M0075138-00 (en-us)
October 2016

RUTHZIL TRATOR COMERCIAL DE PEÇAS LTDA 11 97083-6812 ROLANDO

Parts Manual

313D2 L Excavator

RDE1-UP (Machine)
G8X1-UP (Engine)

Powered By C4.4 Engine

Product and Dealer Information

Note: For product identification plate locations, see the section “Product Identification Information” in the Operation and Maintenance Manual.

Delivery Date: _____

Product Information

Model: _____

Product Identification Number: _____

Engine Serial Number: _____

Transmission Serial Number: _____

Generator Serial Number: _____

Attachment Serial Numbers: _____

Attachment Information: _____

Customer Equipment Number: _____

Dealer Equipment Number: _____

Dealer Information

Name: _____ Branch: _____

Address: _____

_____

_____

	Dealer Contact	Phone Number	Hours
Sales:	_____	_____	_____
Parts:	_____	_____	_____
Service:	_____	_____	_____

MEMORANDA

TABLE OF CONTENTS

NAME PAGE

GENERAL INFORMATION. A4

REPAIR ALTERNATIVES. A7

SUPPLEMENTAL COOLANT ADDITIVES. A8

MAINTENANCE PARTS A9

INDEX A11

MACHINE ARRANGEMENT 1
- CHASSIS AR. 1
- DISTRIBUTION AR 1
- GENERAL AR 3
- OPTION AR-CAB 3
- OPTION AR-REGIONAL 4

ENGINE ARRANGEMENT 5
- ENGINE AR-COMPLETE 5
- ENGINE AR-PRIMARY 5
- INSTALLATION AR-ENGINE 6

BASIC ENGINE 7
- CAMSHAFT GP 7
- COVER GP-CYLINDER HEAD 8
- COVER GP-VALVE MECHANISM 9
- CRANKSHAFT GP. 10
- CYLINDER BLOCK GP 12
- CYLINDER HEAD GP. 15
- DRIVE GP-FAN. 17
- FLYWHEEL GP. 18
- HOUSING GP-FLYWHEEL. 19
- HOUSING GP-FRONT 20
- LIFTING GP-ENGINE 22
- MOUNTING GP-ENGINE 23
- MOUNTING GP-FAN. 25
- PAN GP-OIL 26
- PISTON & ROD GP 28
- PLUG GP-CYLINDER HEAD. 29
- PLUG GP-ENGINE. 30
- PULLEY GP-CRANKSHAFT 33
- PULLEY GP-FAN 34
- ROCKER ARM GP 35
- VALVE MECHANISM GP. 36

LUBRICATION SYSTEM 37
- FILTER GP-ENGINE OIL 37
- FUMES DISPOSAL GP 38
- LINES GP-ENGINE OIL DRAIN 39
- PUMP GP-ENGINE OIL 40

COOLING SYSTEM. 41
- CONNECTION GP-WATER 41
- COOLER GP-ENGINE OIL 42
- FAN AR-SUCTION. 44
- FAN GP-SUCTION. 45
- LINES GP-COOLING. 46
- PUMP GP-WATER. 47
- RADIATOR & HYD OIL COOLER GP. 49
- VALVE GP-COOLANT SAMPLING 54

AIR INLET AND EXHAUST SYSTEM 55
- AIR CLEANER & MOUNTING GP 55
- AIR CLEANER GP. 56
- ELBOW GP-AIR INLET 57
- LINES GP-AIR. 58
- MUFFLER GP 59
- TURBOCHARGER GP 60

FUEL SYSTEM. 61
- CONTROL GP-GOVERNOR 61
- FILTER GP-FUEL. 63
- LINES GP-FUEL. 64
- PUMP GP-FUEL INJECTION 70
- TANK & MTG GP-FUEL 74
- TANK GP-FUEL 75

ELECTRICAL AND STARTING SYSTEM 77
- ALARM GP 77
- ALARM GP-TRAVEL 78
- ANTENNA & MOUNTING GP. 79
- BATTERY & WIRING GP 80
- BLOCK GP-JUNCTION. 86
- CONTROL & MTG GP-COMMUNICATION. 87
- CONTROL & MTG GP-ELECTRONIC 88
- CONTROL GP-UNPROGRAMMED 89
- ELECTRONICS GP-ENGINE. 90
- FASTENER GP-WIRING HARNESS 91
- GLOW PLUG GP. 92
- HARNESS AS-CHASSIS 93
- HARNESS AS-PUMP 96
- INSTALLATION AR-COMMUNICATION 96
- LAMP GP-FLOOD 97
- LIGHTING GP-FLOOD 100
- PANEL & MTG GP-CIRCUIT BREAKER. 106
- PANEL GP-CIRCUIT BREAKER 107
- PANEL GP-SWITCH 110
- SENSOR GP-LIQUID LEVEL 112
- SENSOR GP-PRESSURE 113
- SENSOR GP-SPEED 116
- SENSOR GP-TEMP & PRESS. 117
- STARTING MOTOR GP-ELECTRIC 118
- SWITCH GP-DISCONNECT. 119
- SWITCH GP-MAGNETIC 120
- SWITCH GP-PRESSURE. 121
- SWITCH GP-START 122
- SWITCH GP-TOGGLE 123
- WIRING GP-CAB 124

TABLE OF CONTENTS

NAME	PAGE
WIRING GP-CHASSIS	131
WIRING GP-COMBINED FLOW	133
WIRING GP-COMMUNICATION	134
WIRING GP-CONSOLE	135
WIRING GP-CONVERTER	140
WIRING GP-PLATFORM	141
POWER TRAIN	144
DRIVE GP-FINAL	144
MOTOR GP-TRAVEL	148
POWER TRAIN AR	150
SPROCKET GP	151
FRAME AND BODY	152
BOX & MTG GP-STORAGE	152
BOX GP-STORAGE	153
COUNTERWEIGHT & MOUNTING GP	155
COUNTERWEIGHT GP	156
COVER GP-SOUND SUPPRESSION	157
DOOR AS-ACCESS	158
FRAME GP-UPPER	160
GEAR & BEARING GP-SWING	162
GUARD GP-BOTTOM	164
GUARD GP-SWIVEL	165
HANDRAIL GP	166
HOOD & GUARD GP	167
HOOD GP-ENGINE	171
SHEET AS-SOUND SUPPRESSION	172
STEP GP	176
SUPPORT AS-SOUND SUPPRESSION	178
UNDERCARRIAGE	179
FRAME AR-UNDERCARRIAGE	179
FRAME AS-UNDERCARRIAGE	180
GUARD GP-TRACK GUIDE	181
GUARD GP-TRAVEL MOTOR	182
IDLER GP-FRONT	183
LINK AS-TRACK	187
ROLLER AR-TRACK & CARRIER	189
ROLLER GP-TRACK CARRIER	190
ROLLER GP-TRACK-SINGLE FLANGE	191
TRACK ADJUSTER & RECOIL GP	192
TRACK AR	196
TRACK GP	196
HYDRAULIC SYSTEM	197
ACCUMULATOR GP-HYDRAULIC	197
CLAMP GP-HYDRAULIC LINES	204
CONTROL AR-AUXILIARY	210
COUPLING GP-FLEXIBLE	211
COUPLING GP-PUMP	212
CYLINDER & LINES GP-BOOM	213
CYLINDER & LINES GP-BUCKET	213
CYLINDER & LINES GP-STICK	213
CYLINDER & SEAL GP-BOOM	214
CYLINDER & SEAL GP-BUCKET	216
CYLINDER & SEAL GP-STICK	218
CYLINDER GP-COUPLER	220
DRIVE GP-SWING	221
FASTENER GP-SWING & FINAL DR	225
FILTER & MTG GP-OIL	226
FILTER & VALVE GP-PILOT	228
FILTER GP-OIL	229
FITTING GP-HYDRAULIC	230
GAUGE GP-SIGHT	231
HEAD GP-PUMP	232
HYDRAULIC AR	235
LEVER GP-CONTROL	236
LINES AR-QUICK COUPLER	237
LINES GP-AUXILIARY HYDRAULIC	238
LINES GP-BOOM	242
LINES GP-BOOM CYLINDER	243
LINES GP-BUCKET CYLINDER	248
LINES GP-COUPLER	249
LINES GP-FRONT	256
LINES GP-HYDRAULIC	267
LINES GP-HYDRAULIC OIL COOLER	269
LINES GP-PILOT	272
LINES GP-PUMP	297
LINES GP-STICK	299
LINES GP-STICK CYLINDER	301
LINES GP-TRAVEL MOTOR	302
MANIFOLD GP-CONTROL	304
MOTOR GP-SWING	305
MOUNTING GP-MAIN CONTROL VALVE	307
PUMP & MTG GP-MAIN HYDRAULIC	308
PUMP GP-GEAR	309
PUMP GP-MAIN HYDRAULIC	310
SCREEN GP-HYDRAULIC	314
SPOOL GP-CONTROL VALVE	315
SUPPORT GP-LINES	326
SWIVEL GP	327
TANK & FILTER GP-HYDRAULIC	329
TANK & MTG GP-HYDRAULIC	331
VALVE GP-CHECK	332
VALVE GP-MAIN CONTROL	334
VALVE GP-MANUAL	340
VALVE GP-PILOT	341
VALVE GP-PRESSURE REDUCING	348
VALVE GP-RELIEF	350
VALVE GP-SHUTTLE	355
VALVE GP-SOLENOID	358
VALVE GP-SOLENOID & MANIFOLD	362
VALVE GP-SOLENOID & RELIEF	363

TABLE OF CONTENTS

NAME PAGE

VALVE GP-TRAVEL COUNTERBALANCE 366

IMPLEMENTS 368
BOOM AR-1 PIECE LONG 368
BOOM GP 369
LINES GP-GREASE 371
LINKAGE AR-BUCKET 373
LINKAGE GP-BUCKET 374
STICK AR-HOE 376
STICK GP-HOE 377

WORK TOOLS 380
ADJUSTER GP-BUCKET 380
BUCKET & ADJUSTER GP 381
BUCKET AR-GENERAL PURPOSE 383
BUCKET AR-SEVERE SERVICE ROCK 383
BUCKET AS-GENERAL PURPOSE 384
BUCKET AS-SEVERE SERVICE ROCK 385
CONTROL AR-QUICK COUPLER 386
COUPLER AR-QUICK 386
COUPLER GP-QUICK 387
PIN GP-COUPLER 390
SIDECUTTER GP 391
TIP GP-LONG 392
TIP GP-PENETRATION PLUS 393

OPERATOR STATION 394
AIR CONDITIONER & MOUNTING GP 394
AIR CONDITIONER AR 396
AIR CONDITIONER GP 397
ARMREST GP 399
CAB AR 401
CAB GP 402
COIL GP-EVAPORATOR 412
COMPRESSOR & MTG GP-REFRIG 414
COMPRESSOR GP-REFRIGERANT 415
CONDENSER & MTG GP-REFRIGERANT 416
CONDENSER GP-REFRIGERANT 417
CONSOLE GP-OPERATOR 418
CONTROL & MTG GP-JOYSTICK 425
CONTROL GP-HANDLE 427
CONTROL GP-HEAT & AIR COND 431
CONTROL GP-HYDRAULIC PEDAL 432
CONTROL GP-JOYSTICK 433
CONTROL GP-PILOT OPERATED HYD 437
COVER GP-CAB 439
DOOR & MTG GP-CAB 440
DOOR GP-CAB 441
DUCT GP-CAB AIR 442
FLOOR MAT 443
HATCH GP-ROOF 445

NAME PAGE

HORN GP-ELECTRIC 446
LEVER GP-CAB DOOR 448
LINES GP-AIR CONDITIONER 449
LITERATURE GP 453
MIRROR GP-REAR VIEW 454
MONITOR & MTG GP-OPERATOR 456
MONITOR GP-OPERATOR 457
MOUNTING GP-PLATFORM 459
OPERATOR AR 461
PARTS GP-DOOR 462
PLATFORM GP-OPERATOR 466
SCREEN GP-SUN 467
SEAT & MOUNTING GP 468
SEAT BELT GP 469
SEAT GP 471
SEAT GP-SUSPENSION 472
SUPPORT GP-SEAT 473
SUSPENSION GP-SEAT 474
WASHER GP-WINDOW 475
WINDOW GP-CAB 476
WINDOW GP-DOOR 485
WIPER GP-WINDOW 489

SERVICE EQUIPMENT AND SUPPLIES 491
FILM GP 491
PLATE & FILM GP 497

PART NUMBER INDEX B1

1. MACHINE IDENTIFICATION

Cat machines are identified by Product Identification Numbers (PIN). Some components included in a machine may be identified by Serial Numbers (S/N). Typical components that will be serialized include engines, transmissions, bulldozers, and rippers. The machine and engine are further identified by arrangement numbers and in some cases modification numbers. These numbers are shown on the product identification plate(s) and on the master plate in the operator's compartment.

Cat dealers need all of these numbers to determine accurate parts identification.

Effective First Quarter 2001 the Cat Product Identification Number (PIN) changed from 8 to 17 characters. In an effort to provide uniform equipment identification, Caterpillar and other construction equipment manufacturers are moving to comply with the latest version of the product identification numbering standard. Non-road machine PINs are defined by ISO 10261. The new PIN format will apply to all Cat machines and generator sets. The PIN plates and frame marking will display the 17 character PIN. The new format will look like the following:

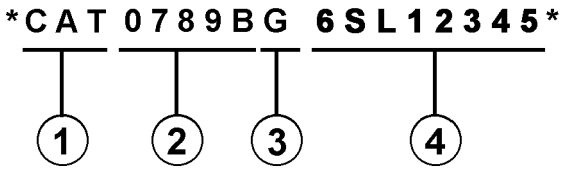

Where:

1. Caterpillar's World Manufacturing Code (characters 1-3)

2. Machine Descriptor (characters 4-8)

3. Check Character (character 9)

4. Machine Indicator Section (MIS) or Product Sequence Number (characters 10-17). These were previously referred to as the Serial Number.

Machines and generator sets produced before First Quarter 2001 will maintain their 8 character PIN format.

Components such as engines, transmissions, axles, etc. and work tools will continue to use an 8 character Serial Number (S/N).

2. ORDERING PARTS

⚠ WARNING

When replacement parts are required for this product Caterpillar recommends using Caterpillar replacement parts or parts with equivalent specifications including, but not limited to, physical dimensions, type, strength and material.

Failure to heed this warning can lead to premature failures, product damage, personal injury or death.

Quality Cat replacement parts are available from Cat dealers throughout the world. Their parts inventories are up to date and include all parts normally required to protect your investment in Cat machines. Dealers may offer repair kits or remanufactured parts to allow selection of the most effective repair alternative for a particular situation. When ordering parts, your order should specify the quantity, part number, part name, and the serial number/product identification number of the machine for which the parts are needed.

3. PARTS MANUAL ORGANIZATION

Product information in this manual is presented as "information elements" that represent all of the components for the specific model. Engine Arrangement and Seat Group are examples of information elements. The information elements are organized alphabetically by part name and secondarily by part number within each major section of the manual.

4. TABLE OF CONTENTS

A table of contents (TOC) is found at the beginning of the manual. The TOC lists each section of the manual with a complete list of all information elements organized as they appear in the manual. Page numbers are provided for quick reference to detailed parts identification illustrations and serviceable consist lists.

5. MAINTENANCE PARTS INDEX

The Maintenance Parts Index, located near the beginning of the manual, references most frequently used maintenance part numbers, providing description, quantity, usage and page number. This information is organized alphabetically by part description.

6. INDEX

The index located near the front of the manual is an alphabetical listing of all information elements included in the manual. Page numbers are provided for quick reference to detailed parts identification illustrations and serviceable consist lists.

7. PART NUMBER INDEX

A numerical index listing all part numbers and the corresponding page number(s) appears at the back of the manual.

8. CAPTIONS

Captions located at the beginning of each information element identify the part number and part name along with additional descriptive information. PIN and S/N information found in each caption should be used to select correct information for a specific machine. Field replacement options, identification of optional attachment components, and where used ("part of") information is also provided.

The first line of a caption is shown in larger type font to indicate the beginning of an information element. Captions for additional pages that may be required to illustrate an information element will be shown in standard type font and will include the term (contd.).

9. NON-SERVICED PARTS

In some instances it is necessary to display non-serviced parts that are a link to a lower level serviceable consist lists. These non-serviced part numbers are shown in italic type indicating that they are not available.

10. PARTS LIST REFERENCE NUMBERS

Numbers shown in the Ref No column correspond to numbers used in the associated graphic(s). An alphabetic suffix may be added to a reference number to identify lower level consist items. Numbers shown in the Graphic Ref column refer to the graphic number identifier displayed in the lower left corner of each illustration. The Graphic Ref number may be used in combination with the item Ref No to determine the correct part number. There may be intentional omission of a Ref No in a consist list as information is updated to reflect the latest serviceable part numbers.

11. INDENTED PART NAMES

When a part name is indented in a parts list, it is part of (included in) the group or assembly under which it is indented.

12. ILLUSTRATION REFERENCE LETTERS

When necessary, illustrations contain reference letters (A, B, C etc.) that are intended to track lines and harnesses from one point to another. They are also used to show where to reconnect illustrations that have been separated.

13. ABBREVIATIONS AND SYMBOLS

O.D. – Outside Diameter
I.D. – Inside Diameter
A – Not Part Of This Group
B – Use As Required
C – Change From Previous Type
D – Order By The Meter
E – Order By The Centimeter
F – Not Shown
G – Order By The Inch
I – Refer To Hydraulic Information System
M – Metric Part
R – Remfg Part May Be Available
Y – Separate Illustration
Z – Not Serviced Separately

14. DESCRIPTION OF TYPE CHANGES

Type - A type is defined as any configuration change that requires an additional Information Element for an Arrangement, Group, or Assembly. If serial number breaks for types are not available, a type # (Type 1, Type 2, etc.) will be displayed in the caption. These "type" changes are identified with a "C" note (change from previous type) in the Parts List. Only the "types" that apply to this Parts Manual will be included. Additional types may exist causing "C" notes to appear on an Information Element when no other types are shown.

15.<END>

This symbol indicates the end of an information element.

NOTE:

Continuing improvement and advancement of product design may cause changes to your machine which may not be included in this publication. Whenever a question arises regarding your Cat product or this publication, please consult your Cat dealer for the latest available information.

FRAME AND BODY

8E-3299 PLATFORM GP-CAB

PIN 3SK1-99999

SMCS-7283 — 100090751

NOTE	REF NO	GRAPHIC REF	PART NUMBER	QTY	PART NAME (1 2 3 4 5 6 PRODUCT LEVEL)	SEE PAGE
		1	3T-3963	1	PLATE AS	
	2	1	6M-3982	25	BOLT (3/8-16X.75DIN)	
	3	1	5P-1078	41	WASHER-HARD (3MM THK)	
	4	1	9F-1444	2	SUPPORT AS-FOOT	
	5	1	7P-2229	19	BOLT (1/2-13X1IN)	
		1	9x-[illegible]	19	WASHER-HARD (4MM THK)	
	6	1	8E-8136	1	COVER AS-LH	
		1	9F-2979	6	NUT-WELD (3/8-16 THD)	
		1	1F-8188	1	CLIP	
	7	1	7S-3411	4	COVER	
	8		5J-0488	19	SCREW-HEAD (3/8-16X.875IN)	
	9	1	[illegible]-4974	1	COVER	
		1	8E-8976	1	GASKET	
	10	1	8E-3249	1	[illegible]	
		1	8E-3250	1	GASKET	
	11	1	3T-3935	1	HANDHOLD	
	12	1	8E-8978	1	COVER AS	
		1	9F-2979	8	NUT-WELD (3/8-16 THD)	
		1	8E-8979	1	GASKET	
	13	1	7T-0131	1	FLOORPLATE AS	
		1	1F-0748	4	NUT-WELD (1/2-13 THD)	
	14	1	7V-8067	1	PLUG-BUTTON	
	15	1	7T-0136	1	PLATE AS	
		1	9F-2979	5	NUT-WELD (3/8-16 THD)	
	16	1	7T-8066	1	COVER	
		1	7T-0779	1	GASKET	
	17	1	3T-3961	1	PLATE AS	
	18	1	9T-9364	4	BOLT (1/4-20X.625IN)	
M		1	9T-4206	4	WASHER-HARD (2MM THK)	
	19	1	6I-9494	1	FLOOR MAT	
	20	1	8E-8946	1	MODULE AS-OPERATOR	
	21	1	3T-3934	1	HANDHOLD	
	22	1	9F-8571	2	PLUG	
	23	2	9T-9364	4	BOLT (1/4-20X.625IN)	
M		2	9T-4206	4	WASHER-HARD (2MM THK)	
	24	2	6M-3982	17	BOLT (3/8-16X.75DIN)	
	25	2	5P-1078	21	WASHER-HARD (3MM THK)	
	26	2	7T-0136	1	SEAL	
	27	2	7X-0378	2	BOLT (3/4-10X5IN)	
		2	7X-0682	2	WASHER-HARD (6MM THK)	
	28	2	3T-3462	2	PLATE	
	29	2	3T-8280	1	PLATE AS	
		2	7S-4828	6	SPACER	
	30	2	3T-8281	1	SEAL	
	31	2	7S-8917	1	GASKET	
	32	2	7S-8916	1	COVER AS	
		2	2S-2376	2	WASHER	
		2	9F-8628	2	SCREW-KNURLED	
	33	2	9W-3429	1	COVER	
	34	2	8E-9697	1	COVER	
	35	2	9D-3931	8	SCREW-SOCKET HEAD	
	36	2	9W-3142	8	MOUNTING	
	37	2	9W-9927	2	PLATE	
	38	2	7X-0290	2	BOLT (7/8-9X5IN)	
		2	7X-0572	2	WASHER-HARD	
	39	2	4L-6454	4	BOLT (3/8-16X1.0IN)	
	40	2	3T-4788	1	COVER	

12 FRAME AND BODY — 1 of 4 — SELP4570-01

FRAME AND BODY

8E-3299 PLATFORM GP-CAB (contd.)

100090751

NOTE	REF NO	GRAPHIC REF	PART NUMBER	QTY	PART NAME (1 2 3 4 5 6 PRODUCT LEVEL)	SEE PAGE
	41	2	8E-2516	1	COVER	
	42	2	7T-0134	1	PLATE	
	43	2	7T-0138	1	GASKET	
	44	2	7S-8724	1	GASKET	
	45	2	7S-8723	1	COVER	
	46	6	6V-1960	2	PLUG-BUTTON	

M-METRIC PART

SELP4570-01 — 2 of 4 — FRAME AND BODY 13

FRAME AND BODY

8E-3299 PLATFORM GP-CAB (contd.)

100090751

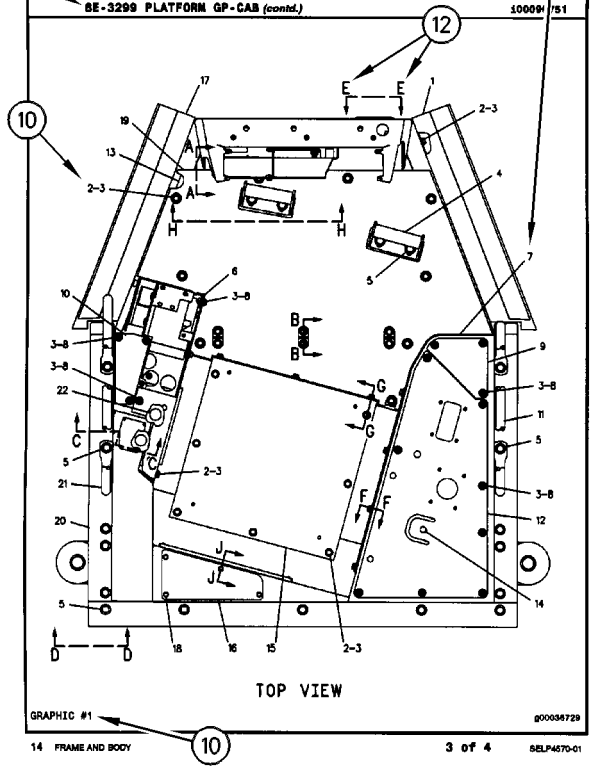

GRAPHIC #1 — g000356729

14 FRAME AND BODY — 3 of 4 — SELP4570-01

FRAME AND BODY

8E-3299 PLATFORM GP-CAB (contd.)

100090751

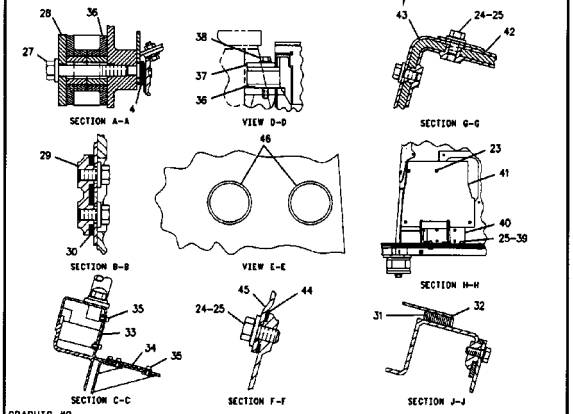

GRAPHIC #2 — g001058874

SELP4570-01 — 4 of 4 — FRAME AND BODY 15

REMANUFACTURED COMPONENTS

As an option when making repairs consider Cat Remanufactured Components. Components that are available through the Cat Remanufactured Program are identified three ways in the parts book:

- with the letter R in the note field of the parts list
- with an R* at the beginning of the first line of the caption
- with an *R at the end of the first line of the caption

Typical components included in the Remanufacturing Program include:

ALTERNATORS
CONNECTING RODS
CRANKSHAFTS - UNDERSIZE
CRANKSHAFTS - UPGRADE TO NEW
CYLINDER HEADS
ELECTRONIC CONTROL MODULES (ECM)
ELECTRONIC SENSORS
FUEL INJECTORS
FUEL NOZZLES
FUEL PUMPS
GOVERNORS
OIL PUMPS
PISTONS
SHORT BLOCKS
STARTERS
TURBOCHARGERS - COMPLETE
TURBOCHARGER CARTRIDGES
WATER PUMPS

Cat Remanufactured engines for many engine arrangements are also available.

SUPPLEMENTAL COOLANT ADDITIVES

CUSTOMER BENEFITS:

Protects against cavitation, foam, erosion, corrosion, and scale buildup in cooling systems.

- Provides measured coolant conditioner.

DESCRIPTION:

Additives deplete from the coolant with normal operation. For this reason, Supplemental Coolant Additives (SCA) must be added to all heavy duty coolants at regular intervals. In addition, when not using a fully formulated, pre-charged antifreeze, like Cat DEAC, an initial charge of SCA must be added to the cooling system. The amount of SCA added to the system is dependent on the capacity of the system.

The SCA for initial fill is provided as a liquid. SCA's for maintenance intervals are available in liquid form and as a spin-on element. (No Spin-on available for 3600 Family of Engines)

NOTE:

The amount of SCA added at initial fill is not the same as the amount added at maintenance intervals.

The coolant additive elements can be used with any ethylene or propylene glycol type antifreeze which meets ASTM D4985 or ASTM D5345 Specifications.

NOTE:

For use with standard heavy duty coolant only, not for use with Extended Life Coolant.

PARTS NEEDED:

Cooling System Capacity		Liquid SCA at Initial Fill	Liquid SCA at Maintenance*	Spin-on SCA Maintenance Element*
Liters	Gallons			
22-30	(6-8)	3P-2044 (1)	6V-3542 (1)	111-2370 (1)
30-38	(8-10)	3P-2044 (1) 6V-3542 (1)	111-2372 (1)	111-2369 (1)
38-49	(10-13)	3P-2044 (1) 8T-1589 (1)	111-2372 (1)	111-2369 (1)
49-64	(13-17)	3P-2044 (2)	8T-1589 (1)	9N-3368 (1)
64-83	(17-22)	3P-2044 (2) 8T-1589 (1)	111-2372 (1) 6V-3542 (1)	111-2371 (1)
83-114	(22-30)	3P-2044 (3) 8T-1589 (1)	3P-2044 (1)	9N-3718 (1)
114-163	(30-43)	3P-2044 (5)	3P-2044 (1) 6V-3542 (1)	111-2371 (2)
163-242	(43-64)	3P-2044 (8)	3P-2044 (2)	9N-3718 (2)

* Normal maintenance period is 250 hrs. See your Operation and Maintenance Manual for complete coolant maintenance instructions.

( ) Indicates quantity required.

MAINTENANCE PARTS

DESCRIPTION	PART NUMBER	QTY	WHERE USED	PAGE
AIR INLET AND EXHAUST SYSTEM				
FILTER ELEMENT AS-AIR (PRIMARY)	131-8902	1	AIR CLEANER GP	56
FILTER ELEMENT AS-AIR (SECONDARY)	131-8903	1	AIR CLEANER GP	56
BASIC ENGINE				
BELT-SERPENTINE	298-5872	1	PULLEY GP-FAN	34
CAP AS (ENGINE OIL FILLER)	136-3608	1	COVER GP-CYLINDER HEAD	8
GASKET (VALVE COVER)	225-6451	1	COVER GP-CYLINDER HEAD	8
PLUG-DRAIN (ENGINE OIL)	7C-0351	1	PAN GP-OIL	26
COOLING SYSTEM				
CAP AS (COOLANT RECOVERY)	171-3369	1	RADIATOR & HYD OIL COOLER GP	52
CAP-RADIATOR	416-0965	1	RADIATOR & HYD OIL COOLER GP	49
HOSE-RADIATOR (LOWER)	399-1118	1	RADIATOR & HYD OIL COOLER GP	52
REGULATOR GP-TEMPERATURE (INCLUDES CONNECTOR) (WATER)	254-2267	1	CONNECTION GP-WATER	41
SCREEN AS (HYDRAULIC OIL COOLER)	418-7955	1	RADIATOR & HYD OIL COOLER GP	49
SCREEN AS (RADIATOR)	418-7956	1	RADIATOR & HYD OIL COOLER GP	49
ELECTRICAL AND STARTING SYSTEM				
BATTERY GP (12-VOLT, 750-CCA) (MAINTENANCE FREE)	3T-5760	2	BATTERY & WIRING GP	81
CAP AS-FILLER (7/8-9-THD)	123-1373	6	BATTERY & WIRING GP	81
CIRCUIT BREAKER AS (40-AMPERE) (GLOW PLUG)	171-2205	1	PANEL GP-CIRCUIT BREAKER	107
CIRCUIT BREAKER AS (60-AMPERE) (ALTERNATOR)	171-2208	1	PANEL GP-CIRCUIT BREAKER	107
CIRCUIT BREAKER AS (80-AMPERE) (MAIN)	171-2210	1	PANEL GP-CIRCUIT BREAKER	107
FUSE (10-AMPERE)	113-8490	20	WIRING GP-CAB	124
FUSE (15-AMPERE)	113-8491	6	WIRING GP-CAB	124
FUSE (20-AMPERE)	113-8492	2	WIRING GP-CAB	124
FUSE (25-AMPERE)	113-8493	2	WIRING GP-CAB	124
FUSE (30-AMPERE)	124-3548	2	WIRING GP-CAB	124
FUSE (5-AMPERE)	141-2759	1	PANEL GP-CIRCUIT BREAKER	107
		8	WIRING GP-CAB	124
GLOW PLUG (24-VOLT) (12-VOLT)	226-8770	4	GLOW PLUG GP	92
KEY (BATTERY DISCONNECT)	8H-5306	1	SWITCH GP-DISCONNECT	119
LAMP AS (24-VOLT, 3-WATT)	170-9324	1	PANEL GP-SWITCH	110
LAMP-HALOGEN (24-VOLT, 70-WATT)	351-9918	1	LAMP GP-FLOOD	97
	9X-3463	1	LAMP GP-FLOOD	98
LAMP-HALOGEN (24-VOLT, 70-WATT) (FLOODLIGHT)	351-9918	1	LAMP GP-FLOOD	99
FUEL SYSTEM				
CAP AS-FUEL (LOCKABLE, VENTED)	349-7059	1	TANK GP-FUEL	75

MAINTENANCE PARTS

DESCRIPTION	PART NUMBER	QTY	WHERE USED	PAGE
FILTER AS-WATER SEP & FUEL (ULTRA HIGH EFFICIENCY)	438-5386	1	LINES GP-FUEL	66
FILTER ELEMENT-WTR SEP & FUEL	1R-1804	1	FILTER GP-FUEL	63
STRAINER (FUEL FILTER)	387-6403	1	FILTER GP-FUEL	63
STRAINER AS-FUEL (FLOAT GAUGE)	303-9933	1	TANK GP-FUEL	75
HYDRAULIC SYSTEM				
BREATHER (HYDRAULIC TANK)	227-0590	1	TANK & FILTER GP-HYDRAULIC	329
BREATHER (SWING DRIVE)	4H-6112	1	DRIVE GP-SWING	222
BREATHER AS (SWING DRIVE)	267-6744	1	DRIVE GP-SWING	222
ELEMENT (HYDRAULIC RETURN FILTER)	398-7171	1	TANK & FILTER GP-HYDRAULIC	329
FILTER-OIL (ADVANCED EFFICIENCY) (HYDRAULIC, CASE DRAIN)	093-7521	1	FILTER GP-OIL	229
FILTER-OIL (ADVANCED EFFICIENCY) (HYDRAULIC, PILOT)	5I-8670	1	FILTER & VALVE GP-PILOT	228
SCREEN AS (HYDRAULIC TANK)	209-6002	1	SCREEN GP-HYDRAULIC	314
LUBRICATION SYSTEM				
FILTER ELEMENT-ENGINE OIL	322-3155	1	FILTER GP-ENGINE OIL	37
OPERATOR STATION				
BLADE AS-WIPER (600-MM)	424-0336	1	WIPER GP-WINDOW	489
CAP AS (WINDOW WASHER)	178-5431	1	WASHER GP-WINDOW	475
DRYER AS-REFRIGERANT (RECEIVER)	176-1902	1	LINES GP-AIR CONDITIONER	449
FILTER AS-AIR (AIR CONDITIONER)	293-1137	1	AIR CONDITIONER GP	397
FILTER ELEMENT-CAB AIR	245-7823	1	AIR CONDITIONER GP	397
	293-1184	1	CAB AR	401
		1	DUCT GP-CAB AIR	442
LAMP (24-VOLT, 10-WATT)	201-4417	1	CAB GP	402
LAMP AS-DOME	176-1986	1	CAB GP	402
SEAT BELT GP (RETRACTABLE, 51-MM (2-IN))	327-6541	1	SEAT BELT GP	469
	488-6524	1	SEAT BELT GP	470
SEAT BELT GP (RETRACTABLE)	488-6541	1	CAB AR	401

INDEX

NAME PAGE

A

ACCUMULATOR GP-HYDRAULIC–CHARGED. . . 197
198
199
200
202
203
ACCUMULATOR GP-HYDRAULIC–UNCHARGED 201
ADJUSTER GP-BUCKET 380
AIR CLEANER & MOUNTING GP 55
AIR CLEANER GP 56
AIR CONDITIONER & MOUNTING GP. 394
AIR CONDITIONER AR 396
AIR CONDITIONER GP 397
ALARM GP-TRAVEL–BACKUP. 78
ALARM GP–FAULT 77
ANTENNA & MOUNTING GP–PRODUCT LINK. 79
ARM GP-WINDOW WIPER. 489
ARMREST GP–LH 400
ARMREST GP–RH. 399

B

BATTERY & WIRING GP 80
BATTERY GP (12-VOLT, 750-CCA) (MAINTENANCE FREE) 81
BELT-SERPENTINE. 34
BLADE AS-WIPER (600-MM) 489
BLOCK GP-JUNCTION. 86
BOOM AR-1 PIECE LONG. 368
BOOM GP 369
BOX & MTG GP-STORAGE. 152
BOX GP-STORAGE. 153
BREATHER (HYDRAULIC TANK) 329
BREATHER (SWING DRIVE) 222
BREATHER AS (SWING DRIVE) 222
BUCKET & ADJUSTER GP–GENERAL PURPOSE 381
BUCKET & ADJUSTER GP–SEVERE SERVICE ROCK 382
BUCKET AR-GENERAL PURPOSE–312-FAMILY. 383
BUCKET AR-SEVERE SERVICE ROCK. 383
BUCKET AS-GENERAL PURPOSE 384
BUCKET AS-SEVERE SERVICE ROCK. 385
BUS BAR GP 92

C

CAB AR–COMFORT 401
CAB GP 405
407
411
CAB GP–EXTERIOR. 402
CAB GP–INTERIOR. 409
CAMSHAFT GP 7

NAME PAGE

CAP AS (COOLANT RECOVERY) 52
CAP AS (ENGINE OIL FILLER) 8
CAP AS (WINDOW WASHER) 475
CAP AS-FILLER (7/8-9-THD) 81
CAP AS-FUEL (LOCKABLE, VENTED) 75
CAP-RADIATOR 49
CHASSIS AR. 1
CIRCUIT BREAKER AS (40-AMPERE) (GLOW PLUG) 107
CIRCUIT BREAKER AS (60-AMPERE) (ALTERNATOR) 107
CIRCUIT BREAKER AS (80-AMPERE) (MAIN). 107
CLAMP GP-HYDRAULIC LINES 204
205
206
207
208
209
COIL GP-EVAPORATOR 412
COMPRESSOR & MTG GP-REFRIG. 414
COMPRESSOR GP-REFRIGERANT. 415
CONDENSER & MTG GP-REFRIGERANT. 416
CONDENSER GP-REFRIGERANT 417
CONNECTION GP-WATER. 41
CONSOLE GP-OPERATOR. 419
CONSOLE GP-OPERATOR–LH 421
CONSOLE GP-OPERATOR–RH. 418
423
CONTROL & MTG GP-COMMUNICATION. 87
CONTROL & MTG GP-ELECTRONIC 88
CONTROL & MTG GP-JOYSTICK 426
CONTROL & MTG GP-JOYSTICK–WITH SLIDE CONTROL 425
CONTROL AR-AUXILIARY 210
CONTROL AR-AUXILIARY–JOYSTICK, MODULATION SWITCH. 210
CONTROL AR-AUXILIARY–SYSTEM 1, 1-WAY, 1-PUMP 210
CONTROL AR-QUICK COUPLER. 386
CONTROL GP-GOVERNOR 61
CONTROL GP-HANDLE (LH). 430
CONTROL GP-HANDLE–JOYSTICK, LH. 427
430
CONTROL GP-HANDLE–JOYSTICK, RH 428
429
CONTROL GP-HEAT & AIR COND–AIR INLET 431
CONTROL GP-HYDRAULIC PEDAL. 432
CONTROL GP-JOYSTICK–LH 434
436
CONTROL GP-JOYSTICK–RH 433
435
CONTROL GP-PILOT OPERATED HYD–TRAVEL 437
CONTROL GP-UNPROGRAMMED (PL631 SATELLITE). 87
CONTROL GP-UNPROGRAMMED–PL631 SATELLITE. 89
COOLER GP-ENGINE OIL 42
43

INDEX

NAME PAGE

CORE AS-AFTERCOOLER 49
CORE AS-HEATER 397
CORE AS-OIL COOLER (HYDRAULIC) 49
CORE AS-RADIATOR 49
COUNTERWEIGHT & MOUNTING GP 155
COUNTERWEIGHT GP 156
COUPLER AR-QUICK 386
COUPLER GP-QUICK–312-LINKAGE 387
COUPLING GP-FLEXIBLE 211
COUPLING GP-PUMP 212
COVER GP-CAB–REAR 439
COVER GP-CYLINDER HEAD 8
COVER GP-SOUND SUPPRESSION–FUEL TANK 157
COVER GP-VALVE MECHANISM 9
CRANKSHAFT GP 10
11
CYLINDER & LINES GP-BOOM–LH 213
CYLINDER & LINES GP-BOOM–RH 213
CYLINDER & LINES GP-BUCKET 213
CYLINDER & LINES GP-STICK 213
CYLINDER & SEAL GP-BOOM 214
CYLINDER & SEAL GP-BUCKET 216
CYLINDER & SEAL GP-STICK 218
CYLINDER BLOCK GP 12
14
CYLINDER GP-COUPLER–312-LINKAGE 220
CYLINDER HEAD GP 15
16

D

DISTRIBUTION AR 1
2
3
DOOR & MTG GP-CAB 440
DOOR AS-ACCESS–MAIN HYDRAULIC PUMP 159
DOOR AS-ACCESS–PUMP COMPARTMENT . . . 158
DOOR GP-CAB 441
DRIVE GP-FAN 17
DRIVE GP-FINAL–WITH MOTOR 147
DRIVE GP-FINAL–WITH MOTOR, SPROCKET 146
DRIVE GP-FINAL–WITHOUT MOTOR 144
DRIVE GP-SWING 223
DRIVE GP-SWING–WITH MOTOR 221
222
DRYER AS-REFRIGERANT (RECEIVER) 449
DUCT GP-CAB AIR 442

E

ELBOW GP-AIR INLET 57
ELECTRONICS GP-ENGINE 90
ELEMENT (HYDRAULIC RETURN FILTER) 329
ENGINE AR-COMPLETE 5
ENGINE AR-PRIMARY 5

F

FAN AR-SUCTION 44
FAN GP-SUCTION–DIRECT DRIVE 45
FASTENER GP-SWING & FINAL DR 225
FASTENER GP-WIRING HARNESS–JOYSTICK 91
FILM GP–BRAZIL 496
FILM GP–OPERATOR CONTROLS, NOTICE . . . 491
493
FILM GP–PRODUCT LINK RADIO, INTL 495
FILM GP–QUICK COUPLER 494
FILM-IDENTIFICATION (HYDRAULIC ACCUMULATOR) 201
FILM-IDENTIFICATION (LIFT EYE LOCATION) 497
FILM-IDENTIFICATION (TIE-DOWN) 497
FILM-INFORMATION (PRODUCT LINK, READ OMM) 495
FILM-INSTRUCTION (ALTERNATE EXIT) 497
FILM-INSTRUCTION (COUPLER OPERATION) 494
FILM-INSTRUCTION (ENGINE SHUTOFF) 497
FILM-INSTRUCTION (FUEL, READ OMM) 497
FILM-INSTRUCTION (NO STEP) 497
FILM-INSTRUCTION (PULL RING, ALTERNATE EXIT) 497
FILM-WARNING (CRUSH HAZARD, READ OMM, U.S.) 494
FILM-WARNING (HIGH PRESSURE CYLINDER) 199
FILM-WARNING (LIFTING EYE, READ OMM) 497
FILM-WARNING (NO ETHER SPRAY/AIR INTK, INTL) 497
FILM-WARNING (READ OMM) 387
FILM-WARNING (UNIVERSAL, READ OMM) 497
FILTER & MTG GP-OIL 226
FILTER & VALVE GP-PILOT–HYDRAULIC OIL 228
FILTER AS-AIR (AIR CONDITIONER) 397
FILTER AS-WATER SEP & FUEL (ULTRA HIGH EFFICIENCY) 66
FILTER ELEMENT AS-AIR (PRIMARY) 56
FILTER ELEMENT AS-AIR (SECONDARY) 56
FILTER ELEMENT-CAB AIR 397
401
442
FILTER ELEMENT-ENGINE OIL 37
FILTER ELEMENT-WTR SEP & FUEL 63
FILTER GP-ENGINE OIL 37
FILTER GP-FUEL 63
FILTER GP-OIL–HYDRAULIC, CASE DRAIN 229
FILTER-OIL (ADVANCED EFFICIENCY) (HYDRAULIC, CASE DRAIN) 229
FILTER-OIL (ADVANCED EFFICIENCY) (HYDRAULIC, PILOT) 228
FITTING GP-HYDRAULIC 230

INDEX

NAME PAGE

FLOOR MAT 1
2
3
443
444
FLYWHEEL GP 18
FRAME AR-UNDERCARRIAGE 179
FRAME AS-UNDERCARRIAGE 180
FRAME GP-UPPER 160
FUMES DISPOSAL GP 38
FUSE (10-AMPERE) 124
FUSE (15-AMPERE) 124
FUSE (20-AMPERE) 124
FUSE (25-AMPERE) 124
FUSE (30-AMPERE) 124
FUSE (5-AMPERE) 107
124

G

GASKET (VALVE COVER) 8
GAUGE AS-OIL LEVEL (DIPSTICK) (ENGINE) . . . 26
GAUGE GP-SIGHT–HYDRAULIC OIL LEVEL . . . 231
GAUGE-OIL LEVEL (SWING DRIVE) 222
GEAR & BEARING GP-SWING 162
163
GENERAL AR 3
GLOW PLUG (24-VOLT) (12-VOLT) 92
GLOW PLUG GP 92
GUARD GP-BOTTOM 164
GUARD GP-SWIVEL 165
GUARD GP-TRACK GUIDE 181
GUARD GP-TRAVEL MOTOR 182

H

HANDLE GP-JOYSTICK (RH) 429
HANDRAIL GP–FRONT, RH 166
HARNESS AS-CAB 124
HARNESS AS-CAB (MONITOR) 456
HARNESS AS-CHASSIS 93
94
131
HARNESS AS-CONSOLE 135
138
HARNESS AS-HEATER & AIR COND 397
HARNESS AS-HEATER & AIR COND (HIGH SIDE) 394
HARNESS AS-HEATER & AIR COND (LOW SIDE) 394
HARNESS AS-LIGHTING 101
HARNESS AS-LIGHTING (BOOM, LH) 100
HARNESS AS-LIGHTING (CAB LIGHT) 103
HARNESS AS-PANEL 110
HARNESS AS-PLATFORM 141
HARNESS AS-PUMP 96
HARNESS AS-SENSOR 115
HARNESS AS-SWITCH (QUICK COUPLER) 123
HARNESS AS-WIRING (HORN) 447

NAME PAGE

HATCH GP-ROOF 445
HEAD GP-MOTOR (SWING) 305
HEAD GP-PUMP 232
HOOD & GUARD GP 167
HOOD GP-ENGINE 171
HORN GP-ELECTRIC 446
447
HOSE-RADIATOR (LOWER) 52
HOUSING GP-FLYWHEEL 19
HOUSING GP-FRONT 20
HYDRAULIC AR 235

I

IDLER GP-FRONT 183
186
IDLER GP-FRONT–LH 185
IDLER GP-FRONT–RH 184
INDICATOR AS-AIR FILTER CHANGE (AIR RESTRICTION) 56
INDICATOR-FUEL FILTER CHANGE 66
INSTALLATION AR-COMMUNICATION–PL631 . . . 96
INSTALLATION AR-ENGINE 6

K

KEY (BATTERY DISCONNECT) 119

L

LAMP (24-VOLT, 10-WATT) 402
LAMP AS (24-VOLT, 3-WATT) 110
LAMP AS-DOME 402
LAMP GP-FLOOD 97
98
99
LAMP-HALOGEN (24-VOLT, 70-WATT) 97
98
LAMP-HALOGEN (24-VOLT, 70-WATT) (FLOODLIGHT) 99
LEVER GP-CAB DOOR 448
LEVER GP-CONTROL–HYDRAULIC LOCKOUT 236
LIFTING GP-ENGINE 22
LIGHTING GP-FLOOD–BOOM, LH 100
LIGHTING GP-FLOOD–BOOM, RH 101
LIGHTING GP-FLOOD–CAB 103
LIGHTING GP-FLOOD–CHASSIS 105
LINES AR-QUICK COUPLER–REACH BOOM . . . 237
LINES GP-AIR 58
LINES GP-AIR CONDITIONER 449
LINES GP-AUXILIARY HYDRAULIC 238
240
LINES GP-BOOM 242
LINES GP-BOOM CYLINDER 245
LINES GP-BOOM CYLINDER–LH 243
LINES GP-BOOM CYLINDER–RH 244
LINES GP-BUCKET CYLINDER 248

NAME PAGE

LINES GP-COOLING. 46
LINES GP-COUPLER 249
252
254
LINES GP-COUPLER–STICK 250
LINES GP-ENGINE OIL DRAIN. 39
LINES GP-FRONT 258
260
LINES GP-FRONT–QUICK COUPLER 263
LINES GP-FRONT–SYSTEM 23, COMBINED FUNCTION. 256
LINES GP-FUEL. 64
66
LINES GP-GREASE–BOOM 371
LINES GP-GREASE–STICK. 372
LINES GP-HYDRAULIC 267
LINES GP-HYDRAULIC OIL COOLER. 269
LINES GP-HYDRAULIC OIL COOLER–REAR . . . 270
LINES GP-PILOT 279
281
286
293
LINES GP-PILOT–JOYSTICK, MAIN CONTROL VALVE. 276
LINES GP-PILOT–JOYSTICK, PEDALS. 272
LINES GP-PILOT–PUMP 283
LINES GP-PUMP–HYDRAULIC 297
LINES GP-STICK. 299
300
LINES GP-STICK CYLINDER. 301
LINES GP-TRAVEL MOTOR. 302
LINK AS-TRACK. 187
188
LINKAGE AR-BUCKET–WITH LIFTING EYE 373
LINKAGE GP-BUCKET–WITH LIFTING EYE 374
LITERATURE GP. 1
453

M

MANIFOLD GP-CONTROL–PILOT OIL SUPPLY 304
METER GP-SERVICE. 124
MIRROR GP-REAR VIEW. 454
455
MONITOR & MTG GP-OPERATOR 456
MONITOR GP-OPERATOR. 457
458
MOTOR GP-SWING 305
MOTOR GP-TRAVEL 148
MOUNTING GP-ENGINE 23
24
MOUNTING GP-FAN. 25
MOUNTING GP-MAIN CONTROL VALVE 307
MOUNTING GP-PLATFORM. 459
MUFFLER GP. 59

O

OPERATOR AR 461
OPTION AR-CAB. 3
OPTION AR-REGIONAL. 4

P

PADLOCK GP. 74
PAN GP-OIL 26
PANEL & MTG GP-CIRCUIT BREAKER. 106
PANEL GP-CIRCUIT BREAKER 107
PANEL GP-SWITCH–CONSOLE 110
PARTS GP-DOOR. 462
PARTS GP-DOOR–CAB. 464
PIN GP-COUPLER. 390
PISTON & ROD GP 28
PLATE & FILM GP 497
PLATE-SERIAL NUMBER (MACHINE). 497
PLATE-WARNING (HIGH PRESSURE CYLINDER) 192
193
PLATFORM GP-OPERATOR 466
PLUG GP-CYLINDER HEAD 29
PLUG GP-ENGINE 30
31
32
PLUG-DRAIN (ENGINE OIL). 26
POWER TRAIN AR. 150
PULLEY GP-CRANKSHAFT 33
PULLEY GP-FAN. 34
PUMP & MTG GP-MAIN HYDRAULIC 308
PUMP GP-ENGINE OIL. 40
PUMP GP-FUEL INJECTION 70
71
PUMP GP-GEAR 309
PUMP GP-MAIN HYDRAULIC 310
PUMP GP-WATER. 47

R

RADIATOR & HYD OIL COOLER GP. 49
52
REGULATOR GP-TEMPERATURE (INCLUDES CONNECTOR) (WATER) 41
RELAY (24-VOLT) (BOOM FLOODLIGHT). 124
RELAY (24-VOLT) (CAB LIGHT). 124
RELAY (24-VOLT) (CHASSIS LIGHT) 124
RELAY (24-VOLT) (ELECTRIC PRIMING) 124
RELAY (24-VOLT) (ETHER START) 124
RELAY (24-VOLT) (HORN). 124
RELAY (24-VOLT) (NEUTRAL START). 124
RELAY (24-VOLT) (PUMP). 124
RELAY (BLOWER). 431
RELAY (COMPRESSOR CLUTCH). 431
RELAY AS (WIPER) 489
ROCKER ARM GP 35
ROLLER AR-TRACK & CARRIER. 189
ROLLER GP-TRACK CARRIER. 190

NAME PAGE

ROLLER GP-TRACK-SINGLE FLANGE 191

S

SCREEN AS (HYDRAULIC OIL COOLER). 49
SCREEN AS (HYDRAULIC TANK) 314
SCREEN AS (RADIATOR) 49
SCREEN GP-HYDRAULIC–TANK 314
SCREEN GP-SUN 467
SEAT & MOUNTING GP–HIGH BACK, TILT. . . . 468
SEAT BELT GP (RETRACTABLE, 51-MM (2-IN)) 469, 470
SEAT BELT GP (RETRACTABLE) 401
SEAT BELT GP–RETRACTABLE 469, 470
SEAT GP-SUSPENSION–HIGH BACK, TILT 472
SEAT GP–HIGH BACK, TILT 471
SENDER AS-FUEL LEVEL 75
SENDER GP-TEMPERATURE (COOLANT) 117
SENSOR AS-PRESSURE (BOOM CYLINDER) 115
SENSOR AS-PRESSURE (MAIN HYDRAULIC PUMP). 283
SENSOR AS-TEMPERATURE (AIR). 431
SENSOR AS-TEMPERATURE (AMBIENT AIR TEMP) 397
SENSOR AS-TEMPERATURE (COOLANT) 397
SENSOR GP-LIQUID LEVEL 66, 112
SENSOR GP-PRESSURE 66, 113, 114, 115
SENSOR GP-PRESSURE (AUXILIARY HYDRAULIC) 256
SENSOR GP-PRESSURE (FUEL). 113, 117
SENSOR GP-PRESSURE (HYDRAULIC OIL) . . . 263
SENSOR GP-SPEED 116
SENSOR GP-SPEED (MAGNETIC) (ENGINE) . . . 80
SENSOR GP-TEMP & PRESS 6, 117
SENSOR-TEMPERATURE (AMBIENT AIR) 394
SENSOR-TEMPERATURE (HYDRAULIC OIL). . . 329
SHEET AS-SOUND SUPPRESSION 172, 173, 174, 175
SIDECUTTER GP 391
SOFTWARE GP-MACHINE 90
SOFTWARE GP-MONITOR. 457, 458
SPOOL GP-CONTROL VALVE–BOOM I. 325
SPOOL GP-CONTROL VALVE–BOOM II 324
SPOOL GP-CONTROL VALVE–BUCKET 316
SPOOL GP-CONTROL VALVE–COMBINED FLOW 318
SPOOL GP-CONTROL VALVE–STICK I 323
SPOOL GP-CONTROL VALVE–STICK II 321
SPOOL GP-CONTROL VALVE–STICK REGENERATION 317
SPOOL GP-CONTROL VALVE–SWING BOOM 320
SPOOL GP-CONTROL VALVE–SWING PRIORITY. 319
SPOOL GP-CONTROL VALVE–TRAVEL, RH, LH. 322
SPOOL GP-CONTROL VALVE–WORK TOOL. . . 315
SPRING AS-GAS (HATCH). 445
SPRING-GAS (ENGINE HOOD). 167
SPROCKET GP 151
STARTING MOTOR GP-ELECTRIC 118
STEP GP 176, 177
STICK AR-HOE–REACH 376
STICK GP-HOE 377, 378
STRAINER (FUEL FILTER). 63
STRAINER AS-FUEL (FLOAT GAUGE). 75
SUPPORT AS-SOUND SUPPRESSION 178
SUPPORT GP-LINES 326
SUPPORT GP-SEAT. 473
SUSPENSION GP-SEAT–MECHANICAL 474
SWITCH (WINDOW LOWER LIMIT). 479
SWITCH AS-LIMIT (HYDRAULIC LOCKOUT) . . . 236
SWITCH AS-LIQUID LEVEL (ENGINE OIL). 26
SWITCH AS-MAGNETIC (24-VOLT) (MAIN RELAY) 124
SWITCH AS-PRESSURE 281
SWITCH AS-PRESSURE (HYDRAULIC OIL) (DIFFERENTIAL). 329
SWITCH AS-PRESSURE (IMPLEMENT, SWING). 276
SWITCH AS-PRESSURE (QUICK COUPLER VALVE) 263
SWITCH AS-PRESSURE (REFRIGERANT) 449
SWITCH AS-PRESSURE (TRAVEL). 276
SWITCH AS-PUSH BUTTON (HORN). 427
SWITCH AS-PUSH BUTTON (MANUAL LOW IDLE) 428
SWITCH AS-TOGGLE (QUICK COUPLER) 123
SWITCH AS-TOGGLE (SECONDARY SHUTDOWN) (SECONDARY SHUTDOWN) 141
SWITCH GP-DISCONNECT–BATTERY 119
SWITCH GP-MAGNETIC–START RELAY 120
SWITCH GP-PRESSURE. 121
SWITCH GP-START–ENGINE, KEY 122
SWITCH GP-TOGGLE–QUICK COUPLER 123
SWITCH-TEMPERATURE (FUEL) 71
SWIVEL GP. 327

T

TANK & FILTER GP-HYDRAULIC 329
TANK & MTG GP-FUEL 74
TANK & MTG GP-HYDRAULIC 331
TANK GP-FUEL 75
TIP GP-LONG–J-250. 392
TIP GP-PENETRATION PLUS–J-300 393

INDEX

NAME PAGE

TRACK ADJUSTER & RECOIL GP 194
195
TRACK ADJUSTER & RECOIL GP–LH. 193
TRACK ADJUSTER & RECOIL GP–RH 192
TRACK AR–2-REQUIRED 196
TRACK GP–2-REQUIRED 196
TURBOCHARGER GP 60

V

VALVE GP-CHECK–COOLER BYPASS. 332
VALVE GP-CHECK–PILOT OPERATED 333
VALVE GP-COOLANT SAMPLING 54
VALVE GP-FLUID SAMPLING (COOLANT) 54
VALVE GP-FLUID SAMPLING (HYDRAULIC OIL) 329
VALVE GP-MAIN CONTROL 334
VALVE GP-MANUAL–AUXILIARY, SHUTOFF . . . 340
VALVE GP-PILOT 341
VALVE GP-PILOT RELIEF (HYDRAULIC FILTER). 228
VALVE GP-PILOT–JOYSTICK. 342
344
VALVE GP-PILOT–WITHOUT SHUTTLE 346
VALVE GP-PRESSURE REDUCING–BOOM, SWING PRIORITY. 348
VALVE GP-RELIEF 351
VALVE GP-RELIEF (SWING MOTOR). 305
VALVE GP-RELIEF–LINE. 350
353
VALVE GP-RELIEF–PILOT OPERATED 354
VALVE GP-RELIEF–TRACTION CONTROL 352
VALVE GP-SHUTTLE 355
356
357
VALVE GP-SOLENOID. 358
359
361
VALVE GP-SOLENOID (24-VOLT) (QUICK COUPLER). 362
VALVE GP-SOLENOID (BLOCK). 293
VALVE GP-SOLENOID (HYDRAULIC LOCKOUT). 304
VALVE GP-SOLENOID (NEGATIVE FLOW CONTROL). 294
VALVE GP-SOLENOID (PRESSURE REDUCING) (PUMP CONTROL) 310
360
VALVE GP-SOLENOID (SWING BRAKE RELEASE) 304
VALVE GP-SOLENOID (TRAVEL SPEED) 304
VALVE GP-SOLENOID & MANIFOLD 362
VALVE GP-SOLENOID & MANIFOLD (QUICK COUPLER). 263
VALVE GP-SOLENOID & RELIEF 363
364
365
VALVE GP-SOLENOID & RELIEF (AUXILIARY, COMBINED FN, LH). 256
VALVE GP-SOLENOID & RELIEF (AUXILIARY, COMBINED FN, RH). 256
VALVE GP-SOLENOID–NEGATIVE FLOW CONTROL 360
VALVE GP-SWING CUSHION 305
VALVE GP-TRAVEL COUNTERBALANCE 366
VALVE MECHANISM GP. 36

W

WASHER GP-WINDOW 475
WINDOW GP-CAB–FRONT, LOWER. 477
WINDOW GP-CAB–FRONT, UPPER 479
482
484
WINDOW GP-CAB–SIDE, REAR 476
WINDOW GP-DOOR. 485
487
WIPER GP-WINDOW–FRONT, UPPER 489
WIRING GP-CAB 124
WIRING GP-CAB–COUPLER 130
WIRING GP-CHASSIS–QUICK COUPLER, HIGH PRESSURE 131
WIRING GP-COMBINED FLOW–SYSTEM 1, 1-WAY, 1-PUMP 133
WIRING GP-COMMUNICATION. 134
WIRING GP-CONSOLE 137
WIRING GP-CONSOLE–LH. 135
WIRING GP-CONSOLE–RH 138
WIRING GP-CONVERTER. 140
WIRING GP-PLATFORM 141

MACHINE ARRANGEMENT

500-9108 CHASSIS AR

S/N: RDE1-UP

PART OF 500-9103 GENERAL AR

SMCS-7000 **i06809976**

NOTE	PART NUMBER	QTY	PART NAME 1 2 3 4 5 6 (PRODUCT LEVEL)	SEE PAGE
Y	*502-7431*	1	BATTERY & WIRING GP	80
Y	*393-8574*	1	BOX & MTG GP-STORAGE	152
Y	*388-6703*	1	CONTROL GP-GOVERNOR	61
Y	*461-7615*	1	FRAME GP-UPPER	160
Y	*170-2602*	1	HANDRAIL GP (FRONT, RH)	166
Y	*501-3917*	1	HOOD & GUARD GP	167
Y	*275-6874*	1	HORN GP-ELECTRIC	446
Y	*4I-5409*	1	LIGHTING GP-FLOOD (CHASSIS)	105
Y	*462-4691*	1	LINES GP-AIR CONDITIONER	449
Y	*504-7666*	1	LINES GP-FUEL	66
Y	*7Y-0059*	1	LITERATURE GP	453
Y	*142-3836*	1	MIRROR GP-REAR VIEW	454
Y	*245-7811*	1	MOUNTING GP-PLATFORM	459
Y	*476-3010*	1	OPERATOR AR	461
Y	*500-9111*	1	PLATE & FILM GP	497
Y	*384-9014*	1	STEP GP	177
Y	*459-4244*	1	TANK & MTG GP-FUEL	74

Y - SEPARATE ILLUSTRATION

<END>

506-8578 DISTRIBUTION AR

S/N: RDE1-UP

SMCS-7000 **i06828918**

NOTE	PART NUMBER	QTY	PART NAME 1 2 3 4 5 6 (PRODUCT LEVEL)	SEE PAGE
Y	*283-9013*	1	BOOM AR-1 PIECE LONG (WITH AUXILIARY)	368
Y	*420-2162*	1	COUNTERWEIGHT & MOUNTING GP	155
Y	*390-8831*	1	FAN AR-SUCTION	44
Y	*420-5793*	1	FILM GP (BRAZIL)	496
Y	*500-9103*	1	GENERAL AR	3
Y	*501-3918*	1	GUARD GP-BOTTOM	164
Y	*137-2813*	1	GUARD GP-SWIVEL	165
Y	*470-6901*	1	INSTALLATION AR-COMMUNICATION	96
Y	*291-7762*	1	LIGHTING GP-FLOOD (BOOM, RH)	101
Y	*283-9018*	1	LINKAGE AR-BUCKET (WITH LIFTING EYE)	373
Y	*506-8572*	1	OPTION AR-CAB	3
Y	*397-4688*	1	OPTION AR-REGIONAL	4
Y	*245-7881*	1	SCREEN GP-SUN	467
Y	*283-9014*	1	STICK AR-HOE (REACH)	376
Y	*445-0692*	2	TRACK GP	196
	284-4376	1	FLOOR MAT	

Y - SEPARATE ILLUSTRATION

<END>

506-8579 DISTRIBUTION AR

S/N: RDE1-UP

SMCS-7000 **i06826581**

NOTE	PART NUMBER	QTY	PART NAME 1 2 3 4 5 6 (PRODUCT LEVEL)	SEE PAGE
Y	*283-9013*	1	BOOM AR-1 PIECE LONG (WITH AUXILIARY)	368
Y	*420-2162*	1	COUNTERWEIGHT & MOUNTING GP	155
Y	*390-8831*	1	FAN AR-SUCTION	44
Y	*420-5793*	1	FILM GP (BRAZIL)	496
Y	*500-9103*	1	GENERAL AR	3
Y	*501-3918*	1	GUARD GP-BOTTOM	164
Y	*137-2813*	1	GUARD GP-SWIVEL	165
Y	*470-6901*	1	INSTALLATION AR-COMMUNICATION	96
Y	*291-7762*	1	LIGHTING GP-FLOOD (BOOM, RH)	101
Y	*283-9018*	1	LINKAGE AR-BUCKET (WITH LIFTING EYE)	373
Y	*506-8572*	1	OPTION AR-CAB	3
Y	*397-4688*	1	OPTION AR-REGIONAL	4
Y	*245-7881*	1	SCREEN GP-SUN	467
Y	*283-9016*	1	STICK AR-HOE (REACH)	376
Y	*350-3300*	2	TRACK AR	196
	284-4376	1	FLOOR MAT	

Y - SEPARATE ILLUSTRATION

<END>

515-4828 DISTRIBUTION AR

S/N: RDE1-UP

SMCS-7000 **i06828914**

NOTE	PART NUMBER	QTY	PART NAME 1 2 3 4 5 6 (PRODUCT LEVEL)	SEE PAGE
Y	*283-9013*	1	BOOM AR-1 PIECE LONG (WITH AUXILIARY)	368
Y	*390-8831*	1	FAN AR-SUCTION	44
Y	*500-9103*	1	GENERAL AR	3
Y	*501-3918*	1	GUARD GP-BOTTOM	164
Y	*291-7762*	1	LIGHTING GP-FLOOD (BOOM, RH)	101
Y	*283-9018*	1	LINKAGE AR-BUCKET (WITH LIFTING EYE)	373
	284-4376	1	FLOOR MAT	

Y - SEPARATE ILLUSTRATION

<END>

515-4829 DISTRIBUTION AR

S/N: RDE1-UP

SMCS-7000 **i06814143**

NOTE	PART NUMBER	QTY	PART NAME 1 2 3 4 5 6 (PRODUCT LEVEL)	SEE PAGE
Y	*283-9013*	1	BOOM AR-1 PIECE LONG (WITH AUXILIARY)	368
Y	*494-3642*	1	CONTROL AR-AUXILIARY (SYSTEM 1, 1-WAY, 1-PUMP)	210
Y	*390-8831*	1	FAN AR-SUCTION	44
Y	*500-9103*	1	GENERAL AR	3
Y	*501-3918*	1	GUARD GP-BOTTOM	164
Y	*291-7762*	1	LIGHTING GP-FLOOD (BOOM, RH)	101
Y	*283-9018*	1	LINKAGE AR-BUCKET (WITH LIFTING EYE)	373
	240-5071	1	FLOOR MAT	

Y - SEPARATE ILLUSTRATION

<END>

500-9103 GENERAL AR

S/N: RDE1-UP

PART OF 506-8578, 506-8579, 515-4828, 515-4829 DISTRIBUTION AR

SMCS-7000 **i06830385**

NOTE	PART NUMBER	QTY	PART NAME 1 2 3 4 5 6 (PRODUCT LEVEL)	SEE PAGE
Y	*500-9108*	1	CHASSIS AR	1
Y	*472-4368*	1	ELECTRONICS GP-ENGINE	90
Y	*460-2113*	1	ENGINE AR-COMPLETE	5
Y	*260-7057*	1	FRAME AR-UNDERCARRIAGE	179
Y	*503-4904*	1	HYDRAULIC AR	235
Y	*460-3429*	1	INSTALLATION AR-ENGINE	6
Y	*441-8587*	1	POWER TRAIN AR	150

Y - SEPARATE ILLUSTRATION

<END>

506-8572 OPTION AR-CAB

S/N: RDE1-UP

PART OF 506-8578, 506-8579 DISTRIBUTION AR

SMCS-7000 **i06826678**

NOTE	PART NUMBER	QTY	PART NAME 1 2 3 4 5 6 (PRODUCT LEVEL)	SEE PAGE
Y	*416-1794*	1	AIR CONDITIONER AR	396
Y	*416-9606*	1	CAB GP	405
Y	*506-8573*	1	CAB AR (COMFORT)	401
Y	*229-9070*	1	WASHER GP-WINDOW	475
Y	*350-8254*	1	WIRING GP-CONVERTER (12-VOLT, 10-AMPERE)	140

Y - SEPARATE ILLUSTRATION

<END>

MACHINE ARRANGEMENT

397-4688 OPTION AR-REGIONAL

S/N: RDE1-UP

PART OF 506-8578, 506-8579 DISTRIBUTION AR

SMCS-7000 **i06750576**

NOTE	PART NUMBER	QTY	PART NAME 1 2 3 4 5 6 (PRODUCT LEVEL)	SEE PAGE
Y	*231-1771*	1	ALARM GP-TRAVEL (BACKUP)	78

Y - SEPARATE ILLUSTRATION

<END>

460-2113 ENGINE AR-COMPLETE

S/N: RDE1-UP

PART OF 500-9103 GENERAL AR

SMCS-1000 **i06775000**

NOTE	PART NUMBER	QTY	PART NAME 1 2 3 4 5 6 (PRODUCT LEVEL)	SEE PAGE
Y	**460-5760**	1	ENGINE AR-PRIMARY	5
Y	*468-1594*	1	MUFFLER GP	59

Y - SEPARATE ILLUSTRATION

<END>

460-5760 ENGINE AR-PRIMARY

S/N: G8X1-UP

75 BRAKE KW (100 BHP) AT 2200 RPM

PART OF 460-2113 ENGINE AR-COMPLETE

SMCS-1000 **i06775015**

NOTE	PART NUMBER	QTY	PART NAME 1 2 3 4 5 6 (PRODUCT LEVEL)	SEE PAGE
Y	*484-8079*	1	CAMSHAFT GP	7
Y	*316-6941*	1	CONNECTION GP-WATER	41
Y	*466-5424*	1	COOLER GP-ENGINE OIL	43
Y	*484-9233*	1	COVER GP-VALVE MECHANISM	9
Y	*484-8067*	1	CRANKSHAFT GP	11
Y	*484-8066*	1	CYLINDER BLOCK GP	14
Y	*484-8072*	1	CYLINDER HEAD GP	16
Y	*484-8280*	1	DRIVE GP-FAN	17
Y	*328-9631*	1	ELBOW GP-AIR INLET	57
Y	*484-8214*	1	FLYWHEEL GP	18
Y	*316-6907*	1	GLOW PLUG GP	92
Y	*484-8202*	1	HOUSING GP-FLYWHEEL	19
Y	*484-9332*	1	HOUSING GP-FRONT	20
Y	*315-3419*	1	LIFTING GP-ENGINE	22
Y	*326-9012*	1	LINES GP-FUEL	64
Y	*484-9814*	1	MOUNTING GP-ENGINE	24
Y	*299-5082*	1	MOUNTING GP-FAN	25
Y	*484-8347*	1	PAN GP-OIL	26
Y	*484-8069*	1	PISTON & ROD GP	28
Y	*298-5129*	1	PLUG GP-CYLINDER HEAD	29
Y	*304-3663*	1	PLUG GP-ENGINE	30
Y	*304-8761*	1	PLUG GP-ENGINE	31
Y	*312-2578*	1	PLUG GP-ENGINE	32
Y	*360-7347*	1	PULLEY GP-CRANKSHAFT	33
Y	*298-5112*	1	PUMP GP-ENGINE OIL	40
Y	*326-9149*	1	PUMP GP-FUEL INJECTION	71
Y	*315-3411*	1	PUMP GP-WATER	47
Y	*484-8227*	1	STARTING MOTOR GP-ELECTRIC	118
Y	*330-4298*	1	SWITCH GP-PRESSURE	121
Y	*484-9403*	1	TURBOCHARGER GP	60
Y	*484-8076*	1	VALVE MECHANISM GP	36
R	**359-0744**	1	CYLINDER BLOCK GP-SHORT	

R - REMANUFACTURED PART MAY BE AVAILABLE
Y - SEPARATE ILLUSTRATION

<END>

460-3429 INSTALLATION AR-ENGINE

S/N: RDE1-UP

PART OF 500-9103 GENERAL AR

SMCS-1000 **i06775017**

NOTE	PART NUMBER	QTY	PART NAME 1 2 3 4 5 6 (PRODUCT LEVEL)	SEE PAGE
Y	*387-2609*	1	AIR CLEANER & MOUNTING GP	55
Y	*387-2610*	1	COMPRESSOR & MTG GP-REFRIG	414
Y	*462-4693*	1	CONDENSER & MTG GP-REFRIGERANT	416
Y	*460-2121*	1	FILTER & MTG GP-OIL	226
Y	*387-2614*	1	FUMES DISPOSAL GP	38
Y	*387-2612*	1	LINES GP-AIR	58
Y	*460-2108*	1	LINES GP-COOLING	46
Y	*387-2613*	1	LINES GP-ENGINE OIL DRAIN	39
Y	*387-2615*	1	MOUNTING GP-ENGINE	23
Y	*460-2107*	1	RADIATOR & HYD OIL COOLER GP	52
Y	*392-3904*	1	SENSOR GP-TEMP & PRESS	117
Y	*396-0293*	1	VALVE GP-COOLANT SAMPLING	54
	506-7131	1	PLUG GP-FLYWHEEL HOUSING	
M	**8T-4179**	2	BOLT (M12X1.75X20-MM)	
	8T-4223	2	WASHER-HARD (13.5X25.5X3-MM THK)	

M - METRIC PART
Y - SEPARATE ILLUSTRATION

<END>

484-8079 CAMSHAFT GP

S/N: G8X1-UP

PART OF 460-5760 ENGINE AR-PRIMARY

SMCS-1210 **i06779685**

NOTE	REF NO	GRAPHIC REF	PART NUMBER	QTY	PART NAME 1 2 3 4 5 6 (PRODUCT LEVEL)	SEE PAGE
	1	1	**278-5126**	8	PUSHROD	
	2	1	**315-3384**	8	TAPPET	
	3	1	**380-2601**	1	CAMSHAFT AS	
	3A	1	**067-6135**	1	KEY-WOODRUFF	

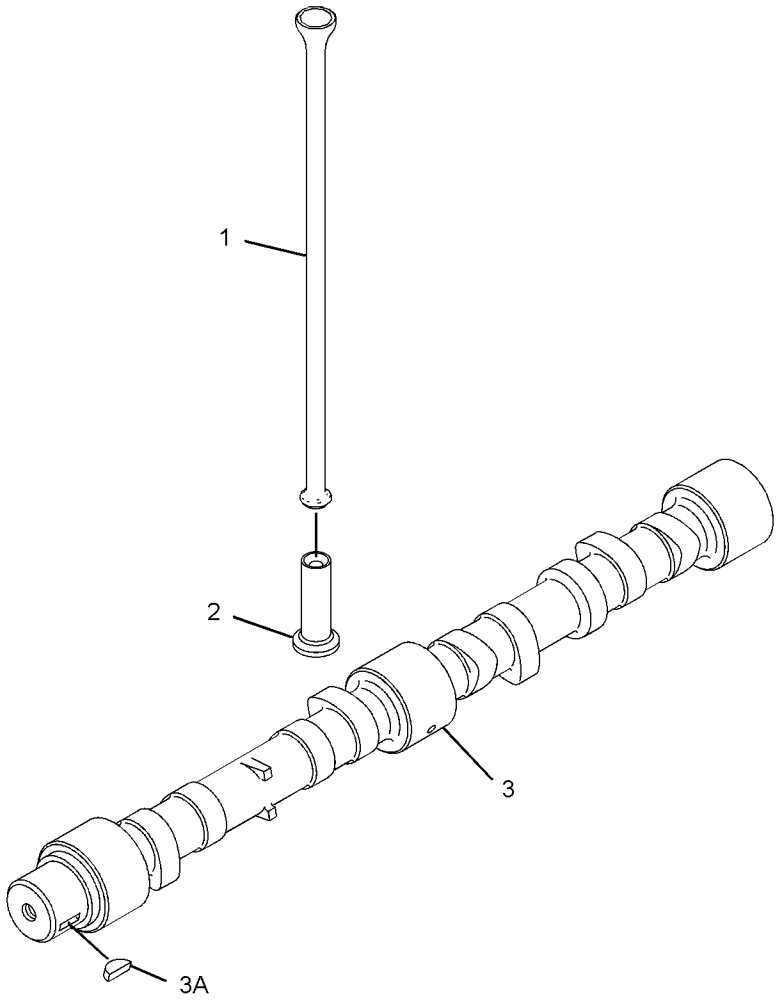

GRAPHIC #1 <END> g03891931

446-9163 COVER GP-CYLINDER HEAD

S/N: G8X1-UP

PART OF 484-9233 COVER GP-VALVE MECHANISM

SMCS-1101 **i06078649**

NOTE	REF NO	GRAPHIC REF	PART NUMBER	QTY	PART NAME 1 2 3 4 5 6 (PRODUCT LEVEL)	SEE PAGE
	1	1	**225-6451**	1	GASKET (VALVE COVER)	
	2	1	**225-6478**	4	SCREW-MACHINE	
	3	1	**431-1704**	1	PLATE	
	4	1	**136-3608**	1	CAP AS (ENGINE OIL FILLER)	
	4A	1	**124-0506**	1	SEAL	
	5	1	**349-2746**	10	BOLT	
	6	1	**292-9008**	1	SEAL	

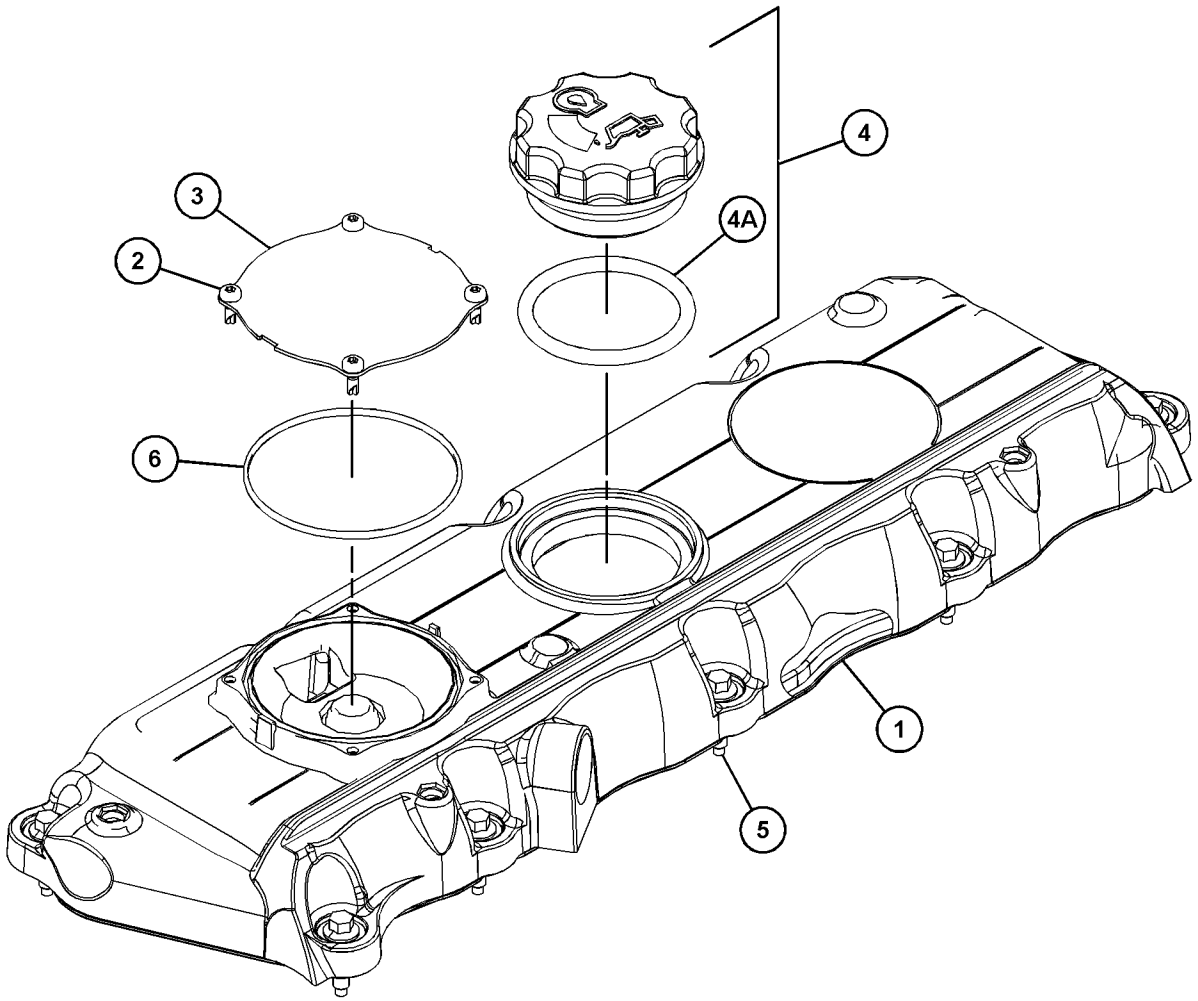

GRAPHIC #1 <END> g03809479

484-9233 COVER GP-VALVE MECHANISM

S/N: G8X1-UP

PART OF 460-5760 ENGINE AR-PRIMARY

SMCS-1107 **i06779726**

NOTE	REF NO	GRAPHIC REF	PART NUMBER	QTY	PART NAME 1 2 3 4 5 6 (PRODUCT LEVEL)	SEE PAGE
M	1	1	**6I-0846**	3	BOLT (M6X1X14-MM)	
MR	2	1	**100-4838**	2	BOLT (M6X1X20-MM)	
	3	1	**230-9127**	1	COVER	
	4	1	**287-8573**	1	PIPE AS	
	4A	1	**150-7732**	1	SEAL-O-RING	
	4B	1	**286-3030**	1	RING-SEAL	
Y	5	1	*446-9163*	1	COVER GP-CYLINDER HEAD	8

M - METRIC PART
R - REMANUFACTURED PART MAY BE AVAILABLE
Y - SEPARATE ILLUSTRATION

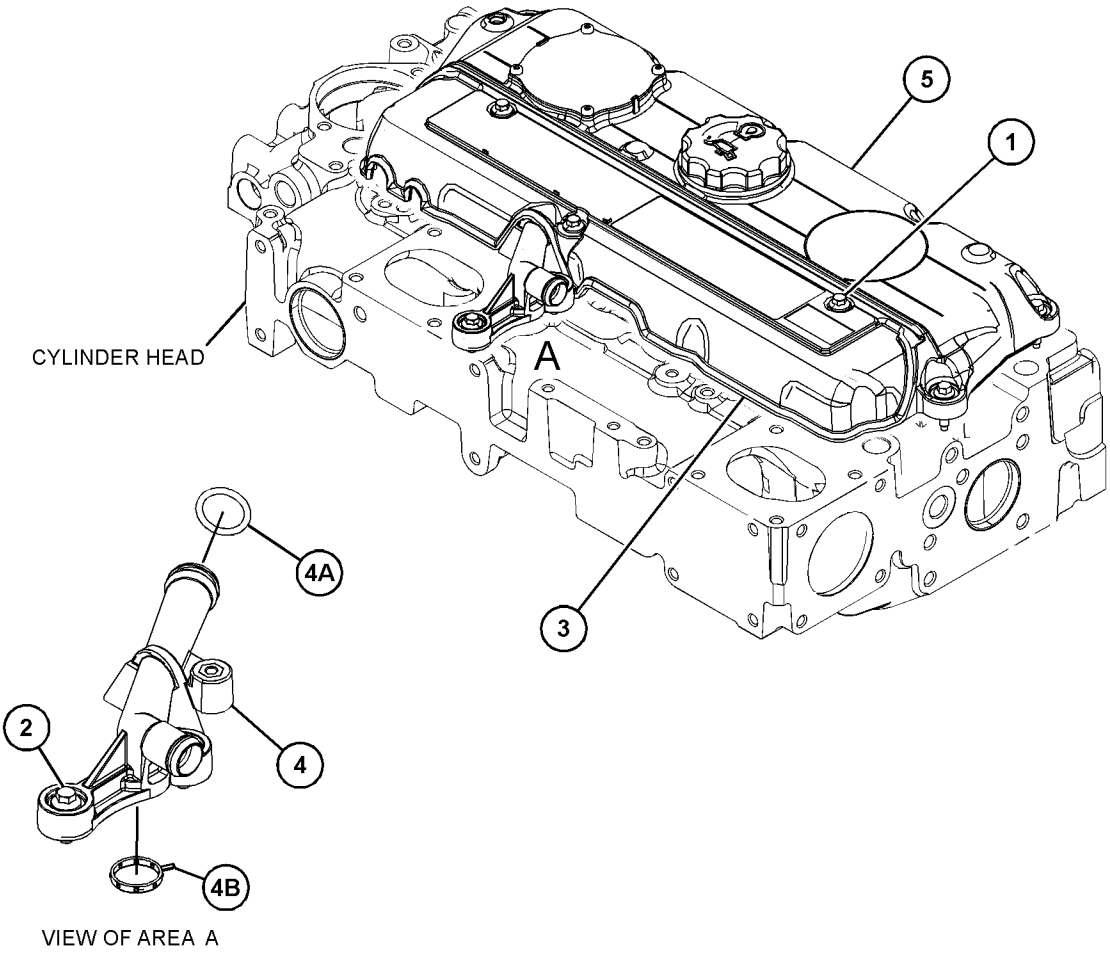

VIEW OF AREA A

GRAPHIC #1 <END> g03892032

359-0715 CRANKSHAFT GP

S/N: G8X1-UP
W/O SPLINE
PART OF 484-8067 CRANKSHAFT GP

SMCS-1202 **i05294623**

NOTE	REF NO	GRAPHIC REF	PART NUMBER	QTY	PART NAME 1 2 3 4 5 6 (PRODUCT LEVEL)	SEE PAGE
	1	1	**032-9090**	2	WASHER-THRUST (STANDARD-UPPER)	
AB		1	**067-6873**		WASHER-THRUST (0.18-MM OS)	
	2	1	**032-9091**	2	WASHER-THRUST (STANDARD-LOWER)	
AB		1	**067-6874**		WASHER-THRUST (0.18-MM OS)	
	3	1	**353-7423**	1	KIT-BEARING (MAIN) (MAIN)	
AB		1	**233-3786**		KIT-CRANKSHAFT BEARING (0.75-MM US)	
AB		1	**353-7424**		KIT-BEARING (0.25-MM US) (0.25-MM US)	
AB		1	**353-7425**		KIT-BEARING (0.50-MM US)	
AB		1	**353-7426**		KIT-BEARING (0.75-MM US)	
	4	1	**360-3986**	1	KIT-BEARING (CONNECTING ROD) (STANDARD)	

A - NOT PART OF THIS GROUP
B - USE AS REQUIRED

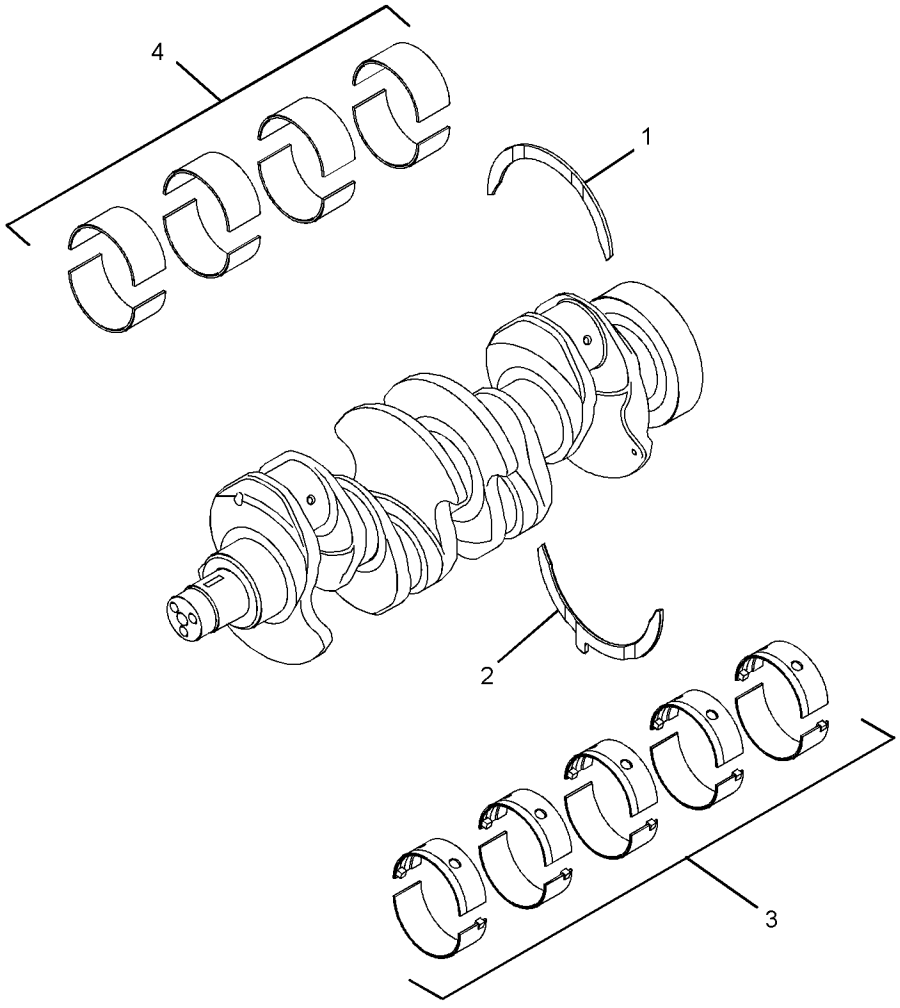

GRAPHIC #1 <END> g02174712

484-8067 CRANKSHAFT GP

S/N: G8X1-UP

PART OF 460-5760 ENGINE AR-PRIMARY

SMCS-1202 **i06779746**

NOTE	REF NO	GRAPHIC REF	PART NUMBER	QTY	PART NAME 1 2 3 4 5 6 (PRODUCT LEVEL)	SEE PAGE
	1	1	**067-6135**	1	KEY-WOODRUFF	
	2	1	**216-8314**	1	GEAR-CRANKSHAFT (34-TEETH)	
Y	3	1	**359-0715**	1	CRANKSHAFT GP (W/O SPLINE)	10

Y - SEPARATE ILLUSTRATION

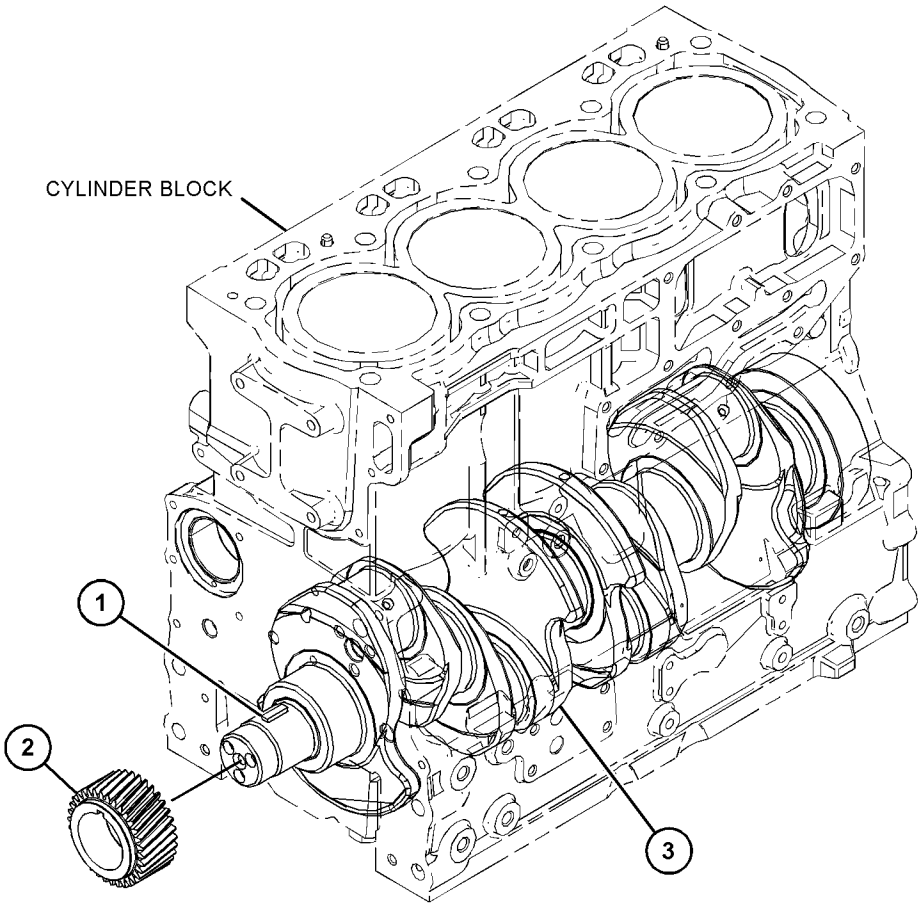

GRAPHIC #1 <END> g03892164

362-2190 CYLINDER BLOCK GP

S/N: G8X1-UP

PART OF 484-8066 CYLINDER BLOCK GP

SMCS-1201 **i06564127**

NOTE	REF NO	GRAPHIC REF	PART NUMBER	QTY	PART NAME 1 2 3 4 5 6 (PRODUCT LEVEL)	SEE PAGE
M	1	1	**6I-0572**	1	BOLT (M8X1.25X20-MM)	
M	2	1	**6I-0646**	1	BOLT (M10X1.5X14-MM)	
	3	1	**035-8063**	1	PLUG	
M	4	1	**100-4841**	4	BOLT (M6X1X10-MM)	
	5	1	**214-3203**	1	WASHER (SEALING)	
	6	1	**225-7944**	1	GASKET	
	7	1	**232-3751**	1	PLATE	
	8	1	**232-7600**	1	PLUG-CUP	
	9	1	**232-7603**	1	PLUG	
	10	1	**276-5605**	4	JET AS-PISTON COOLING	
	11	1	**067-6002**	10	DOWEL	
	12	1	**035-8068**	10	BOLT (5/8-18X3.75-IN)	
	13	1	**366-8853**	1	BEARING	
	14	1	**232-7597**	2	PLUG	
	15	1	**232-7596**	1	PLUG	
	16	1	**067-6006**	1	PLUG	
	17	1	**067-6043**	1	PLUG-SIDE	
	18	1	**225-8858**	2	PLUG	
	19	1	**232-7599**	1	PLUG	
	20	1	**185-0884**	1	DOWEL	

M - METRIC PART

362-2190 **CYLINDER BLOCK GP (**contd.**)** **i06564127**

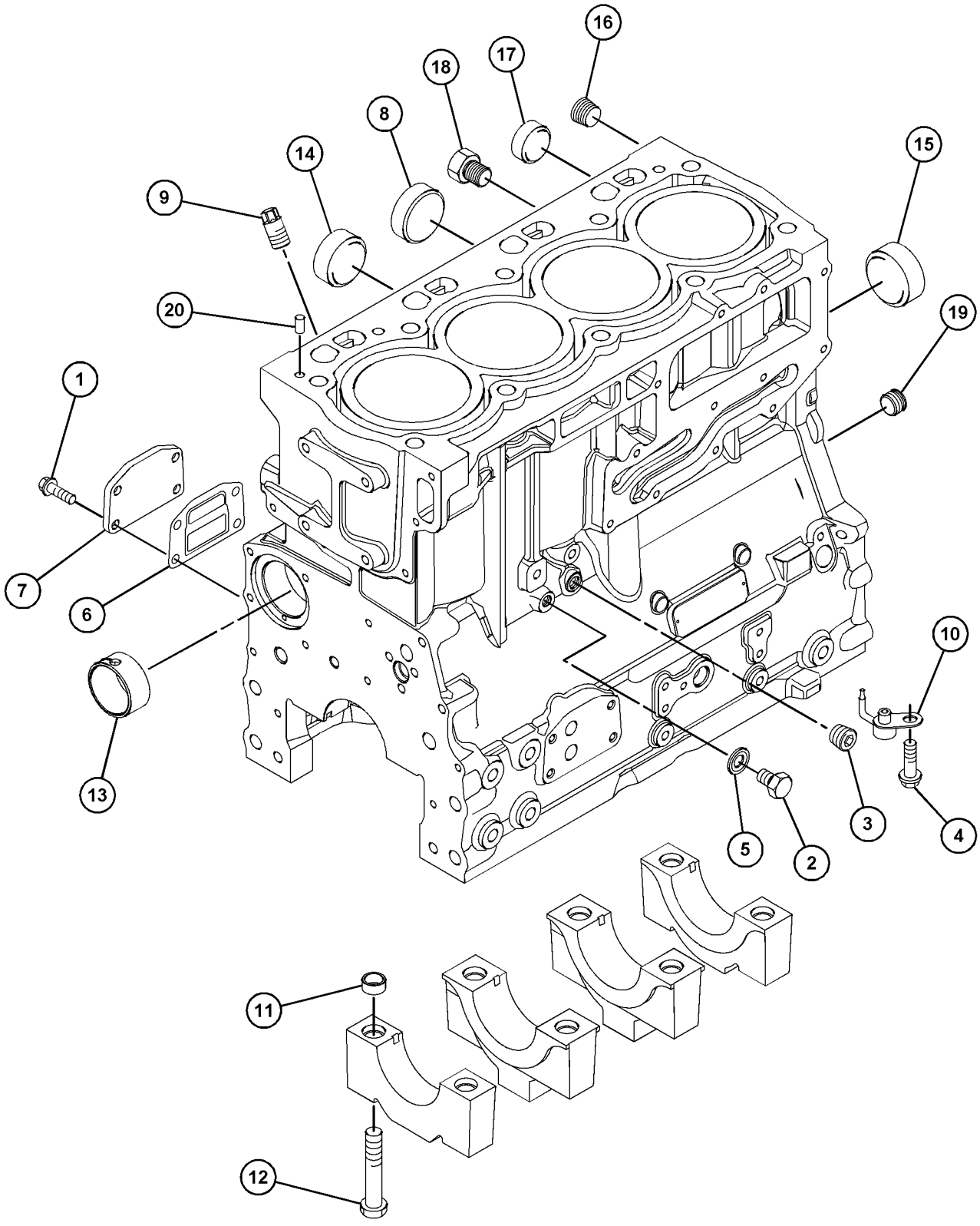

GRAPHIC #1 <END> g06024304

484-8066 CYLINDER BLOCK GP

S/N: G8X1-UP

PART OF 460-5760 ENGINE AR-PRIMARY

SMCS-1201 **i06779750**

NOTE	REF NO	GRAPHIC REF	PART NUMBER	QTY	PART NAME 1 2 3 4 5 6 (PRODUCT LEVEL)	SEE PAGE
M	1	1	**209-9219**	10	BOLT (M8X1.25X16-MM)	
	2	1	**232-7449**	1	HOUSING AS	
Y	3	1	**362-2190**	1	CYLINDER BLOCK GP	12

M - METRIC PART
Y - SEPARATE ILLUSTRATION

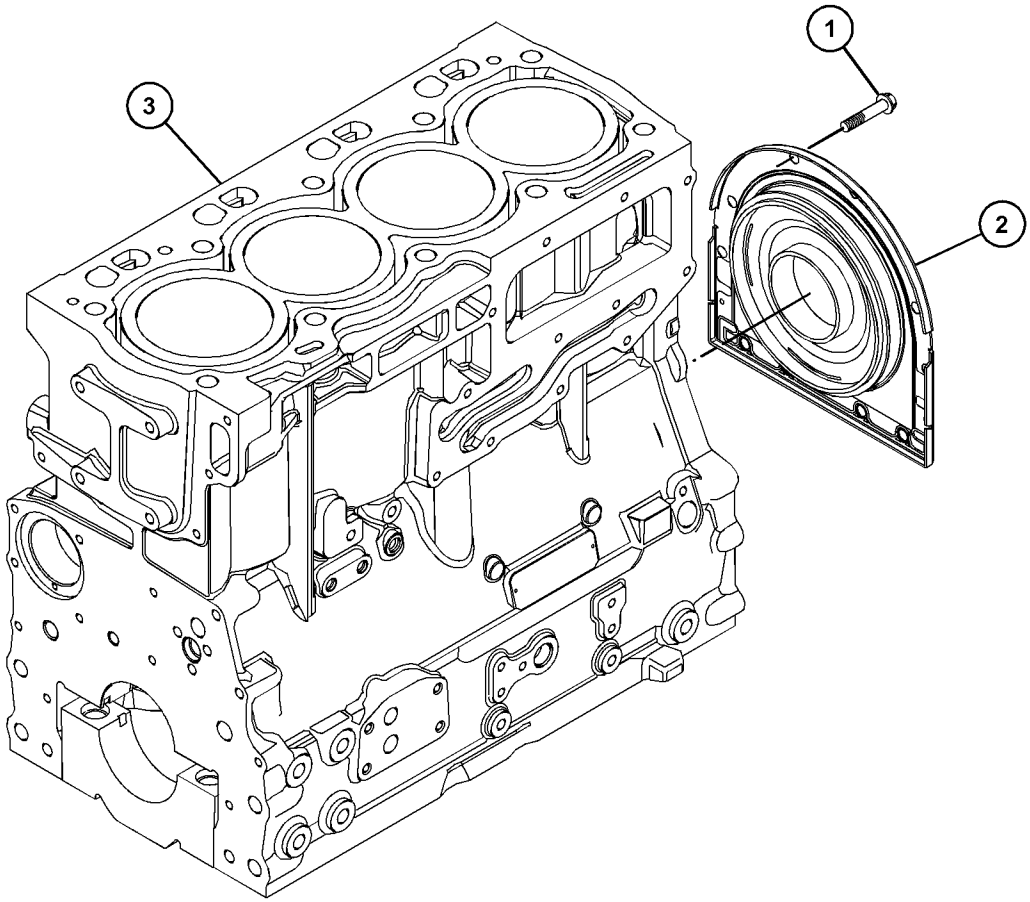

GRAPHIC #1 <END> g03892671

316-7896 CYLINDER HEAD GP

S/N: G8X1-UP

PART OF 484-8072 CYLINDER HEAD GP

SMCS-1100 **i06124232**

NOTE	REF NO	GRAPHIC REF	PART NUMBER	QTY	PART NAME 1 2 3 4 5 6 (PRODUCT LEVEL)	SEE PAGE
	1	1	**2B-0858**	2	PLUG-PIPE	
	2	1	**9Y-5015**	2	PLUG-FREEZE	
	3	1	**067-6006**	4	PLUG	
	4	1	**185-0882**	8	GUIDE-VALVE (INTAKE)	
	5	1	**199-9751**	1	SEAL-O-RING	
	6	1	**232-1322**	1	PLUG	
	7	1	**315-3390**	4	VALVE-INLET	
	8	1	**436-0522**	8	SPRING-VALVE	
	9	1	**315-3392**	8	CAP	
	10	1	**315-3393**	16	COLLET	
	11	1	**315-3394**	4	VALVE-EXHAUST	
	12	1	**252-6438**	4	SEAL-INLET VALVE (GREEN)	
	13	1	**254-3954**	4	SEAL (BROWN)	
	14	1	**322-9663**	4	INSERT-VALVE SEAT	
	15	1	**322-9664**	4	SEAT-VALVE	

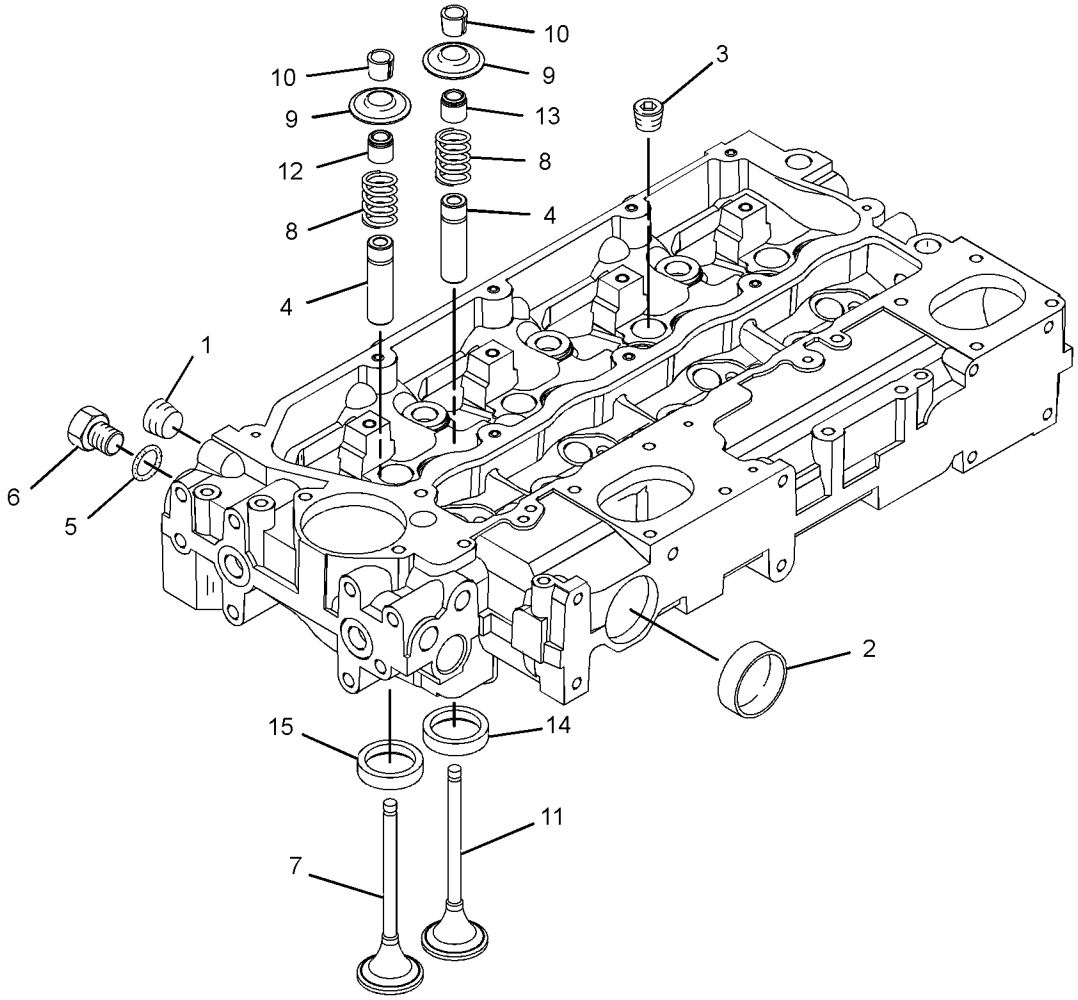

GRAPHIC #1 <END> g01542313

484-8072 CYLINDER HEAD GP

S/N: G8X1-UP

PART OF 460-5760 ENGINE AR-PRIMARY

SMCS-1100 **i06779766**

NOTE	REF NO	GRAPHIC REF	PART NUMBER	QTY	PART NAME 1 2 3 4 5 6 (PRODUCT LEVEL)	SEE PAGE
	1	1	**225-5501**	7	BOLT (M15X1.5X137-MM)	
	2	1	**225-5502**	3	BOLT (M15X1.5X162-MM)	
	3	1	**258-4946**	1	GASKET-CYLINDER HEAD	
Y	4	1	**316-7896**	1	CYLINDER HEAD GP	15

Y - SEPARATE ILLUSTRATION

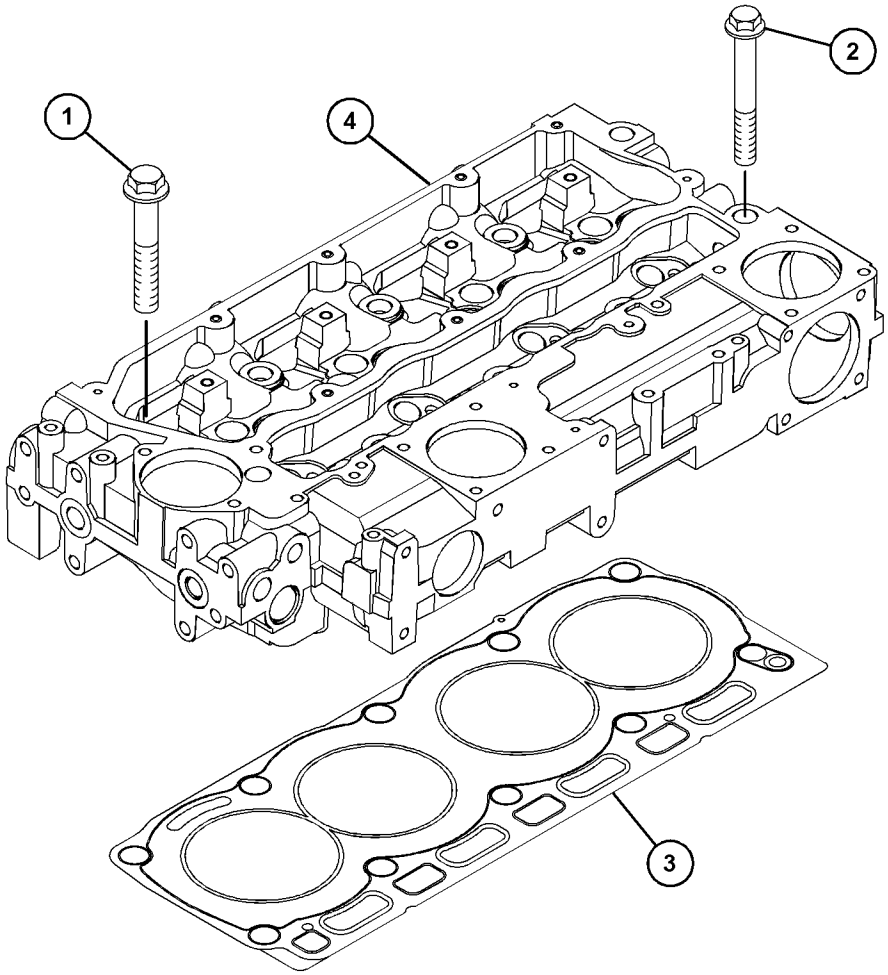

GRAPHIC #1 <END> g03892704

484-8280 DRIVE GP-FAN

S/N: G8X1-UP

PART OF 460-5760 ENGINE AR-PRIMARY

SMCS-1359 **i06779768**

NOTE	REF NO	GRAPHIC REF	PART NUMBER	QTY	PART NAME 1 2 3 4 5 6 (PRODUCT LEVEL)	SEE PAGE
M	1	1	**111-0859**	4	BOLT (M10X1.5X35-MM)	
	2	1	**289-8336**	1	HOUSING AS	

M - METRIC PART

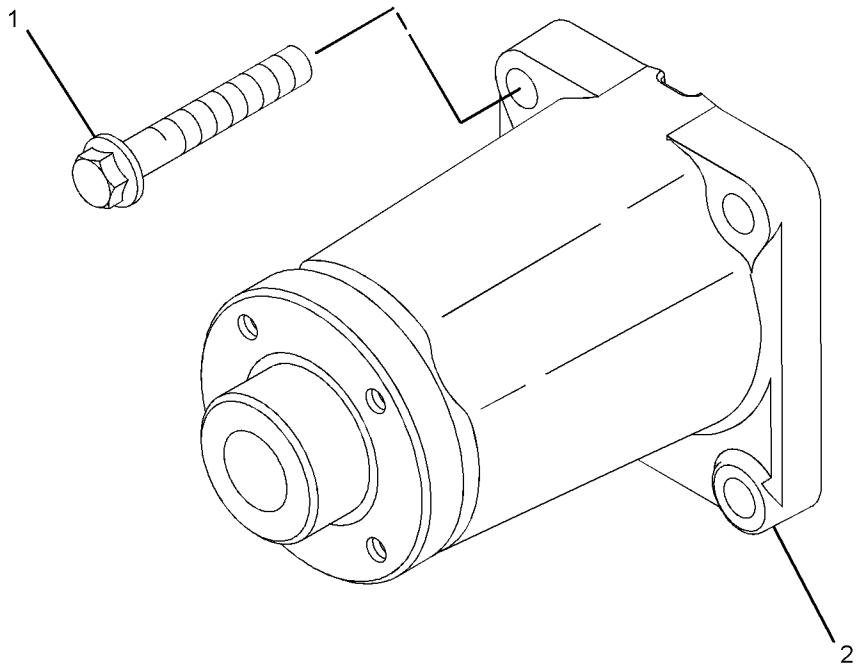

GRAPHIC #1 <END> g02780976

484-8214 FLYWHEEL GP

S/N: G8X1-UP

PART OF 460-5760 ENGINE AR-PRIMARY

SMCS-1156 **i06779814**

NOTE	REF NO	GRAPHIC REF	PART NUMBER	QTY	PART NAME 1 2 3 4 5 6 (PRODUCT LEVEL)	SEE PAGE
	1	1	**145-4911**	10	WASHER	
	2	1	**367-3326**	1	FLYWHEEL AS	
		1	**033-7687**	1	RING-STARTING MOTOR (126-TEETH)	
	3	1	**0S-1603**	10	BOLT (1/2-20X1.5-IN)	

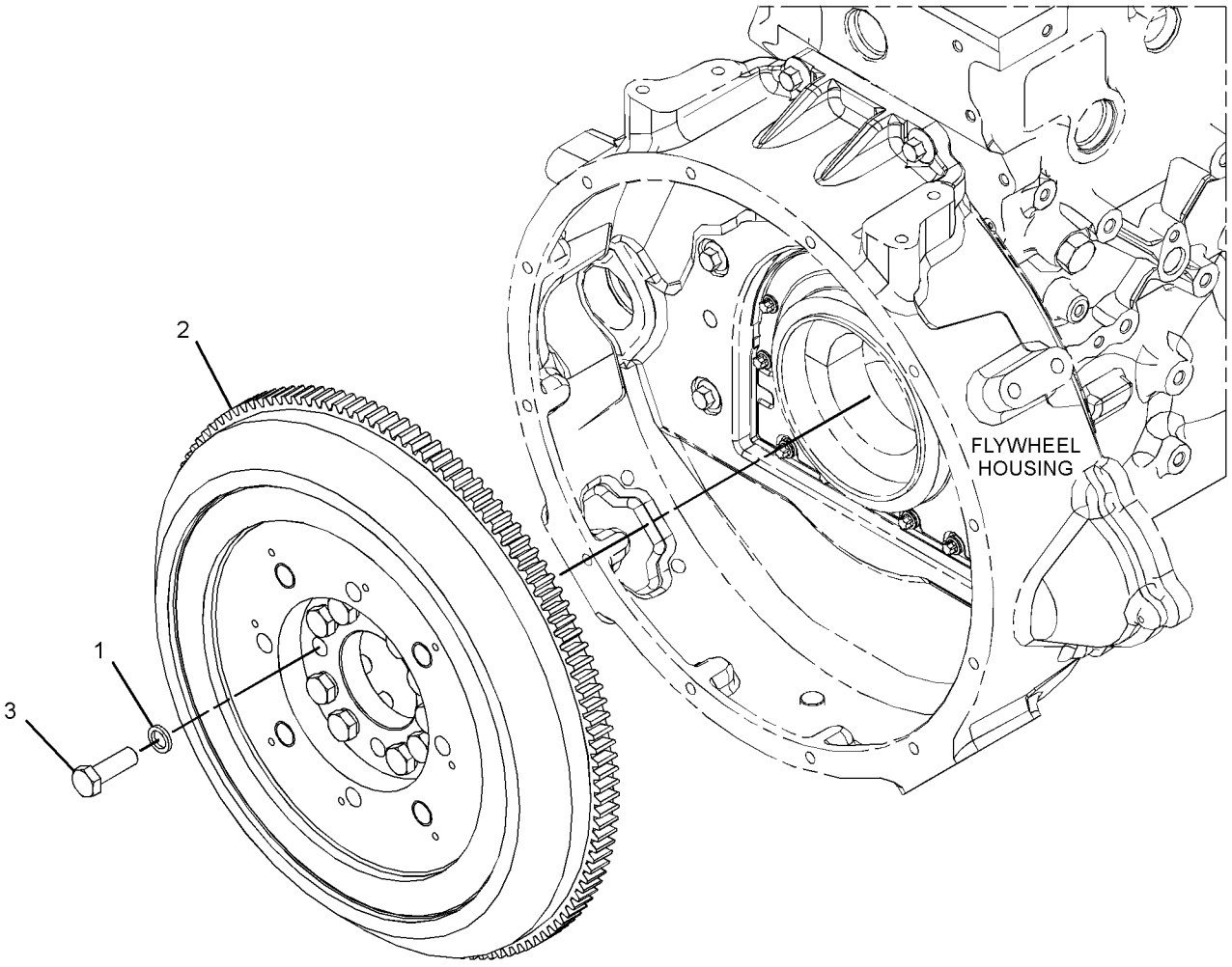

GRAPHIC #1 <END> g03394639

484-8202 HOUSING GP-FLYWHEEL

S/N: G8X1-UP

PART OF 460-5760 ENGINE AR-PRIMARY

SMCS-1157 **i06780037**

NOTE	REF NO	GRAPHIC REF	PART NUMBER	QTY	PART NAME 1 2 3 4 5 6 (PRODUCT LEVEL)	SEE PAGE
	1	1	**277-0121**	1	PLUG	
M	2	1	**6I-0423**	2	BOLT (M12X1.75X30-MM)	
	3	1	**7W-4642**	1	SHIELD-DUST	
M	4	1	**121-0883**	6	BOLT (M10X1.5X30-MM)	
	5	1	**287-8597**	2	DOWEL	
	6	1	**335-2092**	1	COVER-FLYWHEEL	
	7	1	**392-0265**	1	HOUSING-FLYWHEEL	
M	8	1	**6I-0917**	2	BOLT (M6X1X25-MM)	

M - METRIC PART

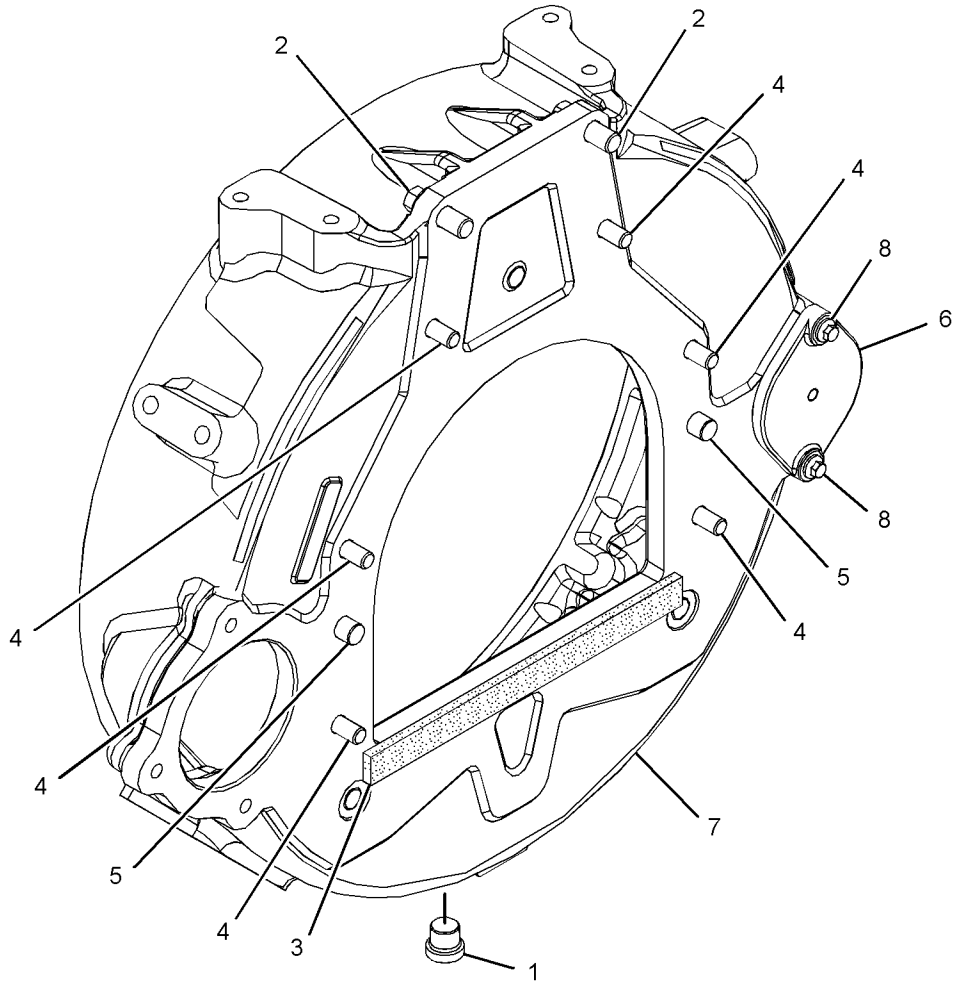

GRAPHIC #1 <END> g02675738

484-9332 HOUSING GP-FRONT

S/N: G8X1-UP

PART OF 460-5760 ENGINE AR-PRIMARY

SMCS-1151, 1162, 1206 **i06780043**

NOTE	REF NO	GRAPHIC REF	PART NUMBER	QTY	PART NAME 1 2 3 4 5 6 (PRODUCT LEVEL)	SEE PAGE
M	1	1	**6I-0217**	6	BOLT (M8X1.25X20-MM)	
M	2	1	**6I-0645**	4	BOLT (M8X1.25X25-MM)	
M	3	1	**6I-0650**	3	BOLT (M10X1.5X65-MM)	
M	4	1	**7C-4616**	1	BOLT (M12X1.75X45-MM)	
	5	1	**067-6179**	1	DOWEL	
M	6	1	**100-3751**	5	BOLT (M8X1.25X65-MM)	
M	7	1	**101-3895**	2	BOLT (M8X1.25X35-MM)	
M	8	1	**124-3815**	10	BOLT (M8X1.25X16-MM)	
	9	1	**133-1011**	1	WASHER	
	10	1	**216-8634**	1	GEAR-CAMSHAFT (68-TEETH)	
	11	1	**232-3657**	1	COVER AS-FRONT	
	11A	1	**225-8287**	1	GASKET (COVER)	
	12	1	**232-3666**	1	WASHER-THRUST	
	13	1	**277-3012**	1	GASKET-COVER	
	14	1	**288-0422**	1	SEAL-OIL	
	15	1	**294-0288**	1	HOUSING-FRONT	
	16	1	**324-0444**	1	HUB-IDLER GEAR	
	17	1	**346-0407**	1	GEAR-IDLER	
	18	1	**346-0408**	1	PLATE	

M - METRIC PART

484-9332 **HOUSING GP-FRONT (**contd.**)** **i06780043**

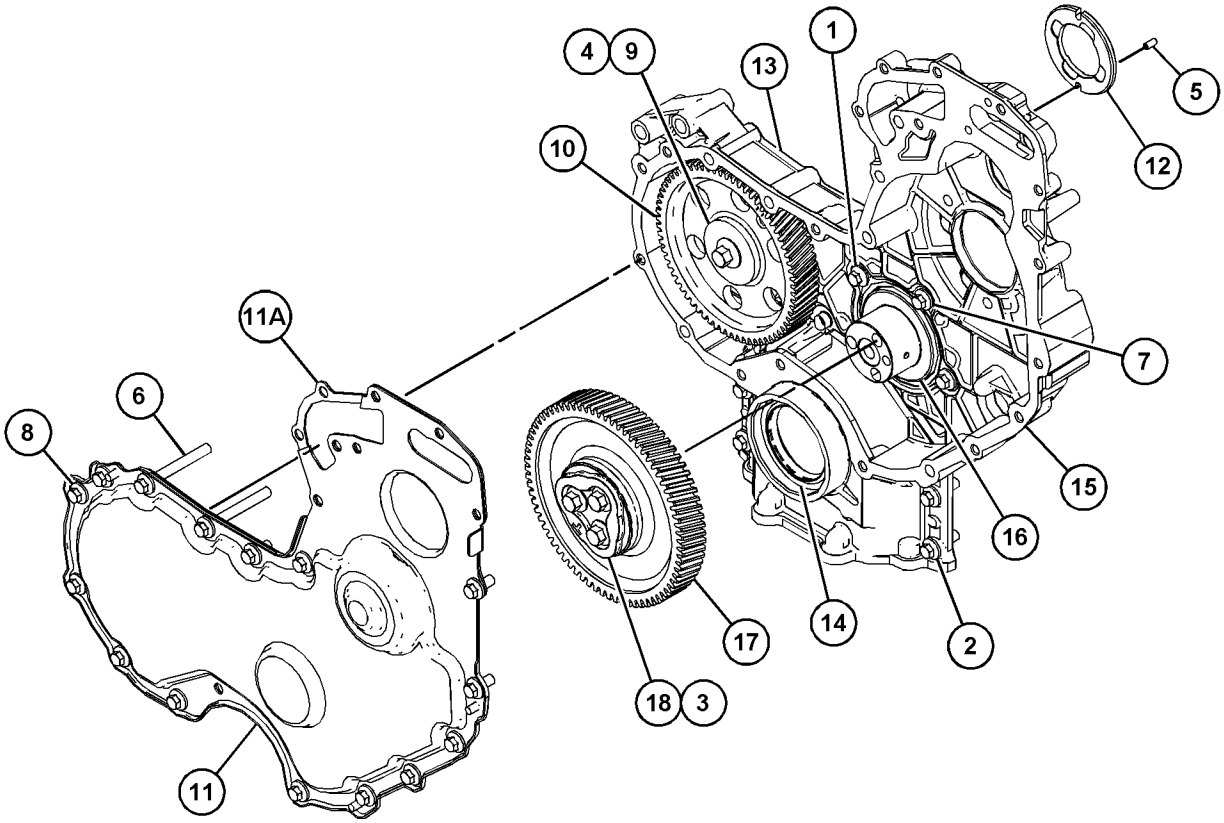

GRAPHIC #1 <END> g03892126

315-3419 LIFTING GP-ENGINE

S/N: G8X1-UP

PART OF 460-5760 ENGINE AR-PRIMARY

SMCS-1122 **i06780073**

NOTE	REF NO	GRAPHIC REF	PART NUMBER	QTY	PART NAME 1 2 3 4 5 6 (PRODUCT LEVEL)	SEE PAGE
M	1	1	**100-4830**	4	BOLT (M10X1.5X20-MM)	
	2	1	**225-8848**	1	PLATE-LIFTING	
	3	1	**275-2452**	1	PLATE-LIFTING	

M - METRIC PART

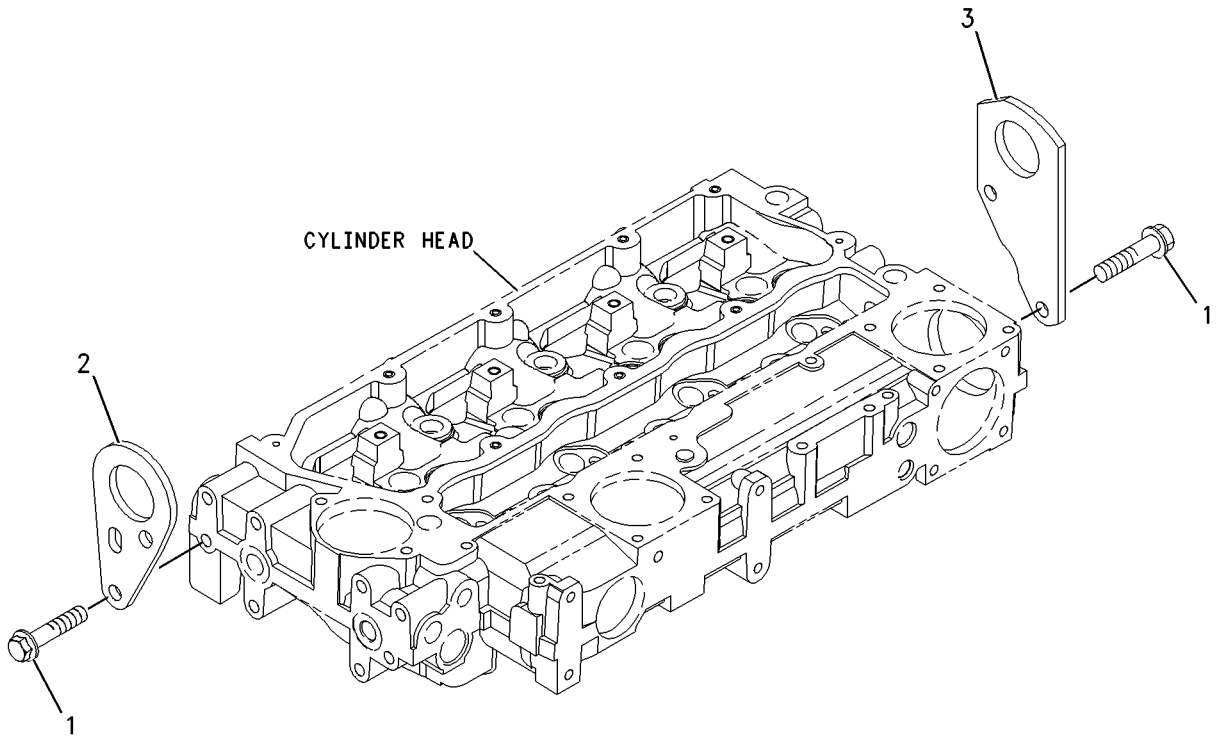

GRAPHIC #1 <END> g00912754

387-2615 MOUNTING GP-ENGINE

S/N: RDE1-UP

PART OF 460-3429 INSTALLATION AR-ENGINE

SMCS-1152 **i05896923**

NOTE	REF NO	GRAPHIC REF	PART NUMBER	QTY	PART NAME 1 2 3 4 5 6 (PRODUCT LEVEL)	SEE PAGE
	1	1	**339-7145**	2	BRACKET	
	2	1	**351-3928**	4	PLATE	
	3	1	**392-2053**	4	MOUNT-RUBBER	
	4	1	**368-6660**	4	MOUNT-RUBBER	
M	5	1	**447-1706**	4	BOLT (M16X2X130-MM)	
M	6	1	**453-3449**	8	BOLT (M12X1.75X50-MM)	
	7	1	**451-2182**	8	WASHER-HARD (13.5X25.5X3-MM THK)	
	8	1	**451-2175**	8	WASHER-HARD (17.5X30X3.5-MM THK)	
	9	1	**118-9941**	4	SUPPORT AS	

M - METRIC PART

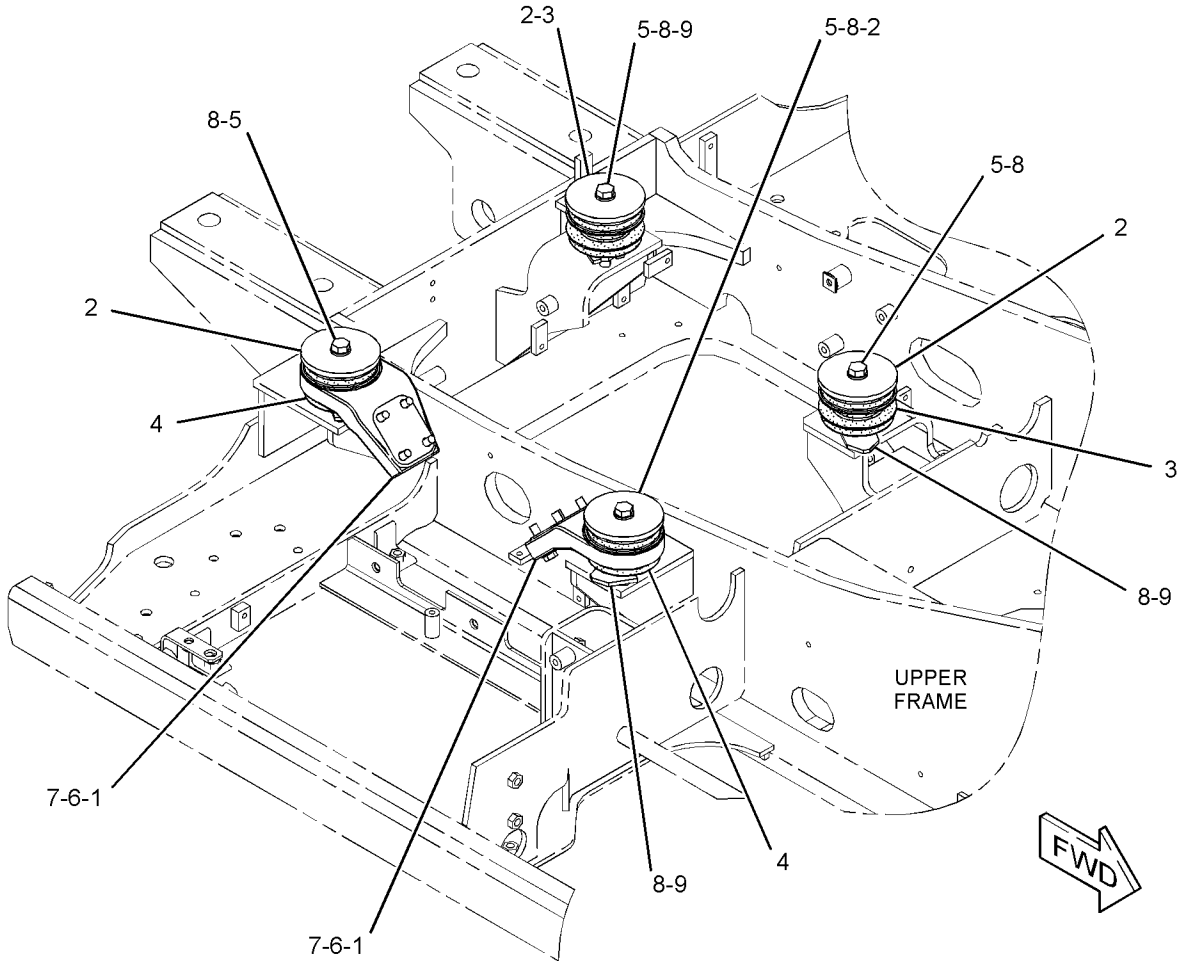

GRAPHIC #1 <END> g03716042

484-9814 MOUNTING GP-ENGINE

S/N: G8X1-UP

PART OF 460-5760 ENGINE AR-PRIMARY

SMCS-1152 **i06780074**

NOTE	REF NO	GRAPHIC REF	PART NUMBER	QTY	PART NAME 1 2 3 4 5 6 (PRODUCT LEVEL)	SEE PAGE
	1	1	**339-7143**	1	BRACKET	
	2	1	**339-7144**	1	BRACKET	
	3	1	**382-5080**	4	BOLT-FLANGE HEAD (M12X1.75X45-MM)	
	4	1	**383-6627**	3	BOLT-FLANGE HEAD (M12X1.75X50-MM)	
	5	1	**383-8104**	1	BOLT	

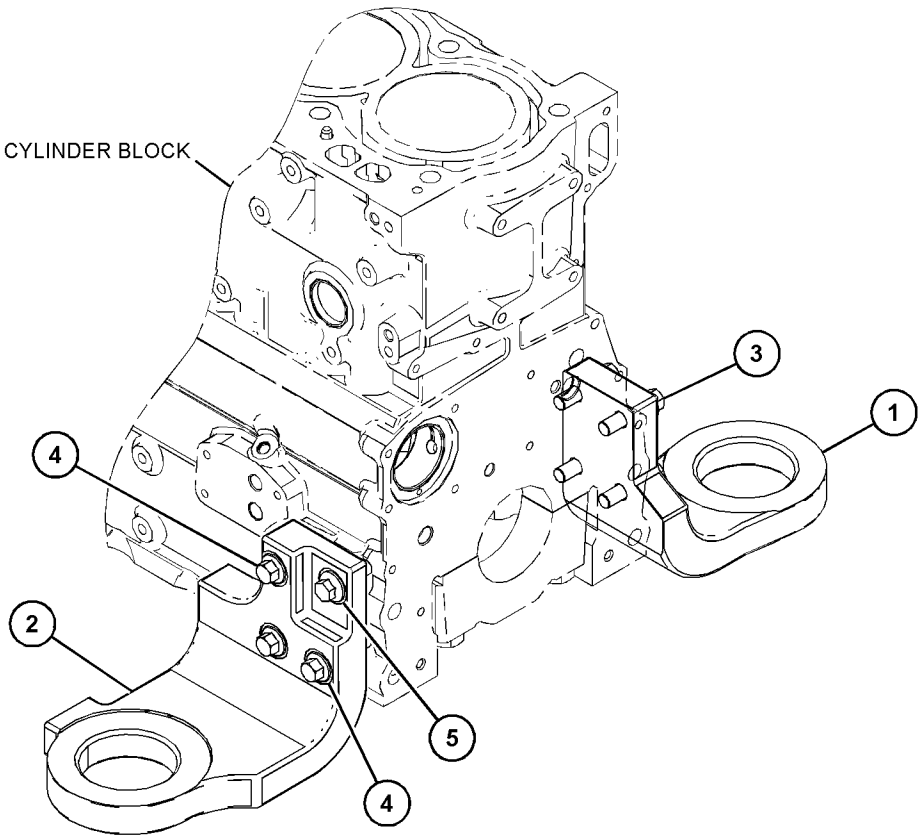

GRAPHIC #1 <END> g03892152

299-5082 MOUNTING GP-FAN

S/N: G8X1-UP

PART OF 460-5760 ENGINE AR-PRIMARY

SMCS-1356 **i03025274**

NOTE	REF NO	GRAPHIC REF	PART NUMBER	QTY	PART NAME 1 2 3 4 5 6 (PRODUCT LEVEL)	SEE PAGE
	1	1	**179-7071**	4	BOLT (M8X1.25X20-MM)	

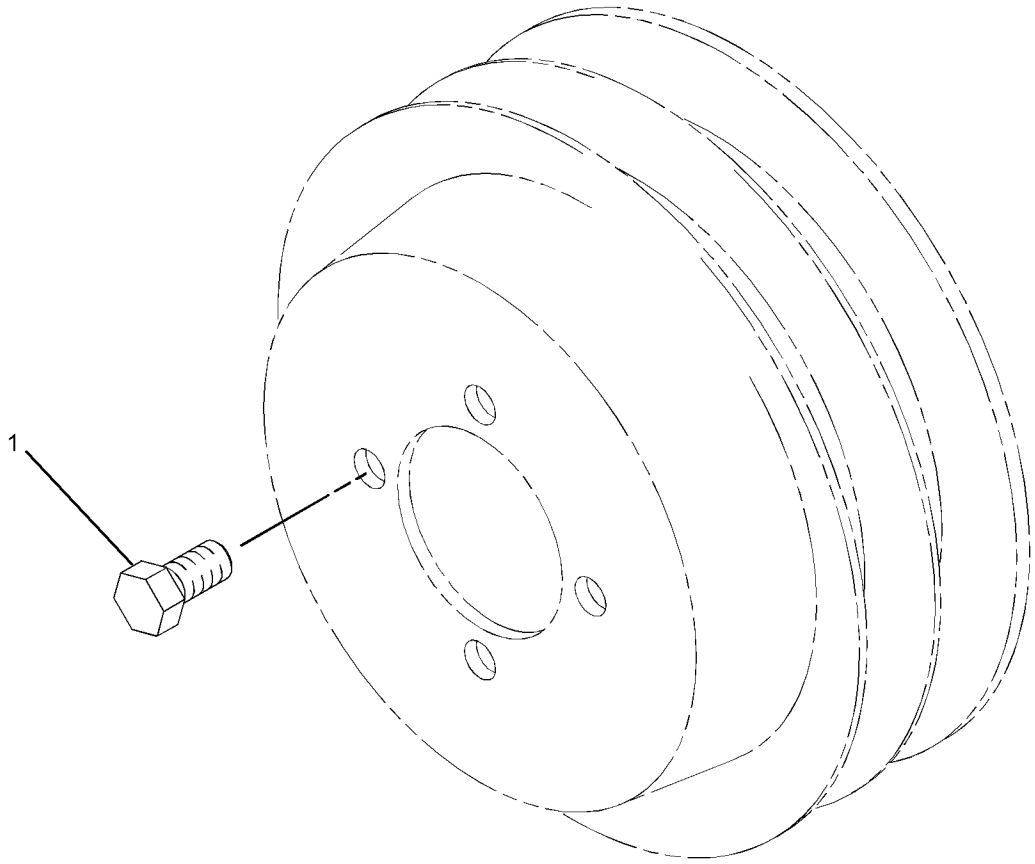

GRAPHIC #1 <END> g01340803

484-8347 PAN GP-OIL

S/N: G8X1-UP

PART OF 460-5760 ENGINE AR-PRIMARY

SMCS-1302 **i06780106**

NOTE	REF NO	GRAPHIC REF	PART NUMBER	QTY	PART NAME 1 2 3 4 5 6 (PRODUCT LEVEL)	SEE PAGE
	1	1	**3K-0360**	1	SEAL-O-RING	
M	2	1	**6I-0260**	4	BOLT (M8X1.25X25-MM)	
	3	1	**6I-0289**	1	PLUG	
M	4	1	**6I-0363**	2	BOLT (M6X1X20-MM)	
M	5	1	**6I-0645**	2	BOLT (M8X1.25X25-MM)	
	6	1	**6V-7238**	1	VALVE-SHUTOFF	
	7	1	**7C-0351**	1	PLUG-DRAIN (ENGINE OIL)	
	8	1	**067-6213**	1	GASKET	
M	9	1	**101-3805**	16	BOLT (M8X1.25X90-MM)	
M	10	1	**103-5687**	2	BOLT (M10X1.5X85-MM)	
	11	1	**189-9377**	1	SEAL-O-RING	
	12	1	**213-0677**	1	SWITCH AS-LIQUID LEVEL (ENGINE OIL)	
		1	**102-8802**	1	KIT-RECEPTACLE (2-PIN)	
					(INCLUDES RECEPTACLE AS & WEDGE)	
		1	**9X-3401**	2	PIN-CONNECTOR (16-GA TO 18-GA)	
					—OR—	
		1	**126-1767**	2	PIN-CONNECTOR (14-GA TO 16-GA)	
	13	1	**225-6005**	1	GASKET	
	14	1	**230-8094**	1	BRIDGE	
	15	1	**235-2435**	1	TUBE-SUCTION	
	16	1	**274-6609**	1	CLIP-HARNESS	
	17	1	**335-7585**	1	SEAL	
	18	1	**341-7597**	1	PAN-OIL	
	19	1	**350-9492**	1	GAUGE AS-OIL LEVEL (DIPSTICK) (ENGINE)	
	19A	1	**275-9891**	2	SEAL-O-RING	
	20	1	**393-0807**	1	TUBE AS	
	20A	1	**228-7089**	1	SEAL-O-RING	
	21	1	**393-5867**	2	SPACER	

M - METRIC PART

484-8347 **PAN GP-OIL (**contd.**)** **i06780106**

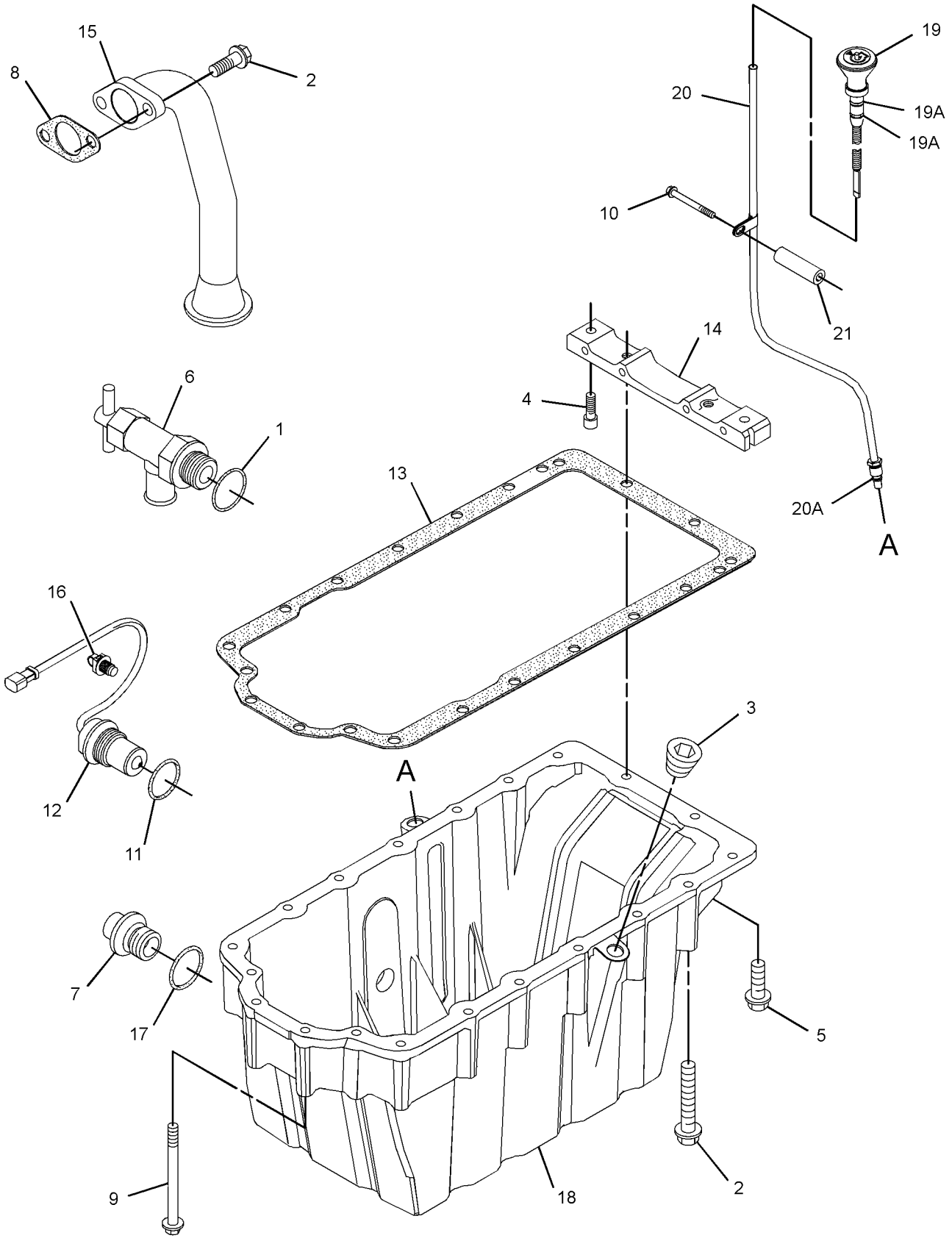

GRAPHIC #1 <END> g03161277

484-8069 PISTON & ROD GP

S/N: G8X1-UP

PART OF 460-5760 ENGINE AR-PRIMARY

SMCS-1225 **i06780107**

NOTE	REF NO	GRAPHIC REF	PART NUMBER	QTY	PART NAME 1 2 3 4 5 6 (PRODUCT LEVEL)	SEE PAGE
BJ	1	1	**359-0719**	4	ROD AS-CONNECTING (LENGTH R)	
					—OR—	
BJ		1	**359-0720**	4	ROD AS-CONNECTING (LENGTH O)	
					—OR—	
BJ		1	**359-0721**	4	ROD AS-CONNECTING (LENGTH W)	
					—OR—	
BJ		1	**359-0722**	4	ROD AS-CONNECTING (LENGTH G)	
					—OR—	
BJ		1	**359-0723**	4	ROD AS-CONNECTING (LENGTH P)	
					—OR—	
BJ		1	**359-0724**	4	ROD AS-CONNECTING (LENGTH B)	
					(EACH INCLUDES)	
	1A	1	**225-5438**	1	BUSHING	
	1B	1	**323-9312**	2	BOLT (M10X1X50-MM)	
	2	1	**458-6992**	4	KIT-PISTON & RING	
					(EACH KIT INCLUDES PISTONS & RINGS)	

B - USE AS REQUIRED
J - ENSURE THAT CORRECT ROD LENGTH IS FITTED

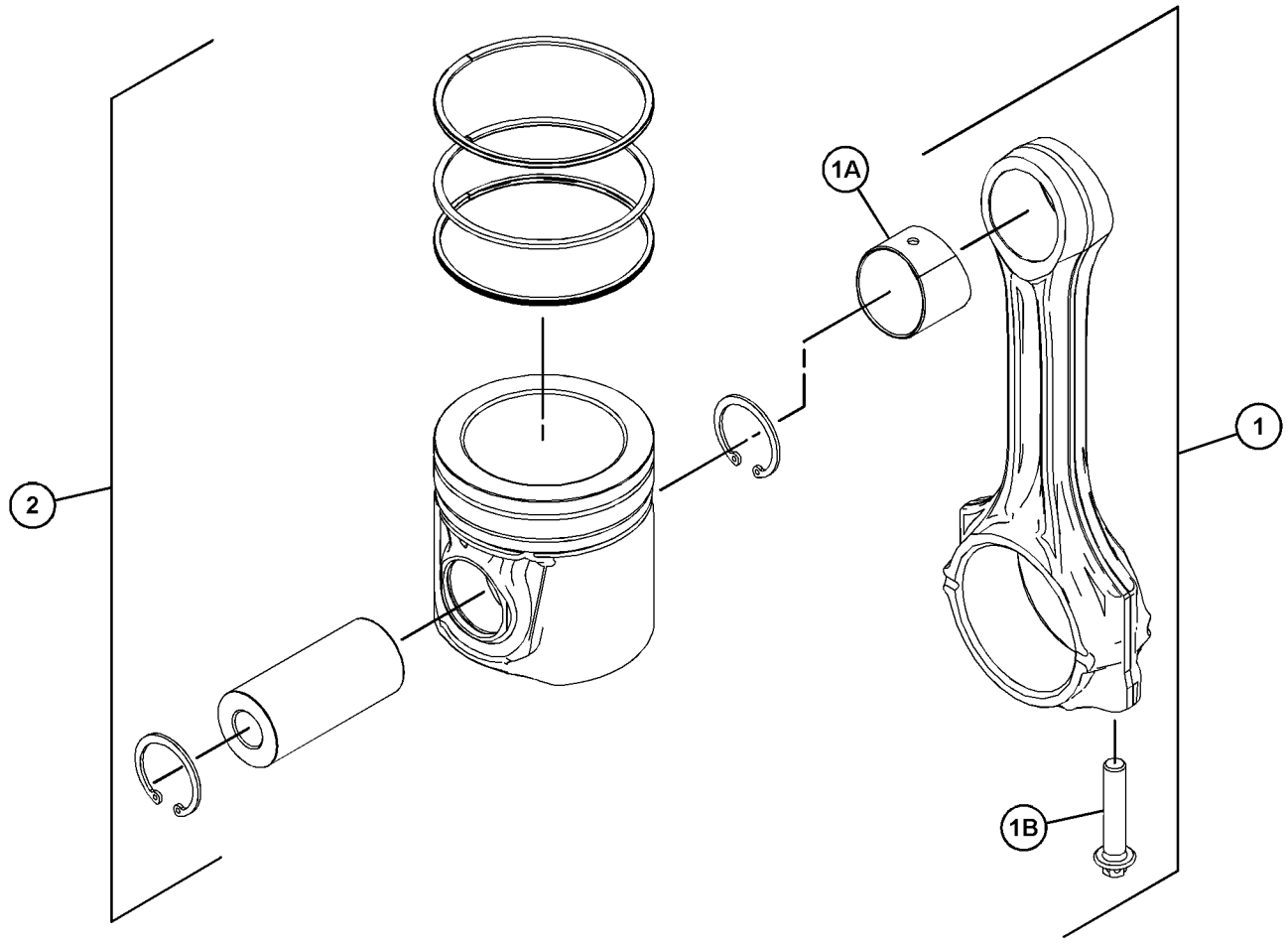

GRAPHIC #1 <END> g03892692

298-5129 PLUG GP-CYLINDER HEAD

S/N: G8X1-UP

PART OF 460-5760 ENGINE AR-PRIMARY

SMCS-1100 **i03025245**

NOTE	REF NO	GRAPHIC REF	PART NUMBER	QTY	PART NAME 1 2 3 4 5 6 (PRODUCT LEVEL)	SEE PAGE
	1	1	**232-1322**	1	PLUG	
	2	1	**199-9751**	1	SEAL-O-RING	

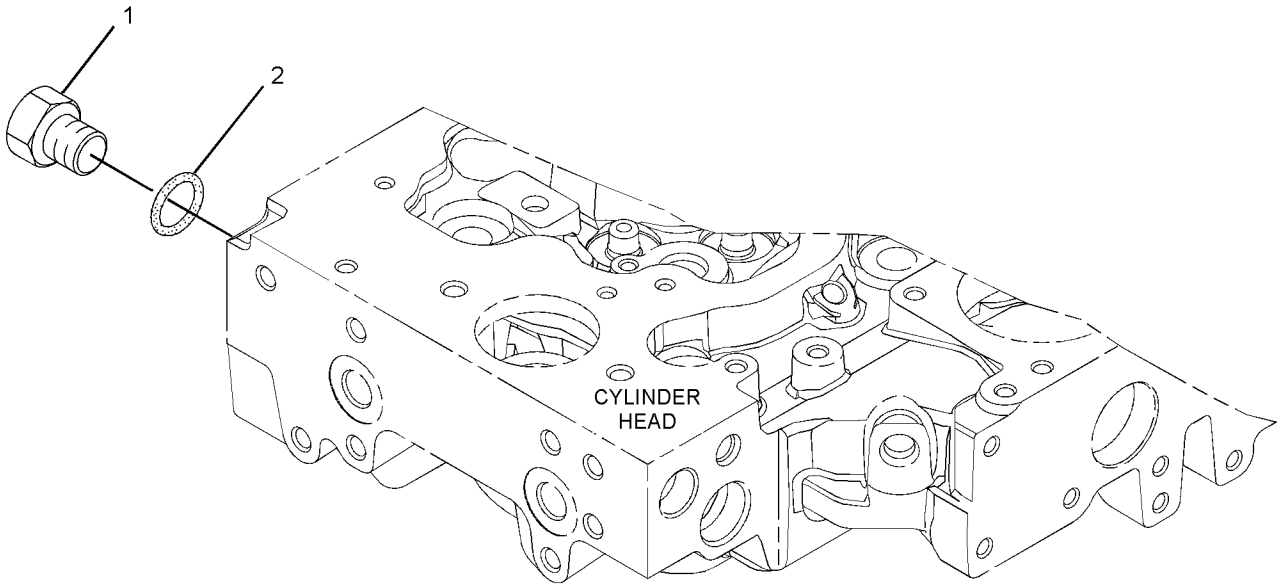

GRAPHIC #1 <END> g01305536

304-3663 PLUG GP-ENGINE

S/N: G8X1-UP

PART OF 460-5760 ENGINE AR-PRIMARY

SMCS-1000 **i06780109**

NOTE	REF NO	GRAPHIC REF	PART NUMBER	QTY	PART NAME 1 2 3 4 5 6 (PRODUCT LEVEL)	SEE PAGE
	1	1	**2B-0858**	1	PLUG-PIPE	
	2	1	**7W-4669**	1	ADAPTER	
	3	1	**134-3856**	1	ELBOW	

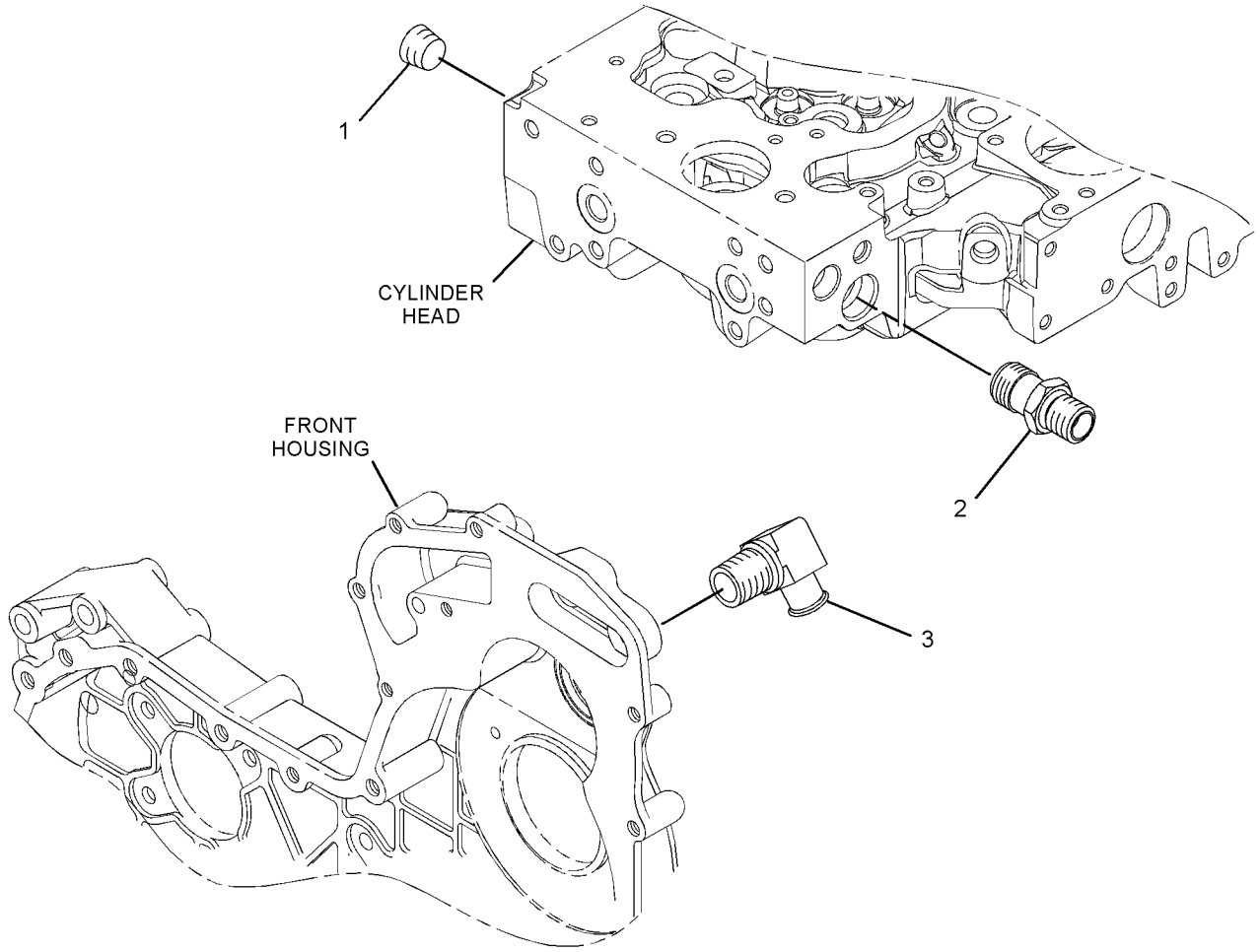

GRAPHIC #1 <END> g01346476

304-8761 PLUG GP-ENGINE

S/N: G8X1-UP

PART OF 460-5760 ENGINE AR-PRIMARY

SMCS-1000 **i03301261**

NOTE	REF NO	GRAPHIC REF	PART NUMBER	QTY	PART NAME 1 2 3 4 5 6 (PRODUCT LEVEL)	SEE PAGE
M	1	1	**6I-0646**	1	BOLT (M10X1.5X14-MM)	
	2	1	**214-3203**	1	WASHER (SEALING)	

M - METRIC PART

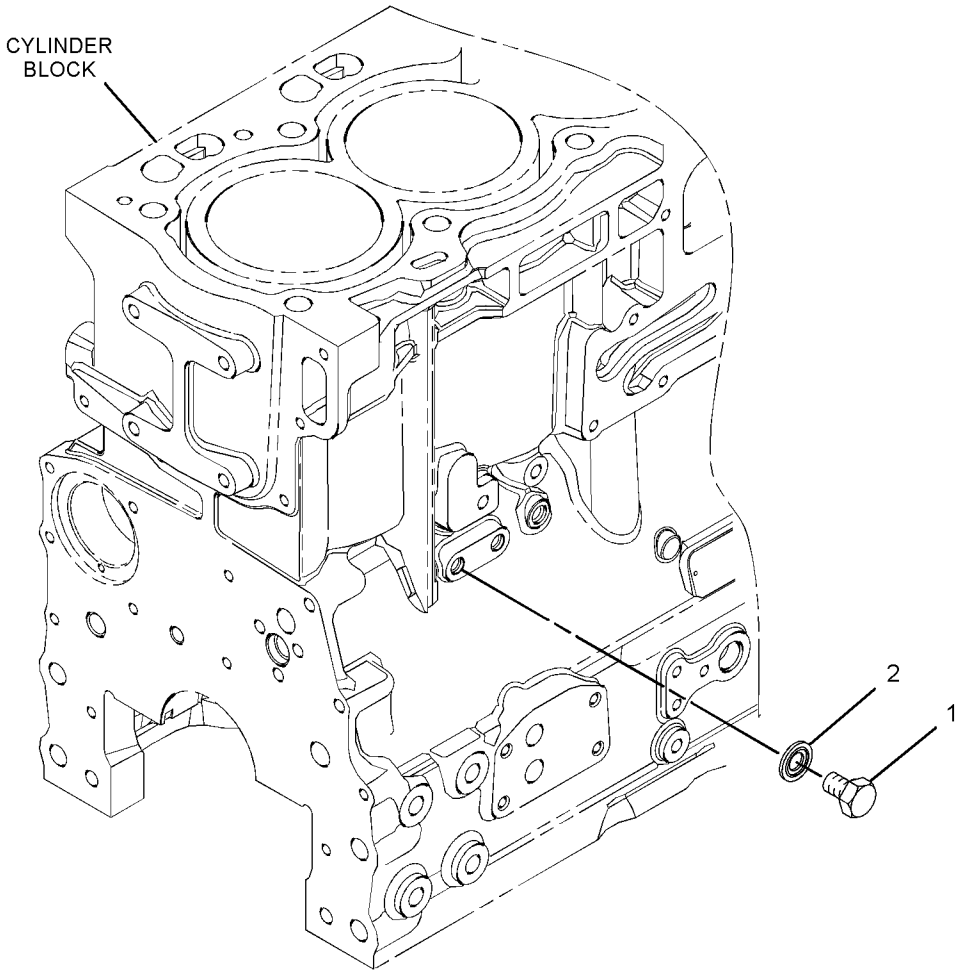

GRAPHIC #1 <END> g01373022

312-2578 PLUG GP-ENGINE

S/N: G8X1-UP

PART OF 460-5760 ENGINE AR-PRIMARY

SMCS-1000 **i06780111**

NOTE	REF NO	GRAPHIC REF	PART NUMBER	QTY	PART NAME 1 2 3 4 5 6 (PRODUCT LEVEL)	SEE PAGE
	1	1	**225-6522**	1	PLUG-CUP	
	2	1	**225-6524**	1	PLUG-CUP	

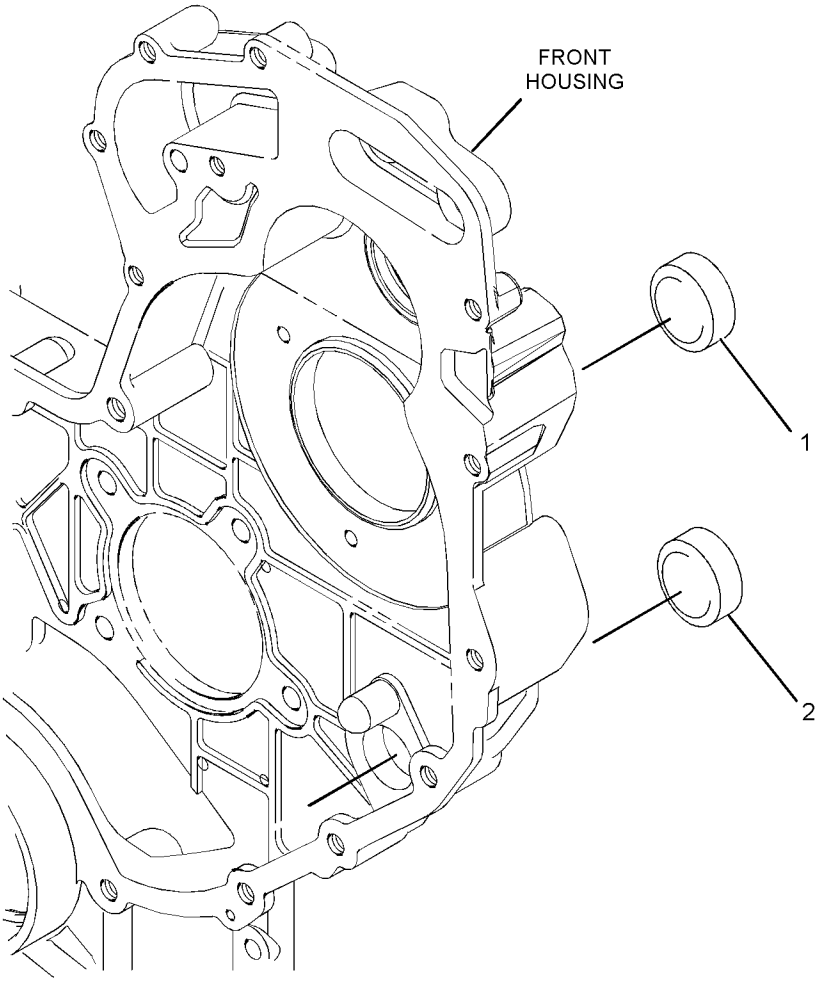

GRAPHIC #1 <END> g01430695

360-7347 PULLEY GP-CRANKSHAFT

S/N: G8X1-UP

PART OF 460-5760 ENGINE AR-PRIMARY

SMCS-1205 **i04132036**

NOTE	REF NO	GRAPHIC REF	PART NUMBER	QTY	PART NAME 1 2 3 4 5 6 (PRODUCT LEVEL)	SEE PAGE
M	1	1	**102-9941**	3	BOLT (M12X1.75X25-MM)	
	2	1	**286-7848**	1	PULLEY (8-GROOVE)	
	3	1	**334-9334**	3	BOLT	
	4	1	**359-0750**	1	PULLEY-CRANKSHAFT	

M - METRIC PART

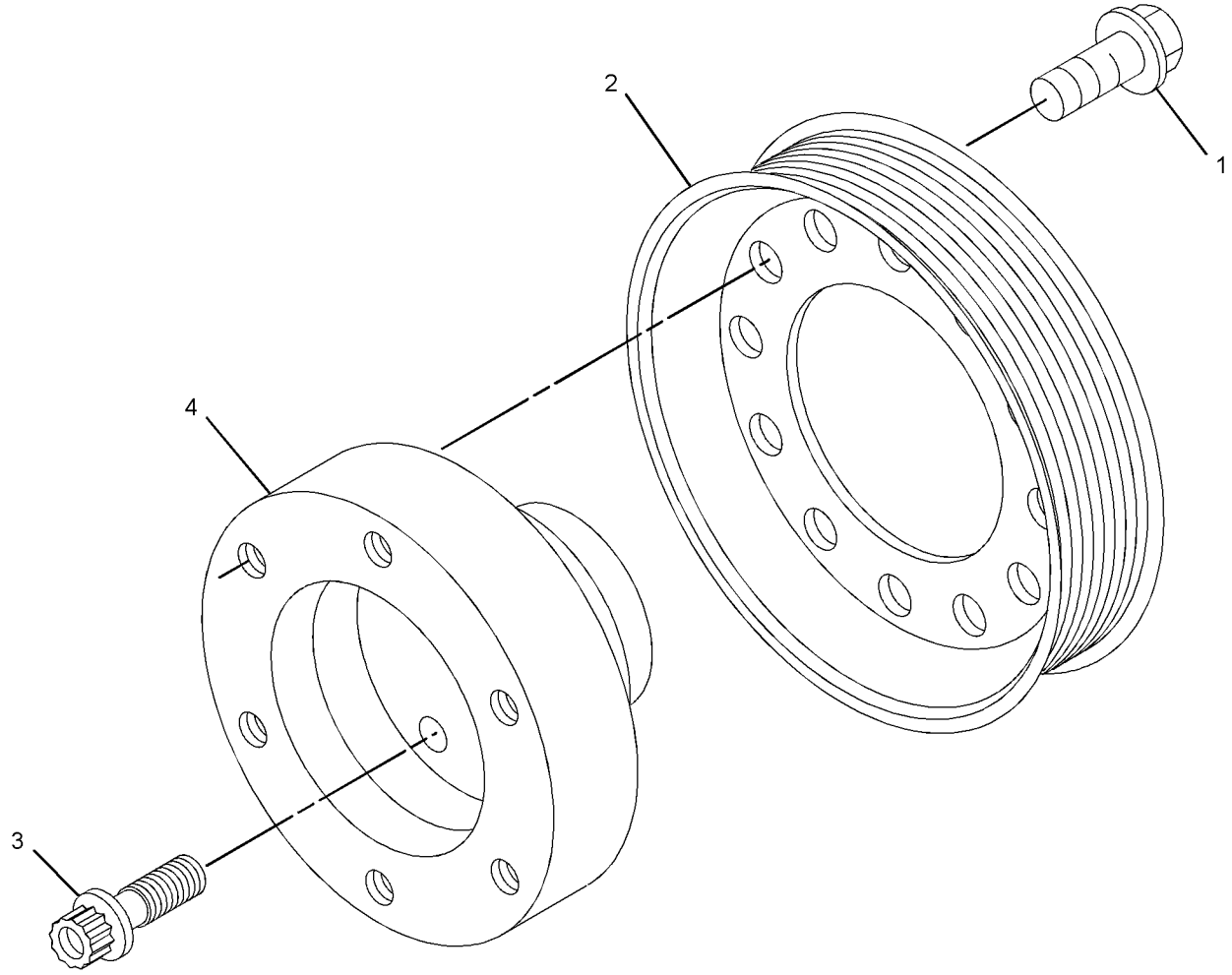

GRAPHIC #1 <END> g02232714

387-2628 PULLEY GP-FAN

S/N: RDE1-UP

PART OF 390-8831 FAN AR-SUCTION

SMCS-1356, 1359 **i05439104**

NOTE	REF NO	GRAPHIC REF	PART NUMBER	QTY	PART NAME 1 2 3 4 5 6 (PRODUCT LEVEL)	SEE PAGE
	1	1	**284-1026**	1	PULLEY (8-GROOVE)	
	2	1	**298-5872**	1	BELT-SERPENTINE	

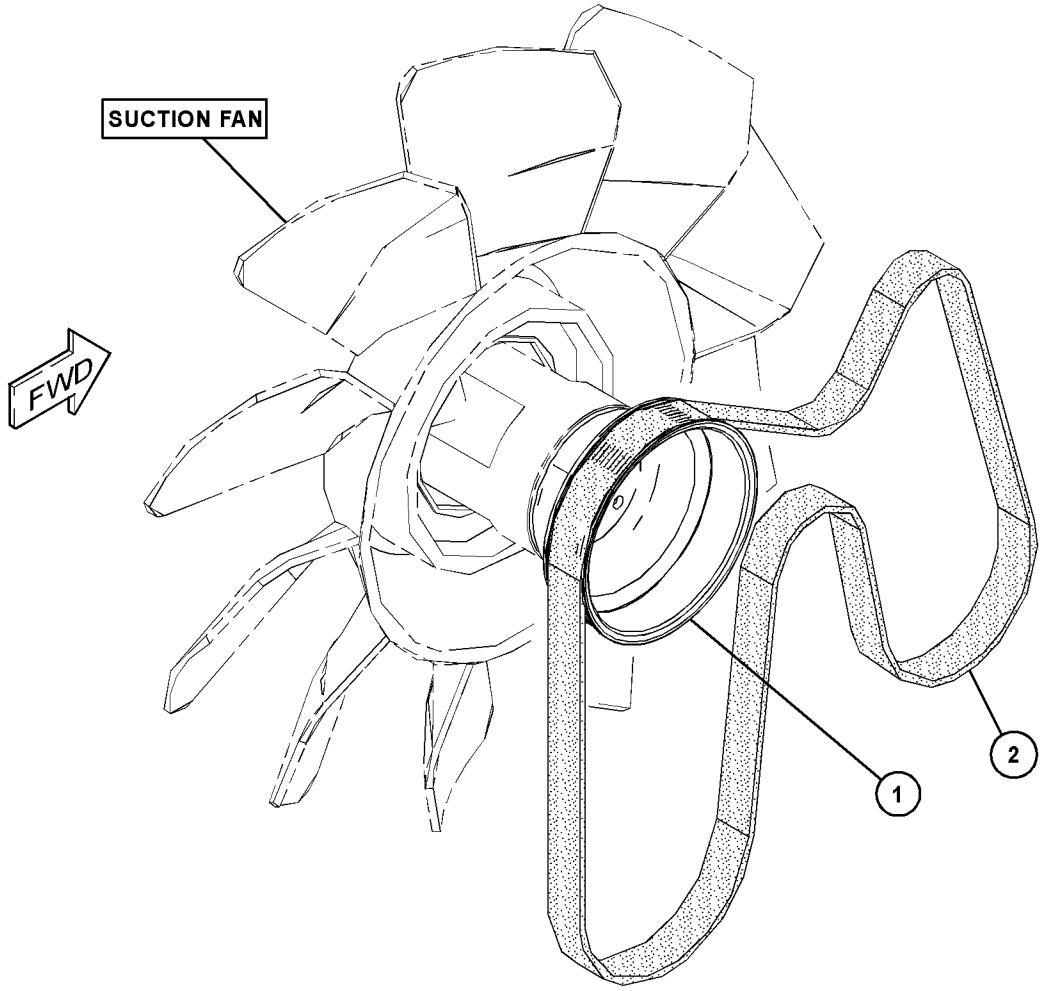

GRAPHIC #1 <END> g03146979

315-3385 ROCKER ARM GP

S/N: G8X1-UP

PART OF 484-8076 VALVE MECHANISM GP

SMCS-1123 **i03301983**

NOTE	REF NO	GRAPHIC REF	PART NUMBER	QTY	PART NAME 1 2 3 4 5 6 (PRODUCT LEVEL)	SEE PAGE
	1	1	**225-5634**	1	SHAFT AS	
	1A	1	**225-5629**	2	PLUG	
	2	1	**225-5638**	3	SPRING	
	3	1	**225-5959**	2	CLIP	
	4	1	**225-5960**	1	BOLT (M8X1.25X60-MM)	
	5	1	**225-5961**	2	WASHER (26.7X34.32X0.38-MM THK)	
	6	1	**225-5962**	3	BOLT (M8X1.25X30-MM)	
	7	1	**315-3386**	4	ROCKER ARM AS	
					(EACH INCLUDES)	
	7A	1	**278-5113**	1	SCREW-ADJUSTING (TORX)	
	7B	1	**315-3387**	1	NUT	
	8	1	**315-3388**	4	ROCKER ARM AS	
					(EACH INCLUDES)	
	8A	1	**278-5113**	1	SCREW-ADJUSTING (TORX)	
	8B	1	**315-3387**	1	NUT	

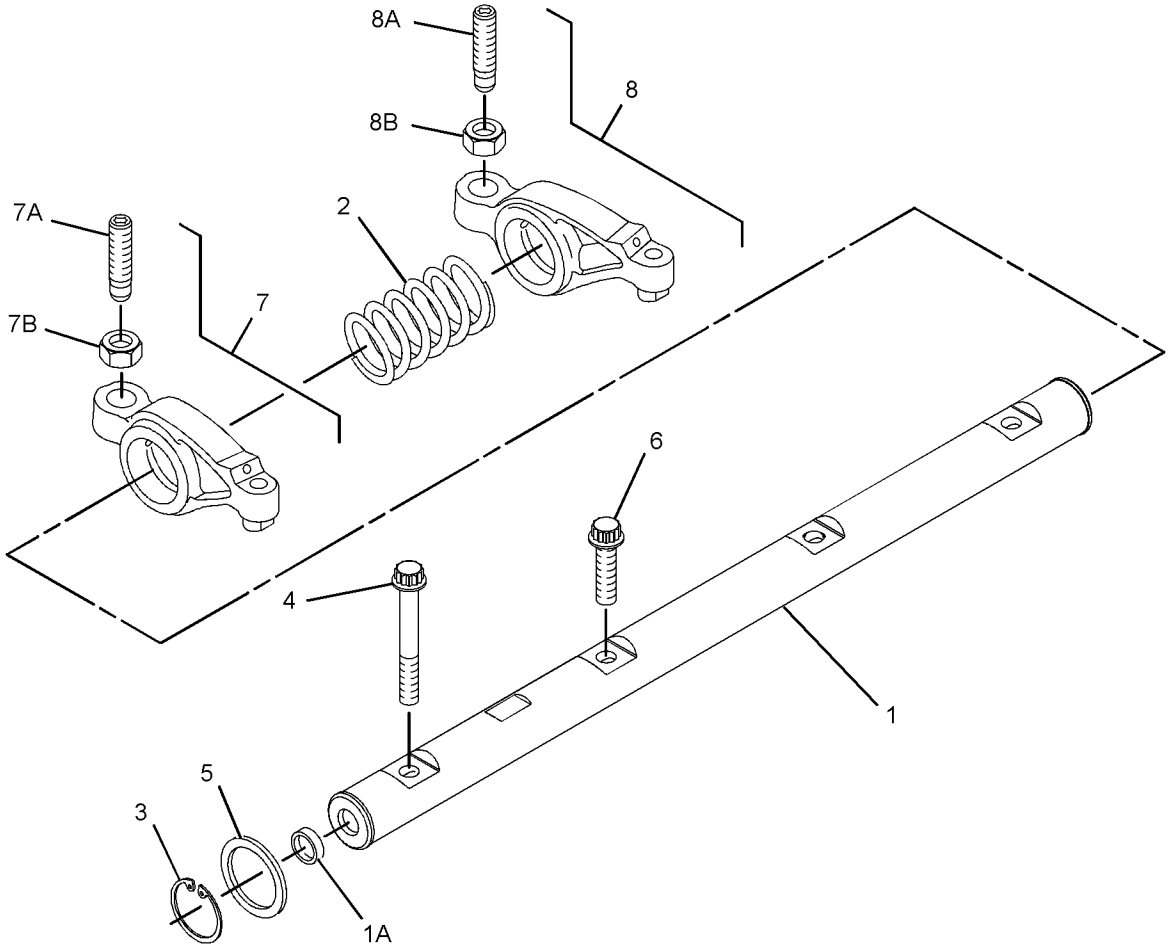

GRAPHIC #1 <END> g01399975

484-8076 VALVE MECHANISM GP

S/N: G8X1-UP

PART OF 460-5760 ENGINE AR-PRIMARY

SMCS-1209 **i06780162**

NOTE	REF NO	GRAPHIC REF	PART NUMBER	QTY	PART NAME 1 2 3 4 5 6 (PRODUCT LEVEL)	SEE PAGE
Y	1	1	**315-3385**	1	ROCKER ARM GP	35

Y - SEPARATE ILLUSTRATION

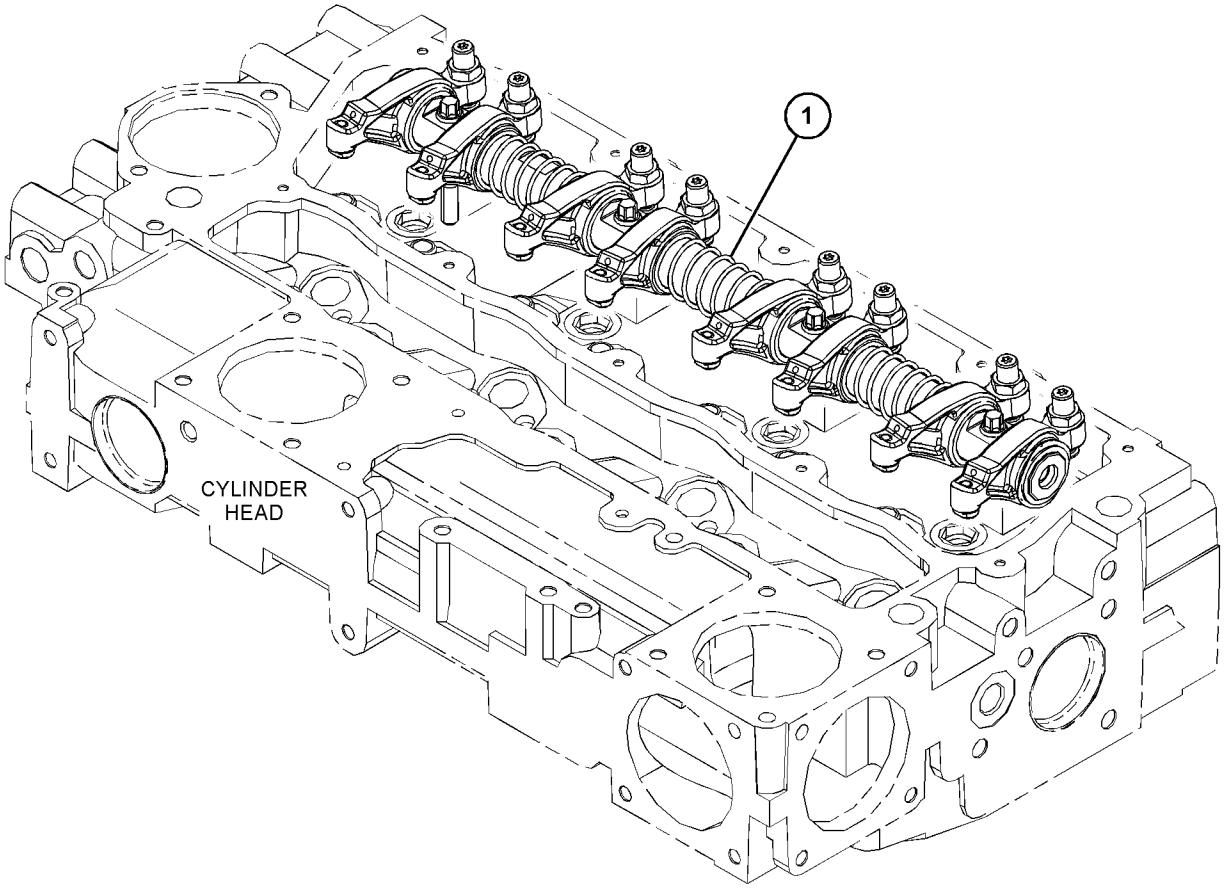

GRAPHIC #1 <END> g03868583

322-3154 FILTER GP-ENGINE OIL

S/N: RDE1-UP

PART OF 460-2121 FILTER & MTG GP-OIL

SMCS-1308 **i05792415**

NOTE	REF NO	GRAPHIC REF	PART NUMBER	QTY	PART NAME 1 2 3 4 5 6 (PRODUCT LEVEL)	SEE PAGE
	1	1	**322-3155**	1	FILTER ELEMENT-ENGINE OIL	
	2	1	**354-5833**	1	KIT-DRAIN	

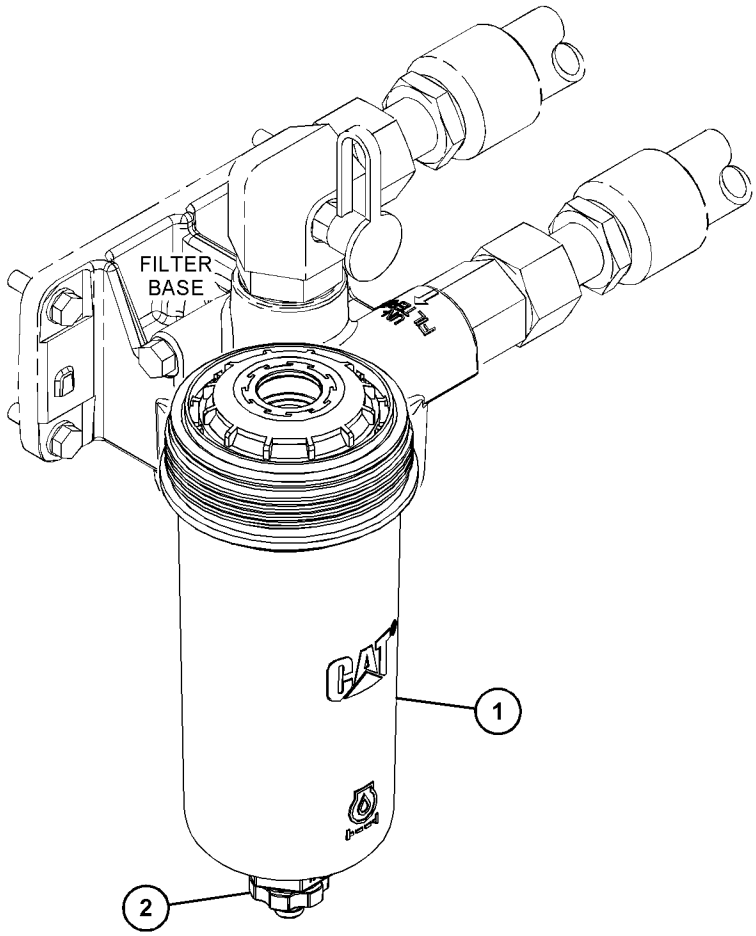

GRAPHIC #1 <END> g03449839

387-2614 FUMES DISPOSAL GP

S/N: RDE1-UP

PART OF 460-3429 INSTALLATION AR-ENGINE

SMCS-1317 **i05401653**

NOTE	REF NO	GRAPHIC REF	PART NUMBER	QTY	PART NAME 1 2 3 4 5 6 (PRODUCT LEVEL)	SEE PAGE
	1	1	**394-8706**	1	PLATE AS	
	2	1	**394-8709**	1	PLATE	
	3	1	**394-8711**	1	HOSE-FUMES DISPOSAL	
	4	1	**067-3045**	1	CLIP	
	5	1	**206-1345**	1	STRAP-CABLE	
M	6	1	**5C-9553**	2	BOLT (M6X1X16-MM)	
	7	1	**5P-4115**	2	WASHER-HARD (7.2X19X2-MM THK)	
	8	1	**5V-9155**	1	CLAMP-HOSE	
	9	1	**8T-4121**	1	WASHER-HARD (11X21X2.5-MM THK)	
M	10	1	**8T-4137**	1	BOLT (M10X1.5X20-MM)	
M	11	1	**8T-4189**	2	BOLT (M8X1.25X20-MM)	
	12	1	**8T-4224**	2	WASHER-HARD (8.8X16X2-MM THK)	

M - METRIC PART

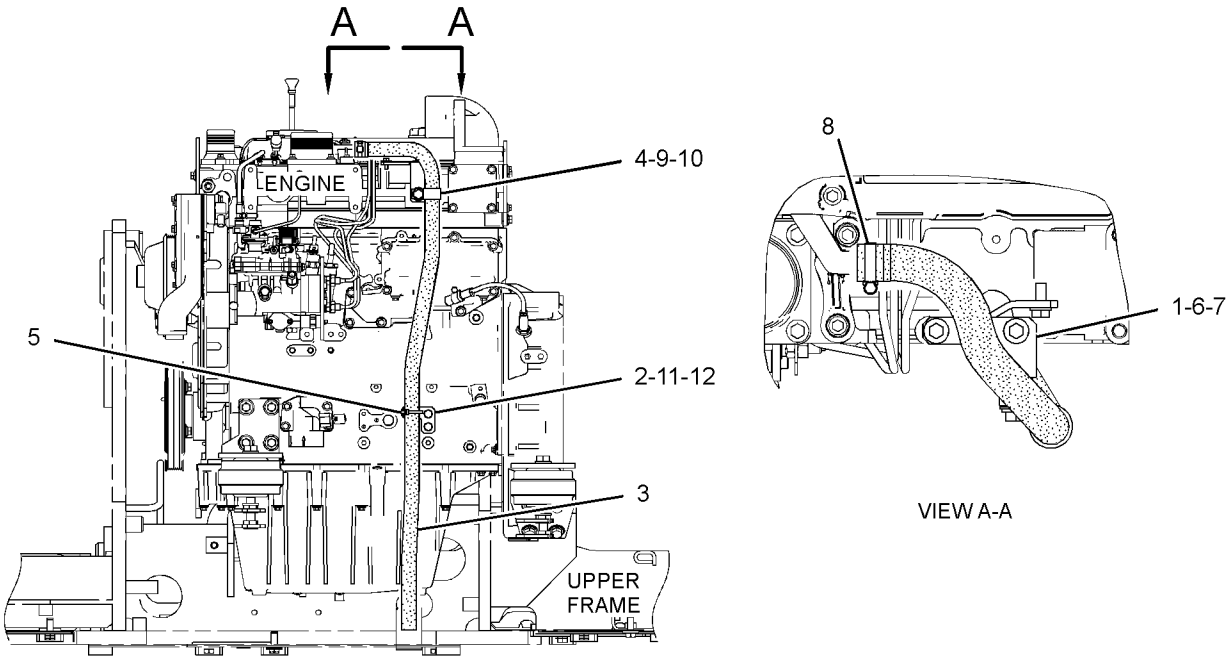

REAR VIEW

GRAPHIC #1 <END> g03122696

387-2613 LINES GP-ENGINE OIL DRAIN

S/N: RDE1-UP

PART OF 460-3429 INSTALLATION AR-ENGINE

SMCS-1307 **i05401652**

NOTE	REF NO	GRAPHIC REF	PART NUMBER	QTY	PART NAME 1 2 3 4 5 6 (PRODUCT LEVEL)	SEE PAGE
	1	1	**095-1388**	1	CLAMP-HOSE	
E	2	1	**5P-0743**		HOSE (12-CM)	

E - ORDER BY THE CENTIMETER

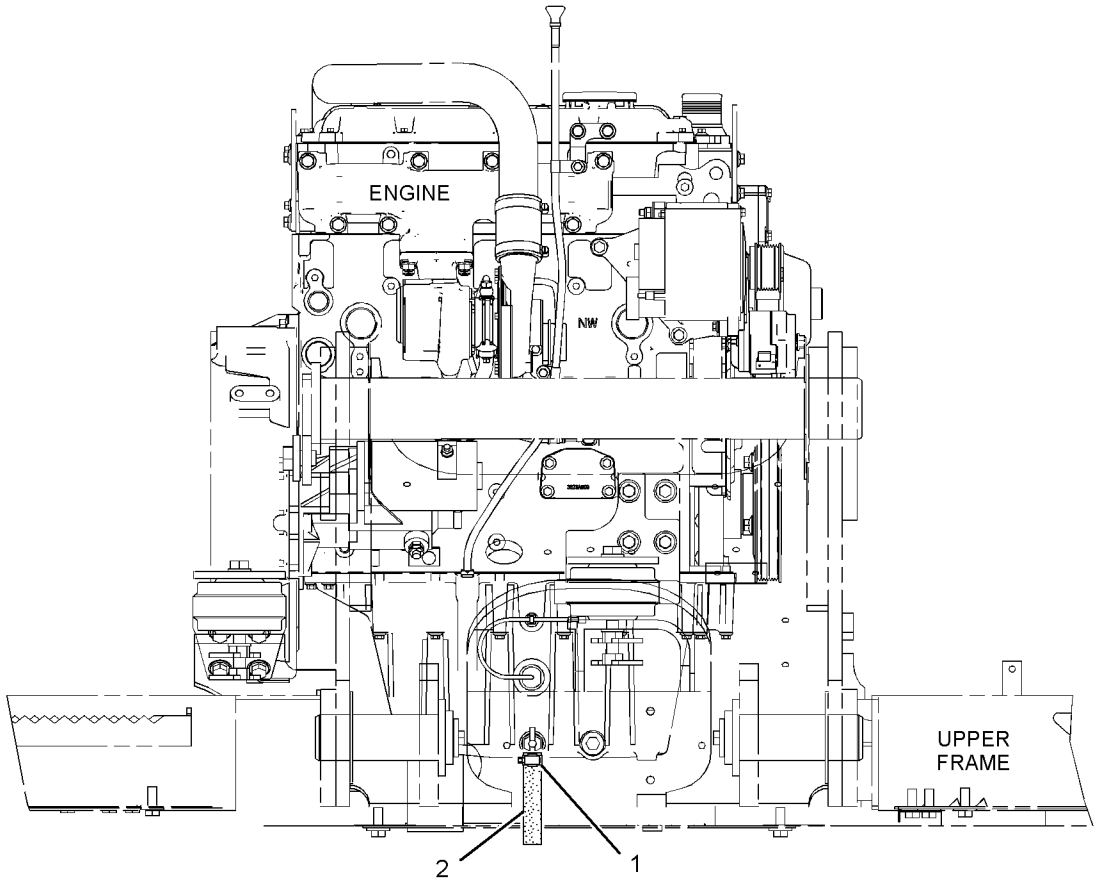

FRONT VIEW

GRAPHIC #1 <END> g03122917

298-5112 PUMP GP-ENGINE OIL

S/N: G8X1-UP

PART OF 460-5760 ENGINE AR-PRIMARY

SMCS-1304, 1315 **i06151661**

NOTE	REF NO	GRAPHIC REF	PART NUMBER	QTY	PART NAME 1 2 3 4 5 6 (PRODUCT LEVEL)	SEE PAGE
	1	1	**447-8572**	1	PUMP AS-OIL	
M	2	1	**100-4461**	5	BOLT (M10X1.5X50-MM)	

M - METRIC PART

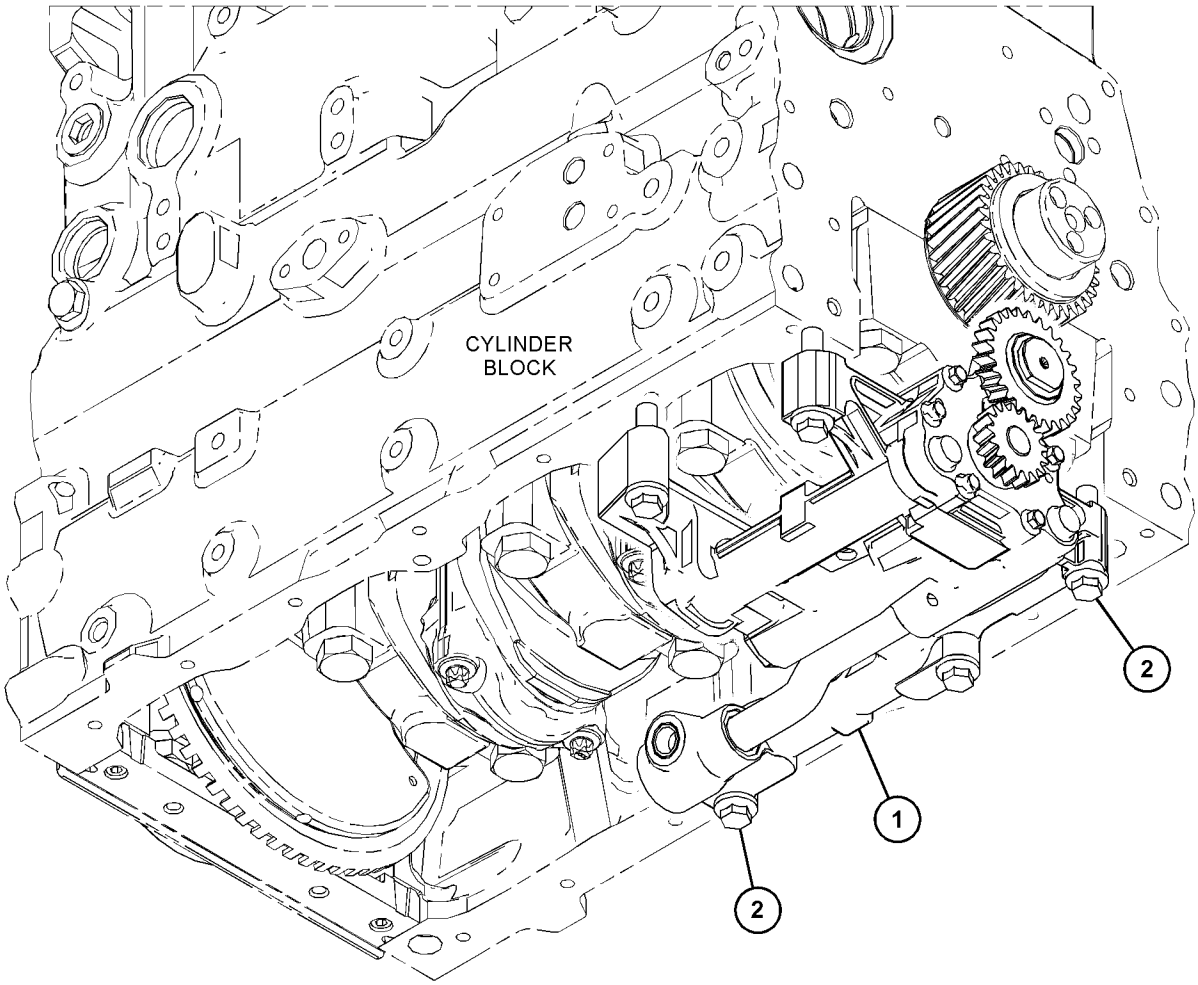

GRAPHIC #1 <END> g03832336

316-6941 CONNECTION GP-WATER

S/N: G8X1-UP

PART OF 460-5760 ENGINE AR-PRIMARY

SMCS-1380 **i03301249**

NOTE	REF NO	GRAPHIC REF	PART NUMBER	QTY	PART NAME 1 2 3 4 5 6 (PRODUCT LEVEL)	SEE PAGE
	1	1	**254-2267**	1	REGULATOR GP-TEMPERATURE (INCLUDES CONNECTOR) (WATER)	
	1A	1	**254-2270**	1	SEAL-O-RING	
M	2	1	**6I-0260**	2	BOLT (M8X1.25X25-MM)	

M - METRIC PART

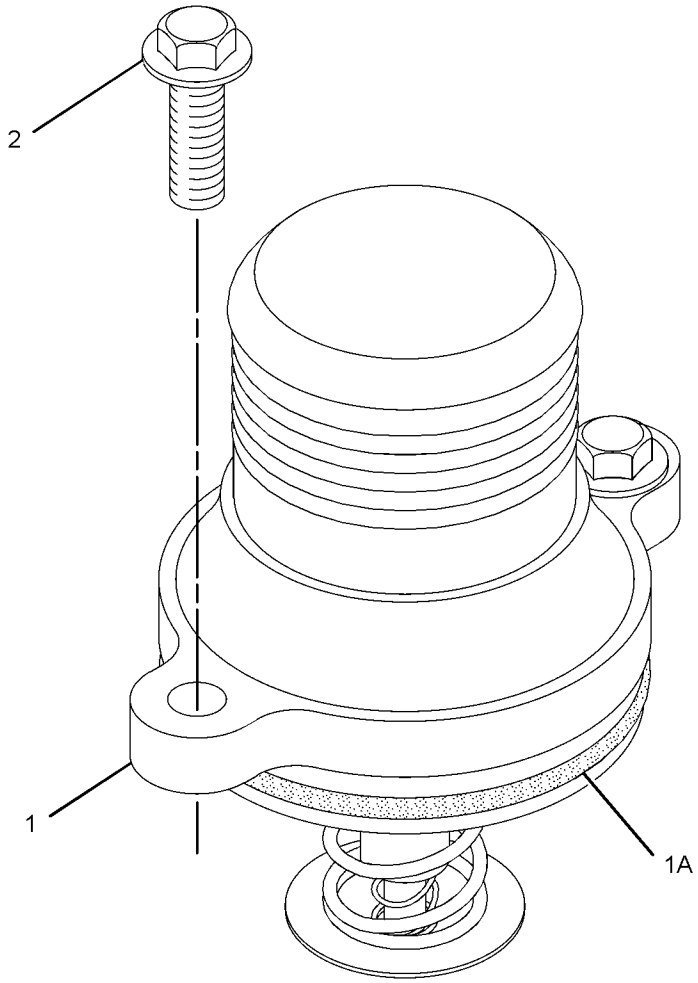

GRAPHIC #1 <END> g01319398

354-1274 COOLER GP-ENGINE OIL

S/N: G8X1-UP

PART OF 466-5424 COOLER GP-ENGINE OIL

SMCS-1378 **i05513634**

NOTE	REF NO	GRAPHIC REF	PART NUMBER	QTY	PART NAME 1 2 3 4 5 6 (PRODUCT LEVEL)	SEE PAGE
M	1	1	**6I-0260**	10	BOLT (M8X1.25X25-MM)	
M	2	1	**6I-4374**	3	BOLT (M8X1.25X60-MM)	
M	3	1	**101-3895**	4	BOLT (M8X1.25X35-MM)	
	4	1	**225-6817**	1	COOLER-OIL	
J	5	1	**225-6818**	2	SEAL	
	6	1	**272-2265**	1	SEAL	
					AVAILABLE REPAIR KIT(S):	
J			**416-8777**	1	KIT-SEAL (ENGINE OIL COOLER)	
					(INCLUDES SEALS & LEAFLET)	

J - KIT MARKED J SERVICES PART(S) MARKED J
M - METRIC PART

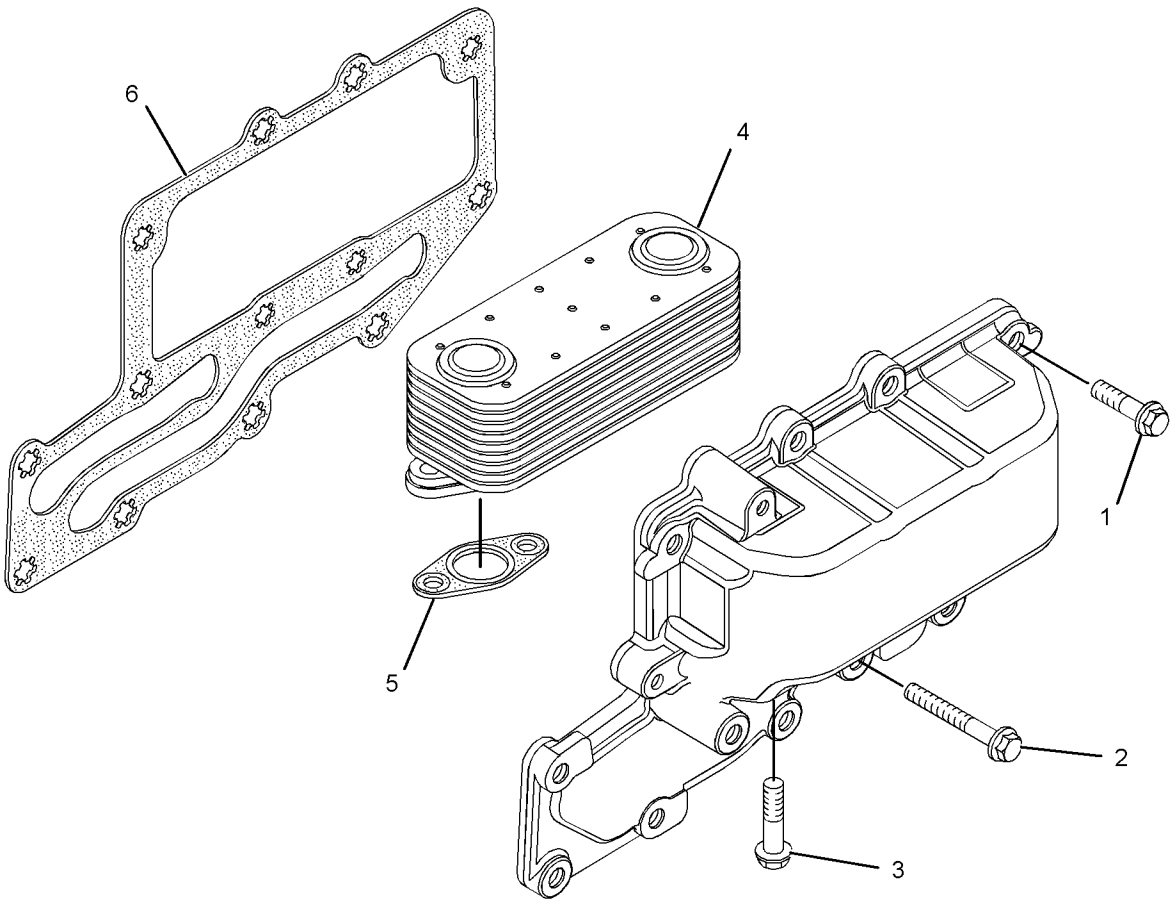

GRAPHIC #1 <END> g02140458

466-5424 COOLER GP-ENGINE OIL

S/N: G8X1-UP

PART OF 460-5760 ENGINE AR-PRIMARY

SMCS-1378 **i06779694**

NOTE	REF NO	GRAPHIC REF	PART NUMBER	QTY	PART NAME 1 2 3 4 5 6 (PRODUCT LEVEL)	SEE PAGE
M	1	1	**6I-0217**	4	BOLT (M8X1.25X20-MM)	
M	2	1	**6I-0645**	4	BOLT (M8X1.25X25-MM)	
	3	1	**225-7944**	2	GASKET (ENGINE OIL FILTER BASE)	
	4	1	**232-3751**	1	PLATE	
	5	1	**242-8660**	1	HEAD AS (OIL FILTER)	
Y	6	1	**354-1274**	1	COOLER GP-ENGINE OIL	42

M - METRIC PART
Y - SEPARATE ILLUSTRATION

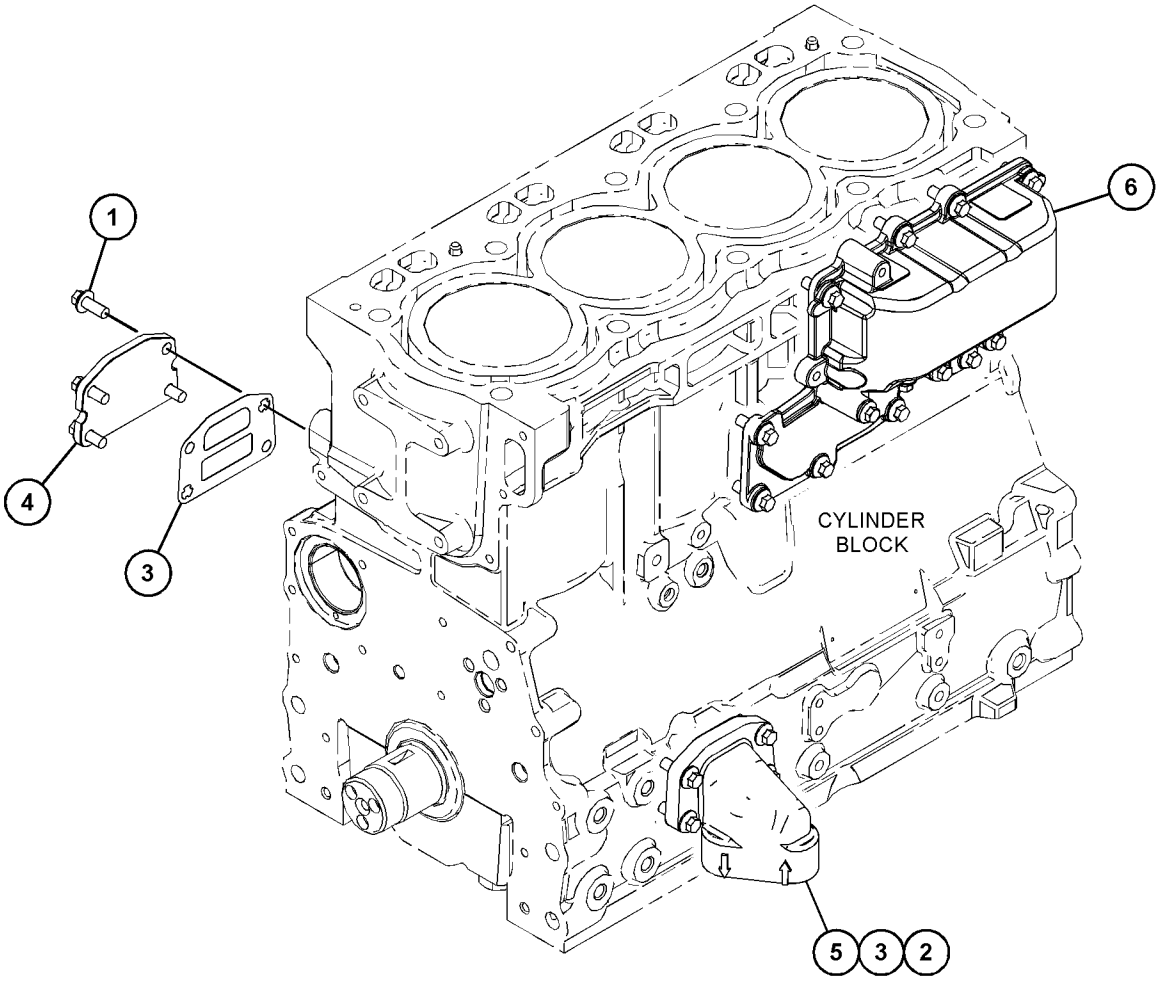

GRAPHIC #1 <END> g03833905

390-8831 FAN AR-SUCTION

S/N: RDE1-UP

PART OF 506-8578, 506-8579, 515-4828, 515-4829 DISTRIBUTION AR

SMCS-1356 **i06749796**

NOTE	PART NUMBER	QTY	PART NAME 1 2 3 4 5 6 (PRODUCT LEVEL)	SEE PAGE
Y	*390-8834*	1	FAN GP-SUCTION (DIRECT DRIVE)	45
Y	*387-2628*	1	PULLEY GP-FAN	34

Y - SEPARATE ILLUSTRATION

<END>

390-8834 FAN GP-SUCTION—DIRECT DRIVE

S/N: RDE1-UP

PART OF 390-8831 FAN AR-SUCTION

SMCS-1356 **i05949212**

NOTE	REF NO	GRAPHIC REF	PART NUMBER	QTY	PART NAME 1 2 3 4 5 6 (PRODUCT LEVEL)	SEE PAGE
C	1	1	**444-4113**	1	SPACER-FAN	
C	2	1	**423-4009**	1	SPIDER AS-FAN	
C	3	1	**453-3452**	4	WASHER-HARD (8.8X20.5X2-MM THK)	
CM	4	1	**453-3437**	4	BOLT (M8X1.25X100-MM)	

C - CHANGE FROM PREVIOUS TYPE
M - METRIC PART

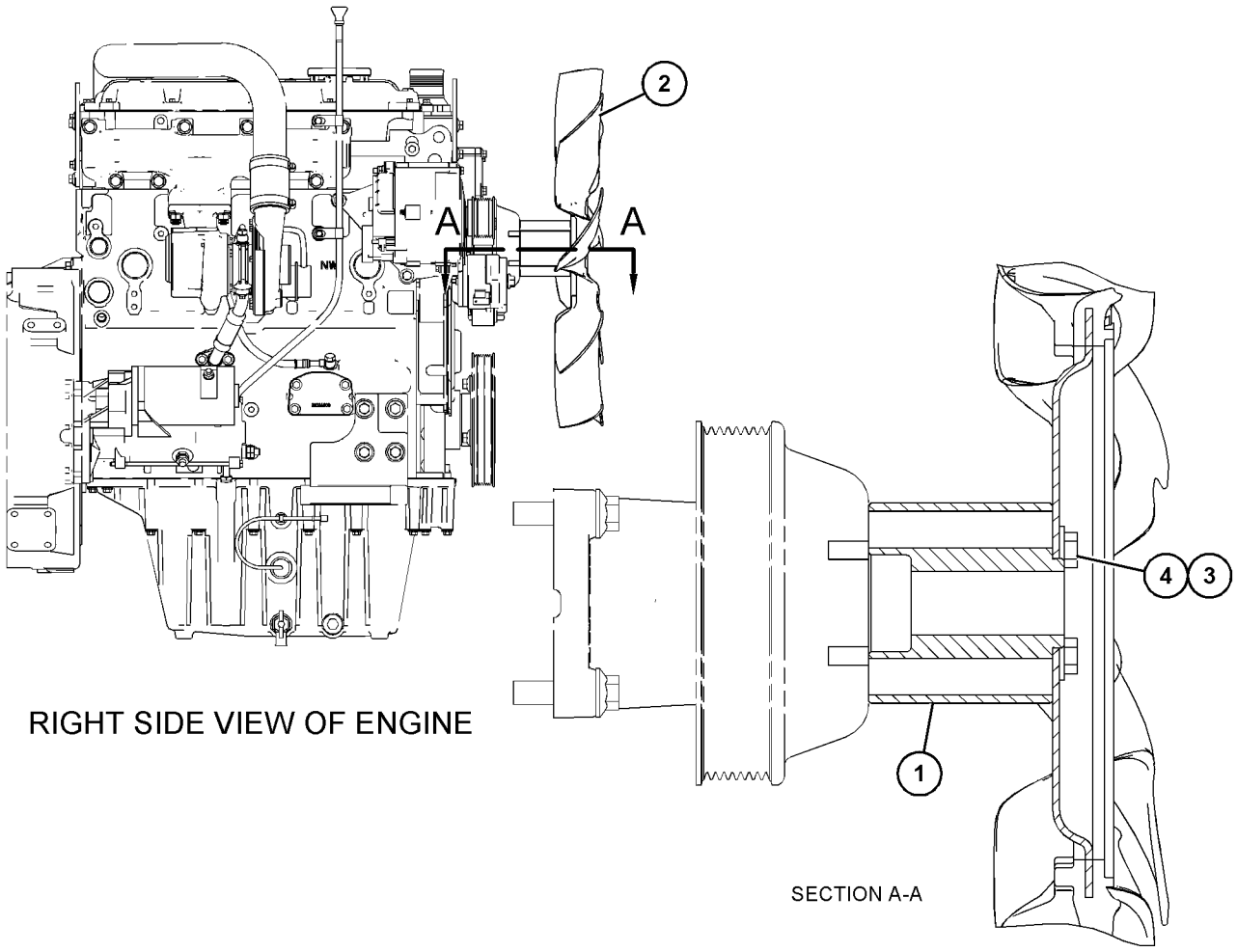

RIGHT SIDE VIEW OF ENGINE

SECTION A-A

GRAPHIC #1 <END> g03649781

460-2108 LINES GP-COOLING

S/N: RDE1-UP

PART OF 460-3429 INSTALLATION AR-ENGINE

SMCS-1380, 5057 **i06775023**

NOTE	REF NO	GRAPHIC REF	PART NUMBER	QTY	PART NAME 1 2 3 4 5 6 (PRODUCT LEVEL)	SEE PAGE
	1	1	**477-6795**	1	HOSE	
	2	1	**477-6796**	1	HOSE	
	3	1	**477-8810**	1	PLATE AS	
M		1	**8T-3490**	1	NUT-WELD (M10X1.5-THD)	
	4	1	**144-0367**	2	CLAMP-HOSE	
	5	1	**3P-9847**	1	CLIP	
	6	1	**8T-4121**	3	WASHER-HARD (11X21X2.5-MM THK)	
M	7	1	**8T-4137**	3	BOLT (M10X1.5X20-MM)	
	8	1	**8T-4985**	1	CLAMP-HOSE	
	9	1	**8T-6703**	1	CLAMP-HOSE	

M - METRIC PART

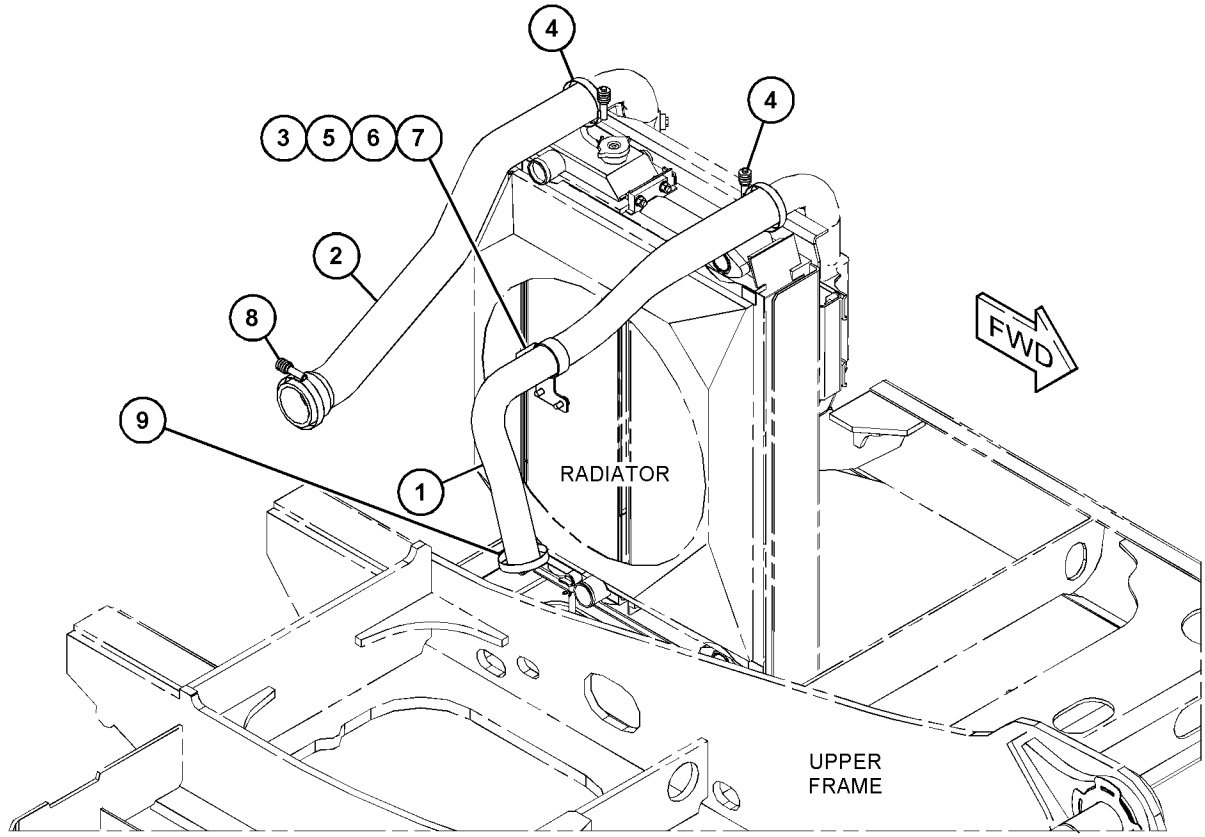

GRAPHIC #1 <END> g06055258

315-3411 PUMP GP-WATER

S/N: G8X1-UP

PART OF 460-5760 ENGINE AR-PRIMARY

SMCS-1361 **i03965792**

NOTE	REF NO	GRAPHIC REF	PART NUMBER	QTY	PART NAME 1 2 3 4 5 6 (PRODUCT LEVEL)	SEE PAGE
M	1	1	**6I-0217**	2	BOLT (M8X1.25X20-MM)	
M	2	1	**6I-0254**	2	BOLT (M8X1.25X30-MM)	
M	3	1	**100-3751**	5	BOLT (M8X1.25X65-MM)	
	4	1	**113-8129**	2	BOLT (M8X1.25X75-MM)	
	5	1	**225-7741**	1	CONNECTION AS	
	5A	1	**225-7738**	1	SEAL-O-RING	
	5B	1	**225-7739**	1	SEAL-O-RING	
	6	1	**355-2252**	1	PUMP GP-WATER	
	6A	1	**225-8019**	1	GASKET	

M - METRIC PART

315-3411 **PUMP GP-WATER (**contd.**)** **i03965792**

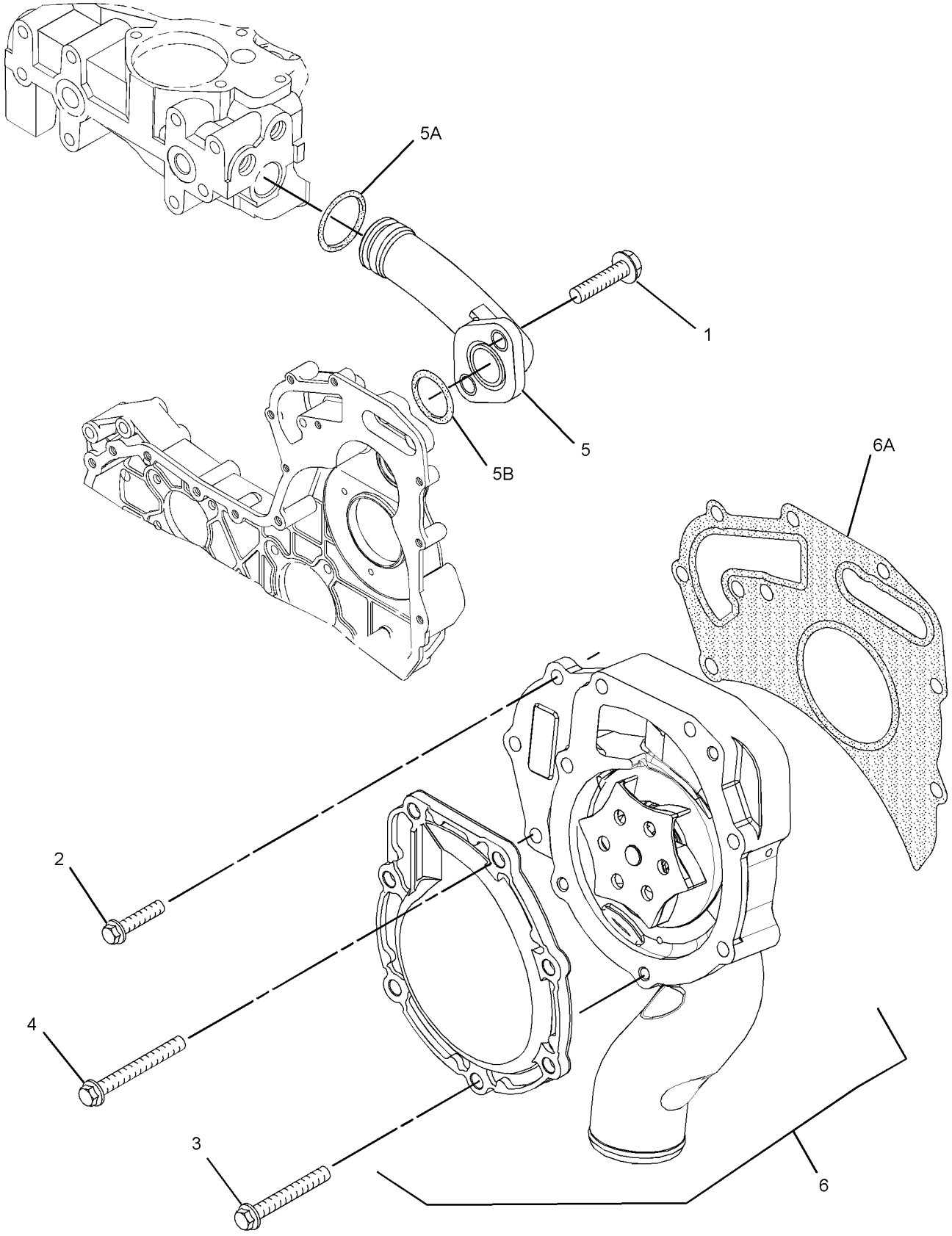

GRAPHIC #1 <END> g02146895

418-7950 RADIATOR & HYD OIL COOLER GP

S/N: RDE1-UP

PART OF 460-2107 RADIATOR & HYD OIL COOLER GP

SMCS-1351 **i06845184**

NOTE	REF NO	GRAPHIC REF	PART NUMBER	QTY	PART NAME 1 2 3 4 5 6 (PRODUCT LEVEL)	SEE PAGE
	1	1,2	**096-4035**	3	CLIP	
	2	2	**313-3762**	2	CUSHION-RUBBER	
	3	2	**313-3766**	2	SLEEVE	
	4	2	**313-3769**	2	CUSHION-RUBBER	
	5	2	**314-6506**	2	CUSHION-RUBBER	
	6	2	**314-6510**	2	PIN	
	7	2	**355-1357**	2	SEAL	
	8	1	**385-7941**	1	SHROUD AS	
	9	2	**416-0965**	1	CAP-RADIATOR	
	10	1	**377-7807**	1	CORE AS-AFTERCOOLER	
		1	**5M-6213**	1	PLUG-PIPE	
	11	1	**418-7952**	1	FRAME AS	
	12	1	**418-7953**	1	CORE AS-RADIATOR	
	13	1	**418-7954**	1	CORE AS-OIL COOLER (HYDRAULIC)	
	14	1	**418-7955**	1	SCREEN AS (HYDRAULIC OIL COOLER)	
	15	1	**418-7956**	1	SCREEN AS (RADIATOR)	
	16	2	**418-7957**	2	SEAL-AIR	
	17	2	**418-7958**	2	SEAL-AIR	
	18	2	**433-5173**	2	SEAL-AIR	
	19	2	**433-5174**	1	SEAL-AIR	
	20	2	**433-5176**	2	SEAL-AIR	
	21	2	**433-5177**	1	SEAL-AIR	
	22	2	**433-5178**	4	SEAL-AIR	
	23	2	**134-3196**	2	WASHER (10.2X39.6X2.3-MM THK)	
	24	2	**5D-8159**	2	PIN AS	
	25	1	**5P-1075**	8	WASHER-HARD (10.2X22.5X3-MM THK)	
	26	1	**7X-7729**	2	WASHER (11X25X3-MM THK)	
	27	1,2	**8T-4121**	8	WASHER-HARD (11X21X2.5-MM THK)	
M	28	1,2	**8T-4136**	8	BOLT (M10X1.5X25-MM)	
M	29	2	**8T-4182**	2	BOLT (M10X1.5X45-MM)	
M	30	1	**8T-4189**	8	BOLT (M8X1.25X20-MM)	
M	31	1	**8T-4195**	4	BOLT (M10X1.5X30-MM)	
E	32	1	**7Y-1976**		HOSE-WATER (80-CM)	
E	32A	2	**7Y-1976**		HOSE-WATER (8-CM)	

E - ORDER BY THE CENTIMETER
M - METRIC PART

418-7950 **RADIATOR & HYD OIL COOLER GP (**contd.**)** **i06845184**

REFER TO ALL ILLUSTRATIONS OF
THIS GROUP FOR AUXILIARY VIEWS

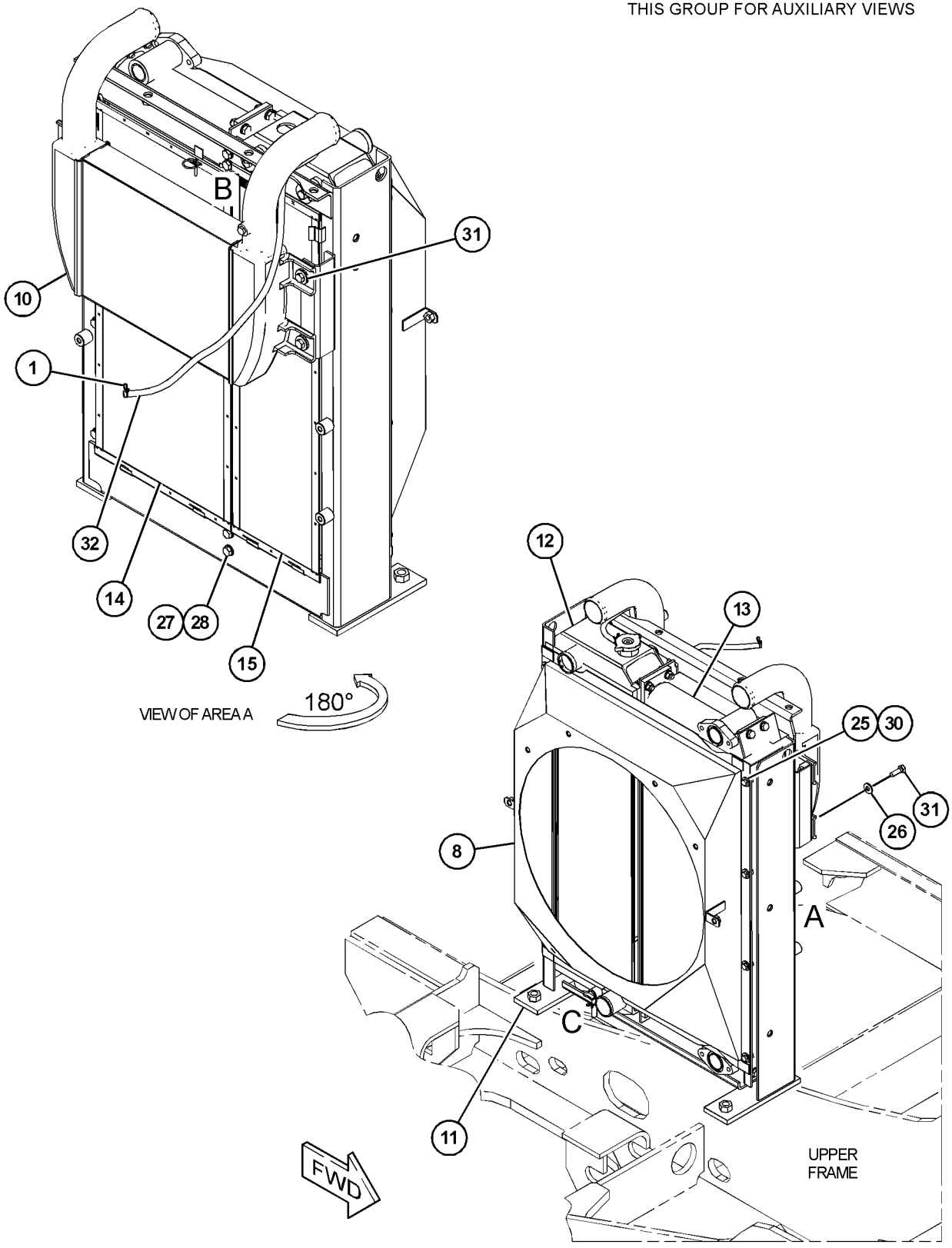

GRAPHIC #1 g06123521

418-7950 **RADIATOR & HYD OIL COOLER GP (**contd.**)** **i06845184**

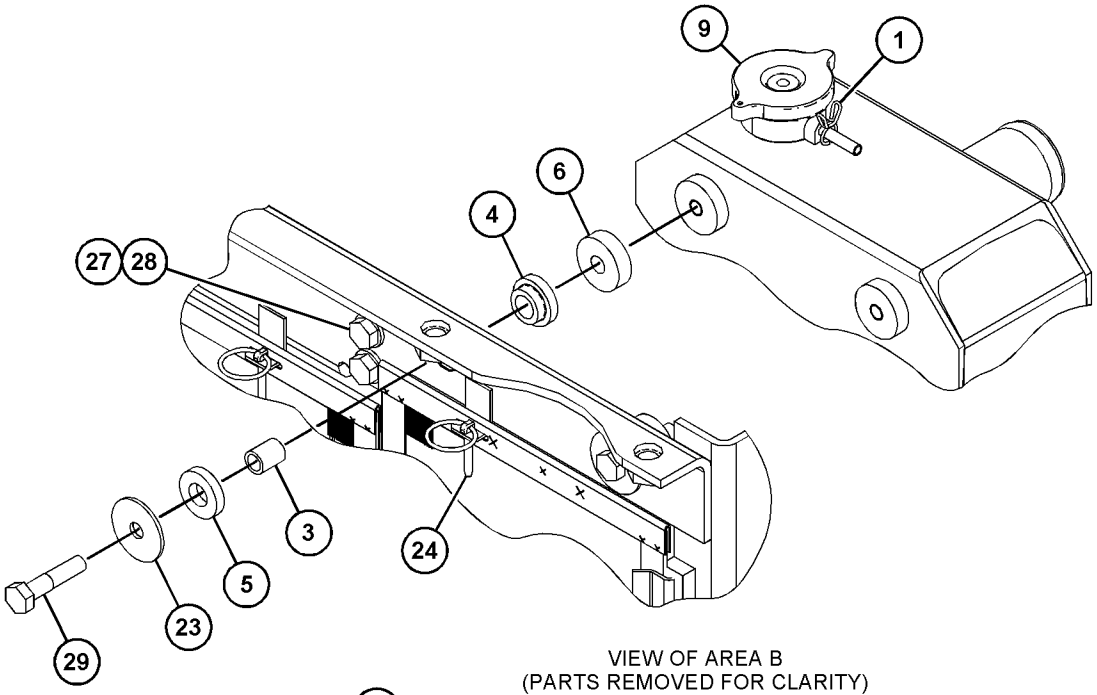

VIEW OF AREA B
(PARTS REMOVED FOR CLARITY)

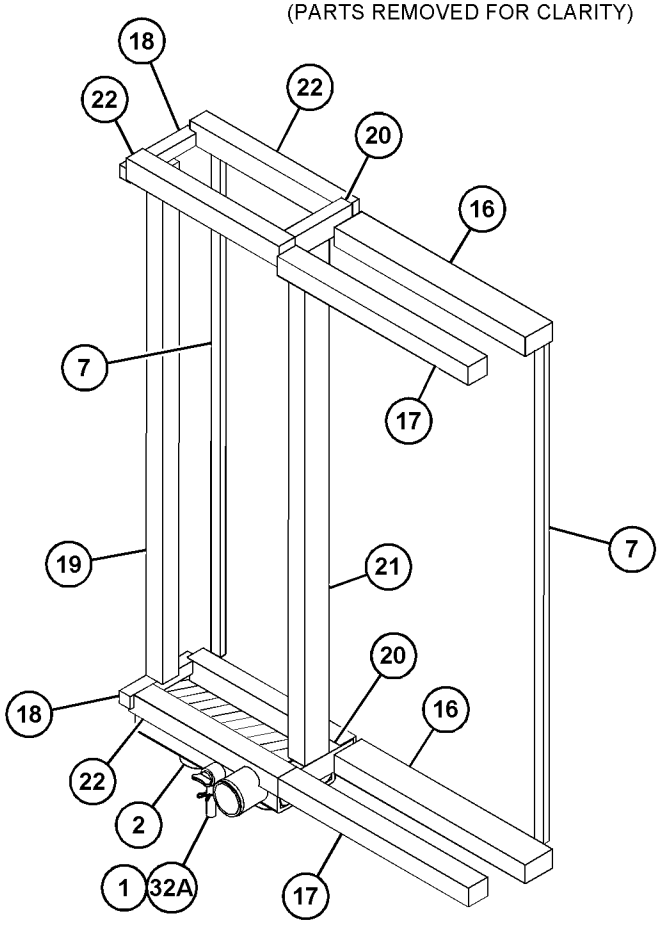

VIEW OF AREA C
(PARTS REMOVED FOR CLARITY)

GRAPHIC #2 <END> g06123523

460-2107 RADIATOR & HYD OIL COOLER GP

S/N: RDE1-UP

PART OF 460-3429 INSTALLATION AR-ENGINE

SMCS-1351 **i06775020**

NOTE	REF NO	GRAPHIC REF	PART NUMBER	QTY	PART NAME 1 2 3 4 5 6 (PRODUCT LEVEL)	SEE PAGE
	1	1	**3S-2093**	2	STRAP-CABLE	
	2	1	**7K-1181**	1	STRAP-CABLE	
	3	1	**096-4035**	1	CLIP	
	4	1	**096-5819**	1	TANK AS-COOLANT (RECOVERY)	
		1	**171-3369**	1	CAP AS (COOLANT RECOVERY)	
	5	1	**171-9077**	1	BAND	
	6	1	**178-6450**	4	SPACER (17X35X30-MM THK)	
	7	1	**391-4150**	1	GUARD AS	
	8	1	**391-4155**	1	GUARD AS	
	9	1	**399-1118**	1	HOSE-RADIATOR (LOWER)	
Y	10	1	**418-7950**	1	RADIATOR & HYD OIL COOLER GP	49
M	11	1	**453-2838**	4	BOLT (M16X2X70-MM)	
	12	1	**477-6793**	1	HOSE	
	13	1	**3P-9847**	1	CLIP	
	14	1	**7X-7729**	7	WASHER (11X25X3-MM THK)	
	15	1	**8T-4121**	1	WASHER-HARD (11X21X2.5-MM THK)	
M	16	1	**8T-4136**	1	BOLT (M10X1.5X25-MM)	
M	17	1	**8T-4137**	7	BOLT (M10X1.5X20-MM)	
M	18	1	**8T-4200**	2	BOLT (M8X1.25X16-MM)	
	19	1	**8T-4224**	2	WASHER-HARD (8.8X16X2-MM THK)	
	20	1	**8T-6703**	4	CLAMP-HOSE	
	21	1	**8T-7934**	1	WASHER-HARD (11X21X5-MM THK)	
E	22	1	**7Y-1976**		HOSE-WATER (96-CM)	
D	23	1	**5P-5649**		SEAL-BULK (0.06-M EACH)	
D	24	1	**5P-9909**		SEAL (0.6-M)	

D - ORDER BY THE METER
E - ORDER BY THE CENTIMETER
M - METRIC PART
Y - SEPARATE ILLUSTRATION

460-2107 **RADIATOR & HYD OIL COOLER GP (**contd.**)** **i06775020**

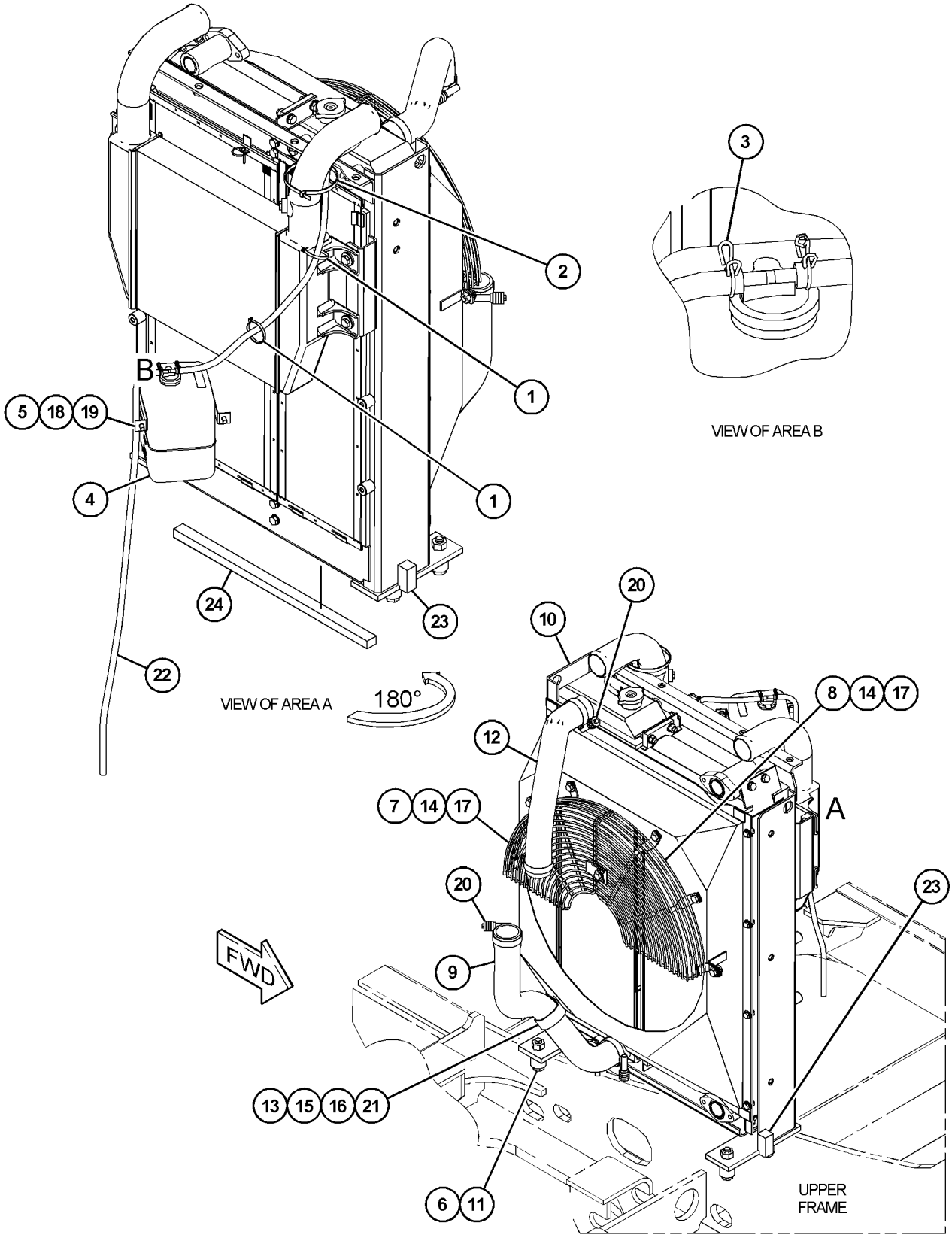

GRAPHIC #1 <END> g03885483

396-0293 VALVE GP-COOLANT SAMPLING

S/N: RDE1-UP

PART OF 460-3429 INSTALLATION AR-ENGINE

SMCS-1380, 1395, 7542

i05401666

NOTE	REF NO	GRAPHIC REF	PART NUMBER	QTY	PART NAME 1 2 3 4 5 6 (PRODUCT LEVEL)	SEE PAGE
	1	1	**154-9024**	1	VALVE GP-FLUID SAMPLING (COOLANT)	
	2	1	**157-0670**	1	CAP-DUST	
	3	1	**3B-7255**	1	BUSHING-REDUCER	

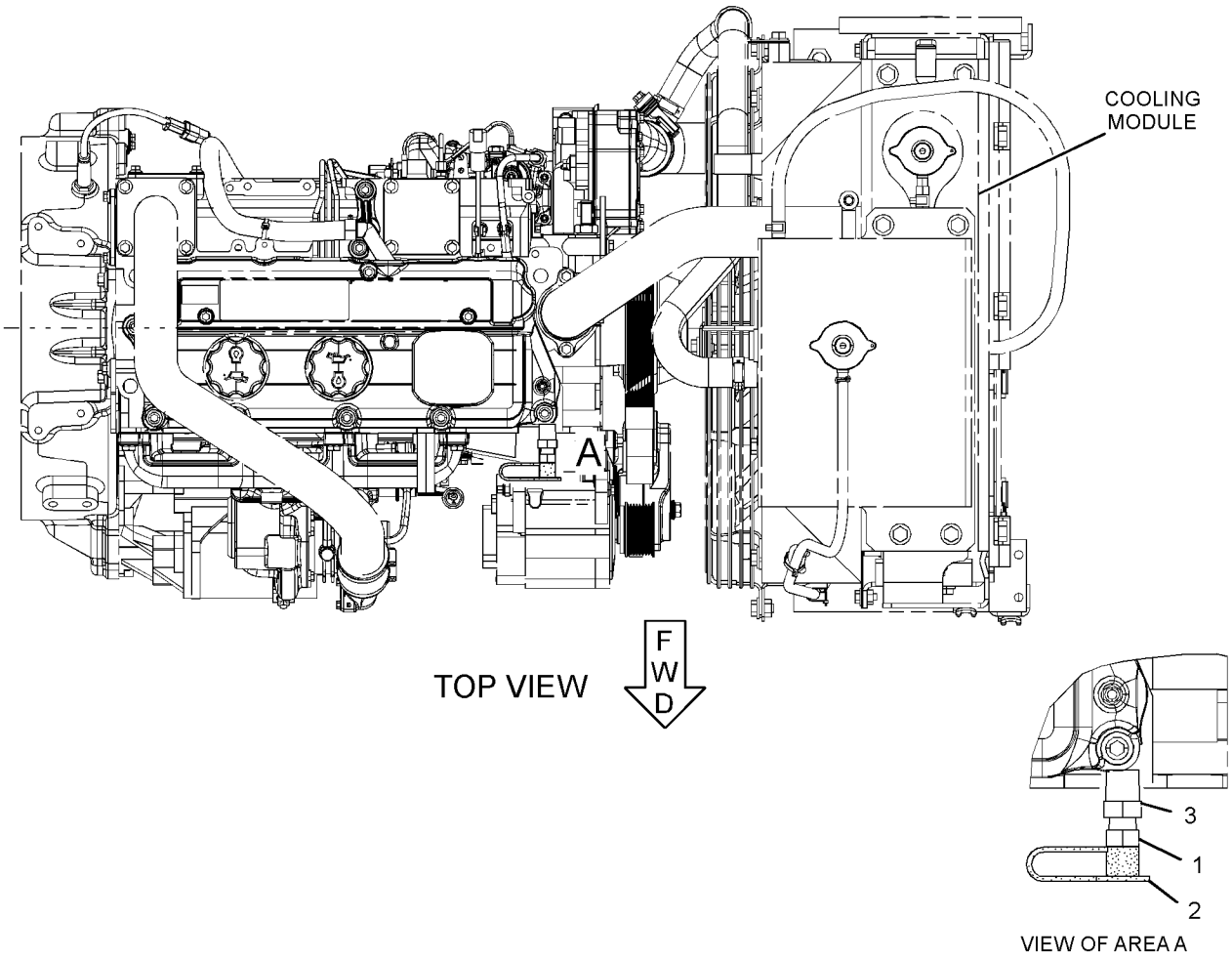

GRAPHIC #1 <END> g03120461

387-2609 AIR CLEANER & MOUNTING GP

S/N: RDE1-UP

PART OF 460-3429 INSTALLATION AR-ENGINE

SMCS-1051, 1054, 7452

i06304395

NOTE	REF NO	GRAPHIC REF	PART NUMBER	QTY	PART NAME 1 2 3 4 5 6 (PRODUCT LEVEL)	SEE PAGE
M	1	1	**8T-4200**	4	BOLT (M8X1.25X16-MM)	
	2	1	**8T-4224**	4	WASHER-HARD (8.8X16X2-MM THK)	
	3	1	**8T-6726**	1	CLAMP-HOSE	
	4	1	**131-8915**	1	CAP (AIR CLEANER)	
Y	5	1	**310-9662**	1	AIR CLEANER GP	56

M - METRIC PART
Y - SEPARATE ILLUSTRATION

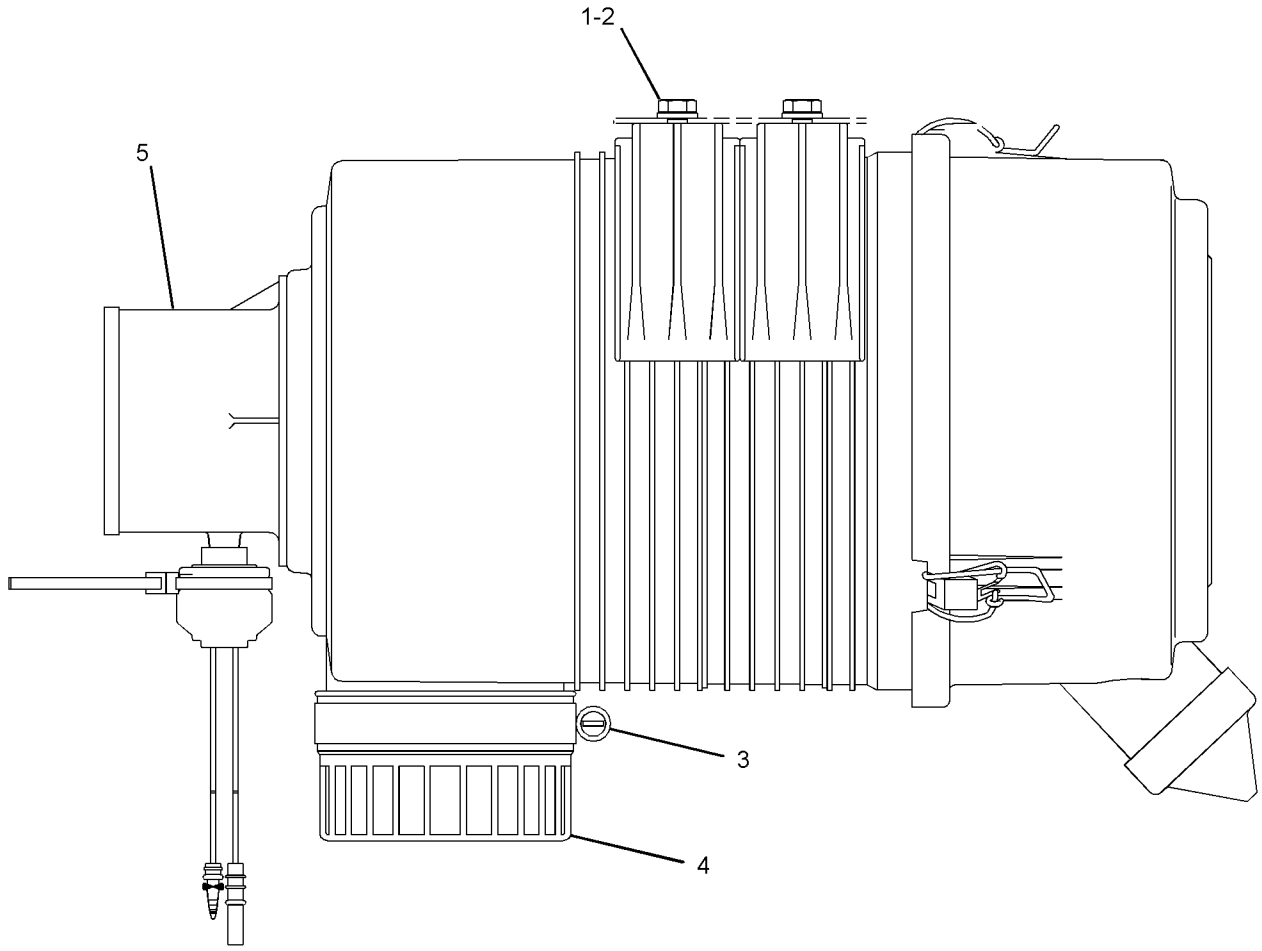

GRAPHIC #1 <END> g01952894

310-9662 AIR CLEANER GP

S/N: RDE1-UP

PART OF 387-2609 AIR CLEANER & MOUNTING GP

SMCS-1051, 1054

i05401526

NOTE	REF NO	GRAPHIC REF	PART NUMBER	QTY	PART NAME 1 2 3 4 5 6 (PRODUCT LEVEL)	SEE PAGE
	1	1	**310-9621**	1	COVER AS-AIR CLEANER	
		1	**162-6172**	3	LATCH	
	2	1	**131-8901**	1	VALVE-DUST (AIR CLEANER)	
	3	1	**131-8902**	1	FILTER ELEMENT AS-AIR (PRIMARY)	
	4	1	**131-8903**	1	FILTER ELEMENT AS-AIR (SECONDARY)	
	5	1	**255-2966**	1	INDICATOR AS-AIR FILTER CHANGE (AIR RESTRICTION)	
	6	1	**310-9622**	1	SEAL	
	7	1	**7I-2673**	1	STRAP-CABLE	

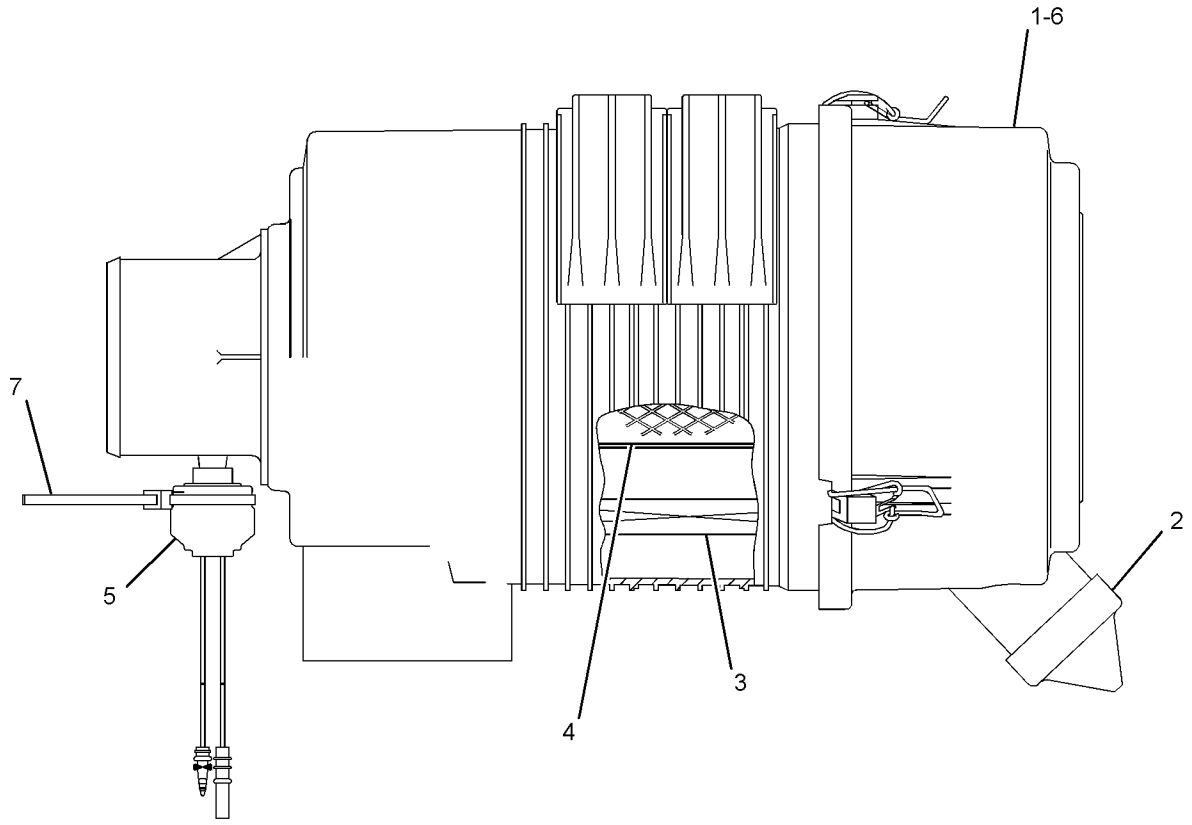

GRAPHIC #1 <END> g01952888

328-9631 ELBOW GP-AIR INLET

S/N: G8X1-UP

PART OF 460-5760 ENGINE AR-PRIMARY

SMCS-1058 **i06779812**

NOTE	REF NO	GRAPHIC REF	PART NUMBER	QTY	PART NAME 1 2 3 4 5 6 (PRODUCT LEVEL)	SEE PAGE
M	1	1	**100-8451**	2	BOLT (M8X1.25X130-MM)	
M	2	1	**111-8222**	4	BOLT (M8X16-MM)	
	3	1	**114-2579**	3	GASKET	
M	4	1	**124-3815**	4	BOLT (M8X1.25X16-MM)	
	5	1	**185-6627**	2	PLATE	
M	6	1	**235-2451**	2	BOLT (M8X1.25X45-MM)	
	7	1	**256-4447**	1	ELBOW AS-AIR INLET	
	7A	1	**238-8288**	1	GASKET-INLET	
	8	1	**261-6700**	1	SPACER	

M - METRIC PART

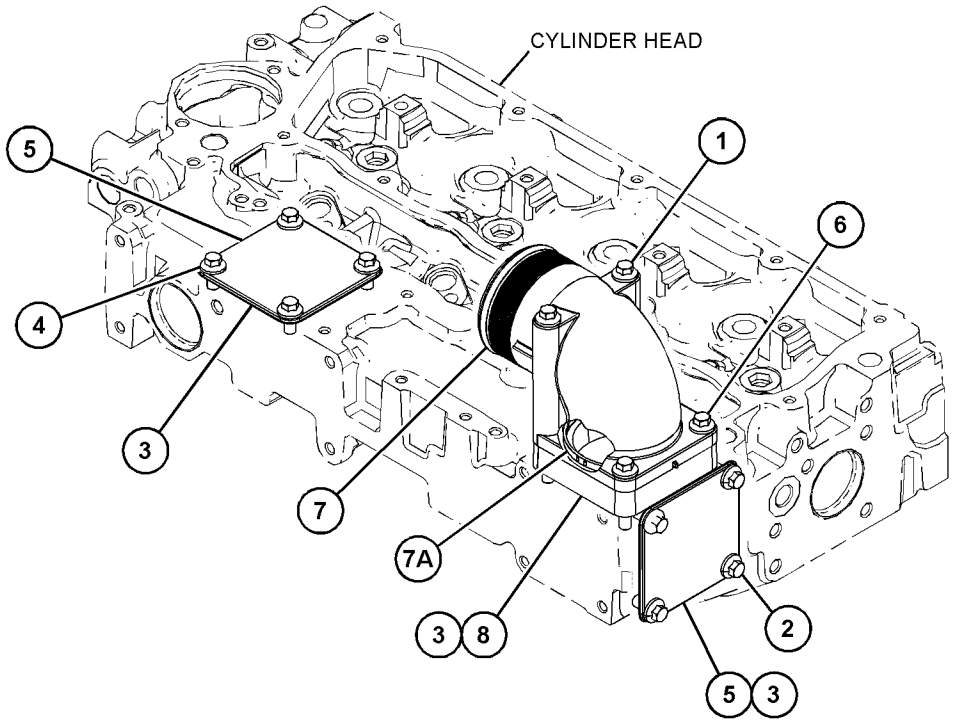

GRAPHIC #1 <END> g03892157

387-2612 LINES GP-AIR

S/N: RDE1-UP

PART OF 460-3429 INSTALLATION AR-ENGINE

SMCS-1071 **i05401651**

NOTE	REF NO	GRAPHIC REF	PART NUMBER	QTY	PART NAME 1 2 3 4 5 6 (PRODUCT LEVEL)	SEE PAGE
	1	1	**398-2318**	1	HOSE-AIR	
	2	1	**398-2319**	1	HOSE-AIR	
	3	1	**144-0367**	3	CLAMP-HOSE	
	4	1	**9X-2201**	1	CLAMP-HOSE	

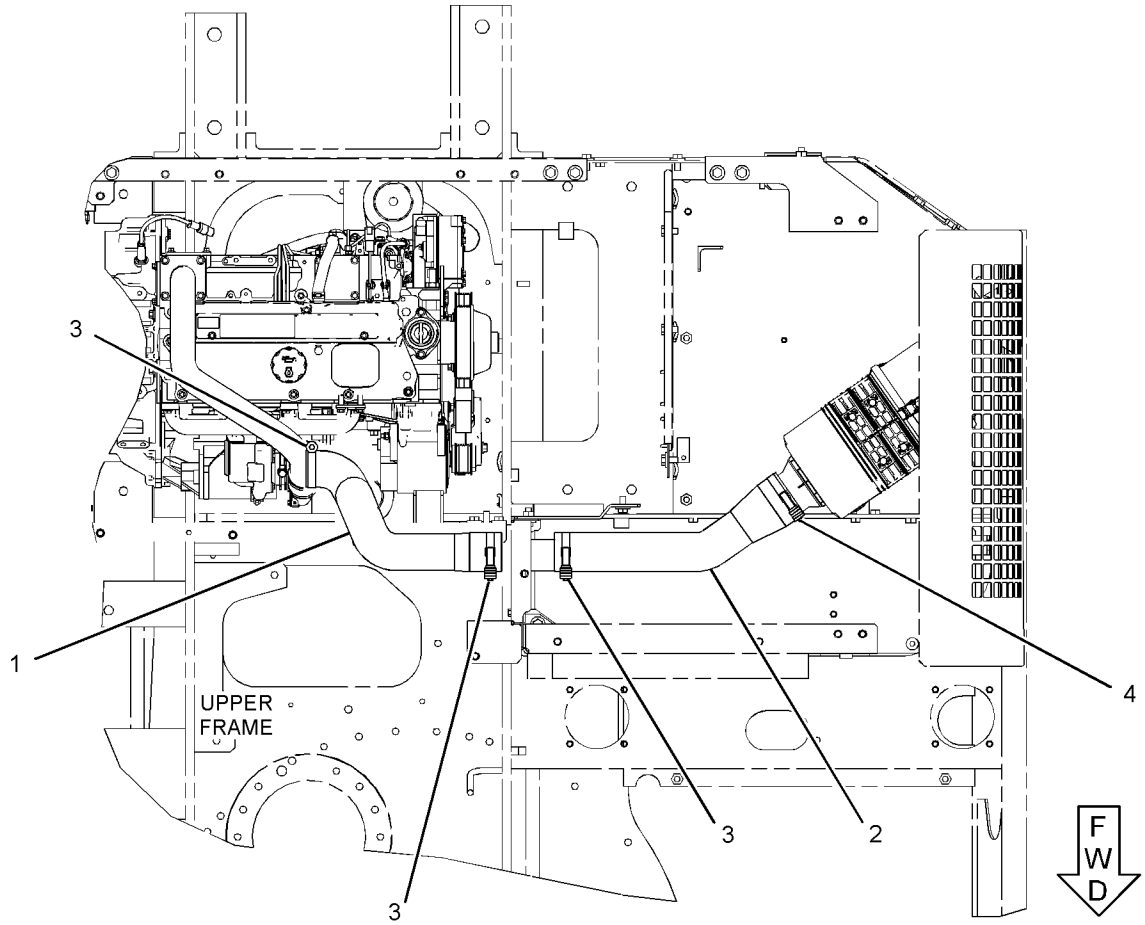

TOP VIEW

GRAPHIC #1 <END> g03120881

468-1594 MUFFLER GP

S/N: RDE1-UP

PART OF 460-2113 ENGINE AR-COMPLETE

SMCS-1062 **i05962486**

NOTE	REF NO	GRAPHIC REF	PART NUMBER	QTY	PART NAME 1 2 3 4 5 6 (PRODUCT LEVEL)	SEE PAGE
	1	1	**241-7688**	1	CLAMP	
	2	1	**462-8091**	1	MUFFLER AS	
	3	1	**392-0250**	1	PIPE AS	
	4	1	**398-7021**	1	SUPPORT AS	
	5	1	**398-7027**	2	U-BOLT	
	6	1	**399-4202**	1	PIPE-TAIL	
	7	1	**5S-0580**	1	CLAMP	
M	8	1	**6V-3938**	3	BOLT (M10X1.5X20-MM)	
M	9	1	**6V-9189**	1	LOCKNUT (M8X1.25-THD)	
M	10	1	**7X-0818**	1	BOLT (M8X1.25X45-MM)	
	11	1	**8T-4121**	8	WASHER-HARD (11X21X2.5-MM THK)	
M	12	1	**8T-4133**	9	NUT (M10X1.5-THD)	
M	13	1	**8T-4136**	6	BOLT (M10X1.5X25-MM)	
M	14	1	**8T-4185**	1	BOLT (M10X1.5X50-MM)	
	15	1	**8T-4224**	2	WASHER-HARD (8.8X16X2-MM THK)	

M - METRIC PART

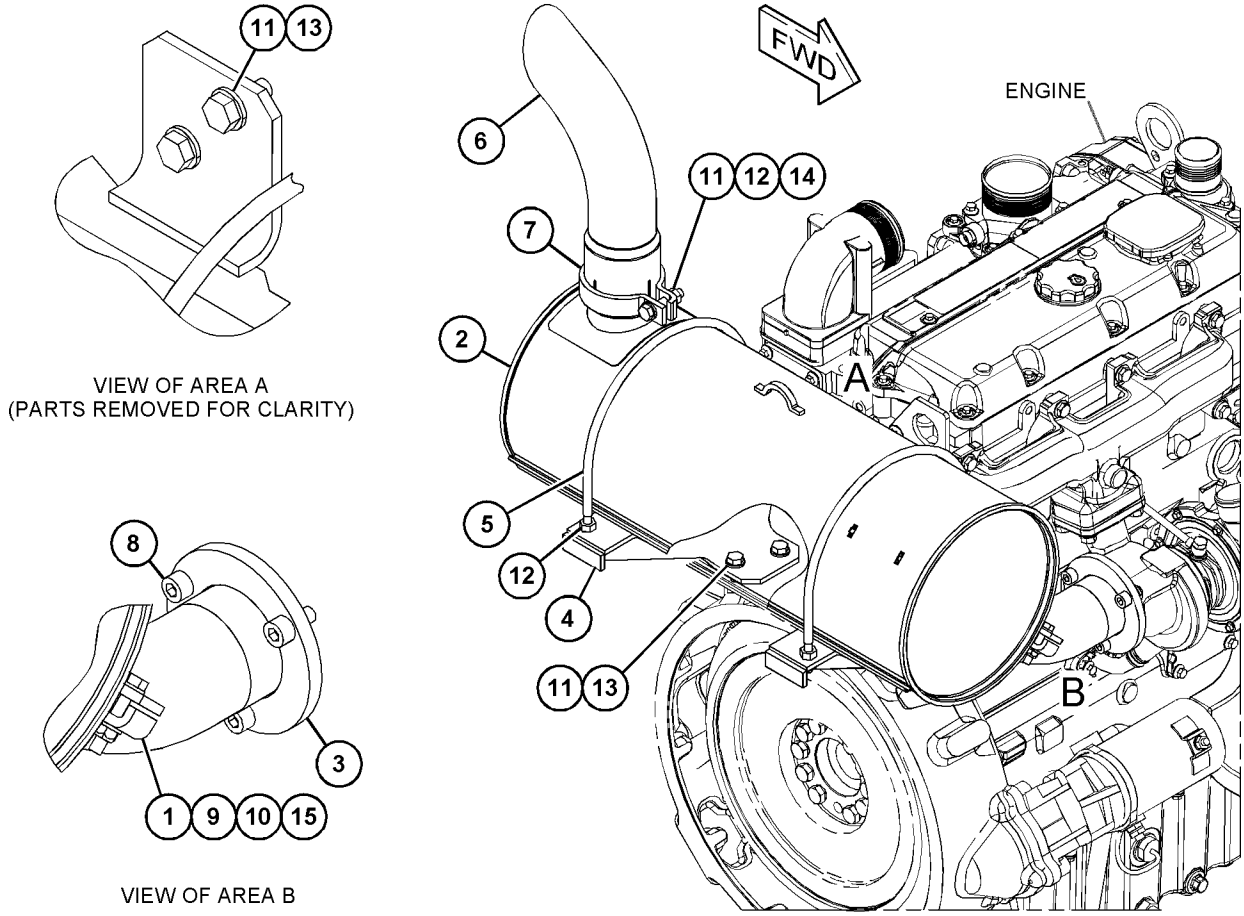

GRAPHIC #1 <END> g03740504

484-9403 TURBOCHARGER GP

S/N: G8X1-UP

PART OF 460-5760 ENGINE AR-PRIMARY

SMCS-1052, 1053 **i06780146**

NOTE	REF NO	GRAPHIC REF	PART NUMBER	QTY	PART NAME 1 2 3 4 5 6 (PRODUCT LEVEL)	SEE PAGE
M	1	1	**6I-0217**	2	BOLT (M8X1.25X20-MM)	
M	2	1	**6I-0563**	4	NUT (M10X1.5-THD)	
M	3	1	**106-8916**	2	BOLT (M6X16-MM)	
	4	1	**174-9638**	8	BOLT	
	5	1	**194-5390**	1	GASKET-MANIFOLD	
	6	1	**225-8536**	1	GASKET	
	7	1	**233-9536**	1	TUBE AS	
	8	1	**233-9537**	1	TUBE AS	
	9	1	**353-3477**	1	GASKET-TURBOCHARGER	
	10	1	**353-3478**	1	GASKET-TURBOCHARGER	
	11	1	**361-7519**	4	ROD-THREADED	
	12	1	**371-6116**	1	MANIFOLD-EXHAUST	
	13	1	**484-9402**	1	TURBOCHARGER GP	

M - METRIC PART

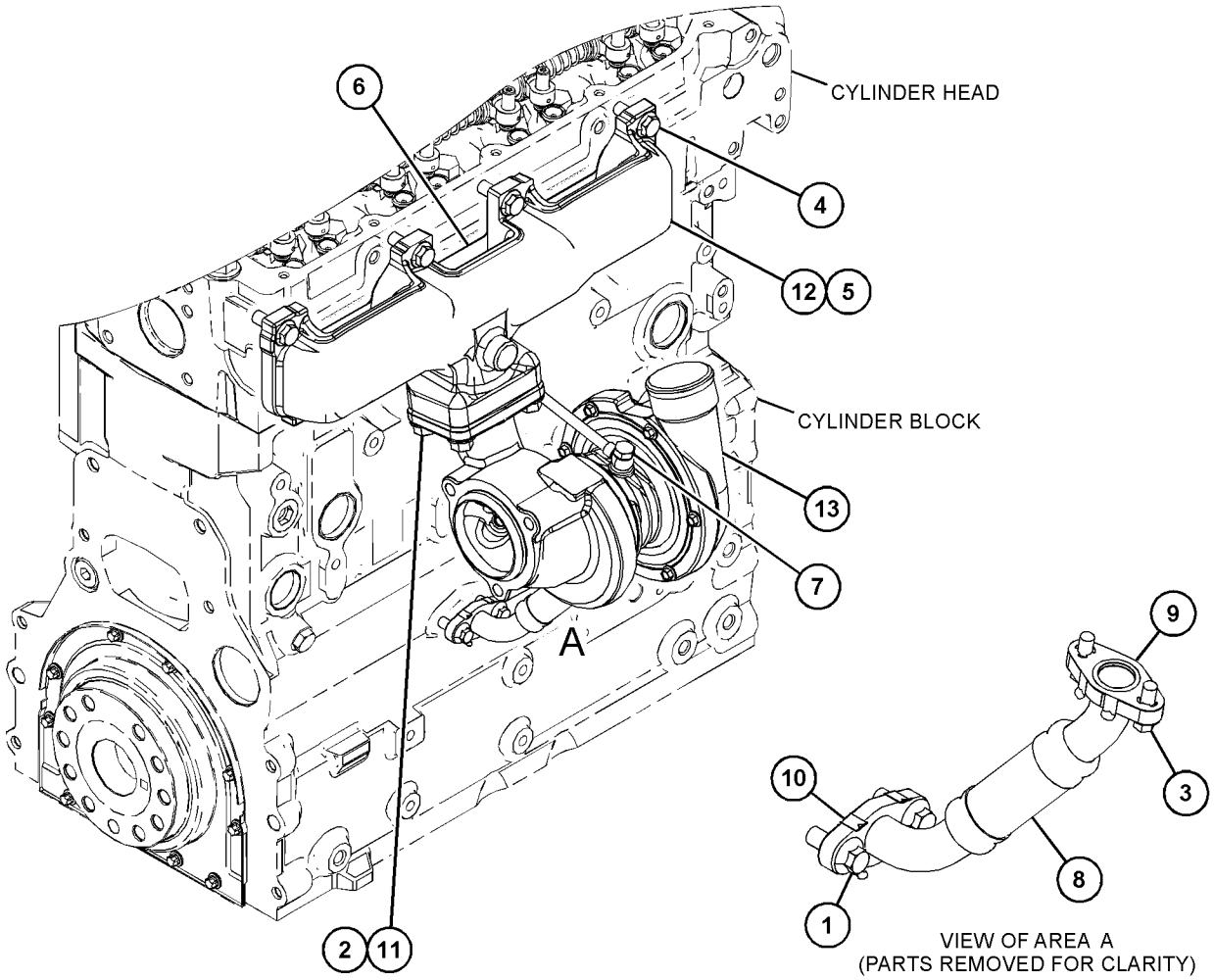

GRAPHIC #1 <END> g03892562

388-6703 CONTROL GP-GOVERNOR

S/N: RDE1-UP

PART OF 500-9108 CHASSIS AR

SMCS-1265, 1276 **i06231127**

NOTE	REF NO	GRAPHIC REF	PART NUMBER	QTY	PART NAME 1 2 3 4 5 6 (PRODUCT LEVEL)	SEE PAGE
	1	1	**483-7809**	1	MOTOR AS-GOVERNOR	
		1	**8T-8737**	1	PLUG-SEAL	
		1	**9X-3401**	7	PIN-CONNECTOR (16-GA TO 18-GA)	
					—OR—	
		1	**126-1767**	7	PIN-CONNECTOR (14-GA TO 16-GA)	
		1	**157-3184**	1	JOINT	
		1	**243-4509**	1	RECEPTACLE AS-CONNECTOR (8-PIN)	
	2	1	**388-6793**	1	BRACKET AS	
		1	**121-1029**	1	CLIP	
	3	1	**388-6794**	1	BRACKET AS	
M		1	**8T-3490**	1	NUT-WELD (M10X1.5-THD)	
		1	**121-1029**	1	CLIP	
	4	1	**388-6797**	1	BRACKET AS	
M		1	**8T-3612**	1	NUT-WELD (M8X1.25-THD)	
	5	1	**399-0966**	1	PLATE	
	6	1	**441-8511**	1	BRACKET AS	
M	7	1	**105-3481**	1	BOLT-SOCKET HEAD (M8X1.25X20-MM)	
M	8	1	**5C-2890**	1	NUT (M6X1-THD)	
	9	1	**6V-3265**	2	CLIP	
M	10	1	**7X-2537**	2	BOLT (M8X1.25X35-MM)	
	11	1	**7X-3392**	2	WASHER-HARD (13.5X22.5X3-MM THK)	
M	12	1	**105-3487**	3	BOLT-SOCKET HEAD (M6X1X20-MM)	
M	13	1	**8T-4139**	2	BOLT (M12X1.75X30-MM)	
M	14	1	**8T-4189**	7	BOLT (M8X1.25X20-MM)	
	15	1	**8T-4224**	10	WASHER-HARD (8.8X16X2-MM THK)	
M	16	1	**8T-4970**	2	BOLT (M6X1X14-MM)	
	17	1	**9X-8256**	6	WASHER (6.6X12X2-MM THK)	
	18	1	**3S-2093**	1	STRAP-CABLE	

M - METRIC PART

388-6703 **CONTROL GP-GOVERNOR (**contd.**)** **i06231127**

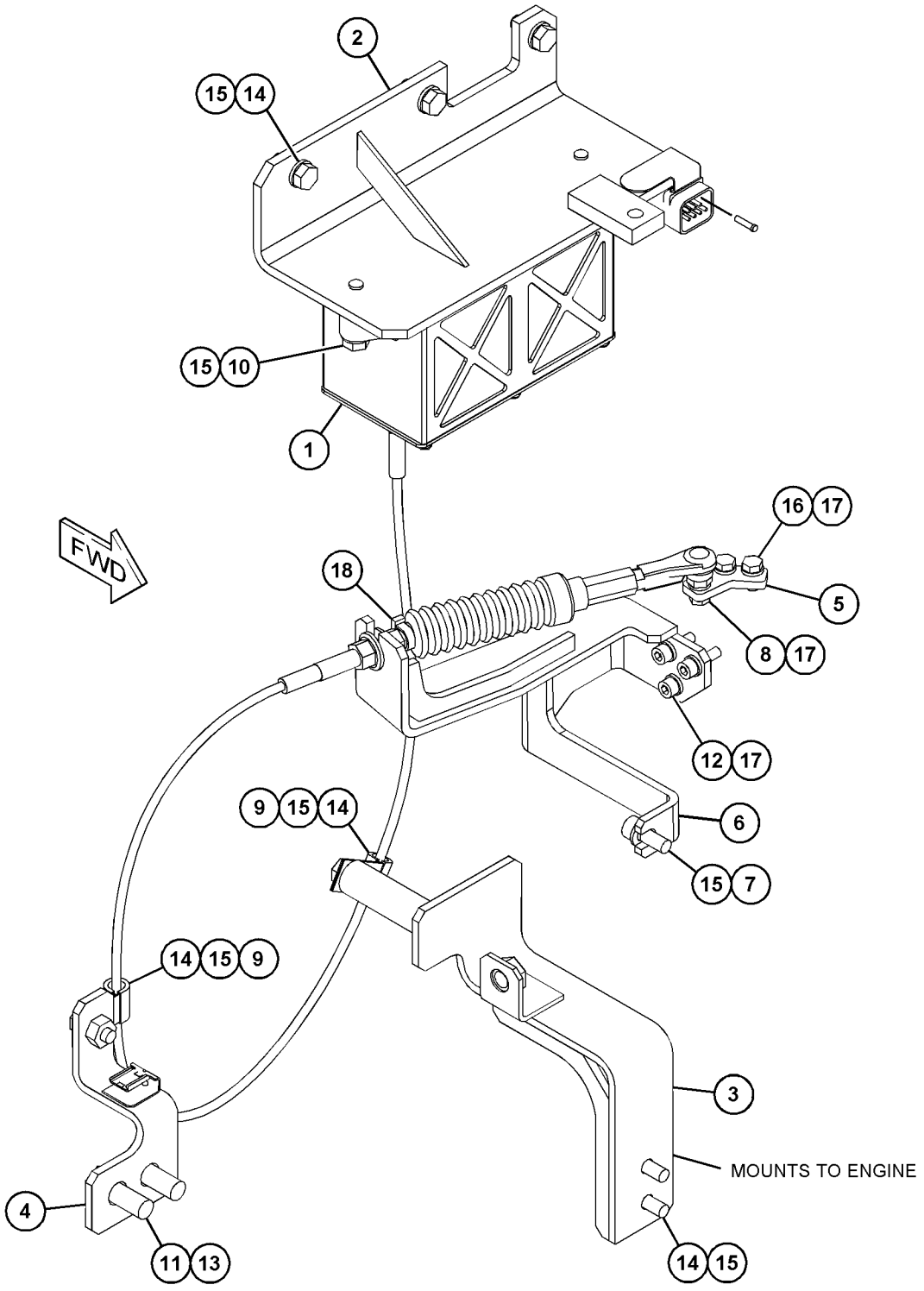

GRAPHIC #1 <END> g03872802

446-1895 FILTER GP-FUEL

S/N: RDE1-UP
24-VOLT
PART OF 504-7666 LINES GP-FUEL

SMCS-1261 **i05979703**

NOTE	REF NO	GRAPHIC REF	PART NUMBER	QTY	PART NAME 1 2 3 4 5 6 (PRODUCT LEVEL)	SEE PAGE
	1	1	**395-3439**	1	BOWL AS (FUEL FILTER)	
	2	1	**1R-1804**	1	FILTER ELEMENT-WTR SEP & FUEL	
	3	1	**387-6403**	1	STRAINER (FUEL FILTER)	
	4	1	**395-3437**	1	VALVE AS-DRAIN (FUEL FILTER)	
					PARTS SHOWN IN GRAPHIC(S) WITHOUT A REFERENCE NUMBER ARE NOT SERVICED SEPARATELY	

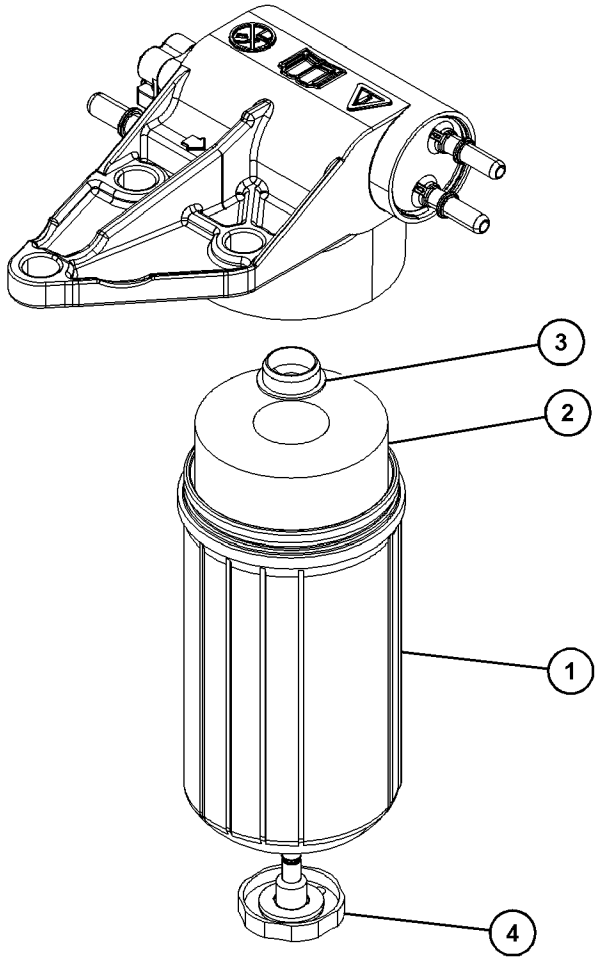

GRAPHIC #1 <END> g03741712

326-9012 LINES GP-FUEL

S/N: G8X1-UP

PART OF 460-5760 ENGINE AR-PRIMARY

SMCS-1274 **i04641492**

NOTE	REF NO	GRAPHIC REF	PART NUMBER	QTY	PART NAME 1 2 3 4 5 6 (PRODUCT LEVEL)	SEE PAGE
	1	1	**8T-7876**	1	SEAL-O-RING	
	2	1	**035-8017**	1	UNION	
	3	1	**365-3308**	1	NUT-COMPRESSION	
	4	1	**067-6265**	1	FITTING-BRASS	
	5	1	**232-3126**	1	CLIP	
	6	1	**236-2144**	1	TUBE AS	
	6A	1	**067-6999**	1	FERRULE	
	7	1	**247-4884**	1	TUBE AS	
	8	1	**320-9213**	1	CONNECTION	

326-9012 **LINES GP-FUEL (**contd.**)** **i04641492**

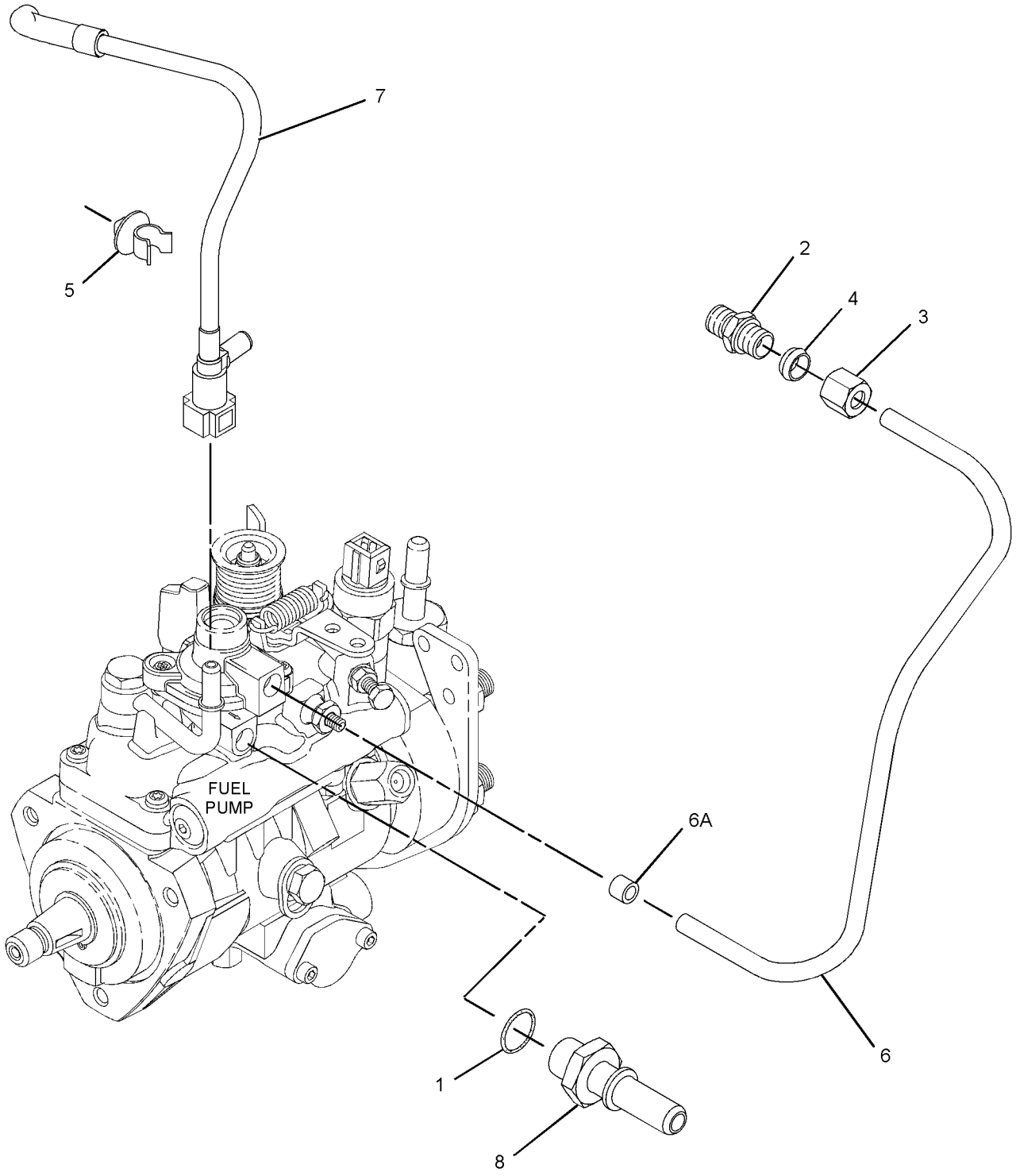

GRAPHIC #1 <END> g01613613

504-7666 LINES GP-FUEL

S/N: RDE1-UP

PART OF 500-9108 CHASSIS AR

SMCS-1274 **i06782575**

NOTE	REF NO	GRAPHIC REF	PART NUMBER	QTY	PART NAME 1 2 3 4 5 6 (PRODUCT LEVEL)	SEE PAGE
	1	1	**4I-0379**	1	VALVE-MANUAL (FUEL)	
	2	2	**9X-9896**	6	MOUNT (ISOLATION)	
	3	1	**099-1319**	1	GROMMET	
	4	1,2	**157-1669**	4	CONNECTOR	
	5	2	**214-7566**	1	SEAL-O-RING	
	6	2	**216-1302**	1	TEE	
	7	2	**238-5080**	1	SEAL-O-RING	
	8	2	**305-6873**	1	SENSOR GP-PRESSURE	
	9	1	**316-8805**	1	GROMMET	
	10	1	**320-3063**	1	SENSOR GP-PRESSURE	
	11	2	*332-8591*	1	ELBOW AS	
		2	**9X-3982**	1	ELBOW	
		2	**238-5080**	1	SEAL-O-RING	
	12	1	*332-8598*	1	ADAPTER AS	
		1	**034-3679**	1	ADAPTER	
		1	**238-5080**	1	SEAL-O-RING	
	13	1	**351-4089**	4	GROMMET	
	14	2	**368-6658**	1	VALVE	
	15	2	**381-9061**	1	BASE AS-FUEL FILTER	
	16	2	**381-9064**	1	INDICATOR-FUEL FILTER CHANGE	
	17	1	**387-2661**	4	CLIP	
	18	1	**390-2263**	1	ADAPTER-TEE	
	19	1	**398-7981**	1	PLATE AS	
	20	2	*421-6175*	2	ADAPTER AS	
					(EACH INCLUDES)	
		2	**214-7568**	1	SEAL-O-RING	
		2	**426-4018**	1	ADAPTER	
Y	21	2	**423-6434**	1	SENSOR GP-LIQUID LEVEL	112
	22	1	**433-4841**	1	ADAPTER	
	23	2	**438-5386**	1	FILTER AS-WATER SEP & FUEL (ULTRA HIGH EFFICIENCY)	
Y	24	2	**446-1895**	1	FILTER GP-FUEL (24-VOLT, LONG BOWL)	63
	25	2	*449-1398*	1	ADAPTER AS	
		2	**6V-8722**	1	ELBOW	
		2	**228-7091**	1	SEAL-O-RING	
		2	**238-5080**	1	SEAL-O-RING	
	26	2	**484-5176**	1	PLATE AS	
	27	1	**506-1930**	1	HOSE	
	28	2	**506-1931**	1	HOSE AS	
	29	2	**506-1932**	1	HOSE AS	
	30	2	**506-1933**	1	HOSE AS	
	31	1	**506-1934**	1	HOSE AS	
	32	1,2	**506-1935**	1	HOSE AS	
	33	1	**506-1936**	1	HOSE AS	
	34	1	**506-3275**	1	HOSE	
	35	1	**506-3276**	1	HOSE	
	36	2	**135-8577**	4	BOLT AS	
	37	2	*148-8411*	3	PLUG AS	

504-7666 **LINES GP-FUEL (**contd.**)** **i06782575**

NOTE	REF NO	GRAPHIC REF	PART NUMBER	QTY	PART NAME 1 2 3 4 5 6 (PRODUCT LEVEL)	SEE PAGE
					(EACH INCLUDES)	
		2	**3K-0360**	1	SEAL-O-RING	
		2	**9S-4185**	1	PLUG (3/4-16-THD)	
	38	1,2	**214-7568**	4	SEAL-O-RING	
	39	1	**228-7102**	1	SEAL-O-RING	
	40	1	**2R-1498**	2	GROMMET	
	41	1,2	**344-5360**	11	CLIP	
	42	1	**347-4416**	2	ADAPTER	
	43	1	**351-4318**	3	CLIP	
	44	1	**351-4320**	5	CLIP	
	45	2	**351-4321**	4	CLIP	
	46	2	**5V-9155**	3	CLAMP-HOSE	
	47	1,2	**6S-8620**	9	CLAMP-HOSE	
	48	1	**7I-2673**	1	STRAP-CABLE	
	49	2	**8C-5608**	3	SPACER (6.5X9.5X25.4-MM THK)	
	50	2	**8T-1715**	1	ADAPTER	
	51	1	**8T-1889**	4	CLIP (SLOT)	
	52	1	**8T-1890**	4	CLIP (TAB)	
	53	1,2	**8T-4121**	32	WASHER-HARD (11X21X2.5-MM THK)	
M	54	1	**8T-4136**	3	BOLT (M10X1.5X25-MM)	
M	55	1,2	**8T-4137**	26	BOLT (M10X1.5X20-MM)	
M	56	1,2	**8T-4196**	3	BOLT (M10X1.5X35-MM)	
M	57	2	**9X-2480**	3	BOLT (M6X1X45-MM)	
	58	2	**9X-6165**	6	WASHER (6.5X22X2.5-MM THK)	
E	59	1	**347-8645**		HOSE (29-CM)	

E - ORDER BY THE CENTIMETER
M - METRIC PART
Y - SEPARATE ILLUSTRATION

504-7666 **LINES GP-FUEL (**contd.**)** **i06782575**

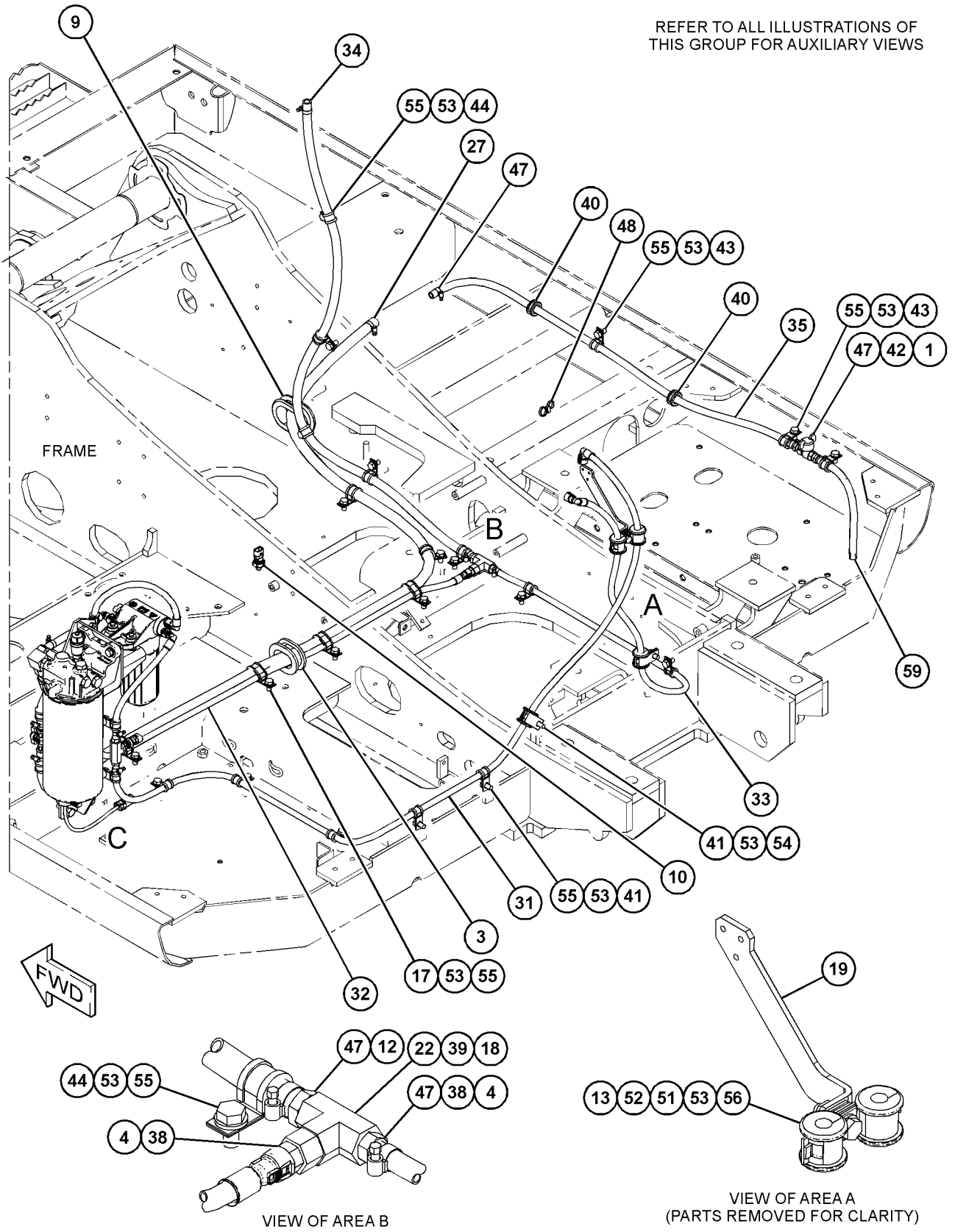

GRAPHIC #1 g06130755

504-7666 **LINES GP-FUEL (**contd.**)** **i06782575**

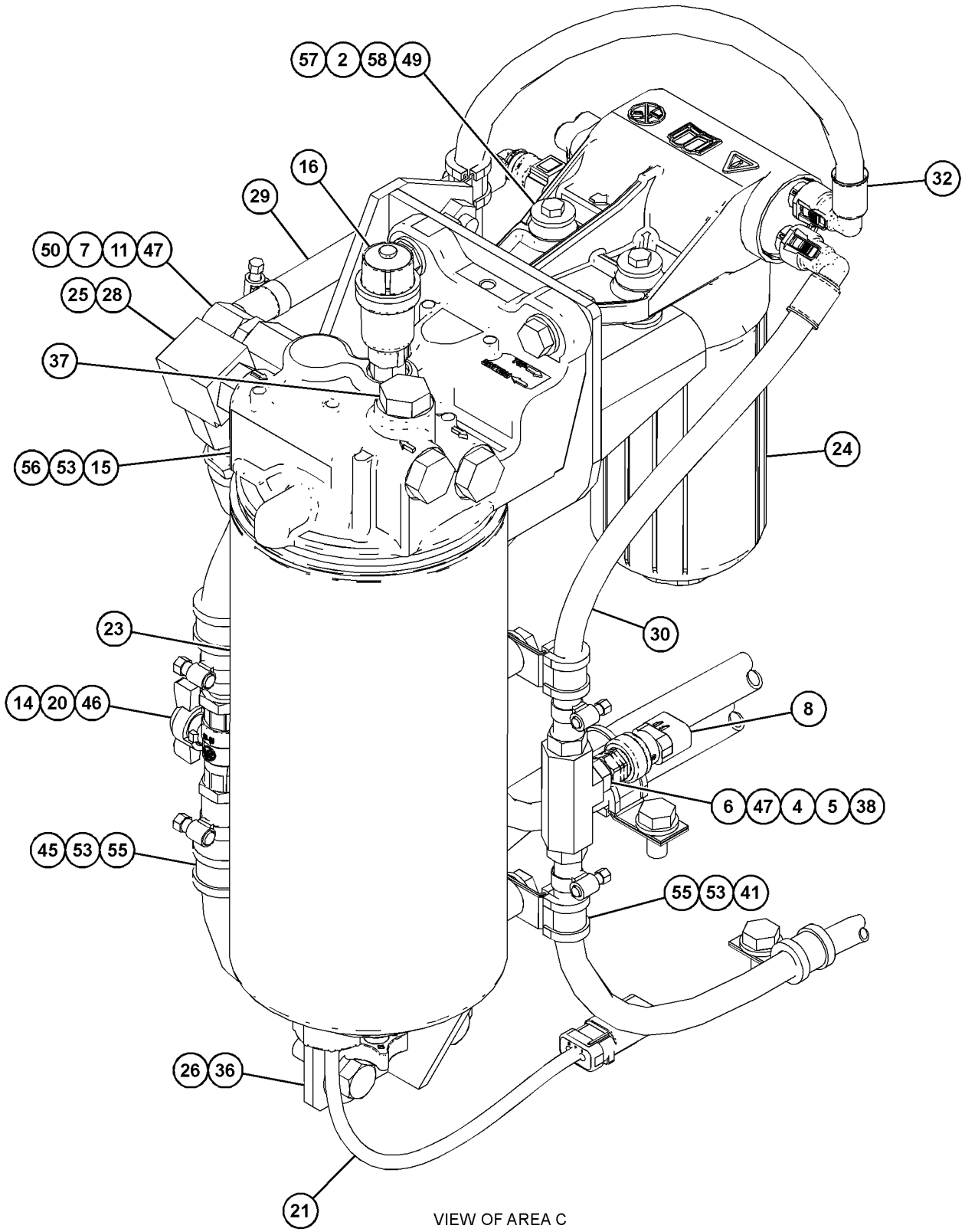

VIEW OF AREA C

GRAPHIC #2 <END> g06130756

326-9147 PUMP GP-FUEL INJECTION

S/N: G8X1-UP

PART OF 326-9149 PUMP GP-FUEL INJECTION

SMCS-1251, 1290 **i06728781**

NOTE	REF NO	GRAPHIC REF	PART NUMBER	QTY	PART NAME 1 2 3 4 5 6 (PRODUCT LEVEL)	SEE PAGE
M	1	1	**111-3422**	1	NUT (M14X1.5-THD)	
	2	1	**111-3423**	1	WASHER	
	3	1	**152-3968**	1	SEAL-O-RING	
	4	1	**176-6219**	1	VALVE GP-SOLENOID (12-VOLT) (FUEL SHUTOFF)	

M - METRIC PART

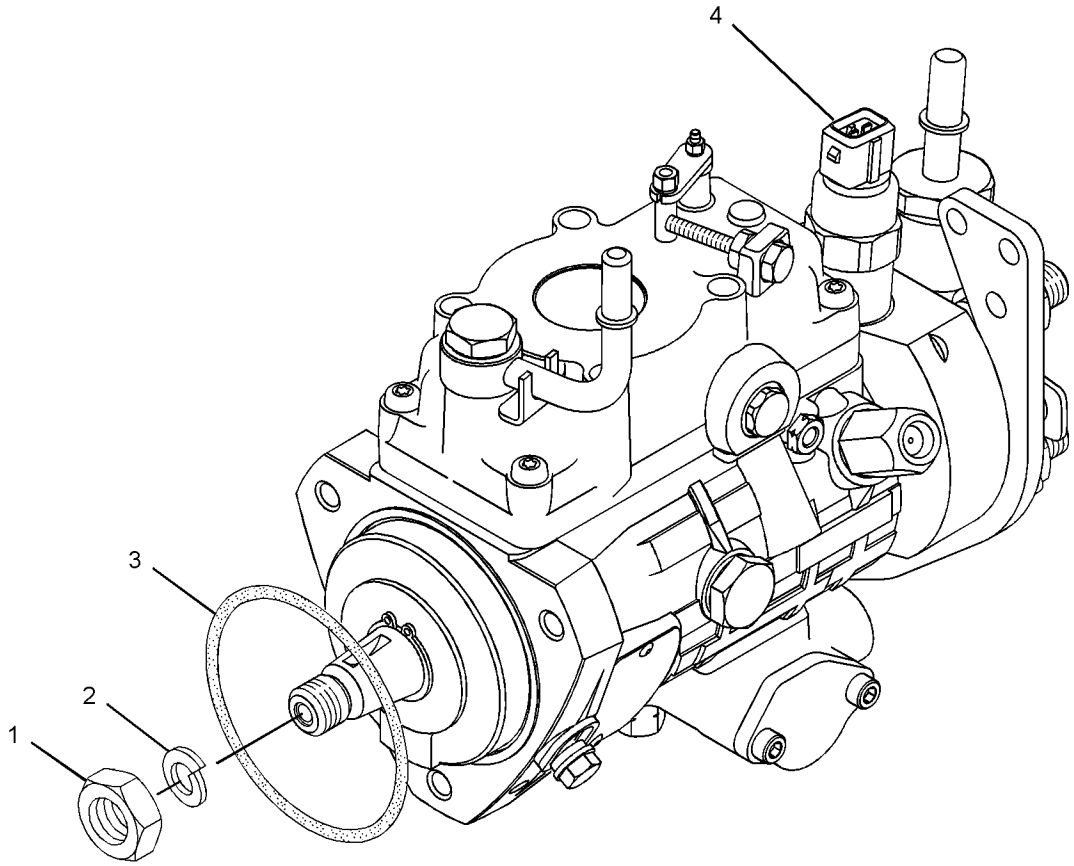

GRAPHIC #1 <END> g01615399

326-9149 PUMP GP-FUEL INJECTION

S/N: G8X1-UP

PART OF 460-5760 ENGINE AR-PRIMARY

SMCS-1251, 1290 **i06728780**

NOTE	REF NO	GRAPHIC REF	PART NUMBER	QTY	PART NAME 1 2 3 4 5 6 (PRODUCT LEVEL)	SEE PAGE
M	1	1	**6I-0217**	1	BOLT (M8X1.25X20-MM)	
M	2	1	**6I-0260**	3	BOLT (M8X1.25X25-MM)	
M	3	1	**6I-0291**	1	NUT (M8X1.25-THD)	
M	4	1	**100-4830**	1	BOLT (M10X1.5X20-MM)	
M	5	1	**124-3815**	1	BOLT (M8X1.25X16-MM)	
	6	1	**140-8714**	1	CLIP	
	7	2	**169-5326**	1	SWITCH-TEMPERATURE (FUEL)	
	8	1	**230-8989**	1	GEAR-FUEL PUMP (68-TEETH)	
	9	1	**230-8995**	1	TUBE AS (CYL NO. 1)	
	10	1	**230-8996**	1	TUBE AS (CYL NO. 2)	
	11	1	**230-8997**	1	TUBE AS (CYL NO. 3)	
	12	1	**230-8998**	1	TUBE AS (CYL NO. 4)	
	14	1	**232-1328**	1	CAP	
	15	2	**232-1793**	1	CABLE	
	16	1	**232-1794**	3	HOSE	
	17	1	**232-2725**	2	CLIP	
	18	1	**232-2726**	1	CLIP	
	19	1	**232-3126**	1	CLIP	
	20	1	**232-3149**	3	WASHER (8.35X16.85X1.55-MM THK)	
	21	1	**232-3157**	1	BRACKET	
M	22	1	**232-3274**	4	BOLT (M8X1.25X48.1-MM)	
	23	1	**238-8671**	4	CLAMP-INJECTOR	
	24	1	**240-5571**	1	BRACKET	
	25	1	**315-3381**	4	ATOMIZER AS	
					(EACH INCLUDES)	
	25A	1	**140-8718**	1	WASHER	
	25B	1	**275-1038**	1	SEAL-O-RING	
Y	26	1	**326-9147**	1	PUMP GP-FUEL INJECTION	70

M - METRIC PART
Y - SEPARATE ILLUSTRATION

326-9149 **PUMP GP-FUEL INJECTION (**contd.**)** **i06728780**

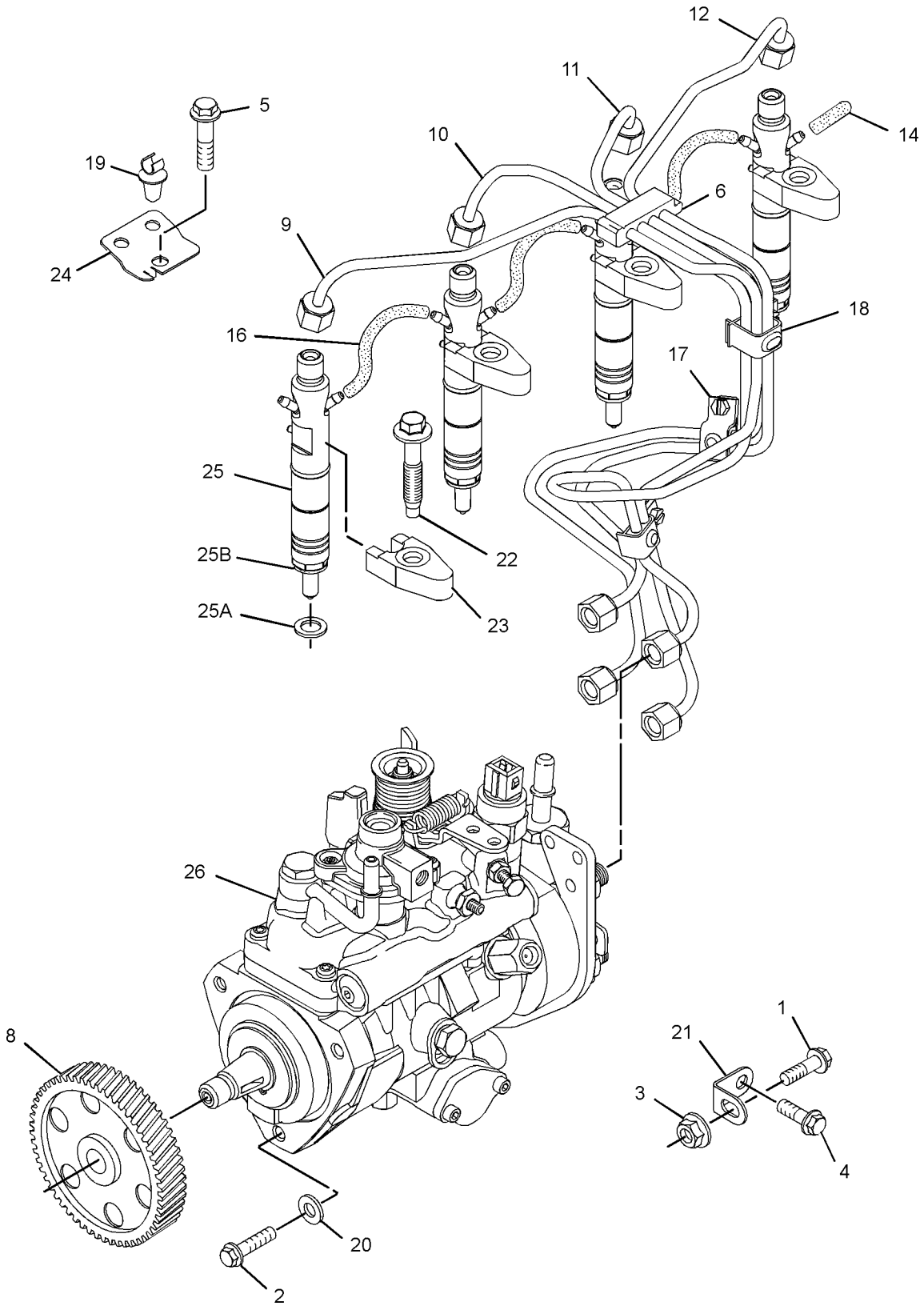

GRAPHIC #1 g01613834

326-9149 **PUMP GP-FUEL INJECTION (**contd.**)** **i06728780**

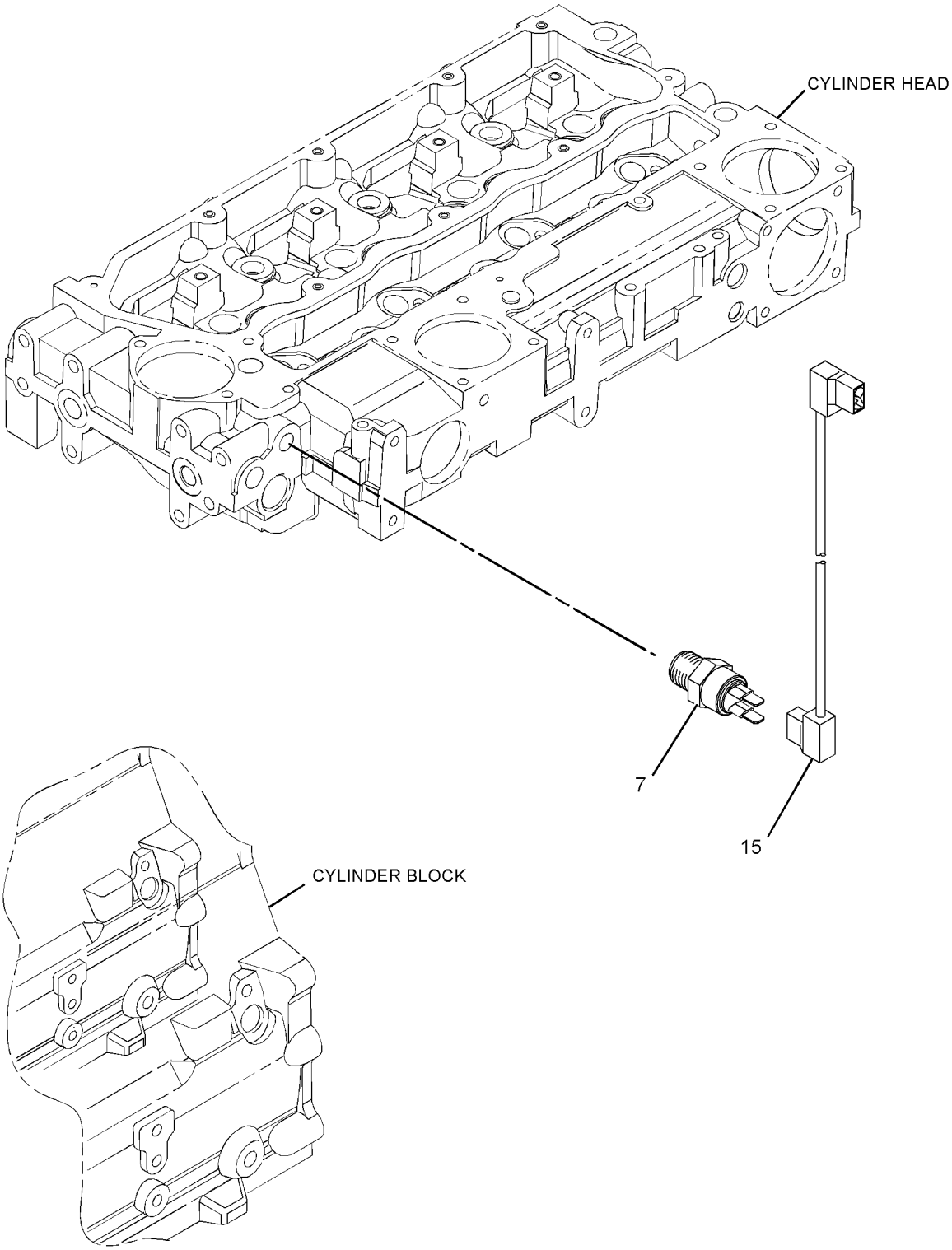

GRAPHIC #2 <END> g02788432

459-4244 TANK & MTG GP-FUEL

S/N: RDE1-UP
235-L (62-US GAL)
PART OF 500-9108 CHASSIS AR

SMCS-1273 **i06781530**

NOTE	REF NO	GRAPHIC REF	PART NUMBER	QTY	PART NAME 1 2 3 4 5 6 (PRODUCT LEVEL)	SEE PAGE
	1	1	**246-2641**	1	PADLOCK GP	
		1	**5P-8500**	1	KEY	
	2	1	**085-9310**	4	SPACER (16.6X32X26-MM THK)	
M	3	1	**447-1707**	4	BOLT (M16X2X60-MM)	
Y	4	1	**466-1057**	1	TANK GP-FUEL	75

M - METRIC PART
Y - SEPARATE ILLUSTRATION

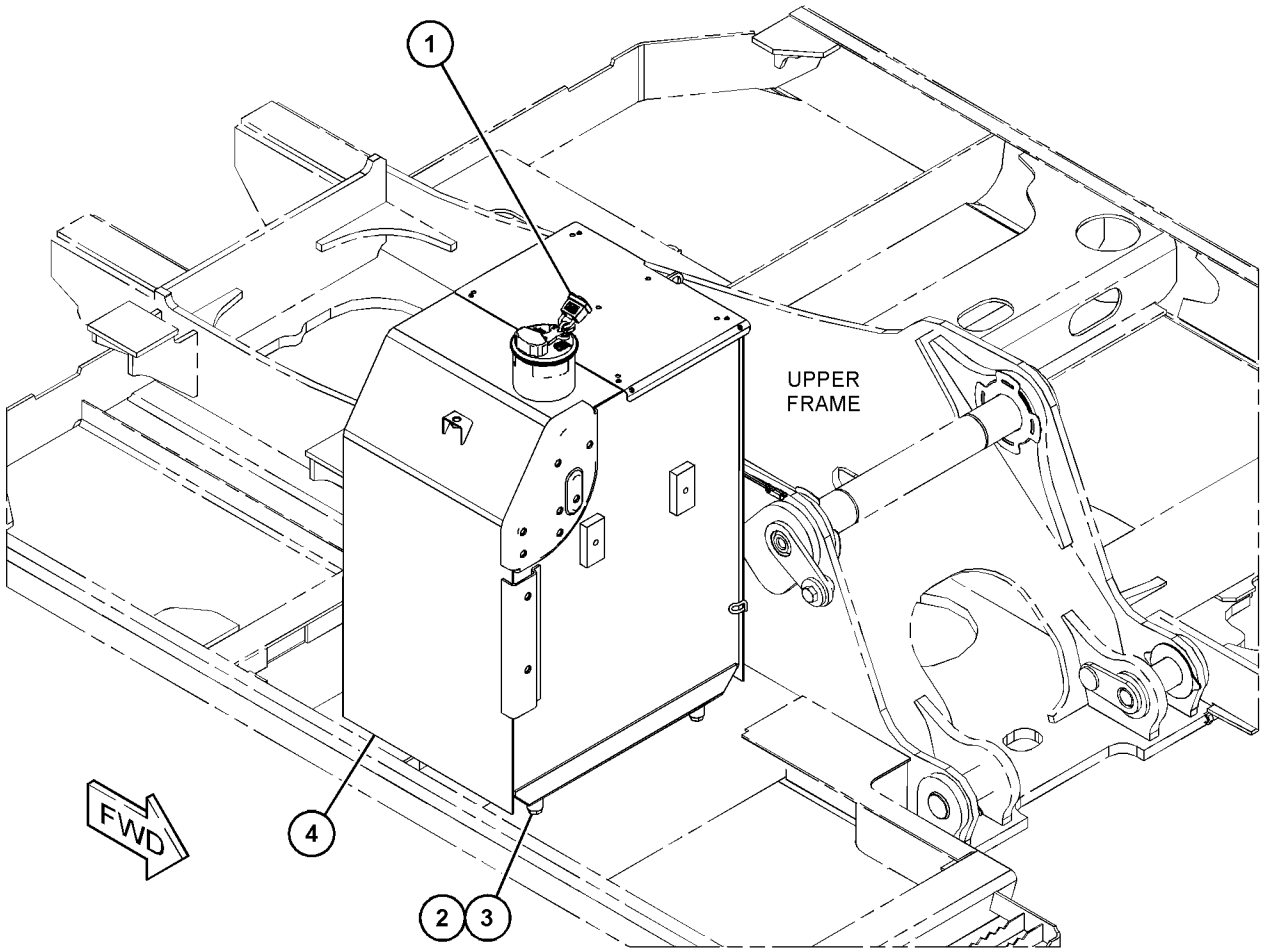

GRAPHIC #1 <END> g03884218

466-1057 TANK GP-FUEL

S/N: RDE1-UP
235-L (62-US GAL)
PART OF 459-4244 TANK & MTG GP-FUEL

SMCS-1273 **i06781542**

NOTE	REF NO	GRAPHIC REF	PART NUMBER	QTY	PART NAME 1 2 3 4 5 6 (PRODUCT LEVEL)	SEE PAGE
	1	1	**4I-0378**	1	GASKET-RUBBER	
J	2	1	**303-9933**	1	STRAINER AS-FUEL (FLOAT GAUGE)	
	3	1	**341-1842**	1	SENDER AS-FUEL LEVEL	
		1	**9X-3401**	2	PIN-CONNECTOR (16-GA TO 18-GA)	
		1	**102-8802**	1	KIT-RECEPTACLE (2-PIN)	
					(INCLUDES RECEPTACLE AS & WEDGE)	
H	4	1	**349-7059**	1	CAP AS-FUEL (LOCKABLE, VENTED)	
		1	**9X-8600**	1	SEAL-O-RING	
	5	1	**8T-0328**	5	WASHER-HARD (5.5X10X1-MM THK)	
M	6	1	**095-0736**	5	SCREW-MACHINE (M5X0.8X10-MM)	
	7	1	**214-7568**	1	SEAL-O-RING	
	8	1	**238-5080**	1	SEAL-O-RING	
	9	1	**238-5081**	1	SEAL-O-RING	
	10	1	**5P-4906**	1	ELBOW	
	11	1	**5P-4924**	1	ELBOW	
	12	1	**6V-5653**	1	ELBOW (7/8-14-THD)	
					AVAILABLE REPAIR KIT(S):	
J			**303-9937**	1	KIT-GAUGE (FUEL STRAINER)	
					(INCLUDES STOPPER & GAUGE)	
H			**350-7735**	1	KIT-CAP FILTER (FUEL TANK)	
					(INCLUDES BODY,GASKET,SCREWS & WASHERS)	

H - KIT MARKED H SERVICES PART(S) MARKED H
J - KIT MARKED J SERVICES PART(S) MARKED J
M - METRIC PART

466-1057 **TANK GP-FUEL (**contd.**)** **i06781542**

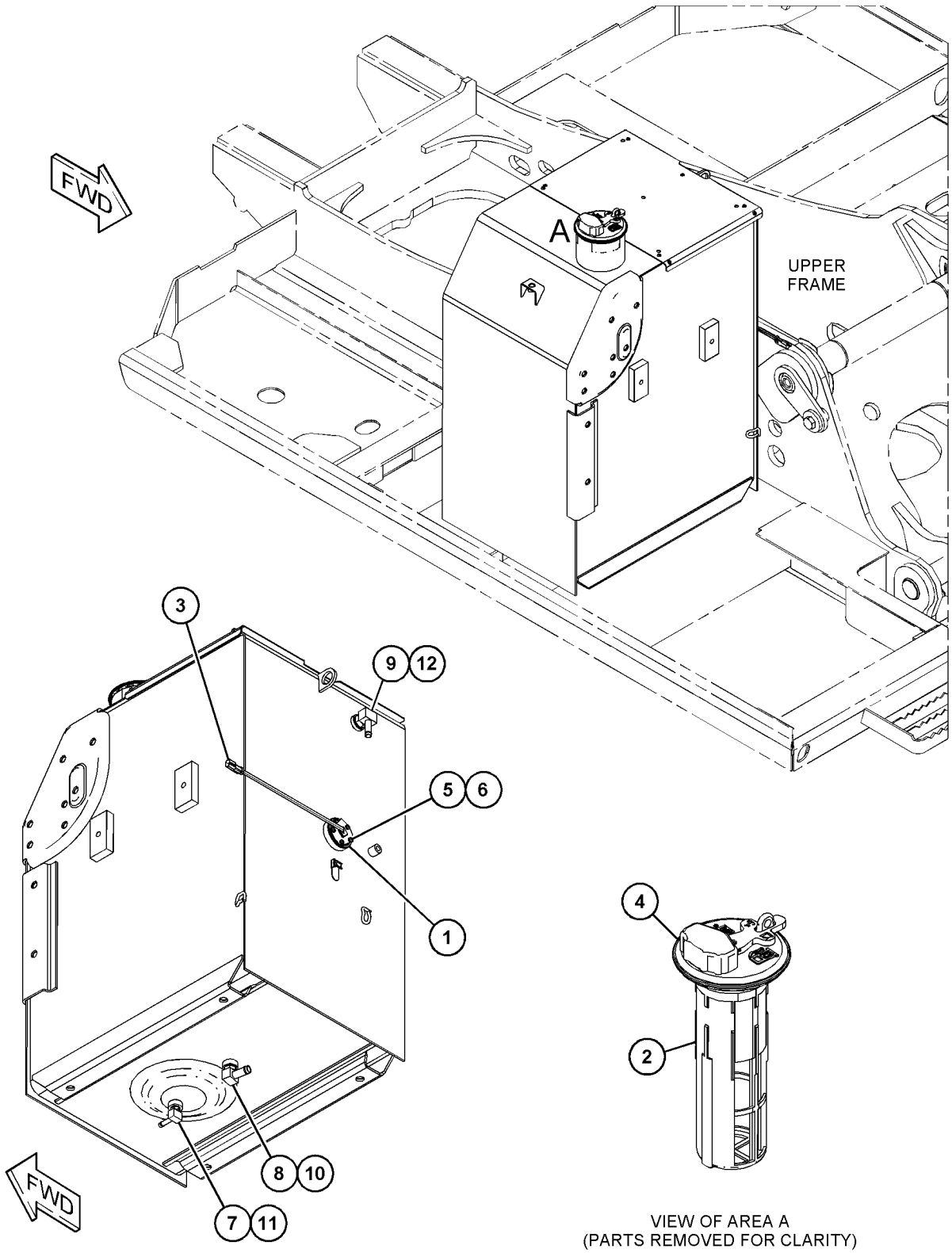

VIEW OF AREA A
(PARTS REMOVED FOR CLARITY)

GRAPHIC #1 <END> g03884311

132-1829 ALARM GP–FAULT

S/N: RDE1-UP

PART OF 398-7003 WIRING GP-CAB

SMCS-7400, 7402, 7407 **i06811605**

NOTE	REF NO	GRAPHIC REF	PART NUMBER	QTY	PART NAME 1 2 3 4 5 6 (PRODUCT LEVEL)	SEE PAGE
	1	1	**102-8802**	1	KIT-RECEPTACLE (2-PIN)	
					(INCLUDES RECEPTACLE AS & WEDGE)	
	2	1	**186-3735**	2	PIN-CONNECTOR (16-GA TO 18-GA)	

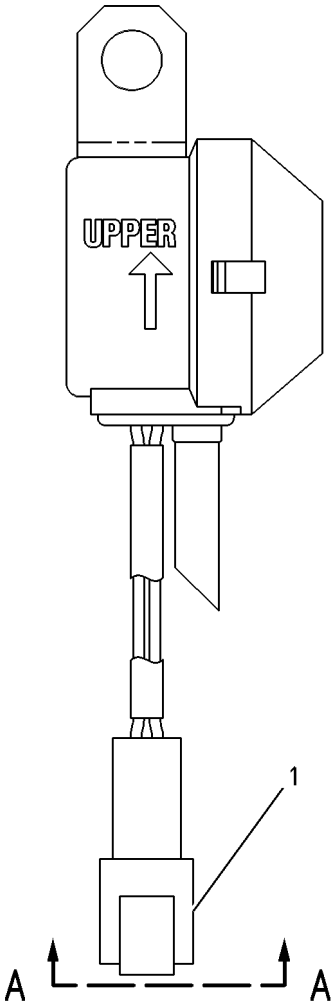

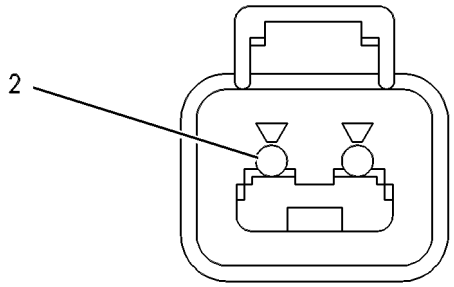

VIEW A-A

GRAPHIC #1 <END> g00272185

231-1771 ALARM GP-TRAVEL–BACKUP

S/N: RDE1-UP

PART OF 397-4688 OPTION AR-REGIONAL

SMCS-7429 **i05518254**

NOTE	REF NO	GRAPHIC REF	PART NUMBER	QTY	PART NAME 1 2 3 4 5 6 (PRODUCT LEVEL)	SEE PAGE
	1	1	**213-9100**	1	ALARM AS (BACKUP)	
		1	**102-8802**	1	KIT-RECEPTACLE (2-PIN)	
					(INCLUDES RECEPTACLE AS & WEDGE)	
		1	**186-3735**	1	PIN-CONNECTOR (16-GA TO 18-GA)	
E		1	**9X-1813**		SLEEVE (29-CM)	
M	2	1	**8T-4189**	2	BOLT (M8X1.25X20-MM)	
	3	1	**5P-4116**	2	WASHER-HARD (8.8X20.5X2-MM THK)	

E - ORDER BY THE CENTIMETER
M - METRIC PART

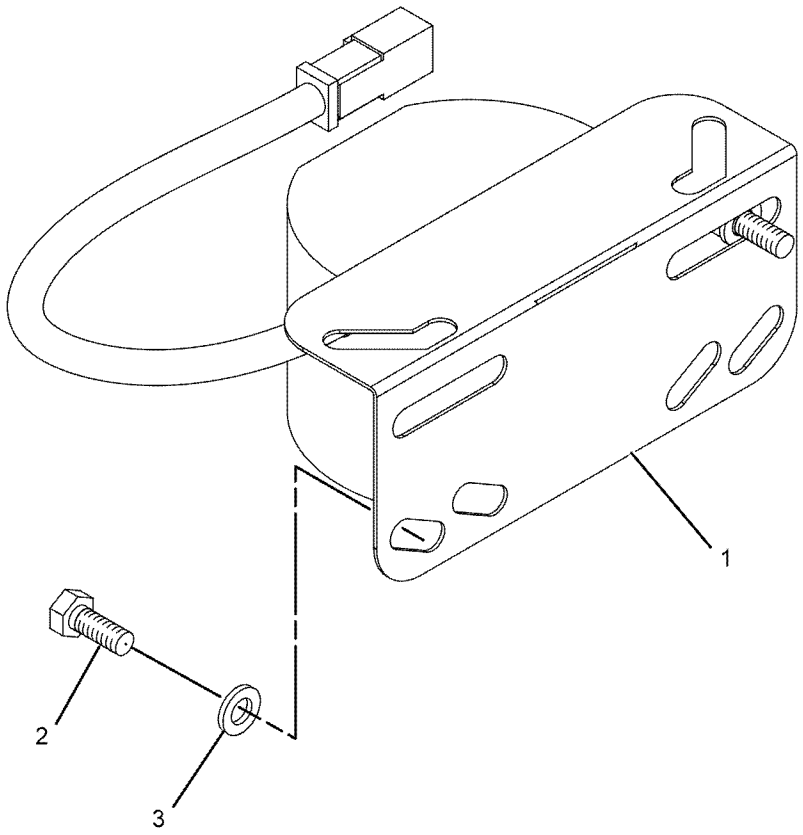

GRAPHIC #1 <END> g01071794

479-5761 ANTENNA & MOUNTING GP–PRODUCT LINK

S/N: RDE1-UP

PART OF 470-6901 INSTALLATION AR-COMMUNICATION

SMCS-7338, 733T

i06792912

NOTE	REF NO	GRAPHIC REF	PART NUMBER	QTY	PART NAME 1 2 3 4 5 6 (PRODUCT LEVEL)	SEE PAGE
	1	1	**3S-2093**	3	STRAP-CABLE	
	2	1	**443-8462**	1	ANTENNA AS (CELLULAR)	
		1	**361-1045**	1	NUT-SPECIAL (5/8-18-THD)	
		1	**385-8201**	1	CAP AS-CONNECTOR	
M	3	1	**447-1730**	1	BOLT (M16X2X25-MM)	
	4	1	**449-4129**	1	BRACKET AS	
	5	1	**451-2175**	1	WASHER-HARD (17.5X30X3.5-MM THK)	
	6	1	**471-3641**	1	BRACKET AS	
	7	1	**114-6658**	1	WASHER (6.5X17X1-MM THK)	
	8	1	**8T-4121**	3	WASHER-HARD (11X21X2.5-MM THK)	
M	9	1	**8T-4137**	3	BOLT (M10X1.5X20-MM)	
M	10	1	**8T-4970**	1	BOLT (M6X1X14-MM)	

M - METRIC PART

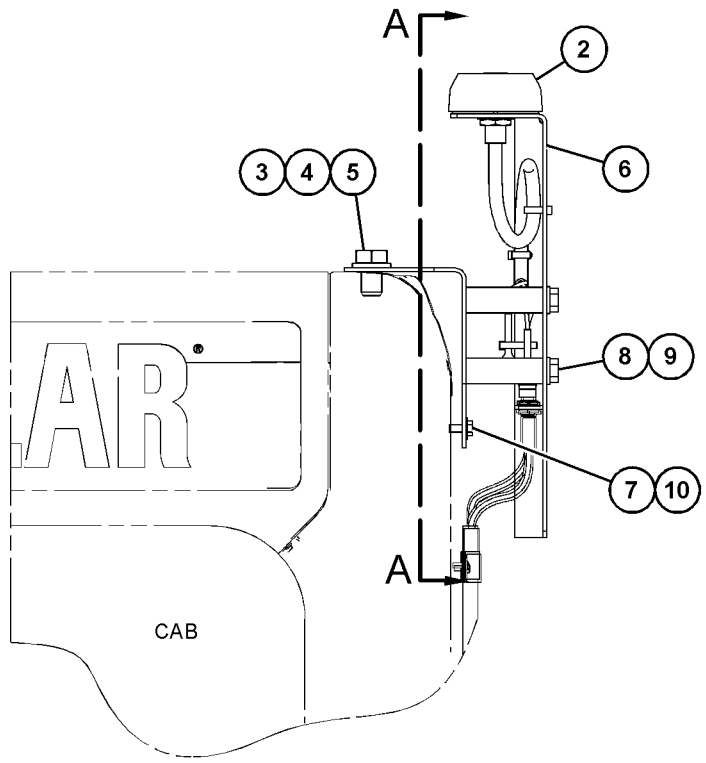

REAR VIEW

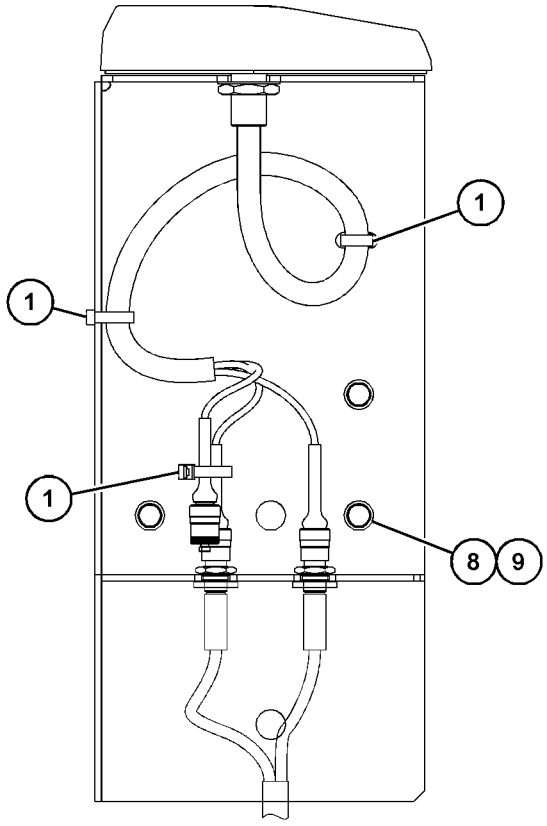

SECTION A-A

GRAPHIC #1 <END> g06041463

502-7431 BATTERY & WIRING GP

S/N: RDE1-UP

PART OF 500-9108 CHASSIS AR

SMCS-1401, 1402, 1408 **i06843691**

NOTE	REF NO	GRAPHIC REF	PART NUMBER	QTY	PART NAME 1 2 3 4 5 6 (PRODUCT LEVEL)	SEE PAGE
	1	1	**3S-2093**	30	STRAP-CABLE	
	2	1	**4I-5399**	2	GROMMET	
	3	2	**4I-7889**	1	SPACER (11X25X45-MM THK)	
	4	2	**5I-4365**	1	GROMMET	
	5	2	**5I-8270**	1	COVER-BATTERY	
	6	3	**6G-2256**	1	CLAMP	
	7	2	**6W-6005**	1	HOLD-DOWN-BATTERY	
	8	1,2,3	**7K-1181**	21	STRAP-CABLE	
	9	3	**7Y-3195**	1	GROMMET	
	10	1	**7Y-5456**	2	GROMMET	
	11	2	**111-4836**	11	CLIP	
	12	2,3	**111-4837**	14	CLIP	
	13	1	**111-4839**	9	STRAP	
	14	1	**116-0118**	8	CLIP	
	15	2	**121-1076**	1	GROMMET	
	16	1	**132-1805**	1	STRAP AS-GROUND	
	17	2	**170-6929**	1	CABLE AS (BATTERY EQUALIZER)	
E		2	**159-8049**		CABLE (00-GA, RED) (31-CM)	
		2	**9G-0002**	1	COVER AS-TERMINAL (RED)	
		2	**9G-0005**	1	COVER AS-TERMINAL (BLACK)	
					(EACH COVER AS INCLUDES)	
		2	**8L-8413**	1	STRAP-CABLE (WHITE)	
		2	**8T-9756**	1	TERMINAL AS (POSITIVE)	
		2	**8C-5918**	1	TERMINAL AS (NEGATIVE)	
					(EACH TERMINAL AS INCLUDES)	
		2	**1M-6119**	1	BOLT (5/16-18X1.375-IN)	
		2	**1M-6120**	1	NUT (5/16-18-THD)	
	18	2	**204-1635**	1	STRAP AS-GROUND	
	19	2	**228-8146**	1	SPACER (11X25X12.5-MM THK)	
	20	2	**238-2501**	1	KNOB	
	21	2	**238-2528**	1	ROD	
	22	2	**259-5206**	1	BRACKET AS	
	23	2	**259-5303**	1	BRACKET AS	
	24	1	**291-7760**	1	BRACKET AS	
	25	2	**299-2901**	1	GROMMET	
	26	1	**306-8531**	1	BRACKET AS	
Y	27	1	**318-1181**	1	SENSOR GP-SPEED (MAGNETIC) (ENGINE)	116
	28	1	**319-1253**	1	BRACKET AS	
	29	2	**328-0181**	1	STRAP AS-GROUND	
	30	3	**347-4734**	1	CLIP	
	31	1	**388-6765**	1	CABLE AS-BATTERY	
		1	**1S-7251**	1	TERMINAL-CABLE (00-GA, 1/2-IN SCREW)	
		1	**8N-1725**	1	COVER AS-TERMINAL (RED)	
		1	**8L-8413**	1	STRAP-CABLE (WHITE)	
		1	**3S-6049**	1	TERMINAL AS-BATTERY (POSITIVE)	
		1	**1M-6119**	1	BOLT (5/16-18X1.375-IN)	
		1	**1M-6120**	1	NUT (5/16-18-THD)	
E		1	**159-8049**		CABLE (00-GA, RED) (25-CM)	

502-7431 **BATTERY & WIRING GP (**contd.**)** **i06843691**

NOTE	REF NO	GRAPHIC REF	PART NUMBER	QTY	PART NAME 1 2 3 4 5 6 (PRODUCT LEVEL)	SEE PAGE
		1	**301-0091**	1	COVER-TERMINAL (RED)	
	32	1	**388-6766**	1	CABLE AS (BREAKER)	
		1	**1S-7251**	1	TERMINAL-CABLE (00-GA, 1/2-IN SCREW)	
		1	**8N-0869**	1	COVER-TERMINAL (RED)	
		1	**030-1706**	1	TERMINAL-RING (00-GA, 1/4-IN SCREW)	
E		1	**159-8049**		CABLE (00-GA, RED) (88-CM)	
		1	**301-0091**	1	COVER-TERMINAL (RED)	
	33	2	**388-6771**	1	PLATE AS (ALTERNATOR)	
		2	**9R-5383**	1	BOSS	
		2	**087-5841**	1	PLATE	
	34	3	**388-6801**	1	BRACKET AS	
	35	1	**441-8610**	1	CABLE AS-STARTER	
		1	**1S-7251**	1	TERMINAL-CABLE (00-GA, 1/2-IN SCREW)	
		1	**1S-7252**	1	TERMINAL-CABLE (00-GA, 3/8-IN SCREW)	
E		1	**8C-5064**		CONDUIT-FLEXIBLE (17.75-MM ID, SPLIT) (94-CM)	
		1	**8N-0869**	1	COVER-TERMINAL (RED)	
E		1	**159-8049**		CABLE (00-GA, RED) (265-CM)	
		1	**301-0091**	1	COVER-TERMINAL (RED)	
	36	1	**464-3040**	1	CABLE AS (DISCONNECT)	
		1	**1S-7252**	1	TERMINAL-CABLE (00-GA, 3/8-IN SCREW)	
		1	**9G-0005**	1	COVER AS-TERMINAL (BLACK)	
		1	**9G-8909**	1	COVER-TERMINAL (BLACK)	
					(EACH INCLUDES)	
		1	**8L-8413**	1	STRAP-CABLE (WHITE)	
		1	**8C-5918**	1	TERMINAL AS (NEGATIVE)	
		1	**1M-6119**	1	BOLT (5/16-18X1.375-IN)	
		1	**1M-6120**	1	NUT (5/16-18-THD)	
E		1	**159-8050**		CABLE (00-GA, BLACK) (89-CM)	
	37	2	**477-2455**	1	BRACKET AS	
Y	38	1	**502-5390**	1	HARNESS AS-CHASSIS	94
	39	2	**091-9035**	2	SPACER (11X25X20-MM THK)	
M	40	2	**099-6418**	2	NUT (M6X1-THD)	
	41	1	**111-4838**	9	CLIP	
Y	42	2	**124-5814**	1	BLOCK GP-JUNCTION	86
	43	1	**132-5789**	3	CLIP	
M	44	1	**199-1187**	1	NUT (M5X0.8-THD)	
	45	1	**1R-6072**	1	GROMMET	
	46	3	**1S-0994**	1	CLIP	
	47	3	**177-2215**	1	STRAP-DUAL CLAMP	
	48	1	**269-7680**	1	CLIP	
	49	3	**2G-8767**	2	WASHER (10.5X60X3-MM THK)	
	50	2,3	**306-8526**	3	GROMMET	
	51	2	**3T-5760**	2	BATTERY GP (12-VOLT, 750-CCA) (MAINTENANCE FREE)	
					(EACH INCLUDES)	
		2	**123-1373**	6	CAP AS-FILLER (7/8-9-THD)	
	52	1	**4P-7429**	1	CLIP	
	53	3	**4P-7581**	6	CLIP	
	54	1	**4P-8134**	1	CLIP	
M	55	2	**5C-7261**	1	NUT (M8X1.25-THD)	
M	56	1	**5C-7883**	4	BOLT-SOCKET HEAD (M6X1X16-MM)	

502-7431 **BATTERY & WIRING GP** (contd.) **i06843691**

NOTE	REF NO	GRAPHIC REF	PART NUMBER	QTY	PART NAME 1 2 3 4 5 6 (PRODUCT LEVEL)	SEE PAGE
	57	3	**5P-4116**	1	WASHER-HARD (8.8X20.5X2-MM THK)	
	58	2,3	**6D-3479**	3	CLIP	
	59	2	**6D-4246**	2	CLIP	
	60	3	**6G-2263**	5	SPACER (10.5X19X28.5-MM THK)	
	61	1	**7I-2673**	2	STRAP-CABLE	
M	62	2	**7X-2621**	4	BOLT (M10X1.5X12-MM)	
	63	2	**7X-7729**	1	WASHER (11X25X3-MM THK)	
	64	1,2,3	**8T-1889**	3	CLIP (SLOT)	
	65	1,2,3	**8T-1890**	3	CLIP (TAB)	
	66	1,2,3	**8T-4121**	66	WASHER-HARD (11X21X2.5-MM THK)	
M	67	2	**8T-4133**	1	NUT (M10X1.5-THD)	
M	68	1,2,3	**8T-4136**	14	BOLT (M10X1.5X25-MM)	
M	69	1,2,3	**8T-4137**	35	BOLT (M10X1.5X20-MM)	
M	70	1	**8T-4179**	2	BOLT (M12X1.75X20-MM)	
M	71	2	**8T-4182**	1	BOLT (M10X1.5X45-MM)	
M	72	3	**8T-4185**	4	BOLT (M10X1.5X50-MM)	
M	73	2	**8T-4186**	2	BOLT (M10X1.5X40-MM)	
M	74	1	**8T-4191**	4	BOLT (M10X1.5X16-MM)	
M	75	2	**8T-4195**	1	BOLT (M10X1.5X30-MM)	
M	76	2	**8T-4196**	2	BOLT (M10X1.5X35-MM)	
M	77	3	**8T-4200**	2	BOLT (M8X1.25X16-MM)	
	78	1	**8T-4223**	2	WASHER-HARD (13.5X25.5X3-MM THK)	
	79	3	**8T-4224**	2	WASHER-HARD (8.8X16X2-MM THK)	
	80	2	**8T-4226**	1	WASHER-PLATED (10.5X45X3-MM THK)	
M	81	2	**8T-5005**	1	BOLT (M10X1.5X70-MM)	
M	82	3	**8T-6912**	1	BOLT (M8X1.25X50-MM)	
	83	1	**9X-8256**	4	WASHER (6.6X12X2-MM THK)	
E	84	2	**107-1678**		GUARD (9-CM)	

E - ORDER BY THE CENTIMETER
M - METRIC PART
Y - SEPARATE ILLUSTRATION

502-7431 **BATTERY & WIRING GP (**contd.**)** **i06843691**

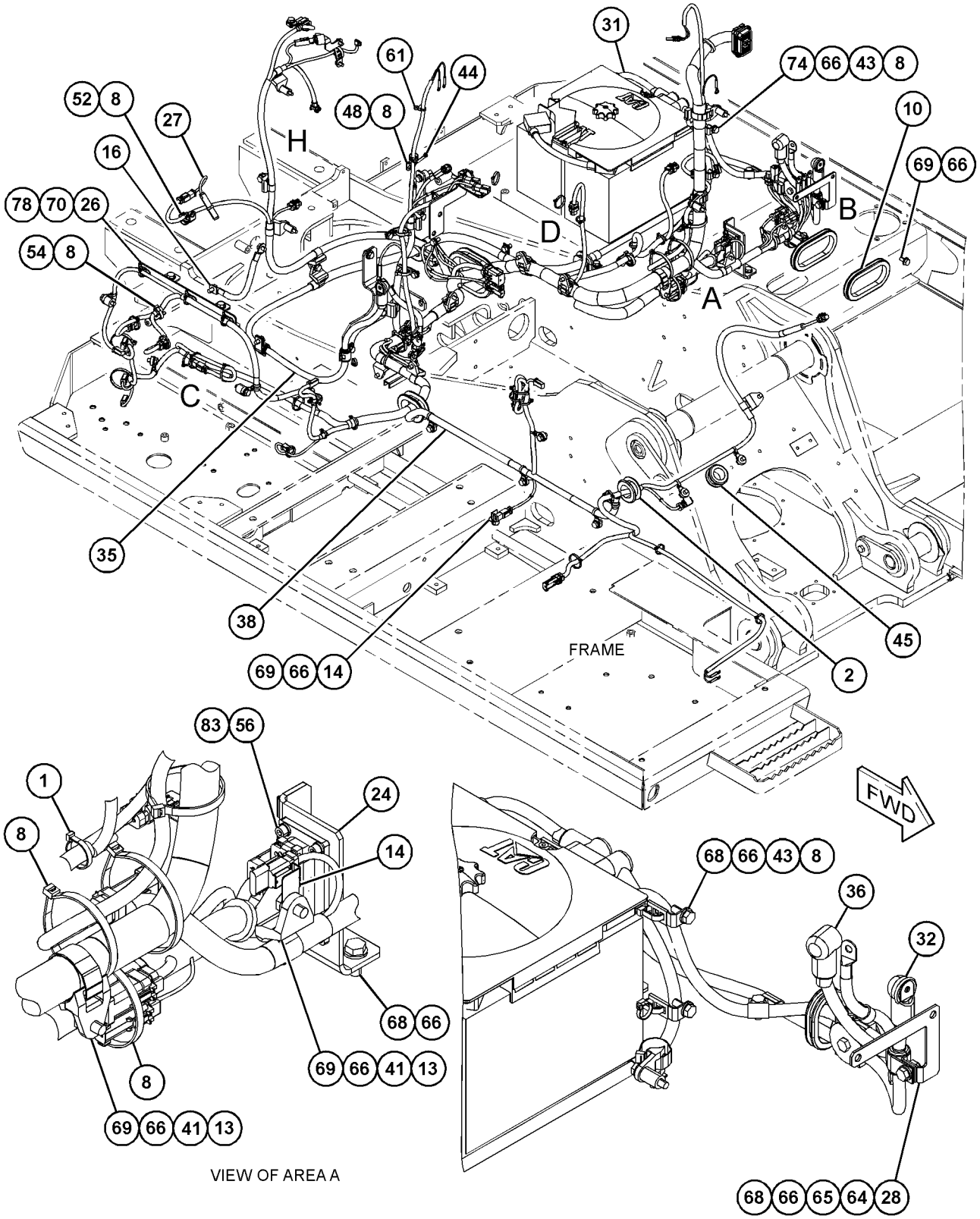

REFER TO ALL ILLUSTRATIONS OF THIS GROUP FOR AUXILIARY VIEWS

GRAPHIC #1

g06136323

502-7431 **BATTERY & WIRING GP (**contd.**)** **i06843691**

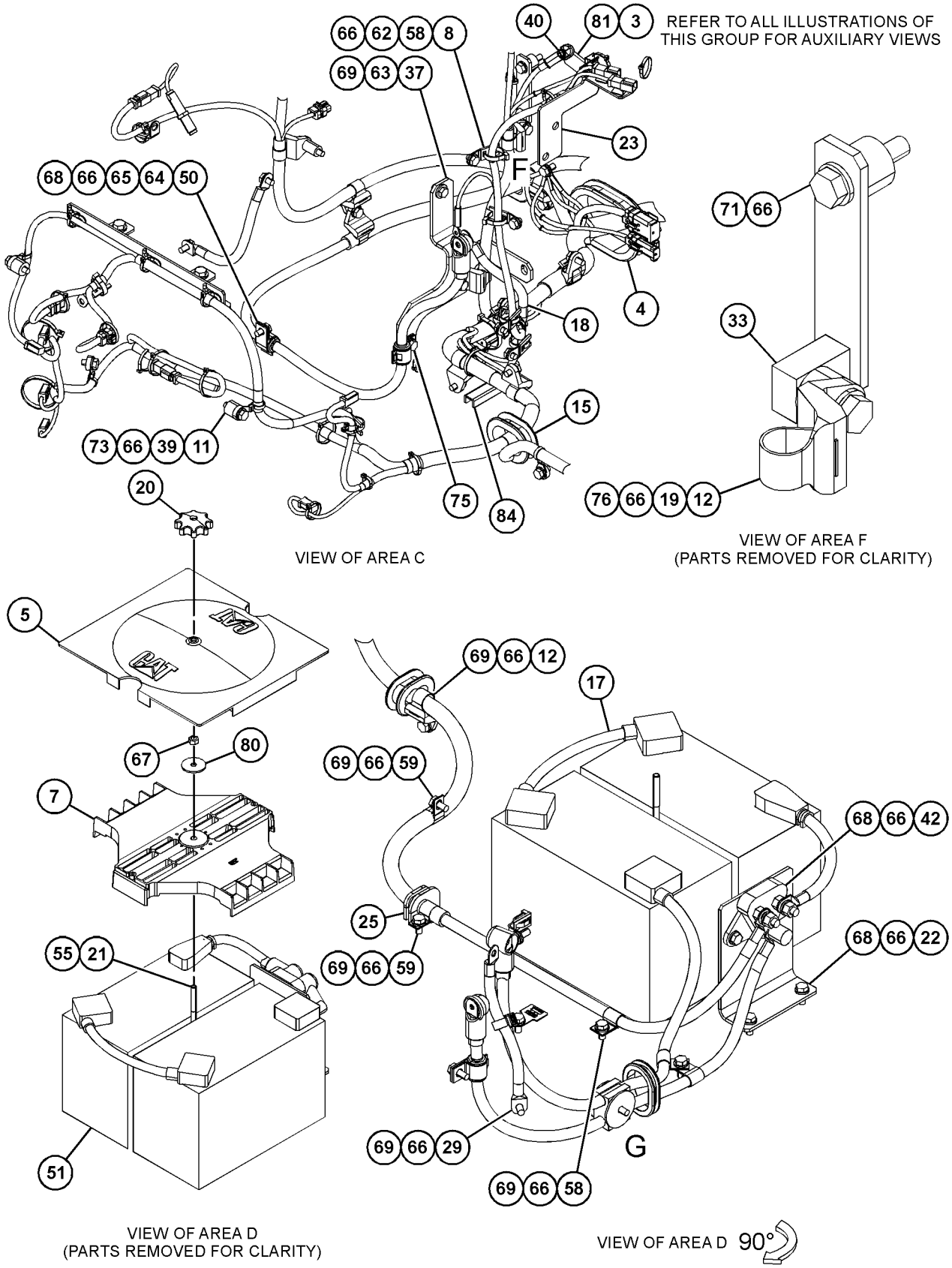

GRAPHIC #2 g06136324

502-7431 **BATTERY & WIRING GP (**contd.**)** **i06843691**

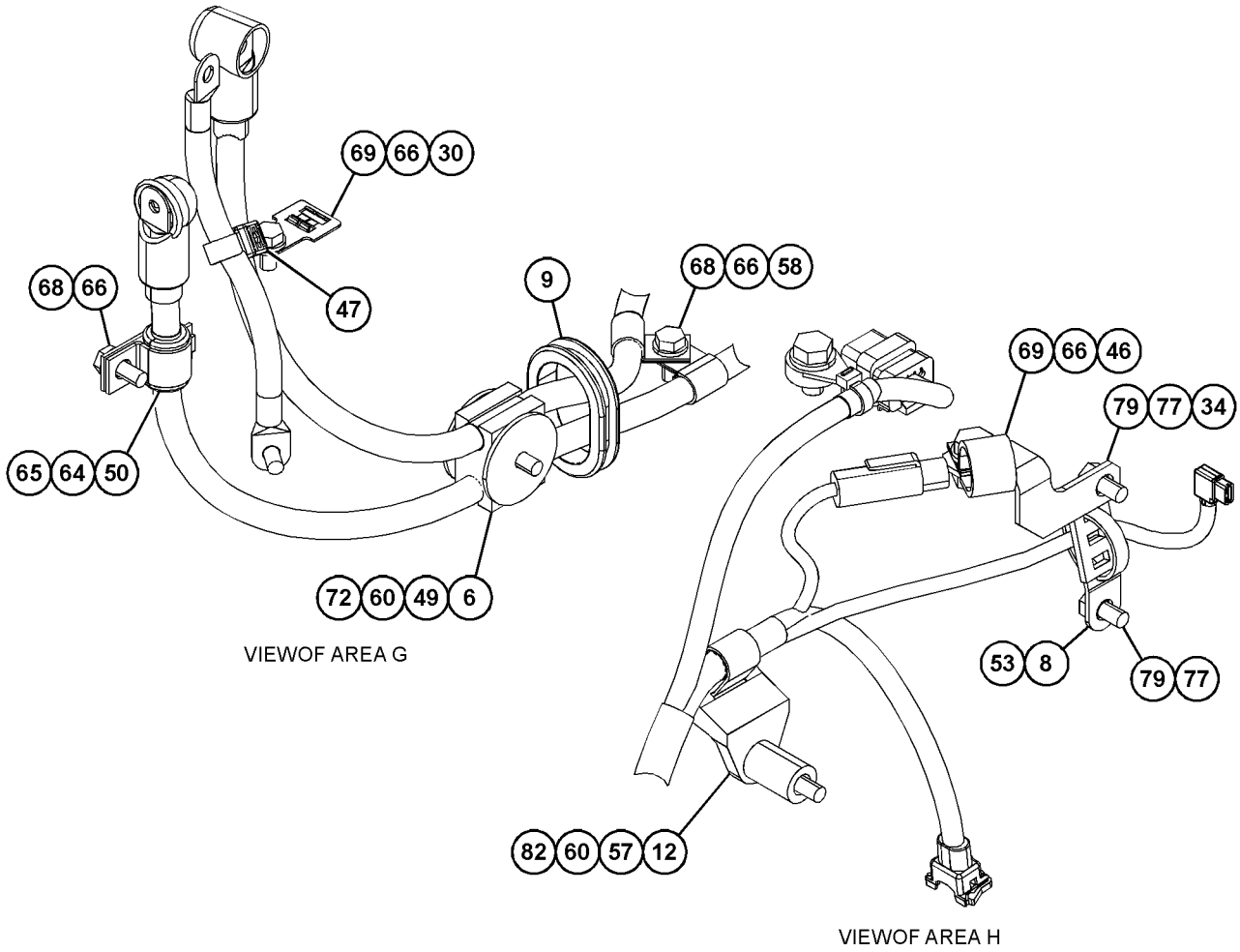

GRAPHIC #3 <END> g06136325

124-5814 BLOCK GP-JUNCTION

S/N: RDE1-UP

PART OF 502-7431 BATTERY & WIRING GP

SMCS-7426 **i06151938**

NOTE	REF NO	GRAPHIC REF	PART NUMBER	QTY	PART NAME 1 2 3 4 5 6 (PRODUCT LEVEL)	SEE PAGE
	1	1	**435-2848**	1	COVER-TERMINAL	
	2	1	**8C-6358**	1	BLOCK AS-JUNCTION (BATTERY)	
	2A	1	**7F-0560**	6	WASHER (0.516X0.938X0.101-IN THK)	
	2B	1	**8T-3518**	6	NUT-FULL (1/2-13-THD)	

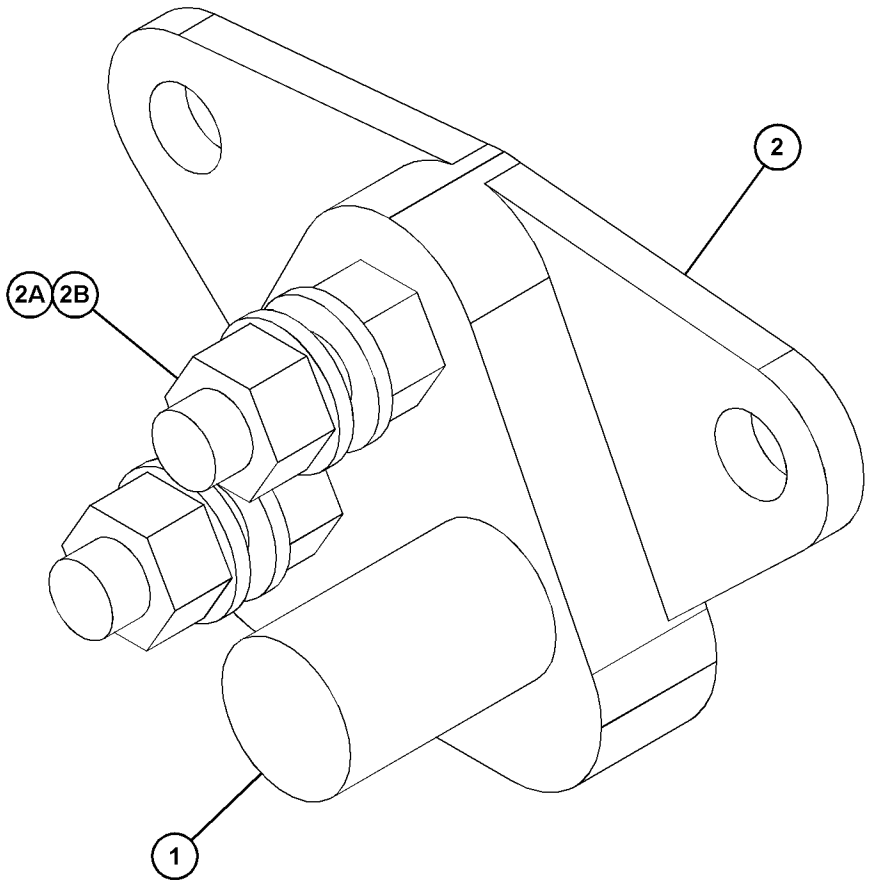

GRAPHIC #1 <END> g03830327

479-6977 CONTROL & MTG GP-COMMUNICATION

S/N: RDE1-UP

PART OF 470-6901 INSTALLATION AR-COMMUNICATION

SMCS-7606 **i06826642**

NOTE	REF NO	GRAPHIC REF	PART NUMBER	QTY	PART NAME 1 2 3 4 5 6 (PRODUCT LEVEL)	SEE PAGE
YR	1	1	**442-7199**	1	CONTROL GP-UNPROGRAMMED (PL631 SATELLITE)	89
	2	1	**449-4188**	1	BRACKET AS	
	3	1	*462-6495*	1	PLUG AS	
		1	**8T-8737**	8	PLUG-SEAL	
		1	**155-2265**	1	KIT-CONNECTING PLUG (8-PIN)	
					(INCLUDES PLUG AS, WEDGE, & INTERFACE SEAL)	
M	4	1	**5C-9553**	4	BOLT (M6X1X16-MM)	
M	5	1	**6V-7357**	4	BOLT (M6X1X25-MM)	
	6	1	**9X-8256**	8	WASHER (6.6X12X2-MM THK)	

M - METRIC PART
R - REMANUFACTURED PART MAY BE AVAILABLE
Y - SEPARATE ILLUSTRATION

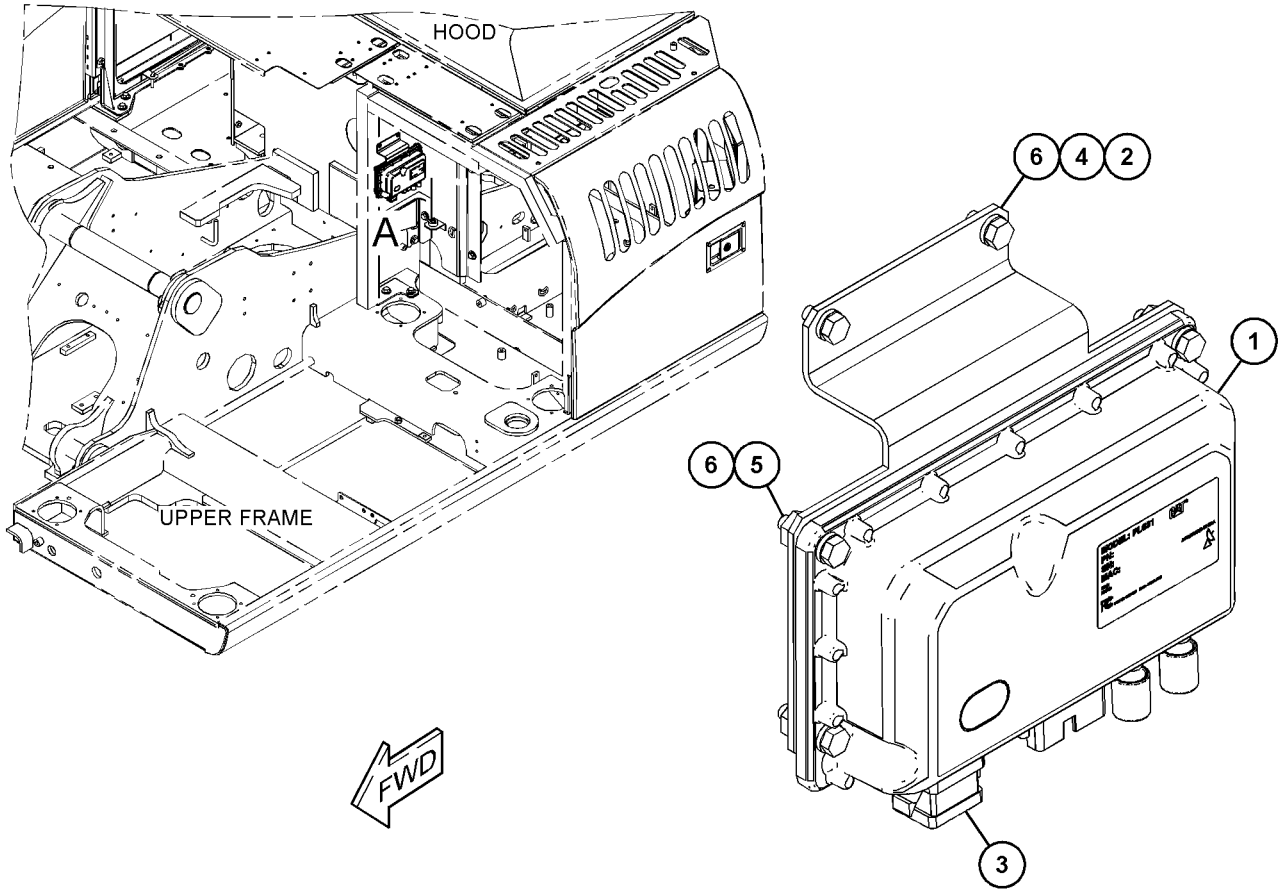

VIEW OF AREA A

GRAPHIC #1 <END> g06125454

399-2618 CONTROL & MTG GP-ELECTRONIC

S/N: RDE1-UP

PART OF 476-3010 OPERATOR AR

SMCS-1901, 3168, 7490, 7610 **i06295257**

NOTE	REF NO	GRAPHIC REF	PART NUMBER	QTY	PART NAME 1 2 3 4 5 6 (PRODUCT LEVEL)	SEE PAGE
	1	1	**155-0576**	8	MOUNT-ISOLATION	
	2	1	**386-3444**	1	CONTROL GP-UNPROGRAMMED	
	3	1	**421-5857**	1	BRACKET AS	
	4	1	**6I-1418**	4	SPACER (8.2X12.7X28.7-MM THK)	
	5	1	**5P-4115**	4	WASHER-HARD (7.2X19X2-MM THK)	
	6	1	**8T-4224**	1	WASHER-HARD (8.8X16X2-MM THK)	
M	7	1	**8T-4970**	4	BOLT (M6X1X14-MM)	
	8	1	**7X-0579**	8	WASHER-HARD (8.8X25.5X2-MM THK)	
	9	1	**9X-8256**	4	WASHER (6.6X12X2-MM THK)	

M - METRIC PART

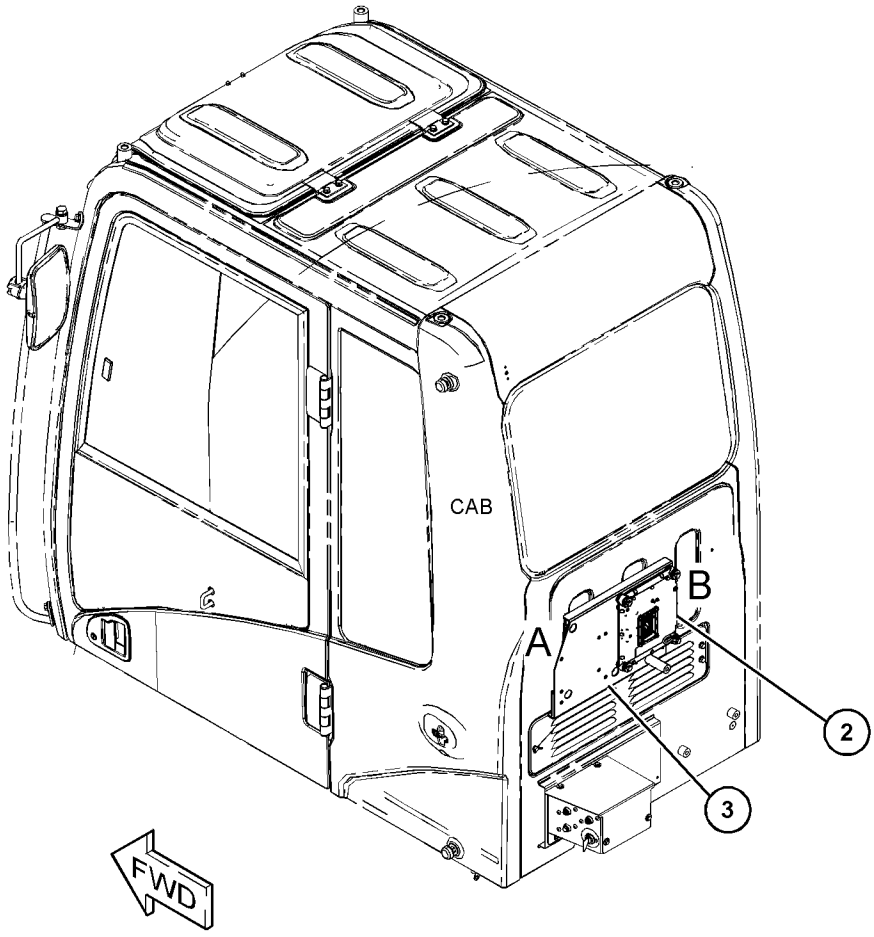

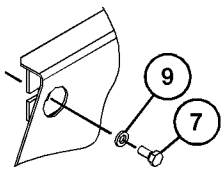

VIEW OF AREA A

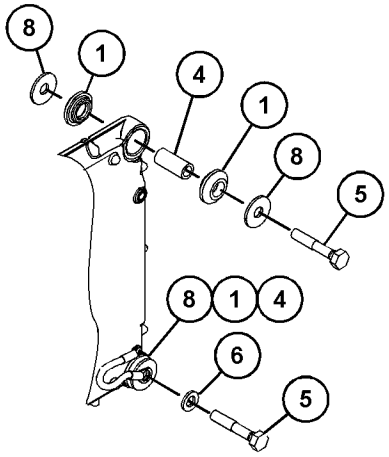

VIEW OF AREA B

GRAPHIC #1 <END> g03457163

442-7199 CONTROL GP-UNPROGRAMMED–PL631 SATELLITE*R

S/N: RDE1-UP

PART OF 479-6977 CONTROL & MTG GP-COMMUNICATION

SMCS-7610 **i06828100**

NOTE	REF NO	GRAPHIC REF	PART NUMBER	QTY	PART NAME 1 2 3 4 5 6 (PRODUCT LEVEL)	SEE PAGE
					(NO SERVICED PARTS)	

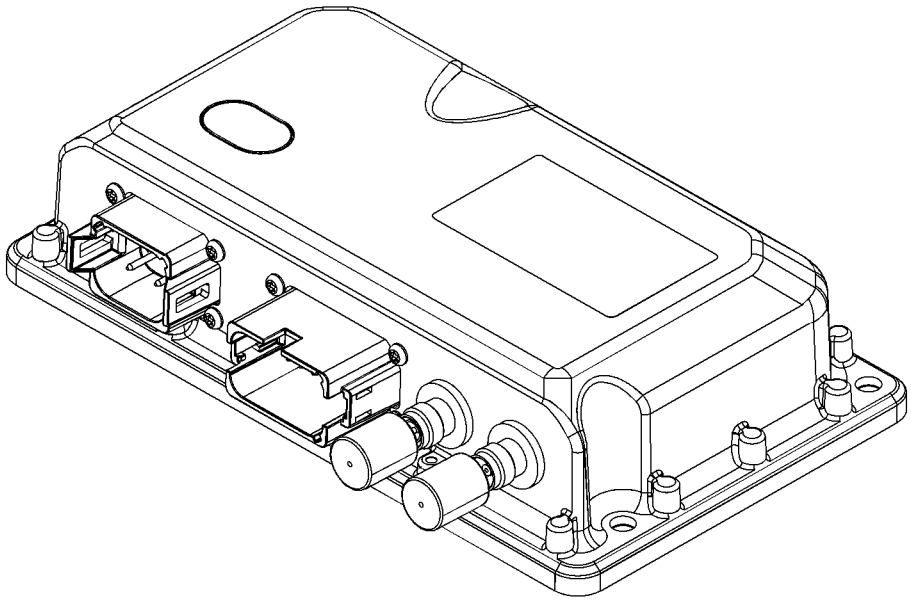

GRAPHIC #1 <END> g06131298

472-4368 ELECTRONICS GP-ENGINE

S/N: RDE1-UP

PART OF 500-9103 GENERAL AR

SMCS-1901, 1920

i06809970

NOTE	PART NUMBER	QTY	PART NAME 1 2 3 4 5 6 (PRODUCT LEVEL)	SEE PAGE
	507-9143	1	SOFTWARE GP-MACHINE	

<END>

259-5295 FASTENER GP-WIRING HARNESS–JOYSTICK

S/N: RDE1-UP

PART OF 255-5843 CONTROL AR-AUXILIARY

SMCS-1408, 7553 **i04007683**

NOTE	REF NO	GRAPHIC REF	PART NUMBER	QTY	PART NAME 1 2 3 4 5 6 (PRODUCT LEVEL)	SEE PAGE
	1	1	**3S-2093**	2	STRAP - CABLE	

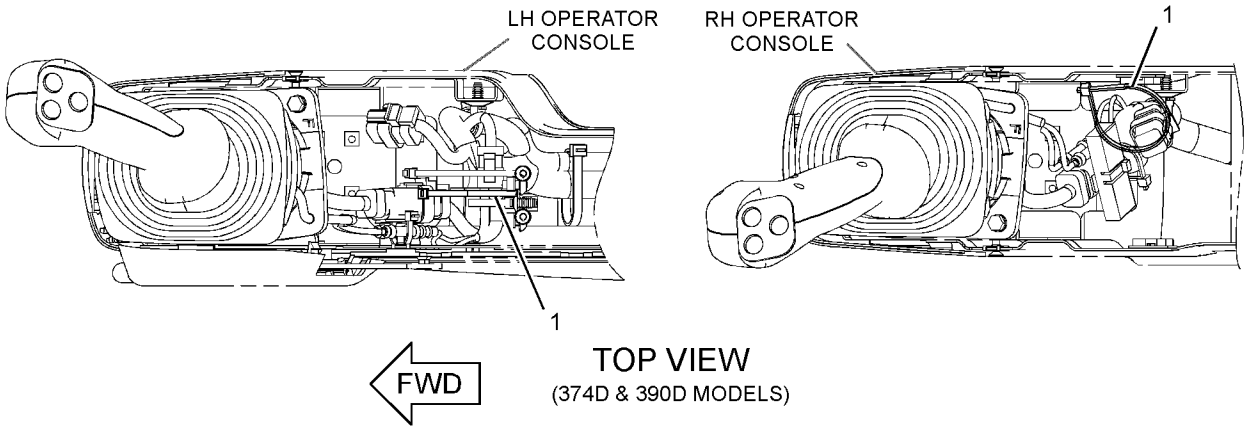

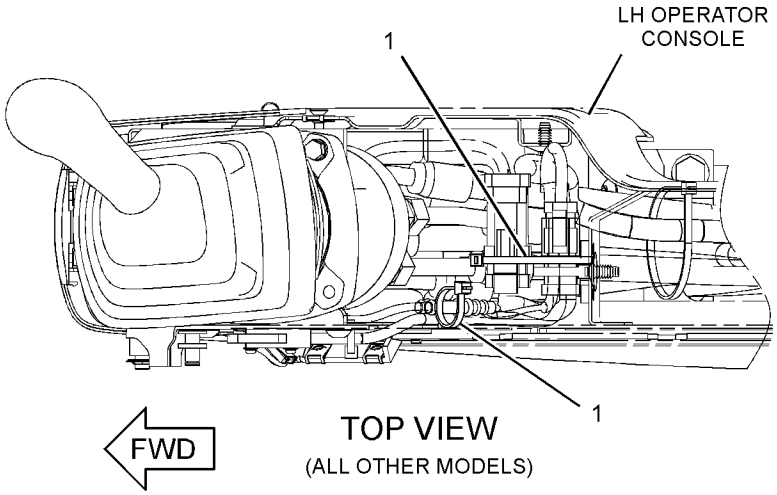

GRAPHIC #1 <END> g02181157

316-6907 GLOW PLUG GP

S/N: G8X1-UP

PART OF 460-5760 ENGINE AR-PRIMARY

SMCS-1412 **i06779986**

NOTE	REF NO	GRAPHIC REF	PART NUMBER	QTY	PART NAME 1 2 3 4 5 6 (PRODUCT LEVEL)	SEE PAGE
	1	1	**368-3151**	1	BUS BAR GP	
	2	1	**226-8770**	4	GLOW PLUG (24-VOLT) (12-VOLT)	

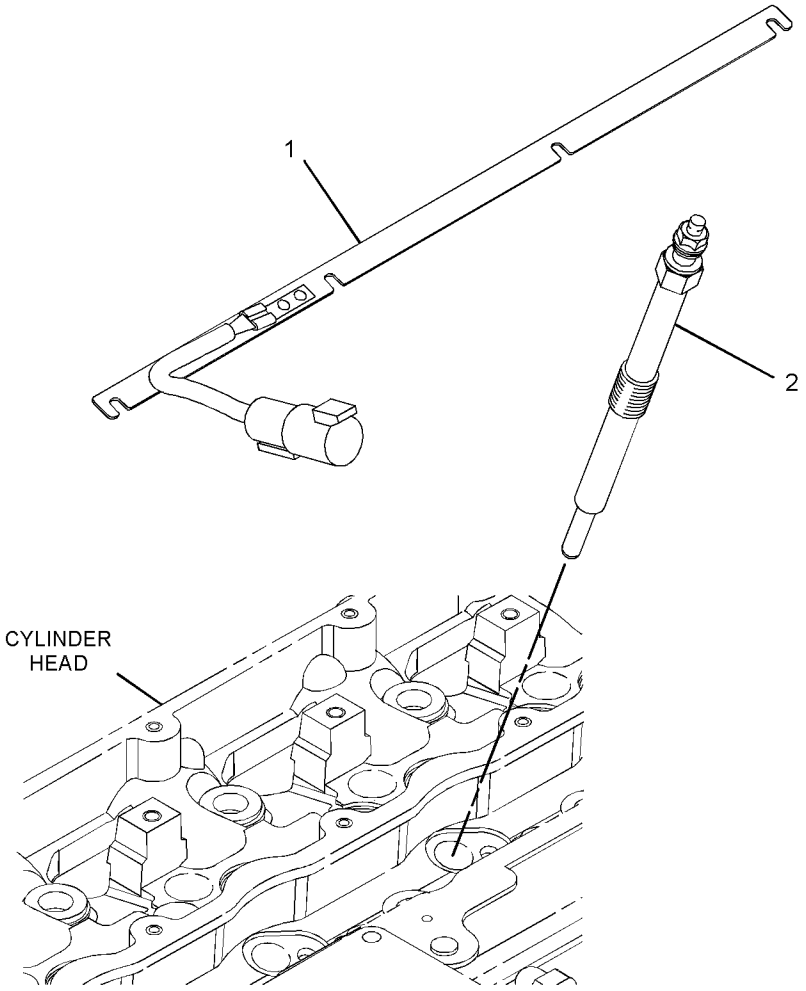

GRAPHIC #1 <END> g01398213

473-4229 HARNESS AS-CHASSIS

S/N: RDE1-UP

PART OF 473-4228 WIRING GP-COMMUNICATION

SMCS-1408 **i06828842**

NOTE	PART NUMBER	QTY	PART NAME 1 2 3 4 5 6 (PRODUCT LEVEL)	SEE PAGE
	8T-8729	2	PIN-CONNECTOR (16-GA TO 18-GA)	
	9X-3401	3	PIN-CONNECTOR (16-GA TO 18-GA)	
			—OR—	
	126-1767	3	PIN-CONNECTOR (14-GA TO 16-GA)	
	155-2256	1	KIT-CONNECTING PLUG (12-PIN)	
			(INCLUDES PLUG AS, WEDGE, & INTERFACE SEAL)	
	155-2260	1	KIT-CONNECTING PLUG (3-PIN)	
			(INCLUDES PLUG AS, WEDGES & INTERFACE SEAL)	
	230-5010	1	PLUG AS-CONNECTOR (6-PIN)	
	455-0707	1	SEAL-CONNECTOR	
	8T-8737	9	PLUG-SEAL	
	102-8803	1	KIT-RECEPTACLE (3-PIN)	
			(INCLUDES RECEPTACLE AS & WEDGE)	
	243-4508	1	RECEPTACLE AS-CONNECTOR (6-PIN)	
	8T-8730	2	SOCKET-CONNECTOR (16-GA TO 18-GA)	
	9X-3402	14	SOCKET-CONNECTOR (16-GA TO 18-GA)	
			—OR—	
	126-1768	14	SOCKET-CONNECTOR (14-GA TO 16-GA)	
D	**5P-6001**		TUBE-HEAT SHRINK (4.75-MM DIA) (0.1-M)	
E	**125-7874**		TUBE-HEAT SHRINK (5.72-MM DIA) (10-CM)	
E	**125-7876**		TUBE-HEAT SHRINK (17.78-MM DIA) (10-CM)	
	155-2258	1	WEDGE-PLUG LOCK (12-PIN)	
	174-0503	1	KIT-CONNECTING PLUG (3-PIN)	
			(INCLUDES PLUG AS, WEDGES & INTERFACE SEAL)	
	176-9299	1	KIT-RECEPTACLE (3-PIN)	
			(INCLUDES RECEPTACLE AS & WEDGES)	

D - ORDER BY THE METER
E - ORDER BY THE CENTIMETER

<END>

502-5390 HARNESS AS-CHASSIS

S/N: RDE1-UP

PART OF 502-7431 BATTERY & WIRING GP

SMCS-1408 **i06783777**

NOTE	PART NUMBER	QTY	PART NAME 1 2 3 4 5 6 (PRODUCT LEVEL)	SEE PAGE
	8T-8799	1	BOOT (RED)	
	342-2972	1	CAP-CONNECTOR (2-PIN)	
	342-2973	3	CAP-CONNECTOR (3-PIN)	
	342-2974	2	CAP-CONNECTOR (6-PIN)	
	342-2976	1	CAP-CONNECTOR (12-PIN)	
	197-4385	1	DIODE	
E	**103-2529**		HOSE (65-CM)	
	8T-8729	17	PIN-CONNECTOR (16-GA TO 18-GA)	
	9W-0852	8	PIN-CONNECTOR (14-GA TO 16-GA)	
	9X-3401	34	PIN-CONNECTOR (16-GA TO 18-GA)	
			—OR—	
	126-1767	34	PIN-CONNECTOR (14-GA TO 16-GA)	
	100-3320	1	PLUG AS-CONNECTOR (2-PIN)	
	126-5011	1	SEAL-CONNECTOR	
	155-2270	13	KIT-CONNECTING PLUG (2-PIN)	
			(EACH INCLUDES PLUG AS, WEDGE, & INTERFACE SEAL)	
	160-7689	1	PLUG AS-CONNECTOR (70-PIN)	
	159-9322	1	SEAL-O-RING	
	174-3016	2	PLUG AS-CONNECTOR (3-PIN)	
	230-4009	1	PLUG AS-CONNECTOR (12-PIN)	
	455-0709	1	SEAL-CONNECTOR	
	230-4011	5	PLUG AS-CONNECTOR (2-PIN)	
			(EACH INCLUDES)	
	455-0704	1	SEAL-CONNECTOR	
	230-4013	5	PLUG AS-CONNECTOR (3-PIN)	
			(EACH INCLUDES)	
	455-0705	1	SEAL-CONNECTOR	
	230-5010	2	PLUG AS-CONNECTOR (6-PIN)	
			(EACH INCLUDES)	
	455-0707	1	SEAL-CONNECTOR	
	231-2295	1	PLUG AS-CONNECTOR (8-PIN)	
	455-0708	1	SEAL-CONNECTOR	
	281-8803	3	PLUG AS-CONNECTOR (3-PIN)	
			(EACH INCLUDES)	
	455-0705	1	SEAL-CONNECTOR	
	281-8804	1	PLUG AS-CONNECTOR (3-PIN)	
	455-0705	1	SEAL-CONNECTOR	
	221-9804	1	PLUG-CONNECTOR (8-GA TO 10-GA)	
	8T-8737	60	PLUG-SEAL	
	102-8802	5	KIT-RECEPTACLE (2-PIN)	
	102-8803	2	KIT-RECEPTACLE (3-PIN)	
			(EACH PLUG KIT INCLUDES PLUG AS, WEDGE, & INTERFACE SEAL)	
	163-6637	1	RECEPTACLE AS-CONNECTOR (54-PIN, BLACK)	
	243-4505	2	RECEPTACLE AS-CONNECTOR (2-PIN)	
	243-4510	1	RECEPTACLE AS-CONNECTOR (12-PIN)	
	349-5085	1	RECEPTACLE AS-CONNECTOR	
	8T-8730	48	SOCKET-CONNECTOR (16-GA TO 18-GA)	
	9W-0844	9	SOCKET-CONNECTOR (14-GA TO 16-GA)	

502-5390 **HARNESS AS-CHASSIS (**contd.**)** **i06783777**

NOTE	PART NUMBER	QTY	PART NAME 1 2 3 4 5 6 (PRODUCT LEVEL)	SEE PAGE
	9X-3402	75	SOCKET-CONNECTOR (16-GA TO 18-GA)	
			—OR—	
	126-1768	75	SOCKET-CONNECTOR (14-GA TO 16-GA)	
	204-6195	1	SOCKET-CONNECTOR (10-GA)	
	305-5362	2	TERMINAL AS (18-GA)	
	3S-2093	21	STRAP-CABLE	
	9X-0196	1	TERMINAL AS (16-GA)	
	7Y-3966	1	TERMINAL AS	
	7Y-3962	1	TERMINAL-BULLET (MALE)	
	7Y-3964	1	TUBE (CONNECTOR TERMINAL)	
	7Y-3967	1	TERMINAL AS	
	7Y-3963	1	TERMINAL-BULLET (FEMALE)	
	7Y-3965	1	TUBE (RECEPTACLE TERMINAL)	
	2L-8069	5	TERMINAL-RING (2-GA TO 10-GA, 3/8-IN SCREW)	
	2L-8075	4	TERMINAL-RING (14-GA TO 16-GA, NO. 8 SCREW)	
	131-1505	1	TERMINAL AS	
	2L-8078	1	TERMINAL-RING (14-GA TO 16-GA, 5/16-IN SCREW)	
E	**125-7874**		TUBE-HEAT SHRINK (5.72-MM DIA) (3-CM)	
	2L-8079	2	TERMINAL-RING (14-GA TO 16-GA, 3/8-IN SCREW)	
	2L-8050	5	TERMINAL-RING (6-GA, 1/4-IN SCREW)	
			—OR—	
	2L-8058	5	TERMINAL-RING (8-GA, 1/4-IN SCREW)	
	2L-8076	1	TERMINAL-RING (14-GA TO 16-GA, NO. 10 SCREW)	
	349-5084	1	TERMINAL-BLADE	
E	**119-3662**		TUBE-HEAT SHRINK (10.85-MM DIA) (26-CM)	
E	**125-7874**		TUBE-HEAT SHRINK (5.72-MM DIA) (75-CM)	
E	**125-7875**		TUBE-HEAT SHRINK (7.44-MM DIA) (30-CM)	
	176-9299	1	KIT-RECEPTACLE (3-PIN)	
			(INCLUDES RECEPTACLE AS & WEDGE)	

E - ORDER BY THE CENTIMETER

<END>

283-2723 HARNESS AS-PUMP

S/N: RDE1-UP

PART OF 275-7055 WIRING GP-COMBINED FLOW

SMCS-1408 **i06814234**

NOTE	PART NUMBER	QTY	PART NAME 1 2 3 4 5 6 (PRODUCT LEVEL)	SEE PAGE
	155-2270	1	KIT-CONNECTING PLUG (2-PIN)	
			(INCLUDES PLUG AS, WEDGE, & INTERFACE SEAL)	
	8T-8729	1	PIN-CONNECTOR (16-GA TO 18-GA)	
	8T-8737	2	PLUG-SEAL	
	243-4506	1	RECEPTACLE AS-CONNECTOR (3-PIN)	
	8T-8730	1	SOCKET-CONNECTOR (16-GA TO 18-GA)	
	2L-8079	1	TERMINAL-RING (14-GA TO 16-GA, 3/8-IN SCREW)	

<END>

470-6901 INSTALLATION AR-COMMUNICATION–PL631

S/N: RDE1-UP

PART OF 506-8578, 506-8579 DISTRIBUTION AR

SMCS-7606 **i06826590**

NOTE	PART NUMBER	QTY	PART NAME 1 2 3 4 5 6 (PRODUCT LEVEL)	SEE PAGE
Y	*479-5761*	1	ANTENNA & MOUNTING GP (PRODUCT LINK)	79
Y	*479-6977*	1	CONTROL & MTG GP-COMMUNICATION	87
Y	*366-8771*	1	FILM GP (PRODUCT LINK RADIO, INTL)	495
Y	*473-4228*	1	WIRING GP-COMMUNICATION	134

Y - SEPARATE ILLUSTRATION

<END>

153-2521 LAMP GP-FLOOD

S/N: RDE1-UP
24-VOLT
PART OF 275-7052, 291-7762 LIGHTING GP-FLOOD

SMCS-1434 **i05856234**

NOTE	REF NO	GRAPHIC REF	PART NUMBER	QTY	PART NAME 1 2 3 4 5 6 (PRODUCT LEVEL)	SEE PAGE
M	1	1	**6V-5210**	2	SCREW-MACHINE (M4X0.7X10-MM)	
	2	1	**3B-4501**	2	LOCKWASHER	
	3	1	**351-9918**	1	LAMP-HALOGEN (24-VOLT, 70-WATT)	
	4	1	**8T-4223**	1	WASHER-HARD (13.5X25.5X3-MM THK)	
M	5	1	**8T-4244**	1	NUT (M12X1.75-THD)	
M	6	1	**174-7791**	1	SCREW-TAPPING	
	7	1	**9B-0453**	1	LOCKWASHER	
	8	1	**170-6993**	1	COVER	
M	9	1	**180-3861**	4	SCREW-TAPPING	
	10	1	**170-9417**	1	LENS AS	
	11	1	**170-9418**	1	BAND	

M - METRIC PART

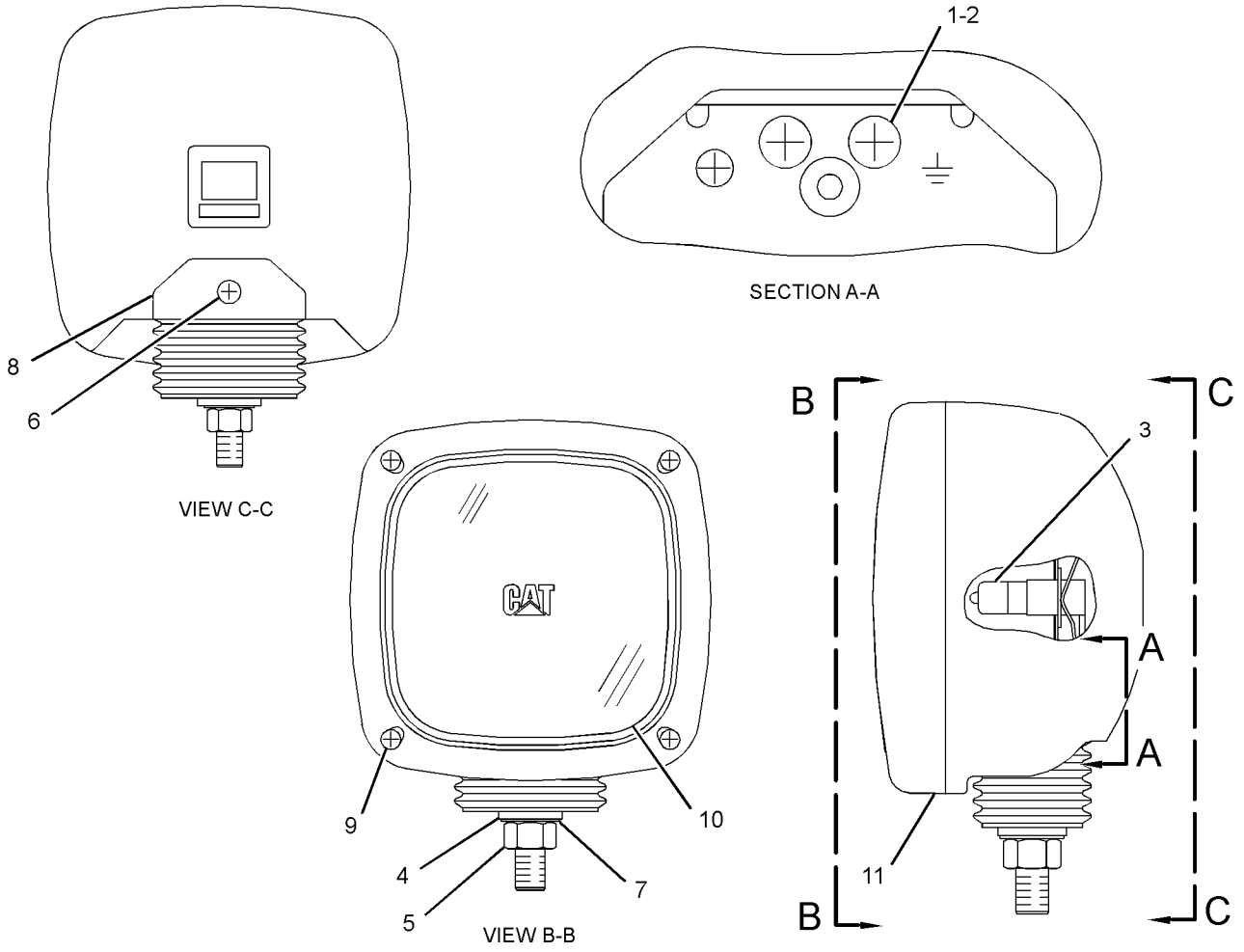

GRAPHIC #1 <END> g01528526

153-2523 LAMP GP-FLOOD

S/N: RDE1-UP
24-VOLT
PART OF 4I-5409 LIGHTING GP-FLOOD

SMCS-1434 **i05785821**

NOTE	REF NO	GRAPHIC REF	PART NUMBER	QTY	PART NAME 1 2 3 4 5 6 (PRODUCT LEVEL)	SEE PAGE
M	1	1	**6V-5210**	2	SCREW-MACHINE (M4X0.7X10-MM)	
	2	1	**3B-4501**	2	LOCKWASHER	
	3	1	**9X-3463**	1	LAMP-HALOGEN (24-VOLT, 70-WATT)	
	4	1	**8T-4223**	1	WASHER-HARD (13.5X25.5X3-MM THK)	
M	5	1	**8T-4244**	1	NUT (M12X1.75-THD)	
M	6	1	**174-7791**	1	SCREW-TAPPING	
	7	1	**5C-2889**	1	LOCKWASHER	
	8	1	**170-6993**	1	COVER	
	9	1	**170-9417**	1	LENS AS	
M	10	1	**180-3861**	4	SCREW-TAPPING	
	11	1	**170-9418**	1	BAND	

M - METRIC PART

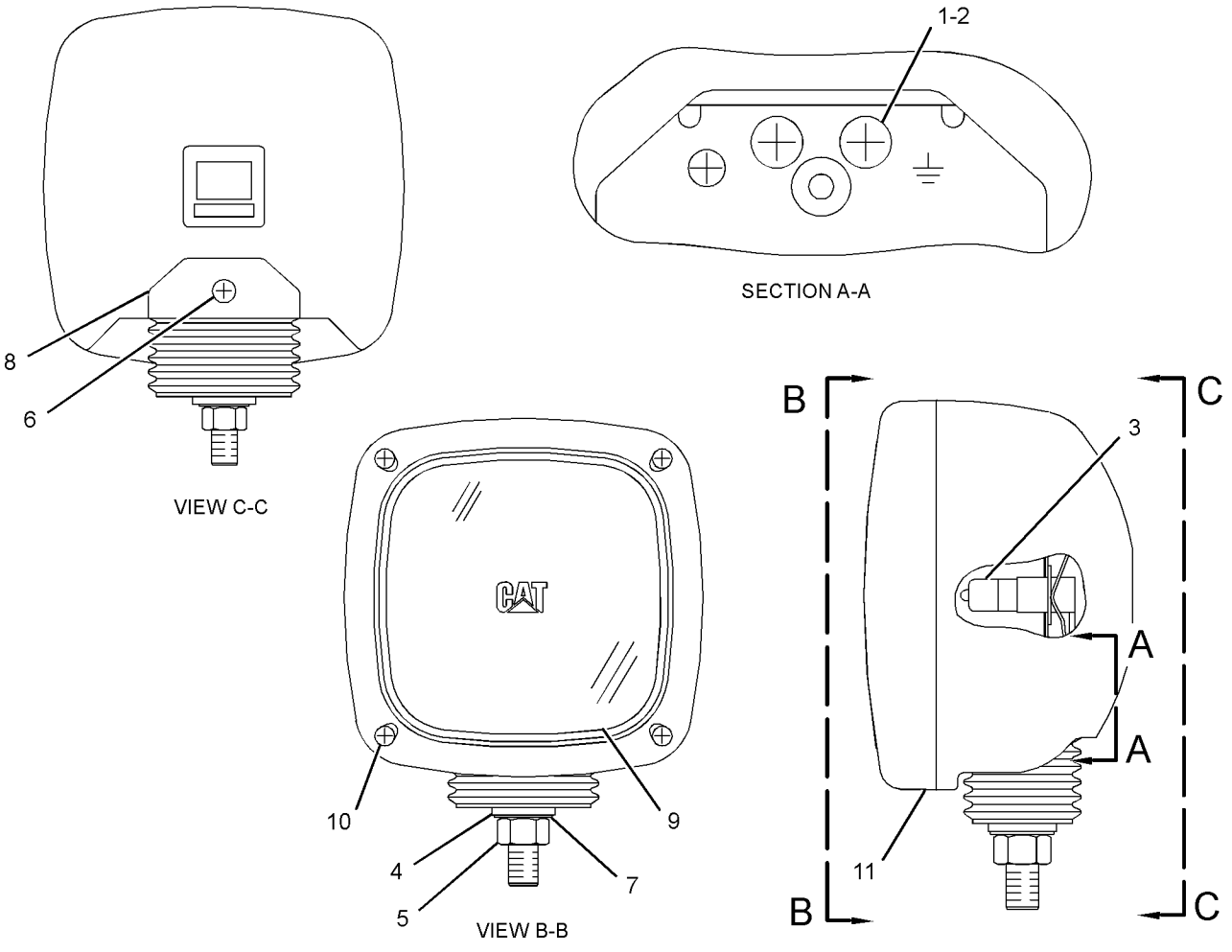

GRAPHIC #1 <END> g01528558

325-4471 LAMP GP-FLOOD

S/N: RDE1-UP
24-VOLT
PART OF 441-6375 LIGHTING GP-FLOOD

SMCS-1434 **i06258940**

NOTE	REF NO	GRAPHIC REF	PART NUMBER	QTY	PART NAME 1 2 3 4 5 6 (PRODUCT LEVEL)	SEE PAGE
	1	1	**175-4291**	1	BRACKET AS	
M	2	1	**9X-4244**	2	SCREW-SPECIAL (M4X1.79X25-MM)	
	3	1	**351-9918**	1	LAMP-HALOGEN (24-VOLT, 70-WATT) (FLOODLIGHT)	
	4	1	**8T-4224**	1	WASHER-HARD (8.8X16X2-MM THK)	
M	5	1	**8T-7547**	1	BOLT (M8X1.25X30-MM)	
M	6	1	**5C-7261**	1	NUT (M8X1.25-THD)	

M - METRIC PART

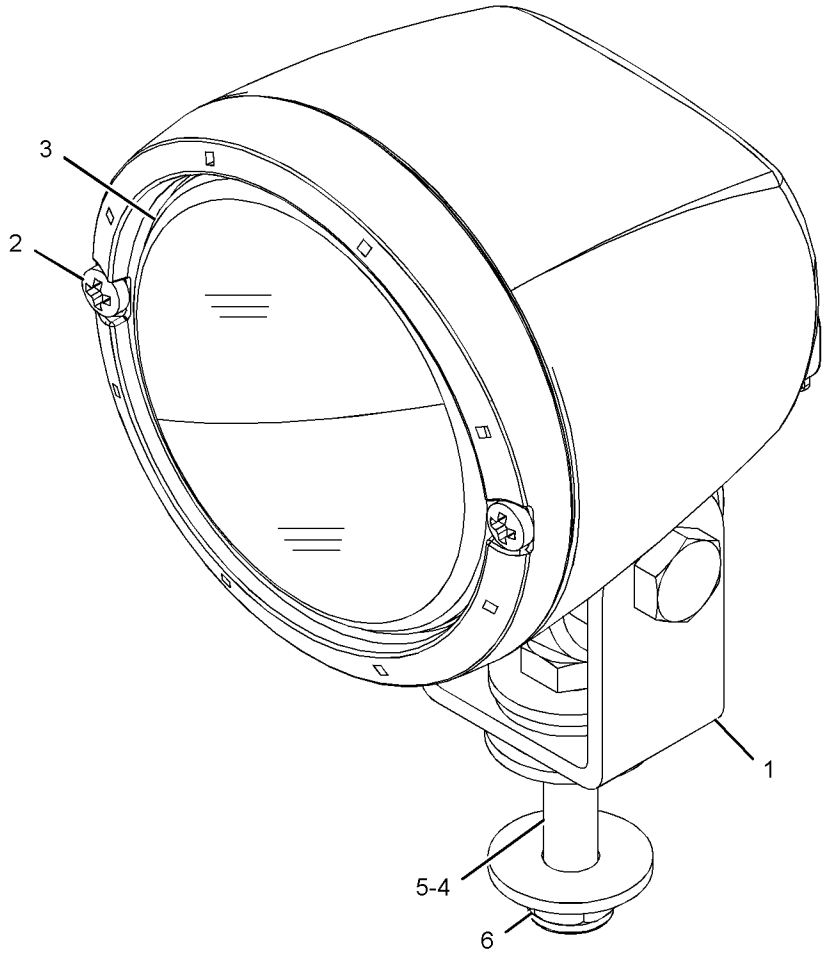

GRAPHIC #1 <END> g02097194

275-7052 LIGHTING GP-FLOOD–BOOM, LH

S/N: RDE1-UP

PART OF 283-9013 BOOM AR-1 PIECE LONG

SMCS-1434 **i06519601**

NOTE	REF NO	GRAPHIC REF	PART NUMBER	QTY	PART NAME 1 2 3 4 5 6 (PRODUCT LEVEL)	SEE PAGE
	1	1	**7I-2673**	1	STRAP-CABLE	
	2	1	**111-4836**	5	CLIP	
	3	1	**116-0118**	1	CLIP	
	4	1	**134-3284**	1	BRACKET	
Y	5	1	**153-2521**	1	LAMP GP-FLOOD (24-VOLT)	97
	6	1	**275-7133**	1	HARNESS AS-LIGHTING (BOOM, LH)	
		1	**9W-0852**	2	PIN-CONNECTOR (14-GA TO 16-GA)	
		1	**2L-8075**	2	TERMINAL-RING (14-GA TO 16-GA, NO. 8 SCREW)	
		1	**243-4505**	1	RECEPTACLE AS-CONNECTOR (2-PIN)	
	7	1	**111-4837**	1	CLIP	
	8	1	**5P-9297**	2	CLIP	
	9	1	**8T-4121**	6	WASHER-HARD (11X21X2.5-MM THK)	
M	10	1	**8T-4133**	6	NUT (M10X1.5-THD)	
M	11	1	**453-2834**	1	BOLT (M16X2X30-MM)	
	12	1	**451-2175**	1	WASHER-HARD (17.5X30X3.5-MM THK)	

M - METRIC PART
Y - SEPARATE ILLUSTRATION

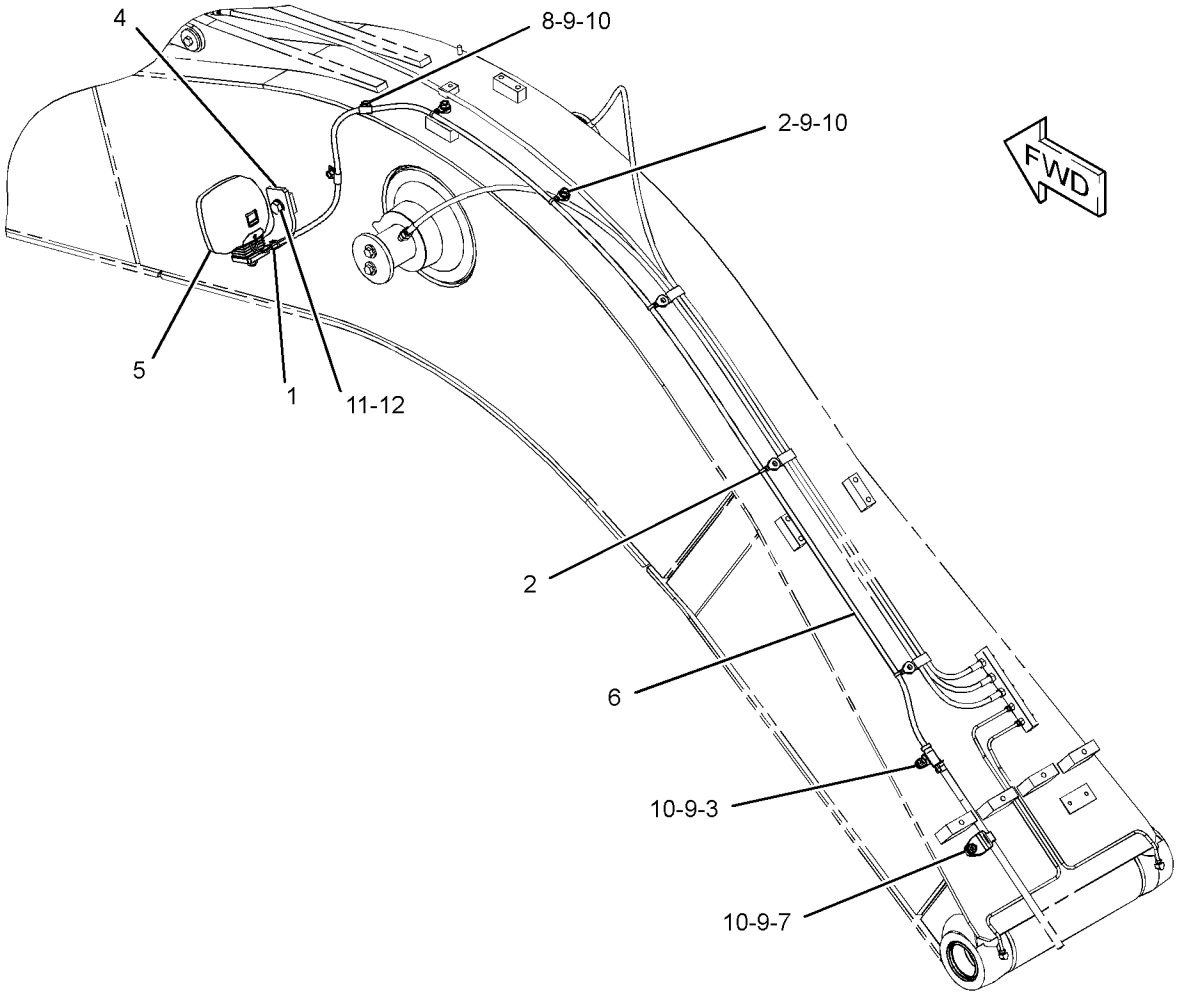

GRAPHIC #1 <END> g01407258

291-7762 LIGHTING GP-FLOOD–BOOM, RH

S/N: RDE1-UP

PART OF 506-8578, 506-8579, 515-4828, 515-4829 DISTRIBUTION AR

SMCS-1434 **i06606662**

NOTE	REF NO	GRAPHIC REF	PART NUMBER	QTY	PART NAME 1 2 3 4 5 6 (PRODUCT LEVEL)	SEE PAGE
	1	1	**7I-2673**	2	STRAP-CABLE	
	2	1	**111-4836**	2	CLIP	
	3	1	**134-3284**	1	BRACKET	
Y	4	1	**153-2521**	1	LAMP GP-FLOOD (24-VOLT)	97
	5	1	**291-7763**	1	HARNESS AS-LIGHTING	
		1	**2L-8075**	4	TERMINAL-RING (14-GA TO 16-GA, NO. 8 SCREW)	
	6	1	**7N-3718**	2	CLIP	
	7	1	**8T-4121**	2	WASHER-HARD (11X21X2.5-MM THK)	
M	8	1	**8T-4133**	2	NUT (M10X1.5-THD)	
M	9	1	**453-2834**	1	BOLT (M16X2X30-MM)	
	10	1	**451-2175**	1	WASHER-HARD (17.5X30X3.5-MM THK)	

M - METRIC PART
Y - SEPARATE ILLUSTRATION

291-7762 **LIGHTING GP-FLOOD (**contd.**)** **i06606662**

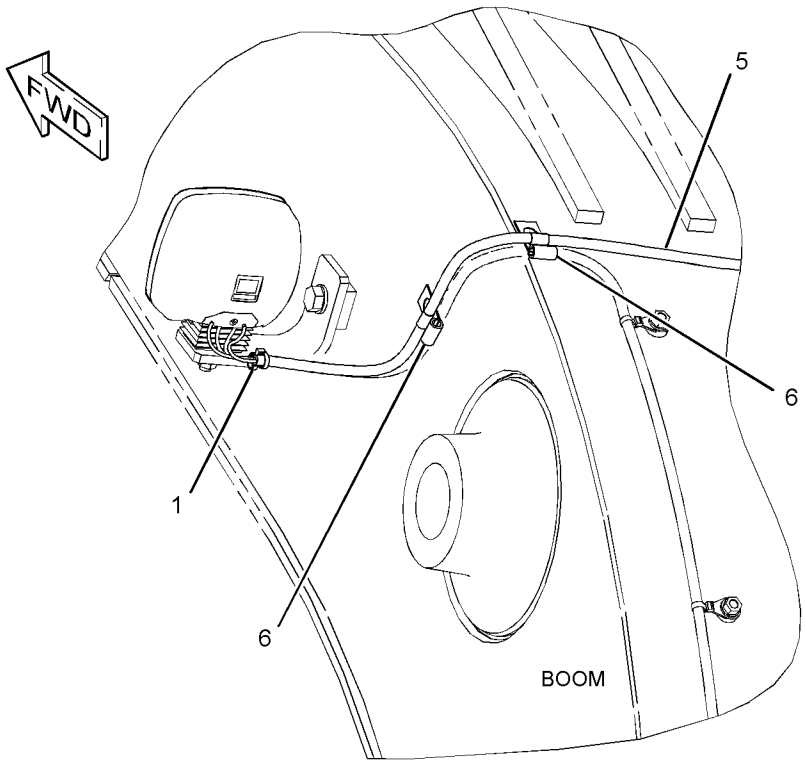

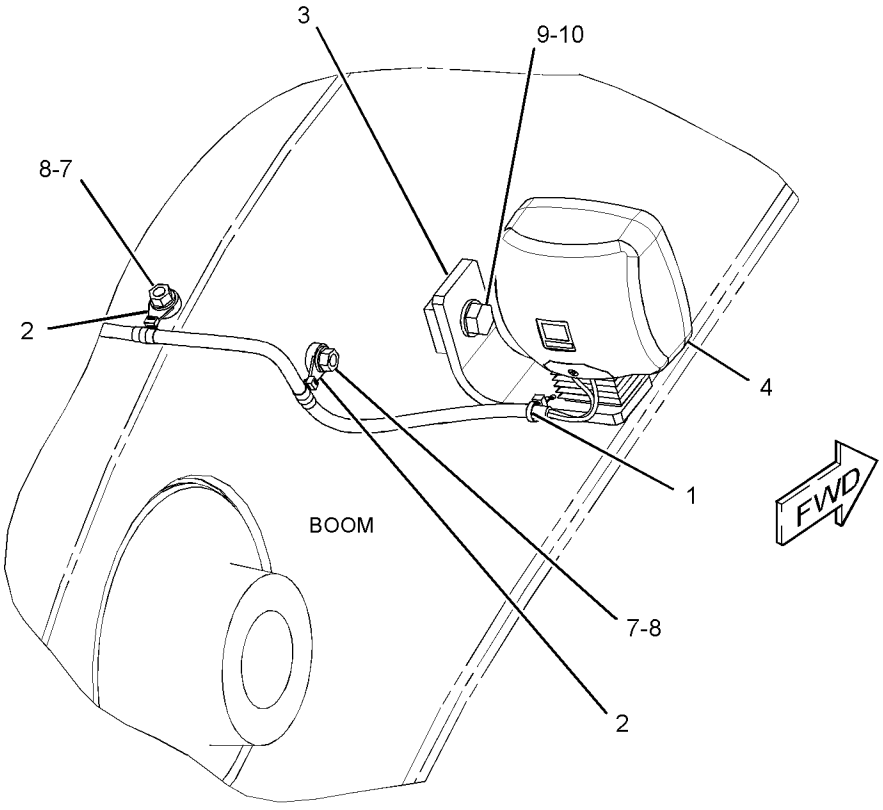

GRAPHIC #1 <END> g01440430

441-6375 LIGHTING GP-FLOOD—CAB

S/N: RDE1-UP

PART OF 506-8573 CAB AR

SMCS-1434 **i06807111**

NOTE	REF NO	GRAPHIC REF	PART NUMBER	QTY	PART NAME 1 2 3 4 5 6 (PRODUCT LEVEL)	SEE PAGE
Y	1	1	**325-4471**	2	LAMP GP-FLOOD (24-VOLT, 35-WATT)	99
	2	1	**441-6376**	2	HARNESS AS-LIGHTING (CAB LIGHT)	
					(EACH INCLUDES)	
		1	*7Y-3966*	1	TERMINAL AS	
		1	**7Y-3962**	1	TERMINAL-BULLET (MALE)	
		1	**7Y-3964**	1	TUBE (CONNECTOR TERMINAL)	
		1	*7Y-3967*	1	TERMINAL AS	
		1	**7Y-3963**	1	TERMINAL-BULLET (FEMALE)	
		1	**7Y-3965**	1	TUBE (RECEPTACLE TERMINAL)	
		1	**9X-3402**	2	SOCKET-CONNECTOR (16-GA TO 18-GA)	
					—OR—	
		1	**126-1768**	2	SOCKET-CONNECTOR (14-GA TO 16-GA)	
		1	**155-2270**	1	KIT-CONNECTING PLUG (2-PIN)	
					(INCLUDES PLUG AS, WEDGE & INTERFACE SEAL)	
	3	1	**441-6377**	1	BRACKET-LIGHT (CAB FRONT, RH)	
	4	1	**441-6379**	1	BRACKET-LIGHT (CAB FRONT, LH)	
	5	1	**163-6795**	2	STRAP-CABLE	
M	6	1	**8T-4200**	2	BOLT (M8X1.25X16-MM)	
	7	1	**8T-4224**	2	WASHER-HARD (8.8X16X2-MM THK)	

M - METRIC PART
Y - SEPARATE ILLUSTRATION

441-6375 **LIGHTING GP-FLOOD (**contd.**)** **i06807111**

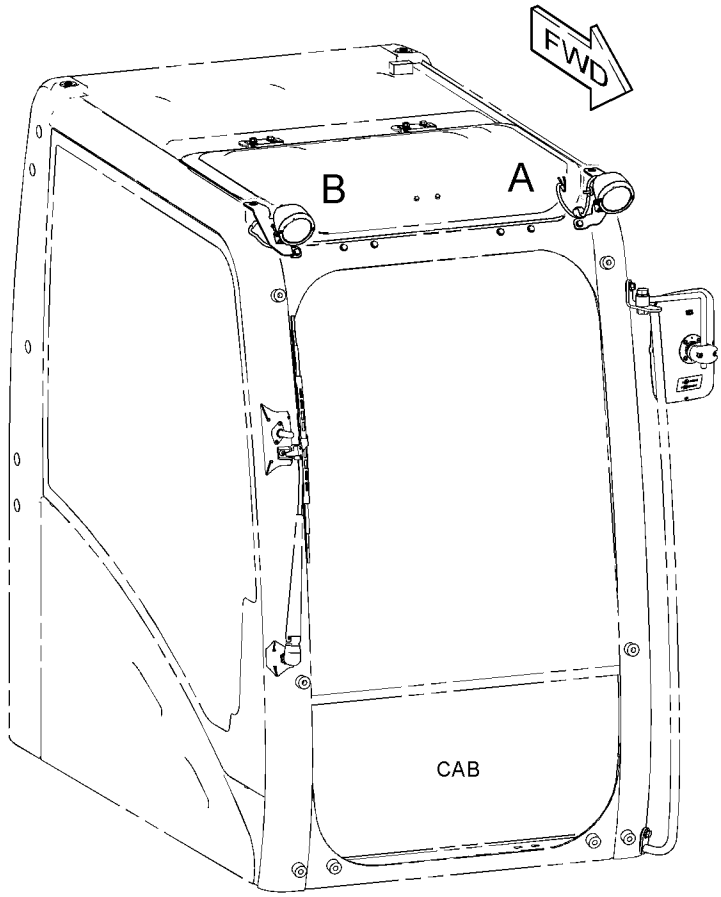

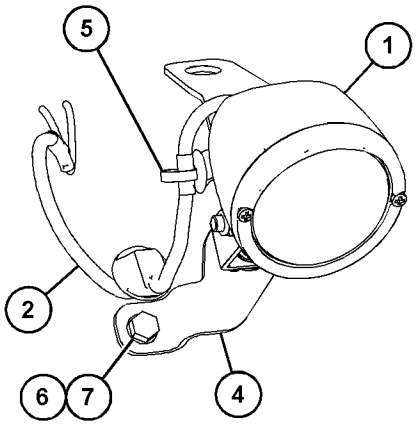

VIEW OF AREA A

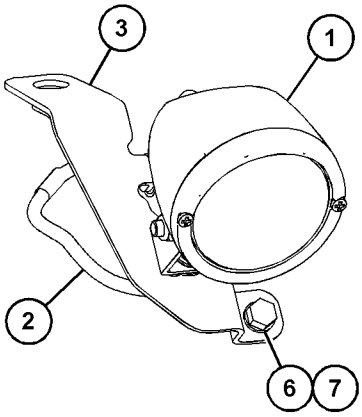

VIEW OF AREA B

GRAPHIC #1 <END> g03808998

4I-5409 LIGHTING GP-FLOOD–CHASSIS

S/N: RDE1-UP

PART OF 500-9108 CHASSIS AR

SMCS-1434 **i05440551**

NOTE	REF NO	GRAPHIC REF	PART NUMBER	QTY	PART NAME 1 2 3 4 5 6 (PRODUCT LEVEL)	SEE PAGE
Y	1	1	**153-2523**	1	LAMP GP-FLOOD (24-VOLT)	98

Y - SEPARATE ILLUSTRATION

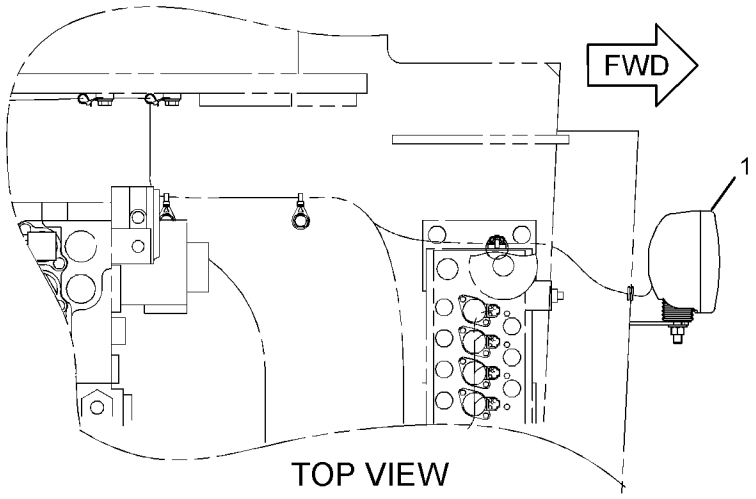

TOP VIEW

(FOR COMPACT RADIUS MACHINES)

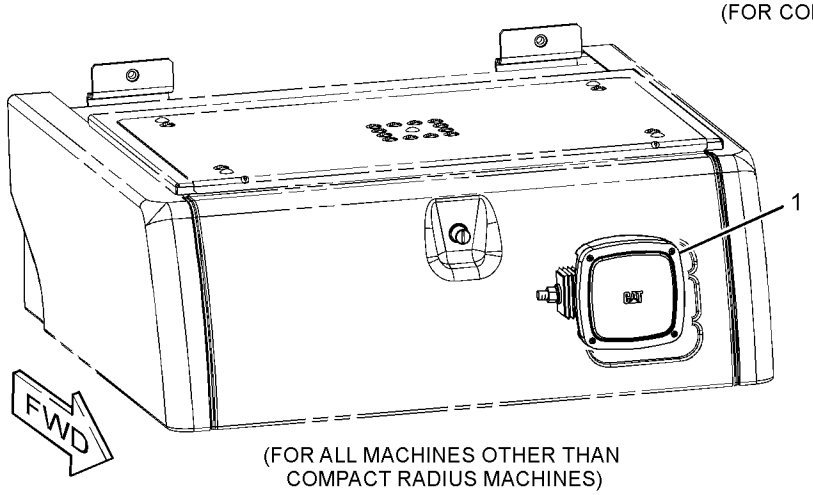

(FOR ALL MACHINES OTHER THAN COMPACT RADIUS MACHINES)

GRAPHIC #1 <END> g01620476

388-6701 PANEL & MTG GP-CIRCUIT BREAKER

S/N: RDE1-UP

PART OF 476-3010 OPERATOR AR

SMCS-1417, 1420 **i05409491**

NOTE	REF NO	GRAPHIC REF	PART NUMBER	QTY	PART NAME 1 2 3 4 5 6 (PRODUCT LEVEL)	SEE PAGE
Y	1	1	*388-6702*	1	PANEL GP-CIRCUIT BREAKER	107
	2	1	**8T-4121**	4	WASHER-HARD (11X21X2.5-MM THK)	
M	3	1	**8T-4137**	4	BOLT (M10X1.5X20-MM)	

M - METRIC PART
Y - SEPARATE ILLUSTRATION

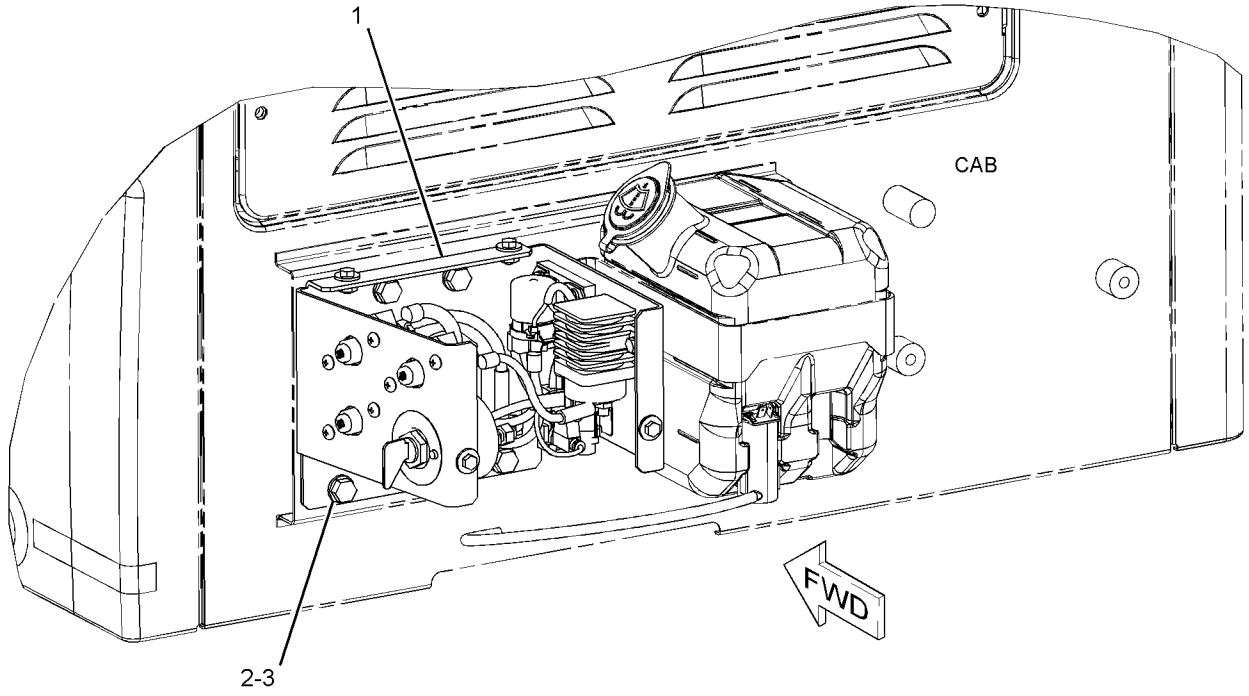

GRAPHIC #1 <END> g03124197

388-6702 PANEL GP-CIRCUIT BREAKER

S/N: RDE1-UP

PART OF 388-6701 PANEL & MTG GP-CIRCUIT BREAKER

SMCS-1417 **i05409510**

NOTE	REF NO	GRAPHIC REF	PART NUMBER	QTY	PART NAME 1 2 3 4 5 6 (PRODUCT LEVEL)	SEE PAGE
	1	1	**3E-8320**	1	PLATE-INSTRUCTION (BATTERY)	
	2	1	**3S-2093**	1	STRAP-CABLE	
Y	3	1	**7N-0718**	1	SWITCH GP-DISCONNECT (BATTERY)	119
	4	1	**7Y-5499**	1	BLOCK AS-TERMINAL	
	5	1	**9G-8451**	1	BLOCK AS	
		1	**1H-3244**	1	LOCKWASHER	
		1	**4B-4276**	2	WASHER (7X16X1.6-MM THK)	
		1	**4L-7124**	1	BOLT (1/4-20X1.25-IN)	
		1	**6V-8185**	2	NUT (1/4-20-THD)	
Y	6	1	**125-1302**	1	SWITCH GP-MAGNETIC (24-VOLT) (START RELAY)	120
	7	1	**141-2759**	1	FUSE (5-AMPERE)	
	8	1	**171-2205**	1	CIRCUIT BREAKER AS (40-AMPERE) (GLOW PLUG)	
		1	**4E-5724**	2	WASHER (7X12X1-MM THK)	
		1	**8T-0122**	2	NUT-FULL (1/4-28-THD)	
		1	**253-2111**	2	LOCKWASHER	
	9	1	**171-2208**	1	CIRCUIT BREAKER AS (60-AMPERE) (ALTERNATOR)	
		1	**4E-5724**	2	WASHER (7X12X1-MM THK)	
		1	**8T-0122**	2	NUT-FULL (1/4-28-THD)	
		1	**253-2111**	2	LOCKWASHER	
	10	1	**171-2210**	1	CIRCUIT BREAKER AS (80-AMPERE) (MAIN)	
		1	**4E-5724**	2	WASHER (7X12X1-MM THK)	
		1	**8T-0122**	2	NUT-FULL (1/4-28-THD)	
		1	**253-2111**	2	LOCKWASHER	
	11	1	**238-1506**	1	COVER	
	12	1	**238-2279**	1	BAR-BUS	
	13	1	**238-2280**	1	WIRE AS	
	14	1	**241-8368**	1	SWITCH GP-MAGNETIC (24-VOLT) (GLOW PLUG RELAY)	
		1	**4F-2294**	2	NUT-JAM (5/16-24-THD)	
		1	**8T-8730**	2	SOCKET-CONNECTOR (16-GA TO 18-GA)	
		1	**155-2270**	1	KIT-CONNECTING PLUG (2-PIN)	
					(INCLUDES PLUG AS, WEDGE & INTERFACE SEAL)	
	15	1	**251-0303**	1	CABLE AS	
D		1	**6V-2369**		CABLE (4-GA, BLACK) (0.2-M)	
		1	**9G-4343**	2	TERMINAL-RING (4-GA, 1/4-IN SCREW)	
	16	1	**251-0304**	1	CABLE AS	
D		1	**6V-2369**		CABLE (4-GA, BLACK) (0.2-M)	
		1	**9G-4343**	2	TERMINAL-RING (4-GA, 1/4-IN SCREW)	
	17	1	**266-7379**	1	STRAP-CABLE	
	18	1	**324-5804**	1	WIRE AS	
	19	1	**324-5805**	1	WIRE AS	
	20	1	**324-5808**	1	HOLDER AS-FUSE	
		1	**8T-8737**	1	PLUG-SEAL	
		1	**9W-0852**	1	PIN-CONNECTOR (14-GA TO 16-GA)	
		1	**2L-8078**	1	TERMINAL-RING (14-GA TO 16-GA, 5/16-IN SCREW)	
		1	**243-4505**	1	RECEPTACLE AS-CONNECTOR (2-PIN)	
	21	1	**388-6773**	1	BRACKET AS-PANEL	
M		1	**6V-9632**	10	NUT-WELD (M6X1-THD)	

388-6702 **PANEL GP-CIRCUIT BREAKER (**contd.**)** **i05409510**

NOTE	REF NO	GRAPHIC REF	PART NUMBER	QTY	PART NAME 1 2 3 4 5 6 (PRODUCT LEVEL)	SEE PAGE
	22	1	**388-6775**	1	WIRE AS	
	23	1	**388-6776**	1	WIRE AS	
M	24	1	**5C-9553**	2	BOLT (M6X1X16-MM)	
	25	1	**5P-4115**	4	WASHER-HARD (7.2X19X2-MM THK)	
	26	1	**6V-5645**	6	SCREW-MACHINE (10-32X0.87-IN)	
	27	1	**8T-0328**	6	WASHER-HARD (5.5X10X1-MM THK)	
M	28	1	**8T-4171**	4	BOLT (M6X1X12-MM)	
M	29	1	**8T-4970**	10	BOLT (M6X1X14-MM)	
	30	1	**9X-8256**	12	WASHER (6.6X12X2-MM THK)	

D - ORDER BY THE METER
M - METRIC PART
Y - SEPARATE ILLUSTRATION

388-6702 **PANEL GP-CIRCUIT BREAKER (**contd.**)** **i05409510**

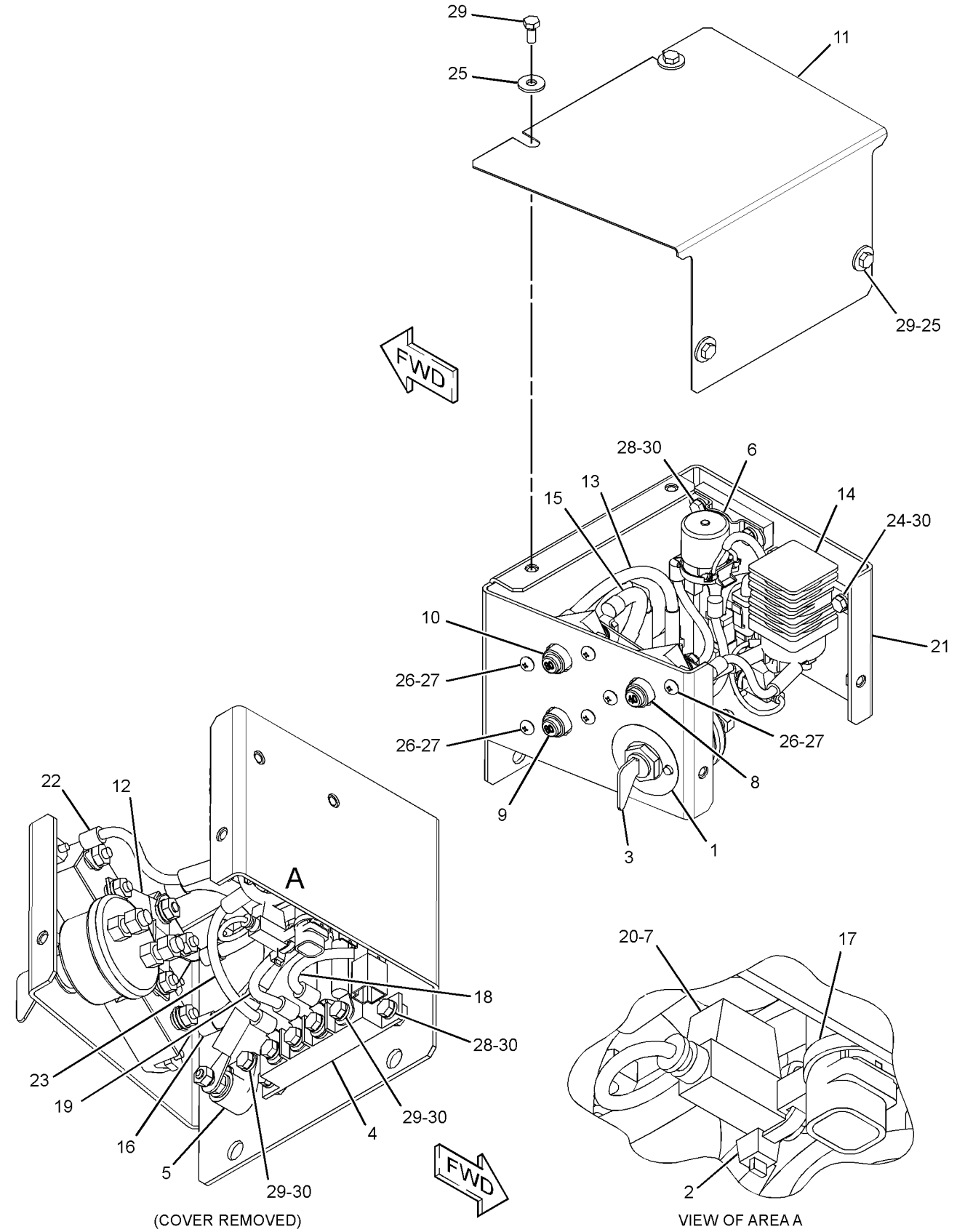

(COVER REMOVED)

VIEW OF AREA A

GRAPHIC #1

<END>

g03125002

398-7007 PANEL GP-SWITCH—CONSOLE

S/N: RDE1-UP

PART OF 506-8573 CAB AR

SMCS-1408, 1429, 7332, 7451 **i06731748**

NOTE	REF NO	GRAPHIC REF	PART NUMBER	QTY	PART NAME 1 2 3 4 5 6 (PRODUCT LEVEL)	SEE PAGE
	1	1	**3S-2093**	4	STRAP-CABLE	
	2	1	**170-9324**	1	LAMP AS (24-VOLT, 3-WATT)	
	3	1	**234-1158**	1	COVER	
Y	4	1	**255-2751**	1	SWITCH GP-START (ENGINE, KEY)	122
	5	1	**267-7976**	1	PANEL	
	6	1	**398-7013**	1	HARNESS AS-PANEL	
		1	**102-8802**	1	KIT-RECEPTACLE (2-PIN)	
					(INCLUDES RECEPTACLE AS & WEDGE)	
		1	**3S-2093**	3	STRAP-CABLE	
		1	**7Y-3951**	2	TERMINAL-BLADE (14-GA)	
		1	**7Y-3952**	1	PLUG-CONNECTOR (2-PIN)	
		1	*7Y-3966*	1	TERMINAL AS	
		1	**7Y-3962**	1	TERMINAL-BULLET (MALE)	
		1	**7Y-3964**	1	TUBE (CONNECTOR TERMINAL)	
		1	*7Y-3967*	1	TERMINAL AS	
		1	**7Y-3963**	1	TERMINAL-BULLET (FEMALE)	
		1	**7Y-3965**	1	TUBE (RECEPTACLE TERMINAL)	
		1	**8T-8737**	2	PLUG-SEAL	
		1	**121-1168**	1	CONNECTOR-RECEPTACLE	
		1	**121-1173**	14	TERMINAL (MALE)	
		1	**9X-3402**	2	SOCKET-CONNECTOR (16-GA TO 18-GA)	
		1	**2L-8075**	4	TERMINAL-RING (14-GA TO 16-GA, NO. 8 SCREW)	
		1	**153-2540**	10	TERMINAL (FEMALE)	
		1	**153-2541**	1	PLUG-CONNECTOR (10-PIN)	
		1	**155-2270**	1	KIT-CONNECTING PLUG (2-PIN)	
					(INCLUDES PLUG AS, WEDGE & INTERFACE SEAL)	
		1	**238-2366**	2	TERMINAL (MALE)	
	7	1	**398-8931**	1	COVER	
	8	1	**096-6166**	4	WASHER-HARD (4.5X9X1-MM THK)	
	9	1	**119-5026**	4	SCREW-PAN HEAD (10-16X0.63-IN)	
M	10	1	**6V-9491**	4	SCREW-MACHINE (M4X0.7X20-MM)	

M - METRIC PART
Y - SEPARATE ILLUSTRATION

398-7007 **PANEL GP-SWITCH (**contd.**)** **i06731748**

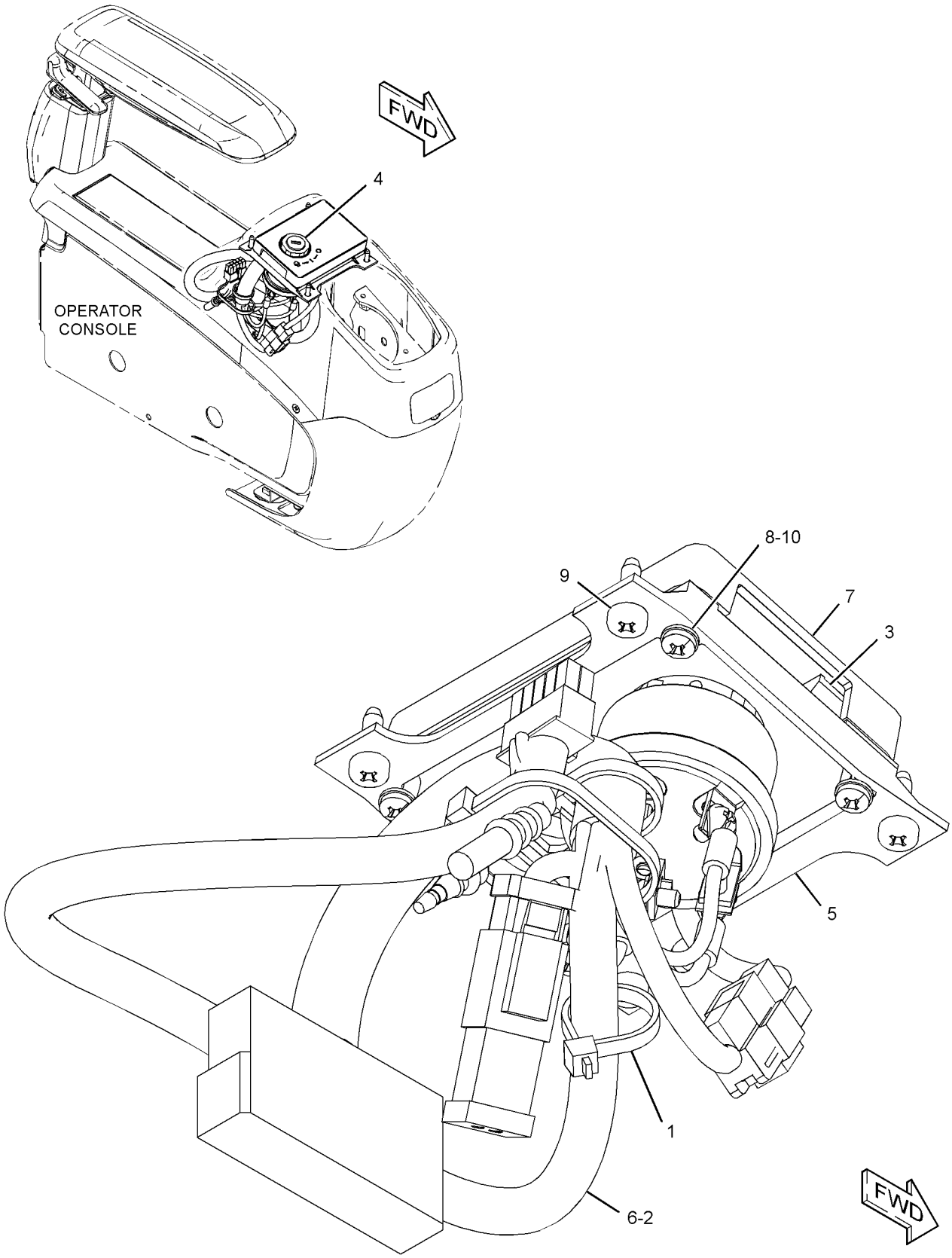

GRAPHIC #1 <END> g03445597

423-6434 SENSOR GP-LIQUID LEVEL

S/N: RDE1-UP
WATER IN FUEL
PART OF 504-7666 LINES GP-FUEL

SMCS-7422 **i05649052**

NOTE	REF NO	GRAPHIC REF	PART NUMBER	QTY	PART NAME 1 2 3 4 5 6 (PRODUCT LEVEL)	SEE PAGE
	1	1	**214-7568**	1	SEAL-O-RING	
	2	1	**281-8805**	1	RECEPTACLE AS-CONNECTOR	
	3	1	**9X-3401**	3	PIN-CONNECTOR (16-GA TO 18-GA)	

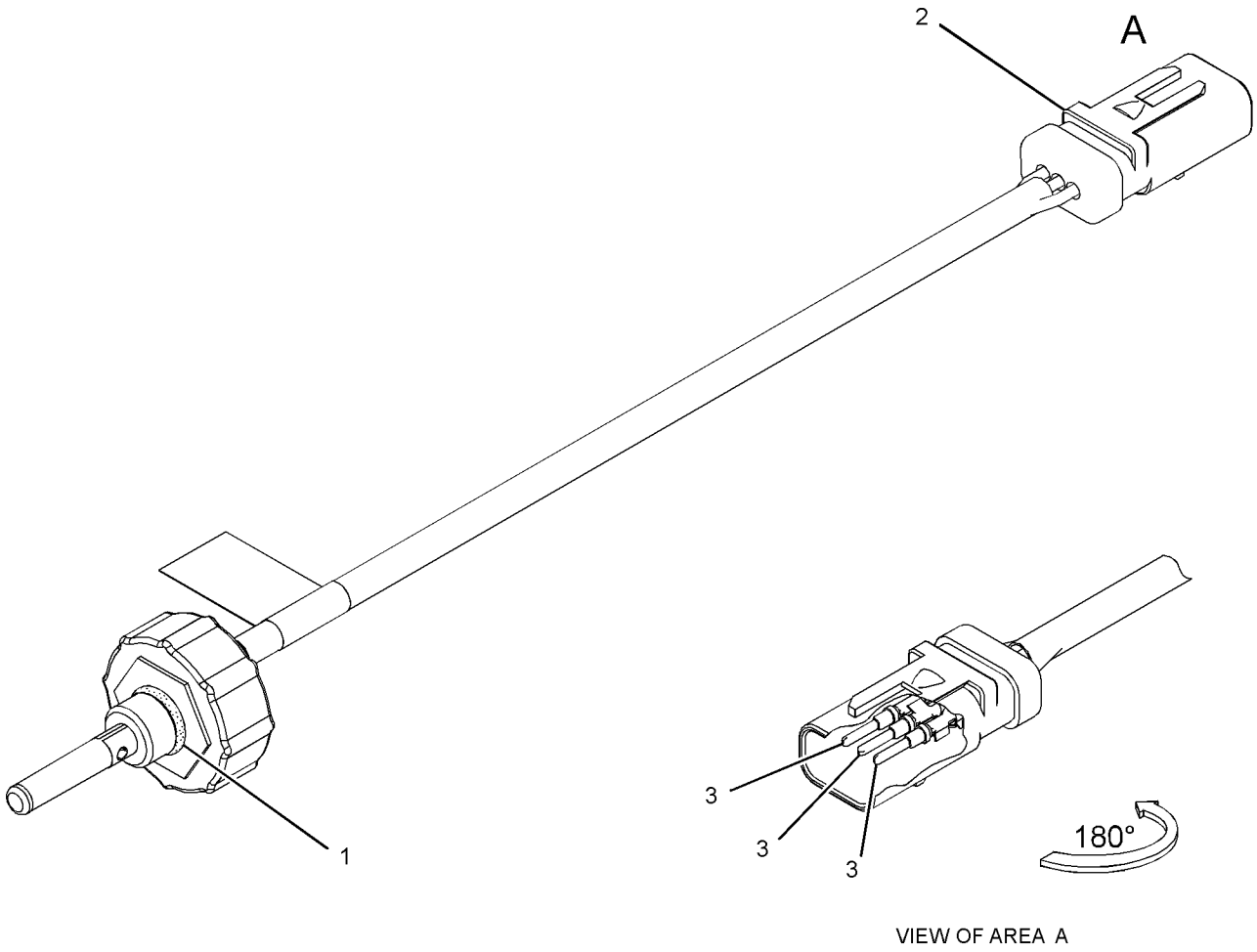

VIEW OF AREA A

GRAPHIC #1 <END> g02423836

325-8634 SENSOR GP-PRESSURE

S/N: RDE1-UP

PART OF 392-3904 SENSOR GP-TEMP & PRESS

SMCS-1439, 1916, 1917, 1923, 1924

i04407512

NOTE	REF NO	GRAPHIC REF	PART NUMBER	QTY	PART NAME 1 2 3 4 5 6 (PRODUCT LEVEL)	SEE PAGE
	1	1	**320-3060**	1	SENSOR GP-PRESSURE (FUEL)	
	2	1	**228-7100**	1	SEAL-O-RING	

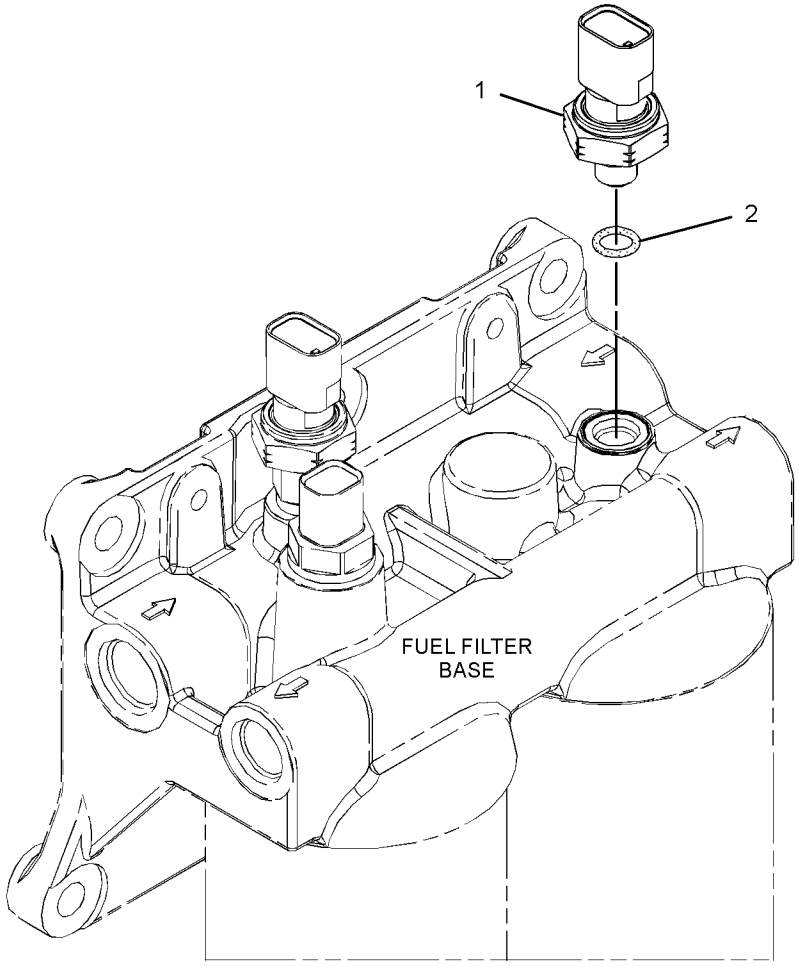

GRAPHIC #1

<END>

g02080674

338-6971 SENSOR GP-PRESSURE

S/N: RDE1-UP

PART OF 502-5317 LINES GP-FRONT

SMCS-1439, 1916, 1917, 1923, 1924 **i06125695**

NOTE	REF NO	GRAPHIC REF	PART NUMBER	QTY	PART NAME 1 2 3 4 5 6 (PRODUCT LEVEL)	SEE PAGE
	1	1	**344-7392**	1	SENSOR GP-PRESSURE	
	2	1	**3J-1907**	1	SEAL-O-RING	

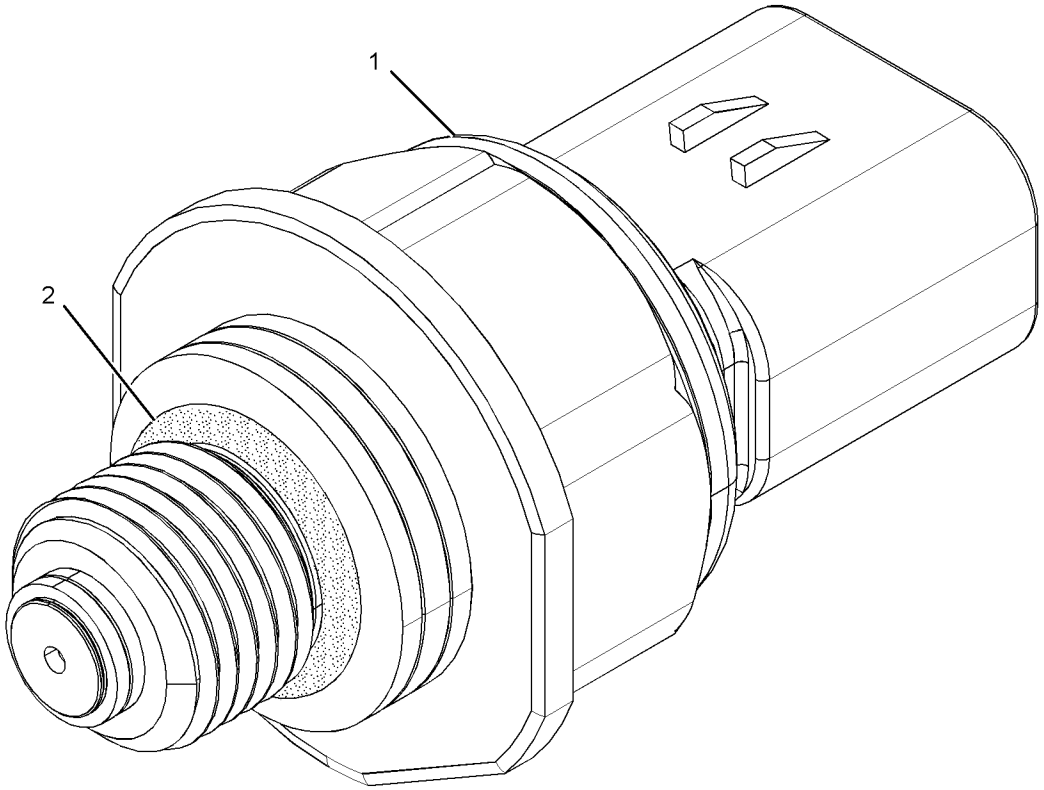

GRAPHIC #1 <END> g02262995

434-8214 SENSOR GP-PRESSURE

S/N: RDE1-UP

PART OF 278-6697 LINES GP-FRONT

SMCS-1439, 1916, 1917, 1923, 1924

i05537291

NOTE	REF NO	GRAPHIC REF	PART NUMBER	QTY	PART NAME 1 2 3 4 5 6 (PRODUCT LEVEL)	SEE PAGE
	1	1	**434-3436**	1	SENSOR AS-PRESSURE (BOOM CYLINDER)	
	1A	1	**3K-0360**	1	SEAL-O-RING	
	2	1	**366-9313**	1	HARNESS AS-SENSOR	
		1	**102-8803**	1	KIT-RECEPTACLE (3-PIN)	
					(INCLUDES RECEPTACLE AS & WEDGE)	
		1	**9X-3402**	3	SOCKET-CONNECTOR (16-GA TO 18-GA)	
					–OR–	
		1	**126-1768**	3	SOCKET-CONNECTOR (14-GA TO 16-GA)	
		1	**9X-3401**	3	PIN-CONNECTOR (16-GA TO 18-GA)	
					–OR–	
		1	**126-1767**	3	PIN-CONNECTOR (14-GA TO 16-GA)	
		1	**230-4013**	1	PLUG AS-CONNECTOR (3-PIN)	
		1	**264-7030**	1	SEAL-CONNECTOR	

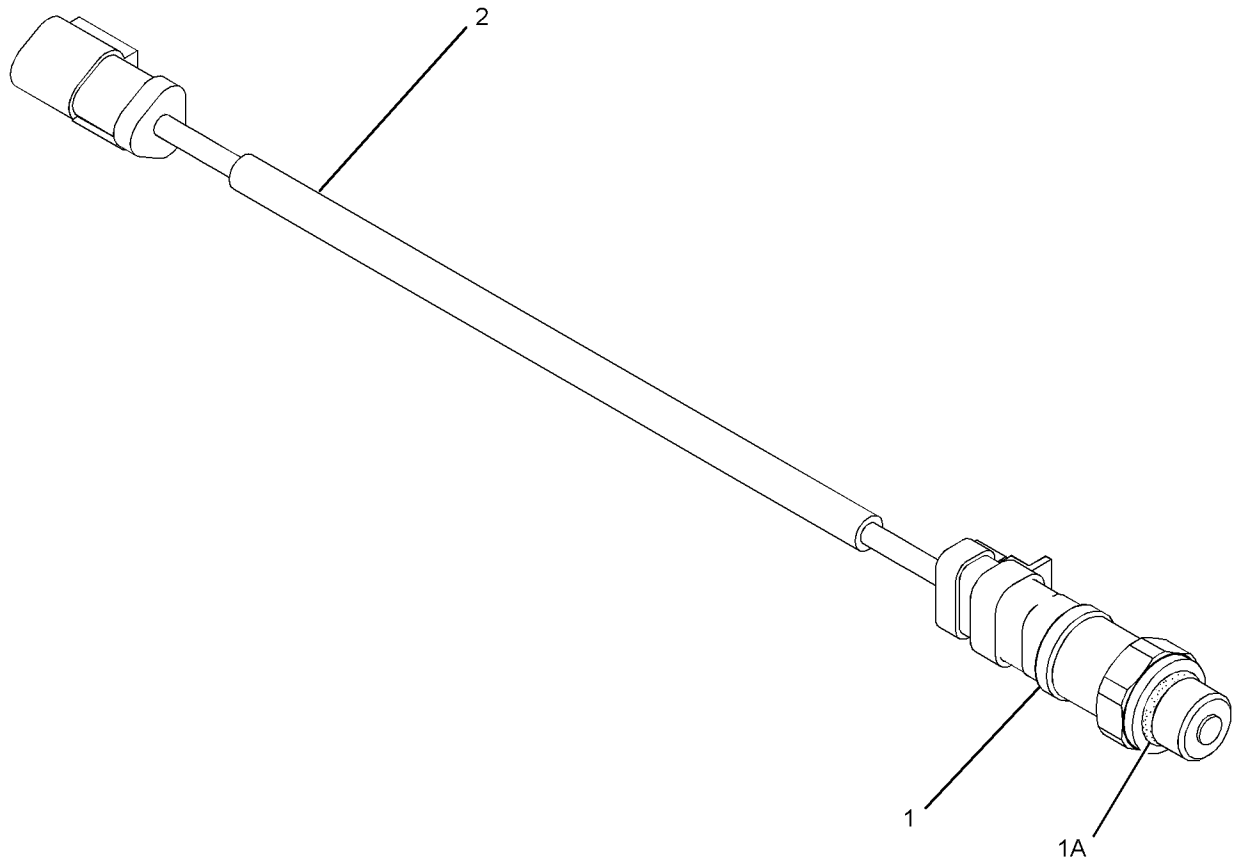

GRAPHIC #1 <END> g02571716

318-1181 SENSOR GP-SPEED

S/N: RDE1-UP

PART OF 502-7431 BATTERY & WIRING GP

SMCS-1907, 1912, 4803, 7493 **i05338159**

NOTE	REF NO	GRAPHIC REF	PART NUMBER	QTY	PART NAME 1 2 3 4 5 6 (PRODUCT LEVEL)	SEE PAGE
	1	1	**171-5349**	1	STRAP-MARKER	
	2	1	**102-8802**	1	KIT-RECEPTACLE (2-PIN)	
					(INCLUDES RECEPTACLE AS & WEDGE)	
	3	1	**9X-3401**	2	PIN-CONNECTOR (16-GA TO 18-GA)	
					–OR–	
		1	**126-1767**	2	PIN-CONNECTOR (14-GA TO 16-GA)	
E	4	1	**9X-1386**		SLEEVE (14-CM)	

E - ORDER BY THE CENTIMETER

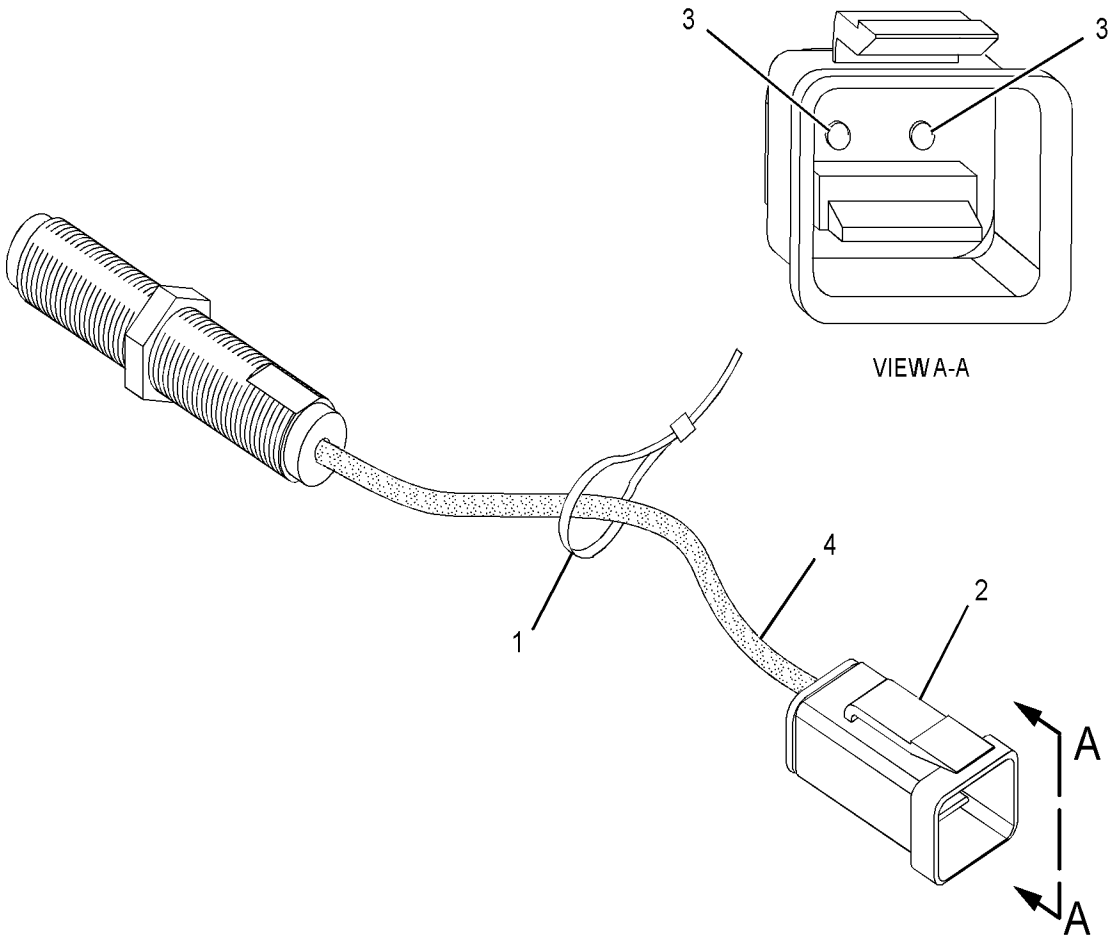

GRAPHIC #1 <END> g03381476

392-3904 SENSOR GP-TEMP & PRESS

S/N: RDE1-UP

PART OF 460-3429 INSTALLATION AR-ENGINE

SMCS-1408, 1435, 1439, 1906, 1924, 7400 **i05401663**

NOTE	REF NO	GRAPHIC REF	PART NUMBER	QTY	PART NAME 1 2 3 4 5 6 (PRODUCT LEVEL)	SEE PAGE
Y	1	1	*325-8634*	1	SENSOR GP-PRESSURE (FUEL)	113
	2	1	**394-4837**	1	SENDER GP-TEMPERATURE (COOLANT)	
		1	**1H-4393**	2	LOCKWASHER	
M		1	**095-7930**	2	SCREW-MACHINE (M4X0.7X6-MM)	
	3	1	**199-9751**	1	SEAL-O-RING	

M - METRIC PART
Y - SEPARATE ILLUSTRATION

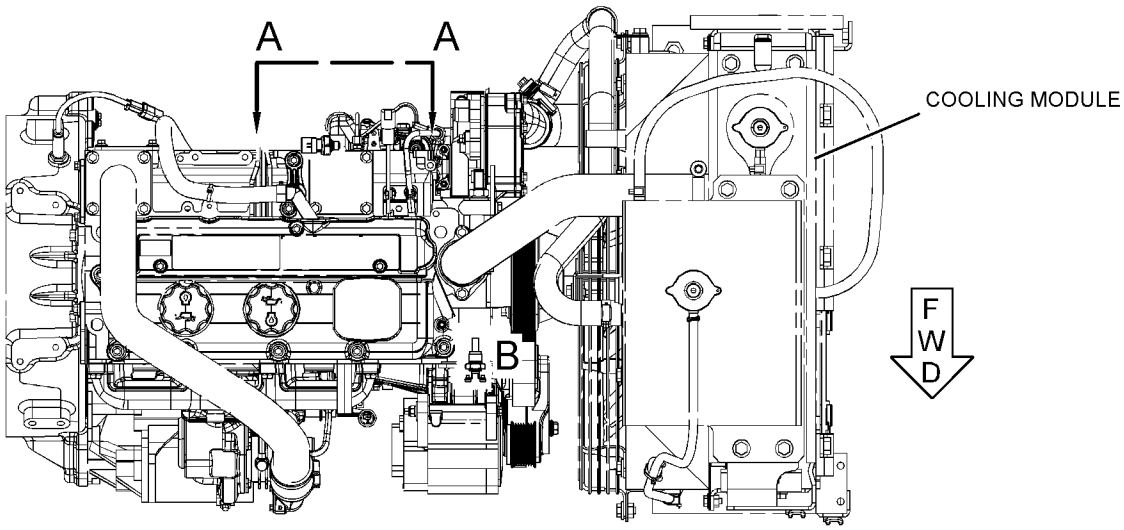

TOP VIEW

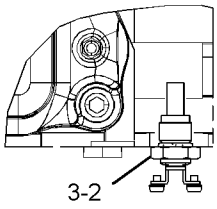

VIEW OF AREA B

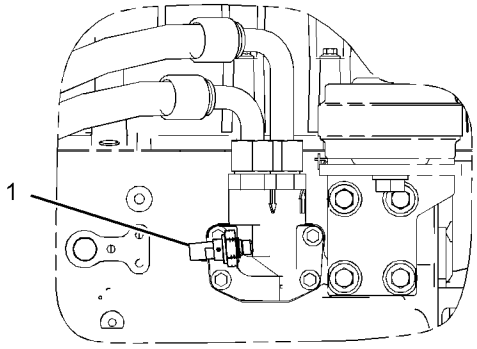

VIEW A-A

GRAPHIC #1 <END> g03119637

484-8227 STARTING MOTOR GP-ELECTRIC

S/N: G8X1-UP

PART OF 460-5760 ENGINE AR-PRIMARY

SMCS-1453 **i06780114**

NOTE	REF NO	GRAPHIC REF	PART NUMBER	QTY	PART NAME 1 2 3 4 5 6 (PRODUCT LEVEL)	SEE PAGE
M	1	1	**6I-0364**	3	STUD (M10X1.5X45-MM)	
M	2	1	**175-7141**	3	NUT-HEX FLANGE (M10X1.5-THD)	
	3	1	**357-5205**	1	MOTOR-STARTING	

M - METRIC PART

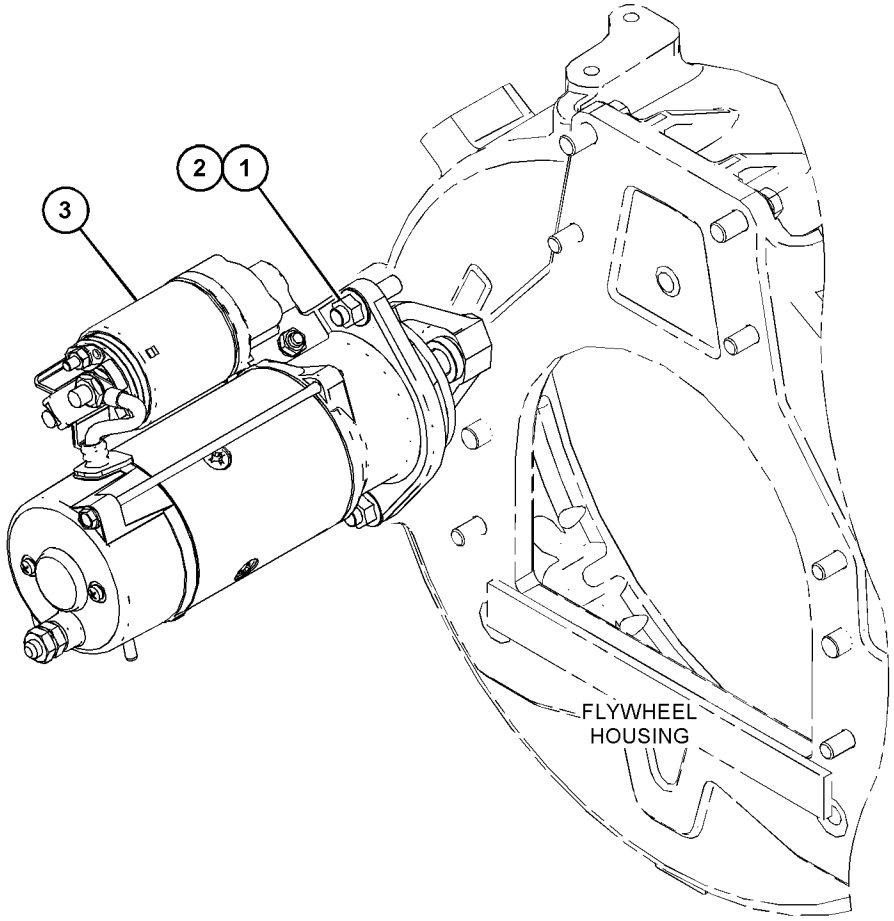

GRAPHIC #1 <END> g03892079

7N-0718 SWITCH GP-DISCONNECT–BATTERY

S/N: RDE1-UP
12-VOLT
PART OF 388-6702 PANEL GP-CIRCUIT BREAKER

SMCS-1411 **i02587657**

NOTE	REF NO	GRAPHIC REF	PART NUMBER	QTY	PART NAME 1 2 3 4 5 6 (PRODUCT LEVEL)	SEE PAGE
	1	1	**8H-5306**	1	KEY (BATTERY DISCONNECT)	
	2	1	**8H-5303**	1	NUT (3/4-16-THD)	
	3	1	**2H-3922**	2	LOCKWASHER	
	4	1	**9F-5644**	2	LOCKWASHER	
	5	1	**6F-7045**	2	NUT-FULL (3/8-24-THD)	

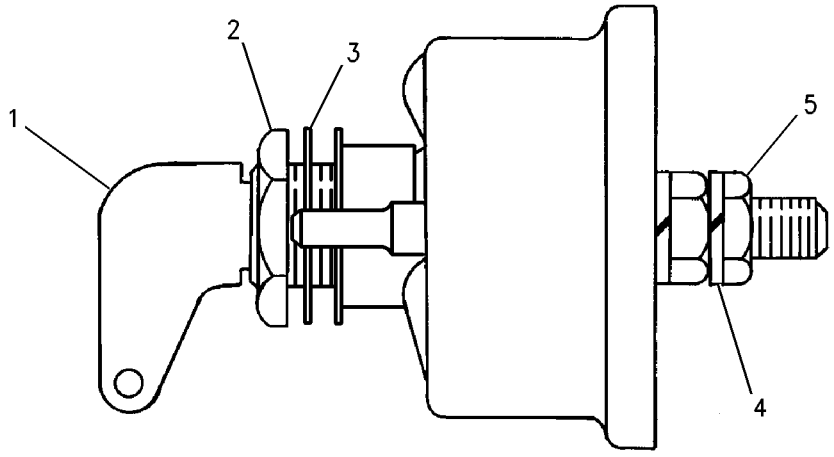

GRAPHIC #1 <END> g00715584

125-1302 SWITCH GP-MAGNETIC—START RELAY

S/N: RDE1-UP
24-VOLT
PART OF 388-6702 PANEL GP-CIRCUIT BREAKER

SMCS-7499 **i06098891**

NOTE	REF NO	GRAPHIC REF	PART NUMBER	QTY	PART NAME 1 2 3 4 5 6 (PRODUCT LEVEL)	SEE PAGE
	1	1	**102-8802**	1	KIT-RECEPTACLE (2-PIN)	
					(INCLUDES RECEPTACLE AS & WEDGE)	
	2	1	**186-3735**	2	PIN-CONNECTOR (16-GA TO 18-GA)	
	3	1	**1H-3338**	2	LOCKWASHER (EXTERNAL TOOTH)	
	4	1	**012-0380**	2	LOCKWASHER (6.5X12.5X1.6-MM THK) (SPLIT)	
M	5	1	**5C-2890**	2	NUT (M6X1-THD)	
BE	6	1	**9X-1813**		SLEEVE	

B - USE AS REQUIRED
E - ORDER BY THE CENTIMETER
M - METRIC PART

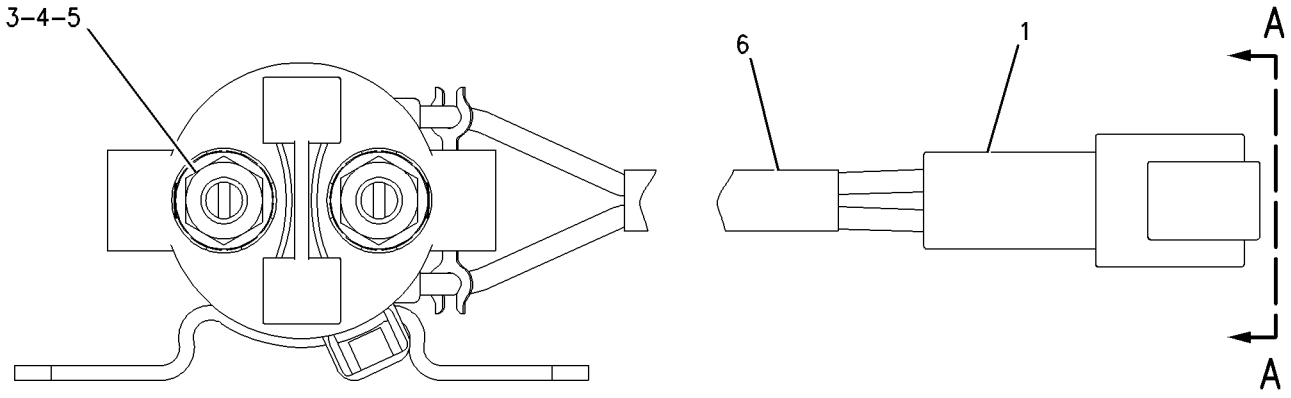

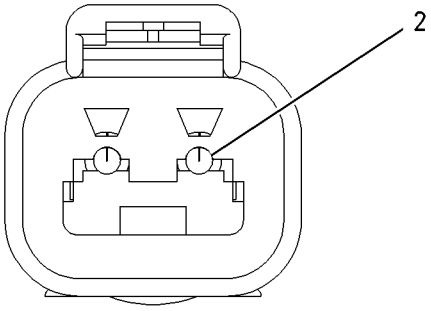

VIEW A–A

GRAPHIC #1 <END> g00987986

330-4298 SWITCH GP-PRESSURE

S/N: G8X1-UP

PART OF 460-5760 ENGINE AR-PRIMARY

SMCS-1435 **i06780130**

NOTE	REF NO	GRAPHIC REF	PART NUMBER	QTY	PART NAME 1 2 3 4 5 6 (PRODUCT LEVEL)	SEE PAGE
	1	1	**035-8063**	1	PLUG	
	2	1	**199-9267**	1	SEAL-O-RING	
	3	1	**232-3861**	1	PLUG (BLANKING)	

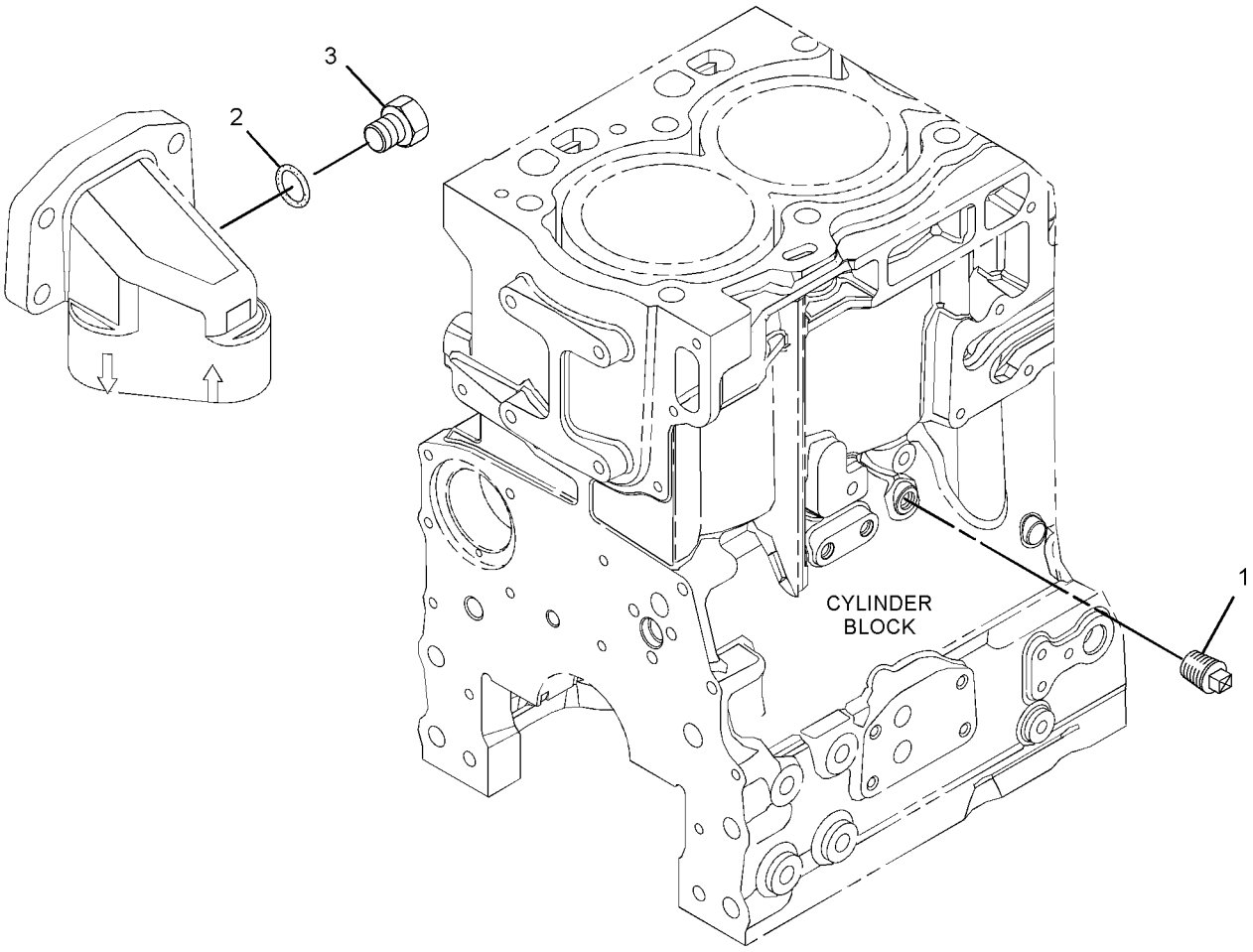

GRAPHIC #1 <END> g01598202

255-2751 SWITCH GP-START–ENGINE, KEY

S/N: RDE1-UP

PART OF 398-7007 PANEL GP-SWITCH

SMCS-1416 **i04574543**

NOTE	REF NO	GRAPHIC REF	PART NUMBER	QTY	PART NAME 1 2 3 4 5 6 (PRODUCT LEVEL)	SEE PAGE
	1	1	**6V-8362**	4	SCREW-MACHINE (8-32X0.31-IN)	
	2	1	**9B-7233**	4	LOCKWASHER	
	3	1	**7T-6799**	1	NUT-MOUNTING (1-32-THD)	
AF			**5P-8500**	1	KEY (IGNITION)	

A - NOT PART OF THIS GROUP
F - NOT SHOWN

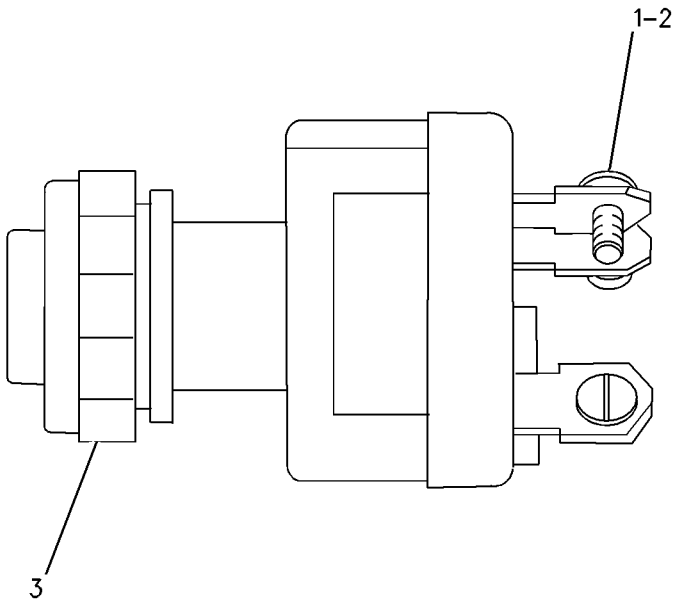

GRAPHIC #1 <END> g00699802

336-5880 SWITCH GP-TOGGLE–QUICK COUPLER

S/N: RDE1-UP

PART OF 421-8400 WIRING GP-CAB

SMCS-7332 **i06093584**

NOTE	REF NO	GRAPHIC REF	PART NUMBER	QTY	PART NAME 1 2 3 4 5 6 (PRODUCT LEVEL)	SEE PAGE
	1	1	**7N-2353**	1	SWITCH AS-TOGGLE (QUICK COUPLER)	
	2	1	**336-5893**	1	HARNESS AS-SWITCH (QUICK COUPLER)	
		1	**3S-2093**	1	STRAP-CABLE	
		1	**7Y-3950**	2	TERMINAL-BLADE (14-GA TO 20-GA)	
		1	**7Y-3953**	1	CONNECTOR-RECEPTACLE	
		1	**5P-2321**	2	TERMINAL-FORK (14-GA TO 16-GA, NO. 6 SCREW)	

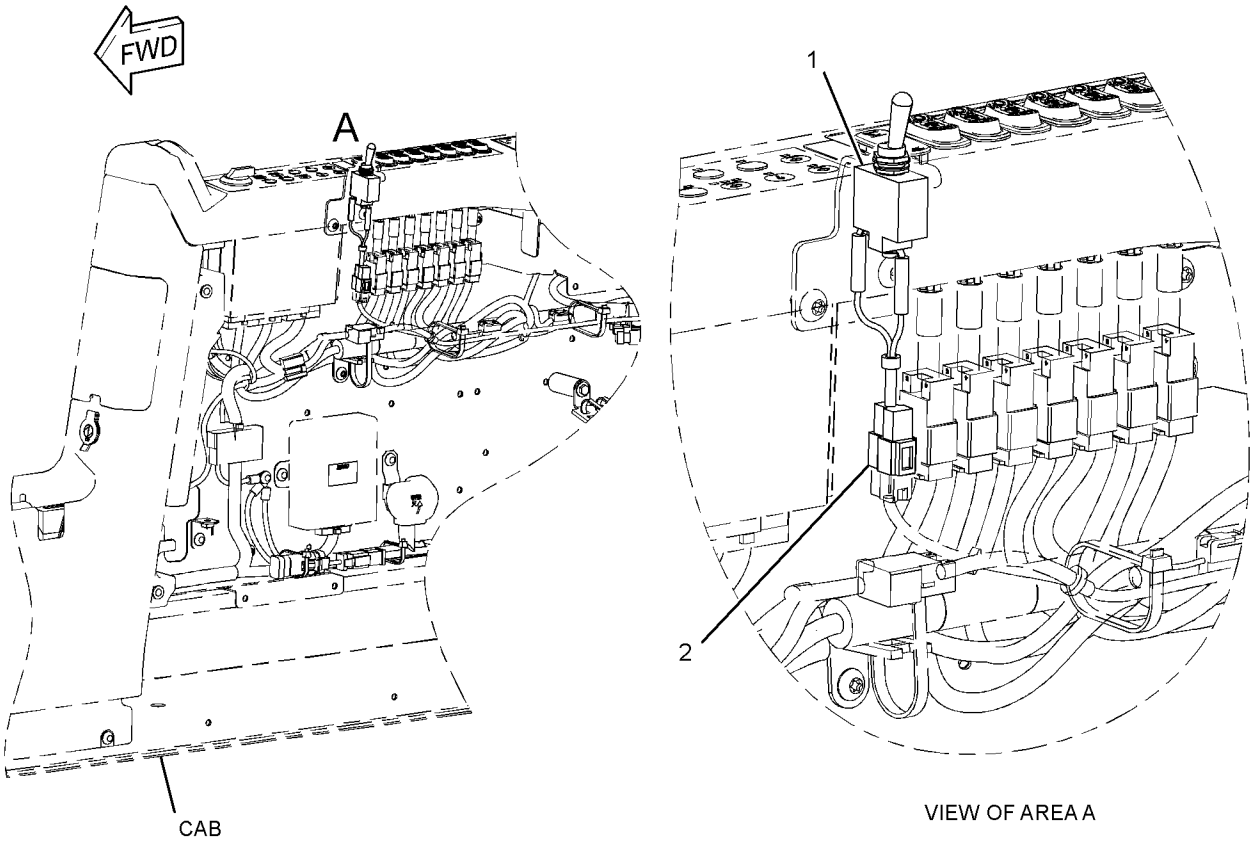

GRAPHIC #1 <END> g02263577

398-7003 WIRING GP-CAB

S/N: RDE1-UP

PART OF 506-8573 CAB AR, 476-3010 OPERATOR AR

SMCS-1408, 7301 **i05649309**

NOTE	REF NO	GRAPHIC REF	PART NUMBER	QTY	PART NAME 1 2 3 4 5 6 (PRODUCT LEVEL)	SEE PAGE
	1	2,3	**7K-1181**	7	STRAP-CABLE	
	2	2	**7Y-5505**	2	SPEAKER AS	
		2	**7Y-3951**	2	TERMINAL-BLADE (14-GA)	
		2	**7Y-3954**	1	CONNECTOR-PLUG (3-PIN)	
J	3	2	**9W-0335**	1	LIGHTER AS-CIGAR (24-VOLT)	
M	4	2	**099-7127**	8	SCREW-MACHINE (M4X0.7X12-MM)	
	5	3	**113-8490**	20	FUSE (10-AMPERE)	
	6	3	**113-8491**	6	FUSE (15-AMPERE)	
	7	3	**113-8492**	2	FUSE (20-AMPERE)	
	8	3	**113-8493**	2	FUSE (25-AMPERE)	
	9	2	**116-0210**	4	BRACKET AS	
	10	3	**124-3548**	2	FUSE (30-AMPERE)	
Y	11	2	**132-1829**	1	ALARM GP (24-VOLT) (FAULT)	77
	12	3	**141-2759**	8	FUSE (5-AMPERE)	
	13	3	**161-3128**	1	RELAY (24-VOLT) (BOOM FLOODLIGHT)	
	13A	3	**161-3128**	1	RELAY (24-VOLT) (CHASSIS LIGHT)	
	13B	3	**161-3128**	1	RELAY (24-VOLT) (CAB LIGHT)	
	13C	3	**161-3128**	1	RELAY (24-VOLT) (HORN)	
	13D	3	**161-3128**	1	RELAY (24-VOLT) (NEUTRAL START)	
	13E	3	**161-3128**	1	RELAY (24-VOLT) (ETHER START)	
	13F	3	**161-3128**	1	RELAY (24-VOLT) (ELECTRIC PRIMING)	
	13G	3	**161-3128**	1	RELAY (24-VOLT) (PUMP)	
	14	2	**163-6795**	15	STRAP-CABLE	
	15	2	**167-3593**	1	STRAP	
	16	3	**170-6888**	1	PULLER-FUSE	
	17	3	**213-0772**	1	SWITCH AS-MAGNETIC (24-VOLT) (MAIN RELAY)	
	18	2	**234-1097**	1	BRACKET	
H	20	2	**238-2318**	1	LIGHTER AS-CIGAR (24-VOLT)	
	21	3	**238-2390**	1	CABLE AS (RED)	
	22	3	**238-2391**	1	CABLE AS (PURPLE)	
					(EACH CABLE AS INCLUDES)	
		3	**9G-4343**	2	TERMINAL-RING (4-GA, 1/4-IN SCREW)	
E		3	**125-7876**		TUBE-HEAT SHRINK (17.78-MM DIA) (4-CM)	
	23	2	**245-7760**	8	INSULATION	
	24	2	**251-0637**	1	INSULATION	
	25	1	**259-4883**	1	ANTENNA AS	
		1	**259-5081**	1	ROD	
		1	**259-5082**	1	CABLE AS	
	26	2	**327-7538**	1	PANEL AS-SWITCH	
		2	**356-7732**	1	KNOB (SWITCH PANEL)	
	27	2	**366-0367**	1	METER GP-SERVICE	
		2	**304-5303**	1	NUT-SPECIAL (SERVICE METER)	
		2	**366-4622**	1	KIT-SERVICE METER (32-VOLT DC)	
					(INCLUDES FILM & METER GP)	
	28	2	**450-3501**	1	HARNESS AS-CAB	
		2	**102-8803**	2	KIT-RECEPTACLE (3-PIN)	
					(INCLUDES RECEPTACLE AS & WEDGE)	
		2	**8T-8730**	5	SOCKET-CONNECTOR (16-GA TO 18-GA)	

398-7003 **WIRING GP-CAB (**contd.**)** **i05649309**

NOTE	REF NO	GRAPHIC REF	PART NUMBER	QTY	PART NAME 1 2 3 4 5 6 (PRODUCT LEVEL)	SEE PAGE
		2	**3S-2093**	109	STRAP-CABLE	
		2	**7Y-3950**	4	TERMINAL-BLADE (14-GA TO 20-GA)	
		2	**7Y-3951**	11	TERMINAL-BLADE (14-GA)	
		2	**7Y-3952**	3	PLUG-CONNECTOR (2-PIN)	
		2	**7Y-3955**	2	CONNECTOR-RECEPTACLE	
		2	**7Y-3958**	1	CONNECTOR-PLUG (6-PIN)	
		2	*7Y-3966*	2	TERMINAL AS	
					(EACH INCLUDES)	
		2	**7Y-3962**	1	TERMINAL-BULLET (MALE)	
		2	**7Y-3964**	1	TUBE (CONNECTOR TERMINAL)	
		2	*7Y-3967*	7	TERMINAL AS	
					(EACH INCLUDES)	
		2	**7Y-3963**	1	TERMINAL-BULLET (FEMALE)	
		2	**7Y-3965**	1	TUBE (RECEPTACLE TERMINAL)	
		2	**8C-6354**	1	CAP-RECEPTACLE (ET CONNECTOR)	
		2	**8T-8737**	8	PLUG-SEAL	
		2	**5P-6271**	1	CONNECTOR AS	
		2	**9W-1951**	1	RECEPTACLE-CONNECTOR (9-PIN)	
		2	**102-7964**	2	PLUG-CONNECTOR (16-PIN)	
		2	**102-7965**	82	TERMINAL (FEMALE)	
		2	**9W-0844**	2	SOCKET-CONNECTOR (14-GA TO 16-GA)	
		2	**111-4816**	1	PLUG-CONNECTOR (13-PIN)	
		2	**116-0255**	1	TERMINAL-BLADE (10-GA TO 20-GA)	
E		2	**119-3662**		TUBE-HEAT SHRINK (10.85-MM DIA) (26-CM)	
		2	**121-1022**	1	DIODE	
		2	**121-1168**	1	CONNECTOR-RECEPTACLE	
		2	**121-1173**	19	TERMINAL (MALE)	
		2	**125-4784**	1	PLUG-CONNECTOR (12-PIN)	
		2	**125-4785**	37	TERMINAL (FEMALE)	
		2	**125-4840**	1	WEDGE-PLUG LOCK (13-PIN)	
		2	**125-4841**	2	WEDGE-PLUG LOCK (21-PIN)	
E		2	**125-7874**		TUBE-HEAT SHRINK (5.72-MM DIA) (55-CM)	
E		2	**125-7875**		TUBE-HEAT SHRINK (7.44-MM DIA) (45-CM)	
		2	**9X-3402**	6	SOCKET-CONNECTOR (16-GA TO 18-GA)	
					—OR—	
		2	**126-1768**	6	SOCKET-CONNECTOR (14-GA TO 16-GA)	
		2	**2L-8065**	3	TERMINAL-RING (10-GA TO 12-GA, NO. 8 SCREW)	
		2	**2L-8066**	2	TERMINAL-RING (10-GA TO 12-GA, NO. 10 SCREW)	
		2	**2L-8067**	6	TERMINAL-RING (10-GA TO 12-GA, 1/4-IN SCREW)	
		2	**2L-8075**	3	TERMINAL-RING (14-GA TO 16-GA, NO. 8 SCREW)	
		2	**2L-8076**	2	TERMINAL-RING (14-GA TO 16-GA, NO. 10 SCREW)	
		2	**128-8950**	1	CONNECTOR-RECEPTACLE	
		2	**5P-2321**	1	TERMINAL-FORK (14-GA TO 16-GA, NO. 6 SCREW)	
		2	**176-9299**	2	KIT-RECEPTACLE (3-PIN)	
					(INCLUDES RECEPTACLE AS & WEDGES)	
		2	**134-3296**	1	HOUSING-PLUG	
		2	**134-3297**	1	SEAL	
		2	**138-5184**	1	PLUG-CONNECTOR (20-PIN)	
		2	**9X-3401**	12	PIN-CONNECTOR (16-GA TO 18-GA)	
					—OR—	
		2	**126-1767**	12	PIN-CONNECTOR (14-GA TO 16-GA)	
		2	**149-5069**	9	TERMINAL-BLADE (14-GA TO 20-GA)	

398-7003 **WIRING GP-CAB (**contd.**)** **i05649309**

NOTE	REF NO	GRAPHIC REF	PART NUMBER	QTY	PART NAME 1 2 3 4 5 6 (PRODUCT LEVEL)	SEE PAGE
		2	**149-5070**	18	TERMINAL-BLADE (16-GA TO 20-GA)	
		2	**149-5071**	9	TERMINAL-BLADE (12-GA TO 14-GA)	
		2	**153-2602**	3	RECEPTACLE-CONNECTOR (1-PIN)	
		2	**153-2631**	3	TERMINAL (FEMALE)	
		2	**155-2270**	1	KIT-CONNECTING PLUG (2-PIN)	
					(INCLUDES PLUG AS, WEDGE & INTERFACE SEAL)	
		2	**163-6803**	8	PLUG-CONNECTOR (5-PIN)	
		2	**167-3487**	8	WEDGE-PLUG LOCK (5-PIN)	
		2	**167-3630**	1	CONNECTOR-PLUG	
		2	**167-3631**	2	TERMINAL (FEMALE)	
		2	**170-6890**	6	TERMINAL-BLADE (14-GA)	
		2	**170-6891**	25	TERMINAL-BLADE (16-GA TO 18-GA)	
		2	**174-3016**	2	PLUG AS-CONNECTOR (3-PIN)	
		2	**230-4009**	1	PLUG AS-CONNECTOR (12-PIN)	
		2	**455-0709**	1	SEAL-CONNECTOR	
		2	**230-4011**	1	PLUG AS-CONNECTOR (2-PIN)	
		2	**455-0704**	1	SEAL-CONNECTOR	
		2	**238-2319**	1	BASE AS (FUSE, RELAY PANEL)	
		2	**9X-8256**	2	WASHER (6.6X12X2-MM THK)	
M		2	**095-0742**	2	SCREW-MACHINE (M6X1X16-MM)	
		2	**170-9394**	40	TERMINAL	
		2	**238-2363**	6	TERMINAL (FEMALE)	
		2	**238-2366**	13	TERMINAL (MALE)	
		2	**243-4505**	1	RECEPTACLE AS-CONNECTOR (2-PIN)	
		2	**342-2972**	1	CAP-CONNECTOR (2-PIN)	
		2	**349-5084**	3	TERMINAL-BLADE	
		2	**349-5085**	3	RECEPTACLE AS-CONNECTOR	
M	29	2	**095-0723**	3	SCREW-SPECIAL (M3X0.5X10-MM)	
	30	2	**096-5962**	3	WASHER-HARD (3.4X7X0.8-MM THK)	
	31	1,2	**096-6166**	6	WASHER-HARD (4.5X9X1-MM THK)	
	32	2,3	**132-5789**	6	CLIP	
	33	2	**3S-2093**	1	STRAP-CABLE	
	34	3	**4P-7581**	1	CLIP	
M	35	2	**5C-2890**	3	NUT (M6X1-THD)	
M	36	2	**6V-5210**	12	SCREW-MACHINE (M4X0.7X10-MM)	
M	37	1	**6V-9672**	2	SCREW-MACHINE (M4X0.7X16-MM)	
	38	2,3	**8T-0328**	3	WASHER-HARD (5.5X10X1-MM THK)	
M	39	3	**8T-4127**	2	SCREW-MACHINE (M5X0.8X20-MM)	
M	40	2	**8T-6693**	1	SCREW-MACHINE (M5X0.8X16-MM)	
M	41	2,3	**9X-2042**	8	SCREW-TRUSS HEAD (M6X1X12-MM)	
M	42	3	**9X-2044**	5	SCREW-TRUSS HEAD (M6X1X16-MM)	
	43	2	**9X-8256**	3	WASHER (6.6X12X2-MM THK)	
E	44	2	**101-2846**		GUARD (28-CM)	

E - ORDER BY THE CENTIMETER
H - FOR AKASHI PLANT
J - FOR OTHER THAN AKASHI PLANT
M - METRIC PART
Y - SEPARATE ILLUSTRATION

398-7003 **WIRING GP-CAB (**contd.**)** **i05649309**

REFER TO ALL ILLUSTRATIONS OF
THIS GROUP FOR AUXILIARY VIEWS

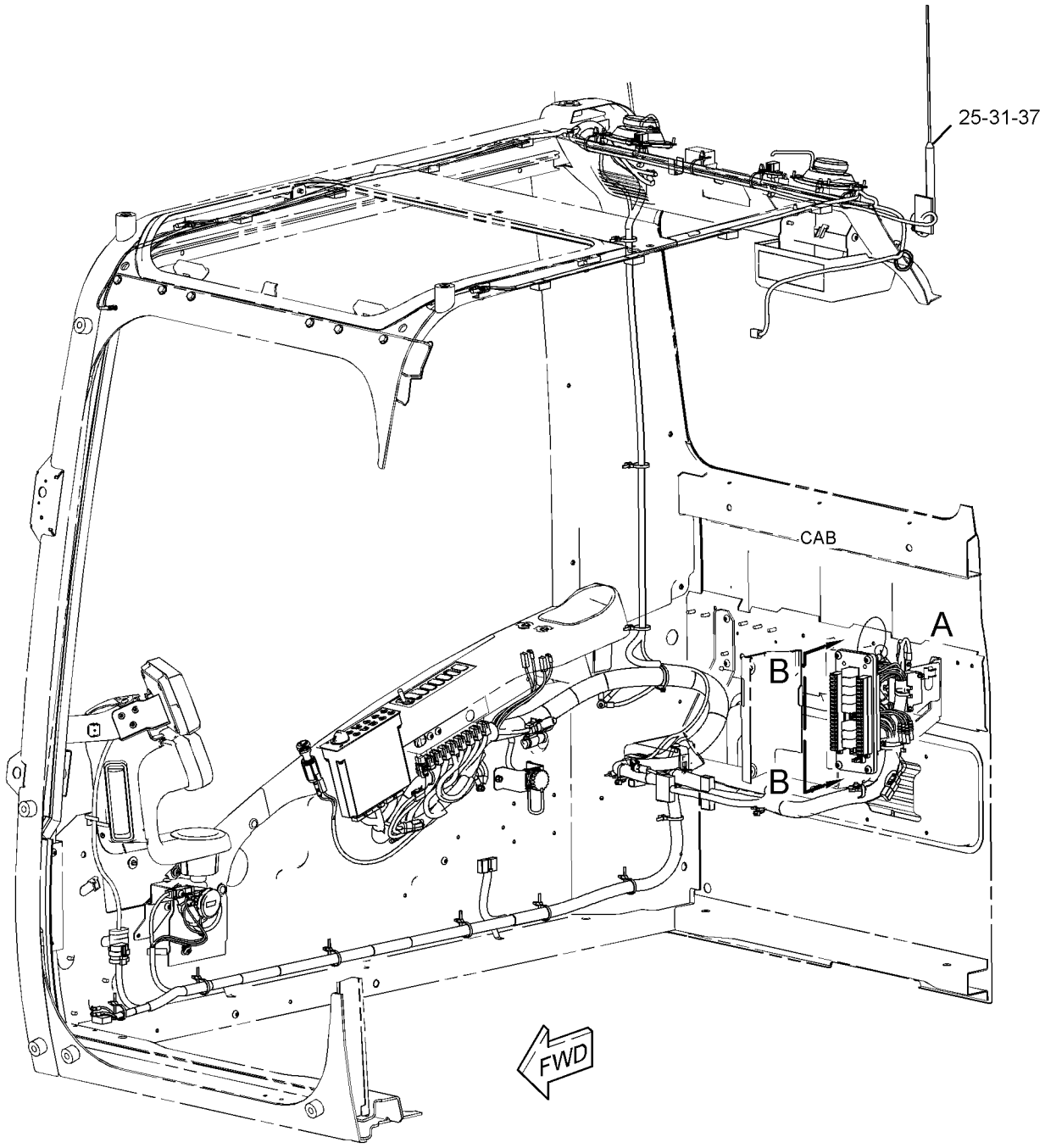

GRAPHIC #1 g03745787

398-7003 **WIRING GP-CAB (**contd.**)** **i05649309**

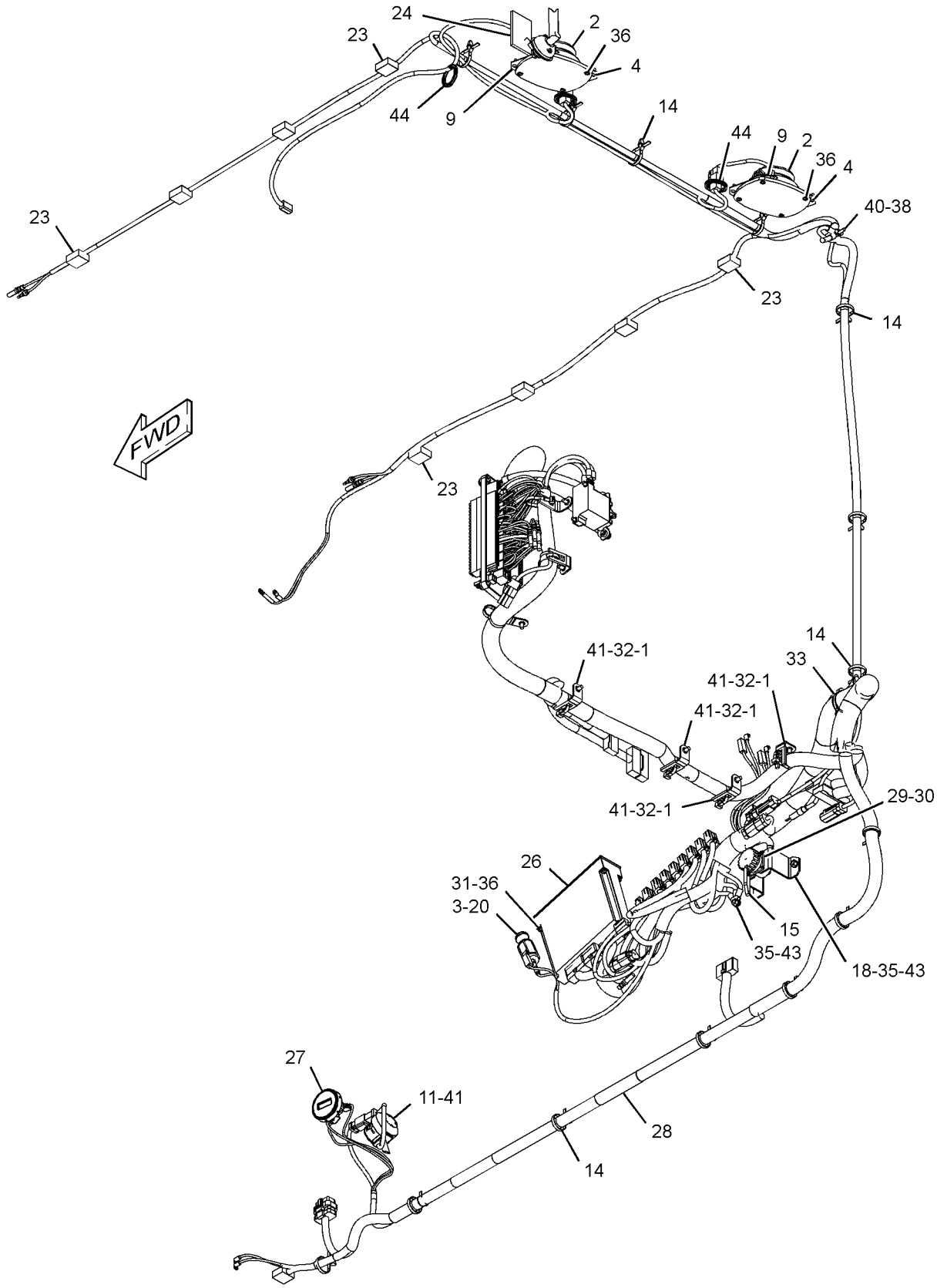

GRAPHIC #2 g03745755

398-7003 **WIRING GP-CAB (**contd.**)** **i05649309**

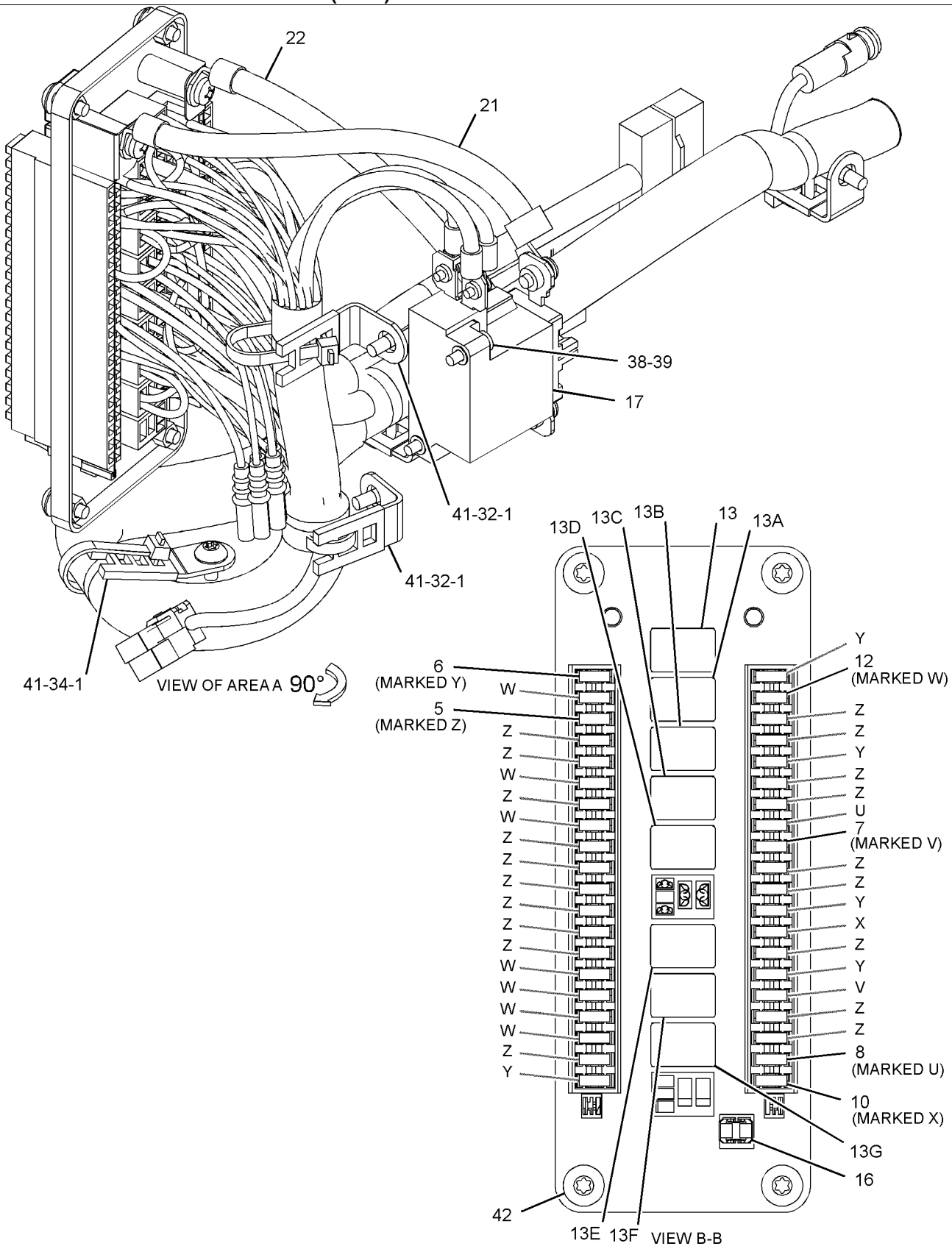

GRAPHIC #3 <END> g03431212

421-8400 WIRING GP-CAB–COUPLER

S/N: RDE1-UP

PART OF 503-9777 CONTROL AR-QUICK COUPLER

SMCS-1408, 7301 **i06093573**

NOTE	REF NO	GRAPHIC REF	PART NUMBER	QTY	PART NAME 1 2 3 4 5 6 (PRODUCT LEVEL)	SEE PAGE
	1	1	**259-7180**	1	COVER	
Y	2	1	*336-5880*	1	SWITCH GP-TOGGLE (QUICK COUPLER)	123
	3	1	**420-7262**	1	BRACKET AS	
M	4	1	**9X-2042**	3	SCREW-TRUSS HEAD (M6X1X12-MM)	

M - METRIC PART
Y - SEPARATE ILLUSTRATION

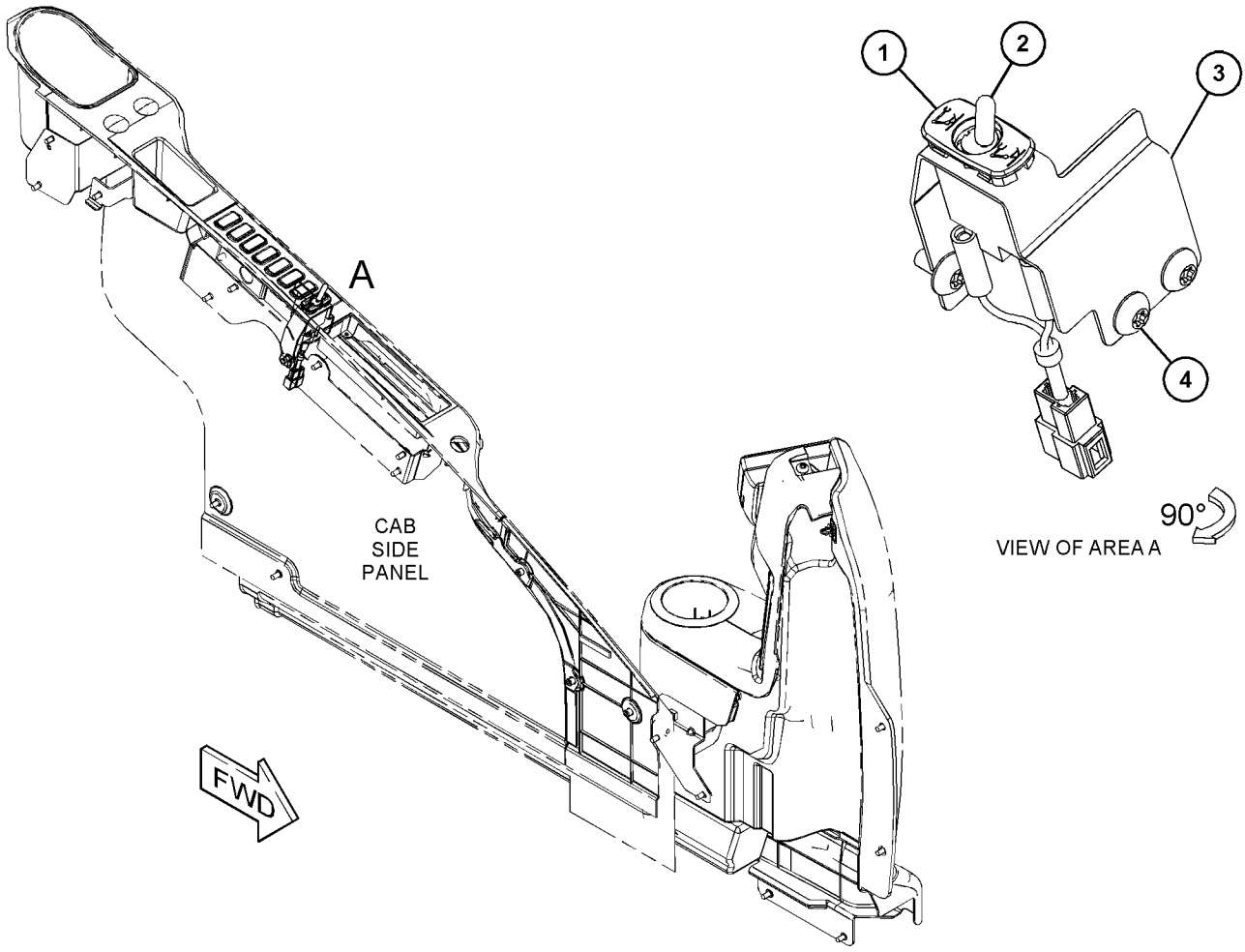

GRAPHIC #1 <END> g03562316

465-1258 WIRING GP-CHASSIS—QUICK COUPLER, HIGH PRESSURE

S/N: RDE1-UP

PART OF 503-9777 CONTROL AR-QUICK COUPLER

SMCS-1408 **i06828441**

NOTE	REF NO	GRAPHIC REF	PART NUMBER	QTY	PART NAME 1 2 3 4 5 6 (PRODUCT LEVEL)	SEE PAGE
	1	1	*465-8752*	1	HARNESS AS-CHASSIS	
		1	**8T-8729**	2	PIN-CONNECTOR (16-GA TO 18-GA)	
		1	**8T-8730**	4	SOCKET-CONNECTOR (16-GA TO 18-GA)	
		1	**3S-2093**	1	STRAP-CABLE	
		1	**8T-8737**	1	PLUG-SEAL	
		1	**125-7874**		TUBE-HEAT SHRINK (5.72-MM DIA) (5-CM)	
		1	**9X-3402**	5	SOCKET-CONNECTOR (16-GA TO 18-GA)	
					—OR—	
		1	**126-1768**	5	SOCKET-CONNECTOR (14-GA TO 16-GA)	
		1	**2L-8069**	1	TERMINAL-RING (2-GA TO 10-GA, 3/8-IN SCREW)	
		1	**9X-3401**	3	PIN-CONNECTOR (16-GA TO 18-GA)	
					—OR—	
		1	**126-1767**	3	PIN-CONNECTOR (14-GA TO 16-GA)	
		1	**230-4011**	3	PLUG AS-CONNECTOR (2-PIN)	
					(EACH INCLUDES)	
		1	**455-0704**	1	SEAL-CONNECTOR	
		1	**230-4013**	1	PLUG AS-CONNECTOR (3-PIN)	
		1	**455-0705**	1	SEAL-CONNECTOR	
		1	**243-4508**	1	RECEPTACLE AS-CONNECTOR (6-PIN)	

465-1258 **WIRING GP-CHASSIS (**contd.**)** **i06828441**

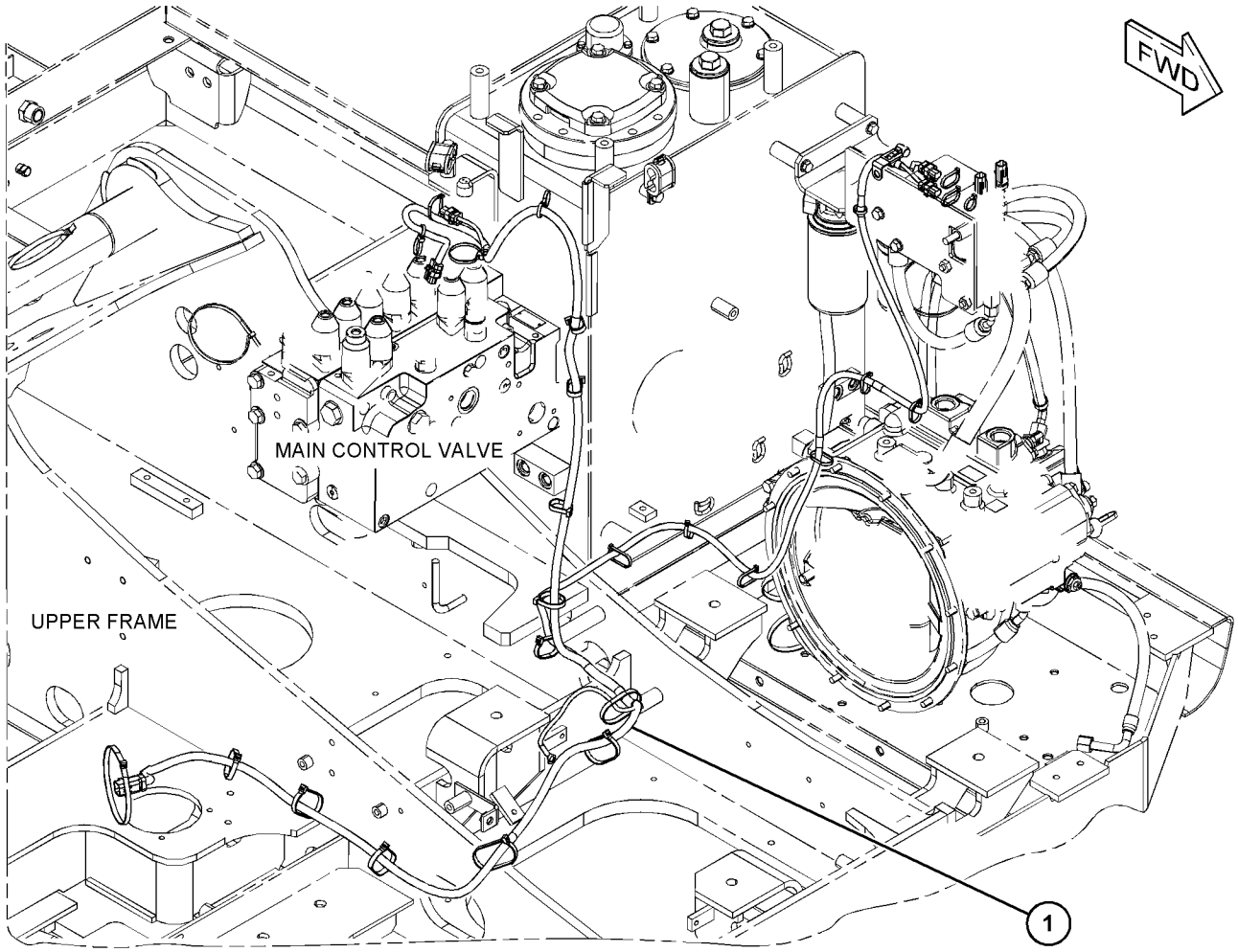

GRAPHIC #1 <END> g06020511

275-7055 WIRING GP-COMBINED FLOW–SYSTEM 1, 1-WAY, 1-PUMP

S/N: RDE1-UP

PART OF 494-3642 CONTROL AR-AUXILIARY

SMCS-1408 **i06814233**

NOTE	REF NO	GRAPHIC REF	PART NUMBER	QTY	PART NAME 1 2 3 4 5 6 (PRODUCT LEVEL)	SEE PAGE
	1	1	**3S-2093**	10	STRAP-CABLE	
	2	1	**7K-1181**	4	STRAP-CABLE	
	3	1	**116-0118**	2	CLIP	
Y	4	1	**283-2723**	1	HARNESS AS-PUMP	96
M	5	1	**7X-2621**	1	BOLT (M10X1.5X12-MM)	
	6	1	**8T-4121**	1	WASHER-HARD (11X21X2.5-MM THK)	

M - METRIC PART
Y - SEPARATE ILLUSTRATION

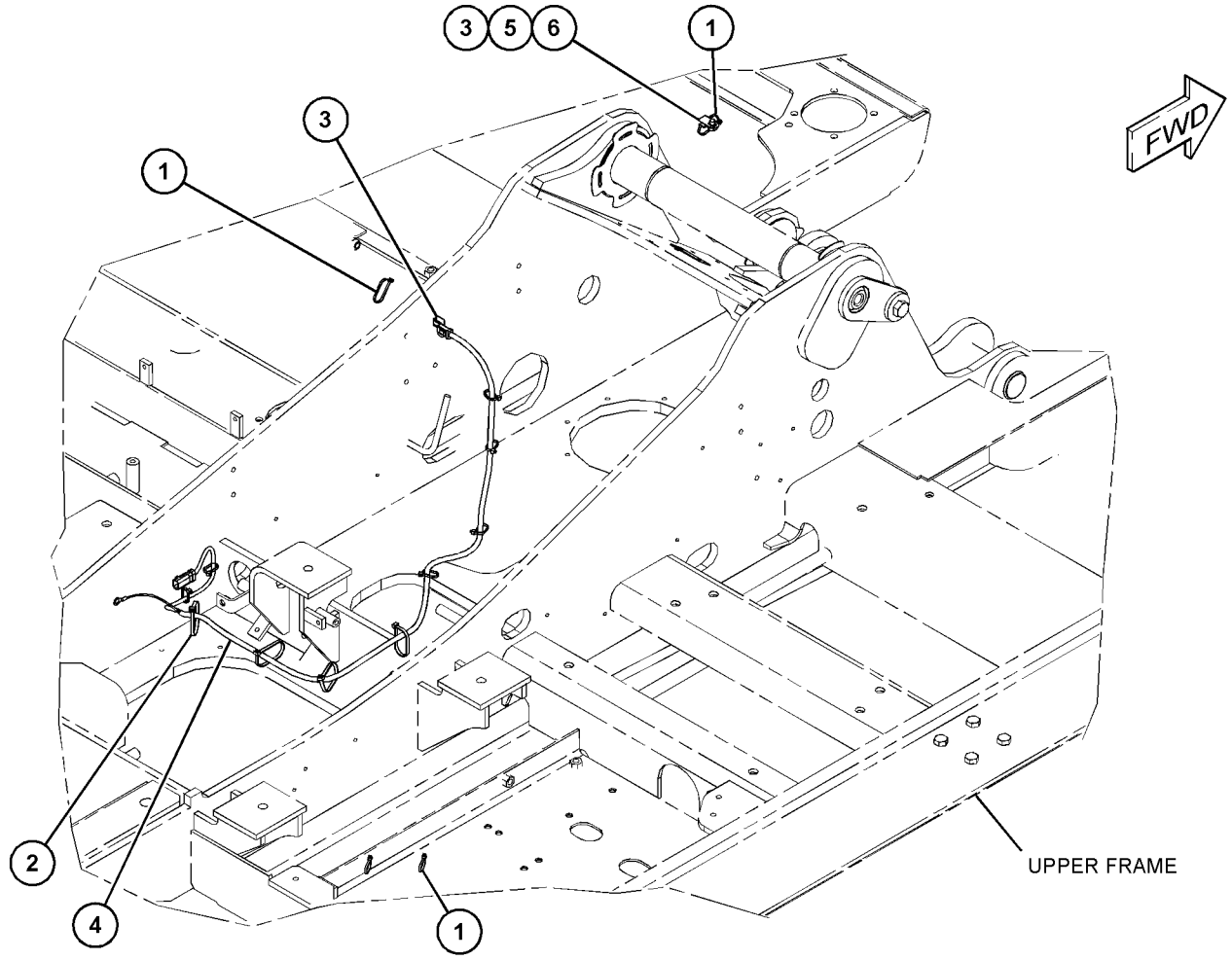

GRAPHIC #1 <END> g06134548

473-4228 WIRING GP-COMMUNICATION

S/N: RDE1-UP

PART OF 470-6901 INSTALLATION AR-COMMUNICATION

SMCS-1408 **i06826602**

NOTE	REF NO	GRAPHIC REF	PART NUMBER	QTY	PART NAME 1 2 3 4 5 6 (PRODUCT LEVEL)	SEE PAGE
	1	1	**3S-2093**	4	STRAP-CABLE	
	2	1	**7K-1181**	19	STRAP-CABLE	
	3	1	**111-4836**	1	CLIP	
	4	1	**116-0118**	1	CLIP	
M	5	1	**143-9397**	3	SCREW-PAN HEAD (M4X0.7X12-MM)	
	6	1	**461-3437**	1	CABLE AS	
Y	7	1	**473-4229**	1	HARNESS AS-CHASSIS	93
	8	1	**095-0910**	3	CLIP	
	9	1	**132-5789**	1	CLIP	
	10	1	**161-6987**	3	WASHER-HARD (5.2X16X1.5-MM THK)	
	11	1	**8T-4121**	3	WASHER-HARD (11X21X2.5-MM THK)	
M	12	1	**8T-4137**	1	BOLT (M10X1.5X20-MM)	
M	13	1	**8T-4191**	2	BOLT (M10X1.5X16-MM)	

M - METRIC PART
Y - SEPARATE ILLUSTRATION

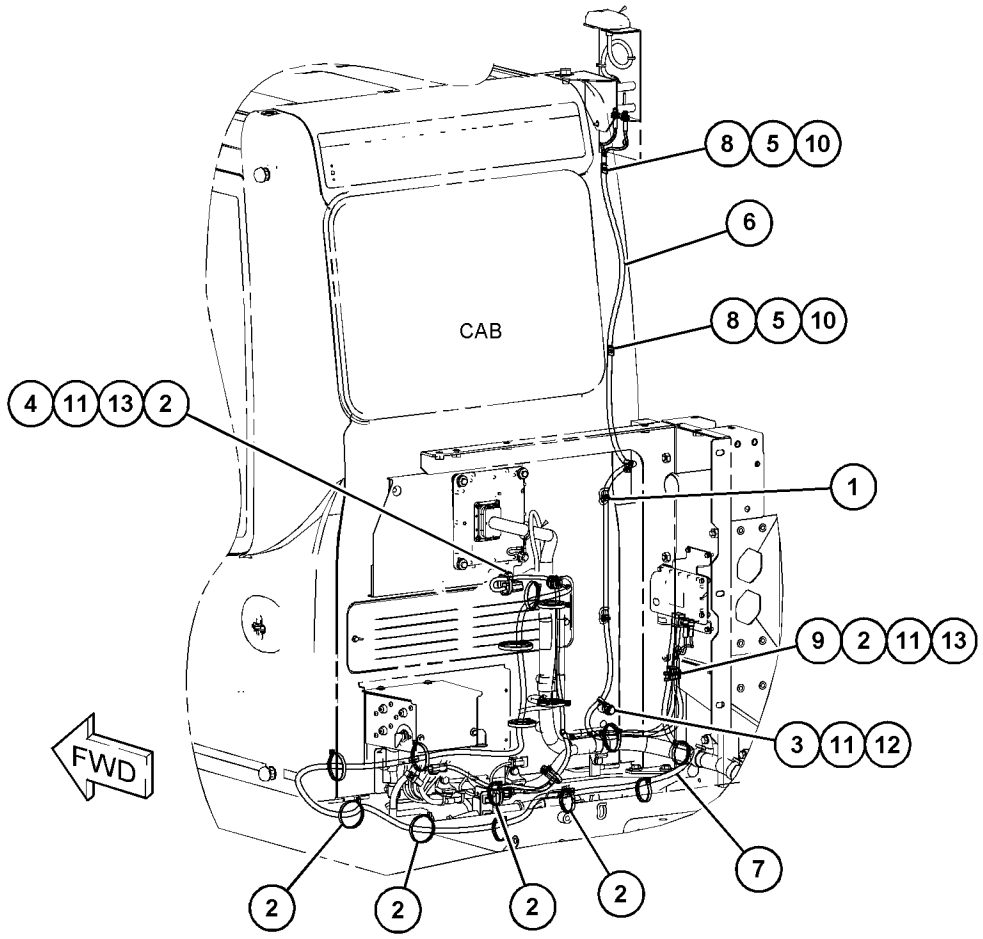

GRAPHIC #1 <END> g06133332

231-1836 WIRING GP-CONSOLE—LH

S/N: RDE1-UP

PART OF 398-7005 WIRING GP-CONSOLE

SMCS-1408 **i04913382**

NOTE	REF NO	GRAPHIC REF	PART NUMBER	QTY	PART NAME 1 2 3 4 5 6 (PRODUCT LEVEL)	SEE PAGE
	1	1	**3S-2093**	2	STRAP-CABLE	
	2	1	**7K-1181**	1	STRAP-CABLE	
	3	1	**163-6795**	2	STRAP-CABLE	
	4	1	**251-0580**	1	HARNESS AS-CONSOLE	
		1	**8T-8729**	4	PIN-CONNECTOR (16-GA TO 18-GA)	
		1	**8T-8730**	3	SOCKET-CONNECTOR (16-GA TO 18-GA)	
		1	**3S-2093**	9	STRAP-CABLE	
D		1	**5P-5995**		TUBE (0.3-M)	
		1	**7Y-3963**	2	TERMINAL-BULLET (FEMALE)	
		1	**7Y-3965**	2	TUBE (RECEPTACLE TERMINAL)	
		1	**8T-8737**	9	PLUG-SEAL	
		1	**9W-0852**	2	PIN-CONNECTOR (14-GA TO 16-GA)	
		1	**9W-0844**	2	SOCKET-CONNECTOR (14-GA TO 16-GA)	
E		1	**125-7874**		TUBE-HEAT SHRINK (5.72-MM DIA) (5-CM)	
E		1	**125-7875**		TUBE-HEAT SHRINK (7.44-MM DIA) (5-CM)	
		1	**9X-3402**	11	SOCKET-CONNECTOR (16-GA TO 18-GA)	
					—OR—	
		1	**126-1768**	11	SOCKET-CONNECTOR (14-GA TO 16-GA)	
		1	**155-2260**	1	KIT-CONNECTING PLUG (3-PIN)	
					(INCLUDES PLUG AS, WEDGE & INTERFACE SEAL)	
		1	**230-4011**	1	PLUG AS-CONNECTOR (2-PIN)	
		1	**264-7029**	1	SEAL-CONNECTOR	
		1	**230-5010**	1	PLUG AS-CONNECTOR (6-PIN)	
		1	**264-7032**	1	SEAL-CONNECTOR	
		1	**239-7352**	1	PLUG AS-CONNECTOR (6-PIN)	
		1	**264-7032**	1	SEAL-CONNECTOR	
		1	**243-4505**	1	RECEPTACLE AS-CONNECTOR (2-PIN)	
		1	**243-4508**	1	RECEPTACLE AS-CONNECTOR (6-PIN)	
		1	**247-2693**	1	RECEPTACLE AS-CONNECTOR (6-PIN)	

D - ORDER BY THE METER
E - ORDER BY THE CENTIMETER

231-1836 **WIRING GP-CONSOLE (**contd.**)** **i04913382**

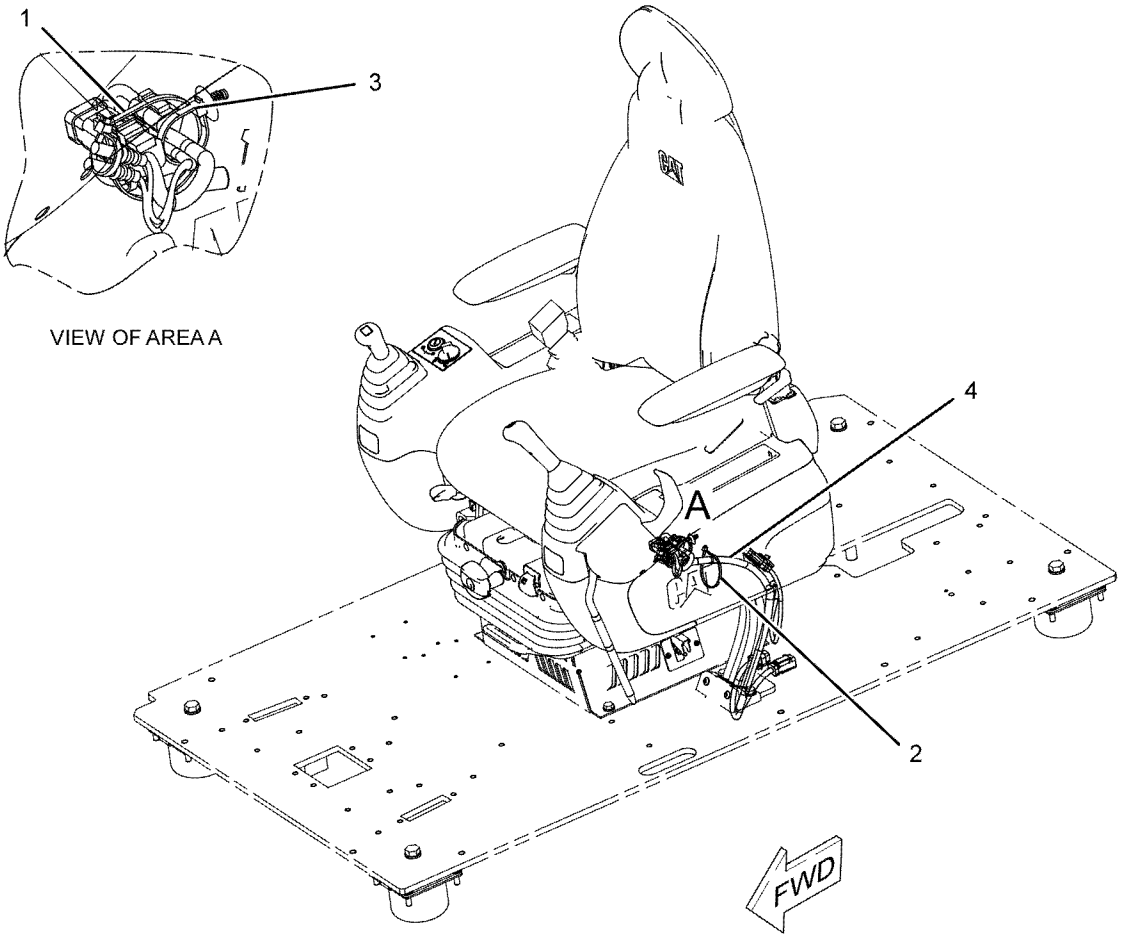

GRAPHIC #1 <END> g01150799

398-7005 WIRING GP-CONSOLE

S/N: RDE1-UP

PART OF 506-8573 CAB AR, 476-3010 OPERATOR AR

SMCS-1408 **i05432265**

NOTE	PART NUMBER	QTY	PART NAME 1 2 3 4 5 6 (PRODUCT LEVEL)	SEE PAGE
Y	*231-1836*	1	WIRING GP-CONSOLE (LH)	135
Y	*398-7006*	1	WIRING GP-CONSOLE (RH)	138

Y - SEPARATE ILLUSTRATION

<END>

398-7006 WIRING GP-CONSOLE—RH

S/N: RDE1-UP

PART OF 398-7005 WIRING GP-CONSOLE

SMCS-1408 **i06098905**

NOTE	REF NO	GRAPHIC REF	PART NUMBER	QTY	PART NAME 1 2 3 4 5 6 (PRODUCT LEVEL)	SEE PAGE
	1	1	**3S-2093**	4	STRAP-CABLE	
	2	1	**7K-1181**	2	STRAP-CABLE	
	3	1	**163-6795**	1	STRAP-CABLE	
	4	1	**398-7012**	1	HARNESS AS-CONSOLE	
		1	**102-8806**	1	KIT-RECEPTACLE (8-PIN)	
					(INCLUDES RECEPTACLE AS & WEDGE)	
		1	**8T-8730**	9	SOCKET-CONNECTOR (16-GA TO 18-GA)	
		1	**3S-2093**	10	STRAP-CABLE	
		1	*7Y-3967*	2	TERMINAL AS	
					(EACH INCLUDES)	
		1	**7Y-3963**	1	TERMINAL-BULLET (FEMALE)	
		1	**7Y-3965**	1	TUBE (RECEPTACLE TERMINAL)	
		1	**8T-8737**	17	PLUG-SEAL	
		1	**102-7964**	1	PLUG-CONNECTOR (16-PIN)	
		1	**102-7965**	14	TERMINAL (FEMALE)	
		1	**9W-0844**	8	SOCKET-CONNECTOR (14-GA TO 16-GA)	
		1	**125-4841**	1	WEDGE-PLUG LOCK (21-PIN)	
E		1	**125-7875**		TUBE-HEAT SHRINK (7.44-MM DIA) (15-CM)	
		1	**9X-3402**	20	SOCKET-CONNECTOR (16-GA TO 18-GA)	
		1	**155-2259**	1	WEDGE-PLUG LOCK (8-PIN)	
		1	**155-2265**	1	KIT-CONNECTING PLUG (8-PIN)	
					(EACH PLUG KIT INCLUDES PLUG AS, WEDGE & INTERFACE SEAL)	
		1	**230-4009**	1	PLUG AS-CONNECTOR (12-PIN)	
		1	**264-7034**	1	SEAL-CONNECTOR	
		1	**230-4011**	1	PLUG AS-CONNECTOR (2-PIN)	
		1	**264-7029**	1	SEAL-CONNECTOR	
		1	**230-5008**	1	PLUG AS-CONNECTOR (4-PIN)	
		1	**264-7031**	1	SEAL-CONNECTOR	
		1	**230-5010**	1	PLUG AS-CONNECTOR (6-PIN)	
		1	**264-7032**	1	SEAL-CONNECTOR	
		1	**231-2295**	1	PLUG AS-CONNECTOR (8-PIN)	
		1	**264-7033**	1	SEAL-CONNECTOR	
		1	**238-2363**	2	TERMINAL (FEMALE)	
		1	**239-7352**	1	PLUG AS-CONNECTOR (6-PIN)	
		1	**264-7032**	1	SEAL-CONNECTOR	
		1	*251-0579*	1	HOSE	
		1	**342-2972**	1	CAP-CONNECTOR (2-PIN)	
		1	**342-2974**	1	CAP-CONNECTOR (6-PIN)	
E	5	1	**3E-9375**		CONDUIT (10-CM)	

E - ORDER BY THE CENTIMETER

398-7006 **WIRING GP-CONSOLE (**contd.**)** **i06098905**

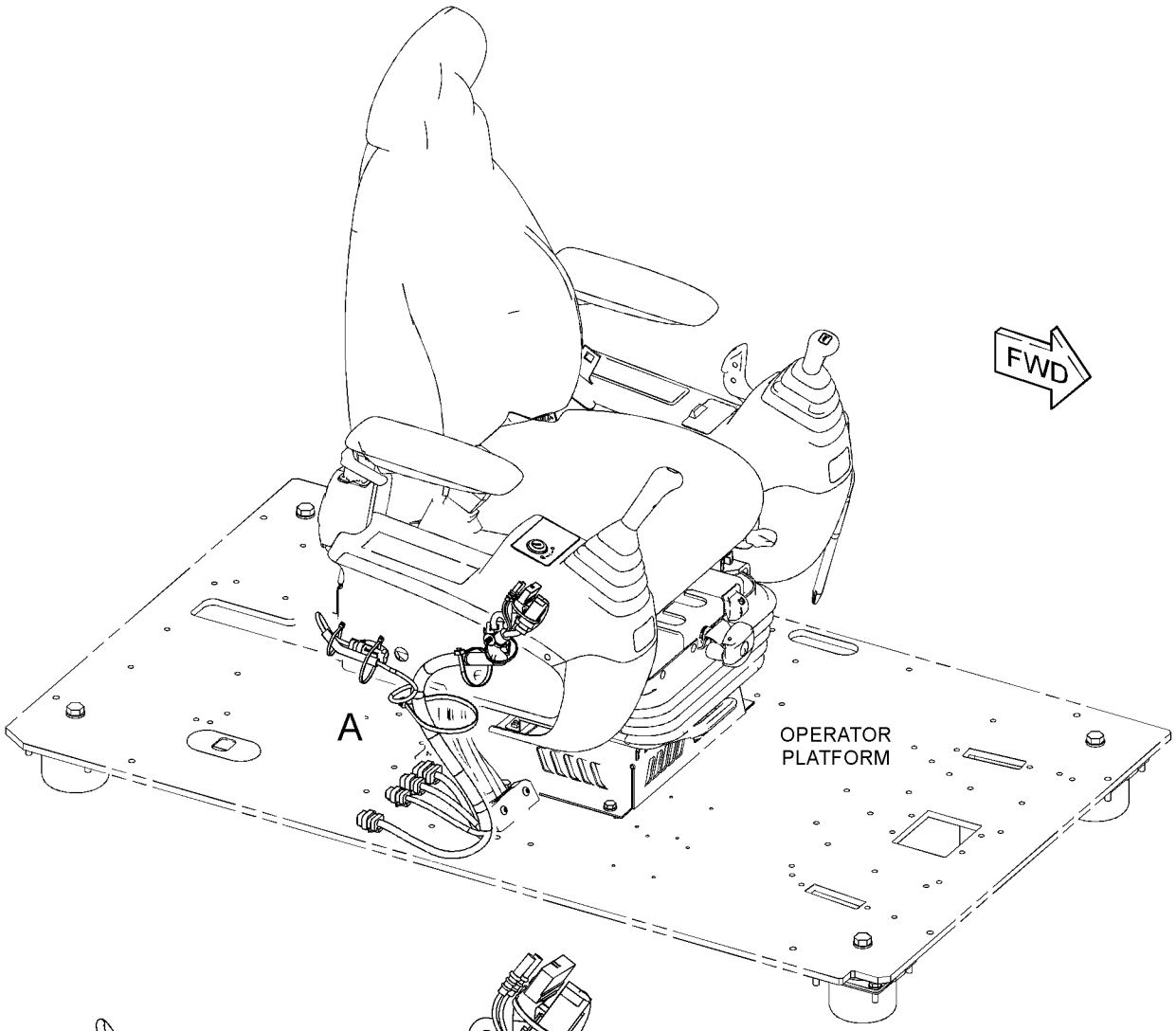

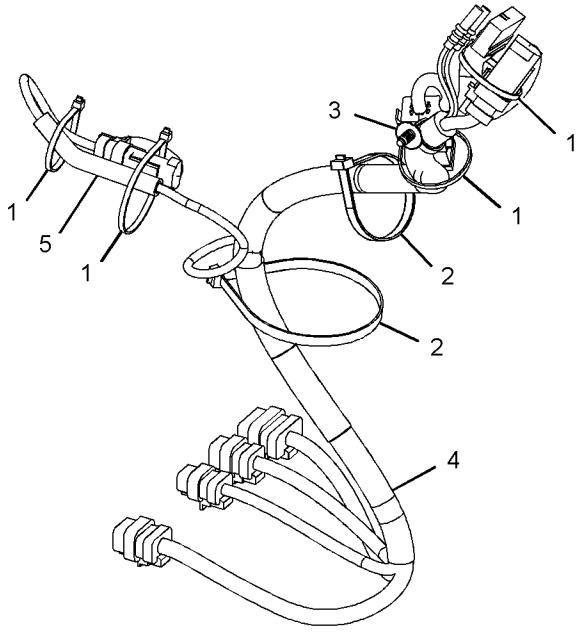

VIEW OF AREA A

GRAPHIC #1 <END> g03431459

350-8254 WIRING GP-CONVERTER

S/N: RDE1-UP
12-VOLT, 10-AMPERE
PART OF 506-8572 OPTION AR-CAB

SMCS-1421 **i06736327**

NOTE	REF NO	GRAPHIC REF	PART NUMBER	QTY	PART NAME 1 2 3 4 5 6 (PRODUCT LEVEL)	SEE PAGE
	1	1	**479-9396**	1	BRACKET	
	2	1	**324-5770**	1	CONVERTER-POWER (24-VOLT TO 12-VOLT)	
	3	1	**324-5771**	2	SOCKET-AUXILIARY POWER (12-VOLT)	
	4	1	**8T-4121**	2	WASHER-HARD (11X21X2.5-MM THK)	
M	5	1	**8T-4136**	2	BOLT (M10X1.5X25-MM)	
M	6	1	**8T-4171**	4	BOLT (M6X1X12-MM)	
	7	1	**9X-8256**	4	WASHER (6.6X12X2-MM THK)	

M - METRIC PART

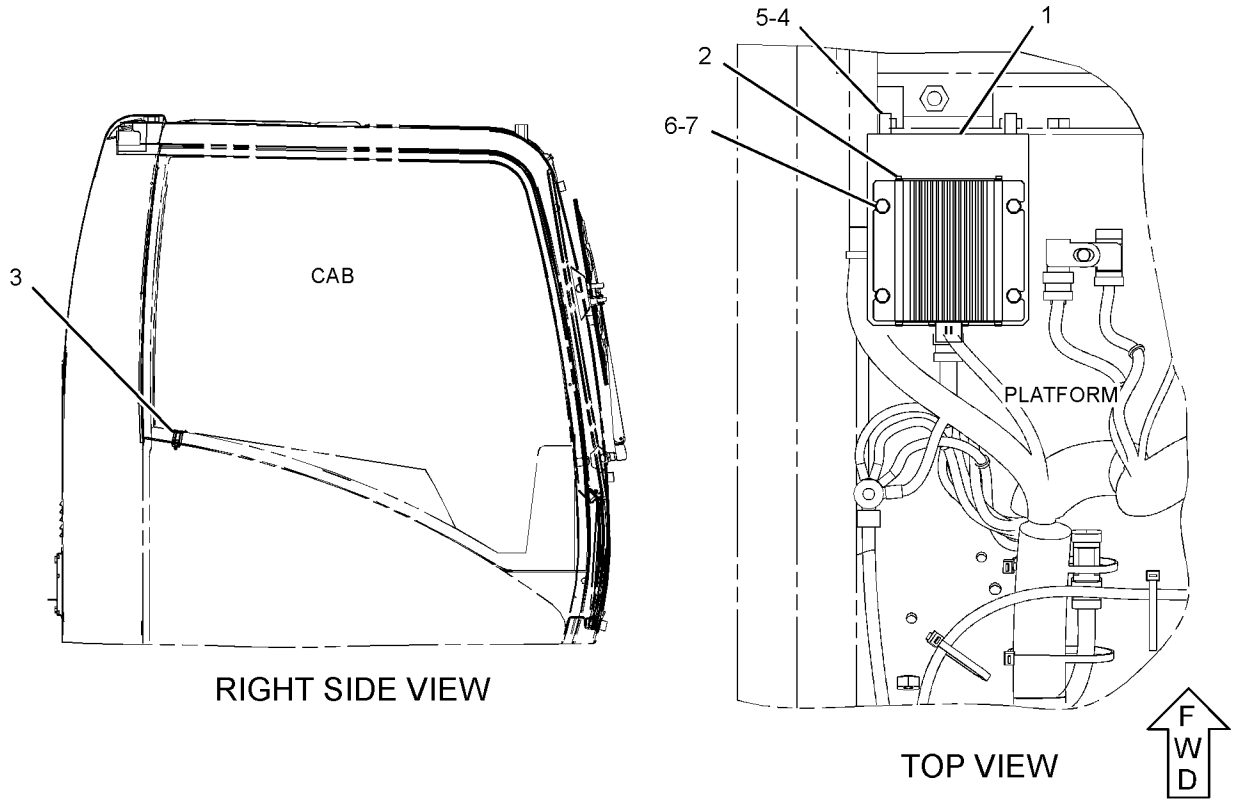

GRAPHIC #1 <END> g02149428

468-7598 WIRING GP-PLATFORM

S/N: RDE1-UP

PART OF 506-8573 CAB AR, 476-3010 OPERATOR AR

SMCS-1408 **i06790069**

NOTE	REF NO	GRAPHIC REF	PART NUMBER	QTY	PART NAME 1 2 3 4 5 6 (PRODUCT LEVEL)	SEE PAGE
	1	1	**3E-5169**	1	GUARD-SWITCH	
	2	1	**7G-1060**	1	STRAP AS-GROUND	
	3	1	**7K-1181**	12	STRAP-CABLE	
	4	1	**111-4839**	2	STRAP	
	5	1	**116-0118**	8	CLIP	
	6	1	**234-1122**	1	COVER	
	7	1	**275-6810**	1	RECEPTACLE AS	
		1	**134-3297**	1	SEAL	
		1	**163-6773**	1	PLUG-SEAL	
	8	1	**301-2981**	1	SWITCH AS-TOGGLE (SECONDARY SHUTDOWN) (SECONDARY SHUTDOWN)	
		1	**3E-3371**	1	WEDGE-RECEPTACLE LOCK (3-PIN)	
		1	**102-8803**	1	KIT-RECEPTACLE (3-PIN)	
					(INCLUDES RECEPTACLE AS & WEDGE)	
		1	**8T-8729**	3	PIN-CONNECTOR (16-GA TO 18-GA)	
C	9	1	**490-8900**	1	HARNESS AS-PLATFORM	
		1	**102-8802**	2	KIT-RECEPTACLE (2-PIN)	
					(EACH INCLUDES RECEPTACLE AS & WEDGE)	
		1	**8T-8729**	8	PIN-CONNECTOR (16-GA TO 18-GA)	
		1	**8T-8730**	19	SOCKET-CONNECTOR (16-GA TO 18-GA)	
		1	**3S-2093**	18	STRAP-CABLE	
		1	**8T-8737**	42	PLUG-SEAL	
		1	**102-7964**	1	PLUG-CONNECTOR (16-PIN)	
		1	**102-7965**	12	TERMINAL (FEMALE)	
		1	**9W-0852**	6	PIN-CONNECTOR (14-GA TO 16-GA)	
		1	**9W-0844**	24	SOCKET-CONNECTOR (14-GA TO 16-GA)	
E		1	**119-3662**		TUBE-HEAT SHRINK (10.85-MM DIA) (7-CM)	
		1	**121-1168**	2	CONNECTOR-RECEPTACLE	
		1	**121-1173**	29	TERMINAL (MALE)	
		1	**125-4766**	1	PLUG-CONNECTOR (17-PIN)	
		1	**125-4841**	1	WEDGE-PLUG LOCK (21-PIN)	
E		1	**125-7874**		TUBE-HEAT SHRINK (5.72-MM DIA) (5-CM)	
E		1	**125-7875**		TUBE-HEAT SHRINK (7.44-MM DIA) (20-CM)	
		1	**9X-3402**	33	SOCKET-CONNECTOR (16-GA TO 18-GA)	
					—OR—	
		1	**126-1768**	33	SOCKET-CONNECTOR (14-GA TO 16-GA)	
		1	**2L-8050**	2	TERMINAL-RING (6-GA, 1/4-IN SCREW)	
					—OR—	
		1	**2L-8058**	2	TERMINAL-RING (8-GA, 1/4-IN SCREW)	
		1	**2L-8069**	4	TERMINAL-RING (2-GA TO 10-GA, 3/8-IN SCREW)	
		1	**9X-3401**	9	PIN-CONNECTOR (16-GA TO 18-GA)	
					—OR—	
		1	**126-1767**	9	PIN-CONNECTOR (14-GA TO 16-GA)	
		1	**153-2620**	1	PLUG AS-CONNECTOR (54-PIN, BLACK)	
		1	**163-6759**	1	SEAL	
		1	**155-2260**	1	KIT-CONNECTING PLUG (3-PIN)	
		1	**155-2270**	2	KIT-CONNECTING PLUG (2-PIN)	
					(EACH PLUG KIT INCLUDES PLUG AS, WEDGE, & INTERFACE SEAL)	

468-7598 **WIRING GP-PLATFORM (**contd.**)** **i06790069**

NOTE	REF NO	GRAPHIC REF	PART NUMBER	QTY	PART NAME 1 2 3 4 5 6 (PRODUCT LEVEL)	SEE PAGE
		1	**230-4009**	2	PLUG AS-CONNECTOR (12-PIN)	
					(EACH INCLUDES)	
		1	**455-0709**	1	SEAL-CONNECTOR	
		1	**230-4011**	2	PLUG AS-CONNECTOR (2-PIN)	
					(EACH INCLUDES)	
		1	**455-0704**	1	SEAL-CONNECTOR	
		1	**230-5010**	2	PLUG AS-CONNECTOR (6-PIN)	
					(EACH INCLUDES)	
		1	**455-0707**	1	SEAL-CONNECTOR	
		1	**238-2363**	10	TERMINAL (FEMALE)	
		1	**238-2366**	6	TERMINAL (MALE)	
		1	**243-4507**	1	RECEPTACLE AS-CONNECTOR (4-PIN)	
		1	**243-4508**	2	RECEPTACLE AS-CONNECTOR (6-PIN)	
		1	**243-4509**	1	RECEPTACLE AS-CONNECTOR (8-PIN)	
		1	**243-4510**	1	RECEPTACLE AS-CONNECTOR (12-PIN)	
		1	**342-2972**	1	CAP-CONNECTOR (2-PIN)	
		1	**342-2974**	1	CAP-CONNECTOR (6-PIN)	
	10	1	**096-6166**	2	WASHER-HARD (4.5X9X1-MM THK)	
	11	1	**111-4838**	2	CLIP	
	12	1	**199-7854**	1	SPACER (11.8X20X45-MM THK)	
M	13	1	**7X-2621**	3	BOLT (M10X1.5X12-MM)	
M	14	1	**8T-0337**	2	SCREW-MACHINE (M4X0.7X12-MM)	
C	15	1	**8T-4121**	12	WASHER-HARD (11X21X2.5-MM THK)	
CM	16	1	**8T-4137**	8	BOLT (M10X1.5X20-MM)	
M	17	1	**8T-6466**	1	BOLT (M10X1.5X60-MM)	
C	18	1	**3S-2093**	2	STRAP-CABLE	
C	19	1	**111-4836**	5	CLIP	

C - CHANGE FROM PREVIOUS TYPE
E - ORDER BY THE CENTIMETER
M - METRIC PART

468-7598 **WIRING GP-PLATFORM (**contd.**)** **i06790069**

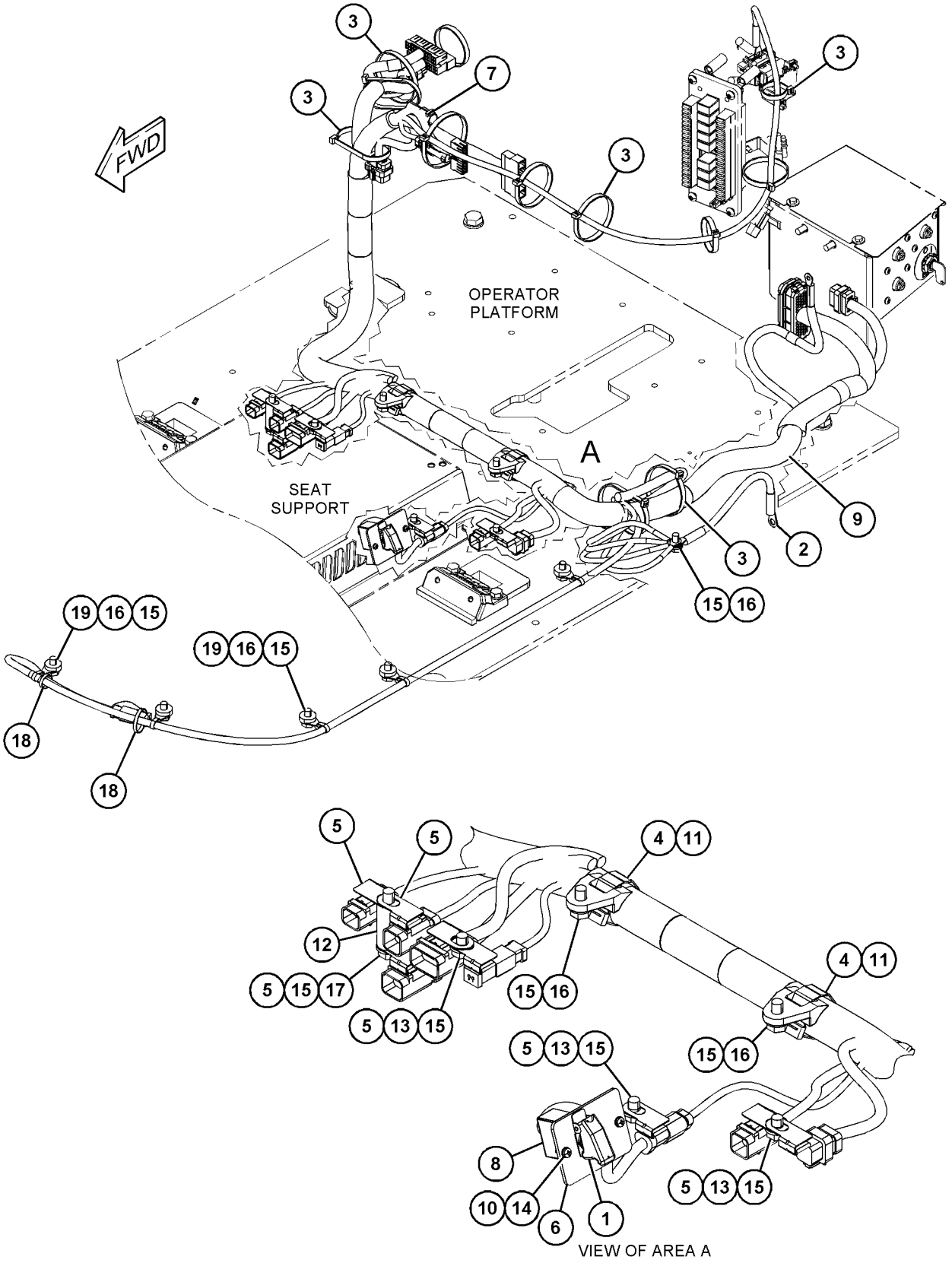

GRAPHIC #1 <END> g06120181

352-8148 DRIVE GP-FINAL—WITHOUT MOTOR

S/N: RDE1-UP

PART OF 421-4381 DRIVE GP-FINAL

SMCS-4050 **i05401348**

NOTE	REF NO	GRAPHIC REF	PART NUMBER	QTY	PART NAME 1 2 3 4 5 6 (PRODUCT LEVEL)	SEE PAGE
	1	1	**094-0580**	1	PLATE (10-MM THK)	
M	2	1	**094-1528**	3	WASHER (53X84X1-MM THK)	
M	3	1	**165-5854**	1	RING-LOCKING	
	4	1	**357-1828**	4	BEARING	
	5	1	**165-5856**	4	GEAR (37-TEETH)	
	6	1	**357-1829**	4	RACE	
	7	1	**165-5859**	3	RACE	
	8	1	**165-5860**	1	COVER	
	9	1	**165-5864**	1	GEAR-SUN (17-TEETH)	
	10	1	**165-5866**	1	RING	
	11	1	**165-5867**	1	GEAR (19-TEETH)	
	12	1	**165-5868**	1	HOUSING	
	13	1	**191-0862**	1	PLATE-LOCK	
	14	1	**204-1086**	4	PLATE	
	15	1	**218-4247**	2	BEARING	
	16	1	**357-1827**	3	BEARING	
	17	1	**310-4980**	1	SEAL GP-DUO-CONE	
	18	1	**332-7484**	1	CARRIER	
	19	1	**332-7485**	3	GEAR-PLANETARY (40-TEETH)	
	20	1	**332-7486**	1	PLATE	
	21	1	**332-7487**	1	PLATE	
	22	1	**3E-2338**	2	PLUG-PIPE (FINAL DRIVE, OIL DRAIN, FILL)	
M	23	1	**6V-7726**	4	SCREW-HEX SOCKET (M10X1.5X25-MM)	
	24	1	**7M-8485**	2	SEAL-O-RING	
M	25	1	**8T-1158**	16	BOLT-SOCKET HEAD (M8X1.25X20-MM)	
M	26	1	**8T-4136**	1	BOLT (M10X1.5X25-MM)	
M	27	1	**8T-4185**	3	BOLT (M10X1.5X50-MM)	
	28	1	**9X-2027**	1	WASHER (11X18X2-MM THK)	
B	29	1	**1U-8846**		SEALANT-GASKET	

B - USE AS REQUIRED
M - METRIC PART

352-8148 **DRIVE GP-FINAL (**contd.**)** **i05401348**

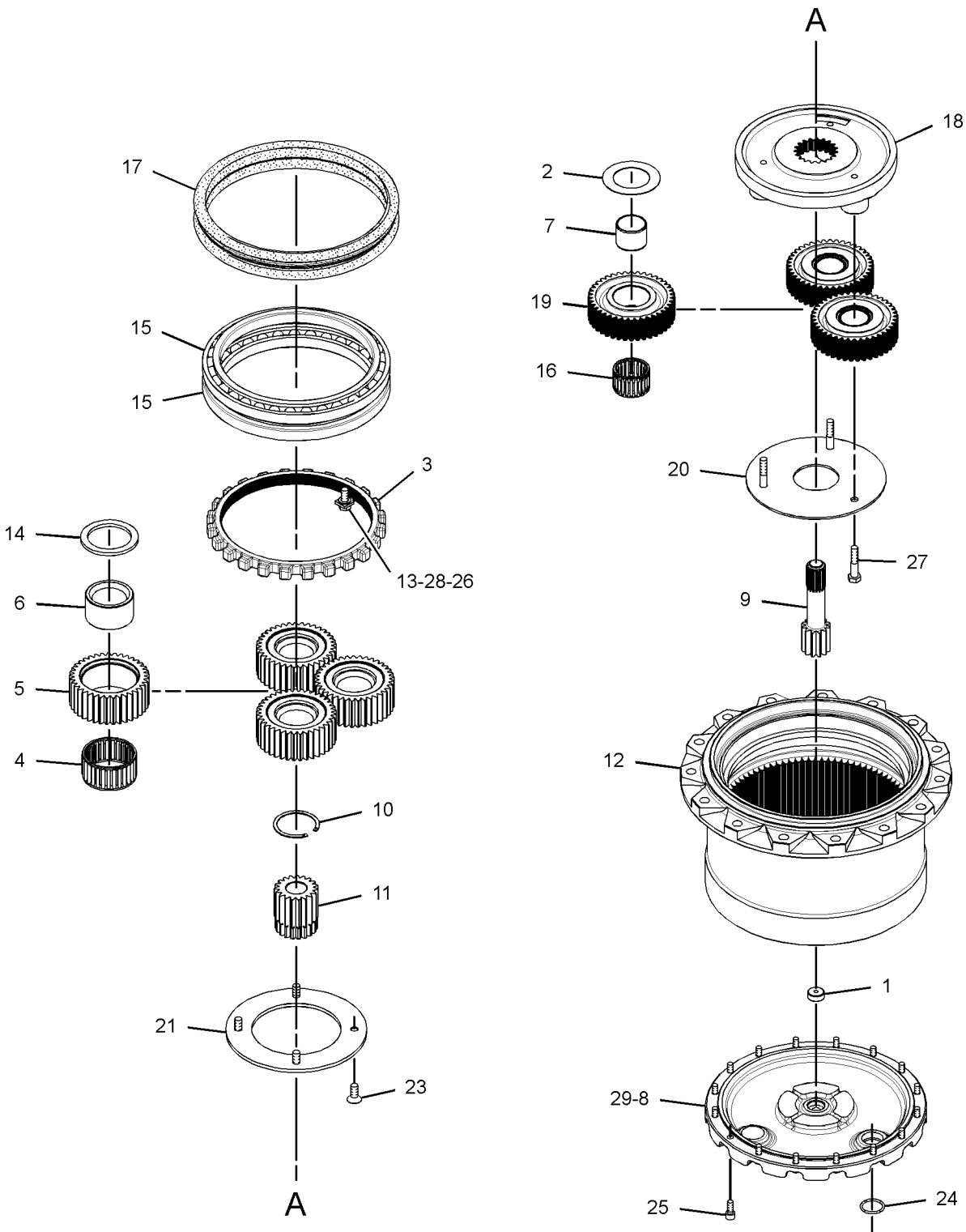

GRAPHIC #1 <END> g01961422

353-0491 DRIVE GP-FINAL—WITH MOTOR, SPROCKET

S/N: RDE1-UP

PART OF 441-8587 POWER TRAIN AR

SMCS-4050 **i05401261**

NOTE	REF NO	GRAPHIC REF	PART NUMBER	QTY	PART NAME 1 2 3 4 5 6 (PRODUCT LEVEL)	SEE PAGE
Y	1	1	*168-6728*	1	SPROCKET GP (21-TEETH)	151
Y	2	1	**421-4381**	1	DRIVE GP-FINAL (WITH MOTOR)	147

Y - SEPARATE ILLUSTRATION

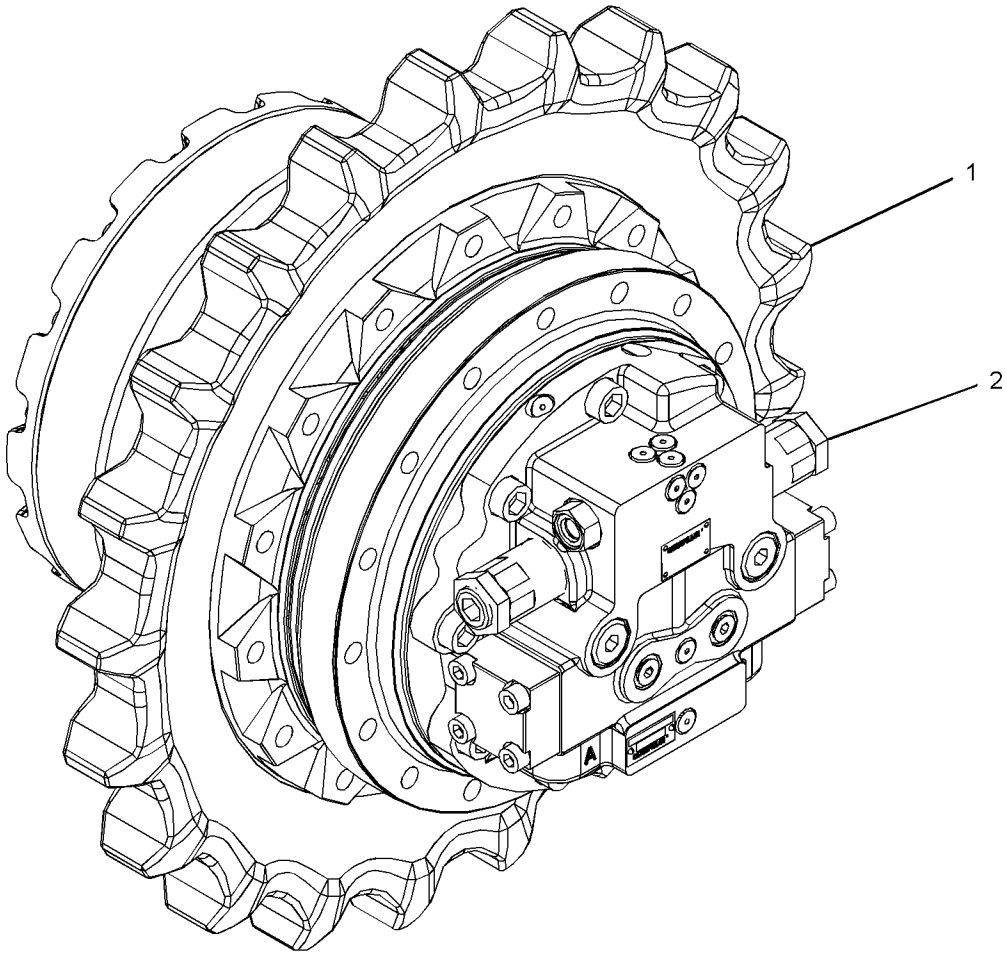

GRAPHIC #1 <END> g02721149

421-4381 DRIVE GP-FINAL–WITH MOTOR

S/N: RDE1-UP

PART OF 353-0491 DRIVE GP-FINAL

SMCS-4050 **i06674796**

NOTE	REF NO	GRAPHIC REF	PART NUMBER	QTY	PART NAME 1 2 3 4 5 6 (PRODUCT LEVEL)	SEE PAGE
Y	1	1	**352-8148**	1	DRIVE GP-FINAL (WITHOUT MOTOR)	144
Y	2	1	**421-4382**	1	MOTOR GP-TRAVEL	148

Y - SEPARATE ILLUSTRATION

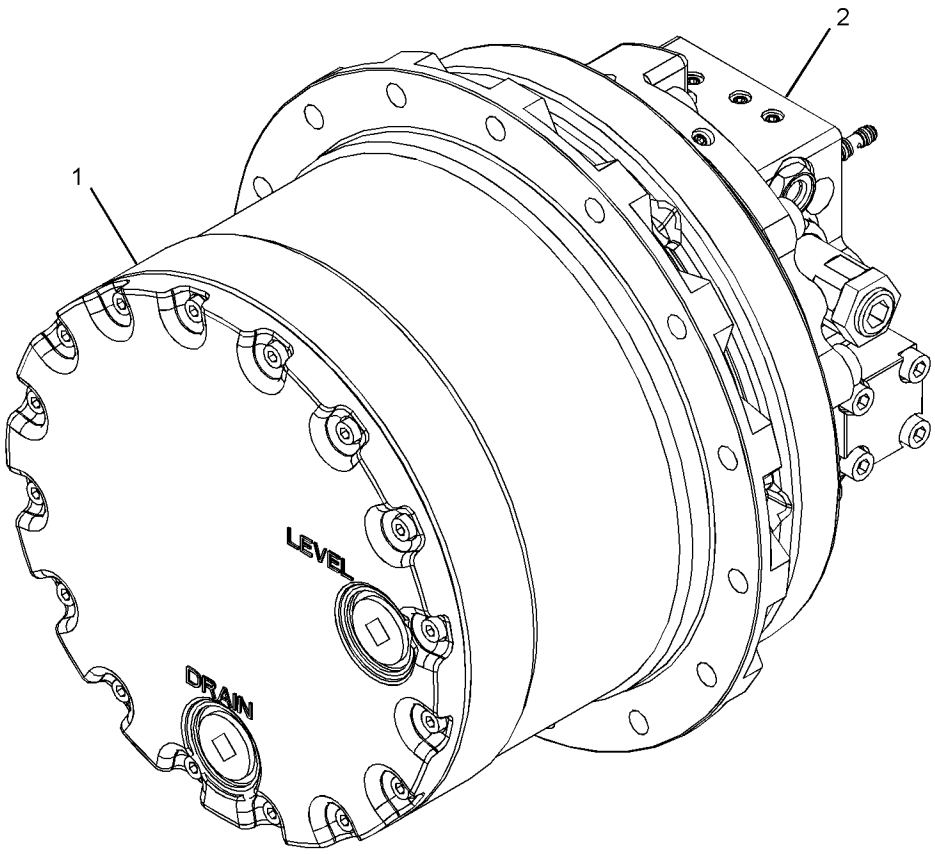

GRAPHIC #1 <END> g03333430

421-4382 MOTOR GP-TRAVEL

S/N: RDE1-UP

PART OF 421-4381 DRIVE GP-FINAL

SMCS-4351 **i05401356**

NOTE	REF NO	GRAPHIC REF	PART NUMBER	QTY	PART NAME 1 2 3 4 5 6 (PRODUCT LEVEL)	SEE PAGE
	1	1	**087-4742**	1	VALVE	
	2	1	**095-7380**	1	SPRING	
	3	1	**095-7382**	1	RETAINER	
	4	1	**096-1519**	1	SEAT	
	5	1	**165-2799**	9	SPRING	
	6	1	**165-5803**	1	SHAFT	
	7	1	**165-5804**	1	BEARING-ROLLER	
	8	1	**165-5811**	1	BARREL AS	
	9	1	**165-5814**	4	PLATE-SEPARATOR	
	10	1	**165-5816**	1	GUIDE-PISTON	
	11	1	**165-5817**	1	PISTON-BRAKE	
	12	1	**165-5818**	8	SPRING	
	13	1	**165-5826**	1	SEAL-LIP TYPE	
	14	1	**165-5828**	2	KEY	
	15	1	**165-5831**	2	SPRING	
	16	1	**176-8131**	1	SPACER-SPECIAL	
	17	1	**176-8573**	4	PLATE-FRICTION	
	18	1	**176-8579**	1	PLATE-CAM	
	19	1	**267-8084**	1	BEARING-NEEDLE	
Y	20	1	**349-9520**	1	VALVE GP-TRAVEL COUNTERBALANCE	366
	21	1	**353-5829**	1	GUIDE-BALL	
	22	1	**357-1832**	1	PISTON AS	
	23	1	**374-4171**	2	PISTON	
	25	1	**421-4384**	1	BODY	
	26	1	**421-4385**	1	ORIFICE	
	27	1	**085-9769**	4	PIN	
	28	1	**094-1875**	1	DOWEL	
	29	1	**094-1882**	7	PLUG	
	30	1	**095-1585**	1	SEAL-O-RING	
	32	1	**165-5819**	1	SEAL-O-RING	
	33	1	**165-5820**	1	RING-BACKUP	
	34	1	**165-5821**	1	SEAL-O-RING	
	35	1	**165-5822**	1	RING-BACKUP	
	36	1	**165-5823**	1	SEAL-O-RING	
	37	1	**165-5824**	1	RING-BACKUP	
	38	1	**1H-8278**	1	SEAL-O-RING	
	39	1	**8T-4240**	1	RING-RETAINING	
M	40	1	**8T-4944**	9	BOLT-SOCKET HEAD (M16X2X40-MM)	

M - METRIC PART
Y - SEPARATE ILLUSTRATION

421-4382 **MOTOR GP-TRAVEL (**contd.**)** **i05401356**

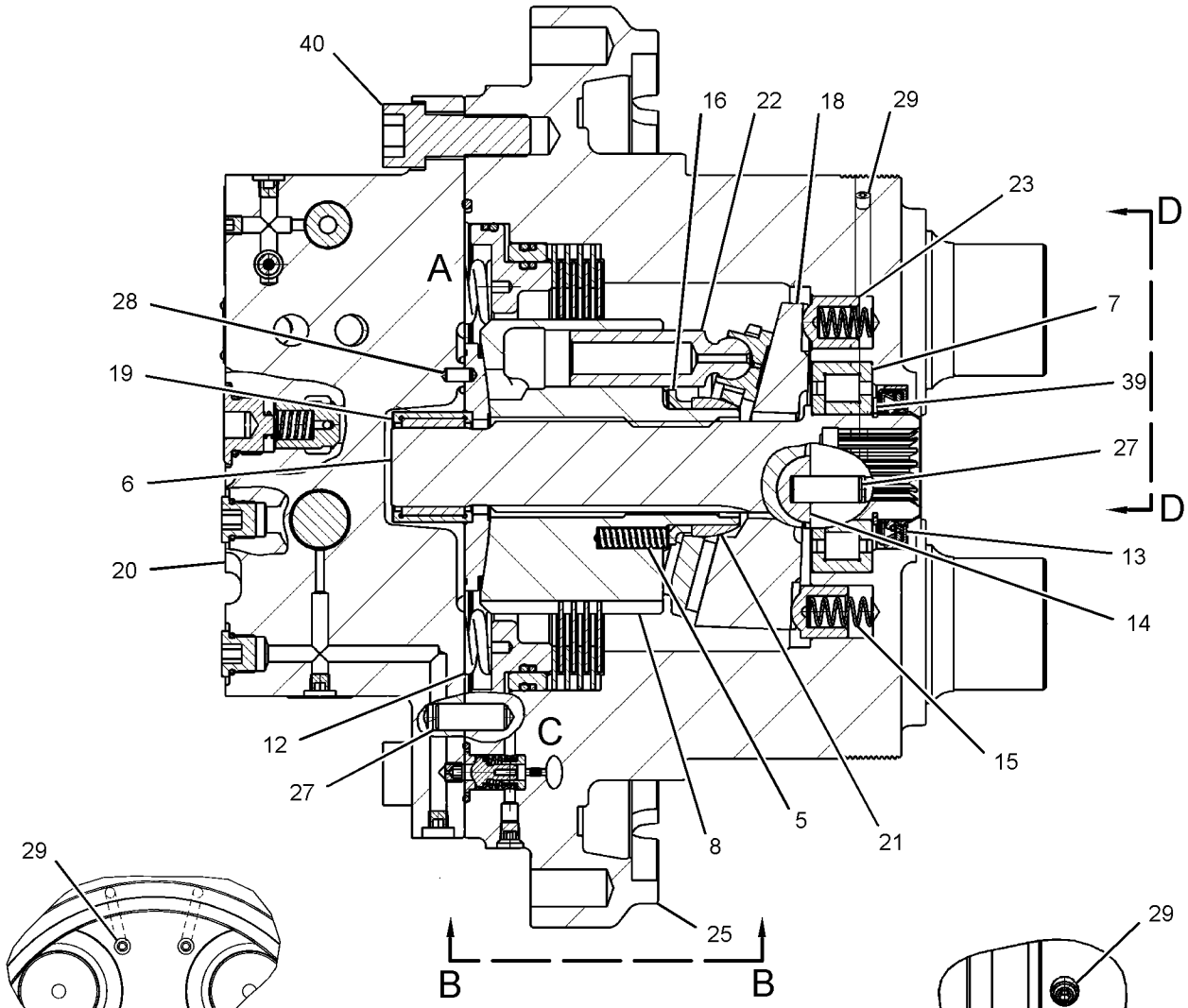

VIEW D-D

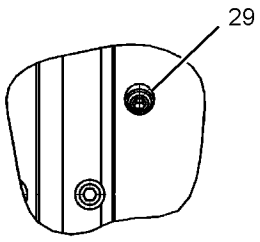

VIEW B-B

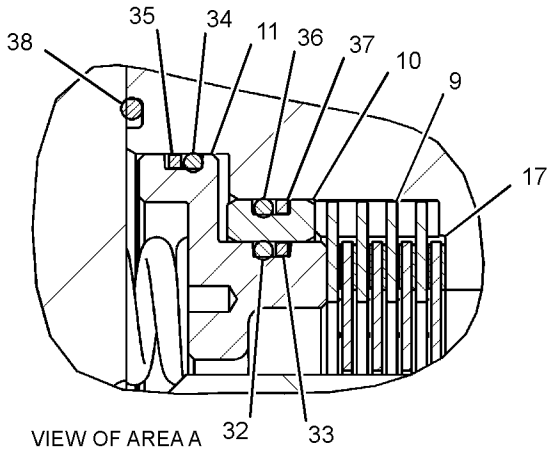

VIEW OF AREA A

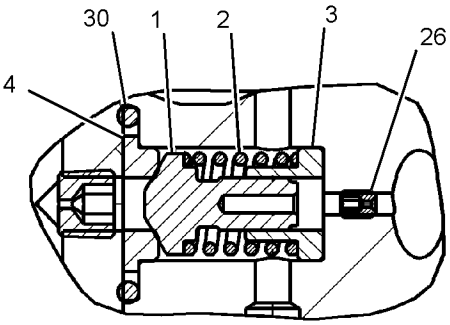

VIEW OF AREA C

GRAPHIC #1 <END> g03333582

441-8587 POWER TRAIN AR

S/N: RDE1-UP

PART OF 500-9103 GENERAL AR

SMCS-3000, 4000

i06019190

NOTE	PART NUMBER	QTY	PART NAME 1 2 3 4 5 6 (PRODUCT LEVEL)	SEE PAGE
Y	*353-0491*	2	DRIVE GP-FINAL (WITH MOTOR, SPROCKET)	146
Y	*424-0519*	1	DRIVE GP-SWING (WITH MOTOR) (WITH MOTOR)	222
Y	*442-0253*	1	FASTENER GP-SWING & FINAL DR	225

Y - SEPARATE ILLUSTRATION

<END>

168-6728 SPROCKET GP

S/N: RDE1-UP

PART OF 353-0491 DRIVE GP-FINAL

SMCS-4164 **i05530503**

NOTE	REF NO	GRAPHIC REF	PART NUMBER	QTY	PART NAME 1 2 3 4 5 6 (PRODUCT LEVEL)	SEE PAGE
M	1	1	**447-1709**	15	BOLT (M16X2X45-MM)	
	2	1	**4I-7472**	1	SPROCKET-TRACK (21-TEETH)	

M - METRIC PART

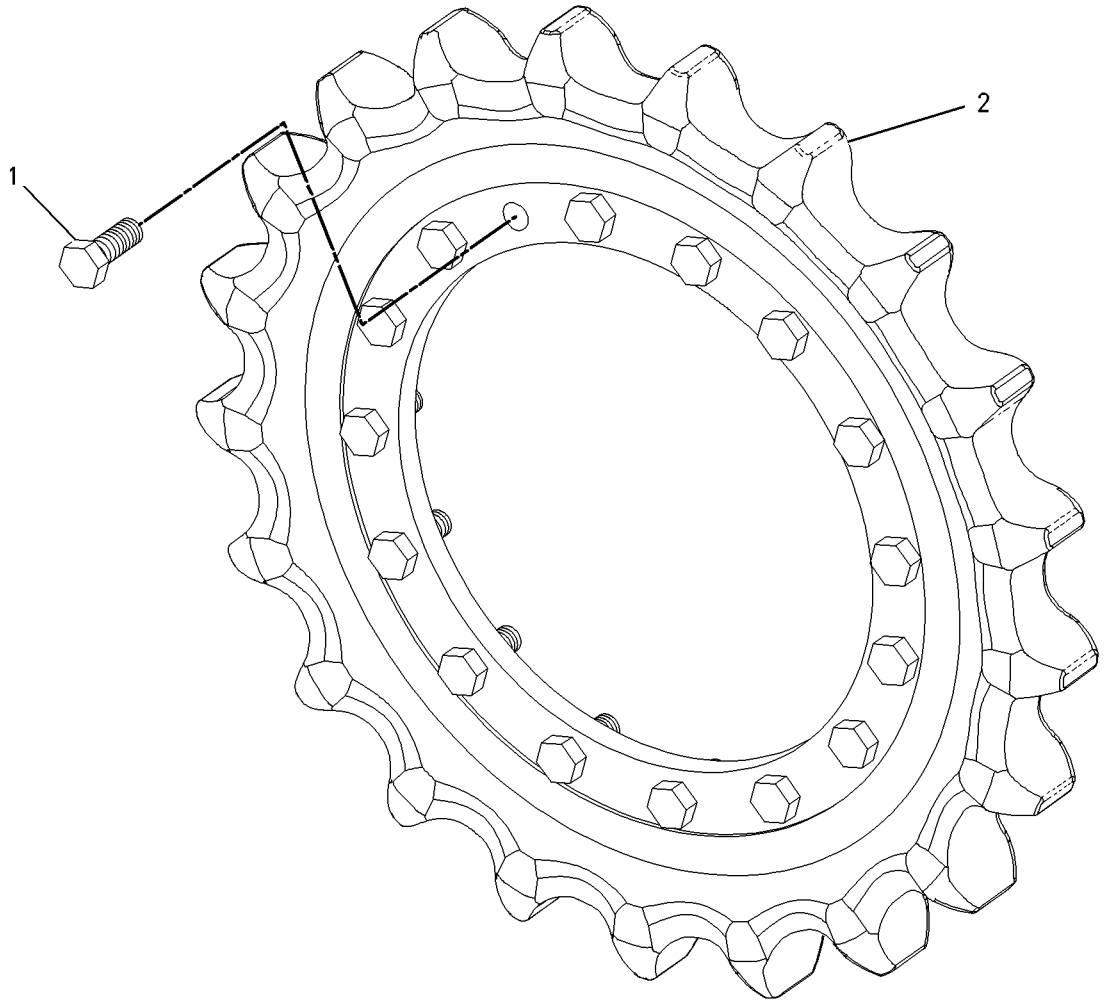

GRAPHIC #1 <END> g00735057

393-8574 BOX & MTG GP-STORAGE

S/N: RDE1-UP

PART OF 500-9108 CHASSIS AR

SMCS-7268 **i05407278**

NOTE	REF NO	GRAPHIC REF	PART NUMBER	QTY	PART NAME 1 2 3 4 5 6 (PRODUCT LEVEL)	SEE PAGE
Y	1	1	**393-8575**	1	BOX GP-STORAGE	153
	2	1	**135-8577**	4	BOLT AS	

Y - SEPARATE ILLUSTRATION

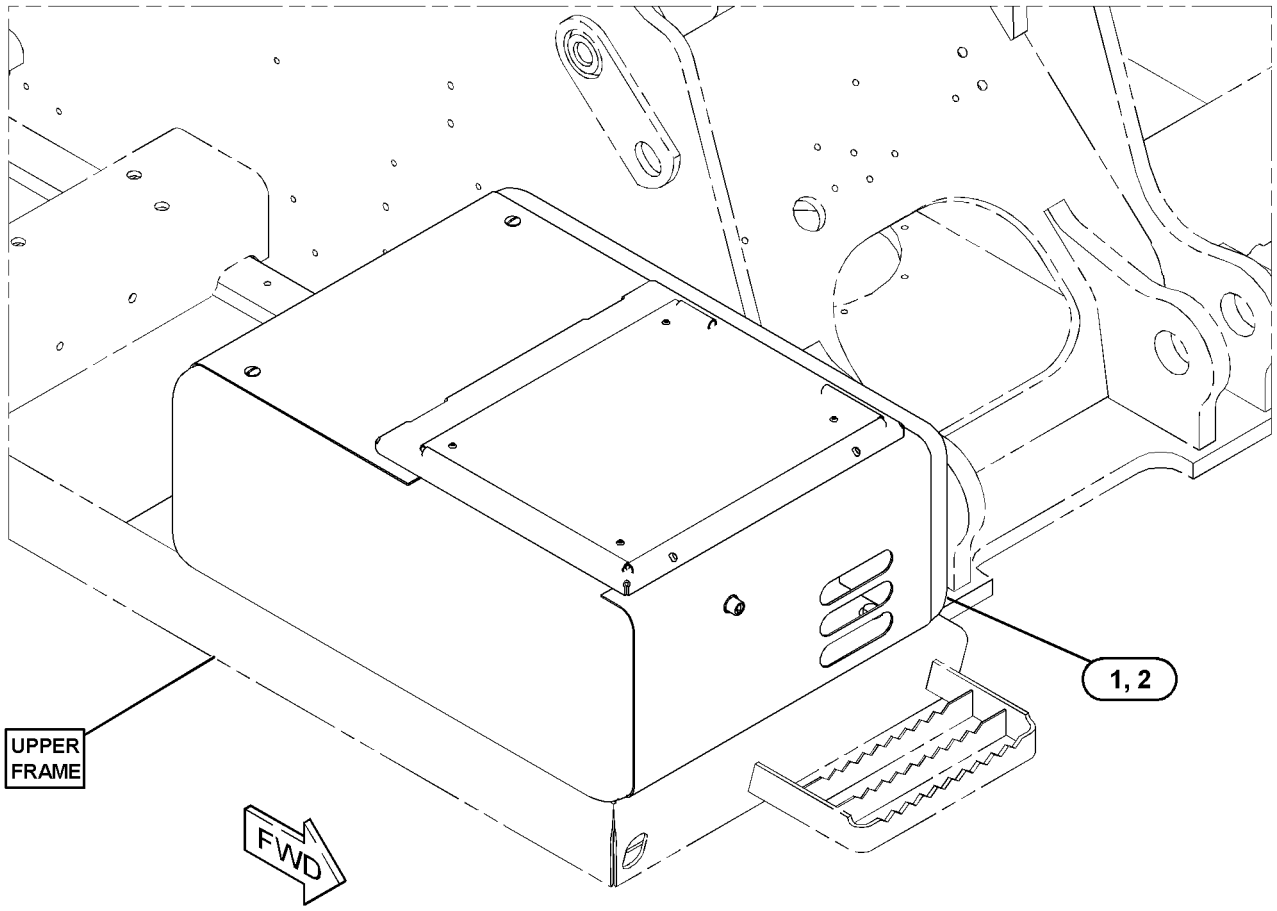

GRAPHIC #1 <END> g03120637

393-8575 BOX GP-STORAGE

S/N: RDE1-UP

PART OF 393-8574 BOX & MTG GP-STORAGE

SMCS-7268 **i05987420**

NOTE	REF NO	GRAPHIC REF	PART NUMBER	QTY	PART NAME 1 2 3 4 5 6 (PRODUCT LEVEL)	SEE PAGE
	1	1	**439-3322**	1	SUPPORT AS	
		1	**4B-4278**	1	WASHER (10.2X20.5X1.6-MM THK)	
	2	1	**170-2755**	1	HOOK AS	
B	3	1	**184-8850**	2	SHIM (0.5-MM THK)	
	4	1	**214-6197**	2	PLUG	
L	6	1	**320-5737**	1	LOCK AS	
	7	1	*393-8576*	1	BOX AS	
J		1	**348-5409**		SEAL (15-DM)	
	8	1	**393-8586**	1	DOOR AS-ACCESS	
	8A	1	**3D-9143**	2	HINGE-BUTT	
	9	1	**095-0843**	1	PIN-COTTER	
	10	1	**096-3780**	1	PIN-CLEVIS	
M	11	1	**105-3487**	4	BOLT-SOCKET HEAD (M6X1X20-MM)	
	12	1	**170-2983**	1	SEAL	
	13	1	**170-9360**	1	GROMMET	
M	14	1	**5C-9553**	2	BOLT (M6X1X16-MM)	
C	15	1	**4B-4278**	4	WASHER (10.2X20.5X1.6-MM THK)	
	16	1	**5P-4116**	1	WASHER-HARD (8.8X20.5X2-MM THK)	
CM	17	1	**293-1501**	4	NUT (M10X1.5-THD)	
	18	1	**9X-8256**	6	WASHER (6.6X12X2-MM THK)	

B - USE AS REQUIRED
C - CHANGE FROM PREVIOUS TYPE
J - ORDER BY THE DECIMETER
L - REQUIRES CORPORATE KEY
M - METRIC PART

393-8575 **BOX GP-STORAGE (**contd.**)** **i05987420**

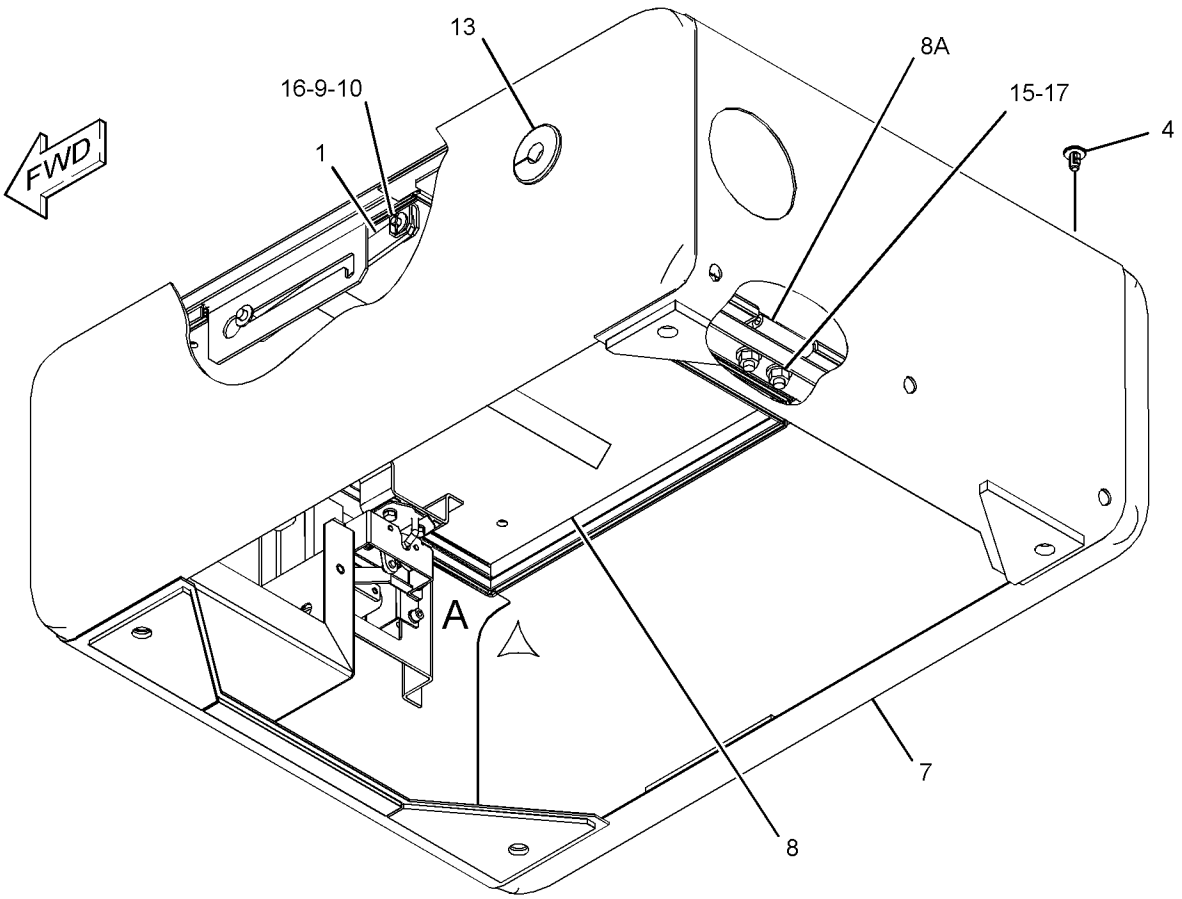

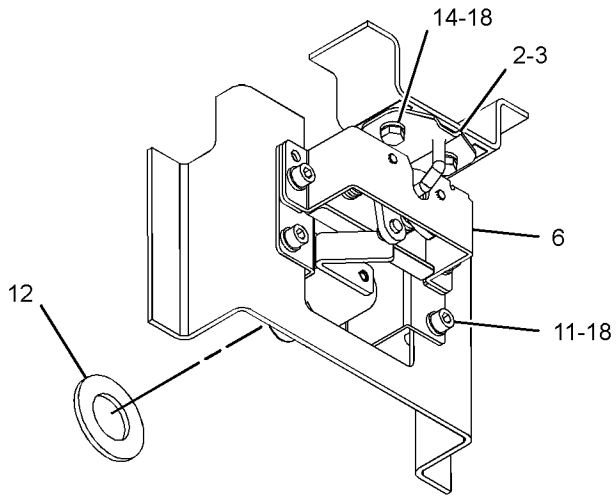

VIEW OF AREA A

GRAPHIC #1 <END> g03431030

420-2162 COUNTERWEIGHT & MOUNTING GP

S/N: RDE1-UP

PART OF 506-8578, 506-8579 DISTRIBUTION AR

SMCS-7056 **i06736009**

NOTE	REF NO	GRAPHIC REF	PART NUMBER	QTY	PART NAME 1 2 3 4 5 6 (PRODUCT LEVEL)	SEE PAGE
	1	1	**4I-0006**	2	CAP	
M	2	1	**447-1732**	4	BOLT (M24X3X150-MM)	
	3	1	**177-5867**	4	SPACER (25.5X50X75-MM THK)	
Y	4	1	*420-2166*	1	COUNTERWEIGHT GP	156

M - METRIC PART
Y - SEPARATE ILLUSTRATION

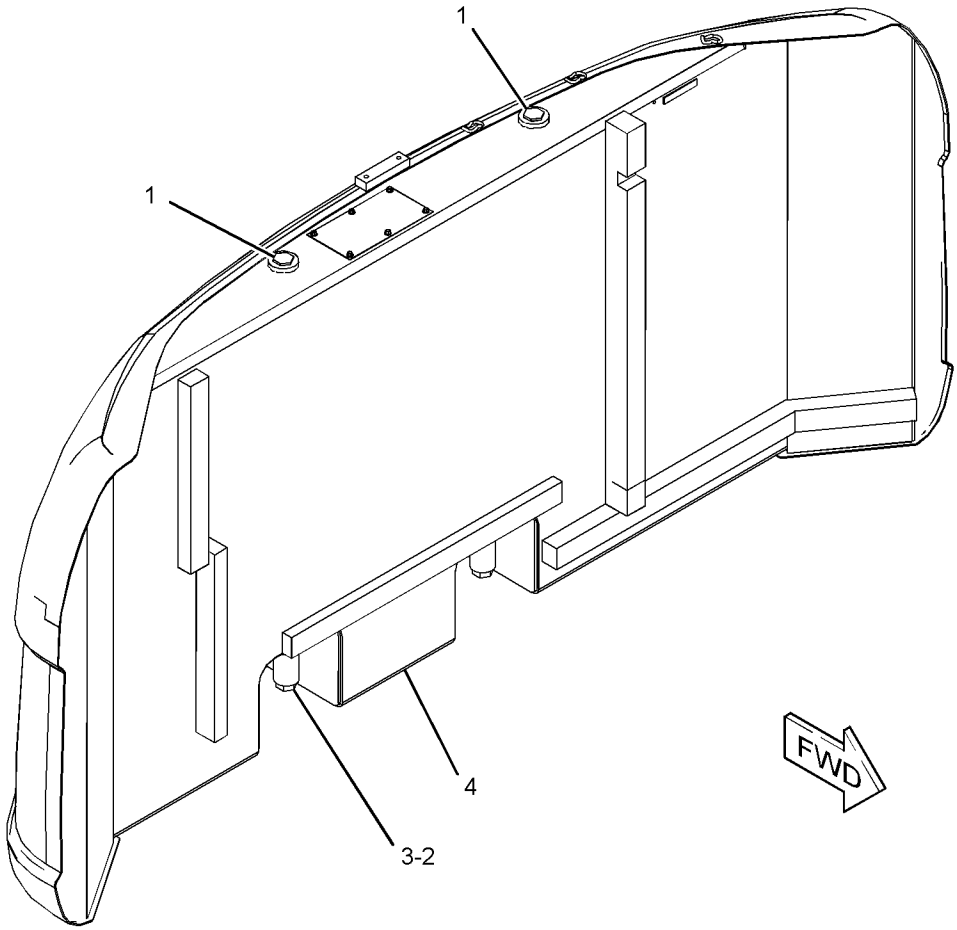

GRAPHIC #1 <END> g03453774

420-2166 COUNTERWEIGHT GP

S/N: RDE1-UP
2650-KG (5842-LB)
PART OF 420-2162 COUNTERWEIGHT & MOUNTING GP

SMCS-7056 **i05412701**

NOTE	REF NO	GRAPHIC REF	PART NUMBER	QTY	PART NAME 1 2 3 4 5 6 (PRODUCT LEVEL)	SEE PAGE
	1	1	**177-6048**	1	LINER	
	2	1	**293-6734**	1	LINER	
	3	1	**420-2169**	1	COUNTERWEIGHT AS	
M	3A	1	**192-3039**	6	SCREW-HEX FLANGE (6.3X1.8X19-MM)	
	3B	1	**289-6570**	1	SHEET	
	3C	1	**7T-1099**	3	LINK	
	4	1	**391-9674**	1	LINER	
	5	1	**419-3327**	1	LINER	
	6	1	**419-5160**	1	LINER	

M - METRIC PART

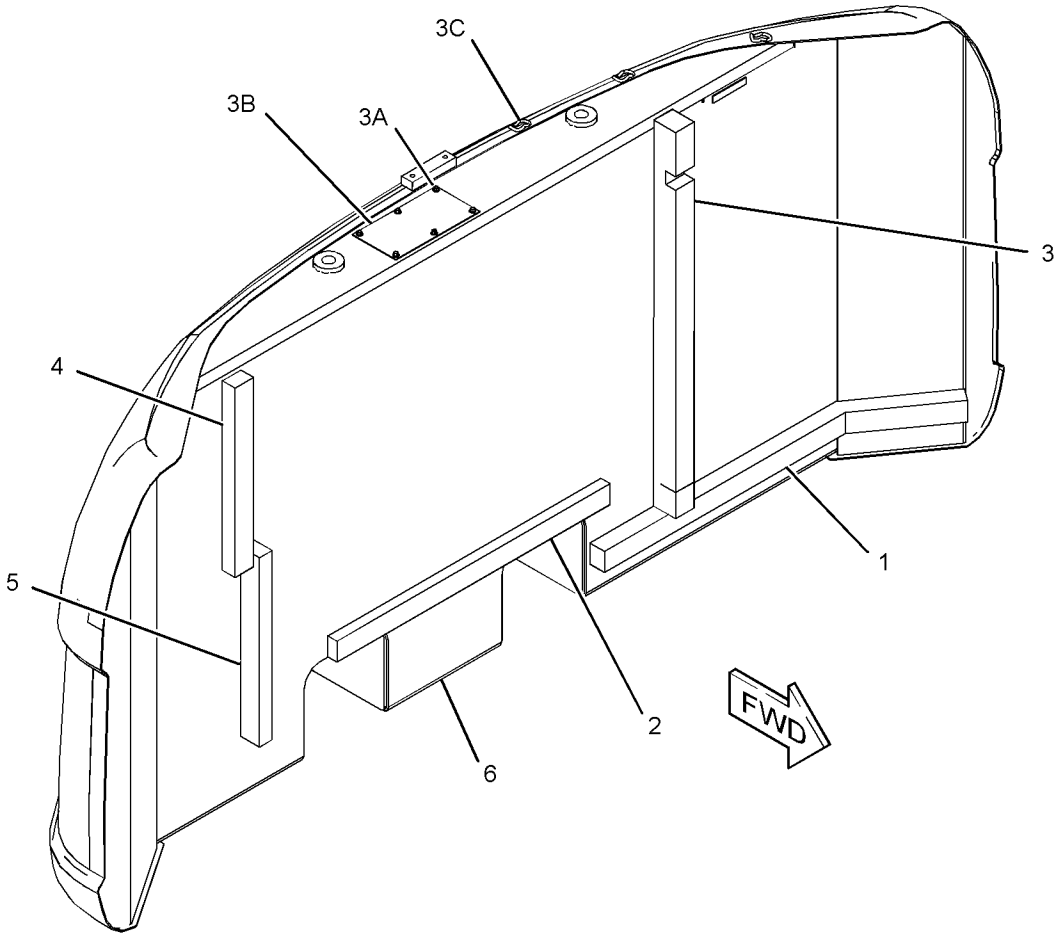

GRAPHIC #1 <END> g03334568

502-3432 COVER GP-SOUND SUPPRESSION–FUEL TANK

S/N: RDE1-UP

PART OF 501-3917 HOOD & GUARD GP

SMCS-7251 **i06781948**

NOTE	REF NO	GRAPHIC REF	PART NUMBER	QTY	PART NAME 1 2 3 4 5 6 (PRODUCT LEVEL)	SEE PAGE
	1	1	**199-0126**	1	LINER	
	2	1	**236-9567**	2	SHEET-RUBBER	
	3	1	**283-3620**	2	LINER	
	4	1	**502-3456**	1	LINER	
	5	1	**502-3440**	1	LINER	

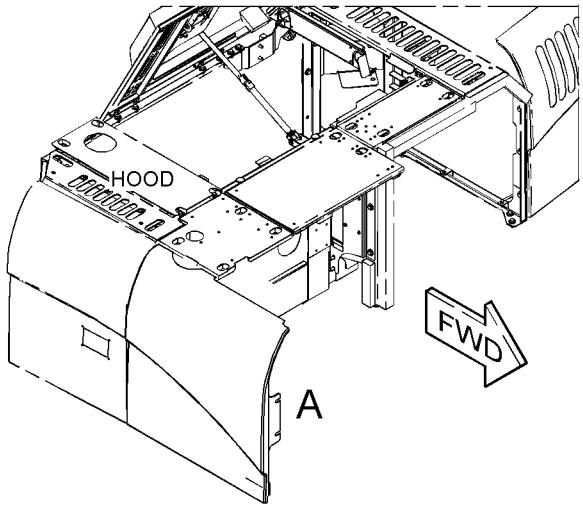

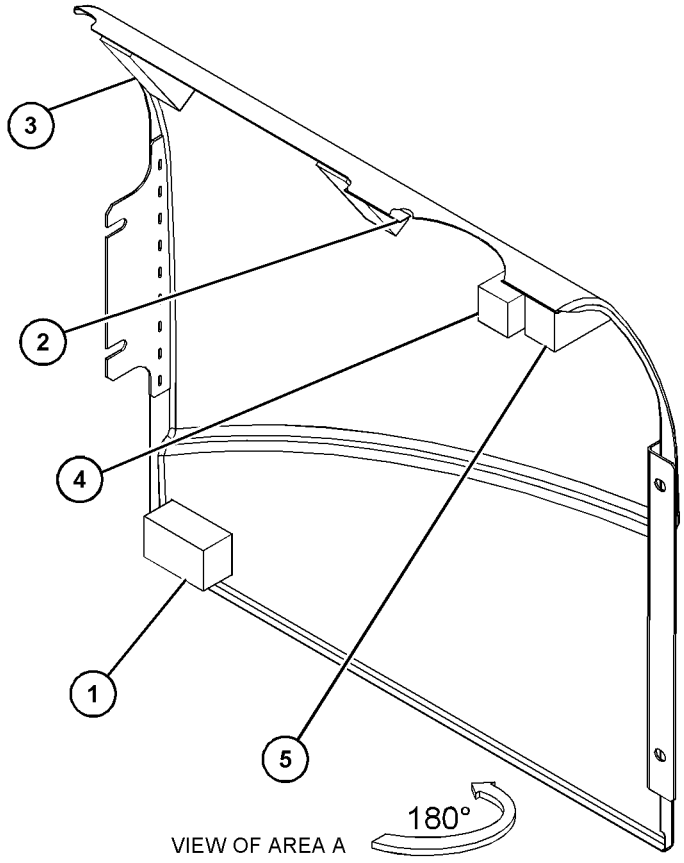

VIEW OF AREA A

GRAPHIC #1 <END> g06113137

436-2800 DOOR AS-ACCESS—PUMP COMPARTMENT

S/N: RDE1-UP

PART OF 501-3917 HOOD & GUARD GP

SMCS-7273 **i06673885**

NOTE	REF NO	GRAPHIC REF	PART NUMBER	QTY	PART NAME 1 2 3 4 5 6 (PRODUCT LEVEL)	SEE PAGE
M	1	1	**099-6418**	4	NUT (M6X1-THD)	
	2	1	**184-8862**	1	COVER	
	3	1	**505-5962**	1	LATCH AS	
J		1	**385-3458**	1	LOCK AS	
	4	1	*384-9034*	1	DOOR AS-ACCESS	
	4A	1	**184-8898**	2	HINGE	

J - REQUIRES CORPORATE KEY
M - METRIC PART

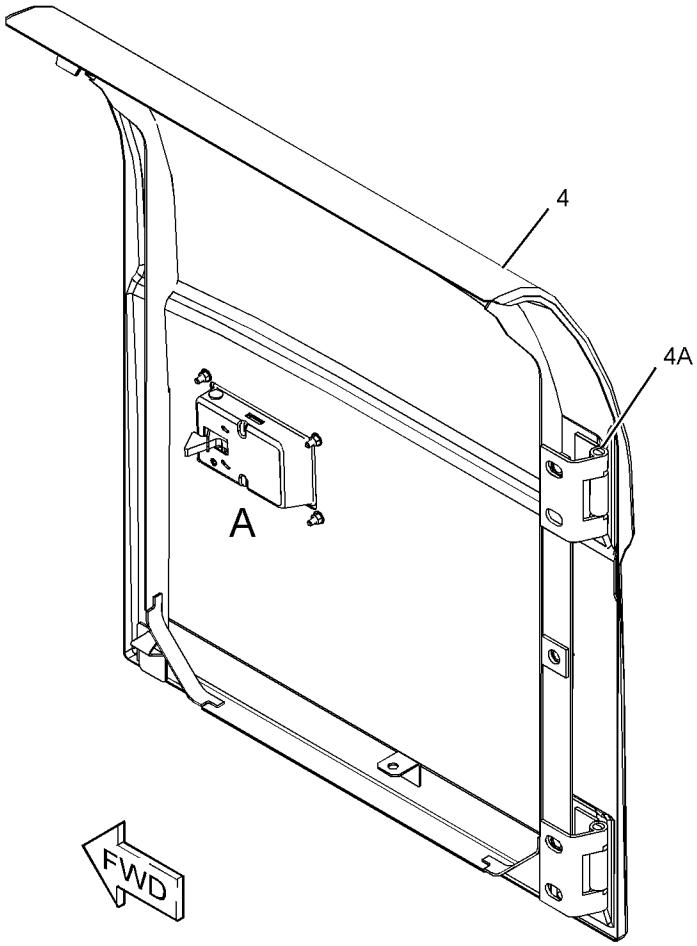

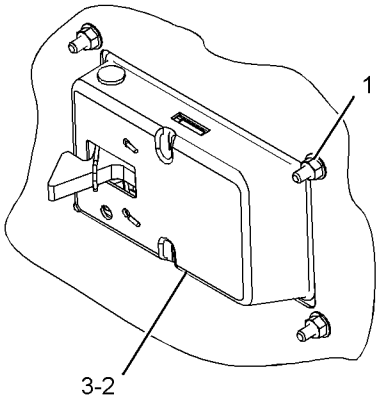

VIEW OF AREA A

GRAPHIC #1 <END> g06068209

490-9266 DOOR AS-ACCESS—MAIN HYDRAULIC PUMP

S/N: RDE1-UP

PART OF 501-3917 HOOD & GUARD GP

SMCS-7273 **i06801250**

NOTE	REF NO	GRAPHIC REF	PART NUMBER	QTY	PART NAME 1 2 3 4 5 6 (PRODUCT LEVEL)	SEE PAGE
	1	1	*490-9267*	1	DOOR AS	
	1A	1	**184-8898**	2	HINGE	
J	2	1	**358-0880**	1	LATCH AS	
		1	**385-3458**	1	LOCK AS	
M	3	1	**099-6418**	4	NUT (M6X1-THD)	

J - REQUIRES CORPORATE KEY
M - METRIC PART

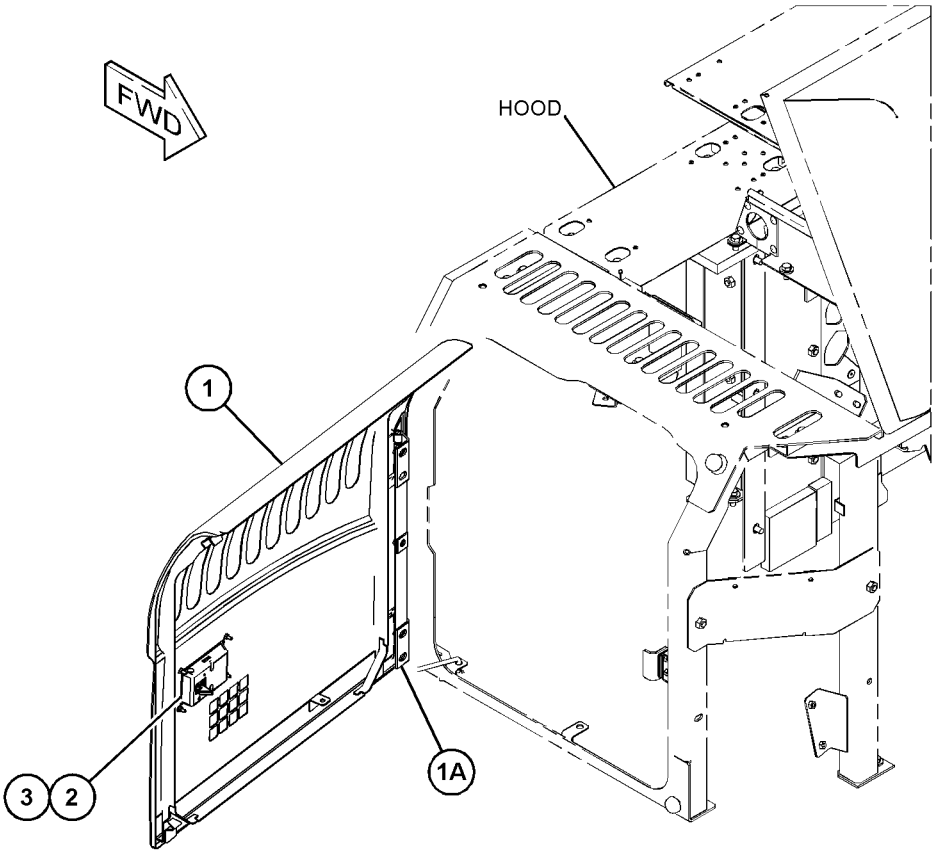

GRAPHIC #1 <END> g06131933

461-7615 FRAME GP-UPPER

S/N: RDE1-UP

PART OF 500-9108 CHASSIS AR

SMCS-7051 **i06781652**

NOTE	REF NO	GRAPHIC REF	PART NUMBER	QTY	PART NAME 1 2 3 4 5 6 (PRODUCT LEVEL)	SEE PAGE
	1	1	**1R-6229**	2	PIN AS	
B	2	1	**093-0065**	2	SHIM (1-MM THK)	
B	3	1	**093-0083**	1	SHIM (1-MM THK)	
B	4	1	**093-0097**	2	SHIM (2-MM THK)	
B	5	1	**093-0115**	1	SHIM (2-MM THK)	
	6	1	**093-0357**	2	SPACER (63X100X9-MM THK)	
B	7	1	**133-2425**	2	SHIM (0.5-MM THK)	
B	8	1	**133-2717**	4	SHIM (0.5-MM THK)	
B	9	1	**212-2837**	2	SHIM (2-MM THK)	
	10	1	**348-0629**	1	PIN AS	
M	11	1	**461-2757**	2	BOLT (M12X1.75X20-MM)	
	12	1	**461-7616**	1	FRAME AS-UPPER	
	12A	1	**186-5639**	1	STEP AS	
	13	1	**086-0297**	2	WASHER (13X50X6-MM THK)	
	14	1	**086-0299**	1	WASHER (22X60X9-MM THK)	
M	15	1	**453-2844**	1	BOLT (M20X2.5X30-MM)	
					(THE FOLLOWING REPAIR PARTS ARE AVAILABLE FOR REPAIR OF DAMAGED SKIRTS)	
F		1	**180-7614**	1	PLATE-SKIRT (1100-MM)	

B - USE AS REQUIRED
F - NOT SHOWN
M - METRIC PART

461-7615 **FRAME GP-UPPER (**contd.**)** **i06781652**

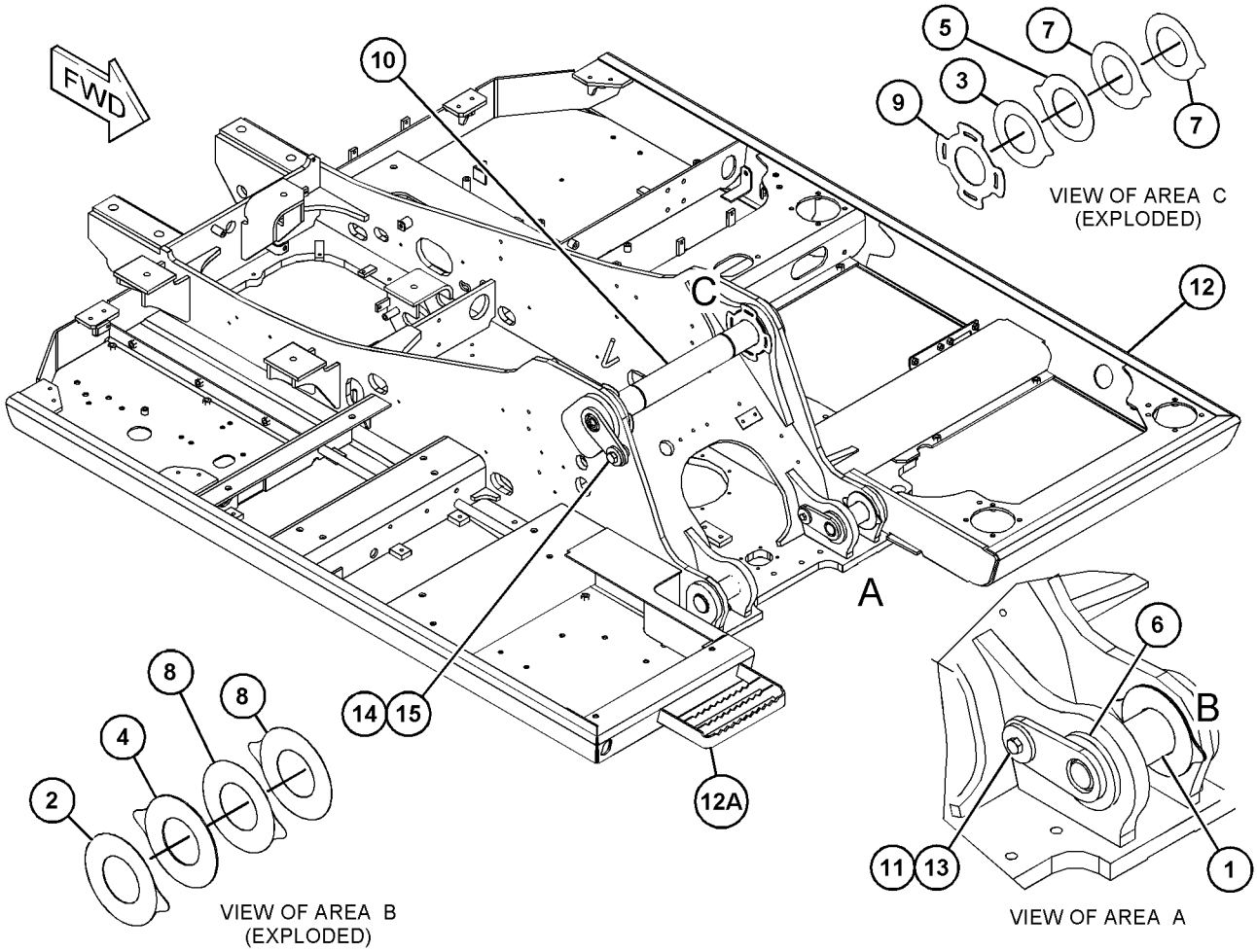

GRAPHIC #1 <END> g06113432

378-9598 GEAR & BEARING GP-SWING

S/N: RDE1-UP

PART OF 436-2836 GEAR & BEARING GP-SWING

SMCS-7063 **i06826341**

NOTE	REF NO	GRAPHIC REF	PART NUMBER	QTY	PART NAME 1 2 3 4 5 6 (PRODUCT LEVEL)	SEE PAGE
	1	1	**3B-8489**	2	FITTING-GREASE (1/8-27 PTF)	
	2	1	**229-1078**	1	SEAL-DUST	
E	3	1	**148-4685**		SEAL (309-CM)	

E - ORDER BY THE CENTIMETER

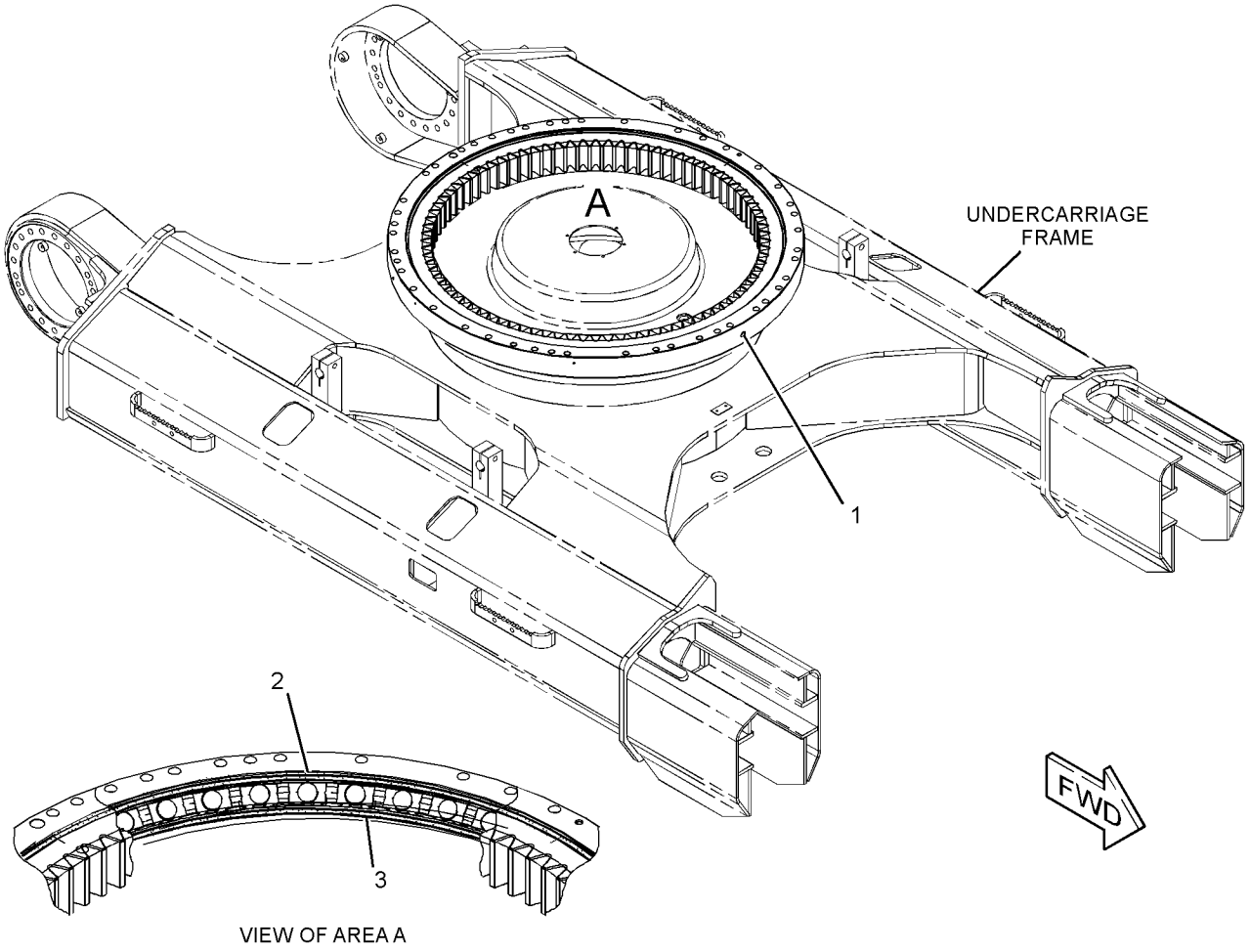

GRAPHIC #1 <END> g01671618

436-2836 GEAR & BEARING GP-SWING

S/N: RDE1-UP

PART OF 260-7057 FRAME AR-UNDERCARRIAGE

SMCS-7063 **i06151375**

NOTE	REF NO	GRAPHIC REF	PART NUMBER	QTY	PART NAME 1 2 3 4 5 6 (PRODUCT LEVEL)	SEE PAGE
	1	1	**4I-7444**	1	BOOT	
	2	1	**4I-7446**	1	GASKET	
	3	1	**227-6186**	38	SPACER (16.6X32X26-MM THK)	
Y	4	1	**378-9598**	1	GEAR & BEARING GP-SWING	162
	5	1	**434-5320**	1	PLATE AS	
	6	1	**095-1299**	1	DOWEL	
	7	1	**191-2544**	34	WASHER (16.6X32X5-MM THK)	
	8	1	**4I-7326**	1	STRIP	
	9	1	**4I-7512**	1	CLAMP-HOSE	
M	10	1	**447-1708**	34	BOLT (M16X2X80-MM)	
M	11	1	**8T-0357**	38	BOLT (M16X2X70-MM)	
	12	1	**8T-4121**	12	WASHER-HARD (11X21X2.5-MM THK)	
M	13	1	**8T-4136**	12	BOLT (M10X1.5X25-MM)	
BF			**1U-8846**		SEALANT-GASKET	

B - USE AS REQUIRED
F - NOT SHOWN
M - METRIC PART
Y - SEPARATE ILLUSTRATION

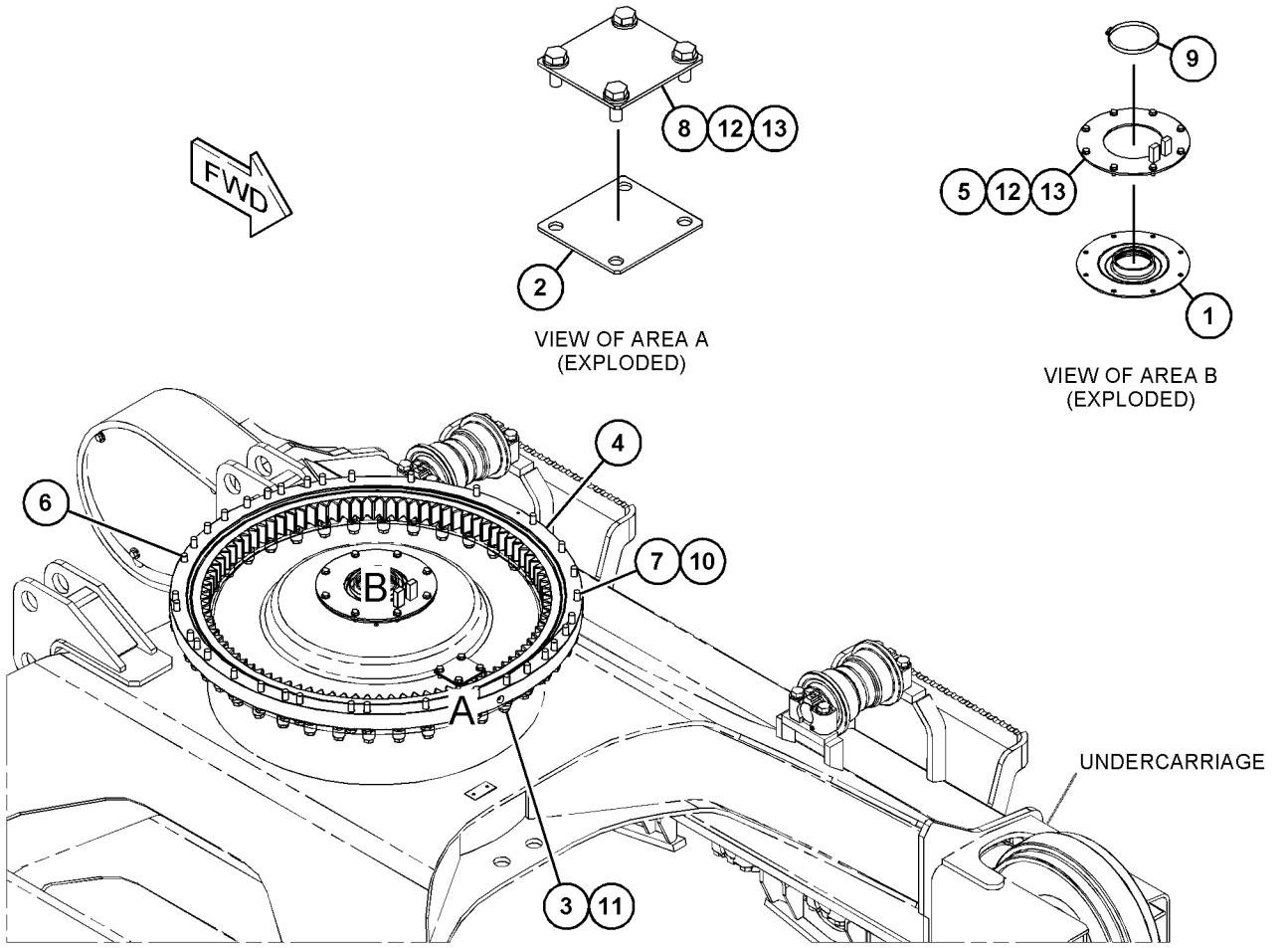

GRAPHIC #1 <END> g03698467

501-3918 GUARD GP-BOTTOM

S/N: RDE1-UP

PART OF 506-8578, 506-8579, 515-4828, 515-4829 DISTRIBUTION AR

SMCS-7153 **i06814235**

NOTE	REF NO	GRAPHIC REF	PART NUMBER	QTY	PART NAME 1 2 3 4 5 6 (PRODUCT LEVEL)	SEE PAGE
	1	1	**278-4050**	1	SHEET	
	2	1	**278-4051**	1	SHEET	
	3	1	**392-2637**	1	SHEET	
	4	1	**392-2638**	1	SHEET	
	5	1	**392-2640**	1	SHEET AS	
	6	1	**502-3441**	1	SHEET	
	7	1	**135-8576**	28	BOLT AS-LOCKING	

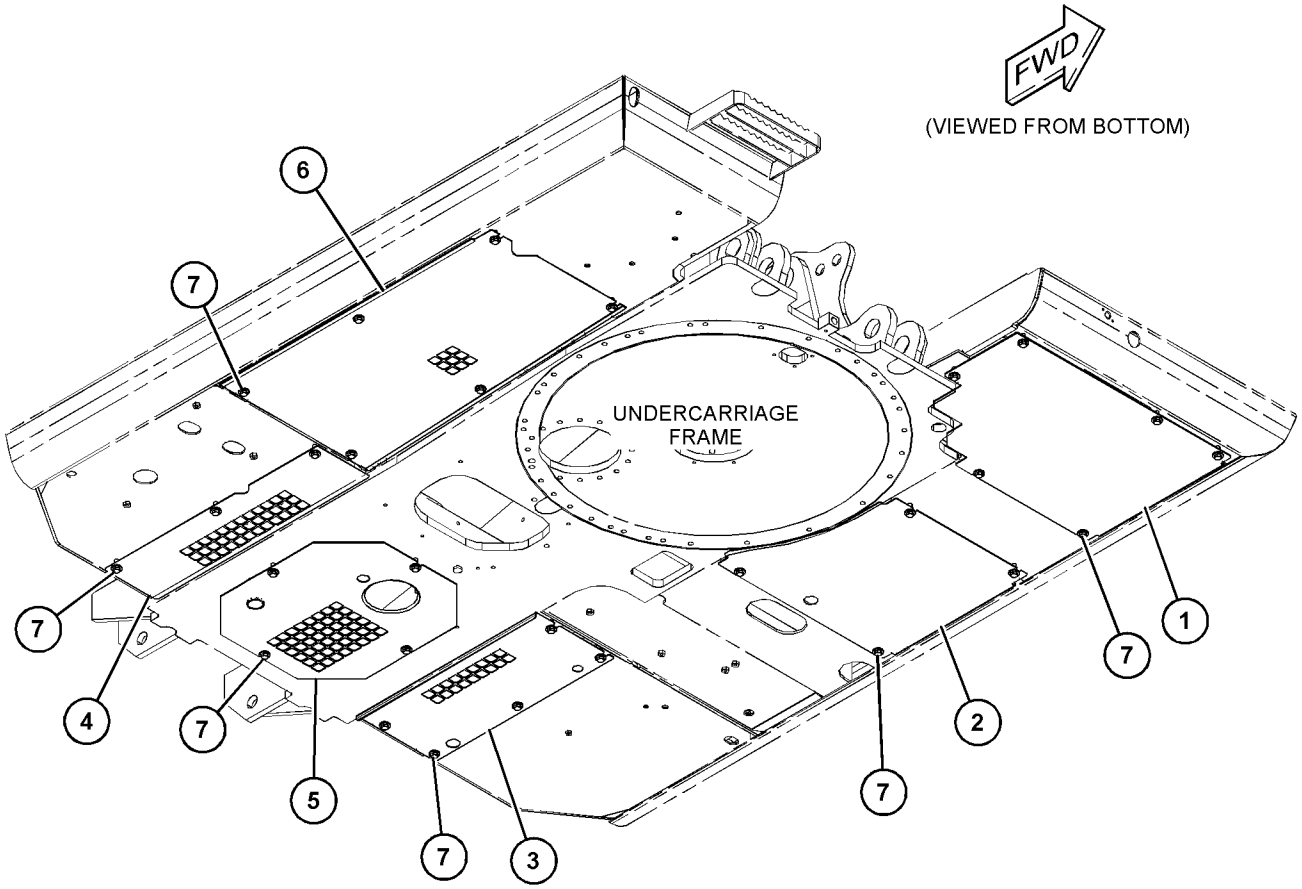

GRAPHIC #1 <END> g06131582

137-2813 GUARD GP-SWIVEL

S/N: RDE1-UP

PART OF 506-8578, 506-8579 DISTRIBUTION AR

SMCS-7183 **i06828455**

NOTE	REF NO	GRAPHIC REF	PART NUMBER	QTY	PART NAME 1 2 3 4 5 6 (PRODUCT LEVEL)	SEE PAGE
	1	1	**137-2853**	1	PLATE AS	
	2	1	**137-2854**	1	PLATE AS	
M	3	1	**8C-8992**	4	BOLT-LOCKING (M12X1.75X30-MM)	
	4	1	**5P-1076**	4	WASHER-HARD (13.5X30X4-MM THK)	

M - METRIC PART

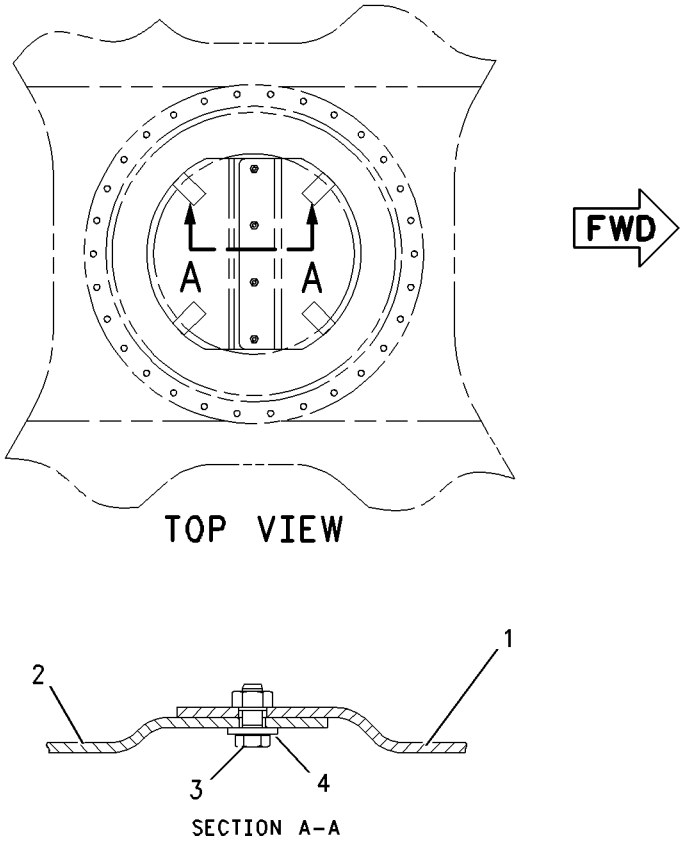

GRAPHIC #1 <END> g00780828

170-2602 HANDRAIL GP–FRONT, RH

S/N: RDE1-UP

PART OF 500-9108 CHASSIS AR

SMCS-7256 **i05407425**

NOTE	REF NO	GRAPHIC REF	PART NUMBER	QTY	PART NAME 1 2 3 4 5 6 (PRODUCT LEVEL)	SEE PAGE
	1	1	**193-9712**	1	HANDRAIL AS	
	2	1	**177-5880**	2	SLEEVE	
	3	1	**177-5879**	1	CLAMP	
	4	1	**135-8578**	3	BOLT AS	
	5	1	**135-8573**	2	BOLT AS	

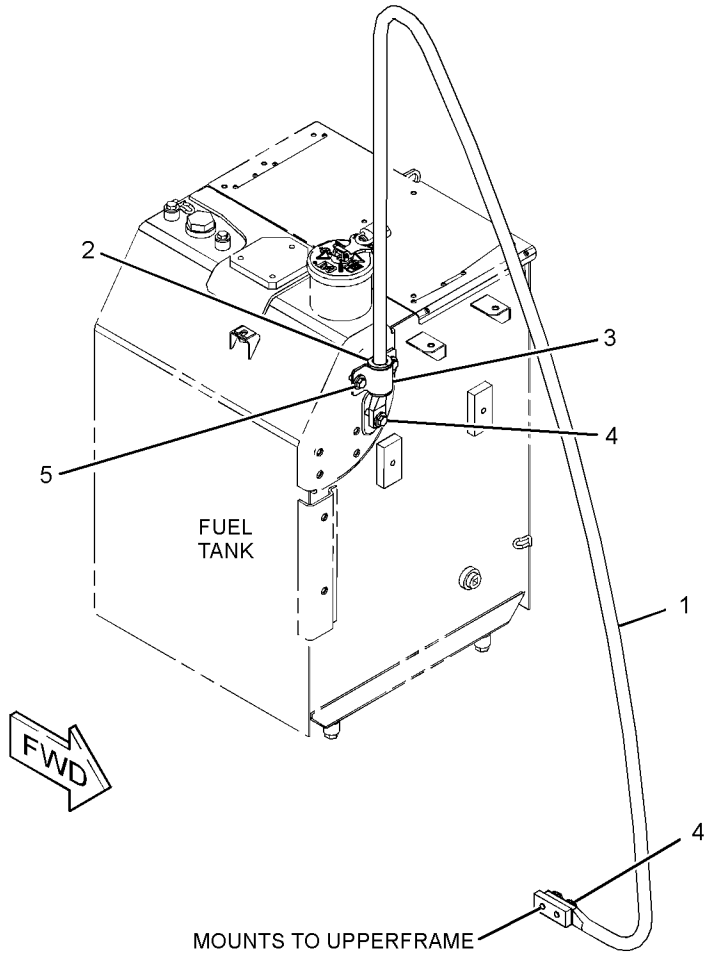

GRAPHIC #1 <END> g02351108

501-3917 HOOD & GUARD GP

S/N: RDE1-UP

PART OF 500-9108 CHASSIS AR

SMCS-7251, 7276 **i06781855**

NOTE	REF NO	GRAPHIC REF	PART NUMBER	QTY	PART NAME 1 2 3 4 5 6 (PRODUCT LEVEL)	SEE PAGE
	1	1	**298-2985**	1	SPRING-GAS (ENGINE HOOD)	
	2	1	**4I-0232**	2	STRIKER	
	3	1	**4I-1205**	4	BUMPER	
	4	1	**6I-6033**	2	STOP	
	5	1	**087-3908**	4	SHIM (1-MM THK)	
	6	1	**087-3909**	4	SHIM (2-MM THK)	
	7	1	**122-4120**	2	ROD	
	8	1	**170-3014**	2	BUMPER	
B	9	1	**190-6821**	3	SHIM (1-MM THK)	
	10	1	**199-0377**	1	PLATE	
	11	2	**293-7010**	1	SHEET AS	
	12	1	**298-3024**	1	LINER	
	13	1	**391-8714**	1	SUPPORT AS	
	14	2	**391-8740**	1	SHEET AS	
Y	15	1	**391-8742**	1	SHEET AS-SOUND SUPPRESSION	172
	16	1	**391-8745**	1	SHEET AS-SOUND SUPPRESSION	
		1	**283-3636**	1	LINER	
	17	2	**391-8763**	1	SHEET AS-SOUND SUPPRESSION	
		2	**391-8765**	1	LINER	
	18	1	**391-8766**	1	SHEET AS-SOUND SUPPRESSION	
		1	**283-3643**	1	LINER	
	19	2	**392-0423**	1	SUPPORT AS	
	20	1	**392-0436**	1	SHEET AS-SOUND SUPPRESSION	
		1	**392-0456**	1	LINER	
Y	21	1	**392-0460**	1	SHEET AS-SOUND SUPPRESSION	173
	22	1	**394-9450**	1	SHEET AS	
	23	1	**396-8526**	1	SUPPORT AS	
	24	2	**419-5231**	1	SHEET AS	
Y	25	1	**436-2800**	1	DOOR AS-ACCESS (PUMP COMPARTMENT)	158
Y	26	2	**463-9830**	1	SUPPORT AS-SOUND SUPPRESSION	178
	27	1	**464-2265**	1	SUPPORT AS	
		1	**303-9623**	1	LINER	
	28	2	**464-2268**	1	SUPPORT AS	
Y	29	1	**464-2278**	1	SHEET AS-SOUND SUPPRESSION	174
Y	30	1	**464-8682**	1	HOOD GP-ENGINE	171
Y	31	1	**466-7750**	1	SHEET AS-SOUND SUPPRESSION	175
	32	2	**466-7751**	1	SHEET AS	
		2	**480-2355**	1	LINER	
	33	2	**473-4116**	1	SHEET AS	
	34	2	**473-4118**	1	SUPPORT AS	
Y	35	1	**490-9266**	1	DOOR AS-ACCESS (MAIN HYDRAULIC PUMP)	159
	36	1	**502-3430**	1	SHEET AS	
	37	1	**502-3431**	1	SHEET AS	
Y	38	1	**502-3432**	1	COVER GP-SOUND SUPPRESSION	157
	39	2	**135-8572**	3	BOLT AS	
	40	1,2	**135-8573**	86	BOLT AS	
	41	1,2	**135-8575**	14	BOLT AS	

501-3917 **HOOD & GUARD GP (**contd.**)** **i06781855**

NOTE	REF NO	GRAPHIC REF	PART NUMBER	QTY	PART NAME 1 2 3 4 5 6 (PRODUCT LEVEL)	SEE PAGE
	42	1	**3B-4618**	3	PIN-COTTER	
M	43	1	**5C-7261**	1	NUT (M8X1.25-THD)	
	44	1	**5P-4115**	4	WASHER-HARD (7.2X19X2-MM THK)	
M	45	1	**6V-7357**	4	BOLT (M6X1X25-MM)	
	46	1	**7F-3708**	1	PIN	
	47	1	**8T-4121**	6	WASHER-HARD (11X21X2.5-MM THK)	
M	48	1	**8T-4133**	4	NUT (M10X1.5-THD)	
M	49	1	**8T-4136**	2	BOLT (M10X1.5X25-MM)	
	50	1	**8T-4224**	1	WASHER-HARD (8.8X16X2-MM THK)	
M	51	1	**9X-2045**	4	SCREW-TRUSS HEAD (M6X1X20-MM)	

B - USE AS REQUIRED
M - METRIC PART
Y - SEPARATE ILLUSTRATION

501-3917 **HOOD & GUARD GP** (contd.) **i06781855**

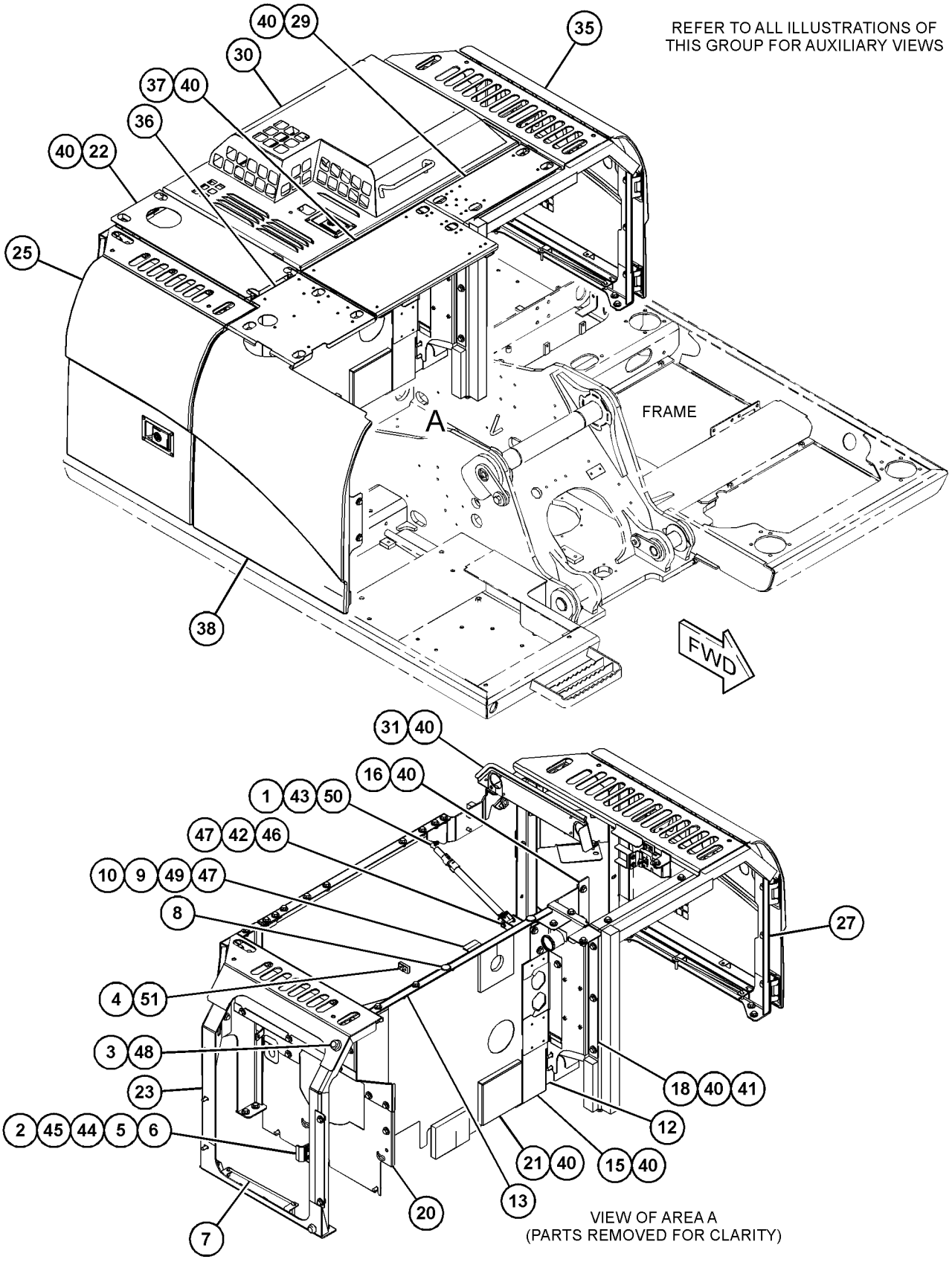

GRAPHIC #1 g06130881

501-3917 **HOOD & GUARD GP (**contd.**)** **i06781855**

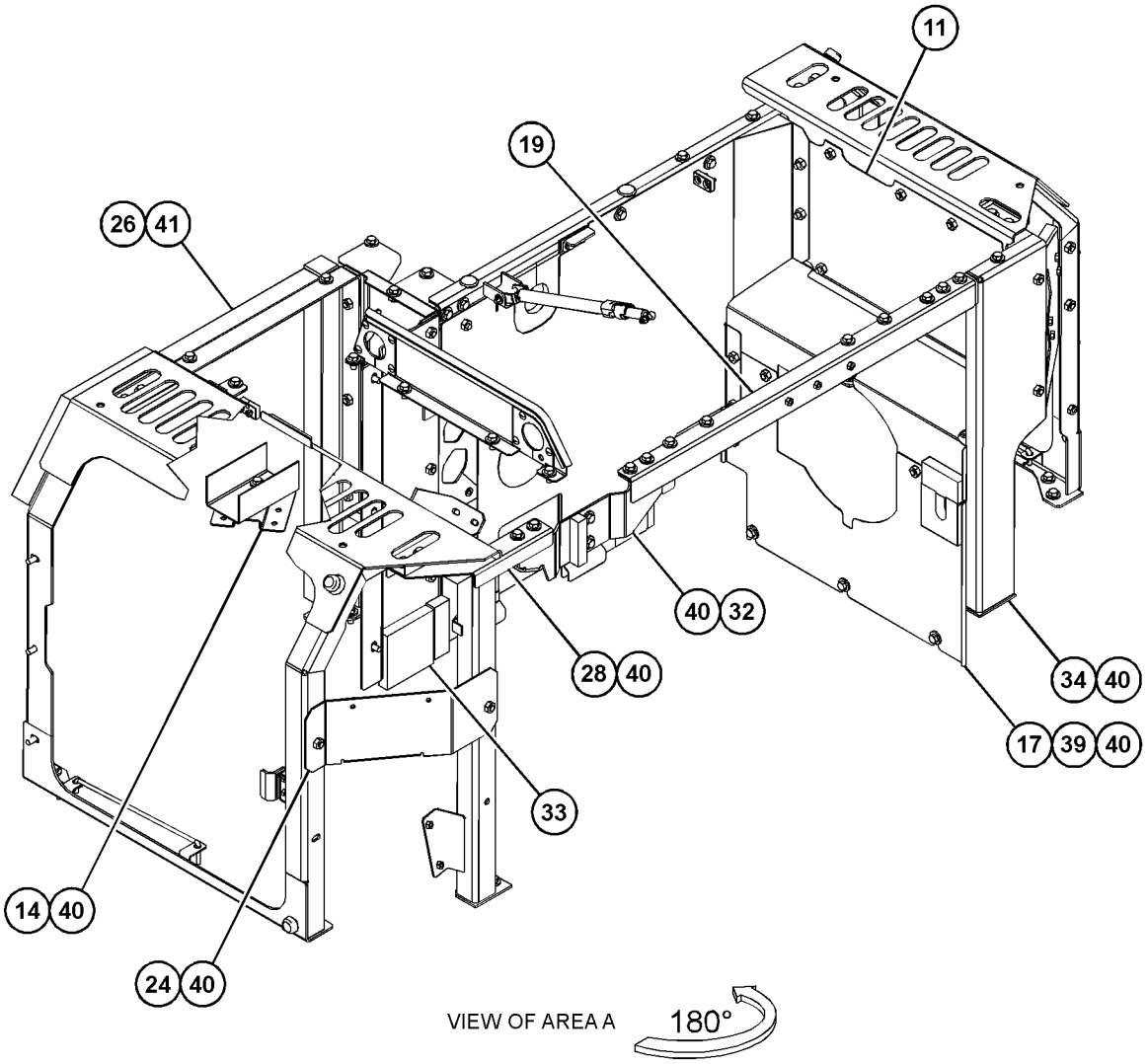

GRAPHIC #2 <END> g06130882

464-8682 HOOD GP-ENGINE

S/N: RDE1-UP

PART OF 501-3917 HOOD & GUARD GP

SMCS-7251 **i06781894**

NOTE	REF NO	GRAPHIC REF	PART NUMBER	QTY	PART NAME 1 2 3 4 5 6 (PRODUCT LEVEL)	SEE PAGE
	1	1	**184-8862**	1	COVER	
	2	1	**203-5005**	1	SHEET	
	3	1	**289-6681**	1	LINER	
	4	1	**358-0880**	1	LATCH AS	
J	4A	1	**385-3458**	1	LOCK AS	
	5	1	**394-7416**	1	LINER	
	6	1	*464-8683*	1	HOOD AS-ENGINE	
	6A	1	**203-5001**	2	HINGE	
	6B	1	**268-0720**	1	HANDLE	
M	7	1	**099-6418**	4	NUT (M6X1-THD)	

J - REQUIRES CORPORATE KEY
M - METRIC PART

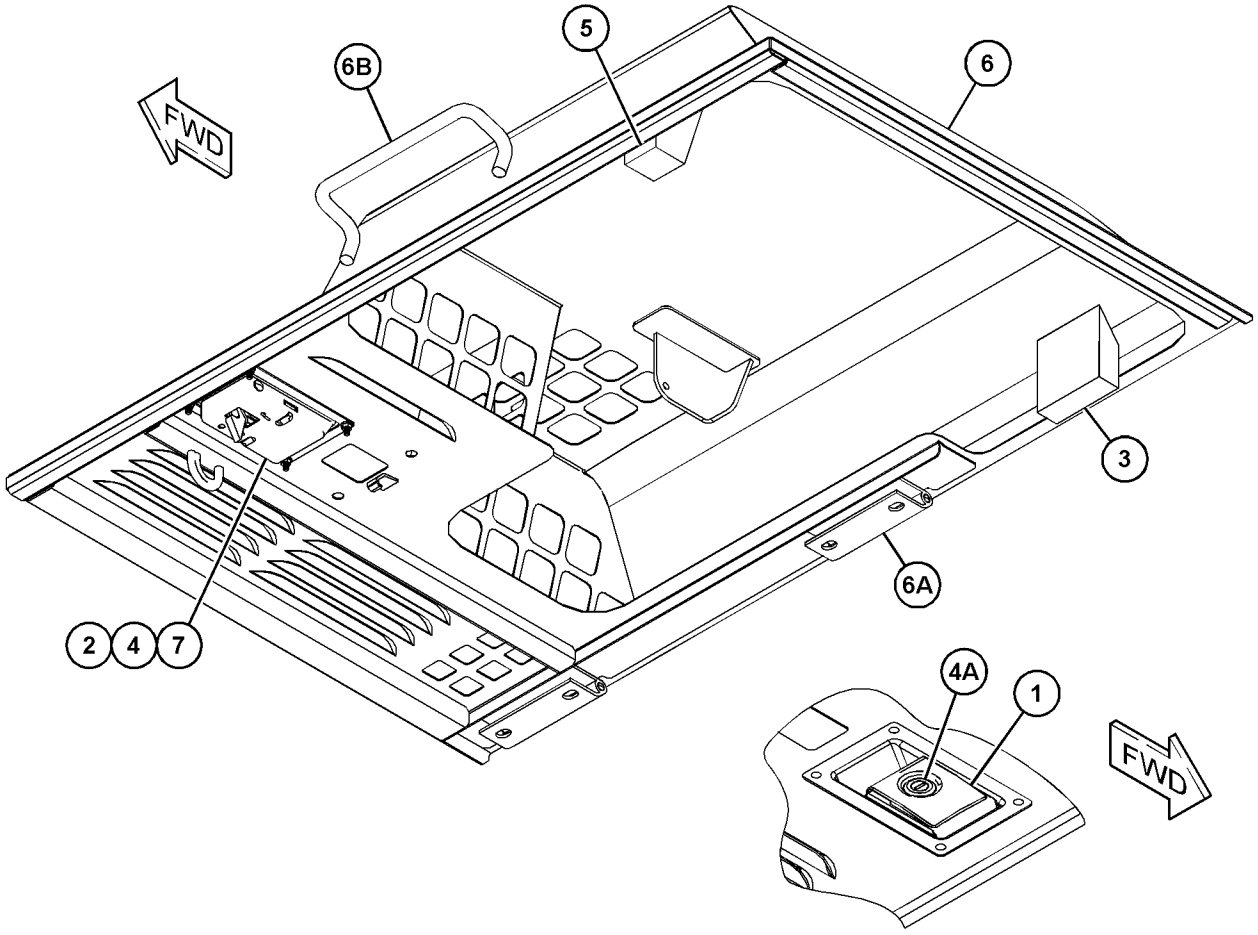

GRAPHIC #1 <END> g03884367

391-8742 SHEET AS-SOUND SUPPRESSION

S/N: RDE1-UP

PART OF 501-3917 HOOD & GUARD GP

SMCS-1801, 7076, 7251, 7267 **i05409043**

NOTE	REF NO	GRAPHIC REF	PART NUMBER	QTY	PART NAME 1 2 3 4 5 6 (PRODUCT LEVEL)	SEE PAGE
	1	1	**9M-5732**	6	RIVET-POP	
	2	1	**391-8744**	1	SHEET-RUBBER	
	3	1	**283-3934**	1	SHEET-RUBBER	
	4	1	**9M-2307**	6	WASHER (5.2X19X2-MM THK)	

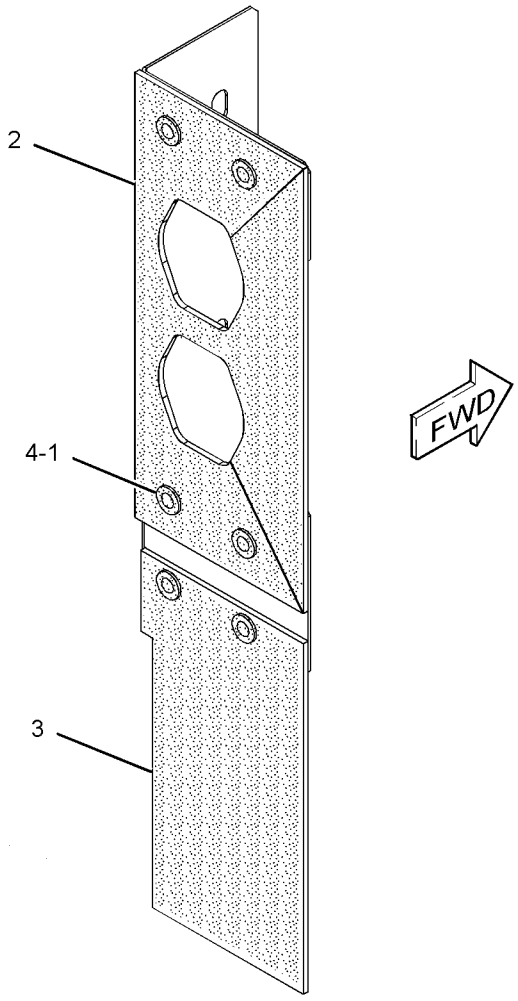

GRAPHIC #1 <END> g03149898

392-0460 SHEET AS-SOUND SUPPRESSION

S/N: RDE1-UP

PART OF 501-3917 HOOD & GUARD GP

SMCS-1801, 7076, 7251, 7267 **i05409051**

NOTE	REF NO	GRAPHIC REF	PART NUMBER	QTY	PART NAME 1 2 3 4 5 6 (PRODUCT LEVEL)	SEE PAGE
	1	1	**283-3648**	1	LINER	
	2	1	**283-3946**	1	LINER	
	3	1	**356-9565**	1	LINER	

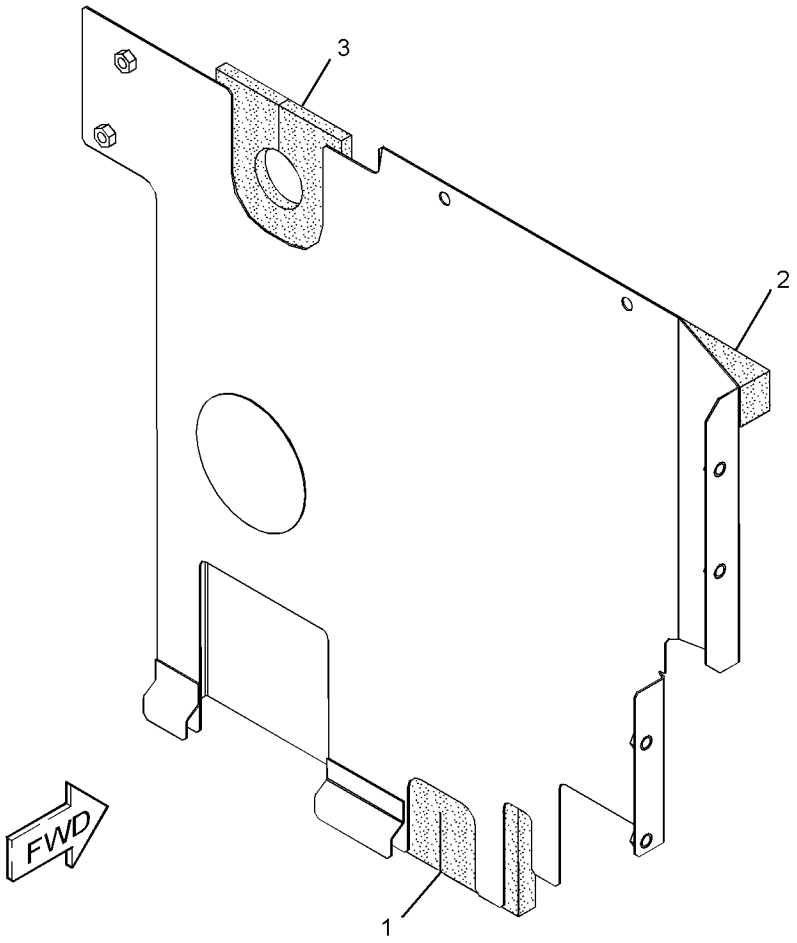

GRAPHIC #1 <END> g03152021

464-2278 SHEET AS-SOUND SUPPRESSION

S/N: RDE1-UP

PART OF 501-3917 HOOD & GUARD GP

SMCS-1801, 7076, 7251, 7267 **i06781949**

NOTE	REF NO	GRAPHIC REF	PART NUMBER	QTY	PART NAME 1 2 3 4 5 6 (PRODUCT LEVEL)	SEE PAGE
	1	1	**396-8472**	1	LINER	
	2	1	**283-3606**	1	LINER	

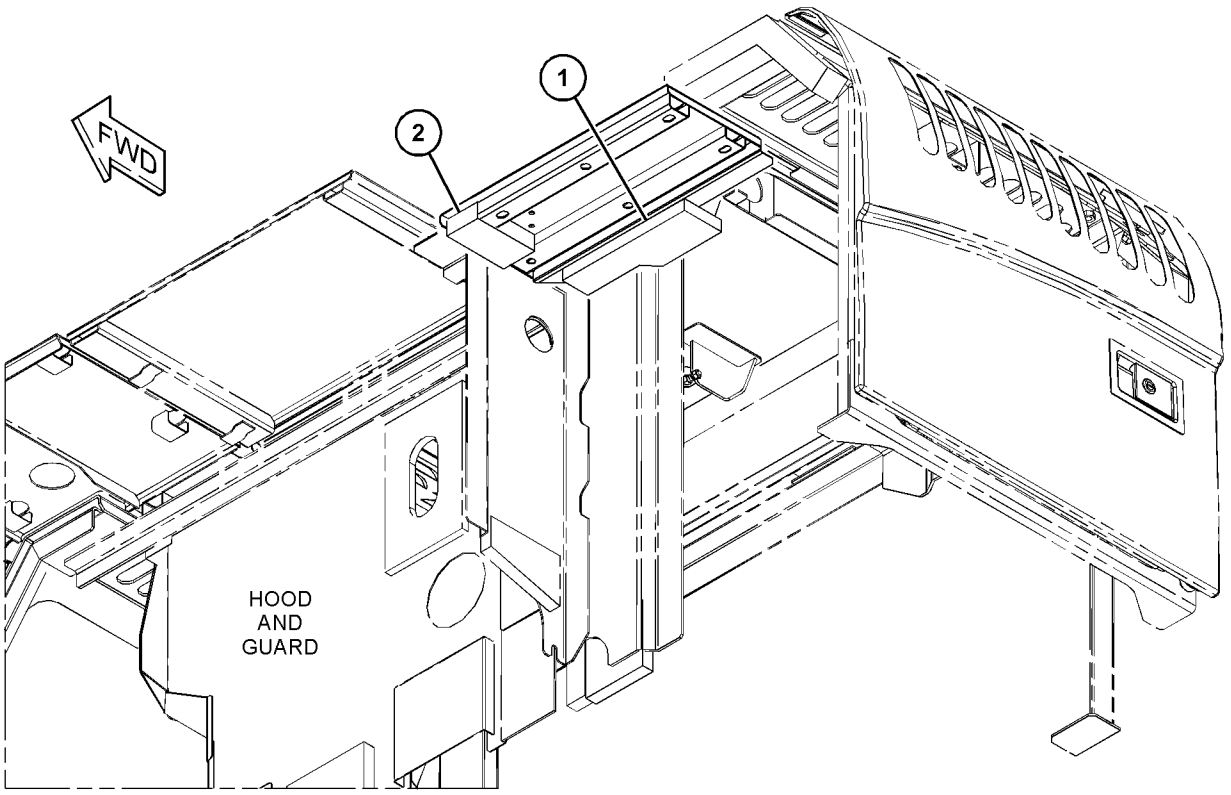

GRAPHIC #1 <END> g03883949

466-7750 SHEET AS-SOUND SUPPRESSION

S/N: RDE1-UP

PART OF 501-3917 HOOD & GUARD GP

SMCS-1801, 7076, 7251, 7267 **i06781896**

NOTE	REF NO	GRAPHIC REF	PART NUMBER	QTY	PART NAME 1 2 3 4 5 6 (PRODUCT LEVEL)	SEE PAGE
	1	1	**185-8205**	7	CLIP	
J	2	1	**348-5409**		SEAL (6.5-DM)	
	3	1	**467-6915**	1	SHEET-RUBBER	
	4	1	**467-6916**	1	SHEET-RUBBER	

J - ORDER BY THE DECIMETER

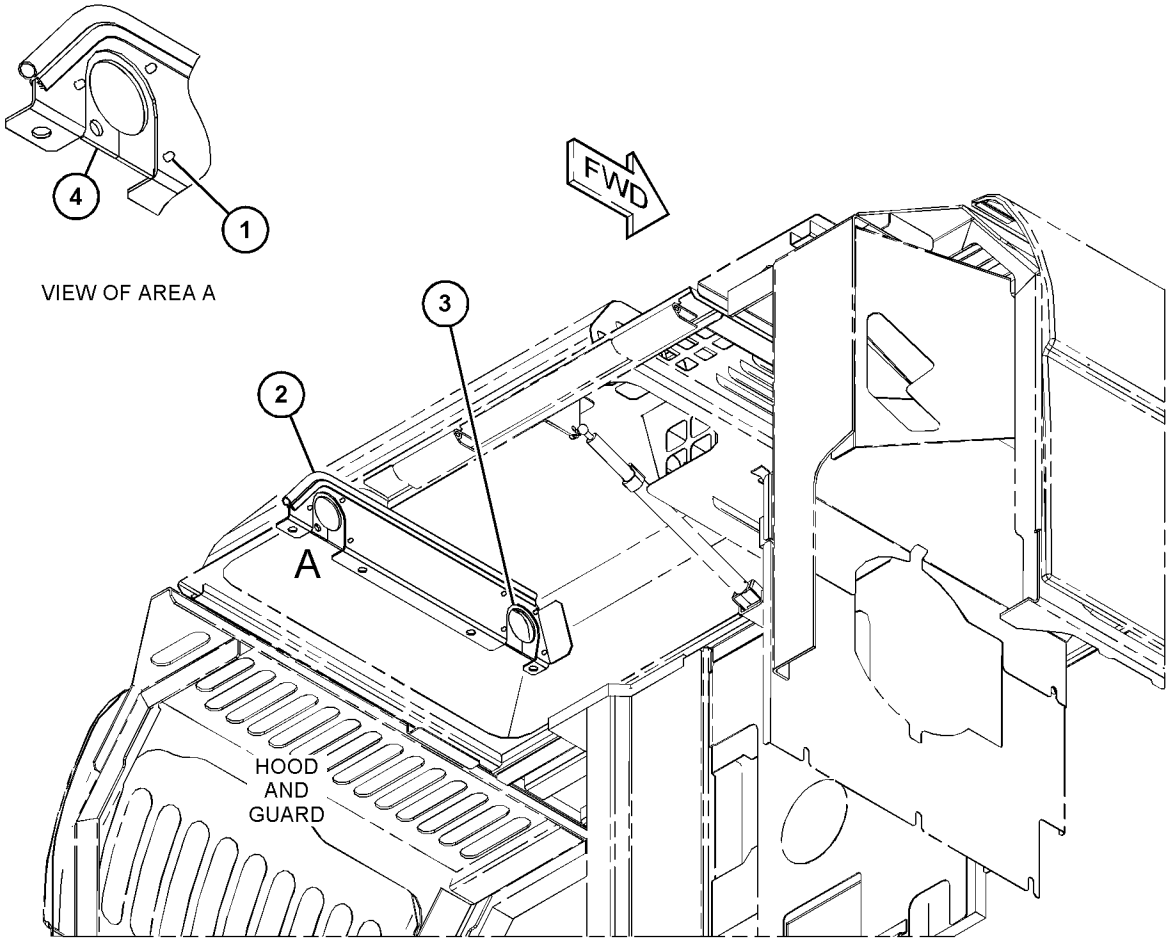

GRAPHIC #1 <END> g03883974

344-6903 STEP GP

S/N: RDE1-UP

PART OF 350-3300 TRACK AR

SMCS-7254 **i05895448**

NOTE	REF NO	GRAPHIC REF	PART NUMBER	QTY	PART NAME 1 2 3 4 5 6 (PRODUCT LEVEL)	SEE PAGE
	1	1	**344-6904**	2	STEP AS	
M	2	1	**453-1259**	4	BOLT (M16X2X40-MM)	
	3	1	**451-2175**	4	WASHER-HARD (17.5X30X3.5-MM THK)	

M - METRIC PART

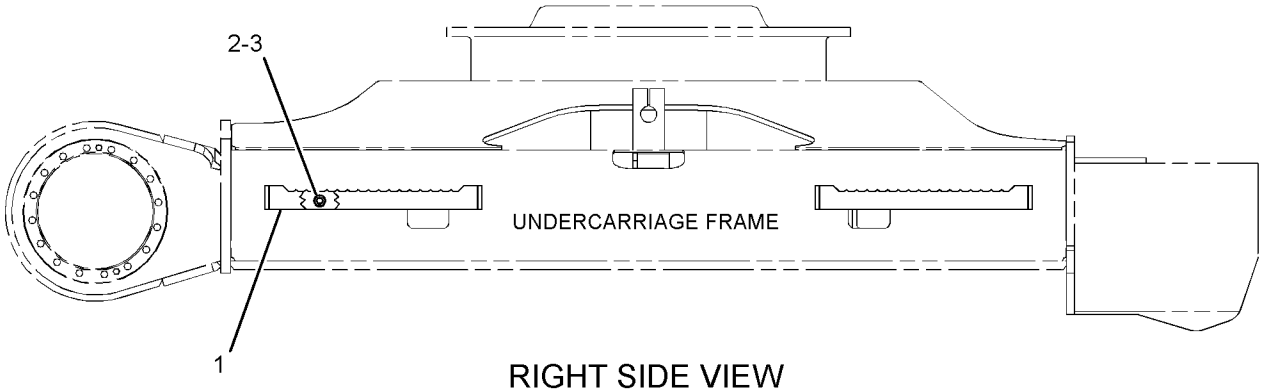

RIGHT SIDE VIEW

GRAPHIC #1 <END> g03433015

384-9014 STEP GP

S/N: RDE1-UP

PART OF 500-9108 CHASSIS AR

SMCS-7254 **i05409886**

NOTE	REF NO	GRAPHIC REF	PART NUMBER	QTY	PART NAME 1 2 3 4 5 6 (PRODUCT LEVEL)	SEE PAGE
	1	1	**135-8573**	2	BOLT AS	
	2	1	**384-9076**	1	STEP AS	

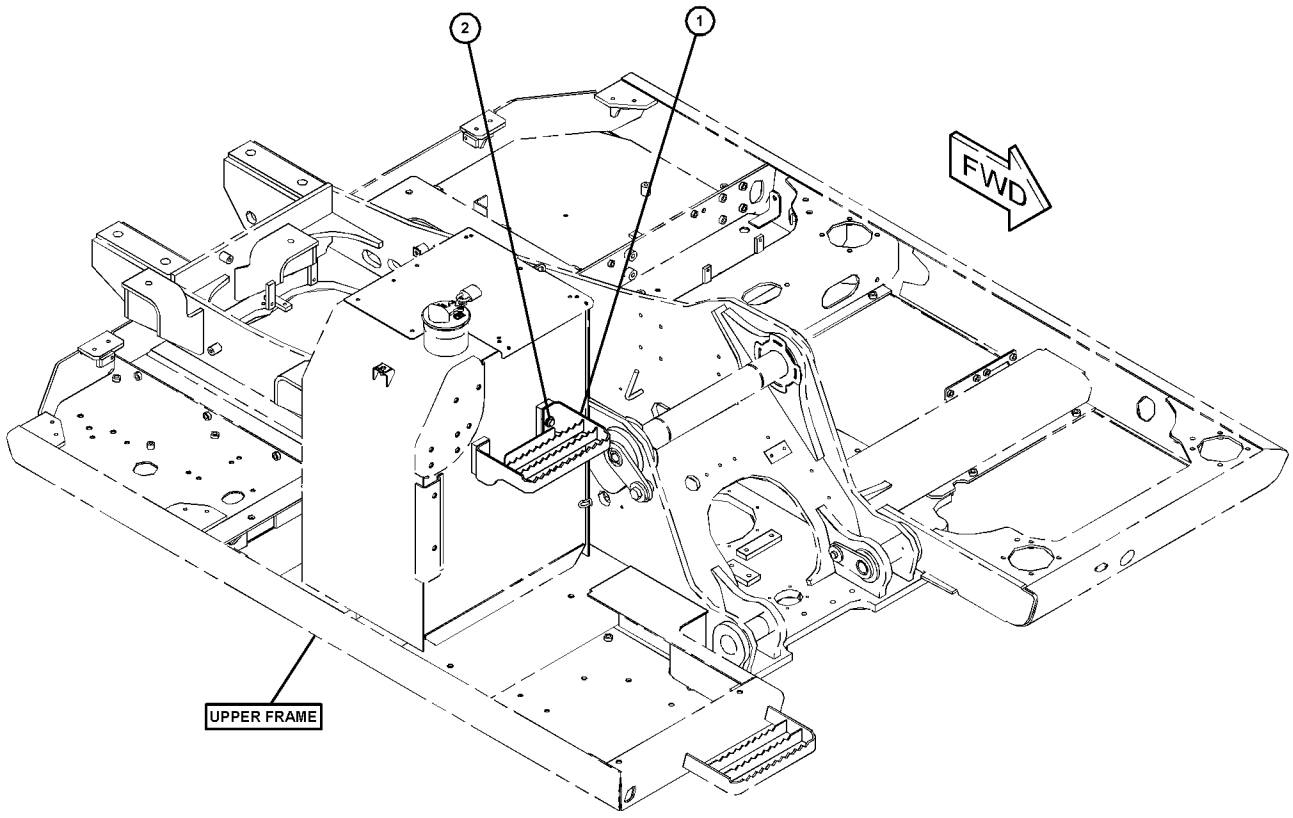

GRAPHIC #1 <END> g03123020

463-9830 SUPPORT AS-SOUND SUPPRESSION

S/N: RDE1-UP

PART OF 501-3917 HOOD & GUARD GP

SMCS-7276 **i06039946**

NOTE	REF NO	GRAPHIC REF	PART NUMBER	QTY	PART NAME 1 2 3 4 5 6 (PRODUCT LEVEL)	SEE PAGE
	1	1	**283-3639**	1	LINER	
	2	1	**283-4085**	1	LINER	
	3	1	**450-7791**	1	LINER	

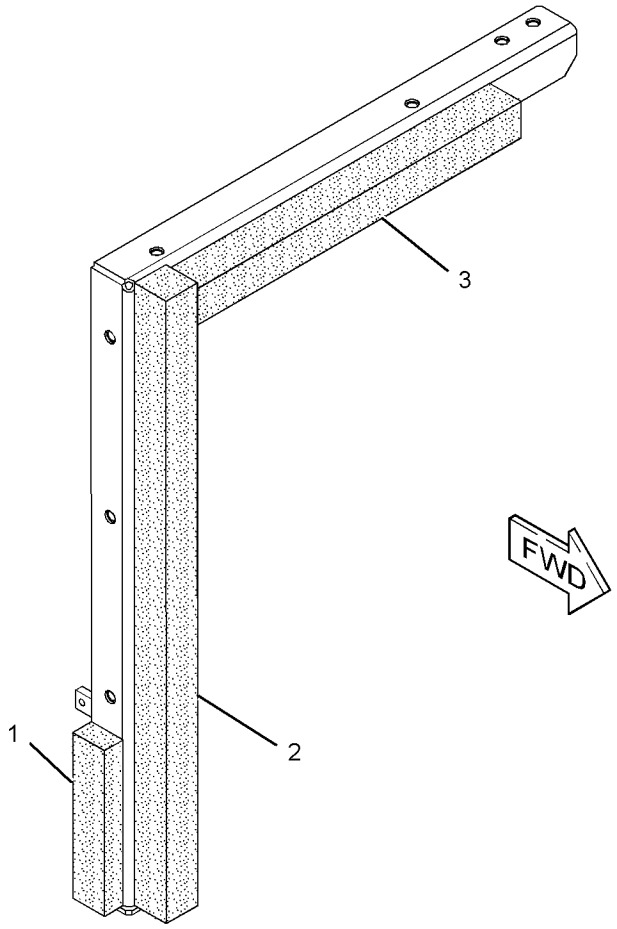

GRAPHIC #1 <END> g03120519

260-7057 FRAME AR-UNDERCARRIAGE

S/N: RDE1-UP

PART OF 500-9103 GENERAL AR

SMCS-4151 **i06238530**

NOTE	PART NUMBER	QTY	PART NAME 1 2 3 4 5 6 (PRODUCT LEVEL)	SEE PAGE
Y	**269-1649**	1	FRAME AS-UNDERCARRIAGE	180
Y	*436-2836*	1	GEAR & BEARING GP-SWING	163
Y	*120-7199*	1	GUARD GP-TRACK GUIDE (CENTER)	181
Y	*169-7904*	1	GUARD GP-TRAVEL MOTOR	182
Y	*248-7184*	1	IDLER GP-FRONT	183
Y	*415-9155*	1	ROLLER AR-TRACK & CARRIER	189

Y - SEPARATE ILLUSTRATION

<END>

269-1649 FRAME AS-UNDERCARRIAGE

S/N: RDE1-UP

PART OF 260-7057 FRAME AR-UNDERCARRIAGE

SMCS-4150, 7062 **i06086135**

NOTE	REF NO	GRAPHIC REF	PART NUMBER	QTY	PART NAME 1 2 3 4 5 6 (PRODUCT LEVEL)	SEE PAGE
C	1	1	*456-5916*	1	FRAME AS-TRACK ROLLER	
	1A	1	**151-9751**	2	BRACKET	
	1B	1	**344-6840**	2	STEP	
C	2	1	*456-5917*	1	FRAME AS-TRACK ROLLER	
	2A	1	**151-9751**	2	BRACKET	
	2B	1	**344-6840**	2	STEP	

C - CHANGE FROM PREVIOUS TYPE

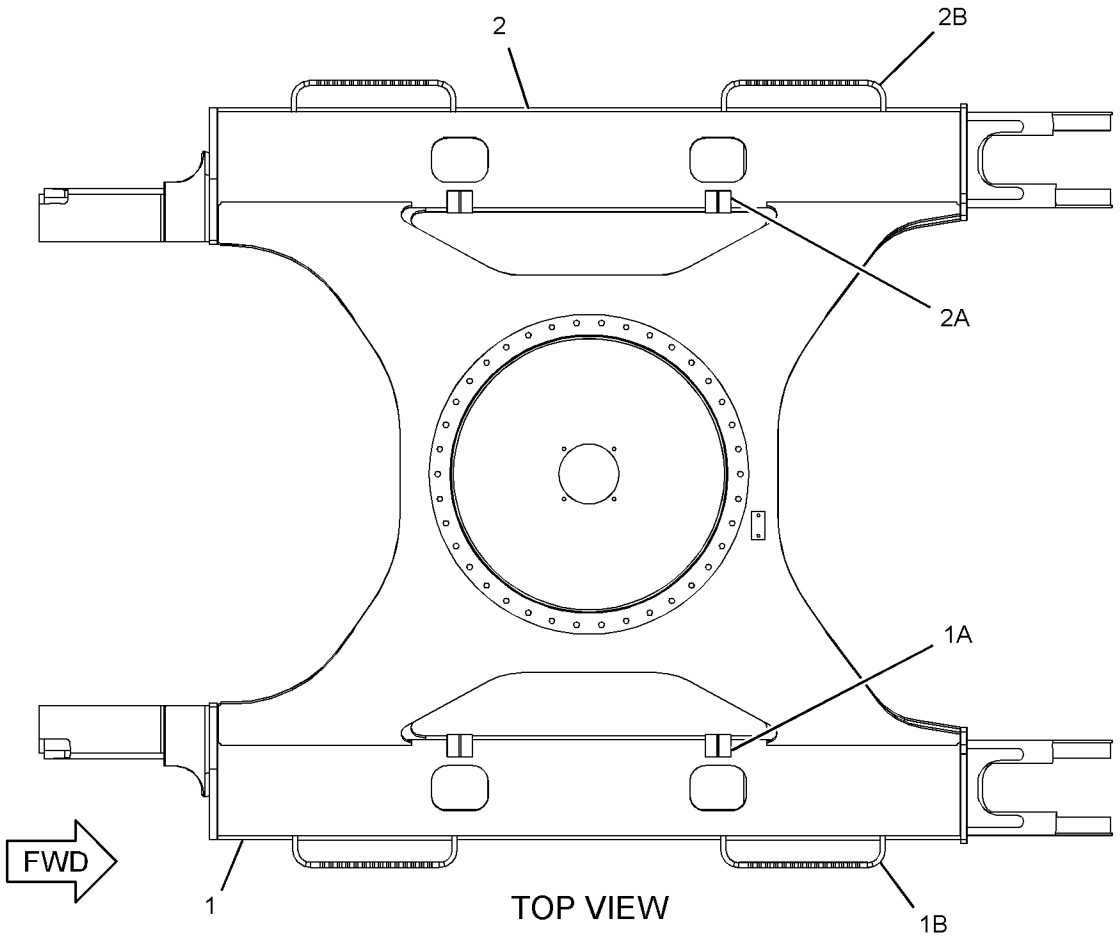

GRAPHIC #1 <END> g03333556

120-7199 GUARD GP-TRACK GUIDE

S/N: RDE1-UP

PART OF 260-7057 FRAME AR-UNDERCARRIAGE

SMCS-4177 **i06729782**

NOTE	REF NO	GRAPHIC REF	PART NUMBER	QTY	PART NAME 1 2 3 4 5 6 (PRODUCT LEVEL)	SEE PAGE
	1	1	**133-2554**	2	GUARD AS-TRACK GUIDE	
M	2	1	**451-2180**	8	BOLT (M16X2X35-MM)	
	3	1	**451-2175**	8	WASHER-HARD (17.5X30X3.5-MM THK)	
					QUANTITIES SHOWN ARE THOSE REQUIRED FOR BOTH LH & RH SIDES	

M - METRIC PART

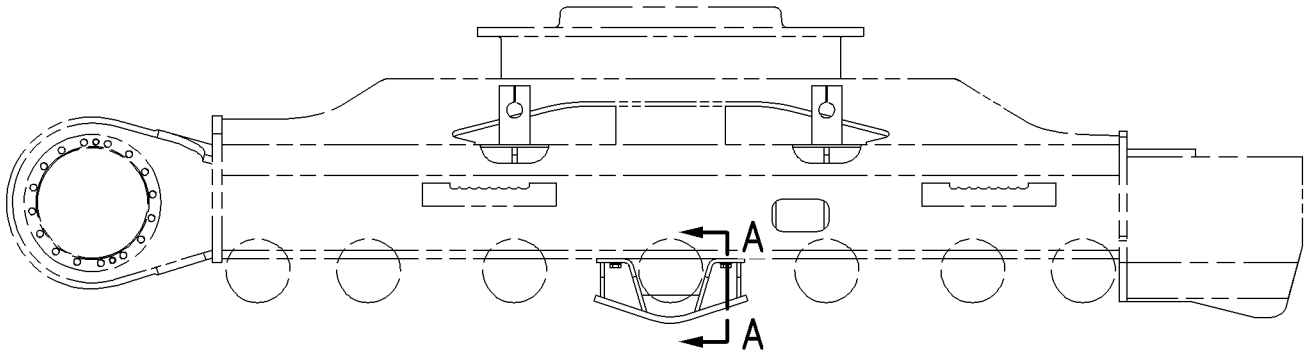

RIGHT SIDE VIEW

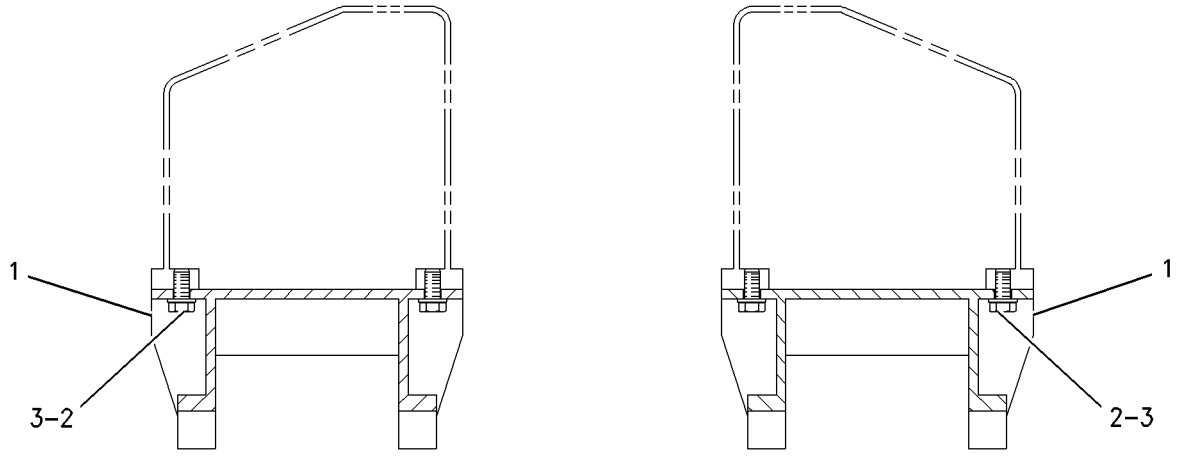

SECTION A-A

GRAPHIC #1 <END> g00755978

169-7904 GUARD GP-TRAVEL MOTOR

S/N: RDE1-UP

PART OF 260-7057 FRAME AR-UNDERCARRIAGE

SMCS-7163 **i05800929**

NOTE	REF NO	GRAPHIC REF	PART NUMBER	QTY	PART NAME 1 2 3 4 5 6 (PRODUCT LEVEL)	SEE PAGE
	1	1	**169-7905**	2	PLATE	
M	2	1	**453-8032**	8	BOLT (M12X1.75X30-MM, SELF LOCKING)	
	3	1	**453-8033**	8	WASHER-HARD (13.5X30X4-MM THK)	
					QUANTITIES SHOWN ARE THOSE REQUIRED FOR BOTH LH & RH SIDES	

M - METRIC PART

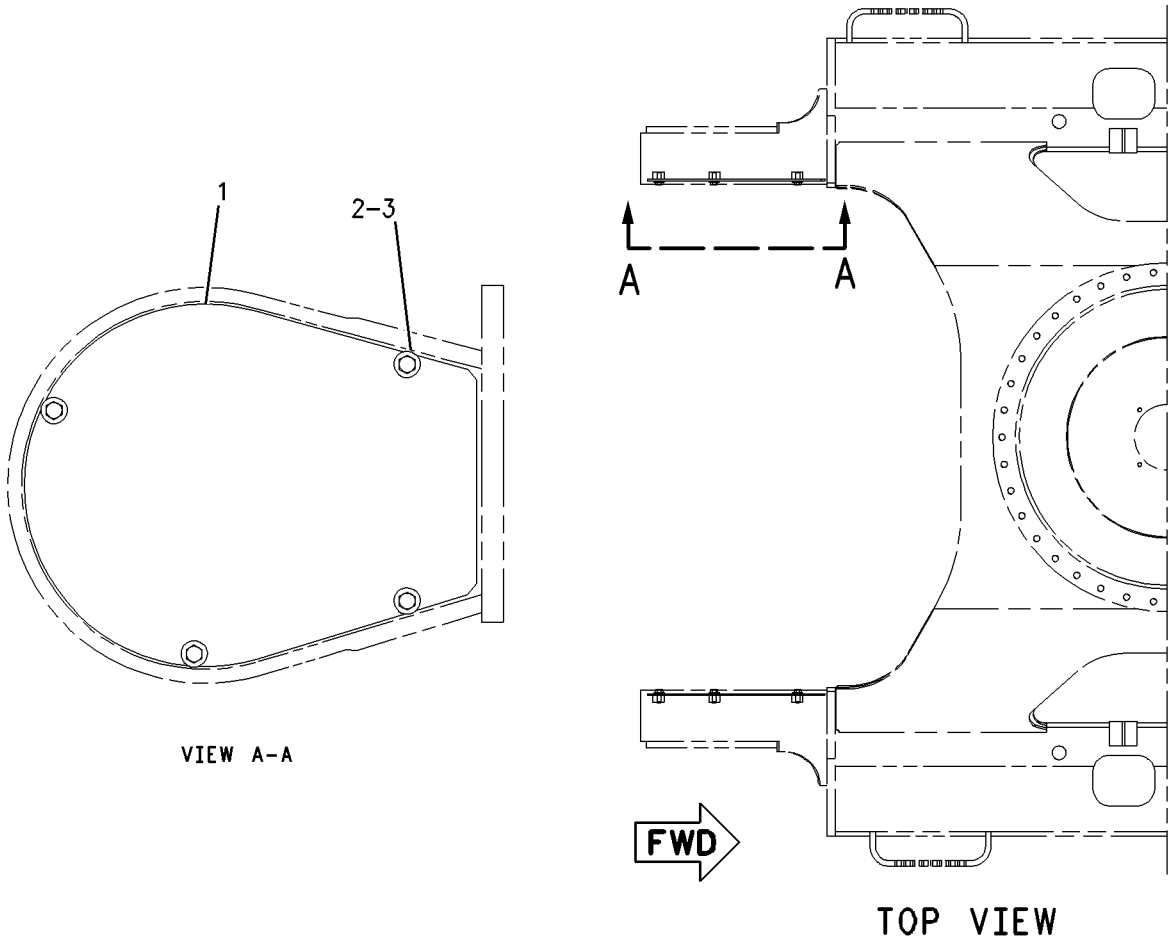

VIEW A-A

TOP VIEW

GRAPHIC #1 <END> g00858779

248-7184 IDLER GP-FRONT

S/N: RDE1-UP

PART OF 260-7057 FRAME AR-UNDERCARRIAGE

SMCS-4159 **i05401025**

NOTE	REF NO	GRAPHIC REF	PART NUMBER	QTY	PART NAME 1 2 3 4 5 6 (PRODUCT LEVEL)	SEE PAGE
Y	1	1	*297-9138*	1	IDLER GP-FRONT (RH)	184
Y	2	1	*297-9139*	1	IDLER GP-FRONT (LH)	185

Y - SEPARATE ILLUSTRATION

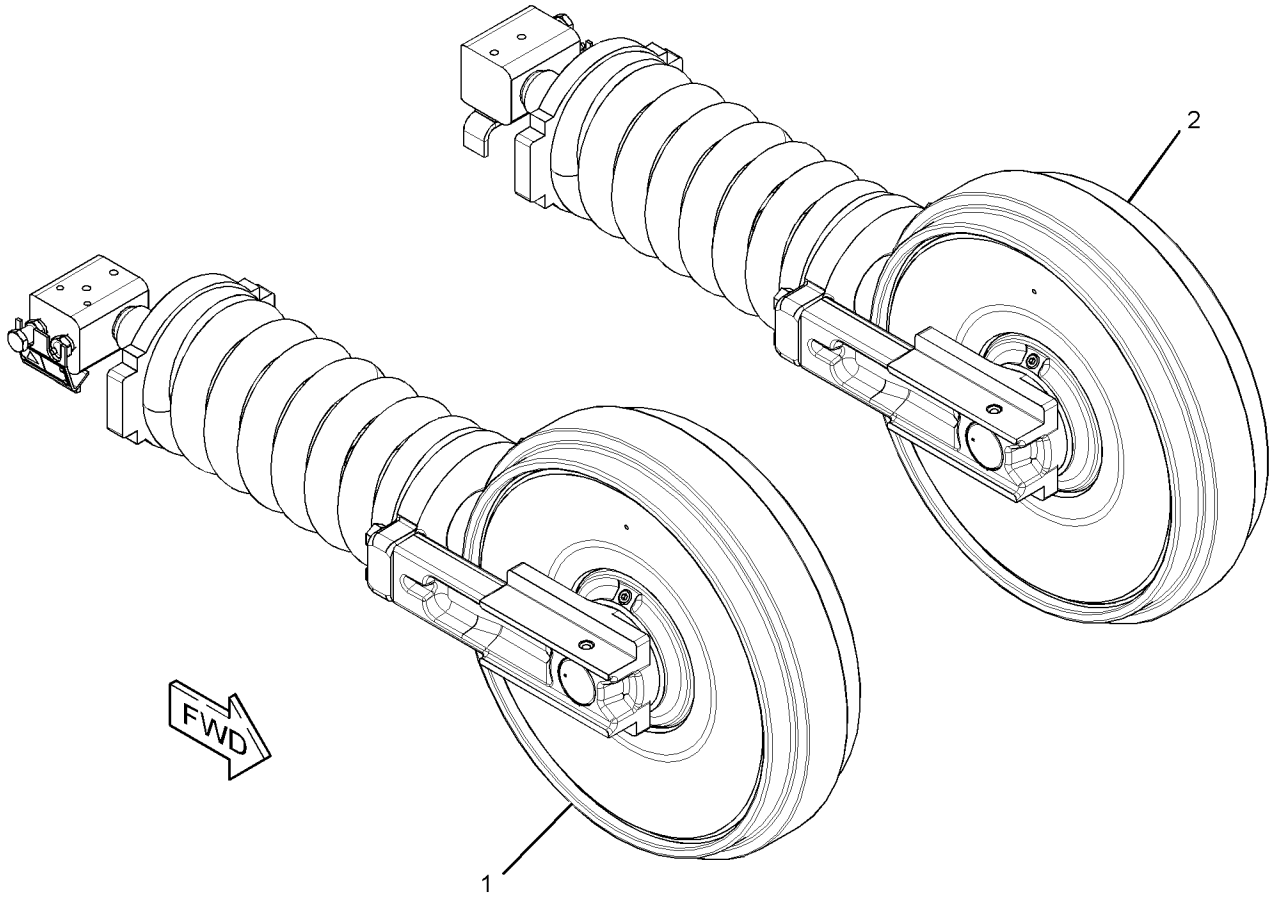

GRAPHIC #1 <END> g01410871

297-9138 IDLER GP-FRONT—RH

S/N: RDE1-UP

PART OF 248-7184 IDLER GP-FRONT

SMCS-4159 **i05892493**

NOTE	REF NO	GRAPHIC REF	PART NUMBER	QTY	PART NAME 1 2 3 4 5 6 (PRODUCT LEVEL)	SEE PAGE
Y	1	1	**4I-7337**	1	IDLER GP-FRONT	186
Y	2	1	*297-9140*	1	TRACK ADJUSTER & RECOIL GP	192
M	3	1	**447-1707**	4	BOLT (M16X2X60-MM)	

M - METRIC PART
Y - SEPARATE ILLUSTRATION

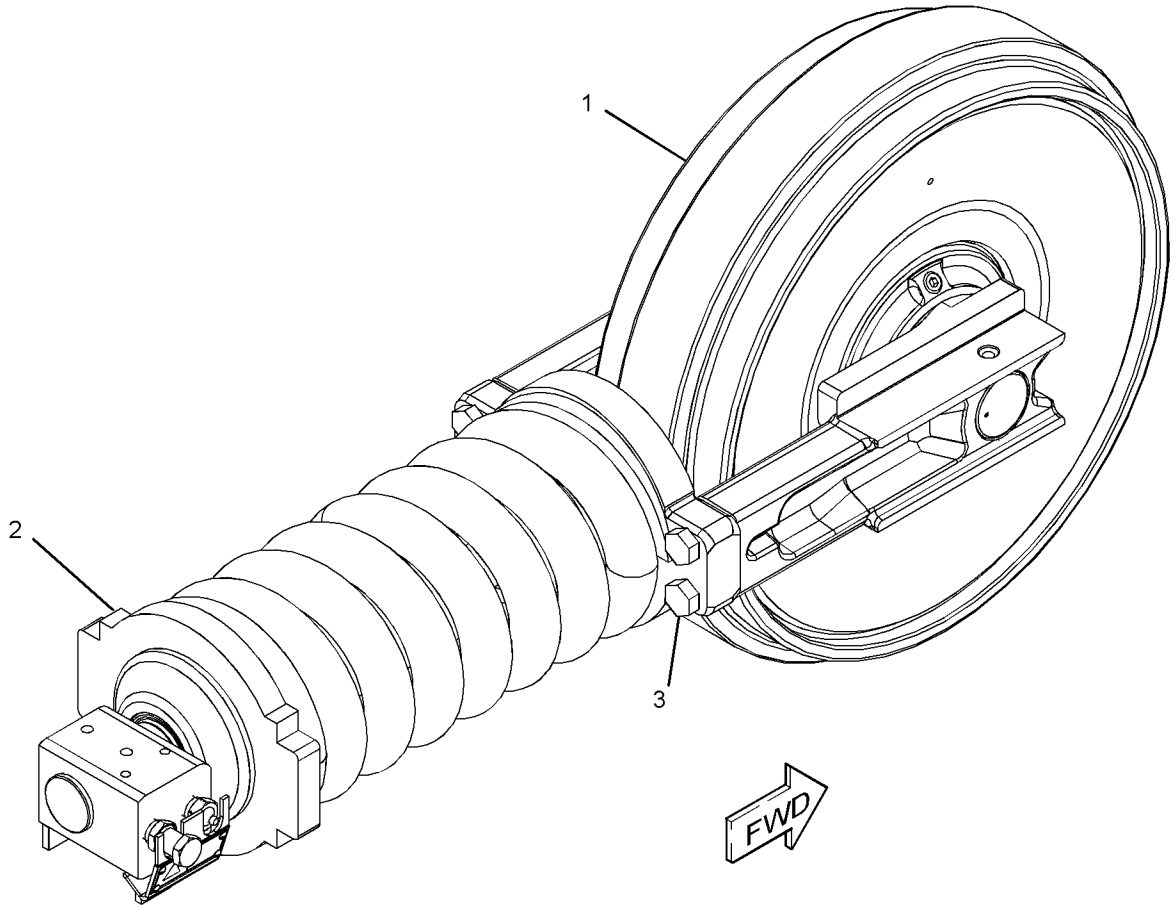

GRAPHIC #1 <END> g01424119

297-9139 IDLER GP-FRONT–LH

S/N: RDE1-UP

PART OF 248-7184 IDLER GP-FRONT

SMCS-4159 **i05892494**

NOTE	REF NO	GRAPHIC REF	PART NUMBER	QTY	PART NAME 1 2 3 4 5 6 (PRODUCT LEVEL)	SEE PAGE
Y	1	1	**4I-7337**	1	IDLER GP-FRONT	186
Y	2	1	*297-9141*	1	TRACK ADJUSTER & RECOIL GP	193
M	3	1	**447-1707**	4	BOLT (M16X2X60-MM)	

M - METRIC PART
Y - SEPARATE ILLUSTRATION

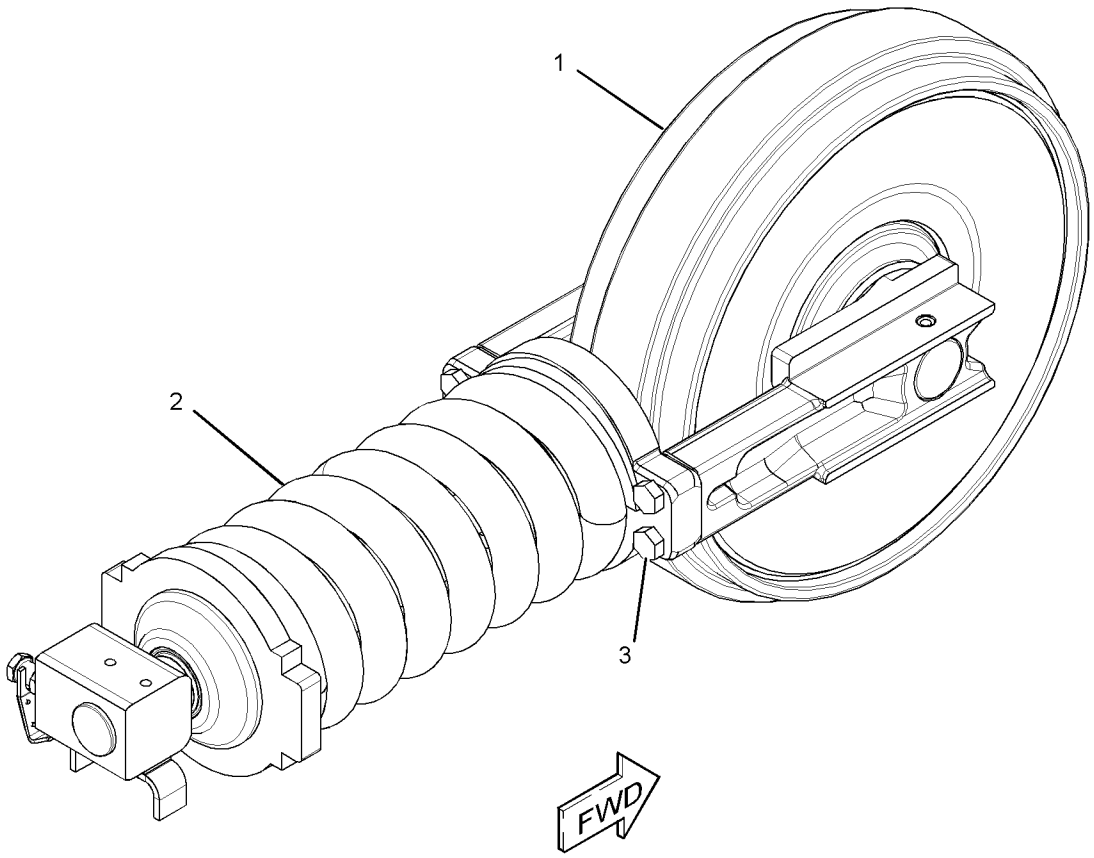

GRAPHIC #1 <END> g01424156

4I-7337 IDLER GP-FRONT

S/N: RDE1-UP

PART OF 297-9138, 297-9139 IDLER GP-FRONT

SMCS-4159 **i05555113**

NOTE	REF NO	GRAPHIC REF	PART NUMBER	QTY	PART NAME 1 2 3 4 5 6 (PRODUCT LEVEL)	SEE PAGE
	1	1	**6I-6590**	1	IDLER & BEARING AS	
	2	1	**099-0157**	2	BEARING-IDLER	
	3	1	**7H-3171**	1	PLUG-PIPE	
	4	1	**099-0159**	2	SEAL GP	
					(EACH INCLUDES)	
		1	**099-0160**	2	RING-SEALING	
	5	1	**095-1662**	2	SEAL-O-RING	
	6	1	**099-0163**	2	PIN	
	7	1	**6I-6477**	1	SHAFT-IDLER	
	8	1	**4I-7488**	2	BEARING-FRONT IDLER	

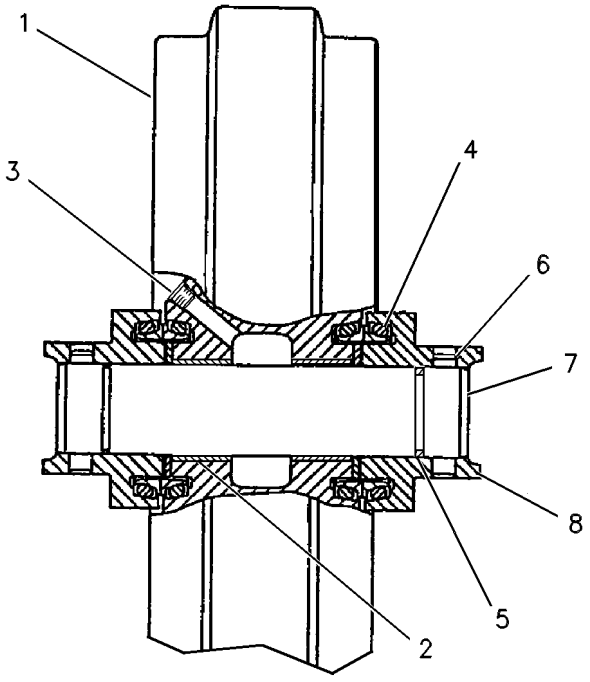

GRAPHIC #1 <END> g00237107

176-4871 LINK AS-TRACK

S/N: RDE1-UP

PART OF 176-4868 TRACK GP

SMCS-4169, 4171

i05411161

NOTE	REF NO	GRAPHIC REF	PART NUMBER	QTY	PART NAME 1 2 3 4 5 6 (PRODUCT LEVEL)	SEE PAGE
	1	1	**4I-7475**	45	LINK-TRACK (RH)	
	2	1	**095-0863**	1	PIN-COTTER	
	3	1	**4I-7477**	1	LINK-MASTER (RH)	
	4	1	**162-4306**	1	TRACK MASTER	
	5	1	**4I-7478**	1	LINK-MASTER (LH)	
	6	1	**099-0653**	1	PIN-LINK MASTER	
	7	1	**176-4872**	2	SEAL-TRACK MASTER	
	8	1	**4I-7476**	45	LINK-TRACK (LH)	
	9	1	**162-4305**	45	PIN-TRACK	
	10	1	**162-4307**	90	SEAL-TRACK	
	11	1	**162-4304**	45	BUSHING-TRACK	

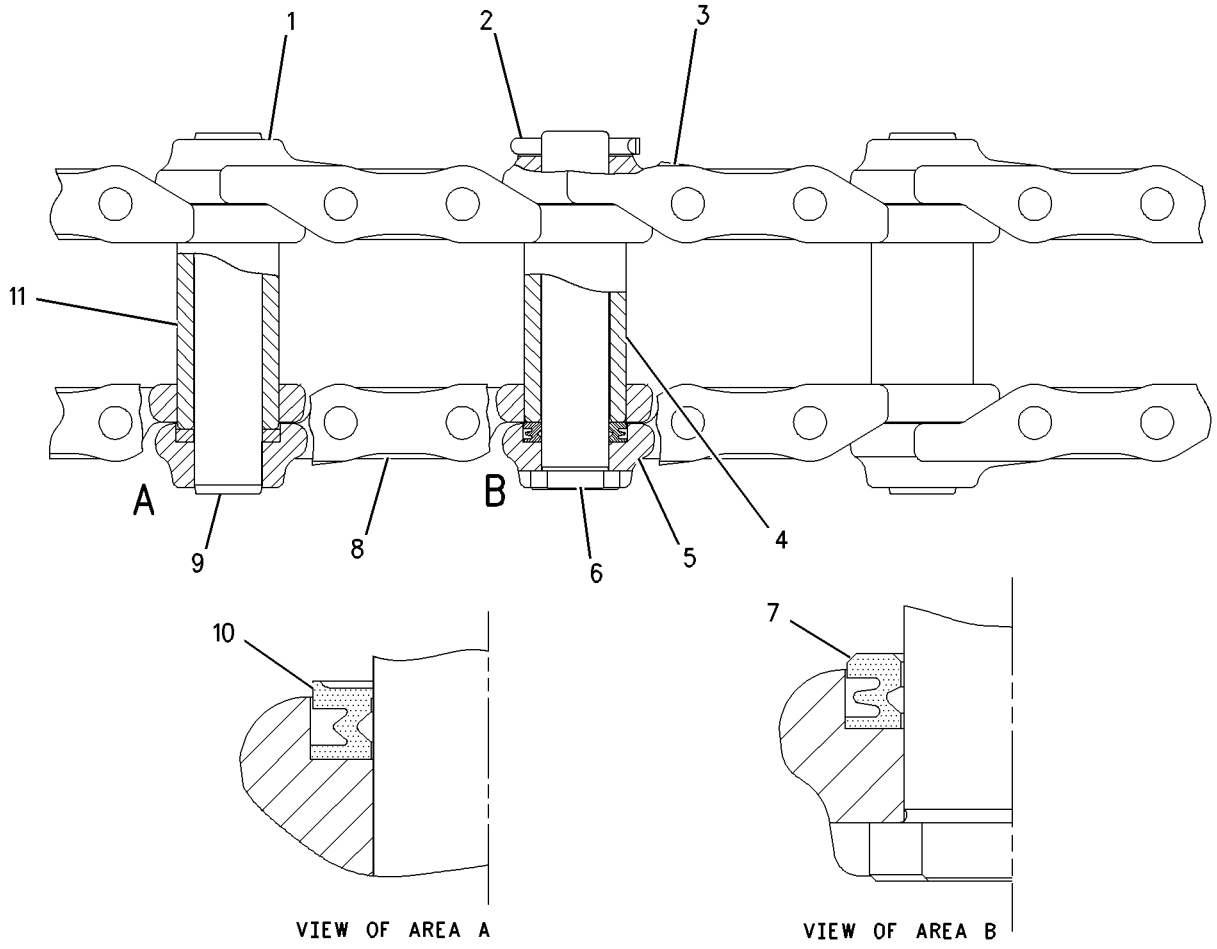

GRAPHIC #1

<END>

g00770877

445-0691 LINK AS-TRACK

S/N: RDE1-UP

PART OF 445-0692 TRACK GP

SMCS-4169, 4171 **i06619934**

NOTE	REF NO	GRAPHIC REF	PART NUMBER	QTY	PART NAME 1 2 3 4 5 6 (PRODUCT LEVEL)	SEE PAGE
	1	1	**4I-7475**	45	LINK-TRACK (RH)	
	2	1	**4I-7476**	45	LINK-TRACK (LH)	
	3	1	**4I-7477**	1	LINK-MASTER (RH)	
	4	1	**4I-7478**	1	LINK-MASTER (LH)	
	5	1	**099-0653**	1	PIN-LINK MASTER	
	6	1	**162-4305**	45	PIN-TRACK	
	7	1	**162-4307**	90	SEAL-TRACK	
	8	1	**176-4872**	2	SEAL-TRACK MASTER	
	9	1	**445-0551**	45	BUSHING-TRACK	
	10	1	**445-0552**	1	BUSHING-MASTER	
	11	1	**095-0863**	1	PIN-COTTER	

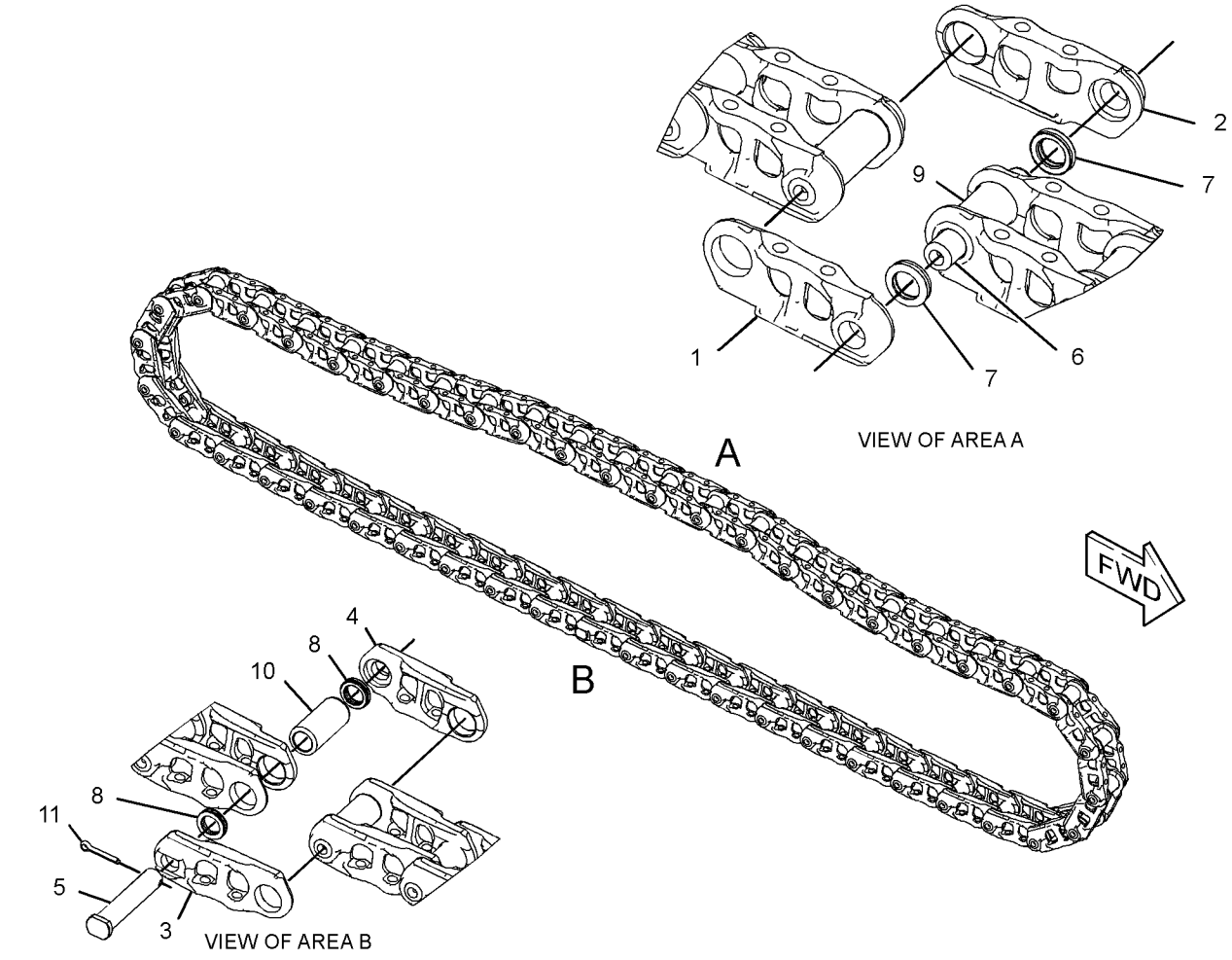

GRAPHIC #1 <END> g03418838

415-9155 ROLLER AR-TRACK & CARRIER

S/N: RDE1-UP

PART OF 260-7057 FRAME AR-UNDERCARRIAGE

SMCS-4154, 4180

i06676918

NOTE	REF NO	GRAPHIC REF	PART NUMBER	QTY	PART NAME 1 2 3 4 5 6 (PRODUCT LEVEL)	SEE PAGE
CY	1	1	**459-5714**	14	ROLLER GP-TRACK-SINGLE FLANGE	191
Y	2	1	**396-3754**	4	ROLLER GP-TRACK CARRIER	190
M	3	1	**447-1708**	56	BOLT (M16X2X80-MM)	
	4	1	**8T-4122**	56	WASHER-HARD (17X32X3.5-MM THK)	
M	5	1	**447-1725**	4	BOLT (M24X3X80-MM)	
					QUANTITIES SHOWN ARE THOSE REQUIRED FOR BOTH LH & RH SIDES	

C - CHANGE FROM PREVIOUS TYPE
M - METRIC PART
Y - SEPARATE ILLUSTRATION

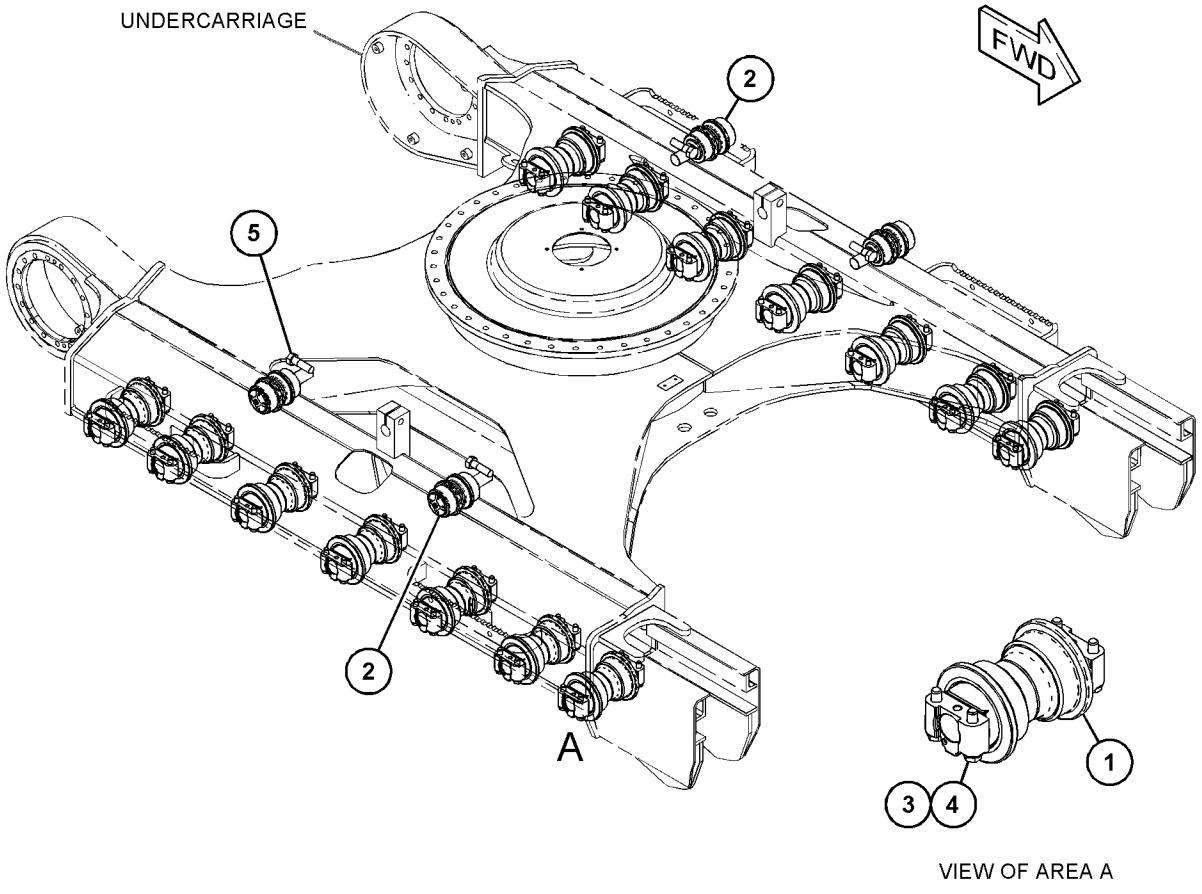

GRAPHIC #1 <END> g03698142

396-3754 ROLLER GP-TRACK CARRIER

S/N: RDE1-UP

PART OF 415-9155 ROLLER AR-TRACK & CARRIER

SMCS-4154 **i06238536**

NOTE	REF NO	GRAPHIC REF	PART NUMBER	QTY	PART NAME 1 2 3 4 5 6 (PRODUCT LEVEL)	SEE PAGE
	1	1	**099-0183**	1	SEAL GP	
	2	1	*396-3755*	1	ROLLER & BEARING AS	
		1	**099-0185**	2	BEARING-CARRIER ROLLER	
	3	1	**396-3759**	1	COVER	
	4	1	**421-3846**	1	SHAFT AS	
	5	1	**422-8464**	1	RETAINER	
	6	1	**7H-3171**	1	PLUG-PIPE	
M	7	1	**8T-1159**	2	BOLT-SOCKET HEAD (M10X1.5X25-MM)	

M - METRIC PART

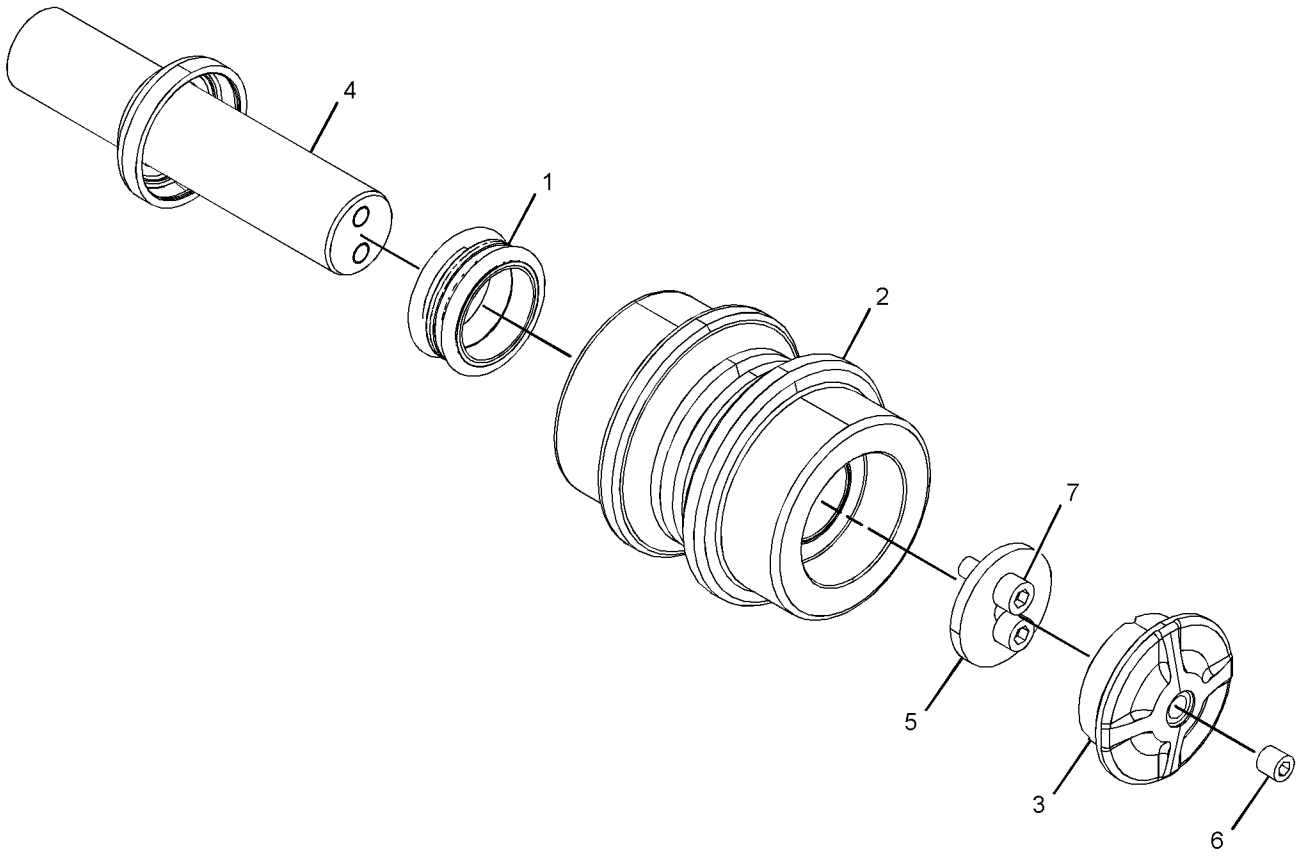

GRAPHIC #1 <END> g03427051

459-5714 ROLLER GP-TRACK-SINGLE FLANGE

S/N: RDE1-UP

PART OF 415-9155 ROLLER AR-TRACK & CARRIER

SMCS-4180 **i06250024**

NOTE	REF NO	GRAPHIC REF	PART NUMBER	QTY	PART NAME 1 2 3 4 5 6 (PRODUCT LEVEL)	SEE PAGE
	1	1	*459-5715*	1	ROLLER & BEARING AS	
	1A	1	**099-0195**	2	BEARING-TRACK ROLLER	
	2	1	**6I-6549**	2	DOWEL	
	3	1	**340-8206**	2	SEAL GP-DUO-CONE	
					(EACH INCLUDES)	
		1	**099-0194**	2	RING-SEALING	
	4	1	**248-7260**	1	COLLAR-TRACK	
	5	1	**248-7261**	1	COLLAR-TRACK	
	6	1	**248-7262**	1	SHAFT-TRACK ROLLER	
	7	1	**3D-4603**	1	PLUG-PIPE	
	8	1	**6V-7660**	2	SEAL-O-RING	

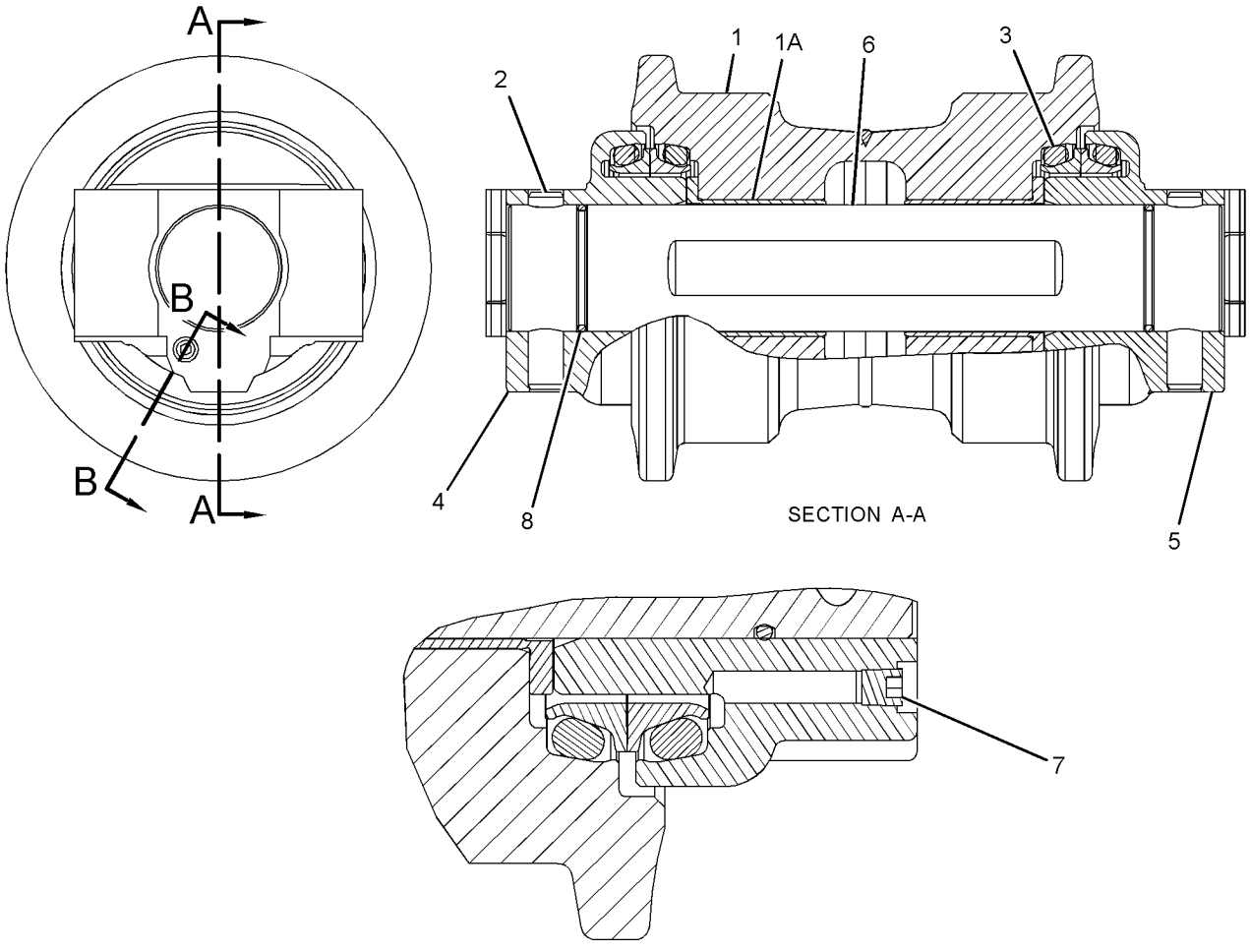

SECTION A-A

SECTION B-B

GRAPHIC #1 <END> g01400534

297-9140 TRACK ADJUSTER & RECOIL GP–RH

S/N: RDE1-UP

PART OF 297-9138 IDLER GP-FRONT

SMCS-4157, 4158 **i05439682**

NOTE	REF NO	GRAPHIC REF	PART NUMBER	QTY	PART NAME 1 2 3 4 5 6 (PRODUCT LEVEL)	SEE PAGE
	1	1	**248-7200**	1	PLATE AS	
		1	**4B-4158**	4	SCREW-DRIVE (NO 4X0.25-IN)	
		1	**253-1346**	1	PLATE-WARNING (HIGH PRESSURE CYLINDER)	
	2	1	**248-7203**	1	PLATE	
Y	3	1	*297-9142*	1	TRACK ADJUSTER & RECOIL GP	194
M	4	1	**8T-4137**	2	BOLT (M10X1.5X20-MM)	

M - METRIC PART
Y - SEPARATE ILLUSTRATION

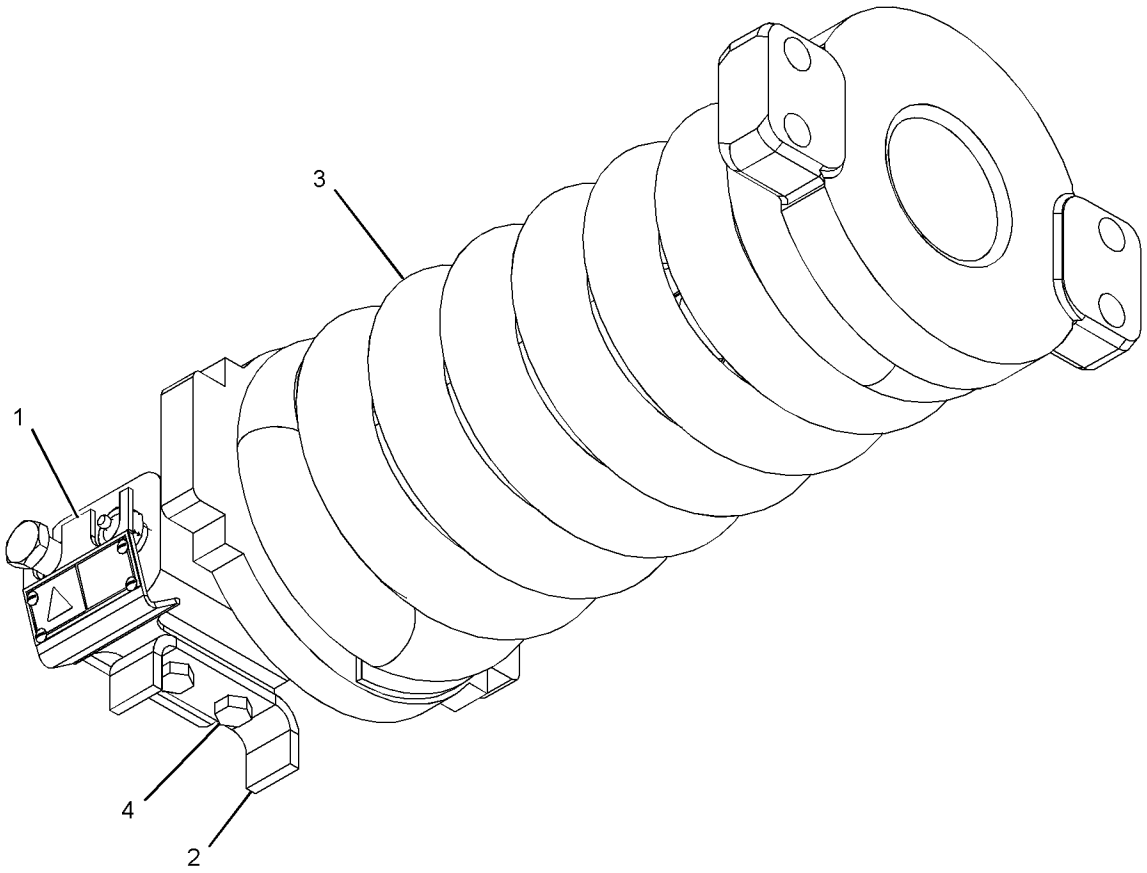

GRAPHIC #1 <END> g03433039

297-9141 TRACK ADJUSTER & RECOIL GP–LH

S/N: RDE1-UP

PART OF 297-9139 IDLER GP-FRONT

SMCS-4157, 4158

i05401149

NOTE	REF NO	GRAPHIC REF	PART NUMBER	QTY	PART NAME 1 2 3 4 5 6 (PRODUCT LEVEL)	SEE PAGE
	1	1	**248-7200**	1	PLATE AS	
		1	**4B-4158**	4	SCREW-DRIVE (NO 4X0.25-IN)	
		1	**253-1346**	1	PLATE-WARNING (HIGH PRESSURE CYLINDER)	
	2	1	**248-7203**	1	PLATE	
Y	3	1	*297-9142*	1	TRACK ADJUSTER & RECOIL GP	194
M	4	1	**8T-4137**	2	BOLT (M10X1.5X20-MM)	

M - METRIC PART
Y - SEPARATE ILLUSTRATION

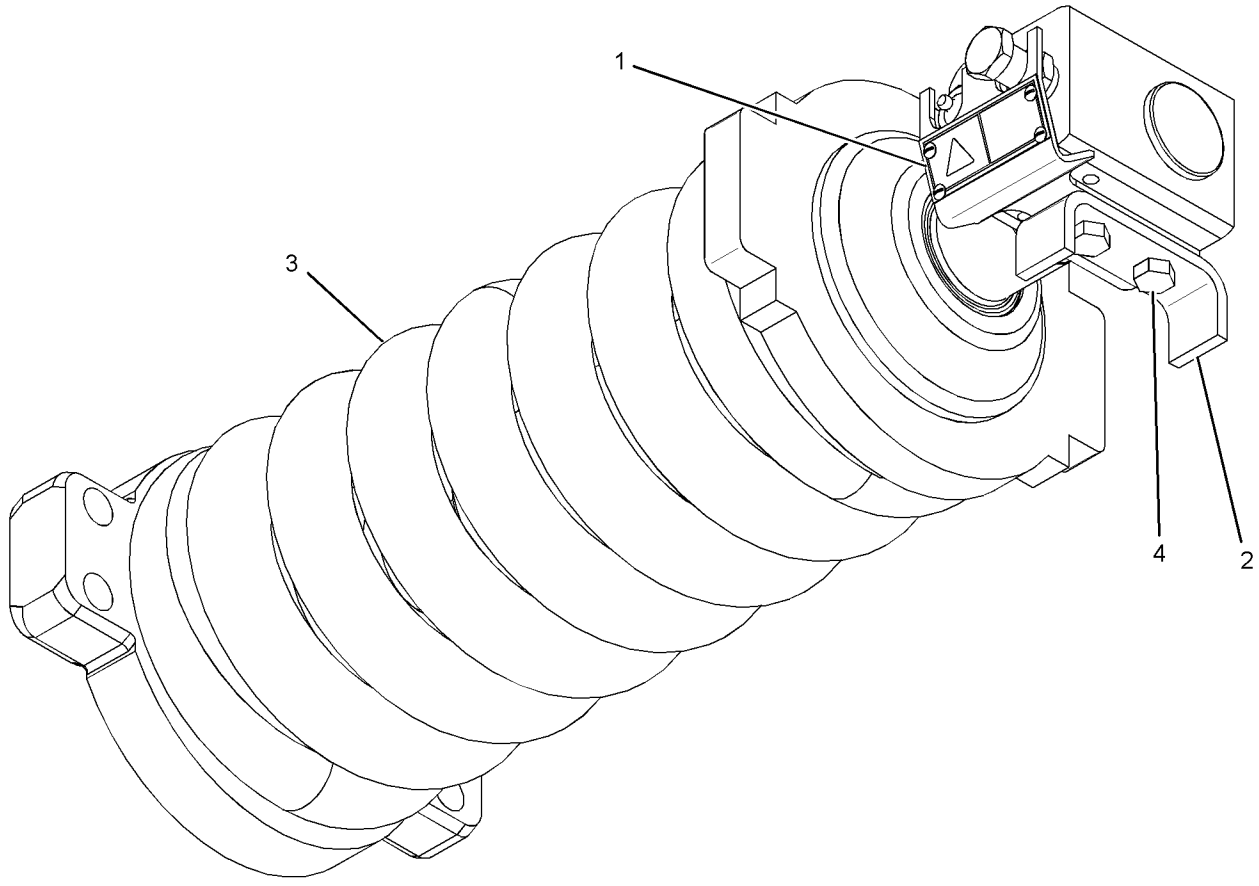

GRAPHIC #1

<END>

g01424123

297-9142 TRACK ADJUSTER & RECOIL GP

S/N: RDE1-UP

PART OF 297-9140, 297-9141 TRACK ADJUSTER & RECOIL GP

SMCS-4157, 4158 **i05401094**

NOTE	REF NO	GRAPHIC REF	PART NUMBER	QTY	PART NAME 1 2 3 4 5 6 (PRODUCT LEVEL)	SEE PAGE
	1	1	**248-7191**	1	PLATE	
	2	1	**248-7194**	1	SPRING	
	3	1	**297-9137**	1	SUPPORT	
Y	4	1	*297-9143*	1	TRACK ADJUSTER & RECOIL GP	195
	5	1	**297-9161**	1	STRIP	
M	6	1	**096-4879**	1	NUT (M36X4-THD)	
	7	1	**179-5764**	1	WASHER (39X60X6-MM THK)	
M	8	1	**8T-4171**	2	BOLT (M6X1X12-MM)	

M - METRIC PART
Y - SEPARATE ILLUSTRATION

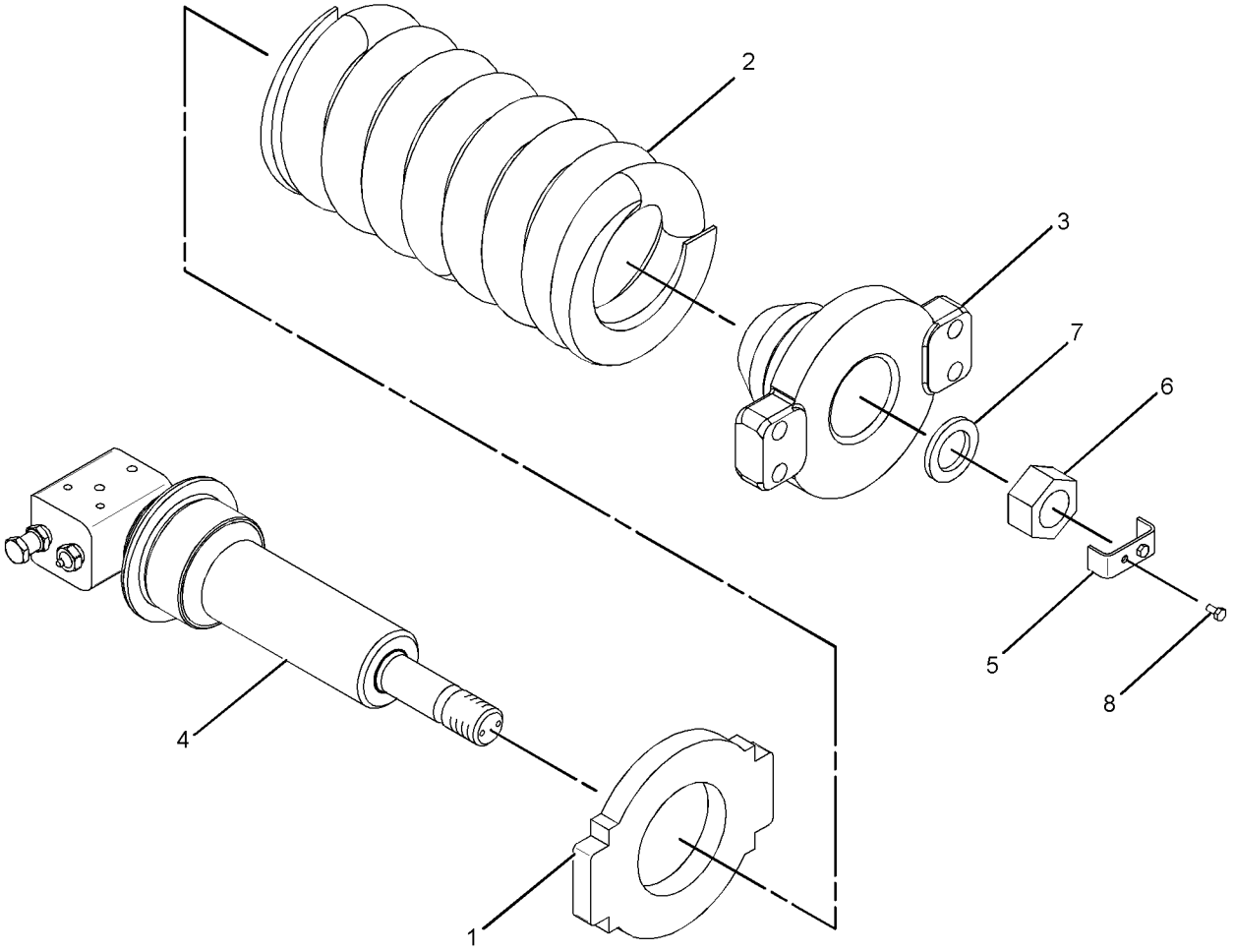

GRAPHIC #1 <END> g01424098

297-9143 TRACK ADJUSTER & RECOIL GP

S/N: RDE1-UP

PART OF 297-9142 TRACK ADJUSTER & RECOIL GP

SMCS-4157, 4158 **i05439684**

NOTE	REF NO	GRAPHIC REF	PART NUMBER	QTY	PART NAME 1 2 3 4 5 6 (PRODUCT LEVEL)	SEE PAGE
	1	1	**2S-5926**	1	VALVE-RELIEF	
	2	1	**357-7540**	1	VALVE-FILL	
	3	1	**095-7101**	1	SEAL-LIP TYPE	
	4	1	**248-7172**	2	SEAL-O-RING	
	5	1	**248-7197**	1	PISTON AS	
	6	1	**297-9133**	1	CYLINDER	
	7	1	**297-9134**	1	ROD	
	8	1	**095-1701**	1	SEAL-O-RING	
	9	1	**096-4276**	1	RING	
	10	1	**099-0172**	2	RING-BACKUP	
	11	1	**099-0173**	2	RING-BACKUP	

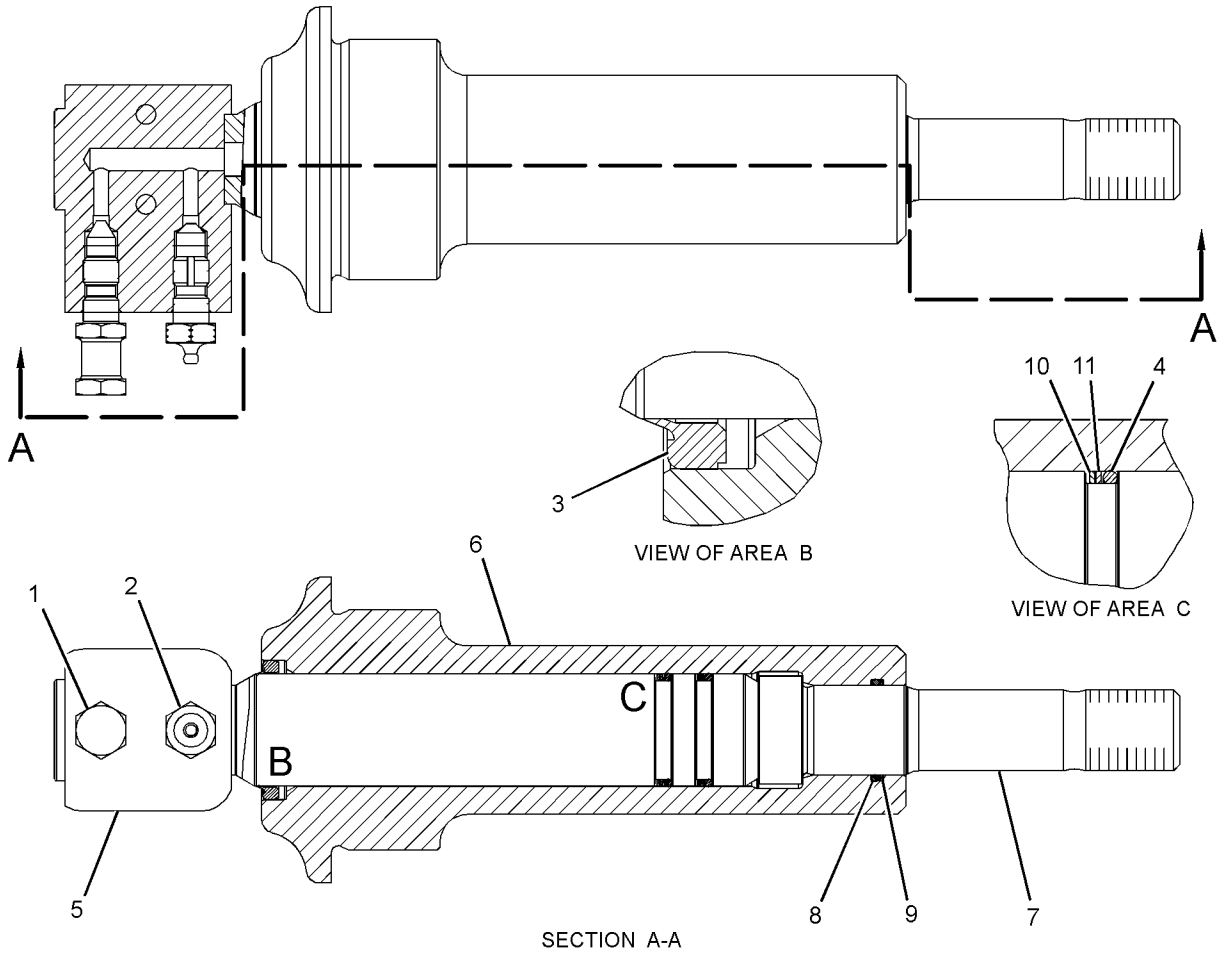

GRAPHIC #1 <END> g01424029

350-3300 TRACK AR–2-REQUIRED

S/N: RDE1-UP
770-MM (30-IN) TRIPLE GROUSER SHOE. WITH STEP
PART OF 506-8579 DISTRIBUTION AR

SMCS-4170 **i06750083**

NOTE	PART NUMBER	QTY	PART NAME 1 2 3 4 5 6 (PRODUCT LEVEL)	SEE PAGE
Y	*344-6903*	1	STEP GP	176
Y	*176-4868*	1	TRACK GP	196

Y - SEPARATE ILLUSTRATION

<END>

176-4868 TRACK GP–2-REQUIRED

S/N: RDE1-UP
770-MM (30-IN) TRIPLE GROUSER SHOE
PART OF 350-3300 TRACK AR

SMCS-4170 **i05411921**

NOTE	PART NUMBER	QTY	PART NAME 1 2 3 4 5 6 (PRODUCT LEVEL)	SEE PAGE
Y	**176-4871**	1	LINK AS-TRACK	187
M	**4I-7538**	184	BOLT-TRACK (M16X1.5X46-MM)	
M	**5I-6125**	184	NUT-TRACK (M16X1.5-THD)	
	1R-6011	46	SHOE-TRACK	

M - METRIC PART
Y - SEPARATE ILLUSTRATION

<END>

445-0692 TRACK GP–2-REQUIRED

S/N: RDE1-UP
600-MM (23.6-IN) TRIPLE GROUSER SHOE
PART OF 506-8578 DISTRIBUTION AR

SMCS-4170 **i06733468**

NOTE	PART NUMBER	QTY	PART NAME 1 2 3 4 5 6 (PRODUCT LEVEL)	SEE PAGE
Y	**445-0691**	1	LINK AS-TRACK	188
M	**4I-7538**	184	BOLT-TRACK (M16X1.5X46-MM)	
M	**5I-6125**	184	NUT-TRACK (M16X1.5-THD)	
	1R-6009	46	SHOE-TRACK	

M - METRIC PART
Y - SEPARATE ILLUSTRATION

<END>

087-4454 ACCUMULATOR GP-HYDRAULIC–CHARGED

S/N: RDE1-UP

PART OF 5I-8416 ACCUMULATOR GP-HYDRAULIC

SMCS-5077 **i00827965**

NOTE	REF NO	GRAPHIC REF	PART NUMBER	QTY	PART NAME 1 2 3 4 5 6 (PRODUCT LEVEL)	SEE PAGE
	1	1	**087-4577**	1	SEAL	
	2	1	**087-4576**	1	CAP	
	3	1	**087-4575**	1	CORE	

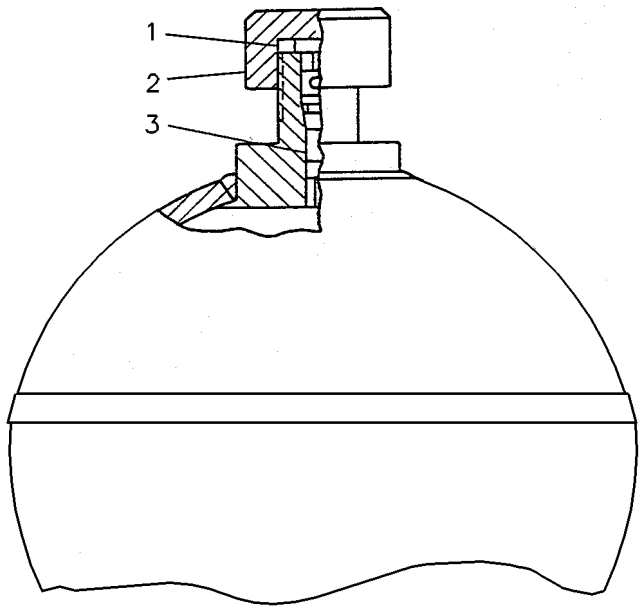

GRAPHIC #1 <END> g00221492

087-4456 ACCUMULATOR GP-HYDRAULIC—CHARGED

S/N: RDE1-UP

FIELD REPLACEMENT ORDER 227-8807—PAGE: 201

PART OF 164-6981 ACCUMULATOR GP-HYDRAULIC

SMCS-5077 **i06795616**

NOTE	PART NUMBER	QTY	PART NAME 1 2 3 4 5 6 (PRODUCT LEVEL)	SEE PAGE
Y	*4I-1536*	1	ACCUMULATOR GP-HYDRAULIC (CHARGED)	202
			—OR—	
Y	*5I-8416*	1	ACCUMULATOR GP-HYDRAULIC (CHARGED)	203
			—OR—	
Y	*145-5106*	1	ACCUMULATOR GP-HYDRAULIC (CHARGED)	199

Y - SEPARATE ILLUSTRATION

<END>

145-5106 ACCUMULATOR GP-HYDRAULIC–CHARGED

S/N: RDE1-UP

PART OF 087-4456 ACCUMULATOR GP-HYDRAULIC

SMCS-5077 **i02837951**

NOTE	REF NO	GRAPHIC REF	PART NUMBER	QTY	PART NAME 1 2 3 4 5 6 (PRODUCT LEVEL)	SEE PAGE
	1	1	**159-4700**	1	FILM-WARNING (HIGH PRESSURE CYLINDER)	

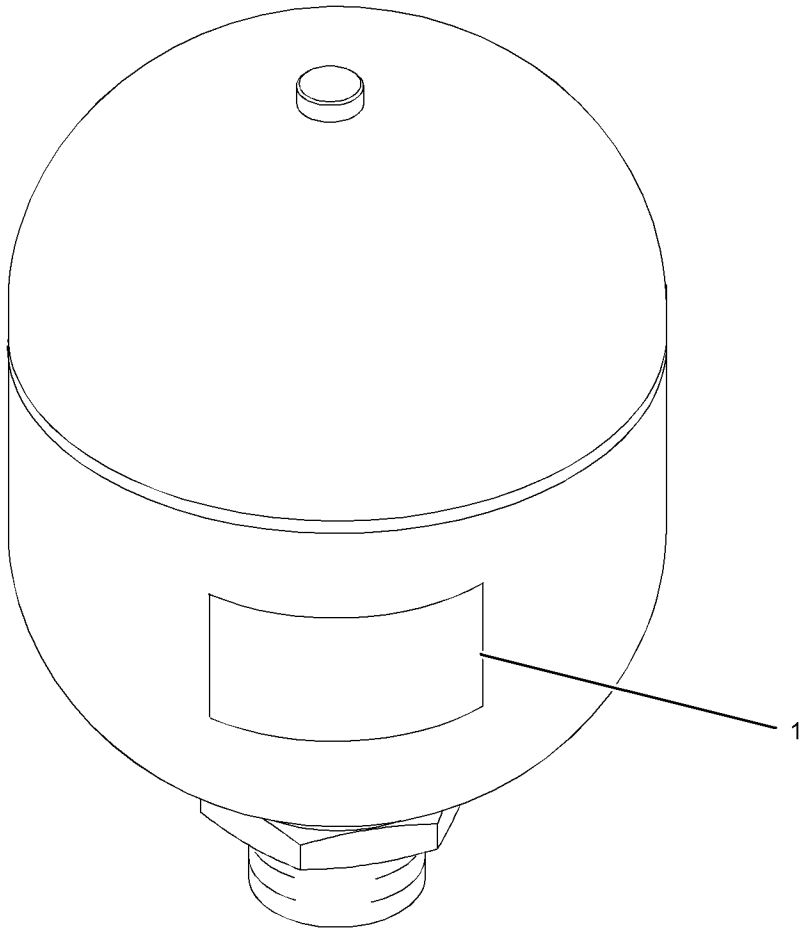

GRAPHIC #1 <END> g01288209

164-6981 ACCUMULATOR GP-HYDRAULIC—CHARGED

S/N: RDE1-UP

PART OF 502-5314 LINES GP-PILOT

SMCS-5077 **i03440920**

NOTE	PART NUMBER	QTY	PART NAME 1 2 3 4 5 6 (PRODUCT LEVEL)	SEE PAGE
Y	**087-4456**	1	ACCUMULATOR GP-HYDRAULIC (CHARGED)	198
	3K-0360	1	SEAL-O-RING	

Y - SEPARATE ILLUSTRATION

<END>

227-8807 ACCUMULATOR GP-HYDRAULIC—UNCHARGED

S/N: RDE1-UP

FIELD REPLACEMENT FOR 087-4456—PAGE: 198

SMCS-5077 **i06737713**

NOTE	REF NO	GRAPHIC REF	PART NUMBER	QTY	PART NAME 1 2 3 4 5 6 (PRODUCT LEVEL)	SEE PAGE
	1	1	**232-3317**	1	FILM-IDENTIFICATION (HYDRAULIC ACCUMULATOR)	

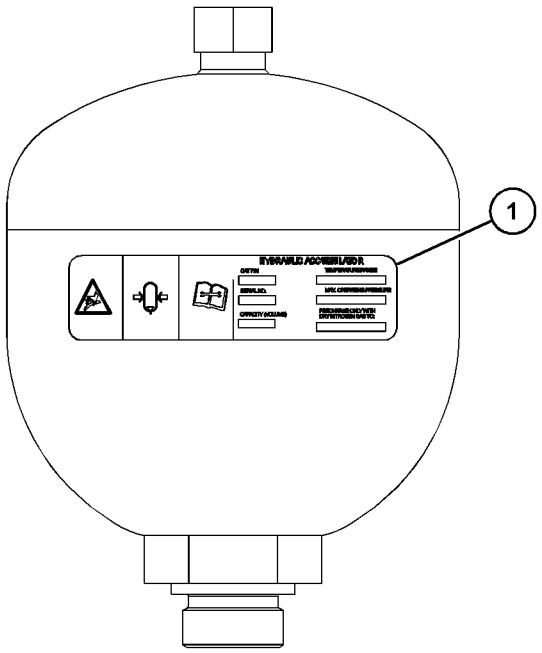

GRAPHIC #1 <END> g06048678

4I-1536 ACCUMULATOR GP-HYDRAULIC—CHARGED

S/N: RDE1-UP

PART OF 087-4456 ACCUMULATOR GP-HYDRAULIC

SMCS-5077 **i00823582**

NOTE	REF NO	GRAPHIC REF	PART NUMBER	QTY	PART NAME 1 2 3 4 5 6 (PRODUCT LEVEL)	SEE PAGE
	1	1	**4I-5862**	1	CAP	
	2	1	**4I-1539**	1	CORE	

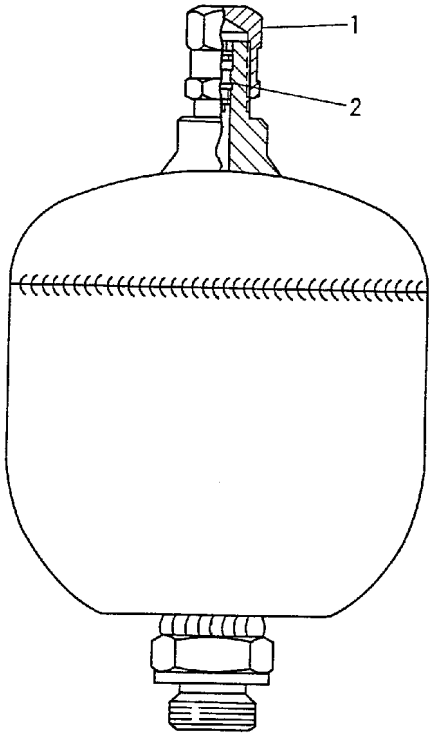

GRAPHIC #1 <END> g00222004

5I-8416 ACCUMULATOR GP-HYDRAULIC–CHARGED

S/N: RDE1-UP

PART OF 087-4456 ACCUMULATOR GP-HYDRAULIC

SMCS-5077 **i00823584**

NOTE	REF NO	GRAPHIC REF	PART NUMBER	QTY	PART NAME 1 2 3 4 5 6 (PRODUCT LEVEL)	SEE PAGE
	1	1	**4I-8267**	1	CAP (ACCUMULATOR)	
Y	2	1	*087-4454*	1	ACCUMULATOR GP-HYDRAULIC (CHARGED)	197

Y - SEPARATE ILLUSTRATION

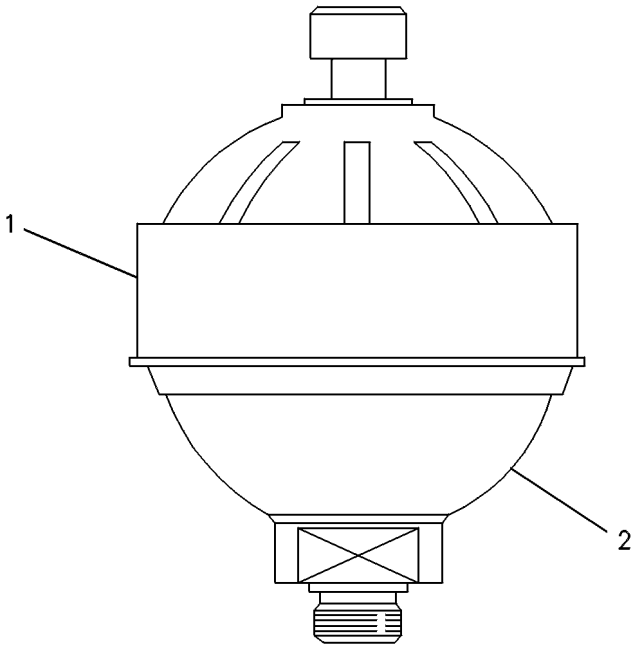

GRAPHIC #1 <END> g00237219

418-6282 CLAMP GP-HYDRAULIC LINES

S/N: RDE1-UP

PART OF 502-5317 LINES GP-FRONT, 502-5314, 502-5318 LINES GP-PILOT

SMCS-5057 **i06780611**

NOTE	PART NUMBER	QTY	PART NAME 1 2 3 4 5 6 (PRODUCT LEVEL)	SEE PAGE
Y	*418-6284*	1	CLAMP GP-HYDRAULIC LINES	205
			–OR–	
Y	*418-6285*	1	CLAMP GP-HYDRAULIC LINES	206

Y - SEPARATE ILLUSTRATION

<END>

418-6284 CLAMP GP-HYDRAULIC LINES

S/N: RDE1-UP

PART OF 418-6282 CLAMP GP-HYDRAULIC LINES

SMCS-5057 **i06780617**

NOTE	REF NO	GRAPHIC REF	PART NUMBER	QTY	PART NAME 1 2 3 4 5 6 (PRODUCT LEVEL)	SEE PAGE
	1	1	**275-1442**	1	CLIP (TAB)	
	2	1	**275-1443**	1	CLIP (SLOT)	
	3	1	**275-1444**	1	GROMMET (19-MM ID)	

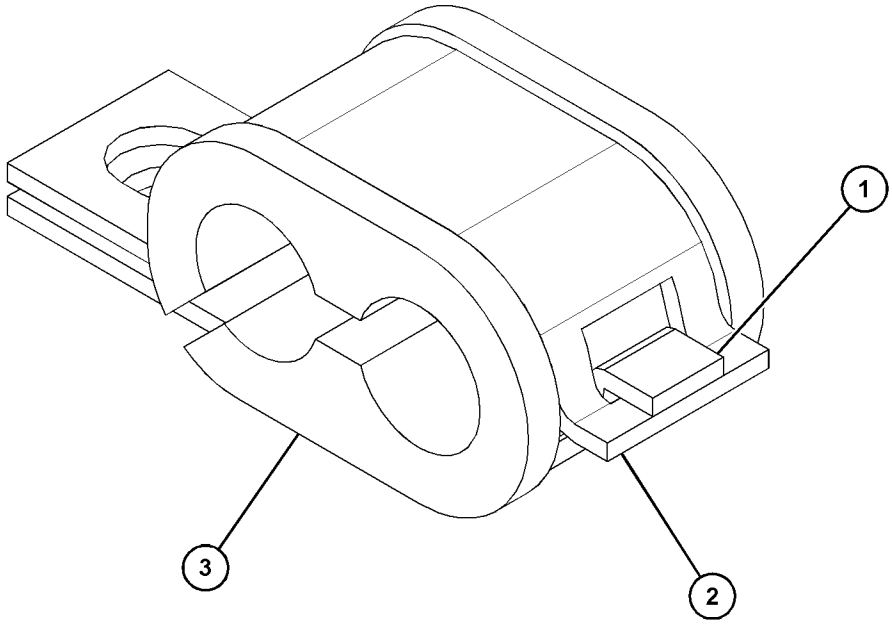

GRAPHIC #1 <END> g03750898

418-6285 CLAMP GP-HYDRAULIC LINES

S/N: RDE1-UP

PART OF 418-6282 CLAMP GP-HYDRAULIC LINES

SMCS-5057 **i06780623**

NOTE	REF NO	GRAPHIC REF	PART NUMBER	QTY	PART NAME 1 2 3 4 5 6 (PRODUCT LEVEL)	SEE PAGE
	1	1	**275-1442**	1	CLIP (TAB)	
	2	1	**275-1443**	1	CLIP (SLOT)	
	3	1	**333-4609**	1	GROMMET (21-MM ID)	

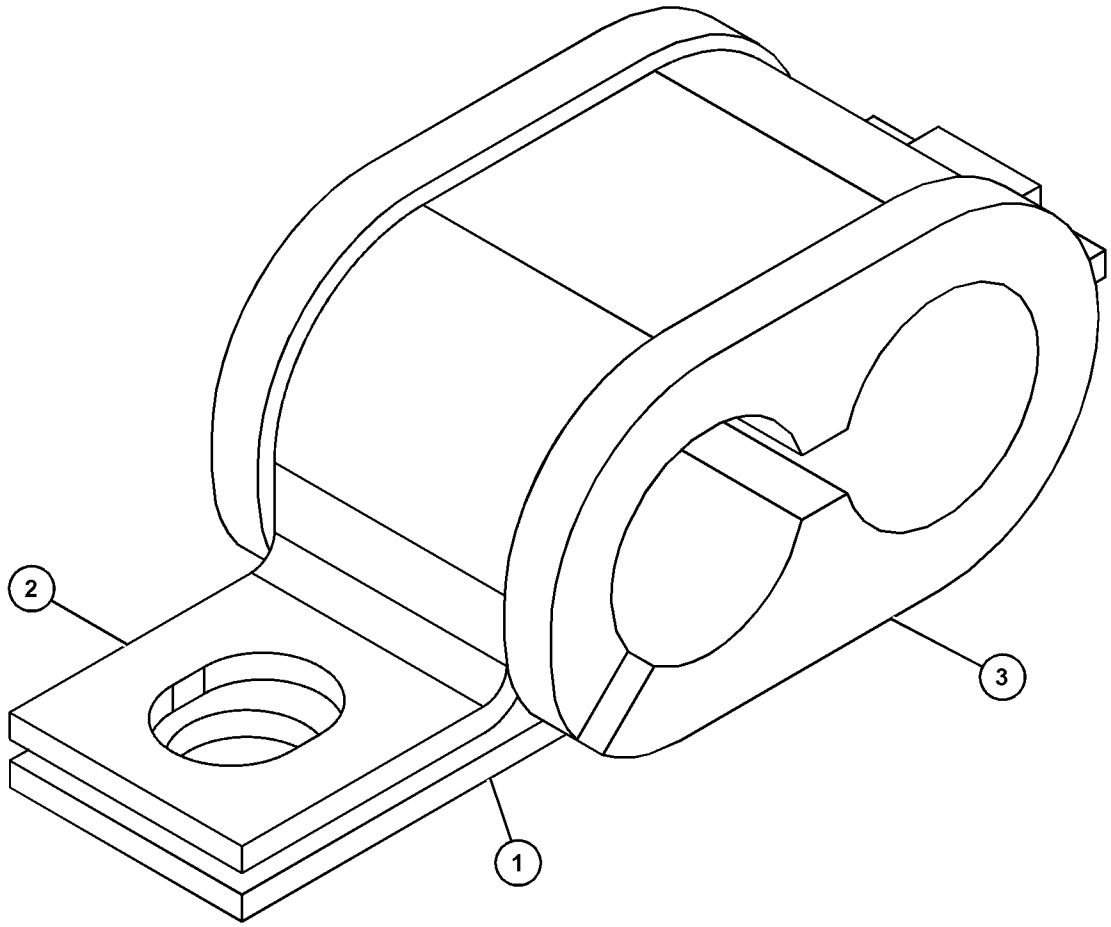

GRAPHIC #1 <END> g03761589

418-6286 CLAMP GP-HYDRAULIC LINES

S/N: RDE1-UP

PART OF 502-5314 LINES GP-PILOT

SMCS-5057 **i06780630**

NOTE	PART NUMBER	QTY	PART NAME 1 2 3 4 5 6 (PRODUCT LEVEL)	SEE PAGE
Y	*418-6287*	1	CLAMP GP-HYDRAULIC LINES	208
			–OR–	
Y	*418-6288*	1	CLAMP GP-HYDRAULIC LINES	209

Y - SEPARATE ILLUSTRATION

<END>

418-6287 CLAMP GP-HYDRAULIC LINES

S/N: RDE1-UP

PART OF 418-6286 CLAMP GP-HYDRAULIC LINES

SMCS-5057 **i06780644**

NOTE	REF NO	GRAPHIC REF	PART NUMBER	QTY	PART NAME 1 2 3 4 5 6 (PRODUCT LEVEL)	SEE PAGE
	1	1	**5P-7462**	1	CLIP (SLOT)	
	2	1	**5P-7463**	1	CLIP (TAB)	
	3	1	**6V-0683**	1	GROMMET (19-MM ID)	

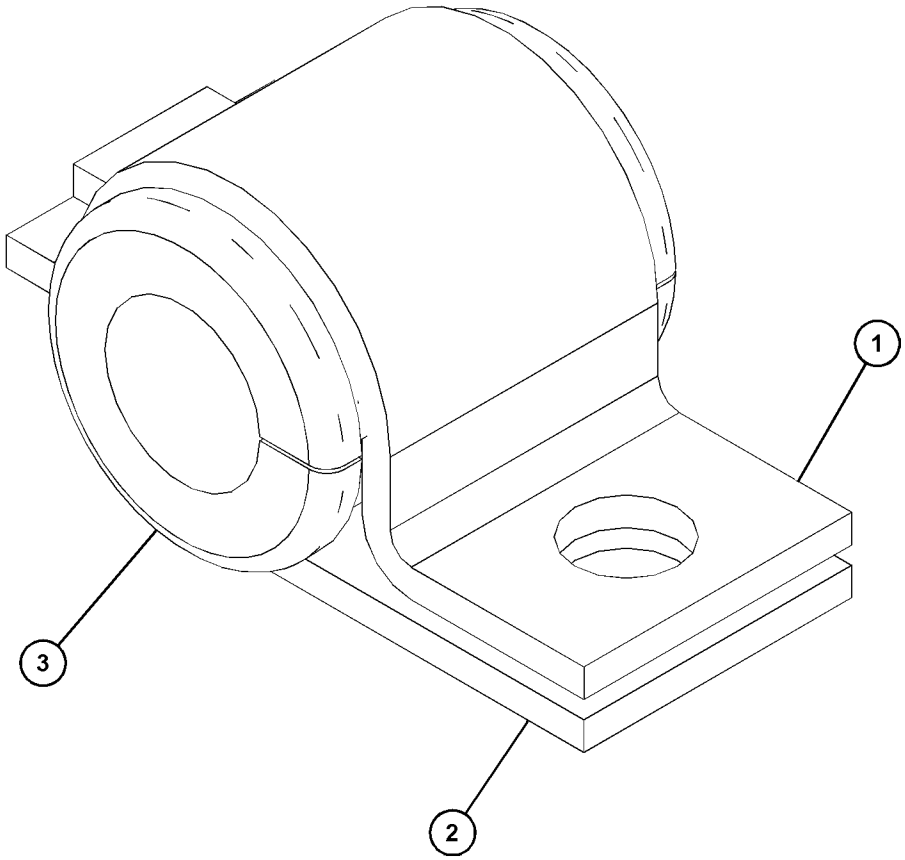

GRAPHIC #1 <END> g03765916

418-6288 CLAMP GP-HYDRAULIC LINES

S/N: RDE1-UP

PART OF 418-6286 CLAMP GP-HYDRAULIC LINES

SMCS-5057 **i06780638**

NOTE	REF NO	GRAPHIC REF	PART NUMBER	QTY	PART NAME 1 2 3 4 5 6 (PRODUCT LEVEL)	SEE PAGE
	1	1	**5P-7464**	1	CLIP (SLOT)	
	2	1	**5P-7465**	1	CLIP (TAB)	
	3	1	**6V-1249**	1	GROMMET (22-MM ID)	

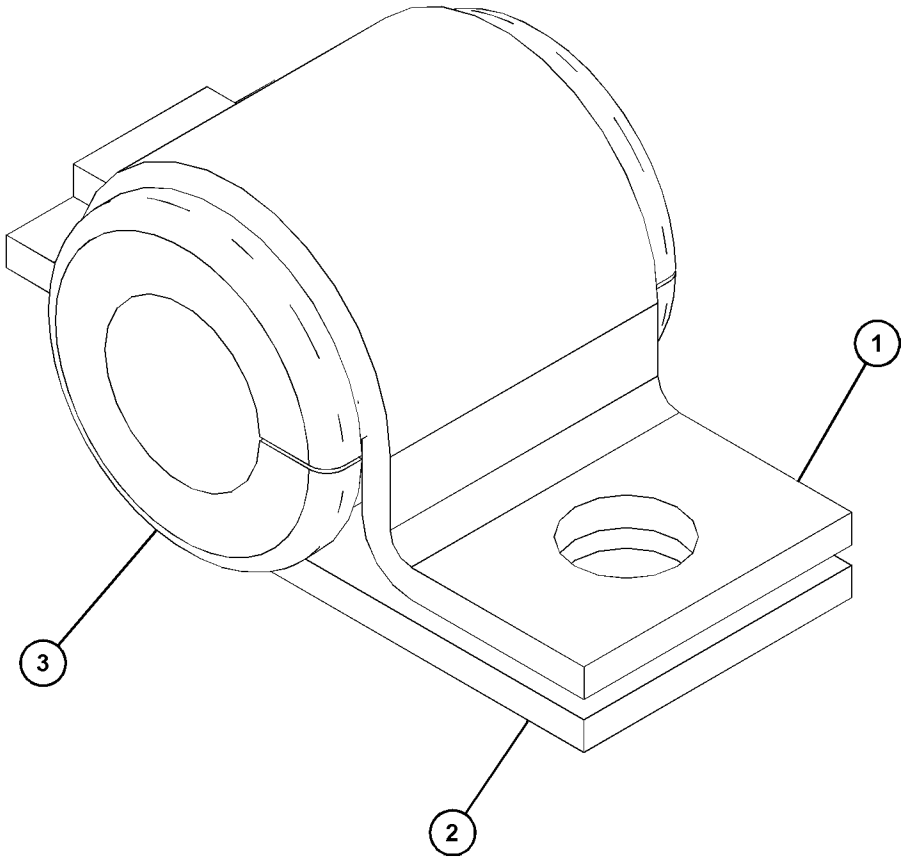

GRAPHIC #1 <END> g03765916

255-5843 CONTROL AR-AUXILIARY—JOYSTICK, MODULATION SWITCH

S/N: RDE1-UP

SMCS-5051 **i06835181**

NOTE	PART NUMBER	QTY	PART NAME 1 2 3 4 5 6 (PRODUCT LEVEL)	SEE PAGE
Y	*259-7598*	1	CONTROL & MTG GP-JOYSTICK (WITH MODULATION SWITCH)	425
Y	*259-5295*	1	FASTENER GP-WIRING HARNESS (JOYSTICK)	91
Y	*247-7410*	1	FILM GP (OPERATOR CONTROLS, NOTICE)	491

Y - SEPARATE ILLUSTRATION

<END>

270-5843 CONTROL AR-AUXILIARY

S/N: RDE1-UP

SMCS-5051 **i06835195**

NOTE	PART NUMBER	QTY	PART NAME 1 2 3 4 5 6 (PRODUCT LEVEL)	SEE PAGE
Y	*278-6697*	1	LINES GP-FRONT (SYSTEM 23, COMBINED FUNCTION)	256

Y - SEPARATE ILLUSTRATION

<END>

494-3642 CONTROL AR-AUXILIARY—SYSTEM 1, 1-WAY, 1-PUMP

S/N: RDE1-UP

PART OF 515-4829 DISTRIBUTION AR

SMCS-5051 **i06814167**

NOTE	PART NUMBER	QTY	PART NAME 1 2 3 4 5 6 (PRODUCT LEVEL)	SEE PAGE
Y	*239-8693*	1	CONTROL GP-HYDRAULIC PEDAL (RH)	432
Y	*247-7424*	1	FILM GP (OPERATOR CONTROLS, NOTICE)	493
Y	*495-0692*	1	LINES GP-FRONT (SYSTEM 1, 1-WAY, 1-PUMP)	260
Y	*282-7411*	1	LINES GP-PILOT (SYSTEM 1, 1-WAY, 1-PUMP)	281
Y	*502-5318*	1	LINES GP-PILOT (SYSTEM 1, 1-WAY, 1-PUMP)	293
Y	*275-7055*	1	WIRING GP-COMBINED FLOW	133

Y - SEPARATE ILLUSTRATION

<END>

351-3869 COUPLING GP-FLEXIBLE

S/N: RDE1-UP

PART OF 344-0688 COUPLING GP-PUMP

SMCS-3252 **i05417409**

NOTE	REF NO	GRAPHIC REF	PART NUMBER	QTY	PART NAME 1 2 3 4 5 6 (PRODUCT LEVEL)	SEE PAGE
	1	1	**351-4126**	4	INSERT-COUPLING	
	2	1	**7Y-1901**	1	ELEMENT-COUPLING	
	3	1	**7Y-1902**	4	INSERT-COUPLING	
M	4	1	**7Y-1904**	4	BOLT-SOCKET HEAD (M16X2X50-MM)	
	5	1	**248-7284**	1	HUB	
M	6	1	**7Y-0466**	2	SETSCREW-SOCKET (M16X2X22-MM)	
	7	1	**7Y-0468**	8	PIN-SPRING	

M - METRIC PART

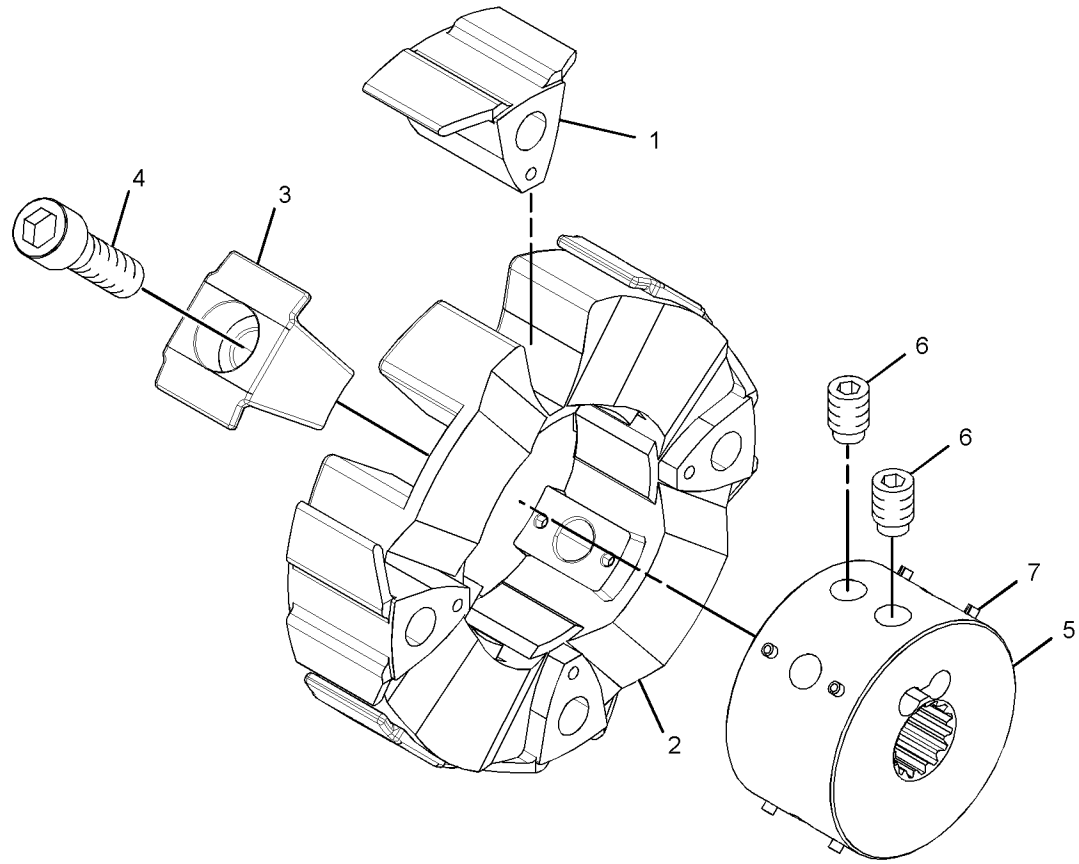

GRAPHIC #1 <END> g02620243

344-0688 COUPLING GP-PUMP

S/N: RDE1-UP

PART OF 387-2606 PUMP & MTG GP-MAIN HYDRAULIC

SMCS-5062 **i05402619**

NOTE	REF NO	GRAPHIC REF	PART NUMBER	QTY	PART NAME 1 2 3 4 5 6 (PRODUCT LEVEL)	SEE PAGE
Y	1	1	**351-3869**	1	COUPLING GP-FLEXIBLE	211
M	2	1	**324-4118**	4	BOLT-SOCKET HEAD (M16X2X55-MM)	
	3	1	**7Y-0468**	4	PIN-SPRING	

M - METRIC PART
Y - SEPARATE ILLUSTRATION

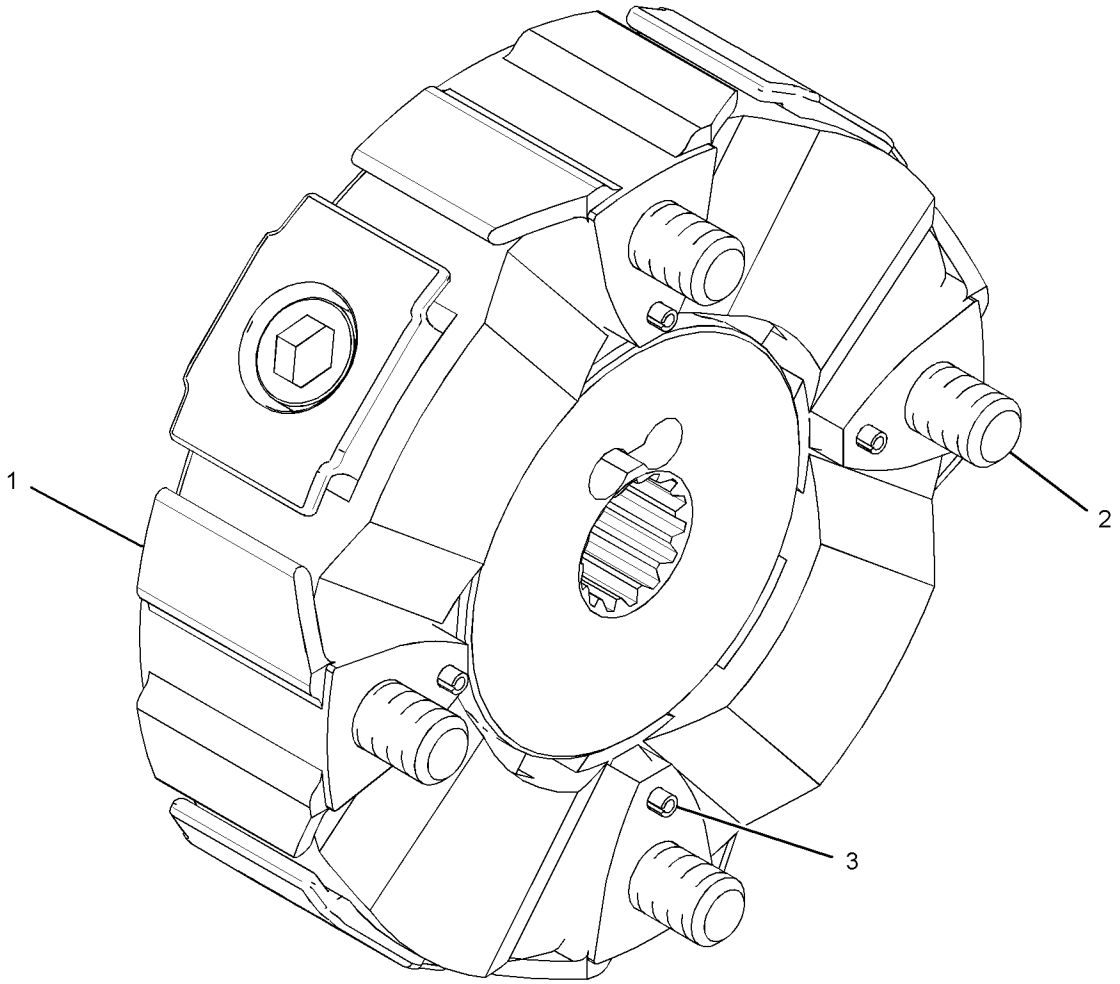

GRAPHIC #1 <END> g01891883

385-2825 CYLINDER & LINES GP-BOOM—LH

S/N: RDE1-UP

PART OF 283-9013 BOOM AR-1 PIECE LONG

SMCS-5456, 7562 **i05411207**

NOTE	PART NUMBER	QTY	PART NAME 1 2 3 4 5 6 (PRODUCT LEVEL)	SEE PAGE
Y	*385-2828*	1	CYLINDER & SEAL GP-BOOM	214
Y	*385-2827*	1	LINES GP-BOOM CYLINDER (LH)	243

Y - SEPARATE ILLUSTRATION

<END>

385-2826 CYLINDER & LINES GP-BOOM—RH

S/N: RDE1-UP

PART OF 283-9013 BOOM AR-1 PIECE LONG

SMCS-5456, 7562 **i05411242**

NOTE	PART NUMBER	QTY	PART NAME 1 2 3 4 5 6 (PRODUCT LEVEL)	SEE PAGE
Y	*385-2828*	1	CYLINDER & SEAL GP-BOOM	214
Y	*385-2835*	1	LINES GP-BOOM CYLINDER (RH)	244

Y - SEPARATE ILLUSTRATION

<END>

385-2832 CYLINDER & LINES GP-BUCKET

S/N: RDE1-UP

PART OF 283-9018 LINKAGE AR-BUCKET

SMCS-5457 **i05411662**

NOTE	PART NUMBER	QTY	PART NAME 1 2 3 4 5 6 (PRODUCT LEVEL)	SEE PAGE
Y	**385-2834**	1	CYLINDER & SEAL GP-BUCKET	216
Y	*385-2833*	1	LINES GP-BUCKET CYLINDER	248

Y - SEPARATE ILLUSTRATION

<END>

385-2829 CYLINDER & LINES GP-STICK

S/N: RDE1-UP

PART OF 283-9013 BOOM AR-1 PIECE LONG

SMCS-5458 **i05411286**

NOTE	PART NUMBER	QTY	PART NAME 1 2 3 4 5 6 (PRODUCT LEVEL)	SEE PAGE
Y	*385-2831*	1	CYLINDER & SEAL GP-STICK	218
Y	*385-2830*	1	LINES GP-STICK CYLINDER	301

Y - SEPARATE ILLUSTRATION

<END>

385-2828 CYLINDER & SEAL GP-BOOM

S/N: RDE1-UP

110-MM (4.3-IN) BORE X 1015-MM (40-IN) STROKE

PART OF 385-2825, 385-2826 CYLINDER & LINES GP-BOOM

SMCS-5456 **i05411220**

NOTE	REF NO	GRAPHIC REF	PART NUMBER	QTY	PART NAME 1 2 3 4 5 6 (PRODUCT LEVEL)	SEE PAGE
	1	1	**390-4188**	1	CYLINDER AS-BOOM	
	1A	1	**273-6945**	1	BUSHING	
	2	1	**390-4189**	1	ROD AS	
	2A	1	**290-9178**	1	BUSHING	
	3	1	**390-4190**	1	HEAD	
	4	1	**393-7930**	1	RING-RETAINING	
	5	1	**393-7931**	1	BUSHING	
	6	1	**390-4193**	1	STOP	
	7	1	**390-4194**	1	PISTON	
	8	1	**393-7933**	1	RING-SNAP	
	9	1	**385-2890**	1	BALL	
	10	1	**390-4197**	1	SETSCREW-SOCKET (M10X1.5X14-MM)	
M	11	1	**3E-6910**	15	BOLT-SOCKET HEAD (M12X1.75X70-MM)	
	12	1	**166-1494**	2	SEAL-LIP TYPE	
	13	1	**166-1492**	2	SEAL-LIP TYPE	
	14	1	**3B-8489**	1	FITTING-GREASE (1/8-27 PTF)	
J	15	1	**416-1273**	1	SEAL-WIPER	
J	16	1	**416-1274**	1	SEAL-U-CUP	
J	17	1	**416-1276**	1	SEAL-BUFFER	
J	18	1	**416-1275**	1	RING-BACKUP	
J	19	1	**416-1277**	1	SEAL-O-RING	
J	20	1	**416-1278**	1	RING-BACKUP	
J	21	1	**416-1280**	1	SEAL AS	
J	22	1	**416-1279**	2	RING-WEAR	
J	23	1	**416-1282**	2	RING-WEAR	
J	24	1	**416-1281**	1	SEAL-RING	
					AVAILABLE REPAIR KIT(S):	
J			**393-7887**	1	KIT-SEAL (BOOM CYLINDER)	

J - KIT MARKED J SERVICES PART(S) MARKED J
M - METRIC PART

385-2828 **CYLINDER & SEAL GP-BOOM (**contd.**)** **i05411220**

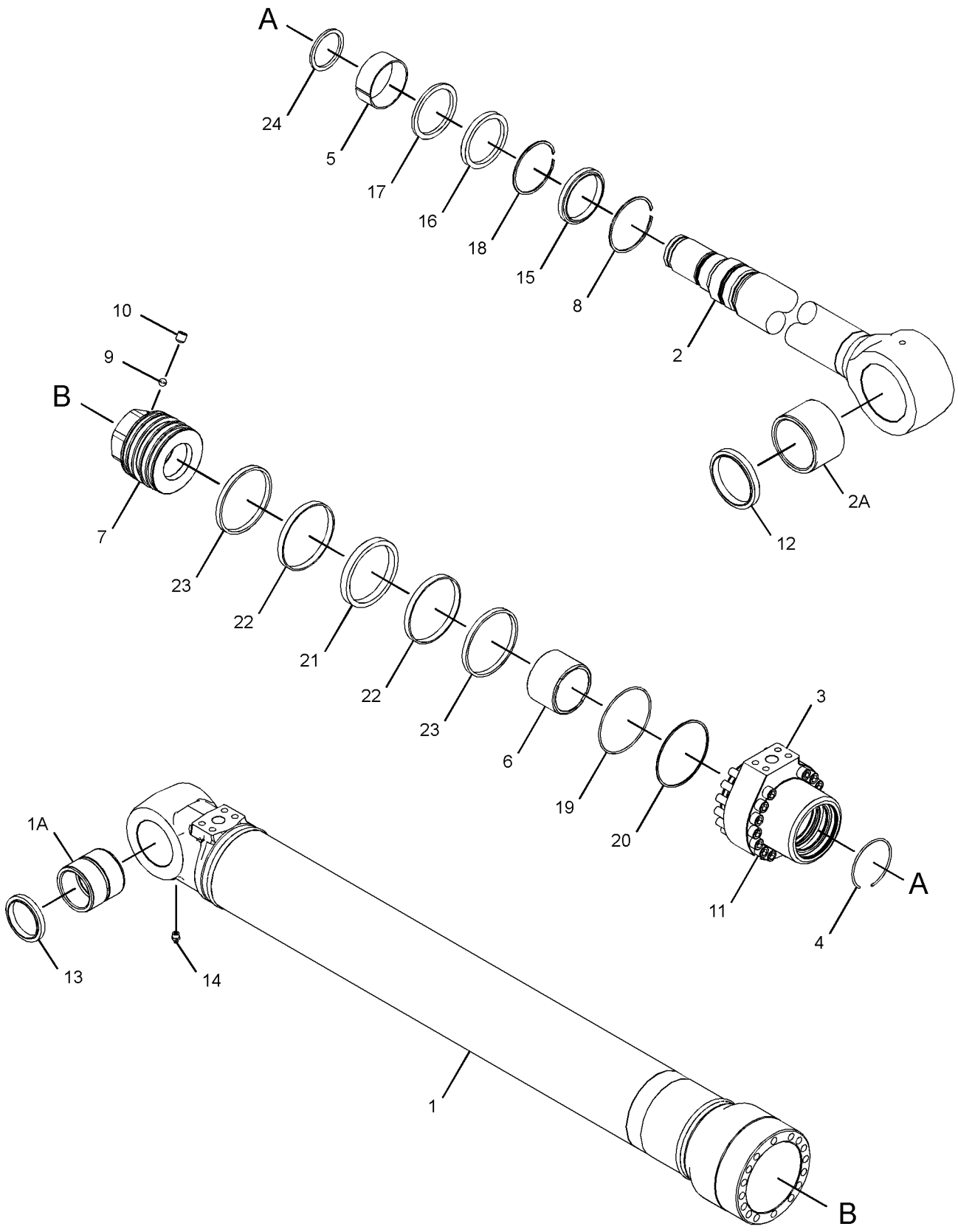

GRAPHIC #1 <END> g03342835

385-2834 CYLINDER & SEAL GP-BUCKET

S/N: RDE1-UP
100-MM (3.9-IN) BORE X 939-MM (36.9-IN) STROKE
PART OF 385-2832 CYLINDER & LINES GP-BUCKET

SMCS-5457 **i05411677**

NOTE	REF NO	GRAPHIC REF	PART NUMBER	QTY	PART NAME 1 2 3 4 5 6 (PRODUCT LEVEL)	SEE PAGE
	1	1	**390-4219**	1	CYLINDER AS	
	1A	1	**229-1095**	1	BUSHING	
	2	1	**390-4220**	1	ROD AS	
	2A	1	**248-7857**	1	BUSHING	
	3	1	**390-4221**	1	HEAD	
	4	1	**390-4158**	1	BUSHING	
	5	1	**390-4157**	1	RING-RETAINING	
	6	1	**390-4159**	1	RING-SNAP	
	7	1	**390-4225**	1	PISTON	
	8	1	**390-4226**	1	SETSCREW-SOCKET (M10X1.5X10-MM)	
	9	1	**385-2890**	1	BALL	
M	10	1	**3E-6910**	15	BOLT-SOCKET HEAD (M12X1.75X70-MM)	
	11	1	**166-1492**	2	SEAL-LIP TYPE	
	12	1	**235-7679**	2	SEAL-LIP TYPE	
	13	1	**3B-8489**	2	FITTING-GREASE (1/8-27 PTF)	
J	14	1	**416-1295**	1	SEAL-WIPER	
J	15	1	**416-1296**	1	SEAL-U-CUP	
J	16	1	**416-1298**	1	SEAL-BUFFER	
J	17	1	**416-1297**	1	RING-BACKUP	
J	18	1	**416-1299**	1	SEAL-O-RING	
J	19	1	**416-1300**	1	RING-BACKUP	
J	20	1	**416-1302**	1	SEAL AS-PISTON	
J	21	1	**416-1301**	2	RING-WEAR	
J	22	1	**416-1303**	2	RING-WEAR	
					AVAILABLE REPAIR KIT(S):	
J			**390-4227**	1	KIT-SEAL (BUCKET CYLINDER)	

J - KIT MARKED J SERVICES PART(S) MARKED J
M - METRIC PART

385-2834 **CYLINDER & SEAL GP-BUCKET (**contd.**)** **i05411677**

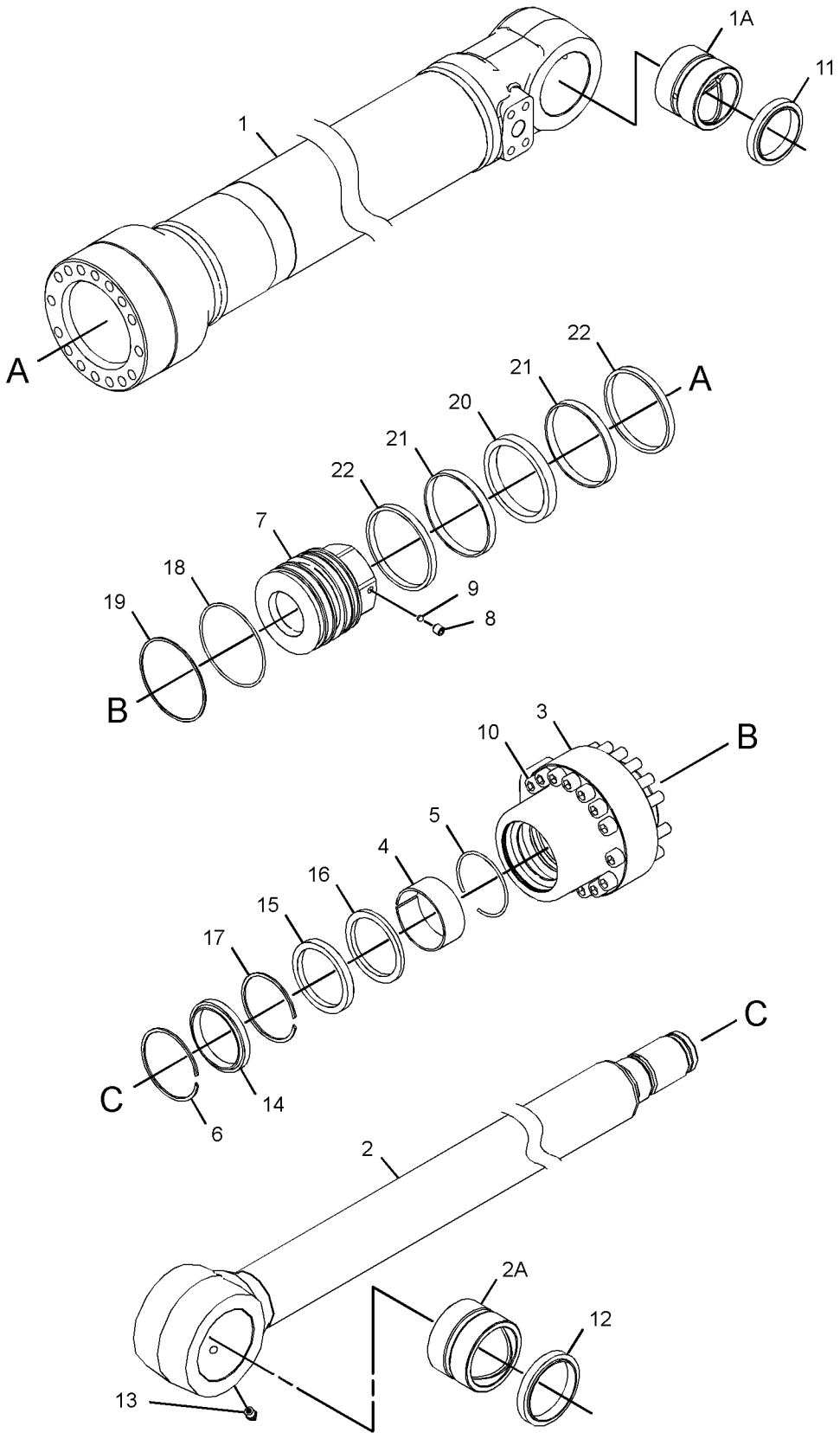

GRAPHIC #1 <END> g03319746

385-2831 CYLINDER & SEAL GP-STICK

S/N: RDE1-UP
120-MM (4.7-IN) BORE X 1197-MM (47.1-IN) STROKE
PART OF 385-2829 CYLINDER & LINES GP-STICK

SMCS-5458 **i05411310**

NOTE	REF NO	GRAPHIC REF	PART NUMBER	QTY	PART NAME 1 2 3 4 5 6 (PRODUCT LEVEL)	SEE PAGE
	1	1	**390-4202**	1	CYLINDER AS-STICK	
	1A	1	**229-1093**	1	BUSHING	
	2	1	**390-4203**	1	ROD AS	
	2A	1	**229-1093**	1	BUSHING	
	3	1	**390-4204**	1	HEAD	
	4	1	**385-2900**	1	BUSHING	
	5	1	**385-2899**	1	RING-RETAINING	
	6	1	**390-4207**	1	STOP	
	7	1	**390-4208**	1	PISTON	
	8	1	**385-2905**	1	RING-SNAP	
	9	1	**385-2922**	1	BALL	
	10	1	**422-9120**	1	SETSCREW-HEX SOCKET	
	11	1	**385-2910**	1	RING-RETAINING	
	12	1	**385-2920**	1	RING-RETAINING	
	13	1	**390-4215**	1	STOP	
M	14	1	**095-0703**	12	BOLT-SOCKET HEAD (M16X2X75-MM)	
	15	1	**166-1492**	4	SEAL-LIP TYPE	
	16	1	**3B-8489**	1	FITTING-GREASE (1/8-27 PTF)	
	17	1	**8T-6763**	1	PLUG-PIPE (1/4-18-THD)	
J	18	1	**416-1284**	1	SEAL-WIPER	
J	19	1	**416-1285**	1	SEAL-U-CUP	
J	20	1	**416-1287**	1	SEAL-BUFFER	
J	21	1	**416-1286**	1	RING-BACKUP	
J	22	1	**416-1288**	1	SEAL-O-RING	
J	23	1	**416-1289**	1	RING-BACKUP	
J	24	1	**416-1291**	1	SEAL AS	
J	25	1	**416-1290**	2	RING-WEAR	
J	26	1	**416-1292**	2	RING-WEAR	
J	27	1	**416-1293**	1	RING-SEAL	
J	28	1	**416-1294**	1	RING-SEAL	
					AVAILABLE REPAIR KIT(S):	
J			**393-7949**		KIT-SEAL (STICK CYLINDER)	

J - KIT MARKED J SERVICES PART(S) MARKED J
M - METRIC PART

385-2831 **CYLINDER & SEAL GP-STICK** (contd.) **i05411310**

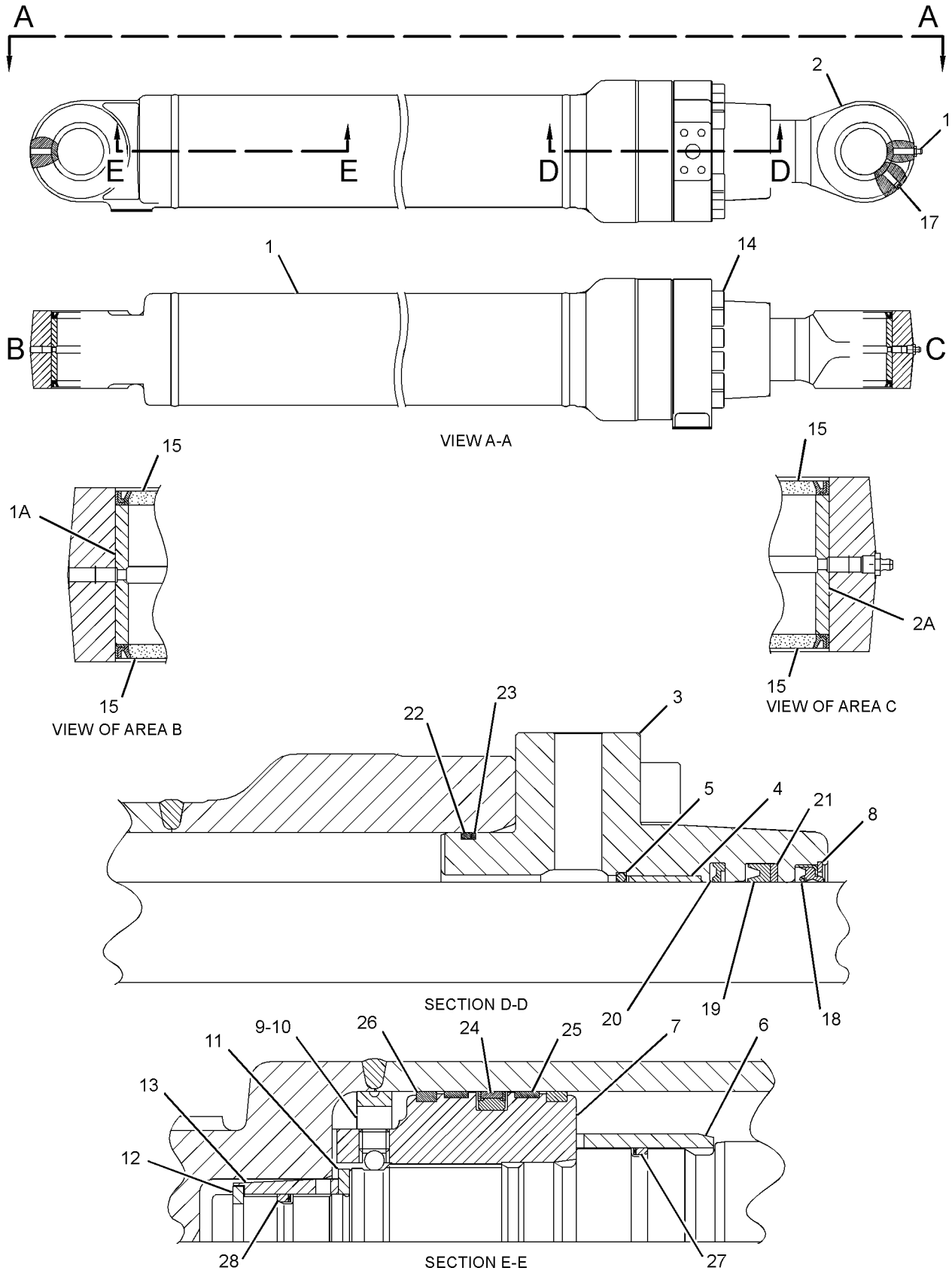

GRAPHIC #1

<END>

g03342794

395-4045 CYLINDER GP-COUPLER–312-LINKAGE

S/N: RDE1-UP

44.5-MM (1.75-IN) BORE X 124.5-MM (4.9-IN) STROKE

PART OF 388-6156 COUPLER GP-QUICK

SMCS-5133 **i06826751**

NOTE	REF NO	GRAPHIC REF	PART NUMBER	QTY	PART NAME 1 2 3 4 5 6 (PRODUCT LEVEL)	SEE PAGE
J	1	1	**237-0947**	1	VALVE GP-CHECK (PILOT OPERATED) (QUICK COUPLER)	
	2	1	**3J-1907**	1	SEAL-O-RING	
	3	1	**3J-7354**	1	SEAL-O-RING	
	4	1	**9S-8002**	1	PLUG (7/16-20-THD)	
	5	1	**9S-8004**	1	PLUG (9/16-18-THD)	
	6	1	**9F-2167**	1	SCREW-PURGE (3/8-24X1.164-IN)	
					AVAILABLE REPAIR KIT(S):	
			453-6525	1	KIT-PACKING (COUPLER CYLINDER)	
					(INCLUDES O-RINGS, BACK-UP RINGS, DUST SEAL, BP SEAL & POLYPAK SEAL)	
J			**213-8433**	1	KIT-SEAL (CHECK VALVE)	

J - KIT MARKED J SERVICES PART(S) MARKED J

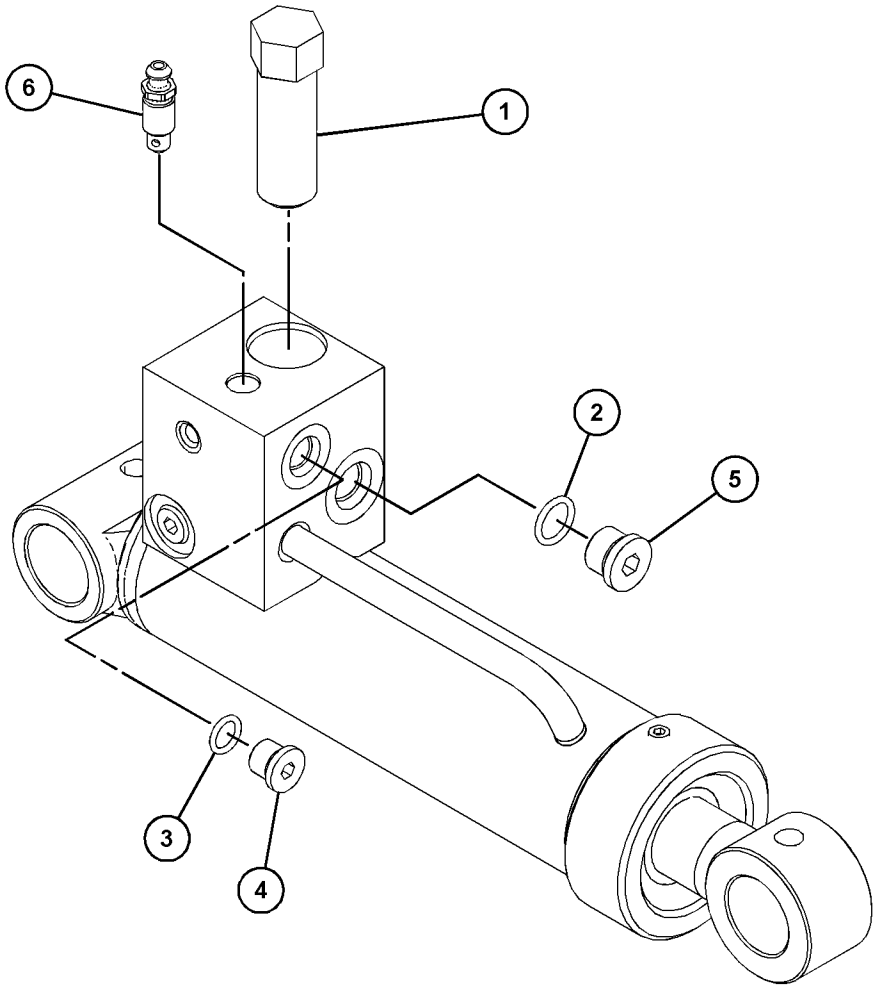

GRAPHIC #1 <END> g03705788

421-9132 DRIVE GP-SWING—WITH MOTOR

S/N: RDE1-UP

PART OF 424-0519 DRIVE GP-SWING

SMCS-5459 **i06146391**

NOTE	REF NO	GRAPHIC REF	PART NUMBER	QTY	PART NAME 1 2 3 4 5 6 (PRODUCT LEVEL)	SEE PAGE
CY	1	1	**467-4412**	1	DRIVE GP-SWING (WITHOUT MOTOR)	223
Y	2	1	**422-9182**	1	MOTOR GP-SWING	305
	3	1	**6V-7644**	1	RING-RETAINING	
	4	1	**8T-4223**	12	WASHER-HARD (13.5X25.5X3-MM THK)	
M	5	1	**8T-5041**	12	BOLT (M12X1.75X120-MM)	

C - CHANGE FROM PREVIOUS TYPE
M - METRIC PART
Y - SEPARATE ILLUSTRATION

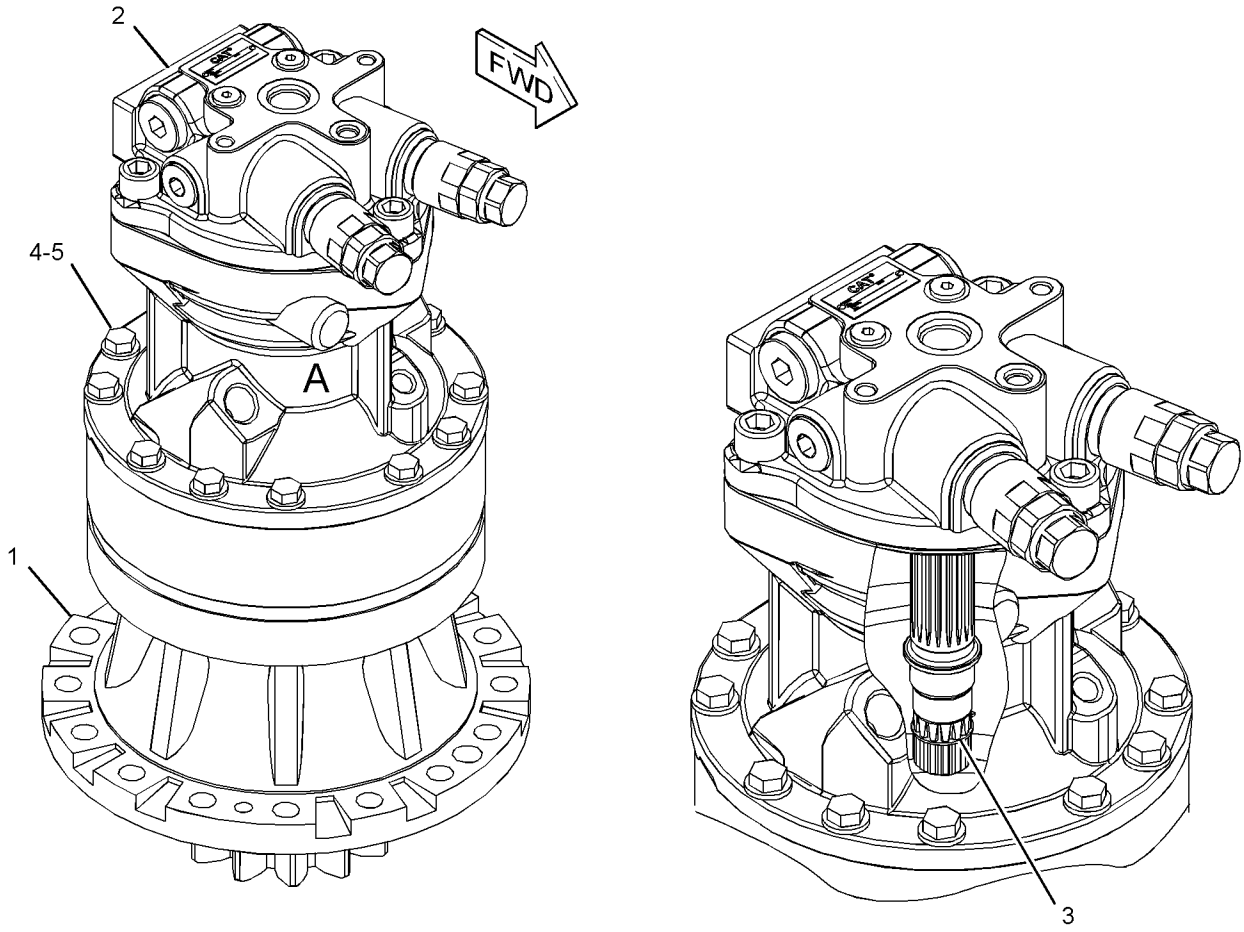

VIEW OF AREA A

GRAPHIC #1 <END> g03408198

424-0519 DRIVE GP-SWING—WITH MOTOR

S/N: RDE1-UP

PART OF 441-8587 POWER TRAIN AR

SMCS-5459 **i06019225**

NOTE	REF NO	GRAPHIC REF	PART NUMBER	QTY	PART NAME 1 2 3 4 5 6 (PRODUCT LEVEL)	SEE PAGE
	1	1	**099-3563**	1	CONNECTOR	
	2	1	**191-2662**	1	GAUGE-OIL LEVEL (SWING DRIVE)	
	3	1	**267-6744**	1	BREATHER AS (SWING DRIVE)	
		1	**4H-6112**	1	BREATHER (SWING DRIVE)	
		1	**227-6227**	1	BOSS	
		1	**267-6786**	1	FITTING	
Y	4	1	*421-9132*	1	DRIVE GP-SWING (WITH MOTOR)	221
	5	1	**424-0524**	1	PIPE-GAUGE	
	6	1	**3K-0360**	2	SEAL-O-RING	
	7	1	**6V-7238**	1	VALVE-SHUTOFF (HYDRAULIC OIL)	

Y - SEPARATE ILLUSTRATION

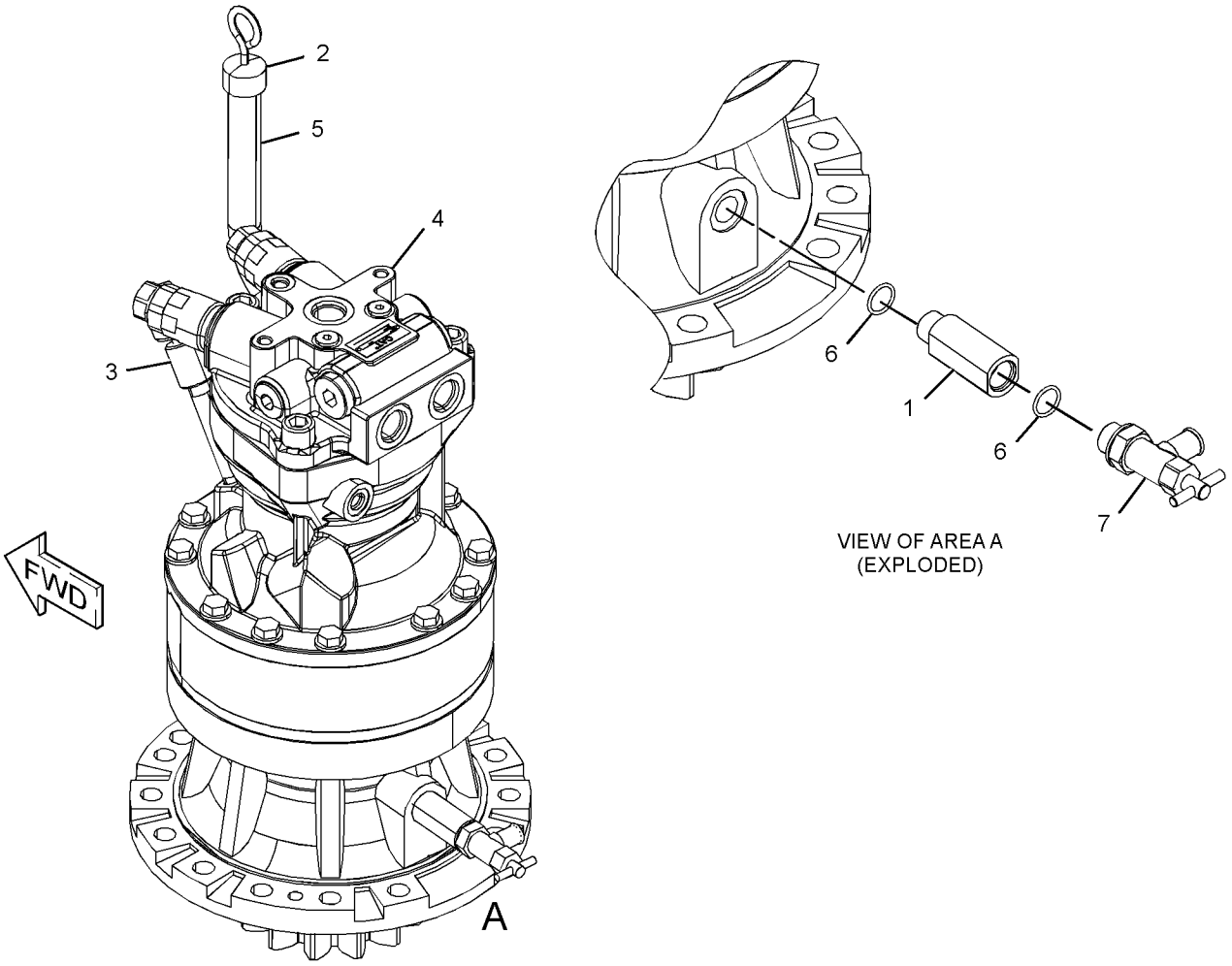

GRAPHIC #1 <END> g03408030

467-4412 DRIVE GP-SWING

S/N: RDE1-UP

PART OF 421-9132 DRIVE GP-SWING

SMCS-5459 **i06146502**

NOTE	REF NO	GRAPHIC REF	PART NUMBER	QTY	PART NAME 1 2 3 4 5 6 (PRODUCT LEVEL)	SEE PAGE
	1	1	**093-6089**	2	DOWEL	
	2	1	**191-2602**	6	WASHER (32X56X1.2-MM THK)	
	3	1	**191-2605**	1	WASHER (30X75X3-MM THK)	
	4	1	**191-2608**	3	GEAR-PLANETARY	
	5	1	**191-2609**	3	SHAFT-PLANETARY	
	6	1	**191-2610**	3	PIN-SPRING	
	7	1	**191-2611**	1	GEAR-SUN	
	8	1	**191-2613**	1	GEAR-RING	
	9	1	**199-4627**	6	WASHER	
	10	1	**333-3048**	1	CARRIER	
	11	1	**333-3049**	3	GEAR-PLANETARY	
	12	1	**333-3050**	3	BEARING	
	13	1	**333-3051**	3	SHAFT	
	14	1	**095-0879**	3	PIN-SPRING	
	15	1	**333-3058**	3	WASHER-THRUST (30X47X2-MM THK)	
	16	1	**333-3059**	3	RING-RETAINING	
M	17	1	**7X-2619**	6	BOLT (M6X1X10-MM)	
	18	1	**353-0534**	1	BEARING	
	19	1	**466-5323**	1	BEARING	
	20	1	**353-0536**	1	CARRIER-PLANETARY	
	21	1	**353-0537**	6	BEARING	
	22	1	**353-0538**	1	GEAR-SUN	
	23	1	**353-0539**	1	SHAFT-PINION	
	24	1	**353-0540**	1	HOUSING	
	25	1	**353-0541**	1	SEAL-LIP TYPE	
	26	1	**353-0542**	1	SEAL	
	27	1	**353-0543**	2	PLATE	
	28	1	**095-0929**	1	RING-RETAINING (EXTERNAL)	

M - METRIC PART

467-4412 **DRIVE GP-SWING (**contd.**)** **i06146502**

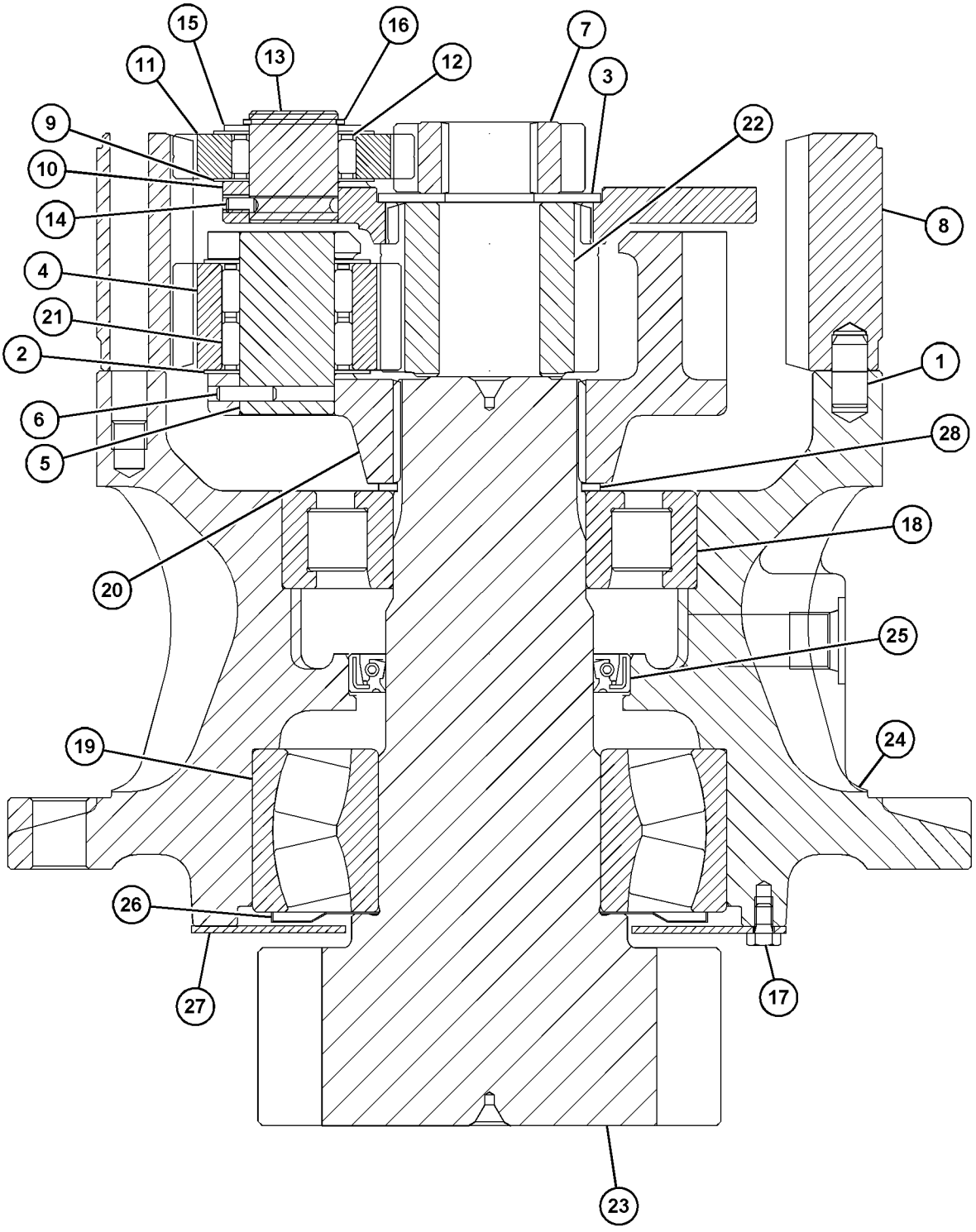

GRAPHIC #1 <END> g06015909

442-0253 FASTENER GP-SWING & FINAL DR

S/N: RDE1-UP

PART OF 441-8587 POWER TRAIN AR

SMCS-4050, 5459 **i06277173**

NOTE	REF NO	GRAPHIC REF	PART NUMBER	QTY	PART NAME 1 2 3 4 5 6 (PRODUCT LEVEL)	SEE PAGE
	1	1	**114-1374**	1	SUPPORT	
	2	1	**352-7064**	2	CAP	
	3	1	**3E-4356**	14	WASHER-HARD (17.5X30X6-MM THK)	
M	4	1	**447-1711**	46	BOLT (M16X2X50-MM)	
	5	1	**191-2543**	2	PIN	
	6	1	**5D-1026**	1	CLAMP-BAND	
	7	1	**8T-4121**	1	WASHER-HARD (11X21X2.5-MM THK)	
M	8	1	**8T-4191**	1	BOLT (M10X1.5X16-MM)	
	9	1	**451-2175**	32	WASHER-HARD (17.5X30X3.5-MM THK)	
E	10	1	**5P-0767**		HOSE (62-CM)	
BF			**1U-8846**		SEALANT-GASKET	

B - USE AS REQUIRED
E - ORDER BY THE CENTIMETER
F - NOT SHOWN
M - METRIC PART

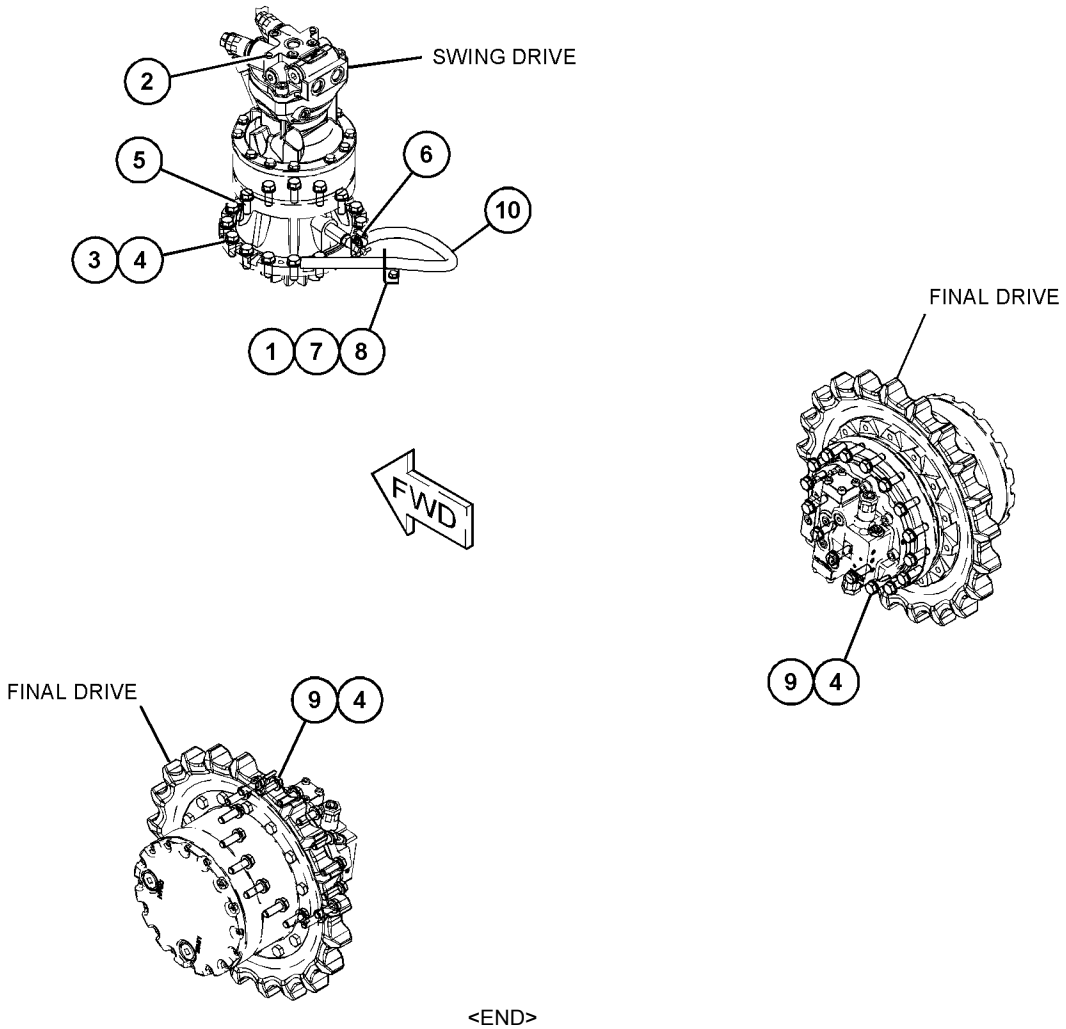

GRAPHIC #1 <END> g03883289

460-2121 FILTER & MTG GP-OIL

S/N: RDE1-UP

PART OF 460-3429 INSTALLATION AR-ENGINE

SMCS-5068 **i06781385**

NOTE	REF NO	GRAPHIC REF	PART NUMBER	QTY	PART NAME 1 2 3 4 5 6 (PRODUCT LEVEL)	SEE PAGE
	1	1	*319-6216*	1	CONNECTOR AS	
		1	**6V-8716**	1	CONNECTOR (STRAIGHT)	
		1	**228-7092**	1	SEAL-O-RING	
		1	**238-5084**	1	SEAL-O-RING	
Y	2	1	**322-3154**	1	FILTER GP-ENGINE OIL	37
	3	1	**346-3229**	1	BASE AS-FILTER	
		1	**232-7599**	1	PLUG	
	4	1	**391-6305**	1	PLATE AS	
	5	1	**475-2260**	1	HOSE AS	
	6	1	**475-2261**	1	HOSE AS	
	7	1	**130-9984**	2	CLIP	
	8	1	*309-5130*	1	PLUG AS	
		1	**9S-4182**	1	PLUG (7/16-20-THD)	
		1	**214-7566**	1	SEAL-O-RING	
	9	1	*319-6221*	1	ELBOW AS	
		1	**6V-9182**	1	ELBOW	
		1	**228-7092**	1	SEAL-O-RING	
		1	**238-5084**	1	SEAL-O-RING	
	10	1	*321-8648*	2	CONNECTOR AS	
					(EACH INCLUDES)	
		1	**2T-2991**	1	CONNECTOR	
		1	**228-7092**	1	SEAL-O-RING	
		1	**238-5083**	1	SEAL-O-RING	
	11	1	*321-8649*	1	VALVE AS-FLUID SAMPLING	
		1	**8C-3446**	1	VALVE-SAMPLING	
		1	**214-7566**	1	SEAL-O-RING	
	12	1	*326-0319*	1	PLUG AS	
		1	**9S-4188**	1	PLUG	
		1	**238-5083**	1	SEAL-O-RING	
	13	1	**8C-3445**	1	CAP-DUST	
	14	1	**8T-4121**	2	WASHER-HARD (11X21X2.5-MM THK)	
M	15	1	**8T-4136**	2	BOLT (M10X1.5X25-MM)	
	16	1	**8T-4224**	4	WASHER-HARD (8.8X16X2-MM THK)	
M	17	1	**8T-7547**	4	BOLT (M8X1.25X30-MM)	

M - METRIC PART
Y - SEPARATE ILLUSTRATION

460-2121 **FILTER & MTG GP-OIL (**contd.**)** **i06781385**

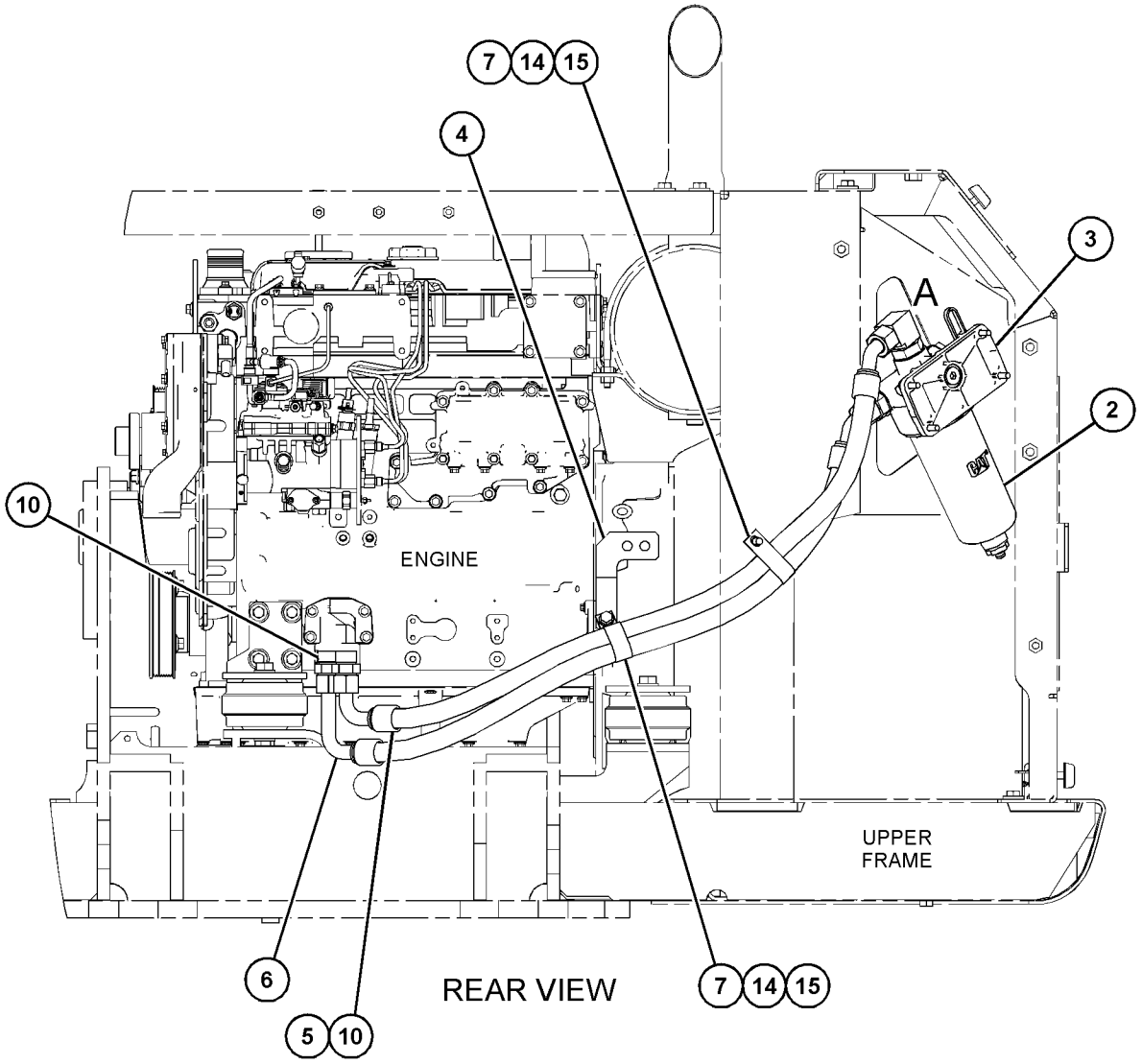

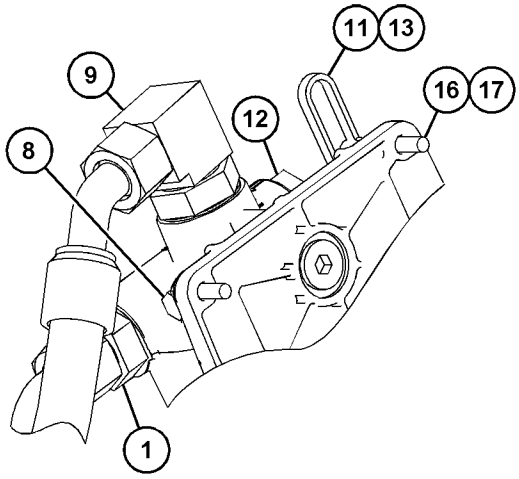

VIEW OF AREA A

GRAPHIC #1 <END> g03884927

158-8987 FILTER & VALVE GP-PILOT—HYDRAULIC OIL

S/N: RDE1-UP

PART OF 499-4831 TANK & FILTER GP-HYDRAULIC

SMCS-5072, 5092 **i05495730**

NOTE	REF NO	GRAPHIC REF	PART NUMBER	QTY	PART NAME 1 2 3 4 5 6 (PRODUCT LEVEL)	SEE PAGE
	1	1	**5I-8670**	1	FILTER-OIL (ADVANCED EFFICIENCY) (HYDRAULIC, PILOT)	
	2	1	**215-4909**	1	VALVE GP-PILOT RELIEF (HYDRAULIC FILTER)	
	2A	1	**095-1584**	1	SEAL-O-RING	
	2B	1	**095-1590**	1	SEAL-O-RING	
	2C	1	**095-1596**	1	SEAL-O-RING	

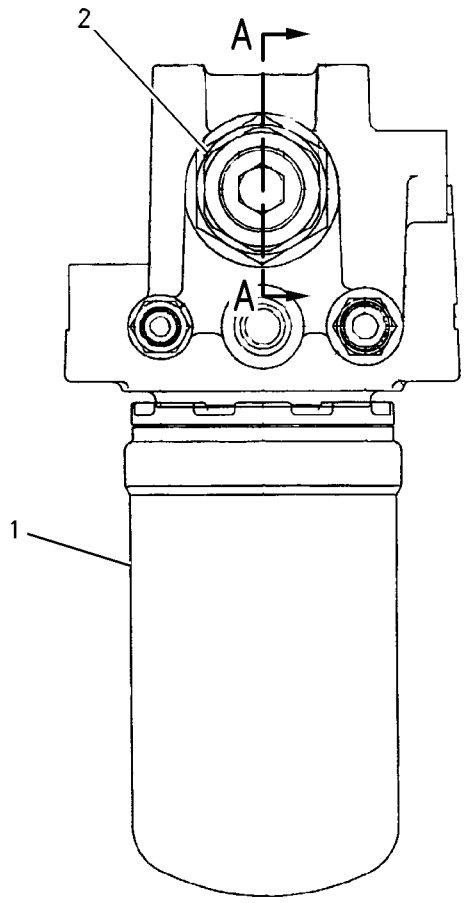

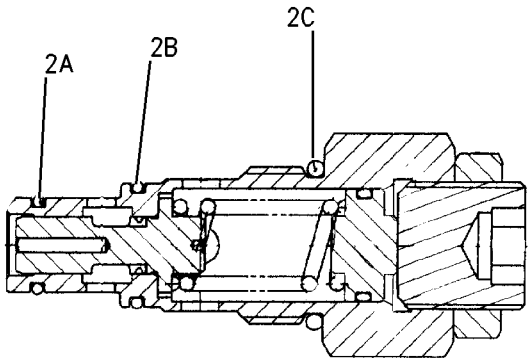

SECTION A–A

GRAPHIC #1 <END> g00842119

289-8194 FILTER GP-OIL—HYDRAULIC, CASE DRAIN

S/N: RDE1-UP

PART OF 499-4831 TANK & FILTER GP-HYDRAULIC

SMCS-3004, 4295, 431F, 5068, 5091, 5092

i03626800

NOTE	REF NO	GRAPHIC REF	PART NUMBER	QTY	PART NAME 1 2 3 4 5 6 (PRODUCT LEVEL)	SEE PAGE
	1	1	**093-7521**	1	FILTER-OIL (ADVANCED EFFICIENCY) (HYDRAULIC, CASE DRAIN)	
	2	1	**289-8195**	1	HEAD AS-FILTER	

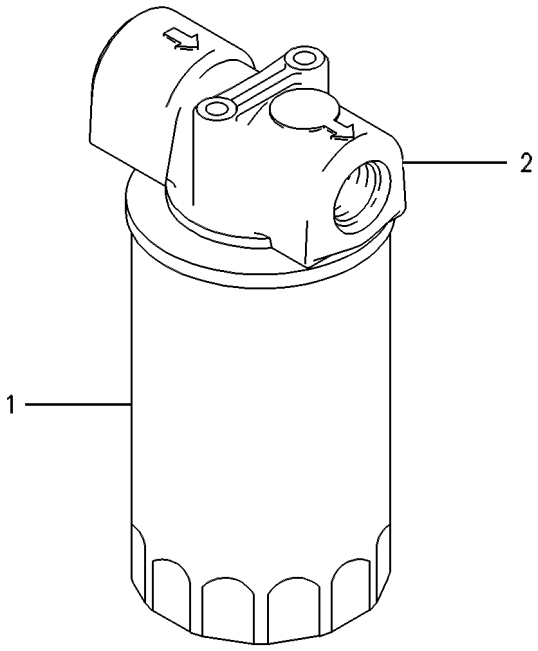

GRAPHIC #1 <END> g00258224

221-5069 FITTING GP-HYDRAULIC

S/N: RDE1-UP

PART OF 499-4830 LINES GP-HYDRAULIC

SMCS-5057, 7553

i05401781

NOTE	PART NUMBER	QTY	PART NAME 1 2 3 4 5 6 (PRODUCT LEVEL)	SEE PAGE
	221-5070	1	TEE AS (TEE,REDUCER & NUT)	
	6V-8556	1	NUT (1-3/16-12-THD)	
	6V-8398	1	SEAL-O-RING	
	6V-8942	1	REDUCER-O-RING	
	3D-2824	1	SEAL-O-RING	
	6V-8784	1	TEE-FACE SEAL	
	6V-9746	2	SEAL-O-RING	
			–OR–	
	221-5071	1	TEE AS (FABRICATED TEE)	
	3D-2824	1	SEAL-O-RING	
	6V-8398	1	SEAL-O-RING	
	6V-9746	1	SEAL-O-RING	
			<END>	

347-6081 GAUGE GP-SIGHT—HYDRAULIC OIL LEVEL

S/N: RDE1-UP

PART OF 499-4831 TANK & FILTER GP-HYDRAULIC

SMCS-7479 **i04281574**

NOTE	REF NO	GRAPHIC REF	PART NUMBER	QTY	PART NAME 1 2 3 4 5 6 (PRODUCT LEVEL)	SEE PAGE
	1	1	**236-3257**	1	PIPE	
M	2	1	**236-3259**	2	BOLT-SPECIAL	
	3	1	**347-6082**	2	BLOCK	
	4	1	**6F-6672**	4	SEAL-O-RING	
	5	1	**6F-4855**	4	SEAL-O-RING	

M - METRIC PART

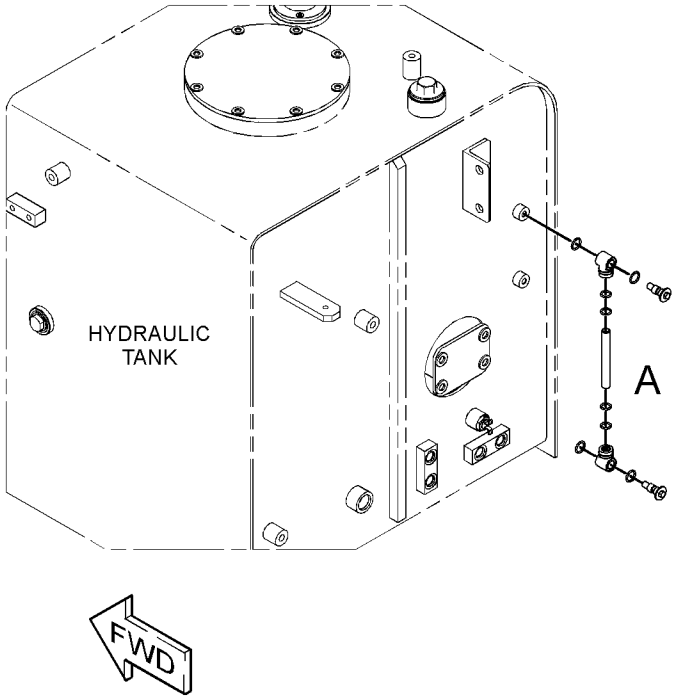

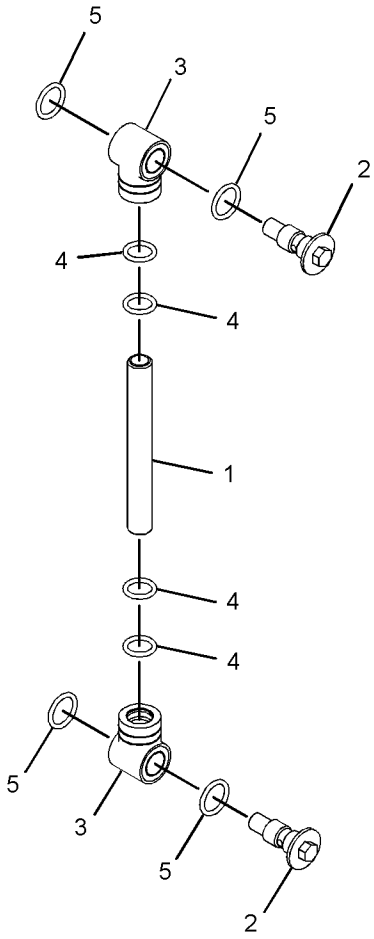

VIEW OF AREA A

GRAPHIC #1 <END> g02303838

391-9444 HEAD GP-PUMP

S/N: RDE1-UP

PART OF 391-9442 PUMP GP-MAIN HYDRAULIC

SMCS-3222, 5070, 5086 **i05402667**

NOTE	REF NO	GRAPHIC REF	PART NUMBER	QTY	PART NAME 1 2 3 4 5 6 (PRODUCT LEVEL)	SEE PAGE
B	1	2	**099-3669**	2	SHIM (1-MM THK)	
B			**099-6109**	2	SHIM (1.05-MM THK)	
B			**099-6110**	2	SHIM (1.1-MM THK)	
B			**099-6111**	2	SHIM (1.15-MM THK)	
B			**099-6112**	2	SHIM (1.2-MM THK)	
B			**099-6113**	2	SHIM (1.25-MM THK)	
B			**099-6115**	2	SHIM (1.3-MM THK)	
	8	2	**200-3245**	1	SPRING	
	9	2	**173-3389**	2	STOPPER	
	10	2	**174-7220**	2	COVER	
	11	2	**174-7221**	1	COVER	
	12	2	**174-7222**	1	COVER	
	13	2	**192-2376**	1	PIN AS	
		2	**192-0573**	1	PIN-DOWEL	
	14	2	**200-3244**	1	SPRING	
M	15	2	**225-0224**	1	SETSCREW (M16X2X55-MM)	
M	16	2	**225-0225**	1	SETSCREW (M16X2X45-MM)	
	17	2	**267-1626**	1	SPOOL AS	
	18	2	**268-4201**	1	LEVER AS	
		2	**094-1875**	1	DOWEL	
	19	2	**268-4203**	1	PIN	
	20	2	**273-8316**	1	SEAL-O-RING	
	21	2	**273-8317**	1	SEAL-O-RING	
	22	2	**273-8318**	1	SEAL-O-RING	
	23	2	**281-6847**	1	PISTON	
	25	2	**301-6874**	1	RETAINER	
	26	2	**301-8294**	1	ADJUSTER	
	27	2	**094-1881**	1	PLATE-SLIDE	
	28	2	**095-1788**	2	RING-BACKUP	
	29	2	**099-3671**	1	SPRING	
	30	2	**185-0169**	1	GUIDE	
	31	2	**189-9763**	3	SEAL-O-RING	
	32	2	**190-7674**	2	SEAL-O-RING	
M	33	2	**251-9567**	1	NUT (M20X1.5-THD)	
	34	2	**283-4715**	1	SPRING	
	35	2	**2H-9247**	1	SEAL-O-RING	
	36	2	**3D-2891**	1	BALL	
	37	2	**3J-1907**	1	SEAL-O-RING	
	38	1	**4J-7533**	9	SEAL-O-RING	
	39	2	**6V-5391**	1	SEAL-O-RING	
M	40	2	**8T-4132**	2	NUT (M16X2-THD)	
M	41	2	**8T-4133**	1	NUT (M10X1.5-THD)	
M	42	1	**8T-4183**	8	BOLT (M12X1.75X40-MM)	
M	43	1	**8T-4192**	2	BOLT (M12X1.75X25-MM)	
	44	1	**9S-8001**	9	PLUG	

B - USE AS REQUIRED
M - METRIC PART

391-9444 **HEAD GP-PUMP (**contd.**)** **i05402667**

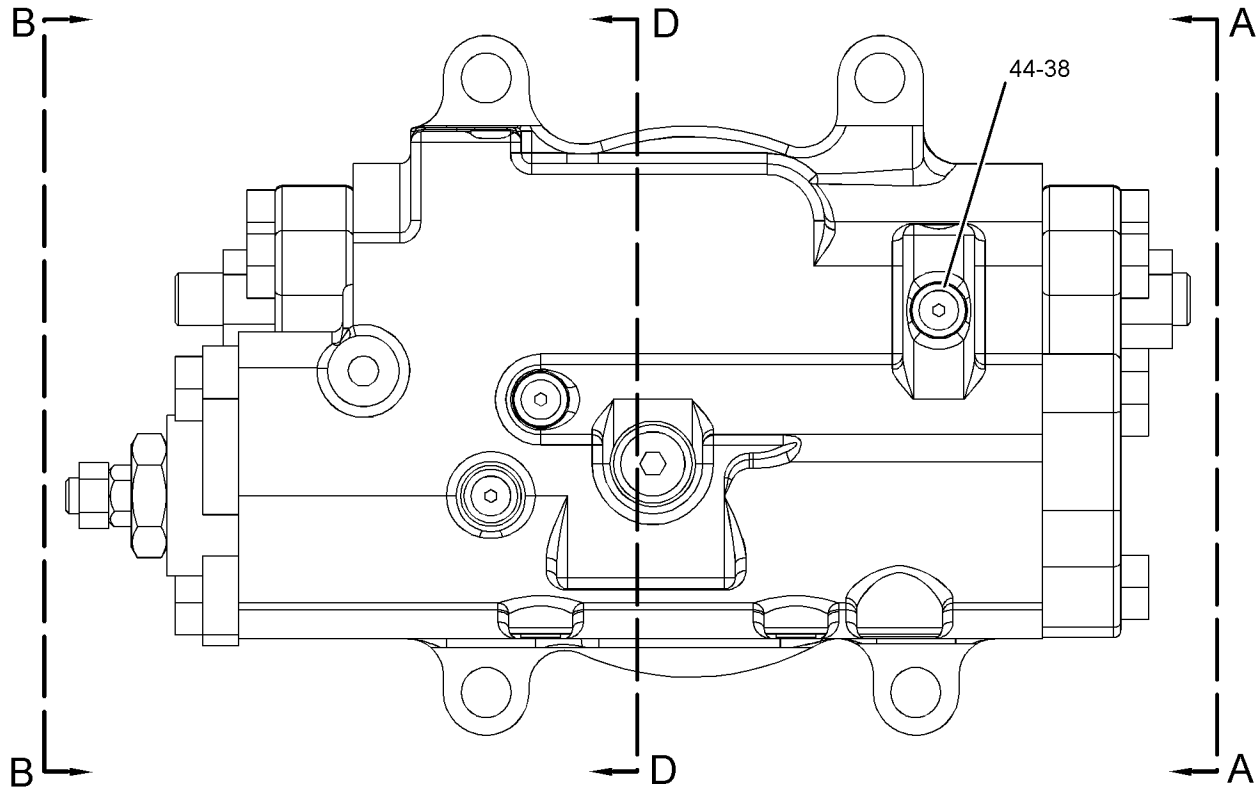

REFER TO ALL ILLUSTRATIONS OF
THIS GROUP FOR AUXILIARY VIEWS

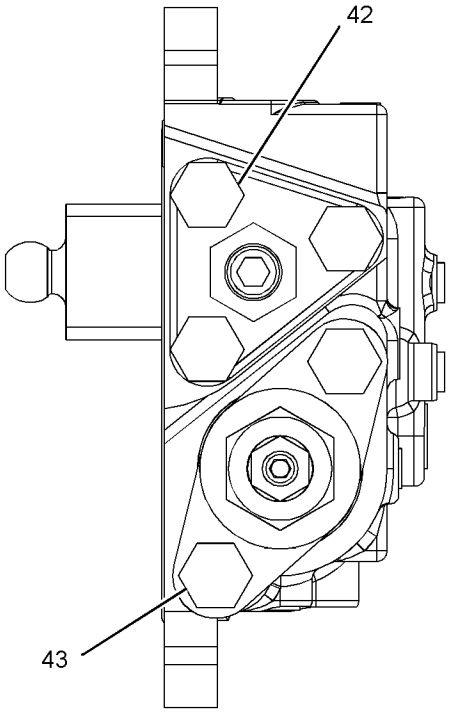

VIEW B-B

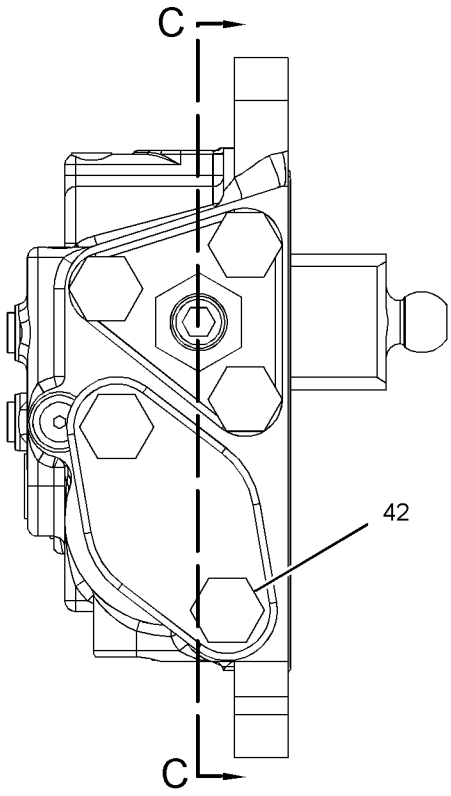

VIEW A-A

GRAPHIC #1

g01410322

391-9444 **HEAD GP-PUMP (**contd.**)** **i05402667**

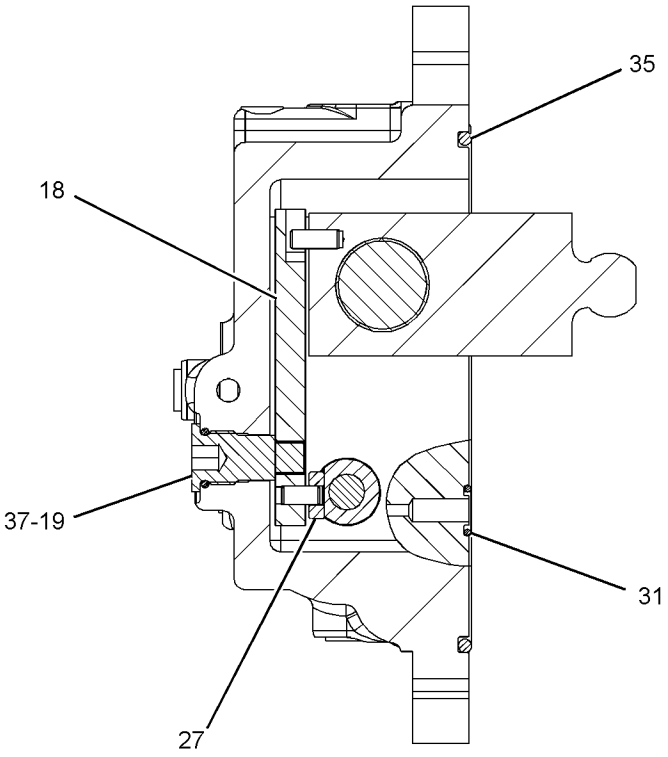

SECTION D-D

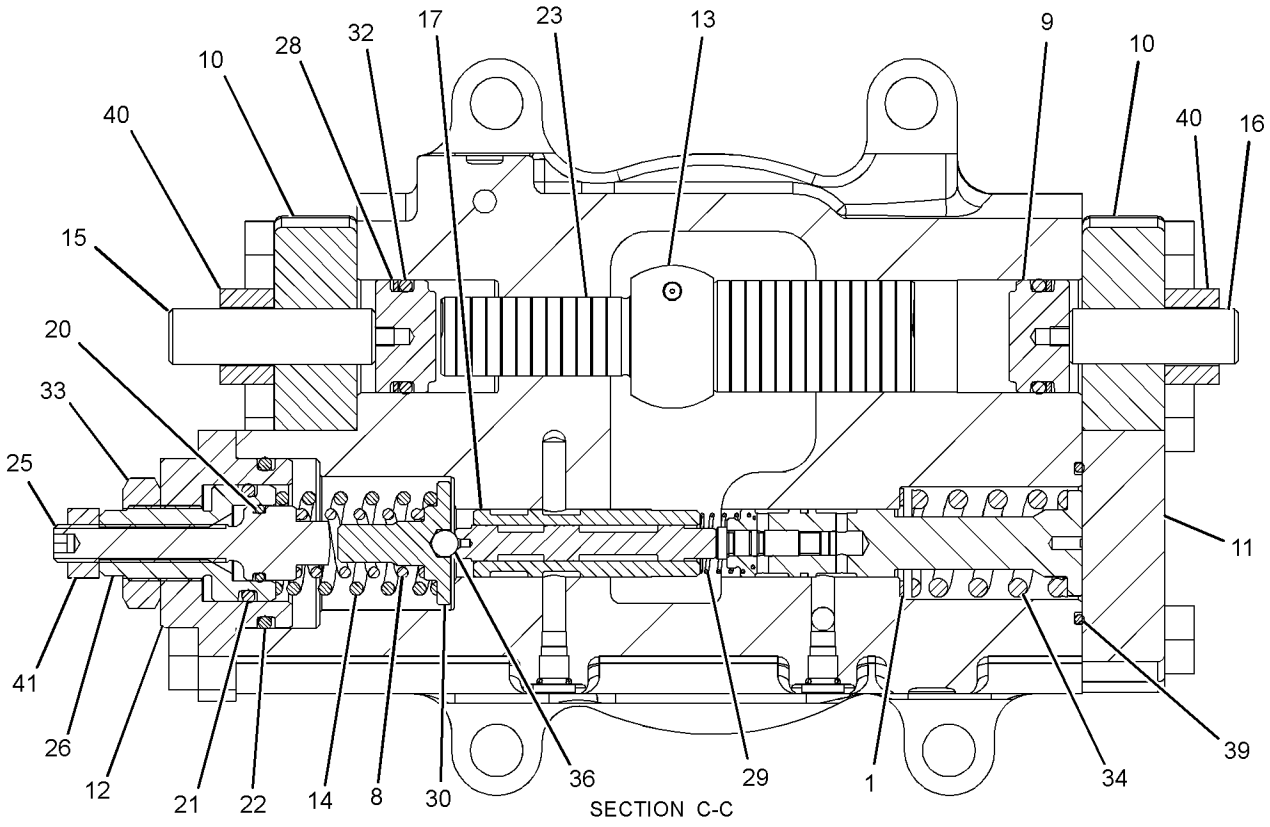

SECTION C-C

GRAPHIC #2 <END> g01410323

503-4904 HYDRAULIC AR

S/N: RDE1-UP

PART OF 500-9103 GENERAL AR

SMCS-5050 **i06810002**

NOTE	PART NUMBER	QTY	PART NAME 1 2 3 4 5 6 (PRODUCT LEVEL)	SEE PAGE
Y	*437-0474*	1	LINES GP-BOOM CYLINDER	245
Y	*437-0464*	1	LINES GP-FRONT	258
Y	*391-7819*	1	LINES GP-HYDRAULIC OIL COOLER	269
Y	*502-5312*	1	LINES GP-HYDRAULIC OIL COOLER (REAR)	270
Y	*278-6672*	1	LINES GP-PILOT (JOYSTICK, PEDALS)	272
Y	*278-6673*	1	LINES GP-PILOT (JOYSTICK, MAIN CONTROL VALVE)	276
Y	*502-5313*	1	LINES GP-PILOT (PUMP)	283
Y	*502-5314*	1	LINES GP-PILOT (CONTROL VALVE)	286
Y	*502-5316*	1	LINES GP-PUMP (HYDRAULIC)	297
Y	*278-6512*	1	LINES GP-TRAVEL MOTOR (LONG UNDERCARRIAGE)	302
Y	*278-6664*	1	MOUNTING GP-MAIN CONTROL VALVE	307
Y	*387-2606*	1	PUMP & MTG GP-MAIN HYDRAULIC	308
Y	*499-4829*	1	TANK & MTG GP-HYDRAULIC	331
Y	**420-2241**	1	VALVE GP-MAIN CONTROL	334

Y - SEPARATE ILLUSTRATION

<END>

234-6613 LEVER GP-CONTROL—HYDRAULIC LOCKOUT

S/N: RDE1-UP

PART OF 421-1434 CONSOLE GP-OPERATOR

SMCS-4805, 5063 **i03903701**

NOTE	REF NO	GRAPHIC REF	PART NUMBER	QTY	PART NAME 1 2 3 4 5 6 (PRODUCT LEVEL)	SEE PAGE
	1	1	**3S-2093**	1	STRAP-CABLE	
	2	1	**4I-3038**	2	WASHER (3.3X8X0.5-MM THK)	
	3	1	**111-4799**	1	SWITCH AS-LIMIT (HYDRAULIC LOCKOUT)	
		1	**102-8803**	1	KIT-RECEPTACLE (3-PIN)	
					(INCLUDES RECEPTACLE AS & WEDGE)	
		1	**8T-8729**	3	PIN-CONNECTOR (16-GA TO 18-GA)	
D		1	**5P-5998**		TUBE (0.3-M)	
M	4	1	**185-8286**	2	SCREW-MACHINE (M4X0.7X8-MM)	
	5	1	**234-6615**	1	KNOB	
	6	1	**087-4683**	2	LOCKWASHER	
M	7	1	**120-9027**	2	SCREW-PAN HEAD (M3X0.5X16-MM)	

D - ORDER BY THE METER
M - METRIC PART

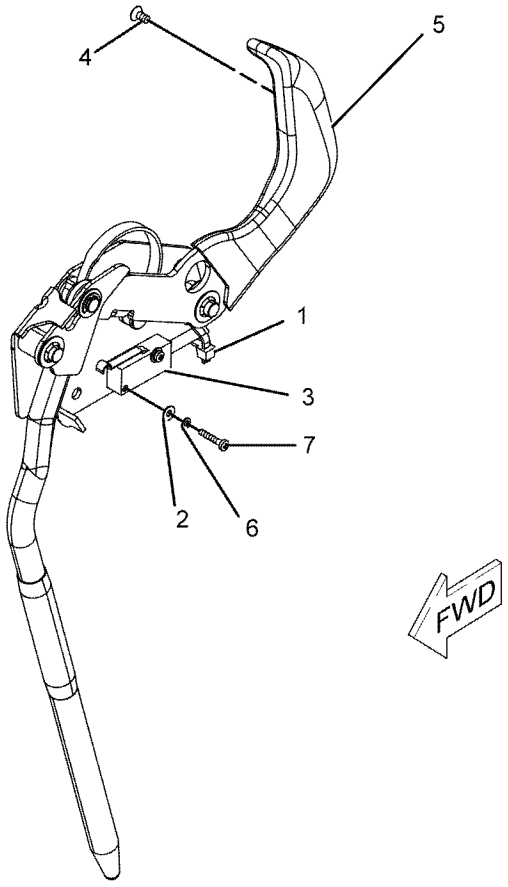

GRAPHIC #1 <END> g01096293

398-8996 LINES AR-QUICK COUPLER–REACH BOOM

S/N: RDE1-UP

SMCS-6129 **i06826762**

NOTE	PART NUMBER	QTY	PART NAME 1 2 3 4 5 6 (PRODUCT LEVEL)	SEE PAGE
Y	*390-4280*	1	LINES GP-COUPLER (REACH BOOM)	252
Y	*390-4281*	1	SUPPORT GP-LINES	326

Y - SEPARATE ILLUSTRATION

<END>

288-7392 LINES GP-AUXILIARY HYDRAULIC

S/N: RDE1-UP

SMCS-5057 **i06828162**

NOTE	REF NO	GRAPHIC REF	PART NUMBER	QTY	PART NAME 1 2 3 4 5 6 (PRODUCT LEVEL)	SEE PAGE
M	1	1	**101-7403**	4	BOLT-SOCKET HEAD (M10X1.5X80-MM)	
I	2	1	**277-0917**	1	HOSE AS	
I	3	1	**282-5772**	1	HOSE AS	
Y	4	1	**282-5894**	2	VALVE GP-MANUAL (AUXILIARY, SHUTOFF)	340
	5	1	**288-7688**	1	TUBE AS	
	6	1	**288-7689**	1	TUBE AS	
	7	1	**288-7690**	2	CLIP AS	
	8	1	**288-7691**	2	CLIP AS	
	9	1	**1P-3703**	4	SEAL-RECTANGULAR	
	10	1	**6V-0400**	4	FLANGE-HALF	
	11	1	**6V-9746**	1	SEAL-O-RING	
	12	1	**7Y-3732**	2	CLIP	
	13	1	**7Y-4868**	2	CLIP	
M	14	1	**8T-4139**	4	BOLT (M12X1.75X30-MM)	
M	15	1	**8T-4184**	8	BOLT (M12X1.75X45-MM)	
M	16	1	**8T-4195**	4	BOLT (M10X1.5X30-MM)	
	17	1	**8T-4223**	16	WASHER-HARD (13.5X25.5X3-MM THK)	
	18	1	**8T-4896**	4	WASHER-HARD (10.2X18.5X2.5-MM THK)	
M	19	1	**8T-4910**	8	BOLT (M12X1.75X60-MM)	

I - REFER TO HYDRAULIC INFORMATION SYSTEM
M - METRIC PART
Y - SEPARATE ILLUSTRATION

288-7392 **LINES GP-AUXILIARY HYDRAULIC (**contd.**)** **i06828162**

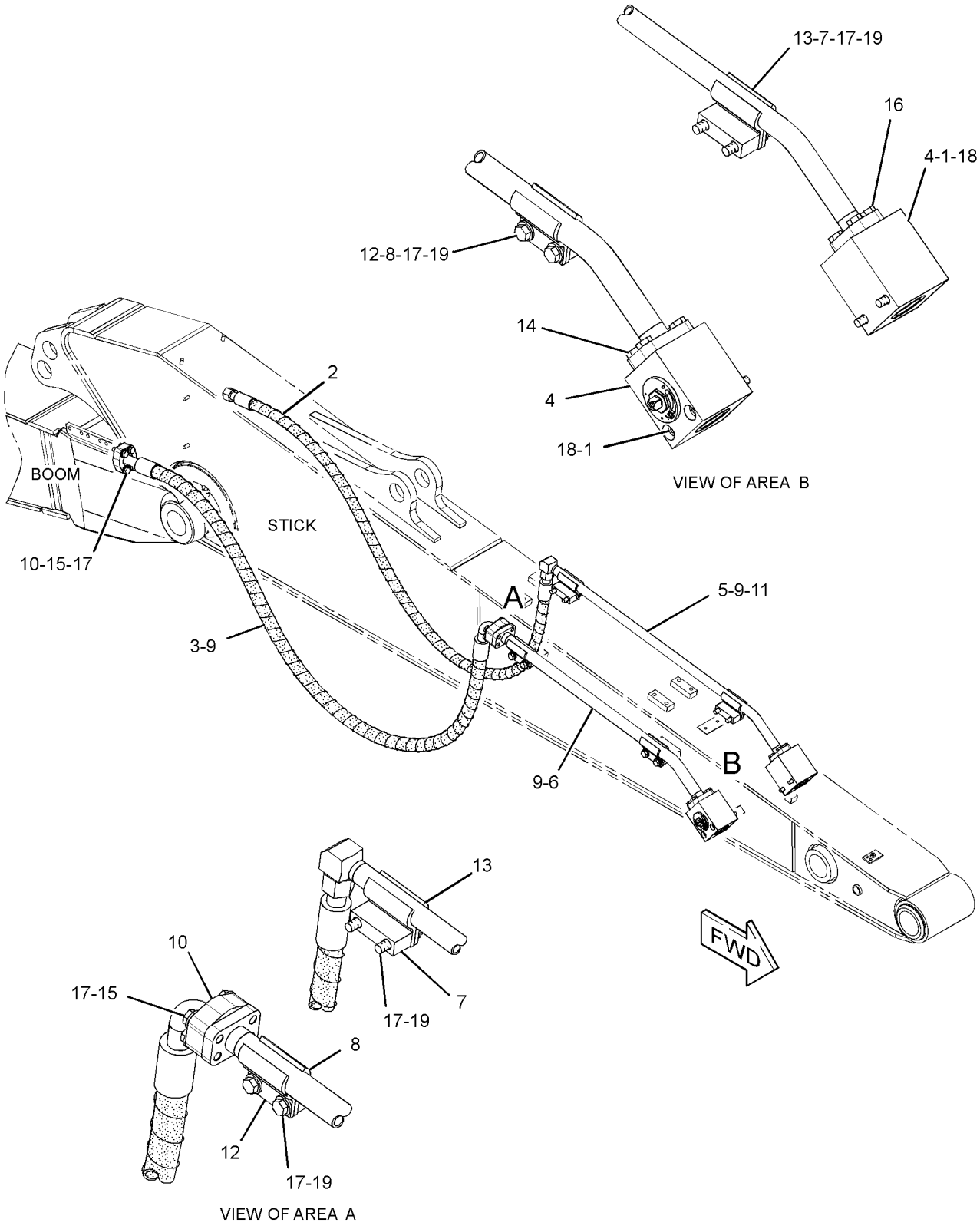

GRAPHIC #1 <END> g01438911

288-7398 LINES GP-AUXILIARY HYDRAULIC

S/N: RDE1-UP

SMCS-5057 **i06828398**

NOTE	REF NO	GRAPHIC REF	PART NUMBER	QTY	PART NAME 1 2 3 4 5 6 (PRODUCT LEVEL)	SEE PAGE
M	1	1	**101-7403**	4	BOLT-SOCKET HEAD (M10X1.5X80-MM)	
I	2	1	**187-6692**	1	HOSE AS	
I	3	1	**253-6694**	1	HOSE AS	
Y	4	1	**282-5894**	2	VALVE GP-MANUAL (AUXILIARY, SHUTOFF)	340
	5	1	**288-7690**	2	CLIP AS	
	6	1	**288-7691**	2	CLIP AS	
	7	1	**288-7721**	1	TUBE AS	
	8	1	**294-6519**	1	TUBE AS	
	9	1	**1P-3703**	4	SEAL-RECTANGULAR	
	10	1	**6V-0400**	4	FLANGE-HALF	
	11	1	**6V-9746**	1	SEAL-O-RING	
	12	1	**7Y-3732**	2	CLIP	
	13	1	**7Y-4868**	2	CLIP	
M	14	1	**8T-4139**	4	BOLT (M12X1.75X30-MM)	
M	15	1	**8T-4184**	8	BOLT (M12X1.75X45-MM)	
M	16	1	**8T-4195**	4	BOLT (M10X1.5X30-MM)	
	17	1	**8T-4223**	16	WASHER-HARD (13.5X25.5X3-MM THK)	
	18	1	**8T-4896**	4	WASHER-HARD (10.2X18.5X2.5-MM THK)	
M	19	1	**8T-4910**	8	BOLT (M12X1.75X60-MM)	

I - REFER TO HYDRAULIC INFORMATION SYSTEM
M - METRIC PART
Y - SEPARATE ILLUSTRATION

288-7398 **LINES GP-AUXILIARY HYDRAULIC (**contd.**)** **i06828398**

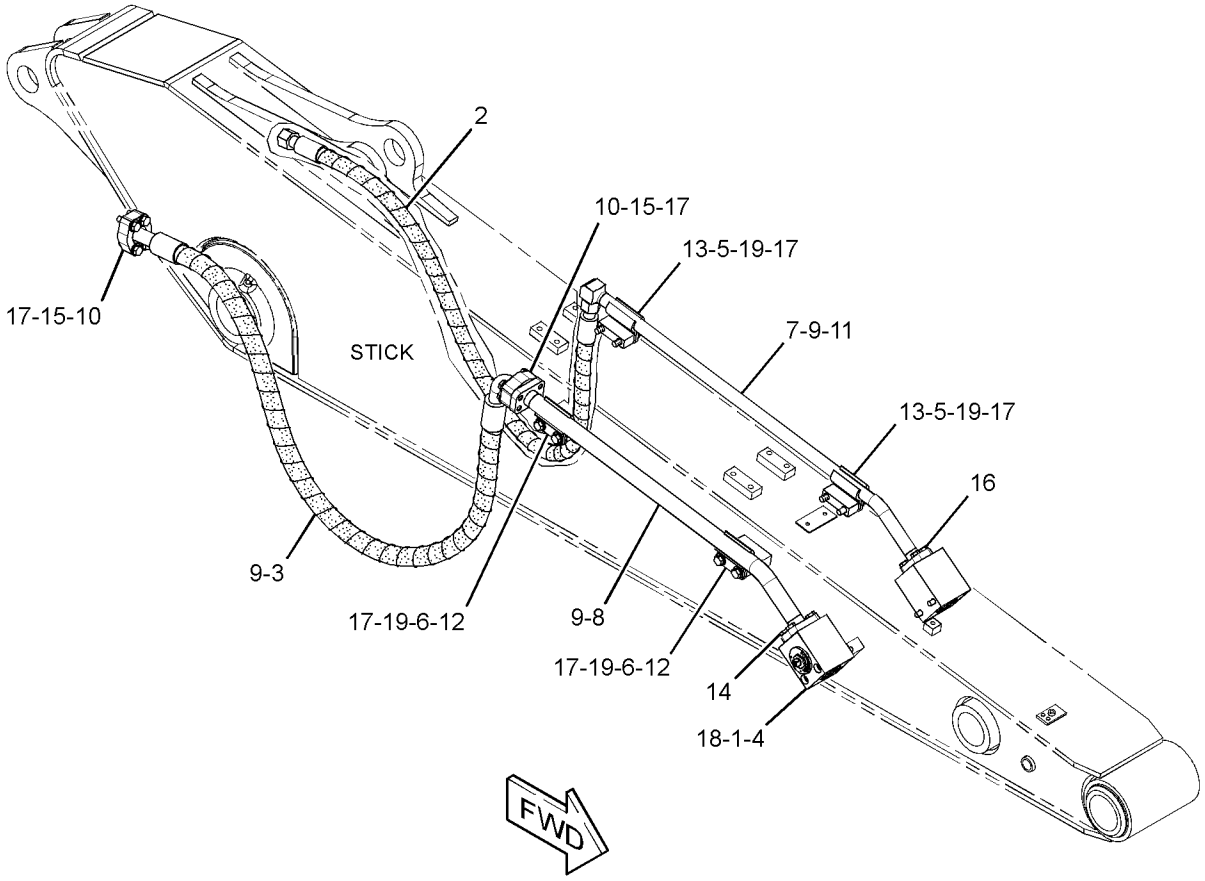

GRAPHIC #1 <END> g01411722

390-4277 LINES GP-BOOM

S/N: RDE1-UP

PART OF 283-9013 BOOM AR-1 PIECE LONG

SMCS-5057 **i06238606**

NOTE	REF NO	GRAPHIC REF	PART NUMBER	QTY	PART NAME 1 2 3 4 5 6 (PRODUCT LEVEL)	SEE PAGE
I	1	1	**4I-1095**	2	HOSE AS	
	2	1	**4I-1674**	4	CLIP	
	3	1	**7Y-4868**	4	CLIP	
	4	1	**093-1295**	1	CLAMP	
	5	1	**099-5408**	1	CLAMP	
	6	1	**149-1738**	4	CLIP	
	7	1	**173-7895**	4	CLIP	
	8	1	**282-7074**	1	TUBE AS	
	9	1	**282-7075**	1	TUBE AS	
	10	1	**390-4298**	1	TUBE AS	
	11	1	**390-4299**	1	TUBE AS	
	12	1	**6V-9746**	8	SEAL-O-RING	
	13	1	**7J-9108**	2	SEAL-O-RING	
M	14	1	**8T-4139**	16	BOLT (M12X1.75X30-MM)	
	15	1	**8T-4223**	18	WASHER-HARD (13.5X25.5X3-MM THK)	
M	16	1	**8T-4910**	2	BOLT (M12X1.75X60-MM)	

I - REFER TO HYDRAULIC INFORMATION SYSTEM
M - METRIC PART

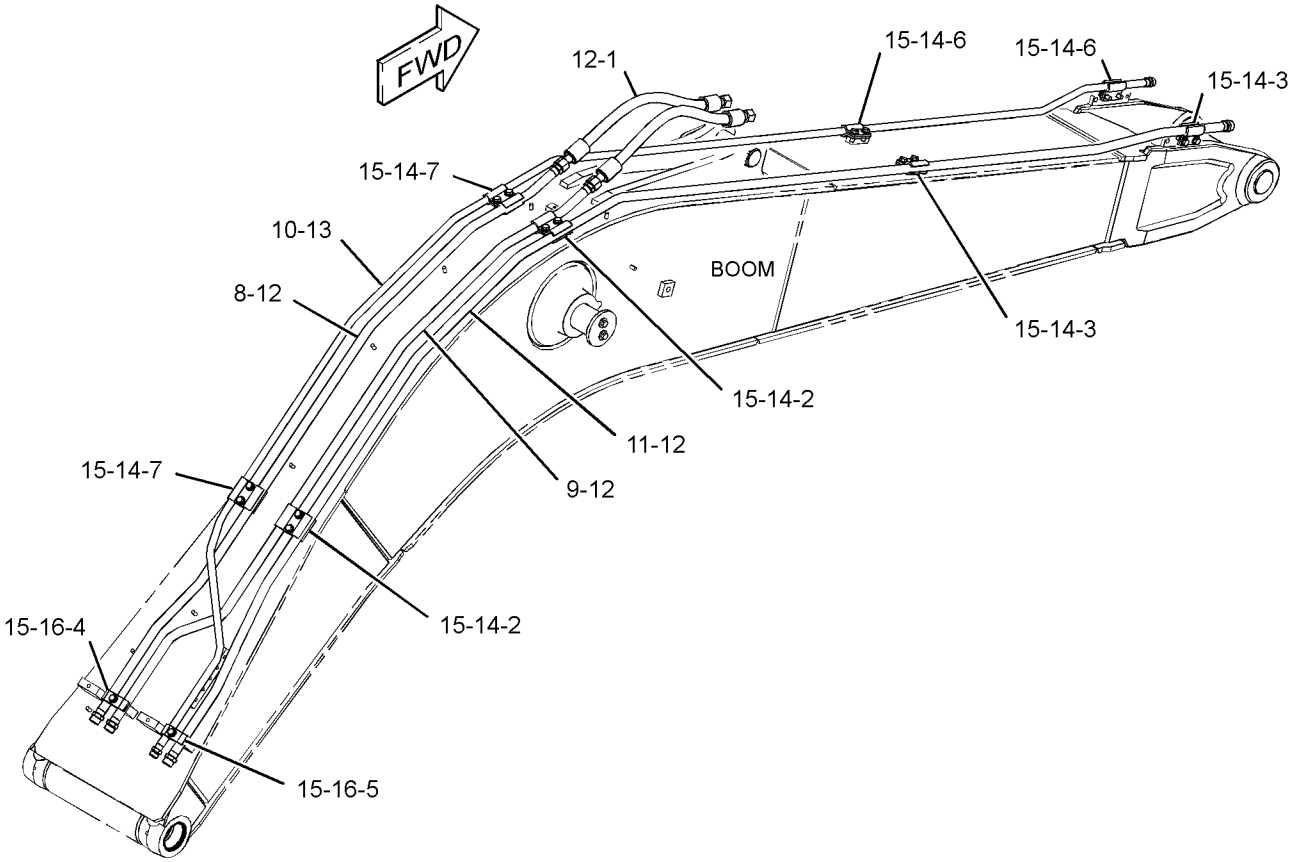

GRAPHIC #1 <END> g03886378

385-2827 LINES GP-BOOM CYLINDER–LH

S/N: RDE1-UP

PART OF 385-2825 CYLINDER & LINES GP-BOOM

SMCS-5057, 5456

i05411225

NOTE	REF NO	GRAPHIC REF	PART NUMBER	QTY	PART NAME 1 2 3 4 5 6 (PRODUCT LEVEL)	SEE PAGE
	1	1	**390-4232**	1	TUBE AS	
	2	1	**390-4233**	1	TUBE AS	
	3	1	**6V-0357**	2	SEAL-O-RING	
M	4	1	**8T-0271**	8	BOLT-SOCKET HEAD (M10X1.5X35-MM)	
	5	1	**422-9130**	1	SUPPORT AS	
	6	1	**7J-9108**	2	SEAL-O-RING	
M	7	1	**6V-5842**	2	BOLT (M10X1.5X40-MM)	
	8	1	**7X-0796**	2	LOCKWASHER	
M	9	1	**269-5224**	1	BOLT (M14X2X80-MM)	
	10	1	**3B-4509**	1	LOCKWASHER	
	11	1	**390-4242**	2	CLAMP	
	12	1	**6V-9831**	2	CAP AS	

M - METRIC PART

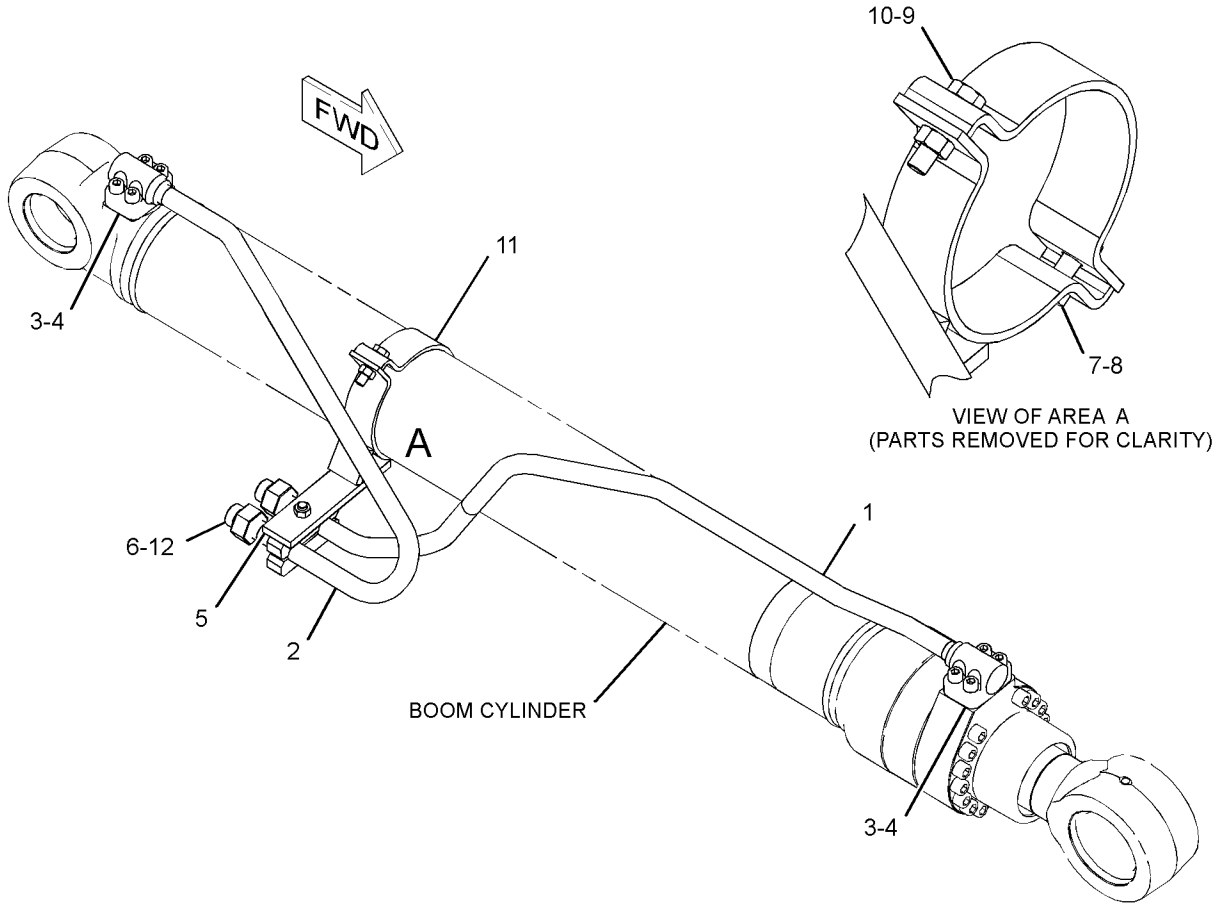

GRAPHIC #1 <END> g03343622

385-2835 LINES GP-BOOM CYLINDER–RH

S/N: RDE1-UP

PART OF 385-2826 CYLINDER & LINES GP-BOOM

SMCS-5057, 5456 **i06263431**

NOTE	REF NO	GRAPHIC REF	PART NUMBER	QTY	PART NAME 1 2 3 4 5 6 (PRODUCT LEVEL)	SEE PAGE
	1	1	**6V-0357**	2	SEAL-O-RING	
M	2	1	**8T-0271**	8	BOLT-SOCKET HEAD (M10X1.5X35-MM)	
	3	1	**390-4248**	1	TUBE AS	
	4	1	**390-4249**	1	TUBE AS	
	5	1	**390-4242**	2	CLAMP	
M	6	1	**269-5224**	1	BOLT (M14X2X80-MM)	
	7	1	**3B-4509**	1	LOCKWASHER	
M	8	1	**6V-5842**	2	BOLT (M10X1.5X40-MM)	
	9	1	**7X-0796**	2	LOCKWASHER	
	10	1	**7J-9108**	2	SEAL-O-RING	
	11	1	**422-9130**	1	SUPPORT AS	
	12	1	**6V-9831**	2	CAP AS	

M - METRIC PART

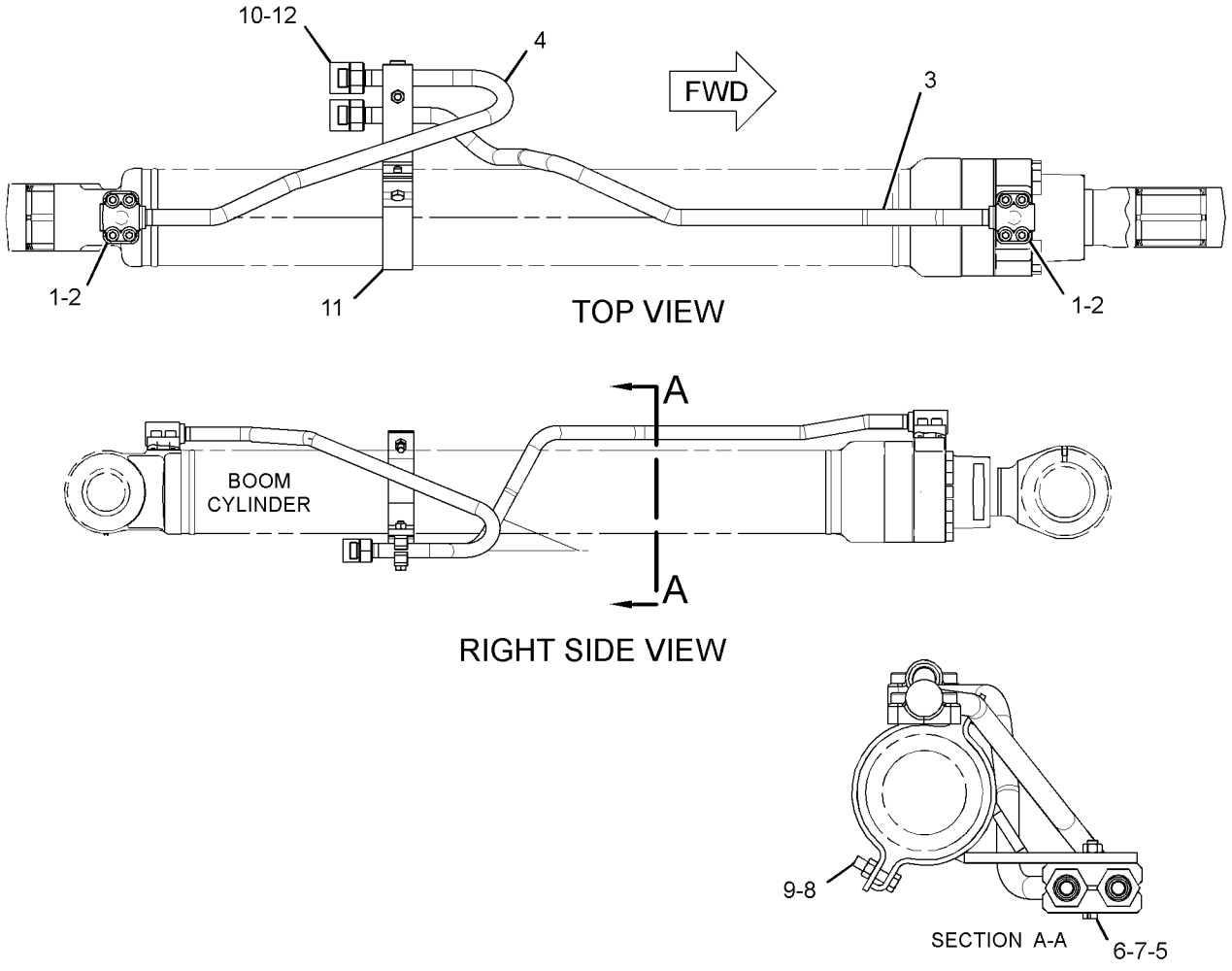

GRAPHIC #1 <END> g03343380

437-0474 LINES GP-BOOM CYLINDER

S/N: RDE1-UP

PART OF 503-4904 HYDRAULIC AR

SMCS-5057, 5456 **i06022034**

NOTE	REF NO	GRAPHIC REF	PART NUMBER	QTY	PART NAME 1 2 3 4 5 6 (PRODUCT LEVEL)	SEE PAGE
	1	1	**6H-3615**	1	PLUG-PROTECTION	
	2	1	**9F-2167**	1	SCREW-PURGE (3/8-24X1.164-IN)	
	3	1	**093-1296**	1	CLAMP	
	4	1	**099-5408**	1	CLAMP	
I	5	1	**123-2636**	2	HOSE AS	
	6	1	**168-9755**	1	TUBE AS	
I	7	1	**187-7173**	2	HOSE AS	
	8	1	**266-7940**	1	ROD AS	
		1	**225-4539**	1	WASHER-SPECIAL (17X30X6-MM THK)	
	9	1	*268-5145*	1	ELBOW AS	
		1	**3D-2824**	1	SEAL-O-RING	
		1	**6V-9746**	1	SEAL-O-RING	
		1	**194-9041**	1	ELBOW	
I	10	1	**278-6495**	1	HOSE AS	
	11	1	**278-6799**	1	SUPPORT AS	
	12	1	**337-1181**	1	TUBE AS	
	13	1	*106-8715*	2	ELBOW AS	
					(EACH INCLUDES)	
		1	**3D-2824**	1	SEAL-O-RING	
		1	**6V-9746**	1	SEAL-O-RING	
		1	**8C-8400**	1	ELBOW	
	14	1	*148-8336*	1	CONNECTOR AS (45-DEG ELBOW)	
		1	**3J-1907**	1	SEAL-O-RING	
		1	**6V-8397**	1	SEAL-O-RING	
		1	**6V-8636**	1	CONNECTOR	
	15	1	*148-8341*	2	CONNECTOR AS	
					(EACH INCLUDES)	
		1	**3D-2824**	1	SEAL-O-RING	
		1	**6V-8713**	1	CONNECTOR	
		1	**7J-9108**	1	SEAL-O-RING	
	16	1	*148-8347*	2	ELBOW AS	
					(EACH INCLUDES)	
		1	**3D-2824**	1	SEAL-O-RING	
		1	**6V-9007**	1	ELBOW	
		1	**6V-9746**	1	SEAL-O-RING	
	17	1	*148-8353*	1	ELBOW AS	
		1	**3J-1907**	1	SEAL-O-RING	
		1	**6V-8397**	1	SEAL-O-RING	
		1	**6V-9001**	1	ELBOW	
	18	1	*148-8365*	1	ELBOW AS	
		1	**3J-1907**	1	SEAL-O-RING	
		1	**6V-8398**	1	SEAL-O-RING	
		1	**8T-6876**	1	ELBOW	
	19	1	*148-8428*	1	TEE AS	
		1	**3K-0360**	1	SEAL-O-RING	
		1	**6V-8398**	2	SEAL-O-RING	
		1	**6V-8782**	1	TEE	
	20	1	**7J-9108**	4	SEAL-O-RING	

437-0474 **LINES GP-BOOM CYLINDER (**contd.**)** **i06022034**

NOTE	REF NO	GRAPHIC REF	PART NUMBER	QTY	PART NAME 1 2 3 4 5 6 (PRODUCT LEVEL)	SEE PAGE
	21	1	**7K-1181**	1	STRAP-CABLE	
M	22	1	**8T-4192**	2	BOLT (M12X1.75X25-MM)	
	23	1	**8T-4223**	4	WASHER-HARD (13.5X25.5X3-MM THK)	
M	24	1	**8T-4648**	1	BOLT (M12X1.75X70-MM)	
M	25	1	**8T-4910**	1	BOLT (M12X1.75X60-MM)	

I - REFER TO HYDRAULIC INFORMATION SYSTEM
M - METRIC PART

437-0474 **LINES GP-BOOM CYLINDER (**contd.**)** **i06022034**

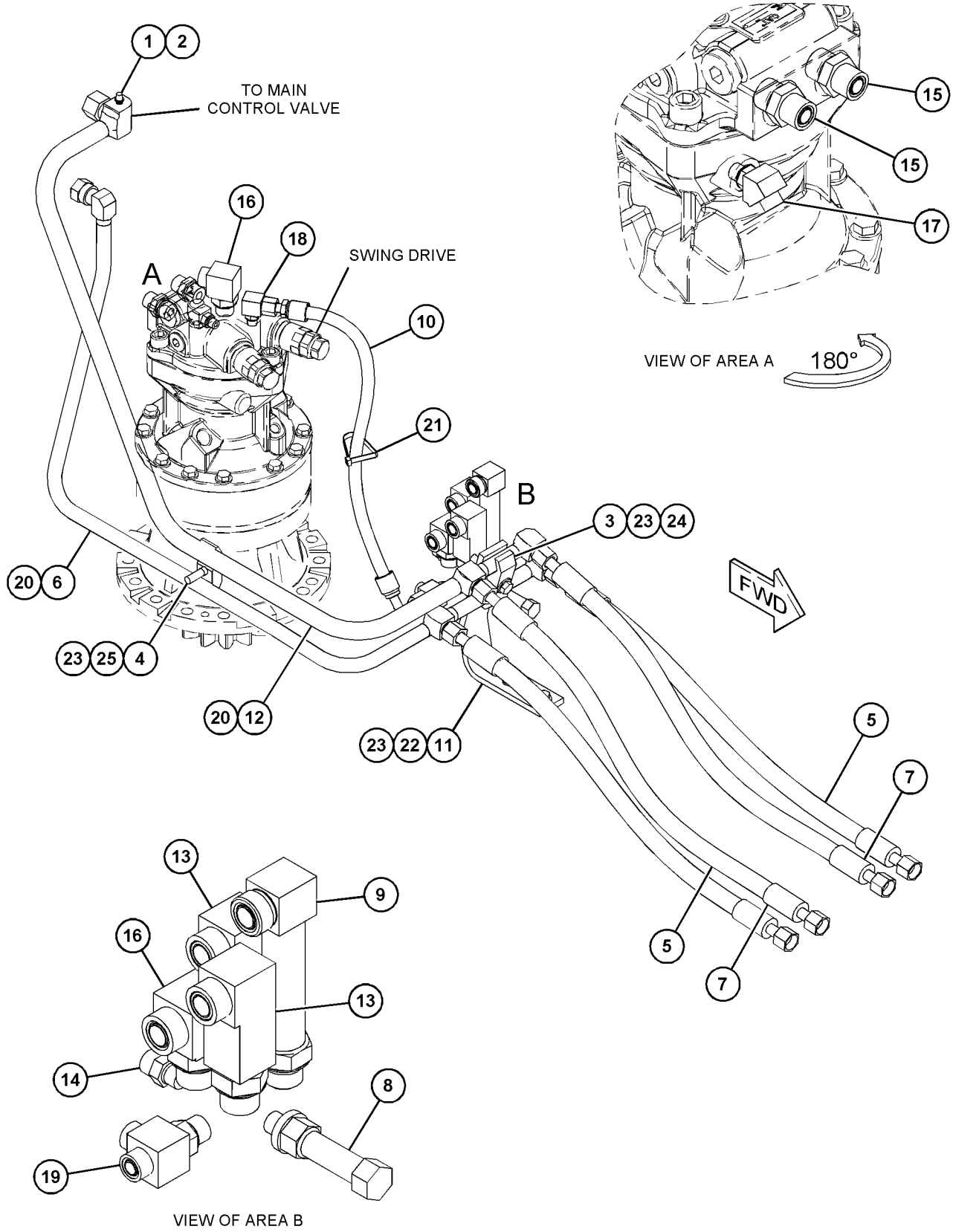

GRAPHIC #1 <END> g03705013

385-2833 LINES GP-BUCKET CYLINDER

S/N: RDE1-UP

PART OF 385-2832 CYLINDER & LINES GP-BUCKET

SMCS-5457 **i06262806**

NOTE	REF NO	GRAPHIC REF	PART NUMBER	QTY	PART NAME 1 2 3 4 5 6 (PRODUCT LEVEL)	SEE PAGE
	1	1	**7X-0796**	3	LOCKWASHER	
M	2	1	**6V-5843**	1	BOLT (M10X1.5X45-MM)	
	3	1	**6V-9831**	1	CAP AS	
M	4	1	**8T-0271**	4	BOLT-SOCKET HEAD (M10X1.5X35-MM)	
M	5	1	**6V-5842**	2	BOLT (M10X1.5X40-MM)	
	6	1	**393-7868**	1	TUBE AS	
	7	1	**422-9131**	1	SUPPORT AS	
	8	1	**393-7870**	1	CLAMP	
	9	1	**6V-0357**	1	SEAL-O-RING	
	10	1	**7J-9108**	1	SEAL-O-RING	

M - METRIC PART

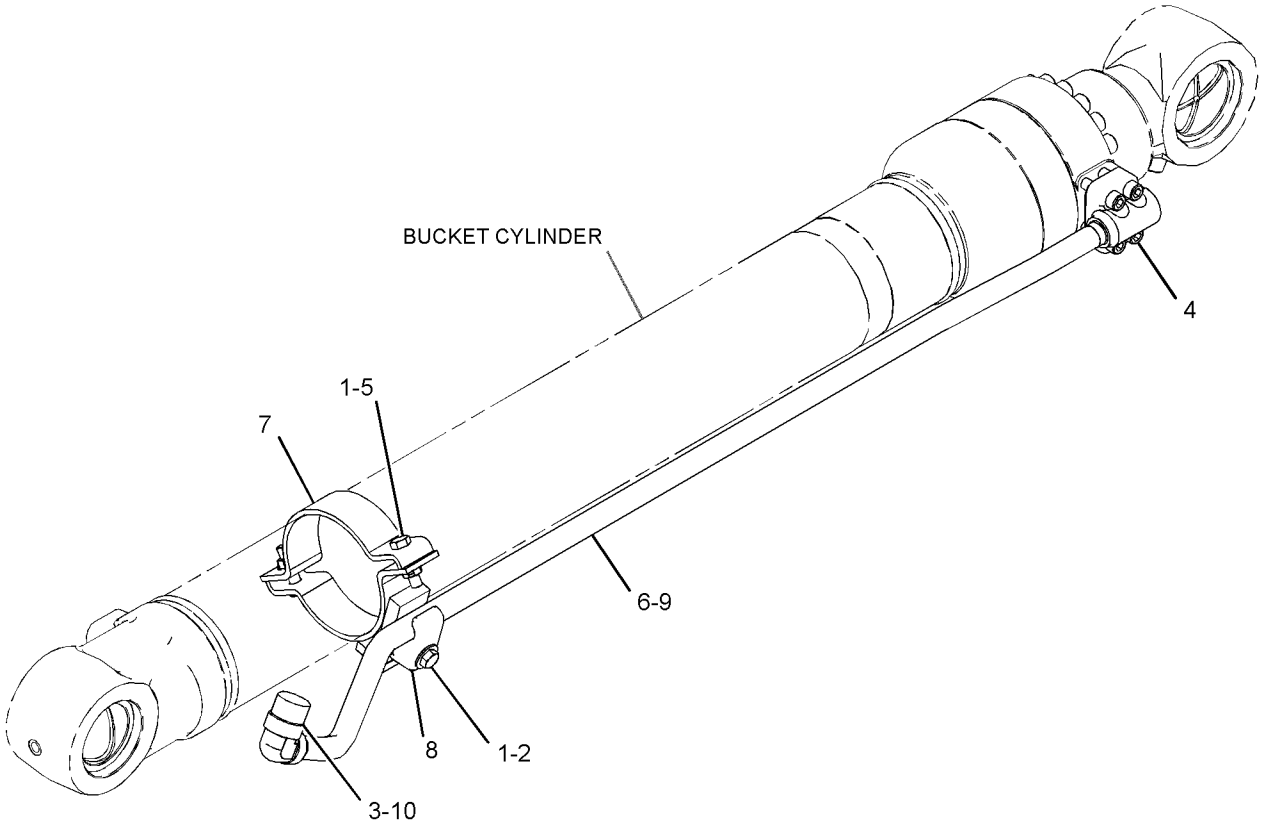

GRAPHIC #1 <END> g03343306

288-7395 LINES GP-COUPLER

S/N: RDE1-UP

SMCS-5057, 5133 **i06828230**

NOTE	REF NO	GRAPHIC REF	PART NUMBER	QTY	PART NAME 1 2 3 4 5 6 (PRODUCT LEVEL)	SEE PAGE
I	1	1	**363-2569**	2	HOSE AS	
	2	1	**198-0370**	2	CLIP	
	3	1	**288-7698**	1	TUBE AS	
	4	1	**288-7699**	1	TUBE AS	
	5	1	*148-8415*	1	REDUCER AS	
		1	**6V-8397**	1	SEAL-O-RING	
		1	**6V-8936**	1	REDUCER	
	6	1	*148-8419*	1	REDUCER AS	
		1	**4J-5477**	1	SEAL-O-RING	
		1	**6V-8935**	1	REDUCER	
	7	1	**5Q-4212**	8	CLIP	
	8	1	**6V-8398**	4	SEAL-O-RING	
	9	1	**8T-4121**	1	WASHER-HARD (11X21X2.5-MM THK)	
M	10	1	**8T-4139**	8	BOLT (M12X1.75X30-MM)	
M	11	1	**8T-4195**	1	BOLT (M10X1.5X30-MM)	
	12	1	**8T-4223**	8	WASHER-HARD (13.5X25.5X3-MM THK)	
	13	1	**9X-6582**	1	NUT (13/16-16-THD)	

I - REFER TO HYDRAULIC INFORMATION SYSTEM
M - METRIC PART

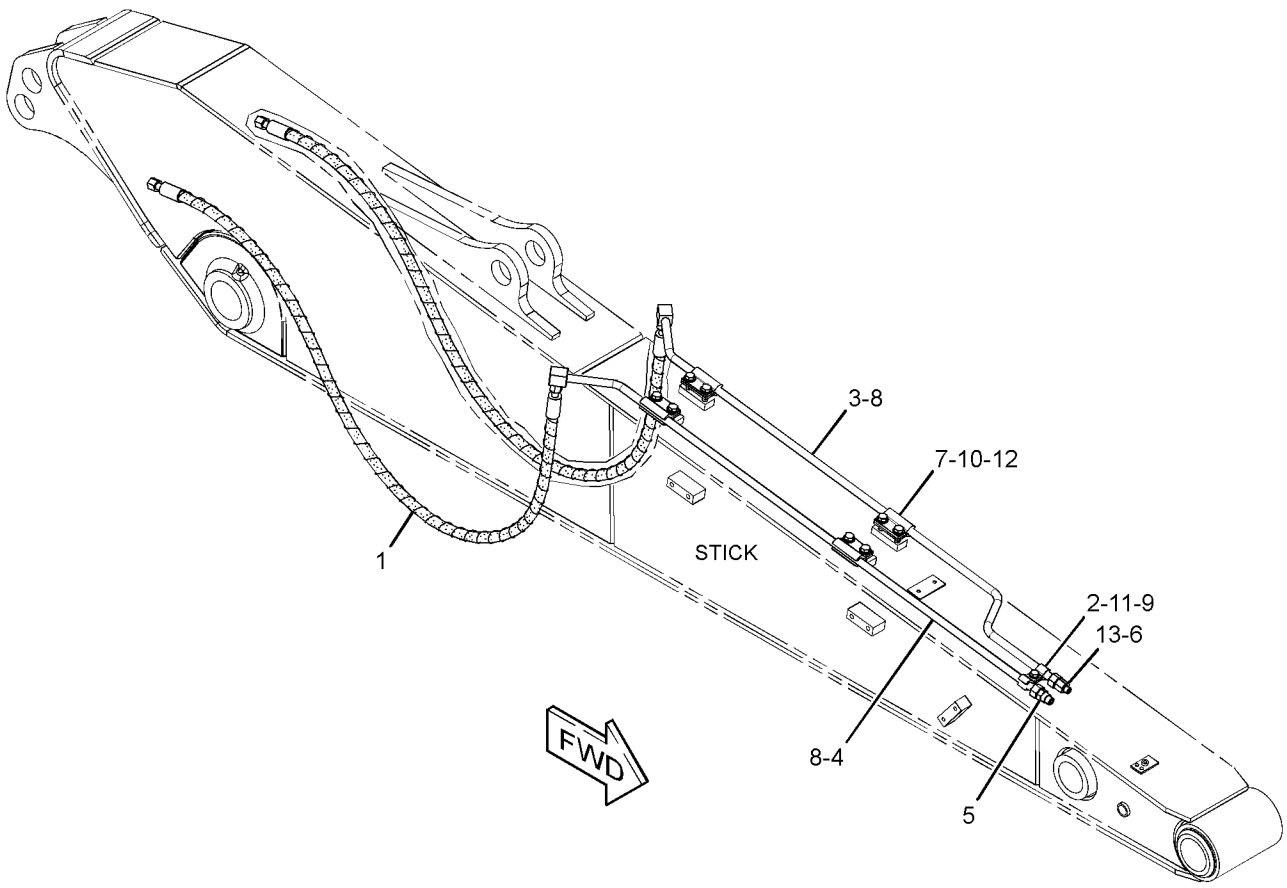

GRAPHIC #1 <END> g01411725

372-9770 LINES GP-COUPLER—STICK

S/N: RDE1-UP

FOR USE WITH 2.5-M (8.2-FT) STICK

SMCS-5057, 5133

i06826767

NOTE	REF NO	GRAPHIC REF	PART NUMBER	QTY	PART NAME 1 2 3 4 5 6 (PRODUCT LEVEL)	SEE PAGE
	1	1	**198-0370**	2	CLIP	
I	2	1	**277-1251**	2	HOSE AS	
	3	1	**288-7727**	1	TUBE AS	
	4	1	**288-7730**	1	TUBE AS	
	5	1	*148-8415*	1	REDUCER AS	
		1	**6V-8397**	1	SEAL-O-RING	
		1	**6V-8936**	1	REDUCER	
	6	1	*148-8419*	1	REDUCER AS	
		1	**4J-5477**	1	SEAL-O-RING	
		1	**6V-8935**	1	REDUCER	
	7	1	**5Q-4212**	8	CLIP	
	8	1	**6V-8398**	4	SEAL-O-RING	
	9	1	**8T-4121**	1	WASHER-HARD (11X21X2.5-MM THK)	
M	10	1	**8T-4139**	8	BOLT (M12X1.75X30-MM)	
M	11	1	**8T-4195**	1	BOLT (M10X1.5X30-MM)	
	12	1	**8T-4223**	8	WASHER-HARD (13.5X25.5X3-MM THK)	
	13	1	**9X-6582**	1	NUT (13/16-16-THD)	

I - REFER TO HYDRAULIC INFORMATION SYSTEM
M - METRIC PART

372-9770 **LINES GP-COUPLER (**contd.**)** **i06826767**

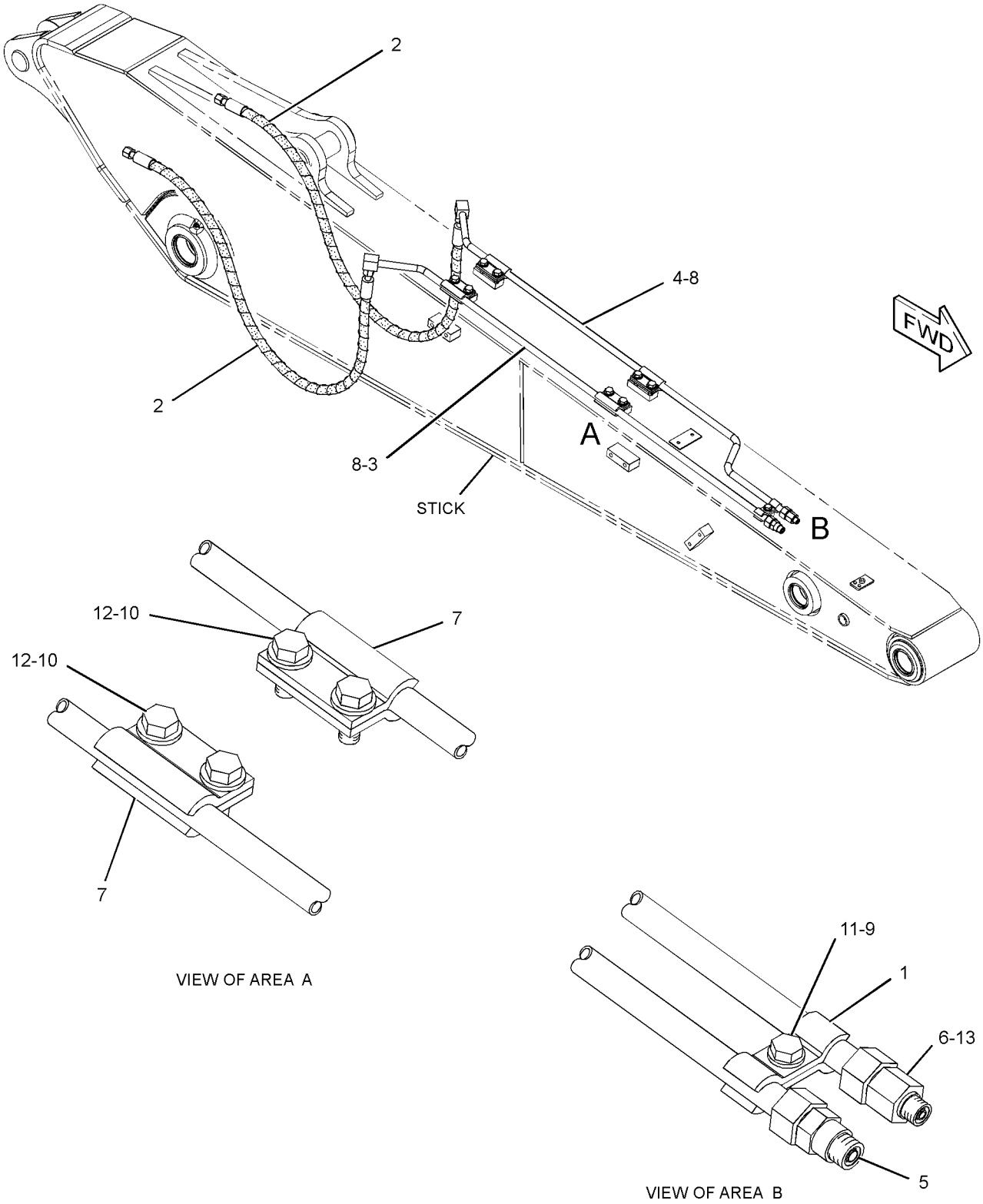

GRAPHIC #1 <END> g01442604

390-4280 LINES GP-COUPLER

S/N: RDE1-UP

PART OF 398-8996 LINES AR-QUICK COUPLER

SMCS-5057, 5133 **i06826760**

NOTE	REF NO	GRAPHIC REF	PART NUMBER	QTY	PART NAME 1 2 3 4 5 6 (PRODUCT LEVEL)	SEE PAGE
	1	1	**193-6606**	2	PLATE	
	2	1	**277-1002**	1	CLAMP	
	3	1	**282-5470**	1	TUBE AS	
	4	1	**282-5476**	1	TUBE AS	
	5	1	**282-5482**	2	SUPPORT AS	
	6	1	**352-6772**	1	CLIP AS	
	7	1	**372-9711**	1	CLIP AS	
	8	1	**390-4315**	1	TUBE AS	
	9	1	**390-4319**	1	TUBE AS	
	10	1	**135-3980**	4	CLIP	
	11	1	**179-5030**	1	CLIP	
	12	1	**5Q-4212**	4	CLIP	
	13	1	**5Q-4213**	1	CLIP	
	14	1	**6V-8398**	6	SEAL-O-RING	
M	15	1	**7X-2549**	4	BOLT (M12X1.75X100-MM)	
M	16	1	**8T-4139**	8	BOLT (M12X1.75X30-MM)	
M	17	1	**8T-4194**	1	BOLT (M12X1.75X50-MM)	
	18	1	**8T-4223**	17	WASHER-HARD (13.5X25.5X3-MM THK)	
M	19	1	**8T-4910**	4	BOLT (M12X1.75X60-MM)	

M - METRIC PART

390-4280 **LINES GP-COUPLER (**contd.**)** **i06826760**

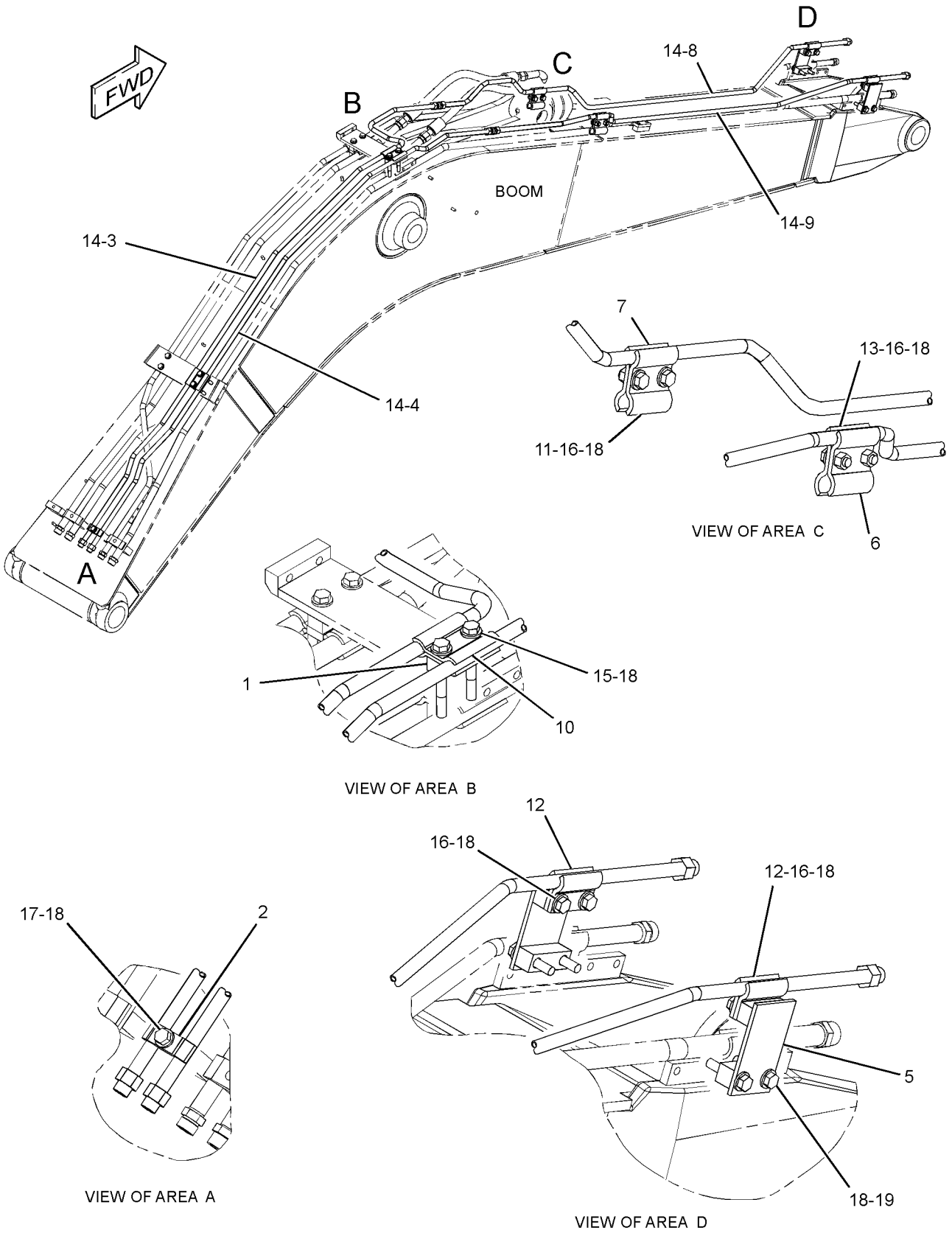

GRAPHIC #1 <END> g03026058

422-2983 LINES GP-COUPLER

S/N: RDE1-UP

FOR USE WITH 388-6156—PAGE: 387

PART OF 455-3914 COUPLER AR-QUICK

SMCS-5057, 5133

i06826752

NOTE	REF NO	GRAPHIC REF	PART NUMBER	QTY	PART NAME 1 2 3 4 5 6 (PRODUCT LEVEL)	SEE PAGE
	1	1	**7K-1181**	4	STRAP-CABLE	
I	2	1	**347-3727**	1	HOSE AS	
I	3	1	**347-3728**	1	HOSE AS	
	4	1	**347-3895**	1	BRACKET	
I	5	1	**422-2984**	1	HOSE AS	
I	6	1	**422-2985**	1	HOSE AS	
	7	1	*148-8377*	1	ELBOW AS	
		1	**6V-8397**	2	SEAL-O-RING	
		1	**6V-8980**	1	ELBOW	
	8	1	*148-8384*	1	ELBOW AS	
		1	**4J-5477**	2	SEAL-O-RING	
		1	**6V-8979**	1	ELBOW	
	9	1	**2P-1279**	1	LOCKNUT (9/16-18-THD)	
	10	1	**6V-9168**	1	NUT (11/16-16-THD)	
	11	1	**8T-4121**	2	WASHER-HARD (11X21X2.5-MM THK)	
M	12	1	**8T-4137**	2	BOLT (M10X1.5X20-MM)	

I - REFER TO HYDRAULIC INFORMATION SYSTEM
M - METRIC PART

422-2983 **LINES GP-COUPLER (**contd.**)** **i06826752**

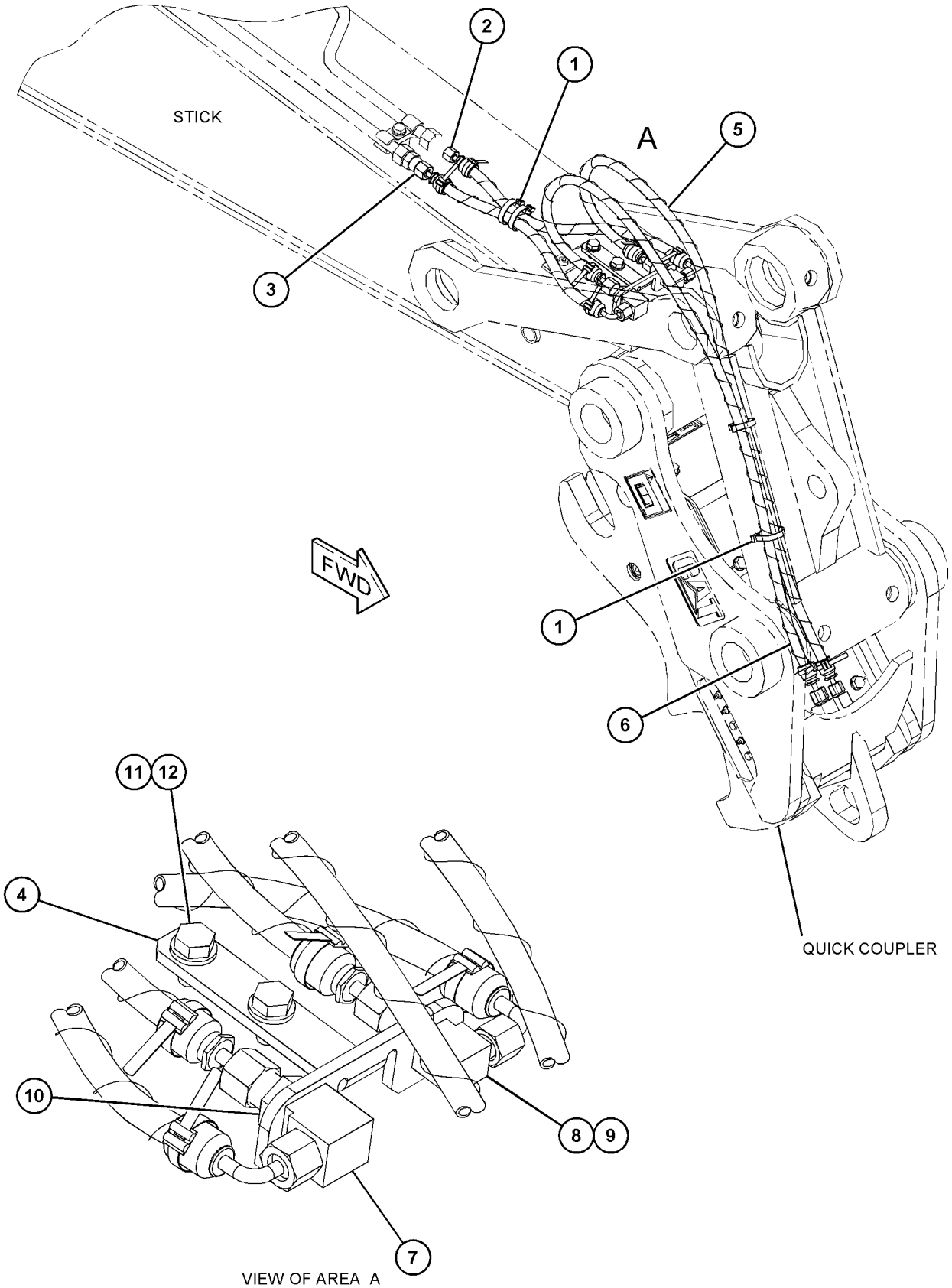

GRAPHIC #1 <END> g03705554

278-6697 LINES GP-FRONT—SYSTEM 23, COMBINED FUNCTION

S/N: RDE1-UP

PART OF 270-5843 CONTROL AR-AUXILIARY

SMCS-5057 **i06828107**

NOTE	REF NO	GRAPHIC REF	PART NUMBER	QTY	PART NAME 1 2 3 4 5 6 (PRODUCT LEVEL)	SEE PAGE
Y	1	1	*434-8214*	1	SENSOR GP-PRESSURE (AUXILIARY HYDRAULIC)	115
Y	2	1	**270-5672**	1	VALVE GP-SOLENOID & RELIEF (AUXILIARY, COMBINED FN, LH)	363
Y	3	1	**270-5757**	1	VALVE GP-SOLENOID & RELIEF (AUXILIARY, COMBINED FN, RH)	364
	4	1	**272-4164**	1	PLATE	
	5	1	*148-8327*	1	CONNECTOR AS	
		1	**3D-2824**	1	SEAL-O-RING	
		1	**6V-8637**	1	CONNECTOR	
		1	**6V-9746**	1	SEAL-O-RING	
	6	1	**8T-4121**	2	WASHER-HARD (11X21X2.5-MM THK)	
M	7	1	**8T-4137**	2	BOLT (M10X1.5X20-MM)	
M	8	1	**8T-4956**	4	BOLT (M12X1.75X35-MM)	
C	9	1	**7I-2673**	1	STRAP-CABLE	

C - CHANGE FROM PREVIOUS TYPE
M - METRIC PART
Y - SEPARATE ILLUSTRATION

278-6697 **LINES GP-FRONT (**contd.**)** **i06828107**

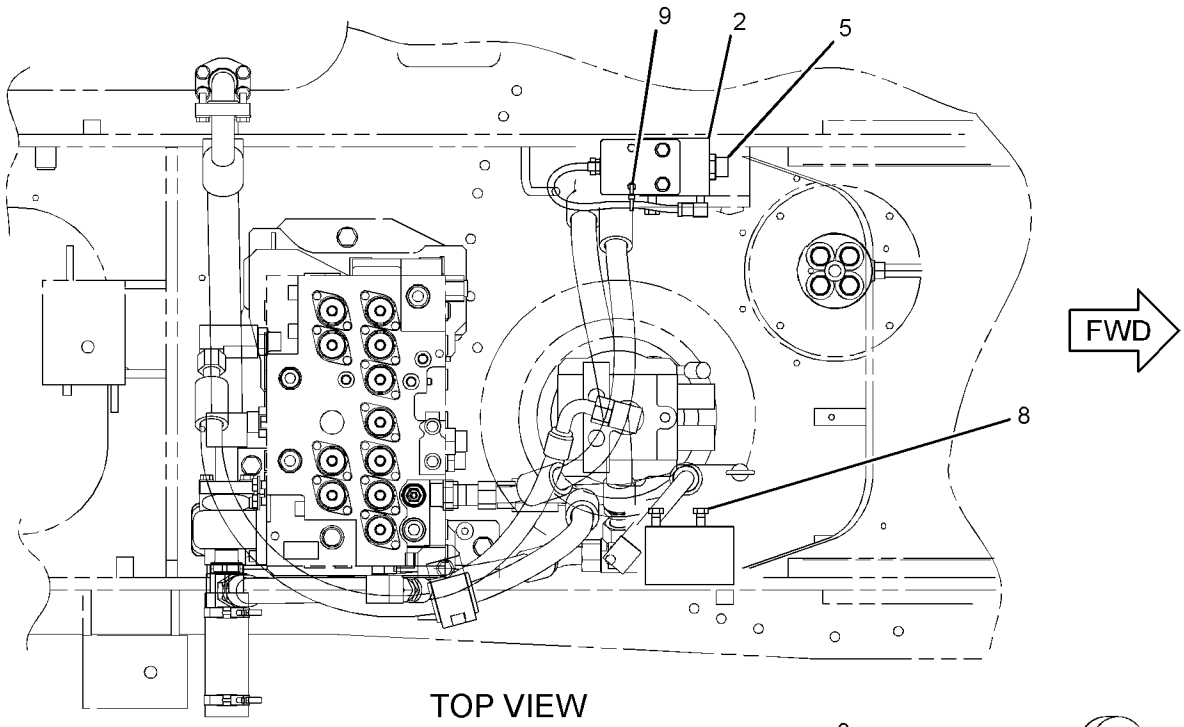

TOP VIEW

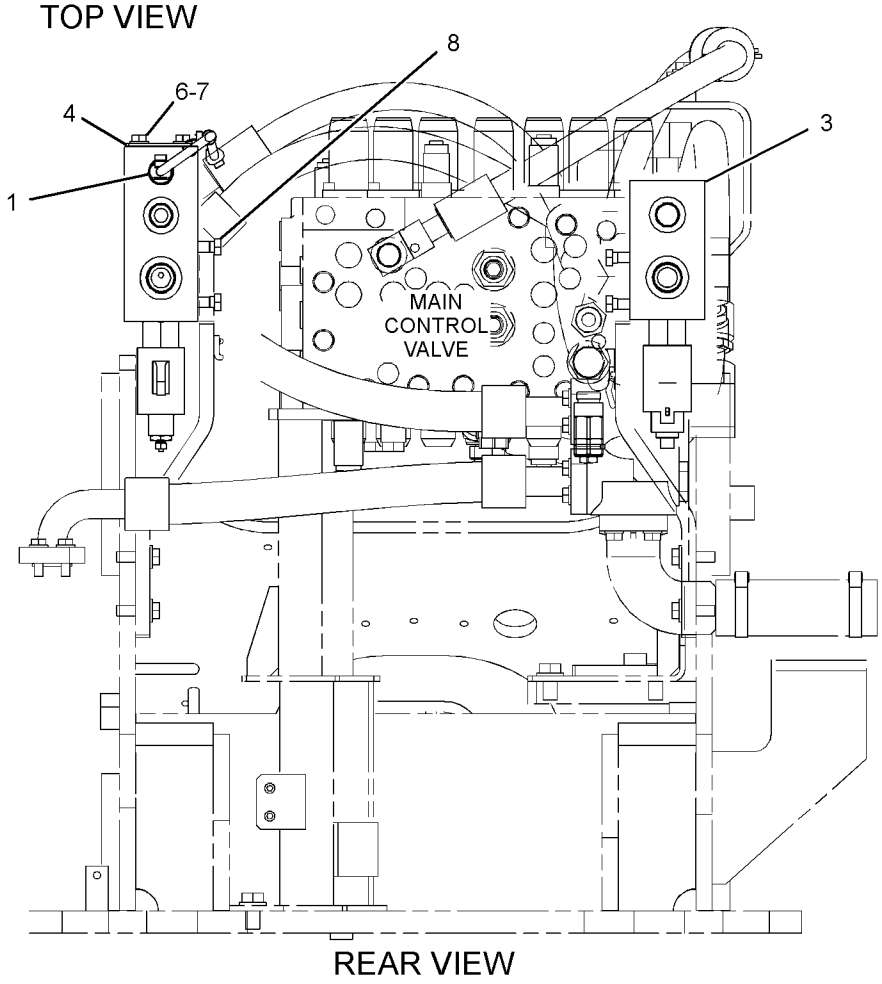

REAR VIEW

GRAPHIC #1 <END> g02712819

437-0464 LINES GP-FRONT

S/N: RDE1-UP

PART OF 503-4904 HYDRAULIC AR

SMCS-5057 **i06021124**

NOTE	REF NO	GRAPHIC REF	PART NUMBER	QTY	PART NAME 1 2 3 4 5 6 (PRODUCT LEVEL)	SEE PAGE
	1	1	**115-8645**	1	GUARD	
I	2	1	**131-9907**	1	HOSE AS	
I	3	1	**179-7464**	1	HOSE AS	
I	4	1	**199-1689**	3	HOSE AS	
	5	1	*260-9174*	1	CONNECTOR AS	
		1	**3D-2824**	1	SEAL-O-RING	
		1	**7J-9108**	1	SEAL-O-RING	
		1	**109-5815**	1	CONNECTOR	
	6	1	*286-6499*	2	CONNECTOR AS	
					(EACH INCLUDES)	
		1	**6V-9746**	1	SEAL-O-RING	
		1	**7M-8485**	1	SEAL-O-RING	
		1	**184-9330**	1	CONNECTOR	
I	7	1	**292-7415**	1	HOSE AS	
I	8	1	**319-9966**	2	HOSE AS	
I	9	1	**419-0619**	1	HOSE AS	
I	10	1	**437-0465**	1	HOSE AS	
I	11	1	**437-0468**	1	HOSE AS	
	12	1	*148-8327*	1	CONNECTOR AS	
		1	**3D-2824**	1	SEAL-O-RING	
		1	**6V-8637**	1	CONNECTOR	
		1	**6V-9746**	1	SEAL-O-RING	
	13	1	*148-8339*	2	CONNECTOR AS	
					(EACH INCLUDES)	
		1	**6V-8716**	1	CONNECTOR (STRAIGHT)	
		1	**6V-9746**	1	SEAL-O-RING	
		1	**7M-8485**	1	SEAL-O-RING	
	14	1	*148-8341*	3	CONNECTOR AS	
					(EACH INCLUDES)	
		1	**3D-2824**	1	SEAL-O-RING	
		1	**6V-8713**	1	CONNECTOR	
		1	**7J-9108**	1	SEAL-O-RING	
	15	1	*148-8347*	1	ELBOW AS	
		1	**3D-2824**	1	SEAL-O-RING	
		1	**6V-9007**	1	ELBOW	
		1	**6V-9746**	1	SEAL-O-RING	
	16	1	*153-6242*	3	CONNECTOR AS	
					(EACH INCLUDES)	
		1	**6V-9746**	1	SEAL-O-RING	
		1	**7M-8485**	1	SEAL-O-RING	
		1	**8T-0197**	1	CONNECTOR	
	17	1	*164-4180*	2	PLUG AS	
					(EACH INCLUDES)	
		1	**7M-8485**	1	SEAL-O-RING	
		1	**9S-4181**	1	PLUG (5/16-12-THD)	
	18	1	**7K-1181**	2	STRAP-CABLE	

I - REFER TO HYDRAULIC INFORMATION SYSTEM

437-0464 **LINES GP-FRONT (**contd.**)** **i06021124**

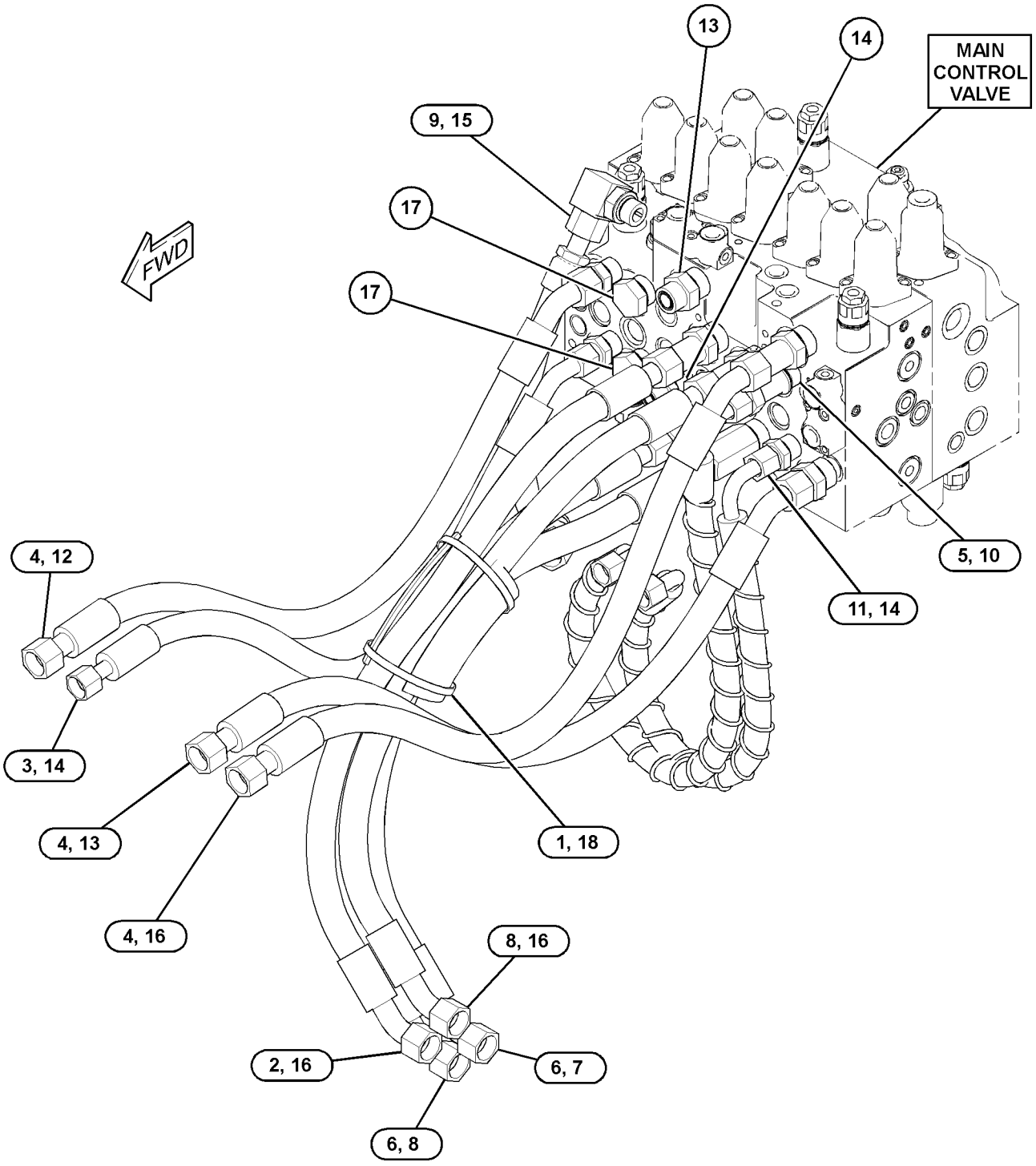

GRAPHIC #1 <END> g03699700

495-0692 LINES GP-FRONT

S/N: RDE1-UP

PART OF 494-3642 CONTROL AR-AUXILIARY

SMCS-5057 **i06814230**

NOTE	REF NO	GRAPHIC REF	PART NUMBER	QTY	PART NAME 1 2 3 4 5 6 (PRODUCT LEVEL)	SEE PAGE
	1	1	*148-8431*	1	TEE AS	
		1	**5K-9090**	2	SEAL-O-RING	
		1	**6V-8785**	1	TEE	
		1	**7M-8485**	1	SEAL-O-RING	
I	2	1	**128-7471**	1	HOSE AS	
Y	3	1	**177-2653**	1	VALVE GP-RELIEF (LINE)	350
	4	1	**187-6913**	1	FLANGE	
	5	1	**270-6110**	1	CONNECTOR AS	
		1	**6V-9746**	1	SEAL-O-RING	
		1	**095-1592**	1	SEAL-O-RING	
I	6	1	**275-1750**	1	HOSE AS	
	7	1	**278-6751**	1	BLOCK	
I	8	1	**278-6883**	1	HOSE AS	
	9	1	**282-7053**	1	BLOCK	
	10	1	**282-7144**	1	SUPPORT AS	
	11	1	**282-7146**	1	SUPPORT AS	
I	12	1	**282-7150**	1	HOSE AS	
	13	1	*337-1176*	1	ELBOW AS	
		1	**3D-2824**	1	SEAL-O-RING	
		1	**6V-9746**	1	SEAL-O-RING	
		1	**337-1177**	1	ELBOW	
	14	1	**466-3349**	1	SUPPORT AS	
	15	1	**099-8232**	1	SEAL-O-RING	
	16	1	*148-8327*	1	CONNECTOR AS	
		1	**3D-2824**	1	SEAL-O-RING	
		1	**6V-8637**	1	CONNECTOR	
		1	**6V-9746**	1	SEAL-O-RING	
	17	1	*148-8347*	1	ELBOW AS	
		1	**3D-2824**	1	SEAL-O-RING	
		1	**6V-9007**	1	ELBOW	
		1	**6V-9746**	1	SEAL-O-RING	
	18	1	*148-8357*	1	ELBOW AS (90-DEG)	
		1	**5K-9090**	1	SEAL-O-RING	
		1	**6V-9008**	1	ELBOW	
		1	**7M-8485**	1	SEAL-O-RING	
	19	1	*153-6242*	1	CONNECTOR AS	
		1	**6V-9746**	1	SEAL-O-RING	
		1	**7M-8485**	1	SEAL-O-RING	
		1	**8T-0197**	1	CONNECTOR	
	20	1	*164-4180*	2	PLUG AS	
					(EACH INCLUDES)	
		1	**7M-8485**	1	SEAL-O-RING	
		1	**9S-4181**	1	PLUG (5/16-12-THD)	
	21	1	**4J-0520**	1	SEAL-O-RING	
	22	1	**5K-9090**	1	SEAL-O-RING	
	23	1	**5P-7468**	1	CLIP (SLOT)	
	24	1	**5P-7469**	1	CLIP (TAB)	
	25	1	**6V-1874**	1	GROMMET (31-MM ID)	

495-0692 **LINES GP-FRONT (**contd.**)** **i06814230**

NOTE	REF NO	GRAPHIC REF	PART NUMBER	QTY	PART NAME 1 2 3 4 5 6 (PRODUCT LEVEL)	SEE PAGE
	26	1	**8T-4121**	1	WASHER-HARD (11X21X2.5-MM THK)	
M	27	1	**8T-4139**	2	BOLT (M12X1.75X30-MM)	
M	28	1	**8T-4176**	4	BOLT (M12X1.75X90-MM)	
M	29	1	**8T-4183**	4	BOLT (M12X1.75X40-MM)	
M	30	1	**8T-4196**	1	BOLT (M10X1.5X35-MM)	
	31	1	**8T-4223**	10	WASHER-HARD (13.5X25.5X3-MM THK)	
M	32	1	**8T-4956**	4	BOLT (M12X1.75X35-MM)	
M	33	1	**8T-6466**	4	BOLT (M10X1.5X60-MM)	

I - REFER TO HYDRAULIC INFORMATION SYSTEM
M - METRIC PART
Y - SEPARATE ILLUSTRATION

495-0692 **LINES GP-FRONT (**contd.**)** **i06814230**

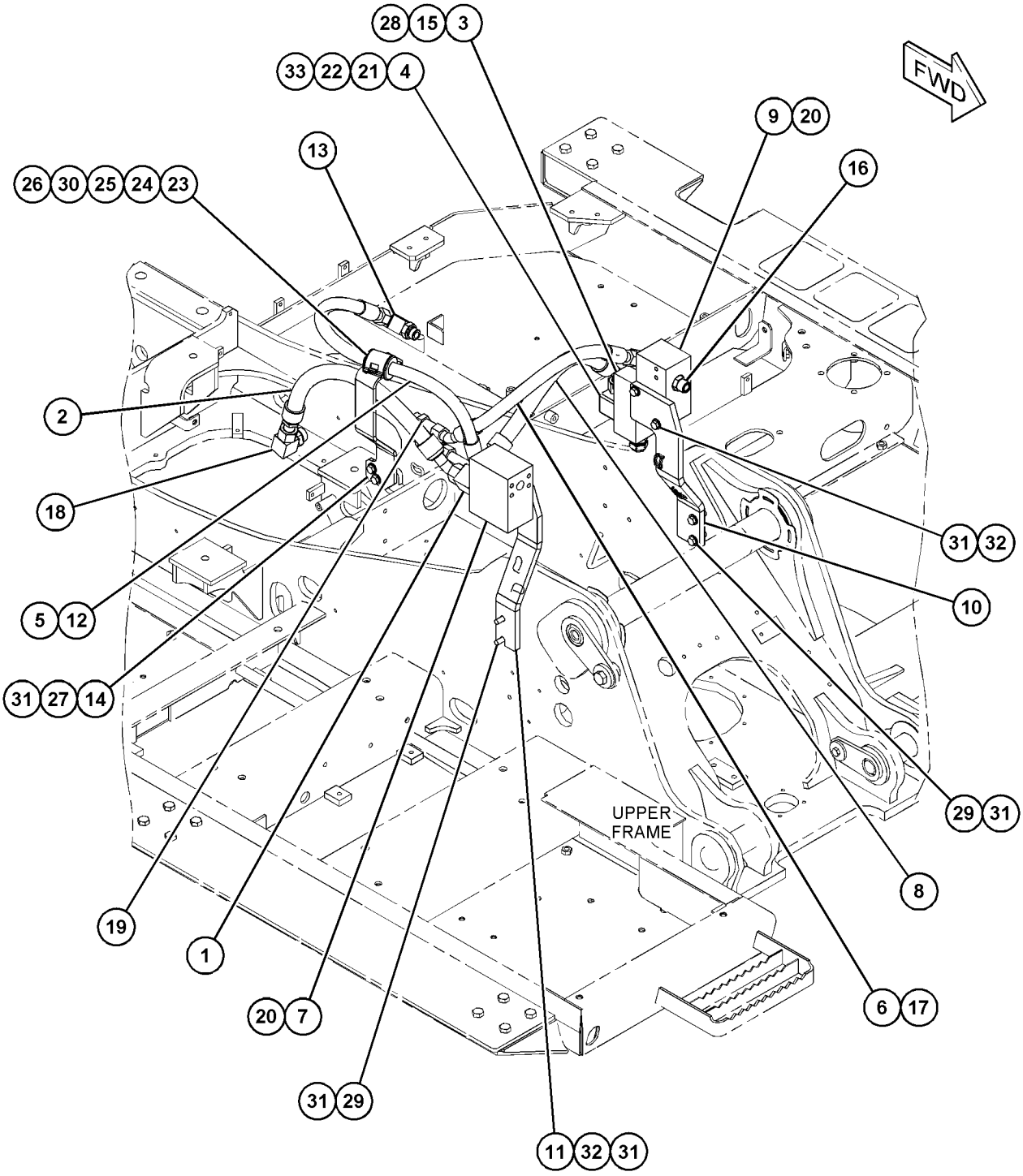

GRAPHIC #1 <END> g06133293

502-5317 LINES GP-FRONT—QUICK COUPLER

S/N: RDE1-UP

PART OF 503-9777 CONTROL AR-QUICK COUPLER

SMCS-5057 **i06828453**

NOTE	REF NO	GRAPHIC REF	PART NUMBER	QTY	PART NAME 1 2 3 4 5 6 (PRODUCT LEVEL)	SEE PAGE
	1	1	**4I-9521**	4	BAND-MARKER (RED, L1)	
	2	1	**4I-9522**	4	BAND-MARKER (YELLOW, L2)	
	3	1	**7K-1181**	4	STRAP-CABLE	
I	4	1	**7Y-8379**	1	HOSE AS	
	5	2	*148-8336*	1	CONNECTOR AS (45-DEG ELBOW)	
		2	**3J-1907**	1	SEAL-O-RING	
		2	**6V-8397**	1	SEAL-O-RING	
		2	**6V-8636**	1	CONNECTOR	
	6	2	*148-8338*	1	CONNECTOR AS	
		2	**3J-1907**	1	SEAL-O-RING	
		2	**6V-8397**	1	SEAL-O-RING	
		2	**8T-0075**	1	CONNECTOR	
	7	1	*148-8435*	1	TEE AS	
		1	**3J-1907**	1	SEAL-O-RING	
		1	**6V-8397**	2	SEAL-O-RING	
		1	**6V-8781**	1	TEE	
	8	1	*164-5546*	1	TEE AS	
		1	**3E-7410**	1	ADAPTER	
		1	**3J-1907**	1	SEAL-O-RING	
	9	1	*168-1968*	1	TEE AS	
		1	**3J-1907**	1	SEAL-O-RING	
		1	**6V-8397**	1	SEAL-O-RING	
		1	**126-6872**	1	TEE	
I	10	1	**236-3056**	1	HOSE AS	
I	11	1	**302-2977**	1	HOSE AS	
	12	1	**319-4407**	1	SWITCH AS-PRESSURE (QUICK COUPLER VALVE)	
		1	**3J-7354**	1	SEAL-O-RING	
		1	**9X-3401**	2	PIN-CONNECTOR (16-GA TO 18-GA)	
					—OR—	
		1	**126-1767**	2	PIN-CONNECTOR (14-GA TO 16-GA)	
Y	13	2	**328-2035**	2	VALVE GP-SOLENOID & MANIFOLD (QUICK COUPLER)	362
I	14	1	**333-7032**	1	HOSE AS	
I	15	1	**337-1286**	1	HOSE AS	
Y	16	1	*338-6971*	1	SENSOR GP-PRESSURE (HYDRAULIC OIL)	114
I	17	2	**350-0837**	1	HOSE AS	
Y	18	1	*418-6282*	2	CLAMP GP-HYDRAULIC LINES	204
Y	19	2	**454-0504**	1	VALVE GP-CHECK (PILOT OPERATED)	333
	20	2	**457-9869**	2	SPACER (11X20X15-MM THK)	
I	21	1	**466-3343**	1	HOSE AS	
	22	2	**466-3346**	1	SUPPORT AS	
	23	1	**466-3349**	1	SUPPORT AS	
I	24	1	**503-1919**	1	HOSE AS	
I	25	1	**503-1922**	1	HOSE AS	
	26	1	*148-8305*	1	ADAPTER AS	
		1	**3J-1907**	1	SEAL-O-RING	
		1	**5P-9617**	1	ADAPTER	
	27	1	*148-8313*	1	ADAPTER AS	
		1	**3K-0360**	1	SEAL-O-RING	

502-5317 **LINES GP-FRONT (**contd.**)** **i06828453**

NOTE	REF NO	GRAPHIC REF	PART NUMBER	QTY	PART NAME 1 2 3 4 5 6 (PRODUCT LEVEL)	SEE PAGE
		1	**5P-6944**	1	ADAPTER	
	28	2	*148-8353*	2	ELBOW AS	
					(EACH INCLUDES)	
		2	**3J-1907**	1	SEAL-O-RING	
		2	**6V-8397**	1	SEAL-O-RING	
		2	**6V-9001**	1	ELBOW	
	29	2	*148-8378*	6	ELBOW AS (90-DEG)	
					(EACH INCLUDES)	
		2	**3J-1907**	1	SEAL-O-RING	
		2	**6V-8397**	1	SEAL-O-RING	
		2	**6V-8724**	1	ELBOW	
	30	1,2	*148-8407*	2	PLUG AS	
					(EACH INCLUDES)	
		1,2	**3J-1907**	1	SEAL-O-RING	
		1,2	**9S-4191**	1	PLUG (9/16-18-THD)	
	31	1	*148-8415*	2	REDUCER AS	
					(EACH INCLUDES)	
		1	**6V-8397**	1	SEAL-O-RING	
		1	**6V-8936**	1	REDUCER	
	32	1	*148-8430*	1	TEE AS	
		1	**6V-9746**	1	SEAL-O-RING	
		1	**7X-0873**	1	TEE	
	33	2	*150-3036*	2	ELBOW AS	
					(EACH INCLUDES)	
		2	**3J-1907**	1	SEAL-O-RING	
		2	**6V-8397**	1	SEAL-O-RING	
		2	**8T-1905**	1	ELBOW	
	34	1	*153-6237*	1	ELBOW AS	
		1	**3D-2824**	1	SEAL-O-RING	
		1	**6V-9004**	1	ELBOW	
		1	**6V-9746**	1	SEAL-O-RING	
	35	1	*164-5567*	1	COUPLER AS-QUICK DISCONNECT (MALE)	
		1	**6V-3965**	1	FITTING (QUICK DISCONNECT)	
		1	**214-7568**	1	SEAL-O-RING	
	36	1,2	*164-6874*	3	FITTING AS-ELBOW (QUICK DISCONNECT, MALE)	
					(EACH INCLUDES)	
		1,2	**3J-1907**	1	SEAL-O-RING	
		1,2	**085-7356**	1	FITTING	
	37	1	**4I-7889**	1	SPACER (11X25X45-MM THK)	
	38	1	**6V-0852**	1	CAP-DUST	
	39	1,2	**8T-4121**	6	WASHER-HARD (11X21X2.5-MM THK)	
M	40	2	**8T-4136**	2	BOLT (M10X1.5X25-MM)	
M	41	1	**8T-4137**	1	BOLT (M10X1.5X20-MM)	
M	42	1	**8T-4139**	2	BOLT (M12X1.75X30-MM)	
M	43	1	**8T-4172**	1	BOLT (M10X1.5X80-MM)	
M	44	2	**8T-4198**	2	BOLT (M10X1.5X100-MM)	
	45	1,2	**8T-4223**	4	WASHER-HARD (13.5X25.5X3-MM THK)	
M	46	2	**8T-4910**	2	BOLT (M12X1.75X60-MM)	

I - REFER TO HYDRAULIC INFORMATION SYSTEM
M - METRIC PART
Y - SEPARATE ILLUSTRATION

502-5317 **LINES GP-FRONT (**contd.**)** **i06828453**

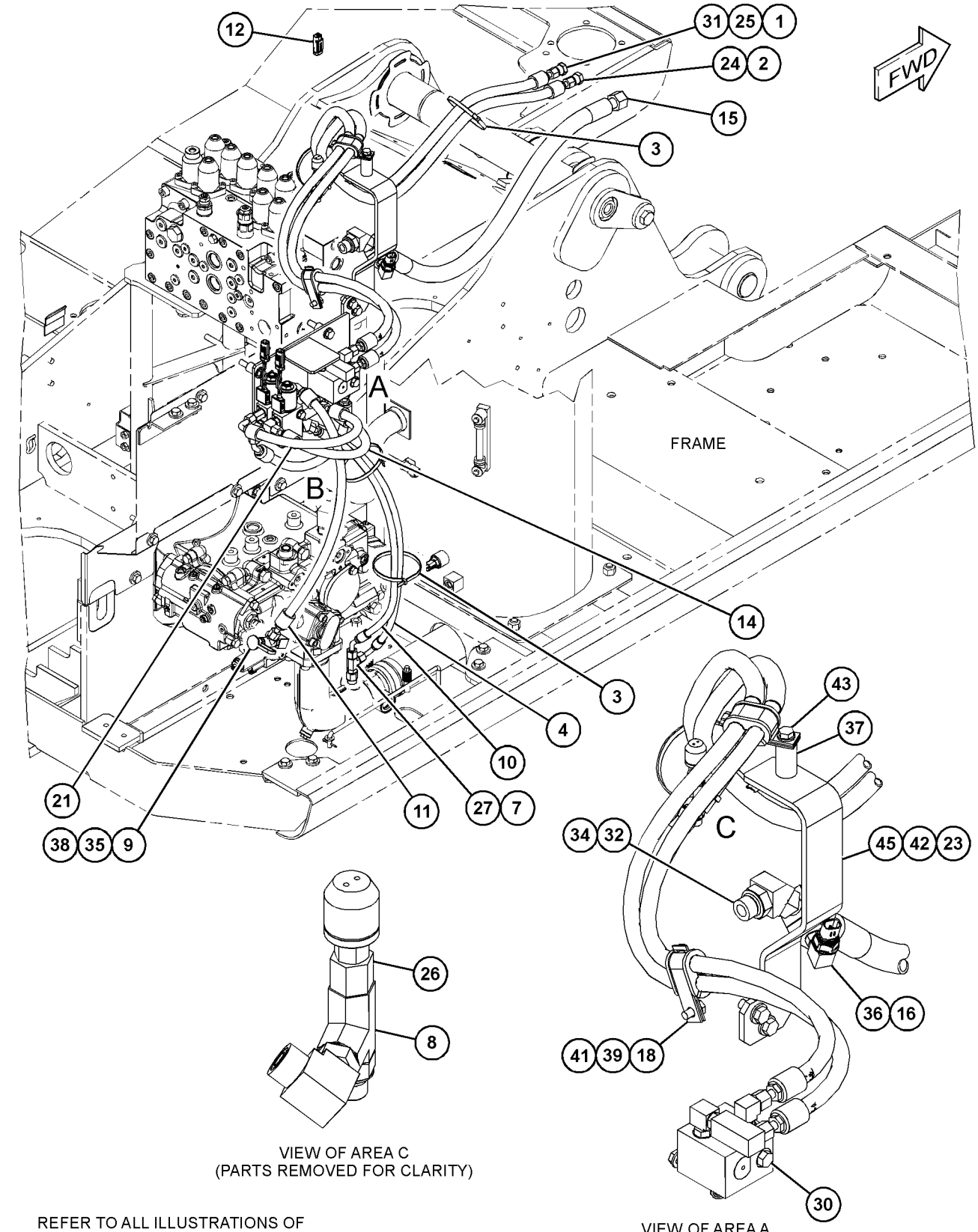

REFER TO ALL ILLUSTRATIONS OF THIS GROUP FOR AUXILIARY VIEWS

GRAPHIC #1

g06137134

502-5317 **LINES GP-FRONT (**contd.**)** **i06828453**

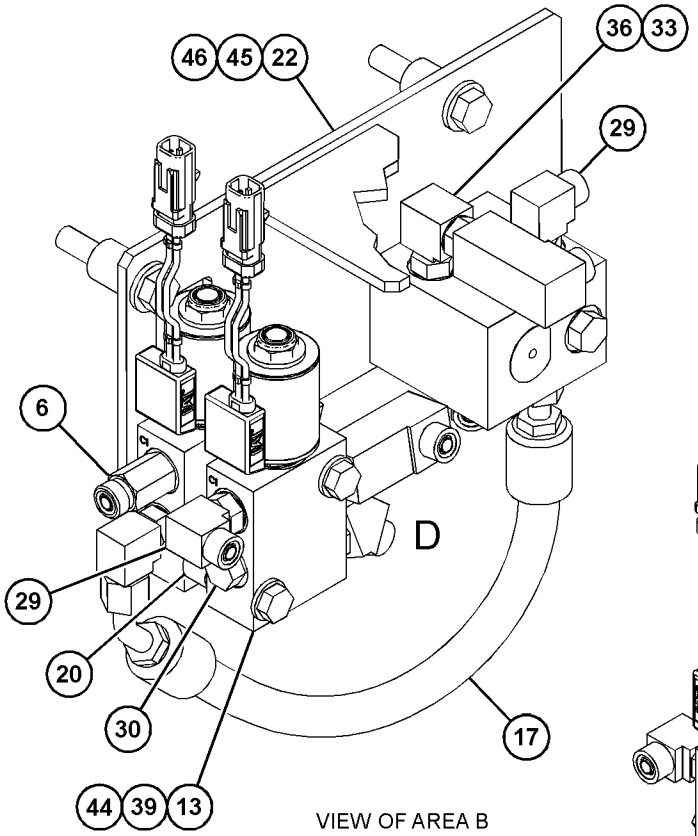

VIEW OF AREA B
(PARTS REMOVED FOR CLARITY)

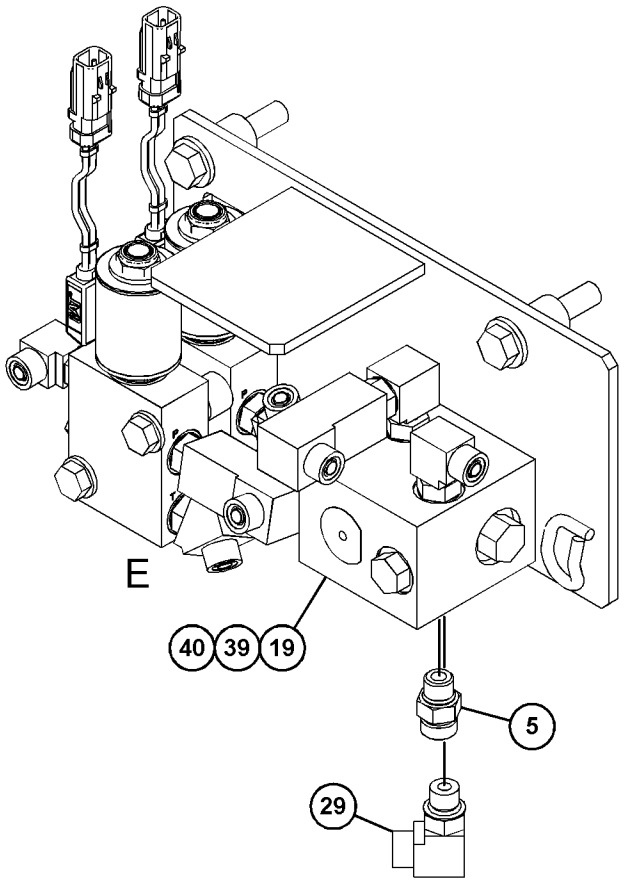

VIEW OF AREA D
(PARTS REMOVED FOR CLARITY) 90°

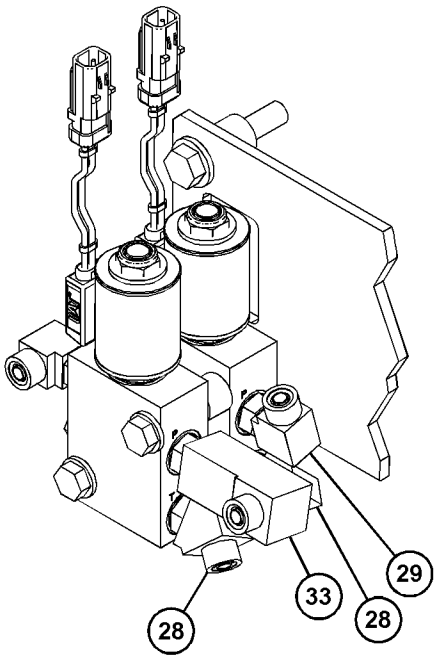

VIEW OF AREA E
(PARTS REMOVED FOR CLARITY)

GRAPHIC #2 <END> g06137135

499-4830 LINES GP-HYDRAULIC

S/N: RDE1-UP

PART OF 499-4829 TANK & MTG GP-HYDRAULIC

SMCS-5057 **i06783717**

NOTE	REF NO	GRAPHIC REF	PART NUMBER	QTY	PART NAME 1 2 3 4 5 6 (PRODUCT LEVEL)	SEE PAGE
	1	1	**4I-9527**	2	BAND-MARKER (GREEN, R3)	
	2	1	**7K-1181**	6	STRAP-CABLE	
I	3	1	**128-9166**	1	HOSE AS	
I	4	1	**131-9453**	1	HOSE AS	
Y	5	1	**221-5069**	1	FITTING GP-HYDRAULIC (TEE)	230
I	6	1	**325-9220**	1	HOSE AS	
	7	1	*148-8345*	1	CONNECTOR AS	
		1	**2M-9780**	1	SEAL-O-RING	
		1	**6V-8398**	1	SEAL-O-RING	
		1	**6V-8638**	1	CONNECTOR	
	8	1	*148-8347*	1	ELBOW AS	
		1	**3D-2824**	1	SEAL-O-RING	
		1	**6V-9007**	1	ELBOW	
		1	**6V-9746**	1	SEAL-O-RING	
	9	1	*148-8354*	1	ELBOW AS	
		1	**3K-0360**	1	SEAL-O-RING	
		1	**6V-8398**	1	SEAL-O-RING	
		1	**6V-9002**	1	ELBOW	
	10	1	*148-8359*	1	ELBOW AS	
		1	**3K-0360**	1	SEAL-O-RING	
		1	**6V-9746**	1	SEAL-O-RING	
		1	**6V-9877**	1	ELBOW	
	11	1	*148-8372*	1	ELBOW AS	
		1	**2M-9780**	1	SEAL-O-RING	
		1	**6V-8398**	1	SEAL-O-RING	
		1	**6V-8721**	1	ELBOW	
	12	1	*150-4043*	1	CONNECTOR AS	
		1	**3J-1907**	1	SEAL-O-RING	
		1	**6V-8398**	1	SEAL-O-RING	
		1	**6V-9873**	1	CONNECTOR	
	13	1	*164-6874*	1	FITTING AS-ELBOW (QUICK DISCONNECT, MALE)	
		1	**3J-1907**	1	SEAL-O-RING	
		1	**085-7356**	1	FITTING	
	14	1	**6D-4246**	1	CLIP	
	15	1	**8T-4121**	1	WASHER-HARD (11X21X2.5-MM THK)	
M	16	1	**8T-4137**	1	BOLT (M10X1.5X20-MM)	

I - REFER TO HYDRAULIC INFORMATION SYSTEM
M - METRIC PART
Y - SEPARATE ILLUSTRATION

499-4830 **LINES GP-HYDRAULIC (**contd.**)** **i06783717**

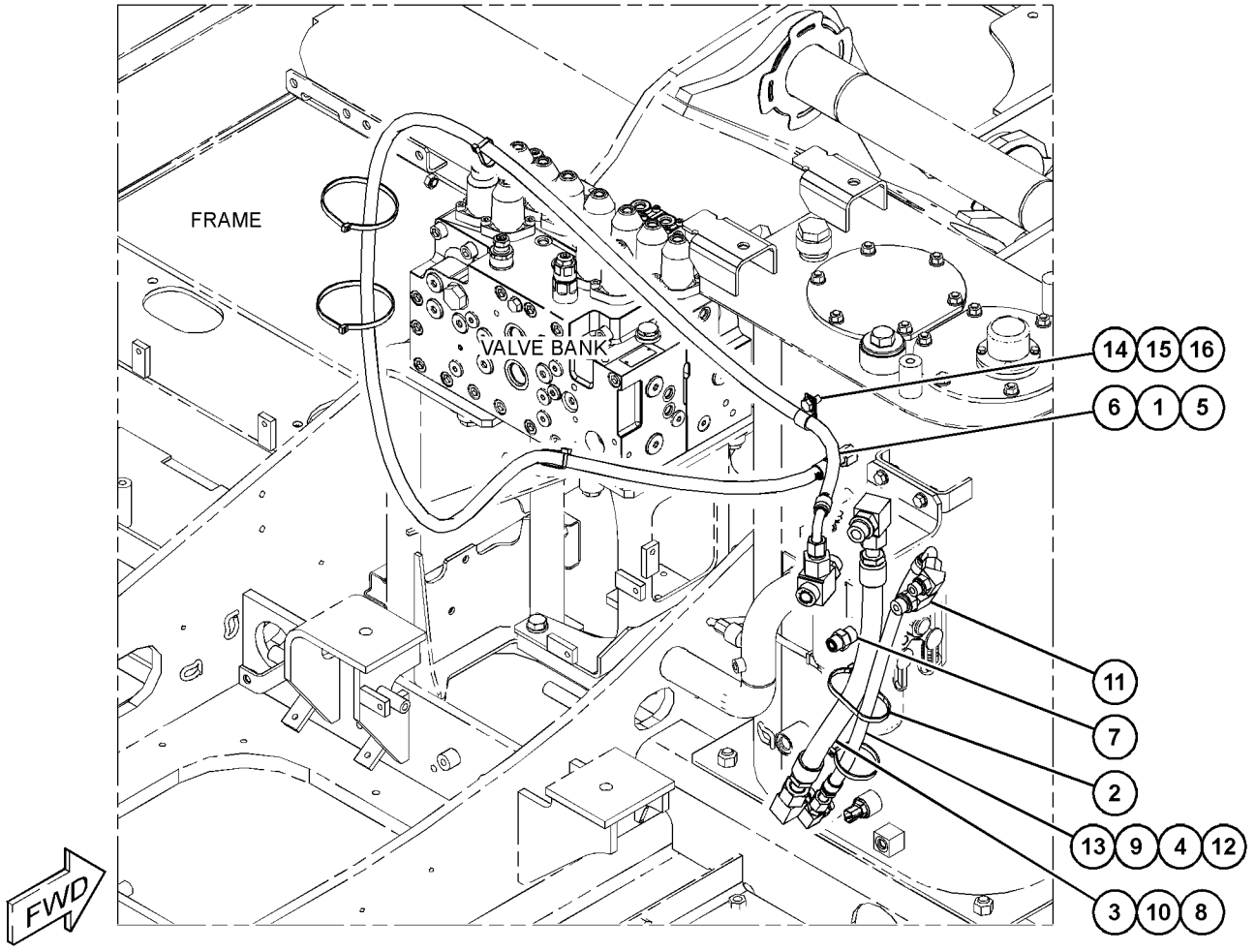

GRAPHIC #1 <END> g06131202

391-7819 LINES GP-HYDRAULIC OIL COOLER

S/N: RDE1-UP

PART OF 503-4904 HYDRAULIC AR

SMCS-1374 **i05406401**

NOTE	REF NO	GRAPHIC REF	PART NUMBER	QTY	PART NAME 1 2 3 4 5 6 (PRODUCT LEVEL)	SEE PAGE
	1	1	**392-1961**	1	PIPE AS	
	2	1	**392-1963**	1	PIPE AS	
M	3	1	**096-4883**	4	LOCKNUT (M10X1.5-THD)	
	4	1	**4J-0523**	2	SEAL-O-RING	
M	5	1	**7Y-5237**	2	U-BOLT	
	6	1	**8T-4121**	4	WASHER-HARD (11X21X2.5-MM THK)	
	7	1	**8T-4223**	4	WASHER-HARD (13.5X25.5X3-MM THK)	
M	8	1	**8T-4956**	4	BOLT (M12X1.75X35-MM)	

M - METRIC PART

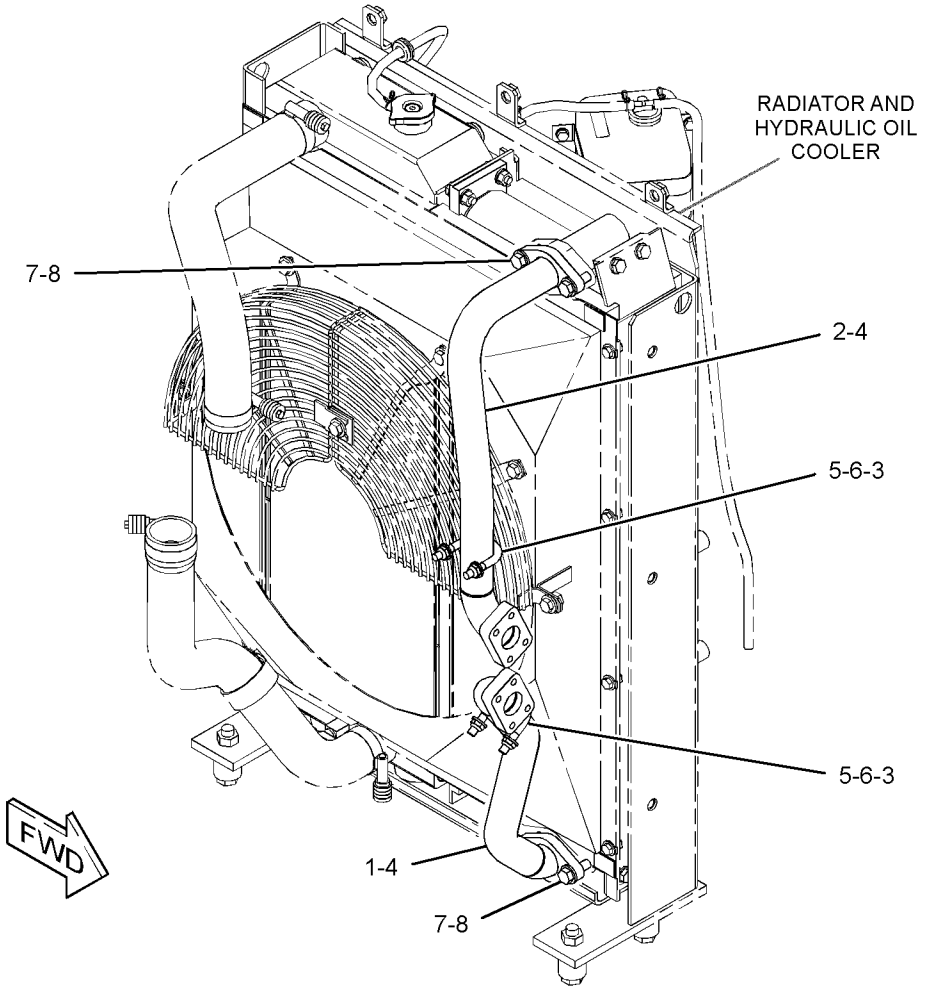

GRAPHIC #1 <END> g03119500

502-5312 LINES GP-HYDRAULIC OIL COOLER–REAR

S/N: RDE1-UP

PART OF 503-4904 HYDRAULIC AR

SMCS-1374 **i06783698**

NOTE	REF NO	GRAPHIC REF	PART NUMBER	QTY	PART NAME 1 2 3 4 5 6 (PRODUCT LEVEL)	SEE PAGE
I	1	1	**7I-1288**	1	HOSE AS	
Y	2	1	**171-0002**	1	VALVE GP-CHECK (OIL COOLER BYPASS) (REAR)	332
	3	1	**239-1568**	1	HOSE	
	4	1	**282-7482**	1	SUPPORT	
	5	1	**302-2872**	1	TUBE AS	
I	6	1	**391-6116**	1	HOSE AS	
I	7	1	**392-1965**	2	HOSE AS	
M	8	1	**101-7404**	4	BOLT-SOCKET HEAD (M10X1.5X30-MM)	
	9	1	*148-8339*	2	CONNECTOR AS	
					(EACH INCLUDES)	
		1	**6V-8716**	1	CONNECTOR (STRAIGHT)	
		1	**6V-9746**	1	SEAL-O-RING	
		1	**7M-8485**	1	SEAL-O-RING	
	10	1	*164-4180*	2	PLUG AS	
					(EACH INCLUDES)	
		1	**7M-8485**	1	SEAL-O-RING	
		1	**9S-4181**	1	PLUG (5/16-12-THD)	
	11	1	**1P-4578**	8	FLANGE-HALF	
	12	1	**4J-0522**	4	SEAL-O-RING	
	13	1	**4J-0527**	2	SEAL-O-RING	
	14	1	**6V-1876**	1	GROMMET	
	15	1	**7G-5984**	1	CLIP (TAB)	
	16	1	**7G-5985**	1	CLIP (SLOT)	
	17	1	**8T-4121**	20	WASHER-HARD (11X21X2.5-MM THK)	
M	18	1	**8T-4139**	2	BOLT (M12X1.75X30-MM)	
M	19	1	**8T-4179**	2	BOLT (M12X1.75X20-MM)	
M	20	1	**8T-4183**	4	BOLT (M12X1.75X40-MM)	
M	21	1	**8T-4196**	16	BOLT (M10X1.5X35-MM)	
	22	1	**8T-4223**	8	WASHER-HARD (13.5X25.5X3-MM THK)	
	23	1	**8T-6703**	2	CLAMP-HOSE	

I - REFER TO HYDRAULIC INFORMATION SYSTEM
M - METRIC PART
Y - SEPARATE ILLUSTRATION

502-5312 **LINES GP-HYDRAULIC OIL COOLER (**contd.**)** **i06783698**

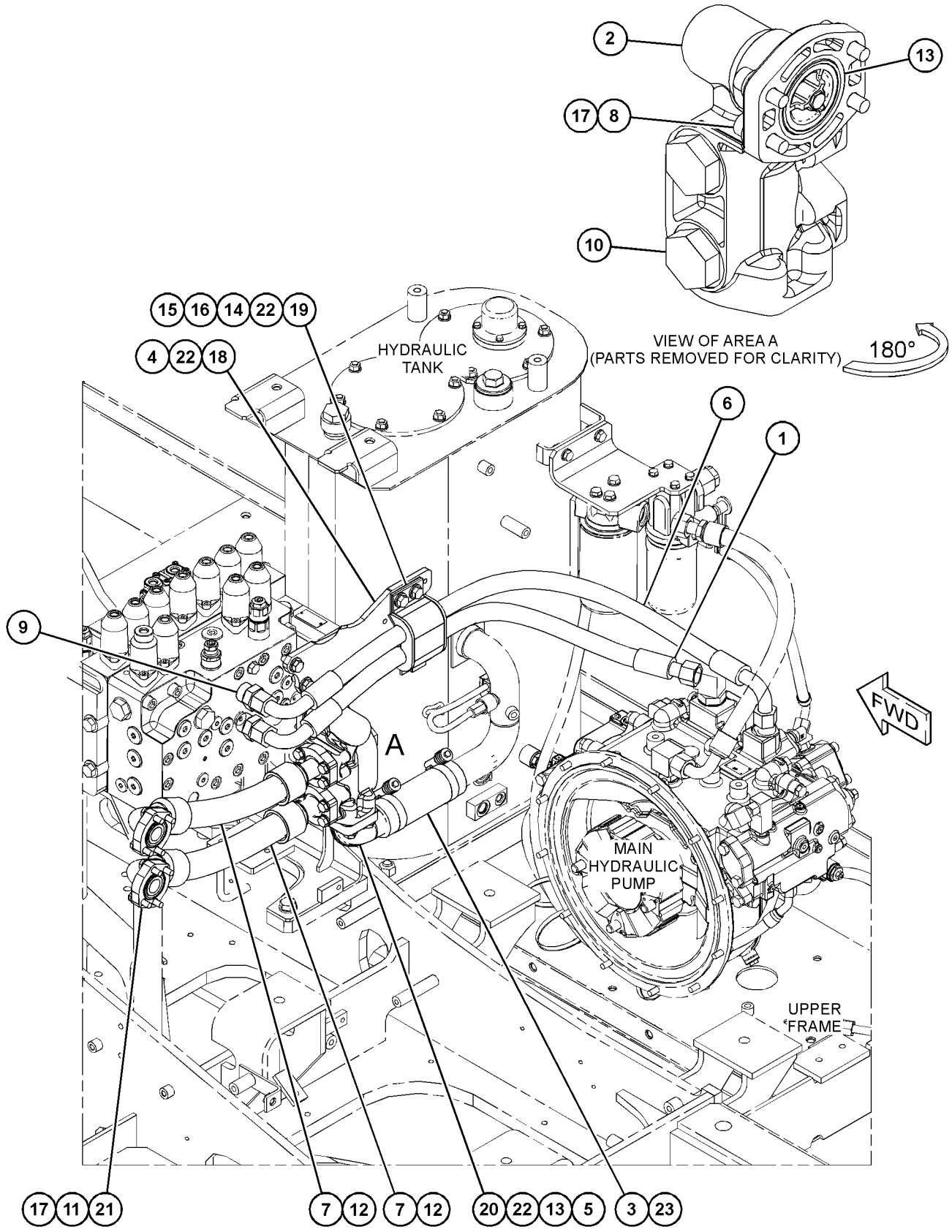

GRAPHIC #1 <END> g06130897

278-6672 LINES GP-PILOT—JOYSTICK, PEDALS

S/N: RDE1-UP

PART OF 506-8573 CAB AR, 503-4904 HYDRAULIC AR

SMCS-5057, 5059 **i05401710**

NOTE	REF NO	GRAPHIC REF	PART NUMBER	QTY	PART NAME 1 2 3 4 5 6 (PRODUCT LEVEL)	SEE PAGE
	1	2	**4I-9521**	2	BAND-MARKER (RED, L1)	
	2	2	**4I-9522**	2	BAND-MARKER (YELLOW, L2)	
	3	2	**4I-9523**	2	BAND-MARKER (BLUE, L3)	
	4	2	**4I-9524**	2	BAND-MARKER (BROWN, L4)	
	5	2	**4I-9525**	2	BAND-MARKER (ORANGE, R1)	
	6	2	**4I-9526**	2	BAND-MARKER (WHITE, R2)	
	7	2	**4I-9527**	2	BAND-MARKER (GREEN, R3)	
	8	2	**4I-9528**	2	BAND-MARKER (PURPLE, R4)	
	9	1	**7K-1181**	2	STRAP-CABLE	
I	10	2	**087-4402**	2	HOSE AS	
	11	1,2	**133-5813**	4	BAND-MARKER (GRAY, P)	
Y	12	1	**369-8503**	1	VALVE GP-PILOT (WITHOUT SHUTTLE)	346
	13	2	**168-9759**	1	BLOCK	
	14	2	**392-2185**	3	SUPPORT	
	15	1	**236-2838**	1	PLATE	
	16	2	**236-2843**	1	HOSE AS	
	17	2	**236-2844**	1	HOSE AS	
	18	1	**354-3834**	1	HOSE AS	
	19	2	**354-3825**	1	HOSE AS	
	20	2	**282-7206**	1	HOSE AS	
I	21	2	**292-7423**	1	HOSE AS	
I	22	2	**292-7424**	1	HOSE AS	
I	23	2	**292-7425**	1	HOSE AS	
I	24	2	**292-7427**	1	HOSE AS	
I	25	2	**292-7428**	1	HOSE AS	
	26	2	**354-3833**	1	HOSE AS	
	27	2	**292-7431**	1	SUPPORT AS	
	28	2	**292-7513**	1	SUPPORT	
	29	1	*148-8336*	11	CONNECTOR AS (45-DEG ELBOW)	
					(EACH INCLUDES)	
		1	**3J-1907**	1	SEAL-O-RING	
		1	**6V-8397**	1	SEAL-O-RING	
		1	**6V-8636**	1	CONNECTOR	
	30	2	*164-5624*	2	ELBOW AS	
					(EACH INCLUDES)	
		2	**3J-1907**	1	SEAL-O-RING	
		2	**6V-8398**	1	SEAL-O-RING	
		2	**9X-2085**	1	ELBOW	
	31	2	*148-8363*	2	ELBOW AS	
					(EACH INCLUDES)	
		2	**3K-0360**	1	SEAL-O-RING	
		2	**6V-8397**	1	SEAL-O-RING	
		2	**6V-9876**	1	ELBOW	
	32	1	*148-8366*	8	ELBOW AS	
					(EACH INCLUDES)	
		1	**6V-8397**	2	SEAL-O-RING	
		1	**6V-8987**	1	ELBOW	
	33	2	*148-8378*	8	ELBOW AS (90-DEG)	

278-6672 **LINES GP-PILOT (**contd.**)** **i05401710**

NOTE	REF NO	GRAPHIC REF	PART NUMBER	QTY	PART NAME 1 2 3 4 5 6 (PRODUCT LEVEL)	SEE PAGE
					(EACH INCLUDES)	
		2	**3J-1907**	1	SEAL-O-RING	
		2	**6V-8397**	1	SEAL-O-RING	
		2	**6V-8724**	1	ELBOW	
	34	2	*148-8407*	4	PLUG AS	
					(EACH INCLUDES)	
		2	**3J-1907**	1	SEAL-O-RING	
		2	**9S-4191**	1	PLUG (9/16-18-THD)	
	35	1	*164-5628*	3	CONNECTOR AS	
					(EACH INCLUDES)	
		1	**3J-1907**	1	SEAL-O-RING	
		1	**6V-8397**	1	SEAL-O-RING	
		1	**107-6631**	1	CONNECTOR-FILTER	
	36	1	**6V-9168**	8	NUT (11/16-16-THD)	
	37	1,2	**8T-4121**	18	WASHER-HARD (11X21X2.5-MM THK)	
M	38	1	**8T-4191**	6	BOLT (M10X1.5X16-MM)	
M	39	1,2	**8T-4137**	10	BOLT (M10X1.5X20-MM)	
M	40	2	**8T-4178**	2	BOLT (M10X1.5X90-MM)	
	41	1	**9X-8257**	8	WASHER (17.5X30X3.5-MM THK)	
	42	1	**272-4514**	1	HOSE AS	

I - REFER TO HYDRAULIC INFORMATION SYSTEM
M - METRIC PART
Y - SEPARATE ILLUSTRATION

278-6672 **LINES GP-PILOT (**contd.**)** **i05401710**

REFER TO ALL ILLUSTRATIONS OF
THIS GROUP FOR AUXILIARY VIEWS

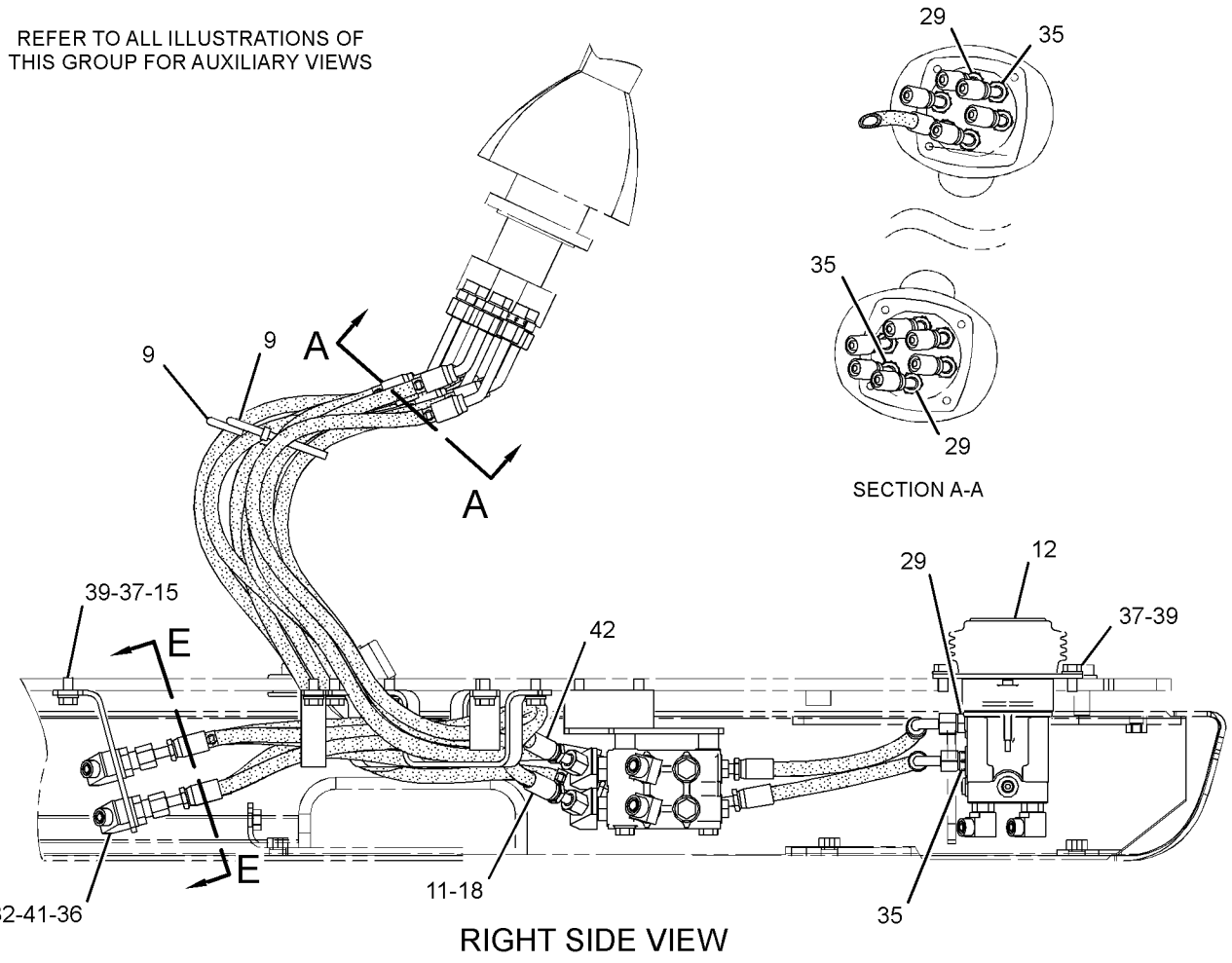

GRAPHIC #1 g03113018

278-6672 **LINES GP-PILOT (**contd.**)** **i05401710**

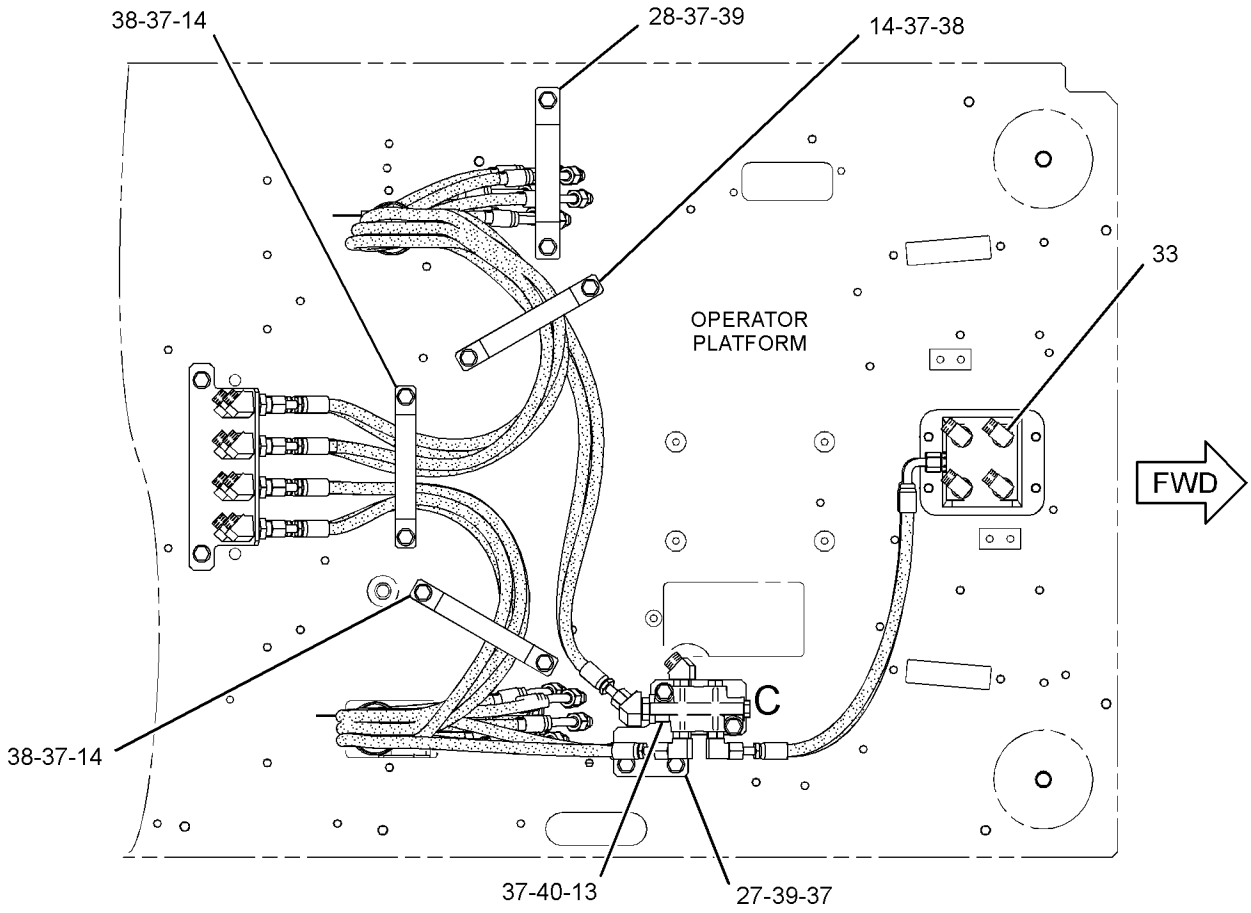

BOTTOM VIEW

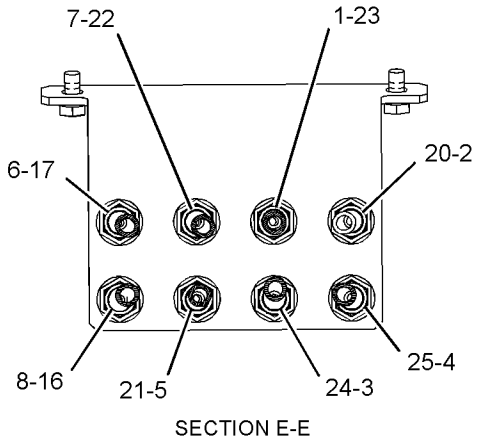

SECTION E-E

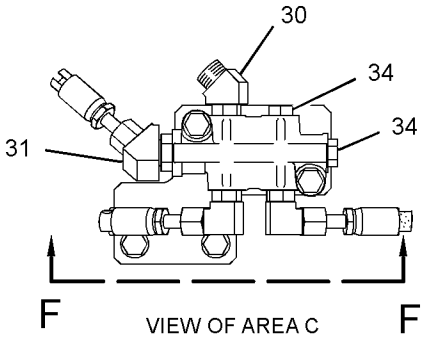

VIEW OF AREA C

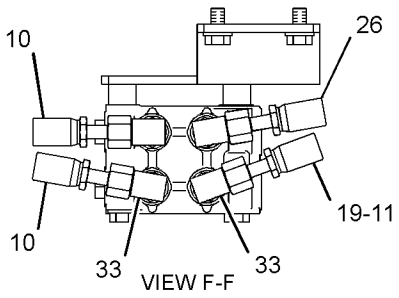

VIEW F-F

GRAPHIC #2 <END> g03123679

278-6673 LINES GP-PILOT—JOYSTICK, MAIN CONTROL VALVE

S/N: RDE1-UP

PART OF 503-4904 HYDRAULIC AR

SMCS-5057, 5059 **i05401717**

NOTE	REF NO	GRAPHIC REF	PART NUMBER	QTY	PART NAME 1 2 3 4 5 6 (PRODUCT LEVEL)	SEE PAGE
I	1	1	**087-5777**	1	HOSE AS	
	2	1	**4I-3941**	2	FITTING AS	
I	3	1	**4I-3988**	3	HOSE AS	
I	4	1	**4I-5933**	1	HOSE AS	
	5	1	**4I-9521**	6	BAND-MARKER (RED, L1)	
	6	1	**4I-9522**	6	BAND-MARKER (YELLOW, L2)	
	7	1	**4I-9523**	2	BAND-MARKER (BLUE, L3)	
	8	1	**4I-9524**	2	BAND-MARKER (BROWN, L4)	
	9	1	**4I-9525**	6	BAND-MARKER (ORANGE, R1)	
	10	1	**4I-9526**	6	BAND-MARKER (WHITE, R2)	
	11	1	**4I-9527**	2	BAND-MARKER (GREEN, R3)	
	12	1	**4I-9528**	2	BAND-MARKER (PURPLE, R4)	
I	13	1	**7I-8252**	2	HOSE AS	
	14	1	**7K-1181**	17	STRAP-CABLE	
I	15	1	**7Y-4199**	2	HOSE AS	
I	16	1	**4I-1037**	1	HOSE AS	
I	17	1	**104-8973**	1	HOSE AS	
I	18	1	**108-7360**	1	HOSE AS	
I	19	1	**363-6187**	1	HOSE AS	
	20	1	**115-8645**	4	GUARD	
	21	1	**133-5813**	2	BAND-MARKER (GRAY, P)	
	22	1	**309-5768**	1	SWITCH AS-PRESSURE (TRAVEL)	
	22A	1	**309-5768**	1	SWITCH AS-PRESSURE (IMPLEMENT, SWING)	
					(EACH INCLUDES)	
		1	**9X-3402**	2	SOCKET-CONNECTOR (16-GA TO 18-GA)	
					—OR—	
		1	**126-1768**	2	SOCKET-CONNECTOR (14-GA TO 16-GA)	
		1	**331-4226**	1	KIT-CONNECTING PLUG (2-PIN)	
					(INCLUDES PLUG AS, WEDGE & INTERFACE SEAL)	
	24	1	**292-7180**	1	GROMMET	
	25	1	*148-8336*	1	CONNECTOR AS (45-DEG ELBOW)	
		1	**3J-1907**	1	SEAL-O-RING	
		1	**6V-8397**	1	SEAL-O-RING	
		1	**6V-8636**	1	CONNECTOR	
	26	1	*148-8353*	4	ELBOW AS	
					(EACH INCLUDES)	
		1	**3J-1907**	1	SEAL-O-RING	
		1	**6V-8397**	1	SEAL-O-RING	
		1	**6V-9001**	1	ELBOW	
	27	1	*148-8378*	3	ELBOW AS (90-DEG)	
					(EACH INCLUDES)	
		1	**3J-1907**	1	SEAL-O-RING	
		1	**6V-8397**	1	SEAL-O-RING	
		1	**6V-8724**	1	ELBOW	
	28	1	*148-8407*	2	PLUG AS	
					(EACH INCLUDES)	
		1	**3J-1907**	1	SEAL-O-RING	
		1	**9S-4191**	1	PLUG (9/16-18-THD)	

278-6673 **LINES GP-PILOT (**contd.**)** **i05401717**

NOTE	REF NO	GRAPHIC REF	PART NUMBER	QTY	PART NAME 1 2 3 4 5 6 (PRODUCT LEVEL)	SEE PAGE
	29	1	*148-8435*	5	TEE AS	
					(EACH INCLUDES)	
		1	**3J-1907**	1	SEAL-O-RING	
		1	**6V-8397**	2	SEAL-O-RING	
		1	**6V-8781**	1	TEE	
	30	1	*150-3036*	1	ELBOW AS	
		1	**3J-1907**	1	SEAL-O-RING	
		1	**6V-8397**	1	SEAL-O-RING	
		1	**8T-1905**	1	ELBOW	
	31	1	*150-4027*	1	TEE AS	
		1	**3E-2310**	1	TEE	
		1	**3J-1907**	1	SEAL-O-RING	
		1	**6V-8397**	1	SEAL-O-RING	
	32	1	*148-8338*	1	CONNECTOR AS	
		1	**3J-1907**	1	SEAL-O-RING	
		1	**6V-8397**	1	SEAL-O-RING	
		1	**8T-0075**	1	CONNECTOR	

I - REFER TO HYDRAULIC INFORMATION SYSTEM

278-6673 **LINES GP-PILOT (**contd.**)** **i05401717**

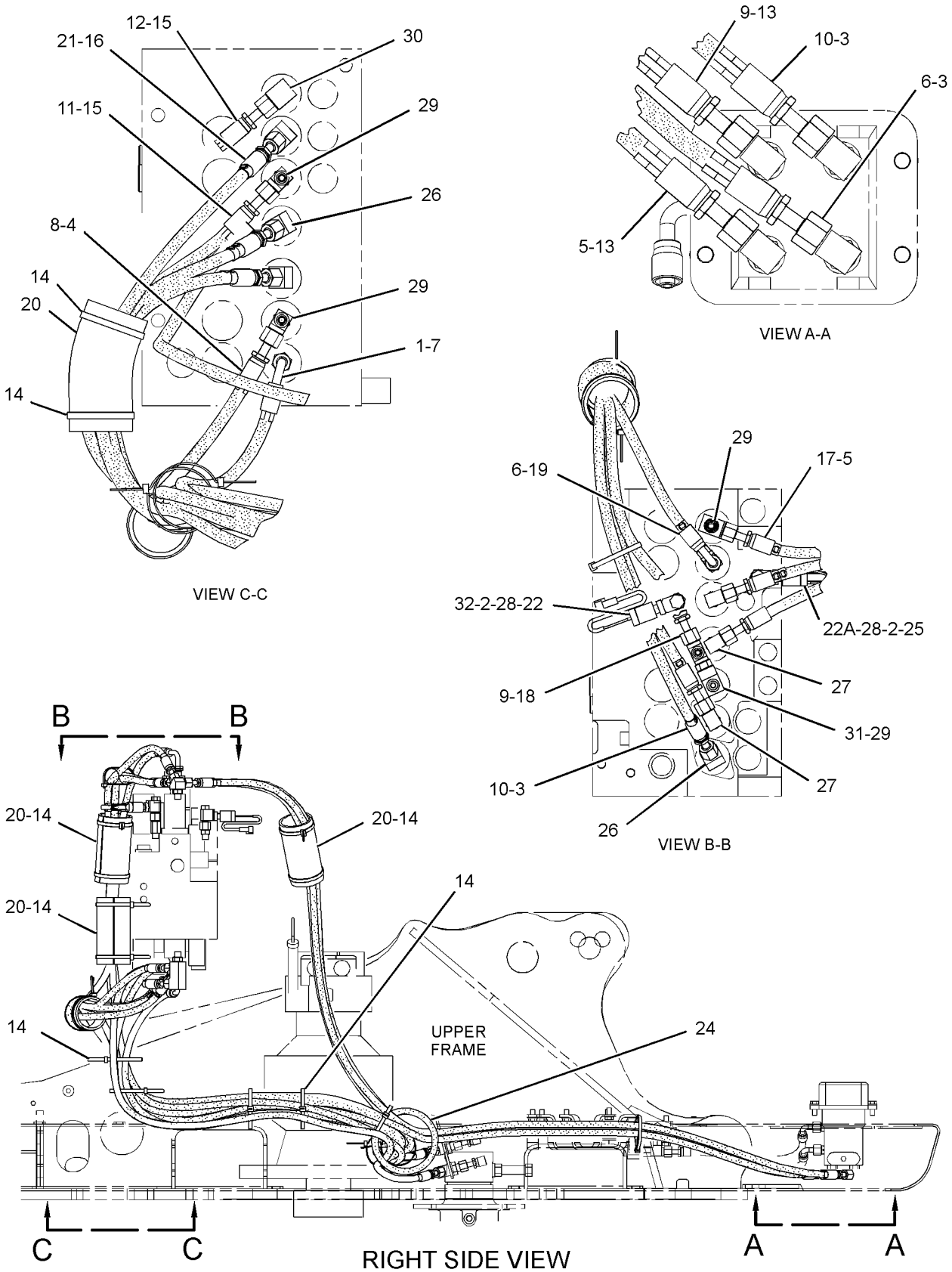

GRAPHIC #1

<END>

g02425437

278-6714 LINES GP-PILOT

S/N: RDE1-UP

SMCS-5057, 5059 **i06828142**

NOTE	REF NO	GRAPHIC REF	PART NUMBER	QTY	PART NAME 1 2 3 4 5 6 (PRODUCT LEVEL)	SEE PAGE
	1	1	**168-9759**	1	BLOCK	
	2	1	**285-2576**	1	SUPPORT AS	
I	3	1	**296-6960**	1	HOSE AS	
	4	1	*148-8378*	2	ELBOW AS (90-DEG)	
					(EACH INCLUDES)	
		1	**3J-1907**	1	SEAL-O-RING	
		1	**6V-8397**	1	SEAL-O-RING	
		1	**6V-8724**	1	ELBOW	
B	5	1	*148-8407*	9	PLUG AS	
					(EACH INCLUDES)	
		1	**3J-1907**	1	SEAL-O-RING	
		1	**9S-4191**	1	PLUG (9/16-18-THD)	
	6	1	*148-8411*	2	PLUG AS	
					(EACH INCLUDES)	
		1	**3K-0360**	1	SEAL-O-RING	
		1	**9S-4185**	1	PLUG (3/4-16-THD)	
	7	1	**8T-4121**	4	WASHER-HARD (11X21X2.5-MM THK)	
M	8	1	**8T-4136**	2	BOLT (M10X1.5X25-MM)	
M	9	1	**8T-4198**	2	BOLT (M10X1.5X100-MM)	

B - USE AS REQUIRED
I - REFER TO HYDRAULIC INFORMATION SYSTEM
M - METRIC PART

278-6714 **LINES GP-PILOT (**contd.**)** **i06828142**

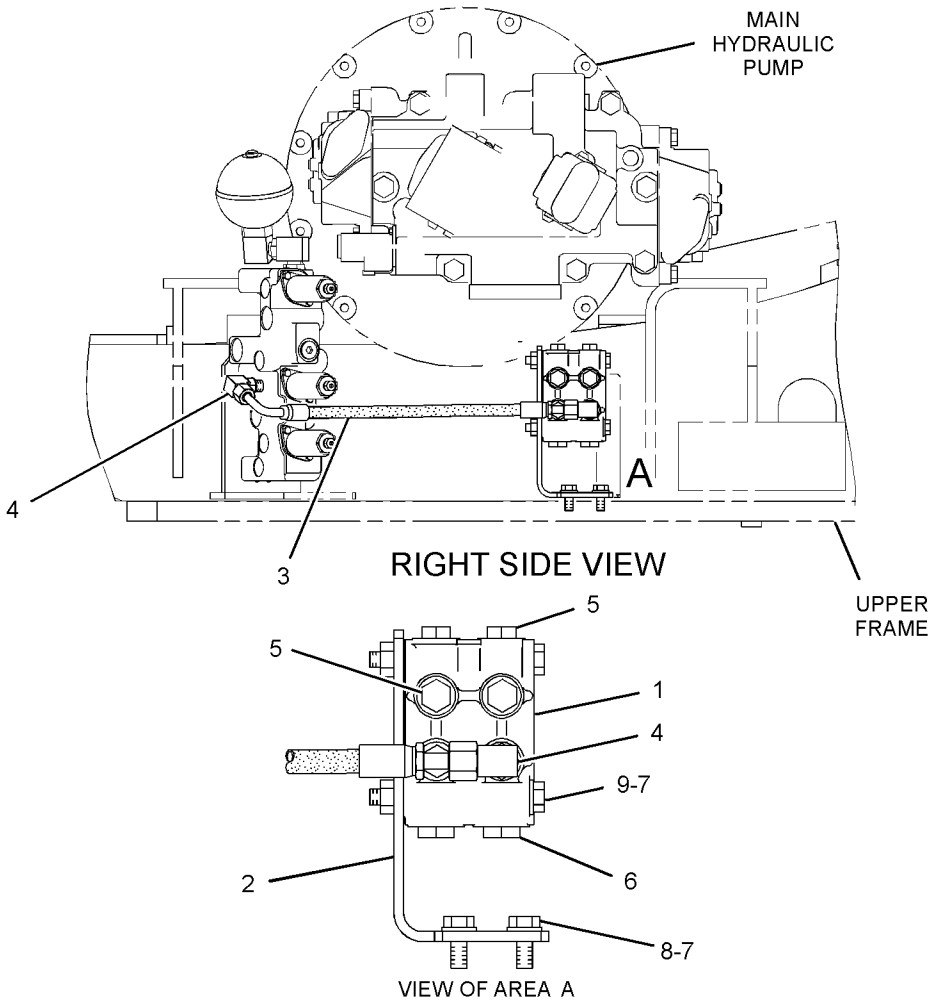

GRAPHIC #1 <END> g01441427

282-7411 LINES GP-PILOT

S/N: RDE1-UP

PART OF 494-3642 CONTROL AR-AUXILIARY

SMCS-5057, 5059 **i06814219**

NOTE	REF NO	GRAPHIC REF	PART NUMBER	QTY	PART NAME 1 2 3 4 5 6 (PRODUCT LEVEL)	SEE PAGE
	1	1	**7K-1181**	1	STRAP-CABLE	
I	2	1	**087-4531**	1	HOSE AS	
I	3	1	**087-5767**	1	HOSE AS	
	4	1	*150-4027*	1	TEE AS	
		1	**3E-2310**	1	TEE	
		1	**3J-1907**	1	SEAL-O-RING	
		1	**6V-8397**	1	SEAL-O-RING	
	5	1	*164-5628*	1	CONNECTOR AS	
		1	**3J-1907**	1	SEAL-O-RING	
		1	**6V-8397**	1	SEAL-O-RING	
		1	**107-6631**	1	CONNECTOR-FILTER	
	6	1	*164-5629*	1	FITTING AS	
		1	**3J-1907**	1	SEAL-O-RING	
		1	**108-7516**	1	FITTING	
	7	1	*164-6874*	1	FITTING AS-ELBOW (QUICK DISCONNECT, MALE)	
		1	**3J-1907**	1	SEAL-O-RING	
		1	**085-7356**	1	FITTING	
Y	8	1	**185-0462**	1	VALVE GP-SHUTTLE	356
	9	1	**309-5769**	2	SWITCH AS-PRESSURE	
	10	1	**387-3699**	1	BRACKET	
	11	1	*148-8336*	9	CONNECTOR AS (45-DEG ELBOW)	
					(EACH INCLUDES)	
		1	**3J-1907**	1	SEAL-O-RING	
		1	**6V-8397**	1	SEAL-O-RING	
		1	**6V-8636**	1	CONNECTOR	
	12	1	*148-8353*	10	ELBOW AS	
					(EACH INCLUDES)	
		1	**3J-1907**	1	SEAL-O-RING	
		1	**6V-8397**	1	SEAL-O-RING	
		1	**6V-9001**	1	ELBOW	
	13	1	*148-8378*	1	ELBOW AS (90-DEG)	
		1	**3J-1907**	1	SEAL-O-RING	
		1	**6V-8397**	1	SEAL-O-RING	
		1	**6V-8724**	1	ELBOW	
	14	1	*148-8407*	1	PLUG AS	
		1	**3J-1907**	1	SEAL-O-RING	
		1	**9S-4191**	1	PLUG (9/16-18-THD)	
	15	1	**8T-4121**	7	WASHER-HARD (11X21X2.5-MM THK)	
M	16	1	**8T-4136**	3	BOLT (M10X1.5X25-MM)	
M	17	1	**8T-4191**	4	BOLT (M10X1.5X16-MM)	

I - REFER TO HYDRAULIC INFORMATION SYSTEM
M - METRIC PART
Y - SEPARATE ILLUSTRATION

282-7411 **LINES GP-PILOT (**contd.**)** **i06814219**

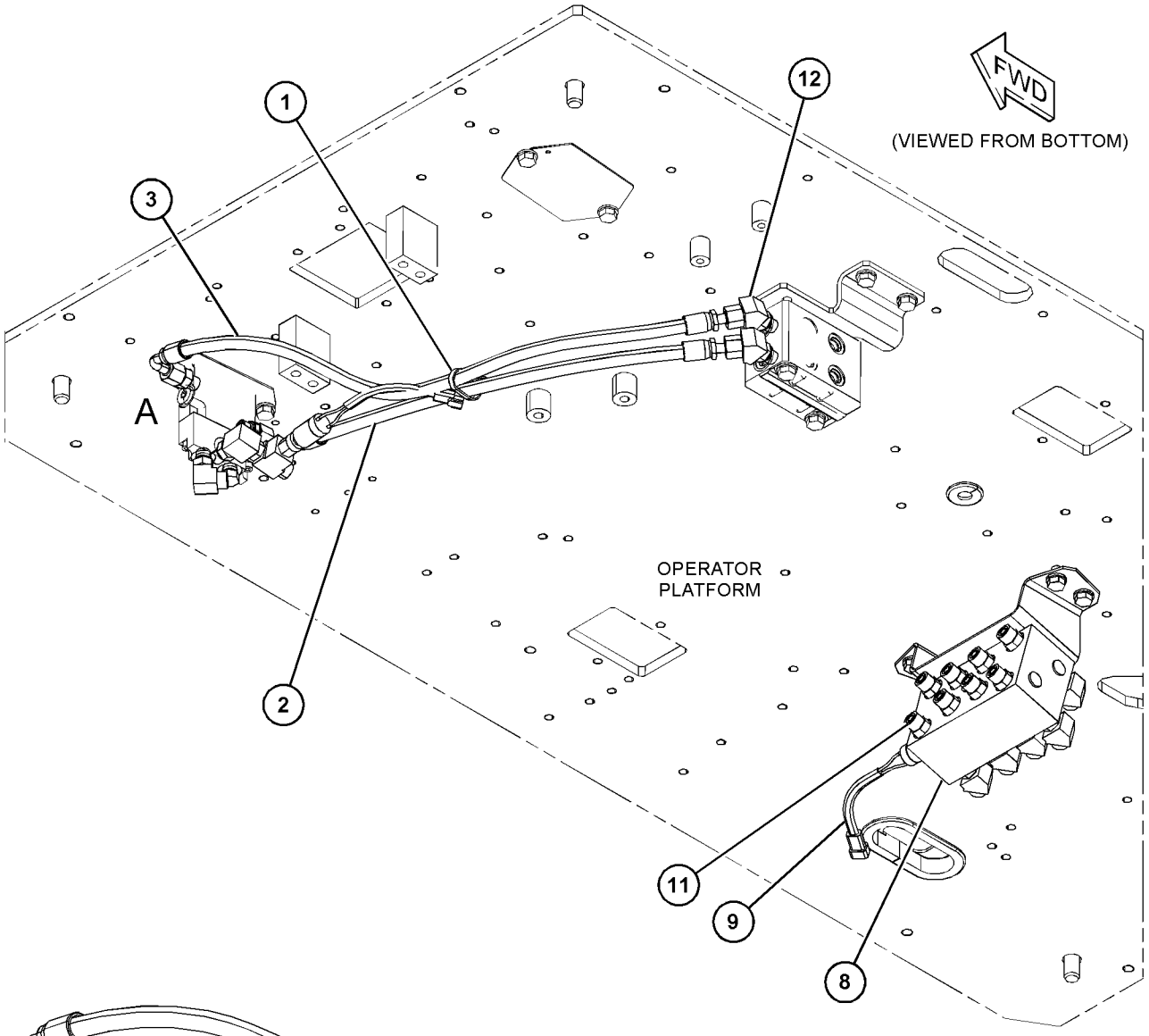

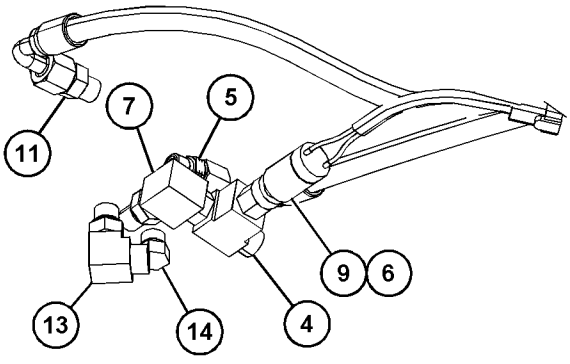

VIEW OF AREA A

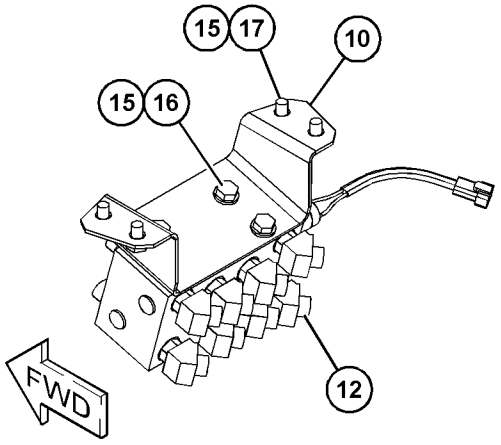

GRAPHIC #1 <END> g06131605

502-5313 LINES GP-PILOT—PUMP

S/N: RDE1-UP

PART OF 503-4904 HYDRAULIC AR

SMCS-5057, 5059 **i06783532**

NOTE	REF NO	GRAPHIC REF	PART NUMBER	QTY	PART NAME 1 2 3 4 5 6 (PRODUCT LEVEL)	SEE PAGE
	1	1	**7K-1181**	4	STRAP-CABLE	
	2	1	*148-8336*	1	CONNECTOR AS (45-DEG ELBOW)	
		1	**3J-1907**	1	SEAL-O-RING	
		1	**6V-8397**	1	SEAL-O-RING	
		1	**6V-8636**	1	CONNECTOR	
	3	1	*168-1968*	1	TEE AS	
		1	**3J-1907**	1	SEAL-O-RING	
		1	**6V-8397**	1	SEAL-O-RING	
		1	**126-6872**	1	TEE	
I	4	1	**178-5955**	1	HOSE AS	
	5	1	**221-8912**	2	FLANGE	
I	6	1	**245-5093**	1	HOSE AS	
I	7	1	**248-9692**	1	HOSE AS	
	8	1	**260-2180**	2	SENSOR AS-PRESSURE (MAIN HYDRAULIC PUMP)	
					(EACH INCLUDES)	
		1	**095-1777**	1	RING-BACKUP	
		1	**260-2191**	1	SEAL-O-RING	
	9	1	*281-5898*	1	TEE AS	
		1	**3J-1907**	1	SEAL-O-RING	
		1	**6V-8398**	2	SEAL-O-RING	
		1	**153-6270**	1	TEE	
	10	1	*285-2663*	1	FITTING AS (QUICK DISCONNECT, MALE)	
		1	**3J-1907**	1	SEAL-O-RING	
		1	**285-2664**	1	FITTING	
I	11	1	**333-7098**	1	HOSE AS	
I	12	1	**381-5872**	1	HOSE AS	
	13	1	**420-0036**	1	HOSE AS	
	14	1	*148-8327*	1	CONNECTOR AS	
		1	**3D-2824**	1	SEAL-O-RING	
		1	**6V-8637**	1	CONNECTOR	
		1	**6V-9746**	1	SEAL-O-RING	
	15	1	*148-8347*	1	ELBOW AS	
		1	**3D-2824**	1	SEAL-O-RING	
		1	**6V-9007**	1	ELBOW	
		1	**6V-9746**	1	SEAL-O-RING	
	16	1	*148-8353*	1	ELBOW AS	
		1	**3J-1907**	1	SEAL-O-RING	
		1	**6V-8397**	1	SEAL-O-RING	
		1	**6V-9001**	1	ELBOW	
	17	1	*148-8354*	1	ELBOW AS	
		1	**3K-0360**	1	SEAL-O-RING	
		1	**6V-8398**	1	SEAL-O-RING	
		1	**6V-9002**	1	ELBOW	
	18	1	*148-8367*	1	ELBOW AS	
		1	**6V-8397**	1	SEAL-O-RING	
		1	**6V-9850**	1	ELBOW	
	19	1	*150-3036*	1	ELBOW AS	

502-5313 **LINES GP-PILOT (**contd.**)** **i06783532**

NOTE	REF NO	GRAPHIC REF	PART NUMBER	QTY	PART NAME 1 2 3 4 5 6 (PRODUCT LEVEL)	SEE PAGE
		1	**3J-1907**	1	SEAL-O-RING	
		1	**6V-8397**	1	SEAL-O-RING	
		1	**8T-1905**	1	ELBOW	
	20	1	*153-6237*	1	ELBOW AS	
		1	**3D-2824**	1	SEAL-O-RING	
		1	**6V-9004**	1	ELBOW	
		1	**6V-9746**	1	SEAL-O-RING	
	21	1	*164-5567*	4	COUPLER AS-QUICK DISCONNECT (MALE)	
					(EACH INCLUDES)	
		1	**6V-3965**	1	FITTING (QUICK DISCONNECT)	
		1	**214-7568**	1	SEAL-O-RING	
	22	1	**6V-0852**	4	CAP-DUST	
M	23	1	**8T-4189**	4	BOLT (M8X1.25X20-MM)	
	24	1	**8T-4224**	4	WASHER-HARD (8.8X16X2-MM THK)	

I - REFER TO HYDRAULIC INFORMATION SYSTEM
M - METRIC PART

502-5313 **LINES GP-PILOT (**contd.**)** **i06783532**

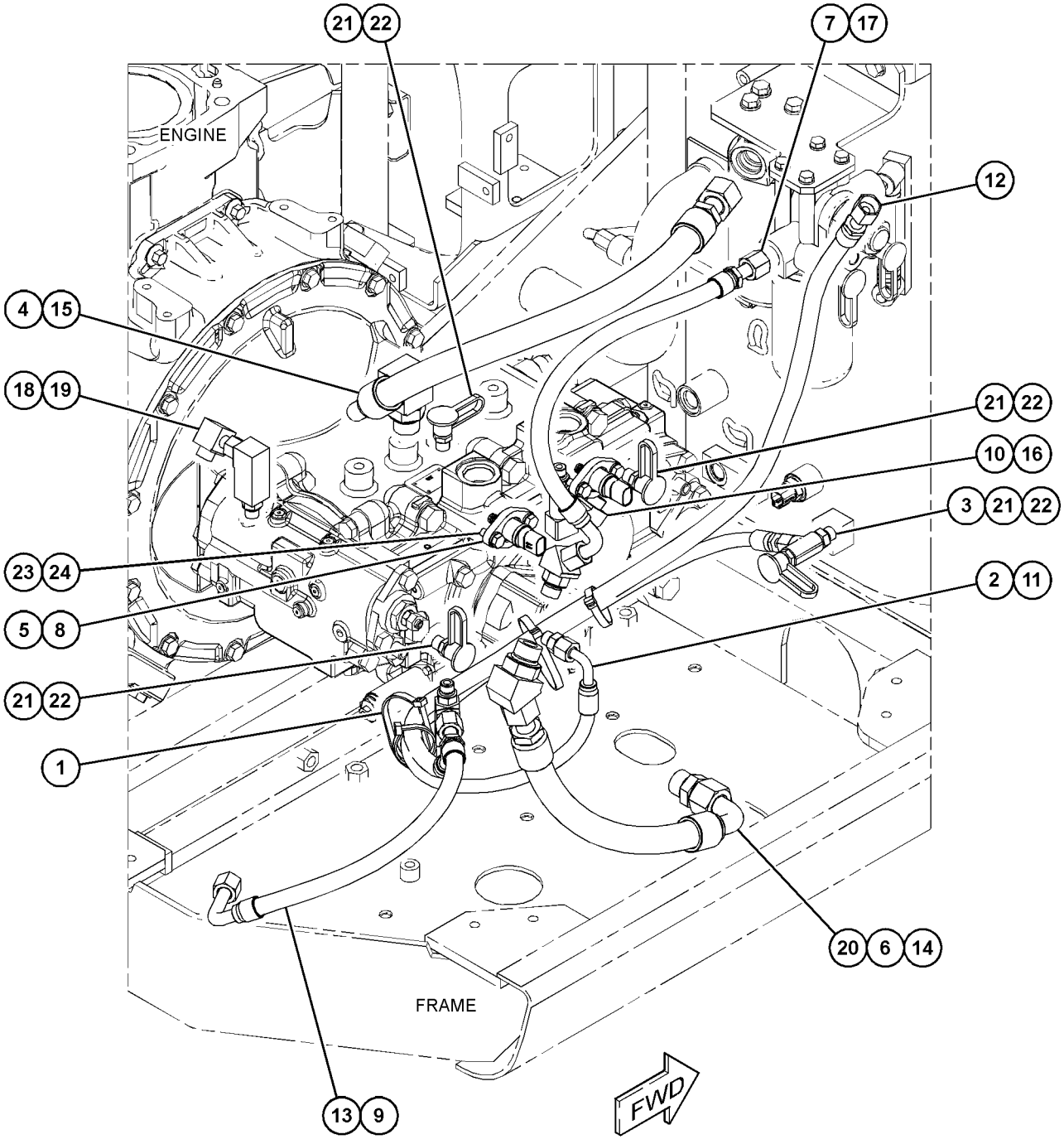

GRAPHIC #1 <END> g06131172

502-5314 LINES GP-PILOT

S/N: RDE1-UP

PART OF 503-4904 HYDRAULIC AR

SMCS-5057, 5059 **i06810016**

NOTE	REF NO	GRAPHIC REF	PART NUMBER	QTY	PART NAME 1 2 3 4 5 6 (PRODUCT LEVEL)	SEE PAGE
I	1	2	**4I-0800**	1	HOSE AS	
I	2	2	**4I-1671**	1	HOSE AS	
I	3	4	**4I-3994**	1	HOSE AS	
I	4	2	**4I-5900**	1	HOSE AS	
	5	3	**4I-6039**	1	GROMMET	
	6	4	**4I-9521**	4	BAND-MARKER (RED, L1)	
	7	1	**4I-9522**	2	BAND-MARKER (YELLOW, L2)	
	8	1,2,4	**4I-9523**	12	BAND-MARKER (BLUE, L3)	
	9	4	**4I-9524**	4	BAND-MARKER (BROWN, L4)	
	10	2	**4I-9525**	2	BAND-MARKER (ORANGE, R1)	
	11	1,2,4	**4I-9527**	8	BAND-MARKER (GREEN, R3)	
	12	4	**4I-9528**	4	BAND-MARKER (PURPLE, R4)	
I	13	4	**5I-8853**	1	HOSE AS	
	14	2	**7K-1181**	13	STRAP-CABLE	
I	15	2	**087-5767**	1	HOSE AS	
I	16	2	**087-5777**	1	HOSE AS	
I	17	2	**104-8950**	1	HOSE AS	
I	18	4	**104-8973**	1	HOSE AS	
I	19	2	**108-7375**	1	HOSE AS	
	20	2	**115-8645**	4	GUARD	
	21	3	**129-3400**	1	GUARD	
I	22	1	**129-5959**	1	HOSE AS	
	23	4	**133-5813**	2	BAND-MARKER (GRAY, P)	
	24	1	*148-8336*	9	CONNECTOR AS (45-DEG ELBOW)	
					(EACH INCLUDES)	
		1	**3J-1907**	1	SEAL-O-RING	
		1	**6V-8397**	1	SEAL-O-RING	
		1	**6V-8636**	1	CONNECTOR	
	25	3	*148-8338*	1	CONNECTOR AS	
		3	**3J-1907**	1	SEAL-O-RING	
		3	**6V-8397**	1	SEAL-O-RING	
		3	**8T-0075**	1	CONNECTOR	
	26	2	*148-8435*	3	TEE AS	
					(EACH INCLUDES)	
		2	**3J-1907**	1	SEAL-O-RING	
		2	**6V-8397**	2	SEAL-O-RING	
		2	**6V-8781**	1	TEE	
	27	2	*150-4027*	1	TEE AS	
		2	**3E-2310**	1	TEE	
		2	**3J-1907**	1	SEAL-O-RING	
		2	**6V-8397**	1	SEAL-O-RING	
	28	2	*164-5628*	1	CONNECTOR AS	
		2	**3J-1907**	1	SEAL-O-RING	
		2	**6V-8397**	1	SEAL-O-RING	
		2	**107-6631**	1	CONNECTOR-FILTER	
	29	1	*164-6869*	1	CONNECTOR AS	
		1	**3K-0360**	1	SEAL-O-RING	
		1	**6V-8398**	1	SEAL-O-RING	

502-5314 **LINES GP-PILOT (**contd.**)** **i06810016**

NOTE	REF NO	GRAPHIC REF	PART NUMBER	QTY	PART NAME 1 2 3 4 5 6 (PRODUCT LEVEL)	SEE PAGE
		1	**128-9001**	1	CONNECTOR-FILTER	
Y	30	3	**164-6979**	1	VALVE GP-SHUTTLE	355
Y	31	1	*164-6981*	1	ACCUMULATOR GP-HYDRAULIC (CHARGED)	200
	32	3	**176-4791**	1	BLOCK	
I	33	2	**184-9420**	1	HOSE AS	
I	34	2	**187-5741**	1	HOSE AS	
	35	1	**187-7028**	1	SUPPORT AS	
I	36	2	**199-1914**	1	HOSE AS	
I	37	2	**207-6418**	1	HOSE AS	
Y	38	1	**215-5037**	1	MANIFOLD GP-CONTROL (PILOT OIL SUPPLY)	304
I	39	4	**218-1183**	1	HOSE AS	
I	40	2	**218-1335**	1	HOSE AS	
I	41	4	**257-3023**	1	HOSE AS	
I	42	2	**292-7523**	1	HOSE AS	
	43	1	*296-7059*	2	FITTING AS	
					(EACH INCLUDES)	
		1	**3K-0360**	1	SEAL-O-RING	
		1	**178-5883**	1	FITTING	
I	44	2	**307-4969**	1	HOSE AS	
Y	45	2	**310-0210**	1	VALVE GP-PRESSURE REDUCING (BOOM, SWING PRIORITY)	348
	46	3	**317-4749**	1	SUPPORT AS	
I	47	1	**317-4846**	1	HOSE AS	
I	48	4	**320-0007**	1	HOSE AS	
I	49	4	**320-0156**	1	HOSE AS	
I	50	2	**358-7523**	1	HOSE AS	
I	51	2	**363-2302**	1	HOSE AS	
Y	52	3	*418-6282*	1	CLAMP GP-HYDRAULIC LINES	204
Y	53	3	*418-6286*	1	CLAMP GP-HYDRAULIC LINES	207
I	54	1	**502-9445**	1	HOSE AS	
I	55	1	**502-9448**	1	HOSE AS	
I	56	4	**502-9479**	1	HOSE AS	
	57	1	*148-8340*	3	CONNECTOR AS	
					(EACH INCLUDES)	
		1	**3K-0360**	1	SEAL-O-RING	
		1	**6V-8398**	1	SEAL-O-RING	
		1	**6V-8639**	1	CONNECTOR	
	58	3	*148-8353*	5	ELBOW AS	
					(EACH INCLUDES)	
		3	**3J-1907**	1	SEAL-O-RING	
		3	**6V-8397**	1	SEAL-O-RING	
		3	**6V-9001**	1	ELBOW	
	59	3	*148-8365*	1	ELBOW AS	
		3	**3J-1907**	1	SEAL-O-RING	
		3	**6V-8398**	1	SEAL-O-RING	
		3	**8T-6876**	1	ELBOW	
	60	3	*148-8367*	1	ELBOW AS	
		3	**6V-8397**	1	SEAL-O-RING	
		3	**6V-9850**	1	ELBOW	
	61	2	*148-8378*	10	ELBOW AS (90-DEG)	
					(EACH INCLUDES)	
		2	**3J-1907**	1	SEAL-O-RING	

502-5314 **LINES GP-PILOT (**contd.**)** **i06810016**

NOTE	REF NO	GRAPHIC REF	PART NUMBER	QTY	PART NAME 1 2 3 4 5 6 (PRODUCT LEVEL)	SEE PAGE
		2	**6V-8397**	1	SEAL-O-RING	
		2	**6V-8724**	1	ELBOW	
	62	1	**148-8407**	10	PLUG AS	
					(EACH INCLUDES)	
		1	**3J-1907**	1	SEAL-O-RING	
		1	**9S-4191**	1	PLUG (9/16-18-THD)	
	63	1	*148-8411*	1	PLUG AS	
		1	**3K-0360**	1	SEAL-O-RING	
		1	**9S-4185**	1	PLUG (3/4-16-THD)	
	64	3	*148-8428*	1	TEE AS	
		3	**3K-0360**	1	SEAL-O-RING	
		3	**6V-8398**	2	SEAL-O-RING	
		3	**6V-8782**	1	TEE	
	65	2	*148-8433*	1	TEE AS	
		2	**6V-8397**	2	SEAL-O-RING	
		2	**6V-9836**	1	TEE-SWIVEL	
	66	2	*150-3036*	3	ELBOW AS	
					(EACH INCLUDES)	
		2	**3J-1907**	1	SEAL-O-RING	
		2	**6V-8397**	1	SEAL-O-RING	
		2	**8T-1905**	1	ELBOW	
	67	2	*164-6874*	1	FITTING AS-ELBOW (QUICK DISCONNECT, MALE)	
		2	**3J-1907**	1	SEAL-O-RING	
		2	**085-7356**	1	FITTING	
	68	3	**204-2281**	1	STRAP-CABLE	
M	69	3	**7X-0818**	2	BOLT (M8X1.25X45-MM)	
	70	3	**8T-4121**	4	WASHER-HARD (11X21X2.5-MM THK)	
M	71	3	**8T-4136**	2	BOLT (M10X1.5X25-MM)	
M	72	3	**8T-4137**	2	BOLT (M10X1.5X20-MM)	
M	73	1	**8T-4139**	3	BOLT (M12X1.75X30-MM)	
M	74	3	**8T-4192**	2	BOLT (M12X1.75X25-MM)	
	75	1,3	**8T-4223**	5	WASHER-HARD (13.5X25.5X3-MM THK)	
M	76	2	**8T-5005**	2	BOLT (M10X1.5X70-MM)	
M	77	3	**8T-6869**	2	BOLT (M8X1.25X60-MM)	

I - REFER TO HYDRAULIC INFORMATION SYSTEM
M - METRIC PART
Y - SEPARATE ILLUSTRATION

502-5314 **LINES GP-PILOT (**contd.**)** **i06810016**

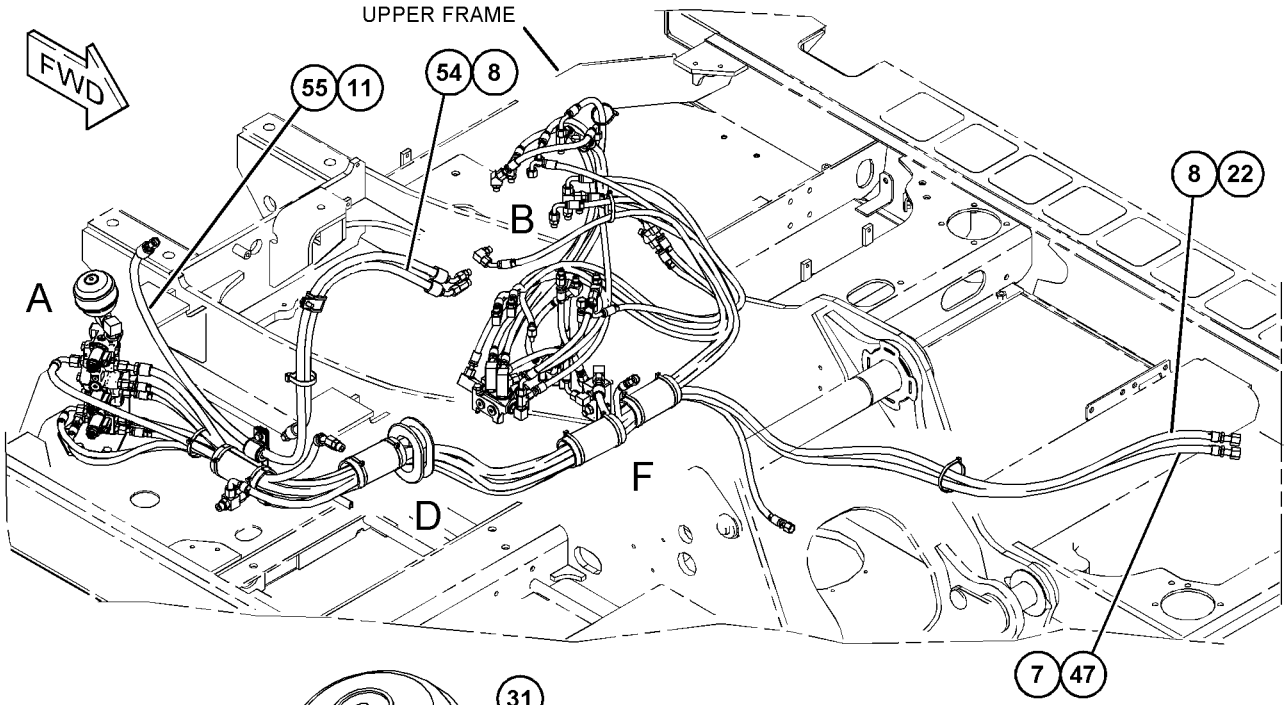

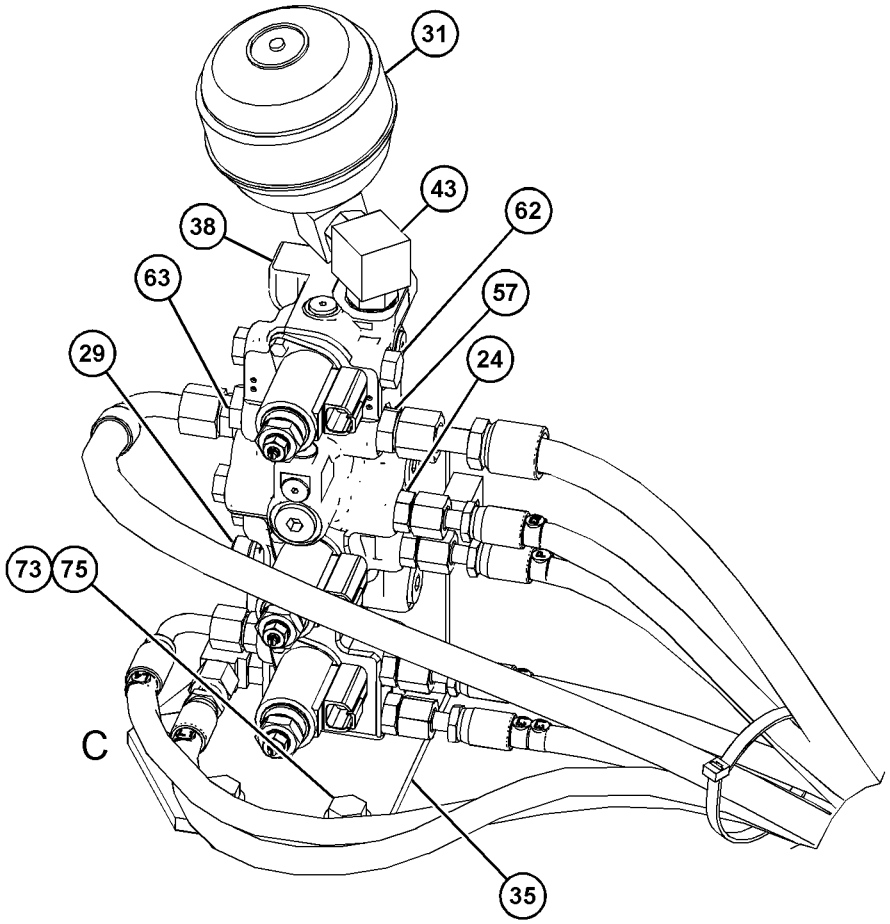

VIEW OF AREA A

REFER TO ALL ILLUSTRATIONS OF THIS GROUP FOR AUXILIARY VIEWS

GRAPHIC #1

g06132791

502-5314 **LINES GP-PILOT (**contd.**)** **i06810016**

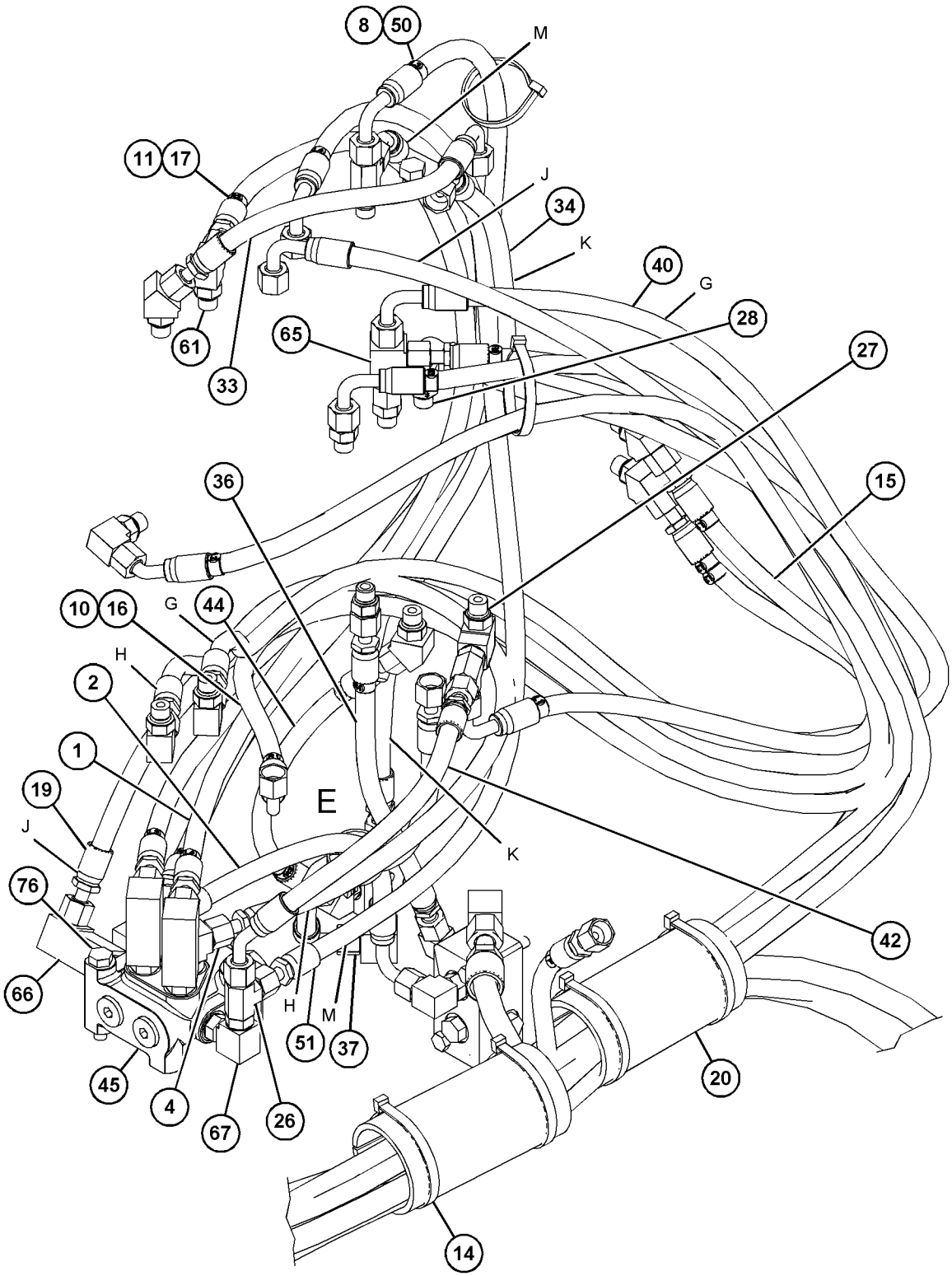

VIEW OF AREA B

REFER TO ALL ILLUSTRATIONS OF THIS GROUP FOR AUXILIARY VIEWS

GRAPHIC #2

g06132795

502-5314 **LINES GP-PILOT (**contd.**)** **i06810016**

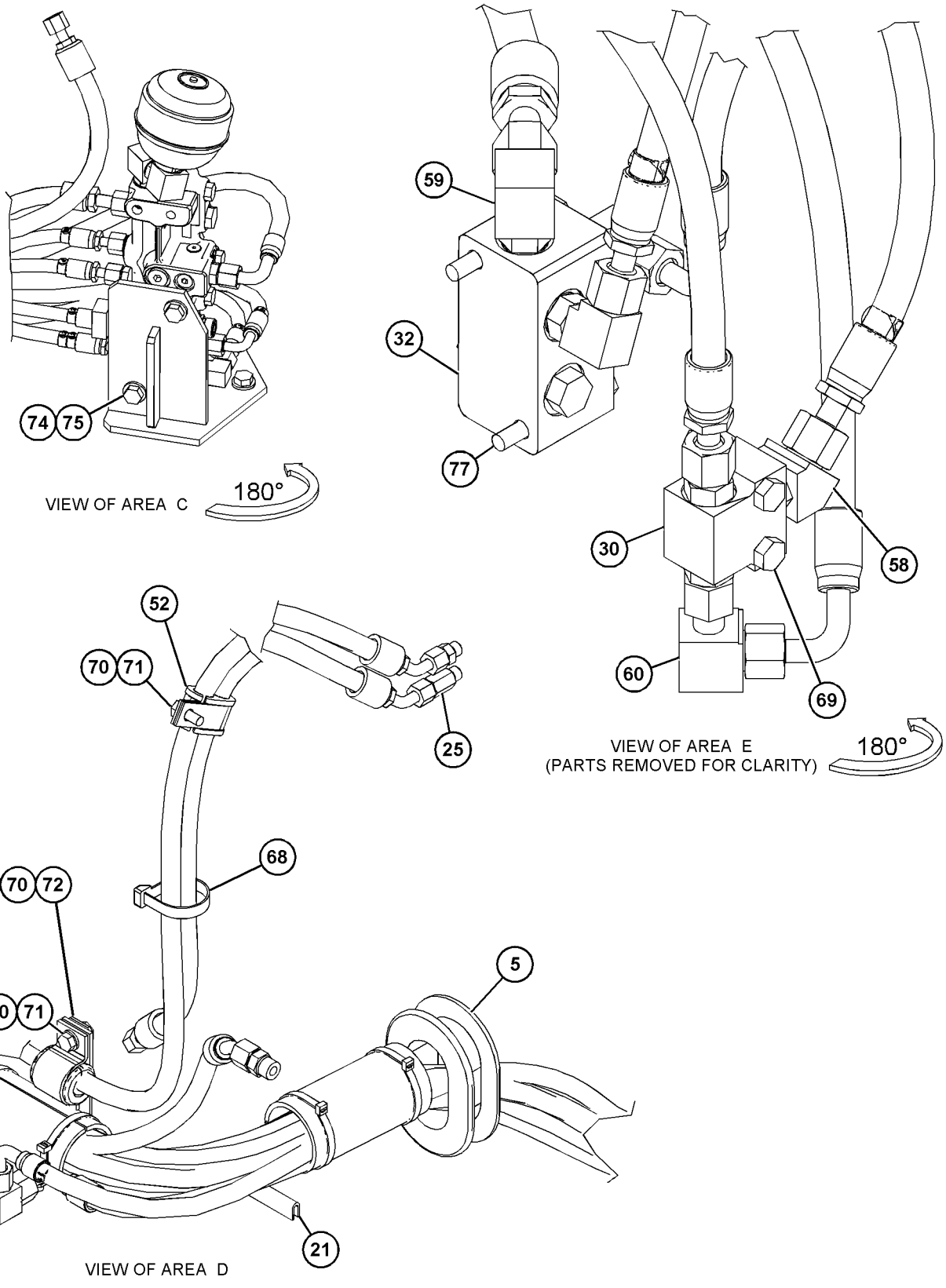

GRAPHIC #3

g06132808

502-5314 **LINES GP-PILOT (**contd.**)** **i06810016**

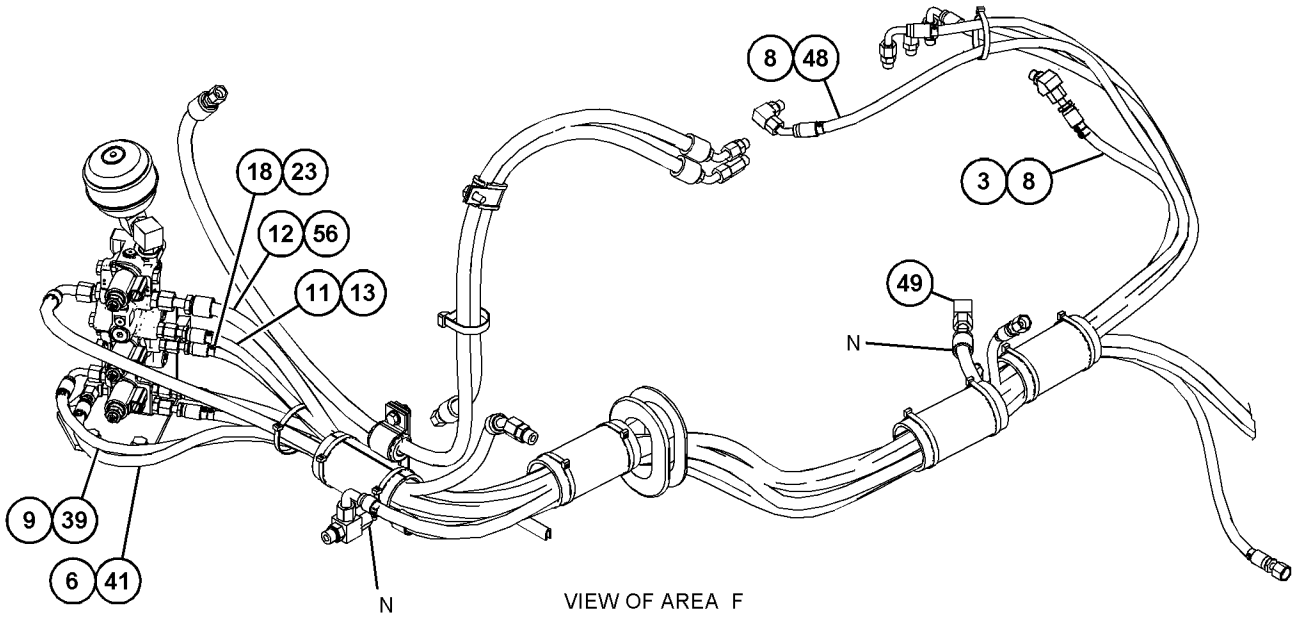

VIEW OF AREA F
(PARTS REMOVED FOR CLARITY)

GRAPHIC #4 <END> g06132810

502-5318 LINES GP-PILOT

S/N: RDE1-UP

PART OF 494-3642 CONTROL AR-AUXILIARY

SMCS-5057, 5059 **i06814227**

NOTE	REF NO	GRAPHIC REF	PART NUMBER	QTY	PART NAME 1 2 3 4 5 6 (PRODUCT LEVEL)	SEE PAGE
I	1	1	**4I-0797**	1	HOSE AS	
I	2	1	**4I-6003**	1	HOSE AS	
	3	1	**4I-9523**	4	BAND-MARKER (BLUE, L3)	
	4	2	**4I-9524**	2	BAND-MARKER (BROWN, L4)	
	5	1	**4I-9527**	8	BAND-MARKER (GREEN, R3)	
	6	1	**7K-1181**	6	STRAP-CABLE	
	7	2	**133-5813**	2	BAND-MARKER (GRAY, P)	
	8	2	*148-8336*	1	CONNECTOR AS (45-DEG ELBOW)	
		2	**3J-1907**	1	SEAL-O-RING	
		2	**6V-8397**	1	SEAL-O-RING	
		2	**6V-8636**	1	CONNECTOR	
	9	1	*148-8338*	3	CONNECTOR AS	
					(EACH INCLUDES)	
		1	**3J-1907**	1	SEAL-O-RING	
		1	**6V-8397**	1	SEAL-O-RING	
		1	**8T-0075**	1	CONNECTOR	
	10	1	*148-8371*	1	ELBOW AS	
		1	**6V-8397**	1	SEAL-O-RING	
		1	**8C-8988**	1	ELBOW	
	11	1	*148-8435*	1	TEE AS	
		1	**3J-1907**	1	SEAL-O-RING	
		1	**6V-8397**	2	SEAL-O-RING	
		1	**6V-8781**	1	TEE	
	12	1	*150-4027*	2	TEE AS	
					(EACH INCLUDES)	
		1	**3E-2310**	1	TEE	
		1	**3J-1907**	1	SEAL-O-RING	
		1	**6V-8397**	1	SEAL-O-RING	
I	13	2	**207-6418**	1	HOSE AS	
I	14	1	**269-9700**	1	HOSE AS	
I	15	1	**269-9703**	1	HOSE AS	
	16	1	*285-2663*	2	FITTING AS (QUICK DISCONNECT, MALE)	
					(EACH INCLUDES)	
		1	**3J-1907**	1	SEAL-O-RING	
		1	**285-2664**	1	FITTING	
I	17	1	**285-2719**	1	HOSE AS	
	18	1	*292-7426*	1	ELBOW AS	
		1	**3J-1907**	1	SEAL-O-RING	
		1	**6V-8397**	1	SEAL-O-RING	
		1	**292-7430**	1	ELBOW	
I	19	2	**296-6928**	1	HOSE AS	
	20	2	**314-8242**	1	SUPPORT	
I	21	1	**317-4793**	1	HOSE AS	
	22	1	**317-4796**	1	SUPPORT AS	
	23	2	**317-4841**	1	BRACKET AS	
I	24	1	**320-0006**	1	HOSE AS	
Y	25	2	**352-7176**	1	VALVE GP-SOLENOID (BLOCK)	359
	26	1	*363-6138*	1	ELBOW AS	

502-5318 **LINES GP-PILOT (**contd.**)** **i06814227**

NOTE	REF NO	GRAPHIC REF	PART NUMBER	QTY	PART NAME 1 2 3 4 5 6 (PRODUCT LEVEL)	SEE PAGE
		1	**3J-1907**	1	SEAL-O-RING	
		1	**6V-8397**	1	SEAL-O-RING	
		1	**363-6120**	1	ADAPTER-FILTER	
Y	27	1	**398-2282**	1	VALVE GP-SOLENOID (NEGATIVE FLOW CONTROL)	360
Y	28	1	*418-6282*	1	CLAMP GP-HYDRAULIC LINES	204
I	29	1	**503-3863**	1	HOSE AS	
I	30	1	**503-3866**	1	HOSE AS	
	31	1	*148-8367*	1	ELBOW AS	
		1	**6V-8397**	1	SEAL-O-RING	
		1	**6V-9850**	1	ELBOW	
	32	1	*148-8378*	6	ELBOW AS (90-DEG)	
					(EACH INCLUDES)	
		1	**3J-1907**	1	SEAL-O-RING	
		1	**6V-8397**	1	SEAL-O-RING	
		1	**6V-8724**	1	ELBOW	
	33	2	*150-3036*	1	ELBOW AS	
		2	**3J-1907**	1	SEAL-O-RING	
		2	**6V-8397**	1	SEAL-O-RING	
		2	**8T-1905**	1	ELBOW	
	34	1	*164-5567*	2	COUPLER AS-QUICK DISCONNECT (MALE)	
					(EACH INCLUDES)	
		1	**6V-3965**	1	FITTING (QUICK DISCONNECT)	
		1	**214-7568**	1	SEAL-O-RING	
	35	1	*164-6874*	4	FITTING AS-ELBOW (QUICK DISCONNECT, MALE)	
					(EACH INCLUDES)	
		1	**3J-1907**	1	SEAL-O-RING	
		1	**085-7356**	1	FITTING	
M	36	2	**5C-9553**	2	BOLT (M6X1X16-MM)	
	37	1	**5P-7462**	1	CLIP (SLOT)	
	38	1	**5P-7463**	1	CLIP (TAB)	
	39	1	**6V-0683**	1	GROMMET (19-MM ID)	
	40	1	**6V-0852**	2	CAP-DUST	
	41	1,2	**8T-4121**	7	WASHER-HARD (11X21X2.5-MM THK)	
M	42	1	**8T-4136**	1	BOLT (M10X1.5X25-MM)	
M	43	1	**8T-4137**	4	BOLT (M10X1.5X20-MM)	
M	44	2	**8T-4139**	2	BOLT (M12X1.75X30-MM)	
M	45	1	**8T-4177**	4	BOLT (M8X1.25X90-MM)	
M	46	2	**8T-4195**	2	BOLT (M10X1.5X30-MM)	
	47	2	**8T-4223**	2	WASHER-HARD (13.5X25.5X3-MM THK)	
	48	2	**9X-8256**	2	WASHER (6.6X12X2-MM THK)	

I - REFER TO HYDRAULIC INFORMATION SYSTEM
M - METRIC PART
Y - SEPARATE ILLUSTRATION

502-5318 **LINES GP-PILOT (**contd.**)** **i06814227**

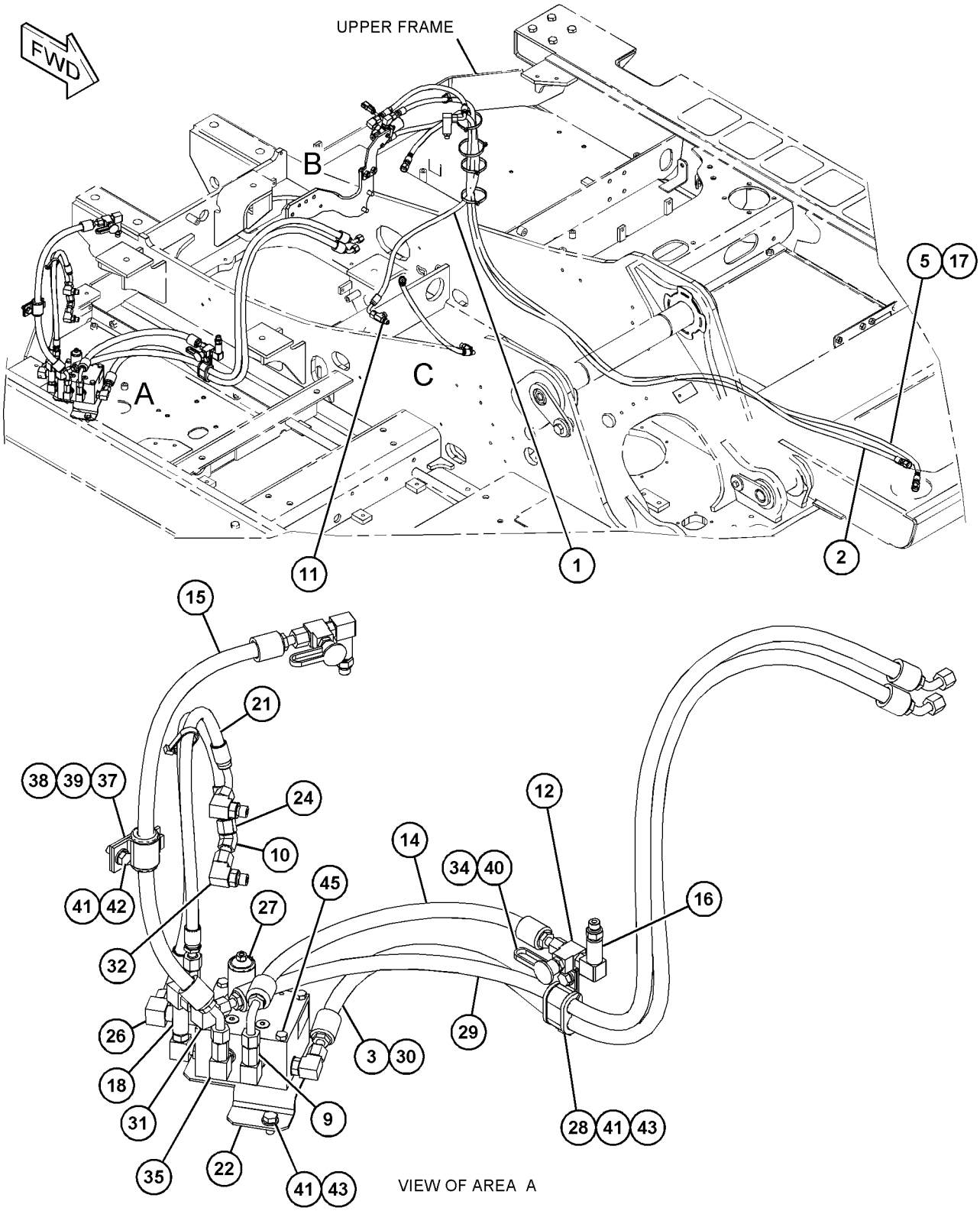

VIEW OF AREA A

REFER TO ALL ILLUSTRATIONS OF THIS GROUP FOR AUXILIARY VIEWS

GRAPHIC #1 g06132276

502-5318 **LINES GP-PILOT (**contd.**)** **i06814227**

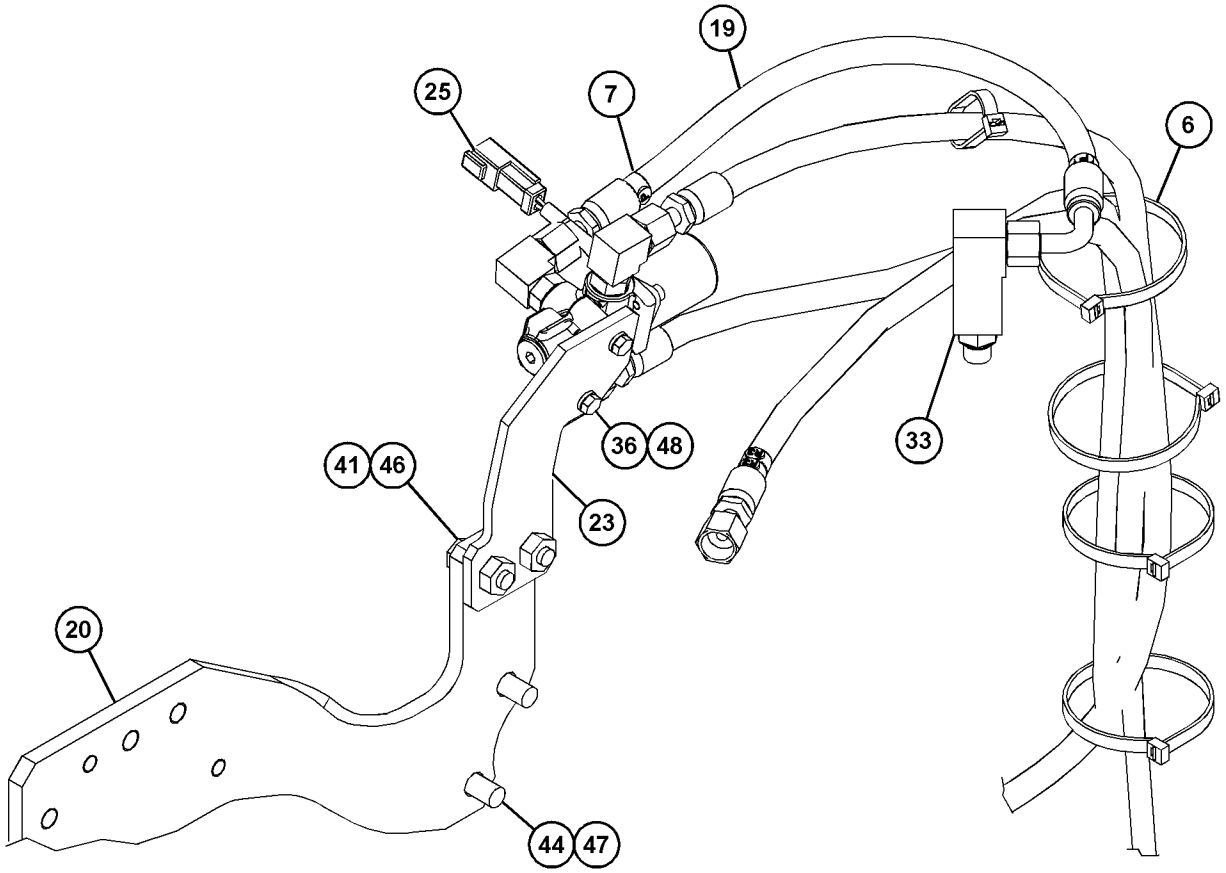

VIEW OF AREA B

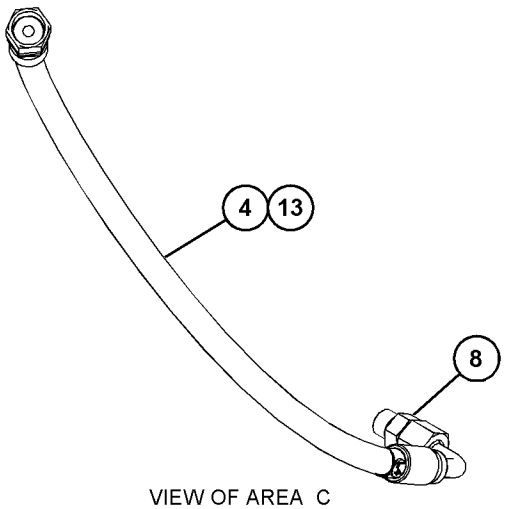

VIEW OF AREA C

GRAPHIC #2 <END> g06132279

502-5316 LINES GP-PUMP–HYDRAULIC

S/N: RDE1-UP

PART OF 503-4904 HYDRAULIC AR

SMCS-5057 **i06783016**

NOTE	REF NO	GRAPHIC REF	PART NUMBER	QTY	PART NAME 1 2 3 4 5 6 (PRODUCT LEVEL)	SEE PAGE
	1	1	**144-0367**	4	CLAMP-HOSE	
	2	1	**194-0097**	1	PIPE AS	
	3	1	**504-8188**	1	HOSE	
	4	1	**6J-2680**	1	SEAL-O-RING	
M	5	1	**108-1781**	4	BOLT-SOCKET HEAD (M12X1.75X35-MM)	
	6	1	*148-8339*	1	CONNECTOR AS	
		1	**6V-8716**	1	CONNECTOR (STRAIGHT)	
		1	**6V-9746**	1	SEAL-O-RING	
		1	**7M-8485**	1	SEAL-O-RING	
	7	1	*148-8360*	1	ELBOW AS	
		1	**6V-9182**	1	ELBOW	
		1	**6V-9746**	1	SEAL-O-RING	
		1	**7M-8485**	1	SEAL-O-RING	
	8	1	*148-8411*	1	PLUG AS	
		1	**3K-0360**	1	SEAL-O-RING	
		1	**9S-4185**	1	PLUG (3/4-16-THD)	
	9	1	*155-3624*	1	PLUG AS	
		1	**3J-7354**	1	SEAL-O-RING	
		1	**9S-4182**	1	PLUG (7/16-20-THD)	
J	10	1	**8T-4223**	4	WASHER-HARD (13.5X25.5X3-MM THK)	

J - USE WHEN NOT EQUIPPED WITH WELDED PIPES ON PUMP SUCTION LINE
M - METRIC PART

502-5316 **LINES GP-PUMP (**contd.**)** **i06783016**

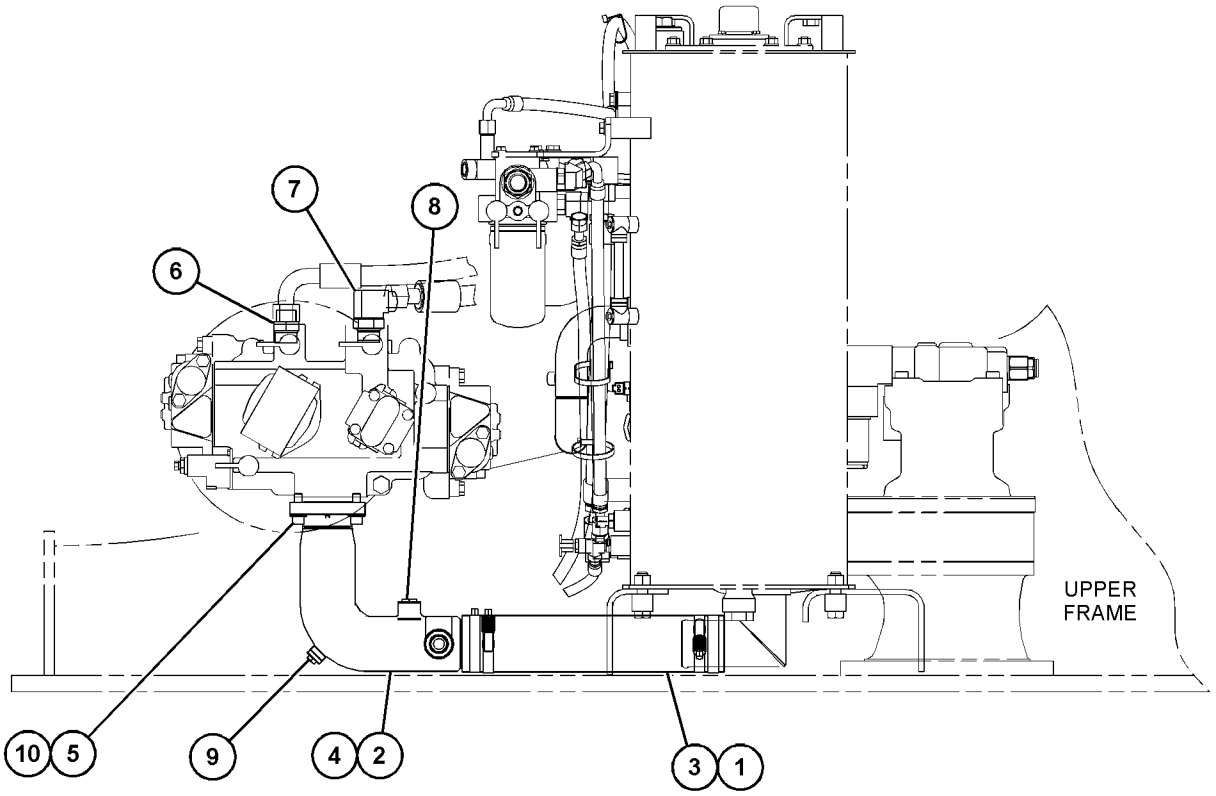

RIGHT SIDE VIEW

GRAPHIC #1 <END> g06130290

179-7600 LINES GP-STICK

S/N: RDE1-UP
FOR USE WITH 3-M (9.8-FT) STICK
PART OF 283-9014 STICK AR-HOE

SMCS-5057, 5458 **i06114109**

NOTE	REF NO	GRAPHIC REF	PART NUMBER	QTY	PART NAME 1 2 3 4 5 6 (PRODUCT LEVEL)	SEE PAGE
I	1	1	**124-1305**	1	HOSE AS	
I	2	1	**123-2729**	1	HOSE AS	
	3	1	**8C-3205**	2	FLANGE-HALF	
	4	1	**4J-5267**	2	SEAL-O-RING	
	5	1	**131-9850**	1	BLOCK	
M	6	1	**8T-5005**	4	BOLT (M10X1.5X70-MM)	
	7	1	**8T-4121**	4	WASHER-HARD (11X21X2.5-MM THK)	
	8	1	**7J-9108**	1	SEAL-O-RING	

I - REFER TO HYDRAULIC INFORMATION SYSTEM
M - METRIC PART

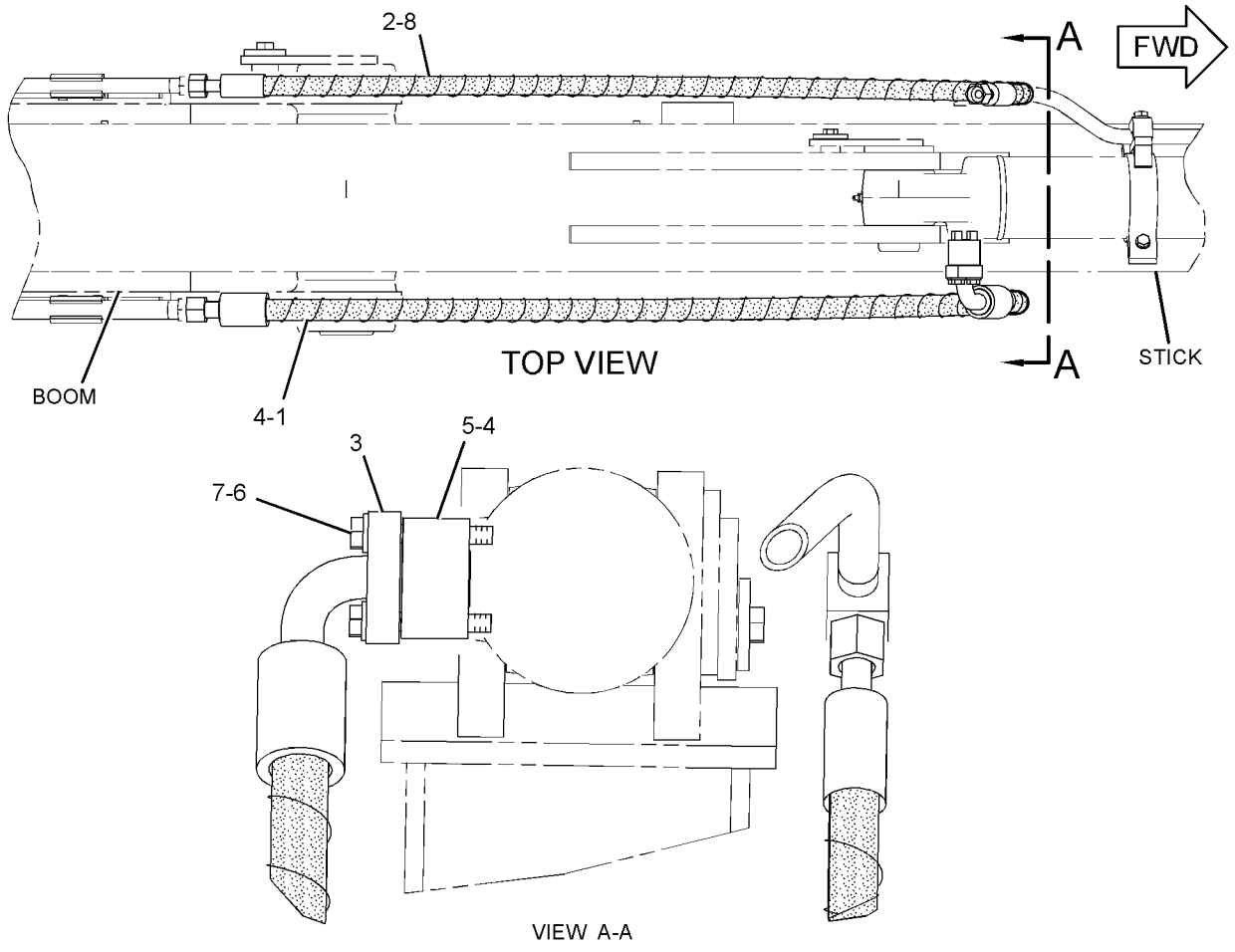

GRAPHIC #1 <END> g03869744

179-7601 LINES GP-STICK

S/N: RDE1-UP
FOR USE WITH 2.5-M (8.2-FT) STICK
PART OF 283-9016 STICK AR-HOE

SMCS-5057, 5458

i06225186

NOTE	REF NO	GRAPHIC REF	PART NUMBER	QTY	PART NAME 1 2 3 4 5 6 (PRODUCT LEVEL)	SEE PAGE
I	1	1	**104-8999**	1	HOSE AS	
I	2	1	**124-0838**	1	HOSE AS	
	3	1	**8C-3205**	2	FLANGE-HALF	
	4	1	**4J-5267**	2	SEAL-O-RING	
	5	1	**131-9850**	1	BLOCK	
M	6	1	**8T-5005**	4	BOLT (M10X1.5X70-MM)	
	7	1	**8T-4121**	4	WASHER-HARD (11X21X2.5-MM THK)	
	8	1	**7J-9108**	1	SEAL-O-RING	

I - REFER TO HYDRAULIC INFORMATION SYSTEM
M - METRIC PART

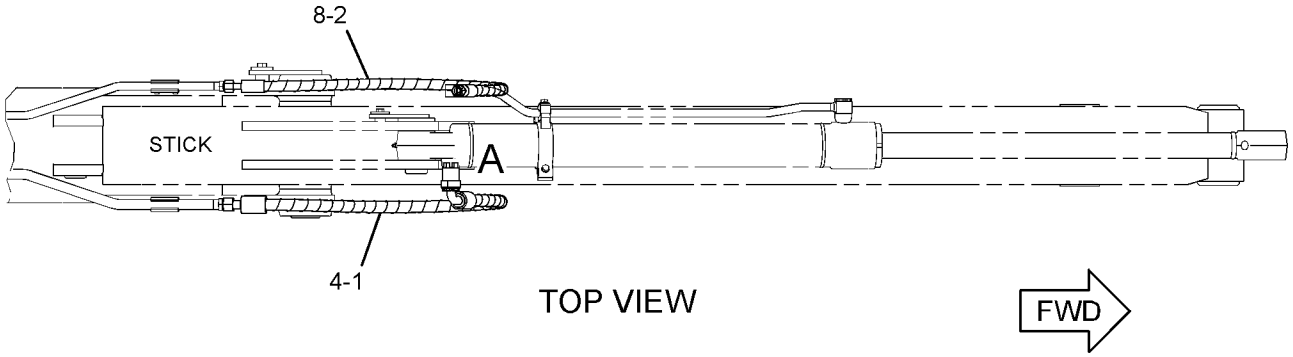

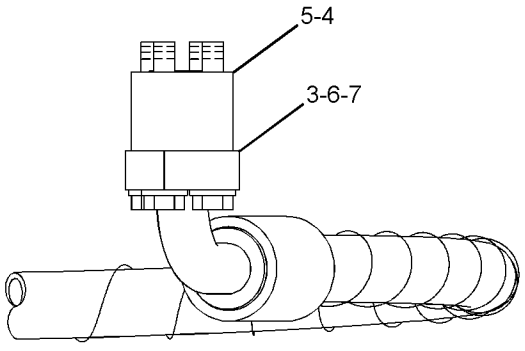

VIEW OF AREA A

GRAPHIC #1 <END> g03885640

385-2830 LINES GP-STICK CYLINDER

S/N: RDE1-UP

PART OF 385-2829 CYLINDER & LINES GP-STICK

SMCS-5458 **i05411330**

NOTE	REF NO	GRAPHIC REF	PART NUMBER	QTY	PART NAME 1 2 3 4 5 6 (PRODUCT LEVEL)	SEE PAGE
	1	1	**385-2967**	1	CLAMP	
	2	1	**422-9132**	1	SUPPORT AS	
M	3	1	**8T-0271**	4	BOLT-SOCKET HEAD (M10X1.5X35-MM)	
	4	1	**385-2970**	1	TUBE AS	
	5	1	**6V-0357**	2	SEAL-O-RING	
	6	1	**7X-0796**	3	LOCKWASHER	
M	7	1	**6V-5842**	2	BOLT (M10X1.5X40-MM)	
M	8	1	**6V-4249**	1	BOLT (M10X1.5X50-MM)	
	9	1	**6V-9832**	2	CAP AS (ORIFICE)	
	10	1	**393-7944**	1	FLANGE-ELBOW	
M	11	1	**8T-1160**	4	BOLT-SOCKET HEAD (M10X1.5X50-MM)	
	12	1	**6V-9746**	2	SEAL-O-RING	

M - METRIC PART

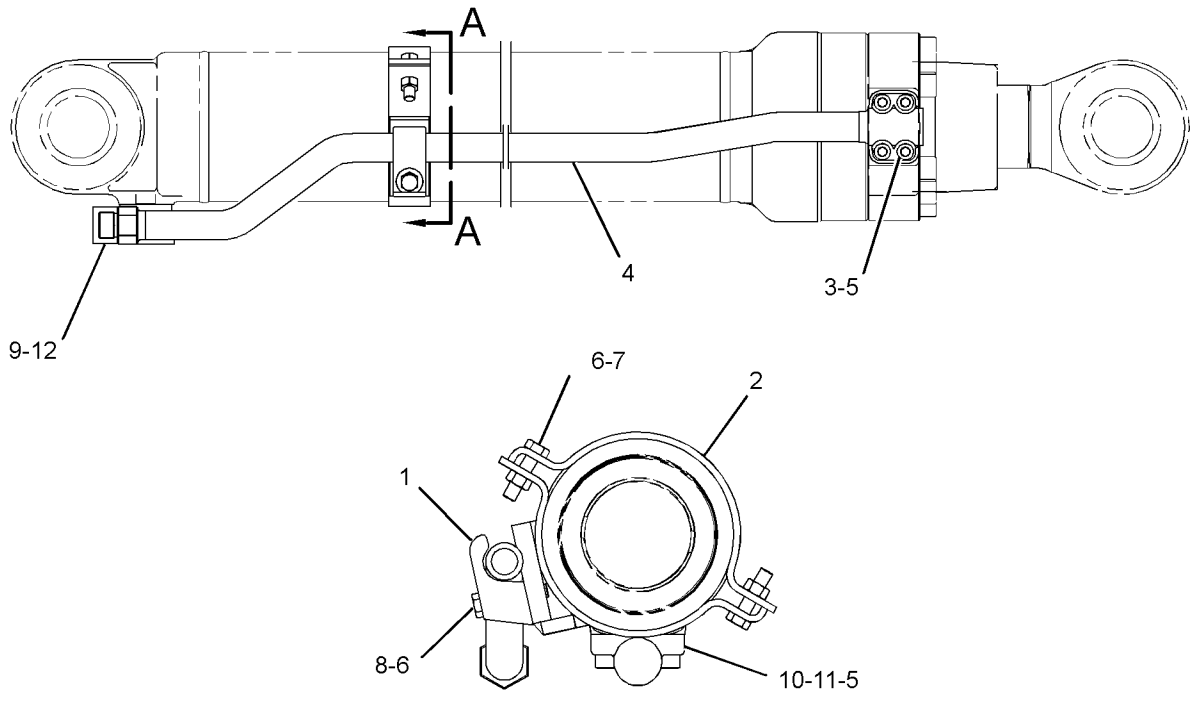

SECTION A-A

GRAPHIC #1 <END> g03343309

278-6512 LINES GP-TRAVEL MOTOR

S/N: RDE1-UP

PART OF 503-4904 HYDRAULIC AR

SMCS-5057, 5058 **i06844654**

NOTE	REF NO	GRAPHIC REF	PART NUMBER	QTY	PART NAME 1 2 3 4 5 6 (PRODUCT LEVEL)	SEE PAGE
	1	1	**5I-4365**	2	GROMMET	
	2	1	**4I-6039**	2	GROMMET	
I	3	1	**7I-1303**	4	HOSE AS	
Y	4	1	**162-4696**	1	SWIVEL GP	327
I	5	1	**179-7778**	2	HOSE AS	
I	6	1	**179-7779**	2	HOSE AS	
	7	1	*267-4063*	2	CONNECTOR AS	
					(EACH INCLUDES)	
		1	**3J-1907**	1	SEAL-O-RING	
		1	**4J-5477**	1	SEAL-O-RING	
		1	**156-8801**	1	CONNECTOR	
	8	1	*148-8325*	2	CONNECTOR AS	
					(EACH INCLUDES)	
		1	**3J-1907**	1	SEAL-O-RING	
		1	**4J-5477**	1	SEAL-O-RING	
		1	**6V-8641**	1	CONNECTOR	
	9	1	*148-8327*	8	CONNECTOR AS	
					(EACH INCLUDES)	
		1	**3D-2824**	1	SEAL-O-RING	
		1	**6V-8637**	1	CONNECTOR	
		1	**6V-9746**	1	SEAL-O-RING	
	10	1	*148-8340*	2	CONNECTOR AS	
					(EACH INCLUDES)	
		1	**3K-0360**	1	SEAL-O-RING	
		1	**6V-8398**	1	SEAL-O-RING	
		1	**6V-8639**	1	CONNECTOR	
	11	1	*148-8436*	1	TEE AS	
		1	**3K-0360**	1	SEAL-O-RING	
		1	**6V-8398**	2	SEAL-O-RING	
		1	**6V-8775**	1	TEE-FACE SEAL	
	12	1	**7K-1181**	4	STRAP-CABLE	
	13	1	**8T-4121**	4	WASHER-HARD (11X21X2.5-MM THK)	
M	14	1	**8T-4137**	4	BOLT (M10X1.5X20-MM)	
B	15	1	**1U-8846**		SEALANT-GASKET	

B - USE AS REQUIRED
I - REFER TO HYDRAULIC INFORMATION SYSTEM
M - METRIC PART
Y - SEPARATE ILLUSTRATION

278-6512 **LINES GP-TRAVEL MOTOR (**contd.**)** **i06844654**

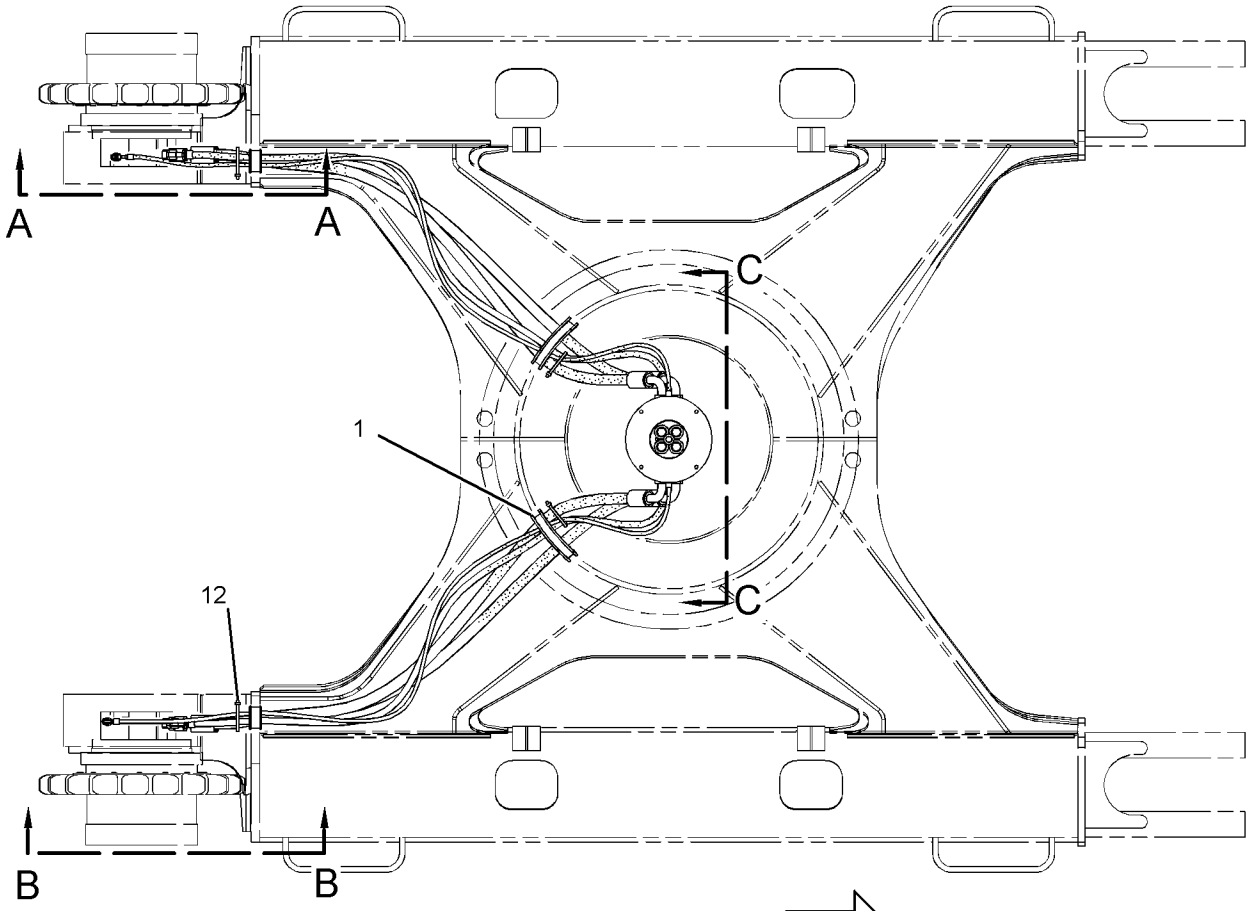

TOP VIEW FWD

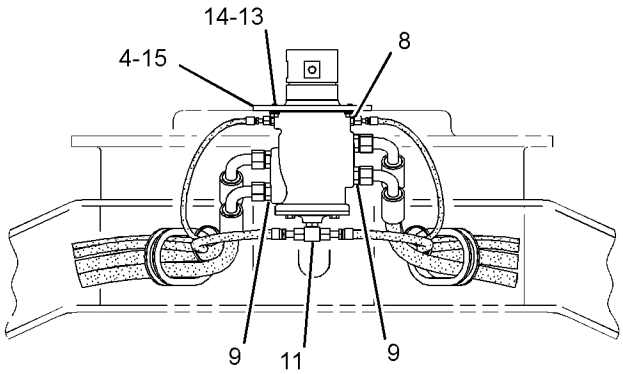

VIEW C-C

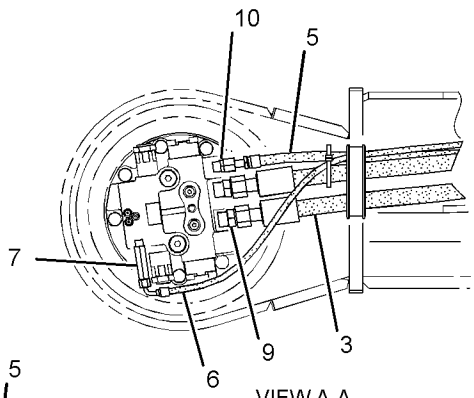

VIEW A-A

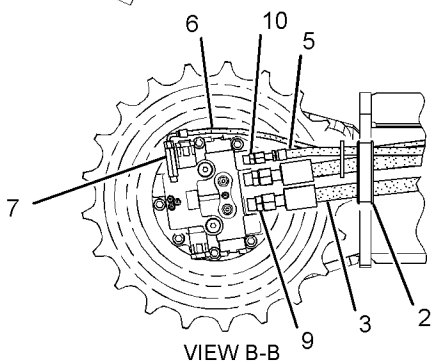

VIEW B-B

GRAPHIC #1 <END> g03433053

215-5037 MANIFOLD GP-CONTROL—PILOT OIL SUPPLY

S/N: RDE1-UP

PART OF 502-5314 LINES GP-PILOT

SMCS-5264 **i06240824**

NOTE	REF NO	GRAPHIC REF	PART NUMBER	QTY	PART NAME 1 2 3 4 5 6 (PRODUCT LEVEL)	SEE PAGE
CY	1	1	**457-9878**	1	VALVE GP-SOLENOID (SWING BRAKE RELEASE)	361
CY	1A	1	**457-9878**	1	VALVE GP-SOLENOID (HYDRAULIC LOCKOUT)	361
CY	1B	1	**457-9878**	1	VALVE GP-SOLENOID (TRAVEL SPEED)	361
C	2	1	**9S-8005**	4	PLUG (3/4-16-THD)	
C	3	1	**9S-8004**	1	PLUG (9/16-18-THD)	
C	4	1	**197-0196**	1	VALVE-CHECK	
C	5	1	**197-0199**	1	SPRING	
C	6	1	**197-0273**	1	SPRING	
CM	7	1	**7I-2272**	6	BOLT (M5X0.8X12-MM)	
C	8	1	**3J-1907**	1	SEAL-O-RING	
C	9	1	**3K-0360**	4	SEAL-O-RING	
C	10	1	*225-4818*	6	PLUG AS	
					(EACH INCLUDES)	
		1	**4J-7533**	1	SEAL-O-RING	
		1	**225-4804**	1	PLUG	

C - CHANGE FROM PREVIOUS TYPE
M - METRIC PART
Y - SEPARATE ILLUSTRATION

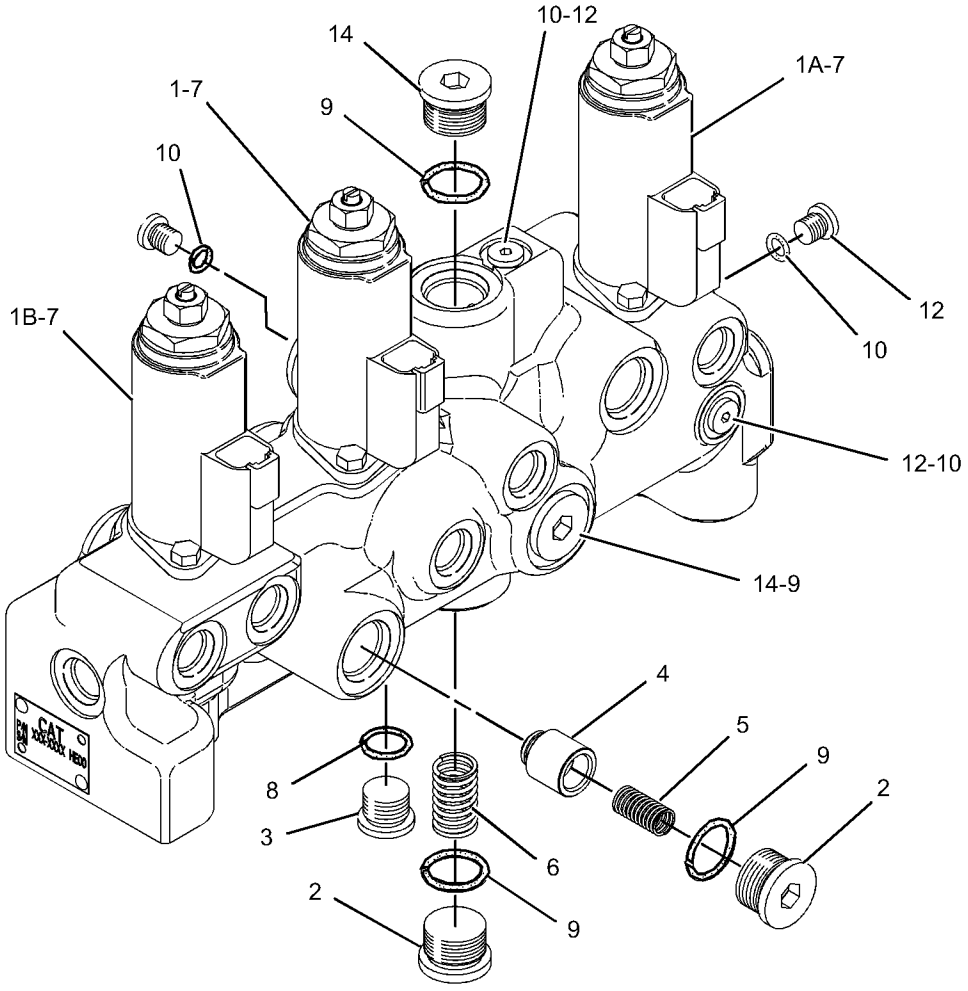

GRAPHIC #1 <END> g03803592

422-9182 MOTOR GP-SWING

S/N: RDE1-UP

PART OF 421-9132 DRIVE GP-SWING

SMCS-5058 **i06021083**

NOTE	REF NO	GRAPHIC REF	PART NUMBER	QTY	PART NAME 1 2 3 4 5 6 (PRODUCT LEVEL)	SEE PAGE
	1	1	**2K-8257**	1	SEAL-O-RING	
	2	1	**3E-6711**	1	SEAL-O-RING	
	3	1	**3J-1907**	2	SEAL-O-RING	
	4	1	**9F-1399**	1	SEAL-O-RING	
	5	1	**095-1590**	2	SEAL-O-RING	
	6	1	**126-2055**	18	SPRING	
	7	1	**184-1836**	3	BOLT	
	8	1	**371-7201**	2	PLUG	
	9	1	**446-7219**	9	PISTON AS	
	10	1	**446-7221**	1	HEAD GP-MOTOR (SWING)	
		1	**095-0882**	2	PIN-SPRING	
	11	1	**446-7224**	1	VALVE GP-SWING CUSHION	
		1	**095-1595**	2	SEAL-O-RING	
	12	1	**446-7226**	2	VALVE GP-RELIEF (SWING MOTOR)	
					(EACH INCLUDES)	
		1	**095-1698**	1	SEAL-O-RING	
	13	1	**446-7227**	2	PLUG	
	14	1	**446-7228**	1	SPRING	
	15	1	**446-7229**	2	SPRING	
	16	1	**446-7230**	2	PLUG	
	17	1	**446-7232**	1	HOUSING-MOTOR	
	18	1	**446-7234**	1	PLATE	
	19	1	**446-7235**	1	SHAFT	
	20	1	**446-7236**	1	BARREL	
	21	1	**446-7237**	1	PISTON-BRAKE	
	22	1	**446-7238**	1	PLATE	
	23	1	**446-7239**	2	PLATE-SEPARATOR	
	24	1	**446-7240**	1	PLATE-VALVE	
	25	1	**446-7241**	2	PLATE-FRICTION	
	26	1	**446-7242**	2	VALVE-CHECK	
	27	1	**446-7243**	1	BEARING	
	28	1	**446-7244**	1	BEARING	
	29	1	**446-7245**	1	SEAL-LIP TYPE	

422-9182 **MOTOR GP-SWING (**contd.**)** **i06021083**

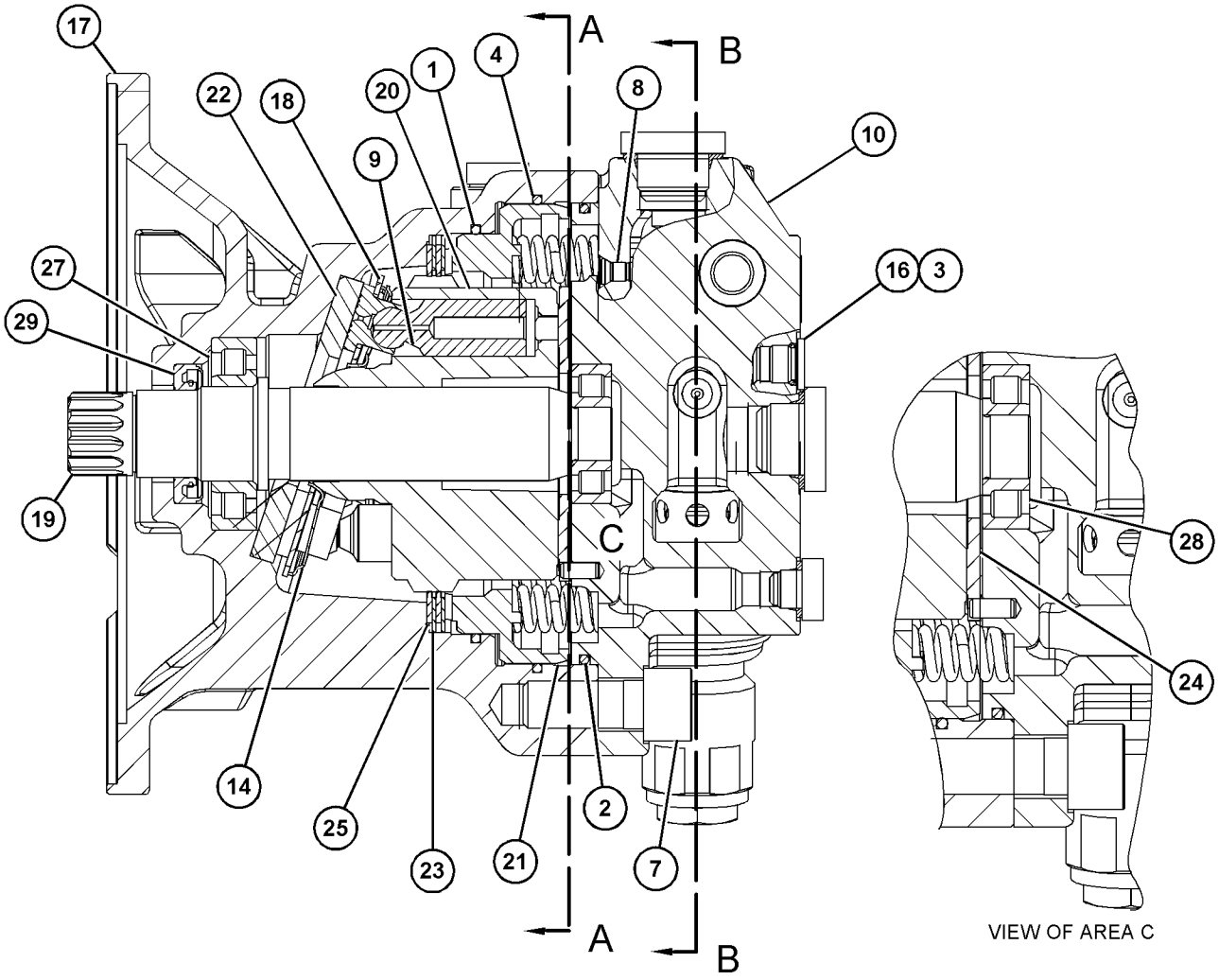

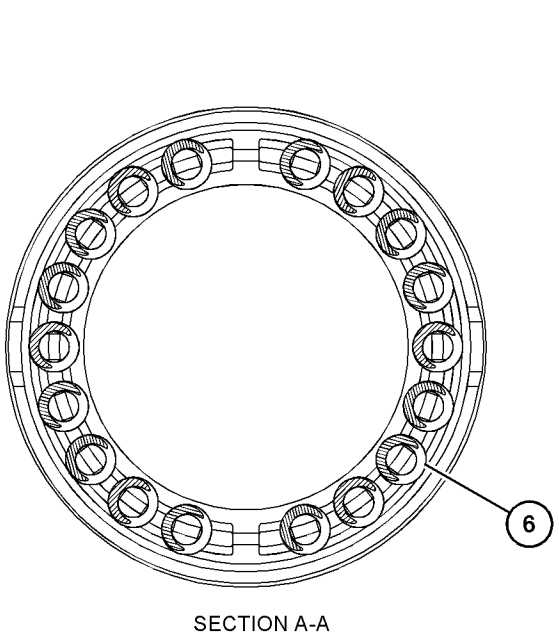

SECTION A-A

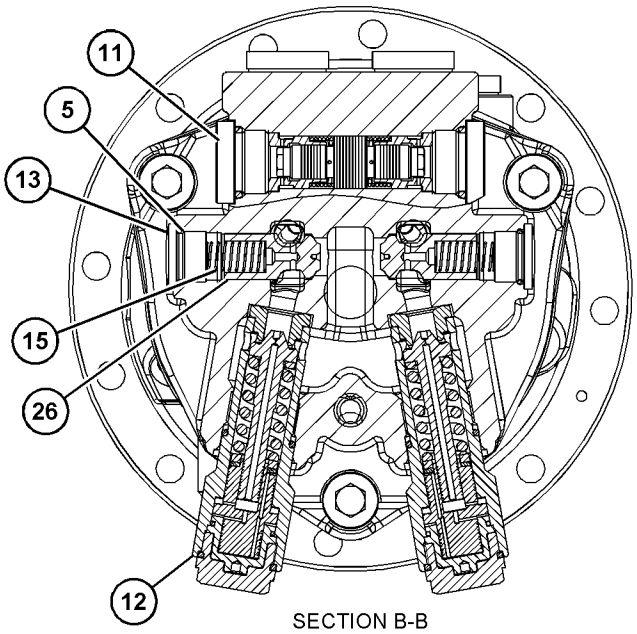

SECTION B-B

GRAPHIC #1 <END> g03712305

278-6664 MOUNTING GP-MAIN CONTROL VALVE

S/N: RDE1-UP

PART OF 503-4904 HYDRAULIC AR

SMCS-5051 **i05831404**

NOTE	REF NO	GRAPHIC REF	PART NUMBER	QTY	PART NAME 1 2 3 4 5 6 (PRODUCT LEVEL)	SEE PAGE
	1	1	**178-6450**	4	SPACER (17X35X30-MM THK)	
	2	1	**375-6708**	1	SUPPORT AS (LH)	
	3	1	**375-6709**	1	SUPPORT AS (RH)	
M	4	1	**453-2834**	3	BOLT (M16X2X30-MM)	
M	5	1	**447-1707**	4	BOLT (M16X2X60-MM)	
	6	1	**451-2175**	3	WASHER-HARD (17.5X30X3.5-MM THK)	

M - METRIC PART

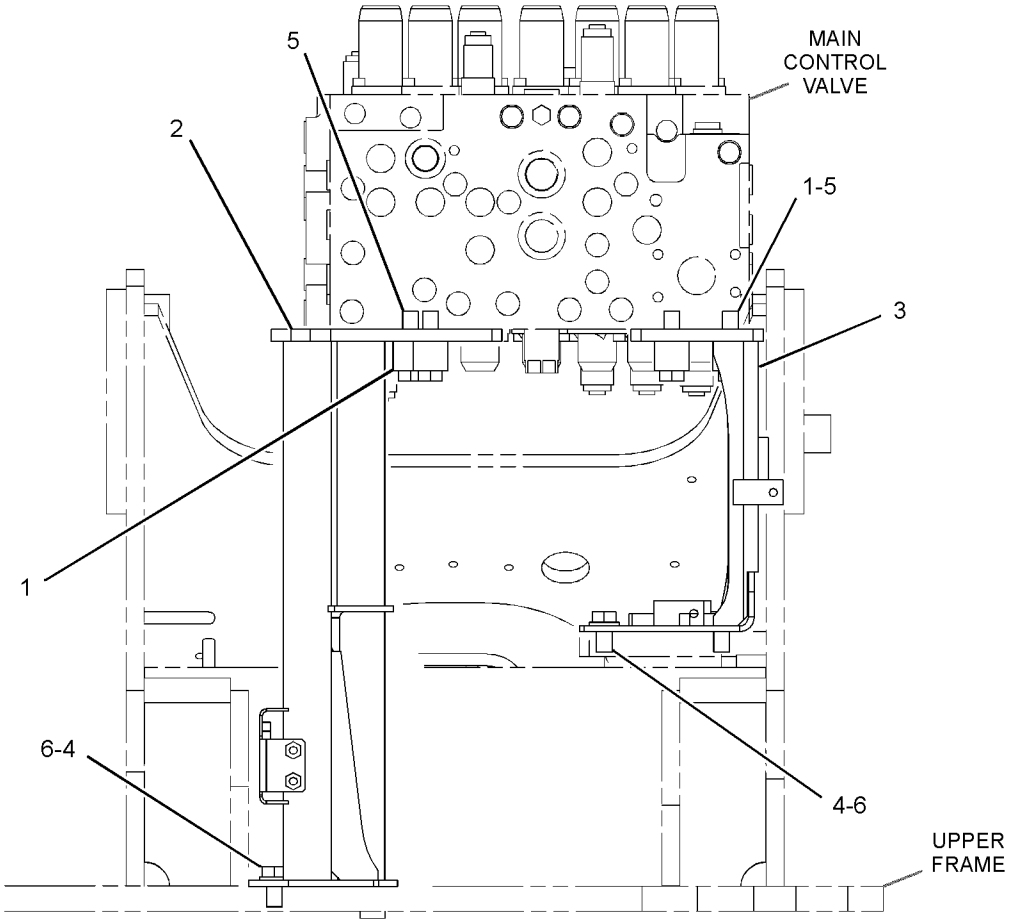

REAR VIEW

GRAPHIC #1 <END> g03071048

387-2606 PUMP & MTG GP-MAIN HYDRAULIC

S/N: RDE1-UP

PART OF 503-4904 HYDRAULIC AR

SMCS-5070 **i05402612**

NOTE	REF NO	GRAPHIC REF	PART NUMBER	QTY	PART NAME 1 2 3 4 5 6 (PRODUCT LEVEL)	SEE PAGE
Y	1	1	*344-0688*	1	COUPLING GP-PUMP	212
Y	2	1	**391-9442**	1	PUMP GP-MAIN HYDRAULIC	310
	3	1	**8T-4121**	12	WASHER-HARD (11X21X2.5-MM THK)	
M	4	1	**8T-4195**	12	BOLT (M10X1.5X30-MM)	

M - METRIC PART
Y - SEPARATE ILLUSTRATION

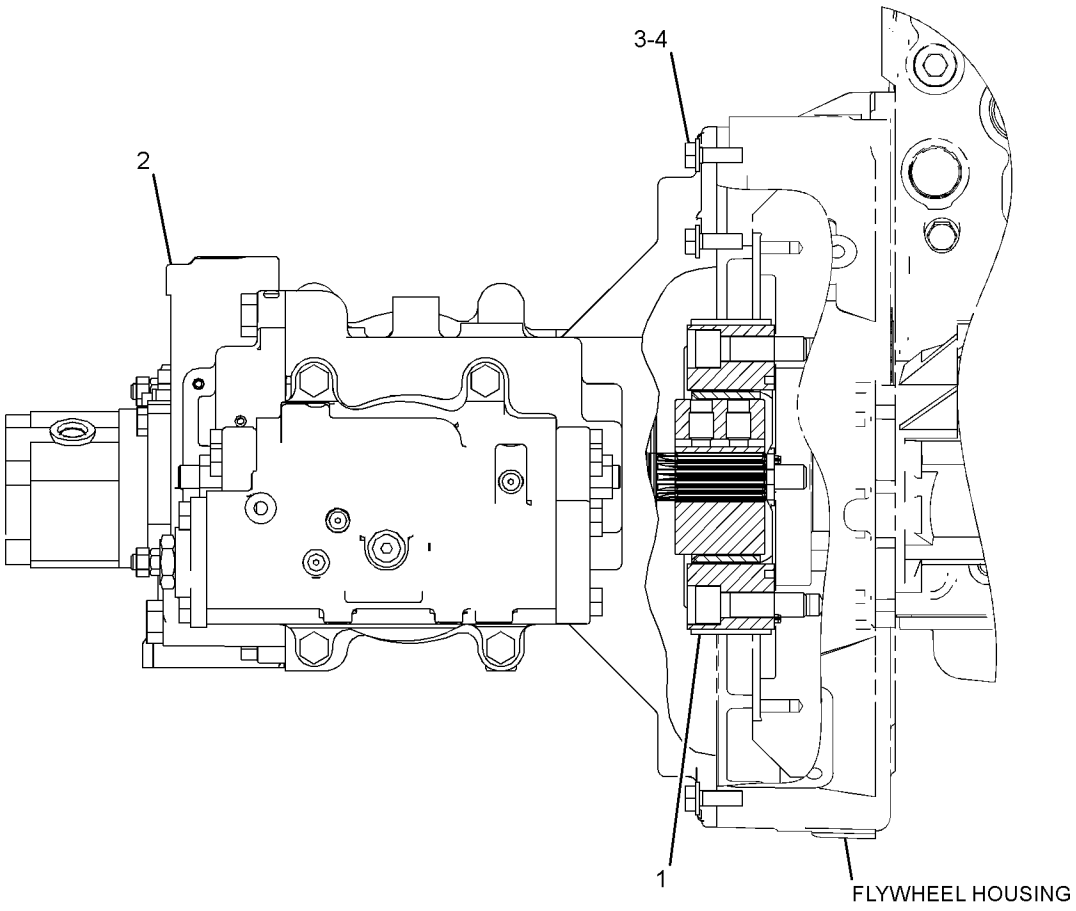

GRAPHIC #1 <END> g03124576

341-2860 PUMP GP-GEAR

S/N: RDE1-UP

PART OF 391-9442 PUMP GP-MAIN HYDRAULIC

SMCS-5073 **i05263929**

NOTE	REF NO	GRAPHIC REF	PART NUMBER	QTY	PART NAME 1 2 3 4 5 6 (PRODUCT LEVEL)	SEE PAGE
					AVAILABLE REPAIR KIT(S):	
			327-8740	1	KIT-SEAL (GEAR PUMP)	
					(KIT INCLUDES GASKETS, LIP TYPE SEAL, SEAL & RETAINING RING)	

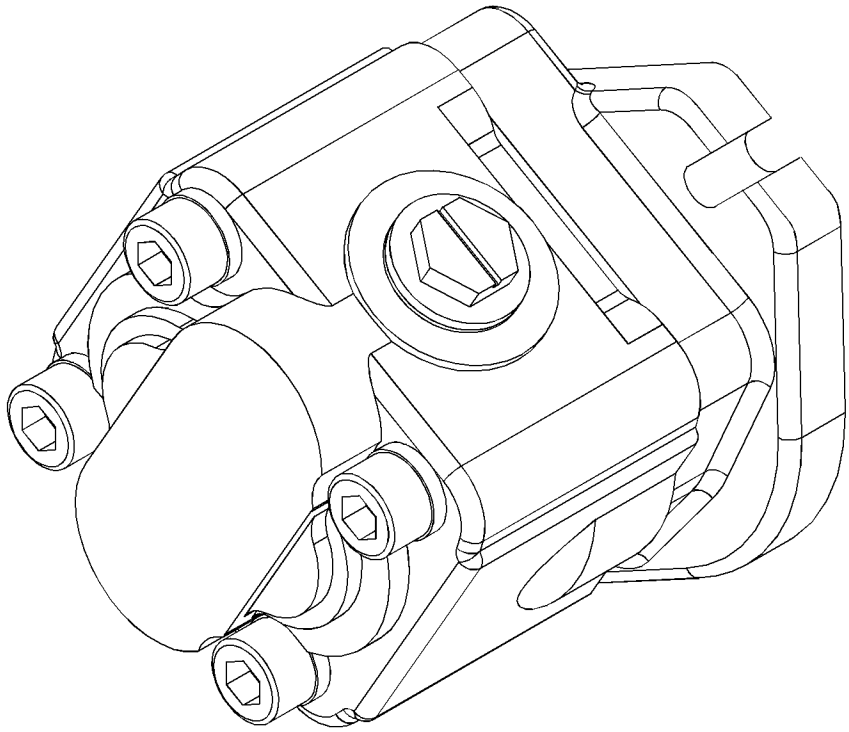

GRAPHIC #1 <END> g02484156

391-9442 PUMP GP-MAIN HYDRAULIC

S/N: RDE1-UP

PART OF 387-2606 PUMP & MTG GP-MAIN HYDRAULIC

SMCS-5070 **i05716475**

NOTE	REF NO	GRAPHIC REF	PART NUMBER	QTY	PART NAME 1 2 3 4 5 6 (PRODUCT LEVEL)	SEE PAGE
Y	1	1	**111-9916**	1	VALVE GP-SOLENOID (PRESSURE REDUCING) (PUMP CONTROL)	358
	2	2	**165-2799**	12	SPRING	
	3	2	**165-2801**	2	BEARING-ROLLER	
	4	1	**165-2804**	1	FLANGE	
	5	2	**165-2805**	2	BLOCK	
	6	2	**165-3838**	1	BARREL AS	
	7	2	**165-3839**	1	BARREL AS	
	8	2	**165-3853**	1	COVER	
	9	2	**176-8131**	2	SPACER-SPECIAL	
	10	2	**176-8132**	2	BEARING	
	11	2	**190-4896**	2	PLUG	
	12	2	**192-0573**	4	PIN-DOWEL	
	13	1	**199-0518**	2	SEAL-O-RING	
	14	2	**207-2985**	2	ORIFICE	
	15	1	**225-6216**	1	GASKET	
	16	2	**267-8084**	2	BEARING-NEEDLE	
	17	2	**268-6263**	2	CAM	
	18	2	**269-2433**	4	BEARING-CRADLE	
	19	2	**273-8315**	1	SEAL-O-RING	
	20	1	**282-9192**	1	CASE-FLANGE	
Y	21	2	**341-2860**	1	PUMP GP-GEAR (PILOT)	309
	22	2	**353-5829**	2	GUIDE-BALL	
	23	2	**353-5837**	1	SEAL-LIP TYPE	
	24	2	**368-9994**	1	PLATE	
	25	2	**368-9995**	2	GEAR (47-TEETH)	
	26	2	**368-9996**	1	SHAFT-DRIVE	
	27	2	**368-9997**	1	SHAFT-DRIVEN	
	28	2	**379-3002**	2	PISTON AS	
					(EACH INCLUDES)	
		2	**353-5825**	1	RETAINER	
		2	**165-3847**	9	PISTON AS	
	29	1	**391-9438**	1	BLOCK-PORT	
Y	30	1	**391-9444**	2	HEAD GP-PUMP	232
	32	1,2	**094-1875**	6	DOWEL	
	33	1	**094-1882**	13	PLUG	
	35	1	**189-9763**	4	SEAL-O-RING	
	36	2	**1H-7339**	1	SEAL-O-RING	
	37	2	**1J-6472**	2	RING-RETAINING	
	38	2	**5P-2545**	1	SEAL-O-RING	
	39	1	**3J-1907**	2	SEAL-O-RING	
	40	2	**388-8368**	2	RING-RETAINING	
	41	2	**6V-8757**	2	RING-RETAINING	
M	42	1	**7I-2272**	2	BOLT (M5X0.8X12-MM)	
M	43	1	**7X-2553**	5	BOLT (M16X2X40-MM)	
M	44	1	**7X-2556**	1	BOLT (M16X2X100-MM)	
	45	1,2	**2Y-5578**	4	PIN	
	46	1	**8T-4121**	2	WASHER-HARD (11X21X2.5-MM THK)	
M	47	1,2	**8T-4136**	4	BOLT (M10X1.5X25-MM)	

391-9442 **PUMP GP-MAIN HYDRAULIC** (contd.) **i05716475**

NOTE	REF NO	GRAPHIC REF	PART NUMBER	QTY	PART NAME 1 2 3 4 5 6 (PRODUCT LEVEL)	SEE PAGE
M	48	1	**8T-4139**	8	BOLT (M12X1.75X30-MM)	
M	49	1	**8T-4140**	2	BOLT (M16X2X60-MM)	
M	50	2	**8T-4185**	4	BOLT (M10X1.5X50-MM)	
M	51	2	**8T-7547**	4	BOLT (M8X1.25X30-MM)	
	52	2	**8T-9599**	1	RING-RETAINING	
	53	1	**9S-4191**	2	PLUG (9/16-18-THD)	

M - METRIC PART
Y - SEPARATE ILLUSTRATION

391-9442 **PUMP GP-MAIN HYDRAULIC (**contd.**)** **i05716475**

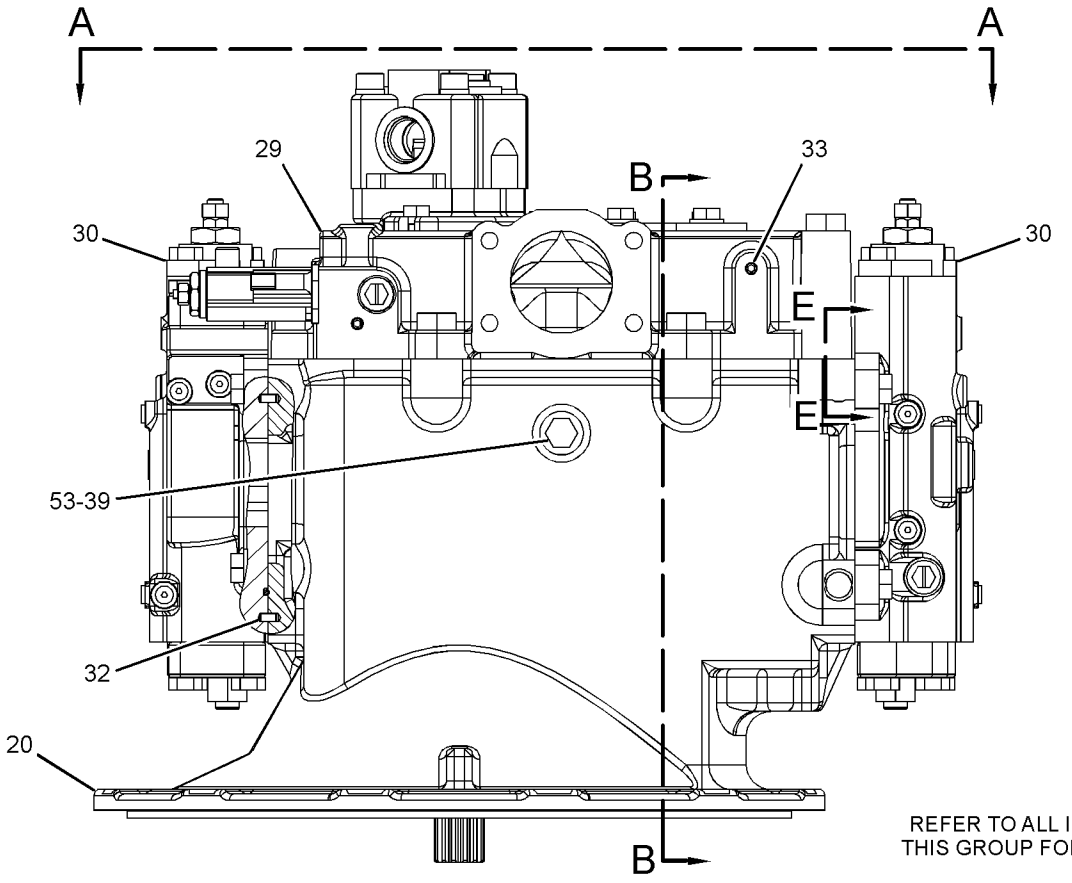

REFER TO ALL ILLUSTRATIONS OF
THIS GROUP FOR AUXILIARY VIEWS

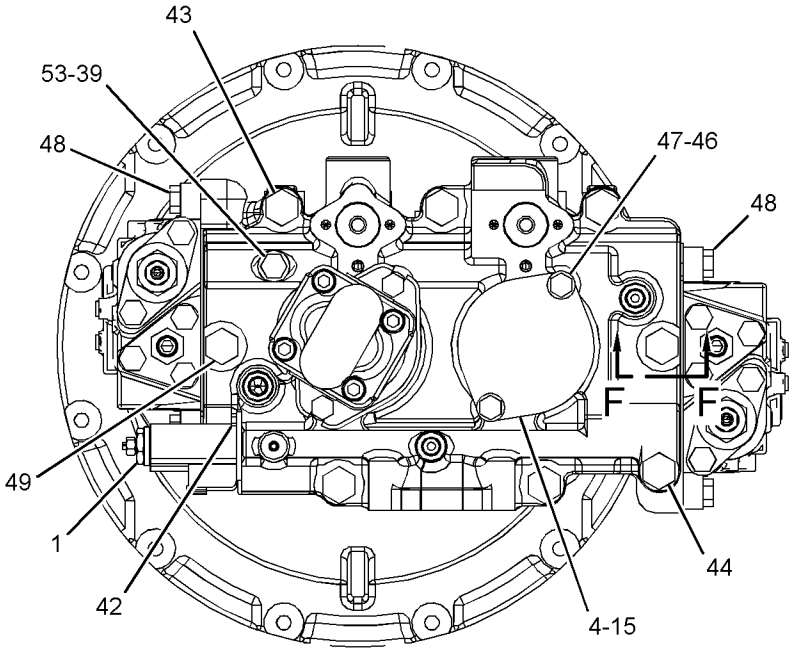

VIEW A-A

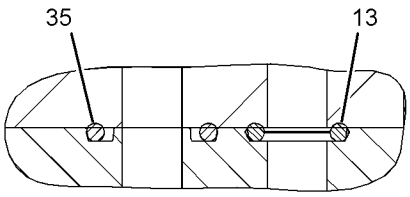

SECTION E-E

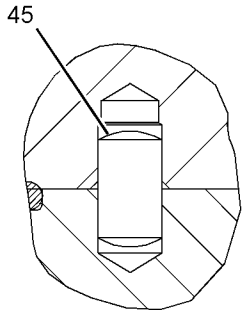

SECTION F-F

GRAPHIC #1

g03124316

391-9442 **PUMP GP-MAIN HYDRAULIC (**contd.**)** **i05716475**

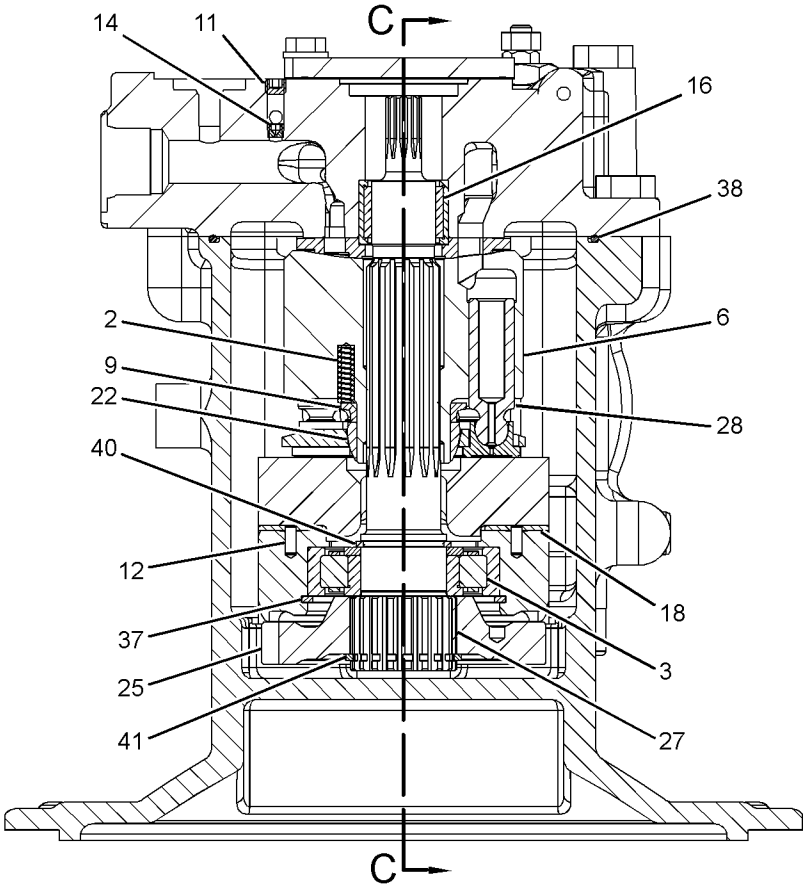

SECTION B-B

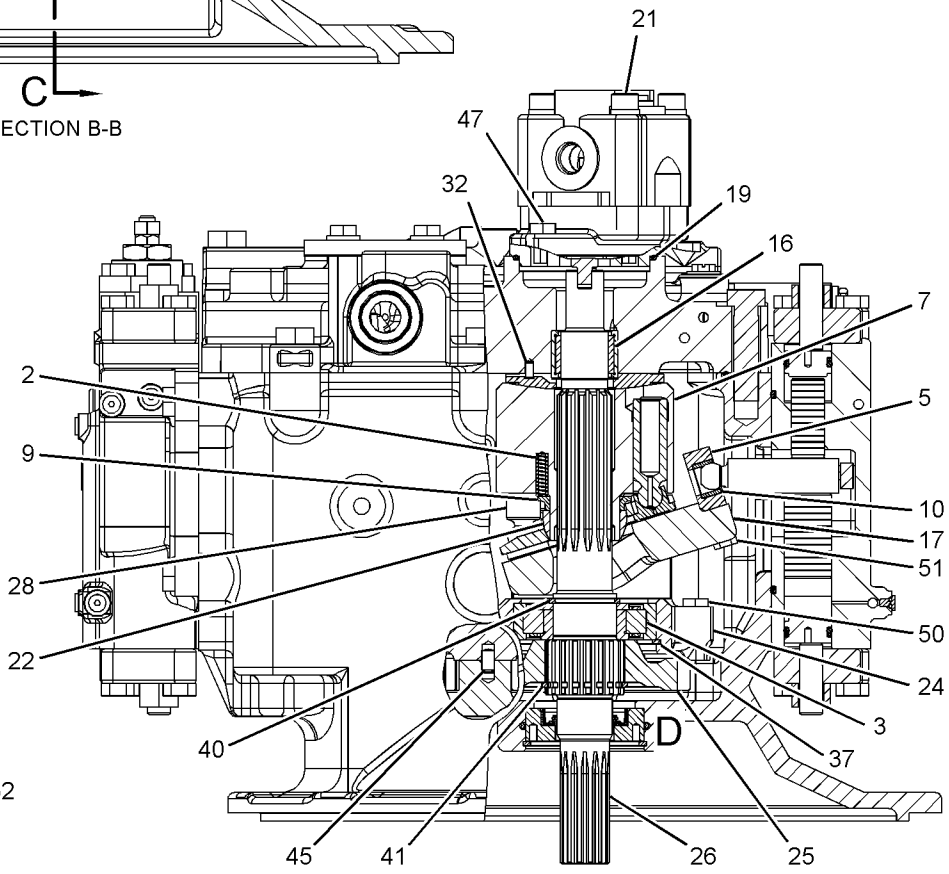

SECTION C-C

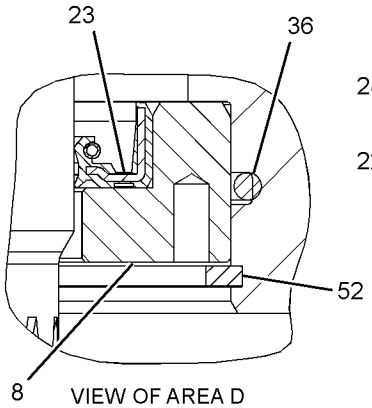

VIEW OF AREA D

GRAPHIC #2

<END>

g03124317

499-5811 SCREEN GP-HYDRAULIC–TANK

S/N: RDE1-UP

PART OF 499-4831 TANK & FILTER GP-HYDRAULIC

SMCS-5068 **i06811392**

NOTE	REF NO	GRAPHIC REF	PART NUMBER	QTY	PART NAME 1 2 3 4 5 6 (PRODUCT LEVEL)	SEE PAGE
M	1	1	**8T-4133**	2	NUT (M10X1.5-THD)	
	2	1	**129-7784**	1	ROD	
	3	1	**209-6002**	1	SCREEN AS (HYDRAULIC TANK)	
	4	1	**259-0918**	1	GUIDE	
	5	1	**095-1552**	1	SEAL-O-RING	
	6	1	**095-6639**	1	SPRING	

M - METRIC PART

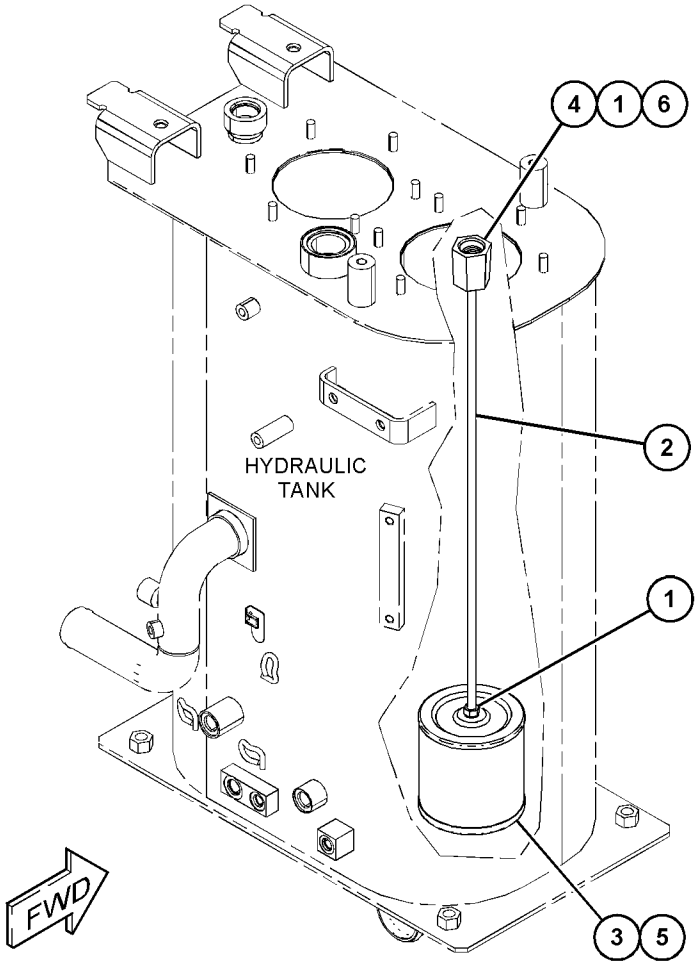

GRAPHIC #1 <END> g06116065

197-0173 SPOOL GP-CONTROL VALVE–WORK TOOL

S/N: RDE1-UP

PART OF 420-2241 VALVE GP-MAIN CONTROL

SMCS-5051, 5464

i05439773

NOTE	REF NO	GRAPHIC REF	PART NUMBER	QTY	PART NAME 1 2 3 4 5 6 (PRODUCT LEVEL)	SEE PAGE
	1	1	**197-0148**	1	BOLT-SPECIAL	
	2	1	**7I-7203**	2	SEAT	
	3	1	**197-0151**	1	SPRING	
	4	1	**197-0150**	1	SPRING	
	5	1	**197-0149**	1	STOP	
	6	1	**197-0156**	1	SPOOL	

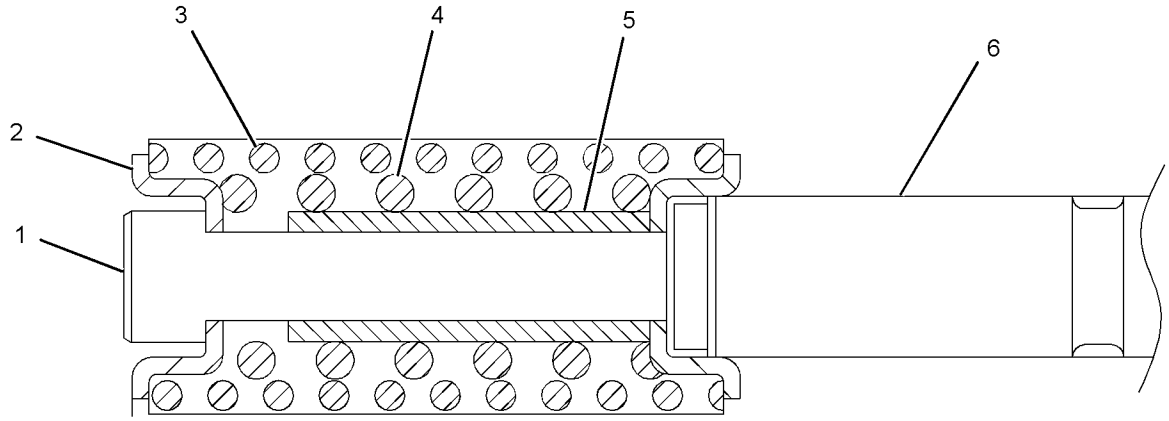

GRAPHIC #1 <END> g03433056

197-0213 SPOOL GP-CONTROL VALVE–BUCKET

S/N: RDE1-UP

PART OF 420-2241 VALVE GP-MAIN CONTROL

SMCS-5051, 5464 **i05407055**

NOTE	REF NO	GRAPHIC REF	PART NUMBER	QTY	PART NAME 1 2 3 4 5 6 (PRODUCT LEVEL)	SEE PAGE
	1	1	**197-0148**	1	BOLT-SPECIAL	
	2	1	**7I-7203**	2	SEAT	
	3	1	**197-0152**	1	SPRING	
	4	1	**197-0150**	1	SPRING	
	5	1	**197-0149**	1	STOP	
	6	1	**197-0214**	1	SPOOL	

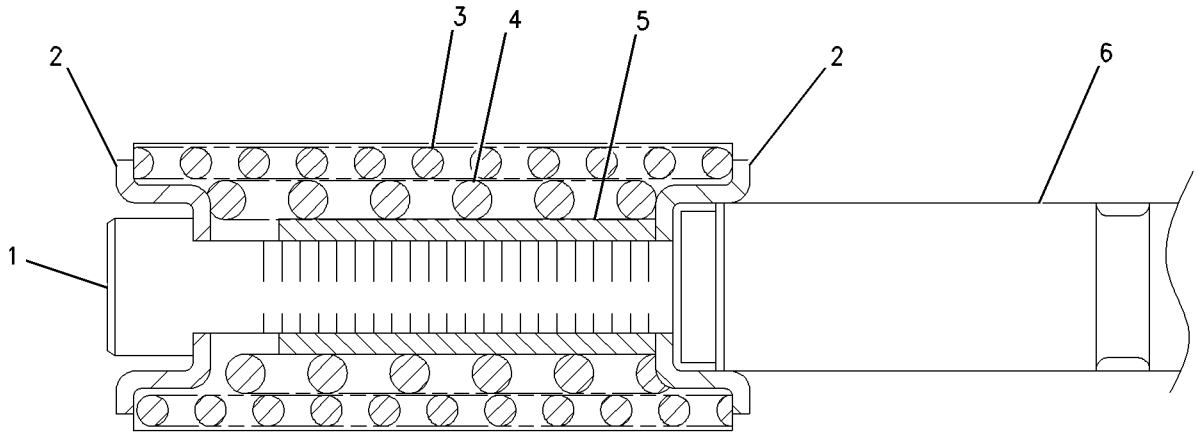

GRAPHIC #1 <END> g00767667

197-0217 SPOOL GP-CONTROL VALVE–STICK REGENERATION

S/N: RDE1-UP

PART OF 420-2241 VALVE GP-MAIN CONTROL

SMCS-5051, 5464

i05407070

NOTE	REF NO	GRAPHIC REF	PART NUMBER	QTY	PART NAME 1 2 3 4 5 6 (PRODUCT LEVEL)	SEE PAGE
	1	1	**197-0148**	1	BOLT-SPECIAL	
	2	1	**7I-7203**	2	SEAT	
	3	1	**197-0151**	1	SPRING	
	4	1	**197-0150**	1	SPRING	
	5	1	**197-0149**	1	STOP	
	6	1	**197-0218**	1	SPOOL AS	

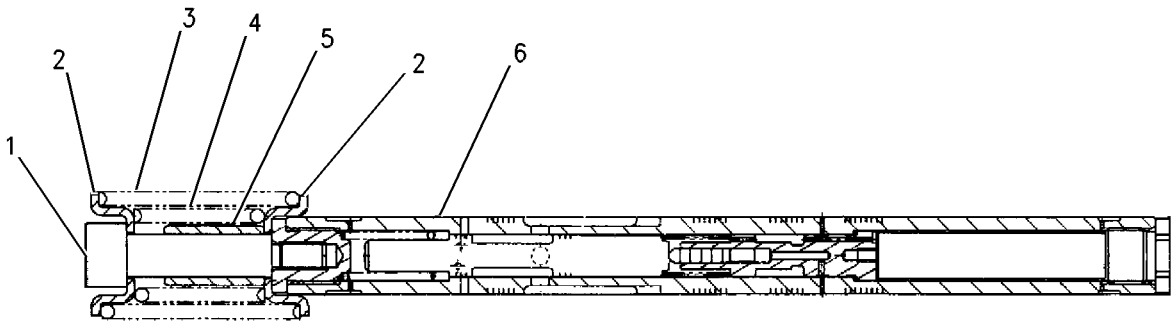

GRAPHIC #1 <END> g00790767

285-1504 SPOOL GP-CONTROL VALVE–COMBINED FLOW

S/N: RDE1-UP

PART OF 420-2241 VALVE GP-MAIN CONTROL

SMCS-5051, 5464 **i05407078**

NOTE	REF NO	GRAPHIC REF	PART NUMBER	QTY	PART NAME 1 2 3 4 5 6 (PRODUCT LEVEL)	SEE PAGE
	1	1	**297-0366**	1	STOP	
	2	1	**197-0148**	1	BOLT-SPECIAL	
	3	1	**7I-7203**	2	SEAT	
	4	1	**197-0151**	1	SPRING	
	5	1	**197-0150**	1	SPRING	

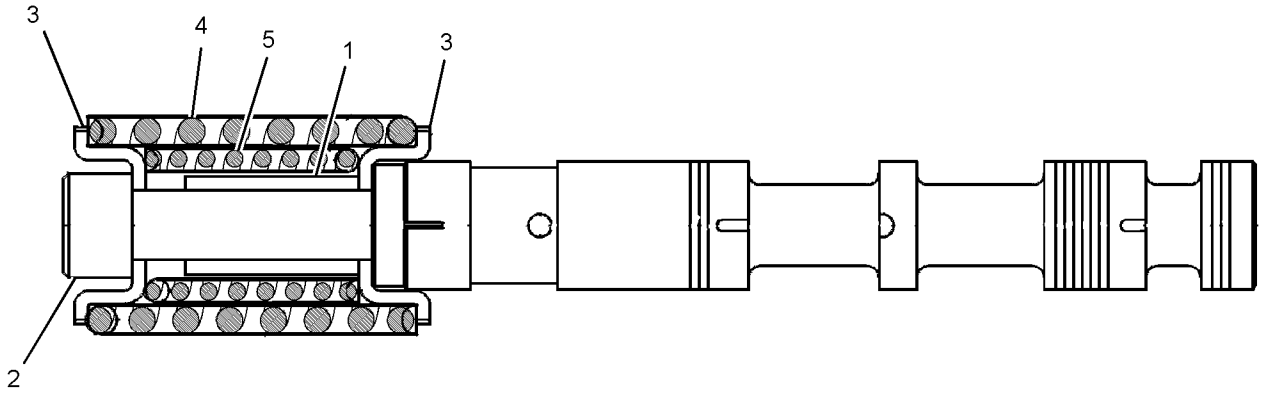

GRAPHIC #1 <END> g01424755

285-1505 SPOOL GP-CONTROL VALVE—SWING PRIORITY

S/N: RDE1-UP

PART OF 420-2241 VALVE GP-MAIN CONTROL

SMCS-5051, 5464

i05407080

NOTE	REF NO	GRAPHIC REF	PART NUMBER	QTY	PART NAME 1 2 3 4 5 6 (PRODUCT LEVEL)	SEE PAGE
	1	1	**197-0149**	1	STOP	
	2	1	**197-0148**	1	BOLT-SPECIAL	
	3	1	**7I-7203**	2	SEAT	
	4	1	**197-0151**	1	SPRING	
	5	1	**197-0150**	1	SPRING	

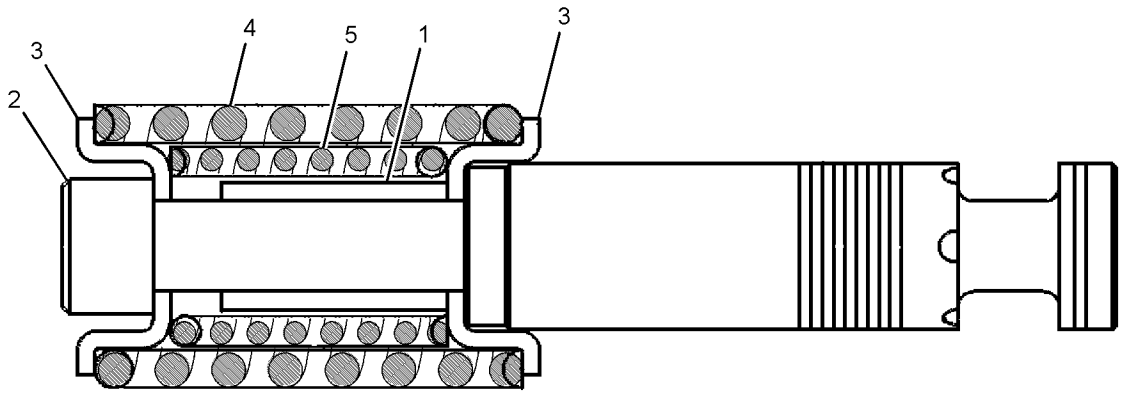

GRAPHIC #1 <END> g01682819

310-0065 SPOOL GP-CONTROL VALVE—SWING BOOM

S/N: RDE1-UP

PART OF 420-2241 VALVE GP-MAIN CONTROL

SMCS-5051, 5464 **i05407100**

NOTE	REF NO	GRAPHIC REF	PART NUMBER	QTY	PART NAME 1 2 3 4 5 6 (PRODUCT LEVEL)	SEE PAGE
	1	1	**197-0149**	1	STOP	
	2	1	**197-0148**	1	BOLT-SPECIAL	
	3	1	**7I-7203**	2	SEAT	
	4	1	**197-0151**	1	SPRING	
	5	1	**197-0150**	1	SPRING	

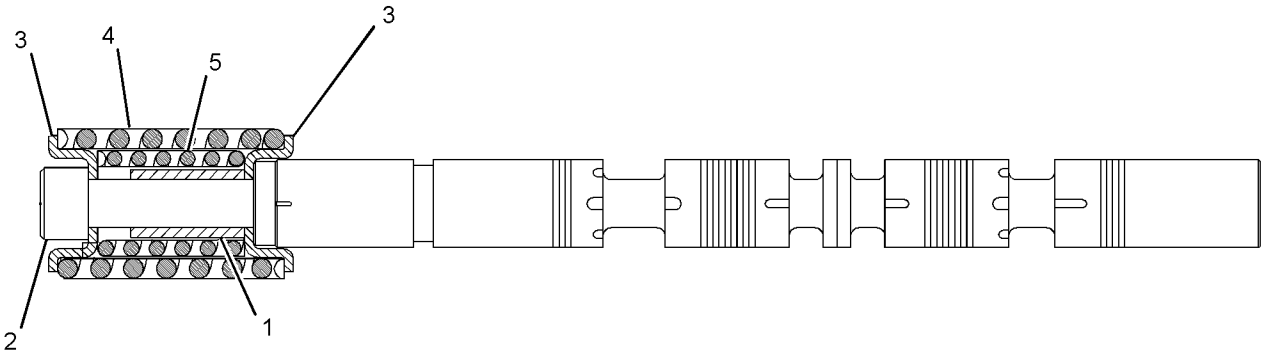

GRAPHIC #1 <END> g01442121

310-0357 SPOOL GP-CONTROL VALVE–STICK II

S/N: RDE1-UP

PART OF 420-2241 VALVE GP-MAIN CONTROL

SMCS-5051, 5464

i05407107

NOTE	REF NO	GRAPHIC REF	PART NUMBER	QTY	PART NAME 1 2 3 4 5 6 (PRODUCT LEVEL)	SEE PAGE
	1	1	**197-0153**	1	SPRING	
	2	1	**7I-7203**	2	SEAT	
	3	1	**197-0148**	1	BOLT-SPECIAL	
	4	1	**197-0149**	1	STOP	
	5	1	**197-0150**	1	SPRING	

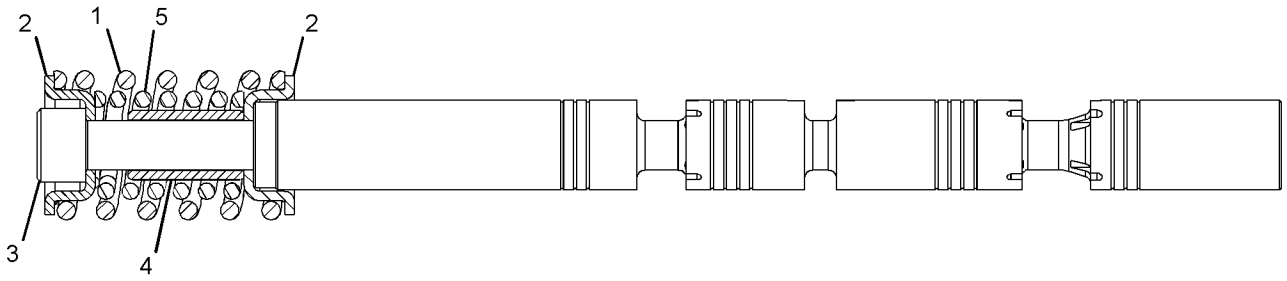

GRAPHIC #1 <END> g01448881

352-7197 SPOOL GP-CONTROL VALVE–TRAVEL, RH, LH

S/N: RDE1-UP

PART OF 420-2241 VALVE GP-MAIN CONTROL

SMCS-5051, 5464 **i05407113**

NOTE	REF NO	GRAPHIC REF	PART NUMBER	QTY	PART NAME 1 2 3 4 5 6 (PRODUCT LEVEL)	SEE PAGE
	1	1	**197-0151**	1	SPRING	
	2	1	**7I-7203**	2	SEAT	
	3	1	**197-0148**	1	BOLT-SPECIAL	
	4	1	**197-0149**	1	STOP	
	5	1	**197-0150**	1	SPRING	

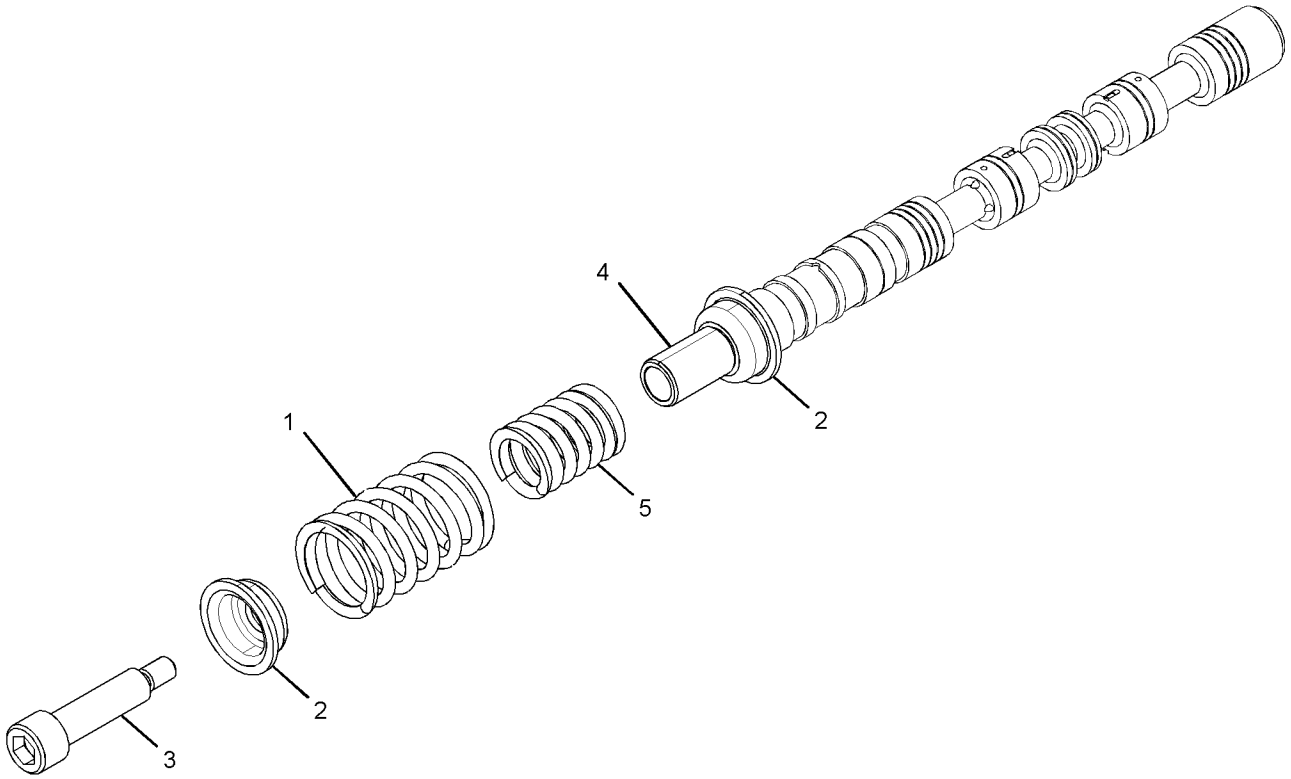

GRAPHIC #1 <END> g02432156

369-8394 SPOOL GP-CONTROL VALVE–STICK I

S/N: RDE1-UP

PART OF 420-2241 VALVE GP-MAIN CONTROL

SMCS-5051, 5464

i05407124

NOTE	REF NO	GRAPHIC REF	PART NUMBER	QTY	PART NAME 1 2 3 4 5 6 (PRODUCT LEVEL)	SEE PAGE
	1	1	**7I-7203**	2	SEAT	
	2	1	**197-0148**	1	BOLT-SPECIAL	
	3	1	**197-0149**	1	STOP	
	4	1	**197-0150**	1	SPRING	
	5	1	**197-0151**	1	SPRING	
					PARTS SHOWN IN GRAPHIC(S) WITHOUT A REFERENCE NUMBER ARE NOT SERVICED SEPARATELY	

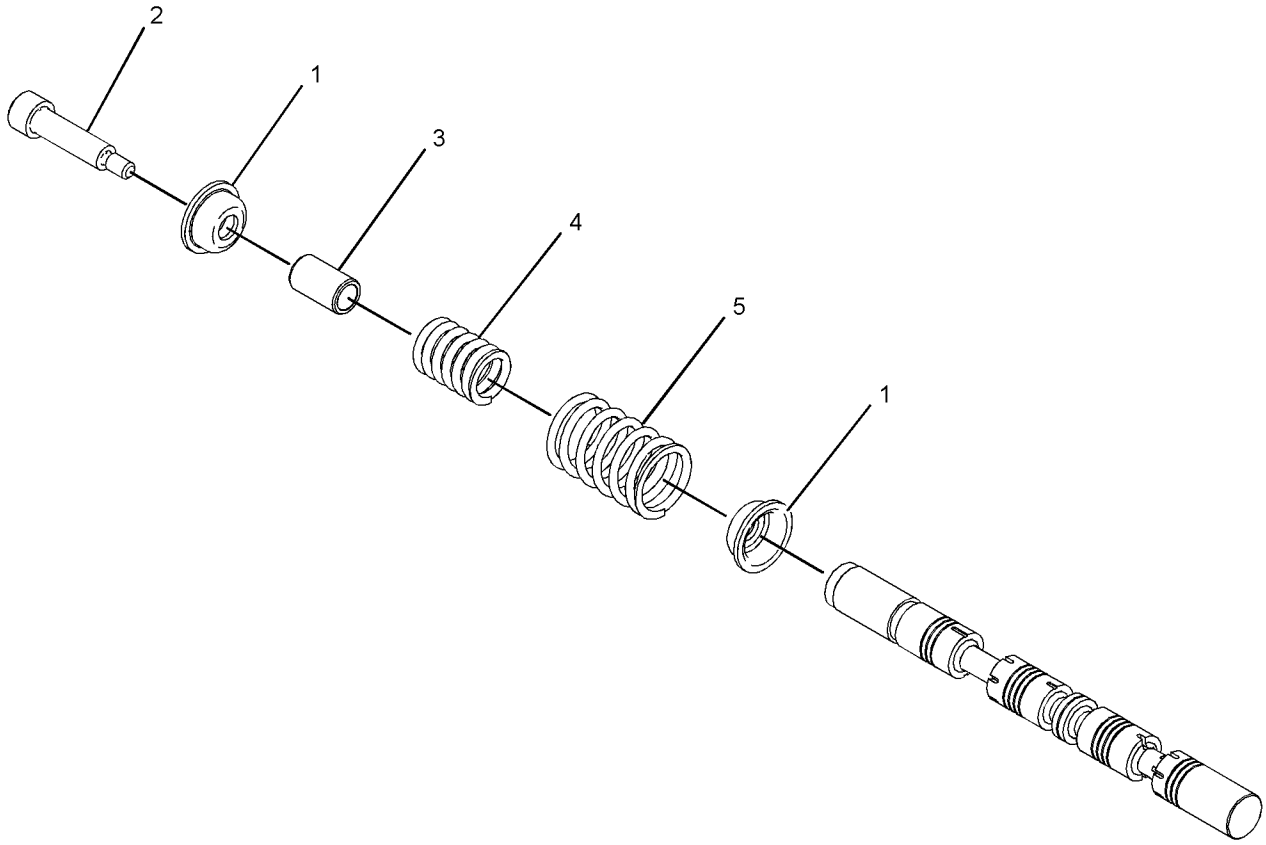

GRAPHIC #1

<END>

g02719941

369-8395 SPOOL GP-CONTROL VALVE–BOOM II

S/N: RDE1-UP

PART OF 420-2241 VALVE GP-MAIN CONTROL

SMCS-5051, 5464 **i05907435**

NOTE	REF NO	GRAPHIC REF	PART NUMBER	QTY	PART NAME 1 2 3 4 5 6 (PRODUCT LEVEL)	SEE PAGE
	1	1	**7I-7203**	2	SEAT	
	2	1	**197-0148**	1	BOLT-SPECIAL	
	3	1	**197-0149**	1	STOP	
	4	1	**197-0150**	1	SPRING	
	5	1	**197-0153**	1	SPRING	
					PARTS SHOWN IN GRAPHIC(S) WITHOUT A REFERENCE NUMBER ARE NOT SERVICED SEPARATELY	

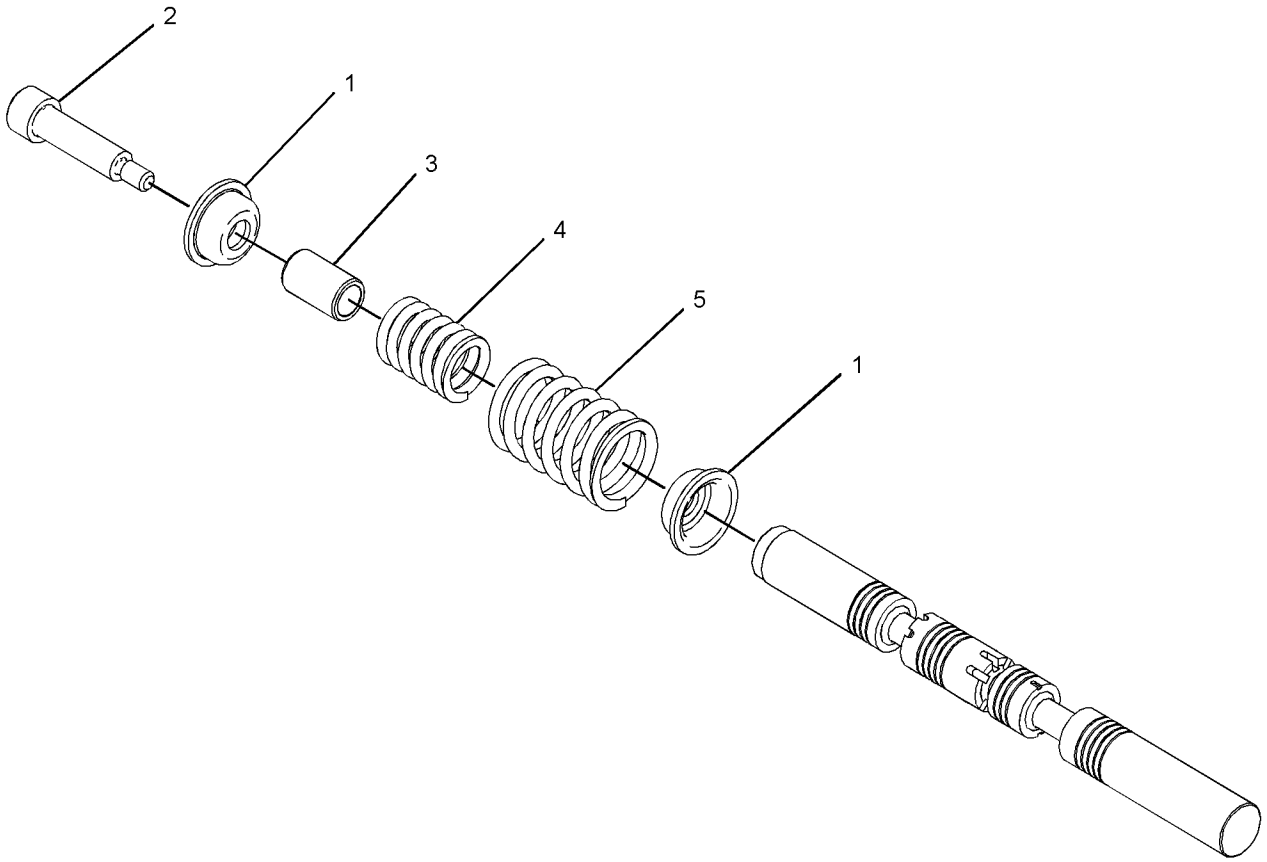

GRAPHIC #1 <END> g02717490

369-8434 SPOOL GP-CONTROL VALVE–BOOM I

S/N: RDE1-UP

PART OF 420-2241 VALVE GP-MAIN CONTROL

SMCS-5051, 5464

i05407139

NOTE	REF NO	GRAPHIC REF	PART NUMBER	QTY	PART NAME 1 2 3 4 5 6 (PRODUCT LEVEL)	SEE PAGE
	1	1	**7I-7203**	2	SEAT	
	2	1	**197-0148**	1	BOLT-SPECIAL	
	3	1	**197-0149**	1	STOP	
	4	1	**197-0150**	1	SPRING	
	5	1	**197-0151**	1	SPRING	
					PARTS SHOWN IN GRAPHIC(S) WITHOUT A REFERENCE NUMBER ARE NOT SERVICED SEPARATELY	

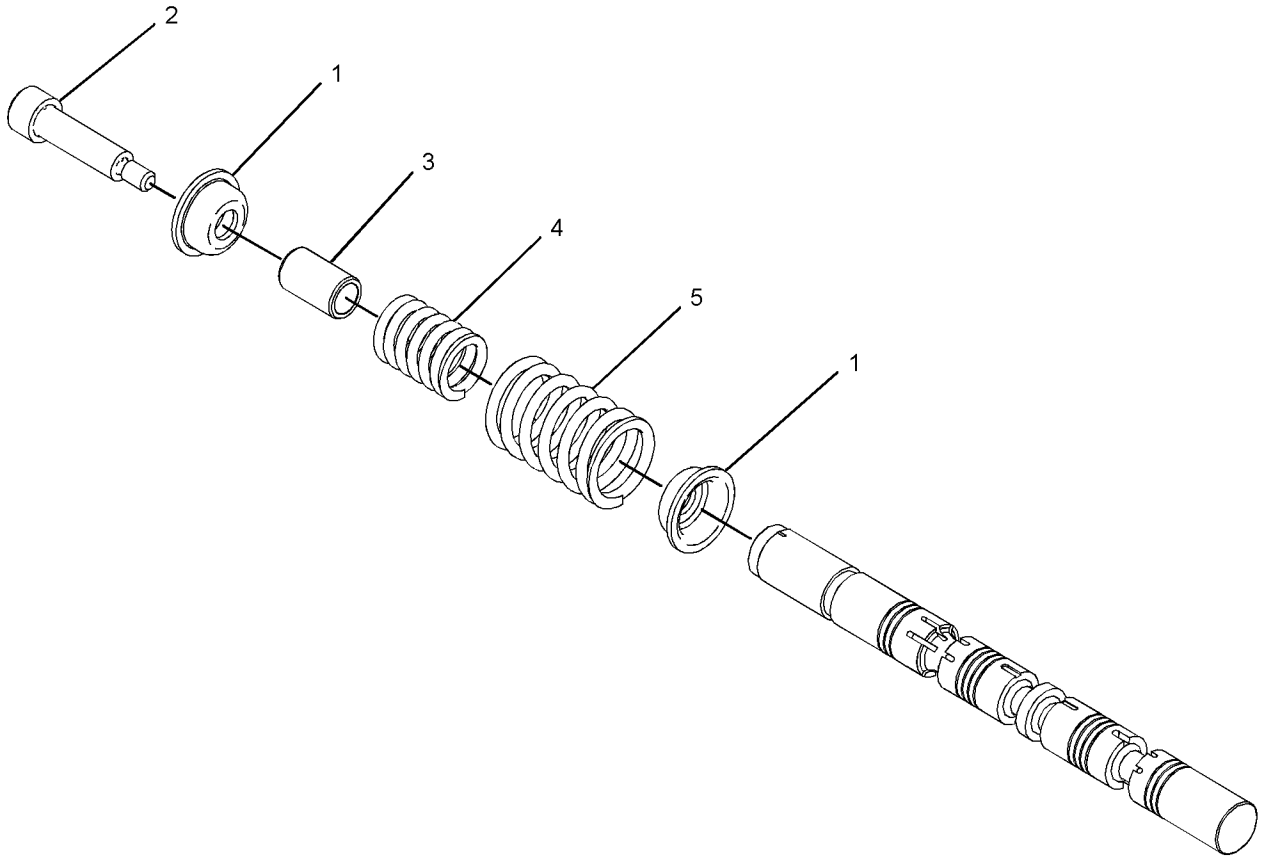

GRAPHIC #1

<END>

g02717495

390-4281 SUPPORT GP-LINES

S/N: RDE1-UP
FOR USE WITH 4.65-M (15.25-FT) BOOM
PART OF 398-8996 LINES AR-QUICK COUPLER

SMCS-5057 **i06826763**

NOTE	REF NO	GRAPHIC REF	PART NUMBER	QTY	PART NAME 1 2 3 4 5 6 (PRODUCT LEVEL)	SEE PAGE
	1	1	**153-8800**	4	PLATE	
	2	1	**277-1232**	1	SUPPORT AS	
	3	1	**390-4327**	1	PLATE	
	4	1	**8T-4223**	8	WASHER-HARD (13.5X25.5X3-MM THK)	
M	5	1	**8T-4648**	8	BOLT (M12X1.75X70-MM)	

M - METRIC PART

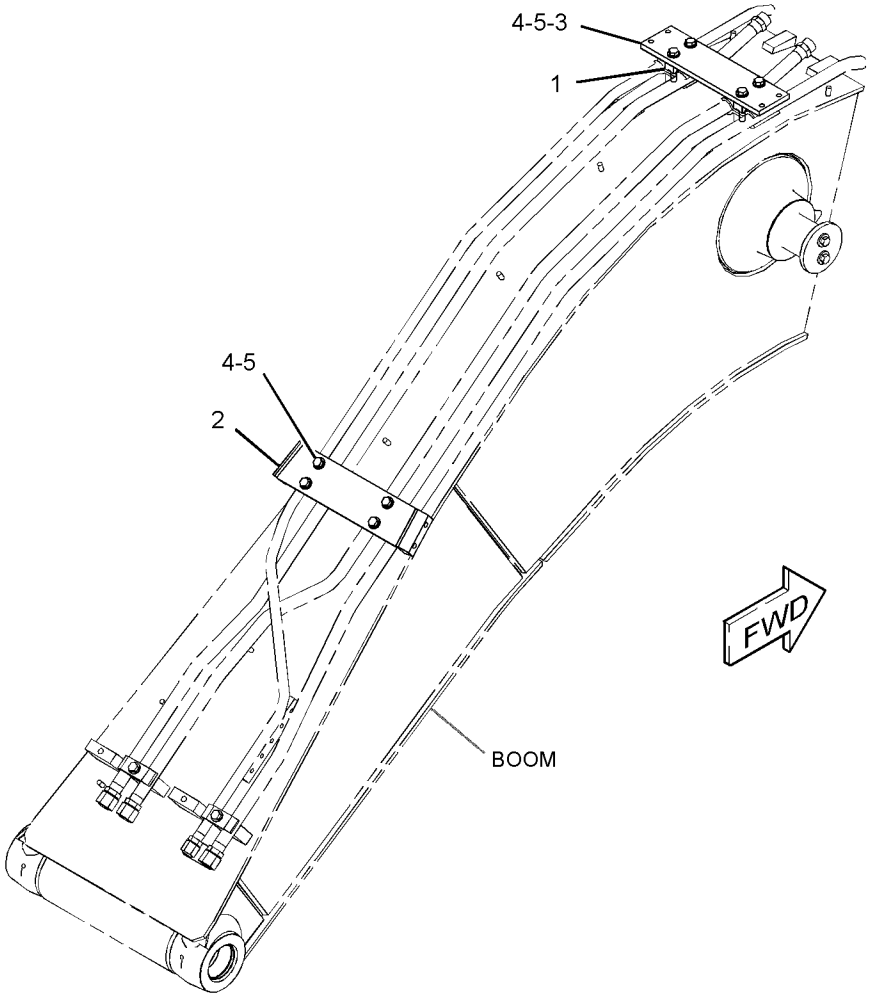

GRAPHIC #1 <END> g03317553

162-4696 SWIVEL GP

S/N: RDE1-UP

PART OF 278-6512 LINES GP-TRAVEL MOTOR

SMCS-5060 **i06646688**

NOTE	REF NO	GRAPHIC REF	PART NUMBER	QTY	PART NAME 1 2 3 4 5 6 (PRODUCT LEVEL)	SEE PAGE
M	1	1	**455-3798**	6	BOLT (M10X1.5X25-MM)	
	2	1	**453-3454**	2	WASHER-HARD (11X21X2.5-MM THK)	
	3	1	**5I-4363**	1	COVER	
	4	1	**095-1716**	1	SEAL-O-RING	
	5	1	**7I-7321**	1	RETAINER	
	6	1	**4I-7604**	1	HOUSING	
	7	1	**159-7782**	5	SEAL	
	8	1	**095-1625**	3	SEAL-O-RING	
	9	1	**4I-7605**	1	ROTOR	
	10	1	**8T-6759**	1	PLUG-PIPE	

M - METRIC PART

162-4696 **SWIVEL GP (**contd.**)** **i06646688**

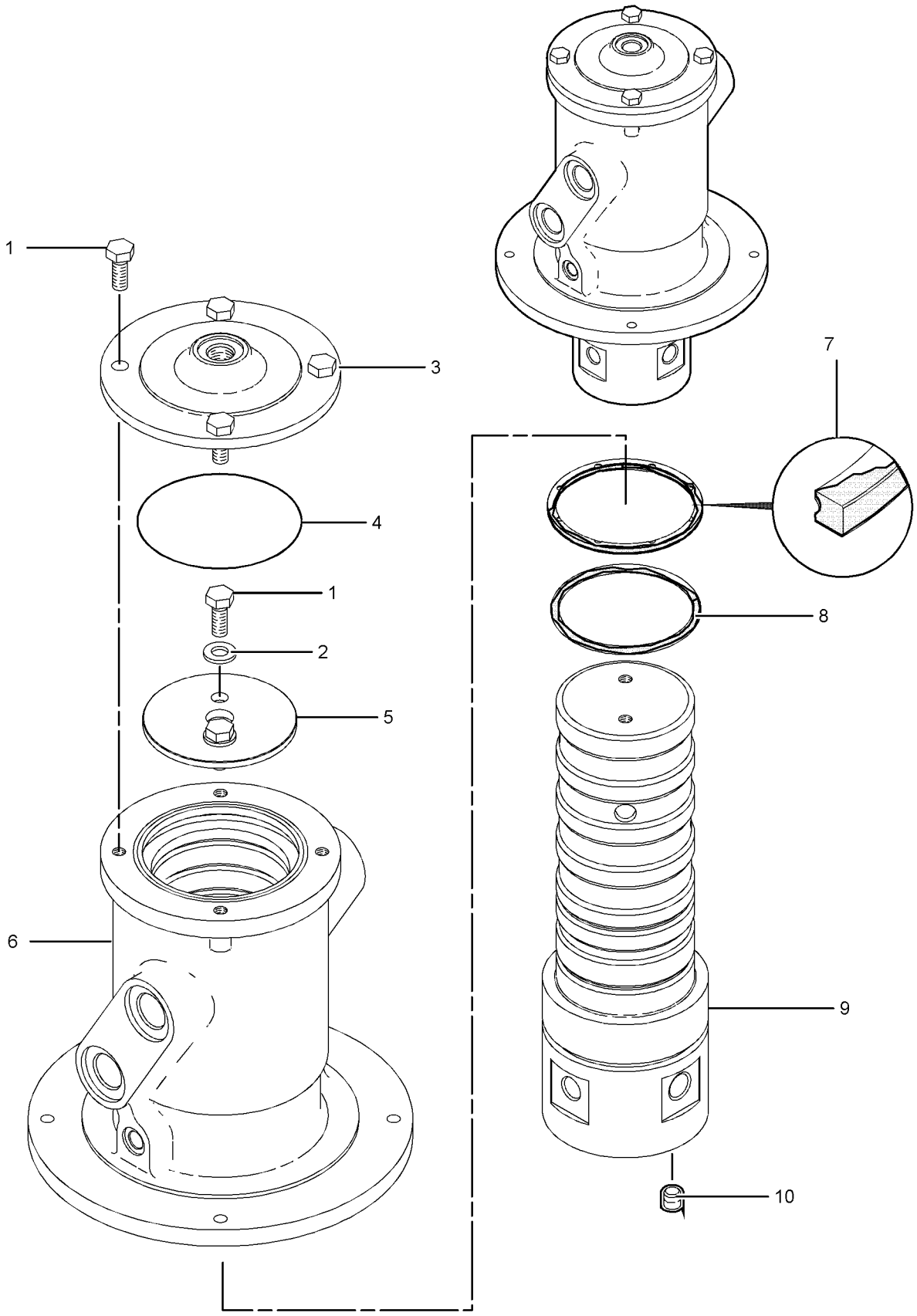

GRAPHIC #1 <END> g03684437

499-4831 TANK & FILTER GP-HYDRAULIC

S/N: RDE1-UP
118-L (31.2-U.S.GAL)
PART OF 499-4829 TANK & MTG GP-HYDRAULIC

SMCS-5056, 5068 **i06783704**

NOTE	REF NO	GRAPHIC REF	PART NUMBER	QTY	PART NAME 1 2 3 4 5 6 (PRODUCT LEVEL)	SEE PAGE
Y	1	1	**158-8987**	1	FILTER & VALVE GP-PILOT (HYDRAULIC OIL)	228
	2	1	**207-6403**	1	PLUG	
	3	1	**207-6404**	1	WASHER (49.5X60.5X1.5-MM THK)	
	4	1	**227-0590**	1	BREATHER (HYDRAULIC TANK)	
Y	5	1	**289-8194**	1	FILTER GP-OIL (HYDRAULIC, CASE DRAIN)	229
	6	1	**315-4441**	1	SWITCH AS-PRESSURE (HYDRAULIC OIL) (DIFFERENTIAL)	
Y	7	1	**347-6081**	1	GAUGE GP-SIGHT (HYDRAULIC OIL LEVEL)	231
	8	1	**398-7171**	1	ELEMENT (HYDRAULIC RETURN FILTER)	
	9	1	**398-7172**	1	VALVE AS	
	10	1	**398-7173**	1	SPRING	
	11	1	**432-6291**	1	SENSOR-TEMPERATURE (HYDRAULIC OIL)	
	12	1	**499-4832**		TANK AS-HYDRAULIC	
	13	1	**499-4836**	1	SUPPORT	
	14	1	**499-4994**	1	COVER	
	15	1	**499-4995**	1	COVER AS	
Y	16	1	**499-5811**	1	SCREEN GP-HYDRAULIC (TANK)	314
	17	1	**095-1608**	1	SEAL-O-RING	
	18	1	**095-1725**	2	SEAL-O-RING	
	19	1	*164-4180*	3	PLUG AS	
					(EACH INCLUDES)	
		1	**7M-8485**	1	SEAL-O-RING	
		1	**9S-4181**	1	PLUG (5/16-12-THD)	
	20	1	*164-5567*	1	COUPLER AS-QUICK DISCONNECT (MALE)	
		1	**6V-3965**	1	FITTING (QUICK DISCONNECT)	
		1	**214-7568**	1	SEAL-O-RING	
	21	1	*164-5590*	1	VALVE GP-FLUID SAMPLING (HYDRAULIC OIL)	
		1	**3J-7354**	1	SEAL-O-RING	
		1	**8C-3446**	1	VALVE-SAMPLING	
	22	1	**3K-0360**	1	SEAL-O-RING	
	23	1	**4J-0527**	1	SEAL-O-RING	
M	24	1	**5C-9553**	4	BOLT (M6X1X16-MM)	
	25	1	**6V-0852**	1	CAP-DUST	
	26	1	**8C-3451**	1	CAP-DUST (HYDRAULIC OIL)	
	27	1	**8T-4121**	17	WASHER-HARD (11X21X2.5-MM THK)	
M	28	1	**8T-4133**	12	NUT (M10X1.5-THD)	
M	29	1	**8T-4136**	3	BOLT (M10X1.5X25-MM)	
M	30	1	**8T-4195**	2	BOLT (M10X1.5X30-MM)	
	31	1	**8T-4224**	4	WASHER-HARD (8.8X16X2-MM THK)	
M	32	1	**8T-4908**	4	BOLT (M8X1.25X25-MM)	
	33	1	**9X-8256**	4	WASHER (6.6X12X2-MM THK)	

M - METRIC PART
Y - SEPARATE ILLUSTRATION

499-4831 **TANK & FILTER GP-HYDRAULIC (**contd.**)** **i06783704**

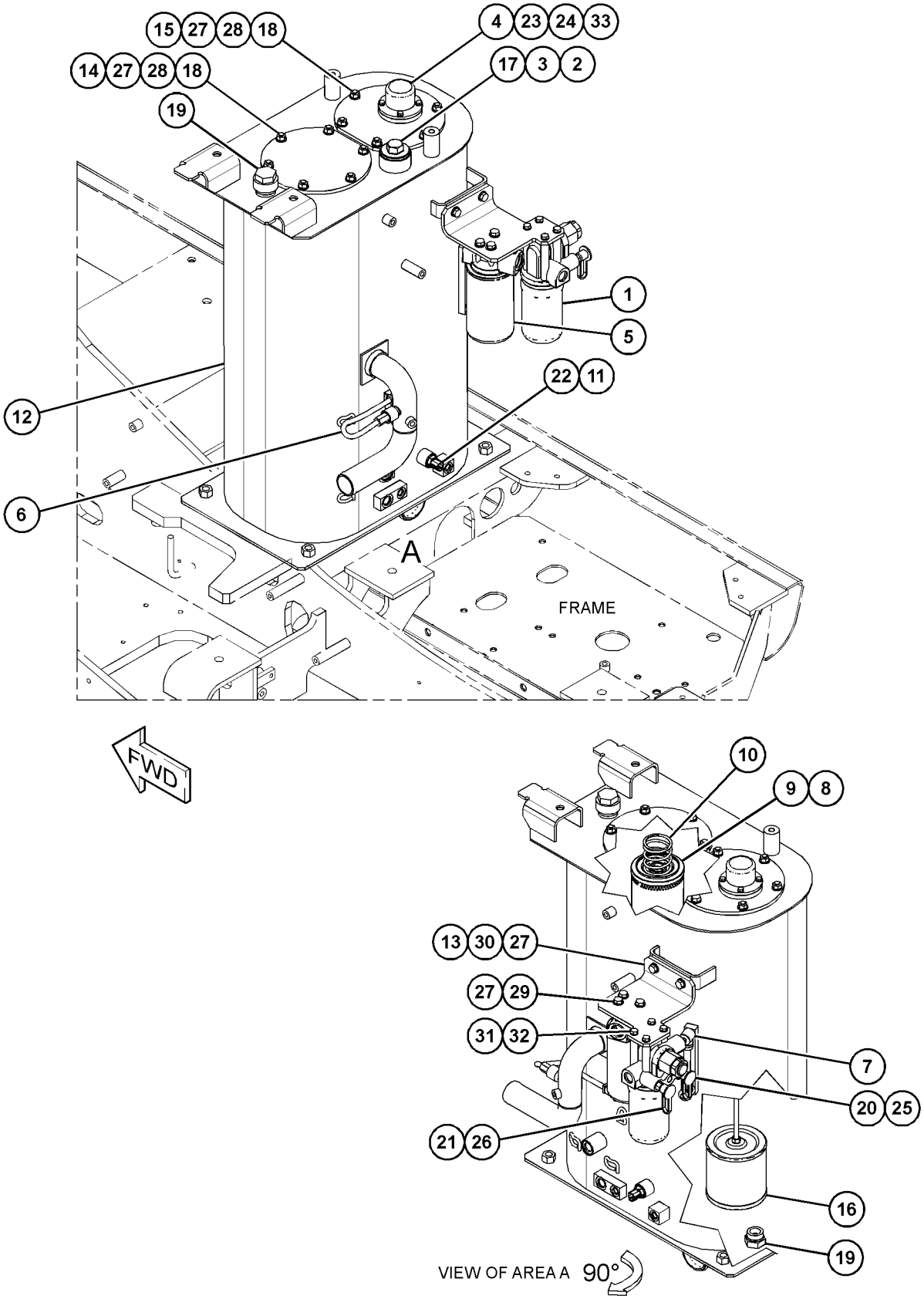

GRAPHIC #1 <END> g06131071

499-4829 TANK & MTG GP-HYDRAULIC

S/N: RDE1-UP

PART OF 503-4904 HYDRAULIC AR

SMCS-5056 **i06783735**

NOTE	REF NO	GRAPHIC REF	PART NUMBER	QTY	PART NAME 1 2 3 4 5 6 (PRODUCT LEVEL)	SEE PAGE
	1	1	**085-9310**	4	SPACER (16.6X32X26-MM THK)	
M	2	1	**447-1707**	4	BOLT (M16X2X60-MM)	
Y	3	1	*499-4830*	1	LINES GP-HYDRAULIC	267
Y	4	1	**499-4831**	1	TANK & FILTER GP-HYDRAULIC	329

M - METRIC PART
Y - SEPARATE ILLUSTRATION

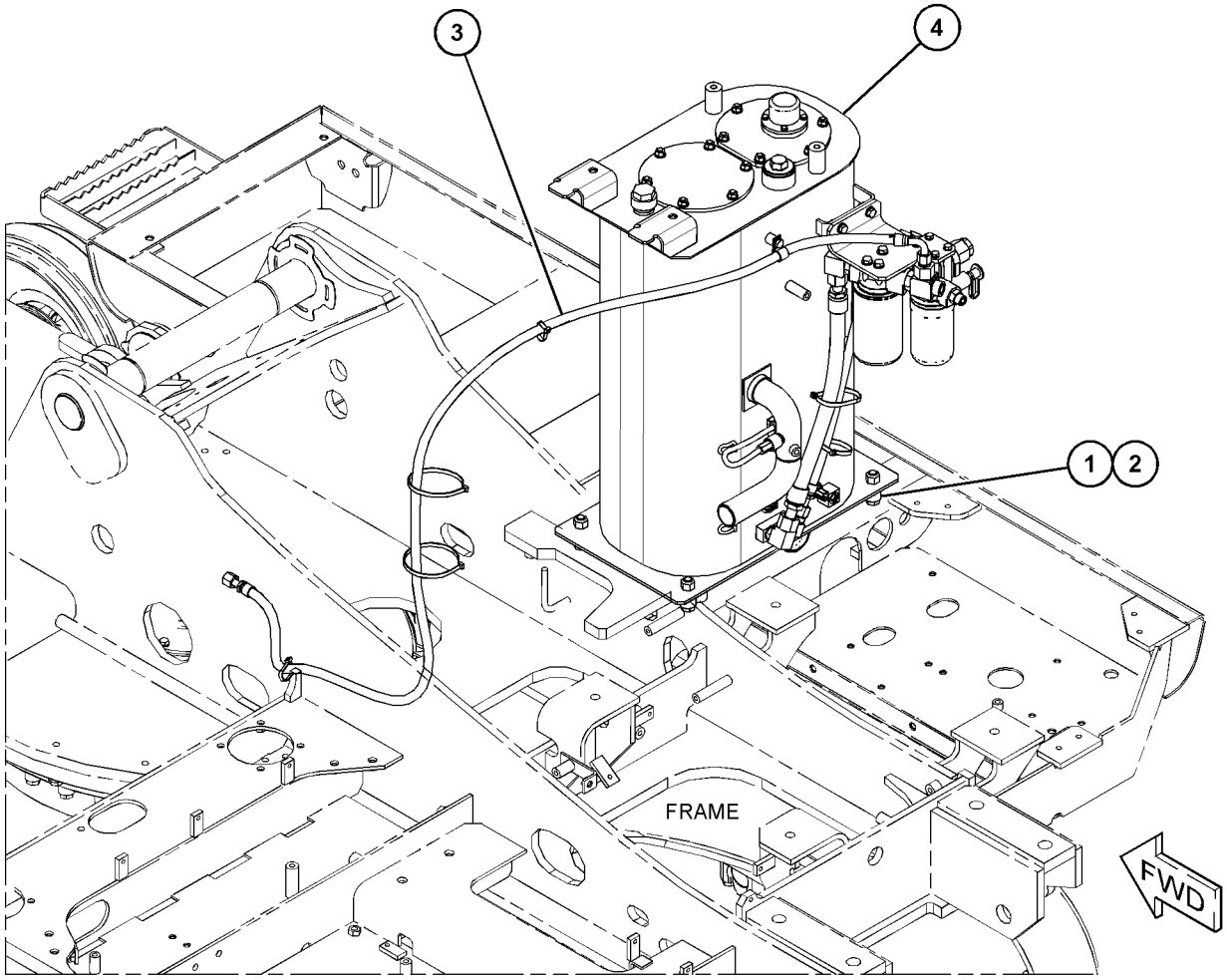

GRAPHIC #1 <END> g06129682

171-0002 VALVE GP-CHECK–COOLER BYPASS

S/N: RDE1-UP

PART OF 502-5312 LINES GP-HYDRAULIC OIL COOLER

SMCS-5067 **i05406347**

NOTE	REF NO	GRAPHIC REF	PART NUMBER	QTY	PART NAME 1 2 3 4 5 6 (PRODUCT LEVEL)	SEE PAGE
	1	1	**177-2706**	1	VALVE AS	
	2	1	**190-7875**	1	VALVE AS	
	3	1	**184-3841**	1	RING	

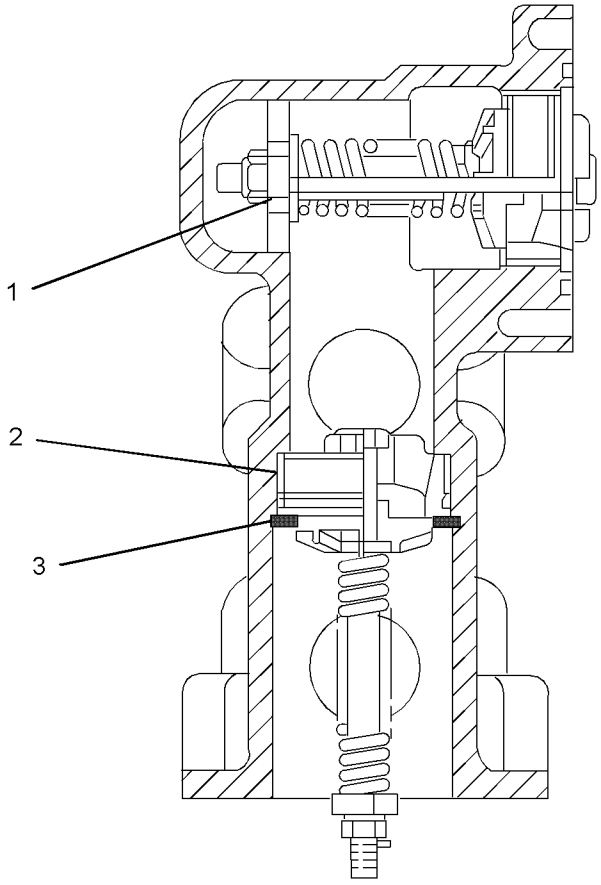

GRAPHIC #1 <END> g03023758

454-0504 VALVE GP-CHECK—PILOT OPERATED

S/N: RDE1-UP

PART OF 502-5317 LINES GP-FRONT

SMCS-5067 **i06125696**

NOTE	REF NO	GRAPHIC REF	PART NUMBER	QTY	PART NAME 1 2 3 4 5 6 (PRODUCT LEVEL)	SEE PAGE
J	1	1	**237-0947**	1	VALVE GP-CHECK (PILOT OPERATED)	
					AVAILABLE REPAIR KIT(S):	
J			**213-8433**	1	KIT-SEAL (CHECK VALVE)	

J - KIT MARKED J SERVICES PART(S) MARKED J

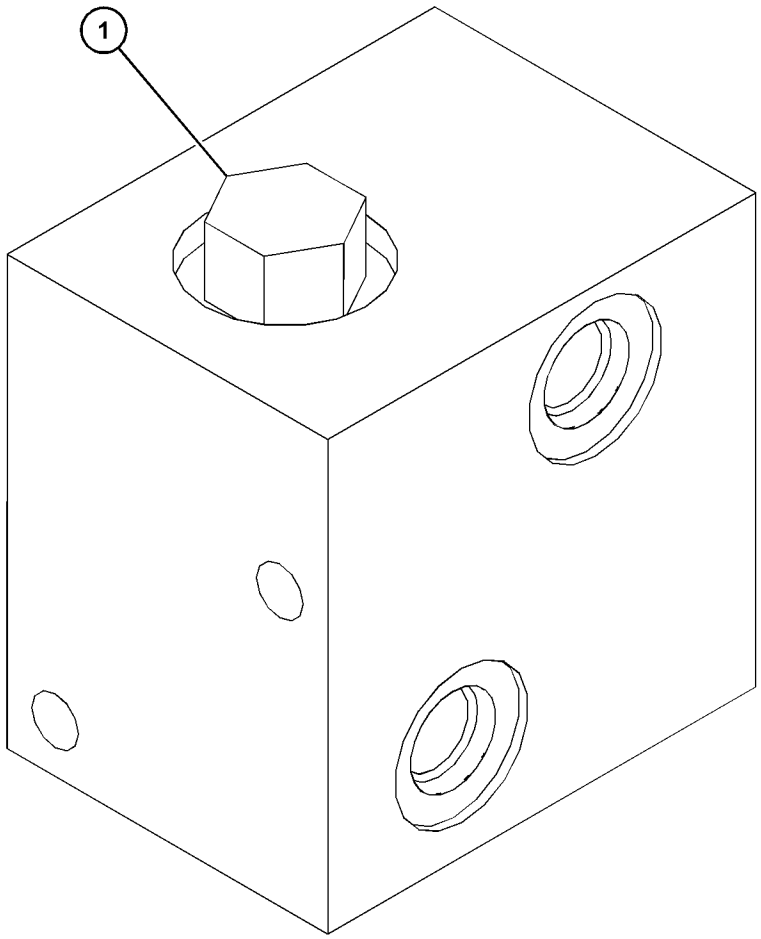

GRAPHIC #1 <END> g03700448

420-2241 VALVE GP-MAIN CONTROL

S/N: RDE1-UP

PART OF 503-4904 HYDRAULIC AR

SMCS-5051 **i05907302**

NOTE	REF NO	GRAPHIC REF	PART NUMBER	QTY	PART NAME 1 2 3 4 5 6 (PRODUCT LEVEL)	SEE PAGE
	1	3	**285-1507**	1	SPRING	
	2	3	**285-1506**	1	VALVE	
Y	3	4	**285-1504**	1	SPOOL GP-CONTROL VALVE (COMBINED FLOW)	318
	4	4	**285-1503**	2	COVER	
	5	3	**095-1579**	1	SEAL-O-RING	
M	6	1	**5A-3604**	24	BOLT-SOCKET HEAD (M8X1.25X25-MM)	
M	7	1	**197-0165**	20	BOLT (M8X1.25X20-MM)	
	8	2	**197-0167**	1	PLATE	
	9	2,3,4	**095-1578**	12	SEAL-O-RING	
	10	2,3,4	**095-1696**	8	SEAL-O-RING	
M	11	2	**085-9768**	5	BOLT (M14X2X40-MM)	
	12	2,3,4	**095-1698**	18	SEAL-O-RING	
	13	2,3,4	**197-0145**	13	PLUG	
	14	2,3,4	**095-1582**	13	SEAL-O-RING	
	15	2,4	**095-1585**	11	SEAL-O-RING	
	16	2,4	**197-0272**	8	PLUG	
M	17	2	**197-0143**	3	BOLT (M14X2X95-MM)	
	18	1,2	**3D-2824**	2	SEAL-O-RING	
	19	1,2	**9S-4183**	2	PLUG (1-1/16-12-THD)	
M	20	2	**197-0144**	13	BOLT (M14X2X130-MM)	
	21	2	**7I-7192**	2	PLUG	
	22	2	**215-4855**	2	VALVE AS-CHECK (MAKEUP)	
	23	2,3,4	**095-1700**	10	SEAL-O-RING	
	24	2,3,4	**197-0168**	10	COVER	
Y	25	1,2,3,4	**309-9973**	6	VALVE GP-RELIEF	353
	26	1,2,3,4	**7I-7208**	10	VALVE-LOAD CHECK	
	27	1,2,3,4	**7I-7207**	13	SPRING	
	28	1,2,3,4	**095-1586**	15	SEAL-O-RING	
	29	1,2,3,4	**7I-7206**	13	PLUG	
Y	30	2	**197-0213**	1	SPOOL GP-CONTROL VALVE (BUCKET)	316
	31	2,3,4	**7I-7204**	12	SEAL	
	32	2,3,4	**197-0170**	10	COVER	
Y	33	3	**310-0357**	1	SPOOL GP-CONTROL VALVE (STICK II)	321
	34	3	**197-0225**	2	PLUG AS	
Y	35	3	**197-0173**	1	SPOOL GP-CONTROL VALVE (WORK TOOL)	315
Y	36	3	**369-8395**	1	SPOOL GP-CONTROL VALVE (BOOM II)	324
	37	3,4	**131-5767**	2	PLUG	
	38	3,4	**105-7405**	2	SPRING	
	39	3,4	**131-5768**	2	VALVE-LOAD CHECK	
	40	1,3	**197-0169**	2	VALVE AS	
Y	41	3	**369-8434**	1	SPOOL GP-CONTROL VALVE (BOOM I)	325
	42	3,4	**7I-7235**	2	PLUG	
	43	4	**3J-1907**	1	SEAL-O-RING	
	44	4	**9S-4191**	1	PLUG (9/16-18-THD)	
	45	4	**201-9271**	1	SPOOL AS	
	46	4	**103-8413**	1	ROD	
	47	4	**103-8412**	1	SPRING	

420-2241 **VALVE GP-MAIN CONTROL (**contd.**)** **i05907302**

NOTE	REF NO	GRAPHIC REF	PART NUMBER	QTY	PART NAME 1 2 3 4 5 6 (PRODUCT LEVEL)	SEE PAGE
	48	4	**103-8411**	1	SPRING	
	49	4	**197-0166**	1	PLUG	
	50	3,4	**7I-8084**	6	PLUG	
Y	51	4	**352-7197**	2	SPOOL GP-CONTROL VALVE (TRAVEL, RH, LH)	322
Y	52	4	**270-5978**	1	VALVE GP-RELIEF (MAIN)	351
	53	4	**095-0965**	2	PLUG	
	54	4	**7I-7241**	2	ORIFICE	
Y	55	4	**197-0217**	1	SPOOL GP-CONTROL VALVE (STICK REGENERATION)	317
Y	57	4	**285-1505**	1	SPOOL GP-CONTROL VALVE (SWING PRIORITY)	319
	58	4	**7I-7250**	1	VALVE-LOAD CHECK	
Y	59	4	**369-8394**	1	SPOOL GP-CONTROL VALVE (STICK I)	323
	60	3	**197-0146**	1	SPRING	
	61	3	**197-0147**	1	VALVE	
	63	3,4	**095-1592**	2	SEAL-O-RING	
	64	4	**215-4872**	2	VALVE	
	65	3	**170-9997**	1	PLUG	
Y	66	4	**310-0065**	1	SPOOL GP-CONTROL VALVE (SWING BOOM)	320

M - METRIC PART
Y - SEPARATE ILLUSTRATION

420-2241 **VALVE GP-MAIN CONTROL (**contd.**)** **i05907302**

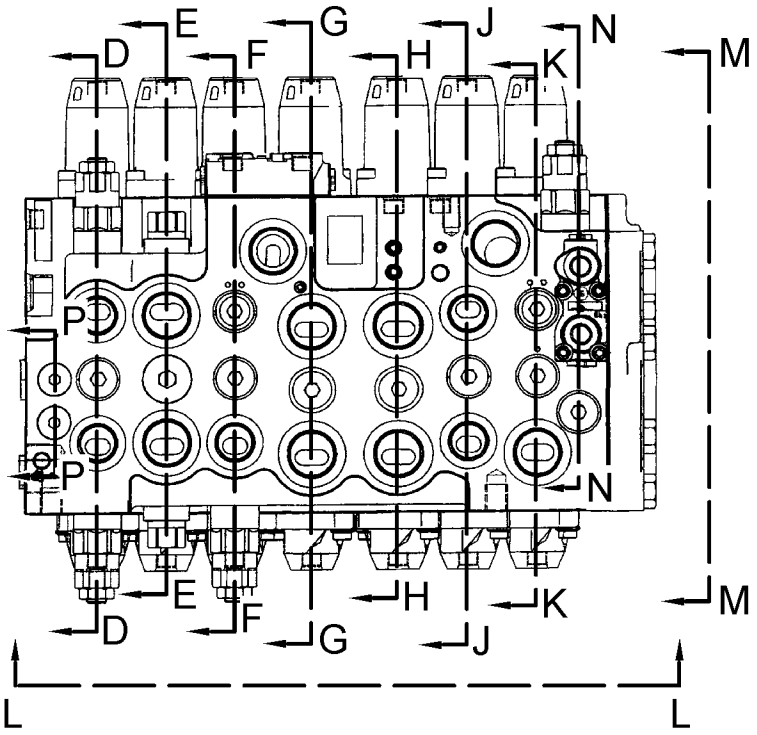

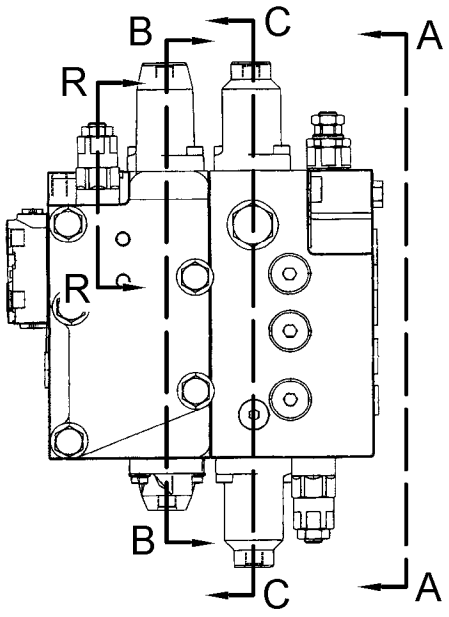

VIEW M-M

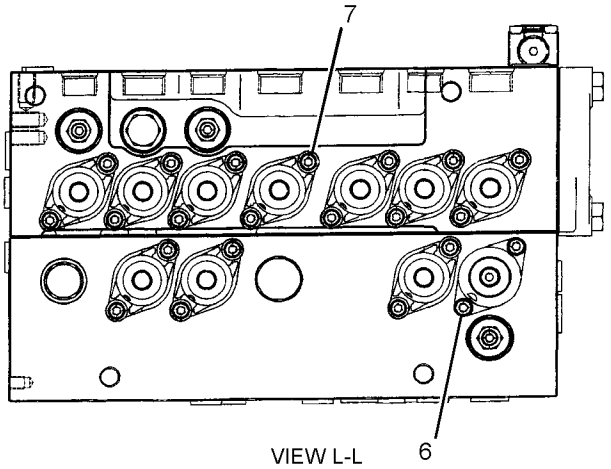

VIEW L-L

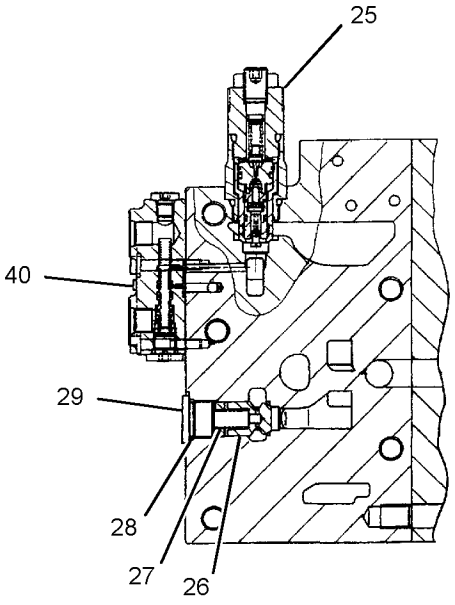

SECTION N-N

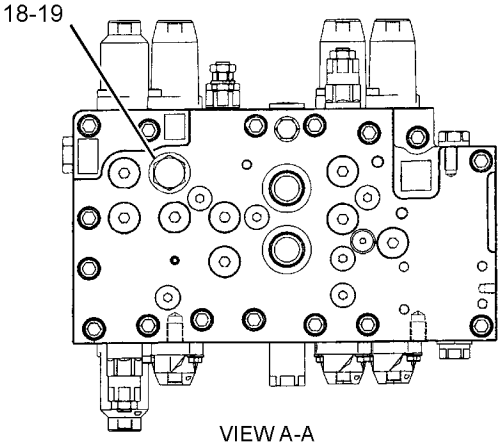

VIEW A-A

REFER TO ALL ILLUSTRATIONS OF THIS GROUP FOR AUXILIARY VIEWS

GRAPHIC #1 g01428833

420-2241 **VALVE GP-MAIN CONTROL (**contd.**)** **i05907302**

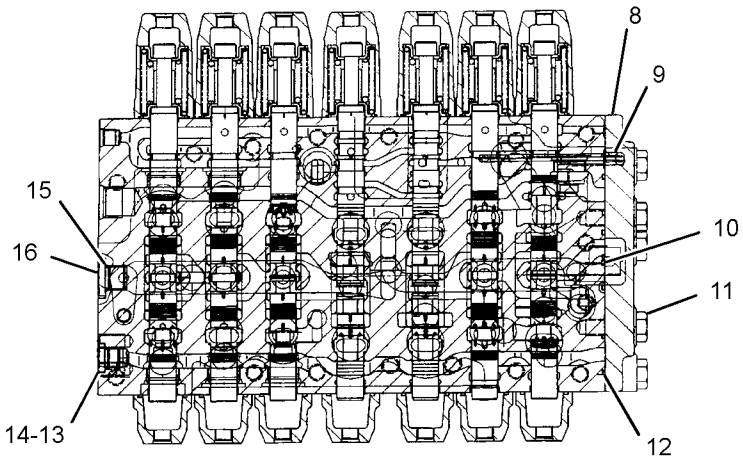

SECTION B-B

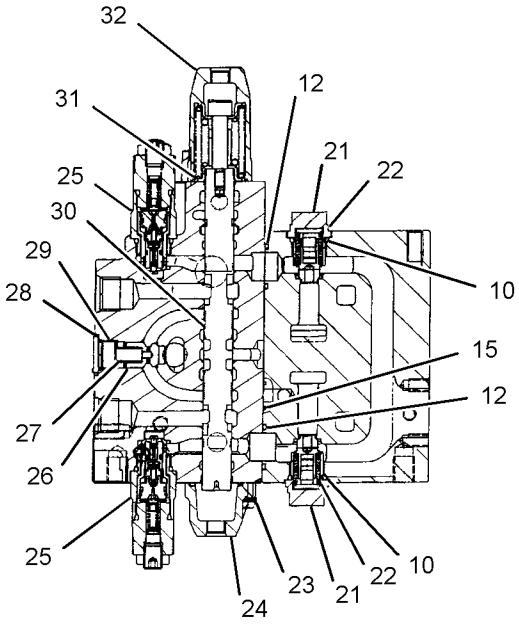

SECTION D-D

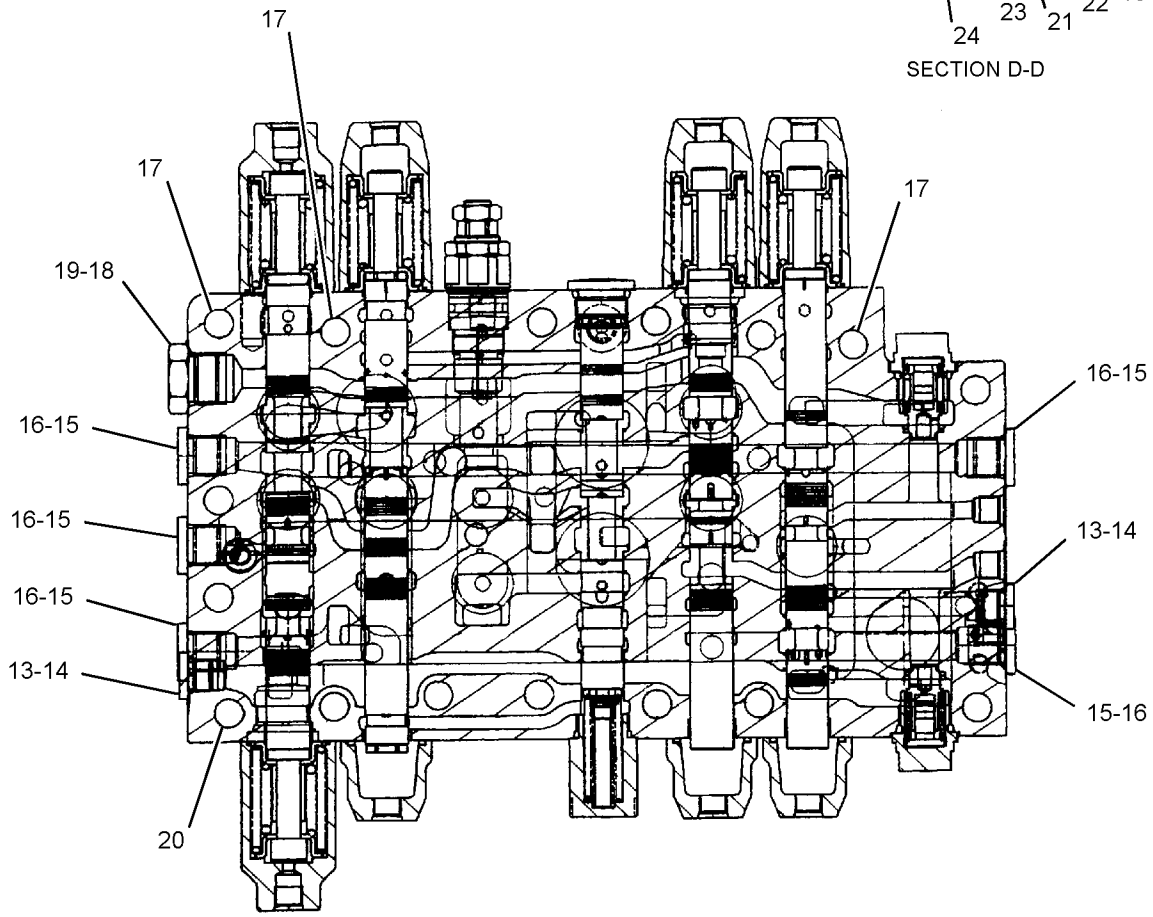

SECTION C-C

GRAPHIC #2 g01428835

420-2241 **VALVE GP-MAIN CONTROL (**contd.**)** **i05907302**

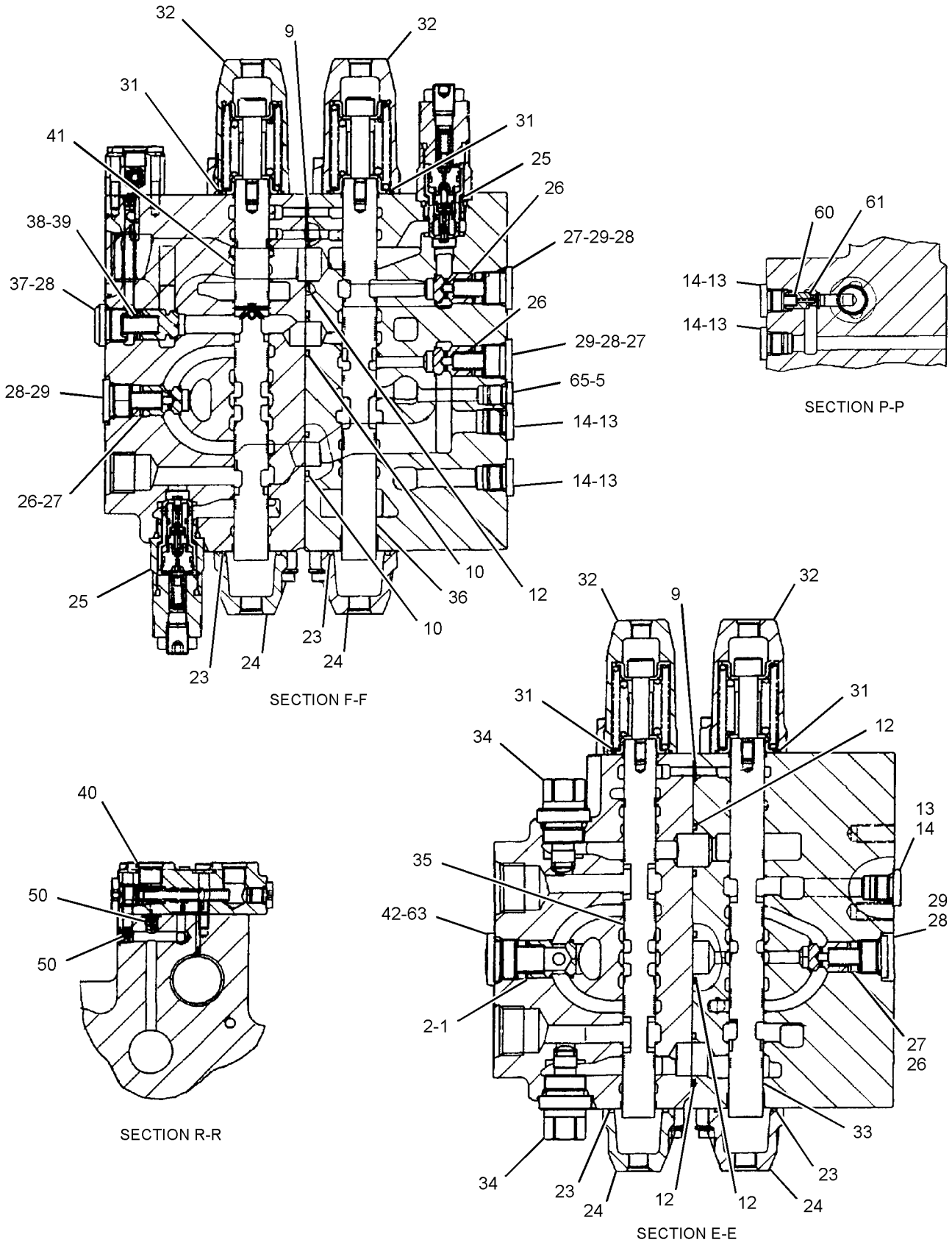

GRAPHIC #3

g01428838

420-2241 **VALVE GP-MAIN CONTROL (**contd.**)** **i05907302**

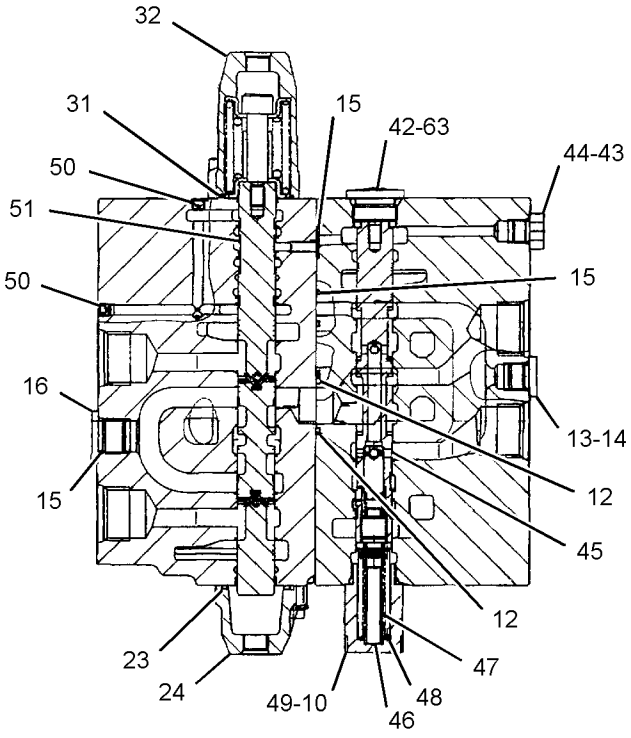

SECTION G-G

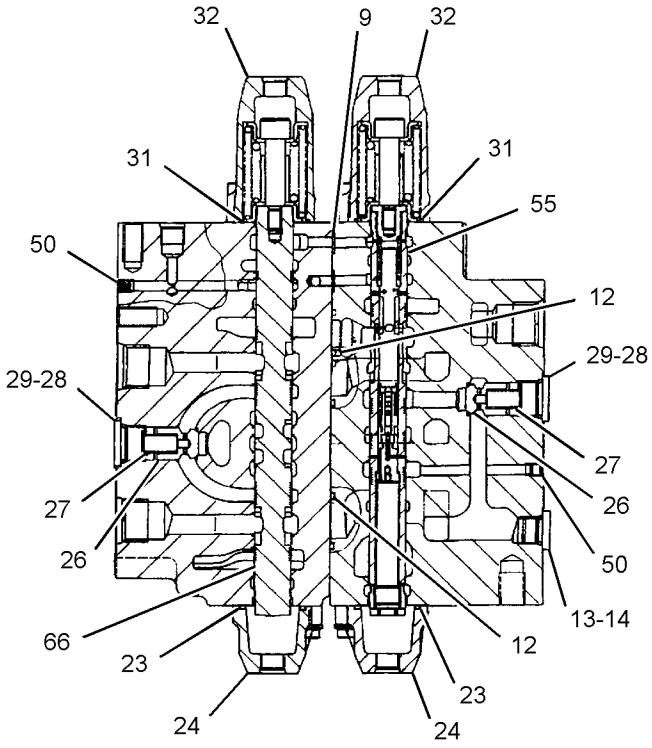

SECTION J-J

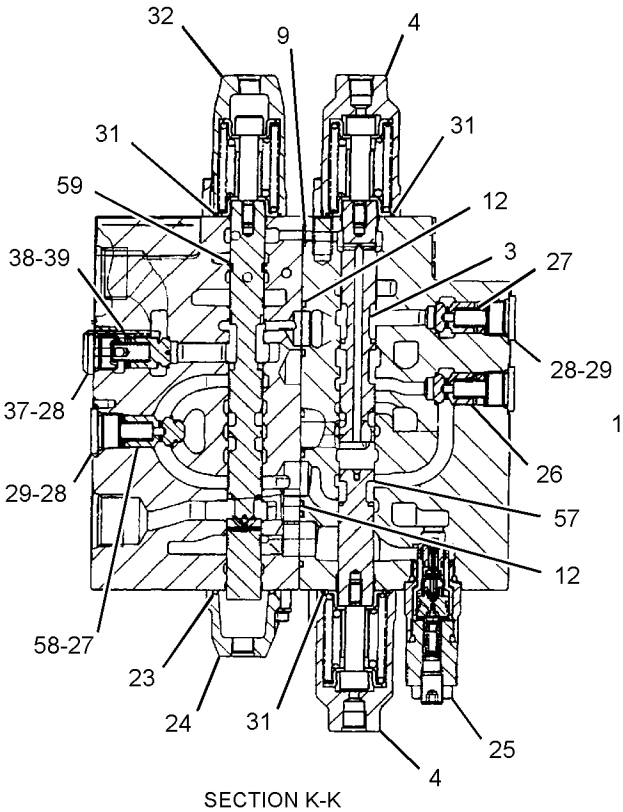

SECTION K-K

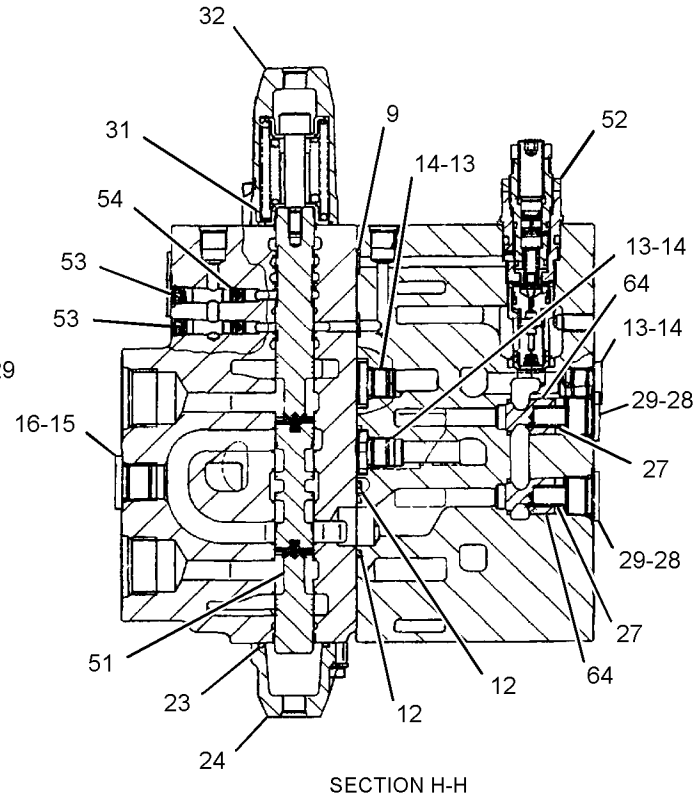

SECTION H-H

GRAPHIC #4 <END> g01442088

282-5894 VALVE GP-MANUAL–AUXILIARY, SHUTOFF

S/N: RDE1-UP

PART OF 288-7392, 288-7398 LINES GP-AUXILIARY HYDRAULIC

SMCS-1329, 5001, 5130

i06792849

NOTE	REF NO	GRAPHIC REF	PART NUMBER	QTY	PART NAME 1 2 3 4 5 6 (PRODUCT LEVEL)	SEE PAGE
	1	1	**302-9466**	1	HANDLE	

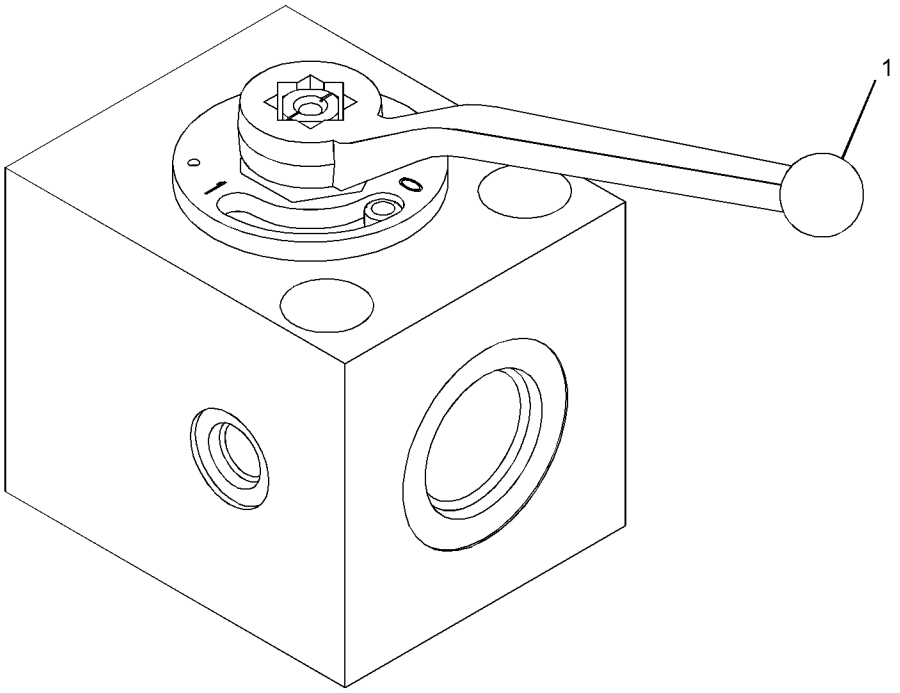

GRAPHIC #1 <END> g06033422

206-3336 VALVE GP-PILOT

S/N: RDE1-UP

PART OF 239-8693 CONTROL GP-HYDRAULIC PEDAL

SMCS-5059 **i05495910**

NOTE	REF NO	GRAPHIC REF	PART NUMBER	QTY	PART NAME 1 2 3 4 5 6 (PRODUCT LEVEL)	SEE PAGE
	1	1	**107-6479**	1	PLUG	
	2	1	**438-4965**	2	SPRING (STANDARD)	
					—OR—	
		1	**190-7819**	2	SPRING (OPTIONAL)	
					(REDUCES OPERATING FORCE BY 40%)	
	3	1	**335-0136**	1	BELLOWS	
	4	1	**335-0138**	2	PACKING	
	5	1	**095-1575**	1	SEAL-O-RING	
	6	1	**095-1578**	2	SEAL-O-RING	
	7	1	**095-1579**	1	SEAL-O-RING	
	8	1	**095-1584**	1	SEAL-O-RING	
	9	1	**6V-8399**	2	SEAL-O-RING	
	10	1	**9M-5590**	1	BALL	

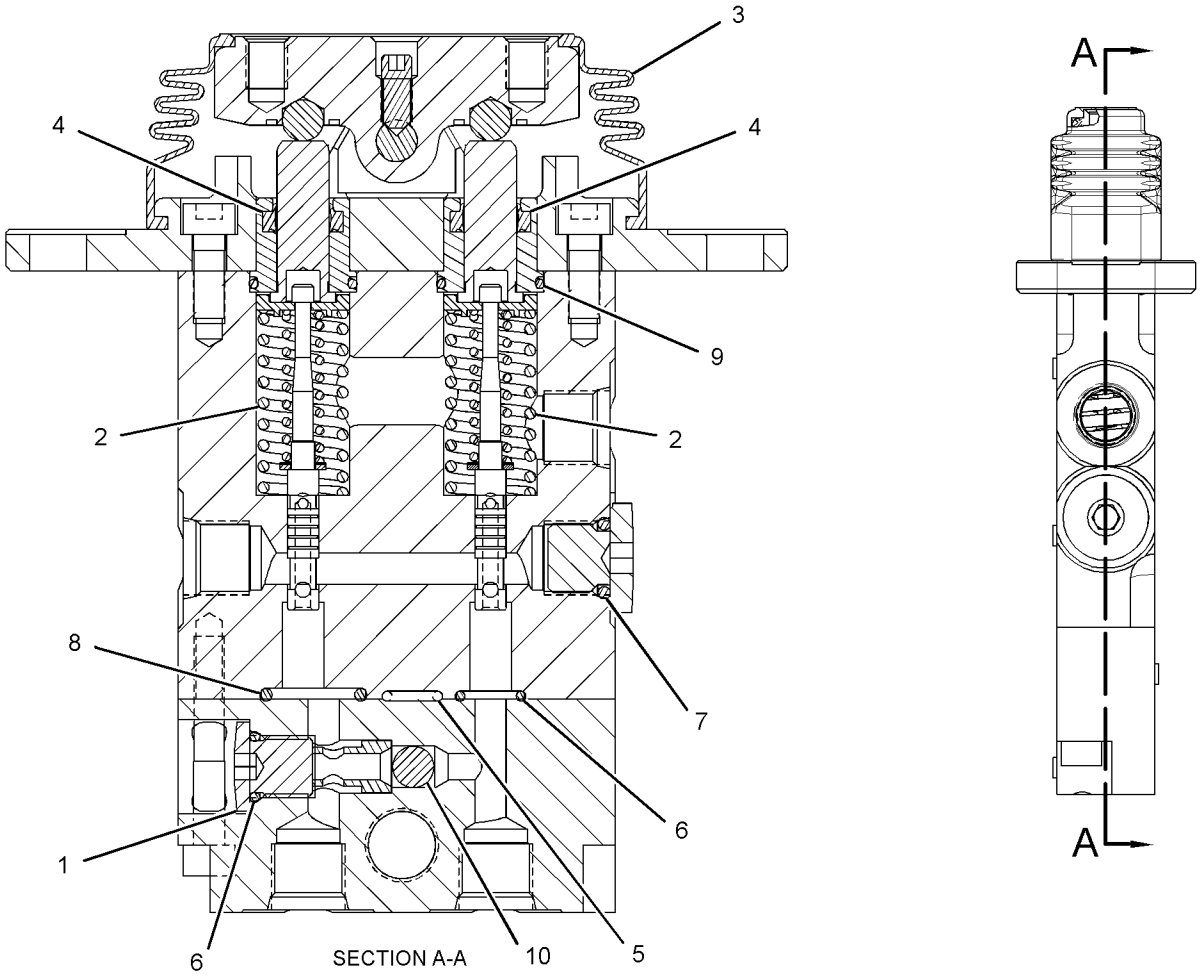

GRAPHIC #1 <END> g03371302

297-0529 VALVE GP-PILOT—JOYSTICK

S/N: RDE1-UP

PART OF 297-0532, 297-0533 CONTROL GP-JOYSTICK

SMCS-5059 **i03257559**

NOTE	REF NO	GRAPHIC REF	PART NUMBER	QTY	PART NAME 1 2 3 4 5 6 (PRODUCT LEVEL)	SEE PAGE
	1	1	**270-5953**	4	SPRING	
	2	1	**095-1586**	4	SEAL-O-RING	
	3	1	**4I-6365**	1	JOINT	
	4	1	**094-0876**	4	SEAL	
	5	1	**096-1628**	4	PLUG	
B	6	1	**099-6137**	4	WASHER (6.1X9X0.2-MM THK)	
	7	1	**118-4086**	4	ROD	
	8	1	**118-4087**	4	SPRING	
M	9	1	**131-5915**	1	NUT-SPECIAL	
	10	1	**165-9431**	1	PLATE	
	11	1	**165-9435**	2	SEAT	
	12	1	**165-9436**	2	SEAT	
	13	1	**165-9438**	1	PLATE	
	14	1	**165-9442**	2	SPRING	
	15	1	**165-9443**	2	SEAT-SPRING	
	16	1	**165-9444**	2	SEAT-SPRING	
	17	1	**165-9460**	2	SPRING	
	18	1	**171-0087**	1	BELLOWS	
					PARTS SHOWN IN GRAPHIC(S) WITHOUT A REFERENCE NUMBER ARE NOT SERVICED SEPARATELY	

B - USE AS REQUIRED
M - METRIC PART

297-0529 **VALVE GP-PILOT (**contd.**)** **i03257559**

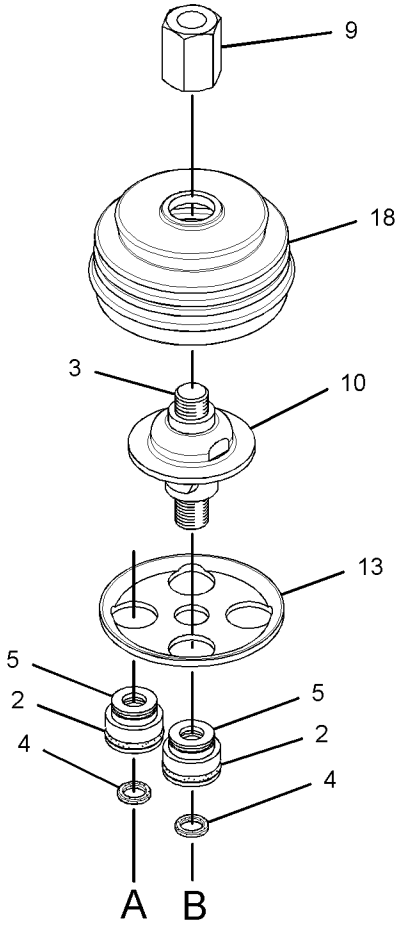

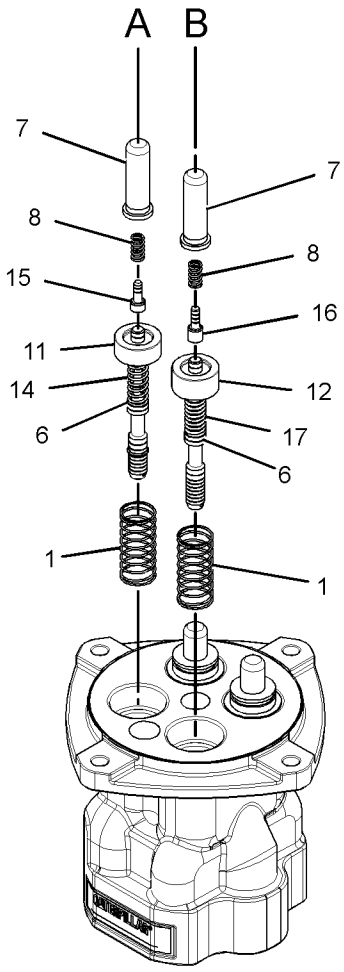

GRAPHIC #1 <END> g01528724

297-0589 VALVE GP-PILOT—JOYSTICK

S/N: RDE1-UP

PART OF 297-0534, 297-0535 CONTROL GP-JOYSTICK

SMCS-5059 **i03772752**

NOTE	REF NO	GRAPHIC REF	PART NUMBER	QTY	PART NAME 1 2 3 4 5 6 (PRODUCT LEVEL)	SEE PAGE
	1	1	**095-1586**	4	SEAL-O-RING	
	2	1	**4I-6365**	1	JOINT	
	3	1	**094-0876**	4	SEAL	
	4	1	**096-1628**	4	PLUG	
B	5	1	**099-6137**	4	WASHER (6.1X9X0.2-MM THK)	
	6	1	**118-4086**	4	ROD	
	7	1	**118-4087**	4	SPRING	
M	8	1	**131-5915**	1	NUT-SPECIAL	
	9	1	**165-9431**	1	PLATE	
	10	1	**165-9435**	2	SEAT	
	11	1	**165-9436**	2	SEAT	
	12	1	**165-9438**	1	PLATE	
	13	1	**165-9442**	2	SPRING	
	14	1	**165-9443**	2	SEAT-SPRING	
	15	1	**165-9444**	2	SEAT-SPRING	
	16	1	**165-9460**	2	SPRING	
	17	1	**165-9461**	4	SPRING	
	18	1	**171-0087**	1	BELLOWS	

B - USE AS REQUIRED
M - METRIC PART

297-0589 **VALVE GP-PILOT (**contd.**)** **i03772752**

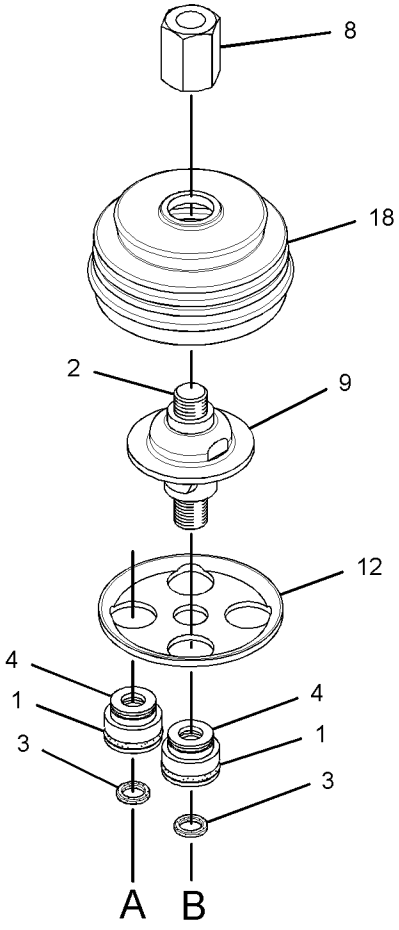

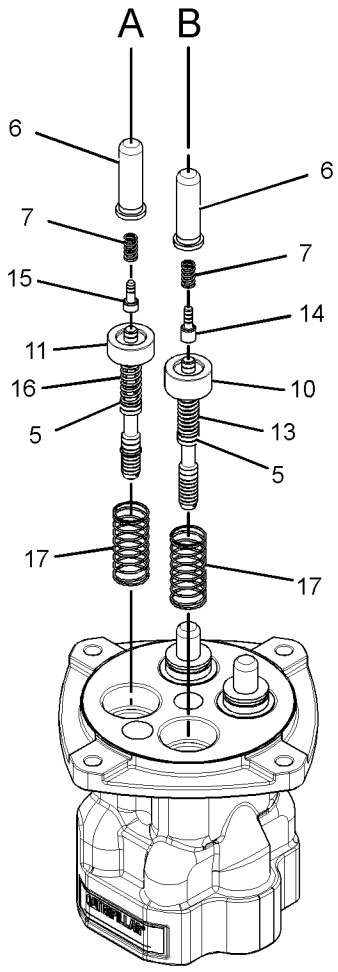

GRAPHIC #1 <END> g01528741

369-8503 VALVE GP-PILOT—WITHOUT SHUTTLE

S/N: RDE1-UP

PART OF 278-6672 LINES GP-PILOT

SMCS-5059 **i05401712**

NOTE	REF NO	GRAPHIC REF	PART NUMBER	QTY	PART NAME 1 2 3 4 5 6 (PRODUCT LEVEL)	SEE PAGE
	1	1	**087-5708**	2	PEDAL	
	2	1	**099-6137**	4	WASHER (6.1X9X0.2-MM THK)	
	3	1	**099-6141**	4	WASHER (6.1X11X1.5-MM THK)	
	4	1	**099-6144**	4	BUSHING-TERMINAL	
	5	1	**099-6145**	2	CAMSHAFT	
	6	1	**119-5388**	4	CAP	
	7	1	**119-5389**	4	PACKING	
	8	1	**119-5391**	4	SEAT	
	9	1	**126-1865**	4	SPRING	
	10	1	**126-1866**	4	SPRING	
	11	1	**131-5818**	4	SPRING	
	12	1	**153-5223**	12	BALL	
	13	1	**165-9552**	4	PUSHROD	
	14	1	**165-9554**	4	PLUG	
	15	1	**270-5949**	4	PISTON	
	16	1	**270-5950**	4	SPRING	
	17	1	**310-0419**	4	SEAT	
	18	1	**310-0420**	4	SEAL-O-RING	
	19	1	**369-8509**	2	COVER	
	20	1	**369-8510**	1	COVER	
M	21	1	**369-8568**	2	BOLT-SOCKET HEAD (M10X1.5X65-MM)	
	22	1	**369-8569**	2	BELLOWS	
M	23	1	**087-4710**	4	SETSCREW (M10X21-MM)	
M	24	1	**095-1260**	2	SETSCREW-SOCKET (M6X1X6-MM)	
	25	1	**095-1575**	2	SEAL-O-RING	
M	26	1	**6V-8202**	2	BOLT-SOCKET HEAD (M8X1.25X16-MM)	
	27	1	**6V-8400**	4	SEAL-O-RING	
M	28	1	**8C-6965**	2	BOLT-SOCKET HEAD (M6X1X45-MM)	
M	29	1	**8T-4133**	4	NUT (M10X1.5-THD)	
	30	1	**8T-6759**	1	PLUG-PIPE	

M - METRIC PART

369-8503 **VALVE GP-PILOT (**contd.**)** **i05401712**

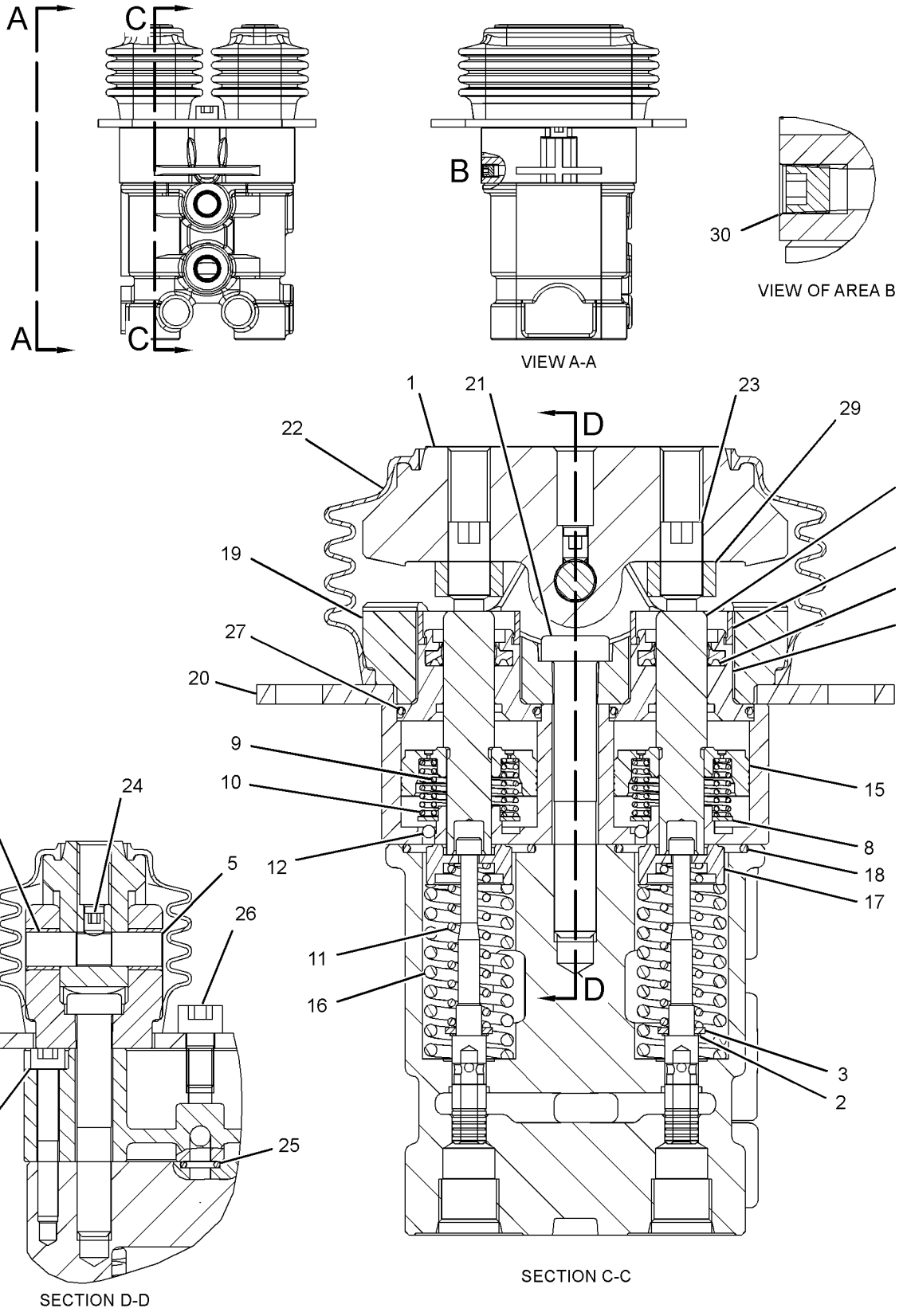

GRAPHIC #1 <END> g02930556

310-0210 VALVE GP-PRESSURE REDUCING–BOOM, SWING PRIORITY

S/N: RDE1-UP

PART OF 502-5314 LINES GP-PILOT

SMCS-5117 **i06138574**

NOTE	REF NO	GRAPHIC REF	PART NUMBER	QTY	PART NAME 1 2 3 4 5 6 (PRODUCT LEVEL)	SEE PAGE
	1	1	**111-9998**	2	PLUG	
	2	1	**171-0123**	2	PLUG	
M	3	1	**171-0124**	2	SETSCREW (M8X1.25X18-MM)	
	4	1	**171-0126**	2	SEAT-SPRING	
	5	1	**171-0127**	2	SEAT-SPRING	
	6	1	**171-0128**	2	SPRING	
	7	1	**185-0423**	2	STOP	
	8	1	**095-1580**	2	SEAL-O-RING	
	9	1	**095-1582**	2	SEAL-O-RING	
	10	1	**095-1590**	2	SEAL-O-RING	
M	11	1	**5C-7261**	2	NUT (M8X1.25-THD)	
					PARTS SHOWN IN GRAPHIC(S) WITHOUT A REFERENCE NUMBER ARE NOT SERVICED SEPARATELY	

M - METRIC PART

310-0210 **VALVE GP-PRESSURE REDUCING (**contd.**)** **i06138574**

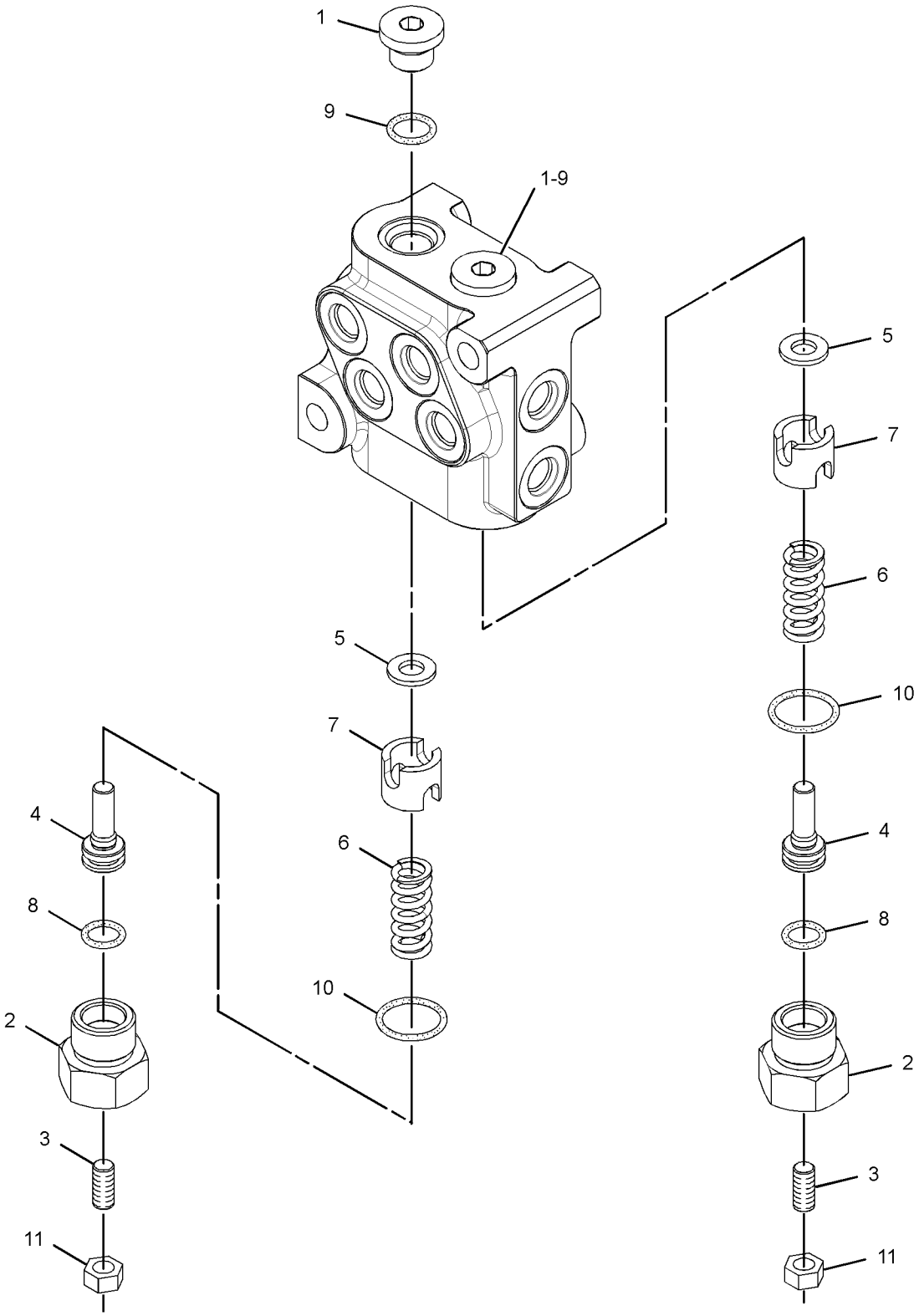

GRAPHIC #1 <END> g01506435

177-2653 VALVE GP-RELIEF–LINE

S/N: RDE1-UP

PART OF 495-0692 LINES GP-FRONT

SMCS-5069, 5117

i04393465

NOTE	REF NO	GRAPHIC REF	PART NUMBER	QTY	PART NAME 1 2 3 4 5 6 (PRODUCT LEVEL)	SEE PAGE
CY	1	1	**352-7117**	1	VALVE GP-RELIEF (PILOT OPERATED)	354

C - CHANGE FROM PREVIOUS TYPE
Y - SEPARATE ILLUSTRATION

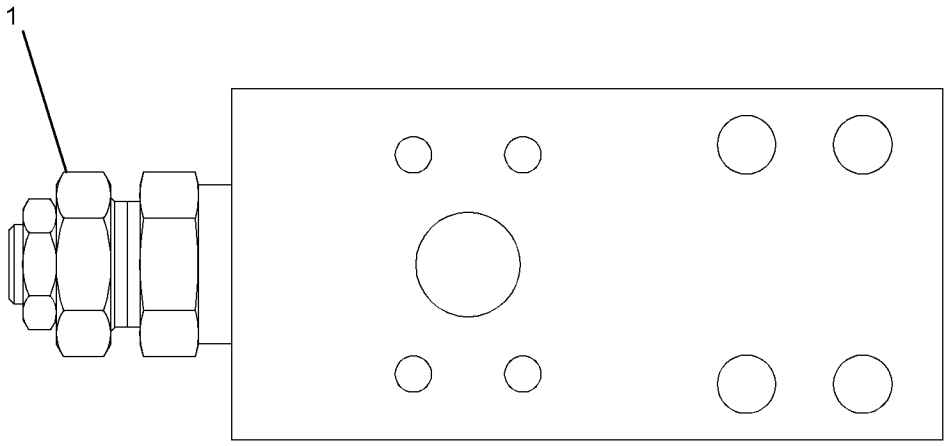

GRAPHIC #1 <END> g02320914

270-5978 VALVE GP-RELIEF

S/N: RDE1-UP

PART OF 420-2241 VALVE GP-MAIN CONTROL

SMCS-5069, 5117

i05407073

NOTE	REF NO	GRAPHIC REF	PART NUMBER	QTY	PART NAME 1 2 3 4 5 6 (PRODUCT LEVEL)	SEE PAGE
	1	1	**095-1519**	1	SEAL-O-RING	
	2	1	**095-1575**	1	SEAL-O-RING	
	3	1	**095-1582**	1	SEAL-O-RING	
	4	1	**095-1584**	1	SEAL-O-RING	
	5	1	**095-1593**	1	SEAL-O-RING	
	6	1	**095-1783**	1	RING-BACKUP	

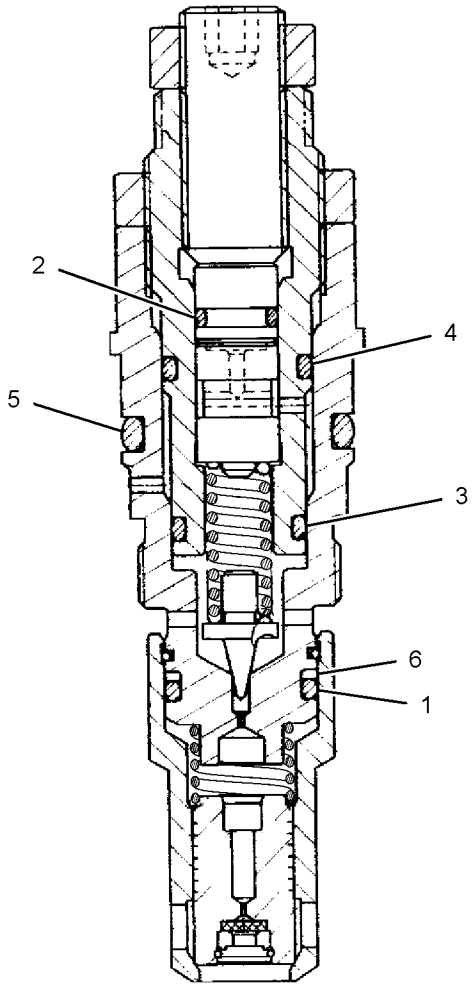

GRAPHIC #1 <END> g01886574

304-3961 VALVE GP-RELIEF—TRACTION CONTROL

S/N: RDE1-UP

PART OF 349-9520 VALVE GP-TRAVEL COUNTERBALANCE

SMCS-5069, 5117 **i05982490**

NOTE	REF NO	GRAPHIC REF	PART NUMBER	QTY	PART NAME 1 2 3 4 5 6 (PRODUCT LEVEL)	SEE PAGE
M	1	1	**7Y-8436**	1	SETSCREW (M27X2X27-MM)	
	2	1	**114-0515**	1	SEAT	
	3	1	**114-0517**	1	PISTON	
	4	1	**165-5840**	1	STOP	
	6	1	**176-8590**	1	VALVE GP-RELIEF	
	7	1	**095-1586**	3	SEAL-O-RING	
	8	1	**7Y-4217**	3	RING-BACKUP	
	9	1	**121-1459**	2	RING-BACKUP	
	10	1	**165-5839**	1	SPRING	
	11	1	**4K-1388**	1	SEAL-O-RING	
M	12	1	**7Y-8437**	1	NUT (M27X2-THD)	

M - METRIC PART

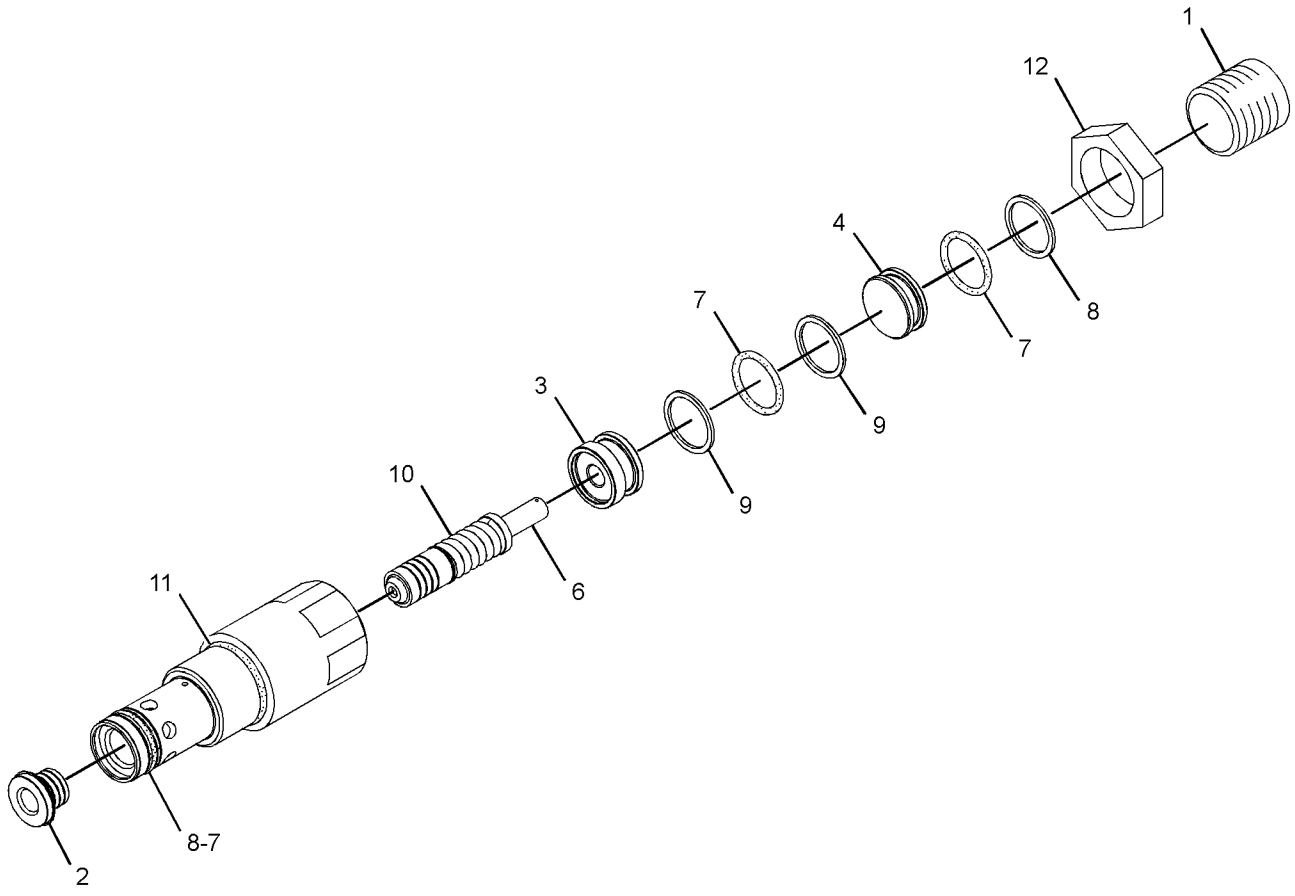

GRAPHIC #1 <END> g01413822

309-9973 VALVE GP-RELIEF–LINE

S/N: RDE1-UP

PART OF 420-2241 VALVE GP-MAIN CONTROL

SMCS-5069, 5117

i05407091

NOTE	REF NO	GRAPHIC REF	PART NUMBER	QTY	PART NAME 1 2 3 4 5 6 (PRODUCT LEVEL)	SEE PAGE
	1	1	**095-1514**	1	SEAL-O-RING	
	2	1	**095-1519**	1	SEAL-O-RING	
	3	1	**095-1575**	1	SEAL-O-RING	
	4	1	**095-1591**	1	SEAL-O-RING	
	5	1	**095-1592**	1	SEAL-O-RING	
	6	1	**095-1783**	1	RING-BACKUP	
	7	1	**095-8024**	1	RING-BACKUP	

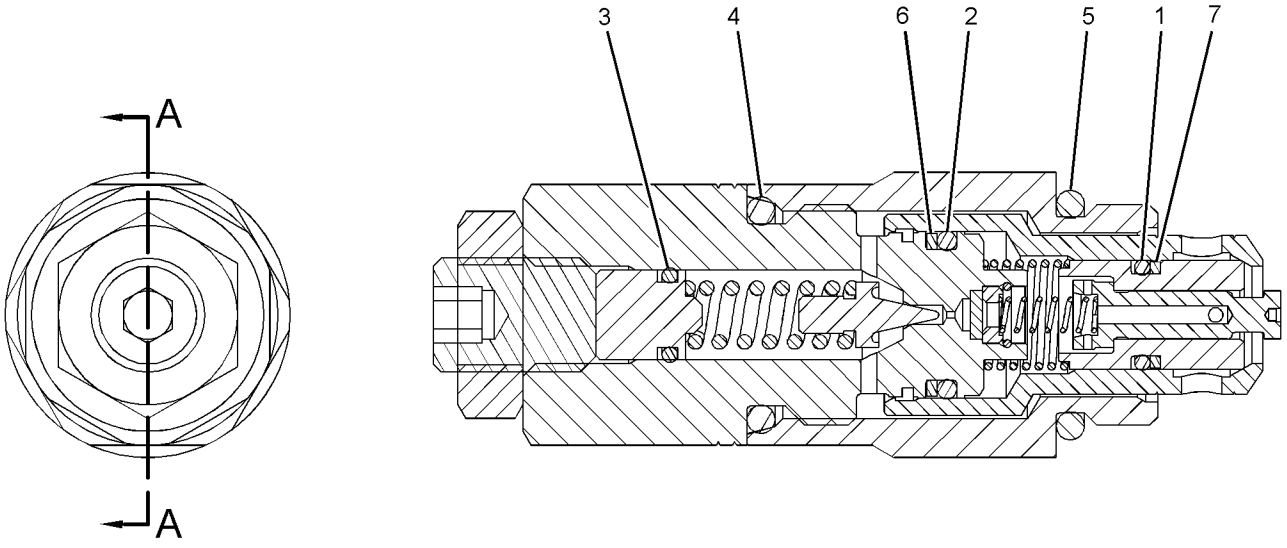

SECTION A-A

GRAPHIC #1

<END>

g01425186

352-7117 VALVE GP-RELIEF–PILOT OPERATED

S/N: RDE1-UP

PART OF 177-2653 VALVE GP-RELIEF

SMCS-5069, 5117

i06241705

NOTE	REF NO	GRAPHIC REF	PART NUMBER	QTY	PART NAME 1 2 3 4 5 6 (PRODUCT LEVEL)	SEE PAGE
	1	1	**4I-3510**	1	SPRING	
	2	1	**6I-6795**	1	SPRING	
	3	1	**095-1786**	1	RING-BACKUP	
	4	1	**352-6864**	1	SEAT-VALVE	
	5	1	**171-0035**	1	HOLDER	
	6	1	**171-0036**	1	ADJUSTER	
	7	1	**171-0037**	1	VALVE	
	8	1	**222-0085**	1	NUT (3/4-16-THD)	
	9	1	**6V-8978**	1	SEAL-O-RING	
	10	1	**095-1579**	1	SEAL-O-RING	
	11	1	**095-1587**	1	SEAL-O-RING	
	12	1	**095-1590**	1	SEAL-O-RING	
	13	1	**3D-2824**	1	SEAL-O-RING	
	14	1	**6V-8218**	1	SEAL-O-RING	

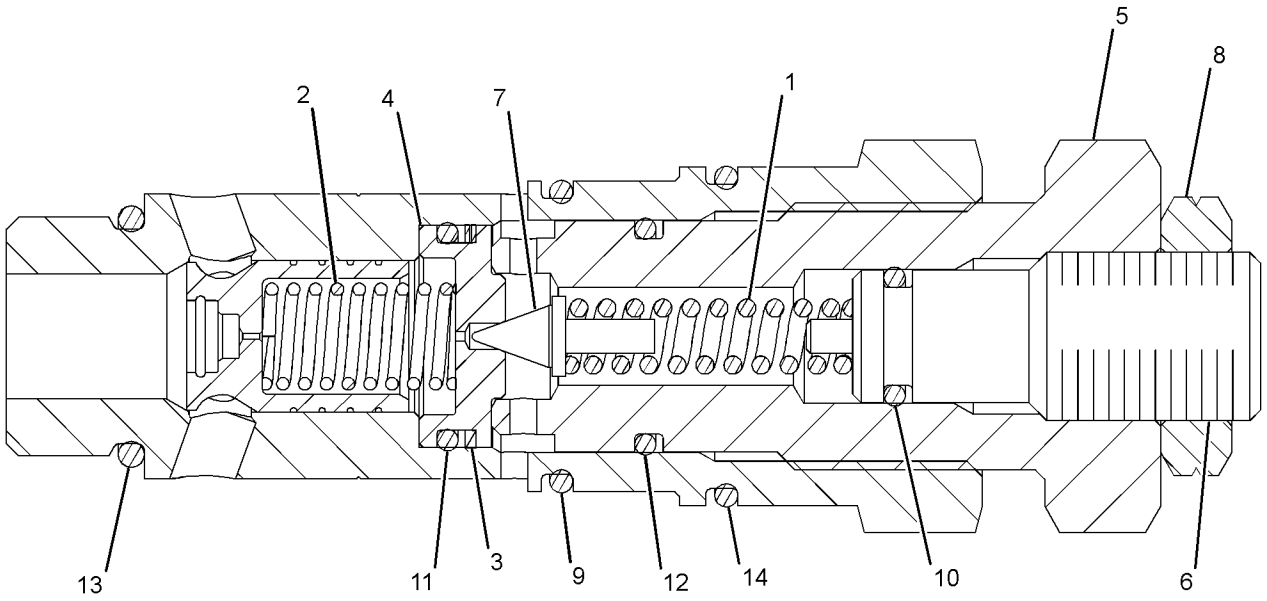

GRAPHIC #1 <END> g01513501

164-6979 VALVE GP-SHUTTLE

S/N: RDE1-UP

PART OF 502-5314 LINES GP-PILOT

SMCS-5079 **i03815390**

NOTE	REF NO	GRAPHIC REF	PART NUMBER	QTY	PART NAME 1 2 3 4 5 6 (PRODUCT LEVEL)	SEE PAGE
	1	1	**123-2431**	1	BODY-VALVE	
	2	1	**4B-9783**	1	BALL	
	3	1	*175-4430*	2	CONNECTOR AS	
					(EACH INCLUDES)	
		1	**3J-1907**	1	SEAL-O-RING	
		1	**6V-8397**	1	SEAL-O-RING	
		1	**123-2552**	1	CONNECTOR	

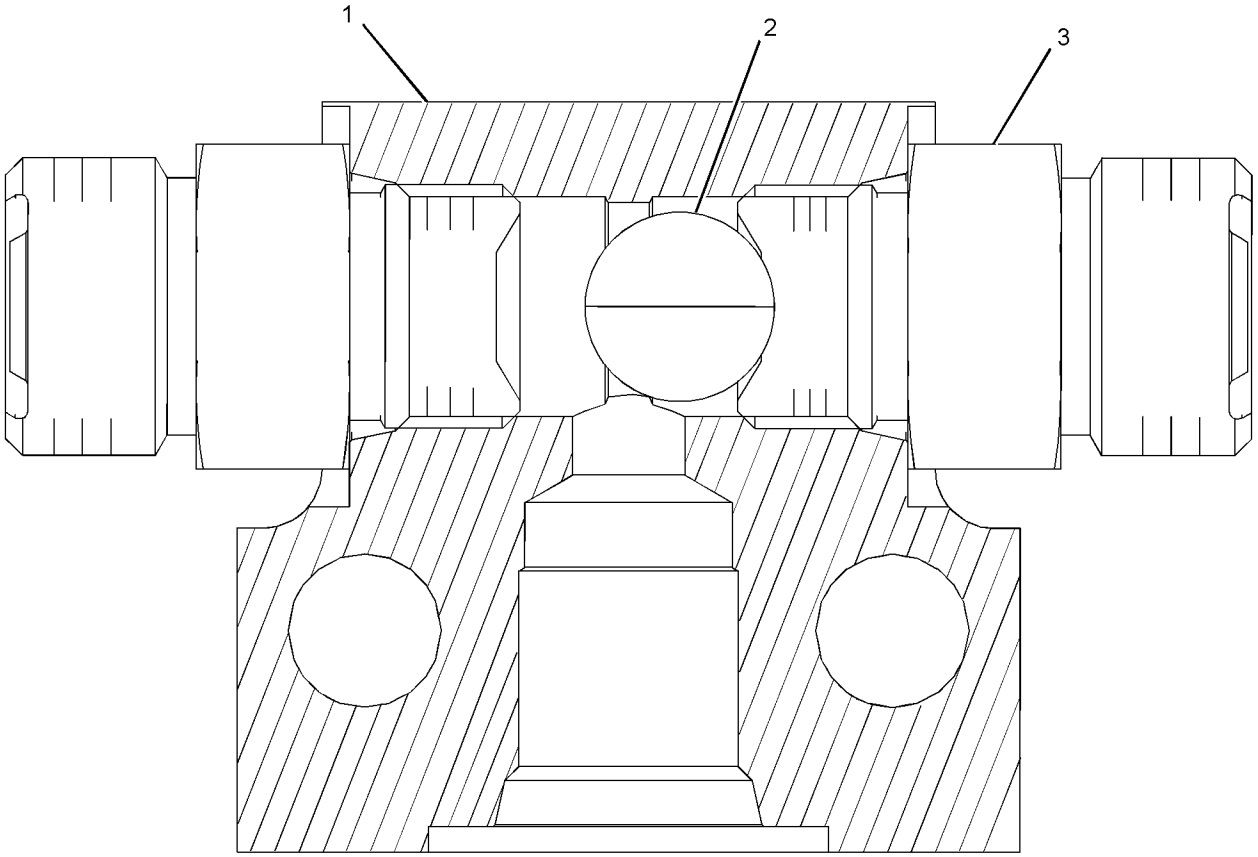

GRAPHIC #1 <END> g01955237

185-0462 VALVE GP-SHUTTLE

S/N: RDE1-UP

PART OF 282-7411 LINES GP-PILOT

SMCS-5079 **i01375688**

NOTE	REF NO	GRAPHIC REF	PART NUMBER	QTY	PART NAME 1 2 3 4 5 6 (PRODUCT LEVEL)	SEE PAGE
	1	1	**7I-8084**	4	PLUG	
	2	1	**185-0463**	1	SEAT	
	3	1	**4B-9880**	7	BALL	
	4	1	**165-9464**	6	SEAT	
	5	1	**095-1578**	7	SEAL-O-RING	
	6	1	**107-6479**	7	PLUG	

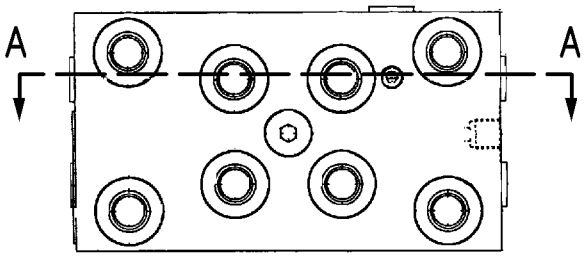

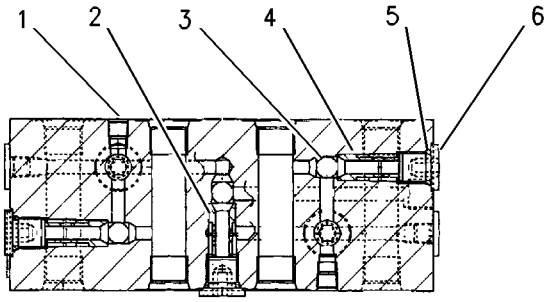

SECTION A-A

GRAPHIC #1 <END> g00699270

4T-1860 VALVE GP-SHUTTLE

S/N: RDE1-UP

PART OF 349-9520 VALVE GP-TRAVEL COUNTERBALANCE

SMCS-5079 **i06601671**

NOTE	REF NO	GRAPHIC REF	PART NUMBER	QTY	PART NAME 1 2 3 4 5 6 (PRODUCT LEVEL)	SEE PAGE
	1	1	**6V-5324**	1	SEAL-O-RING	
	2	1	**4T-0928**	1	VALVE	
	3	1	**147-6603**	1	SEAL-O-RING	
	4	1	**147-6604**	2	RING-BACKUP	
	5	1	**147-6605**	2	RING-BACKUP	
	6	1	**1M-6718**	1	BALL	
	7	1	**3J-1907**	1	SEAL-O-RING	

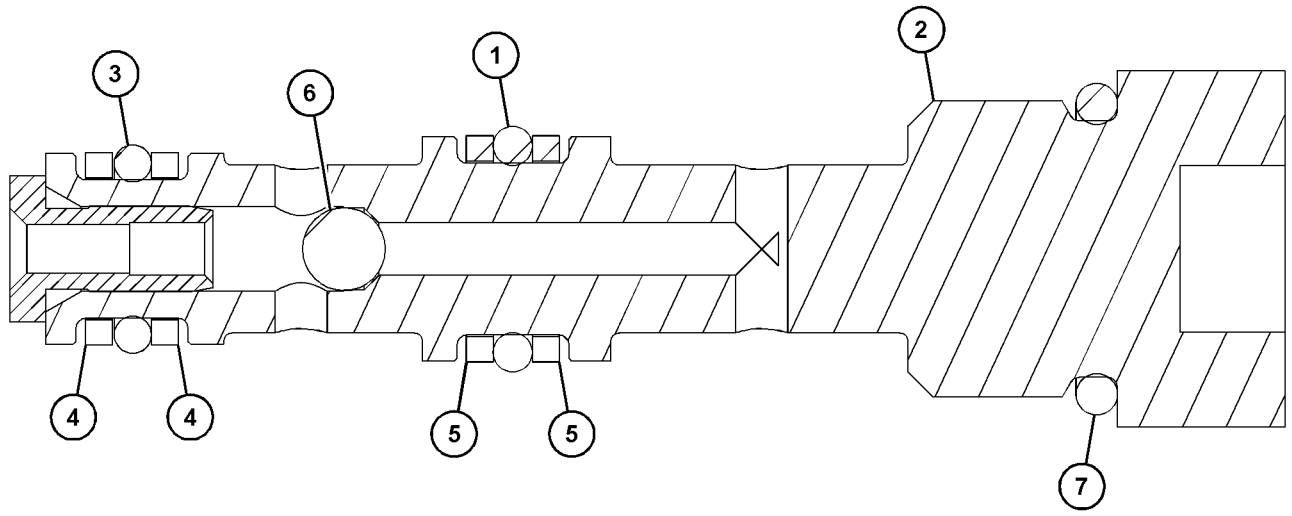

GRAPHIC #1 <END> g06040735

111-9916 VALVE GP-SOLENOID

S/N: RDE1-UP

PART OF 391-9442 PUMP GP-MAIN HYDRAULIC, 398-2282 VALVE GP-SOLENOID

SMCS-5479 **i05606711**

NOTE	REF NO	GRAPHIC REF	PART NUMBER	QTY	PART NAME 1 2 3 4 5 6 (PRODUCT LEVEL)	SEE PAGE
	1	1	**095-1750**	1	SEAL-O-RING	
	2	1	**6V-8398**	1	SEAL-O-RING	
	3	1	**095-1751**	1	SEAL-O-RING	
	4	1	**095-1586**	1	SEAL-O-RING	
M	5	1	**114-0623**	1	NUT AS (M6X1-THD)	

M - METRIC PART

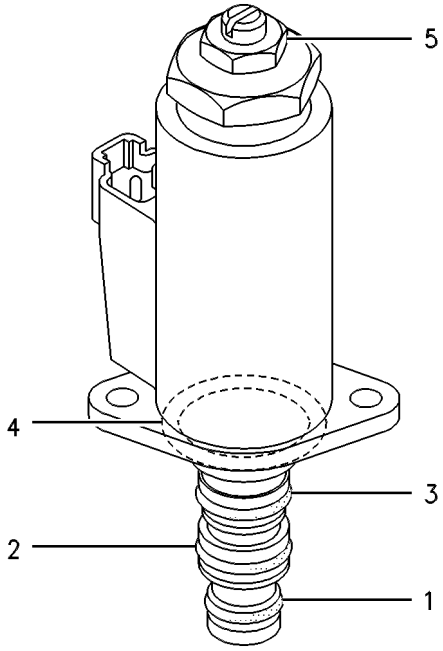

GRAPHIC #1 <END> g00258219

352-7176 VALVE GP-SOLENOID

S/N: RDE1-UP

PART OF 502-5318 LINES GP-PILOT

SMCS-5479 **i04365031**

NOTE	REF NO	GRAPHIC REF	PART NUMBER	QTY	PART NAME 1 2 3 4 5 6 (PRODUCT LEVEL)	SEE PAGE
	1	1	**102-8802**	1	KIT-RECEPTACLE (2-PIN)	
					(INCLUDES RECEPTACLE AS & WEDGE)	
	2	1	**8T-8729**	2	PIN-CONNECTOR (16-GA TO 18-GA)	
	3	1	**095-1519**	1	SEAL-O-RING	
	4	1	**095-1579**	1	SEAL-O-RING	
					PARTS SHOWN IN GRAPHIC(S) WITHOUT A REFERENCE NUMBER ARE NOT SERVICED SEPARATELY	

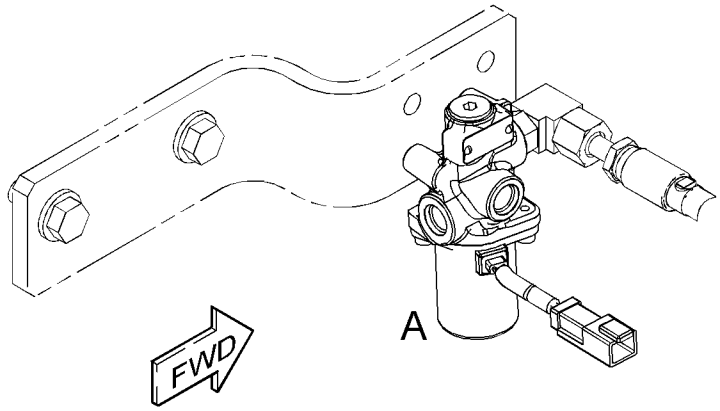

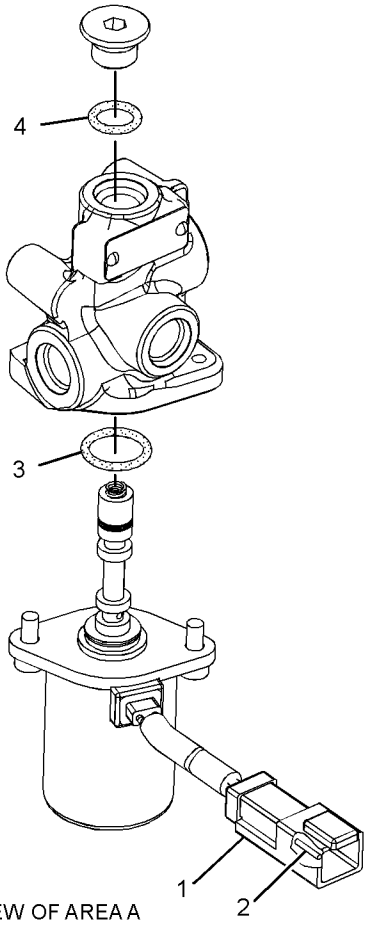

VIEW OF AREA A

GRAPHIC #1 <END> g02317033

398-2282 VALVE GP-SOLENOID—NEGATIVE FLOW CONTROL

S/N: RDE1-UP

PART OF 502-5318 LINES GP-PILOT

SMCS-5479 **i05164782**

NOTE	REF NO	GRAPHIC REF	PART NUMBER	QTY	PART NAME 1 2 3 4 5 6 (PRODUCT LEVEL)	SEE PAGE
	1	1	**7I-8084**	3	PLUG	
	2	1	**107-6479**	2	PLUG	
Y	3	1	**111-9916**	1	VALVE GP-SOLENOID (PRESSURE REDUCING) (PUMP CONTROL)	358
	4	1	**185-0463**	2	SEAT	
	5	1	**095-1578**	2	SEAL-O-RING	
M	6	1	**7I-2272**	2	BOLT (M5X0.8X12-MM)	
	7	1	**9M-5590**	2	BALL	

M - METRIC PART
Y - SEPARATE ILLUSTRATION

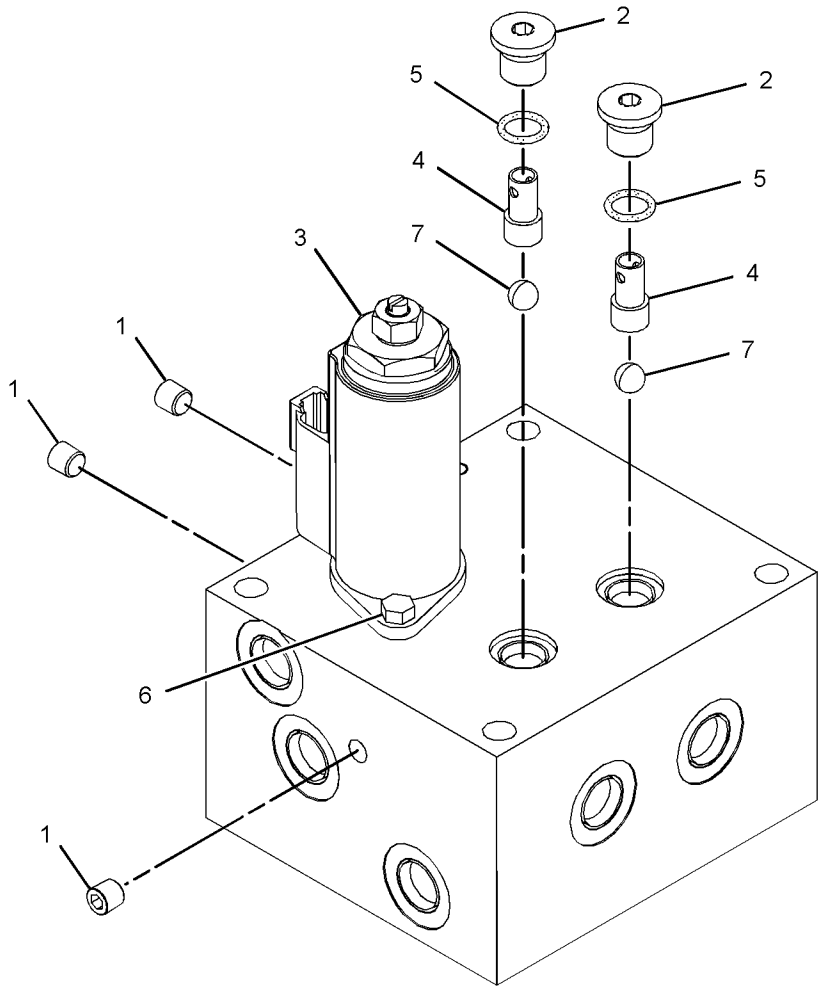

GRAPHIC #1 <END> g03149637

457-9878 VALVE GP-SOLENOID

S/N: RDE1-UP
24-VOLT
PART OF 215-5037 MANIFOLD GP-CONTROL

SMCS-5479 **i06066982**

NOTE	REF NO	GRAPHIC REF	PART NUMBER	QTY	PART NAME 1 2 3 4 5 6 (PRODUCT LEVEL)	SEE PAGE
M	1	1	**114-0623**	1	NUT AS (M6X1-THD)	
	2	1	**095-1586**	1	SEAL-O-RING	
	3	1	**095-1750**	1	SEAL-O-RING	
	4	1	**095-1751**	1	SEAL-O-RING	
	5	1	**6V-8398**	1	SEAL-O-RING	

M - METRIC PART

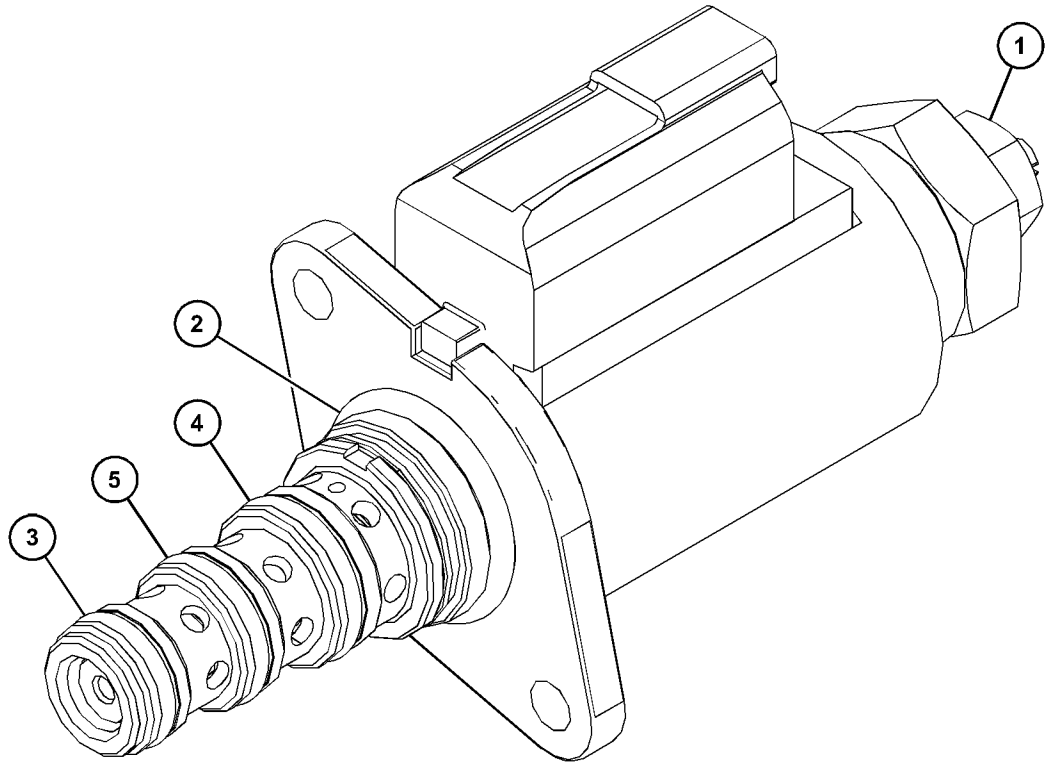

GRAPHIC #1 <END> g03803062

328-2035 VALVE GP-SOLENOID & MANIFOLD

S/N: RDE1-UP
24-VOLT
PART OF 502-5317 LINES GP-FRONT

SMCS-5264, 5479

i05454235

NOTE	REF NO	GRAPHIC REF	PART NUMBER	QTY	PART NAME 1 2 3 4 5 6 (PRODUCT LEVEL)	SEE PAGE
J	1	1	**368-8651**	1	VALVE GP-SOLENOID (24-VOLT) (QUICK COUPLER)	
		1	**260-3883**	1	COIL AS-SOLENOID (24-VOLT)	
		1	**1S-9593**	2	STRAP-CABLE	
		1	**186-3735**	2	PIN-CONNECTOR (16-GA TO 18-GA)	
		1	**230-4012**	1	RECEPTACLE AS-CONNECTOR (2-PIN)	
	1A	1	**156-5970**	1	NUT (1/2-20-THD)	
					AVAILABLE REPAIR KIT(S):	
J			**268-8209**	1	KIT-SEAL (QUICK COUPLER SOLENOID)	
					(INCLUDES 4 O-RING SEALS & 3 RINGS)	

J - KIT MARKED J SERVICES PART(S) MARKED J

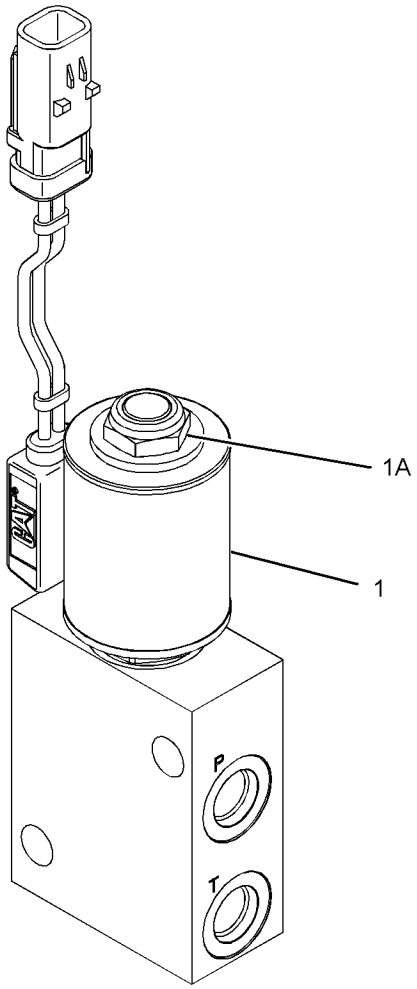

GRAPHIC #1 <END> g02452258

270-5672 VALVE GP-SOLENOID & RELIEF

S/N: RDE1-UP

PART OF 278-6697 LINES GP-FRONT

SMCS-5571 **i05781467**

NOTE	REF NO	GRAPHIC REF	PART NUMBER	QTY	PART NAME 1 2 3 4 5 6 (PRODUCT LEVEL)	SEE PAGE
Y	1	1	**335-0158**	1	VALVE GP-SOLENOID & RELIEF	365

Y - SEPARATE ILLUSTRATION

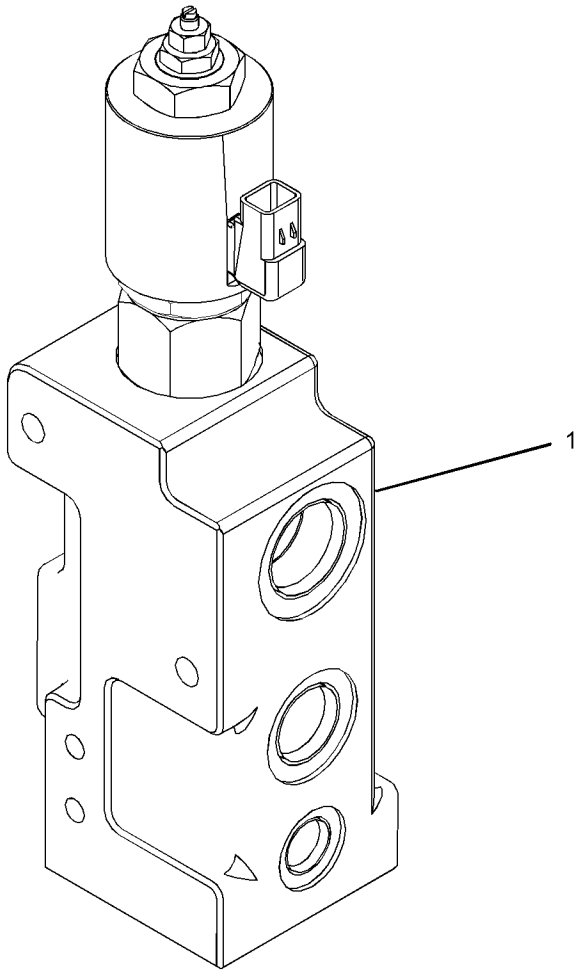

GRAPHIC #1 <END> g02662696

270-5757 VALVE GP-SOLENOID & RELIEF

S/N: RDE1-UP

PART OF 278-6697 LINES GP-FRONT

SMCS-5571 **i05781479**

NOTE	REF NO	GRAPHIC REF	PART NUMBER	QTY	PART NAME 1 2 3 4 5 6 (PRODUCT LEVEL)	SEE PAGE
Y	1	1	**335-0158**	1	VALVE GP-SOLENOID & RELIEF	365

Y - SEPARATE ILLUSTRATION

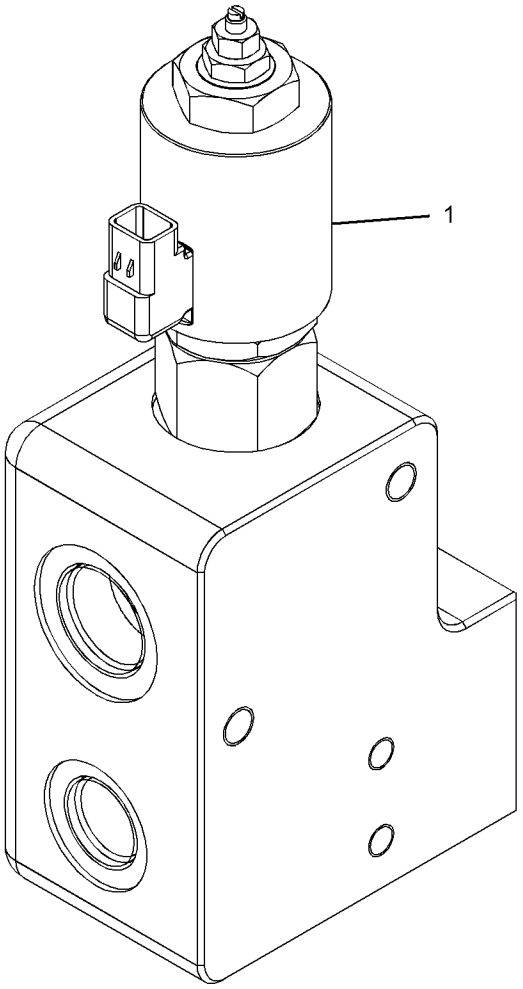

GRAPHIC #1 <END> g02107553

335-0158 VALVE GP-SOLENOID & RELIEF

S/N: RDE1-UP

PART OF 270-5672, 270-5757 VALVE GP-SOLENOID & RELIEF

SMCS-5571 **i06020076**

NOTE	REF NO	GRAPHIC REF	PART NUMBER	QTY	PART NAME 1 2 3 4 5 6 (PRODUCT LEVEL)	SEE PAGE
	1	1	**095-1590**	1	SEAL-O-RING	
	2	1	**095-1787**	1	RING-BACKUP	
	3	1	**7M-8485**	1	SEAL-O-RING	
	4	1	**458-5907**	1	COIL AS	
		1	**095-1533**	2	SEAL-O-RING	

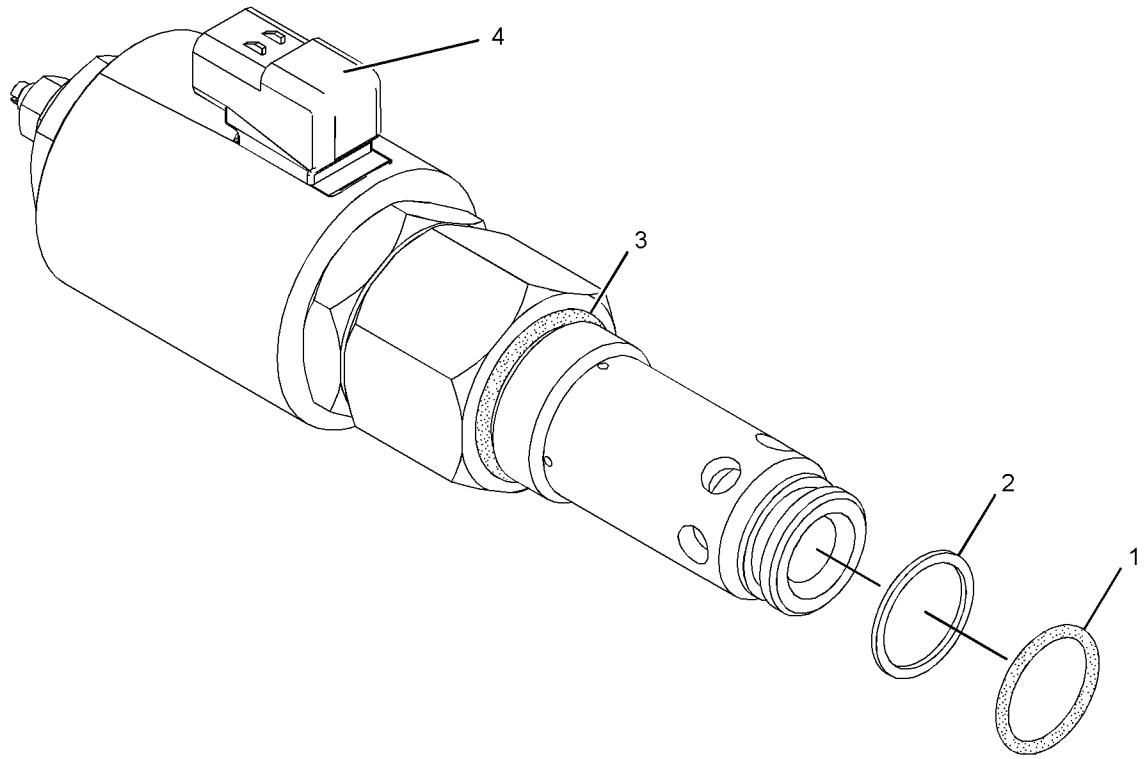

GRAPHIC #1 <END> g03785439

349-9520 VALVE GP-TRAVEL COUNTERBALANCE

S/N: RDE1-UP

PART OF 421-4382 MOTOR GP-TRAVEL

SMCS-5811 **i05401375**

NOTE	REF NO	GRAPHIC REF	PART NUMBER	QTY	PART NAME 1 2 3 4 5 6 (PRODUCT LEVEL)	SEE PAGE
Y	1	1	**4T-1860**	1	VALVE GP-SHUTTLE (BALL RESOLVER)	357
	2	1	**7Y-4224**	2	ORIFICE	
	3	1	**7Y-5010**	2	PLUG	
	4	1	**087-4786**	1	ADAPTER	
	5	1	**087-5631**	1	ORIFICE	
	6	1	**095-1585**	2	SEAL-O-RING	
	7	1	**119-5362**	2	SPRING	
	8	1	**119-5364**	2	PLUG	
	9	1	**129-7932**	2	GUIDE	
	10	1	**165-5837**	2	COVER	
	11	1	**165-5846**	2	VALVE	
	12	1	**165-5850**	1	SPRING	
	13	1	**199-5152**	2	SPRING	
Y	14	1	**304-3961**	2	VALVE GP-RELIEF (TRACTION CONTROL)	352
	15	1	**337-6461**	1	SPOOL	
	16	1	**349-9521**	1	VALVE GP-CONTROL	
		1	**5H-1472**	2	BALL	
	17	1	**9S-8006**	1	PLUG (7/8-14-THD)	
	18	1	**094-1882**	11	PLUG	
	19	1	**095-1701**	2	SEAL-O-RING	
	20	1	**2M-9780**	4	SEAL-O-RING	
	21	1	**3J-1907**	3	SEAL-O-RING	
	22	1	**3K-0360**	2	SEAL-O-RING	
M	23	1	**8T-9515**	8	BOLT-SOCKET HEAD (M10X1.5X40-MM)	
	24	1	**9S-8004**	3	PLUG (9/16-18-THD)	

M - METRIC PART
Y - SEPARATE ILLUSTRATION

349-9520 **VALVE GP-TRAVEL COUNTERBALANCE (**contd.**)** **i05401375**

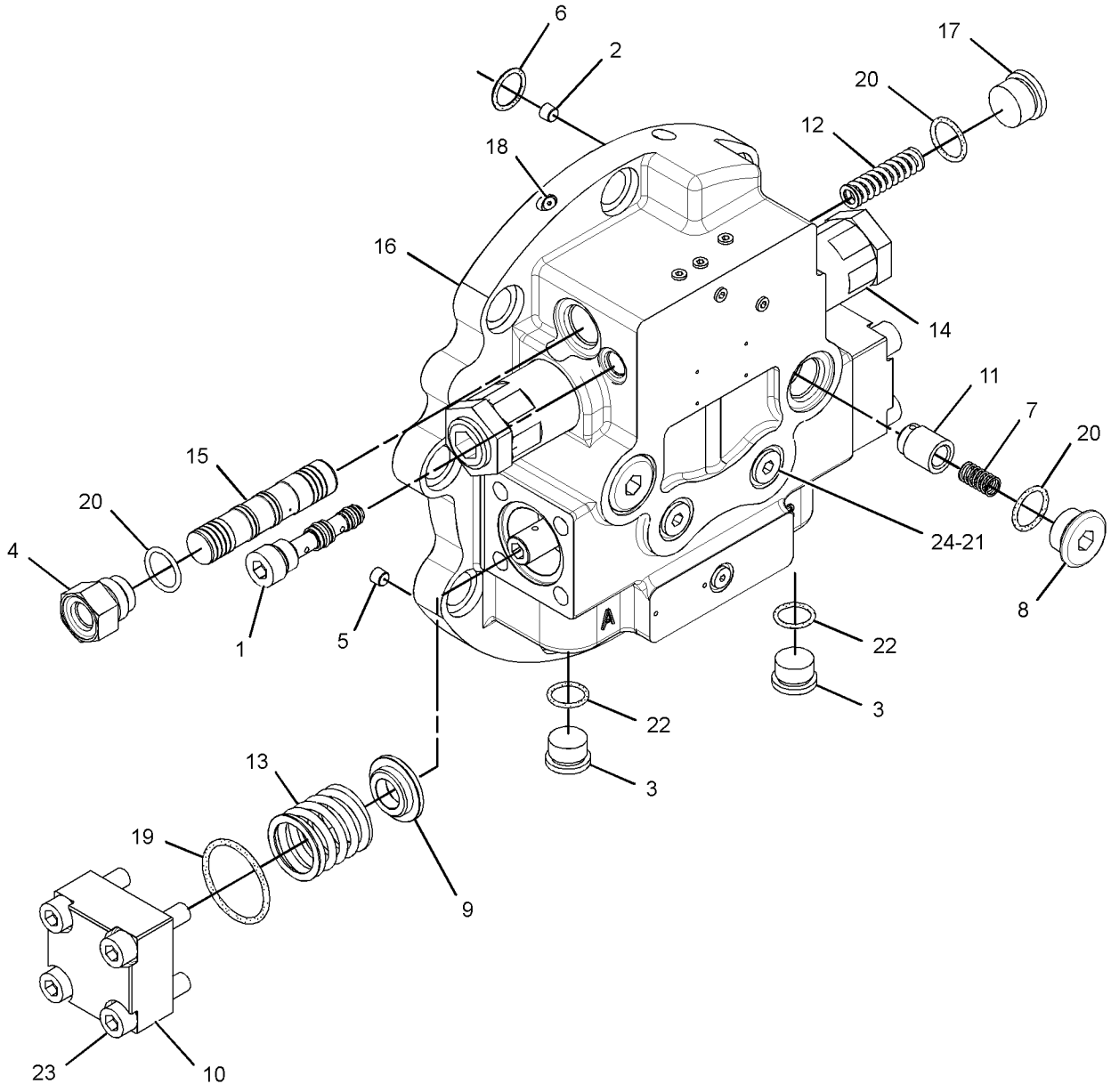

GRAPHIC #1 <END> g02721420

283-9013 BOOM AR-1 PIECE LONG

S/N: RDE1-UP

PART OF 506-8578, 506-8579, 515-4828, 515-4829 DISTRIBUTION AR

SMCS-6501 **i06821112**

NOTE	PART NUMBER	QTY	PART NAME 1 2 3 4 5 6 (PRODUCT LEVEL)	SEE PAGE
Y	*392-0291*	1	BOOM GP	369
Y	**385-2825**	1	CYLINDER & LINES GP-BOOM (LH)	213
Y	**385-2826**	1	CYLINDER & LINES GP-BOOM (RH)	213
Y	*385-2829*	1	CYLINDER & LINES GP-STICK	213
Y	*275-7052*	1	LIGHTING GP-FLOOD (BOOM, LH)	100
Y	*390-4277*	1	LINES GP-BOOM	242
Y	*315-1030*	1	LINES GP-GREASE	371

Y - SEPARATE ILLUSTRATION

<END>

392-0291 BOOM GP

S/N: RDE1-UP
4.7-M (15.3-FT)
PART OF 283-9013 BOOM AR-1 PIECE LONG

SMCS-6301, 6302, 6460, 6501, 6516, 6521, 6535, 6536 **i05832637**

NOTE	REF NO	GRAPHIC REF	PART NUMBER	QTY	PART NAME 1 2 3 4 5 6 (PRODUCT LEVEL)	SEE PAGE
	1	1	**1R-6225**	1	PIN AS	
	2	1	**1R-6226**	1	PIN AS	
	3	1	**4I-3309**	2	SPACER (82X110X3-MM THK)	
B	4	1	**093-0115**	1	SHIM (2-MM THK)	
	5	1	**093-0357**	1	SPACER (63X100X9-MM THK)	
B	6	1	**133-2425**	1	SHIM (0.5-MM THK)	
	7	1	**166-1486**	4	SHIM (2-MM THK)	
	8	1	**172-3080**	1	PIN	
	9	1	**392-0292**	1	BOOM & BEARING AS	
J		1	**273-6814**	2	BUSHING (1000 SERVICE HOURS) (1000 SERVICE HOURS)	
					—OR—	
J		1	**240-2913**	2	BUSHING (500 SERVICE HOURS)	
					—OR—	
J		1	**357-5710**	2	BUSHING (500 SERVICE HOURS) (500 SERVICE HOURS)	
	10	1	**086-0297**	1	WASHER (13X50X6-MM THK)	
	11	1	**086-0298**	1	WASHER (19X60X9-MM THK)	
	12	1	**095-6824**	2	PLATE	
	13	1	**099-3600**	4	WASHER (12.7X30X4-MM THK)	
	14	1	**166-1494**	2	SEAL-LIP TYPE	
M	15	1	**453-2834**	1	BOLT (M16X2X30-MM)	
M	16	1	**8T-4179**	1	BOLT (M12X1.75X20-MM)	
M	17	1	**8T-4192**	4	BOLT (M12X1.75X25-MM)	

B - USE AS REQUIRED
J - PART(S) MARKED J ARE INTERCHANGEABLE
M - METRIC PART

392-0291 **BOOM GP (**contd.**)** **i05832637**

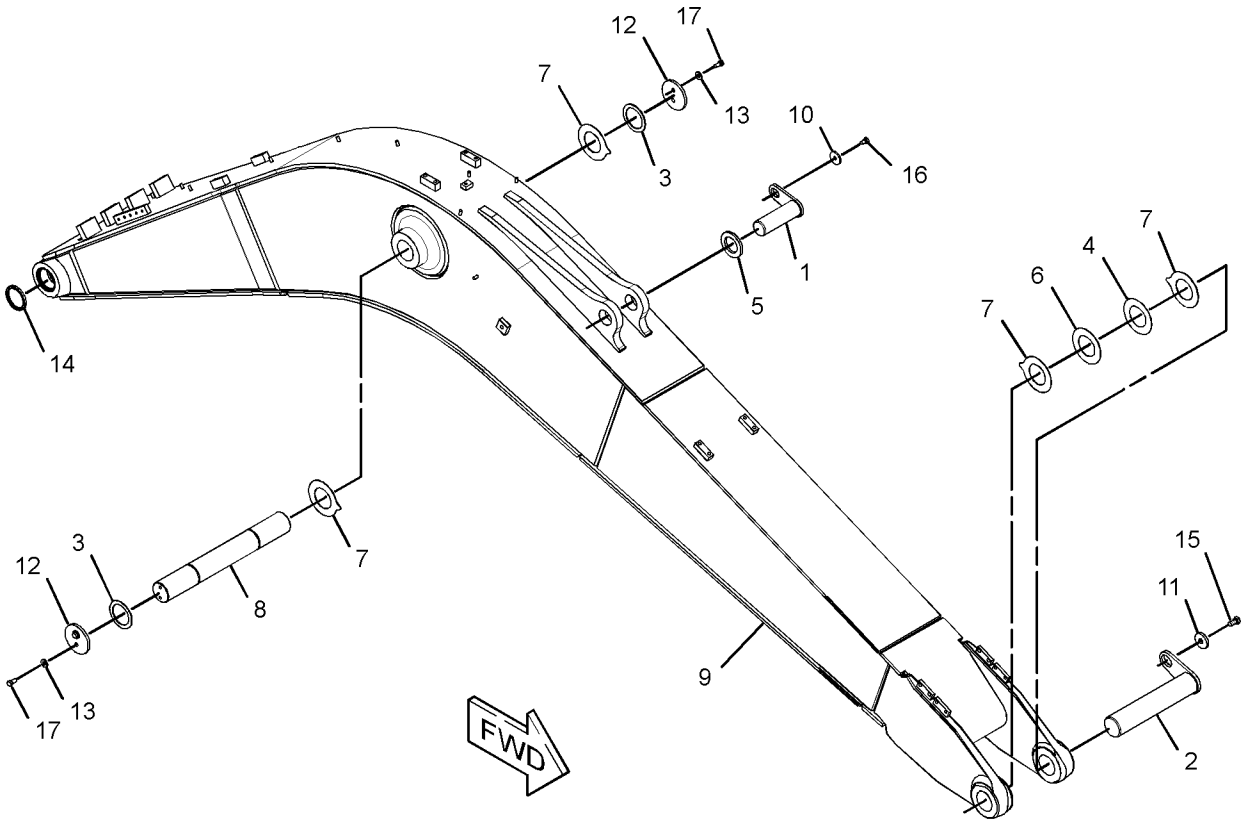

GRAPHIC #1 <END> g03102483

315-1030 LINES GP-GREASE–BOOM

S/N: RDE1-UP

PART OF 283-9013 BOOM AR-1 PIECE LONG

SMCS-7510 **i05411200**

NOTE	REF NO	GRAPHIC REF	PART NUMBER	QTY	PART NAME 1 2 3 4 5 6 (PRODUCT LEVEL)	SEE PAGE
	1	1	**5K-9243**	2	ELBOW-FLARED	
	2	1	**7I-6896**	1	TUBE AS	
I	3	1	**121-8659**	1	HOSE AS	
I	4	1	**121-8662**	1	HOSE AS	
	5	1	**166-1579**	3	CLIP	
	6	1	**180-7758**	1	TUBE AS	
I	7	1	**203-7401**	1	HOSE AS	
		1	**105-6431**	1	CONNECTOR	
	8	1	**033-8248**	3	CLIP	
	9	1	**3B-8489**	5	FITTING-GREASE (1/8-27 PTF)	
	10	1	**6L-3616**	2	CONNECTOR	
	11	1	**8T-4121**	6	WASHER-HARD (11X21X2.5-MM THK)	
M	12	1	**8T-4133**	3	NUT (M10X1.5-THD)	
M	13	1	**8T-4191**	3	BOLT (M10X1.5X16-MM)	

I - REFER TO HYDRAULIC INFORMATION SYSTEM
M - METRIC PART

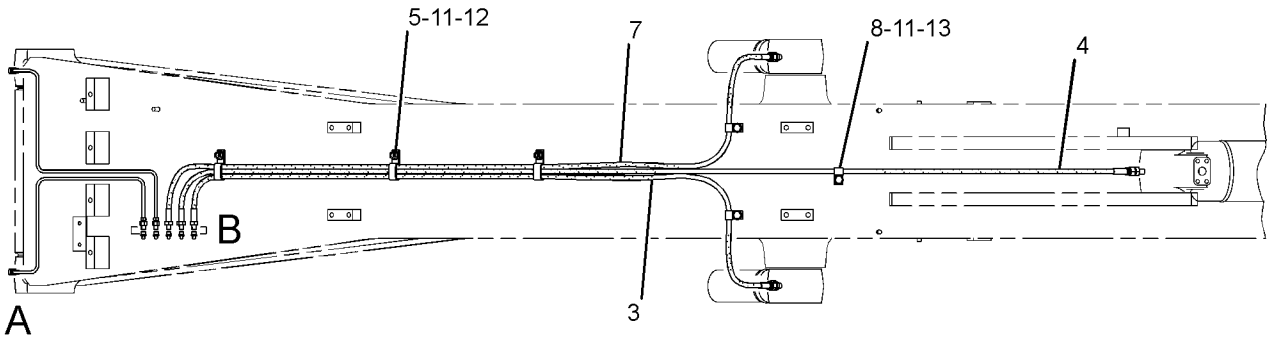

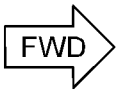

TOP VIEW

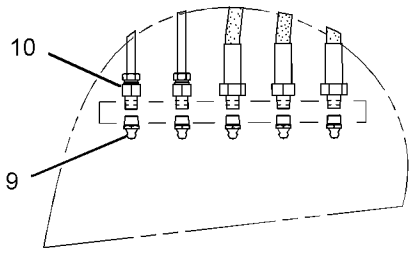

VIEW OF AREA B

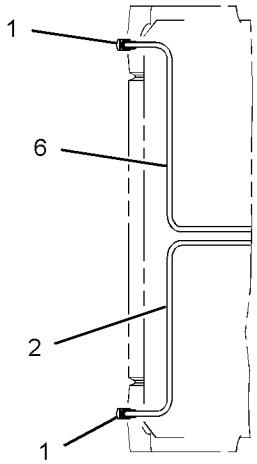

VIEW OF AREA A

GRAPHIC #1 <END> g01440220

387-3507 LINES GP-GREASE–STICK

S/N: RDE1-UP

PART OF 283-9014 STICK AR-HOE

SMCS-7510 **i05412964**

NOTE	REF NO	GRAPHIC REF	PART NUMBER	QTY	PART NAME 1 2 3 4 5 6 (PRODUCT LEVEL)	SEE PAGE
	1	1	**7J-8611**	1	ELBOW-PIPE	
I	2	1	**203-7400**	1	HOSE AS	
		1	**105-6431**	1	CONNECTOR	
	3	1	**033-8248**	4	CLIP	
	4	1	**3B-8489**	1	FITTING-GREASE (1/8-27 PTF)	
	5	1	**8T-4121**	4	WASHER-HARD (11X21X2.5-MM THK)	
M	6	1	**8T-4133**	3	NUT (M10X1.5-THD)	
M	7	1	**8T-4137**	1	BOLT (M10X1.5X20-MM)	

I - REFER TO HYDRAULIC INFORMATION SYSTEM
M - METRIC PART

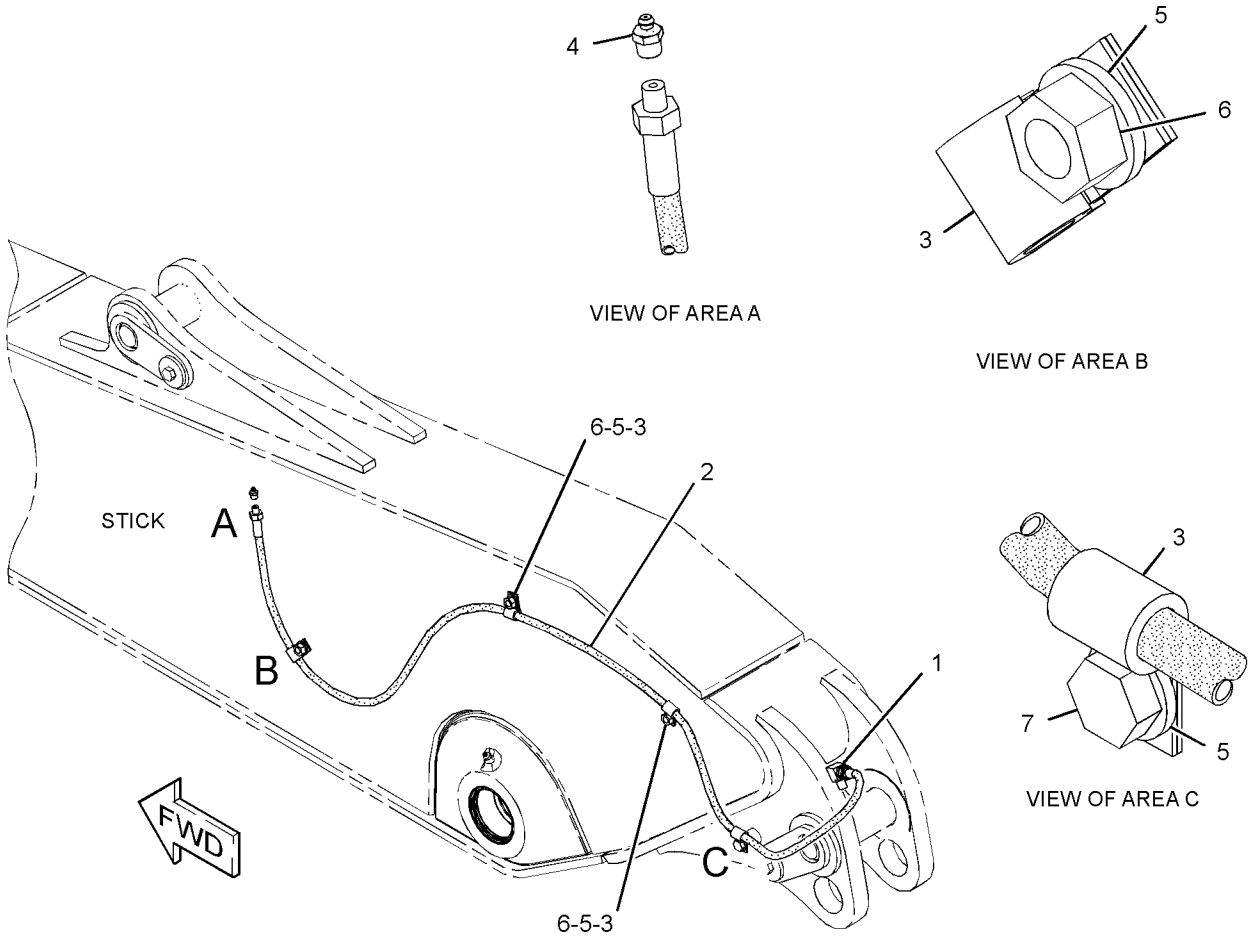

GRAPHIC #1 <END> g02940997

283-9018 LINKAGE AR-BUCKET—WITH LIFTING EYE

S/N: RDE1-UP

PART OF 506-8578, 506-8579, 515-4828, 515-4829 DISTRIBUTION AR

SMCS-6513 **i06750650**

NOTE	PART NUMBER	QTY	PART NAME 1 2 3 4 5 6 (PRODUCT LEVEL)	SEE PAGE
Y	*385-2832*	1	CYLINDER & LINES GP-BUCKET	213
Y	*278-9293*	1	LINKAGE GP-BUCKET (WITH LIFTING EYE)	374

Y - SEPARATE ILLUSTRATION

<END>

278-9293 LINKAGE GP-BUCKET—WITH LIFTING EYE

S/N: RDE1-UP

PART OF 283-9018 LINKAGE AR-BUCKET

SMCS-6513 **i05750920**

NOTE	REF NO	GRAPHIC REF	PART NUMBER	QTY	PART NAME 1 2 3 4 5 6 (PRODUCT LEVEL)	SEE PAGE
	1	1	**3B-8489**	5	FITTING-GREASE (1/8-27 PTF)	
	2	1	**7I-6843**	1	PIN	
	3	1	**086-0523**	2	PIN	
M	4	1	**096-4876**	6	NUT (M14X2-THD)	
	5	1	**166-1482**	2	SHIM (2-MM THK)	
M	6	1	**236-6365**	1	BOLT (M16X2X150-MM)	
	7	1	**235-7679**	4	SEAL-LIP TYPE	
	8	1	**248-7820**	1	PIN	
	9	1	**248-7822**	1	LINK	
	10	1	**248-7823**	1	LINK AS	
	11	1	**248-7836**	2	SEAL-LIP TYPE	
	12	1	**282-4503**	1	LINK & BEARING AS	
	12A	1	**248-7835**	2	BUSHING	
	12B	1	**229-1092**	2	BUSHING	
	13	1	**367-8465**	4	SEAL-O-RING	
M	14	1	**099-0707**	1	BOLT (M14X2X115-MM)	
M	15	1	**099-0724**	2	BOLT (M14X2X145-MM)	
M	16	1	**451-2183**	2	NUT (M16X2-THD)	

M - METRIC PART

278-9293 **LINKAGE GP-BUCKET (**contd.**)** **i05750920**

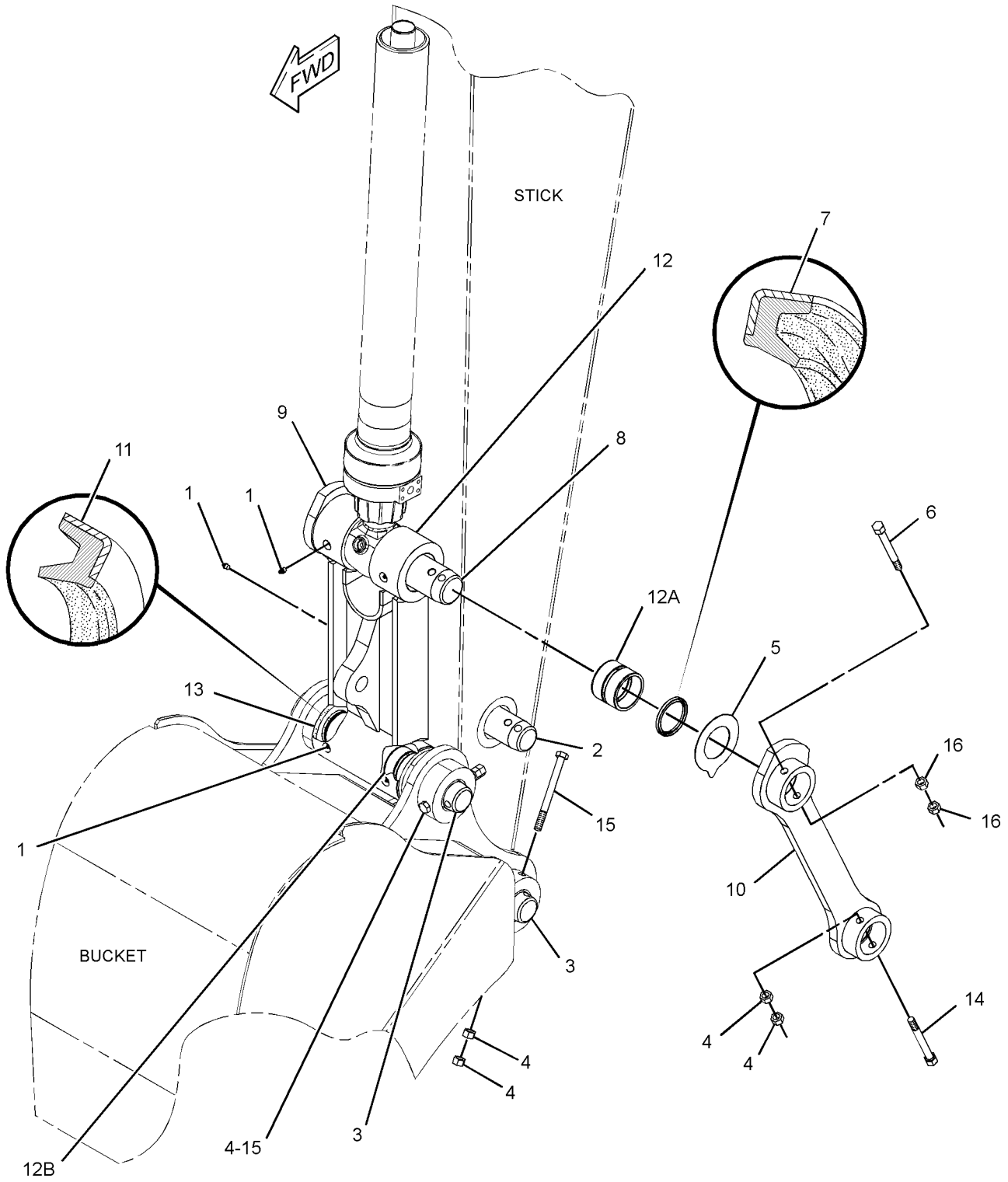

GRAPHIC #1 <END> g02444678

283-9014 STICK AR-HOE—REACH

S/N: RDE1-UP
3.0-M (9.8-FT)
PART OF 506-8578 DISTRIBUTION AR

SMCS-6502 **i06736210**

NOTE	PART NUMBER	QTY	PART NAME 1 2 3 4 5 6 (PRODUCT LEVEL)	SEE PAGE
Y	*387-3507*	1	LINES GP-GREASE	372
Y	*179-7600*	1	LINES GP-STICK	299
Y	*393-4026*	1	STICK GP-HOE (WITH AUXILIARY)	377

Y - SEPARATE ILLUSTRATION

<END>

283-9016 STICK AR-HOE—REACH

S/N: RDE1-UP
2.5-M (8.2-FT)
PART OF 506-8579 DISTRIBUTION AR

SMCS-6502 **i06735998**

NOTE	PART NUMBER	QTY	PART NAME 1 2 3 4 5 6 (PRODUCT LEVEL)	SEE PAGE
Y	*179-7601*	1	LINES GP-STICK	300
Y	*393-4054*	1	STICK GP-HOE	378

Y - SEPARATE ILLUSTRATION

<END>

393-4026 STICK GP-HOE

S/N: RDE1-UP
3-M (9.8-FT)
PART OF 283-9014 STICK AR-HOE

SMCS-6502 **i05411424**

NOTE	REF NO	GRAPHIC REF	PART NUMBER	QTY	PART NAME 1 2 3 4 5 6 (PRODUCT LEVEL)	SEE PAGE
	1	1	**1R-6225**	1	PIN AS	
	2	1	**093-0357**	2	SPACER (63X100X9-MM THK)	
	3	1	**127-3913**	1	PIN AS	
	4	1	**166-1481**	2	SHIM (2-MM THK)	
	5	1	**166-1492**	2	SEAL-LIP TYPE	
	6	1	**248-7836**	2	SEAL-LIP TYPE	
	7	1	**393-4028**	1	STICK & BEARING AS	
	7A	1	**229-1091**	2	BUSHING	
	7B	1	**229-1095**	2	BUSHING	
	7C	1	**357-5710**	2	BUSHING (500 SERVICE HOURS)	
	8	1	**086-0297**	2	WASHER (13X50X6-MM THK)	
	9	1	**166-1494**	2	SEAL-LIP TYPE	
	10	1	**3B-8489**	3	FITTING-GREASE (1/8-27 PTF)	
M	11	1	**8T-4179**	2	BOLT (M12X1.75X20-MM)	

M - METRIC PART

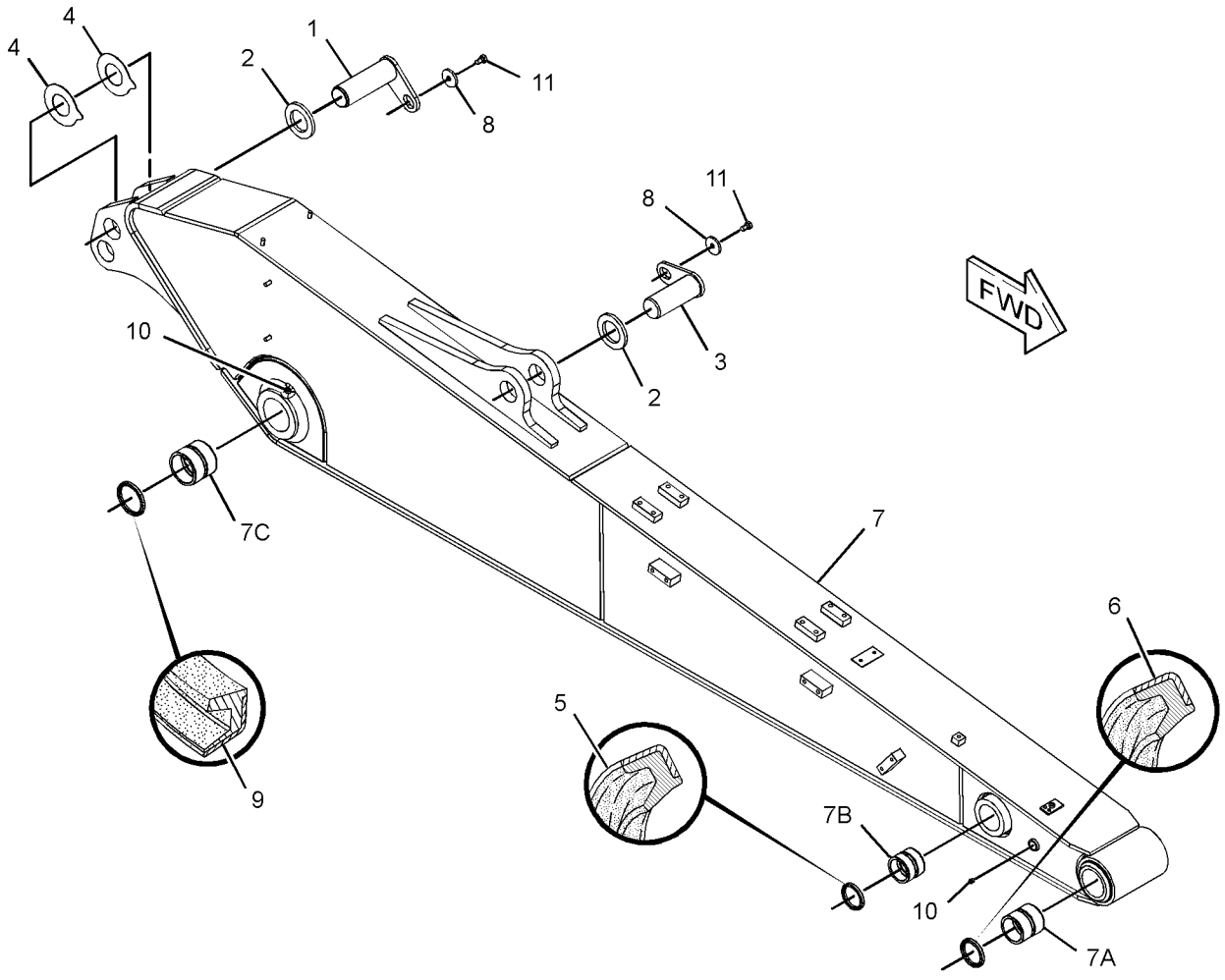

GRAPHIC #1 <END> g01413952

393-4054 STICK GP-HOE

S/N: RDE1-UP
2.5-M (8.2-FT)
PART OF 283-9016 STICK AR-HOE

SMCS-6502 **i05487770**

NOTE	REF NO	GRAPHIC REF	PART NUMBER	QTY	PART NAME 1 2 3 4 5 6 (PRODUCT LEVEL)	SEE PAGE
	1	1	**1R-6225**	1	PIN AS	
	2	1	**093-0357**	2	SPACER (63X100X9-MM THK)	
	3	1	**127-3913**	1	PIN AS	
	4	1	**166-1481**	2	SHIM (2-MM THK)	
	5	1	**166-1492**	2	SEAL-LIP TYPE	
	6	1	**248-7836**	2	SEAL-LIP TYPE	
	7	1	**393-4055**	1	STICK & BEARING AS	
	7A	1	**229-1091**	2	BUSHING	
	7B	1	**229-1095**	2	BUSHING	
	7C	1	**357-5710**	2	BUSHING (500 SERVICE HOURS)	
	8	1	**086-0297**	2	WASHER (13X50X6-MM THK)	
	9	1	**166-1494**	2	SEAL-LIP TYPE	
	10	1	**3B-8489**	3	FITTING-GREASE (1/8-27 PTF)	
M	11	1	**8T-4179**	2	BOLT (M12X1.75X20-MM)	

M - METRIC PART

393-4054 **STICK GP-HOE (**contd.**)** **i05487770**

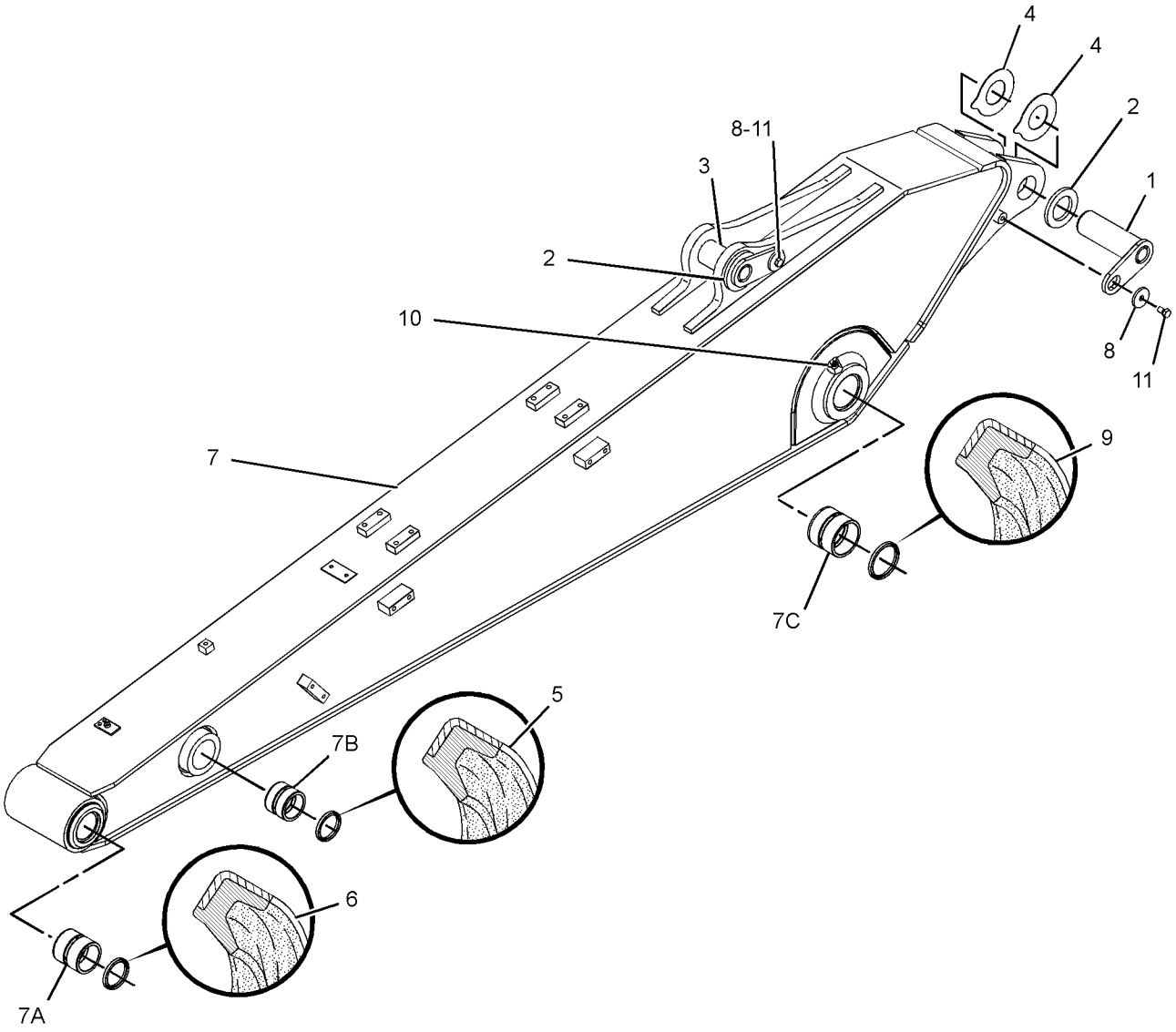

GRAPHIC #1 <END> g01406805

4I-6914 ADJUSTER GP-BUCKET

S/N: RDE1-UP

PART OF 358-8621, 358-8641 BUCKET & ADJUSTER GP

SMCS-6513, 6700 **i05412064**

NOTE	REF NO	GRAPHIC REF	PART NUMBER	QTY	PART NAME 1 2 3 4 5 6 (PRODUCT LEVEL)	SEE PAGE
B	1	1	**086-0416**	6	SHIM (1-MM THK)	
B	2	1	**086-0415**	4	SHIM (0.5-MM THK)	
	3	1	**085-9769**	1	PIN	
	4	1	**085-8828**	1	PLATE	
M	5	1	**8T-4183**	4	BOLT (M12X1.75X40-MM)	
	6	1	**8T-4223**	4	WASHER-HARD (13.5X25.5X3-MM THK)	
	7	1	**086-0414**	1	FLANGE	

B - USE AS REQUIRED
M - METRIC PART

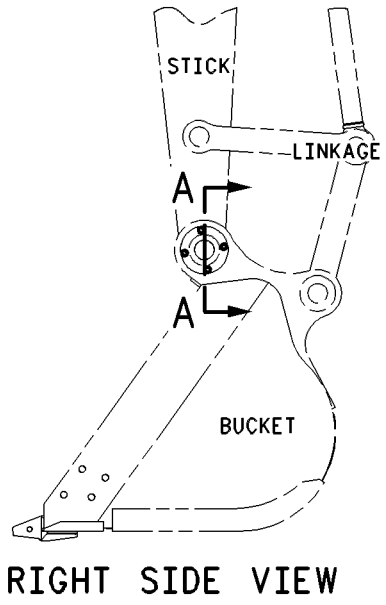

RIGHT SIDE VIEW

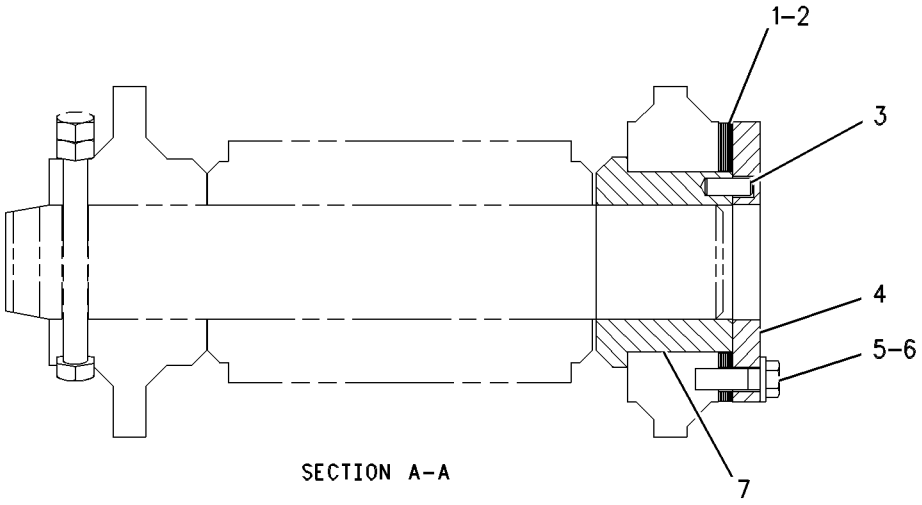

SECTION A–A

GRAPHIC #1 <END> g00658085

358-8621 BUCKET & ADJUSTER GP—GENERAL PURPOSE

S/N: RDE1-UP

1200-MM (48-IN) WIDE X 0.8-CU M (1.0-CU YD) CAPACITY. J-250 ADAPTERS, QTY OF 7

PART OF 473-4633 BUCKET AR-GENERAL PURPOSE

SMCS-6503, 6513

i06733475

NOTE	REF NO	GRAPHIC REF	PART NUMBER	QTY	PART NAME 1 2 3 4 5 6 (PRODUCT LEVEL)	SEE PAGE
	1	1	**2C-9259**	1	PLATE-IDENTIFICATION (CAT)	
Y	2	1	**4I-6914**	1	ADJUSTER GP-BUCKET	380
	3	1	**312-5694**	1	SETSCREW (1/4-20X0.25-IN)	
Y	4	1	*358-8633*	1	BUCKET AS-GENERAL PURPOSE	384

Y - SEPARATE ILLUSTRATION

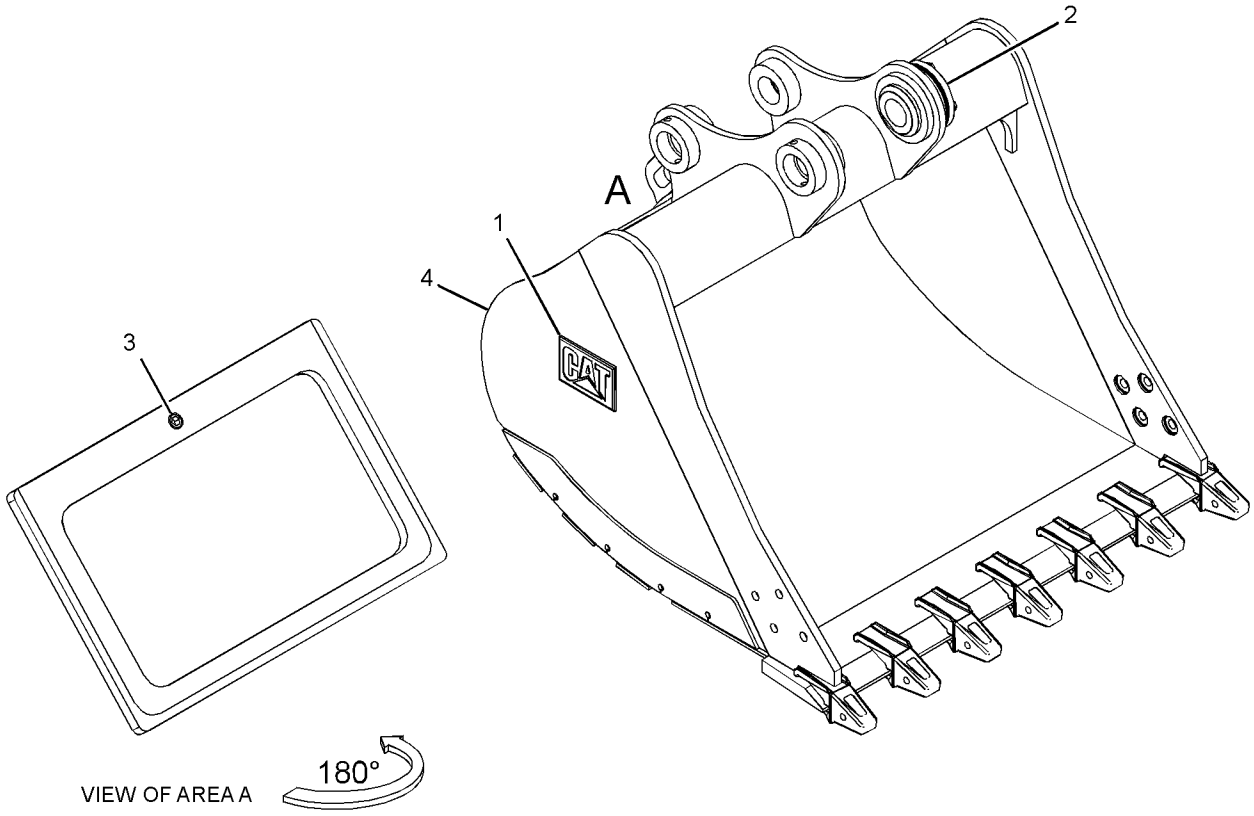

GRAPHIC #1 <END> g02750942

358-8641 BUCKET & ADJUSTER GP—SEVERE SERVICE ROCK

S/N: RDE1-UP

1050-MM (42-IN) WIDE X 0.65-CU M (0.84-CU YD) CAPACITY. J-300 ADAPTERS, QTY OF 5

PART OF 385-6080 BUCKET AR-SEVERE SERVICE ROCK

SMCS-6503, 6513

i06733451

NOTE	REF NO	GRAPHIC REF	PART NUMBER	QTY	PART NAME 1 2 3 4 5 6 (PRODUCT LEVEL)	SEE PAGE
	1	1	**2C-9259**	1	PLATE-IDENTIFICATION (CAT)	
Y	2	1	**4I-6914**	1	ADJUSTER GP-BUCKET	380
	3	1	**312-5694**	1	SETSCREW (1/4-20X0.25-IN)	
Y	4	1	*358-8647*	1	BUCKET AS-SEVERE SERVICE ROCK	385

Y - SEPARATE ILLUSTRATION

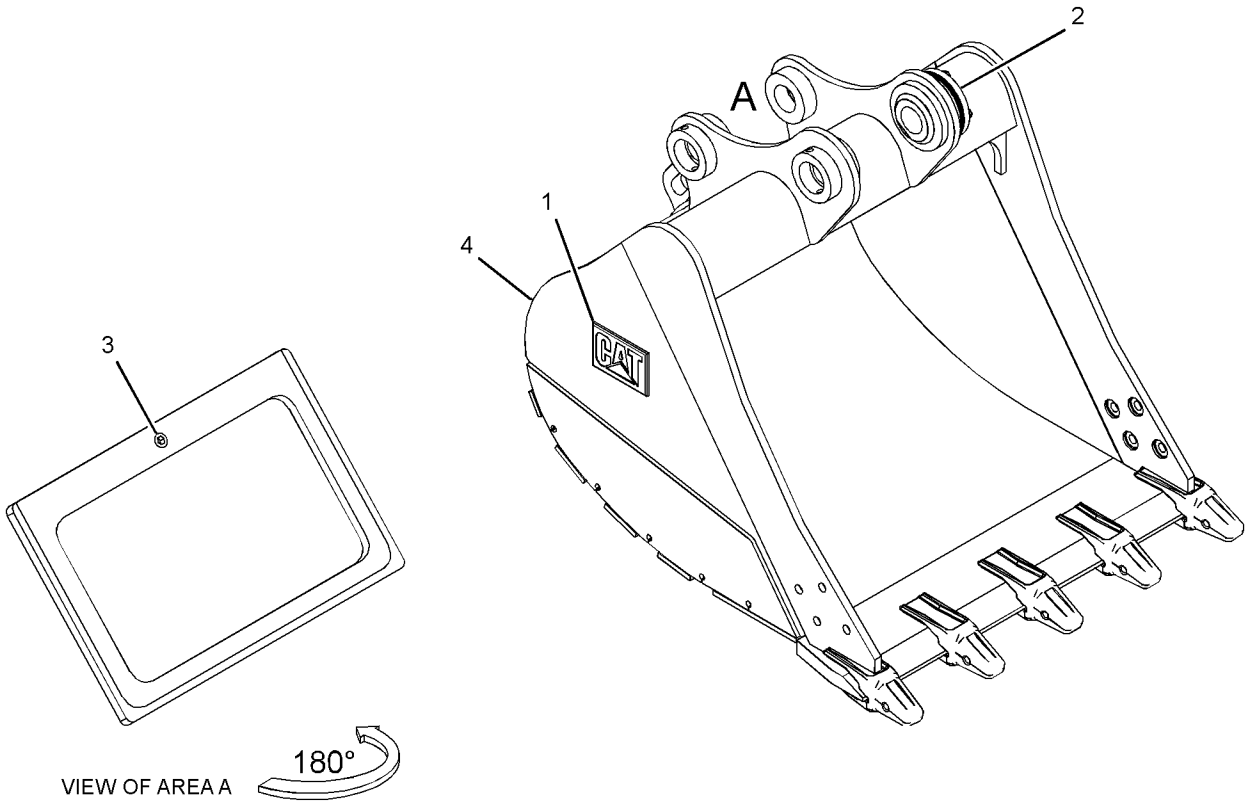

GRAPHIC #1 <END> g02749167

473-4633 BUCKET AR-GENERAL PURPOSE–312-FAMILY

S/N: RDE1-UP

1200-MM (48-IN) WIDE X 0.76-CU M (1.0-CU YD) CAPACITY

SMCS-6101 **i06826714**

NOTE	PART NUMBER	QTY	PART NAME 1 2 3 4 5 6 (PRODUCT LEVEL)	SEE PAGE
Y	*358-8621*	1	BUCKET & ADJUSTER GP	381
Y	*380-1203*	1	SIDECUTTER GP	391
Y	*9J-3169*	7	TIP GP-LONG (J-250)	392

Y - SEPARATE ILLUSTRATION

<END>

385-6080 BUCKET AR-SEVERE SERVICE ROCK

S/N: RDE1-UP

1050-MM (42-IN) WIDE X 0.65-CU M (0.84-CU YD) CAPACITY

SMCS-6102, 6529 **i06738062**

NOTE	PART NUMBER	QTY	PART NAME 1 2 3 4 5 6 (PRODUCT LEVEL)	SEE PAGE
Y	**358-8641**	1	BUCKET & ADJUSTER GP (SEVERE SERVICE ROCK)	382
Y	*380-1203*	1	SIDECUTTER GP	391
Y	*195-9180*	5	TIP GP-PENETRATION PLUS (J-300)	393

Y - SEPARATE ILLUSTRATION

<END>

358-8633 BUCKET AS-GENERAL PURPOSE

S/N: RDE1-UP

1200-MM (48-IN) WIDE X 0.8-CU M (1.0-CU YD) CAPACITY. J-250 ADAPTERS, QTY OF 7

PART OF 358-8621 BUCKET & ADJUSTER GP

SMCS-6101 **i05412161**

NOTE	REF NO	GRAPHIC REF	PART NUMBER	QTY	PART NAME 1 2 3 4 5 6 (PRODUCT LEVEL)	SEE PAGE
	1	1	**354-5807**	1	PLATE (LH)	
	2	1	**354-5811**	1	PLATE (RH)	
	3	1	**354-5813**	2	PLATE-WEAR	
	4	1	**370-4404**	1	EDGE AS	
	4A	1	**8P-9770**	1	PLATE	
	4B	1	**119-3253**	7	ADAPTER-TIP (J-250, 2-STRAP)	
	5	1	**370-4414**	1	PLATE-WEAR	
	6	1	**370-4420**	3	PLATE-WEAR	
	7	1	**370-4425**	1	PLATE AS-HINGE	

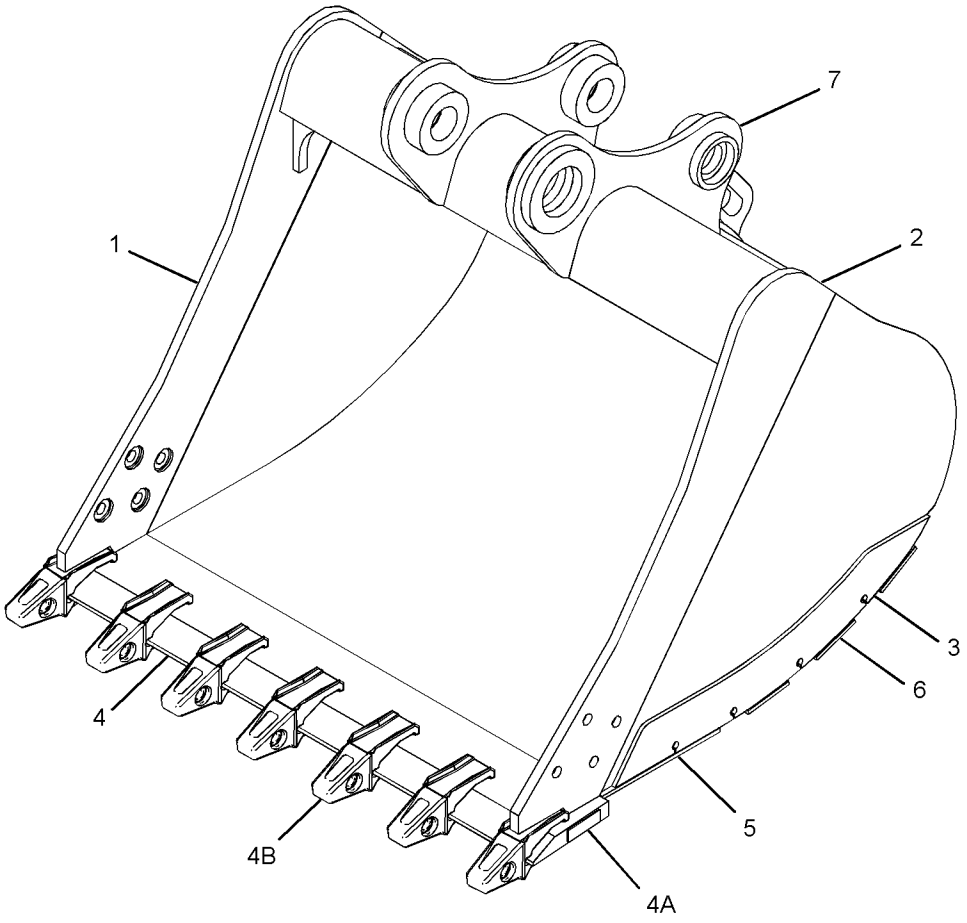

GRAPHIC #1 <END> g02751096

358-8647 BUCKET AS-SEVERE SERVICE ROCK

S/N: RDE1-UP

1050-MM (42-IN) WIDE X 0.65-CU M (0.84-CU YD) CAPACITY. J-300 ADAPTERS, QTY OF 5

PART OF 358-8641 BUCKET & ADJUSTER GP

SMCS-6001 **i05439877**

NOTE	REF NO	GRAPHIC REF	PART NUMBER	QTY	PART NAME 1 2 3 4 5 6 (PRODUCT LEVEL)	SEE PAGE
	1	1	**393-5679**	1	EDGE AS	
	1A	1	**8E-9490**	5	ADAPTER-TIP (J-300, 2-STRAP)	
	1B	1	**8P-9770**	1	PLATE	
	2	1	**354-5799**	1	PLATE AS-HINGE	
	3	1	**371-3615**	1	PLATE (LH)	
	4	1	**371-3616**	1	PLATE (RH)	
	5	1	**371-3618**	2	PLATE-WEAR	
	6	1	**371-3622**	1	PLATE-WEAR	
	7	1	**371-3626**	3	PLATE-WEAR	
	8	1	**371-4372**	1	PLATE-WEAR	

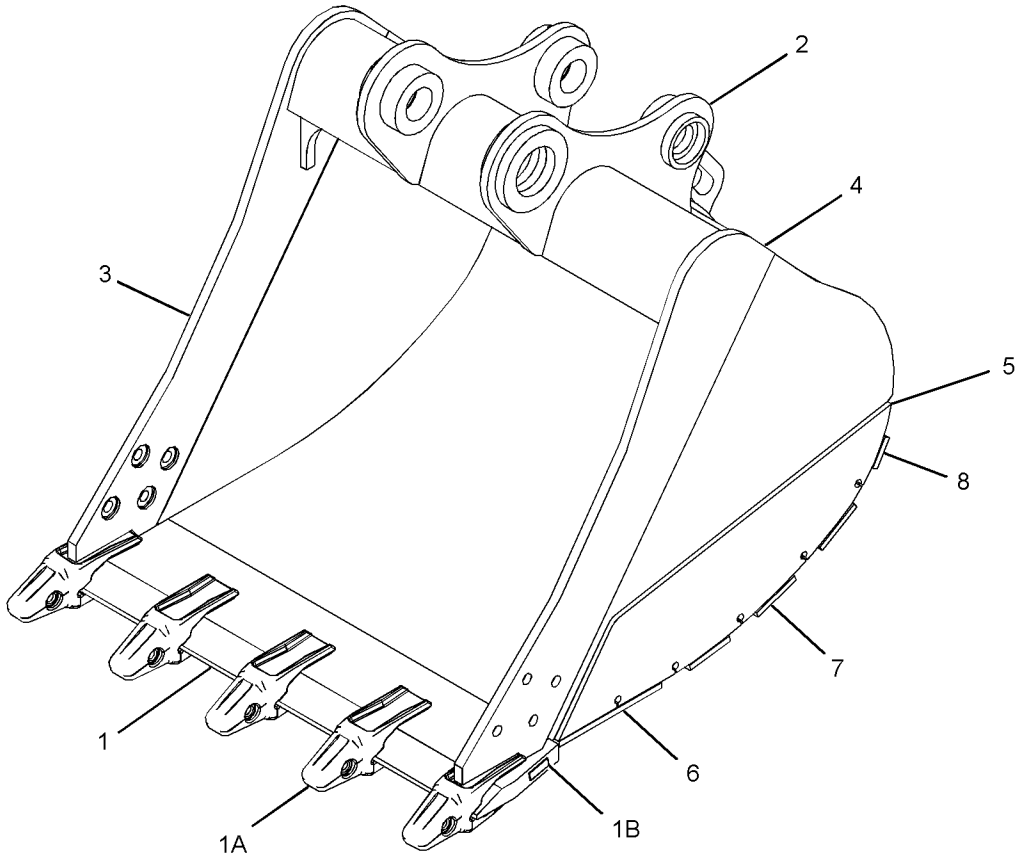

GRAPHIC #1 <END> g02749279

503-9777 CONTROL AR-QUICK COUPLER

S/N: RDE1-UP
HIGH PRESSURE

SMCS-6129 **i06828437**

NOTE	PART NUMBER	QTY	PART NAME 1 2 3 4 5 6 (PRODUCT LEVEL)	SEE PAGE
Y	*282-5705*	1	FILM GP (QUICK COUPLER)	494
Y	*502-5317*	1	LINES GP-FRONT (QUICK COUPLER)	263
Y	*421-8400*	1	WIRING GP-CAB (COUPLER)	130
Y	*465-1258*	1	WIRING GP-CHASSIS (QUICK COUPLER, HIGH PRESSURE)	131

Y - SEPARATE ILLUSTRATION

<END>

455-3913 COUPLER AR-QUICK

S/N: RDE1-UP

SMCS-1408, 5057, 6129 **i06828855**

NOTE	PART NUMBER	QTY	PART NAME 1 2 3 4 5 6 (PRODUCT LEVEL)	SEE PAGE
Y	*455-3914*	1	COUPLER AR-QUICK (PIN GRABBER)	386
Y	*253-6406*	1	PIN GP-COUPLER (BUCKET)	390

Y - SEPARATE ILLUSTRATION

<END>

455-3914 COUPLER AR-QUICK

S/N: RDE1-UP
PART OF 455-3913 COUPLER AR-QUICK

SMCS-1408, 5057, 6129 **i06826742**

NOTE	PART NUMBER	QTY	PART NAME 1 2 3 4 5 6 (PRODUCT LEVEL)	SEE PAGE
Y	*388-6156*	1	COUPLER GP-QUICK (312-LINKAGE)	387
Y	*422-2983*	1	LINES GP-COUPLER (312-LINKAGE)	254
	172-8490	2	SHIM (1-MM THK)	

Y - SEPARATE ILLUSTRATION

<END>

388-6156 COUPLER GP-QUICK–312-LINKAGE

S/N: RDE1-UP

PART OF 455-3914 COUPLER AR-QUICK

SMCS-1408, 5057, 6129

i06826748

NOTE	REF NO	GRAPHIC REF	PART NUMBER	QTY	PART NAME 1 2 3 4 5 6 (PRODUCT LEVEL)	SEE PAGE
	1	1	**5B-0935**	8	FITTING-GREASE	
	3	1	**159-8036**	1	FILM-WARNING (READ OMM)	
	4	1	**355-5804**	2	PLUG	
I	5	1	**388-0105**	2	HOSE AS	
I	6	1	**388-0110**	1	HOSE AS	
I	7	1	**388-0109**	1	HOSE AS	
	8	1	**388-6177**	1	PIN	
	9	1	**388-6178**	1	PIN	
	10	1	**391-4597**	1	ROCKER ARM	
	11	1	**391-4598**	1	ROCKER ARM	
	12	1	**391-4599**	1	LATCH	
	13	1	**394-9469**	1	PIN	
Y	14	1	**395-4045**	1	CYLINDER GP-COUPLER	220
	15	1	**418-9163**	2	SPRING-SPACER	
	16	1	**418-9164**	2	SPRING-GUIDE	
	17	1	**424-6686**	2	SPRING	
I	18	1	**440-5314**	1	HOSE AS	
I	19	1	**440-5315**	1	HOSE AS	
	20	1	**449-2856**	1	WEDGE	
	21	1	**449-8112**	1	PIN	
	24	1	**459-2215**	1	PLATE-COVER	
	25	1	**459-2216**	1	PIN	
	26	1	**095-0933**	2	RING-RETAINING	
	27	1	**2P-1279**	2	LOCKNUT (9/16-18-THD)	
	28	1	**2W-5975**	1	SCREW-BOLT (1/4-28X0.5-IN)	
	29	1	**3J-1907**	1	SEAL-O-RING	
	30	1	**3J-7354**	1	SEAL-O-RING	
	31	1	**4D-1322**	2	RING-RETAINING	
	32	1	**4D-7794**	1	CLIP	
	33	1	**4J-5477**	3	SEAL-O-RING	
	34	1	**4M-8973**	1	ELBOW	
	35	1	**6J-7836**	2	RING-SNAP	
	36	1	**6V-5205**	2	RING	
	37	1	**6V-8397**	3	SEAL-O-RING	
	38	1	**6V-8636**	1	CONNECTOR	
	39	1	**6V-8647**	1	CONNECTOR	
	40	1	**6V-8979**	1	ELBOW	
	41	1	**6V-8980**	1	ELBOW	
	42	1	**6V-9168**	2	NUT (11/16-16-THD)	
	43	1	**6V-9828**	1	CAP AS	
	44	1	**6V-9829**	1	CAP	
	45	1	**8C-3312**	2	RING-RETAINING	
	46	1	**8L-5008**	1	ELBOW-PIPE	
	47	1	**8T-4121**	6	WASHER-HARD (11X21X2.5-MM THK)	
M	48	1	**8T-4136**	5	BOLT (M10X1.5X25-MM)	
M	49	1	**8T-4137**	1	BOLT (M10X1.5X20-MM)	
	50	1	**9S-4185**	2	PLUG (3/4-16-THD)	

388-6156 **COUPLER GP-QUICK (**contd.**)** **i06826748**

NOTE	REF NO	GRAPHIC REF	PART NUMBER	QTY	PART NAME 1 2 3 4 5 6 (PRODUCT LEVEL)	SEE PAGE

I - REFER TO HYDRAULIC INFORMATION SYSTEM
M - METRIC PART
Y - SEPARATE ILLUSTRATION

388-6156 **COUPLER GP-QUICK (**contd.**)** **i06826748**

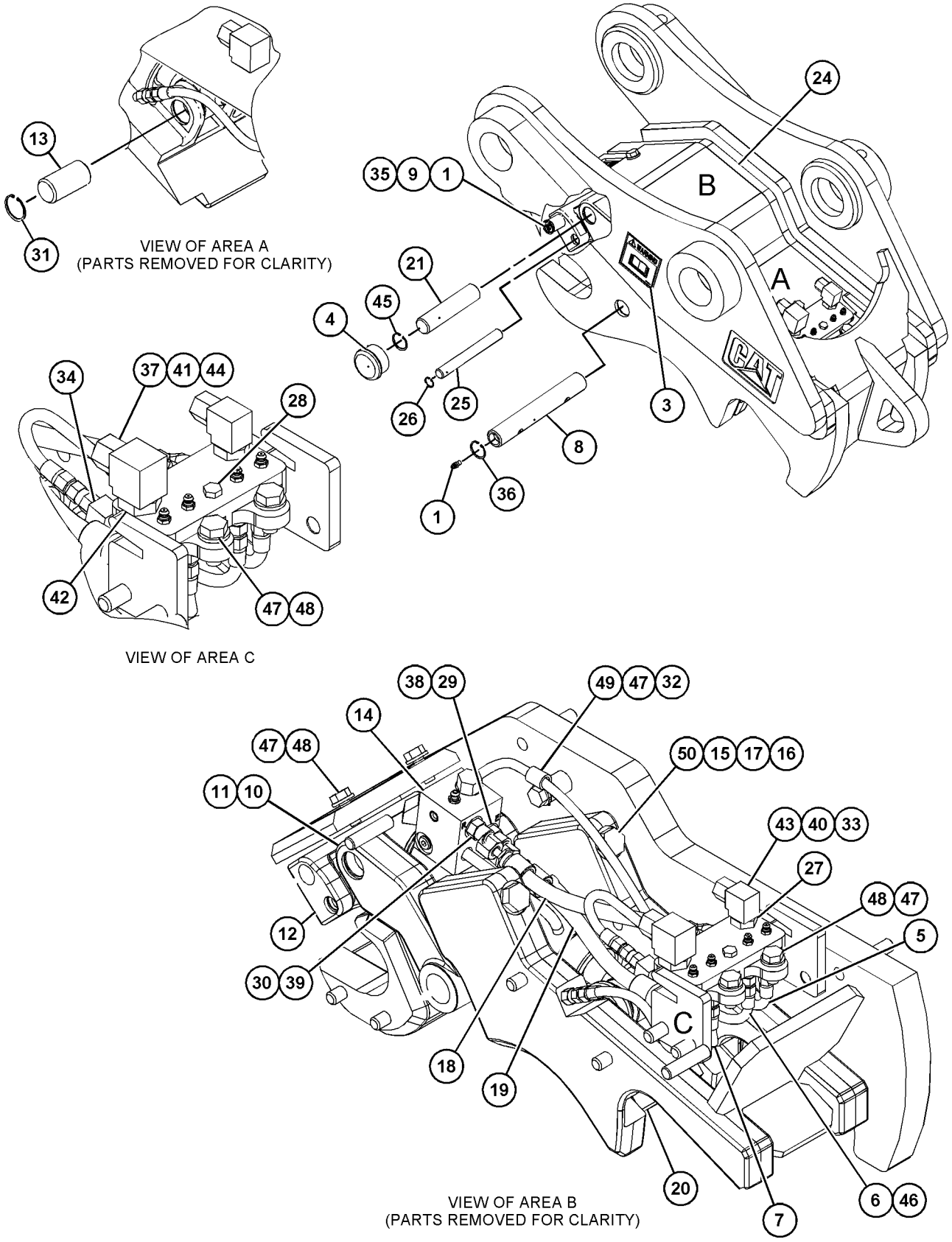

GRAPHIC #1 <END> g03726008

253-6406 PIN GP-COUPLER

S/N: RDE1-UP

PART OF 455-3913 COUPLER AR-QUICK

SMCS-6129 **i06826741**

NOTE	REF NO	GRAPHIC REF	PART NUMBER	QTY	PART NAME 1 2 3 4 5 6 (PRODUCT LEVEL)	SEE PAGE
	1	1	**086-0523**	2	PIN	
M	2	1	**096-4876**	4	NUT (M14X2-THD)	
M	3	1	**099-0724**	2	BOLT (M14X2X145-MM)	

M - METRIC PART

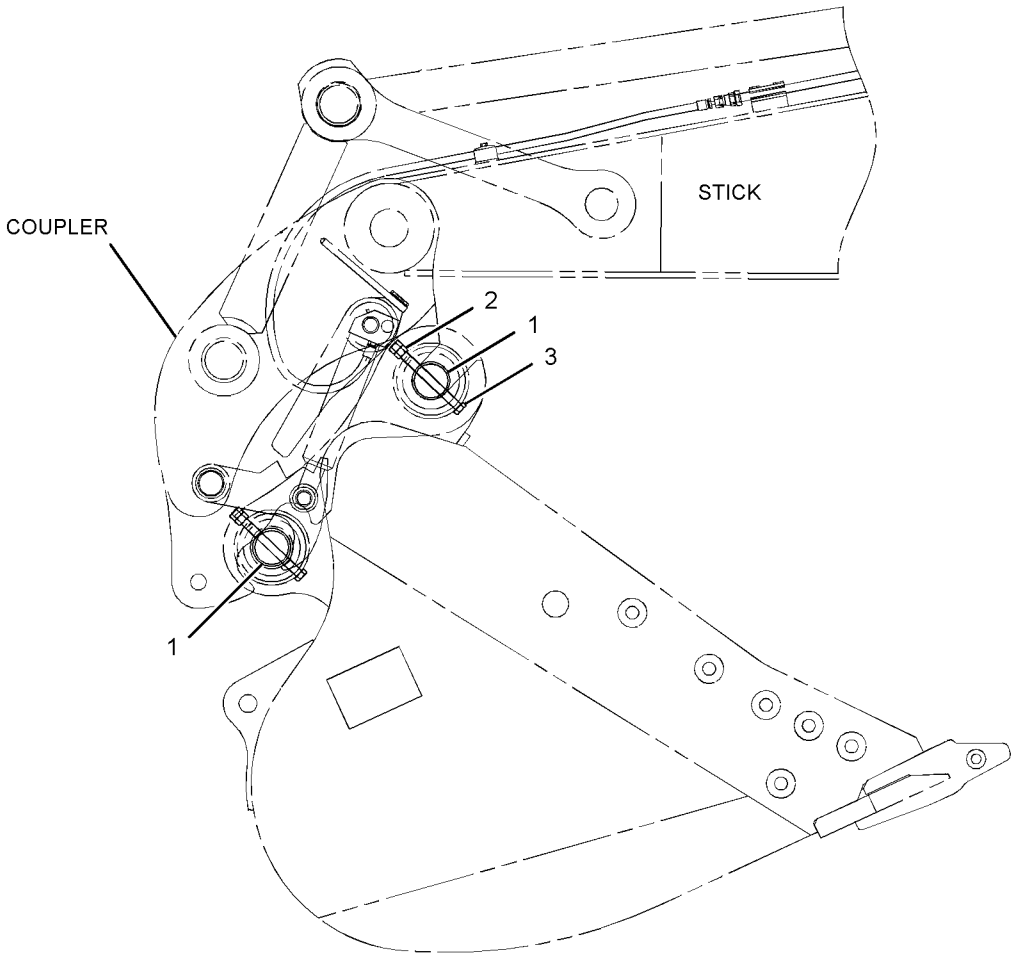

LEFT SIDE VIEW

GRAPHIC #1 <END> g01118540

380-1203 SIDECUTTER GP

S/N: RDE1-UP

PART OF 473-4633 BUCKET AR-GENERAL PURPOSE, 385-6080 BUCKET AR-SEVERE SERVICE ROCK

SMCS-6813 **i06729793**

NOTE	REF NO	GRAPHIC REF	PART NUMBER	QTY	PART NAME 1 2 3 4 5 6 (PRODUCT LEVEL)	SEE PAGE
	1	1	**380-1201**	1	SIDECUTTER (LH)	
	2	1	**380-1202**	1	SIDECUTTER (RH)	
M	3	1	**6V-3531**	8	BOLT (M20X2.5X50-MM)	
M	4	1	**8T-4131**	8	NUT (M20X2.5-THD)	

M - METRIC PART

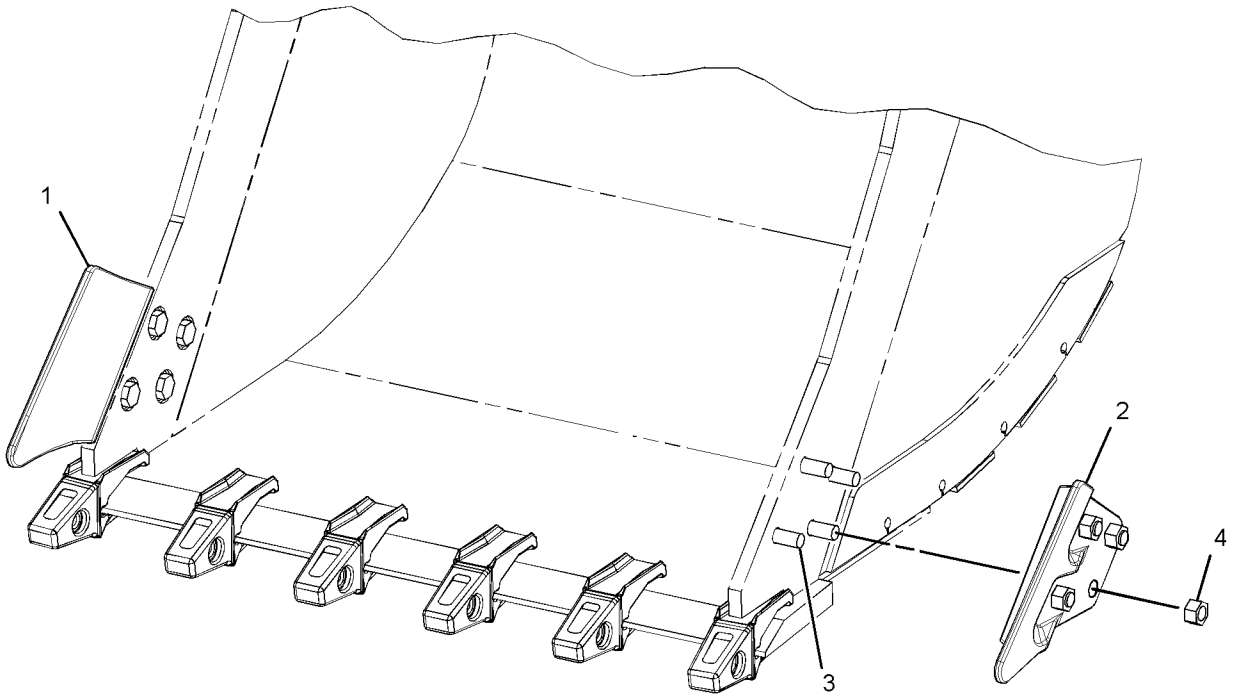

GRAPHIC #1 <END> g02724118

9J-3169 TIP GP-LONG–J-250

S/N: RDE1-UP

PART OF 473-4633 BUCKET AR-GENERAL PURPOSE

SMCS-6805 **i06731006**

NOTE	REF NO	GRAPHIC REF	PART NUMBER	QTY	PART NAME 1 2 3 4 5 6 (PRODUCT LEVEL)	SEE PAGE
	1	1	**132-4763**	1	PIN (G.E.T.)	
	2	1	**149-5733**	1	RETAINER AS (G.E.T.)	
	3	1	**1U-3252**	1	TIP-LONG	

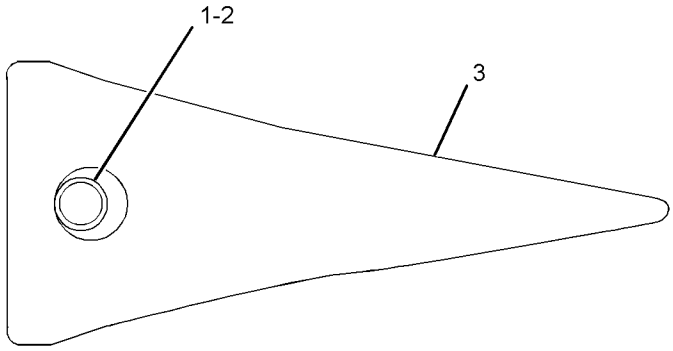

GRAPHIC #1 <END> g01946215

195-9180 TIP GP-PENETRATION PLUS–J-300

S/N: RDE1-UP

PART OF 385-6080 BUCKET AR-SEVERE SERVICE ROCK

SMCS-6805 **i06736237**

NOTE	REF NO	GRAPHIC REF	PART NUMBER	QTY	PART NAME 1 2 3 4 5 6 (PRODUCT LEVEL)	SEE PAGE
	1	1	**132-4766**	1	PIN	
	2	1	**183-5300**	1	TIP	
	3	1	**149-5733**	1	RETAINER AS (G.E.T.)	

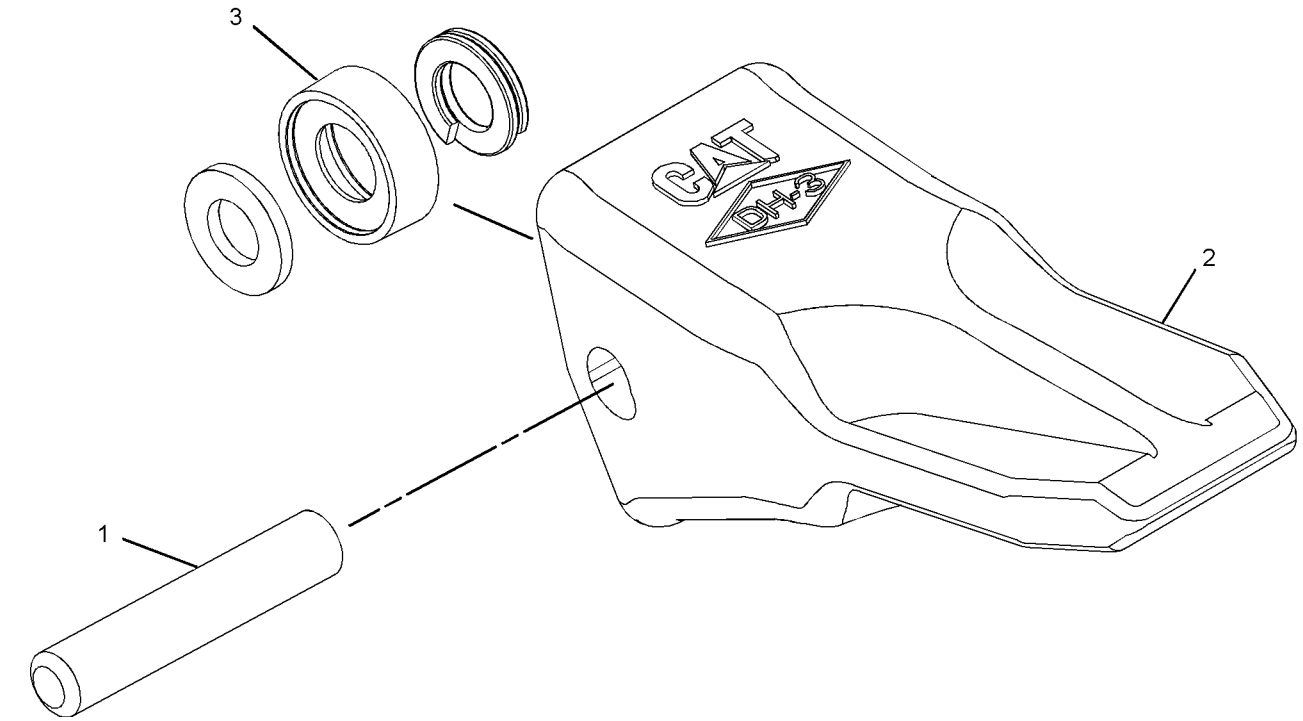

GRAPHIC #1 <END> g01069187

416-1798 AIR CONDITIONER & MOUNTING GP

S/N: RDE1-UP

PART OF 416-1794 AIR CONDITIONER AR, 506-8573 CAB AR

SMCS-7320 **i06175542**

NOTE	REF NO	GRAPHIC REF	PART NUMBER	QTY	PART NAME 1 2 3 4 5 6 (PRODUCT LEVEL)	SEE PAGE
	1	1	**111-4836**	3	CLIP	
	2	1	**235-8874**	1	SENSOR-TEMPERATURE (AMBIENT AIR)	
	3	1	**235-8875**	1	BRACKET	
	4	1	**235-9005**	1	HARNESS AS-HEATER & AIR COND (LOW SIDE)	
Y	5	1	**316-8916**	1	AIR CONDITIONER GP	397
	6	1	**396-6895**	1	PANEL AS-CONTROL	
	7	1	**416-1802**	1	HARNESS AS-HEATER & AIR COND (HIGH SIDE)	
	8	1	**119-5026**	4	SCREW-PAN HEAD (10-16X0.63-IN)	
	9	1	**3S-2093**	1	STRAP-CABLE	
	10	1	**4P-7581**	1	CLIP	
M	11	1	**5C-9553**	1	BOLT (M6X1X16-MM)	
	12	1	**7X-7729**	7	WASHER (11X25X3-MM THK)	
	13	1	**8T-4121**	3	WASHER-HARD (11X21X2.5-MM THK)	
M	14	1	**8T-4136**	7	BOLT (M10X1.5X25-MM)	
M	15	1	**8T-4137**	3	BOLT (M10X1.5X20-MM)	
	16	1	**9X-8256**	1	WASHER (6.6X12X2-MM THK)	
	17	1	**235-8950**	2	CLIP	

M - METRIC PART
Y - SEPARATE ILLUSTRATION

416-1798 **AIR CONDITIONER & MOUNTING GP (**contd.**)** **i06175542**

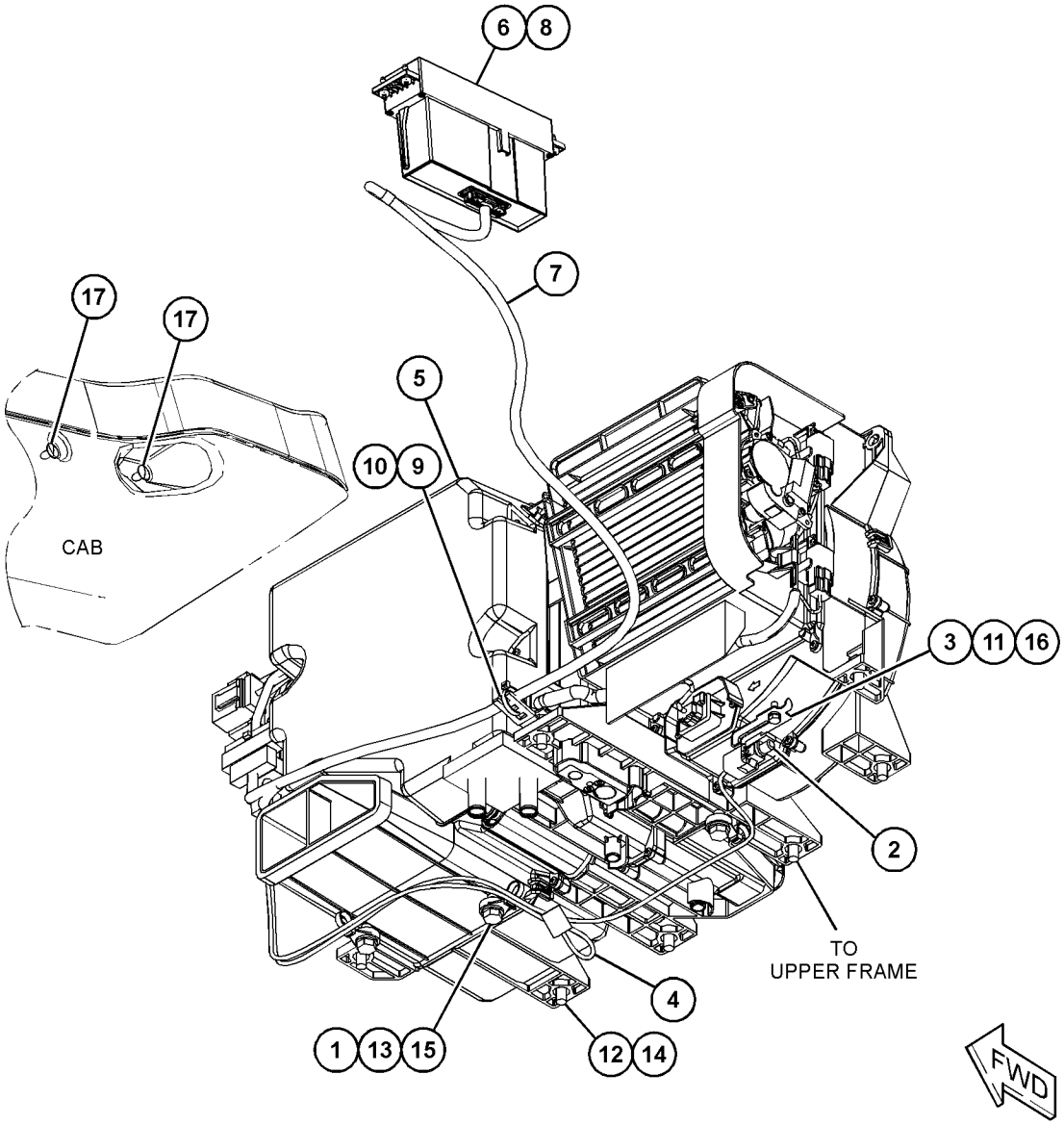

GRAPHIC #1 <END> g03785323

416-1794 AIR CONDITIONER AR

S/N: RDE1-UP

PART OF 506-8572 OPTION AR-CAB

SMCS-7320 **i06731755**

NOTE	PART NUMBER	QTY	PART NAME 1 2 3 4 5 6 (PRODUCT LEVEL)	SEE PAGE
Y	*416-1798*	1	AIR CONDITIONER & MOUNTING GP	394
Y	*229-9082*	1	DUCT GP-CAB AIR	442

Y - SEPARATE ILLUSTRATION

<END>

316-8916 AIR CONDITIONER GP

S/N: RDE1-UP

PART OF 416-1798 AIR CONDITIONER & MOUNTING GP

SMCS-7320 **i03423324**

NOTE	REF NO	GRAPHIC REF	PART NUMBER	QTY	PART NAME 1 2 3 4 5 6 (PRODUCT LEVEL)	SEE PAGE
	1	1	**185-8300**	35	SCREW-TAPPING	
	2	1	**185-8302**	3	SCREW-TAPPING	
	3	1	**245-7817**	2	MOTOR AS	
	4	1	**245-7818**	3	CLIP	
	5	1	**245-7819**	2	CLIP	
	6	1	**245-7820**	1	COVER-FRONT	
	7	1	**245-7825**	1	INSULATOR	
	8	1	**245-7826**	1	INSULATOR	
	9	1	**245-7827**	1	INSULATOR	
	10	1	**245-7828**	1	INSULATOR	
	11	1	**245-7829**	1	PACKING	
	12	1	**245-7830**	1	CLIP	
	13	1	**245-7831**	1	SENSOR AS-TEMPERATURE (COOLANT)	
	14	1	**245-7832**	1	CONTROL AS	
	15	1	**245-7833**	1	CORE AS-HEATER	
	16	1	**245-7834**	1	DAMPER AS	
	17	1	**245-7835**	1	SENSOR AS-TEMPERATURE (AMBIENT AIR TEMP)	
Y	18	1	**245-7836**	1	COIL GP-EVAPORATOR	412
	19	1	**245-7838**	1	PACKING	
	20	1	**245-7839**	1	MOTOR AS (WITH FAN)	
Y	21	1	**245-7846**	1	CONTROL GP-HEAT & AIR COND (AIR INLET)	431
	22	1	**245-7847**	1	HARNESS AS-HEATER & AIR COND	
	23	1	**245-7856**	3	SCREW-TAPPING	
	24	1	**293-1137**	1	FILTER AS-AIR (AIR CONDITIONER)	
		1	**245-7823**	1	FILTER ELEMENT-CAB AIR	
		1	**245-7824**	1	PACKING	
	25	1	**316-8846**	1	PLATE	
	26	1	**316-8847**	2	ROD	
	27	1	**316-8849**	1	ROD	
	28	1	**316-8918**	1	PLATE	
	29	1	**316-8920**	1	ROD	
	30	1	**316-8921**	1	ROD	

Y - SEPARATE ILLUSTRATION

316-8916 **AIR CONDITIONER GP** (contd.) **i03423324**

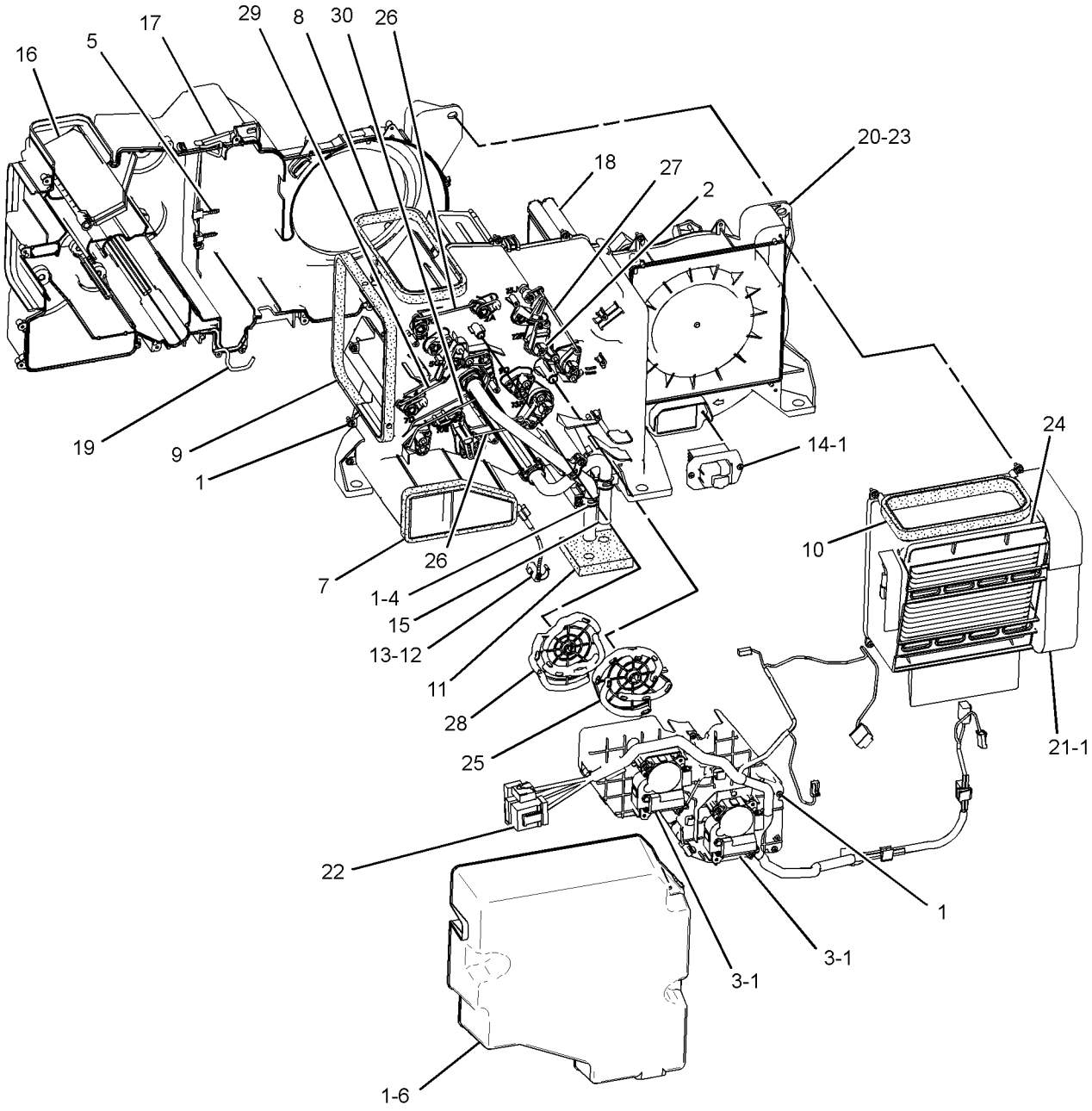

FRONT VIEW
(UPPER RIGHT)

GRAPHIC #1 <END> g01684274

259-7346 ARMREST GP–RH

S/N: RDE1-UP

PART OF 459-2731 CONSOLE GP-OPERATOR

SMCS-7307 **i05509636**

NOTE	REF NO	GRAPHIC REF	PART NUMBER	QTY	PART NAME 1 2 3 4 5 6 (PRODUCT LEVEL)	SEE PAGE
M	1	1	**171-7325**	3	SCREW-TAPPING (M5X0.8-THD)	
M	2	1	**185-8286**	2	SCREW-MACHINE (M4X0.7X8-MM)	
	3	1	**235-8951**	1	SUPPORT AS	
	4	1	**235-8996**	1	COVER	
	5	1	**235-8997**	1	KNOB	
	6	1	**259-7345**	1	CUSHION	

M - METRIC PART

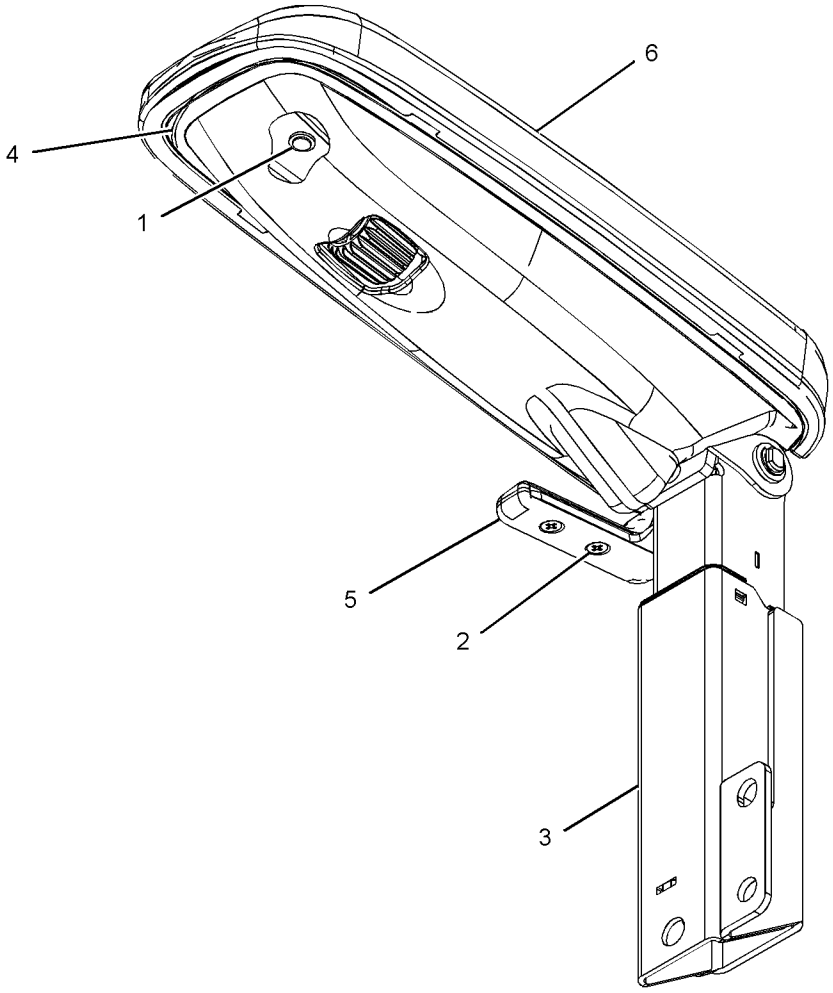

GRAPHIC #1 <END> g03482800

259-7347 ARMREST GP–LH

S/N: RDE1-UP

PART OF 421-1434 CONSOLE GP-OPERATOR

SMCS-7307 **i02604406**

NOTE	REF NO	GRAPHIC REF	PART NUMBER	QTY	PART NAME 1 2 3 4 5 6 (PRODUCT LEVEL)	SEE PAGE
M	1	1	**171-7325**	3	SCREW-TAPPING (M5XO.8-THD)	
M	2	1	**185-8286**	2	SCREW-MACHINE (M4XO.7X8-MM)	
	3	1	**235-8952**	1	SUPPORT AS	
	4	1	**235-8996**	1	COVER	
	5	1	**235-8998**	1	KNOB	
	6	1	**259-7345**	1	CUSHION	

M - METRIC PART

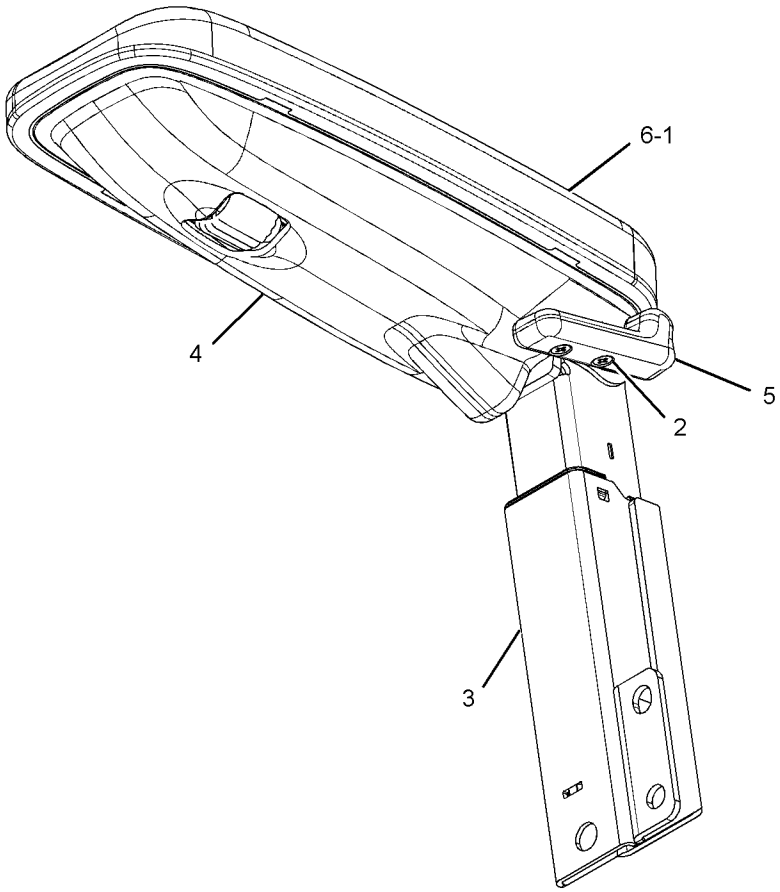

GRAPHIC #1 <END> g01210886

506-8573 CAB AR–COMFORT

S/N: RDE1-UP

PART OF 506-8572 OPTION AR-CAB

SMCS-7301, 7325 **i06828868**

NOTE	PART NUMBER	QTY	PART NAME 1 2 3 4 5 6 (PRODUCT LEVEL)	SEE PAGE
Y	*416-1798*	1	AIR CONDITIONER & MOUNTING GP	394
Y	**416-9607**	1	CAB GP (BASIC)	407
Y	*421-1431*	1	CONSOLE GP-OPERATOR	419
Y	*310-0078*	1	CONTROL & MTG GP-JOYSTICK	426
Y	*170-9497*	1	CONTROL GP-PILOT OPERATED HYD (TRAVEL)	437
Y	*441-6375*	1	LIGHTING GP-FLOOD (CAB)	103
Y	*278-6672*	1	LINES GP-PILOT (JOYSTICK, PEDALS)	272
Y	*399-2620*	1	MONITOR & MTG GP-OPERATOR	456
Y	*398-7007*	1	PANEL GP-SWITCH (CONSOLE)	110
Y	*327-6501*	1	SEAT & MOUNTING GP (HIGH BACK, TILT)	468
Y	*488-6541*	1	SEAT BELT GP (RETRACTABLE)	470
Y	*327-6523*	1	SUPPORT GP-SEAT	473
Y	*398-7003*	1	WIRING GP-CAB	124
Y	*398-7005*	1	WIRING GP-CONSOLE	137
Y	*468-7598*	1	WIRING GP-PLATFORM	141
M	**8T-4179**	5	BOLT (M12X1.75X20-MM)	
M	**8T-4190**	4	BOLT (M16X2X25-MM)	
M	**8T-4191**	4	BOLT (M10X1.5X16-MM)	
M	**8T-4910**	6	BOLT (M12X1.75X60-MM)	
M	**8T-6868**	2	BOLT (M12X1.75X80-MM)	
	122-9657	2	CLAMP	
	235-8879	1	DUCT AS (FLOOR)	
	245-7873	1	INSULATOR	
	293-1183	1	FILTER GP-CAB AIR	
	293-1184	1	FILTER ELEMENT-CAB AIR	
	135-8965	1	GROMMET	
	135-8966	1	GROMMET	
	293-1238	2	HOSE-DRAIN	
	167-7135	1	PLATE AS	
	454-6472	1	PLATFORM AS	
	324-5771	2	SOCKET-AUXILIARY POWER (12-VOLT)	
	161-3717	1	STRIP	
	4I-3266	1	STRIP	
	235-9001	1	SUPPORT	
	9X-8257	6	WASHER (17.5X30X3.5-MM THK)	
	8T-4121	4	WASHER-HARD (11X21X2.5-MM THK)	
	8T-4223	13	WASHER-HARD (13.5X25.5X3-MM THK)	

M - METRIC PART
Y - SEPARATE ILLUSTRATION

<END>

388-9102 CAB GP—EXTERIOR

S/N: RDE1-UP

PART OF 416-9607 CAB GP

SMCS-7301, 7325 **i05873383**

NOTE	REF NO	GRAPHIC REF	PART NUMBER	QTY	PART NAME 1 2 3 4 5 6 (PRODUCT LEVEL)	SEE PAGE
	1	1	**139-7126**	1	HOLDER	
	2	1	**139-7127**	1	HOLDER	
	3	1	**156-6599**	1	STRIKER	
	4	1	**161-3685**	1	ROD	
	5	1	**161-3697**	1	GUARD	
	6	1	**164-0523**	1	LEVER AS	
	7	1	**164-0527**	1	ROD	
Y	8	1	*164-0528*	1	LEVER GP-CAB DOOR	448
	9	1	**167-7018**	1	COVER AS	
	10	1	**167-7042**	2	SEAL	
	11	1	**171-7426**	1	CABLE AS	
	12	1	*176-1939*	1	LEVER AS	
M		1	**9X-2044**	1	SCREW-TRUSS HEAD (M6X1X16-MM)	
		1	**176-1937**	1	BRACKET AS	
		1	**176-1938**	1	LEVER	
	13	1	**178-5570**	2	GROMMET	
	14	1	**185-8196**	1	GROMMET	
	15	1	**189-2704**	1	SEAL	
M	16	1	**189-2864**	2	SCREW-FLAT HEAD (M8X1.25X30-MM)	
	17	1	**4B-4278**	3	WASHER (10.2X20.5X1.6-MM THK)	
	18	1	**201-4530**	1	BRACKET AS	
	19	1	**205-6295**	1	LATCH AS	
	20	1	**210-5808**	1	SEAL	
	21	1	**235-8912**	1	HANDLE AS	
	22	1	**235-8933**	1	HANDLE AS	
M	23	1	**284-4426**	1	BOLT-WING (M8X1.25X15-MM)	
	24	1	**315-5313**	1	COVER	
Y	25	1	**327-6550**	1	MIRROR GP-REAR VIEW	455
	26	1	**156-6618**	1	SUPPORT AS	
	27	1	**9X-8257**	1	WASHER (17.5X30X3.5-MM THK)	
M	28	1	**099-0823**	3	SCREW-MACHINE (M6X1X6-MM)	
	29	1	**3B-4510**	1	LOCKWASHER	
M	30	1	**105-2169**	2	BOLT AS (M8X1.25X16-MM)	
M	31	1	**127-0580**	2	SCREW-FLAT HEAD (M8X1.25X20-MM)	
	32	1	**133-8016**	1	PACKING	
	33	1	**176-1986**	1	LAMP AS-DOME	
		1	**201-4417**	1	LAMP (24-VOLT, 10-WATT)	
	34	1	**1R-5998**	4	LOCKWASHER	
M	35	1	**3E-8020**	6	SCREW-TRUSS HEAD (M6X1X25-MM)	
M	36	1	**095-0755**	2	SCREW-MACHINE (M4X0.7X12-MM)	
	37	1	**4I-1205**	2	BUMPER	
	38	1	**4I-1206**	2	GUIDE	
	39	1	**4I-3063**	1	SPRING	
	40	1	**4I-3090**	4	SEAL	
M	41	1	**6V-6317**	2	BOLT (M10X1.5X20-MM)	
	42	1	**5P-1075**	2	WASHER-HARD (10.2X22.5X3-MM THK)	
	43	1	**4I-4270**	1	HOLDER-GLASS	

388-9102 **CAB GP (**contd.**)** **i05873383**

NOTE	REF NO	GRAPHIC REF	PART NUMBER	QTY	PART NAME 1 2 3 4 5 6 (PRODUCT LEVEL)	SEE PAGE
	44	1	**4I-4392**	3	CLIP	
	45	1	**5C-7793**	1	HOOK-COAT	
	46	1	**6V-7636**	4	PIN AS-SPRING	
	47	1	**7X-0578**	2	WASHER-HARD (10.2X32X2.5-MM THK)	
M	48	1	**8T-4133**	5	NUT (M10X1.5-THD)	
M	49	1	**8T-4193**	1	BOLT (M16X2X50-MM)	
M	50	1	**9X-2041**	3	SCREW-TRUSS HEAD (M10X1.5X20-MM)	
M	51	1	**9X-2042**	5	SCREW-TRUSS HEAD (M6X1X12-MM)	
M	52	1	**9X-2044**	5	SCREW-TRUSS HEAD (M6X1X16-MM)	
M	53	1	**9X-2045**	2	SCREW-TRUSS HEAD (M6X1X20-MM)	
E	54	1	**6I-5470**		SEAL (150-CM)	

E - ORDER BY THE CENTIMETER
M - METRIC PART
Y - SEPARATE ILLUSTRATION

388-9102 **CAB GP** (contd.) **i05873383**

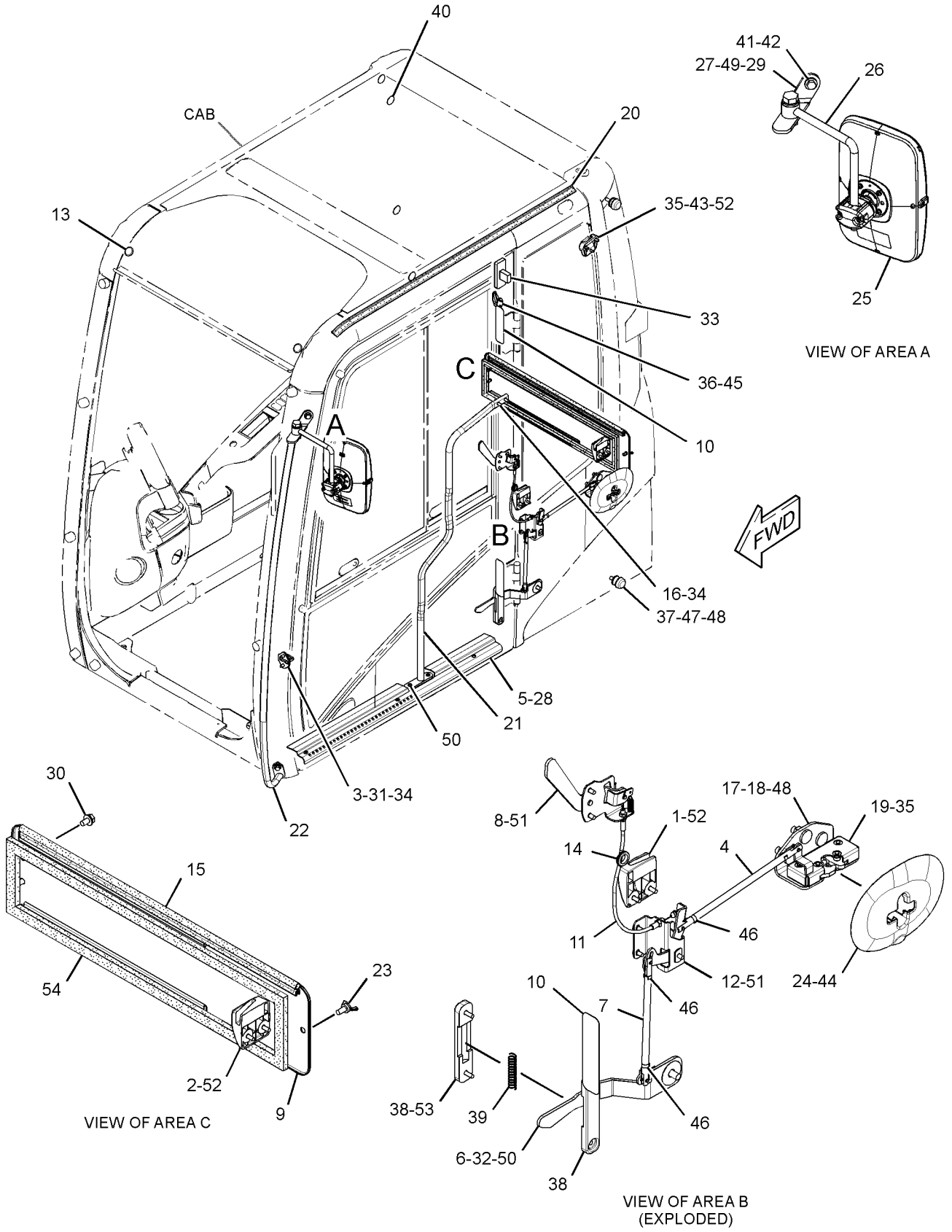

GRAPHIC #1 <END> g03179316

416-9606 CAB GP

S/N: RDE1-UP

PART OF 506-8572 OPTION AR-CAB

SMCS-7301, 7325 **i06822565**

NOTE	REF NO	GRAPHIC REF	PART NUMBER	QTY	PART NAME 1 2 3 4 5 6 (PRODUCT LEVEL)	SEE PAGE
M	1	1	**128-2135**	5	SCREW-TRUSS HEAD (M6X1X13-MM)	
	2	1	**164-8474**	2	LOUVER AS-VENT	
Y	3	1	*416-9607*	1	CAB GP (BASIC)	407
Y	4	1	**234-6501**	1	COVER GP-CAB (REAR)	439
	5	1	**235-9001**	1	SUPPORT	
M	6	1	**8T-4179**	5	BOLT (M12X1.75X20-MM)	
M	7	1	**8T-4190**	4	BOLT (M16X2X25-MM)	
	8	1	**8T-4223**	13	WASHER-HARD (13.5X25.5X3-MM THK)	
M	9	1	**8T-4910**	6	BOLT (M12X1.75X60-MM)	
M	10	1	**8T-6868**	2	BOLT (M12X1.75X80-MM)	
	11	1	**8Y-6967**	2	LOUVER AS-VENT	
	12	1	**9X-8257**	6	WASHER (17.5X30X3.5-MM THK)	

M - METRIC PART
Y - SEPARATE ILLUSTRATION

416-9606 **CAB GP** (contd.) **i06822565**

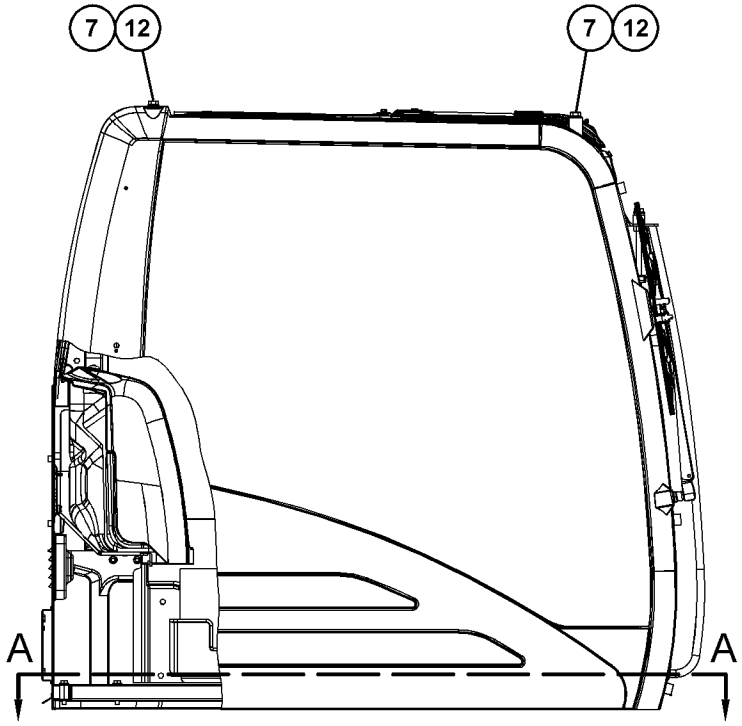

RIGHT SIDE VIEW

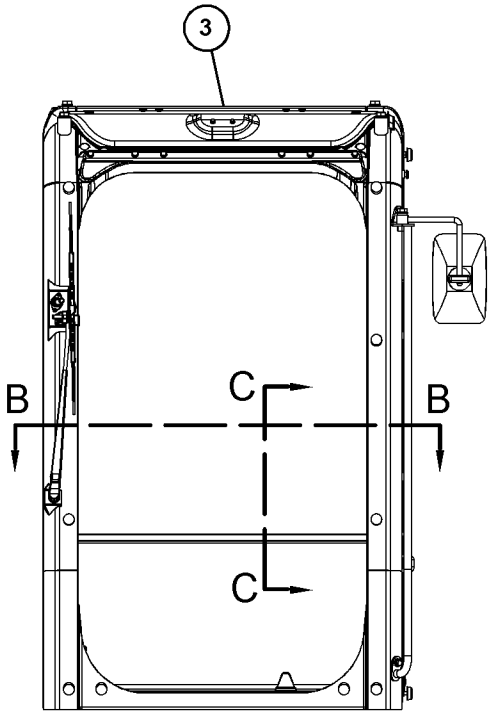

FRONT VIEW

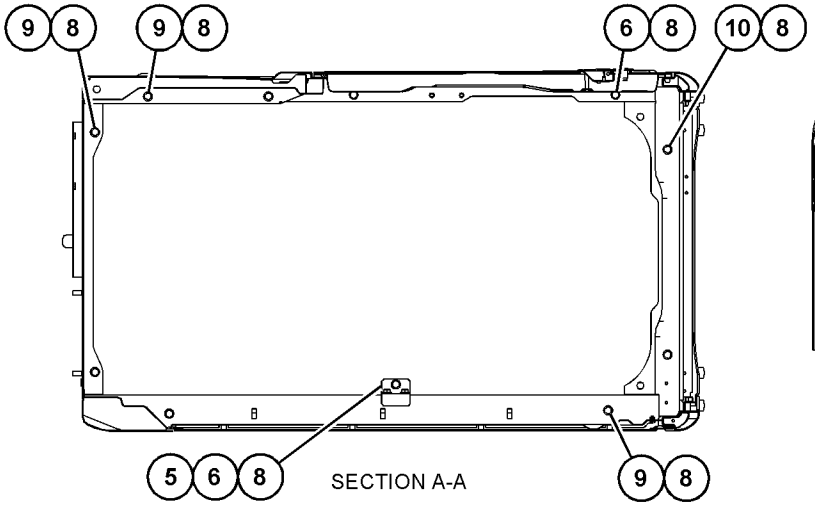

SECTION A-A

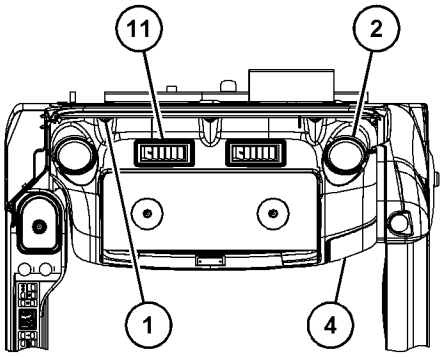

VIEW B-B

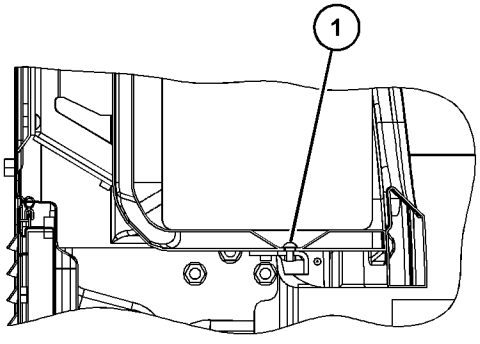

SECTION C-C

GRAPHIC #1 <END> g03431201

416-9607 CAB GP

S/N: RDE1-UP

PART OF 506-8573 CAB AR, 416-9606 CAB GP

SMCS-7301, 7325 **i06293015**

NOTE	REF NO	GRAPHIC REF	PART NUMBER	QTY	PART NAME 1 2 3 4 5 6 (PRODUCT LEVEL)	SEE PAGE
CY	1	1	*439-2522*	1	CAB GP	411
Y	2	1	*388-9102*	1	CAB GP (EXTERIOR)	402
Y	3	1	*416-9608*	1	CAB GP (INTERIOR)	409
Y	4	1	*388-9107*	1	WINDOW GP-CAB (SIDE, REAR)	476
CY	5	1	*436-1116*	1	WIPER GP-WINDOW (FRONT, UPPER)	489
HY	6	1	*388-9105*	1	PARTS GP-DOOR (CAB)	464
JY	7	1	*388-9109*	1	WINDOW GP-CAB (FRONT, UPPER)	479
Y	8	1	*388-9108*	1	WINDOW GP-CAB (FRONT, LOWER)	477
CY	9	1	*431-8611*	1	HATCH GP-ROOF	445
FHY			**388-9115**	1	DOOR GP-CAB	441
FJY			**388-9116**	1	WINDOW GP-CAB (FRONT, UPPER)	482
FJY			**388-9117**	1	WINDOW GP-CAB (FRONT, UPPER)	484

C - CHANGE FROM PREVIOUS TYPE
F - NOT SHOWN
H - DOOR GP MARKED H AVAILABLE FOR FIELD REPLACEMENT OF PART MARKED H
J - ITEMS MARKED J AVAILABLE FOR SERVICE REPAIR OF WINDOW GP MARKED J
Y - SEPARATE ILLUSTRATION

416-9607 **CAB GP** (contd.) **i06293015**

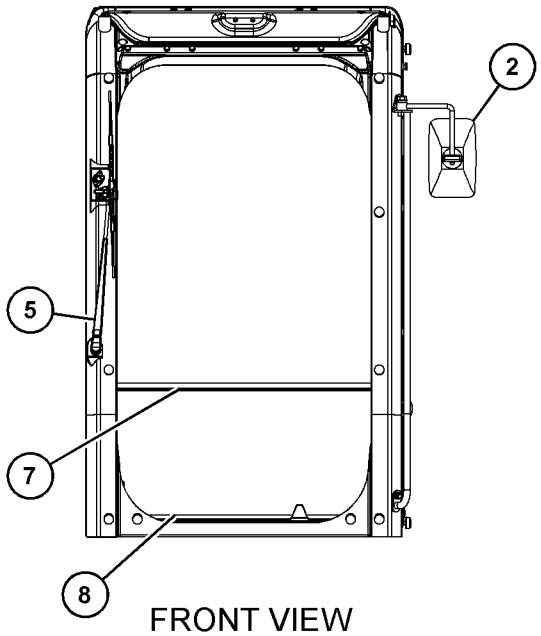

FRONT VIEW

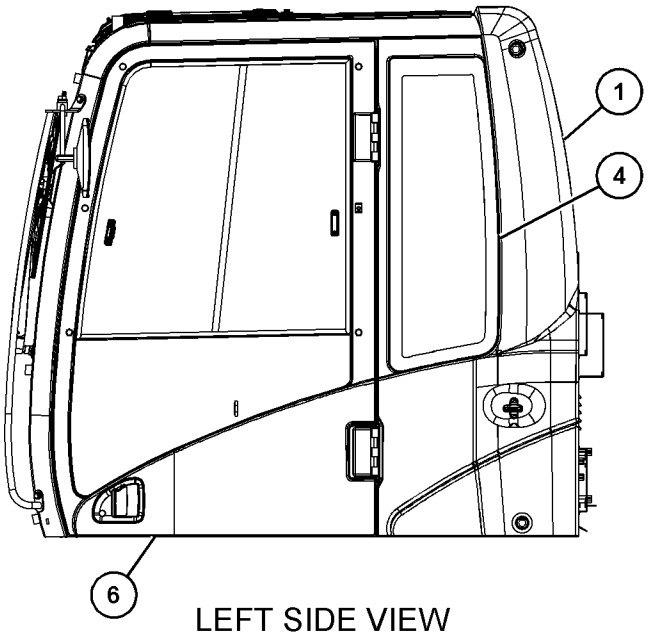

LEFT SIDE VIEW

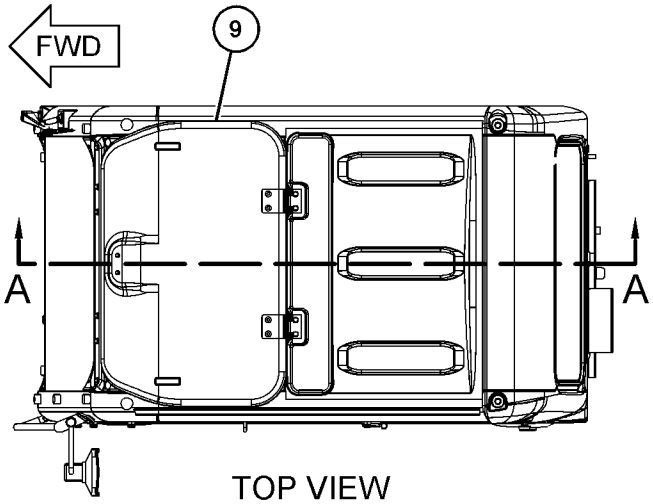

TOP VIEW

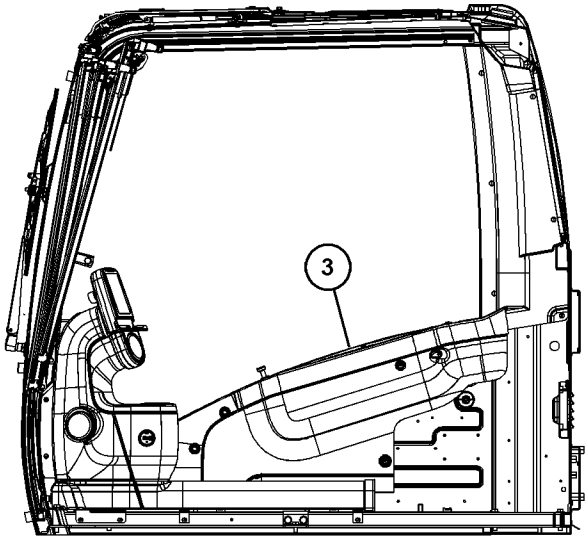

SECTION A-A

GRAPHIC #1 <END> g03722802

416-9608 CAB GP—INTERIOR

S/N: RDE1-UP

PART OF 416-9607 CAB GP

SMCS-7301, 7325 **i05432483**

NOTE	REF NO	GRAPHIC REF	PART NUMBER	QTY	PART NAME 1 2 3 4 5 6 (PRODUCT LEVEL)	SEE PAGE
	1	1	**164-0646**	1	CUP	
	2	1	**164-0655**	1	PANEL-SWITCH	
	3	1	**170-9724**	5	CLIP	
	4	1	**171-7420**	6	CLIP	
	5	1	**176-1972**	1	COVER	
	6	1	**185-8205**	7	CLIP	
	7	1	**189-2678**	3	SPACER	
	8	1	**189-2853**	1	COVER	
	9	1	**189-2854**	1	COVER	
	10	1	**234-6468**	1	COVER AS	
		1	**259-7353**	4	CLIP	
	11	1	**234-6470**	1	COVER-MONITOR	
	12	1	**234-6471**	1	COVER-DUCT	
	13	1	**234-6472**	1	COVER	
	14	1	**234-6473**	1	COVER-FRONT (UPPER, RH)	
	15	1	**234-6476**	1	DUCT	
	16	1	**234-6477**	1	BRACKET AS	
	17	1	**234-6483**	1	BRACKET AS	
	18	1	**234-6485**	1	BRACKET AS	
	19	1	**234-6490**	1	CUP	
	20	1	**234-6491**	1	COVER	
	21	1	**234-6497**	1	COVER	
	22	1	**234-6498**	3	RIVET	
	23	1	**234-6579**	2	NUT-SPEED	
	24	1	**235-8923**	2	CAP	
	25	1	**235-8930**	1	LINER	
	26	1	**235-8950**	12	CLIP	
	27	1	**245-7790**	2	SCREW-TAPPING	
	28	1	**305-0330**	1	COVER (LOWER, RH)	
	29	1	**383-5767**	1	COVER	
	30	1	**388-9091**	1	COVER	
	31	1	**388-9094**	1	COVER	
	32	1	**388-9095**	1	COVER	
	33	1	**396-2351**	1	LOUVER AS	
	34	1	**396-2352**	2	LOUVER AS	
	35	1	**399-0061**	1	BRACKET AS	
	36	1	**399-0062**	1	COVER	
	37	1	**399-0065**	1	BRACKET	
M	38	1	**128-2135**	10	SCREW-TRUSS HEAD (M6X1X13-MM)	
M	39	1	**128-2136**	1	SCREW-TRUSS HEAD (M6X1X16-MM)	
	40	1	**234-6469**	1	COVER	
M	41	1	**9X-2042**	11	SCREW-TRUSS HEAD (M6X1X12-MM)	

M - METRIC PART

416-9608 **CAB GP** (contd.) **i05432483**

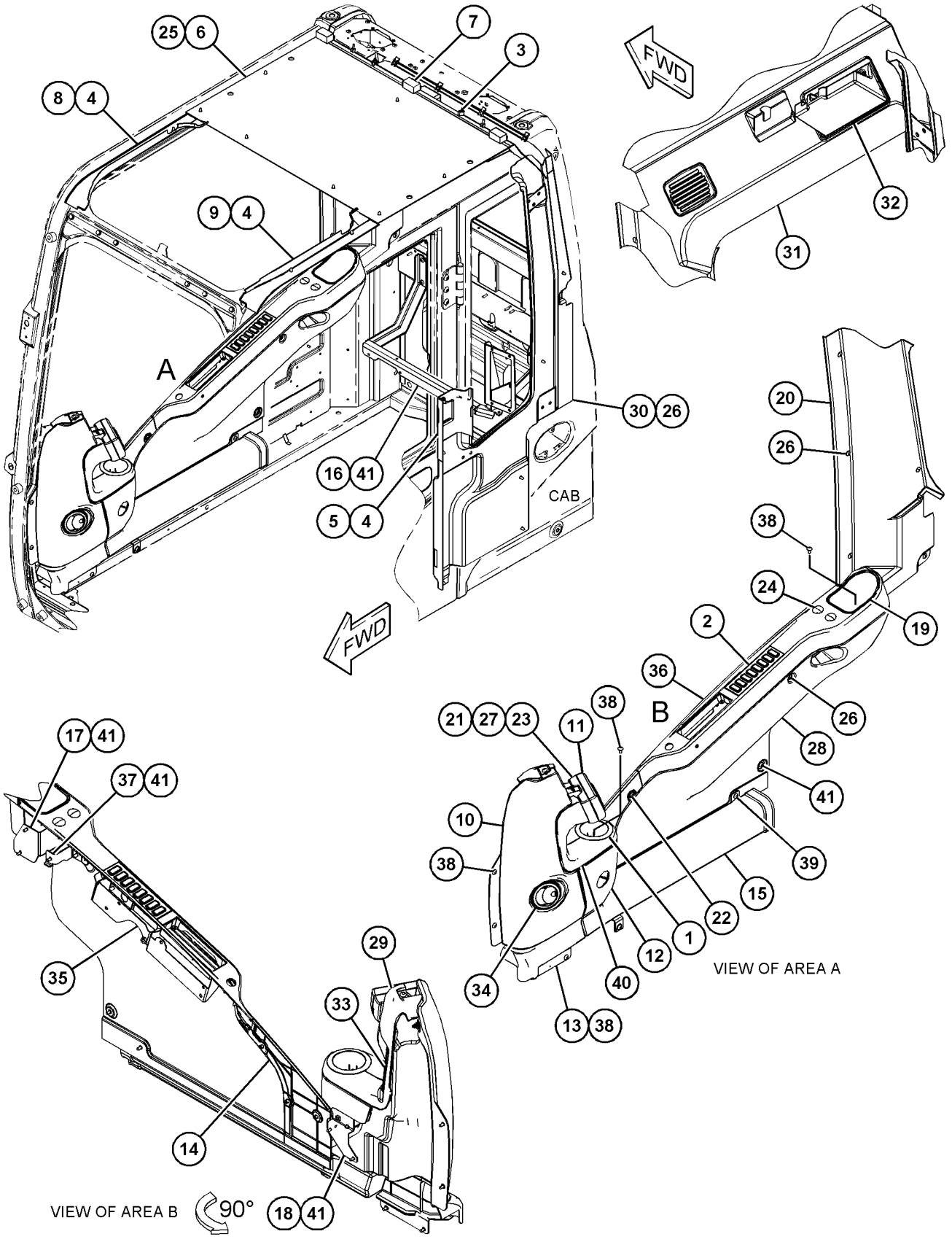

GRAPHIC #1 <END> g03431204

439-2522 CAB GP

S/N: RDE1-UP

PART OF 416-9607 CAB GP

SMCS-7301, 7325

i06293715

NOTE	REF NO	GRAPHIC REF	PART NUMBER	QTY	PART NAME 1 2 3 4 5 6 (PRODUCT LEVEL)	SEE PAGE
Y	1	1	*420-3151*	1	DOOR & MTG GP-CAB	440
	2	1	**5P-1075**	6	WASHER-HARD (10.2X22.5X3-MM THK)	
M	3	1	**185-8182**	6	BOLT (M10X1.5X20-MM)	

M - METRIC PART
Y - SEPARATE ILLUSTRATION

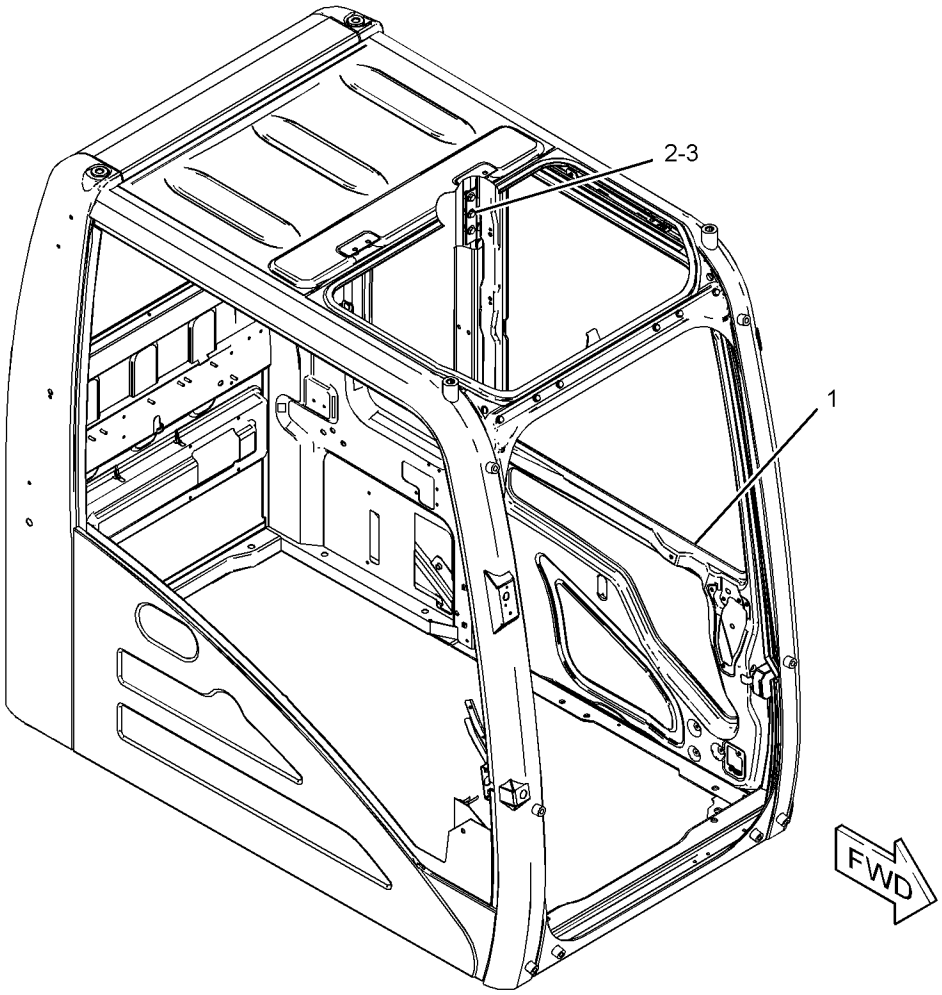

GRAPHIC #1 <END> g03861068

245-7836 COIL GP-EVAPORATOR

S/N: RDE1-UP

PART OF 316-8916 AIR CONDITIONER GP

SMCS-7343 **i05412515**

NOTE	REF NO	GRAPHIC REF	PART NUMBER	QTY	PART NAME 1 2 3 4 5 6 (PRODUCT LEVEL)	SEE PAGE
	1	1	**245-7837**	1	VALVE AS-EXPANSION	
	2	1	**245-7905**	1	INSULATOR	
M	3	1	**281-0791**	2	BOLT-SOCKET HEAD (M5X0.8X40-MM)	
	4	1	**121-7136**	1	SEAL-O-RING	
	5	1	**121-7137**	1	SEAL-O-RING	

M - METRIC PART

245-7836 **COIL GP-EVAPORATOR (**contd.**)** **i05412515**

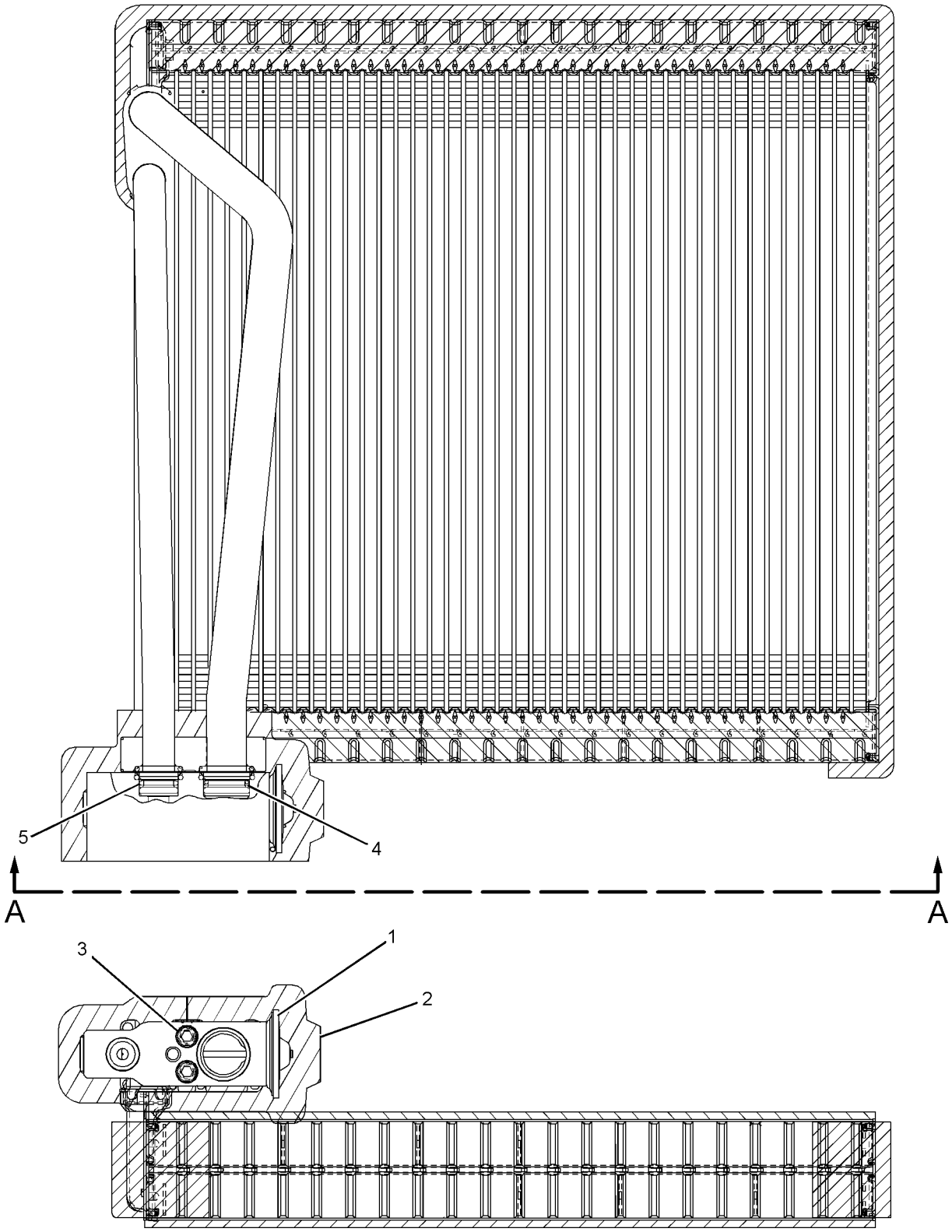

VIEW A-A

GRAPHIC #1 <END> g01134658

387-2610 COMPRESSOR & MTG GP-REFRIG

S/N: RDE1-UP

PART OF 460-3429 INSTALLATION AR-ENGINE

SMCS-1802 **i05871786**

NOTE	REF NO	GRAPHIC REF	PART NUMBER	QTY	PART NAME 1 2 3 4 5 6 (PRODUCT LEVEL)	SEE PAGE
Y	1	1	**372-9493**	1	COMPRESSOR GP-REFRIGERANT (24-VOLT)	415
	2	1	**392-1165**	1	BRACKET AS	
M		1	**8T-3490**	2	NUT-WELD (M10X1.5-THD)	
	3	1	**393-8618**	1	BRACKET	
M	4	1	**364-1614**	4	BOLT-FLANGE HEAD (M8X1.25X95-MM)	
M	5	1	**453-1259**	2	BOLT (M16X2X40-MM)	
	6	1	**8T-4121**	2	WASHER-HARD (11X21X2.5-MM THK)	
M	7	1	**8T-4136**	1	BOLT (M10X1.5X25-MM)	
M	8	1	**8T-4137**	1	BOLT (M10X1.5X20-MM)	
	9	1	**451-2175**	2	WASHER-HARD (17.5X30X3.5-MM THK)	

M - METRIC PART
Y - SEPARATE ILLUSTRATION

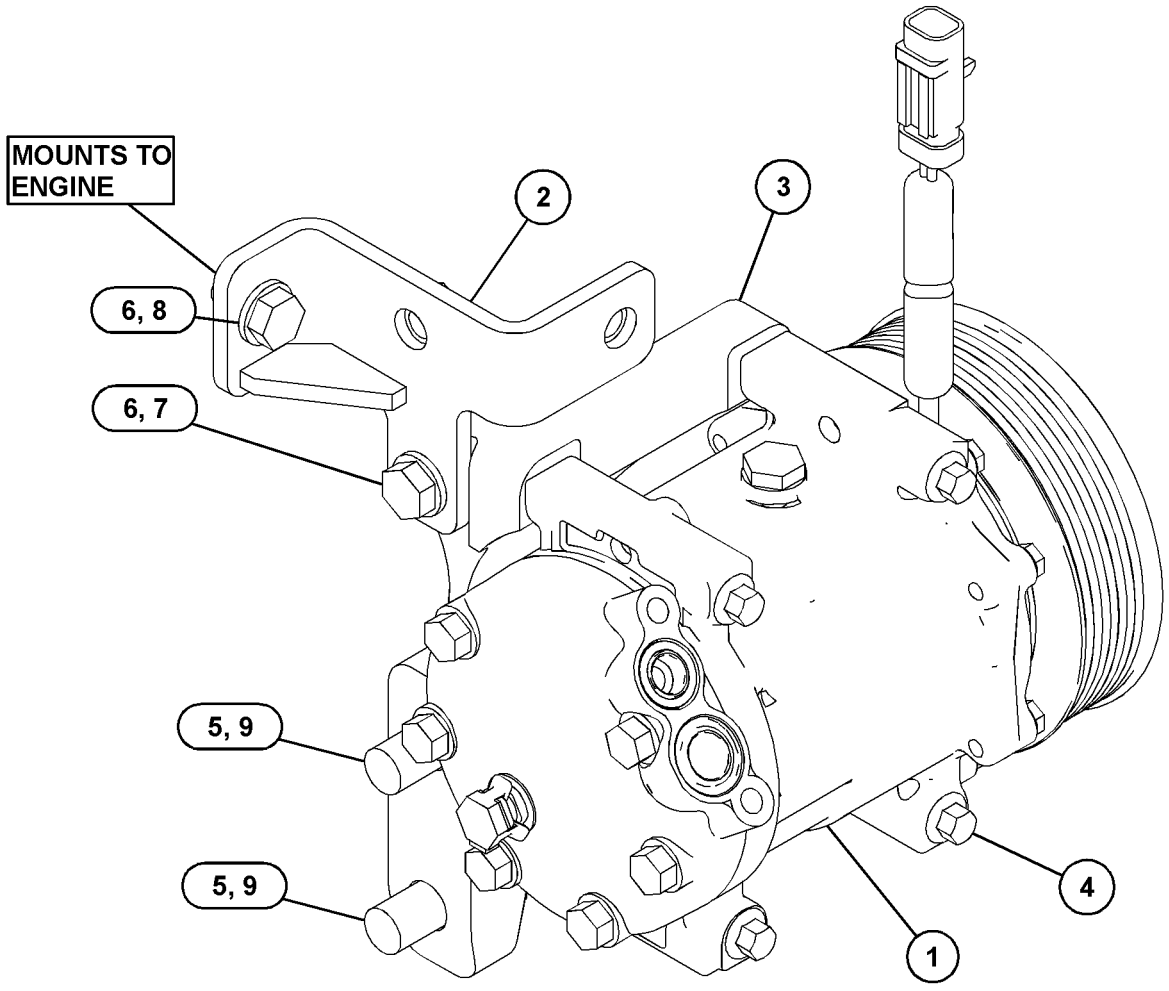

GRAPHIC #1 <END> g03122396

372-9493 COMPRESSOR GP-REFRIGERANT

S/N: RDE1-UP
24-VOLT
PART OF 387-2610 COMPRESSOR & MTG GP-REFRIG

SMCS-1802 **i05440258**

NOTE	REF NO	GRAPHIC REF	PART NUMBER	QTY	PART NAME 1 2 3 4 5 6 (PRODUCT LEVEL)	SEE PAGE
	1	1	**9W-0852**	2	PIN-CONNECTOR (14-GA TO 16-GA)	
	2	1	**327-6593**	1	SEAL-O-RING	
	3	1	**327-6594**	1	SEAL-O-RING	
	4	1	**243-4505**	1	RECEPTACLE AS-CONNECTOR (2-PIN)	

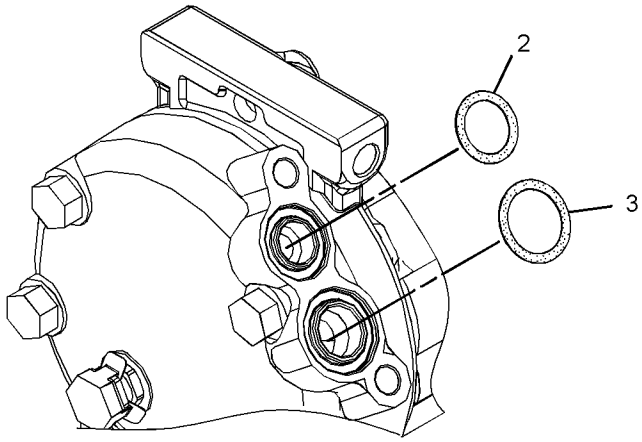

VIEW OF AREA A

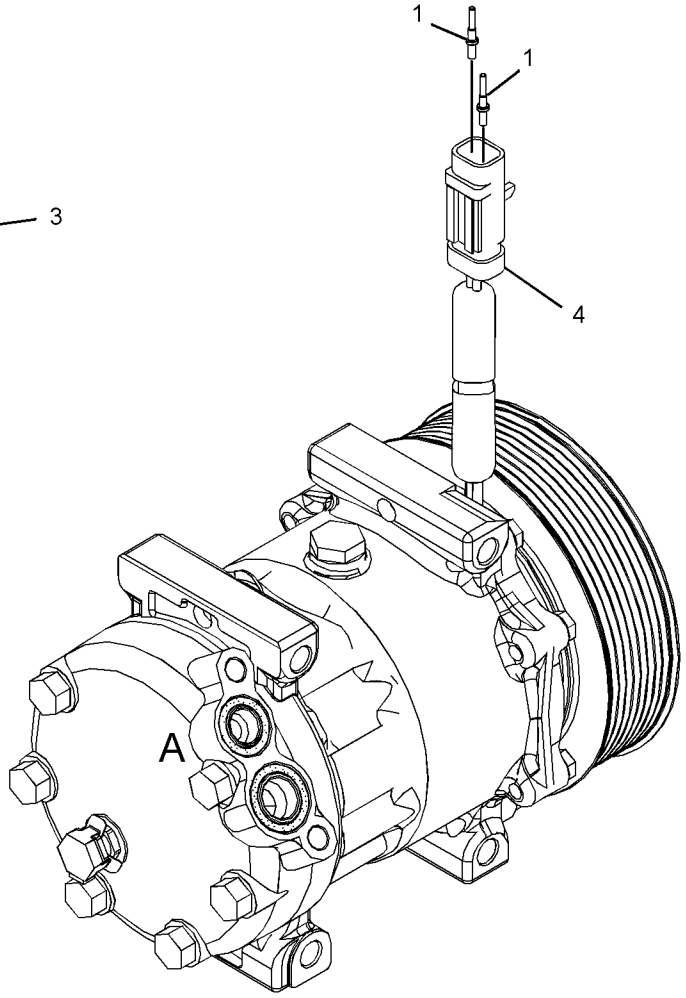

GRAPHIC #1 <END> g03433060

462-4693 CONDENSER & MTG GP-REFRIGERANT

S/N: RDE1-UP

PART OF 460-3429 INSTALLATION AR-ENGINE

SMCS-1805 **i06781395**

NOTE	REF NO	GRAPHIC REF	PART NUMBER	QTY	PART NAME 1 2 3 4 5 6 (PRODUCT LEVEL)	SEE PAGE
Y	1	1	**245-7749**	1	CONDENSER GP-REFRIGERANT	417
	2	1	**461-2803**	1	SUPPORT AS-CONDENSER	
	3	1	**461-2804**	1	SUPPORT AS-CONDENSER	
	4	1	**8T-4121**	4	WASHER-HARD (11X21X2.5-MM THK)	
M	5	1	**8T-4137**	4	BOLT (M10X1.5X20-MM)	
M	6	1	**8T-4971**	4	BOLT (M6X1X30-MM)	
	7	1	**9X-2038**	4	WASHER (7X19X2-MM THK)	

M - METRIC PART
Y - SEPARATE ILLUSTRATION

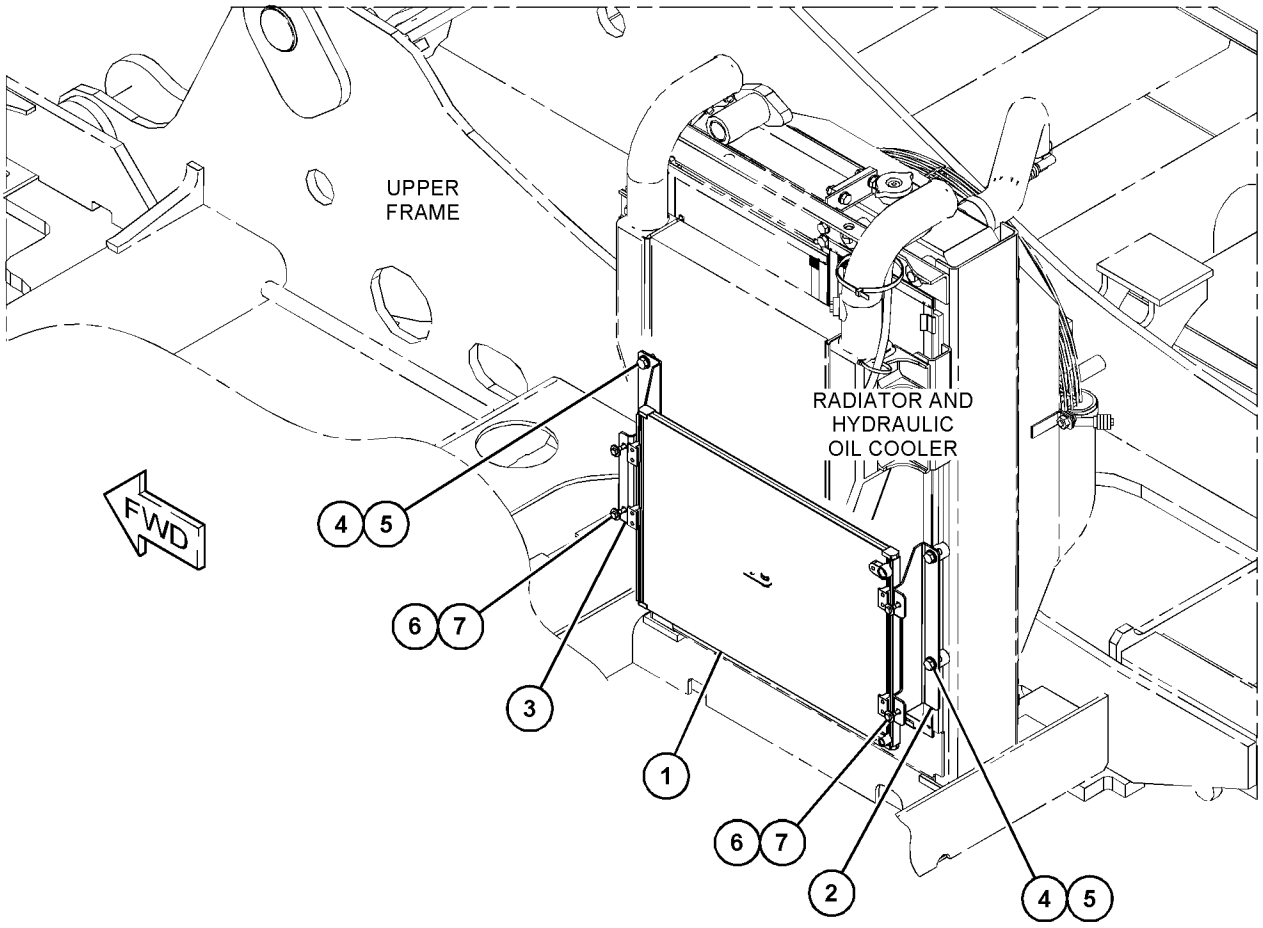

GRAPHIC #1 <END> g03884540

245-7749 CONDENSER GP-REFRIGERANT

S/N: RDE1-UP

PART OF 462-4693 CONDENSER & MTG GP-REFRIGERANT

SMCS-1805 **i02778309**

NOTE	REF NO	GRAPHIC REF	PART NUMBER	QTY	PART NAME 1 2 3 4 5 6 (PRODUCT LEVEL)	SEE PAGE
	1	1	**235-8880**	1	CONDENSER AS	
	2	1	**245-7750**	4	BUSHING-RUBBER	
	3	1	**245-7751**	4	BRACKET	
	4	1	**095-0827**	8	LOCKWASHER	
M	5	1	**8T-4171**	8	BOLT (M6X1X12-MM)	
	6	1	**9X-8256**	8	WASHER (6.6X12X2-MM THK)	

M - METRIC PART

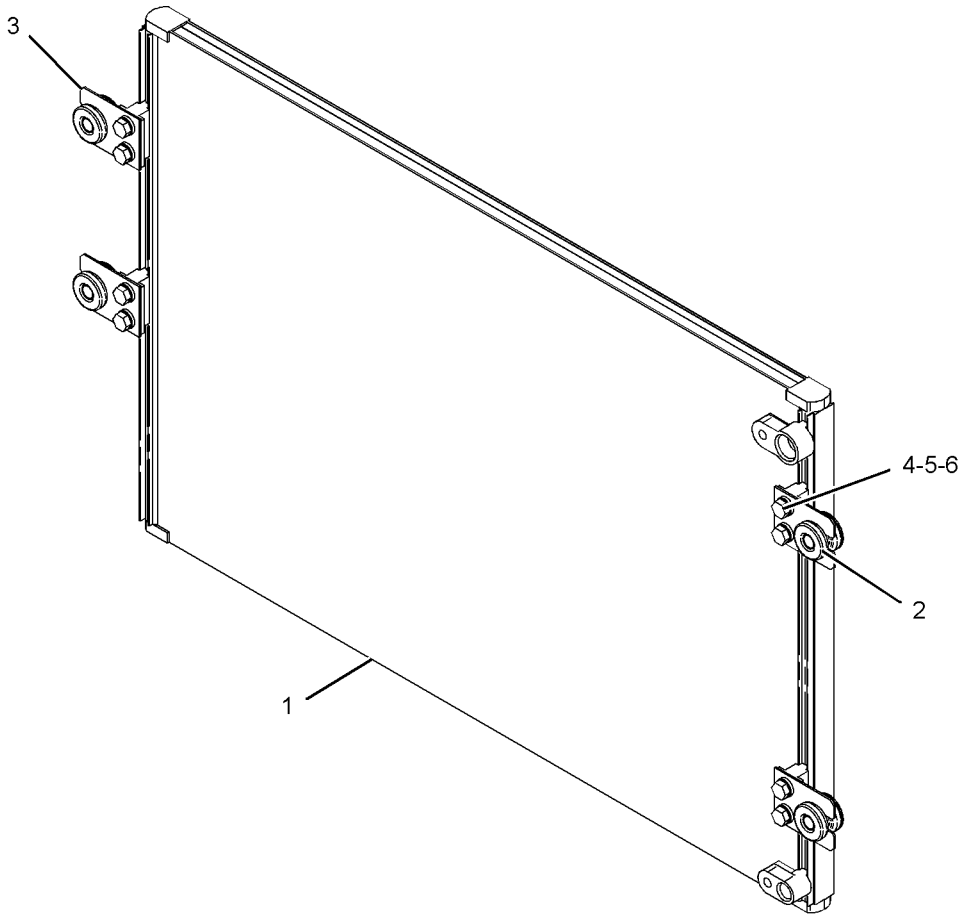

GRAPHIC #1 <END> g01086695

259-7348 CONSOLE GP-OPERATOR–RH

S/N: RDE1-UP

PART OF 421-1431 CONSOLE GP-OPERATOR

SMCS-5258 **i06757980**

NOTE	REF NO	GRAPHIC REF	PART NUMBER	QTY	PART NAME 1 2 3 4 5 6 (PRODUCT LEVEL)	SEE PAGE
Y	1	1	*459-2731*	1	CONSOLE GP-OPERATOR	423
	2	1	**185-8284**	1	COVER	

Y - SEPARATE ILLUSTRATION

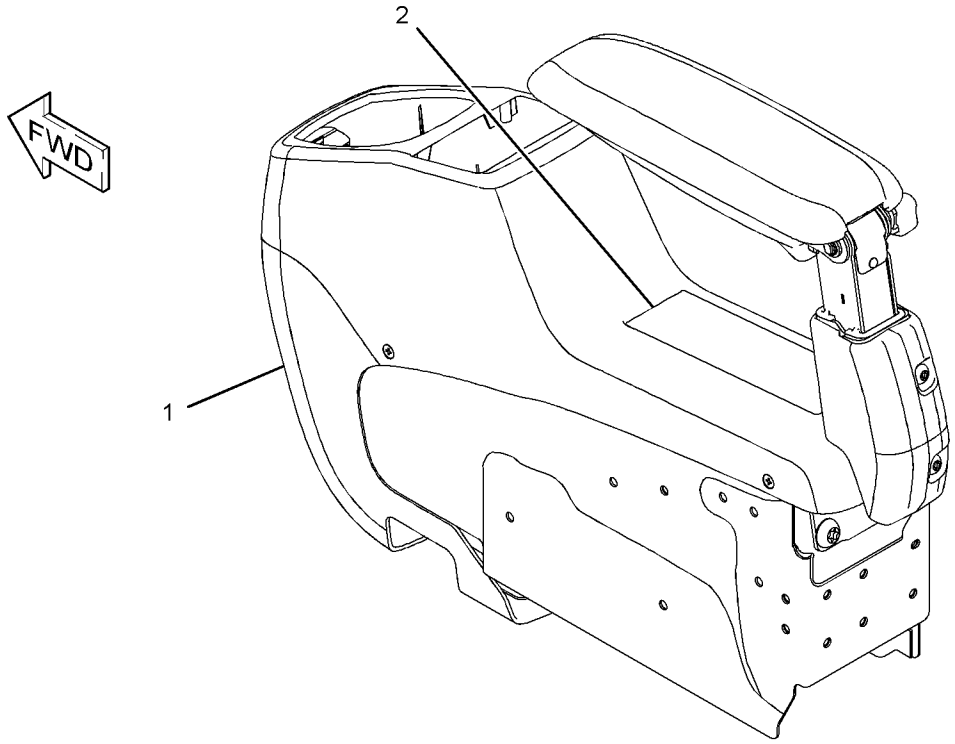

GRAPHIC #1 <END> g03837421

421-1431 CONSOLE GP-OPERATOR

S/N: RDE1-UP

PART OF 506-8573 CAB AR, 476-3010 OPERATOR AR

SMCS-5258 **i06676914**

NOTE	REF NO	GRAPHIC REF	PART NUMBER	QTY	PART NAME 1 2 3 4 5 6 (PRODUCT LEVEL)	SEE PAGE
	1	1	**176-1916**	2	GROMMET	
	2	1	**178-5422**	2	GROMMET	
	3	1	**178-5423**	2	GROMMET	
	4	1	**185-8161**	2	INSULATOR	
	5	1	**235-8893**	2	SUPPORT	
	6	1	**235-8894**	2	SUPPORT	
Y	7	1	*421-1434*	1	CONSOLE GP-OPERATOR (LH)	421
Y	8	1	*259-7348*	1	CONSOLE GP-OPERATOR (RH)	418
	9	1	**8T-4121**	4	WASHER-HARD (11X21X2.5-MM THK)	
M	10	1	**8T-4195**	4	BOLT (M10X1.5X30-MM)	
M	11	1	**9X-2046**	8	SCREW-TRUSS HEAD (M6X1X35-MM)	
M	12	1	**9X-2045**	12	SCREW-TRUSS HEAD (M6X1X20-MM)	
	13	1	**7K-1181**	4	STRAP-CABLE	
	14	1	**122-9617**	2	GUARD	
	15	1	**475-4173**	2	INSULATOR	
D	16	1	**5P-5927**		SEAL (0.12-M EACH)	

D - ORDER BY THE METER
M - METRIC PART
Y - SEPARATE ILLUSTRATION

421-1431 **CONSOLE GP-OPERATOR (**contd.**)** **i06676914**

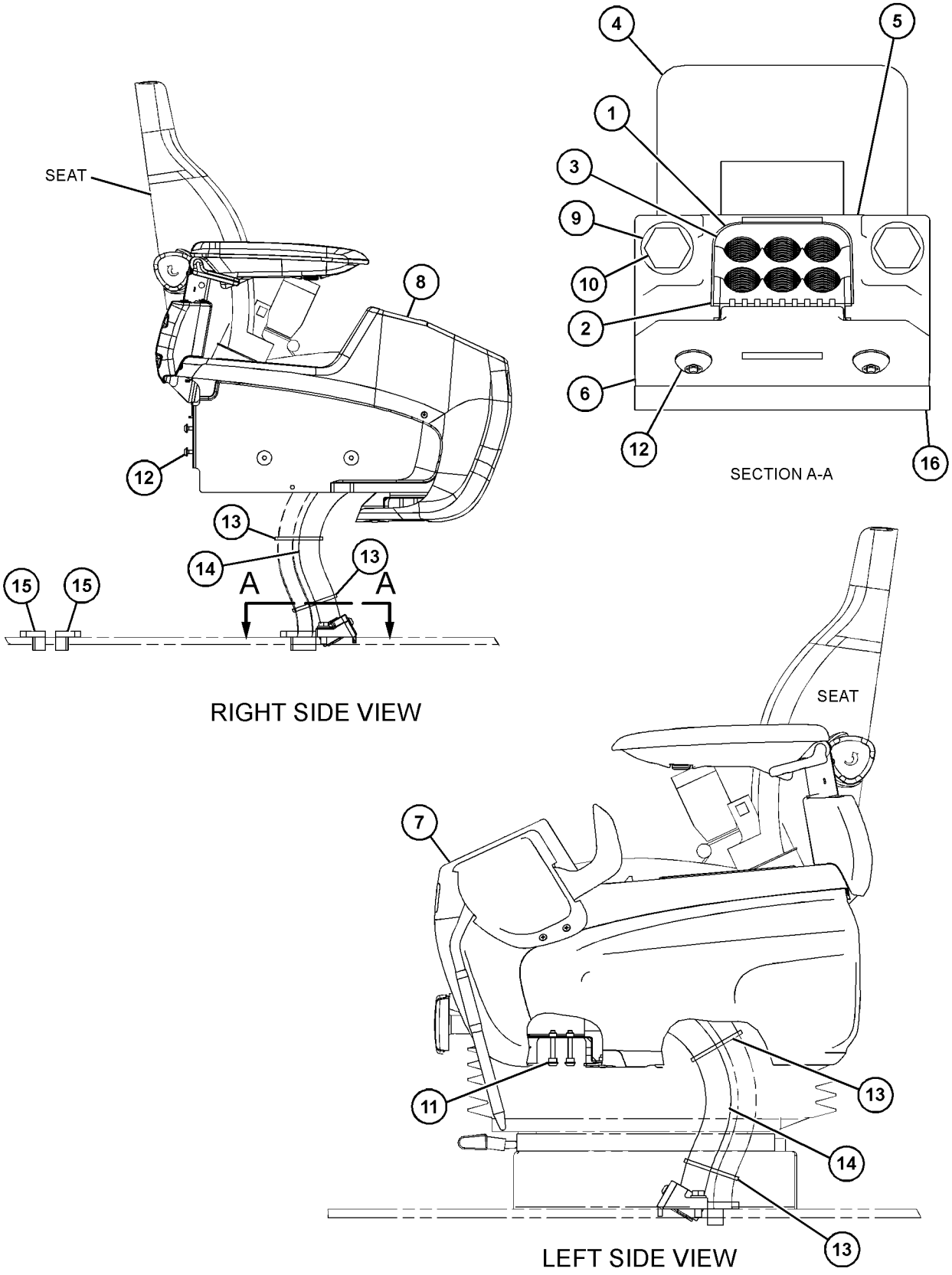

GRAPHIC #1 <END> g06110374

421-1434 CONSOLE GP-OPERATOR–LH

S/N: RDE1-UP

PART OF 421-1431 CONSOLE GP-OPERATOR

SMCS-5258 **i06703286**

NOTE	REF NO	GRAPHIC REF	PART NUMBER	QTY	PART NAME 1 2 3 4 5 6 (PRODUCT LEVEL)	SEE PAGE
M	1	1	**128-2135**	5	SCREW-TRUSS HEAD (M6X1X13-MM)	
M	2	1	**171-7325**	3	SCREW-TAPPING (M5X0.8-THD)	
	3	1	**234-6579**	6	NUT-SPEED	
	4	1	**234-6580**	4	CAP	
	5	1	**234-6603**	1	COVER	
	6	1	**234-6605**	1	COVER	
	7	1	**234-6608**	1	COVER	
	8	1	**234-6609**	1	COVER	
	9	1	**234-6610**	1	COVER	
	11	1	**234-6612**	1	COVER	
Y	12	1	**234-6613**	1	LEVER GP-CONTROL (HYDRAULIC LOCKOUT)	236
	13	1	**234-6614**	1	COVER	
	14	1	**235-8914**	4	NUT-SPEED	
	15	1	**235-8965**	1	GUARD	
	16	1	**245-7790**	3	SCREW-TAPPING	
	17	1	**245-7925**	1	SUPPORT AS	
	18	1	**245-7948**	7	SCREW-TAPPING	
	19	1	**259-7202**	1	ASHTRAY	
Y	20	1	**259-7347**	1	ARMREST GP (LH)	400
M	21	1	**9X-2041**	3	SCREW-TRUSS HEAD (M10X1.5X20-MM)	
M	22	1	**9X-2042**	2	SCREW-TRUSS HEAD (M6X1X12-MM)	

M - METRIC PART
Y - SEPARATE ILLUSTRATION

421-1434 **CONSOLE GP-OPERATOR (**contd.**)** **i06703286**

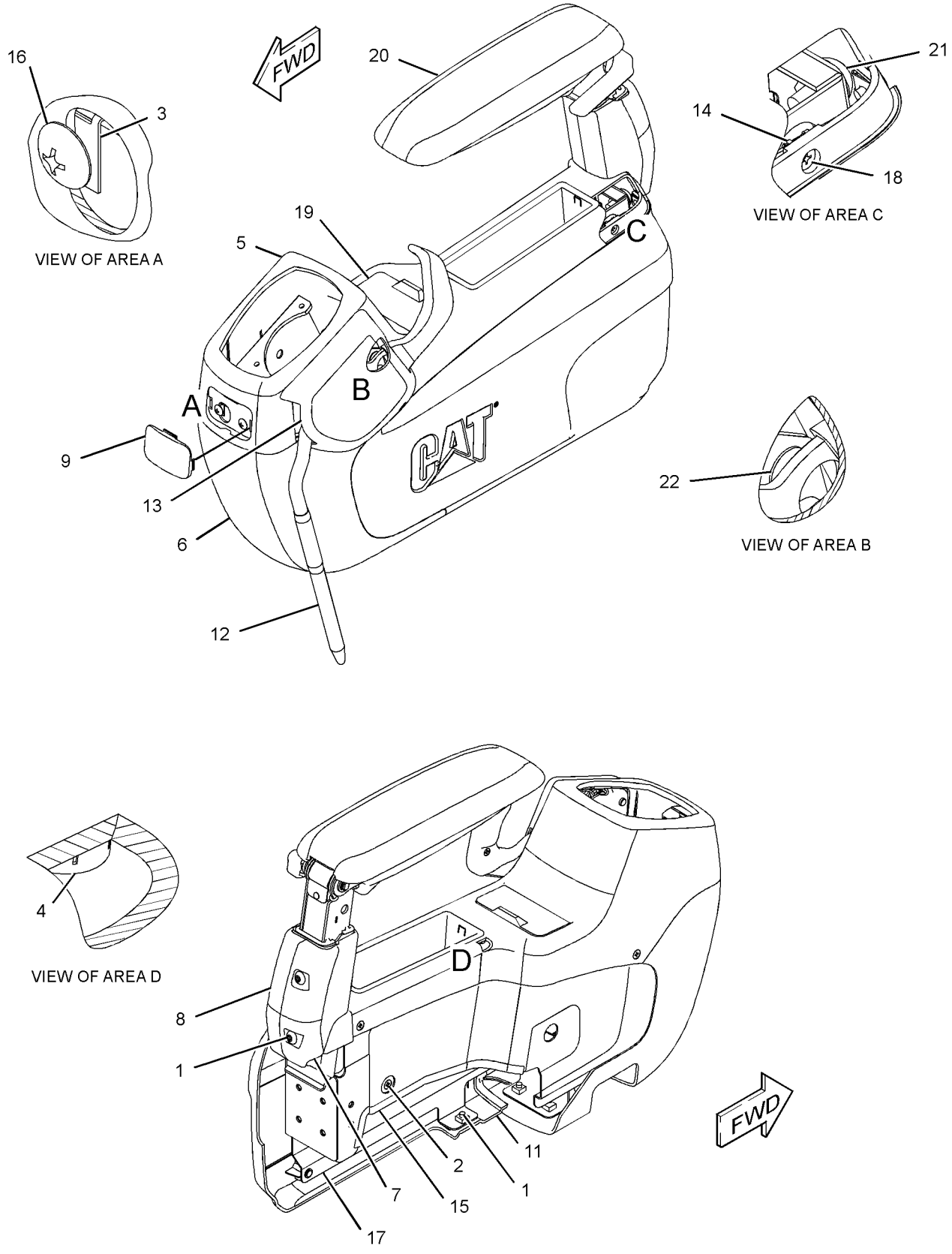

GRAPHIC #1 <END> g03401396

459-2731 CONSOLE GP-OPERATOR–RH

S/N: RDE1-UP

PART OF 259-7348 CONSOLE GP-OPERATOR

SMCS-5258 **i06676828**

NOTE	REF NO	GRAPHIC REF	PART NUMBER	QTY	PART NAME 1 2 3 4 5 6 (PRODUCT LEVEL)	SEE PAGE
M	1	1	**128-2135**	4	SCREW-TRUSS HEAD (M6X1X13-MM)	
	3	1	**234-6579**	2	NUT-SPEED	
	4	1	**234-6580**	2	CAP	
	5	1	**234-6602**	1	COVER	
	6	1	**234-6604**	1	COVER	
	7	1	**234-6608**	1	COVER	
	8	1	**234-6609**	1	COVER	
	9	1	**234-6610**	1	COVER	
	10	1	**235-8914**	4	NUT-SPEED	
	11	1	**235-8966**	2	BASE-MOUNTING	
	12	1	**245-7790**	2	SCREW-TAPPING	
	13	1	**245-7926**	1	SUPPORT AS	
	14	1	**245-7948**	4	SCREW-TAPPING	
Y	15	1	**259-7346**	1	ARMREST GP (RH)	399
M	16	1	**9X-2041**	3	SCREW-TRUSS HEAD (M10X1.5X20-MM)	

M - METRIC PART
Y - SEPARATE ILLUSTRATION

459-2731 **CONSOLE GP-OPERATOR (**contd.**)** **i06676828**

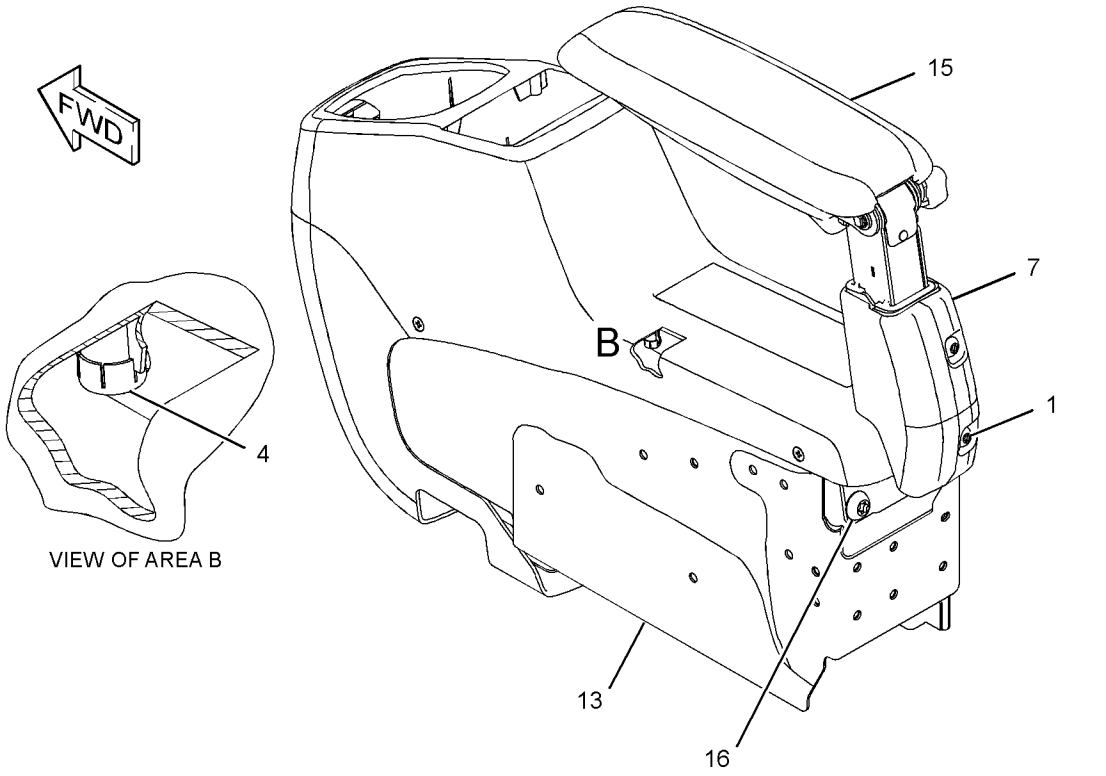

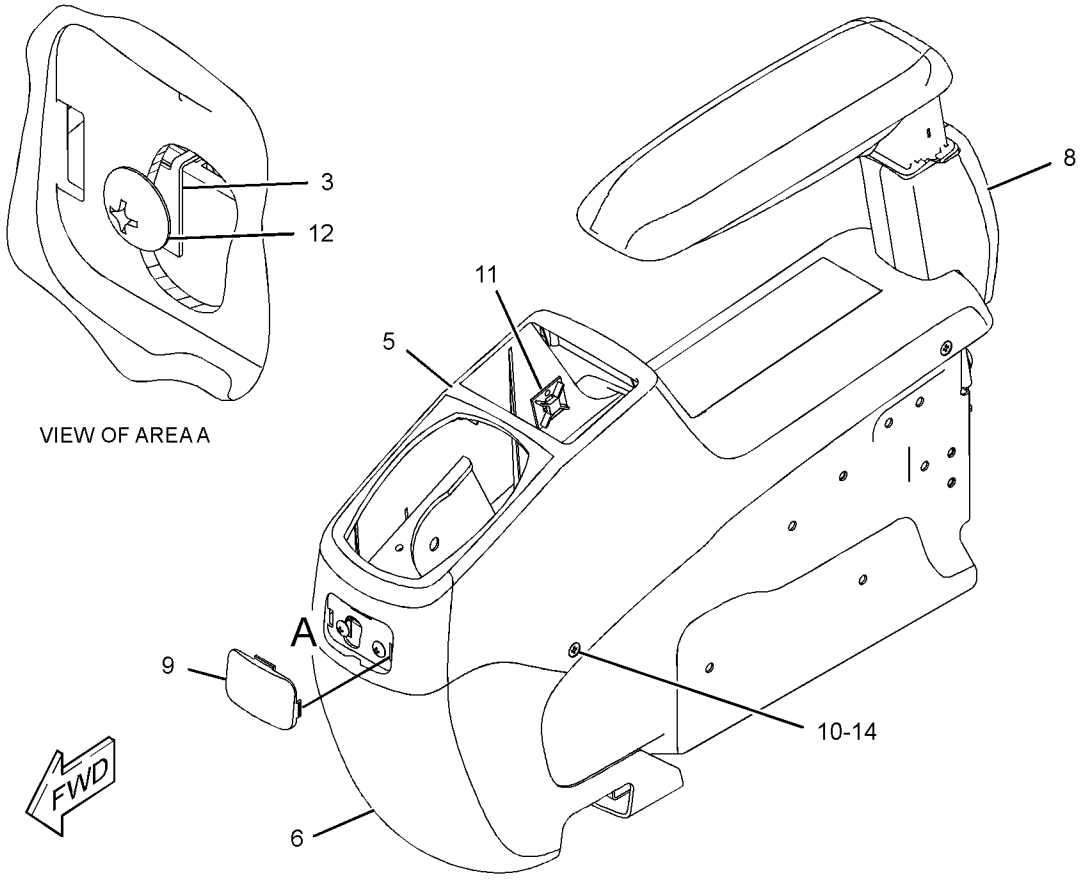

GRAPHIC #1 <END> g03837441

259-7598 CONTROL & MTG GP-JOYSTICK—WITH SLIDE CONTROL

S/N: RDE1-UP

PART OF 255-5843 CONTROL AR-AUXILIARY

SMCS-5063, 5705 **i06588074**

NOTE	REF NO	GRAPHIC REF	PART NUMBER	QTY	PART NAME 1 2 3 4 5 6 (PRODUCT LEVEL)	SEE PAGE
CY	1	1	**297-0535**	1	CONTROL GP-JOYSTICK (LH)	436
CY	2	1	**297-0534**	1	CONTROL GP-JOYSTICK (RH)	435
M	3	1	**6V-7357**	6	BOLT (M6X1X25-MM)	
	4	1	**9X-8256**	6	WASHER (6.6X12X2-MM THK)	

C - CHANGE FROM PREVIOUS TYPE
M - METRIC PART
Y - SEPARATE ILLUSTRATION

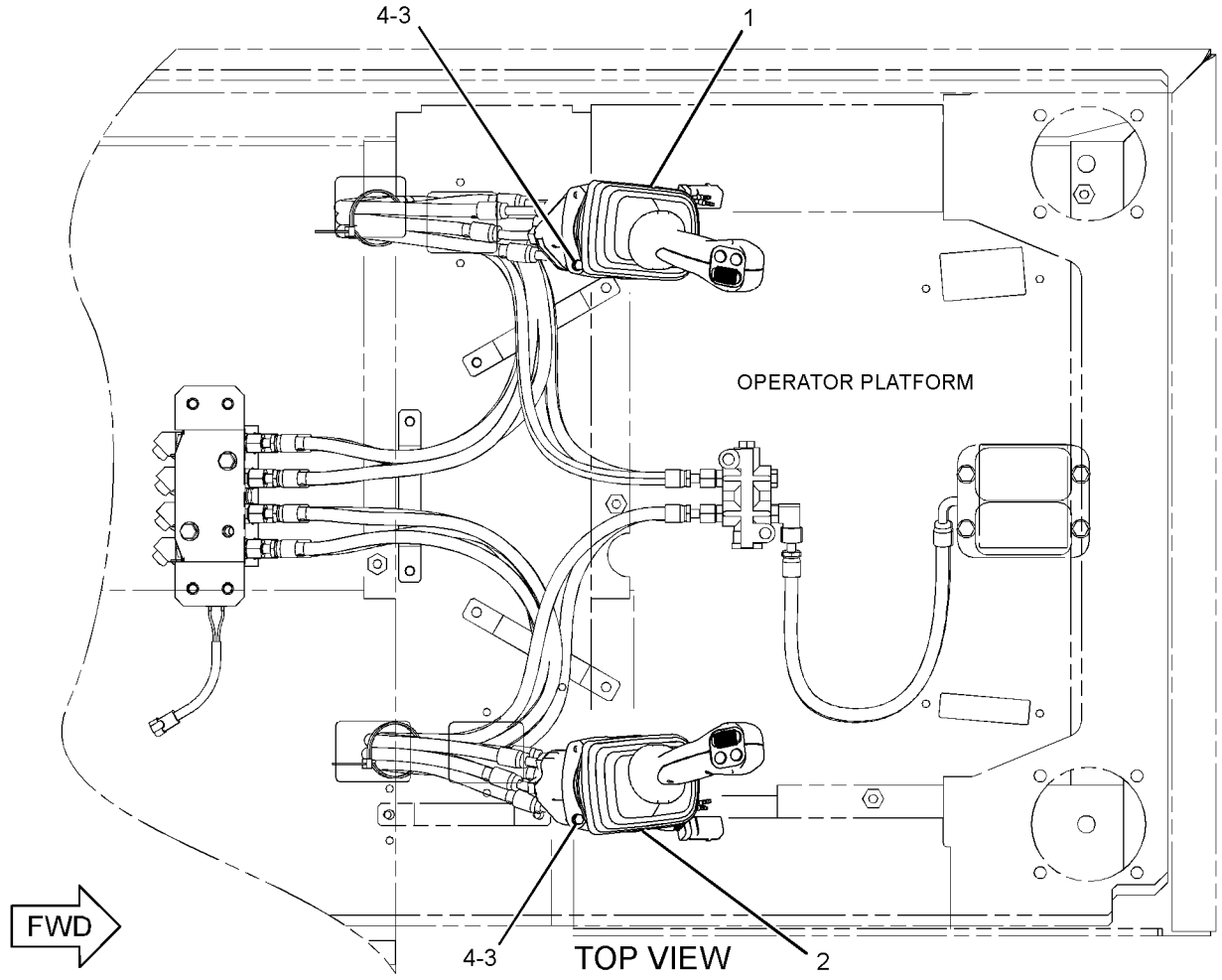

GRAPHIC #1 <END> g01541355

310-0078 CONTROL & MTG GP-JOYSTICK

S/N: RDE1-UP

PART OF 506-8573 CAB AR

SMCS-5063, 5705

i06749797

NOTE	REF NO	GRAPHIC REF	PART NUMBER	QTY	PART NAME 1 2 3 4 5 6 (PRODUCT LEVEL)	SEE PAGE
Y	1	1	**297-0532**	1	CONTROL GP-JOYSTICK (RH)	433
Y	2	1	**297-0533**	1	CONTROL GP-JOYSTICK (LH)	434
M	3	1	**6V-7357**	6	BOLT (M6X1X25-MM)	
	4	1	**9X-8256**	6	WASHER (6.6X12X2-MM THK)	

M - METRIC PART
Y - SEPARATE ILLUSTRATION

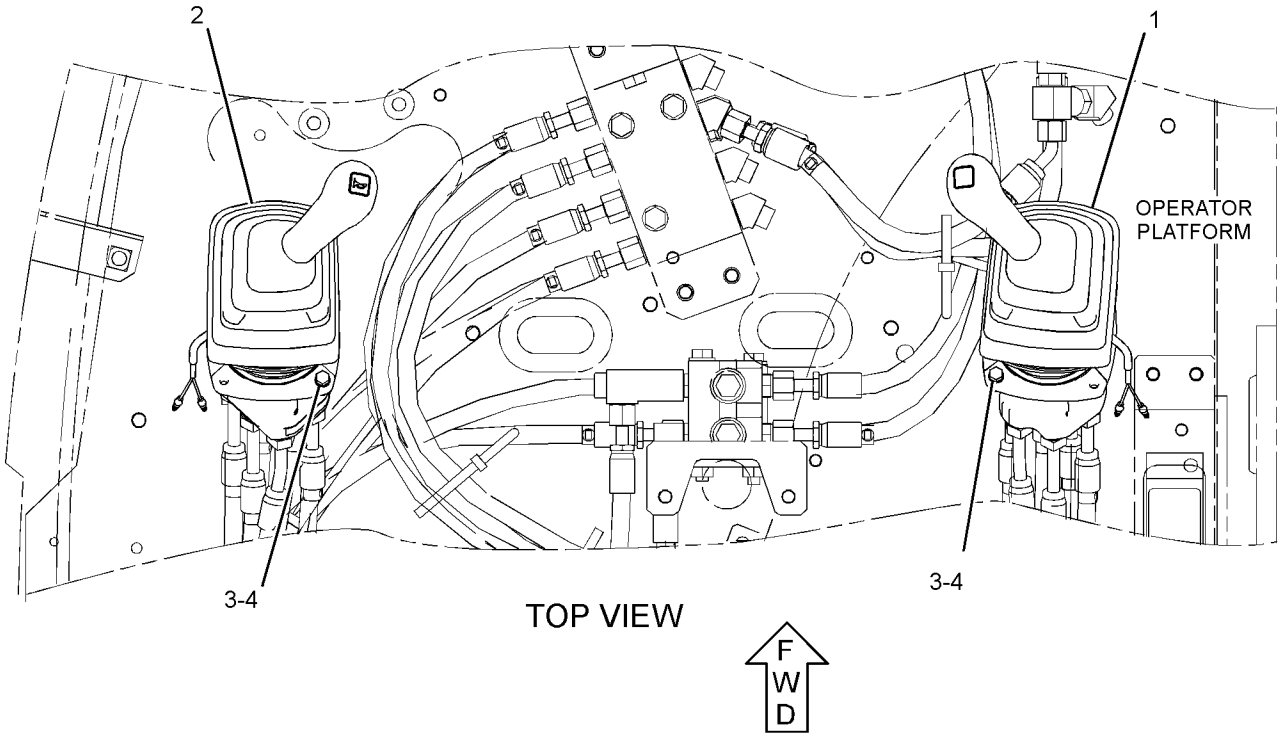

GRAPHIC #1 <END> g01442248

235-8969 CONTROL GP-HANDLE—JOYSTICK, LH

S/N: RDE1-UP

PART OF 297-0533 CONTROL GP-JOYSTICK

SMCS-5705 **i02924513**

NOTE	REF NO	GRAPHIC REF	PART NUMBER	QTY	PART NAME 1 2 3 4 5 6 (PRODUCT LEVEL)	SEE PAGE
	1	1	**124-4010**	1	LEVER	
	2	1	**235-8971**	1	BOOT	
	3	1	**245-7842**	1	KNOB AS	
M		1	**6I-5298**	1	SCREW-TAPPING	
		1	**124-4009**	1	SHAFT	
		1	**222-0225**	1	SWITCH AS-PUSH BUTTON (HORN)	
M	4	1	**096-2617**	2	SCREW-MACHINE (M5X0.8X6-MM)	

M - METRIC PART

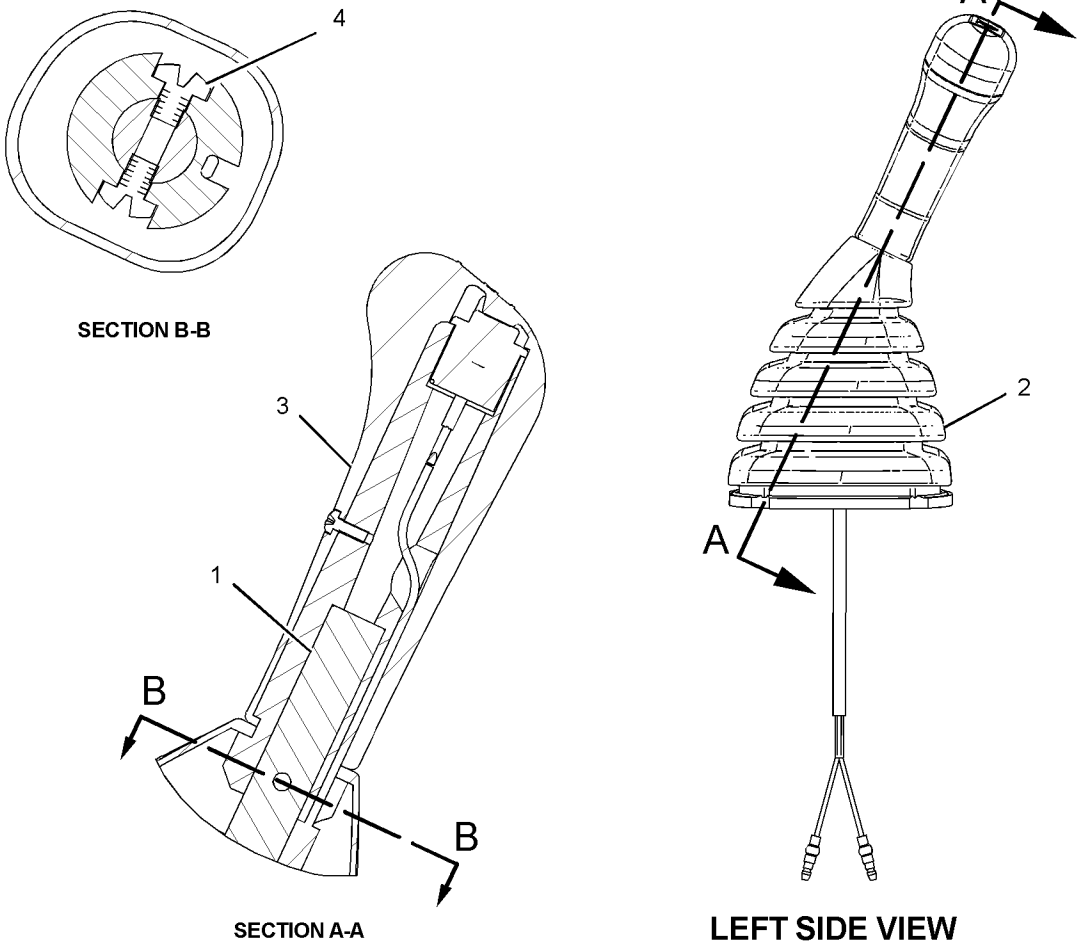

GRAPHIC #1 <END> g01253539

235-8970 CONTROL GP-HANDLE—JOYSTICK, RH

S/N: RDE1-UP

PART OF 297-0532 CONTROL GP-JOYSTICK

SMCS-5705 **i02923994**

NOTE	REF NO	GRAPHIC REF	PART NUMBER	QTY	PART NAME 1 2 3 4 5 6 (PRODUCT LEVEL)	SEE PAGE
	1	1	**124-4010**	1	LEVER	
	2	1	**235-8972**	1	BOOT	
	3	1	**245-7844**	1	KNOB AS	
M		1	**6I-5298**	1	SCREW-TAPPING	
		1	**124-4009**	1	SHAFT	
		1	**222-0225**	1	SWITCH AS-PUSH BUTTON (MANUAL LOW IDLE)	
M	4	1	**096-2617**	2	SCREW-MACHINE (M5X0.8X6-MM)	

M - METRIC PART

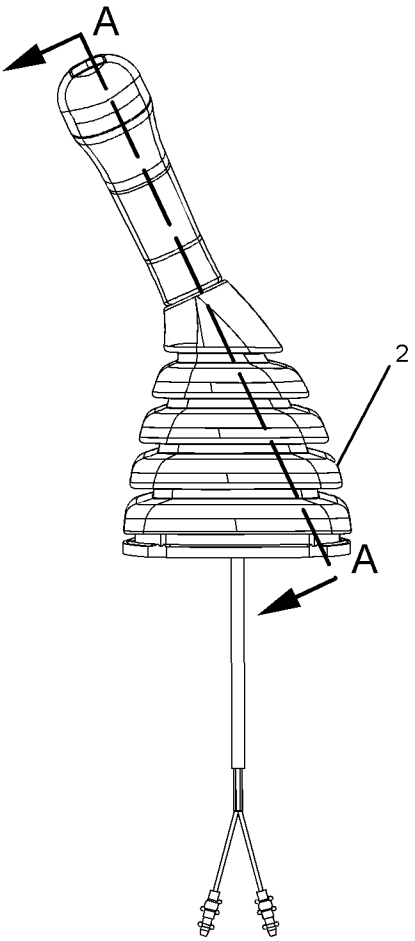

RIGHT SIDE VIEW

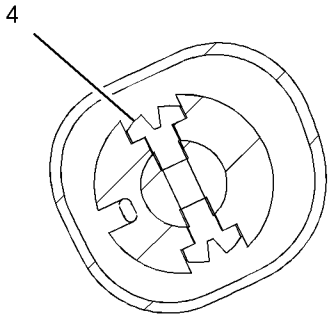

SECTION B-B

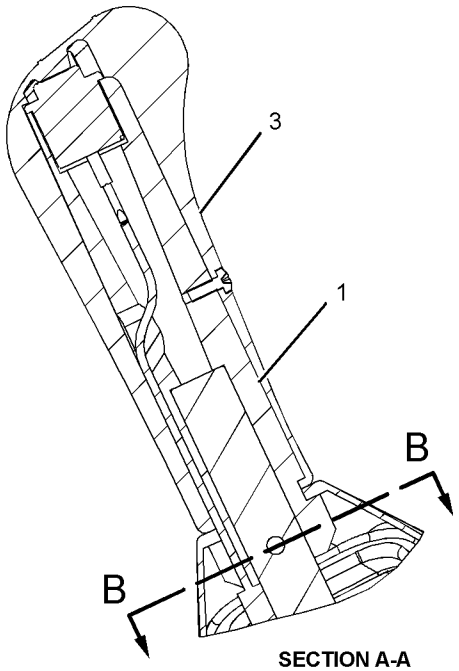

SECTION A-A

GRAPHIC #1 <END> g01082427

260-2109 CONTROL GP-HANDLE—JOYSTICK, RH

S/N: RDE1-UP

PART OF 297-0534 CONTROL GP-JOYSTICK

SMCS-5705 **i03438360**

NOTE	REF NO	GRAPHIC REF	PART NUMBER	QTY	PART NAME 1 2 3 4 5 6 (PRODUCT LEVEL)	SEE PAGE
M	1	1	**7Y-8463**	1	NUT (M14X2-THD)	
	2	1	**117-8683**	1	PIN-SPRING	
	3	1	**260-2111**	1	LEVER	
	4	1	**227-7616**	1	HANDLE GP-JOYSTICK (RH)	
		1	**247-2693**	1	RECEPTACLE AS-CONNECTOR (6-PIN)	
		1	**9X-3401**	6	PIN-CONNECTOR (16-GA TO 18-GA)	
					—OR—	
		1	**126-1767**	6	PIN-CONNECTOR (14-GA TO 16-GA)	
	5	1	**240-5066**	1	BOOT	

M - METRIC PART

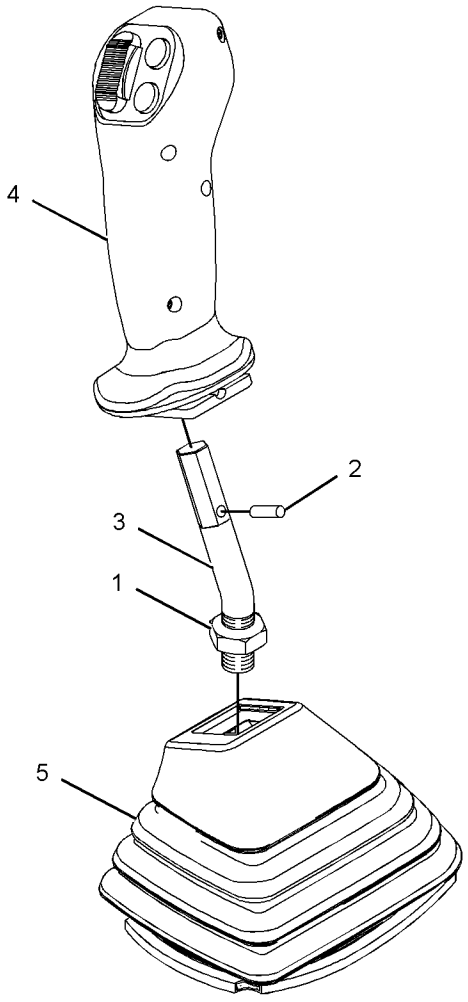

GRAPHIC #1 <END> g01220527

260-2110 CONTROL GP-HANDLE—JOYSTICK, LH

S/N: RDE1-UP

PART OF 297-0535 CONTROL GP-JOYSTICK

SMCS-5705 **i02508828**

NOTE	REF NO	GRAPHIC REF	PART NUMBER	QTY	PART NAME 1 2 3 4 5 6 (PRODUCT LEVEL)	SEE PAGE
M	1	1	**7Y-8463**	1	NUT (M14X2-THD)	
	2	1	**113-2532**	1	PIN	
	3	1	**260-2111**	1	LEVER	
	4	1	**227-7617**	1	CONTROL GP-HANDLE (LH)	
		1	**9X-3401**	6	PIN-CONNECTOR (16-GA TO 18-GA)	
					—OR—	
		1	**126-1767**	6	PIN-CONNECTOR (14-GA TO 16-GA)	
		1	**247-2693**	1	RECEPTACLE AS-CONNECTOR (6-PIN)	
	5	1	**240-5067**	1	BOOT	

M - METRIC PART

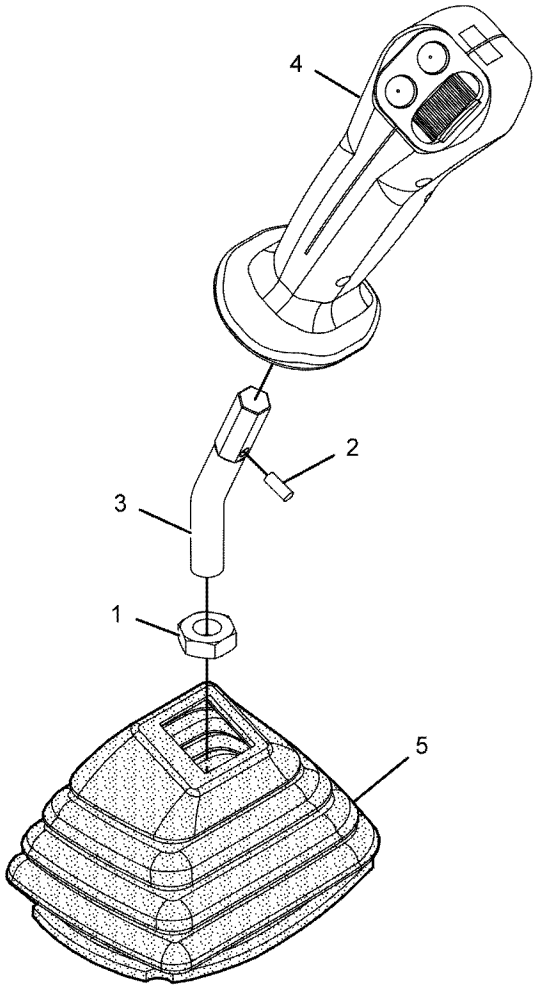

GRAPHIC #1 <END> g01127317

245-7846 CONTROL GP-HEAT & AIR COND–AIR INLET

S/N: RDE1-UP

PART OF 316-8916 AIR CONDITIONER GP

SMCS-7309 **i05343327**

NOTE	REF NO	GRAPHIC REF	PART NUMBER	QTY	PART NAME 1 2 3 4 5 6 (PRODUCT LEVEL)	SEE PAGE
	1	1	**185-8300**	4	SCREW-TAPPING	
	2	1	**196-1666**	1	RELAY (COMPRESSOR CLUTCH)	
	2A	1	**196-1666**	1	RELAY (BLOWER)	
	3	1	**245-7813**	1	MOTOR AS	
	4	1	**245-7814**	1	BRACKET	
	5	1	**245-7815**	1	SENSOR AS-TEMPERATURE (AIR)	
	6	1	**245-7816**	1	DAMPER AS	

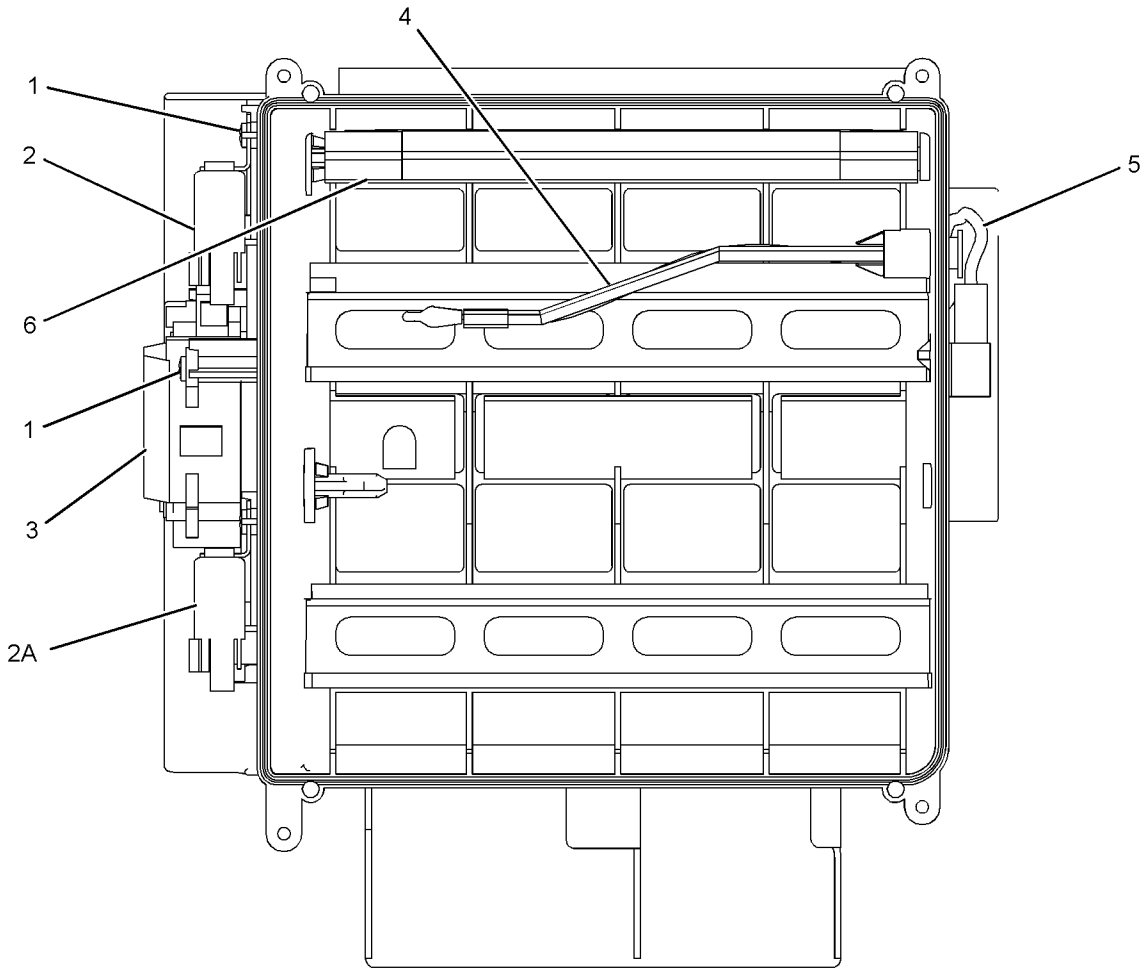

GRAPHIC #1 <END> g01245591

239-8693 CONTROL GP-HYDRAULIC PEDAL

S/N: RDE1-UP

PART OF 494-3642 CONTROL AR-AUXILIARY

SMCS-5059, 5063 **i05536530**

NOTE	REF NO	GRAPHIC REF	PART NUMBER	QTY	PART NAME 1 2 3 4 5 6 (PRODUCT LEVEL)	SEE PAGE
	1	1	**233-5260**	1	LANYARD	
	2	1	**122-9611**	1	PEDAL-RUBBER (RH)	
	3	1	**357-3877**	1	PIN	
	4	1	**153-8762**	1	PEDAL AS	
	5	1	**153-8763**	1	SUPPORT AS	
Y	6	1	**206-3336**	1	VALVE GP-PILOT	341
M	7	1	**095-0735**	2	SCREW-MACHINE (M5X0.8X8-MM)	
M	8	1	**7X-2536**	2	BOLT (M8X1.25X14-MM)	
	9	1	**8T-0114**	1	PIN-SPRING	
	10	1	**8T-4121**	3	WASHER-HARD (11X21X2.5-MM THK)	
M	11	1	**8T-4136**	2	BOLT (M10X1.5X25-MM)	
M	12	1	**8T-4137**	1	BOLT (M10X1.5X20-MM)	
	13	1	**8T-4224**	2	WASHER-HARD (8.8X16X2-MM THK)	

M - METRIC PART
Y - SEPARATE ILLUSTRATION

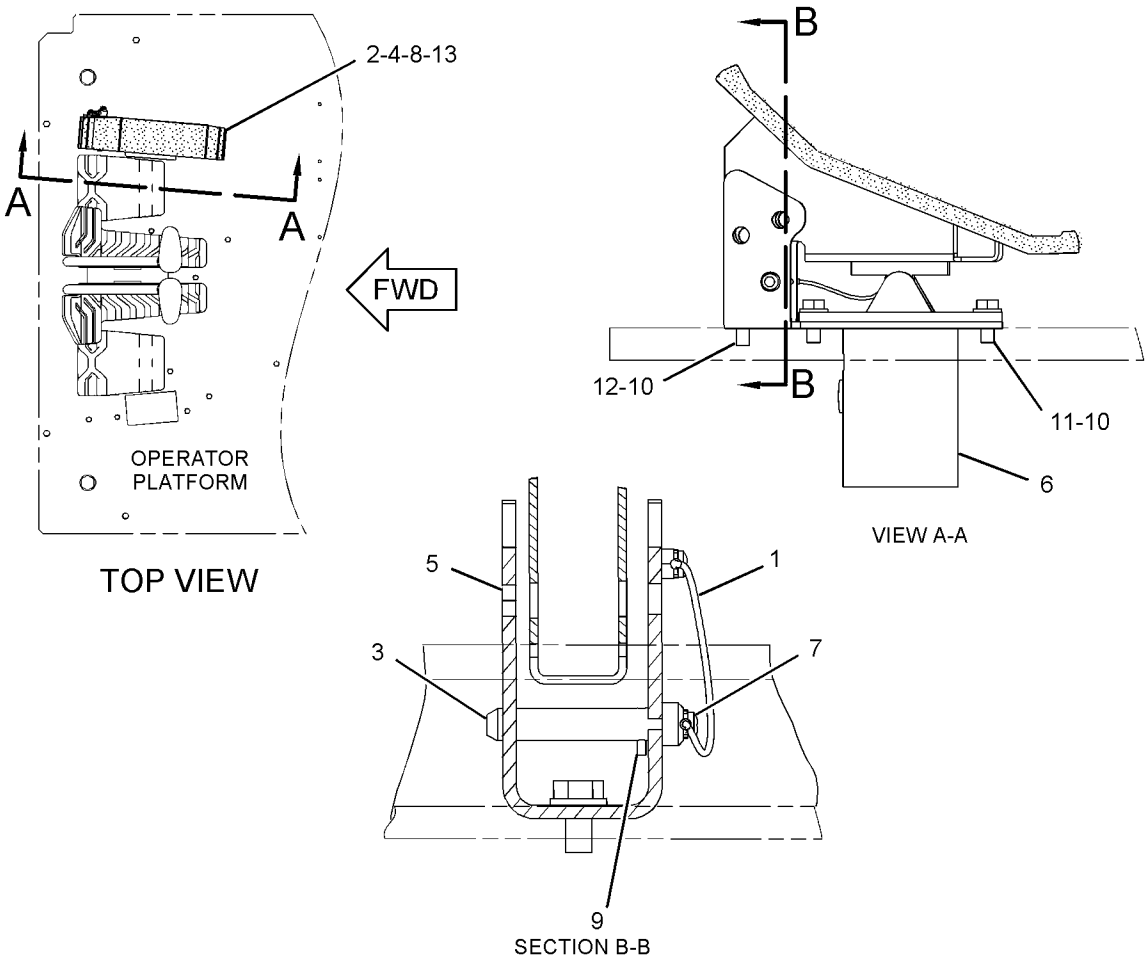

GRAPHIC #1 <END> g02360561

297-0532 CONTROL GP-JOYSTICK–RH

S/N: RDE1-UP

PART OF 310-0078 CONTROL & MTG GP-JOYSTICK

SMCS-5705 **i05349608**

NOTE	REF NO	GRAPHIC REF	PART NUMBER	QTY	PART NAME 1 2 3 4 5 6 (PRODUCT LEVEL)	SEE PAGE
M	1	1	**271-7843**	1	NUT (M14X2-THD)	
Y	2	1	**235-8970**	1	CONTROL GP-HANDLE (JOYSTICK, RH)	428
Y	3	1	**297-0529**	1	VALVE GP-PILOT (JOYSTICK)	342
	4	1	**6K-0806**	1	STRAP-CABLE	

M - METRIC PART
Y - SEPARATE ILLUSTRATION

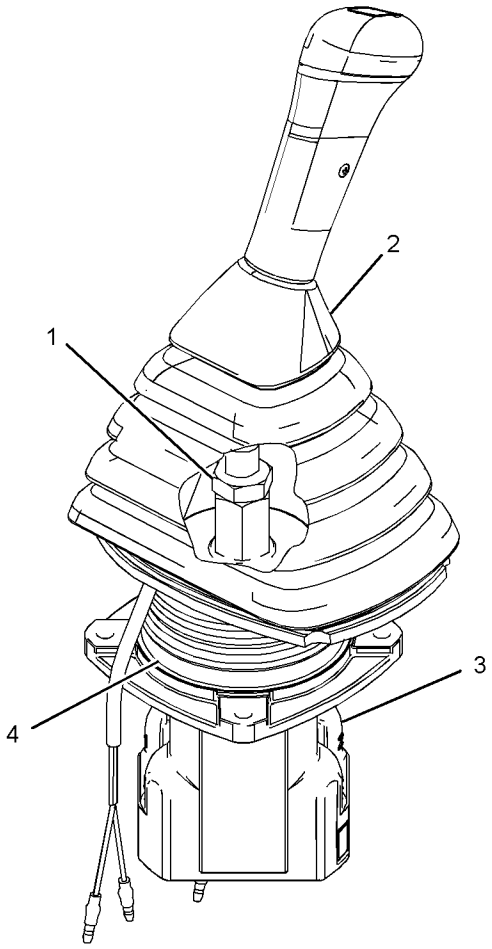

GRAPHIC #1 <END> g03057522

297-0533 CONTROL GP-JOYSTICK—LH

S/N: RDE1-UP

PART OF 310-0078 CONTROL & MTG GP-JOYSTICK

SMCS-5705 **i05349639**

NOTE	REF NO	GRAPHIC REF	PART NUMBER	QTY	PART NAME 1 2 3 4 5 6 (PRODUCT LEVEL)	SEE PAGE
M	1	1	**271-7843**	1	NUT (M14X2-THD)	
Y	2	1	**235-8969**	1	CONTROL GP-HANDLE (JOYSTICK, LH)	427
Y	3	1	**297-0529**	1	VALVE GP-PILOT (JOYSTICK)	342
	4	1	**6K-0806**	1	STRAP-CABLE	

M - METRIC PART
Y - SEPARATE ILLUSTRATION

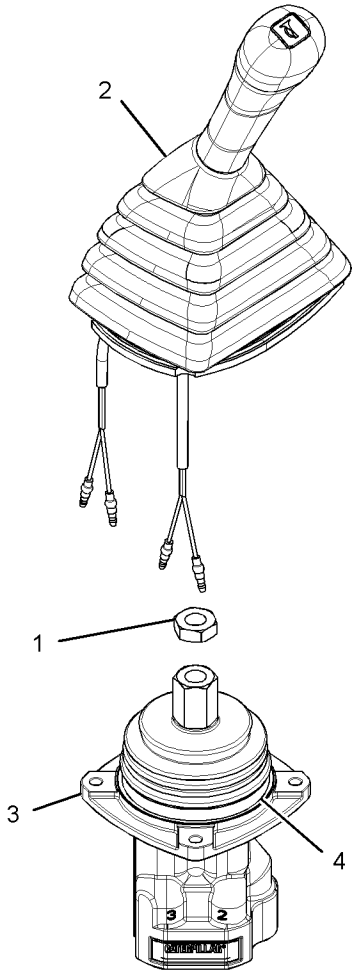

GRAPHIC #1 <END> g03057536

297-0534 CONTROL GP-JOYSTICK–RH

S/N: RDE1-UP

PART OF 259-7598 CONTROL & MTG GP-JOYSTICK

SMCS-5705 **i03908994**

NOTE	REF NO	GRAPHIC REF	PART NUMBER	QTY	PART NAME 1 2 3 4 5 6 (PRODUCT LEVEL)	SEE PAGE
	1	1	**6K-0806**	1	STRAP-CABLE	
Y	2	1	**260-2109**	1	CONTROL GP-HANDLE (JOYSTICK, RH)	429
Y	3	1	**297-0589**	1	VALVE GP-PILOT (JOYSTICK)	344

Y - SEPARATE ILLUSTRATION

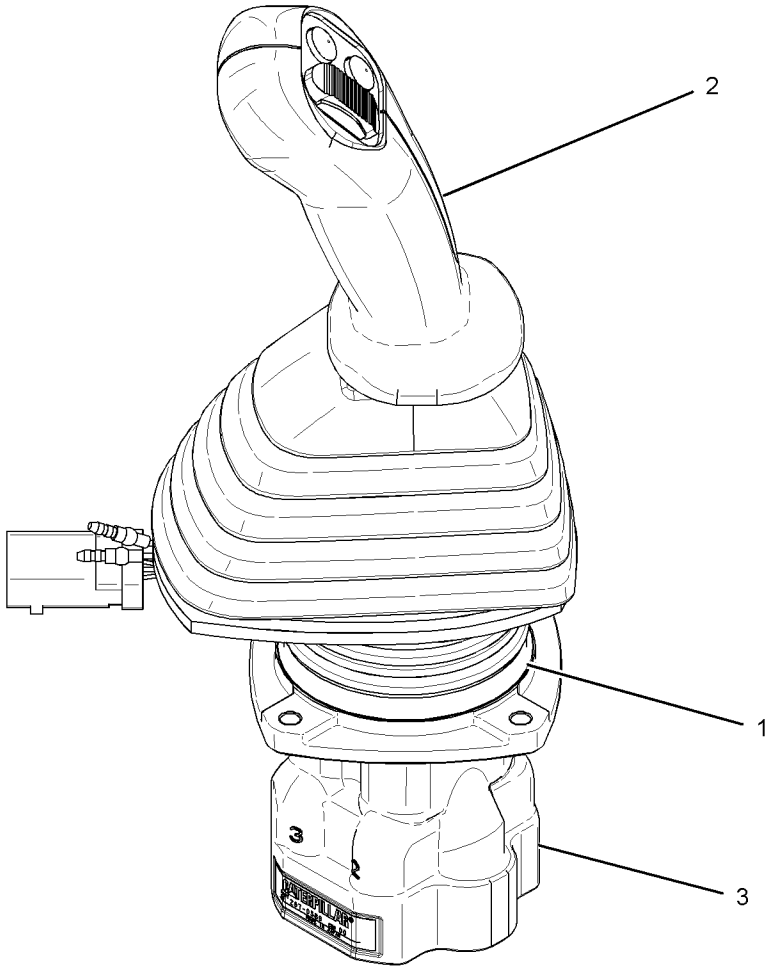

GRAPHIC #1 <END> g01539394

297-0535 CONTROL GP-JOYSTICK–LH

S/N: RDE1-UP

PART OF 259-7598 CONTROL & MTG GP-JOYSTICK

SMCS-5705 **i03908992**

NOTE	REF NO	GRAPHIC REF	PART NUMBER	QTY	PART NAME 1 2 3 4 5 6 (PRODUCT LEVEL)	SEE PAGE
	1	1	**6K-0806**	1	STRAP-CABLE	
Y	2	1	**260-2110**	1	CONTROL GP-HANDLE (JOYSTICK, LH)	430
Y	3	1	**297-0589**	1	VALVE GP-PILOT (JOYSTICK)	344

Y - SEPARATE ILLUSTRATION

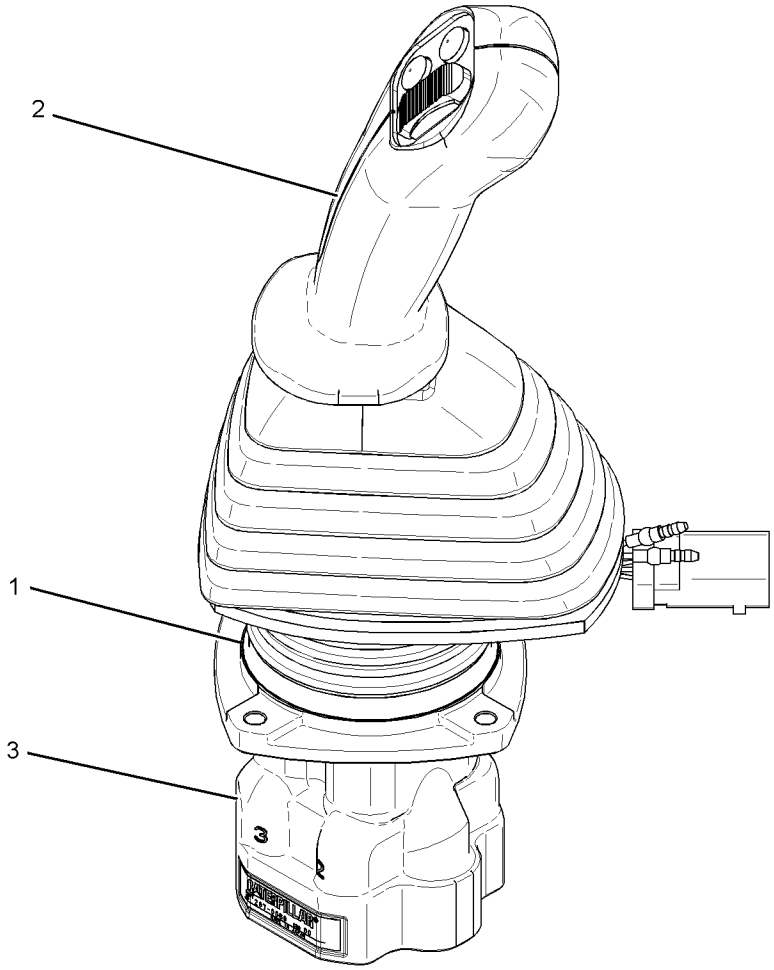

GRAPHIC #1 <END> g01541298

170-9497 CONTROL GP-PILOT OPERATED HYD–TRAVEL

S/N: RDE1-UP

PART OF 506-8573 CAB AR, 476-3010 OPERATOR AR

SMCS-5059 **i01364060**

NOTE	REF NO	GRAPHIC REF	PART NUMBER	QTY	PART NAME 1 2 3 4 5 6 (PRODUCT LEVEL)	SEE PAGE
	1	1	**096-6166**	1	WASHER-HARD (4.5X9X1-MM THK)	
M	2	1	**095-0728**	2	SCREW-MACHINE (M4X0.7X12-MM)	
	3	1	**8T-4121**	12	WASHER-HARD (11X21X2.5-MM THK)	
M	4	1	**8T-4136**	4	BOLT (M10X1.5X25-MM)	
M	5	1	**8T-4191**	8	BOLT (M10X1.5X16-MM)	
	6	1	**142-5546**	2	KNOB	
	7	1	**117-6356**	2	STEP AS	
	8	1	**122-9610**	2	STEP	
	9	1	**170-9499**	1	LEVER AS (LH)	
	10	1	**170-9498**	1	LEVER AS (RH)	
	11	1	**122-9608**	1	PEDAL-RUBBER (RH)	
	12	1	**117-6350**	1	PEDAL AS (RH)	
M		1	**8T-3490**	2	NUT-WELD (M10X1.5-THD)	
	13	1	**122-9609**	1	PEDAL-RUBBER (LH)	
	14	1	**117-6349**	1	PEDAL AS (LH)	
M		1	**8T-3490**	2	NUT-WELD (M10X1.5-THD)	

M - METRIC PART

170-9497 **CONTROL GP-PILOT OPERATED HYD (**contd.**)** **i01364060**

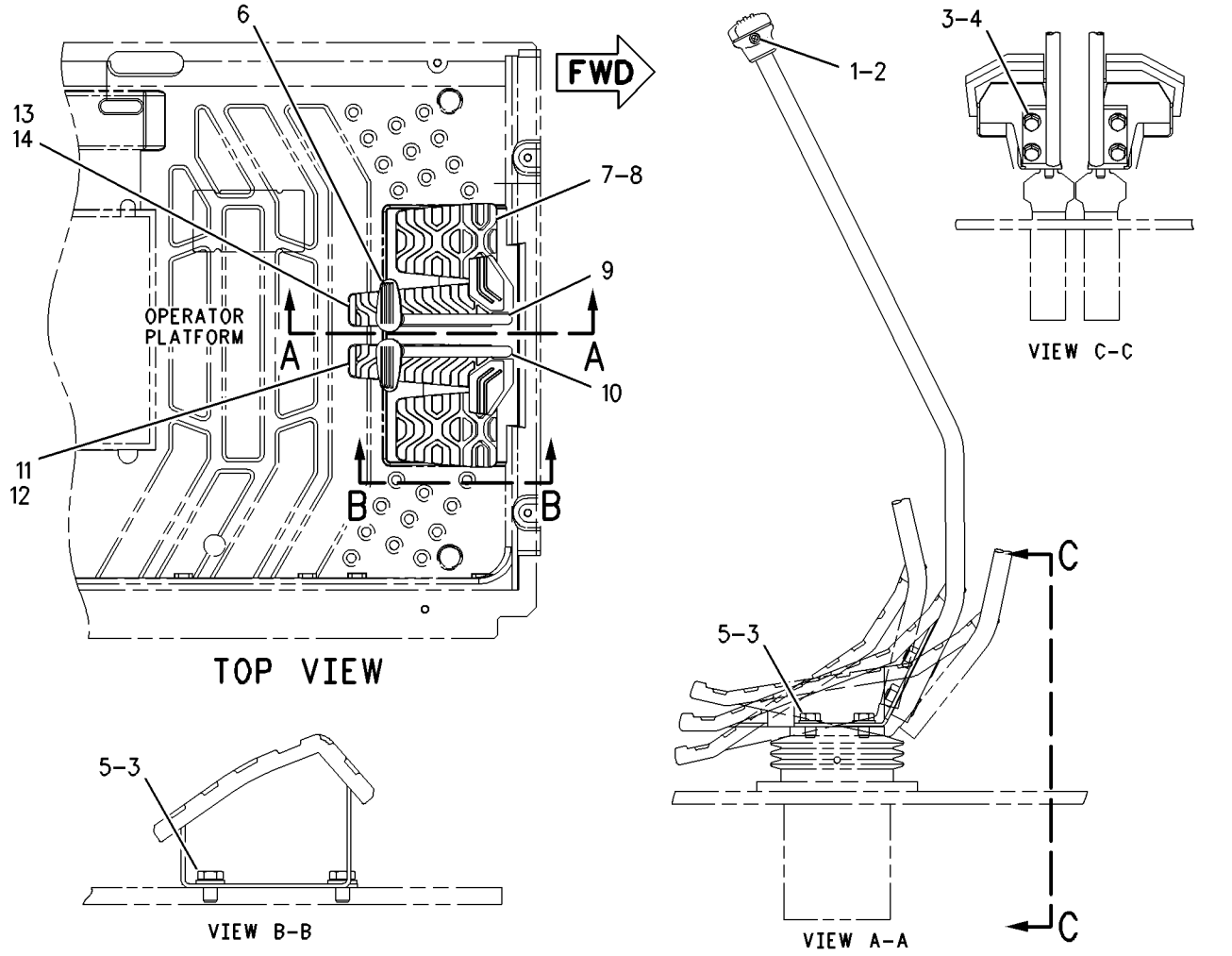

GRAPHIC #1 <END> g00672963

234-6501 COVER GP-CAB–REAR

S/N: RDE1-UP

PART OF 416-9606 CAB GP

SMCS-7301, 7308

i05349676

NOTE	REF NO	GRAPHIC REF	PART NUMBER	QTY	PART NAME 1 2 3 4 5 6 (PRODUCT LEVEL)	SEE PAGE
	1	1	**234-6499**	1	COVER AS	
	2	1	**234-6502**	1	COVER-ACCESS (FUSE-REAR PANEL)	
	3	1	**234-6593**	2	FASTENER	
					USE WITH COVER WITH A 9-MM DIAMETER UPPER MOUNTING HOLE	
					–OR–	
		1	**245-7929**	2	CLIP	
					USE WITH COVER WITH A 7.6-MM DIAMETER UPPER MOUNTING HOLE	

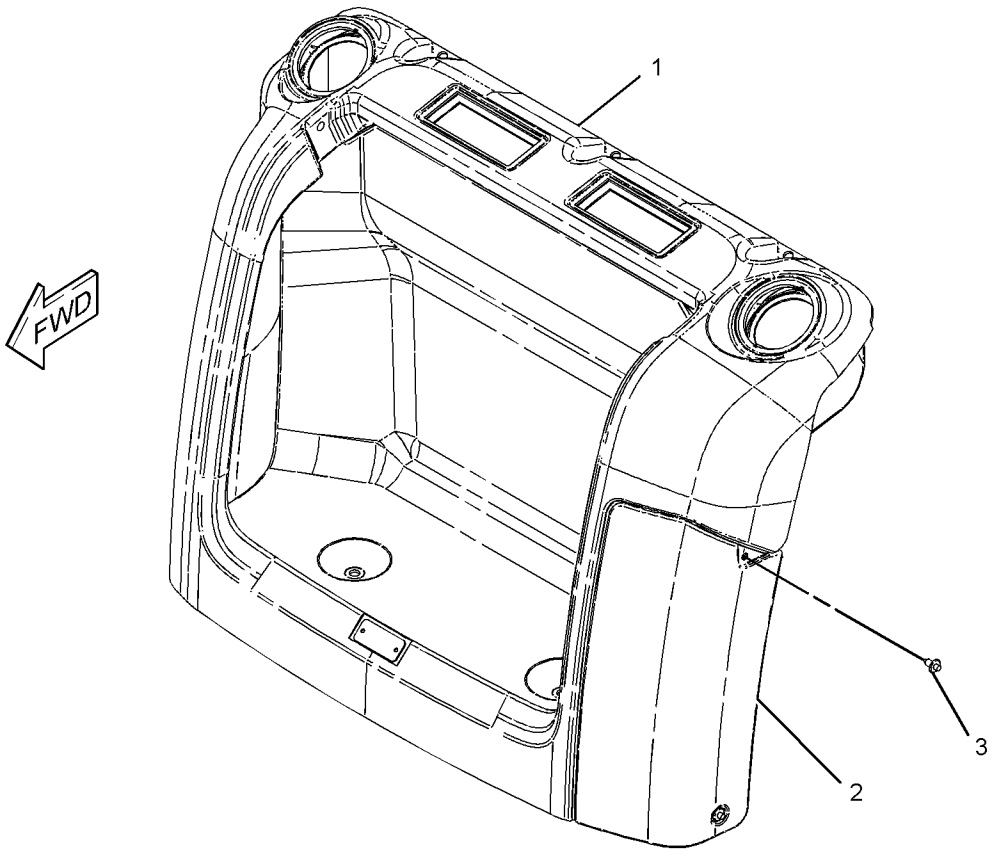

GRAPHIC #1

<END>

g03389225

420-3151 DOOR & MTG GP-CAB

S/N: RDE1-UP

PART OF 439-2522 CAB GP, 388-9115 DOOR GP-CAB

SMCS-7308 **i05432401**

NOTE	REF NO	GRAPHIC REF	PART NUMBER	QTY	PART NAME 1 2 3 4 5 6 (PRODUCT LEVEL)	SEE PAGE
	1	1	**436-1901**	2	HINGE	
	2	1	**425-7079**	1	PANEL AS-DOOR	
M	3	1	**9X-2041**	6	SCREW-TRUSS HEAD (M10X1.5X20-MM)	

M - METRIC PART

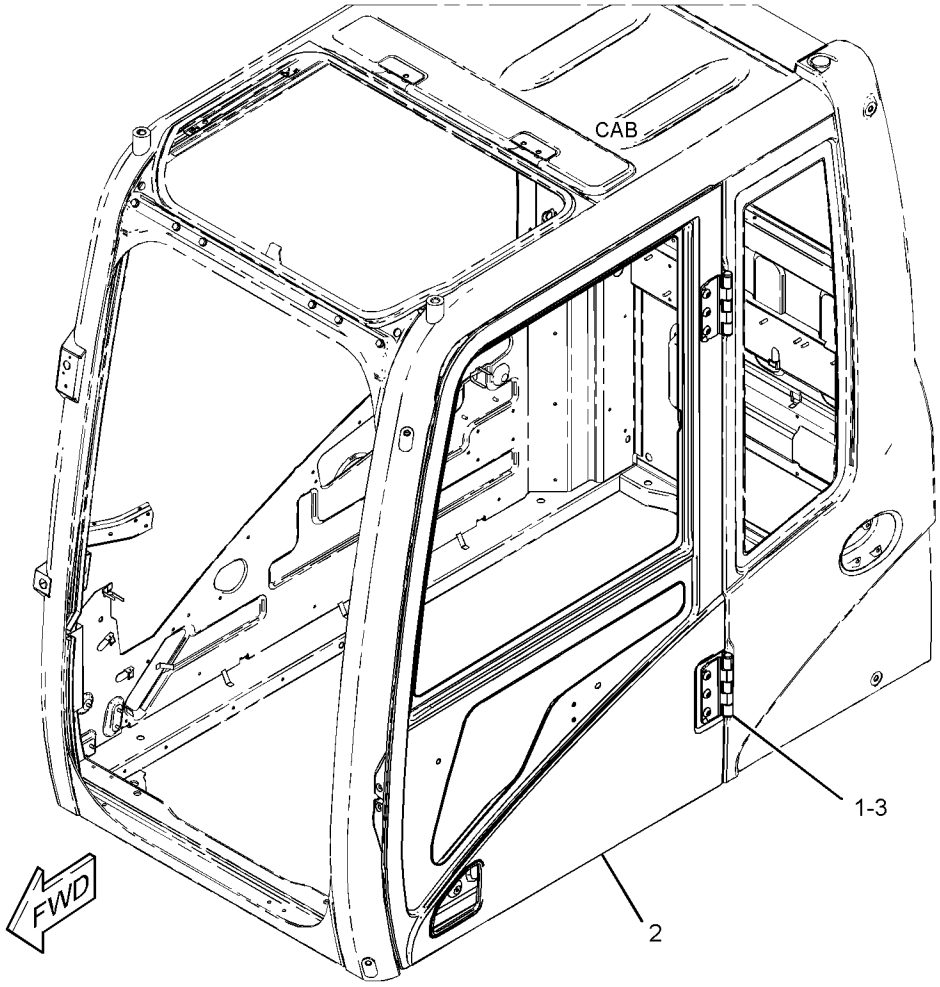

GRAPHIC #1 <END> g03440163

388-9115 DOOR GP-CAB

S/N: RDE1-UP

PART OF 416-9607 CAB GP

SMCS-7308 **i06796118**

NOTE	REF NO	GRAPHIC REF	PART NUMBER	QTY	PART NAME 1 2 3 4 5 6 (PRODUCT LEVEL)	SEE PAGE
Y	1	1	*307-1818*	1	PARTS GP-DOOR (CAB)	462
Y	2	1	*420-3151*	1	DOOR & MTG GP-CAB	440

Y - SEPARATE ILLUSTRATION

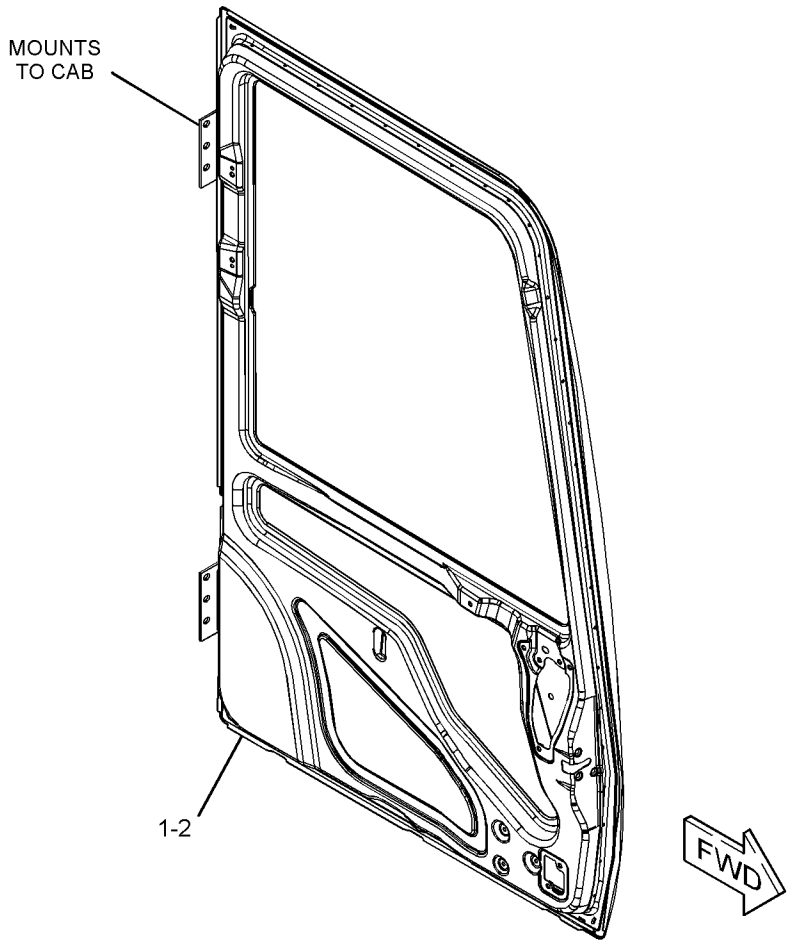

GRAPHIC #1 <END> g03440825

229-9082 DUCT GP-CAB AIR

S/N: RDE1-UP

PART OF 416-1794 AIR CONDITIONER AR

SMCS-734D **i04823037**

NOTE	REF NO	GRAPHIC REF	PART NUMBER	QTY	PART NAME 1 2 3 4 5 6 (PRODUCT LEVEL)	SEE PAGE
	1	1	**293-1183**	1	FILTER GP-CAB AIR	
		1	**293-1184**	1	FILTER ELEMENT-CAB AIR	
	2	1	**235-8876**	1	DUCT AS (FRESH AIR, UPPER)	
		1	**245-7872**	1	INSULATOR	
	3	1	**235-8877**	1	DUCT AS (VENT, REAR)	
		1	**245-7792**	1	INSULATOR	
	4	1	**235-8878**	1	DUCT AS (VENT, FRONT)	
		1	**245-7793**	1	INSULATOR	
	5	1	**235-8879**	1	DUCT AS (FLOOR)	
		1	**245-7873**	1	INSULATOR	
	6	1	**240-5074**	1	DUCT AS (FRESH AIR, LOWER)	
		1	**245-7791**	1	INSULATOR	
M	7	1	**101-8899**	2	SCREW AS (M6X1.0X16-MM)	
	8	1	**176-1996**	5	CLIP	

M - METRIC PART

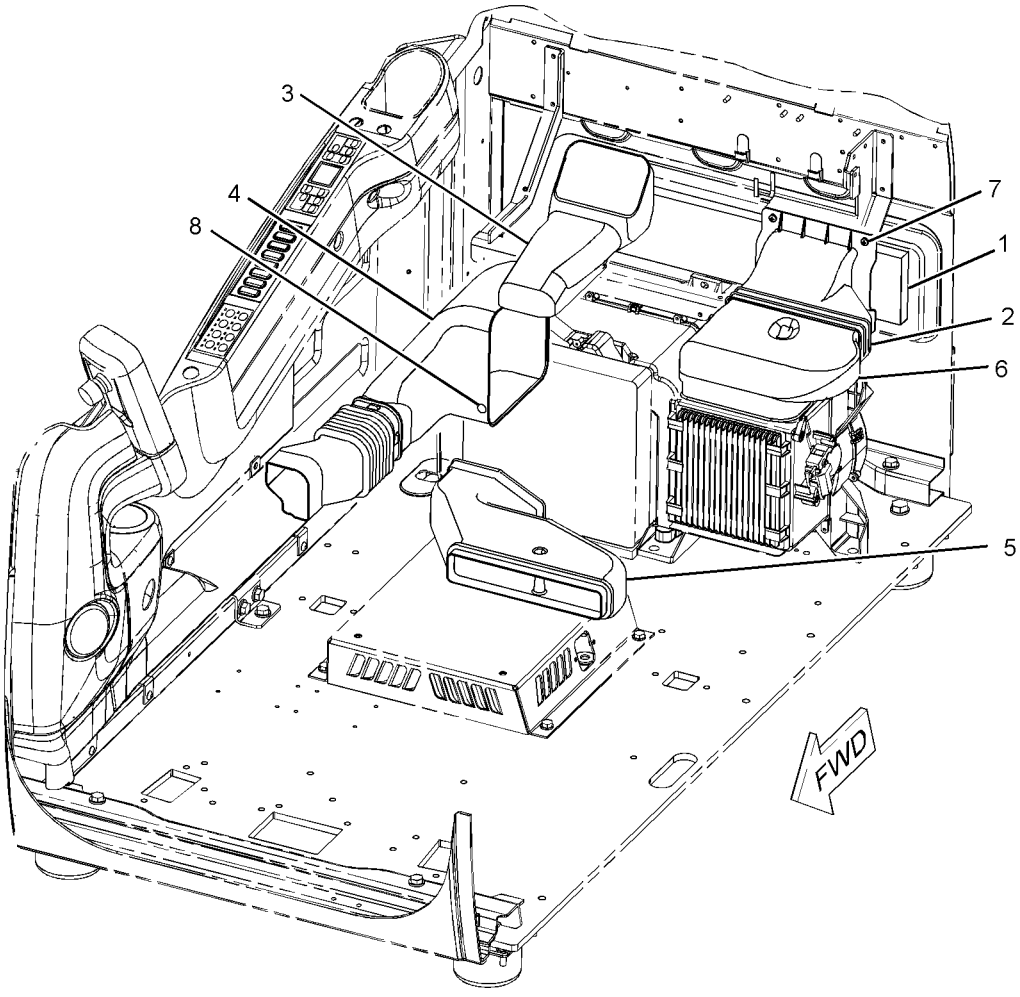

GRAPHIC #1 <END> g01126665

240-5073 FLOOR MAT

S/N: RDE1-UP

SMCS-726M **i06806550**

NOTE	REF NO	GRAPHIC REF	PART NUMBER	QTY	PART NAME 1 2 3 4 5 6 (PRODUCT LEVEL)	SEE PAGE
					(NO SERVICED PARTS)	

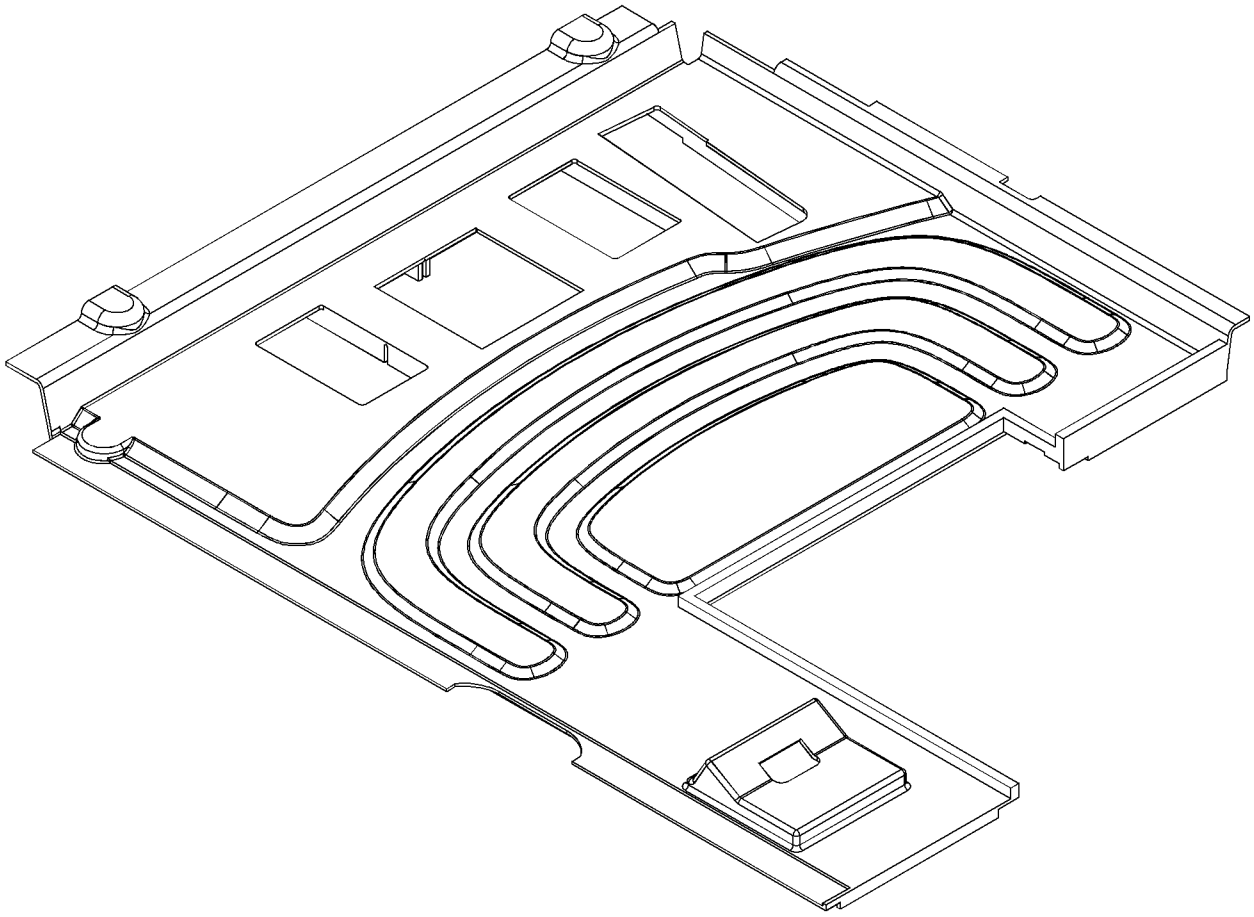

GRAPHIC #1 <END> g01124624

284-4376 FLOOR MAT

S/N: RDE1-UP

SMCS-726M **i06606209**

NOTE	REF NO	GRAPHIC REF	PART NUMBER	QTY	PART NAME 1 2 3 4 5 6 (PRODUCT LEVEL)	SEE PAGE
			(NO SERVICED PARTS)			

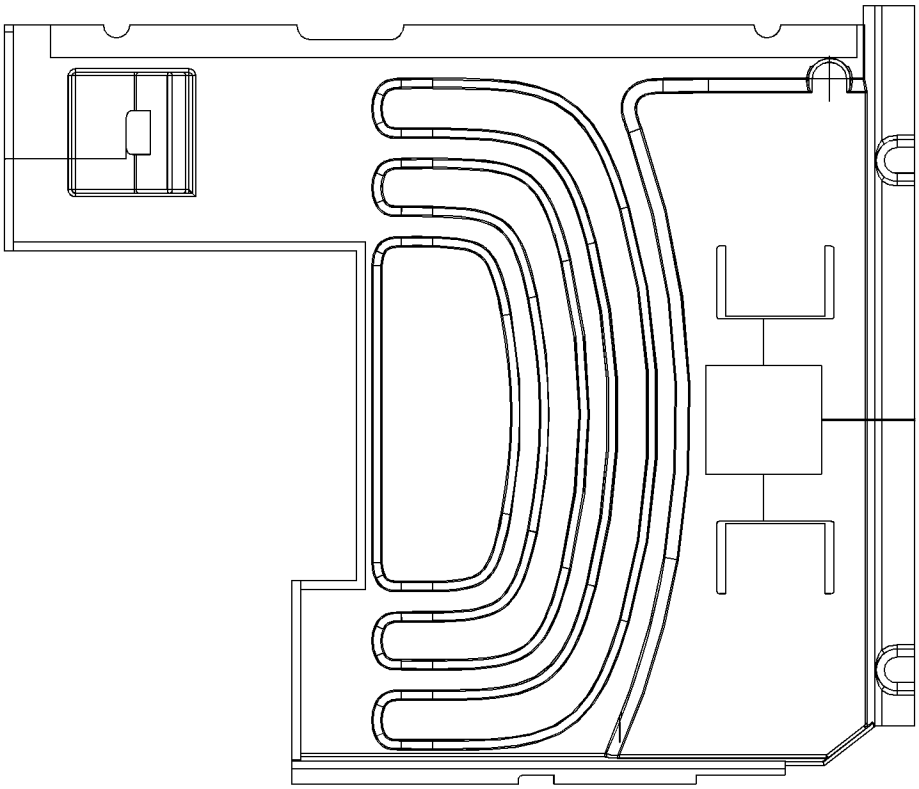

GRAPHIC #1 <END> g01420854

431-8611 HATCH GP-ROOF

S/N: RDE1-UP

PART OF 416-9607 CAB GP

SMCS-7303 **i06293461**

NOTE	REF NO	GRAPHIC REF	PART NUMBER	QTY	PART NAME 1 2 3 4 5 6 (PRODUCT LEVEL)	SEE PAGE
	1	1	**189-2847**	1	SEAL	
	2	1	**259-7351**	1	HATCH AS	
	2A	1	**176-1949**	2	BRACKET AS	
	2B	1	**189-2717**	2	HINGE AS	
	3	1	**259-7352**	1	CATCH	
	4	1	**398-1505**	2	SPRING AS-GAS (HATCH)	
	5	1	**3B-4505**	4	LOCKWASHER	
	6	1	**5D-4822**	4	RING-RETAINING	
M	7	1	**8T-4200**	4	BOLT (M8X1.25X16-MM)	
	8	1	**8T-4224**	4	WASHER-HARD (8.8X16X2-MM THK)	
M	9	1	**9X-2042**	2	SCREW-TRUSS HEAD (M6X1X12-MM)	

M - METRIC PART

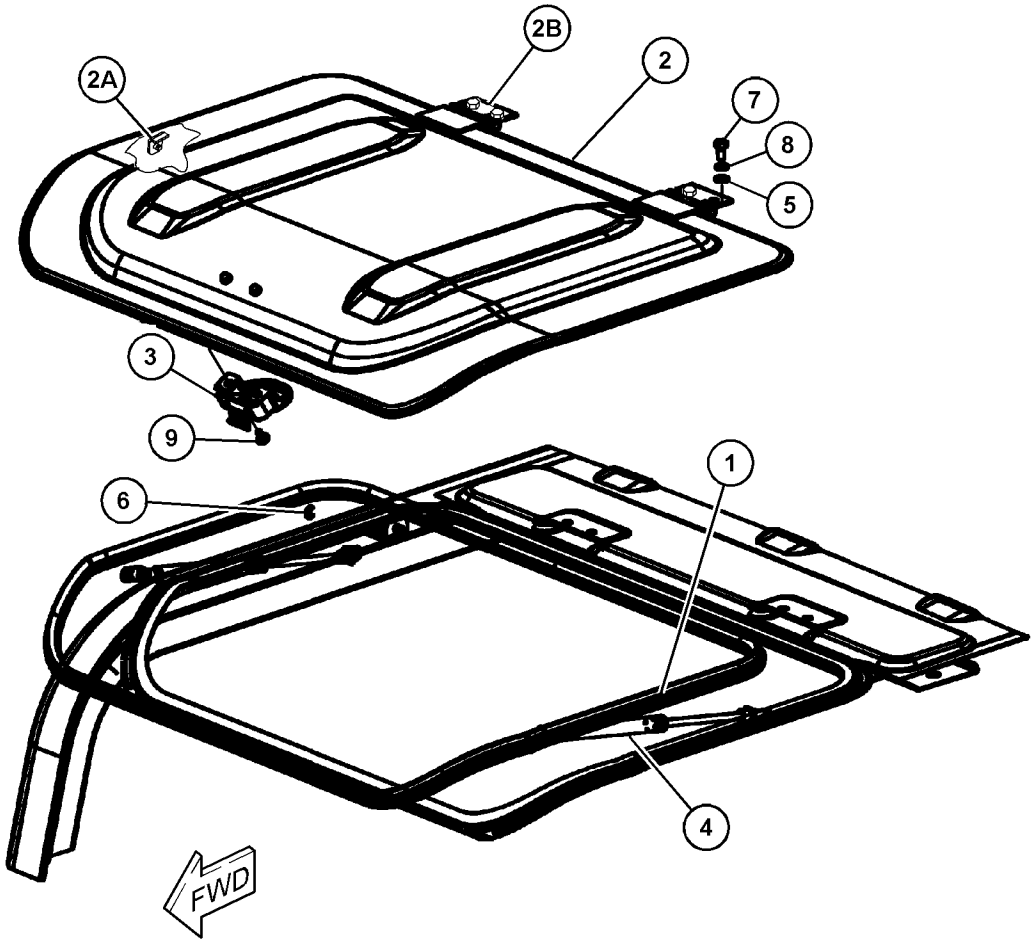

GRAPHIC #1 <END> g03683184

275-6874 HORN GP-ELECTRIC

S/N: RDE1-UP

PART OF 500-9108 CHASSIS AR

SMCS-7402 **i05408880**

NOTE	REF NO	GRAPHIC REF	PART NUMBER	QTY	PART NAME 1 2 3 4 5 6 (PRODUCT LEVEL)	SEE PAGE
Y	1	1	*275-6875*	1	HORN GP-ELECTRIC	447
	2	1	**8T-4121**	2	WASHER-HARD (11X21X2.5-MM THK)	
M	3	1	**8T-4137**	2	BOLT (M10X1.5X20-MM)	

M - METRIC PART
Y - SEPARATE ILLUSTRATION

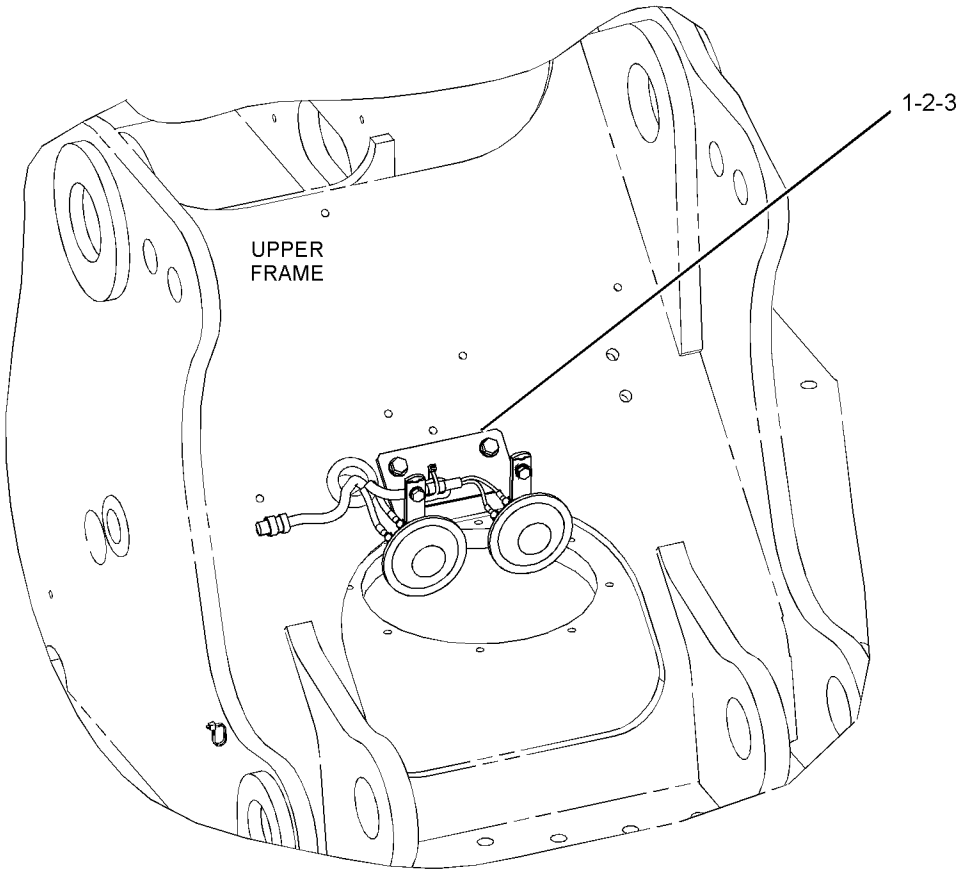

FRONT VIEW
(UPPER RIGHT)

GRAPHIC #1 <END> g01304388

275-6875 HORN GP-ELECTRIC

S/N: RDE1-UP

PART OF 275-6874 HORN GP-ELECTRIC

SMCS-7402 **i05408900**

NOTE	REF NO	GRAPHIC REF	PART NUMBER	QTY	PART NAME 1 2 3 4 5 6 (PRODUCT LEVEL)	SEE PAGE
	1	1	**3S-2093**	1	STRAP-CABLE	
	2	1	**7Y-3919**	1	HORN AS (24-VOLT, LOW TONE)	
		1	**095-0826**	2	LOCKWASHER	
M		1	**095-7930**	2	SCREW-MACHINE (M4X0.7X6-MM)	
	3	1	**7Y-3920**	1	HORN AS (24-VOLT, HIGH TONE)	
		1	**095-0826**	2	LOCKWASHER	
M		1	**095-7930**	2	SCREW-MACHINE (M4X0.7X6-MM)	
	4	1	**170-6941**	1	BRACKET AS	
	5	1	**275-6876**	1	HARNESS AS-WIRING (HORN)	
		1	**3S-2093**	2	STRAP-CABLE	
		1	**230-4011**	1	PLUG AS-CONNECTOR (2-PIN)	
M	6	1	**8T-4200**	2	BOLT (M8X1.25X16-MM)	
	7	1	**8T-4224**	2	WASHER-HARD (8.8X16X2-MM THK)	

M - METRIC PART

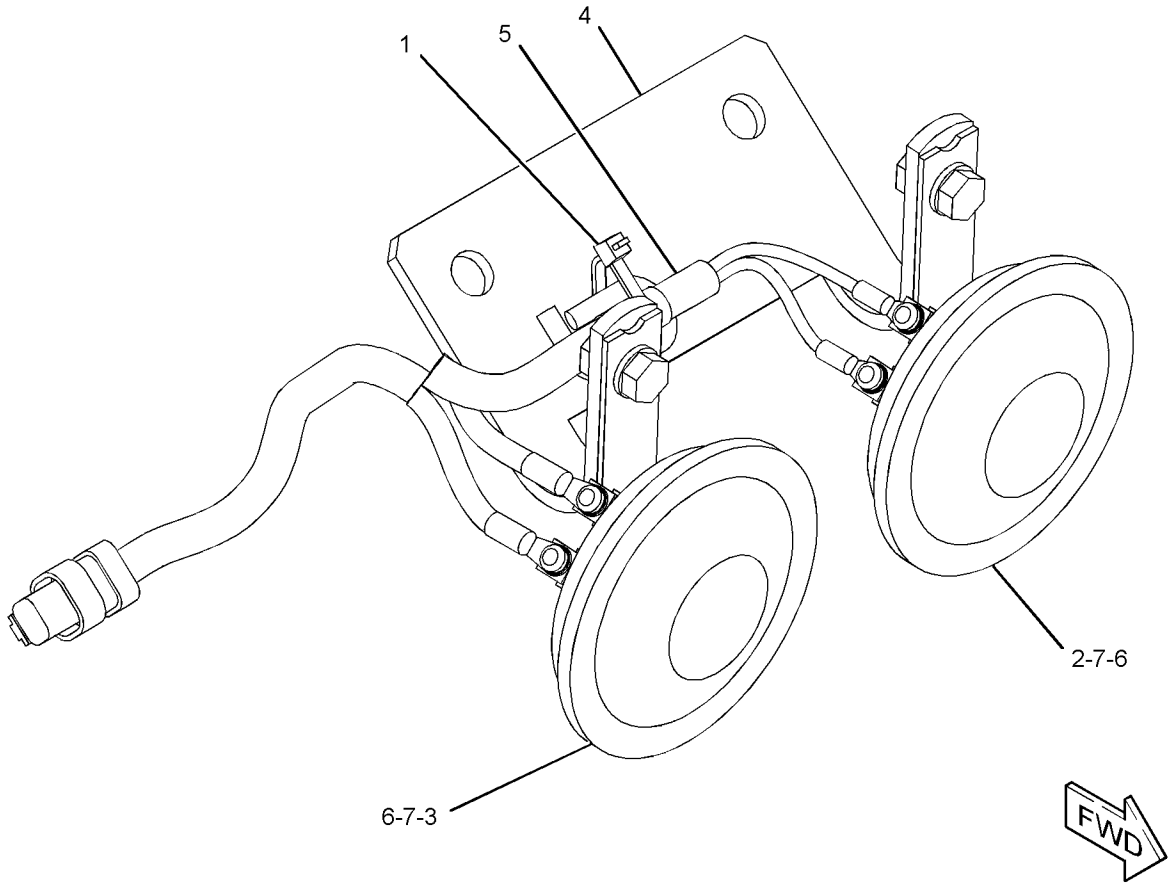

GRAPHIC #1 <END> g01304939

164-0528 LEVER GP-CAB DOOR

S/N: RDE1-UP

PART OF 388-9102 CAB GP

SMCS-7308 **i03990635**

NOTE	REF NO	GRAPHIC REF	PART NUMBER	QTY	PART NAME 1 2 3 4 5 6 (PRODUCT LEVEL)	SEE PAGE
	1	1	**156-6642**	1	LEVER AS	
	2	1	**164-0664**	1	BRACKET	
	3	1	**176-1941**	1	PIN	
	4	1	**185-8280**	1	WASHER-WAVE (10.5X15X0.3-MM THK)	
	5	1	**185-8281**	1	SPRING	

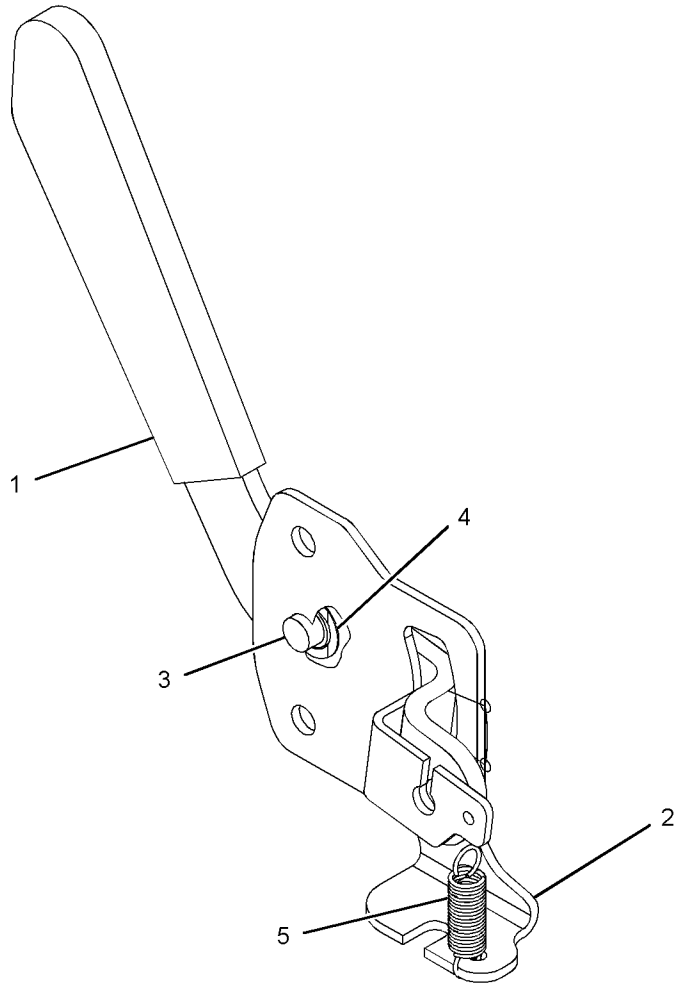

GRAPHIC #1 <END> g01217036

462-4691 LINES GP-AIR CONDITIONER

S/N: RDE1-UP

PART OF 500-9108 CHASSIS AR

SMCS-1808 **i06781676**

NOTE	REF NO	GRAPHIC REF	PART NUMBER	QTY	PART NAME 1 2 3 4 5 6 (PRODUCT LEVEL)	SEE PAGE
	1	1,2	**7K-1181**	2	STRAP-CABLE	
	2	1	**099-1319**	1	GROMMET	
	3	1	**121-7098**	1	BRACKET AS	
M		1	**8T-4138**	2	BOLT (M6X1X20-MM)	
		1	**9X-8256**	2	WASHER (6.6X12X2-MM THK)	
	4	1	**122-9605**	2	TUBE	
	5	1	**149-6549**	1	GROMMET	
	6	1	**176-1902**	1	DRYER AS-REFRIGERANT (RECEIVER)	
	7	1	**235-8891**	1	PLATE	
	8	1	**235-9015**	2	HOSE	
	9	1	**293-1238**	2	HOSE-DRAIN (REFRIGERANT)	
	10	1	**305-0303**	1	HOSE AS	
		1	**121-7138**	2	SEAL-O-RING	
	11	1	**305-0359**	1	GROMMET	
	12	1,2	**305-0441**	2	BAND-MARKER (HS)	
	13	1,2	**305-0442**	2	BAND-MARKER (HR)	
	14	2	**383-5687**	1	BRACKET AS	
	15	1	**383-5697**	1	HOSE AS-REFRIGERANT	
		1	**121-7138**	2	SEAL-O-RING	
		1	**130-0270**	1	SWITCH AS-PRESSURE (REFRIGERANT)	
		1	**185-8293**	1	SEAL-O-RING	
	16	2	**424-5499**	1	HOSE AS-REFRIGERANT	
		2	**121-7136**	1	SEAL-O-RING	
		2	**245-7851**	1	PLUG	
	17	2	**424-5500**	1	BRACKET AS	
	18	1	**454-6473**	1	HOSE AS-REFRIGERANT	
		1	**121-7137**	1	SEAL-O-RING	
		1	**245-7850**	1	PLUG	
	19	1,2	**100-4336**	3	CLIP	
	20	1	**122-9657**	2	CLAMP	
	21	1,2	**235-9014**	8	CLAMP-SPRING	
	22	1	**4P-8134**	1	CLIP	
	23	2	**4S-1962**	2	CLIP	
	24	2	**5K-3294**	2	CLIP	
	25	1,2	**5P-4325**	2	CLIP	
	26	2	**6D-1641**	2	CLIP	
	27	1,2	**6D-3479**	2	CLIP	
	28	1,2	**6D-4244**	3	CLIP	
	29	2	**6V-2235**	1	CLIP	
	30	1	**6V-3265**	1	CLIP	
M	31	1	**6V-7357**	5	BOLT (M6X1X25-MM)	
	32	1	**7I-2673**	1	STRAP-CABLE	
M	33	2	**7X-2537**	2	BOLT (M8X1.25X35-MM)	
	34	2	**7Y-8168**	1	GROMMET	
	35	1	**8M-2773**	1	CLIP	
	36	1,2	**8T-4121**	18	WASHER-HARD (11X21X2.5-MM THK)	
M	37	1,2	**8T-4136**	6	BOLT (M10X1.5X25-MM)	
M	38	1,2	**8T-4137**	11	BOLT (M10X1.5X20-MM)	

462-4691 **LINES GP-AIR CONDITIONER (**contd.**)** **i06781676**

NOTE	REF NO	GRAPHIC REF	PART NUMBER	QTY	PART NAME 1 2 3 4 5 6 (PRODUCT LEVEL)	SEE PAGE
M	39	2	**8T-4189**	2	BOLT (M8X1.25X20-MM)	
M	40	1	**8T-4191**	1	BOLT (M10X1.5X16-MM)	
M	41	1	**8T-4199**	2	BOLT (M8X1.25X12-MM)	
	42	1,2	**8T-4224**	6	WASHER-HARD (8.8X16X2-MM THK)	
	43	1	**9X-8256**	5	WASHER (6.6X12X2-MM THK)	
E	44	2	**225-5714**		GUARD (20-CM EACH)	
E	45	2	**225-5707**		GUARD (44-CM)	
E	46	1	**5P-0767**		HOSE (282-CM)	
E	46A	1	**5P-0767**		HOSE (260-CM)	

E - ORDER BY THE CENTIMETER
M - METRIC PART

462-4691 **LINES GP-AIR CONDITIONER (**contd.**)** **i06781676**

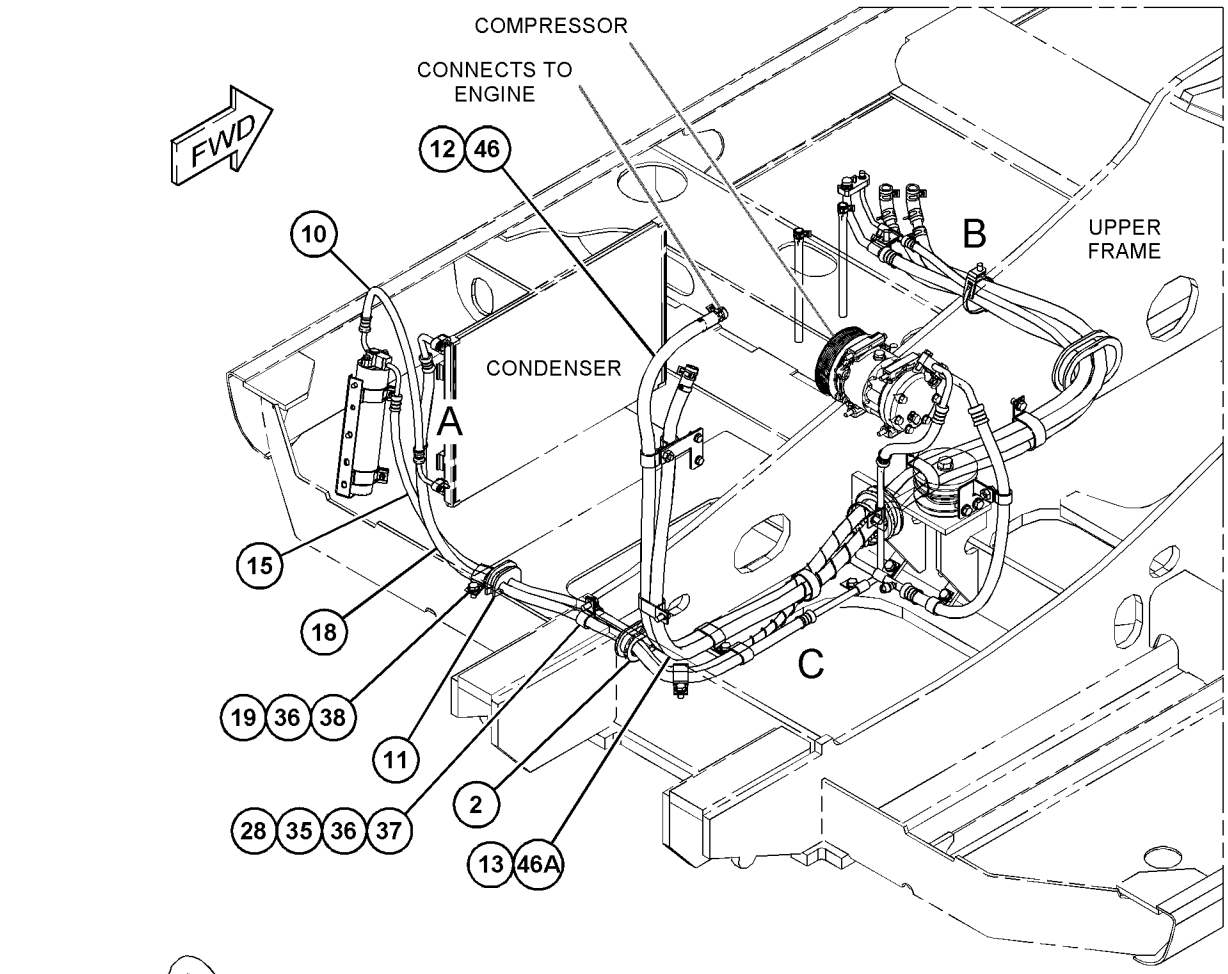

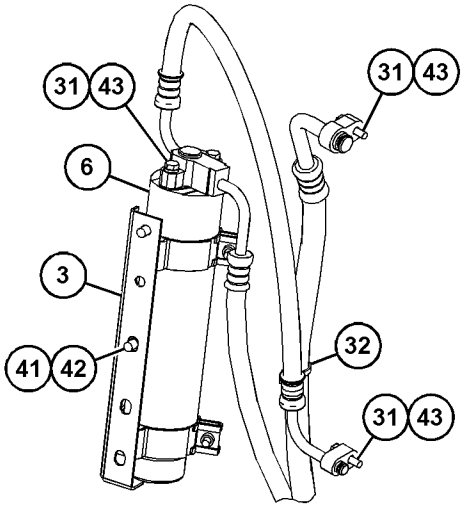

VIEW OF AREA A

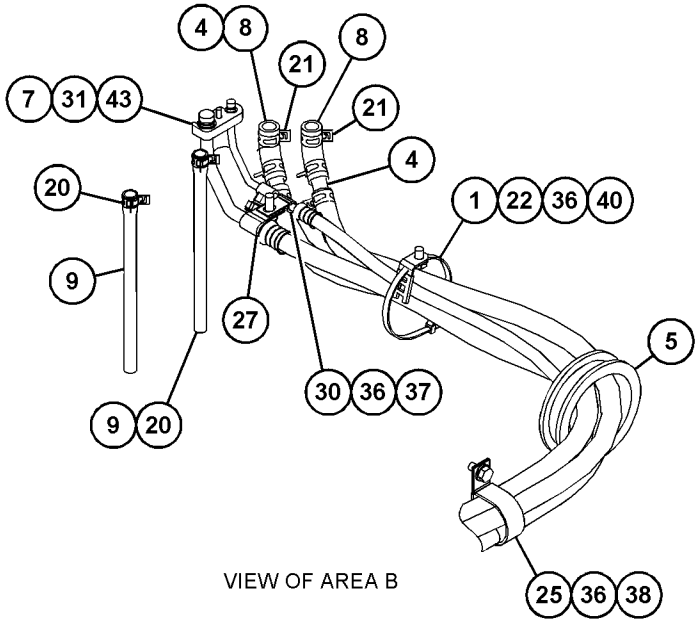

VIEW OF AREA B

REFER TO ALL ILLUSTRATIONS OF THIS GROUP FOR AUXILIARY VIEWS

GRAPHIC #1 g03885818

462-4691 **LINES GP-AIR CONDITIONER (**contd.**)** **i06781676**

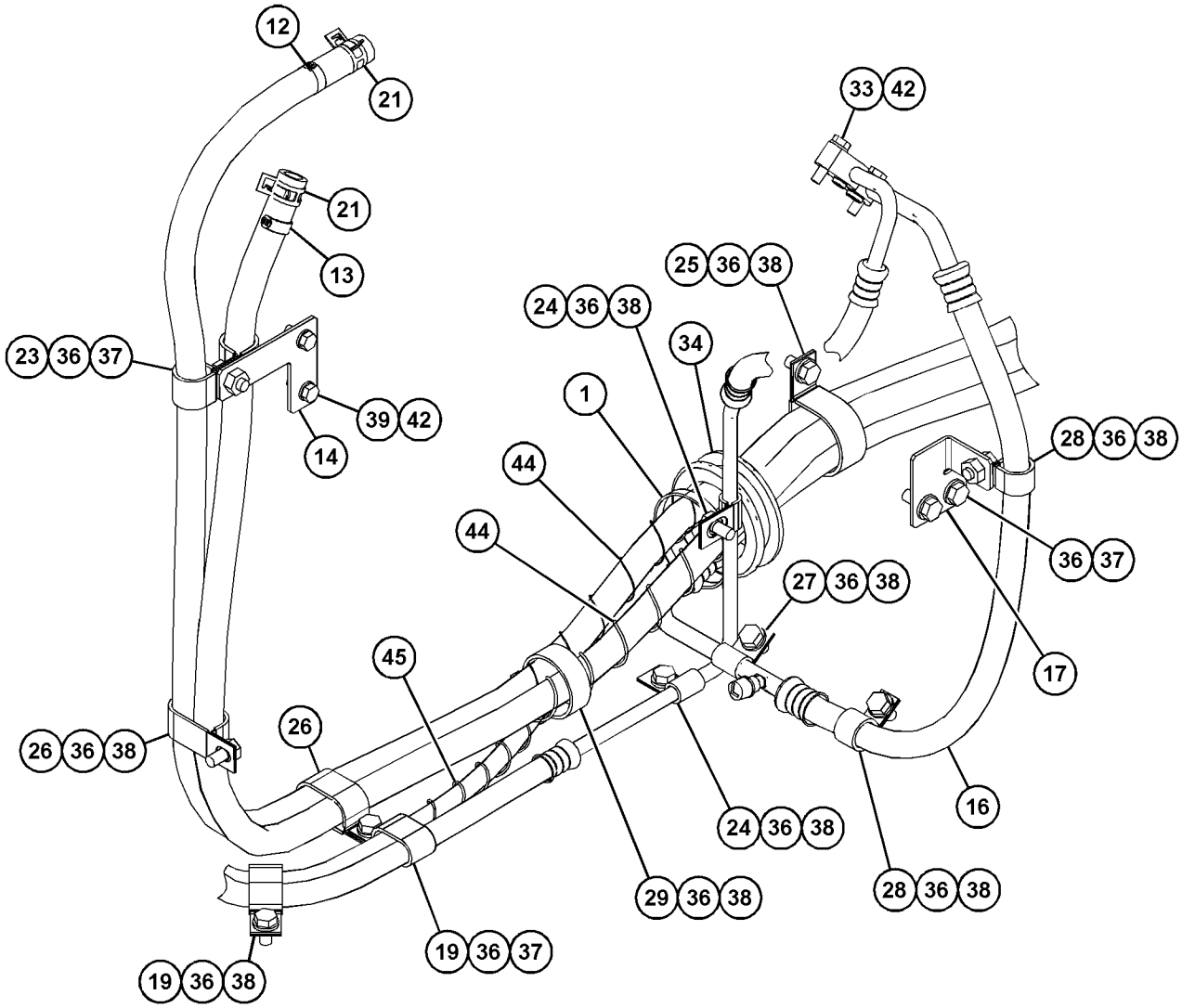

VIEW OF AREA C

GRAPHIC #2 <END> g03885819

7Y-0059 LITERATURE GP

S/N: RDE1-UP

PART OF 500-9108 CHASSIS AR

SMCS-7300 **i06617166**

NOTE	PART NUMBER	QTY	PART NAME 1 2 3 4 5 6 (PRODUCT LEVEL)	SEE PAGE
	099-3645	1	CABLE-LANYARD	
	5P-8500	2	KEY	
	5P-7958	2	SLEEVE-CABLE SPLICE	

<END>

142-3836 MIRROR GP-REAR VIEW

S/N: RDE1-UP

PART OF 500-9108 CHASSIS AR

SMCS-7319 **i05253855**

NOTE	REF NO	GRAPHIC REF	PART NUMBER	QTY	PART NAME 1 2 3 4 5 6 (PRODUCT LEVEL)	SEE PAGE
	1	1	**8T-7971**	4	WASHER-HARD (13.5X25.5X5-MM THK)	
	2	1	**137-2270**	1	MIRROR	
	3	1	**165-3065**	1	BRACKET-MIRROR	
M	4	1	**8T-4192**	4	BOLT (M12X1.75X25-MM)	

M - METRIC PART

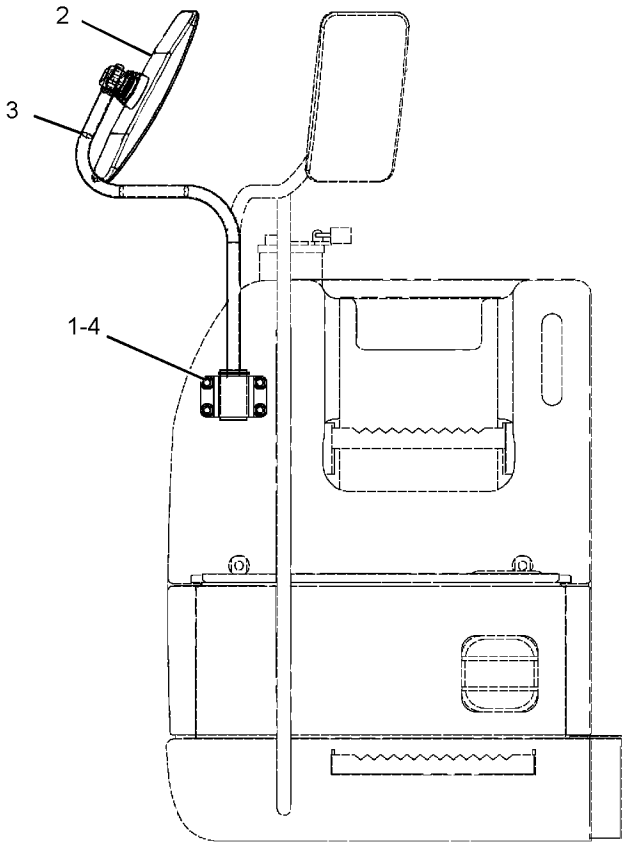

FRONT VIEW

GRAPHIC #1 <END> g02089313

327-6550 MIRROR GP-REAR VIEW

S/N: RDE1-UP

PART OF 388-9102 CAB GP

SMCS-7319 **i05719329**

NOTE	REF NO	GRAPHIC REF	PART NUMBER	QTY	PART NAME 1 2 3 4 5 6 (PRODUCT LEVEL)	SEE PAGE
M	1	1	**105-3487**	2	BOLT-SOCKET HEAD (M6X1X20-MM)	
	2	1	**9X-8256**	2	WASHER (6.6X12X2-MM THK)	

M - METRIC PART

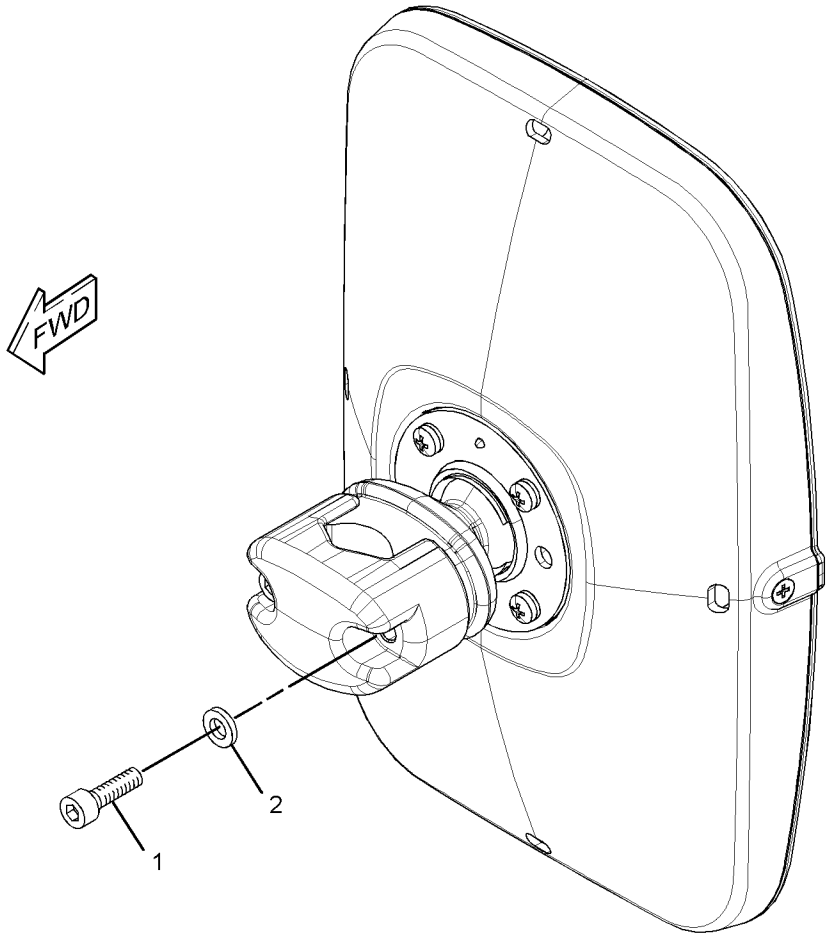

GRAPHIC #1 <END> g01615528

399-2620 MONITOR & MTG GP-OPERATOR

S/N: RDE1-UP

PART OF 506-8573 CAB AR, 476-3010 OPERATOR AR

SMCS-7490 **i06049351**

NOTE	REF NO	GRAPHIC REF	PART NUMBER	QTY	PART NAME 1 2 3 4 5 6 (PRODUCT LEVEL)	SEE PAGE
Y	1	1	**466-3567**	1	MONITOR GP-OPERATOR	457
	2	1	**399-5313**	1	BRACKET AS	
	3	1	**421-1370**	1	HARNESS AS-CAB (MONITOR)	
		1	**8T-8729**	3	PIN-CONNECTOR (16-GA TO 18-GA)	
		1	**3S-2093**	2	STRAP-CABLE	
D		1	**5P-5998**		TUBE (0.5-M)	
		1	**8T-8737**	13	PLUG-SEAL	
		1	**9X-3401**	8	PIN-CONNECTOR (16-GA TO 18-GA)	
		1	**230-5010**	1	PLUG AS-CONNECTOR (6-PIN)	
		1	**264-7032**	1	SEAL-CONNECTOR	
		1	**243-4508**	1	RECEPTACLE AS-CONNECTOR (6-PIN)	
		1	**243-4510**	1	RECEPTACLE AS-CONNECTOR (12-PIN)	
		1	**340-2567**	11	WIRE AS (18-GA)	
		1	**340-2566**	23	PLUG-SEAL	
		1	**379-0830**	1	PLUG AS-CONNECTOR (34-PIN)	
M	4	1	**9X-2042**	7	SCREW-TRUSS HEAD (M6X1X12-MM)	

D - ORDER BY THE METER
M - METRIC PART
Y - SEPARATE ILLUSTRATION

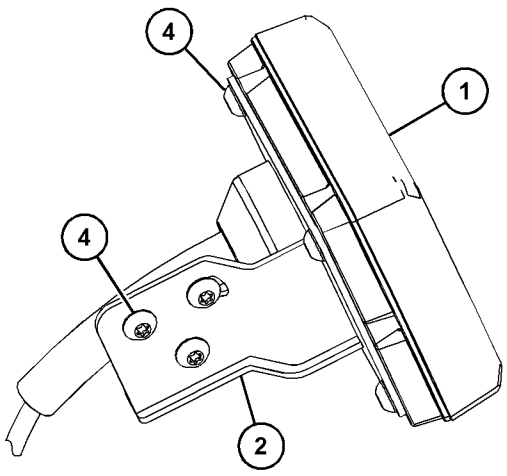

VIEW OF AREA A

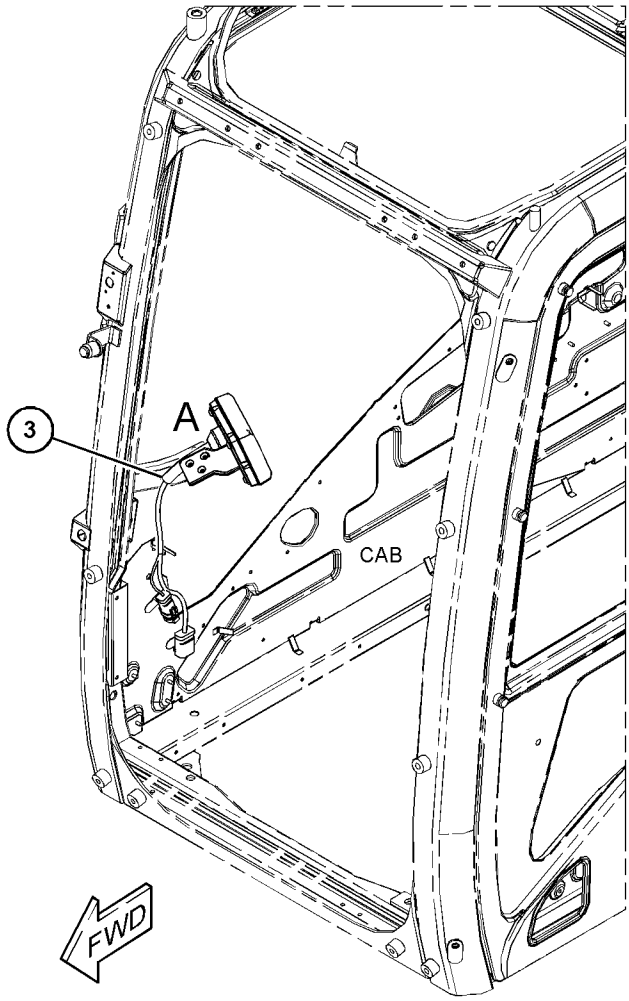

GRAPHIC #1 <END> g03682387

466-3567 MONITOR GP-OPERATOR

S/N: RDE1-UP

PART OF 399-2620 MONITOR & MTG GP-OPERATOR

SMCS-7490 **i06049350**

NOTE	REF NO	GRAPHIC REF	PART NUMBER	QTY	PART NAME 1 2 3 4 5 6 (PRODUCT LEVEL)	SEE PAGE
	1	1	**466-3569**	1	SOFTWARE GP-MONITOR	
Y	2	1	*466-3570*	1	MONITOR GP-OPERATOR	458

Y - SEPARATE ILLUSTRATION

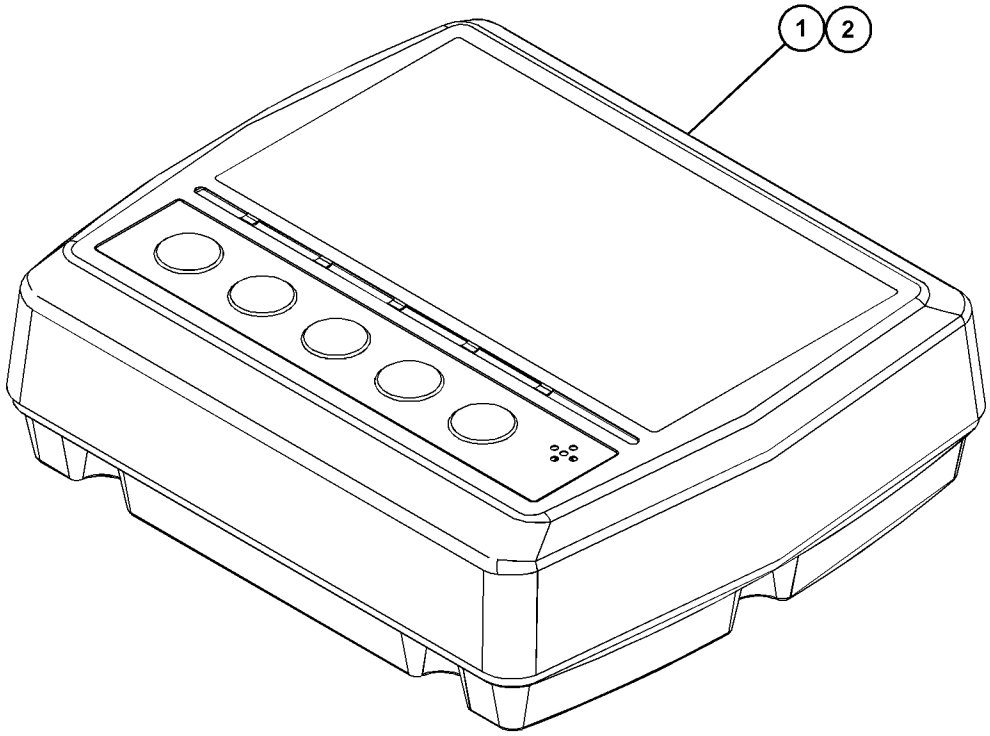

GRAPHIC #1 <END> g03745583

466-3570 MONITOR GP-OPERATOR

S/N: RDE1-UP

PART OF 466-3567 MONITOR GP-OPERATOR

SMCS-7490 **i05971169**

NOTE	REF NO	GRAPHIC REF	PART NUMBER	QTY	PART NAME 1 2 3 4 5 6 (PRODUCT LEVEL)	SEE PAGE
	1	1	**444-5471**	1	MONITOR GP-OPERATOR	
	2	1	**466-3572**	1	SOFTWARE GP-MONITOR	

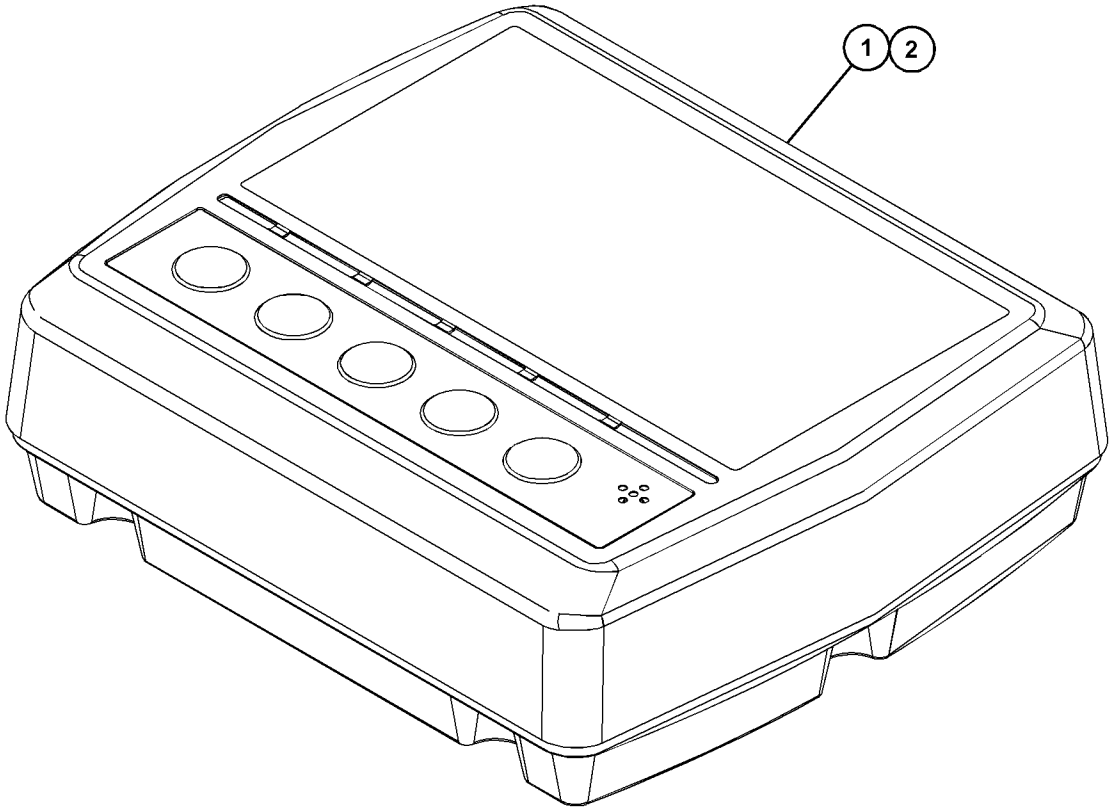

GRAPHIC #1 <END> g03745570

245-7811 MOUNTING GP-PLATFORM

S/N: RDE1-UP

PART OF 500-9108 CHASSIS AR

SMCS-7253 **i02495888**

NOTE	REF NO	GRAPHIC REF	PART NUMBER	QTY	PART NAME 1 2 3 4 5 6 (PRODUCT LEVEL)	SEE PAGE
	1	1	**235-8862**	4	MOUNT AS	
	2	1	**8T-4121**	16	WASHER-HARD (11X21X2.5-MM THK)	
M	3	1	**8T-4195**	16	BOLT (M10X1.5X30-MM)	

M - METRIC PART

245-7811 **MOUNTING GP-PLATFORM (**contd.**)** **i02495888**

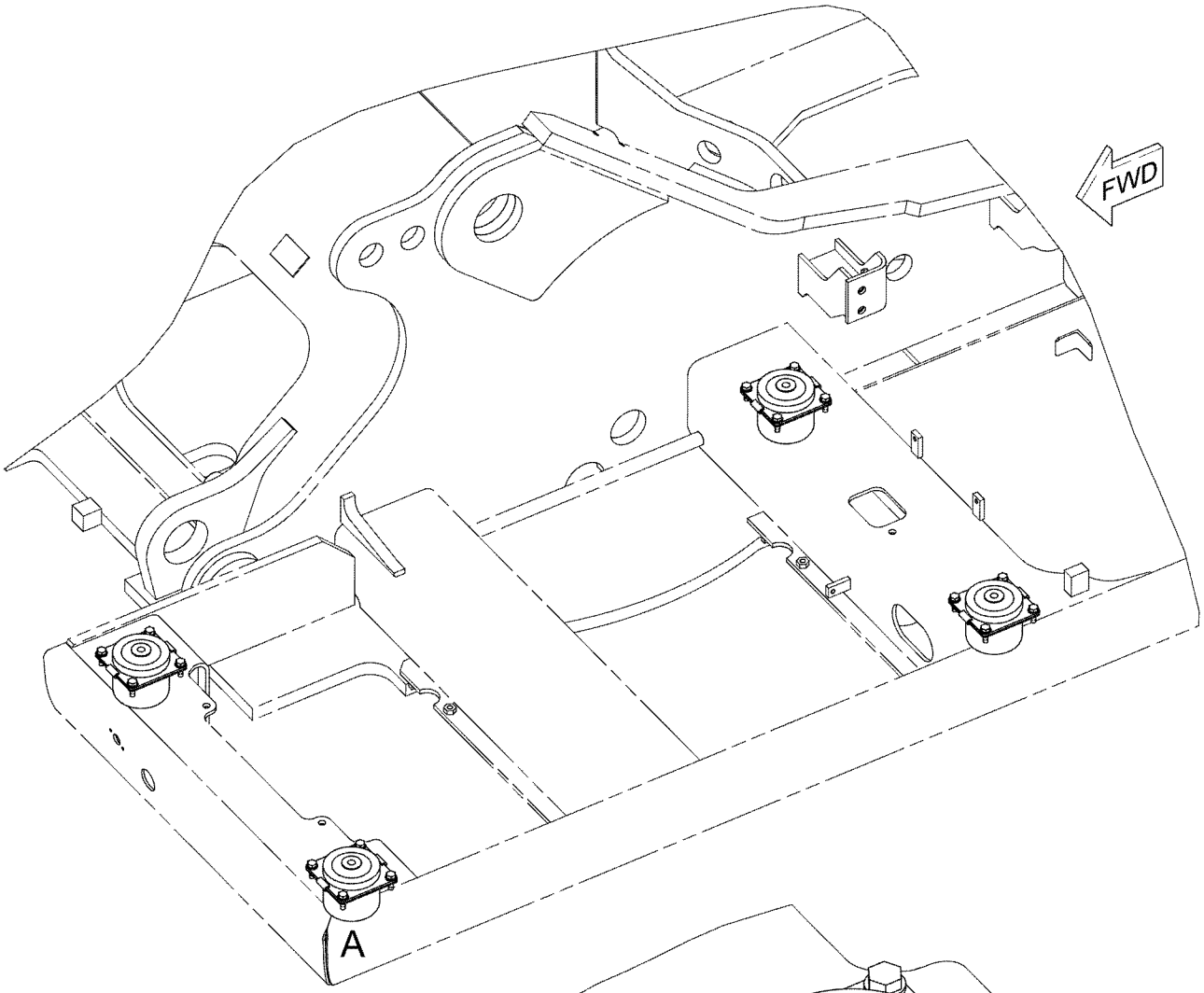

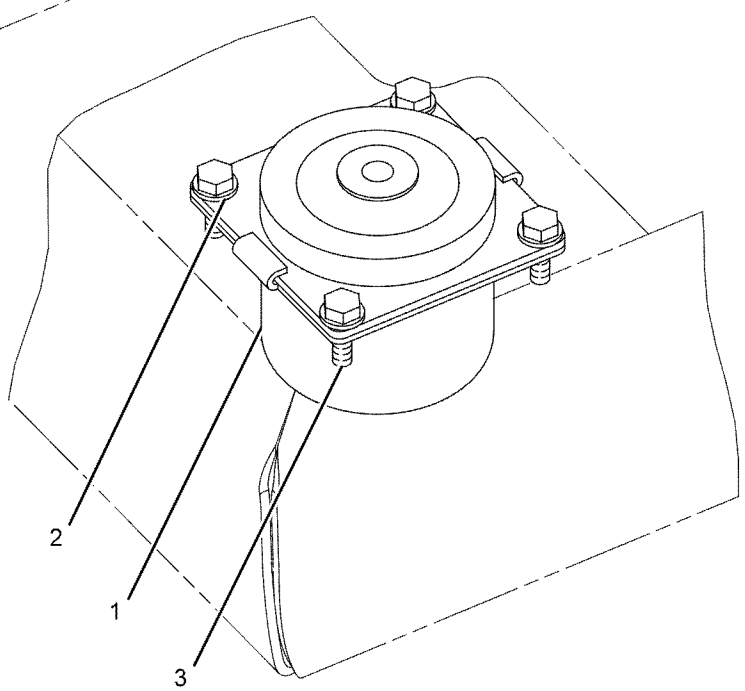

VIEW OF AREA A

GRAPHIC #1 <END> g01101486

476-3010 OPERATOR AR

S/N: RDE1-UP

PART OF 500-9108 CHASSIS AR

SMCS-7301 **i06781680**

NOTE	PART NUMBER	QTY	PART NAME 1 2 3 4 5 6 (PRODUCT LEVEL)	SEE PAGE
Y	*421-1431*	1	CONSOLE GP-OPERATOR	419
Y	*399-2618*	1	CONTROL & MTG GP-ELECTRONIC	88
Y	*170-9497*	1	CONTROL GP-PILOT OPERATED HYD (TRAVEL)	437
Y	*399-2620*	1	MONITOR & MTG GP-OPERATOR	456
Y	*388-6701*	1	PANEL & MTG GP-CIRCUIT BREAKER	106
Y	*462-4692*	1	PLATFORM GP-OPERATOR	466
Y	*327-6523*	1	SUPPORT GP-SEAT	473
Y	*398-7003*	1	WIRING GP-CAB	124
Y	*398-7005*	1	WIRING GP-CONSOLE	137
Y	*468-7598*	1	WIRING GP-PLATFORM	141

Y - SEPARATE ILLUSTRATION

<END>

307-1818 PARTS GP-DOOR

S/N: RDE1-UP

PART OF 388-9115 DOOR GP-CAB

SMCS-7308 **i05343740**

NOTE	REF NO	GRAPHIC REF	PART NUMBER	QTY	PART NAME 1 2 3 4 5 6 (PRODUCT LEVEL)	SEE PAGE
	1	1	**151-6703**	1	HANDLE-PULL	
	2	1	**151-6704**	2	CAP	
Y	3	1	**151-6792**	1	WINDOW GP-DOOR	485
	4	1	**156-6471**	1	GLASS	
	5	1	**156-6598**	1	HOOK	
	6	1	**156-6600**	1	LOCK AS	
		1	**164-0514**	1	CLIP	
	6A	1	**164-0519**	1	CLIP	
	7	1	**156-6643**	2	COVER	
	8	1	**156-6645**	1	HANDLE AS	
		1	**201-4391**	1	CLIP	
	9	1	**161-3639**	1	HANDLE AS	
	10	1	**161-3650**	1	COVER AS	
	11	1	**161-3663**	1	SEAL AS	
		1	**151-9497**	45	CLIP	
	12	1	**161-3665**	1	SEAL	
	13	1	**164-0515**	1	JOINT	
	14	1	**167-7039**	1	GROMMET	
M	15	1	**185-8180**	3	SCREW (M6X1X16-MM)	
	16	1	**8T-4224**	2	WASHER-HARD (8.8X16X2-MM THK)	
	17	1	**259-7354**	1	COVER	
M	18	1	**096-2622**	2	SCREW-MACHINE (M4X0.7X8-MM)	
M	19	1	**096-3884**	2	NUT-SPRING (M8X1.25-THD)	
M	20	1	**101-8899**	2	SCREW AS (M6X1.0X16-MM)	
M	21	1	**101-8900**	2	SCREW AS (M6X1X20-MM)	
	22	1	**151-9461**	4	SPACER	
	23	1	**178-5573**	4	SPACER	
	24	1	**178-5574**	2	SPACER	
	25	1	**189-2690**	1	HANDLE	
	26	1	**4I-4286**	1	KNOB	
M	27	1	**9X-2042**	8	SCREW-TRUSS HEAD (M6X1X12-MM)	

M - METRIC PART
Y - SEPARATE ILLUSTRATION

307-1818 **PARTS GP-DOOR (**contd.**)** **i05343740**

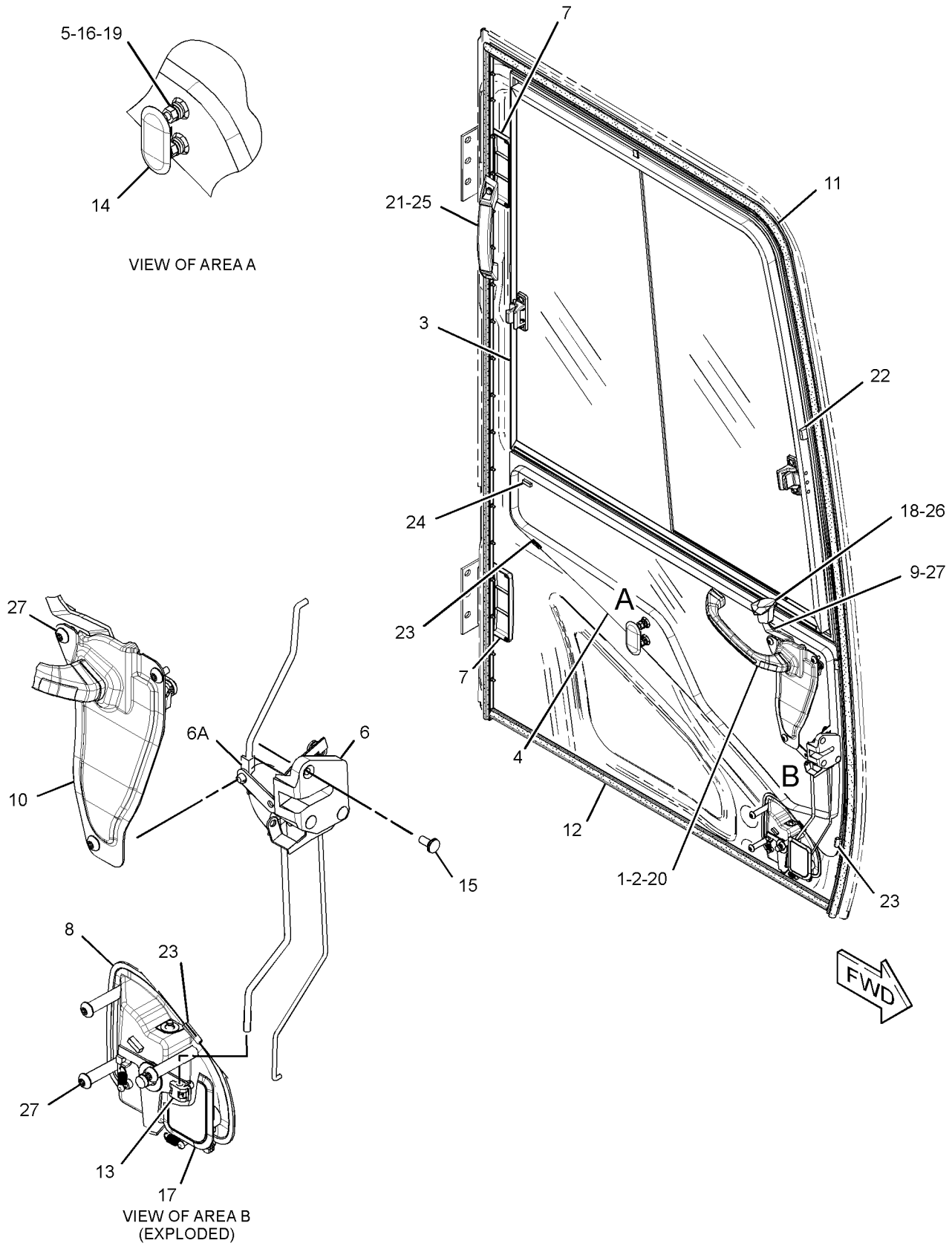

GRAPHIC #1 <END> g02178270

388-9105 PARTS GP-DOOR—CAB

S/N: RDE1-UP

PART OF 416-9607 CAB GP

SMCS-7308 **i06098839**

NOTE	REF NO	GRAPHIC REF	PART NUMBER	QTY	PART NAME 1 2 3 4 5 6 (PRODUCT LEVEL)	SEE PAGE
	1	1	**151-6703**	1	HANDLE-PULL	
	2	1	**151-6704**	2	CAP	
Y	3	1	**384-6533**	1	WINDOW GP-DOOR	487
	4	1	**383-6933**	1	GLASS	
	5	1	**156-6598**	1	HOOK	
	6	1	**398-7107**	1	LOCK AS	
	6A	1	**398-7105**	1	CLIP	
		1	**398-7105**	1	CLIP	
	7	1	**156-6643**	2	COVER	
	8	1	**398-7111**	1	HANDLE AS	
		1	**398-7106**	1	CLIP	
	9	1	**161-3639**	1	HANDLE AS	
	10	1	**161-3650**	1	COVER AS	
	11	1	**161-3663**	1	SEAL AS	
		1	**151-9497**	45	CLIP	
	12	1	**161-3665**	1	SEAL	
	13	1	**164-0515**	1	JOINT	
	14	1	**167-7039**	1	GROMMET	
M	15	1	**185-8180**	3	SCREW (M6X1X16-MM)	
	16	1	**8T-4224**	2	WASHER-HARD (8.8X16X2-MM THK)	
	17	1	**259-7354**	1	COVER	
M	18	1	**096-2622**	2	SCREW-MACHINE (M4X0.7X8-MM)	
M	19	1	**096-3884**	2	NUT-SPRING (M8X1.25-THD)	
M	20	1	**101-8899**	2	SCREW AS (M6X1.0X16-MM)	
M	21	1	**101-8900**	2	SCREW AS (M6X1X20-MM)	
	22	1	**151-9461**	4	SPACER	
	23	1	**178-5573**	4	SPACER	
	24	1	**178-5574**	3	SPACER	
	25	1	**189-2690**	1	HANDLE	
	26	1	**4I-4286**	1	KNOB (HANDLE)	
M	27	1	**9X-2042**	8	SCREW-TRUSS HEAD (M6X1X12-MM)	

M - METRIC PART
Y - SEPARATE ILLUSTRATION

388-9105 **PARTS GP-DOOR (**contd.**)** **i06098839**

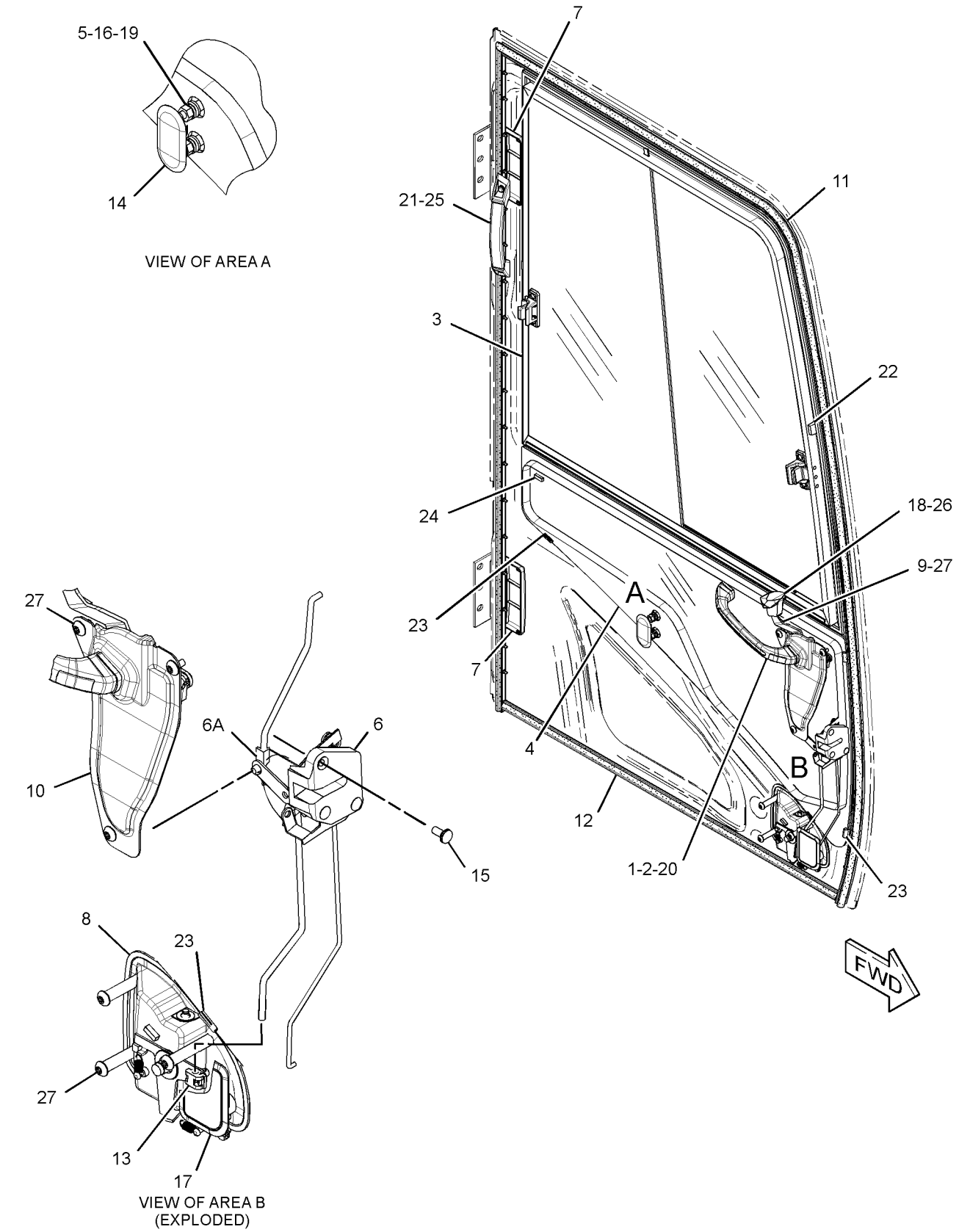

GRAPHIC #1 <END> g02178270

462-4692 PLATFORM GP-OPERATOR

S/N: RDE1-UP

PART OF 476-3010 OPERATOR AR

SMCS-7253 **i06781713**

NOTE	REF NO	GRAPHIC REF	PART NUMBER	QTY	PART NAME 1 2 3 4 5 6 (PRODUCT LEVEL)	SEE PAGE
	1	1	**4I-3266**	1	STRIP	
	2	1	**135-8965**	1	GROMMET	
	3	1	**135-8966**	1	GROMMET	
	4	1	**161-3717**	1	STRIP	
	5	1	**167-7135**	1	PLATE AS	
	6	1	**451-2175**	4	WASHER-HARD (17.5X30X3.5-MM THK)	
M	7	1	**453-1259**	4	BOLT (M16X2X40-MM)	
	8	1	**454-6472**	1	PLATFORM AS	
	9	1	**8T-4121**	4	WASHER-HARD (11X21X2.5-MM THK)	
M	10	1	**8T-4191**	4	BOLT (M10X1.5X16-MM)	

M - METRIC PART

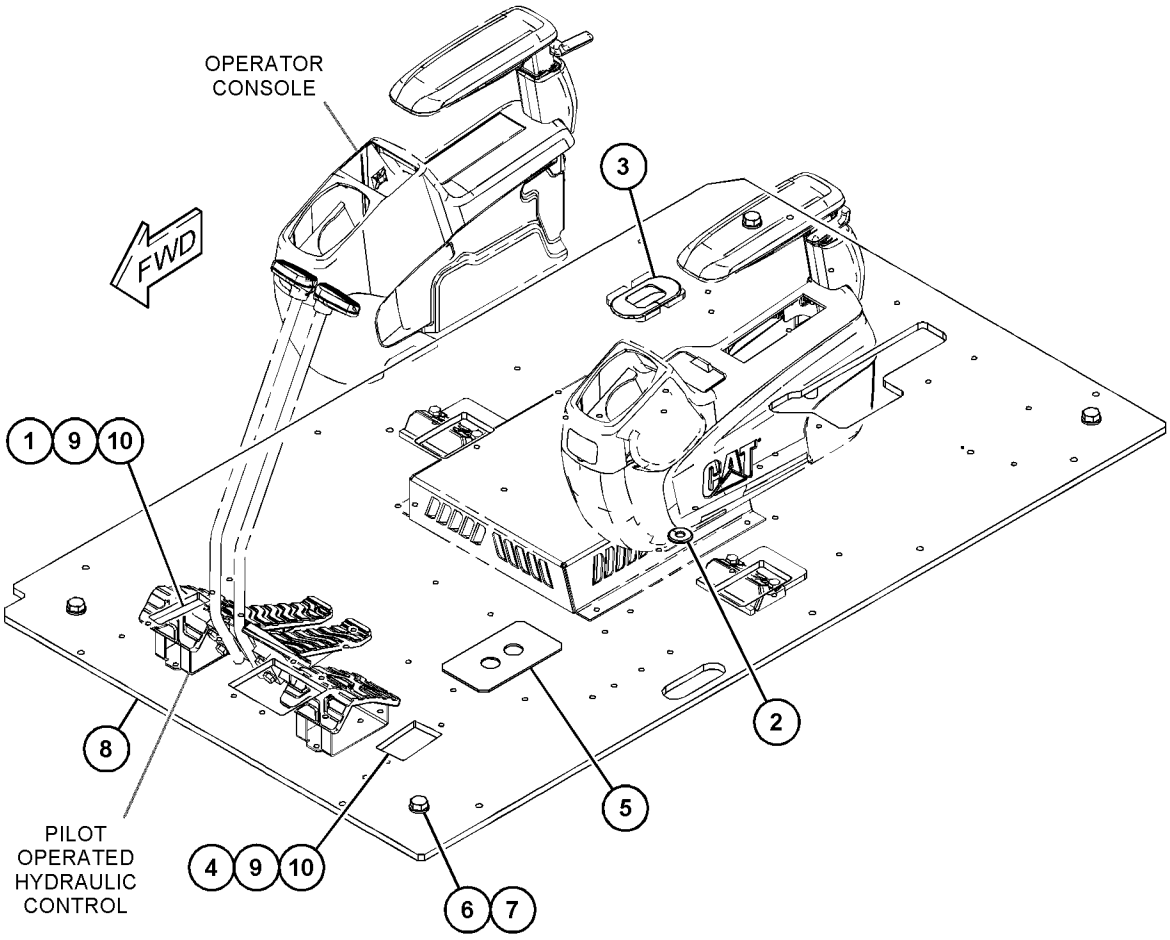

GRAPHIC #1 <END> g03884441

245-7881 SCREEN GP-SUN

S/N: RDE1-UP

PART OF 506-8578, 506-8579 DISTRIBUTION AR

SMCS-7165 **i06812743**

NOTE	REF NO	GRAPHIC REF	PART NUMBER	QTY	PART NAME 1 2 3 4 5 6 (PRODUCT LEVEL)	SEE PAGE
	1	1	**255-4410**	1	SCREEN-SUN (CAB)	
	2	1	**259-7214**	3	HOOK-RETAINER	
	3	1	**259-7215**	3	HOOK-RETAINER	
M	4	1	**153-3568**	6	BOLT-SOCKET HEAD (M5X0.8X10-MM)	

M - METRIC PART

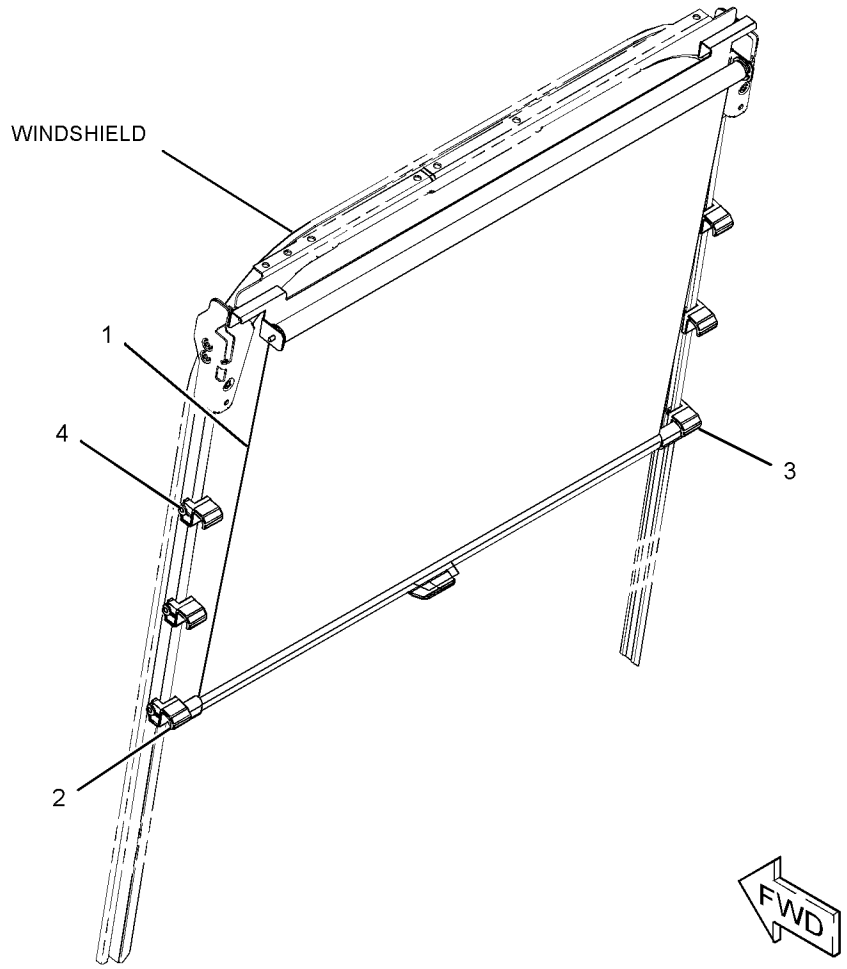

GRAPHIC #1 <END> g01177458

327-6501 SEAT & MOUNTING GP—HIGH BACK, TILT

S/N: RDE1-UP
CLOTH
PART OF 506-8573 CAB AR

SMCS-7312 **i06738077**

NOTE	REF NO	GRAPHIC REF	PART NUMBER	QTY	PART NAME 1 2 3 4 5 6 (PRODUCT LEVEL)	SEE PAGE
Y	1	1	*327-6507*	1	SEAT GP-SUSPENSION (HIGH BACK, TILT)	472
M	2	1	**6V-8202**	4	BOLT-SOCKET HEAD (M8X1.25X16-MM)	

M - METRIC PART
Y - SEPARATE ILLUSTRATION

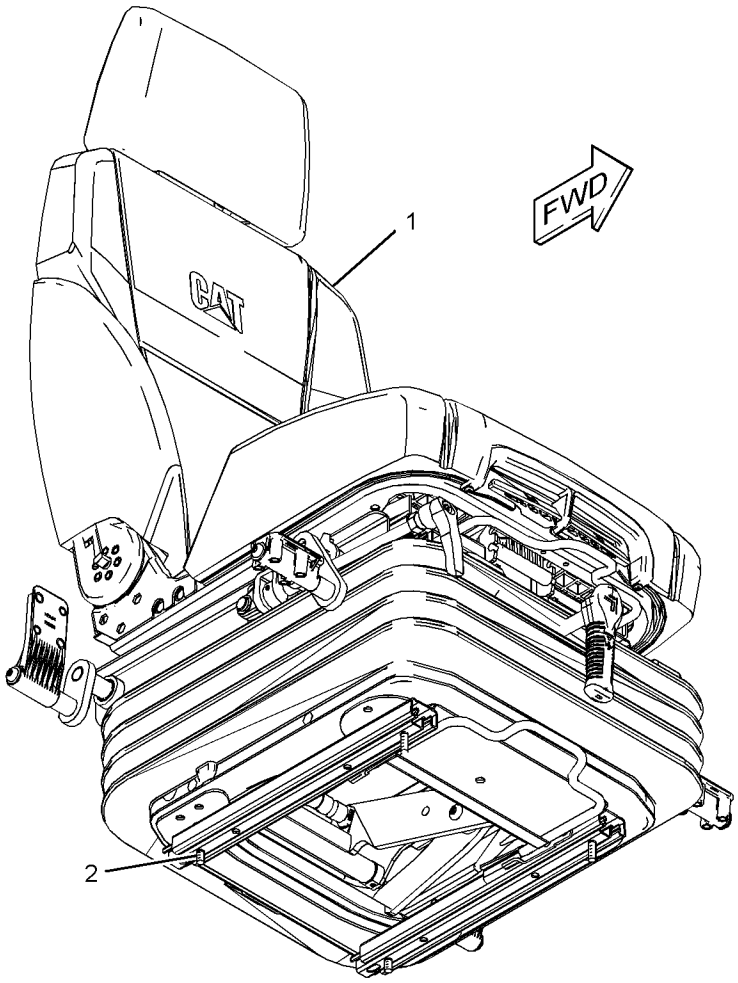

GRAPHIC #1 <END> g01803395

305-0467 SEAT BELT GP–RETRACTABLE

S/N: RDE1-UP

SMCS-7327 **i06736209**

NOTE	REF NO	GRAPHIC REF	PART NUMBER	QTY	PART NAME 1 2 3 4 5 6 (PRODUCT LEVEL)	SEE PAGE
C	1	1	**327-6541**	1	SEAT BELT GP (RETRACTABLE, 51-MM (2-IN))	

C - CHANGE FROM PREVIOUS TYPE

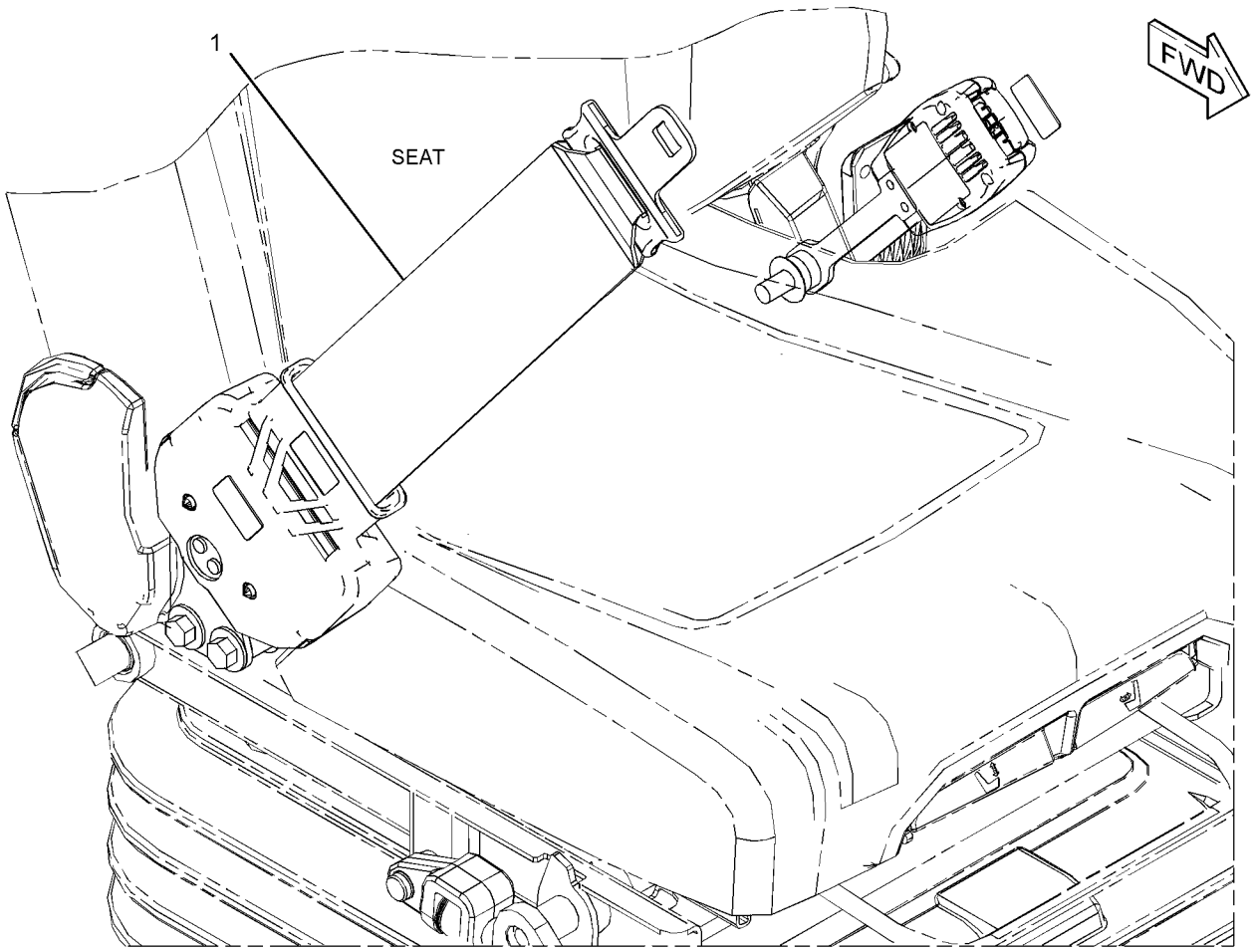

GRAPHIC #1 <END> g03442416

488-6541 SEAT BELT GP–RETRACTABLE

S/N: RDE1-UP
51-MM (2-IN)
PART OF 506-8573 CAB AR

SMCS-7327 **i06814673**

NOTE	REF NO	GRAPHIC REF	PART NUMBER	QTY	PART NAME 1 2 3 4 5 6 (PRODUCT LEVEL)	SEE PAGE
	1	1	**488-6524**	1	SEAT BELT GP (RETRACTABLE, 51-MM (2-IN))	

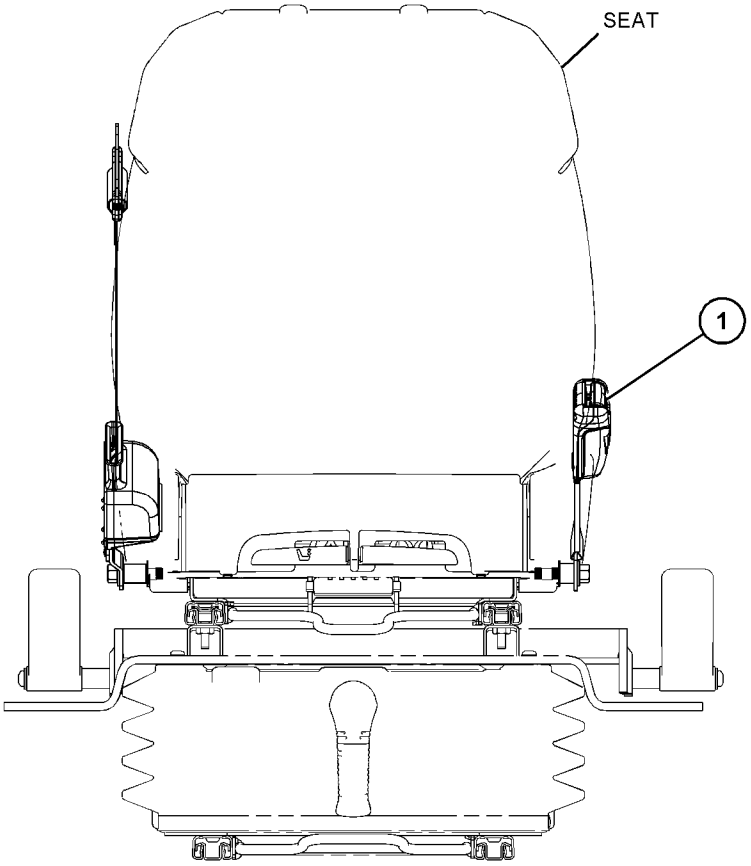

FRONT VIEW

GRAPHIC #1 <END> g06076786

327-6512 SEAT GP—HIGH BACK, TILT

S/N: RDE1-UP

PART OF 327-6507 SEAT GP-SUSPENSION

SMCS-7312 **i05832601**

NOTE	REF NO	GRAPHIC REF	PART NUMBER	QTY	PART NAME 1 2 3 4 5 6 (PRODUCT LEVEL)	SEE PAGE
	1	1	**178-5659**	1	HANDLE (LUMBAR SUPPORT ADJUSTER)	
	2	1	**316-8987**	2	BRACKET	
	3	1	**327-6515**	1	HEADREST AS-SEAT (CLOTH)	
	4	1	**327-6640**	1	KIT-HANDLE (RECLINER)	
	5	1	**327-6642**	1	KIT-SEAT TILT (ADJUSTER)	
	6	1	**327-6643**	1	KIT-ADJUSTER (CUSHION POSITIONING)	
	7	1	**333-4160**	1	KIT-SEAT (HIGH BACK, MANUAL)	
		1	**332-0195**	1	CLIP	
		1	**383-5647**	1	SPRING	
		1	**440-5584**	1	LEVER	
		1	**440-5585**	1	PIN	
	8	1	**333-4179**	2	BOLT-SPECIAL	
M	9	1	**9X-2616**	4	SCREW-SOCKET (M8X1.25X16-MM)	

M - METRIC PART

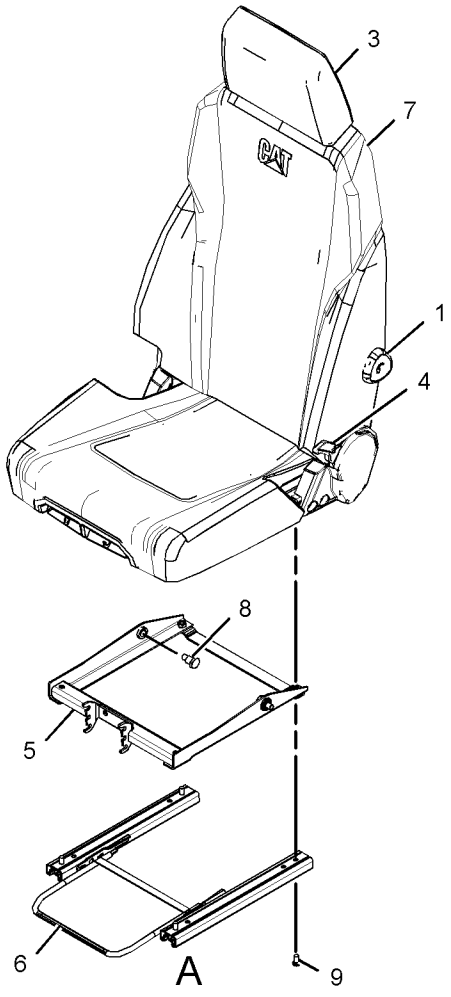

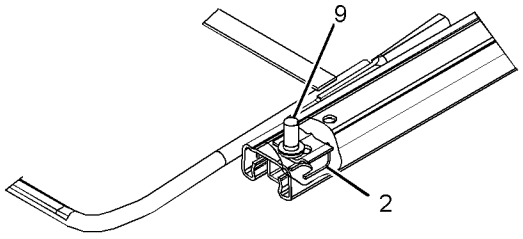

VIEW OF AREA A

GRAPHIC #1 <END> g03058636

327-6507 SEAT GP-SUSPENSION—HIGH BACK, TILT

S/N: RDE1-UP

PART OF 327-6501 SEAT & MOUNTING GP

SMCS-7324, 7336 **i05439945**

NOTE	REF NO	GRAPHIC REF	PART NUMBER	QTY	PART NAME 1 2 3 4 5 6 (PRODUCT LEVEL)	SEE PAGE
	1	1	**316-8987**	2	BRACKET	
Y	2	1	**327-6512**	1	SEAT GP (HIGH BACK, TILT)	471
Y	3	1	**327-6520**	1	SUSPENSION GP-SEAT (MECHANICAL)	474
M	4	1	**5A-3604**	4	BOLT-SOCKET HEAD (M8X1.25X25-MM)	

M - METRIC PART
Y - SEPARATE ILLUSTRATION

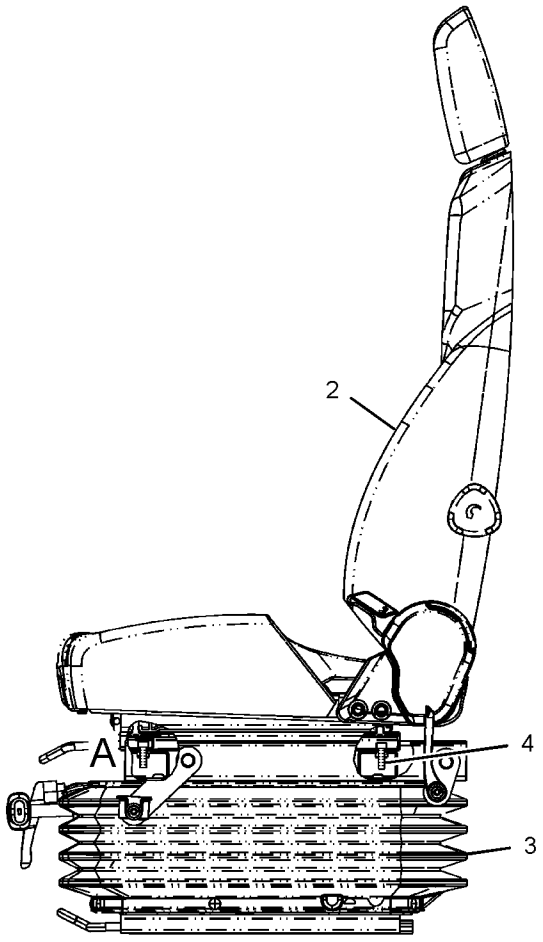

LEFT SIDE VIEW

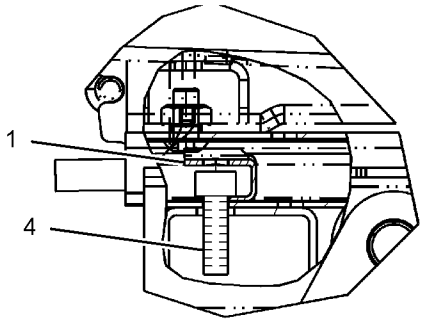

VIEW OF AREA A

GRAPHIC #1 <END> g01794435

327-6523 SUPPORT GP-SEAT

S/N: RDE1-UP

PART OF 506-8573 CAB AR, 476-3010 OPERATOR AR

SMCS-7321 **i03722760**

NOTE	REF NO	GRAPHIC REF	PART NUMBER	QTY	PART NAME 1 2 3 4 5 6 (PRODUCT LEVEL)	SEE PAGE
	1	1	**327-6538**	1	SUPPORT AS-SEAT	
	2	1	**8T-4121**	4	WASHER-HARD (11X21X2.5-MM THK)	
M	3	1	**8T-4191**	4	BOLT (M10X1.5X16-MM)	

M - METRIC PART

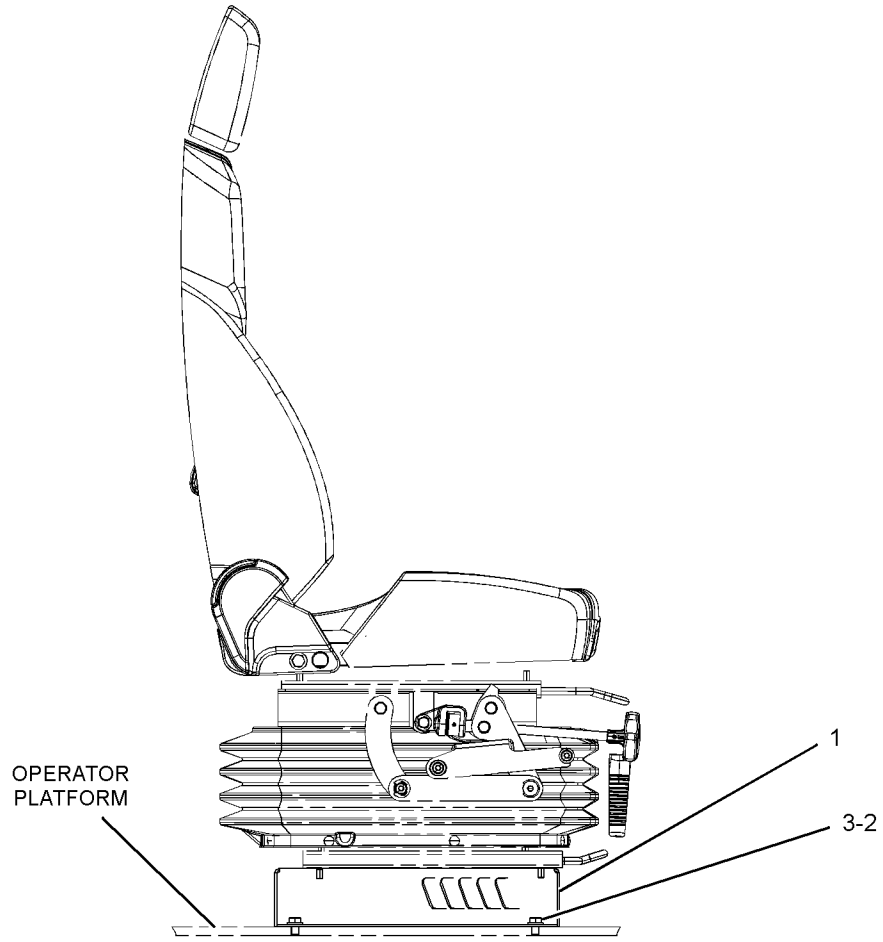

RIGHT SIDE VIEW

GRAPHIC #1 <END> g01809475

327-6520 SUSPENSION GP-SEAT—MECHANICAL

S/N: RDE1-UP

PART OF 327-6507 SEAT GP-SUSPENSION

SMCS-7324 **i05439962**

NOTE	REF NO	GRAPHIC REF	PART NUMBER	QTY	PART NAME 1 2 3 4 5 6 (PRODUCT LEVEL)	SEE PAGE
	1	1	**327-6644**	1	KIT-BRACKET (CONSOLE RAISE, LOWER)	
	1A	1	**372-9306**	16	SPACER (16.5X28.5X0.1-MM THK)	
	2	1	**327-6645**	1	KIT-SEAT SUSPENSION (MECHANICAL)	
	3	1	**327-6648**	1	KIT-ADJUSTER (SEAT POSITION)	
M	4	1	**198-3899**	4	SCREW-BUTTON HEAD (M8X1.25X20-MM)	
	5	1	**245-7895**	1	KIT-CLIP (SEAT)	
					(INCLUDES 28 CLIPS)	
	6	1	**327-6646**	1	KIT-CYLINDER (DAMPENER)	
	7	1	**327-6647**	1	KIT-COVER (SUSPENSION)	
	8	1	**333-4180**	6	SCREW-BUTTON HEAD (M8X1.25X20-MM)	
	9	1	**333-4181**	1	KIT-HANDLE (SEAT HEIGHT) (SEAT HEIGHT)	

M - METRIC PART

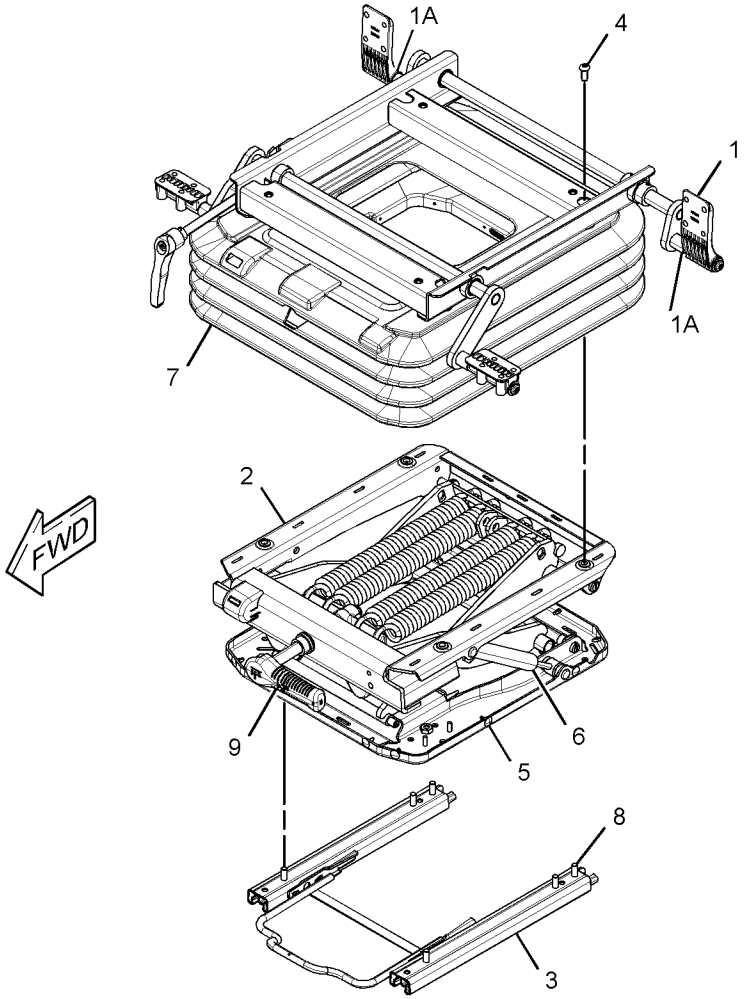

GRAPHIC #1 <END> g02809057

229-9070 WASHER GP-WINDOW

S/N: RDE1-UP

PART OF 506-8572 OPTION AR-CAB

SMCS-7306 **i06636118**

NOTE	REF NO	GRAPHIC REF	PART NUMBER	QTY	PART NAME 1 2 3 4 5 6 (PRODUCT LEVEL)	SEE PAGE
	1	1	**7Y-3474**	1	VALVE AS-CHECK (WINDOW WASHER)	
	2	1	**163-6795**	2	STRAP-CABLE	
	3	1	**176-1931**	1	TANK AS-WINDOW WASHER	
		1	**5C-8138**	1	GROMMET	
		1	**7T-8890**	1	PUMP AS-WASHER (24-VOLT)	
		1	**178-5431**	1	CAP AS (WINDOW WASHER)	
		1	**3W-6399**		PACKING	
	4	1	**235-9012**	1	SUPPORT AS	
M	5	1	**8T-4970**	2	BOLT (M6X1X14-MM)	
	6	1	**9X-8256**	2	WASHER (6.6X12X2-MM THK)	
CE	7	1	**144-0195**		HOSE (13-CM)	
	8	1	**3S-2093**	1	STRAP-CABLE	

C - CHANGE FROM PREVIOUS TYPE
E - ORDER BY THE CENTIMETER
M - METRIC PART

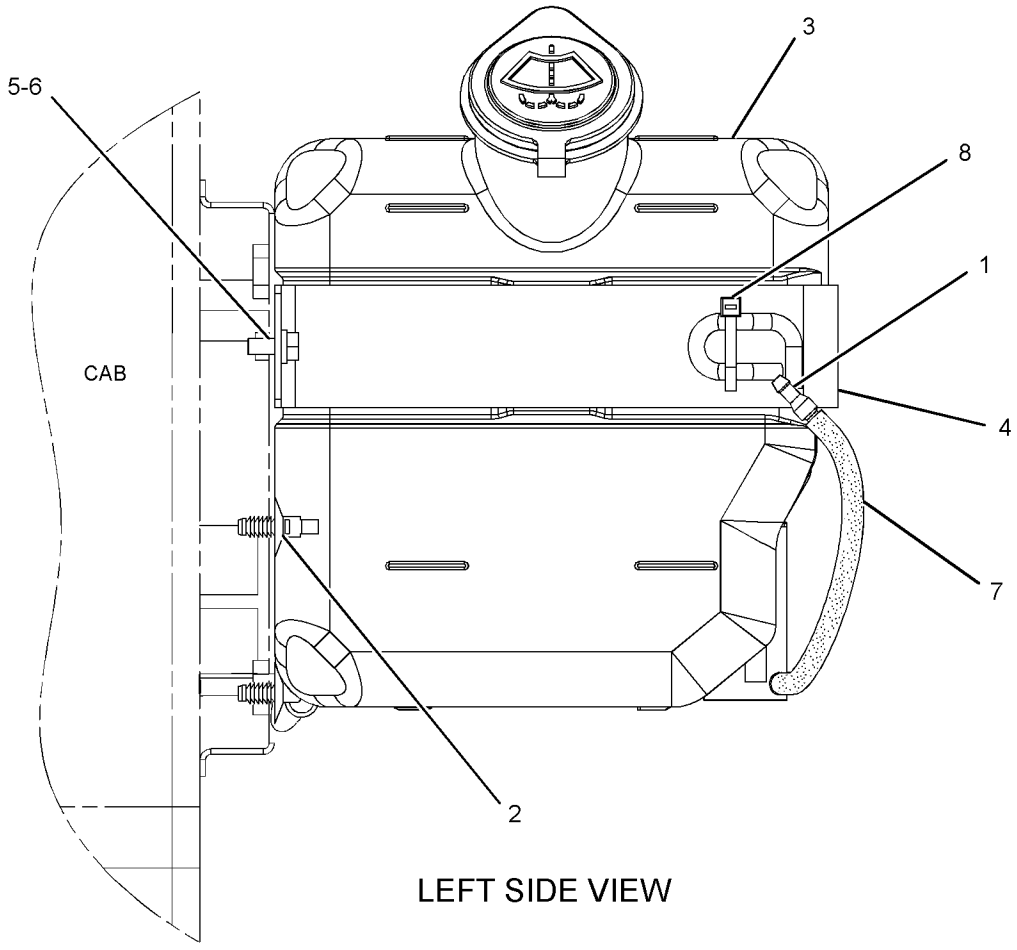

LEFT SIDE VIEW

GRAPHIC #1 <END> g01307642

388-9107 WINDOW GP-CAB—SIDE, REAR

S/N: RDE1-UP

PART OF 416-9607 CAB GP

SMCS-7310 **i05503869**

NOTE	REF NO	GRAPHIC REF	PART NUMBER	QTY	PART NAME 1 2 3 4 5 6 (PRODUCT LEVEL)	SEE PAGE
	1	1	**383-6931**	1	GLASS (LH)	
	2	1	**383-6929**	1	GLASS (REAR)	
	3	1	**164-0666**	1	SEAL	
	4	1	**178-5572**	4	SPACER-SPECIAL (WINDOW)	
	5	1	**383-6932**	1	GLASS (RH)	
	6	1	**099-3629**	1	RING-KEY	
	7	1	**178-5573**	4	SPACER	
	8	1	**178-5574**	10	SPACER	

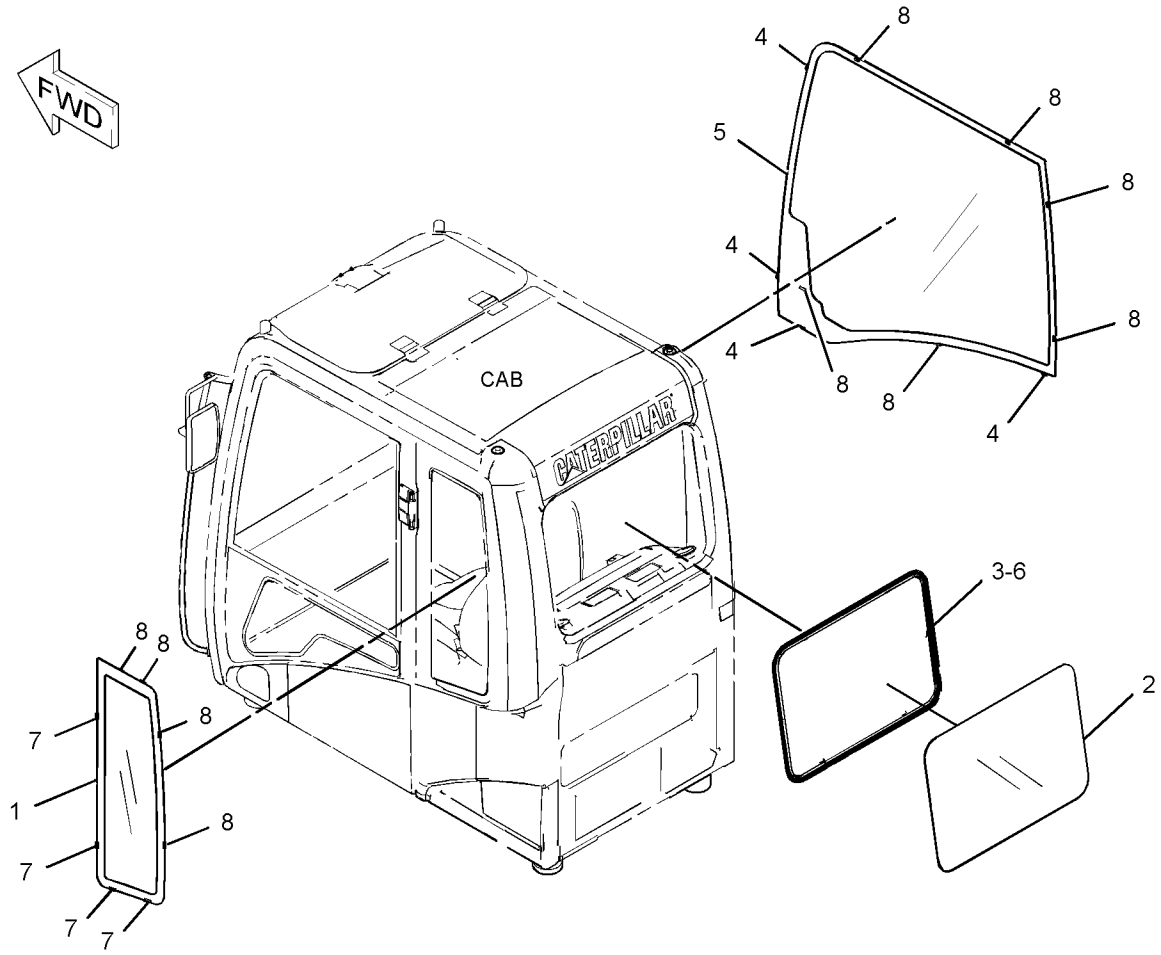

GRAPHIC #1 <END> g03499618

388-9108 WINDOW GP-CAB–FRONT, LOWER

S/N: RDE1-UP

PART OF 416-9607 CAB GP

SMCS-7310 **i05208414**

NOTE	REF NO	GRAPHIC REF	PART NUMBER	QTY	PART NAME 1 2 3 4 5 6 (PRODUCT LEVEL)	SEE PAGE
	1	1	**383-6930**	1	GLASS (FRONT, LOWER)	
	2	1	**156-6631**	2	STOP	
	3	1	**305-0361**	1	SEAL	
	4	1	**178-5569**	2	SEAL	
	5	1	**189-2702**	2	SEAL	
	6	1	**139-7119**	2	PLUG	

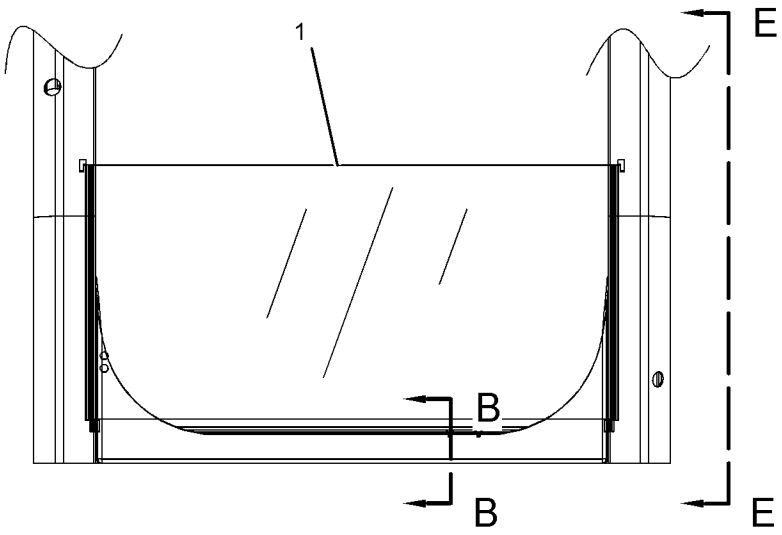

FRONT VIEW

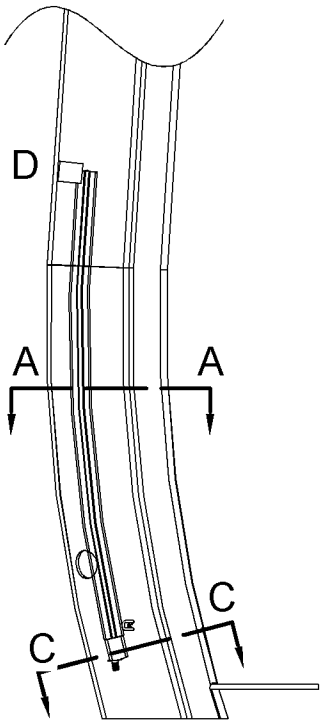

VIEW E-E

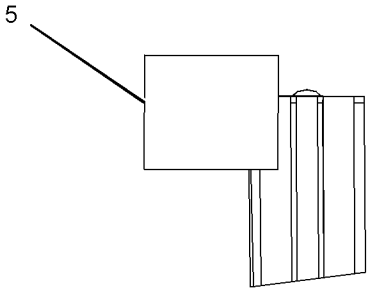

VIEW OF AREA D

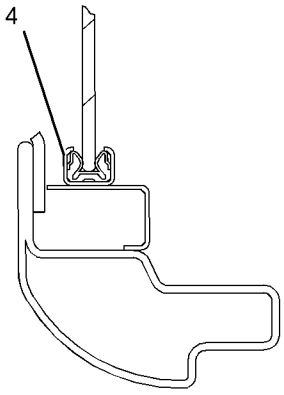

SECTION A-A

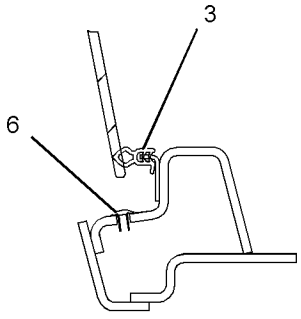

SECTION B-B

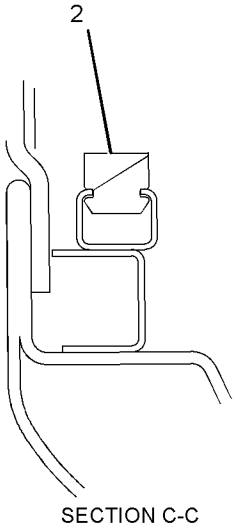

SECTION C-C

GRAPHIC #1 <END> g01398601

388-9109 WINDOW GP-CAB—FRONT, UPPER

S/N: RDE1-UP

PART OF 416-9607 CAB GP

SMCS-7310 **i05437801**

NOTE	REF NO	GRAPHIC REF	PART NUMBER	QTY	PART NAME 1 2 3 4 5 6 (PRODUCT LEVEL)	SEE PAGE
	1	2	**170-9722**	1	CUSHION	
	2	1	**151-6703**	1	HANDLE-PULL	
	3	1	**151-6704**	2	CAP	
	4	2	**151-6778**	1	FRAME AS	
	4A	2	**156-6470**	1	HANDLE	
	5	1	**417-1143**	1	BRACKET AS	
	6	1	**151-6813**	1	BRACKET AS	
	7	1	**151-6815**	1	BRACKET AS	
	8	1	**273-5345**	1	LINK AS	
	9	1	**273-5346**	1	LINK AS	
	10	1	**398-7109**	1	LOCK AS	
	11	1	**151-6832**	1	LEVER AS	
	12	2	**388-9097**	1	COVER	
	13	1	**151-9557**	2	STOP-RUBBER	
	14	2	**383-8541**	1	GLASS	
	15	2	**156-6554**	1	CABLE AS	
	16	1	**398-7110**	1	STRIKER AS	
	17	2	**156-6562**	1	BRACKET	
	18	2	**156-6563**	1	CATCH AS	
					(TWO JAW)	
					—OR—	
			273-5274	1	CATCH AS	
					(ONE JAW)	
	19	2	**156-6579**	1	STOP	
	20	2	**418-8379**	1	SEAL AS	
	21	2	**156-6627**	1	STOP AS	
	22	1	**161-3684**	2	STOP	
	23	1	**161-3698**	1	SEAL	
	24	2	**164-0648**	1	BRACKET AS	
	25	1	**178-5576**	1	STOP	
M	26	2	**138-8454**	2	SCREW-TRUSS HEAD (M4X0.7X10-MM)	
M	27	2	**185-8182**	4	BOLT (M10X1.5X20-MM)	
M	28	2	**5C-8312**	1	NUT (M4X0.7-THD)	
	29	1	**5P-1075**	4	WASHER-HARD (10.2X22.5X3-MM THK)	
M	30	1	**142-0485**	1	NUT (M10X1.5-THD)	
	31	1	**185-8221**	1	STOP	
M	32	1	**099-0823**	2	SCREW-MACHINE (M6X1X6-MM)	
M	33	1	**101-8900**	2	SCREW AS (M6X1X20-MM)	
	34	1	**117-6306**	1	SWITCH (WINDOW LOWER LIMIT)	
	35	1	**151-9576**	4	ROLLER	
	36	1	**4I-0420**	1	STRIP	
	37	1	**7X-0578**	1	WASHER-HARD (10.2X32X2.5-MM THK)	
M	38	2	**9X-2042**	20	SCREW-TRUSS HEAD (M6X1X12-MM)	
M	39	1,2	**9X-2044**	5	SCREW-TRUSS HEAD (M6X1X16-MM)	
M	40	2	**9X-2045**	3	SCREW-TRUSS HEAD (M6X1X20-MM)	
	41	2	**9X-8256**	2	WASHER (6.6X12X2-MM THK)	

M - METRIC PART

388-9109 **WINDOW GP-CAB (**contd.**)** **i05437801**

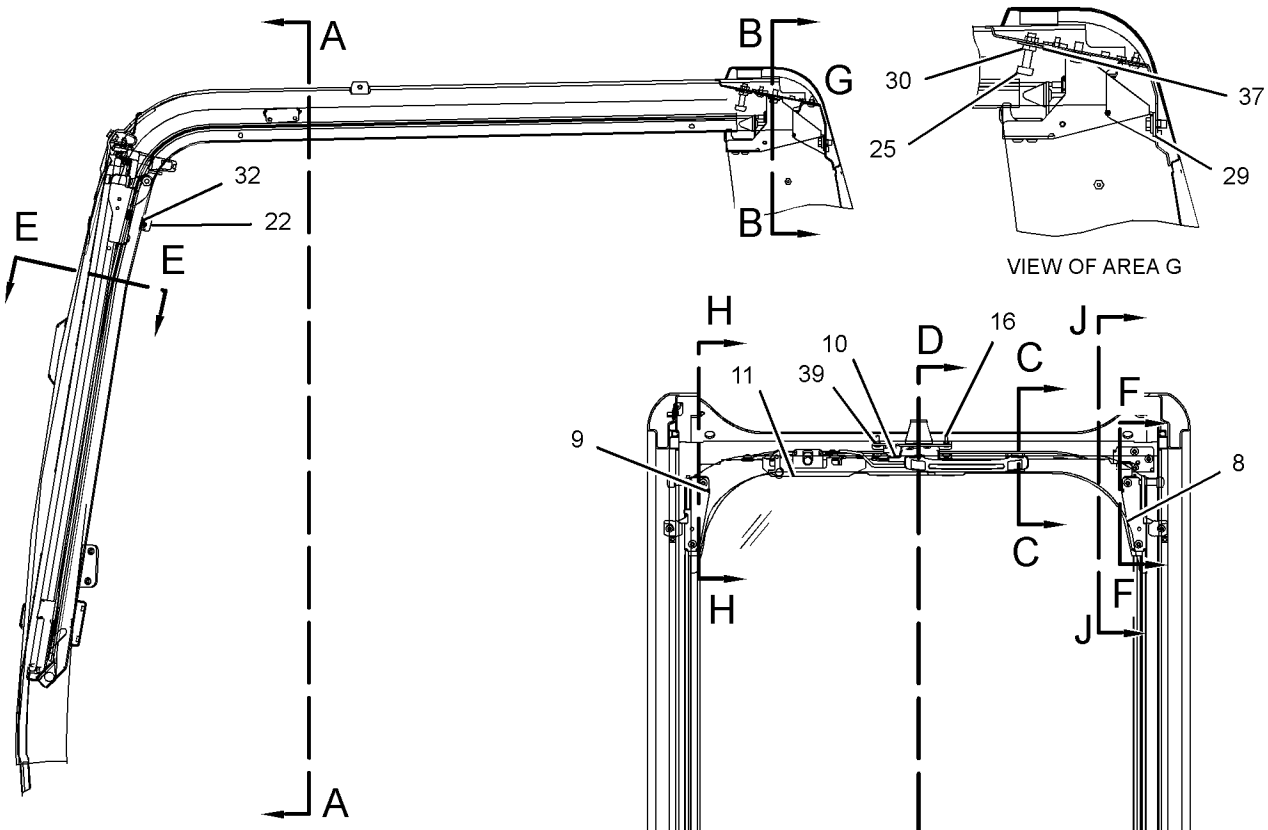

LEFT SIDE VIEW

REFER TO ALL ILLUSTRATIONS OF THIS GROUP FOR AUXILIARY VIEWS

SECTION A-A

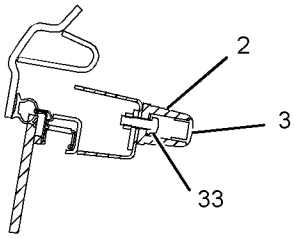

SECTION C-C

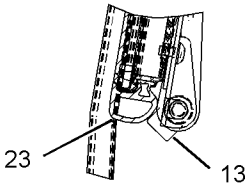

SECTION D-D

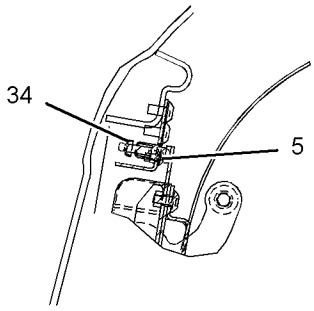

SECTION F-F

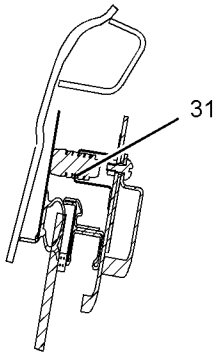

SECTION H-H

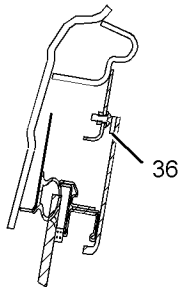

SECTION J-J

GRAPHIC #1 g03445379

388-9109 **WINDOW GP-CAB (**contd.**)** **i05437801**

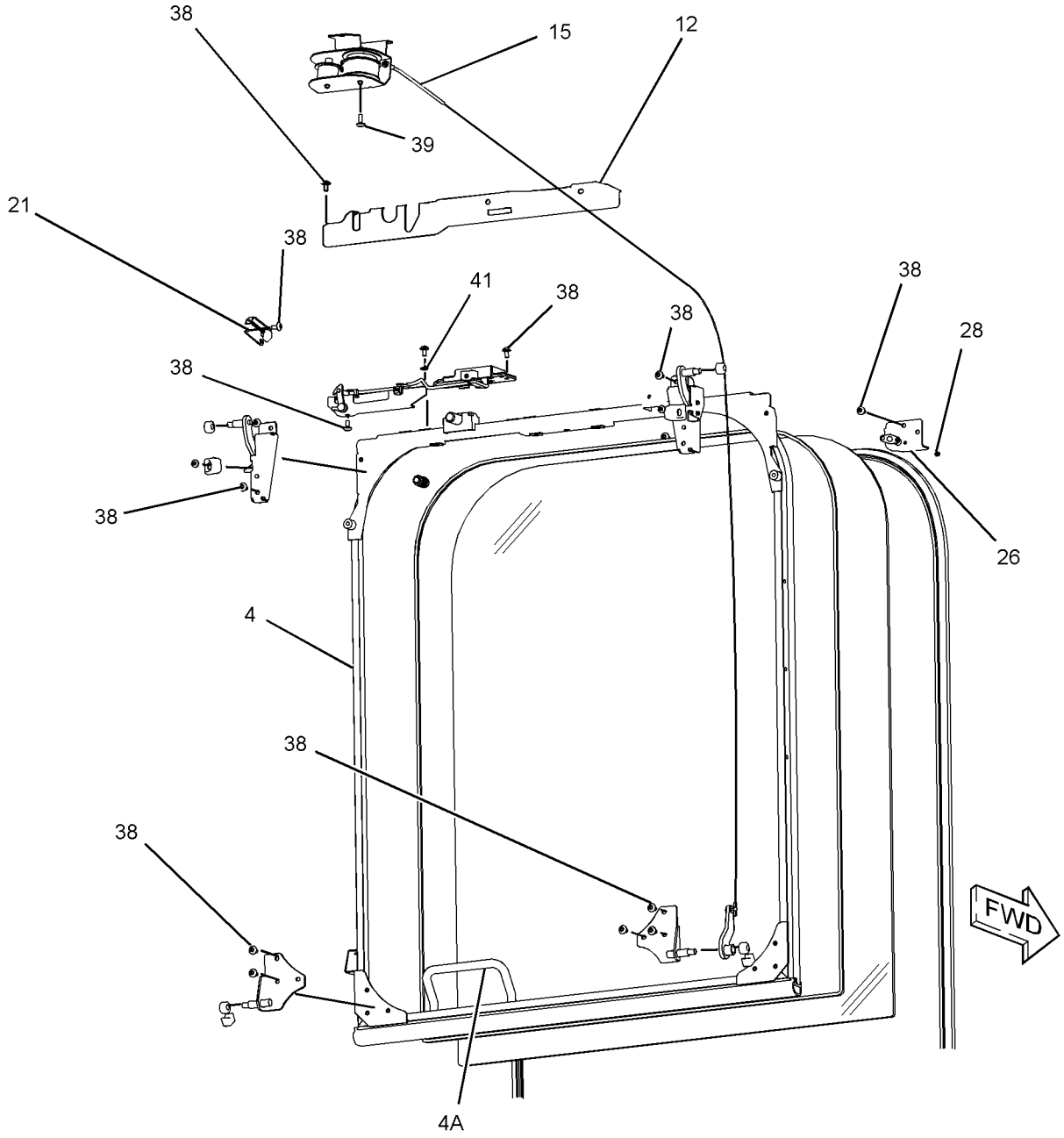

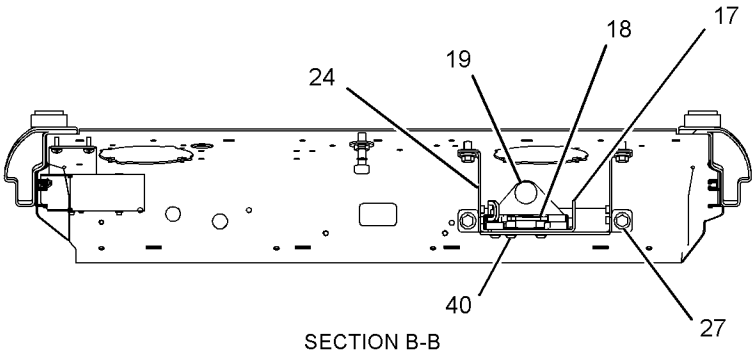

SECTION B-B

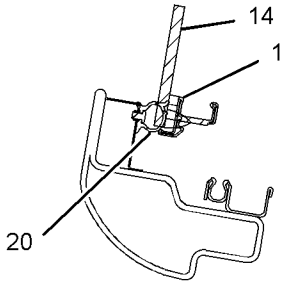

SECTION E-E

GRAPHIC #2 <END> g03445380

388-9116 WINDOW GP-CAB—FRONT, UPPER

S/N: RDE1-UP

PART OF 416-9607 CAB GP

SMCS-7310 **i05917586**

NOTE	REF NO	GRAPHIC REF	PART NUMBER	QTY	PART NAME 1 2 3 4 5 6 (PRODUCT LEVEL)	SEE PAGE
	1	1	**161-3698**	1	SEAL	
M	2	1	**101-8900**	2	SCREW AS (M6X1X20-MM)	
	3	1	**151-6703**	1	HANDLE-PULL	
	4	1	**151-6704**	2	CAP	
	5	1	**151-6778**	1	FRAME AS	
	5A	1	**156-6470**	1	HANDLE	
	6	1	**151-6813**	1	BRACKET AS	
	7	1	**151-6815**	1	BRACKET AS	
	8	1	**273-5345**	1	LINK AS	
	9	1	**273-5346**	1	LINK AS	
	10	1	**151-6831**	1	LOCK AS	
	11	1	**151-6832**	1	LEVER AS	
	12	1	**383-8541**	1	GLASS	
	13	1	**170-9722**	1	CUSHION	
	14	1	**151-9576**	4	ROLLER	
M	15	1	**9X-2042**	15	SCREW-TRUSS HEAD (M6X1X12-MM)	

M - METRIC PART

388-9116 **WINDOW GP-CAB (**contd.**)** **i05917586**

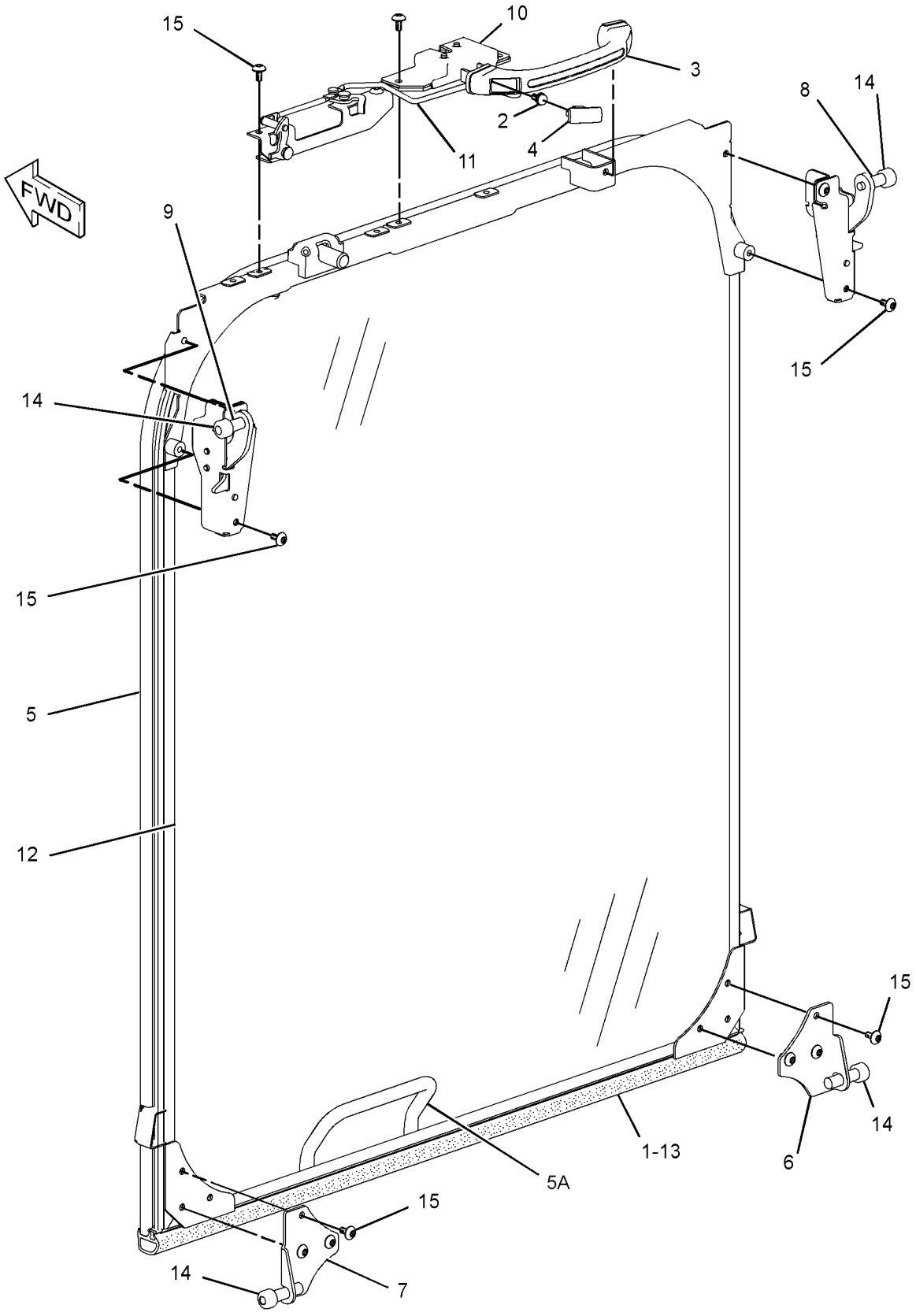

GRAPHIC #1 <END> g01935199

388-9117 WINDOW GP-CAB—FRONT, UPPER

S/N: RDE1-UP

PART OF 416-9607 CAB GP

SMCS-7310 **i05458912**

NOTE	REF NO	GRAPHIC REF	PART NUMBER	QTY	PART NAME 1 2 3 4 5 6 (PRODUCT LEVEL)	SEE PAGE
	1	1	**170-9722**	1	CUSHION	
	2	1	**151-6778**	1	FRAME AS	
	2A	1	**156-6470**	1	HANDLE	
	3	1	**161-3698**	1	SEAL	
	4	1	**383-8541**	1	GLASS	
	5	1	**4I-0420**	1	STRIP	

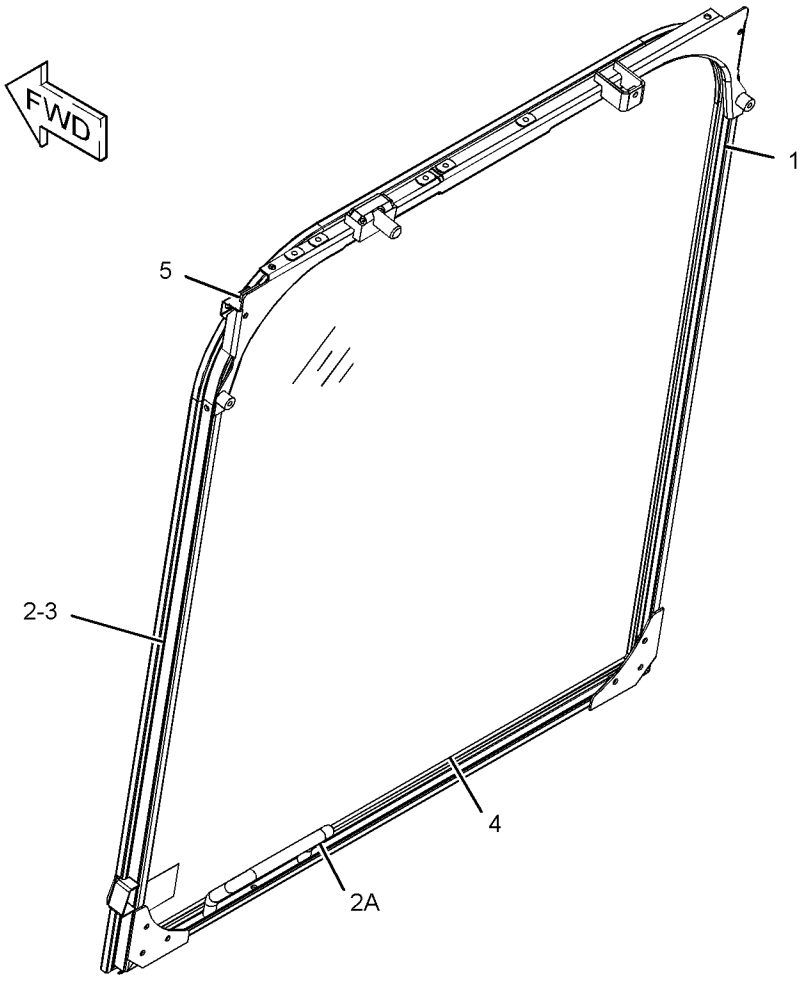

GRAPHIC #1 <END> g03443317

151-6792 WINDOW GP-DOOR

S/N: RDE1-UP

PART OF 307-1818 PARTS GP-DOOR

SMCS-7308, 7310

i03632584

NOTE	REF NO	GRAPHIC REF	PART NUMBER	QTY	PART NAME 1 2 3 4 5 6 (PRODUCT LEVEL)	SEE PAGE
	1	1	**085-6444**	2	LATCH GP-WINDOW	
					(EACH INCLUDES)	
		1	**085-6447**	1	RETAINER	
M		1	**085-6448**	2	SCREW-TAPPING	
		1	**085-6449**	1	PACKING	
	2	1	**151-6793**	1	FRAME AS	
		1	**4I-4298**	1	STOPPER	
		1	**4I-4300**	1	CATCH	
		1	**099-0139**	3	RIVET	
	3	1	**151-6841**	1	SEAL	
	4	1	**156-6474**	1	GLASS	
	5	1	**156-6475**	1	GLASS	
	6	1	**161-3695**	1	SEAL	
	7	1	**161-3705**	1	SEAL	
	8	1	**164-0516**	1	RUBBER	
	9	1	**164-0517**	1	RUBBER	
	10	1	**164-0518**	1	RUBBER	
	11	1	**171-7413**	1	SPACER	
	12	1	**171-7414**	1	SPACER	
	13	1	**176-1951**	1	SPACER	
	14	1	**176-1952**	1	SPACER	
	15	1	**176-1953**	1	STOP	
	16	1	**176-1954**	1	SEAL	
	17	1	**176-1955**	1	SEAL	
	18	1	**176-1956**	1	SEAL	
	19	1	**176-1957**	1	SEAL	

M - METRIC PART

151-6792 **WINDOW GP-DOOR (**contd.**)** **i03632584**

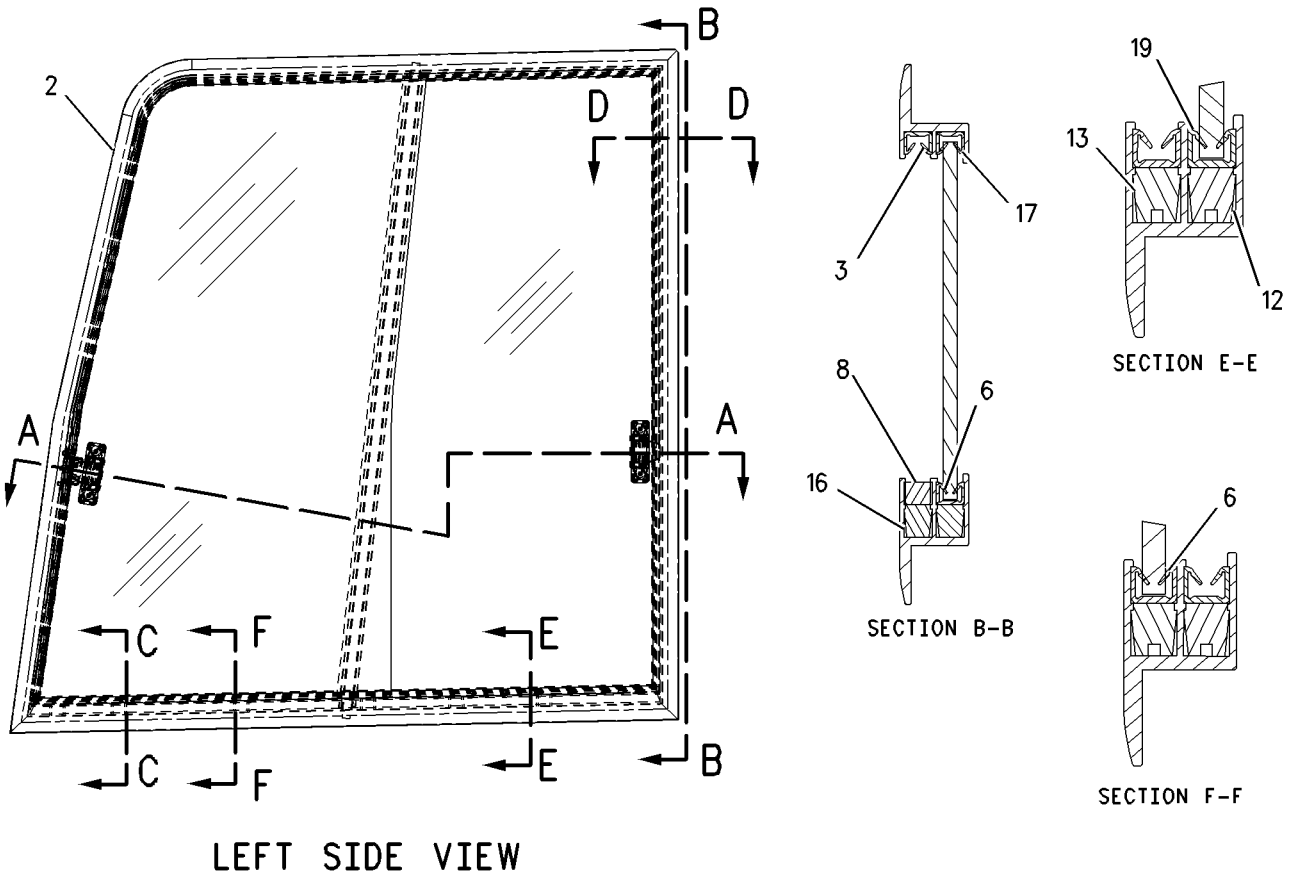

GRAPHIC #1 <END> g00722948

384-6533 WINDOW GP-DOOR

S/N: RDE1-UP

PART OF 388-9105 PARTS GP-DOOR

SMCS-7308, 7310 **i05440251**

NOTE	REF NO	GRAPHIC REF	PART NUMBER	QTY	PART NAME 1 2 3 4 5 6 (PRODUCT LEVEL)	SEE PAGE
	1	1	**385-8757**	2	CATCH AS	
	2	1	**387-2846**	1	GLASS	
	3	1	**387-2847**	1	GLASS	
	4	1	**387-2848**	1	PILLAR	
	5	1	**387-2849**	1	HOOK	
	6	1	**438-4951**	1	SEAL	
	7	1	**438-4952**	1	SEAL	
	8	1	**438-4953**	1	SEAL	
	9	1	**438-4954**	1	SEAL	
	10	1	**438-4955**	1	SEAL	
	11	1	**438-4956**	1	SEAL	
	12	1	**438-4957**	1	SEAL	
	13	1	**438-4958**	1	SEAL	
E	14	1	**430-4119**		RUBBER (10-CM)	
E	14A	1	**430-4119**		RUBBER (5.2-CM EACH)	

E - ORDER BY THE CENTIMETER

384-6533 **WINDOW GP-DOOR (**contd.**)** **i05440251**

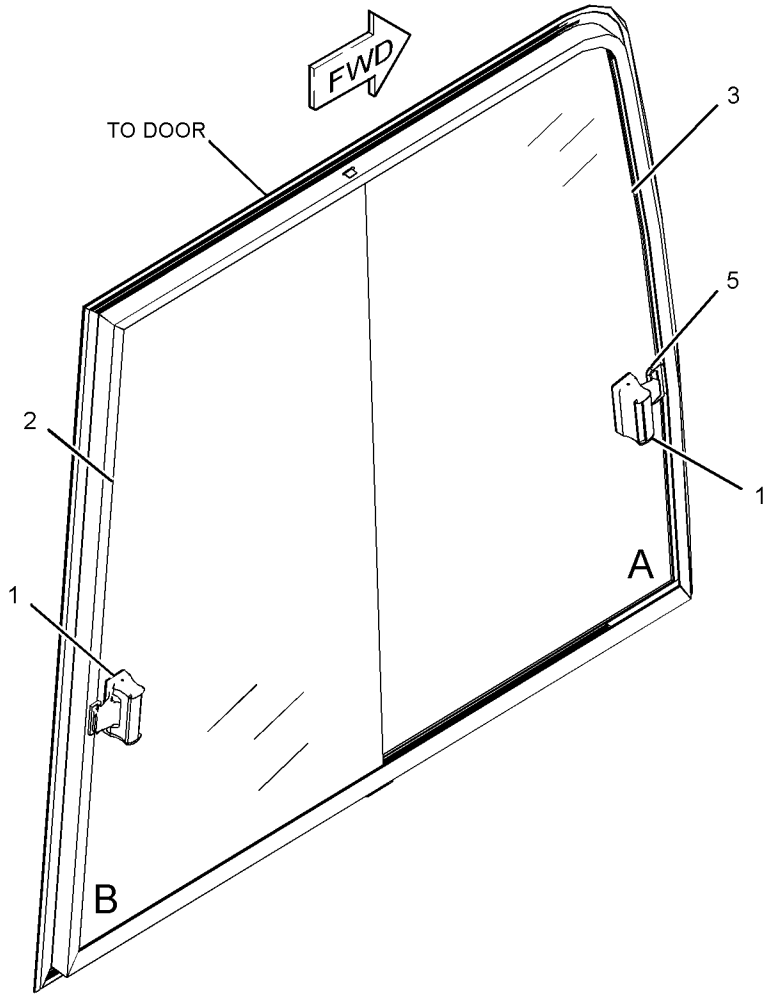

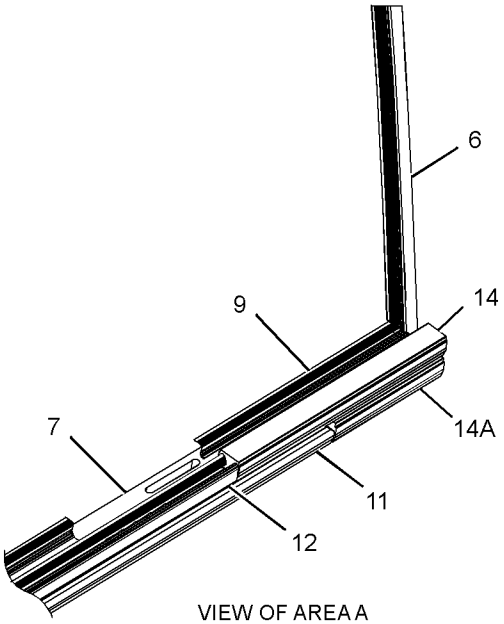

VIEW OF AREA A
(PARTS REMOVED FOR CLARITY)

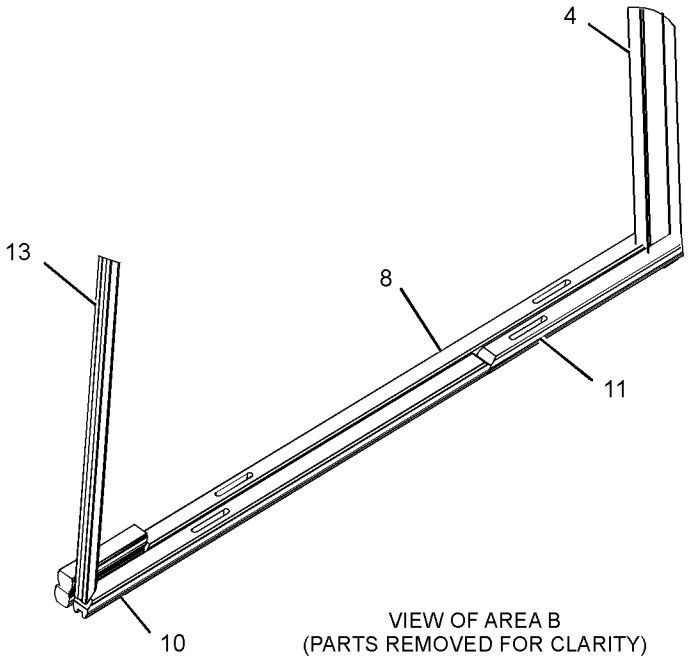

VIEW OF AREA B
(PARTS REMOVED FOR CLARITY)

GRAPHIC #1 <END> g03405579

436-1116 WIPER GP-WINDOW—FRONT, UPPER

S/N: RDE1-UP

PART OF 416-9607 CAB GP

SMCS-7305 **i06075047**

NOTE	REF NO	GRAPHIC REF	PART NUMBER	QTY	PART NAME 1 2 3 4 5 6 (PRODUCT LEVEL)	SEE PAGE
	1	1	**099-3633**	1	GROMMET	
	2	1	**424-0331**	1	HOLDER	
	3	1	**424-0332**	1	NOZZLE AS	
	4	1	**424-0333**	1	MOTOR AS-WINDOW WIPER	
M		1	**175-7141**	1	NUT-HEX FLANGE (M10X1.5-THD)	
		1	**438-1294**	1	CAP	
	5	1	**424-0334**	1	ARM GP-WINDOW WIPER	
		1	**424-0335**	1	GUIDE	
		1	**424-0336**	1	BLADE AS-WIPER (600-MM)	
		1	**424-0337**	1	ARM AS-WIPER	
	6	1	**424-0338**	1	RELAY AS (WIPER)	
	7	1	**096-6166**	2	WASHER-HARD (4.5X9X1-MM THK)	
	8	1	**163-6795**	1	STRAP-CABLE	
	9	1	**4I-3090**	1	SEAL	
M	10	1	**5C-2890**	4	NUT (M6X1-THD)	
M	11	1	**8T-0337**	2	SCREW-MACHINE (M4X0.7X12-MM)	
M	12	1	**9X-2042**	2	SCREW-TRUSS HEAD (M6X1X12-MM)	
M	13	1	**9X-2044**	3	SCREW-TRUSS HEAD (M6X1X16-MM)	
E	14	1	**444-2791**		HOSE (360-CM)	

E - ORDER BY THE CENTIMETER
M - METRIC PART

436-1116 **WIPER GP-WINDOW (**contd.**)** **i06075047**

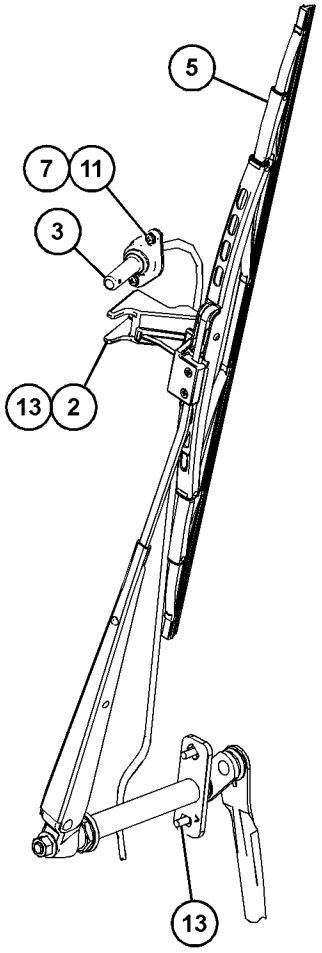

VIEW OF AREA A

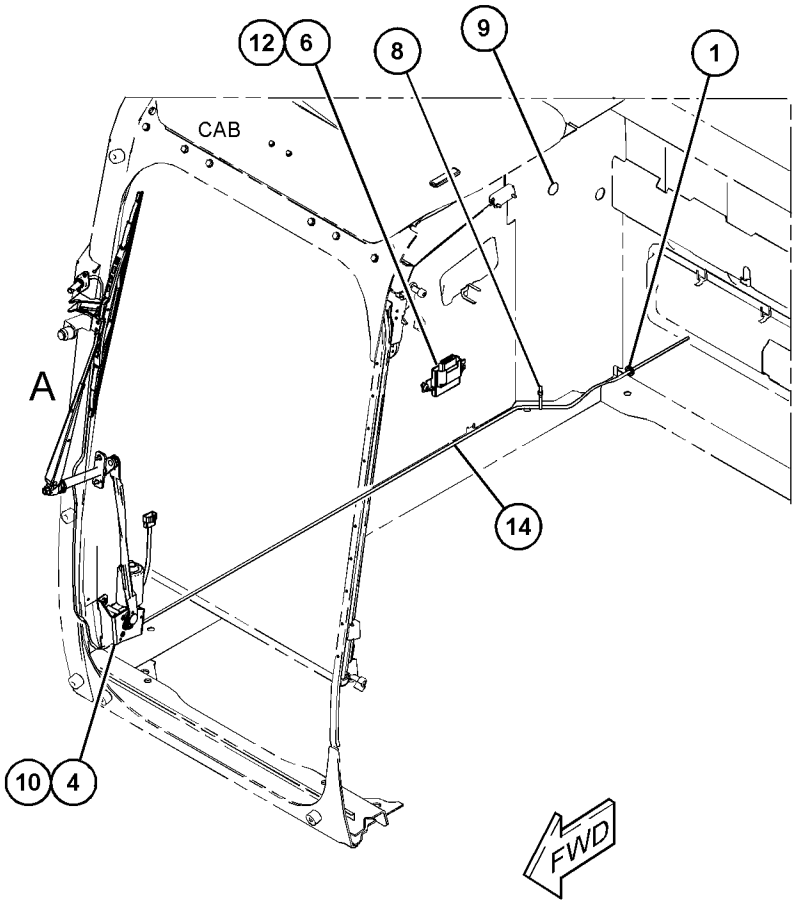

GRAPHIC #1 <END> g03644687

247-7410 FILM GP–OPERATOR CONTROLS, NOTICE

S/N: RDE1-UP

PART OF 255-5843 CONTROL AR-AUXILIARY

SMCS-7405, 7557

i02508869

NOTE	REF NO	GRAPHIC REF	PART NUMBER	QTY	PART NAME 1 2 3 4 5 6 (PRODUCT LEVEL)	SEE PAGE
	1	1	**250-8054**	1	FILM-NOTICE (HAMMER, READ OMM)	
	2	1	**260-6941**	1	FILM-INFORMATION (OPERATOR CONTROLS, READ OMM)	

247-7410 **FILM GP (**contd.**)** **i02508869**

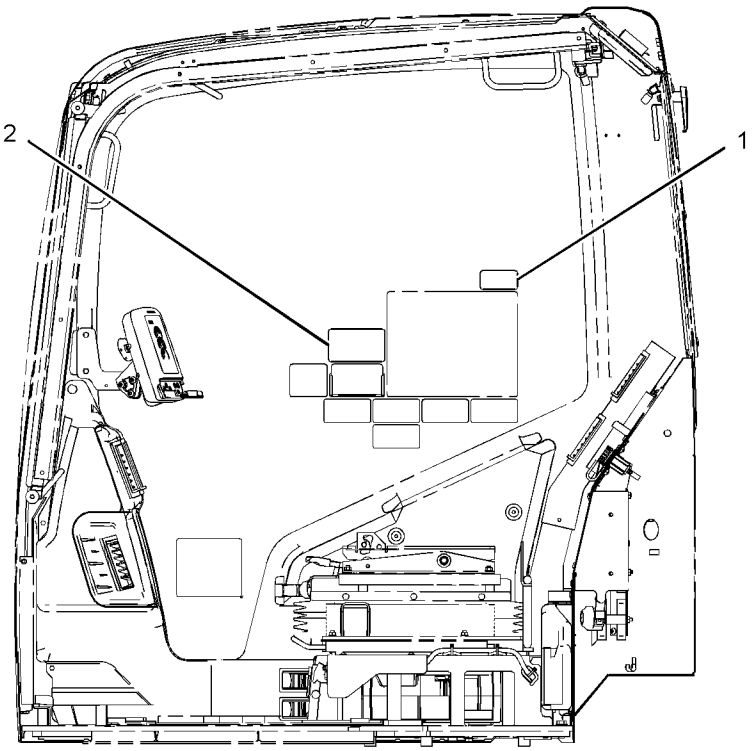

LEFT SIDE VIEW
(328D MODELS)

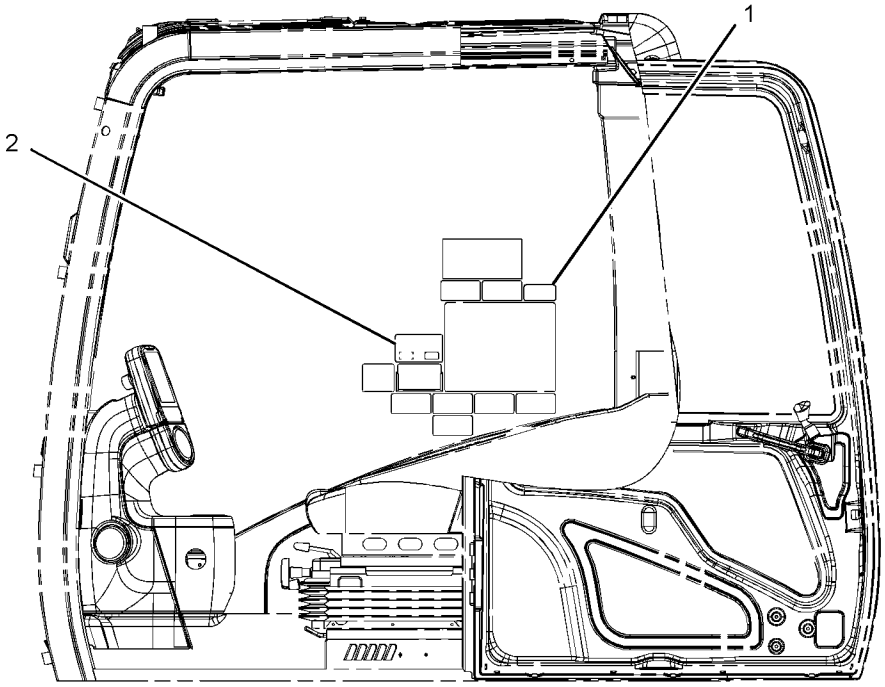

LEFT SIDE VIEW
(ALL OTHER MODELS)

GRAPHIC #1 <END> g01246655

247-7424 FILM GP–OPERATOR CONTROLS, NOTICE

S/N: RDE1-UP

PART OF 494-3642 CONTROL AR-AUXILIARY

SMCS-7405, 7557

i02790509

NOTE	REF NO	GRAPHIC REF	PART NUMBER	QTY	PART NAME 1 2 3 4 5 6 (PRODUCT LEVEL)	SEE PAGE
	1	1	**260-6946**	1	FILM-INSTRUCTION (OPERATOR CONTROL PEDALS)	
	2	1	**250-8054**	1	FILM-NOTICE (HAMMER, READ OMM)	

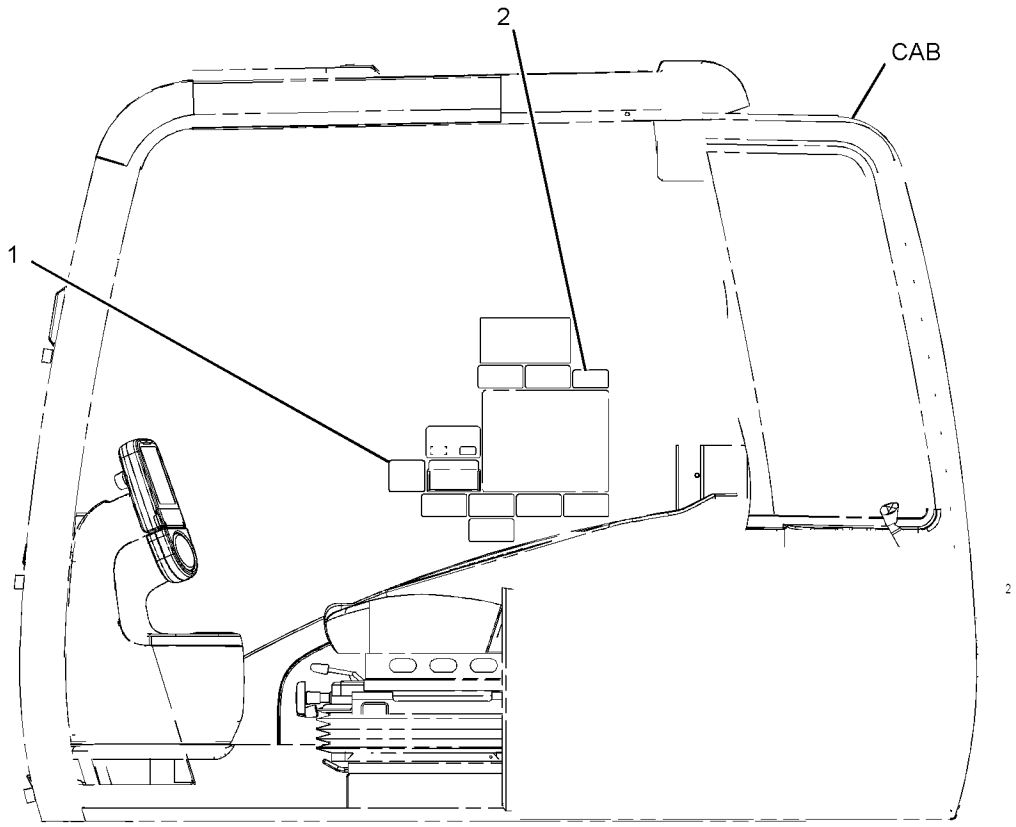

LEFT SIDE VIEW

GRAPHIC #1 <END> g01231531

282-5705 FILM GP–QUICK COUPLER

S/N: RDE1-UP

PART OF 503-9777 CONTROL AR-QUICK COUPLER

SMCS-7405, 7557

i02956553

NOTE	REF NO	GRAPHIC REF	PART NUMBER	QTY	PART NAME 1 2 3 4 5 6 (PRODUCT LEVEL)	SEE PAGE
	1	1	**268-4530**	1	FILM-WARNING (CRUSH HAZARD, READ OMM, U.S.)	
					–OR–	
		1	**269-0120**	1	FILM-WARNING (CRUSH HAZARD, READ OMM, INTL)	
	2	1	**268-4531**	1	FILM-INSTRUCTION (COUPLER OPERATION)	
	3	1	**268-8872**	1	FILM-WARNING (CRUSH HAZARD, READ OMM, U.S.)	
					–OR–	
		1	**269-0121**	1	FILM-WARNING (CRUSH HAZARD, READ OMM, INTL)	

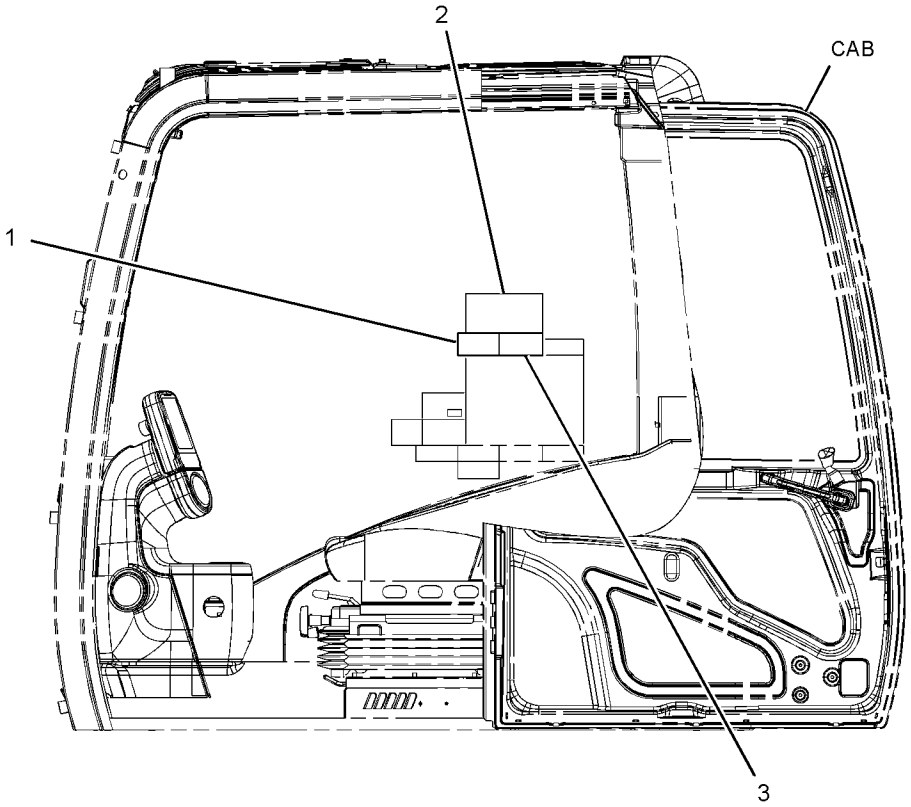

LEFT SIDE VIEW

GRAPHIC #1 <END> g01238116

366-8771 FILM GP—PRODUCT LINK RADIO, INTL

S/N: RDE1-UP

PART OF 470-6901 INSTALLATION AR-COMMUNICATION

SMCS-7405, 7557

i06842597

NOTE	REF NO	GRAPHIC REF	PART NUMBER	QTY	PART NAME 1 2 3 4 5 6 (PRODUCT LEVEL)	SEE PAGE
	1	1	**230-1341**	1	FILM-WARNING (PRODUCT LINK RADIO, INTL)	
	2	1	**307-0047**	1	FILM-INFORMATION (PRODUCT LINK, READ OMM)	

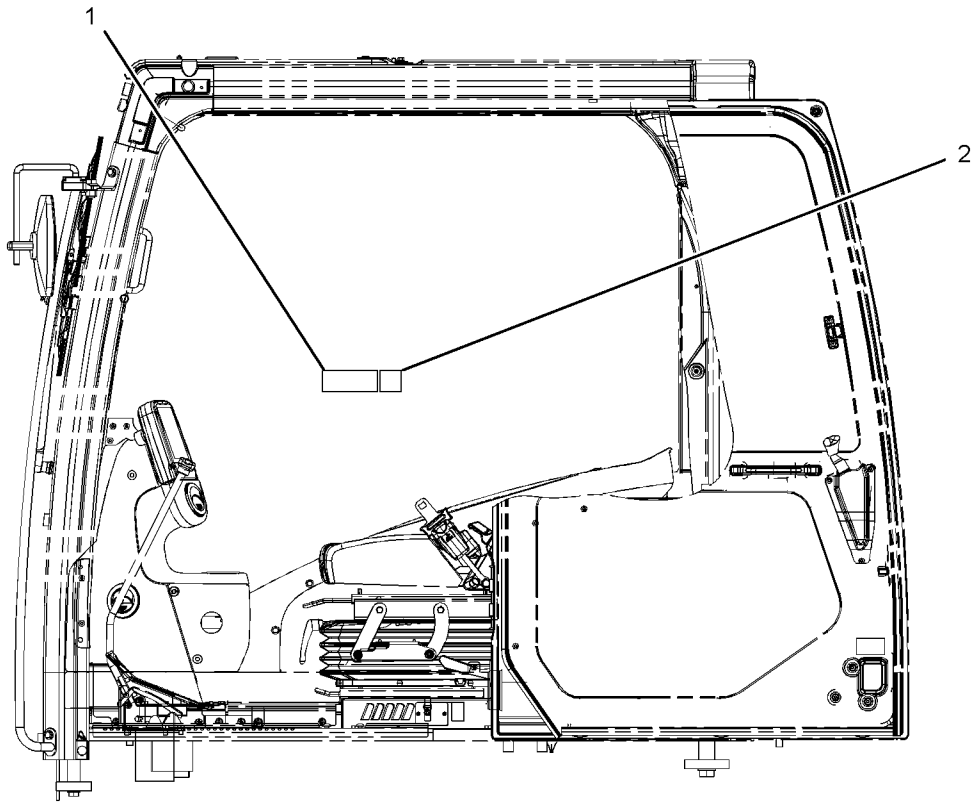

LEFT SIDE VIEW
(CAB)

GRAPHIC #1 <END> g03439537

420-5793 FILM GP–BRAZIL

S/N: RDE1-UP

PART OF 506-8578, 506-8579 DISTRIBUTION AR

SMCS-7405, 7557

i06636157

NOTE	REF NO	GRAPHIC REF	PART NUMBER	QTY	PART NAME 1 2 3 4 5 6 (PRODUCT LEVEL)	SEE PAGE
	1	1	**202-9824**	1	FILM-INFORMATION (BRAZIL)	

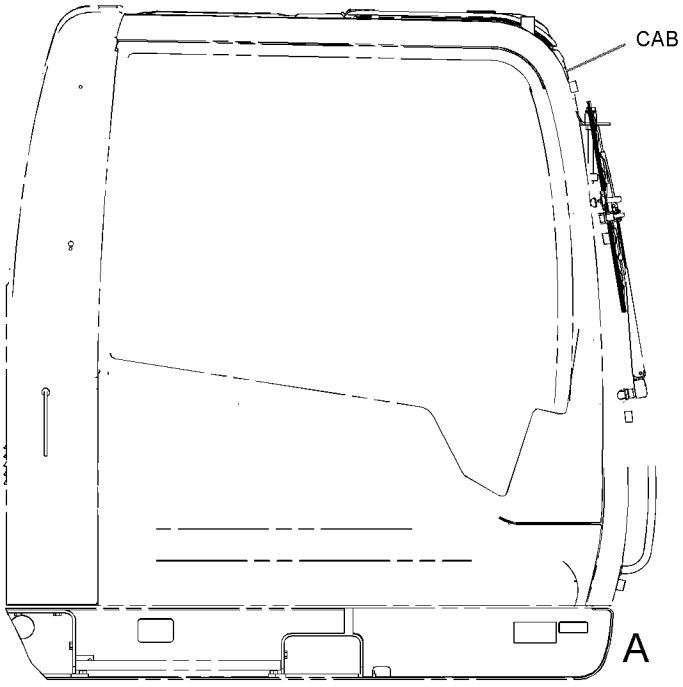

RIGHT SIDE VIEW

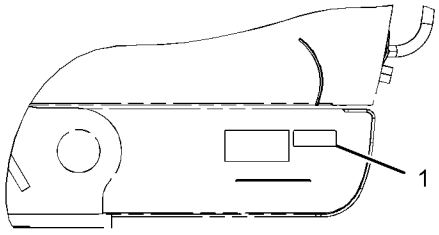

VIEW OF AREA A

GRAPHIC #1 <END> g03350586

500-9111 PLATE & FILM GP

S/N: RDE1-UP

PART OF 500-9108 CHASSIS AR

SMCS-7405, 7557

i06844364

NOTE	REF NO	GRAPHIC REF	PART NUMBER	QTY	PART NAME 1 2 3 4 5 6 (PRODUCT LEVEL)	SEE PAGE
	1	1,2	**1P-2807**	4	FILM-IDENTIFICATION (LIFT EYE LOCATION)	
	2	3	**4I-8472**	1	FILM-INSTRUCTION (OPERATOR CONTROLS)	
	3	2,4	**7X-7644**	4	FILM-IDENTIFICATION (TIE-DOWN)	
	4	3	**8T-6842**	1	FILM-INSTRUCTION (PULL RING, ALTERNATE EXIT)	
	5	3	**110-6393**	1	PLATE-INSTRUCTION (AIR CONDITIONER)	
	6	4	**134-7258**	1	FILM-INFORMATION (EXTENDED LIFE COOLANT)	
	7	2	**146-6747**	1	FILM-INFORMATION (24-VOLT)	
	8	1,4	**167-7270**	3	FILM-INSTRUCTION (NO STEP)	
	9	3	**187-0661**	1	FILM-INSTRUCTION (ALTERNATE EXIT)	
	10	2	**190-5386**	2	FILM-IDENTIFICATION (ROUND RED REFLECTIVE)	
	11	3	**214-7915**	1	FILM-INSTRUCTION (ENGINE SHUTOFF)	
	12	3	**221-8045**	1	FILM-WARNING (SEAT BELT, INTERNATIONAL)	
	13	3	**224-0554**	1	FILM-WARNING (UNIVERSAL, READ OMM)	
	14	4	**224-8946**	1	FILM-WARNING (NO ETHER SPRAY/AIR INTK, INTL)	
	15	2	**225-0312**	1	FILM-WARNING (JUMP START, READ OMM, INTL)	
	16	4	**225-4257**	2	FILM-WARNING (HOT FLUID UNDER PRESS)	
	17	1,2	**228-2781**	2	FILM-WARNING (MACHINE SWING, CRUSHING, INTL)	
	18	3	**228-9254**	1	FILM-WARNING (ELEC HAZARD, READ OMM, INTL)	
	19	4	**229-0887**	1	FILM-INFORMATION (AIR CLEANER)	
	20	4	**493-1610**	1	FILM-WARNING (ACCUMULATOR PRESSURE)	
	21	1	**239-6986**	1	PLATE-SERIAL NUMBER (MACHINE)	
	22	4	**242-1510**	1	FILM-INSTRUCTION (HYDRAULIC OIL CHECK)	
	23	3	**242-1588**	1	FILM-WARNING (FRONT WINDOW, READ OMM, INTL)	
	24	2	**247-7437**	1	FILM-IDENTIFICATION (BATTERY CIRCUIT BREAKER)	
	25	2	**247-7438**	1	FILM-IDENTIFICATION (ELECTRICAL CIRCUIT BREAKER)	
	26	3	**266-5431**	1	FILM-WARNING (CRUSH HAZARD, READ OMM, INTL)	
	27	1,2	**290-1729**	2	FILM-IDENTIFICATION (CAT)	
	28	1,2	**298-4282**	2	FILM-WARNING (CRUSH HAZARD, STAY BACK, INTL)	
	29	2	**358-6390**	1	FILM-IDENTIFICATION (STRIPE, LH)	
	30	1	**362-3719**	1	FILM-IDENTIFICATION (CAT, RH)	
	31	2	**362-3720**	1	FILM-IDENTIFICATION (CAT, LH)	
	32	4	**367-0844**	1	FILM-INSTRUCTION (FUEL, READ OMM)	
	33	1	**370-7639**	1	FILM-INFORMATION (BELT ROUTING)	
	34	2	**381-1373**	1	FILM-IDENTIFICATION (CIRCUIT BREAKER)	
	35	1	**385-4093**	1	FILM-IDENTIFICATION (STRIPE, RH)	
	36	2	**394-1310**	1	FILM-IDENTIFICATION (CAT)	
	37	4	**443-5690**	2	FILM-WARNING (LIFTING EYE, READ OMM)	
	38	3	**477-2894**	1	FILM-IDENTIFICATION (FUSE, RELAY PANEL)	
	39	1,2	**485-1569**	2	FILM-IDENTIFICATION (313D2 L)	

500-9111 **PLATE & FILM GP (**contd.**)** **i06844364**

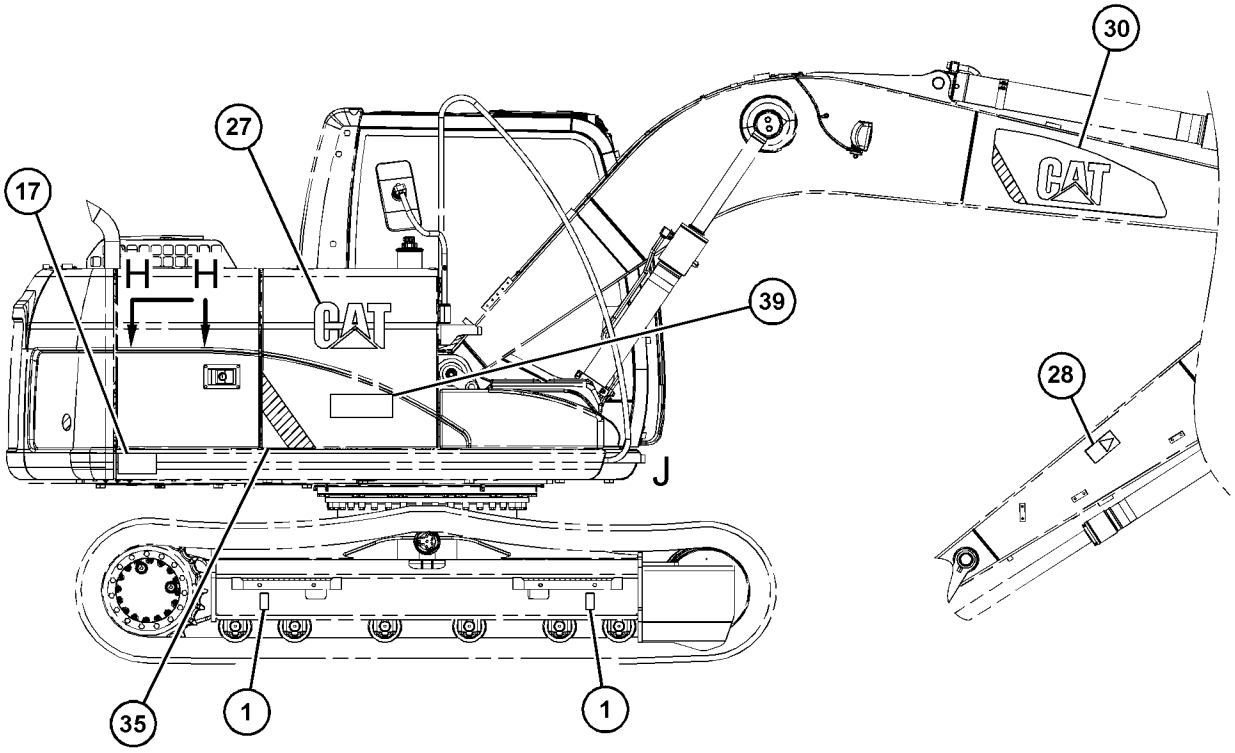

RIGHT SIDE VIEW

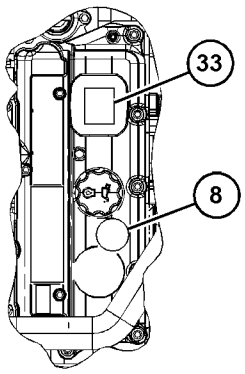

VIEW H-H

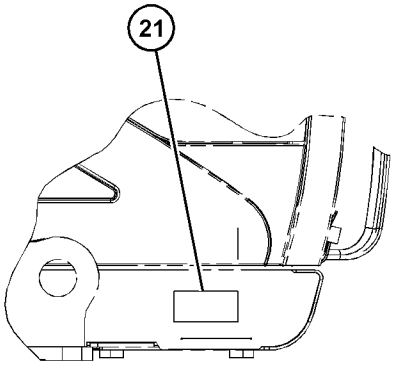

VIEW OF AREA J

GRAPHIC #1 g06138546

500-9111 **PLATE & FILM GP** (contd.) **i06844364**

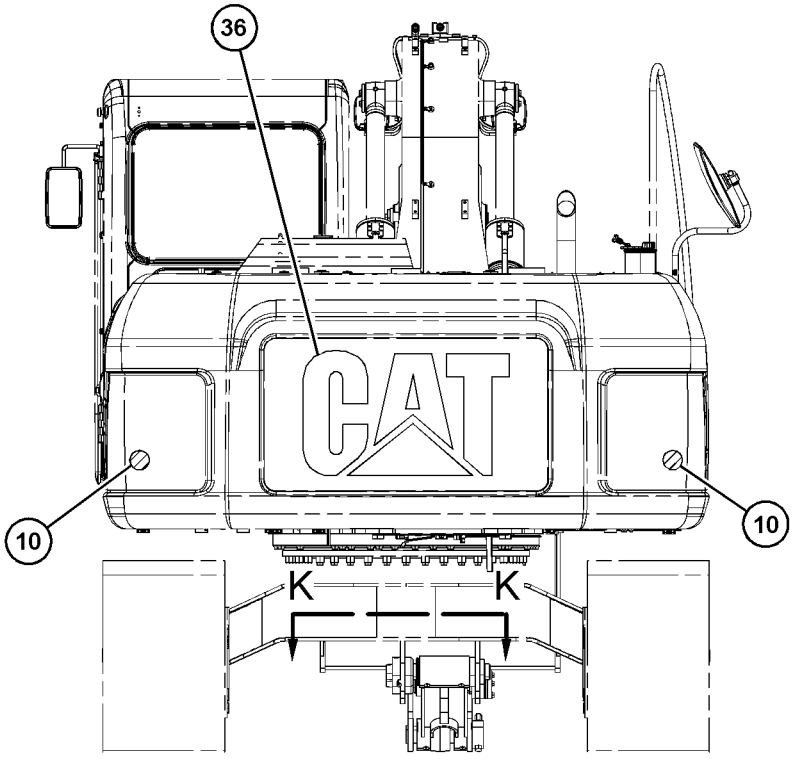

REAR VIEW

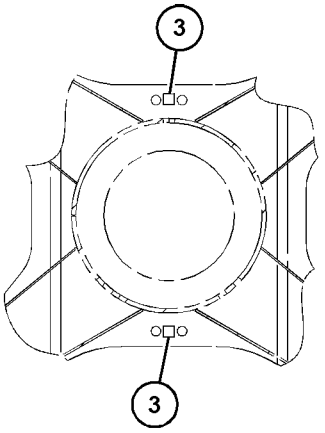

VIEW K-K

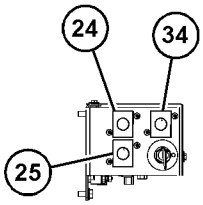

VIEW U-U

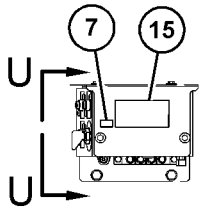

VIEW L-L

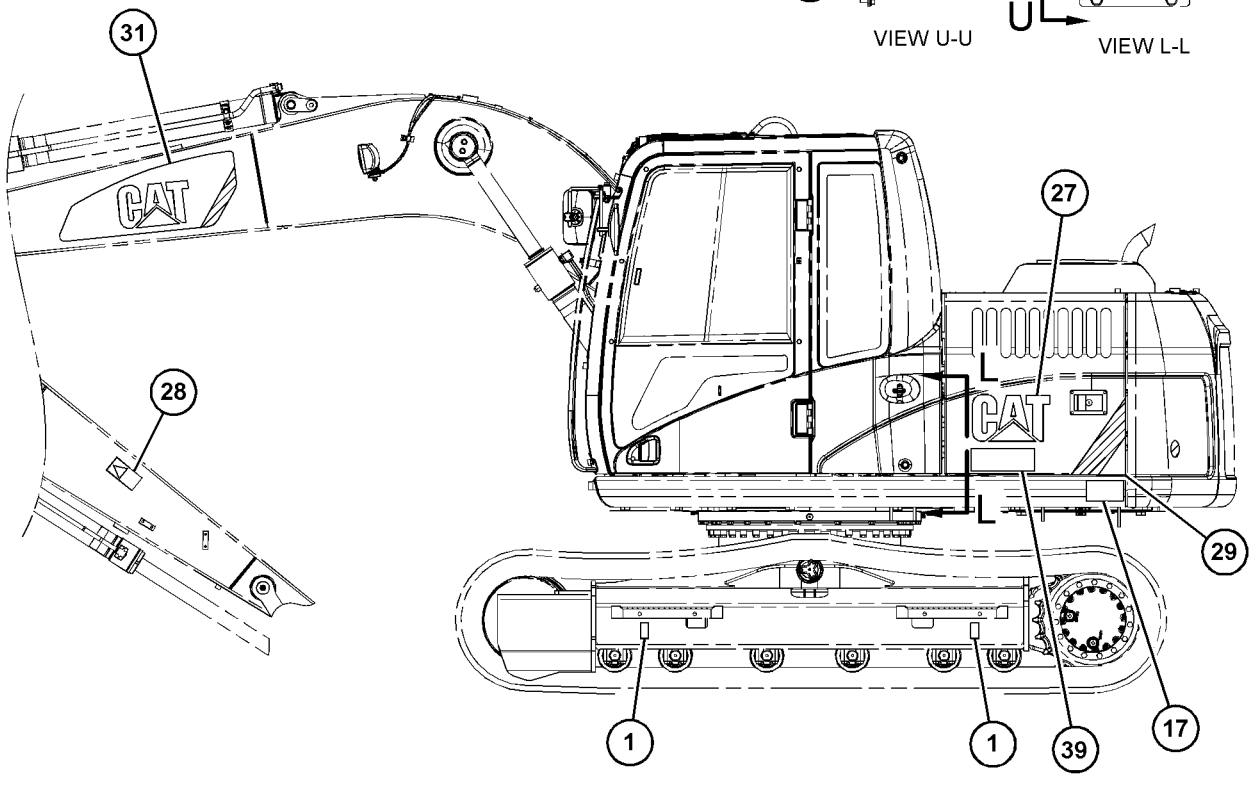

LEFT SIDE VIEW

GRAPHIC #2 g06138547

500-9111 **PLATE & FILM GP (**contd.**)** **i06844364**

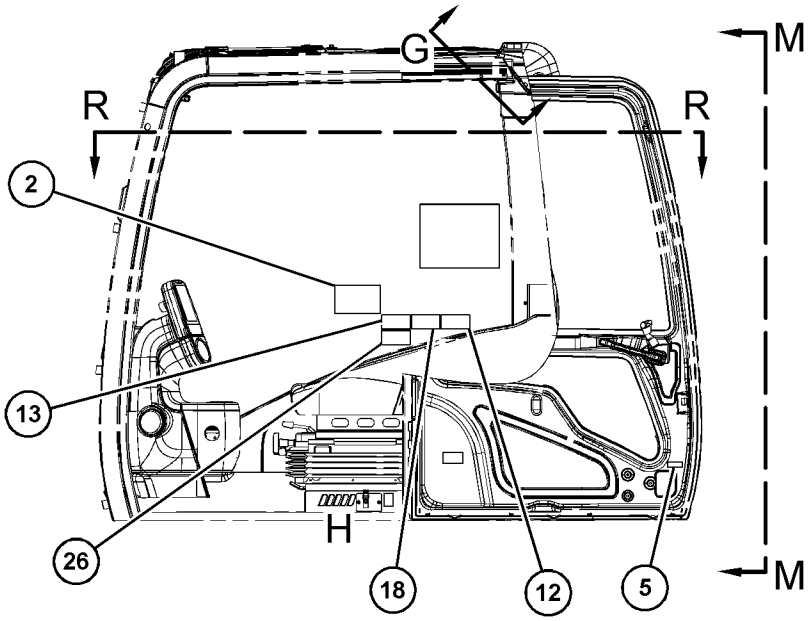

LEFT SIDE VIEW
(OF CAB)

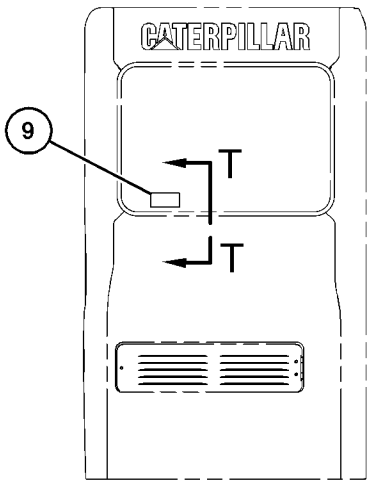

VIEW M-M

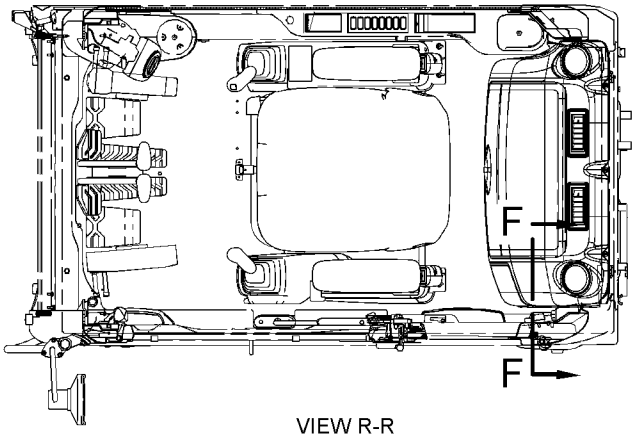

VIEW R-R

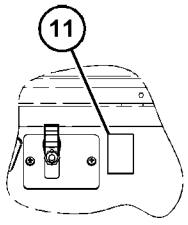

VIEW OF AREA H

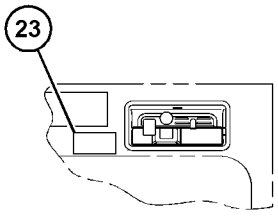

VIEW G

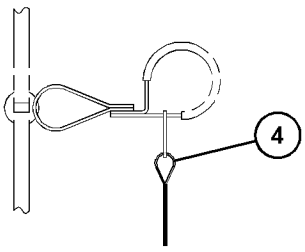

VIEW T-T

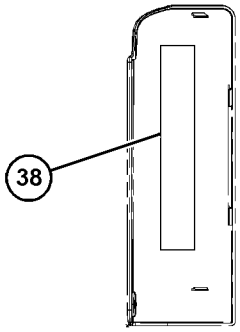

VIEW F-F

GRAPHIC #3 g06138548

500-9111 **PLATE & FILM GP** (contd.) **i06844364**

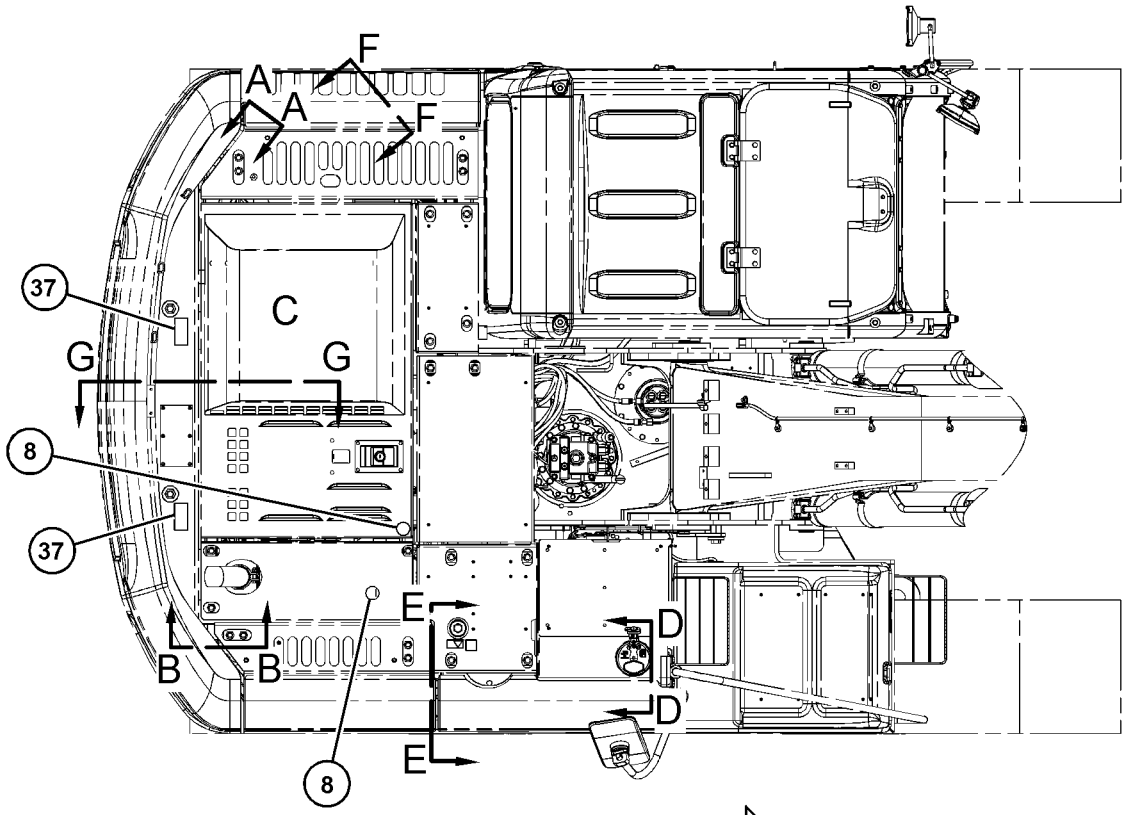

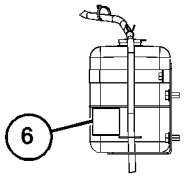

VIEW A-A

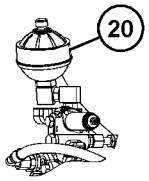

VIEW B-B

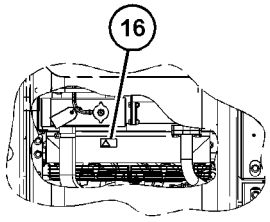

VIEW OF AREA C

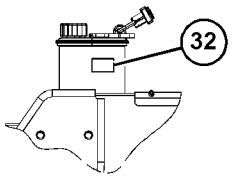

VIEW D-D

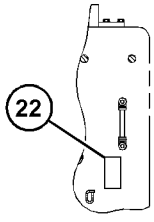

VIEW E-E

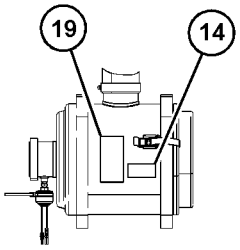

VIEW F-F

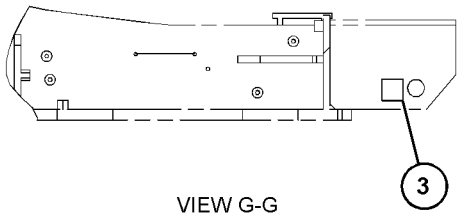

VIEW G-G

GRAPHIC #4 <END> g06138544

PART NUMBER INDEX

Part Page

0

0S-1603 18

1

1H-3244 107
1H-3338 120
1H-4393 117
1H-7339 310
1H-8278 148
1J-6472 310
1M-6119 80
81
1M-6120 80
81
1M-6718 357
1P-2807 497
1P-3703 238
240
1P-4578 270
1R-1804 63
1R-5998 402
1R-6009 196
1R-6011 196
1R-6072 81
1R-6225 369
377
378
1R-6226 369
1R-6229 160
1S-0994 81
1S-7251 80
81
1S-7252 81
1S-9593 362
1U-3252 392
1U-8846 144
163
225
302

2

2B-0858 15
30
2C-9259 381
382
2G-8767 81
2H-3922 119
2H-9247 232
2K-8257 305
2L-8050 95
141
2L-8058 95
141
2L-8065 125
2L-8066 125
2L-8067 125
2L-8069 95
131
141
2L-8075 95
100
101
110
125
2L-8076 95
125
2L-8078 95
107
2L-8079 95
96
2M-9780 267
366
2P-1279 254
387
2R-1498 67
2S-5926 195
2T-2991 226
2W-5975 387
2Y-5578 310

3

3B-4501 97
98
3B-4505 445
3B-4509 243
244
3B-4510 402
3B-4618 168
3B-7255 54
3B-8489 162
214
216
218
371
372
374
377
378
3D-2824 230
245
256
258
260
264
267
283
284
302
334
354
3D-2891 232
3D-4603 191
3D-9143 153
3E-2310 277
281
286
293
3E-2338 144
3E-3371 141
3E-4356 225
3E-5169 141
3E-6711 305
3E-6910 214
216
3E-7410 263
3E-8020 402
3E-8320 107
3E-9375 138
3J-1907 114
220
232
245
263
264
267
272
273
276
277
279
281
283
284
286
287
288
293
294
302
304
305
310
334
355
357
366
387
3J-7354 220
263
297
329
387
3K-0360 26
67
115
200
222
245
263
267
272
279
283
286
287
288
297
302
304
329
366
3P-9847 46
52
3S-2093 52
61
79
80
91
95
107
110
123
125
126
131
133
134
135
138
141
142
236
394
447
456
475
3S-6049 80
3T-5760 81
3W-6399 475

4

4B-4158 192
193
4B-4276 107
4B-4278 153
402
4B-9783 355
4B-9880 356
4D-1322 387
4D-7794 387
4E-5724 107
4F-2294 107
4H-6112 222
4I-0006 155
4I-0232 167
4I-0378 75
4I-0379 66
4I-0420 479
484
4I-0797 293
4I-0800 286
4I-1037 276
4I-1095 242
4I-1205 167
402
4I-1206 402
4I-1536 198
▶202
4I-1539 202
4I-1671 286
4I-1674 242
4I-3038 236
4I-3063 402
4I-3090 402
489
4I-3266 401
466
4I-3309 369
4I-3510 354
4I-3941 276
4I-3988 276
4I-3994 286
4I-4270 402
4I-4286 462
464
4I-4298 485
4I-4300 485
4I-4392 403
4I-5399 80
4I-5409 1
▶105
4I-5862 202
4I-5900 286
4I-5933 276
4I-6003 293
4I-6039 286
302
4I-6365 342
344
4I-6914 . . . . . ▶380
381
382
4I-7326 163
4I-7337 184
185
▶186
4I-7444 163
4I-7446 163
4I-7472 151
4I-7475 187
188
4I-7476 187
188

PART NUMBER INDEX

Part	Page
4I-7477	187
	188
4I-7478	187
	188
4I-7488	186
4I-7512	163
4I-7538	196
4I-7604	327
4I-7605	327
4I-7889	80
	264
4I-8267	203
4I-8472	497
4I-9521	263
	272
	276
	286
4I-9522	263
	272
	276
	286
4I-9523	272
	276
	286
	293
4I-9524	272
	276
	286
	293
4I-9525	272
	276
	286
4I-9526	272
	276
4I-9527	267
	272
	276
	286
	293
4I-9528	272
	276
	286
4J-0520	260
4J-0522	270
4J-0523	269
4J-0527	270
	329
4J-5267	299
	300
4J-5477	249
	250
	254
	302
	387
4J-7533	232
	304
4K-1388	352
4L-7124	107
4M-8973	387
4P-7429	81
4P-7581	81
	126
	394
4P-8134	81
	449
4S-1962	449
4T-0928	357
4T-1860	►357
	366

5

Part	Page
5A-3604	334
	472
5B-0935	387
5C-2889	98
5C-2890	61
	120
	126
	489
5C-7261	81
	99
	168
	348
5C-7793	403
5C-7883	81
5C-8138	475
5C-8312	479
5C-9553	38
	87
	108
	153
	294
	329
	394
5D-1026	225
5D-4822	445
5D-8159	49
5H-1472	366
5I-4363	327
5I-4365	80
	302
5I-6125	196
5I-8270	80
5I-8416	198
	►203
5I-8670	228
5I-8853	286
5K-3294	449
5K-9090	260
5K-9243	371
5M-6213	49
5P-0743	39
5P-0767	225
	450
5P-1075	49
	402
	411
	479
5P-1076	165
5P-2321	123
	125
5P-2545	310
5P-4115	38
	88
	108
	168
5P-4116	78
	82
	153
5P-4325	449
5P-4906	75
5P-4924	75
5P-5649	52
5P-5927	419
5P-5995	135
5P-5998	236
	456
5P-6001	93
5P-6271	125
5P-6944	264
5P-7462	208
	294
5P-7463	208
	294
5P-7464	209
5P-7465	209
5P-7468	260
5P-7469	260
5P-7958	453
5P-8500	74
	122
	453
5P-9297	100
5P-9617	263
5P-9909	52
5Q-4212	249
	250
	252
5Q-4213	252
5S-0580	59
5V-9155	38
	67

6

Part	Page
6D-1641	449
6D-3479	82
	449
6D-4244	449
6D-4246	82
	267
6F-4855	231
6F-6672	231
6F-7045	119
6G-2256	80
6G-2263	82
6H-3615	245
6I-0217	20
	43
	47
	60
	71
6I-0254	47
6I-0260	26
	41
	42
	71
6I-0289	26
6I-0291	71
6I-0363	26
6I-0364	118
6I-0423	19
6I-0563	60
6I-0572	12
6I-0645	20
	26
	43
6I-0646	12
	31
6I-0650	20
6I-0846	9
6I-0917	19
6I-1418	88
6I-4374	42
6I-5298	427
	428
6I-5470	403
6I-6033	167
6I-6477	186
6I-6549	191
6I-6590	186
6I-6795	354
6J-2680	297
6J-7836	387
6K-0806	433
	434
	435
	436
6L-3616	371
6S-8620	67
6V-0357	243
	244
	248
	301
6V-0400	238
	240
6V-0683	208
	294
6V-0852	264
	284
	294
	329
6V-1249	209
6V-1874	260
6V-1876	270
6V-2235	449
6V-2369	107
6V-3265	61
	449
6V-3531	391
6V-3938	59
6V-3965	264
	284
	294
	329
6V-4249	301
6V-5205	387
6V-5210	97
	98
	126
6V-5324	357
6V-5391	232
6V-5645	108
6V-5653	75
6V-5842	243
	244
	248
	301
6V-5843	248
6V-6317	402
6V-7238	26
	222
6V-7357	87
	168
	425
	426
	449
6V-7636	403
6V-7644	221
6V-7660	191
6V-7726	144
6V-8185	107
6V-8202	346
	468
6V-8218	354
6V-8362	122
6V-8397	245
	249
	250
	254
	263
	264
	272
	273
	276
	277
	279
	281
	283

► PRIMARY REFERENCE

PART NUMBER INDEX

Part	Page
	284
	286
	287
	288
	293
	294
	355
	387
6V-8398	230
	245
	249
	250
	252
	267
	272
	283
	286
	287
	288
	302
	358
	361
6V-8399	341
6V-8400	346
6V-8556	230
6V-8636	245
	263
	272
	276
	281
	283
	286
	293
	387
6V-8637	256
	258
	260
	283
	302
6V-8638	267
6V-8639	287
	302
6V-8641	302
6V-8647	387
6V-8713	245
	258
6V-8716	226
	258
	270
	297
6V-8721	267
6V-8722	66
6V-8724	264
	273
	276
	279
	281
	288
	294
6V-8757	310
6V-8775	302
6V-8781	263
	277
	286
	293
6V-8782	245
	288
6V-8784	230
6V-8785	260
6V-8935	249
	250
6V-8936	249
	250
	264
6V-8942	230
6V-8978	354
6V-8979	254
	387
6V-8980	254
	387
6V-8987	272
6V-9001	245
	264
	276
	281
	283
	287
6V-9002	267
	283
6V-9004	264
	284
6V-9007	245
	258
	260
	267
	283
6V-9008	260
6V-9168	254
	273
	387
6V-9182	226
	297
6V-9189	59
6V-9491	110
6V-9632	107
6V-9672	126
6V-9746	230
	238
	240
	242
	245
	256
	258
	260
	264
	267
	270
	283
	284
	297
	301
	302
6V-9828	387
6V-9829	387
6V-9831	243
	244
	248
6V-9832	301
6V-9836	288
6V-9850	283
	287
	294
6V-9873	267
6V-9876	272
6V-9877	267
6W-6005	80
7C-0351	26
7C-4616	20
7F-0560	86
7F-3708	168
7G-1060	141
7G-5984	270
7G-5985	270
7H-3171	186
	190
7I-1288	270
7I-1303	302
7I-2272	304
	310
	360
7I-2673	56
	67
	82
	100
	101
	256
	449
7I-6843	374
7I-6896	371
7I-7192	334
7I-7203	315
	316
	317
	318
	319
	320
	321
	322
	323
	324
	325
7I-7204	334
7I-7206	334
7I-7207	334
7I-7208	334
7I-7235	334
7I-7241	335
7I-7250	335
7I-7321	327
7I-8084	335
	356
	360
7I-8252	276
7J-8611	372
7J-9108	242
	243
	244
	245
	248
	258
	299
	300
7K-1181	52
	80
	124
	133
	134
	135
	138
	141
	246
	254
	258
	263
	267
	272
	276
	281
	283
	286
	293
	302
	419
	449
7M-8485	144
	258
	260
	270
	297
	329
	365
7N-0718	107
	▶119
7N-2353	123
7N-3718	101
7T-1099	156
7T-6799	122
7T-8890	475
7W-4642	19
7W-4669	30
7X-0578	403
	479
7X-0579	88
7X-0796	243
	244
	248
	301
7X-0818	59
	288
7X-0873	264
7X-2536	432
7X-2537	61
	449
7X-2549	252
7X-2553	310
7X-2556	310
7X-2619	223
7X-2621	82
	133
	142
7X-3392	61
7X-7644	497
7X-7729	49
	52
	82
	394
7Y-0059	1
	▶453
7Y-0466	211
7Y-0468	211
	212
7Y-1901	211
7Y-1902	211
7Y-1904	211
7Y-1976	49
	52
7Y-3195	80
7Y-3474	475
7Y-3732	238
	240
7Y-3919	447
7Y-3920	447
7Y-3950	123
	125
7Y-3951	110
	124
	125
7Y-3952	110
	125
7Y-3953	123
7Y-3954	124
7Y-3955	125
7Y-3958	125
7Y-3962	95
	103
	110
	125
7Y-3963	95
	103
	110
	125

7

► PRIMARY REFERENCE

PART NUMBER INDEX

Part	Page
	135
	138
7Y-3964	95
	103
	110
	125
7Y-3965	95
	103
	110
	125
	135
	138
7Y-3966	95
	103
	110
	125
7Y-3967	95
	103
	110
	125
	138
7Y-4199	276
7Y-4217	352
7Y-4224	366
7Y-4868	238
	240
	242
7Y-5010	366
7Y-5237	269
7Y-5456	80
7Y-5499	107
7Y-5505	124
7Y-8168	449
7Y-8379	263
7Y-8436	352
7Y-8437	352
7Y-8463	429
	430

8

8C-3205	299
	300
8C-3312	387
8C-3445	226
8C-3446	226
	329
8C-3451	329
8C-5064	81
8C-5608	67
8C-5918	80
	81
8C-6354	125
8C-6358	86
8C-6965	346
8C-8400	245
8C-8988	293
8C-8992	165
8E-9490	385
8H-5303	119
8H-5306	119
8L-5008	387
8L-8413	80
	81
8M-2773	449
8N-0869	81
8N-1725	80
8P-9770	384
	385
8T-0075	263
	277
	286
	293
8T-0114	432
8T-0122	107
8T-0197	258
	260
8T-0271	243
	244
	248
	301
8T-0328	75
	108
	126
8T-0337	142
	489
8T-0357	163
8T-1158	144
8T-1159	190
8T-1160	301
8T-1715	67
8T-1889	67
	82
8T-1890	67
	82
8T-1905	264
	277
	284
	288
	294
8T-3490	46
	61
	414
	437
8T-3518	86
8T-3612	61
8T-4121	38
	46
	49
	52
	59
	67
	79
	82
	100
	101
	106
	133
	134
	140
	142
	163
	168
	225
	226
	249
	250
	254
	256
	261
	264
	267
	269
	270
	273
	279
	281
	288
	294
	299
	300
	302
	308
	310
	329
	371
	372
	387
	394
	401
	414
	416
	419
	432
	437
	446
	449
	459
	466
	473
8T-4122	189
8T-4127	126
8T-4131	391
8T-4132	232
8T-4133	59
	82
	100
	101
	168
	232
	314
	329
	346
	371
	372
	403
8T-4136	49
	52
	59
	67
	82
	140
	144
	163
	168
	226
	264
	279
	281
	288
	294
	310
	329
	387
	394
	414
	432
	437
	449
8T-4137	38
	46
	52
	67
	79
	82
	106
	134
	142
	192
	193
	254
	256
	264
	267
	273
	288
	294
	302
	308
	310
	329
	371
	394
	414
	416
	432
	446
	449
8T-4138	449
8T-4139	61
	238
	240
	242
	249
	250
	252
	261
	264
	270
	288
	294
	311
8T-4140	311
8T-4171	108
	140
	194
	417
8T-4172	264
8T-4176	261
8T-4177	294
8T-4178	273
8T-4179	6
	82
	270
	369
	377
	378
	401
	405
8T-4182	49
	82
8T-4183	232
	261
	270
	380
8T-4184	238
	240
8T-4185	59
	82
	144
	311
8T-4186	82
8T-4189	38
	49
	61
	78
	284
	450
8T-4190	401
	405
8T-4191	82
	134
	225
	273
	281
	371
	401
	437
	450
	466
	473
8T-4192	232
	246
	288
	369
	454

PART NUMBER INDEX

Part	Page
8T-4193	403
8T-4194	252
8T-4195	49
	82
	238
	240
	249
	250
	294
	308
	329
	419
	459
8T-4196	67
	82
	261
	270
8T-4198	264
	279
8T-4199	450
8T-4200	52
	55
	82
	103
	445
	447
8T-4223	6
	82
	97
	98
	221
	238
	240
	242
	246
	249
	250
	252
	261
	264
	269
	270
	288
	294
	297
	326
	380
	401
	405
8T-4224	38
	52
	55
	59
	61
	82
	88
	99
	103
	168
	226
	284
	329
	432
	445
	447
	450
	462
	464
8T-4226	82
8T-4240	148
8T-4244	97
	98
8T-4648	246
	326
8T-4896	238
	240
8T-4908	329
8T-4910	238
	240
	242
	246
	252
	264
	401
	405
8T-4944	148
8T-4956	256
	261
	269
8T-4970	61
	79
	88
	108
	475
8T-4971	416
8T-4985	46
8T-5005	82
	288
	299
	300
8T-5041	221
8T-6466	142
	261
8T-6693	126
8T-6703	46
	52
	270
8T-6726	55
8T-6759	327
	346
8T-6763	218
8T-6842	497
8T-6868	401
	405
8T-6869	288
8T-6876	245
	287
8T-6912	82
8T-7547	99
	226
	311
8T-7876	64
8T-7934	52
8T-7971	454
8T-8729	93
	94
	96
	131
	135
	141
	236
	359
	456
8T-8730	93
	94
	96
	107
	124
	131
	135
	138
	141
8T-8737	61
	87
	93
	94
	96
	107
	110
	125
	131
	135
	138
	141
	456
8T-8799	94
8T-9515	366
8T-9599	311
8T-9756	80
8Y-6967	405

9

Part	Page
9B-0453	97
9B-7233	122
9F-1399	305
9F-2167	220
	245
9F-5644	119
9G-0002	80
9G-0005	80
	81
9G-4343	107
	124
9G-8451	107
9G-8909	81
9J-3169	383
	►392
9M-2307	172
9M-5590	341
	360
9M-5732	172
9R-5383	81
9S-4181	258
	260
	270
	329
9S-4182	226
	297
9S-4183	334
9S-4185	67
	279
	288
	297
	387
9S-4188	226
9S-4191	264
	273
	276
	279
	281
	288
	311
	334
9S-8001	232
9S-8002	220
9S-8004	220
	304
	366
9S-8005	304
9S-8006	366
9W-0335	124
9W-0844	94
	125
	135
	138
	141
9W-0852	94
	100
	107
	135
	141
	415
9W-1951	125
9X-0196	95
9X-1386	116
9X-1813	78
	120
9X-2027	144
9X-2038	416
9X-2041	403
	421
	423
	440
9X-2042	126
	130
	403
	409
	421
	445
	456
	462
	464
	479
	482
	489
9X-2044	126
	402
	403
	479
	489
9X-2045	168
	403
	419
	479
9X-2046	419
9X-2085	272
9X-2201	58
9X-2480	67
9X-2616	471
9X-3401	26
	61
	75
	93
	94
	112
	115
	116
	125
	131
	141
	263
	429
	430
	456
9X-3402	93
	95
	103
	110
	115
	125
	131
	135
	138
	141
	276
9X-3463	98
9X-3982	66
9X-4244	99
9X-6165	67
9X-6582	249
	250
9X-8256	61
	82

► PRIMARY REFERENCE

PART NUMBER INDEX

Part	Page
	87
	88
	108
	126
	140
	153
	294
	329
	394
	417
	425
	426
	449
	450
	455
	475
	479
9X-8257	273
	401
	402
	405
9X-8600	75
9X-9896	66
9Y-5015	15
0	
012-0380	120
030-1706	81
032-9090	10
032-9091	10
033-7687	18
033-8248	371
	372
034-3679	66
035-8017	64
035-8063	12
	121
035-8068	12
067-3045	38
067-6002	12
067-6006	12
	15
067-6043	12
067-6135	7
	11
067-6179	20
067-6213	26
067-6265	64
067-6873	10
067-6874	10
067-6999	64
085-6444	485
085-6447	485
085-6448	485
085-6449	485
085-7356	264
	267
	281
	288
	294
085-8828	380
085-9310	74
	331
085-9768	334
085-9769	148
	380
086-0297	160
	369
	377
	378
086-0298	369
086-0299	160
086-0414	380
086-0415	380
086-0416	380
086-0523	374
	390
087-3908	167
087-3909	167
087-4402	272
087-4454	▶197
	203
087-4456	▶198
	200
087-4531	281
087-4575	197
087-4576	197
087-4577	197
087-4683	236
087-4710	346
087-4742	148
087-4786	366
087-5631	366
087-5708	346
087-5767	281
	286
087-5777	276
	286
087-5841	81
091-9035	81
093-0065	160
093-0083	160
093-0097	160
093-0115	160
	369
093-0357	160
	369
	377
	378
093-1295	242
093-1296	245
093-6089	223
093-7521	229
094-0580	144
094-0876	342
	344
094-1528	144
094-1875	148
	232
	310
094-1881	232
094-1882	148
	310
	366
095-0703	218
095-0723	126
095-0728	437
095-0735	432
095-0736	75
095-0742	126
095-0755	402
095-0826	447
095-0827	417
095-0843	153
095-0863	187
	188
095-0879	223
095-0882	305
095-0910	134
095-0929	223
095-0933	387
095-0965	335
095-1260	346
095-1299	163
095-1388	39
095-1514	353
095-1519	351
	353
	359
095-1533	365
095-1552	314
095-1575	341
	346
	351
	353
095-1578	334
	341
	356
	360
095-1579	334
	341
	354
	359
095-1580	348
095-1582	334
	348
	351
095-1584	228
	341
	351
095-1585	148
	334
	366
095-1586	334
	342
	344
	352
	358
	361
095-1587	354
095-1590	228
	305
	348
	354
	365
095-1591	353
095-1592	260
	335
	353
095-1593	351
095-1595	305
095-1596	228
095-1608	329
095-1625	327
095-1662	186
095-1696	334
095-1698	305
	334
095-1700	334
095-1701	195
	366
095-1716	327
095-1725	329
095-1750	358
	361
095-1751	358
	361
095-1777	283
095-1783	351
	353
095-1786	354
095-1787	365
095-1788	232
095-6639	314
095-6824	369
095-7101	195
095-7380	148
095-7382	148
095-7930	117
	447
095-8024	353
096-1519	148
096-1628	342
	344
096-2617	427
	428
096-2622	462
	464
096-3780	153
096-3884	462
	464
096-4035	49
	52
096-4276	195
096-4876	374
	390
096-4879	194
096-4883	269
096-5819	52
096-5962	126
096-6166	110
	126
	142
	437
	489
099-0139	485
099-0157	186
099-0159	186
099-0160	186
099-0163	186
099-0172	195
099-0173	195
099-0183	190
099-0185	190
099-0194	191
099-0195	191
099-0653	187
	188
099-0707	374
099-0724	374
	390
099-0823	402
	479
099-1319	66
	449
099-3563	222
099-3600	369
099-3629	476
099-3633	489
099-3645	453
099-3669	232
099-3671	232
099-5408	242
	245
099-6109	232
099-6110	232
099-6111	232
099-6112	232
099-6113	232
099-6115	232
099-6137	342
	344
	346
099-6141	346
099-6144	346
099-6145	346
099-6418	81
	158
	159
	171
099-7127	124
099-8232	260

▶ PRIMARY REFERENCE

PART NUMBER INDEX

Part	Page
1	
100-3320	94
100-3751	20
	47
100-4336	449
100-4461	40
100-4830	22
	71
100-4838	9
100-4841	12
100-8451	57
101-2846	126
101-3805	26
101-3895	20
	42
101-7403	238
	240
101-7404	270
101-8899	442
	462
	464
101-8900	462
	464
	479
	482
102-7964	125
	138
	141
102-7965	125
	138
	141
102-8802	26
	75
	77
	78
	94
	110
	116
	120
	141
	359
102-8803	93
	94
	115
	124
	141
	236
102-8806	138
102-9941	33
103-2529	94
103-5687	26
103-8411	335
103-8412	334
103-8413	334
104-8950	286
104-8973	276
	286
104-8999	300
105-2169	402
105-3481	61
105-3487	61
	153
	455
105-6431	371
	372
105-7405	334
106-8715	245
106-8916	60
107-1678	82
107-6479	341
	356
	360
107-6631	273
	281
	286
108-1781	297
108-7360	276
108-7375	286
108-7516	281
109-5815	258
110-6393	497
111-0859	17
111-3422	70
111-3423	70
111-4799	236
111-4816	125
111-4836	80
	100
	101
	134
	142
	394
111-4837	80
	100
111-4838	81
	142
111-4839	80
	141
111-8222	57
111-9916	310
	▶358
	360
111-9998	348
113-2532	430
113-8129	47
113-8490	124
113-8491	124
113-8492	124
113-8493	124
114-0515	352
114-0517	352
114-0623	358
	361
114-1374	225
114-2579	57
114-6658	79
115-8645	258
	276
	286
116-0118	80
	100
	133
	134
	141
116-0210	124
116-0255	125
117-6306	479
117-6349	437
117-6350	437
117-6356	437
117-8683	429
118-4086	342
	344
118-4087	342
	344
118-9941	23
119-3253	384
119-3662	95
	125
	141
119-5026	110
	394
119-5362	366
119-5364	366
119-5388	346
119-5389	346
119-5391	346
120-7199	179
	▶181
120-9027	236
121-0883	19
121-1022	125
121-1029	61
121-1076	80
121-1168	110
	125
	141
121-1173	110
	125
	141
121-1459	352
121-7098	449
121-7136	412
	449
121-7137	412
	449
121-7138	449
121-8659	371
121-8662	371
122-4120	167
122-9605	449
122-9608	437
122-9609	437
122-9610	437
122-9611	432
122-9617	419
122-9657	401
	449
123-1373	81
123-2431	355
123-2552	355
123-2636	245
123-2729	299
124-0506	8
124-0838	300
124-1305	299
124-3548	124
124-3815	20
	57
	71
124-4009	427
	428
124-4010	427
	428
124-5814	81
	▶86
125-1302	107
	▶120
125-4766	141
125-4784	125
125-4785	125
125-4840	125
125-4841	125
	138
	141
125-7874	93
	95
	125
	131
	135
	141
125-7875	95
	125
	135
	138
	141
125-7876	93
	124
126-1767	26
	61
	93
	94
	115
	116
	125
	131
	141
	263
	429
	430
126-1768	93
	95
	103
	115
	125
	131
	135
	141
	276
126-1865	346
126-1866	346
126-2055	305
126-5011	94
126-6872	263
	283
127-0580	402
127-3913	377
	378
128-2135	405
	409
	421
	423
128-2136	409
128-7471	260
128-8950	125
128-9001	287
128-9166	267
129-3400	286
129-5959	286
129-7784	314
129-7932	366
130-0270	449
130-9984	226
131-1505	95
131-5767	334
131-5768	334
131-5818	346
131-5915	342
	344
131-8901	56
131-8902	56
131-8903	56
131-8915	55
131-9453	267
131-9850	299
	300
131-9907	258
132-1805	80
132-1829	▶77
	124
132-4763	392
132-4766	393
132-5789	81
	126
	134
133-1011	20
133-2425	160
	369
133-2554	181
133-2717	160
133-5813	272
	276
	286
	293
133-8016	402

PART NUMBER INDEX

Part	Page
134-3196	49
134-3284	100
	101
134-3296	125
134-3297	125
	141
134-3856	30
134-7258	497
135-3980	252
135-8572	167
135-8573	166
	167
	177
135-8575	167
135-8576	164
135-8577	66
	152
135-8578	166
135-8965	401
	466
135-8966	401
	466
136-3608	8
137-2270	454
137-2813	1
	2
	▶165
137-2853	165
137-2854	165
138-5184	125
138-8454	479
139-7119	477
139-7126	402
139-7127	402
140-8714	71
140-8718	71
141-2759	107
	124
142-0485	479
142-3836	1
	▶454
142-5546	437
143-9397	134
144-0195	475
144-0367	46
	58
	297
145-4911	18
145-5106	198
	▶199
146-6747	497
147-6603	357
147-6604	357
147-6605	357
148-4685	162
148-8305	263
148-8313	263
148-8325	302
148-8327	256
	258
	260
	283
	302
148-8336	245
	263
	272
	276
	281
	283
	286
	293
148-8338	263
	277
	286
	293
148-8339	258
	270
	297
148-8340	287
	302
148-8341	245
	258
148-8345	267
148-8347	245
	258
	260
	267
	283
148-8353	245
	264
	276
	281
	283
	287
148-8354	267
	283
148-8357	260
148-8359	267
148-8360	297
148-8363	272
148-8365	245
	287
148-8366	272
148-8367	283
	287
	294
148-8371	293
148-8372	267
148-8377	254
148-8378	264
	272
	276
	279
	281
	287
	294
148-8384	254
148-8407	264
	273
	276
	279
	281
	288
148-8411	66
	279
	288
	297
148-8415	249
	250
	264
148-8419	249
	250
148-8428	245
	288
148-8430	264
148-8431	260
148-8433	288
148-8435	263
	277
	286
	293
148-8436	302
149-1738	242
149-5069	125
149-5070	126
149-5071	126
149-5733	392
	393
149-6549	449
150-3036	264
	277
	283
	288
	294
150-4027	277
	281
	286
	293
150-4043	267
150-7732	9
151-6703	462
	464
	479
	482
151-6704	462
	464
	479
	482
151-6778	479
	482
	484
151-6792	462
	▶485
151-6793	485
151-6813	479
	482
151-6815	479
	482
151-6831	482
151-6832	479
	482
151-6841	485
151-9461	462
	464
151-9497	462
	464
151-9557	479
151-9576	479
	482
151-9751	180
152-3968	70
153-2521	▶97
	100
	101
153-2523	▶98
	105
153-2540	110
153-2541	110
153-2602	126
153-2620	141
153-2631	126
153-3568	467
153-5223	346
153-6237	264
	284
153-6242	258
	260
153-6270	283
153-8762	432
153-8763	432
153-8800	326
154-9024	54
155-0576	88
155-2256	93
155-2258	93
155-2259	138
155-2260	93
	135
	141
155-2265	87
	138
155-2270	94
	96
	103
	107
	110
	126
	141
155-3624	297
156-5970	362
156-6470	479
	482
	484
156-6471	462
156-6474	485
156-6475	485
156-6554	479
156-6562	479
156-6563	479
156-6579	479
156-6598	462
	464
156-6599	402
156-6600	462
156-6618	402
156-6627	479
156-6631	477
156-6642	448
156-6643	462
	464
156-6645	462
156-8801	302
157-0670	54
157-1669	66
157-3184	61
158-8987	▶228
	329
159-4700	199
159-7782	327
159-8036	387
159-8049	80
	81
159-8050	81
159-9322	94
160-7689	94
161-3128	124
161-3639	462
	464
161-3650	462
	464
161-3663	462
	464
161-3665	462
	464
161-3684	479
161-3685	402
161-3695	485
161-3697	402
161-3698	479
	482
	484
161-3705	485
161-3717	401
	466
161-6987	134
162-4304	187
162-4305	187
	188
162-4306	187
162-4307	187
	188
162-4696	302
	▶327
162-6172	56
163-6637	94
163-6759	141

▶ PRIMARY REFERENCE

PART NUMBER INDEX

Part	Page
163-6773	141
163-6795	103
	124
	135
	138
	475
	489
163-6803	126
164-0514	462
164-0515	462
	464
164-0516	485
164-0517	485
164-0518	485
164-0519	462
164-0523	402
164-0527	402
164-0528	402
	▶448
164-0646	409
164-0648	479
164-0655	409
164-0664	448
164-0666	476
164-4180	258
	260
	270
	329
164-5546	263
164-5567	264
	284
	294
	329
164-5590	329
164-5624	272
164-5628	273
	281
	286
164-5629	281
164-6869	286
164-6874	264
	267
	281
	288
	294
164-6979	287
	▶355
164-6981	▶200
	287
164-8474	405
165-2799	148
	310
165-2801	310
165-2804	310
165-2805	310
165-3065	454
165-3838	310
165-3839	310
165-3847	310
165-3853	310
165-5803	148
165-5804	148
165-5811	148
165-5814	148
165-5816	148
165-5817	148
165-5818	148
165-5819	148
165-5820	148
165-5821	148
165-5822	148
165-5823	148
165-5824	148
165-5826	148
165-5828	148
165-5831	148
165-5837	366
165-5839	352
165-5840	352
165-5846	366
165-5850	366
165-5854	144
165-5856	144
165-5859	144
165-5860	144
165-5864	144
165-5866	144
165-5867	144
165-5868	144
165-9431	342
	344
165-9435	342
	344
165-9436	342
	344
165-9438	342
	344
165-9442	342
	344
165-9443	342
	344
165-9444	342
	344
165-9460	342
	344
165-9461	344
165-9464	356
165-9552	346
165-9554	346
166-1481	377
	378
166-1482	374
166-1486	369
166-1492	214
	216
	218
	377
	378
166-1494	214
	369
	377
	378
166-1579	371
167-3487	126
167-3593	124
167-3630	126
167-3631	126
167-7018	402
167-7039	462
	464
167-7042	402
167-7135	401
	466
167-7270	497
168-1968	263
	283
168-6728	146
	▶151
168-9755	245
168-9759	272
	279
169-5326	71
169-7904	179
	▶182
169-7905	182
170-2602	1
	▶166
170-2755	153
170-2983	153
170-3014	167
170-6888	124
170-6890	126
170-6891	126
170-6929	80
170-6941	447
170-6993	97
	98
170-9324	110
170-9360	153
170-9394	126
170-9417	97
	98
170-9418	97
	98
170-9497	401
	▶437
	461
170-9498	437
170-9499	437
170-9722	479
	482
	484
170-9724	409
170-9997	335
171-0002	270
	▶332
171-0035	354
171-0036	354
171-0037	354
171-0087	342
	344
171-0123	348
171-0124	348
171-0126	348
171-0127	348
171-0128	348
171-2205	107
171-2208	107
171-2210	107
171-3369	52
171-5349	116
171-7325	399
	400
	421
171-7413	485
171-7414	485
171-7420	409
171-7426	402
171-9077	52
172-3080	369
172-8490	386
173-3389	232
173-7895	242
174-0503	93
174-3016	94
	126
174-7220	232
174-7221	232
174-7222	232
174-7791	97
	98
174-9638	60
175-4291	99
175-4430	355
175-7141	118
	489
176-1902	449
176-1916	419
176-1931	475
176-1937	402
176-1938	402
176-1939	402
176-1941	448
176-1949	445
176-1951	485
176-1952	485
176-1953	485
176-1954	485
176-1955	485
176-1956	485
176-1957	485
176-1972	409
176-1986	402
176-1996	442
176-4791	287
176-4868	▶196
176-4871	▶187
	196
176-4872	187
	188
176-6219	70
176-8131	148
	310
176-8132	310
176-8573	148
176-8579	148
176-8590	352
176-9299	93
	95
	125
177-2215	81
177-2653	260
	▶350
177-2706	332
177-5867	155
177-5879	166
177-5880	166
177-6048	156
178-5422	419
178-5423	419
178-5431	475
178-5569	477
178-5570	402
178-5572	476
178-5573	462
	464
	476
178-5574	462
	464
	476
178-5576	479
178-5659	471
178-5883	287
178-5955	283
178-6450	52
	307
179-5030	252
179-5764	194
179-7071	25
179-7464	258
179-7600	▶299
	376
179-7601	▶300
	376
179-7778	302
179-7779	302
180-3861	97
	98
180-7614	160
180-7758	371
183-5300	393
184-1836	305
184-3841	332
184-8850	153
184-8862	158

▶ PRIMARY REFERENCE

PART NUMBER INDEX

Part	Page
	171
184-8898	158
	159
184-9330	258
184-9420	287
185-0169	232
185-0423	348
185-0462	281
	▶356
185-0463	356
	360
185-0882	15
185-0884	12
185-6627	57
185-8161	419
185-8180	462
	464
185-8182	411
	479
185-8196	402
185-8205	175
	409
185-8221	479
185-8280	448
185-8281	448
185-8284	418
185-8286	236
	399
	400
185-8293	449
185-8300	397
	431
185-8302	397
186-3735	77
	78
	120
	362
186-5639	160
187-0661	497
187-5741	287
187-6692	240
187-6913	260
187-7028	287
187-7173	245
189-2678	409
189-2690	462
	464
189-2702	477
189-2704	402
189-2717	445
189-2847	445
189-2853	409
189-2854	409
189-2864	402
189-9377	26
189-9763	232
	310
190-4896	310
190-5386	497
190-6821	167
190-7674	232
190-7819	341
190-7875	332
191-0862	144
191-2543	225
191-2544	163
191-2602	223
191-2605	223
191-2608	223
191-2609	223
191-2610	223
191-2611	223
191-2613	223
191-2662	222
192-0573	232
	310
192-2376	232
192-3039	156
193-6606	252
193-9712	166
194-0097	297
194-5390	60
194-9041	245
195-9180	383
	▶393
196-1666	431
197-0143	334
197-0144	334
197-0145	334
197-0146	335
197-0147	335
197-0148	315
	316
	317
	318
	319
	320
	321
	322
	323
	324
	325
197-0149	315
	316
	317
	319
	320
	321
	322
	323
	324
	325
197-0150	315
	316
	317
	318
	319
	320
	321
	322
	323
	324
	325
197-0151	315
	317
	318
	319
	320
	322
	323
	325
197-0152	316
197-0153	321
	324
197-0156	315
197-0165	334
197-0166	335
197-0167	334
197-0168	334
197-0169	334
197-0170	334
197-0173	▶315
	334
197-0196	304
197-0199	304
197-0213	▶316
	334
197-0214	316
197-0217	▶317
	335
197-0218	317
197-0225	334
197-0272	334
197-0273	304
197-4385	94
198-0370	249
	250
198-3899	474
199-0126	157
199-0377	167
199-0518	310
199-1187	81
199-1689	258
199-1914	287
199-4627	223
199-5152	366
199-7854	142
199-9267	121
199-9751	15
	29
	117
2	
200-3244	232
200-3245	232
201-4391	462
201-4417	402
201-4530	402
201-9271	334
202-9824	496
203-5001	171
203-5005	171
203-7400	372
203-7401	371
204-1086	144
204-1635	80
204-2281	288
204-6195	95
205-6295	402
206-1345	38
206-3336	▶341
	432
207-2985	310
207-6403	329
207-6404	329
207-6418	287
	293
209-6002	314
209-9219	14
210-5808	402
212-2837	160
213-0677	26
213-0772	124
213-8433	220
	333
213-9100	78
214-3203	12
	31
214-6197	153
214-7566	66
	226
214-7568	66
	67
	75
	112
	264
	284
	294
	329
214-7915	497
215-4855	334
215-4872	335
215-4909	228
215-5037	287
	▶304
216-1302	66
216-8314	11
216-8634	20
218-1183	287
218-1335	287
218-4247	144
221-5069	▶230
	267
221-5070	230
221-5071	230
221-8045	497
221-8912	283
221-9804	94
222-0085	354
222-0225	427
	428
224-0554	497
224-8946	497
225-0224	232
225-0225	232
225-0312	497
225-4257	497
225-4539	245
225-4804	304
225-4818	304
225-5438	28
225-5501	16
225-5502	16
225-5629	35
225-5634	35
225-5638	35
225-5707	450
225-5714	450
225-5959	35
225-5960	35
225-5961	35
225-5962	35
225-6005	26
225-6216	310
225-6451	8
225-6478	8
225-6522	32
225-6524	32
225-6817	42
225-6818	42
225-7738	47
225-7739	47
225-7741	47
225-7944	12
	43
225-8019	47
225-8287	20
225-8536	60
225-8848	22
225-8858	12
226-8770	92
227-0590	329
227-6186	163
227-6227	222
227-7616	429
227-7617	430
227-8807	▶201
228-2781	497
228-7089	26
228-7091	66
228-7092	226
228-7100	113
228-7102	67

PART NUMBER INDEX

Part	Page
228-8146	80
228-9254	497
229-0887	497
229-1078	162
229-1091	377
	378
229-1092	374
229-1093	218
229-1095	216
	377
	378
229-9070	3
	▶475
229-9082	396
	▶442
230-1341	495
230-4009	94
	126
	138
	142
230-4011	94
	126
	131
	135
	138
	142
	447
230-4012	362
230-4013	94
	115
	131
230-5008	138
230-5010	93
	94
	135
	138
	142
	456
230-8094	26
230-8989	71
230-8995	71
230-8996	71
230-8997	71
230-8998	71
230-9127	9
231-1771	4
	▶78
231-1836	▶135
	137
231-2295	94
	138
232-1322	15
	29
232-1328	71
232-1793	71
232-1794	71
232-2725	71
232-2726	71
232-3126	64
	71
232-3149	71
232-3157	71
232-3274	71
232-3317	201
232-3657	20
232-3666	20
232-3751	12
	43
232-3861	121
232-7449	14
232-7596	12
232-7597	12
232-7599	12
	226
232-7600	12
232-7603	12
233-3786	10
233-5260	432
233-9536	60
233-9537	60
234-1097	124
234-1122	141
234-1158	110
234-6468	409
234-6469	409
234-6470	409
234-6471	409
234-6472	409
234-6473	409
234-6476	409
234-6477	409
234-6483	409
234-6485	409
234-6490	409
234-6491	409
234-6497	409
234-6498	409
234-6499	439
234-6501	405
	▶439
234-6502	439
234-6579	409
	421
	423
234-6580	421
	423
234-6593	439
234-6602	423
234-6603	421
234-6604	423
234-6605	421
234-6608	421
	423
234-6609	421
	423
234-6610	421
	423
234-6612	421
234-6613	▶236
	421
234-6614	421
234-6615	236
235-2435	26
235-2451	57
235-7679	216
	374
235-8862	459
235-8874	394
235-8875	394
235-8876	442
235-8877	442
235-8878	442
235-8879	401
	442
235-8880	417
235-8891	449
235-8893	419
235-8894	419
235-8912	402
235-8914	421
	423
235-8923	409
235-8930	409
235-8933	402
235-8950	394
	409
235-8951	399
235-8952	400
235-8965	421
235-8966	423
235-8969	▶427
	434
235-8970	▶428
	433
235-8971	427
235-8972	428
235-8996	399
	400
235-8997	399
235-8998	400
235-9001	401
	405
235-9005	394
235-9012	475
235-9014	449
235-9015	449
236-2144	64
236-2838	272
236-2843	272
236-2844	272
236-3056	263
236-3257	231
236-3259	231
236-6365	374
236-9567	157
237-0947	220
	333
238-1506	107
238-2279	107
238-2280	107
238-2318	124
238-2319	126
238-2363	126
	138
	142
238-2366	110
	126
	142
238-2390	124
238-2391	124
238-2501	80
238-2528	80
238-5080	66
	75
238-5081	75
238-5083	226
238-5084	226
238-8288	57
238-8671	71
239-1568	270
239-6986	497
239-7352	135
	138
239-8693	210
	▶432
240-2913	369
240-5066	429
240-5067	430
240-5071	3
240-5073	▶443
240-5074	442
240-5571	71
241-7688	59
241-8368	107
242-1510	497
242-1588	497
242-8660	43
243-4505	94
	100
	107
	126
	135
	415
243-4506	96
243-4507	142
243-4508	93
	131
	135
	142
	456
243-4509	61
	142
243-4510	94
	142
	456
245-5093	283
245-7749	416
	▶417
245-7750	417
245-7751	417
245-7760	124
245-7790	409
	421
	423
245-7791	442
245-7792	442
245-7793	442
245-7811	1
	▶459
245-7813	431
245-7814	431
245-7815	431
245-7816	431
245-7817	397
245-7818	397
245-7819	397
245-7820	397
245-7823	397
245-7824	397
245-7825	397
245-7826	397
245-7827	397
245-7828	397
245-7829	397
245-7830	397
245-7831	397
245-7832	397
245-7833	397
245-7834	397
245-7835	397
245-7836	397
	▶412
245-7837	412
245-7838	397
245-7839	397
245-7842	427
245-7844	428
245-7846	397
	▶431
245-7847	397
245-7850	449
245-7851	449
245-7856	397
245-7872	442
245-7873	401
	442
245-7881	1
	2
	▶467
245-7895	474
245-7905	412
245-7925	421
245-7926	423
245-7929	439
245-7948	421
	423

▶ PRIMARY REFERENCE

PART NUMBER INDEX

Part	Page
246-2641	74
247-2693	135
	429
	430
247-4884	64
247-7410	210
	▶491
247-7424	210
	▶493
247-7437	497
247-7438	497
248-7172	195
248-7184	179
	▶183
248-7191	194
248-7194	194
248-7197	195
248-7200	192
	193
248-7203	192
	193
248-7260	191
248-7261	191
248-7262	191
248-7284	211
248-7820	374
248-7822	374
248-7823	374
248-7835	374
248-7836	374
	377
	378
248-7857	216
248-9692	283
250-8054	491
	493
251-0303	107
251-0304	107
251-0579	138
251-0580	135
251-0637	124
251-9567	232
252-6438	15
253-1346	192
	193
253-2111	107
253-6406	386
	▶390
253-6694	240
254-2267	41
254-2270	41
254-3954	15
255-2751	110
	▶122
255-2966	56
255-4410	467
255-5843	▶210
256-4447	57
257-3023	287
258-4946	16
259-0918	314
259-4883	124
259-5081	124
259-5082	124
259-5206	80
259-5295	▶91
	210
259-5303	80
259-7180	130
259-7202	421
259-7214	467
259-7215	467
259-7345	399
	400
259-7346	▶399
	423
259-7347	▶400
	421
259-7348	▶418
	419
259-7351	445
259-7352	445
259-7353	409
259-7354	462
	464
259-7598	210
	▶425
260-2109	▶429
	435
260-2110	▶430
	436
260-2111	429
	430
260-2180	283
260-2191	283
260-3883	362
260-6941	491
260-6946	493
260-7057	3
	▶179
260-9174	258
261-6700	57
264-7029	135
	138
264-7030	115
264-7031	138
264-7032	135
	138
	456
264-7033	138
264-7034	138
266-5431	497
266-7379	107
266-7940	245
267-1626	232
267-4063	302
267-6744	222
267-6786	222
267-7976	110
267-8084	148
	310
268-0720	171
268-4201	232
268-4203	232
268-4530	494
268-4531	494
268-5145	245
268-6263	310
268-8209	362
268-8872	494
269-0120	494
269-0121	494
269-1649	179
	▶180
269-2433	310
269-5224	243
	244
269-7680	81
269-9700	293
269-9703	293
270-5672	256
	▶363
270-5757	256
	▶364
270-5843	▶210
270-5949	346
270-5950	346
270-5953	342
270-5978	335
	▶351
270-6110	260
271-7843	433
	434
272-2265	42
272-4164	256
272-4514	273
273-5274	479
273-5345	479
	482
273-5346	479
	482
273-6814	369
273-6945	214
273-8315	310
273-8316	232
273-8317	232
273-8318	232
274-6609	26
275-1038	71
275-1442	205
	206
275-1443	205
	206
275-1444	205
275-1750	260
275-2452	22
275-6810	141
275-6874	1
	▶446
275-6875	446
	▶447
275-6876	447
275-7052	▶100
	368
275-7055	▶133
	210
275-7133	100
275-9891	26
276-5605	12
277-0121	19
277-0917	238
277-1002	252
277-1232	326
277-1251	250
277-3012	20
278-4050	164
278-4051	164
278-5113	35
278-5126	7
278-6495	245
278-6512	235
	▶302
278-6664	235
	▶307
278-6672	235
	▶272
	401
278-6673	235
	▶276
278-6697	210
	▶256
278-6714	▶279
278-6751	260
278-6799	245
278-6883	260
278-9293	373
	▶374
281-0791	412
281-5898	283
281-6847	232
281-8803	94
281-8804	94
281-8805	112
282-4503	374
282-5470	252
282-5476	252
282-5482	252
282-5705	386
	▶494
282-5772	238
282-5894	238
	240
	▶340
282-7053	260
282-7074	242
282-7075	242
282-7144	260
282-7146	260
282-7150	260
282-7206	272
282-7411	210
	▶281
282-7482	270
282-9192	310
283-2723	▶96
	133
283-3606	174
283-3620	157
283-3636	167
283-3639	178
283-3643	167
283-3648	173
283-3934	172
283-3946	173
283-4085	178
283-4715	232
283-9013	1
	2
	3
	▶368
283-9014	1
	▶376
283-9016	2
	▶376
283-9018	1
	2
	3
	▶373
284-1026	34
284-4376	1
	2
	▶444
284-4426	402
285-1503	334
285-1504	▶318
	334
285-1505	▶319
	335
285-1506	334
285-1507	334
285-2576	279
285-2663	283
	293
285-2664	283
	293
285-2719	293
286-3030	9
286-6499	258
286-7848	33
287-8573	9
287-8597	19
288-0422	20
288-7392	▶238
288-7395	▶249
288-7398	▶240
288-7688	238

▶ PRIMARY REFERENCE

PART NUMBER INDEX

Part	Page
288-7689	238
288-7690	238
	240
288-7691	238
	240
288-7698	249
288-7699	249
288-7721	240
288-7727	250
288-7730	250
289-6570	156
289-6681	171
289-8194	▶229
	329
289-8195	229
289-8336	17
290-1729	497
290-9178	214
291-7760	80
291-7762	1
	2
	3
	▶101
291-7763	101
292-7180	276
292-7415	258
292-7423	272
292-7424	272
292-7425	272
292-7426	293
292-7427	272
292-7428	272
292-7430	293
292-7431	272
292-7513	272
292-7523	287
292-9008	8
293-1137	397
293-1183	401
	442
293-1184	401
	442
293-1238	401
	449
293-1501	153
293-6734	156
293-7010	167
294-0288	20
294-6519	240
296-6928	293
296-6960	279
296-7059	287
297-0366	318
297-0529	▶342
	433
	434
297-0532	426
	▶433
297-0533	426
	▶434
297-0534	425
	▶435
297-0535	425
	▶436
297-0589	▶344
	435
	436
297-9133	195
297-9134	195
297-9137	194
297-9138	183
	▶184
297-9139	183
	▶185
297-9140	184
	▶192
297-9141	185
	▶193
297-9142	192
	193
	▶194
297-9143	194
	▶195
297-9161	194
298-2985	167
298-3024	167
298-4282	497
298-5112	5
	▶40
298-5129	5
	▶29
298-5872	34
299-2901	80
299-5082	5
	▶25
3	
301-0091	81
301-2981	141
301-6874	232
301-8294	232
302-2872	270
302-2977	263
302-9466	340
303-9623	167
303-9933	75
303-9937	75
304-3663	5
	▶30
304-3961	▶352
	366
304-5303	124
304-8761	5
	▶31
305-0303	449
305-0330	409
305-0359	449
305-0361	477
305-0441	449
305-0442	449
305-0467	▶469
305-5362	95
305-6873	66
306-8526	81
306-8531	80
307-0047	495
307-1818	441
	▶462
307-4969	287
309-5130	226
309-5768	276
309-5769	281
309-9973	334
	▶353
310-0065	▶320
	335
310-0078	401
	▶426
310-0210	287
	▶348
310-0357	▶321
	334
310-0419	346
310-0420	346
310-4980	144
310-9621	56
310-9622	56
310-9662	55
	▶56
312-2578	5
	▶32
312-5694	381
	382
313-3762	49
313-3766	49
313-3769	49
314-6506	49
314-6510	49
314-8242	293
315-1030	368
	▶371
315-3381	71
315-3384	7
315-3385	▶35
	36
315-3386	35
315-3387	35
315-3388	35
315-3390	15
315-3392	15
315-3393	15
315-3394	15
315-3411	5
	▶47
315-3419	5
	▶22
315-4441	329
315-5313	402
316-6907	5
	▶92
316-6941	5
	▶41
316-7896	▶15
	16
316-8805	66
316-8846	397
316-8847	397
316-8849	397
316-8916	394
	▶397
316-8918	397
316-8920	397
316-8921	397
316-8987	471
	472
317-4749	287
317-4793	293
317-4796	293
317-4841	293
317-4846	287
318-1181	80
	▶116
319-1253	80
319-4407	263
319-6216	226
319-6221	226
319-9966	258
320-0006	293
320-0007	287
320-0156	287
320-3060	113
320-3063	66
320-5737	153
320-9213	64
321-8648	226
321-8649	226
322-3154	▶37
	226
322-3155	37
322-9663	15
322-9664	15
323-9312	28
324-0444	20
324-4118	212
324-5770	140
324-5771	140
	401
324-5804	107
324-5805	107
324-5808	107
325-4471	▶99
	103
325-8634	▶113
	117
325-9220	267
326-0319	226
326-9012	5
	▶64
326-9147	▶70
	71
326-9149	5
	▶71
327-6501	401
	▶468
327-6507	468
	▶472
327-6512	▶471
	472
327-6515	471
327-6520	472
	▶474
327-6523	401
	461
	▶473
327-6538	473
327-6541	469
327-6550	402
	▶455
327-6593	415
327-6594	415
327-6640	471
327-6642	471
327-6643	471
327-6644	474
327-6645	474
327-6646	474
327-6647	474
327-6648	474
327-7538	124
327-8740	309
328-0181	80
328-2035	263
	▶362
328-9631	5
	▶57
330-4298	5
	▶121
331-4226	276
332-0195	471
332-7484	144
332-7485	144
332-7486	144
332-7487	144
332-8591	66
332-8598	66
333-3048	223
333-3049	223
333-3050	223
333-3051	223
333-3058	223
333-3059	223
333-4160	471
333-4179	471

PART NUMBER INDEX

Part	Page
333-4180	474
333-4181	474
333-4609	206
333-7032	263
333-7098	283
334-9334	33
335-0136	341
335-0138	341
335-0158	363
	364
	▶365
335-2092	19
335-7585	26
336-5880	▶123
	130
336-5893	123
337-1176	260
337-1177	260
337-1181	245
337-1286	263
337-6461	366
338-6971	▶114
	263
339-7143	24
339-7144	24
339-7145	23
340-2566	456
340-2567	456
340-8206	191
341-1842	75
341-2860	▶309
	310
341-7597	26
342-2972	94
	126
	138
	142
342-2973	94
342-2974	94
	138
	142
342-2976	94
344-0688	▶212
	308
344-5360	67
344-6840	180
344-6903	▶176
	196
344-6904	176
344-7392	114
346-0407	20
346-0408	20
346-3229	226
347-3727	254
347-3728	254
347-3895	254
347-4416	67
347-4734	80
347-6081	▶231
	329
347-6082	231
347-8645	67
348-0629	160
348-5409	153
	175
349-2746	8
349-5084	95
	126
349-5085	94
	126
349-7059	75
349-9520	148
	▶366
349-9521	366
350-0837	263
350-3300	2
	▶196
350-7735	75
350-8254	3
	▶140
350-9492	26
351-3869	▶211
	212
351-3928	23
351-4089	66
351-4126	211
351-4318	67
351-4320	67
351-4321	67
351-9918	97
	99
352-6772	252
352-6864	354
352-7064	225
352-7117	350
	▶354
352-7176	293
	▶359
352-7197	▶322
	335
352-8148	▶144
	147
353-0491	▶146
	150
353-0534	223
353-0536	223
353-0537	223
353-0538	223
353-0539	223
353-0540	223
353-0541	223
353-0542	223
353-0543	223
353-3477	60
353-3478	60
353-5825	310
353-5829	148
	310
353-5837	310
353-7423	10
353-7424	10
353-7425	10
353-7426	10
354-1274	▶42
	43
354-3825	272
354-3833	272
354-3834	272
354-5799	385
354-5807	384
354-5811	384
354-5813	384
354-5833	37
355-1357	49
355-2252	47
355-5804	387
356-7732	124
356-9565	173
357-1827	144
357-1828	144
357-1829	144
357-1832	148
357-3877	432
357-5205	118
357-5710	369
	377
	378
357-7540	195
358-0880	159
	171
358-6390	497
358-7523	287
358-8621	▶381
	383
358-8633	381
	▶384
358-8641	▶382
	383
358-8647	382
	▶385
359-0715	▶10
	11
359-0719	28
359-0720	28
359-0721	28
359-0722	28
359-0723	28
359-0724	28
359-0744	5
359-0750	33
360-3986	10
360-7347	5
	▶33
361-1045	79
361-7519	60
362-2190	▶12
	14
362-3719	497
362-3720	497
363-2302	287
363-2569	249
363-6120	294
363-6138	293
363-6187	276
364-1614	414
365-3308	64
366-0367	124
366-4622	124
366-8771	96
	▶495
366-8853	12
366-9313	115
367-0844	497
367-3326	18
367-8465	374
368-3151	92
368-6658	66
368-6660	23
368-8651	362
368-9994	310
368-9995	310
368-9996	310
368-9997	310
369-8394	▶323
	335
369-8395	▶324
	334
369-8434	▶325
	334
369-8503	272
	▶346
369-8509	346
369-8510	346
369-8568	346
369-8569	346
370-4404	384
370-4414	384
370-4420	384
370-4425	384
370-7639	497
371-3615	385
371-3616	385
371-3618	385
371-3622	385
371-3626	385
371-4372	385
371-6116	60
371-7201	305
372-9306	474
372-9493	414
	▶415
372-9711	252
372-9770	▶250
374-4171	148
375-6708	307
375-6709	307
377-7807	49
378-9598	▶162
	163
379-0830	456
379-3002	310
380-1201	391
380-1202	391
380-1203	383
	▶391
380-2601	7
381-1373	497
381-5872	283
381-9061	66
381-9064	66
382-5080	24
383-5647	471
383-5687	449
383-5697	449
383-5767	409
383-6627	24
383-6929	476
383-6930	477
383-6931	476
383-6932	476
383-6933	464
383-8104	24
383-8541	479
	482
	484
384-6533	464
	▶487
384-9014	1
	▶177
384-9034	158
384-9076	177
385-2825	▶213
	368
385-2826	▶213
	368
385-2827	213
	▶243
385-2828	213
	▶214
385-2829	▶213
	368
385-2830	213
	▶301
385-2831	213
	▶218
385-2832	▶213
	373
385-2833	213
	▶248
385-2834	213
	▶216
385-2835	213
	▶244
385-2890	214
	216
385-2899	218

▶ PRIMARY REFERENCE

PART NUMBER INDEX

Part	Page
385-2900	218
385-2905	218
385-2910	218
385-2920	218
385-2922	218
385-2967	301
385-2970	301
385-3458	158
	159
	171
385-4093	497
385-6080	▶383
385-7941	49
385-8201	79
385-8757	487
386-3444	88
387-2606	235
	▶308
387-2609	6
	▶55
387-2610	6
	▶414
387-2612	6
	▶58
387-2613	6
	▶39
387-2614	6
	▶38
387-2615	6
	▶23
387-2628	▶34
	44
387-2661	66
387-2846	487
387-2847	487
387-2848	487
387-2849	487
387-3507	▶372
	376
387-3699	281
387-6403	63
388-0105	387
388-0109	387
388-0110	387
388-6156	386
	▶387
388-6177	387
388-6178	387
388-6701	▶106
	461
388-6702	106
	▶107
388-6703	1
	▶61
388-6765	80
388-6766	81
388-6771	81
388-6773	107
388-6775	108
388-6776	108
388-6793	61
388-6794	61
388-6797	61
388-6801	81
388-8368	310
388-9091	409
388-9094	409
388-9095	409
388-9097	479
388-9102	▶402
	407
388-9105	407
	▶464
388-9107	407
	▶476
388-9108	407
	▶477
388-9109	407
	▶479
388-9115	407
	▶441
388-9116	407
	▶482
388-9117	407
	▶484
390-2263	66
390-4157	216
390-4158	216
390-4159	216
390-4188	214
390-4189	214
390-4190	214
390-4193	214
390-4194	214
390-4197	214
390-4202	218
390-4203	218
390-4204	218
390-4207	218
390-4208	218
390-4215	218
390-4219	216
390-4220	216
390-4221	216
390-4225	216
390-4226	216
390-4227	216
390-4232	243
390-4233	243
390-4242	243
	244
390-4248	244
390-4249	244
390-4277	▶242
	368
390-4280	237
	▶252
390-4281	237
	▶326
390-4298	242
390-4299	242
390-4315	252
390-4319	252
390-4327	326
390-8831	1
	2
	3
	▶44
390-8834	44
	▶45
391-4150	52
391-4155	52
391-4597	387
391-4598	387
391-4599	387
391-6116	270
391-6305	226
391-7819	235
	▶269
391-8714	167
391-8740	167
391-8742	167
	▶172
391-8744	172
391-8745	167
391-8763	167
391-8765	167
391-8766	167
391-9438	310
391-9442	308
	▶310
391-9444	▶232
	310
391-9674	156
392-0250	59
392-0265	19
392-0291	368
	▶369
392-0292	369
392-0423	167
392-0436	167
392-0456	167
392-0460	167
	▶173
392-1165	414
392-1961	269
392-1963	269
392-1965	270
392-2053	23
392-2185	272
392-2637	164
392-2638	164
392-2640	164
392-3904	6
	▶117
393-0807	26
393-4026	376
	▶377
393-4028	377
393-4054	376
	▶378
393-4055	378
393-5679	385
393-5867	26
393-7868	248
393-7870	248
393-7887	214
393-7930	214
393-7931	214
393-7933	214
393-7944	301
393-7949	218
393-8574	1
	▶152
393-8575	152
	▶153
393-8576	153
393-8586	153
393-8618	414
394-1310	497
394-4837	117
394-7416	171
394-8706	38
394-8709	38
394-8711	38
394-9450	167
394-9469	387
395-3437	63
395-3439	63
395-4045	▶220
	387
396-0293	6
	▶54
396-2351	409
396-2352	409
396-3754	189
	▶190
396-3755	190
396-3759	190
396-6895	394
396-8472	174
396-8526	167
397-4688	1
	2
	▶4
398-1505	445
398-2282	294
	▶360
398-2318	58
398-2319	58
398-7003	▶124
	401
	461
398-7005	▶137
	401
	461
398-7006	137
	▶138
398-7007	▶110
	401
398-7012	138
398-7013	110
398-7021	59
398-7027	59
398-7105	464
398-7106	464
398-7107	464
398-7109	479
398-7110	479
398-7111	464
398-7171	329
398-7172	329
398-7173	329
398-7981	66
398-8931	110
398-8996	▶237
399-0061	409
399-0062	409
399-0065	409
399-0966	61
399-1118	52
399-2618	▶88
	461
399-2620	401
	▶456
	461
399-4202	59
399-5313	456

4

Part	Page
415-9155	179
	▶189
416-0965	49
416-1273	214
416-1274	214
416-1275	214
416-1276	214
416-1277	214
416-1278	214
416-1279	214
416-1280	214
416-1281	214
416-1282	214
416-1284	218
416-1285	218
416-1286	218
416-1287	218
416-1288	218
416-1289	218
416-1290	218
416-1291	218
416-1292	218
416-1293	218

PART NUMBER INDEX

Part	Page
416-1294	218
416-1295	216
416-1296	216
416-1297	216
416-1298	216
416-1299	216
416-1300	216
416-1301	216
416-1302	216
416-1303	216
416-1794	3
	▶396
416-1798	▶394
	396
	401
416-1802	394
416-8777	42
416-9606	3
	▶405
416-9607	401
	405
	▶407
416-9608	407
	▶409
417-1143	479
418-6282	▶204
	263
	287
	294
418-6284	204
	▶205
418-6285	204
	▶206
418-6286	▶207
	287
418-6287	207
	▶208
418-6288	207
	▶209
418-7950	▶49
	52
418-7952	49
418-7953	49
418-7954	49
418-7955	49
418-7956	49
418-7957	49
418-7958	49
418-8379	479
418-9163	387
418-9164	387
419-0619	258
419-3327	156
419-5160	156
419-5231	167
420-0036	283
420-2162	1
	2
	▶155
420-2166	155
	▶156
420-2169	156
420-2241	235
	▶334
420-3151	411
	▶440
	441
420-5793	1
	2
	▶496
420-7262	130
421-1370	456
421-1431	401
	▶419
	461
421-1434	419
	▶421
421-3846	190
421-4381	146
	▶147
421-4382	147
	▶148
421-4384	148
421-4385	148
421-5857	88
421-6175	66
421-8400	▶130
	386
421-9132	▶221
	222
422-2983	▶254
	386
422-2984	254
422-2985	254
422-8464	190
422-9120	218
422-9130	243
	244
422-9131	248
422-9132	301
422-9182	221
	▶305
423-4009	45
423-6434	66
	▶112
424-0331	489
424-0332	489
424-0333	489
424-0334	489
424-0335	489
424-0336	489
424-0337	489
424-0338	489
424-0519	150
	▶222
424-0524	222
424-5499	449
424-5500	449
424-6686	387
425-7079	440
426-4018	66
430-4119	487
431-1704	8
431-8611	407
	▶445
432-6291	329
433-4841	66
433-5173	49
433-5174	49
433-5176	49
433-5177	49
433-5178	49
434-3436	115
434-5320	163
434-8214	▶115
	256
435-2848	86
436-0522	15
436-1116	407
	▶489
436-1901	440
436-2800	▶158
	167
436-2836	▶163
	179
437-0464	235
	▶258
437-0465	258
437-0468	258
437-0474	235
	▶245
438-1294	489
438-4951	487
438-4952	487
438-4953	487
438-4954	487
438-4955	487
438-4956	487
438-4957	487
438-4958	487
438-4965	341
438-5386	66
439-2522	407
	▶411
439-3322	153
440-5314	387
440-5315	387
440-5584	471
440-5585	471
441-6375	▶103
	401
441-6376	103
441-6377	103
441-6379	103
441-8511	61
441-8587	3
	▶150
441-8610	81
442-0253	150
	▶225
442-7199	87
	▶89
443-5690	497
443-8462	79
444-2791	489
444-4113	45
444-5471	458
445-0551	188
445-0552	188
445-0691	▶188
	196
445-0692	1
	▶196
446-1895	▶63
	66
446-7219	305
446-7221	305
446-7224	305
446-7226	305
446-7227	305
446-7228	305
446-7229	305
446-7230	305
446-7232	305
446-7234	305
446-7235	305
446-7236	305
446-7237	305
446-7238	305
446-7239	305
446-7240	305
446-7241	305
446-7242	305
446-7243	305
446-7244	305
446-7245	305
446-9163	▶8
	9
447-1706	23
447-1707	74
	184
	185
	307
	331
447-1708	163
	189
447-1709	151
447-1711	225
447-1725	189
447-1730	79
447-1732	155
447-8572	40
449-1398	66
449-2856	387
449-4129	79
449-4188	87
449-8112	387
450-3501	124
450-7791	178
451-2175	23
	79
	100
	101
	176
	181
	225
	307
	414
	466
451-2180	181
451-2182	23
451-2183	374
453-1259	176
	414
	466
453-2834	100
	101
	307
	369
453-2838	52
453-2844	160
453-3437	45
453-3449	23
453-3452	45
453-3454	327
453-6525	220
453-8032	182
453-8033	182
454-0504	263
	▶333
454-6472	401
	466
454-6473	449
455-0704	94
	126
	131
	142
455-0705	94
	131
455-0707	93
	94
	142
455-0708	94
455-0709	94
	126
	142
455-3798	327
455-3913	▶386
455-3914	▶386
456-5916	180
456-5917	180
457-9869	263
457-9878	304
	▶361
458-5907	365

▶ PRIMARY REFERENCE

PART NUMBER INDEX

Part	Page
458-6992	28
459-2215	387
459-2216	387
459-2731	418
	▶423
459-4244	1
	▶74
459-5714	189
	▶191
459-5715	191
460-2107	6
	▶52
460-2108	6
	▶46
460-2113	3
	▶5
460-2121	6
	▶226
460-3429	3
	▶6
460-5760	▶5
461-2757	160
461-2803	416
461-2804	416
461-3437	134
461-7615	1
	▶160
461-7616	160
462-4691	1
	▶449
462-4692	461
	▶466
462-4693	6
	▶416
462-6495	87
462-8091	59
463-9830	167
	▶178
464-2265	167
464-2268	167
464-2278	167
	▶174
464-3040	81
464-8682	167
	▶171
464-8683	171
465-1258	▶131
	386
465-8752	131
466-1057	74
	▶75
466-3343	263
466-3346	263
466-3349	260
	263
466-3567	456
	▶457
466-3569	457
466-3570	457
	▶458
466-3572	458
466-5323	223
466-5424	5
	▶43
466-7750	167
	▶175
466-7751	167
467-4412	221
	▶223
467-6915	175
467-6916	175
468-1594	5
	▶59
468-7598	▶141
	401
	461
470-6901	1
	2
	▶96
471-3641	79
472-4368	3
	▶90
473-4116	167
473-4118	167
473-4228	96
	▶134
473-4229	▶93
	134
473-4633	▶383
475-2260	226
475-2261	226
475-4173	419
476-3010	1
	▶461
477-2455	81
477-2894	497
477-6793	52
477-6795	46
477-6796	46
477-8810	46
479-5761	▶79
	96
479-6977	▶87
	96
479-9396	140
480-2355	167
483-7809	61
484-5176	66
484-8066	5
	▶14
484-8067	5
	▶11
484-8069	5
	▶28
484-8072	5
	▶16
484-8076	5
	▶36
484-8079	5
	▶7
484-8202	5
	▶19
484-8214	5
	▶18
484-8227	5
	▶118
484-8280	5
	▶17
484-8347	5
	▶26
484-9233	5
	▶9
484-9332	5
	▶20
484-9402	60
484-9403	5
	▶60
484-9814	5
	▶24
485-1569	497
488-6524	470
488-6541	401
	▶470
490-8900	141
490-9266	▶159
	167
490-9267	159
493-1610	497
494-3642	3
	▶210
495-0692	210
	▶260
499-4829	235
	▶331
499-4830	▶267
	331
499-4831	▶329
	331
499-4832	329
499-4836	329
499-4994	329
499-4995	329
499-5811	▶314
	329
500-9103	1
	2
	3
	▶3
500-9108	▶1
	3
500-9111	1
	▶497
501-3917	1
	▶167
501-3918	1
	2
	3
	▶164
502-3430	167
502-3431	167
502-3432	▶157
	167
502-3440	157
502-3441	164
502-3456	157
502-5312	235
	▶270
502-5313	235
	▶283
502-5314	235
	▶286
502-5316	235
	▶297
502-5317	▶263
	386
502-5318	210
	▶293
502-5390	81
	▶94
502-7431	1
	▶80
502-9445	287
502-9448	287
502-9479	287
503-1919	263
503-1922	263
503-3863	294
503-3866	294
503-4904	3
	▶235
503-9777	▶386
504-7666	1
	▶66
504-8188	297
505-5962	158
506-1930	66
506-1931	66
506-1932	66
506-1933	66
506-1934	66
506-1935	66
506-1936	66
506-3275	66
506-3276	66
506-7131	6
506-8572	1
	2
	▶3
506-8573	3
	▶401
506-8578	▶1
506-8579	▶2
507-9143	90
515-4828	▶2
515-4829	▶3

5

► PRIMARY REFERENCE

MEMORANDA



©2016 Caterpillar
All Rights Reserved

CAT, CATERPILLAR, their respective logos, “Caterpillar Yellow”, and the POWER EDGE trade dress as well as corporate and product identity used herein, are trademarks of Caterpillar and may not be used without permission.