CATERPILLAR®

SEBP4950-01
September 2008

RUTHZIL TRATOR COMERCIAL DE PEÇAS LTDA 11 97083-6812 ROLANDO

Parts Manual

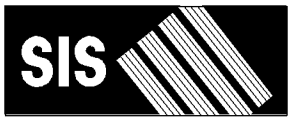

See "General Information" for New Parts Manual Features.

314D CR & 314D LCR Excavators

BYJ1-Up (Machine)
PDP1-Up (Machine)
JKH1-Up (Engine)

Powered By C4.2 Engine

Product and Dealer Information

Note: For product identification plate locations, see the section “Product Identification Information” in the Operation and Maintenance Manual.

Delivery Date: _____

Product Information

Model: _____

Product Identification Number: _____

Engine Serial Number: _____

Transmission Serial Number: _____

Generator Serial Number: _____

Attachment Serial Numbers: _____

Attachment Information: _____

Customer Equipment Number: _____

Dealer Equipment Number: _____

Dealer Information

Name: _____ Branch: _____

Address: _____

_____

_____

	Dealer Contact	Phone Number	Hours
Sales:	_____	_____	_____
Parts:	_____	_____	_____
Service:	_____	_____	_____

MEMORANDA

TABLE OF CONTENTS

Name	Page
GENERAL INFORMATION	A5
REPAIR ALTERNATIVES	A8
SUPPLEMENTAL COOLANT ADDITIVES	A9
MAINTENANCE PARTS	A10
INDEX	A12
MACHINE ARRANGEMENT	1
CHASSIS AR	1
GENERAL AR	2
ENGINE ARRANGEMENT	4
ENGINE AR	4
ENGINE AR-COMPLETE	8
INSTALLATION AR-ENGINE	14
BASIC ENGINE	15
CAMSHAFT GP	15
COVER GP-SOUND SUPPRESSION	16
COVER GP-VALVE MECHANISM	17
CRANKSHAFT GP	19
CYLINDER BLOCK GP	20
CYLINDER HEAD AS	25
CYLINDER HEAD GP	26
FLYWHEEL GP	27
GEAR GP-FRONT	28
HOUSING GP-FLYWHEEL	29
HOUSING GP-FRONT	30
MOUNTING GP-ALTERNATOR	32
MOUNTING GP-ENGINE	33
MOUNTING GP-STARTING MOTOR	35
PAN GP-OIL	36
PISTON & ROD GP	37
PULLEY AS-IDLER	38
PULLEY GP-FAN & ALT DRIVE	39
PULLEY GP-IDLER	41
VALVE MECHANISM GP	42
LUBRICATION SYSTEM	44
ADAPTER GP-REMOTE OIL FILTER	44
BREATHER GP	45
FILTER & MTG GP-ENGINE OIL	46
LINES GP-ENGINE OIL	48
LINES GP-TURBOCHARGER OIL	49
COOLING SYSTEM	50
COOLER GP-ENGINE OIL	50
COOLING AR	51
FAN GP-SUCTION	52
LINES GP-WATER	53
PUMP GP-WATER	55
RADIATOR & HYD OIL COOLER GP	57

Name	Page
AIR INLET AND EXHAUST SYSTEM	61
AIR CLEANER GP	61
INSULATION GP-MUFFLER	63
LINES GP-AIR	64
LINES GP-MUFFLER DRAIN	65
LINES GP-TURBOCHARGER AIR	66
MANIFOLD GP-EXHAUST	67
MANIFOLD GP-INLET	68
MUFFLER GP	69
TURBOCHARGER GP	73
FUEL SYSTEM	75
CAP GP-FUEL FILLER	75
FILTER GP-FUEL	76
FILTER GP-WATER SEP & FUEL	79
INJECTOR GP-FUEL	80
LINES GP-FUEL	81
LINES GP-FUEL INJECTION	83
PUMP & MTG GP-FUEL TRANSFER	85
PUMP AR-FUEL TRANSFER	86
PUMP GP-FUEL TRANSFER	87
TANK & MTG GP-FUEL	91
TANK GP-FUEL	94
VALVE GP-FUEL SHUTOFF	100
ELECTRICAL AND STARTING SYSTEM	101
ALARM GP	101
ALARM GP-TRAVEL	102
ALTERNATOR GP-CHARGING	103
BATTERY & WIRING GP	105
BATTERY GP	112
BLOCK GP-JUNCTION	113
CAMERA GP	114
CONTROL & MTG GP-COMMUNICATION	117
CONTROL & MTG GP-ENGINE ELEK	118
CONTROL & MTG GP-MACHINE	119
CONTROL GP-COMMUNICATION	120
ELECTRONICS GP-COMMUNICATION	120
ELECTRONICS GP-MACHINE	120
ELECTRONICS GP-MONITOR	121
FASTENER GP-WIRING HARNESS	122
INSTALLATION AR-COMMUNICATION	128
INSTALLATION GP-COMMUNICATION	129
INSTALLATION GP-SECURITY	130
KIT-BRACKET	131
LAMP GP-FLOOD	132
LIGHTING GP-FLOOD	133
MOUNTING GP-CAMERA	140
PANEL GP-CIRCUIT BREAKER	141
PANEL GP-SWITCH	143
SENSOR & MTG GP-POSITION	150
SENSOR GP-ENGINE	152
SENSOR GP-LIQUID LEVEL	154

TABLE OF CONTENTS

Name	Page
SENSOR GP-POSITION	155
STARTING AR-COLD WEATHER	156
STARTING MOTOR GP-ELECTRIC	157
SWITCH GP-DISCONNECT	159
SWITCH GP-MAGNETIC	160
SWITCH GP-POSITION	162
SWITCH GP-REFUELING	163
SWITCH GP-ROTARY	164
SWITCH GP-START	166
SWITCH GP-TOGGLE	167
WIRING GP-AUX START RECEPTACLE	168
WIRING GP-AUXILIARY CONTROL	170
WIRING GP-BOOM	172
WIRING GP-CAB	173
WIRING GP-CAMERA	184
WIRING GP-COMMUNICATION	186
WIRING GP-CONSOLE	188
WIRING GP-CONTROL	191
WIRING GP-ELECTRONIC CONTROL	192
WIRING GP-FAN	195
WIRING GP-FINE SWING	196
WIRING GP-FUEL SYSTEM	197
WIRING GP-HEATER	199
WIRING GP-MEDIUM PRESSURE	202
WIRING GP-OVERLOAD WARNING	204
WIRING GP-PLATFORM	205
POWER TRAIN	207
FINAL DRIVE GP	207
FASTENER GP-FINAL DRIVE	210
POWER TRAIN AR	211
SPROCKET GP	212
FRAME AND BODY	213
BOX & MOUNTING GP	213
BOX & MTG GP-STORAGE	214
BOX GP-FUEL TRANSFER	215
BOX GP-STORAGE	216
COUNTERWEIGHT GP	218
COVER AS-ACCESS	226
COVER AS-SOUND SUPPRESSION	227
COVER GP-ACCESS	229
DOOR GP-ACCESS	235
FENDER AS-SOUND SUPPRESSION	237
FENDER GP	238
FRAME GP-UPPER	239
GEAR & BEARING GP-SWING	241
GUARD GP-BOTTOM	245
GUARD GP-FENDER	247
GUARD GP-FRONT	248
GUARD GP-SWIVEL	249
HANDRAIL GP	250
HOOD & GUARD GP	253
HOOD GP-ENGINE	261
SHEET AS-SOUND SUPPRESSION	262
STEP GP	267
STORAGE GP-VANDALISM GUARD	268
SUPPORT AS-ENCLOSURE	269
UNDERCARRIAGE	271
FRAME AR-UNDERCARRIAGE	271
FRAME AS-UNDERCARRIAGE	272
GUARD GP-TRACK GUIDE	276
GUARD GP-TRAVEL MOTOR	277
IDLER GP-FRONT	279
LINK AS-TRACK	283
ROLLER AR-TRACK	285
ROLLER AR-TRACK & CARRIER	286
ROLLER GP-TRACK CARRIER	287
ROLLER GP-TRACK-SINGLE FLANGE	288
TRACK ADJUSTER & RECOIL GP	289
TRACK GP	293
HYDRAULIC SYSTEM	303
ACCUMULATOR GP-HYDRAULIC	303
CONTROL AR-AUXILIARY	308
CONTROL AR-COUPLER	311
COUPLING GP-FLEXIBLE	312
COUPLING GP-PUMP	313
CYLINDER & LINES GP-BLADE	314
CYLINDER & LINES GP-BOOM	314
CYLINDER & LINES GP-BUCKET	315
CYLINDER & LINES GP-STICK	315
CYLINDER & SEAL GP-BLADE	316
CYLINDER & SEAL GP-BOOM	318
CYLINDER & SEAL GP-BUCKET	319
CYLINDER & SEAL GP-STICK	320
CYLINDER GP-BLADE	321
CYLINDER GP-BOOM	325
CYLINDER GP-BUCKET	327
CYLINDER GP-COUPLER	329
CYLINDER GP-STICK	330
DRIVE GP-SWING	332
FILTER & LINES GP-HYDRAULIC	339
FILTER & VALVE GP-PILOT	342
FILTER AR-HYDRAULIC	343
FILTER GP-OIL	344
GAUGE GP-SIGHT	350
GUARD GP-CYLINDER	351
HEAD GP-PUMP	352
HYDRAULIC AR	355
LINES AR-AUXILIARY HYDRAULIC	356
LINES AR-QUICK COUPLER	357
LINES GP-AUXILIARY HYDRAULIC	358
LINES GP-BLADE CYLINDER	379
LINES GP-BOOM	384
LINES GP-BOOM CYLINDER	388
LINES GP-BUCKET CYLINDER	395
LINES GP-CONTROL	397

TABLE OF CONTENTS

Name	Page
LINES GP-COUPLER	401
LINES GP-FRONT	411
LINES GP-HYDRAULIC OIL COOLER	422
LINES GP-PILOT	424
LINES GP-PUMP	473
LINES GP-RETURN	479
LINES GP-RETURN & FILTER	480
LINES GP-STICK	482
LINES GP-STICK CYLINDER	486
LINES GP-SWING MOTOR	489
LINES GP-TRAVEL MOTOR	490
MANIFOLD GP-CONTROL	494
MOTOR GP-HYDRAULIC	497
MOTOR GP-PISTON	498
MOUNTING GP-LINES	504
MOUNTING GP-VALVE	505
PUMP & MTG GP-AUXILIARY	506
PUMP & MTG GP-MAIN HYDRAULIC	507
PUMP GP-PISTON	508
SCREEN GP-HYDRAULIC	512
SPOOL GP-CONTROL VALVE	513
SWIVEL & MOUNTING GP	524
SWIVEL GP	525
TANK & FILTER GP-HYDRAULIC	528
TANK & MTG GP-HYDRAULIC	530
VALVE & MTG GP-CONTROL	531
VALVE & MTG GP-MAIN CONTROL	532
VALVE AR	533
VALVE AR-ALT PATTERN CONTROL	533
VALVE AR-CHECK & RELIEF	533
VALVE AR-SWING	534
VALVE AS-MANUAL	535
VALVE GP-BANK	536
VALVE GP-CHECK	537
VALVE GP-CONTROL	538
VALVE GP-LOAD CONTROL	541
VALVE GP-MAIN CONTROL	547
VALVE GP-PILOT	559
VALVE GP-PRESSURE REDUCING	574
VALVE GP-RELIEF	575
VALVE GP-SHUTTLE	582
VALVE GP-SOLENOID	586
VALVE GP-SOLENOID & PRESS REDC	594
VALVE GP-TRAVEL COUNTERBALANCE	596
IMPLEMENTS	598
BOOM AR-1 PIECE LONG	598
BOOM GP	599
INSTALLATION AR-AUXILIARY	601
LINES GP-GREASE	602
LINKAGE AR-BUCKET	606
LINKAGE GP-BUCKET	607
STICK AR	614
STICK AR-HOE	614
STICK GP-HOE	616
WORK TOOLS	622
ADJUSTER GP-BUCKET	622
BLADE & MOUNTING GP	623
BLADE GP-STRAIGHT	628
BUCKET & ADJUSTER GP	631
BUCKET AS	634
BUCKET AS-DITCH CLEANING	639
BUCKET AS-GENERAL PURPOSE	640
BUCKET AS-HEAVY DUTY ROCK	646
BUCKET GP	650
BUCKET GP-DITCH CLEANING	651
COUPLER AR-QUICK	652
COUPLER GP-QUICK	653
EDGE GP-CUTTING	654
PIN GP-BUCKET	654
PIN GP-COUPLER	655
SIDECUTTER GP	656
TIP GP-LONG	657
OPERATOR STATION	658
AIR CONDITIONER & MOUNTING GP	658
AIR CONDITIONER AR	660
AIR CONDITIONER GP	661
ARMREST GP	663
BRACKET GP-MIRROR	665
CAB GP	666
CAB GP-ENCLOSED ROPS	683
COMPRESSOR GP-REFRIGERANT	695
CONDENSER & MTG GP-REFRIGERANT	697
CONDENSER GP-REFRIGERANT	698
CONSOLE GP-OPERATOR	699
CONTROL & MTG GP-JOYSTICK	704
CONTROL & MTG GP-PEDAL	709
CONTROL GP-BLADE	710
CONTROL GP-FOOT	711
CONTROL GP-HANDLE	712
CONTROL GP-HYDRAULIC PEDAL	718
CONTROL GP-JOYSTICK	719
CONTROL GP-PEDAL	727
CONTROL GP-PILOT OPERATED HYD	728
CONTROL GP-UNPRGMED MONITOR	730
COVER GP-PLATFORM	731
DISTRIBUTOR GP-AIR	732
DOOR GP-CAB	734
DUCT GP-CAB AIR	740
FLOOR MAT GP	743
GUARD AR-OVERHEAD	746
GUARD AR-VANDALISM	746
GUARD GP-FRONT WINDOW	747
GUARD GP-OVERHEAD	748

TABLE OF CONTENTS

Name	Page	Name	Page
GUARD GP-VANDALISM	749		
GUARD GP-WINDOW	751		
HATCH GP-ROOF	754		
HEATER & MTG GP-CAB	755		
HEATER AR-CAB	757		
HORN GP-ELECTRIC	758		
INSTALLATION AR	760		
INSTALLATION GP-RADIO	761		
LINES GP-AIR CONDITIONER	762		
LINES GP-HEATER	766		
LITERATURE GP	768		
MIRROR GP-REAR VIEW	769		
MONITOR GP-OPERATOR	774		
MOUNTING GP-PLATFORM	776		
OPERATOR AR	777		
PLATFORM GP-OPERATOR	778		
SEAT BELT GP	779		
SEAT GP	784		
SEAT GP-SUSPENSION	796		
SUPPORT GP-SEAT	799		
SUSPENSION GP-SEAT	802		
VISOR GP-PROTECTION	805		
WASHER GP-WINDOW	806		
WINDOW GP-CAB	807		
WINDOW GP-FRONT	812		
WIPER GP-WINDOW	814		
SERVICE EQUIPMENT AND SUPPLIES	816		
FILM GP	816		
PLATE & FILM GP	830		
PART NUMBER INDEX	B1		

GENERAL INFORMATION

1. MACHINE IDENTIFICATION

Caterpillar machines are identified by Product Identification Numbers (PIN). Some components included in a machine may be identified by Serial Numbers (S/N). Typical components that will be serialized include engines, transmissions, bulldozers, and rippers. The machine and engine are further identified by arrangement numbers and in some cases modification numbers. These numbers are shown on the product identification plate(s) and on the master plate in the operator's compartment.

Caterpillar dealers need all of these numbers to determine accurate parts identification.

SIS *New Feature*

Effective First Quarter 2001 the Caterpillar Product Identification Number (PIN) changed from 8 to 17 characters. In an effort to provide uniform equipment identification, Caterpillar and other construction equipment manufacturers are moving to comply with the latest version of the product identification numbering standard. Non-road machine PINs are defined by ISO 10261. The new PIN format will apply to all Caterpillar machines and generator sets. The PIN plates and frame marking will display the 17 character PIN. The new format will look like the following:

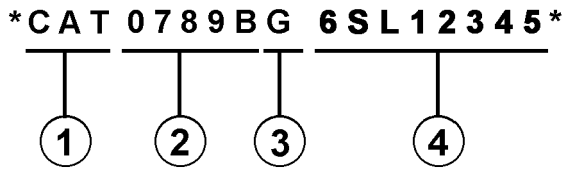

Where:

1. Caterpillar's World Manufacturing Code (characters 1-3)

2. Machine Descriptor (characters 4-8)

3. Check Character (character 9)

4. Machine Indicator Section (MIS) or Product Sequence Number (characters 10-17). These were previously referred to as the Serial Number.

Machines and generator sets produced before First Quarter 2001 will maintain their 8 character PIN format.

Components such as engines, transmissions, axles, etc. and work tools will continue to use an 8 character Serial Number (S/N).

2. ORDERING PARTS

⚠ WARNING

When replacement parts are required for this product Caterpillar recommends using Caterpillar replacement parts or parts with equivalent specifications including, but not limited to, physical dimensions, type, strength and material.

Failure to heed this warning can lead to premature failures, product damage, personal injury or death.

Quality Caterpillar replacement parts are available from Caterpillar dealers throughout the world. Their parts inventories are up to date and include all parts normally required to protect your investment in Caterpillar machines. Dealers may offer repair kits or remanufactured parts to allow selection of the most effective repair alternative for a particular situation. When ordering parts, your order should specify the quantity, part number, part name, and the serial number/product identification number of the machine for which the parts are needed.

3. PARTS MANUAL ORGANIZATION

Product information in this manual is presented as "information elements" that represent all of the components for the specific model. Engine Arrangement and Seat Group are examples of information elements. The information elements are organized alphabetically by part name and secondarily by part number within each major section of the manual.

4. TABLE OF CONTENTS

A table of contents (TOC) is found at the beginning of the manual. The TOC lists each section of the manual with a complete list of all information elements organized as they appear in the manual. Page numbers are provided for quick reference to detailed parts identification illustrations and serviceable consist lists.

5. MAINTENANCE PARTS INDEX

The Maintenance Parts Index, located near the beginning of the manual, references most frequently used maintenance part numbers, providing description, quantity, usage and page number. This information is organized alphabetically by part description.

GENERAL INFORMATION

6. INDEX

The index located near the front of the manual is an alphabetical listing of all information elements included in the manual. Page numbers are provided for quick reference to detailed parts identification illustrations and serviceable consist lists.

7. PART NUMBER INDEX

A numerical index listing all part numbers and the corresponding page number(s) appears at the back of the manual.

8. CAPTIONS

Captions located at the beginning of each information element identify the part number and part name along with additional descriptive information. PIN and S/N information found in each caption should be used to select correct information for a specific machine. Field replacement options, identification of optional attachment components, and where used ("part of") information is also provided.

The first line of a caption is shown in larger type font to indicate the beginning of an information element. Captions for additional pages that may be required to illustrate an information element will be shown in standard type font and will include the term *(contd.)* .

9. NON-SERVICED PARTS

In some instances it is necessary to display non-serviced parts that are a link to a lower level serviceable consist lists. These non-serviced part numbers are shown in *italic* type indicating that they are not available.

10. PARTS LIST REFERENCE NUMBERS

Numbers shown in the Ref No column correspond to numbers used in the associated graphic(s). An alphabetic suffix may be added to a reference number to identify lower level consist items. Numbers shown in the Graphic Ref column refer to the graphic number identifier displayed in the lower left corner of each illustration. The Graphic Ref number may be used in combination with the item Ref No to determine the correct part number. There may be intentional omission of a Ref No in a consist list as information is updated to reflect the latest serviceable part numbers.

11. INDENTED PART NAMES

When a part name is indented in a parts list, it is part of (included in) the group or assembly under which it is indented.

12. ILLUSTRATION REFERENCE LETTERS

When necessary, illustrations contain reference letters (A, B, C etc.) that are intended to track lines and harnesses from one point to another. They are also used to show where to reconnect illustrations that have been separated.

13. ABBREVIATIONS AND SYMBOLS

O.D. – Outside Diameter
I.D. – Inside Diameter
A – Not Part Of This Group
B – Use As Required
C – Change From Previous Type
D – Order By The Meter
E – Order By The Centimeter
F – Not Shown
G – Order By The Inch
I – Refer To Hydraulic Information System
M – Metric Part
R – Remfg Part May Be Available
Y – Separate Illustration
Z – Not Serviced Separately

SIS *New Feature*

14. DESCRIPTION OF TYPE CHANGES

Type - A type is defined as any configuration change that requires an additional Information Element for an Arrangement, Group, or Assembly. If serial number breaks for types are not available, a type # (Type 1, Type 2, etc.) will be displayed in the caption. These "type" changes are identified with a "C" note (change from previous type) in the Parts List. Only the "types" that apply to this Parts Manual will be included. Additional types may exist causing "C" notes to appear on an Information Element when no other types are shown.

15.<END>

This symbol indicates the end of an information element.

NOTE:

Continuing improvement and advancement of product design may cause changes to your machine which may not be included in this publication. Whenever a question arises regarding your caterpillar product or this publication, please consult your caterpillar dealer for the latest available information.

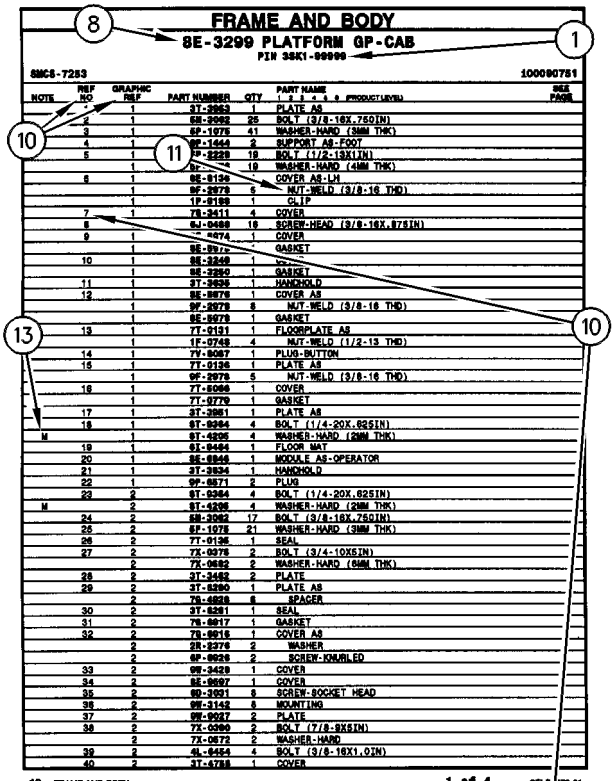

FRAME AND BODY

8E-3299 PLATFORM GP-CAB

PIN 3SK1-99999

SMCS-7253 100090751

NOTE	REF NO	GRAPHIC REF	PART NUMBER	QTY	PART NAME 1 2 3 4 5 6 (PRODUCT LEVEL)	SEE PAGE
	*	1	3T-3863	1	PLATE AS	
	2	1	6E-2662	25	BOLT (3/8-16X.750IN)	
	3	1	6F-1076	41	WASHER-HARD (38MM THK)	
	4	1	9F-1444	2	SUPPORT AS-FOOT	
	5	1	7P-2229	18	BOLT (1/2-13X1IN)	
		1	6F-	18	WASHER-HARD (41MM THK)	
	6	1	6E-6136		COVER AS-LH	
		1	9F-2978	6	NUT-WELD (3/8-16 THD)	
		1	1P-0188	1	CLIP	
	7	1	7S-3411	4	COVER	
	8	1	9J-0488	18	SCREW-HEAD (3/8-16X.875IN)	
	9	1	-4474	1	COVER	
		1	6E-897		GASKET	
	10	1	6E-3249	1		
		1	6E-3250	1	GASKET	
	11	1	3T-3638	1	HANDHOLD	
	12	1	6E-9678	1	COVER AS	
		1	9F-2978	8	NUT-WELD (3/8-16 THD)	
		1	6E-9679	1	GASKET	
	13	1	7T-0131	1	FLOORPLATE AS	
		1	1F-0748	4	NUT-WELD (1/2-13 THD)	
	14	1	7V-8067	1	PLUG-BUTTON	
	15	1	7T-0136	1	PLATE AS	
		1	9F-2978	5	NUT-WELD (3/8-16 THD)	
	16	1	7T-8066	1	COVER	
		1	7T-9779	1	GASKET	
	17	1	3T-3861	1	PLATE AS	
	18	1	6T-8364	4	BOLT (1/4-20X.625IN)	
M		1	9T-4295	4	WASHER-HARD (28MM THK)	
	19	1	6L-8494	1	FLOOR MAT	
	20	1	6E-6846	1	MODULE AS-OPERATOR	
	21	1	3T-3834	1	HANDHOLD	
	22	1	9P-8671	2	PLUG	
	23	2	6T-8364	4	BOLT (1/4-20X.625IN)	
M		2	9T-4295	4	WASHER-HARD (28MM THK)	
	24	2	6E-3062	17	BOLT (3/8-16X.750IN)	
	26	2	6F-1076	21	WASHER-HARD (38MM THK)	
	26	2	7T-0135	1	SEAL	
	27	2	7X-0075	2	BOLT (3/4-10X5IN)	
		2	7X-0682	2	WASHER-HARD (64MM THK)	
	28	2	3T-3462	2	PLATE	
	29	2	3T-3290	1	PLATE AS	
		2	7S-6828	8	SPACER	
	30	2	3T-8281	1	SEAL	
	31	2	7S-8817	1	GASKET	
	32	2	7S-8816	1	COVER AS	
		2	2R-3276	2	WASHER	
		2	6P-8626	2	SCREW-KNURLED	
	33	2	9W-3429	1	COVER	
	34	2	6E-8697	1	COVER	
	35	2	6D-3931	8	SCREW-SOCKET HEAD	
	36	2	9W-3142	8	MOUNTING	
	37	2	9W-8027	2	PLATE	
	38	2	7X-0390	2	BOLT (7/8-9X5IN)	
		2	7X-0672	2	WASHER-HARD	
	39	2	4L-6454	4	BOLT (3/8-16X1.0IN)	
	40	2	3T-4788	1	COVER	

12 FRAME AND BODY 1 of 4 SELP4570-01

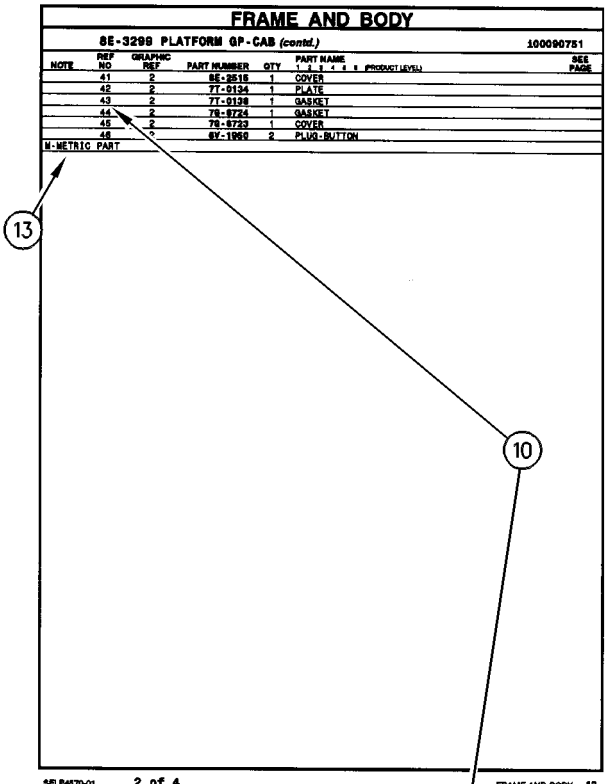

FRAME AND BODY

8E-3299 PLATFORM GP-CAB (contd.) 100090751

NOTE	REF NO	GRAPHIC REF	PART NUMBER	QTY	PART NAME 1 2 3 4 5 6 (PRODUCT LEVEL)	SEE PAGE
	41	2	6E-2616	1	COVER	
	42	2	7T-0134	1	PLATE	
	43	2	7T-0138	1	GASKET	
	44	2	7S-8724	1	GASKET	
	45	2	7S-8723	1	COVER	
	46	2	6V-1950	2	PLUG-BUTTON	

M-METRIC PART

SELP4570-01 2 of 4 FRAME AND BODY 13

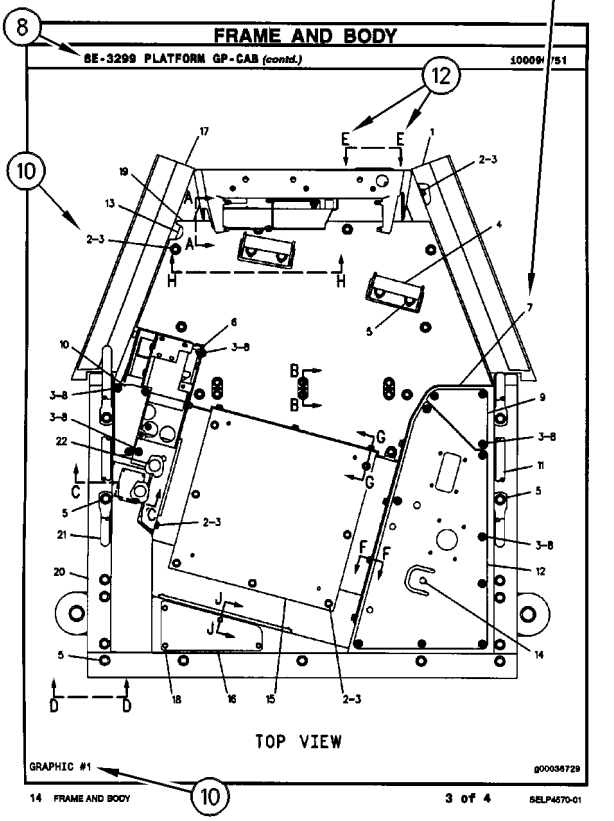

FRAME AND BODY

8E-3299 PLATFORM GP-CAB (contd.) 100090751

TOP VIEW

GRAPHIC #1 g00036729

14 FRAME AND BODY 3 of 4 SELP4570-01

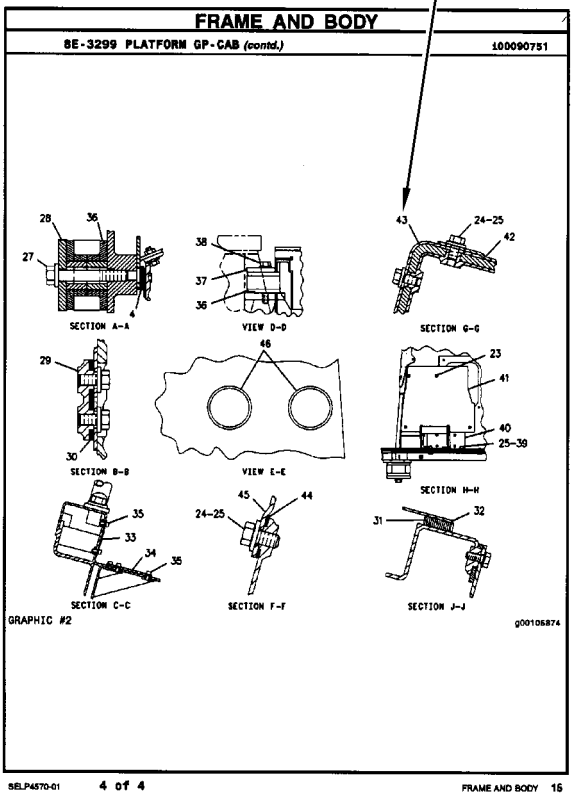

FRAME AND BODY

8E-3299 PLATFORM GP-CAB (contd.) 100090751

SECTION A-A

VIEW D-D

SECTION G-G

SECTION B-B

VIEW E-E

SECTION H-H

SECTION C-C

SECTION F-F

SECTION J-J

GRAPHIC #2 g00105874

SELP4570-01 4 of 4 FRAME AND BODY 16

REPAIR ALTERNATIVES

REMANUFACTURED COMPONENTS

As an option when making repairs consider Caterpillar Remanufactured Components. Components that are available through the Caterpillar Remanufactured Program are identified three ways in the parts book:

- with the letter R in the note field of the parts list
- with an R* at the beginning of the first line of the caption
- with an *R at the end of the first line of the caption

Typical components included in the Remanufacturing Program include:

ALTERNATORS
CONNECTING RODS
CRANKSHAFTS - UNDERSIZE
CRANKSHAFTS - UPGRADE TO NEW
CYLINDER HEADS
ELECTRONIC CONTROL MODULES (ECM)
ELECTRONIC SENSORS
FUEL INJECTORS
FUEL NOZZLES
FUEL PUMPS
GOVERNORS
OIL PUMPS
PISTONS
SHORT BLOCKS
STARTERS
TURBOCHARGERS - COMPLETE
TURBOCHARGER CARTRIDGES
WATER PUMPS

Caterpillar Remanufactured engines for many engine arrangements are also available.

SUPPLEMENTAL COOLANT ADDITIVES

CUSTOMER BENEFITS:

Protects against cavitation, foam, erosion, corrosion, and scale buildup in cooling systems.

- Provides measured coolant conditioner.

DESCRIPTION:

Additives deplete from the coolant with normal operation. For this reason, Supplemental Coolant Additives (SCA) must be added to all heavy duty coolants at regular intervals. In addition, when not using a fully formulated, pre-charged antifreeze, like Caterpillar's DEAC, an initial charge of SCA must be added to the cooling system. The amount of SCA added to the system is dependent on the capacity of the system.

The SCA for initial fill is provided as a liquid. SCA's for maintenance intervals are available in liquid form and as a spin-on element. (No Spin-on available for 3600 Family of Engines)

NOTE:

The amount of SCA added at initial fill is not the same as the amount added at maintenance intervals.

The coolant additive elements can be used with any ethylene or propylene glycol type antifreeze which meets ASTM D4985 or ASTM D5345 Specifications.

NOTE:

For use with standard heavy duty coolant only, not for use with Extended Life Coolant.

PARTS NEEDED:

Cooling System Capacity		Liquid SCA at Initial Fill	Liquid SCA at Maintenance*	Spin-on SCA Maintenance Element*
Liters	Gallons			
22-30	(6-8)	3P-2044 (1)	6V-3542 (1)	111-2370 (1)
30-38	(8-10)	3P-2044 (1) 6V-3542 (1)	111-2372 (1)	111-2369 (1)
38-49	(10-13)	3P-2044 (1) 8T-1589 (1)	111-2372 (1)	111-2369 (1)
49-64	(13-17)	3P-2044 (2)	8T-1589 (1)	9N-3368 (1)
64-83	(17-22)	3P-2044 (2) 8T-1589 (1)	111-2372 (1) 6V-3542 (1)	111-2371 (1)
83-114	(22-30)	3P-2044 (3) 8T-1589 (1)	3P-2044 (1)	9N-3718 (1)
114-163	(30-43)	3P-2044 (5)	3P-2044 (1) 6V-3542 (1)	111-2371 (2)
163-242	(43-64)	3P-2044 (8)	3P-2044 (2)	9N-3718 (2)

** Normal maintenance period is 250 hrs. See your Operation and Maintenance Manual for complete coolant maintenance instructions.*

( ) Indicates quantity required.

MAINTENANCE PARTS

DESCRIPTION	PART NUMBER	QTY	WHERE USED	PAGE
AIR INLET AND EXHAUST SYSTEM				
FILTER ELEMENT AS-AIR (PRIMARY)	131-8902	1	AIR CLEANER GP	62
FILTER ELEMENT AS-AIR (SECONDARY)	131-8903	1	AIR CLEANER GP	62
BASIC ENGINE				
BELT-SERPENTINE	310-9592	1	PULLEY GP-FAN & ALT DRIVE	39
	310-9778	1	PULLEY GP-FAN & ALT DRIVE	40
CAP (ENGINE OIL FILLER)	294-1708	1	COVER GP-VALVE MECHANISM	17
GASKET (VALVE COVER)	296-4694	1	COVER GP-VALVE MECHANISM	17
PLUG-DRAIN (ENGINE OIL PAN)	5I-5607	1	PAN GP-OIL	36
COOLING SYSTEM				
CAP AS (COOLANT RECOVERY)	171-3369	1	RADIATOR & HYD OIL COOLER GP	57
CAP AS-RADIATOR	245-9212	1	RADIATOR & HYD OIL COOLER GP	59
GASKET (WATER TEMPERATURE REGULATOR)	294-1780	1	LINES GP-WATER	53
	5I-7735	1	LINES GP-WATER	53
HOSE (LOWER)	305-7628	1	RADIATOR & HYD OIL COOLER GP	57
HOSE (UPPER)	305-7627	1	RADIATOR & HYD OIL COOLER GP	57
REGULATOR-TEMPERATURE (COOLANT)	5I-8010	1	LINES GP-WATER	53
ELECTRICAL AND STARTING SYSTEM				
BATTERY (12-VOLT, MAINTENANCE FREE, WET)	3T-5760	2	BATTERY & WIRING GP	105
	9X-3404	2	BATTERY GP	112
CIRCUIT BREAKER AS (60-AMPERE) (ALTERNATOR)	171-2208	1	PANEL GP-CIRCUIT BREAKER	141
FUSE (10-AMPERE)	9W-1442	12	PANEL GP-CIRCUIT BREAKER	141
FUSE (20-AMPERE)	9W-1446	2	PANEL GP-CIRCUIT BREAKER	141
FUSE (25-AMPERE)	127-4618	1	PANEL GP-CIRCUIT BREAKER	141
FUSE (5-AMPERE)	139-5345	6	PANEL GP-CIRCUIT BREAKER	141
KEY (BATTERY DISCONNECT)	8H-5306	1	SWITCH GP-DISCONNECT	159
LAMP AS (24-VOLT, 3-WATT)	170-9324	1	PANEL GP-SWITCH	143
LAMP-HALOGEN (24-VOLT, 65-WATT)	9X-3463	1	LAMP GP-FLOOD	132
FRAME AND BODY				
KEY (ACCESS DOOR)	5P-8500	1	BOX & MOUNTING GP	213
FUEL SYSTEM				
CAP GP-FUEL FILLER (EXTREME SERVICE, LOCKABLE)	164-4858	1	TANK GP-FUEL	94
		1	TANK GP-FUEL	96
		1	TANK GP-FUEL	98
FILTER (ADVANCED EFFICIENCY) (FUEL)	1R-0751	2	FILTER GP-FUEL	76
FILTER AS-WATER SEP & FUEL (PRIMARY)	326-1644	1	FILTER GP-WATER SEP & FUEL	79
GASKET (FUEL PRIMING PUMP)	294-1820	1	FILTER GP-FUEL	76
KEY (FUEL TANK FILL CAP)	5P-8500	1	TANK & MTG GP-FUEL	91
STRAINER AS-FUEL (FLOAT GAUGE)	303-9933	1	TANK GP-FUEL	94
		1	TANK GP-FUEL	96
		1	TANK GP-FUEL	98

MAINTENANCE PARTS

DESCRIPTION	PART NUMBER	QTY	WHERE USED	PAGE
HYDRAULIC SYSTEM				
BREATHER (SWING DRIVE)	4H-6112	1	DRIVE GP-SWING	334
		1	DRIVE GP-SWING	337
BREATHER AS	267-6744	1	DRIVE GP-SWING	334
		1	DRIVE GP-SWING	337
BREATHER GP (HYDRAULIC TANK)	227-0590	1	TANK & FILTER GP-HYDRAULIC	528
FILTER ELEMENT AS-OIL (HYDRAULIC RETURN)	179-9806	1	FILTER GP-OIL	344
FILTER ELEMENT AS-OIL (HYDRAULIC)	216-6676	1	FILTER GP-OIL	348
FILTER-OIL (ADVANCED EFFICIENCY) (HYDRAULIC)	5I-8670	1	FILTER & VALVE GP-PILOT	342
FILTER-OIL (ADVANCED EFFICIENCY) (HYDRAULIC, CASE DRAIN)	093-7521	1	FILTER GP-OIL	349
PLUG-DRAIN (HYDRAULIC TANK)	4B-7739	1	TANK & FILTER GP-HYDRAULIC	528
SCREEN AS (HYDRAULIC TANK)	209-6002	1	SCREEN GP-HYDRAULIC	512
LUBRICATION SYSTEM				
BREATHER (CRANKCASE)	5I-7725	1	BREATHER GP	45
FILTER AS-ENGINE OIL (STANDARD EFFICIENCY)	1R-0739	1	FILTER & MTG GP-ENGINE OIL	46
STRAINER (OIL)	310-9596	1	LINES GP-ENGINE OIL	48
OPERATOR STATION				
BLADE AS-WIPER (550-MM)	196-1508	1	WIPER GP-WINDOW	814
FILTER ELEMENT-CAB AIR	284-4496	1	DUCT GP-CAB AIR	741
	284-4568	1	AIR CONDITIONER GP	661
LAMP (DOME)	099-0865	1	CAB GP	669
		1	CAB GP	676
		1	CAB GP-ENCLOSED ROPS	684
		1	CAB GP-ENCLOSED ROPS	690
RECEIVER DRYER AS	229-8997	1	LINES GP-AIR CONDITIONER	762
SEAT BELT GP	327-6540	1	SEAT BELT GP	783
SEAT BELT GP (RETRACTABLE, 3-IN)	235-9020	1	SEAT BELT GP	781
SEAT BELT GP (RETRACTABLE, 46-MM)	273-5446	1	SEAT BELT GP	780
V-BELT (REFRIGERANT COMPRESSOR)	255-3016	1	COMPRESSOR GP-REFRIGERANT	695

INDEX

Name	Page
A	
ACCUMULATOR GP-HYDRAULIC–CHARGED	303, 304, 305, 306, 307, 308
ADAPTER GP-REMOTE OIL FILTER–ENGINE	44
ADJUSTER GP-BUCKET	622
AIR CLEANER GP	61, 62
AIR CONDITIONER & MOUNTING GP	658
AIR CONDITIONER AR	660
AIR CONDITIONER GP	658, 661
ALARM GP	101
ALARM GP (TRAVEL)	102
ALARM GP-TRAVEL	102
ALTERNATOR GP-CHARGING	103
ARMREST GP–LH	664
ARMREST GP–RH	663
B	
BATTERY & WIRING GP	105
BATTERY (12-VOLT, MAINTENANCE FREE, WET)	105, 112
BATTERY GP–COLD WEATHER	112
BELT-SERPENTINE	39, 40
BLADE & MOUNTING GP	623, 624, 626
BLADE AS-WIPER (550-MM)	814
BLADE GP-STRAIGHT	628, 629, 630
BLOCK GP-JUNCTION–BATTERY	113
BOOM AR-1 PIECE LONG	598
BOOM GP	599
BOX & MOUNTING GP	213
BOX & MTG GP-STORAGE	214
BOX GP-FUEL TRANSFER	215
BOX GP-STORAGE	216, 217
BRACKET GP-MIRROR	665
BREATHER (CRANKCASE)	45
BREATHER (SWING DRIVE)	334, 337
BREATHER AS	334, 337
BREATHER GP	45
BREATHER GP (HYDRAULIC TANK)	528
BUCKET & ADJUSTER GP–GENERAL PURPOSE	631, 632
BUCKET & ADJUSTER GP–HEAVY DUTY ROCK	633
BUCKET & ADJUSTER GP–HEAVY-DUTY ROCK	631, 633
BUCKET AS	634, 635, 636, 637, 638
BUCKET AS-DITCH CLEANING	639
BUCKET AS-GENERAL PURPOSE	640, 641, 642, 643, 644, 645
BUCKET AS-HEAVY DUTY ROCK	646, 647, 648, 649
BUCKET GP	650, 651
BUCKET GP-DITCH CLEANING	651
C	
CAB GP	666, 667, 668, 675, 682
CAB GP-ENCLOSED ROPS	683, 689
CAMERA GP	114, 115
CAMSHAFT GP	15
CAP (ENGINE OIL FILLER)	17
CAP AS (COOLANT RECOVERY)	57
CAP AS-RADIATOR	59
CAP GP-FUEL FILLER (EXTREME SERVICE, LOCKABLE)	94, 96, 98
CAP GP-FUEL FILLER–EXTREME SERVICE, LOCKABLE	75
CHASSIS AR	1, 2
CIRCUIT BREAKER AS (60-AMPERE) (ALTERNATOR)	141
COMPRESSOR GP-REFRIGERANT	695

INDEX

Name	Page
CONDENSER & MTG GP-REFRIGERANT	697
CONDENSER GP-REFRIGERANT	698
CONSOLE GP-OPERATOR	699
CONSOLE GP-OPERATOR–LH	702
CONSOLE GP-OPERATOR–RH	700
CONTROL & MTG GP-COMMUNICATION–PRODUCT LINK 300	117
CONTROL & MTG GP-ENGINE ELEK	118
CONTROL & MTG GP-JOYSTICK	706
CONTROL & MTG GP-JOYSTICK–3-BUTTON, TRIGGER SWITCH	705
CONTROL & MTG GP-JOYSTICK–4-SWITCH, JOYSTICK	708
CONTROL & MTG GP-JOYSTICK–WITH SLIDE CONTROL	704
	707
CONTROL & MTG GP-MACHINE	119
CONTROL & MTG GP-PEDAL–RH	709
CONTROL AR-AUXILIARY	309
CONTROL AR-AUXILIARY–4-SWITCH, JOYSTICK	311
CONTROL AR-AUXILIARY–AUX PUMP, MEDIUM PRESS VALVE	310
CONTROL AR-AUXILIARY–AUXILIARY READY	309
CONTROL AR-AUXILIARY–ELECTRIC PEDAL CONTROL	308
CONTROL AR-AUXILIARY–JOYSTICK WITH SLIDE CONTROL	308
CONTROL AR-AUXILIARY–JOYSTICK, 3-BUTTON, TRIGGER SW	308
CONTROL AR-AUXILIARY–JOYSTICK, MODULATION SWITCH	310
CONTROL AR-AUXILIARY–MEDIUM PRESSURE	310
CONTROL AR-AUXILIARY–SYSTEM 20, WORK TOOL PRIORITY	309
CONTROL AR-COUPLER	311
CONTROL GP-BLADE	710
CONTROL GP-COMMUNICATION–PRODUCT LINK 121SR	120
CONTROL GP-FOOT–WORK TOOL	711
CONTROL GP-HANDLE	725
	726
	728
CONTROL GP-HANDLE (LH)	729
CONTROL GP-HANDLE–JOYSTICK, LH	712
	715
	717
CONTROL GP-HANDLE–JOYSTICK, RH	713
	714
	716
CONTROL GP-HYDRAULIC PEDAL–TRAVEL	718
CONTROL GP-JOYSTICK–LH	720
	722
	724
	726
CONTROL GP-JOYSTICK–RH	719
	721
	723
	725
CONTROL GP-PEDAL–ELECTRIC	727
CONTROL GP-PILOT OPERATED HYD–LH	729
CONTROL GP-PILOT OPERATED HYD–RH	728
CONTROL GP-UNPRGMED MONITOR	730
CONTROL GP-UNPROGRAMMED	118
	119
CONTROL-REFUELING PUMP	87
	89
CONVERTER GP-ELECTRICAL (24-VOLT TO 12-VOLT)	174
COOLER GP-ENGINE OIL	50
COOLING AR–HIGH AMBIENT	51
CORE AS-ENGINE OIL COOLER	50
CORE AS-EVAPORATOR	661
CORE AS-HEATER	661
CORE AS-OIL COOLER	59
CORE AS-RADIATOR	59
COUNTERWEIGHT GP	218
	219
	220
	221
	222
	223
	224
	225
COUPLER AR-QUICK	652
COUPLER AR-QUICK–WITH COUPLER PIN	652
COUPLER AR-QUICK–WITHOUT COUPLER PIN	652
COUPLER GP-QUICK	653
COUPLING GP-FLEXIBLE	312
COUPLING GP-PUMP	313
COVER AS-ACCESS–FUEL TANK	226
COVER AS-SOUND SUPPRESSION	227
	228
COVER GP-ACCESS	230
	234
COVER GP-ACCESS–ENGINE OIL DIPSTICK	229
COVER GP-ACCESS–HYDRAULIC PUMPS	233
COVER GP-ACCESS–UPPER, REAR, LH	232
COVER GP-PLATFORM	731
COVER GP-SOUND SUPPRESSION	16
COVER GP-VALVE MECHANISM	17
CRANKSHAFT GP	19
CYLINDER & LINES GP-BLADE–LH	314
CYLINDER & LINES GP-BLADE–RH	314
CYLINDER & LINES GP-BOOM–LH	314
CYLINDER & LINES GP-BOOM–RH	314
CYLINDER & LINES GP-BUCKET	315

INDEX

Name	Page
CYLINDER & LINES GP-STICK	315
CYLINDER & SEAL GP-BLADE–LH	316
CYLINDER & SEAL GP-BLADE–RH	317
CYLINDER & SEAL GP-BOOM	318
CYLINDER & SEAL GP-BUCKET	319
CYLINDER & SEAL GP-STICK	320
CYLINDER BLOCK GP	20
	23
CYLINDER GP-BLADE–LH	321
CYLINDER GP-BLADE–RH	323
CYLINDER GP-BOOM	325
CYLINDER GP-BUCKET	327
CYLINDER GP-COUPLER	329
CYLINDER GP-STICK	330
CYLINDER HEAD AS	25
CYLINDER HEAD GP	26
D	
DISTRIBUTOR GP-AIR	732
DOOR GP-ACCESS–AIR CLEANER	236
DOOR GP-ACCESS–HYDRAULIC PUMPS	235
DOOR GP-CAB	734
	737
DRIVE GP-SWING–WITH MOTOR	334
	336
	337
	338
DRIVE GP-SWING–WITHOUT MOTOR	332
DUCT GP-CAB AIR	740
	741
	742
E	
EDGE GP-CUTTING	654
ELECTRONICS GP-COMMUNICATION–PRODUCT LINK 300	120
ELECTRONICS GP-MACHINE	120
	121
ELECTRONICS GP-MONITOR	121
ENGINE AR	4
	5
	6
	7
ENGINE AR-COMPLETE	8
	9
	10
	11
	12
	13
F	
FAN GP-SUCTION	52
FASTENER GP-FINAL DRIVE	210
FASTENER GP-WIRING HARNESS	124
	125
	127
FASTENER GP-WIRING HARNESS–HAMMER FILTER	126
FASTENER GP-WIRING HARNESS–JOYSTICK	122
FASTENER GP-WIRING HARNESS–PEDAL, RH	123
FENDER AS-SOUND SUPPRESSION	237
FENDER GP	238
FILM GP–CONTROL PATTERN CHANGE, 2-WAY	823
FILM GP–CONTROL PATTERN, QUICK CHANGE	821
FILM GP–FUEL TRANSFER PUMP	826
FILM GP–HAMMER CONTROL, FOOT SWITCH	820
FILM GP–OPERATOR CONTROLS, NOTICE	817
	819
FILM GP–OVERLOAD WARNING DEVICE	829
FILM GP–QUICK COUPLER	825
FILM GP–SECONDARY EXIT	816
FILM GP–WORK AREA VISUAL SYSTEM, REAR	828
FILM GP–WORK TOOL CONTROL, RH PEDAL	824
FILM-CERTIFICATION (OPS GUARD, READ OMM)	748
FILM-CERTIFICATION (OPS GUARD, READ OMM, ENGLISH)	747
FILM-CERTIFICATION (OPS GUARD, READ OMM, JAPANESE)	747
FILM-INFORMATION (24-VOLT)	833
	837
FILM-INSTRUCTION (COLD WEATHER)	112
FILM-INSTRUCTION (HYDRAULIC OIL RETURN FILTER)	344
FILM-INSTRUCTION (MACHINE SECURITY, CONSOLE)	145
	147
FILM-INSTRUCTION (PULL RING, ALTERNATE EXIT)	833
	837
FILM-WARNING (HIGH PRESSURE CYLINDER)	307
FILM-WARNING (HOT FLUID UNDER PRESSURE, U.S.)	831
FILM-WARNING (NO WELD, NO DRILL, READ OMM)	747
	748
FILM-WARNING (PRODUCT LINK RADIO, INTL)	129

INDEX

Name	Page
FILM-WARNING (PRODUCT LINK RADIO, U.S.)	129
FILM-WARNING (SEAT BELT, U.S.)	831
FILTER & LINES GP-HYDRAULIC	339
FILTER & MTG GP-ENGINE OIL	46
FILTER & VALVE GP-PILOT–HYDRAULIC OIL	342
FILTER (ADVANCED EFFICIENCY) (FUEL)	76
FILTER AR-HYDRAULIC–HAMMER, RETURN	343
FILTER AS-ENGINE OIL (STANDARD EFFICIENCY)	46
FILTER AS-WATER SEP & FUEL (PRIMARY)	79
FILTER ELEMENT AS-AIR (PRIMARY)	62
FILTER ELEMENT AS-AIR (SECONDARY)	62
FILTER ELEMENT AS-OIL (HYDRAULIC RETURN)	344
FILTER ELEMENT AS-OIL (HYDRAULIC)	348
FILTER ELEMENT-CAB AIR	661 741
FILTER GP-FUEL	76
FILTER GP-OIL–HYDRAULIC	348
FILTER GP-OIL–HYDRAULIC RETURN	344 346
FILTER GP-OIL–HYDRAULIC, CASE DRAIN	349
FILTER GP-WATER SEP & FUEL	79
FILTER-OIL (ADVANCED EFFICIENCY) (HYDRAULIC)	342
FILTER-OIL (ADVANCED EFFICIENCY) (HYDRAULIC, CASE DRAIN)	349
FINAL DRIVE GP	208
FINAL DRIVE GP–WITH MOTOR	207
FLOOR MAT GP	743 744 745
FLYWHEEL GP	27
FRAME AR-UNDERCARRIAGE–HEAVY-DUTY	271
FRAME AR-UNDERCARRIAGE–LONG CARRIAGE	271
FRAME AS-UNDERCARRIAGE	275
FRAME AS-UNDERCARRIAGE–HEAVY-DUTY	273
FRAME AS-UNDERCARRIAGE–LONG	272 274
FRAME GP-UPPER	239
FUSE (10-AMPERE)	141
FUSE (20-AMPERE)	141
FUSE (25-AMPERE)	141
FUSE (5-AMPERE)	141

G

Name	Page
GASKET (FUEL PRIMING PUMP)	76
GASKET (VALVE COVER)	17
GASKET (WATER TEMPERATURE REGULATOR)	53
GAUGE AS-OIL LEVEL (DIPSTICK) (ENGINE)	36
GAUGE GP-SIGHT–HYDRAULIC OIL LEVEL	350
GAUGE-OIL LEVEL (DIPSTICK)	334 337
GEAR & BEARING GP-SWING	241 243
GEAR GP-FRONT	28
GENERAL AR	2 3
GUARD AR-OVERHEAD	746
GUARD AR-VANDALISM	746
GUARD GP-BOTTOM	245
GUARD GP-BOTTOM–HEAVY-DUTY	246
GUARD GP-CYLINDER–BLADE	351
GUARD GP-FENDER	247
GUARD GP-FRONT–STICK	248
GUARD GP-FRONT WINDOW	747
GUARD GP-OVERHEAD	748
GUARD GP-SWIVEL	249
GUARD GP-TRACK GUIDE	276
GUARD GP-TRAVEL MOTOR	277 278
GUARD GP-VANDALISM	749
GUARD GP-VANDALISM–CAB WINDOW	750
GUARD GP-WINDOW	751 752 753

H

Name	Page
HANDRAIL GP	250 252
HARNESS AS-ALARM	759
HARNESS AS-CAB	176 180 182 183
HARNESS AS-CHASSIS	105
HARNESS AS-CONSOLE	147
HARNESS AS-CONSOLE (LH)	188
HARNESS AS-CONSOLE (RH)	143 145 190
HARNESS AS-CONTROL	179
HARNESS AS-CONTROL (PRODUCT LINK)	186 187
HARNESS AS-CONTROL (PUMP, SECONDARY SHUTDOWN)	205
HARNESS AS-ENGINE	192
HARNESS AS-ENGINE (FUEL INJECTORS)	192
HARNESS AS-HEATER & AIR COND	661
HARNESS AS-LIGHTING (1-PIECE BOOM)	134
HARNESS AS-LIGHTING (BOOM, RH)	135 138
HARNESS AS-LIGHTING (CAB)	136

INDEX

Name	Page
	139
HARNESS AS-OPERATOR CONTROLS	711
HARNESS AS-PANEL (CIRCUIT BREAKER)	141
HARNESS AS-PUMP	198
HARNESS AS-SENSOR	200
HARNESS AS-SENSOR (AIR TEMPERATURE)	658
	755
HARNESS AS-SOLENOID (FINE SWING)	196
HARNESS AS-SWITCH	167
HARNESS AS-SWITCH (HEATER)	199
HARNESS AS-VALVE	170
	172
	191
	202
	203
	204
HARNESS AS-WIRING	200
HARNESS AS-WIRING (FAN)	195
HARNESS AS-WIRING (IGNITION)	732
HARNESS AS-WIRING (PRODUCT LINK 321SR, 121SR)	131
HATCH GP-ROOF	754
HEAD GP-PUMP	352
HEATER & MTG GP-CAB	755
HEATER (24-VOLT)	68
HEATER AR-CAB	757
HOOD & GUARD GP	253
	257
HOOD GP-ENGINE	261
HORN GP-ELECTRIC	758
	759
HOSE (LOWER)	57
HOSE (UPPER)	57
HOUSING GP-FLYWHEEL	29
HOUSING GP-FRONT	30
HYDRAULIC AR	355

I

Name	Page
IDLER GP-FRONT	279
	280
IDLER GP-FRONT–LH	282
IDLER GP-FRONT–RH	281
INJECTOR GP-FUEL	80
INSTALLATION AR	760
INSTALLATION AR–CAMERA	760
INSTALLATION AR-AUXILIARY–BLADE, HEAVY-DUTY UNDCRG	601
INSTALLATION AR-AUXILIARY–BLADE, LONG UNDERCARRIAGE	601
INSTALLATION AR-COMMUNICATION–PRODUCT LINK 121SR	128
INSTALLATION AR-COMMUNICATION–PRODUCT LINK 321SR	128
INSTALLATION AR-ENGINE	14
INSTALLATION GP-COMMUNICATION–PRODUCT LINK 121SR	129
INSTALLATION GP-RADIO	761
INSTALLATION GP-SECURITY	130
INSULATION GP-MUFFLER	63

K

Name	Page
KEY (ACCESS DOOR)	213
KEY (BATTERY DISCONNECT)	159
KEY (FUEL TANK FILL CAP)	91
KIT-BRACKET–PRODUCT LINK 121SR, 321SR	131

L

Name	Page
LAMP (DOME)	669
	676
	684
	690
LAMP AS (24-VOLT, 3-WATT)	143
LAMP GP-DOME (CAB)	669
	684
LAMP GP-FLOOD	132
LAMP-HALOGEN (24-VOLT, 65-WATT)	132
LIGHTING GP-FLOOD	133
LIGHTING GP-FLOOD–1-PIECE BOOM	134
LIGHTING GP-FLOOD–BOOM, RH	135
	138
LIGHTING GP-FLOOD–CAB	136
	139
LINES AR-AUXILIARY HYDRAULIC–HIGH PRESSURE	356
LINES AR-AUXILIARY HYDRAULIC–MEDIUM PRESSURE	356
LINES AR-AUXILIARY HYDRAULIC–SYSTEM 20, WORK TOOL PRIORITY	356
LINES AR-AUXILIARY HYDRAULIC–SYSTEM 23, COMBINED FUNCTION	356
LINES AR-QUICK COUPLER–REACH BOOM	357
LINES GP-AIR	64
LINES GP-AIR CONDITIONER	762
LINES GP-AUXILIARY HYDRAULIC–1-PUMP, 1-PUMP/2-PUMP, 1-WAY	364
LINES GP-AUXILIARY HYDRAULIC–REACH BOOM	366
LINES GP-AUXILIARY HYDRAULIC–STICK, HIGH PRESSURE	358
	371
	375
LINES GP-AUXILIARY HYDRAULIC–STICK, MEDIUM PRESSURE	360
	373
	377

INDEX

Name	Page
LINES GP-AUXILIARY HYDRAULIC– SYSTEM 20, WORK TOOL PRIORITY	368
LINES GP-AUXILIARY HYDRAULIC– SYSTEM 23, COMBINED FUNCTION	362
LINES GP-BLADE CYLINDER	381
LINES GP-BLADE CYLINDER–LH	379
LINES GP-BLADE CYLINDER–RH	380
LINES GP-BOOM	387
LINES GP-BOOM CYLINDER	388
LINES GP-BOOM CYLINDER– BOOM LOWERING CONTROL	393
LINES GP-BOOM CYLINDER–LH	391
LINES GP-BOOM CYLINDER–RH	392
LINES GP-BOOM– REACH BOOM, STICK LOAD CONTROL	384
	385
LINES GP-BOOM– SUPPORT, AUXILIARY READY	386
LINES GP-BUCKET CYLINDER	395
	396
LINES GP-CONTROL–FRONT	397
LINES GP-CONTROL–REAR	399
LINES GP-COUPLER	405
	406
	408
	410
LINES GP-COUPLER–BOOM	401
LINES GP-COUPLER–REACH BOOM	407
LINES GP-COUPLER–STICK	403
LINES GP-ENGINE OIL	48
LINES GP-FRONT–AUXILIARY READY	411
LINES GP-FRONT–MEDIUM PRESSURE	415
	420
LINES GP-FRONT–QUICK COUPLER	417
LINES GP-FRONT– SYSTEM 20, WORK TOOL PRIORITY	413
LINES GP-FUEL	81
LINES GP-FUEL INJECTION	83
LINES GP-GREASE	602
	603
	605
LINES GP-HEATER	766
LINES GP-HYDRAULIC OIL COOLER	422
LINES GP-MUFFLER DRAIN	65
LINES GP-PILOT	454
	457
	467
LINES GP-PILOT–AUXILIARY READY	445
LINES GP-PILOT–BLADE	465
LINES GP-PILOT– BOOM LOWERING CONTROL	461
LINES GP-PILOT–CAB	424
	428
LINES GP-PILOT–CONTROL VALVE	432
	434
LINES GP-PILOT–MEDIUM PRESSURE	469
LINES GP-PILOT–PILOT SUPPLY	471
LINES GP-PILOT–PUMP	440
LINES GP-PILOT–SHUTTLE VALVE	443
LINES GP-PILOT– STICK LOWERING CONTROL VALVE	463
LINES GP-PILOT– SYSTEM 20, WORK TOOL PRIORITY	449
LINES GP-PUMP	473
	477
LINES GP-PUMP– SYSTEM 20, WORK TOOL PRIORITY	475
LINES GP-RETURN	479
LINES GP-RETURN & FILTER– HAMMER FILTER	480
LINES GP-STICK	482
	483
	485
LINES GP-STICK CYLINDER	486
LINES GP-STICK CYLINDER– LOWERING CONTROL	487
LINES GP-STICK–OFFSET	484
LINES GP-SWING MOTOR–FINE SWING	489
LINES GP-TRAVEL MOTOR	490
	492
LINES GP-TURBOCHARGER AIR	66
LINES GP-TURBOCHARGER OIL	49
LINES GP-WATER	53
LINK AS-TRACK	283
	284
LINKAGE AR-BUCKET–WITH LIFTING EYE	606
LINKAGE AR-BUCKET– WITHOUT LIFTING EYE	606
LINKAGE GP-BUCKET	607
	609
LINKAGE GP-BUCKET–COUPLER	613
LINKAGE GP-BUCKET–WITH LIFTING EYE	611
LITERATURE GP	768

M

MANIFOLD GP-CONTROL– PILOT OIL SUPPLY	494
	495
	496
MANIFOLD GP-EXHAUST	67
MANIFOLD GP-INLET	68
MIRROR GP-REAR VIEW	769
	770
	771
	772
MIRROR GP-REAR VIEW–SIDE	773
MODULE GP-INTERFACE (KEY)	130
MONITOR GP-OPERATOR	774
	775

INDEX

Name	Page
MOTOR GP-HYDRAULIC–AIR CONDITIONER CONDENSER	497
MOTOR GP-PISTON	498, 500, 502
MOUNTING GP-ALTERNATOR	32
MOUNTING GP-CAMERA	140
MOUNTING GP-ENGINE	33
MOUNTING GP-LINES	504
MOUNTING GP-PLATFORM	776
MOUNTING GP-STARTING MOTOR	35
MOUNTING GP-VALVE	505
MUFFLER GP	69, 71
O	
OPERATOR AR	777
P	
PADLOCK GP	91, 213
PAN GP-OIL	36
PANEL GP-CIRCUIT BREAKER	141
PANEL GP-SWITCH	149
PANEL GP-SWITCH–ENGINE SPEED, START	143, 145, 147
PIN GP-BUCKET	654
PIN GP-COUPLER	655
PISTON & ROD GP	37
PLATE & FILM GP	830, 831, 833, 837, 841, 842
PLATE-IDENTIFICATION (CAT)	634, 635, 644
PLATE-WARNING (HIGH PRESSURE CYLINDER)	289, 290
PLATFORM GP-OPERATOR	778
PLUG-DRAIN (ENGINE OIL PAN)	36
PLUG-DRAIN (HYDRAULIC TANK)	528
POWER TRAIN AR	211
PROBE AS-LIQUID LEVEL (WATER SEPARATOR)	154
PULLEY AS-IDLER	38
PULLEY GP-FAN & ALT DRIVE	40
PULLEY GP-FAN & ALT DRIVE–WITH IDLER PULLEY	39
PULLEY GP-IDLER	41
PUMP & MTG GP-AUXILIARY–MEDIUM PRESSURE	506
PUMP & MTG GP-FUEL TRANSFER	85
PUMP & MTG GP-MAIN HYDRAULIC	507
PUMP AR-FUEL TRANSFER	86
PUMP AR-FUEL TRANSFER–SYSTEM 20, WORK TOOL PRIORITY	86
PUMP GP-FUEL TRANSFER	85, 87, 89
PUMP GP-GEAR	508
PUMP GP-PISTON	508
PUMP GP-WATER	55
R	
RADIATOR & HYD OIL COOLER GP	57, 59
RECEIVER DRYER AS	762
REGULATOR AS-VOLTAGE	103
REGULATOR-TEMPERATURE (COOLANT)	53
RELAY (24-VOLT) (BOOM FLOODLIGHT)	141
RELAY (24-VOLT) (CAB LIGHTS)	136, 139
RELAY (24-VOLT) (CHASSIS LIGHT)	141
RELAY (24-VOLT) (HORN)	141
RELAY (24-VOLT) (NEUTRAL START)	141
RELAY (24-VOLT) (POWER RELAY)	141
RELAY (24-VOLT) (TRAVEL ALARM)	102
RELAY (24-VOLT) (WORK TOOL PRIORITY)	170
RELAY (BLOWER MOTOR)	661
ROLLER AR-TRACK	285
ROLLER AR-TRACK & CARRIER	286
ROLLER GP-TRACK CARRIER	287
ROLLER GP-TRACK-SINGLE FLANGE	288
S	
SCREEN AS (HYDRAULIC TANK)	512
SCREEN GP-HYDRAULIC	512
SEAT BELT GP	783
SEAT BELT GP (RETRACTABLE, 3-IN)	781
SEAT BELT GP (RETRACTABLE, 46-MM)	780
SEAT BELT GP–RETRACTABLE	779, 783
SEAT BELT GP–RETRACTABLE, 3-IN	781
SEAT BELT GP–RETRACTABLE, 46-MM	780, 782
SEAT GP	784, 785, 786, 787, 788, 789, 790

INDEX

Name	Page
	791
	792
	793
	794
	795
SEAT GP-SUSPENSION	796
	797
	798
SENDER AS-TEMPERATURE (HYDRAULIC OIL)	528
SENSOR & MTG GP-POSITION–BOOM	151
SENSOR & MTG GP-POSITION–STICK	150
SENSOR AS-FUEL LEVEL	94
	96
	98
SENSOR AS-LIQUID LEVEL (WATER SEPARATOR)	154
SENSOR AS-POSITION (OFFSET BOOM)	150
	151
SENSOR AS-PRESSURE (AUXILIARY HYDRAULIC)	362
	368
SENSOR AS-PRESSURE (BOOM CYLINDER)	393
SENSOR AS-PRESSURE (PUMP DISCHARGE 1)	440
SENSOR AS-PRESSURE (PUMP DISCHARGE 2)	440
SENSOR GP-ENGINE	152
SENSOR GP-LIQUID LEVEL	154
SENSOR GP-LIQUID LEVEL (WATER IN FUEL)	155
SENSOR GP-POSITION–WATER SEPARATOR	155
SENSOR GP-PRESSURE (AIR INLET MANIFOLD)	152
SENSOR GP-PRESSURE (ENGINE OIL)	152
SENSOR GP-PRESSURE (FUEL MANIFOLD)	152
SENSOR GP-PRESSURE (FUEL)	152
SENSOR GP-SPEED (ENGINE)	152
SENSOR GP-SPEED (FUEL PUMP)	85
SENSOR GP-TEMPERATURE (AIR INLET)	152
SENSOR GP-TEMPERATURE (ENGINE COOLANT)	152
SENSOR GP-TEMPERATURE (FUEL)	152
SENSOR-TEMPERATURE (AMBIENT AIR)	658
	755
SERVICE GP-MACHINE	121
SHEET AS-SOUND SUPPRESSION	262
	263
	264
	265
	266
SIDECUTTER GP	656
SOCKET (12-VOLT, 7-AMPERE)	174
SOFTWARE GP-COMMUNICATION (PRODUCT LINK 121SR)	120
SOFTWARE GP-COMMUNICATION (PRODUCT LINK 300)	120
SOFTWARE GP-MACHINE	121
SOFTWARE GP-MONITOR	121
SPOOL GP-CONTROL VALVE–BOOM I	515
SPOOL GP-CONTROL VALVE–BOOM II	522
SPOOL GP-CONTROL VALVE–BUCKET	517
SPOOL GP-CONTROL VALVE–COMBINED FLOW	519
SPOOL GP-CONTROL VALVE–STICK	518
SPOOL GP-CONTROL VALVE–STICK I	516
SPOOL GP-CONTROL VALVE–STICK II	514
	523
SPOOL GP-CONTROL VALVE–SWING PRIORITY	520
SPOOL GP-CONTROL VALVE–TRAVEL	521
SPOOL GP-CONTROL VALVE–WORK TOOL	513
SPROCKET GP	212
STARTING AR-COLD WEATHER	156
STARTING MOTOR GP-ELECTRIC	157
STEP GP	267
STICK AR	614
STICK AR–WITH AUXILIARY	614
STICK AR-HOE–OFFSET BOOM	615
STICK AR-HOE–REACH	614
STICK GP-HOE	616
	617
	620
STICK GP-HOE–WITH AUXILIARY	618
STORAGE GP-VANDALISM GUARD	268
STRAINER (OIL)	48
STRAINER AS-FUEL (FLOAT GAUGE)	94
	96
	98
SUPPORT AS-ENCLOSURE	269
	270
SUPPORT GP-SEAT	799
	800
	801
SUSPENSION GP-SEAT	802
	803
	804
SWITCH (LIQUID LEVEL) (FUEL)	163
SWITCH (WINDOW LOWER LIMIT)	684
	690
SWITCH (WINDOW POSITION)	669
	676
SWITCH AS (FILTER BYPASS)	348
SWITCH AS-FOOT	711
SWITCH AS-LIMIT (HYD LOCKOUT, NEUTRAL START)	162
SWITCH AS-LIQUID LEVEL (ENGINE OIL)	36

INDEX

Name	Page
SWITCH AS-LIQUID LEVEL (FUEL TANK SHUTOFF)	89
SWITCH AS-LIQUID LEVEL (HYDRAULIC OIL)	528
SWITCH AS-MAGNETIC (24-VOLT) (HEATER RELAY)	141
SWITCH AS-PRESSURE (ACTION INPUT, 2-WAY PATTERN)	454
SWITCH AS-PRESSURE (ACTION INPUT, BOOM DOWN)	424
	428
SWITCH AS-PRESSURE (ACTION INPUT, BOOM UP)	443
	450
SWITCH AS-PRESSURE (BLADE)	465
SWITCH AS-PRESSURE (HYDRAULIC OIL)	528
SWITCH AS-PRESSURE (PILOT, BOOM UP)	445
SWITCH AS-PRESSURE (TRAVEL)	435
SWITCH AS-PUSH BUTTON (HORN)	712
SWITCH AS-PUSH BUTTON (MANUAL LOW IDLE)	713
SWITCH AS-ROCKER (FINE SWING)	196
SWITCH AS-ROCKER (HEATED SEAT)	798
SWITCH AS-ROCKER (OVERLOAD WARNING)	175
	180
	183
SWITCH AS-TOGGLE (AUTO/MANUAL ENG SPEED CONTROL)	190
SWITCH AS-TOGGLE (MANUAL ENGINE SPEED CONTROL)	190
SWITCH AS-TOGGLE (QUICK COUPLER)	167
SWITCH AS-TOGGLE (SECONDARY SHUTDOWN)	205
SWITCH AS-TOGGLE (WORK TOOL PRIORITY)	179
SWITCH GP-DISCONNECT–BATTERY	159
SWITCH GP-MAGNETIC (24-VOLT) (AIR INLET HEATER RELAY)	160
SWITCH GP-MAGNETIC– AIR INLET HEATER RELAY	160
SWITCH GP-MAGNETIC–START RELAY	161
SWITCH GP-PEDAL (WORK TOOL)	711
SWITCH GP-POSITION– HYDRAULIC LOCKOUT	162
SWITCH GP-REFUELING– FUEL TANK SHUTOFF	163
SWITCH GP-ROTARY (THROTTLE POSITION)	143
	145
	147
SWITCH GP-ROTARY– THROTTLE POSITION	164
	165
SWITCH GP-START–ENGINE, KEY	166
SWITCH GP-TOGGLE	167
SWITCH-MAGNETIC (24-VOLT) (START RELAY)	141
SWIVEL & MOUNTING GP–BLADE	524
SWIVEL GP	525
	526

T

TANK & FILTER GP-HYDRAULIC	528
TANK & MTG GP-FUEL	91
	92
TANK & MTG GP-FUEL– SYSTEM 20, WORK TOOL PRIORITY	93
TANK & MTG GP-HYDRAULIC	530
TANK GP-FUEL	94
	96
	98
THERMISTOR	661
TIMER AS (TIME DELAY LIGHTING)	136
TIP GP-LONG	657
TOOL (FUSE PULLER)	141
TRACK ADJUSTER & RECOIL GP	291
	292
TRACK ADJUSTER & RECOIL GP–LH	290
TRACK ADJUSTER & RECOIL GP–RH	289
TRACK GP–2-REQUIRED	293
	294
	295
	296
	297
	298
	299
	300
	302
TURBOCHARGER GP	73
	74

V

V-BELT (REFRIGERANT COMPRESSOR)	695
VALVE & MTG GP-CONTROL	531
VALVE & MTG GP-MAIN CONTROL	532
VALVE AR–1-PIECE BOOM	533
VALVE AR-ALT PATTERN CONTROL– 1-PIECE BOOM	533
VALVE AR-CHECK & RELIEF– BOOM LOWERING CONTROL	533
VALVE AR-CHECK & RELIEF– BOOM LOWERING CONTROL VALVE	534
VALVE AR-CHECK & RELIEF– STICK LOWERING CONTROL VALVE	533
VALVE AR-SWING	534
VALVE AS-MANUAL–AUXILIARY, SHUTOFF	535
VALVE AS-RELIEF (ENGINE OIL PRESSURE)	44

INDEX

Name	Page
VALVE AS-RELIEF (LINE, MEDIUM PRESSURE)	536
VALVE GP-BANK–MEDIUM PRESSURE	536
VALVE GP-CHECK (HYD CYLINDER, QUICK COUPLER)	329
VALVE GP-CHECK–RETURN FILTER	537
VALVE GP-CONTROL	538
	590
VALVE GP-CONTROL–2-PUMP, 1-WAY	540
VALVE GP-COUNTERBALANCE	596
VALVE GP-FLOW CONTROL (MEDIUM PRESSURE)	538
VALVE GP-FLUID SAMPLING (ENGINE COOLANT)	53
VALVE GP-FUEL SHUTOFF	100
VALVE GP-LOAD CONTROL–BOOM, LH	541
VALVE GP-LOAD CONTROL–BOOM, RH	543
VALVE GP-LOAD CONTROL–STICK	545
VALVE GP-MAIN CONTROL	547
	553
VALVE GP-PILOT	559
	561
VALVE GP-PILOT (ALT PATTERN CONTROL, 2-WAY)	454
VALVE GP-PILOT–JOYSTICK	563
	568
	570
VALVE GP-PILOT RELIEF (HYDRAULIC FILTER)	342
VALVE GP-PILOT–TRAVEL	566
VALVE GP-PILOT–WITHOUT SHUTTLE	572
VALVE GP-PRESSURE REDUCING–BOOM, SWING PRIORITY	574
VALVE GP-PRIORITY (FLOW DIVIDER VALVE)	475
VALVE GP-RELIEF	579
	580
VALVE GP-RELIEF (AUXILIARY PUMP)	536
VALVE GP-RELIEF–LINE	578
VALVE GP-RELIEF–MAIN	576
VALVE GP-RELIEF–PILOT OPERATED	581
VALVE GP-RELIEF–TRACTION CONTROL	577
VALVE GP-RELIEF–WITH BLOCK	575
VALVE GP-SHUTTLE	582
	584
	585
VALVE GP-SHUTTLE–1-PUMP/2-PUMP	583
VALVE GP-SOLENOID	508
	587
	588
	589
	590
	592
	593
	595
VALVE GP-SOLENOID & MANIFOLD (QUICK COUPLER)	417
VALVE GP-SOLENOID & PRESS REDC	424
	428
	595
VALVE GP-SOLENOID & PRESS REDC (WORK TOOL CONTROL)	449
VALVE GP-SOLENOID & PRESS REDC–WORK TOOL CONTROL	594
VALVE GP-SOLENOID & RELIEF (AUXILIARY, COMBINED FN, LH)	362
	368
VALVE GP-SOLENOID & RELIEF (AUXILIARY, COMBINED FN, RH)	362
	368
VALVE GP-SOLENOID (24-VOLT) (FINE SWING)	593
VALVE GP-SOLENOID (AUXILIARY, COMBINED FUNCTION)	594
VALVE GP-SOLENOID (BOOM FLOAT, PILOT OIL)	449
VALVE GP-SOLENOID (HEAVY LIFT)	445
	449
VALVE GP-SOLENOID (HYDRAULIC LOCKOUT)	495
	496
VALVE GP-SOLENOID (NEG FLOW CONT, PROPN RED VALVE)	445
	450
VALVE GP-SOLENOID (PRESSURE REDUCING)	445
	469
	589
	591
VALVE GP-SOLENOID (SWING BRAKE RELEASE)	495
	496
VALVE GP-SOLENOID (TRAVEL SPEED)	495
	496
VALVE GP-SOLENOID–PRESSURE REDUCING	586
	591
VALVE GP-TRAVEL COUNTERBALANCE	596
VALVE MECHANISM GP	42
VALVE-FILL	292
VALVE-RELIEF	292
VISOR GP-PROTECTION	805

W

WASHER GP-WINDOW	806
WINDOW GP-CAB	807
	810
	811
WINDOW GP-CAB–REAR	809

INDEX

Name	Page	Name	Page
WINDOW GP-FRONT	812		
WIPER GP-WINDOW	814		
WIRING GP-AUX START RECEPTACLE–JUMP START	168		
WIRING GP-AUXILIARY CONTROL–SYSTEM 20, WORK TOOL PRIORITY	170		
WIRING GP-BOOM	172		
WIRING GP-CAB	174		
	175		
	176		
WIRING GP-CAB–OVERLOAD WARNING	180		
	183		
WIRING GP-CAB–QUICK COUPLER	173		
WIRING GP-CAB–REAR VISION CAMERA	182		
WIRING GP-CAB–SYSTEM 20, WORK TOOL PRIORITY	179		
WIRING GP-CAMERA–REAR VISION CAMERA	184		
WIRING GP-COMMUNICATION–PRODUCT LINK 121SR	187		
WIRING GP-COMMUNICATION–PRODUCT LINK 321SR	186		
WIRING GP-CONSOLE	189		
WIRING GP-CONSOLE–LH	188		
WIRING GP-CONSOLE–RH	190		
WIRING GP-CONTROL–BOOM PRIORITY, PUMP	191		
WIRING GP-ELECTRONIC CONTROL	192		
WIRING GP-FAN	195		
WIRING GP-FINE SWING	196		
WIRING GP-FUEL SYSTEM–REFUELING PUMP	197		
	198		
WIRING GP-HEATER	199		
	200		
WIRING GP-MEDIUM PRESSURE	202		
	203		
WIRING GP-OVERLOAD WARNING	204		
WIRING GP-PLATFORM	205		

MACHINE ARRANGEMENT

260-7182 CHASSIS AR

S/N: PDP1-UP

PART OF 260-7176 GENERAL AR

SMCS-7000 **i02906374**

NOTE	PART NUMBER	QTY	PART NAME 1 2 3 4 5 6 (PRODUCT LEVEL)	SEE PAGE
Y	*275-7106*	1	BATTERY & WIRING GP	105
Y	*320-5763*	1	BOX & MTG GP-STORAGE	214
Y	*278-3971*	1	COUNTERWEIGHT GP	218
Y	*278-3980*	1	COVER GP-ACCESS	230
Y	*273-6772*	1	FRAME GP-UPPER	239
Y	*278-3973*	1	GUARD GP-BOTTOM	245
Y	*278-3981*	1	GUARD GP-FENDER	247
Y	*278-3975*	1	HANDRAIL GP	250
Y	*278-3974*	1	HOOD & GUARD GP	253
Y	*275-6981*	1	HORN GP-ELECTRIC	758
Y	*275-7014*	1	LIGHTING GP-FLOOD	133
Y	*316-8807*	1	LINES GP-AIR CONDITIONER	762
Y	*278-3977*	1	LINES GP-FUEL	81
Y	*7Y-0059*	1	LITERATURE GP	768
Y	*278-3976*	1	MIRROR GP-REAR VIEW	769
Y	*305-0366*	1	MOUNTING GP-PLATFORM	776
Y	*273-5406*	1	OPERATOR AR	777
Y	*283-8808*	1	PLATE & FILM GP	833
Y	*278-3874*	1	TANK & MTG GP-FUEL	91
Y	*189-3465*	1	WASHER GP-WINDOW	806
Y	*319-0870*	1	WIRING GP-FAN (CONDENSER FAN)	195
Y	*306-8606*	1	WIRING GP-HEATER	199
Y	*291-7712*	1	WIRING GP-PLATFORM	205

Y-SEPARATE ILLUSTRATION

<END>

MACHINE ARRANGEMENT

260-7183 CHASSIS AR

S/N: BYJ1-UP

PART OF 260-7177 GENERAL AR

SMCS-7000 **i03084889**

NOTE	PART NUMBER	QTY	PART NAME 1 2 3 4 5 6 (PRODUCT LEVEL)	SEE PAGE
Y	*275-7106*	1	BATTERY & WIRING GP	105
Y	*320-5763*	1	BOX & MTG GP-STORAGE	214
Y	*278-3971*	1	COUNTERWEIGHT GP	218
Y	*278-3980*	1	COVER GP-ACCESS	230
Y	*273-6772*	1	FRAME GP-UPPER	239
Y	*278-3973*	1	GUARD GP-BOTTOM	245
Y	*278-3981*	1	GUARD GP-FENDER	247
Y	*278-3975*	1	HANDRAIL GP	250
Y	*278-3974*	1	HOOD & GUARD GP	253
Y	*275-6981*	1	HORN GP-ELECTRIC	758
Y	*275-7014*	1	LIGHTING GP-FLOOD	133
Y	*316-8807*	1	LINES GP-AIR CONDITIONER	762
Y	*278-3977*	1	LINES GP-FUEL	81
Y	*7Y-0059*	1	LITERATURE GP	768
Y	*278-3976*	1	MIRROR GP-REAR VIEW	769
Y	*305-0366*	1	MOUNTING GP-PLATFORM	776
Y	*273-5406*	1	OPERATOR AR	777
Y	*283-8809*	1	PLATE & FILM GP	837
Y	*278-3874*	1	TANK & MTG GP-FUEL	91
Y	*189-3465*	1	WASHER GP-WINDOW	806
Y	*319-0870*	1	WIRING GP-FAN (CONDENSER FAN)	195
Y	*306-8606*	1	WIRING GP-HEATER	199
Y	*291-7712*	1	WIRING GP-PLATFORM	205

Y-SEPARATE ILLUSTRATION

<END>

260-7176 GENERAL AR

S/N: PDP1-UP

SMCS-7000 **i02977184**

NOTE	PART NUMBER	QTY	PART NAME 1 2 3 4 5 6 (PRODUCT LEVEL)	SEE PAGE
Y	*260-7182*	1	CHASSIS AR	1
Y	*279-7555*	1	ELECTRONICS GP-MACHINE	120
Y	*260-2171*	1	ELECTRONICS GP-MONITOR	121
Y	*279-7759*	1	ENGINE AR-COMPLETE	8
Y	*260-7185*	1	FRAME AR-UNDERCARRIAGE	271
Y	*270-5956*	1	HYDRAULIC AR	355
Y	*279-7768*	1	INSTALLATION AR-ENGINE	14
Y	*267-6827*	1	POWER TRAIN AR	211

Y-SEPARATE ILLUSTRATION

<END>

MACHINE ARRANGEMENT

260-7177 GENERAL AR

S/N: BYJ1-UP

SMCS-7000 **i02977784**

NOTE	PART NUMBER	QTY	PART NAME 1 2 3 4 5 6 (PRODUCT LEVEL)	SEE PAGE
Y	*260-7183*	1	CHASSIS AR	2
Y	*279-7555*	1	ELECTRONICS GP-MACHINE	120
Y	*260-2171*	1	ELECTRONICS GP-MONITOR	121
Y	*279-7759*	1	ENGINE AR-COMPLETE	8
Y	*260-7186*	1	FRAME AR-UNDERCARRIAGE	271
Y	*270-5957*	1	HYDRAULIC AR	355
Y	*279-7768*	1	INSTALLATION AR-ENGINE	14
Y	*267-6827*	1	POWER TRAIN AR	211

Y-SEPARATE ILLUSTRATION

<END>

ENGINE ARRANGEMENT

279-7764 ENGINE AR

S/N: JKH1-UP

PART OF 279-7777, 279-7816, 279-7818 ENGINE AR-COMPLETE

AN ATTACHMENT

SMCS-1000 **i02991841**

NOTE	PART NUMBER	QTY	PART NAME 1 2 3 4 5 6 (PRODUCT LEVEL)	SEE PAGE
Y	*296-4792*	1	ADAPTER GP-REMOTE OIL FILTER	44
Y	*310-9586*	1	BREATHER GP	45
Y	*305-4955*	1	CAMSHAFT GP	15
Y	*296-4800*	1	CONTROL & MTG GP-ENGINE ELEK	118
Y	*296-4782*	1	COOLER GP-ENGINE OIL	50
Y	*296-4786*	1	COVER GP-VALVE MECHANISM	17
Y	*296-4789*	1	CRANKSHAFT GP	19
Y	*296-4787*	1	CYLINDER BLOCK GP	23
Y	*296-4784*	1	CYLINDER HEAD GP	26
Y	*310-9549*	1	FAN GP-SUCTION	52
Y	*296-4794*	1	FILTER GP-FUEL	76
Y	*296-4783*	1	FLYWHEEL GP	27
Y	*296-4651*	1	GEAR GP-FRONT	28
Y	*296-4803*	1	HOUSING GP-FLYWHEEL	29
Y	*296-4788*	1	HOUSING GP-FRONT	30
Y	*310-9609*	1	INJECTOR GP-FUEL	80
Y	*310-9585*	1	LINES GP-ENGINE OIL	48
Y	*296-4793*	1	LINES GP-FUEL INJECTION	83
Y	*296-4777*	1	LINES GP-TURBOCHARGER OIL	49
Y	*296-4795*	1	LINES GP-WATER	53
Y	*296-4791*	1	MANIFOLD GP-EXHAUST	67
Y	*296-4790*	1	MANIFOLD GP-INLET	68
Y	*296-4798*	1	MOUNTING GP-ALTERNATOR	32
Y	*296-4637*	1	MOUNTING GP-STARTING MOTOR	35
Y	*310-9551*	1	MUFFLER GP	71
Y	*310-9494*	1	PAN GP-OIL	36
Y	*296-4796*	1	PISTON & ROD GP	37
Y	*305-4680*	1	PUMP & MTG GP-FUEL TRANSFER	85
Y	*296-4655*	1	PUMP GP-WATER	55
Y	*296-4802*	1	SENSOR GP-ENGINE	152
Y	*310-9614*	1	TURBOCHARGER GP	74
Y	*305-4954*	1	VALVE MECHANISM GP	42
Y	*296-4801*	1	WIRING GP-ELECTRONIC CONTROL	192

Y-SEPARATE ILLUSTRATION

ENGINE ARRANGEMENT

279-7766 ENGINE AR

S/N: JKH1-UP

PART OF 279-7759, 279-7815, 279-7817 ENGINE AR-COMPLETE

ALSO AN ATTACHMENT

SMCS-1000 **i03021461**

NOTE	PART NUMBER	QTY	PART NAME 1 2 3 4 5 6 (PRODUCT LEVEL)	SEE PAGE
Y	*296-4792*	1	ADAPTER GP-REMOTE OIL FILTER	44
Y	*310-9586*	1	BREATHER GP	45
Y	*305-4955*	1	CAMSHAFT GP	15
Y	*296-4800*	1	CONTROL & MTG GP-ENGINE ELEK	118
Y	*296-4782*	1	COOLER GP-ENGINE OIL	50
Y	*296-4786*	1	COVER GP-VALVE MECHANISM	17
Y	*296-4789*	1	CRANKSHAFT GP	19
Y	*296-4787*	1	CYLINDER BLOCK GP	23
Y	*296-4784*	1	CYLINDER HEAD GP	26
Y	*310-9549*	1	FAN GP-SUCTION	52
Y	*296-4794*	1	FILTER GP-FUEL	76
Y	*296-4783*	1	FLYWHEEL GP	27
Y	*296-4651*	1	GEAR GP-FRONT	28
Y	*296-4803*	1	HOUSING GP-FLYWHEEL	29
Y	*296-4788*	1	HOUSING GP-FRONT	30
Y	*310-9609*	1	INJECTOR GP-FUEL	80
Y	*310-9585*	1	LINES GP-ENGINE OIL	48
Y	*296-4793*	1	LINES GP-FUEL INJECTION	83
Y	*296-4777*	1	LINES GP-TURBOCHARGER OIL	49
Y	*296-4795*	1	LINES GP-WATER	53
Y	*296-4791*	1	MANIFOLD GP-EXHAUST	67
Y	*296-4790*	1	MANIFOLD GP-INLET	68
Y	*296-4798*	1	MOUNTING GP-ALTERNATOR	32
Y	*296-4637*	1	MOUNTING GP-STARTING MOTOR	35
Y	*310-9550*	1	MUFFLER GP	69
Y	*310-9494*	1	PAN GP-OIL	36
Y	*296-4796*	1	PISTON & ROD GP	37
Y	*305-4680*	1	PUMP & MTG GP-FUEL TRANSFER	85
Y	*296-4655*	1	PUMP GP-WATER	55
Y	*296-4802*	1	SENSOR GP-ENGINE	152
Y	*310-9614*	1	TURBOCHARGER GP	74
Y	*305-4954*	1	VALVE MECHANISM GP	42
Y	*296-4801*	1	WIRING GP-ELECTRONIC CONTROL	192
	315-2759	1	ELECTRONICS GP-ENGINE RATINGS	

Y-SEPARATE ILLUSTRATION

ENGINE ARRANGEMENT

279-7850 ENGINE AR

S/N: BYJ1-UP; PDP1-UP

AN ATTACHMENT

SMCS-1000 **i03193021**

NOTE	PART NUMBER	QTY	PART NAME 1 2 3 4 5 6 (PRODUCT LEVEL)	SEE PAGE
Y	*279-7815*	1	ENGINE AR-COMPLETE	10

Y-SEPARATE ILLUSTRATION

ENGINE ARRANGEMENT

279-7851 ENGINE AR

S/N: BYJ1-UP; PDP1-UP
AN ATTACHMENT

SMCS-1000 **i03192894**

NOTE	PART NUMBER	QTY	PART NAME 1 2 3 4 5 6 (PRODUCT LEVEL)	SEE PAGE
Y	*279-7817*	1	ENGINE AR-COMPLETE	12

Y-SEPARATE ILLUSTRATION

ENGINE ARRANGEMENT

279-7759 ENGINE AR-COMPLETE

S/N: BYJ1-UP; PDP1-UP

PART OF 260-7176, 260-7177 GENERAL AR

SMCS-1000 **i02977179**

NOTE	PART NUMBER	QTY	PART NAME 1 2 3 4 5 6 (PRODUCT LEVEL)	SEE PAGE
Y	*279-7766*	1	ENGINE AR	5
Y	*279-7779*	1	PULLEY GP-FAN & ALT DRIVE (WITH IDLER PULLEY)	39

Y-SEPARATE ILLUSTRATION

ENGINE ARRANGEMENT

279-7777 ENGINE AR-COMPLETE

S/N: BYJ1-UP; PDP1-UP
PART OF 260-7207 COOLING AR-HIGH AMBIENT TEMP
AN ATTACHMENT

SMCS-1000 **i03084612**

NOTE	PART NUMBER	QTY	PART NAME 1 2 3 4 5 6 (PRODUCT LEVEL)	SEE PAGE
Y	*279-7764*	1	ENGINE AR	4
Y	*310-9776*	1	PULLEY GP-FAN & ALT DRIVE (WITH IDLER PULLEY)	40

Y-SEPARATE ILLUSTRATION

ENGINE ARRANGEMENT

279-7815 ENGINE AR-COMPLETE

S/N: BYJ1-UP; PDP1-UP
PART OF 279-7850 ENGINE AR
AN ATTACHMENT

SMCS-1000 **i03035662**

NOTE	PART NUMBER	QTY	PART NAME 1 2 3 4 5 6 (PRODUCT LEVEL)	SEE PAGE
Y	*279-7766*	1	ENGINE AR	5
Y	*279-7779*	1	PULLEY GP-FAN & ALT DRIVE (WITH IDLER PULLEY)	39

Y-SEPARATE ILLUSTRATION

ENGINE ARRANGEMENT

279-7816 ENGINE AR-COMPLETE

S/N: BYJ1-UP; PDP1-UP
PART OF 283-8803 COOLING AR
AN ATTACHMENT

SMCS-1000 **i03173629**

NOTE	PART NUMBER	QTY	PART NAME 1 2 3 4 5 6 (PRODUCT LEVEL)	SEE PAGE
Y	*279-7764*	1	ENGINE AR	4
Y	*310-9776*	1	PULLEY GP-FAN & ALT DRIVE (WITH IDLER PULLEY)	40

Y-SEPARATE ILLUSTRATION

ENGINE ARRANGEMENT

279-7817 ENGINE AR-COMPLETE

S/N: BYJ1-UP; PDP1-UP
PART OF 279-7851 ENGINE AR
AN ATTACHMENT

SMCS-1000 **i03192902**

NOTE	PART NUMBER	QTY	PART NAME 1 2 3 4 5 6 (PRODUCT LEVEL)	SEE PAGE
Y	*279-7766*	1	ENGINE AR	5
Y	*279-7779*	1	PULLEY GP-FAN & ALT DRIVE (WITH IDLER PULLEY)	39

Y-SEPARATE ILLUSTRATION

ENGINE ARRANGEMENT

279-7818 ENGINE AR-COMPLETE

S/N: BYJ1-UP; PDP1-UP
PART OF 283-8804 COOLING AR
AN ATTACHMENT

SMCS-1000 **i03173630**

NOTE	PART NUMBER	QTY	PART NAME 1 2 3 4 5 6 (PRODUCT LEVEL)	SEE PAGE
Y	*279-7764*	1	ENGINE AR	4
Y	*310-9776*	1	PULLEY GP-FAN & ALT DRIVE (WITH IDLER PULLEY)	40

Y-SEPARATE ILLUSTRATION

ENGINE ARRANGEMENT

279-7768 INSTALLATION AR-ENGINE

S/N: BYJ1-UP; PDP1-UP

PART OF 260-7176, 260-7177 GENERAL AR

SMCS-1000 **i02977167**

NOTE	PART NUMBER	QTY	PART NAME 1 2 3 4 5 6 (PRODUCT LEVEL)	SEE PAGE
Y	*310-9698*	1	AIR CLEANER GP	61
Y	*279-7776*	1	COMPRESSOR GP-REFRIGERANT	695
Y	*316-8808*	1	CONDENSER & MTG GP-REFRIGERANT	697
Y	*310-9629*	1	FILTER & MTG GP-ENGINE OIL	46
Y	*255-2971*	1	INSULATION GP-MUFFLER	63
Y	*265-3615*	1	LINES GP-AIR	64
Y	*279-7773*	1	LINES GP-MUFFLER DRAIN	65
Y	*279-7771*	1	LINES GP-TURBOCHARGER AIR	66
Y	*279-7772*	1	MOUNTING GP-ENGINE	33
Y	*265-3613*	1	RADIATOR & HYD OIL COOLER GP	57

Y-SEPARATE ILLUSTRATION

305-4955 CAMSHAFT GP

S/N: JKH1-UP
PART OF 279-7764, 279-7766 ENGINE AR
ALSO AN ATTACHMENT

SMCS-1210 **i02790536**

NOTE	REF NO	GRAPHIC REF	PART NUMBER	QTY	PART NAME 1 2 3 4 5 6 (PRODUCT LEVEL)	SEE PAGE
	1	1	**305-4758**	1	CAMSHAFT	
	2	1	**279-7859**	8	TAPPET	
	3	1	**294-1716**	8	PUSHROD	
	4	1	**094-4628**	1	KEY	
	5	1	**5I-7650**	1	PLATE	
M	6	1	**6V-5215**	2	BOLT (M8X1.25X16-MM)	

M-METRIC PART

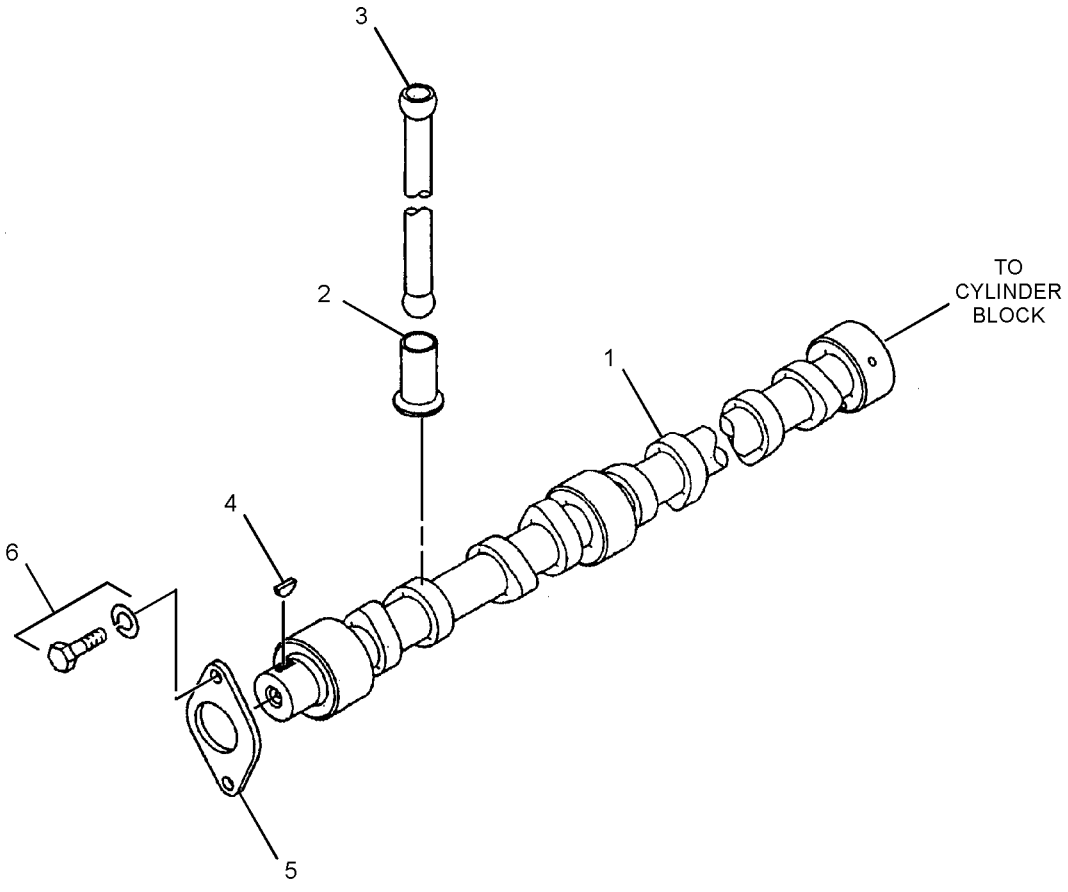

GRAPHIC #1 **<END>** g01405446

286-6178 COVER GP-SOUND SUPPRESSION

S/N: BYJ1-UP; PDP1-UP

PART OF 278-3980 COVER GP-ACCESS

SMCS-1801 **i02811988**

NOTE	REF NO	GRAPHIC REF	PART NUMBER	QTY	PART NAME 1 2 3 4 5 6 (PRODUCT LEVEL)	SEE PAGE
	1	1	**178-5789**	1	HANDLE AS	
	2	1	**248-7881**	1	INSULATION	
	3	1	**248-7882**	1	INSULATION	
	4	1	**5P-1075**	4	WASHER-HARD (10.2X22.5X3-MM THK)	
	5	1	**298-2922**	1	INSULATION	
M	6	1	**137-2255**	4	BOLT (M8X1.25X8-MM)	
M	7	1	**5C-7261**	4	NUT (M8X1.25-THD)	

M-METRIC PART

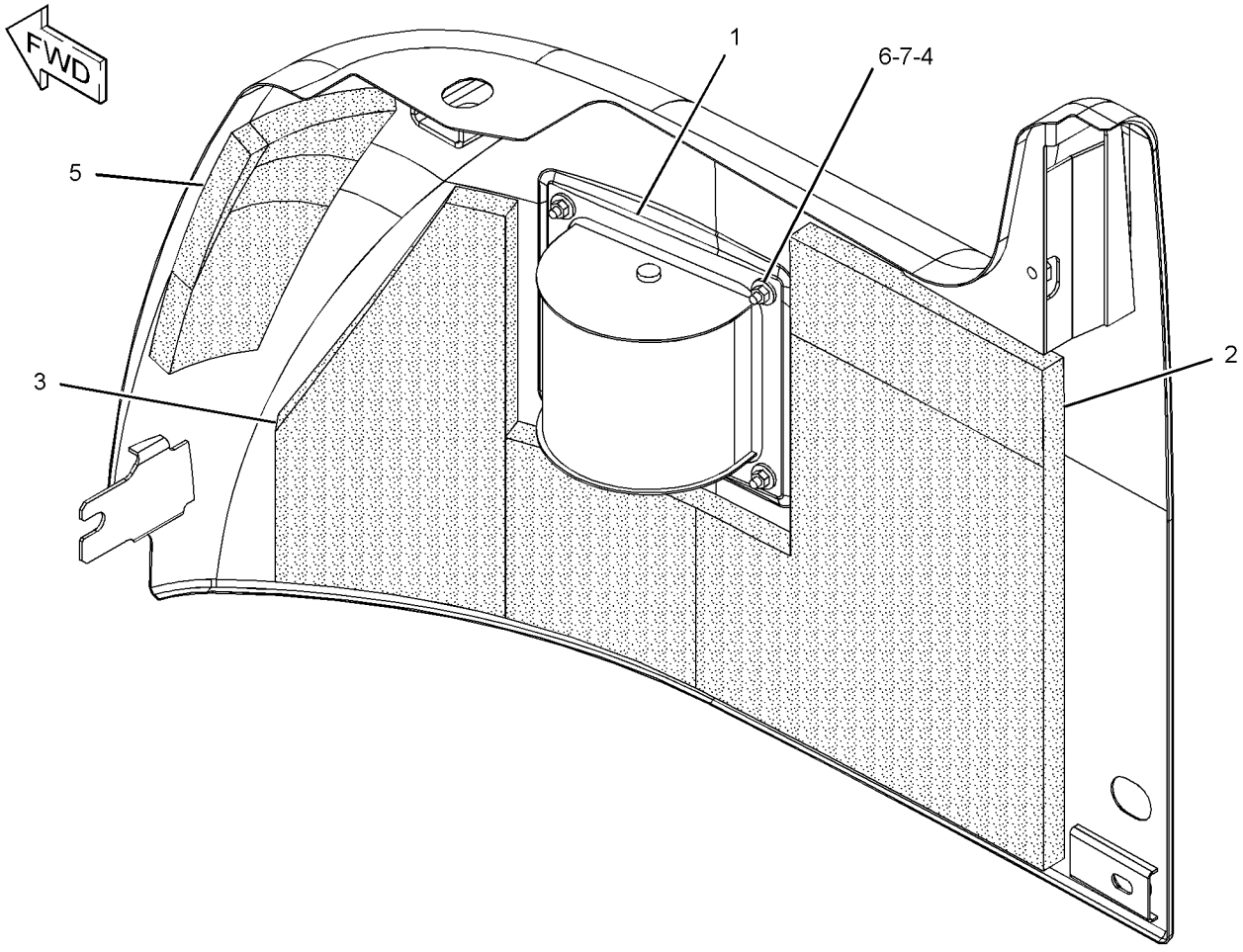

GRAPHIC #1 **<END>** g01416858

296-4786 COVER GP-VALVE MECHANISM

S/N: JKH1-UP
PART OF 279-7764, 279-7766 ENGINE AR
ALSO AN ATTACHMENT

SMCS-1107 **i03021616**

NOTE	REF NO	GRAPHIC REF	PART NUMBER	QTY	PART NAME 1 2 3 4 5 6 (PRODUCT LEVEL)	SEE PAGE
	1	1	**305-4767**	1	BASE-ROCKER ARM	
	2	1	**296-4692**	1	COVER-ROCKER	
	3	1	**305-4768**	1	GASKET	
	4	1	**296-4694**	1	GASKET (VALVE COVER)	
	5	1	**296-4695**	1	COVER	
	6	1	**294-1708**	1	CAP (ENGINE OIL FILLER)	
	7	1	**296-4696**	1	BRACKET	
	8	1	**294-1710**	6	BOLT (M6X1X16.2-MM)	
	9	1	**294-1711**	12	WASHER	
	10	1	**096-8569**	2	BOLT (140-MM LG)	
	11	1	**294-1712**	1	SEAL	
	12	1	**8T-4224**	7	WASHER-HARD (8.8X16X2-MM THK)	
	13	1	**294-1713**	12	BOLT (M8X1.25X38.3-MM)	
	14	1	**294-1700**	12	BOLT (M8X1.25X108.3-MM)	
	15	1	**095-8799**	5	BOLT (M8X1.25X30.5-MM)	
	16	1	**294-1821**	2	BOLT (M8X1.25X35.5-MM)	
	17	1	**294-1714**	2	STUD	

296-4786 **COVER GP-VALVE MECHANISM** *(contd.)* **i03021616**

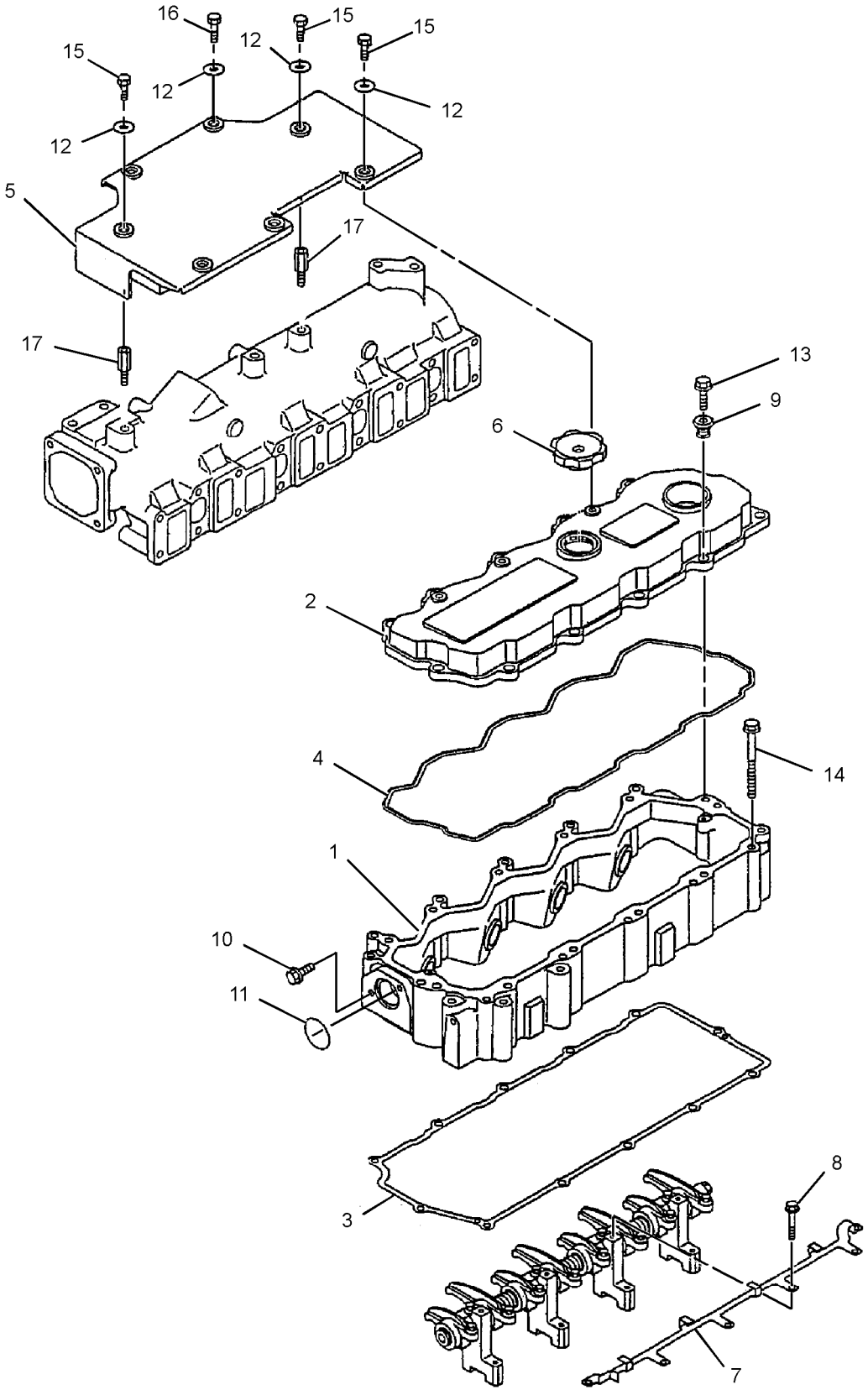

GRAPHIC #1 **<END>** g01404286

296-4789 CRANKSHAFT GP

S/N: JKH1-UP
PART OF 279-7764, 279-7766 ENGINE AR
ALSO AN ATTACHMENT

SMCS-1202 **i02710559**

NOTE	REF NO	GRAPHIC REF	PART NUMBER	QTY	PART NAME 1 2 3 4 5 6 (PRODUCT LEVEL)	SEE PAGE
	1	1	**296-4710**	1	CRANKSHAFT AS	
	1A	1	**294-1751**	1	GEAR (31-TEETH)	
	1B	1	**130-7596**	1	NUT	
	1C	1	**085-9513**	2	PIN	
	1D	1	**094-4628**	2	KEY	
	2	1	**233-1277**	1	PLATE	

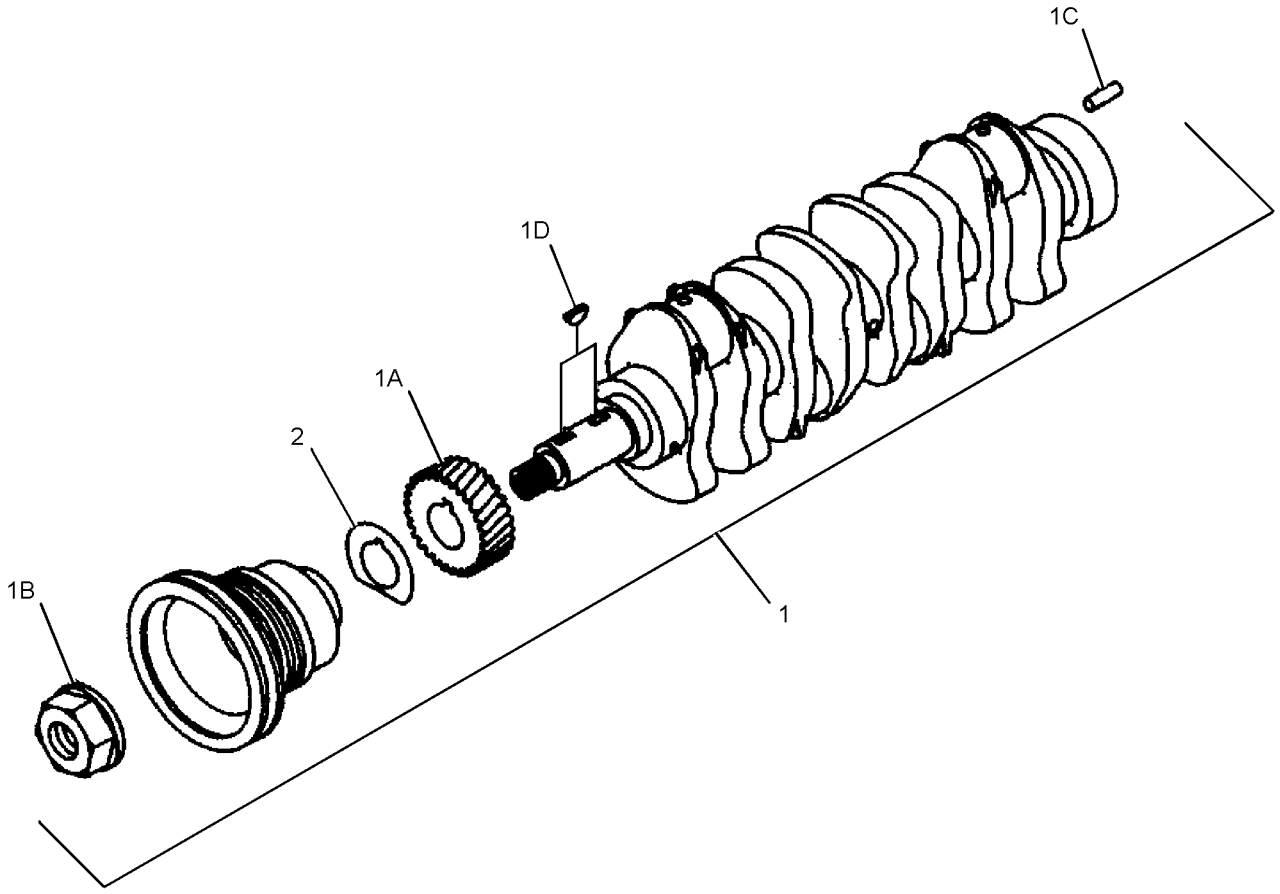

GRAPHIC #1 **<END>** g01403342

296-4699 CYLINDER BLOCK GP

S/N: JKH1-UP

PART OF 296-4787 CYLINDER BLOCK GP

ALSO AN ATTACHMENT

SMCS-1201 **i02975503**

NOTE	REF NO	GRAPHIC REF	PART NUMBER	QTY	PART NAME 1 2 3 4 5 6 (PRODUCT LEVEL)	SEE PAGE
	1	2	**4I-9664**	2	PIN	
	5	2	**5I-8009**	1	BUSHING	
	6	1	**5I-7528**	1	BUSHING	
	7	1	**5I-7529**	1	BUSHING	
	8	1	**3P-1896**	10	PLUG-CUP	
M	9	2	**094-7741**	10	BOLT-BEARING CAP (M14X2X120-MM)	
	10	2	**095-2005**	2	CAP	
	11	1	**096-3741**	7	CAP	
	12	1	**294-1720**	2	SEAL	
	13	2	**294-1722**	4	JET	
	14	1	**5I-7525**	1	PLUG	
	15	1	**5I-7505**	8	PLUG	
	16	2	**294-1721**	1	SHAFT	
	17	2	**5I-7724**	2	PIN	
	18	2	**095-2039**	1	WASHER-SPECIAL	
M	19	2	**8T-4191**	1	BOLT (M10X1.5X16-MM)	
	20	2	**099-4420**	2	PIN	
	21	1	**296-4672**	6	PIN	
	22	2	**139-7814**	4	VALVE	
	23	2	**094-9424**	8	GASKET	

M-METRIC PART

296-4699 CYLINDER BLOCK GP *(contd.)* **i02975503**

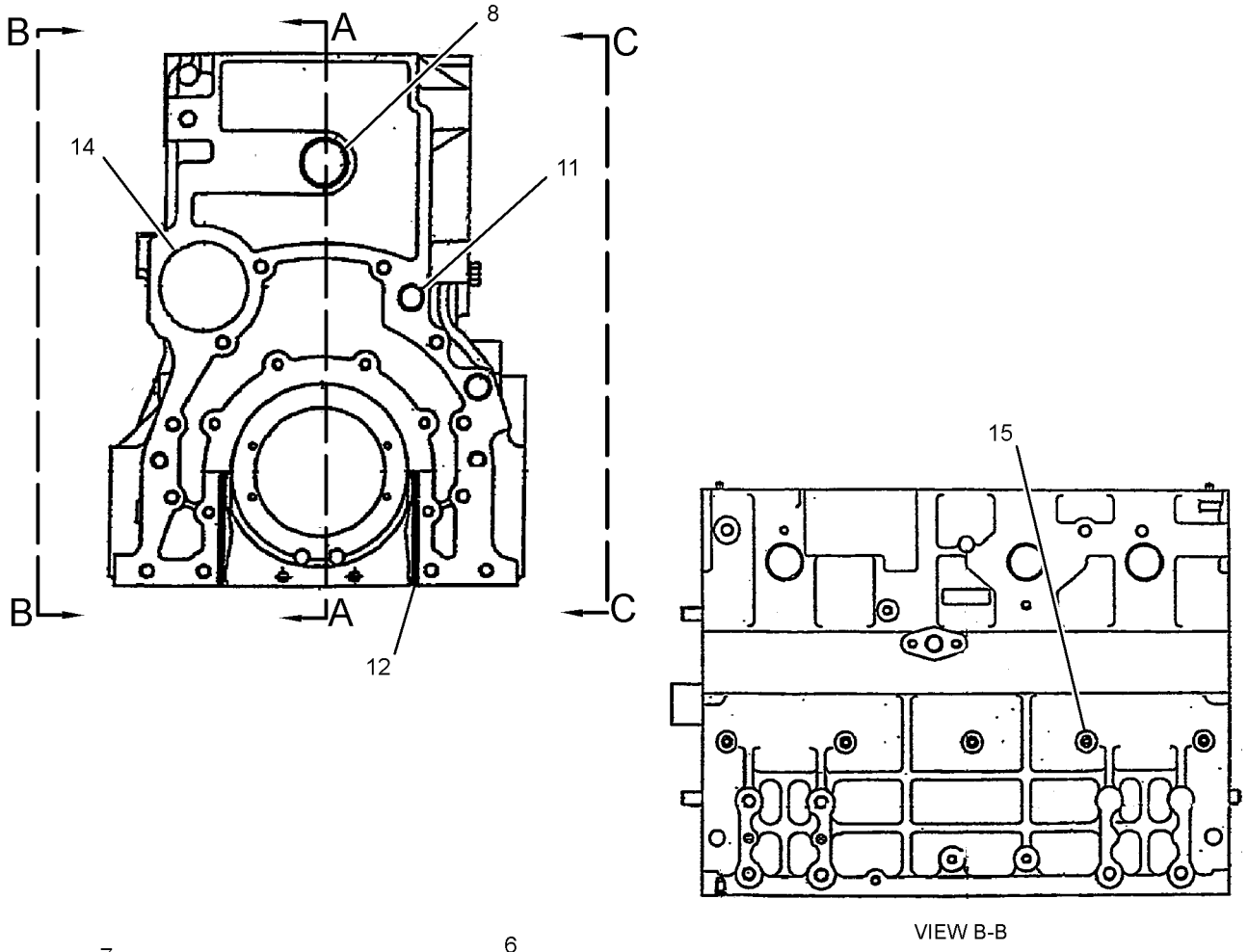

VIEW B-B

SECTION A-A

GRAPHIC #1 g01504593

296-4699 CYLINDER BLOCK GP *(contd.)* **i02975503**

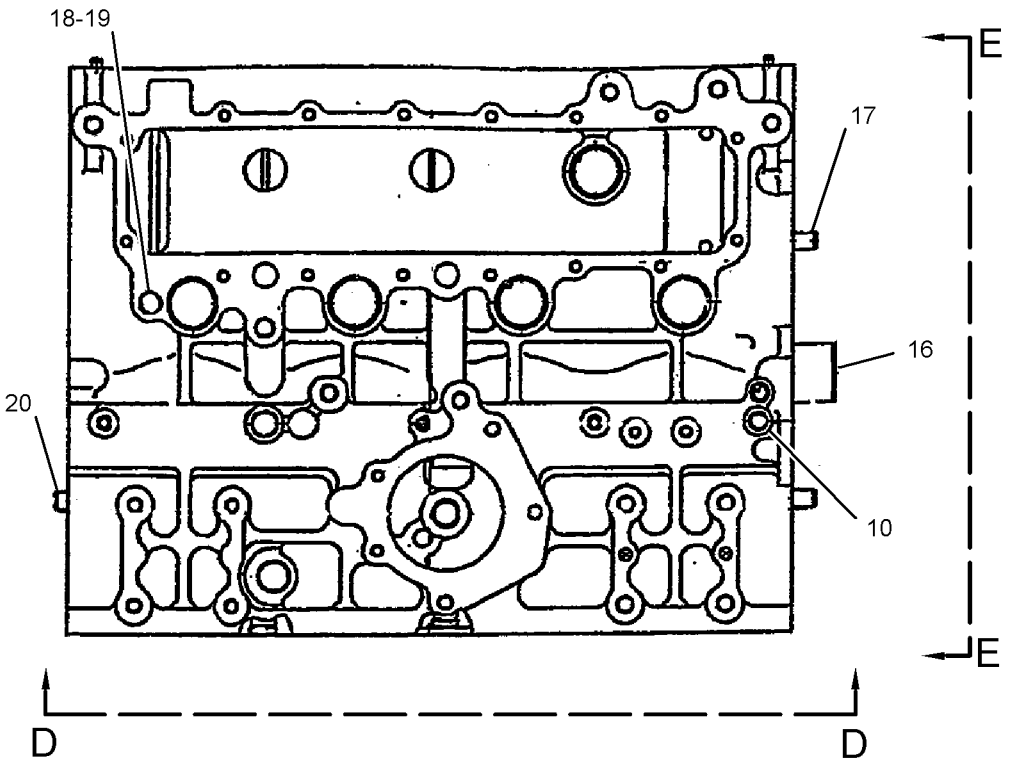

VIEW C-C

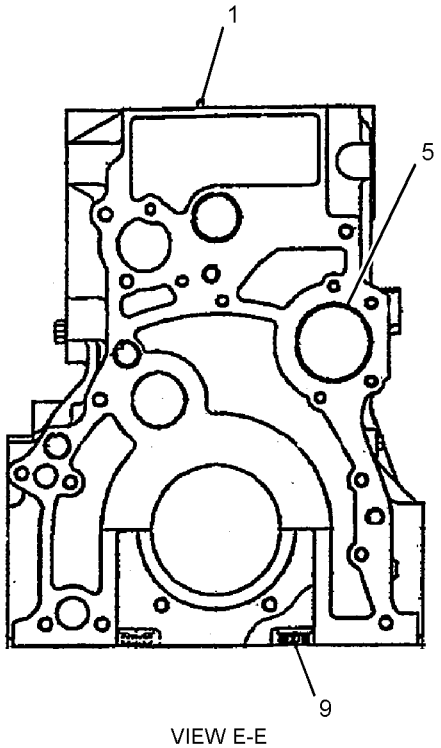

VIEW E-E

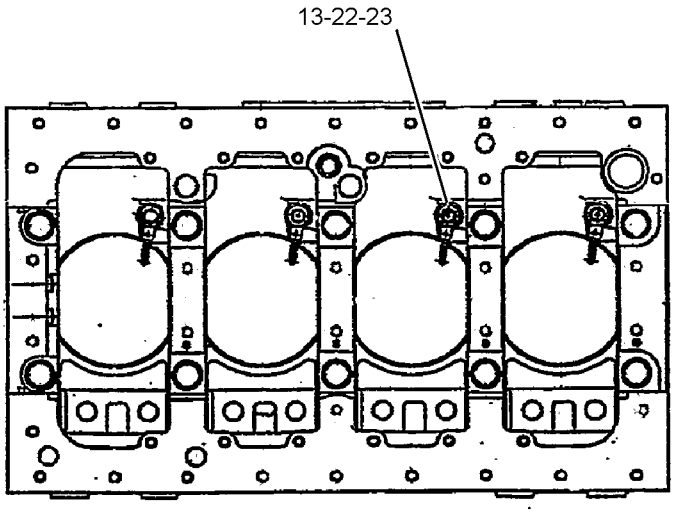

VIEW D-D

GRAPHIC #2 **<END>** g01378474

296-4787 CYLINDER BLOCK GP

S/N: JKH1-UP
PART OF 279-7764, 279-7766 ENGINE AR
ALSO AN ATTACHMENT

SMCS-1201 **i02837568**

NOTE	REF NO	GRAPHIC REF	PART NUMBER	QTY	PART NAME 1 2 3 4 5 6 (PRODUCT LEVEL)	SEE PAGE
	1	1	**294-1723**	1	EYE	
	2	1	**294-1724**	1	EYE	
	3	1	**5I-5181**	4	BOLT	
	5	1	**096-2501**	4	LOCKWASHER	
M	6	1	**8T-4191**	1	BOLT (M10X1.5X16-MM)	
	7	1	**095-2039**	1	WASHER-SPECIAL	
	8	1	**5I-7654**	3	PLATE (STANDARD)	
AB			**5I-7787**	3	PLATE (0.15-MM OS)	
AB			**5I-7788**	3	PLATE (0.3-MM OS)	
AB			**5I-7789**	3	PLATE (0.45-MM OS)	
	9	1	**5I-7588**	5	SET-BEARING (STANDARD)	
AB			**5I-7784**	5	SET-BEARING (0.25-MM US)	
AB			**5I-7785**	5	SET-BEARING (0.5-MM US)	
AB			**5I-7786**	5	SET-BEARING (0.75-MM US)	
Y	10	1	**296-4699**	1	CYLINDER BLOCK GP (WITH BEARINGS)	20

A-NOT PART OF THIS GROUP
B-USE AS REQUIRED
M-METRIC PART
Y-SEPARATE ILLUSTRATION

296-4787 **CYLINDER BLOCK GP** *(contd.)* **i02837568**

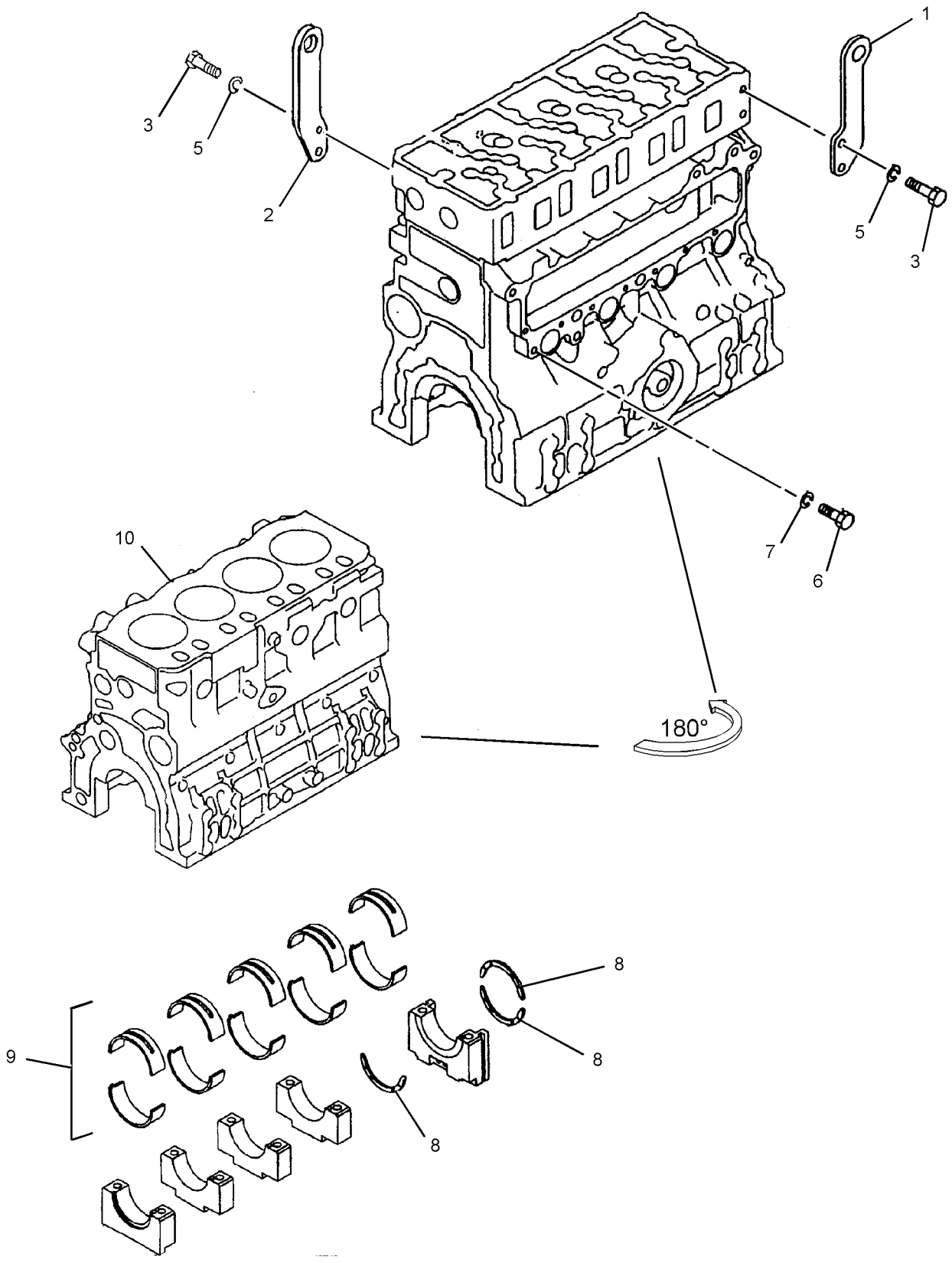

GRAPHIC #1 **<END>** g01370920

305-4766 CYLINDER HEAD AS

S/N: JKH1-UP
PART OF 296-4784 CYLINDER HEAD GP
ALSO AN ATTACHMENT

SMCS-1100 **i02996131**

NOTE	REF NO	GRAPHIC REF	PART NUMBER	QTY	PART NAME 1 2 3 4 5 6 (PRODUCT LEVEL)	SEE PAGE
	1	1	**305-4883**	8	SEAT	
	2	1	**305-4884**	8	SEAT	
	3	1	**305-4885**	16	GUIDE	
	4	1	**103-9011**	8	CAP-SEALING	
	5	1	**5I-4915**	7	CAP	
	6	1	**4I-9664**	2	PIN	

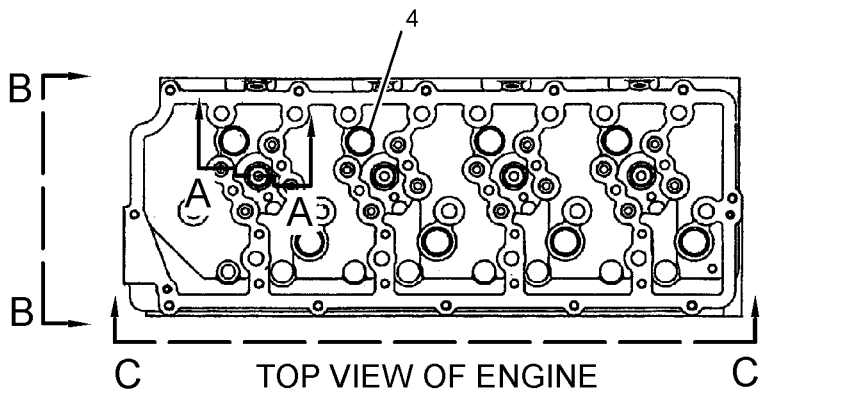

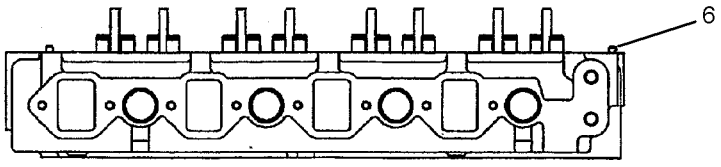

VIEW C-C

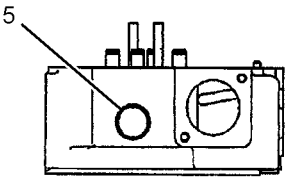

VIEW B-B

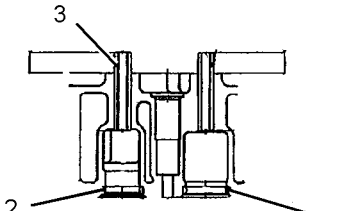

SECTION A-A

GRAPHIC #1 **<END>** g01520316

BASIC ENGINE

296-4784 CYLINDER HEAD GP

S/N: JKH1-UP
PART OF 279-7764, 279-7766 ENGINE AR
ALSO AN ATTACHMENT

SMCS-1100 **i02981660**

NOTE	REF NO	GRAPHIC REF	PART NUMBER	QTY	PART NAME 1 2 3 4 5 6 (PRODUCT LEVEL)	SEE PAGE
Y	1	1	**305-4766**	1	CYLINDER HEAD AS	25
	2	1	**296-4689**	1	GASKET	
	3	1	**294-1683**	17	BOLT	
	4	1	**4I-9664**	2	PIN	
	5	1	**310-9532**	8	GUIDE	

Y-SEPARATE ILLUSTRATION

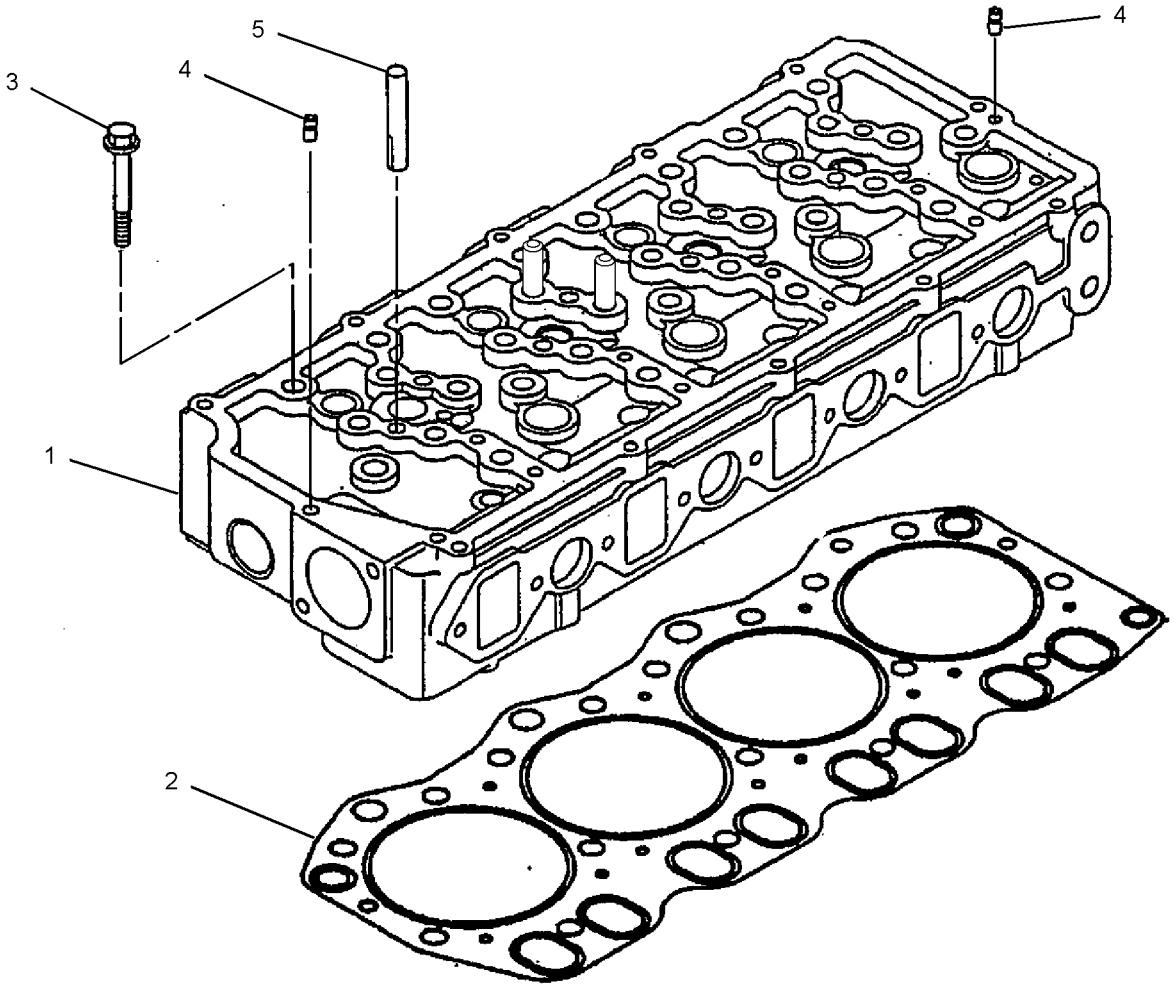

GRAPHIC #1 **<END>** g01366148

296-4783 FLYWHEEL GP

S/N: JKH1-UP
PART OF 279-7764, 279-7766 ENGINE AR
ALSO AN ATTACHMENT

SMCS-1156 **i02710560**

NOTE	REF NO	GRAPHIC REF	PART NUMBER	QTY	PART NAME 1 2 3 4 5 6 (PRODUCT LEVEL)	SEE PAGE
	1	1	**296-4713**	1	FLYWHEEL AS	
	1A	1	**205-6788**	1	GEAR (127-TEETH)	
	2	1	**5I-5005**	6	BOLT (M12X1.25X35-MM)	
	3	1	**096-2501**	6	LOCKWASHER	

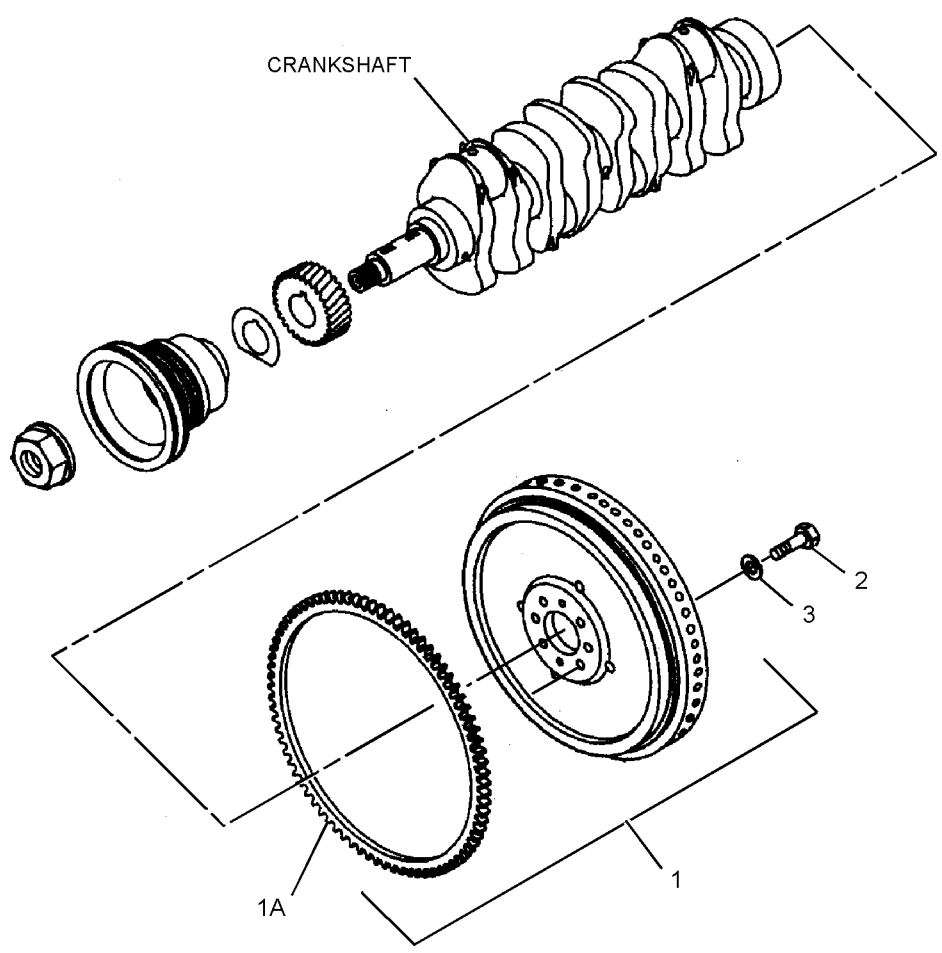

GRAPHIC #1 **<END>** g01403322

BASIC ENGINE

296-4651 GEAR GP-FRONT

S/N: JKH1-UP
PART OF 279-7764, 279-7766 ENGINE AR
ALSO AN ATTACHMENT

SMCS-1151, 1162, 1206 **i02981450**

NOTE	REF NO	GRAPHIC REF	PART NUMBER	QTY	PART NAME 1 2 3 4 5 6 (PRODUCT LEVEL)	SEE PAGE
	1	1	*294-1753*	1	GEAR AS-IDLER (69-TEETH)	
	1A	1	**296-4673**	1	BUSHING	
	2	1	**294-1754**	1	GEAR (62-TEETH)	
	3	1	**294-1755**	1	GEAR (62-TEETH)	
	4	1	**294-1756**	1	PLATE	
	5	1	**294-1757**	1	BOLT	

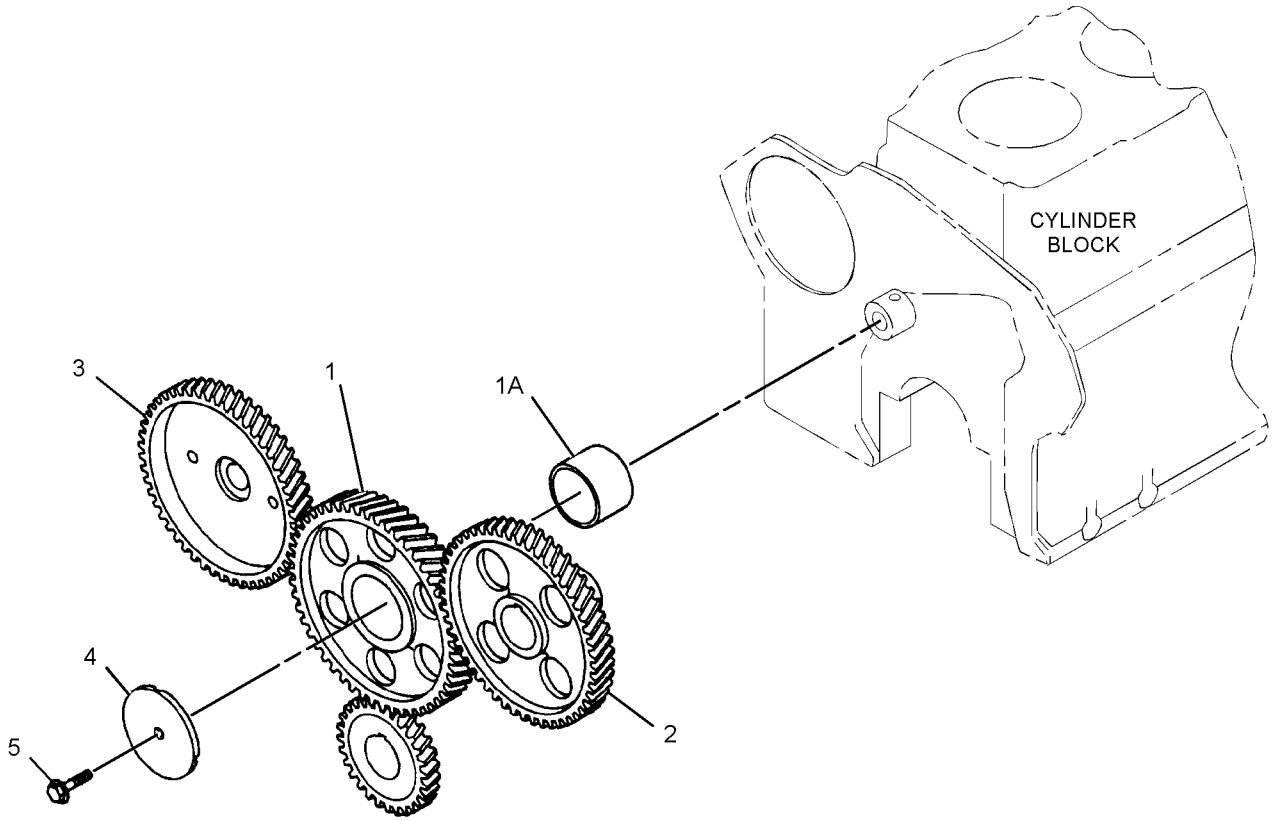

GRAPHIC #1 **<END>** g01317830

296-4803 HOUSING GP-FLYWHEEL

S/N: JKH1-UP
PART OF 279-7764, 279-7766 ENGINE AR
ALSO AN ATTACHMENT

SMCS-1157 **i02943494**

NOTE	REF NO	GRAPHIC REF	PART NUMBER	QTY	PART NAME 1 2 3 4 5 6 (PRODUCT LEVEL)	SEE PAGE
	1	1	**296-4701**	1	HOUSING	
	2	1	**5I-7660**	1	SEAL AS	
	4	1	**5I-4983**	2	STUD	
	6	1	**294-1737**	8	BOLT (M8X1.25X35.5-MM)	
	7	1	**294-1738**	2	BOLT (M10X1.5X32-MM)	
M	8	1	**294-1726**	10	BOLT (M10X1.5X37-MM)	
	9	1	**294-1739**	1	GASKET	
	10	1	**5I-7607**	1	PLUG	
M	11	1	**294-7251**	1	BOLT AS (M8X20X1-MM)	

M-METRIC PART

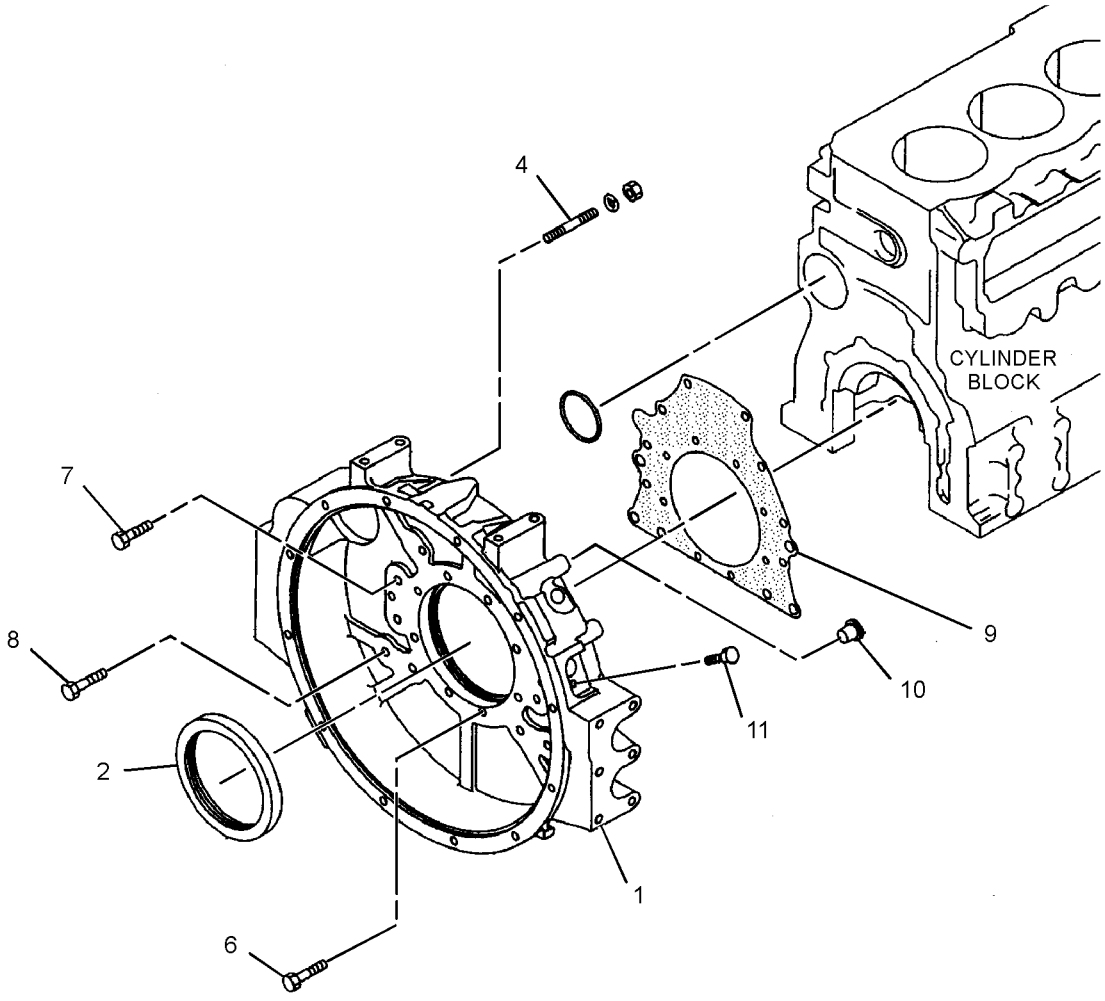

GRAPHIC #1 **<END>** g01458955

BASIC ENGINE

296-4788 HOUSING GP-FRONT

S/N: JKH1-UP
PART OF 279-7764, 279-7766 ENGINE AR
ALSO AN ATTACHMENT

SMCS-1151, 1162, 1206 **i02830615**

NOTE	REF NO	GRAPHIC REF	PART NUMBER	QTY	PART NAME 1 2 3 4 5 6 (PRODUCT LEVEL)	SEE PAGE
	1	1	**222-8292**	1	POINTER	
	2	1	**294-1731**	1	BOLT (M8X1.25X19.5-MM)	
	3	1	**6V-8236**	1	PIN-SPRING	
	4	1	**294-1732**	1	PLATE	
M	5	1	**6V-5215**	2	BOLT (M8X1.25X16-MM)	
	6	1	**297-7646**	2	BOLT (M8X1.25X95.5-MM)	
	7	1	**178-6538**	1	COVER AS	
M	8	1	**8T-4137**	6	BOLT (M10X1.5X20-MM)	
M	9	1	**5I-7610**	1	BOLT (M10X1.5X20-MM)	
	10	1	**297-7647**	6	BOLT (M10X1.5X77-MM)	
M	11	1	**8T-4172**	2	BOLT (M10X1.5X80-MM)	
	12	1	**5I-7896**	4	BOLT (M8X1.25X95-MM)	
	13	1	**7X-0796**	6	LOCKWASHER	
	14	1	**294-1733**	1	GASKET	
	15	1	**294-1734**	1	GASKET	
	16	1	**212-8571**	1	COVER	
	17	1	**212-8572**	1	GASKET	
	18	1	**196-8366**	1	BOLT	
	19	1	**294-1735**	5	BOLT (M8X1.25X90.5-MM)	
M	20	1	**294-7251**	6	BOLT AS (M8X20X1-MM)	
M	21	1	**294-1726**	3	BOLT (M10X1.5X37-MM)	
	22	1	**096-9435**	1	PLUG	
	23	1	**096-9532**	1	WASHER (15.8X22.5X2-MM THK)	
	24	1	**096-9528**	1	SEAL-O-RING	
	25	1	**6F-7556**	2	COVER	
	26	1	**5I-7632**	1	PIPE	
	27	1	**296-4700**	1	BODY AS	
	27A	1	**294-1728**	1	GEAR	
	27B	1	**125-2950**	1	GEAR AS (9-TEETH)	
	27C	1	**195-8225**	1	CAP (MAIN BEARING)	
	30	1	**294-1729**	1	GEAR AS	
	31	1	**5I-7656**	1	SEAL	
	32	1	**6F-7557**	2	GASKET	
	33	1	**5I-7683**	1	SPINDLE	
	34	1	**178-6537**	1	GASKET	
	35	1	**5I-7558**	1	GEAR AS (9-TEETH)	
	36	1	**096-1024**	1	BOLT AS	
	37	1	**195-8212**	1	PLUG	

M-METRIC PART

296-4788 **HOUSING GP-FRONT** *(contd.)* **i02830615**

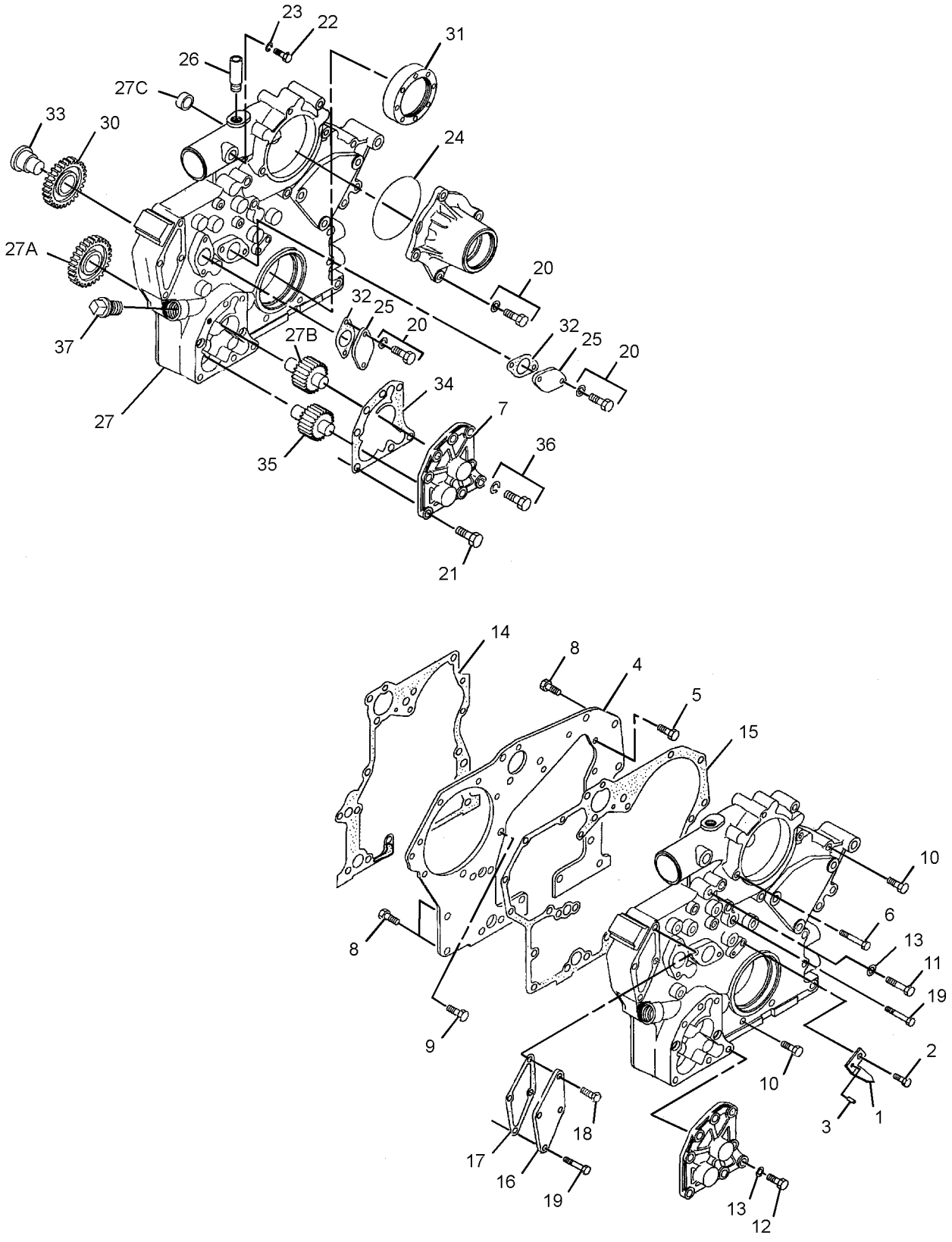

GRAPHIC #1 **<END>** g01413014

BASIC ENGINE

296-4798 MOUNTING GP-ALTERNATOR

S/N: JKH1-UP
PART OF 279-7764, 279-7766 ENGINE AR
ALSO AN ATTACHMENT

SMCS-1405 **i02944511**

NOTE	REF NO	GRAPHIC REF	PART NUMBER	QTY	PART NAME 1 2 3 4 5 6 (PRODUCT LEVEL)	SEE PAGE
	1	1	**178-6600**	1	PULLER	
	2	1	**296-4758**	1	PLATE	
	3	1	**5I-7750**	2	WASHER (12.5X25X8-MM THK)	
	4	1	**294-1860**	1	BOLT	
M	5	1	**8T-4137**	1	BOLT (M10X1.5X20-MM)	
M	6	1	**294-1861**	2	BOLT (M12X1.75X30-MM)	
	7	1	**8T-4223**	1	WASHER-HARD (13.5X25.5X3-MM THK)	
	8	1	**296-4759**	1	BOLT	
	9	1	**178-6599**	1	WASHER	
	10	1	**178-6601**	1	RING	
Y	11	1	**125-2994**	1	ALTERNATOR GP-CHARGING	103

M-METRIC PART
Y-SEPARATE ILLUSTRATION

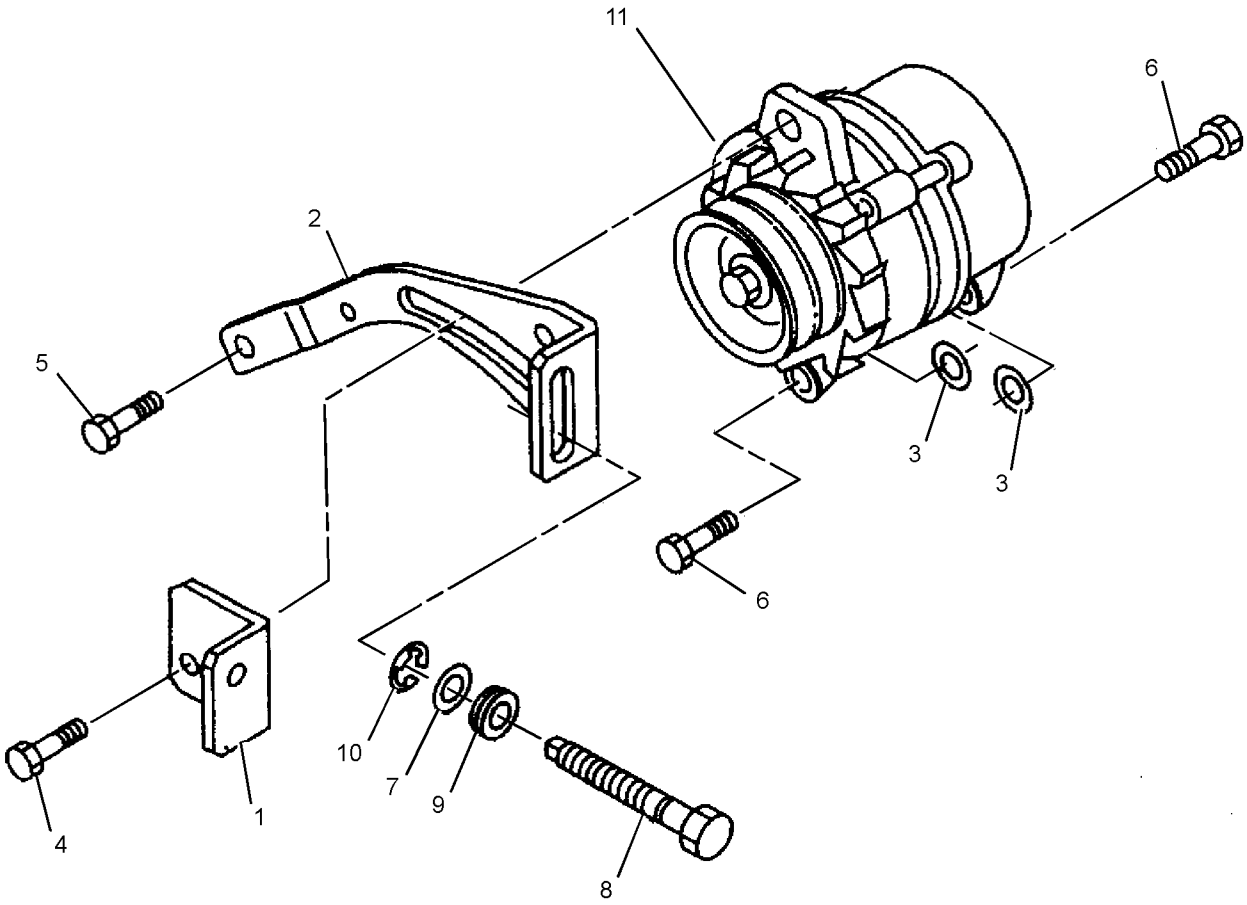

GRAPHIC #1 **<END>** g01459034

279-7772 MOUNTING GP-ENGINE

S/N: BYJ1-UP; PDP1-UP

PART OF 279-7768 INSTALLATION AR-ENGINE

SMCS-1152 **i02814041**

NOTE	REF NO	GRAPHIC REF	PART NUMBER	QTY	PART NAME 1 2 3 4 5 6 (PRODUCT LEVEL)	SEE PAGE
	1	1	**099-4707**	4	WASHER (16.5X90X9-MM THK)	
	2	1	**118-9941**	4	SUPPORT AS	
	3	1	**266-6203**	1	BRACKET-FRONT (RH)	
	4	1	**266-6204**	1	BRACKET-FRONT (LH)	
	5	1	**266-6303**	2	MOUNT-RUBBER	
	6	1	**266-6304**	2	MOUNT-RUBBER	
	7	1	**279-7880**	1	BRACKET	
	8	1	**279-7881**	1	BRACKET	
	9	1	**310-9519**	2	MOUNT-RUBBER	
	10	1	**310-9520**	2	MOUNT-RUBBER	
M	11	1	**8T-4174**	4	BOLT (M16X2X120-MM)	
	12	1	**8T-4223**	16	WASHER-HARD (13.5X25.5X3-MM THK)	
M	13	1	**8T-4956**	16	BOLT (M12X1.75X35-MM)	
	14	1	**9X-8257**	8	WASHER (17.5X30X3.5-MM THK)	

M-METRIC PART

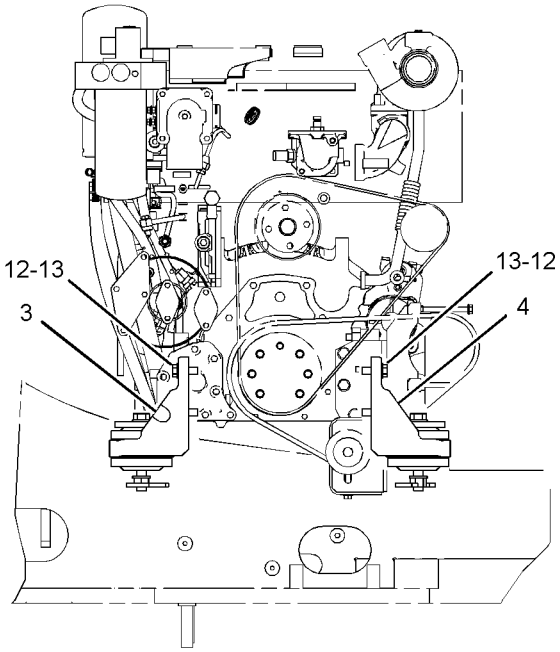

LEFT SIDE VIEW

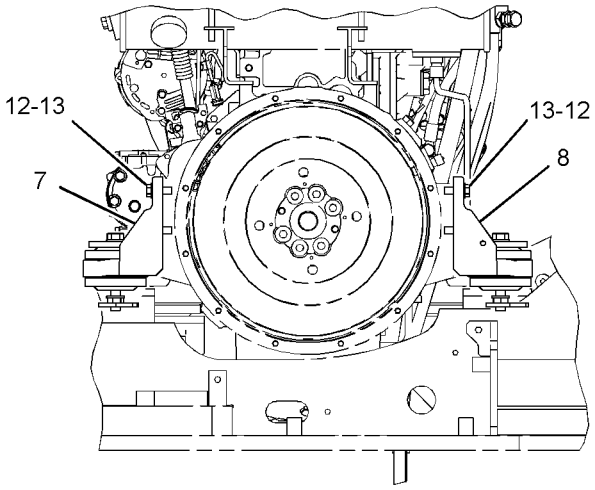

RIGHT SIDE VIEW

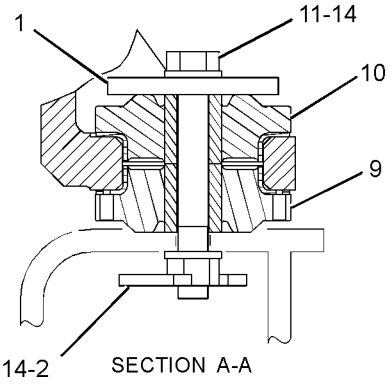

SECTION A-A

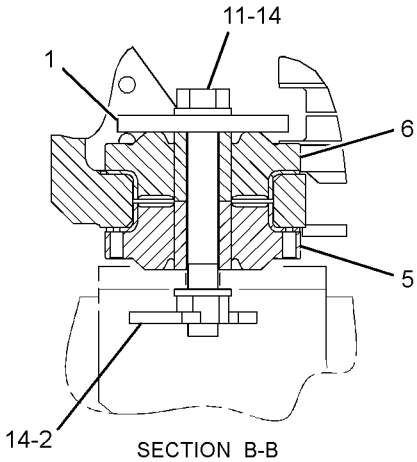

SECTION B-B

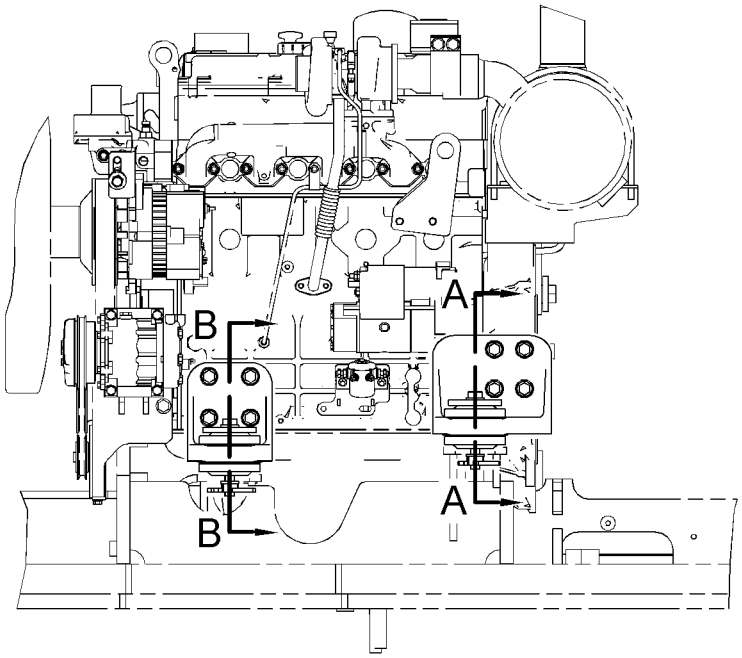

REAR VIEW

GRAPHIC #1 **<END>** g01408161

296-4637 MOUNTING GP-STARTING MOTOR

S/N: JKH1-UP
PART OF 279-7764, 279-7766 ENGINE AR
ALSO AN ATTACHMENT

SMCS-1453 **i02936172**

NOTE	REF NO	GRAPHIC REF	PART NUMBER	QTY	PART NAME 1 2 3 4 5 6 (PRODUCT LEVEL)	SEE PAGE
	1	1	**5I-7599**	1	SEAL-O-RING	
	2	1	**135-2369**	1	COVER	
M	3	1	**135-2370**	1	BOLT (M5X0.8X25-MM)	
	4	1	**294-1850**	1	WASHER	
	5	1	**294-1851**	1	WASHER	
Y	6	1	**272-4774**	1	STARTING MOTOR GP-ELECTRIC	157
M	7	1	**6V-8231**	2	NUT (M10X1.25-THD)	
	8	1	**7X-0796**	2	LOCKWASHER	

M-METRIC PART
Y-SEPARATE ILLUSTRATION

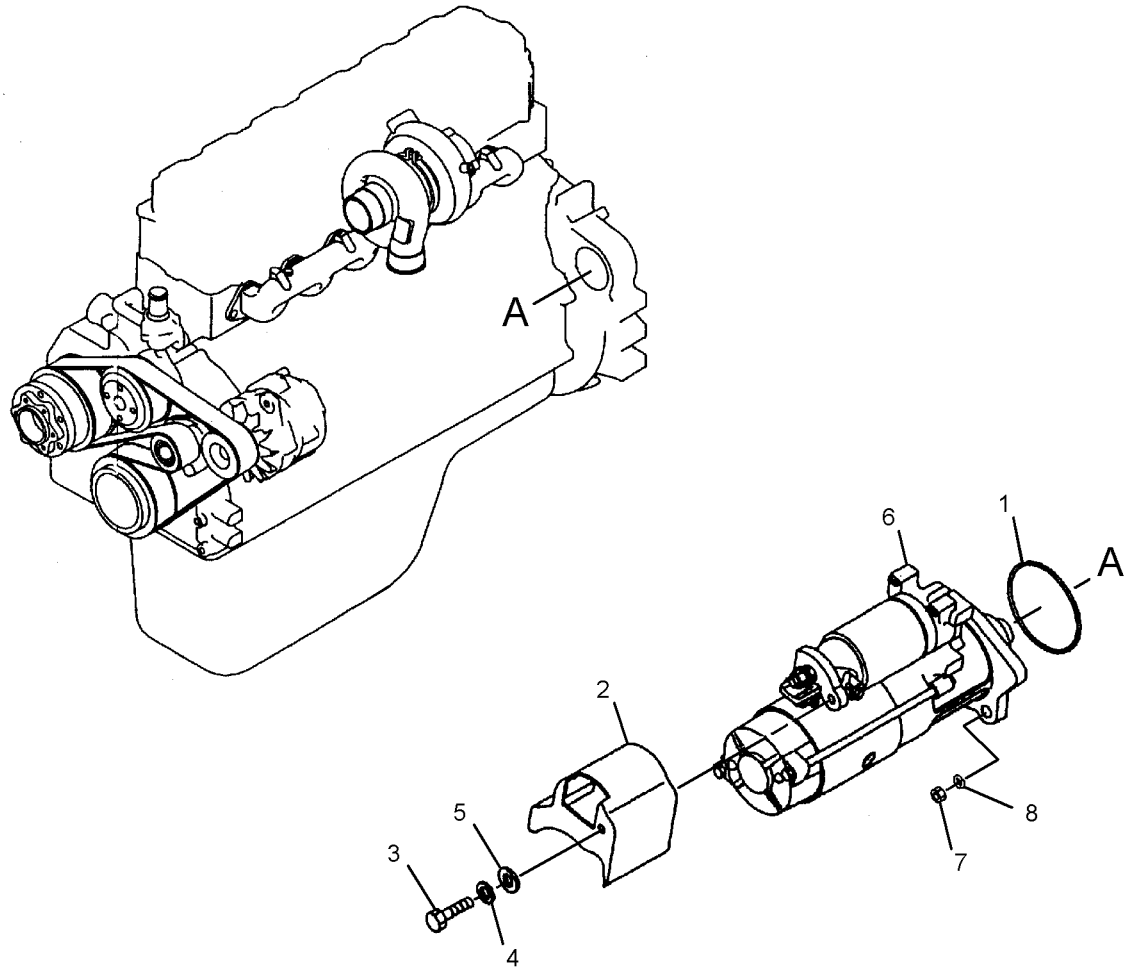

GRAPHIC #1 **<END>** g01456158

BASIC ENGINE

310-9494 PAN GP-OIL

S/N: JKH1-UP
PART OF 279-7764, 279-7766 ENGINE AR
ALSO AN ATTACHMENT

SMCS-1302 **i02992233**

NOTE	REF NO	GRAPHIC REF	PART NUMBER	QTY	PART NAME 1 2 3 4 5 6 (PRODUCT LEVEL)	SEE PAGE
	1	1	**310-9594**	1	GUIDE	
	2	1	**296-4703**	16	BOLT	
	3	1	**5I-7663**	12	BOLT (M8X1.25X16-MM)	
	4	1	**7X-0796**	1	LOCKWASHER	
M	5	1	**6V-8231**	1	NUT (M10X1.25-THD)	
	6	1	**310-9595**	1	PAN AS	
	7	1	**176-4979**	1	VALVE (ENGINE OIL PAN)	
	8	1	**5I-8067**	1	WASHER-SEALING	
	9	1	**5I-5607**	1	PLUG-DRAIN (ENGINE OIL PAN)	
	10	1	**095-2040**	1	WASHER	
	11	1	**294-1743**	1	GAUGE AS-OIL LEVEL (DIPSTICK) (ENGINE)	
	12	1	**5I-7842**	1	GASKET	
	13	1	**213-0677**	1	SWITCH AS-LIQUID LEVEL (ENGINE OIL)	
	14	1	**125-2968**	1	SEAL	
	15	1	**5I-4993**	1	SEAL	

M-METRIC PART

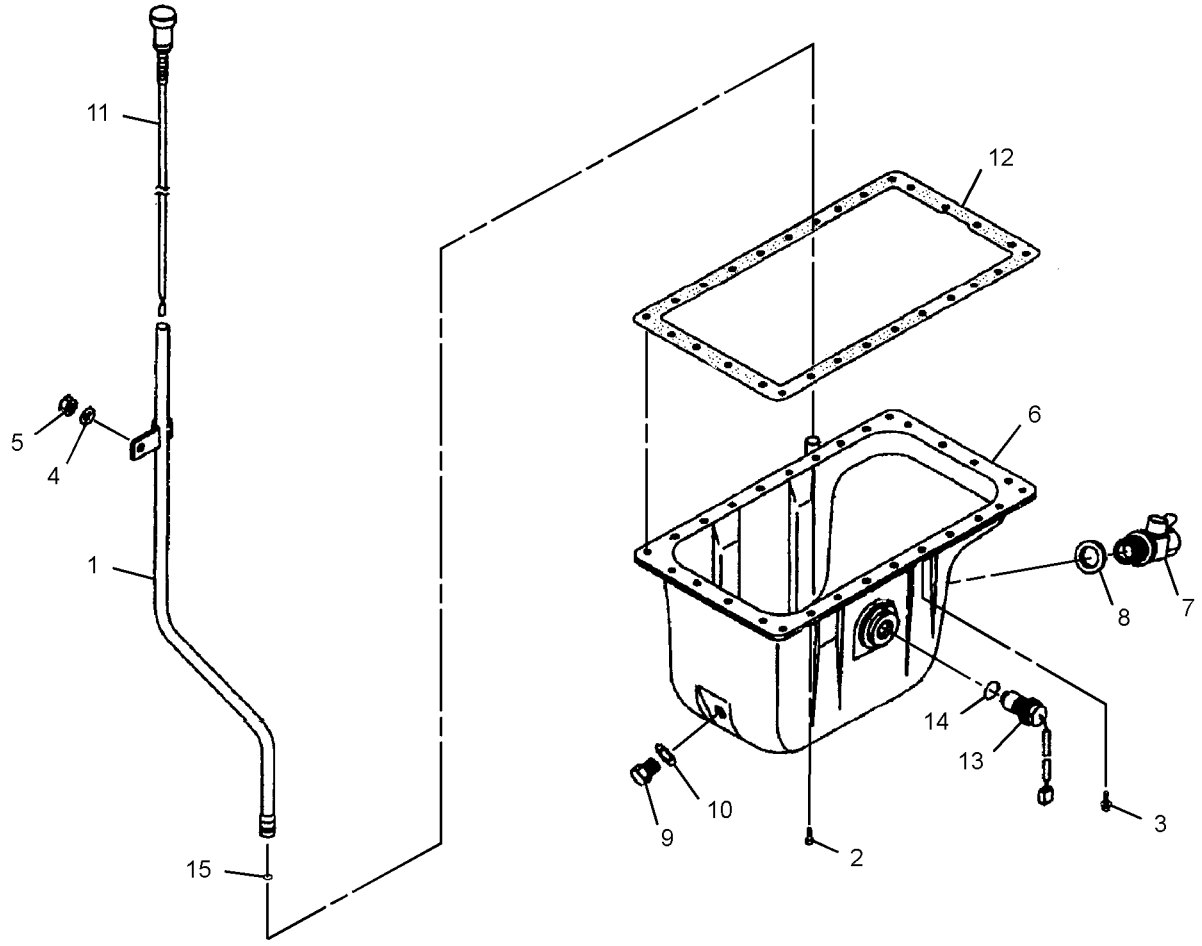

GRAPHIC #1 **<END>** g01520182

296-4796 PISTON & ROD GP

S/N: JKH1-UP
PART OF 279-7764, 279-7766 ENGINE AR
ALSO AN ATTACHMENT

SMCS-1225 **i02710557**

NOTE	REF NO	GRAPHIC REF	PART NUMBER	QTY	PART NAME 1 2 3 4 5 6 (PRODUCT LEVEL)	SEE PAGE
	1	1	**310-9489**	4	PISTON (STANDARD)	
AB			**310-9490**		PISTON (0.25-MM OS)	
AB			**310-9491**		PISTON (0.5-MM OS)	
	2	1	**094-7134**	4	PIN	
	3	1	**5I-7667**	8	RING	
J	4	1	**178-6543**	4	SET-PISTON RING (STANDARD)	
ABJ			**178-6544**		SET-PISTON RING (0.25-MM OS)	
ABJ			**178-6545**		SET-PISTON RING (0.5-MM OS)	
	5	1	**294-1747**	4	ROD AS	
					(EACH INCLUDES)	
	5A	1	**094-7154**	2	BOLT (M12X1.25-1X85-MM)	
	5B	1	**094-7516**	2	NUT (M12X1.25-THD)	
	5C	1	**296-4663**	1	BUSHING	
	6	1	**294-1748**	8	BEARING	
AB		1	**297-7648**		BEARING (0.25-MM US)	
AB		1	**297-7649**		BEARING (0.50-MM US)	
AB		1	**297-7650**		BEARING (0.75-MM US)	

A-NOT PART OF THIS GROUP
B-USE AS REQUIRED
J-INCLUDES COMPLETE SET OF RINGS FOR ONE PISTON

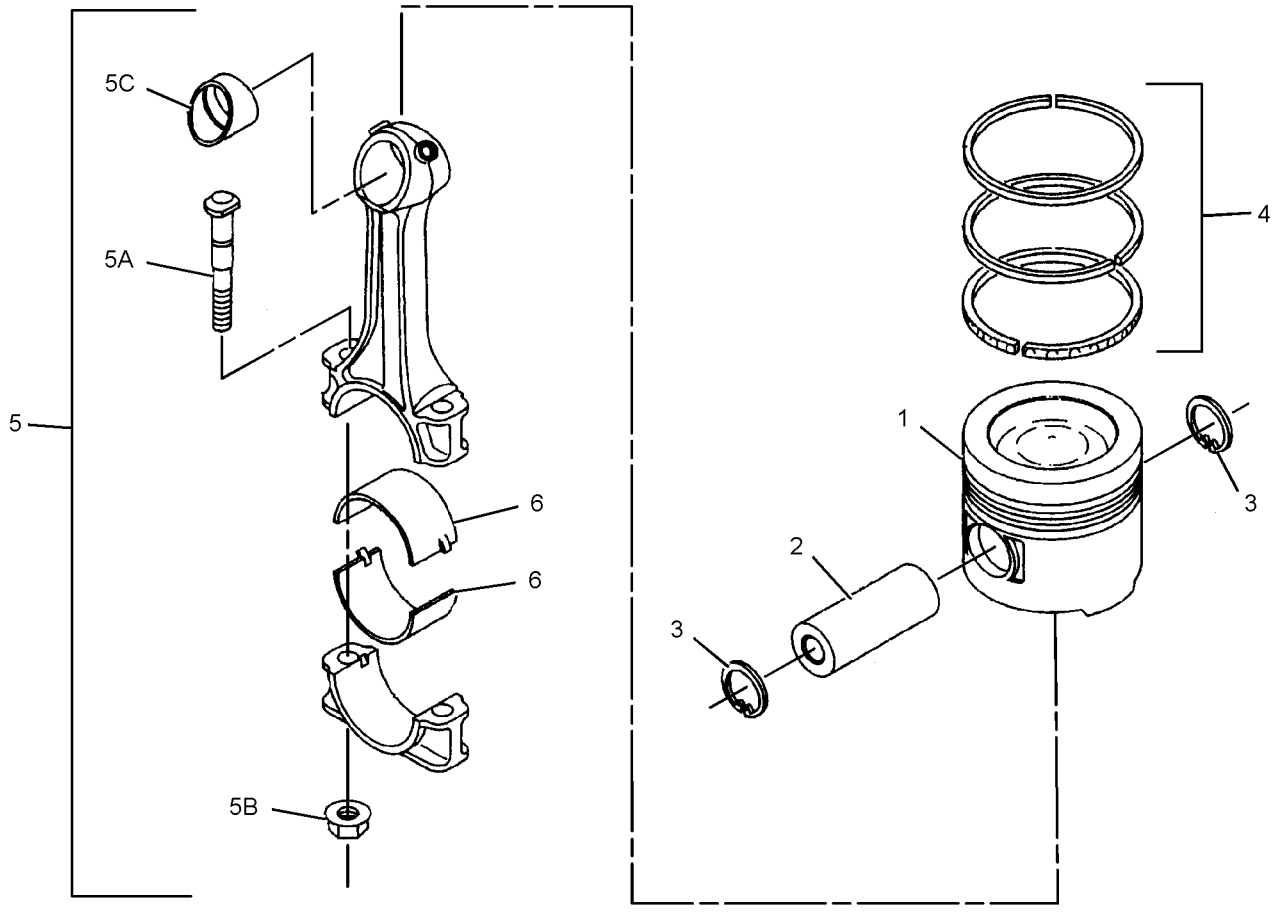

GRAPHIC #1 **<END>** g01403170

296-4738 PULLEY AS-IDLER

S/N: BYJ1-UP; PDP1-UP
PART OF 279-7779, 310-9776 PULLEY GP-FAN & ALT DRIVE
ALSO AN ATTACHMENT

SMCS-1358 **i02719552**

NOTE	REF NO	GRAPHIC REF	PART NUMBER	QTY	PART NAME 1 2 3 4 5 6 (PRODUCT LEVEL)	SEE PAGE
	1	1	**296-4739**	1	BRACKET	
	2	1	**294-1784**	1	PULLEY	
	3	1	**294-1785**	2	BEARING	
	4	1	**294-1786**	1	RING	
	5	1	**8T-9598**	2	RING-RETAINING	

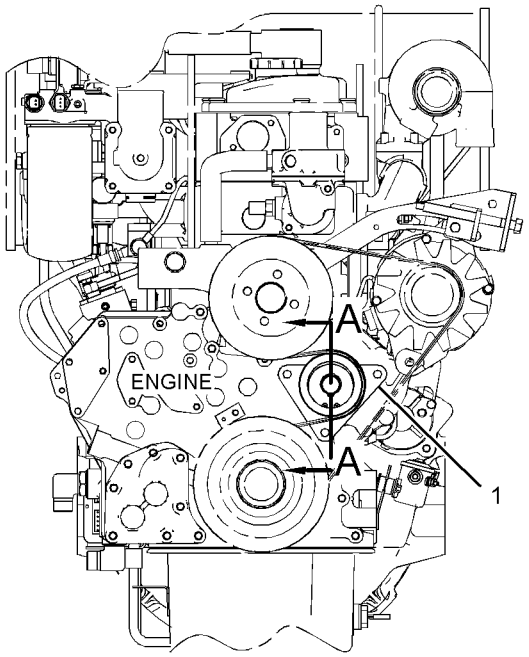

LEFT SIDE VIEW

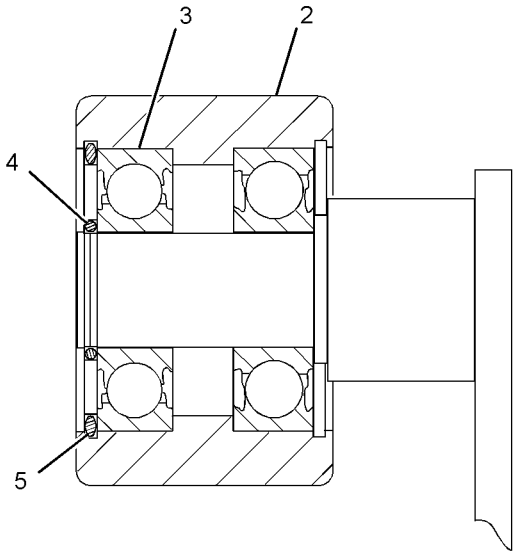

SECTION A-A

GRAPHIC #1 **<END>** g01367875

279-7779 PULLEY GP-FAN & ALT DRIVE—WITH IDLER PULLEY

S/N: BYJ1-UP; PDP1-UP

PART OF 279-7759, 279-7815, 279-7817 ENGINE AR-COMPLETE

ALSO AN ATTACHMENT

SMCS-1359 **i02909181**

NOTE	REF NO	GRAPHIC REF	PART NUMBER	QTY	PART NAME 1 2 3 4 5 6 (PRODUCT LEVEL)	SEE PAGE
	1	1	**294-1738**	3	BOLT (M10X1.5X32-MM)	
Y	2	1	**296-4738**	1	PULLEY AS-IDLER	38
	3	1	**310-9538**	1	PULLEY AS	
		1	**5I-7540**	1	SLEEVE	
	4	1	**310-9591**	1	PULLEY	
	5	1	**310-9592**	1	BELT-SERPENTINE	

Y-SEPARATE ILLUSTRATION

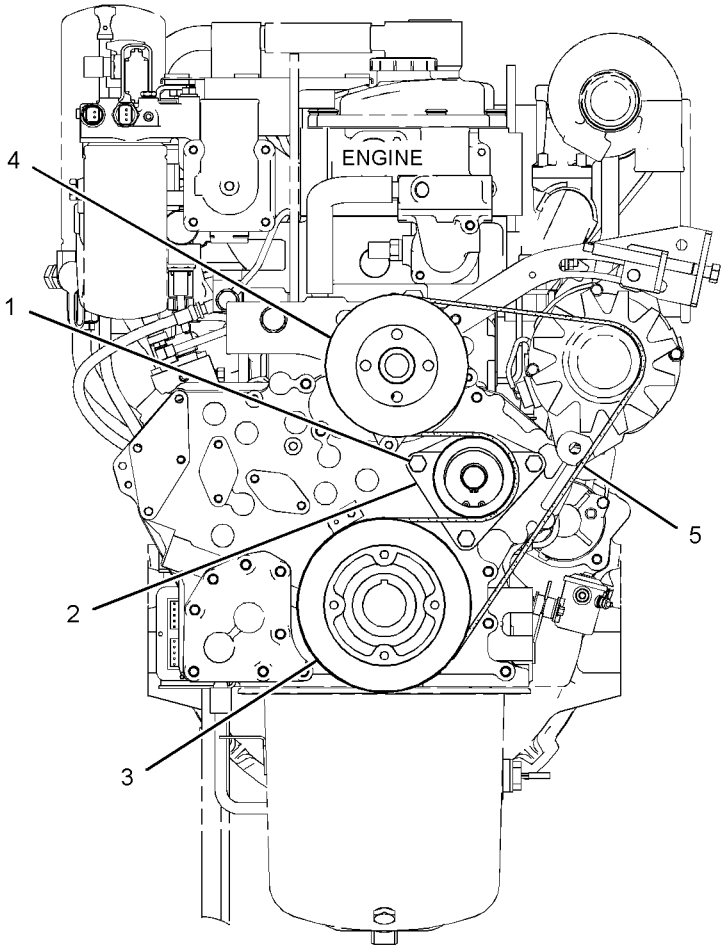

LEFT SIDE VIEW

GRAPHIC #1 **<END>** g01440271

310-9776 PULLEY GP-FAN & ALT DRIVE

S/N: BYJ1-UP; PDP1-UP

PART OF 279-7777, 279-7816, 279-7818 ENGINE AR-COMPLETE

AN ATTACHMENT

SMCS-1359 **i03084620**

NOTE	REF NO	GRAPHIC REF	PART NUMBER	QTY	PART NAME 1 2 3 4 5 6 (PRODUCT LEVEL)	SEE PAGE
	1	1	**294-1738**	3	BOLT (M10X1.5X32-MM)	
Y	2	1	**296-4738**	1	PULLEY AS-IDLER	38
	3	1	**310-9538**	1	PULLEY AS	
	3A	1	**5I-7540**	1	SLEEVE	
	4	1	**310-9777**	1	PULLEY	
	5	1	**310-9778**	1	BELT-SERPENTINE	

Y-SEPARATE ILLUSTRATION

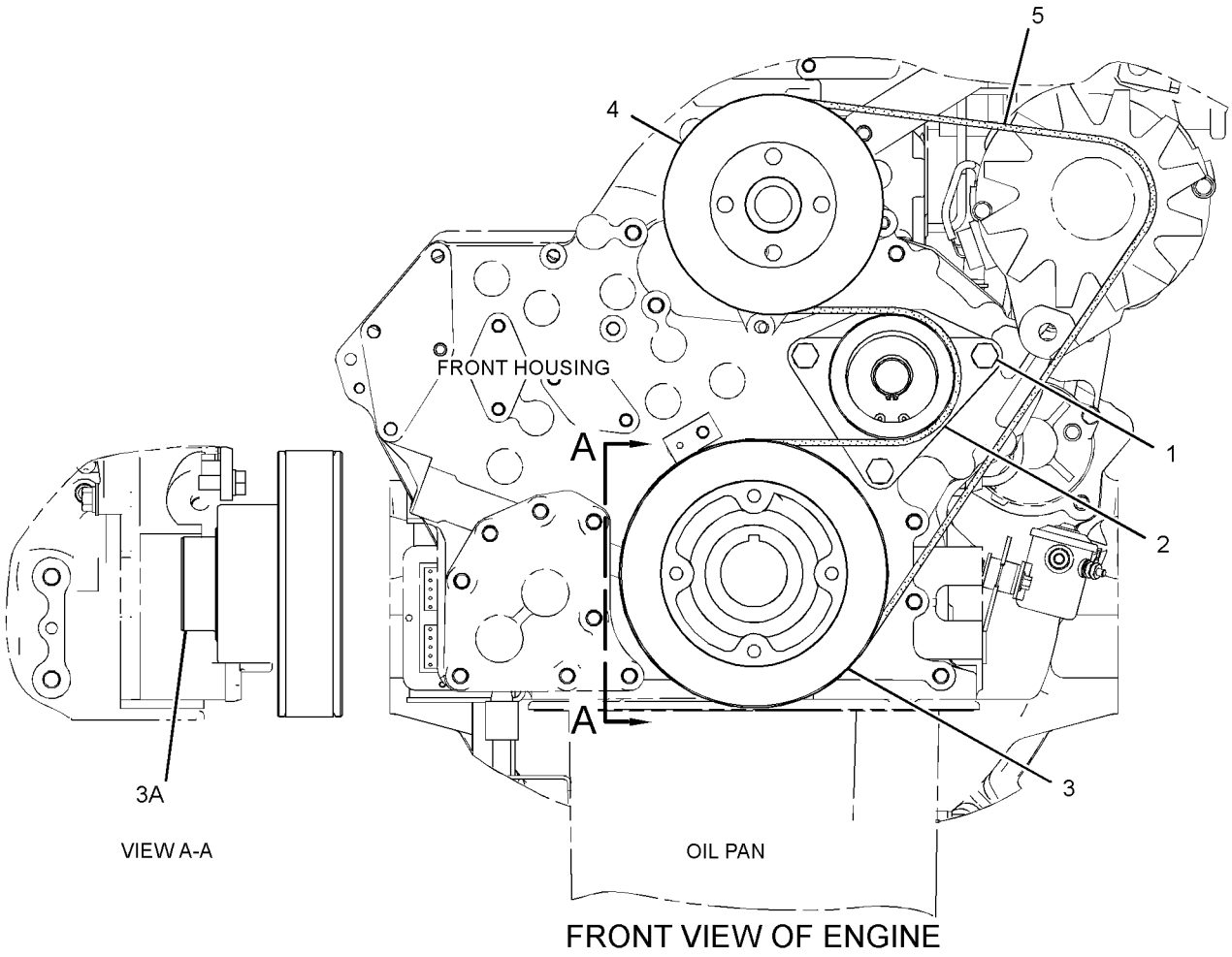

GRAPHIC #1 **<END>** g01602962

255-3018 PULLEY GP-IDLER

S/N: BYJ1-UP; PDP1-UP

PART OF 279-7776 COMPRESSOR GP-REFRIGERANT

SMCS-1358 **i02674719**

NOTE	REF NO	GRAPHIC REF	PART NUMBER	QTY	PART NAME 1 2 3 4 5 6 (PRODUCT LEVEL)	SEE PAGE
M	1	1	**255-3022**	1	NUT (M10X1.25-THD)	
	2	1	**239-6626**	1	PULLEY-IDLER	
M	3	1	**239-6627**	1	BOLT (M8X1.25X110-MM)	
	4	1	**239-6632**	1	RING-SNAP	
	5	1	**255-3020**	1	SHAFT	
	6	1	**255-3021**	1	WASHER	
	7	1	**239-6630**	1	COLLAR	
	8	1	**239-6631**	1	BEARING AS-BALL	

M-METRIC PART

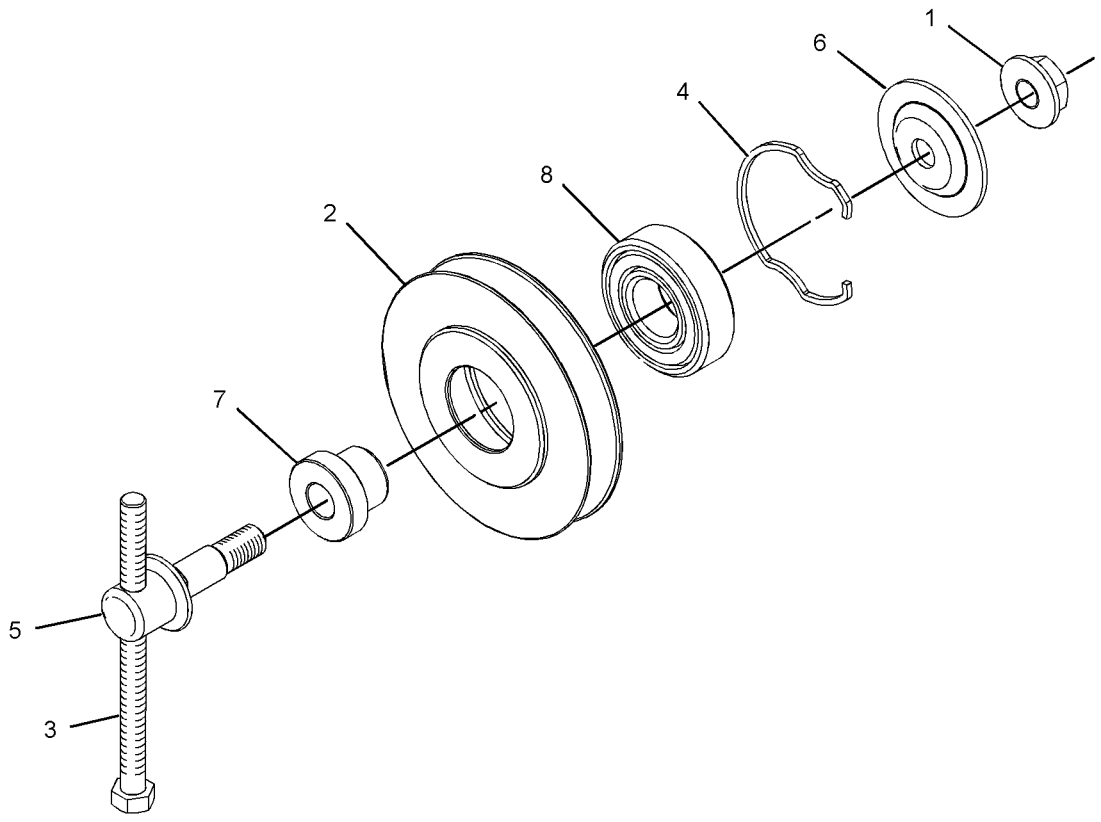

GRAPHIC #1 **<END>** g01277313

BASIC ENGINE

305-4954 VALVE MECHANISM GP

S/N: JKH1-UP
PART OF 279-7764, 279-7766 ENGINE AR
ALSO AN ATTACHMENT

SMCS-1209 **i02790534**

NOTE	REF NO	GRAPHIC REF	PART NUMBER	QTY	PART NAME 1 2 3 4 5 6 (PRODUCT LEVEL)	SEE PAGE
	1	1	**294-1684**	8	VALVE-INLET	
	2	1	**294-1685**	8	VALVE-EXHAUST	
	3	1	**294-1686**	4	BASE-ROCKER ARM	
	4	1	**294-1687**	4	BRIDGE-EXHAUST	
	5	1	**5I-7630**	8	CAP	
	6	1	**294-1688**	16	SPRING	
	7	1	**294-1689**	8	SCREW	
M	8	1	**8T-7964**	8	NUT (M6X1-THD)	
	9	1	**199-2188**	32	PIN-COTTER	
	10	1	**199-2189**	16	SEAL-VALVE STEM	
	11	1	**199-2187**	16	RETAINER	
	12	1	**305-4750**	4	BRACKET	
	13	1	**305-4751**	3	SPRING	
	14	1	**294-1693**	1	PIPE	
	15	1	**305-4931**	1	SHAFT AS-ROCKER ARM	
		1	**096-3741**	1	CAP	
	16	1	**305-4929**	4	ROCKER ARM AS	
M		1	**091-3474**	1	NUT (M8X1.25-THD)	
		1	**094-9525**	1	SCREW	
	17	1	**305-4927**	4	ROCKER ARM AS	
M		1	**091-3474**	1	NUT (M8X1.25-THD)	
		1	**094-9525**	1	SCREW	
	18	1	**294-1698**	2	WASHER	
	19	1	**294-1699**	4	BOLT	
	20	1	**305-4746**	4	BOLT	
	21	1	**294-1786**	2	RING	
	22	1	**294-1702**	1	BOLT	
	23	1	**3B-4505**	4	LOCKWASHER	
	24	1	**305-4747**	4	WASHER	

M-METRIC PART

305-4954 **VALVE MECHANISM GP** *(contd.)* **i02790534**

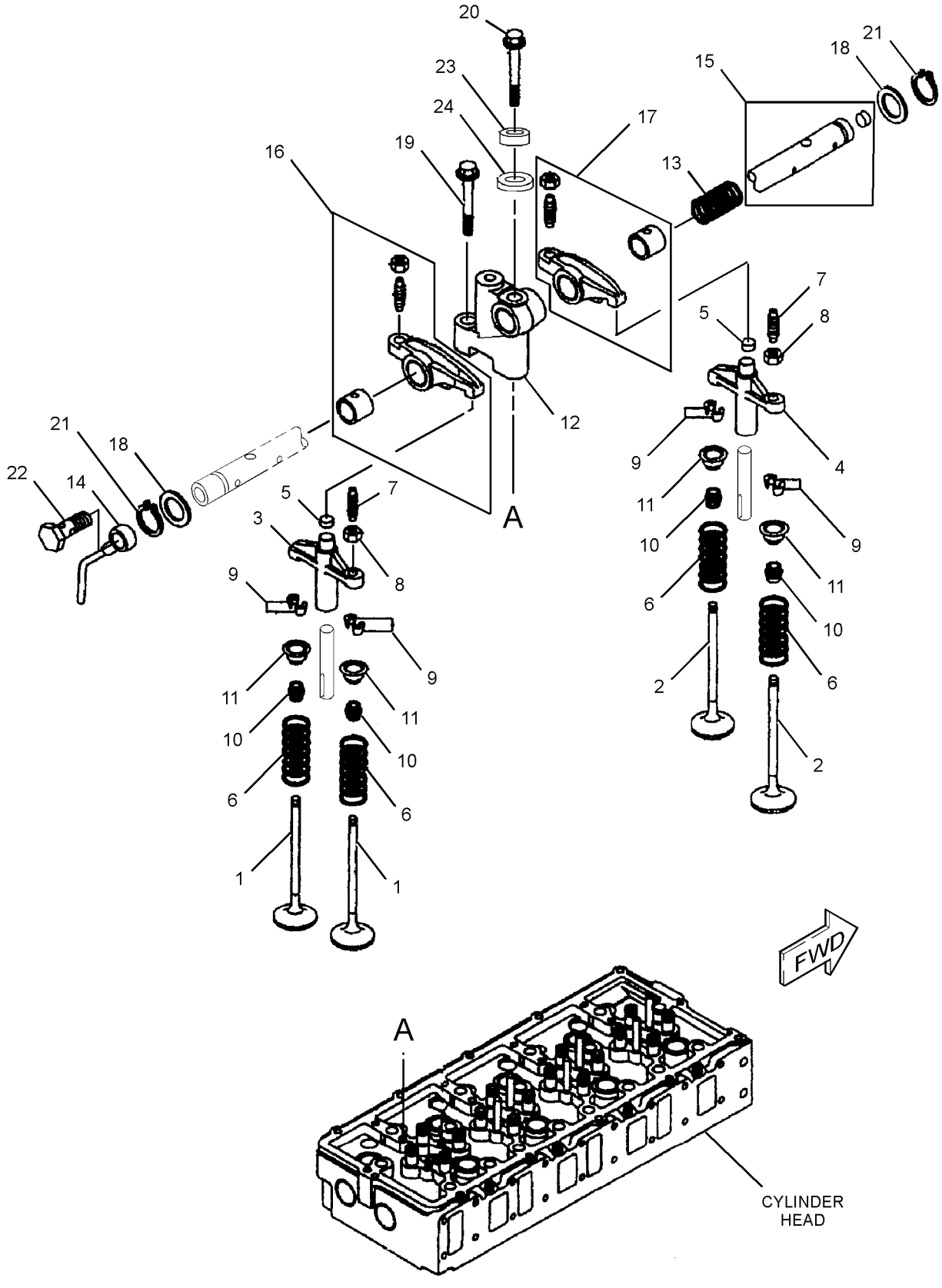

GRAPHIC #1 **<END>** g01406102

296-4792 ADAPTER GP-REMOTE OIL FILTER–ENGINE

S/N: JKH1-UP
PART OF 279-7764, 279-7766 ENGINE AR
ALSO AN ATTACHMENT

SMCS-1308 **i03021634**

NOTE	REF NO	GRAPHIC REF	PART NUMBER	QTY	PART NAME 1 2 3 4 5 6 (PRODUCT LEVEL)	SEE PAGE
	1	1	**5I-7864**	1	GASKET	
	2	1	**296-4728**	1	COVER AS	
	2A	1	**185-2793**	2	ELBOW	
	2B	1	**296-4729**	1	COVER	
	2C	1	**305-4892**	2	SEAL-O-RING	
	3	1	**5B-5947**	1	GASKET	
	4	1	**5I-8066**	1	VALVE AS-RELIEF (ENGINE OIL PRESSURE)	
M	5	1	**294-1726**	3	BOLT (M10X1.5X37-MM)	
	6	1	**095-8575**	2	BOLT AS	

M-METRIC PART

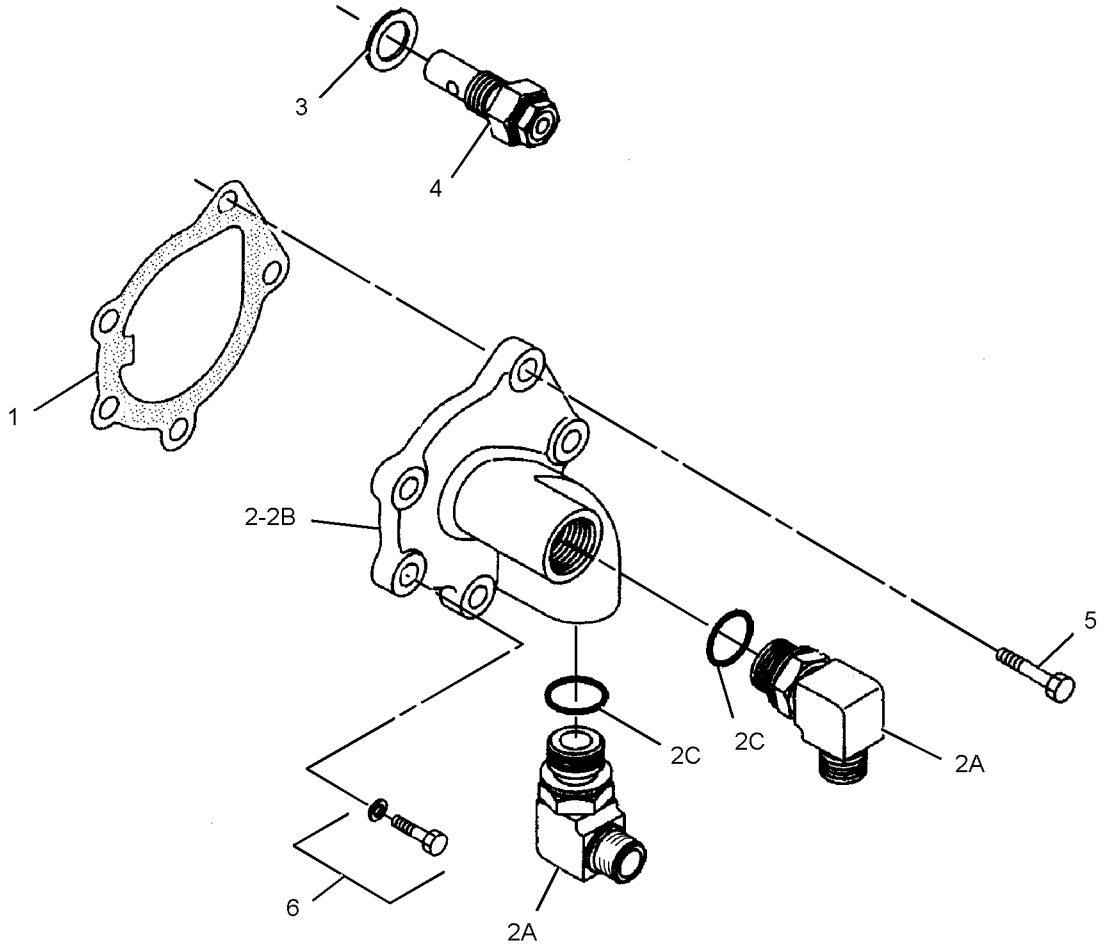

GRAPHIC #1 **<END>** g01403262

LUBRICATION SYSTEM

310-9586 BREATHER GP

S/N: JKH1-UP
PART OF 279-7764, 279-7766 ENGINE AR
ALSO AN ATTACHMENT

SMCS-1317 **i02992231**

NOTE	REF NO	GRAPHIC REF	PART NUMBER	QTY	PART NAME 1 2 3 4 5 6 (PRODUCT LEVEL)	SEE PAGE
	1	1	**310-9597**	1	HOSE	
	2	1	**294-1774**	1	SEAL-O-RING	
	3	1	**5I-7725**	1	BREATHER (CRANKCASE)	
	4	1	**2S-3440**	3	CLAMP-HOSE	
	5	1	**5I-7645**	1	PIPE	
	6	1	**294-1775**	2	BOLT (M10X1.5X23-MM)	
	7	1	**5I-4940**	1	TUBE (FUMES DISPOSAL)	
	8	1	**305-4771**	1	CLIP	

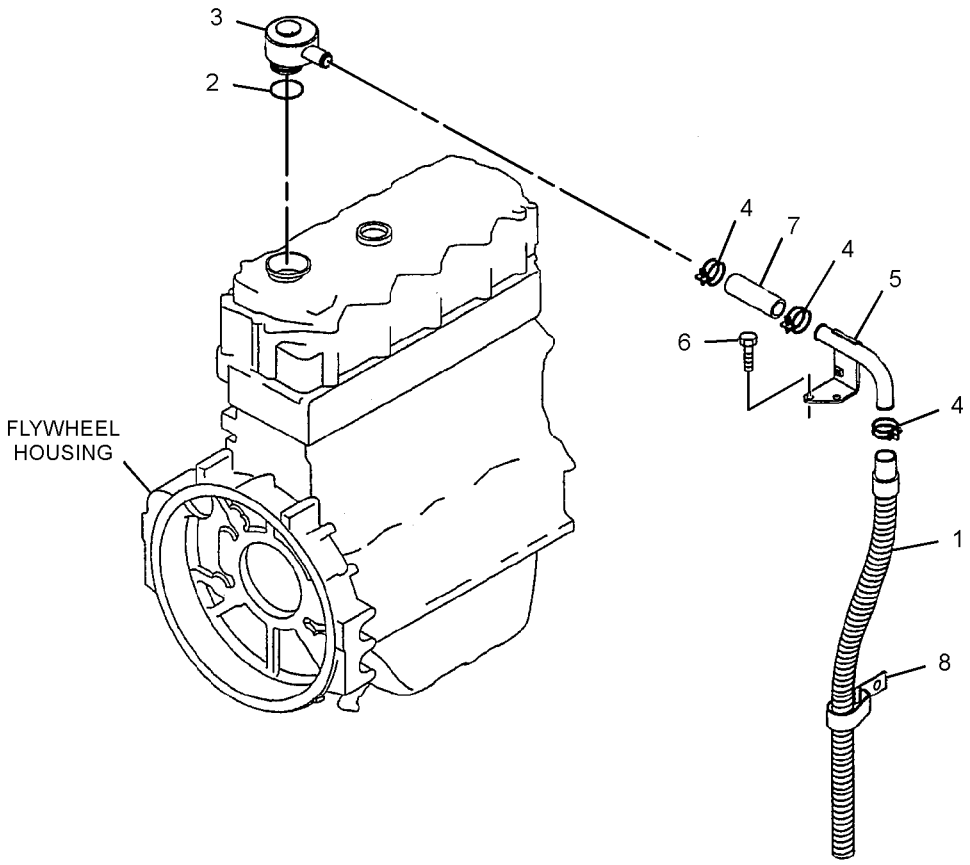

GRAPHIC #1 **<END>** g01520295

LUBRICATION SYSTEM

310-9629 FILTER & MTG GP-ENGINE OIL

S/N: BYJ1-UP; PDP1-UP

PART OF 279-7768 INSTALLATION AR-ENGINE

SMCS-1306, 1308 **i03033600**

NOTE	REF NO	GRAPHIC REF	PART NUMBER	QTY	PART NAME 1 2 3 4 5 6 (PRODUCT LEVEL)	SEE PAGE
	1	1	**7C-1493**	1	VALVE AS-BYPASS	
	2	1	**7W-9028**	1	BASE AS-OIL FILTER	
		1	**2P-2537**	1	STUD-HOLLOW	
	3	1	**8C-3445**	1	CAP-DUST	
	4	1	**9L-9188**	1	SPRING-VALVE	
	5	1	**121-0307**	1	BASE	
M	6	1	**135-8573**	3	BOLT AS (M12X1.75X25-MM)	
	7	1	**152-2938**	3	SEAL-O-RING	
	8	1	**152-2939**	1	SEAL-O-RING	
	9	1	**324-3963**	1	PLATE AS	
	10	1	**310-9565**	1	HOSE AS	
	11	1	**310-9566**	1	HOSE AS	
	12	1	**310-9630**	1	PLATE AS	
	13	1	**033-5853**	1	SEAL-O-RING	
	14	1	**033-6038**	2	SEAL-O-RING	
	15	1	**153-4906**	1	SEAL-O-RING	
	16	1	**189-9377**	1	SEAL-O-RING	
	17	1	**1R-0739**	1	FILTER AS-ENGINE OIL (STANDARD EFFICIENCY)	
	18	1	**228-7092**	3	SEAL-O-RING	
	19	1	**2T-2991**	1	CONNECTOR	
M	20	1	**5P-8196**	1	PLUG	
	21	1	**5P-9617**	1	ADAPTER	
	22	1	**6D-1641**	2	CLIP	
	23	1	**6V-5266**	3	SEAL-O-RING	
	24	1	**6V-8637**	1	CONNECTOR	
	25	1	**6V-9852**	1	ELBOW	
	26	1	**8C-3446**	1	VALVE-FLUID SAMPLING	
	27	1	**8T-4121**	7	WASHER-HARD (11X21X2.5-MM THK)	
M	28	1	**8T-4136**	2	BOLT (M10X1.5X25-MM)	
M	29	1	**8T-4137**	1	BOLT (M10X1.5X20-MM)	
M	30	1	**8T-4196**	3	BOLT (M10X1.5X35-MM)	
M	31	1	**8T-4197**	3	BOLT (M8X1.25X40-MM)	
	32	1	**8T-4224**	5	WASHER-HARD (8.8X16X2-MM THK)	
M	33	1	**8T-7547**	2	BOLT (M8X1.25X30-MM)	
	34	1	**8T-8899**	1	ELBOW	
	35	1	**9S-4188**	1	PLUG	
	36	1	**205-6716**	1	SPACER (10.5X20X19-MM THK)	
	37	1	**116-0118**	1	CLIP	
M	38	1	**8T-4186**	1	BOLT (M10X1.5X40-MM)	

M-METRIC PART

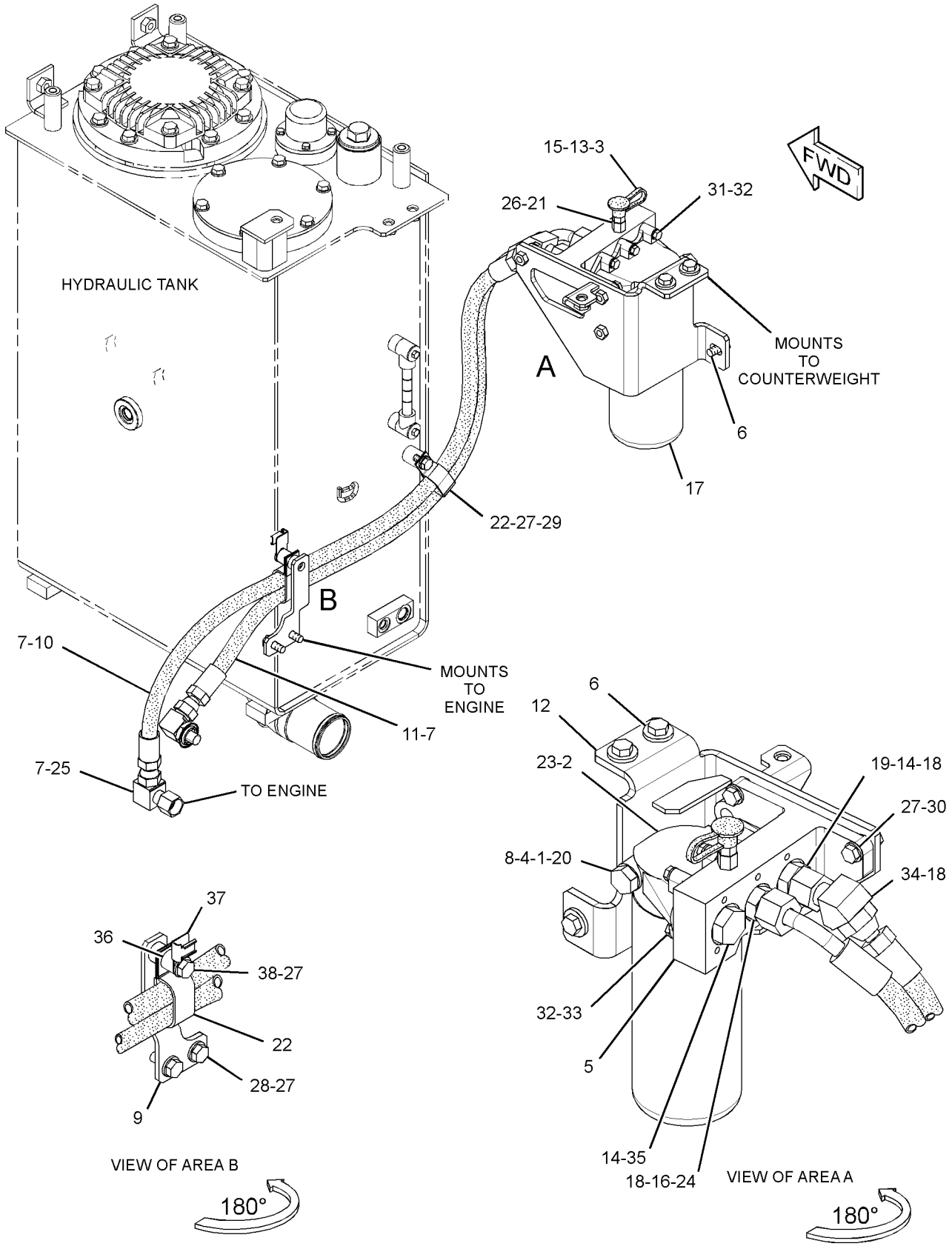

GRAPHIC #1 **<END>** g01637473

LUBRICATION SYSTEM

310-9585 LINES GP-ENGINE OIL

S/N: JKH1-UP
PART OF 279-7764, 279-7766 ENGINE AR
ALSO AN ATTACHMENT

SMCS-1307 **i02992232**

NOTE	REF NO	GRAPHIC REF	PART NUMBER	QTY	PART NAME 1 2 3 4 5 6 (PRODUCT LEVEL)	SEE PAGE
	1	1	**294-1767**	1	VALVE	
	2	1	**310-9596**	1	STRAINER (OIL)	
	3	1	**5I-7642**	1	PLATE	
	4	1	**234-4796**	1	GASKET	
M	5	1	**195-8351**	1	BOLT AS (M6X1X16-MM)	
	6	1	**294-1768**	2	BOLT	
	7	1	**5I-5038**	1	SEAL-O-RING	

M-METRIC PART

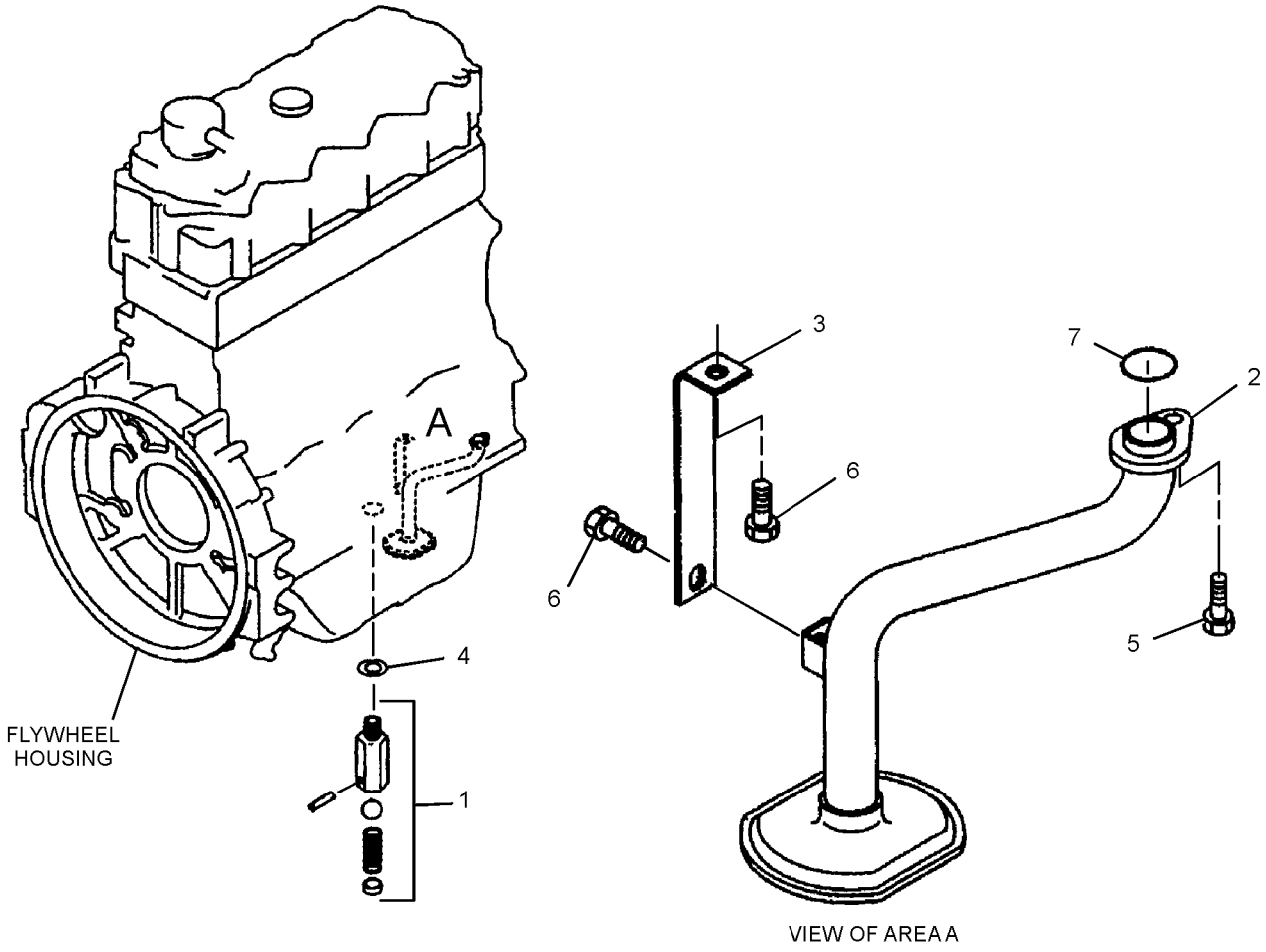

GRAPHIC #1 **<END>** g01520282

296-4777 LINES GP-TURBOCHARGER OIL

S/N: JKH1-UP
PART OF 279-7764, 279-7766 ENGINE AR
ALSO AN ATTACHMENT

SMCS-1052 **i03254760**

NOTE	REF NO	GRAPHIC REF	PART NUMBER	QTY	PART NAME 1 2 3 4 5 6 (PRODUCT LEVEL)	SEE PAGE
	1	1	**296-4725**	1	PIPE	
	2	1	**296-4726**	1	PIPE	
	3	1	**294-1766**	1	GASKET	
	4	1	**195-8322**	2	BOLT (M6X1X16-MM)	
	5	1	**2A-5222**	2	WASHER (10.3X15.9X1-IN)	
	6	1	**5I-7623**	1	BOLT (M10X1.25X20-MM)	
	7	1	**5I-8058**	1	CONNECTOR	
	8	1	**5I-7561**	1	GASKET	
	9	1	**196-8366**	2	BOLT	

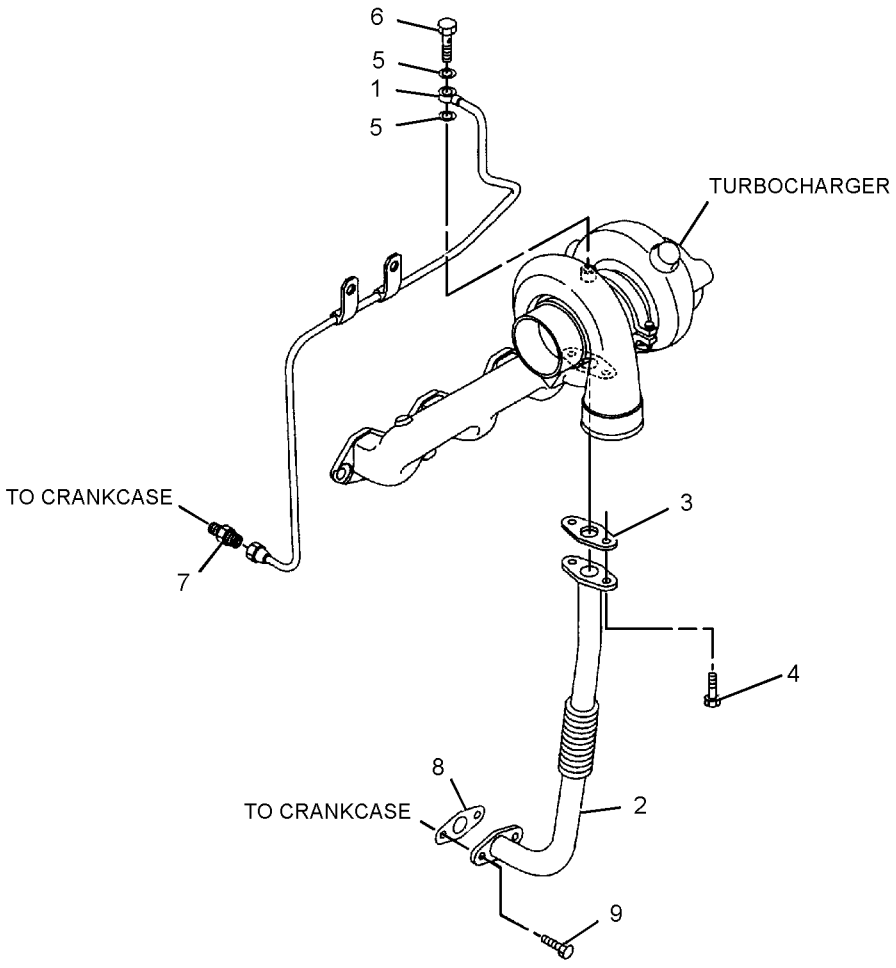

GRAPHIC #1 **<END>** g01403341

COOLING SYSTEM

296-4782 COOLER GP-ENGINE OIL

S/N: JKH1-UP
PART OF 279-7764, 279-7766 ENGINE AR
ALSO AN ATTACHMENT

SMCS-1378 **i03021637**

NOTE	REF NO	GRAPHIC REF	PART NUMBER	QTY	PART NAME 1 2 3 4 5 6 (PRODUCT LEVEL)	SEE PAGE
	1	1	**196-8366**	3	BOLT	
M	2	1	**8T-4908**	9	BOLT (M8X1.25X25-MM)	
	3	1	**296-4727**	1	COVER AS	
	3A	1	**178-6572**	2	PLUG	
	4	1	**135-2403**	1	CORE AS-ENGINE OIL COOLER	
M	5	1	**5C-7261**	4	NUT (M8X1.25-THD)	
	6	1	**3B-4505**	4	LOCKWASHER	
	7	1	**5I-7862**	1	GASKET	
	8	1	**5I-7691**	2	GASKET	
	9	1	**222-8238**	1	COVER	
	10	1	**217-5589**	1	GASKET	
	11	1	**094-9267**	4	BOLT (M8X1.25X60.5-MM)	
	12	1	**294-1738**	4	BOLT (M10X1.5X32-MM)	

M-METRIC PART

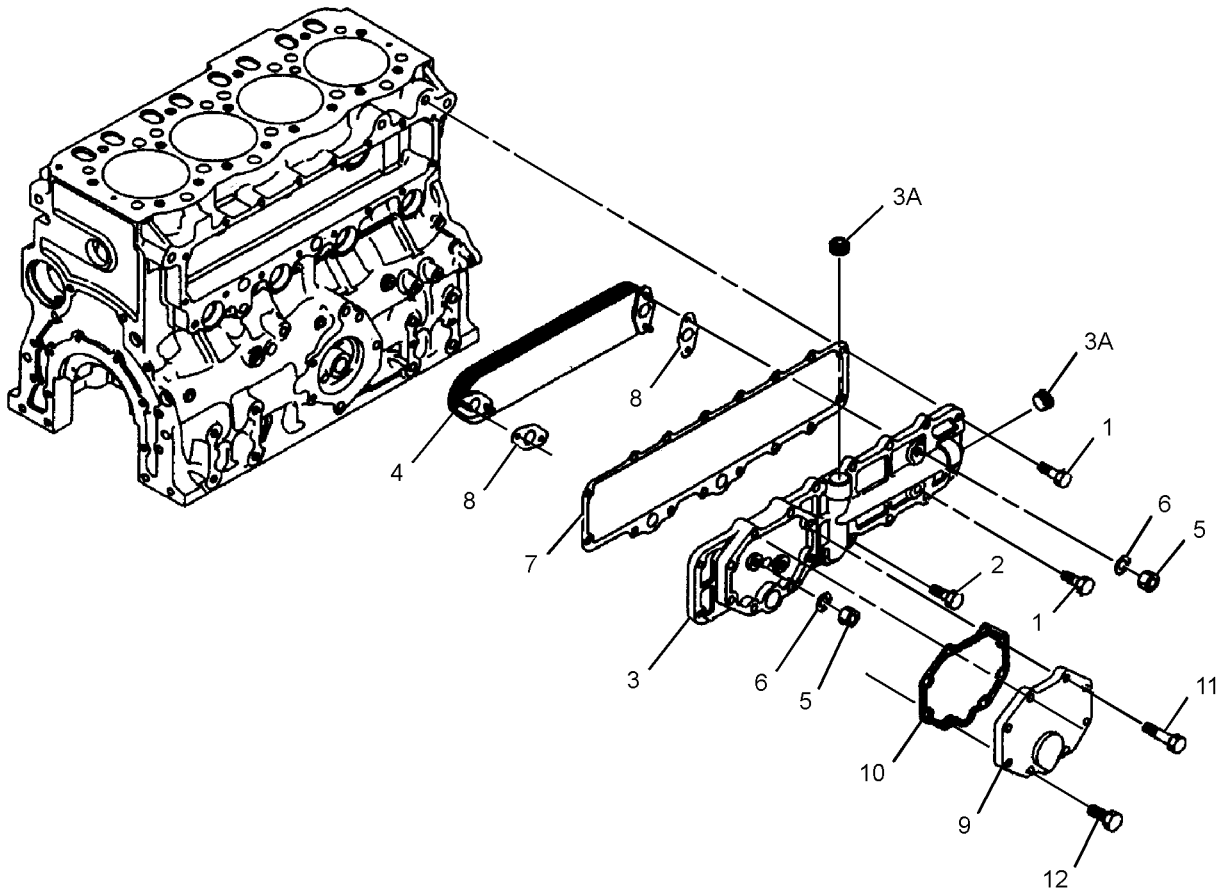

GRAPHIC #1 **<END>** g01403263

283-8803 COOLING AR—HIGH AMBIENT

S/N: BYJ1-UP; PDP1-UP
APD MARKET (EXCEPT CHINA)
AN ATTACHMENT

SMCS-1350 **i02976657**

NOTE	PART NUMBER	QTY	PART NAME 1 2 3 4 5 6 (PRODUCT LEVEL)	SEE PAGE
Y	*290-9438*	1	ELECTRONICS GP-MACHINE	121
Y	*279-7816*	1	ENGINE AR-COMPLETE	11
Y-SEPARATE ILLUSTRATION				

<END>

283-8804 COOLING AR—HIGH AMBIENT

S/N: BYJ1-UP; PDP1-UP
CHINA MARKET
AN ATTACHMENT

SMCS-1350 **i02976554**

NOTE	PART NUMBER	QTY	PART NAME 1 2 3 4 5 6 (PRODUCT LEVEL)	SEE PAGE
Y	*290-9438*	1	ELECTRONICS GP-MACHINE	121
Y	*279-7818*	1	ENGINE AR-COMPLETE	13
Y-SEPARATE ILLUSTRATION				

<END>

260-7207 COOLING AR—HIGH AMBIENT

S/N: BYJ1-UP; PDP1-UP
CANNOT BE USED WITH 283-8803—PAGE 51, 283-8804—PAGE 51
AN ATTACHMENT

SMCS-1350 **i03084623**

NOTE	PART NUMBER	QTY	PART NAME 1 2 3 4 5 6 (PRODUCT LEVEL)	SEE PAGE
Y	*290-9438*	1	ELECTRONICS GP-MACHINE	121
Y	*279-7777*	1	ENGINE AR-COMPLETE	9
Y-SEPARATE ILLUSTRATION				

<END>

COOLING SYSTEM

310-9549 FAN GP-SUCTION

S/N: JKH1-UP
PART OF 279-7764, 279-7766 ENGINE AR
ALSO AN ATTACHMENT

SMCS-1356 **i02896387**

NOTE	REF NO	GRAPHIC REF	PART NUMBER	QTY	PART NAME 1 2 3 4 5 6 (PRODUCT LEVEL)	SEE PAGE
	1	1	**135-2407**	1	FAN	
	2	1	**185-8977**	2	SPACER	
M	3	1	**8T-4195**	4	BOLT (M10X1.5X30-MM)	
	4	1	**8T-4121**	4	WASHER-HARD (11X21X2.5-MM THK)	
	5	1	**7X-0796**	8	LOCKWASHER	
M	6	1	**266-6231**	4	BOLT (M10X1.5X120-MM)	
	7	1	**297-7839**	1	SPACER	

M-METRIC PART

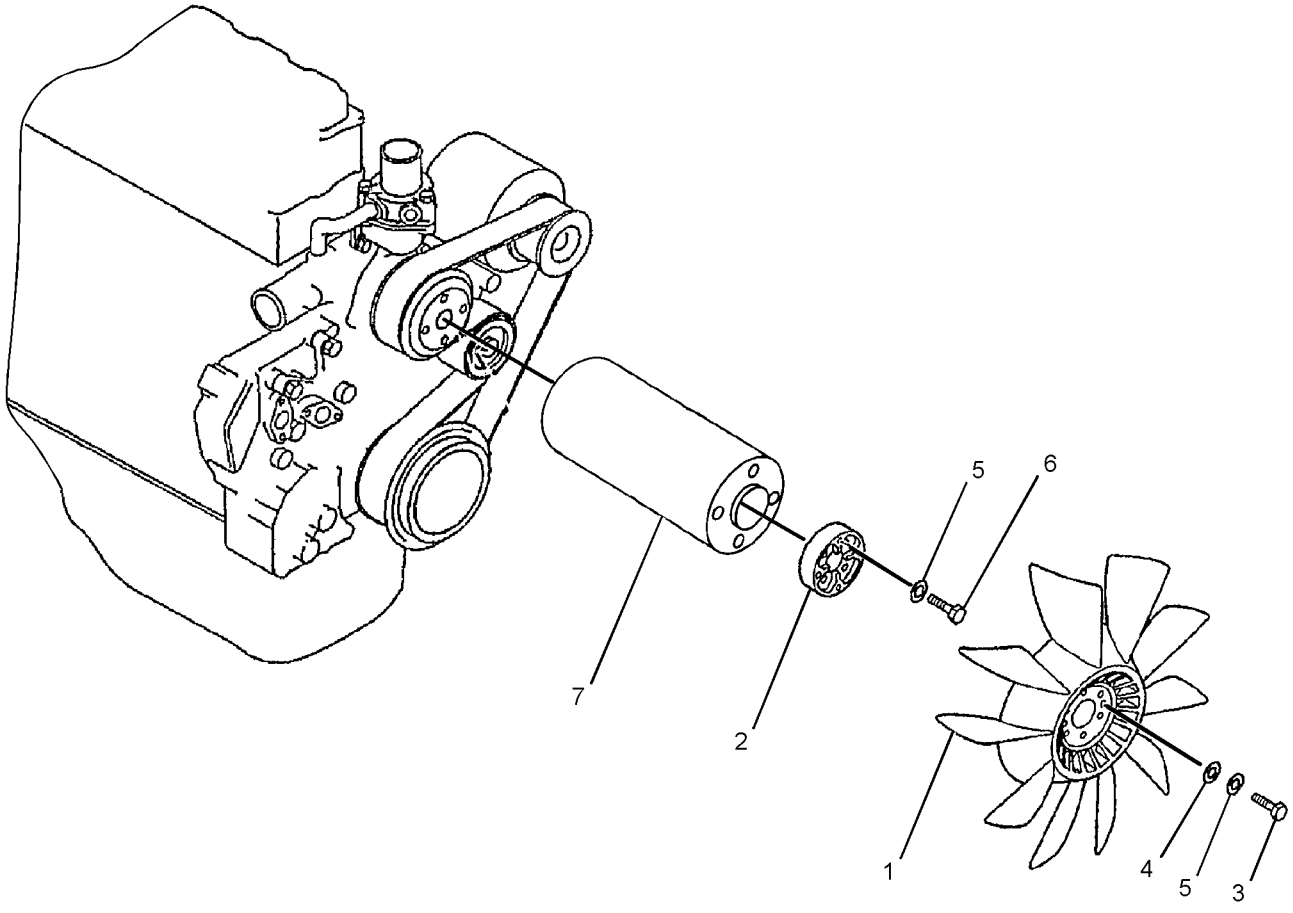

GRAPHIC #1 **<END>** g01442603

COOLING SYSTEM

296-4795 LINES GP-WATER

S/N: JKH1-UP
PART OF 279-7764, 279-7766 ENGINE AR
ALSO AN ATTACHMENT

SMCS-1355, 1380 **i02857243**

NOTE	REF NO	GRAPHIC REF	PART NUMBER	QTY	PART NAME 1 2 3 4 5 6 (PRODUCT LEVEL)	SEE PAGE
	1	1	**5I-7867**	1	COVER AS	
	2	1	**154-9024**	1	VALVE GP-FLUID SAMPLING (ENGINE COOLANT)	
	3	1	**157-0670**	1	CAP-DUST	
	4	1	**5I-7646**	1	ELBOW	
	5	1	**294-1777**	2	GASKET (WATER TEMPERATURE REGULATOR)	
	6	1	**5I-8056**	2	PLUG	
	7	1	**096-9532**	2	WASHER (15.8X22.5X2-MM THK)	
	8	1	*270-6338*	1	BOLT AS	
M		1	**8T-6870**	1	BOLT (M8X1.25X70-MM)	
		1	**3B-4505**	1	LOCKWASHER	
	9	1	**294-1778**	1	HOSE	
	10	1	**5I-8010**	1	REGULATOR-TEMPERATURE (COOLANT)	
	11	1	**5I-7735**	1	GASKET (WATER TEMPERATURE REGULATOR)	
	12	1	**096-8619**	3	BOLT	
	13	1	**297-7655**	1	BOLT	
	14	1	**3B-4505**	1	LOCKWASHER	
	15	1	**2S-3440**	2	CLAMP-HOSE	
	16	1	**294-1780**	1	GASKET (WATER TEMPERATURE REGULATOR)	
	17	1	**296-4733**	1	SPACER	

M-METRIC PART

296-4795 **LINES GP-WATER** *(contd.)* **i02857243**

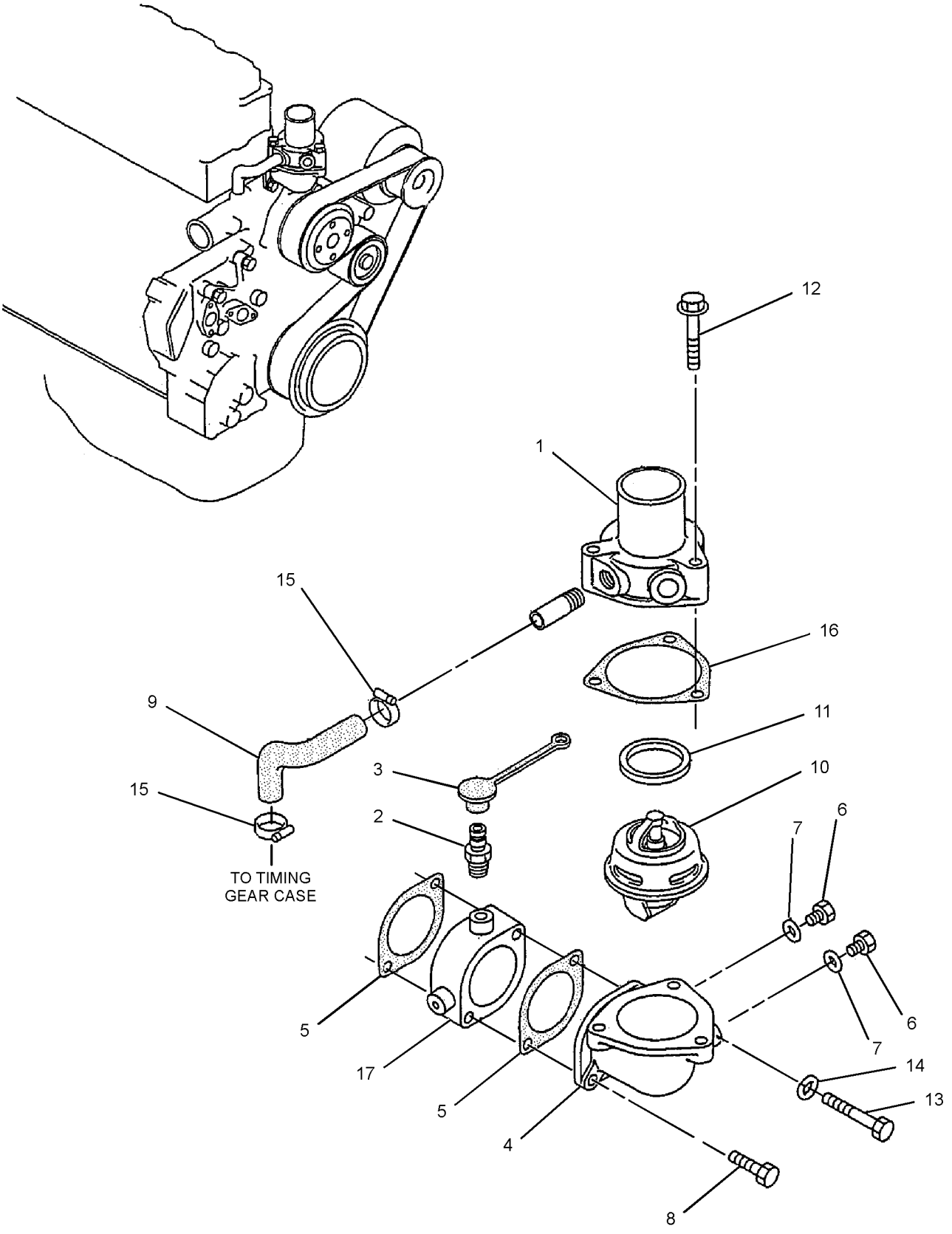

GRAPHIC #1 **<END>** g01415123

COOLING SYSTEM

296-4655 PUMP GP-WATER

S/N: JKH1-UP
PART OF 279-7764, 279-7766 ENGINE AR
ALSO AN ATTACHMENT

SMCS-1361 **i02618456**

NOTE	REF NO	GRAPHIC REF	PART NUMBER	QTY	PART NAME 1 2 3 4 5 6 (PRODUCT LEVEL)	SEE PAGE
	1	1	**178-6633**	1	PUMP GP-WATER	
	1A	1	**5I-7696**	1	FLANGE	
	1B	1	**178-6635**	1	SHAFT	
	1C	1	**8T-9598**	1	RING-RETAINING	
	1D	1	**5L-6326**	1	BALL BEARING (62-MM OD)	
	1E	1	**178-6634**	1	IMPELLER	
	1F	1	**5I-7697**	1	SPACER (28-MM)	
	1G	1	**2H-3814**	1	BALL BEARING (52-MM OD)	
	1H	1	**125-2947**	1	WASHER (1-MM THK)	
	1J	1	**178-6636**	1	SEAL	
	2	1	**294-1738**	7	BOLT	
	3	1	**8T-4121**	4	WASHER-HARD (11X21X2.5-MM THK)	

296-4655 **PUMP GP-WATER** *(contd.)* **i02618456**

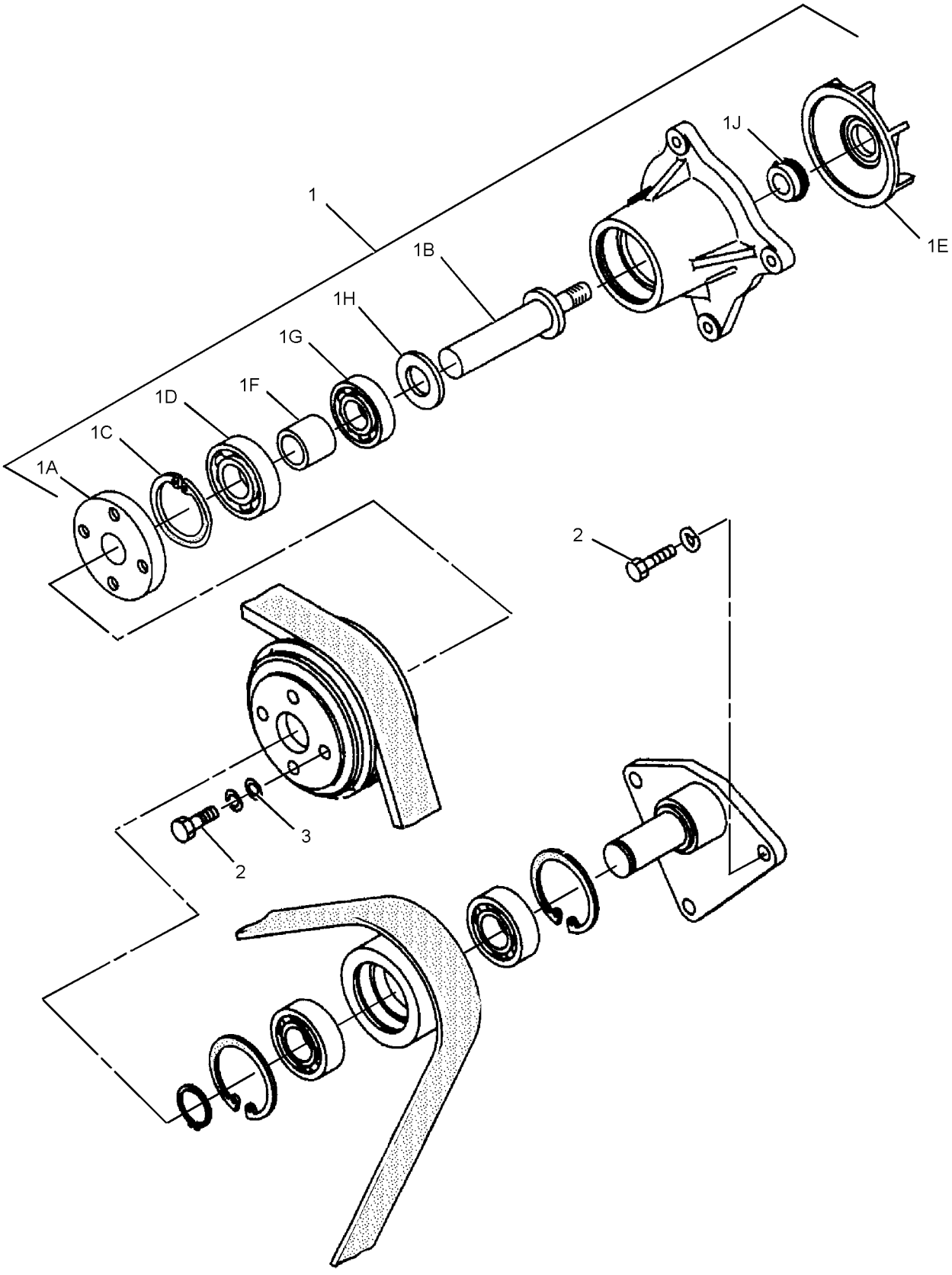

GRAPHIC #1 **<END>** g01316735

265-3613 RADIATOR & HYD OIL COOLER GP

S/N: BYJ1-UP; PDP1-UP

PART OF 279-7768 INSTALLATION AR-ENGINE

SMCS-1351 **i03019208**

NOTE	REF NO	GRAPHIC REF	PART NUMBER	QTY	PART NAME 1 2 3 4 5 6 (PRODUCT LEVEL)	SEE PAGE
	1	1	**7I-2673**	4	STRAP-CABLE	
	2	1	**8T-4984**	1	CLAMP-HOSE	
	3	1	**8T-6703**	3	CLAMP-HOSE	
	4	1	**096-4035**	1	CLIP	
	5	1	**196-8174**	1	BAND	
	6	1	**245-9205**	1	TANK AS-COOLANT (RECOVERY)	
		1	**171-3369**	1	CAP AS (COOLANT RECOVERY)	
	7	1	**265-3621**	1	GUARD AS (LOWER)	
	8	1	**281-3571**	1	GUARD AS (UPPER)	
	9	1	**281-3580**	1	GUARD AS (UPPER)	
Y	10	1	**305-7604**	1	RADIATOR & HYD OIL COOLER GP	59
	11	1	**305-7627**	1	HOSE (UPPER)	
	12	1	**305-7628**	1	HOSE (LOWER)	
	13	1	**305-7629**	1	BRACKET AS	
	14	1	**3P-9847**	1	CLIP	
M	15	1	**7X-2555**	3	BOLT (M16X2X80-MM)	
	16	1	**7X-7729**	14	WASHER (11X25X3-MM THK)	
	17	1	**8T-4121**	1	WASHER-HARD (11X21X2.5-MM THK)	
M	18	1	**8T-4137**	13	BOLT (M10X1.5X20-MM)	
M	19	1	**8T-4175**	1	BOLT (M16X2X90-MM)	
M	20	1	**8T-4185**	2	BOLT (M10X1.5X50-MM)	
M	21	1	**8T-4200**	2	BOLT (M8X1.25X16-MM)	
	22	1	**8T-4224**	2	WASHER-HARD (8.8X16X2-MM THK)	
	23	1	**9X-8257**	4	WASHER (17.5X30X3.5-MM THK)	
E	24	1	**7Y-1976**		HOSE-WATER (80-CM)	
D	25	1	**5P-7174**		SEAL (0.4-M)	
D	26	1	**5P-9909**		SEAL (0.5-M)	

D-ORDER BY THE METER
E-ORDER BY THE CENTIMETER
M-METRIC PART
Y-SEPARATE ILLUSTRATION

265-3613 **RADIATOR & HYD OIL COOLER GP** *(contd.)* **i03019208**

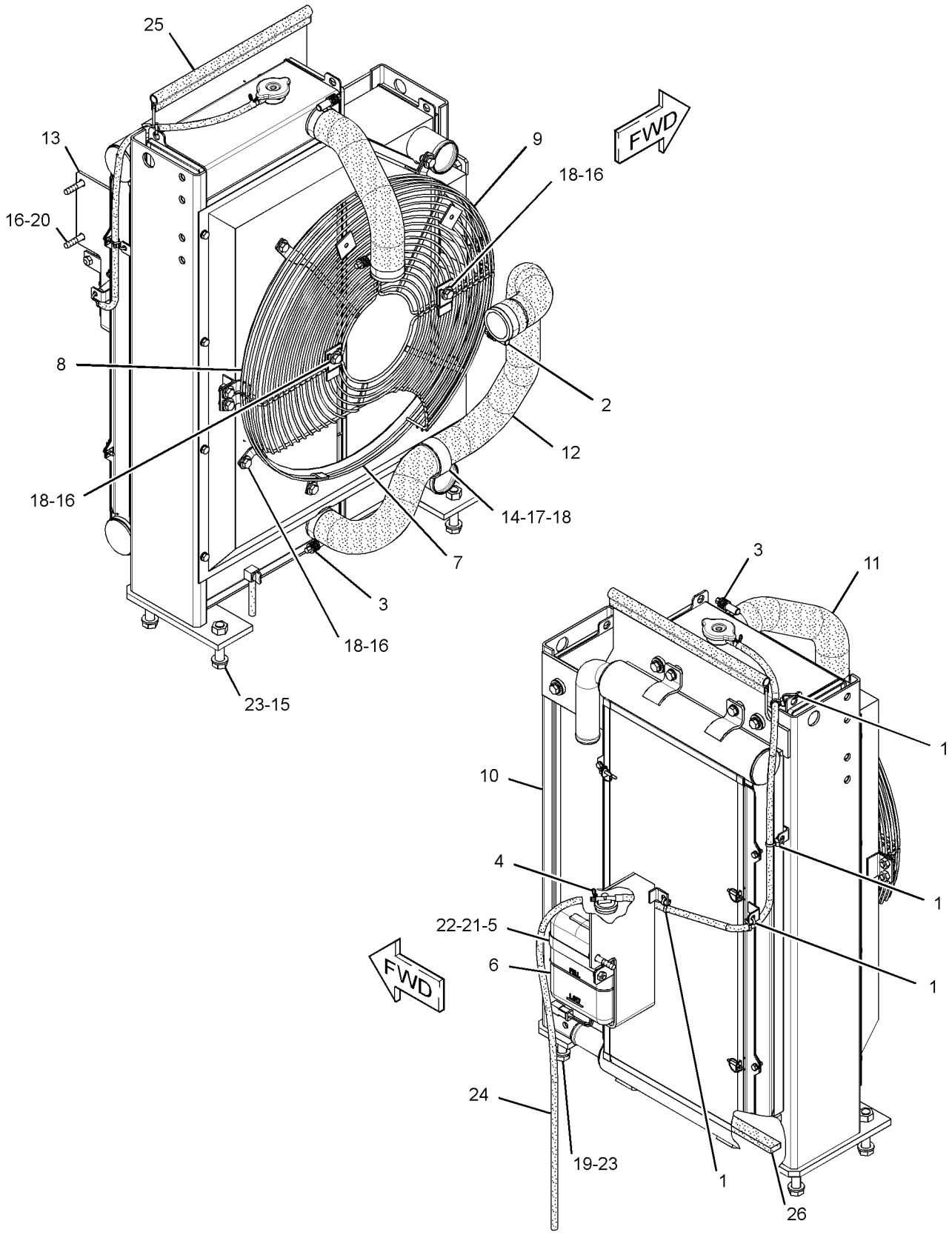

GRAPHIC #1 **<END>** g01517272

305-7604 RADIATOR & HYD OIL COOLER GP

S/N: BYJ1-UP; PDP1-UP

PART OF 265-3613 RADIATOR & HYD OIL COOLER GP

SMCS-1351 **i02957179**

NOTE	REF NO	GRAPHIC REF	PART NUMBER	QTY	PART NAME 1 2 3 4 5 6 (PRODUCT LEVEL)	SEE PAGE
	1	1	**5D-8159**	4	PIN AS	
M	2	1	**093-5432**	1	VALVE AS-DRAIN (COOLANT)	
	3	1	**096-4035**	2	CLIP	
	4	1	**196-8059**	1	SEAL	
	5	1	**196-8200**	2	SEAL	
	6	1	**204-0894**	1	SEAL	
	7	1	**204-0991**	2	SEAL	
	8	1	**204-1002**	1	SEAL	
	9	1	**245-9212**	1	CAP AS-RADIATOR	
	10	1	**245-9216**	4	BOSS	
	11	1	**245-9217**	4	CUSHION-RUBBER	
	12	1	**245-9218**	4	CUSHION-RUBBER	
	13	1	**265-3642**	1	SEAL	
	14	1	**305-7605**	1	CORE AS-RADIATOR	
	15	1	**305-7606**	1	CORE AS-OIL COOLER	
	16	1	**305-7607**	1	AFTERCOOLER AS	
	17	1	**305-7608**	1	FRAME AS	
	18	1	**305-7609**	1	SHROUD AS-RADIATOR	
	19	1	**305-7610**	1	SEAL	
	20	1	**305-7611**	1	SEAL	
	21	1	**305-7612**	2	SEAL	
	22	1	**305-7613**	2	SEAL	
	23	1	**305-7615**	1	SEAL	
	24	1	**305-7617**	1	SEAL	
	25	1	**305-7618**	1	SEAL	
	26	1	**305-7619**	1	SEAL	
	27	1	**305-7620**	1	SEAL	
	28	1	**305-7621**	1	SCREEN AS (HYDRAULIC OIL COOLER)	
	29	1	**305-7622**	2	SEAL	
	30	1	**305-7623**	1	BRACKET	
	31	1	**305-7624**	1	BRACKET AS	
M	32	1	**5C-9553**	4	BOLT (M6X1X16-MM)	
	33	1	**8T-4121**	8	WASHER-HARD (11X21X2.5-MM THK)	
M	34	1	**8T-4137**	4	BOLT (M10X1.5X20-MM)	
M	35	1	**8T-4189**	7	BOLT (M8X1.25X20-MM)	
M	36	1	**8T-4195**	4	BOLT (M10X1.5X30-MM)	
	37	1	**8T-4224**	7	WASHER-HARD (8.8X16X2-MM THK)	
	38	1	**9X-8256**	4	WASHER (6.6X12X2-MM THK)	
E	39	1	**7Y-1976**		HOSE-WATER (95-CM)	
E	39A	1	**7Y-1976**		HOSE-WATER (8-CM)	

E-ORDER BY THE CENTIMETER
M-METRIC PART

305-7604 RADIATOR & HYD OIL COOLER GP *(contd.)* i02957179

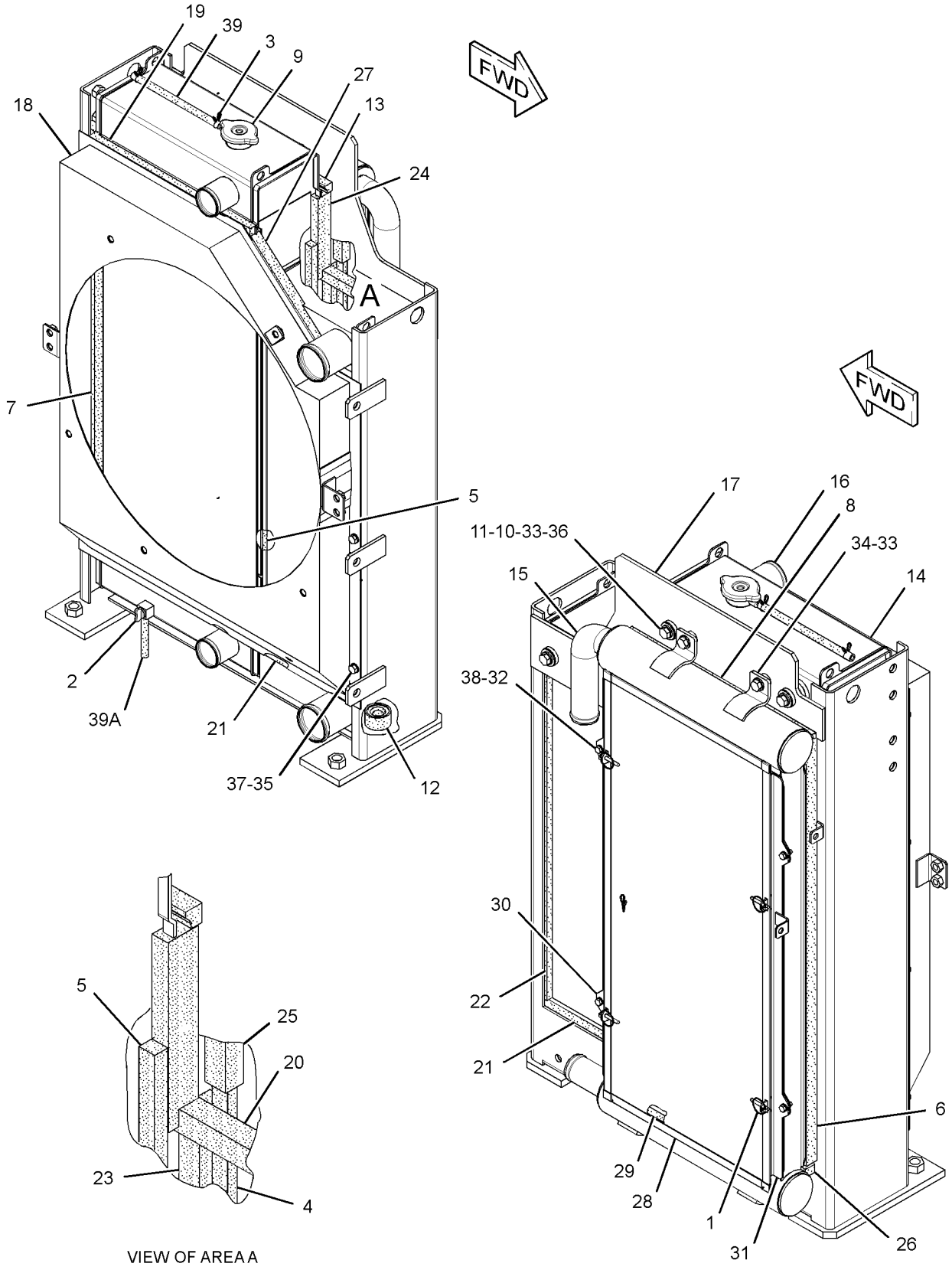

GRAPHIC #1 **<END>** g01518436

AIR INLET AND EXHAUST SYSTEM

310-9698 AIR CLEANER GP

S/N: BYJ1-UP; PDP1-UP

PART OF 279-7768 INSTALLATION AR-ENGINE

SMCS-1051, 1054 **i02954216**

NOTE	REF NO	GRAPHIC REF	PART NUMBER	QTY	PART NAME 1 2 3 4 5 6 (PRODUCT LEVEL)	SEE PAGE
	1	1	**8T-6726**	1	CLAMP-HOSE	
	2	1	**131-8915**	1	CAP (AIR CLEANER)	
Y	3	1	**310-9700**	1	AIR CLEANER GP	62
M	4	1	**8T-4200**	4	BOLT (M8X1.25X16-MM)	
	5	1	**8T-4224**	4	WASHER-HARD (8.8X16X2-MM THK)	

M-METRIC PART
Y-SEPARATE ILLUSTRATION

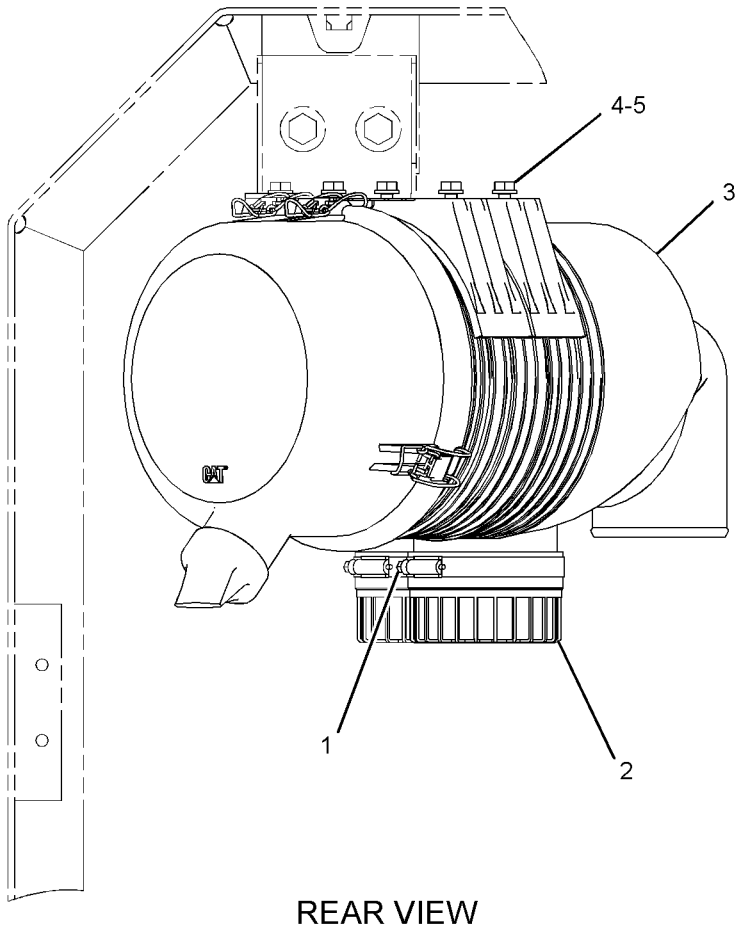

REAR VIEW

GRAPHIC #1 **<END>** g01514397

310-9700 AIR CLEANER GP

S/N: BYJ1-UP; PDP1-UP

PART OF 310-9698 AIR CLEANER GP

SMCS-1051, 1054 **i02954212**

NOTE	REF NO	GRAPHIC REF	PART NUMBER	QTY	PART NAME 1 2 3 4 5 6 (PRODUCT LEVEL)	SEE PAGE
	1	1	**1R-9953**	1	CAP	
	2	1	**131-8901**	1	VALVE-VACUATOR	
	3	1	**131-8902**	1	FILTER ELEMENT AS-AIR (PRIMARY)	
	4	1	**131-8903**	1	FILTER ELEMENT AS-AIR (SECONDARY)	
	5	1	**310-9621**	1	COVER AS-AIR CLEANER	
	6	1	**310-9622**	1	SEAL	

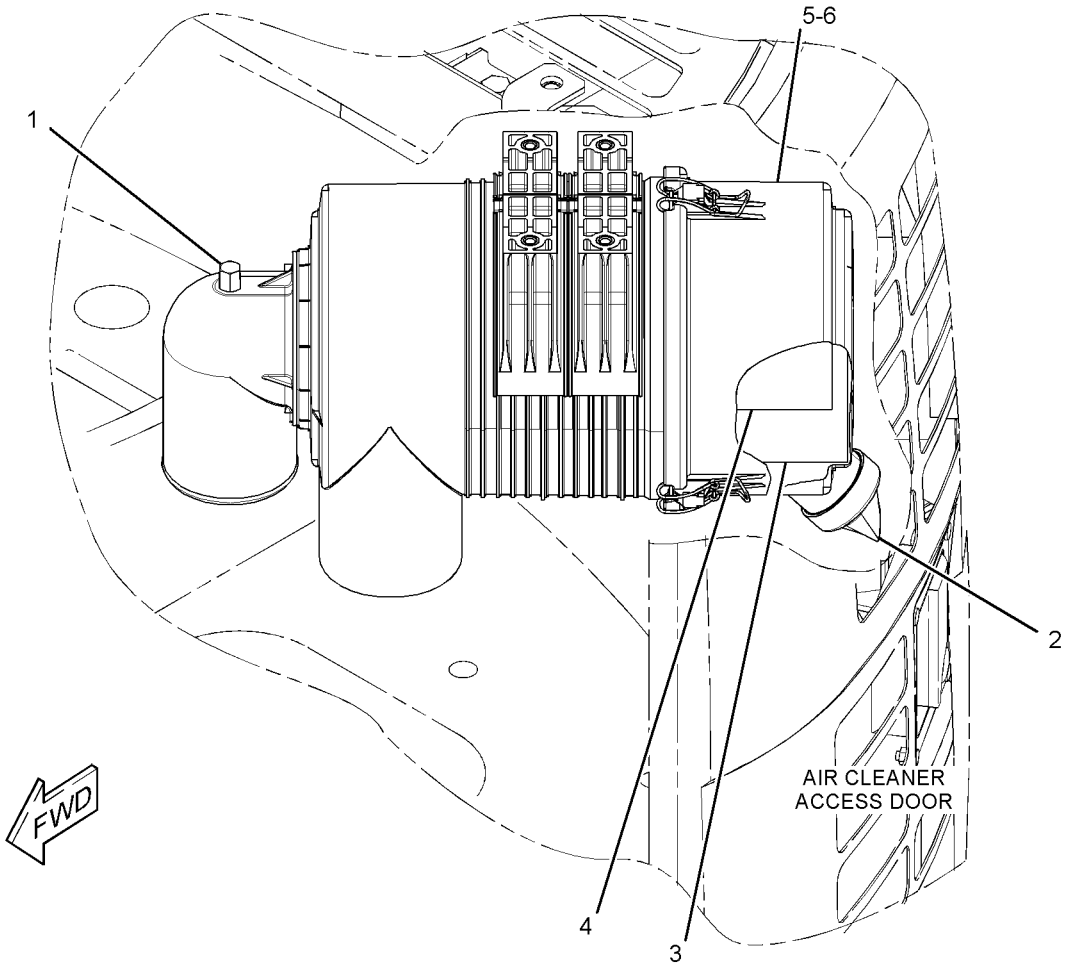

GRAPHIC #1 **<END>** g01514398

AIR INLET AND EXHAUST SYSTEM

255-2971 INSULATION GP-MUFFLER

S/N: BYJ1-UP; PDP1-UP

PART OF 279-7768 INSTALLATION AR-ENGINE

SMCS-1062, 1801 **i03189750**

NOTE	REF NO	GRAPHIC REF	PART NUMBER	QTY	PART NAME 1 2 3 4 5 6 (PRODUCT LEVEL)	SEE PAGE
	1	1	**255-2972**	1	SHEET	
	2	1	**255-2973**	1	SHEET	
	3	1	**255-2981**	3	WIRE	
	4	1	**255-2974**	1	TAPE	

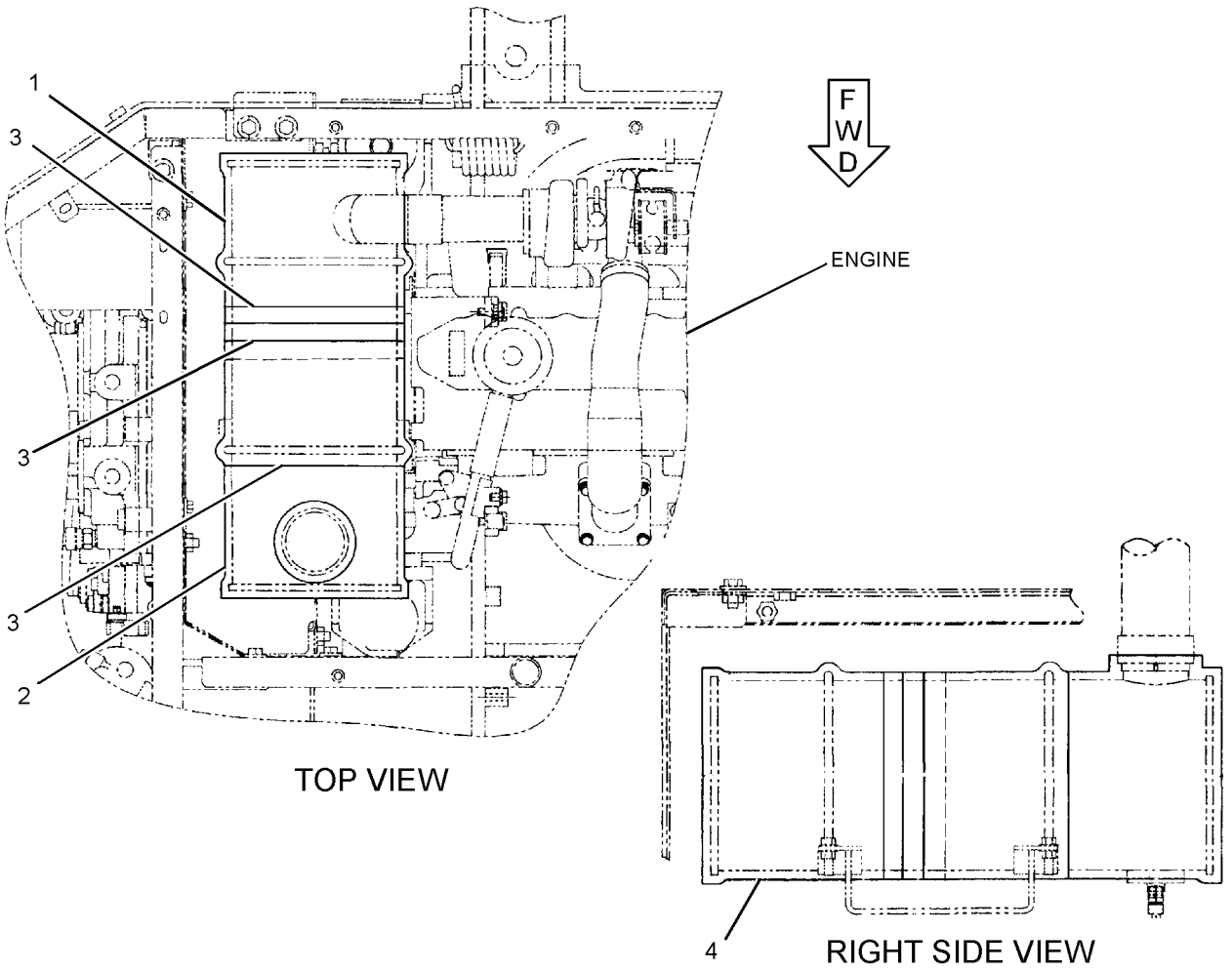

GRAPHIC #1 **<END>** g01637479

AIR INLET AND EXHAUST SYSTEM

265-3615 LINES GP-AIR

S/N: BYJ1-UP; PDP1-UP

PART OF 279-7768 INSTALLATION AR-ENGINE

SMCS-1071 **i02814046**

NOTE	REF NO	GRAPHIC REF	PART NUMBER	QTY	PART NAME 1 2 3 4 5 6 (PRODUCT LEVEL)	SEE PAGE
	1	1	**8T-4984**	5	CLAMP-HOSE	
	2	1	**8T-6703**	1	CLAMP-HOSE	
	3	1	**281-3462**	1	HOSE	
	4	1	**281-3463**	1	HOSE	
	5	1	**281-3464**	1	HOSE	
	6	1	**281-3465**	1	TUBE AS	
	7	1	**8T-4121**	2	WASHER-HARD (11X21X2.5-MM THK)	
M	8	1	**8T-4136**	2	BOLT (M10X1.5X25-MM)	

M-METRIC PART

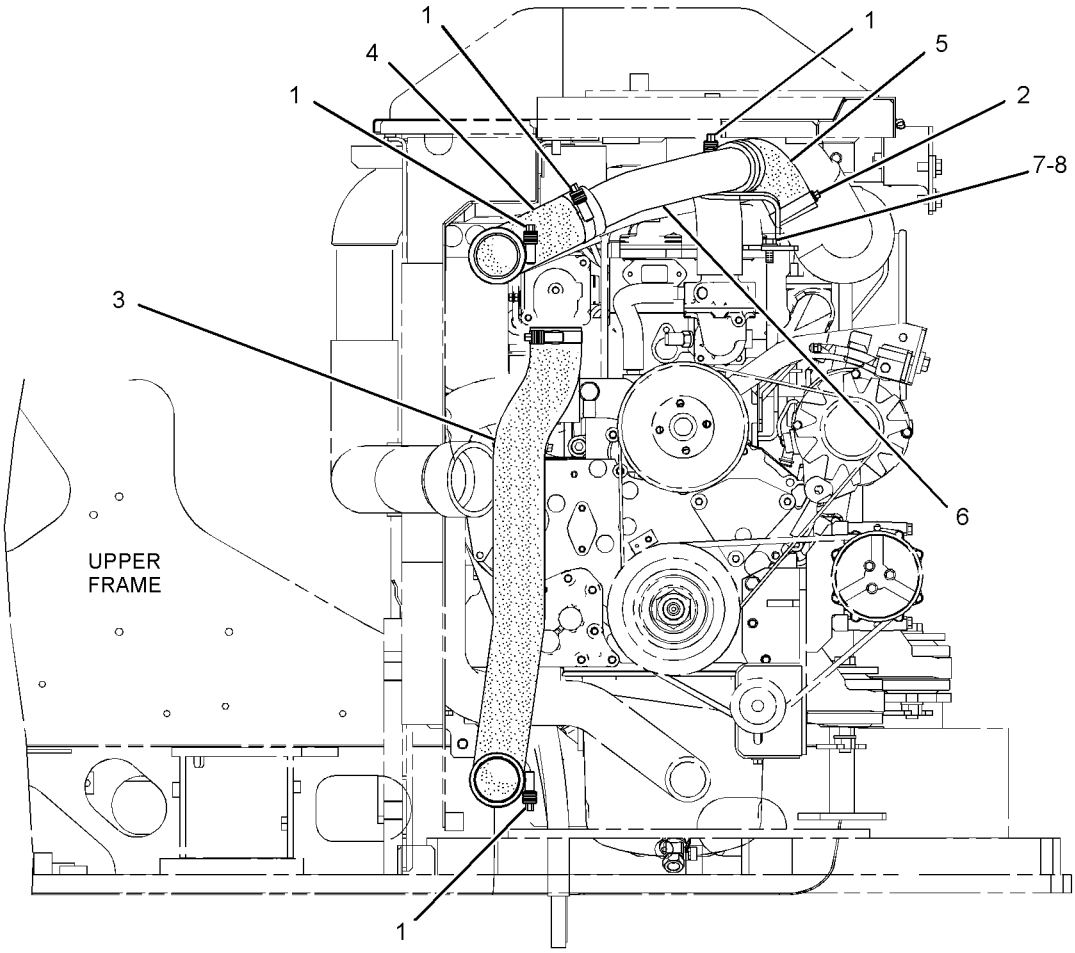

LEFT SIDE VIEW

GRAPHIC #1 **<END>** g01413125

279-7773 LINES GP-MUFFLER DRAIN

S/N: BYJ1-UP; PDP1-UP

PART OF 279-7768 INSTALLATION AR-ENGINE

SMCS-1062 **i02900462**

NOTE	REF NO	GRAPHIC REF	PART NUMBER	QTY	PART NAME 1 2 3 4 5 6 (PRODUCT LEVEL)	SEE PAGE
	1	1	**2B-0941**	1	SPACER (10.5X19X19-MM THK)	
	2	1	**5P-4961**	1	CLAMP-HOSE	
	3	1	**151-6641**	1	CLIP	
	4	1	**305-4730**	1	PLATE AS	
M		1	**8T-3490**	1	NUT-WELD (M10X1.5-THD)	
	5	1	**305-4739**	1	TUBE AS	
		1	**287-0118**	1	ADAPTER AS	
	6	1	**8T-4121**	3	WASHER-HARD (11X21X2.5-MM THK)	
M	7	1	**8T-4137**	2	BOLT (M10X1.5X20-MM)	
M	8	1	**8T-4196**	1	BOLT (M10X1.5X35-MM)	
	9	1	**9M-8406**	1	CLIP	
E	10	1	**5P-1442**		HOSE (53-CM)	
	11	1	**3S-2093**	1	STRAP-CABLE	

E-ORDER BY THE CENTIMETER
M-METRIC PART

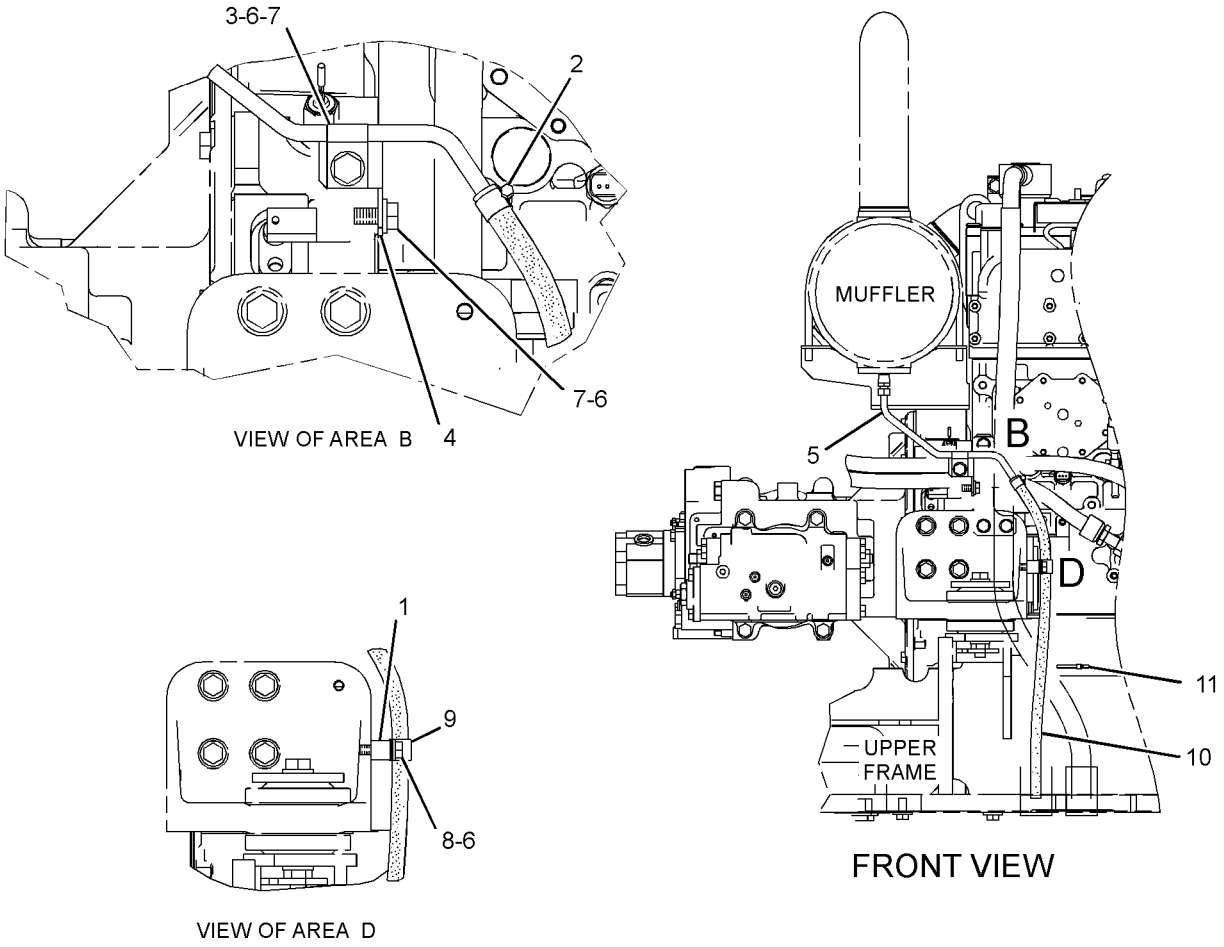

GRAPHIC #1 **<END>** g01521899

AIR INLET AND EXHAUST SYSTEM

279-7771 LINES GP-TURBOCHARGER AIR

S/N: BYJ1-UP; PDP1-UP

PART OF 279-7768 INSTALLATION AR-ENGINE

SMCS-1052, 1071 **i02814039**

NOTE	REF NO	GRAPHIC REF	PART NUMBER	QTY	PART NAME 1 2 3 4 5 6 (PRODUCT LEVEL)	SEE PAGE
	1	1	**8T-4985**	2	CLAMP-HOSE	
	2	1	**9X-2201**	1	CLAMP-HOSE	
	3	1	**144-0367**	1	CLAMP-HOSE	
	4	1	**204-1071**	1	CLIP	
	5	1	**297-7809**	1	HOSE-AIR	
	6	1	**310-9477**	1	HOSE-AIR	
	7	1	**310-9575**	1	TUBE AS	
	8	1	**5P-1076**	2	WASHER-HARD (13.5X30X4-MM THK)	
	9	1	**8T-4121**	1	WASHER-HARD (11X21X2.5-MM THK)	
M	10	1	**8T-4133**	1	NUT (M10X1.5-THD)	
M	11	1	**8T-4139**	2	BOLT (M12X1.75X30-MM)	

M-METRIC PART

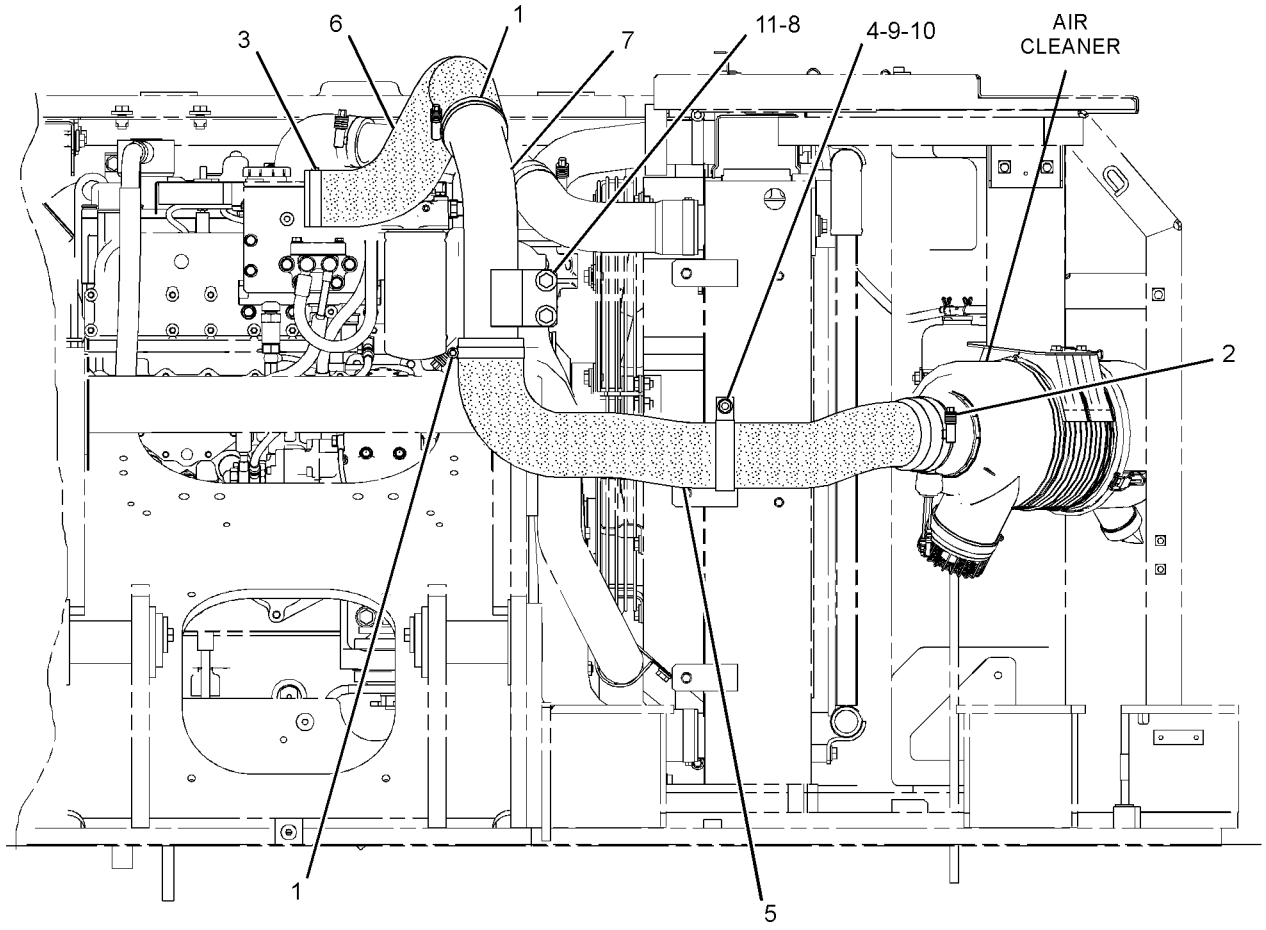

FRONT VIEW

GRAPHIC #1 **<END>** g01413110

296-4791 MANIFOLD GP-EXHAUST

S/N: JKH1-UP
PART OF 279-7764, 279-7766 ENGINE AR
ALSO AN ATTACHMENT

SMCS-1059 **i02944497**

NOTE	REF NO	GRAPHIC REF	PART NUMBER	QTY	PART NAME 1 2 3 4 5 6 (PRODUCT LEVEL)	SEE PAGE
	1	1	**279-7787**	1	MANIFOLD-EXHAUST	
	2	1	**296-4716**	2	GASKET	
M	3	1	**178-6554**	4	STUD (M10X1.5X15-MM, M10X1.25X20-MM)	
	6	1	**5I-7549**	8	STUD (M8X1.25X86-MM)	
	7	1	**5I-7550**	7	SPACER	
	8	1	**239-6604**	8	WASHER	
	9	1	**212-8489**	8	NUT	
	10	1	**095-8638**	1	WASHER-SPRING	
	11	1	**5I-7601**	1	SPACER	
M	12	1	**091-3474**	1	NUT (M8X1.25-THD)	
	13	1	**5I-5087**	1	PLUG	

M-METRIC PART

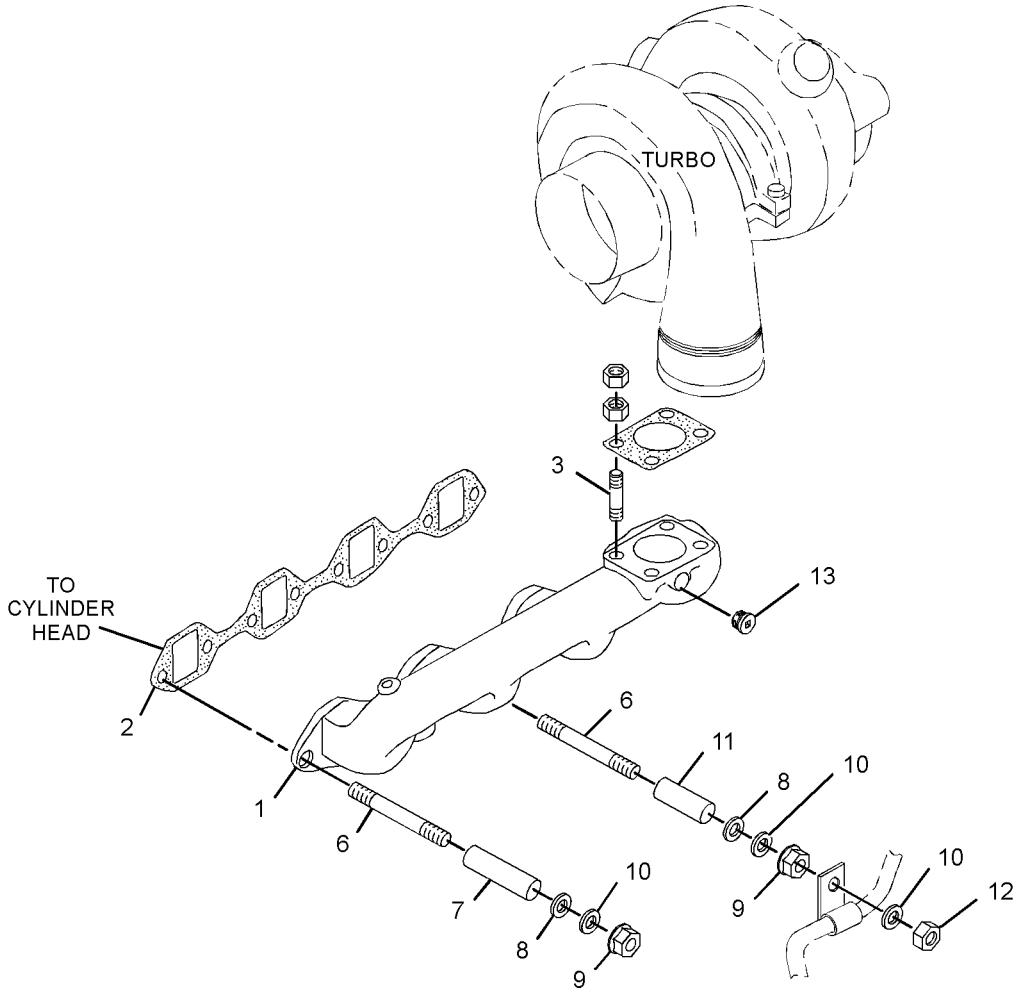

GRAPHIC #1 **<END>** g01459018

AIR INLET AND EXHAUST SYSTEM

296-4790 MANIFOLD GP-INLET

S/N: JKH1-UP
PART OF 279-7764, 279-7766 ENGINE AR
ALSO AN ATTACHMENT

SMCS-1058, 1090 **i03156081**

NOTE	REF NO	GRAPHIC REF	PART NUMBER	QTY	PART NAME 1 2 3 4 5 6 (PRODUCT LEVEL)	SEE PAGE
	1	1	**296-4714**	1	GASKET	
	2	1	**096-8490**	7	BOLT	
	3	1	**294-1700**	11	BOLT (M8X1.25X108.3-MM)	
	4	1	**5I-8021**	1	ELBOW AS	
		1	**5I-8023**	1	PLUG	
	5	1	**5I-7678**	1	GASKET	
	6	1	**303-6261**	4	BOLT	
	7	1	**310-9528**	1	MANIFOLD	
	8	1	**5I-7677**	1	GASKET	
	9	1	**305-4691**	1	HEATER (24-VOLT)	

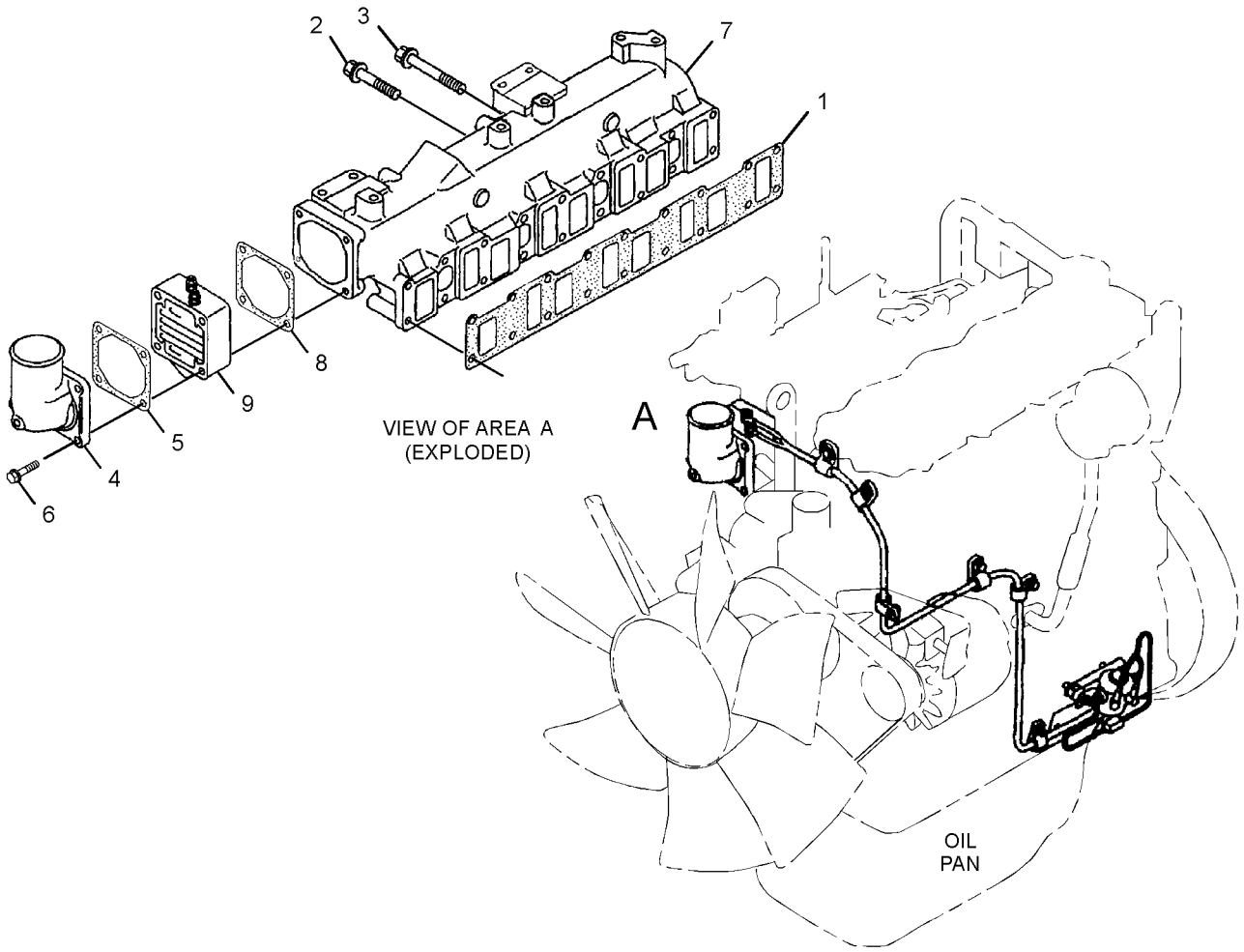

GRAPHIC #1 **<END>** g01414473

310-9550 MUFFLER GP

S/N: JKH1-UP
PART OF 279-7766 ENGINE AR
ALSO AN ATTACHMENT

SMCS-1062 **i02926901**

NOTE	REF NO	GRAPHIC REF	PART NUMBER	QTY	PART NAME 1 2 3 4 5 6 (PRODUCT LEVEL)	SEE PAGE
	1	1	**239-6659**	1	MUFFLER	
	2	1	**5I-7848**	2	U-BOLT	
	3	1	**196-8014**	1	BRACKET	
	4	1	**196-8012**	1	BRACKET	
	5	1	**5I-5597**	4	BOLT (M14X1.5X10-MM)	
M	6	1	**6V-8231**	8	NUT (M10X1.25-THD)	
	7	1	**196-8013**	1	PIPE	
	8	1	**5I-7937**	1	GASKET	
	9	1	**196-8015**	3	STUD	
	10	1	**5I-7633**	6	NUT (M10X1.25-THD)	
	11	1	**5I-7639**	1	CLAMP AS	
	12	1	**8T-4121**	8	WASHER-HARD (11X21X2.5-MM THK)	

M-METRIC PART

310-9550 **MUFFLER GP** *(contd.)* **i02926901**

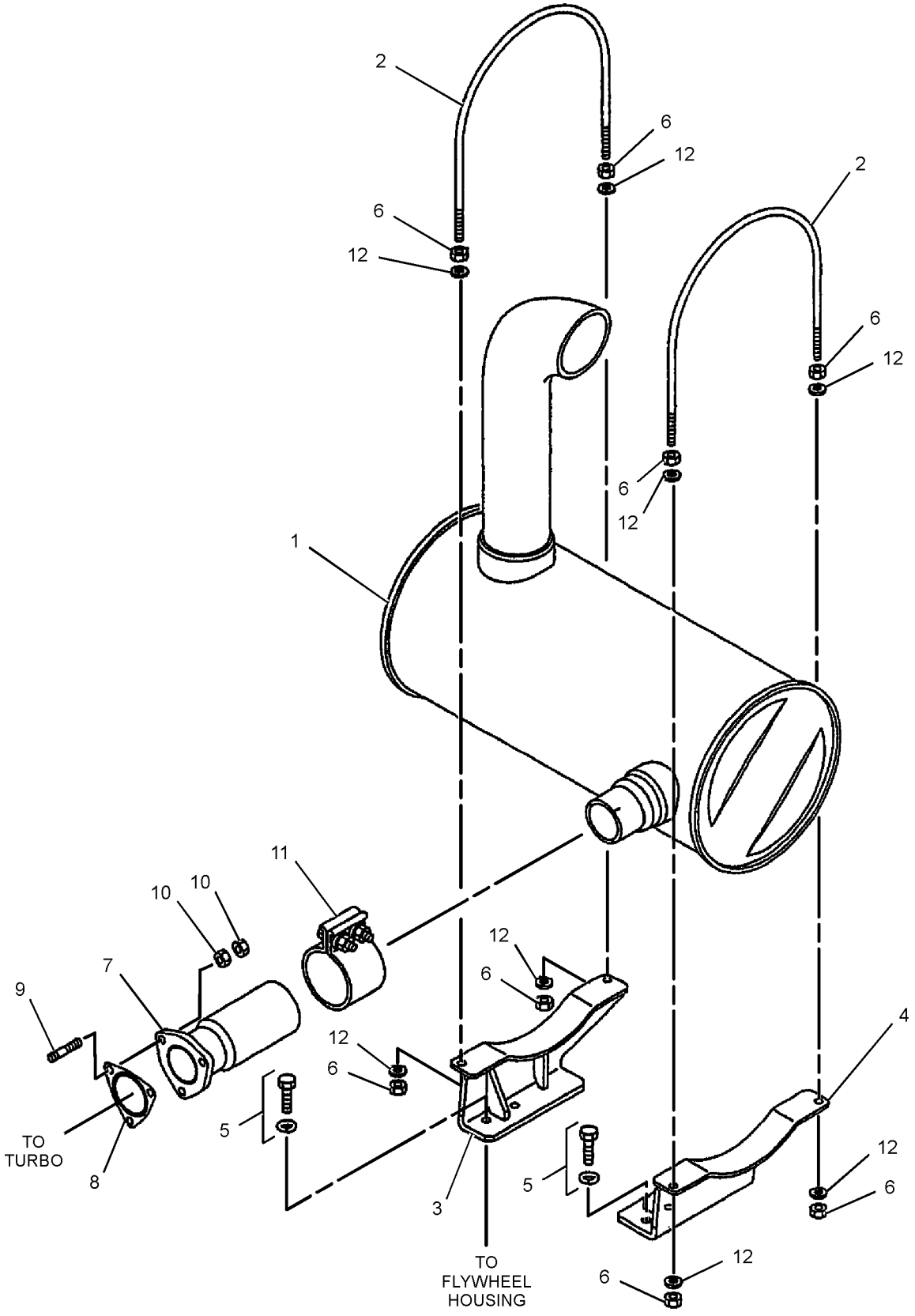

GRAPHIC #1

<END>

g01453511

AIR INLET AND EXHAUST SYSTEM

310-9551 MUFFLER GP

S/N: JKH1-UP
PART OF 279-7764 ENGINE AR
AN ATTACHMENT

SMCS-1062 **i02896392**

NOTE	REF NO	GRAPHIC REF	PART NUMBER	QTY	PART NAME 1 2 3 4 5 6 (PRODUCT LEVEL)	SEE PAGE
	1	1	**212-8491**	1	MUFFLER	
	2	1	**5I-7848**	2	U-BOLT	
	3	1	**196-8014**	1	BRACKET	
	4	1	**196-8012**	1	BRACKET	
	5	1	**5I-5597**	4	BOLT (M14X1.5X10-MM)	
M	6	1	**6V-8231**	8	NUT (M10X1.25-THD)	
	7	1	**196-8013**	1	PIPE	
	8	1	**5I-7937**	1	GASKET	
	9	1	**196-8015**	3	STUD	
	10	1	**5I-7633**	6	NUT (M10X1.25-THD)	
	11	1	**5I-7639**	1	CLAMP AS	
	12	1	**8T-4121**	8	WASHER-HARD (11X21X2.5-MM THK)	

M-METRIC PART

310-9551 **MUFFLER GP** *(contd.)* **i02896392**

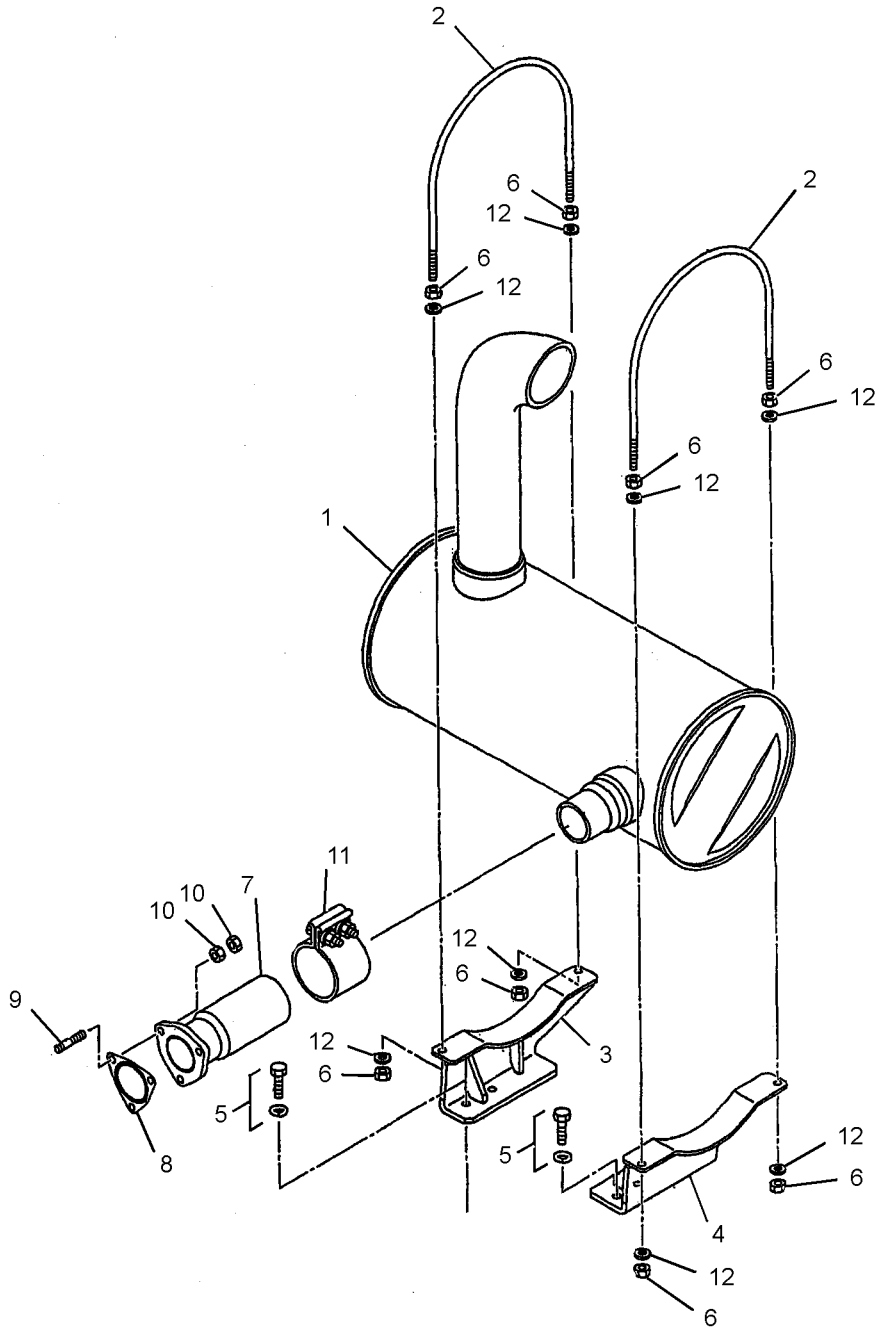

GRAPHIC #1 **<END>** g01442610

AIR INLET AND EXHAUST SYSTEM

305-4921 TURBOCHARGER GP

S/N: JKH1-UP
PART OF 310-9614 TURBOCHARGER GP
ALSO AN ATTACHMENT

SMCS-1052, 1053 **i02992877**

NOTE	REF NO	GRAPHIC REF	PART NUMBER	QTY	PART NAME 1 2 3 4 5 6 (PRODUCT LEVEL)	SEE PAGE
	1	1	**305-4769**	1	CARTRIDGE AS	
	2	1	**5I-7941**	1	RING	
	3	1	**5I-8124**	1	SEAL	
	4	1	**305-4965**	1	COVER	
	5	1	**310-9539**	1	HOUSING	
	6	1	**5I-7942**	1	COUPLING AS	

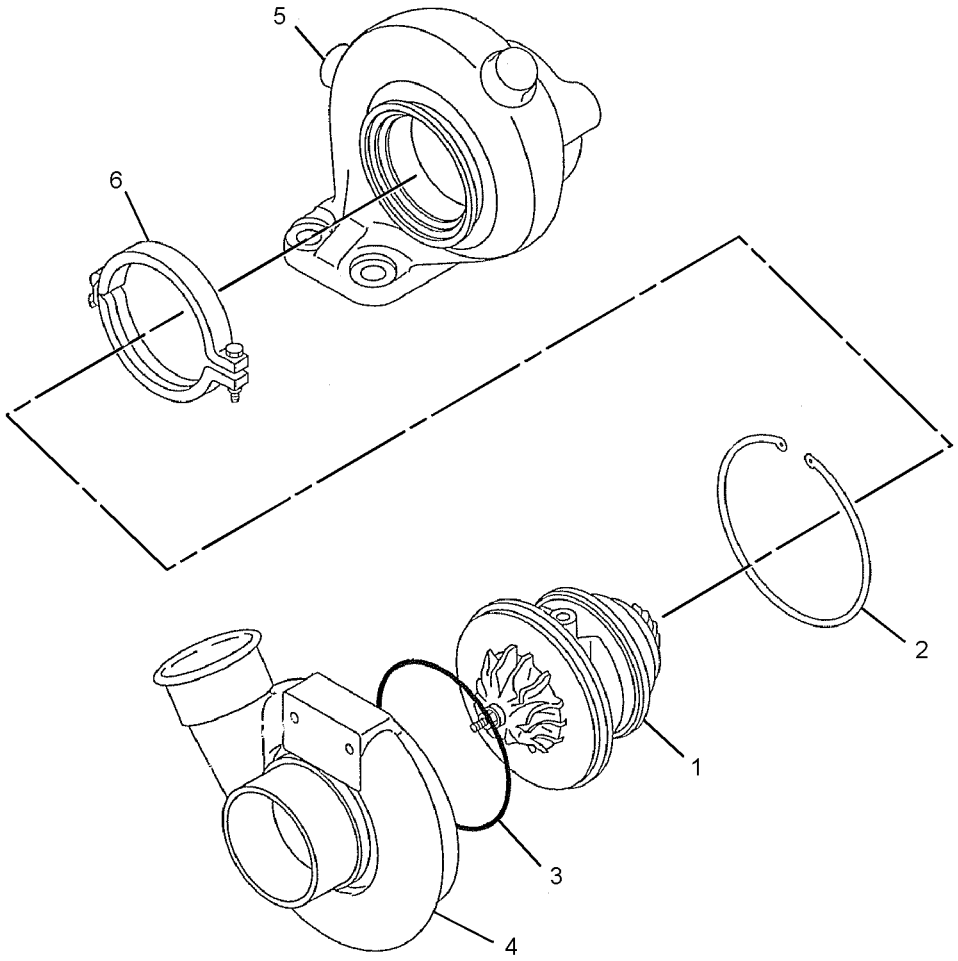

GRAPHIC #1 **<END>** g01520175

AIR INLET AND EXHAUST SYSTEM

310-9614 TURBOCHARGER GP

S/N: JKH1-UP
PART OF 279-7764, 279-7766 ENGINE AR
ALSO AN ATTACHMENT

SMCS-1052, 1053 **i02991885**

NOTE	REF NO	GRAPHIC REF	PART NUMBER	QTY	PART NAME 1 2 3 4 5 6 (PRODUCT LEVEL)	SEE PAGE
Y	1	1	**305-4921**	1	TURBOCHARGER GP	73
	2	1	**5I-7933**	1	GASKET	
	3	1	**5I-7633**	8	NUT (M10X1.25-THD)	

Y-SEPARATE ILLUSTRATION

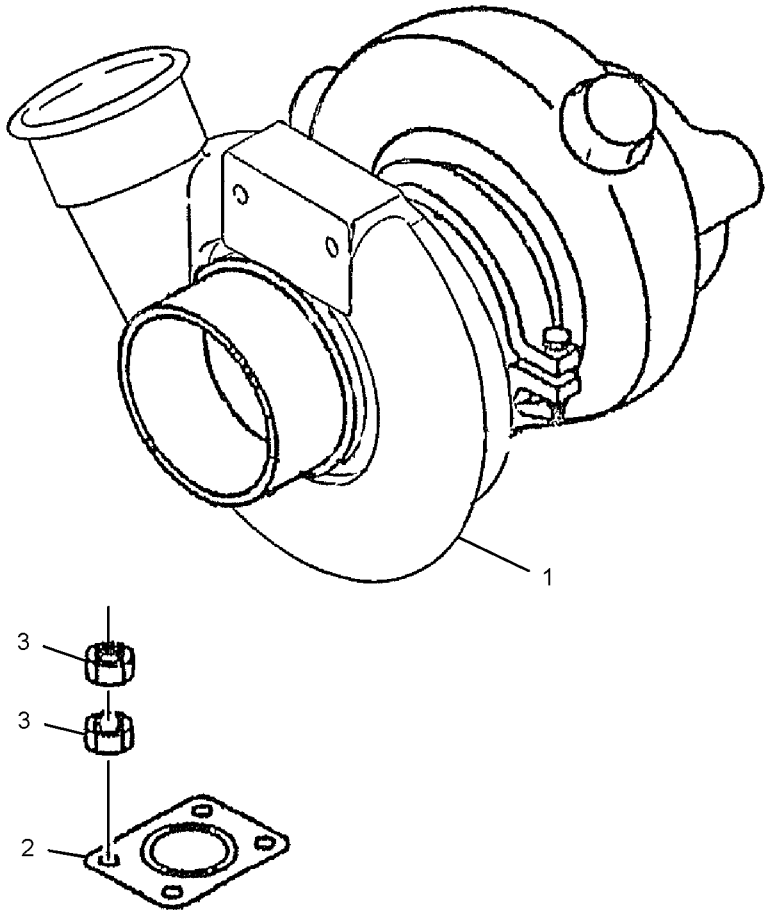

GRAPHIC #1 **<END>** g01520304

164-4858 CAP GP-FUEL FILLER–EXTREME SERVICE, LOCKABLE

S/N: BYJ1-UP; PDP1-UP
PART OF 278-3875, 278-3998, 307-7731 TANK GP-FUEL
ALSO AN ATTACHMENT

SMCS-1273 **i02959244**

NOTE	REF NO	GRAPHIC REF	PART NUMBER	QTY	PART NAME 1 2 3 4 5 6 (PRODUCT LEVEL)	SEE PAGE
	1	1	**9X-8600**	1	SEAL-O-RING	
	2	1	**190-9775**	1	COVER AS-FILTER	

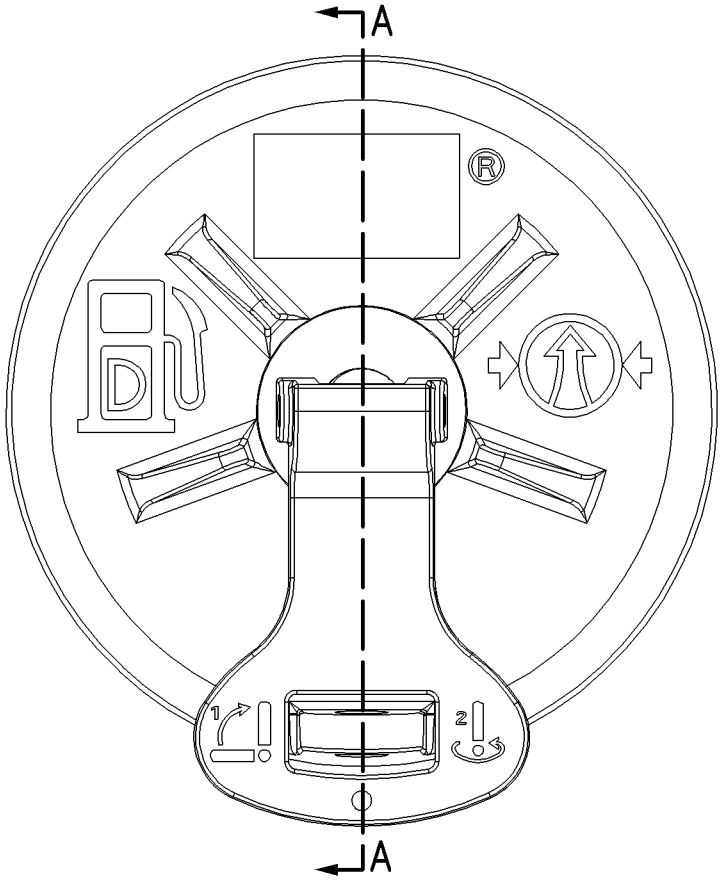

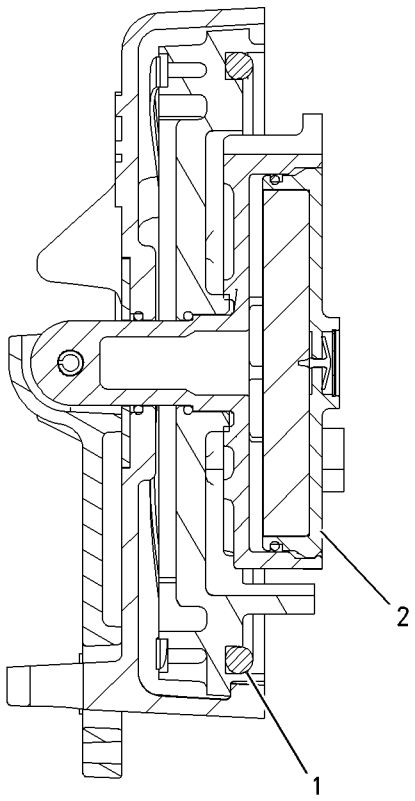

SECTION A-A

GRAPHIC #1 **<END>** g00849812

FUEL SYSTEM

296-4794 FILTER GP-FUEL

S/N: JKH1-UP
PART OF 279-7764, 279-7766 ENGINE AR
ALSO AN ATTACHMENT

SMCS-1261 **i03013641**

NOTE	REF NO	GRAPHIC REF	PART NUMBER	QTY	PART NAME 1 2 3 4 5 6 (PRODUCT LEVEL)	SEE PAGE
	1	1,2	**099-4437**	19	GASKET	
	2	1,2	**099-5041**	8	BOLT (M14X1.5X27-MM)	
	3	2	**294-1811**	2	WASHER	
	4	1	**296-4749**	1	HOSE	
	5	1	**137-5541**	1	PUMP AS-FUEL PRIMING	
		1	**061-7539**	1	SEAL-O-RING	
		1	**229-3218**	2	VALVE AS	
	6	1	**294-1820**	1	GASKET (FUEL PRIMING PUMP)	
	7	1	**199-2241**	1	BOLT	
	8	1	**294-1821**	1	BOLT (M8X1.25X35.5-MM)	
	9	1	**294-1822**	1	BASE	
	10	1	**296-4750**	4	BOLT	
	11	1	**1R-0751**	2	FILTER (ADVANCED EFFICIENCY) (FUEL)	
	12	1	**305-4886**	1	HOSE	
	13	1	**296-4752**	1	BRACKET	
	14	1	**296-4753**	2	BOLT	
	15	1	**8T-4121**	2	WASHER-HARD (11X21X2.5-MM THK)	
	17	1	**294-1819**	1	HOSE	
	18	1	**296-4754**	1	TUBE	
	19	1	**190-5830**	1	TUBE	
	20	1	**094-9725**	2	PLUG	
	21	1	**310-9529**	1	BRACKET	
	22	1	**310-9530**	1	HOSE	
	23	1	**095-2038**	2	WASHER (7.8X13.5X2-MM THK)	
M	24	1	**213-9433**	2	BOLT (M10X1.5X45-MM)	
	25	2	**294-1838**	1	BRACKET	
	26	1	**294-1831**	3	CLAMP	
	27	1	**310-9531**	1	CLAMP	
	28	1	**297-7706**	2	BOLT (M6X1X64-MM)	
	29	1	**096-2500**	2	LOCKWASHER	
	30	1	**5I-5078**	2	NUT	
	33	2	**294-1809**	1	BOLT	
	34	2	**294-1844**	1	BOLT (M12X1.75X28-MM)	
	35	2	**294-1845**	1	BOLT (M12X1.25X38-MM)	
	37	2	**297-7660**	1	NUT	
	38	2	**5I-8058**	1	CONNECTOR	
	39	2	**297-7661**	1	CONNECTOR	
	40	2	**294-1810**	2	CONNECTOR	
M	41	2	**6V-5215**	2	BOLT (M8X1.25X16-MM)	
	43	2	**294-1837**	1	BRACKET	
	44	2	**305-4901**	1	SEAL-O-RING	
	45	2	**305-4902**	1	CONNECTOR	
	46	2	**305-4900**	1	PIPE	
	48	2	**125-2983**	1	FITTING	
	49	2	**294-1804**	3	SEAL-O-RING	

M-METRIC PART

296-4794 **FILTER GP-FUEL** *(contd.)* **i03013641**

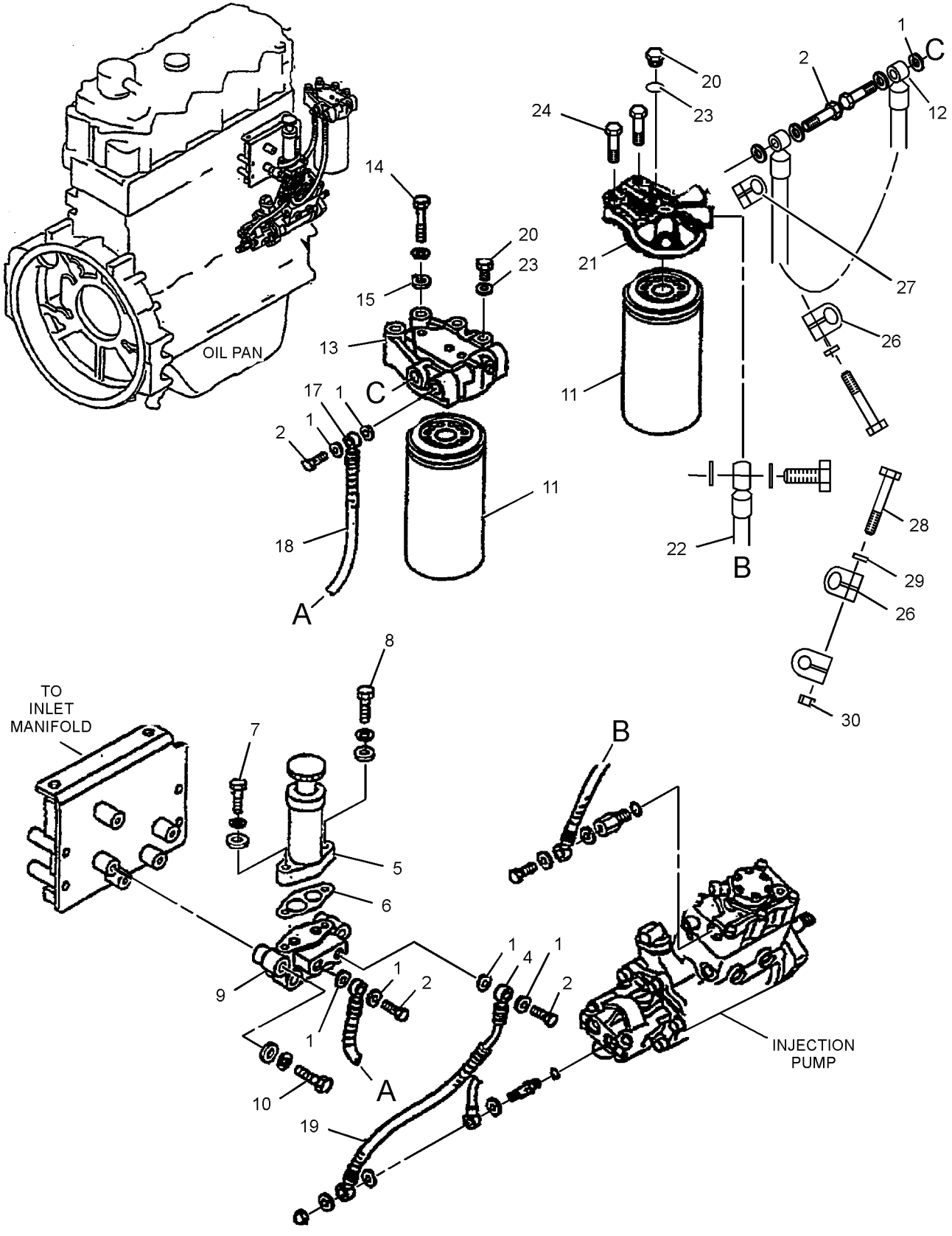

GRAPHIC #1 g01433207

296-4794 **FILTER GP-FUEL** *(contd.)* **i03013641**

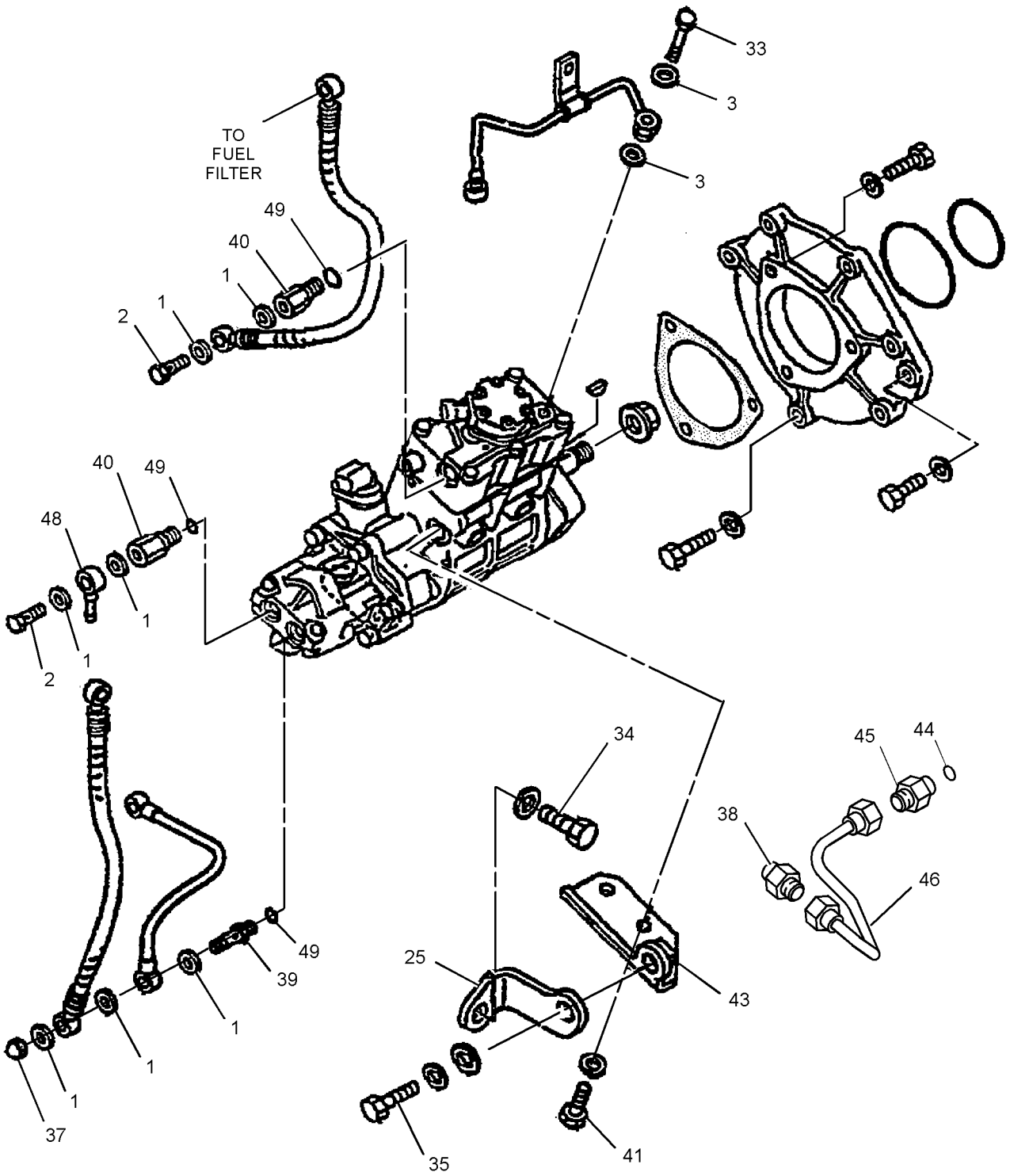

GRAPHIC #2 **<END>** g01433208

FUEL SYSTEM

174-9570 FILTER GP-WATER SEP & FUEL

S/N: BYJ1-UP; PDP1-UP

PART OF 278-3977 LINES GP-FUEL

SMCS-1261, 1263 **i03181950**

NOTE	REF NO	GRAPHIC REF	PART NUMBER	QTY	PART NAME 1 2 3 4 5 6 (PRODUCT LEVEL)	SEE PAGE
	1	1	**326-1644**	1	FILTER AS-WATER SEP & FUEL (PRIMARY)	
	1A	1	**220-8678**	1	SEAL-RING (FUEL, WATER SEPARATOR)	
	2	1	**270-5320**	1	BOWL AS (FUEL, WATER SEPARATOR)	

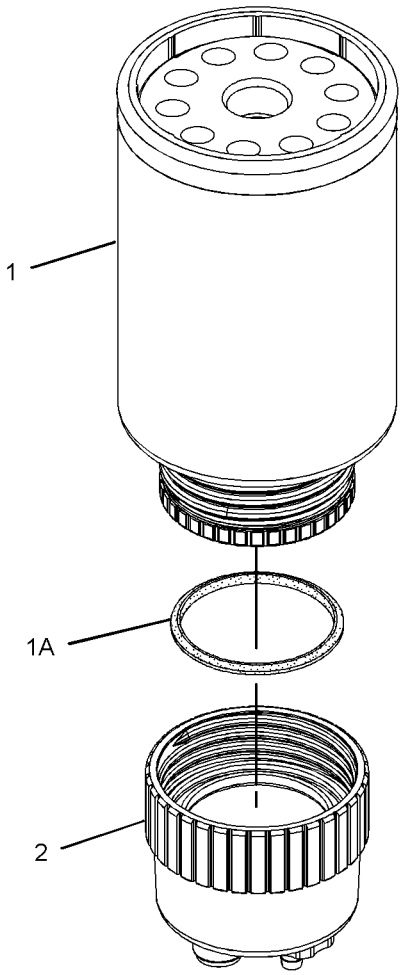

GRAPHIC #1 **<END>** g01179858

FUEL SYSTEM

310-9609 INJECTOR GP-FUEL

S/N: JKH1-UP
PART OF 279-7764, 279-7766 ENGINE AR
ALSO AN ATTACHMENT

SMCS-1251, 1254, 1290, 1713 **i02896386**

NOTE	REF NO	GRAPHIC REF	PART NUMBER	QTY	PART NAME 1 2 3 4 5 6 (PRODUCT LEVEL)	SEE PAGE
	1	1	**260-5656**	4	INJECTOR GP-FUEL	
	2	1	**294-1796**	4	WASHER-SPECIAL	
	3	1	**294-1800**	4	SUPPORT	
	4	1	**294-1803**	4	SEAL-O-RING	
	5	1	**1R-6573**	4	GASKET	
M	6	1	**294-1805**	4	BOLT (M8X1.25X43-MM)	

M-METRIC PART

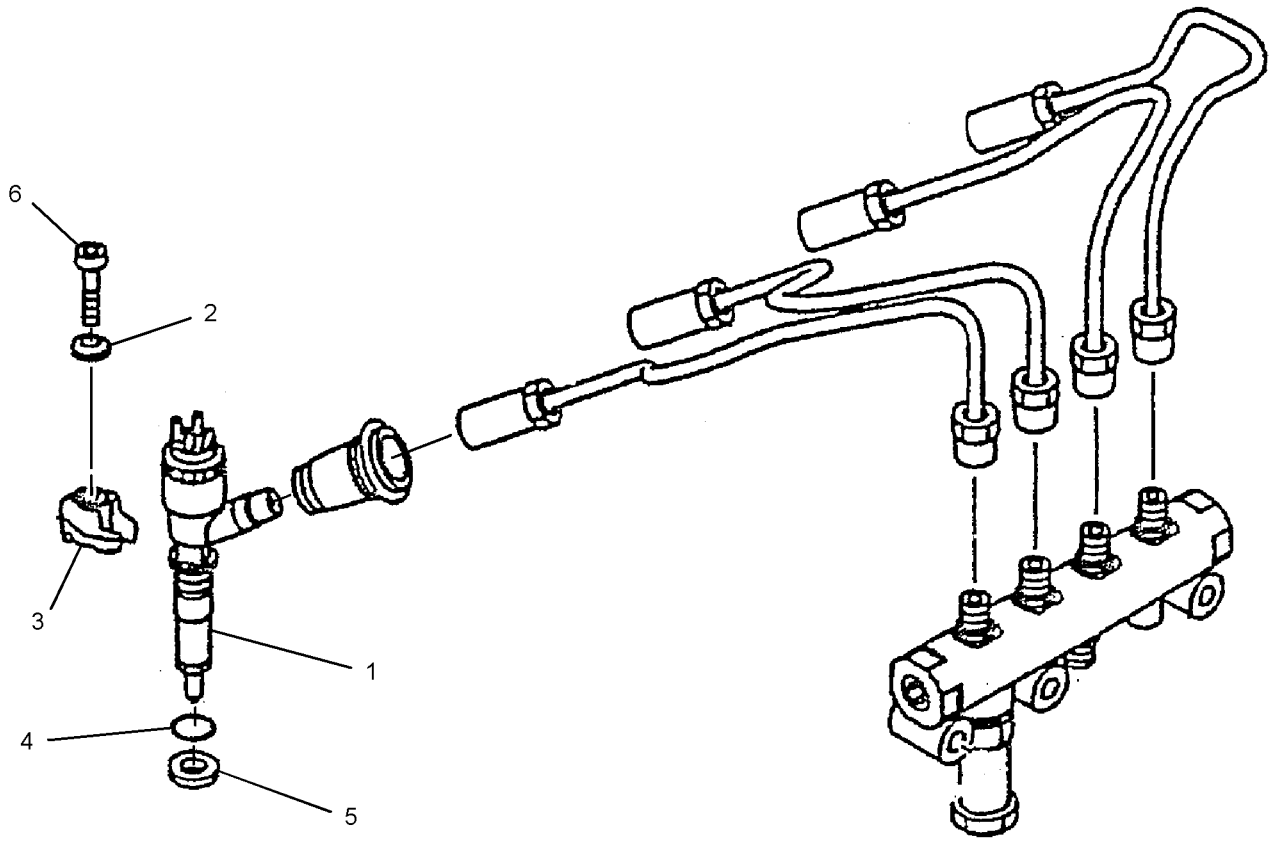

GRAPHIC #1 **<END>** g01442576

FUEL SYSTEM

278-3977 LINES GP-FUEL

S/N: BYJ1-UP; PDP1-UP

PART OF 260-7182, 260-7183 CHASSIS AR

SMCS-1274 **i02812002**

NOTE	REF NO	GRAPHIC REF	PART NUMBER	QTY	PART NAME 1 2 3 4 5 6 (PRODUCT LEVEL)	SEE PAGE
	1	1	**4I-0379**	1	VALVE-MANUAL (DRAIN, FUEL TANK)	
	2	1	**5P-7175**	1	FITTING-STRAIGHT	
	3	1	**7Y-8167**	1	GROMMET	
	4	1	**003-7764**	1	END-HOSE	
	5	1	**006-5490**	1	ELBOW	
	6	1	**095-1386**	9	CLAMP-HOSE	
	7	1	**134-3299**	1	GROMMET	
	8	1	*150-3024*	1	ELBOW AS	
		1	**3J-1907**	1	SEAL-O-RING	
		1	**5P-4924**	1	ELBOW	
Y	9	1	*174-9570*	1	FILTER GP-WATER SEP & FUEL	79
	10	1	**177-9778**	1	BASE AS	
	11	1	**178-6460**	1	HOSE	
Y	12	1	**298-3147**	1	VALVE GP-FUEL SHUTOFF	100
	13	1	**304-0041**	1	BRACKET AS	
M		1	**8T-3490**	1	NUT-WELD (M10X1.5-THD)	
		1	**121-1029**	1	CLIP	
		1	**304-0042**	1	BRACKET	
	14	1	**307-8027**	1	HOSE AS	
	15	1	**307-8028**	1	HOSE AS	
	16	1	**307-8029**	1	HOSE AS	
	17	1	**307-8030**	1	HOSE AS	
	18	1	**3J-1907**	5	SEAL-O-RING	
	19	1	**4D-7733**	2	CLIP	
	20	1	**4D-7735**	2	CLIP	
	21	1	**6D-4636**	2	CLIP	
	22	1	**6K-8178**	1	CLIP	
	23	1	**8M-2773**	7	CLIP	
	24	1	**8T-4121**	20	WASHER-HARD (11X21X2.5-MM THK)	
M	25	1	**8T-4133**	1	NUT (M10X1.5-THD)	
M	26	1	**8T-4136**	2	BOLT (M10X1.5X25-MM)	
M	27	1	**8T-4137**	13	BOLT (M10X1.5X20-MM)	
M	28	1	**8T-4195**	4	BOLT (M10X1.5X30-MM)	
	29	1	**9M-8406**	1	CLIP	
	30	1	**9S-8004**	5	PLUG-O-RING	
E	31	1	**5P-1442**		HOSE (23-CM)	

E-ORDER BY THE CENTIMETER
M-METRIC PART
Y-SEPARATE ILLUSTRATION

278-3977 **LINES GP-FUEL** *(contd.)* **i02812002**

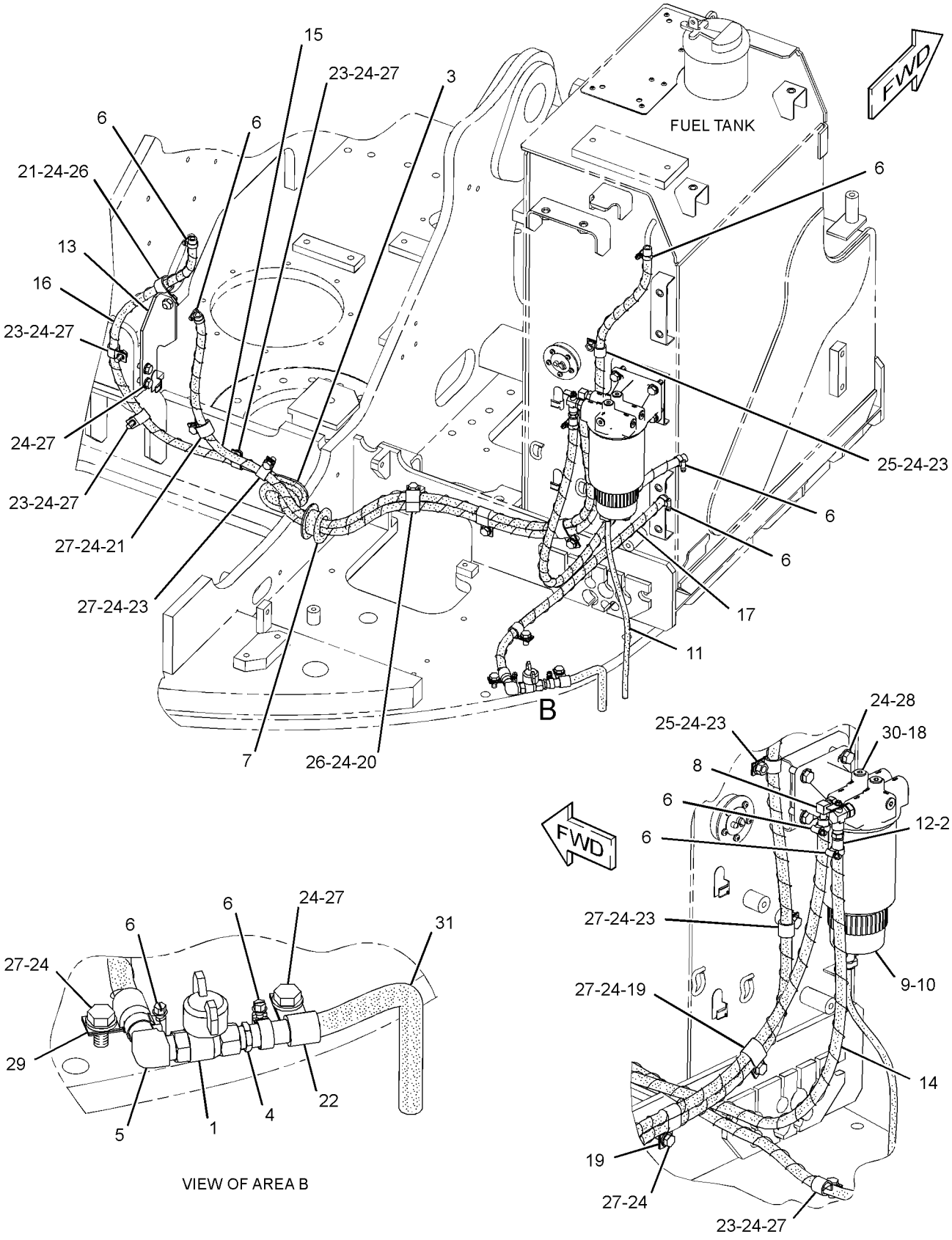

GRAPHIC #1 **<END>** g01424097

296-4793 LINES GP-FUEL INJECTION

S/N: JKH1-UP
PART OF 279-7764, 279-7766 ENGINE AR
ALSO AN ATTACHMENT

SMCS-1252, 1254 **i02944413**

NOTE	REF NO	GRAPHIC REF	PART NUMBER	QTY	PART NAME 1 2 3 4 5 6 (PRODUCT LEVEL)	SEE PAGE
	1	1	**294-1788**	4	SEAL	
	2	1	**096-9260**	4	BOLT AS	
	3	1	**296-4740**	1	PIPE	
	4	1	**311-6631**	1	RAIL AS-FUEL	
	5	1	**296-4741**	1	PIPE	
	6	1	**296-4742**	1	PIPE	
	7	1	**296-4743**	1	PIPE	
	8	1	**296-4744**	1	PIPE	
	10	1	**305-4772**	1	PIPE	
	11	1	**297-7657**	1	HOSE	
	12	1	**297-7658**	1	BLOCK	
	14	1	**294-1802**	2	CLAMP	
	16	1	**095-2039**	8	WASHER-SPECIAL	
	18	1	**296-4812**	4	BOLT	
	20	1	**195-8256**	5	BOLT (M8X1.25X45-MM)	
M	21	1	**5C-2890**	2	NUT (M6X1-THD)	
	22	1	**9X-8256**	2	WASHER (6.6X12X2-MM THK)	
	23	1	**099-4437**	4	GASKET	
	24	1	**099-5041**	3	BOLT (M14X1.5X27-MM)	
	25	1	**294-1808**	2	BOLT AS (M6X1X29-MM)	
	26	1	**294-1812**	2	WASHER	
	27	1	**310-9537**	1	VALVE AS	
	28	1	**296-4747**	1	PIPE	
	29	1	**296-4748**	1	BRACKET	

M-METRIC PART

296-4793 **LINES GP-FUEL INJECTION** *(contd.)* **i02944413**

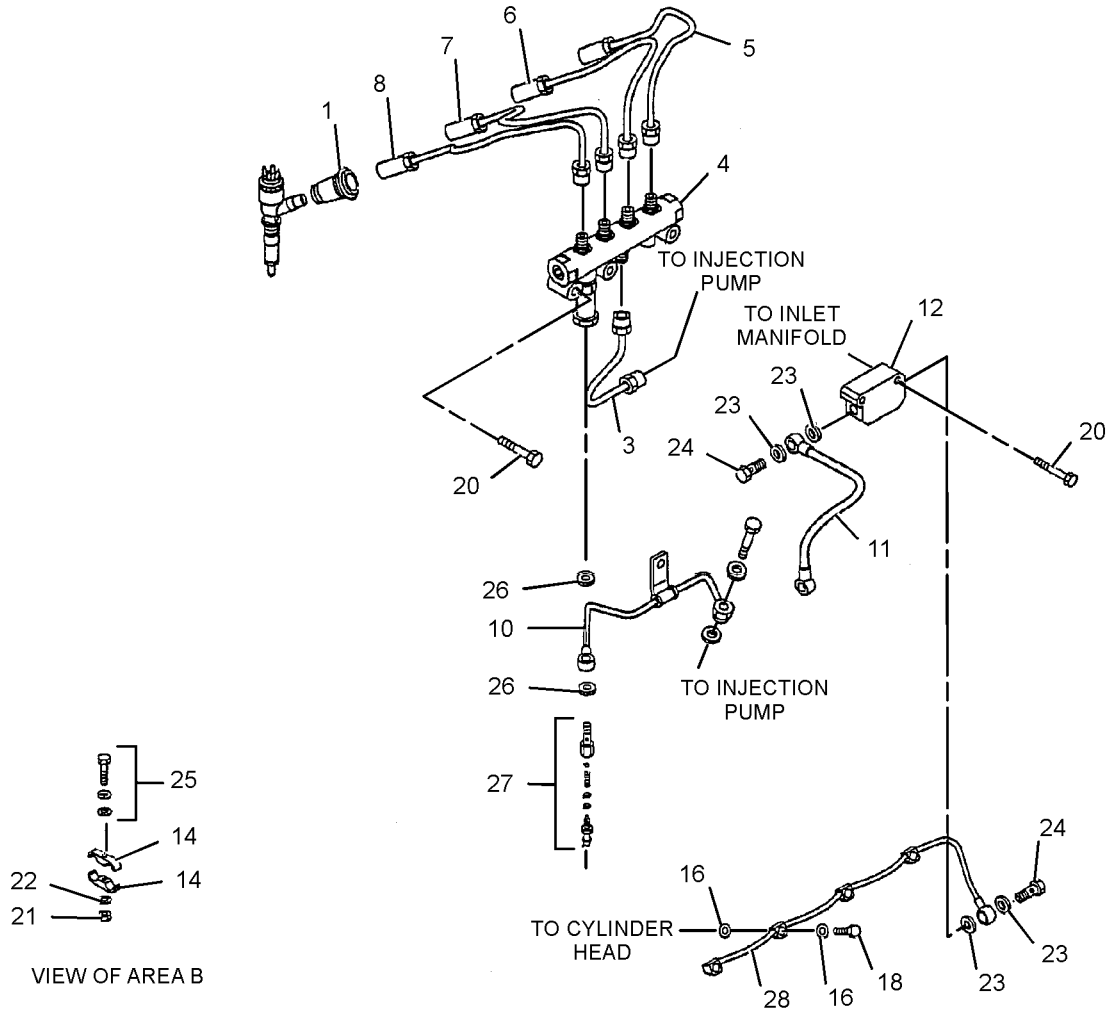

GRAPHIC #1 **<END>** g01414737

305-4680 PUMP & MTG GP-FUEL TRANSFER

S/N: JKH1-UP
PART OF 279-7764, 279-7766 ENGINE AR
ALSO AN ATTACHMENT

SMCS-1256 **i02879720**

NOTE	REF NO	GRAPHIC REF	PART NUMBER	QTY	PART NAME 1 2 3 4 5 6 (PRODUCT LEVEL)	SEE PAGE
R	1	1	**295-9127**	1	PUMP GP-FUEL INJECTION (INCLUDES TRANSFER PUMP)	
	1A	1	**238-0120**	1	SENSOR GP-SPEED (FUEL PUMP)	
	1B	1	**117-1385**	1	SEAL-O-RING	
M	1C	1	**5A-3604**	5	BOLT-SOCKET HEAD (M8X1.25X25-MM)	
	1D	1	**292-3751**	1	PUMP GP-FUEL TRANSFER	
M	1E	1	**8T-4200**	1	BOLT (M8X1.25X16-MM)	
	1F	1	**247-6019**	1	SEAL	
	2	1	**294-1834**	1	NUT	
	3	1	**294-1836**	1	KEY-WOODRUFF	
	4	1	**294-1839**	1	FLANGE	
	5	1	**294-1841**	1	GASKET	
	6	1	**294-1842**	1	SEAL-O-RING	
	7	1	**095-8799**	4	BOLT (M8X1.25X30.5-MM)	
	8	1	**294-1843**	1	BOLT (M10X1.5X47-MM)	
	9	1	**294-1846**	1	SEAL-O-RING	

M-METRIC PART
R-REMFG PART MAY BE AVAILABLE

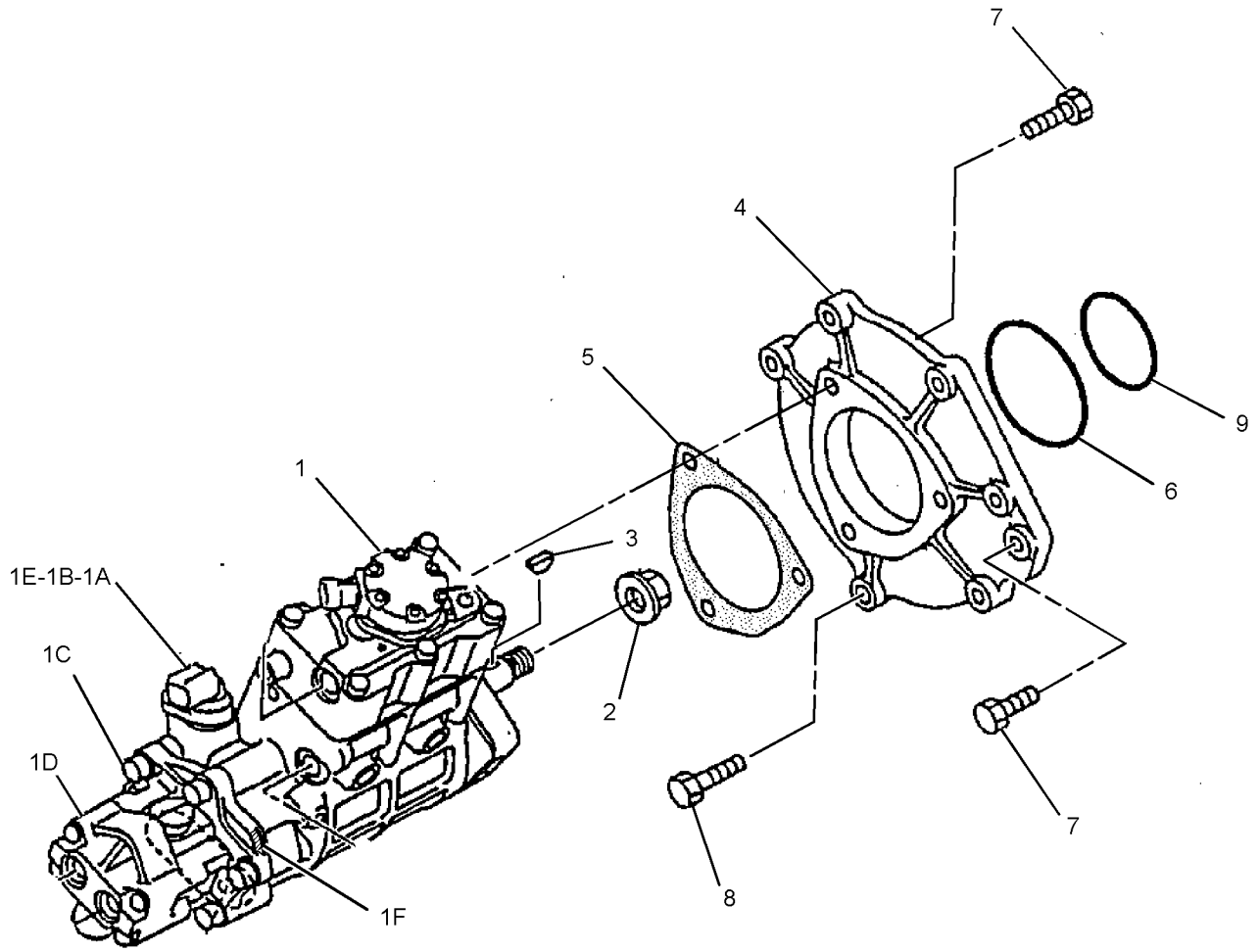

GRAPHIC #1 **<END>** g01433257

FUEL SYSTEM

260-7221 PUMP AR-FUEL TRANSFER

S/N: BYJ1-UP; PDP1-UP

AN ATTACHMENT

SMCS-1256 **i03159642**

NOTE	PART NUMBER	QTY	PART NAME 1 2 3 4 5 6 (PRODUCT LEVEL)	SEE PAGE
Y	*283-3831*	1	BOX & MOUNTING GP	213
Y	*301-2573*	1	FILM GP (FUEL TRANSFER PUMP)	826
Y	*260-7222*	1	PUMP GP-FUEL TRANSFER	87
Y	*278-3997*	1	TANK & MTG GP-FUEL	92
Y	*275-7122*	1	WIRING GP-FUEL SYSTEM (REFUELING PUMP)	197

Y-SEPARATE ILLUSTRATION

<END>

301-2607 PUMP AR-FUEL TRANSFER–

SYSTEM 20, WORK TOOL PRIORITY

S/N: BYJ1-UP; PDP1-UP

AN ATTACHMENT

SMCS-1256 **i02942908**

NOTE	PART NUMBER	QTY	PART NAME 1 2 3 4 5 6 (PRODUCT LEVEL)	SEE PAGE
Y	*283-3831*	1	BOX & MOUNTING GP	213
Y	*301-2573*	1	FILM GP (FUEL TRANSFER PUMP)	826
Y	*260-7222*	1	PUMP GP-FUEL TRANSFER	87
Y	*275-7122*	1	WIRING GP-FUEL SYSTEM (REFUELING PUMP)	197

Y-SEPARATE ILLUSTRATION

<END>

260-7222 PUMP GP-FUEL TRANSFER

S/N: BYJ1-UP; PDP1-UP
PART OF 260-7221, 301-2607 PUMP AR-FUEL TRANSFER
AN ATTACHMENT
TYPE 1

SMCS-1256 **i02820535**

NOTE	REF NO	GRAPHIC REF	PART NUMBER	QTY	PART NAME 1 2 3 4 5 6 (PRODUCT LEVEL)	SEE PAGE
Y	1	1	**5C-6108**	1	SWITCH GP-REFUELING (FUEL TANK SHUTOFF)	163
	2	1	**9M-7958**	6	CLAMP-HOSE	
	3	1	**006-5707**	1	ELBOW-PIPE	
	4	1	**105-6701**	3	CONNECTOR-HOSE	
	5	1	**122-4021**	1	COVER	
M	6	1	**135-8572**	2	BOLT AS (M12X1.75X20-MM)	
	7	1	**190-5283**	1	VALVE AS (FOOT)	
	8	1	**283-8952**	1	BLOCK	
	9	1	**301-2477**	1	CONTROL GP-REFUELING PUMP	
		1	*7Y-3966*	1	TERMINAL AS	
		1	**7Y-3962**	1	TERMINAL (CONNECTOR)	
		1	**7Y-3964**	1	TUBE (CONNECTOR TERMINAL)	
		1	*7Y-3967*	1	TERMINAL AS	
		1	**7Y-3963**	1	TERMINAL (RECEPTACLE)	
		1	**7Y-3965**	1	TUBE (RECEPTACLE TERMINAL)	
		1	**272-0710**	1	CONTROL-REFUELING PUMP	
	10	1	**301-2478**	1	PUMP GP-FUEL TRANSFER	
		1	*7Y-3966*	1	TERMINAL AS	
		1	**7Y-3962**	1	TERMINAL (CONNECTOR)	
		1	**7Y-3964**	1	TUBE (CONNECTOR TERMINAL)	
		1	*7Y-3967*	1	TERMINAL AS	
		1	**7Y-3963**	1	TERMINAL (RECEPTACLE)	
		1	**7Y-3965**	1	TUBE (RECEPTACLE TERMINAL)	
		1	**272-0709**	1	PUMP GP-FUEL	
	11	1	**301-2524**	2	CONNECTOR-HOSE	
	12	1	**301-2526**	1	SHEET AS	
M		1	**6V-9632**	2	NUT-WELD (M6X1-THD)	
	13	1	**301-2527**	2	SEAL-WASHER	
	14	1	**132-5789**	1	CLIP	
M	15	1	**5C-9553**	2	BOLT (M6X1X16-MM)	
	16	1	**8T-4121**	5	WASHER-HARD (11X21X2.5-MM THK)	
M	17	1	**8T-4137**	1	BOLT (M10X1.5X20-MM)	
M	18	1	**8T-4189**	2	BOLT (M8X1.25X20-MM)	
M	19	1	**8T-4195**	2	BOLT (M10X1.5X30-MM)	
	20	1	**8T-4224**	2	WASHER-HARD (8.8X16X2-MM THK)	
M	21	1	**8T-6466**	2	BOLT (M10X1.5X60-MM)	
	22	1	**9X-8256**	2	WASHER (6.6X12X2-MM THK)	
E	23	1	**234-3344**		HOSE (300-CM)	
E	23A	1	**234-3344**		HOSE (36-CM)	
E	23B	1	**234-3344**		HOSE (23-CM)	
	24	1	**3S-2093**	2	STRAP-CABLE	
	25	1	**7K-1181**	2	STRAP-CABLE	

E-ORDER BY THE CENTIMETER
M-METRIC PART
Y-SEPARATE ILLUSTRATION

260-7222 **PUMP GP-FUEL TRANSFER** *(contd.)* **i02820535**

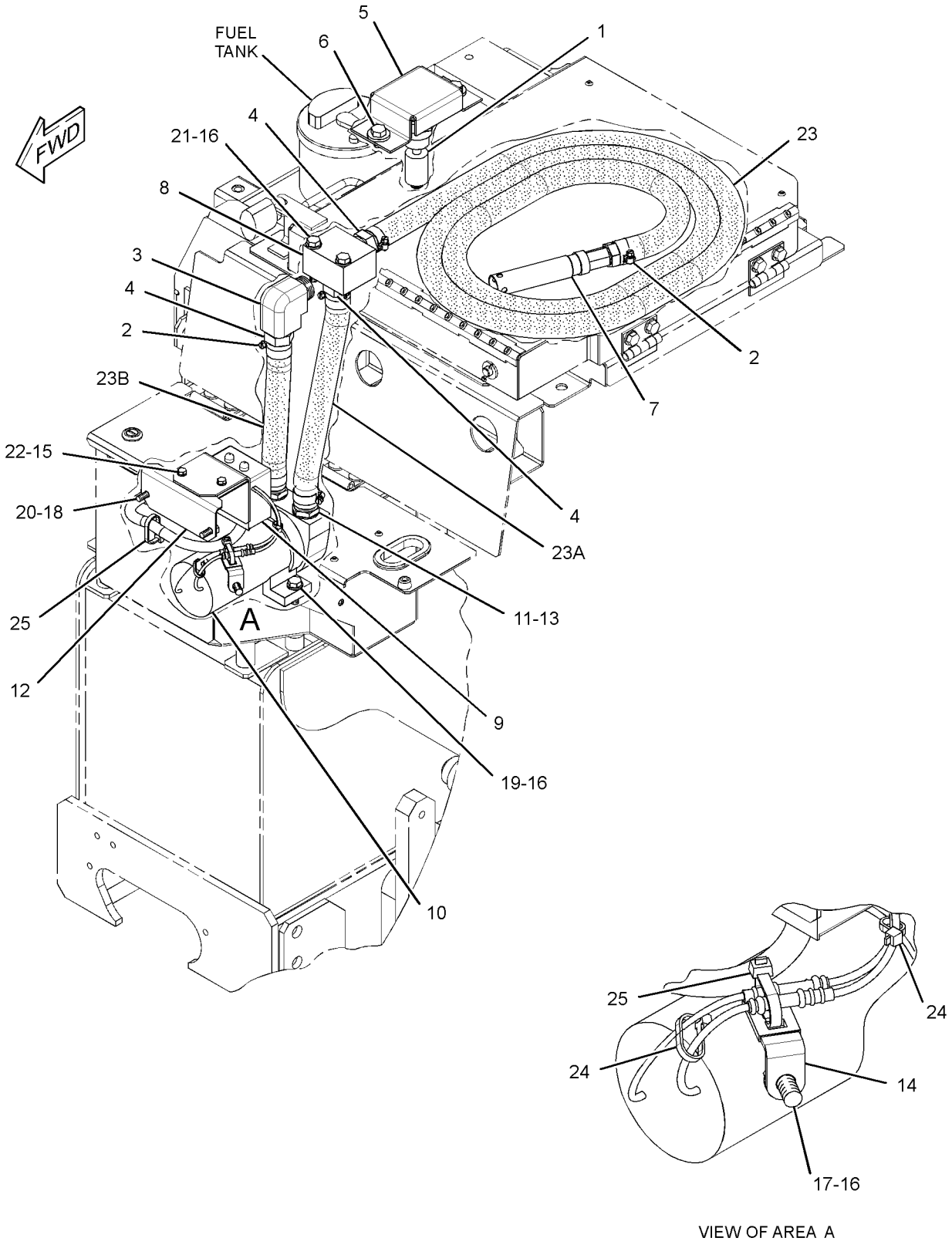

VIEW OF AREA A

GRAPHIC #1 **<END>** g01521729

FUEL SYSTEM

260-7222 PUMP GP-FUEL TRANSFER

S/N: BYJ1-UP; PDP1-UP
PART OF 260-7221, 301-2607 PUMP AR-FUEL TRANSFER
AN ATTACHMENT
TYPE 2

SMCS-1256 **i03171320**

NOTE	REF NO	GRAPHIC REF	PART NUMBER	QTY	PART NAME 1 2 3 4 5 6 (PRODUCT LEVEL)	SEE PAGE
C	1	1	**312-2645**	1	SWITCH AS-LIQUID LEVEL (FUEL TANK SHUTOFF)	
		1	**2S-4078**	1	SEAL-O-RING	
		1	**186-3735**	2	PIN-CONNECTOR (16-GA TO 18-GA)	
		1	**243-4505**	1	RECEPTACLE AS-CONNECTOR (2-PIN)	
	2	1	**9M-7958**	6	CLAMP-HOSE	
	3	1	**006-5707**	1	ELBOW-PIPE	
	4	1	**105-6701**	3	CONNECTOR-HOSE	
C	5	1	**324-5761**	1	COVER AS	
M	6	1	**135-8572**	2	BOLT AS (M12X1.75X20-MM)	
	7	1	**190-5283**	1	VALVE AS (FOOT)	
	8	1	**283-8952**	1	BLOCK	
	9	1	**301-2477**	1	CONTROL GP-REFUELING PUMP	
		1	*7Y-3966*	1	TERMINAL AS	
		1	**7Y-3962**	1	TERMINAL (CONNECTOR)	
		1	**7Y-3964**	1	TUBE (CONNECTOR TERMINAL)	
		1	*7Y-3967*	1	TERMINAL AS	
		1	**7Y-3963**	1	TERMINAL (RECEPTACLE)	
		1	**7Y-3965**	1	TUBE (RECEPTACLE TERMINAL)	
		1	**272-0710**	1	CONTROL-REFUELING PUMP	
	10	1	**301-2478**	1	PUMP GP-FUEL TRANSFER	
		1	*7Y-3966*	1	TERMINAL AS	
		1	**7Y-3962**	1	TERMINAL (CONNECTOR)	
		1	**7Y-3964**	1	TUBE (CONNECTOR TERMINAL)	
		1	*7Y-3967*	1	TERMINAL AS	
		1	**7Y-3963**	1	TERMINAL (RECEPTACLE)	
		1	**7Y-3965**	1	TUBE (RECEPTACLE TERMINAL)	
		1	**272-0709**	1	PUMP GP-FUEL	
	11	1	**301-2524**	2	CONNECTOR-HOSE	
	12	1	**301-2526**	1	SHEET AS	
	13	1	**301-2527**	2	SEAL-WASHER	
	14	1	**132-5789**	1	CLIP	
M	15	1	**5C-9553**	2	BOLT (M6X1X16-MM)	
	16	1	**8T-4121**	5	WASHER-HARD (11X21X2.5-MM THK)	
M	17	1	**8T-4137**	1	BOLT (M10X1.5X20-MM)	
M	18	1	**8T-4189**	2	BOLT (M8X1.25X20-MM)	
M	19	1	**8T-4195**	2	BOLT (M10X1.5X30-MM)	
	20	1	**8T-4224**	2	WASHER-HARD (8.8X16X2-MM THK)	
M	21	1	**8T-6466**	2	BOLT (M10X1.5X60-MM)	
	22	1	**9X-8256**	2	WASHER (6.6X12X2-MM THK)	
E	23	1	**234-3344**		HOSE (300-CM)	
E	23A	1	**234-3344**		HOSE (36-CM)	
E	23B	1	**234-3344**		HOSE (23-CM)	
	24	1	**3S-2093**	2	STRAP-CABLE	
	25	1	**7K-1181**	2	STRAP-CABLE	

C-CHANGE FROM PREVIOUS TYPE
E-ORDER BY THE CENTIMETER
M-METRIC PART

260-7222 **PUMP GP-FUEL TRANSFER** *(contd.)* **i03171320**

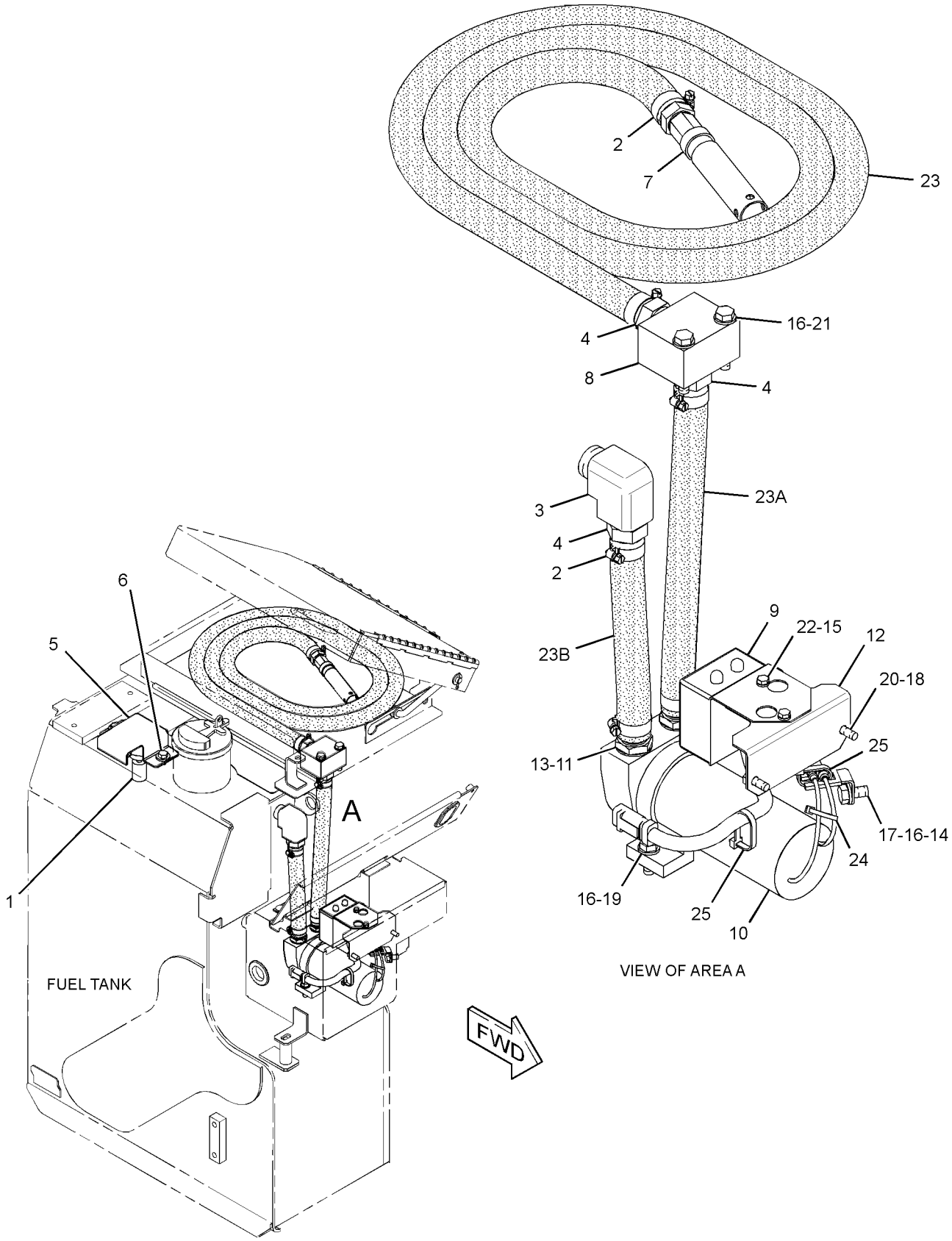

GRAPHIC #1 **<END>** g01624747

FUEL SYSTEM

278-3874 TANK & MTG GP-FUEL

S/N: BYJ1-UP; PDP1-UP

PART OF 260-7182, 260-7183 CHASSIS AR

SMCS-1273 **i03009875**

NOTE	REF NO	GRAPHIC REF	PART NUMBER	QTY	PART NAME 1 2 3 4 5 6 (PRODUCT LEVEL)	SEE PAGE
	1	1	**246-2641**	1	PADLOCK GP	
		1	**5P-8500**	1	KEY (FUEL TANK FILL CAP)	
Y	2	1	**278-3875**	1	TANK GP-FUEL	94
	3	1	**085-9310**	6	SPACER (16.6X32X26-MM THK)	
M	4	1	**8T-4140**	6	BOLT (M16X2X60-MM)	

M-METRIC PART
Y-SEPARATE ILLUSTRATION

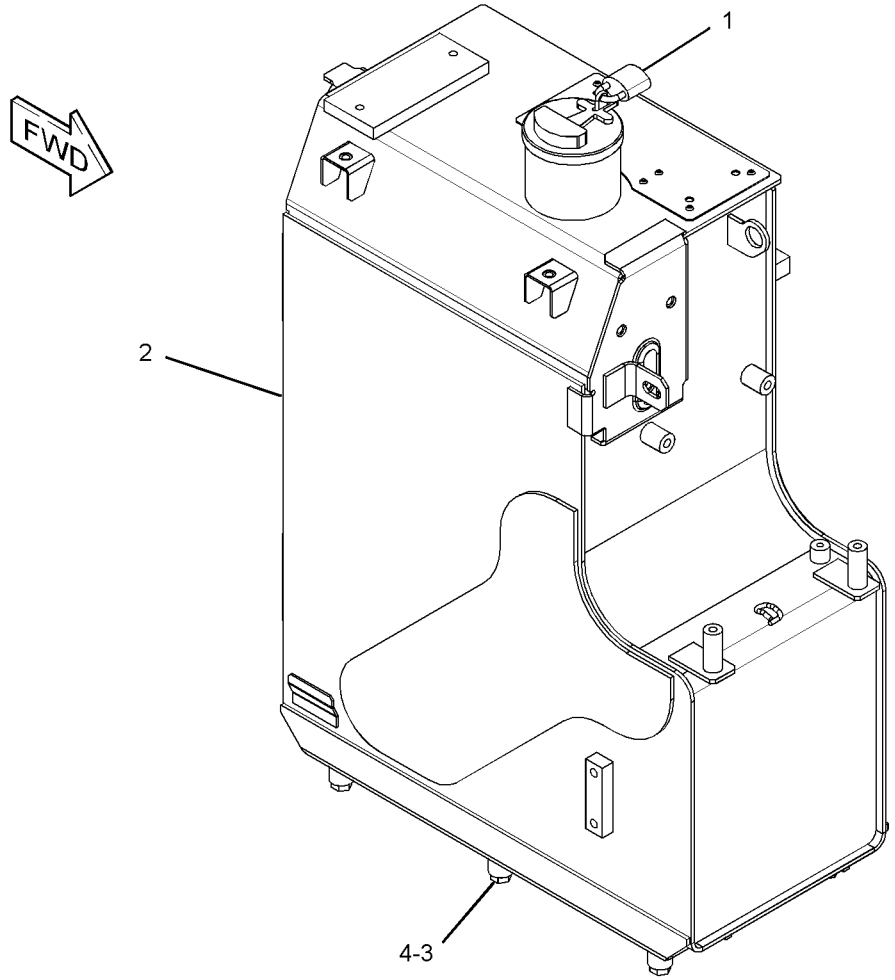

GRAPHIC #1 **<END>** g01415379

278-3997 TANK & MTG GP-FUEL

S/N: BYJ1-UP; PDP1-UP
PART OF 260-7221 PUMP AR-FUEL TRANSFER
AN ATTACHMENT

SMCS-1273 **i02852106**

NOTE	REF NO	GRAPHIC REF	PART NUMBER	QTY	PART NAME 1 2 3 4 5 6 (PRODUCT LEVEL)	SEE PAGE
Y	1	1	**278-3998**	1	TANK GP-FUEL	96

Y-SEPARATE ILLUSTRATION

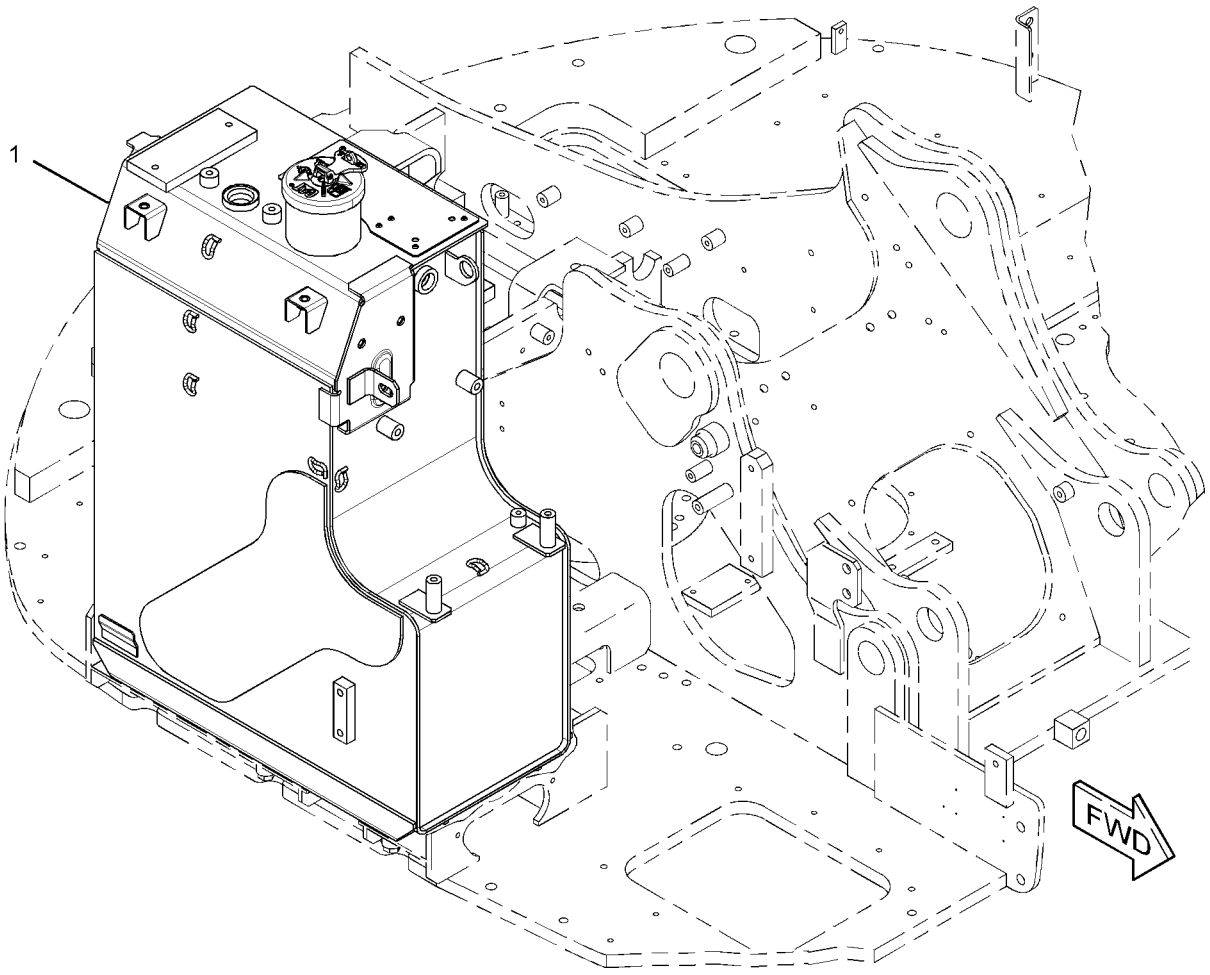

GRAPHIC #1 **<END>** g01502050

286-6125 TANK & MTG GP-FUEL—SYSTEM 20, WORK TOOL PRIORITY

S/N: BYJ1-UP; PDP1-UP
PART OF 270-5996 CONTROL AR-AUXILIARY
AN ATTACHMENT

SMCS-1273 **i03033601**

NOTE	REF NO	GRAPHIC REF	PART NUMBER	QTY	PART NAME 1 2 3 4 5 6 (PRODUCT LEVEL)	SEE PAGE
M	1	1	**135-8575**	2	BOLT AS-LOCKING (M12X1.75X30-MM)	
	2	1	**307-7725**	1	SHEET AS	
Y	3	1	**307-7731**	1	TANK GP-FUEL	98
	4	1	**177-5987**	4	SPACER (17X35X56.5-MM THK)	
M	5	1	**8T-4175**	4	BOLT (M16X2X90-MM)	

M-METRIC PART
Y-SEPARATE ILLUSTRATION

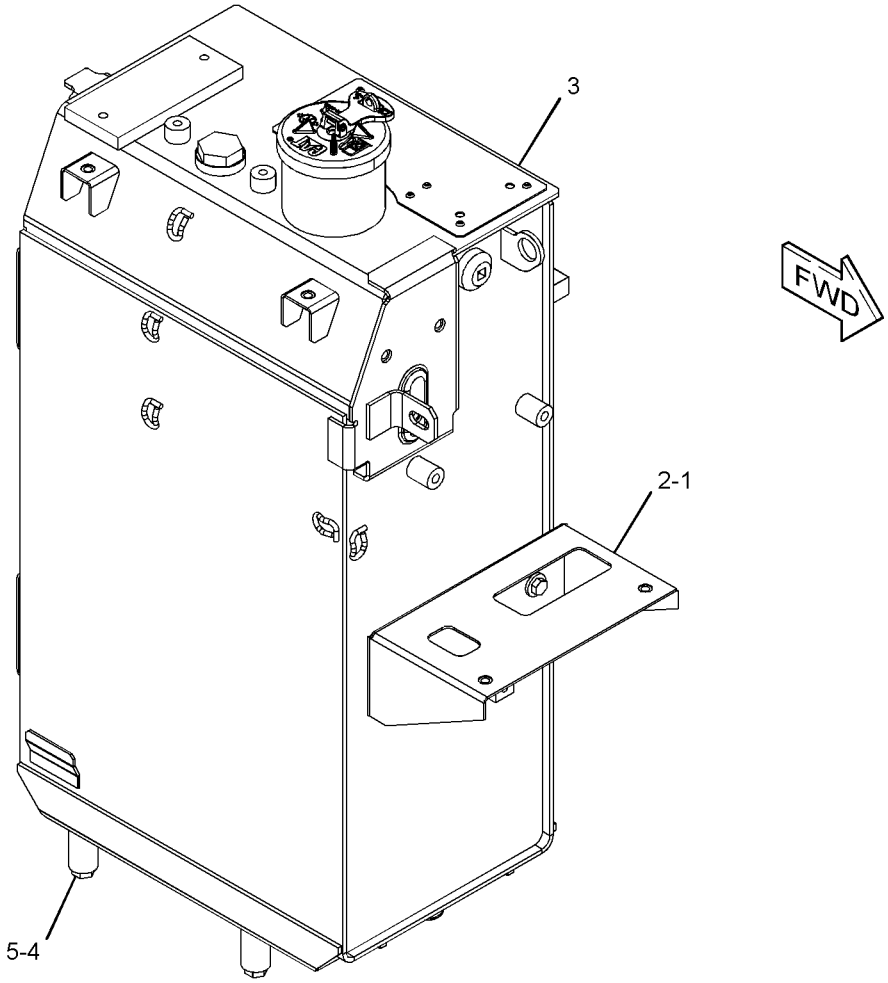

GRAPHIC #1 **<END>** g01638895

FUEL SYSTEM

278-3875 TANK GP-FUEL

S/N: BYJ1-UP; PDP1-UP
186-L (49-US GAL)
PART OF 278-3874 TANK & MTG GP-FUEL

SMCS-1273 **i02961287**

NOTE	REF NO	GRAPHIC REF	PART NUMBER	QTY	PART NAME 1 2 3 4 5 6 (PRODUCT LEVEL)	SEE PAGE
	1	1	**4I-0378**	1	GASKET-RUBBER	
Y	2	1	**164-4858**	1	CAP GP-FUEL FILLER (EXTREME SERVICE, LOCKABLE)	75
	3	1	**003-7764**	1	END-HOSE	
	4	1	**128-4411**	1	VALVE AS (FUEL SHUTOFF)	
J	5	1	**303-9933**	1	STRAINER AS-FUEL (FLOAT GAUGE)	
	6	1	**248-7812**	2	INSULATION	
	7	1	**8T-0328**	5	WASHER-HARD (5.5X10X1-MM THK)	
	8	1	**283-2800**	1	SENSOR AS-FUEL LEVEL	
		1	**9X-3401**	2	PIN-CONNECTOR (16-GA TO 18-GA)	
		1	**243-4505**	1	RECEPTACLE AS-CONNECTOR (2-PIN)	
	9	1	**283-3738**	1	SHEET-RUBBER	
	10	1	**150-3024**	1	ELBOW AS	
		1	**3J-1907**	1	SEAL-O-RING	
		1	**5P-4924**	1	ELBOW	
M	11	1	**095-0736**	5	SCREW-MACHINE (M5X0.8X10-MM)	
					AVAILABLE REPAIR KIT(S):	
J			**303-9937**	1	KIT-GAUGE (FUEL STRAINER)	
					(INCLUDES FLOAT GAUGE & STOPPER)	

J-KIT MARKED J SERVICES PARTS MARKED J
M-METRIC PART
Y-SEPARATE ILLUSTRATION

278-3875 TANK GP-FUEL *(contd.)* **i02961287**

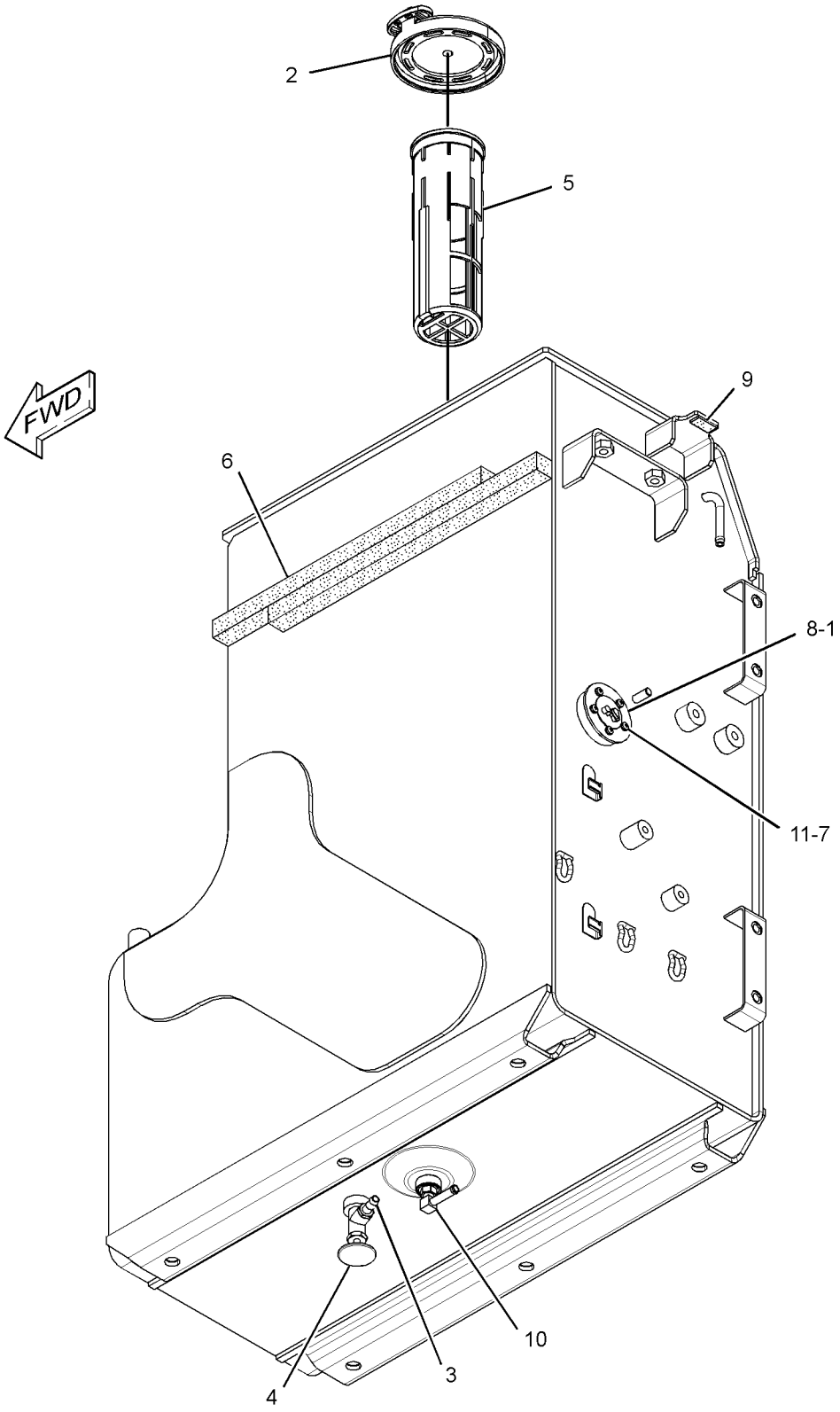

GRAPHIC #1 **<END>** g01509653

278-3998 TANK GP-FUEL

S/N: BYJ1-UP; PDP1-UP
186-L (49-US GAL)
PART OF 278-3997 TANK & MTG GP-FUEL
AN ATTACHMENT

SMCS-1273 **i03254061**

NOTE	REF NO	GRAPHIC REF	PART NUMBER	QTY	PART NAME 1 2 3 4 5 6 (PRODUCT LEVEL)	SEE PAGE
	1	1	**4I-0378**	1	GASKET-RUBBER	
	2	1	**003-7764**	1	END-HOSE	
	3	1	**128-4411**	1	VALVE AS (FUEL SHUTOFF)	
Y	4	1	**164-4858**	1	CAP GP-FUEL FILLER (EXTREME SERVICE, LOCKABLE)	75
	5	1	**248-7812**	2	INSULATION	
	6	1	**8T-0328**	5	WASHER-HARD (5.5X10X1-MM THK)	
	7	1	**283-2800**	1	SENSOR AS-FUEL LEVEL	
		1	**9X-3401**	2	PIN-CONNECTOR (16-GA TO 18-GA)	
		1	**243-4505**	1	RECEPTACLE AS-CONNECTOR (2-PIN)	
	8	1	**283-3738**	1	SHEET-RUBBER	
J	9	1	**303-9933**	1	STRAINER AS-FUEL (FLOAT GAUGE)	
	10	1	*150-3024*	1	ELBOW AS	
		1	**3J-1907**	1	SEAL-O-RING	
		1	**5P-4924**	1	ELBOW	
M	11	1	**095-0736**	5	SCREW-MACHINE (M5X0.8X10-MM)	
	12	1	**2S-4078**	1	SEAL-O-RING	
	13	1	**3B-0551**	1	PLUG-PIPE	
	14	1	**9S-6130**	1	PLUG	
					AVAILABLE REPAIR KIT(S):	
J			**303-9937**	1	KIT-GAUGE (FUEL STRAINER)	
					(INCLUDES STOPPER & GAUGE)	

J-KIT MARKED J SERVICES PART MARKED J
M-METRIC PART
Y-SEPARATE ILLUSTRATION

278-3998 TANK GP-FUEL *(contd.)* **i03254061**

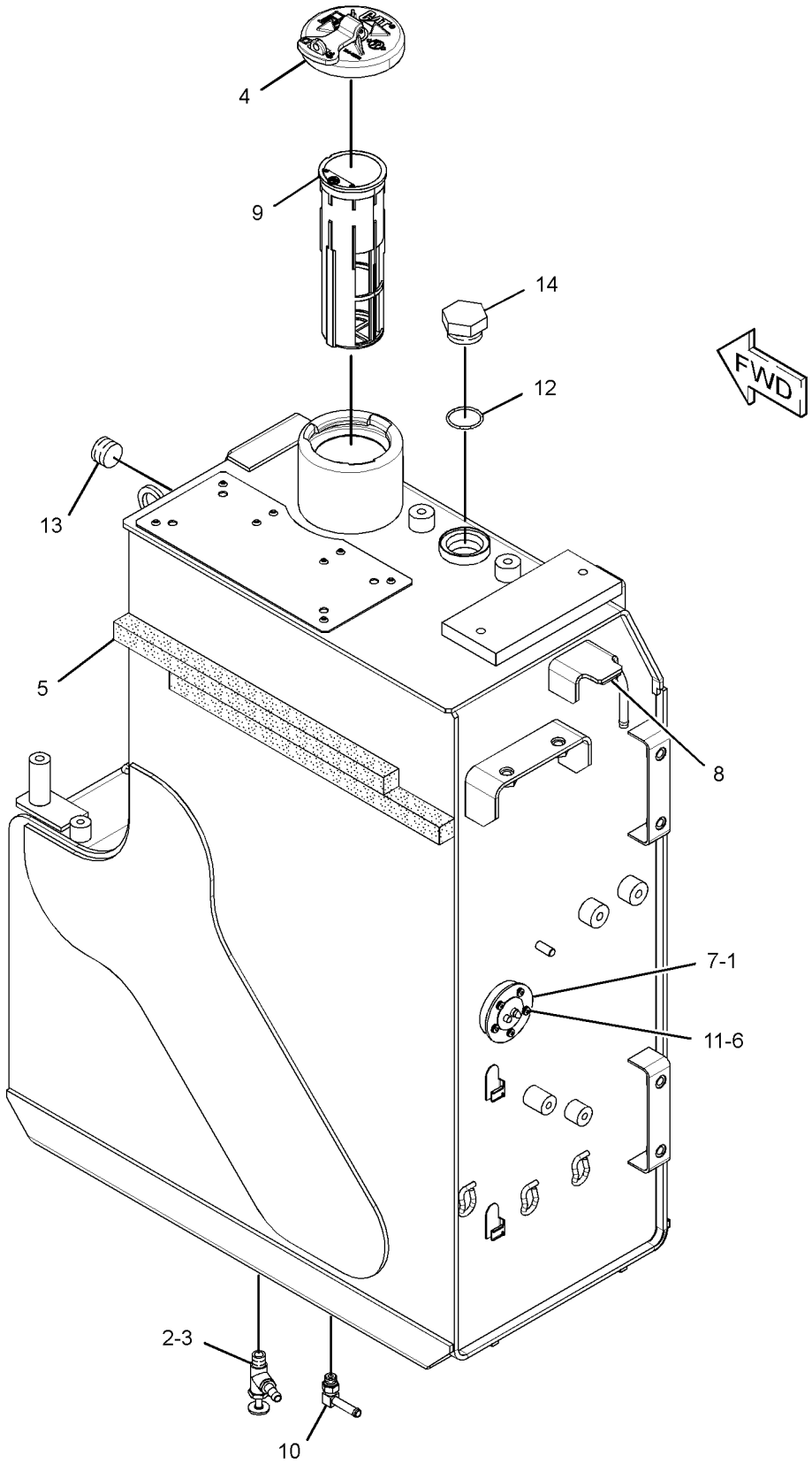

GRAPHIC #1 **<END>** g01508353

307-7731 TANK GP-FUEL

S/N: BYJ1-UP; PDP1-UP
160-L (42.2-US GAL)
PART OF 286-6125 TANK & MTG GP-FUEL
AN ATTACHMENT

SMCS-1273 **i02957159**

NOTE	REF NO	GRAPHIC REF	PART NUMBER	QTY	PART NAME 1 2 3 4 5 6 (PRODUCT LEVEL)	SEE PAGE
	1	1	**4I-0378**	1	GASKET-RUBBER	
	2	1	**003-7764**	1	END-HOSE	
	3	1	**128-4411**	1	VALVE AS (FUEL SHUTOFF)	
	4	1	*150-3024*	1	ELBOW AS	
		1	**5P-4924**	1	ELBOW	
		1	**3J-1907**	1	SEAL-O-RING	
Y	5	1	**164-4858**	1	CAP GP-FUEL FILLER (EXTREME SERVICE, LOCKABLE)	75
	6	1	**248-7812**	2	INSULATION	
	7	1	**283-2800**	1	SENSOR AS-FUEL LEVEL	
		1	**9X-3401**	2	PIN-CONNECTOR (16-GA TO 18-GA)	
		1	**243-4505**	1	RECEPTACLE AS-CONNECTOR (2-PIN)	
	8	1	**283-3738**	1	SHEET-RUBBER	
J	9	1	**303-9933**	1	STRAINER AS-FUEL (FLOAT GAUGE)	
M	11	1	**095-0736**	5	SCREW-MACHINE (M5X0.8X10-MM)	
	12	1	**2S-4078**	1	SEAL-O-RING	
	13	1	**3B-0551**	1	PLUG-PIPE	
	14	1	**8T-0328**	5	WASHER-HARD (5.5X10X1-MM THK)	
	15	1	**9S-6130**	1	PLUG	
					AVAILABLE REPAIR KIT(S):	
J			**303-9937**	1	KIT-GAUGE (FUEL STRAINER)	
					(INCLUDES STOPPER & GAUGE FLOAT)	

J-KIT MARKED J SERVICES PARTS MARKED J
M-METRIC PART
Y-SEPARATE ILLUSTRATION

307-7731 TANK GP-FUEL *(contd.)* **i02957159**

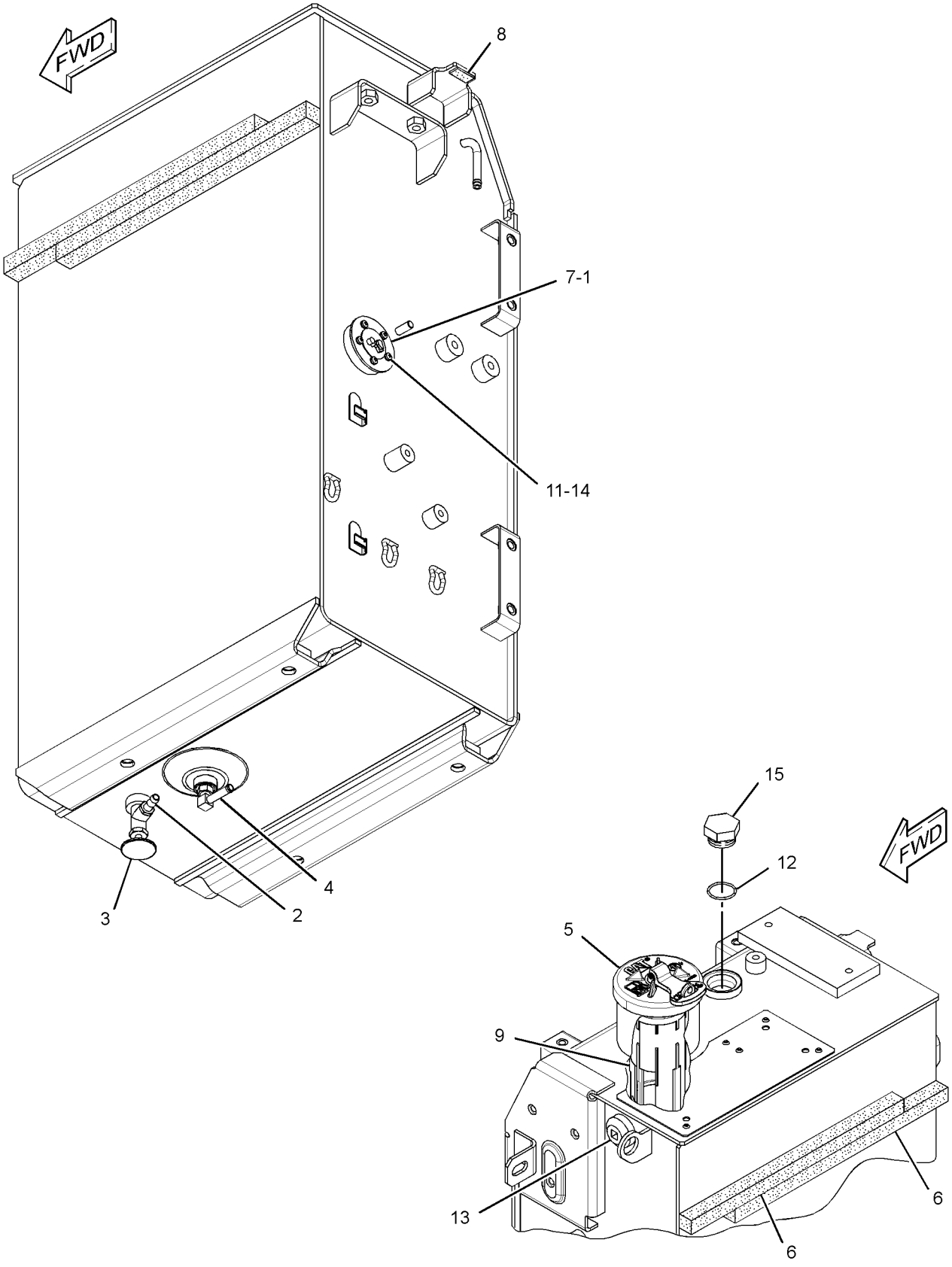

GRAPHIC #1 **<END>** g01523552

298-3147 VALVE GP-FUEL SHUTOFF

S/N: BYJ1-UP; PDP1-UP

PART OF 278-3977 LINES GP-FUEL

SMCS-1273 **i02750485**

NOTE	REF NO	GRAPHIC REF	PART NUMBER	QTY	PART NAME 1 2 3 4 5 6 (PRODUCT LEVEL)	SEE PAGE
	1	1	**298-3257**	1	STOP	
	2	1	**298-3258**	1	LEVER	
M	3	1	**260-6692**	1	NUT (M5X0.8-THD)	
	4	1	**3J-1907**	1	SEAL-O-RING	
	5	1	**8T-0328**	1	WASHER-HARD (5.5X10X1-MM THK)	
					PARTS SHOWN IN GRAPHIC(S) WITHOUT A REFERENCE NUMBER ARE NOT SERVICED SEPARATELY	

M-METRIC PART

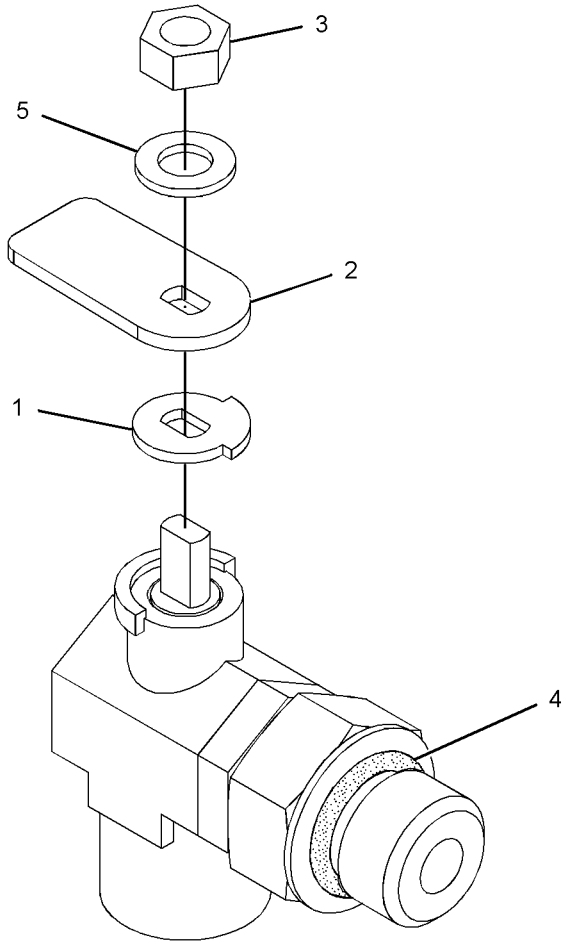

GRAPHIC #1 **<END>** g01377343

132-1829 ALARM GP

S/N: BYJ1-UP; PDP1-UP
24-VOLT
PART OF 275-7111 WIRING GP-CAB

SMCS-7400, 7402, 7407 **i03254766**

NOTE	REF NO	GRAPHIC REF	PART NUMBER	QTY	PART NAME 1 2 3 4 5 6 (PRODUCT LEVEL)	SEE PAGE
	1	1	**102-8802**	1	KIT-RECEPTACLE (2-PIN)	
					(INCLUDES RECEPTACLE AS & WEDGE)	
	2	1	**186-3735**	2	PIN-CONNECTOR (16-GA TO 18-GA)	

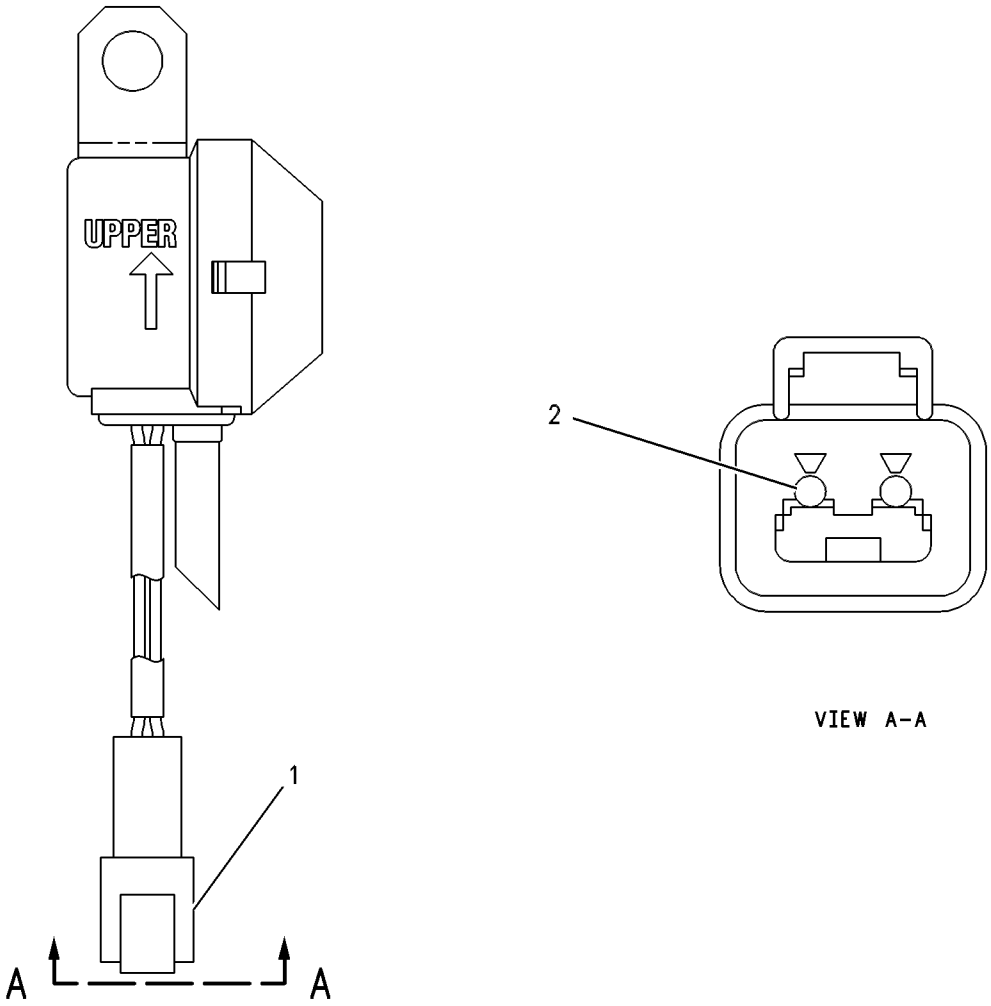

GRAPHIC #1 **<END>** g00272185

275-7115 ALARM GP-TRAVEL

S/N: BYJ1-UP; PDP1-UP
AN ATTACHMENT

SMCS-7429 **i03009884**

NOTE	REF NO	GRAPHIC REF	PART NUMBER	QTY	PART NAME 1 2 3 4 5 6 (PRODUCT LEVEL)	SEE PAGE
	1	1	**7K-1181**	1	STRAP-CABLE	
	2	1	**213-9100**	1	ALARM GP (TRAVEL)	
D		1	**5P-5623**		WIRE-ELECTRICAL (16-GA, BLACK) (0.4-M)	
		1	**102-8802**	1	KIT-RECEPTACLE (2-PIN)	
					(INCLUDES RECEPTACLE AS & WEDGE)	
		1	**186-3735**	2	PIN-CONNECTOR (16-GA TO 18-GA)	
E		1	**9X-1813**		SLEEVE (31-CM)	
	3	1	**5P-4116**	2	WASHER-HARD (8.8X20.5X2-MM THK)	
M	4	1	**8T-4199**	2	BOLT (M8X1.25X12-MM)	
	5	1	**140-0866**	1	RELAY (24-VOLT) (TRAVEL ALARM)	

D-ORDER BY THE METER
E-ORDER BY THE CENTIMETER
M-METRIC PART

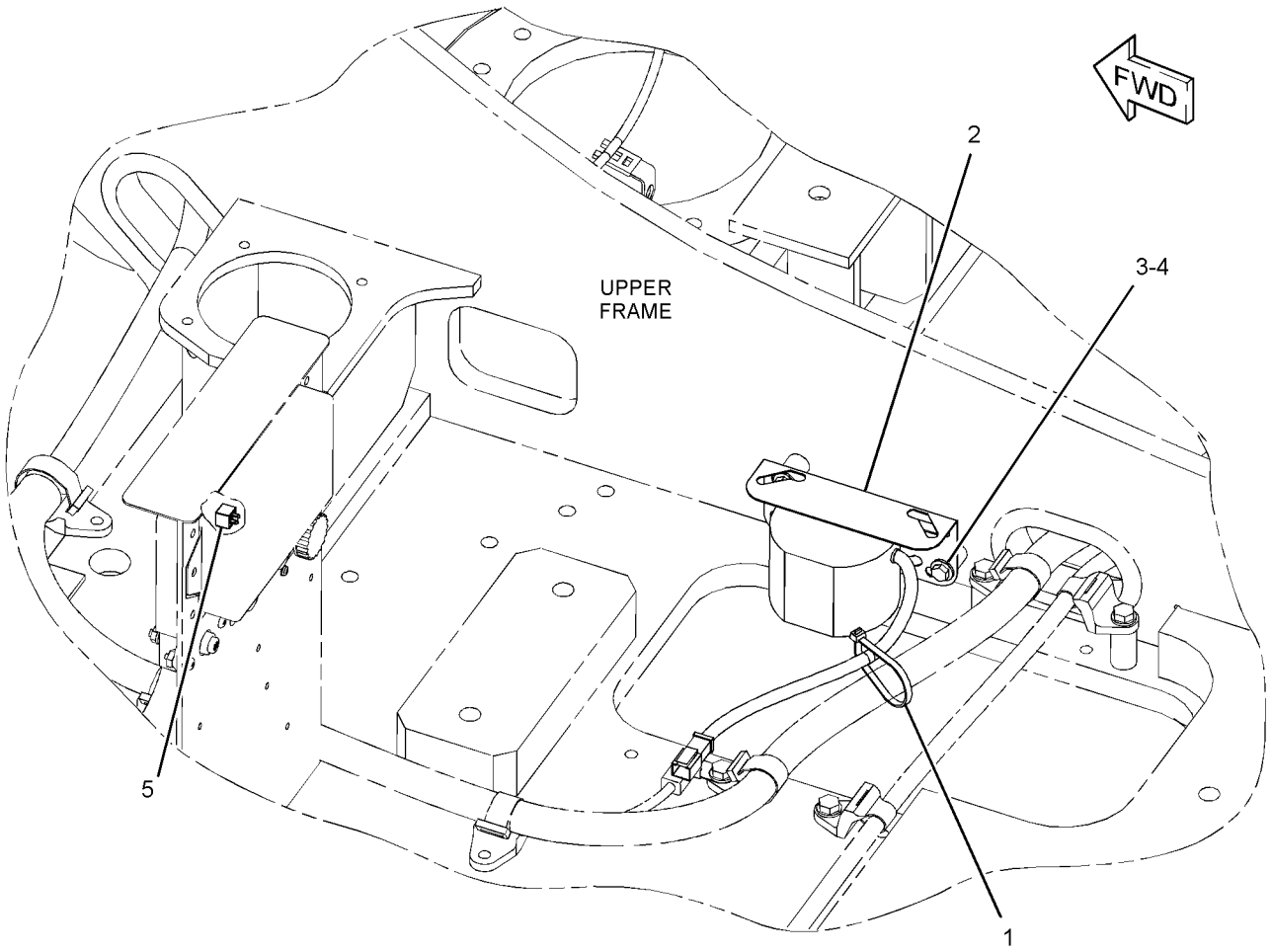

GRAPHIC #1 **<END>** g01513150

125-2994 ALTERNATOR GP-CHARGING

S/N: JKH1-UP

PART OF 296-4798 MOUNTING GP-ALTERNATOR

ALSO AN ATTACHMENT

SMCS-1405 **i02182383**

NOTE	REF NO	GRAPHIC REF	PART NUMBER	QTY	PART NAME 1 2 3 4 5 6 (PRODUCT LEVEL)	SEE PAGE
	1	1	**135-2382**	1	NUT SET	
	2	1	**125-2995**	1	PULLEY AS	
	3	1	**5I-7985**	1	SETSCREW	
	4	1	**5I-8086**	1	BRACKET AS	
	5	1	**5I-7987**	1	SETSCREW	
	6	1	**5I-8087**	1	BEARING	
	7	1	**5I-8097**	1	SETSCREW	
	8	1	**5I-8088**	1	ROTOR AS	
	9	1	**5I-8089**	1	BEARING	
	10	1	**5I-8098**	1	COIL AS	
	11	1	**5I-8090**	1	STATOR	
	12	1	**5I-8091**	1	BRACKET AS	
		1	**212-8521**	1	BRACKET	
	13	1	**239-6681**	1	REGULATOR AS-VOLTAGE	
	14	1	**5I-8095**	1	RECTIFIER AS	
	15	1	**085-9429**	1	NUT SET	
	16	1	**135-2381**	1	PLATE	
	17	1	**5I-8080**	1	CONNECTOR AS	
	18	1	**5I-8094**	1	BOLT	
	19	1	**5I-7997**	1	SETSCREW	

125-2994 ALTERNATOR GP-CHARGING *(contd.)* **i02182383**

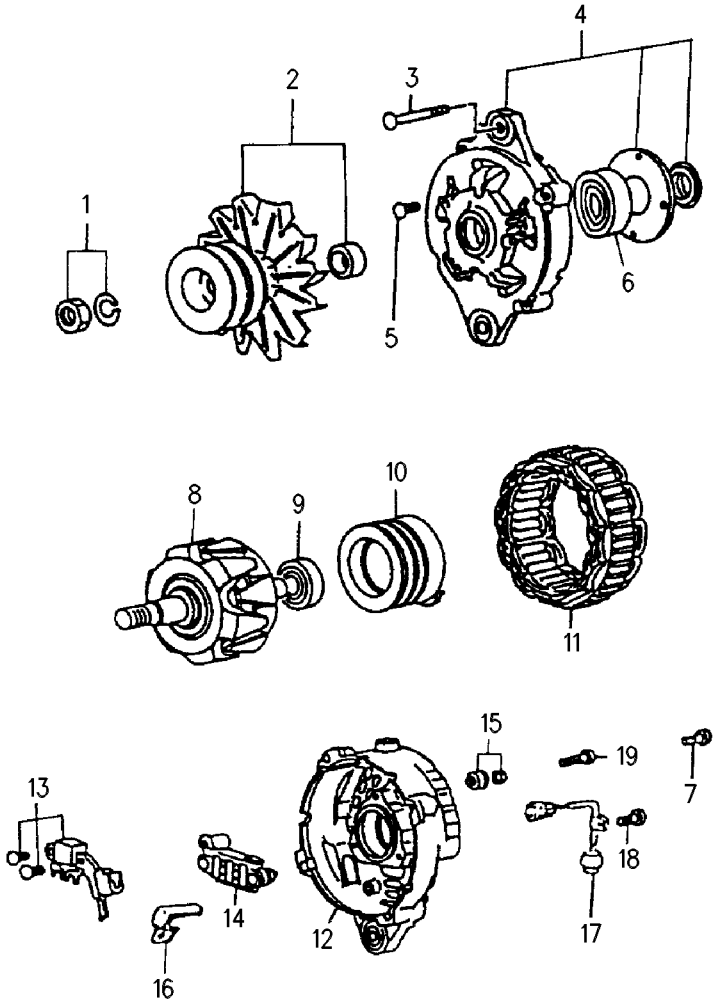

GRAPHIC #1 **<END>** g00287948

275-7106 BATTERY & WIRING GP

S/N: BYJ1-UP; PDP1-UP

PART OF 260-7182, 260-7183 CHASSIS AR

SMCS-1401, 1402, 1408 **i03009893**

NOTE	REF NO	GRAPHIC REF	PART NUMBER	QTY	PART NAME 1 2 3 4 5 6 (PRODUCT LEVEL)	SEE PAGE
	1	1	**3E-8320**	1	PLATE-INSTRUCTION (BATTERY)	
	2	2,3,4,5	**3S-2093**	36	STRAP-CABLE	
	3	2	**3T-5760**	2	BATTERY (12-VOLT, MAINTENANCE FREE, WET)	
	4	2	**5I-8270**	1	COVER-BATTERY	
	5	5	**5I-9368**	1	SPACER (9.24X13.72X20.5-MM THK)	
	6	3,5	**6G-2263**	3	SPACER (10.5X19X28.5-MM THK)	
	7	2	**6W-6005**	1	HOLD-DOWN-BATTERY	
	8	2,3,4,5	**7K-1181**	31	STRAP-CABLE	
Y	9	1	**7N-0718**	1	SWITCH GP-DISCONNECT (BATTERY)	159
	10	1	**7Y-8167**	1	GROMMET	
	11	2,3,4,5	**111-4836**	6	CLIP	
	12	1,2,3, 4,5	**111-4837**	26	CLIP	
	13	1,2,3	**111-4838**	12	CLIP	
	14	1,2,3	**111-4839**	11	STRAP	
	15	1,2,3, 4,5	**116-0118**	10	CLIP	
	16	1,3	**134-3344**	2	STRAP AS	
	17	5	**146-0334**	2	COLLAR	
	18	2	**170-6929**	1	CABLE AS	
E		2	**5P-0761**		CABLE (00-GA, RED) (31-CM)	
		2	**9G-0002**	1	COVER-TERMINAL (RED)	
		2	**9G-0005**	1	COVER-TERMINAL (BLACK)	
		2	**8C-5918**	1	TERMINAL AS (NEGATIVE)	
		2	**8T-9756**	1	TERMINAL AS (POSITIVE)	
	19	2	**266-0982**	1	GUARD	
	20	1,3	**202-4004**	2	GROMMET	
	21	2,5	**204-1611**	4	STRAP-CABLE	
	22	2	**204-1936**	2	LINER	
	23	5	**233-0891**	2	BRACKET AS	
					(EACH INCLUDES)	
M		5	**232-1693**	1	BOLT-FLANGE HEAD (M6X1X35-MM)	
	24	2	**238-2501**	1	KNOB	
	25	5	**252-4598**	1	SPACER (11X25X137-MM THK)	
Y	26	2	**259-5274**	1	SWITCH GP-MAGNETIC (24-VOLT) (START RELAY)	161
	27	5	**259-5303**	1	BRACKET AS	
	28	2	**267-8055**	1	ROD	
Y	29	2	*319-1405*	1	PANEL GP-CIRCUIT BREAKER	141
	30	1	**306-8781**	1	HARNESS AS-CHASSIS	
	31	1	**275-7141**	1	CABLE AS	
		1	**1S-7252**	1	TERMINAL-CABLE (00-GA, 3/8-IN BOLT)	
E		1	**5P-0761**		CABLE (00-GA, RED) (223-CM)	
		1	**8N-0869**	1	COVER-TERMINAL (RED)	
		1	**9G-0004**	1	COVER-TERMINAL (RED)	
		1	**8T-5917**	1	SEAL-O-RING	
	32	1	**275-7142**	1	CABLE AS	
		1	**1S-7252**	1	TERMINAL-CABLE (00-GA, 3/8-IN BOLT)	
E		1	**5P-0747**		CABLE (00-GA, BLACK) (120-CM)	
		1	**9G-0003**	1	COVER-TERMINAL (BLACK)	
		1	**9G-8909**	1	COVER-TERMINAL (BLACK)	
		1	**8T-9757**	1	TERMINAL AS-BATTERY (NEGATIVE)	
	33	1	**283-2881**	1	BRACKET	
	34	2	**283-2888**	1	BRACKET AS	
	36	3	**306-8526**	2	GROMMET	
	37	4	**4P-7428**	2	CLIP	
	38	4,5	**4P-7581**	2	CLIP	

275-7106 **BATTERY & WIRING GP** ***(contd.)*** **i03009893**

NOTE	REF NO	GRAPHIC REF	PART NUMBER	QTY	PART NAME 1 2 3 4 5 6 (PRODUCT LEVEL)	SEE PAGE
	39	4	**4P-8134**	1	CLIP	
	41	5	**5P-4115**	1	WASHER-HARD (7.2X19X2-MM THK)	
	42	5	**5P-4116**	1	WASHER-HARD (8.8X20.5X2-MM THK)	
M	43	5	**7X-2619**	1	BOLT (M6X1X10-MM)	
M	44	3	**7X-2621**	1	BOLT (M10X1.5X12-MM)	
	45	4	**7Y-3283**	1	SPACER (13.88X21.34X95-MM THK)	
M	46	5	**7Y-5226**	1	NUT (M5X0.8-THD)	
M	47	5	**7X-2534**	1	BOLT (M6X1X50-MM)	
	48	5	**8J-1256**	1	CLIP (SLOT)	
	50	5	**8T-0328**	1	WASHER-HARD (5.5X10X1-MM THK)	
	51	3	**8T-1889**	2	CLIP (SLOT)	
	52	3	**8T-1890**	2	CLIP (TAB)	
	53	1,2,3, 4,5	**8T-4121**	63	WASHER-HARD (11X21X2.5-MM THK)	
M	54	2	**8T-4133**	2	NUT (M10X1.5-THD)	
M	55	1,2,3, 4,5	**8T-4137**	44	BOLT (M10X1.5X20-MM)	
M	56	5	**8T-4139**	2	BOLT (M12X1.75X30-MM)	
M	57	2	**8T-4171**	2	BOLT (M6X1X12-MM)	
M	58	3,4	**8T-4179**	2	BOLT (M12X1.75X20-MM)	
M	59	5	**8T-4182**	1	BOLT (M10X1.5X45-MM)	
M	60	3	**8T-4185**	1	BOLT (M10X1.5X50-MM)	
M	61	1,2,3,5	**8T-4191**	11	BOLT (M10X1.5X16-MM)	
M	62	1,3	**8T-4195**	3	BOLT (M10X1.5X30-MM)	
	63	3,4,5	**8T-4223**	4	WASHER-HARD (13.5X25.5X3-MM THK)	
	65	2	**8T-4226**	1	WASHER-PLATED (10.5X45X3-MM THK)	
M	66	4,5	**8T-6685**	1	BOLT (M10X1.5X110-MM)	
M	67	5	**8T-7352**	1	BOLT (M8X160-MM)	
	68	2,5	**9X-8256**	4	WASHER (6.6X12X2-MM THK)	
	69	2	**319-1214**	1	STRIP AS	
	70	2	**319-1200**	2	LINER	
	71	5	**132-5789**	1	CLIP	
	72	3	**4P-7429**	1	CLIP	
M	73	3	**8T-6466**	1	BOLT (M10X1.5X60-MM)	

E-ORDER BY THE CENTIMETER
M-METRIC PART
Y-SEPARATE ILLUSTRATION

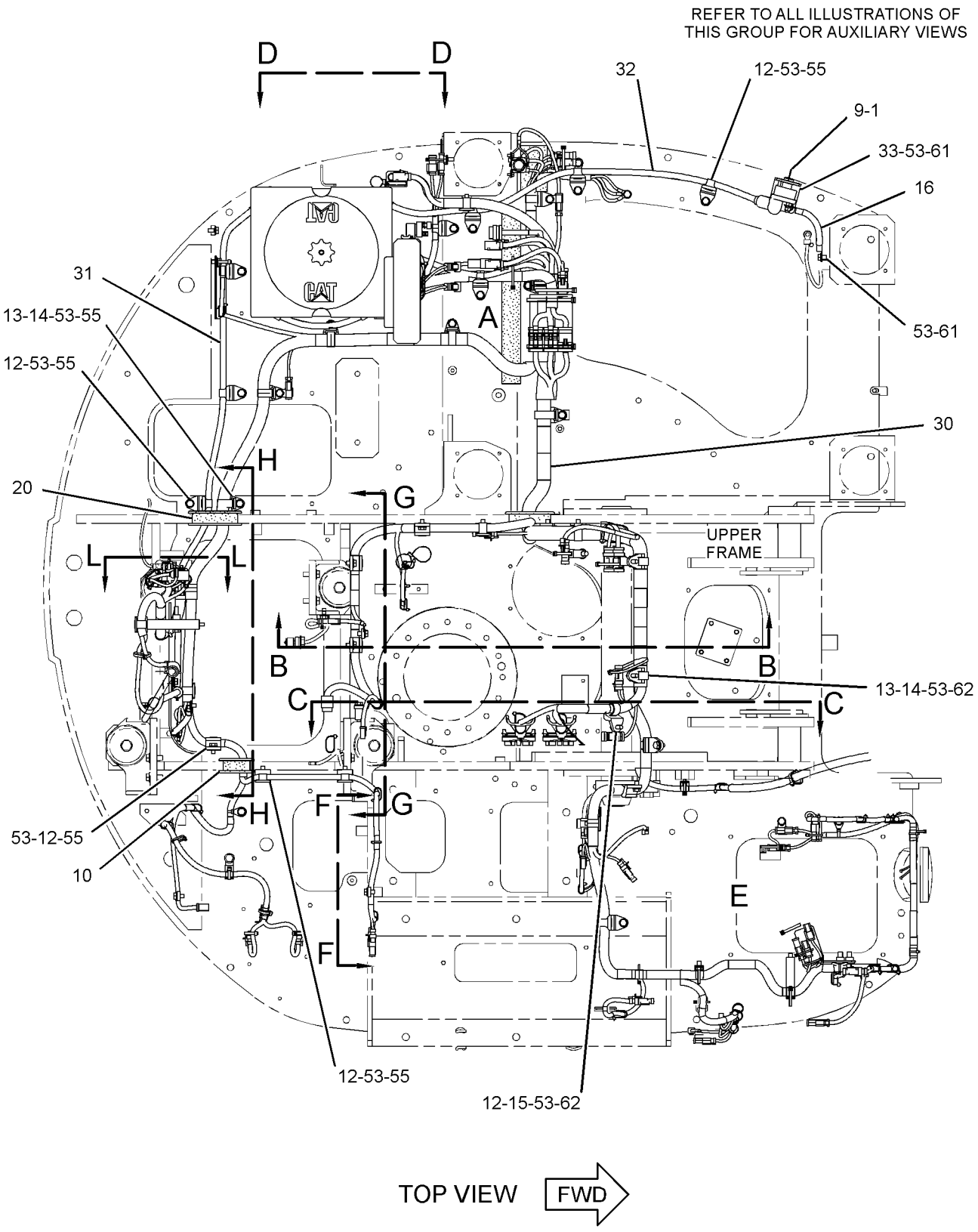

GRAPHIC #1 g01521511

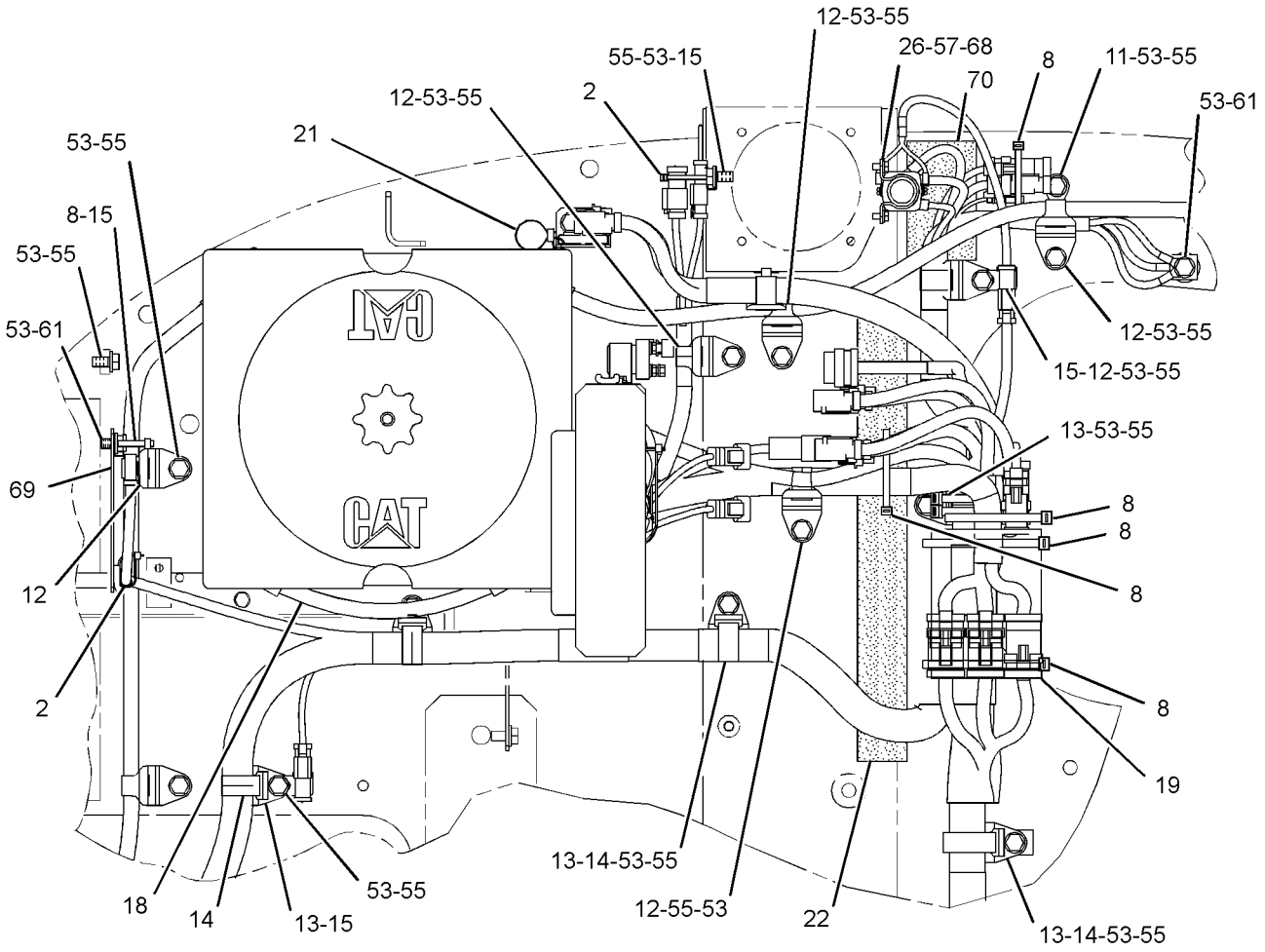

VIEW OF AREA A

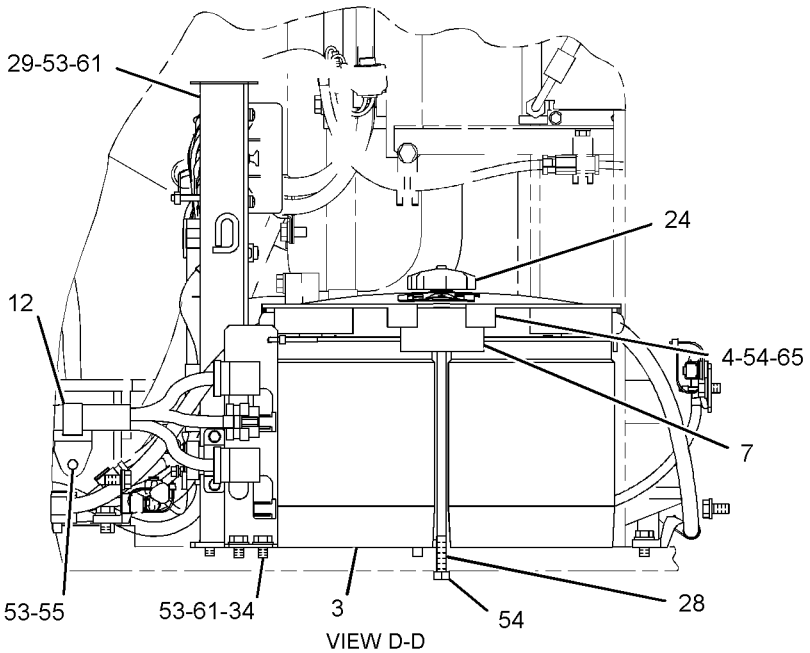

VIEW D-D

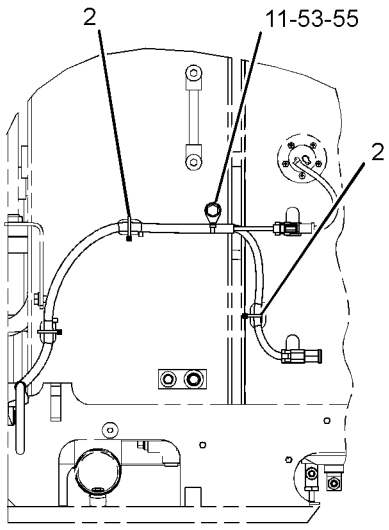

VIEW F-F

GRAPHIC #2

g01521512

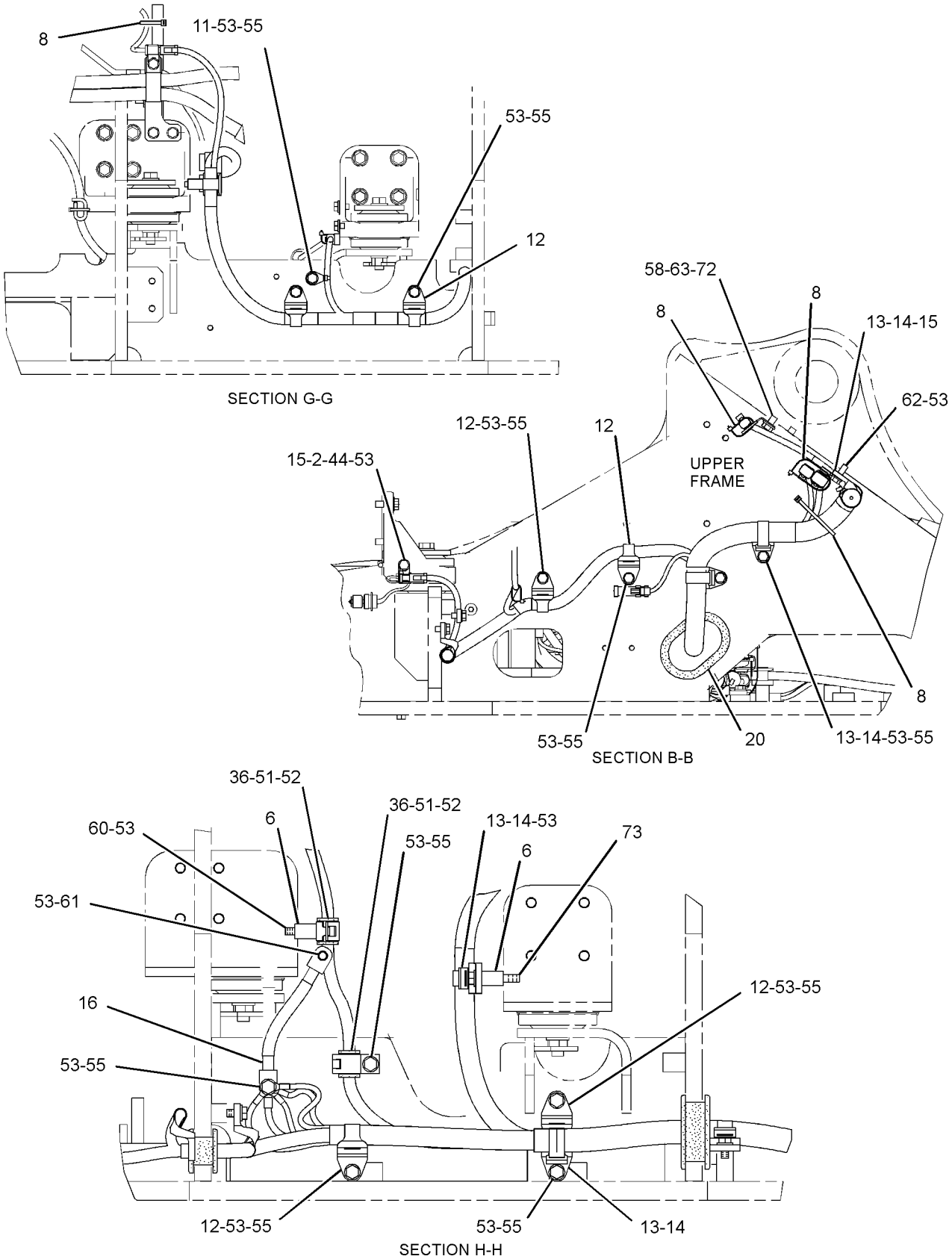

GRAPHIC #3

g01521513

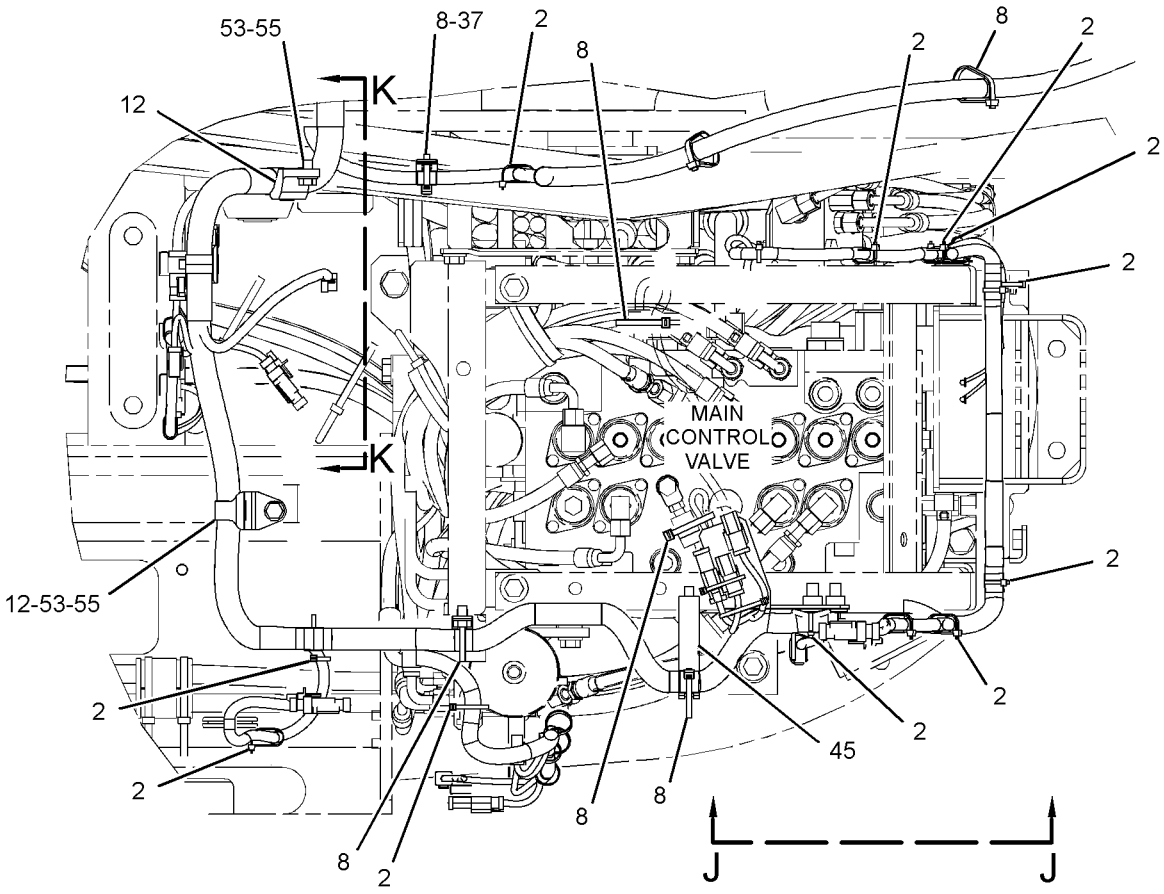

VIEW OF AREA E

REFER TO ALL ILLUSTRATIONS OF
THIS GROUP FOR AUXILIARY VIEWS

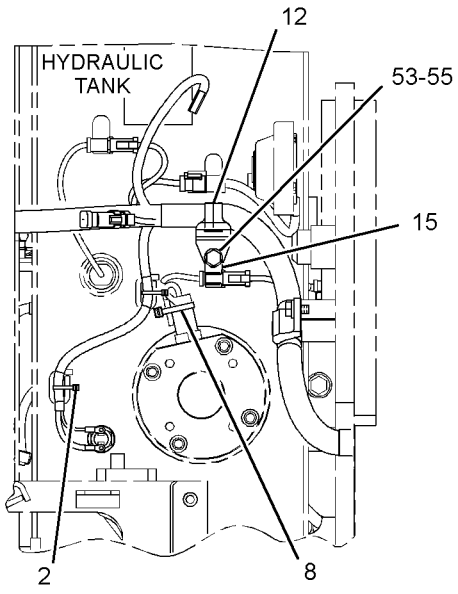

SECTION K-K

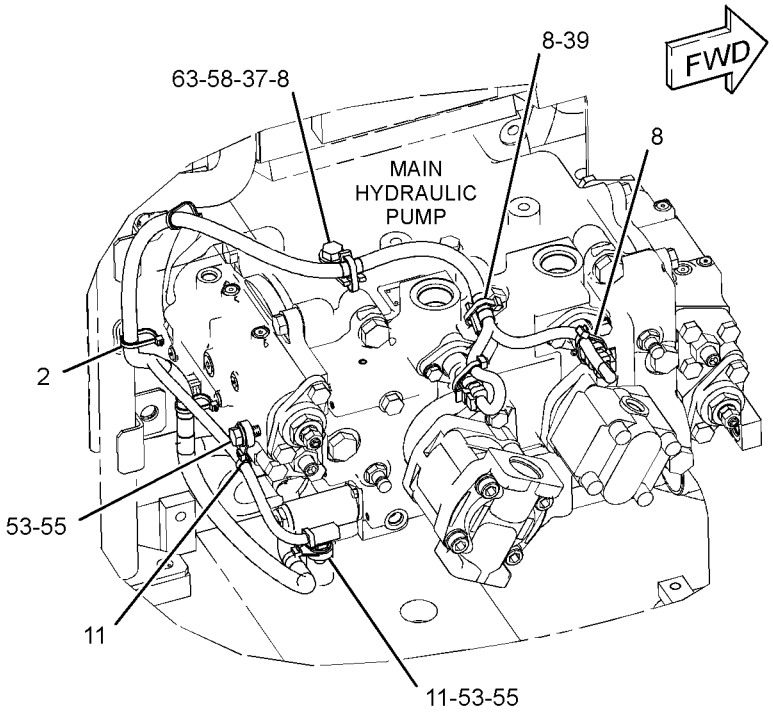

GRAPHIC #4 g01521514

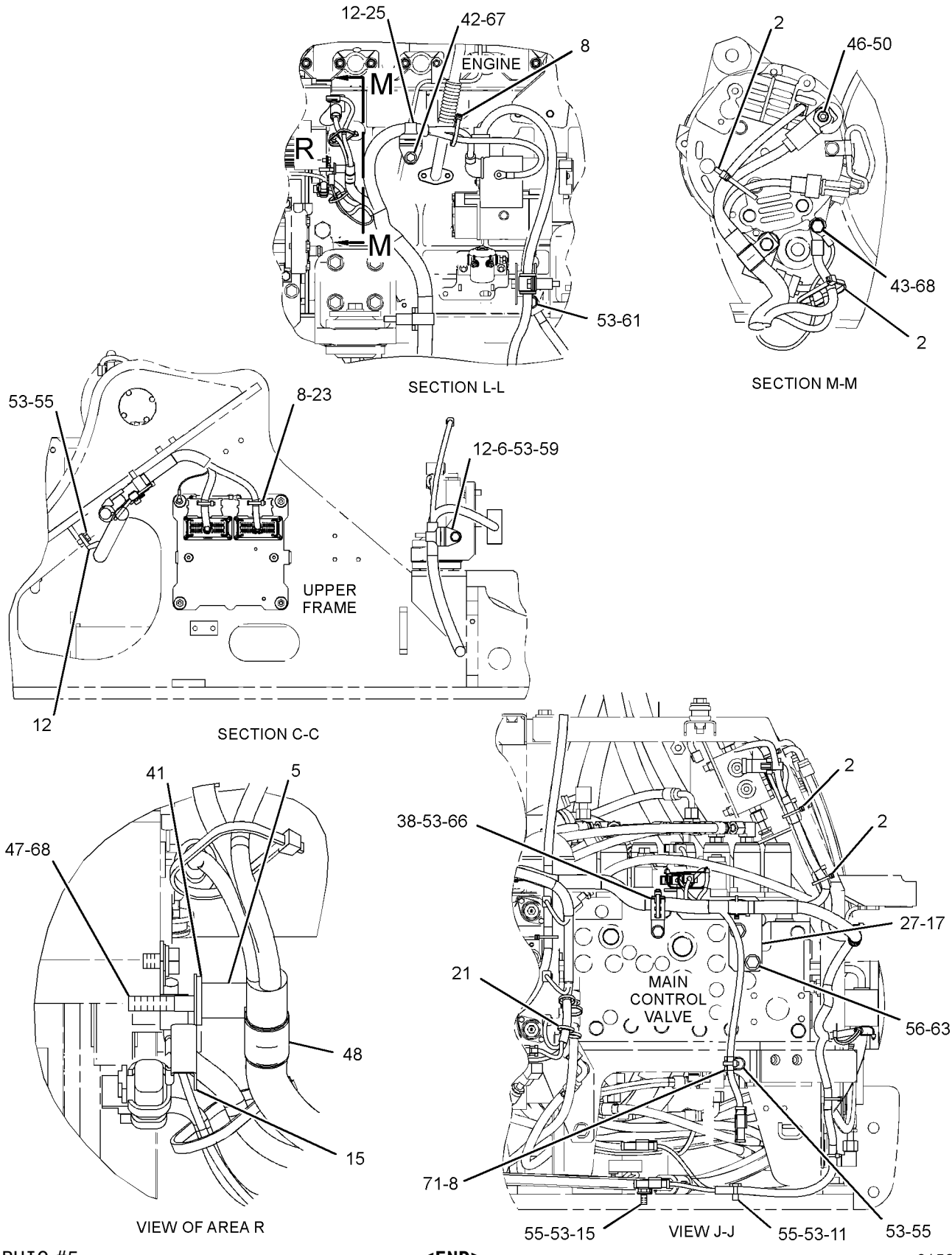

GRAPHIC #5

<END>

g01521515

259-5050 BATTERY GP–COLD WEATHER

S/N: BYJ1-UP; PDP1-UP
PART OF 298-4105 STARTING AR-COLD WEATHER
AN ATTACHMENT

SMCS-1401 **i02419977**

NOTE	REF NO	GRAPHIC REF	PART NUMBER	QTY	PART NAME 1 2 3 4 5 6 (PRODUCT LEVEL)	SEE PAGE
	1	1	**102-5420**	1	FILM-INSTRUCTION (COLD WEATHER)	
	2	1	**9X-3404**	2	BATTERY (12-VOLT, MAINTENANCE FREE, WET)	

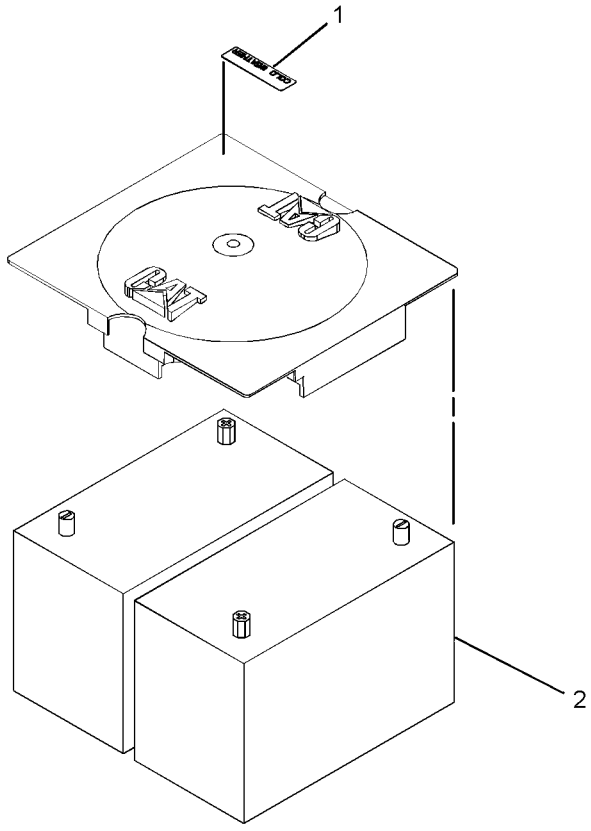

GRAPHIC #1 **<END>** g01226775

9W-0742 BLOCK GP-JUNCTION–BATTERY

S/N: BYJ1-UP; PDP1-UP
PART OF 275-7121 WIRING GP-AUX START RECEPTACLE
AN ATTACHMENT

SMCS-7426 **i02236462**

NOTE	REF NO	GRAPHIC REF	PART NUMBER	QTY	PART NAME 1 2 3 4 5 6 (PRODUCT LEVEL)	SEE PAGE
	1	1	**8C-6358**	1	BLOCK GP-JUNCTION (BATTERY)	
	1A	1	**8T-3519**	3	BOLT-BRONZE (1/2-13X2-IN)	
BD	2	1	**6V-2722**		TUBE-HEAT SHRINK (25.4-MM DIA)	
	3	1	**7F-0560**	6	WASHER (0.516X0.938X0.101-IN THK)	
	4	1	**8T-3518**	6	NUT-FULL (1/2-13-THD)	

B-USE AS REQUIRED
D-ORDER BY THE METER

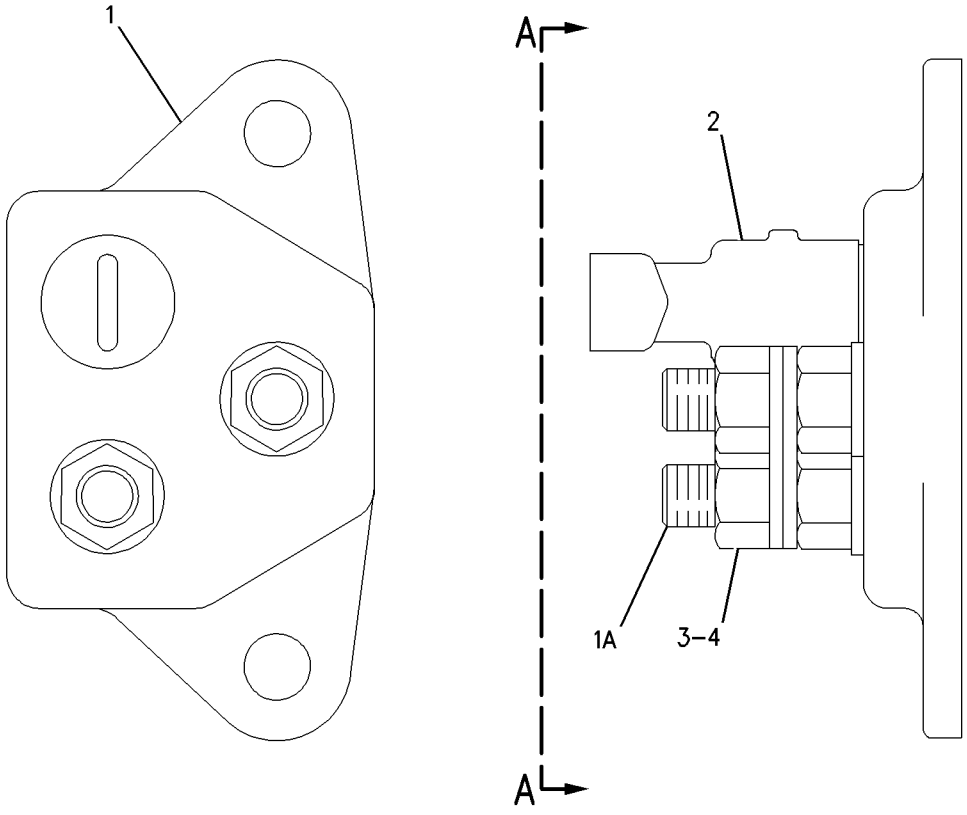

VIEW A-A

GRAPHIC #1 **<END>** g00650721

286-4271 CAMERA GP

S/N: BYJ1-UP; PDP1-UP
PART OF 313-7833 CAMERA GP
AN ATTACHMENT

SMCS-7348 **i02957535**

NOTE	REF NO	GRAPHIC REF	PART NUMBER	QTY	PART NAME 1 2 3 4 5 6 (PRODUCT LEVEL)	SEE PAGE
					AVAILABLE REPAIR KIT(S):	
			251-4162	1	KIT-BRACKET (CAMERA)	
					(KIT INCLUDES BRACKET, BOLTS, LOCKNUTS, SOCKET BOLTS, GASKET, & ALLEN KEY)	

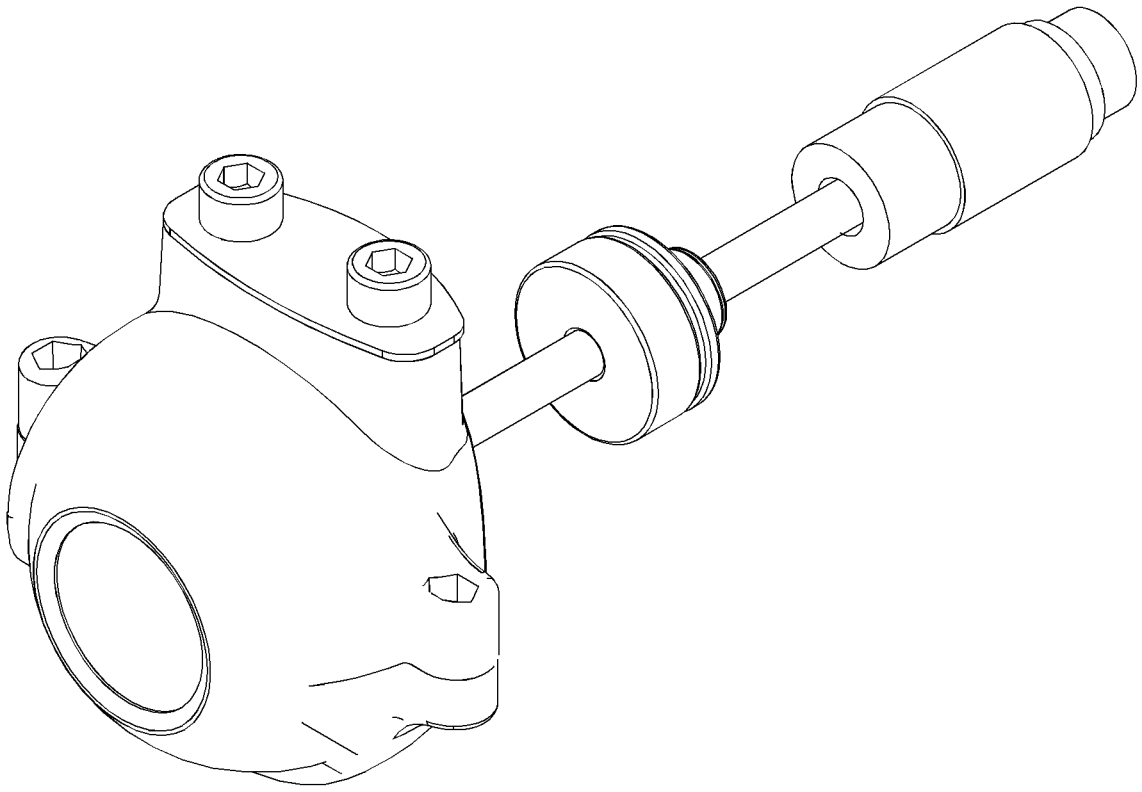

GRAPHIC #1 **<END>** g01356476

313-7833 CAMERA GP

S/N: BYJ1-UP; PDP1-UP
PART OF 330-1319 MOUNTING GP-CAMERA
AN ATTACHMENT

SMCS-7348 **i03045209**

NOTE	REF NO	GRAPHIC REF	PART NUMBER	QTY	PART NAME 1 2 3 4 5 6 (PRODUCT LEVEL)	SEE PAGE
	1	1	**096-0061**	1	STRAP-CABLE	
Y	2	1	**286-4271**	1	CAMERA GP	114
	3	1	**320-5392**	1	BRACKET AS	
M	4	1	**8T-4970**	2	BOLT (M6X1X14-MM)	
	5	1	**9X-8256**	2	WASHER (6.6X12X2-MM THK)	

M-METRIC PART
Y-SEPARATE ILLUSTRATION

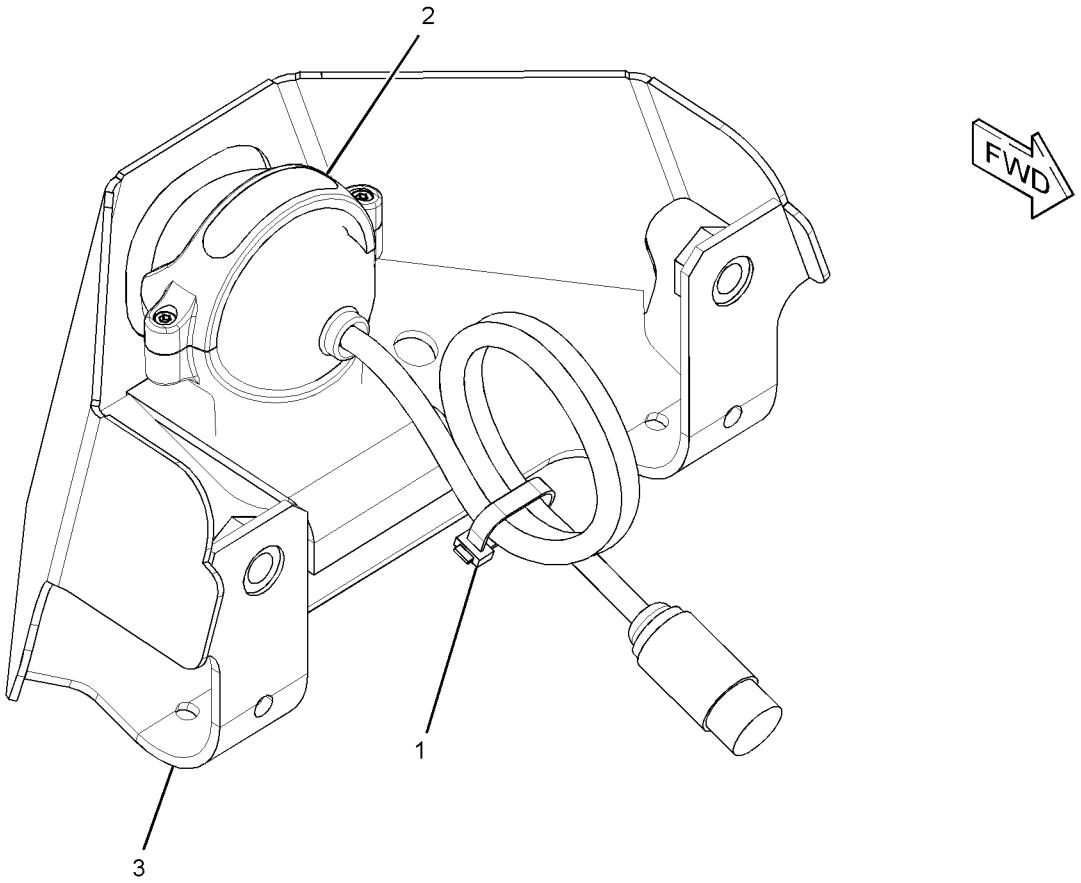

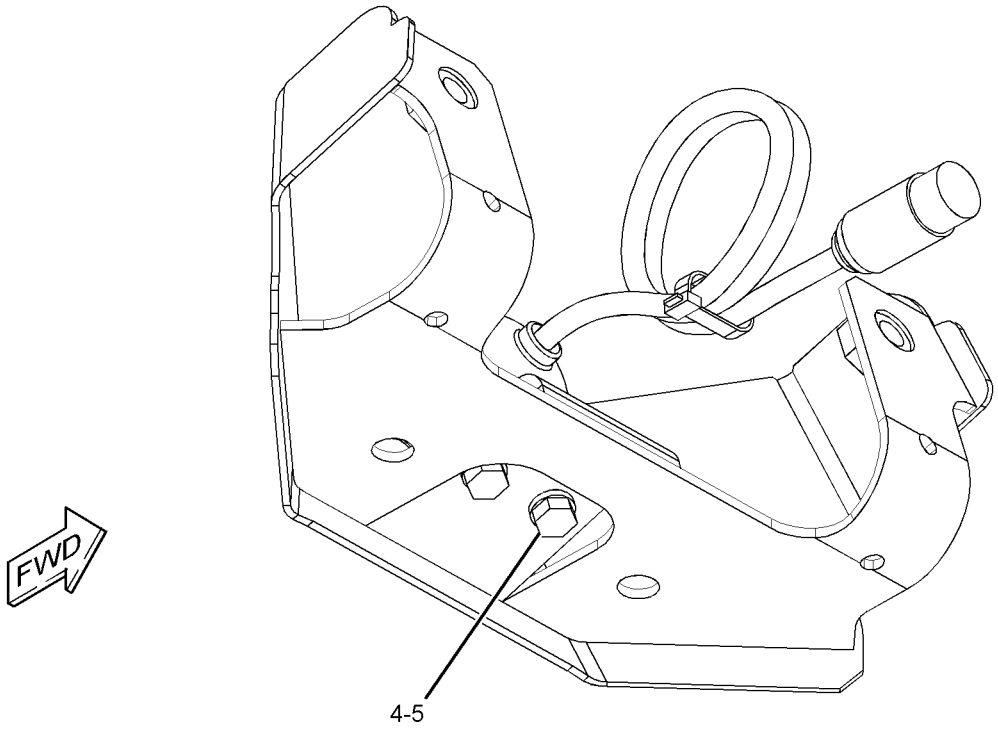

GRAPHIC #1 **<END>** g01515863

309-5891 CONTROL & MTG GP-COMMUNICATION–

PRODUCT LINK 300

S/N: BYJ1-UP; PDP1-UP

PART OF 301-2588 INSTALLATION AR-COMMUNICATION

AN ATTACHMENT

SMCS-7606 **i02961486**

NOTE	REF NO	GRAPHIC REF	PART NUMBER	QTY	PART NAME 1 2 3 4 5 6 (PRODUCT LEVEL)	SEE PAGE
	1	1	**8C-5608**	4	SPACER (6.5X9.5X25.4-MM THK)	
	2	1	**9X-9896**	8	MOUNT (ISOLATION)	
Y	3	1	*262-1421*	1	ELECTRONICS GP-COMMUNICATION (PRODUCT LINK 300)	120
M	4	1	**8C-8451**	4	BOLT (M6X1X40-MM)	
	5	1	**9X-6165**	4	WASHER (6.5X22X2.5-MM THK)	

M-METRIC PART
Y-SEPARATE ILLUSTRATION

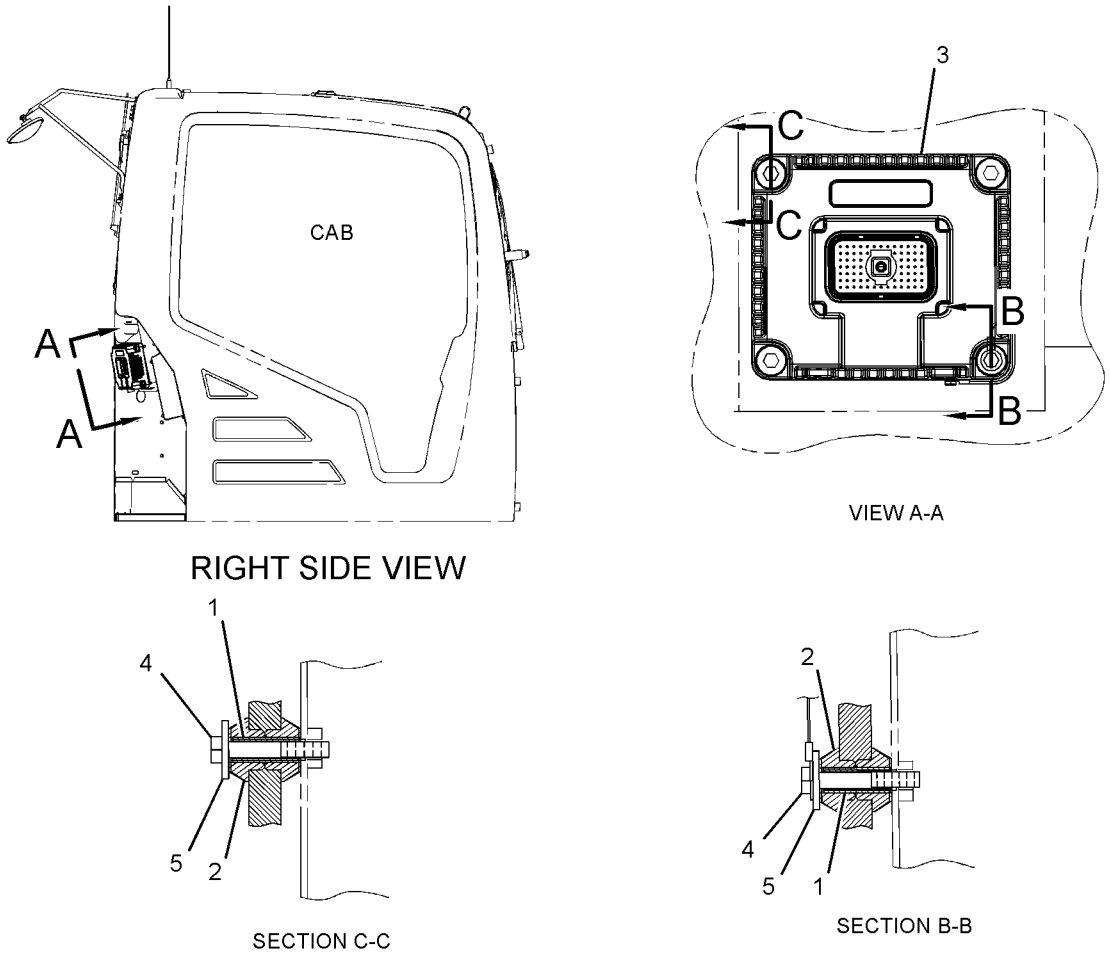

GRAPHIC #1 **<END>** g01515128

296-4800 CONTROL & MTG GP-ENGINE ELEK

S/N: JKH1-UP
PART OF 279-7764, 279-7766 ENGINE AR
ALSO AN ATTACHMENT

SMCS-1901 **i02710566**

NOTE	REF NO	GRAPHIC REF	PART NUMBER	QTY	PART NAME 1 2 3 4 5 6 (PRODUCT LEVEL)	SEE PAGE
	1	1	**296-4761**	1	BRACKET	
	2	1	**296-4762**	3	BOLT	
	3	1	**294-1775**	2	BOLT (M10X1.5X23-MM)	
	4	1	**286-3683**	1	CONTROL GP-UNPROGRAMMED	
	5	1	**270-6259**	4	BOLT (M8X1.25X40-MM)	
	6	1	**8T-4224**	4	WASHER-HARD (8.8X16X2-MM THK)	
	7	1	**155-0576**	8	MOUNT-ISOLATION	
	8	1	**6I-1418**	4	SPACER (8.2X12.7X28.7-MM THK)	

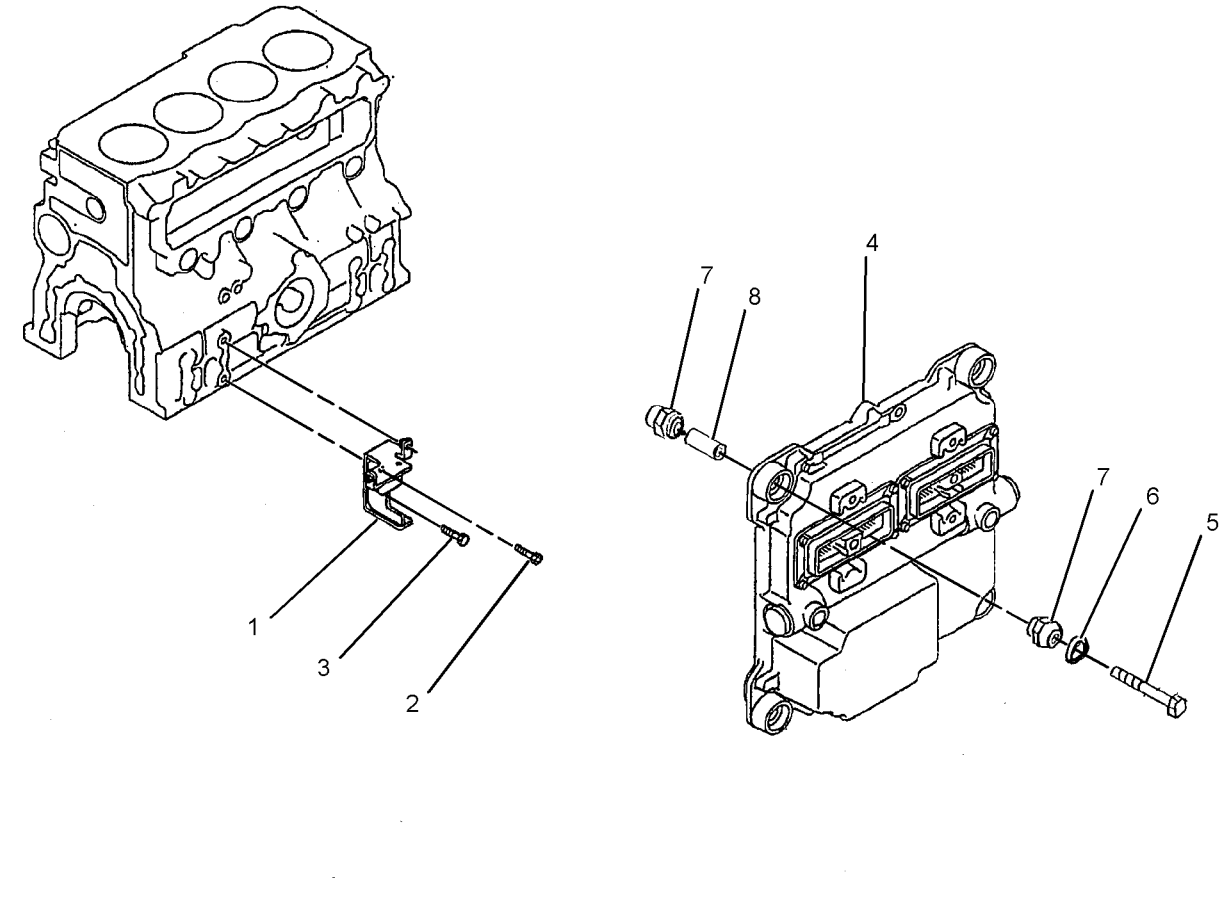

GRAPHIC #1 **<END>** g01402501

260-2212 CONTROL & MTG GP-MACHINE

S/N: BYJ1-UP; PDP1-UP

PART OF 273-5406 OPERATOR AR

SMCS-1931, 7600 **i02488527**

NOTE	REF NO	GRAPHIC REF	PART NUMBER	QTY	PART NAME 1 2 3 4 5 6 (PRODUCT LEVEL)	SEE PAGE
	1	1	**221-8874**	1	CONTROL GP-UNPROGRAMMED	
M	2	1	**9X-2480**	4	BOLT (M6X1X45-MM)	
	3	1	**9X-8256**	4	WASHER (6.6X12X2-MM THK)	

M-METRIC PART

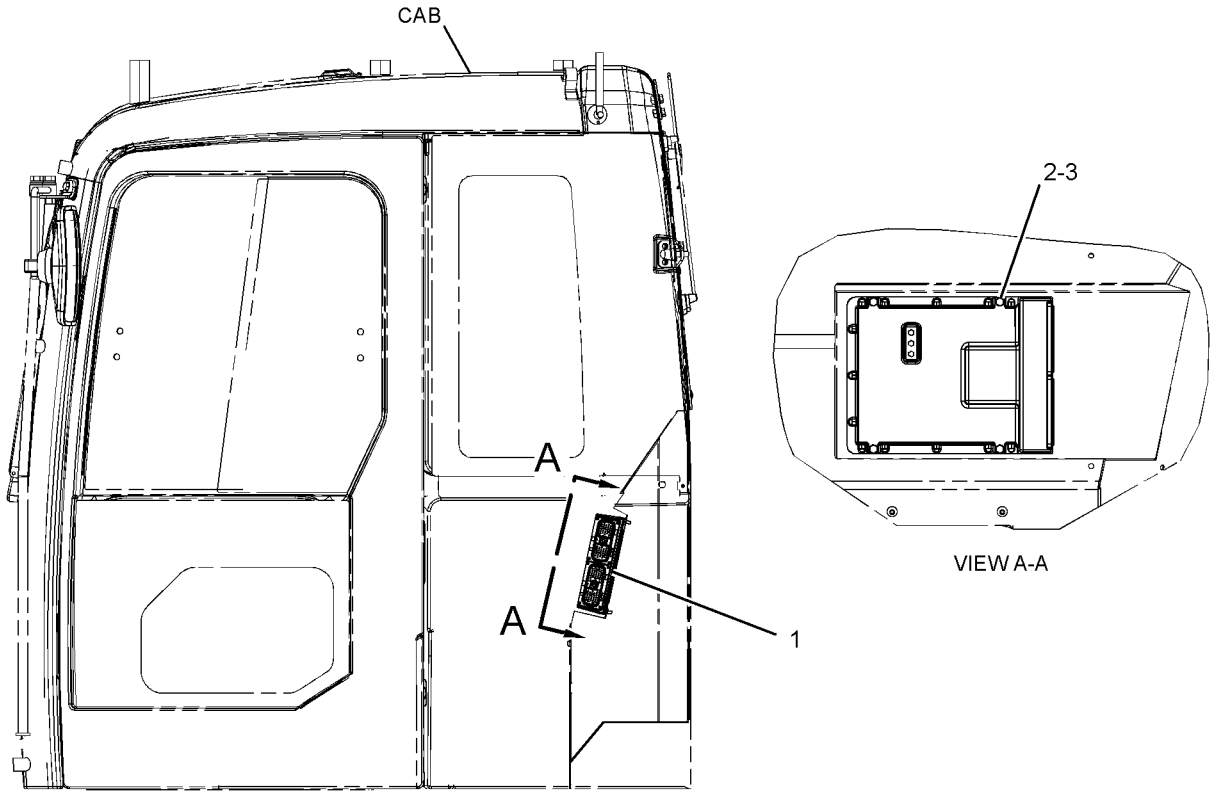

LEFT SIDE VIEW

GRAPHIC #1 **<END>** g01257505

263-9088 CONTROL GP-COMMUNICATION–PRODUCT LINK 121SR

S/N: BYJ1-UP; PDP1-UP
PART OF 309-5886 INSTALLATION GP-COMMUNICATION
AN ATTACHMENT

SMCS-7606, 7610, 7620 **i03135906**

NOTE	PART NUMBER	QTY	PART NAME 1 2 3 4 5 6 (PRODUCT LEVEL)	SEE PAGE
	330-3408	1	SOFTWARE GP-COMMUNICATION (PRODUCT LINK 121SR)	

<END>

262-1421 ELECTRONICS GP-COMMUNICATION–PRODUCT LINK 300

S/N: BYJ1-UP; PDP1-UP
PART OF 309-5891 CONTROL & MTG GP-COMMUNICATION
AN ATTACHMENT

SMCS-7606, 7610, 7620 **i03136107**

NOTE	PART NUMBER	QTY	PART NAME 1 2 3 4 5 6 (PRODUCT LEVEL)	SEE PAGE
	330-3409	1	SOFTWARE GP-COMMUNICATION (PRODUCT LINK 300)	
			–OR–	
	330-3410	1	SERVICE GP-COMMUNICATION (PRODUCT LINK 300)	
			(OPTIONAL SERVICE REPLACEMENT)(INCLUDES CONTROL GP & SOFTWARE)	
	7X-6315	1	STRAP AS-GROUND	
	126-7574	1	SCREW-PAN HEAD (8-32X9.52-MM)	
	134-4126	1	WASHER (4.52X8.28X0.76-MM THK)	

<END>

279-7555 ELECTRONICS GP-MACHINE

S/N: BYJ1-UP; PDP1-UP
PART OF 260-7176, 260-7177 GENERAL AR

SMCS-7610, 7620 **i02829104**

NOTE	PART NUMBER	QTY	PART NAME 1 2 3 4 5 6 (PRODUCT LEVEL)	SEE PAGE
	290-9459	1	SOFTWARE GP-MACHINE	
			-OR-	
	290-9460	1	SERVICE GP-MACHINE	
			(OPTIONAL SERVICE REPLACEMENT)(INCLUDES CONTROL GP & SOFTWARE)	

<END>

290-9438 ELECTRONICS GP-MACHINE

S/N: BYJ1-UP; PDP1-UP
PART OF 283-8803, 283-8804 COOLING AR, 260-7207 COOLING AR-HIGH AMBIENT TEMP AN ATTACHMENT

SMCS-7610, 7620 **i02900455**

NOTE	PART NUMBER	QTY	PART NAME 1 2 3 4 5 6 (PRODUCT LEVEL)	SEE PAGE
	290-9439	1	SOFTWARE GP-MACHINE	
			-OR-	
	290-9440	1	SERVICE GP-MACHINE	
			(OPTIONAL SERVICE REPLACEMENT)(INCLUDES CONTROL GP & SOFTWARE)	

<END>

260-2171 ELECTRONICS GP-MONITOR

S/N: BYJ1-UP; PDP1-UP
PART OF 260-7176, 260-7177 GENERAL AR

SMCS-7490, 7601, 7610, 7620 **i03250690**

NOTE	PART NUMBER	QTY	PART NAME 1 2 3 4 5 6 (PRODUCT LEVEL)	SEE PAGE
	327-7486	1	SOFTWARE GP-MONITOR	
			—OR—	
	327-7485	1	SERVICE GP-MONITOR	
			(OPTIONAL SERVICE REPLACEMENT)	
			(INCLUDES CONTROL GP. AND SOFTWARE)	

<END>

259-5295 FASTENER GP-WIRING HARNESS–JOYSTICK

S/N: BYJ1-UP; PDP1-UP

PART OF 255-5843, 255-5844, 323-7766, 323-7767 CONTROL AR-AUXILIARY

AN ATTACHMENT

SMCS-1408, 7553 **i02425705**

NOTE	REF NO	GRAPHIC REF	PART NUMBER	QTY	PART NAME 1 2 3 4 5 6 (PRODUCT LEVEL)	SEE PAGE
	1	1	**3S-2093**	2	STRAP-CABLE	

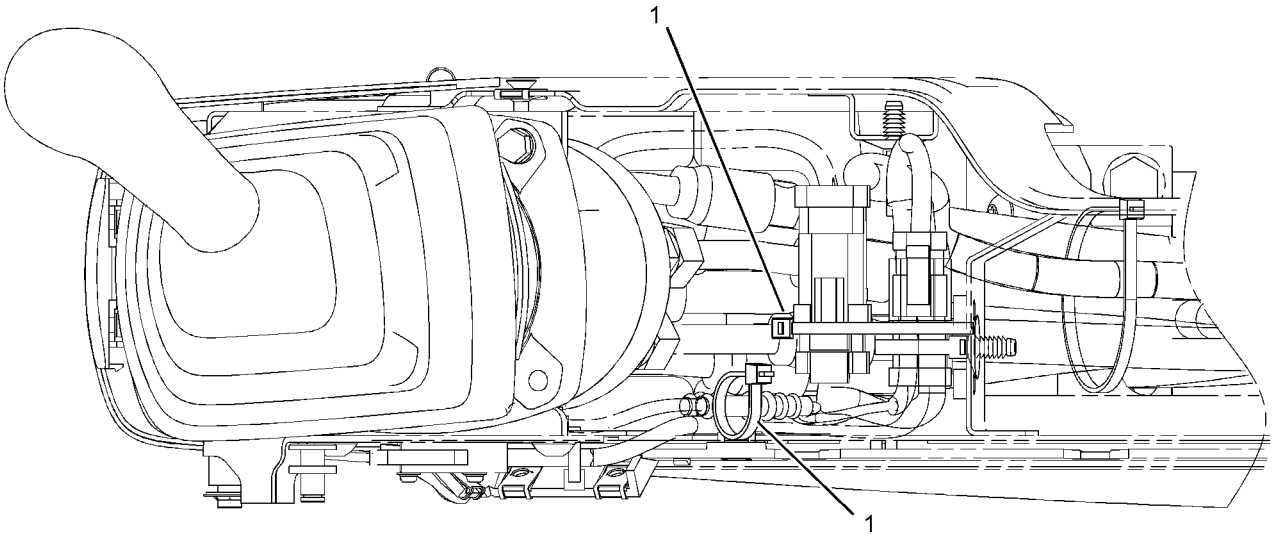

GRAPHIC #1 **<END>** g01160306

267-7801 FASTENER GP-WIRING HARNESS–PEDAL, RH

S/N: BYJ1-UP; PDP1-UP
PART OF 259-7857 CONTROL AR-AUXILIARY
AN ATTACHMENT

SMCS-1408, 7553 **i03009966**

NOTE	REF NO	GRAPHIC REF	PART NUMBER	QTY	PART NAME 1 2 3 4 5 6 (PRODUCT LEVEL)	SEE PAGE
	1	1	**116-0118**	1	CLIP	

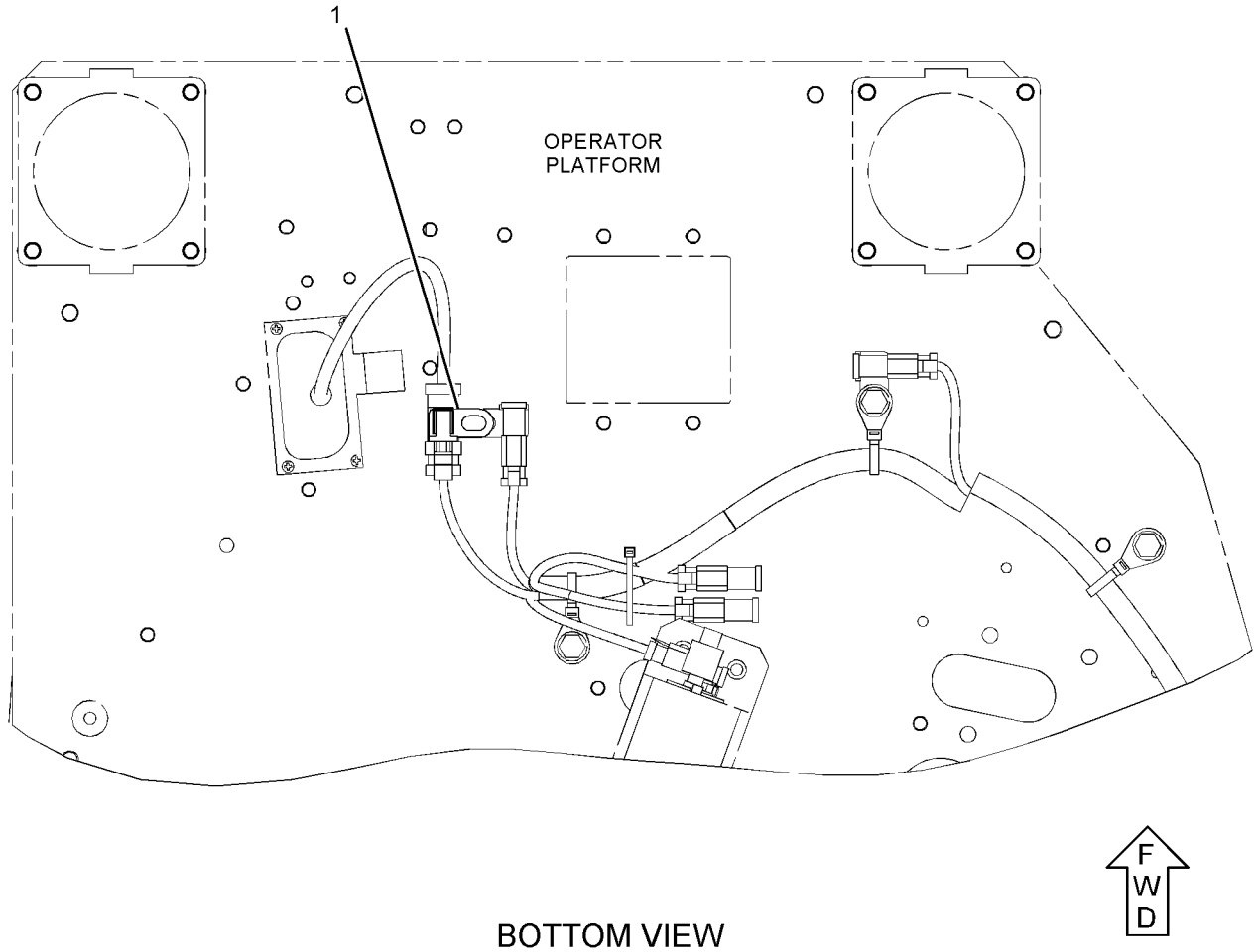

BOTTOM VIEW

GRAPHIC #1 **<END>** g01251341

267-7802 FASTENER GP-WIRING HARNESS

S/N: BYJ1-UP; PDP1-UP
PART OF 259-7858 CONTROL AR-AUXILIARY
AN ATTACHMENT

SMCS-1408, 7553 **i02512265**

NOTE	REF NO	GRAPHIC REF	PART NUMBER	QTY	PART NAME 1 2 3 4 5 6 (PRODUCT LEVEL)	SEE PAGE
	1	1	**116-0118**	1	CLIP	

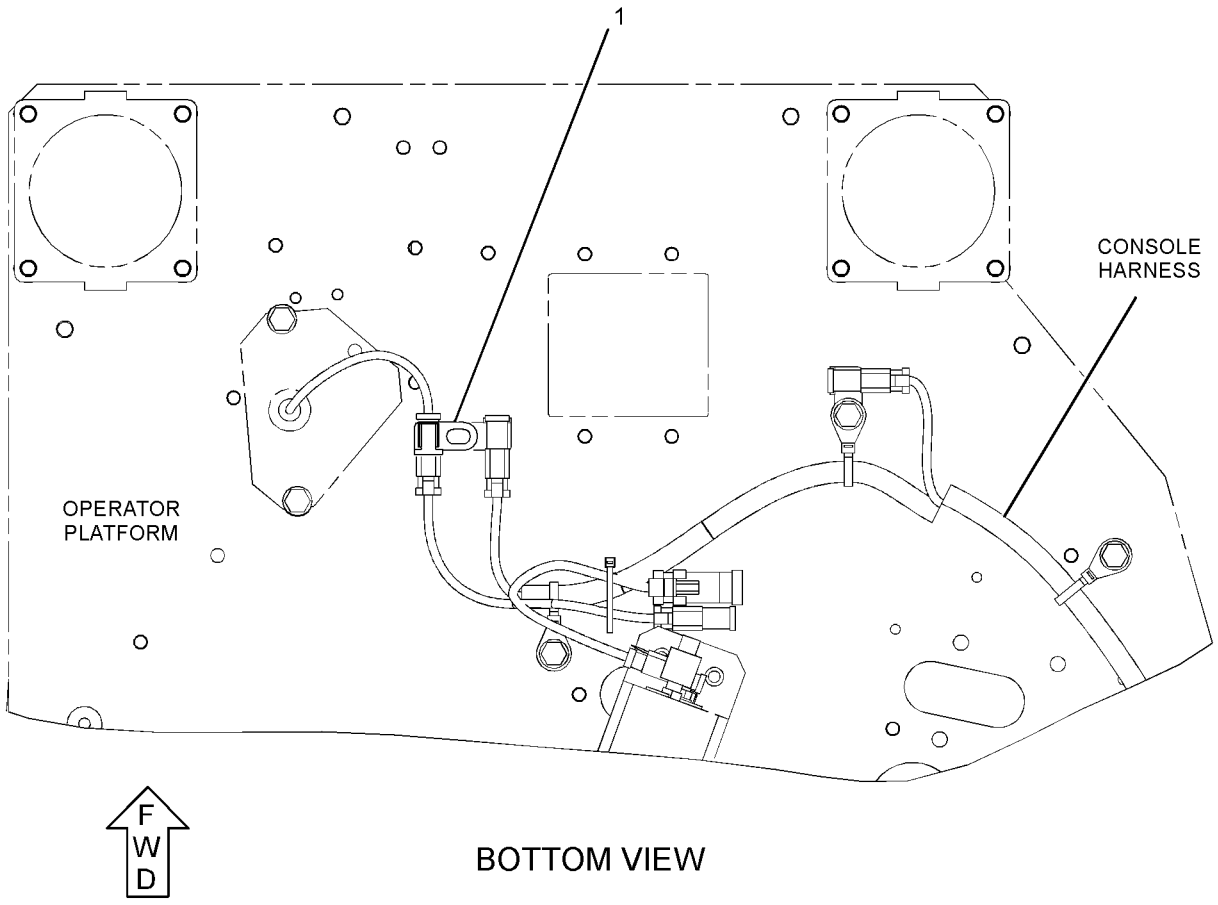

BOTTOM VIEW

GRAPHIC #1 **<END>** g01265301

275-7118 FASTENER GP-WIRING HARNESS

S/N: BYJ1-UP; PDP1-UP
PART OF 282-5547 CONTROL AR-COUPLER
AN ATTACHMENT

SMCS-1408, 7553 **i02821601**

NOTE	REF NO	GRAPHIC REF	PART NUMBER	QTY	PART NAME 1 2 3 4 5 6 (PRODUCT LEVEL)	SEE PAGE
	1	1	**7K-1181**	1	STRAP-CABLE	
	2	1	**116-0118**	1	CLIP	

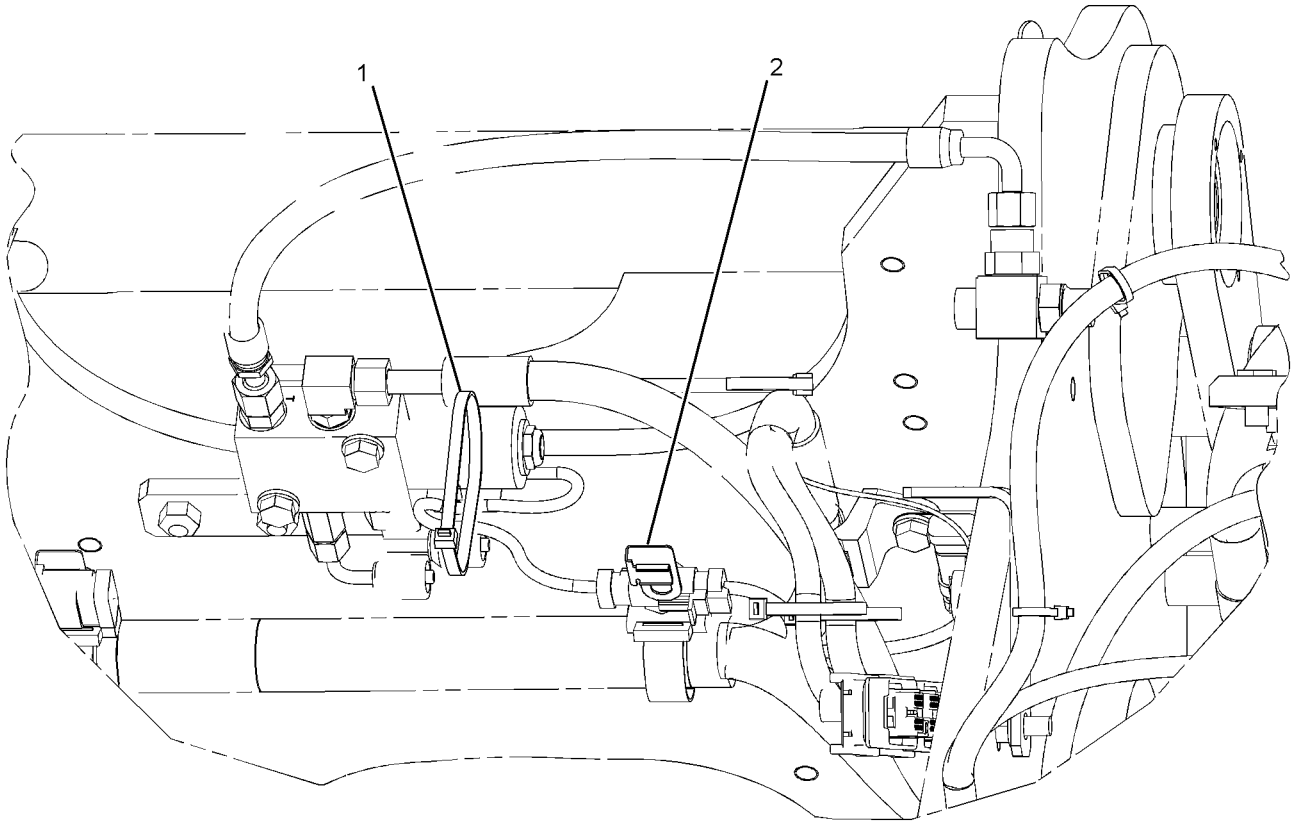

REAR VIEW
(QUICK COUPLER SOLENOID)

GRAPHIC #1 **<END>** g01409033

275-7174 FASTENER GP-WIRING HARNESS–HAMMER FILTER

S/N: BYJ1-UP; PDP1-UP
PART OF 260-7199 FILTER AR-HYDRAULIC
AN ATTACHMENT

SMCS-1408, 7553 **i02819111**

NOTE	REF NO	GRAPHIC REF	PART NUMBER	QTY	PART NAME 1 2 3 4 5 6 (PRODUCT LEVEL)	SEE PAGE
	1	1	**3S-2093**	2	STRAP-CABLE	
	2	1	**7K-1181**	1	STRAP-CABLE	
	3	1	**4P-7428**	1	CLIP	

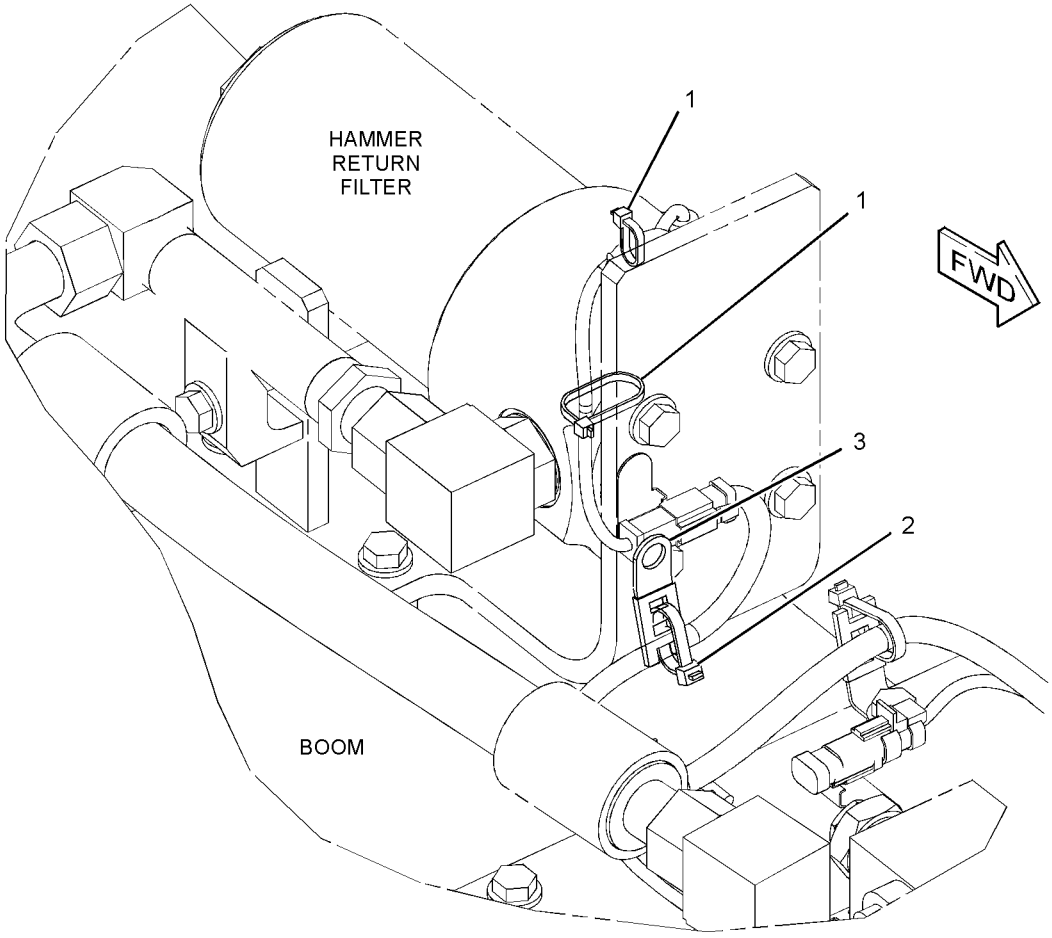

GRAPHIC #1 **<END>** g01415034

299-2664 FASTENER GP-WIRING HARNESS

S/N: BYJ1-UP; PDP1-UP
PART OF 297-0271 VALVE AR-ALT PATTERN CONTROL
AN ATTACHMENT

SMCS-1408, 7553 **i02900437**

NOTE	REF NO	GRAPHIC REF	PART NUMBER	QTY	PART NAME 1 2 3 4 5 6 (PRODUCT LEVEL)	SEE PAGE
	1	1	**3S-2093**	1	STRAP - CABLE	
	2	1	**7K-1181**	2	STRAP - CABLE	

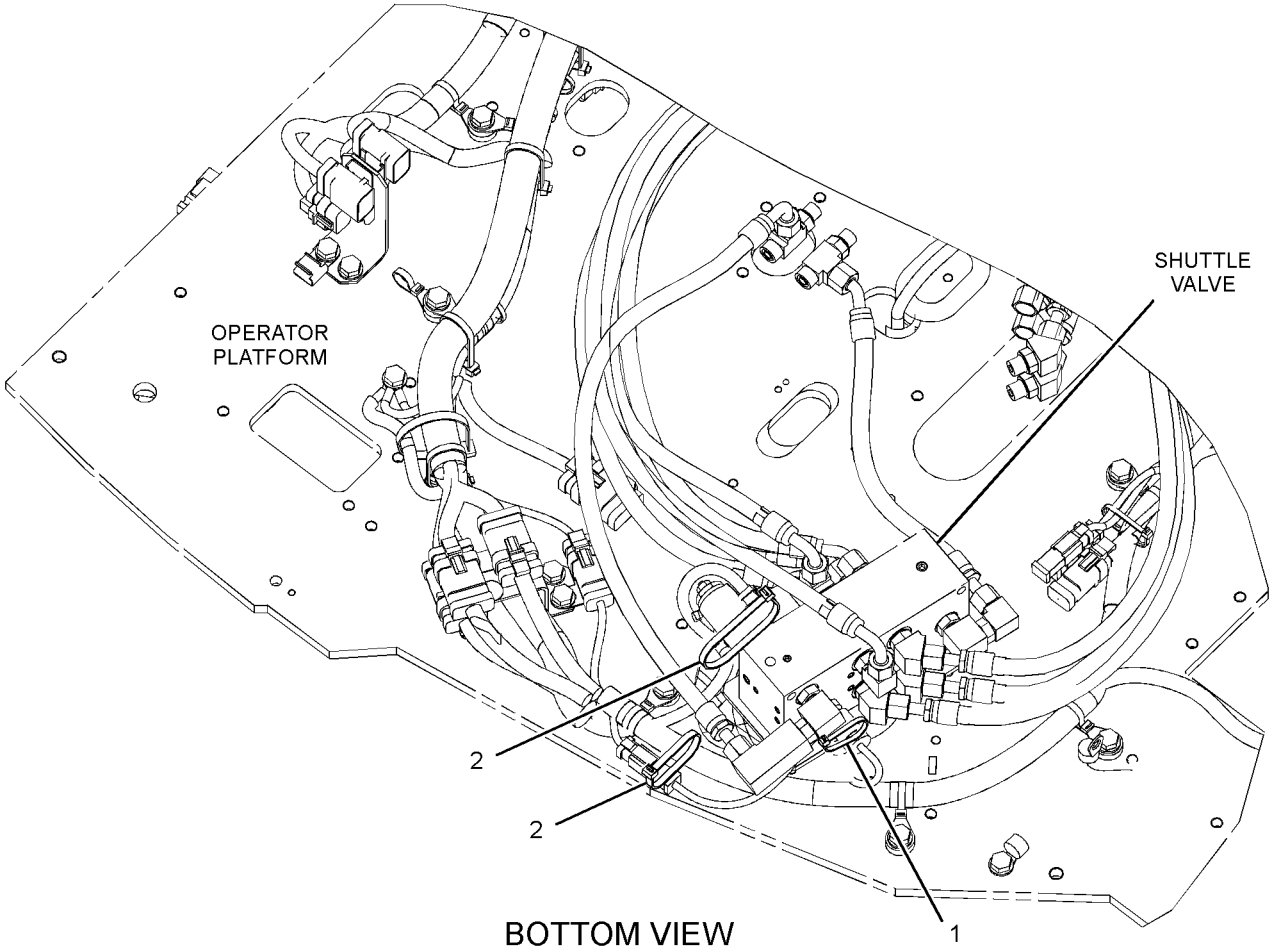

BOTTOM VIEW
(FRONT LEFT)

GRAPHIC #1 **<END>** g01491093

301-2587 INSTALLATION AR-COMMUNICATION–

PRODUCT LINK 121SR

S/N: BYJ1-UP; PDP1-UP

AN ATTACHMENT

SMCS-7606 **i02961483**

NOTE	PART NUMBER	QTY	PART NAME 1 2 3 4 5 6 (PRODUCT LEVEL)	SEE PAGE
Y	*309-5886*	1	INSTALLATION GP-COMMUNICATION	129
Y	*275-7124*	1	WIRING GP-COMMUNICATION (PRODUCT LINK 121SR)	187
Y-SEPARATE ILLUSTRATION				

<END>

301-2588 INSTALLATION AR-COMMUNICATION–

PRODUCT LINK 321SR

S/N: BYJ1-UP; PDP1-UP

AN ATTACHMENT

SMCS-7606 **i02961484**

NOTE	PART NUMBER	QTY	PART NAME 1 2 3 4 5 6 (PRODUCT LEVEL)	SEE PAGE
Y	*309-5891*	1	CONTROL & MTG GP-COMMUNICATION	117
Y	*309-5886*	1	INSTALLATION GP-COMMUNICATION	129
Y	*275-7123*	1	WIRING GP-COMMUNICATION (PRODUCT LINK 321SR)	186
Y-SEPARATE ILLUSTRATION				

<END>

309-5886 INSTALLATION GP-COMMUNICATION–

PRODUCT LINK 121SR

S/N: BYJ1-UP; PDP1-UP

PART OF 301-2587, 301-2588 INSTALLATION AR-COMMUNICATION

AN ATTACHMENT

SMCS-7606 **i02961485**

NOTE	REF NO	GRAPHIC REF	PART NUMBER	QTY	PART NAME 1 2 3 4 5 6 (PRODUCT LEVEL)	SEE PAGE
	1	1	**3S-2093**	3	STRAP-CABLE	
	2	1	**7I-2673**	2	STRAP-CABLE	
M	3	1	**143-9397**	3	SCREW-PAN HEAD (M4X0.7X12-MM)	
	4	1	**235-8966**	1	BASE-MOUNTING	
Y	5	1	**263-9088**	1	CONTROL GP-COMMUNICATION (PRODUCT LINK 121SR)	120
	6	1	**284-8532**	1	ANTENNA AS	
		1	**301-0589**	1	ANTENNA (WHIP)	
	7	1	**319-4249**	1	BRACKET	
	8	1	**095-0910**	3	CLIP	
	9	1	**161-6987**	3	WASHER-HARD (5.2X16X1.5-MM THK)	
	10	1	**8T-4121**	3	WASHER-HARD (11X21X2.5-MM THK)	
M	11	1	**8T-4136**	3	BOLT (M10X1.5X25-MM)	
M	12	1	**8T-4138**	4	BOLT (M6X1X20-MM)	
	13	1	**9X-8256**	4	WASHER (6.6X12X2-MM THK)	
	14	1	**230-1340**	1	FILM-WARNING (PRODUCT LINK RADIO, U.S.)	
					–OR–	
			230-1341	1	FILM-WARNING (PRODUCT LINK RADIO, INTL)	

M-METRIC PART
Y-SEPARATE ILLUSTRATION

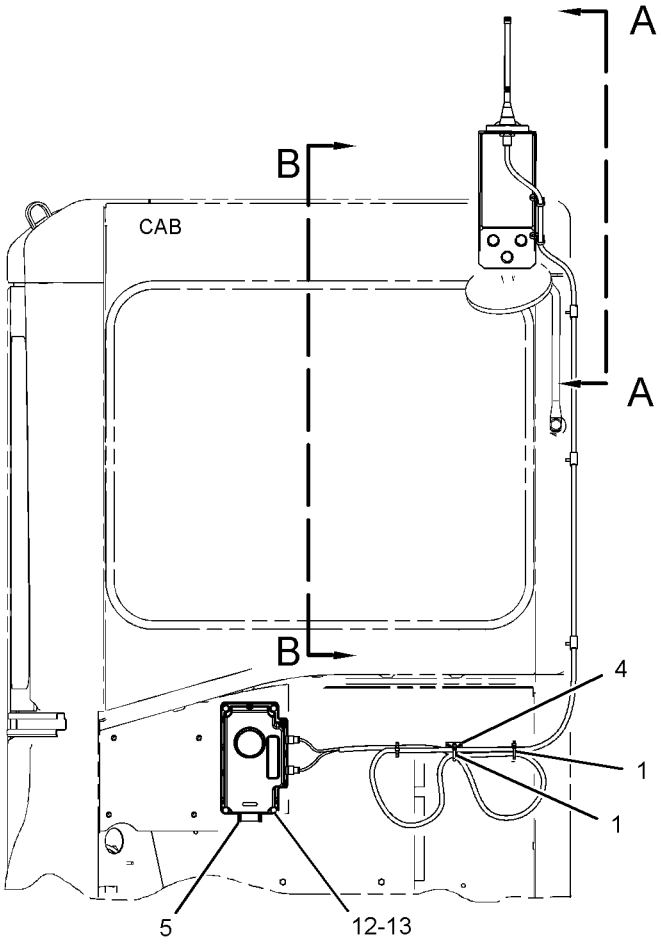

REAR VIEW

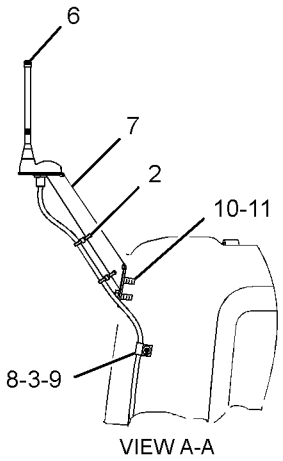

VIEW A-A

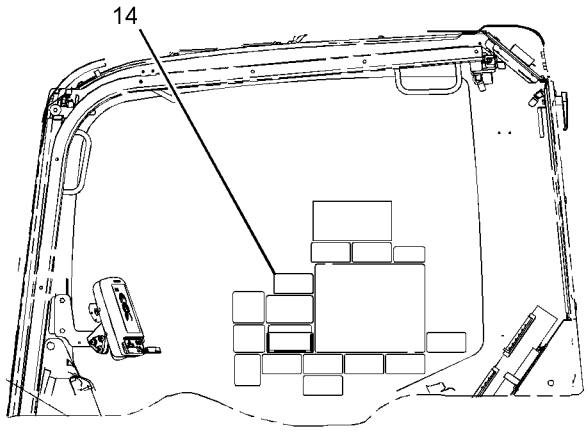

VIEW B-B

GRAPHIC #1 **<END>** g01521418

309-5764 INSTALLATION GP-SECURITY

S/N: BYJ1-UP; PDP1-UP
AN ATTACHMENT

SMCS-7631 **i02829189**

NOTE	REF NO	GRAPHIC REF	PART NUMBER	QTY	PART NAME 1 2 3 4 5 6 (PRODUCT LEVEL)	SEE PAGE
	1	1	**8C-5607**	4	MOUNT-ISOLATION	
	2	1	**8C-5608**	2	SPACER (6.5X9.5X25.4-MM THK)	
	3	1	**206-5162**	2	KEY AS-ELECTRONIC (SECURITY)	
	4	1	**218-0404**	1	MODULE GP-INTERFACE (KEY)	
	6	1	**9X-6165**	2	WASHER (6.5X22X2.5-MM THK)	
M	7	1	**7X-2533**	2	BOLT (M6X1X35-MM)	
Y	8	1	*251-0544*	1	PANEL GP-SWITCH (ENGINE SPEED, START)	145

M-METRIC PART
Y-SEPARATE ILLUSTRATION

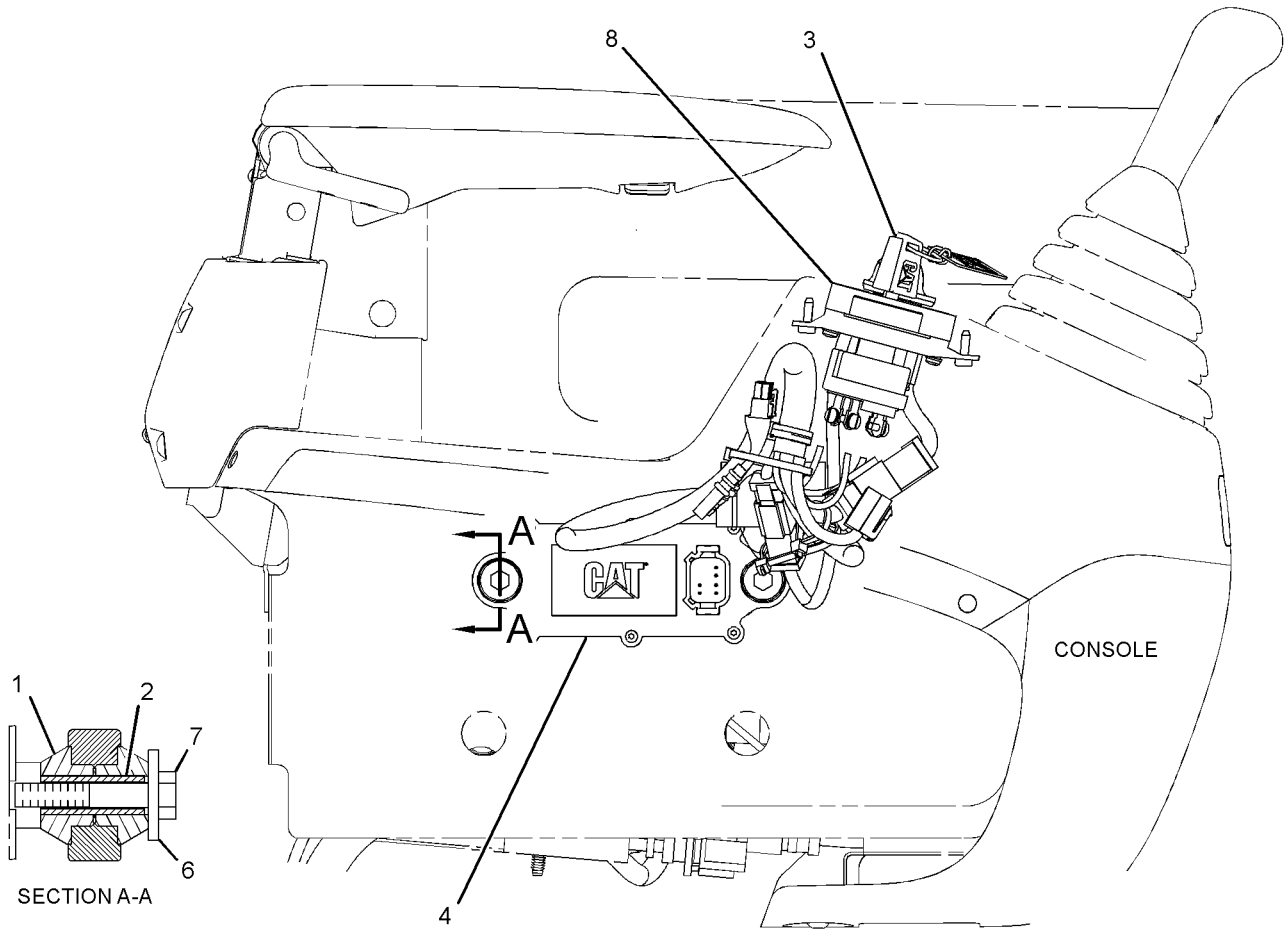

RIGHT SIDE VIEW

GRAPHIC #1 **<END>** g01414125

291-7702 KIT-BRACKET—PRODUCT LINK 121SR, 321SR

S/N: BYJ1-UP; PDP1-UP

FIELD INSTALLATION

SMCS-0635, 7606 **i03254200**

NOTE	PART NUMBER	QTY	PART NAME 1 2 3 4 5 6 (PRODUCT LEVEL)	SEE PAGE
M	**8T-4136**	3	BOLT (M10X1.5X25-MM)	
	270-5460	1	BRACKET	
	299-2690	1	HARNESS AS-WIRING (PRODUCT LINK 321SR, 121SR)	
	155-2274	1	KIT-CONNECTING PLUG (6-PIN)	
			(INCLUDES PLUG AS, WEDGE, AND INTERFACE SEAL)	
	243-4509	1	RECEPTACLE AS-CONNECTOR (8-PIN)	
	8T-4121	3	WASHER-HARD (11X21X2.5-MM THK)	

M-METRIC PART

<END>

153-2521 LAMP GP-FLOOD

S/N: BYJ1-UP; PDP1-UP
24-VOLT
PART OF 275-7014, 275-7113, 275-7114, 275-7116, 275-7180, 283-2647 LIGHTING GP-FLOOD
ALSO AN ATTACHMENT

SMCS-1434 **i02743410**

NOTE	REF NO	GRAPHIC REF	PART NUMBER	QTY	PART NAME 1 2 3 4 5 6 (PRODUCT LEVEL)	SEE PAGE
M	1	1	**6V-5210**	2	SCREW-MACHINE (M4X0.7X10-MM)	
	2	1	**3B-4501**	2	LOCKWASHER	
	3	1	**9X-3463**	1	LAMP-HALOGEN (24-VOLT, 65-WATT)	
	4	1	**8T-4223**	1	WASHER-HARD (13.5X25.5X3-MM THK)	
M	5	1	**8T-4244**	1	NUT (M12X1.75-THD)	
M	6	1	**174-7791**	1	SCREW-TAPPING	
	7	1	**5C-2889**	1	LOCKWASHER	
	8	1	**170-6993**	1	COVER	
M	9	1	**180-3861**	4	SCREW-TAPPING	
	10	1	**170-9417**	1	LENS AS (FLOODLIGHT)	
	11	1	**170-9418**	1	BAND	

M-METRIC PART

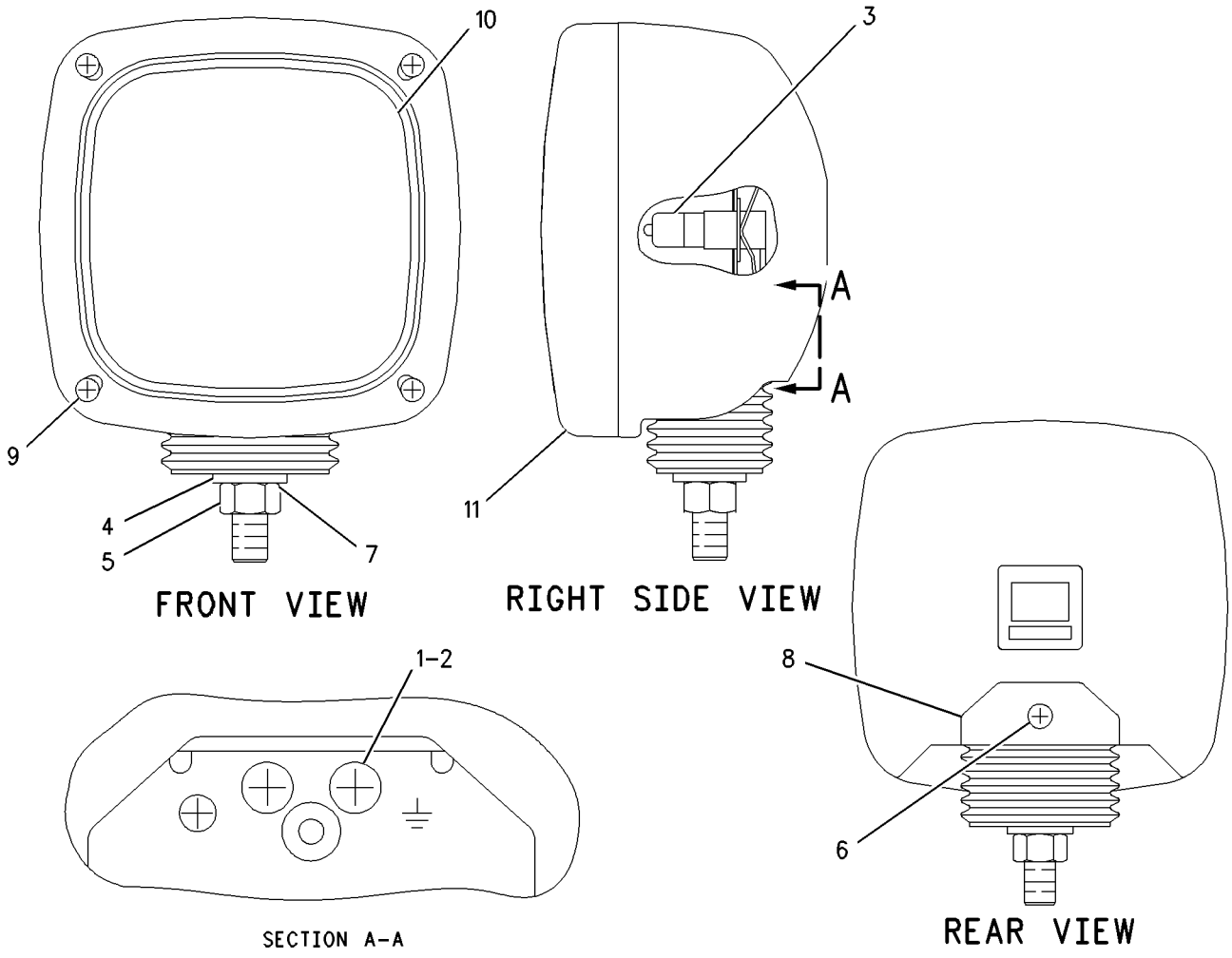

GRAPHIC #1 **<END>** g00645948

275-7014 LIGHTING GP-FLOOD

S/N: BYJ1-UP; PDP1-UP

PART OF 260-7182, 260-7183 CHASSIS AR

SMCS-1434 **i02512251**

NOTE	REF NO	GRAPHIC REF	PART NUMBER	QTY	PART NAME 1 2 3 4 5 6 (PRODUCT LEVEL)	SEE PAGE
Y	1	1	**153-2521**	1	LAMP GP-FLOOD (24-VOLT, VERTICAL MOUNT)	132

Y-SEPARATE ILLUSTRATION

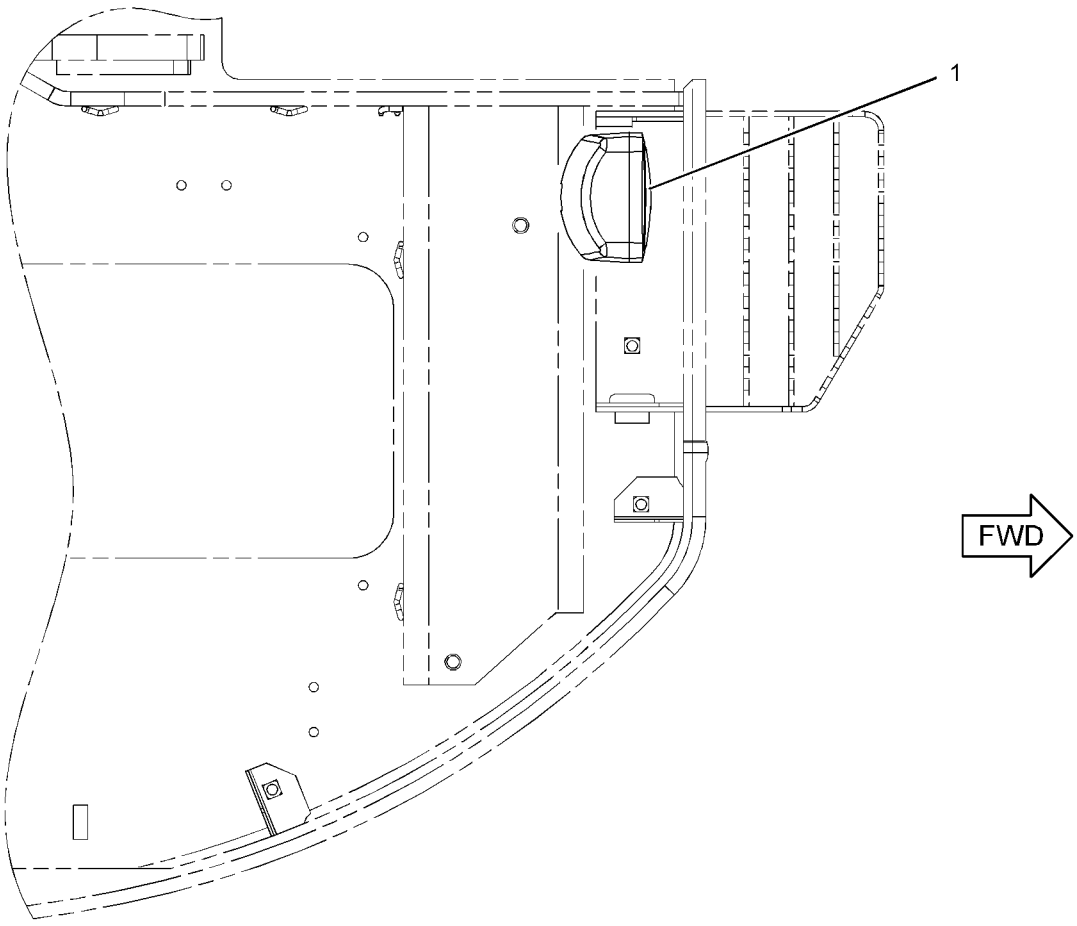

TOP VIEW

GRAPHIC #1 **<END>** g01264643

275-7113 LIGHTING GP-FLOOD—1-PIECE BOOM

S/N: BYJ1-UP; PDP1-UP
PART OF 260-7189 BOOM AR-1 PIECE LONG
AN ATTACHMENT

SMCS-1434 **i03009906**

NOTE	REF NO	GRAPHIC REF	PART NUMBER	QTY	PART NAME 1 2 3 4 5 6 (PRODUCT LEVEL)	SEE PAGE
	1	1	**7I-2673**	1	STRAP-CABLE	
	2	1	**111-4836**	5	CLIP	
	3	1	**116-0118**	1	CLIP	
	4	1	**134-3284**	1	BRACKET	
Y	5	1	**153-2521**	1	LAMP GP-FLOOD (24-VOLT)	132
	6	1	**283-2802**	1	HARNESS AS-LIGHTING (1-PIECE BOOM)	
	7	1	**3S-8664**	1	CLIP	
	8	1	**8T-4121**	7	WASHER-HARD (11X21X2.5-MM THK)	
M	9	1	**8T-4133**	6	NUT (M10X1.5-THD)	
M	10	1	**8T-4137**	1	BOLT (M10X1.5X20-MM)	
M	11	1	**8T-4190**	1	BOLT (M16X2X25-MM)	
	12	1	**9X-8257**	1	WASHER (17.5X30X3.5-MM THK)	

M-METRIC PART
Y-SEPARATE ILLUSTRATION

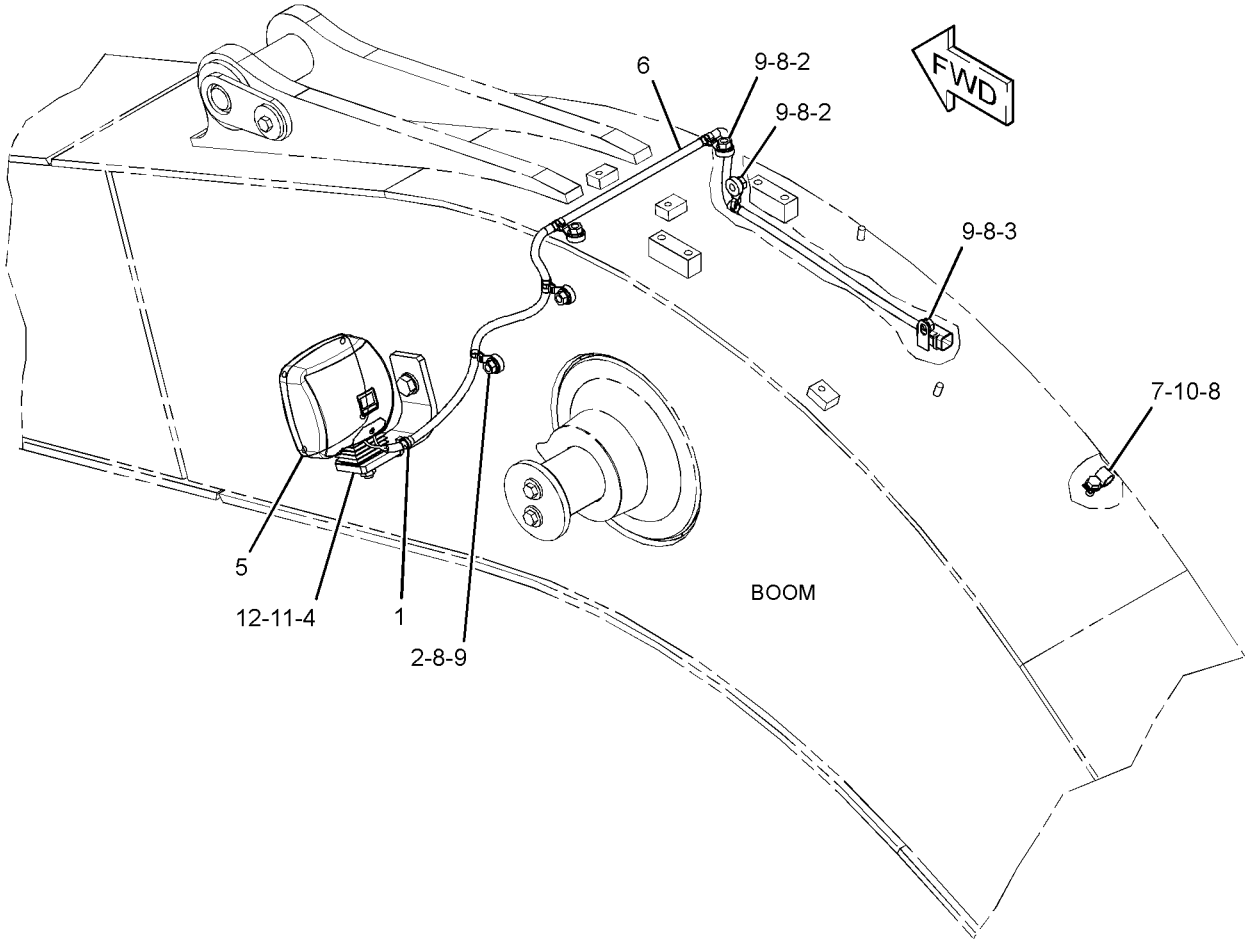

GRAPHIC #1 **<END>** g01413061

275-7114 LIGHTING GP-FLOOD–BOOM, RH

S/N: BYJ1-UP; PDP1-UP
AN ATTACHMENT

SMCS-1434 **i03009907**

NOTE	REF NO	GRAPHIC REF	PART NUMBER	QTY	PART NAME 1 2 3 4 5 6 (PRODUCT LEVEL)	SEE PAGE
	1	1	**7I-2673**	2	STRAP-CABLE	
	2	1	**111-4836**	1	CLIP	
	3	1	**134-3284**	1	BRACKET	
Y	4	1	**153-2521**	1	LAMP GP-FLOOD (24-VOLT)	132
	5	1	**283-2807**	1	HARNESS AS-LIGHTING (BOOM, RH)	
	6	1	**5P-9297**	5	CLIP	
	7	1	**7N-3718**	5	CLIP	
	8	1	**8T-4121**	1	WASHER-HARD (11X21X2.5-MM THK)	
M	9	1	**8T-4133**	1	NUT (M10X1.5-THD)	
M	10	1	**8T-4190**	1	BOLT (M16X2X25-MM)	
	11	1	**9X-8257**	1	WASHER (17.5X30X3.5-MM THK)	

M-METRIC PART
Y-SEPARATE ILLUSTRATION

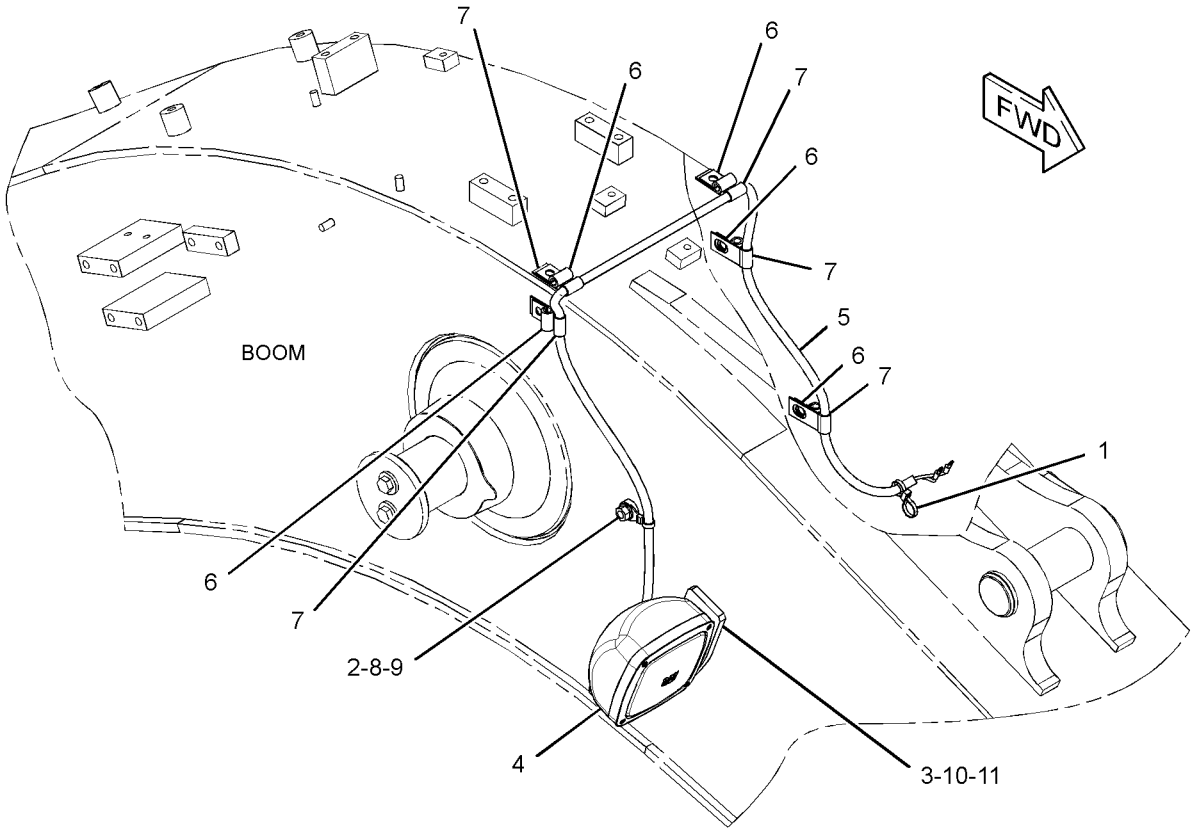

GRAPHIC #1 **<END>** g01411300

275-7116 LIGHTING GP-FLOOD—CAB

S/N: BYJ1-UP; PDP1-UP
TIMER-ON DELAY
CANNOT BE USED WITH 283-2647—PAGE 139
AN ATTACHMENT

SMCS-1434 **i03009915**

NOTE	REF NO	GRAPHIC REF	PART NUMBER	QTY	PART NAME 1 2 3 4 5 6 (PRODUCT LEVEL)	SEE PAGE
	1	1	**3S-2093**	1	STRAP-CABLE	
	2	1	**4I-5459**	1	BRACKET AS	
	3	1	**4I-5461**	1	BRACKET	
	4	1	**116-0243**	1	HARNESS AS-LIGHTING (CAB)	
	5	1	**140-0866**	1	RELAY (24-VOLT) (CAB LIGHTS)	
Y	6	1	**153-2521**	1	LAMP GP-FLOOD (24-VOLT)	132
	7	1	**163-6704**	1	TIMER AS (TIME DELAY LIGHTING)	
		1	**102-8802**	1	KIT-RECEPTACLE (2-PIN)	
		1	**102-8803**	1	KIT-RECEPTACLE (3-PIN)	
					(EACH RECEPTACLE KIT INCLUDES RECEPTACLE AS & WEDGE)	
		1	**186-3735**	5	PIN-CONNECTOR (16-GA TO 18-GA)	
	8	1	**3K-8107**	1	GROMMET	
M	9	1	**8T-4137**	4	BOLT (M10X1.5X20-MM)	
	10	1	**4I-3144**	4	WASHER-HARD (10.2X22X3.2-MM THK)	
M	11	1	**8T-4171**	2	BOLT (M6X1X12-MM)	
	12	1	**9X-8256**	2	WASHER (6.6X12X2-MM THK)	

M-METRIC PART
Y-SEPARATE ILLUSTRATION

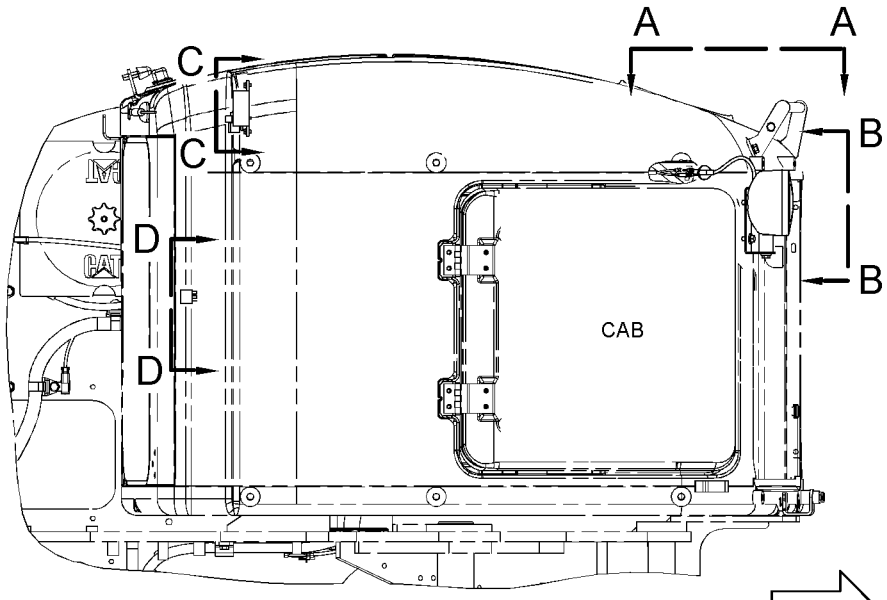

TOP VIEW

FWD

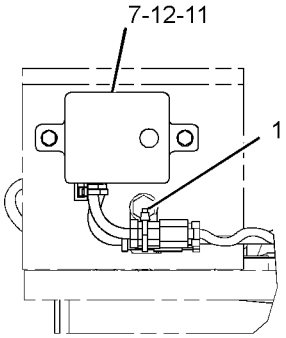

VIEW C-C

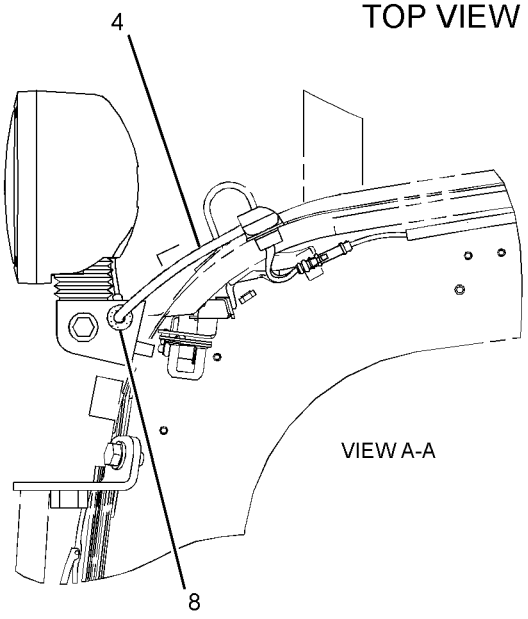

VIEW A-A

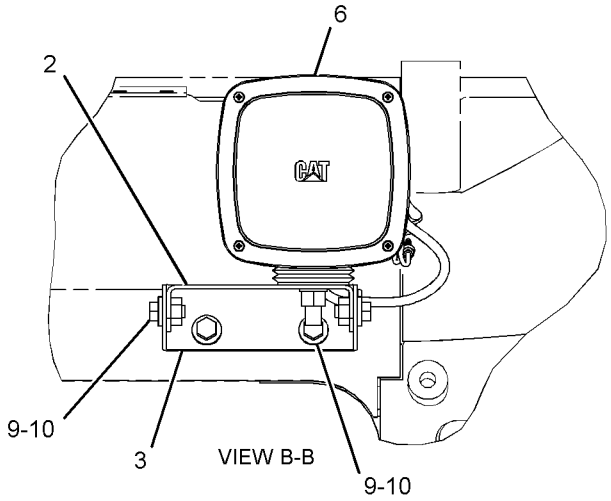

VIEW B-B

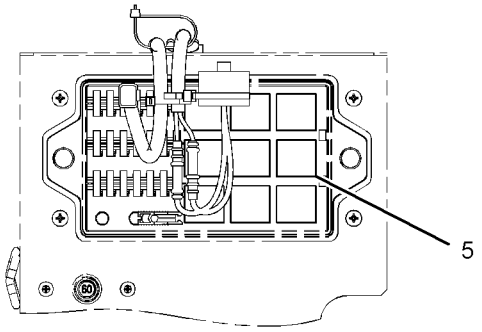

VIEW D-D

GRAPHIC #1 **<END>** g01408336

275-7180 LIGHTING GP-FLOOD—BOOM, RH

S/N: BYJ1-UP; PDP1-UP
AN ATTACHMENT

SMCS-1434 **i03009919**

NOTE	REF NO	GRAPHIC REF	PART NUMBER	QTY	PART NAME 1 2 3 4 5 6 (PRODUCT LEVEL)	SEE PAGE
	1	1	**3S-2093**	2	STRAP-CABLE	
	2	1	**7I-2673**	1	STRAP-CABLE	
	3	1	**134-3284**	1	BRACKET	
Y	4	1	**153-2521**	1	LAMP GP-FLOOD (24-VOLT)	132
	5	1	**291-7509**	1	HARNESS AS-LIGHTING (BOOM, RH)	
	6	1	**4D-8123**	1	CLIP	
M	7	1	**8T-4190**	1	BOLT (M16X2X25-MM)	
	8	1	**9X-8257**	1	WASHER (17.5X30X3.5-MM THK)	

M-METRIC PART
Y-SEPARATE ILLUSTRATION

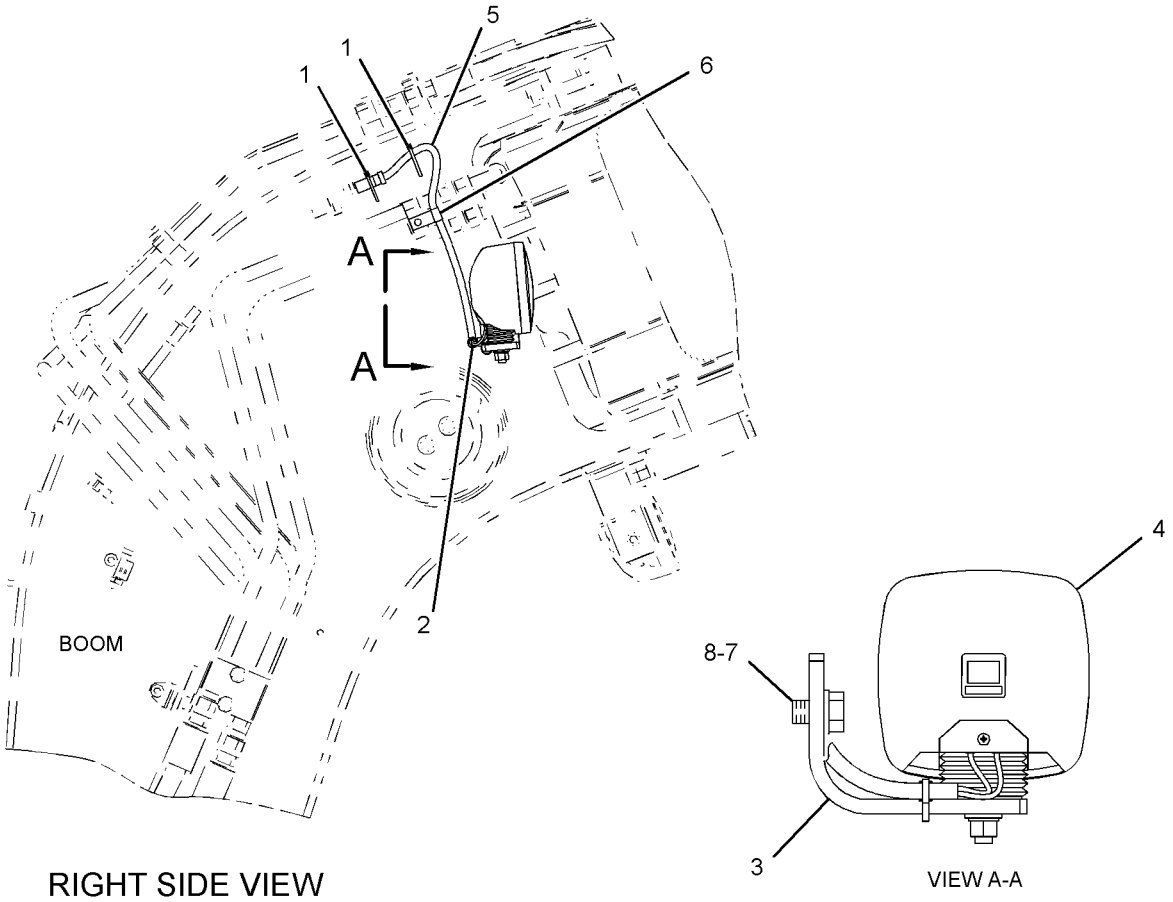

RIGHT SIDE VIEW

GRAPHIC #1 **<END>** g01411308

283-2647 LIGHTING GP-FLOOD—CAB

S/N: BYJ1-UP; PDP1-UP
CANNOT BE USED WITH 275-7116—PAGE 136
AN ATTACHMENT

SMCS-1434 **i03009921**

NOTE	REF NO	GRAPHIC REF	PART NUMBER	QTY	PART NAME 1 2 3 4 5 6 (PRODUCT LEVEL)	SEE PAGE
	1	1	**4I-5459**	1	BRACKET AS	
	2	1	**4I-5461**	1	BRACKET	
	3	1	**116-0243**	1	HARNESS AS-LIGHTING (CAB)	
	4	1	**140-0866**	1	RELAY (24-VOLT) (CAB LIGHTS)	
Y	5	1	**153-2521**	1	LAMP GP-FLOOD (24-VOLT)	132
	6	1	**3K-8107**	1	GROMMET	
M	7	1	**8T-4137**	4	BOLT (M10X1.5X20-MM)	
	8	1	**4I-3144**	4	WASHER-HARD (10.2X22X3.2-MM THK)	

M-METRIC PART
Y-SEPARATE ILLUSTRATION

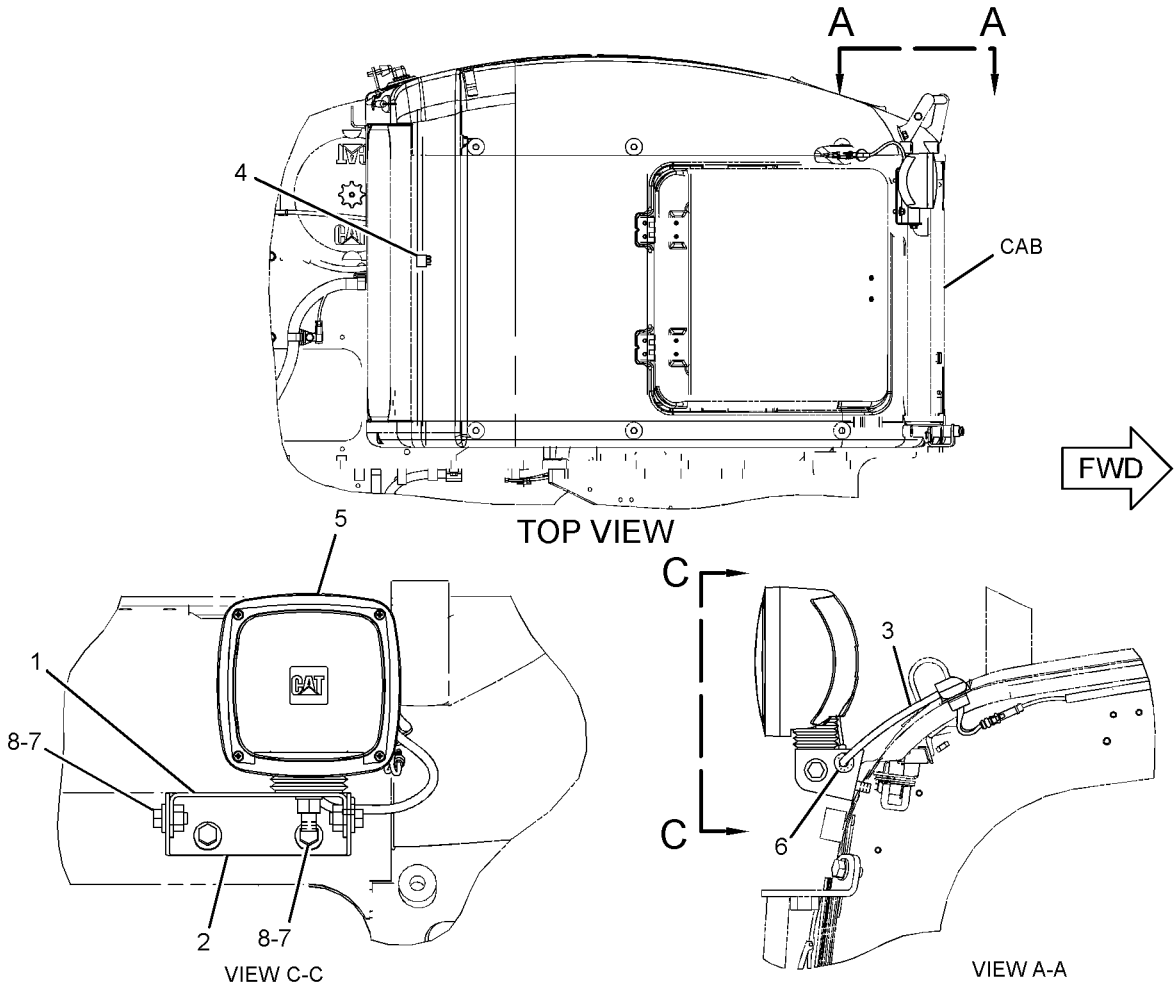

GRAPHIC #1 **<END>** g01413059

330-1319 MOUNTING GP-CAMERA

S/N: BYJ1-UP; PDP1-UP
PART OF 330-8751 INSTALLATION AR
AN ATTACHMENT

SMCS-7348 **i03151200**

NOTE	REF NO	GRAPHIC REF	PART NUMBER	QTY	PART NAME 1 2 3 4 5 6 (PRODUCT LEVEL)	SEE PAGE
Y	1	1	*313-7833*	1	CAMERA GP (WITH MOUNTING)	115
	2	1	**320-5396**	1	COVER	
	3	1	**333-5082**	1	SHEET AS	
	4	1	**8T-4121**	5	WASHER-HARD (11X21X2.5-MM THK)	
M	5	1	**8T-4137**	5	BOLT (M10X1.5X20-MM)	

M-METRIC PART
Y-SEPARATE ILLUSTRATION

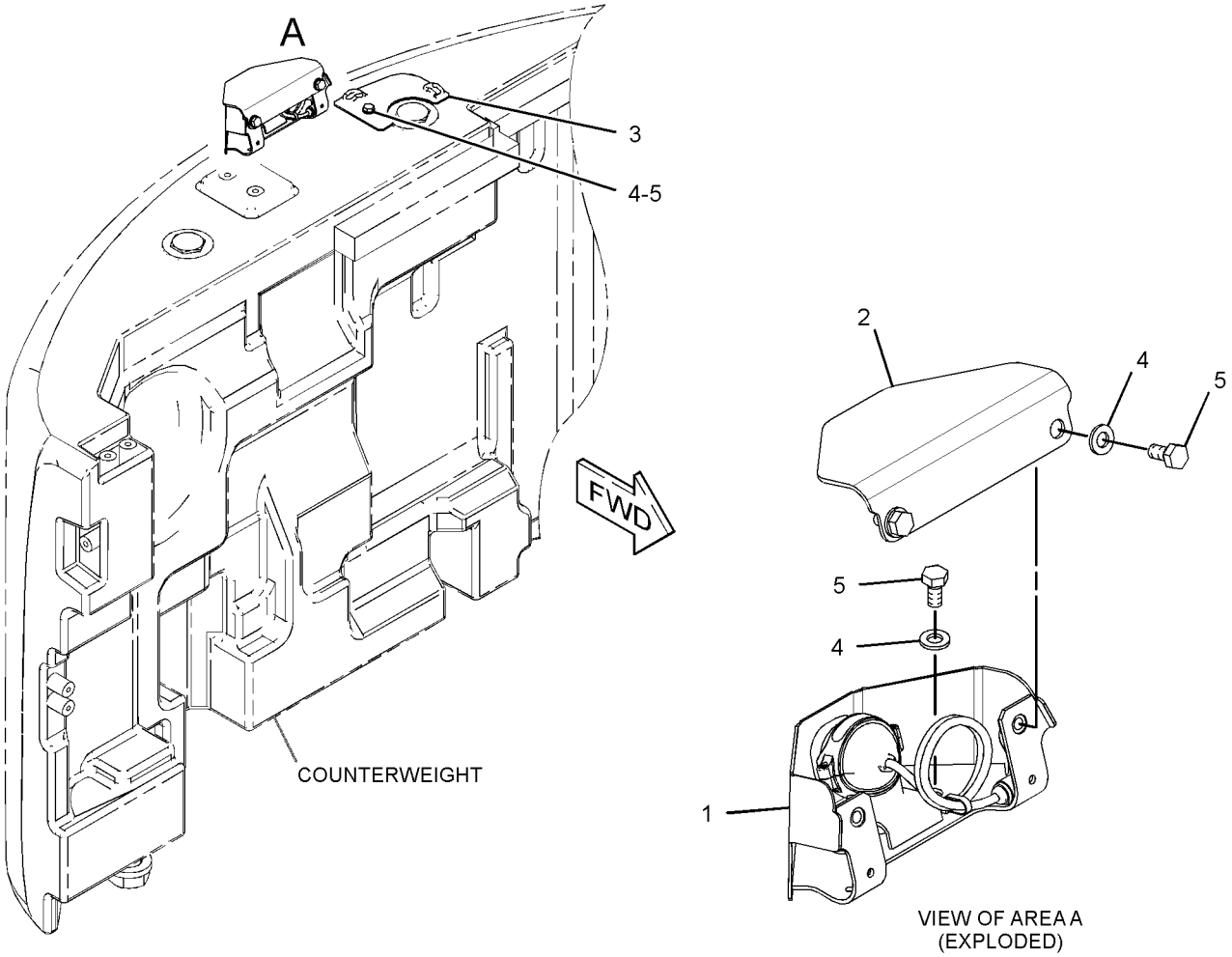

GRAPHIC #1 **<END>** g01626643

319-1405 PANEL GP-CIRCUIT BREAKER

S/N: BYJ1-UP; PDP1-UP

PART OF 275-7106 BATTERY & WIRING GP, 306-8768 WIRING GP-HEATER

SMCS-1417 **i03254201**

NOTE	REF NO	GRAPHIC REF	PART NUMBER	QTY	PART NAME 1 2 3 4 5 6 (PRODUCT LEVEL)	SEE PAGE
	1	1	**7K-1181**	2	STRAP-CABLE	
	2	1	**7Y-5493**	1	TOOL (FUSE PULLER)	
	3	1	**9G-8451**	1	BLOCK AS	
		1	**1H-3244**	1	LOCKWASHER	
		1	**4B-4276**	2	WASHER (7X16X1.6-MM THK)	
		1	**4L-7124**	1	BOLT (1/4-20X1.25-IN)	
		1	**6V-8185**	2	NUT (1/4-20-THD)	
	4	1	**9W-1442**	12	FUSE (10-AMPERE)	
	5	1	**9W-1446**	2	FUSE (20-AMPERE)	
	6	1	**094-2080**	1	SWITCH-MAGNETIC (24-VOLT) (START RELAY)	
	7	1	**111-4837**	1	CLIP	
	8	1	**116-0114**	1	SWITCH AS-MAGNETIC (24-VOLT) (HEATER RELAY)	
		1	**186-3735**	2	PIN-CONNECTOR (16-GA TO 18-GA)	
		1	**102-8802**	1	KIT-RECEPTACLE (2-PIN)	
					(INCLUDES RECEPTACLE AS & WEDGE)	
	9	1	**127-4618**	1	FUSE (25-AMPERE)	
	10	1	**139-5345**	6	FUSE (5-AMPERE)	
	11	1	**140-0866**	3	RELAY (24-VOLT) (POWER RELAY)	
	11A	1	**140-0866**	1	RELAY (24-VOLT) (BOOM FLOODLIGHT)	
	11B	1	**140-0866**	1	RELAY (24-VOLT) (NEUTRAL START)	
	11C	1	**140-0866**	1	RELAY (24-VOLT) (HORN)	
	11D	1	**140-0866**	1	RELAY (24-VOLT) (CHASSIS LIGHT)	
	12	1	**163-6758**	1	WIRE AS	
	13	1	**170-9372**	1	COVER	
	14	1	**170-9373**	2	LATCH	
	15	1	**171-2208**	1	CIRCUIT BREAKER AS (60-AMPERE) (ALTERNATOR)	
		1	**6V-8187**	2	NUT (1/4-28-THD)	
		1	**8T-4205**	2	WASHER-HARD (7.2X14.5X2-MM THK)	
		1	**253-2111**	2	LOCKWASHER	
	16	1	**197-4330**	1	CONTROLLER-AIR (HEATER)	
	17	1	**319-1406**	1	HARNESS AS-PANEL (CIRCUIT BREAKER)	
	18	1	**319-1407**	1	BRACKET AS	
	19	1	**319-1414**	1	CABLE AS	
D		1	**6V-2369**		WIRE (4-GA, BLACK) (0.3-M)	
		1	**9G-4343**	1	TERMINAL (4-GA)	
E		1	**125-7876**		TUBE-HEAT SHRINK (17.78-MM DIA) (4-CM)	
M	20	1	**5C-2890**	2	NUT (M6X1-THD)	
	21	1	**6V-5645**	2	SCREW-MACHINE (10-32X0.87-IN)	
M	22	1	**7X-2619**	7	BOLT (M6X1X10-MM)	
	23	1	**8T-4121**	1	WASHER-HARD (11X21X2.5-MM THK)	
M	24	1	**8T-4137**	1	BOLT (M10X1.5X20-MM)	
M	25	1	**8T-4171**	2	BOLT (M6X1X12-MM)	
M	26	1	**8T-6411**	4	SCREW-MACHINE (M6X1X12-MM)	
	27	1	**9X-8256**	15	WASHER (6.6X12X2-MM THK)	

D-ORDER BY THE METER
E-ORDER BY THE CENTIMETER
M-METRIC PART

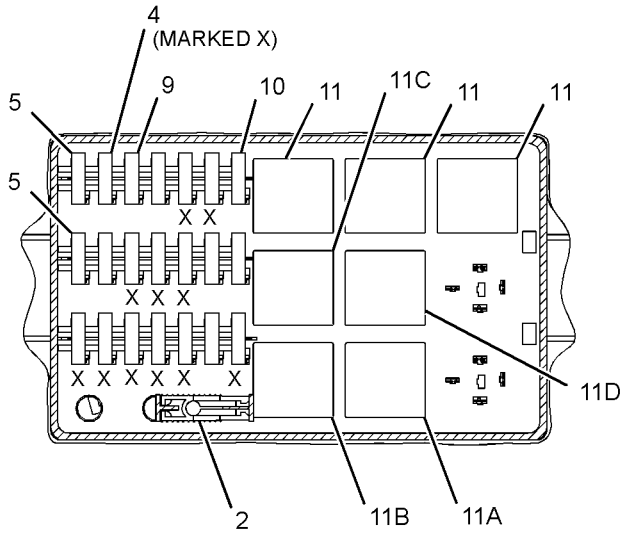

SECTION B-B

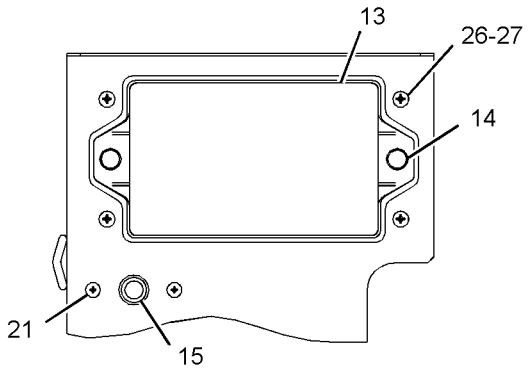

VIEW C-C

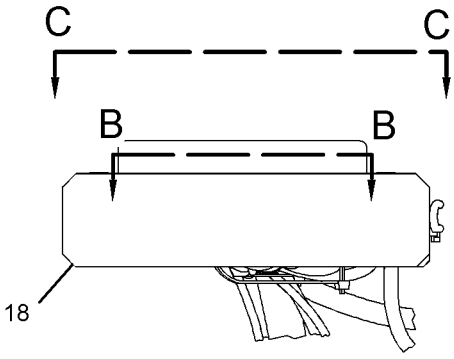

VIEW A-A

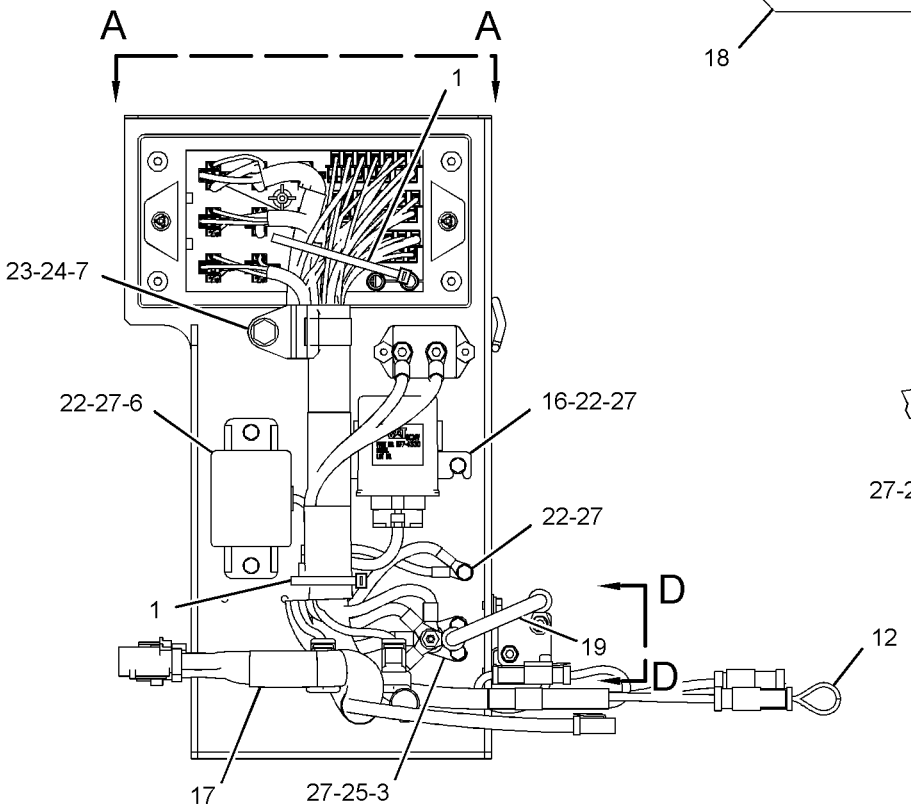

FRONT VIEW

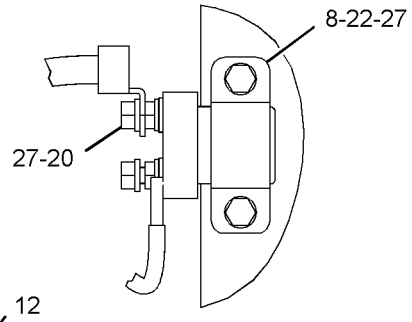

VIEW D-D

GRAPHIC #1 **<END>** g01519733

251-0542 PANEL GP-SWITCH–ENGINE SPEED, START

S/N: BYJ1-UP; PDP1-UP
CONSOLE
CANNOT BE USED WITH 251-0544–PAGE 145
AN ATTACHMENT

SMCS-1408, 1429, 7332, 7451 **i03098161**

NOTE	REF NO	GRAPHIC REF	PART NUMBER	QTY	PART NAME 1 2 3 4 5 6 (PRODUCT LEVEL)	SEE PAGE
	1	1	**3S-2093**	4	STRAP-CABLE	
Y	2	1	**9G-7641**	1	SWITCH GP-START (ENGINE, KEY)	166
CY	3	1	**319-4420**	1	SWITCH GP-ROTARY (THROTTLE POSITION)	165
	4	1	**170-9324**	1	LAMP AS (24-VOLT, 3-WATT)	
	5	1	**185-9208**	1	KNOB AS (THROTTLE POSITION)	
	6	1	**234-1156**	1	COVER	
	7	1	**234-1158**	1	COVER	
	8	1	**267-7976**	1	PANEL	
C	9	1	**328-0021**	1	HARNESS AS-CONSOLE (RH)	
	10	1	**096-6166**	4	WASHER-HARD (4.5X9X1-MM THK)	
	11	1	**119-5026**	4	SCREW-PAN HEAD (10-16X0.63-IN)	
M	12	1	**6V-9491**	4	SCREW-MACHINE (M4X0.7X20-MM)	

C-CHANGE FROM PREVIOUS TYPE
M-METRIC PART
Y-SEPARATE ILLUSTRATION

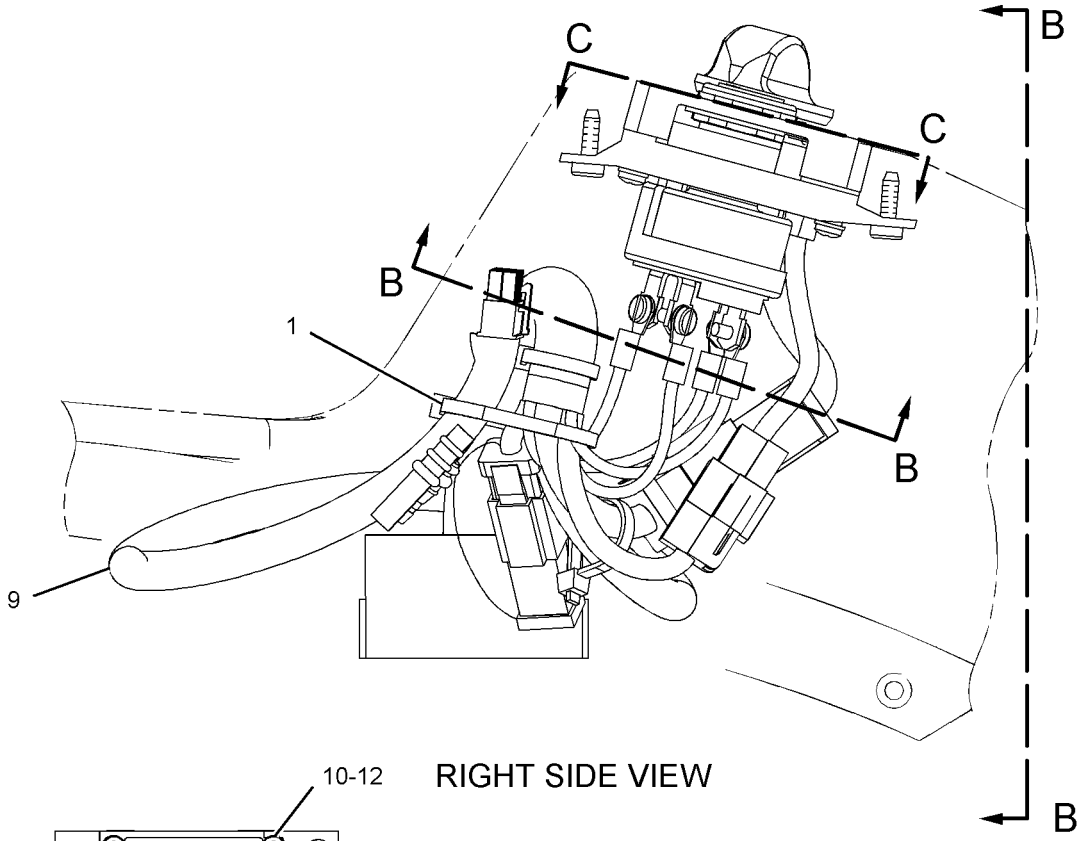

RIGHT SIDE VIEW

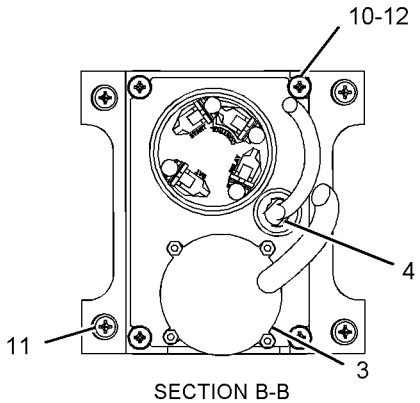

SECTION B-B

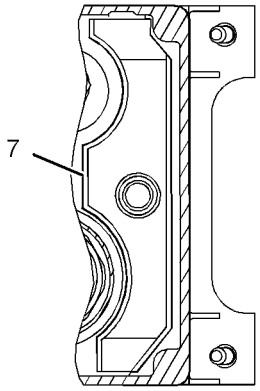

VIEW C-C

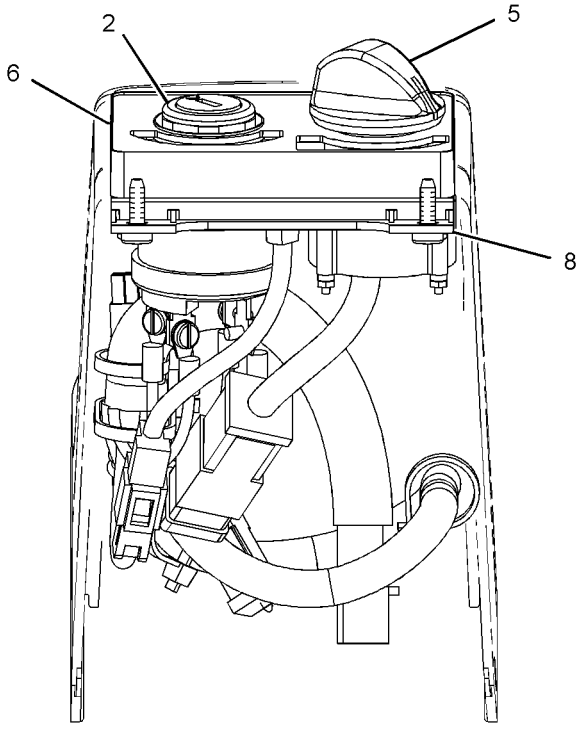

VIEW B-B

GRAPHIC #1 **<END>** g01112022

251-0544 PANEL GP-SWITCH–ENGINE SPEED, START

S/N: BYJ1-UP; PDP1-UP
PART OF 309-5764 INSTALLATION GP-SECURITY
AN ATTACHMENT
TYPE 1

SMCS-1408, 1429, 7332, 7451 **i02742288**

NOTE	REF NO	GRAPHIC REF	PART NUMBER	QTY	PART NAME 1 2 3 4 5 6 (PRODUCT LEVEL)	SEE PAGE
	1	1	**3S-2093**	5	STRAP-CABLE	
Y	2	1	**9G-7641**	1	SWITCH GP-START (ENGINE, KEY)	166
Y	3	1	**106-0107**	1	SWITCH GP-ROTARY (THROTTLE POSITION)	164
	4	1	**185-9208**	1	KNOB AS	
	5	1	**205-0826**	1	FILM-INSTRUCTION (MACHINE SECURITY, CONSOLE)	
	6	1	**205-8257**	1	COIL AS (EXCITER)	
		1	**186-3735**	2	PIN-CONNECTOR (16-GA TO 18-GA)	
	7	1	**234-1156**	1	COVER	
	8	1	**267-7977**	1	PANEL	
	9	1	**251-0543**	1	HARNESS AS-CONSOLE (RH)	
		1	**102-8802**	1	KIT-RECEPTACLE (2-PIN)	
					(INCLUDES RECEPTACLE AS & WEDGE)	
		1	**155-2270**	1	KIT-CONNECTING PLUG (2-PIN)	
		1	**155-2274**	1	KIT-CONNECTING PLUG (6-PIN)	
					(EACH PLUG KIT INCLUDES PLUG AS, WEDGE & INTERFACE SEAL)	
	10	1	**096-6166**	4	WASHER-HARD (4.5X9X1-MM THK)	
	11	1	**119-5026**	4	SCREW-PAN HEAD (10-16X0.63-IN)	
M	12	1	**6V-9491**	4	SCREW-MACHINE (M4X0.7X20-MM)	

M-METRIC PART
Y-SEPARATE ILLUSTRATION

251-0544 **PANEL GP-SWITCH** *(contd.)* **i02742288**

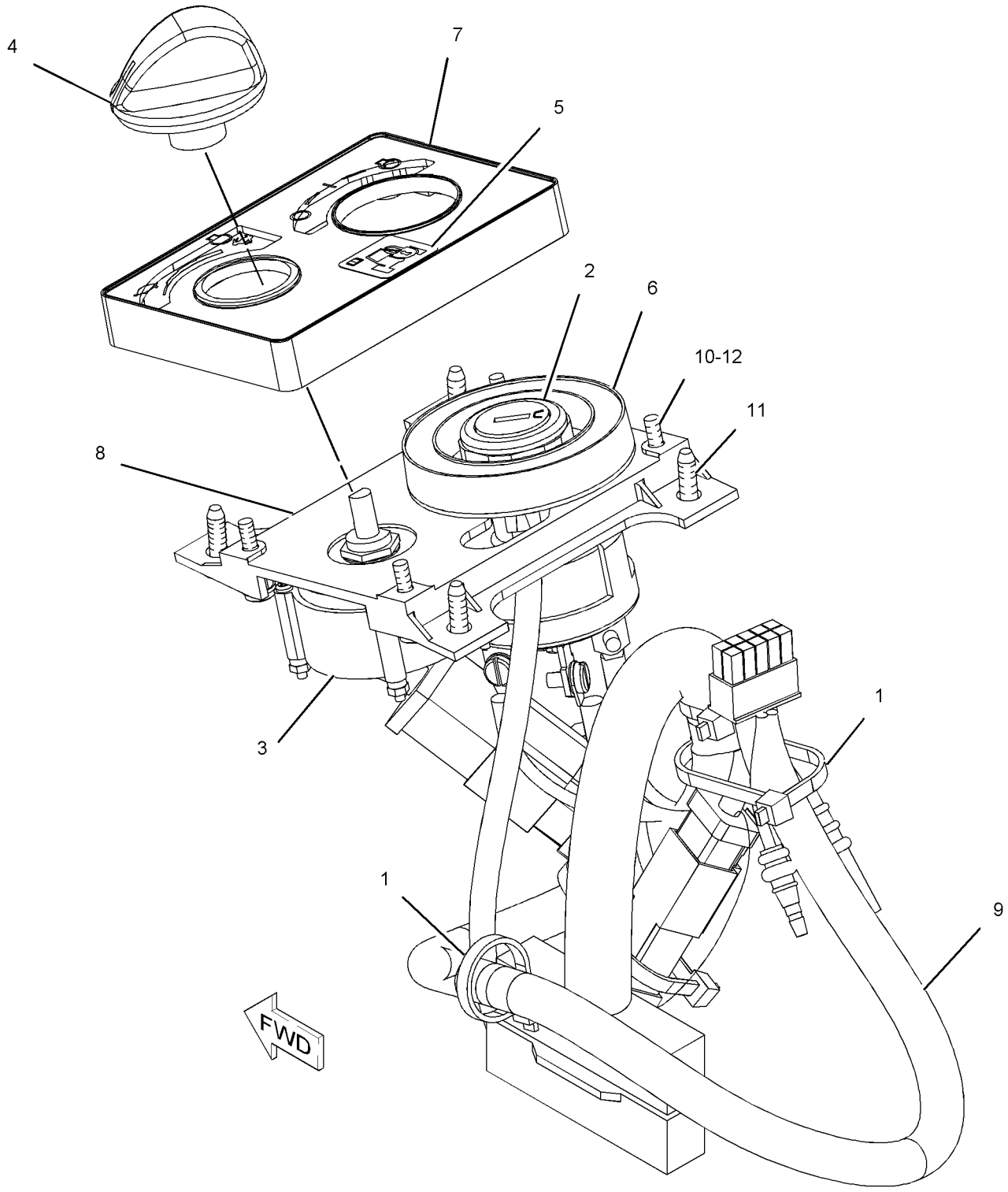

GRAPHIC #1 **<END>** g01123869

251-0544 PANEL GP-SWITCH–ENGINE SPEED, START

S/N: BYJ1-UP; PDP1-UP
PART OF 309-5764 INSTALLATION GP-SECURITY
AN ATTACHMENT
TYPE 2

SMCS-1408, 1429, 7332, 7451 **i03115847**

NOTE	REF NO	GRAPHIC REF	PART NUMBER	QTY	PART NAME 1 2 3 4 5 6 (PRODUCT LEVEL)	SEE PAGE
	1	1	**3S-2093**	5	STRAP-CABLE	
Y	2	1	**9G-7641**	1	SWITCH GP-START (ENGINE, KEY)	166
CY	3	1	**319-4420**	1	SWITCH GP-ROTARY (THROTTLE POSITION)	165
	4	1	**185-9208**	1	KNOB AS	
	5	1	**205-0826**	1	FILM-INSTRUCTION (MACHINE SECURITY, CONSOLE)	
	6	1	**206-5208**	1	COIL AS (EXCITER)	
	7	1	**234-1156**	1	COVER	
	8	1	**267-7977**	1	PANEL	
C	9	1	**328-0021**	1	HARNESS AS-CONSOLE	
	10	1	**096-6166**	4	WASHER-HARD (4.5X9X1-MM THK)	
	11	1	**119-5026**	4	SCREW-PAN HEAD (10-16X0.63-IN)	
M	12	1	**6V-9491**	4	SCREW-MACHINE (M4X0.7X20-MM)	

C-CHANGE FROM PREVIOUS TYPE
M-METRIC PART
Y-SEPARATE ILLUSTRATION

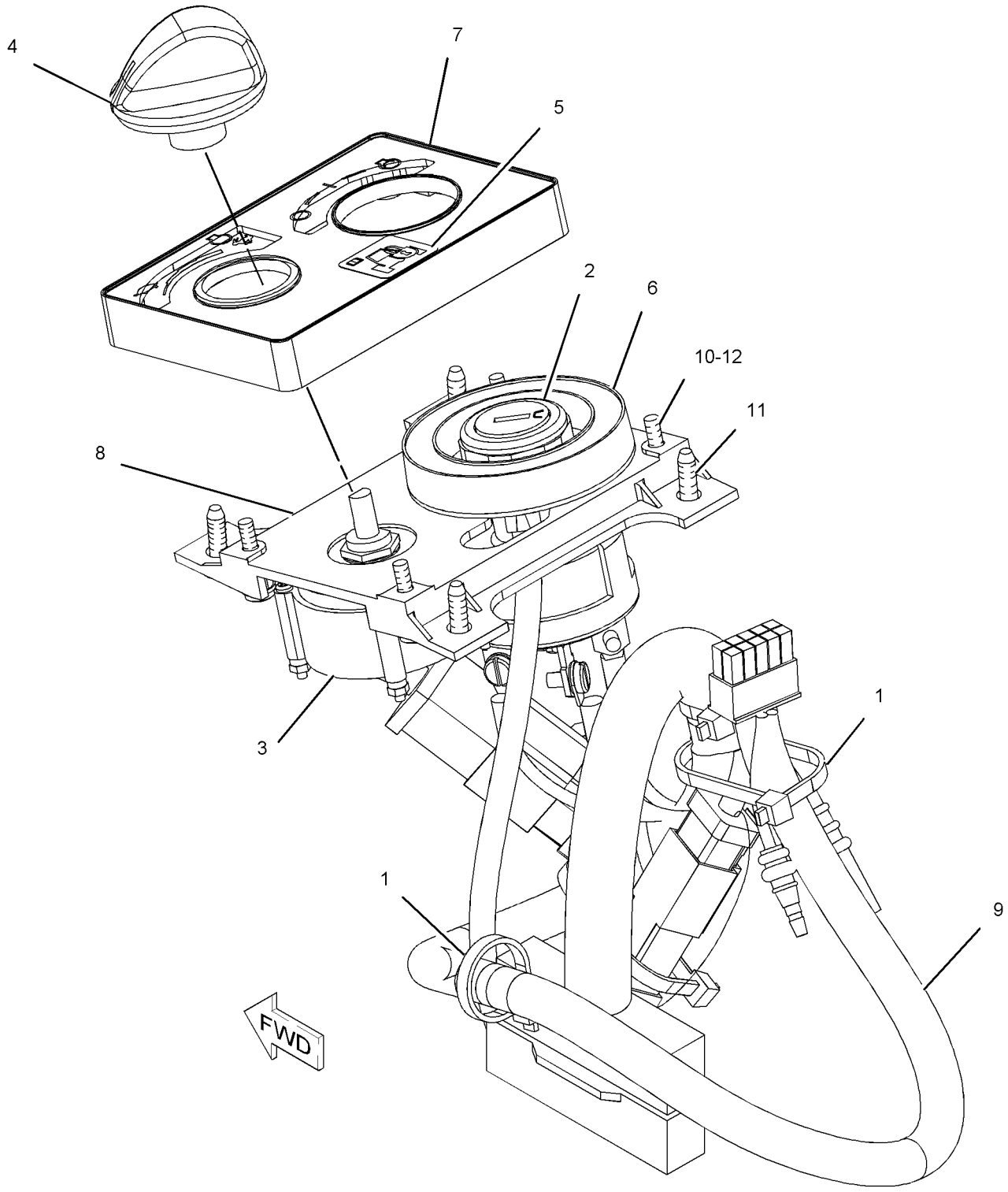

GRAPHIC #1 **<END>** g01123869

306-8369 PANEL GP-SWITCH

S/N: BYJ1-UP; PDP1-UP

PART OF 273-5406 OPERATOR AR

SMCS-1408, 1429, 7332, 7451 **i02811832**

NOTE	REF NO	GRAPHIC REF	PART NUMBER	QTY	PART NAME 1 2 3 4 5 6 (PRODUCT LEVEL)	SEE PAGE
	1	1	**7K-1181**	1	STRAP-CABLE	
	2	1	**227-7575**	1	PANEL-CONTROL (SWITCH)	

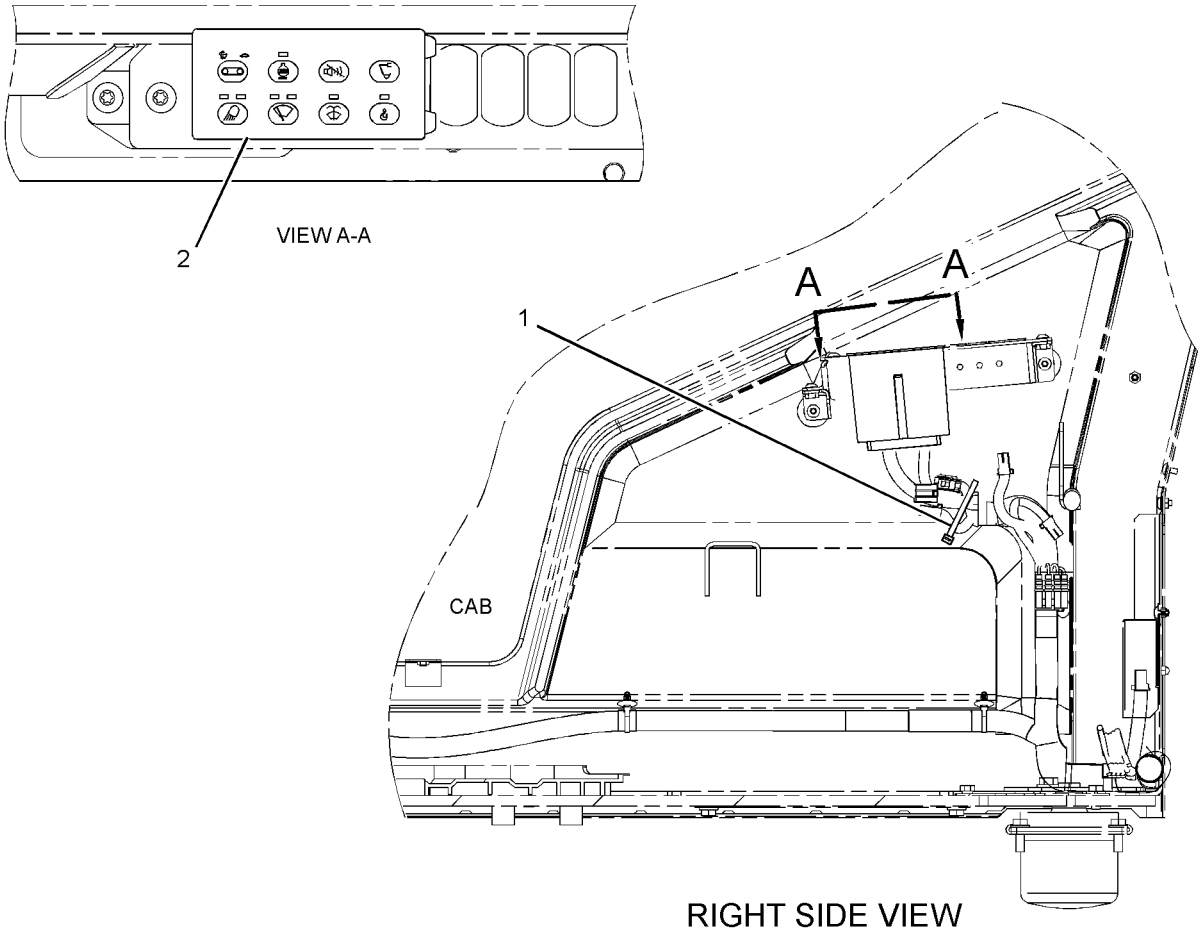

RIGHT SIDE VIEW

GRAPHIC #1 **<END>** g01411154

157-9162 SENSOR & MTG GP-POSITION–STICK

S/N: BYJ1-UP; PDP1-UP
PART OF 260-7193 STICK AR-HOE
AN ATTACHMENT

SMCS-5736 **i02814141**

NOTE	REF NO	GRAPHIC REF	PART NUMBER	QTY	PART NAME 1 2 3 4 5 6 (PRODUCT LEVEL)	SEE PAGE
	1	1	**120-0044**	1	SENSOR AS-POSITION (OFFSET BOOM)	
		1	**102-8803**	1	KIT-RECEPTACLE (3-PIN)	
					(INCLUDES RECEPTACLE AS & WEDGE)	
		1	**186-3735**	3	PIN-CONNECTOR (16-GA TO 18-GA)	
M	2	1	**134-7721**	2	BOLT (M6X1X12-MM)	
	3	1	**9X-8256**	8	WASHER (6.6X12X2-MM THK)	
M	4	1	**3T-0849**	4	BOLT-SOCKET HEAD (M6X1X25-MM)	
M	5	1	**6V-7357**	1	BOLT (M6X1X25-MM)	
	6	1	**157-9163**	1	LEVER AS	
	7	1	**157-9165**	1	ROD AS	
M		1	**5C-2890**	2	NUT (M6X1-THD)	
		1	**8C-3111**	2	ROD END	
		1	**157-9167**	1	BAR	
	8	1	**3S-2093**	1	STRAP-CABLE	
M	9	1	**8T-4138**	1	BOLT (M6X1X20-MM)	

M-METRIC PART

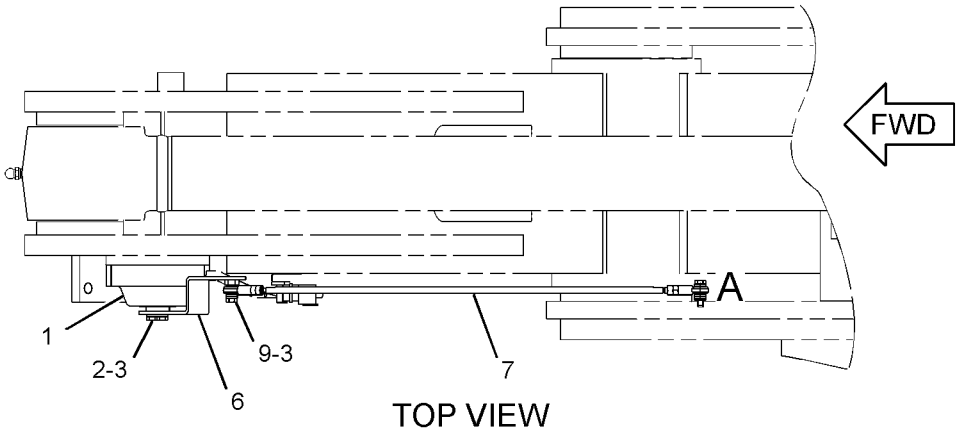

TOP VIEW

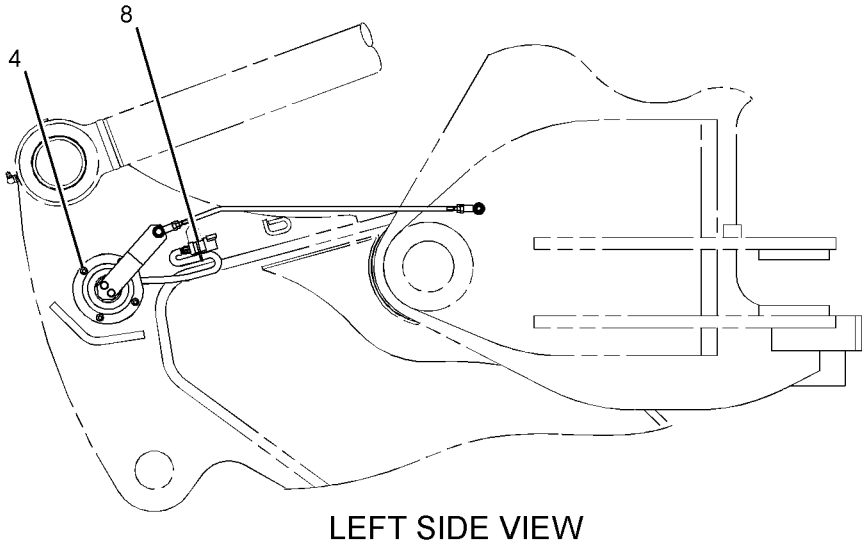

LEFT SIDE VIEW

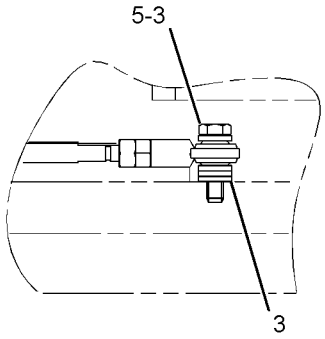

VIEW OF AREA A

GRAPHIC #1 **<END>** g01413457

279-7565 SENSOR & MTG GP-POSITION–BOOM

S/N: BYJ1-UP; PDP1-UP
PART OF 260-7189 BOOM AR-1 PIECE LONG
AN ATTACHMENT

SMCS-5736 **i02826357**

NOTE	REF NO	GRAPHIC REF	PART NUMBER	QTY	PART NAME 1 2 3 4 5 6 (PRODUCT LEVEL)	SEE PAGE
	1	1	**120-0044**	1	SENSOR AS-POSITION (OFFSET BOOM)	
		1	**102-8803**	1	KIT-RECEPTACLE (3-PIN)	
					(INCLUDES RECEPTACLE AS & WEDGE)	
		1	**8T-8729**	1	PIN-CONNECTOR	
M	2	1	**134-7721**	2	BOLT (M6X1X12-MM)	
	3	1	**211-6411**	1	LEVER	
M	4	1	**134-7722**	1	BOLT-LOCKING (M8X1.25X16-MM)	
M	5	1	**3T-0849**	4	BOLT-SOCKET HEAD (M6X1X25-MM)	
	6	1	**8T-4224**	1	WASHER-HARD (8.8X16X2-MM THK)	
	7	1	**9X-8256**	2	WASHER (6.6X12X2-MM THK)	

M-METRIC PART

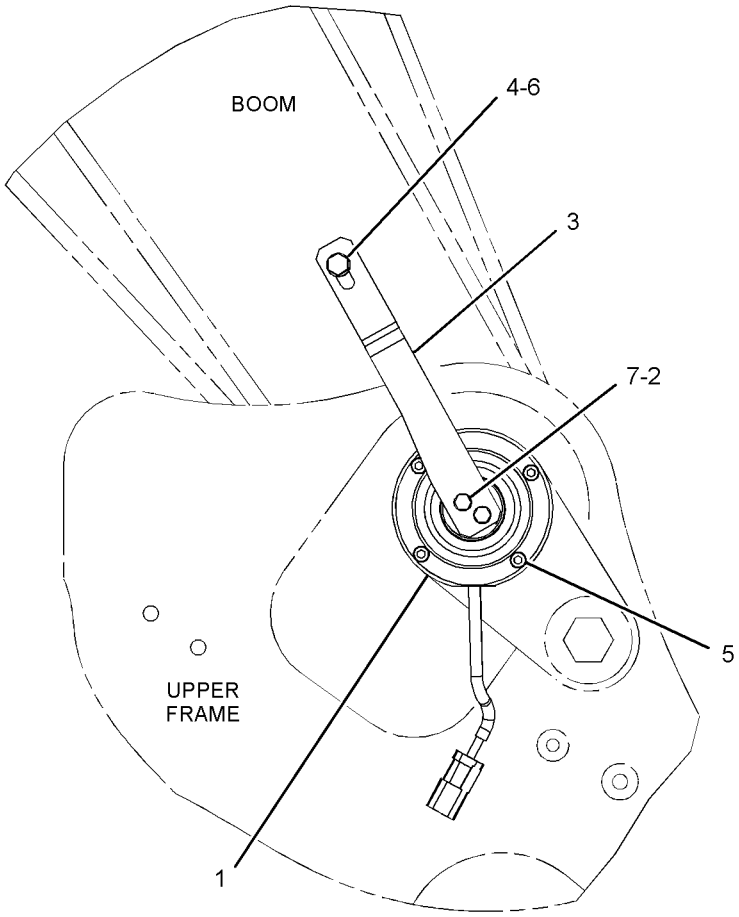

RIGHT SIDE VIEW

GRAPHIC #1 **<END>** g01491813

296-4802 SENSOR GP-ENGINE

S/N: JKH1-UP
PART OF 279-7764, 279-7766 ENGINE AR
ALSO AN ATTACHMENT

SMCS-1000, 1906, 1907, 1924, 7422 **i02710546**

NOTE	REF NO	GRAPHIC REF	PART NUMBER	QTY	PART NAME 1 2 3 4 5 6 (PRODUCT LEVEL)	SEE PAGE
	1	1	**238-0112**	1	SENSOR GP-TEMPERATURE (AIR INLET)	
	1A	1	**238-0112**	1	SENSOR GP-TEMPERATURE (ENGINE COOLANT)	
	1B	1	**238-0112**	1	SENSOR GP-TEMPERATURE (FUEL)	
	2	1	**238-0118**	1	SENSOR GP-PRESSURE (FUEL MANIFOLD)	
	3	1	**296-4631**	1	WASHER	
	4	1	**274-6720**	1	SENSOR GP-PRESSURE (AIR INLET MANIFOLD)	
	5	1	**274-6721**	1	SENSOR GP-PRESSURE (FUEL)	
	5A	1	**274-6721**	1	SENSOR GP-PRESSURE (ENGINE OIL)	
	6	1	**238-0120**	1	SENSOR GP-SPEED (ENGINE)	
	7	1	**196-7973**	1	SENSOR GP-SPEED (ENGINE)	
	8	1	**294-1804**	5	SEAL-O-RING	
	9	1	**296-4633**	1	SEAL-O-RING	
	10	1	**266-0136**	1	SENSOR GP-PRESSURE (FUEL)	
	11	1	**296-4621**	2	BOLT (M6X1.25X23.5-MM)	

296-4802 **SENSOR GP-ENGINE** *(contd.)* **i02710546**

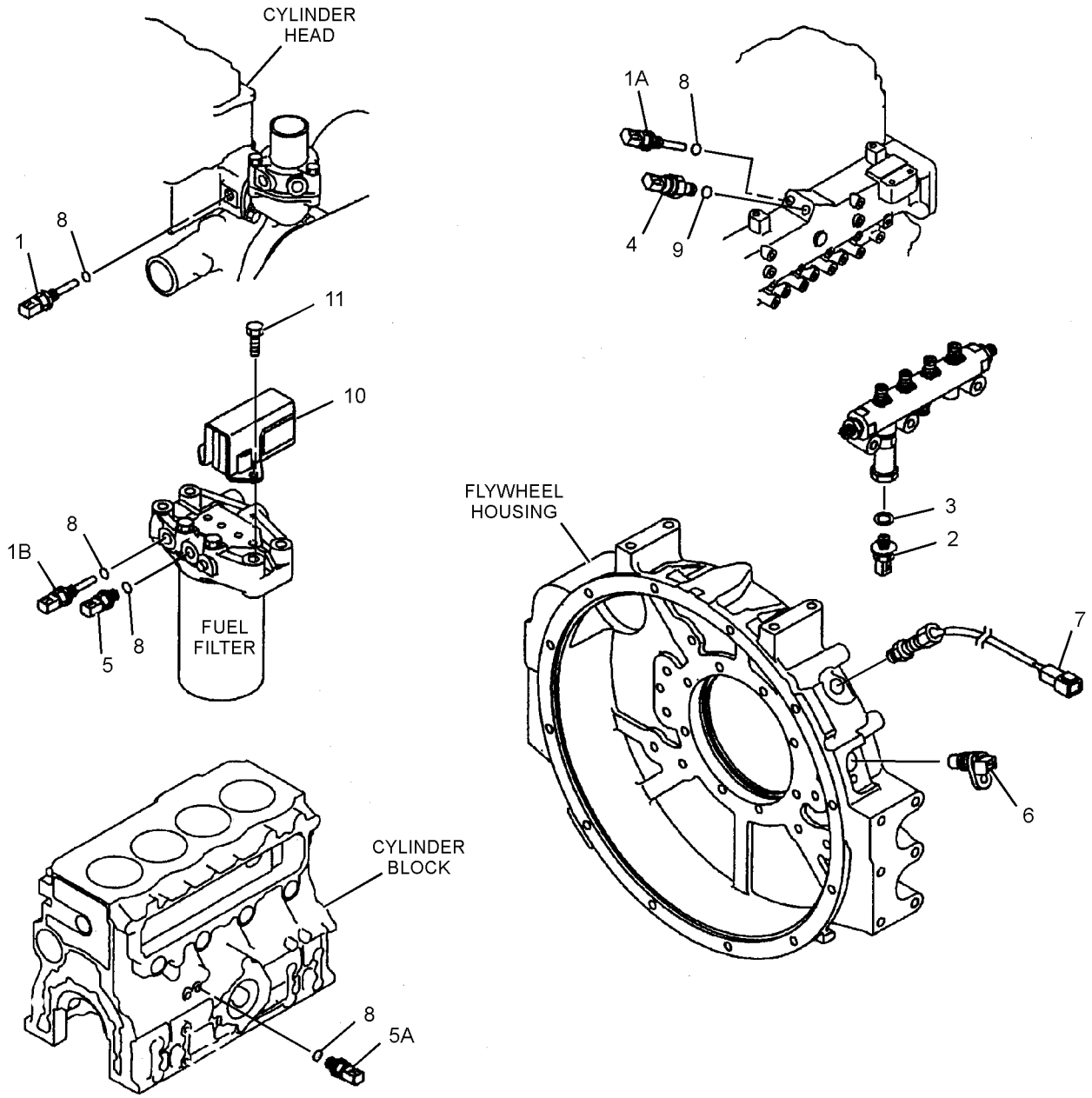

GRAPHIC #1 **<END>** g01403837

178-2345 SENSOR GP-LIQUID LEVEL

S/N: BYJ1-UP; PDP1-UP
PART OF 279-7780 SENSOR GP-POSITION
AN ATTACHMENT

SMCS-7422 **i03195620**

NOTE	REF NO	GRAPHIC REF	PART NUMBER	QTY	PART NAME 1 2 3 4 5 6 (PRODUCT LEVEL)	SEE PAGE
	1	1	**178-2334**	1	PROBE AS-LIQUID LEVEL (WATER SEPARATOR)	
	2	1	**178-2335**	1	SENSOR AS-LIQUID LEVEL (WATER SEPARATOR)	
		1	**102-8804**	1	KIT-RECEPTACLE (4-PIN)	
					(INCLUDES RECEPTACLE AS & WEDGE)	
		1	**155-2270**	1	KIT-CONNECTING PLUG (2-PIN)	
					(INCLUDES PLUG AS,WEDGE & INTERFACE SEAL)	
		1	**186-3735**	4	PIN-CONNECTOR (16-GA TO 18-GA)	
		1	**186-3736**	2	SOCKET-CONNECTOR (16-GA TO 18-GA)	

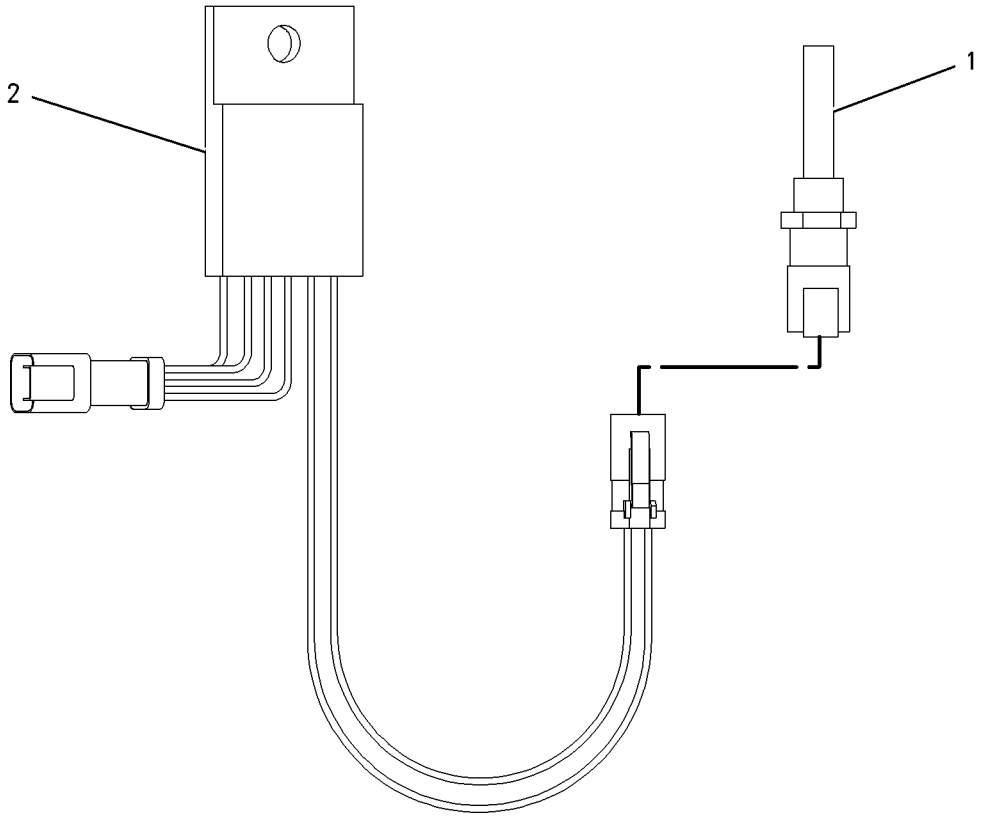

GRAPHIC #1 **<END>** g00816289

279-7780 SENSOR GP-POSITION–WATER SEPARATOR

S/N: BYJ1-UP; PDP1-UP
AN ATTACHMENT

SMCS-5737 **i02820692**

NOTE	REF NO	GRAPHIC REF	PART NUMBER	QTY	PART NAME 1 2 3 4 5 6 (PRODUCT LEVEL)	SEE PAGE
	1	1	**3S-2093**	3	STRAP-CABLE	
Y	2	1	**178-2345**	1	SENSOR GP-LIQUID LEVEL (WATER IN FUEL)	154
	3	1	**6V-5049**	1	SEAL-O-RING	
	4	1	**8T-4121**	1	WASHER-HARD (11X21X2.5-MM THK)	
M	5	1	**8T-4195**	1	BOLT (M10X1.5X30-MM)	

M-METRIC PART
Y-SEPARATE ILLUSTRATION

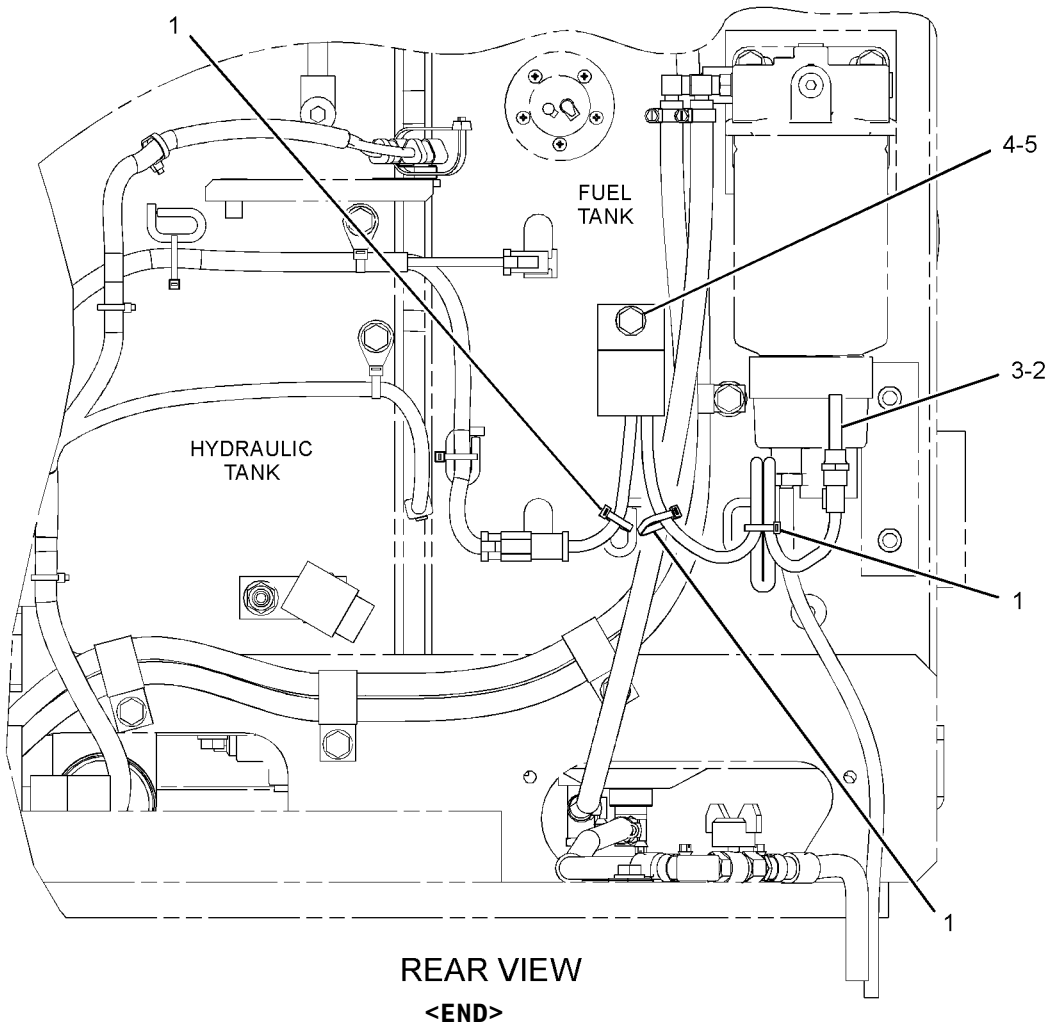

REAR VIEW

GRAPHIC #1 **<END>** g01410188

ELECTRICAL AND STARTING SYSTEM

298-4105 STARTING AR-COLD WEATHER

S/N: BYJ1-UP; PDP1-UP
AN ATTACHMENT

SMCS-1450 **i02656744**

NOTE	PART NUMBER	QTY	PART NAME 1 2 3 4 5 6 (PRODUCT LEVEL)	SEE PAGE
Y	*259-5050*	1	BATTERY GP (COLD WEATHER)	112
Y	*193-9776*	1	COVER GP-ACCESS (ENGINE OIL DIPSTICK)	229

Y-SEPARATE ILLUSTRATION

<END>

272-4774 STARTING MOTOR GP-ELECTRIC

S/N: JKH1-UP

PART OF 296-4637 MOUNTING GP-STARTING MOTOR

ALSO AN ATTACHMENT

SMCS-1453 **i02646437**

NOTE	REF NO	GRAPHIC REF	PART NUMBER	QTY	PART NAME 1 2 3 4 5 6 (PRODUCT LEVEL)	SEE PAGE
	1	1	**127-5947**	1	SETSCREW	
C	2	1	**294-1855**	1	BRACKET AS	
		1	**127-5937**	1	BEARING AS	
	3	1	**127-5944**	1	LEVER AS	
C	4	1	**294-1857**	1	SOLENOID AS-STARTING MOTOR (STARTING MOTOR)	
	5	1	**127-5948**	1	BALL	
	6	1	**127-5949**	1	PACKING AS	
	7	1	**127-5950**	1	ARMATURE AS	
		1	**095-0410**	1	BEARING	
	8	1	**095-0085**	1	BOLT SET	
	9	1	**279-7750**	1	PINION SET	
		1	**094-9950**	1	STOP SET	
	10	1	**233-1279**	1	SHAFT GP-MOTOR	
		1	**127-5939**	1	SHAFT AS-GEAR	
		1	**127-5940**	1	WASHER AS	
		1	**127-5941**	1	GEAR AS-INTERNAL	
		1	**127-5943**	4	GEAR AS (55/138-TEETH)	
		1	**233-1280**	1	CLUTCH	
	11	1	**094-9980**	2	GASKET	
	12	1	**127-5952**	1	YOKE AS	
		1	**127-5953**	2	BRUSH	
C	13	1	**294-1858**	1	HOLDER AS	
	14	1	**135-2366**	1	BRACKET	

C-CHANGE FROM PREVIOUS TYPE

272-4774 **STARTING MOTOR GP-ELECTRIC** *(contd.)* **i02646437**

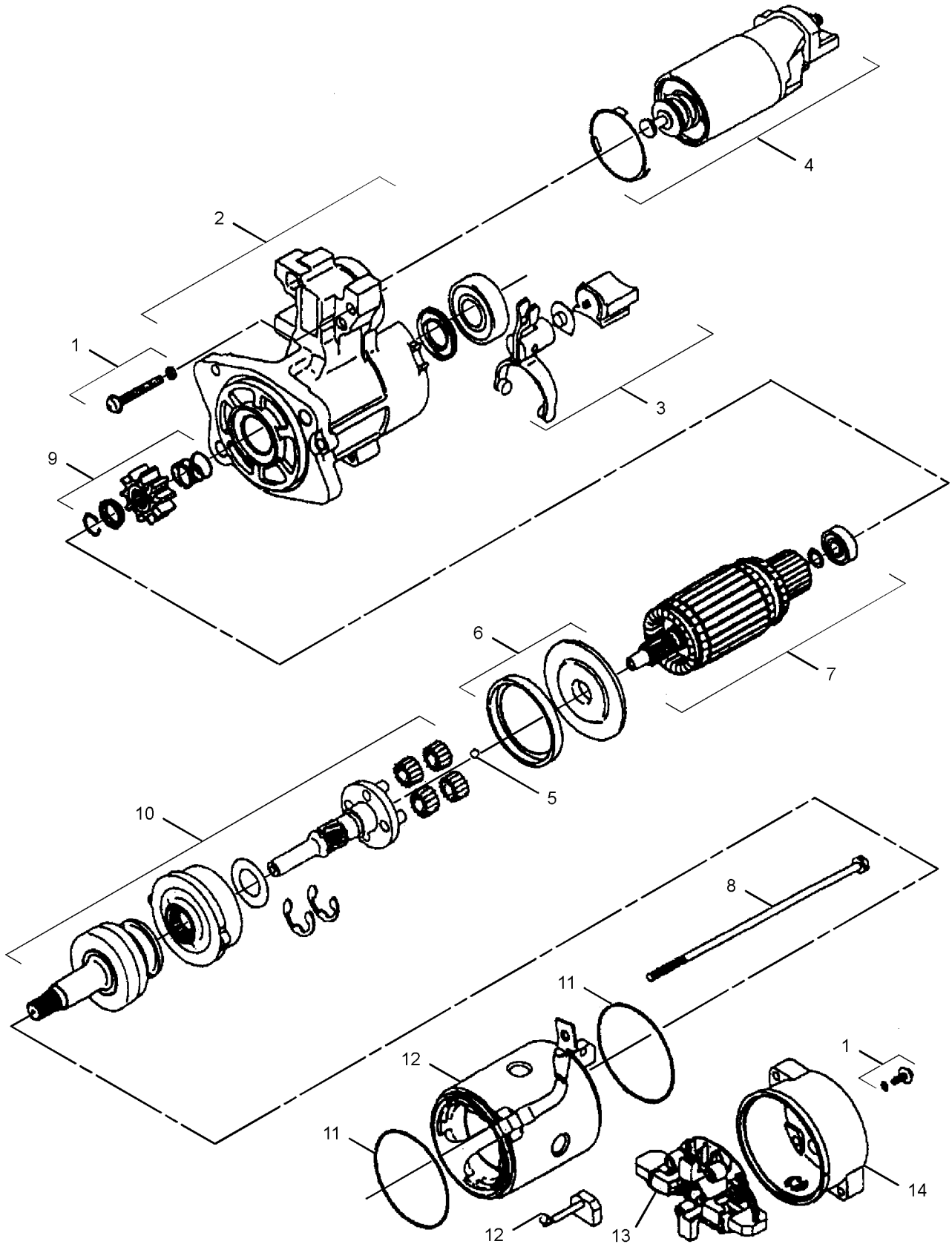

GRAPHIC #1

<END>

g01219448

7N-0718 SWITCH GP-DISCONNECT–BATTERY

S/N: BYJ1-UP; PDP1-UP

PART OF 275-7106 BATTERY & WIRING GP

SMCS-1411 **i01213345**

NOTE	REF NO	GRAPHIC REF	PART NUMBER	QTY	PART NAME 1 2 3 4 5 6 (PRODUCT LEVEL)	SEE PAGE
	1	1	**2H-3922**	2	LOCKWASHER	
	2	1	**8H-5303**	1	NUT (3/4-16-THD)	
	3	1	**9F-5644**	2	LOCKWASHER	
	4	1	**6F-7045**	2	NUT-FULL (3/8-24-THD)	
	5	1	**8H-5306**	1	KEY (BATTERY DISCONNECT)	

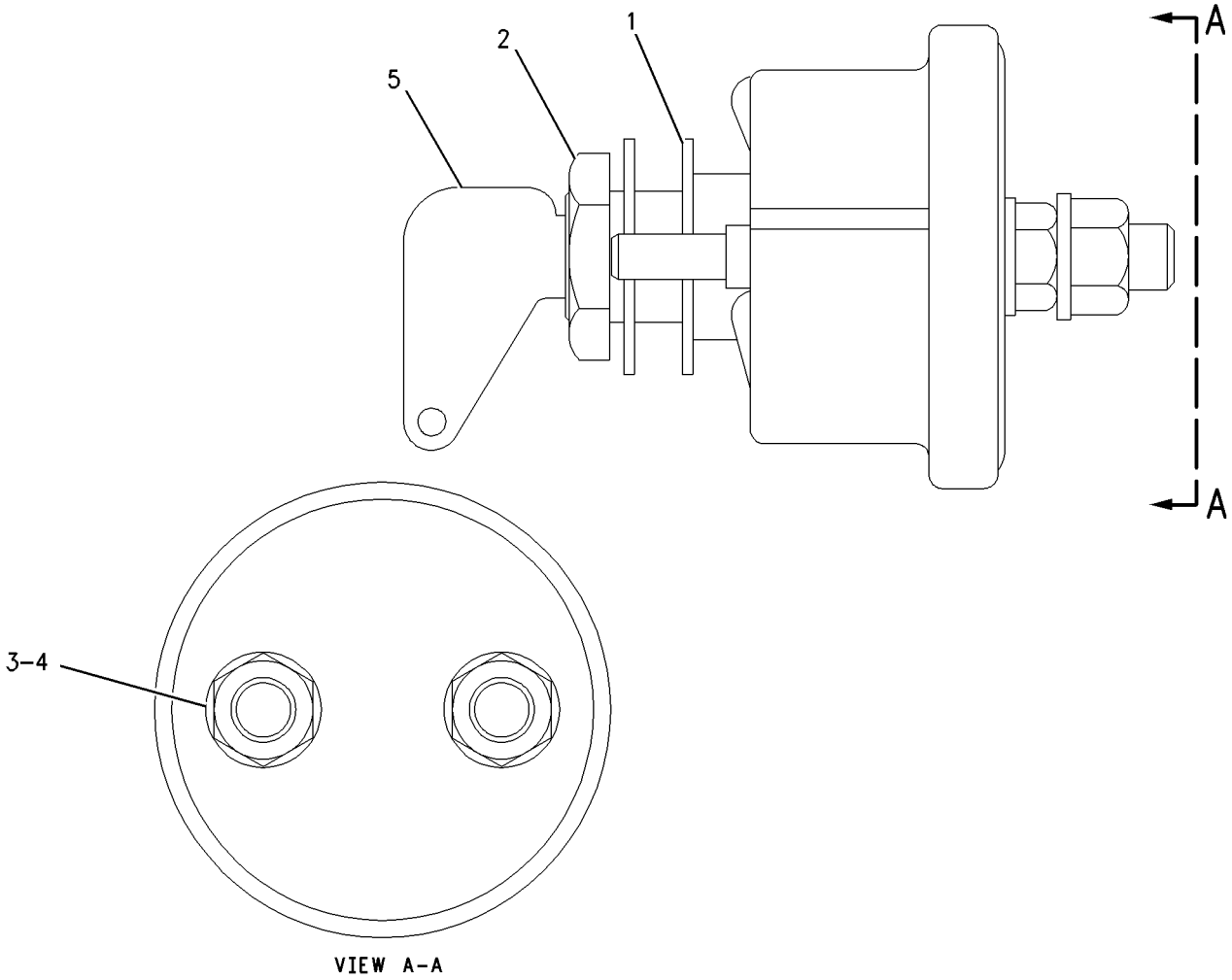

GRAPHIC #1 **<END>** g00664195

223-7577 SWITCH GP-MAGNETIC—AIR INLET HEATER RELAY

S/N: JKH1-UP
24 VOLT
PART OF 296-4801 WIRING GP-ELECTRONIC CONTROL
ALSO AN ATTACHMENT

SMCS-7499 **i02953207**

NOTE	REF NO	GRAPHIC REF	PART NUMBER	QTY	PART NAME 1 2 3 4 5 6 (PRODUCT LEVEL)	SEE PAGE
	1	1	**209-5582**	1	SWITCH GP-MAGNETIC (24-VOLT) (AIR INLET HEATER RELAY)	
	1A	1	**102-8802**	1	KIT-RECEPTACLE (2-PIN)	
					(INCLUDES RECEPTACLE AS & WEDGE)	
	1B	1	**186-3735**	2	PIN-CONNECTOR (16-GA TO 18-GA)	
	1C	1	**3F-9556**	2	LOCKWASHER	
	1D	1	**6V-8186**	2	NUT-FULL (5/16-24-THD)	
	1E	1	**6V-8378**	2	NUT (10-32-THD)	
	1F	1	**8F-1434**	2	LOCKWASHER	
	2	1	**283-1224**	1	BRACKET AS	
	3	1	**208-9277**	2	BOLT-FLANGE HEAD (M8X1X25-MM)	

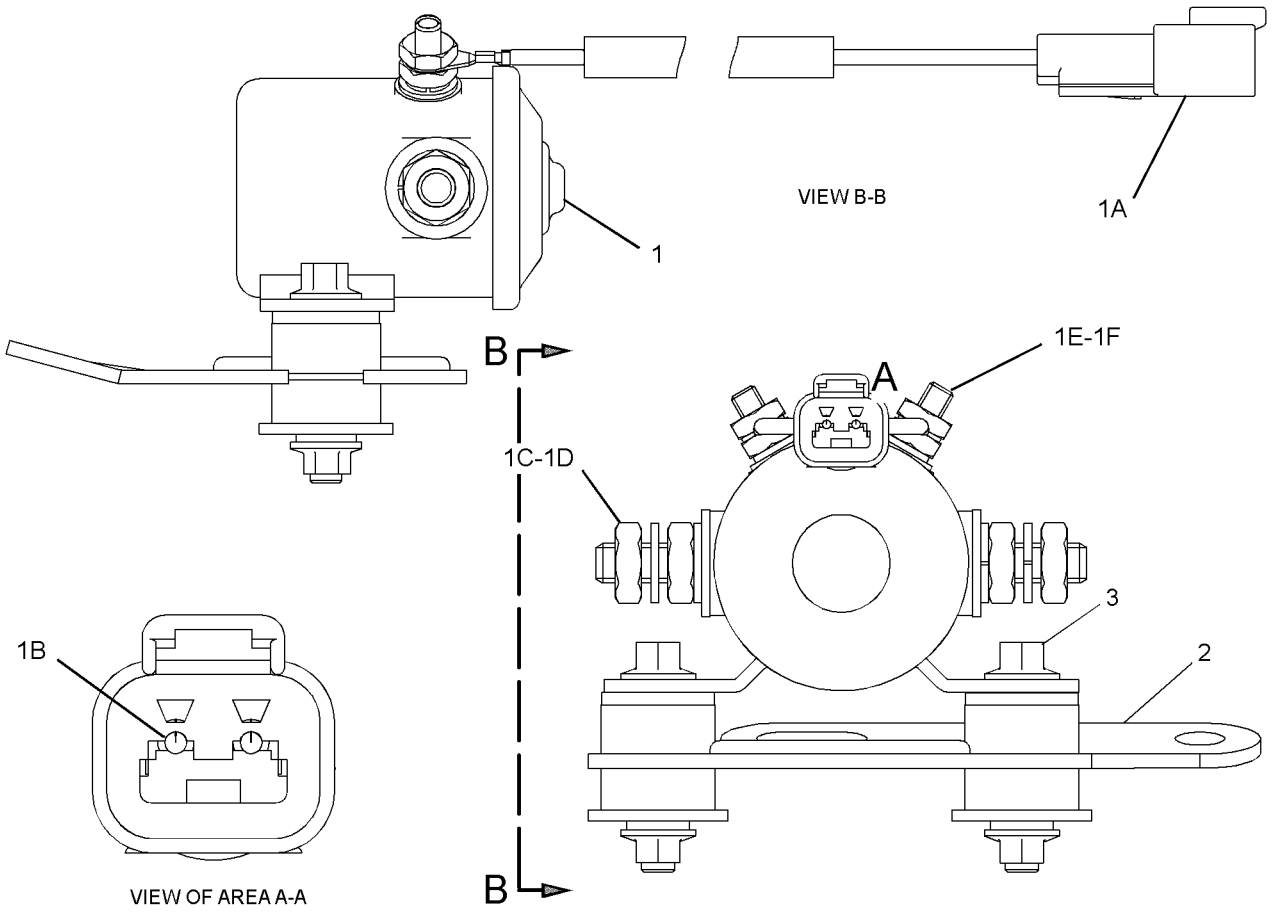

GRAPHIC #1 **<END>** g01269556

259-5274 SWITCH GP-MAGNETIC–START RELAY

S/N: BYJ1-UP; PDP1-UP

PART OF 275-7106 BATTERY & WIRING GP

SMCS-7499 **i02420131**

NOTE	REF NO	GRAPHIC REF	PART NUMBER	QTY	PART NAME 1 2 3 4 5 6 (PRODUCT LEVEL)	SEE PAGE
	1	1	**102-8802**	1	KIT-RECEPTACLE (2-PIN)	
					(INCLUDES RECEPTACLE AS & WEDGE)	
	2	1	**186-3735**	2	PIN-CONNECTOR (16-GA TO 18-GA)	
	3	1	**1H-3338**	2	LOCKWASHER (TOOTH)	
	4	1	**012-0380**	2	LOCKWASHER (SPLIT)	
M	5	1	**5C-2890**	2	NUT (M6X1-THD)	

M-METRIC PART

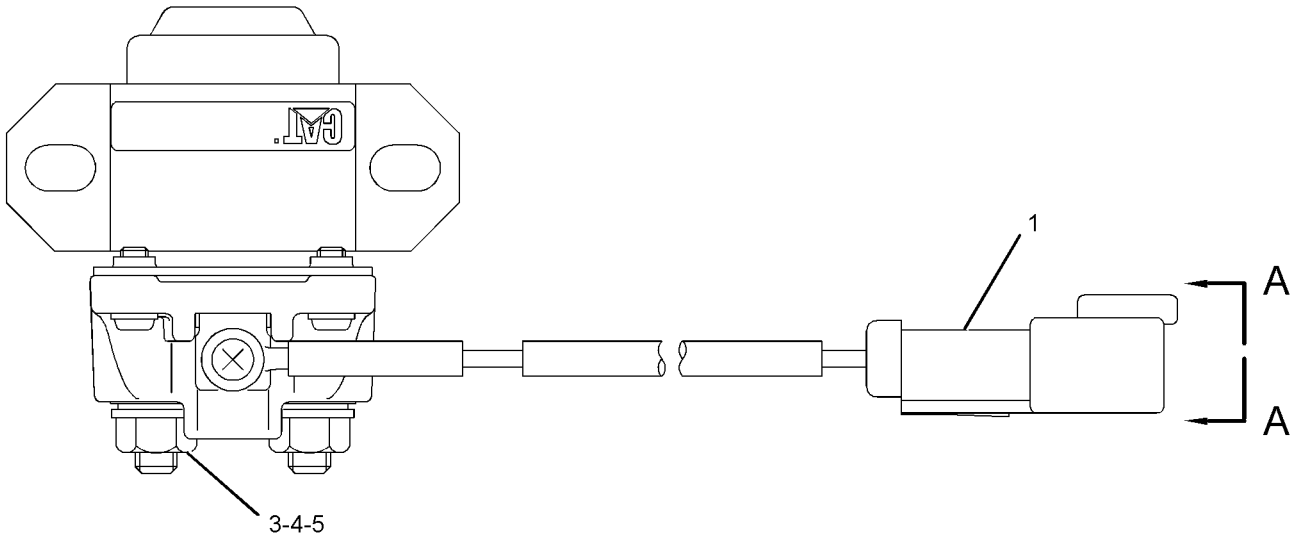

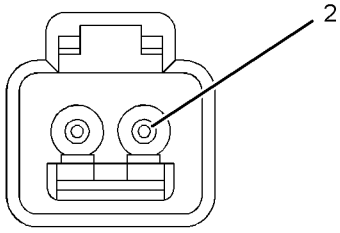

VIEW A-A

GRAPHIC #1 **<END>** g01196733

245-7932 SWITCH GP-POSITION–HYDRAULIC LOCKOUT

S/N: BYJ1-UP; PDP1-UP

PART OF 284-4569 CONSOLE GP-OPERATOR

SMCS-1408, 1435 **i02488838**

NOTE	REF NO	GRAPHIC REF	PART NUMBER	QTY	PART NAME 1 2 3 4 5 6 (PRODUCT LEVEL)	SEE PAGE
	1	1	**3S-2093**	1	STRAP-CABLE	
	2	1	**4I-3038**	2	WASHER (3.3X8X0.5-MM THK)	
	3	1	**111-4799**	1	SWITCH AS-LIMIT (HYD LOCKOUT, NEUTRAL START)	
		1	**102-8803**	1	KIT-RECEPTACLE (3-PIN)	
					(INCLUDES RECEPTACLE AS & WEDGE)	
		1	**3E-3371**	1	WEDGE-RECEPTACLE LOCK (3-PIN)	
M	4	1	**185-8286**	2	SCREW-MACHINE (M4X0.7X8-MM)	
	5	1	**245-7939**	1	KNOB	
	6	1	**087-4683**	2	LOCKWASHER	
M	7	1	**120-9027**	2	SCREW-PAN HEAD (M3X0.5X16-MM)	

M-METRIC PART

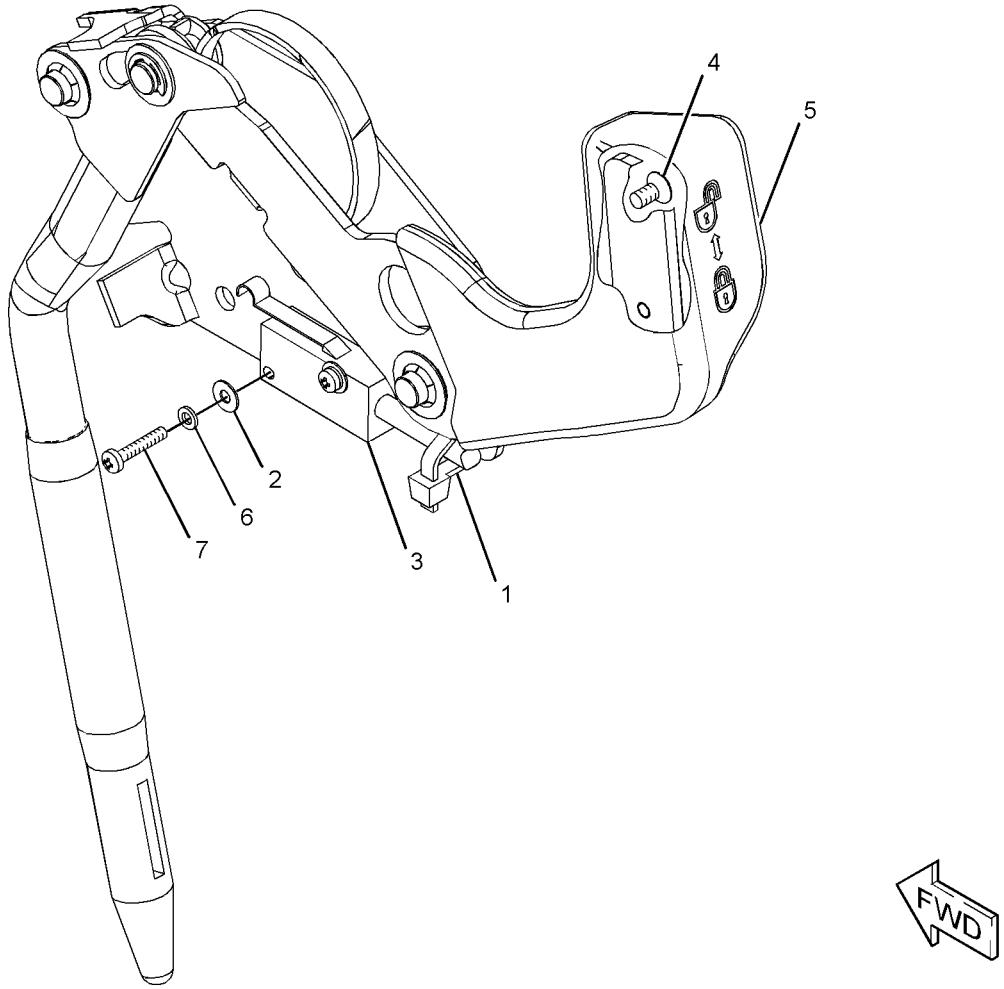

GRAPHIC #1 **<END>** g01246315

5C-6108 SWITCH GP-REFUELING–FUEL TANK SHUTOFF

S/N: BYJ1-UP; PDP1-UP
PART OF 260-7222 PUMP GP-FUEL TRANSFER
AN ATTACHMENT

SMCS-1295 **i02742303**

NOTE	REF NO	GRAPHIC REF	PART NUMBER	QTY	PART NAME 1 2 3 4 5 6 (PRODUCT LEVEL)	SEE PAGE
	1	1	**8J-9236**	1	SWITCH (LIQUID LEVEL) (FUEL)	
	2	1	**5C-6074**	1	FITTING	
	3	1	**2S-4078**	1	SEAL-O-RING	
	4	1	**3D-2824**	1	SEAL-O-RING	
	5	1	**8S-1815**	1	PLUG	
	6	1	**8S-1814**	2	INSULATOR	
	7	1	**4B-2049**	2	NUT (10-32-THD)	
	8	1	**8S-1812**	1	TERMINAL	
	9	1	**9B-4499**	1	SCREW-MACHINE (8-36X0.375-IN)	
	10	1	**2L-8076**	1	TERMINAL (14-GA TO 16-GA, NO. 10 SCREW)	

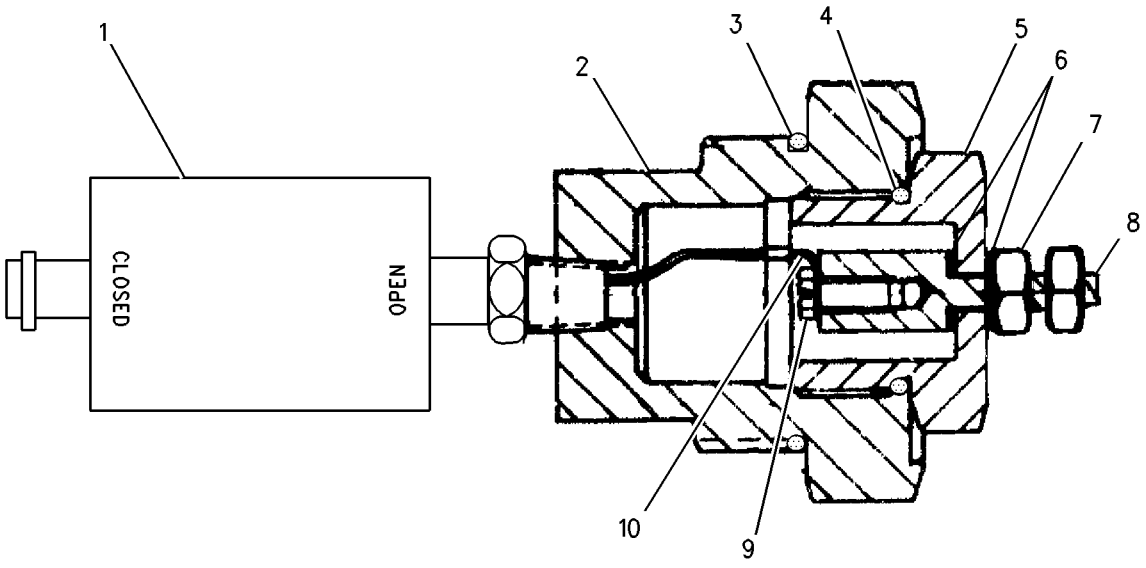

GRAPHIC #1 **<END>** g00687581

106-0107 SWITCH GP-ROTARY–THROTTLE POSITION

S/N: BYJ1-UP; PDP1-UP
PART OF 251-0544 PANEL GP-SWITCH
AN ATTACHMENT

SMCS-7332 **i02164374**

NOTE	REF NO	GRAPHIC REF	PART NUMBER	QTY	PART NAME 1 2 3 4 5 6 (PRODUCT LEVEL)	SEE PAGE
	1	1	**102-8805**	1	KIT-RECEPTACLE (6-PIN)	
					(INCLUDES RECEPTACLE AS & WEDGE)	
	2	1	**3E-3383**	1	WEDGE-RECEPTACLE LOCK (6-PIN)	
	3	1	**8T-8737**	1	PLUG-SEAL	
	4	1	**144-1636**	5	PIN-CONNECTOR (14-GA TO 18-GA)	
M	5	1	**7Y-5458**	1	NUT (M12X1-THD)	
	6	1	**7Y-5464**	1	WASHER (M12.2X15.4X0.5-MM THK)	
	7	1	**106-0210**	1	SEAL	

M-METRIC PART

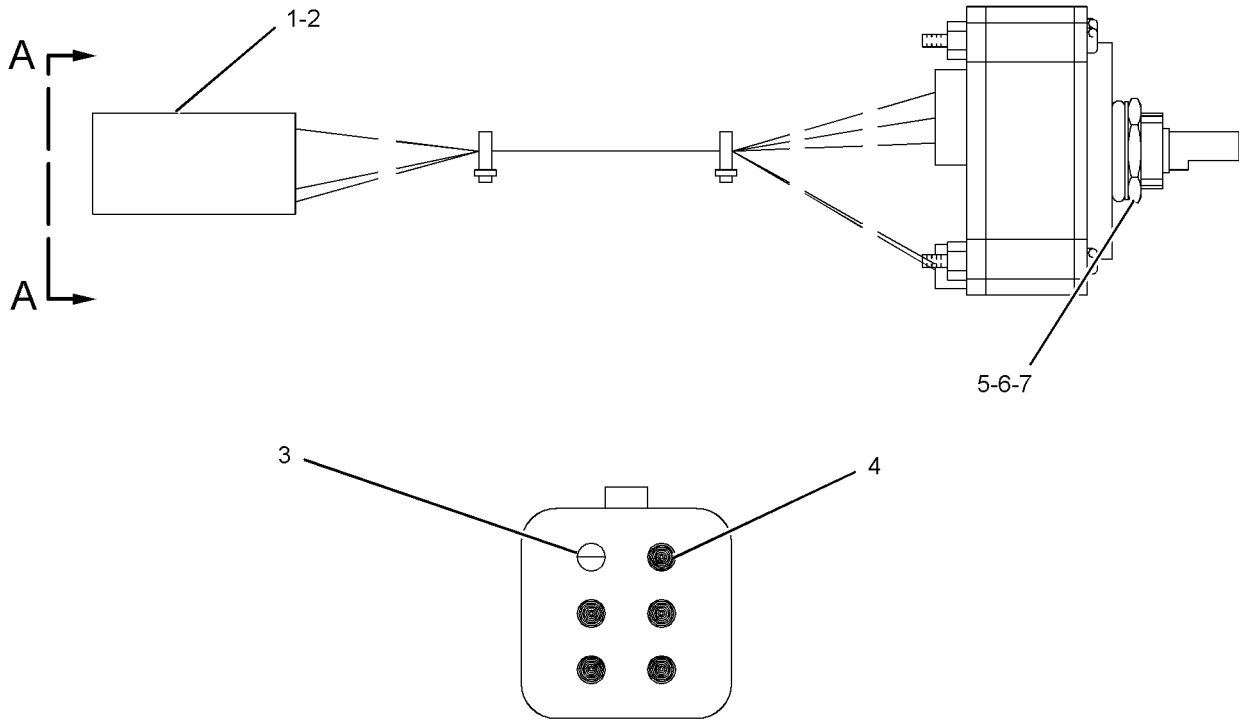

VIEW A-A

GRAPHIC #1 **<END>** g01098706

319-4420 SWITCH GP-ROTARY–THROTTLE POSITION

S/N: BYJ1-UP; PDP1-UP
PART OF 251-0542, 251-0544 PANEL GP-SWITCH
AN ATTACHMENT

SMCS-7332 **i03105700**

NOTE	REF NO	GRAPHIC REF	PART NUMBER	QTY	PART NAME 1 2 3 4 5 6 (PRODUCT LEVEL)	SEE PAGE
	1	1	**243-4508**	1	RECEPTACLE AS-CONNECTOR (6-PIN)	
	2	1	**9X-3401**	5	PIN-CONNECTOR (16-GA TO 18-GA)	
					–OR–	
		1	**126-1767**	5	PIN-CONNECTOR (14-GA)	
	3	1	**8T-8737**	1	PLUG-SEAL	
M	4	1	**7Y-5458**	1	NUT (M12X1-THD)	
	5	1	**7Y-5464**	1	WASHER (M12.2X15.4X0.5-MM THK)	
	6	1	**106-0210**	1	SEAL	

M-METRIC PART

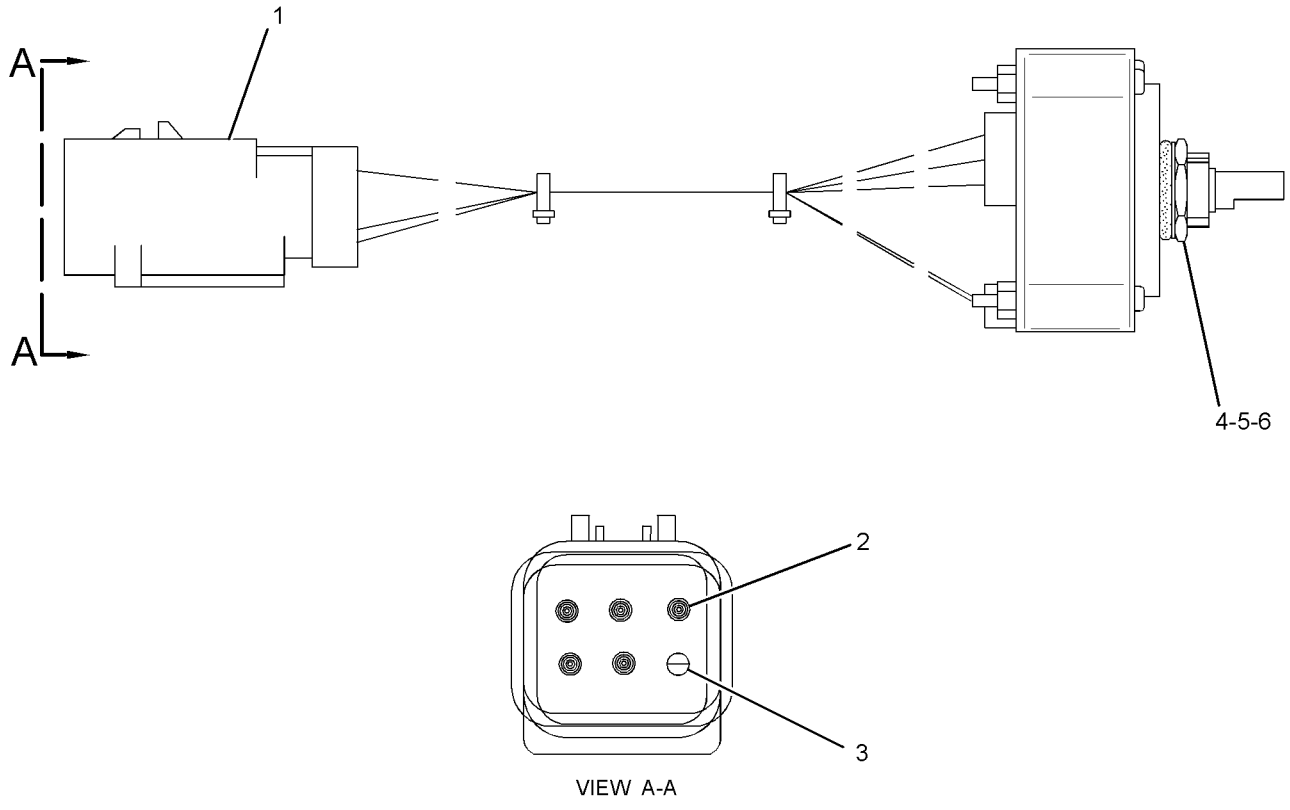

GRAPHIC #1 **<END>** g01588034

9G-7641 SWITCH GP-START–ENGINE, KEY

S/N: BYJ1-UP; PDP1-UP
PART OF 251-0542, 251-0544 PANEL GP-SWITCH
AN ATTACHMENT

SMCS-1416 **i01101254**

NOTE	REF NO	GRAPHIC REF	PART NUMBER	QTY	PART NAME 1 2 3 4 5 6 (PRODUCT LEVEL)	SEE PAGE
	1	1	**6V-8362**	4	SCREW-MACHINE (8-32X0.31-IN)	
	2	1	**9B-7233**	4	LOCKWASHER	
	3	1	**7T-6799**	1	NUT-MOUNTING (1-32-THD)	

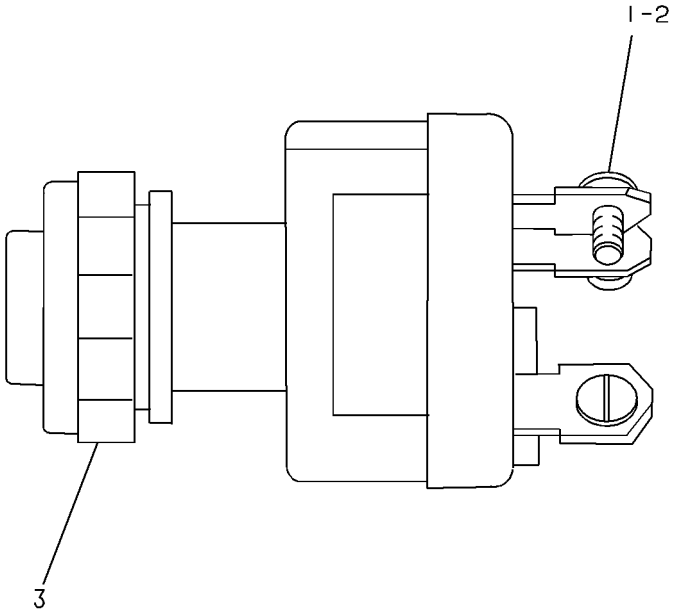

GRAPHIC #1 **<END>** g00081868

275-7190 SWITCH GP-TOGGLE

S/N: BYJ1-UP; PDP1-UP
PART OF 267-7773 WIRING GP-CAB
AN ATTACHMENT

SMCS-7332 **i02486683**

NOTE	REF NO	GRAPHIC REF	PART NUMBER	QTY	PART NAME 1 2 3 4 5 6 (PRODUCT LEVEL)	SEE PAGE
	1	1	**7N-2353**	1	SWITCH AS-TOGGLE (QUICK COUPLER)	
	2	1	**275-7191**	1	HARNESS AS-SWITCH	
		1	**3S-2093**	1	STRAP-CABLE	
		1	**7Y-3950**	2	TERMINAL (MALE)	
		1	**7Y-3955**	1	CONNECTOR-RECEPTACLE	

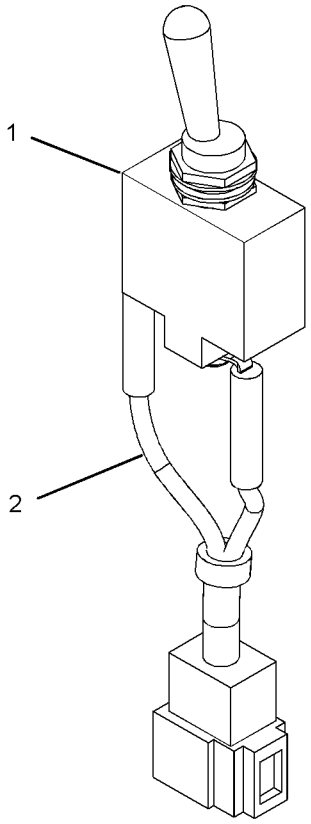

GRAPHIC #1 **<END>** g01251324

275-7121 WIRING GP-AUX START RECEPTACLE–JUMP START

S/N: BYJ1-UP; PDP1-UP
AN ATTACHMENT

SMCS-1408, 1463 **i02820602**

NOTE	REF NO	GRAPHIC REF	PART NUMBER	QTY	PART NAME 1 2 3 4 5 6 (PRODUCT LEVEL)	SEE PAGE
	1	1	**2G-1830**	1	RECEPTACLE AS	
		1	**1S-7251**	2	TERMINAL-CABLE (00-GA, 1/2-IN BOLT)	
E		1	**5P-0747**		CABLE (00-GA, BLACK) (49-CM)	
E		1	**5P-0761**		CABLE (00-GA, RED) (56-CM)	
		1	**6V-2722**	1	TUBE-HEAT SHRINK (25.4-MM DIA)	
	2	1	**8S-2634**	1	COVER AS	
Y	3	1	**9W-0742**	1	BLOCK GP-JUNCTION (BATTERY)	113
	4	1	**111-4837**	3	CLIP	
	5	1	**204-1673**	1	STRAP-CABLE	
	6	1	**275-7127**	1	CABLE AS	
		1	**1S-7251**	2	TERMINAL-CABLE (00-GA, 1/2-IN BOLT)	
E		1	**5P-0761**		CABLE (00-GA, RED) (183-CM)	
		1	**8N-0869**	1	COVER-TERMINAL (RED)	
		1	**301-0091**	1	COVER-TERMINAL (RED)	
	7	1	**275-7128**	1	CABLE AS	
		1	**1S-7251**	1	TERMINAL-CABLE (00-GA, 1/2-IN BOLT)	
E		1	**5P-0761**		CABLE (00-GA, RED) (37-CM)	
		1	**9G-0004**	1	COVER-TERMINAL (RED)	
		1	**8C-5917**	1	TERMINAL AS-BATTERY (POSITIVE)	
		1	**301-0091**	1	COVER-TERMINAL (RED)	
	8	1	**275-7129**	1	BRACKET	
	9	1	**301-0091**	1	COVER-TERMINAL (RED)	
M	10	1	**5C-7261**	4	NUT (M8X1.25-THD)	
	11	1	**8T-4121**	4	WASHER-HARD (11X21X2.5-MM THK)	
M	12	1	**8T-4137**	4	BOLT (M10X1.5X20-MM)	
	13	1	**8T-4224**	8	WASHER-HARD (8.8X16X2-MM THK)	
M	14	1	**8T-4908**	4	BOLT (M8X1.25X25-MM)	

E-ORDER BY THE CENTIMETER
M-METRIC PART
Y-SEPARATE ILLUSTRATION

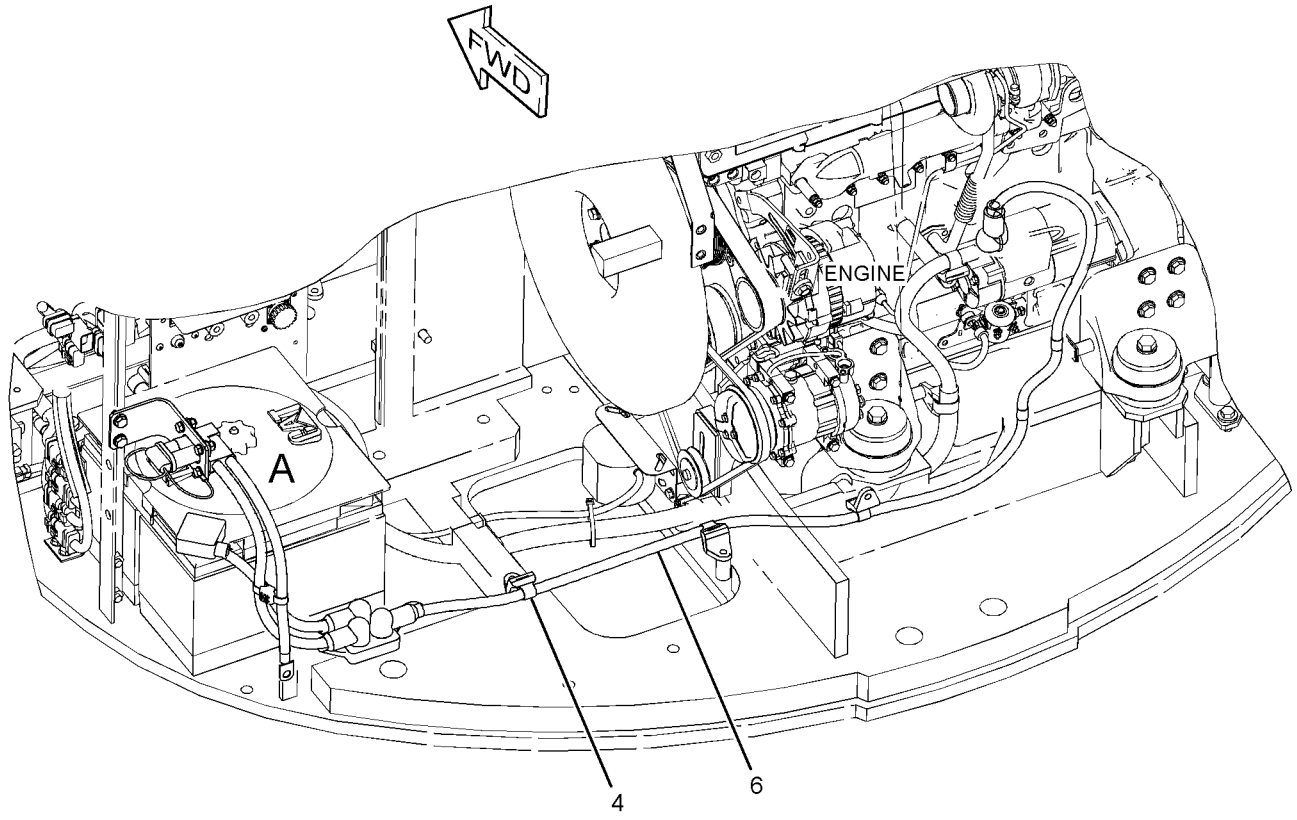

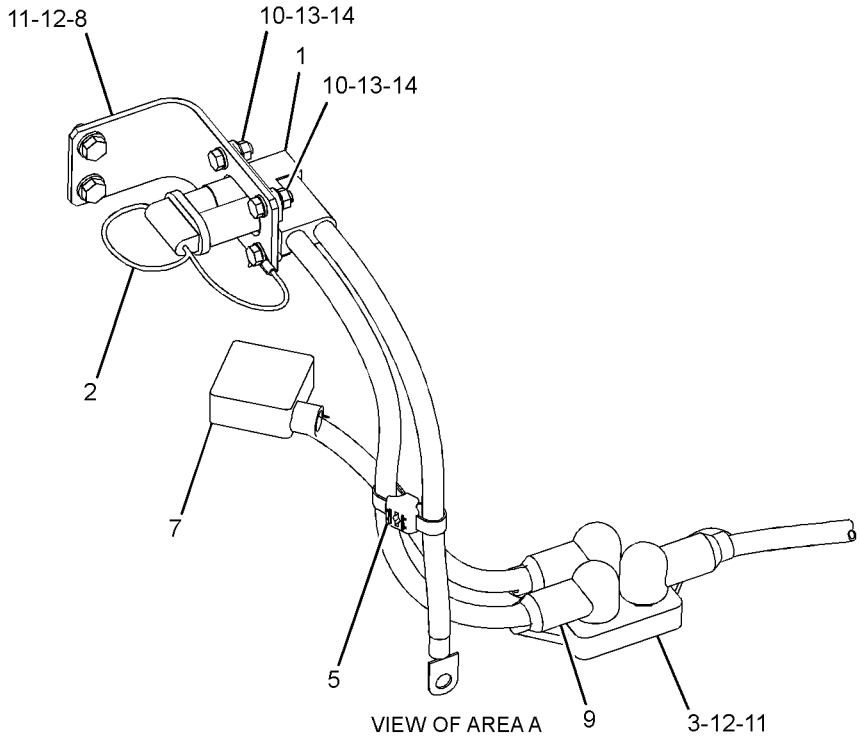

GRAPHIC #1

<END>

g01413085

275-7169 WIRING GP-AUXILIARY CONTROL–

SYSTEM 20, WORK TOOL PRIORITY

S/N: BYJ1-UP; PDP1-UP

PART OF 270-5996 CONTROL AR-AUXILIARY

AN ATTACHMENT

SMCS-1408 **i02975144**

NOTE	REF NO	GRAPHIC REF	PART NUMBER	QTY	PART NAME 1 2 3 4 5 6 (PRODUCT LEVEL)	SEE PAGE
	1	1	**3S-2093**	1	STRAP-CABLE	
	2	1	**7K-1181**	22	STRAP-CABLE	
	3	1	**111-4837**	1	CLIP	
	4	1	**149-5050**	1	RELAY (24-VOLT) (WORK TOOL PRIORITY)	
	5	1	**283-2846**	1	HARNESS AS-VALVE	
	6	1	**283-2857**	1	HARNESS AS-VALVE	
	7	1	**291-7741**	1	HARNESS AS-VALVE	
	8	1	**291-7742**	1	BRACKET AS	
	9	1	**291-7756**	1	HARNESS AS-VALVE	
	10	1	**132-5789**	1	CLIP	
	11	1	**8S-0948**	1	CLIP	
M	12	1	**7X-2619**	1	BOLT (M6X1X10-MM)	
	13	1	**8T-4121**	3	WASHER-HARD (11X21X2.5-MM THK)	
M	14	1	**8T-4191**	3	BOLT (M10X1.5X16-MM)	
	15	1	**9X-8256**	1	WASHER (6.6X12X2-MM THK)	

M-METRIC PART

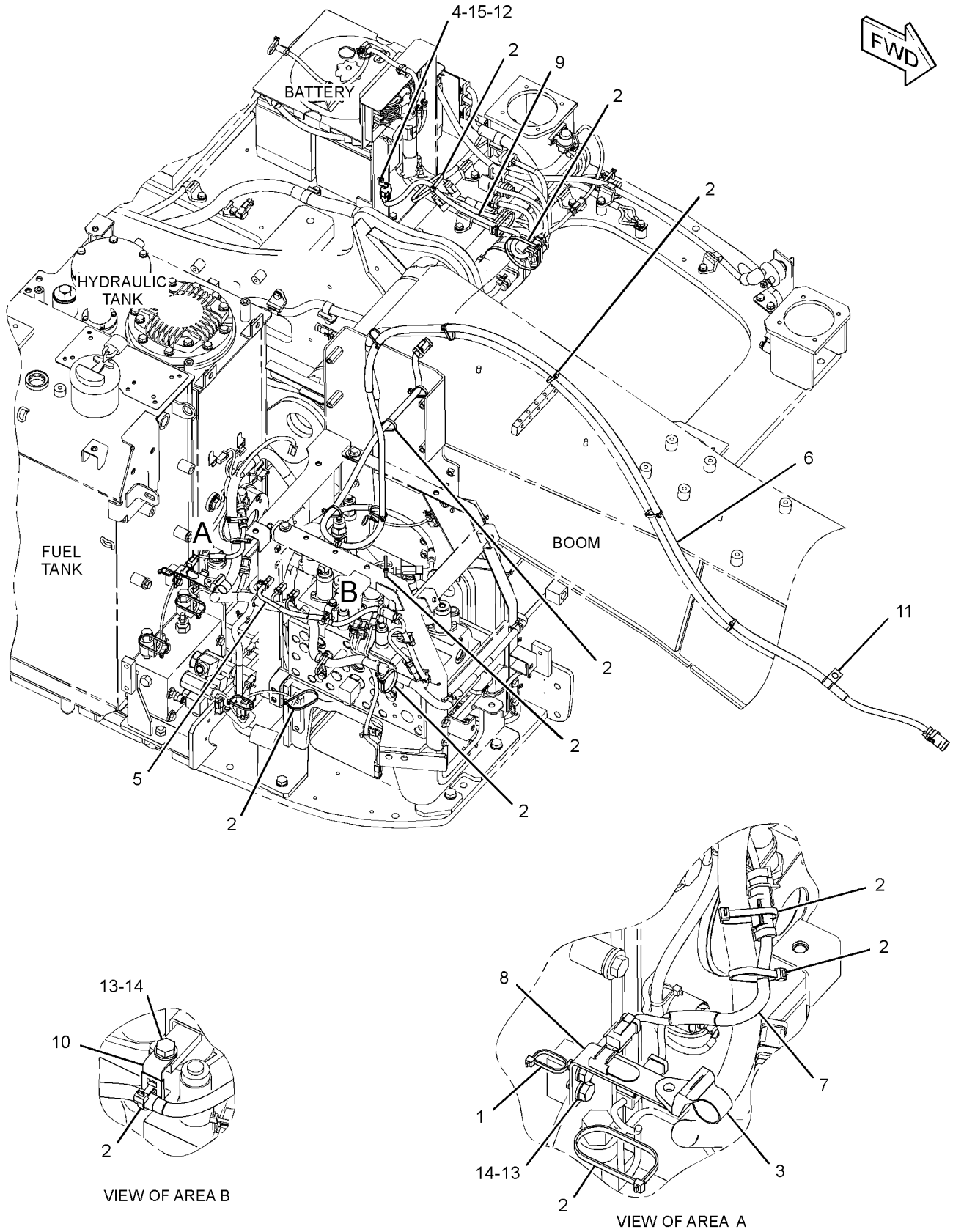

GRAPHIC #1 **<END>** g01487693

283-2867 WIRING GP-BOOM

S/N: BYJ1-UP; PDP1-UP
PART OF 294-6359, 294-6361 LINES AR-AUXILIARY HYDRAULIC
AN ATTACHMENT

SMCS-1408 **i02814187**

NOTE	REF NO	GRAPHIC REF	PART NUMBER	QTY	PART NAME 1 2 3 4 5 6 (PRODUCT LEVEL)	SEE PAGE
	1	1	**3S-2093**	5	STRAP-CABLE	
	2	1	**7K-1181**	7	STRAP-CABLE	
	3	1	**111-4836**	1	CLIP	
	4	1	**116-0118**	1	CLIP	
	5	1	**283-2856**	1	HARNESS AS-VALVE	
	6	1	**132-5789**	1	CLIP	
	7	1	**4P-7429**	1	CLIP	
M	8	1	**8T-4136**	1	BOLT (M10X1.5X25-MM)	

M-METRIC PART

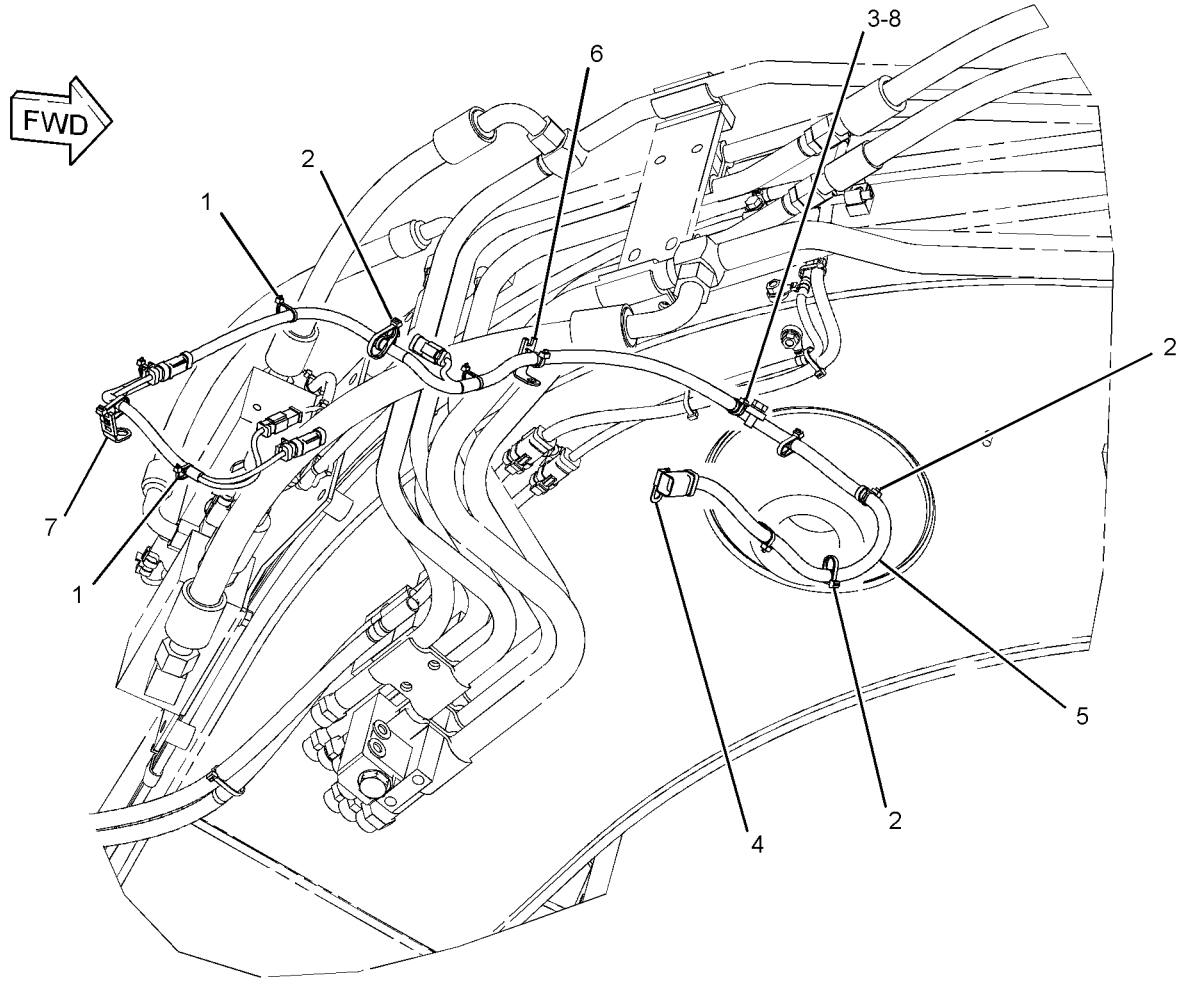

GRAPHIC #1 **<END>** g01412987

267-7773 WIRING GP-CAB–QUICK COUPLER

S/N: BYJ1-UP; PDP1-UP
PART OF 282-5547 CONTROL AR-COUPLER
AN ATTACHMENT

SMCS-1408, 7301 **i02486680**

NOTE	REF NO	GRAPHIC REF	PART NUMBER	QTY	PART NAME 1 2 3 4 5 6 (PRODUCT LEVEL)	SEE PAGE
	1	1	**259-7180**	1	COVER	
	2	1	**267-7965**	1	BRACKET AS	
Y	3	1	*275-7190*	1	SWITCH GP-TOGGLE (QUICK COUPLER)	167
M	4	1	**9X-2042**	2	SCREW-TRUSS HEAD (M6X1X12-MM)	

M-METRIC PART
Y-SEPARATE ILLUSTRATION

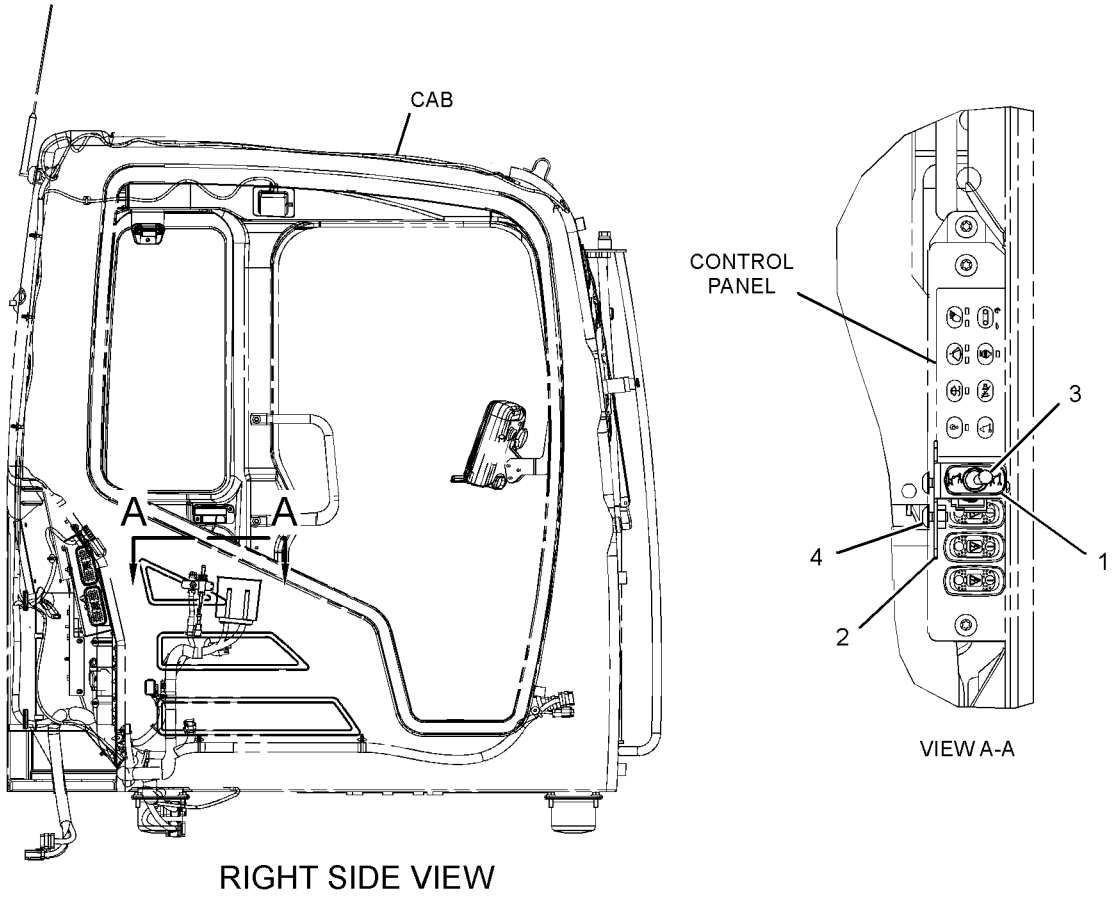

RIGHT SIDE VIEW

GRAPHIC #1 **<END>** g01263959

267-7775 WIRING GP-CAB

S/N: BYJ1-UP; PDP1-UP
12-VOLT, 5-AMPERE. POWER SUPPLY
AN ATTACHMENT

SMCS-1408, 7301 **i02486613**

NOTE	REF NO	GRAPHIC REF	PART NUMBER	QTY	PART NAME 1 2 3 4 5 6 (PRODUCT LEVEL)	SEE PAGE
	1	1	**3S-2093**	4	STRAP-CABLE	
	2	1	**121-0987**	1	SOCKET (12-VOLT, 7-AMPERE)	
	3	1	**205-4285**	1	CONVERTER GP-ELECTRICAL (24-VOLT TO 12-VOLT)	
	4	1	**267-7901**	1	HARNESS AS-CAB	
		1	**155-2274**	1	KIT-CONNECTING PLUG (6-PIN)	
					(INCLUDES PLUG AS, WEDGE & INTERFACE SEAL)	
		1	**243-4505**	1	RECEPTACLE AS-CONNECTOR (2-PIN)	
	5	1	**207-0210**	1	GROMMET	
M	6	1	**6V-9673**	2	SCREW-MACHINE (M5X0.8X12-MM)	
	7	1	**8T-0328**	2	WASHER-HARD (5.5X10X1-MM THK)	

M-METRIC PART

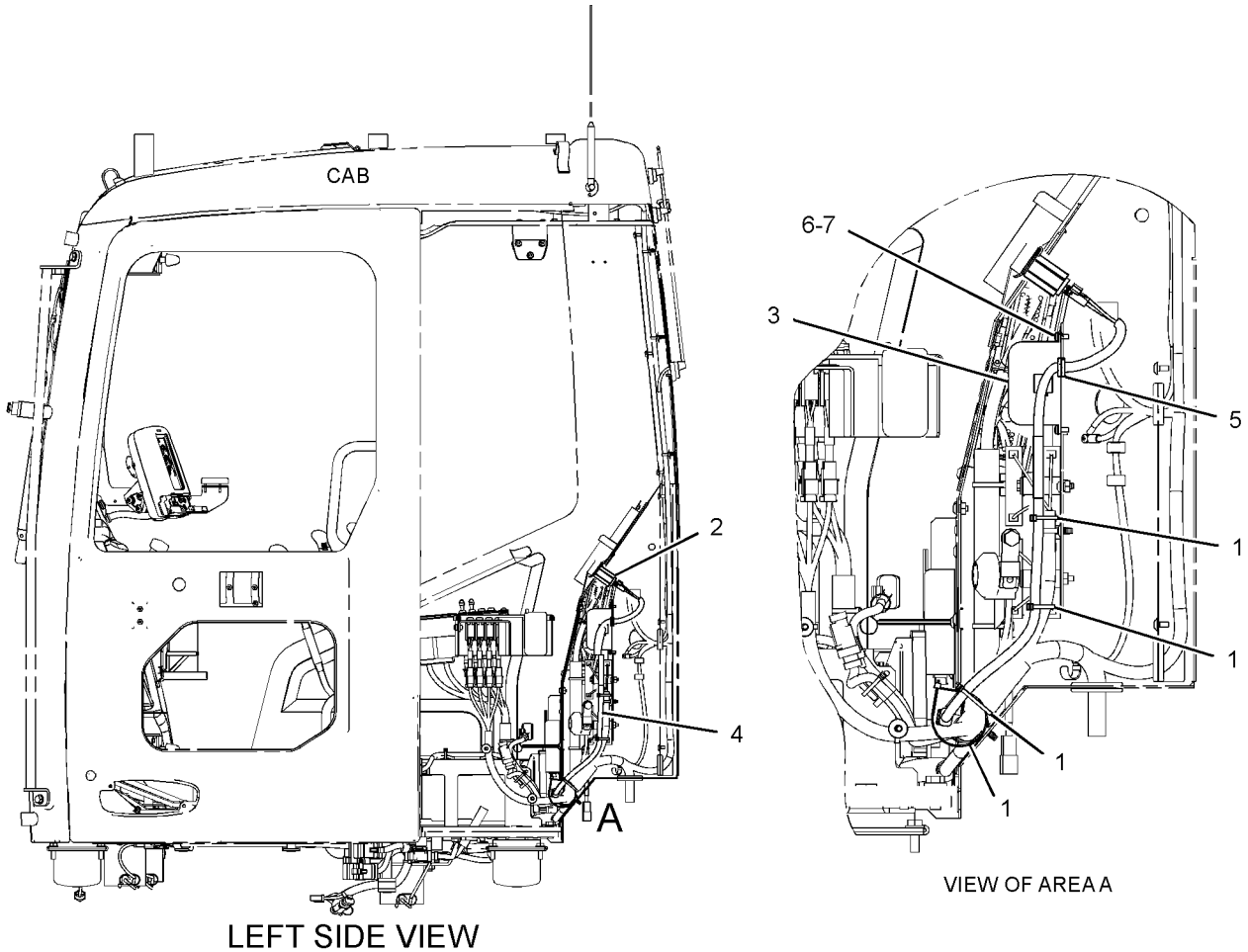

LEFT SIDE VIEW

VIEW OF AREA A

GRAPHIC #1 **<END>** g01255835

275-6811 WIRING GP-CAB

S/N: BYJ1-UP; PDP1-UP
OVERLOAD WARNING
PART OF 297-0199 VALVE AR-CHECK & RELIEF
AN ATTACHMENT

SMCS-1408, 7301 **i02486568**

NOTE	REF NO	GRAPHIC REF	PART NUMBER	QTY	PART NAME 1 2 3 4 5 6 (PRODUCT LEVEL)	SEE PAGE
	1	1	**238-2215**	1	SWITCH AS-ROCKER (OVERLOAD WARNING)	
		1	**167-3542**	1	CONNECTOR-RECEPTACLE	
		1	**167-3543**	4	TERMINAL	

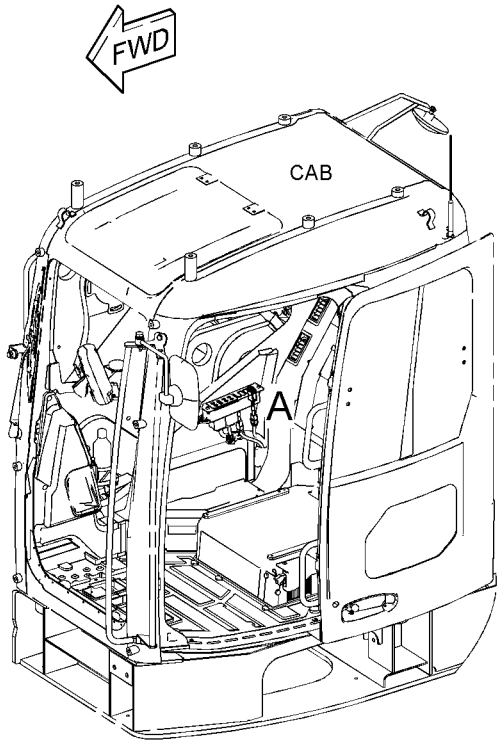

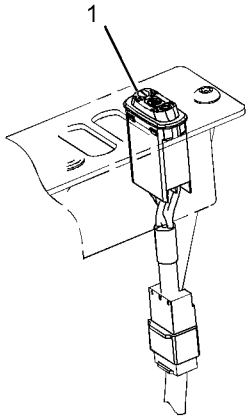

VIEW OF AREA A

GRAPHIC #1 **<END>** g01248721

275-7111 WIRING GP-CAB

S/N: BYJ1-UP; PDP1-UP

PART OF 273-5406 OPERATOR AR

SMCS-1408, 7301 **i03099260**

NOTE	REF NO	GRAPHIC REF	PART NUMBER	QTY	PART NAME 1 2 3 4 5 6 (PRODUCT LEVEL)	SEE PAGE
	1	2	**7I-2673**	3	STRAP-CABLE	
	2	1,2	**7K-1181**	6	STRAP-CABLE	
Y	3	2	**132-1829**	1	ALARM GP (24-VOLT)	101
	4	1,2	**163-6795**	9	STRAP-CABLE	
	5	2	**167-3593**	1	STRAP	
	6	1	**259-4883**	1	ANTENNA AS	
		1	**259-5081**	1	ROD	
		1	**259-5082**	1	CABLE AS	
	7	2	**267-7931**	1	BRACKET AS	
	8	2	**267-7935**	1	STRIP AS	
	9	1	**319-1422**	1	HARNESS AS-CAB	
	10	2	**290-9428**	1	RESISTOR AS	
M	11	2	**095-0735**	4	SCREW-MACHINE (M5X0.8X8-MM)	
	12	1	**096-6166**	2	WASHER-HARD (4.5X9X1-MM THK)	
M	13	2	**096-9278**	3	SCREW-PAN HEAD	
M	14	1	**6V-9672**	2	SCREW-MACHINE (M4X0.7X16-MM)	
M	15	2	**7X-2619**	2	BOLT (M6X1X10-MM)	
	16	1,2	**8T-0328**	5	WASHER-HARD (5.5X10X1-MM THK)	
	17	2	**8T-4121**	1	WASHER-HARD (11X21X2.5-MM THK)	
M	18	2	**8T-4133**	1	NUT (M10X1.5-THD)	
M	19	1	**8T-6693**	1	SCREW-MACHINE (M5X0.8X16-MM)	
M	20	2	**9X-2042**	6	SCREW-TRUSS HEAD (M6X1X12-MM)	
	21	2	**9X-8256**	2	WASHER (6.6X12X2-MM THK)	
	22	2	**3S-2093**	3	STRAP-CABLE	
	23	2	**125-4726**	3	CLIP	

M-METRIC PART
Y-SEPARATE ILLUSTRATION

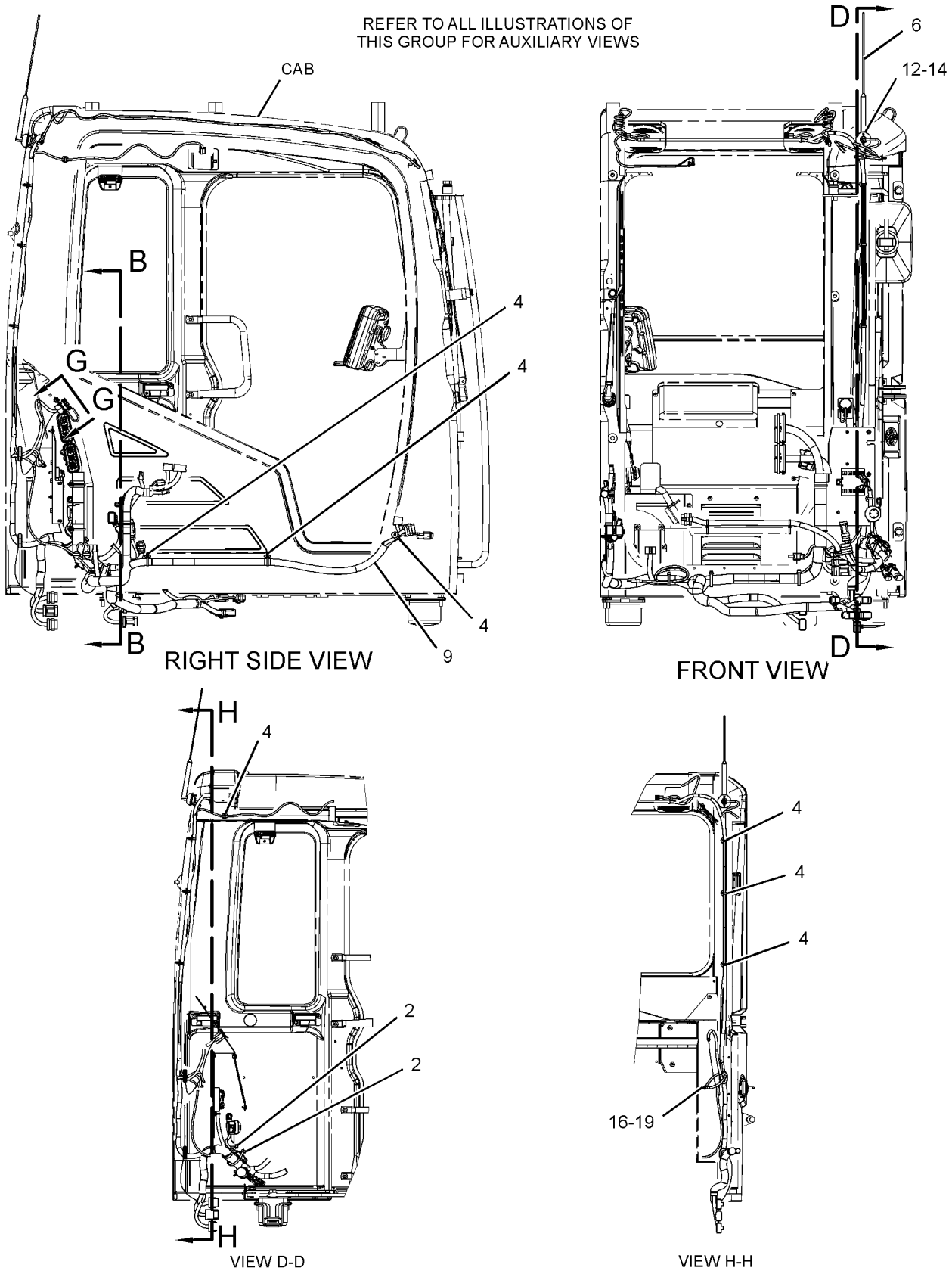

GRAPHIC #1

g01644096

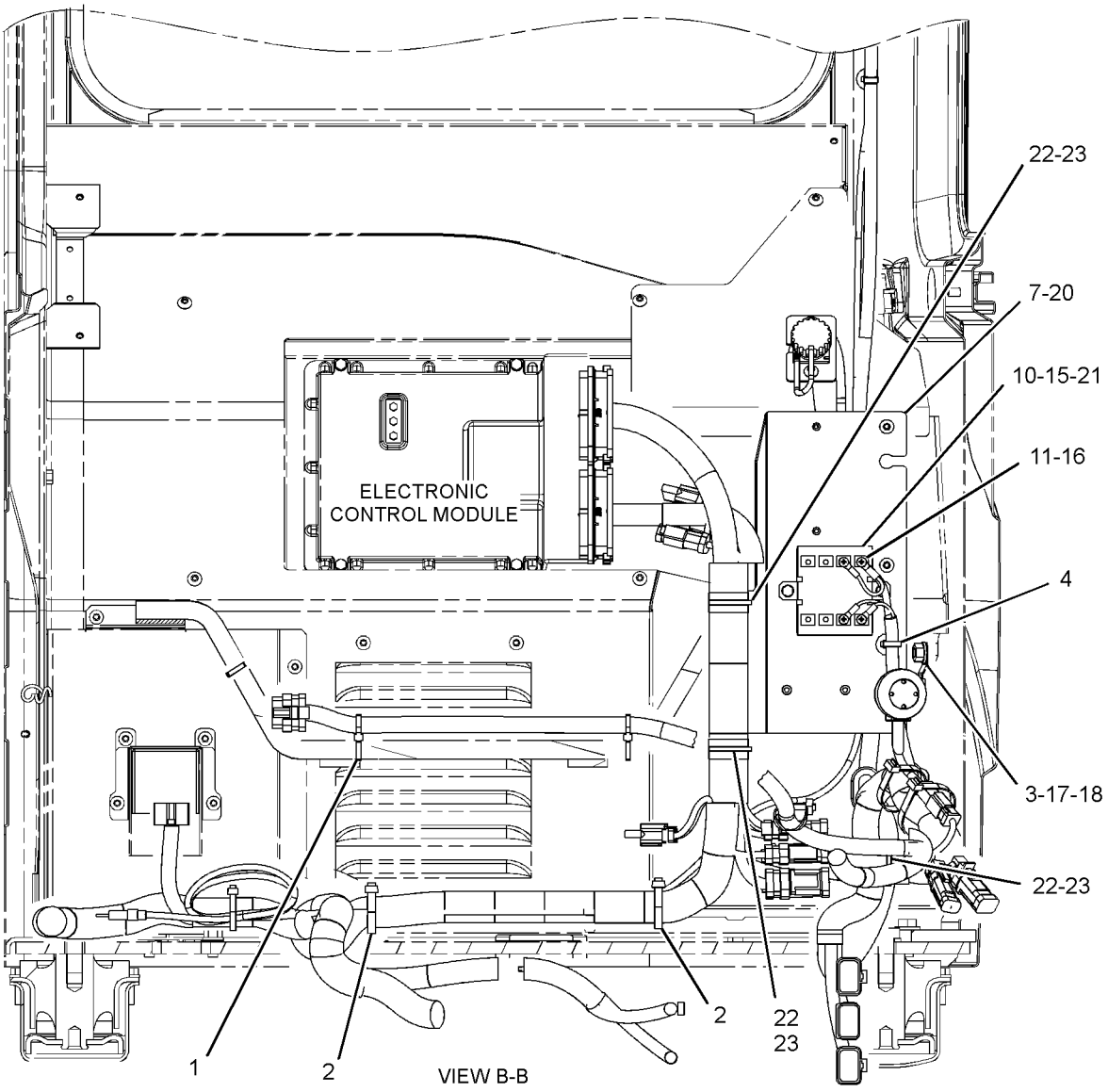

VIEW B-B

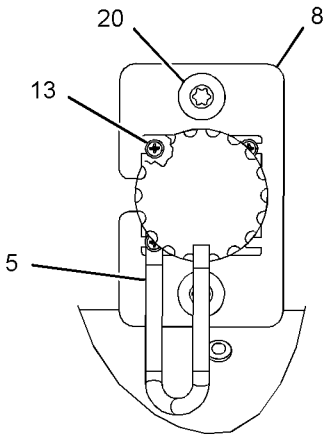

VIEW G-G

GRAPHIC #2 **<END>** g01644094

275-7112 WIRING GP-CAB–SYSTEM 20, WORK TOOL PRIORITY

S/N: BYJ1-UP; PDP1-UP
PART OF 270-5996 CONTROL AR-AUXILIARY
AN ATTACHMENT

SMCS-1408, 7301 **i02889201**

NOTE	REF NO	GRAPHIC REF	PART NUMBER	QTY	PART NAME 1 2 3 4 5 6 (PRODUCT LEVEL)	SEE PAGE
	1	1	**259-7219**	1	COVER	
	2	1	*267-7693*	1	SWITCH GP-TOGGLE (WORK TOOL PRIORITY)	
		1	**7N-2353**	1	SWITCH AS-TOGGLE (WORK TOOL PRIORITY)	
		1	**267-7694**	1	HARNESS AS-CONTROL	
	3	1	**291-7791**	1	BRACKET AS	
M	4	1	**9X-2042**	2	SCREW-TRUSS HEAD (M6X1X12-MM)	

M-METRIC PART

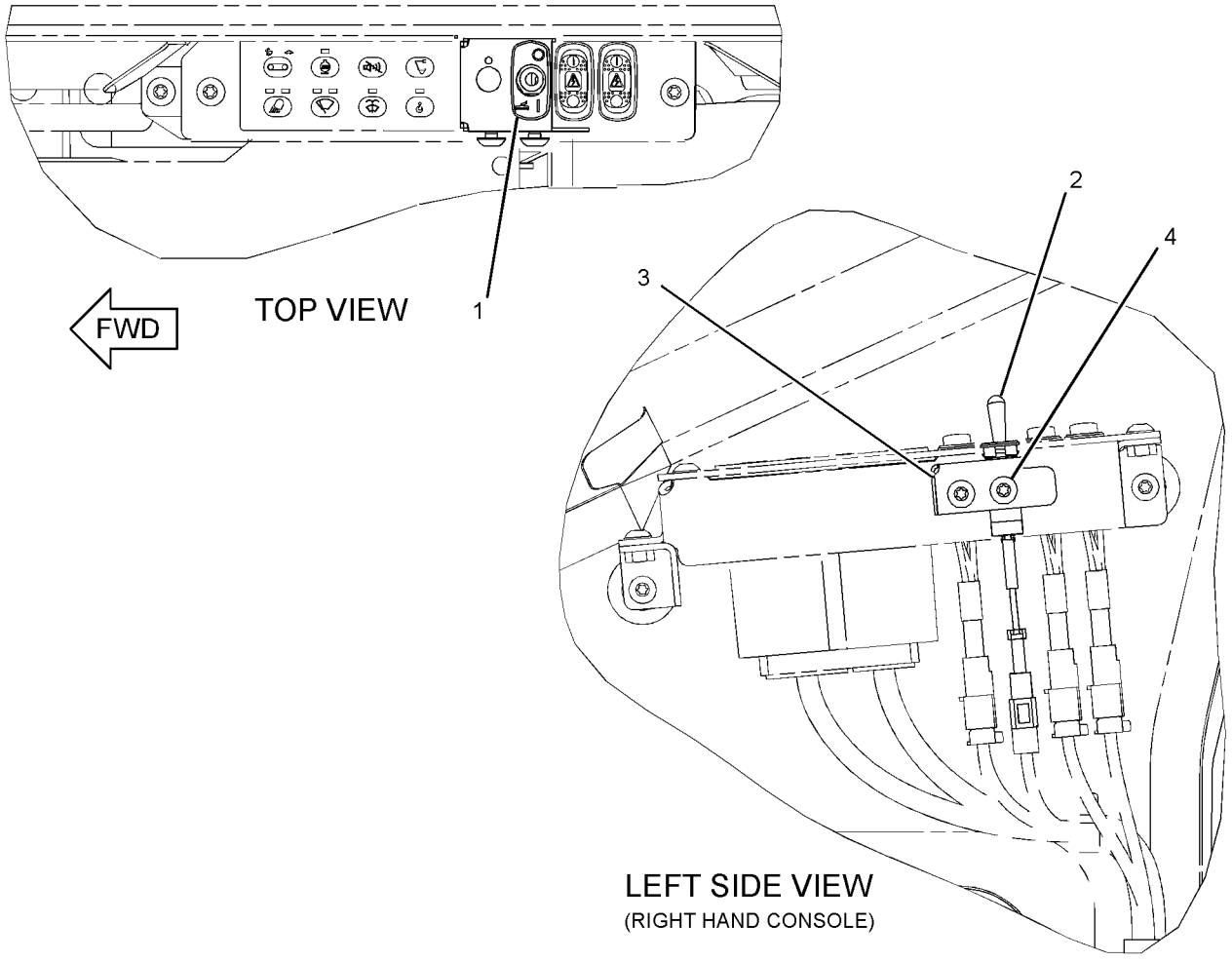

GRAPHIC #1 **<END>** g01497813

306-8395 WIRING GP-CAB–OVERLOAD WARNING

S/N: BYJ1-UP; PDP1-UP
PART OF 297-0199 VALVE AR-CHECK & RELIEF
AN ATTACHMENT

SMCS-1408, 7301 **i02826344**

NOTE	REF NO	GRAPHIC REF	PART NUMBER	QTY	PART NAME 1 2 3 4 5 6 (PRODUCT LEVEL)	SEE PAGE
	1	1	**7K-1181**	11	STRAP-CABLE	
	2	1	**120-8071**	1	GROMMET	
	3	1	**121-1125**	3	PLUG-BEZEL	
	4	1	**163-6795**	2	STRAP-CABLE	
	5	1	**238-2215**	1	SWITCH AS-ROCKER (OVERLOAD WARNING)	
		1	**167-3542**	1	CONNECTOR-RECEPTACLE	
		1	**167-3543**	4	TERMINAL (MALE)	
	6	1	**273-5187**	1	BRACKET AS	
	7	1	**273-5188**	1	COVER AS	
	8	1	**306-8400**	1	HARNESS AS-CAB	
M	9	1	**9X-2042**	4	SCREW-TRUSS HEAD (M6X1X12-MM)	

M-METRIC PART

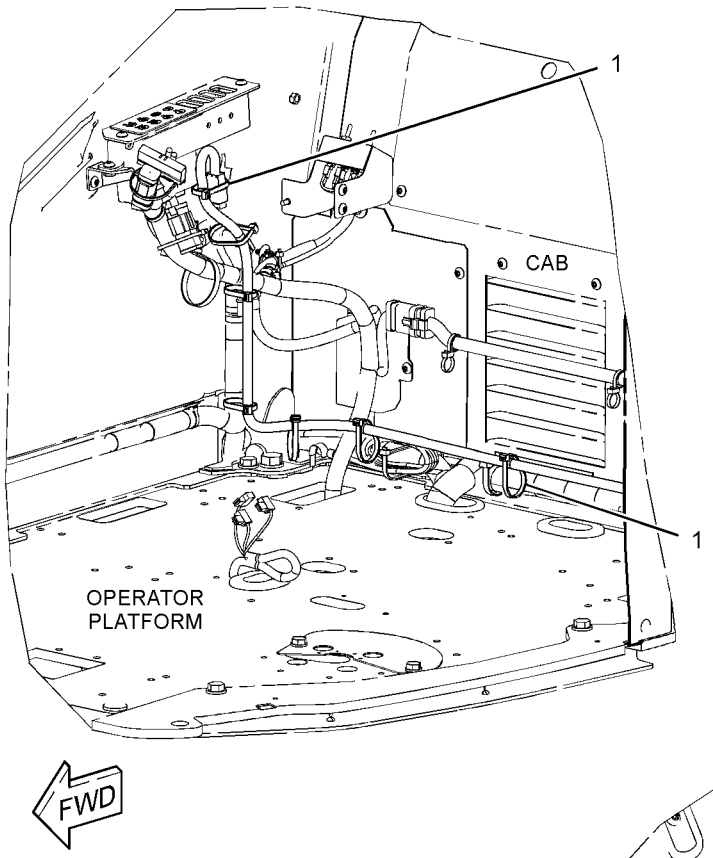

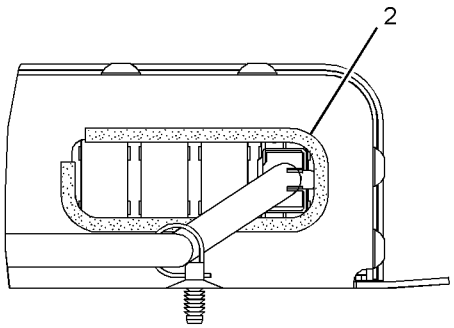

VIEW A-A

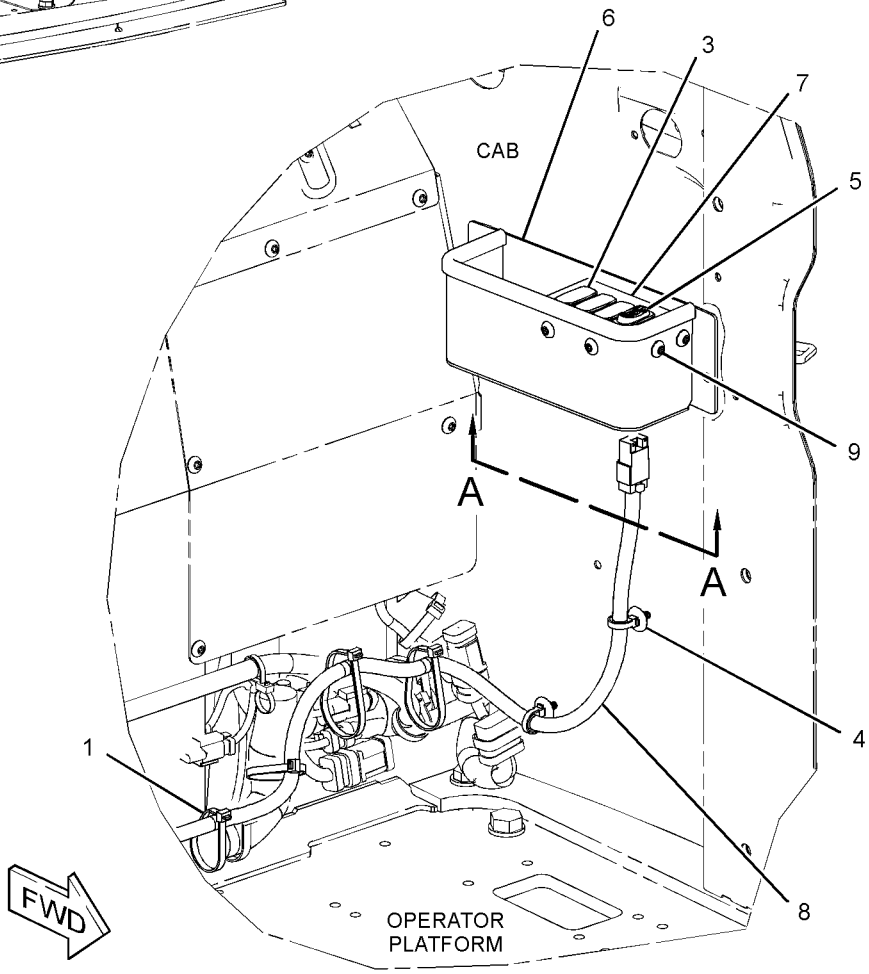

GRAPHIC #1 **<END>** g01521911

328-0081 WIRING GP-CAB–REAR VISION CAMERA

S/N: BYJ1-UP; PDP1-UP
PART OF 330-8751 INSTALLATION AR
AN ATTACHMENT

SMCS-1408, 7301 **i03256672**

NOTE	REF NO	GRAPHIC REF	PART NUMBER	QTY	PART NAME 1 2 3 4 5 6 (PRODUCT LEVEL)	SEE PAGE
	1	1	**7K-1181**	12	STRAP-CABLE	
	2	1	**328-0083**	1	HARNESS AS-CAB	

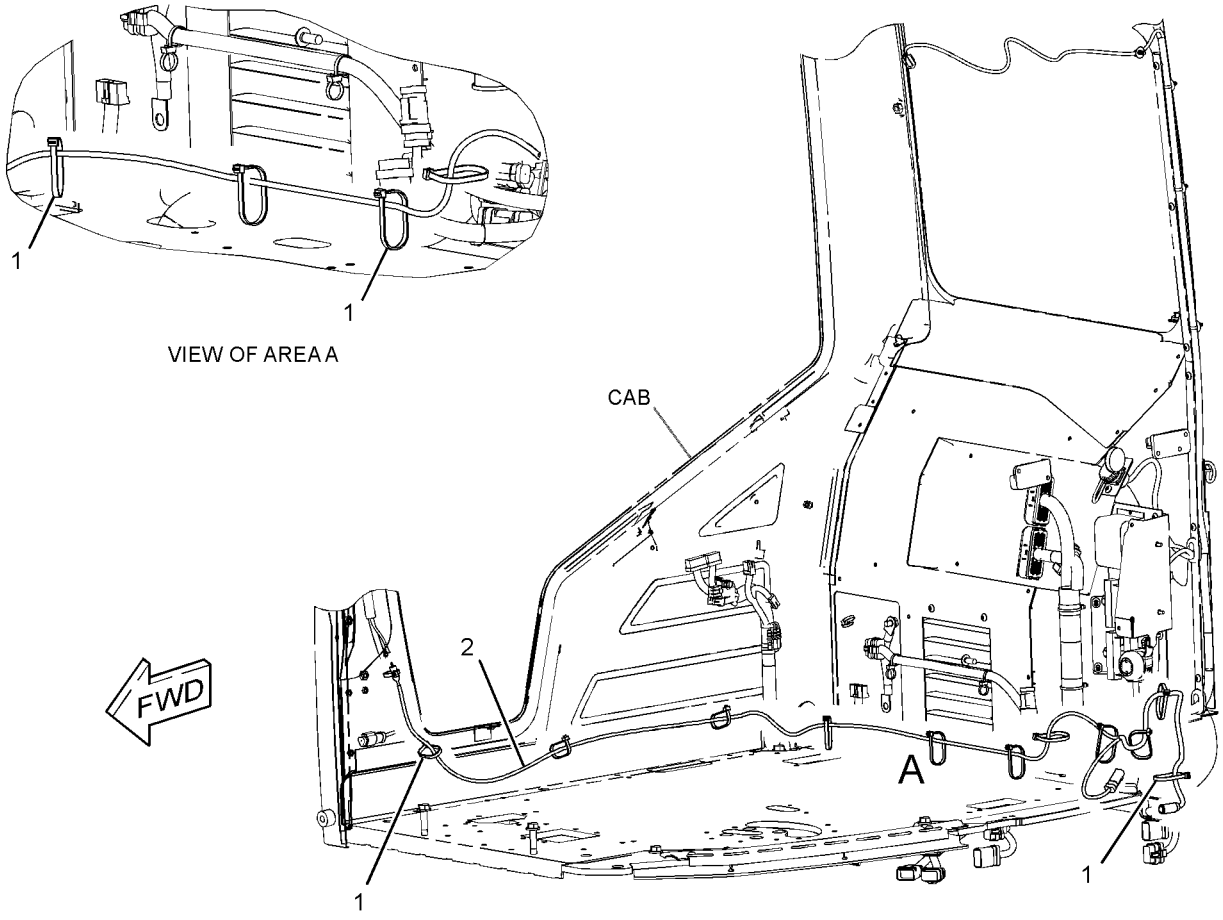

GRAPHIC #1 **<END>** g01628997

328-0091 WIRING GP-CAB–OVERLOAD WARNING

S/N: BYJ1-UP; PDP1-UP
PART OF 323-7796 VALVE AR-CHECK & RELIEF
AN ATTACHMENT

SMCS-1408, 7301 **i03148124**

NOTE	REF NO	GRAPHIC REF	PART NUMBER	QTY	PART NAME 1 2 3 4 5 6 (PRODUCT LEVEL)	SEE PAGE
	1	1	**7K-1181**	11	STRAP-CABLE	
	2	1	**120-8071**	1	GROMMET	
	3	1	**121-1125**	3	PLUG-BEZEL	
	4	1	**163-6795**	2	STRAP-CABLE	
	5	1	**273-5187**	1	BRACKET AS	
	6	1	**273-5188**	1	COVER AS	
	7	1	**306-8400**	1	HARNESS AS-CAB	
	8	1	**328-0028**	1	SWITCH AS-ROCKER (OVERLOAD WARNING)	
		1	**167-3542**	1	CONNECTOR-RECEPTACLE	
		1	**167-3543**	4	TERMINAL (MALE)	
M	9	1	**9X-2042**	4	SCREW-TRUSS HEAD (M6X1X12-MM)	

M-METRIC PART

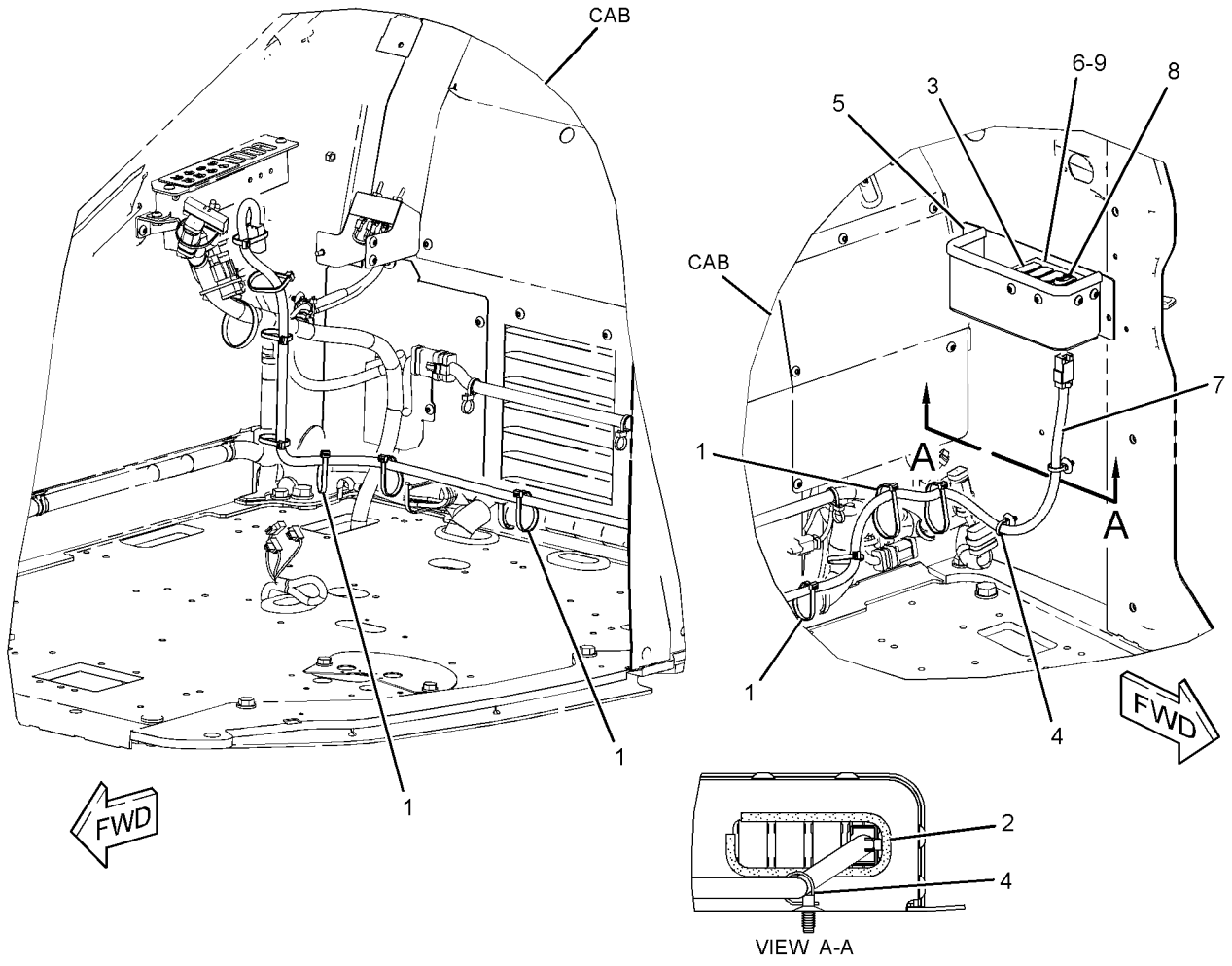

GRAPHIC #1 **<END>** g01627180

328-0082 WIRING GP-CAMERA–REAR VISION CAMERA

S/N: BYJ1-UP; PDP1-UP
PART OF 330-8751 INSTALLATION AR
AN ATTACHMENT

SMCS-1408, 7348 **i03151186**

NOTE	REF NO	GRAPHIC REF	PART NUMBER	QTY	PART NAME 1 2 3 4 5 6 (PRODUCT LEVEL)	SEE PAGE
	1	1	**3S-2093**	16	STRAP-CABLE	
	2	1	**7K-1181**	1	STRAP-CABLE	
M	3	1	**135-8573**	1	BOLT AS (M12X1.75X25-MM)	
	4	1	**261-3223**	1	CABLE AS-COAXIAL (CAMERA)	
	5	1	**4D-8948**	1	CLIP	

M-METRIC PART

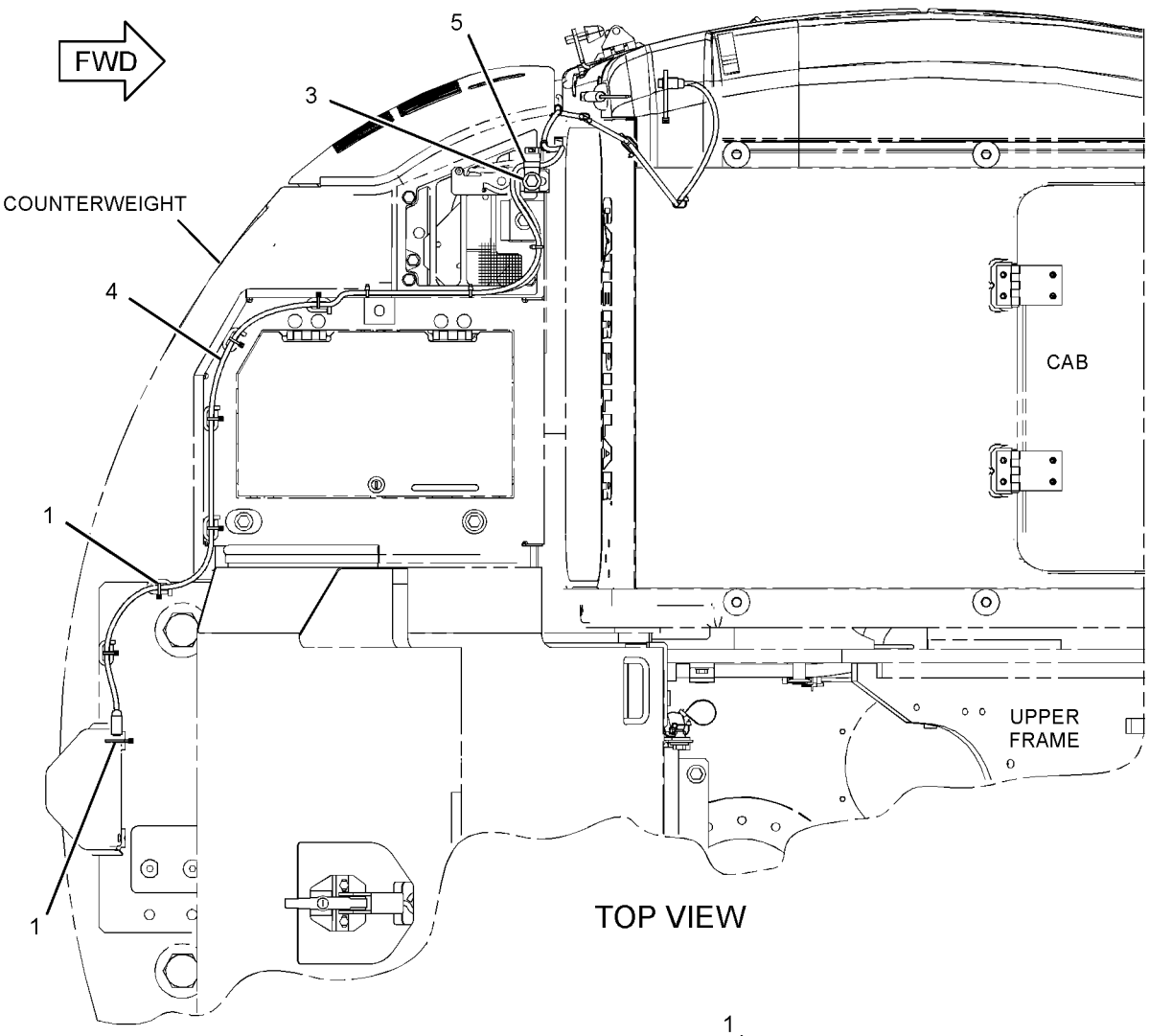

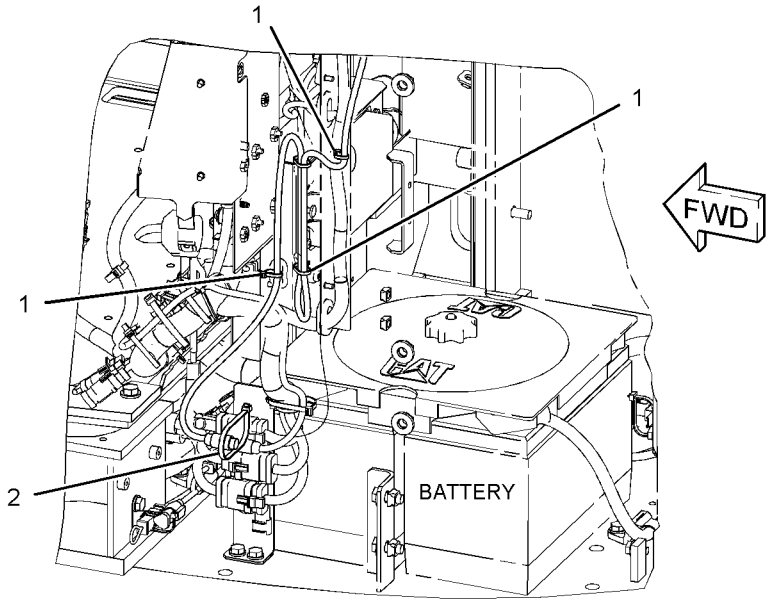

GRAPHIC #1 **<END>** g01626445

275-7123 WIRING GP-COMMUNICATION–PRODUCT LINK 321SR

S/N: BYJ1-UP; PDP1-UP

PART OF 301-2588 INSTALLATION AR-COMMUNICATION

AN ATTACHMENT

SMCS-1408 **i02819125**

NOTE	REF NO	GRAPHIC REF	PART NUMBER	QTY	PART NAME 1 2 3 4 5 6 (PRODUCT LEVEL)	SEE PAGE
	1	1	**3S-2093**	2	STRAP-CABLE	
	2	1	**7K-1181**	3	STRAP-CABLE	
	3	1	**267-7952**	1	HARNESS AS-CONTROL (PRODUCT LINK)	
	4	1	**283-2797**	1	HARNESS AS-CONTROL (PRODUCT LINK)	

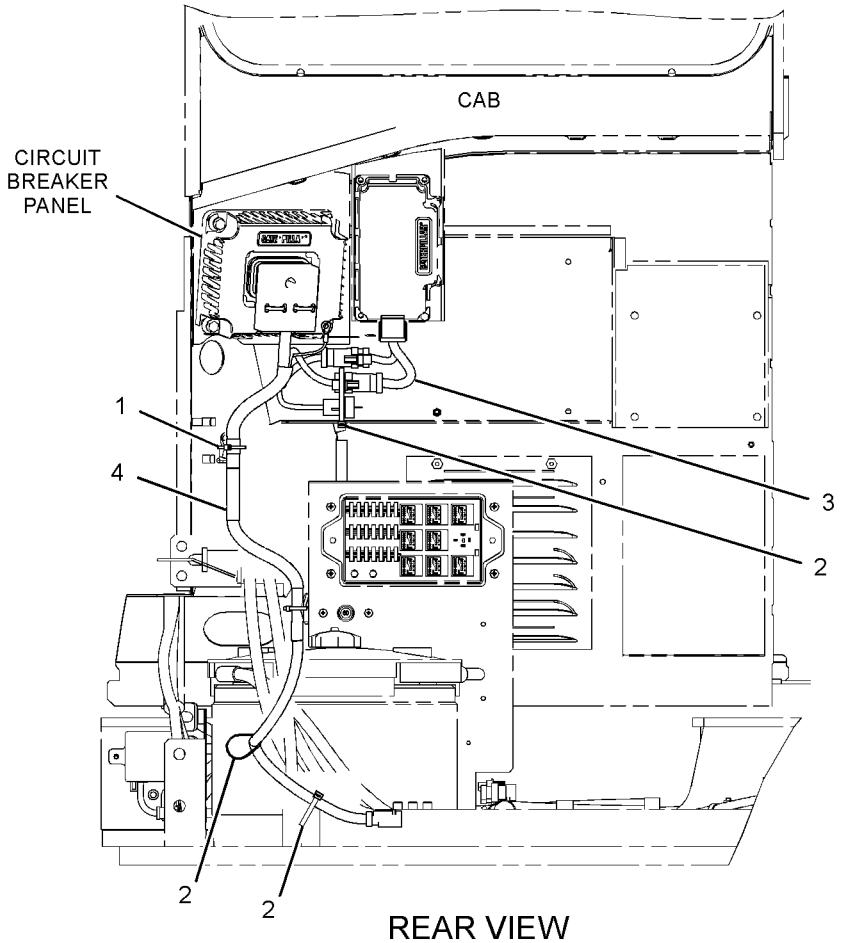

REAR VIEW

GRAPHIC #1 **<END>** g01411315

275-7124 WIRING GP-COMMUNICATION–PRODUCT LINK 121SR

S/N: BYJ1-UP; PDP1-UP
PART OF 301-2587 INSTALLATION AR-COMMUNICATION
AN ATTACHMENT

SMCS-1408 **i02819266**

NOTE	REF NO	GRAPHIC REF	PART NUMBER	QTY	PART NAME 1 2 3 4 5 6 (PRODUCT LEVEL)	SEE PAGE
	1	1	**3S-2093**	2	STRAP-CABLE	
	2	1	**7K-1181**	3	STRAP-CABLE	
	3	1	**267-7952**	1	HARNESS AS-CONTROL (PRODUCT LINK)	
	4	1	**306-8568**	1	HARNESS AS-CONTROL (PRODUCT LINK)	

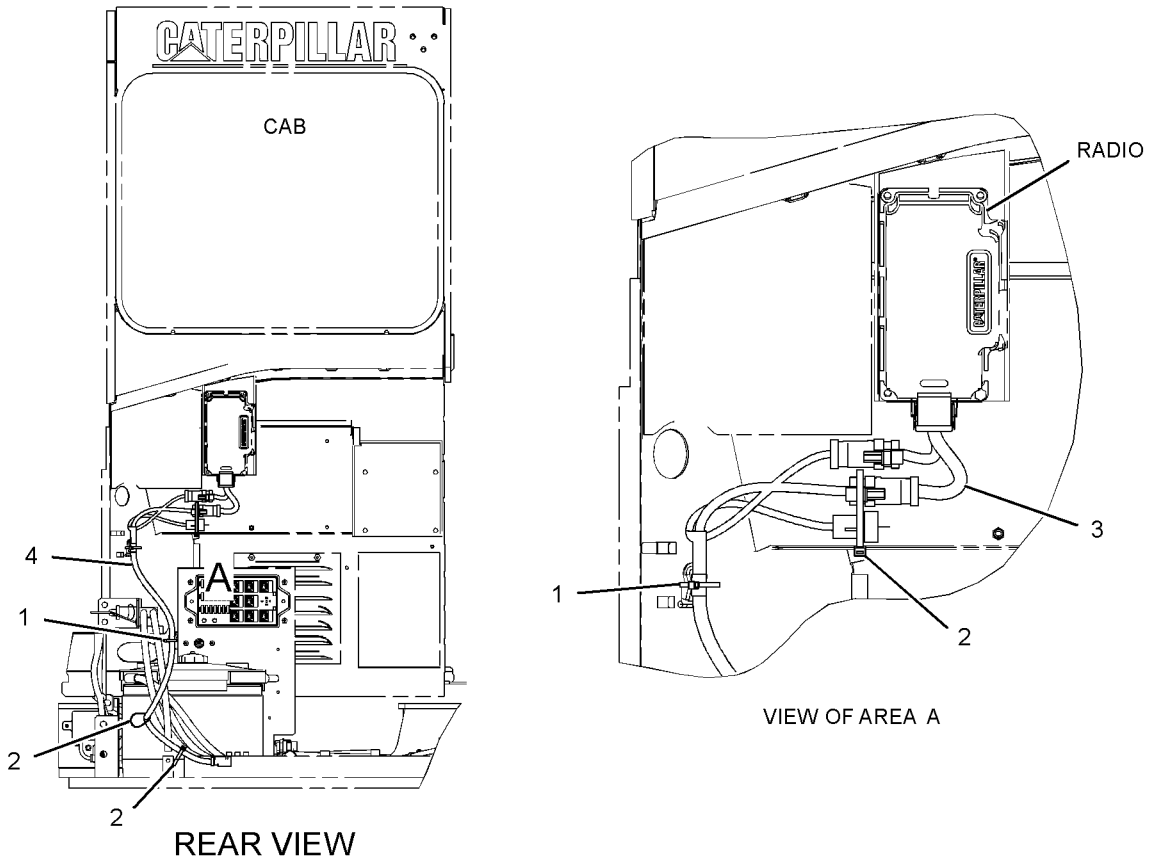

GRAPHIC #1 **<END>** g01415198

267-7764 WIRING GP-CONSOLE–LH

S/N: BYJ1-UP; PDP1-UP

PART OF 275-7108 WIRING GP-CONSOLE

SMCS-1408 **i03009934**

NOTE	REF NO	GRAPHIC REF	PART NUMBER	QTY	PART NAME 1 2 3 4 5 6 (PRODUCT LEVEL)	SEE PAGE
	1	1	**3S-2093**	2	STRAP-CABLE	
	2	1	**7K-1181**	1	STRAP-CABLE	
	3	1	**163-6795**	2	STRAP-CABLE	
	4	1	**267-7898**	1	HARNESS AS-CONSOLE (LH)	
		1	**3S-2093**	7	STRAP-CABLE	
		1	**155-2260**	1	KIT-CONNECTING PLUG (3-PIN)	
					(INCLUDES PLUG AS, WEDGE & INTERFACE SEAL)	
		1	**230-4011**	2	PLUG AS-CONNECTOR (2-PIN)	
		1	**239-7352**	1	PLUG AS-CONNECTOR (6-PIN)	
		1	**243-4505**	1	RECEPTACLE AS-CONNECTOR (2-PIN)	
		1	**243-4510**	2	RECEPTACLE AS-CONNECTOR (12-PIN)	
		1	**247-2693**	1	RECEPTACLE AS-CONNECTOR (6-PIN)	

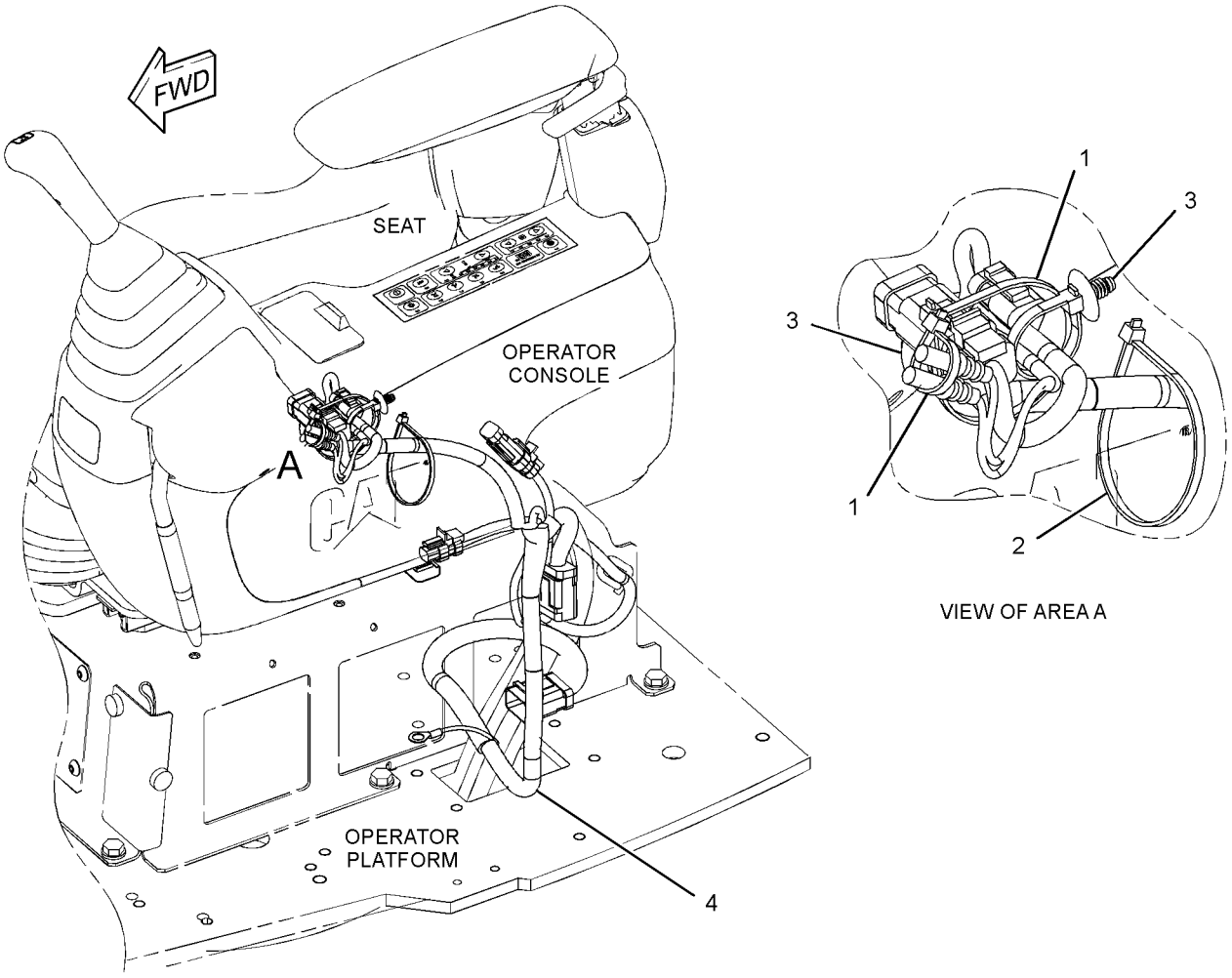

GRAPHIC #1 **<END>** g01255449

275-7108 WIRING GP-CONSOLE

S/N: BYJ1-UP; PDP1-UP
PART OF 273-5406 OPERATOR AR

SMCS-1408 **i02811603**

NOTE	PART NUMBER	QTY	PART NAME 1 2 3 4 5 6 (PRODUCT LEVEL)	SEE PAGE
Y	*267-7764*	1	WIRING GP-CONSOLE (LH)	188
			—OR—	
Y	*275-7110*	1	WIRING GP-CONSOLE (RH)	190

Y-SEPARATE ILLUSTRATION

<END>

275-7110 WIRING GP-CONSOLE–RH

S/N: BYJ1-UP; PDP1-UP

PART OF 275-7108 WIRING GP-CONSOLE

SMCS-1408 **i03009935**

NOTE	REF NO	GRAPHIC REF	PART NUMBER	QTY	PART NAME 1 2 3 4 5 6 (PRODUCT LEVEL)	SEE PAGE
	1	1	**3S-2093**	3	STRAP-CABLE	
	2	1	**7K-1181**	1	STRAP-CABLE	
	3	1	**163-6711**	1	SWITCH AS-TOGGLE (MANUAL ENGINE SPEED CONTROL)	
	4	1	**163-6795**	3	STRAP-CABLE	
	5	1	**267-7939**	1	BRACKET	
	6	1	**319-1032**	1	HARNESS AS-CONSOLE (RH)	
	7	1	**283-3074**	1	SWITCH AS-TOGGLE (AUTO/MANUAL ENG SPEED CONTROL)	
M	8	1	**9X-2042**	3	SCREW-TRUSS HEAD (M6X1X12-MM)	

M-METRIC PART

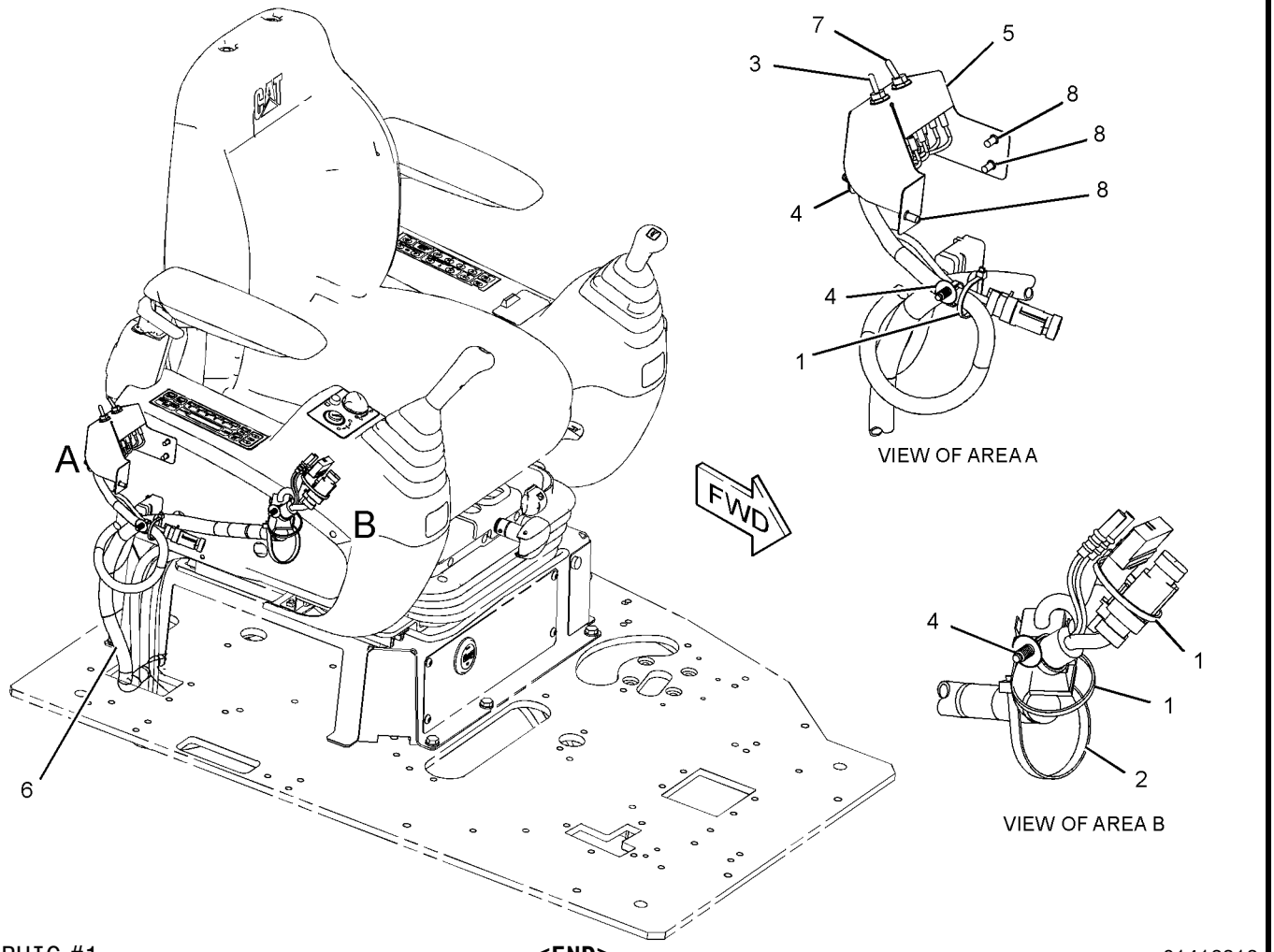

GRAPHIC #1 **<END>** g01412313

275-7170 WIRING GP-CONTROL–BOOM PRIORITY, PUMP

S/N: BYJ1-UP; PDP1-UP
PART OF 270-5993 CONTROL AR-AUXILIARY
AN ATTACHMENT

SMCS-1408 **i02977852**

NOTE	REF NO	GRAPHIC REF	PART NUMBER	QTY	PART NAME 1 2 3 4 5 6 (PRODUCT LEVEL)	SEE PAGE
	1	1	**3S-2093**	2	STRAP-CABLE	
	2	1	**7K-1181**	12	STRAP-CABLE	
	3	1	**116-0118**	1	CLIP	
	4	1	**283-2846**	1	HARNESS AS-VALVE	
	5	1	**283-2857**	1	HARNESS AS-VALVE	
	6	1	**132-5789**	1	CLIP	
	7	1	**8S-0948**	1	CLIP	
	8	1	**8T-4121**	2	WASHER-HARD (11X21X2.5-MM THK)	
M	9	1	**8T-4191**	2	BOLT (M10X1.5X16-MM)	

M-METRIC PART

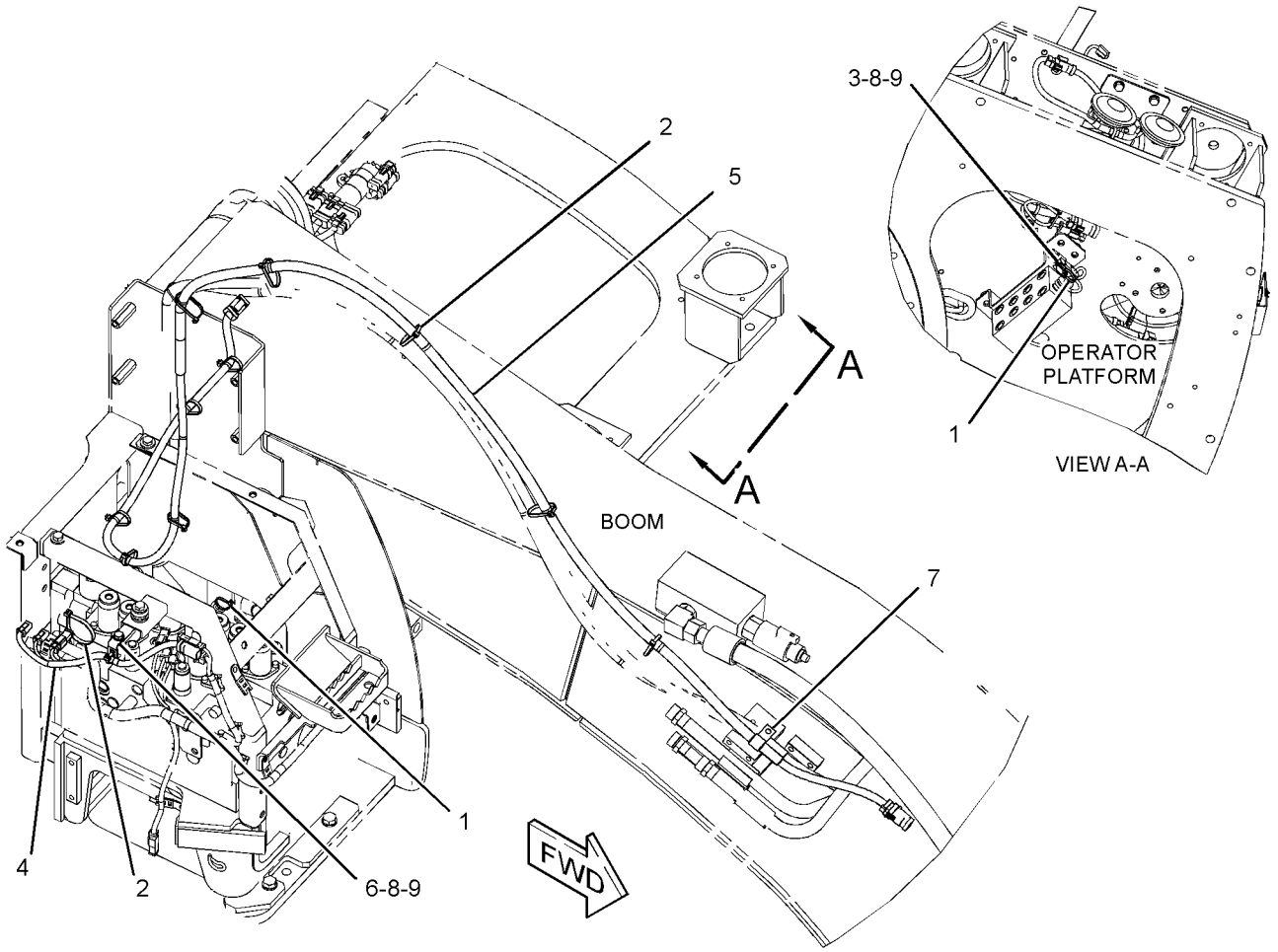

GRAPHIC #1 **<END>** g01518592

296-4801 WIRING GP-ELECTRONIC CONTROL

S/N: JKH1-UP
PART OF 279-7764, 279-7766 ENGINE AR
ALSO AN ATTACHMENT

SMCS-1408 **i03021485**

NOTE	REF NO	GRAPHIC REF	PART NUMBER	QTY	PART NAME 1 2 3 4 5 6 (PRODUCT LEVEL)	SEE PAGE
	1	1	**310-9688**	1	HARNESS AS-ENGINE	
	2	1	**296-4618**	1	SPACER	
	3	1	**296-4619**	1	CLIP	
	4	1	**099-4460**	1	BOLT	
	5	1	**096-2501**	1	LOCKWASHER	
	6	1	**8T-4223**	1	WASHER-HARD (13.5X25.5X3-MM THK)	
	7	1	**305-4891**	1	HARNESS AS-ENGINE (FUEL INJECTORS)	
	8	1,2	**305-4895**	15	STRAP-CABLE	
	9	1,2	**282-8567**	2	BOLT	
	10	1	**305-4898**	1	CLIP	
	11	1,2	**305-4896**	11	CLIP	
	12	1	**305-4897**	3	CLIP	
	13	1,2	**294-1768**	6	BOLT	
	14	1	**296-4766**	1	BRACKET	
Y	15	2	**223-7577**	1	SWITCH GP-MAGNETIC (AIR INLET HEATER RELAY)	160
	16	2	**296-4755**	1	CABLE	
	17	2	**296-4621**	2	BOLT (M6X1.25X23.5-MM)	

Y-SEPARATE ILLUSTRATION

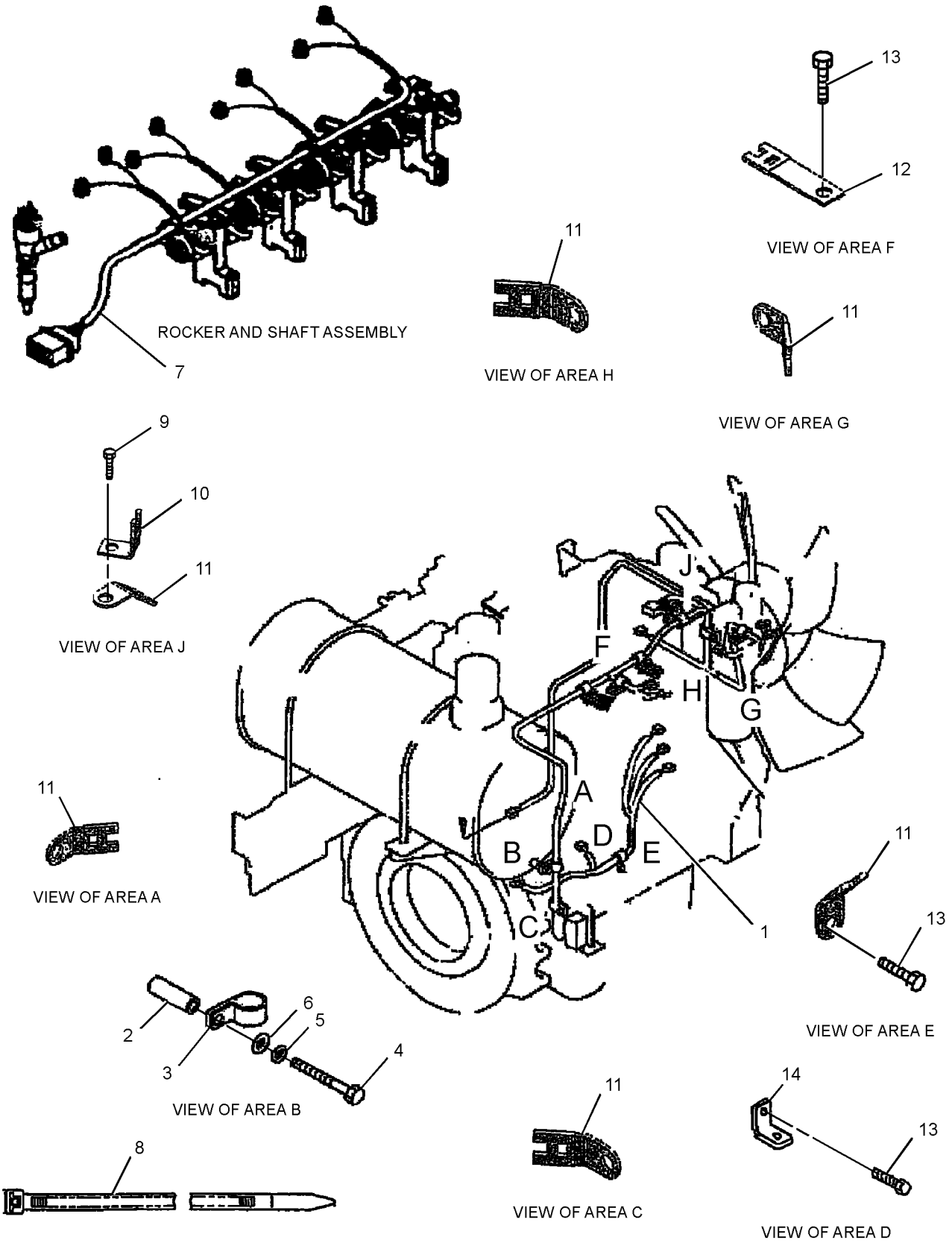

GRAPHIC #1 g01414753

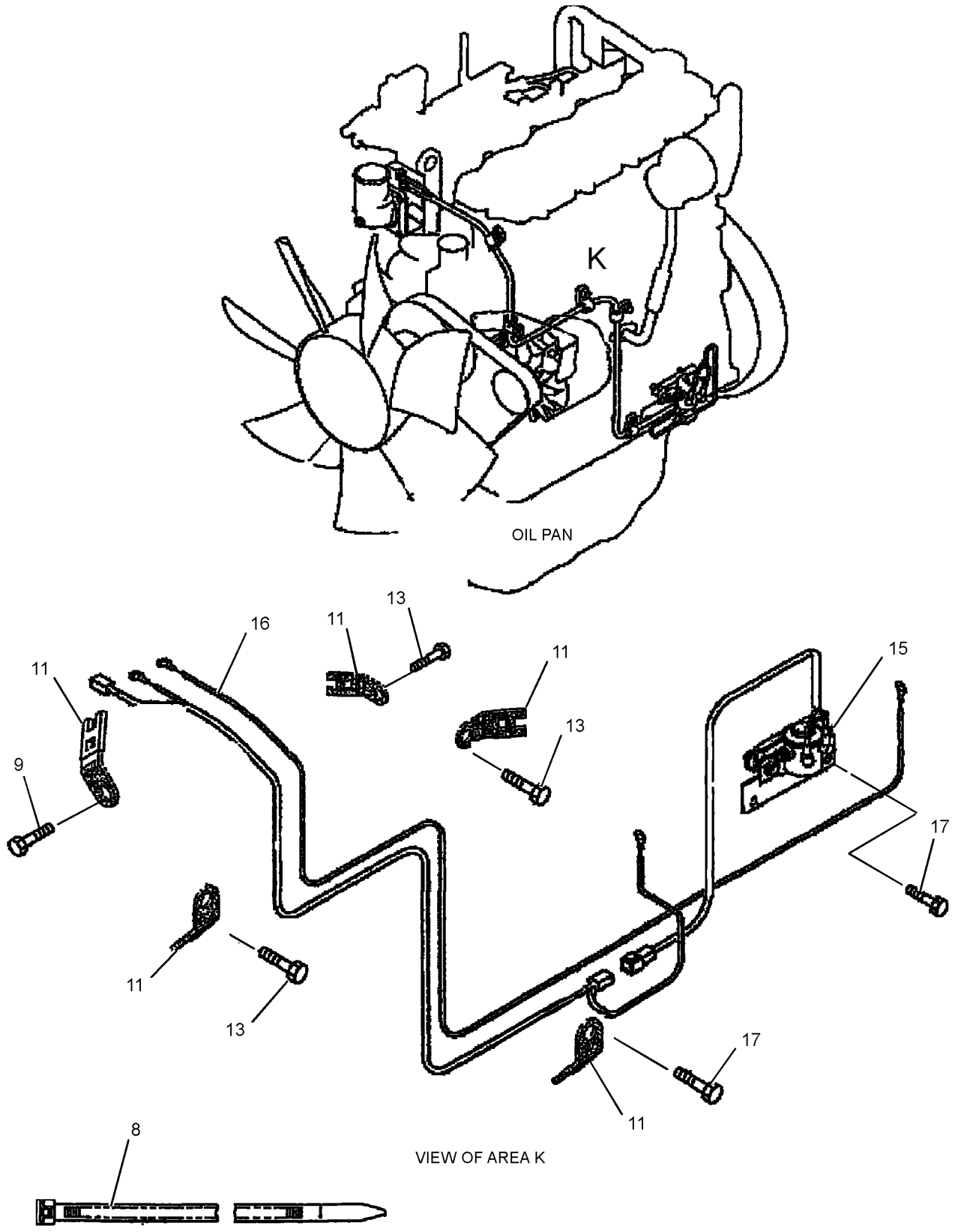

GRAPHIC #2 **<END>** g01414579

319-0870 WIRING GP-FAN

S/N: BYJ1-UP; PDP1-UP

PART OF 260-7182, 260-7183 CHASSIS AR

SMCS-1408 **i03009943**

NOTE	REF NO	GRAPHIC REF	PART NUMBER	QTY	PART NAME 1 2 3 4 5 6 (PRODUCT LEVEL)	SEE PAGE
	1	1	**7K-1181**	1	STRAP-CABLE	
	2	1	**204-1611**	2	STRAP-CABLE	
	3	1	**319-1164**	1	HARNESS AS-WIRING (FAN)	
	4	1	**132-5789**	1	CLIP	
M	5	1	**8T-4200**	1	BOLT (M8X1.25X16-MM)	
	6	1	**8T-4224**	1	WASHER-HARD (8.8X16X2-MM THK)	

M-METRIC PART

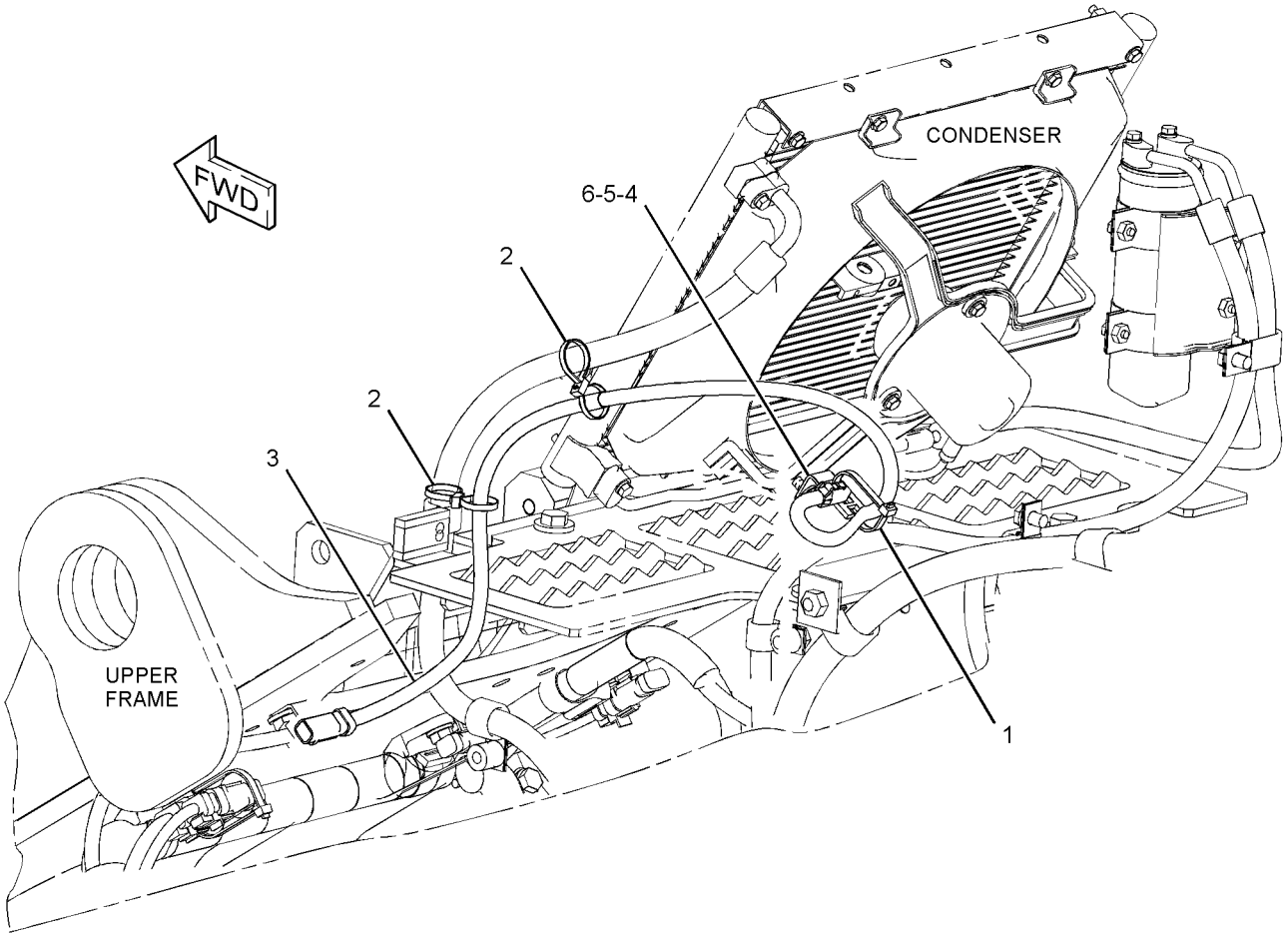

GRAPHIC #1 **<END>** g01448975

275-7117 WIRING GP-FINE SWING

S/N: BYJ1-UP; PDP1-UP
PART OF 260-7204 VALVE AR-SWING
AN ATTACHMENT

SMCS-1408 **i02820453**

NOTE	REF NO	GRAPHIC REF	PART NUMBER	QTY	PART NAME 1 2 3 4 5 6 (PRODUCT LEVEL)	SEE PAGE
	1	1	**7K-1181**	3	STRAP-CABLE	
	2	1	**111-4836**	1	CLIP	
	3	1	**116-0118**	1	CLIP	
	4	1	**238-2212**	1	SWITCH AS-ROCKER (FINE SWING)	
		1	**167-3542**	1	CONNECTOR-RECEPTACLE	
		1	**167-3543**	5	TERMINAL (MALE)	
	5	1	**283-2812**	1	HARNESS AS-SOLENOID (FINE SWING)	
	6	1	**283-2813**	1	BRACKET AS	
	7	1	**8T-4121**	1	WASHER-HARD (11X21X2.5-MM THK)	
M	8	1	**8T-4137**	1	BOLT (M10X1.5X20-MM)	
M	9	1	**8T-4199**	2	BOLT (M8X1.25X12-MM)	
	10	1	**8T-4224**	2	WASHER-HARD (8.8X16X2-MM THK)	

M-METRIC PART

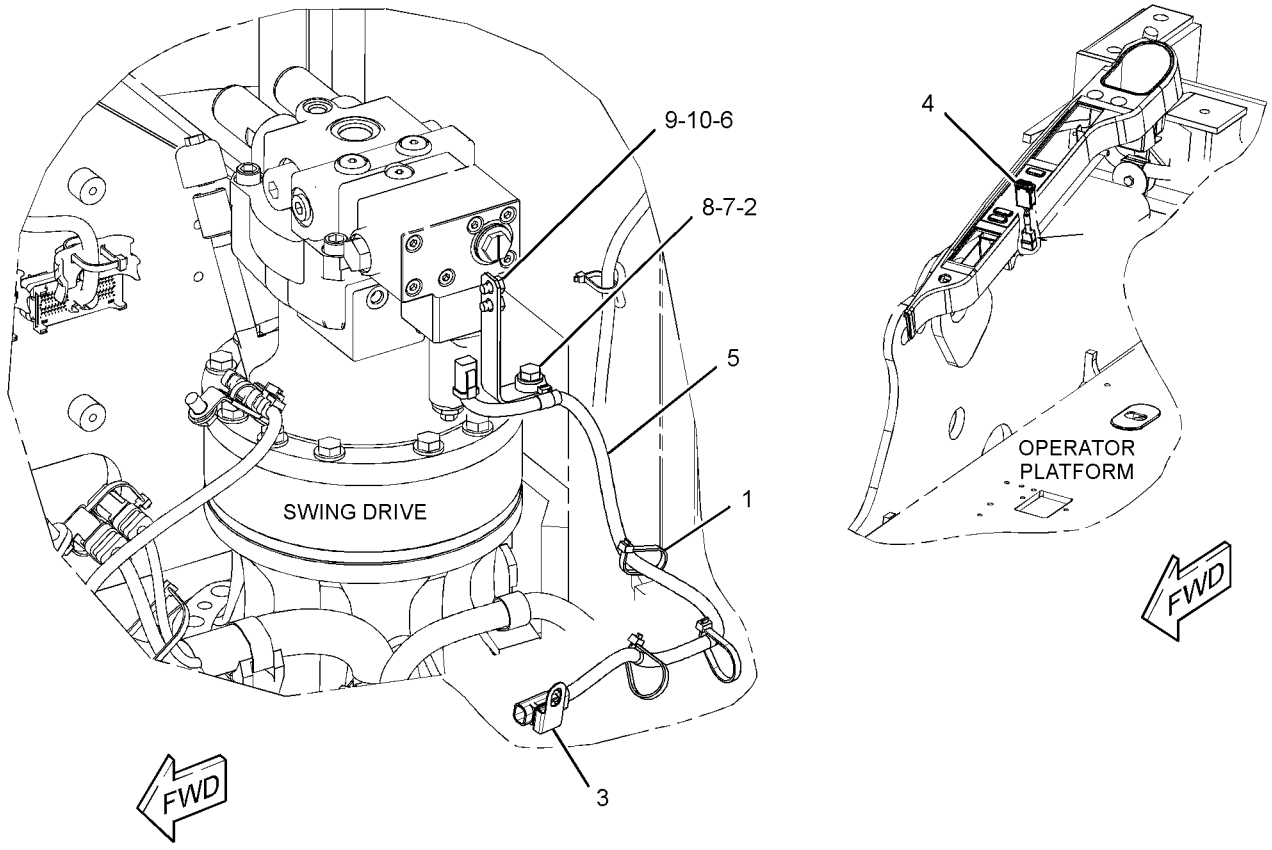

GRAPHIC #1 **<END>** g01514270

275-7122 WIRING GP-FUEL SYSTEM–REFUELING PUMP

S/N: BYJ1-UP; PDP1-UP
PART OF 260-7221, 301-2607 PUMP AR-FUEL TRANSFER
AN ATTACHMENT
TYPE 1

SMCS-1408 **i02820537**

NOTE	REF NO	GRAPHIC REF	PART NUMBER	QTY	PART NAME 1 2 3 4 5 6 (PRODUCT LEVEL)	SEE PAGE
	1	1	**3S-2093**	6	STRAP-CABLE	
	2	1	**283-2811**	1	WIRE AS	

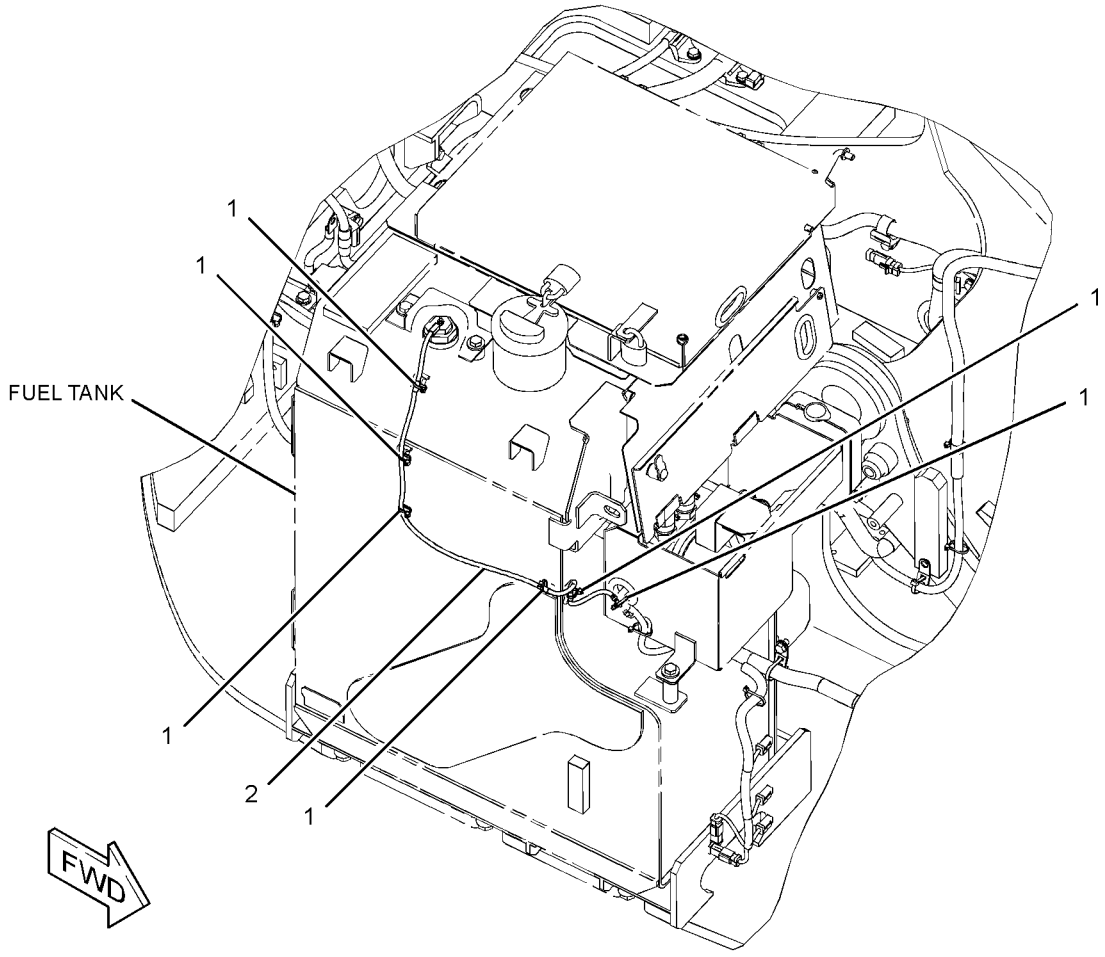

GRAPHIC #1 **<END>** g01410930

275-7122 WIRING GP-FUEL SYSTEM–REFUELING PUMP

S/N: BYJ1-UP; PDP1-UP
PART OF 260-7221, 301-2607 PUMP AR-FUEL TRANSFER
AN ATTACHMENT
TYPE 2

SMCS-1408 **i03093826**

NOTE	REF NO	GRAPHIC REF	PART NUMBER	QTY	PART NAME 1 2 3 4 5 6 (PRODUCT LEVEL)	SEE PAGE
	1	1	**3S-2093**	6	STRAP-CABLE	
C	2	1	**7K-1181**	21	STRAP-CABLE	
C	3	1	**319-1281**	1	HARNESS AS-PUMP	

C-CHANGE FROM PREVIOUS TYPE

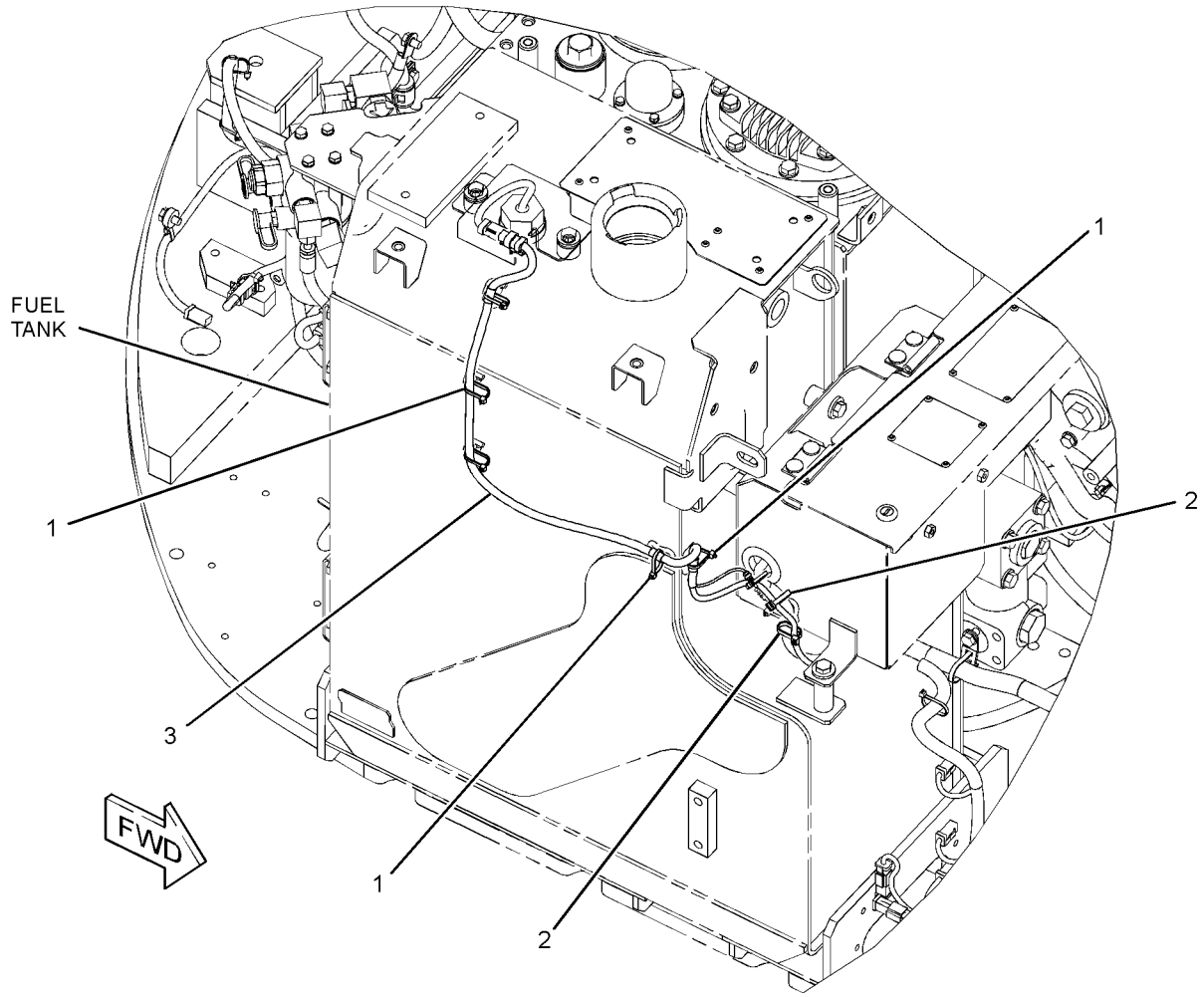

GRAPHIC #1 **<END>** g01627350

306-8606 WIRING GP-HEATER

S/N: BYJ1-UP; PDP1-UP
PART OF 260-7182, 260-7183 CHASSIS AR

SMCS-7304 **i03009947**

NOTE	REF NO	GRAPHIC REF	PART NUMBER	QTY	PART NAME 1 2 3 4 5 6 (PRODUCT LEVEL)	SEE PAGE
	1	1	**7K-1181**	10	STRAP-CABLE	
	2	1	**324-5643**	1	HARNESS AS-SWITCH (HEATER)	

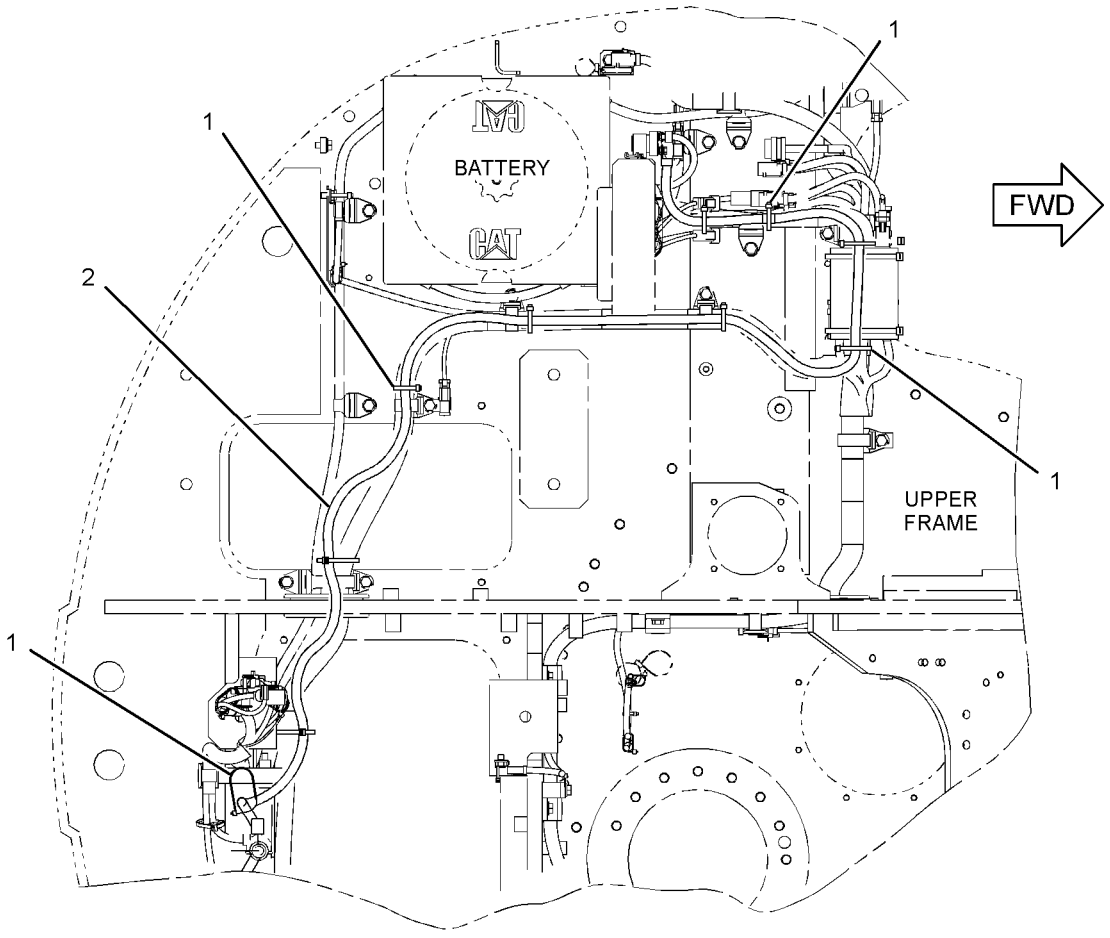

TOP VIEW

GRAPHIC #1 **<END>** g01511015

306-8768 WIRING GP-HEATER

S/N: BYJ1-UP; PDP1-UP
FIELD INSTALLATION

SMCS-7304 **i02976193**

NOTE	REF NO	GRAPHIC REF	PART NUMBER	QTY	PART NAME 1 2 3 4 5 6 (PRODUCT LEVEL)	SEE PAGE
	1	1	**7K-1181**	18	STRAP-CABLE	
	2	1	**306-8677**	1	HARNESS AS-WIRING	
Y	3	1	*319-1405*	1	PANEL GP-CIRCUIT BREAKER	141
	4	1	**324-5647**	1	HARNESS AS-SENSOR	

Y-SEPARATE ILLUSTRATION

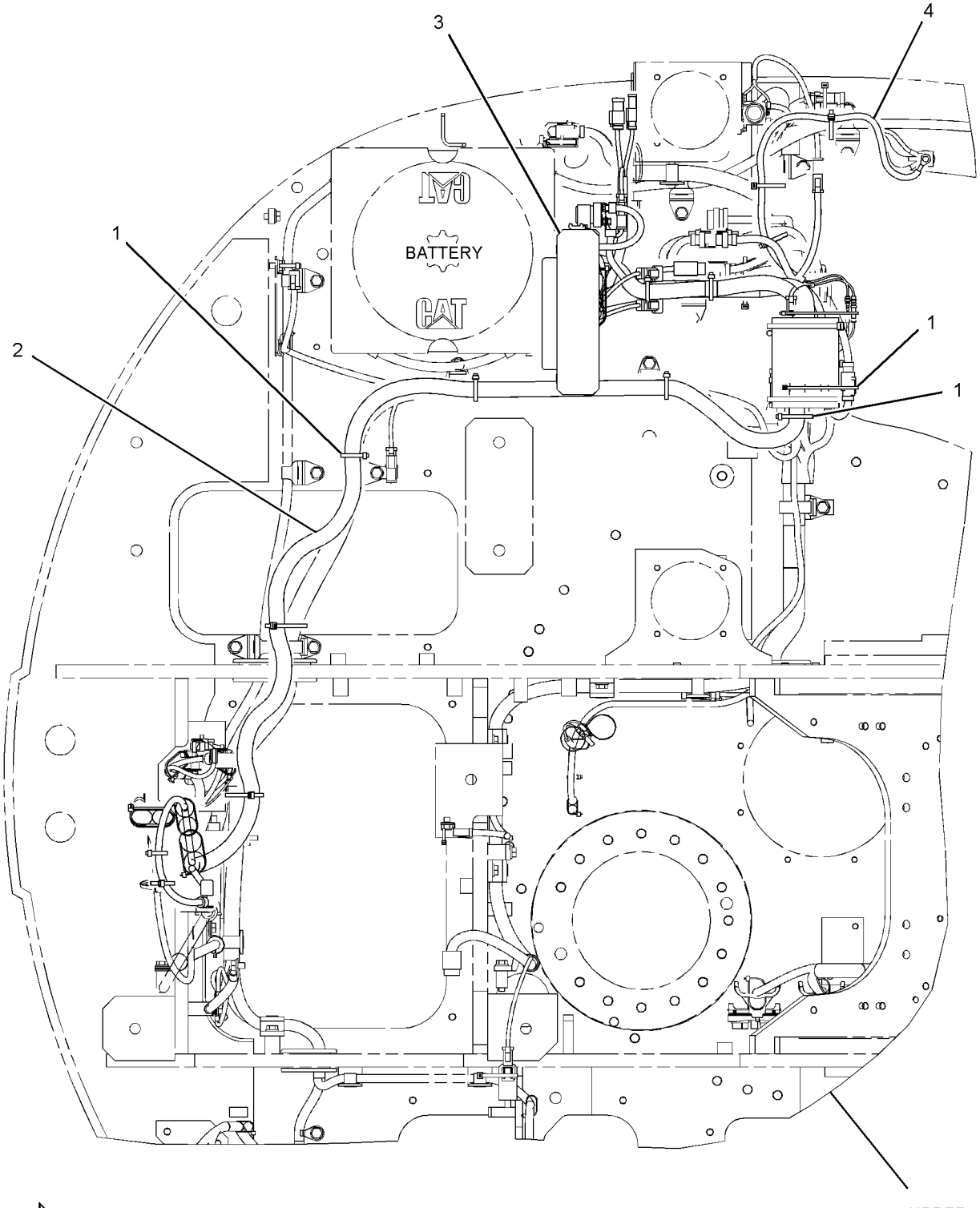

GRAPHIC #1

<END>

g01514487

275-7171 WIRING GP-MEDIUM PRESSURE

S/N: BYJ1-UP; PDP1-UP
PART OF 270-6001 CONTROL AR-AUXILIARY
AN ATTACHMENT

SMCS-1408 **i02900443**

NOTE	REF NO	GRAPHIC REF	PART NUMBER	QTY	PART NAME 1 2 3 4 5 6 (PRODUCT LEVEL)	SEE PAGE
	1	1	**7K-1181**	9	STRAP-CABLE	
	2	1	**283-2951**	1	HARNESS AS-VALVE	

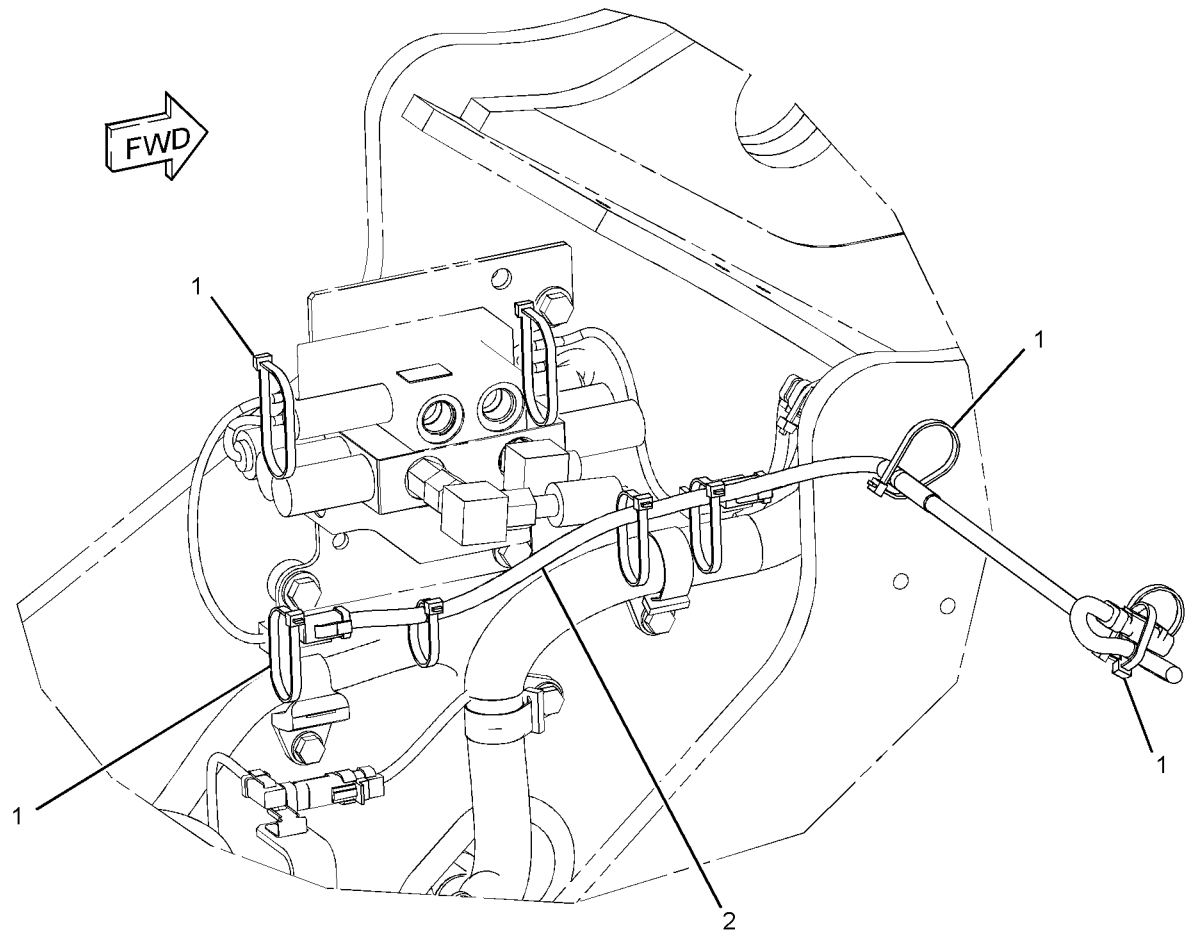

GRAPHIC #1 **<END>** g01521807

275-7172 WIRING GP-MEDIUM PRESSURE

S/N: BYJ1-UP; PDP1-UP
PART OF 285-1677 CONTROL AR-AUXILIARY
AN ATTACHMENT

SMCS-1408 **i02977855**

NOTE	REF NO	GRAPHIC REF	PART NUMBER	QTY	PART NAME 1 2 3 4 5 6 (PRODUCT LEVEL)	SEE PAGE
	1	1	**7K-1181**	2	STRAP-CABLE	
	2	1	**275-7109**	1	HARNESS AS-VALVE	
	3	1	**132-5789**	1	CLIP	
	4	1	**4P-7428**	1	CLIP	
M	5	1	**7X-2548**	1	BOLT (M12X1.75X16-MM)	
	6	1	**8T-4223**	1	WASHER-HARD (13.5X25.5X3-MM THK)	
	7	1	**204-1611**	1	STRAP-CABLE	

M-METRIC PART

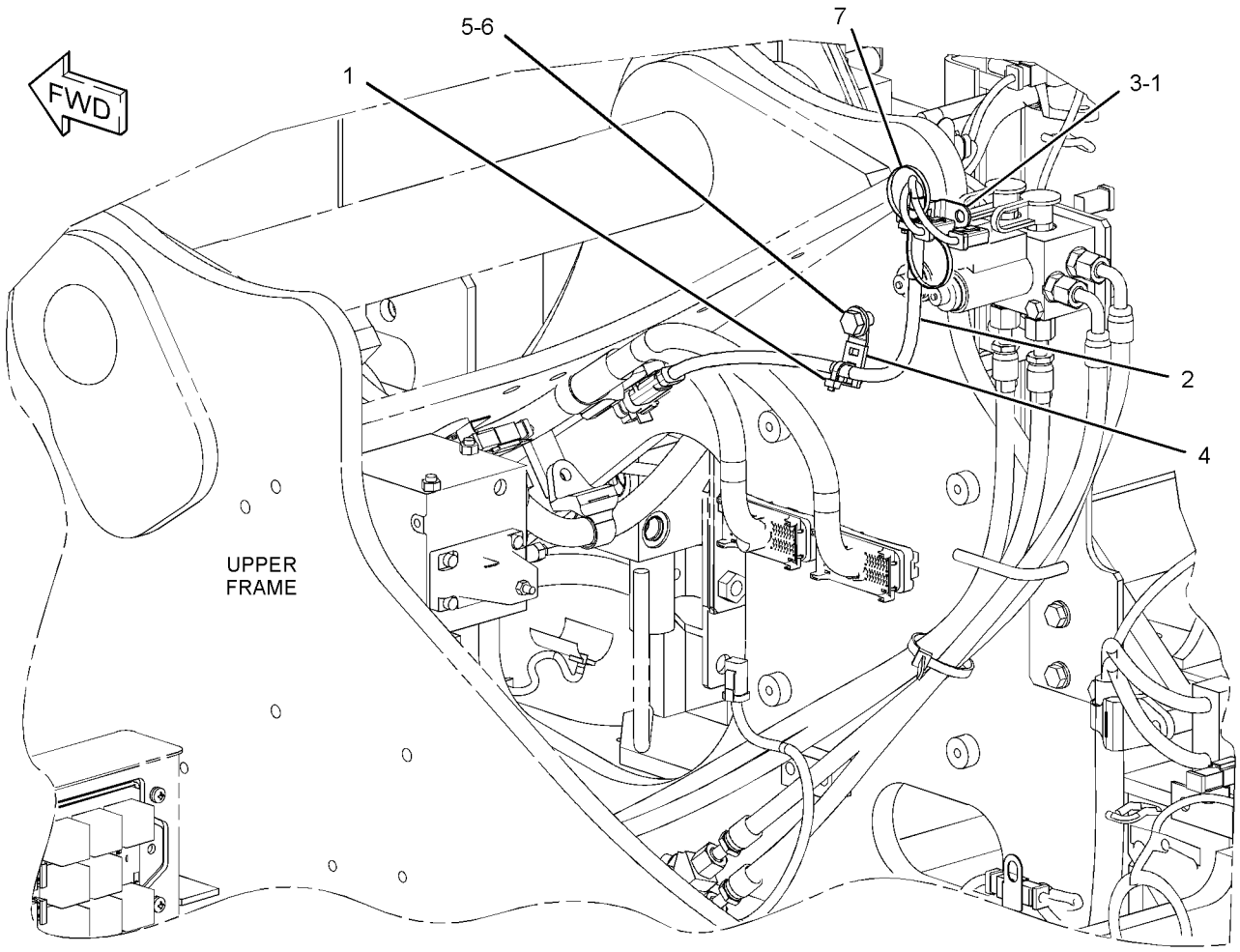

GRAPHIC #1 **<END>** g01513753

275-7126 WIRING GP-OVERLOAD WARNING

S/N: BYJ1-UP; PDP1-UP
PART OF 323-7796 VALVE AR-CHECK & RELIEF
AN ATTACHMENT

SMCS-1408 **i02826242**

NOTE	REF NO	GRAPHIC REF	PART NUMBER	QTY	PART NAME 1 2 3 4 5 6 (PRODUCT LEVEL)	SEE PAGE
	1	1	**204-1611**	5	STRAP-CABLE	
	2	1	**299-3061**	1	HARNESS AS-VALVE	

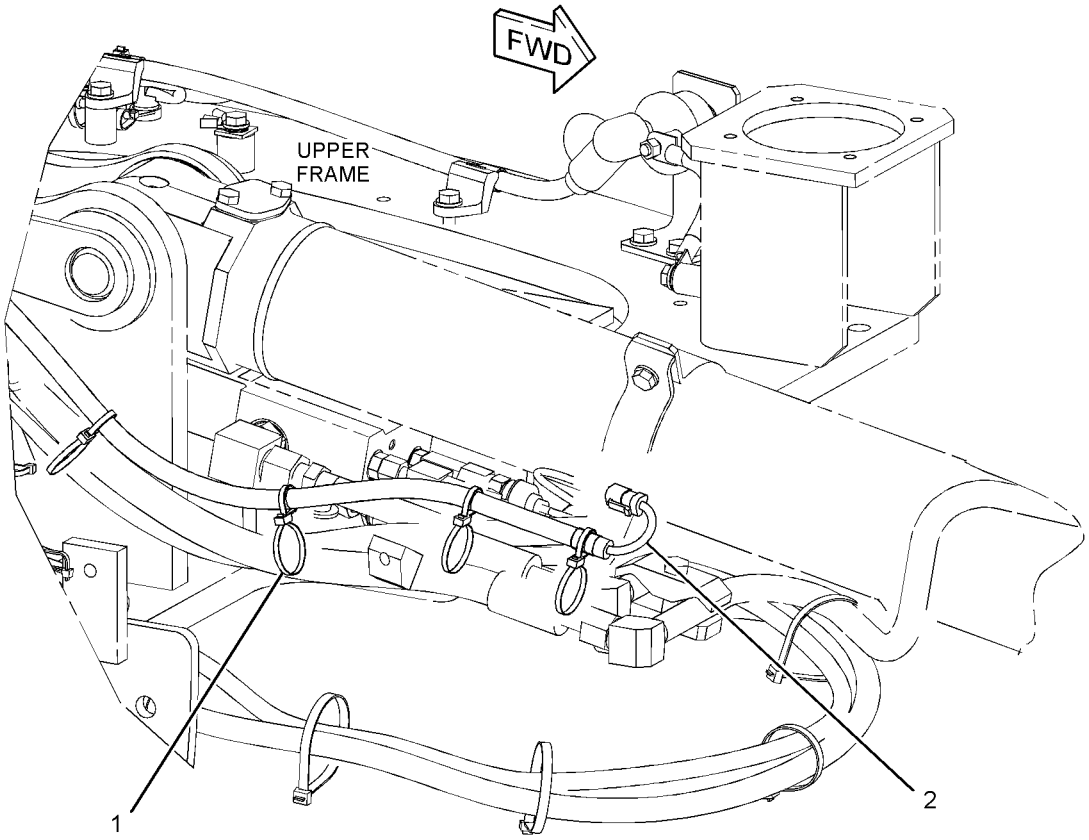

GRAPHIC #1 **<END>** g01628303

291-7712 WIRING GP-PLATFORM

S/N: BYJ1-UP; PDP1-UP

PART OF 260-7182, 260-7183 CHASSIS AR

SMCS-1408 **i02961492**

NOTE	REF NO	GRAPHIC REF	PART NUMBER	QTY	PART NAME 1 2 3 4 5 6 (PRODUCT LEVEL)	SEE PAGE
	1	2	**3E-5169**	1	GUARD-SWITCH	
	2	1,2	**3S-2093**	3	STRAP-CABLE	
	3	1	**7G-1060**	1	STRAP AS-GROUND	
	4	1	**7K-1181**	7	STRAP-CABLE	
	5	1	**111-4836**	14	CLIP	
	6	1,2	**116-0118**	8	CLIP	
	7	2	**268-1964**	1	KIT-SERVICE METER	
					(INCLUDES SERVICE METER & FILM)	
	8	2	**267-7933**	1	BRACKET AS	
	9	2	**267-7937**	1	BRACKET AS	
	10	2	**267-7950**	1	HARNESS AS-CONTROL (PUMP, SECONDARY SHUTDOWN)	
	11	2	**306-8379**	1	BRACKET AS	
	12	2	**4D-1836**	1	SWITCH AS-TOGGLE (SECONDARY SHUTDOWN)	
	13	1,2	**8T-4121**	22	WASHER-HARD (11X21X2.5-MM THK)	
M	14	1	**8T-4137**	11	BOLT (M10X1.5X20-MM)	
M	15	1,2	**8T-4191**	9	BOLT (M10X1.5X16-MM)	
M	16	1	**8T-4195**	2	BOLT (M10X1.5X30-MM)	
M	17	2	**9X-2042**	2	SCREW-TRUSS HEAD (M6X1X12-MM)	
	18	2	**104-8161**	1	GROMMET	

M-METRIC PART

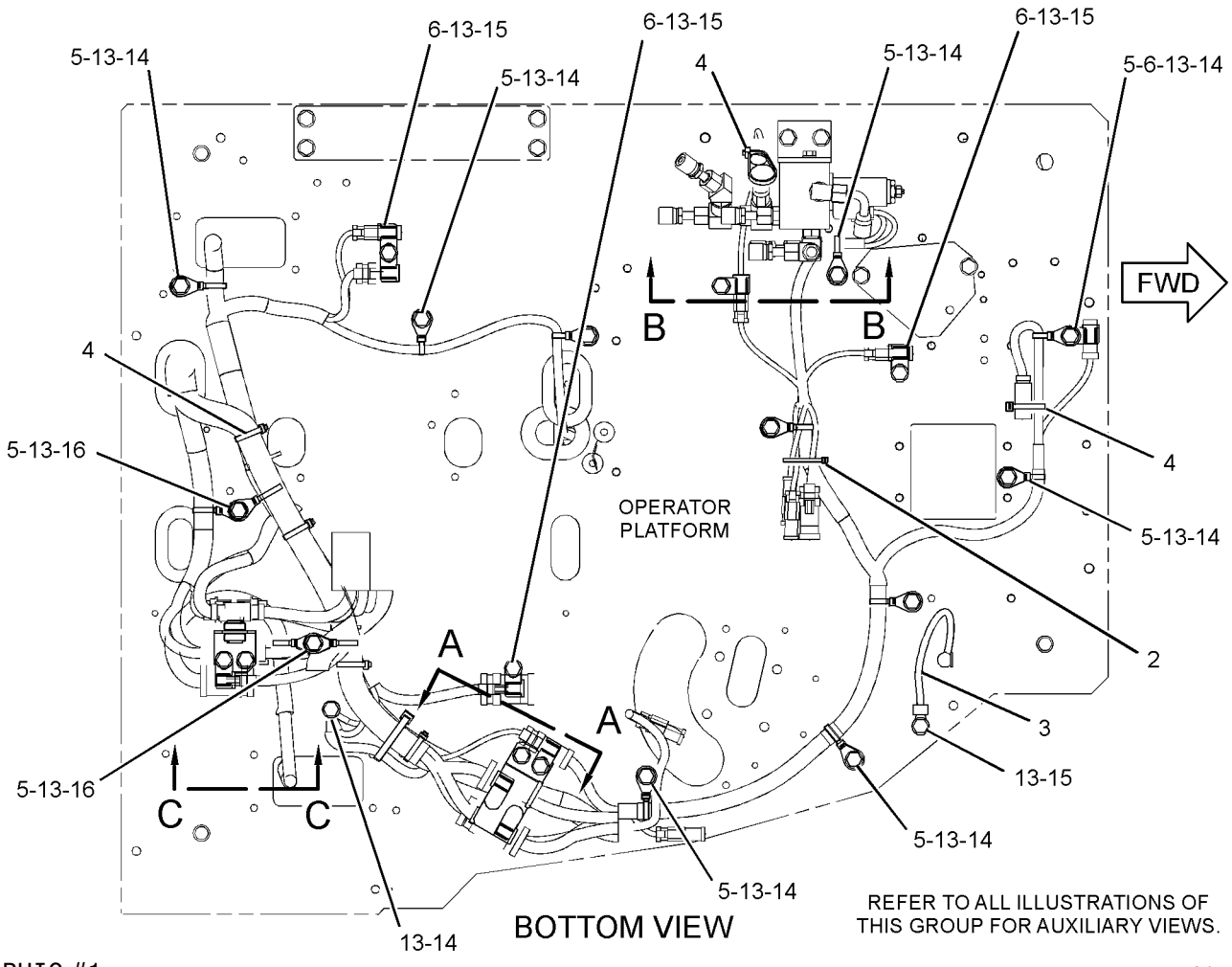

GRAPHIC #1 g01519037

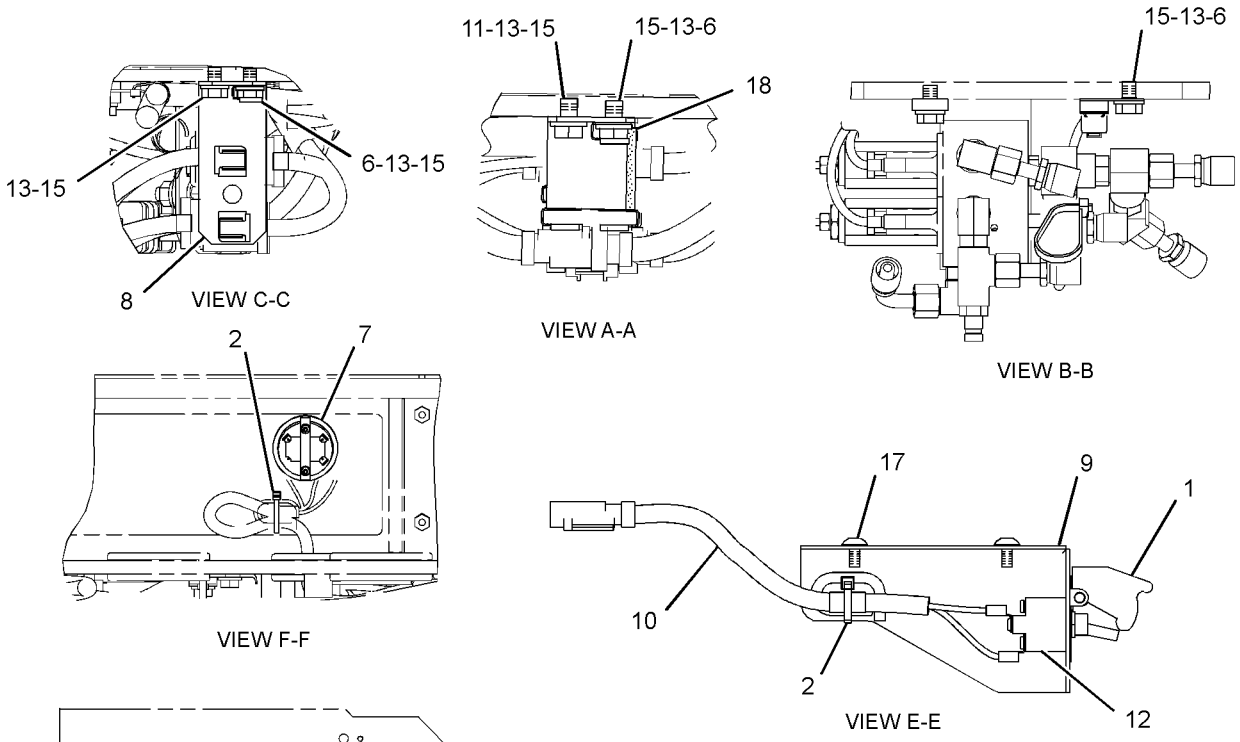

TOP VIEW

GRAPHIC #2

<END>

g01519038

277-6695 FINAL DRIVE GP—WITH MOTOR

S/N: BYJ1-UP; PDP1-UP

PART OF 267-6827 POWER TRAIN AR

SMCS-4050 **i02794290**

NOTE	REF NO	GRAPHIC REF	PART NUMBER	QTY	PART NAME 1 2 3 4 5 6 (PRODUCT LEVEL)	SEE PAGE
Y	1	1	*277-6697*	1	MOTOR GP-PISTON	502
Y	2	1	**278-6920**	1	FINAL DRIVE GP	208

Y-SEPARATE ILLUSTRATION

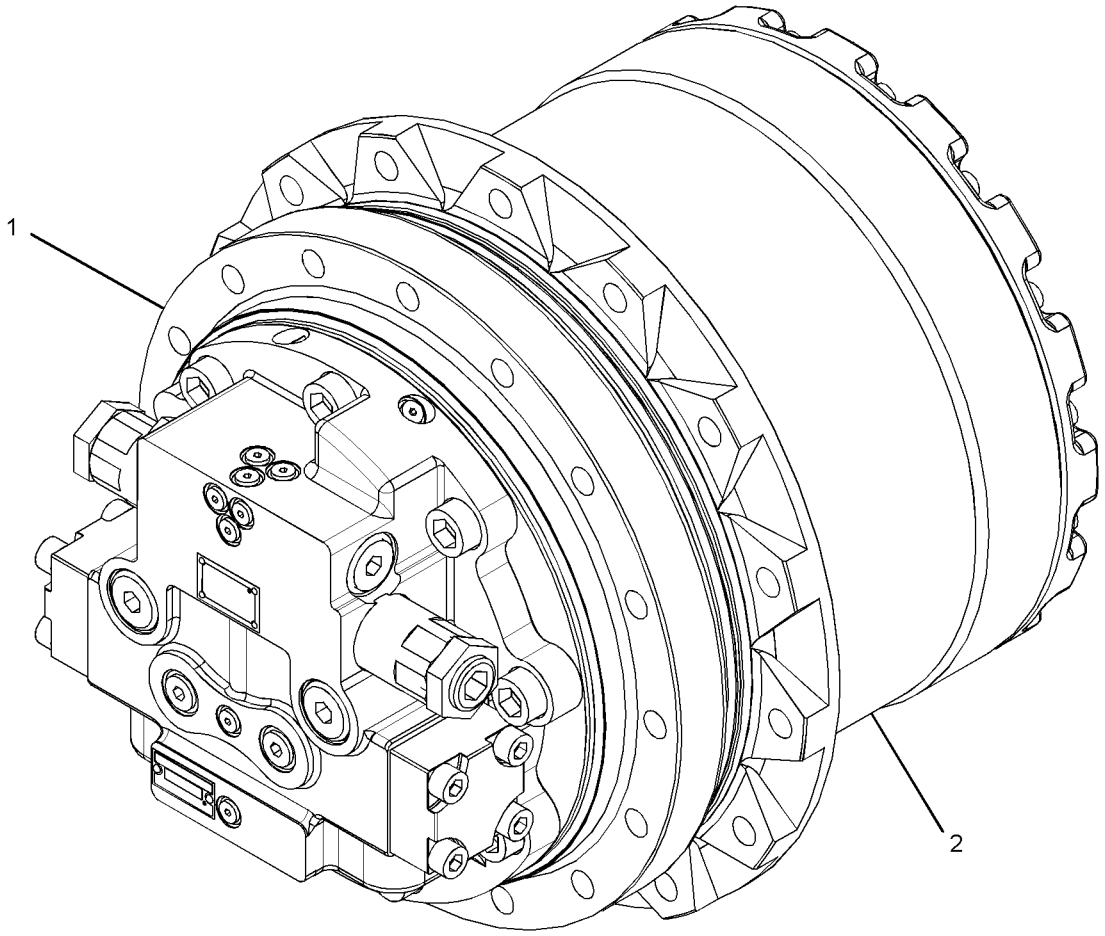

GRAPHIC #1 **<END>** g01417498

POWER TRAIN

278-6920 FINAL DRIVE GP

S/N: BYJ1-UP; PDP1-UP

PART OF 277-6695 DRIVE GP-FINAL

SMCS-4050 **i02902066**

NOTE	REF NO	GRAPHIC REF	PART NUMBER	QTY	PART NAME 1 2 3 4 5 6 (PRODUCT LEVEL)	SEE PAGE
	1	1	**094-0580**	1	PLATE (10-MM THK)	
M	2	1	**165-5854**	1	RING-LOCKING	
	3	1	**165-5855**	4	BEARING	
	4	1	**165-5856**	4	GEAR (37-TEETH)	
	5	1	**165-5857**	4	RACE	
	6	1	**165-5859**	3	RACE	
	7	1	**165-5860**	1	COVER	
	8	1	**307-9371**	1	CARRIER	
	9	1	**165-5864**	1	GEAR-SUN (17-TEETH)	
	10	1	**165-5865**	1	PLATE	
	11	1	**165-5866**	1	RING	
	12	1	**165-5867**	1	GEAR (19-TEETH)	
	13	1	**165-5868**	1	HOUSING	
	14	1	**176-8574**	1	PLATE	
	15	1	**191-0862**	1	PLATE-LOCK	
	16	1	**204-1086**	4	PLATE	
	17	1	**218-4246**	3	GEAR-PLANETARY (40-TEETH)	
	18	1	**218-4247**	2	BEARING	
	19	1	**310-4980**	1	SEAL GP-DUO-CONE	
	20	1	**278-1980**	3	BEARING AS	
	21	1	**3E-2338**	2	PLUG-PIPE	
M	22	1	**6V-7726**	4	SCREW-HEX SOCKET (M10X1.5X25-MM)	
	23	1	**7M-8485**	2	SEAL-O-RING	
M	24	1	**8T-1158**	16	BOLT-SOCKET HEAD (M8X1.25X20-MM)	
M	25	1	**8T-4137**	1	BOLT (M10X1.5X20-MM)	
M	26	1	**8T-4185**	3	BOLT (M10X1.5X50-MM)	
B	27	1	**1U-8846**		SEALANT-GASKET	

B-USE AS REQUIRED
M-METRIC PART

278-6920 **FINAL DRIVE GP** *(contd.)* **i02902066**

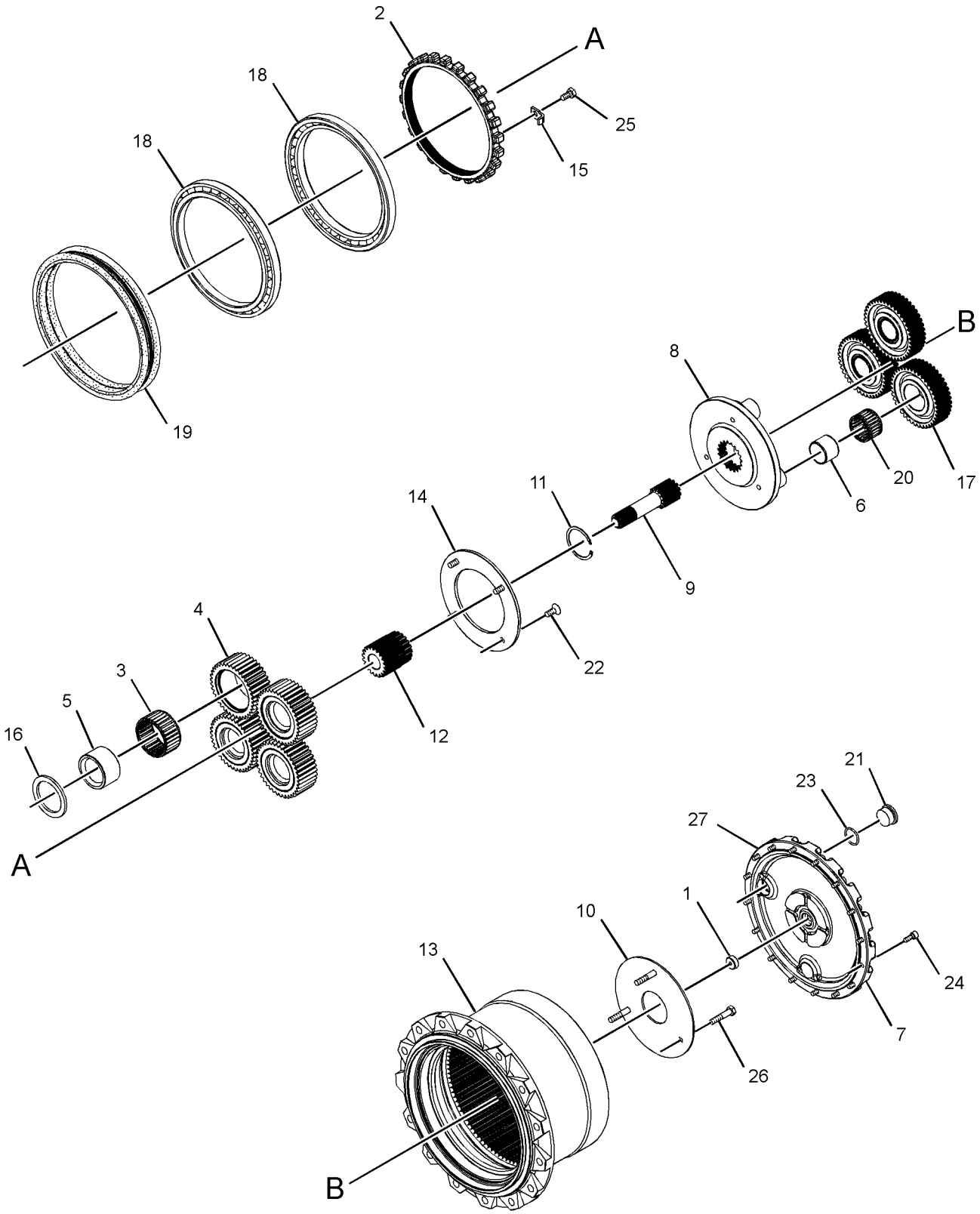

GRAPHIC #1 **<END>** g01428299

191-2595 FASTENER GP-FINAL DRIVE

S/N: BYJ1-UP; PDP1-UP

PART OF 267-6827 POWER TRAIN AR

SMCS-4050, 7553 **i01654714**

NOTE	REF NO	GRAPHIC REF	PART NUMBER	QTY	PART NAME 1 2 3 4 5 6 (PRODUCT LEVEL)	SEE PAGE
M	1	1	**8T-4193**	32	BOLT (M16X2X50-MM)	
	2	1	**9X-8257**	46	WASHER (17.5X30X3.5-MM THK)	
M	3	1	**8T-7338**	14	BOLT (M16X2X45-MM)	
	4	1	**191-2543**	2	PIN	
B	5	1	**1U-8846**		SEALANT-GASKET	

B-USE AS REQUIRED
M-METRIC PART

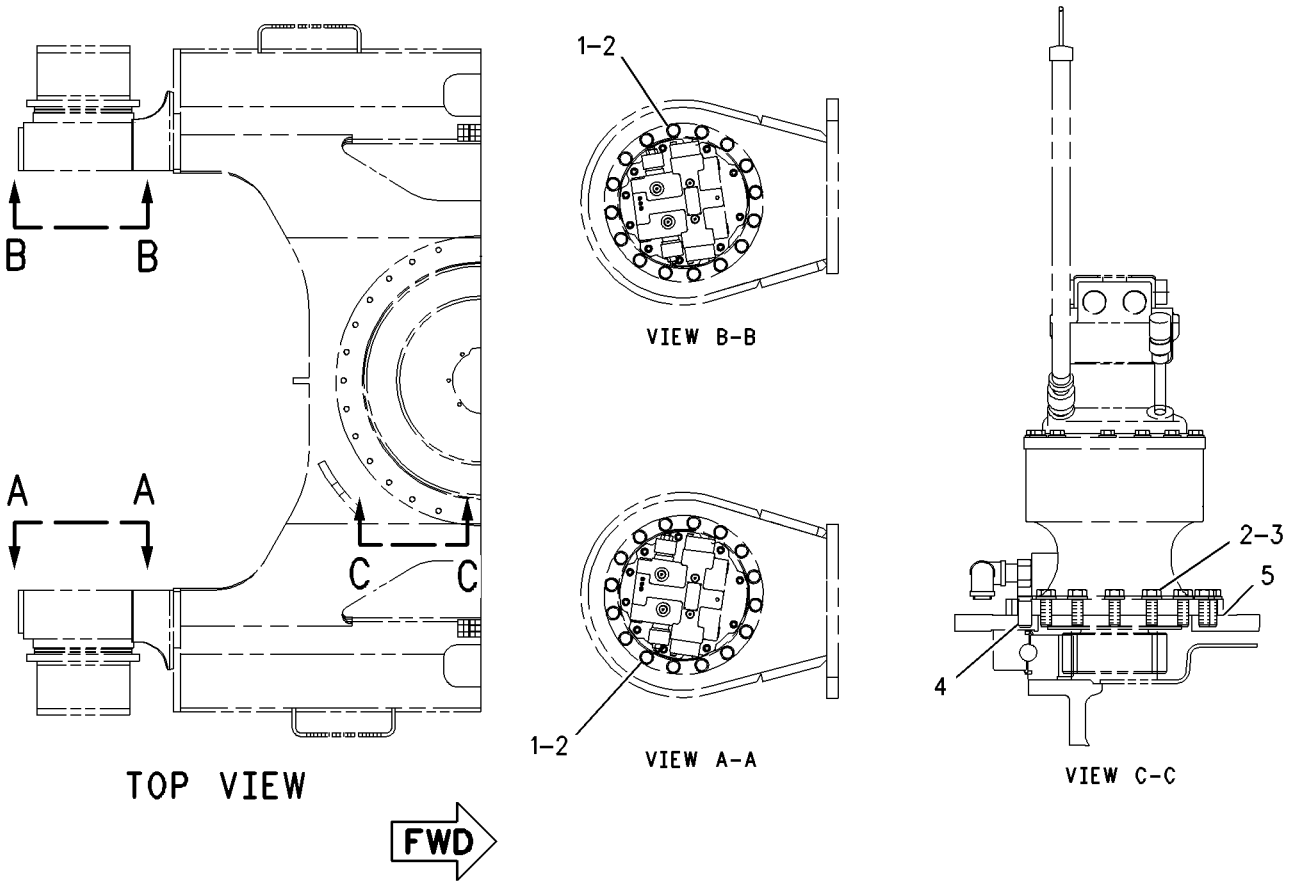

GRAPHIC #1 **<END>** g00857193

267-6827 POWER TRAIN AR

S/N: BYJ1-UP; PDP1-UP

PART OF 260-7176, 260-7177 GENERAL AR

SMCS-3000, 4000 **i02829103**

NOTE	PART NUMBER	QTY	PART NAME 1 2 3 4 5 6 (PRODUCT LEVEL)	SEE PAGE
Y	*267-6844*	1	DRIVE GP-SWING (WITH MOTOR)	337
Y	*191-2595*	1	FASTENER GP-FINAL DRIVE	210
Y	**277-6695**	2	FINAL DRIVE GP (WITH MOTOR)	207
Y	*168-6728*	2	SPROCKET GP	212

Y-SEPARATE ILLUSTRATION

<END>

POWER TRAIN

168-6728 SPROCKET GP

S/N: BYJ1-UP; PDP1-UP

PART OF 267-6827 POWER TRAIN AR

SMCS-4164 **i01473887**

NOTE	REF NO	GRAPHIC REF	PART NUMBER	QTY	PART NAME 1 2 3 4 5 6 (PRODUCT LEVEL)	SEE PAGE
M	1	1	**8T-7338**	15	BOLT (M16X2.0X45MM)	
	2	1	**4I-7472**	1	SPROCKET-TRACK (21 TEETH)	

M-METRIC PART

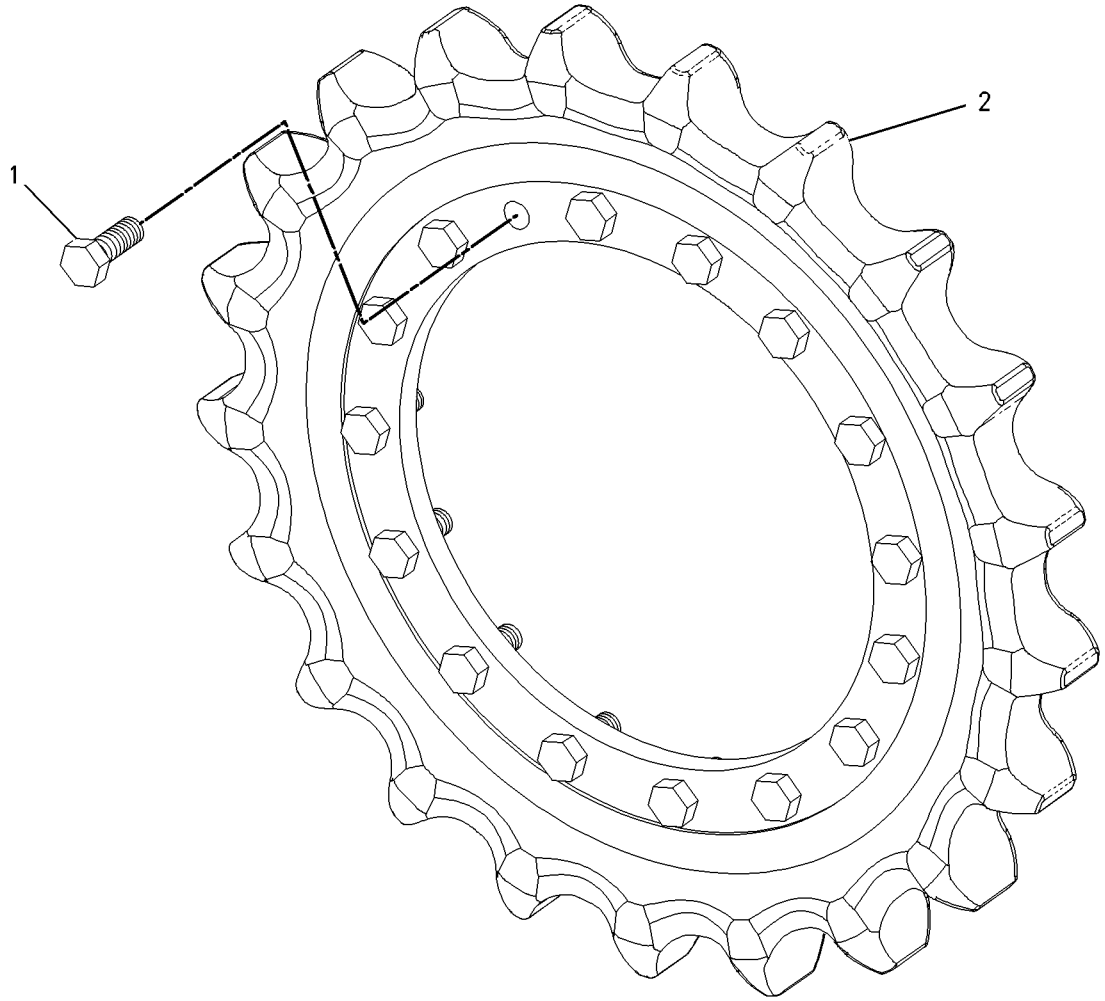

GRAPHIC #1 **<END>** g00735057

FRAME AND BODY

283-3831 BOX & MOUNTING GP

S/N: BYJ1-UP; PDP1-UP
PART OF 260-7221, 301-2607 PUMP AR-FUEL TRANSFER
AN ATTACHMENT

SMCS-7268 **i03009956**

NOTE	REF NO	GRAPHIC REF	PART NUMBER	QTY	PART NAME 1 2 3 4 5 6 (PRODUCT LEVEL)	SEE PAGE
	1	1	**246-2641**	1	PADLOCK GP	
		1	**5P-8500**	1	KEY (ACCESS DOOR)	
	2	1	**286-6065**	1	SHEET AS	
Y	3	1	**286-6084**	1	BOX GP-FUEL TRANSFER	215

Y-SEPARATE ILLUSTRATION

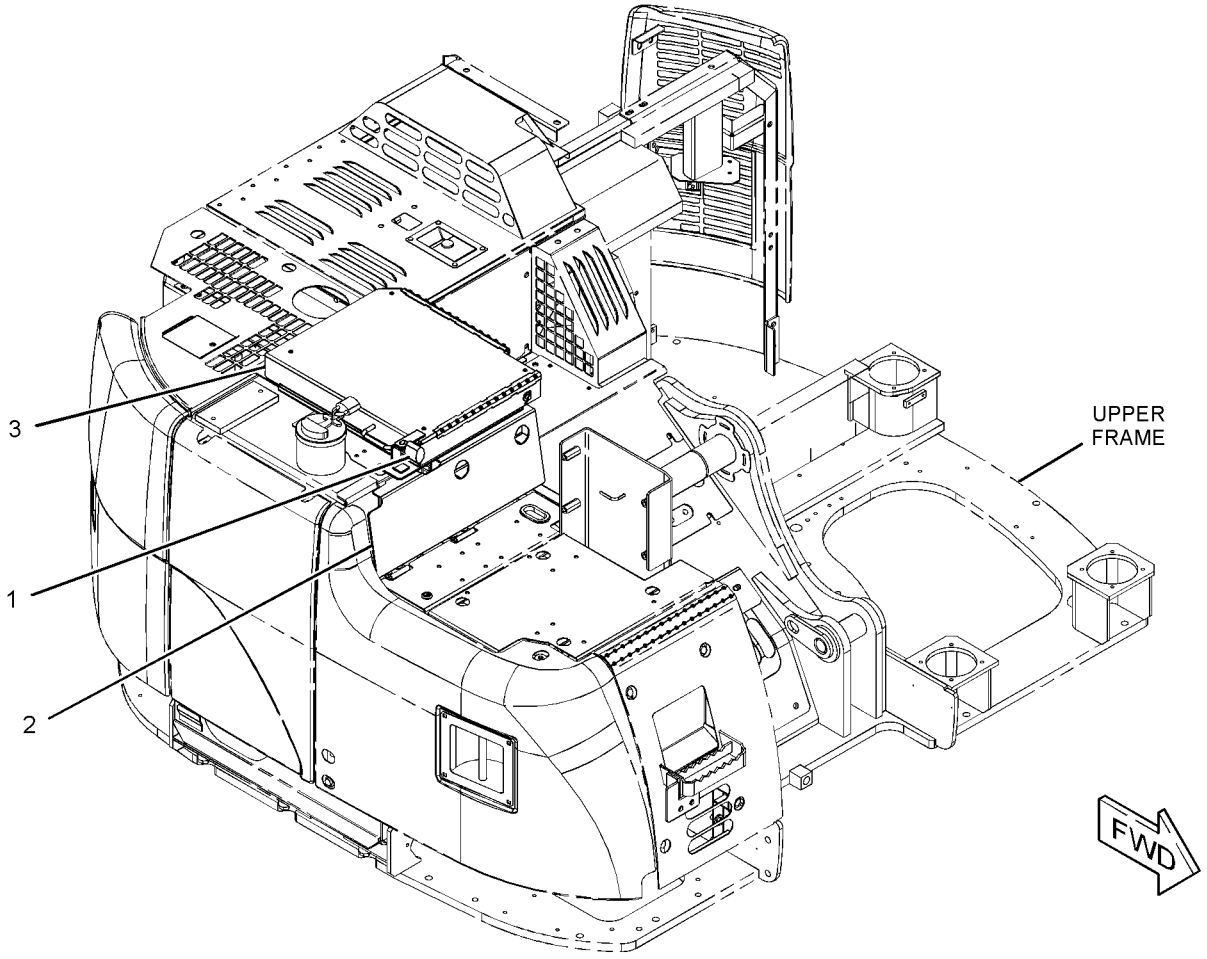

GRAPHIC #1 **<END>** g01419314

320-5763 BOX & MTG GP-STORAGE

S/N: BYJ1-UP; PDP1-UP

PART OF 260-7182, 260-7183 CHASSIS AR

SMCS-7268 **i02981176**

NOTE	REF NO	GRAPHIC REF	PART NUMBER	QTY	PART NAME 1 2 3 4 5 6 (PRODUCT LEVEL)	SEE PAGE
M	1	1	**135-8575**	4	BOLT AS-LOCKING (M12X1.75X30-MM)	
Y	2	1	**278-3979**	1	BOX GP-STORAGE	216

M-METRIC PART
Y-SEPARATE ILLUSTRATION

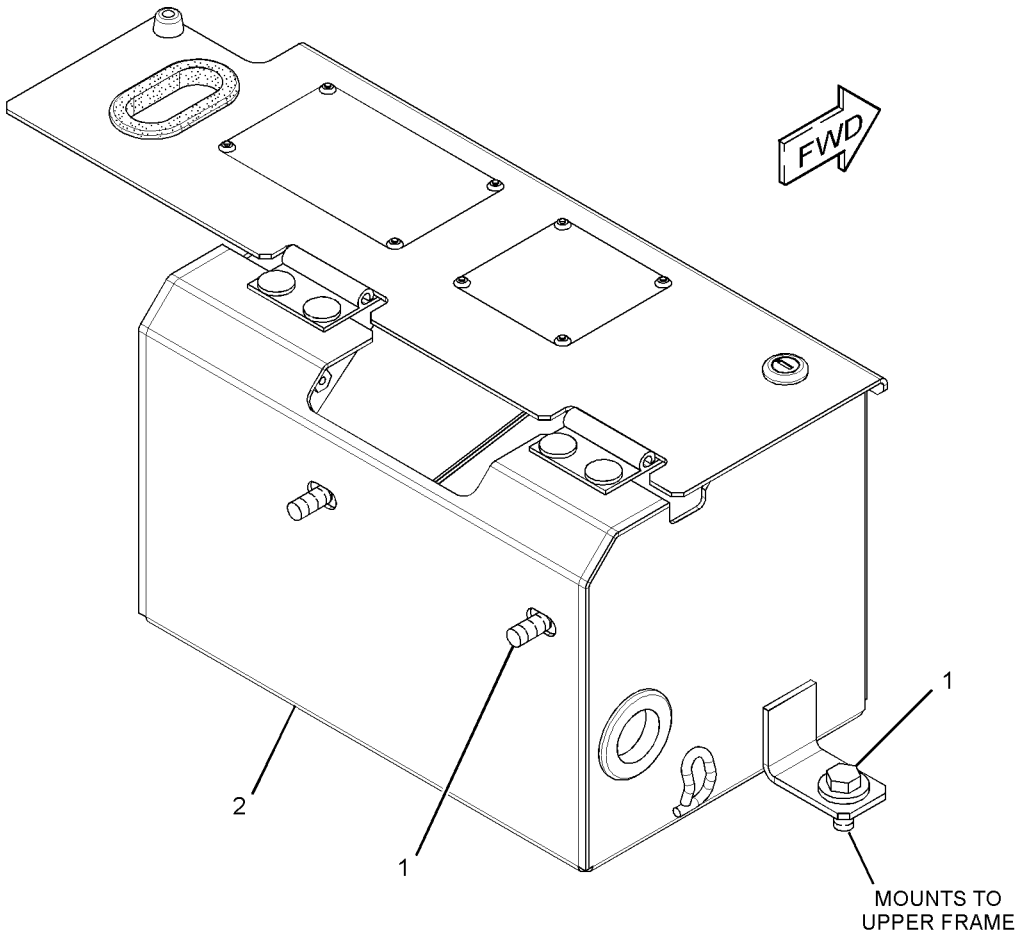

GRAPHIC #1 **<END>** g01517133

FRAME AND BODY

286-6084 BOX GP-FUEL TRANSFER

S/N: BYJ1-UP; PDP1-UP
PART OF 283-3831 BOX & MOUNTING GP
AN ATTACHMENT

SMCS-1256, 1901, 7268 **i02992203**

NOTE	REF NO	GRAPHIC REF	PART NUMBER	QTY	PART NAME 1 2 3 4 5 6 (PRODUCT LEVEL)	SEE PAGE
	1	1	**2S-1647**	1	GROMMET	
	2	1	**286-6063**	1	SHEET AS	
	3	1	**286-6064**	1	SHEET AS	
	4	1	**298-2932**	1	GROMMET	
	5	1	**298-3052**	1	ROD AS	
	6	1	**320-5769**	1	SEAL	
	7	1	**320-5770**	2	SEAL	
	8	1	**320-5771**	1	SEAL	
	9	1	**3B-4618**	1	PIN-COTTER	
	10	1	**8T-4121**	4	WASHER-HARD (11X21X2.5-MM THK)	
M	11	1	**8T-4137**	4	BOLT (M10X1.5X20-MM)	
	12	1	**8T-4223**	1	WASHER-HARD (13.5X25.5X3-MM THK)	

M-METRIC PART

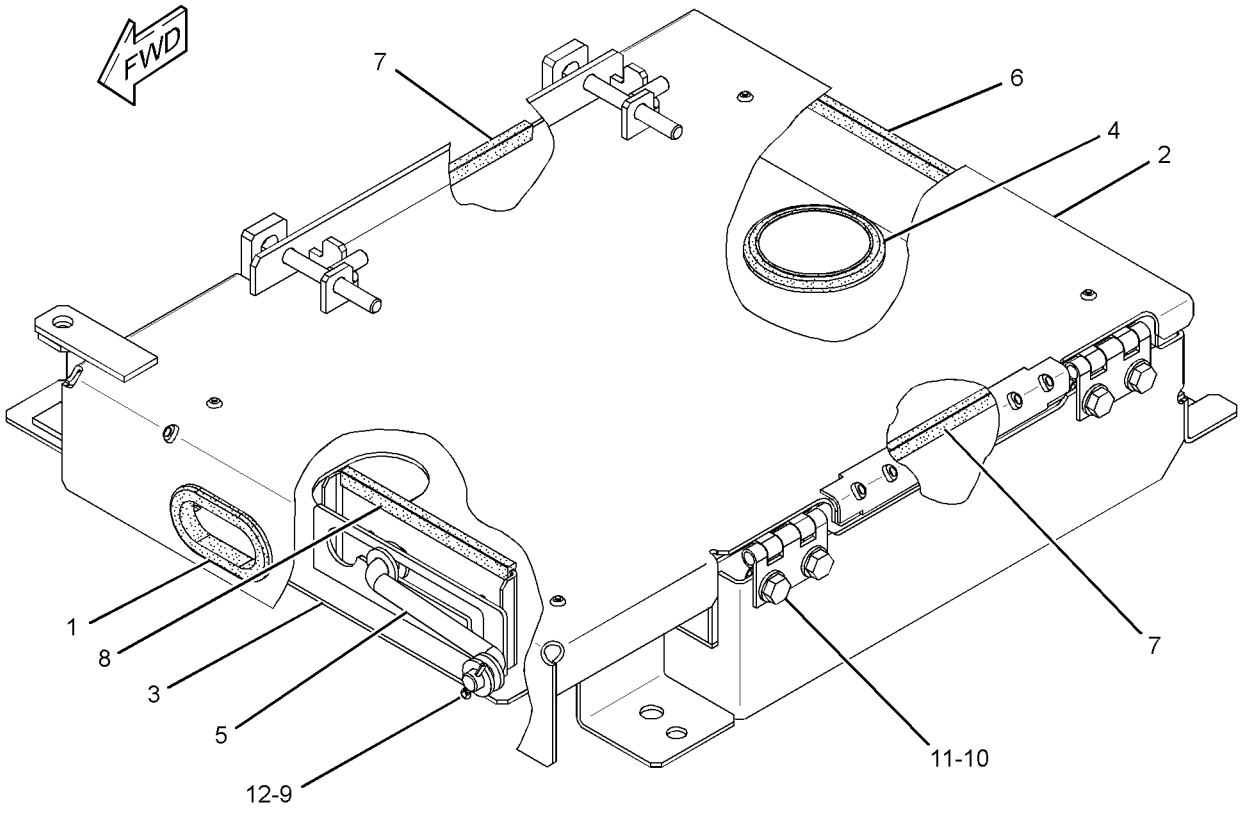

GRAPHIC #1 **<END>** g01518702

FRAME AND BODY

278-3979 BOX GP-STORAGE

S/N: BYJ1-UP; PDP1-UP

PART OF 320-5763 BOX & MTG GP-STORAGE

SMCS-7268 **i02824840**

NOTE	REF NO	GRAPHIC REF	PART NUMBER	QTY	PART NAME 1 2 3 4 5 6 (PRODUCT LEVEL)	SEE PAGE
J	1	1	**8Y-4804**	1	LOCK AS-CYLINDER	
		1	**226-0326**	1	CAM-LOCK	
	2	1	**6V-8823**	2	WASHER-HARD (19.25X27X2-MM THK)	
	3	1	**301-9823**	1	RING	
	4	1	**2S-1647**	1	GROMMET	
	5	1	**162-4635**	1	CUSHION	
E	6	1	**184-8580**		SEAL (36-CM)	
	7	1	**283-3969**	1	BOX AS-STORAGE	
	8	1	**283-3970**	1	SHEET AS	
	9	1	**096-3872**	1	GROMMET	
M	10	1	**8T-0337**	1	SCREW-MACHINE (M4X0.7X12-MM)	
	11	1	**8T-4121**	4	WASHER-HARD (11X21X2.5-MM THK)	
M	12	1	**8T-4133**	4	NUT (M10X1.5-THD)	

E-ORDER BY THE CENTIMETER
J-REQUIRES CORPORATE KEY
M-METRIC PART

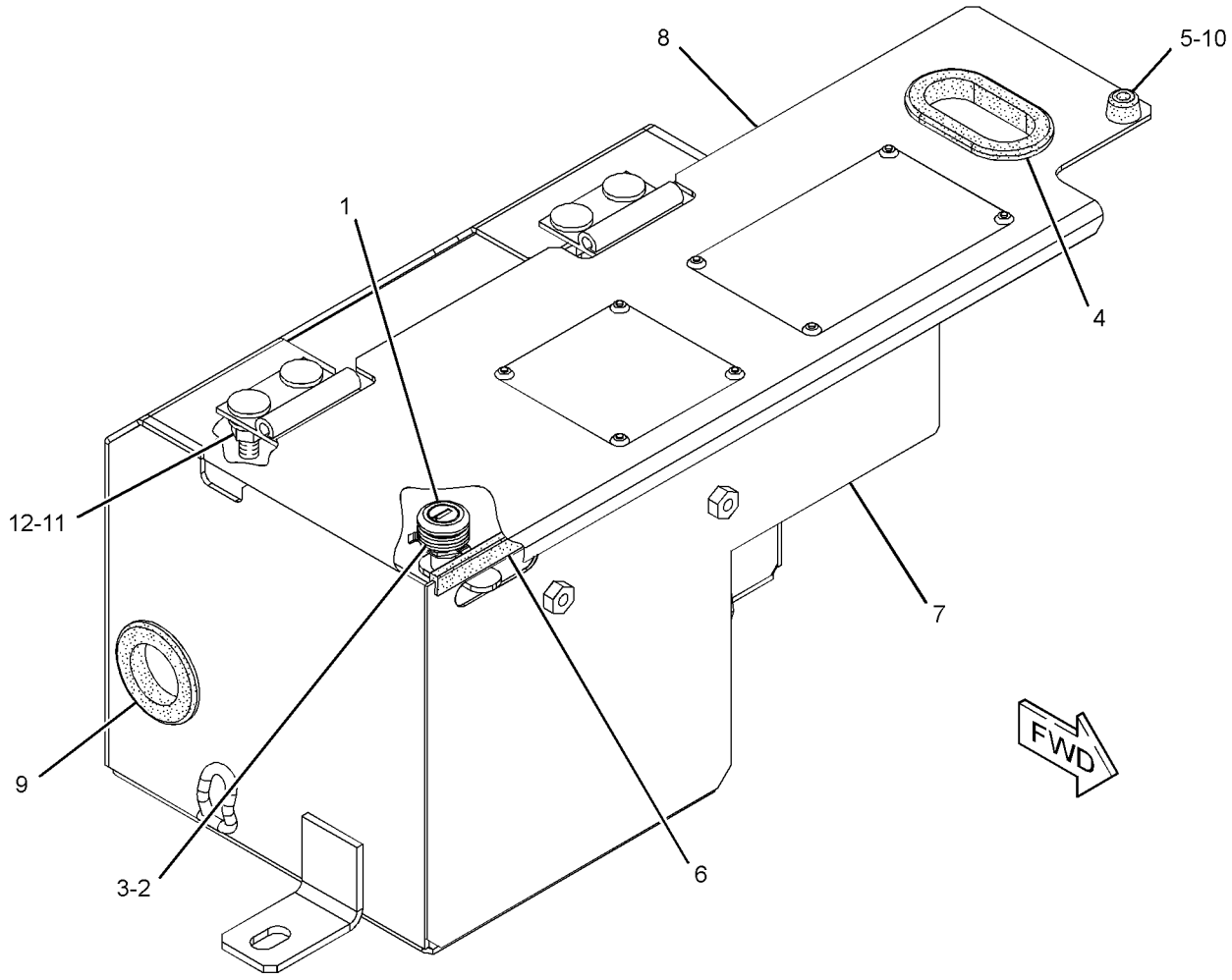

GRAPHIC #1 **<END>** g01408660

298-2927 BOX GP-STORAGE

S/N: BYJ1-UP; PDP1-UP
PART OF 278-3983 STORAGE GP-VANDALISM GUARD
AN ATTACHMENT

SMCS-7268 **i03022081**

NOTE	REF NO	GRAPHIC REF	PART NUMBER	QTY	PART NAME 1 2 3 4 5 6 (PRODUCT LEVEL)	SEE PAGE
	1	1	**298-3052**	1	ROD AS	
	2	1	**298-3055**	1	COVER AS	
	3	1	**320-5769**	1	SEAL	
	4	1	**327-3092**	1	SEAL	
	5	1	**327-3093**	1	SEAL	
	6	1	**327-3096**	1	SHEET AS	
	7	1	**327-3097**	1	SEAL	
	8	1	**327-3098**	1	SEAL	
	9	1	**327-3099**	1	SHEET-RUBBER	
	10	1	**3B-4618**	1	PIN-COTTER	
	11	1	**8T-4121**	4	WASHER-HARD (11X21X2.5-MM THK)	
M	12	1	**8T-4137**	4	BOLT (M10X1.5X20-MM)	
	13	1	**8T-4223**	1	WASHER-HARD (13.5X25.5X3-MM THK)	

M-METRIC PART

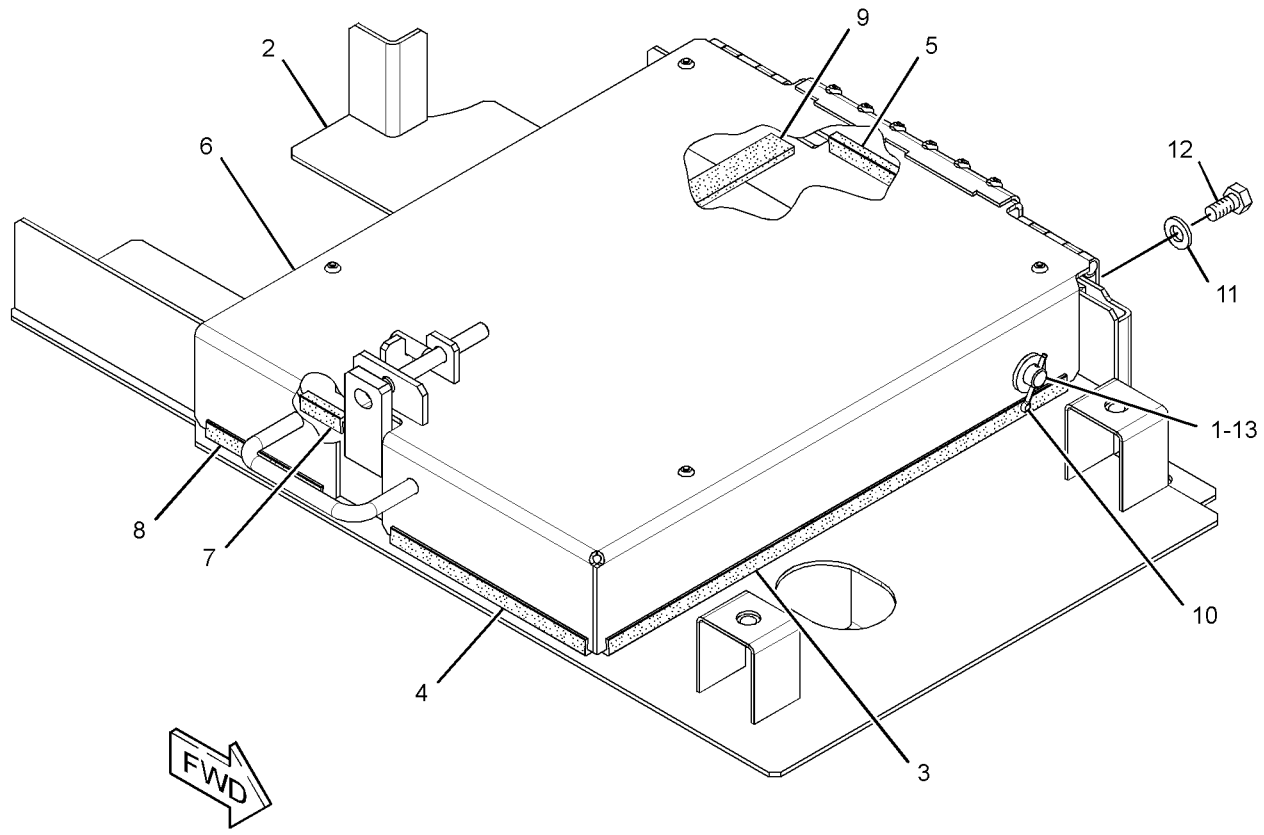

GRAPHIC #1 **<END>** g01637373

278-3971 COUNTERWEIGHT GP

S/N: BYJ1-UP; PDP1-UP
PART OF 260-7182, 260-7183 CHASSIS AR
TYPE 1

SMCS-7056 **i02961289**

NOTE	REF NO	GRAPHIC REF	PART NUMBER	QTY	PART NAME 1 2 3 4 5 6 (PRODUCT LEVEL)	SEE PAGE
	1	1	**136-0139**	2	CAP	
Y	2	1	*278-3972*	1	COUNTERWEIGHT GP	220
M	3	1	**286-6208**	2	BOLT (M42X4.5X180-MM)	
	4	1	**286-6209**	2	BOLT (M42X4.5X145-MM)	
	5	1	**298-3185**	4	SPACER	
	6	1	**313-8149**	1	SHEET	
	7	1	**8T-4121**	4	WASHER-HARD (11X21X2.5-MM THK)	
M	8	1	**8T-4136**	4	BOLT (M10X1.5X25-MM)	

M-METRIC PART
Y-SEPARATE ILLUSTRATION

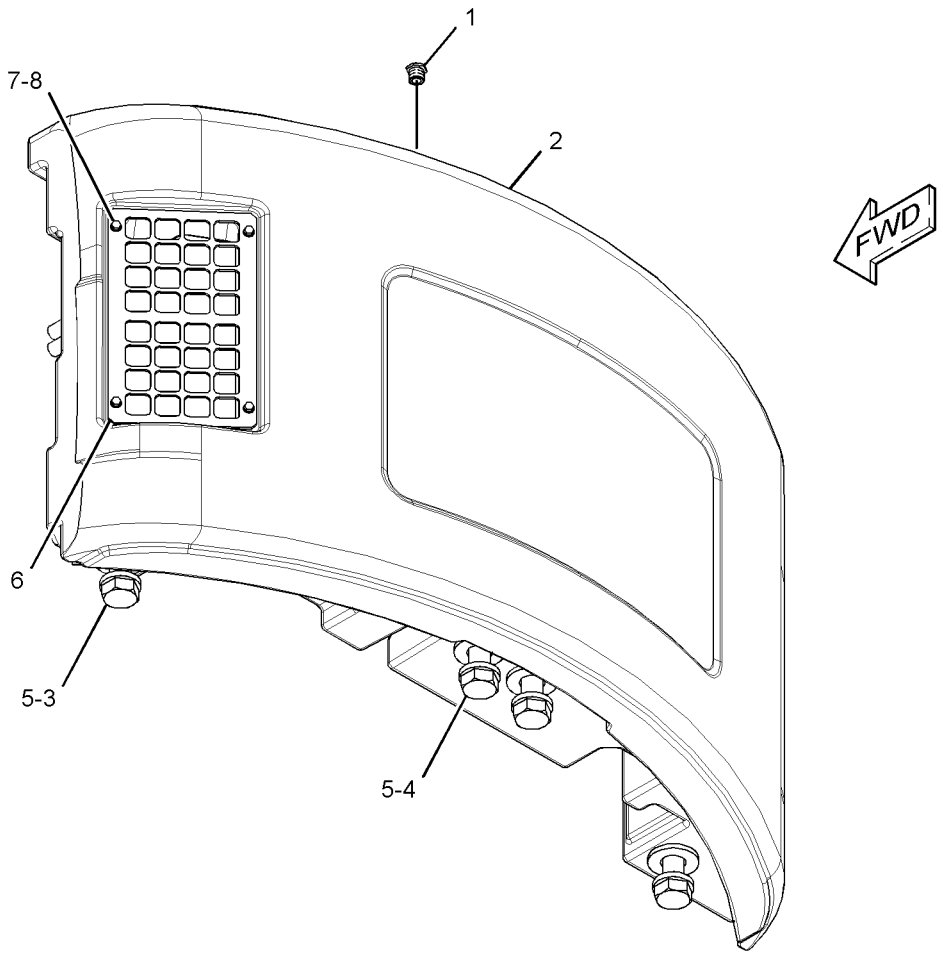

GRAPHIC #1 **<END>** g01413023

278-3971 COUNTERWEIGHT GP

S/N: BYJ1-UP; PDP1-UP
PART OF 260-7182, 260-7183 CHASSIS AR
TYPE 2

SMCS-7056 **i03212419**

NOTE	REF NO	GRAPHIC REF	PART NUMBER	QTY	PART NAME 1 2 3 4 5 6 (PRODUCT LEVEL)	SEE PAGE
	1	1	**136-0139**	2	CAP	
CY	2	1	*333-5078*	1	COUNTERWEIGHT GP	223
M	3	1	**286-6208**	2	BOLT (M42X4.5X180-MM)	
	4	1	**286-6209**	2	BOLT (M42X4.5X145-MM)	
	5	1	**298-3185**	4	SPACER (45X80X12-MM THK)	
	6	1	**313-8149**	1	SHEET	
	7	1	**8T-4121**	4	WASHER-HARD (11X21X2.5-MM THK)	
M	8	1	**8T-4136**	4	BOLT (M10X1.5X25-MM)	

C-CHANGE FROM PREVIOUS TYPE
M-METRIC PART
Y-SEPARATE ILLUSTRATION

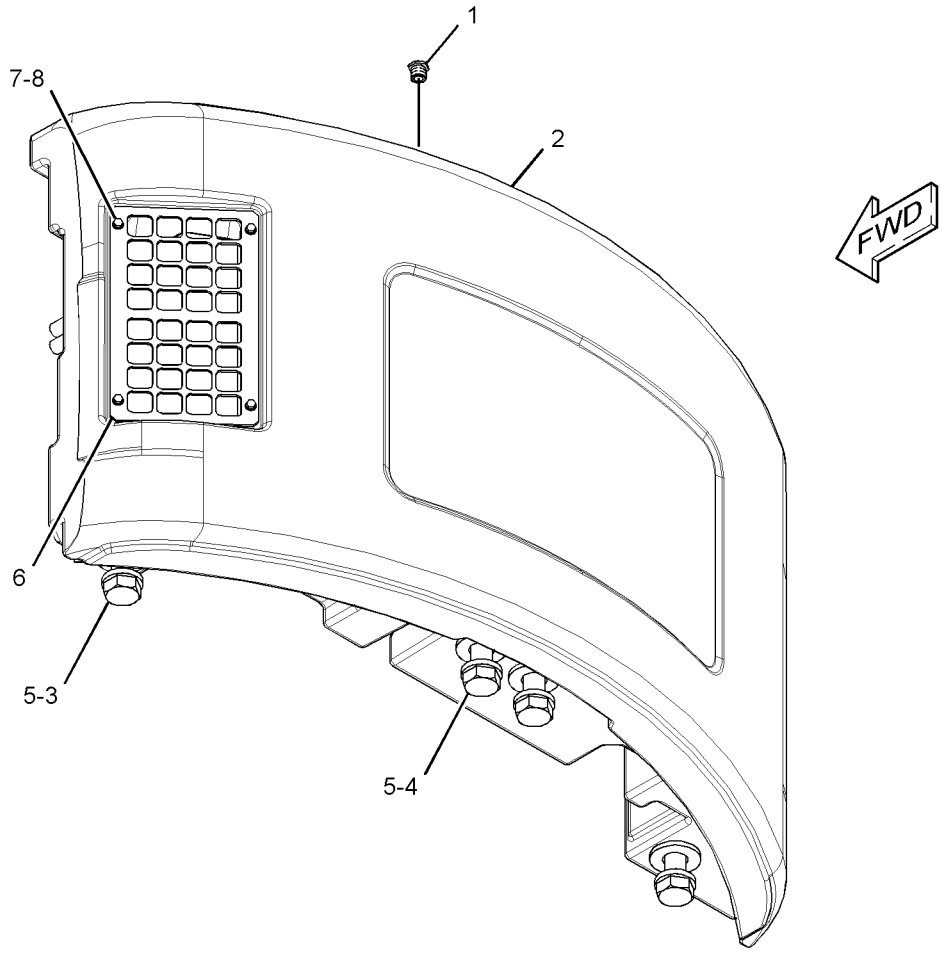

GRAPHIC #1 **<END>** g01413023

278-3972 COUNTERWEIGHT GP

S/N: BYJ1-UP; PDP1-UP
3350-KG (7385.5-LB)
PART OF 278-3971 COUNTERWEIGHT GP

SMCS-7056 **i02811976**

NOTE	REF NO	GRAPHIC REF	PART NUMBER	QTY	PART NAME 1 2 3 4 5 6 (PRODUCT LEVEL)	SEE PAGE
	1	1	**286-6205**	1	COUNTERWEIGHT AS	
	2	1	**286-6210**	1	LINER	
	3	1	**286-6211**	1	LINER	
	4	1	**286-6212**	1	LINER	
	5	1	**286-6213**	1	LINER	
	6	1	**286-6214**	1	LINER	

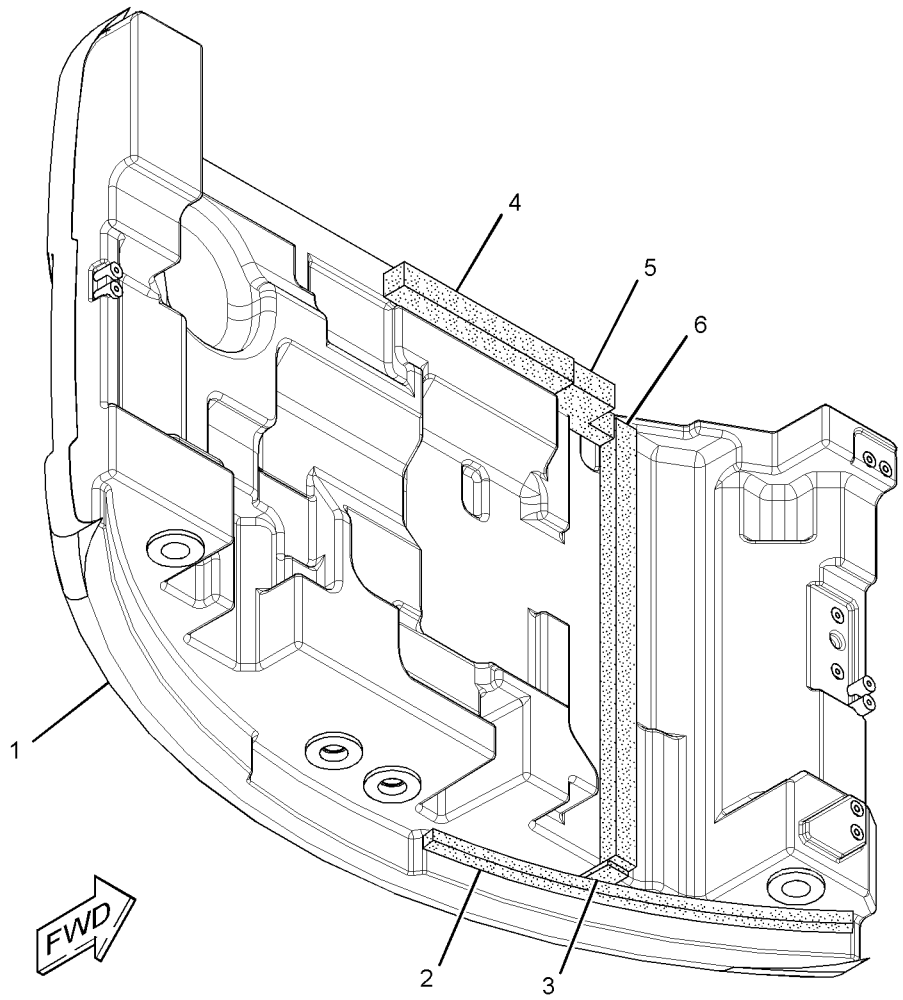

GRAPHIC #1 **<END>** g01415381

FRAME AND BODY

278-3995 COUNTERWEIGHT GP

S/N: BYJ1-UP; PDP1-UP
AN ATTACHMENT

SMCS-7056 **i02820674**

NOTE	REF NO	GRAPHIC REF	PART NUMBER	QTY	PART NAME 1 2 3 4 5 6 (PRODUCT LEVEL)	SEE PAGE
	1	1	**136-0139**	2	CAP	
Y	2	1	*278-3996*	1	COUNTERWEIGHT GP	222
M	3	1	**286-6208**	2	BOLT (M42X4.5X180-MM)	
	4	1	**286-6209**	2	BOLT (M42X4.5X145-MM)	
	5	1	**298-3185**	4	SPACER (45X80X12-MM THK)	
	6	1	**313-8149**	1	SHEET	
	7	1	**8T-4121**	4	WASHER-HARD (11X21X2.5-MM THK)	
M	8	1	**8T-4136**	4	BOLT (M10X1.5X25-MM)	

M-METRIC PART
Y-SEPARATE ILLUSTRATION

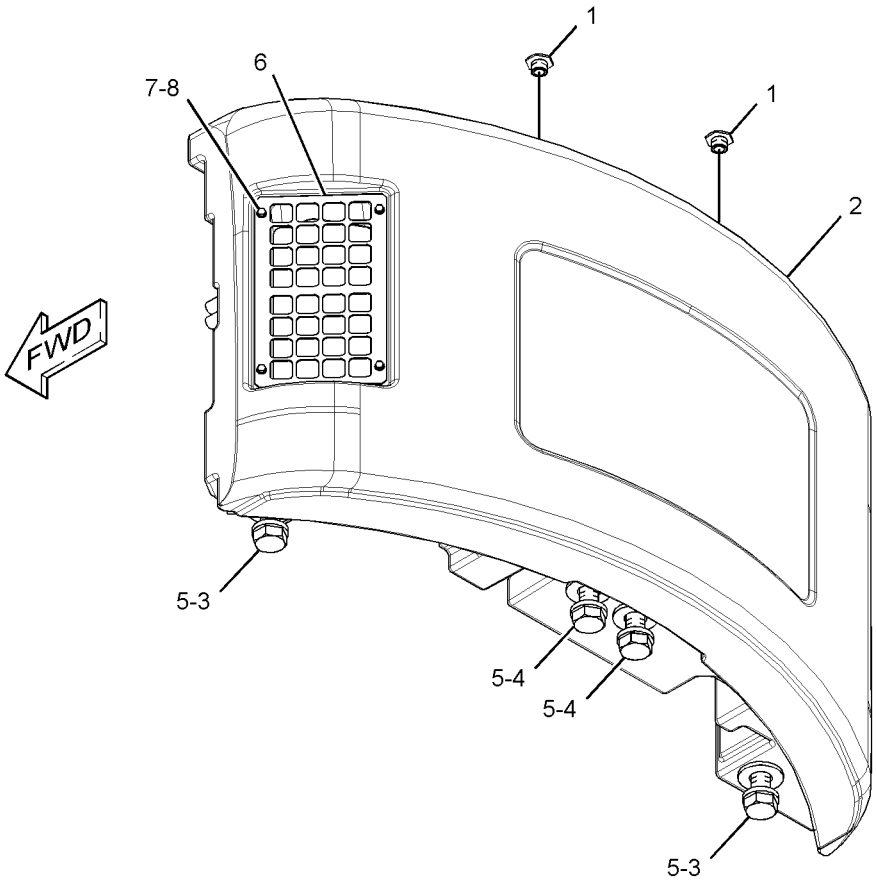

GRAPHIC #1 **<END>** g01514242

278-3996 COUNTERWEIGHT GP

S/N: BYJ1-UP; PDP1-UP
77.65-KG (171.2-LB)
PART OF 278-3995 COUNTERWEIGHT GP
AN ATTACHMENT

SMCS-7056 **i02944674**

NOTE	REF NO	GRAPHIC REF	PART NUMBER	QTY	PART NAME 1 2 3 4 5 6 (PRODUCT LEVEL)	SEE PAGE
	1	1	**286-6210**	1	LINER	
	2	1	**286-6211**	1	LINER	
	3	1	**313-8034**	1	COUNTERWEIGHT AS	
	4	1	**320-5478**	1	LINER	
	5	1	**320-5479**	1	LINER	
	6	1	**320-5480**	1	LINER	

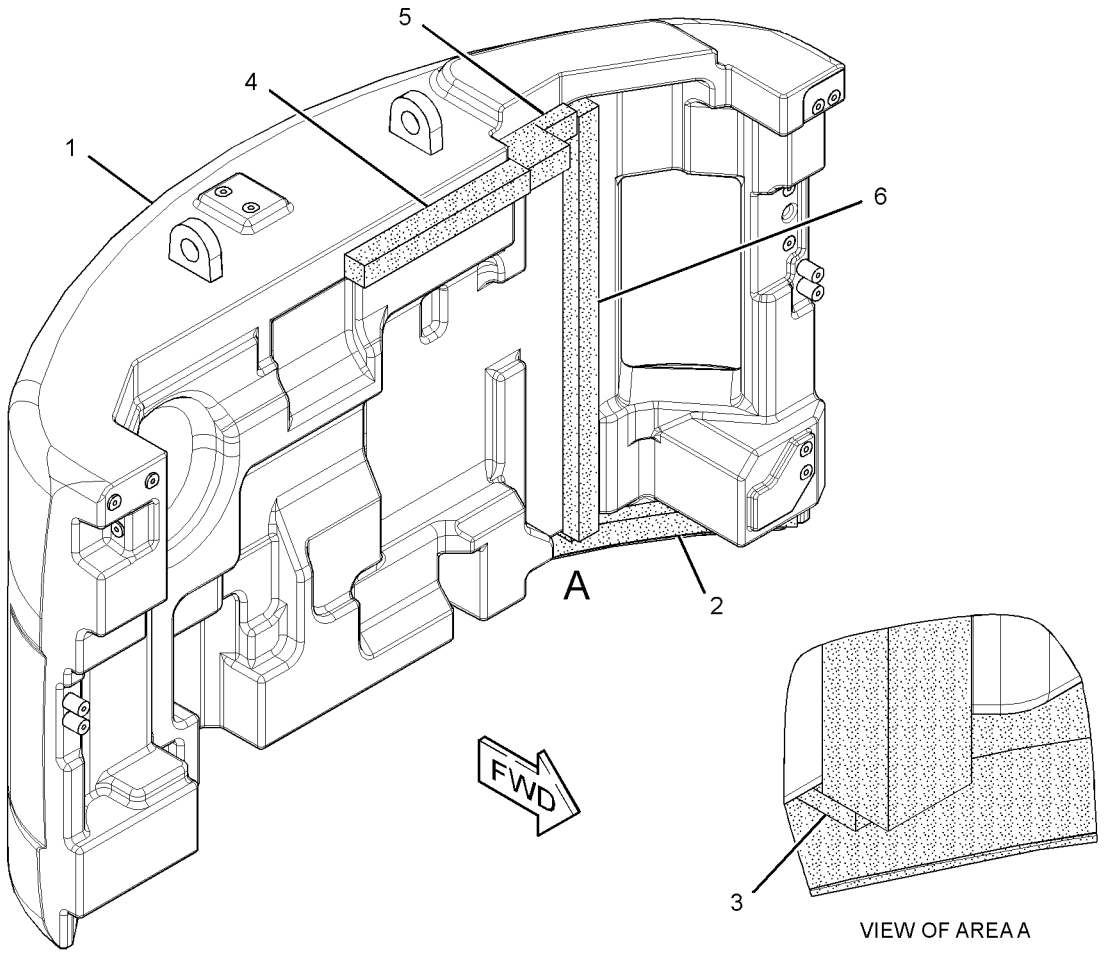

GRAPHIC #1 **<END>** g01410928

333-5078 COUNTERWEIGHT GP

S/N: BYJ1-UP; PDP1-UP
3350-KG (7385.5-LB)
PART OF 278-3971 COUNTERWEIGHT GP

SMCS-7056 **i03212416**

NOTE	REF NO	GRAPHIC REF	PART NUMBER	QTY	PART NAME 1 2 3 4 5 6 (PRODUCT LEVEL)	SEE PAGE
	1	1	**286-6210**	1	LINER	
	2	1	**286-6211**	1	LINER	
	3	1	**320-5478**	1	LINER	
	4	1	**320-5479**	1	LINER	
	5	1	**320-5480**	1	LINER	
	6	1	**333-5079**	1	COUNTERWEIGHT AS	

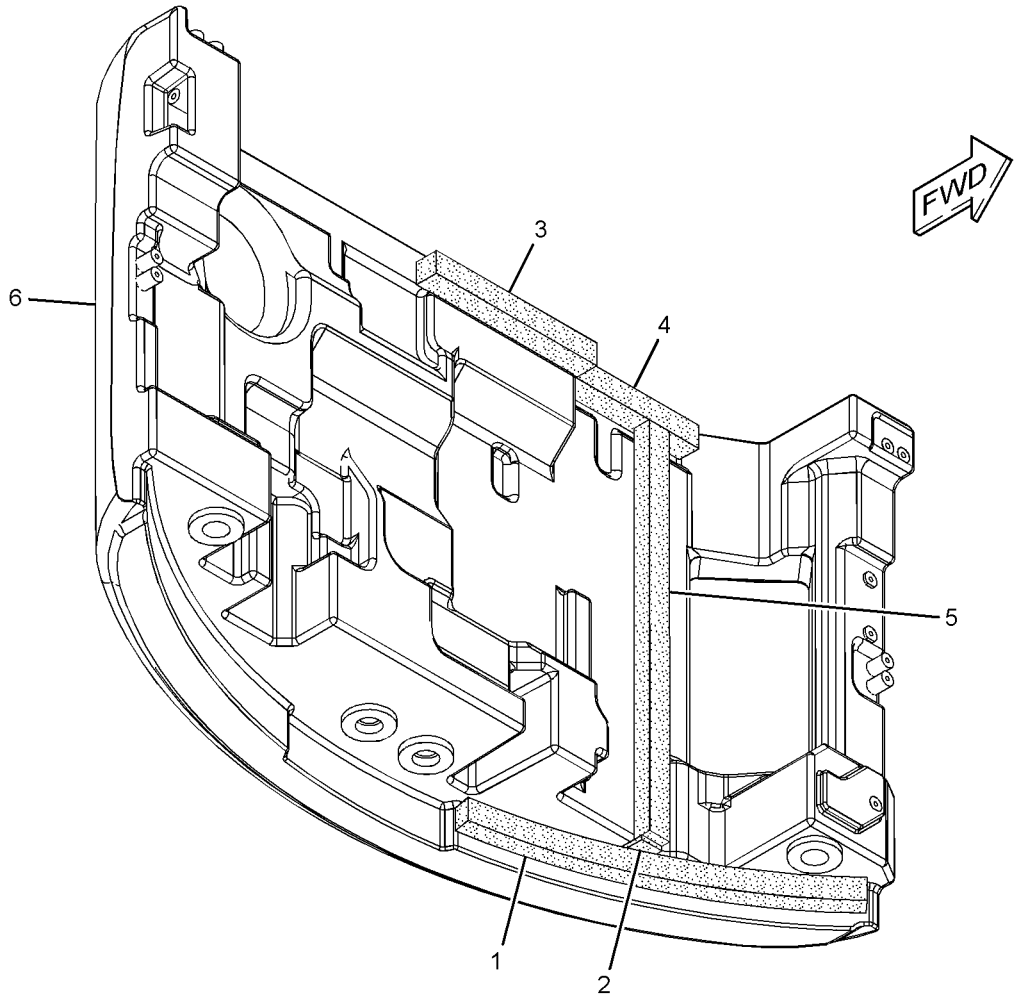

GRAPHIC #1 **<END>** g01626180

333-5080 COUNTERWEIGHT GP

S/N: BYJ1-UP; PDP1-UP
3900-KG (8598-LB)
PART OF 333-5085 COUNTERWEIGHT GP
AN ATTACHMENT

SMCS-7056 **i03242701**

NOTE	REF NO	GRAPHIC REF	PART NUMBER	QTY	PART NAME 1 2 3 4 5 6 (PRODUCT LEVEL)	SEE PAGE
	1	1	**286-6210**	1	LINER	
	2	1	**286-6211**	1	LINER	
	3	1	**320-5478**	1	LINER	
	4	1	**320-5479**	1	LINER	
	5	1	**320-5480**	1	LINER	
	6	1	**333-5081**	1	COUNTERWEIGHT AS	

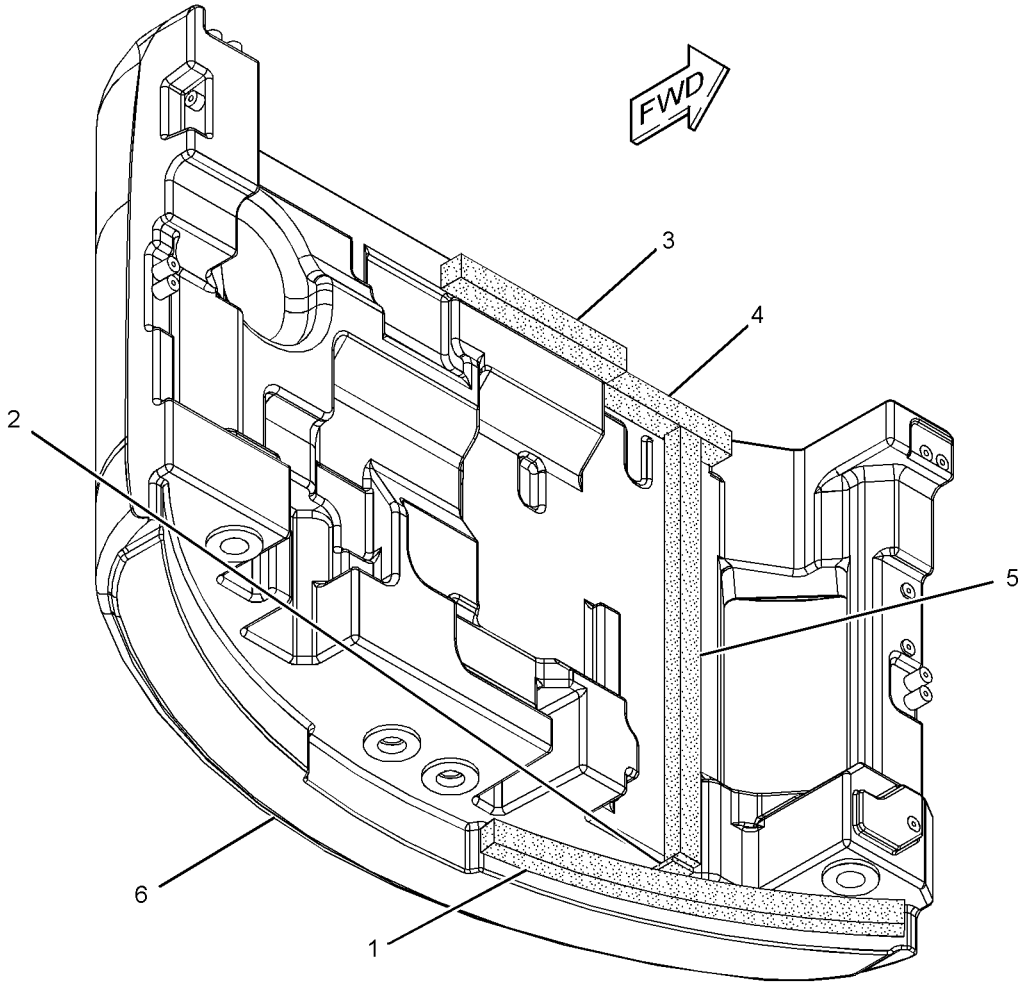

GRAPHIC #1 **<END>** g01622459

333-5085 COUNTERWEIGHT GP

S/N: BYJ1-UP; PDP1-UP
AN ATTACHMENT

SMCS-7056 **i03212417**

NOTE	REF NO	GRAPHIC REF	PART NUMBER	QTY	PART NAME 1 2 3 4 5 6 (PRODUCT LEVEL)	SEE PAGE
	1	1	**136-0139**	2	CAP	
M	2	1	**286-6208**	2	BOLT (M42X4.5X180-MM)	
	3	1	**286-6209**	2	BOLT (M42X4.5X145-MM)	
	4	1	**298-3185**	4	SPACER (45X80X12-MM THK)	
	5	1	**313-8149**	1	SHEET	
Y	6	1	*333-5080*	1	COUNTERWEIGHT GP	224
	7	1	**8T-4121**	4	WASHER-HARD (11X21X2.5-MM THK)	
M	8	1	**8T-4136**	4	BOLT (M10X1.5X25-MM)	

M-METRIC PART
Y-SEPARATE ILLUSTRATION

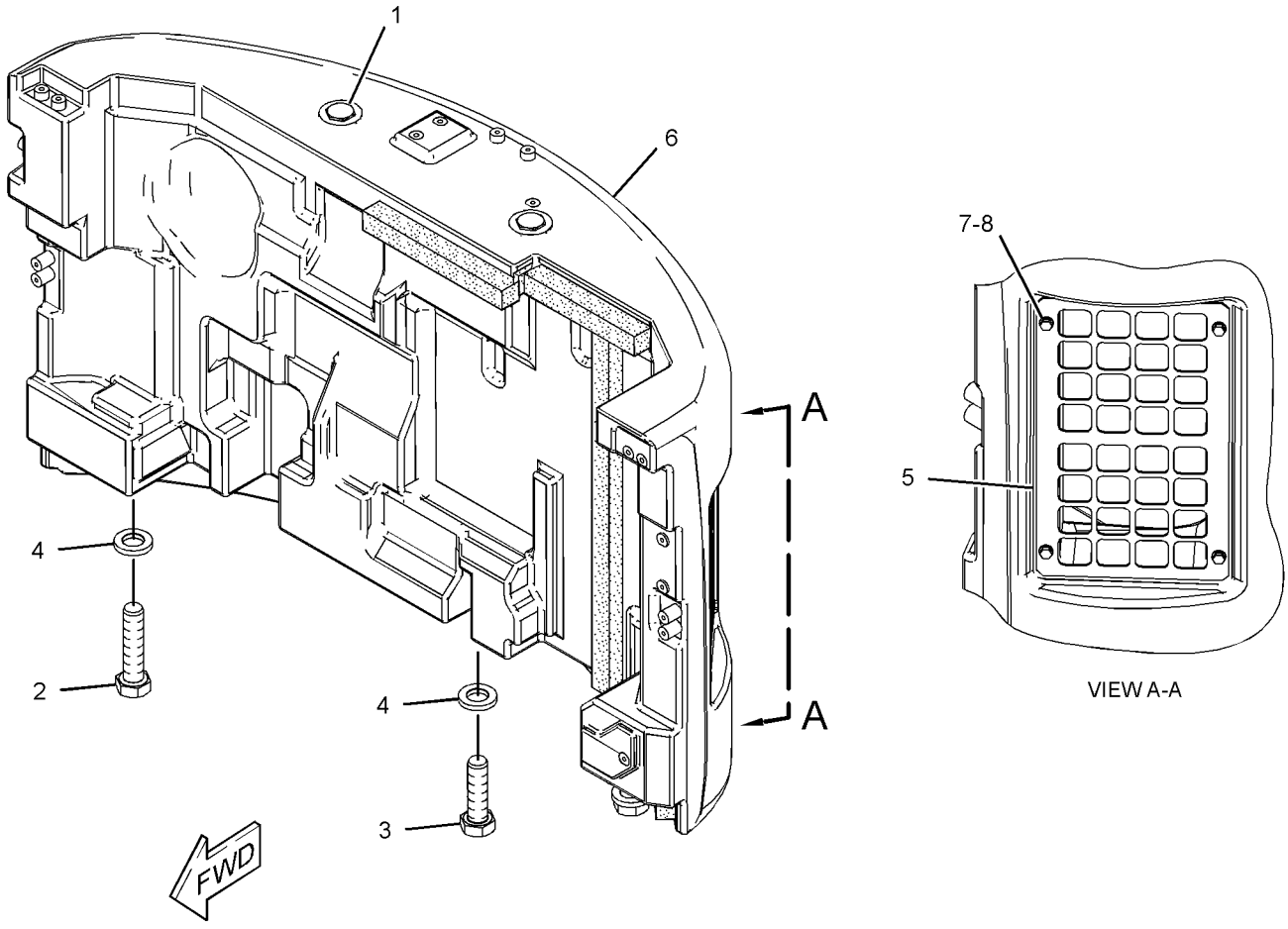

GRAPHIC #1 **<END>** g01622095

286-6179 COVER AS-ACCESS–FUEL TANK

S/N: BYJ1-UP; PDP1-UP

PART OF 278-3974 HOOD & GUARD GP

SMCS-726A, 795C **i02862843**

NOTE	REF NO	GRAPHIC REF	PART NUMBER	QTY	PART NAME 1 2 3 4 5 6 (PRODUCT LEVEL)	SEE PAGE
	1	1	**307-7664**	1	INSULATION	
	2	1	**251-2874**	1	INSULATION	
	3	1	**289-6863**	1	LINER	
	4	1	**286-6153**	1	LINER	
	5	1	**289-6862**	1	LINER	

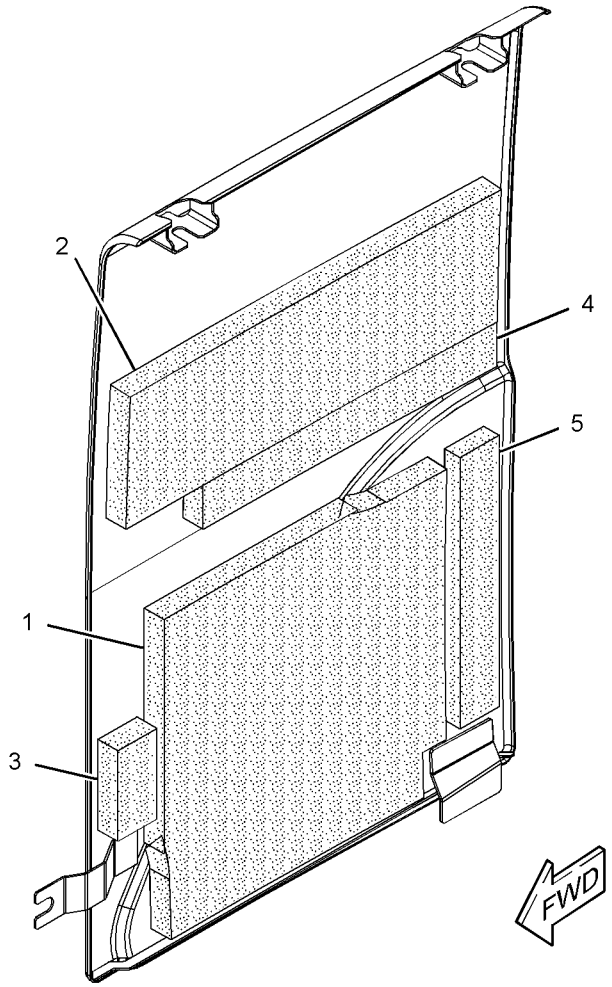

GRAPHIC #1 **<END>** g01417080

286-6081 COVER AS-SOUND SUPPRESSION

S/N: BYJ1-UP; PDP1-UP

PART OF 278-3980 COVER GP-ACCESS

SMCS-7253, 7263, 7276, 795C **i02835660**

NOTE	REF NO	GRAPHIC REF	PART NUMBER	QTY	PART NAME 1 2 3 4 5 6 (PRODUCT LEVEL)	SEE PAGE
	1	1	**286-6107**	1	LINER	
	2	1	**286-6106**	1	LINER	

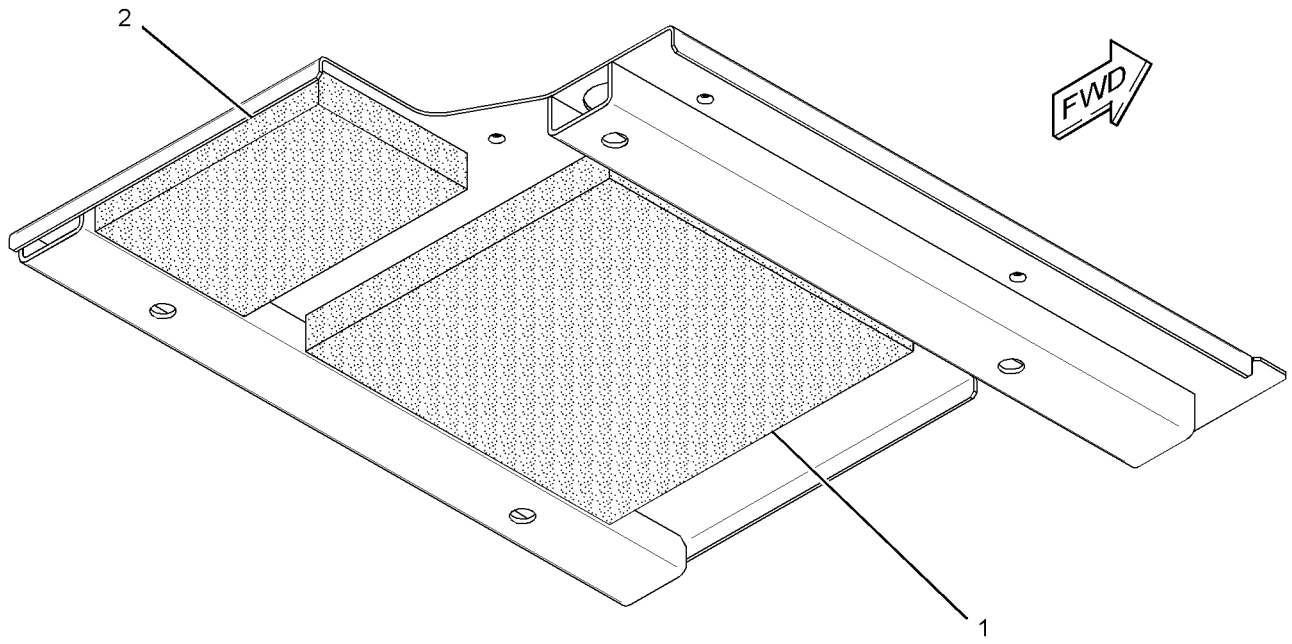

GRAPHIC #1 **<END>** g01416782

286-6082 COVER AS-SOUND SUPPRESSION

S/N: BYJ1-UP; PDP1-UP

PART OF 278-3974 HOOD & GUARD GP

SMCS-7253, 7263, 7276, 795C **i02944623**

NOTE	REF NO	GRAPHIC REF	PART NUMBER	QTY	PART NAME 1 2 3 4 5 6 (PRODUCT LEVEL)	SEE PAGE
	1	1	**233-2854**	2	CAP-PUSH ON	
	2	1	**251-2836**	1	INSULATION	
	3	1	**298-2920**	1	LINER	
	4	1	**286-6108**	1	LINER	
	5	1	**286-6109**	1	LINER	

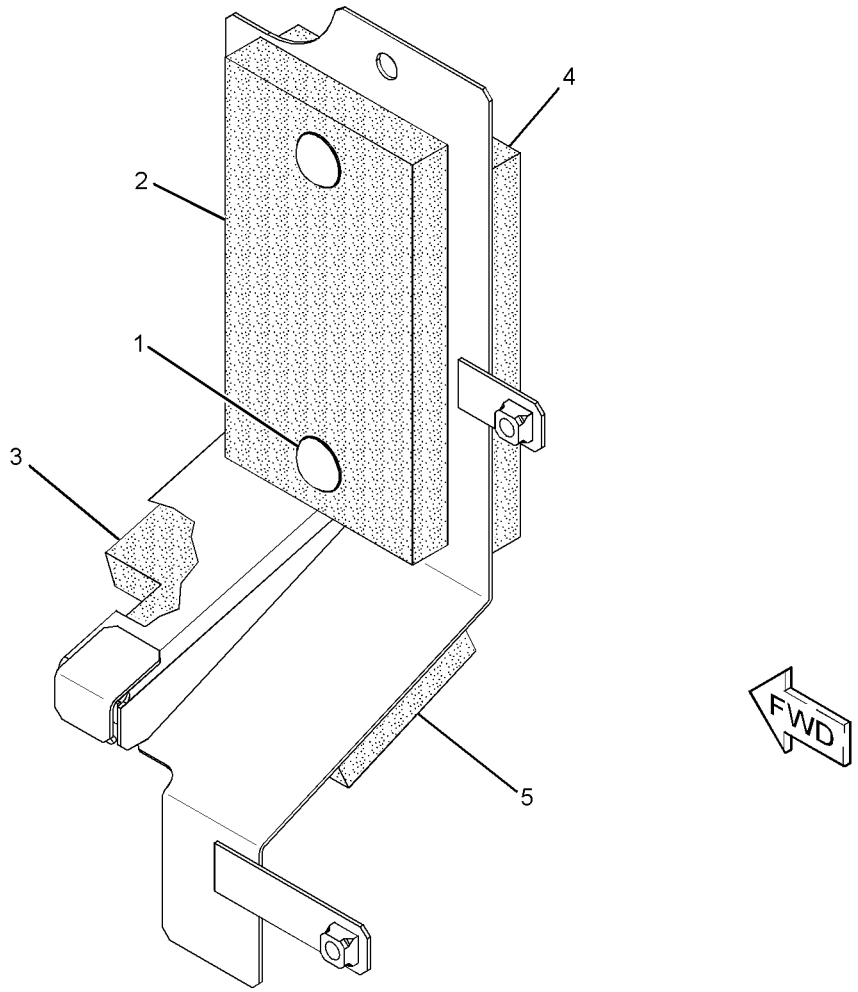

GRAPHIC #1

<END>

g01495033

193-9776 COVER GP-ACCESS—ENGINE OIL DIPSTICK

S/N: BYJ1-UP; PDP1-UP
PART OF 298-4105 STARTING AR-COLD WEATHER
AN ATTACHMENT

SMCS-726A **i03063893**

NOTE	REF NO	GRAPHIC REF	PART NUMBER	QTY	PART NAME 1 2 3 4 5 6 (PRODUCT LEVEL)	SEE PAGE
	1	1	**1K-8850**	1	SPRING	
	2	1	**193-9793**	1	COVER AS	
	2A	1	**4K-8501**	1	CLIP	
M	2B	1	**8T-5413**	2	STUD-WELD (M10X1.5X25-MM OAL)	
	2C	1	**9V-3659**	1	HINGE	
	3	1	**8T-4121**	2	WASHER-HARD (11X21X2.5-MM THK)	
M	4	1	**8T-4133**	2	NUT (M10X1.5-THD)	

M-METRIC PART

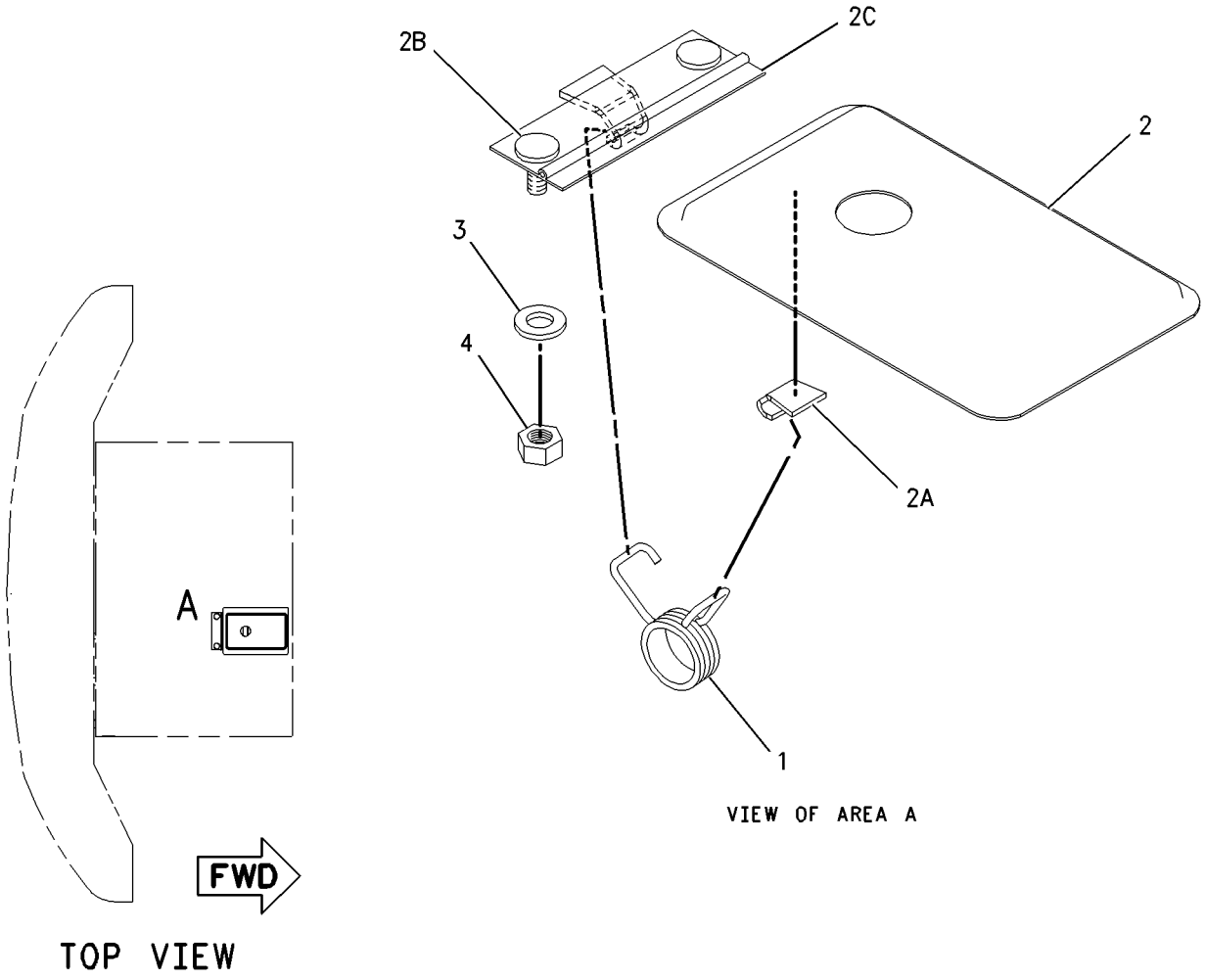

GRAPHIC #1 **<END>** g00791460

FRAME AND BODY

278-3980 COVER GP-ACCESS

S/N: BYJ1-UP; PDP1-UP

PART OF 260-7182, 260-7183 CHASSIS AR

SMCS-726A **i03011807**

NOTE	REF NO	GRAPHIC REF	PART NUMBER	QTY	PART NAME 1 2 3 4 5 6 (PRODUCT LEVEL)	SEE PAGE
M	1	1	**135-8572**	1	BOLT AS (M12X1.75X20-MM)	
M	2	1	**135-8573**	24	BOLT AS (M12X1.75X25-MM)	
M	3	1	**135-8575**	6	BOLT AS-LOCKING (M12X1.75X30-MM)	
	4	1	**211-6246**	1	SPACER (13.3X21.3X25-MM THK)	
	5	1	**286-6056**	1	SHEET AS	
	6	1	**286-6058**	1	SUPPORT AS	
M	7	1	**8T-4194**	1	BOLT (M12X1.75X50-MM)	
	8	1	**286-6061**	1	SHEET AS	
	9	1	**327-3145**	1	SHEET AS	
		1	**320-5448**	1	SHEET-RUBBER	
Y	10	1	**286-6081**	1	COVER AS-SOUND SUPPRESSION	227
Y	11	1	**286-6178**	1	COVER GP-SOUND SUPPRESSION	16
	12	1	**289-6794**	1	SHEET AS	
D		1	**101-9848**		SEAL (0.6-M)	
Y	13	1	**293-7117**	1	SUPPORT AS-ENCLOSURE	269
	14	1	**099-3600**	1	WASHER (12.7X30X4-MM THK)	
	15	1	**178-5801**	1	GROMMET	
M	16	1	**135-8577**	2	BOLT AS (M12X1.75X35-MM)	
	17	1	**313-8147**	1	SHEET AS	
	18	1	**320-5447**	1	SUPPORT AS	
	19	1	**286-6059**	1	COVER AS	

D-ORDER BY THE METER
M-METRIC PART
Y-SEPARATE ILLUSTRATION

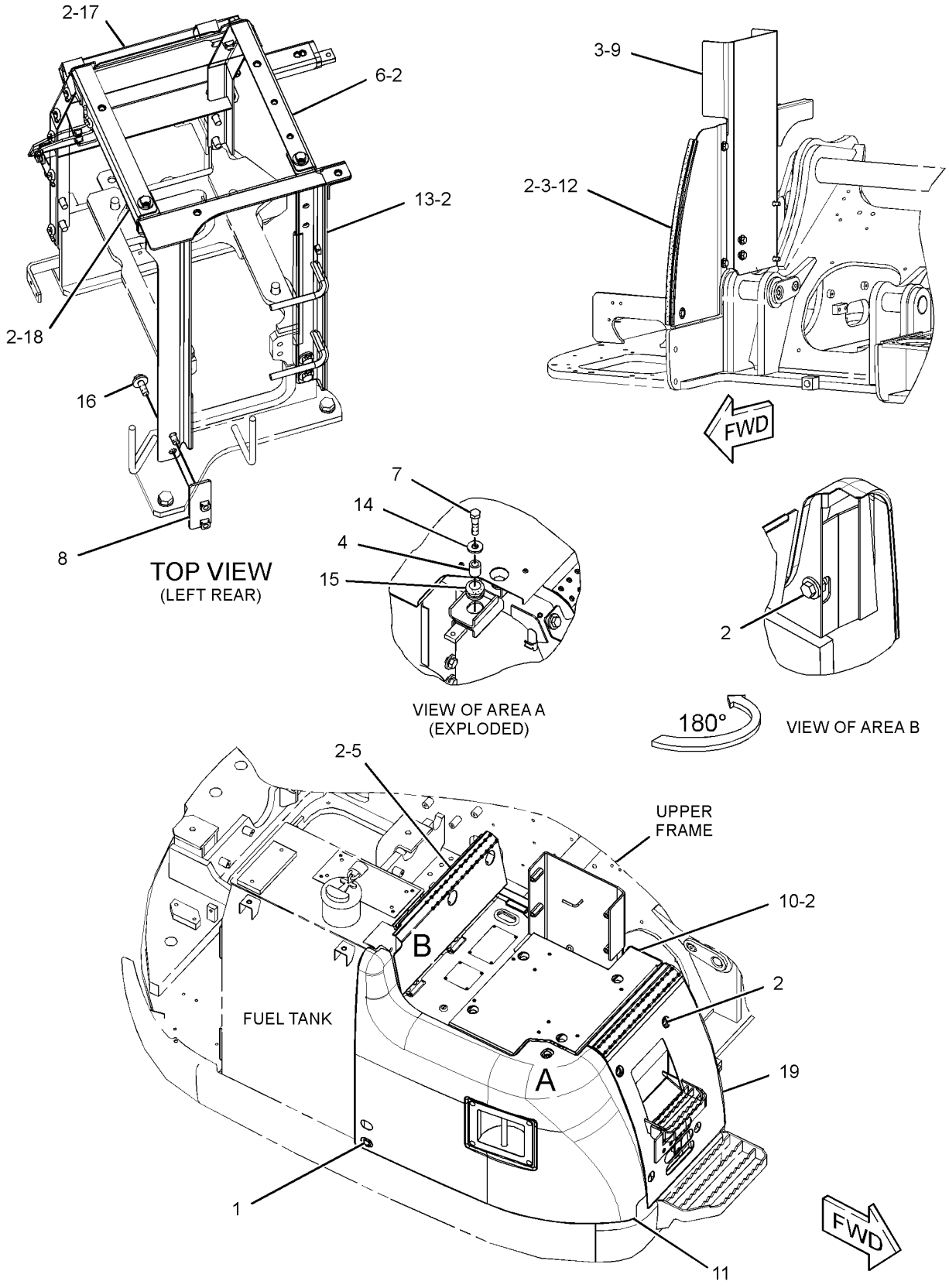

GRAPHIC #1 **<END>** g01509603

286-6069 COVER GP-ACCESS—UPPER, REAR, LH

S/N: BYJ1-UP; PDP1-UP

PART OF 278-3974 HOOD & GUARD GP

SMCS-726A **i03148200**

NOTE	REF NO	GRAPHIC REF	PART NUMBER	QTY	PART NAME 1 2 3 4 5 6 (PRODUCT LEVEL)	SEE PAGE
	1	1	**202-1741**	1	GUARD	
J	2	1	**226-0294**	1	LOCK AS	
	3	1	**226-0341**	1	CAM	
	4	1	**286-6032**	1	DOOR AS	
	6	1	**286-6113**	1	LINER	
	7	1	**286-6114**	1	LINER	
	8	1	**298-2910**	1	BUMPER	
	9	1	**298-2917**	1	LINER	
	10	1	**298-2934**	1	LINER	
	11	1	**301-9823**	1	RING	
	12	1	**6V-8823**	2	WASHER-HARD (19.25X27X2-MM THK)	
	13	1	**8T-4121**	4	WASHER-HARD (11X21X2.5-MM THK)	
M	14	1	**8T-4133**	4	NUT (M10X1.5-THD)	
	16	1	**313-8144**	1	LINER	
	17	1	**298-2937**	1	LINER	

J-REQUIRES CORPORATE KEY
M-METRIC PART

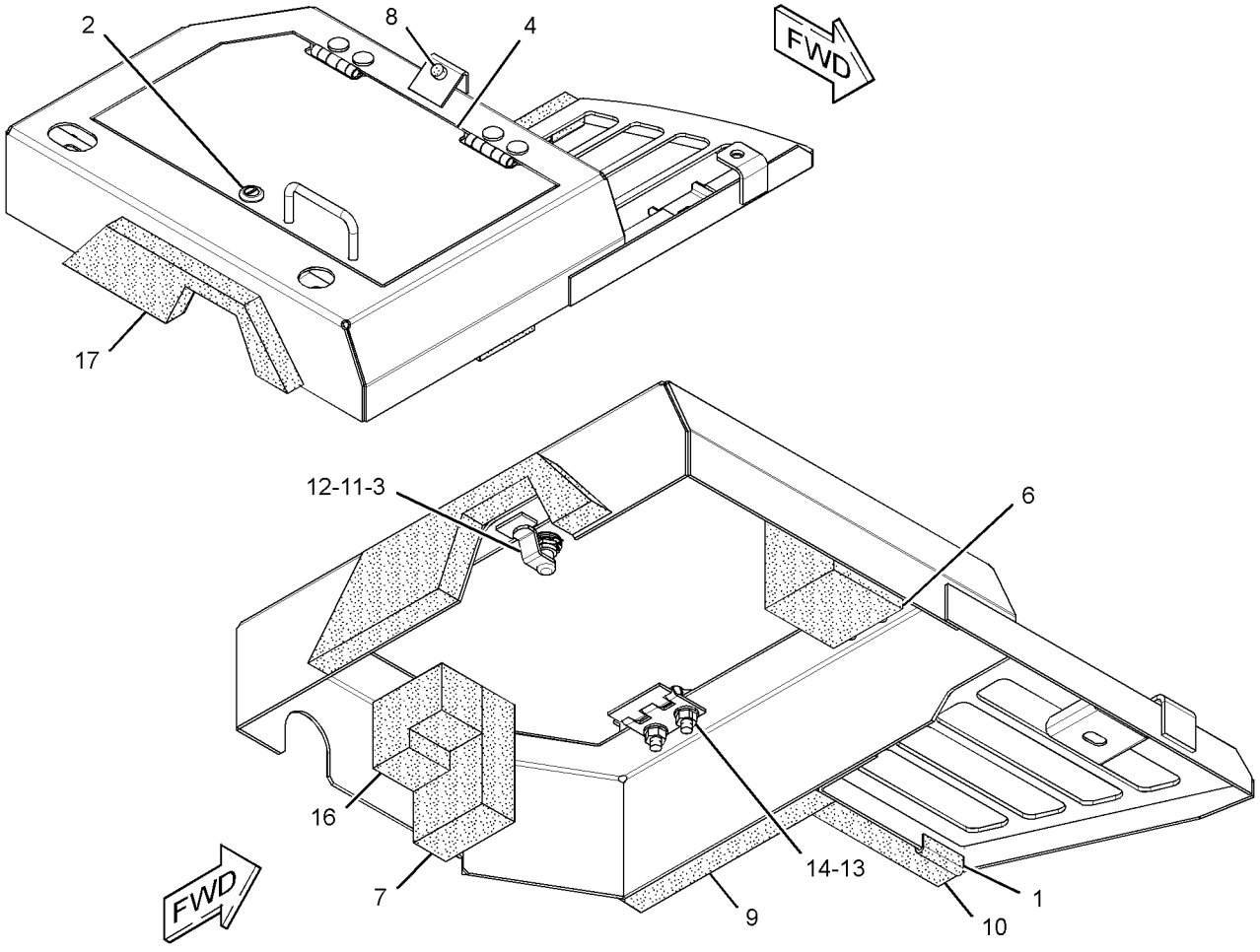

GRAPHIC #1 **<END>** g01641793

286-6078 COVER GP-ACCESS—HYDRAULIC PUMPS

S/N: BYJ1-UP; PDP1-UP

PART OF 278-3974 HOOD & GUARD GP

SMCS-726A **i02944688**

NOTE	REF NO	GRAPHIC REF	PART NUMBER	QTY	PART NAME 1 2 3 4 5 6 (PRODUCT LEVEL)	SEE PAGE
	1	1	**8T-4121**	1	WASHER-HARD (11X21X2.5-MM THK)	
M	2	1	**8T-4137**	1	BOLT (M10X1.5X20-MM)	

M-METRIC PART

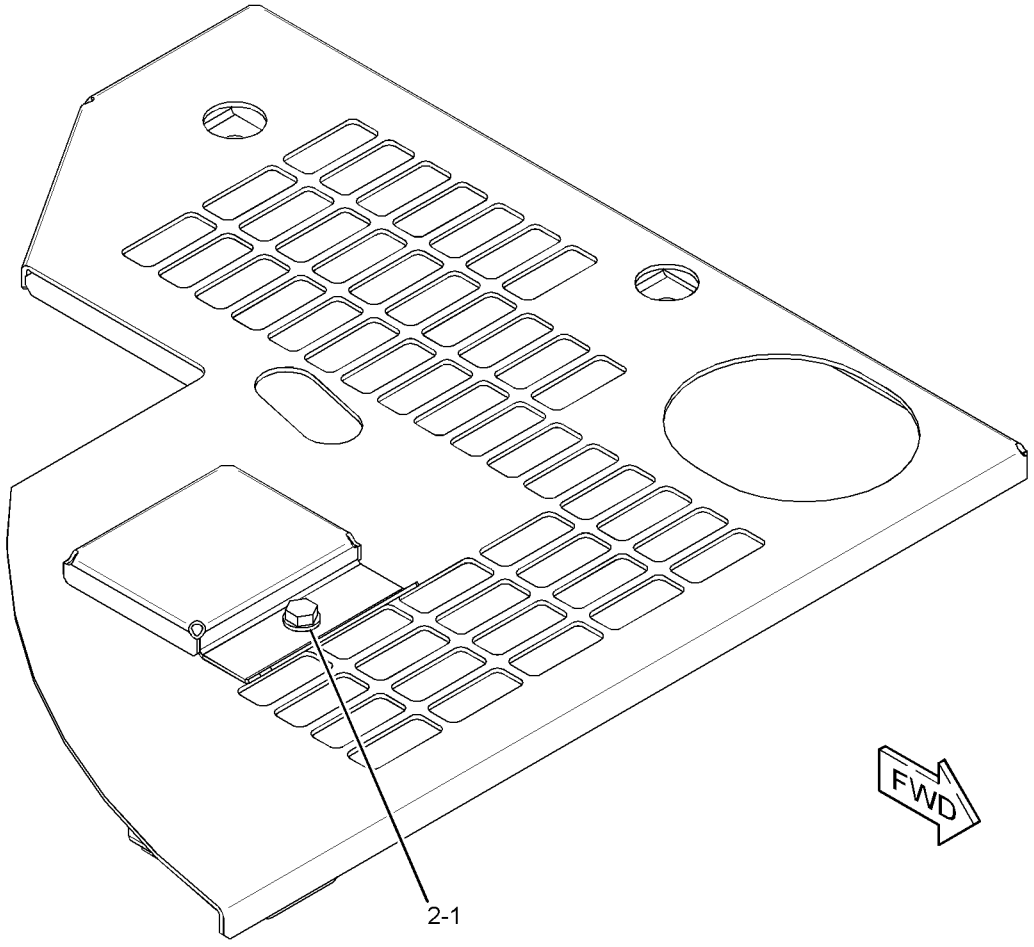

GRAPHIC #1 **<END>** g01493135

330-1608 COVER GP-ACCESS

S/N: BYJ1-UP; PDP1-UP

PART OF 278-3974 HOOD & GUARD GP

SMCS-726A **i03157100**

NOTE	REF NO	GRAPHIC REF	PART NUMBER	QTY	PART NAME 1 2 3 4 5 6 (PRODUCT LEVEL)	SEE PAGE
	1	1	**202-1741**	1	GUARD	
	2	1	**226-0294**	1	LOCK AS	
	3	1	**226-0341**	1	CAM	
	4	1	**286-6032**	1	DOOR AS	
	5	1	**286-6113**	1	LINER	
	6	1	**286-6114**	1	LINER	
	7	1	**298-2910**	1	BUMPER	
	8	1	**298-2917**	1	LINER	
	9	1	**298-2934**	1	LINER	
	10	1	**298-2937**	1	LINER	
	11	1	**301-9823**	1	RING	
	12	1	**313-8144**	1	LINER	
	14	1	**6V-8823**	2	WASHER-HARD (19.25X27X2-MM THK)	
	15	1	**8T-4121**	4	WASHER-HARD (11X21X2.5-MM THK)	
M	16	1	**8T-4133**	4	NUT (M10X1.5-THD)	
					PARTS SHOWN IN GRAPHIC(S) WITHOUT A REFERENCE NUMBER ARE NOT SERVICED SEPARATELY	

M-METRIC PART

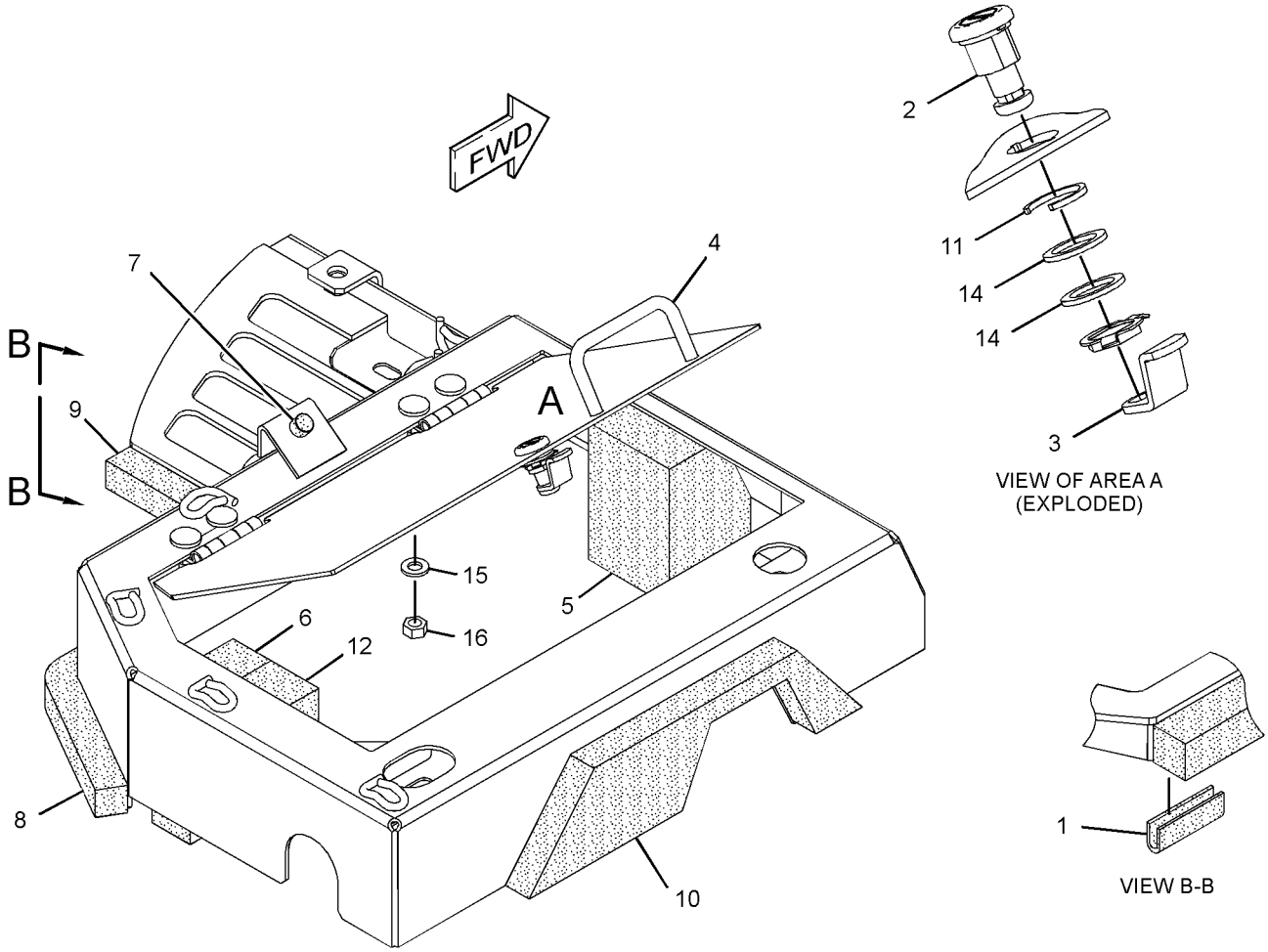

GRAPHIC #1 **<END>** g01622043

298-2928 DOOR GP-ACCESS—HYDRAULIC PUMPS

S/N: BYJ1-UP; PDP1-UP

PART OF 278-3974 HOOD & GUARD GP

SMCS-7273 **i02811948**

NOTE	REF NO	GRAPHIC REF	PART NUMBER	QTY	PART NAME 1 2 3 4 5 6 (PRODUCT LEVEL)	SEE PAGE
M	1	1	**099-6418**	4	NUT (M6X1-THD)	
J	2	1	**168-1587**	1	LOCK AS	
	3	1	**184-8874**	1	ROD	
	4	1	**198-2317**	1	INSULATION	
	5	1	**198-2318**	1	INSULATION	
	6	1	**208-3287**	1	LINER	
	7	1	*298-2929*	1	DOOR AS-ACCESS	
	7A	1	**099-7857**	2	HINGE	
	8	1	**298-2930**	1	LINER	

J-REQUIRES CORPORATE KEY
M-METRIC PART

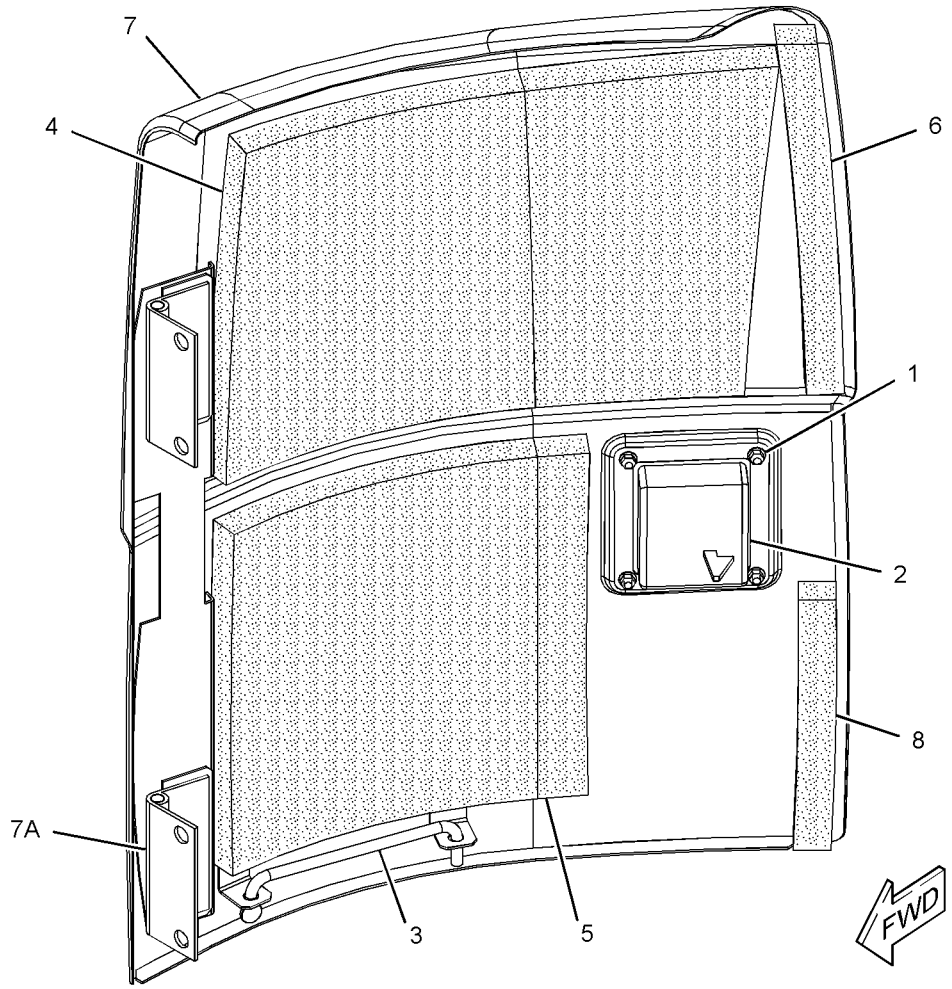

GRAPHIC #1 **<END>** g01413280

313-8150 DOOR GP-ACCESS–AIR CLEANER

S/N: BYJ1-UP; PDP1-UP

PART OF 278-3974 HOOD & GUARD GP

SMCS-7273 **i02957170**

NOTE	REF NO	GRAPHIC REF	PART NUMBER	QTY	PART NAME 1 2 3 4 5 6 (PRODUCT LEVEL)	SEE PAGE
M	1	1	**099-6418**	4	NUT (M6X1-THD)	
J	2	1	**168-1587**	1	LOCK AS	
	3	1	**184-8874**	1	ROD	
	4	1	**208-3286**	1	LINER	
	5	1	**208-3287**	1	LINER	
	6	1	*313-8151*	1	DOOR AS-ACCESS	
M		1	**4I-2733**	4	STUD-WELD	
		1	**099-7857**	2	HINGE	

J-REQUIRES CORPORATE KEY
M-METRIC PART

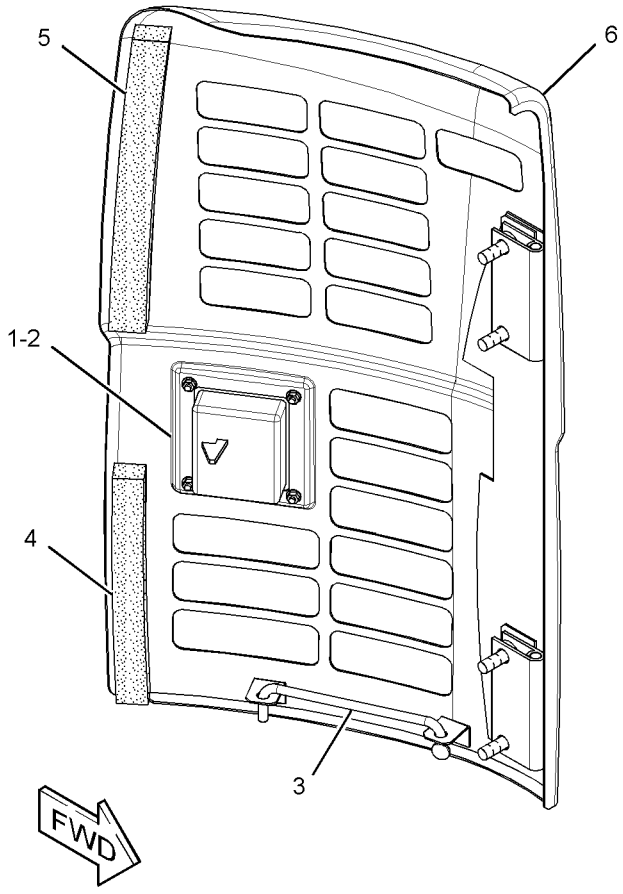

GRAPHIC #1 **<END>** g01509733

313-8136 FENDER AS-SOUND SUPPRESSION

S/N: BYJ1-UP; PDP1-UP

PART OF 278-3981 GUARD GP-FENDER

SMCS-7253, 7276, 795C **i02956561**

NOTE	REF NO	GRAPHIC REF	PART NUMBER	QTY	PART NAME 1 2 3 4 5 6 (PRODUCT LEVEL)	SEE PAGE
	1	1	**286-6028**	1	FENDER AS	
	2	1	**313-8137**	1	LINER	
	3	1	**313-8138**	1	LINER	
	4	1	**313-8139**	1	LINER	

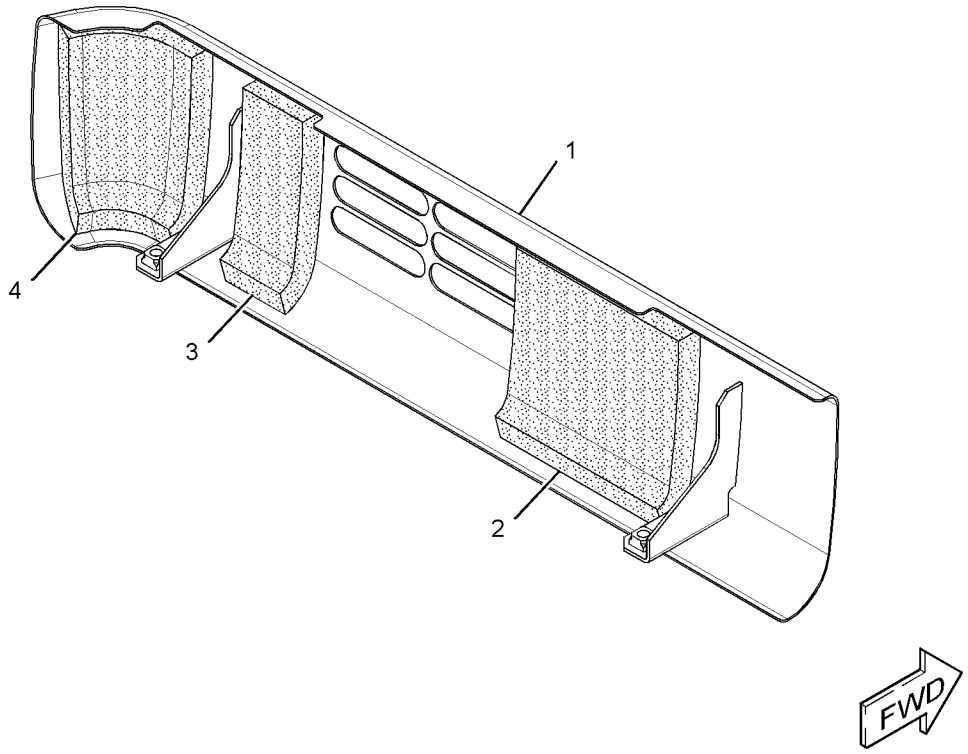

GRAPHIC #1 **<END>** g01514233

286-6067 FENDER GP

S/N: BYJ1-UP; PDP1-UP

PART OF 278-3981 GUARD GP-FENDER

SMCS-7252 **i02961312**

NOTE	REF NO	GRAPHIC REF	PART NUMBER	QTY	PART NAME 1 2 3 4 5 6 (PRODUCT LEVEL)	SEE PAGE
	1	1	**2S-1647**	1	GROMMET	
J	2	1	**226-0294**	1	LOCK AS	
	3	1	**226-0341**	1	CAM	
M	4	1	**8T-4908**	2	BOLT (M8X1.25X25-MM)	
	5	1	**286-6030**	1	DOOR AS	
	6	1	**293-7110**	1	SEAL	
	7	1	**293-7116**	2	SHEET-RUBBER	
	8	1	**301-9823**	1	RING	
	9	1	**313-8138**	1	LINER	
	10	1	**313-8140**	1	LINER	
	11	1	**313-8141**	1	LINER	
	12	1	**313-8142**	1	LINER	
	13	1	**313-8145**	1	LINER	
	14	1	**6V-8823**	2	WASHER-HARD (19.25X27X2-MM THK)	
	15	1	**8T-4224**	2	WASHER-HARD (8.8X16X2-MM THK)	

J-REQUIRES CORPORATE KEY
M-METRIC PART

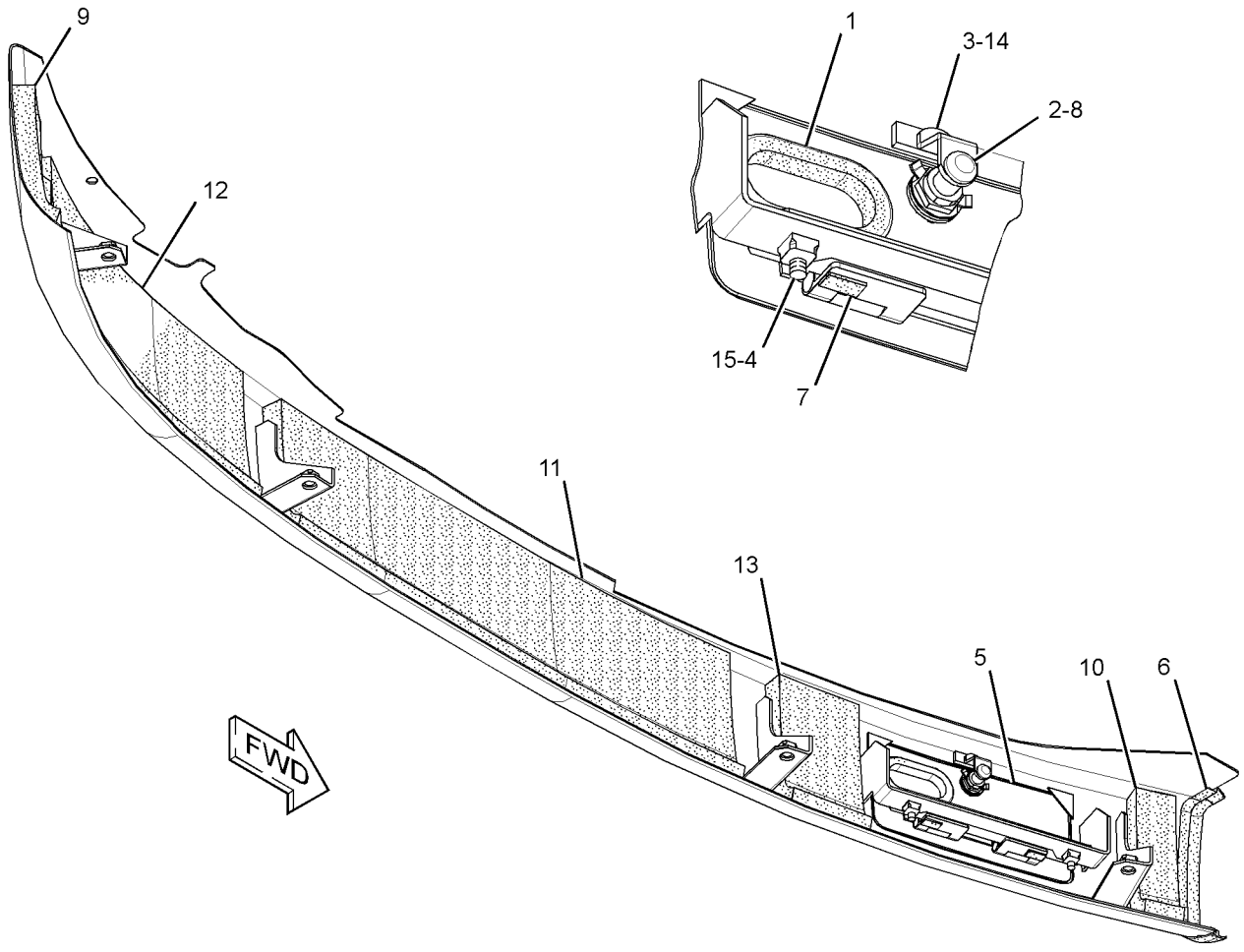

GRAPHIC #1 **<END>** g01515714

273-6772 FRAME GP-UPPER

S/N: BYJ1-UP; PDP1-UP

PART OF 260-7182, 260-7183 CHASSIS AR

SMCS-7051 **i02811605**

NOTE	REF NO	GRAPHIC REF	PART NUMBER	QTY	PART NAME 1 2 3 4 5 6 (PRODUCT LEVEL)	SEE PAGE
	1	1	**1R-6229**	2	PIN AS	
B	2	1	**093-0065**	2	SHIM (1-MM THK)	
B	3	1	**093-0083**	1	SHIM (1-MM THK)	
B	4	1	**093-0097**	2	SHIM (2-MM THK)	
B	5	1	**093-0115**	1	SHIM (2-MM THK)	
	6	1	**093-0357**	2	WASHER (63X100X9-MM THK)	
B	7	1	**133-2425**	2	SHIM (0.5-MM THK)	
B	8	1	**133-2717**	4	SHIM (0.5-MM THK)	
B	9	1	**212-2837**	2	SHIM (2-MM THK)	
	10	1	**273-6773**	1	FRAME AS-UPPER	
	11	1	**278-9274**	1	PIN AS	
	12	1	**086-0297**	2	WASHER (13X50X6-MM THK)	
	13	1	**086-0299**	1	WASHER (22X60X9-MM THK)	
M	14	1	**8T-4179**	2	BOLT (M12X1.75X20-MM)	
M	15	1	**8T-4780**	1	BOLT (M20X2.5X30-MM)	

B-USE AS REQUIRED
M-METRIC PART

273-6772 **FRAME GP-UPPER** *(contd.)* **i02811605**

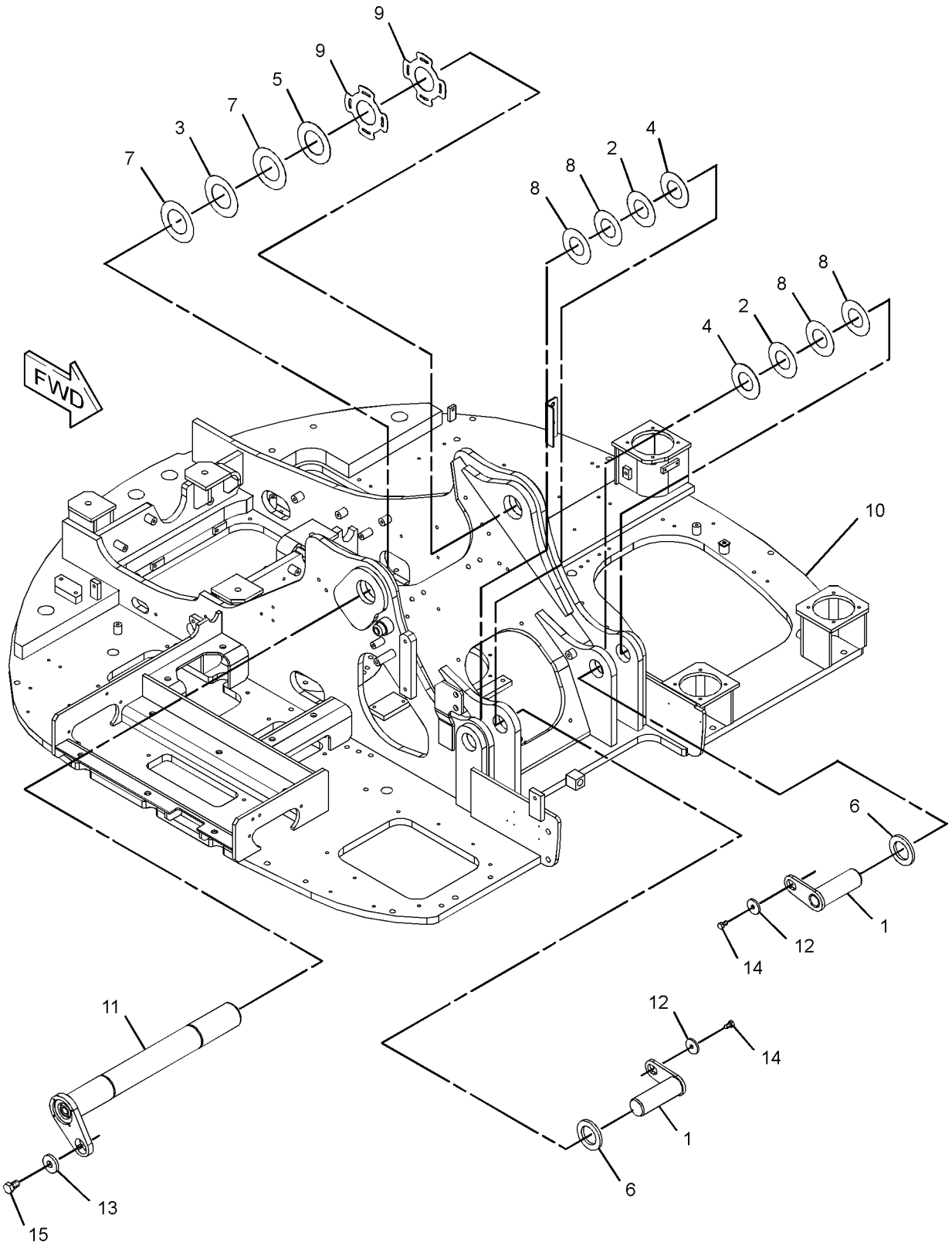

GRAPHIC #1 **<END>** g01413860

191-2596 GEAR & BEARING GP-SWING

S/N: BYJ1-UP; PDP1-UP

PART OF 260-7185, 260-7186 FRAME AR-UNDERCARRIAGE

SMCS-7063 **i02332234**

NOTE	REF NO	GRAPHIC REF	PART NUMBER	QTY	PART NAME 1 2 3 4 5 6 (PRODUCT LEVEL)	SEE PAGE
	1	1	**4I-7511**	1	RETAINER	
	2	1	**4I-7512**	1	CLAMP-HOSE	
	3	1	**4I-7444**	1	BOOT	
M	4	1	**8T-4136**	12	BOLT (M10X1.5X25-MM)	
	5	1	**8T-4121**	12	WASHER-HARD (11X21X2.5-MM THK)	
	6	1	**5K-9243**	2	ELBOW-FLARED	
M	7	1	**7X-2555**	34	BOLT (M16X2X80-MM)	
	8	1	**095-1299**	1	DOWEL	
M	9	1	**8T-4199**	2	BOLT (M8X1.25X12-MM)	
	10	1	**4N-9170**	2	CLIP	
	11	1	**3B-8489**	1	FITTING-GREASE	
	12	1	**4I-7446**	1	GASKET	
	13	1	**4I-7326**	1	STRIP	
	14	1	**191-2665**	1	TUBE AS	
	15	1	**229-1079**	1	GEAR & BEARING GP-SWING	
		1	**3B-8489**	1	FITTING-GREASE	
E	15A	1	**148-4685**		SEAL (309-CM)	
	15B	1	**229-1078**	1	SEAL-DUST	
M	16	1	**8T-0357**	38	BOLT (M16X2X70-MM)	
	17	1	**085-9310**	38	SPACER (16.6X32X26-MM THK)	
B	18	1	**1U-8846**		SEALANT-GASKET	
	19	1	**191-2544**	34	WASHER (16.6X32X5-MM THK)	

B-USE AS REQUIRED
E-ORDER BY THE CENTIMETER
M-METRIC PART

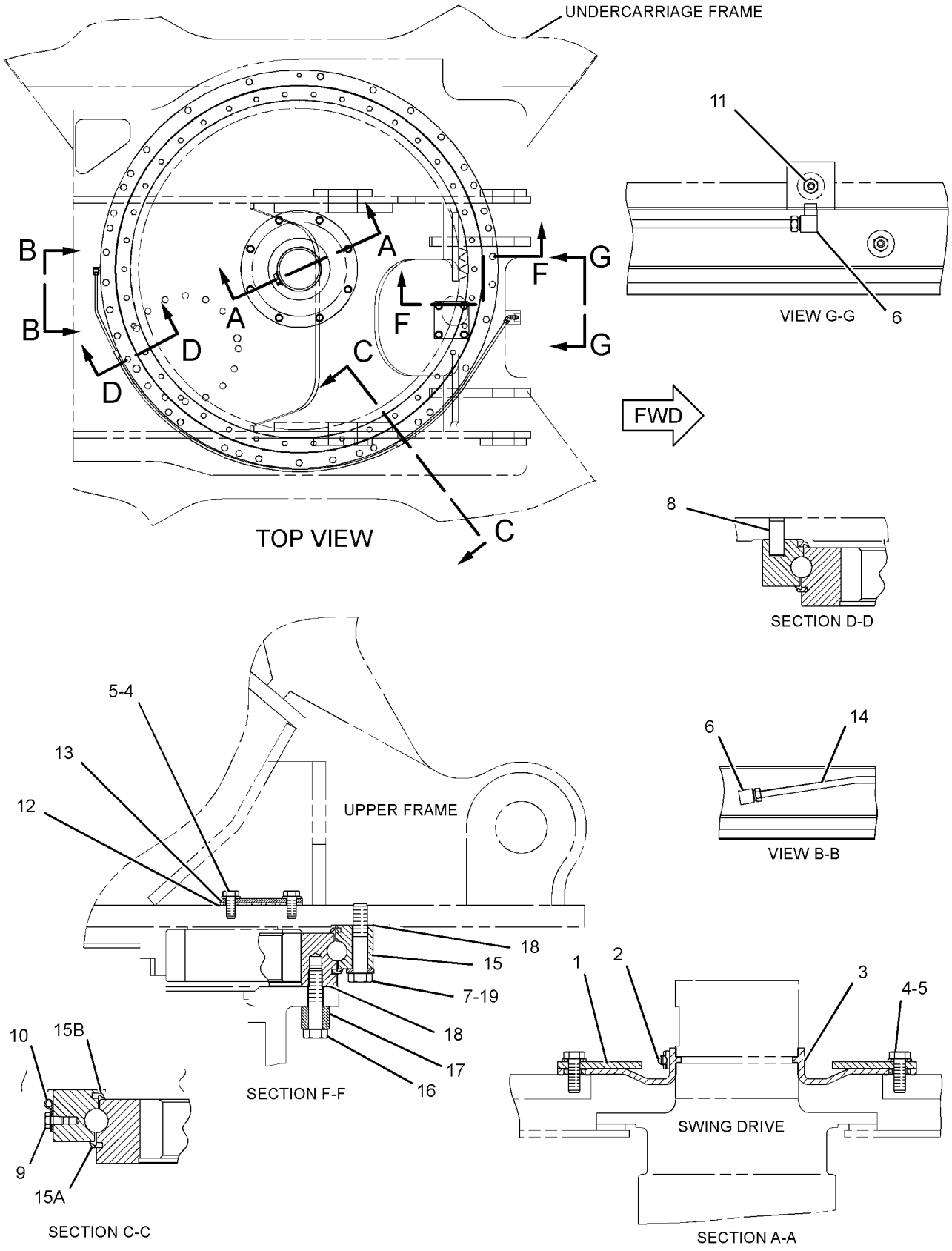

GRAPHIC #1 **<END>** g01165853

199-4692 GEAR & BEARING GP-SWING

S/N: BYJ1-UP; PDP1-UP
PART OF 260-7212, 260-7213 INSTALLATION AR-AUXILIARY
AN ATTACHMENT

SMCS-7063 **i02332236**

NOTE	REF NO	GRAPHIC REF	PART NUMBER	QTY	PART NAME 1 2 3 4 5 6 (PRODUCT LEVEL)	SEE PAGE
	1	1	**121-5204**	1	RETAINER	
	2	1	**099-0913**	1	CLAMP-HOSE	
	3	1	**121-5203**	1	BOOT	
M	4	1	**8T-4136**	12	BOLT (M10X1.5X25-MM)	
	5	1	**8T-4121**	12	WASHER-HARD (11X21X2.5-MM THK)	
	6	1	**5K-9243**	2	ELBOW-FLARED	
M	7	1	**7X-2555**	34	BOLT (M16X2X80-MM)	
	8	1	**095-1299**	1	DOWEL	
M	9	1	**8T-4199**	2	BOLT (M8X1.25X12-MM)	
	10	1	**4N-9170**	2	CLIP	
	11	1	**3B-8489**	1	FITTING-GREASE	
	12	1	**4I-7446**	1	GASKET	
	13	1	**4I-7326**	1	STRIP	
	14	1	**191-2665**	1	TUBE AS	
	15	1	**229-1079**	1	GEAR & BEARING GP-SWING	
		1	**3B-8489**	1	FITTING-GREASE	
E	15A	1	**148-4685**		SEAL (309-CM)	
	15B	1	**229-1078**	1	SEAL-DUST	
M	16	1	**8T-0357**	38	BOLT (M16X2X70-MM)	
	17	1	**085-9310**	38	SPACER (16.6X32X26-MM THK)	
B	18	1	**1U-8846**		SEALANT-GASKET	
	19	1	**191-2544**	34	WASHER (16.6X32X5-MM THK)	

B-USE AS REQUIRED
E-ORDER BY THE CENTIMETER
M-METRIC PART

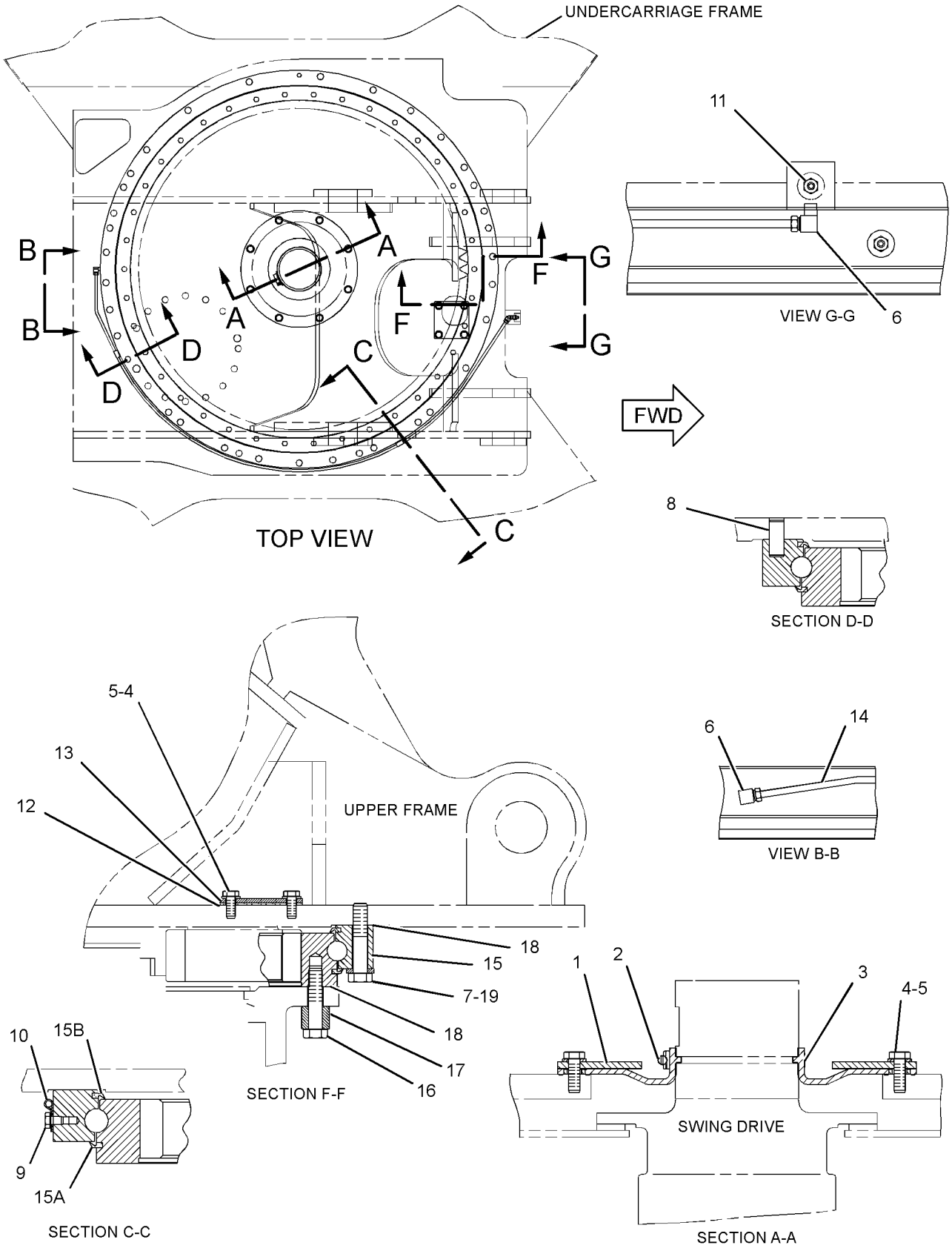

GRAPHIC #1 **<END>** g01165853

FRAME AND BODY

278-3973 GUARD GP-BOTTOM

S/N: BYJ1-UP; PDP1-UP

PART OF 260-7182, 260-7183 CHASSIS AR

SMCS-7153 **i03036025**

NOTE	REF NO	GRAPHIC REF	PART NUMBER	QTY	PART NAME 1 2 3 4 5 6 (PRODUCT LEVEL)	SEE PAGE
M	1	1	**135-8574**	27	BOLT AS (M12X1.75X25-MM)	
	2	1	**194-9127**	1	SHEET	
	3	1	**283-4049**	1	SHEET	
	4	1	**283-4050**	1	SHEET	
	5	1	**283-4051**	1	SHEET	
	6	1	**283-4053**	1	PLATE AS	
	7	1	**327-3179**	1	SHEET AS	
	8	1	**303-9929**	1	SHEET AS	

M-METRIC PART

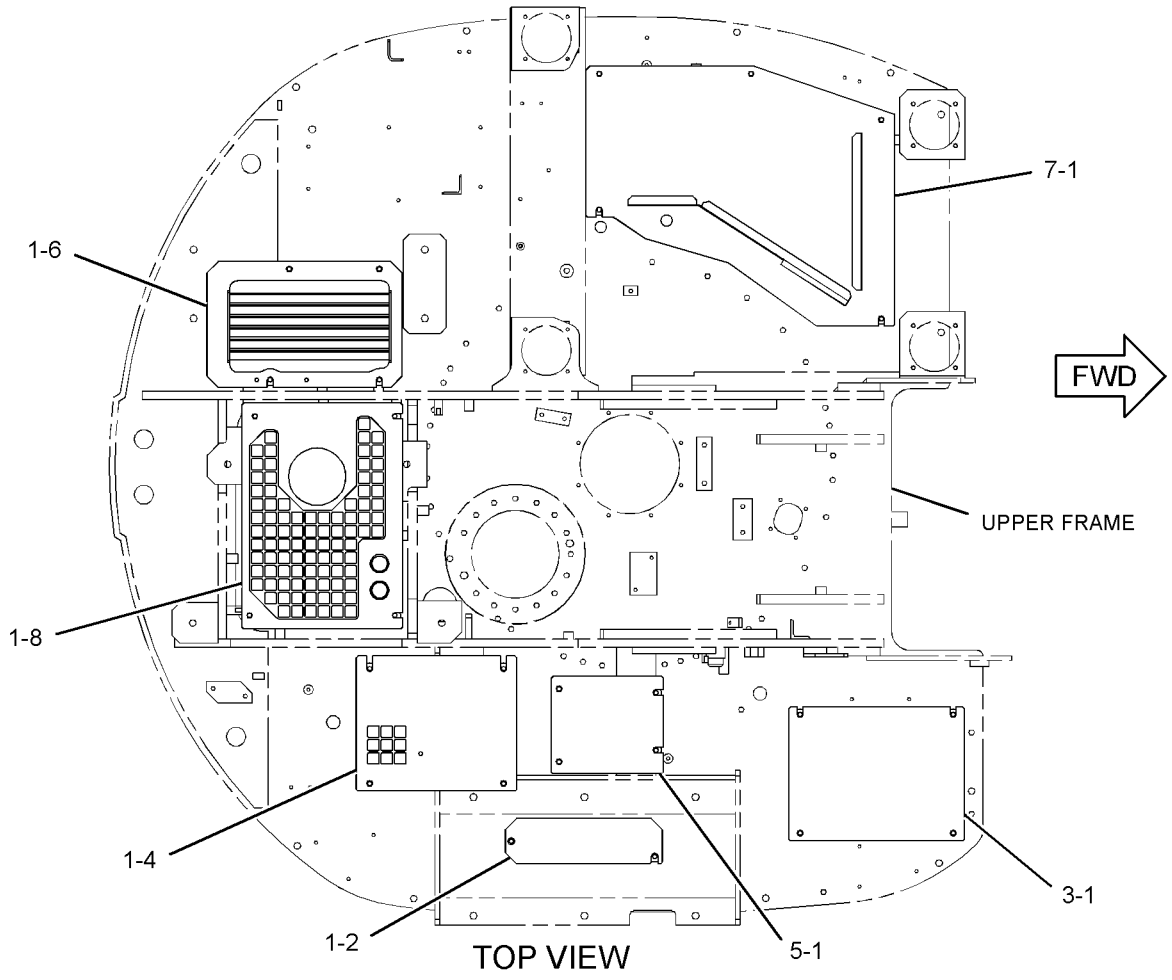

GRAPHIC #1

<END>

g01638253

FRAME AND BODY

278-3982 GUARD GP-BOTTOM–HEAVY-DUTY

S/N: BYJ1-UP; PDP1-UP

AN ATTACHMENT

SMCS-7153 **i03036027**

NOTE	REF NO	GRAPHIC REF	PART NUMBER	QTY	PART NAME 1 2 3 4 5 6 (PRODUCT LEVEL)	SEE PAGE
M	1	1	**135-8574**	2	BOLT AS (M12X1.75X25-MM)	
	2	1	**265-2385**	1	PLATE AS	
	3	1	**265-2388**	1	PLATE AS	
	4	1	**327-3182**	1	SHEET AS	
	5	1	**303-9644**	1	SHEET AS	
	6	1	**303-9646**	1	SHEET AS	
	7	1	**303-9939**	1	PLATE AS	
	8	1	**303-9940**	1	SHEET AS	

M-METRIC PART

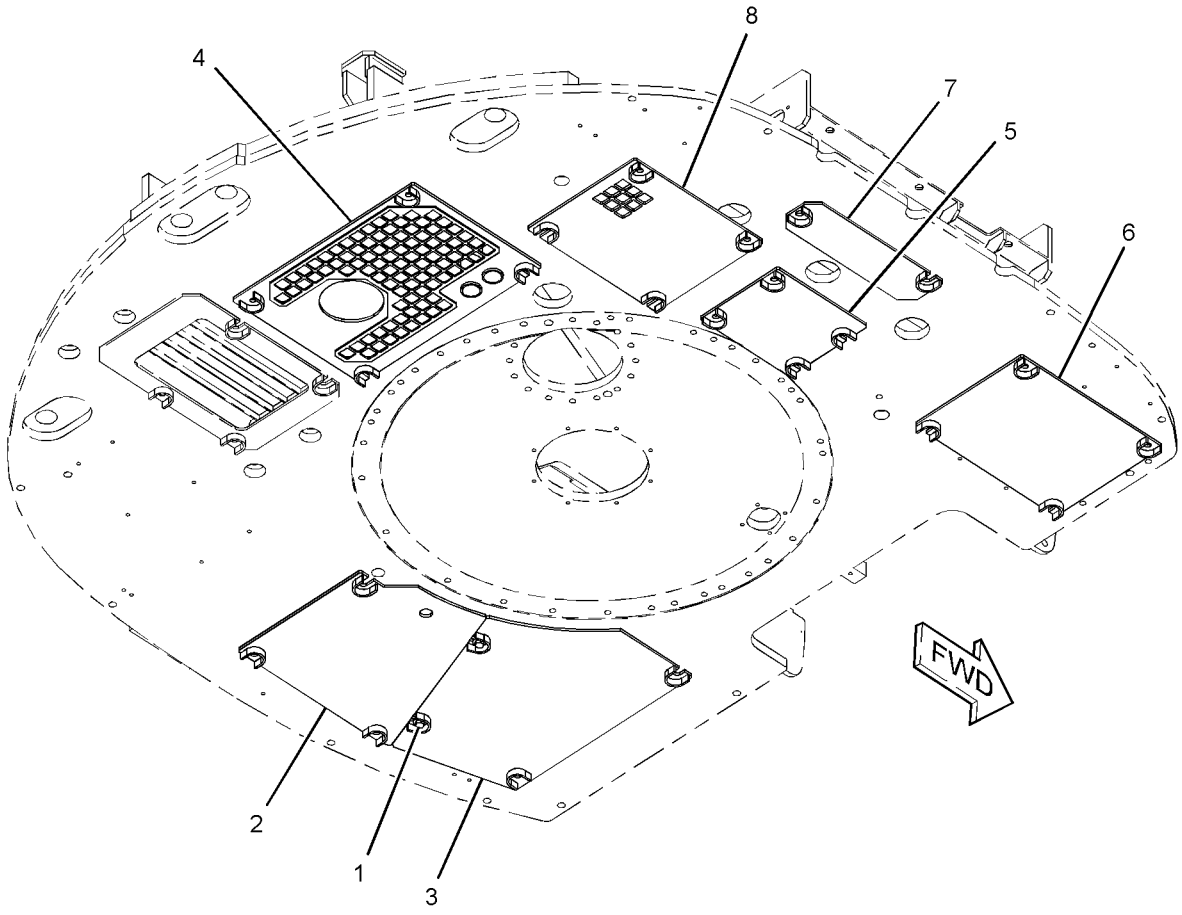

GRAPHIC #1 **<END>** g01638654

278-3981 GUARD GP-FENDER

S/N: BYJ1-UP; PDP1-UP

PART OF 260-7182, 260-7183 CHASSIS AR

SMCS-7150 **i02954202**

NOTE	REF NO	GRAPHIC REF	PART NUMBER	QTY	PART NAME 1 2 3 4 5 6 (PRODUCT LEVEL)	SEE PAGE
	1	1	**286-6026**	1	FENDER AS	
Y	2	1	**313-8136**	1	FENDER AS-SOUND SUPPRESSION	237
Y	3	1	**286-6067**	1	FENDER GP	238
	4	1	**293-7111**	1	FENDER AS	
		1	**293-7110**	1	SEAL	
	5	1	**5P-1076**	13	WASHER-HARD (13.5X30X4-MM THK)	
M	6	1	**8T-4184**	13	BOLT (M12X1.75X45-MM)	

M-METRIC PART
Y-SEPARATE ILLUSTRATION

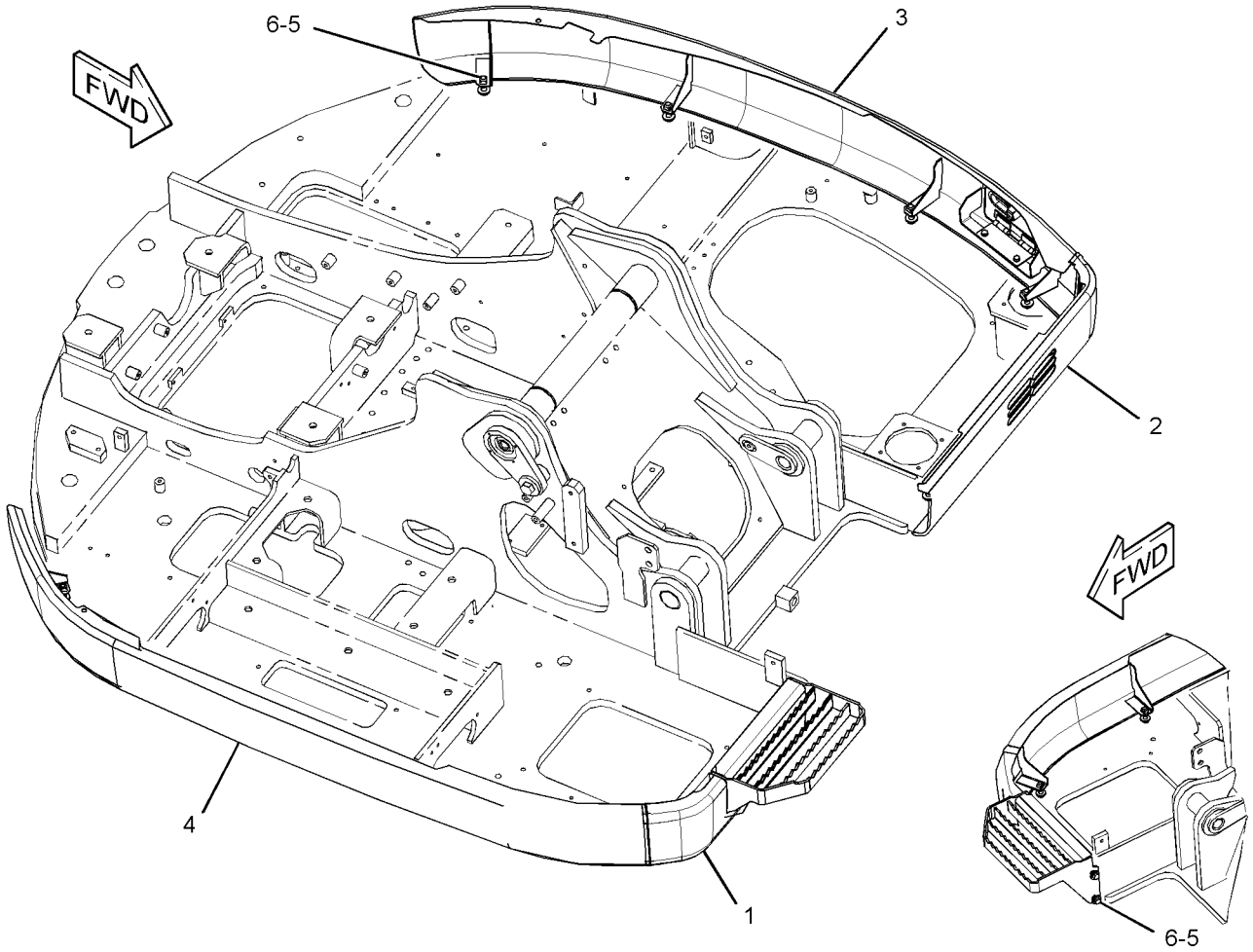

GRAPHIC #1 **<END>** g01415333

157-9168 GUARD GP-FRONT–STICK

S/N: BYJ1-UP; PDP1-UP
PART OF 260-7193 STICK AR-HOE
AN ATTACHMENT

SMCS-7167, 7182 **i02814142**

NOTE	REF NO	GRAPHIC REF	PART NUMBER	QTY	PART NAME 1 2 3 4 5 6 (PRODUCT LEVEL)	SEE PAGE
	1	1	**211-6406**	1	COVER AS	
M	2	1	**8T-4139**	2	BOLT (M12X1.75X30-MM)	
	3	1	**8T-4223**	2	WASHER-HARD (13.5X25.5X3-MM THK)	

M-METRIC PART

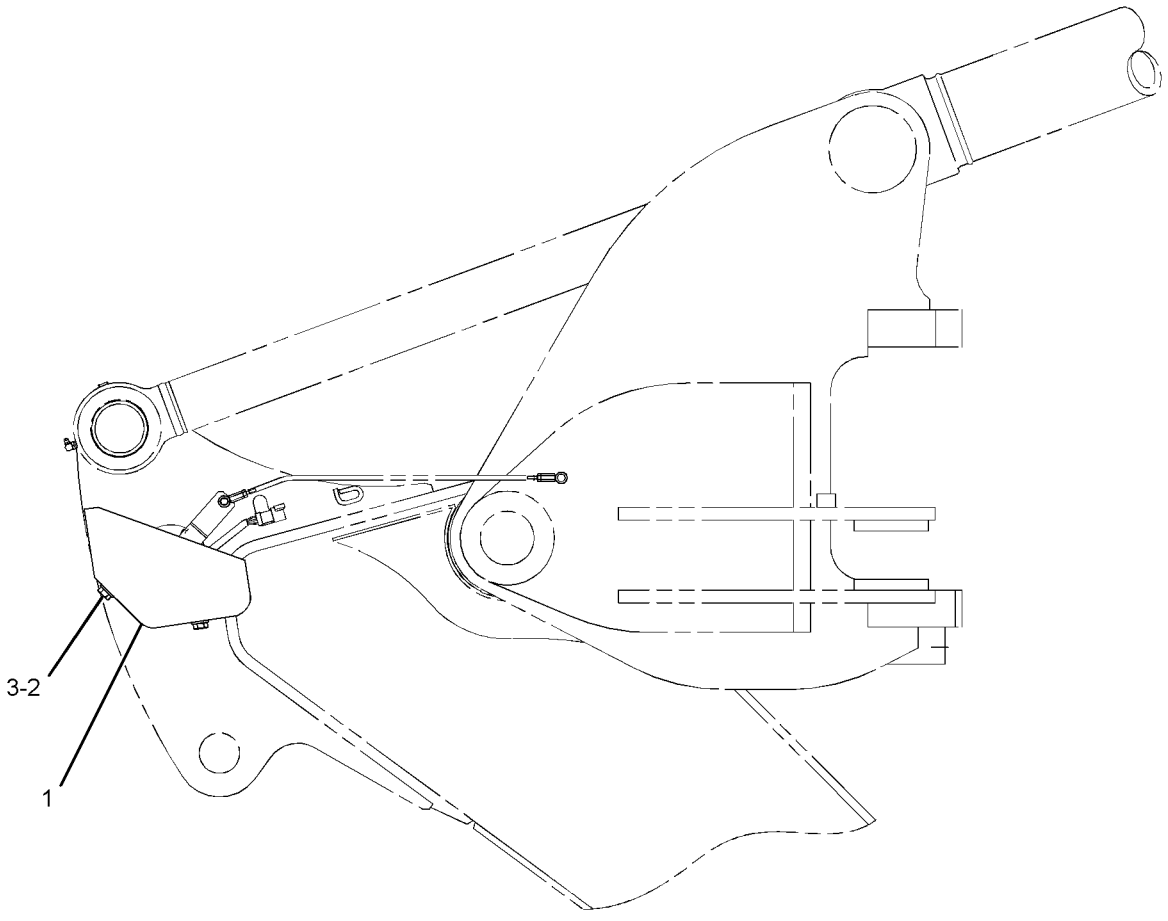

LEFT SIDE VIEW

GRAPHIC #1 **<END>** g01413471

137-2813 GUARD GP-SWIVEL

S/N: BYJ1-UP; PDP1-UP
AN ATTACHMENT

SMCS-7183 **i01764407**

NOTE	REF NO	GRAPHIC REF	PART NUMBER	QTY	PART NAME 1 2 3 4 5 6 (PRODUCT LEVEL)	SEE PAGE
	1	1	**137-2853**	1	PLATE AS	
	2	1	**137-2854**	1	PLATE AS	
M	3	1	**8C-8992**	4	BOLT-LOCKING (M12X1.75X30MM)	
	4	1	**5P-1076**	4	WASHER-HARD (13.5X30X4MM THK)	

M-METRIC PART

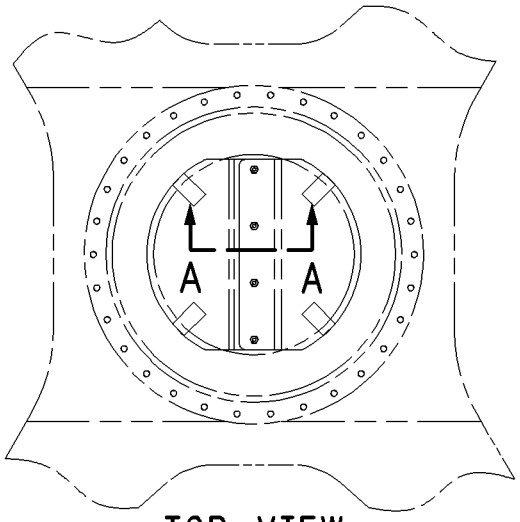

TOP VIEW

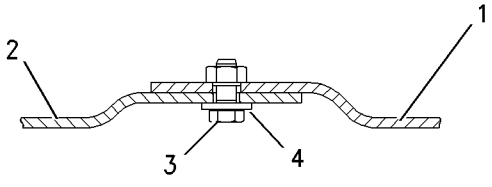

SECTION A-A

GRAPHIC #1 **<END>** g00780828

FRAME AND BODY

278-3975 HANDRAIL GP

S/N: BYJ1-UP; PDP1-UP

PART OF 260-7182, 260-7183 CHASSIS AR

SMCS-7256 **i02811970**

NOTE	REF NO	GRAPHIC REF	PART NUMBER	QTY	PART NAME 1 2 3 4 5 6 (PRODUCT LEVEL)	SEE PAGE
M	1	1	**135-8573**	2	BOLT AS (M12X1.75X25-MM)	
M	2	1	**135-8577**	2	BOLT AS (M12X1.75X35-MM)	
M	3	1	**135-8578**	1	BOLT AS (M12X1.75X40-MM)	
	4	1	**177-5879**	1	CLAMP	
	5	1	**177-5880**	2	SLEEVE	
	6	1	**178-5870**	2	CLIP	
	7	1	**178-5871**	2	CLIP	
	8	1	**214-8098**	1	HANDRAIL AS	
Y	9	1	*286-6159*	1	HANDRAIL GP	252
	10	1	**5P-1076**	8	WASHER-HARD (13.5X30X4-MM THK)	
M	11	1	**8C-8992**	2	BOLT-LOCKING (M12X1.75X30-MM)	
	12	1	**8T-2920**	2	GROMMET	
M	13	1	**8T-4194**	4	BOLT (M12X1.75X50-MM)	
M	14	1	**8T-4244**	2	NUT (M12X1.75-THD)	

M-METRIC PART
Y-SEPARATE ILLUSTRATION

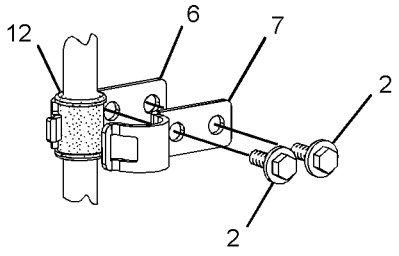

VIEW OF AREA B
(EXPLODED)

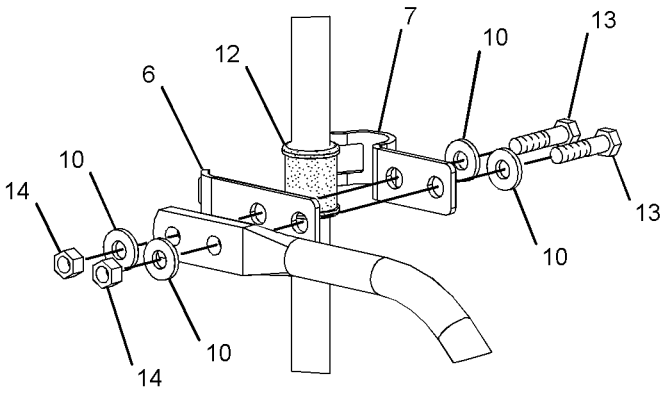

VIEW OF AREA C
(EXPLODED)

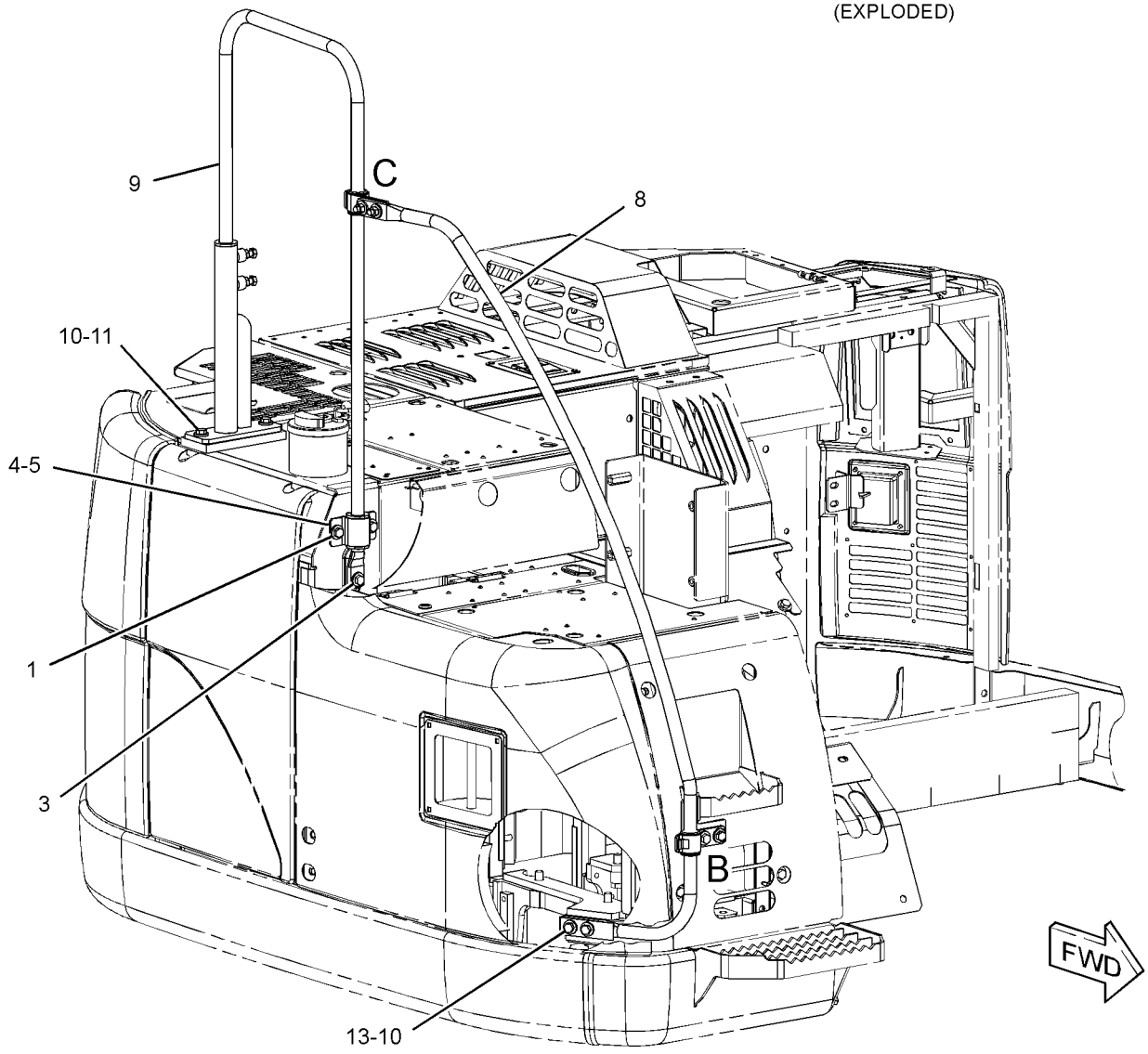

GRAPHIC #1 **<END>** g01410275

286-6159 HANDRAIL GP

S/N: BYJ1-UP; PDP1-UP

PART OF 278-3975 HANDRAIL GP

SMCS-7256 **i02811971**

NOTE	REF NO	GRAPHIC REF	PART NUMBER	QTY	PART NAME 1 2 3 4 5 6 (PRODUCT LEVEL)	SEE PAGE
	1	1	**129-3348**	1	PIPE AS	
	2	1	**137-2292**	1	SLEEVE	
M	3	1	**137-2294**	2	BOLT (M12X1.75X53-MM)	
	4	1	**286-6160**	1	HANDRAIL AS	
M	5	1	**8T-4244**	2	NUT (M12X1.75-THD)	

M-METRIC PART

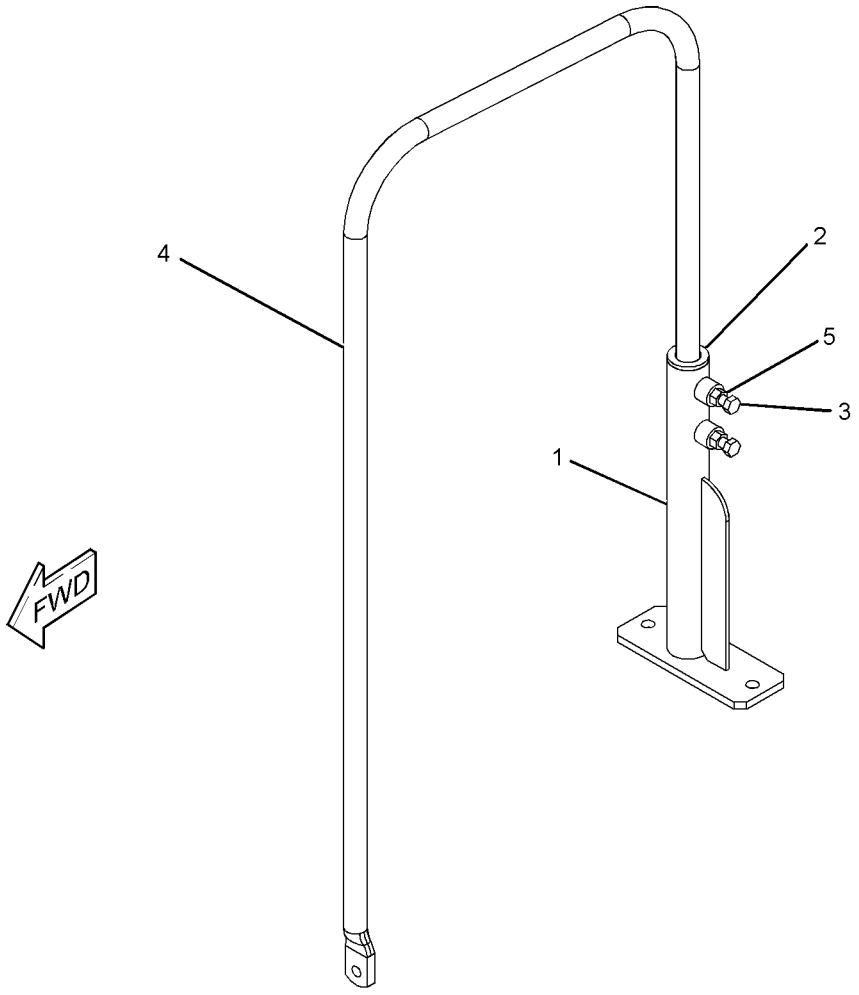

GRAPHIC #1 **<END>** g01414505

FRAME AND BODY

278-3974 HOOD & GUARD GP

S/N: BYJ1-UP; PDP1-UP
PART OF 260-7182, 260-7183 CHASSIS AR
TYPE 1

SMCS-7251, 7276 **i03036026**

NOTE	REF NO	GRAPHIC REF	PART NUMBER	QTY	PART NAME 1 2 3 4 5 6 (PRODUCT LEVEL)	SEE PAGE
B	1	1	**096-0684**	2	SHIM (0.8-MM THK)	
B	2	1	**102-5689**	2	SHIM (2-MM THK)	
M	3	1	**135-8572**	1	BOLT AS (M12X1.75X20-MM)	
M	4	1,2	**135-8573**	67	BOLT AS (M12X1.75X25-MM)	
M	5	1,2	**135-8575**	21	BOLT AS-LOCKING (M12X1.75X30-MM)	
	6	1,2	**198-2295**	2	PLATE AS	
	7	1	**202-1766**	1	PLATE	
	8	2	**211-6246**	2	SPACER (13.3X21.3X25-MM THK)	
	9	1	**258-5906**	1	ROD AS	
	10	2	**286-6038**	1	SUPPORT AS	
	11	2	**286-6039**	1	SUPPORT AS	
	12	2	**286-6041**	1	SUPPORT AS	
	13	2	**286-6042**	1	SUPPORT AS	
M	14	1	**8T-4244**	4	NUT (M12X1.75-THD)	
	15	2	**286-6053**	1	SUPPORT AS	
	16	2	**286-6060**	1	SHEET AS	
Y	18	2	**286-6068**	1	SHEET AS-SOUND SUPPRESSION	262
Y	19	1	**286-6069**	1	COVER GP-ACCESS (UPPER, REAR, LH)	232
Y	20	1	**286-6070**	1	HOOD GP-ENGINE	261
Y	21	2	**286-6071**	1	SHEET AS-SOUND SUPPRESSION	263
Y	22	2	**286-6074**	1	SHEET AS-SOUND SUPPRESSION	264
	23	1	**286-6075**	1	SHEET AS	
		1	**286-6104**	1	LINER	
Y	24	2	**286-6076**	1	SHEET AS-SOUND SUPPRESSION	265
	25	1	**286-6077**	1	COVER AS	
		1	**298-2897**	1	SHEET-RUBBER	
Y	26	1	**286-6078**	1	COVER GP-ACCESS (HYDRAULIC PUMPS)	233
Y	27	2	**286-6082**	1	COVER AS-SOUND SUPPRESSION	228
Y	28	2	**286-6083**	1	SHEET AS-SOUND SUPPRESSION	266
Y	29	1	**313-8150**	1	DOOR GP-ACCESS (AIR CLEANER)	236
	30	1	**286-6162**	1	LINER	
	31	2	**286-6164**	1	STRIKER	
	32	1	**286-6165**	1	STRIKER	
	33	2	**286-6166**	1	STRIKER	
	34	1	**286-6167**	1	LINER	
	35	1	**286-6168**	1	LINER	
	36	1	**286-6172**	1	LINER	
Y	37	1	**286-6179**	1	COVER AS-ACCESS (FUEL TANK)	226
	38	2	**289-6786**	1	SHEET AS	
		2	**298-2896**	1	SHEET-RUBBER	
	39	2	**289-6864**	1	SHEET AS	
Y	40	2	**298-2914**	1	SUPPORT AS-ENCLOSURE	270
	41	1	**298-2919**	1	LINER	
	42	2	**298-2924**	1	SHEET AS	
		2	**9M-2307**	3	WASHER (5.2X19X2-MM THK)	
		2	**9M-5732**	3	RIVET-POP	
		2	**298-2925**	1	SHEET-RUBBER	
Y	43	1	**298-2928**	1	DOOR GP-ACCESS (HYDRAULIC PUMPS)	235
	45	2	**307-7665**	1	SHEET AS	
	46	1	**3B-4618**	1	PIN-COTTER	
	47	2	**099-3600**	2	WASHER (12.7X30X4-MM THK)	
	48	2	**178-5801**	2	GROMMET	
	49	1	**5P-1076**	4	WASHER-HARD (13.5X30X4-MM THK)	
	50	1,2	**7X-7729**	10	WASHER (11X25X3-MM THK)	
B	51	1	**087-8895**	2	SHIM (1-MM THK)	

278-3974 **HOOD & GUARD GP** *(contd.)* **i03036026**

NOTE	REF NO	GRAPHIC REF	PART NUMBER	QTY	PART NAME 1 2 3 4 5 6 (PRODUCT LEVEL)	SEE PAGE
M	52	1,2	**8T-4136**	10	BOLT (M10X1.5X25-MM)	
B	53	1	**087-8894**	2	SHIM (2-MM THK)	
M	54	1	**8T-4192**	2	BOLT (M12X1.75X25-MM)	
M	55	2	**8T-4194**	2	BOLT (M12X1.75X50-MM)	
	56	1	**8T-4223**	3	WASHER-HARD (13.5X25.5X3-MM THK)	
B	57	2	**190-6821**	3	SHIM (1-MM THK)	
	58	1	**320-5451**	1	SUPPORT AS	
M		1	**095-7930**	2	SCREW-MACHINE (M4X0.07X6-MM)	
		1	**096-6166**	2	WASHER-HARD (4.5X9X1-MM THK)	
		1	**218-8054**	1	SPRING	
		1	**320-5452**	1	ROD AS	
	59	1	**320-5435**	1	SHEET AS	
	60	1	**320-5434**	1	SHEET AS	
	61	1	**313-8164**	1	SHEET AS	
		1	**320-5453**	1	SEAL	
Y	62	1	**313-8163**	1	COVER GP-PLATFORM	731
	63	1	**313-8161**	1	SUPPORT AS	
	64	2	**313-8133**	1	SUPPORT AS	
		2	**313-8134**	1	LINER	

B-USE AS REQUIRED
M-METRIC PART
Y-SEPARATE ILLUSTRATION

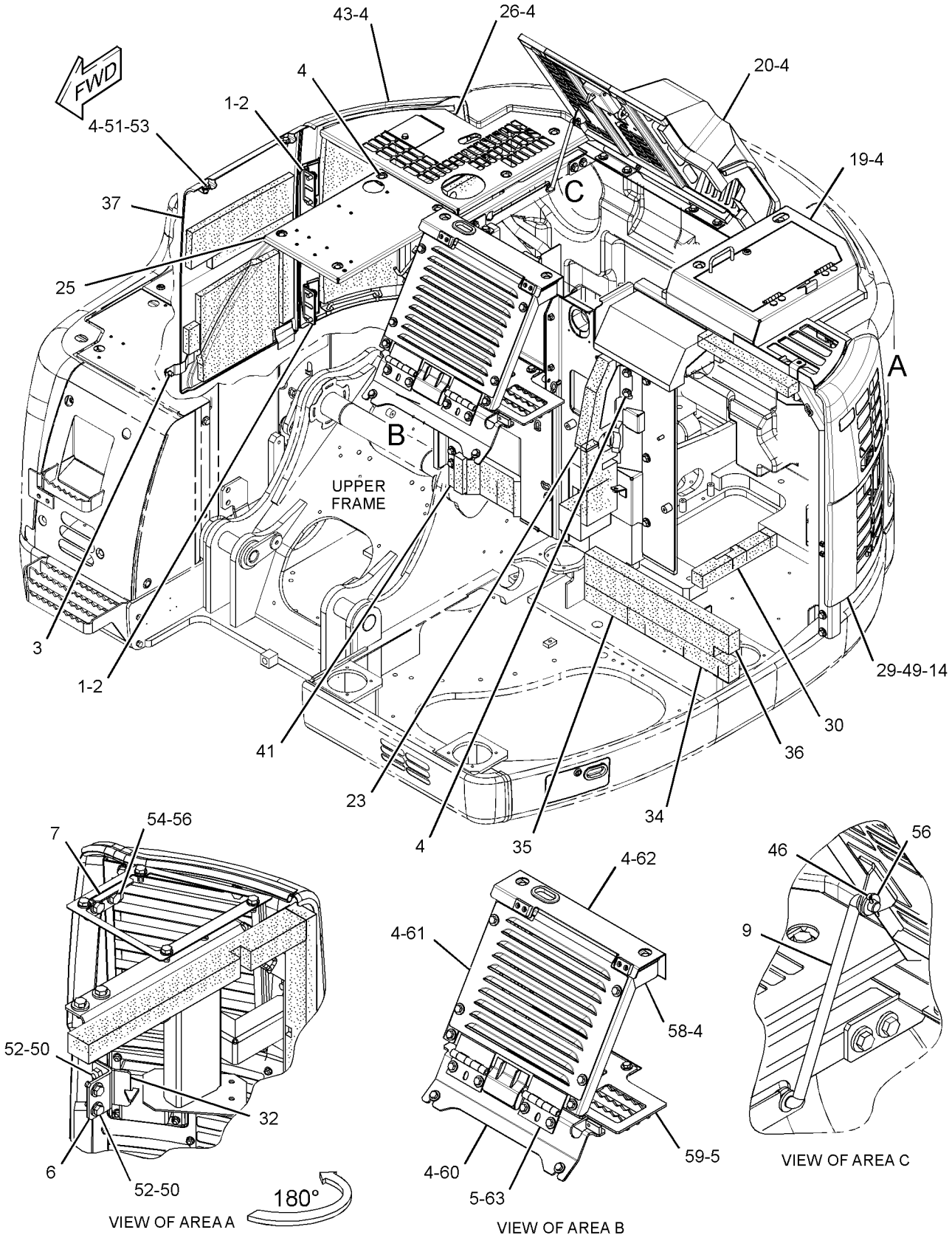

GRAPHIC #1 g01541421

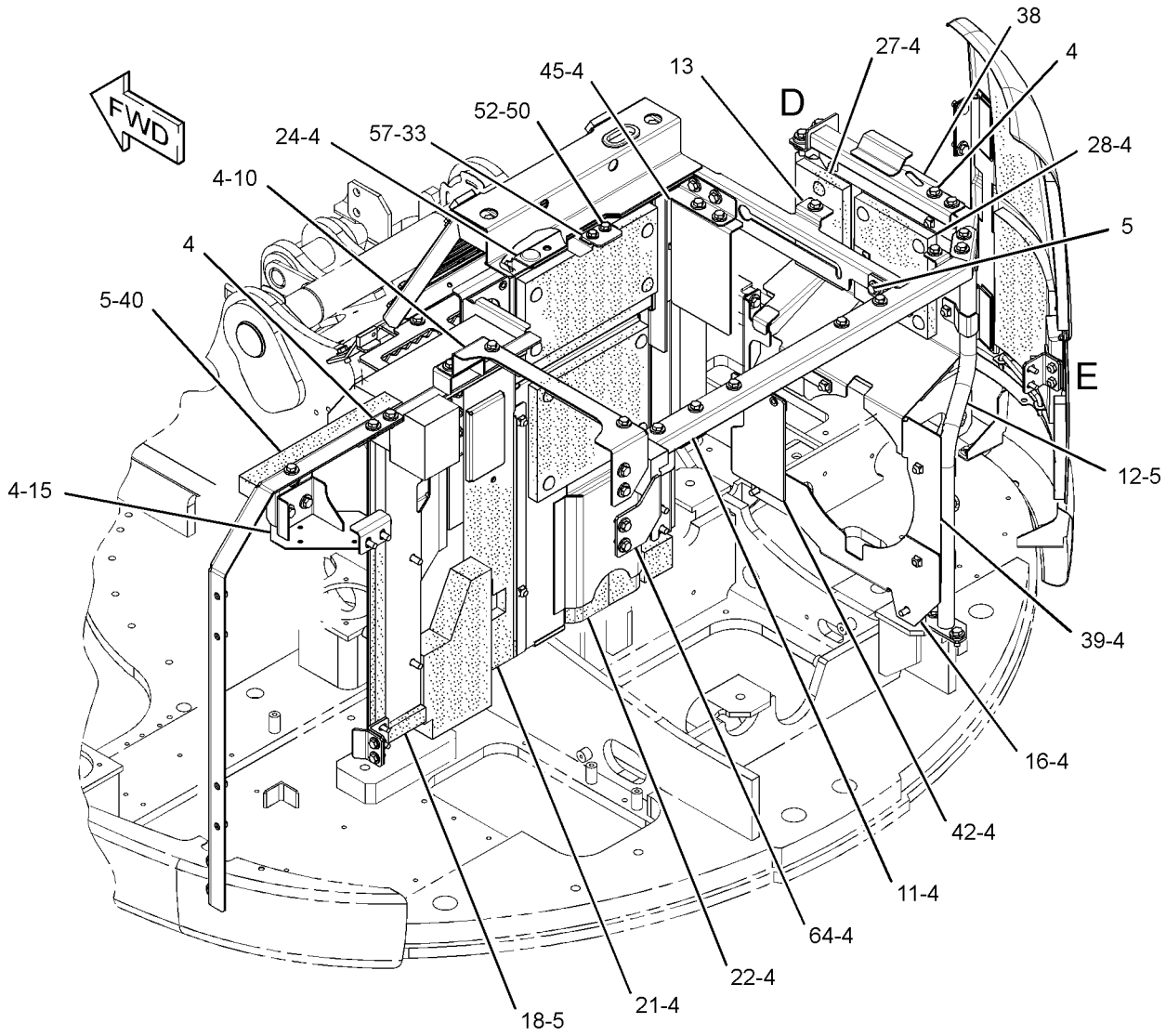

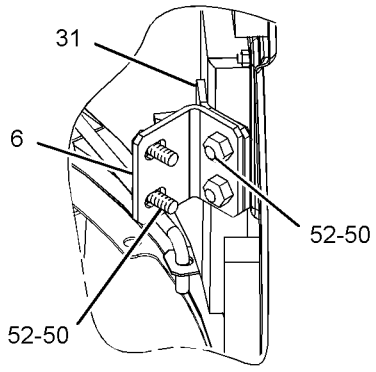

VIEW OF AREA E

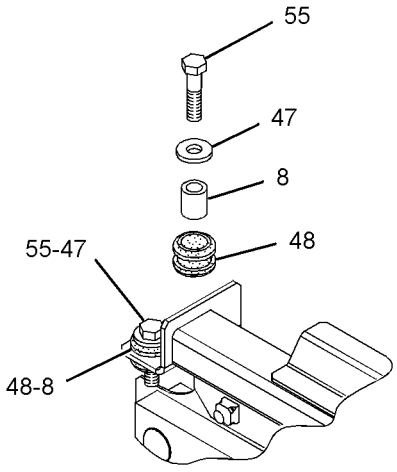

VIEW OF AREA D
(EXPLODED)

GRAPHIC #2 **<END>** g01541454

FRAME AND BODY

278-3974 HOOD & GUARD GP

S/N: BYJ1-UP; PDP1-UP
PART OF 260-7182, 260-7183 CHASSIS AR
TYPE 2

SMCS-7251, 7276 **i03157742**

NOTE	REF NO	GRAPHIC REF	PART NUMBER	QTY	PART NAME 1 2 3 4 5 6 (PRODUCT LEVEL)	SEE PAGE
B	1	1	**096-0684**	2	SHIM (0.8-MM THK)	
B	2	1	**102-5689**	2	SHIM (2-MM THK)	
M	3	1	**135-8572**	1	BOLT AS (M12X1.75X20-MM)	
M	4	1,2	**135-8573**	67	BOLT AS (M12X1.75X25-MM)	
M	5	1,2	**135-8575**	21	BOLT AS-LOCKING (M12X1.75X30-MM)	
	6	1,2	**198-2295**	2	PLATE AS	
	7	1	**202-1766**	1	PLATE	
	8	2	**211-6246**	2	SPACER (13.3X21.3X25-MM THK)	
	9	1	**258-5906**	1	ROD AS	
	10	2	**286-6038**	1	SUPPORT AS	
	11	2	**286-6039**	1	SUPPORT AS	
	12	2	**286-6041**	1	SUPPORT AS	
	13	2	**286-6042**	1	SUPPORT AS	
M	14	1	**8T-4244**	4	NUT (M12X1.75-THD)	
	15	2	**286-6053**	1	SUPPORT AS	
	16	2	**286-6060**	1	SHEET AS	
Y	18	2	**286-6068**	1	SHEET AS-SOUND SUPPRESSION	262
CY	19	1	**330-1608**	1	COVER GP-ACCESS	234
Y	20	1	**286-6070**	1	HOOD GP-ENGINE	261
Y	21	2	**286-6071**	1	SHEET AS-SOUND SUPPRESSION	263
Y	22	2	**286-6074**	1	SHEET AS-SOUND SUPPRESSION	264
	23	1	**286-6075**	1	SHEET AS	
		1	**286-6104**	1	LINER	
Y	24	2	**286-6076**	1	SHEET AS-SOUND SUPPRESSION	265
	25	1	**286-6077**	1	COVER AS	
		1	**298-2897**	1	SHEET-RUBBER	
Y	26	1	**286-6078**	1	COVER GP-ACCESS (HYDRAULIC PUMPS)	233
Y	27	2	**286-6082**	1	COVER AS-SOUND SUPPRESSION	228
Y	28	2	**286-6083**	1	SHEET AS-SOUND SUPPRESSION	266
Y	29	1	**313-8150**	1	DOOR GP-ACCESS (AIR CLEANER)	236
	30	1	**286-6162**	1	LINER	
	31	2	**286-6164**	1	STRIKER	
	32	1	**286-6165**	1	STRIKER	
	33	2	**286-6166**	1	STRIKER	
	34	1	**286-6167**	1	LINER	
	35	1	**286-6168**	1	LINER	
	36	1	**286-6172**	1	LINER	
Y	37	1	**286-6179**	1	COVER AS-ACCESS (FUEL TANK)	226
	38	2	**289-6786**	1	SHEET AS	
		2	**298-2896**	1	SHEET-RUBBER	
	39	2	**289-6864**	1	SHEET AS	
Y	40	2	**298-2914**	1	SUPPORT AS-ENCLOSURE	270
	41	1	**298-2919**	1	LINER	
	42	2	**298-2924**	1	SHEET AS	
		2	**9M-2307**	3	WASHER (5.2X19X2-MM THK)	
		2	**9M-5732**	3	RIVET-POP	
		2	**298-2925**	1	SHEET-RUBBER	
Y	43	1	**298-2928**	1	DOOR GP-ACCESS (HYDRAULIC PUMPS)	235
	45	2	**307-7665**	1	SHEET AS	
	46	1	**3B-4618**	1	PIN-COTTER	
	47	2	**099-3600**	2	WASHER (12.7X30X4-MM THK)	
	48	2	**178-5801**	2	GROMMET	
	49	1	**5P-1076**	4	WASHER-HARD (13.5X30X4-MM THK)	
	50	1,2	**7X-7729**	10	WASHER (11X25X3-MM THK)	
B	51	1	**087-8895**	2	SHIM (1-MM THK)	

278-3974 **HOOD & GUARD GP** *(contd.)* **i03157742**

NOTE	REF NO	GRAPHIC REF	PART NUMBER	QTY	PART NAME 1 2 3 4 5 6 (PRODUCT LEVEL)	SEE PAGE
M	52	1,2	**8T-4136**	10	BOLT (M10X1.5X25-MM)	
B	53	1	**087-8894**	2	SHIM (2-MM THK)	
M	54	1	**8T-4192**	2	BOLT (M12X1.75X25-MM)	
M	55	2	**8T-4194**	2	BOLT (M12X1.75X50-MM)	
	56	1	**8T-4223**	3	WASHER-HARD (13.5X25.5X3-MM THK)	
B	57	2	**190-6821**	3	SHIM (1-MM THK)	
	58	1	**320-5451**	1	SUPPORT AS	
M		1	**095-7930**	2	SCREW-MACHINE (M4X0.07X6-MM)	
		1	**096-6166**	2	WASHER-HARD (4.5X9X1-MM THK)	
		1	**218-8054**	1	SPRING	
		1	**320-5452**	1	ROD AS	
	59	1	**320-5435**	1	SHEET AS	
	60	1	**320-5434**	1	SHEET AS	
	61	1	**313-8164**	1	SHEET AS	
		1	**320-5453**	1	SEAL	
Y	62	1	**313-8163**	1	COVER GP-PLATFORM	731
	63	1	**313-8161**	1	SUPPORT AS	
	64	2	**313-8133**	1	SUPPORT AS	
		2	**313-8134**	1	LINER	

B-USE AS REQUIRED
C-CHANGE FROM PREVIOUS TYPE
M-METRIC PART
Y-SEPARATE ILLUSTRATION

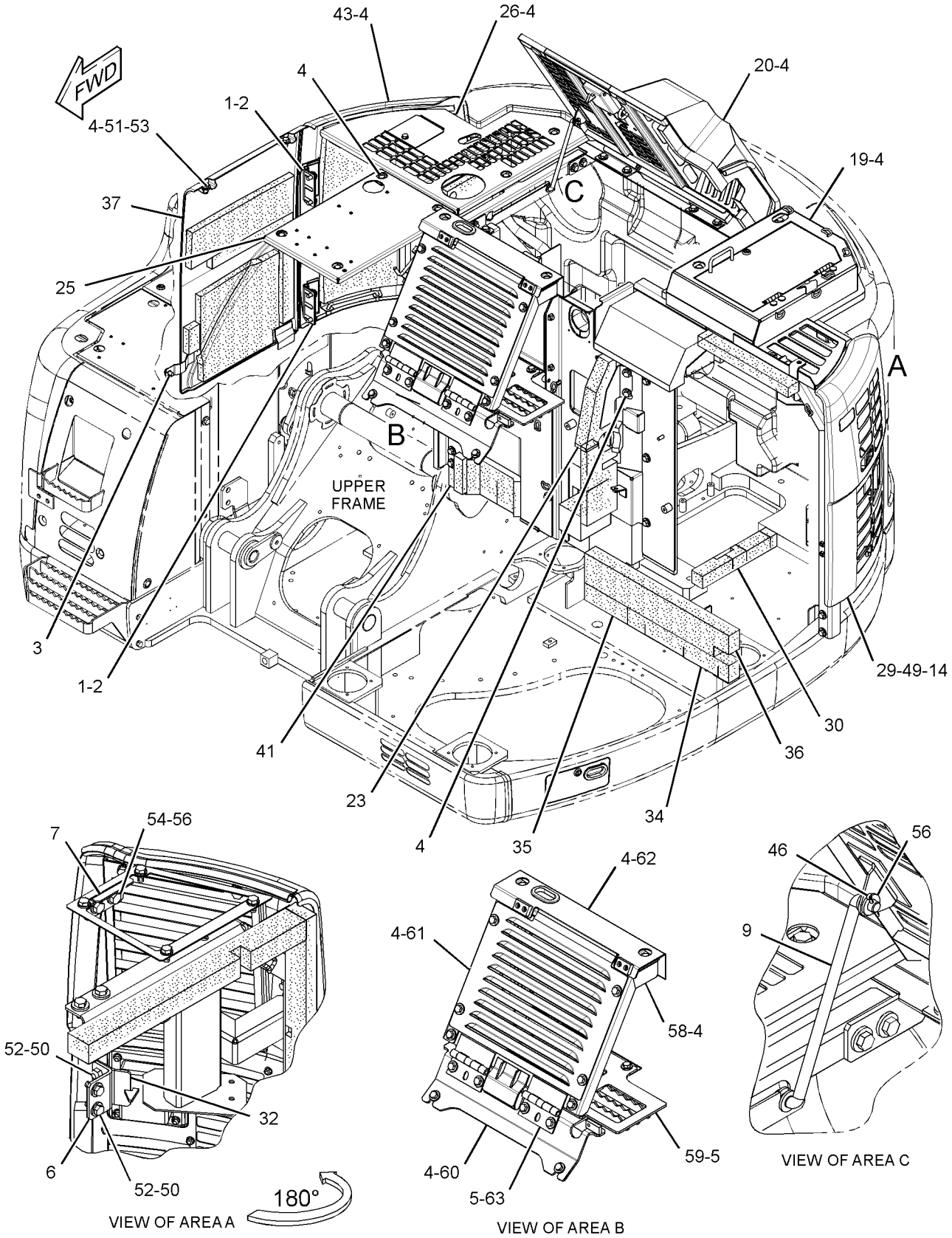

GRAPHIC #1 g01625646

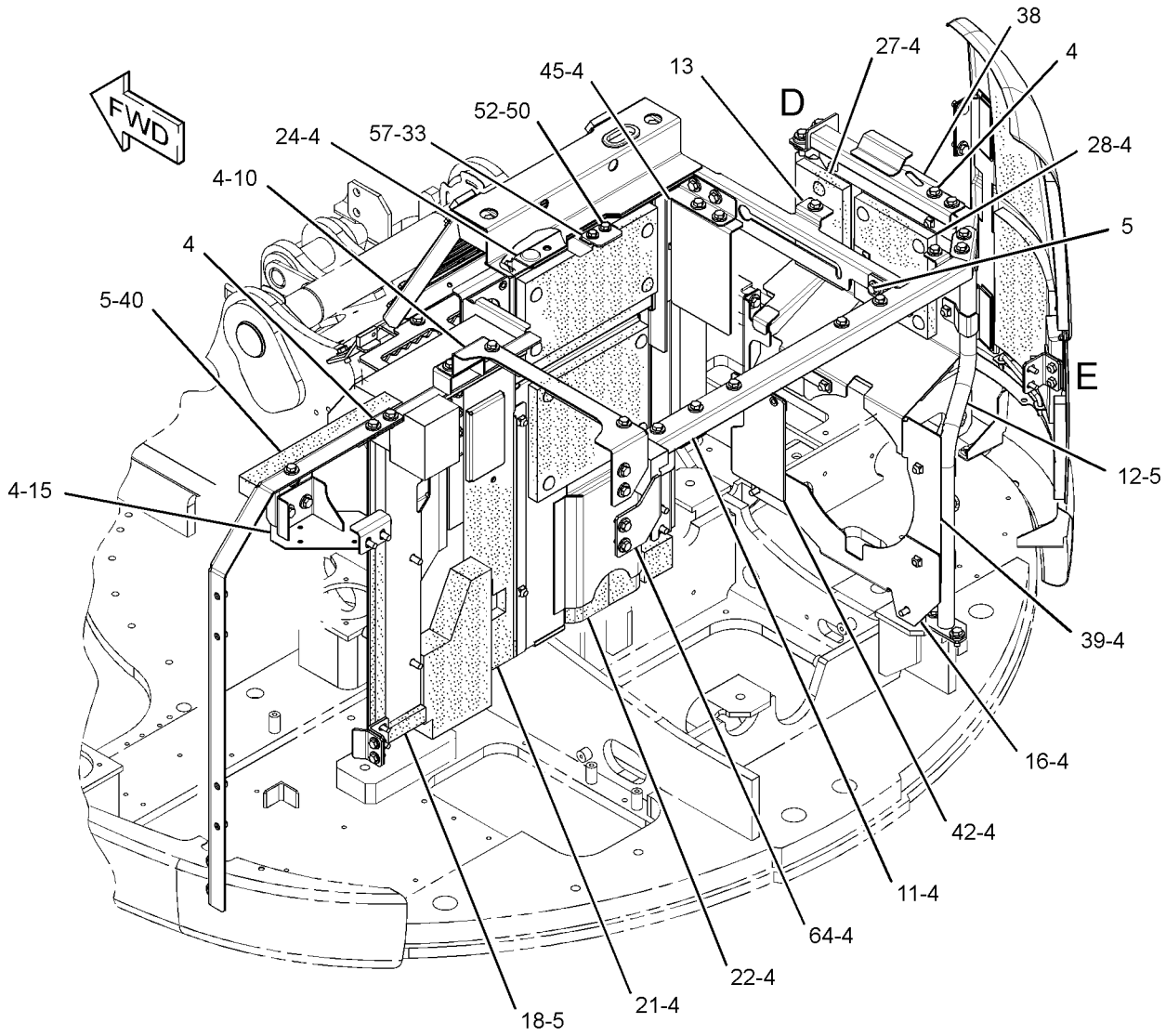

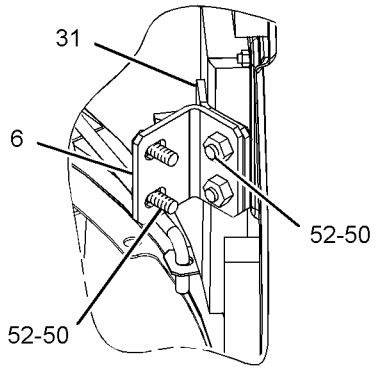

VIEW OF AREA E

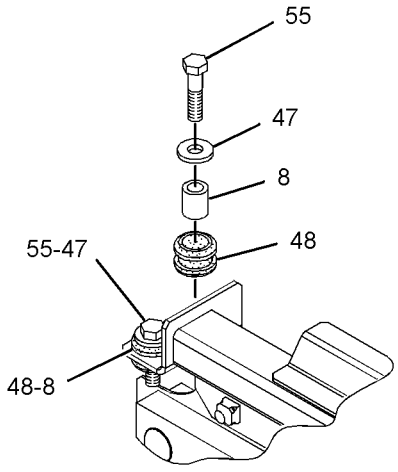

VIEW OF AREA D
(EXPLODED)

GRAPHIC #2 **<END>** g01625647

286-6070 HOOD GP-ENGINE

S/N: BYJ1-UP; PDP1-UP
PART OF 278-3974 HOOD & GUARD GP

SMCS-7251 **i02961342**

NOTE	REF NO	GRAPHIC REF	PART NUMBER	QTY	PART NAME 1 2 3 4 5 6 (PRODUCT LEVEL)	SEE PAGE
M	1	1	**099-6418**	4	NUT (M6X1-THD)	
	2	1	**184-8862**	1	COVER	
	3	1	**313-8162**	1	GUARD	
J	4	1	**298-2942**	1	LOCK AS	
	5	1	**286-6095**	1	LINER	
	7	1	**286-6097**	3	LINER	
	8	1	**286-6098**	1	LINER	
	9	1	**170-3014**	2	BUMPER	
D	10	1	**5P-8309**		SEAL (0.5-M)	

D-ORDER BY THE METER
J-REQUIRES CORPORATE KEY
M-METRIC PART

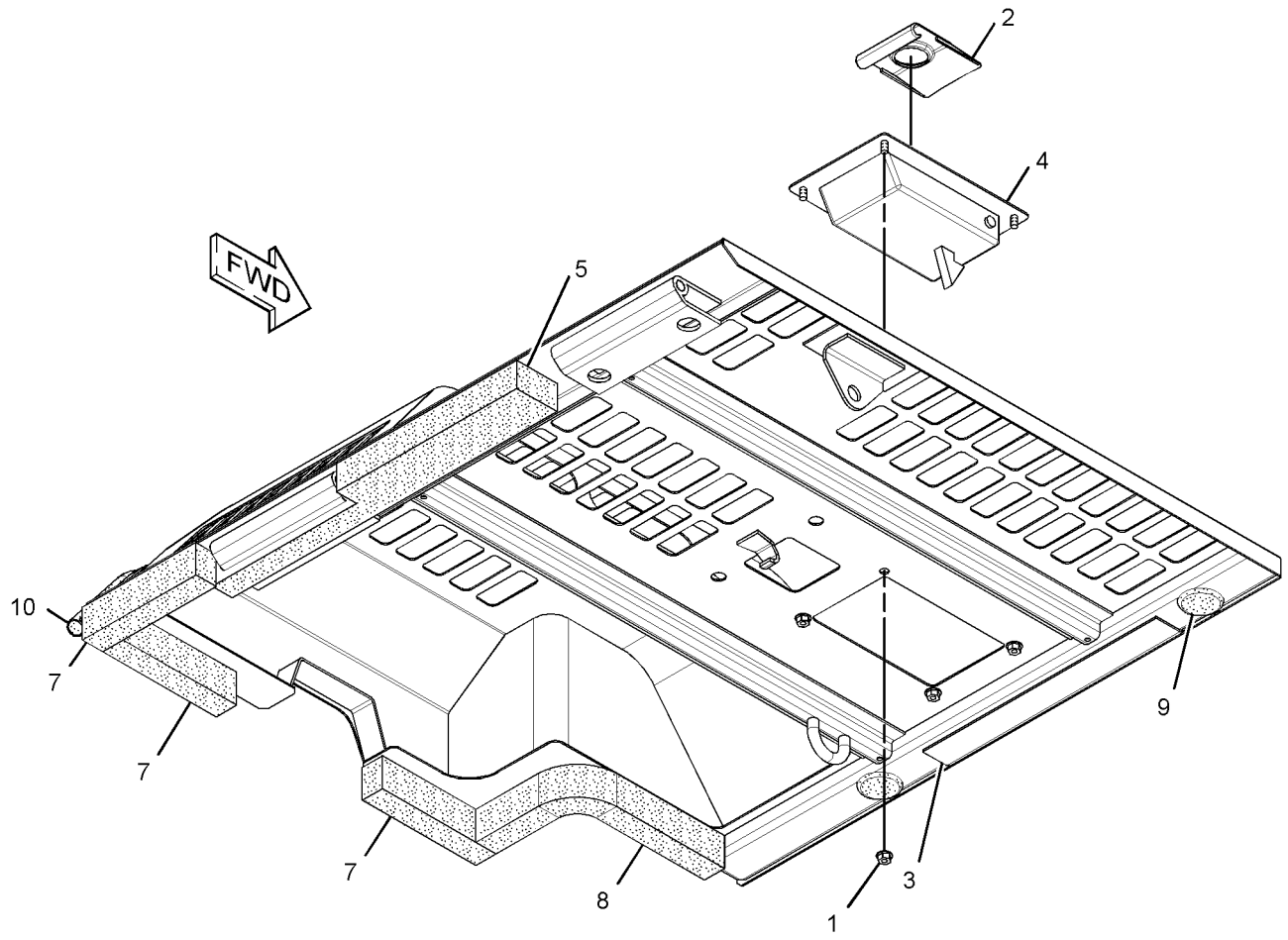

GRAPHIC #1 **<END>** g01510014

286-6068 SHEET AS-SOUND SUPPRESSION

S/N: BYJ1-UP; PDP1-UP

PART OF 278-3974 HOOD & GUARD GP

SMCS-1801, 7076, 7251, 7267 **i02944625**

NOTE	REF NO	GRAPHIC REF	PART NUMBER	QTY	PART NAME 1 2 3 4 5 6 (PRODUCT LEVEL)	SEE PAGE
	1	1	**313-8143**	1	LINER	
	2	1	**298-2906**	1	LINER	
	4	1	**286-6088**	1	LINER	
	5	1	**286-6089**	1	LINER	
	6	1	**286-6090**	1	LINER	
	7	1	**286-6091**	1	LINER	
	8	1	**286-6092**	1	LINER	
	9	1	**286-6093**	1	LINER	
	10	1	**298-2893**	1	LINER	
	11	1	**298-2894**	1	LINER	
	12	1	**298-2895**	1	LINER	

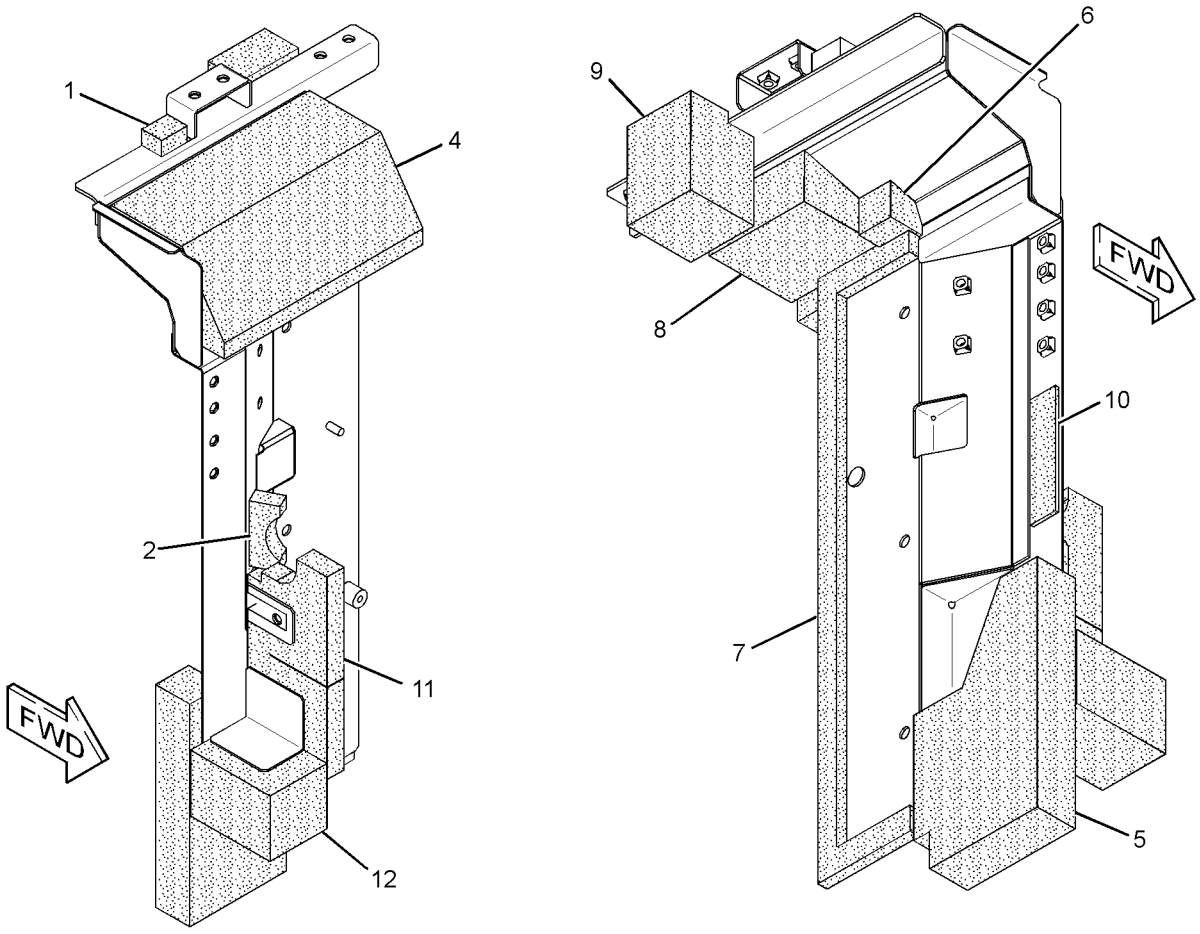

GRAPHIC #1

<END>

g01495253

286-6071 SHEET AS-SOUND SUPPRESSION

S/N: BYJ1-UP; PDP1-UP

PART OF 278-3974 HOOD & GUARD GP

SMCS-1801, 7076, 7251, 7267 **i02944690**

NOTE	REF NO	GRAPHIC REF	PART NUMBER	QTY	PART NAME 1 2 3 4 5 6 (PRODUCT LEVEL)	SEE PAGE
	1	1	**9M-5732**	4	RIVET-POP	
	2	1	**9M-2307**	4	WASHER (5.2X19X2-MM THK)	
	3	1	**286-6112**	1	LINER	
	4	1	**293-7114**	1	SHEET-RUBBER	

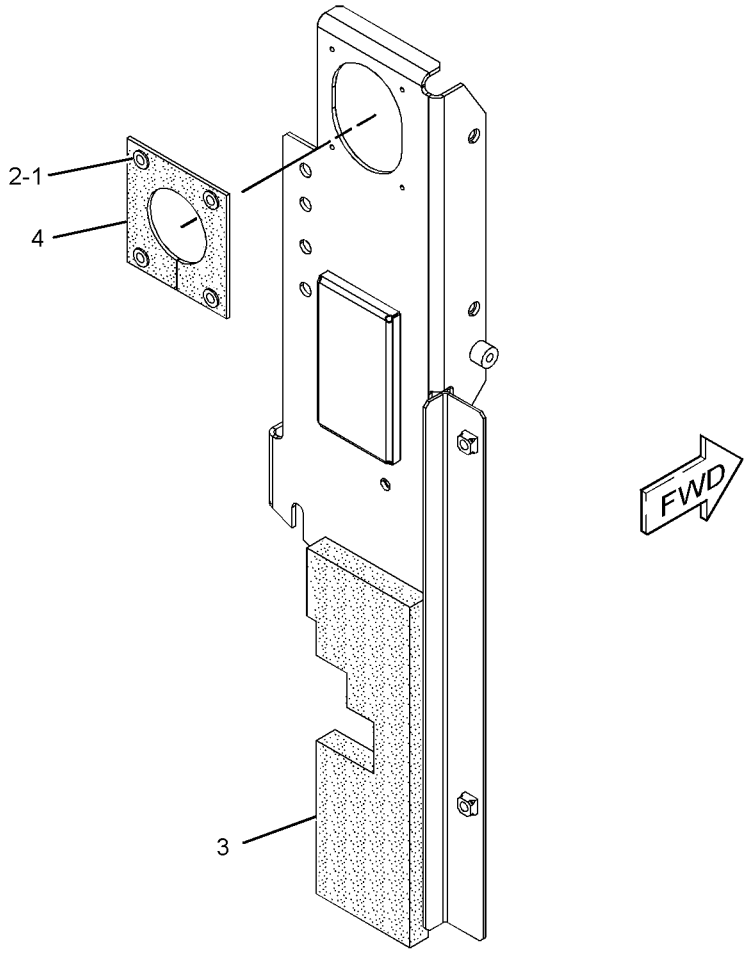

GRAPHIC #1 **<END>** g01488455

286-6074 SHEET AS-SOUND SUPPRESSION

S/N: BYJ1-UP; PDP1-UP

PART OF 278-3974 HOOD & GUARD GP

SMCS-1801, 7076, 7251, 7267 **i02944624**

NOTE	REF NO	GRAPHIC REF	PART NUMBER	QTY	PART NAME 1 2 3 4 5 6 (PRODUCT LEVEL)	SEE PAGE
	1	1	**233-2854**	4	CAP-PUSH ON	
	2	1	**298-2918**	1	LINER	
	3	1	**286-6102**	1	LINER	
	4	1	**286-6154**	1	INSULATION	
	5	1	**289-6791**	1	LINER	
D	6	1	**5P-8309**		SEAL (0.03-M)	
	7	1	**293-7115**	1	SEAL	
	8	1	**313-8146**	1	LINER	

D-ORDER BY THE METER

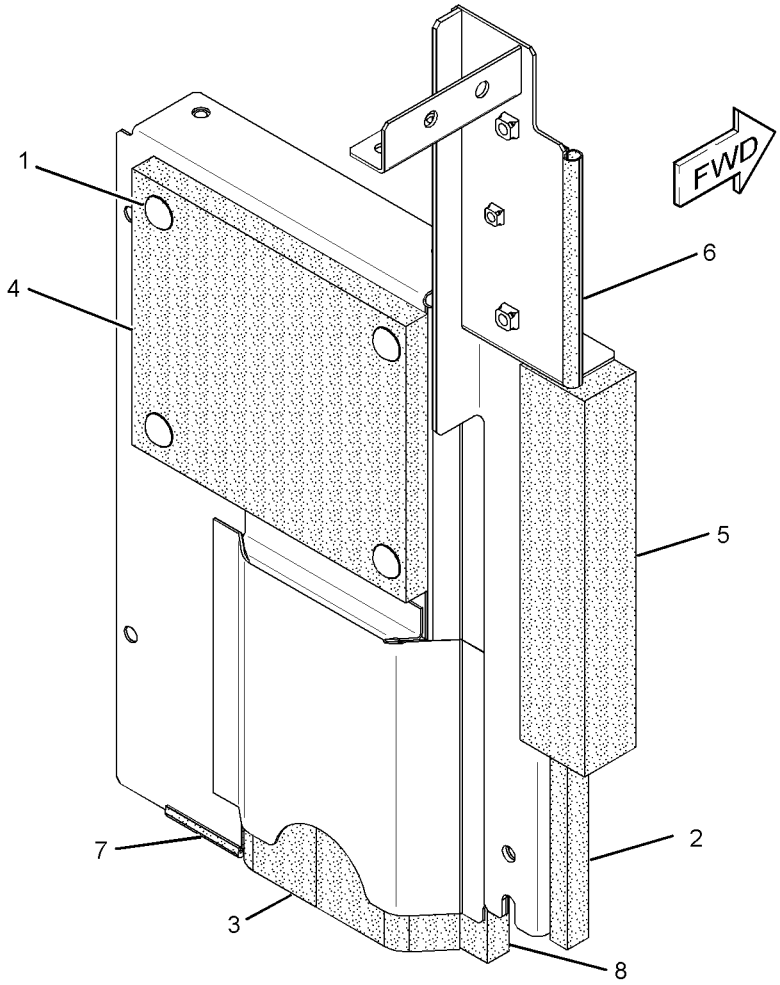

GRAPHIC #1 **<END>** g01496134

286-6076 SHEET AS-SOUND SUPPRESSION

S/N: BYJ1-UP; PDP1-UP
PART OF 278-3974 HOOD & GUARD GP

SMCS-1801, 7076, 7251, 7267 **i02944689**

NOTE	REF NO	GRAPHIC REF	PART NUMBER	QTY	PART NAME 1 2 3 4 5 6 (PRODUCT LEVEL)	SEE PAGE
	1	1	**170-3014**	2	BUMPER	
	2	1	**233-2854**	4	CAP-PUSH ON	
	3	1	**286-6155**	1	INSULATION	

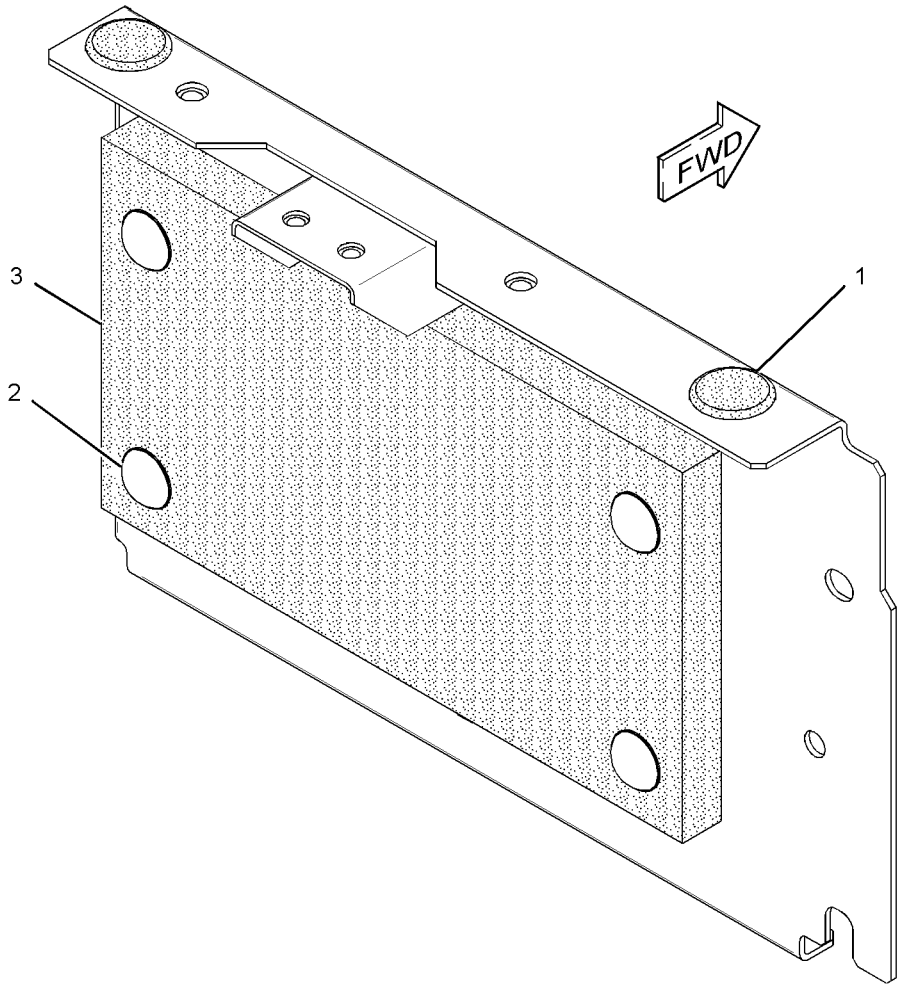

GRAPHIC #1 **<END>** g01501787

286-6083 SHEET AS-SOUND SUPPRESSION

S/N: BYJ1-UP; PDP1-UP

PART OF 278-3974 HOOD & GUARD GP

SMCS-1801, 7076, 7251, 7267 **i02811954**

NOTE	REF NO	GRAPHIC REF	PART NUMBER	QTY	PART NAME 1 2 3 4 5 6 (PRODUCT LEVEL)	SEE PAGE
	1	1	**233-2854**	4	CAP-PUSH ON	
	2	1	**248-7923**	1	INSULATION	
D	3	1	**5P-8309**		SEAL (0.1-M)	
	4	1	**286-6110**	1	LINER	
	5	1	**286-6111**	1	LINER	

D-ORDER BY THE METER

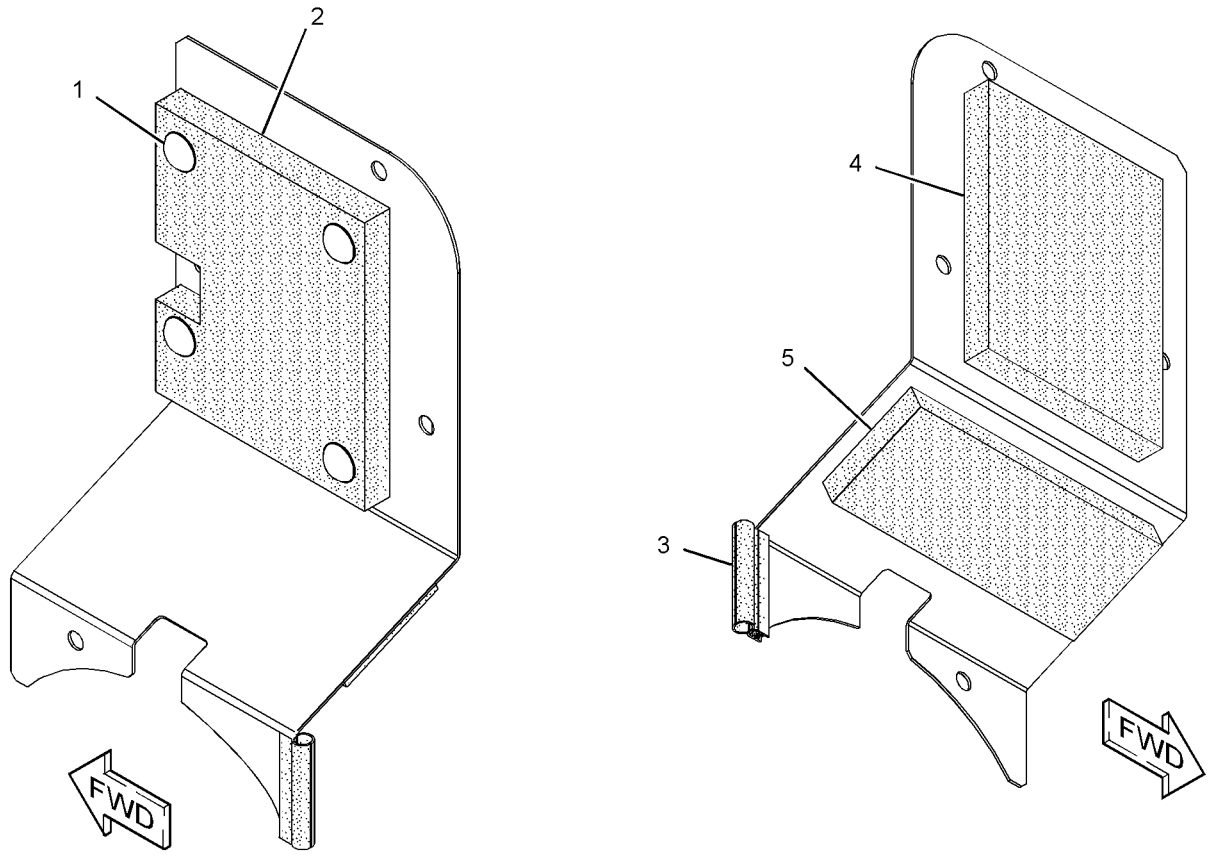

GRAPHIC #1 **<END>** g01409114

235-7764 STEP GP

S/N: BYJ1-UP; PDP1-UP
PART OF 283-8848, 283-9034 TRACK GP
FOR USE WITH TRACK SHOES UPT TO 800-MM (31.5-IN) WIDE
AN ATTACHMENT

SMCS-7254 **i03255291**

NOTE	REF NO	GRAPHIC REF	PART NUMBER	QTY	PART NAME 1 2 3 4 5 6 (PRODUCT LEVEL)	SEE PAGE
	1	1	**235-7765**	2	STEP	
M	2	1	**8T-7338**	4	BOLT (M16X2X45-MM)	
	3	1	**9X-8257**	4	WASHER (17.5X30X3.5-MM THK)	

M-METRIC PART

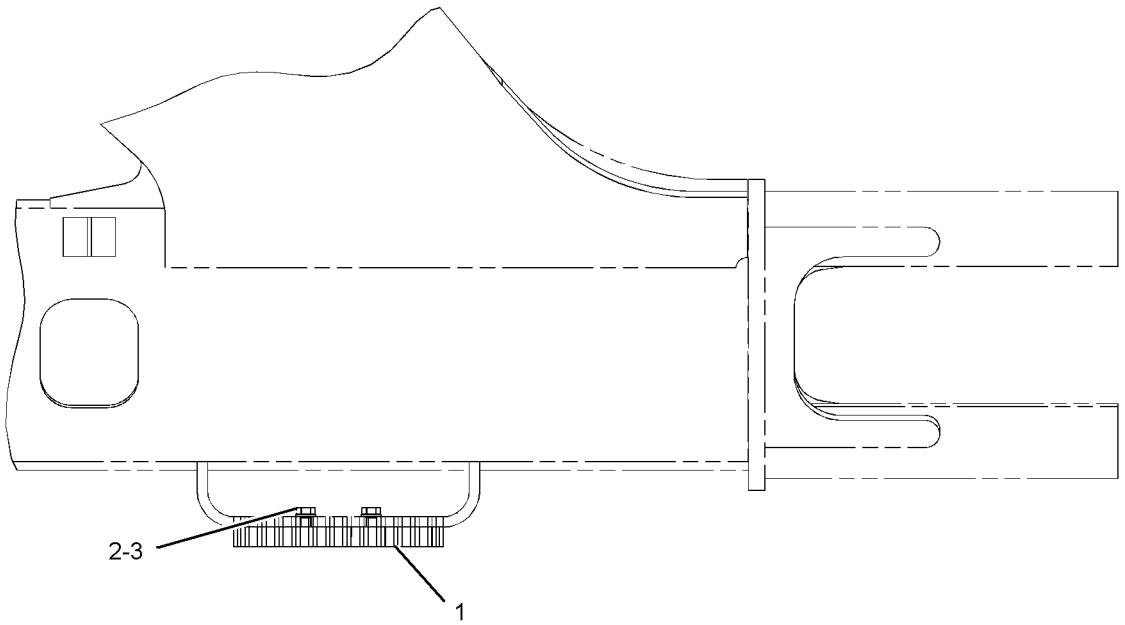

TOP VIEW

GRAPHIC #1 **<END>** g01150668

278-3983 STORAGE GP-VANDALISM GUARD

S/N: BYJ1-UP; PDP1-UP
PART OF 260-7197, 260-7198 GUARD AR-VANDALISM
AN ATTACHMENT

SMCS-7315 **i03036028**

NOTE	REF NO	GRAPHIC REF	PART NUMBER	QTY	PART NAME 1 2 3 4 5 6 (PRODUCT LEVEL)	SEE PAGE
	1	1	**5P-7958**	2	SLEEVE-CABLE SPLICE	
M	2	1	**135-8573**	2	BOLT AS (M12X1.75X25-MM)	
	3	1	**203-5292**	1	CABLE	
	4	1	**241-1933**	1	BOLT AS-SPECIAL	
Y	5	1	**298-2927**	1	BOX GP-STORAGE	217
	6	1	**327-3095**	1	COVER AS	

M-METRIC PART
Y-SEPARATE ILLUSTRATION

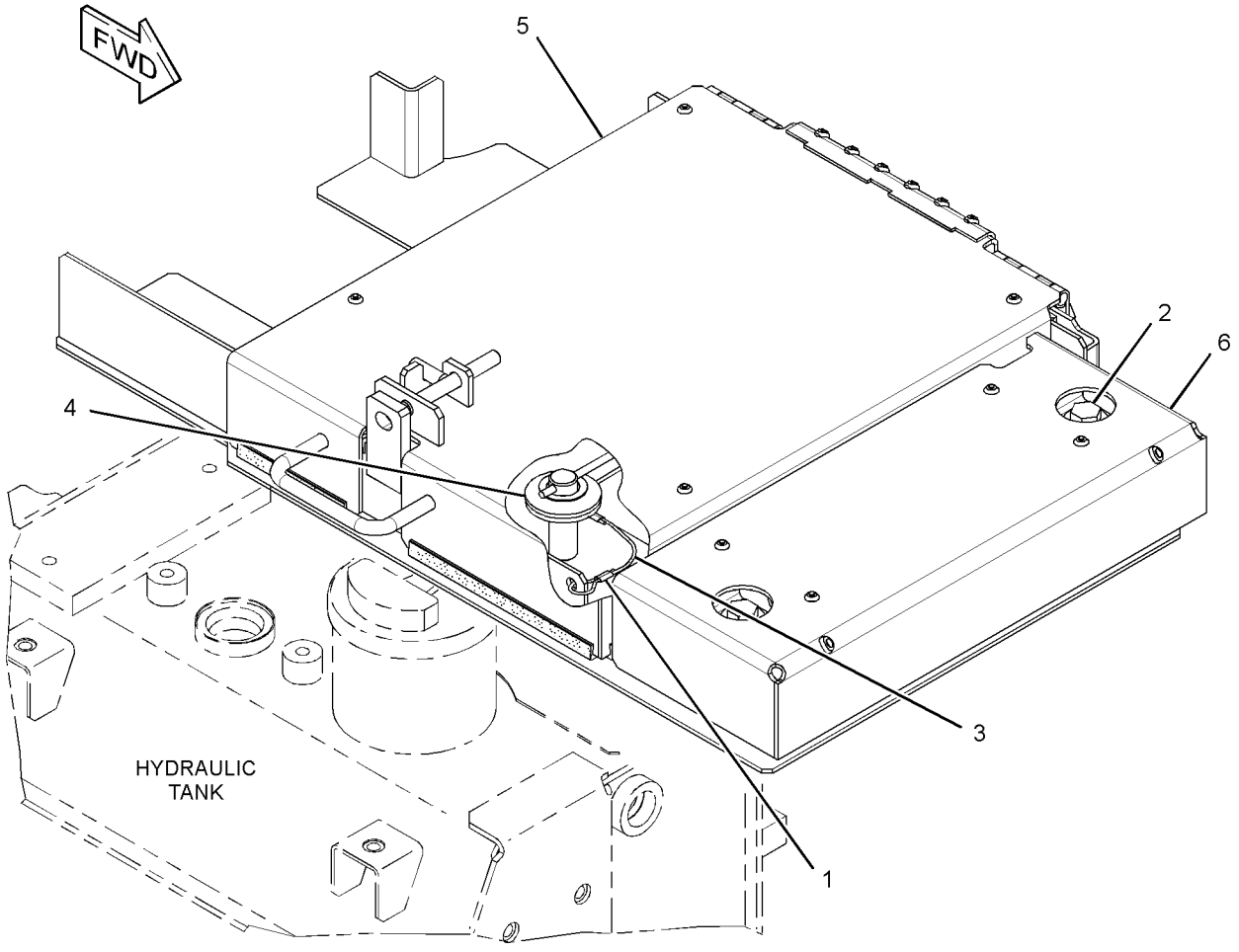

GRAPHIC #1 **<END>** g01637445

FRAME AND BODY

293-7117 SUPPORT AS-ENCLOSURE

S/N: BYJ1-UP; PDP1-UP

PART OF 278-3980 COVER GP-ACCESS

SMCS-0635, 1801, 7076, 7251, 7263, 7267, 7272, 7276 **i02811992**

NOTE	REF NO	GRAPHIC REF	PART NUMBER	QTY	PART NAME 1 2 3 4 5 6 (PRODUCT LEVEL)	SEE PAGE
	1	1	**237-1250**	1	GUARD	
	2	1	**115-8647**	1	GUARD	

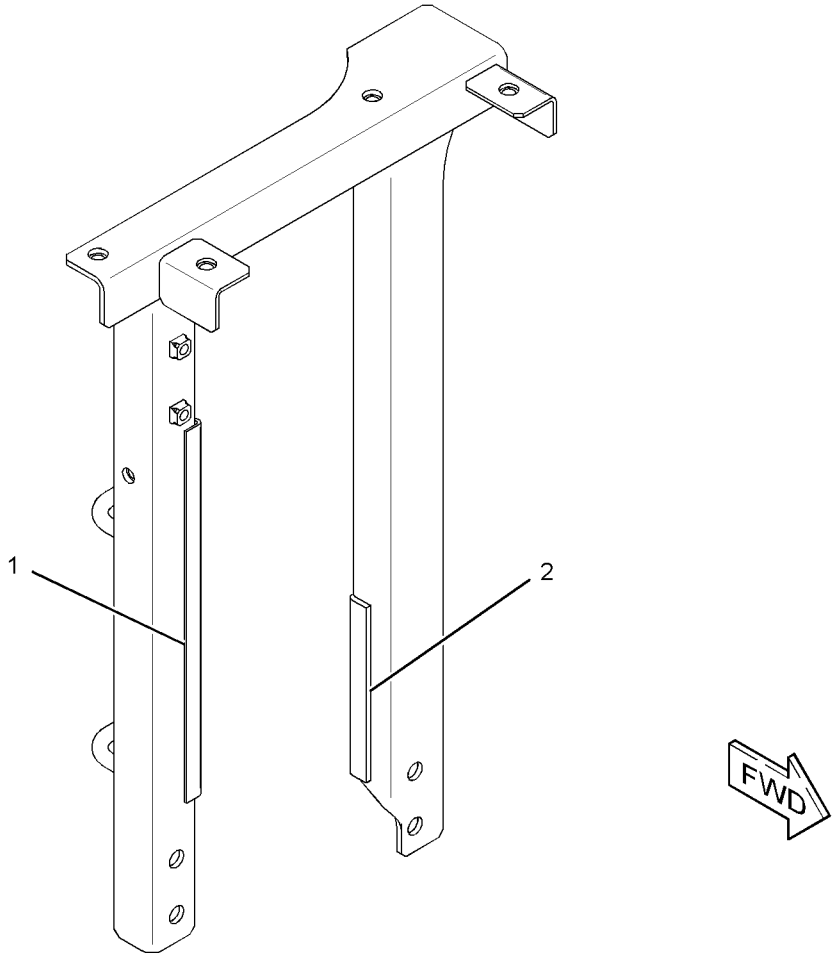

GRAPHIC #1 **<END>** g01414484

298-2914 SUPPORT AS-ENCLOSURE

S/N: BYJ1-UP; PDP1-UP

PART OF 278-3974 HOOD & GUARD GP

SMCS-0635, 1801, 7076, 7251, 7263, 7267, 7272, 7276 **i02984441**

NOTE	REF NO	GRAPHIC REF	PART NUMBER	QTY	PART NAME 1 2 3 4 5 6 (PRODUCT LEVEL)	SEE PAGE
	1	1	**320-5444**	1	LINER	

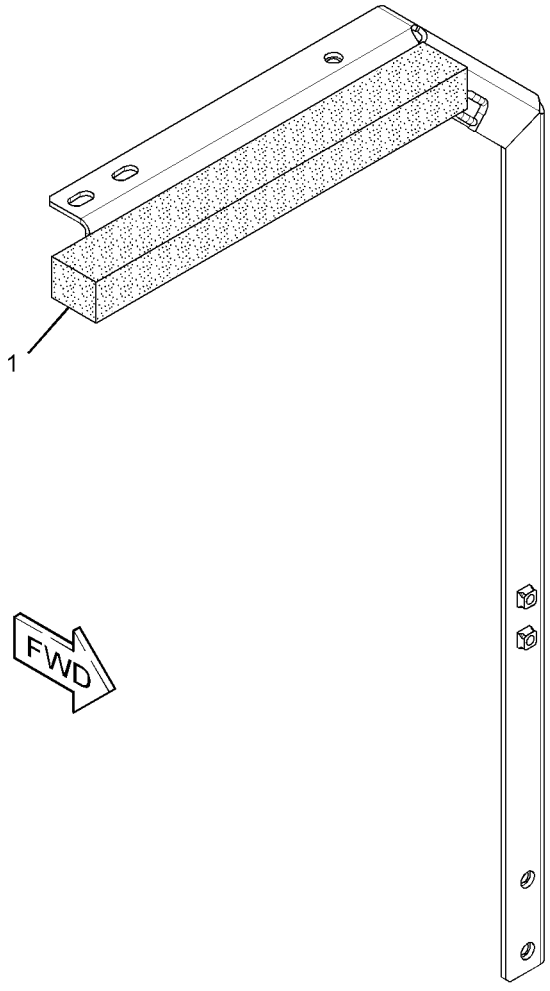

GRAPHIC #1 **<END>** g01515007

260-7185 FRAME AR-UNDERCARRIAGE—HEAVY-DUTY

S/N: PDP1-UP

PART OF 260-7176 GENERAL AR

SMCS-4151 **i02829107**

NOTE	PART NUMBER	QTY	PART NAME 1 2 3 4 5 6 (PRODUCT LEVEL)	SEE PAGE
Y	**269-1653**	1	FRAME AS-UNDERCARRIAGE (HEAVY-DUTY)	273
Y	*191-2596*	1	GEAR & BEARING GP-SWING	241
Y	*169-7904*	1	GUARD GP-TRAVEL MOTOR	277
Y	*248-7184*	1	IDLER GP-FRONT	280
Y	*248-7268*	1	ROLLER AR-TRACK & CARRIER	286
Y-SEPARATE ILLUSTRATION				

<END>

260-7186 FRAME AR-UNDERCARRIAGE—LONG CARRIAGE

S/N: BYJ1-UP

PART OF 260-7177 GENERAL AR

SMCS-4151 **i02829116**

NOTE	PART NUMBER	QTY	PART NAME 1 2 3 4 5 6 (PRODUCT LEVEL)	SEE PAGE
Y	**269-1649**	1	FRAME AS-UNDERCARRIAGE	272
Y	*191-2596*	1	GEAR & BEARING GP-SWING	241
Y	*120-7199*	1	GUARD GP-TRACK GUIDE	276
Y	*169-7904*	1	GUARD GP-TRAVEL MOTOR	277
Y	*248-7184*	1	IDLER GP-FRONT	280
Y	*248-7269*	1	ROLLER AR-TRACK	285
Y-SEPARATE ILLUSTRATION				

<END>

269-1649 FRAME AS-UNDERCARRIAGE–LONG

S/N: BYJ1-UP

PART OF 260-7186 FRAME AR-UNDERCARRIAGE, 278-9285 FRAME AS-UNDERCARRIAGE

ALSO AN ATTACHMENT

SMCS-4150, 7062 **i02814318**

NOTE	REF NO	GRAPHIC REF	PART NUMBER	QTY	PART NAME 1 2 3 4 5 6 (PRODUCT LEVEL)	SEE PAGE
	1	1	*269-1651*	1	FRAME AS-TRACK ROLLER (RH)	
	1A	1	**151-9751**	2	BRACKET	
	1B	1	**235-7520**	2	STEP	
	2	1	*269-1652*	1	FRAME AS-TRACK ROLLER (LH)	
	2A	1	**151-9751**	2	BRACKET	
	2B	1	**235-7520**	2	STEP	

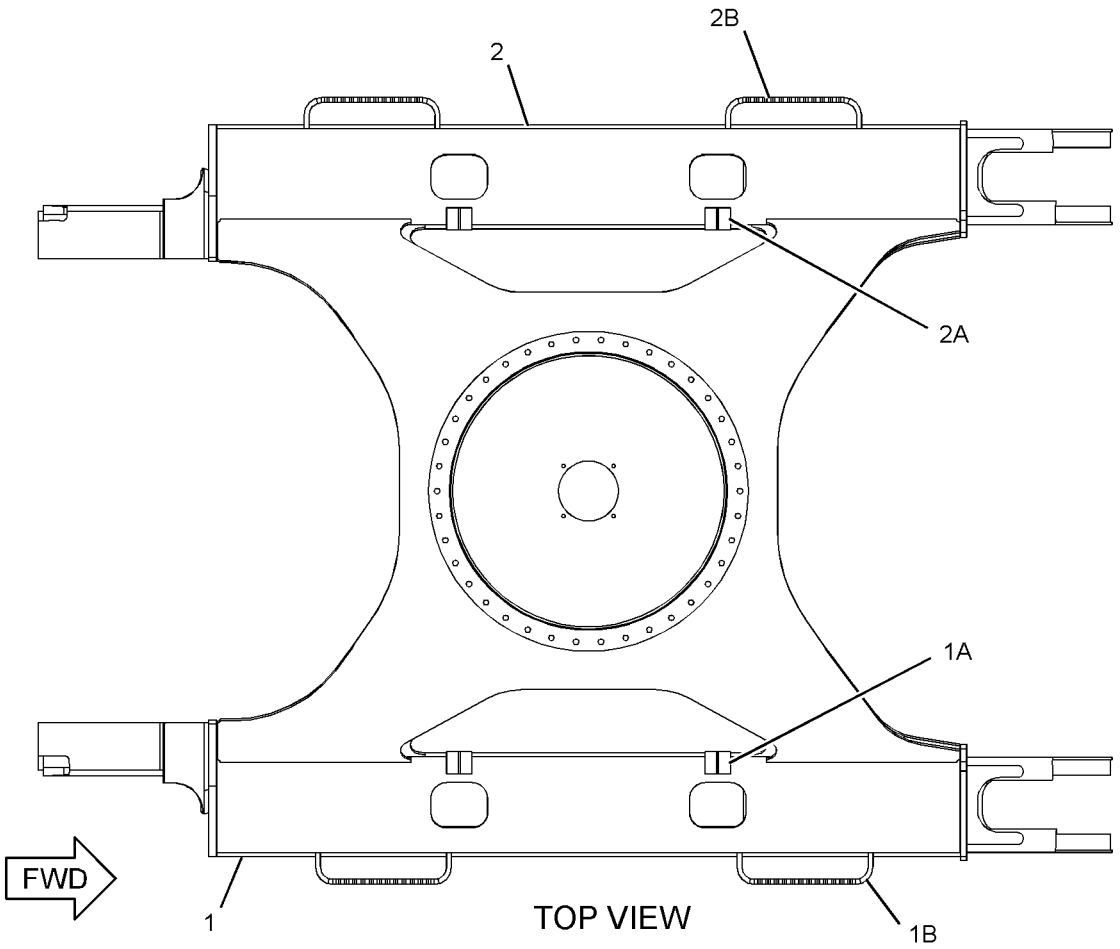

GRAPHIC #1 **<END>** g01406648

269-1653 FRAME AS-UNDERCARRIAGE–HEAVY-DUTY

S/N: PDP1-UP

PART OF 260-7185 FRAME AR-UNDERCARRIAGE, 278-9352 FRAME AS-UNDERCARRIAGE

ALSO AN ATTACHMENT

SMCS-4150, 7062 **i02829106**

NOTE	REF NO	GRAPHIC REF	PART NUMBER	QTY	PART NAME 1 2 3 4 5 6 (PRODUCT LEVEL)	SEE PAGE
	1	1	*269-1655*	1	FRAME AS-TRACK ROLLER (RH)	
	1A	1	**151-9751**	1	BRACKET	
	1B	1	**235-7520**	2	STEP	
	2	1	*269-1656*	1	FRAME AS-TRACK ROLLER (LH)	
	2A	1	**151-9751**	1	BRACKET	
	2B	1	**235-7520**	2	STEP	

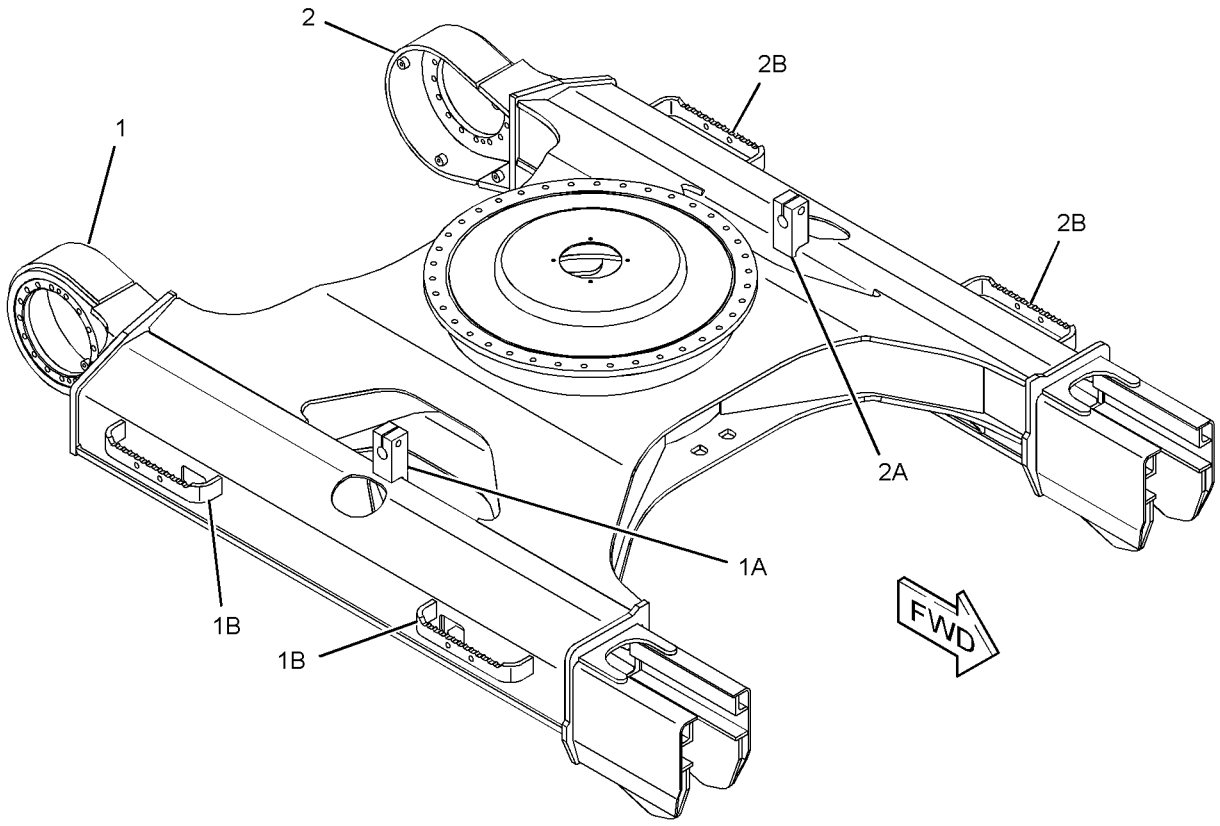

GRAPHIC #1 **<END>** g01416197

UNDERCARRIAGE

278-9285 FRAME AS-UNDERCARRIAGE—LONG

S/N: BYJ1-UP

PART OF 260-7213 INSTALLATION AR-AUXILIARY

AN ATTACHMENT

SMCS-4150, 7062 **i03254203**

NOTE	PART NUMBER	QTY	PART NAME 1 2 3 4 5 6 (PRODUCT LEVEL)	SEE PAGE
Y	*269-1649*	1	FRAME AS-UNDERCARRIAGE (LONG)	272

Y-SEPARATE ILLUSTRATION

<END>

UNDERCARRIAGE

278-9352 FRAME AS-UNDERCARRIAGE

S/N: PDP1-UP

PART OF 260-7212 INSTALLATION AR-AUXILIARY

AN ATTACHMENT

SMCS-4150, 7062 **i02820462**

NOTE	REF NO	GRAPHIC REF	PART NUMBER	QTY	PART NAME 1 2 3 4 5 6 (PRODUCT LEVEL)	SEE PAGE
Y	1	1	**269-1653**	1	FRAME AS-UNDERCARRIAGE (HEAVY-DUTY)	273

Y-SEPARATE ILLUSTRATION

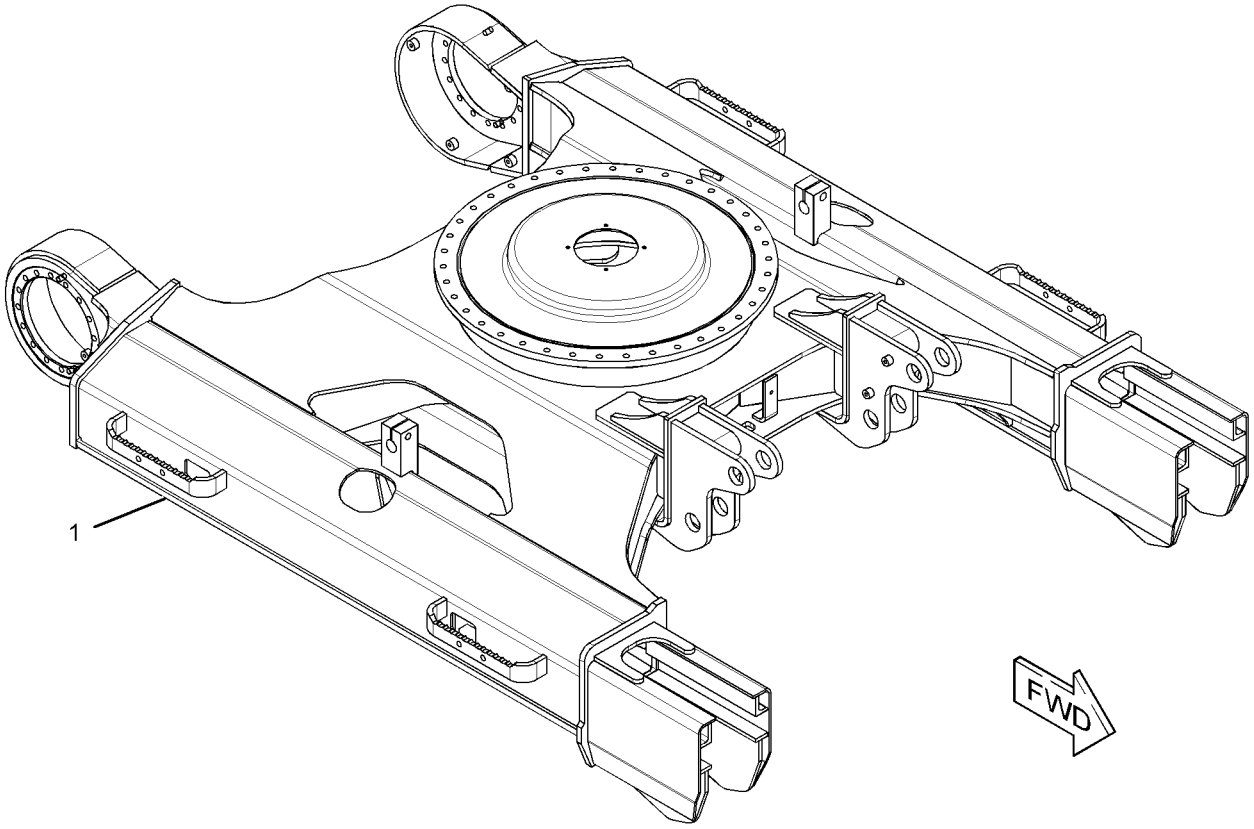

GRAPHIC #1 **<END>** g01421330

120-7199 GUARD GP-TRACK GUIDE

S/N: BYJ1-UP; PDP1-UP
PART OF 260-7186 FRAME AR-UNDERCARRIAGE
ALSO AN ATTACHMENT

SMCS-4177 **i01667851**

NOTE	REF NO	GRAPHIC REF	PART NUMBER	QTY	PART NAME 1 2 3 4 5 6 (PRODUCT LEVEL)	SEE PAGE
	1	1	**133-2554**	2	GUARD AS-TRACK GUIDE	
M	2	1	**8T-4779**	8	BOLT (M16X2X35-MM)	
	3	1	**9X-8257**	8	WASHER (17.5X30X3.5-MM THK)	

QUANTITIES SHOWN ARE THOSE REQUIRED FOR BOTH LH AND RH SIDES
M-METRIC PART

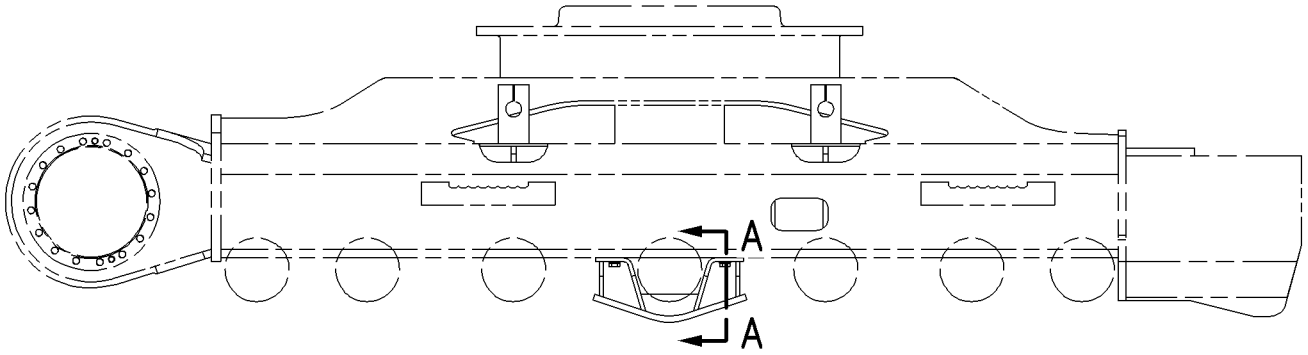

RIGHT SIDE VIEW

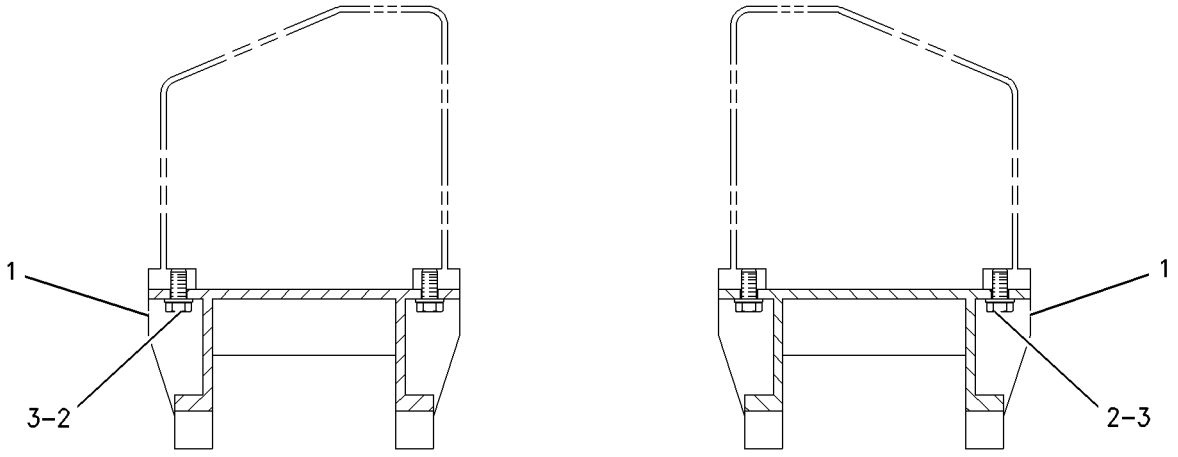

SECTION A-A

GRAPHIC #1 **<END>** g00755978

169-7904 GUARD GP-TRAVEL MOTOR

S/N: BYJ1-UP; PDP1-UP

PART OF 260-7185, 260-7186 FRAME AR-UNDERCARRIAGE

SMCS-7163 **i02906091**

NOTE	REF NO	GRAPHIC REF	PART NUMBER	QTY	PART NAME 1 2 3 4 5 6 (PRODUCT LEVEL)	SEE PAGE
	1	1	**169-7905**	2	PLATE	
M	2	1	**8C-8992**	8	BOLT-LOCKING (M12X1.75X30-MM)	
	3	1	**5P-1076**	8	WASHER-HARD (13.5X30X4-MM THK)	

QUANTITIES SHOWN ARE THOSE REQUIRED FOR BOTH LH AND RH SIDES
M-METRIC PART

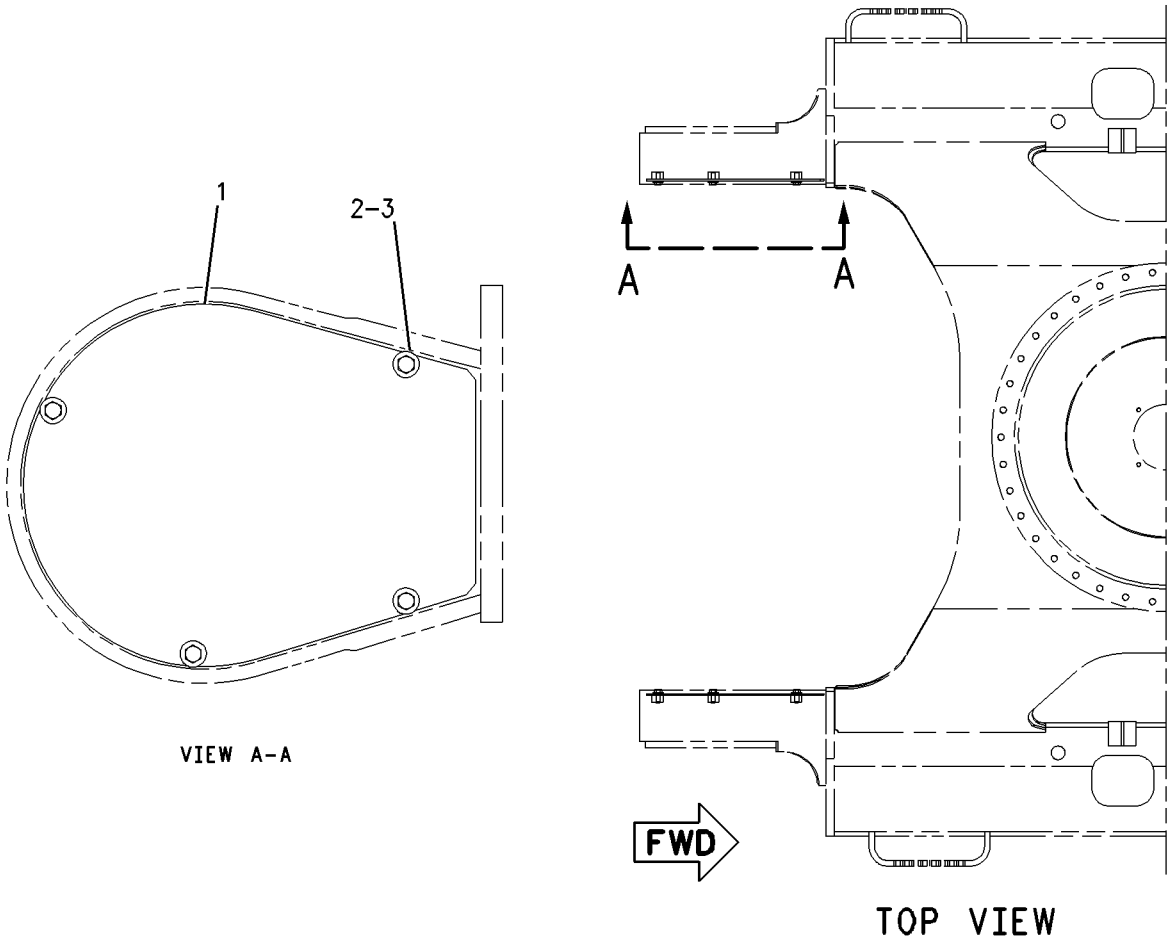

VIEW A-A

TOP VIEW

GRAPHIC #1 **<END>** g00858779

185-9123 GUARD GP-TRAVEL MOTOR

S/N: BYJ1-UP; PDP1-UP
DEMOLITION
AN ATTACHMENT

SMCS-7163 **i01729100**

NOTE	REF NO	GRAPHIC REF	PART NUMBER	QTY	PART NAME 1 2 3 4 5 6 (PRODUCT LEVEL)	SEE PAGE
	1	1	**185-9124**	1	COVER AS-MOTOR (LH)	
	2	1	**185-9125**	1	COVER AS (MOTOR RH)	
M	3	1	**6V-8097**	8	BOLT (M12X1.75X30MM)	
	4	1	**5P-1076**	8	WASHER-HARD (13.5X30X4MM THK)	

M-METRIC PART

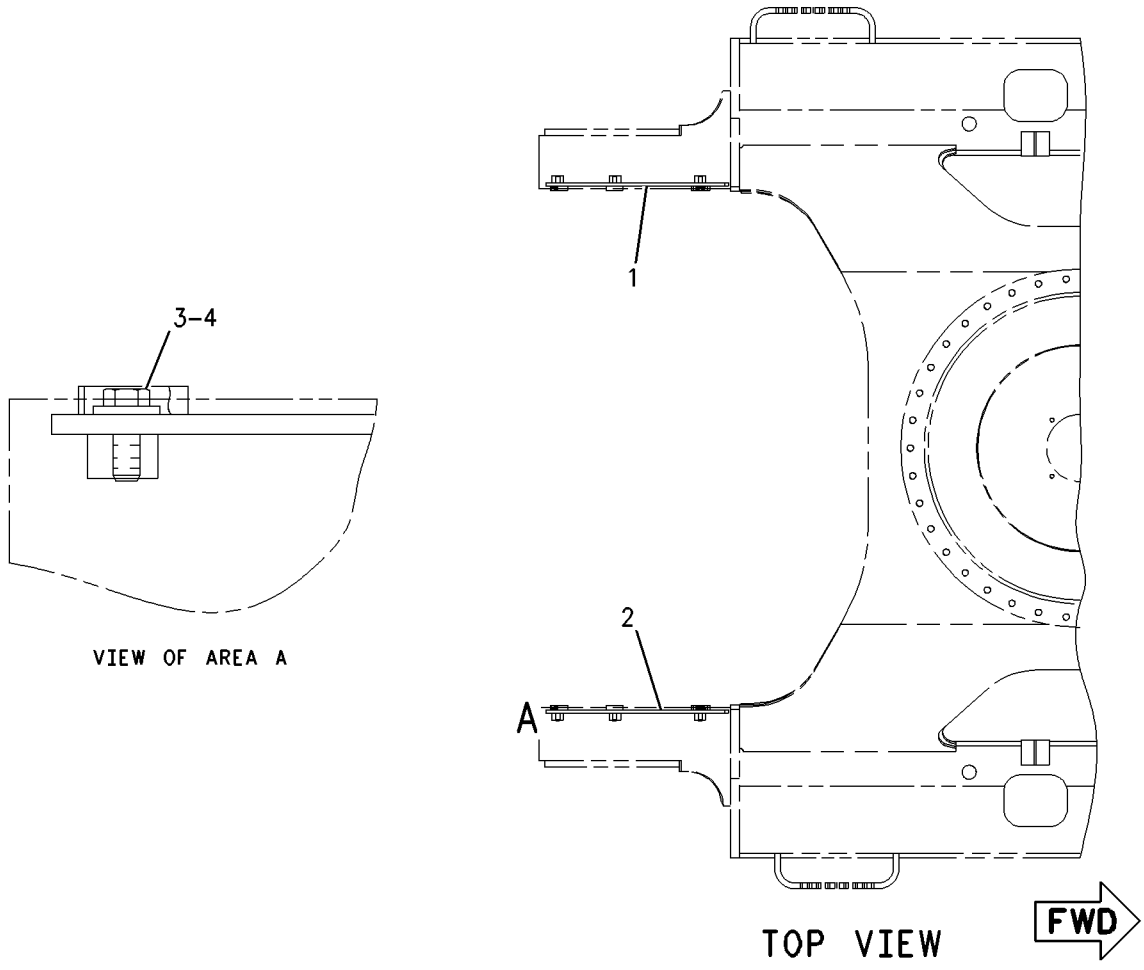

GRAPHIC #1 **<END>** g00900266

4I-7337 IDLER GP-FRONT

S/N: BYJ1-UP; PDP1-UP

PART OF 297-9138, 297-9139 IDLER GP-FRONT

SMCS-4159 **i01667852**

NOTE	REF NO	GRAPHIC REF	PART NUMBER	QTY	PART NAME 1 2 3 4 5 6 (PRODUCT LEVEL)	SEE PAGE
	1	1	**6I-6590**	1	IDLER & BEARING AS	
	2	1	**7H-3171**	1	PLUG-PIPE	
	3	1	**099-0159**	2	SEAL GP	
					(EACH INCLUDES)	
		1	**099-0160**	2	RING-SEALING	
	4	1	**095-1662**	2	SEAL-O-RING	
	5	1	**099-0163**	2	PIN	
	6	1	**6I-6477**	1	SHAFT-IDLER	
	7	1	**4I-7488**	2	BEARING-FRONT IDLER	

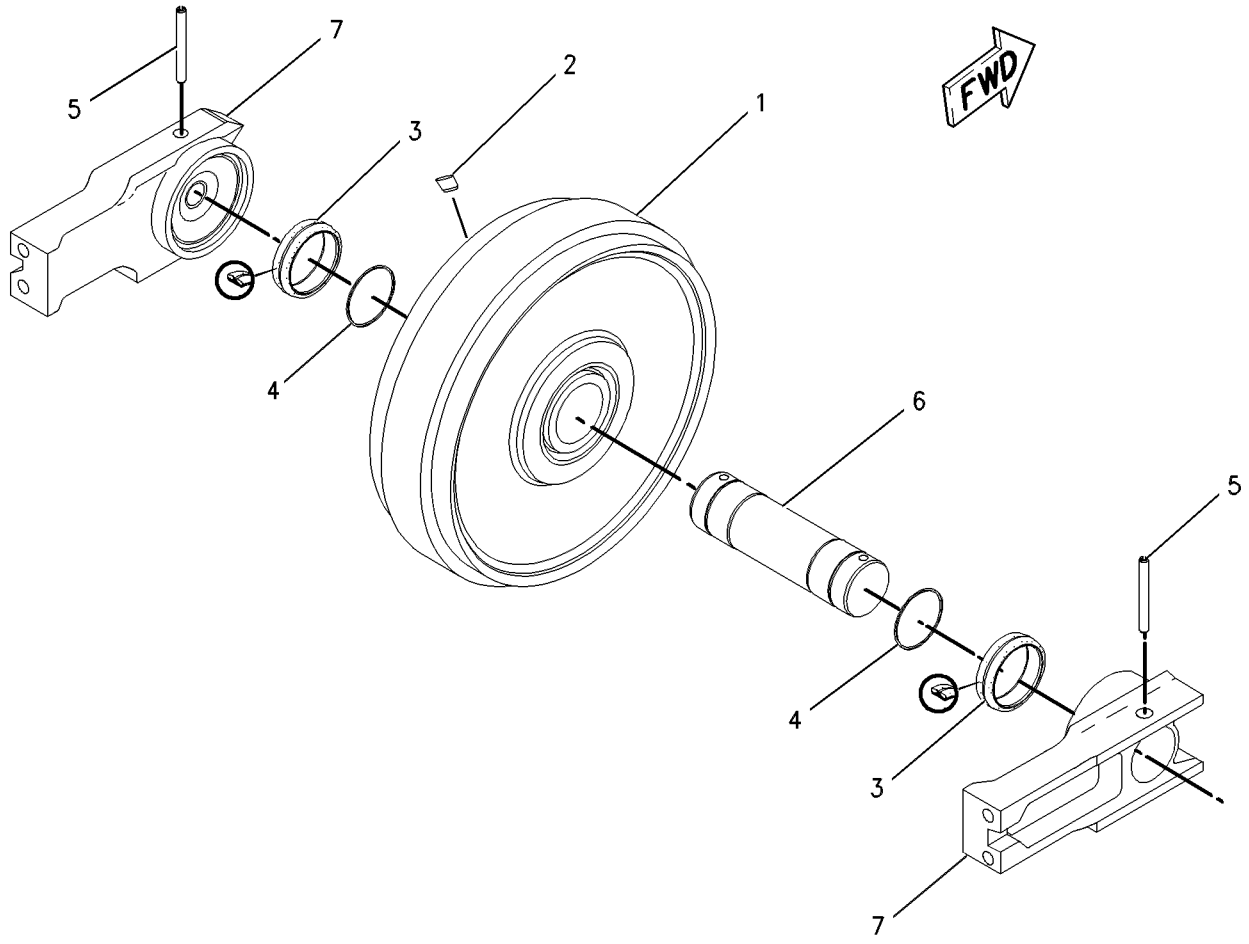

GRAPHIC #1 **<END>** g00662615

248-7184 IDLER GP-FRONT

S/N: BYJ1-UP; PDP1-UP

PART OF 260-7185, 260-7186 FRAME AR-UNDERCARRIAGE

SMCS-4159 **i02845523**

NOTE	REF NO	GRAPHIC REF	PART NUMBER	QTY	PART NAME 1 2 3 4 5 6 (PRODUCT LEVEL)	SEE PAGE
Y	1	1	*297-9138*	1	IDLER GP-FRONT (RH)	281
Y	2	1	*297-9139*	1	IDLER GP-FRONT (LH)	282

Y-SEPARATE ILLUSTRATION

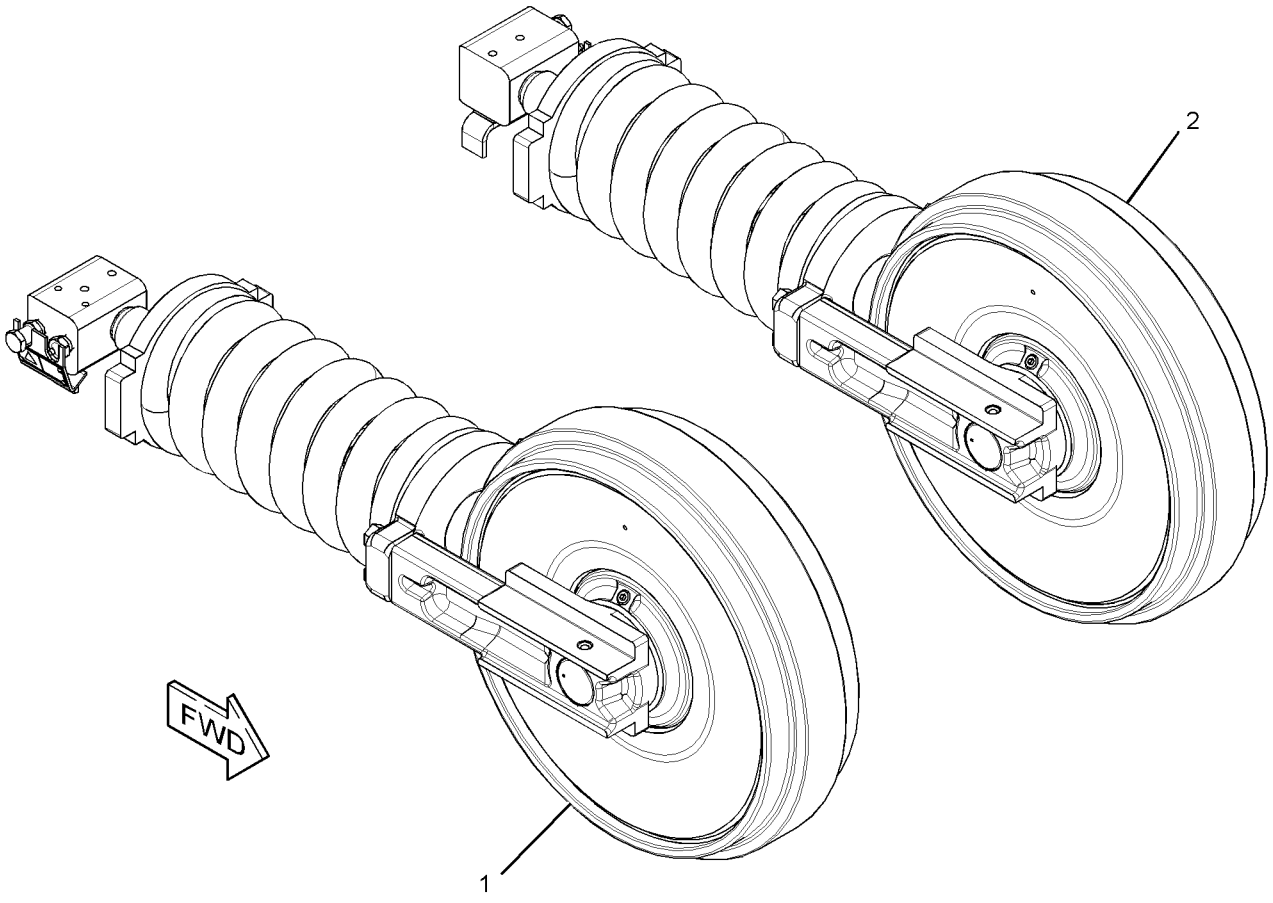

GRAPHIC #1 **<END>** g01410871

297-9138 IDLER GP-FRONT—RH

S/N: BYJ1-UP; PDP1-UP

PART OF 248-7184 IDLER GP-FRONT

SMCS-4159 **i02845517**

NOTE	REF NO	GRAPHIC REF	PART NUMBER	QTY	PART NAME 1 2 3 4 5 6 (PRODUCT LEVEL)	SEE PAGE
Y	1	1	**4I-7337**	1	IDLER GP-FRONT	279
Y	2	1	*297-9140*	1	TRACK ADJUSTER & RECOIL GP	289
M	3	1	**8T-4140**	4	BOLT (M16X2X60-MM)	

M-METRIC PART
Y-SEPARATE ILLUSTRATION

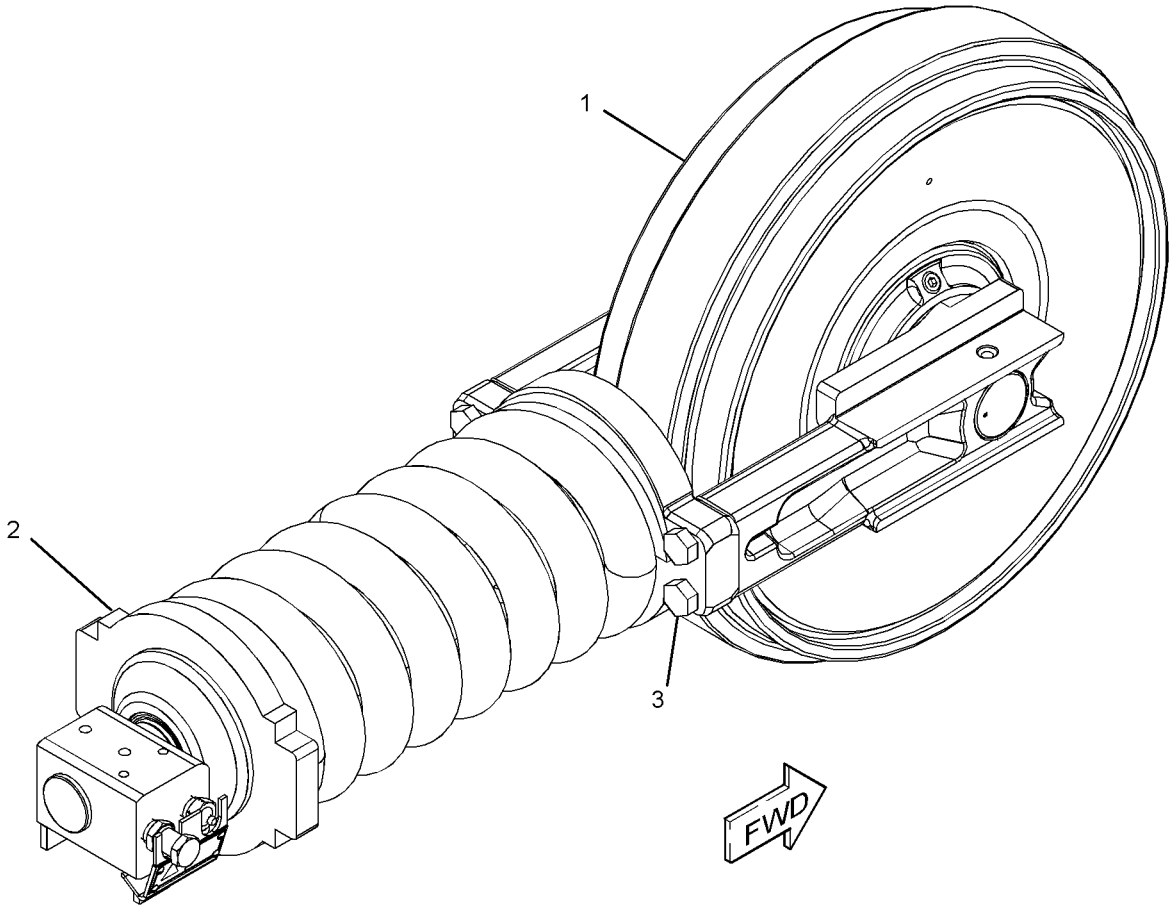

GRAPHIC #1 **<END>** g01424119

297-9139 IDLER GP-FRONT–LH

S/N: BYJ1-UP; PDP1-UP

PART OF 248-7184 IDLER GP-FRONT

SMCS-4159 **i02845519**

NOTE	REF NO	GRAPHIC REF	PART NUMBER	QTY	PART NAME 1 2 3 4 5 6 (PRODUCT LEVEL)	SEE PAGE
Y	1	1	**4I-7337**	1	IDLER GP-FRONT	279
Y	2	1	*297-9141*	1	TRACK ADJUSTER & RECOIL GP	290
M	3	1	**8T-4140**	4	BOLT (M16X2X60-MM)	

M-METRIC PART
Y-SEPARATE ILLUSTRATION

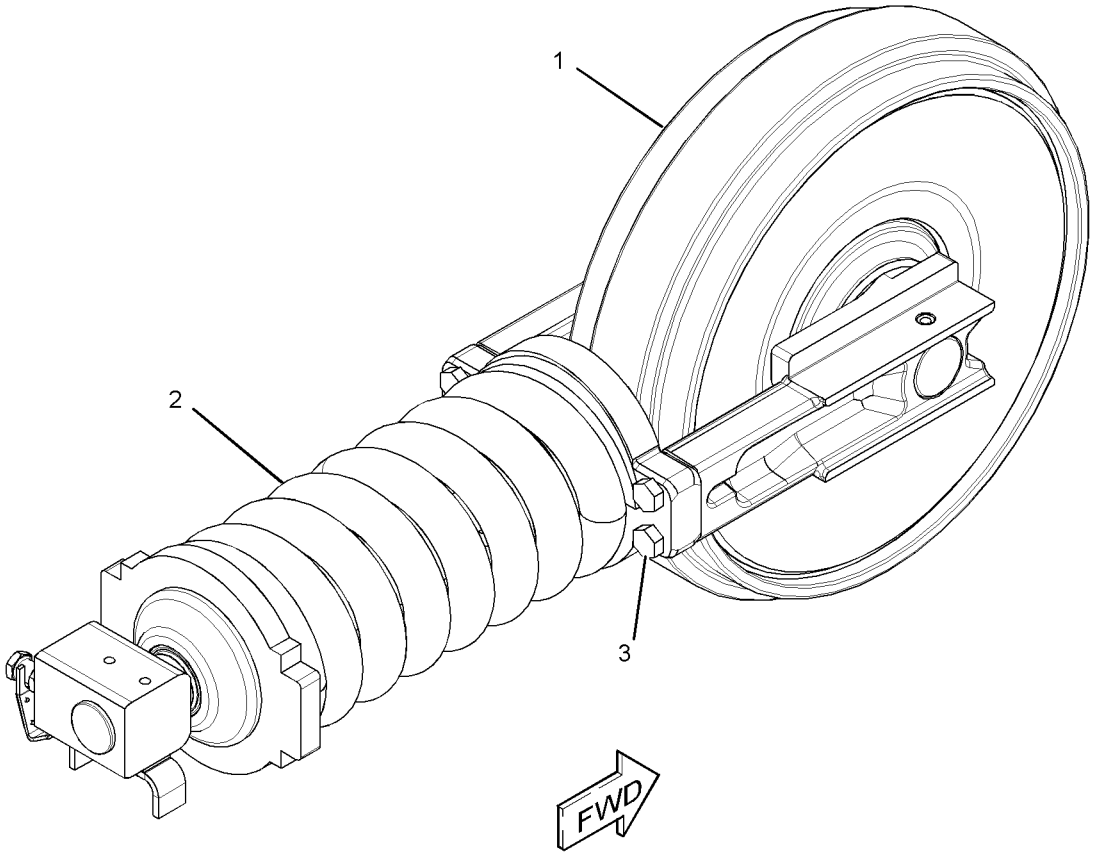

GRAPHIC #1 **<END>** g01424156

176-4870 LINK AS-TRACK

S/N: PDP1-UP

PART OF 176-4863, 176-4864, 176-4865, 176-4869 TRACK GP

AN ATTACHMENT

SMCS-4169, 4171 **i01477527**

NOTE	REF NO	GRAPHIC REF	PART NUMBER	QTY	PART NAME 1 2 3 4 5 6 (PRODUCT LEVEL)	SEE PAGE
	1	1	**4I-7475**	42	LINK-TRACK	
	2	1	**095-0863**	1	COTTER	
	3	1	**4I-7477**	1	LINK-MASTER	
	4	1	**162-4306**	1	BUSHING	
	5	1	**4I-7478**	1	LINK-MASTER	
	6	1	**099-0653**	1	PIN-LINK MASTER	
	7	1	**176-4872**	2	SEAL-TRACK MASTER	
	8	1	**4I-7476**	42	LINK-TRACK	
	9	1	**162-4305**	42	PIN-TRACK	
	10	1	**162-4307**	84	SEAL-TRACK	
	11	1	**162-4304**	42	BUSHING-TRACK	

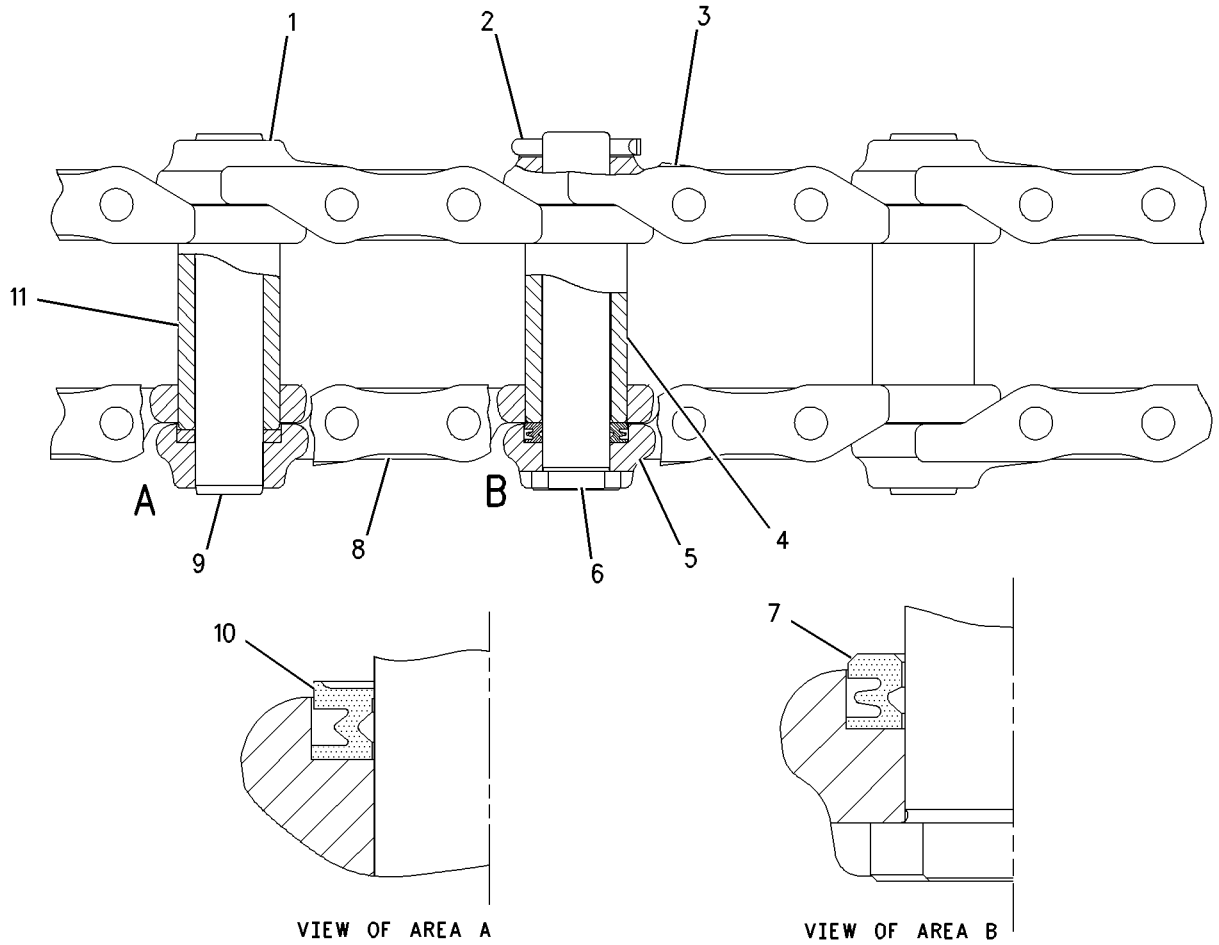

GRAPHIC #1 **<END>** g00770977

176-4871 LINK AS-TRACK

S/N: BYJ1-UP

PART OF 176-4866, 176-4867, 179-3029, 244-5247 TRACK GP

AN ATTACHMENT

SMCS-4169, 4171 **i01477571**

NOTE	REF NO	GRAPHIC REF	PART NUMBER	QTY	PART NAME 1 2 3 4 5 6 (PRODUCT LEVEL)	SEE PAGE
	1	1	**4I-7475**	45	LINK-TRACK	
	2	1	**095-0863**	1	COTTER	
	3	1	**4I-7477**	1	LINK-MASTER	
	4	1	**162-4306**	1	BUSHING	
	5	1	**4I-7478**	1	LINK-MASTER	
	6	1	**099-0653**	1	PIN-LINK MASTER	
	7	1	**176-4872**	2	SEAL-TRACK MASTER	
	8	1	**4I-7476**	45	LINK-TRACK	
	9	1	**162-4305**	45	PIN-TRACK	
	10	1	**162-4307**	90	SEAL-TRACK	
	11	1	**162-4304**	45	BUSHING-TRACK	

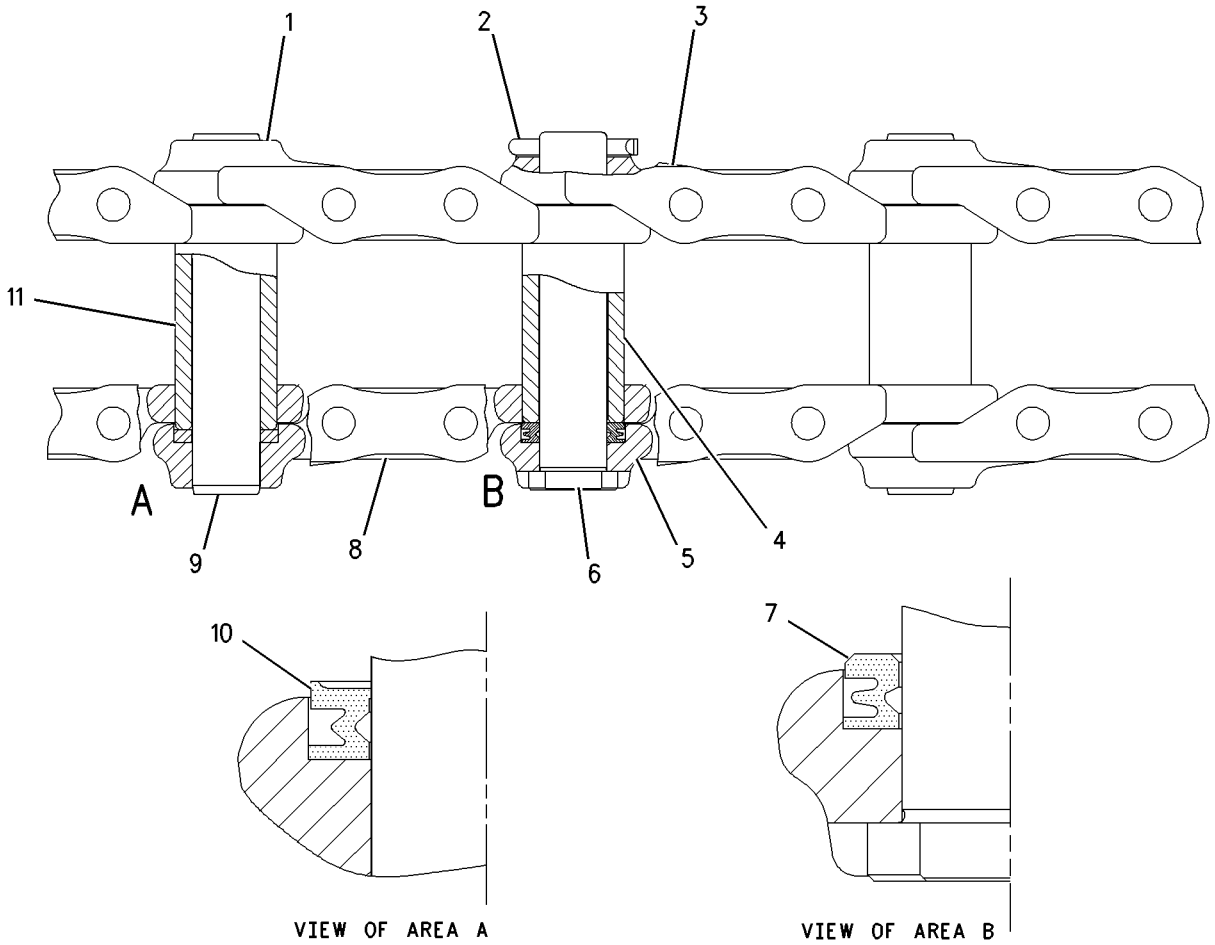

GRAPHIC #1 **<END>** g00770877

UNDERCARRIAGE

248-7269 ROLLER AR-TRACK

S/N: BYJ1-UP

PART OF 260-7186 FRAME AR-UNDERCARRIAGE

SMCS-4180 **i02877389**

NOTE	REF NO	GRAPHIC REF	PART NUMBER	QTY	PART NAME 1 2 3 4 5 6 (PRODUCT LEVEL)	SEE PAGE
Y	1	1	**4I-7345**	4	ROLLER GP-TRACK CARRIER	287
Y	2	1	**248-7259**	14	ROLLER GP-TRACK-SINGLE FLANGE	288
M	3	1	**7X-2555**	56	BOLT (M16X2X80-MM)	
	4	1	**8T-4122**	56	WASHER-HARD (17X32X3.5-MM THK)	
M	5	1	**8T-5878**	4	BOLT (M24X3X80-MM)	

QUANTITIES SHOWN ARE THOSE REQUIRED FOR BOTH LH AND RH SIDES
M-METRIC PART
Y-SEPARATE ILLUSTRATION

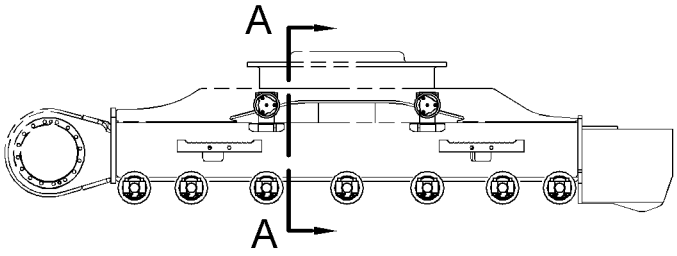

RIGHT SIDE VIEW

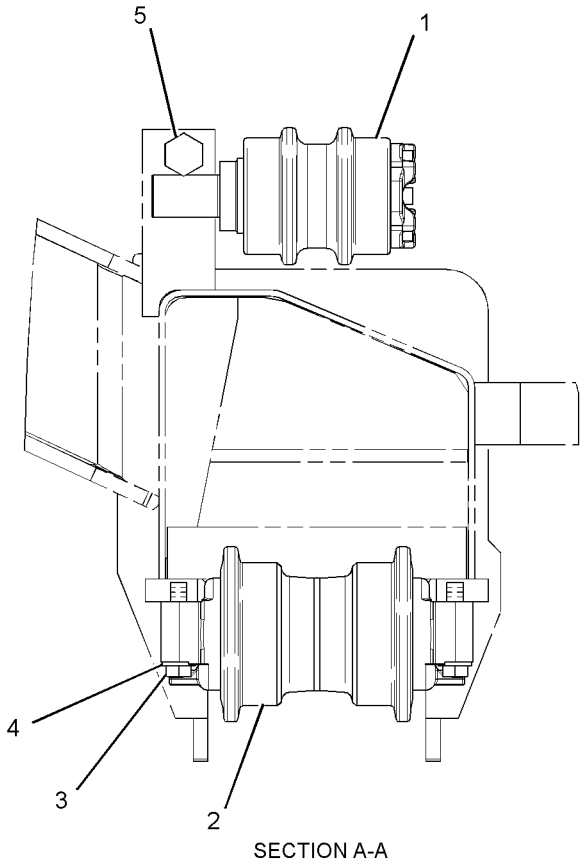

SECTION A-A

GRAPHIC #1 **<END>** g01411345

248-7268 ROLLER AR-TRACK & CARRIER

S/N: PDP1-UP

PART OF 260-7185 FRAME AR-UNDERCARRIAGE

SMCS-4154, 4180 **i02795031**

NOTE	REF NO	GRAPHIC REF	PART NUMBER	QTY	PART NAME 1 2 3 4 5 6 (PRODUCT LEVEL)	SEE PAGE
Y	1	1	**4I-7345**	2	ROLLER GP-TRACK CARRIER	287
Y	2	1	**248-7259**	12	ROLLER GP-TRACK-SINGLE FLANGE	288
M	3	1	**7X-2555**	48	BOLT (M16X2X80-MM)	
	4	1	**8T-4122**	48	WASHER-HARD (17X32X3.5-MM THK)	
M	5	1	**8T-5878**	2	BOLT (M24X3X80-MM)	

M-METRIC PART
Y-SEPARATE ILLUSTRATION

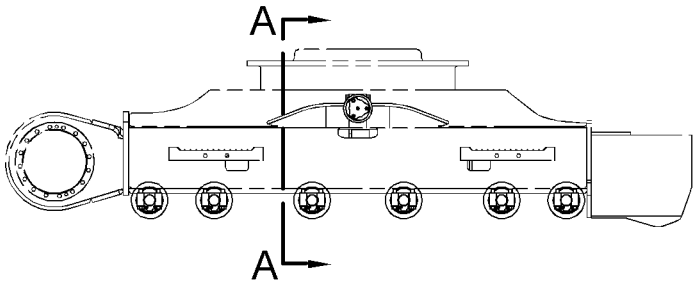

RIGHT SIDE VIEW

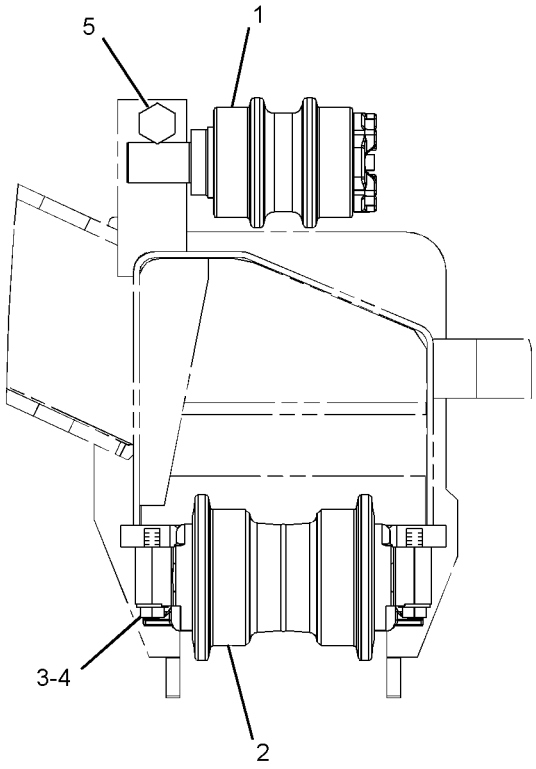

VIEW A-A

GRAPHIC #1 **<END>** g01406170

4I-7345 ROLLER GP-TRACK CARRIER

S/N: BYJ1-UP; PDP1-UP

PART OF 248-7269 ROLLER AR-TRACK, 248-7268 ROLLER AR-TRACK & CARRIER

SMCS-4154 **i01667856**

NOTE	REF NO	GRAPHIC REF	PART NUMBER	QTY	PART NAME 1 2 3 4 5 6 (PRODUCT LEVEL)	SEE PAGE
	1	1	**7Y-2159**	1	SHAFT AS-ROLLER	
	2	1	**099-0183**	1	SEAL GP	
		1	**099-4739**	2	RING-SEALING	
	3	1	**7Y-2155**	1	ROLLER & BEARING AS	
	4	1	**7Y-2162**	1	RETAINER	
	5	1	**6V-7658**	1	SEAL-O-RING	
M	6	1	**8T-1159**	5	BOLT-SOCKET HEAD (M10X1.5X25-MM)	
	7	1	**7Y-2158**	1	COVER-CARRIER ROLLER	
	8	1	**7H-3171**	1	PLUG-PIPE	

M-METRIC PART

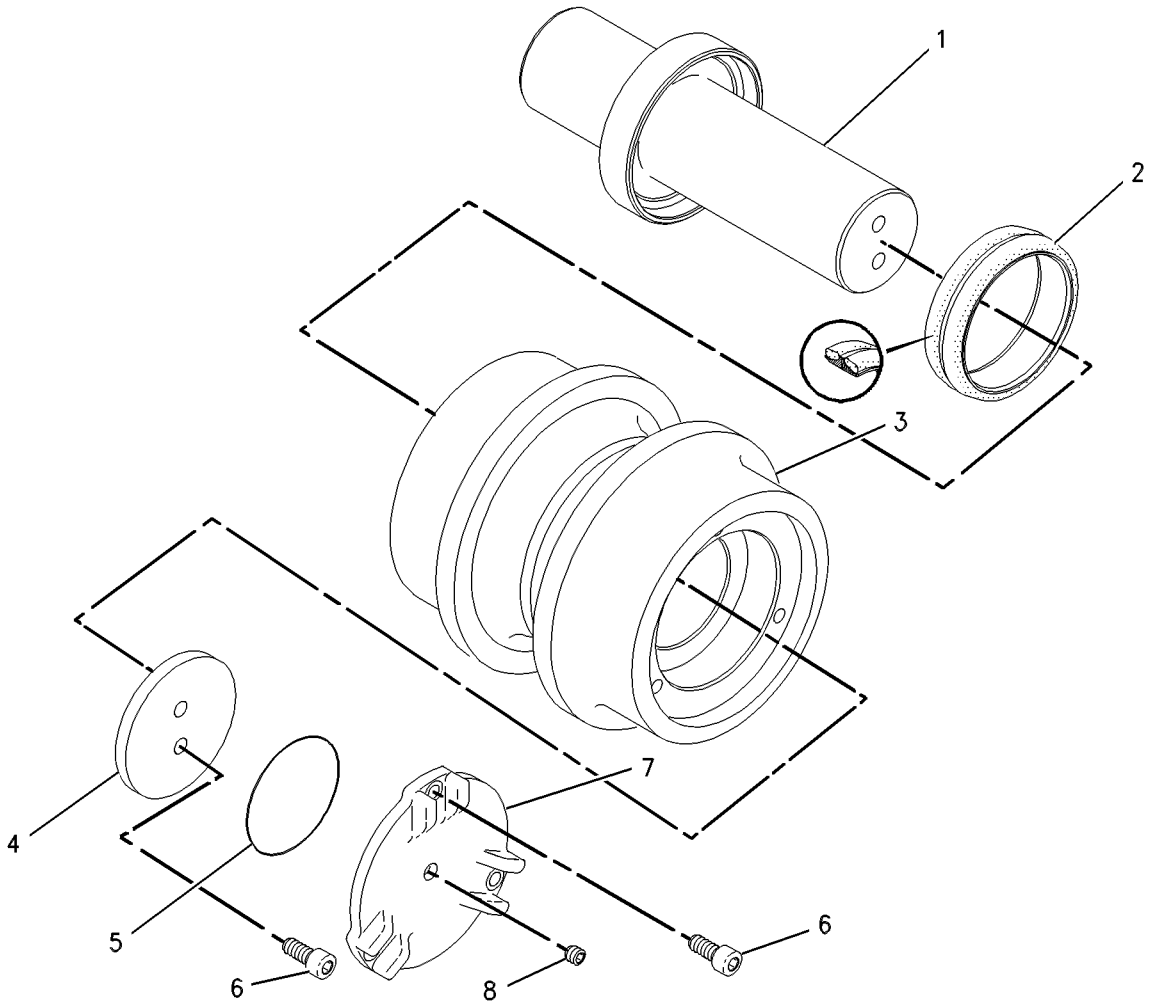

GRAPHIC #1 **<END>** g00661754

248-7259 ROLLER GP-TRACK-SINGLE FLANGE

S/N: BYJ1-UP; PDP1-UP

PART OF 248-7269 ROLLER AR-TRACK, 248-7268 ROLLER AR-TRACK & CARRIER

SMCS-4180 **i02876845**

NOTE	REF NO	GRAPHIC REF	PART NUMBER	QTY	PART NAME 1 2 3 4 5 6 (PRODUCT LEVEL)	SEE PAGE
	1	1	**6I-6451**	1	ROLLER & BEARING AS	
	1A	1	**099-0195**	2	BEARING-TRACK ROLLER	
	2	1	**6I-6549**	2	DOWEL	
	3	1	**099-0193**	2	SEAL GP	
					(EACH INCLUDES)	
		1	**6I-6449**	2	SEAL-RING	
		1	**099-0194**	2	RING-SEALING	
	4	1	**248-7260**	1	COLLAR-TRACK	
	5	1	**248-7261**	1	COLLAR-TRACK	
	6	1	**248-7262**	1	SHAFT-TRACK ROLLER	
	7	1	**3D-4603**	1	PLUG-PIPE	
	8	1	**6V-7660**	2	SEAL-O-RING	

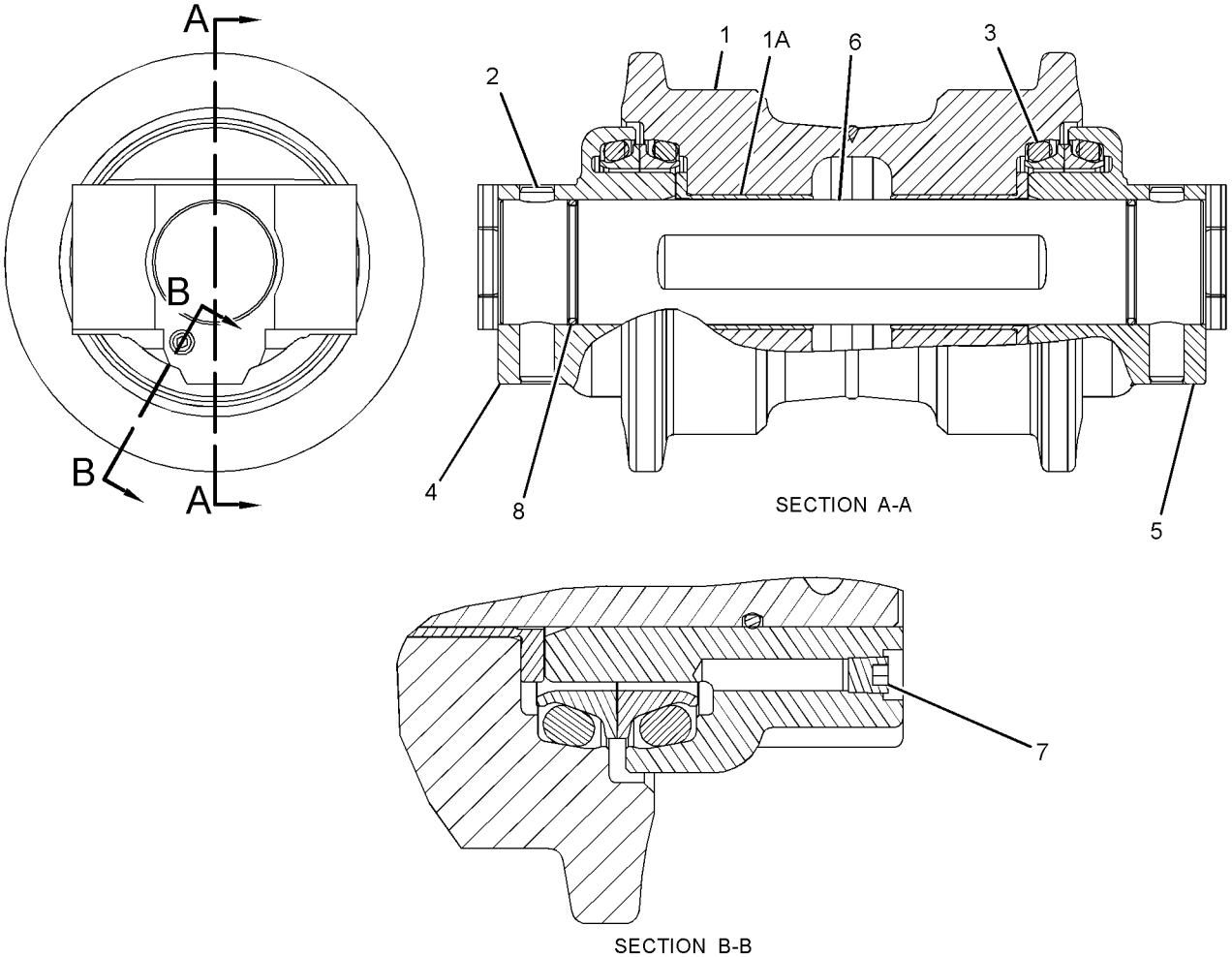

GRAPHIC #1 **<END>** g01400534

297-9140 TRACK ADJUSTER & RECOIL GP–RH

S/N: BYJ1-UP; PDP1-UP

PART OF 297-9138 IDLER GP-FRONT

SMCS-4157, 4158 **i02845518**

NOTE	REF NO	GRAPHIC REF	PART NUMBER	QTY	PART NAME 1 2 3 4 5 6 (PRODUCT LEVEL)	SEE PAGE
	1	1	**248-7200**	1	PLATE AS	
		1	**4B-4158**	4	SCREW-DRIVE (3/16X0.25-IN)	
		1	**253-1346**	1	PLATE-WARNING (HIGH PRESSURE CYLINDER)	
	2	1	**248-7203**	1	PLATE	
Y	3	1	*297-9142*	1	TRACK ADJUSTER & RECOIL GP	291
M	4	1	**8T-4137**	2	BOLT (M10X1.5X20-MM)	

M-METRIC PART
Y-SEPARATE ILLUSTRATION

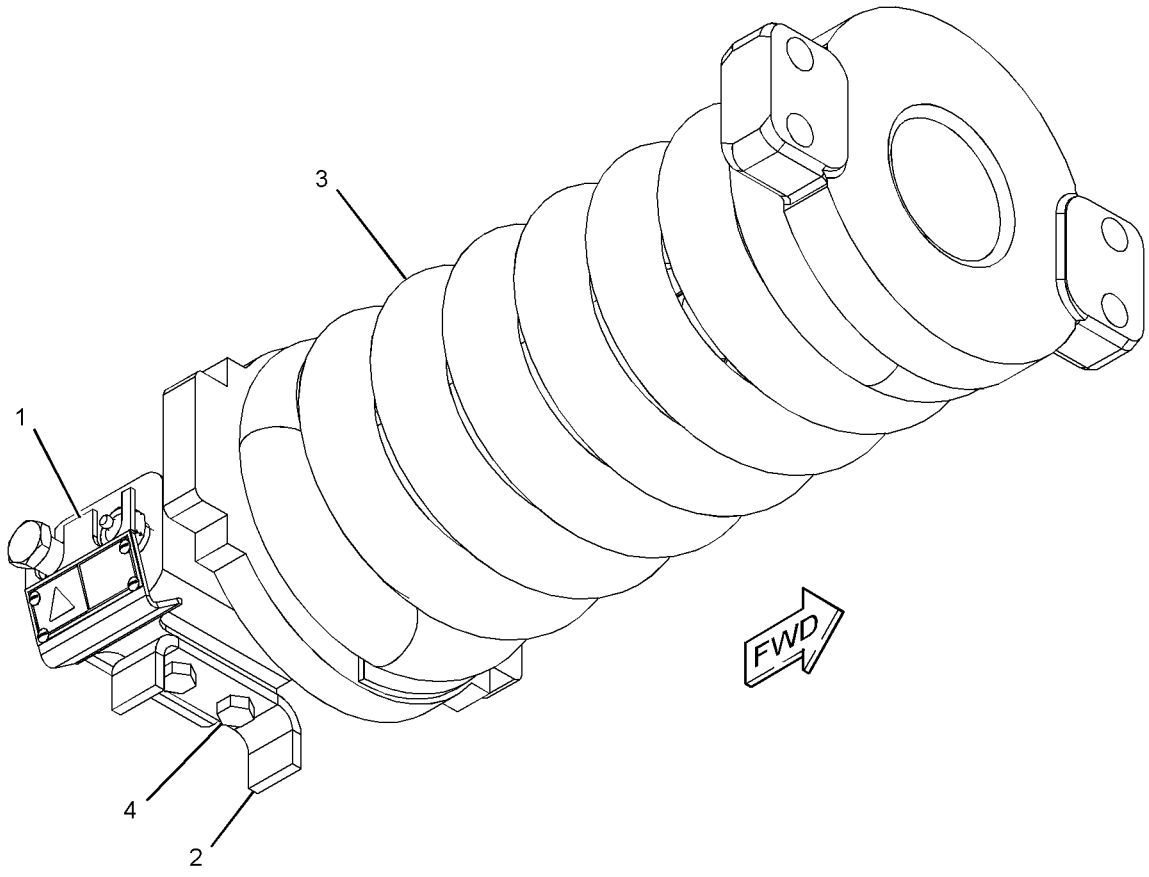

GRAPHIC #1 **<END>** g01424091

297-9141 TRACK ADJUSTER & RECOIL GP–LH

S/N: BYJ1-UP; PDP1-UP

PART OF 297-9139 IDLER GP-FRONT

SMCS-4157, 4158 **i02845520**

NOTE	REF NO	GRAPHIC REF	PART NUMBER	QTY	PART NAME 1 2 3 4 5 6 (PRODUCT LEVEL)	SEE PAGE
	1	1	**248-7200**	1	PLATE AS	
		1	**4B-4158**	4	SCREW-DRIVE (3/16X0.25-IN)	
		1	**253-1346**	1	PLATE-WARNING (HIGH PRESSURE CYLINDER)	
	2	1	**248-7203**	1	PLATE	
Y	3	1	*297-9142*	1	TRACK ADJUSTER & RECOIL GP	291
M	4	1	**8T-4137**	2	BOLT (M10X1.5X20-MM)	

M-METRIC PART
Y-SEPARATE ILLUSTRATION

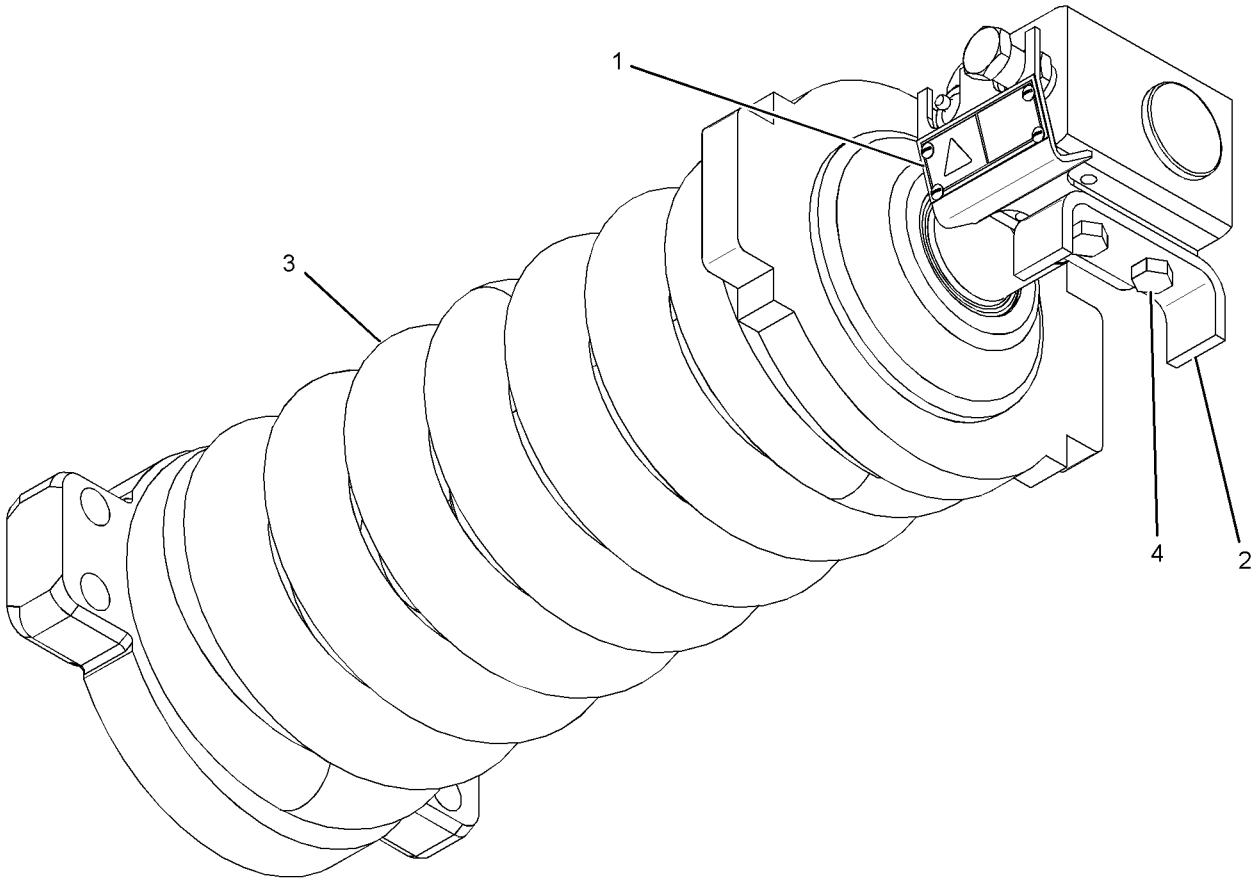

GRAPHIC #1 **<END>** g01424123

UNDERCARRIAGE

297-9142 TRACK ADJUSTER & RECOIL GP

S/N: BYJ1-UP; PDP1-UP

PART OF 297-9140, 297-9141 TRACK ADJUSTER & RECOIL GP

SMCS-4157, 4158 **i02845521**

NOTE	REF NO	GRAPHIC REF	PART NUMBER	QTY	PART NAME 1 2 3 4 5 6 (PRODUCT LEVEL)	SEE PAGE
	1	1	**248-7191**	1	PLATE	
	2	1	**248-7194**	1	SPRING	
	3	1	**297-9137**	1	SUPPORT	
Y	4	1	*297-9143*	1	TRACK ADJUSTER & RECOIL GP	292
	5	1	**297-9161**	1	STRIP	
M	6	1	**096-4879**	1	NUT (M36X4-THD)	
	7	1	**179-5764**	1	WASHER (39X60X6-MM THK)	
M	8	1	**8T-4171**	2	BOLT (M6X1X12-MM)	

M-METRIC PART
Y-SEPARATE ILLUSTRATION

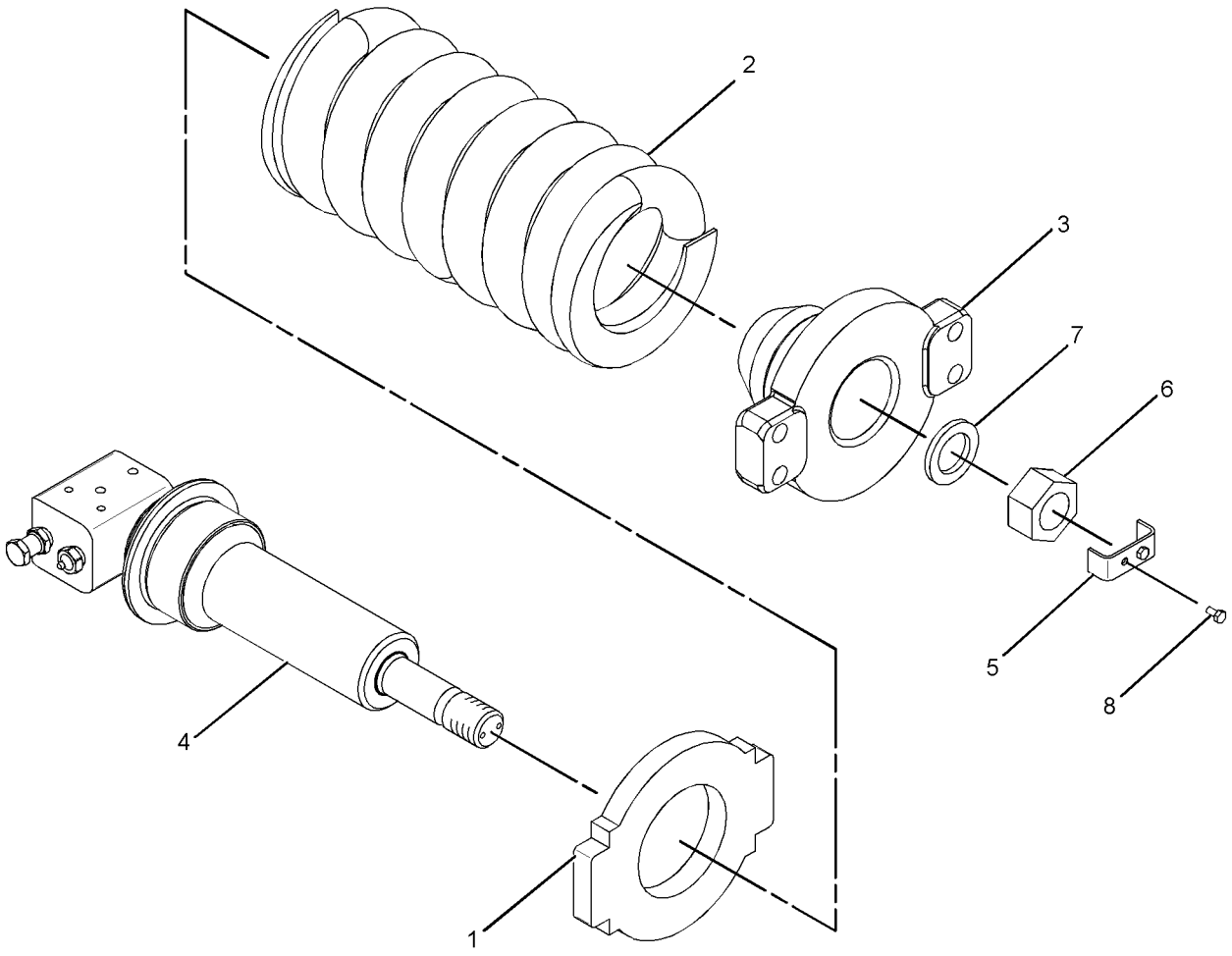

GRAPHIC #1 **<END>** g01424098

297-9143 TRACK ADJUSTER & RECOIL GP

S/N: BYJ1-UP; PDP1-UP

PART OF 297-9142 TRACK ADJUSTER & RECOIL GP

SMCS-4157, 4158 **i02845522**

NOTE	REF NO	GRAPHIC REF	PART NUMBER	QTY	PART NAME 1 2 3 4 5 6 (PRODUCT LEVEL)	SEE PAGE
	1	1	**2S-5926**	1	VALVE-RELIEF	
	2	1	**095-2927**	1	VALVE-FILL	
	3	1	**095-7101**	1	SEAL-LIP TYPE	
	4	1	**248-7172**	2	SEAL-O-RING	
	5	1	**248-7197**	1	PISTON AS	
	6	1	**297-9133**	1	CYLINDER	
	7	1	**297-9134**	1	ROD	
	8	1	**095-1701**	1	SEAL-O-RING	
	9	1	**096-4276**	1	RING	
	10	1	**099-0172**	2	RING-BACKUP	
	11	1	**099-0173**	2	RING-BACKUP	

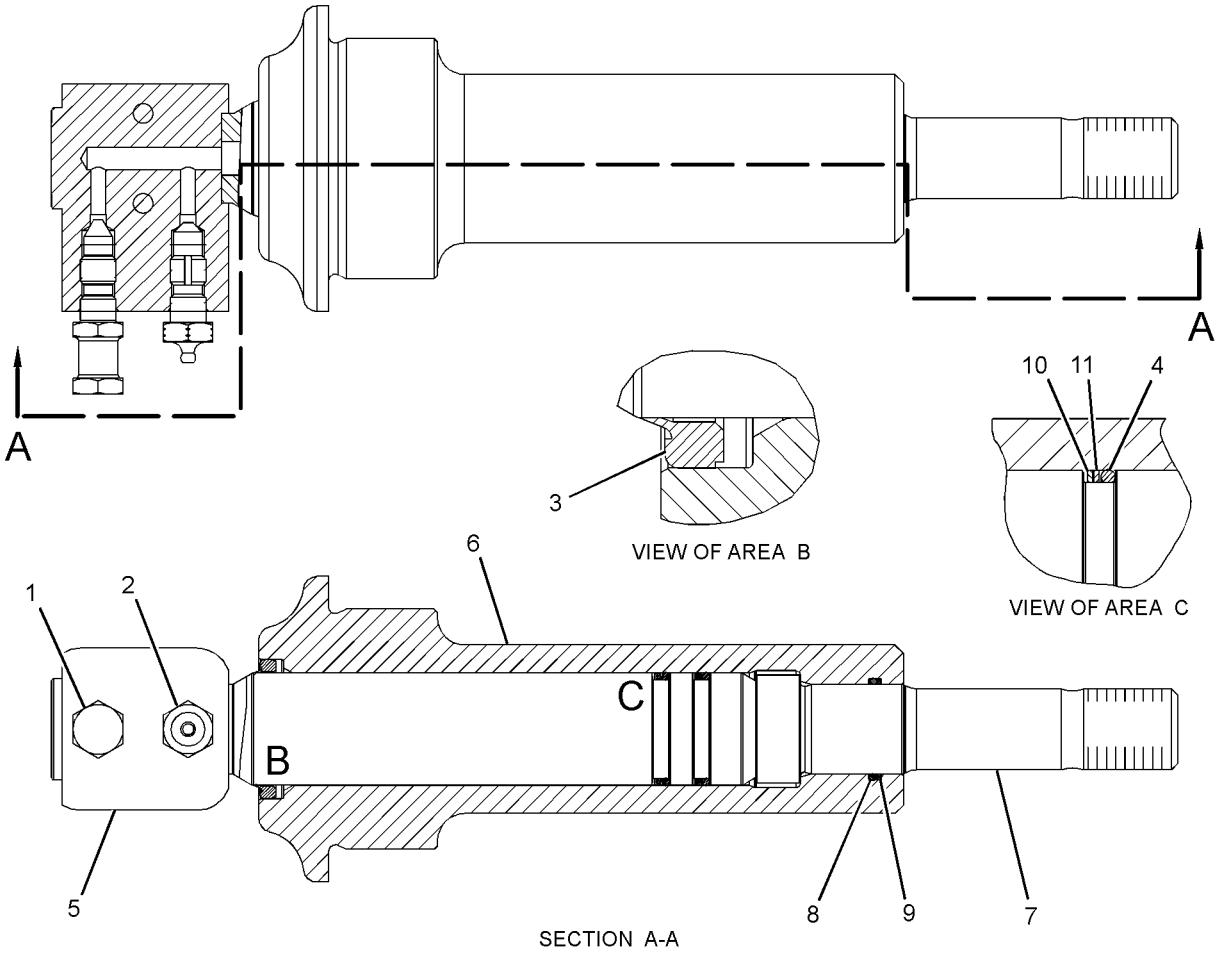

GRAPHIC #1 **<END>** g01424029

176-4863 TRACK GP–2-REQUIRED

S/N: PDP1-UP
500-MM (19-IN) TRIPLE GROUSER SHOE
AN ATTACHMENT

SMCS-4170 **i01477598**

NOTE	REF NO	GRAPHIC REF	PART NUMBER	QTY	PART NAME 1 2 3 4 5 6 (PRODUCT LEVEL)	SEE PAGE
Y	1	1	**176-4870**	1	LINK AS-TRACK	283
	2	1	**137-6114**	43	SHOE-TRACK	
M	3	1	**4I-7538**	172	BOLT-TRACK (M16X1.5X46-MM)	
M	4	1	**5I-6125**	172	NUT-TRACK (M16X1.5-THD)	

M-METRIC PART
Y-SEPARATE ILLUSTRATION

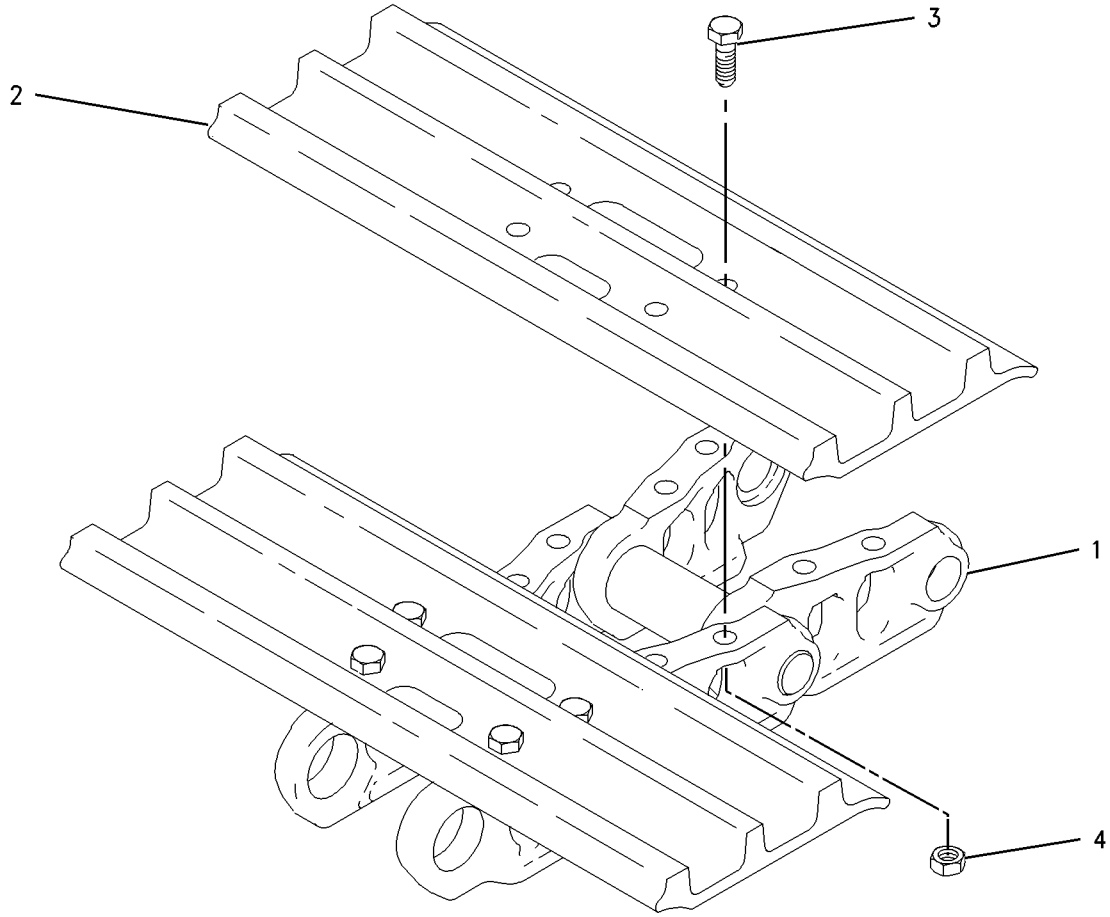

GRAPHIC #1 **<END>** g00731630

176-4864 TRACK GP–2-REQUIRED

S/N: PDP1-UP
600-MM (23.6-IN) TRIPLE GROUSER SHOE
AN ATTACHMENT

SMCS-4170 **i01477596**

NOTE	REF NO	GRAPHIC REF	PART NUMBER	QTY	PART NAME 1 2 3 4 5 6 (PRODUCT LEVEL)	SEE PAGE
Y	1	1	**176-4870**	1	LINK AS-TRACK	283
	2	1	**1R-6009**	43	SHOE-TRACK	
M	3	1	**4I-7538**	172	BOLT-TRACK (M16X1.5X46-MM)	
M	4	1	**5I-6125**	172	NUT-TRACK (M16X1.5-THD)	

M-METRIC PART
Y-SEPARATE ILLUSTRATION

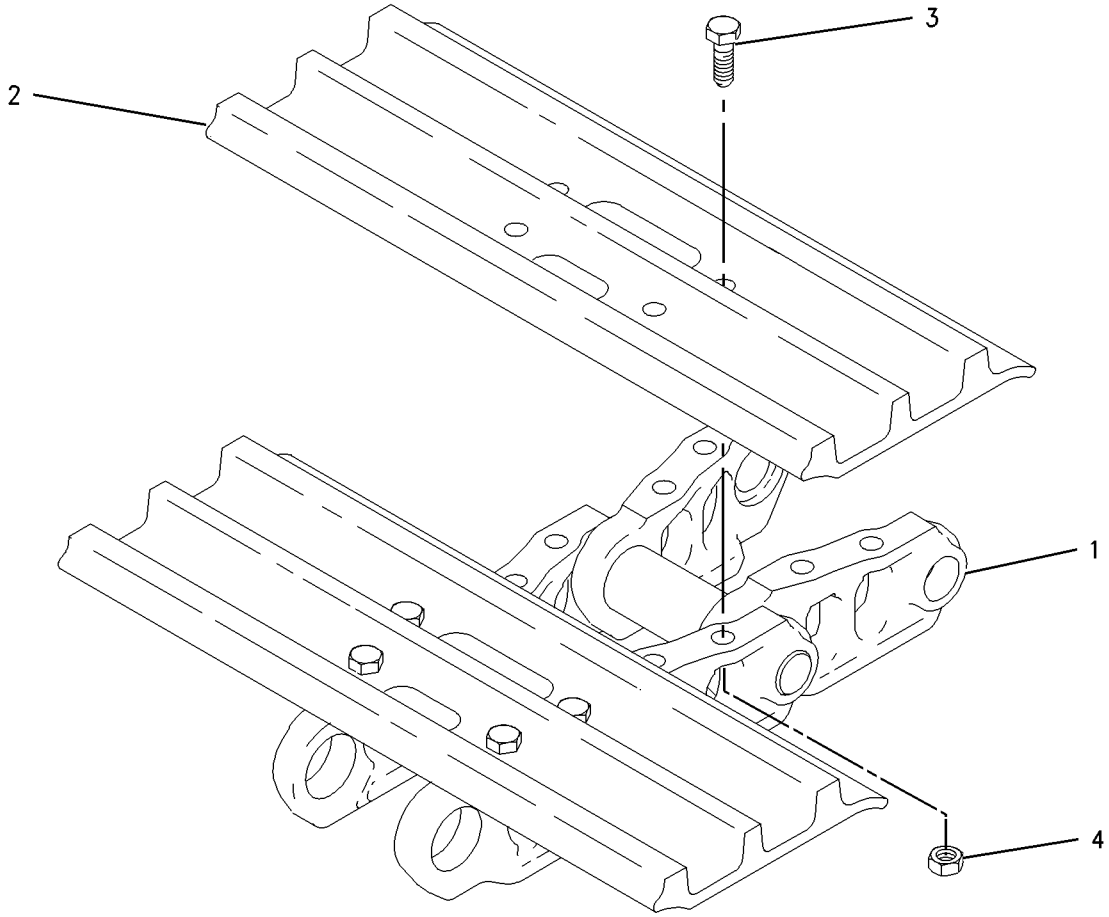

GRAPHIC #1 **<END>** g00731630

176-4865 TRACK GP–2-REQUIRED

S/N: PDP1-UP
700-MM (27.5-IN) TRIPLE GROUSER SHOE
PART OF 283-8848 TRACK GP
AN ATTACHMENT

SMCS-4170 **i01477592**

NOTE	REF NO	GRAPHIC REF	PART NUMBER	QTY	PART NAME 1 2 3 4 5 6 (PRODUCT LEVEL)	SEE PAGE
Y	1	1	**176-4870**	1	LINK AS-TRACK	283
	2	1	**1R-6010**	43	SHOE-TRACK	
M	3	1	**4I-7538**	172	BOLT-TRACK (M16X1.5X46-MM)	
M	4	1	**5I-6125**	172	NUT-TRACK (M16X1.5-THD)	

M-METRIC PART
Y-SEPARATE ILLUSTRATION

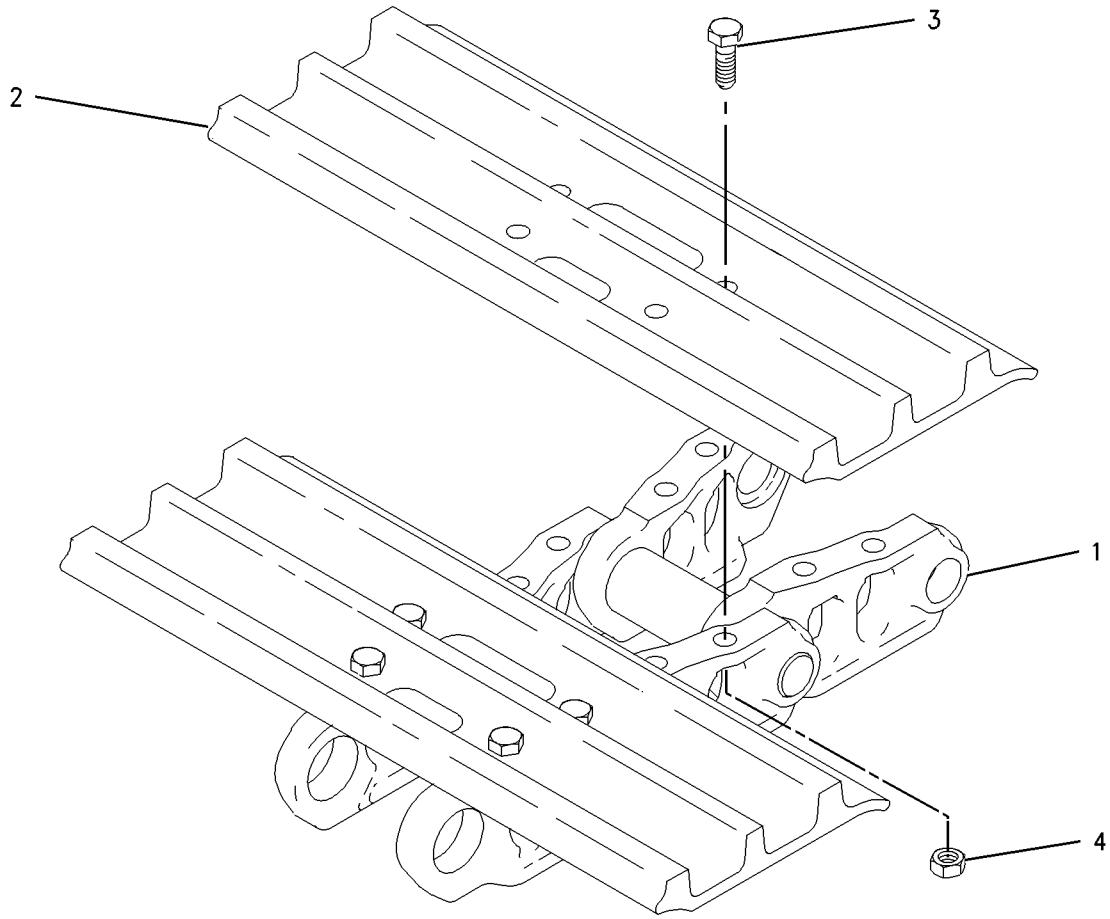

GRAPHIC #1 **<END>** g00731630

176-4866 TRACK GP–2-REQUIRED

S/N: BYJ1-UP
600-MM (23-IN) TRIPLE GROUSER SHOE
AN ATTACHMENT

SMCS-4170 **i01477590**

NOTE	REF NO	GRAPHIC REF	PART NUMBER	QTY	PART NAME 1 2 3 4 5 6 (PRODUCT LEVEL)	SEE PAGE
Y	1	1	**176-4871**	1	LINK AS-TRACK	284
	2	1	**1R-6009**	46	SHOE-TRACK	
M	3	1	**4I-7538**	184	BOLT-TRACK (M16X1.5X46-MM)	
M	4	1	**5I-6125**	184	NUT-TRACK (M16X1.5-THD)	

M-METRIC PART
Y-SEPARATE ILLUSTRATION

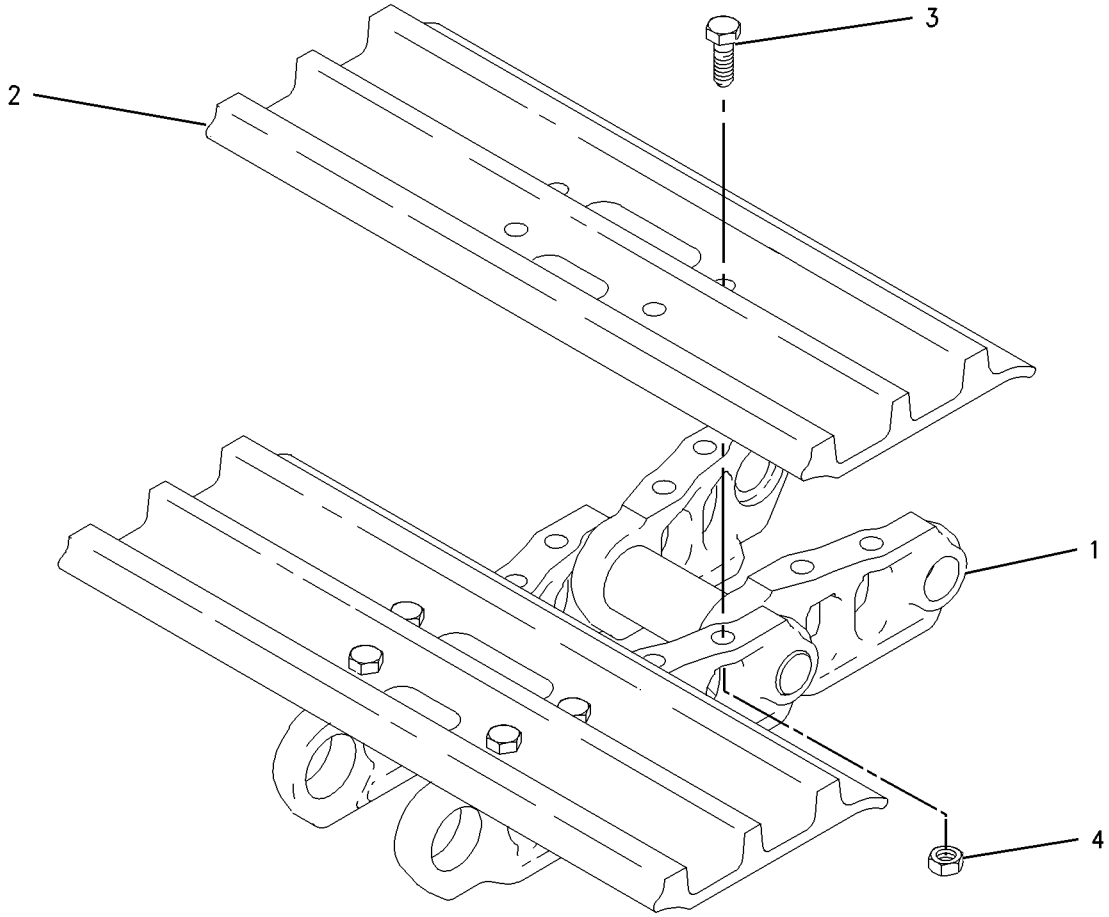

GRAPHIC #1 **<END>** g00731630

176-4867 TRACK GP–2-REQUIRED

S/N: BYJ1-UP
700-MM (27.5-IN) TRIPLE GROUSER SHOE
PART OF 283-9034 TRACK GP
AN ATTACHMENT

SMCS-4170 **i01477588**

NOTE	REF NO	GRAPHIC REF	PART NUMBER	QTY	PART NAME 1 2 3 4 5 6 (PRODUCT LEVEL)	SEE PAGE
Y	1	1	**176-4871**	1	LINK AS-TRACK	284
	2	1	**1R-6010**	46	SHOE-TRACK	
M	3	1	**4I-7538**	184	BOLT-TRACK (M16X1.5X46-MM)	
M	4	1	**5I-6125**	184	NUT-TRACK (M16X1.5-THD)	

M-METRIC PART
Y-SEPARATE ILLUSTRATION

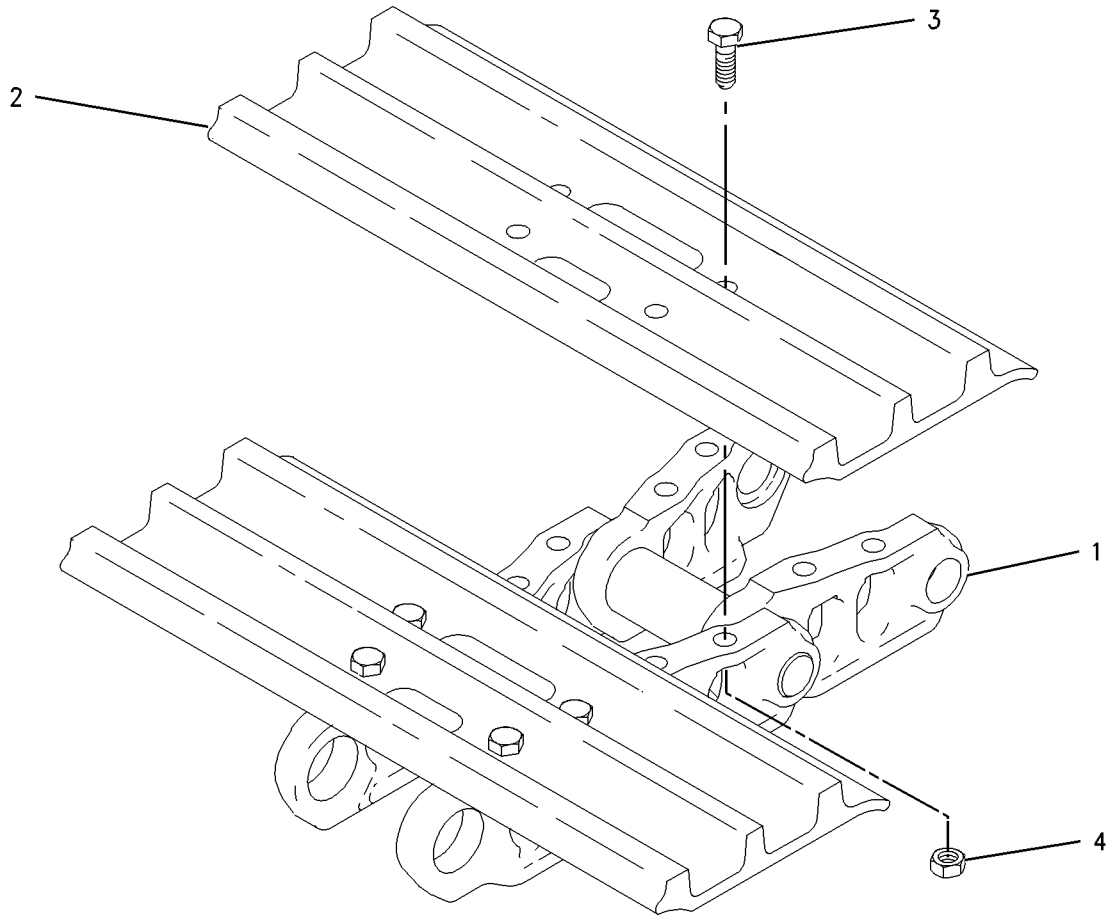

GRAPHIC #1 **<END>** g00731630

176-4869 TRACK GP–2-REQUIRED

S/N: PDP1-UP
SEGMENT RUBBER BELT
AN ATTACHMENT

SMCS-4170 **i01477631**

NOTE	REF NO	GRAPHIC REF	PART NUMBER	QTY	PART NAME 1 2 3 4 5 6 (PRODUCT LEVEL)	SEE PAGE
	1	1	**169-8089**	1	SHOE AS	
	2	1	**169-8091**	1	SHOE AS	
Y	3	1	**176-4870**	1	LINK AS-TRACK	283
	4	1	**096-1043**	172	BOLT-TRACK	
M	5	1	**5I-6125**	172	NUT-TRACK (M16X1.5-THD)	

M-METRIC PART
Y-SEPARATE ILLUSTRATION

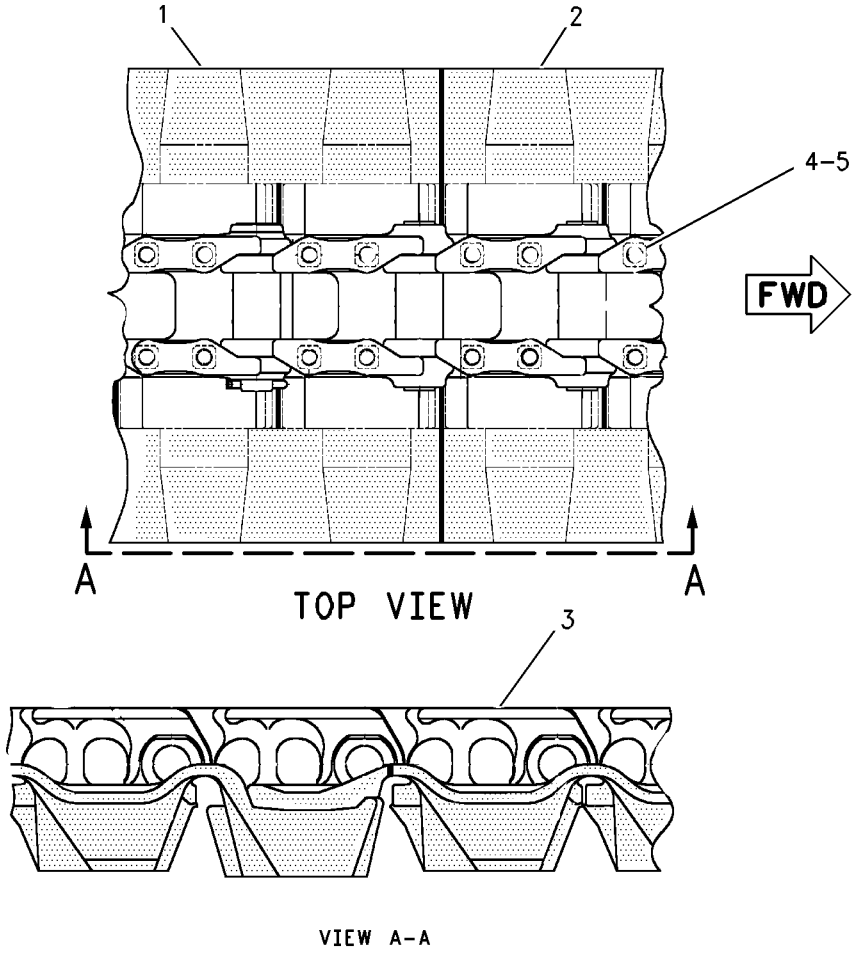

GRAPHIC #1 **<END>** g00770878

179-3029 TRACK GP–2-REQUIRED

S/N: BYJ1-UP
500-MM (19-IN) TRIPLE GROUSER SHOE
AN ATTACHMENT

SMCS-4170 **i01477584**

NOTE	REF NO	GRAPHIC REF	PART NUMBER	QTY	PART NAME 1 2 3 4 5 6 (PRODUCT LEVEL)	SEE PAGE
Y	1	1	**176-4871**	1	LINK AS-TRACK	284
	2	1	**137-6114**	46	SHOE-TRACK	
M	3	1	**4I-7538**	184	BOLT-TRACK (M16X1.5X46-MM)	
M	4	1	**5I-6125**	184	NUT-TRACK (M16X1.5-THD)	

M-METRIC PART
Y-SEPARATE ILLUSTRATION

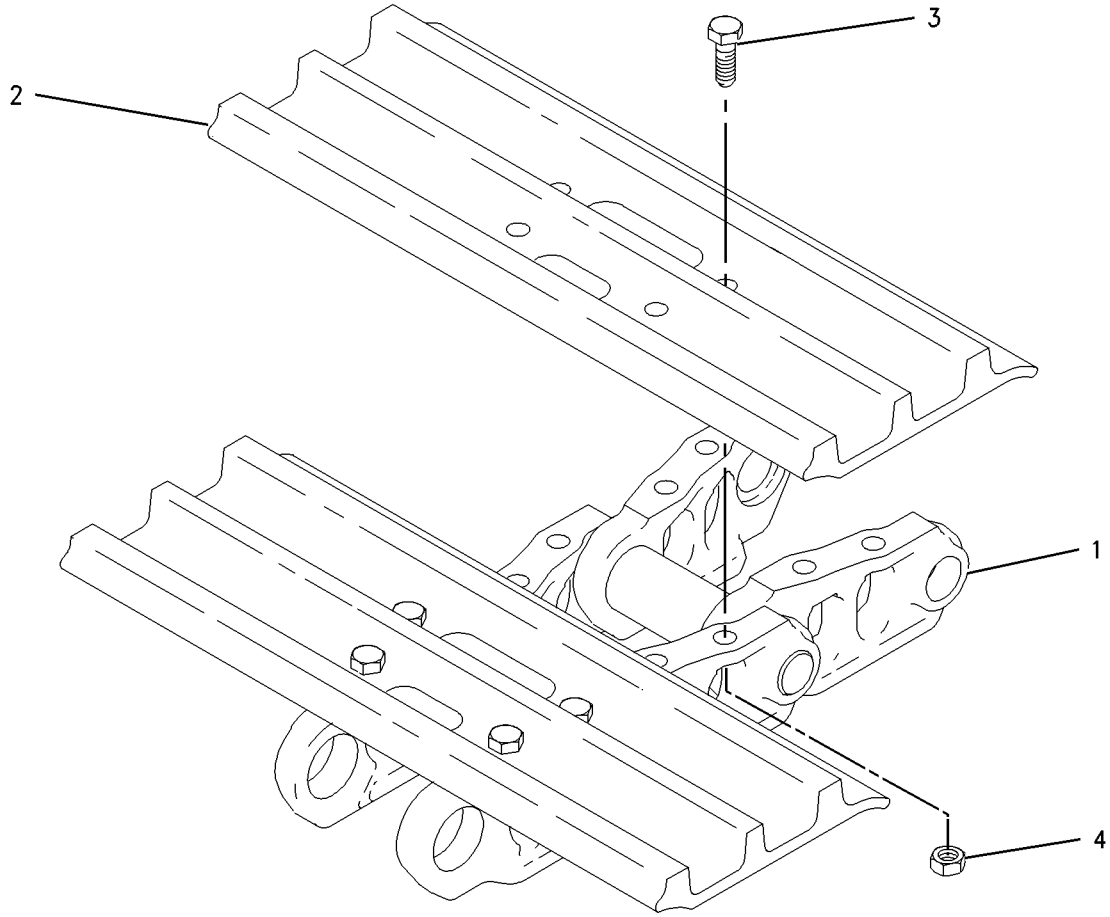

GRAPHIC #1 **<END>** g00731630

UNDERCARRIAGE

244-5247 TRACK GP—2-REQUIRED

S/N: BYJ1-UP
500-MM (19.7-IN). RUBBER PADDED
CANNOT BE USED WITH 120-7199—PAGE 276
AN ATTACHMENT

SMCS-4170 **i02837049**

NOTE	REF NO	GRAPHIC REF	PART NUMBER	QTY	PART NAME 1 2 3 4 5 6 (PRODUCT LEVEL)	SEE PAGE
	1	1	**169-8091**	2	SHOE AS	
Y	2	1	**176-4871**	1	LINK AS-TRACK	284
	3	1	**096-1043**	184	BOLT-TRACK	
M	4	1	**5I-6125**	184	NUT-TRACK (M16X1.5-THD)	

M-METRIC PART
Y-SEPARATE ILLUSTRATION

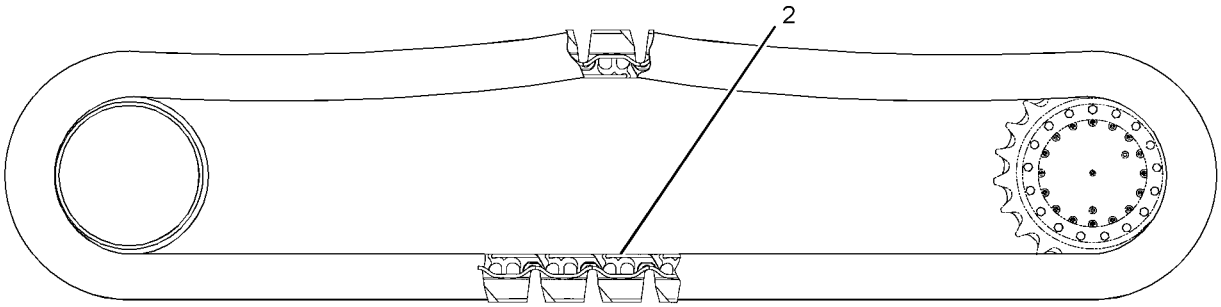

LEFT SIDE VIEW

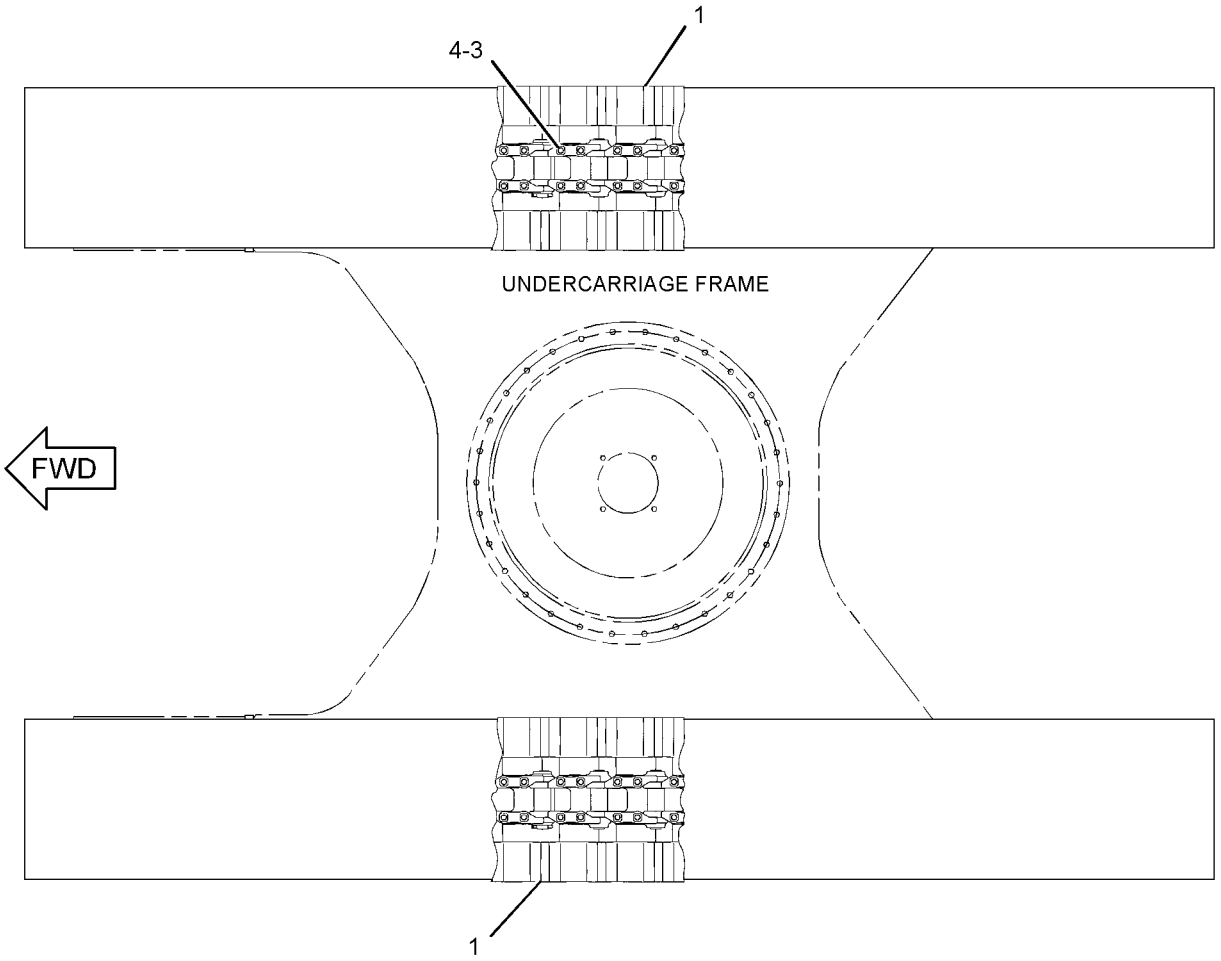

TOP VIEW

GRAPHIC #1 **<END>** g01439386

UNDERCARRIAGE

283-8848 TRACK GP—2-REQUIRED

S/N: PDP1-UP
700-MM (27.5-IN) TRIPLE GROUSER SHOE
AN ATTACHMENT

SMCS-4170 **i02821854**

NOTE	PART NUMBER	QTY	PART NAME 1 2 3 4 5 6 (PRODUCT LEVEL)	SEE PAGE
Y	*235-7764*	1	STEP GP	267
Y	*176-4865*	1	TRACK GP	295

Y-SEPARATE ILLUSTRATION

<END>

283-9034 TRACK GP—2-REQUIRED

S/N: BYJ1-UP
700-MM (27.5-IN) TRIPLE GROUSER SHOE
AN ATTACHMENT

SMCS-4170 **i02831573**

NOTE	PART NUMBER	QTY	PART NAME 1 2 3 4 5 6 (PRODUCT LEVEL)	SEE PAGE
Y	*235-7764*	1	STEP GP	267
Y	*176-4867*	1	TRACK GP	297

Y-SEPARATE ILLUSTRATION

<END>

4I-1536 ACCUMULATOR GP-HYDRAULIC—CHARGED

S/N: BYJ1-UP; PDP1-UP

PART OF 087-4456 ACCUMULATOR GP-HYDRAULIC

SMCS-5077 **i01107876**

NOTE	REF NO	GRAPHIC REF	PART NUMBER	QTY	PART NAME 1 2 3 4 5 6 (PRODUCT LEVEL)	SEE PAGE
	1	1	**4I-5862**	1	CAP	
	2	1	**4I-1539**	1	CORE	
	3	1	**5P-3779**	1	TAG-NOTICE (SHIPPING INSTRUCTIONS)	

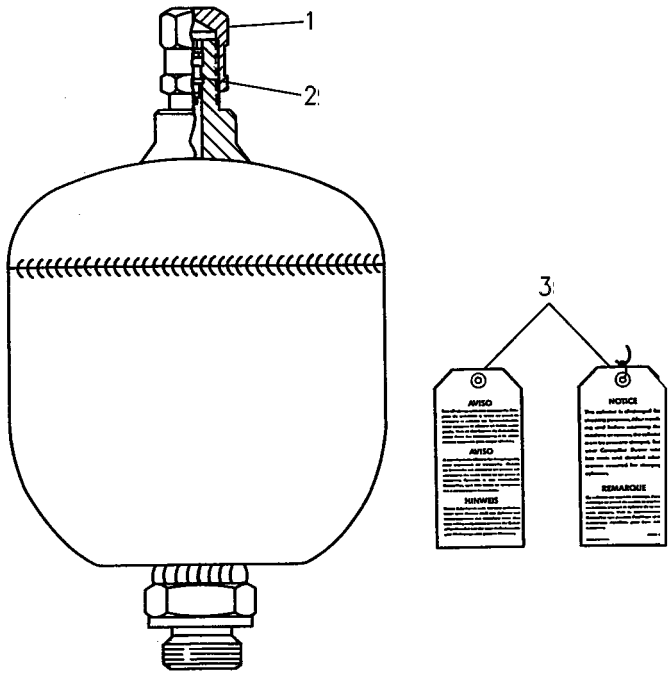

GRAPHIC #1 **<END>** g00237221

5I-8416 ACCUMULATOR GP-HYDRAULIC–CHARGED

S/N: BYJ1-UP; PDP1-UP

PART OF 087-4456 ACCUMULATOR GP-HYDRAULIC

SMCS-5077 **i01548084**

NOTE	REF NO	GRAPHIC REF	PART NUMBER	QTY	PART NAME 1 2 3 4 5 6 (PRODUCT LEVEL)	SEE PAGE
	1	1	**4I-8267**	1	CAP-ACCUMULATOR	
Y	2	1	*087-4454*	1	ACCUMULATOR GP-HYDRAULIC (CHARGED)	305

Y-SEPARATE ILLUSTRATION

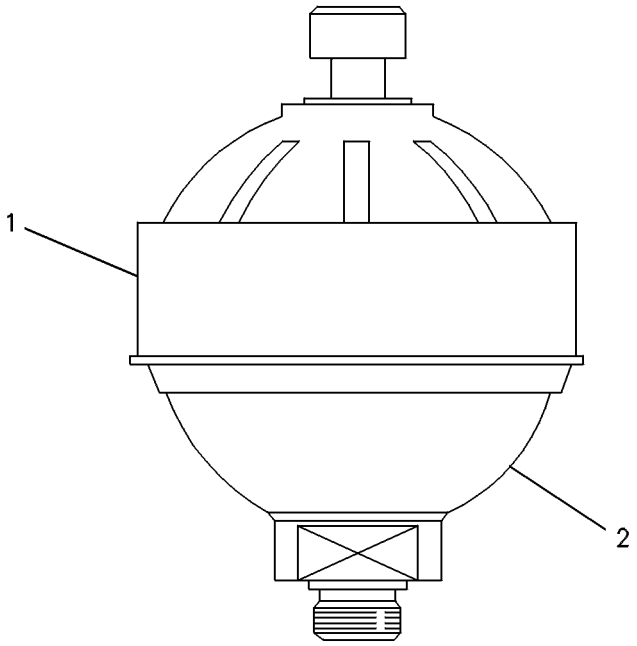

GRAPHIC #1 **<END>** g00237219

087-4454 ACCUMULATOR GP-HYDRAULIC—CHARGED

S/N: BYJ1-UP; PDP1-UP

PART OF 5I-8416 ACCUMULATOR GP-HYDRAULIC

SMCS-5077 **i01611978**

NOTE	REF NO	GRAPHIC REF	PART NUMBER	QTY	PART NAME 1 2 3 4 5 6 (PRODUCT LEVEL)	SEE PAGE
	1	1	**087-4577**	1	SEAL	
	2	1	**087-4576**	1	CAP	
	3	1	**087-4575**	1	CORE	
	4	1	**5P-3779**	1	TAG-NOTICE (SHIPPING INSTRUCTIONS)	

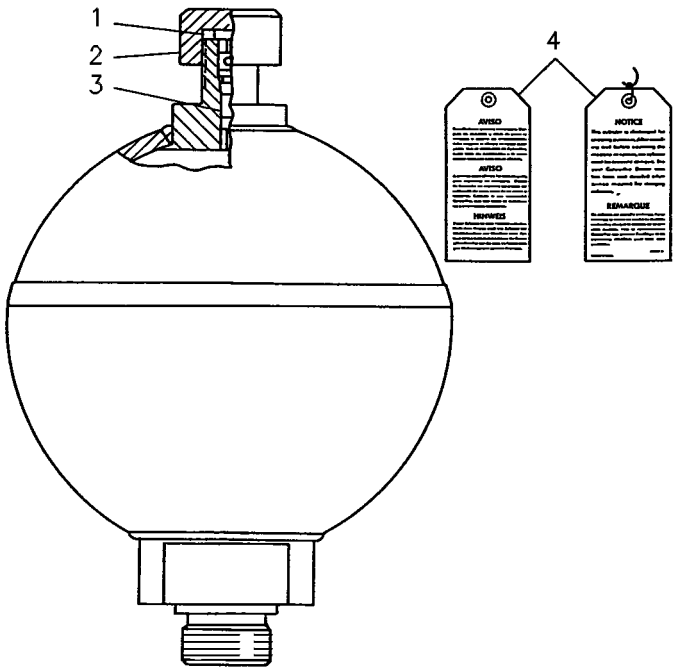

GRAPHIC #1 **<END>** g00237220

087-4456 ACCUMULATOR GP-HYDRAULIC—CHARGED

S/N: BYJ1-UP; PDP1-UP

PART OF 164-6981 ACCUMULATOR GP-HYDRAULIC

SMCS-5077 **i02290967**

NOTE	PART NUMBER	QTY	PART NAME 1 2 3 4 5 6 (PRODUCT LEVEL)	SEE PAGE
Y	*4I-1536*	1	ACCUMULATOR GP-HYDRAULIC (CHARGED)	303
			-OR-	
Y	*5I-8416*	1	ACCUMULATOR GP-HYDRAULIC (CHARGED)	304
			-OR-	
Y	*145-5106*	1	ACCUMULATOR GP-HYDRAULIC (CHARGED)	307

Y-SEPARATE ILLUSTRATION

<END>

145-5106 ACCUMULATOR GP-HYDRAULIC–CHARGED

S/N: BYJ1-UP; PDP1-UP

PART OF 087-4456 ACCUMULATOR GP-HYDRAULIC

SMCS-5077 **i02464714**

NOTE	REF NO	GRAPHIC REF	PART NUMBER	QTY	PART NAME 1 2 3 4 5 6 (PRODUCT LEVEL)	SEE PAGE
	1	1	**159-4700**	1	FILM-WARNING (HIGH PRESSURE CYLINDER)	

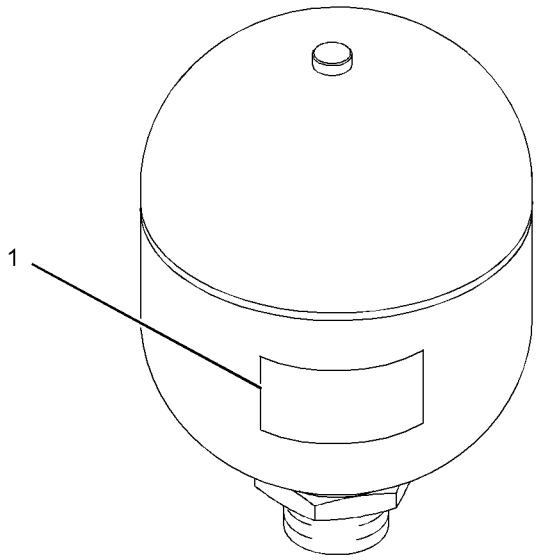

GRAPHIC #1 **<END>** g01229518

HYDRAULIC SYSTEM

164-6981 ACCUMULATOR GP-HYDRAULIC–CHARGED

S/N: BYJ1-UP; PDP1-UP
PART OF 282-7234 LINES GP-PILOT

SMCS-5077 **i01284579**

NOTE	PART NUMBER	QTY	PART NAME 1 2 3 4 5 6 (PRODUCT LEVEL)	SEE PAGE
Y	**087-4456**	1	ACCUMULATOR GP-HYDRAULIC (CHARGED)	306
	3K-0360	1	SEAL-O-RING	

Y-SEPARATE ILLUSTRATION

<END>

255-5843 CONTROL AR-AUXILIARY–JOYSTICK WITH SLIDE CONTROL

S/N: BYJ1-UP; PDP1-UP
AN ATTACHMENT

SMCS-5051 **i02431300**

NOTE	PART NUMBER	QTY	PART NAME 1 2 3 4 5 6 (PRODUCT LEVEL)	SEE PAGE
Y	*259-7598*	1	CONTROL & MTG GP-JOYSTICK (WITH SLIDE CONTROL)	704
Y	*259-5295*	1	FASTENER GP-WIRING HARNESS (JOYSTICK)	122
Y	*247-7410*	1	FILM GP (OPERATOR CONTROLS, NOTICE)	817

Y-SEPARATE ILLUSTRATION

<END>

255-5844 CONTROL AR-AUXILIARY–JOYSTICK, 3-BUTTON, TRIGGER SW

S/N: BYJ1-UP; PDP1-UP
AN ATTACHMENT

SMCS-5051 **i02430669**

NOTE	PART NUMBER	QTY	PART NAME 1 2 3 4 5 6 (PRODUCT LEVEL)	SEE PAGE
Y	*259-7599*	1	CONTROL & MTG GP-JOYSTICK	705
Y	*259-5295*	1	FASTENER GP-WIRING HARNESS (JOYSTICK)	122
Y	*247-7411*	1	FILM GP (OPERATOR CONTROLS, NOTICE)	819

Y-SEPARATE ILLUSTRATION

<END>

259-7857 CONTROL AR-AUXILIARY–ELECTRIC PEDAL CONTROL

S/N: BYJ1-UP; PDP1-UP
AN ATTACHMENT

SMCS-5051 **i03009974**

NOTE	PART NUMBER	QTY	PART NAME 1 2 3 4 5 6 (PRODUCT LEVEL)	SEE PAGE
Y	*221-8885*	1	CONTROL & MTG GP-PEDAL (RH)	709
Y	*267-7801*	1	FASTENER GP-WIRING HARNESS (PEDAL, RH)	123
Y	*264-8565*	1	FILM GP (WORK TOOL CONTROL, RH PEDAL)	824

Y-SEPARATE ILLUSTRATION

<END>

259-7858 CONTROL AR-AUXILIARY

S/N: BYJ1-UP; PDP1-UP
AN ATTACHMENT

SMCS-5051 **i02512268**

NOTE	PART NUMBER	QTY	PART NAME 1 2 3 4 5 6 (PRODUCT LEVEL)	SEE PAGE
Y	*259-7859*	1	CONTROL GP-FOOT (WORK TOOL)	711
Y	*267-7802*	1	FASTENER GP-WIRING HARNESS (FOOT SWITCH)	124
Y	*247-7465*	1	FILM GP (HAMMER CONTROL, FOOT SWITCH)	820

Y-SEPARATE ILLUSTRATION

<END>

270-5993 CONTROL AR-AUXILIARY—AUXILIARY READY

S/N: BYJ1-UP; PDP1-UP
AN ATTACHMENT

SMCS-5051 **i02836807**

NOTE	PART NUMBER	QTY	PART NAME 1 2 3 4 5 6 (PRODUCT LEVEL)	SEE PAGE
Y	*282-5731*	1	LINES GP-BOOM (SUPPORT, AUXILIARY READY)	386
Y	*282-7249*	1	LINES GP-FRONT (AUXILIARY READY)	411
Y	*282-7251*	1	LINES GP-PILOT (SHUTTLE VALVE)	443
Y	*282-7252*	1	LINES GP-PILOT (AUXILIARY READY)	445
Y	*275-7170*	1	WIRING GP-CONTROL (BOOM PRIORITY, PUMP)	191

Y-SEPARATE ILLUSTRATION

<END>

270-5996 CONTROL AR-AUXILIARY—

SYSTEM 20, WORK TOOL PRIORITY
S/N: BYJ1-UP; PDP1-UP
FOR USE WITH 255-5843—PAGE 308, 255-5844—PAGE 308, 259-7857—PAGE 308, 259-7858—PAGE 309, 273-5297—PAGE 743, 273-5298—PAGE 744, 273-5299—PAGE 745, 294-6361—PAGE 356
AN ATTACHMENT

SMCS-5051 **i02976055**

NOTE	PART NUMBER	QTY	PART NAME 1 2 3 4 5 6 (PRODUCT LEVEL)	SEE PAGE
Y	*282-7259*	1	LINES GP-FRONT	413
Y	*282-7251*	1	LINES GP-PILOT (SHUTTLE VALVE)	443
Y	*282-7261*	1	LINES GP-PILOT	449
Y	*282-7262*	1	LINES GP-PUMP	475
Y	*286-6125*	1	TANK & MTG GP-FUEL	93
Y	**285-1761**	1	VALVE & MTG GP-CONTROL	531
Y	*275-7169*	1	WIRING GP-AUXILIARY CONTROL	170
Y	*275-7112*	1	WIRING GP-CAB	179

Y-SEPARATE ILLUSTRATION

<END>

270-6001 CONTROL AR-AUXILIARY–
AUX PUMP, MEDIUM PRESS VALVE
S/N: BYJ1-UP; PDP1-UP
FOR USE WITH 255-5843–PAGE 308, 255-5844–PAGE 308, 259-7857–PAGE 308, 273-5297–PAGE 743, 273-5298–PAGE 744, 273-5299–PAGE 745, 282-7281–PAGE 479.
CANNOT BE USED WITH 270-5993–PAGE 309
AN ATTACHMENT

SMCS-5051 **i02957115**

NOTE	PART NUMBER	QTY	PART NAME 1 2 3 4 5 6 (PRODUCT LEVEL)	SEE PAGE
Y	*282-7270*	1	LINES GP-FRONT	415
Y	*286-6722*	1	LINES GP-PILOT	467
Y	*282-7271*	1	LINES GP-PUMP	477
Y	*259-0917*	1	PUMP & MTG GP-AUXILIARY (MEDIUM PRESSURE)	506
Y	*275-7171*	1	WIRING GP-MEDIUM PRESSURE	202
Y-SEPARATE ILLUSTRATION				

<END>

285-1677 CONTROL AR-AUXILIARY–MEDIUM PRESSURE
S/N: BYJ1-UP; PDP1-UP
FOR USE WITH 255-5843–PAGE 308, 255-5844–PAGE 308, 259-7857–PAGE 308, 259-7858–PAGE 309, 282-7281–PAGE 479, 273-5297–PAGE 743, 273-5298–PAGE 744, 273-5299–PAGE 745
AN ATTACHMENT

SMCS-5051 **i03035568**

NOTE	PART NUMBER	QTY	PART NAME 1 2 3 4 5 6 (PRODUCT LEVEL)	SEE PAGE
Y	*292-7638*	1	LINES GP-FRONT	420
Y	*292-7640*	1	LINES GP-PILOT	469
Y	**285-1759**	1	VALVE & MTG GP-MAIN CONTROL	532
Y	*275-7172*	1	WIRING GP-MEDIUM PRESSURE	203
Y-SEPARATE ILLUSTRATION				

<END>

323-7766 CONTROL AR-AUXILIARY–
JOYSTICK, MODULATION SWITCH
S/N: BYJ1-UP; PDP1-UP
AN ATTACHMENT

SMCS-5051 **i03156385**

NOTE	PART NUMBER	QTY	PART NAME 1 2 3 4 5 6 (PRODUCT LEVEL)	SEE PAGE
Y	*323-7698*	1	CONTROL & MTG GP-JOYSTICK (WITH SLIDE CONTROL)	707
Y	*259-5295*	1	FASTENER GP-WIRING HARNESS (JOYSTICK)	122
Y	*247-7410*	1	FILM GP (OPERATOR CONTROLS, NOTICE)	817
Y-SEPARATE ILLUSTRATION				

<END>

323-7767 CONTROL AR-AUXILIARY—4-SWITCH, JOYSTICK

S/N: BYJ1-UP; PDP1-UP
AN ATTACHMENT

SMCS-5051 **i03254206**

NOTE	PART NUMBER	QTY	PART NAME 1 2 3 4 5 6 (PRODUCT LEVEL)	SEE PAGE
Y	*323-7699*	1	CONTROL & MTG GP-JOYSTICK (4-SWITCH)	708
Y	*259-5295*	1	FASTENER GP-WIRING HARNESS (JOYSTICK)	122
Y	*247-7411*	1	FILM GP (OPERATOR CONTROLS, NOTICE)	819
Y-SEPARATE ILLUSTRATION				

<END>

282-5547 CONTROL AR-COUPLER

S/N: BYJ1-UP; PDP1-UP
AN ATTACHMENT

SMCS-6129 **i02957130**

NOTE	PART NUMBER	QTY	PART NAME 1 2 3 4 5 6 (PRODUCT LEVEL)	SEE PAGE
Y	*275-7118*	1	FASTENER GP-WIRING HARNESS (QUICK COUPLER)	125
Y	*282-5705*	1	FILM GP (QUICK COUPLER)	825
Y	*282-7300*	1	LINES GP-FRONT	417
Y	*267-7773*	1	WIRING GP-CAB (QUICK COUPLER)	173
Y-SEPARATE ILLUSTRATION				

<END>

HYDRAULIC SYSTEM

266-6280 COUPLING GP-FLEXIBLE

S/N: BYJ1-UP; PDP1-UP

PART OF 255-3027 COUPLING GP-PUMP

SMCS-3252 **i02747795**

NOTE	REF NO	GRAPHIC REF	PART NUMBER	QTY	PART NAME 1 2 3 4 5 6 (PRODUCT LEVEL)	SEE PAGE
	1	1	**7Y-1900**	4	INSERT-COUPLING	
	2	1	**7Y-1901**	1	ELEMENT-COUPLING	
	3	1	**7Y-1902**	4	INSERT-COUPLING	
M	4	1	**7Y-1904**	4	BOLT-SOCKET HEAD (M16X2X50-MM)	
	5	1	**248-7284**	1	HUB	
M	6	1	**7Y-0466**	2	SETSCREW-SOCKET (M16X2X22-MM)	
	7	1	**7Y-0468**	12	PIN-SPRING	

M-METRIC PART

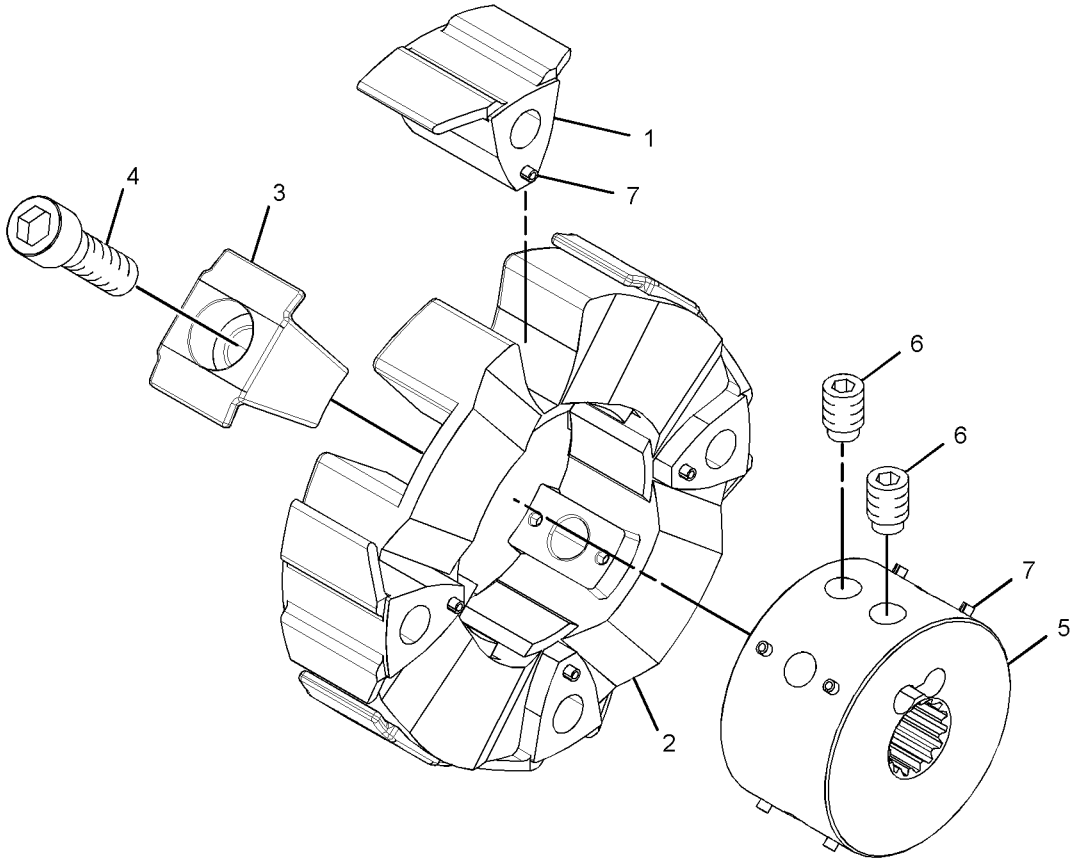

GRAPHIC #1 **<END>** g01379448

255-3027 COUPLING GP-PUMP

S/N: BYJ1-UP; PDP1-UP

PART OF 279-7721 PUMP & MTG GP-MAIN HYDRAULIC

SMCS-5062 **i02724264**

NOTE	REF NO	GRAPHIC REF	PART NUMBER	QTY	PART NAME 1 2 3 4 5 6 (PRODUCT LEVEL)	SEE PAGE
M	1	1	**8T-6429**	4	BOLT-SOCKET HEAD (M16X2X55-MM)	
Y	2	1	**266-6280**	1	COUPLING GP-FLEXIBLE	312
	3	1	**7Y-0468**	4	PIN-SPRING	

M-METRIC PART
Y-SEPARATE ILLUSTRATION

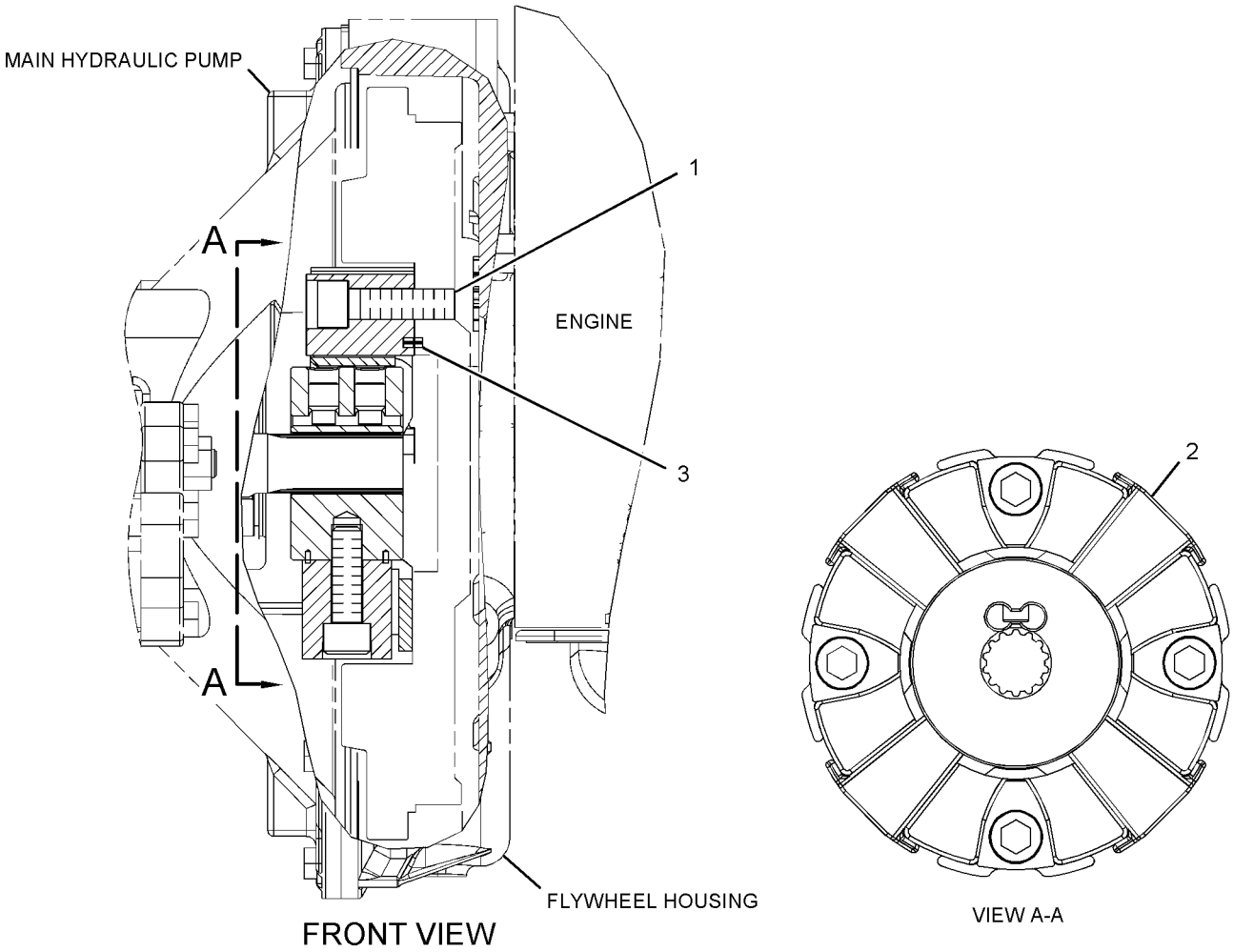

GRAPHIC #1 **<END>** g01325820

274-2678 CYLINDER & LINES GP-BLADE–LH

S/N: BYJ1-UP; PDP1-UP
PART OF 260-7212, 260-7213 INSTALLATION AR-AUXILIARY
AN ATTACHMENT

SMCS-5102 **i03255884**

NOTE	PART NUMBER	QTY	PART NAME 1 2 3 4 5 6 (PRODUCT LEVEL)	SEE PAGE
Y	*274-2680*	1	CYLINDER & SEAL GP-BLADE (LH)	316
Y	*179-7602*	1	LINES GP-BLADE CYLINDER (LH)	379
Y-SEPARATE ILLUSTRATION				

<END>

274-2679 CYLINDER & LINES GP-BLADE–RH

S/N: BYJ1-UP; PDP1-UP
PART OF 260-7212, 260-7213 INSTALLATION AR-AUXILIARY
AN ATTACHMENT

SMCS-5102 **i03255885**

NOTE	PART NUMBER	QTY	PART NAME 1 2 3 4 5 6 (PRODUCT LEVEL)	SEE PAGE
Y	*274-2681*	1	CYLINDER & SEAL GP-BLADE (RH)	317
Y	*179-7604*	1	LINES GP-BLADE CYLINDER (RH)	380
Y-SEPARATE ILLUSTRATION				

<END>

289-7717 CYLINDER & LINES GP-BOOM–LH

S/N: BYJ1-UP; PDP1-UP
PART OF 260-7189 BOOM AR-1 PIECE LONG
AN ATTACHMENT

SMCS-5456, 7562 **i02826366**

NOTE	PART NUMBER	QTY	PART NAME 1 2 3 4 5 6 (PRODUCT LEVEL)	SEE PAGE
Y	*289-7719*	1	CYLINDER & SEAL GP-BOOM	318
Y	*282-7237*	1	LINES GP-BOOM CYLINDER (LH)	391
Y-SEPARATE ILLUSTRATION				

<END>

289-7718 CYLINDER & LINES GP-BOOM–RH

S/N: BYJ1-UP; PDP1-UP
PART OF 260-7189 BOOM AR-1 PIECE LONG
AN ATTACHMENT

SMCS-5456, 7562 **i02826374**

NOTE	PART NUMBER	QTY	PART NAME 1 2 3 4 5 6 (PRODUCT LEVEL)	SEE PAGE
Y	*289-7719*	1	CYLINDER & SEAL GP-BOOM	318
Y	*282-7238*	1	LINES GP-BOOM CYLINDER (RH)	392
Y-SEPARATE ILLUSTRATION				

<END>

289-7697 CYLINDER & LINES GP-BUCKET

S/N: BYJ1-UP; PDP1-UP
PART OF 282-5536, 282-5537 COUPLER AR-QUICK, 260-7065, 260-7066, 260-7067 LINKAGE AR-BUCKET
AN ATTACHMENT

SMCS-5457 **i02796335**

NOTE	PART NUMBER	QTY	PART NAME 1 2 3 4 5 6 (PRODUCT LEVEL)	SEE PAGE
Y	*289-7698*	1	CYLINDER & SEAL GP-BUCKET	319
Y	*179-7598*	1	LINES GP-BUCKET CYLINDER	395

Y-SEPARATE ILLUSTRATION

<END>

289-7787 CYLINDER & LINES GP-BUCKET

S/N: BYJ1-UP; PDP1-UP
PART OF 282-5538, 282-5539 COUPLER AR-QUICK
AN ATTACHMENT

SMCS-5457 **i02820711**

NOTE	PART NUMBER	QTY	PART NAME 1 2 3 4 5 6 (PRODUCT LEVEL)	SEE PAGE
Y	*289-7698*	1	CYLINDER & SEAL GP-BUCKET	319
Y	*282-7248*	1	LINES GP-BUCKET CYLINDER	396

Y-SEPARATE ILLUSTRATION

<END>

289-7711 CYLINDER & LINES GP-STICK

S/N: BYJ1-UP; PDP1-UP
PART OF 260-7189 BOOM AR-1 PIECE LONG
AN ATTACHMENT

SMCS-5458 **i02807950**

NOTE	PART NUMBER	QTY	PART NAME 1 2 3 4 5 6 (PRODUCT LEVEL)	SEE PAGE
Y	*289-7712*	1	CYLINDER & SEAL GP-STICK	320
Y	*194-8989*	1	LINES GP-STICK CYLINDER	486

Y-SEPARATE ILLUSTRATION

<END>

274-2680 CYLINDER & SEAL GP-BLADE–LH

S/N: BYJ1-UP; PDP1-UP
PART OF 274-2678 CYLINDER & LINES GP-BLADE
AN ATTACHMENT

SMCS-5102 **i02810009**

NOTE	REF NO	GRAPHIC REF	PART NUMBER	QTY	PART NAME 1 2 3 4 5 6 (PRODUCT LEVEL)	SEE PAGE
	1	1	**3B-8489**	2	FITTING-GREASE	
	2	1	**166-1492**	4	SEAL-LIP TYPE	
Y	3	1	**274-2682**	1	CYLINDER GP-BLADE	321

Y-SEPARATE ILLUSTRATION

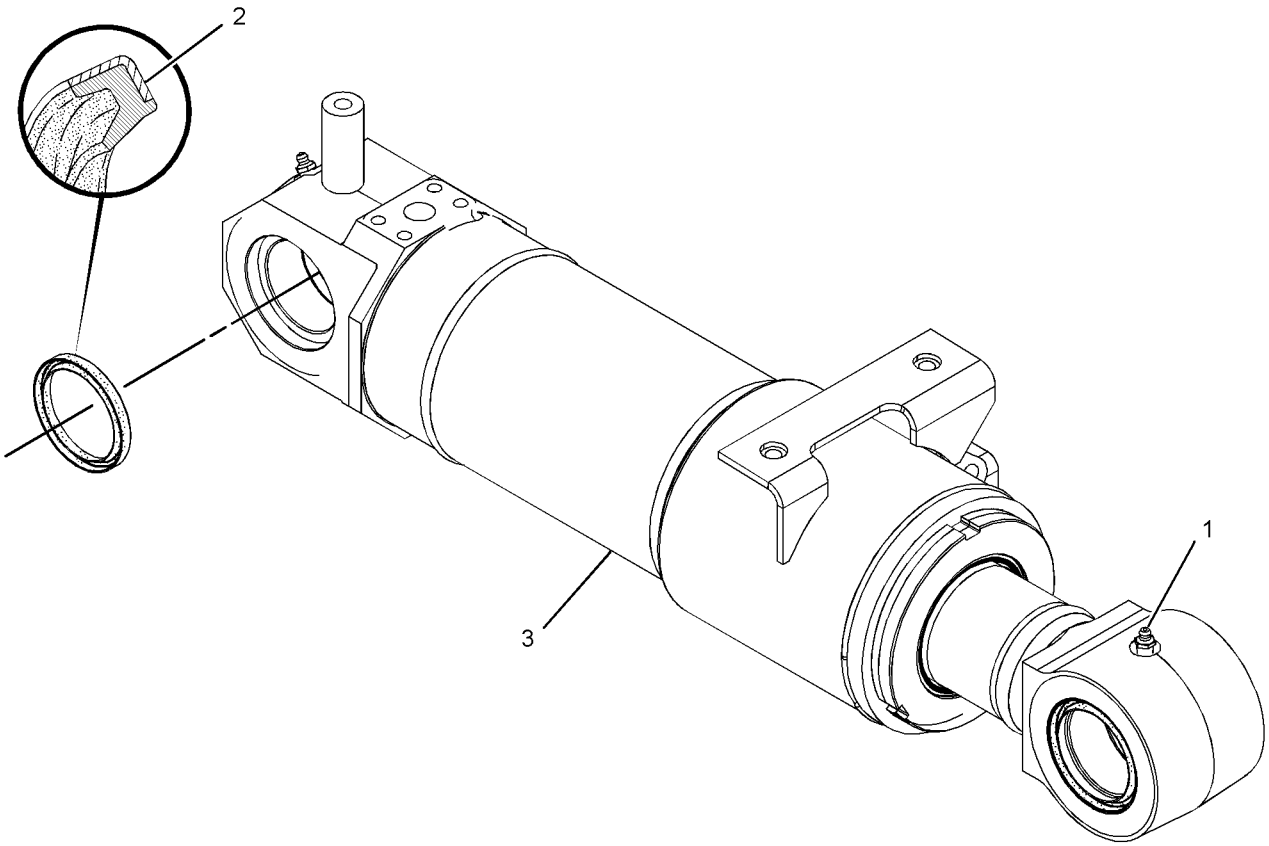

GRAPHIC #1 **<END>** g01406626

274-2681 CYLINDER & SEAL GP-BLADE–RH

S/N: BYJ1-UP; PDP1-UP
PART OF 274-2679 CYLINDER & LINES GP-BLADE
AN ATTACHMENT

SMCS-5102 **i02810002**

NOTE	REF NO	GRAPHIC REF	PART NUMBER	QTY	PART NAME 1 2 3 4 5 6 (PRODUCT LEVEL)	SEE PAGE
	1	1	**3B-8489**	2	FITTING-GREASE	
	2	1	**166-1492**	4	SEAL-LIP TYPE	
Y	3	1	**274-2683**	1	CYLINDER GP-BLADE	323

Y-SEPARATE ILLUSTRATION

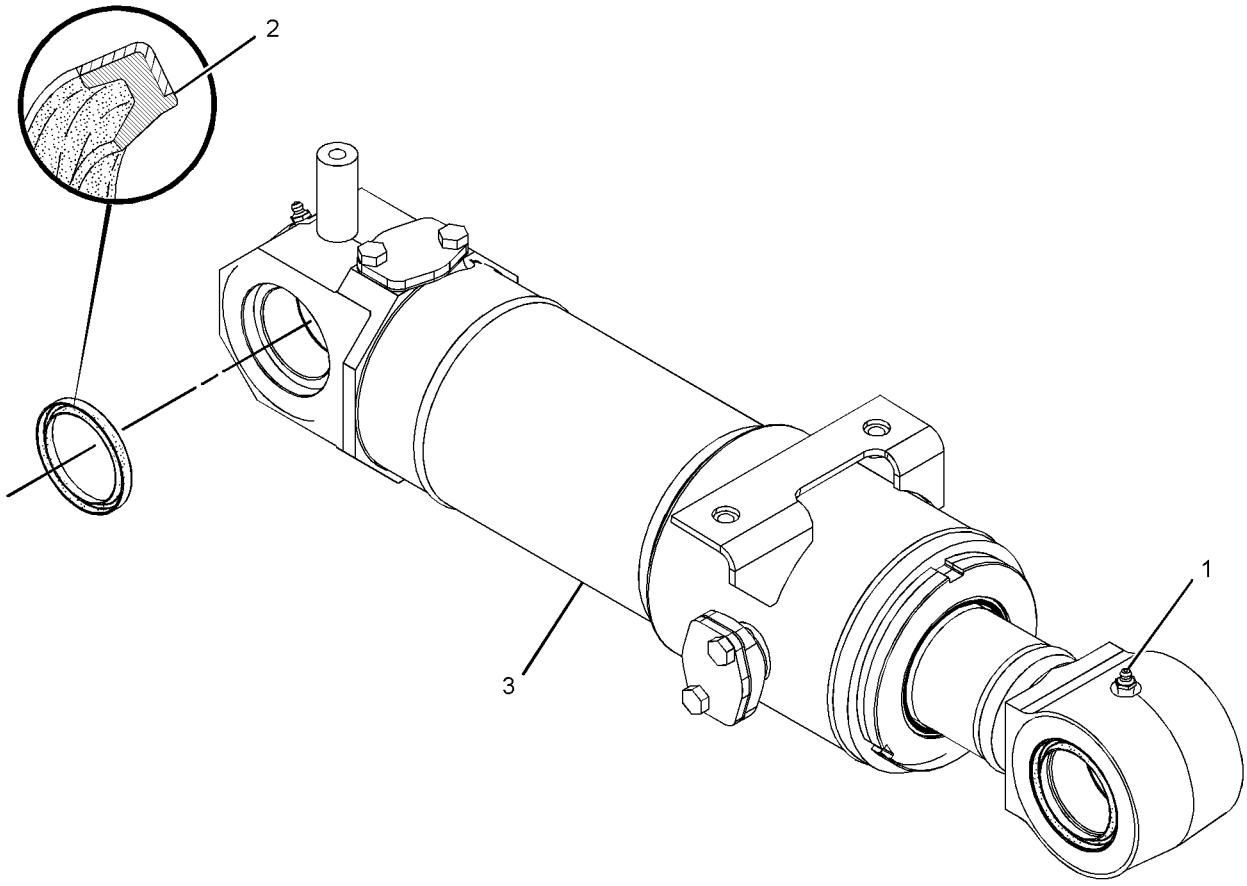

GRAPHIC #1 **<END>** g01406619

HYDRAULIC SYSTEM

289-7719 CYLINDER & SEAL GP-BOOM

S/N: BYJ1-UP; PDP1-UP

PART OF 289-7717, 289-7718 CYLINDER & LINES GP-BOOM

AN ATTACHMENT

SMCS-5456 **i02826367**

NOTE	REF NO	GRAPHIC REF	PART NUMBER	QTY	PART NAME 1 2 3 4 5 6 (PRODUCT LEVEL)	SEE PAGE
	1	1	**3B-8489**	1	FITTING-GREASE	
	2	1	**166-1492**	2	SEAL-LIP TYPE	
Y	3	1	**289-7720**	1	CYLINDER GP-BOOM	325
	4	1	**166-1494**	2	SEAL-LIP TYPE	

Y-SEPARATE ILLUSTRATION

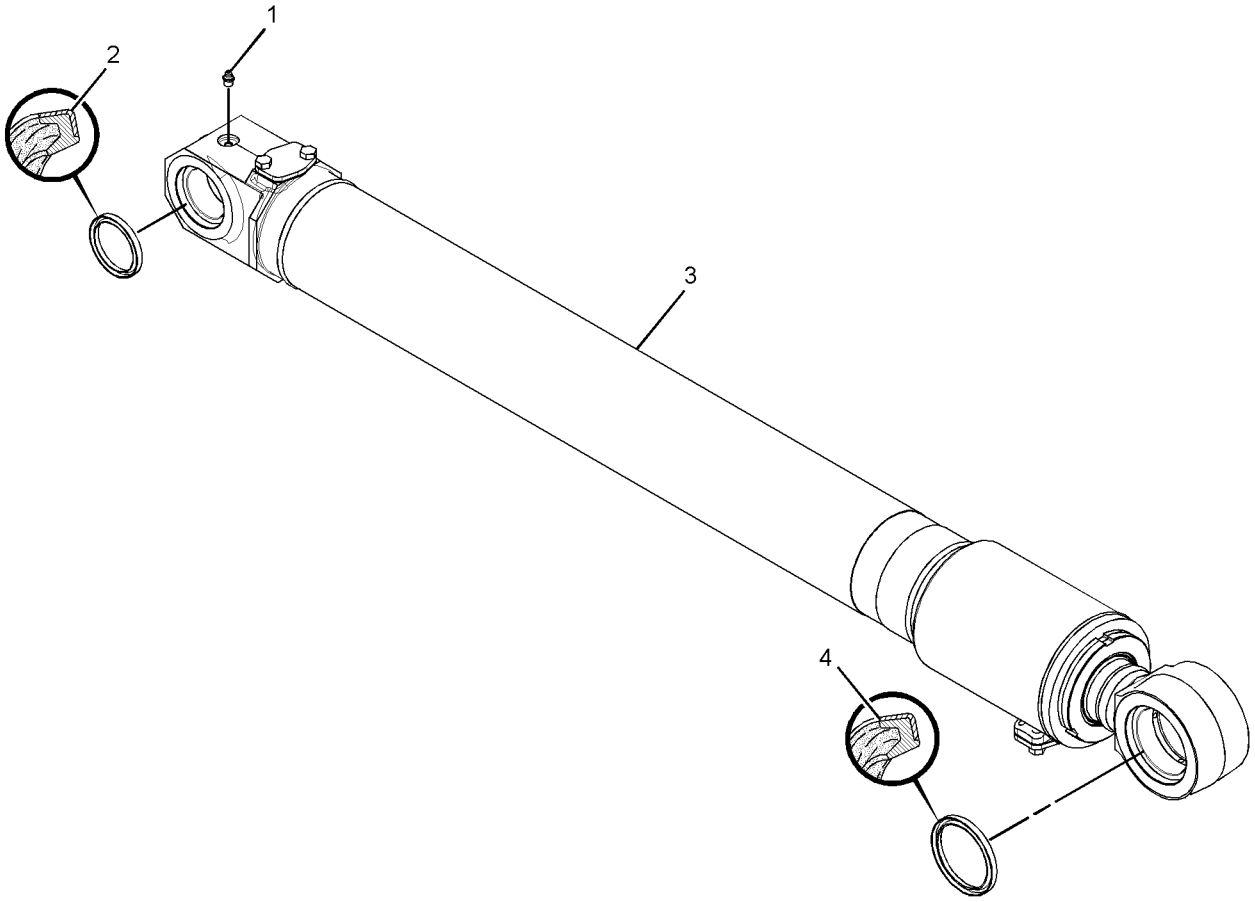

GRAPHIC #1 **<END>** g01412598

289-7698 CYLINDER & SEAL GP-BUCKET

S/N: BYJ1-UP; PDP1-UP
PART OF 289-7697, 289-7787 CYLINDER & LINES GP-BUCKET
AN ATTACHMENT

SMCS-5457 **i02796336**

NOTE	REF NO	GRAPHIC REF	PART NUMBER	QTY	PART NAME 1 2 3 4 5 6 (PRODUCT LEVEL)	SEE PAGE
	1	1	**3B-8489**	2	FITTING-GREASE	
	2	1	**166-1492**	2	SEAL-LIP TYPE	
	3	1	**235-7679**	2	SEAL-LIP TYPE	
Y	4	1	**289-7699**	1	CYLINDER GP-BUCKET	327
Y-SEPARATE ILLUSTRATION						

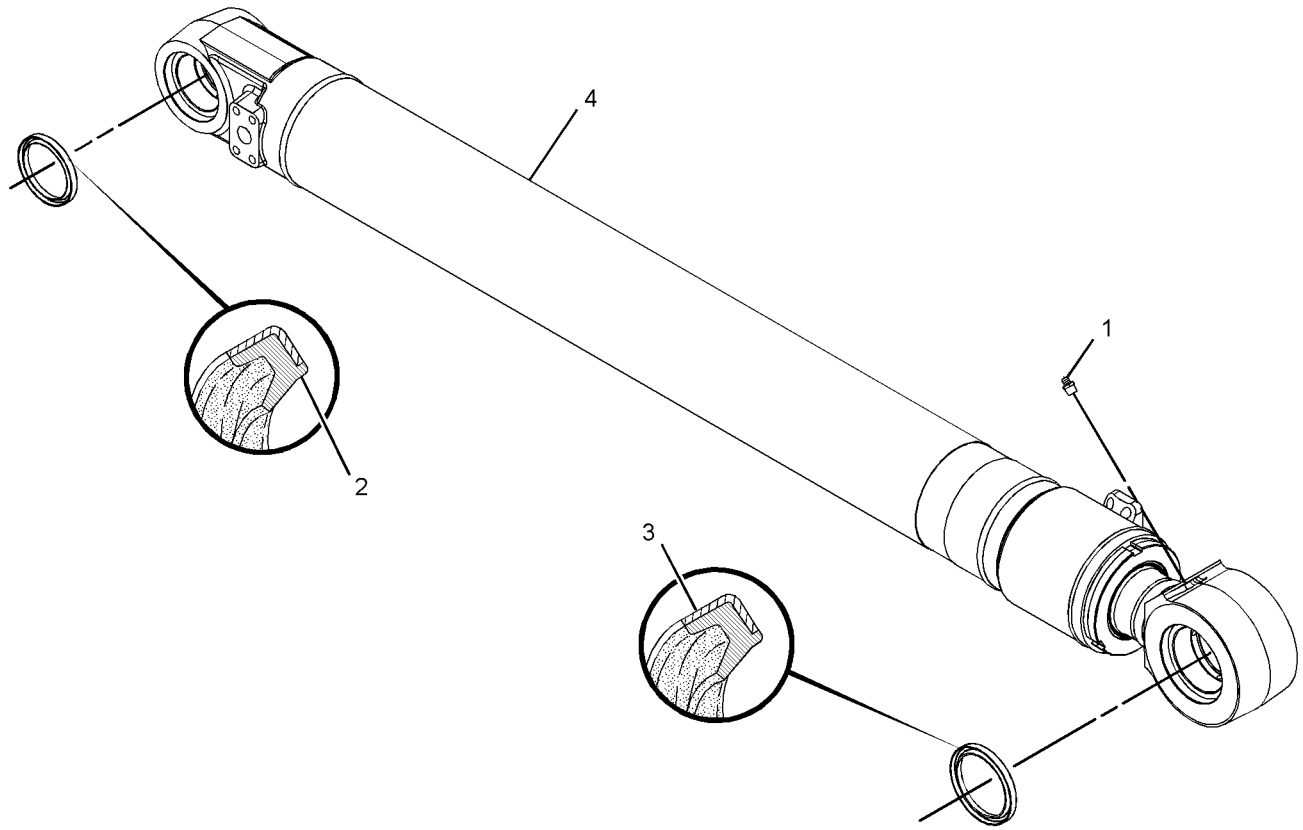

GRAPHIC #1 **<END>** g01400038

289-7712 CYLINDER & SEAL GP-STICK

S/N: BYJ1-UP; PDP1-UP
PART OF 289-7711 CYLINDER & LINES GP-STICK
AN ATTACHMENT

SMCS-5458 **i02807946**

NOTE	REF NO	GRAPHIC REF	PART NUMBER	QTY	PART NAME 1 2 3 4 5 6 (PRODUCT LEVEL)	SEE PAGE
	1	1	**3B-8489**	1	FITTING-GREASE	
	2	1	**166-1492**	4	SEAL-LIP TYPE	
Y	3	1	**289-7713**	1	CYLINDER GP-STICK	330
	4	1	**8T-6763**	1	PLUG-PIPE	

Y-SEPARATE ILLUSTRATION

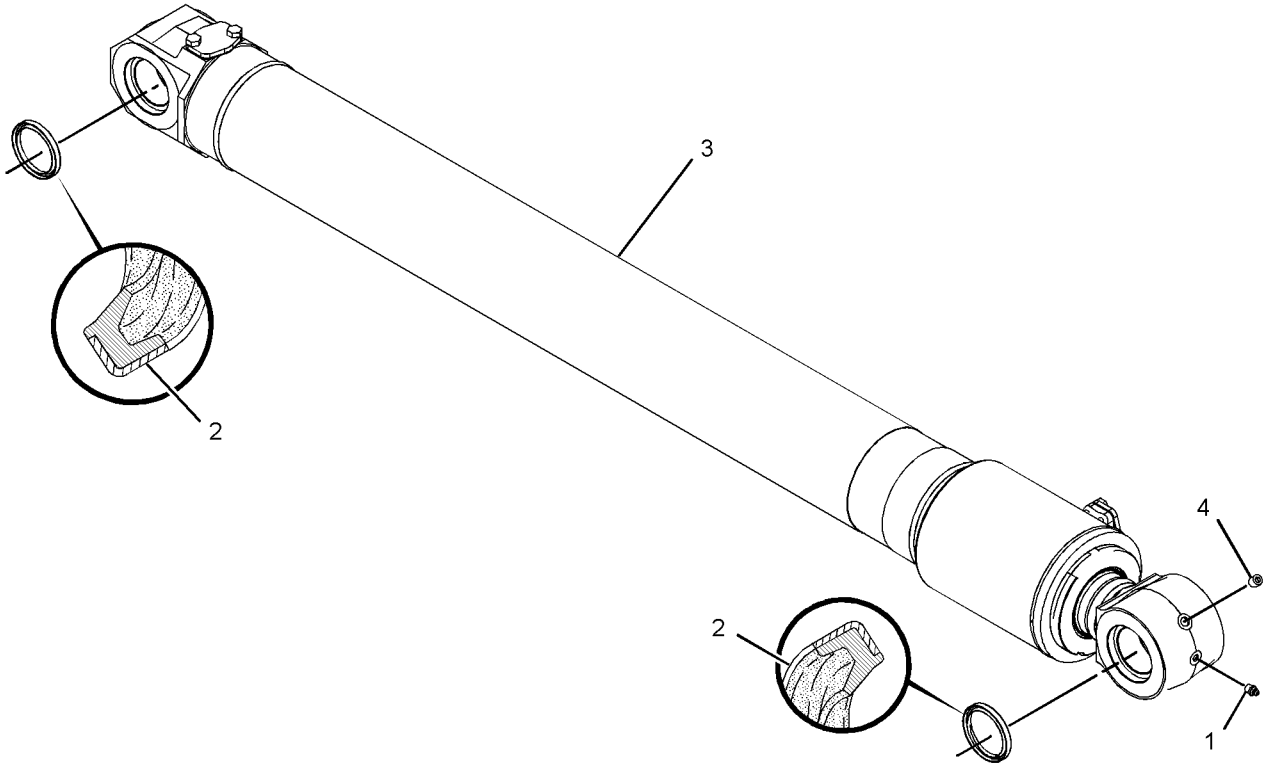

GRAPHIC #1 **<END>** g01403514

274-2682 CYLINDER GP-BLADE–LH

S/N: BYJ1-UP; PDP1-UP
120-MM (4.7-IN) BORE X 202-MM (7.9-IN) STROKE
PART OF 274-2680 CYLINDER & SEAL GP-BLADE
AN ATTACHMENT

SMCS-5102 **i02903872**

NOTE	REF NO	GRAPHIC REF	PART NUMBER	QTY	PART NAME 1 2 3 4 5 6 (PRODUCT LEVEL)	SEE PAGE
J	1	1	**9X-3592**	1	SEAL AS	
	2	1	**099-0695**	1	RING	
J	3	1	**119-5445**	1	RING	
	4	1	**123-9950**	1	HEAD	
	5	1	**125-1551**	1	PISTON	
J	6	1	**143-8027**	1	RING	
M	7	1	**143-8151**	1	LOCKNUT-SPECIAL	
	8	1	**283-6080**	1	CYLINDER AS	
	8A	1	**273-6945**	1	BEARING-SLEEVE	
	9	1	**283-6083**	1	ROD AS	
	9A	1	**273-6945**	1	BEARING-SLEEVE	
J	10	1	**096-1054**	1	RING-BACKUP	
	11	1	**096-8139**	1	RING-RETAINING	
J	12	1	**165-9285**	1	SEAL-LIP TYPE	
J	13	1	**170-9843**	1	SEAL-BUFFER	
J	14	1	**170-9859**	1	SEAL-U-CUP	
J	15	1	**095-1628**	1	SEAL-O-RING	
J	16	1	**095-1676**	1	SEAL-O-RING	
J	17	1	**099-0681**	1	RING-BACKUP	
	18	1	**114-0755**	1	BEARING-SLEEVE	
					AVAILABLE REPAIR KIT(S):	
J			**170-9946**	1	KIT-SEAL (BLADE CYLINDER)	

J-KIT MARKED J SERVICES PART(S) MARKED J
M-METRIC PART

274-2682 CYLINDER GP-BLADE *(contd.)* **i02903872**

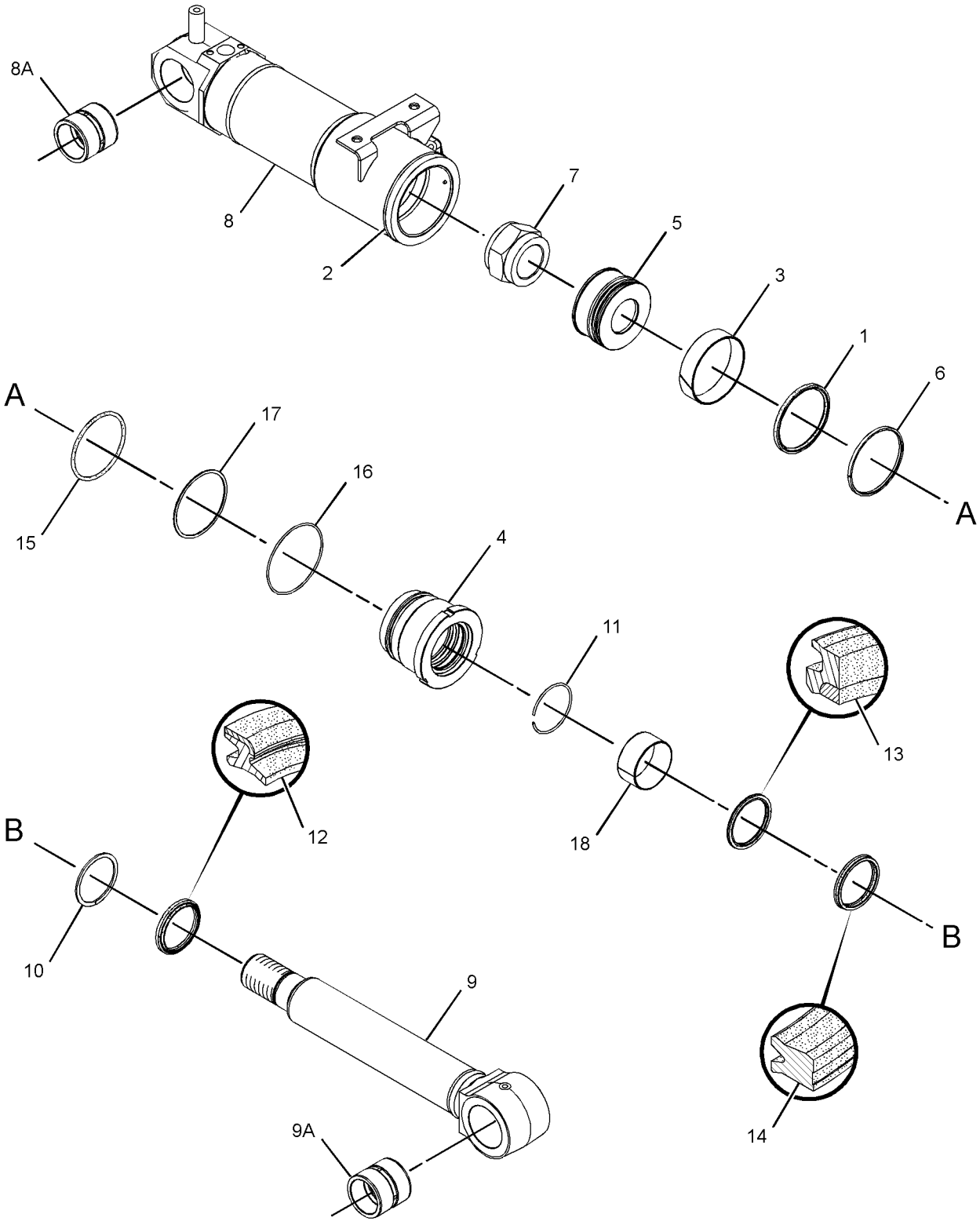

GRAPHIC #1 **<END>** g01453963

HYDRAULIC SYSTEM

274-2683 CYLINDER GP-BLADE–RH

S/N: BYJ1-UP; PDP1-UP
120-MM (4.7-IN) BORE X 202-MM (7.9-IN) STROKE
PART OF 274-2681 CYLINDER & SEAL GP-BLADE
AN ATTACHMENT

SMCS-5102 **i02903863**

NOTE	REF NO	GRAPHIC REF	PART NUMBER	QTY	PART NAME 1 2 3 4 5 6 (PRODUCT LEVEL)	SEE PAGE
J	1	1	**9X-3592**	1	SEAL AS	
	2	1	**099-0695**	1	RING	
J	3	1	**119-5445**	1	RING	
	4	1	**123-9950**	1	HEAD	
	5	1	**125-1551**	1	PISTON	
J	6	1	**143-8027**	1	RING	
M	7	1	**143-8151**	1	LOCKNUT-SPECIAL	
	8	1	**283-6081**	1	CYLINDER AS	
	8A	1	**273-6945**	1	BEARING-SLEEVE	
	9	1	**283-6083**	1	ROD AS	
	9A	1	**273-6945**	1	BEARING-SLEEVE	
J	10	1	**096-1054**	1	RING-BACKUP	
	11	1	**096-8139**	1	RING-RETAINING	
J	12	1	**165-9285**	1	SEAL-LIP TYPE	
J	13	1	**170-9843**	1	SEAL-BUFFER	
J	14	1	**170-9859**	1	SEAL-U-CUP	
J	15	1	**095-1628**	1	SEAL-O-RING	
J	16	1	**095-1676**	1	SEAL-O-RING	
J	17	1	**099-0681**	1	RING-BACKUP	
	18	1	**114-0755**	1	BEARING-SLEEVE	
					AVAILABLE REPAIR KIT(S):	
J			**170-9946**	1	KIT-SEAL (BLADE CYLINDER)	

J-KIT MARKED J SERVICES PART(S) MARKED J
M-METRIC PART

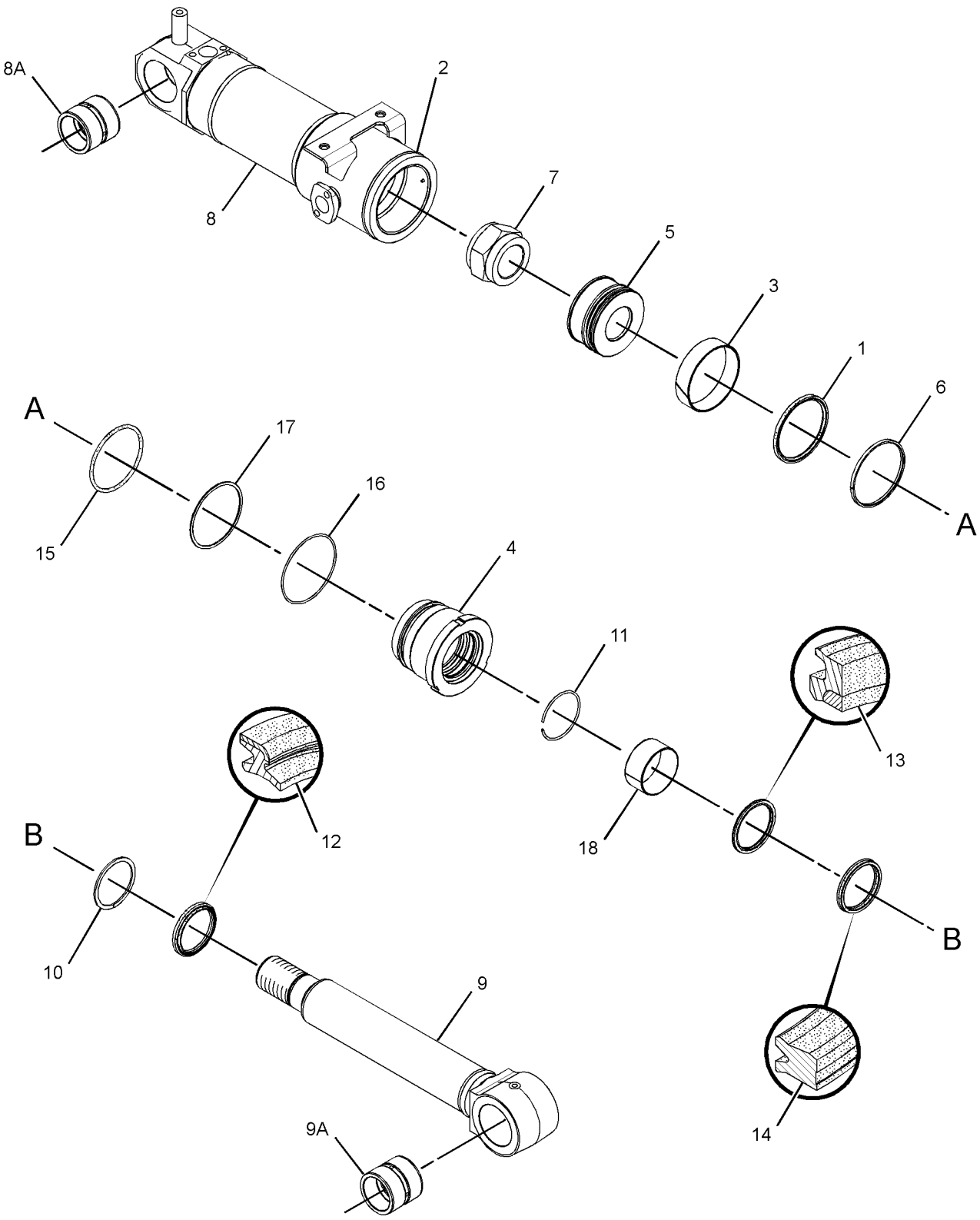

GRAPHIC #1 **<END>** g01453987

HYDRAULIC SYSTEM

289-7720 CYLINDER GP-BOOM

S/N: BYJ1-UP; PDP1-UP
110-MM (4.3-IN) BORE X 1000-MM (39.3-IN) STROKE
PART OF 289-7719 CYLINDER & SEAL GP-BOOM
AN ATTACHMENT

SMCS-5456 **i02826371**

NOTE	REF NO	GRAPHIC REF	PART NUMBER	QTY	PART NAME 1 2 3 4 5 6 (PRODUCT LEVEL)	SEE PAGE
J	1	1	**9X-7301**	1	SEAL AS	
	2	1	**099-0661**	1	RING-RETAINING	
	3	1	**099-0674**	1	RING	
J	4	1	**143-8031**	2	RING	
M	5	1	**143-8150**	1	LOCKNUT-SPECIAL	
J	6	1	**165-9284**	1	SEAL-LIP TYPE	
J	7	1	**170-9842**	1	SEAL-BUFFER	
J	8	1	**170-9858**	1	SEAL-U-CUP	
	9	1	**173-3350**	1	STOP	
	10	1	**173-3351**	1	HEAD	
	11	1	**283-5926**	1	PISTON	
J	12	1	**283-5927**	2	RING	
J	13	1	**283-5971**	1	RING-SEAL	
	14	1	**283-6040**	1	ROD AS	
	14A	1	**273-6813**	1	BEARING-SLEEVE	
	15	1	**289-7721**	1	CYLINDER AS	
	15A	1	**273-6811**	1	BEARING-SLEEVE	
J	16	1	**095-1627**	2	SEAL-O-RING	
J	17	1	**095-1674**	1	SEAL-O-RING	
J	18	1	**096-3467**	1	RING-BACKUP	
J	19	1	**099-0660**	3	RING-BACKUP	
	20	1	**114-0750**	1	BEARING-SLEEVE	
					AVAILABLE REPAIR KIT(S):	
J			**289-7733**	1	KIT-SEAL (BOOM CYLINDER)	

J-KIT MARKED J SERVICES PARTS MARKED J
M-METRIC PART

289-7720 CYLINDER GP-BOOM *(contd.)* i02826371

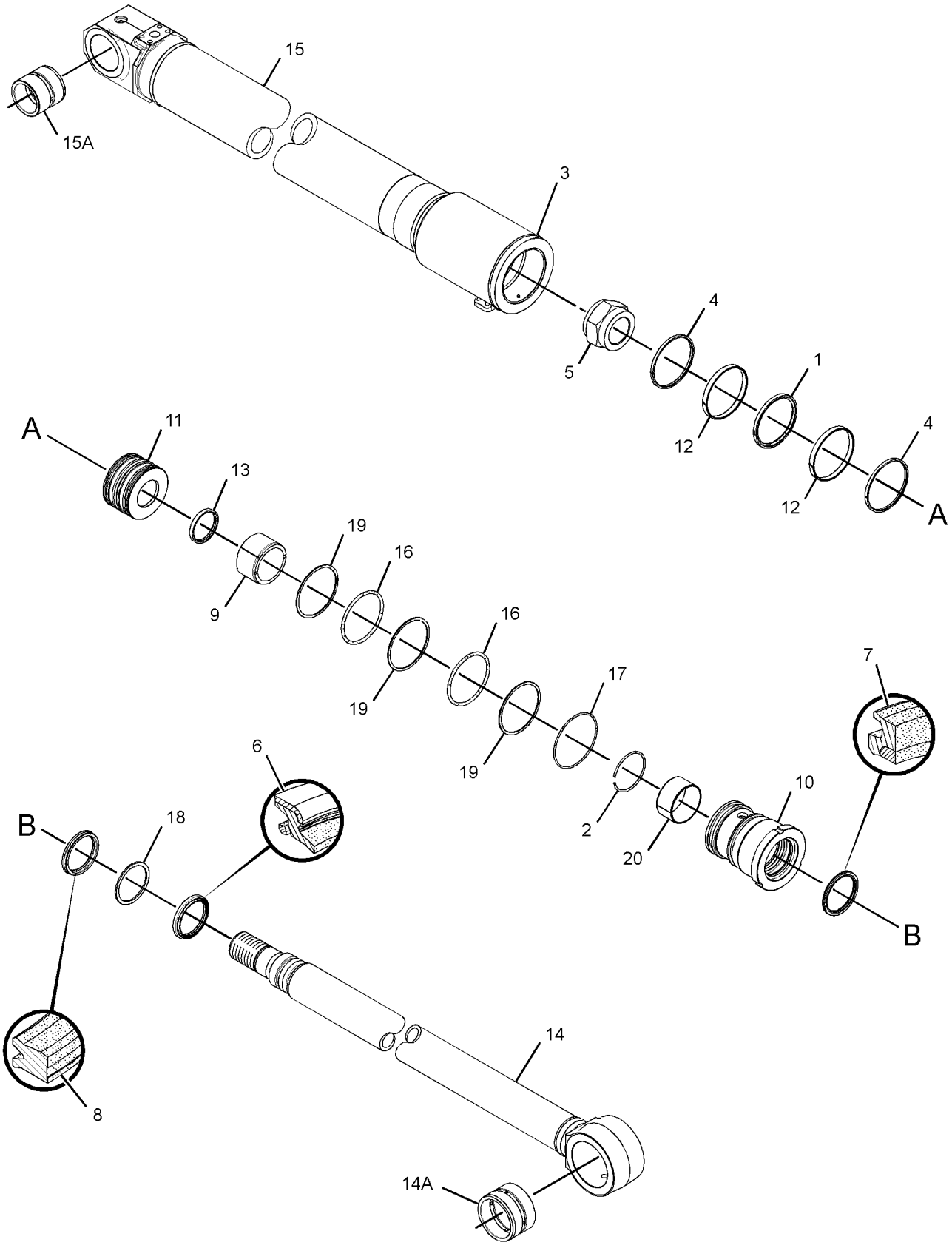

GRAPHIC #1 **<END>** g01521843

HYDRAULIC SYSTEM

289-7699 CYLINDER GP-BUCKET

S/N: BYJ1-UP; PDP1-UP
100-MM (3.9-IN) BORE X 939-MM (37-IN) STROKE
PART OF 289-7698 CYLINDER & SEAL GP-BUCKET
AN ATTACHMENT

SMCS-5457 **i02796337**

NOTE	REF NO	GRAPHIC REF	PART NUMBER	QTY	PART NAME 1 2 3 4 5 6 (PRODUCT LEVEL)	SEE PAGE
J	1	1	**9X-7298**	1	SEAL AS	
J	2	1	**093-1519**	1	RING-BACKUP	
	3	1	**099-0600**	1	RING	
	4	1	**099-5400**	1	RING-RETAINING	
M	5	1	**133-6686**	1	LOCKNUT-SPECIAL	
J	6	1	**143-8025**	2	RING	
J	7	1	**165-9283**	1	SEAL-LIP TYPE	
J	8	1	**170-9841**	1	SEAL-BUFFER	
J	9	1	**170-9857**	1	SEAL-U-CUP	
	10	1	**283-5952**	1	PISTON	
J	11	1	**283-5953**	2	RING	
	12	1	**289-7700**	1	CYLINDER AS	
	12A	1	**273-6810**	1	BEARING-SLEEVE	
	13	1	**289-7702**	1	HEAD	
	14	1	**289-7743**	1	ROD AS	
	14A	1	**248-7857**	1	BEARING-SLEEVE	
J	15	1	**095-1713**	1	SEAL-O-RING	
J	16	1	**099-5399**	1	RING-BACKUP	
	17	1	**114-0753**	1	BEARING-SLEEVE	
J	18	1	**6V-8467**	1	SEAL-O-RING	
					AVAILABLE REPAIR KIT(S):	
			283-6179	1	KIT-SEAL (BUCKET CYLINDER)	
					(ALSO INCLUDES A SEAL RING)	

J-KIT MARKED J SERVICES PART(S) MARKED J
M-METRIC PART

289-7699 CYLINDER GP-BUCKET *(contd.)* **i02796337**

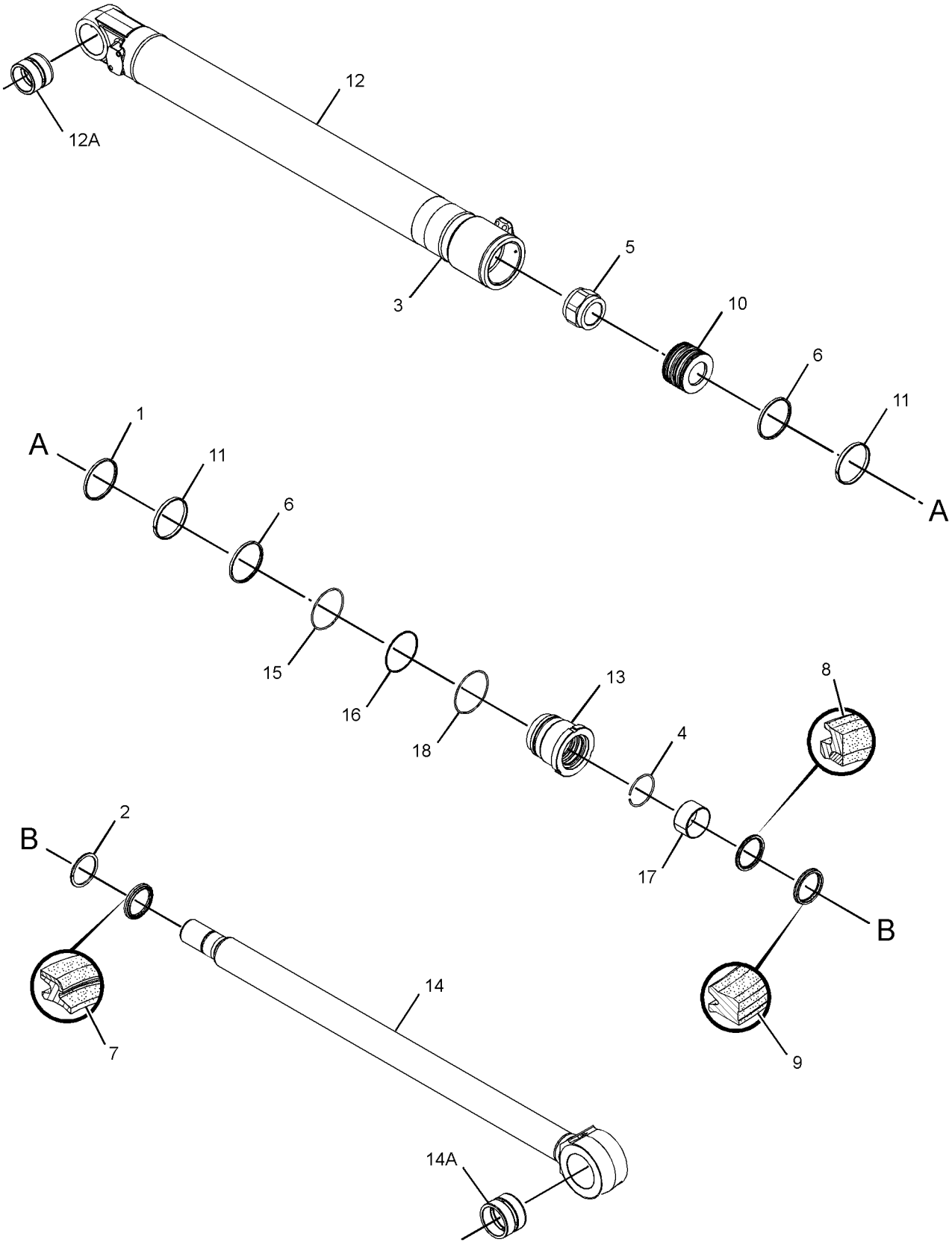

GRAPHIC #1

<END>

g01400302

273-4147 CYLINDER GP-COUPLER

S/N: BYJ1-UP; PDP1-UP
PART OF 236-4153 COUPLER GP-QUICK
AN ATTACHMENT

SMCS-5133 **i03017532**

NOTE	REF NO	GRAPHIC REF	PART NUMBER	QTY	PART NAME 1 2 3 4 5 6 (PRODUCT LEVEL)	SEE PAGE
	1	1	**091-5928**	2	FITTING-GREASE	
	2	1	**172-8406**	1	VALVE GP-CHECK (HYD CYLINDER, QUICK COUPLER)	
		1	**2U-5338**	1	SEAL-O-RING	
		1	**107-7640**	1	SEAL-O-RING	
		1	**9W-3340**	1	SEAL-O-RING	
					AVAILABLE REPAIR KIT(S):	
			172-8488	1	KIT-SEAL (COUPLER CYLINDER)	

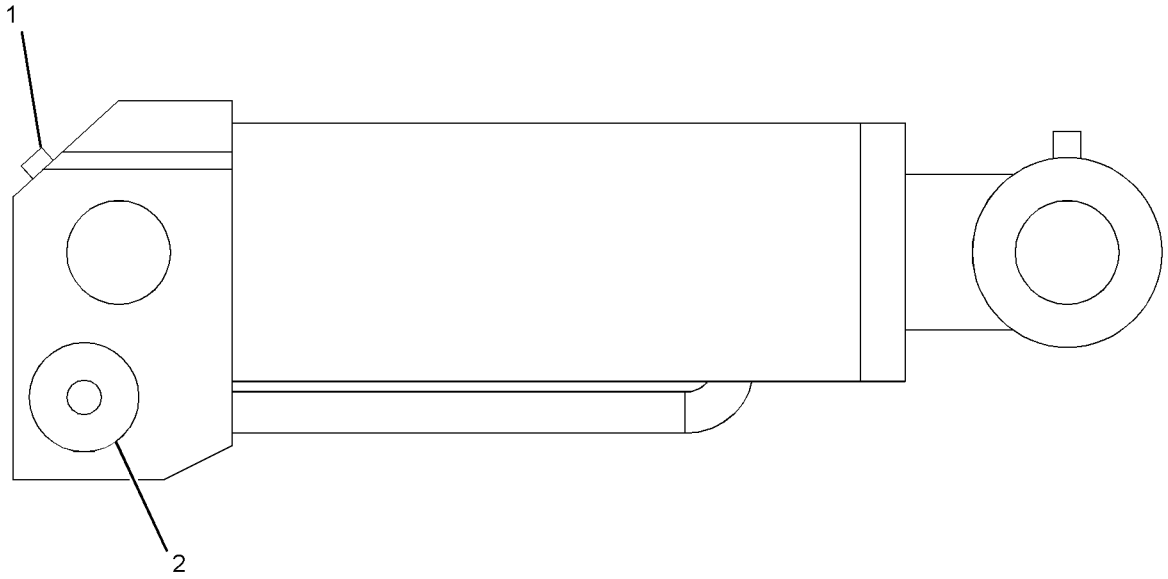

GRAPHIC #1 **<END>** g01203166

HYDRAULIC SYSTEM

289-7713 CYLINDER GP-STICK

S/N: BYJ1-UP; PDP1-UP
120-MM (4.7-IN) BORE X 1197-MM (47.1-IN) STROKE
PART OF 289-7712 CYLINDER & SEAL GP-STICK
AN ATTACHMENT

SMCS-5458 **i02808995**

NOTE	REF NO	GRAPHIC REF	PART NUMBER	QTY	PART NAME 1 2 3 4 5 6 (PRODUCT LEVEL)	SEE PAGE
	1	1	**5I-3046**	1	STOP	
J	2	1	**9X-3592**	1	SEAL AS	
	3	1	**103-8441**	1	RING-RETAINING	
	4	1	**103-8442**	1	RING	
	5	1	**105-7398**	1	STOP	
	6	1	**123-2002**	1	RING	
J	7	1	**143-8027**	2	RING	
M	8	1	**143-8151**	1	LOCKNUT-SPECIAL	
	9	1	**173-3358**	1	HEAD	
	10	1	*289-8082*	1	ROD AS	
	10A	1	**273-6812**	1	BEARING-SLEEVE	
	11	1	**283-5939**	1	PISTON	
J	12	1	**283-5940**	2	RING	
J	13	1	**283-5972**	1	RING-SEAL	
	14	1	**289-7714**	1	CYLINDER AS	
	14A	1	**273-6812**	1	BEARING-SLEEVE	
J	15	1	**096-1054**	1	RING-BACKUP	
	16	1	**096-8139**	1	RING-RETAINING	
	17	1	**114-0755**	1	BEARING-SLEEVE	
J	18	1	**165-9285**	1	SEAL-LIP TYPE	
J	19	1	**170-9843**	1	SEAL-BUFFER	
J	20	1	**170-9859**	1	SEAL-U-CUP	
J	21	1	**095-1628**	2	SEAL-O-RING	
J	22	1	**095-1676**	1	SEAL-O-RING	
J	23	1	**099-0681**	3	RING-BACKUP	
	24	1	**8T-4241**	2	RING-RETAINING	
					AVAILABLE REPAIR KIT(S):	
J			**289-7716**	1	KIT-SEAL (STICK CYLINDER)	

J-KIT MARKED J SERVICES PART(S) MARKED J
M-METRIC PART

289-7713 CYLINDER GP-STICK *(contd.)* **i02808995**

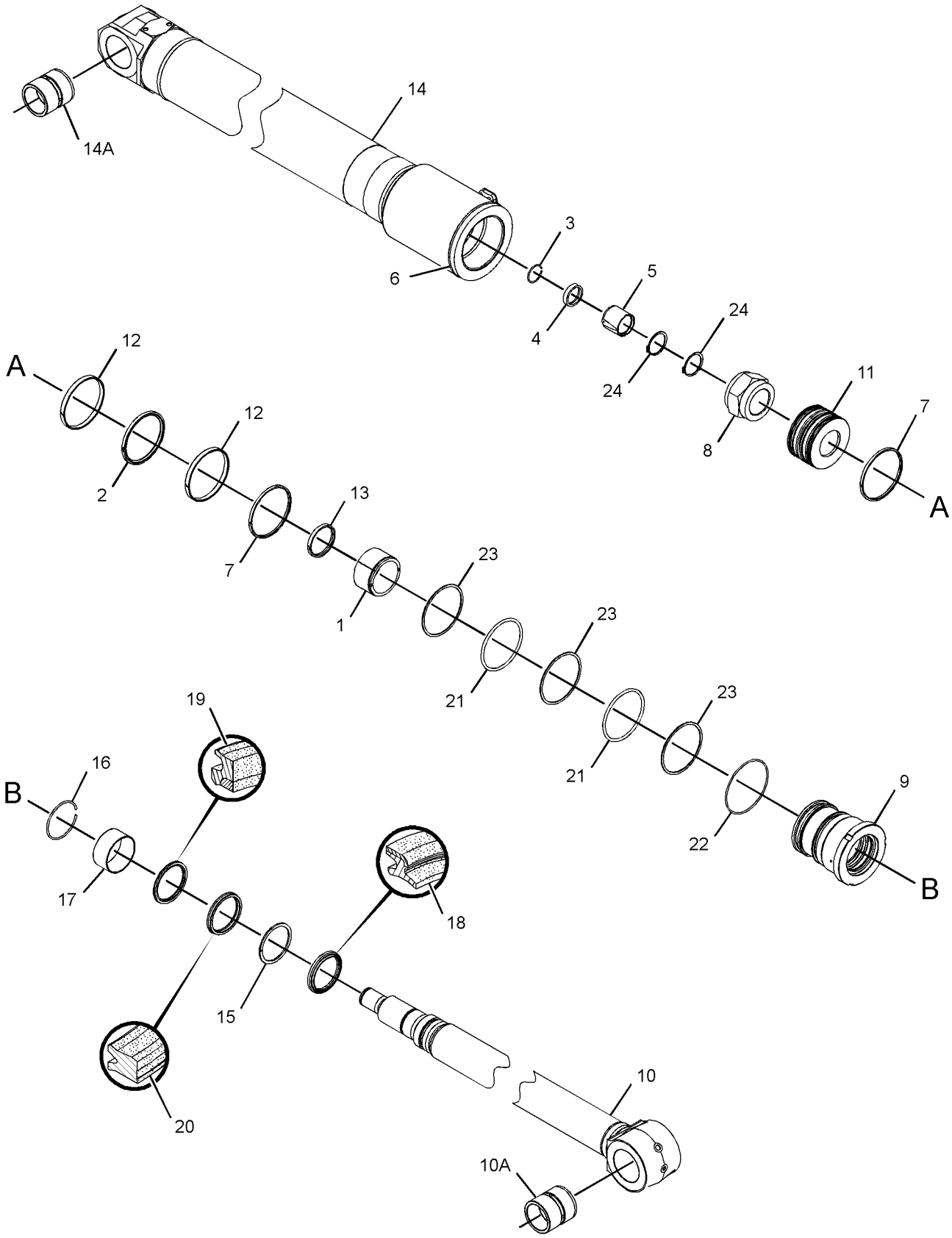

GRAPHIC #1 **<END>** g01405220

HYDRAULIC SYSTEM

169-5549 DRIVE GP-SWING—WITHOUT MOTOR

S/N: BYJ1-UP; PDP1-UP
PART OF 267-6840, 267-6845 DRIVE GP-SWING
ALSO AN ATTACHMENT

SMCS-5459 **i01485213**

NOTE	REF NO	GRAPHIC REF	PART NUMBER	QTY	PART NAME 1 2 3 4 5 6 (PRODUCT LEVEL)	SEE PAGE
	1	1	**191-2600**	3	GEAR-PLANETARY	
	2	1	**191-2599**	1	CARRIER-PLANETARY	
	3	1	**191-2604**	3	PIN-SPRING	
	4	1	**191-2603**	3	SHAFT-PLANETARY	
	5	1	**191-2609**	3	SHAFT-PLANETARY	
	6	1	**191-2605**	1	WASHER (30X75X3-MM THK)	
	7	1	**191-2611**	1	GEAR-SUN	
	8	1	**191-2612**	1	GEAR-SUN	
M	9	1	**114-8224**	1	BOLT (M20X1.5-THD)	
	10	1	**191-2613**	1	GEAR-RING	
	11	1	**093-6089**	2	DOWEL	
	12	1	**095-0893**	1	PIN-SPRING	
	13	1	**7I-7625**	1	BEARING AS-ROLLER	
	14	1	**191-2615**	1	HOUSING	
	15	1	**191-2614**	1	SHAFT-PINION	
B	16	1	**7I-7632**	1	SPACER (69.5-MM THK)	
B		1	**7I-7633**	1	SPACER (69.8-MM THK)	
B		1	**7I-7634**	1	SPACER (70.1-MM THK)	
B		1	**7I-7635**	1	SPACER (70.4-MM THK)	
B		1	**7I-7636**	1	SPACER (70.7-MM THK)	
	21	1	**7I-7626**	1	BEARING AS-ROLLER	
M	22	1	**8T-4195**	8	BOLT (M10X1.5X30-MM)	
	23	1	**8T-4121**	8	WASHER-HARD (11X21X2.5-MM THK)	
	24	1	**099-0233**	1	SEAL-LIP TYPE	
	25	1	**099-0235**	1	CAGE	
B	26	1	**7I-7638**	1	SPACER (10-MM THK)	
B		1	**7I-7639**	1	SPACER (10.03-MM THK)	
B		1	**7I-7640**	1	SPACER (10.05-MM THK)	
B		1	**7I-7641**	1	SPACER (10.08-MM THK)	
B		1	**7I-7642**	1	SPACER (10.1-MM THK)	
B		1	**7I-7643**	1	SPACER (10.12-MM THK)	
B		1	**7I-7644**	1	SPACER (10.15-MM THK)	
B		1	**7I-7645**	1	SPACER (10.18-MM THK)	
B		1	**7I-7646**	1	SPACER (10.2-MM THK)	
B		1	**7I-7647**	1	SPACER (10.23-MM THK)	
B		1	**7I-7648**	1	SPACER (10.25-MM THK)	
B		1	**7I-7649**	1	SPACER (10.28-MM THK)	
	38	1	**191-2607**	1	CARRIER-PLANETARY	
	39	1	**114-8223**	1	RETAINER	
	40	1	**191-2610**	3	PIN-SPRING	
	41	1	**191-2602**	12	WASHER (32X56X1.2-MM THK)	
	42	1	**191-2601**	9	BEARING	
	43	1	**191-2608**	3	GEAR-PLANETARY	
B	44	1	**1U-8846**		SEALANT-GASKET	

B-USE AS REQUIRED
M-METRIC PART

169-5549 **DRIVE GP-SWING** *(contd.)* **i01485213**

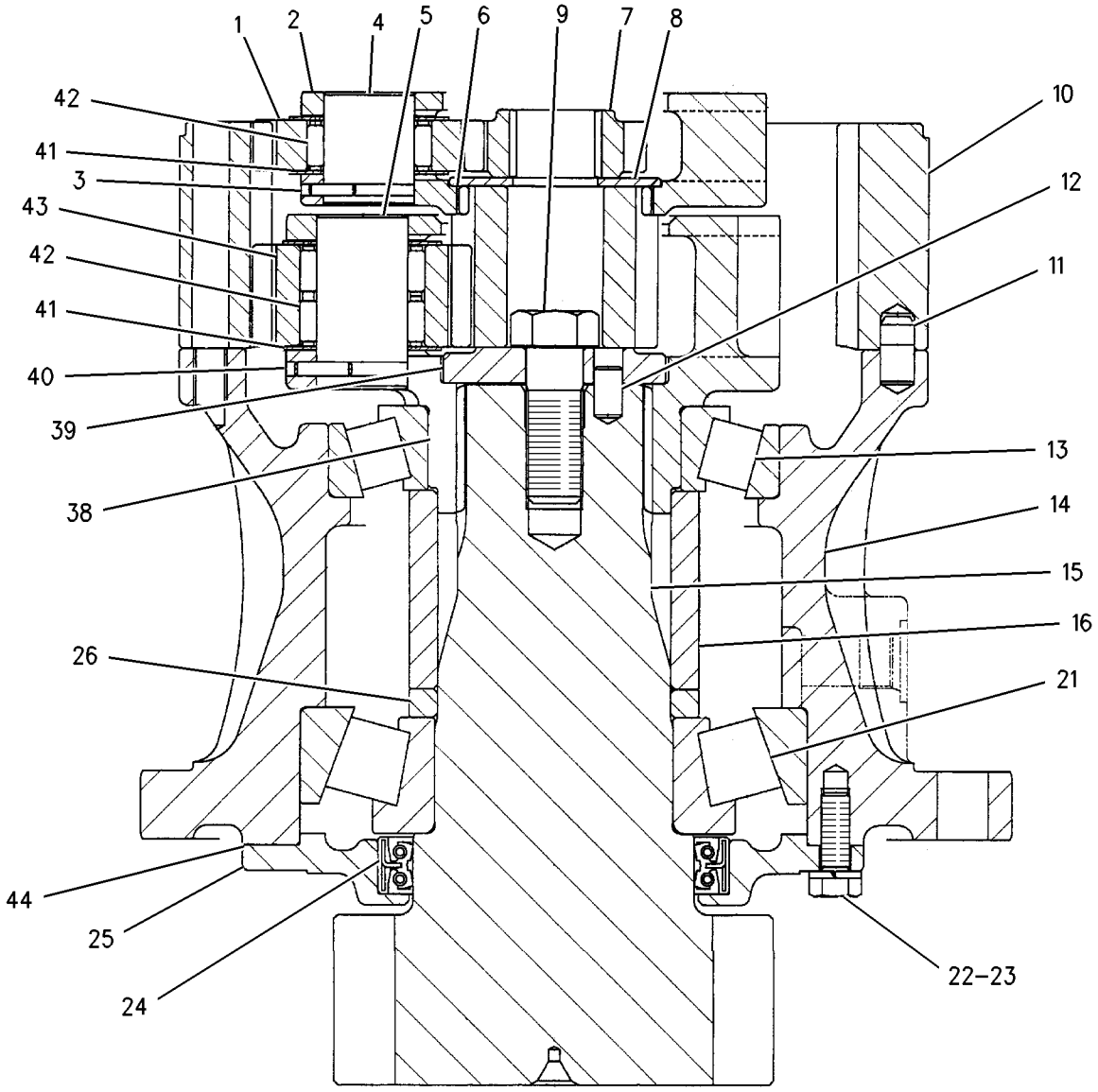

GRAPHIC #1 **<END>** g00772422

HYDRAULIC SYSTEM

267-6839 DRIVE GP-SWING—WITH MOTOR

S/N: BYJ1-UP; PDP1-UP
PART OF 260-7204 VALVE AR-SWING
AN ATTACHMENT

SMCS-5459 **i03036107**

NOTE	REF NO	GRAPHIC REF	PART NUMBER	QTY	PART NAME 1 2 3 4 5 6 (PRODUCT LEVEL)	SEE PAGE
	1	1	**3K-0360**	1	SEAL-O-RING	
	2	1	**171-9420**	1	FITTING-PIPE	
	3	1	*184-2421*	1	CONNECTOR AS	
		1	**6V-9746**	1	SEAL-O-RING	
		1	**8C-6874**	1	CONNECTOR	
	4	1	**191-2691**	1	CONNECTOR	
	5	1	**267-6744**	1	BREATHER AS	
		1	**4H-6112**	1	BREATHER (SWING DRIVE)	
		1	**227-6227**	1	BOSS	
		1	**267-6786**	1	FITTING	
Y	6	1	*267-6840*	1	DRIVE GP-SWING	336
	7	1	**267-6874**	1	TUBE AS	
	8	1	**267-6876**	1	GAUGE-OIL LEVEL (DIPSTICK)	
Y	9	1	*326-4402*	1	VALVE GP-SOLENOID (SWING DRIVE)	593
	10	1	**095-1581**	1	SEAL-O-RING	
	11	1	**095-1698**	2	SEAL-O-RING	
	12	1	**1B-5174**	1	PLUG-PIPE	
	13	1	**4B-5984**	2	ELBOW	
M	14	1	**6V-8213**	6	BOLT-SOCKET HEAD (M8X1.25X70-MM)	

M-METRIC PART
Y-SEPARATE ILLUSTRATION

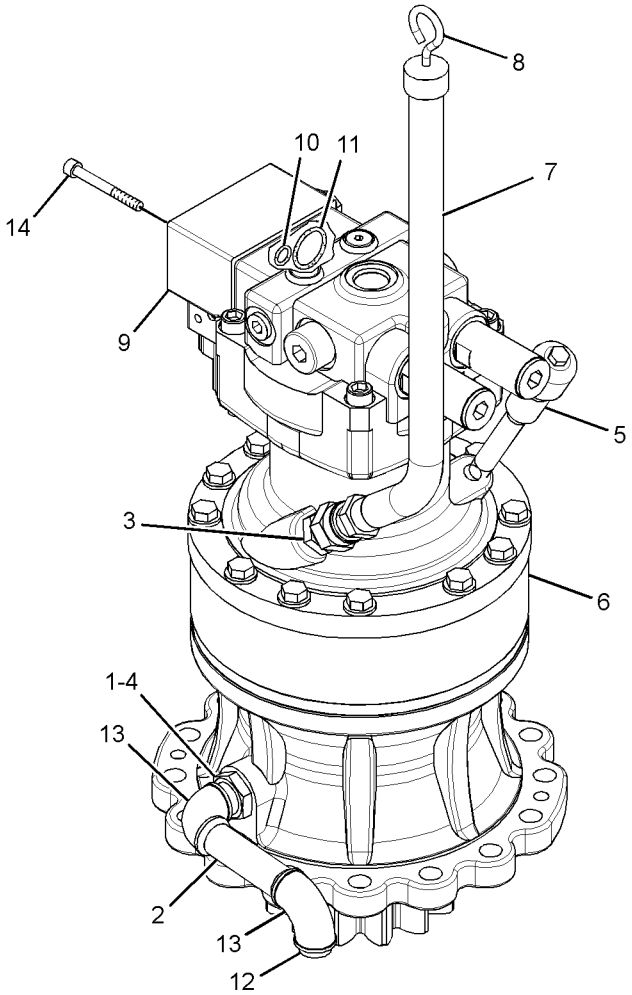

GRAPHIC #1 **<END>** g01412603

HYDRAULIC SYSTEM

267-6840 DRIVE GP-SWING—WITH MOTOR

S/N: BYJ1-UP; PDP1-UP
PART OF 267-6839 DRIVE GP-SWING
AN ATTACHMENT

SMCS-5459 **i02820449**

NOTE	REF NO	GRAPHIC REF	PART NUMBER	QTY	PART NAME 1 2 3 4 5 6 (PRODUCT LEVEL)	SEE PAGE
Y	1	1	**169-5549**	1	DRIVE GP-SWING (WITHOUT MOTOR)	332
Y	2	1	**274-2639**	1	MOTOR GP-PISTON	500
	3	1	**8T-4223**	12	WASHER-HARD (13.5X25.5X3-MM THK)	
M	4	1	**8T-5041**	12	BOLT (M12X1.75X120-MM)	

M-METRIC PART
Y-SEPARATE ILLUSTRATION

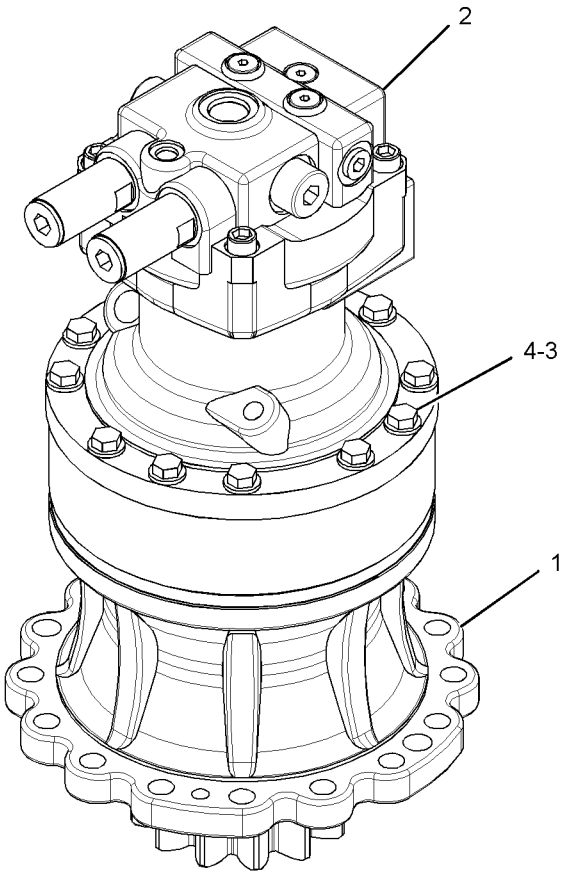

GRAPHIC #1 **<END>** g01410868

267-6844 DRIVE GP-SWING—WITH MOTOR

S/N: BYJ1-UP; PDP1-UP

PART OF 267-6827 POWER TRAIN AR

SMCS-5459 **i02812049**

NOTE	REF NO	GRAPHIC REF	PART NUMBER	QTY	PART NAME 1 2 3 4 5 6 (PRODUCT LEVEL)	SEE PAGE
	1	1	**3K-0360**	1	SEAL-O-RING	
	2	1	**171-9420**	1	FITTING-PIPE	
	3	1	*184-2421*	1	CONNECTOR AS	
		1	**6V-9746**	1	SEAL-O-RING	
		1	**8C-6874**	1	CONNECTOR	
	4	1	**191-2691**	1	CONNECTOR	
	5	1	**267-6744**	1	BREATHER AS	
		1	**4H-6112**	1	BREATHER (SWING DRIVE)	
		1	**227-6227**	1	BOSS	
		1	**267-6786**	1	FITTING	
Y	6	1	*267-6845*	1	DRIVE GP-SWING	338
	7	1	**267-6874**	1	TUBE AS	
	8	1	**267-6876**	1	GAUGE-OIL LEVEL (DIPSTICK)	
	9	1	**1B-5174**	1	PLUG-PIPE	
	10	1	**4B-5984**	2	ELBOW	

Y-SEPARATE ILLUSTRATION

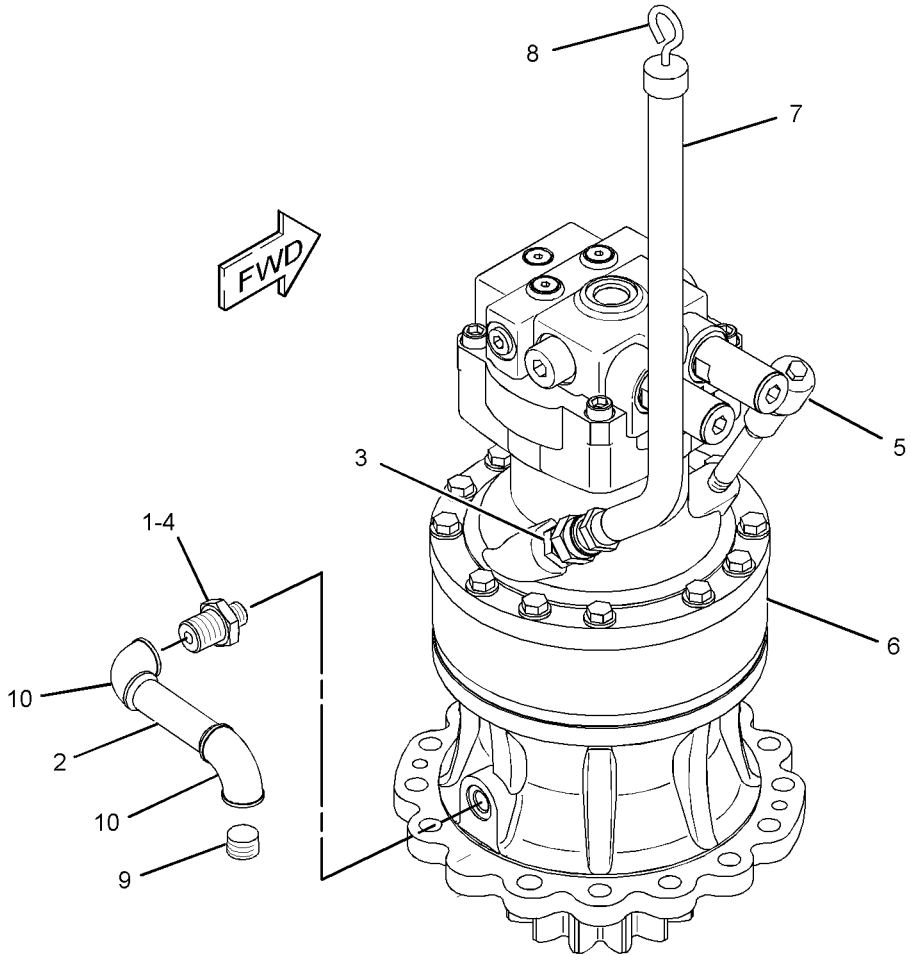

GRAPHIC #1 **<END>** g01416010

267-6845 DRIVE GP-SWING—WITH MOTOR

S/N: BYJ1-UP; PDP1-UP

PART OF 267-6844 DRIVE GP-SWING

SMCS-5459 **i02812031**

NOTE	REF NO	GRAPHIC REF	PART NUMBER	QTY	PART NAME 1 2 3 4 5 6 (PRODUCT LEVEL)	SEE PAGE
Y	1	1	**169-5549**	1	DRIVE GP-SWING (WITHOUT MOTOR)	332
Y	2	1	**274-2636**	1	MOTOR GP-PISTON	498
	3	1	**8T-4223**	12	WASHER-HARD (13.5X25.5X3-MM THK)	
M	4	1	**8T-5041**	12	BOLT (M12X1.75X120-MM)	

M-METRIC PART
Y-SEPARATE ILLUSTRATION

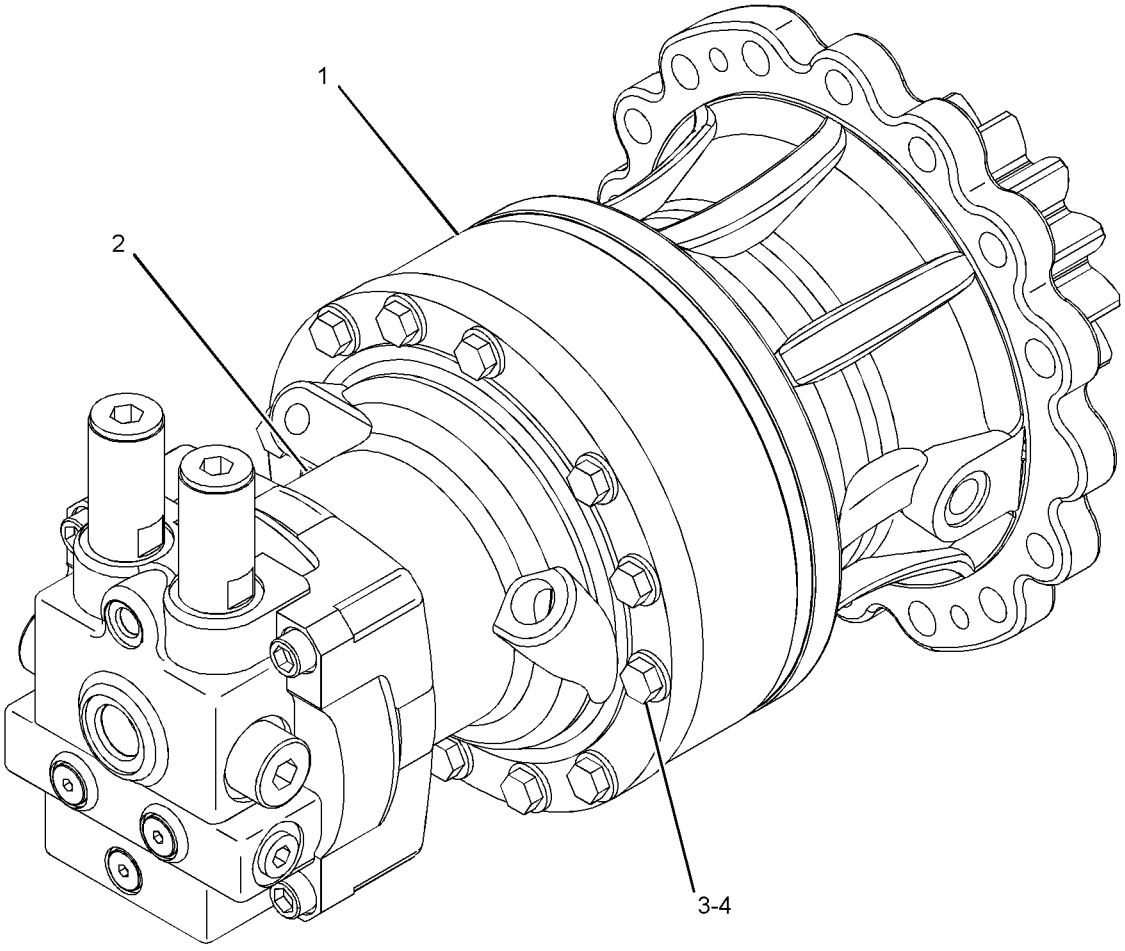

GRAPHIC #1 **<END>** g01408295

HYDRAULIC SYSTEM

282-7219 FILTER & LINES GP-HYDRAULIC

S/N: BYJ1-UP; PDP1-UP

PART OF 282-7218 TANK & MTG GP-HYDRAULIC

SMCS-5057, 5068 **i03088567**

NOTE	REF NO	GRAPHIC REF	PART NUMBER	QTY	PART NAME 1 2 3 4 5 6 (PRODUCT LEVEL)	SEE PAGE
I	1	1	**4I-1739**	1	HOSE AS	
	2	1	**7K-1181**	6	STRAP-CABLE	
I	3	1	**113-2829**	1	HOSE AS	
	4	1	**124-1212**	1	FITTING	
Y	5	1	**158-8987**	1	FILTER & VALVE GP-PILOT (HYDRAULIC OIL)	342
Y	6	1	**230-2720**	1	VALVE GP-CHECK (RETURN FILTER)	537
	7	1	**266-0982**	2	GUARD	
	8	1	**325-8796**	1	HOSE AS	
	9	1	**285-2566**	1	PLATE AS	
Y	10	1	**289-8194**	1	FILTER GP-OIL (HYDRAULIC, CASE DRAIN)	349
I	11	1	**317-4883**	1	HOSE AS	
	12	1	*148-8324*	1	CONNECTOR AS	
		1	**3K-0360**	1	SEAL-O-RING	
		1	**6V-9746**	1	SEAL-O-RING	
		1	**6V-9874**	1	CONNECTOR	
	13	1	*148-8338*	1	CONNECTOR AS	
		1	**3J-1907**	1	SEAL-O-RING	
		1	**6V-8397**	1	SEAL-O-RING	
		1	**8T-0075**	1	CONNECTOR	
	14	1	*148-8347*	1	ELBOW AS	
		1	**3D-2824**	1	SEAL-O-RING	
		1	**6V-9007**	1	ELBOW	
		1	**6V-9746**	1	SEAL-O-RING	
	15	1	*148-8354*	1	ELBOW AS	
		1	**3K-0360**	1	SEAL-O-RING	
		1	**6V-8398**	1	SEAL-O-RING	
		1	**6V-9002**	1	ELBOW	
	16	1	*148-8364*	1	ELBOW AS	
		1	**3K-0360**	1	SEAL-O-RING	
		1	**6V-8398**	1	SEAL-O-RING	
		1	**6V-8625**	1	ELBOW	
	17	1	*148-8372*	2	ELBOW AS	
					(EACH INCLUDES)	
		1	**2M-9780**	1	SEAL-O-RING	
		1	**6V-8398**	1	SEAL-O-RING	
		1	**6V-8721**	1	ELBOW	
	18	1	*148-8374*	1	ELBOW AS	
		1	**3K-0360**	1	SEAL-O-RING	
		1	**6V-8397**	1	SEAL-O-RING	
		1	**6V-8723**	1	ELBOW	
	19	1	*148-8392*	1	ELBOW AS	
		1	**6V-9746**	1	SEAL-O-RING	
		1	**6V-9853**	1	ELBOW	
	20	1	*164-5567*	1	COUPLER AS-QUICK DISCONNECT	
		1	**3J-1907**	1	SEAL-O-RING	
		1	**6V-3965**	1	FITTING (QUICK DISCONNECT)	
	21	1	*164-5590*	1	VALVE AS-FLUID SAMPLING	
		1	**3J-7354**	1	SEAL-O-RING	
		1	**8C-3446**	1	VALVE-FLUID SAMPLING	
	22	1	**3D-2824**	1	SEAL-O-RING	
	23	1	**4J-0527**	1	SEAL-O-RING	
	24	1	**5K-8451**	1	CLIP	
	25	1	**6D-1641**	2	CLIP	
	26	1	**6V-0852**	1	CAP-DUST	
	27	1	**6V-9746**	1	SEAL-O-RING	
	28	1	**8C-3451**	1	CAP-DUST	

282-7219 **FILTER & LINES GP-HYDRAULIC** *(contd.)* **i03088567**

NOTE	REF NO	GRAPHIC REF	PART NUMBER	QTY	PART NAME 1 2 3 4 5 6 (PRODUCT LEVEL)	SEE PAGE
	29	1	**8T-4121**	5	WASHER-HARD (11X21X2.5-MM THK)	
M	30	1	**8T-4136**	1	BOLT (M10X1.5X25-MM)	
M	31	1	**8T-4137**	4	BOLT (M10X1.5X20-MM)	
M	32	1	**8T-4139**	2	BOLT (M12X1.75X30-MM)	
M	33	1	**8T-4189**	4	BOLT (M8X1.25X20-MM)	
	34	1	**8T-4223**	6	WASHER-HARD (13.5X25.5X3-MM THK)	
	35	1	**8T-4224**	4	WASHER-HARD (8.8X16X2-MM THK)	
M	36	1	**8T-5001**	4	BOLT (M12X1.75X130-MM)	

I-REFER TO HYDRAULIC INFORMATION SYSTEM
M-METRIC PART
Y-SEPARATE ILLUSTRATION

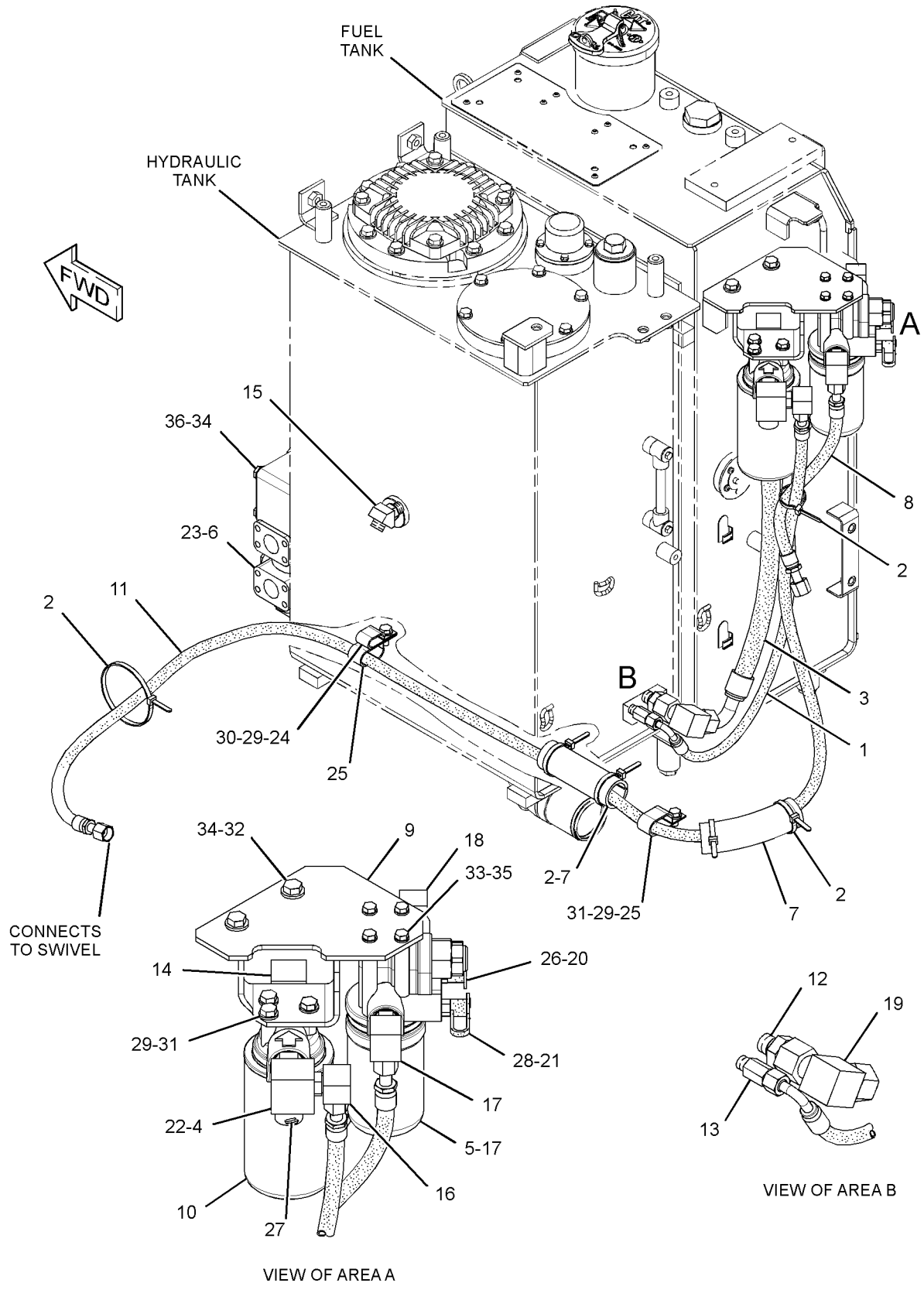

GRAPHIC #1 **<END>** g01516393

158-8987 FILTER & VALVE GP-PILOT–HYDRAULIC OIL

S/N: BYJ1-UP; PDP1-UP

PART OF 282-7219 FILTER & LINES GP-HYDRAULIC

SMCS-5072, 5092 **i03215762**

NOTE	REF NO	GRAPHIC REF	PART NUMBER	QTY	PART NAME 1 2 3 4 5 6 (PRODUCT LEVEL)	SEE PAGE
C	1	1	**5I-8670**	1	FILTER-OIL (ADVANCED EFFICIENCY) (HYDRAULIC)	
C	2	1	**215-4909**	1	VALVE GP-PILOT RELIEF (HYDRAULIC FILTER)	
	2A	1	**095-1584**	1	SEAL-O-RING	
	2B	1	**095-1590**	1	SEAL-O-RING	
	2C	1	**095-1596**	1	SEAL-O-RING	

C-CHANGE FROM PREVIOUS TYPE

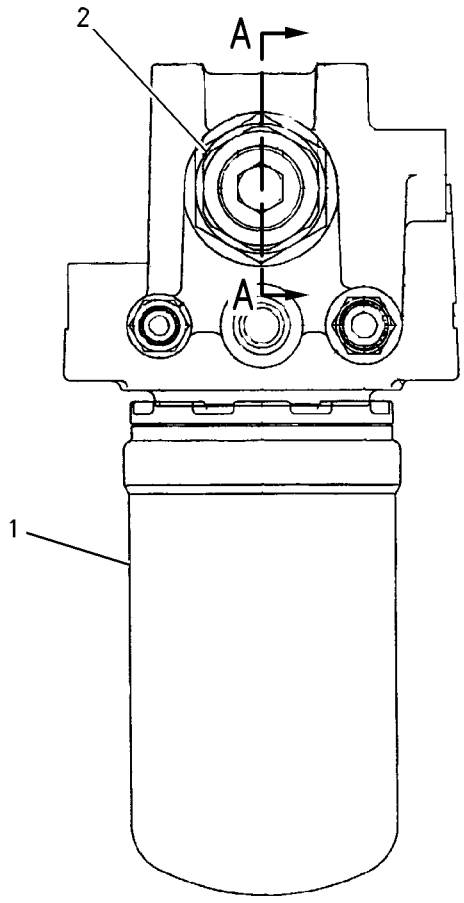

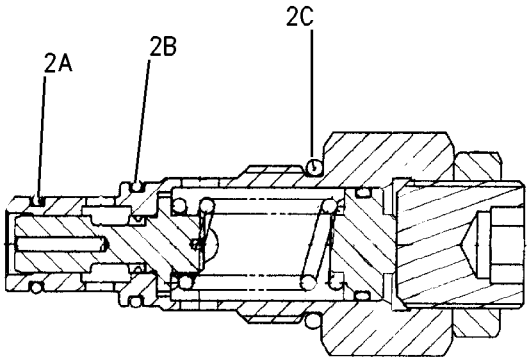

SECTION A–A

GRAPHIC #1 **<END>** g00842119

260-7199 FILTER AR-HYDRAULIC—HAMMER, RETURN

S/N: BYJ1-UP; PDP1-UP

FOR USE WITH BOOM AR WITH AUXILIARY MOUNT, CONTROL AR-AUXILIARY FOR HIGH PRESSURE, LINES AR-AUX HYD FOR REACH BOOM/HIGH PRESSURE. CANNOT BE USED WITH CONTROL AR-AUXILIARY (SYSTEM 1, 1-WAY,1-PUMP)

AN ATTACHMENT

SMCS-5068 **i03254220**

NOTE	PART NUMBER	QTY	PART NAME 1 2 3 4 5 6 (PRODUCT LEVEL)	SEE PAGE
Y	*275-7174*	1	FASTENER GP-WIRING HARNESS (HAMMER FILTER)	126
Y	*294-6363*	1	LINES GP-RETURN & FILTER (HAMMER FILTER)	480

Y-SEPARATE ILLUSTRATION

<END>

188-4142 FILTER GP-OIL—HYDRAULIC RETURN

S/N: BYJ1-UP; PDP1-UP

PART OF 188-4145 FILTER GP-OIL

SMCS-3004, 4295, 431F, 5068, 5091, 5092 **i03009976**

NOTE	REF NO	GRAPHIC REF	PART NUMBER	QTY	PART NAME 1 2 3 4 5 6 (PRODUCT LEVEL)	SEE PAGE
	1	1	**204-2762**	1	PLATE	
JM	2	1	**173-3529**	6	BOLT (M6X1X15-MM)	
J	3	1	**3T-7528**	6	SEAL-O-RING	
	4	1	**173-3513**	1	BASE	
J	5	1	**3E-4297**	2	SEAL-O-RING	
M	6	1	**137-3626**	1	BOLT-SHOULDER (M6X1X28.75-MM)	
Z	7	1		1	SHELL AS	
	8	1	**179-9806**	1	FILTER ELEMENT AS-OIL (HYDRAULIC RETURN)	
J	9	1	**137-3623**	4	SEAL-O-RING	
J	10	1	**6V-7658**	2	SEAL-O-RING	
J	11	1	**177-2553**	1	SEAL	
J	12	1	**095-1681**	1	SEAL-O-RING	
	13	1	**173-3515**	1	RING-RETAINING	
	14	1	**173-3516**	1	HANDLE	
J	15	1	**4J-7533**	1	SEAL-O-RING	
J	16	1	**9S-4180**	1	PLUG	
JM	17	1	**137-3624**	8	SCREW (M3X0.5X5-MM)	
J	18	1	**137-3625**	2	PAD	
	19	1	**173-3517**	1	PLATE	
J	20	1	**137-3628**	1	SHIM (0.1-MM THK)	
	21	1	**188-4143**	1	FILM-INSTRUCTION (HYDRAULIC OIL RETURN FILTER)	
					AVAILABLE REPAIR KIT(S):	
J			**201-9299**	1	KIT-SERVICE (HYDRAULIC FILTER) (RETURN)	

J-KIT MARKED J SERVICES PARTS MARKED J
M-METRIC PART
Z-NOT SERVICED SEPARATELY

188-4142 **FILTER GP-OIL** *(contd.)* **i03009976**

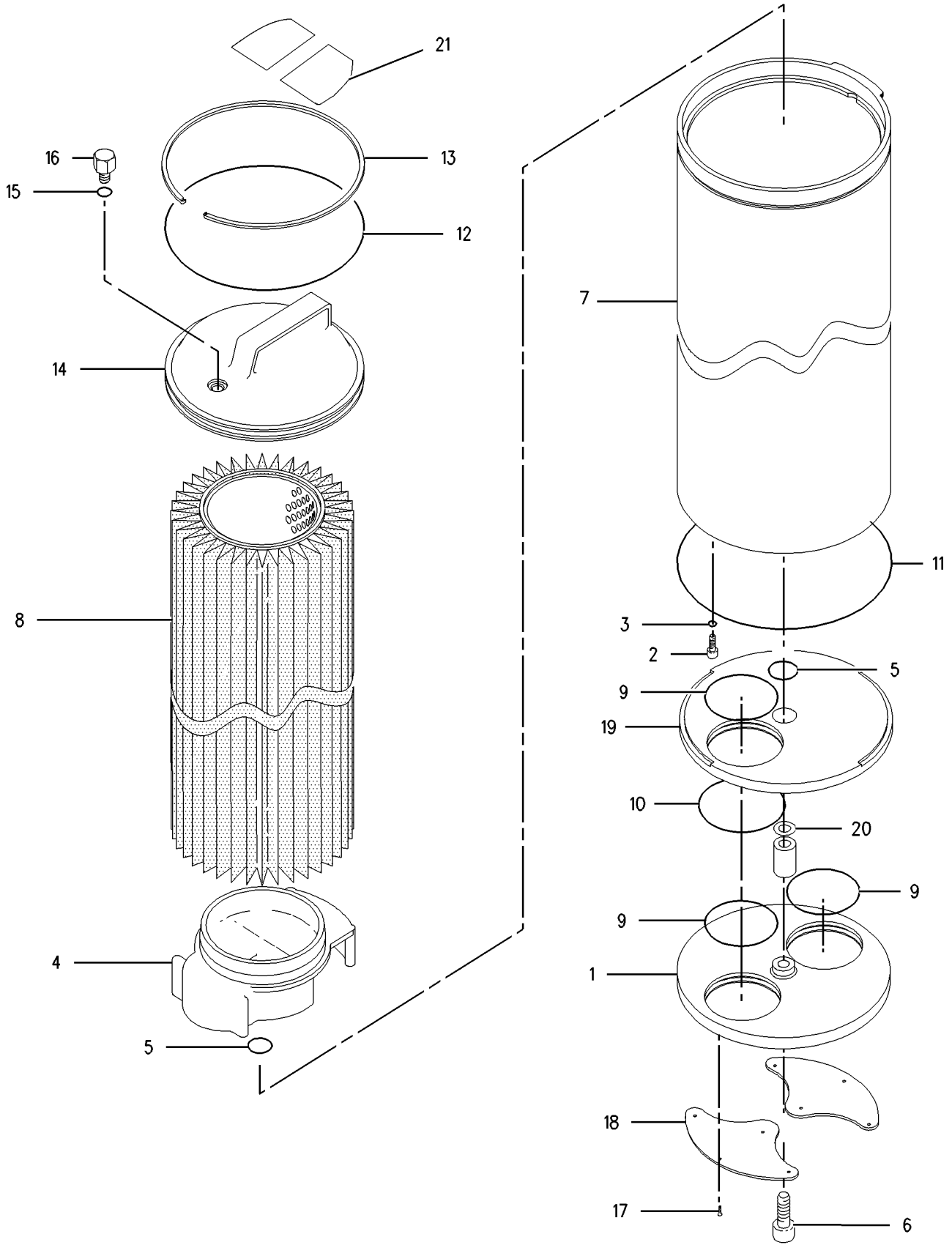

GRAPHIC #1 **<END>** g00923879

HYDRAULIC SYSTEM

188-4145 FILTER GP-OIL–HYDRAULIC RETURN

S/N: BYJ1-UP; PDP1-UP

PART OF 282-7220 TANK & FILTER GP-HYDRAULIC

SMCS-3004, 4295, 431F, 5068, 5091, 5092 **i02215924**

NOTE	REF NO	GRAPHIC REF	PART NUMBER	QTY	PART NAME 1 2 3 4 5 6 (PRODUCT LEVEL)	SEE PAGE
	1	1	**177-2620**	1	HOUSING GP-FILTER	
M		1	**095-0757**	4	SCREW-MACHINE (M6X1X8.6-MM)	
		1	**123-2003**	1	SEAL-O-RING	
		1	**177-2621**	1	FLANGE AS	
	2	1	**177-2617**	1	BLOCK GP-HYDRAULIC	
		1	**5L-4758**	1	SEAL-O-RING	
M		1	**137-3626**	1	BOLT-SHOULDER (M6X1X28.75-MM)	
		1	**137-3628**	1	SHIM (0.1-MM THK)	
		1	**177-2619**	2	PACKING	
		1	**179-9618**	1	PLATE-SLIDE	
	3	1	**177-2625**	1	PACKING	
	4	1	**095-1682**	1	SEAL-O-RING	
M	5	1	**8T-4189**	4	BOLT (M8X1.25X20-MM)	
	6	1	**8T-4224**	4	WASHER-HARD (8.8X16X2-MM THK)	
Y	7	1	**188-4142**	1	FILTER GP-OIL (HYDRAULIC RETURN)	344
	8	1	**173-3510**	1	COVER	
	9	1	**123-2003**	1	SEAL-O-RING	
M	10	1	**8T-4184**	4	BOLT (M12X1.75X45-MM)	
	11	1	**8T-4223**	4	WASHER-HARD (13.5X25.5X3-MM THK)	
	12	1	**175-6178**	1	HOUSING	
	13	1	**177-2623**	1	VALVE AS (BYPASS)	
	14	1	**175-6174**	1	PIPE	
M	15	1	**8T-4970**	2	BOLT (M6X1X14-MM)	
	16	1	**175-6176**	1	SEAL-O-RING	
M	17	1	**6V-8932**	1	SETSCREW-SOCKET (M6X1X10-MM)	
	18	1	**095-1663**	2	SEAL-O-RING	
	19	1	**187-7171**	2	BOLT (M8X1.25X14-MM)	
	20	1	**175-6175**	1	PIPE	

M-METRIC PART
Y-SEPARATE ILLUSTRATION

188-4145 **FILTER GP-OIL** *(contd.)* **i02215924**

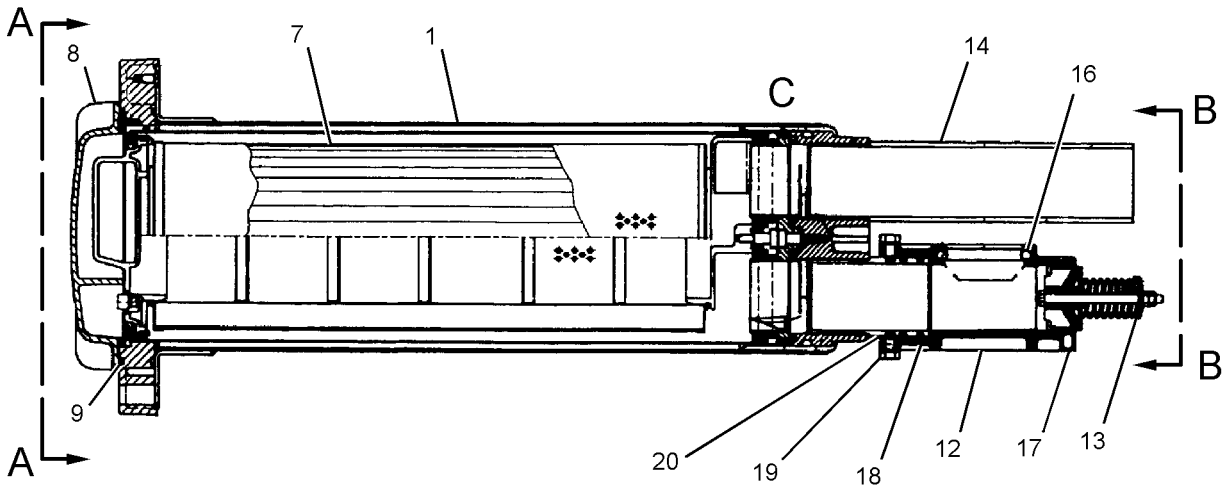

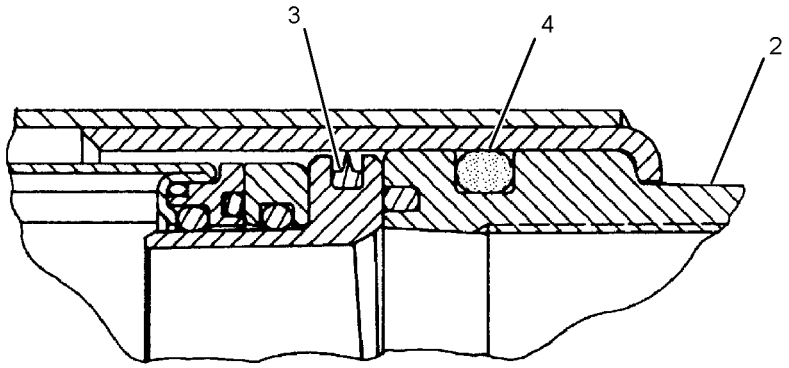

VIEW OF AREA C

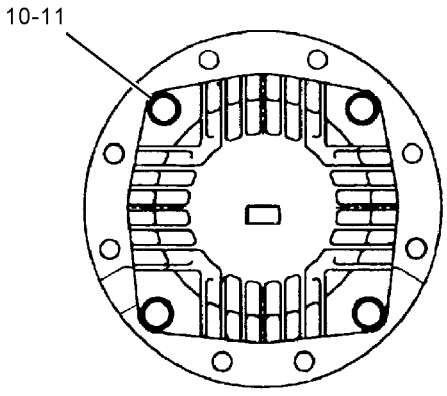

VIEW A-A

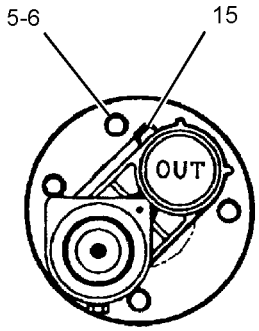

VIEW B-B

GRAPHIC #1 **<END>** g01123506

224-1687 FILTER GP-OIL–HYDRAULIC

S/N: BYJ1-UP; PDP1-UP
PART OF 294-6363 LINES GP-RETURN & FILTER
AN ATTACHMENT

SMCS-3004, 4295, 431F, 5068, 5091, 5092 **i02855340**

NOTE	REF NO	GRAPHIC REF	PART NUMBER	QTY	PART NAME 1 2 3 4 5 6 (PRODUCT LEVEL)	SEE PAGE
	1	1	**224-1685**	1	SWITCH AS (FILTER BYPASS)	
	2	1	**096-6073**	1	PLUG	
	3	1	**095-1582**	1	SEAL-O-RING	
	4	1	**216-6678**	1	CASE	
	5	1	**216-6676**	1	FILTER ELEMENT AS-OIL (HYDRAULIC)	
	6	1	**216-6677**	1	HEAD AS	
	7	1	**095-1717**	1	SEAL-O-RING	

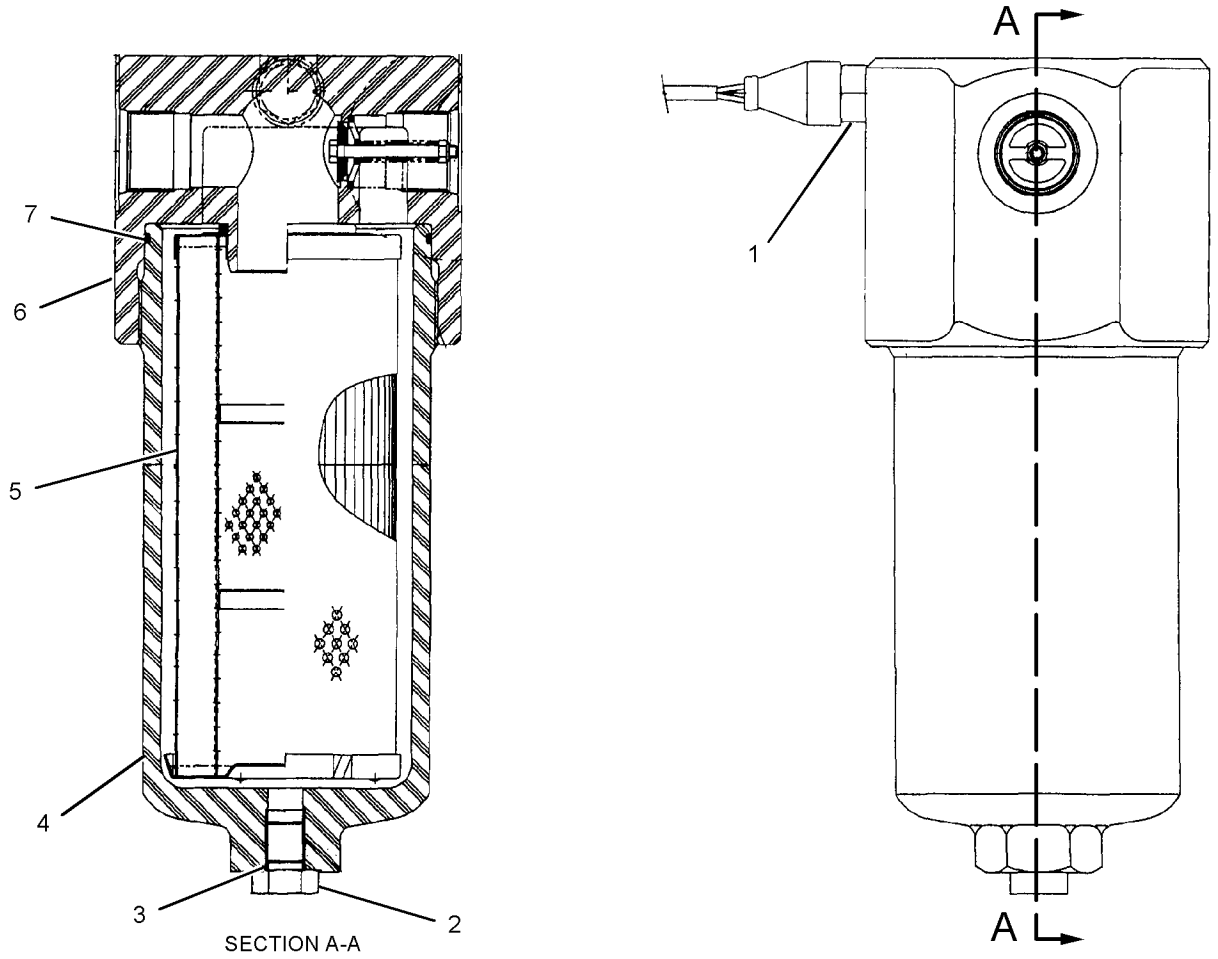

GRAPHIC #1 **<END>** g01029603

289-8194 FILTER GP-OIL—HYDRAULIC, CASE DRAIN

S/N: BYJ1-UP; PDP1-UP

PART OF 282-7219 FILTER & LINES GP-HYDRAULIC

SMCS-3004, 4295, 431F, 5068, 5091, 5092 **i02997232**

NOTE	REF NO	GRAPHIC REF	PART NUMBER	QTY	PART NAME 1 2 3 4 5 6 (PRODUCT LEVEL)	SEE PAGE
	1	1	**093-7521**	1	FILTER-OIL (ADVANCED EFFICIENCY) (HYDRAULIC, CASE DRAIN)	
	2	1	**289-8195**	1	HEAD AS-FILTER	

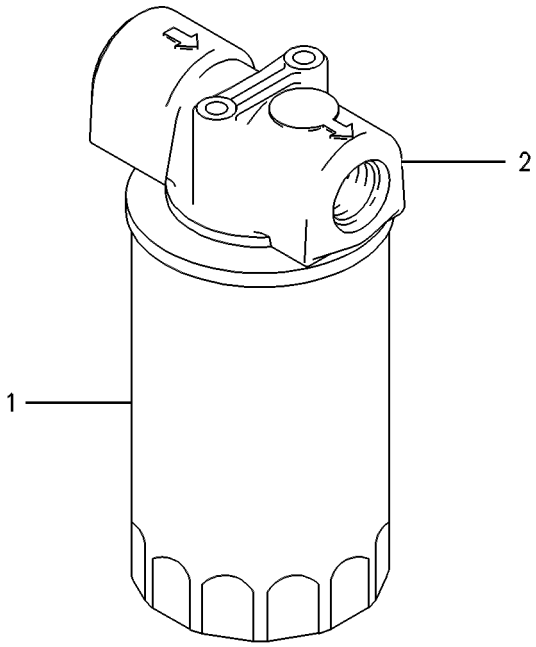

GRAPHIC #1 **<END>** g00258224

227-0620 GAUGE GP-SIGHT—HYDRAULIC OIL LEVEL

S/N: BYJ1-UP; PDP1-UP

PART OF 282-7220 TANK & FILTER GP-HYDRAULIC

SMCS-7479 **i02220641**

NOTE	REF NO	GRAPHIC REF	PART NUMBER	QTY	PART NAME 1 2 3 4 5 6 (PRODUCT LEVEL)	SEE PAGE
	1	1	**236-3258**	2	BLOCK	
M	2	1	**236-3259**	2	BOLT-SPECIAL	
	3	1	**236-3257**	1	PIPE	
	4	1	**095-1519**	4	SEAL-O-RING	
	5	1	**6F-4855**	4	SEAL-O-RING	

M-METRIC PART

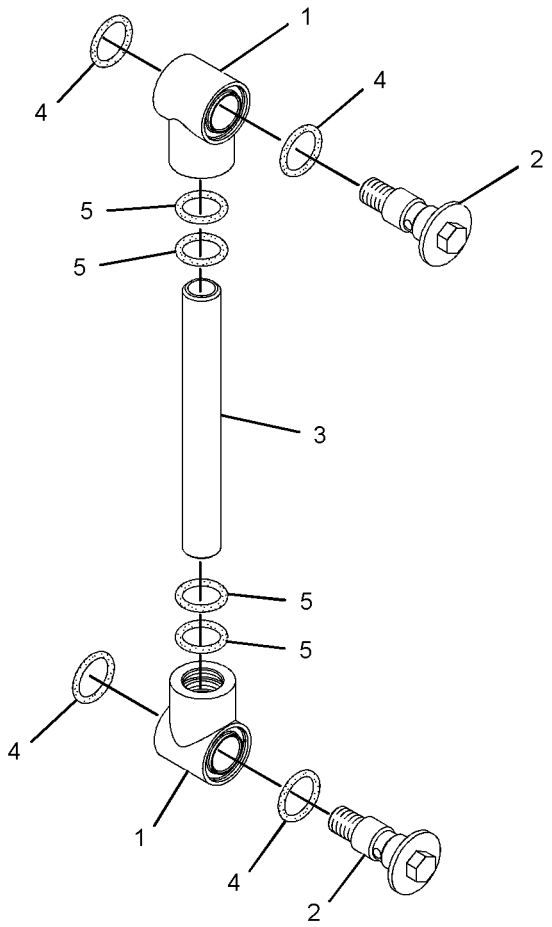

GRAPHIC #1 **<END>** g01091508

289-7814 GUARD GP-CYLINDER–BLADE

S/N: BYJ1-UP; PDP1-UP
PART OF 260-7212, 260-7213 INSTALLATION AR-AUXILIARY
AN ATTACHMENT

SMCS-7164 **i02811450**

NOTE	REF NO	GRAPHIC REF	PART NUMBER	QTY	PART NAME 1 2 3 4 5 6 (PRODUCT LEVEL)	SEE PAGE
	1	1	**289-7815**	1	COVER	
	2	1	**289-7816**	1	COVER	
	3	1	**5P-1076**	6	WASHER-HARD (13.5X30X4-MM THK)	
M	4	1	**8T-4192**	6	BOLT (M12X1.75X25-MM)	

M-METRIC PART

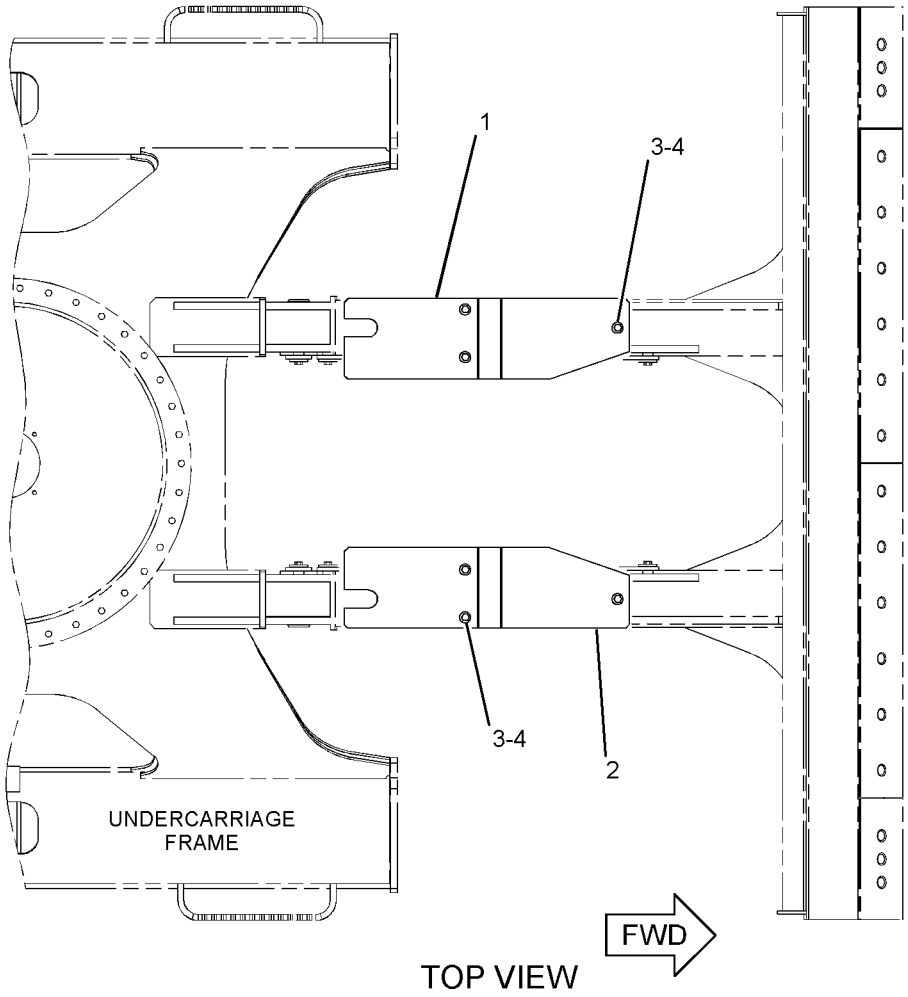

TOP VIEW

GRAPHIC #1 **<END>** g01403234

HYDRAULIC SYSTEM

282-9155 HEAD GP-PUMP

S/N: BYJ1-UP; PDP1-UP

PART OF 311-7404 PUMP GP-PISTON

SMCS-3222, 5070, 5086 **i02811433**

NOTE	REF NO	GRAPHIC REF	PART NUMBER	QTY	PART NAME 1 2 3 4 5 6 (PRODUCT LEVEL)	SEE PAGE
B	1	2	**099-3669**	2	SHIM (1-MM THK)	
B		2	**099-6109**	2	SHIM (1.05-MM THK)	
B		2	**099-6110**	2	SHIM (1.1-MM THK)	
B		2	**099-6111**	2	SHIM (1.15-MM THK)	
B		2	**099-6112**	2	SHIM (1.2-MM THK)	
B		2	**099-6113**	2	SHIM (1.25-MM THK)	
B		2	**099-6115**	2	SHIM (1.3-MM THK)	
	8	2	**173-1170**	1	SPRING	
	9	2	**173-3389**	2	STOPPER	
	10	2	**174-7220**	2	COVER	
	11	2	**174-7221**	1	COVER	
	12	2	**174-7222**	1	COVER	
	13	2	**192-2376**	1	PIN AS	
		2	**192-0573**	1	PIN-DOWEL	
	14	2	**200-3244**	1	SPRING	
M	15	2	**225-0224**	1	SETSCREW (M16X2X55-MM)	
M	16	2	**225-0225**	1	SETSCREW (M16X2X45-MM)	
	17	2	**267-1626**	1	SPOOL AS	
	18	2	**268-4201**	1	LEVER AS	
		2	**094-1875**	1	DOWEL	
	19	2	**268-4203**	1	PIN	
	20	2	**273-8316**	1	SEAL-O-RING	
	21	2	**273-8317**	1	SEAL-O-RING	
	22	2	**273-8318**	1	SEAL-O-RING	
	23	2	**281-6847**	1	PISTON	
	25	2	**301-6874**	1	RETAINER	
	26	2	**301-8294**	1	ADJUSTER	
	27	2	**094-1881**	1	PLATE-SLIDE	
	28	2	**095-1788**	2	RING-BACKUP	
	29	2	**099-3671**	1	SPRING	
	30	2	**185-0169**	1	GUIDE	
	31	2	**189-9763**	3	SEAL-O-RING	
	32	2	**190-7674**	2	SEAL-O-RING	
M	33	2	**200-3255**	1	NUT (M20X1.5-THD)	
	34	2	**283-4715**	1	SPRING	
	35	2	**2H-9247**	1	SEAL-O-RING	
	36	2	**3D-2891**	1	BALL	
	37	2	**3J-1907**	1	SEAL-O-RING	
	38	1	**4J-7533**	9	SEAL-O-RING	
	39	2	**6V-5391**	1	SEAL-O-RING	
M	40	2	**8T-4132**	2	NUT (M16X2-THD)	
M	41	2	**8T-4133**	1	NUT (M10X1.5-THD)	
M	42	1	**8T-4183**	8	BOLT (M12X1.75X40-MM)	
M	43	1	**8T-4192**	2	BOLT (M12X1.75X25-MM)	
	44	1	**9S-8001**	9	PLUG-O-RING	

B-USE AS REQUIRED
M-METRIC PART

282-9155 **HEAD GP-PUMP** ***(contd.)*** **i02811433**

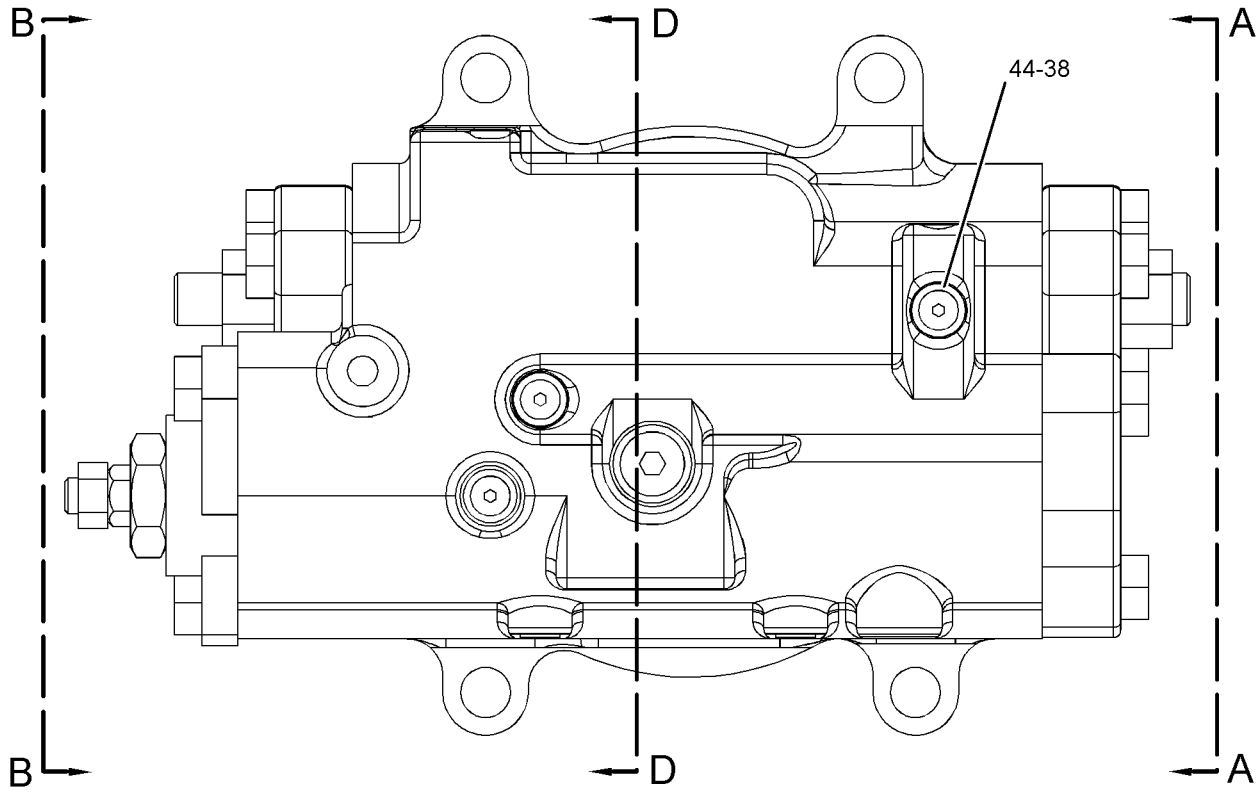

REFER TO ALL ILLUSTRATIONS OF
THIS GROUP FOR AUXILIARY VIEWS

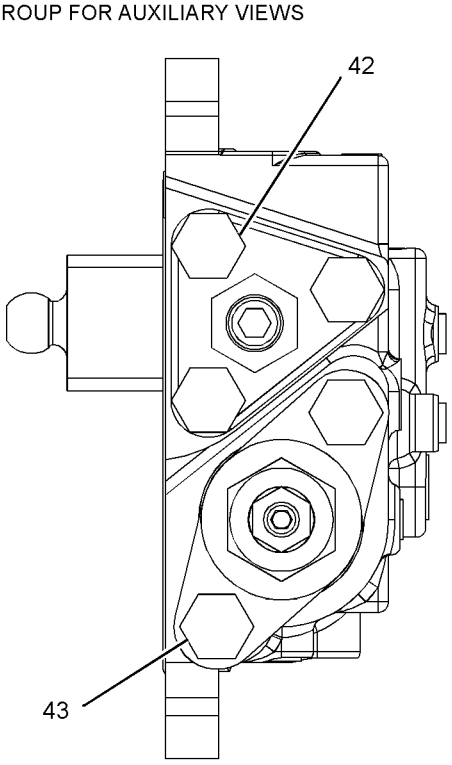

VIEW B-B

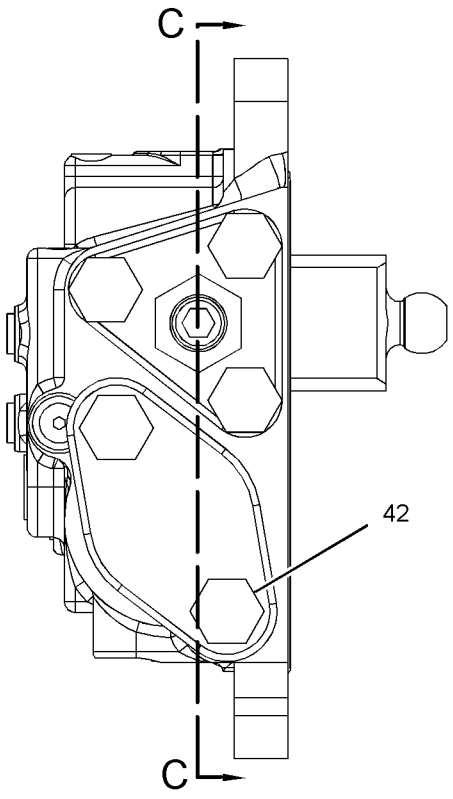

VIEW A-A

GRAPHIC #1

g01410322

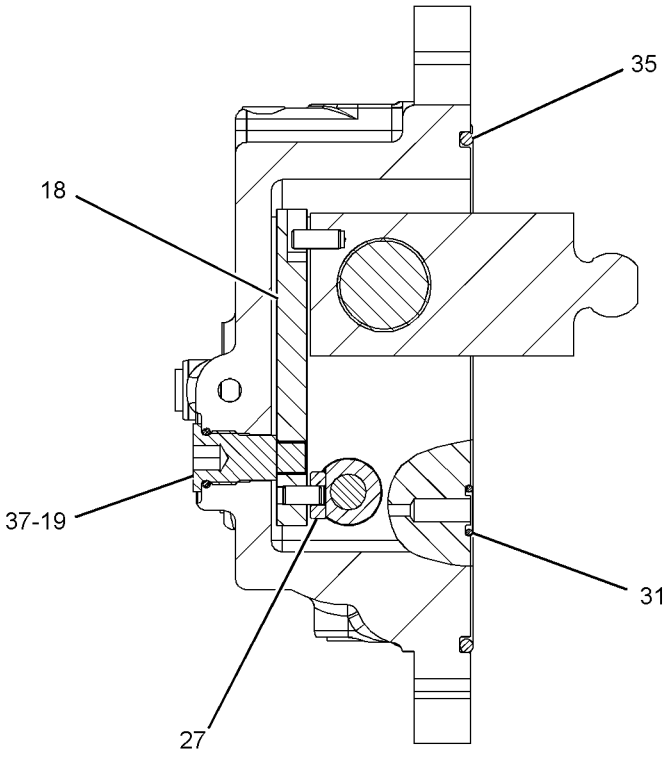

SECTION D-D

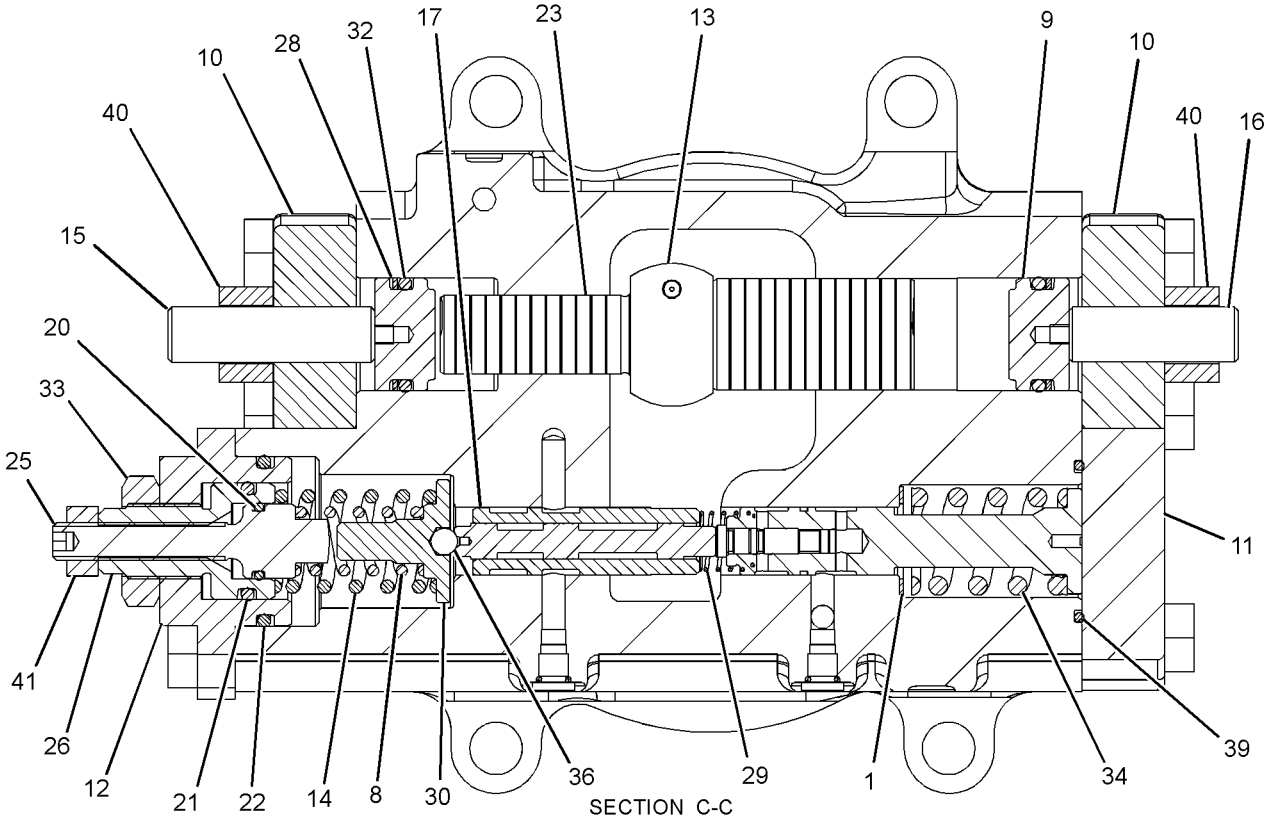

SECTION C-C

GRAPHIC #2 **<END>** g01410323

HYDRAULIC SYSTEM

270-5956 HYDRAULIC AR

S/N: PDP1-UP

PART OF 260-7176 GENERAL AR

SMCS-5050 **i02977785**

NOTE	PART NUMBER	QTY	PART NAME 1 2 3 4 5 6 (PRODUCT LEVEL)	SEE PAGE
Y	*282-7225*	1	LINES GP-BOOM CYLINDER	388
Y	*282-7223*	1	LINES GP-CONTROL	397
Y	*282-7226*	1	LINES GP-CONTROL	399
Y	*282-7227*	1	LINES GP-HYDRAULIC OIL COOLER	422
Y	*282-7230*	1	LINES GP-PILOT (CAB)	424
Y	*282-7232*	1	LINES GP-PILOT (CONTROL VALVE)	432
Y	*282-7234*	1	LINES GP-PILOT (CONTROL VALVE)	434
Y	*282-7235*	1	LINES GP-PILOT (PUMP)	440
Y	*282-7228*	1	LINES GP-PUMP	473
Y	*278-6511*	1	LINES GP-TRAVEL MOTOR	490
Y	*282-7221*	1	MOUNTING GP-VALVE	505
Y	*279-7721*	1	PUMP & MTG GP-MAIN HYDRAULIC	507
Y	*282-7218*	1	TANK & MTG GP-HYDRAULIC	530
Y	**270-5960**	1	VALVE GP-MAIN CONTROL	547

Y-SEPARATE ILLUSTRATION

<END>

270-5957 HYDRAULIC AR

S/N: BYJ1-UP

PART OF 260-7177 GENERAL AR

SMCS-5050 **i03009981**

NOTE	PART NUMBER	QTY	PART NAME 1 2 3 4 5 6 (PRODUCT LEVEL)	SEE PAGE
Y	*282-7225*	1	LINES GP-BOOM CYLINDER	388
Y	*282-7223*	1	LINES GP-CONTROL (FRONT)	397
Y	*282-7226*	1	LINES GP-CONTROL (REAR)	399
Y	*282-7227*	1	LINES GP-HYDRAULIC OIL COOLER	422
Y	*282-7230*	1	LINES GP-PILOT (CAB)	424
Y	*282-7232*	1	LINES GP-PILOT (CONTROL VALVE)	432
Y	*282-7234*	1	LINES GP-PILOT (CONTROL VALVE)	434
Y	*282-7235*	1	LINES GP-PILOT (PUMP)	440
Y	*282-7228*	1	LINES GP-PUMP	473
Y	*278-6512*	1	LINES GP-TRAVEL MOTOR	492
Y	*282-7221*	1	MOUNTING GP-VALVE	505
Y	*279-7721*	1	PUMP & MTG GP-MAIN HYDRAULIC	507
Y	*282-7218*	1	TANK & MTG GP-HYDRAULIC	530
Y	**270-5960**	1	VALVE GP-MAIN CONTROL	547

Y-SEPARATE ILLUSTRATION

<END>

294-6359 LINES AR-AUXILIARY HYDRAULIC–
SYSTEM 23, COMBINED FUNCTION
S/N: BYJ1-UP; PDP1-UP
HIGH PRESSURE, REACH BOOM
FOR USE WITH 316-3790–PAGE 504
AN ATTACHMENT

SMCS-5057 **i02961480**

NOTE	PART NUMBER	QTY	PART NAME 1 2 3 4 5 6 (PRODUCT LEVEL)	SEE PAGE
Y	*282-5541*	1	LINES GP-AUXILIARY HYDRAULIC	362
Y	*316-3790*	1	MOUNTING GP-LINES	504
Y	*283-2867*	1	WIRING GP-BOOM	172
Y-SEPARATE ILLUSTRATION				

<END>

294-6361 LINES AR-AUXILIARY HYDRAULIC–
SYSTEM 20, WORK TOOL PRIORITY
S/N: BYJ1-UP; PDP1-UP
HIGH PRESSURE, REACH BOOM
FOR USE WITH 316-3790–PAGE 504
AN ATTACHMENT

SMCS-5057 **i02961478**

NOTE	PART NUMBER	QTY	PART NAME 1 2 3 4 5 6 (PRODUCT LEVEL)	SEE PAGE
Y	*282-5730*	1	LINES GP-AUXILIARY HYDRAULIC	368
Y	*316-3790*	1	MOUNTING GP-LINES	504
Y	*283-2867*	1	WIRING GP-BOOM	172
Y-SEPARATE ILLUSTRATION				

<END>

321-0540 LINES AR-AUXILIARY HYDRAULIC–HIGH PRESSURE
S/N: BYJ1-UP; PDP1-UP
AN ATTACHMENT

SMCS-5057 **i02976243**

NOTE	PART NUMBER	QTY	PART NAME 1 2 3 4 5 6 (PRODUCT LEVEL)	SEE PAGE
Y	*282-5543*	1	LINES GP-AUXILIARY HYDRAULIC (1-PUMP, 1-PUMP/2-PUMP, 1-WAY)	364
Y	*316-3790*	1	MOUNTING GP-LINES	504
Y-SEPARATE ILLUSTRATION				

<END>

321-8137 LINES AR-AUXILIARY HYDRAULIC–MEDIUM PRESSURE
S/N: BYJ1-UP; PDP1-UP
AN ATTACHMENT

SMCS-5057 **i02976247**

NOTE	PART NUMBER	QTY	PART NAME 1 2 3 4 5 6 (PRODUCT LEVEL)	SEE PAGE
Y	*282-5544*	1	LINES GP-AUXILIARY HYDRAULIC (REACH BOOM)	366
Y	*316-3790*	1	MOUNTING GP-LINES	504
Y-SEPARATE ILLUSTRATION				

<END>

HYDRAULIC SYSTEM

321-8138 LINES AR-QUICK COUPLER–REACH BOOM

S/N: BYJ1-UP; PDP1-UP

AN ATTACHMENT

SMCS-6129 **i02976248**

NOTE	PART NUMBER	QTY	PART NAME 1 2 3 4 5 6 (PRODUCT LEVEL)	SEE PAGE
Y	*282-5546*	1	LINES GP-COUPLER (REACH BOOM)	407
Y	*316-3790*	1	MOUNTING GP-LINES	504

Y-SEPARATE ILLUSTRATION

<END>

277-1169 LINES GP-AUXILIARY HYDRAULIC–
STICK, HIGH PRESSURE
S/N: BYJ1-UP; PDP1-UP
2.8-M (9.1-FT)
AN ATTACHMENT

SMCS-5057 **i02902211**

NOTE	REF NO	GRAPHIC REF	PART NUMBER	QTY	PART NAME 1 2 3 4 5 6 (PRODUCT LEVEL)	SEE PAGE
M	1	1	**101-7403**	4	BOLT-SOCKET HEAD (M10X1.5X80-MM)	
I	2	1	**102-1279**	1	HOSE AS	
I	3	1	**212-5326**	1	HOSE AS	
Y	4	1	**282-5894**	2	VALVE AS-MANUAL	535
	5	1	**288-7688**	1	TUBE AS	
	6	1	**288-7689**	1	TUBE AS	
	7	1	**288-7690**	2	CLIP AS	
	8	1	**288-7691**	2	CLIP AS	
	9	1	**1P-3703**	4	SEAL-RECTANGULAR	
	10	1	**6V-0400**	4	FLANGE-HALF	
	11	1	**6V-9746**	1	SEAL-O-RING	
	12	1	**7Y-3732**	2	CLIP	
	13	1	**7Y-4868**	2	CLIP	
M	14	1	**8T-4184**	8	BOLT (M12X1.75X45-MM)	
M	15	1	**8T-4196**	4	BOLT (M10X1.5X35-MM)	
	16	1	**8T-4223**	16	WASHER-HARD (13.5X25.5X3-MM THK)	
	17	1	**8T-4896**	4	WASHER-HARD (10.2X18.5X2.5-MM THK)	
M	18	1	**8T-4910**	8	BOLT (M12X1.75X60-MM)	
M	19	1	**8T-4956**	4	BOLT (M12X1.75X35-MM)	

I-REFER TO HYDRAULIC INFORMATION SYSTEM
M-METRIC PART
Y-SEPARATE ILLUSTRATION

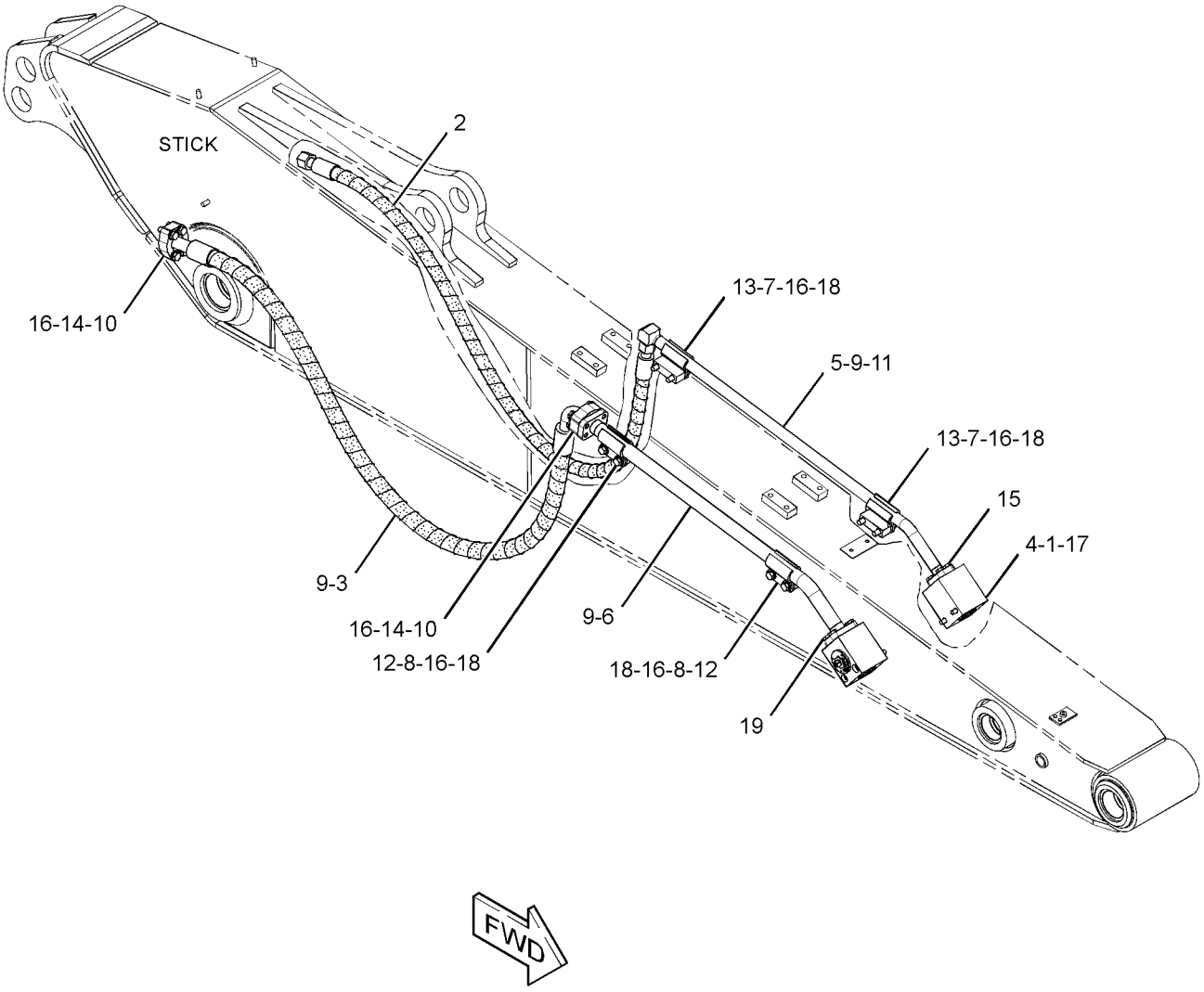

GRAPHIC #1 **<END>** g01413767

HYDRAULIC SYSTEM

277-1170 LINES GP-AUXILIARY HYDRAULIC–STICK, MEDIUM PRESSURE

S/N: BYJ1-UP; PDP1-UP
2.8-M (9.1-FT) STICK
AN ATTACHMENT

SMCS-5057 **i02953930**

NOTE	REF NO	GRAPHIC REF	PART NUMBER	QTY	PART NAME 1 2 3 4 5 6 (PRODUCT LEVEL)	SEE PAGE
	1	1	**6C-6760**	2	MANIFOLD	
	2	1	**149-1738**	8	CLIP	
	3	1	*250-1440*	2	ADAPTER AS	
					(EACH INCLUDES)	
		1	**3K-0360**	1	SEAL-O-RING	
		1	**7X-3164**	1	ADAPTER-SWIVEL	
I	4	1	**282-5755**	2	HOSE AS	
	5	1	**288-7692**	2	TUBE AS	
	6	1	**288-7693**	2	PLATE	
	7	1	**288-7694**	2	SUPPORT AS	
	8	1	**288-7696**	2	SUPPORT AS	
	9	1	**6V-8398**	4	SEAL-O-RING	
	10	1	**8T-4121**	4	WASHER-HARD (11X21X2.5-MM THK)	
M	11	1	**8T-4136**	4	BOLT (M10X1.5X25-MM)	
M	12	1	**8T-4139**	8	BOLT (M12X1.75X30-MM)	
M	13	1	**8T-4185**	4	BOLT (M10X1.5X50-MM)	
M	14	1	**8T-4192**	8	BOLT (M12X1.75X25-MM)	
	15	1	**8T-4223**	16	WASHER-HARD (13.5X25.5X3-MM THK)	
JM	16	1	**105-3479**	4	BOLT-SOCKET HEAD (M10X1.5X90-MM)	
JM	17	1	**8T-4648**	8	BOLT (M12X1.75X70-MM)	
J	18	1	**8T-7971**	8	WASHER-HARD (13.5X25.5X5-MM THK)	

I-REFER TO HYDRAULIC INFORMATION SYSTEM
J-WHEN USED WITH AUXILIARY HYDRAULIC LINES GROUP (HIGH PRESSURE)
M-METRIC PART

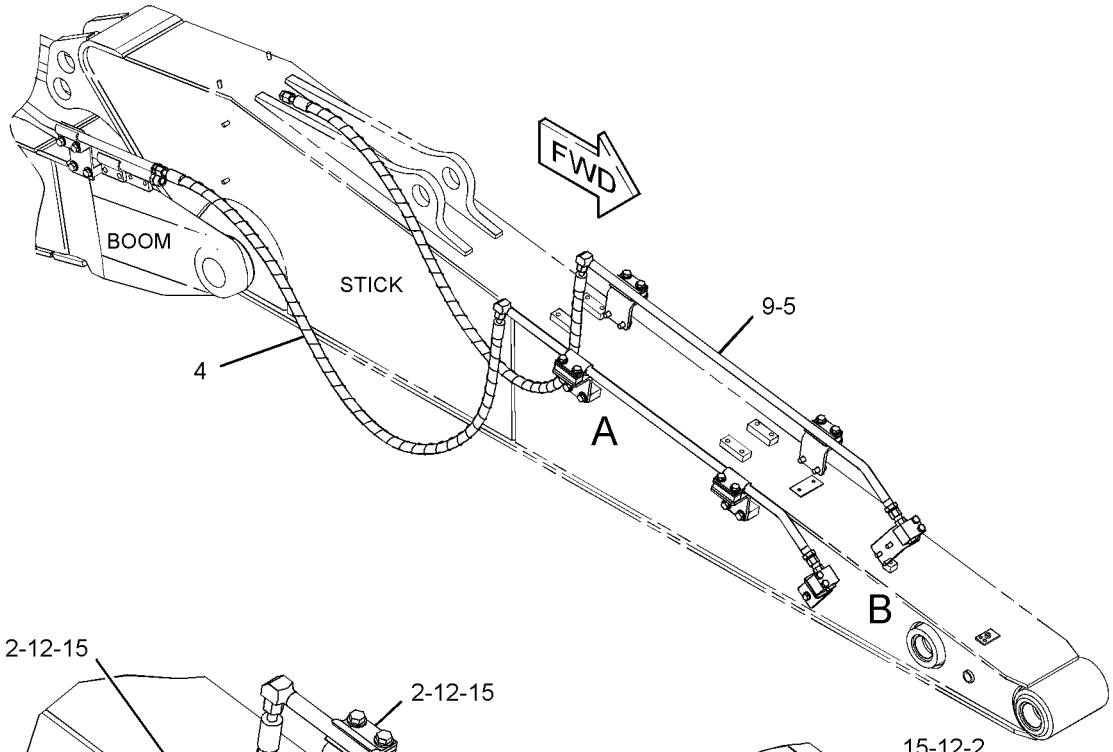

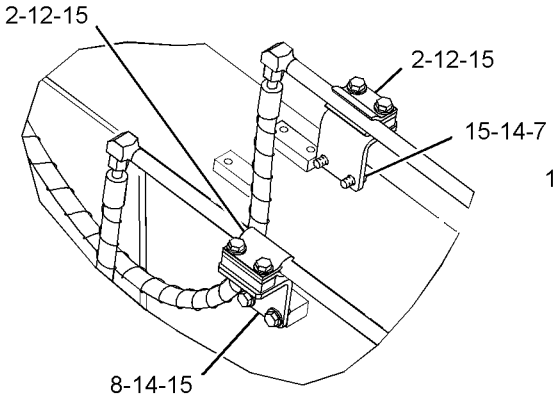

VIEW OF AREA A

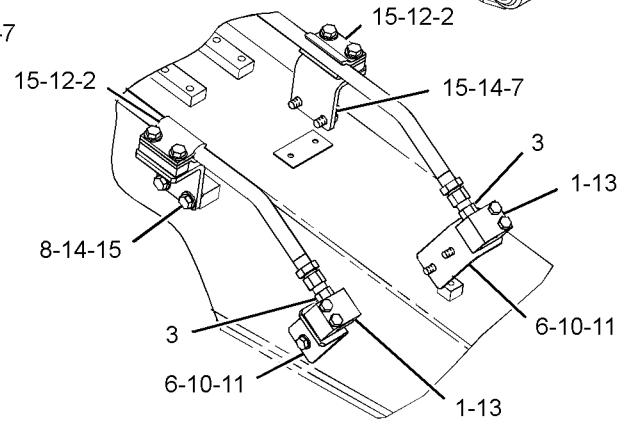

VIEW OF AREA B

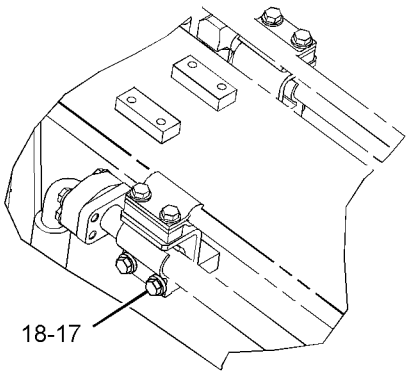

VIEW OF AREA A
(OPTIONAL DESIGN)

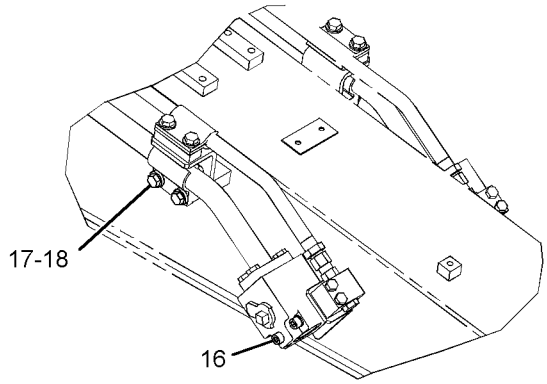

VIEW OF AREA B
(OPTIONAL DESIGN)

GRAPHIC #1 **<END>** g01444455

HYDRAULIC SYSTEM

282-5541 LINES GP-AUXILIARY HYDRAULIC–

SYSTEM 23, COMBINED FUNCTION

S/N: BYJ1-UP; PDP1-UP

PART OF 294-6359 LINES AR-AUXILIARY HYDRAULIC AN ATTACHMENT

SMCS-5057 **i03071154**

NOTE	REF NO	GRAPHIC REF	PART NUMBER	QTY	PART NAME 1 2 3 4 5 6 (PRODUCT LEVEL)	SEE PAGE
	1	1	**4I-1676**	2	CLIP	
	2	1	**128-7624**	1	FLANGE-SPECIAL	
	3	1	*148-8347*	1	ELBOW AS	
		1	**3D-2824**	1	SEAL-O-RING	
		1	**6V-9007**	1	ELBOW	
		1	**6V-9746**	1	SEAL-O-RING	
	4	1	**202-7000**	1	COUPLING AS	
	5	1	**221-8859**	1	SENSOR AS-PRESSURE (AUXILIARY HYDRAULIC)	
		1	**3K-0360**	1	SEAL-O-RING	
		1	**3E-3371**	1	WEDGE-RECEPTACLE LOCK (3-PIN)	
		1	**9X-3401**	3	PIN-CONNECTOR (16-GA TO 18-GA)	
					–OR–	
		1	**126-1767**	3	PIN-CONNECTOR (14-GA)	
		1	**171-0596**	1	RECEPTACLE AS	
	6	1	**253-6276**	2	PLATE	
	7	1	**270-5672**	1	VALVE GP-SOLENOID & RELIEF (AUXILIARY, COMBINED FN, LH)	
	8	1	**270-5757**	1	VALVE GP-SOLENOID & RELIEF (AUXILIARY, COMBINED FN, RH)	
I	9	1	**278-6756**	1	HOSE AS	
	10	1	**282-5902**	1	SUPPORT AS	
	11	1	**328-4823**	1	TUBE AS	
	12	1	**328-4828**	1	TUBE AS	
	13	1	**302-9465**	1	TUBE AS	
	14	1	**302-9484**	1	SUPPORT AS	
I	15	1	**302-9487**	1	HOSE AS	
I	16	1	**302-9491**	1	HOSE AS	
	17	1	*148-8352*	1	ELBOW AS	
		1	**5K-9090**	1	SEAL-O-RING	
		1	**6V-9854**	1	ELBOW	
	18	1	*148-8408*	2	PLUG AS	
					(EACH INCLUDES)	
		1	**3D-2824**	1	SEAL-O-RING	
		1	**9S-4183**	1	PLUG-O-RING	
	19	1	*148-8431*	1	TEE AS	
		1	**5K-9090**	2	SEAL-O-RING	
		1	**6V-8785**	1	TEE	
		1	**7M-8485**	1	SEAL-O-RING	
	20	1	**1P-3703**	1	SEAL-RECTANGULAR	
	21	1	**5K-9090**	3	SEAL-O-RING	
	22	1	**6V-9746**	5	SEAL-O-RING	
	23	1	**7M-8485**	1	SEAL-O-RING	
M	24	1	**7X-2549**	4	BOLT (M12X1.75X100-MM)	
	25	1	**7Y-3732**	6	CLIP	
	26	1	**7Y-4868**	10	CLIP	
M	27	1	**8T-4139**	6	BOLT (M12X1.75X30-MM)	
M	28	1	**8T-4184**	4	BOLT (M12X1.75X45-MM)	
M	29	1	**8T-4192**	4	BOLT (M12X1.75X25-MM)	
	30	1	**8T-4223**	32	WASHER-HARD (13.5X25.5X3-MM THK)	
M	31	1	**8T-4956**	12	BOLT (M12X1.75X35-MM)	
M	32	1	**8T-5041**	2	BOLT (M12X1.75X120-MM)	

I-REFER TO HYDRAULIC INFORMATION SYSTEM
M-METRIC PART

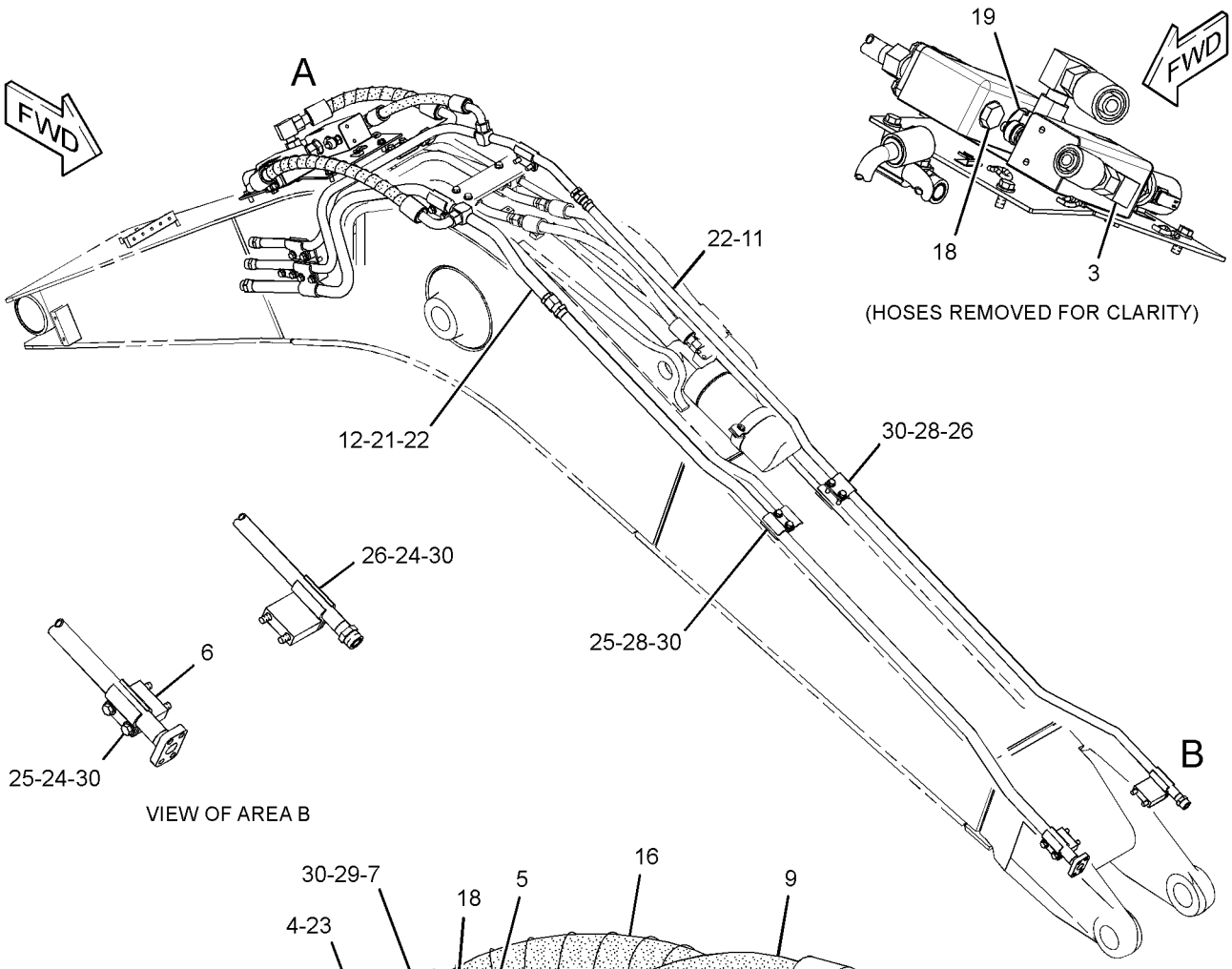

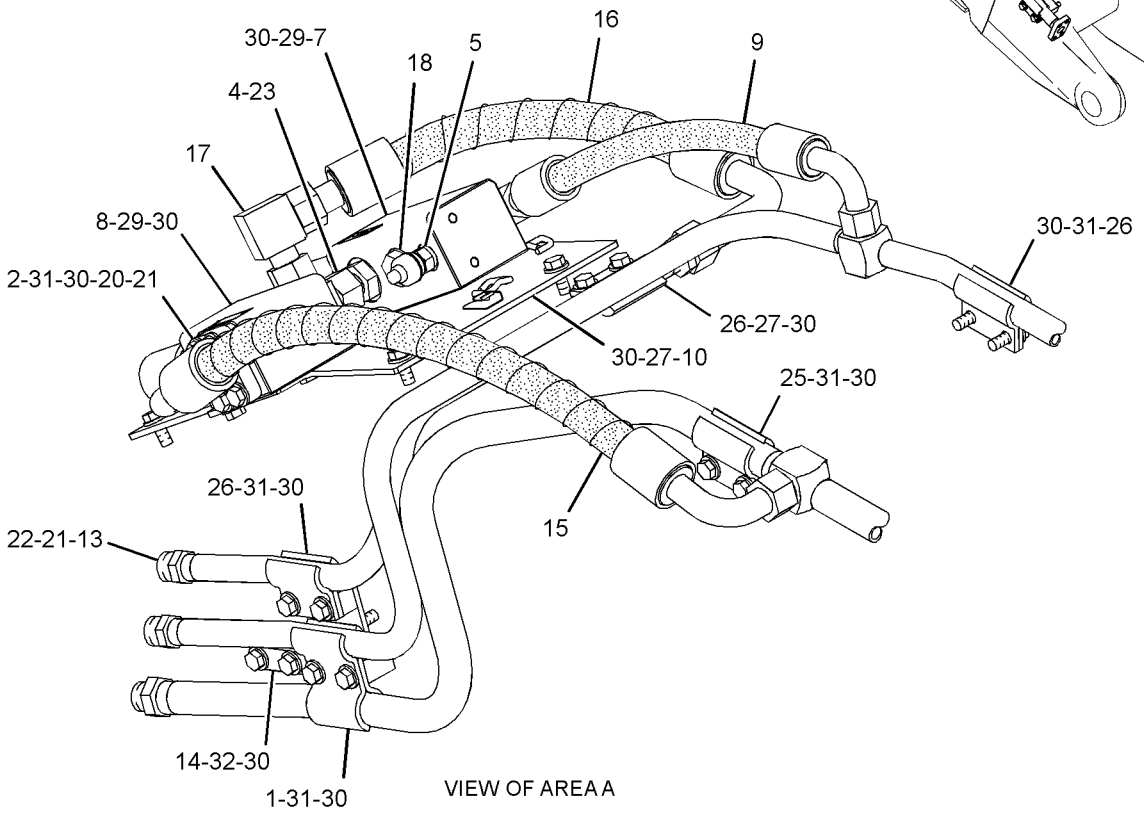

GRAPHIC #1 **<END>** g01641974

HYDRAULIC SYSTEM

282-5543 LINES GP-AUXILIARY HYDRAULIC–

1-PUMP, 1-PUMP/2-PUMP, 1-WAY

S/N: BYJ1-UP; PDP1-UP

PART OF 321-0540 LINES AR-AUXILIARY HYDRAULIC

AN ATTACHMENT

SMCS-5057 **i03036032**

NOTE	REF NO	GRAPHIC REF	PART NUMBER	QTY	PART NAME 1 2 3 4 5 6 (PRODUCT LEVEL)	SEE PAGE
	1	1	**302-8203**	1	COVER AS	
M	2	1	**7X-2549**	4	BOLT (M12X1.75X100-MM)	
M	3	1	**8T-4139**	6	BOLT (M12X1.75X30-MM)	
M	4	1	**8T-4176**	4	BOLT (M12X1.75X90-MM)	
M	5	1	**8T-4184**	4	BOLT (M12X1.75X45-MM)	
M	6	1	**8T-4192**	2	BOLT (M12X1.75X25-MM)	
M	7	1	**8T-4956**	8	BOLT (M12X1.75X35-MM)	
M	8	1	**8T-5041**	2	BOLT (M12X1.75X120-MM)	
M	9	1	**101-7404**	4	BOLT-SOCKET HEAD (M10X1.5X30-MM)	
	10	1	**6V-9832**	1	CAP AS	
	11	1	**4I-1676**	2	CLIP	
	12	1	**7Y-3732**	6	CLIP	
	13	1	**7Y-4868**	10	CLIP	
	14	1	*148-8347*	1	ELBOW AS	
		1	**3D-2824**	1	SEAL-O-RING	
		1	**6V-9007**	1	ELBOW	
		1	**6V-9746**	1	SEAL-O-RING	
	15	1	*148-8352*	1	ELBOW AS	
		1	**5K-9090**	1	SEAL-O-RING	
		1	**6V-9854**	1	ELBOW	
	16	1	**187-9788**	1	FLANGE	
I	17	1	**278-6756**	1	HOSE AS	
I	18	1	**306-1219**	1	HOSE AS	
I	19	1	**306-1223**	1	HOSE AS	
	20	1	**253-6276**	2	PLATE	
	21	1	**099-8232**	1	SEAL-O-RING	
	22	1	**5K-9090**	3	SEAL-O-RING	
	23	1	**6V-9746**	5	SEAL-O-RING	
	24	1	**1P-3703**	1	SEAL-RECTANGULAR	
	25	1	**282-5902**	1	SUPPORT AS	
	26	1	**302-9484**	1	SUPPORT AS	
	27	1	*148-8429*	1	TEE AS	
		1	**5K-9090**	2	SEAL-O-RING	
		1	**6V-9840**	1	TEE-SWIVEL	
	28	1	**328-4823**	1	TUBE AS	
	29	1	**328-4828**	1	TUBE AS	
	30	1	**302-9465**	1	TUBE AS	
Y	31	1	**177-2653**	1	VALVE GP-RELIEF (WITH BLOCK)	575
	32	1	**8T-4223**	26	WASHER-HARD (13.5X25.5X3-MM THK)	

I-REFER TO HYDRAULIC INFORMATION SYSTEM
M-METRIC PART
Y-SEPARATE ILLUSTRATION

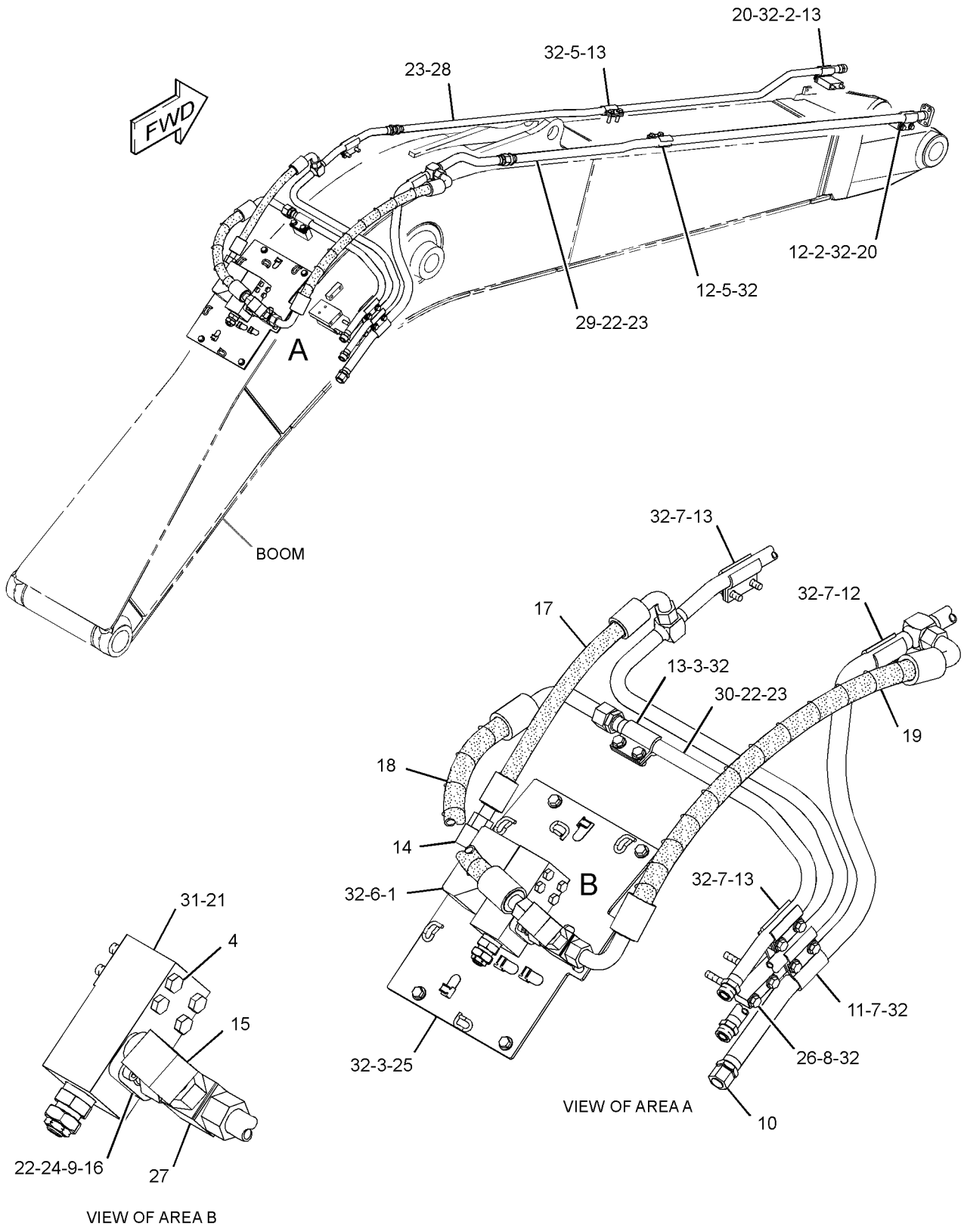

GRAPHIC #1 **<END>** g01637424

282-5544 LINES GP-AUXILIARY HYDRAULIC–REACH BOOM

S/N: BYJ1-UP; PDP1-UP
MEDIUM PRESSURE
PART OF 321-8137 LINES AR-AUXILIARY HYDRAULIC
AN ATTACHMENT

SMCS-5057 **i02862881**

NOTE	REF NO	GRAPHIC REF	PART NUMBER	QTY	PART NAME 1 2 3 4 5 6 (PRODUCT LEVEL)	SEE PAGE
	1	1	**149-1738**	5	CLIP	
	2	1	**153-8867**	4	CLIP	
	3	1	**193-6606**	1	PLATE	
	4	1	**268-6886**	1	CLIP AS	
	5	1	**282-5527**	2	SUPPORT AS	
	6	1	**282-5528**	1	CLIP AS	
	7	1	**282-5711**	1	SUPPORT AS	
	8	1	**316-3875**	1	TUBE AS	
	9	1	**316-3874**	1	TUBE AS	
	10	1	**306-1265**	1	TUBE AS	
	11	1	**093-1291**	2	CLAMP	
	12	1	**6V-8398**	4	SEAL-O-RING	
	13	1	**7J-9108**	1	SEAL-O-RING	
M	14	1	**7X-2549**	2	BOLT (M12X1.75X100-MM)	
	15	1	**7Y-4868**	1	CLIP	
	16	1	**8T-4121**	2	WASHER-HARD (11X21X2.5-MM THK)	
M	17	1	**8T-4133**	2	NUT (M10X1.5-THD)	
M	18	1	**8T-4139**	10	BOLT (M12X1.75X30-MM)	
M	19	1	**8T-4176**	2	BOLT (M12X1.75X90-MM)	
M	20	1	**8T-4185**	2	BOLT (M10X1.5X50-MM)	
	21	1	**8T-4223**	18	WASHER-HARD (13.5X25.5X3-MM THK)	
M	22	1	**8T-4910**	4	BOLT (M12X1.75X60-MM)	

M-METRIC PART

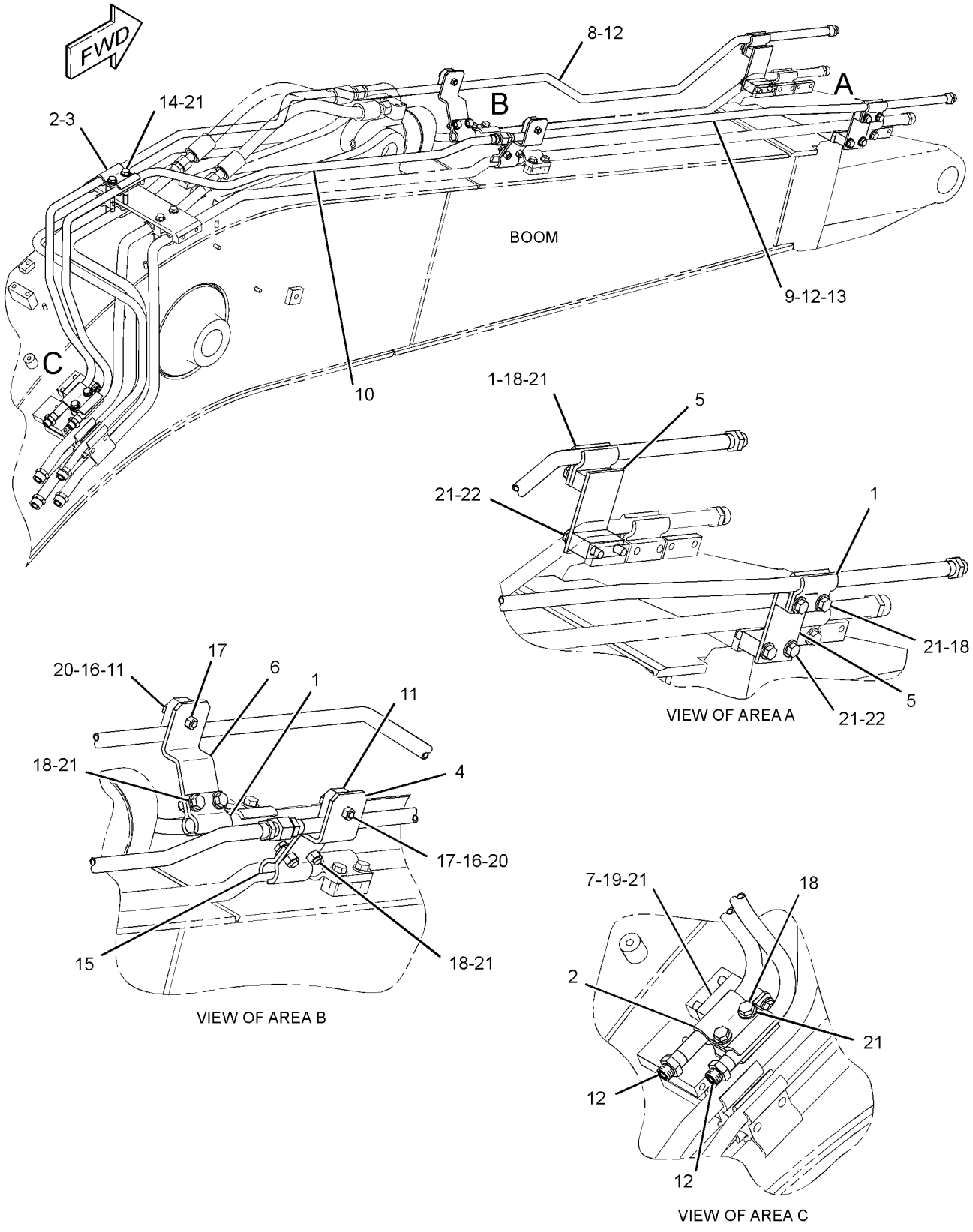

GRAPHIC #1 **<END>** g01409633

HYDRAULIC SYSTEM

282-5730 LINES GP-AUXILIARY HYDRAULIC–

SYSTEM 20, WORK TOOL PRIORITY

S/N: BYJ1-UP; PDP1-UP

PART OF 294-6361 LINES AR-AUXILIARY HYDRAULIC

AN ATTACHMENT

SMCS-5057 **i03036035**

NOTE	REF NO	GRAPHIC REF	PART NUMBER	QTY	PART NAME 1 2 3 4 5 6 (PRODUCT LEVEL)	SEE PAGE
	1	1	**4I-1676**	2	CLIP	
	2	1	**128-7624**	1	FLANGE-SPECIAL	
	3	1	*148-8347*	1	ELBOW AS	
		1	**3D-2824**	1	SEAL-O-RING	
		1	**6V-9007**	1	ELBOW	
		1	**6V-9746**	1	SEAL-O-RING	
	4	1	**202-7000**	1	COUPLING AS	
	5	1	**221-8859**	1	SENSOR AS-PRESSURE (AUXILIARY HYDRAULIC)	
		1	**3E-3371**	1	WEDGE-RECEPTACLE LOCK (3-PIN)	
		1	**3K-0360**	1	SEAL-O-RING	
		1	**9X-3401**	3	PIN-CONNECTOR (16-GA TO 18-GA)	
					–OR–	
		1	**126-1767**	3	PIN-CONNECTOR (14-GA)	
		1	**171-0596**	1	RECEPTACLE AS	
	6	1	**253-6276**	2	PLATE	
	7	1	**270-5672**	1	VALVE GP-SOLENOID & RELIEF (AUXILIARY, COMBINED FN, LH)	
	8	1	**270-5757**	1	VALVE GP-SOLENOID & RELIEF (AUXILIARY, COMBINED FN, RH)	
I	9	1	**278-6756**	1	HOSE AS	
	10	1	**282-5902**	1	SUPPORT AS	
	11	1	**328-4828**	1	TUBE AS	
	12	1	**302-9465**	1	TUBE AS	
	13	1	**302-9484**	1	SUPPORT AS	
I	14	1	**302-9487**	1	HOSE AS	
I	15	1	**302-9491**	1	HOSE AS	
	16	1	**329-6218**	1	TUBE AS	
	17	1	**306-1143**	1	SUPPORT AS	
	18	1	*148-8327*	1	CONNECTOR AS	
		1	**3D-2824**	1	SEAL-O-RING	
		1	**6V-8637**	1	CONNECTOR	
		1	**6V-9746**	1	SEAL-O-RING	
	19	1	*148-8352*	1	ELBOW AS	
		1	**5K-9090**	1	SEAL-O-RING	
		1	**6V-9854**	1	ELBOW	
	20	1	*148-8408*	3	PLUG AS	
					(EACH INCLUDES)	
		1	**3D-2824**	1	SEAL-O-RING	
		1	**9S-4183**	1	PLUG-O-RING	
	21	1	*148-8431*	1	TEE AS	
		1	**5K-9090**	2	SEAL-O-RING	
		1	**6V-8785**	1	TEE	
		1	**7M-8485**	1	SEAL-O-RING	
	22	1	*164-5606*	1	CONNECTOR AS	
		1	**3D-2824**	1	SEAL-O-RING	
		1	**6V-9746**	1	SEAL-O-RING	
		1	**8T-0078**	1	CONNECTOR	
	23	1	**1P-3703**	1	SEAL-RECTANGULAR	
	24	1	**5K-9090**	3	SEAL-O-RING	
	25	1	**6V-9746**	4	SEAL-O-RING	
	26	1	**7M-8485**	1	SEAL-O-RING	
M	27	1	**7X-2549**	4	BOLT (M12X1.75X100-MM)	
	28	1	**7X-7729**	2	WASHER (11X25X3-MM THK)	
	29	1	**7Y-3732**	6	CLIP	

282-5730 **LINES GP-AUXILIARY HYDRAULIC** *(contd.)* **i03036035**

NOTE	REF NO	GRAPHIC REF	PART NUMBER	QTY	PART NAME 1 2 3 4 5 6 (PRODUCT LEVEL)	SEE PAGE
	30	1	**7Y-4868**	10	CLIP	
M	31	1	**8T-4137**	2	BOLT (M10X1.5X20-MM)	
M	32	1	**8T-4139**	6	BOLT (M12X1.75X30-MM)	
M	33	1	**8T-4184**	4	BOLT (M12X1.75X45-MM)	
M	34	1	**8T-4192**	4	BOLT (M12X1.75X25-MM)	
	35	1	**8T-4223**	32	WASHER-HARD (13.5X25.5X3-MM THK)	
M	36	1	**8T-4910**	2	BOLT (M12X1.75X60-MM)	
M	37	1	**8T-4956**	10	BOLT (M12X1.75X35-MM)	
M	38	1	**8T-5041**	2	BOLT (M12X1.75X120-MM)	

I-REFER TO HYDRAULIC INFORMATION SYSTEM
M-METRIC PART

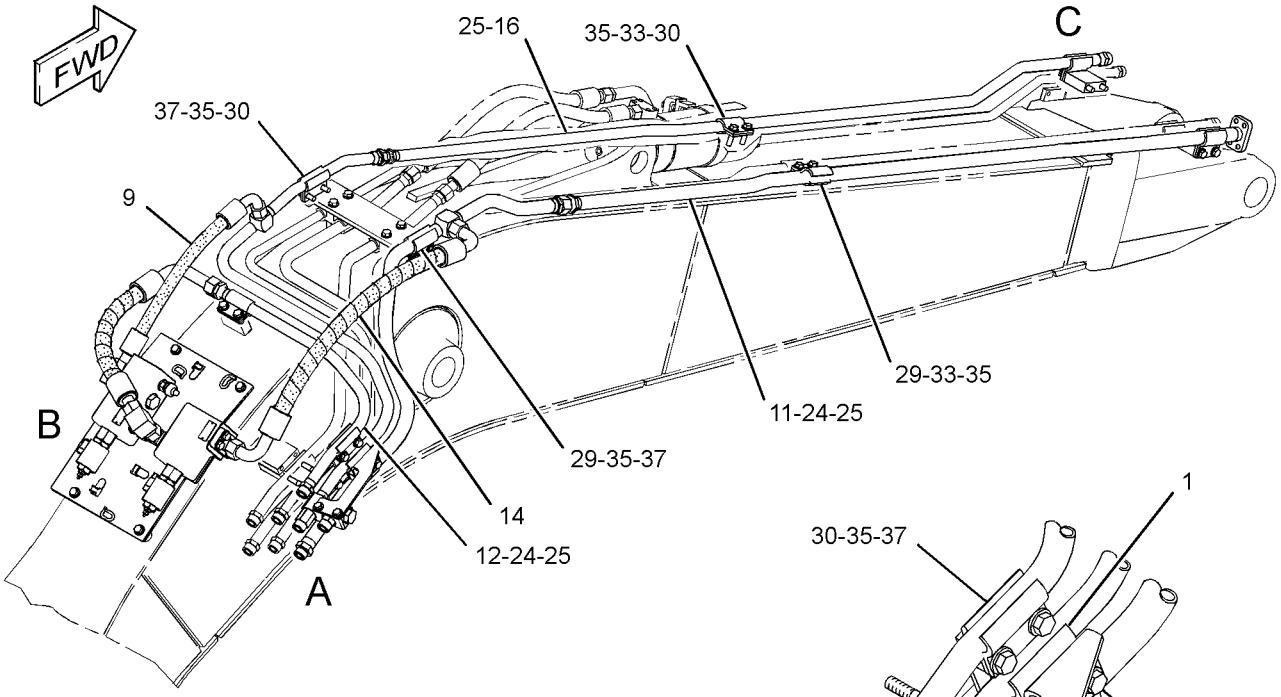

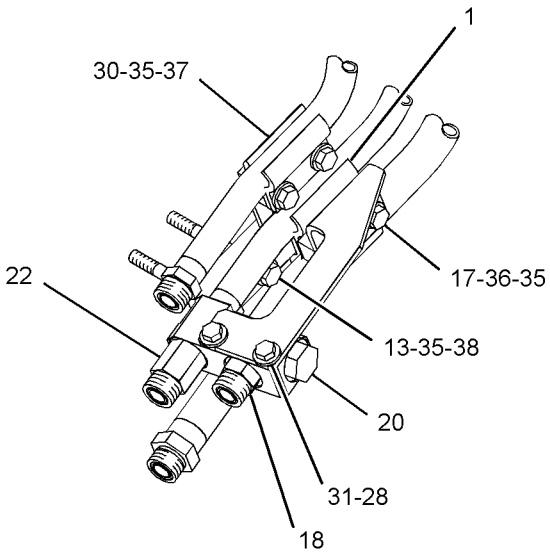

VIEW OF AREA A

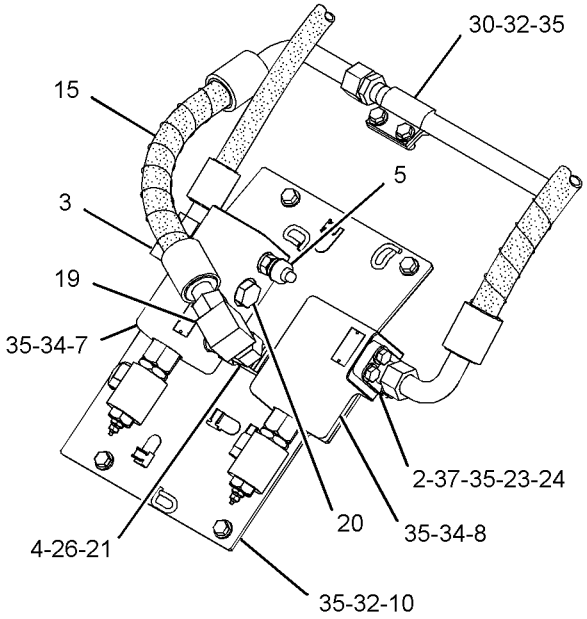

VIEW OF AREA B

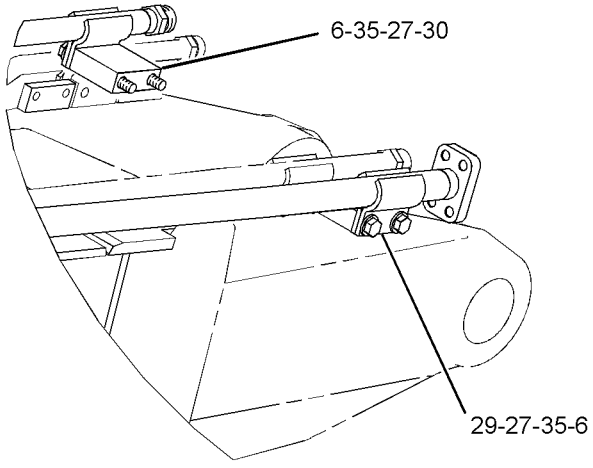

VIEW OF AREA C

GRAPHIC #1 **<END>** g01637439

288-7392 LINES GP-AUXILIARY HYDRAULIC–STICK, HIGH PRESSURE

S/N: BYJ1-UP; PDP1-UP
3.0-M (9.8-FT) STICK
AN ATTACHMENT

SMCS-5057 **i02821905**

NOTE	REF NO	GRAPHIC REF	PART NUMBER	QTY	PART NAME 1 2 3 4 5 6 (PRODUCT LEVEL)	SEE PAGE
M	1	1	**101-7403**	4	BOLT-SOCKET HEAD (M10X1.5X80-MM)	
I	2	1	**277-0917**	1	HOSE AS	
I	3	1	**282-5772**	1	HOSE AS	
Y	4	1	**282-5894**	2	VALVE AS-MANUAL	535
	5	1	**288-7688**	1	TUBE AS	
	6	1	**288-7689**	1	TUBE AS	
	7	1	**288-7690**	2	CLIP AS	
	8	1	**288-7691**	2	CLIP AS	
	9	1	**1P-3703**	4	SEAL-RECTANGULAR	
	10	1	**6V-0400**	4	FLANGE-HALF	
	11	1	**6V-9746**	1	SEAL-O-RING	
	12	1	**7Y-3732**	2	CLIP	
	13	1	**7Y-4868**	2	CLIP	
M	14	1	**8T-4139**	4	BOLT (M12X1.75X30-MM)	
M	15	1	**8T-4184**	8	BOLT (M12X1.75X45-MM)	
M	16	1	**8T-4195**	4	BOLT (M10X1.5X30-MM)	
	17	1	**8T-4223**	16	WASHER-HARD (13.5X25.5X3-MM THK)	
	18	1	**8T-4896**	4	WASHER-HARD (10.2X18.5X2.5-MM THK)	
M	19	1	**8T-4910**	8	BOLT (M12X1.75X60-MM)	

I-REFER TO HYDRAULIC INFORMATION SYSTEM
M-METRIC PART
Y-SEPARATE ILLUSTRATION

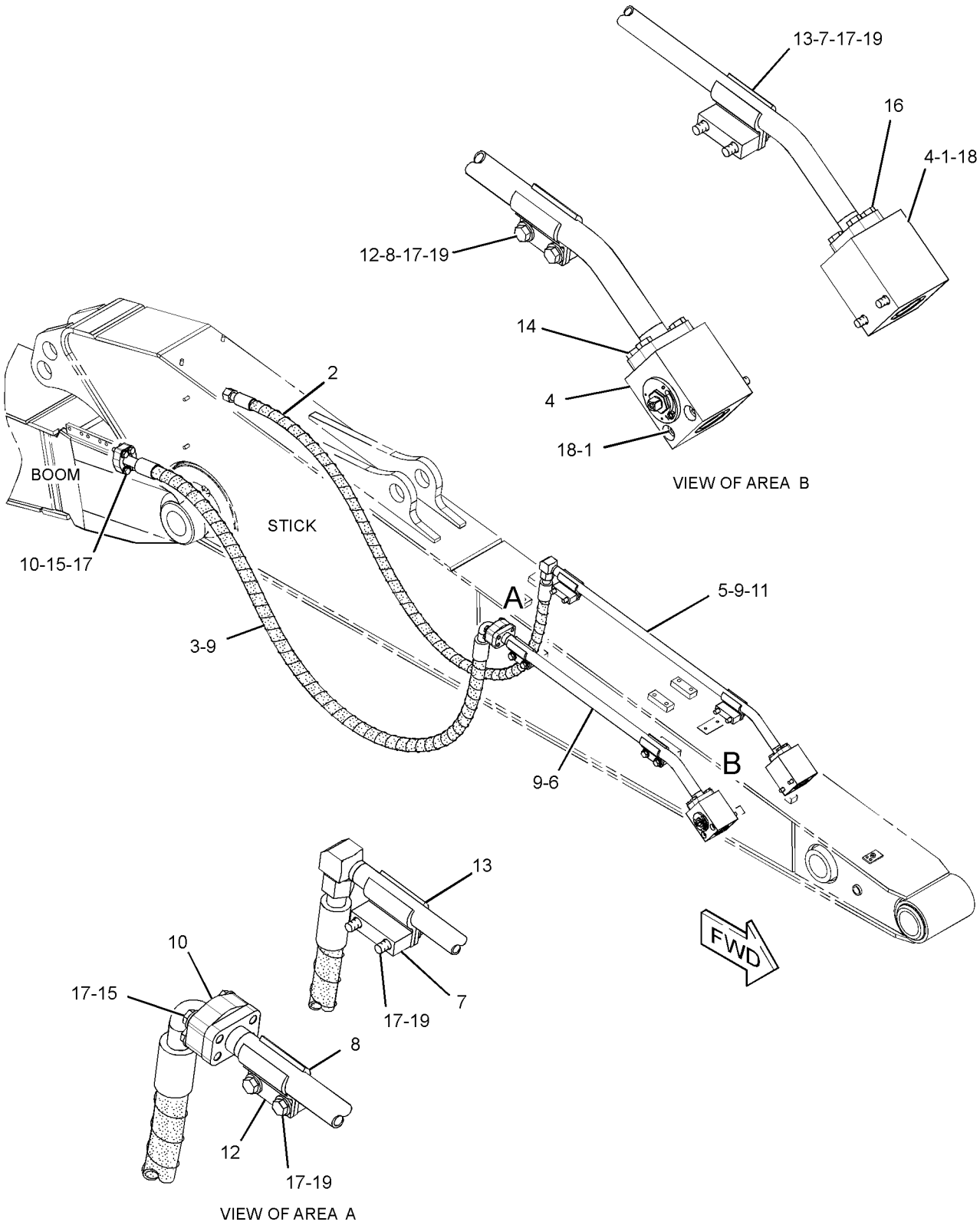

GRAPHIC #1 **<END>** g01438911

288-7393 LINES GP-AUXILIARY HYDRAULIC–
STICK, MEDIUM PRESSURE
S/N: BYJ1-UP; PDP1-UP
3-M (9.8-FT)
AN ATTACHMENT

SMCS-5057 **i02896137**

NOTE	REF NO	GRAPHIC REF	PART NUMBER	QTY	PART NAME 1 2 3 4 5 6 (PRODUCT LEVEL)	SEE PAGE
	1	1	**6C-6760**	2	MANIFOLD	
	2	1	**149-1738**	8	CLIP	
	3	1	*250-1440*	2	ADAPTER AS	
					(EACH INCLUDES)	
		1	**3K-0360**	1	SEAL-O-RING	
		1	**7X-3164**	1	ADAPTER-SWIVEL	
	4	1	**288-7692**	2	TUBE AS	
	5	1	**288-7693**	2	PLATE	
	6	1	**288-7694**	2	SUPPORT AS	
	7	1	**288-7696**	2	SUPPORT AS	
I	8	1	**288-7709**	2	HOSE AS	
	9	1	**6V-8398**	4	SEAL-O-RING	
	10	1	**8T-4121**	4	WASHER-HARD (11X21X2.5-MM THK)	
M	11	1	**8T-4136**	4	BOLT (M10X1.5X25-MM)	
M	12	1	**8T-4139**	8	BOLT (M12X1.75X30-MM)	
M	13	1	**8T-4185**	4	BOLT (M10X1.5X50-MM)	
M	14	1	**8T-4192**	8	BOLT (M12X1.75X25-MM)	
	15	1	**8T-4223**	16	WASHER-HARD (13.5X25.5X3-MM THK)	
JM	16	1	**105-3479**	4	BOLT-SOCKET HEAD (M10X1.5X90-MM)	
JM	17	1	**8T-4648**	8	BOLT (M12X1.75X70-MM)	
J	18	1	**8T-7971**	8	WASHER-HARD (13.5X25.5X5-MM THK)	

I-REFER TO HYDRAULIC INFORMATION SYSTEM
J-WHEN USED WITH HIGH PRESSURE AUXILIARY HYDRAULIC LINES GROUP
M-METRIC PART

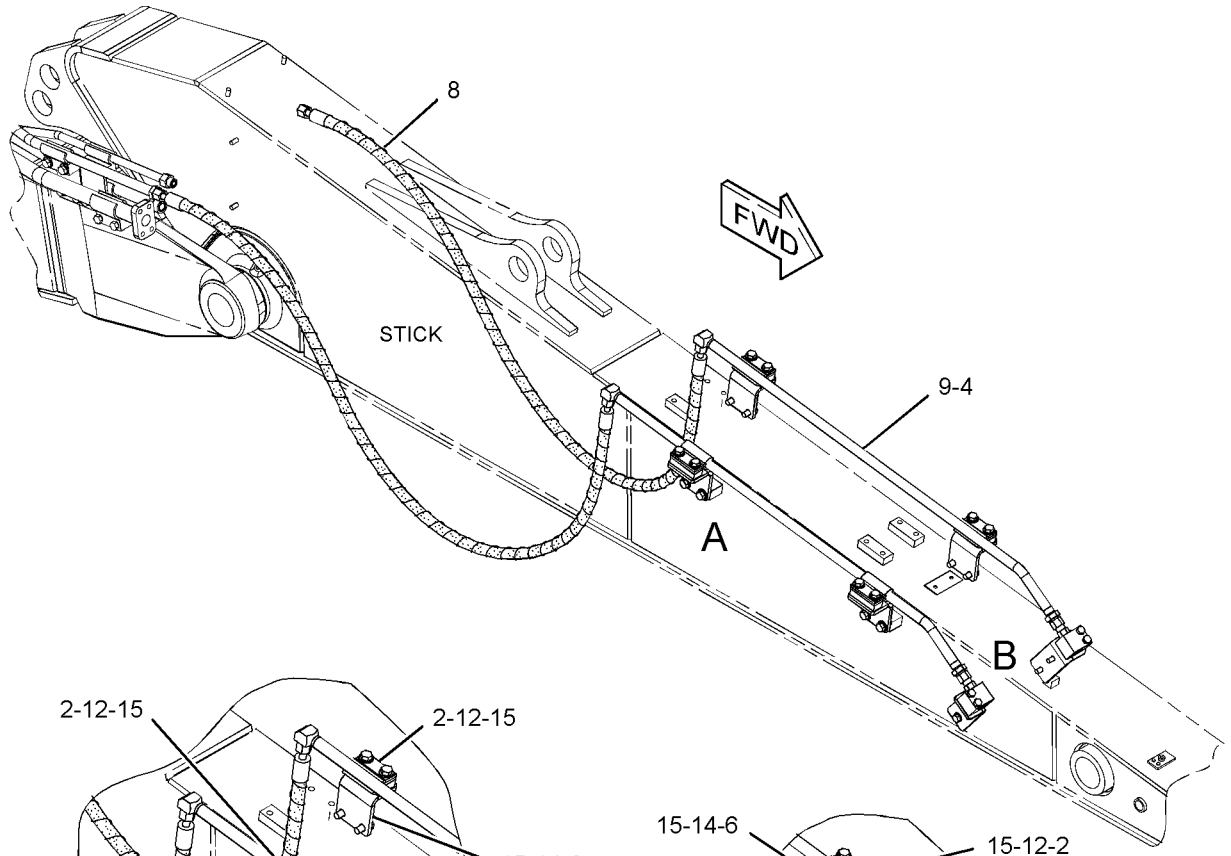

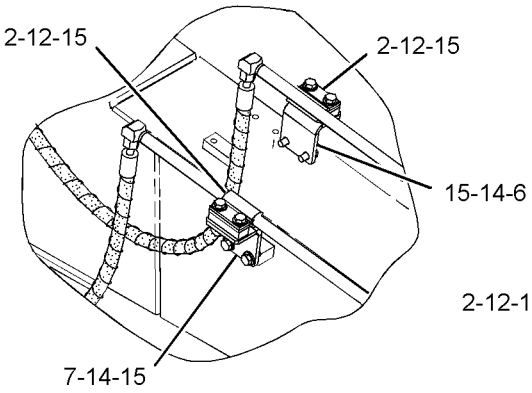

VIEW OF AREA A

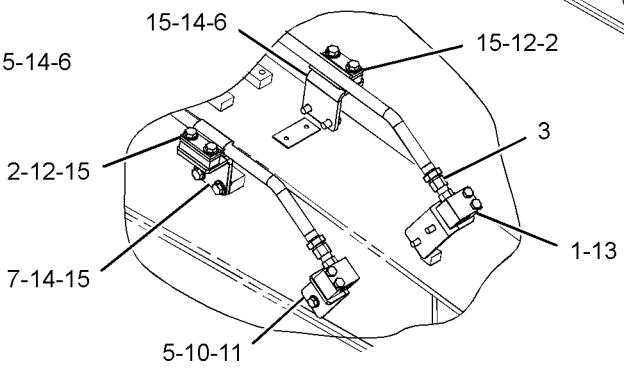

VIEW OF AREA B

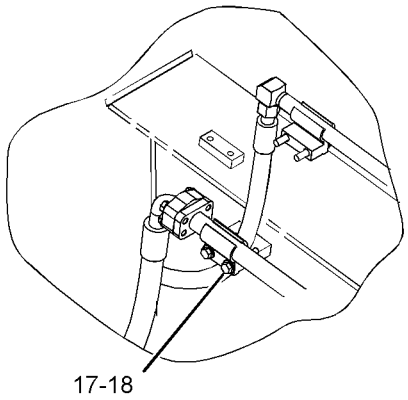

VIEW OF AREA A
(OPTIONAL DESIGN)

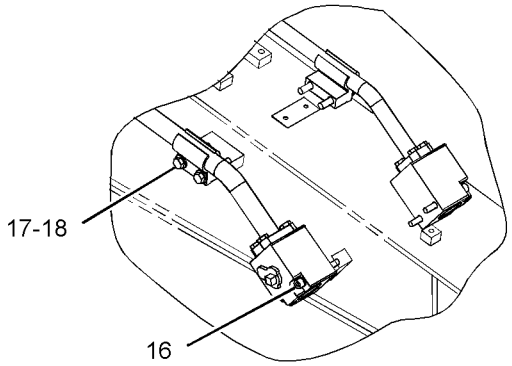

VIEW OF AREA B
(OPTIONAL DESIGN)

GRAPHIC #1 **<END>** g01441771

288-7398 LINES GP-AUXILIARY HYDRAULIC–STICK, HIGH PRESSURE

S/N: BYJ1-UP; PDP1-UP
2.5-M (8.2-FT)
AN ATTACHMENT

SMCS-5057 **i02821910**

NOTE	REF NO	GRAPHIC REF	PART NUMBER	QTY	PART NAME 1 2 3 4 5 6 (PRODUCT LEVEL)	SEE PAGE
M	1	1	**101-7403**	4	BOLT-SOCKET HEAD (M10X1.5X80-MM)	
I	2	1	**187-6692**	1	HOSE AS	
I	3	1	**253-6694**	1	HOSE AS	
Y	4	1	**282-5894**	2	VALVE AS-MANUAL	535
	5	1	**288-7690**	2	CLIP AS	
	6	1	**288-7691**	2	CLIP AS	
	7	1	**288-7721**	1	TUBE AS	
	8	1	**294-6519**	1	TUBE AS	
	9	1	**1P-3703**	4	SEAL-RECTANGULAR	
	10	1	**6V-0400**	4	FLANGE-HALF	
	11	1	**6V-9746**	1	SEAL-O-RING	
	12	1	**7Y-3732**	2	CLIP	
	13	1	**7Y-4868**	2	CLIP	
M	14	1	**8T-4139**	4	BOLT (M12X1.75X30-MM)	
M	15	1	**8T-4184**	8	BOLT (M12X1.75X45-MM)	
M	16	1	**8T-4195**	4	BOLT (M10X1.5X30-MM)	
	17	1	**8T-4223**	16	WASHER-HARD (13.5X25.5X3-MM THK)	
	18	1	**8T-4896**	4	WASHER-HARD (10.2X18.5X2.5-MM THK)	
M	19	1	**8T-4910**	8	BOLT (M12X1.75X60-MM)	

I-REFER TO HYDRAULIC INFORMATION SYSTEM
M-METRIC PART
Y-SEPARATE ILLUSTRATION

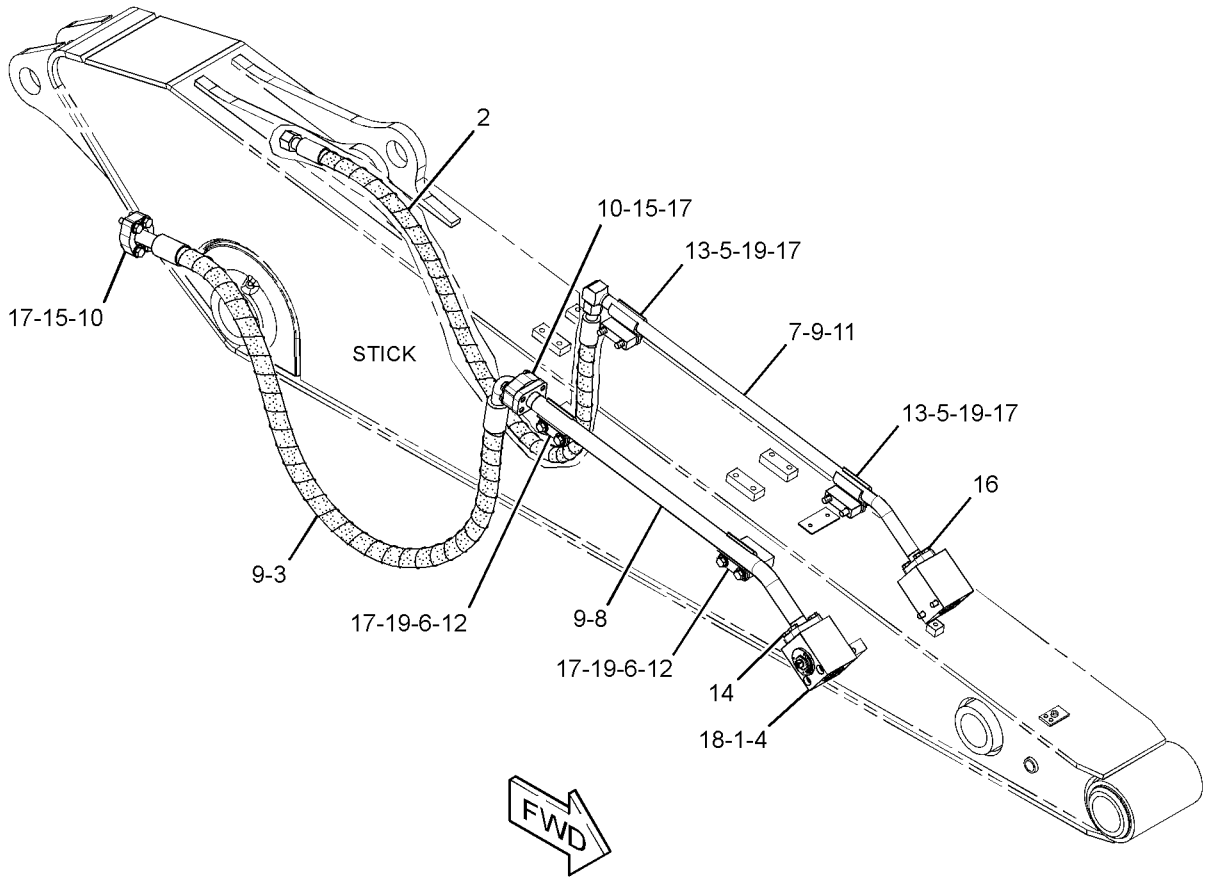

GRAPHIC #1 **<END>** g01411722

288-7399 LINES GP-AUXILIARY HYDRAULIC–
STICK, MEDIUM PRESSURE
S/N: BYJ1-UP; PDP1-UP
2.5-M (8.2-FT)
AN ATTACHMENT

SMCS-5057 **i02910145**

NOTE	REF NO	GRAPHIC REF	PART NUMBER	QTY	PART NAME 1 2 3 4 5 6 (PRODUCT LEVEL)	SEE PAGE
	1	1	**6C-6760**	2	MANIFOLD	
	2	1	**149-1738**	8	CLIP	
	3	1	*250-1440*	2	ADAPTER AS	
					(EACH INCLUDES)	
		1	**3K-0360**	1	SEAL-O-RING	
		1	**7X-3164**	1	ADAPTER-SWIVEL	
	4	1	**288-7693**	2	PLATE	
	5	1	**288-7694**	2	SUPPORT AS	
	6	1	**288-7696**	2	SUPPORT AS	
	7	1	**288-7722**	2	TUBE AS	
I	8	1	**288-7723**	2	HOSE AS	
	9	1	**6V-8398**	4	SEAL-O-RING	
	10	1	**8T-4121**	4	WASHER-HARD (11X21X2.5-MM THK)	
M	11	1	**8T-4136**	4	BOLT (M10X1.5X25-MM)	
M	12	1	**8T-4139**	8	BOLT (M12X1.75X30-MM)	
M	13	1	**8T-4185**	4	BOLT (M10X1.5X50-MM)	
M	14	1	**8T-4192**	8	BOLT (M12X1.75X25-MM)	
	15	1	**8T-4223**	16	WASHER-HARD (13.5X25.5X3-MM THK)	
JM	16	1	**105-3479**	4	BOLT-SOCKET HEAD (M10X1.5X90-MM)	
JM	17	1	**8T-4648**	8	BOLT (M12X1.75X70-MM)	
J	18	1	**8T-7971**	8	WASHER-HARD (13.5X25.5X5-MM THK)	

I-REFER TO HYDRAULIC INFORMATION SYSTEM
J-WHEN USED WITH AUXILIARY HYDRAULIC LINES GROUP (HIGH PRESSURE)
M-METRIC PART

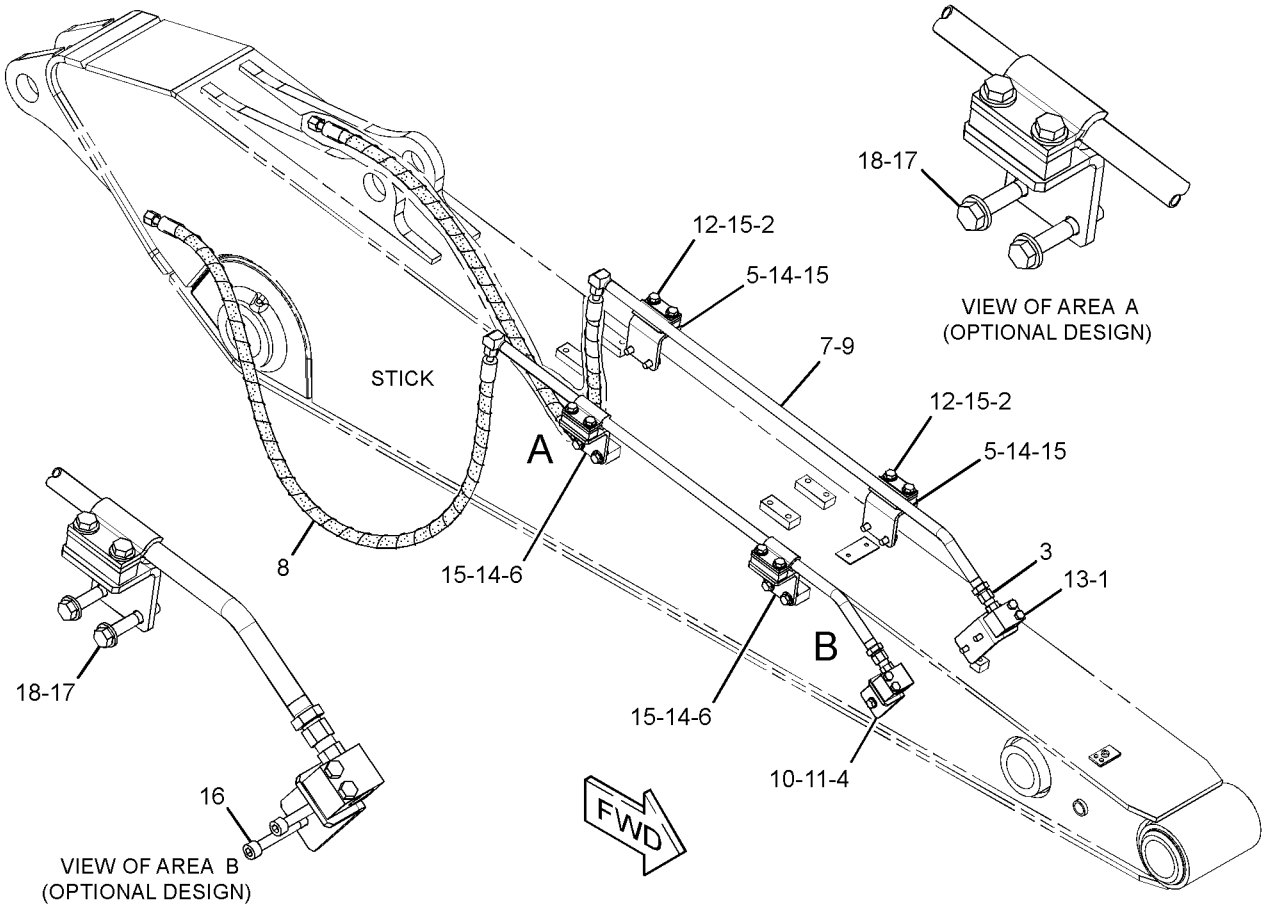

GRAPHIC #1 **<END>** g01438770

179-7602 LINES GP-BLADE CYLINDER–LH

S/N: BYJ1-UP; PDP1-UP
PART OF 274-2678 CYLINDER & LINES GP-BLADE
AN ATTACHMENT

SMCS-5102 **i01779825**

NOTE	REF NO	GRAPHIC REF	PART NUMBER	QTY	PART NAME 1 2 3 4 5 6 (PRODUCT LEVEL)	SEE PAGE
	1	1	**179-7603**	1	PIPE AS	
	2	1	**4J-5267**	2	SEAL-O-RING	
M	3	1	**8T-4182**	4	BOLT (M10X1.5X45-MM)	
M	4	1	**8T-4185**	4	BOLT (M10X1.5X50-MM)	
	5	1	**139-1773**	1	ELBOW	
	6	1	**7J-9108**	2	SEAL-O-RING	
	7	1	**093-1291**	1	CLAMP	
	8	1	**8T-4223**	1	WASHER-HARD (13.5X25.5X3-MM THK)	
M	9	1	**8T-4194**	1	BOLT (M12X1.75X50-MM)	
	10	1	**122-5420**	1	SUPPORT AS	
	11	1	**122-5500**	1	SUPPORT AS	
	12	1	**8T-4121**	2	WASHER-HARD (11X21X2.5-MM THK)	
M	13	1	**8T-4196**	2	BOLT (M10X1.5X35-MM)	

M-METRIC PART

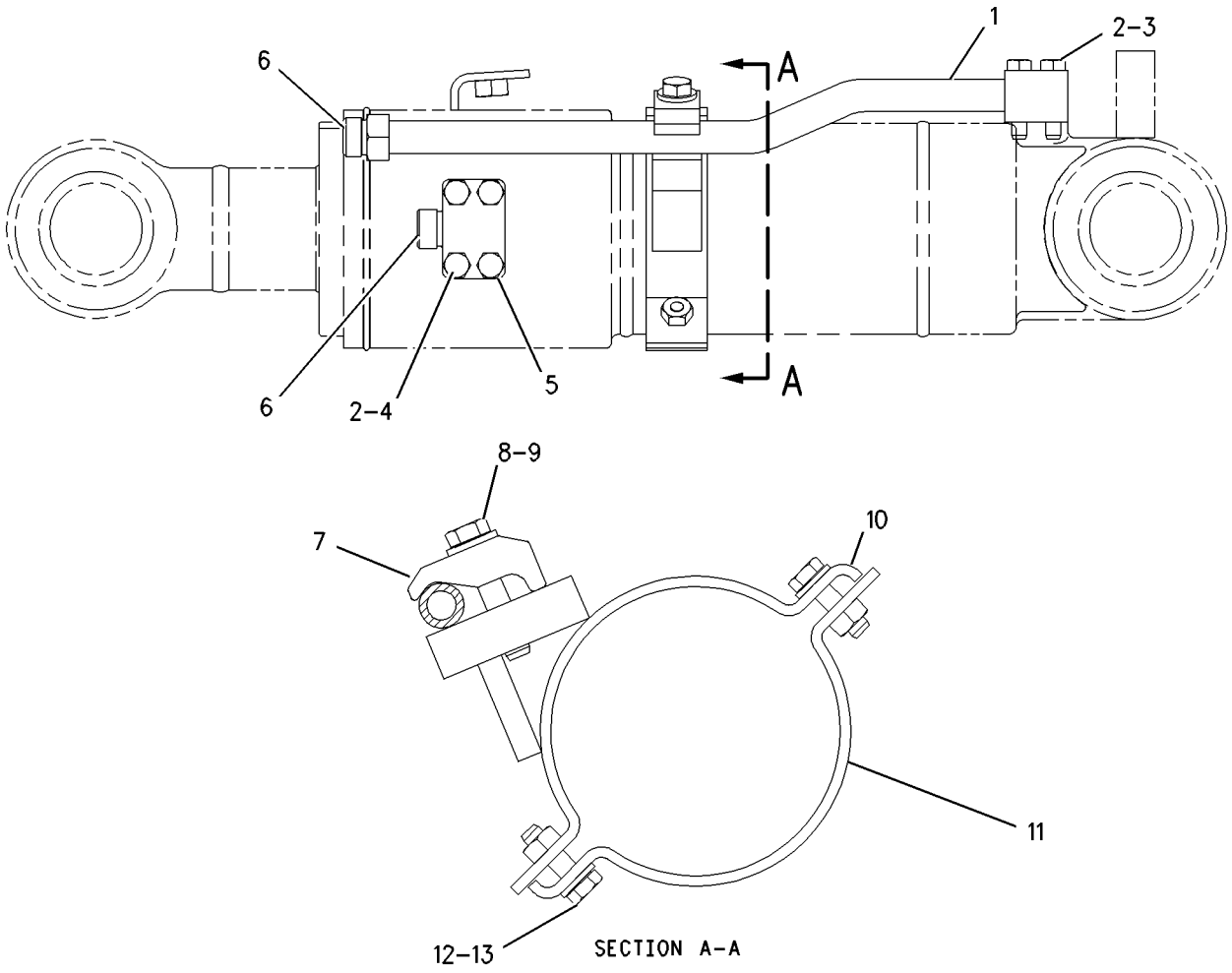

GRAPHIC #1 **<END>** g00748461

179-7604 LINES GP-BLADE CYLINDER–RH

S/N: BYJ1-UP; PDP1-UP
PART OF 274-2679 CYLINDER & LINES GP-BLADE
AN ATTACHMENT

SMCS-5102 **i01777943**

NOTE	REF NO	GRAPHIC REF	PART NUMBER	QTY	PART NAME 1 2 3 4 5 6 (PRODUCT LEVEL)	SEE PAGE
	1	1	**179-7605**	1	PIPE AS	
	2	1	**4J-5267**	2	SEAL-O-RING	
M	3	1	**8T-4182**	4	BOLT (M10X1.5X45-MM)	
M	4	1	**8T-4185**	4	BOLT (M10X1.5X50-MM)	
	5	1	**139-1773**	1	ELBOW	
	6	1	**7J-9108**	2	SEAL-O-RING	
	7	1	**093-1291**	1	CLAMP	
	8	1	**8T-4223**	1	WASHER-HARD (13.5X25.5X3-MM THK)	
M	9	1	**8T-4194**	1	BOLT (M12X1.75X50-MM)	
	10	1	**122-5500**	1	SUPPORT AS	
	11	1	**122-5420**	1	SUPPORT AS	
	12	1	**8T-4121**	2	WASHER-HARD (11X21X2.5-MM THK)	
M	13	1	**8T-4196**	2	BOLT (M10X1.5X35-MM)	

M-METRIC PART

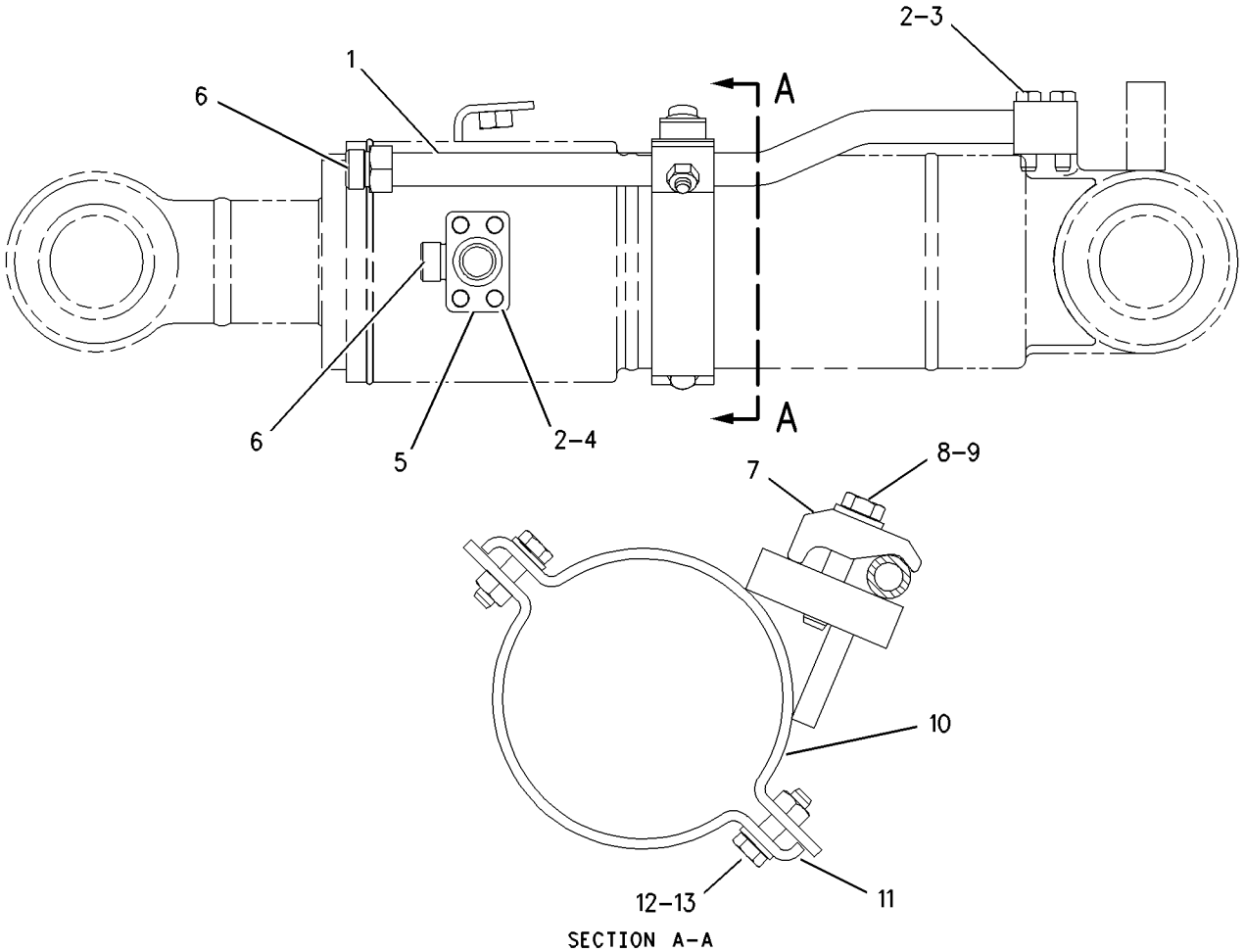

SECTION A-A

GRAPHIC #1 **<END>** g00748452

HYDRAULIC SYSTEM

282-7236 LINES GP-BLADE CYLINDER

S/N: BYJ1-UP; PDP1-UP

PART OF 260-7212, 260-7213 INSTALLATION AR-AUXILIARY

AN ATTACHMENT

SMCS-5102 **i02954203**

NOTE	REF NO	GRAPHIC REF	PART NUMBER	QTY	PART NAME 1 2 3 4 5 6 (PRODUCT LEVEL)	SEE PAGE
	1	1	**6V-0852**	1	CAP-DUST	
	2	1	**7K-1181**	6	STRAP-CABLE	
	3	1	**093-1295**	2	CLAMP	
	4	1	**310-0234**	1	VALVE GP-BANK 2	
I	5	1	**139-1762**	2	HOSE AS	
I	6	1	**139-1765**	2	HOSE AS	
	7	1	*148-8362*	1	ELBOW AS	
		1	**3D-2824**	1	SEAL-O-RING	
		1	**5K-9090**	1	SEAL-O-RING	
		1	**8T-6684**	1	ELBOW	
	8	1	*148-8382*	1	ELBOW AS	
		1	**3D-2824**	1	SEAL-O-RING	
		1	**7J-9108**	1	SEAL-O-RING	
		1	**8T-0404**	1	ELBOW	
	9	1	*148-8393*	2	ELBOW AS	
					(EACH INCLUDES)	
		1	**6V-9852**	1	ELBOW	
		1	**7J-9108**	1	SEAL-O-RING	
	10	1	*148-8447*	1	TEE AS-SWIVEL	
		1	**7J-9108**	1	SEAL-O-RING	
		1	**7X-0872**	1	TEE-SWIVEL	
	11	1	*155-3504*	1	ELBOW AS	
		1	**2M-9780**	1	SEAL-O-RING	
		1	**6V-9003**	1	ELBOW	
		1	**7J-9108**	1	SEAL-O-RING	
	12	1	*164-5567*	1	COUPLER AS-QUICK DISCONNECT	
		1	**3J-1907**	1	SEAL-O-RING	
		1	**6V-3965**	1	FITTING (QUICK DISCONNECT)	
	13	1	**179-7874**	1	TUBE AS	
	14	1	**179-7875**	1	TUBE AS	
I	15	1	**207-6269**	1	HOSE AS	
I	16	1	**245-5232**	1	HOSE AS	
	17	1	*250-1454*	1	TEE AS	
		1	**3D-2824**	1	SEAL-O-RING	
		1	**6V-9746**	1	SEAL-O-RING	
		1	**7J-9108**	1	SEAL-O-RING	
		1	**118-4569**	1	TEE	
	18	1	**266-0982**	2	GUARD	
I	19	1	**285-2897**	1	HOSE AS	
I	20	1	**286-6749**	1	HOSE AS	
	21	1	**320-0096**	1	SUPPORT AS	
I	22	1	**296-7201**	1	HOSE AS	
	23	1	*148-8315*	1	CONNECTOR AS	
		1	**2M-9780**	1	SEAL-O-RING	
		1	**6V-8642**	1	CONNECTOR	
		1	**7J-9108**	1	SEAL-O-RING	
	24	1	*148-8341*	2	CONNECTOR AS	
					(EACH INCLUDES)	
		1	**3D-2824**	1	SEAL-O-RING	
		1	**6V-8713**	1	CONNECTOR	
		1	**7J-9108**	1	SEAL-O-RING	
	25	1	*148-8355*	1	ELBOW AS	
		1	**5K-9090**	1	SEAL-O-RING	
		1	**6V-9005**	1	ELBOW	
		1	**7M-8485**	1	SEAL-O-RING	

282-7236 **LINES GP-BLADE CYLINDER** *(contd.)* **i02954203**

NOTE	REF NO	GRAPHIC REF	PART NUMBER	QTY	PART NAME 1 2 3 4 5 6 (PRODUCT LEVEL)	SEE PAGE
	27	1	*150-4048*	2	ELBOW AS	
					(EACH INCLUDES)	
		1	**3K-0360**	1	SEAL-O-RING	
		1	**6V-8722**	1	ELBOW	
		1	**7J-9108**	1	SEAL-O-RING	
	28	1	**7J-9108**	4	SEAL-O-RING	
M	29	1	**8T-4183**	3	BOLT (M12X1.75X40-MM)	
M	30	1	**8T-4194**	2	BOLT (M12X1.75X50-MM)	
	31	1	**8T-4223**	5	WASHER-HARD (13.5X25.5X3-MM THK)	
	32	1	**8T-4224**	3	WASHER-HARD (8.8X16X2-MM THK)	
M	33	1	**8T-7547**	3	BOLT (M8X1.25X30-MM)	
	34	1	*148-8342*	2	CONNECTOR AS	
					(EACH INCLUDES)	
		1	**3K-0360**	1	SEAL-O-RING	
		1	**6V-8632**	1	CONNECTOR	
		1	**7J-9108**	1	SEAL-O-RING	

I-REFER TO HYDRAULIC INFORMATION SYSTEM
M-METRIC PART

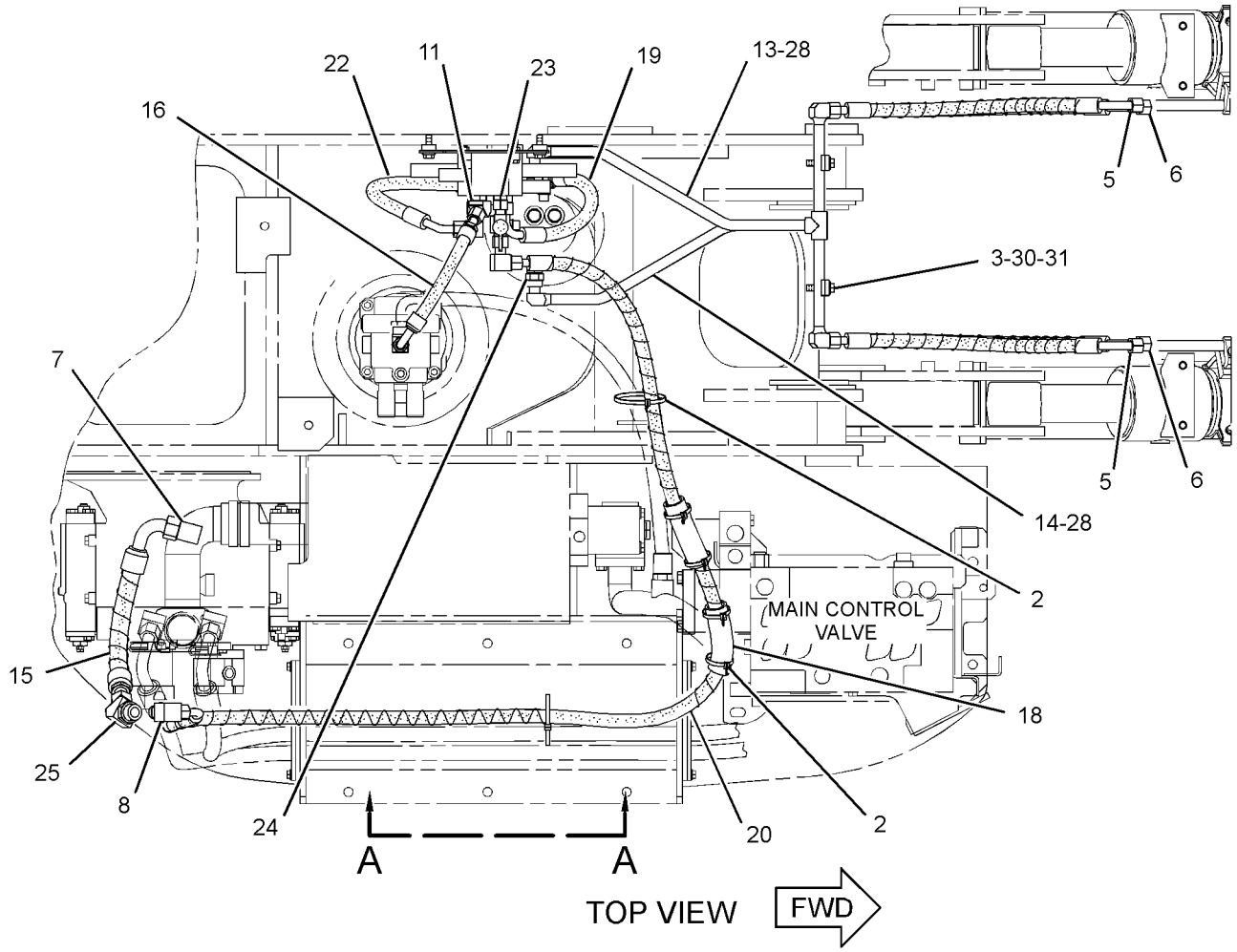

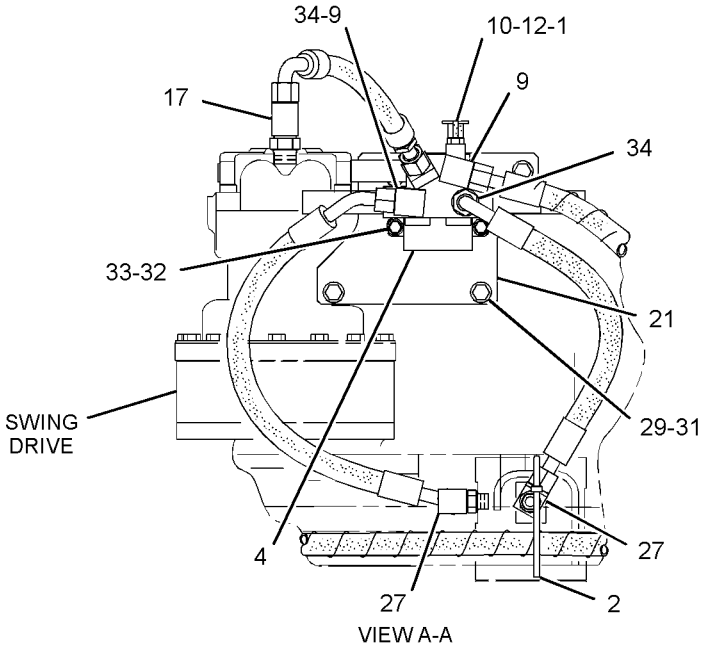

GRAPHIC #1 **<END>** g01511194

282-5551 LINES GP-BOOM–REACH BOOM, STICK LOAD CONTROL

S/N: BYJ1-UP; PDP1-UP
PART OF 297-0200 VALVE AR-CHECK & RELIEF
AN ATTACHMENT
TYPE 1

SMCS-5057 **i02900473**

NOTE	REF NO	GRAPHIC REF	PART NUMBER	QTY	PART NAME 1 2 3 4 5 6 (PRODUCT LEVEL)	SEE PAGE
	1	1	**7K-1181**	3	STRAP-CABLE	
I	2	1	**302-9635**	2	HOSE AS	
	3	1	**302-9636**	1	SUPPORT AS	
	4	1	*149-5452*	2	UNION AS	
					(EACH INCLUDES)	
		1	**6V-8397**	2	SEAL-O-RING	
		1	**6V-8994**	1	UNION	
	5	1	**6V-9168**	2	NUT (11/16-16-THD)	
	6	1	**8T-4223**	2	WASHER-HARD (13.5X25.5X3-MM THK)	
M	7	1	**8T-5041**	2	BOLT (M12X1.75X120-MM)	
BM	8	1	**8T-7930**	2	BOLT (M12X1.75X160-MM)	

B-USE AS REQUIRED
I-REFER TO HYDRAULIC INFORMATION SYSTEM
M-METRIC PART

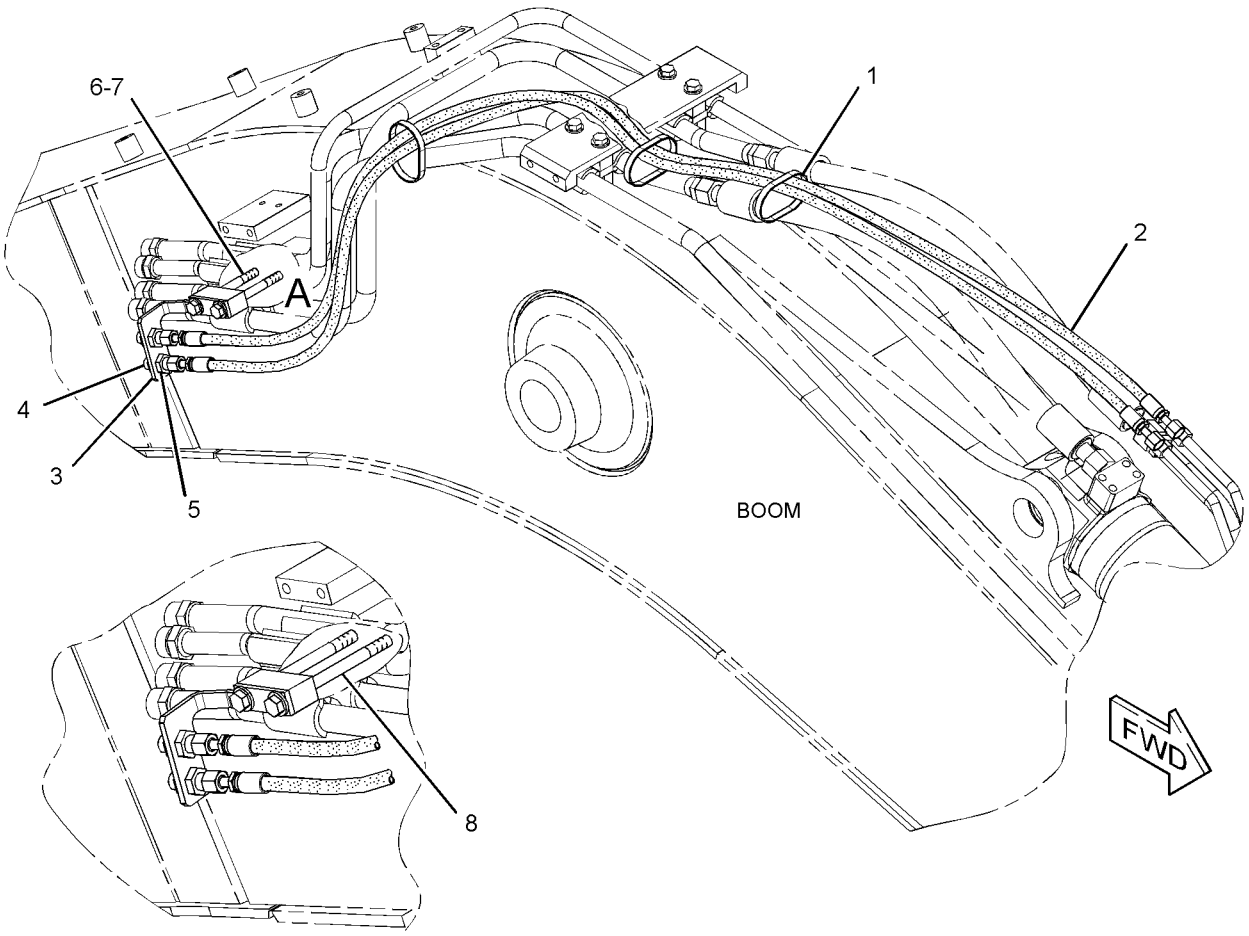

VIEW OF AREA A
(OPTIONAL DESIGN)

GRAPHIC #1 **<END>** g01520221

282-5551 LINES GP-BOOM–REACH BOOM, STICK LOAD CONTROL

S/N: BYJ1-UP; PDP1-UP
PART OF 297-0200 VALVE AR-CHECK & RELIEF
AN ATTACHMENT
TYPE 2

SMCS-5057 **i03093840**

NOTE	REF NO	GRAPHIC REF	PART NUMBER	QTY	PART NAME 1 2 3 4 5 6 (PRODUCT LEVEL)	SEE PAGE
	1	1	**7K-1181**	3	STRAP-CABLE	
CI	2	1	**302-2890**	2	HOSE AS	
	3	1	**302-9636**	1	SUPPORT AS	
	4	1	*149-5452*	2	UNION AS	
					(EACH INCLUDES)	
		1	**6V-8397**	2	SEAL-O-RING	
		1	**6V-8994**	1	UNION	
	5	1	**6V-9168**	2	NUT (11/16-16-THD)	
	6	1	**8T-4223**	2	WASHER-HARD (13.5X25.5X3-MM THK)	
M	7	1	**8T-5041**	2	BOLT (M12X1.75X120-MM)	
JM	8	1	**8T-7930**	2	BOLT (M12X1.75X160-MM)	

C-CHANGE FROM PREVIOUS TYPE
I-REFER TO HYDRAULIC INFORMATION SYSTEM
J-WHEN USED WITH HIGH PRESSURE AUXILIARY HYDRAULIC LINES GROUP
M-METRIC PART

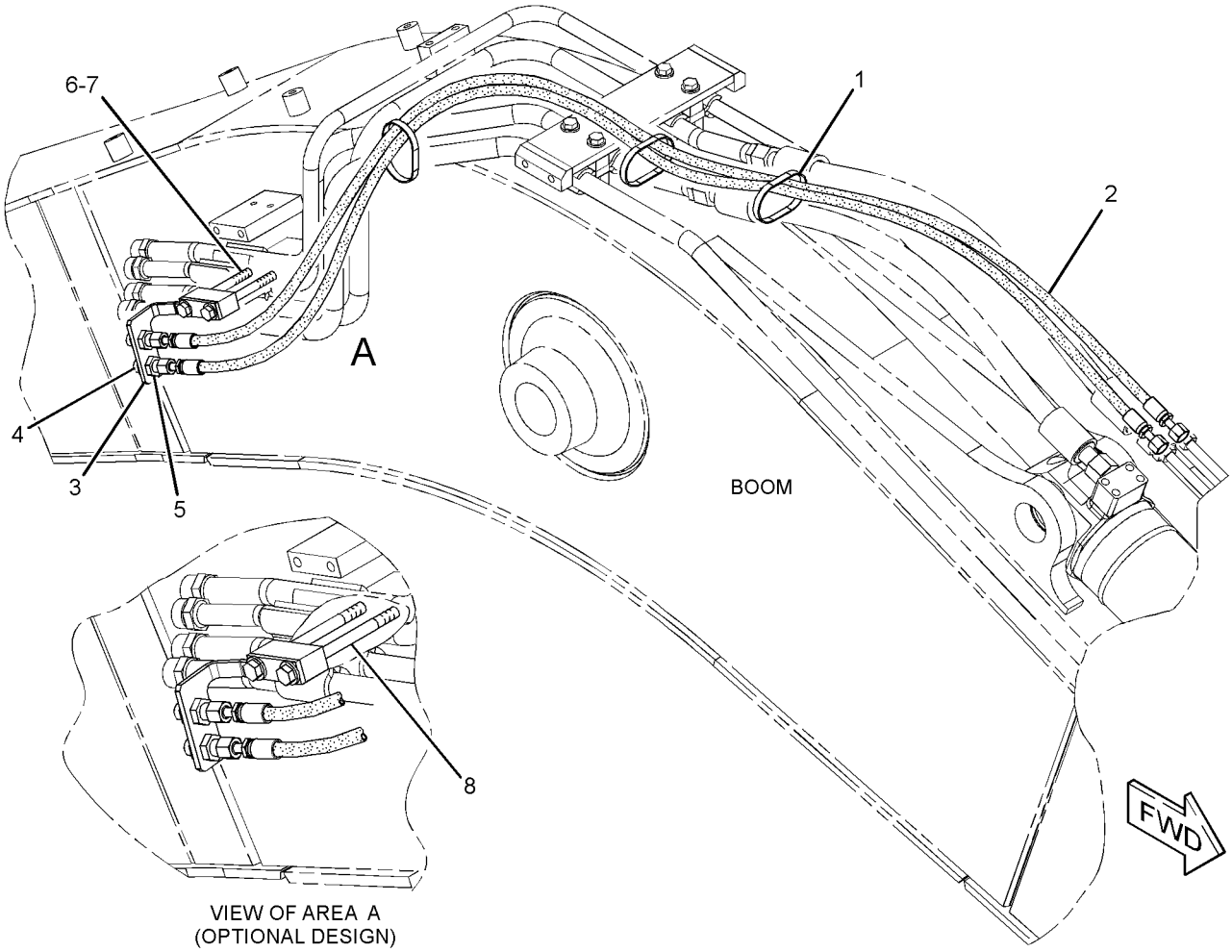

GRAPHIC #1 **<END>** g01627248

HYDRAULIC SYSTEM

282-5731 LINES GP-BOOM–SUPPORT, AUXILIARY READY

S/N: BYJ1-UP; PDP1-UP
PART OF 270-5993 CONTROL AR-AUXILIARY
AN ATTACHMENT

SMCS-5057 **i02836800**

NOTE	REF NO	GRAPHIC REF	PART NUMBER	QTY	PART NAME 1 2 3 4 5 6 (PRODUCT LEVEL)	SEE PAGE
	1	1	**306-1230**	1	SUPPORT AS	
	2	1	**6V-9746**	3	SEAL-O-RING	
	3	1	**8T-4223**	2	WASHER-HARD (13.5X25.5X3-MM THK)	
M	4	1	**8T-5092**	2	BOLT (M12X1.75X150-MM)	

M-METRIC PART

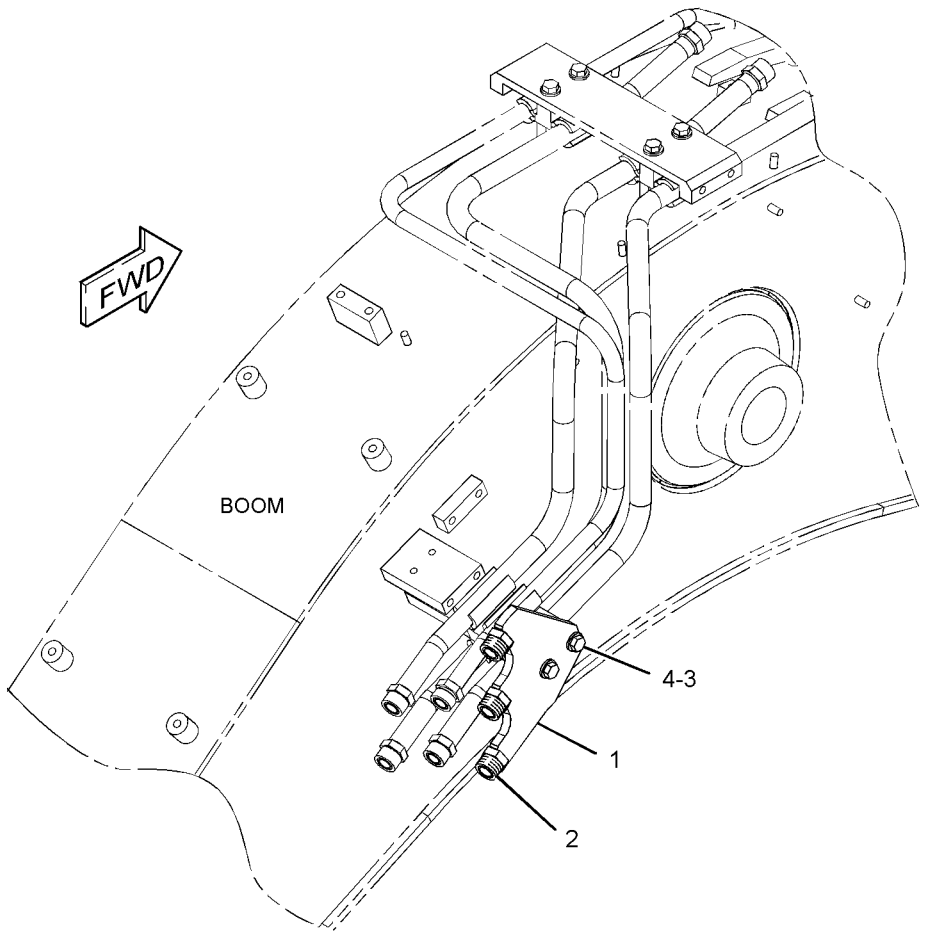

GRAPHIC #1 **<END>** g01421297

HYDRAULIC SYSTEM

319-9919 LINES GP-BOOM

S/N: BYJ1-UP; PDP1-UP
PART OF 260-7189 BOOM AR-1 PIECE LONG
AN ATTACHMENT

SMCS-5057 **i02961285**

NOTE	REF NO	GRAPHIC REF	PART NUMBER	QTY	PART NAME 1 2 3 4 5 6 (PRODUCT LEVEL)	SEE PAGE
I	1	1	**4I-1095**	2	HOSE AS	
	2	1	**4I-1674**	4	CLIP	
	3	1	**7Y-4868**	4	CLIP	
	4	1	**149-1738**	4	CLIP	
	5	1	**197-2150**	1	PLATE	
	6	1	**198-2066**	4	CLIP	
	7	1	**282-7192**	1	TUBE AS	
	8	1	**282-7193**	1	TUBE AS	
	9	1	**282-7509**	1	TUBE AS	
	10	1	**282-7510**	1	TUBE AS	
	11	1	**6V-9746**	7	SEAL-O-RING	
	12	1	**7J-9108**	1	SEAL-O-RING	
M	13	1	**8T-4139**	12	BOLT (M12X1.75X30-MM)	
	14	1	**8T-4223**	14	WASHER-HARD (13.5X25.5X3-MM THK)	
M	15	1	**8T-6868**	2	BOLT (M12X1.75X80-MM)	

I-REFER TO HYDRAULIC INFORMATION SYSTEM
M-METRIC PART

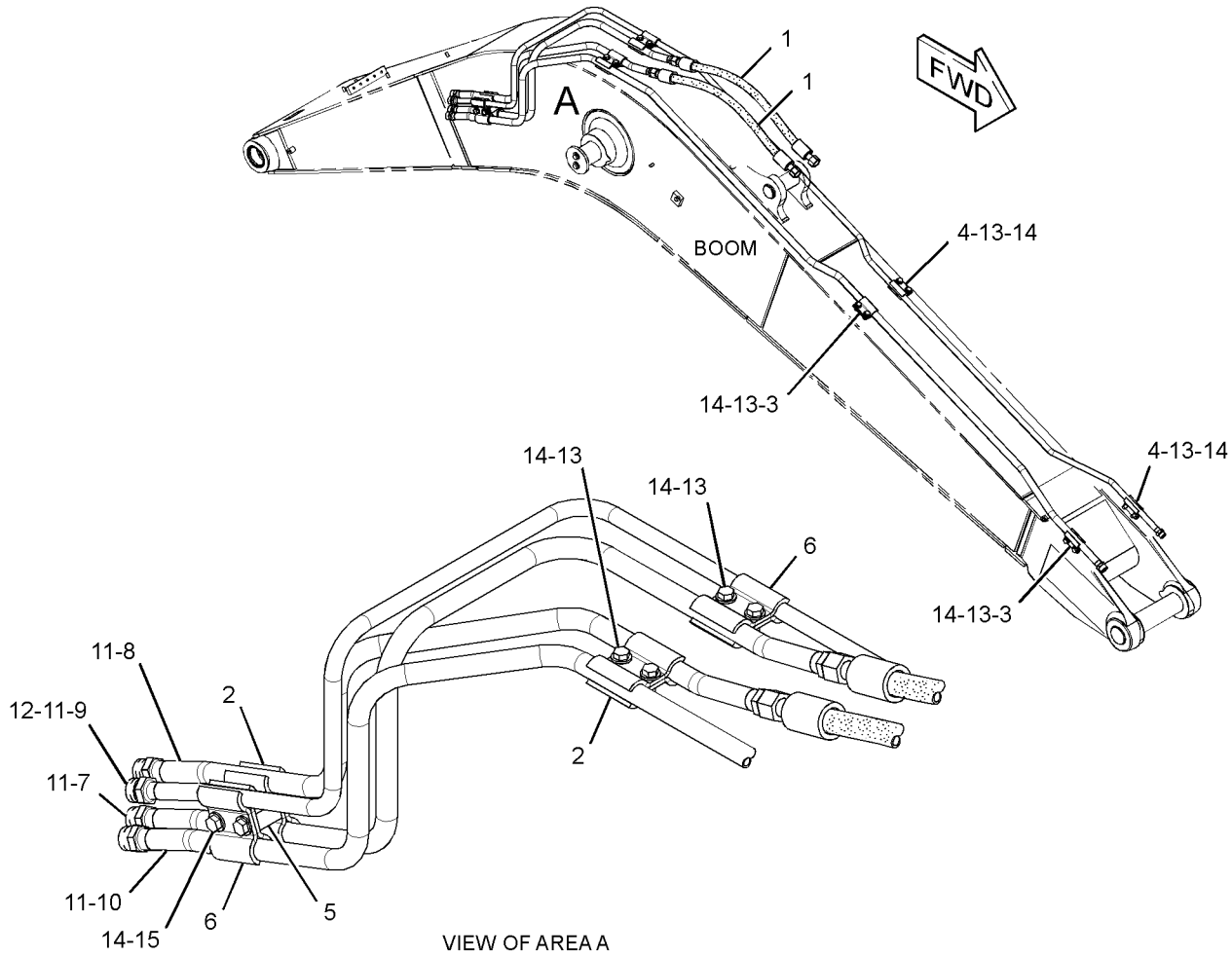

VIEW OF AREA A

GRAPHIC #1 **<END>** g01514453

HYDRAULIC SYSTEM

282-7225 LINES GP-BOOM CYLINDER

S/N: BYJ1-UP; PDP1-UP

PART OF 270-5956, 270-5957 HYDRAULIC AR

SMCS-5057, 5456 **i02961298**

NOTE	REF NO	GRAPHIC REF	PART NUMBER	QTY	PART NAME 1 2 3 4 5 6 (PRODUCT LEVEL)	SEE PAGE
	1	1	**7K-1181**	3	STRAP-CABLE	
	2	2	**087-4587**	1	GROMMET	
I	3	1	**319-9902**	1	HOSE AS	
	4	1	*106-8715*	1	ELBOW AS	
		1	**3D-2824**	1	SEAL-O-RING	
		1	**6V-9746**	1	SEAL-O-RING	
		1	**8C-8400**	1	ELBOW	
	5	1	**124-1008**	1	GUARD	
	6	2	**194-9077**	1	TUBE AS	
I	7	1	**198-1978**	4	HOSE AS	
	8	2	**198-2330**	1	GROMMET	
	9	1	**202-1718**	1	GUARD	
B	10	2	**208-3107**	3	SPACER-SPECIAL	
	11	2	**211-6257**	1	ELBOW	
	12	1	**266-7940**	1	ROD AS	
		1	**225-4539**	1	WASHER-SPECIAL	
	13	1	**266-7941**	1	BRACKET AS	
	14	1	*268-5145*	2	ELBOW AS	
					(EACH INCLUDES)	
		1	**3D-2824**	1	SEAL-O-RING	
		1	**6V-9746**	1	SEAL-O-RING	
		1	**194-9041**	1	ELBOW	
	15	1	*282-7046*	1	ELBOW AS	
		1	**3D-2824**	1	SEAL-O-RING	
		1	**6V-9746**	1	SEAL-O-RING	
		1	**194-9040**	1	ELBOW	
	16	2	**285-2593**	2	SPACER-SPECIAL	
	17	2	**285-2616**	2	SPACER-SPECIAL	
	18	2	**285-2621**	1	GROMMET	
	19	2	**285-2622**	1	GROMMET	
	20	2	**285-2623**	2	SUPPORT AS	
	21	1	**286-6476**	1	BRACKET AS	
	22	2	**296-6944**	1	TUBE AS	
	23	2	**296-6946**	1	SUPPORT AS	
	24	2	**296-6948**	1	PLATE	
	25	2	**319-9986**	1	SPACER-SPECIAL	
	26	2	**096-5766**	2	CLAMP	
	27	2	*148-8361*	1	ELBOW AS	
		2	**3J-7354**	1	SEAL-O-RING	
		2	**6V-8397**	1	SEAL-O-RING	
		2	**6V-9200**	1	ELBOW	
	29	1	*148-8347*	1	ELBOW AS	
		1	**3D-2824**	1	SEAL-O-RING	
		1	**6V-9007**	1	ELBOW	
		1	**6V-9746**	1	SEAL-O-RING	
	31	1	*148-8365*	1	ELBOW AS	
		1	**3J-1907**	1	SEAL-O-RING	
		1	**6V-8398**	1	SEAL-O-RING	
		1	**8T-6876**	1	ELBOW (90-DEG)	
	32	1	*148-8370*	1	ELBOW AS	
		1	**6V-8398**	1	SEAL-O-RING	
		1	**6V-9851**	1	ELBOW	
	33	1	*148-8378*	1	ELBOW AS	
		1	**3J-1907**	1	SEAL-O-RING	
		1	**6V-8397**	1	SEAL-O-RING	
		1	**6V-8724**	1	ELBOW	

282-7225 **LINES GP-BOOM CYLINDER** *(contd.)* **i02961298**

NOTE	REF NO	GRAPHIC REF	PART NUMBER	QTY	PART NAME 1 2 3 4 5 6 (PRODUCT LEVEL)	SEE PAGE
	34	2	*148-8382*	1	ELBOW AS	
		2	**3D-2824**	1	SEAL-O-RING	
		2	**7J-9108**	1	SEAL-O-RING	
		2	**8T-0404**	1	ELBOW	
	36	1	*148-8428*	1	TEE AS	
		1	**3K-0360**	1	SEAL-O-RING	
		1	**6V-8398**	2	SEAL-O-RING	
		1	**6V-8782**	1	TEE	
	38	2	**3D-2824**	1	SEAL-O-RING	
	41	2	**5P-7468**	1	CLIP (SLOT)	
	42	2	**5P-7469**	1	CLIP (TAB)	
	43	2	**6V-1874**	1	GROMMET	
	44	2	**6V-9746**	1	SEAL-O-RING	
	45	2	**7J-9108**	6	SEAL-O-RING	
	46	1,2	**8T-4121**	6	WASHER-HARD (11X21X2.5-MM THK)	
M	47	1	**8T-4136**	2	BOLT (M10X1.5X25-MM)	
M	48	2	**8T-4137**	2	BOLT (M10X1.5X20-MM)	
M	49	2	**8T-4139**	4	BOLT (M12X1.75X30-MM)	
M	51	1,2	**8T-4192**	5	BOLT (M12X1.75X25-MM)	
	52	1,2	**8T-4223**	9	WASHER-HARD (13.5X25.5X3-MM THK)	
M	53	2	**8T-6466**	2	BOLT (M10X1.5X60-MM)	

B-USE AS REQUIRED
I-REFER TO HYDRAULIC INFORMATION SYSTEM
M-METRIC PART

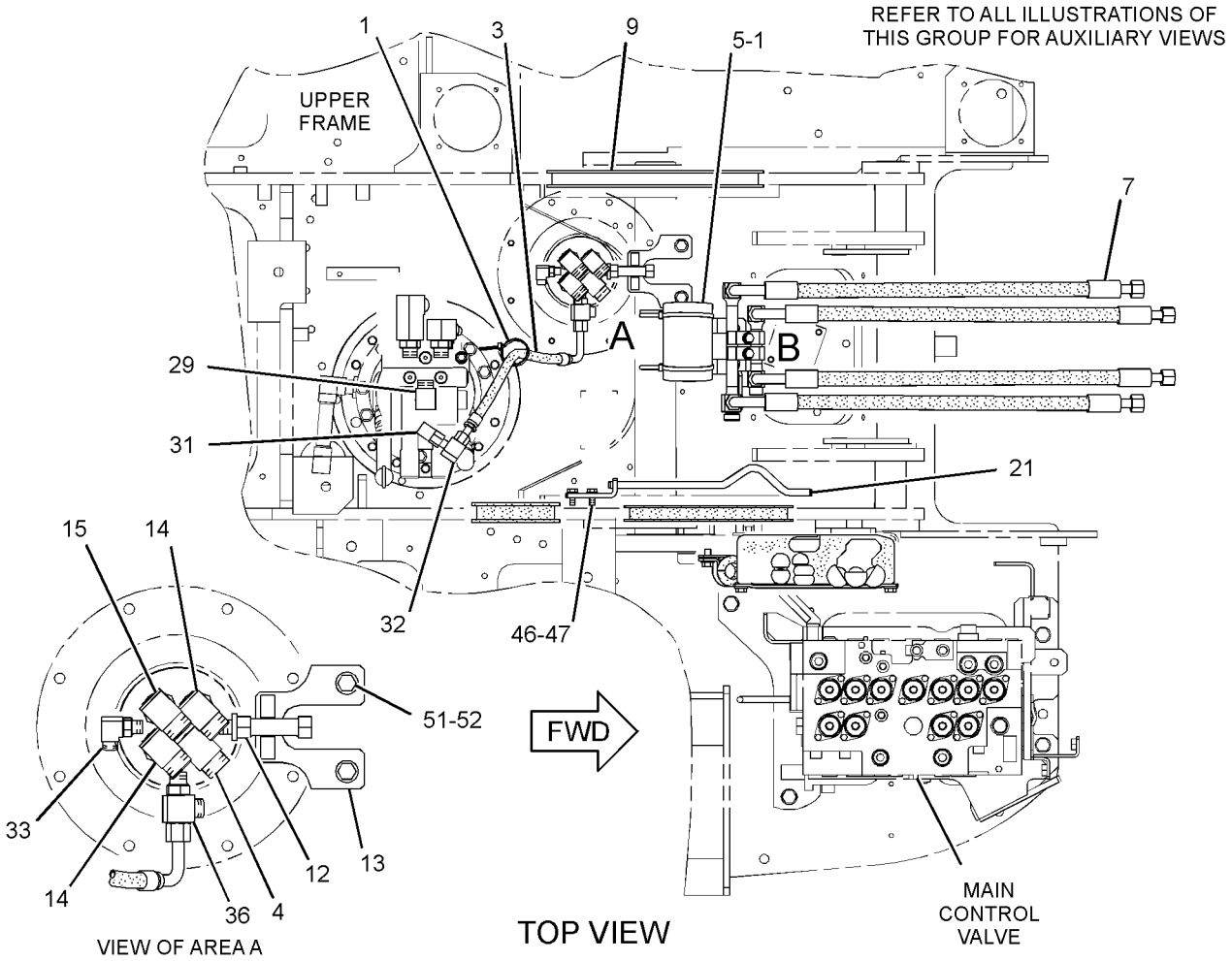

GRAPHIC #1 g01511114

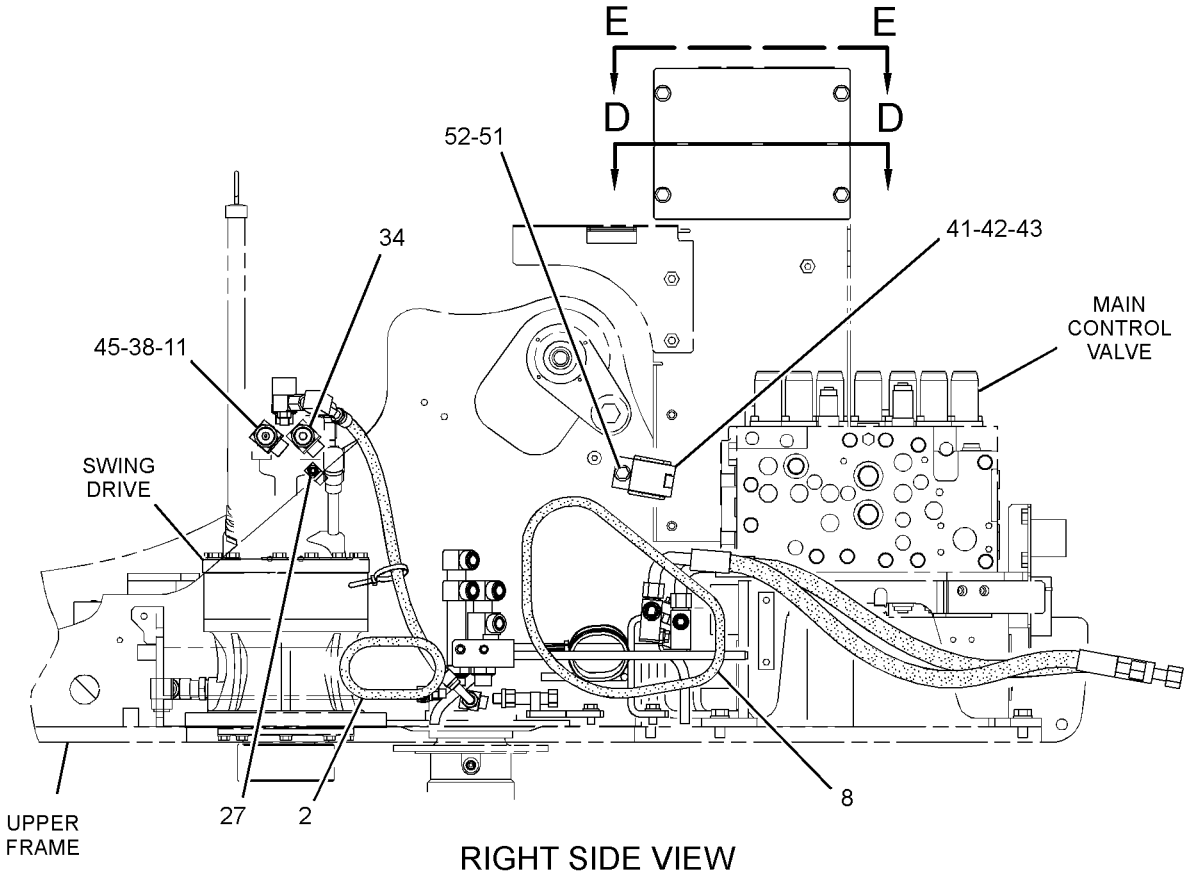

RIGHT SIDE VIEW

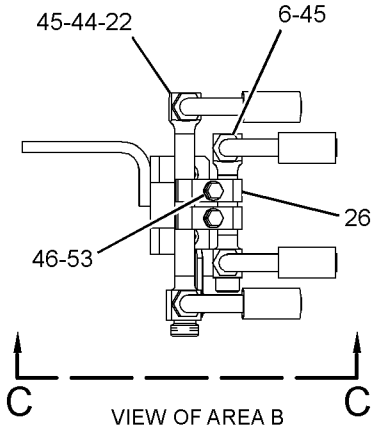

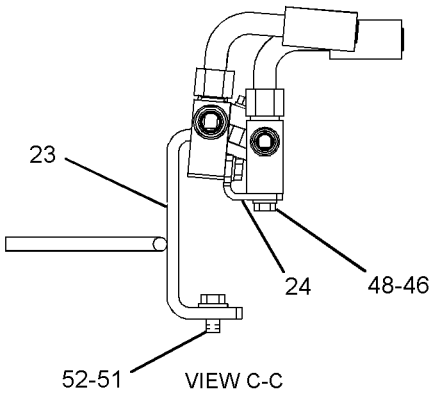

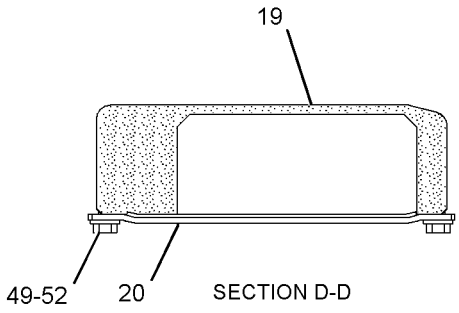

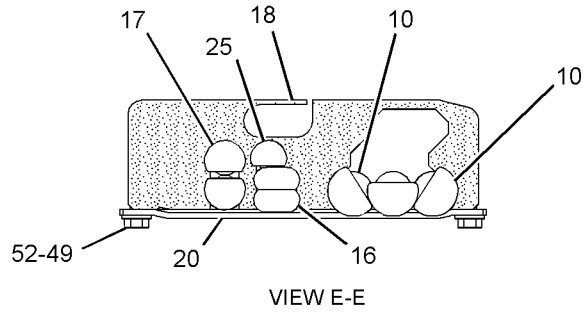

GRAPHIC #2

<END>

g01511115

282-7237 LINES GP-BOOM CYLINDER–LH

S/N: BYJ1-UP; PDP1-UP
PART OF 289-7717 CYLINDER & LINES GP-BOOM
AN ATTACHMENT

SMCS-5057, 5456 **i03036036**

NOTE	REF NO	GRAPHIC REF	PART NUMBER	QTY	PART NAME 1 2 3 4 5 6 (PRODUCT LEVEL)	SEE PAGE
	1	1	**093-1295**	1	CLAMP	
	2	1	**121-6217**	1	SUPPORT AS	
	3	1	**194-9118**	1	TUBE AS	
	4	1	**194-9122**	1	SUPPORT AS	
	5	1	**285-2594**	1	TUBE AS	
	6	1	**4J-5267**	2	SEAL-O-RING	
	7	1	**7J-9108**	2	SEAL-O-RING	
	8	1	**8T-4121**	2	WASHER-HARD (11X21X2.5-MM THK)	
M	9	1	**8T-4182**	8	BOLT (M10X1.5X45-MM)	
M	10	1	**8T-4194**	1	BOLT (M12X1.75X50-MM)	
M	11	1	**8T-4196**	2	BOLT (M10X1.5X35-MM)	
	12	1	**8T-4223**	1	WASHER-HARD (13.5X25.5X3-MM THK)	

M-METRIC PART

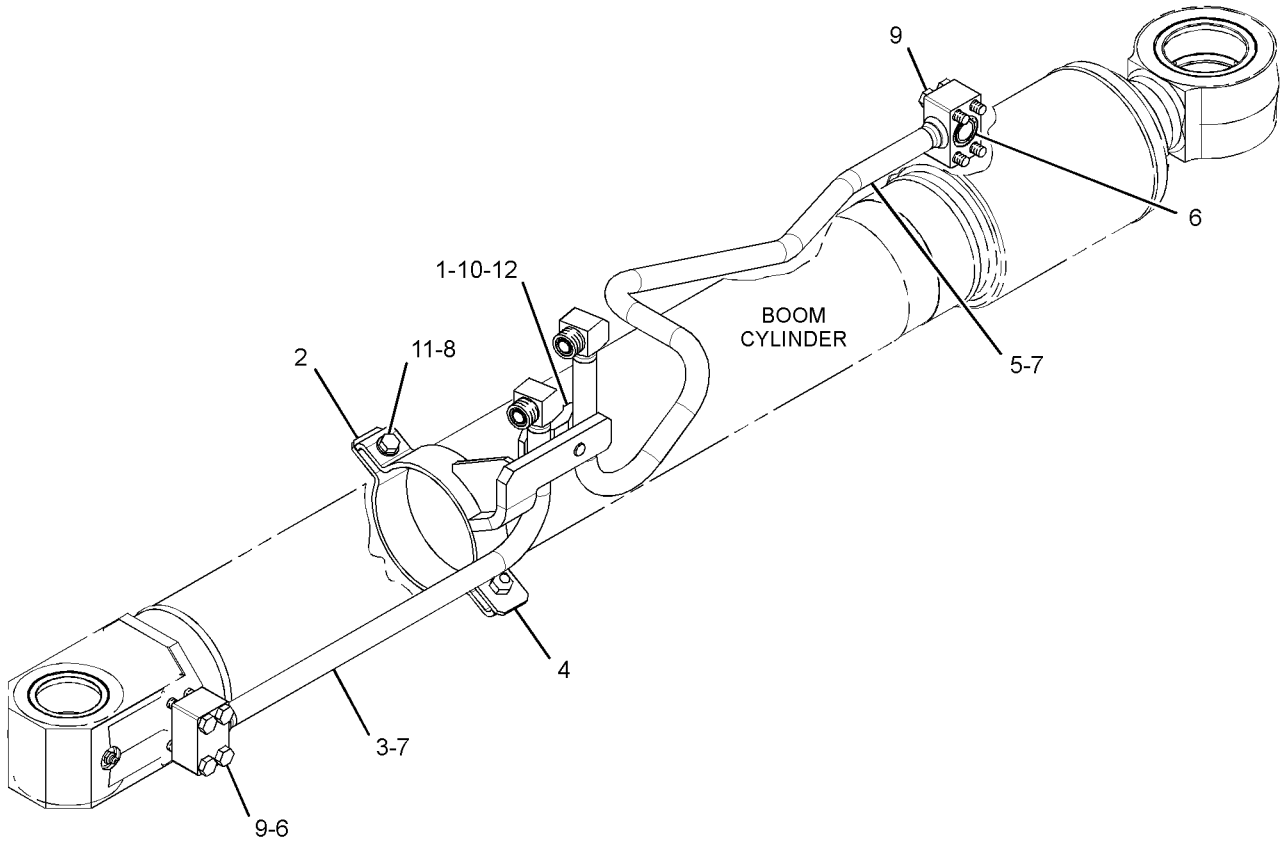

GRAPHIC #1 **<END>** g01637470

HYDRAULIC SYSTEM

282-7238 LINES GP-BOOM CYLINDER–RH

S/N: BYJ1-UP; PDP1-UP
PART OF 289-7718 CYLINDER & LINES GP-BOOM
AN ATTACHMENT

SMCS-5057, 5456 **i03036037**

NOTE	REF NO	GRAPHIC REF	PART NUMBER	QTY	PART NAME 1 2 3 4 5 6 (PRODUCT LEVEL)	SEE PAGE
	1	1	**093-1295**	1	CLAMP	
	2	1	**121-6217**	1	SUPPORT AS	
	3	1	**194-9120**	1	TUBE AS	
	4	1	**194-9123**	1	SUPPORT AS	
	5	1	**285-2595**	1	TUBE AS	
	6	1	**4J-5267**	2	SEAL-O-RING	
	7	1	**7J-9108**	2	SEAL-O-RING	
	8	1	**8T-4121**	2	WASHER-HARD (11X21X2.5-MM THK)	
M	9	1	**8T-4182**	8	BOLT (M10X1.5X45-MM)	
M	10	1	**8T-4194**	1	BOLT (M12X1.75X50-MM)	
M	11	1	**8T-4196**	2	BOLT (M10X1.5X35-MM)	
	12	1	**8T-4223**	1	WASHER-HARD (13.5X25.5X3-MM THK)	

M-METRIC PART

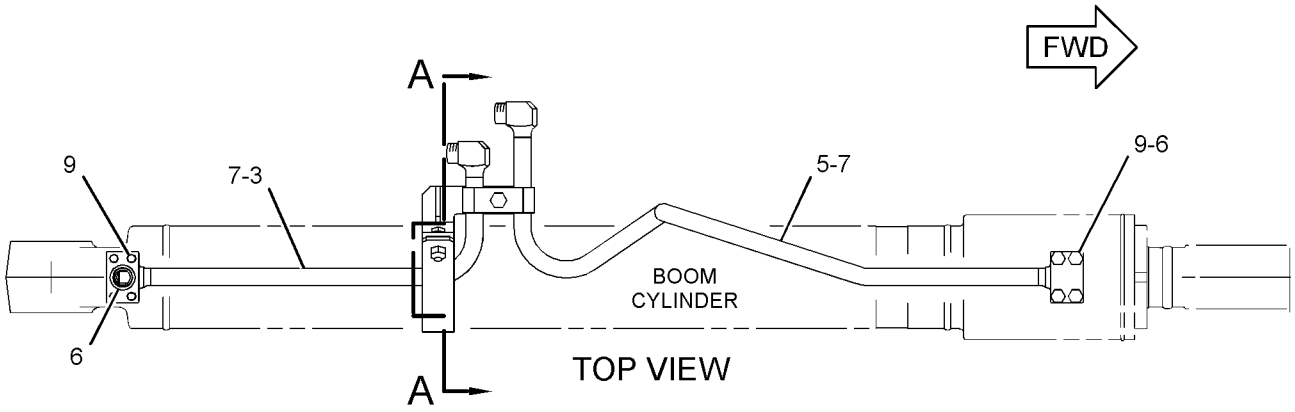

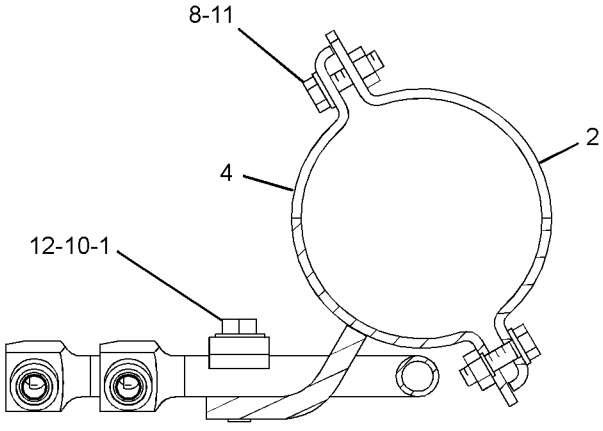

SECTION A-A

GRAPHIC #1 **<END>** g01637461

282-7285 LINES GP-BOOM CYLINDER—BOOM LOWERING CONTROL

S/N: BYJ1-UP; PDP1-UP

PART OF 297-0199, 323-7796 VALVE AR-CHECK & RELIEF

AN ATTACHMENT

SMCS-5057, 5456 **i02826243**

NOTE	REF NO	GRAPHIC REF	PART NUMBER	QTY	PART NAME 1 2 3 4 5 6 (PRODUCT LEVEL)	SEE PAGE
	1	1	**6V-0852**	2	CAP-DUST	
	2	1	**7K-1181**	5	STRAP-CABLE	
I	3	1	**135-9003**	1	HOSE AS	
	4	1	*168-1968*	1	TEE AS	
		1	**3J-1907**	1	SEAL-O-RING	
		1	**6V-8397**	1	SEAL-O-RING	
		1	**126-6872**	1	TEE	
	5	1	**221-8859**	1	SENSOR AS-PRESSURE (BOOM CYLINDER)	
		1	**3K-0360**	1	SEAL-O-RING	
		1	**144-1636**	3	PIN-CONNECTOR (14-GA TO 18-GA)	
		1	**171-0596**	1	RECEPTACLE AS	
	6	1	**244-5263**	1	TUBE AS	
	7	1	**244-5264**	1	TUBE AS	
I	8	1	**278-6907**	1	HOSE AS	
I	9	1	**285-2744**	1	HOSE AS	
Y	10	1	**297-0187**	1	VALVE GP-LOAD CONTROL (BOOM CYLINDER, LH)	541
Y	11	1	**297-0188**	1	VALVE GP-LOAD CONTROL (BOOM CYLINDER, RH)	543
	12	1	**302-3118**	1	SUPPORT AS	
	13	1	*148-8307*	1	ADAPTER AS	
		1	**3J-1907**	1	SEAL-O-RING	
		1	**5P-8874**	1	ADAPTER	
	14	1	*148-8336*	3	CONNECTOR AS	
					(EACH INCLUDES)	
		1	**3J-1907**	1	SEAL-O-RING	
		1	**6V-8397**	1	SEAL-O-RING	
		1	**6V-8636**	1	CONNECTOR	
	15	1	*148-8371*	1	ELBOW AS	
		1	**6V-8397**	1	SEAL-O-RING	
		1	**8C-8988**	1	ELBOW	
	16	1	*148-8378*	2	ELBOW AS	
					(EACH INCLUDES)	
		1	**3J-1907**	1	SEAL-O-RING	
		1	**6V-8397**	1	SEAL-O-RING	
		1	**6V-8724**	1	ELBOW	
	17	1	*148-8382*	2	ELBOW AS	
					(EACH INCLUDES)	
		1	**3D-2824**	1	SEAL-O-RING	
		1	**7J-9108**	1	SEAL-O-RING	
		1	**8T-0404**	1	ELBOW	
	18	1	*148-8433*	2	TEE AS	
					(EACH INCLUDES)	
		1	**6V-8397**	2	SEAL-O-RING	
		1	**6V-9836**	1	TEE-SWIVEL	
	19	1	*164-5567*	2	COUPLER AS-QUICK DISCONNECT	
					(EACH INCLUDES)	
		1	**3J-1907**	1	SEAL-O-RING	
		1	**6V-3965**	1	FITTING (QUICK DISCONNECT)	
M	20	1	**280-2747**	8	BOLT-SOCKET HEAD (M10X1.5X60-MM)	
	21	1	**4J-5267**	2	SEAL-O-RING	
	22	1	**7J-9108**	2	SEAL-O-RING	

I-REFER TO HYDRAULIC INFORMATION SYSTEM
M-METRIC PART
Y-SEPARATE ILLUSTRATION

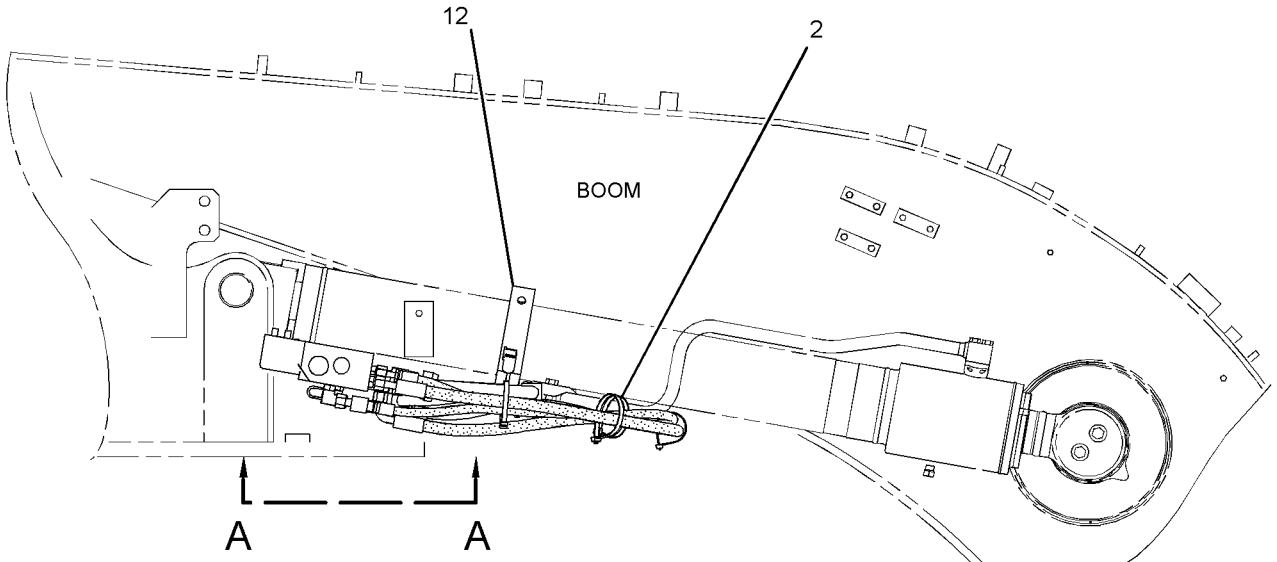

RIGHT SIDE VIEW

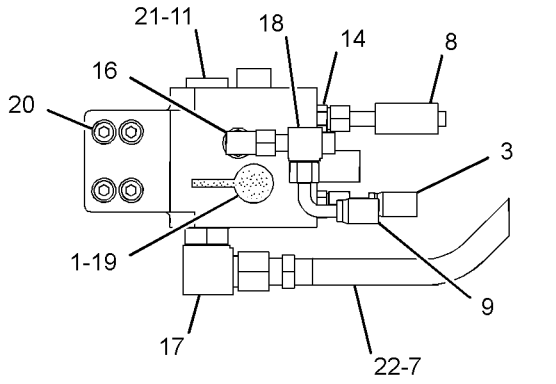

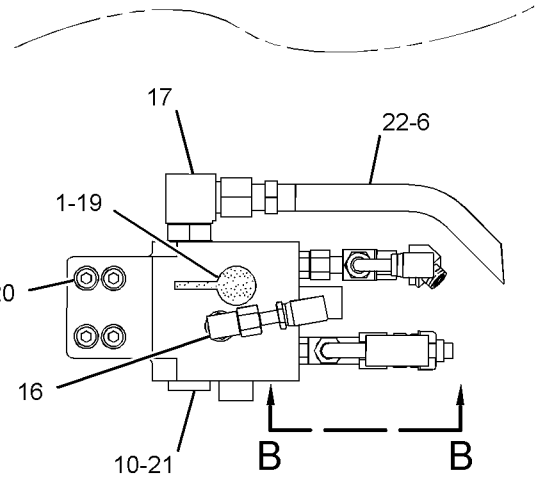

VIEW A-A

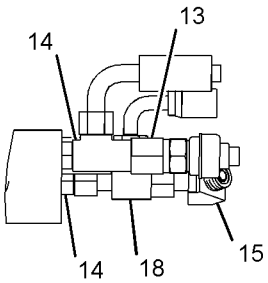

VIEW B-B

GRAPHIC #1 **<END>** g01521929

179-7598 LINES GP-BUCKET CYLINDER

S/N: BYJ1-UP; PDP1-UP
PART OF 289-7697 CYLINDER & LINES GP-BUCKET
AN ATTACHMENT

SMCS-5457 **i01423947**

NOTE	REF NO	GRAPHIC REF	PART NUMBER	QTY	PART NAME 1 2 3 4 5 6 (PRODUCT LEVEL)	SEE PAGE
	1	1	**179-7599**	1	TUBE AS	
	2	1	**4J-5267**	1	SEAL-O-RING	
M	3	1	**8T-4182**	4	BOLT (M10X1.5X45-MM)	
	4	1	**8T-4223**	1	WASHER-HARD (13.5X25.5X3-MM THK)	
M	5	1	**8T-4194**	1	BOLT (M12X1.75X50-MM)	
	6	1	**093-1291**	1	CLAMP	
	7	1	**121-6222**	1	SUPPORT AS	
M		1	**8T-3490**	1	NUT-WELD (M10X1.5-THD)	
	8	1	**8T-4121**	2	WASHER-HARD (11X21X2.5-MM THK)	
M	9	1	**8T-4196**	2	BOLT (M10X1.5X35-MM)	
	10	1	**121-6223**	1	SUPPORT AS	
M		1	**8T-3490**	1	NUT-WELD (M10X1.5-THD)	
	11	1	**7J-9108**	1	SEAL-O-RING	

M-METRIC PART

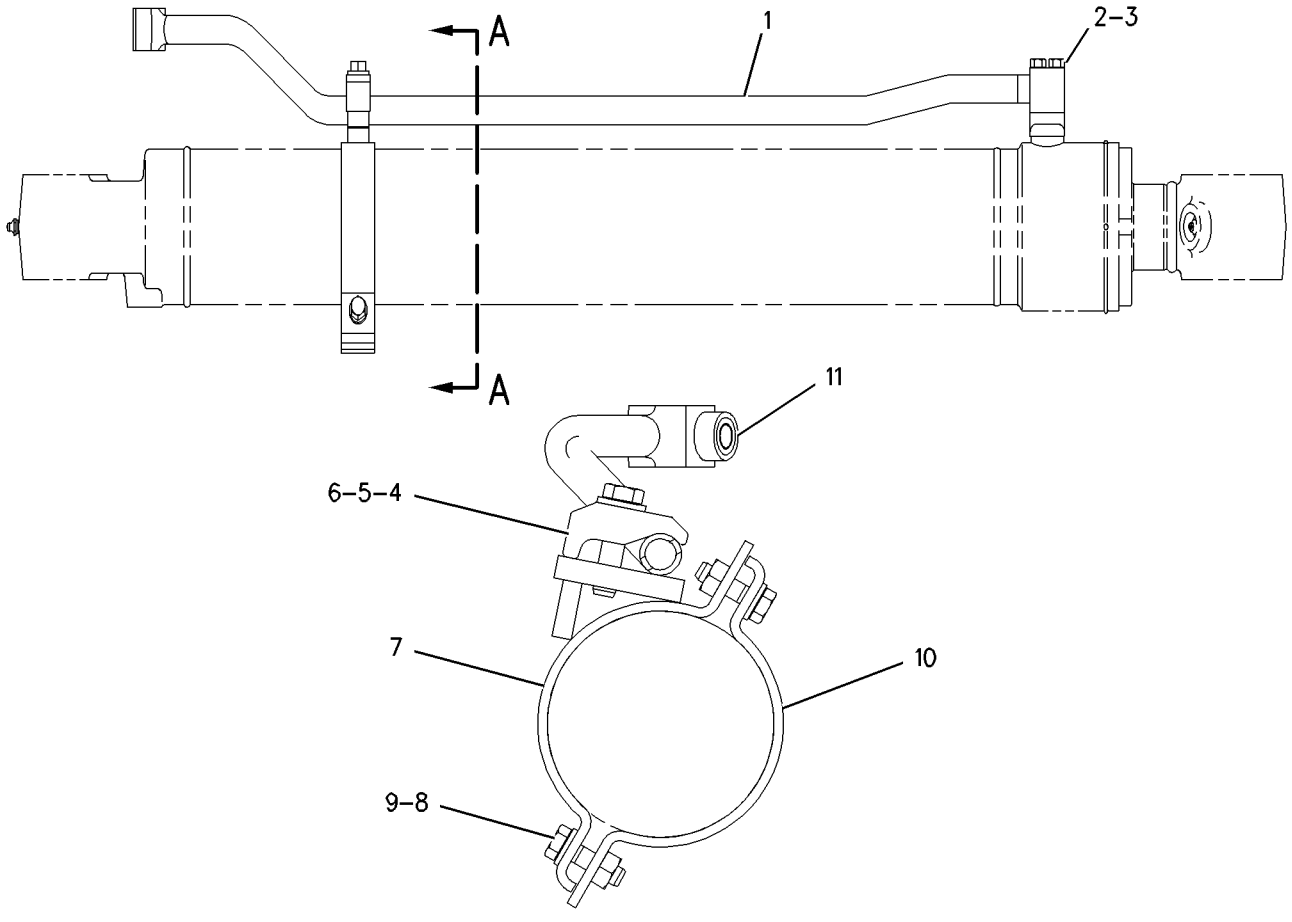

SECTION A-A

GRAPHIC #1 **<END>** g00747069

HYDRAULIC SYSTEM

282-7248 LINES GP-BUCKET CYLINDER

S/N: BYJ1-UP; PDP1-UP
PART OF 289-7787 CYLINDER & LINES GP-BUCKET
AN ATTACHMENT

SMCS-5457 **i02820716**

NOTE	REF NO	GRAPHIC REF	PART NUMBER	QTY	PART NAME 1 2 3 4 5 6 (PRODUCT LEVEL)	SEE PAGE
	1	1	**121-6223**	1	SUPPORT AS	
	2	1	**208-3072**	1	TUBE AS	
	3	1	**208-3075**	1	SUPPORT AS	
	4	1	**289-5494**	1	TUBE AS	
	5	1	**093-1291**	2	CLAMP	
	6	1	**4J-5267**	2	SEAL-O-RING	
	7	1	**7J-9108**	2	SEAL-O-RING	
	8	1	**8T-4121**	2	WASHER-HARD (11X21X2.5-MM THK)	
M	9	1	**8T-4182**	8	BOLT (M10X1.5X45-MM)	
M	10	1	**8T-4194**	2	BOLT (M12X1.75X50-MM)	
M	11	1	**8T-4196**	2	BOLT (M10X1.5X35-MM)	
	12	1	**8T-4223**	2	WASHER-HARD (13.5X25.5X3-MM THK)	

M-METRIC PART

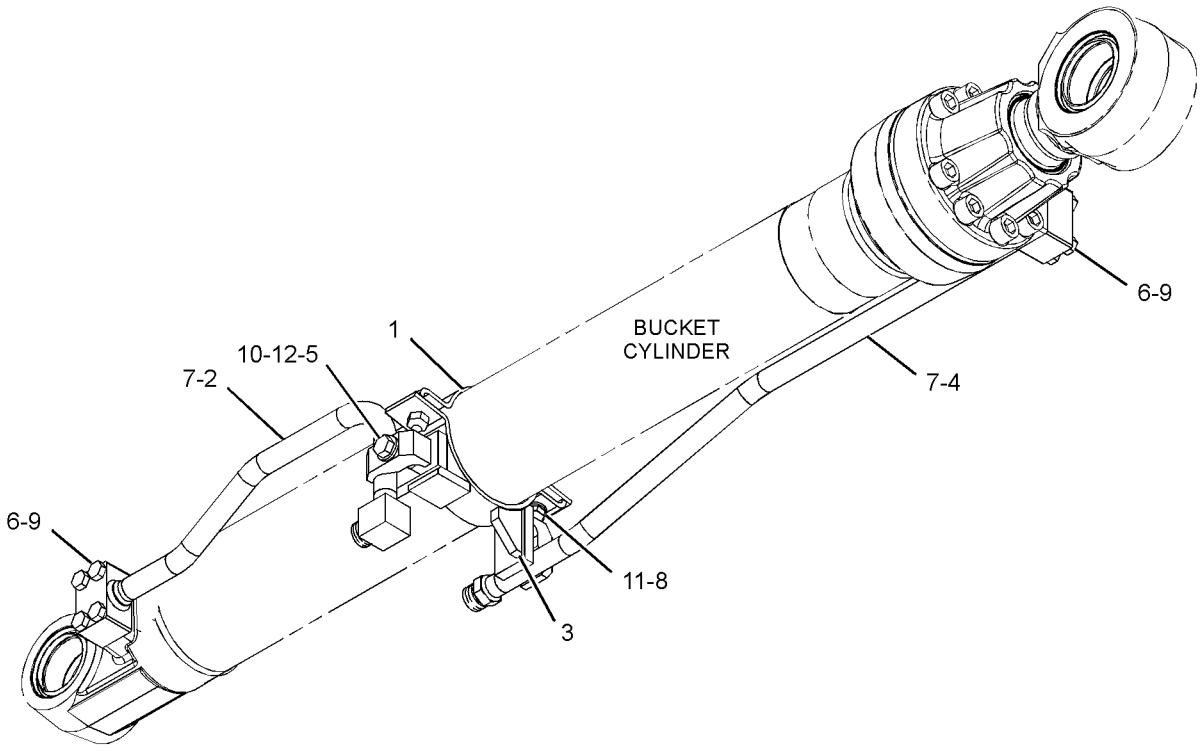

GRAPHIC #1 **<END>** g01414351

HYDRAULIC SYSTEM

282-7223 LINES GP-CONTROL–FRONT

S/N: BYJ1-UP; PDP1-UP

PART OF 270-5956, 270-5957 HYDRAULIC AR

SMCS-5057 **i02978370**

NOTE	REF NO	GRAPHIC REF	PART NUMBER	QTY	PART NAME 1 2 3 4 5 6 (PRODUCT LEVEL)	SEE PAGE
	1	1	**5P-5148**	4	STRAP-TIE	
	2	1	**7K-1181**	5	STRAP-CABLE	
	3	1	**9F-2167**	1	SCREW-PURGE (3/8-24X1.164-IN)	
I	4	1	**320-0179**	1	HOSE AS	
	5	1	**194-9079**	2	CONNECTOR	
	6	1	**194-9081**	2	CONNECTOR	
	7	1	**208-3106**	1	TEE	
	8	1	*260-9174*	1	CONNECTOR AS	
		1	**3D-2824**	1	SEAL-O-RING	
		1	**7J-9108**	1	SEAL-O-RING	
		1	**109-5815**	1	CONNECTOR	
I	9	1	**285-2626**	2	HOSE AS	
I	10	1	**285-2630**	2	HOSE AS	
I	11	1	**285-2634**	1	HOSE AS	
I	12	1	**285-2638**	1	HOSE AS	
I	13	1	**285-2642**	1	HOSE AS	
I	14	1	**285-2646**	1	HOSE AS	
I	15	1	**285-2650**	1	HOSE AS	
I	16	1	**320-0182**	1	HOSE AS	
I	17	1	**296-7197**	1	HOSE AS	
	18	1	*148-8339*	4	CONNECTOR AS	
					(EACH INCLUDES)	
		1	**6V-8716**	1	CONNECTOR	
		1	**6V-9746**	1	SEAL-O-RING	
		1	**7M-8485**	1	SEAL-O-RING	
	19	1	*148-8341*	1	CONNECTOR AS	
		1	**3D-2824**	1	SEAL-O-RING	
		1	**6V-8713**	1	CONNECTOR	
		1	**7J-9108**	1	SEAL-O-RING	
	20	1	*148-8382*	1	ELBOW AS	
		1	**3D-2824**	1	SEAL-O-RING	
		1	**7J-9108**	1	SEAL-O-RING	
		1	**8T-0404**	1	ELBOW	
	21	1	*164-4180*	2	PLUG AS	
					(EACH INCLUDES)	
		1	**7M-8485**	1	SEAL-O-RING	
		1	**9S-4181**	1	PLUG-O-RING	
	22	1	**3D-2824**	2	SEAL-O-RING	
	23	1	**6V-9746**	5	SEAL-O-RING	
	24	1	**7M-8485**	3	SEAL-O-RING	

I-REFER TO HYDRAULIC INFORMATION SYSTEM

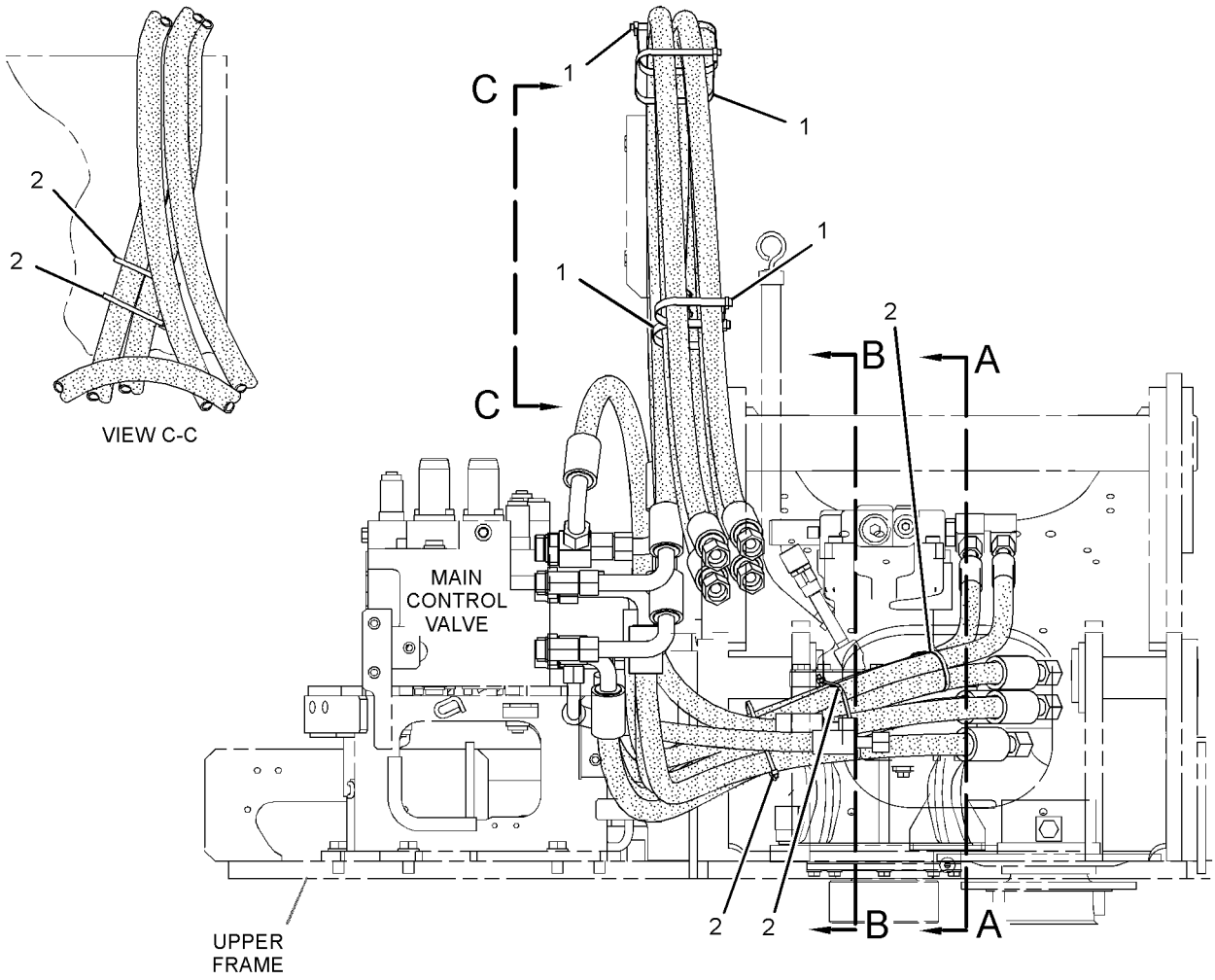

FRONT VIEW

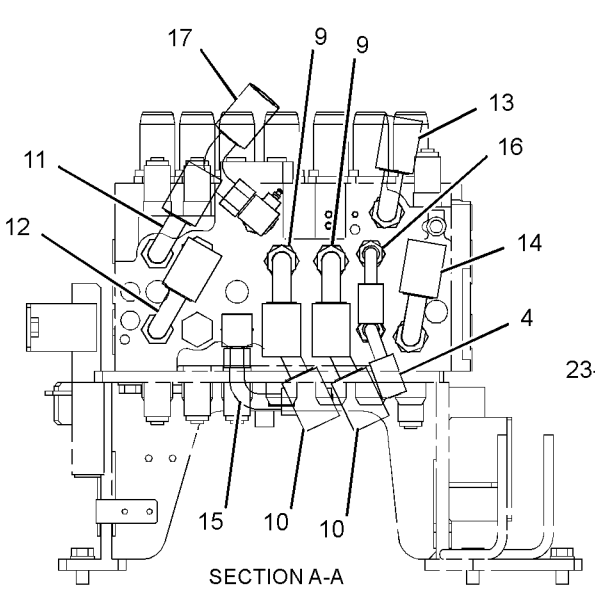

SECTION A-A

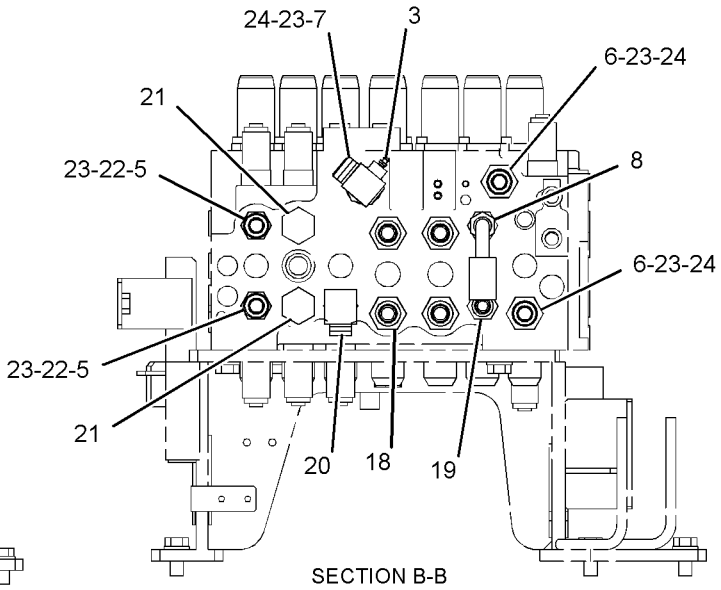

SECTION B-B

GRAPHIC #1 **<END>** g01417055

HYDRAULIC SYSTEM

282-7226 LINES GP-CONTROL–REAR

S/N: BYJ1-UP; PDP1-UP

PART OF 270-5956, 270-5957 HYDRAULIC AR

SMCS-5057 **i02812814**

NOTE	REF NO	GRAPHIC REF	PART NUMBER	QTY	PART NAME 1 2 3 4 5 6 (PRODUCT LEVEL)	SEE PAGE
	1	1	**7K-1181**	1	STRAP-CABLE	
	2	1	**8T-6703**	3	CLAMP-HOSE	
I	3	1	**198-1982**	1	HOSE AS	
	4	1	**285-2678**	1	TUBE AS	
	5	1	**285-2680**	1	TUBE AS	
	6	1	**285-2855**	1	HOSE	
	7	1	*286-6468*	1	ELBOW AS	
		1	**6V-9746**	1	SEAL-O-RING	
		1	**7M-8485**	1	SEAL-O-RING	
		1	**286-6469**	1	ELBOW	
	8	1	**296-7214**	1	SUPPORT AS	
M	9	1	**096-4883**	2	LOCKNUT (M10X1.15-THD)	
	10	1	*148-8347*	1	ELBOW AS	
		1	**3D-2824**	1	SEAL-O-RING	
		1	**6V-9007**	1	ELBOW	
		1	**6V-9746**	1	SEAL-O-RING	
	11	1	*148-8360*	1	ELBOW AS	
		1	**6V-9182**	1	ELBOW	
		1	**6V-9746**	1	SEAL-O-RING	
		1	**7M-8485**	1	SEAL-O-RING	
	12	1	*148-8408*	1	PLUG AS	
		1	**3D-2824**	1	SEAL-O-RING	
		1	**9S-4183**	1	PLUG-O-RING	
	13	1	**4J-0527**	2	SEAL-O-RING	
M	14	1	**7Y-5238**	1	U-BOLT (M10X1.5-THD)	
	15	1	**8T-4121**	6	WASHER-HARD (11X21X2.5-MM THK)	
M	16	1	**8T-4136**	4	BOLT (M10X1.5X25-MM)	
M	17	1	**8T-4956**	4	BOLT (M12X1.75X35-MM)	

I-REFER TO HYDRAULIC INFORMATION SYSTEM
M-METRIC PART

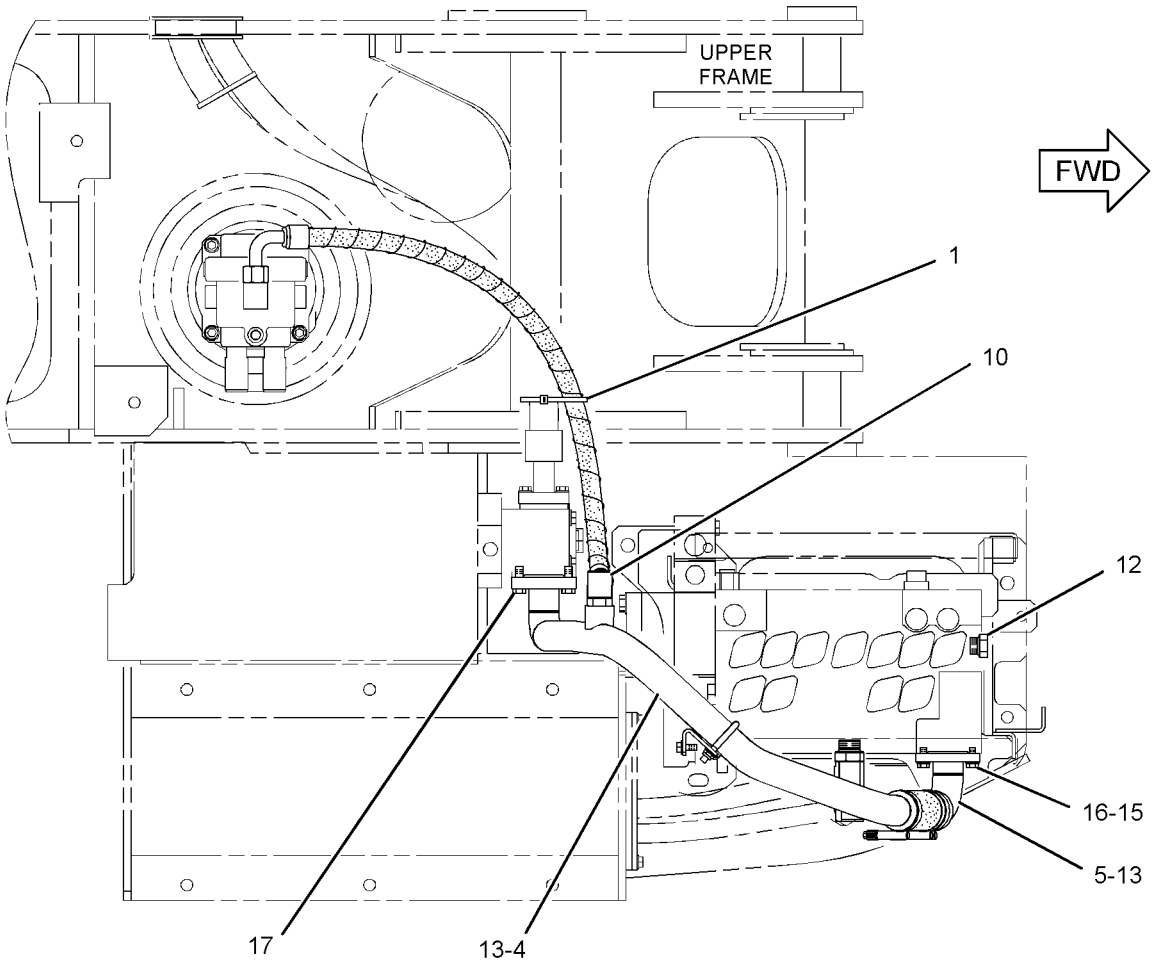

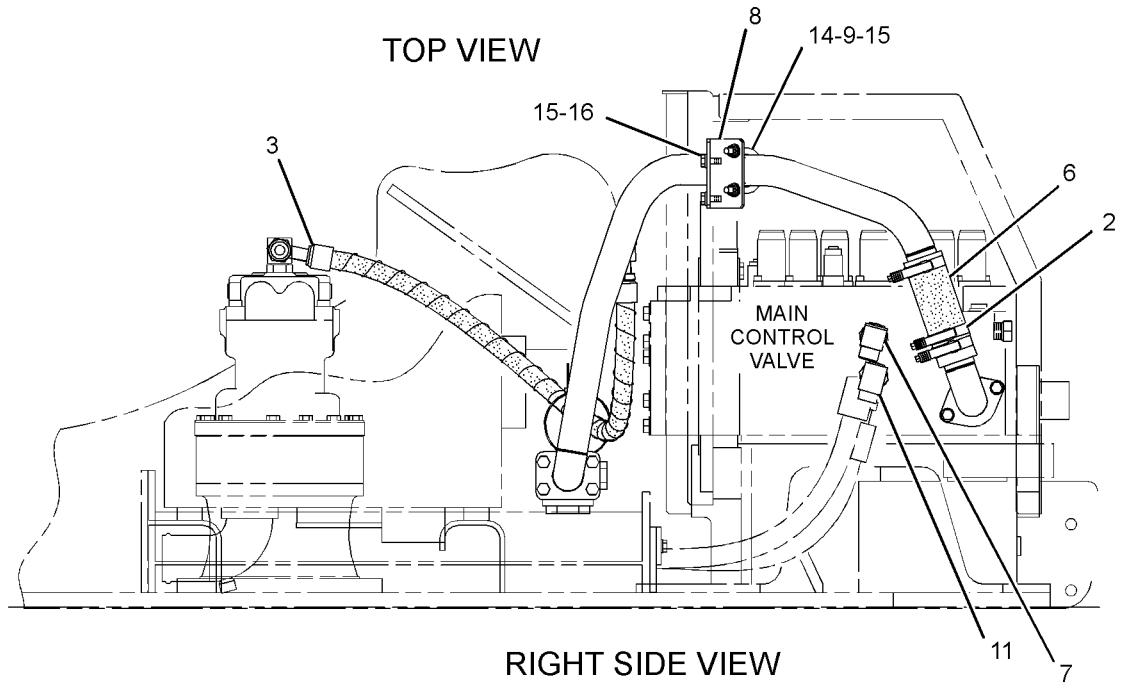

GRAPHIC #1

<END>

g01416918

HYDRAULIC SYSTEM

245-2337 LINES GP-COUPLER–BOOM

S/N: BYJ1-UP; PDP1-UP

AN ATTACHMENT

SMCS-5057, 5133 **i02900449**

NOTE	REF NO	GRAPHIC REF	PART NUMBER	QTY	PART NAME 1 2 3 4 5 6 (PRODUCT LEVEL)	SEE PAGE
	1	1	**302-9861**	1	SUPPORT AS	
M	2	1	**8T-5092**	2	BOLT (M12X1.75X150-MM)	
	3	1	**8T-4223**	4	WASHER-HARD (13.5X25.5X3-MM THK)	
	4	1	*148-8413*	4	REDUCER AS	
					(EACH INCLUDES)	
		1	**4J-5477**	1	SEAL-O-RING	
		1	**6V-8934**	1	ADAPTER AS	
	5	1	*149-5452*	2	UNION AS	
					(EACH INCLUDES)	
		1	**6V-8397**	2	SEAL-O-RING	
		1	**6V-8994**	1	UNION	
	6	1	**6V-9168**	2	NUT (11/16-16-THD)	
	7	1	**099-7241**	2	WASHER-HARD (19X34X3-MM THK)	
I	8	1	**227-0361**	2	HOSE AS	
	9	1	**7K-1181**	9	STRAP-CABLE	
	10	1	*148-8419*	2	REDUCER AS	
					(EACH INCLUDES)	
		1	**4J-5477**	1	SEAL-O-RING	
		1	**6V-8935**	1	REDUCER-O-RING	
	11	1	**6V-8554**	2	NUT (13/16-16-THD)	
	12	1	**245-2338**	2	TUBE AS	
	13	1	**6V-8398**	4	SEAL-O-RING	
	14	1	**135-3980**	2	CLIP	
M	15	1	**8T-4139**	2	BOLT (M12X1.75X30-MM)	

I-REFER TO HYDRAULIC INFORMATION SYSTEM
M-METRIC PART

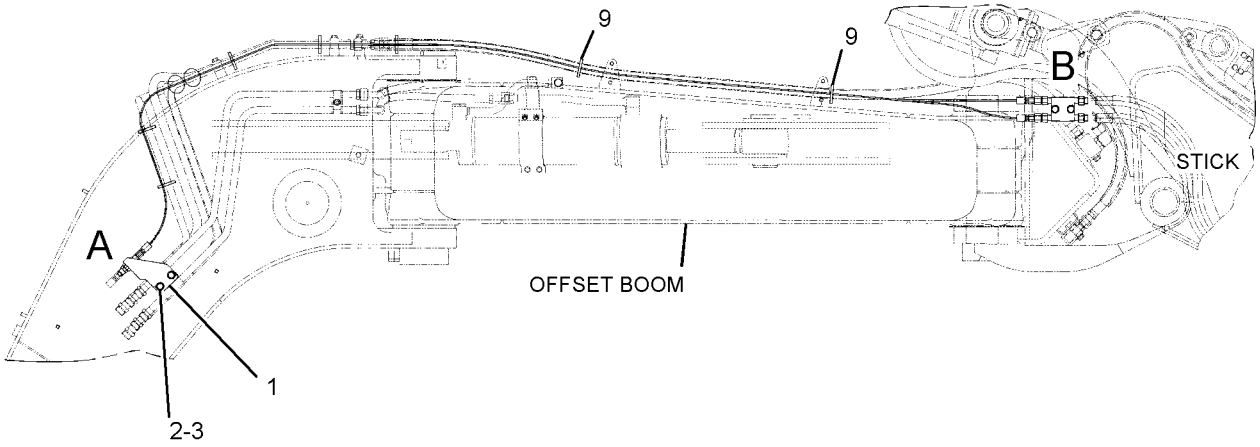

RIGHT SIDE VIEW

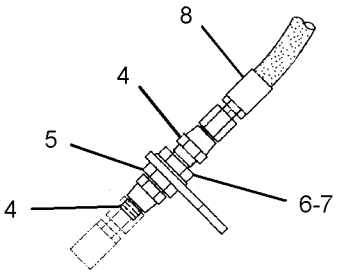

VIEW OF AREA A

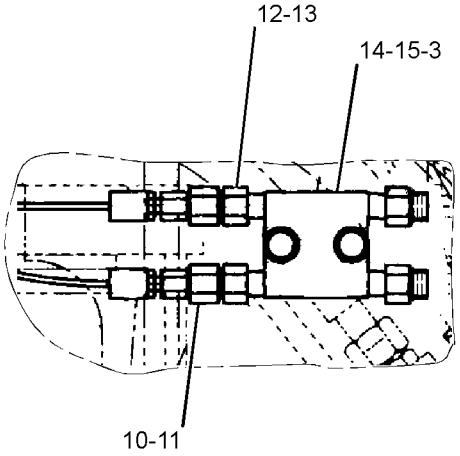

VIEW OF AREA B

GRAPHIC #1 **<END>** g01520246

HYDRAULIC SYSTEM

245-2342 LINES GP-COUPLER–STICK

S/N: BYJ1-UP; PDP1-UP
AN ATTACHMENT

SMCS-5057, 5133 **i02900448**

NOTE	REF NO	GRAPHIC REF	PART NUMBER	QTY	PART NAME 1 2 3 4 5 6 (PRODUCT LEVEL)	SEE PAGE
I	1	1	**177-8659**	2	HOSE AS	
	2	1	**245-2343**	1	TUBE AS	
	3	1	**198-0799**	1	TUBE AS	
	4	1	**6V-8398**	4	SEAL-O-RING	
	5	1	**135-3980**	4	CLIP	
M	6	1	**8T-4139**	4	BOLT (M12X1.75X30-MM)	
	7	1	**8T-4223**	4	WASHER-HARD (13.5X25.5X3-MM THK)	
	8	1	**9X-6582**	1	NUT (13/16-16-THD)	
	9	1	*148-8419*	1	REDUCER AS	
		1	**4J-5477**	1	SEAL-O-RING	
		1	**6V-8935**	1	REDUCER-O-RING	
	10	1	*148-8415*	1	REDUCER AS	
		1	**6V-8397**	1	SEAL-O-RING	
		1	**6V-8936**	1	REDUCER	

I-REFER TO HYDRAULIC INFORMATION SYSTEM
M-METRIC PART

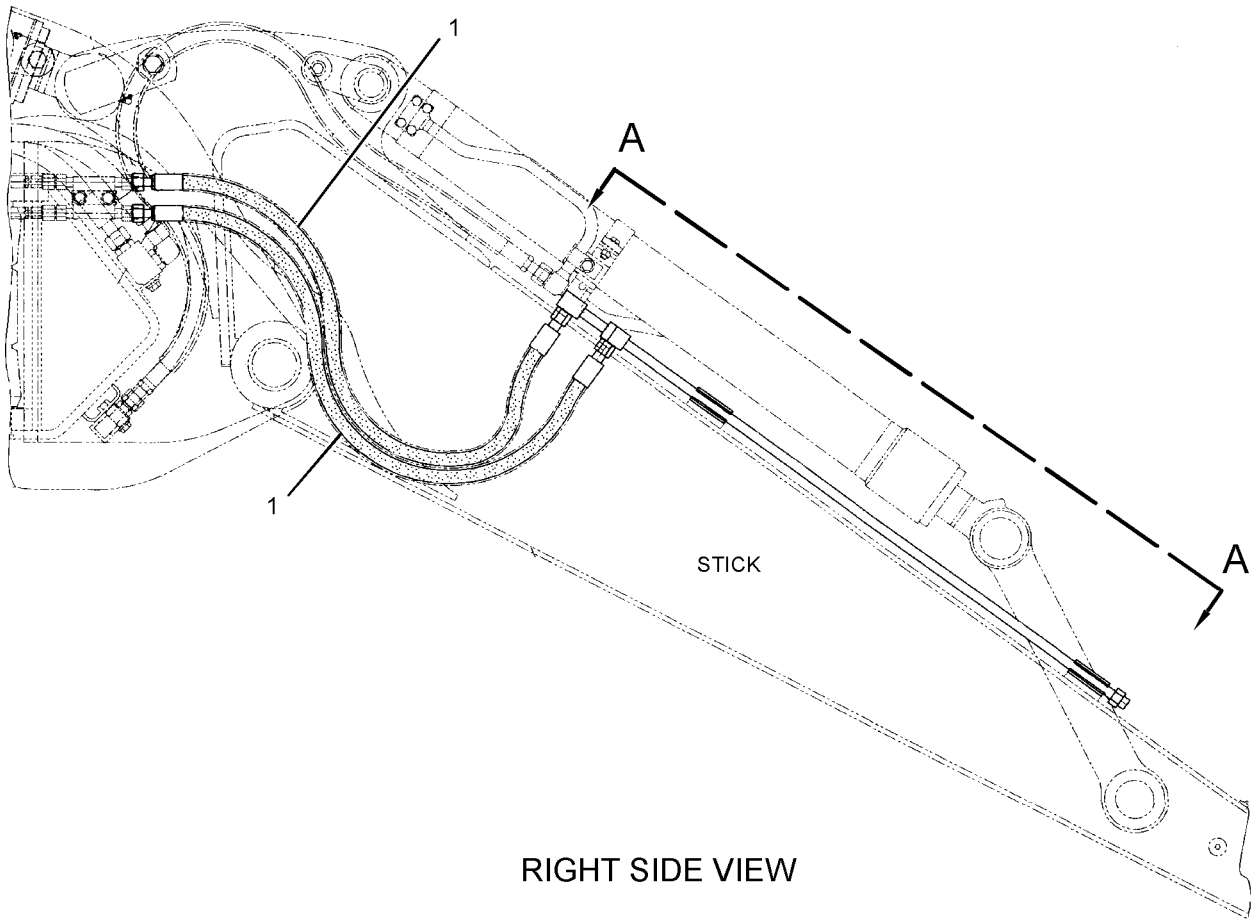

RIGHT SIDE VIEW

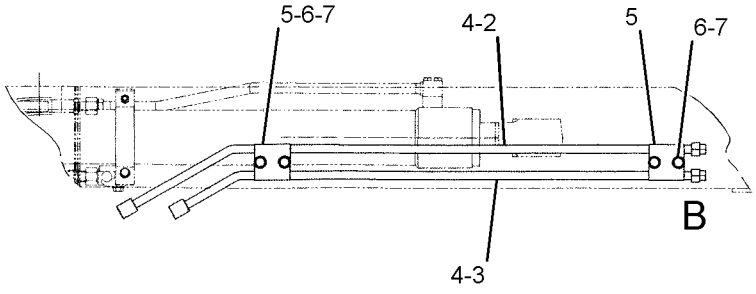

VIEW A-A

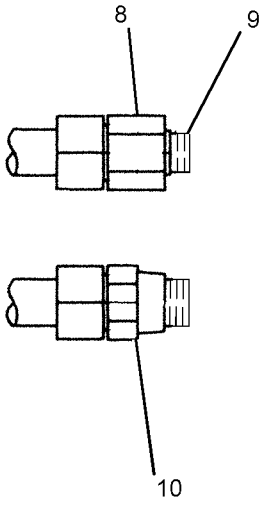

VIEW OF AREA B

GRAPHIC #1 **<END>** g01520670

HYDRAULIC SYSTEM

253-6396 LINES GP-COUPLER

S/N: BYJ1-UP; PDP1-UP

PART OF 282-5536, 282-5537, 282-5538, 282-5539 COUPLER AR-QUICK

AN ATTACHMENT

SMCS-5057, 5133 **i02909661**

NOTE	REF NO	GRAPHIC REF	PART NUMBER	QTY	PART NAME 1 2 3 4 5 6 (PRODUCT LEVEL)	SEE PAGE
	1	1	**8C-6561**	1	BOLT (5/16-18X1.375-IN)	
	2	1	**6W-2464**	2	CLAMP	
Y	3	1	*236-4153*	1	COUPLER GP-QUICK	653
CI	4	1	**316-4076**	1	HOSE AS	
CI	5	1	**316-4077**	1	HOSE AS	
	6	1	**3V-0046**	1	PLATE	
	7	1	**3J-1907**	1	SEAL-O-RING	
	8	1	**3J-7354**	1	SEAL-O-RING	

C-CHANGE FROM PREVIOUS TYPE
I-REFER TO HYDRAULIC INFORMATION SYSTEM
Y-SEPARATE ILLUSTRATION

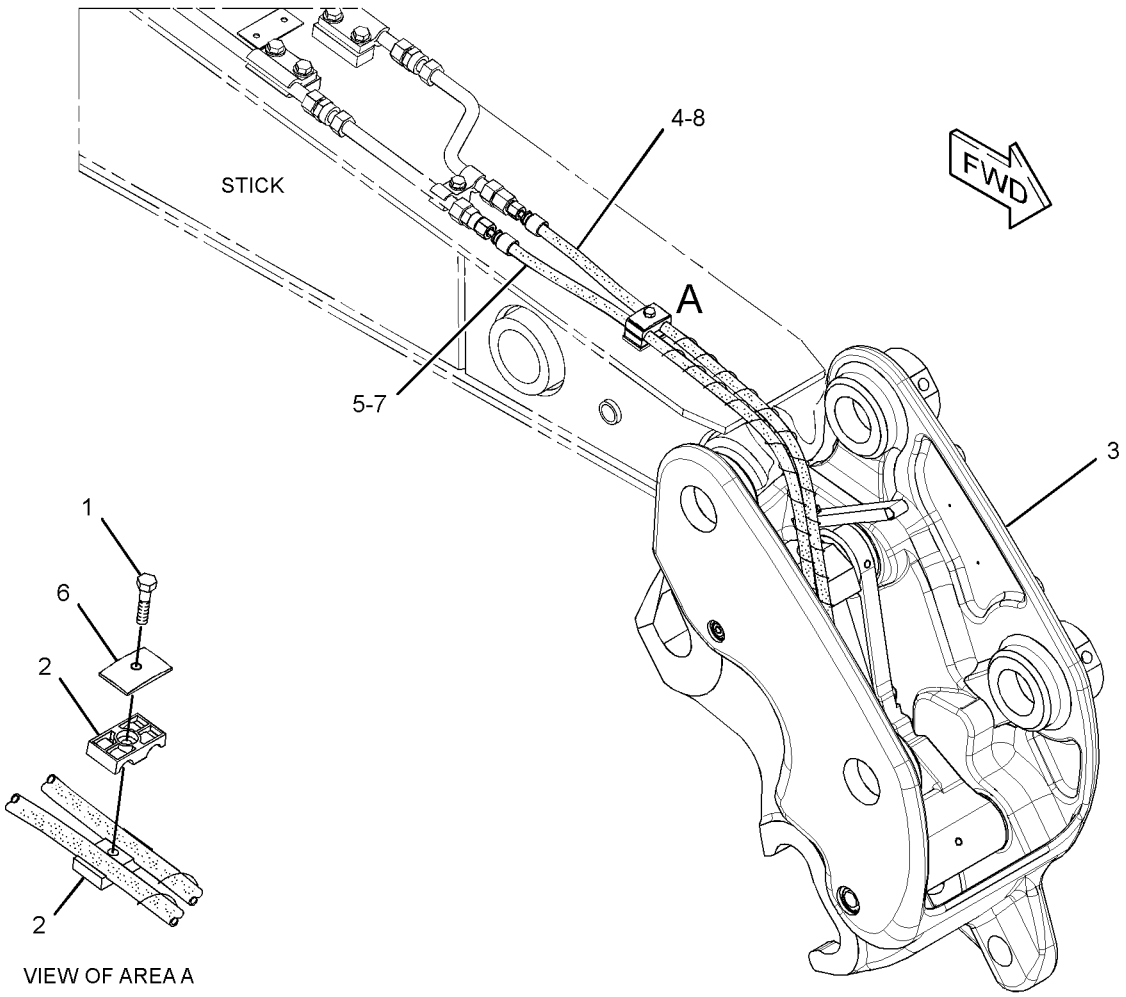

GRAPHIC #1 **<END>** g01447120

HYDRAULIC SYSTEM

277-1172 LINES GP-COUPLER

S/N: BYJ1-UP; PDP1-UP
2.8-M (9.1-FT) STICK
AN ATTACHMENT

SMCS-5057, 5133 **i02820640**

NOTE	REF NO	GRAPHIC REF	PART NUMBER	QTY	PART NAME 1 2 3 4 5 6 (PRODUCT LEVEL)	SEE PAGE
	1	1	**198-0370**	2	CLIP	
I	2	1	**216-6485**	2	HOSE AS	
	3	1	**288-7698**	1	TUBE AS	
	4	1	**288-7699**	1	TUBE AS	
	5	1	*148-8415*	1	REDUCER AS	
		1	**6V-8397**	1	SEAL-O-RING	
		1	**6V-8936**	1	REDUCER	
	6	1	*148-8419*	1	REDUCER AS	
		1	**4J-5477**	1	SEAL-O-RING	
		1	**6V-8935**	1	REDUCER-O-RING	
	7	1	**5Q-4212**	8	CLIP	
	8	1	**6V-8398**	4	SEAL-O-RING	
	9	1	**8T-4121**	1	WASHER-HARD (11X21X2.5-MM THK)	
M	10	1	**8T-4139**	8	BOLT (M12X1.75X30-MM)	
M	11	1	**8T-4195**	1	BOLT (M10X1.5X30-MM)	
	12	1	**8T-4223**	8	WASHER-HARD (13.5X25.5X3-MM THK)	
	13	1	**9X-6582**	1	NUT (13/16-16-THD)	

I-REFER TO HYDRAULIC INFORMATION SYSTEM
M-METRIC PART

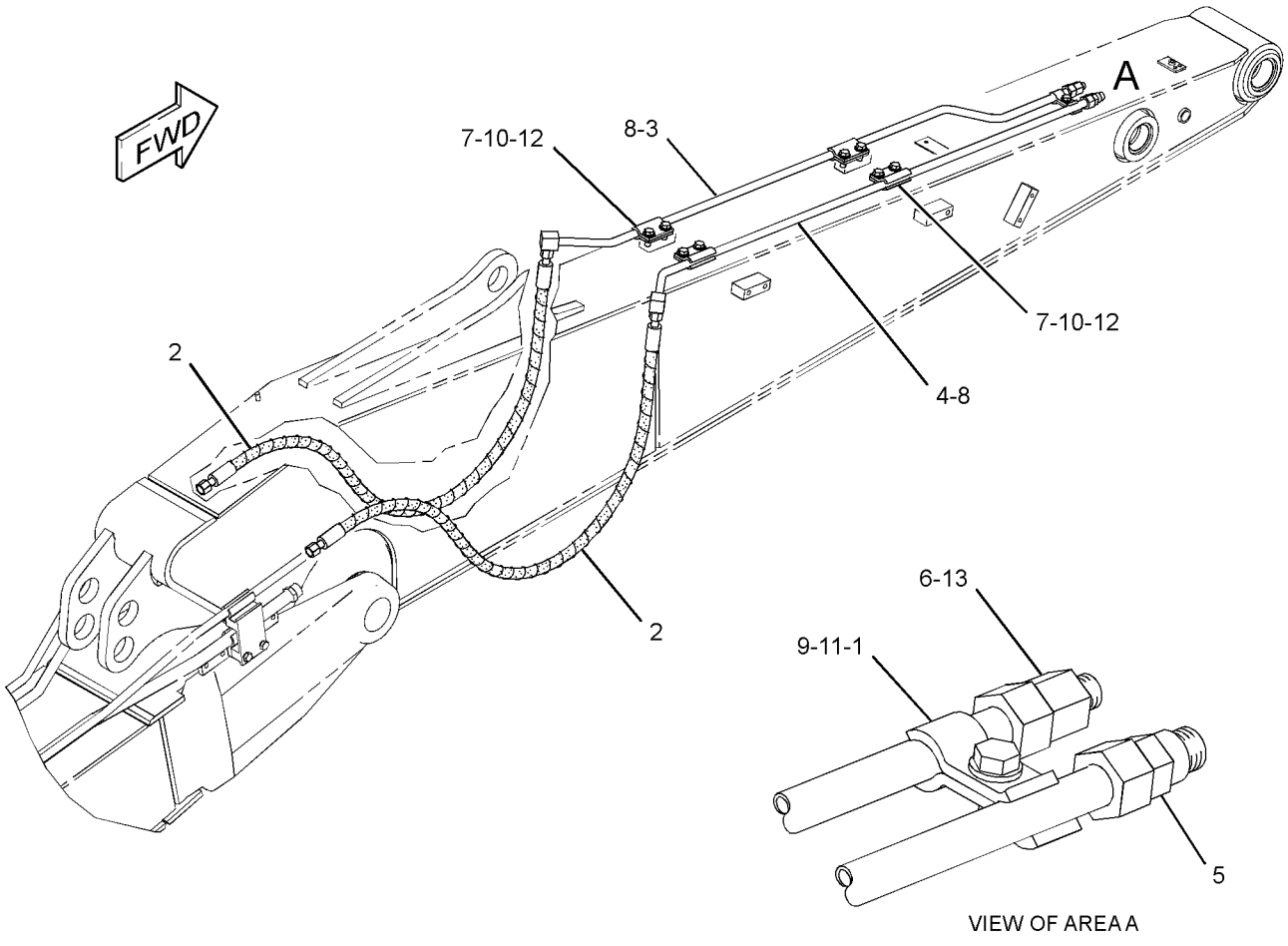

VIEW OF AREA A

GRAPHIC #1 **<END>** g01415079

282-5546 LINES GP-COUPLER—REACH BOOM

S/N: BYJ1-UP; PDP1-UP
PART OF 321-8138 LINES AR-QUICK COUPLER
FOR USE WITH 316-3790—PAGE 504
AN ATTACHMENT

SMCS-5057, 5133 **i02820724**

NOTE	REF NO	GRAPHIC REF	PART NUMBER	QTY	PART NAME 1 2 3 4 5 6 (PRODUCT LEVEL)	SEE PAGE
	1	1	**5Q-4213**	2	CLIP	
	2	1	**179-5030**	2	CLIP	
	3	1	**193-6606**	1	PLATE	
	4	1	**197-2150**	1	PLATE	
	5	1	**282-5482**	2	SUPPORT AS	
	6	1	**302-9451**	1	TUBE AS	
	7	1	**302-9454**	1	TUBE AS	
	8	1	**135-3980**	2	CLIP	
	9	1	**5Q-4212**	8	CLIP	
	10	1	**6V-8398**	4	SEAL-O-RING	
M	11	1	**7X-2549**	2	BOLT (M12X1.75X100-MM)	
M	12	1	**8T-4139**	8	BOLT (M12X1.75X30-MM)	
	13	1	**8T-4223**	16	WASHER-HARD (13.5X25.5X3-MM THK)	
M	14	1	**8T-4244**	4	NUT (M12X1.75-THD)	
M	15	1	**8T-4910**	4	BOLT (M12X1.75X60-MM)	
M	16	1	**8T-6868**	2	BOLT (M12X1.75X80-MM)	

M-METRIC PART

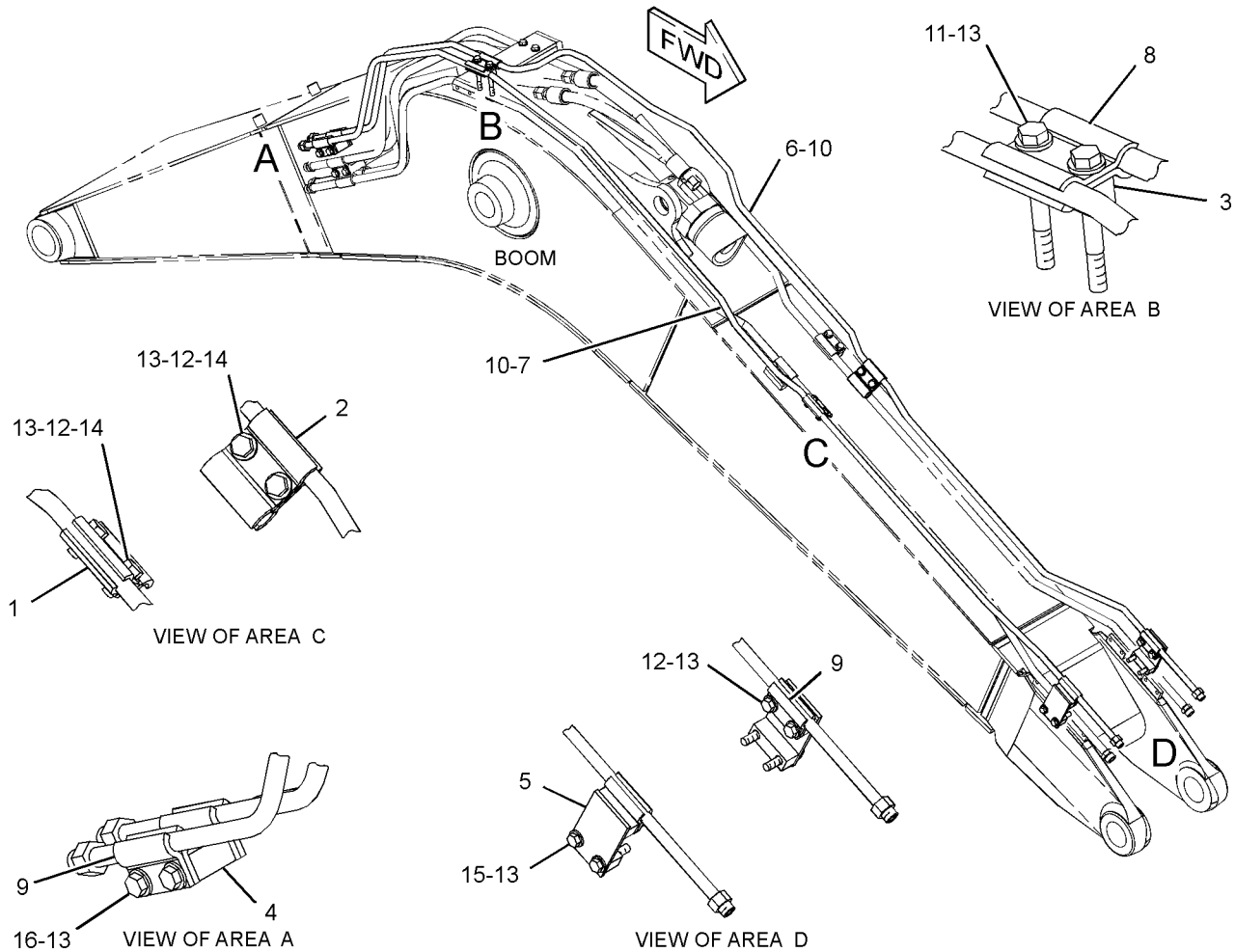

GRAPHIC #1 **<END>** g01410361

HYDRAULIC SYSTEM

282-5633 LINES GP-COUPLER

S/N: BYJ1-UP; PDP1-UP
2.5-M (8.2-FT), 2.6-M (8.5-FT) STICK
AN ATTACHMENT

SMCS-5057, 5133 **i02819022**

NOTE	REF NO	GRAPHIC REF	PART NUMBER	QTY	PART NAME 1 2 3 4 5 6 (PRODUCT LEVEL)	SEE PAGE
	1	1	**198-0370**	2	CLIP	
I	2	1	**277-1251**	2	HOSE AS	
	3	1	**288-7727**	1	TUBE AS	
	4	1	**288-7730**	1	TUBE AS	
	5	1	*148-8415*	1	REDUCER AS	
		1	**6V-8397**	1	SEAL-O-RING	
		1	**6V-8936**	1	REDUCER	
	6	1	*148-8419*	1	REDUCER AS	
		1	**4J-5477**	1	SEAL-O-RING	
		1	**6V-8935**	1	REDUCER-O-RING	
	7	1	**5Q-4212**	8	CLIP	
	8	1	**6V-8398**	4	SEAL-O-RING	
	9	1	**8T-4121**	1	WASHER-HARD (11X21X2.5-MM THK)	
M	10	1	**8T-4139**	8	BOLT (M12X1.75X30-MM)	
M	11	1	**8T-4195**	1	BOLT (M10X1.5X30-MM)	
	12	1	**8T-4223**	8	WASHER-HARD (13.5X25.5X3-MM THK)	
	13	1	**9X-6582**	1	NUT (13/16-16-THD)	

I-REFER TO HYDRAULIC INFORMATION SYSTEM
M-METRIC PART

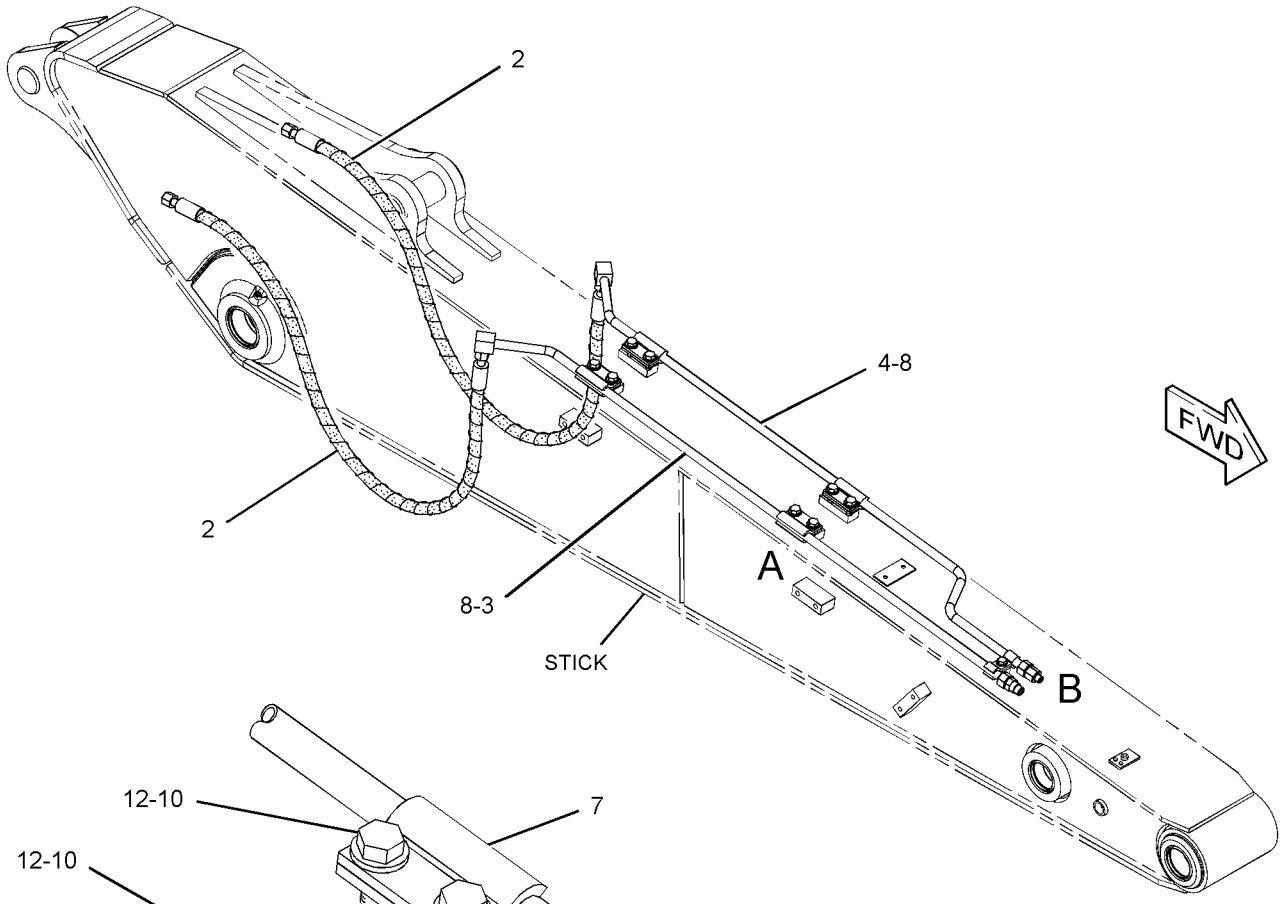

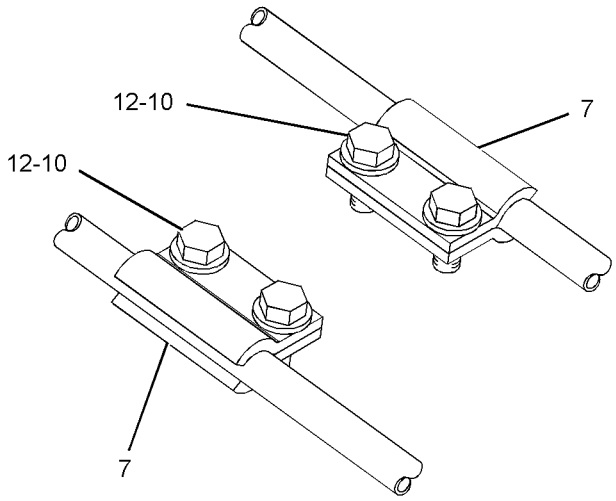

VIEW OF AREA A

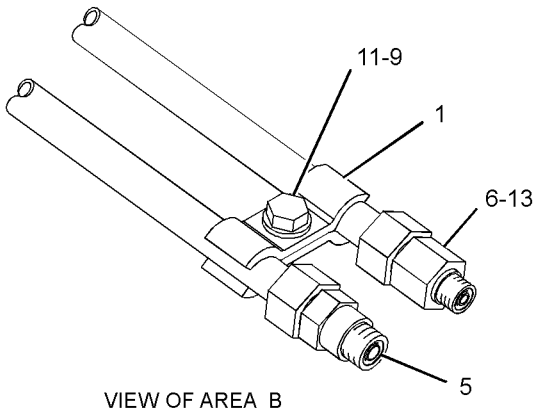

VIEW OF AREA B

GRAPHIC #1 **<END>** g01442604

HYDRAULIC SYSTEM

288-7395 LINES GP-COUPLER

S/N: BYJ1-UP; PDP1-UP
3.0-M (9.8-FT) STICK
AN ATTACHMENT

SMCS-5057, 5133 **i02821907**

NOTE	REF NO	GRAPHIC REF	PART NUMBER	QTY	PART NAME 1 2 3 4 5 6 (PRODUCT LEVEL)	SEE PAGE
I	1	1	**177-8506**	2	HOSE AS	
	2	1	**198-0370**	2	CLIP	
	3	1	**288-7698**	1	TUBE AS	
	4	1	**288-7699**	1	TUBE AS	
	5	1	*148-8415*	1	REDUCER AS	
		1	**6V-8397**	1	SEAL-O-RING	
		1	**6V-8936**	1	REDUCER	
	6	1	*148-8419*	1	REDUCER AS	
		1	**4J-5477**	1	SEAL-O-RING	
		1	**6V-8935**	1	REDUCER-O-RING	
	7	1	**5Q-4212**	8	CLIP	
	8	1	**6V-8398**	4	SEAL-O-RING	
	9	1	**8T-4121**	1	WASHER-HARD (11X21X2.5-MM THK)	
M	10	1	**8T-4139**	8	BOLT (M12X1.75X30-MM)	
M	11	1	**8T-4195**	1	BOLT (M10X1.5X30-MM)	
	12	1	**8T-4223**	8	WASHER-HARD (13.5X25.5X3-MM THK)	
	13	1	**9X-6582**	1	NUT (13/16-16-THD)	

I-REFER TO HYDRAULIC INFORMATION SYSTEM
M-METRIC PART

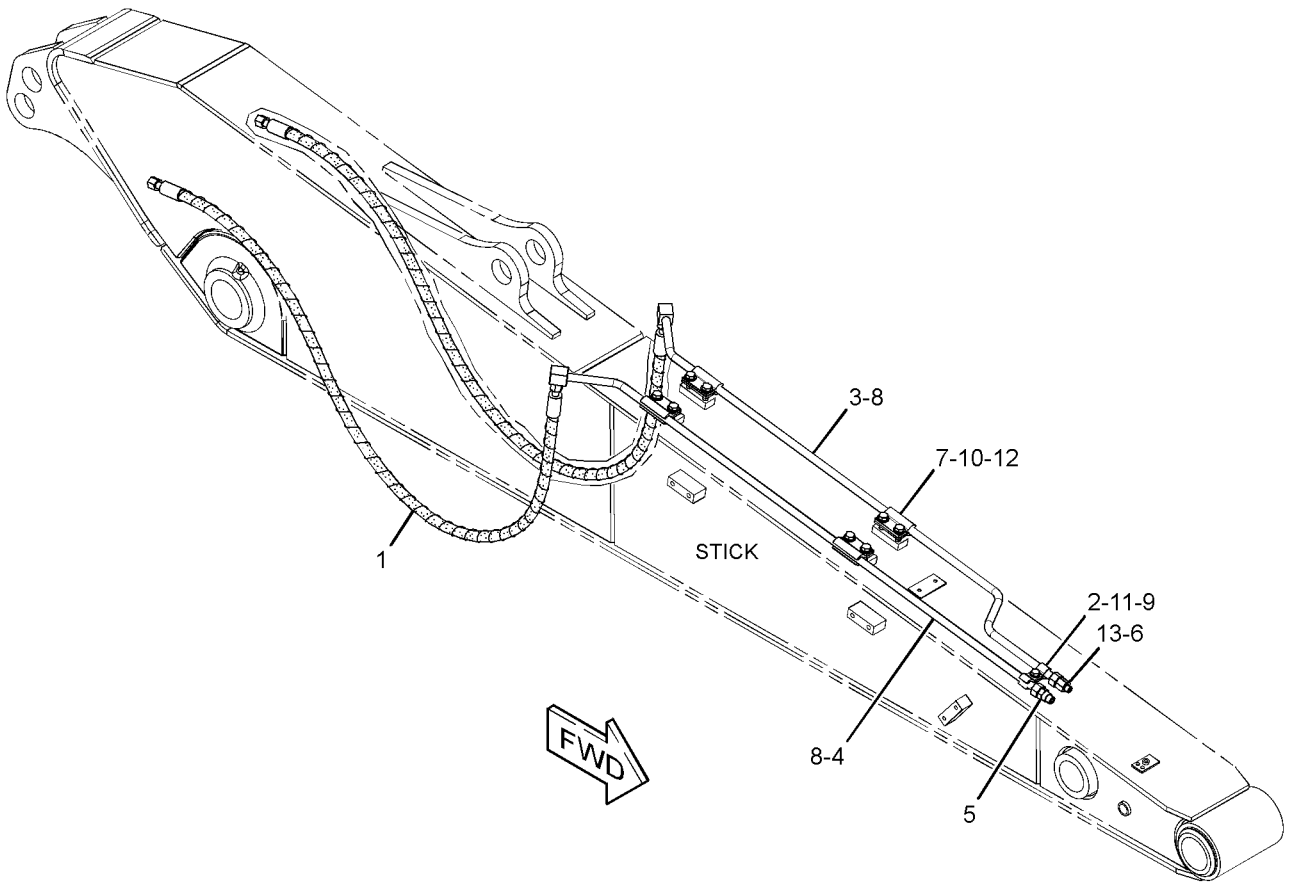

GRAPHIC #1 **<END>** g01411725

282-7249 LINES GP-FRONT–AUXILIARY READY

S/N: BYJ1-UP; PDP1-UP
PART OF 270-5993 CONTROL AR-AUXILIARY
AN ATTACHMENT

SMCS-5057 **i02954204**

NOTE	REF NO	GRAPHIC REF	PART NUMBER	QTY	PART NAME 1 2 3 4 5 6 (PRODUCT LEVEL)	SEE PAGE
	1	1	**5P-5148**	8	STRAP-TIE	
	2	1	**7K-1181**	2	STRAP-CABLE	
	4	1	**285-1328**	1	CONNECTOR AS	
		1	**6V-9746**	1	SEAL-O-RING	
		1	**095-1592**	1	SEAL-O-RING	
	5	1	**286-6431**	1	SUPPORT AS	
I	6	1	**286-6433**	1	HOSE AS	
I	7	1	**286-6437**	1	HOSE AS	
I	8	1	**286-6441**	1	HOSE AS	
I	9	1	**307-5157**	1	HOSE AS	
	10	1	*148-8392*	1	ELBOW AS	
		1	**6V-9746**	1	SEAL-O-RING	
		1	**6V-9853**	1	ELBOW	
	11	1	*296-5750*	1	CONNECTOR AS	
		1	**6V-9746**	1	SEAL-O-RING	
		1	**7M-8485**	1	SEAL-O-RING	
		1	**109-5821**	1	CONNECTOR	
	12	1	**5P-7468**	1	CLIP (SLOT)	
	13	1	**5P-7469**	1	CLIP (TAB)	
	14	1	**6V-1874**	1	GROMMET	
	15	1	*148-8347*	1	ELBOW AS	
		1	**3D-2824**	1	SEAL-O-RING	
		1	**6V-9007**	1	ELBOW	
		1	**6V-9746**	1	SEAL-O-RING	
M	18	1	**8T-4139**	1	BOLT (M12X1.75X30-MM)	
M	19	1	**8T-4192**	2	BOLT (M12X1.75X25-MM)	
	20	1	**8T-4223**	3	WASHER-HARD (13.5X25.5X3-MM THK)	
Y	21	1	**309-9973**	2	VALVE GP-RELIEF (LINE, WORK TOOL)	578
	22	1	*320-0050*	2	CONNECTOR AS	
					(EACH INCLUDES)	
		1	**6V-9746**	1	SEAL-O-RING	
		1	**7M-8485**	1	SEAL-O-RING	
		1	**208-3110**	1	CONNECTOR	

I-REFER TO HYDRAULIC INFORMATION SYSTEM
M-METRIC PART
Y-SEPARATE ILLUSTRATION

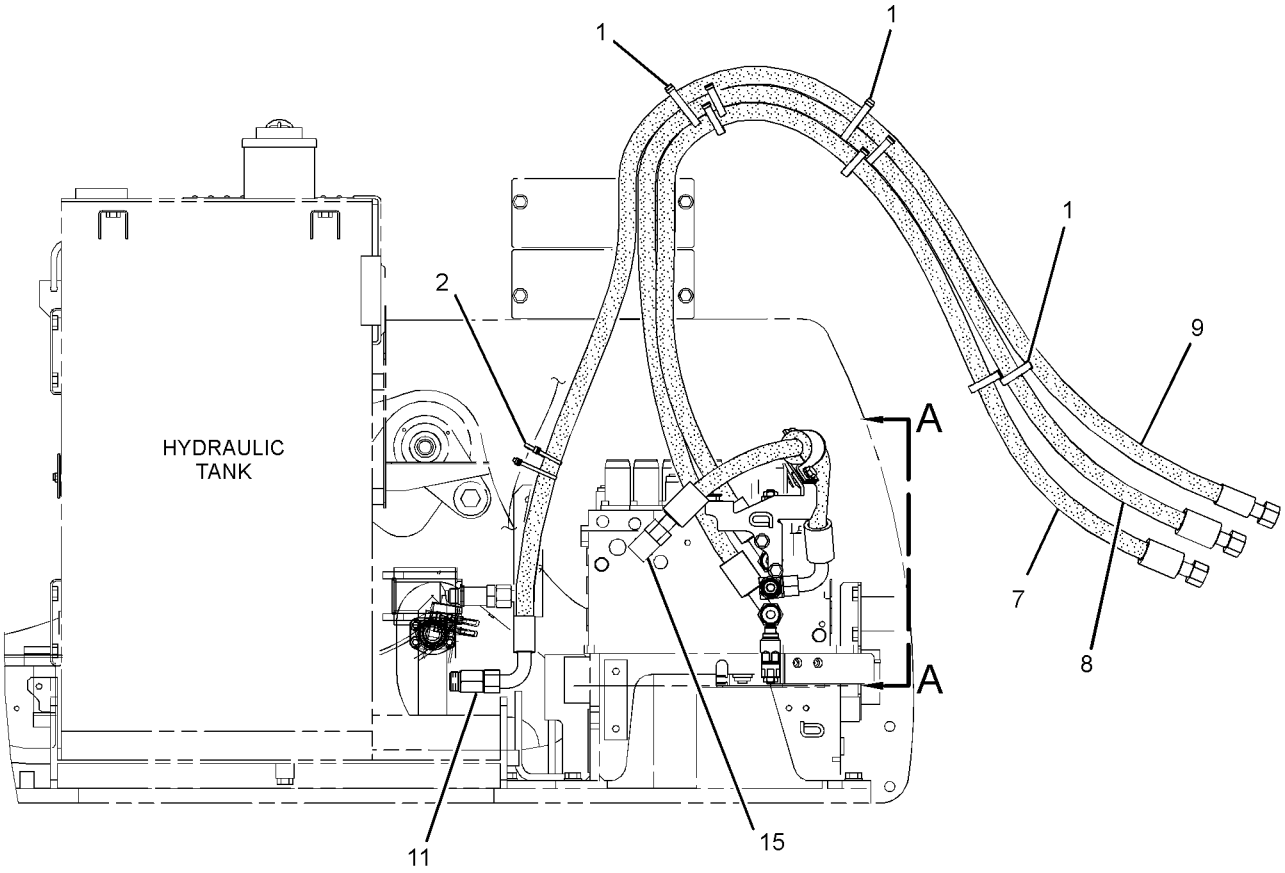

RIGHT SIDE VIEW

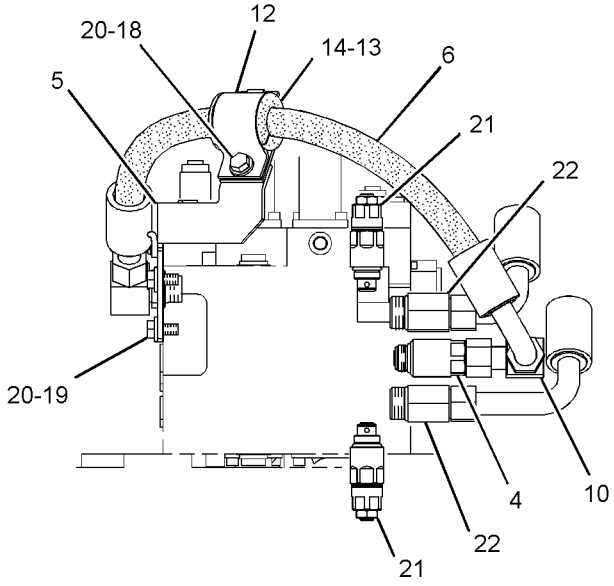

VIEW A-A

GRAPHIC #1 **<END>** g01513042

282-7259 LINES GP-FRONT—SYSTEM 20, WORK TOOL PRIORITY

S/N: BYJ1-UP; PDP1-UP
PART OF 270-5996 CONTROL AR-AUXILIARY
AN ATTACHMENT

SMCS-5057 **i02992208**

NOTE	REF NO	GRAPHIC REF	PART NUMBER	QTY	PART NAME 1 2 3 4 5 6 (PRODUCT LEVEL)	SEE PAGE
	1	1	**5P-5148**	8	STRAP-TIE	
	2	1	**7K-1181**	3	STRAP-CABLE	
	3	1	**208-3107**	1	SPACER-SPECIAL	
	4	1	**285-1328**	1	CONNECTOR AS	
		1	**6V-9746**	1	SEAL-O-RING	
		1	**095-1592**	1	SEAL-O-RING	
	5	1	**286-6431**	1	SUPPORT AS	
		1	**7T-1099**	1	LINK	
I	6	1	**286-6433**	1	HOSE AS	
I	7	1	**286-6437**	1	HOSE AS	
I	8	1	**286-6441**	1	HOSE AS	
	9	1	**286-6796**	1	GROMMET	
I	10	1	**286-6797**	1	HOSE AS	
	11	1	*296-5750*	1	CONNECTOR AS	
		1	**6V-9746**	1	SEAL-O-RING	
		1	**7M-8485**	1	SEAL-O-RING	
		1	**109-5821**	1	CONNECTOR	
I	12	1	**307-5157**	1	HOSE AS	
Y	13	1	**309-9973**	2	VALVE GP-RELIEF	578
	14	1	*320-0050*	3	CONNECTOR AS	
					(EACH INCLUDES)	
		1	**6V-9746**	1	SEAL-O-RING	
		1	**7M-8485**	1	SEAL-O-RING	
		1	**208-3110**	1	CONNECTOR	
	15	1	*148-8347*	1	ELBOW AS	
		1	**3D-2824**	1	SEAL-O-RING	
		1	**6V-9007**	1	ELBOW	
		1	**6V-9746**	1	SEAL-O-RING	
	16	1	*148-8392*	1	ELBOW AS	
		1	**6V-9746**	1	SEAL-O-RING	
		1	**6V-9853**	1	ELBOW	
	17	1	**5P-7468**	1	CLIP (SLOT)	
	18	1	**5P-7469**	1	CLIP (TAB)	
	19	1	**6V-1874**	1	GROMMET	
M	20	1	**8T-4139**	1	BOLT (M12X1.75X30-MM)	
M	21	1	**8T-4192**	2	BOLT (M12X1.75X25-MM)	
	22	1	**8T-4223**	3	WASHER-HARD (13.5X25.5X3-MM THK)	

I-REFER TO HYDRAULIC INFORMATION SYSTEM
M-METRIC PART
Y-SEPARATE ILLUSTRATION

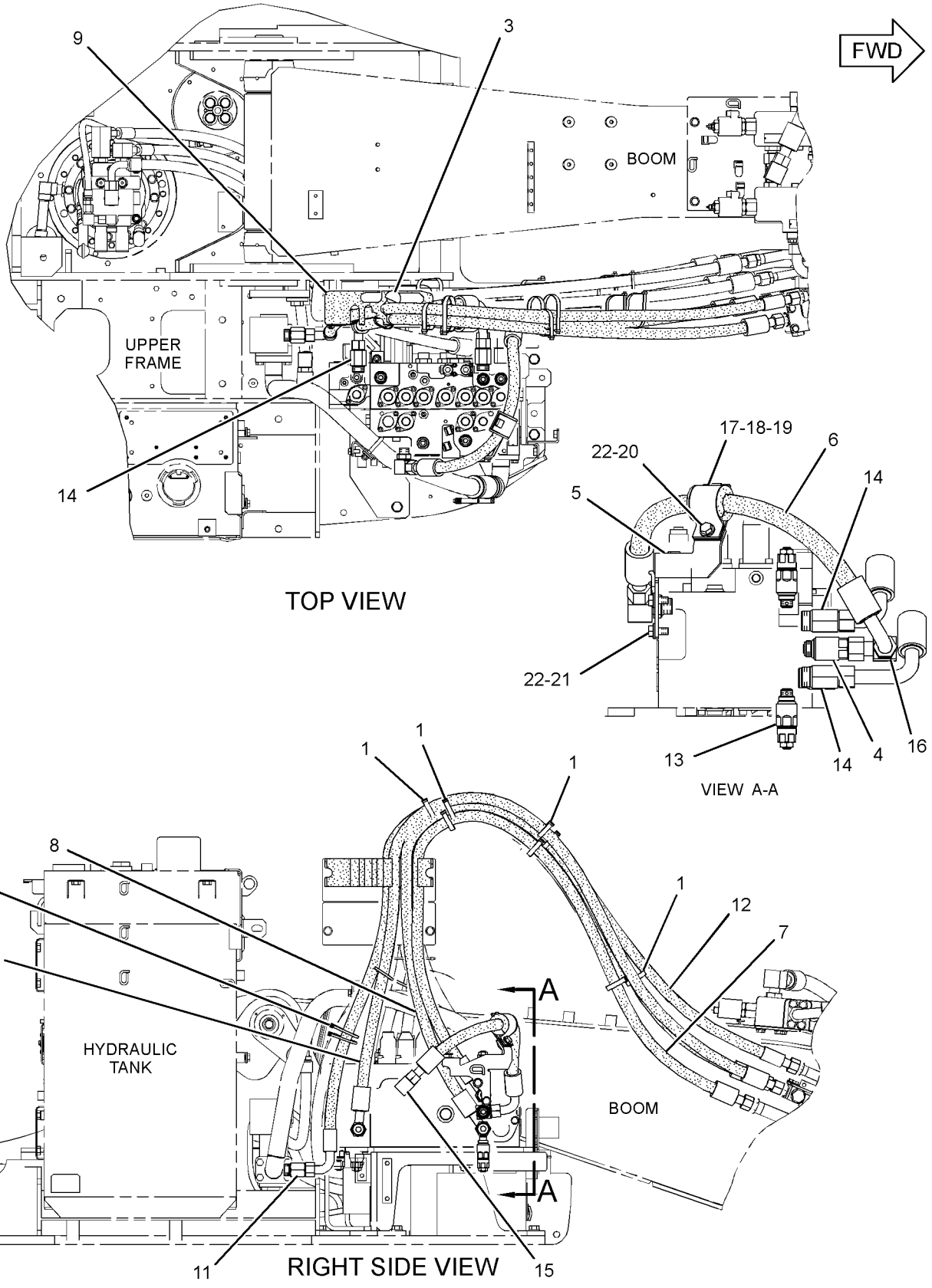

GRAPHIC #1

<END>

g01518760

282-7270 LINES GP-FRONT—MEDIUM PRESSURE

S/N: BYJ1-UP; PDP1-UP
PART OF 270-6001 CONTROL AR-AUXILIARY
AN ATTACHMENT

SMCS-5057 **i02957114**

NOTE	REF NO	GRAPHIC REF	PART NUMBER	QTY	PART NAME 1 2 3 4 5 6 (PRODUCT LEVEL)	SEE PAGE
	1	1	**5P-5148**	3	STRAP-TIE	
	2	1	**7K-1181**	4	STRAP-CABLE	
Y	3	1	**259-7545**	1	VALVE GP-BANK (MEDIUM PRESSURE)	536
I	4	1	**285-2900**	2	HOSE AS	
	5	1	**286-6737**	1	SUPPORT AS	
	6	1	*148-8364*	1	ELBOW AS	
		1	**3K-0360**	1	SEAL-O-RING	
		1	**6V-8398**	1	SEAL-O-RING	
		1	**6V-8625**	1	ELBOW	
	7	1	*148-8370*	1	ELBOW AS	
		1	**6V-8398**	1	SEAL-O-RING	
		1	**6V-9851**	1	ELBOW	
	8	1	*164-5608*	1	CONNECTOR AS	
		1	**3K-0360**	1	SEAL-O-RING	
		1	**6V-8398**	1	SEAL-O-RING	
		1	**8T-1687**	1	CONNECTOR	
	9	1	**8T-4121**	4	WASHER-HARD (11X21X2.5-MM THK)	
M	10	1	**8T-4183**	3	BOLT (M12X1.75X40-MM)	
M	11	1	**8T-4191**	4	BOLT (M10X1.5X16-MM)	
	12	1	**8T-4223**	3	WASHER-HARD (13.5X25.5X3-MM THK)	

I-REFER TO HYDRAULIC INFORMATION SYSTEM
M-METRIC PART
Y-SEPARATE ILLUSTRATION

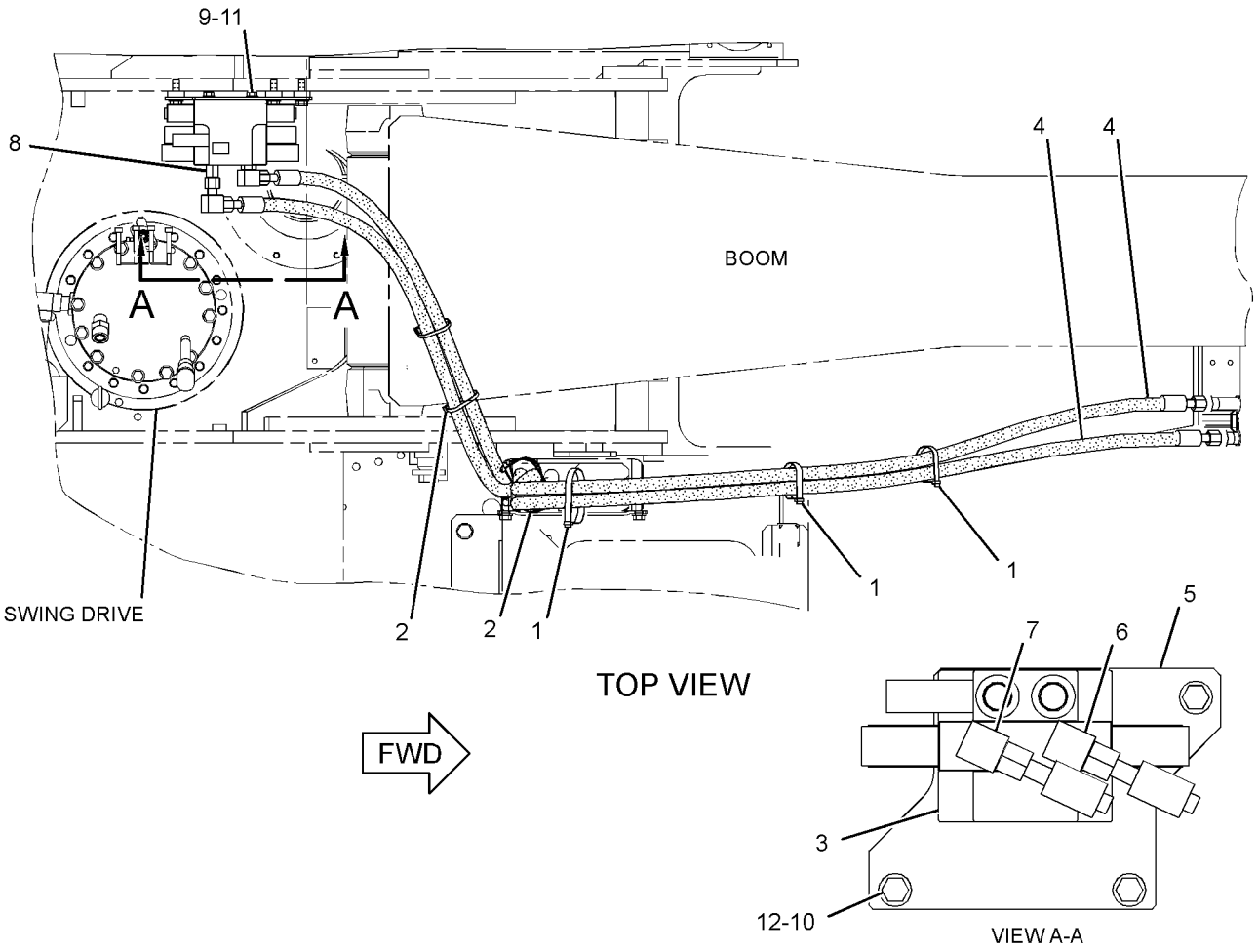

GRAPHIC #1 **<END>** g01513044

HYDRAULIC SYSTEM

282-7300 LINES GP-FRONT—QUICK COUPLER

S/N: BYJ1-UP; PDP1-UP
PART OF 282-5547 CONTROL AR-COUPLER
AN ATTACHMENT

SMCS-5057 **i03026537**

NOTE	REF NO	GRAPHIC REF	PART NUMBER	QTY	PART NAME 1 2 3 4 5 6 (PRODUCT LEVEL)	SEE PAGE
	1	1	**4I-9521**	4	BAND-MARKER (RED, L1)	
	2	1	**4I-9522**	4	BAND-MARKER (YELLOW, L2)	
	3	1	**4I-9525**	2	BAND-MARKER (ORANGE, R1)	
	4	1	**5P-5148**	3	STRAP-TIE	
	5	1	**6V-0852**	1	CAP-DUST	
	6	1	**7K-1181**	7	STRAP-CABLE	
	7	1	**123-2511**	1	TEE	
	9	1	*164-6874*	1	FITTING AS-ELBOW	
		1	**3J-1907**	1	SEAL-O-RING	
		1	**085-7356**	1	FITTING	
	10	1	**328-2035**	1	VALVE GP-SOLENOID & MANIFOLD (QUICK COUPLER)	
	11	1	*267-4051*	1	CONNECTOR AS	
		1	**3J-1907**	1	SEAL-O-RING	
		1	**4J-5477**	1	SEAL-O-RING	
		1	**156-8845**	1	CONNECTOR	
	12	1	**282-7092**	1	GROMMET	
I	13	1	**087-4531**	1	HOSE AS	
	14	1	**289-5737**	1	SUPPORT AS	
I	15	1	**289-5742**	2	HOSE AS	
I	16	1	**319-9955**	1	HOSE AS	
	17	1	*148-8325*	1	CONNECTOR AS	
		1	**3J-1907**	1	SEAL-O-RING	
		1	**4J-5477**	1	SEAL-O-RING	
		1	**6V-8641**	1	CONNECTOR	
	18	1	*148-8378*	1	ELBOW AS	
		1	**3J-1907**	1	SEAL-O-RING	
		1	**6V-8397**	1	SEAL-O-RING	
		1	**6V-8724**	1	ELBOW	
	19	1	*148-8415*	1	REDUCER AS	
		1	**6V-8397**	1	SEAL-O-RING	
		1	**6V-8936**	1	REDUCER	
	20	1	*148-8419*	2	REDUCER AS	
					(EACH INCLUDES)	
		1	**4J-5477**	1	SEAL-O-RING	
		1	**6V-8935**	1	REDUCER-O-RING	
	21	1	*148-8436*	1	TEE AS	
		1	**3K-0360**	1	SEAL-O-RING	
		1	**6V-8398**	2	SEAL-O-RING	
		1	**6V-8775**	1	TEE-FACE SEAL	
	22	1	*150-3036*	1	ELBOW AS	
		1	**3J-1907**	1	SEAL-O-RING	
		1	**6V-8397**	1	SEAL-O-RING	
		1	**8T-1905**	1	ELBOW	
	23	1	*153-6249*	1	CONNECTOR AS	
		1	**3J-1907**	1	SEAL-O-RING	
		1	**6V-8397**	1	SEAL-O-RING	
		1	**8T-8887**	1	CONNECTOR	
	24	1	*164-5567*	1	COUPLER AS-QUICK DISCONNECT	
		1	**3J-1907**	1	SEAL-O-RING	
		1	**6V-3965**	1	FITTING (QUICK DISCONNECT)	
	27	1	**8T-4121**	2	WASHER-HARD (11X21X2.5-MM THK)	
M	28	1	**8T-4183**	2	BOLT (M12X1.75X40-MM)	
M	29	1	**8T-4185**	2	BOLT (M10X1.5X50-MM)	
	30	1	**8T-4223**	2	WASHER-HARD (13.5X25.5X3-MM THK)	
	31	1	**9X-6582**	2	NUT (13/16-16-THD)	

282-7300 **LINES GP-FRONT** ***(contd.)*** **i03026537**

NOTE	REF NO	GRAPHIC REF	PART NUMBER	QTY	PART NAME 1 2 3 4 5 6 (PRODUCT LEVEL)	SEE PAGE
	32	1	*148-8336*	1	CONNECTOR AS	
		1	**3J-1907**	1	SEAL-O-RING	
		1	**6V-8397**	1	SEAL-O-RING	
		1	**6V-8636**	1	CONNECTOR	

I-REFER TO HYDRAULIC INFORMATION SYSTEM
M-METRIC PART

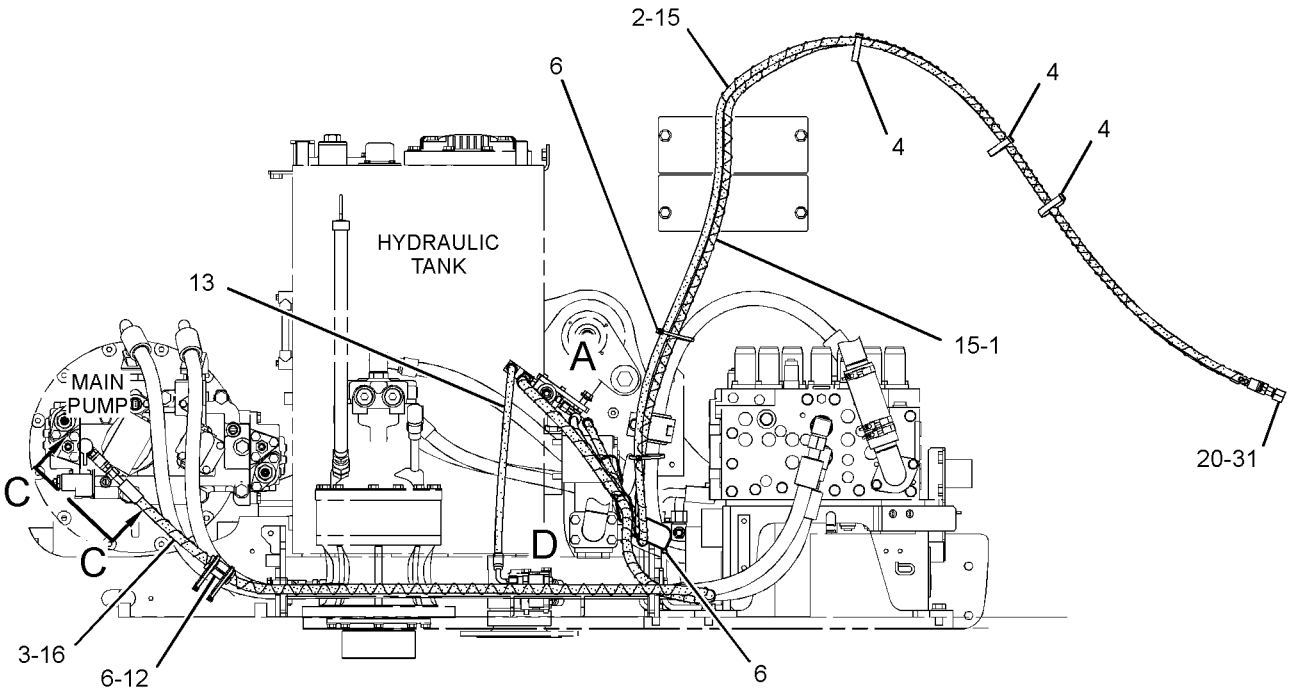

RIGHT SIDE VIEW

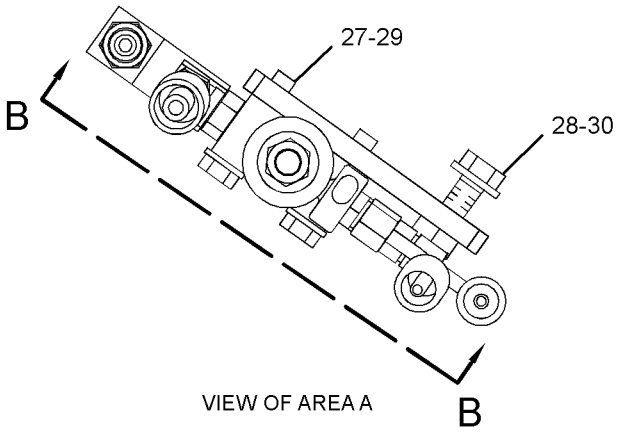

VIEW OF AREA A

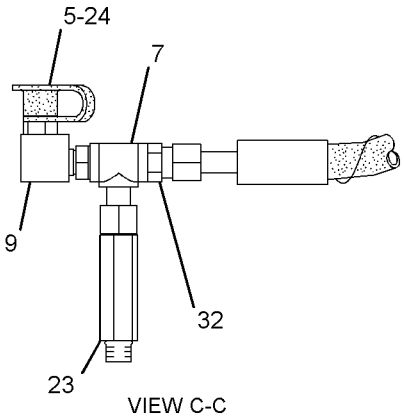

VIEW C-C

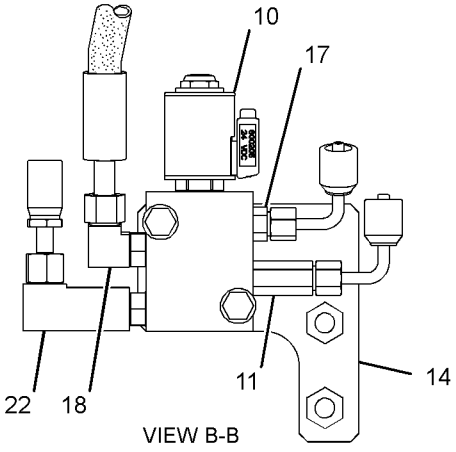

VIEW B-B

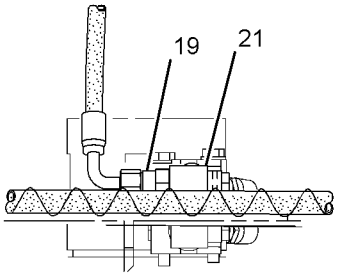

VIEW OF AREA D

GRAPHIC #1 **<END>** g01515947

HYDRAULIC SYSTEM

292-7638 LINES GP-FRONT—MEDIUM PRESSURE

S/N: BYJ1-UP; PDP1-UP
PART OF 285-1677 CONTROL AR-AUXILIARY
AN ATTACHMENT

SMCS-5057 **i03035525**

NOTE	REF NO	GRAPHIC REF	PART NUMBER	QTY	PART NAME 1 2 3 4 5 6 (PRODUCT LEVEL)	SEE PAGE
	1	1	**5P-5148**	3	STRAP-TIE	
	2	1	**7K-1181**	3	STRAP-CABLE	
B	3	1	**129-3400**	1	GUARD	
	4	1	*296-7059*	1	FITTING AS	
		1	**3K-0360**	1	SEAL-O-RING	
		1	**178-5883**	1	FITTING	
	5	1	**302-3236**	1	SUPPORT AS	
	6	1	**302-3243**	1	TUBE AS	
I	7	1	**302-3245**	1	HOSE AS	
I	8	1	**302-3246**	1	HOSE AS	
I	9	1	**302-3250**	1	HOSE AS	
B	10	1	**325-8885**	1	GUARD	
	11	1	**325-8886**	1	TUBE AS	
I	12	1	**325-8889**	1	HOSE AS	
B	13	1	*148-8339*	1	CONNECTOR AS	
		1	**6V-8716**	1	CONNECTOR	
		1	**6V-9746**	1	SEAL-O-RING	
		1	**7M-8485**	1	SEAL-O-RING	
	14	1	*148-8347*	1	ELBOW AS	
		1	**3D-2824**	1	SEAL-O-RING	
		1	**6V-9007**	1	ELBOW	
		1	**6V-9746**	1	SEAL-O-RING	
	15	1	*148-8360*	2	ELBOW AS	
					(EACH INCLUDES)	
		1	**6V-9182**	1	ELBOW	
		1	**6V-9746**	1	SEAL-O-RING	
		1	**7M-8485**	1	SEAL-O-RING	
	16	1	*148-8364*	1	ELBOW AS	
		1	**3K-0360**	1	SEAL-O-RING	
		1	**6V-8398**	1	SEAL-O-RING	
		1	**6V-8625**	1	ELBOW	
	17	1	*148-8411*	1	PLUG AS	
		1	**3K-0360**	1	SEAL-O-RING	
		1	**9S-4185**	1	PLUG-O-RING	
	18	1	*148-8414*	1	REDUCER AS	
		1	**6V-8943**	1	REDUCER	
		1	**7J-9108**	1	SEAL-O-RING	
	19	1	*148-8418*	2	REDUCER AS	
					(EACH INCLUDES)	
		1	**6V-8398**	1	SEAL-O-RING	
		1	**6V-8942**	1	REDUCER-O-RING	
	20	1	*148-8436*	1	TEE AS	
		1	**3K-0360**	1	SEAL-O-RING	
		1	**6V-8398**	2	SEAL-O-RING	
		1	**6V-8775**	1	TEE-FACE SEAL	
	21	1	*164-5608*	1	CONNECTOR AS	
		1	**3K-0360**	1	SEAL-O-RING	
		1	**6V-8398**	1	SEAL-O-RING	
		1	**8T-1687**	1	CONNECTOR	
	22	1	**4J-0527**	1	SEAL-O-RING	
	23	1	**9X-6580**	2	NUT (1-3/16-12-THD)	

B-USE AS REQUIRED
I-REFER TO HYDRAULIC INFORMATION SYSTEM

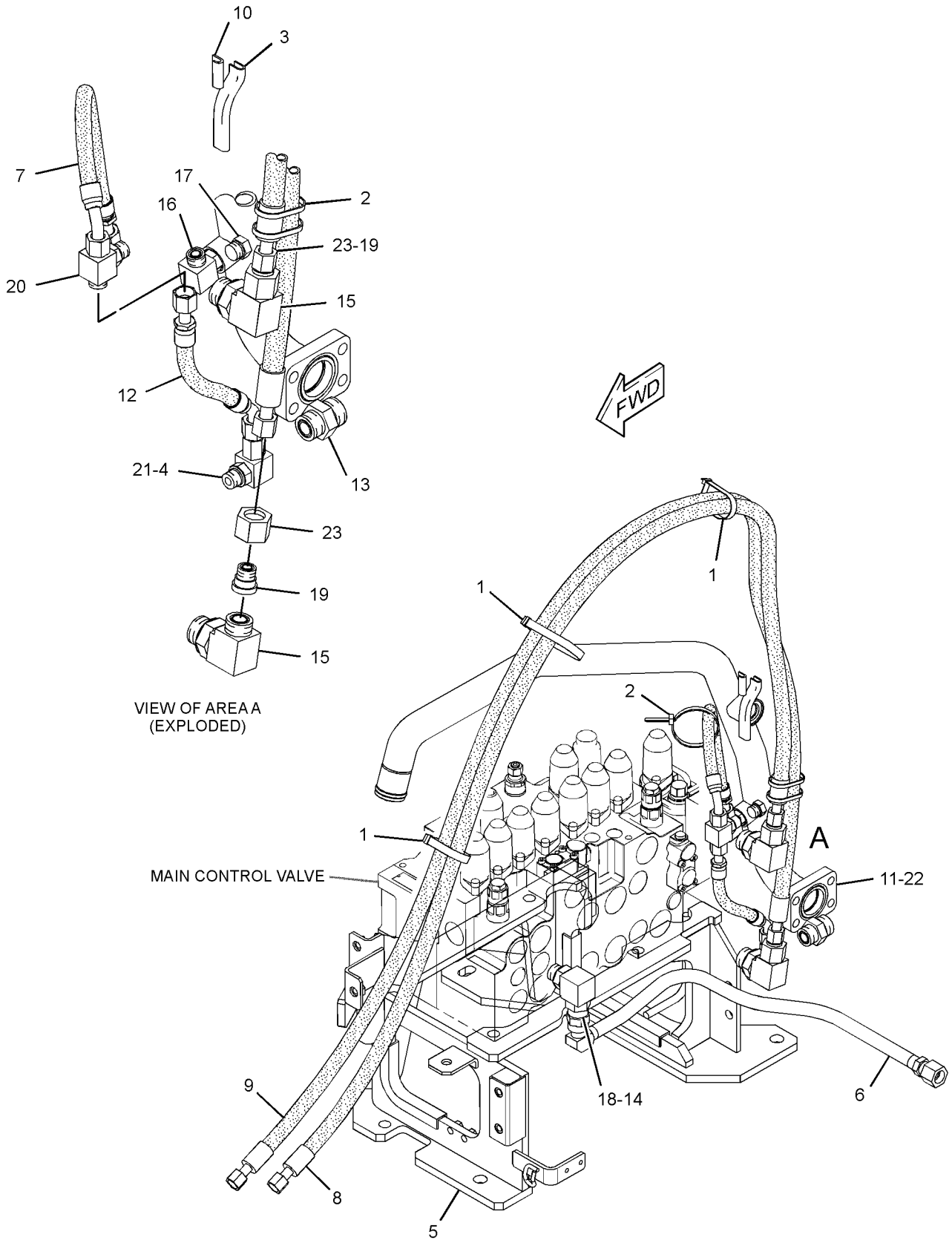

GRAPHIC #1

<END>

g01626506

HYDRAULIC SYSTEM

282-7227 LINES GP-HYDRAULIC OIL COOLER

S/N: BYJ1-UP; PDP1-UP

PART OF 270-5956, 270-5957 HYDRAULIC AR

SMCS-1374 **i02961297**

NOTE	REF NO	GRAPHIC REF	PART NUMBER	QTY	PART NAME 1 2 3 4 5 6 (PRODUCT LEVEL)	SEE PAGE
	1	1	**7K-1181**	4	STRAP-CABLE	
	2	1	**8T-6703**	4	CLAMP-HOSE	
	3	1	**229-1019**	1	HOSE	
	4	1	**229-1021**	1	HOSE	
	5	1	**320-0078**	1	TUBE AS	
	6	1	**285-2673**	1	TUBE AS	
	7	1	**320-0080**	1	SUPPORT AS	
	8	1	**320-0082**	2	CLIP	
I	9	1	**285-2682**	1	HOSE AS	
I	10	1	**285-2685**	1	HOSE AS	
	11	1	**285-2688**	1	GROMMET	
	12	1	**1P-4578**	8	FLANGE-HALF	
	13	1	**4J-0522**	4	SEAL-O-RING	
	14	1	**8T-4121**	18	WASHER-HARD (11X21X2.5-MM THK)	
M	15	1	**8T-4196**	18	BOLT (M10X1.5X35-MM)	
	16	1	**8T-4223**	1	WASHER-HARD (13.5X25.5X3-MM THK)	
M	17	1	**8T-4956**	1	BOLT (M12X1.75X35-MM)	
	18	1	**320-0049**	1	INSULATOR	

I-REFER TO HYDRAULIC INFORMATION SYSTEM
M-METRIC PART

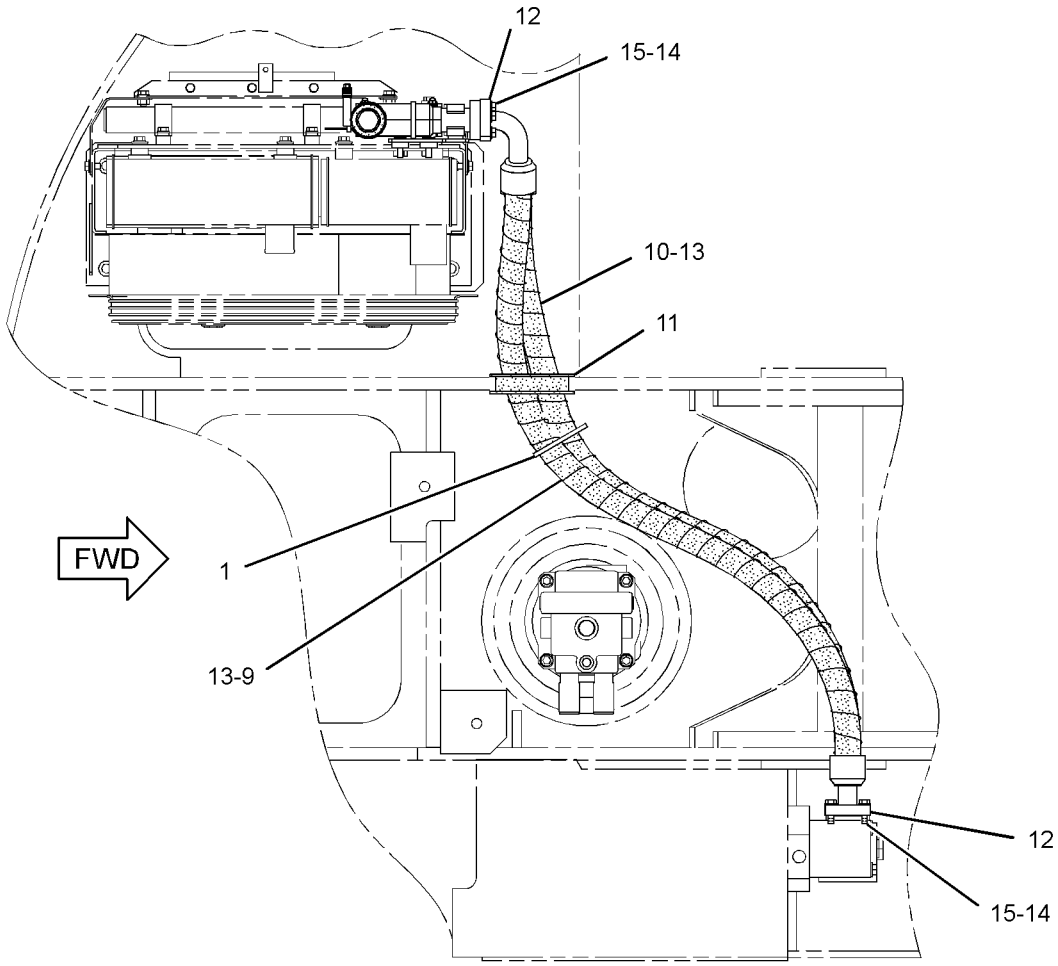

TOP VIEW

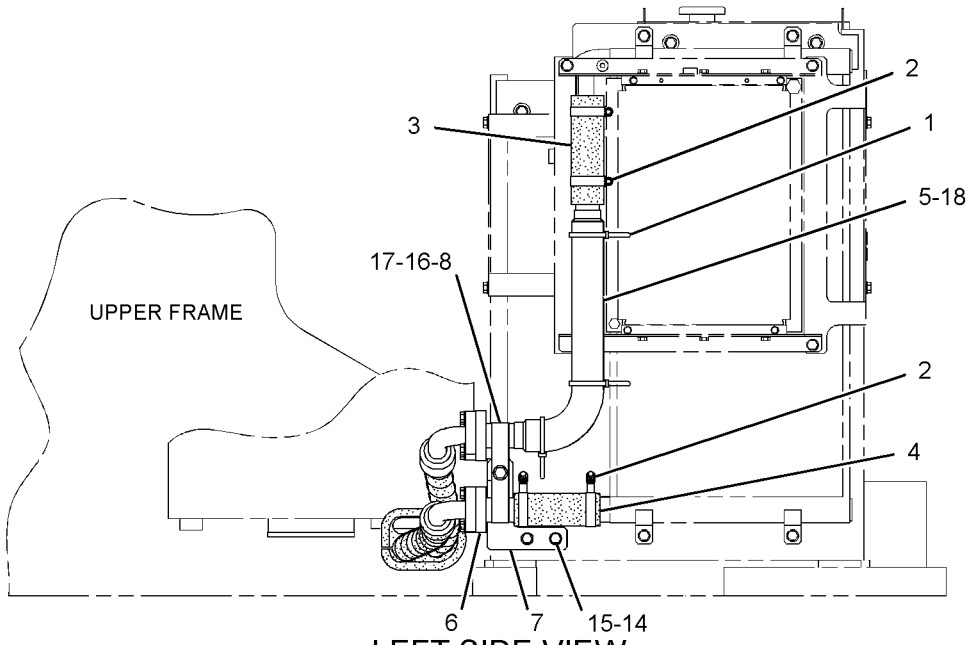

LEFT SIDE VIEW

GRAPHIC #1

<END>

g01511459

HYDRAULIC SYSTEM

282-7230 LINES GP-PILOT–CAB

S/N: BYJ1-UP; PDP1-UP

PART OF 270-5956, 270-5957 HYDRAULIC AR

TYPE 1

SMCS-5057, 5059 **i02961299**

NOTE	REF NO	GRAPHIC REF	PART NUMBER	QTY	PART NAME 1 2 3 4 5 6 (PRODUCT LEVEL)	SEE PAGE
	1	1	**4I-9521**	2	BAND-MARKER (RED, L1)	
	2	1	**4I-9522**	2	BAND-MARKER (YELLOW, L2)	
	3	1	**4I-9523**	2	BAND-MARKER (BLUE, L3)	
	4	1	**4I-9524**	2	BAND-MARKER (BROWN, L4)	
	5	1,2	**4I-9525**	4	BAND-MARKER (ORANGE, R1)	
	6	1	**4I-9526**	2	BAND-MARKER (WHITE, R2)	
	7	1,2	**4I-9527**	4	BAND-MARKER (GREEN, R3)	
	8	1	**4I-9528**	2	BAND-MARKER (PURPLE, R4)	
	9	1,2	**7K-1181**	8	STRAP-CABLE	
	11	1,2	**133-5813**	6	BAND-MARKER (GRAY, P)	
	12	2	*164-5546*	1	TEE AS	
		2	**3E-7410**	1	TEE-O-RING	
		2	**3J-1907**	1	SEAL-O-RING	
	13	1,2	*164-5628*	3	CONNECTOR AS	
					(EACH INCLUDES)	
		1,2	**3J-1907**	1	SEAL-O-RING	
		1,2	**6V-8397**	1	SEAL-O-RING	
		1,2	**107-6631**	1	CONNECTOR-FILTER	
	14	2	*164-5629*	1	FITTING AS	
		2	**3J-1907**	1	SEAL-O-RING	
		2	**108-7516**	1	FITTING	
	15	2	*164-6874*	1	FITTING AS-ELBOW	
		2	**3J-1907**	1	SEAL-O-RING	
		2	**085-7356**	1	FITTING	
	16	2	**309-5769**	1	SWITCH AS-PRESSURE (ACTION INPUT, BOOM DOWN)	
		2	**102-8802**	1	KIT-RECEPTACLE (2-PIN)	
					(INCLUDES RECEPTACLE AS & WEDGE)	
		2	**144-1636**	2	PIN-CONNECTOR (14-GA TO 18-GA)	
	17	2	*168-1968*	1	TEE AS	
		2	**3J-1907**	1	SEAL-O-RING	
		2	**6V-8397**	1	SEAL-O-RING	
		2	**126-6872**	1	TEE	
	18	2	**168-9759**	1	BLOCK	
	19	1	**184-9336**	1	SUPPORT	
	21	2	**236-2848**	1	HOSE AS	
Y	22	1	**270-5948**	1	VALVE GP-PILOT (TRAVEL)	566
	23	2	**272-4471**	1	SUPPORT AS	
	25	1	**272-4558**	1	SUPPORT AS	
	26	2	**282-7166**	1	HOSE AS	
	27	1	**289-5651**	2	HOSE AS	
	28	1	**289-5652**	1	HOSE AS	
	29	1	**289-5653**	1	HOSE AS	
	30	2	**289-5654**	1	HOSE AS	
	31	1	**289-5655**	1	HOSE AS	
	32	1	**289-5656**	1	HOSE AS	
	33	1,2	**289-5657**	2	HOSE AS	
	34	1	**289-5658**	1	HOSE AS	
Y	35	2	**297-0683**	1	VALVE GP-SOLENOID & PRESS REDC	595
	36	2	**307-5099**	1	SUPPORT	
I	37	2	**319-9978**	1	HOSE AS	
I	38	2	**319-9981**	1	HOSE AS	
I	39	1	**307-5153**	1	HOSE AS	
	40	1,2	*148-8336*	15	CONNECTOR AS	
					(EACH INCLUDES)	
		1,2	**3J-1907**	1	SEAL-O-RING	

282-7230 **LINES GP-PILOT** *(contd.)* **i02961299**

NOTE	REF NO	GRAPHIC REF	PART NUMBER	QTY	PART NAME 1 2 3 4 5 6 (PRODUCT LEVEL)	SEE PAGE
		1,2	**6V-8397**	1	SEAL-O-RING	
		1,2	**6V-8636**	1	CONNECTOR	
	41	2	*148-8353*	1	ELBOW AS	
		2	**3J-1907**	1	SEAL-O-RING	
		2	**6V-8397**	1	SEAL-O-RING	
		2	**6V-9001**	1	ELBOW	
	42	2	*148-8364*	2	ELBOW AS	
					(EACH INCLUDES)	
		2	**3K-0360**	1	SEAL-O-RING	
		2	**6V-8398**	1	SEAL-O-RING	
		2	**6V-8625**	1	ELBOW	
	43	1,2	*148-8378*	7	ELBOW AS	
					(EACH INCLUDES)	
		1,2	**3J-1907**	1	SEAL-O-RING	
		1,2	**6V-8397**	1	SEAL-O-RING	
		1,2	**6V-8724**	1	ELBOW	
	44	2	*148-8407*	4	PLUG AS	
					(EACH INCLUDES)	
		2	**3J-1907**	1	SEAL-O-RING	
		2	**9S-4191**	1	PLUG-O-RING	
	45	1	*148-8435*	1	TEE AS	
		1	**3J-1907**	1	SEAL-O-RING	
		1	**6V-8397**	2	SEAL-O-RING	
		1	**6V-8781**	1	TEE-FACE SEAL	
	46	2	*150-3036*	1	ELBOW AS	
		2	**3J-1907**	1	SEAL-O-RING	
		2	**6V-8397**	1	SEAL-O-RING	
		2	**8T-1905**	1	ELBOW	
	47	2	*150-4027*	1	TEE AS	
		2	**3E-2310**	1	TEE	
		2	**3J-1907**	1	SEAL-O-RING	
		2	**6V-8397**	1	SEAL-O-RING	
	48	2	*164-5567*	1	COUPLER AS-QUICK DISCONNECT	
		2	**3J-1907**	1	SEAL-O-RING	
		2	**6V-3965**	1	FITTING (QUICK DISCONNECT)	
	49	1	**5P-4325**	1	CLIP	
	50	2	**6V-0852**	1	CAP-DUST	
	51	1,2	**8T-4121**	19	WASHER-HARD (11X21X2.5-MM THK)	
M	53	1,2	**8T-4137**	17	BOLT (M10X1.5X20-MM)	
M	54	2	**8T-4189**	2	BOLT (M8X1.25X20-MM)	
M	55	2	**8T-4198**	2	BOLT (M10X1.5X100-MM)	
	56	2	**8T-4224**	2	WASHER-HARD (8.8X16X2-MM THK)	
	57	1	**319-9977**	1	SUPPORT	
	58	1	*148-8366*	8	ELBOW AS	
					(EACH INCLUDES)	
		1	**6V-8397**	2	SEAL-O-RING	
		1	**6V-8987**	1	ELBOW	
	59	1	**099-7241**	8	WASHER-HARD (19X34X3-MM THK)	
I	60	1	**087-5768**	1	HOSE AS	
I	61	1	**087-5766**	1	HOSE AS	
	62	1	**6V-9168**	8	NUT (11/16-16-THD)	

I-REFER TO HYDRAULIC INFORMATION SYSTEM
M-METRIC PART
Y-SEPARATE ILLUSTRATION

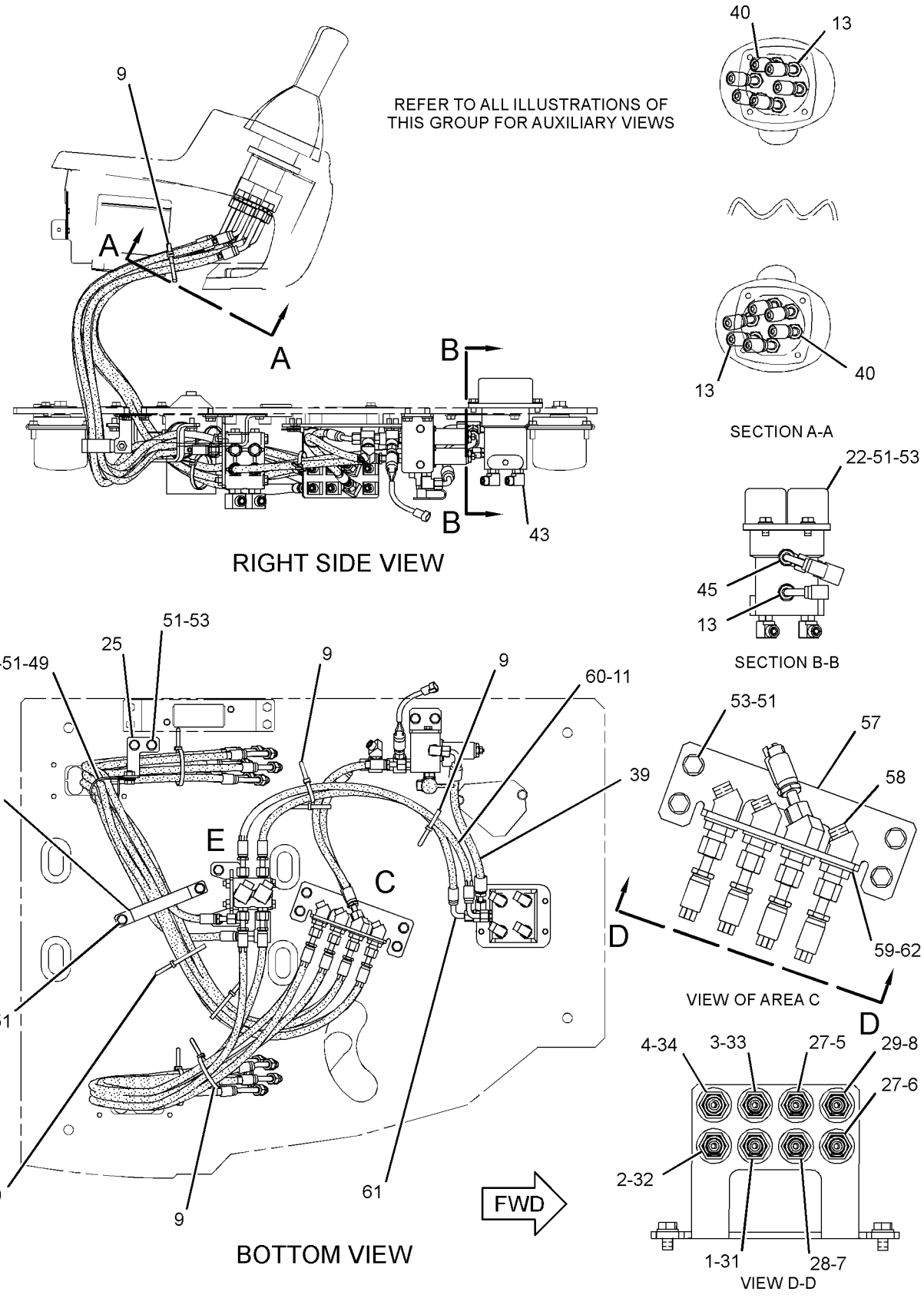

GRAPHIC #1

g01519636

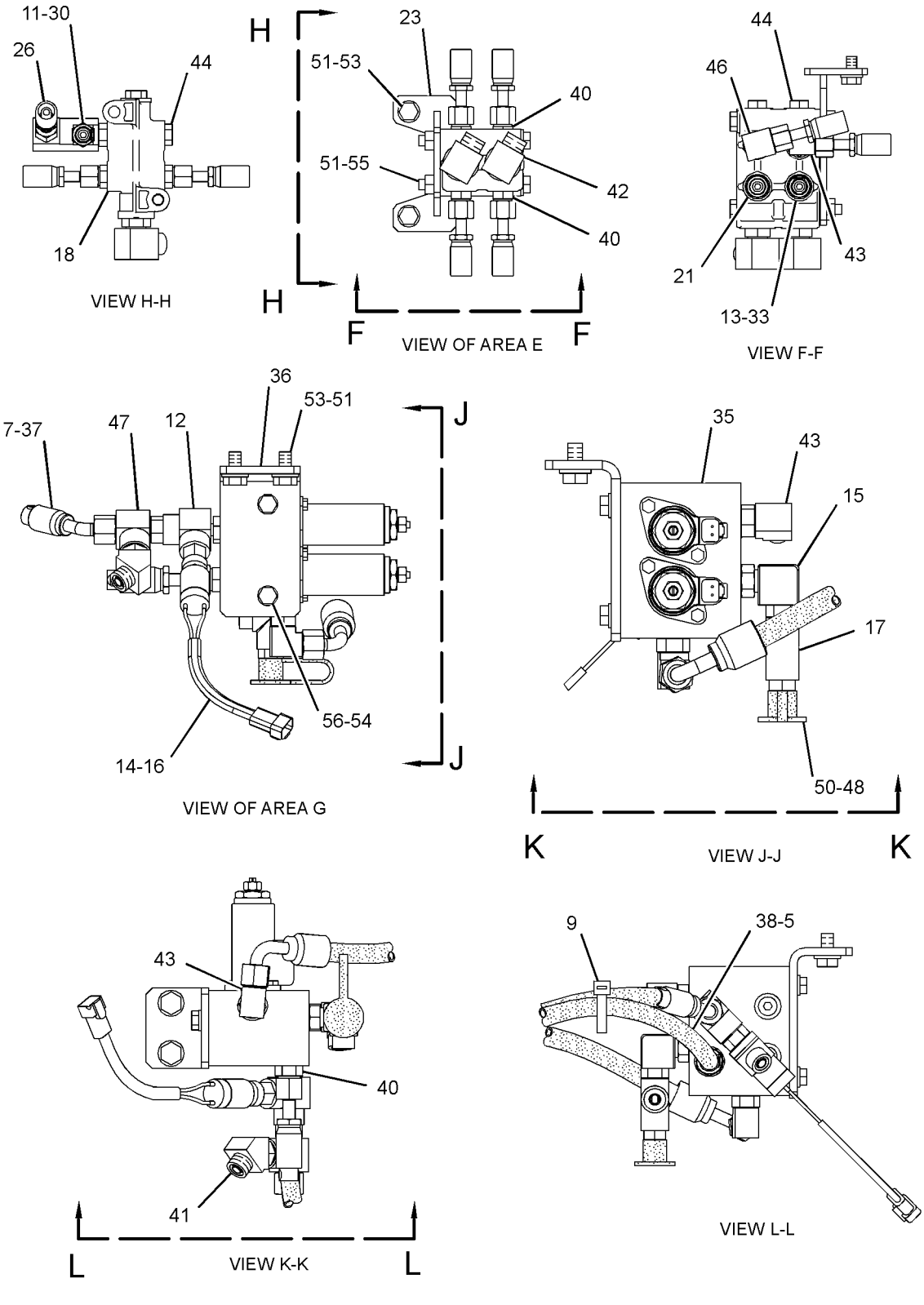

GRAPHIC #2 **<END>** g01519637

HYDRAULIC SYSTEM

282-7230 LINES GP-PILOT—CAB

S/N: BYJ1-UP; PDP1-UP
PART OF 270-5956, 270-5957 HYDRAULIC AR
TYPE 2

SMCS-5057, 5059 **i03162755**

NOTE	REF NO	GRAPHIC REF	PART NUMBER	QTY	PART NAME 1 2 3 4 5 6 (PRODUCT LEVEL)	SEE PAGE
	1	1	**4I-9521**	2	BAND-MARKER (RED, L1)	
	2	1	**4I-9522**	2	BAND-MARKER (YELLOW, L2)	
	3	1	**4I-9523**	2	BAND-MARKER (BLUE, L3)	
	4	1	**4I-9524**	2	BAND-MARKER (BROWN, L4)	
	5	1,2	**4I-9525**	4	BAND-MARKER (ORANGE, R1)	
	6	1	**4I-9526**	2	BAND-MARKER (WHITE, R2)	
	7	1,2	**4I-9527**	4	BAND-MARKER (GREEN, R3)	
	8	1	**4I-9528**	2	BAND-MARKER (PURPLE, R4)	
	9	1,2	**7K-1181**	8	STRAP-CABLE	
	11	1,2	**133-5813**	6	BAND-MARKER (GRAY, P)	
	12	2	*164-5546*	1	TEE AS	
		2	**3E-7410**	1	TEE-O-RING	
		2	**3J-1907**	1	SEAL-O-RING	
	13	1,2	*164-5628*	3	CONNECTOR AS	
					(EACH INCLUDES)	
		1,2	**3J-1907**	1	SEAL-O-RING	
		1,2	**6V-8397**	1	SEAL-O-RING	
		1,2	**107-6631**	1	CONNECTOR-FILTER	
	14	2	*164-5629*	1	FITTING AS	
		2	**3J-1907**	1	SEAL-O-RING	
		2	**108-7516**	1	FITTING	
	15	2	*164-6874*	1	FITTING AS-ELBOW	
		2	**3J-1907**	1	SEAL-O-RING	
		2	**085-7356**	1	FITTING	
	16	2	**309-5769**	1	SWITCH AS-PRESSURE (ACTION INPUT, BOOM DOWN)	
		2	**102-8802**	1	KIT-RECEPTACLE (2-PIN)	
					(INCLUDES RECEPTACLE AS & WEDGE)	
		2	**9X-3401**	2	PIN-CONNECTOR (16-GA TO 18-GA)	
					—OR—	
		2	**126-1767**	2	PIN-CONNECTOR (14-GA)	
	17	2	*168-1968*	1	TEE AS	
		2	**3J-1907**	1	SEAL-O-RING	
		2	**6V-8397**	1	SEAL-O-RING	
		2	**126-6872**	1	TEE	
	18	2	**168-9759**	1	BLOCK	
	19	1	**184-9336**	1	SUPPORT	
	21	2	**236-2848**	1	HOSE AS	
CY	22	1	**310-0415**	1	VALVE GP-PILOT	572
	23	2	**272-4471**	1	SUPPORT AS	
	25	1	**272-4558**	1	SUPPORT AS	
	26	2	**282-7166**	1	HOSE AS	
	27	1	**289-5651**	2	HOSE AS	
	28	1	**289-5652**	1	HOSE AS	
	29	1	**289-5653**	1	HOSE AS	
	30	2	**289-5654**	1	HOSE AS	
	31	1	**289-5655**	1	HOSE AS	
	32	1	**289-5656**	1	HOSE AS	
	33	1,2	**289-5657**	2	HOSE AS	
	34	1	**289-5658**	1	HOSE AS	
Y	35	2	**297-0683**	1	VALVE GP-SOLENOID & PRESS REDC	595
	36	2	**307-5099**	1	SUPPORT	
I	37	2	**319-9978**	1	HOSE AS	
I	38	2	**319-9981**	1	HOSE AS	
I	39	1	**307-5153**	1	HOSE AS	

282-7230 **LINES GP-PILOT** *(contd.)* **i03162755**

NOTE	REF NO	GRAPHIC REF	PART NUMBER	QTY	PART NAME 1 2 3 4 5 6 (PRODUCT LEVEL)	SEE PAGE
	40	1,2	*148-8336*	15	CONNECTOR AS	
					(EACH INCLUDES)	
		1,2	**3J-1907**	1	SEAL-O-RING	
		1,2	**6V-8397**	1	SEAL-O-RING	
		1,2	**6V-8636**	1	CONNECTOR	
	41	2	*148-8353*	1	ELBOW AS	
		2	**3J-1907**	1	SEAL-O-RING	
		2	**6V-8397**	1	SEAL-O-RING	
		2	**6V-9001**	1	ELBOW	
	42	2	*148-8364*	2	ELBOW AS	
					(EACH INCLUDES)	
		2	**3K-0360**	1	SEAL-O-RING	
		2	**6V-8398**	1	SEAL-O-RING	
		2	**6V-8625**	1	ELBOW	
	43	1,2	*148-8378*	7	ELBOW AS	
					(EACH INCLUDES)	
		1,2	**3J-1907**	1	SEAL-O-RING	
		1,2	**6V-8397**	1	SEAL-O-RING	
		1,2	**6V-8724**	1	ELBOW	
	44	2	*148-8407*	4	PLUG AS	
					(EACH INCLUDES)	
		2	**3J-1907**	1	SEAL-O-RING	
		2	**9S-4191**	1	PLUG-O-RING	
	45	1	*148-8435*	1	TEE AS	
		1	**3J-1907**	1	SEAL-O-RING	
		1	**6V-8397**	2	SEAL-O-RING	
		1	**6V-8781**	1	TEE-FACE SEAL	
	46	2	*150-3036*	1	ELBOW AS	
		2	**3J-1907**	1	SEAL-O-RING	
		2	**6V-8397**	1	SEAL-O-RING	
		2	**8T-1905**	1	ELBOW	
	47	2	*150-4027*	1	TEE AS	
		2	**3E-2310**	1	TEE	
		2	**3J-1907**	1	SEAL-O-RING	
		2	**6V-8397**	1	SEAL-O-RING	
	48	2	*164-5567*	1	COUPLER AS-QUICK DISCONNECT	
		2	**3J-1907**	1	SEAL-O-RING	
		2	**6V-3965**	1	FITTING (QUICK DISCONNECT)	
	49	1	**5P-4325**	1	CLIP	
	50	2	**6V-0852**	1	CAP-DUST	
	51	1,2	**8T-4121**	19	WASHER-HARD (11X21X2.5-MM THK)	
M	53	1,2	**8T-4137**	17	BOLT (M10X1.5X20-MM)	
M	54	2	**8T-4189**	2	BOLT (M8X1.25X20-MM)	
M	55	2	**8T-4198**	2	BOLT (M10X1.5X100-MM)	
	56	2	**8T-4224**	2	WASHER-HARD (8.8X16X2-MM THK)	
	57	1	**319-9977**	1	SUPPORT	
	58	1	*148-8366*	8	ELBOW AS	
					(EACH INCLUDES)	
		1	**6V-8397**	2	SEAL-O-RING	
		1	**6V-8987**	1	ELBOW	
	59	1	**099-7241**	8	WASHER-HARD (19X34X3-MM THK)	
I	60	1	**087-5768**	1	HOSE AS	
I	61	1	**087-5766**	1	HOSE AS	
	62	1	**6V-9168**	8	NUT (11/16-16-THD)	

C-CHANGE FROM PREVIOUS TYPE
I-REFER TO HYDRAULIC INFORMATION SYSTEM
M-METRIC PART
Y-SEPARATE ILLUSTRATION

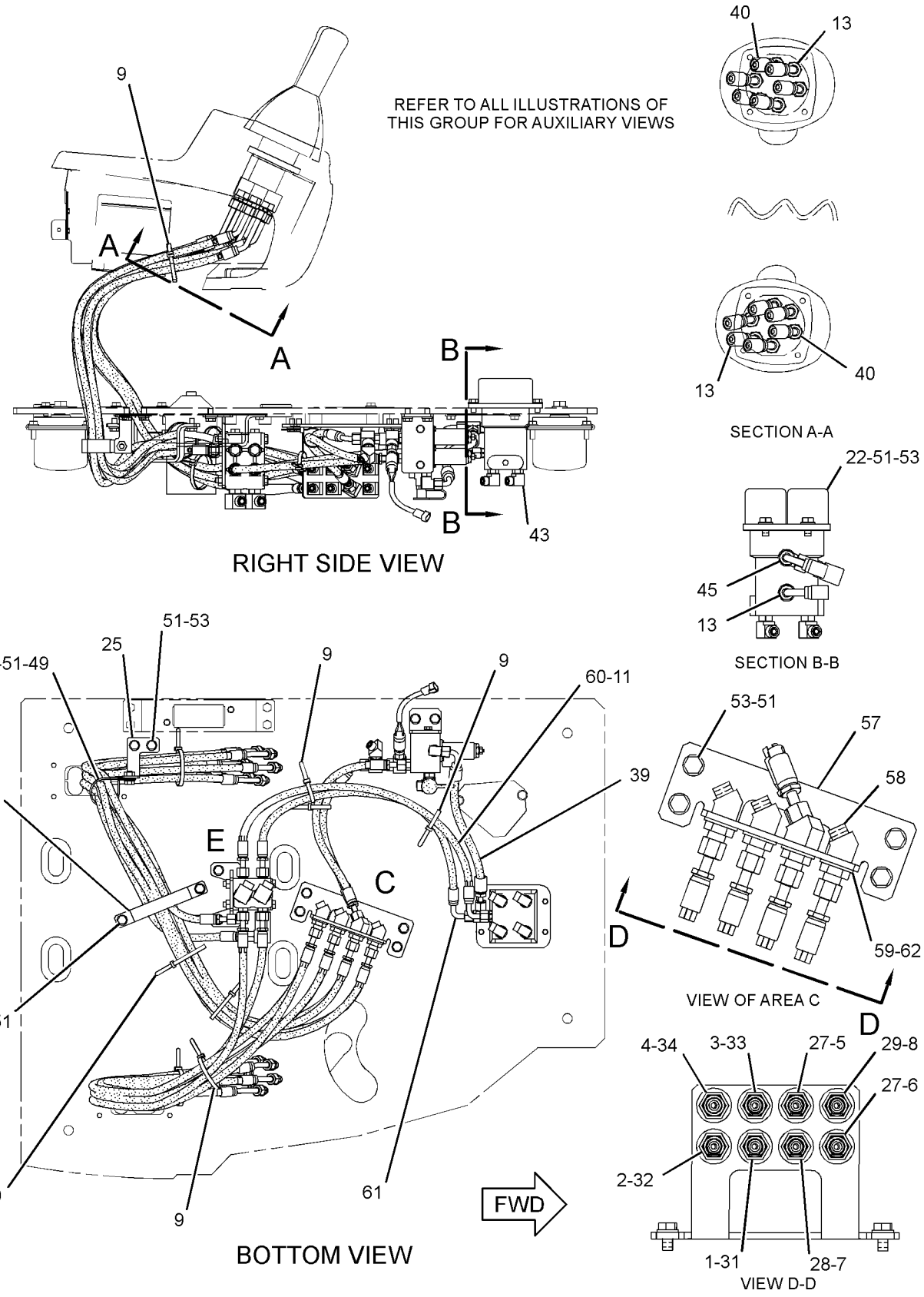

GRAPHIC #1

g01519636

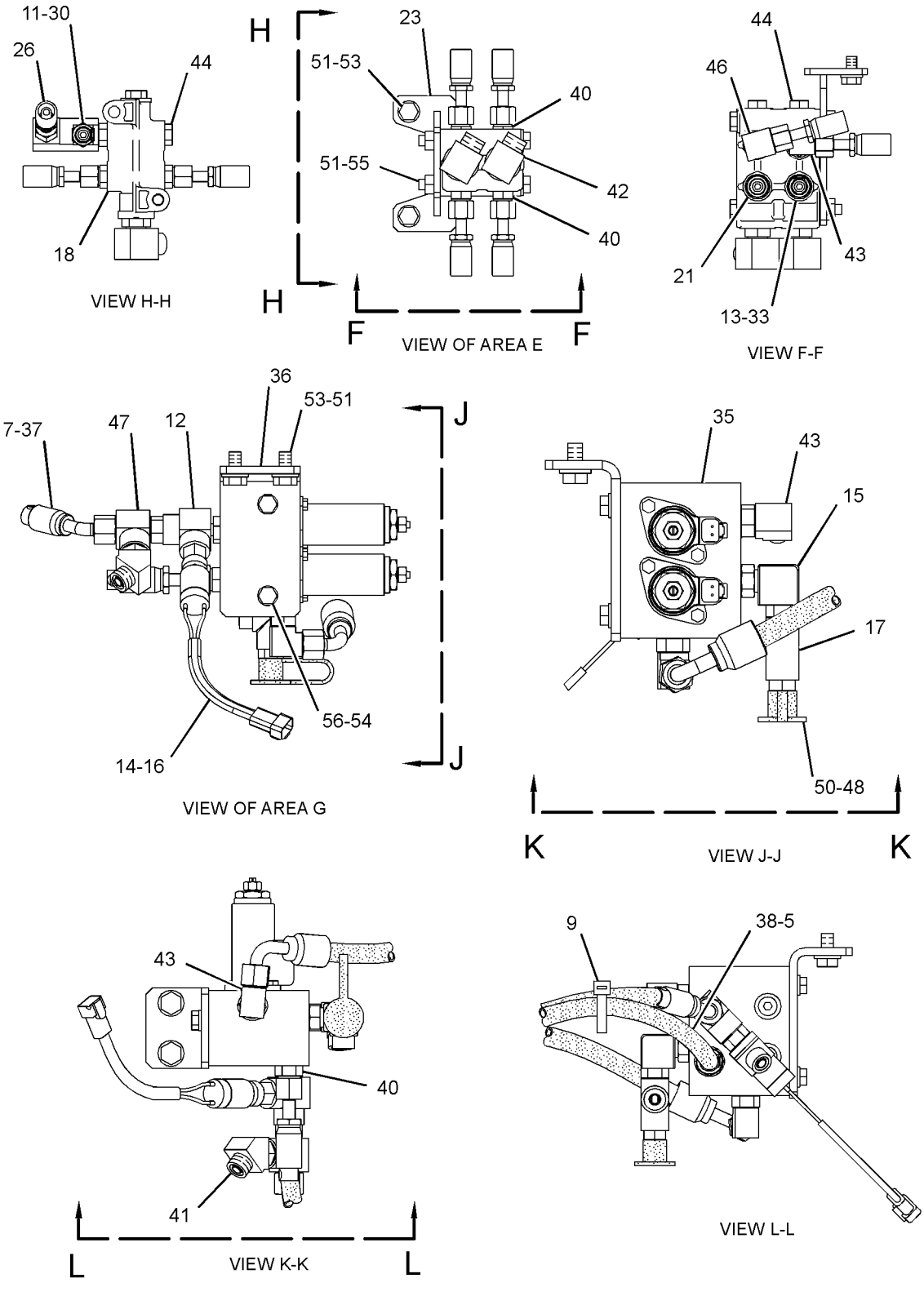

GRAPHIC #2 **<END>** g01519637

HYDRAULIC SYSTEM

282-7232 LINES GP-PILOT–CONTROL VALVE

S/N: BYJ1-UP; PDP1-UP

PART OF 270-5956, 270-5957 HYDRAULIC AR

SMCS-5057, 5059 **i02961302**

NOTE	REF NO	GRAPHIC REF	PART NUMBER	QTY	PART NAME 1 2 3 4 5 6 (PRODUCT LEVEL)	SEE PAGE
I	1	1	**4I-0806**	1	HOSE AS	
	2	1	**218-1336**	1	HOSE AS	
I	3	1	**4I-5795**	1	HOSE AS	
	4	1	**4I-9521**	6	BAND-MARKER (RED, L1)	
	5	1	**4I-9522**	6	BAND-MARKER (YELLOW, L2)	
	6	1	**4I-9523**	2	BAND-MARKER (BLUE, L3)	
	7	1	**4I-9524**	4	BAND-MARKER (BROWN, L4)	
	8	1	**4I-9525**	6	BAND-MARKER (ORANGE, R1)	
	9	1	**4I-9526**	6	BAND-MARKER (WHITE, R2)	
	10	1	**4I-9527**	2	BAND-MARKER (GREEN, R3)	
	11	1	**4I-9528**	2	BAND-MARKER (PURPLE, R4)	
	12	1	**6V-0852**	1	CAP-DUST	
	13	1	**7K-1181**	11	STRAP-CABLE	
I	14	1	**7Y-4387**	1	HOSE AS	
I	15	1	**4I-6054**	1	HOSE AS	
I	16	1	**104-8771**	2	HOSE AS	
I	17	1	**104-8780**	1	HOSE AS	
I	18	1	**104-8783**	1	HOSE AS	
I	19	1	**108-7313**	2	HOSE AS	
I	20	1	**108-7387**	1	HOSE AS	
I	21	1	**108-7572**	1	HOSE AS	
	22	1	**133-5813**	2	BAND-MARKER (GRAY, P)	
	23	1	*164-6874*	1	FITTING AS-ELBOW	
		1	**3J-1907**	1	SEAL-O-RING	
		1	**085-7356**	1	FITTING	
	24	1	**320-0066**	1	HOSE AS	
	25	1	*148-8336*	3	CONNECTOR AS	
					(EACH INCLUDES)	
		1	**3J-1907**	1	SEAL-O-RING	
		1	**6V-8397**	1	SEAL-O-RING	
		1	**6V-8636**	1	CONNECTOR	
	26	1	*148-8378*	3	ELBOW AS	
					(EACH INCLUDES)	
		1	**3J-1907**	1	SEAL-O-RING	
		1	**6V-8397**	1	SEAL-O-RING	
		1	**6V-8724**	1	ELBOW	
	27	1	*148-8435*	5	TEE AS	
					(EACH INCLUDES)	
		1	**3J-1907**	1	SEAL-O-RING	
		1	**6V-8397**	2	SEAL-O-RING	
		1	**6V-8781**	1	TEE-FACE SEAL	
	28	1	*150-3036*	2	ELBOW AS	
					(EACH INCLUDES)	
		1	**3J-1907**	1	SEAL-O-RING	
		1	**6V-8397**	1	SEAL-O-RING	
		1	**8T-1905**	1	ELBOW	
	29	1	*150-4027*	2	TEE AS	
					(EACH INCLUDES)	
		1	**3E-2310**	1	TEE	
		1	**3J-1907**	1	SEAL-O-RING	
		1	**6V-8397**	1	SEAL-O-RING	
	30	1	*164-5567*	1	COUPLER AS-QUICK DISCONNECT	
		1	**3J-1907**	1	SEAL-O-RING	
		1	**6V-3965**	1	FITTING (QUICK DISCONNECT)	

I-REFER TO HYDRAULIC INFORMATION SYSTEM

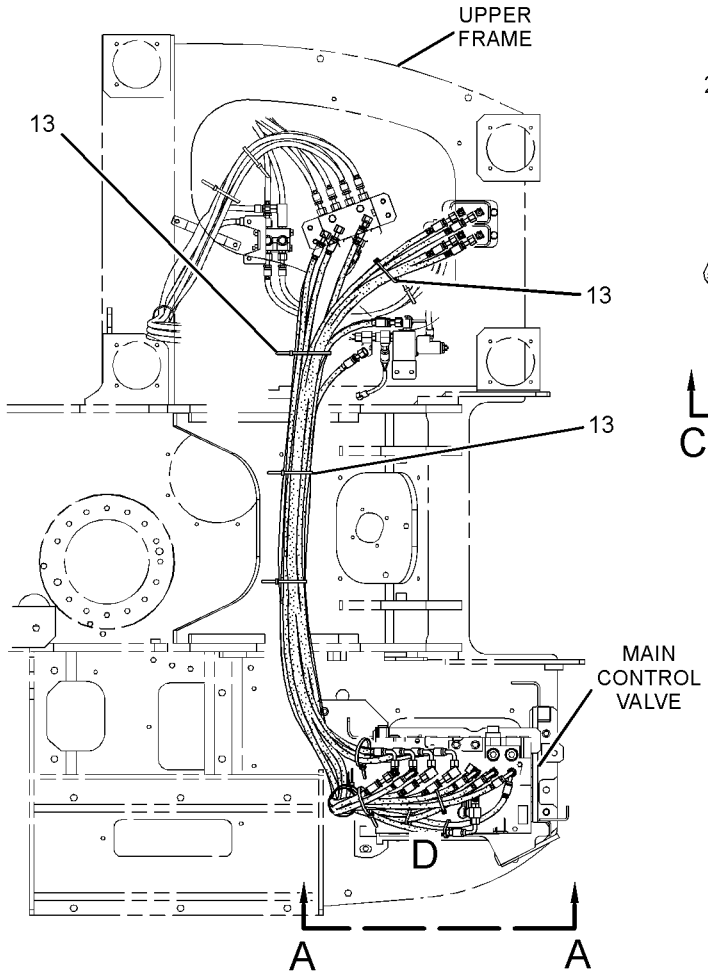

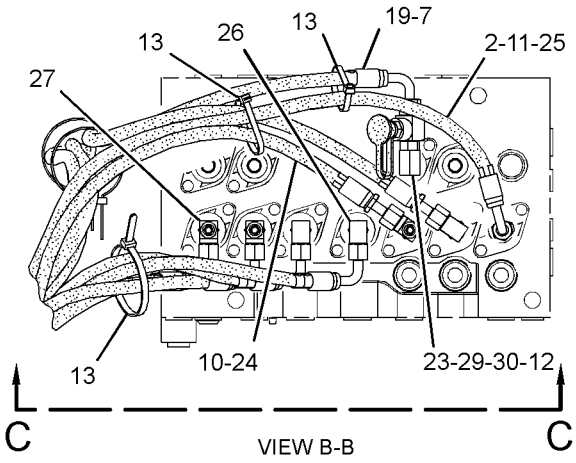

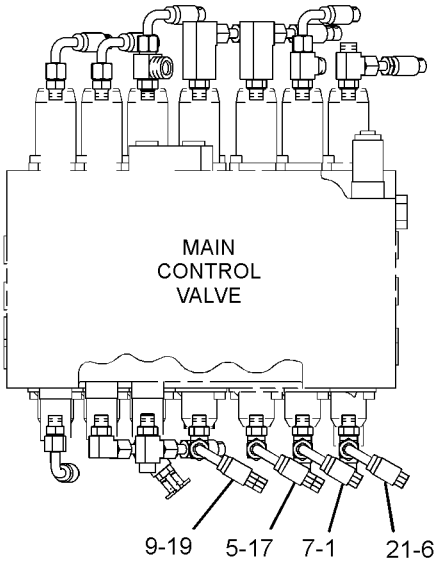

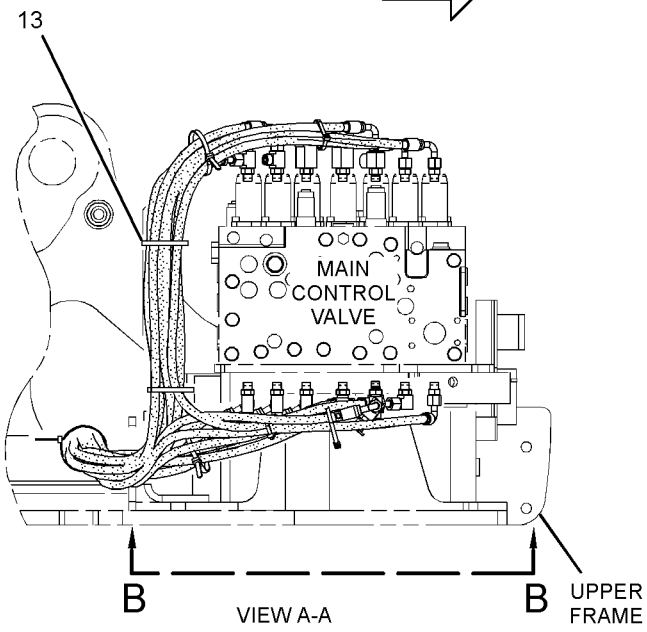

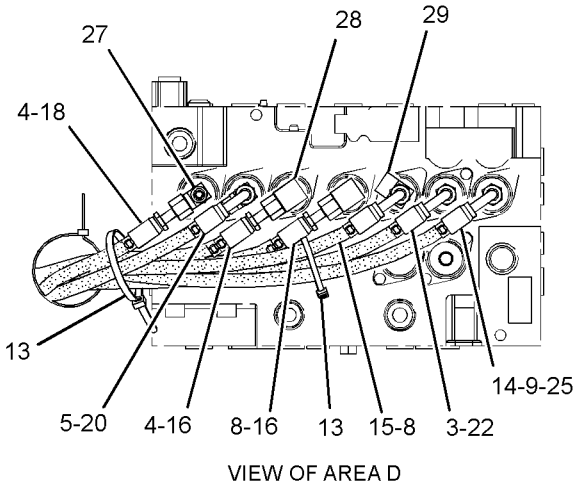

GRAPHIC #1 **<END>** g01514539

HYDRAULIC SYSTEM

282-7234 LINES GP-PILOT—CONTROL VALVE

S/N: BYJ1-UP; PDP1-UP

PART OF 270-5956, 270-5957 HYDRAULIC AR

SMCS-5057, 5059 **i02961301**

NOTE	REF NO	GRAPHIC REF	PART NUMBER	QTY	PART NAME 1 2 3 4 5 6 (PRODUCT LEVEL)	SEE PAGE
I	1	3	**4I-0797**	1	HOSE AS	
I	2	3	**4I-0821**	1	HOSE AS	
I	3	2	**4I-0836**	1	HOSE AS	
I	4	2	**4I-1704**	1	HOSE AS	
I	5	2	**4I-1739**	1	HOSE AS	
I	6	3	**4I-1751**	1	HOSE AS	
I	7	2	**4I-1760**	1	HOSE AS	
I	8	1	**4I-1780**	1	HOSE AS	
I	9	3	**4I-1783**	1	HOSE AS	
I	10	1	**4I-3573**	1	HOSE AS	
	11	3	**4I-3941**	1	FITTING AS	
	12	2,3	**4I-9521**	4	BAND-MARKER (RED, L1)	
	13	1	**4I-9522**	2	BAND-MARKER (YELLOW, L2)	
	14	1,2	**4I-9523**	10	BAND-MARKER (BLUE, L3)	
	15	1	**4I-9524**	2	BAND-MARKER (BROWN, L4)	
	16	3	**4I-9525**	2	BAND-MARKER (ORANGE, R1)	
	17	1,2	**4I-9527**	8	BAND-MARKER (GREEN, R3)	
	18	2	**4I-9528**	2	BAND-MARKER (PURPLE, R4)	
I	19	2	**5I-4396**	1	HOSE AS	
	20	1,2,3	**7K-1181**	18	STRAP-CABLE	
I	21	2	**7Y-5088**	1	HOSE AS	
I	22	2	**7Y-8379**	2	HOSE AS	
I	23	3	**087-5762**	1	HOSE AS	
I	24	2	**087-5774**	1	HOSE AS	
I	25	2	**104-8780**	1	HOSE AS	
I	26	2	**111-0988**	1	HOSE AS	
Y	27	3	**123-2430**	1	VALVE GP-SHUTTLE	582
	28	3	**123-2431**	1	BODY-VALVE	
	29	3	**124-1008**	1	GUARD	
	30	1	**133-5813**	2	BAND-MARKER (GRAY, P)	
M	31	2	**135-8577**	3	BOLT AS (M12X1.75X35-MM)	
	32	3	*164-5546*	1	TEE AS	
		3	**3E-7410**	1	TEE-O-RING	
		3	**3J-1907**	1	SEAL-O-RING	
	33	3	*164-5628*	1	CONNECTOR AS	
		3	**3J-1907**	1	SEAL-O-RING	
		3	**6V-8397**	1	SEAL-O-RING	
		3	**107-6631**	1	CONNECTOR-FILTER	
	34	3	*164-5629*	1	FITTING AS	
		3	**3J-1907**	1	SEAL-O-RING	
		3	**108-7516**	1	FITTING	
	35	3	*164-6874*	1	FITTING AS-ELBOW	
		3	**3J-1907**	1	SEAL-O-RING	
		3	**085-7356**	1	FITTING	
Y	36	2	*164-6981*	1	ACCUMULATOR GP-HYDRAULIC (CHARGED) (ACTION INPUT, PILOT SYSTEM)	308
	37	3	**198-2003**	1	CONNECTOR	
	38	2	**208-3238**	1	PLATE	
	39	2,3	**212-5402**	1	HOSE AS	
Y	40	2	**215-5037**	1	MANIFOLD GP-CONTROL (PILOT OIL SUPPLY)	494
	41	1	**221-4807**	1	HOSE AS	
	42	3	**221-4882**	1	HOSE AS	
Y	43	3	**232-4102**	1	VALVE GP-PRESSURE REDUCING (BOOM, SWING PRIORITY)	574
	44	3	**275-1442**	1	CLIP (TAB)	
	45	3	**275-1443**	1	CLIP (SLOT)	

282-7234 **LINES GP-PILOT** *(contd.)* **i02961301**

NOTE	REF NO	GRAPHIC REF	PART NUMBER	QTY	PART NAME 1 2 3 4 5 6 (PRODUCT LEVEL)	SEE PAGE
	46	3	**275-1444**	1	GROMMET	
I	47	1	**275-1624**	1	HOSE AS	
	48	1	**278-6626**	2	HOSE AS	
	49	1,3	**282-7092**	8	GROMMET	
I	50	2	**292-7357**	1	HOSE AS	
	51	3	**309-5768**	2	SWITCH AS-PRESSURE (TRAVEL)	
					(EACH INCLUDES)	
		3	**155-2270**	2	KIT-CONNECTING PLUG (2-PIN)	
					(INCLUDES PLUG AS,WEDGE & INTERFACE SEAL)	
		3	**9X-3402**	2	SOCKET-CONNECTOR (16-GA TO 18-GA)	
					—OR—	
		3	**126-1768**	2	SOCKET-CONNECTOR (14-GA)	
I	52	1	**319-9946**	1	HOSE AS	
I	53	1	**319-9949**	1	HOSE AS	
I	54	2	**319-9973**	1	HOSE AS	
	55	2	**325-8785**	1	SUPPORT AS	
	56	3	**091-9035**	1	SPACER (11X25X20-MM THK)	
M	57	3	**099-3649**	4	BOLT (M8X1.25X40-MM)	
	58	2,3	*148-8336*	9	CONNECTOR AS	
					(EACH INCLUDES)	
		2,3	**3J-1907**	1	SEAL-O-RING	
		2,3	**6V-8397**	1	SEAL-O-RING	
		2,3	**6V-8636**	1	CONNECTOR	
	59	3	*148-8338*	3	CONNECTOR AS	
					(EACH INCLUDES)	
		3	**3J-1907**	1	SEAL-O-RING	
		3	**6V-8397**	1	SEAL-O-RING	
		3	**8T-0075**	1	CONNECTOR	
	60	2	*148-8340*	4	CONNECTOR AS	
					(EACH INCLUDES)	
		2	**3K-0360**	1	SEAL-O-RING	
		2	**6V-8398**	1	SEAL-O-RING	
		2	**6V-8639**	1	CONNECTOR	
	61	2,3	*148-8353*	5	ELBOW AS	
					(EACH INCLUDES)	
		2,3	**3J-1907**	1	SEAL-O-RING	
		2,3	**6V-8397**	1	SEAL-O-RING	
		2,3	**6V-9001**	1	ELBOW	
	62	3	*148-8367*	2	ELBOW AS	
					(EACH INCLUDES)	
		3	**6V-8397**	1	SEAL-O-RING	
		3	**6V-9850**	1	ELBOW	
	63	3	*148-8371*	1	ELBOW AS	
		3	**6V-8397**	1	SEAL-O-RING	
		3	**8C-8988**	1	ELBOW	
	64	2,3	*148-8378*	8	ELBOW AS	
					(EACH INCLUDES)	
		2,3	**3J-1907**	1	SEAL-O-RING	
		2,3	**6V-8397**	1	SEAL-O-RING	
		2,3	**6V-8724**	1	ELBOW	
	65	2,3	*148-8407*	7	PLUG AS	
					(EACH INCLUDES)	
		2,3	**3J-1907**	1	SEAL-O-RING	
		2,3	**9S-4191**	1	PLUG-O-RING	
	66	3	*148-8435*	4	TEE AS	
					(EACH INCLUDES)	
		3	**3J-1907**	1	SEAL-O-RING	
		3	**6V-8397**	2	SEAL-O-RING	
		3	**6V-8781**	1	TEE-FACE SEAL	

282-7234 **LINES GP-PILOT** *(contd.)* **i02961301**

NOTE	REF NO	GRAPHIC REF	PART NUMBER	QTY	PART NAME 1 2 3 4 5 6 (PRODUCT LEVEL)	SEE PAGE
	67	2,3	*150-3036*	3	ELBOW AS	
					(EACH INCLUDES)	
		2,3	**3J-1907**	1	SEAL-O-RING	
		2,3	**6V-8397**	1	SEAL-O-RING	
		2,3	**8T-1905**	1	ELBOW	
	68	3	**3J-1907**	1	SEAL-O-RING	
	69	1	**5P-7462**	1	CLIP (SLOT)	
	70	1	**5P-7463**	1	CLIP (TAB)	
	71	2	**6K-8178**	1	CLIP	
	72	1	**6V-0683**	1	GROMMET	
	73	3	**6V-8397**	3	SEAL-O-RING	
	74	1,2,3	**8T-4121**	3	WASHER-HARD (11X21X2.5-MM THK)	
M	75	1	**8T-4136**	1	BOLT (M10X1.5X25-MM)	
M	76	2	**8T-4139**	3	BOLT (M12X1.75X30-MM)	
M	77	3	**8T-4172**	2	BOLT (M10X1.5X80-MM)	
M	78	3	**8T-4182**	1	BOLT (M10X1.5X45-MM)	
M	79	2	**8T-4191**	1	BOLT (M10X1.5X16-MM)	
M	80	2	**8T-4192**	4	BOLT (M12X1.75X25-MM)	
	81	2	**8T-4223**	7	WASHER-HARD (13.5X25.5X3-MM THK)	

I-REFER TO HYDRAULIC INFORMATION SYSTEM
M-METRIC PART
Y-SEPARATE ILLUSTRATION

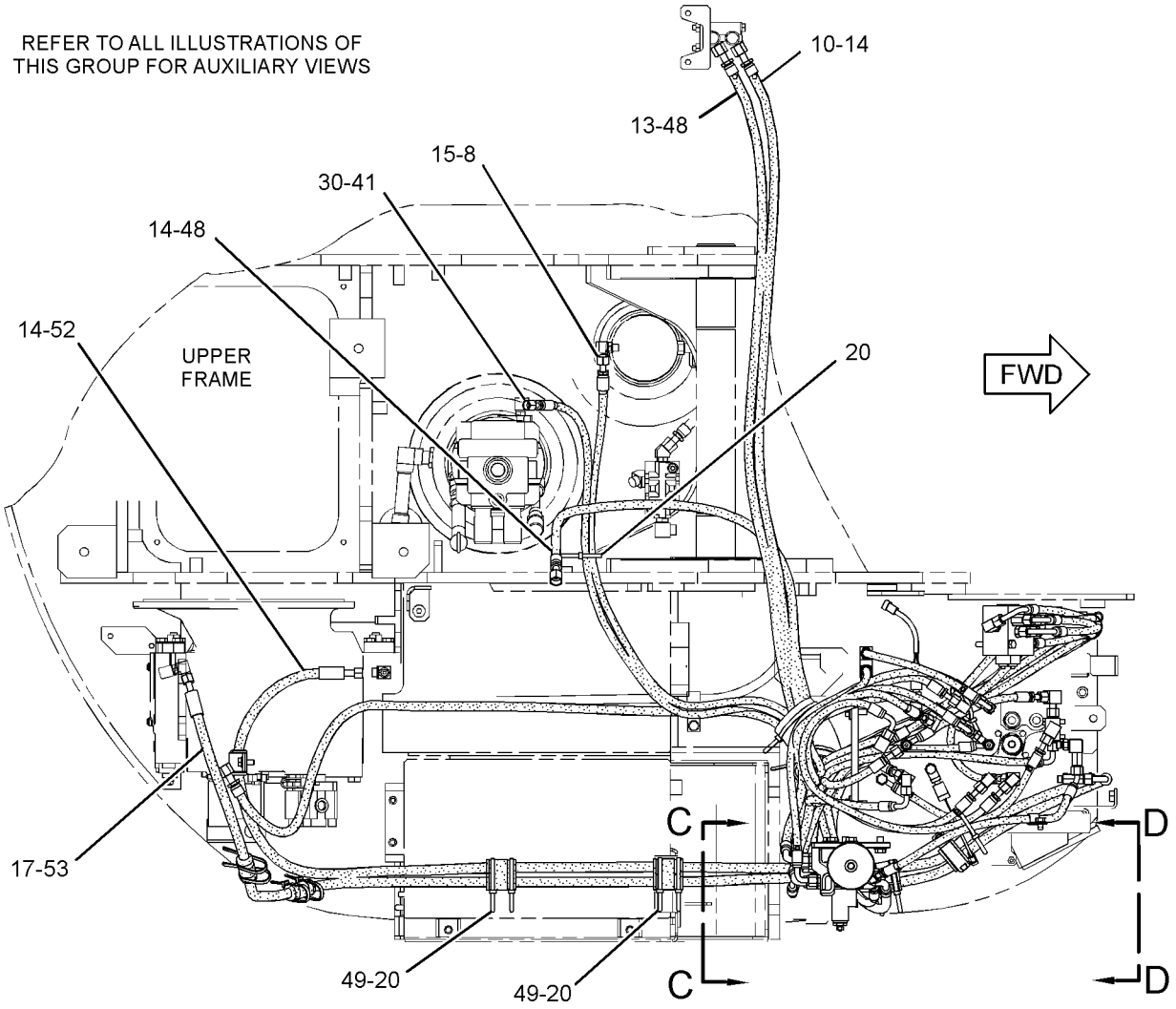

TOP VIEW

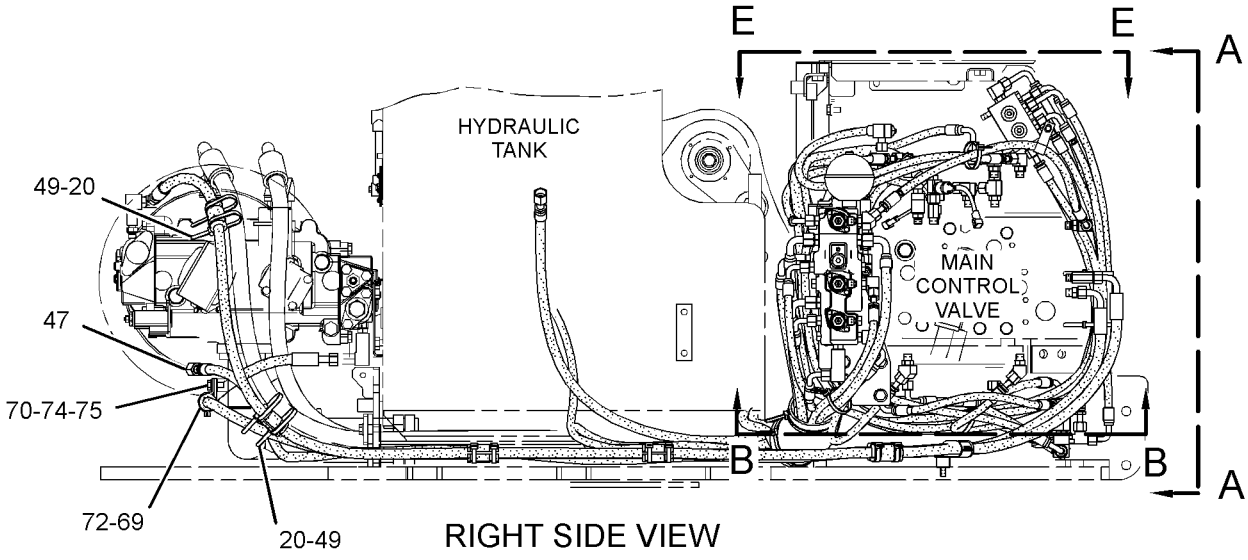

RIGHT SIDE VIEW

GRAPHIC #1 g01514394

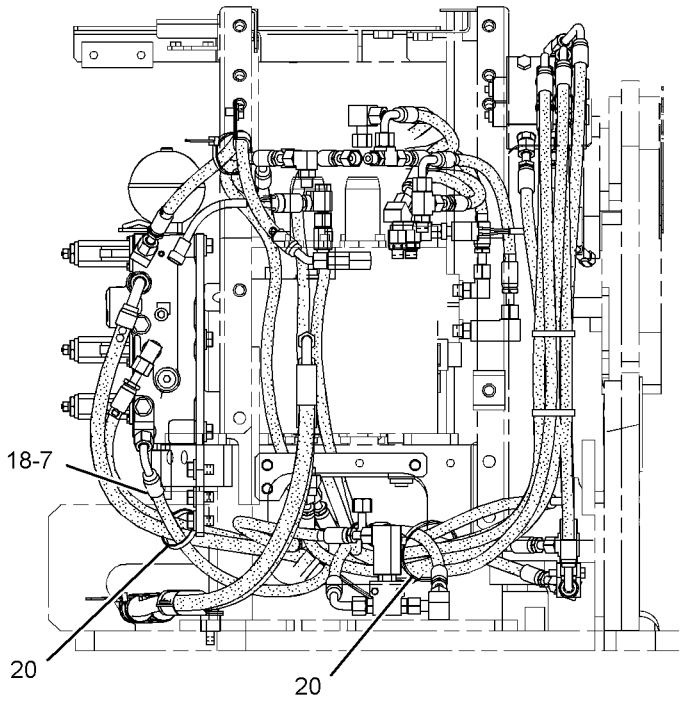

VIEW A-A

REFER TO ALL ILLUSTRATIONS OF
THIS GROUP FOR AUXILIARY VIEWS

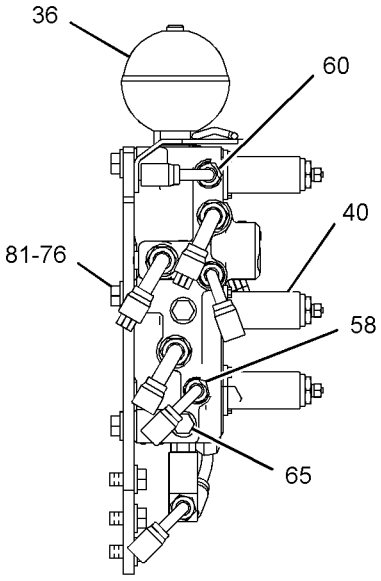

VIEW C-C

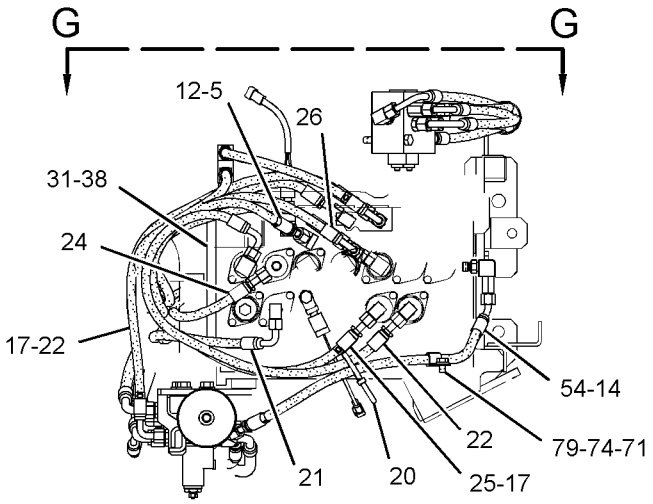

VIEW E-E

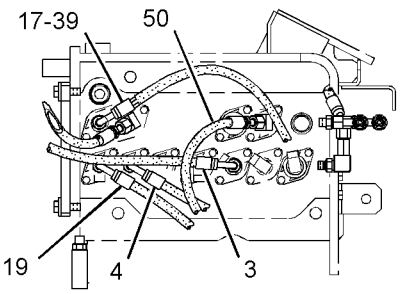

SECTION B-B

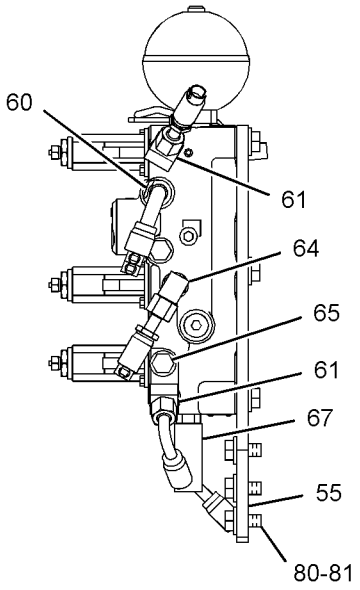

VIEW D-D

GRAPHIC #2

g01514395

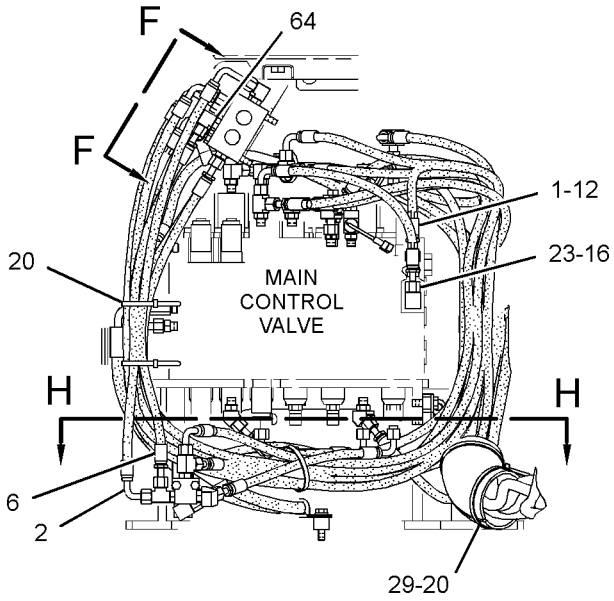

VIEW G-G

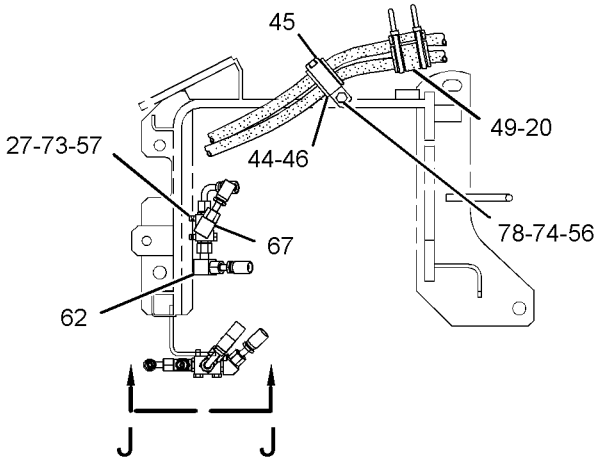

SECTION H-H

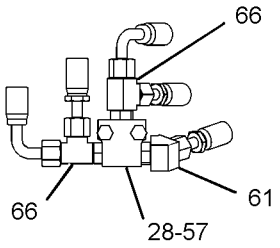

VIEW J-J

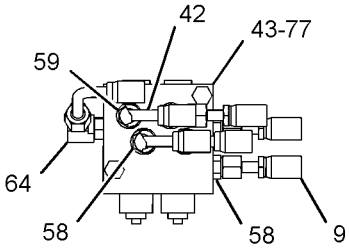

VIEW F-F

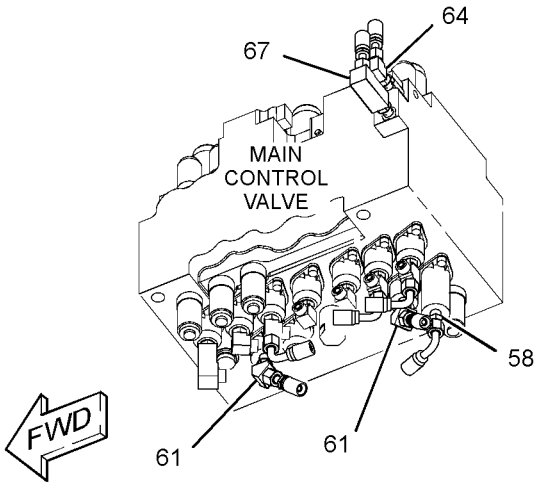

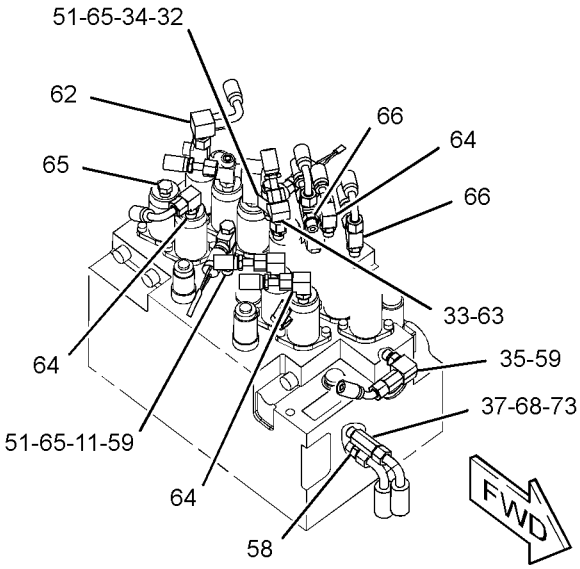

GRAPHIC #3 **<END>** g01514393

HYDRAULIC SYSTEM

282-7235 LINES GP-PILOT—PUMP

S/N: BYJ1-UP; PDP1-UP

PART OF 270-5956, 270-5957 HYDRAULIC AR

SMCS-5057, 5059 **i03160601**

NOTE	REF NO	GRAPHIC REF	PART NUMBER	QTY	PART NAME 1 2 3 4 5 6 (PRODUCT LEVEL)	SEE PAGE
	1	2	**7K-1181**	4	STRAP-CABLE	
I	2	2	**087-5771**	1	HOSE AS	
	3	1	**317-4884**	1	HOSE AS	
	4	2	**123-2431**	1	BODY-VALVE	
	5	2	*164-6874*	1	FITTING AS-ELBOW	
		2	**3J-1907**	1	SEAL-O-RING	
		2	**085-7356**	1	FITTING	
	6	2	**221-8912**	2	FLANGE	
I	7	1	**227-0292**	2	HOSE AS	
	8	2	**260-2180**	1	SENSOR AS-PRESSURE (PUMP DISCHARGE 1)	
	8A	2	**260-2180**	1	SENSOR AS-PRESSURE (PUMP DISCHARGE 2)	
					(EACH SENSOR AS INCLUDES)	
		2	**095-1777**	1	RING-BACKUP	
		2	**260-2191**	1	SEAL-O-RING	
	9	2	**285-2663**	2	FITTING AS	
					(EACH INCLUDES)	
		2	**3J-1907**	1	SEAL-O-RING	
	10	2	**292-7360**	1	SUPPORT AS	
	11	2	*148-8327*	1	CONNECTOR AS	
		2	**3D-2824**	1	SEAL-O-RING	
		2	**6V-8637**	1	CONNECTOR	
		2	**6V-9746**	1	SEAL-O-RING	
	12	2	*148-8338*	1	CONNECTOR AS	
		2	**3J-1907**	1	SEAL-O-RING	
		2	**6V-8397**	1	SEAL-O-RING	
		2	**8T-0075**	1	CONNECTOR	
	13	2	*148-8354*	1	ELBOW AS	
		2	**3K-0360**	1	SEAL-O-RING	
		2	**6V-8398**	1	SEAL-O-RING	
		2	**6V-9002**	1	ELBOW	
	14	2	*148-8347*	1	ELBOW AS	
		2	**3D-2824**	1	SEAL-O-RING	
		2	**6V-9007**	1	ELBOW	
		2	**6V-9746**	1	SEAL-O-RING	
	15	2	*148-8353*	1	ELBOW AS	
		2	**3J-1907**	1	SEAL-O-RING	
		2	**6V-8397**	1	SEAL-O-RING	
		2	**6V-9001**	1	ELBOW	
	16	2	*148-8378*	2	ELBOW AS	
					(EACH INCLUDES)	
		2	**3J-1907**	1	SEAL-O-RING	
		2	**6V-8397**	1	SEAL-O-RING	
		2	**6V-8724**	1	ELBOW	
	17	1	*148-8407*	1	PLUG AS	
		1	**3J-1907**	1	SEAL-O-RING	
		1	**9S-4191**	1	PLUG-O-RING	
	18	2	*150-4037*	1	TEE AS	
		2	**6V-8398**	2	SEAL-O-RING	
		2	**6V-9844**	1	TEE-SWIVEL	
	19	2	*150-4043*	1	CONNECTOR AS	
		2	**3J-1907**	1	SEAL-O-RING	
		2	**6V-8398**	1	SEAL-O-RING	
		2	**6V-9873**	1	CONNECTOR	
	20	2	*153-6237*	1	ELBOW AS	
		2	**3D-2824**	1	SEAL-O-RING	
		2	**6V-9004**	1	ELBOW	

282-7235 **LINES GP-PILOT** *(contd.)* **i03160601**

NOTE	REF NO	GRAPHIC REF	PART NUMBER	QTY	PART NAME 1 2 3 4 5 6 (PRODUCT LEVEL)	SEE PAGE
		2	**6V-9746**	1	SEAL-O-RING	
	21	1,2	*164-5567*	4	COUPLER AS-QUICK DISCONNECT	
					(EACH INCLUDES)	
		1,2	**3J-1907**	1	SEAL-O-RING	
		1,2	**6V-3965**	1	FITTING (QUICK DISCONNECT)	
	22	1,2	**6V-0852**	4	CAP-DUST	
M	23	2	**7X-0818**	2	BOLT (M8X1.25X45-MM)	
	24	2	**8T-4121**	2	WASHER-HARD (11X21X2.5-MM THK)	
M	25	2	**8T-4136**	2	BOLT (M10X1.5X25-MM)	
M	26	2	**8T-4189**	4	BOLT (M8X1.25X20-MM)	
	27	2	**8T-4224**	4	WASHER-HARD (8.8X16X2-MM THK)	

I-REFER TO HYDRAULIC INFORMATION SYSTEM
M-METRIC PART

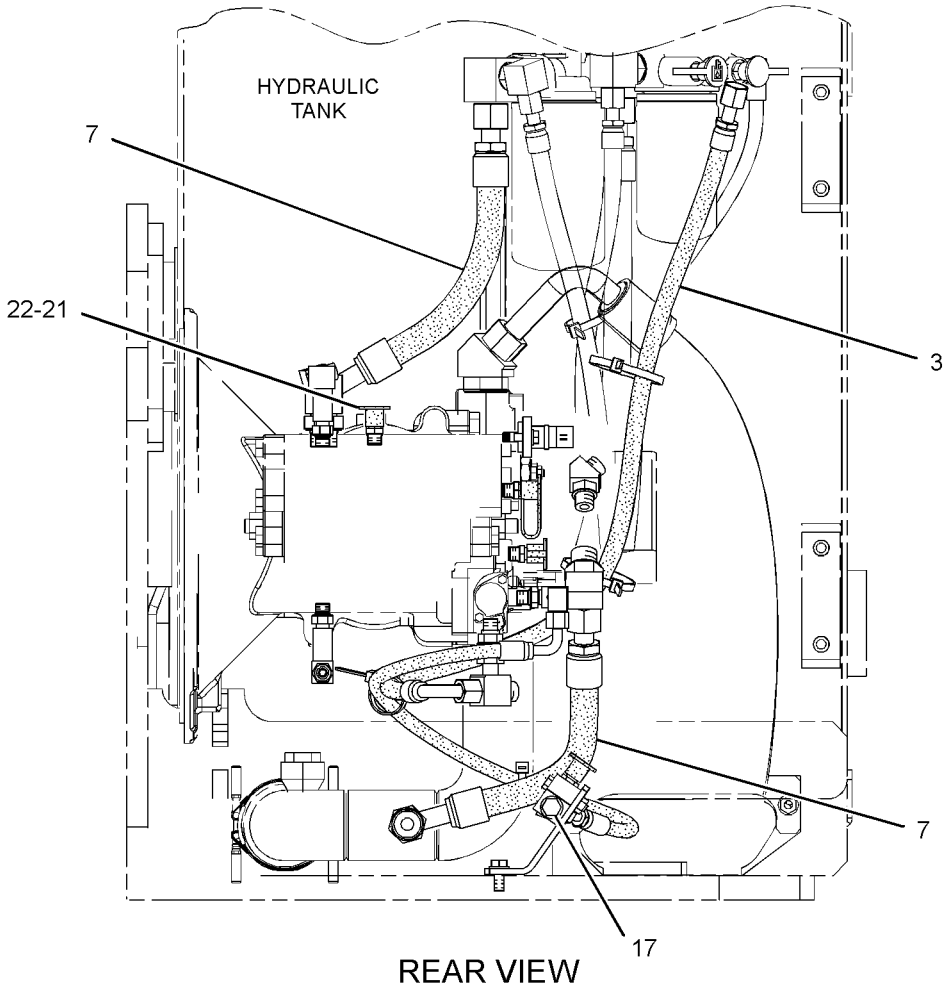

GRAPHIC #1 g01641776

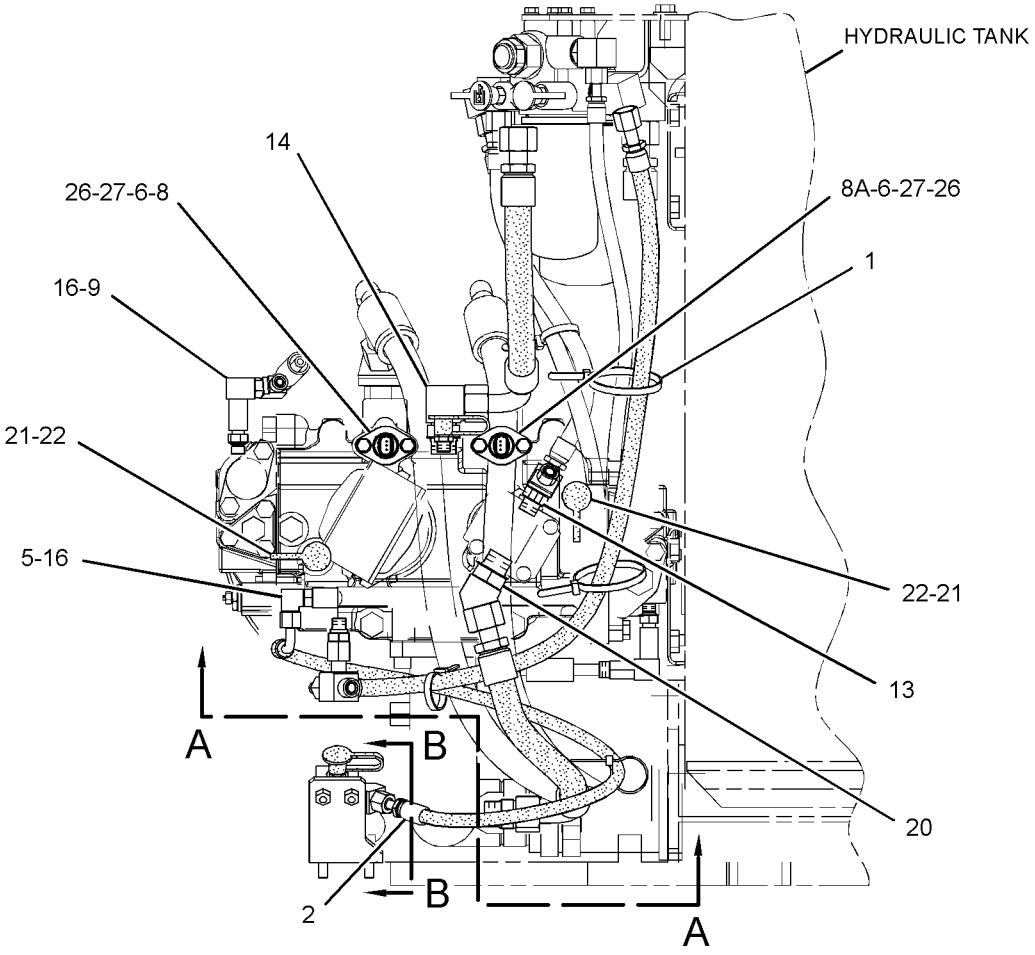

RIGHT SIDE VIEW

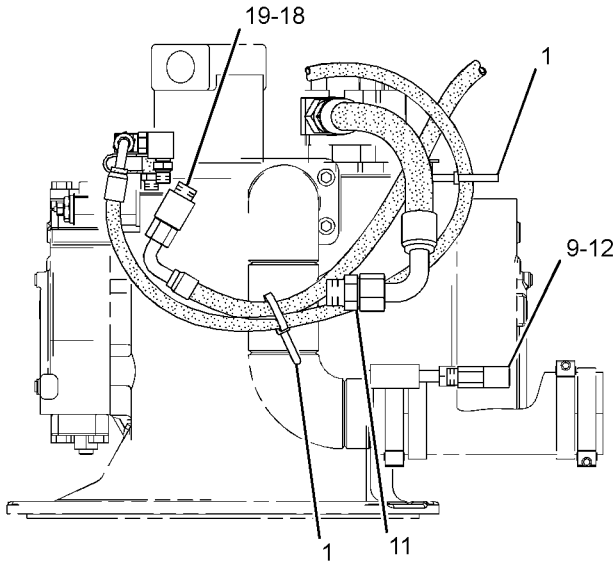

SECTION A-A

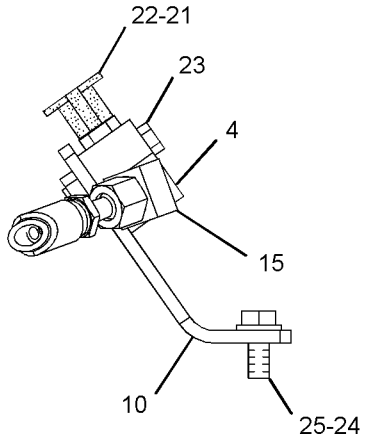

SECTION B-B

GRAPHIC #2 **<END>** g01641777

282-7251 LINES GP-PILOT—SHUTTLE VALVE

S/N: BYJ1-UP; PDP1-UP
PART OF 270-5993, 270-5996 CONTROL AR-AUXILIARY
AN ATTACHMENT

SMCS-5057, 5059 **i02961307**

NOTE	REF NO	GRAPHIC REF	PART NUMBER	QTY	PART NAME 1 2 3 4 5 6 (PRODUCT LEVEL)	SEE PAGE
	1	1	**4I-9525**	2	BAND-MARKER (ORANGE, R1)	
	2	1	**4I-9527**	2	BAND-MARKER (GREEN, R3)	
Y	3	1	**185-0462**	1	VALVE GP-SHUTTLE	585
	4	1	**272-4474**	1	SUPPORT AS	
I	5	1	**307-5100**	1	HOSE AS	
I	6	1	**307-5103**	1	HOSE AS	
	7	1	**309-5769**	1	SWITCH AS-PRESSURE (ACTION INPUT, BOOM UP)	
		1	**102-8802**	1	KIT-RECEPTACLE (2-PIN)	
					(INCLUDES RECEPTACLE AS & WEDGE)	
		1	**9X-3401**	2	PIN-CONNECTOR (16-GA TO 18-GA)	
					—OR—	
		1	**126-1767**	2	PIN-CONNECTOR (14-GA)	
	8	1	*148-8336*	8	CONNECTOR AS	
					(EACH INCLUDES)	
		1	**3J-1907**	1	SEAL-O-RING	
		1	**6V-8397**	1	SEAL-O-RING	
		1	**6V-8636**	1	CONNECTOR	
	9	1	*148-8353*	8	ELBOW AS	
					(EACH INCLUDES)	
		1	**3J-1907**	1	SEAL-O-RING	
		1	**6V-8397**	1	SEAL-O-RING	
		1	**6V-9001**	1	ELBOW	
	10	1	**7K-1181**	1	STRAP-CABLE	
	11	1	**8T-4121**	7	WASHER-HARD (11X21X2.5-MM THK)	
M	12	1	**8T-4136**	3	BOLT (M10X1.5X25-MM)	
M	13	1	**8T-4137**	4	BOLT (M10X1.5X20-MM)	

I-REFER TO HYDRAULIC INFORMATION SYSTEM
M-METRIC PART
Y-SEPARATE ILLUSTRATION

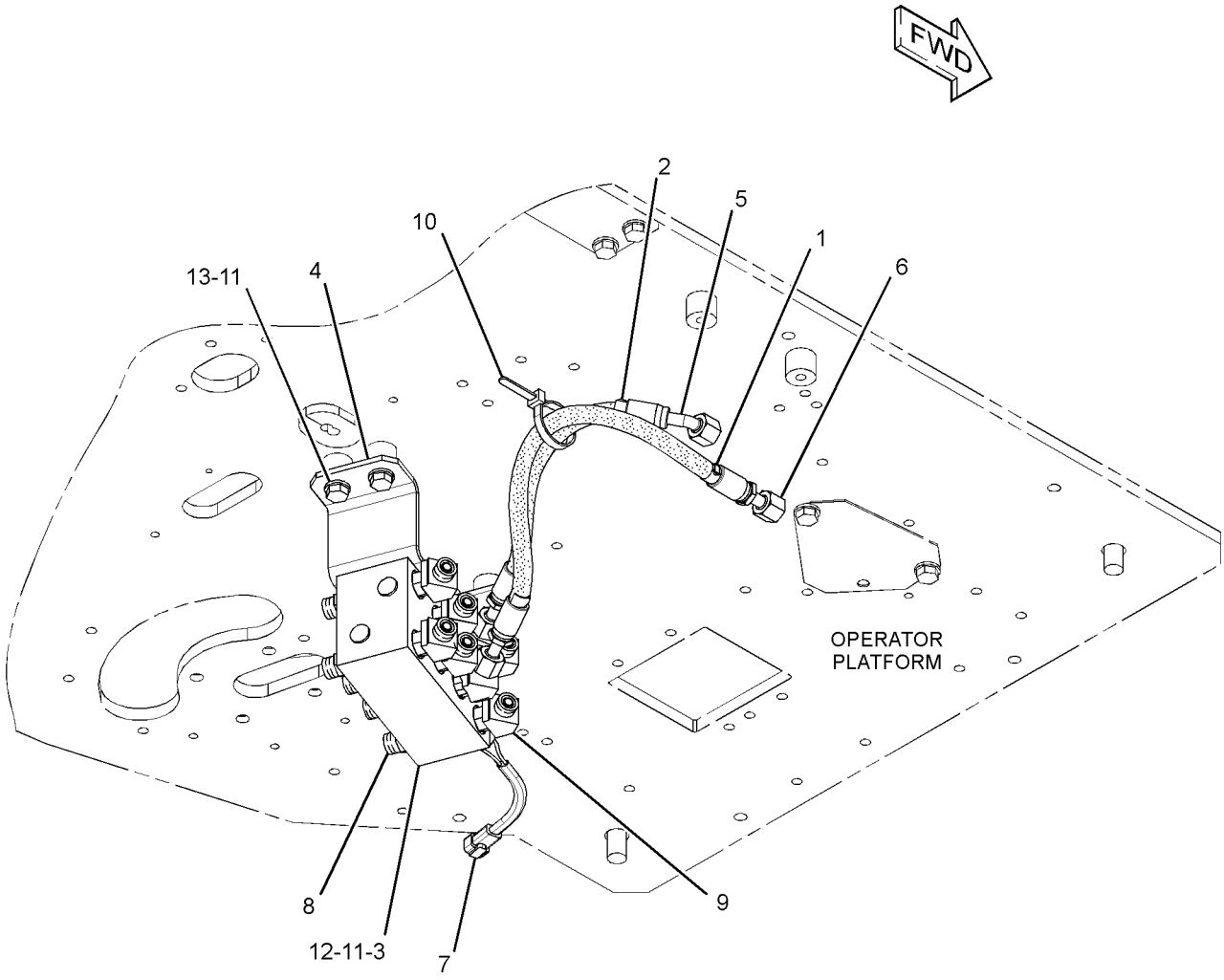

GRAPHIC #1 **<END>** g01514254

HYDRAULIC SYSTEM

282-7252 LINES GP-PILOT—AUXILIARY READY

S/N: BYJ1-UP; PDP1-UP
PART OF 270-5993 CONTROL AR-AUXILIARY
AN ATTACHMENT

SMCS-5057, 5059 **i03009997**

NOTE	REF NO	GRAPHIC REF	PART NUMBER	QTY	PART NAME 1 2 3 4 5 6 (PRODUCT LEVEL)	SEE PAGE
I	1	2	**4I-0806**	1	HOSE AS	
I	2	1	**4I-1739**	1	HOSE AS	
I	3	2	**4I-1783**	1	HOSE AS	
	4	1,2	**4I-9523**	4	BAND-MARKER (BLUE, L3)	
	5	1	**4I-9527**	4	BAND-MARKER (GREEN, R3)	
	6	1,2	**6V-0852**	4	CAP-DUST	
	7	1,2	**7K-1181**	4	STRAP-CABLE	
I	8	1	**7Y-5088**	1	HOSE AS	
I	9	2	**087-4402**	1	HOSE AS	
Y	10	2	**121-6303**	1	VALVE GP-SOLENOID (HEAVY LIFT)	588
	11	1,2	*150-4027*	2	TEE AS	
					(EACH INCLUDES)	
		1,2	**3J-1907**	1	SEAL-O-RING	
		1,2	**3E-2310**	1	TEE	
		1,2	**6V-8397**	1	SEAL-O-RING	
	12	2	*164-5546*	1	TEE AS	
		2	**3E-7410**	1	TEE-O-RING	
		2	**3J-1907**	1	SEAL-O-RING	
	13	2	*164-5629*	1	FITTING AS	
		2	**3J-1907**	1	SEAL-O-RING	
		2	**108-7516**	1	FITTING	
	14	1,2	*164-6874*	3	FITTING AS-ELBOW	
					(EACH INCLUDES)	
		1,2	**3J-1907**	1	SEAL-O-RING	
		1,2	**085-7356**	1	FITTING	
Y	15	2	*164-6980*	1	VALVE GP-SHUTTLE	584
	16	1,2	*168-1968*	2	TEE AS	
					(EACH INCLUDES)	
		1,2	**3J-1907**	1	SEAL-O-RING	
		1,2	**6V-8397**	1	SEAL-O-RING	
		1,2	**126-6872**	1	TEE	
Y	17	2	**171-0188**	1	VALVE GP-SOLENOID (NEG FLOW CONT, PROPN RED VALVE)	589
I	18	2	**176-4569**	2	HOSE AS	
	19	1	**198-2003**	1	CONNECTOR	
I	20	2	**207-6418**	1	HOSE AS	
	21	2	**238-6189**	1	HOSE AS	
Y	22	2	**259-7430**	1	VALVE GP-SOLENOID (PRESSURE REDUCING)	591
I	23	2	**278-6768**	1	HOSE AS	
	24	1	**282-7092**	1	GROMMET	
	25	2	**285-2656**	1	SUPPORT AS	
	26	1	**285-2661**	1	SUPPORT AS	
	27	2	**286-6532**	1	SUPPORT AS	
	28	2	**296-7223**	1	SUPPORT AS	
I	29	1	**296-7226**	1	HOSE AS	
I	30	2	**296-7229**	1	HOSE AS	
	31	2	**309-5769**	1	SWITCH AS-PRESSURE (PILOT, BOOM UP)	
		2	**102-8802**	1	KIT-RECEPTACLE (2-PIN)	
					(INCLUDES RECEPTACLE AS & WEDGE)	
		2	**9X-3401**	2	PIN-CONNECTOR (16-GA TO 18-GA)	
I	32	1	**319-9940**	1	HOSE AS	
I	33	1	**319-9943**	1	HOSE AS	
	34	2	*148-8336*	8	CONNECTOR AS	
					(EACH INCLUDES)	
		2	**3J-1907**	1	SEAL-O-RING	

282-7252 **LINES GP-PILOT** ***(contd.)*** **i03009997**

NOTE	REF NO	GRAPHIC REF	PART NUMBER	QTY	PART NAME 1 2 3 4 5 6 (PRODUCT LEVEL)	SEE PAGE
		2	**6V-8397**	1	SEAL-O-RING	
		2	**6V-8636**	1	CONNECTOR	
	35	2	*148-8338*	2	CONNECTOR AS	
					(EACH INCLUDES)	
		2	**3J-1907**	1	SEAL-O-RING	
		2	**6V-8397**	1	SEAL-O-RING	
		2	**8T-0075**	1	CONNECTOR	
	36	2	*148-8353*	1	ELBOW AS	
		2	**3J-1907**	1	SEAL-O-RING	
		2	**6V-8397**	1	SEAL-O-RING	
		2	**6V-9001**	1	ELBOW	
	37	2	*148-8378*	4	ELBOW AS	
					(EACH INCLUDES)	
		2	**3J-1907**	1	SEAL-O-RING	
		2	**6V-8397**	1	SEAL-O-RING	
		2	**6V-8724**	1	ELBOW	
	38	1,2	*148-8435*	2	TEE AS	
					(EACH INCLUDES)	
		1,2	**3J-1907**	1	SEAL-O-RING	
		1,2	**6V-8397**	2	SEAL-O-RING	
		1,2	**6V-8781**	1	TEE-FACE SEAL	
	39	2	*150-3036*	2	ELBOW AS	
					(EACH INCLUDES)	
		2	**3J-1907**	1	SEAL-O-RING	
		2	**6V-8397**	1	SEAL-O-RING	
		2	**8T-1905**	1	ELBOW	
	40	1,2	*164-5567*	4	COUPLER AS-QUICK DISCONNECT	
					(EACH INCLUDES)	
		1,2	**3J-1907**	1	SEAL-O-RING	
		1,2	**6V-3965**	1	FITTING (QUICK DISCONNECT)	
	41	1	**3J-1907**	1	SEAL-O-RING	
M	42	2	**5C-9553**	2	BOLT (M6X1X16-MM)	
	43	1	**5P-7462**	1	CLIP (SLOT)	
	44	1	**5P-7463**	1	CLIP (TAB)	
	45	1	**6V-0683**	1	GROMMET	
	46	1	**6V-8397**	1	SEAL-O-RING	
	47	1,2	**8T-4121**	9	WASHER-HARD (11X21X2.5-MM THK)	
M	48	1,2	**8T-4137**	4	BOLT (M10X1.5X20-MM)	
M	49	2	**8T-4177**	4	BOLT (M8X1.25X90-MM)	
M	50	2	**8T-4182**	2	BOLT (M10X1.5X45-MM)	
M	51	1	**8T-4192**	1	BOLT (M12X1.75X25-MM)	
M	52	2	**8T-4196**	3	BOLT (M10X1.5X35-MM)	
	53	1	**8T-4223**	1	WASHER-HARD (13.5X25.5X3-MM THK)	
	54	2	**8T-4224**	4	WASHER-HARD (8.8X16X2-MM THK)	
M	55	2	**8T-6870**	2	BOLT (M8X1.25X70-MM)	
	56	2	**9X-8256**	2	WASHER (6.6X12X2-MM THK)	

I-REFER TO HYDRAULIC INFORMATION SYSTEM
M-METRIC PART
Y-SEPARATE ILLUSTRATION

REFER TO ALL ILLUSTRATIONS OF THIS GROUP FOR AUXILIARY VIEWS

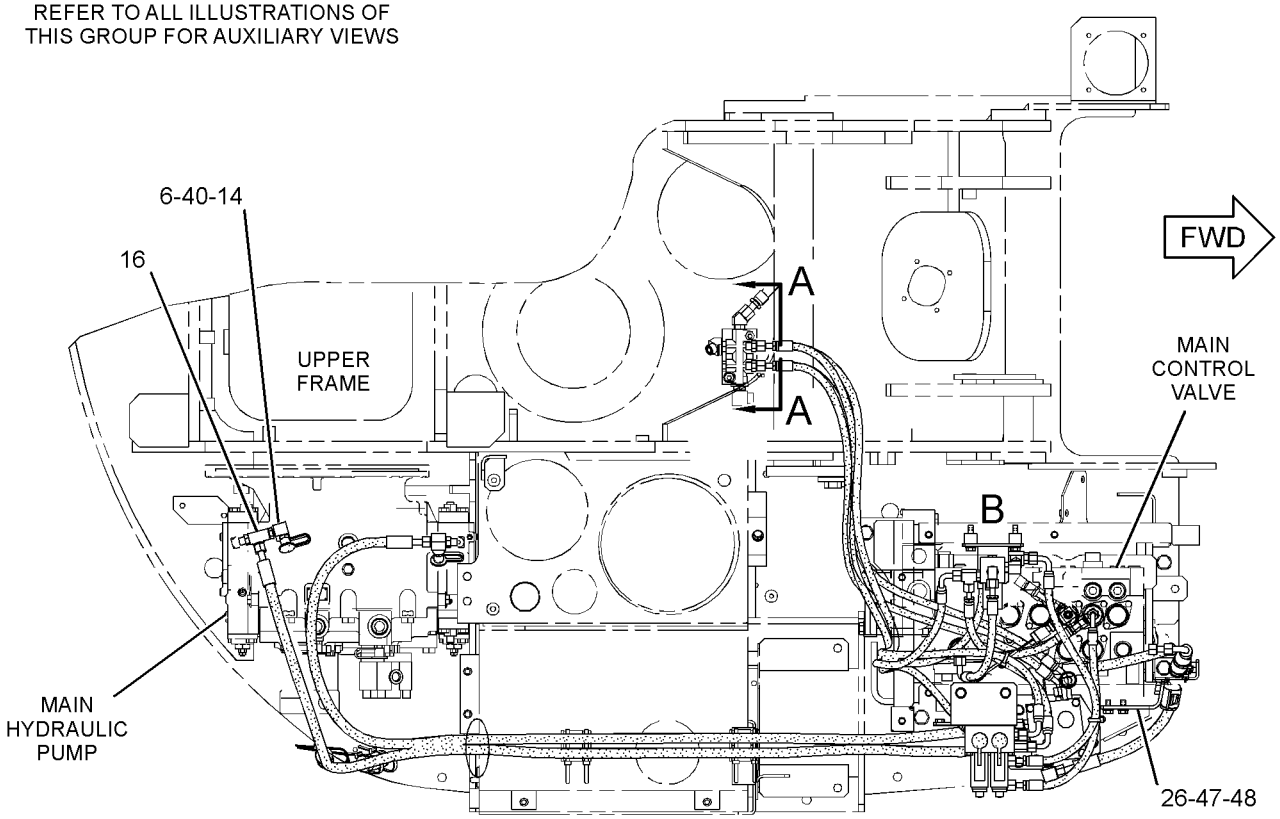

TOP VIEW

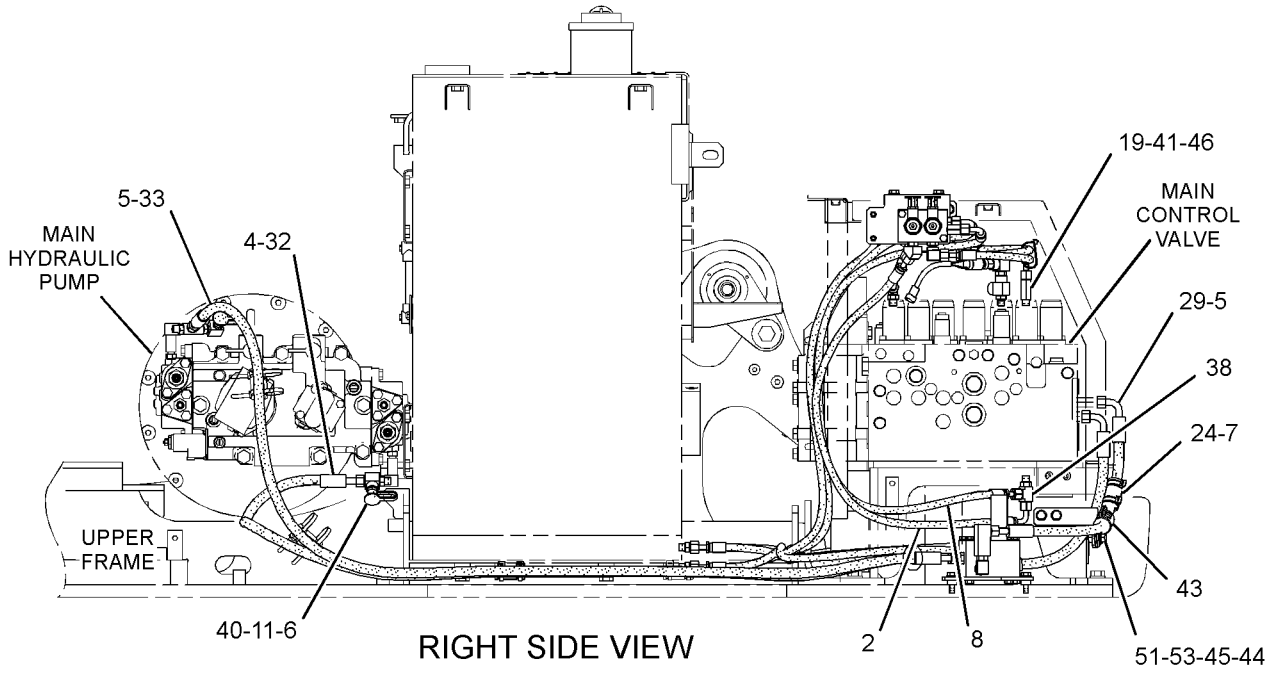

RIGHT SIDE VIEW

GRAPHIC #1

g01507770

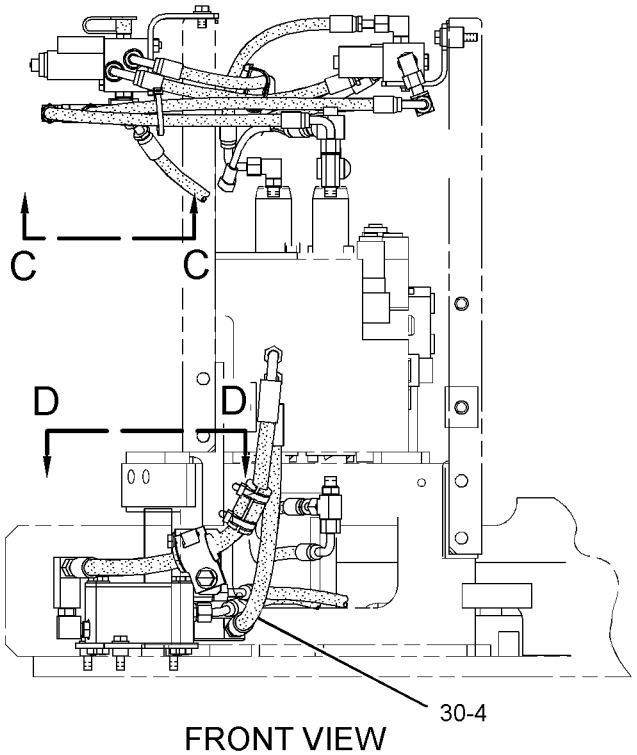

FRONT VIEW

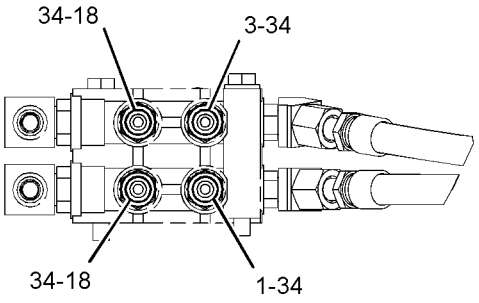

SECTION A-A

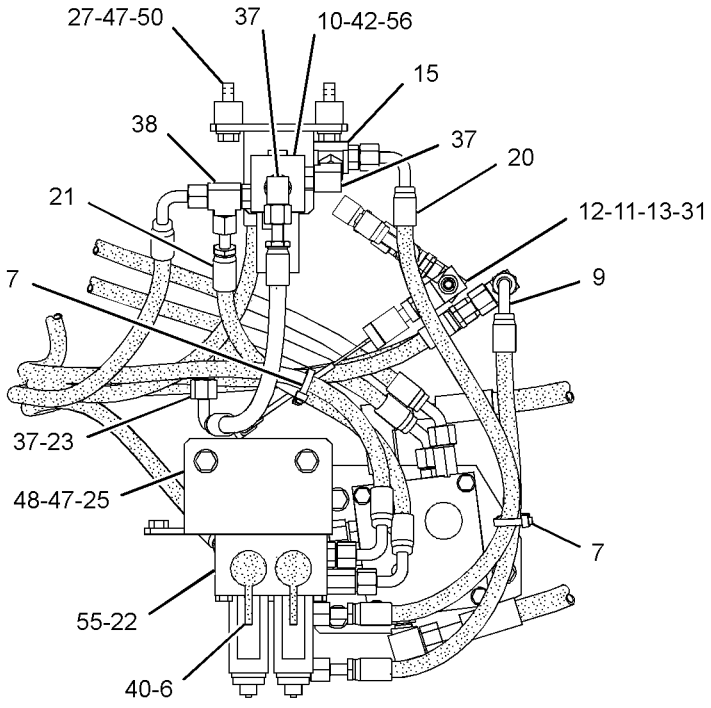

VIEW OF AREA B

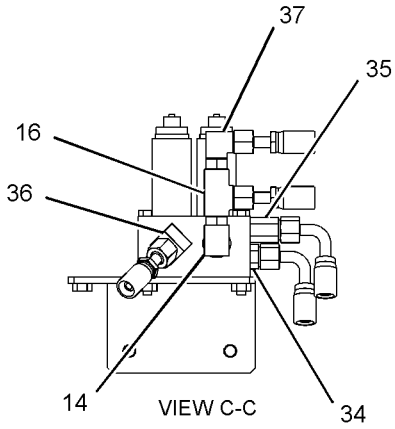

VIEW C-C

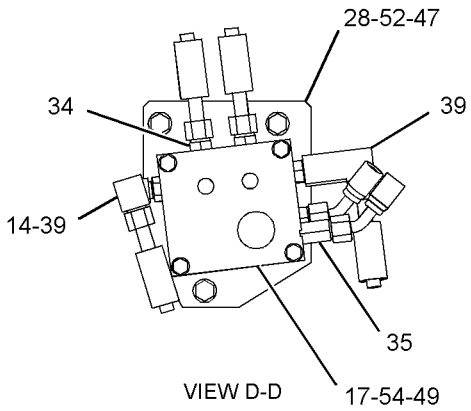

VIEW D-D

GRAPHIC #2 **<END>** g01507771

282-7261 LINES GP-PILOT—SYSTEM 20, WORK TOOL PRIORITY

S/N: BYJ1-UP; PDP1-UP

PART OF 270-5996 CONTROL AR-AUXILIARY

AN ATTACHMENT

SMCS-5057, 5059 **i02975148**

NOTE	REF NO	GRAPHIC REF	PART NUMBER	QTY	PART NAME 1 2 3 4 5 6 (PRODUCT LEVEL)	SEE PAGE
I	1	1	**4I-0806**	1	HOSE AS	
I	2	3	**4I-1688**	1	HOSE AS	
I	3	3	**4I-1739**	1	HOSE AS	
I	4	1	**4I-6391**	1	HOSE AS	
	5	3	**4I-9521**	2	BAND-MARKER (RED, L1)	
	6	1,3	**4I-9522**	4	BAND-MARKER (YELLOW, L2)	
	7	1,2	**4I-9523**	8	BAND-MARKER (BLUE, L3)	
	8	2	**4I-9524**	2	BAND-MARKER (BROWN, L4)	
	9	1,3	**4I-9527**	6	BAND-MARKER (GREEN, R3)	
	10	2,3	**7K-1181**	7	STRAP-CABLE	
I	11	2	**7Y-5088**	1	HOSE AS	
I	12	3	**087-4408**	1	HOSE AS	
I	13	3	**087-4531**	1	HOSE AS	
Y	14	3	**121-6303**	1	VALVE GP-SOLENOID (HEAVY LIFT)	588
	15	3	**133-5813**	2	BAND-MARKER (GRAY, P)	
	16	1,3	*150-4027*	3	TEE AS	
					(EACH INCLUDES)	
		1,3	**3E-2310**	1	TEE	
		1,3	**3J-1907**	1	SEAL-O-RING	
		1,3	**6V-8397**	1	SEAL-O-RING	
	17	3	*164-5546*	1	TEE AS	
		3	**3E-7410**	1	TEE-O-RING	
		3	**3J-1907**	1	SEAL-O-RING	
	18	3	*164-5629*	1	FITTING AS	
		3	**3J-1907**	1	SEAL-O-RING	
		3	**108-7516**	1	FITTING	
	19	1,2,3	*164-6874*	3	FITTING AS-ELBOW	
					(EACH INCLUDES)	
		1,2,3	**3J-1907**	1	SEAL-O-RING	
		1,2,3	**085-7356**	1	FITTING	
Y	20	3	*164-6980*	1	VALVE GP-SHUTTLE	584
	21	1,3	*168-1968*	2	TEE AS	
					(EACH INCLUDES)	
		1,3	**3J-1907**	1	SEAL-O-RING	
		1,3	**6V-8397**	1	SEAL-O-RING	
		1,3	**126-6872**	1	TEE	
I	22	1	**176-4569**	2	HOSE AS	
I	23	3	**179-7580**	1	HOSE AS	
Y	24	2,3	**185-0472**	2	VALVE GP-SOLENOID (BOOM FLOAT, PILOT OIL)	590
	25	3	**198-2003**	2	CONNECTOR	
	26	3	**238-6189**	1	HOSE AS	
Y	27	3	**270-5766**	1	VALVE GP-SOLENOID & PRESS REDC (WORK TOOL CONTROL)	594
I	28	3	**278-6768**	1	HOSE AS	
	29	3	**282-7092**	1	GROMMET	
	30	3	**285-2656**	1	SUPPORT AS	
I	31	1	**285-2715**	1	HOSE AS	
	32	3	**285-2869**	1	HOSE AS	
	33	3	**286-6532**	1	SUPPORT AS	
		3	**091-9035**	2	SPACER (11X25X20-MM THK)	
	34	3	**286-6804**	1	SUPPORT	
	35	2	**286-6805**	1	PLATE	
I	36	3	**286-6806**	1	HOSE AS	
I	37	2	**286-6812**	1	HOSE AS	
I	38	2	**286-6815**	1	HOSE AS	

282-7261 **LINES GP-PILOT** *(contd.)* **i02975148**

NOTE	REF NO	GRAPHIC REF	PART NUMBER	QTY	PART NAME 1 2 3 4 5 6 (PRODUCT LEVEL)	SEE PAGE
I	39	1	**289-5514**	1	HOSE AS	
I	40	1	**289-5517**	1	HOSE AS	
I	41	3	**289-5709**	1	HOSE AS	
I	42	3	**307-5100**	1	HOSE AS	
	43	3	**309-5769**	1	SWITCH AS-PRESSURE (ACTION INPUT, BOOM UP)	
		3	**102-8802**	1	KIT-RECEPTACLE (2-PIN)	
					(INCLUDES RECEPTACLE AS & WEDGE)	
		3	**144-1636**	2	PIN-CONNECTOR (14-GA TO 18-GA)	
	44	1	**319-9916**	1	SUPPORT AS	
	45	2	**319-9918**	1	PLATE	
M	46	3	**101-7404**	1	BOLT-SOCKET HEAD (M10X1.5X30-MM)	
	47	1,3	*148-8336*	5	CONNECTOR AS	
					(EACH INCLUDES)	
		1,3	**3J-1907**	1	SEAL-O-RING	
		1,3	**6V-8397**	1	SEAL-O-RING	
		1,3	**6V-8636**	1	CONNECTOR	
	48	2,3	*148-8338*	3	CONNECTOR AS	
					(EACH INCLUDES)	
		2,3	**3J-1907**	1	SEAL-O-RING	
		2,3	**6V-8397**	1	SEAL-O-RING	
		2,3	**8T-0075**	1	CONNECTOR	
	49	2,3	*148-8353*	6	ELBOW AS	
					(EACH INCLUDES)	
		2,3	**3J-1907**	1	SEAL-O-RING	
		2,3	**6V-8397**	1	SEAL-O-RING	
		2,3	**6V-9001**	1	ELBOW	
	50	1,2,3	*148-8378*	14	ELBOW AS	
					(EACH INCLUDES)	
		1,2,3	**3J-1907**	1	SEAL-O-RING	
		1,2,3	**6V-8397**	1	SEAL-O-RING	
		1,2,3	**6V-8724**	1	ELBOW	
	51	3	*148-8407*	1	PLUG AS	
		3	**3J-1907**	1	SEAL-O-RING	
		3	**9S-4191**	1	PLUG-O-RING	
	52	2,3	*148-8435*	2	TEE AS	
					(EACH INCLUDES)	
		2,3	**3J-1907**	1	SEAL-O-RING	
		2,3	**6V-8397**	2	SEAL-O-RING	
		2,3	**6V-8781**	1	TEE-FACE SEAL	
	53	3	*150-3036*	2	ELBOW AS	
					(EACH INCLUDES)	
		3	**3J-1907**	1	SEAL-O-RING	
		3	**6V-8397**	1	SEAL-O-RING	
		3	**8T-1905**	1	ELBOW	
	54	1,3	*164-5567*	5	COUPLER AS-QUICK DISCONNECT	
					(EACH INCLUDES)	
		1,3	**3J-1907**	1	SEAL-O-RING	
		1,3	**6V-3965**	1	FITTING (QUICK DISCONNECT)	
Y	55	3	**171-0188**	1	VALVE GP-SOLENOID (NEG FLOW CONT, PROPN RED VALVE)	589
	56	3	**3J-1907**	2	SEAL-O-RING	
M	57	2,3	**5C-9553**	6	BOLT (M6X1X16-MM)	
	58	1,3	**5P-7462**	2	CLIP (SLOT)	
	59	1,3	**5P-7463**	2	CLIP (TAB)	
	60	1,3	**6V-0683**	2	GROMMET	
	61	1,3	**6V-0852**	5	CAP-DUST	
	62	3	**6V-8397**	2	SEAL-O-RING	
	63	1,2,3	**8T-4121**	12	WASHER-HARD (11X21X2.5-MM THK)	
M	64	3	**8T-4136**	2	BOLT (M10X1.5X25-MM)	
M	65	1,2,3	**8T-4137**	6	BOLT (M10X1.5X20-MM)	

282-7261 **LINES GP-PILOT** *(contd.)* **i02975148**

NOTE	REF NO	GRAPHIC REF	PART NUMBER	QTY	PART NAME 1 2 3 4 5 6 (PRODUCT LEVEL)	SEE PAGE
M	66	1,3	**8T-4139**	2	BOLT (M12X1.75X30-MM)	
M	67	3	**8T-4177**	4	BOLT (M8X1.25X90-MM)	
M	68	3	**8T-4182**	2	BOLT (M10X1.5X45-MM)	
M	69	2	**8T-4196**	2	BOLT (M10X1.5X35-MM)	
	70	1,3	**8T-4223**	2	WASHER-HARD (13.5X25.5X3-MM THK)	
M	71	3	**8T-6870**	4	BOLT (M8X1.25X70-MM)	
	72	2,3	**9X-8256**	6	WASHER (6.6X12X2-MM THK)	

I-REFER TO HYDRAULIC INFORMATION SYSTEM
M-METRIC PART
Y-SEPARATE ILLUSTRATION

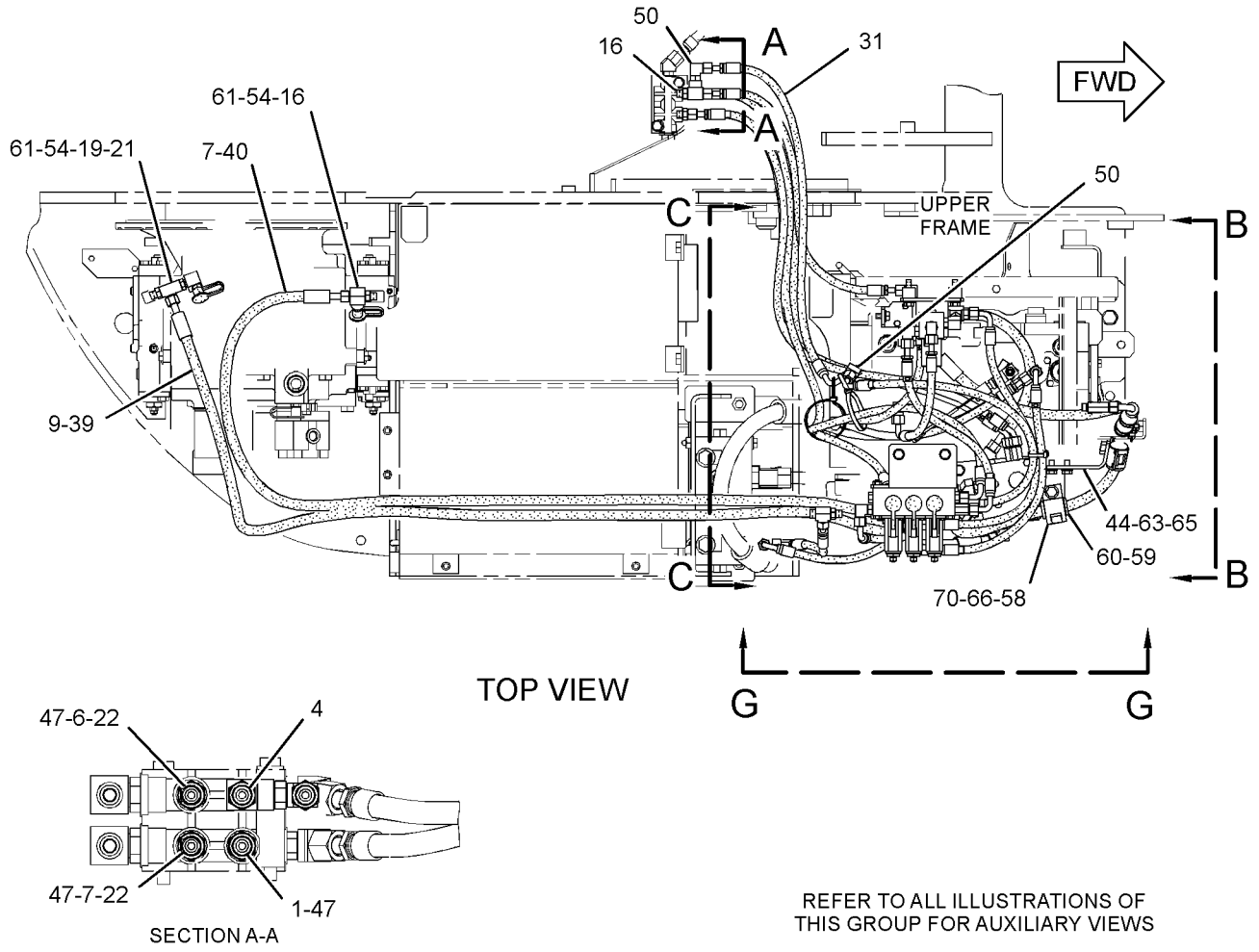

REFER TO ALL ILLUSTRATIONS OF THIS GROUP FOR AUXILIARY VIEWS

GRAPHIC #1 g01519744

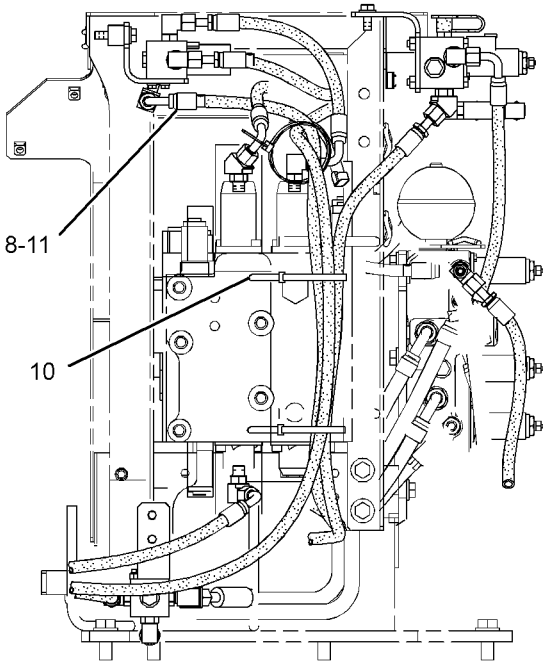

SECTION C-C

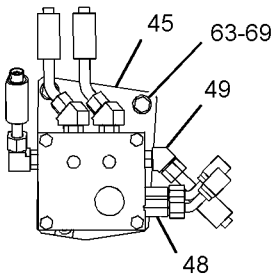

SECTION D-D

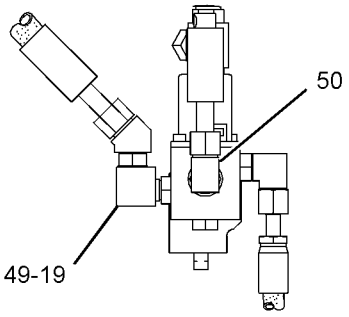

VIEW E-E

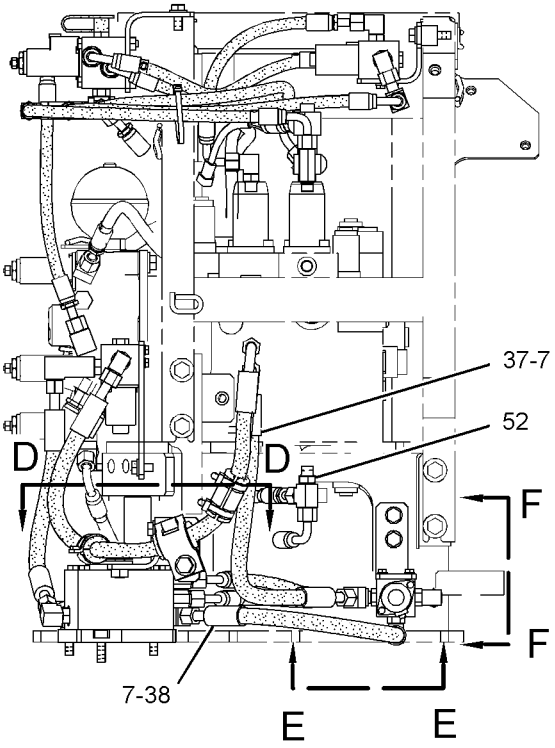

VIEW B-B

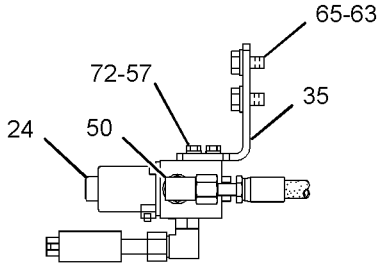

VIEW F-F

GRAPHIC #2

g01519743

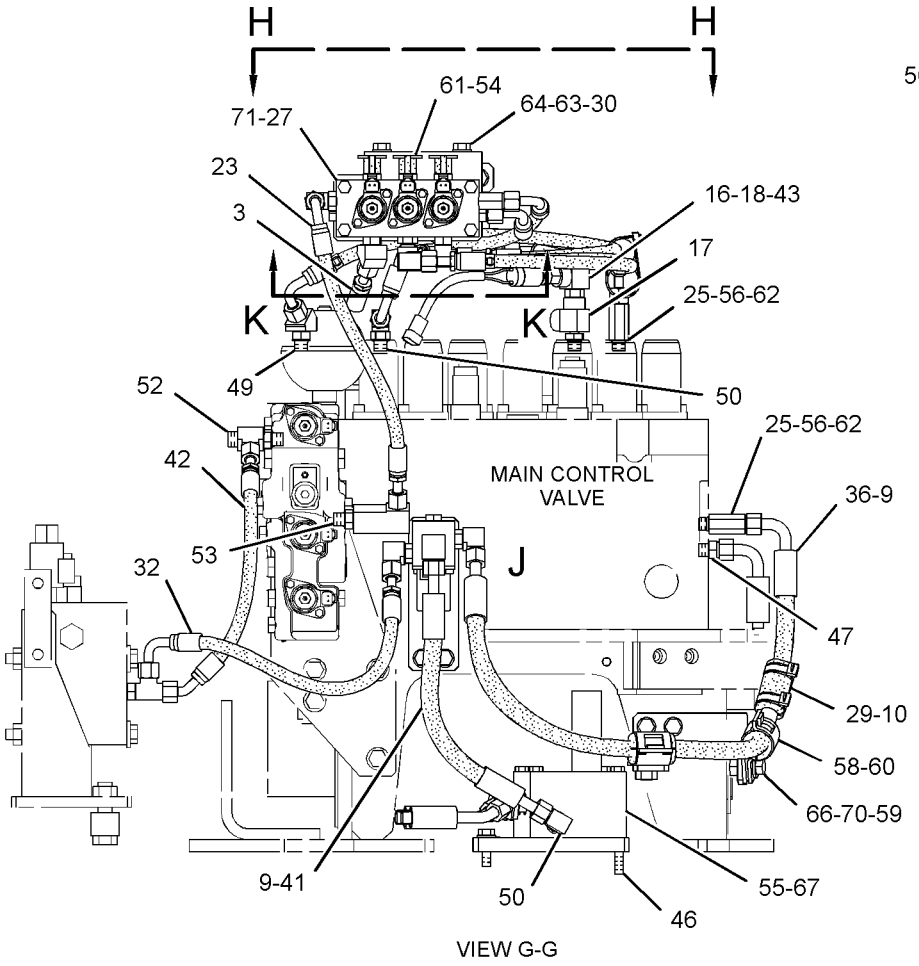

VIEW G-G

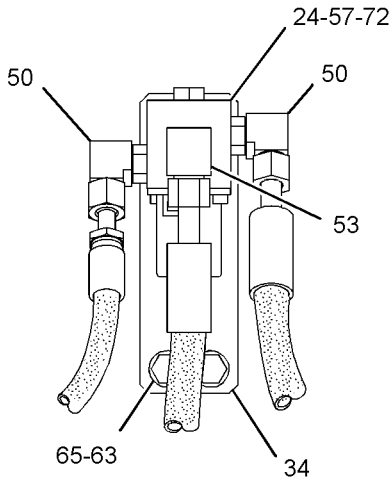

VIEW OF AREA J

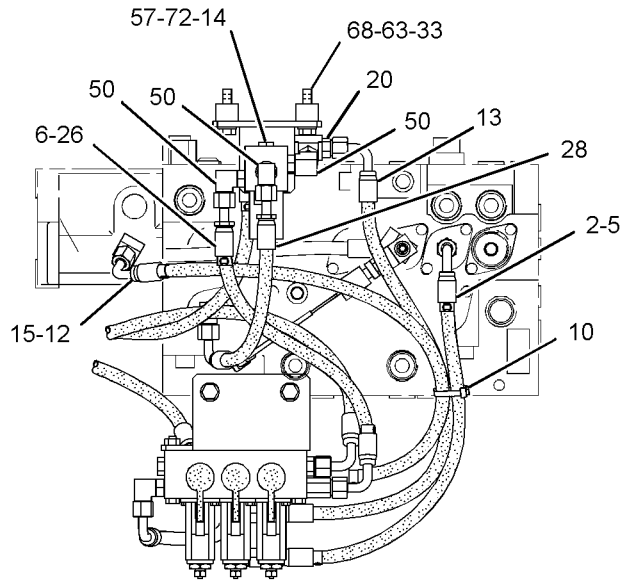

VIEW H-H

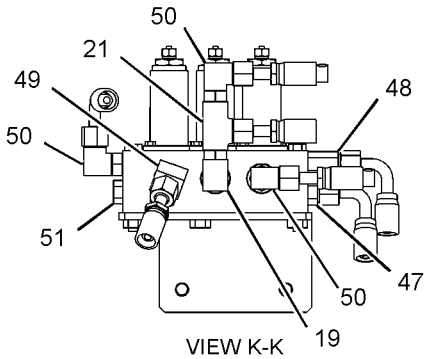

VIEW K-K

GRAPHIC #3 **<END>** g01519746

HYDRAULIC SYSTEM

282-7282 LINES GP-PILOT

S/N: BYJ1-UP; PDP1-UP
PART OF 297-0271 VALVE AR-ALT PATTERN CONTROL
AN ATTACHMENT

SMCS-5057, 5059 **i02900442**

NOTE	REF NO	GRAPHIC REF	PART NUMBER	QTY	PART NAME 1 2 3 4 5 6 (PRODUCT LEVEL)	SEE PAGE
I	1	1	**4I-0800**	1	HOSE AS	
I	2	1	**4I-0821**	1	HOSE AS	
I	3	1	**4I-1878**	1	HOSE AS	
	4	1	**4I-9521**	4	BAND-MARKER (RED, L1)	
	5	1	**4I-9523**	4	BAND-MARKER (BLUE, L3)	
	6	1	**4I-9525**	4	BAND-MARKER (ORANGE, R1)	
	7	1	**4I-9527**	4	BAND-MARKER (GREEN, R3)	
I	8	1	**5I-8825**	1	HOSE AS	
I	9	1	**104-8768**	1	HOSE AS	
	10	1	**134-6918**	1	HOSE AS	
	11	1	*164-6874*	2	FITTING AS-ELBOW	
					(EACH INCLUDES)	
		1	**3J-1907**	1	SEAL-O-RING	
		1	**085-7356**	1	FITTING	
	12	1	**270-5664**	1	VALVE GP-PILOT (ALT PATTERN CONTROL, 2-WAY)	
	13	1	**292-7183**	1	HOSE AS	
	14	1	**296-7276**	1	SUPPORT AS	
I	15	1	**302-2877**	1	HOSE AS	
I	16	1	**307-5126**	2	HOSE AS	
	17	1	**309-5769**	1	SWITCH AS-PRESSURE (ACTION INPUT, 2-WAY PATTERN)	
		1	**102-8802**	1	KIT-RECEPTACLE (2-PIN)	
					(INCLUDES RECEPTACLE AS & WEDGE)	
		1	**9X-3401**	2	PIN-CONNECTOR (16-GA TO 18-GA)	
					—OR—	
		1	**126-1767**	2	PIN-CONNECTOR (14-GA)	
	18	1	**099-7241**	2	WASHER-HARD (19X34X3-MM THK)	
	19	1	*148-8336*	1	CONNECTOR AS	
		1	**3J-1907**	1	SEAL-O-RING	
		1	**6V-8397**	1	SEAL-O-RING	
		1	**6V-8636**	1	CONNECTOR	
	20	1	*148-8338*	2	CONNECTOR AS	
					(EACH INCLUDES)	
		1	**3J-1907**	1	SEAL-O-RING	
		1	**6V-8397**	1	SEAL-O-RING	
		1	**8T-0075**	1	CONNECTOR	
	21	1	*148-8353*	3	ELBOW AS	
					(EACH INCLUDES)	
		1	**3J-1907**	1	SEAL-O-RING	
		1	**6V-8397**	1	SEAL-O-RING	
		1	**6V-9001**	1	ELBOW	
	22	1	*148-8366*	2	ELBOW AS	
					(EACH INCLUDES)	
		1	**6V-8397**	2	SEAL-O-RING	
		1	**6V-8987**	1	ELBOW	
	23	1	*148-8378*	3	ELBOW AS	
					(EACH INCLUDES)	
		1	**3J-1907**	1	SEAL-O-RING	
		1	**6V-8397**	1	SEAL-O-RING	
		1	**6V-8724**	1	ELBOW	
	24	1	*148-8435*	2	TEE AS	
					(EACH INCLUDES)	
		1	**3J-1907**	1	SEAL-O-RING	
		1	**6V-8397**	2	SEAL-O-RING	
		1	**6V-8781**	1	TEE-FACE SEAL	

282-7282 **LINES GP-PILOT** *(contd.)* **i02900442**

NOTE	REF NO	GRAPHIC REF	PART NUMBER	QTY	PART NAME 1 2 3 4 5 6 (PRODUCT LEVEL)	SEE PAGE
	25	1	*150-3036*	1	ELBOW AS	
		1	**3J-1907**	1	SEAL-O-RING	
		1	**6V-8397**	1	SEAL-O-RING	
		1	**8T-1905**	1	ELBOW	
	26	1	**6V-9168**	2	NUT (11/16-16-THD)	
	27	1	**8T-4121**	7	WASHER-HARD (11X21X2.5-MM THK)	
M	28	1	**8T-4136**	7	BOLT (M10X1.5X25-MM)	

I-REFER TO HYDRAULIC INFORMATION SYSTEM
M-METRIC PART

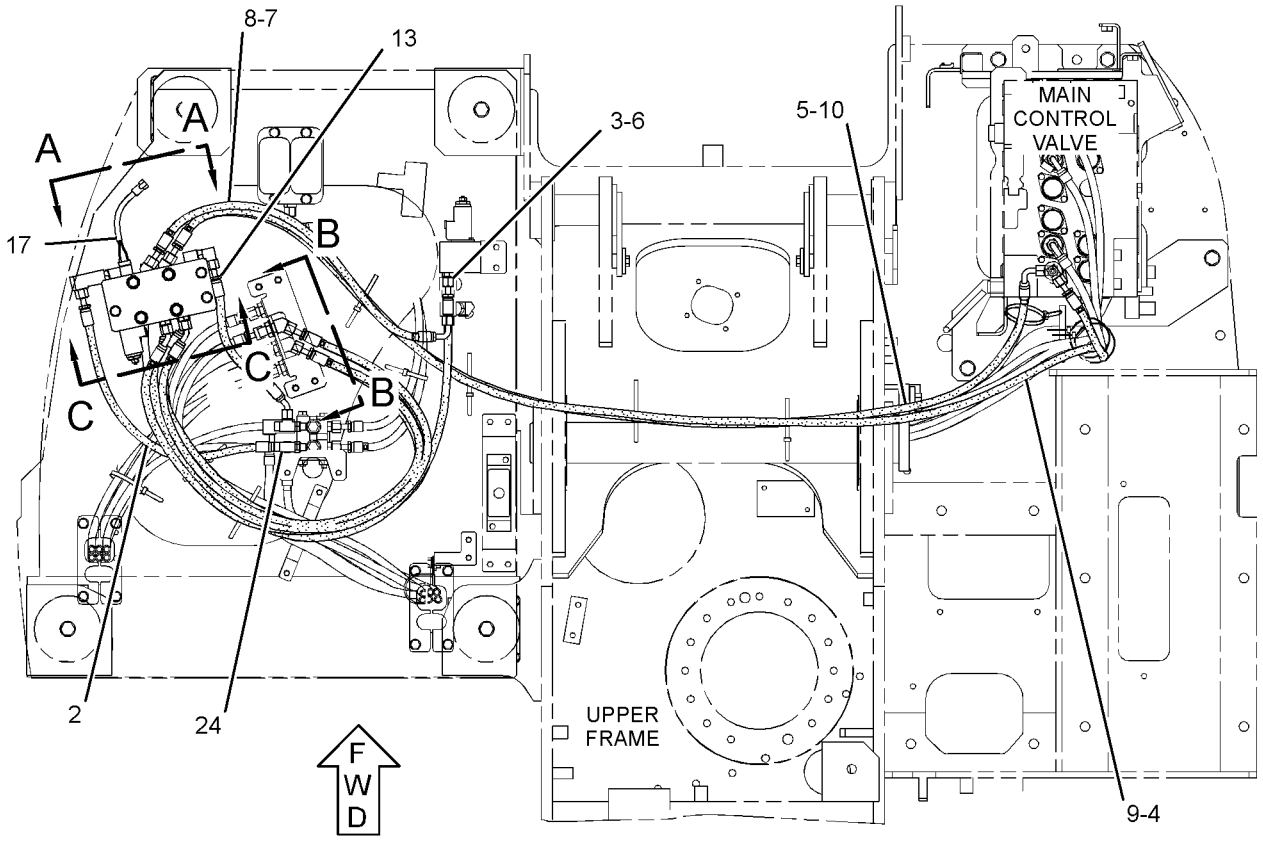

TOP VIEW

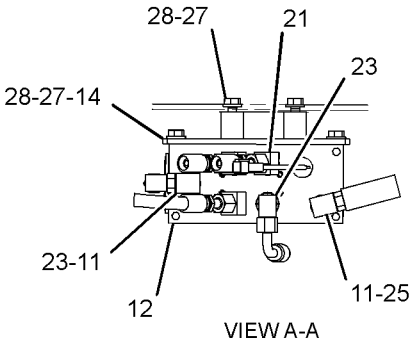

VIEW A-A

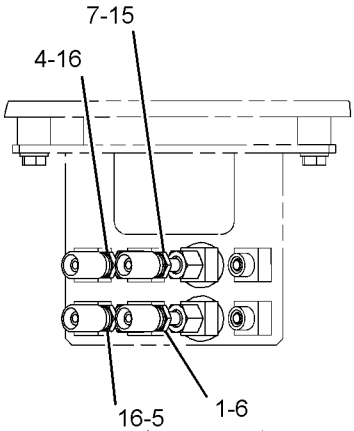

SECTION B-B

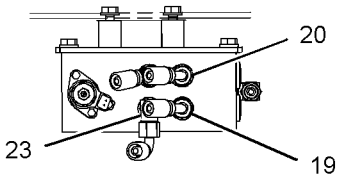

SECTION C-C

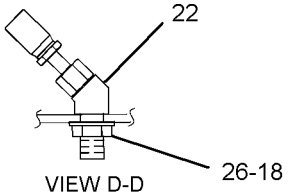

VIEW D-D

GRAPHIC #1 **<END>** g01519115

HYDRAULIC SYSTEM

282-7283 LINES GP-PILOT

S/N: BYJ1-UP; PDP1-UP
PART OF 270-6065 VALVE AR
AN ATTACHMENT

SMCS-5057, 5059 **i02980592**

NOTE	REF NO	GRAPHIC REF	PART NUMBER	QTY	PART NAME 1 2 3 4 5 6 (PRODUCT LEVEL)	SEE PAGE
I	1	1	**4I-0821**	1	HOSE AS	
I	2	1	**4I-1037**	1	HOSE AS	
I	3	2	**4I-6054**	1	HOSE AS	
	4	1,2	**4I-9521**	4	BAND-MARKER (RED, L1)	
	5	1,2	**4I-9522**	4	BAND-MARKER (YELLOW, L2)	
	6	1,2	**4I-9523**	4	BAND-MARKER (BLUE, L3)	
	7	1,2	**4I-9524**	4	BAND-MARKER (BROWN, L4)	
	8	1	**4I-9525**	6	BAND-MARKER (ORANGE, R1)	
	9	2	**4I-9526**	4	BAND-MARKER (WHITE, R2)	
	10	1	**4I-9527**	4	BAND-MARKER (GREEN, R3)	
	11	1,2	**4I-9528**	4	BAND-MARKER (PURPLE, R4)	
I	12	1	**5I-4076**	1	HOSE AS	
	13	1	**7K-1181**	5	STRAP-CABLE	
I	14	2	**7Y-4193**	1	HOSE AS	
I	15	2	**7Y-4387**	1	HOSE AS	
I	16	1	**087-5761**	2	HOSE AS	
I	17	1	**104-8950**	2	HOSE AS	
I	18	2	**108-7372**	1	HOSE AS	
I	19	1	**115-3667**	1	HOSE AS	
I	20	1	**143-4254**	2	HOSE AS	
Y	21	2	**165-9603**	1	VALVE GP-PILOT	559
	22	2	**189-2817**	1	LEVER	
I	23	2	**087-5780**	1	HOSE AS	
	24	2	**221-4882**	1	HOSE AS	
	25	1	**285-2663**	1	FITTING AS	
	26	1,2	*148-8336*	3	CONNECTOR AS	
					(EACH INCLUDES)	
		1,2	**3J-1907**	1	SEAL-O-RING	
		1,2	**6V-8397**	1	SEAL-O-RING	
		1,2	**6V-8636**	1	CONNECTOR	
	27	1,2	*148-8353*	6	ELBOW AS	
					(EACH INCLUDES)	
		1,2	**3J-1907**	1	SEAL-O-RING	
		1,2	**6V-8397**	1	SEAL-O-RING	
		1,2	**6V-9001**	1	ELBOW	
	28	1,2	*148-8378*	6	ELBOW AS	
					(EACH INCLUDES)	
		1,2	**3J-1907**	1	SEAL-O-RING	
		1,2	**6V-8397**	1	SEAL-O-RING	
		1,2	**6V-8724**	1	ELBOW	
	29	2	**8T-4121**	4	WASHER-HARD (11X21X2.5-MM THK)	
M	30	2	**8T-4137**	4	BOLT (M10X1.5X20-MM)	
M	31	2	**8T-4189**	1	BOLT (M8X1.25X20-MM)	
	32	1	*164-6874*	1	FITTING AS-ELBOW	
		1	**3J-1907**	1	SEAL-O-RING	
		1	**085-7356**	1	FITTING	
	33	1	**3J-1907**	1	SEAL-O-RING	
	34	1	**6V-8397**	1	SEAL-O-RING	
	35	1	**6V-9168**	2	NUT (11/16-16-THD)	
	36	1	**099-7241**	2	WASHER-HARD (19X34X3-MM THK)	
	37	1	*148-8366*	2	ELBOW AS	
					(EACH INCLUDES)	
		1	**6V-8397**	2	SEAL-O-RING	
		1	**6V-8987**	1	ELBOW	
	38	1	**198-2003**	1	CONNECTOR	

I-REFER TO HYDRAULIC INFORMATION SYSTEM
M-METRIC PART
Y-SEPARATE ILLUSTRATION

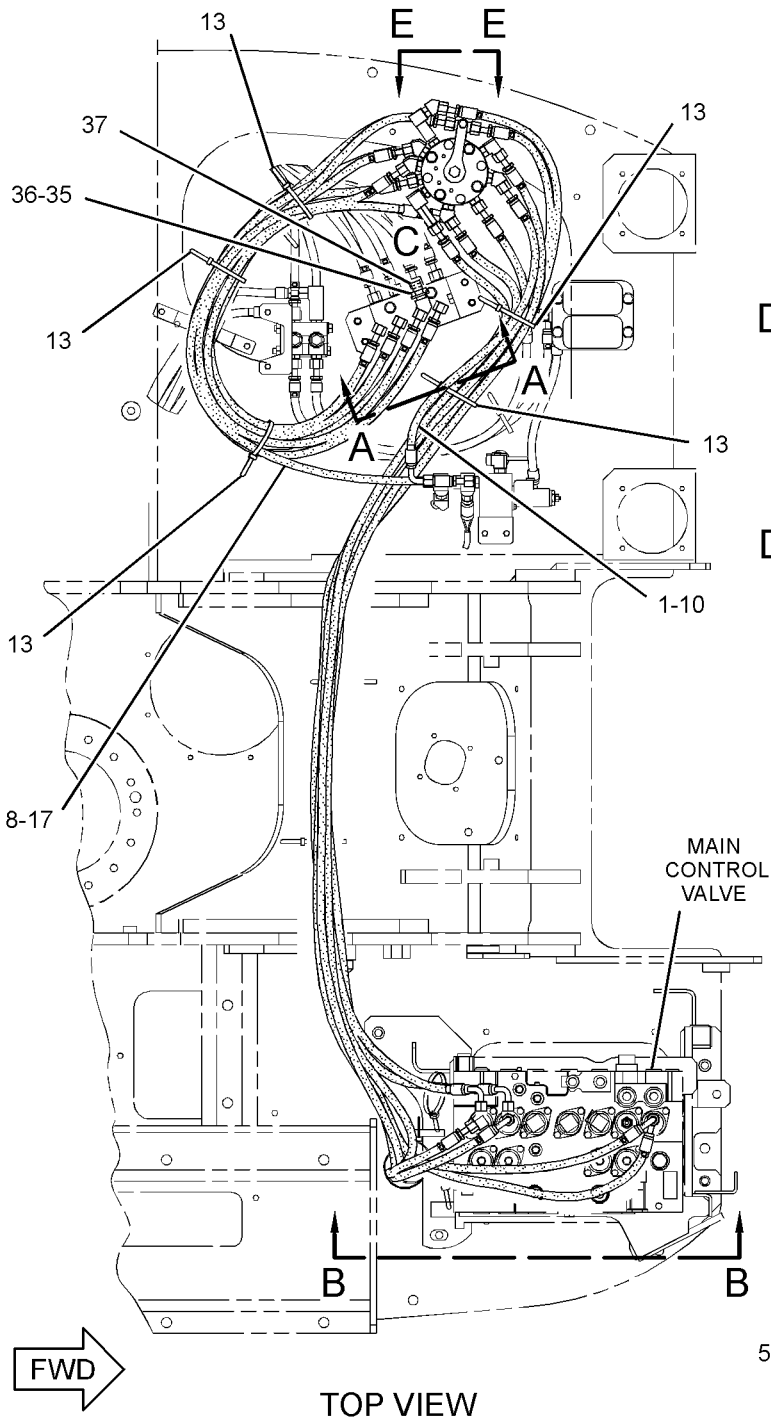

TOP VIEW

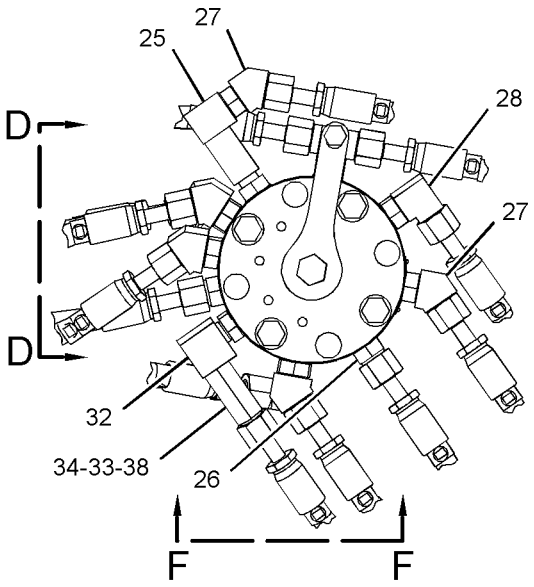

VIEW OF AREA C

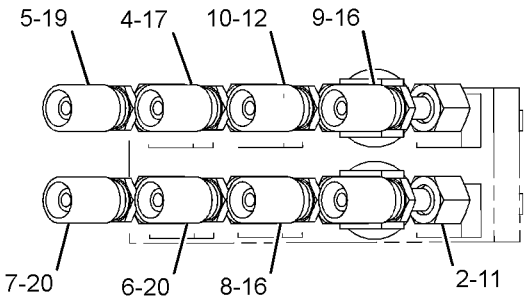

SECTION A-A

REFER TO ALL ILLUSTRATIONS OF
THIS GROUP FOR AUXILIARY VIEWS

GRAPHIC #1

g01519594

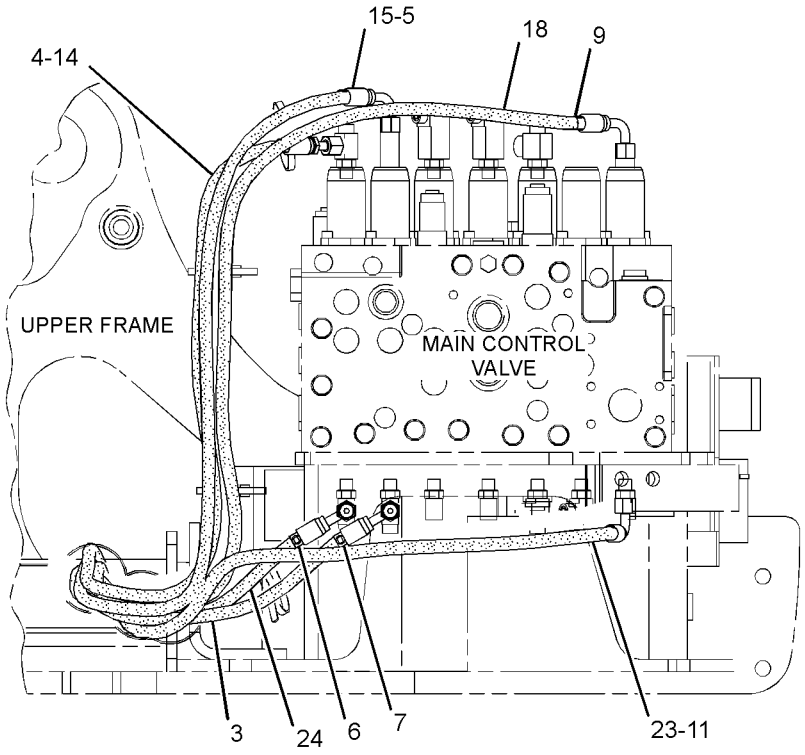

VIEW B-B

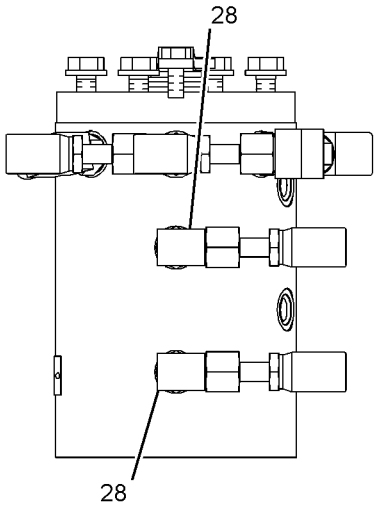

VIEW E-E

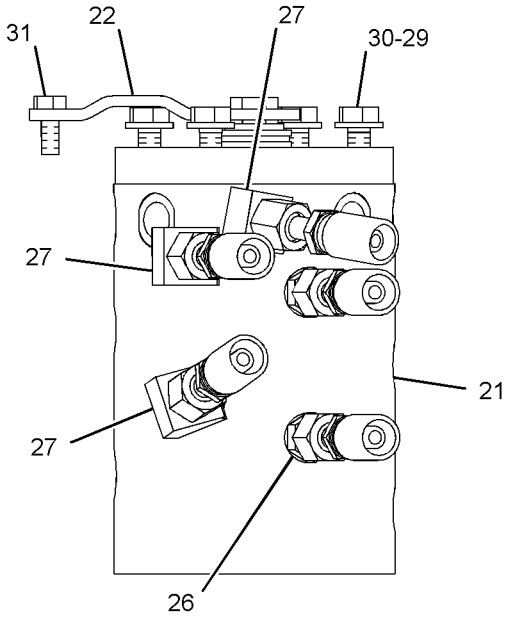

VIEW D-D

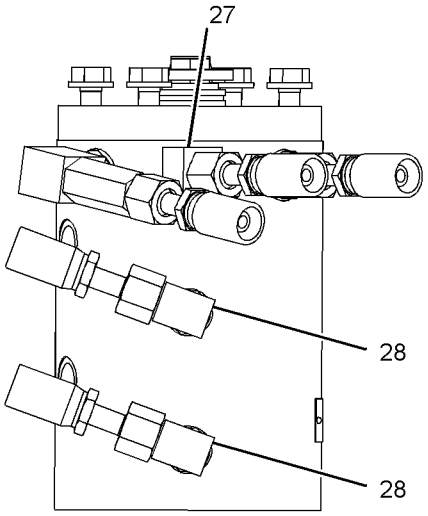

VIEW F-F

GRAPHIC #2 **<END>** g01519595

HYDRAULIC SYSTEM

282-7286 LINES GP-PILOT—BOOM LOWERING CONTROL

S/N: BYJ1-UP; PDP1-UP

PART OF 297-0199, 323-7796 VALVE AR-CHECK & RELIEF

AN ATTACHMENT

SMCS-5057, 5059 **i02978368**

NOTE	REF NO	GRAPHIC REF	PART NUMBER	QTY	PART NAME 1 2 3 4 5 6 (PRODUCT LEVEL)	SEE PAGE
	1	1	**7K-1181**	8	STRAP-CABLE	
	2	1	*148-8443*	1	TEE AS	
		1	**3J-1907**	1	SEAL-O-RING	
		1	**6V-8397**	1	SEAL-O-RING	
		1	**7X-2459**	1	TEE-O-RING	
	3	1	*164-6874*	1	FITTING AS-ELBOW	
		1	**3J-1907**	1	SEAL-O-RING	
		1	**085-7356**	1	FITTING	
I	4	1	**320-0060**	1	HOSE AS	
I	5	1	**320-0063**	1	HOSE AS	
	6	1	*148-8365*	1	ELBOW AS	
		1	**3J-1907**	1	SEAL-O-RING	
		1	**6V-8398**	1	SEAL-O-RING	
		1	**8T-6876**	1	ELBOW (90-DEG)	
	7	1	*148-8435*	1	TEE AS	
		1	**3J-1907**	1	SEAL-O-RING	
		1	**6V-8397**	2	SEAL-O-RING	
		1	**6V-8781**	1	TEE-FACE SEAL	
	8	1	*150-4027*	1	TEE AS	
		1	**3E-2310**	1	TEE	
		1	**3J-1907**	1	SEAL-O-RING	
		1	**6V-8397**	1	SEAL-O-RING	

I-REFER TO HYDRAULIC INFORMATION SYSTEM

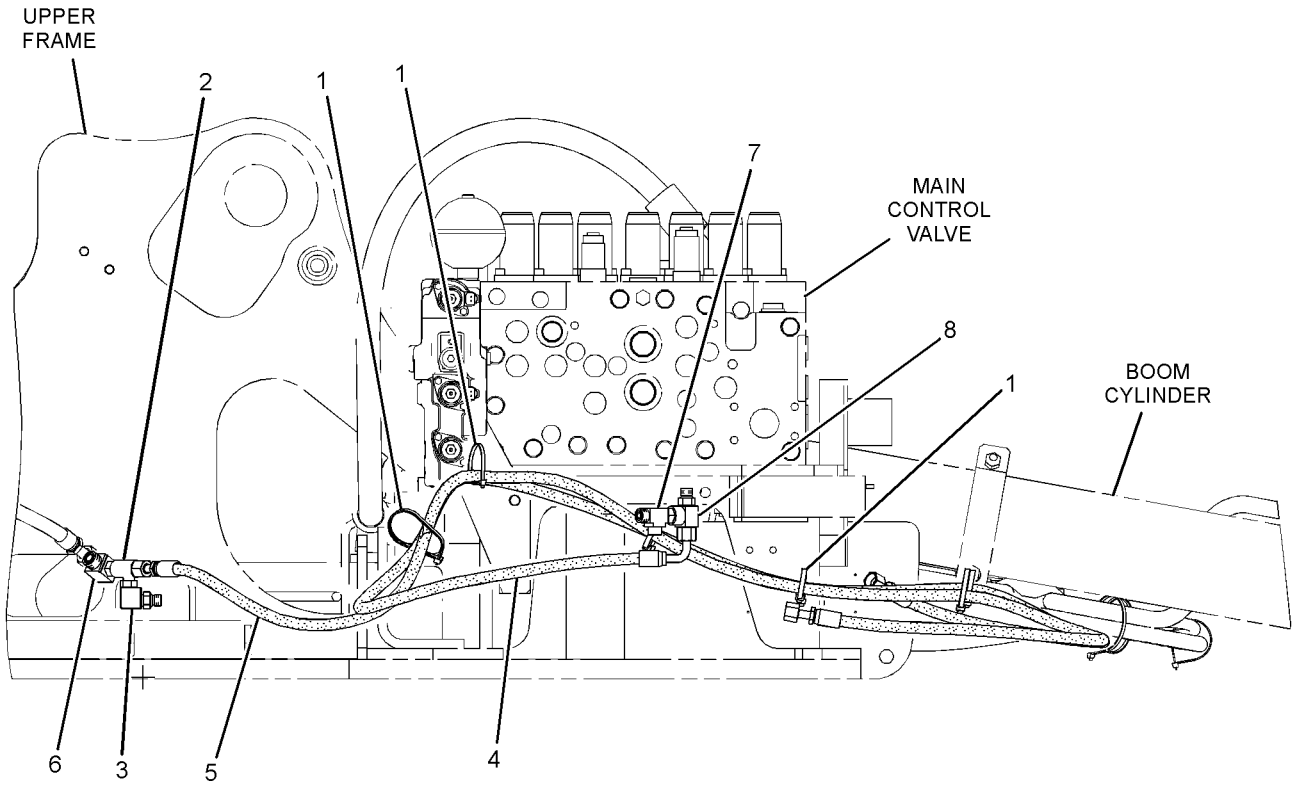

RIGHT SIDE VIEW

GRAPHIC #1 **<END>** g01513302

282-7288 LINES GP-PILOT—STICK LOWERING CONTROL VALVE

S/N: BYJ1-UP; PDP1-UP
PART OF 297-0200 VALVE AR-CHECK & RELIEF
AN ATTACHMENT

SMCS-5057, 5059 **i02900477**

NOTE	REF NO	GRAPHIC REF	PART NUMBER	QTY	PART NAME 1 2 3 4 5 6 (PRODUCT LEVEL)	SEE PAGE
	1	1	**4I-9521**	2	BAND-MARKER (RED, L1)	
	2	1	**4I-9523**	2	BAND-MARKER (BLUE, L3)	
I	3	1	**5I-4076**	1	HOSE AS	
	4	1	**7K-1181**	7	STRAP-CABLE	
	5	1	**133-5813**	2	BAND-MARKER (GRAY, P)	
	6	1	*150-3058*	1	TEE AS	
		1	**3J-1907**	1	SEAL-O-RING	
		1	**8C-8431**	1	TEE	
	7	1	*168-1968*	1	TEE AS	
		1	**3J-1907**	1	SEAL-O-RING	
		1	**6V-8397**	1	SEAL-O-RING	
		1	**126-6872**	1	TEE	
I	8	1	**320-0109**	1	HOSE AS	
I	9	1	**320-0112**	1	HOSE AS	
	10	1	*148-8435*	1	TEE AS	
		1	**3J-1907**	1	SEAL-O-RING	
		1	**6V-8397**	2	SEAL-O-RING	
		1	**6V-8781**	1	TEE-FACE SEAL	
	11	1	*150-3036*	1	ELBOW AS	
		1	**3J-1907**	1	SEAL-O-RING	
		1	**6V-8397**	1	SEAL-O-RING	
		1	**8T-1905**	1	ELBOW	

I-REFER TO HYDRAULIC INFORMATION SYSTEM

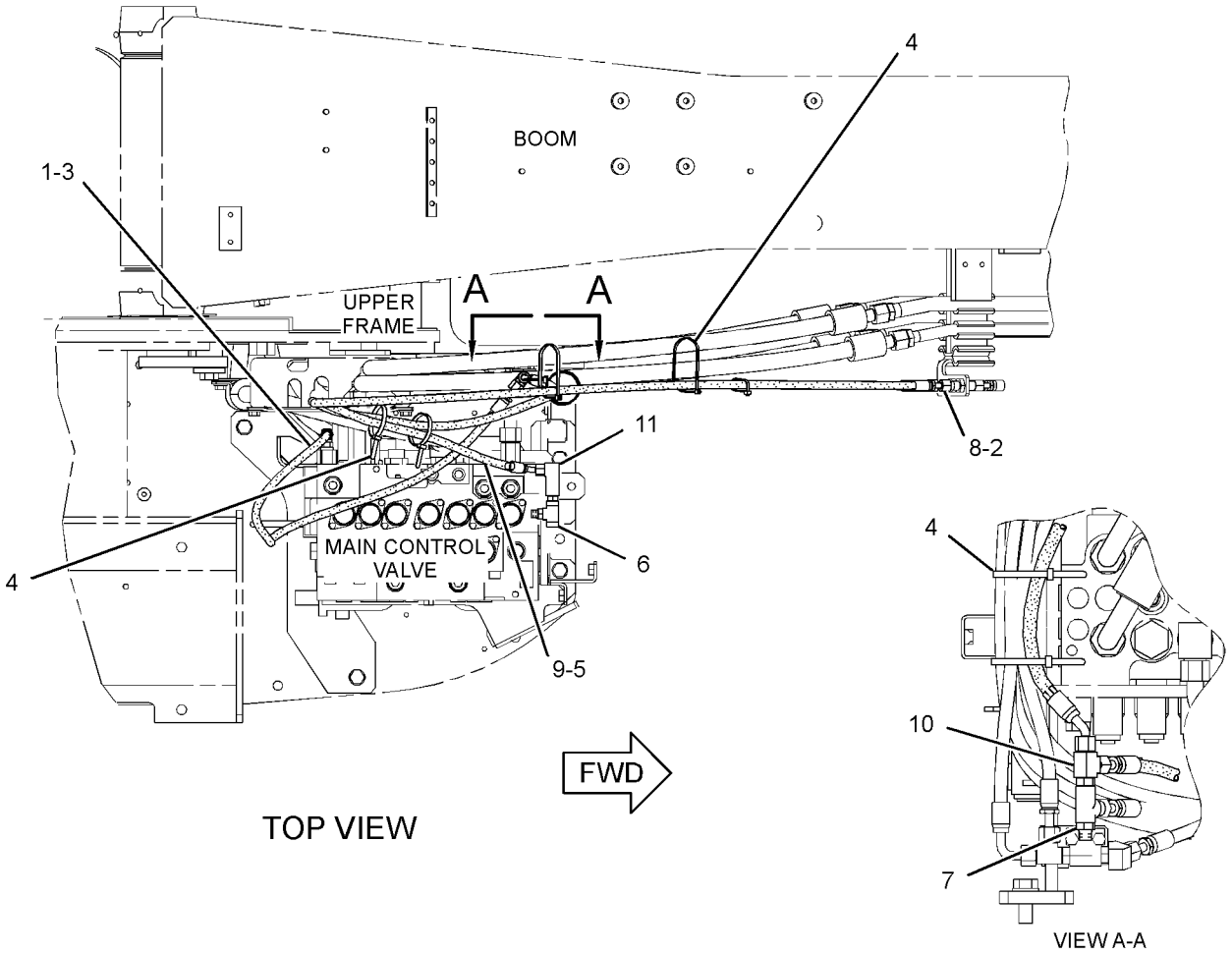

GRAPHIC #1 **<END>** g01520118

HYDRAULIC SYSTEM

282-7296 LINES GP-PILOT–BLADE

S/N: BYJ1-UP; PDP1-UP

PART OF 260-7212, 260-7213 INSTALLATION AR-AUXILIARY

AN ATTACHMENT

SMCS-5057, 5059 **i02975157**

NOTE	REF NO	GRAPHIC REF	PART NUMBER	QTY	PART NAME 1 2 3 4 5 6 (PRODUCT LEVEL)	SEE PAGE
I	1	1	**4I-1783**	1	HOSE AS	
	2	1	**4I-9524**	2	BAND-MARKER (BROWN, L4)	
	3	1	**4I-9527**	2	BAND-MARKER (GREEN, R3)	
	4	1	**4I-9528**	2	BAND-MARKER (PURPLE, R4)	
	5	1	**7K-1181**	3	STRAP-CABLE	
I	6	1	**087-5775**	1	HOSE AS	
	7	1	*164-5628*	1	CONNECTOR AS	
		1	**3J-1907**	1	SEAL-O-RING	
		1	**6V-8397**	1	SEAL-O-RING	
		1	**107-6631**	1	CONNECTOR-FILTER	
	8	1	**309-5769**	1	SWITCH AS-PRESSURE (BLADE)	
		1	**102-8802**	1	KIT-RECEPTACLE (2-PIN)	
					(INCLUDES RECEPTACLE AS & WEDGE)	
		1	**9X-3401**	2	PIN-CONNECTOR (16-GA TO 18-GA)	
					–OR–	
		1	**126-1767**	2	PIN-CONNECTOR (14-GA)	
	9	1	**278-6905**	1	HOSE AS	
	10	1	**285-2869**	1	HOSE AS	
	11	1	**302-2889**	1	HOSE AS	
E		1	**7I-7439**		GUARD (167-CM)	
	12	1	*148-8336*	2	CONNECTOR AS	
					(EACH INCLUDES)	
		1	**3J-1907**	1	SEAL-O-RING	
		1	**6V-8397**	1	SEAL-O-RING	
		1	**6V-8636**	1	CONNECTOR	
	13	1	*148-8367*	2	ELBOW AS	
					(EACH INCLUDES)	
		1	**6V-8397**	1	SEAL-O-RING	
		1	**6V-9850**	1	ELBOW	
	14	1	*148-8378*	3	ELBOW AS	
					(EACH INCLUDES)	
		1	**3J-1907**	1	SEAL-O-RING	
		1	**6V-8397**	1	SEAL-O-RING	
		1	**6V-8724**	1	ELBOW	
	15	1	*148-8433*	2	TEE AS	
					(EACH INCLUDES)	
		1	**6V-8397**	2	SEAL-O-RING	
		1	**6V-9836**	1	TEE-SWIVEL	
	16	1	*150-3036*	1	ELBOW AS	
		1	**3J-1907**	1	SEAL-O-RING	
		1	**6V-8397**	1	SEAL-O-RING	
		1	**8T-1905**	1	ELBOW	

E-ORDER BY THE CENTIMETER
I-REFER TO HYDRAULIC INFORMATION SYSTEM

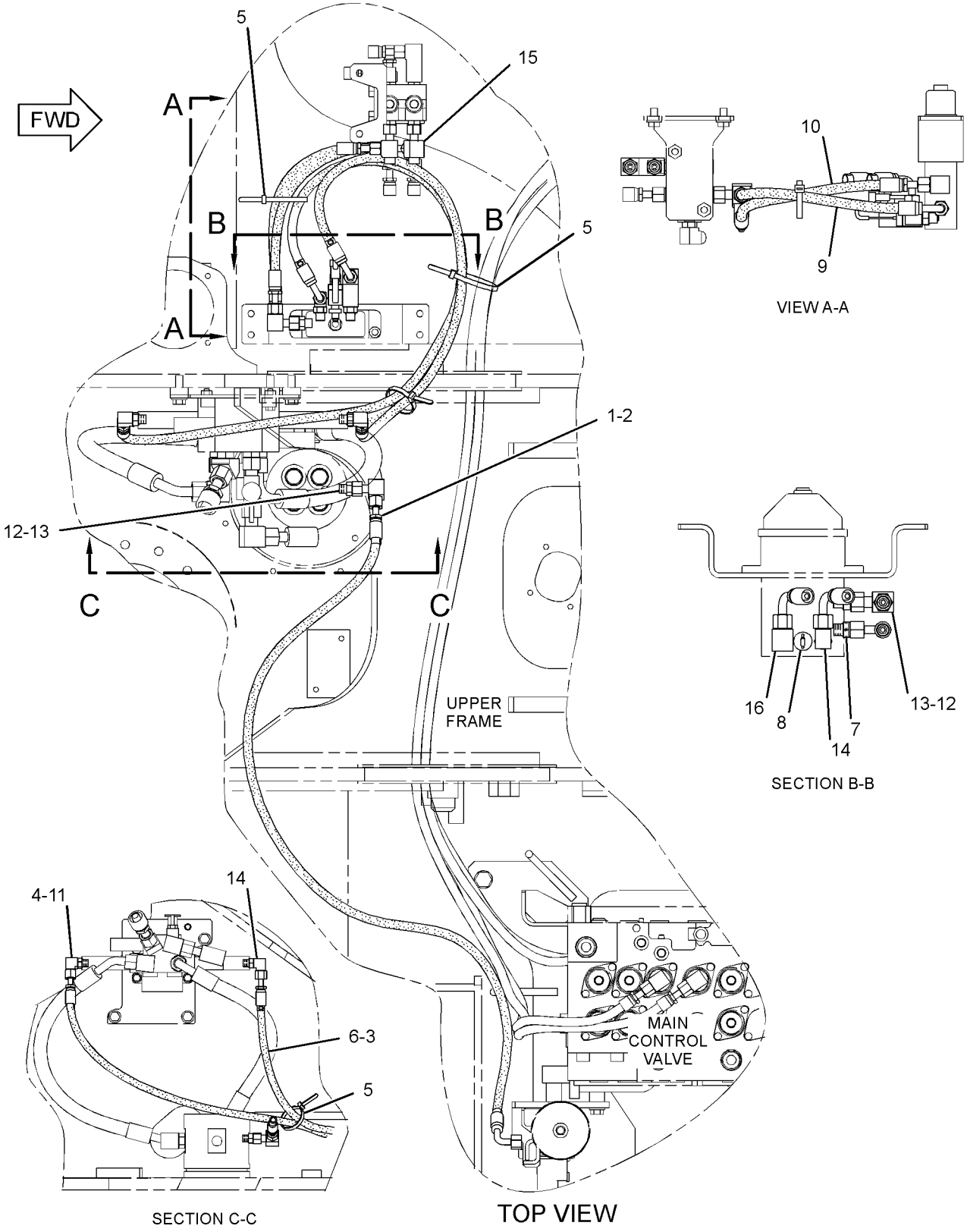

GRAPHIC #1 **<END>** g01517153

HYDRAULIC SYSTEM

286-6722 LINES GP-PILOT

S/N: BYJ1-UP; PDP1-UP
PART OF 270-6001 CONTROL AR-AUXILIARY
AN ATTACHMENT

SMCS-5057, 5059 **i02957111**

NOTE	REF NO	GRAPHIC REF	PART NUMBER	QTY	PART NAME 1 2 3 4 5 6 (PRODUCT LEVEL)	SEE PAGE
	1	1	**4I-9522**	2	BAND-MARKER (YELLOW, L2)	
	2	1	**4I-9523**	2	BAND-MARKER (BLUE, L3)	
	3	1	**7K-1181**	1	STRAP-CABLE	
I	4	1	**087-5766**	1	HOSE AS	
	5	1	*153-6249*	1	CONNECTOR AS	
		1	**3J-1907**	1	SEAL-O-RING	
		1	**6V-8397**	1	SEAL-O-RING	
		1	**8T-8887**	1	CONNECTOR	
I	6	1	**176-4472**	1	HOSE AS	
	7	1	*148-8338*	1	CONNECTOR AS	
		1	**3J-1907**	1	SEAL-O-RING	
		1	**6V-8397**	1	SEAL-O-RING	
		1	**8T-0075**	1	CONNECTOR	
	8	1	*148-8353*	1	ELBOW AS	
		1	**3J-1907**	1	SEAL-O-RING	
		1	**6V-8397**	1	SEAL-O-RING	
		1	**6V-9001**	1	ELBOW	
	9	1	*148-8378*	1	ELBOW AS	
		1	**3J-1907**	1	SEAL-O-RING	
		1	**6V-8397**	1	SEAL-O-RING	
		1	**6V-8724**	1	ELBOW	

I-REFER TO HYDRAULIC INFORMATION SYSTEM

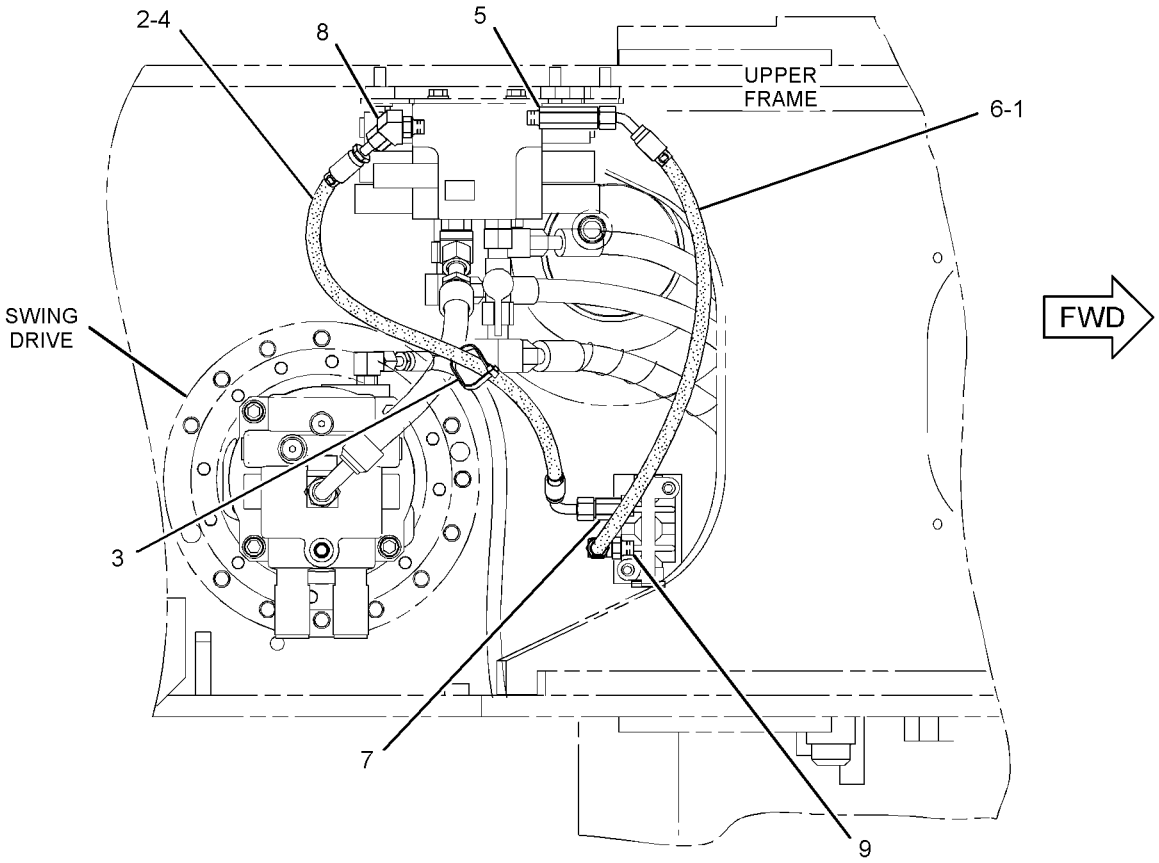

TOP VIEW

GRAPHIC #1 **<END>** g01511016

HYDRAULIC SYSTEM

292-7640 LINES GP-PILOT—MEDIUM PRESSURE

S/N: BYJ1-UP; PDP1-UP
PART OF 285-1677 CONTROL AR-AUXILIARY
AN ATTACHMENT

SMCS-5057, 5059 **i03035540**

NOTE	REF NO	GRAPHIC REF	PART NUMBER	QTY	PART NAME 1 2 3 4 5 6 (PRODUCT LEVEL)	SEE PAGE
I	1	1	**4I-0821**	1	HOSE AS	
I	2	1	**4I-5795**	2	HOSE AS	
	3	1	**4I-9521**	2	BAND-MARKER (RED, L1)	
	4	1	**4I-9523**	2	BAND-MARKER (BLUE, L3)	
	5	1	**4I-9525**	2	BAND-MARKER (ORANGE, R1)	
	6	1	**4I-9526**	2	BAND-MARKER (WHITE, R2)	
	7	1	**7K-1181**	1	STRAP-CABLE	
I	8	1	**087-5767**	1	HOSE AS	
	9	1	*168-1968*	2	TEE AS	
					(EACH INCLUDES)	
		1	**3J-1907**	1	SEAL-O-RING	
		1	**6V-8397**	1	SEAL-O-RING	
		1	**126-6872**		TEE	
	10	1	**218-1061**	1	HOSE AS	
Y	11	1	**259-7430**	1	VALVE GP-SOLENOID (PRESSURE REDUCING)	591
	12	1	**285-2654**	1	SUPPORT AS	
	13	1	**292-7233**	1	HOSE AS	
	14	1	*148-8336*	4	CONNECTOR AS	
					(EACH INCLUDES)	
		1	**3J-1907**	1	SEAL-O-RING	
		1	**6V-8397**	1	SEAL-O-RING	
		1	**6V-8636**	1	CONNECTOR	
	15	1	*148-8338*	1	CONNECTOR AS	
		1	**3J-1907**	1	SEAL-O-RING	
		1	**6V-8397**	1	SEAL-O-RING	
		1	**8T-0075**	1	CONNECTOR	
	16	1	*148-8353*	4	ELBOW AS	
					(EACH INCLUDES)	
		1	**3J-1907**	1	SEAL-O-RING	
		1	**6V-8397**	1	SEAL-O-RING	
		1	**6V-9001**	1	ELBOW	
	17	1	*148-8371*	1	ELBOW AS	
		1	**6V-8397**	1	SEAL-O-RING	
		1	**8C-8988**	1	ELBOW	
	18	1	*148-8378*	3	ELBOW AS	
					(EACH INCLUDES)	
		1	**3J-1907**	1	SEAL-O-RING	
		1	**6V-8397**	1	SEAL-O-RING	
		1	**6V-8724**	1	ELBOW	
	19	1	*164-5567*	2	COUPLER AS-QUICK DISCONNECT	
					(EACH INCLUDES)	
		1	**3J-1907**	1	SEAL-O-RING	
		1	**6V-3965**	1	FITTING (QUICK DISCONNECT)	
	20	1	**6V-0852**	2	CAP-DUST	
	21	1	**8T-4121**	3	WASHER-HARD (11X21X2.5-MM THK)	
M	22	1	**8T-4136**	3	BOLT (M10X1.5X25-MM)	
M	23	1	**8T-6870**	2	BOLT (M8X1.25X70-MM)	

I-REFER TO HYDRAULIC INFORMATION SYSTEM
M-METRIC PART
Y-SEPARATE ILLUSTRATION

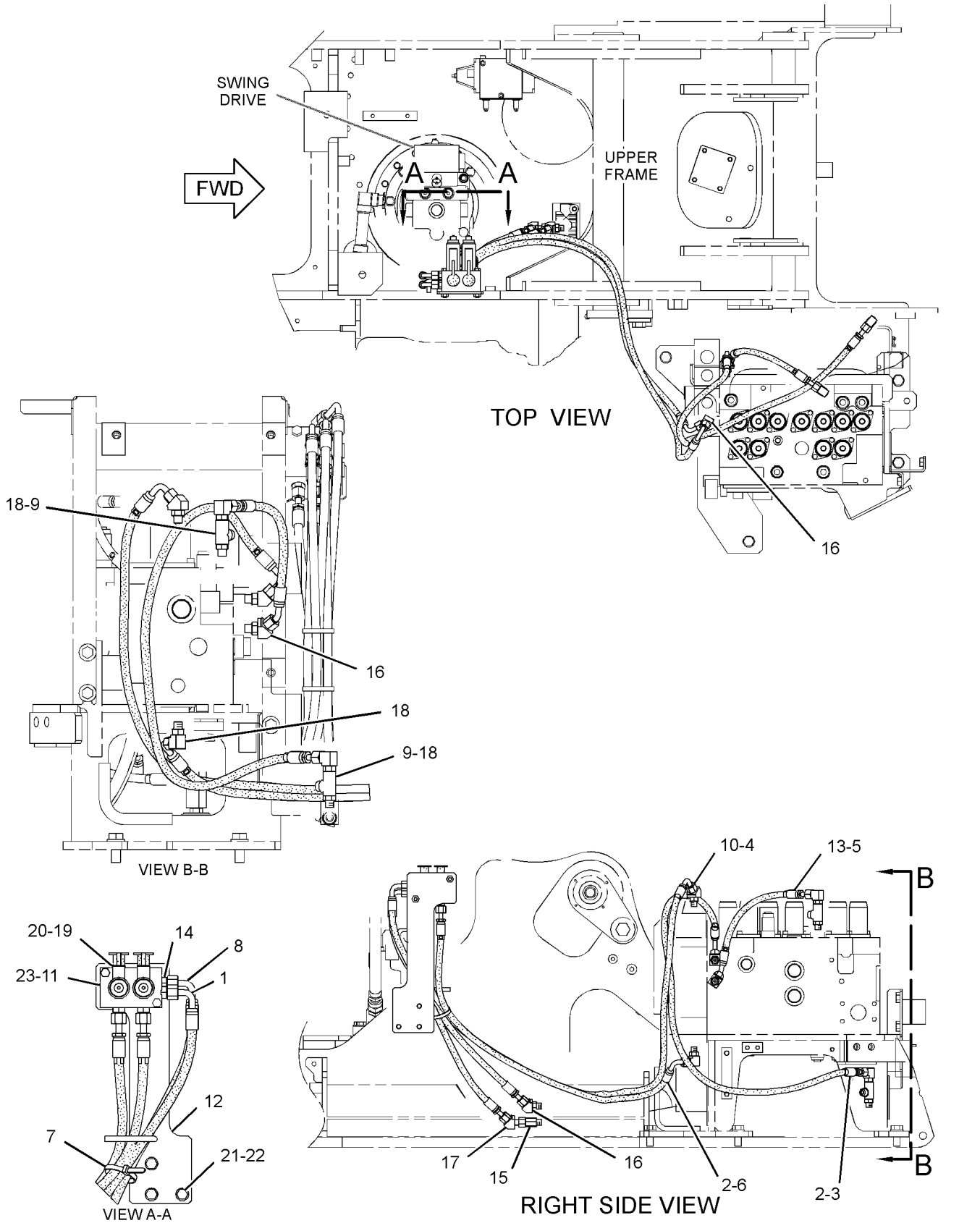

GRAPHIC #1

<END>

g01626153

HYDRAULIC SYSTEM

320-0019 LINES GP-PILOT—PILOT SUPPLY

S/N: BYJ1-UP; PDP1-UP
AN ATTACHMENT

SMCS-5057, 5059 **i02976216**

NOTE	REF NO	GRAPHIC REF	PART NUMBER	QTY	PART NAME 1 2 3 4 5 6 (PRODUCT LEVEL)	SEE PAGE
I	1	1	**121-6369**	2	HOSE AS	
	2	1	**4I-9522**	4	BAND-MARKER (YELLOW, L2)	
	3	1	**4I-9523**	4	BAND-MARKER (BLUE, L3)	
I	4	1	**108-7351**	1	HOSE AS	
	5	1	**168-9759**	1	BLOCK	
	6	1	**292-7321**	1	HOSE AS	
	7	1	*296-7059*	1	FITTING AS	
		1	**3K-0360**	1	SEAL-O-RING	
		1	**178-5883**	1	FITTING	
I	8	1	**320-0039**	1	HOSE AS	
	9	1	*148-8340*	1	CONNECTOR AS	
		1	**3K-0360**	1	SEAL-O-RING	
		1	**6V-8398**	1	SEAL-O-RING	
		1	**6V-8639**	1	CONNECTOR	
	10	1	*148-8364*	1	ELBOW AS	
		1	**3K-0360**	1	SEAL-O-RING	
		1	**6V-8398**	1	SEAL-O-RING	
		1	**6V-8625**	1	ELBOW	
B	11	1	*148-8407*	7	PLUG AS	
					(EACH INCLUDES)	
		1	**3J-1907**	1	SEAL-O-RING	
		1	**9S-4191**	1	PLUG-O-RING	
	12	1	*148-8411*	1	PLUG AS	
		1	**3K-0360**	1	SEAL-O-RING	
		1	**9S-4185**	1	PLUG-O-RING	
	13	1	*164-5624*	3	ELBOW AS	
					(EACH INCLUDES)	
		1	**3J-1907**	1	SEAL-O-RING	
		1	**6V-8398**	1	SEAL-O-RING	
		1	**9X-2085**	1	ELBOW	
	14	1	*164-8908*	1	CONNECTOR AS	
		1	**3K-0360**	1	SEAL-O-RING	
		1	**6V-8398**	1	SEAL-O-RING	
		1	**8T-0077**	1	CONNECTOR	
	15	1	**8T-4121**	2	WASHER-HARD (11X21X2.5-MM THK)	
M	16	1	**8T-4178**	2	BOLT (M10X1.5X90-MM)	

B-USE AS REQUIRED
I-REFER TO HYDRAULIC INFORMATION SYSTEM
M-METRIC PART

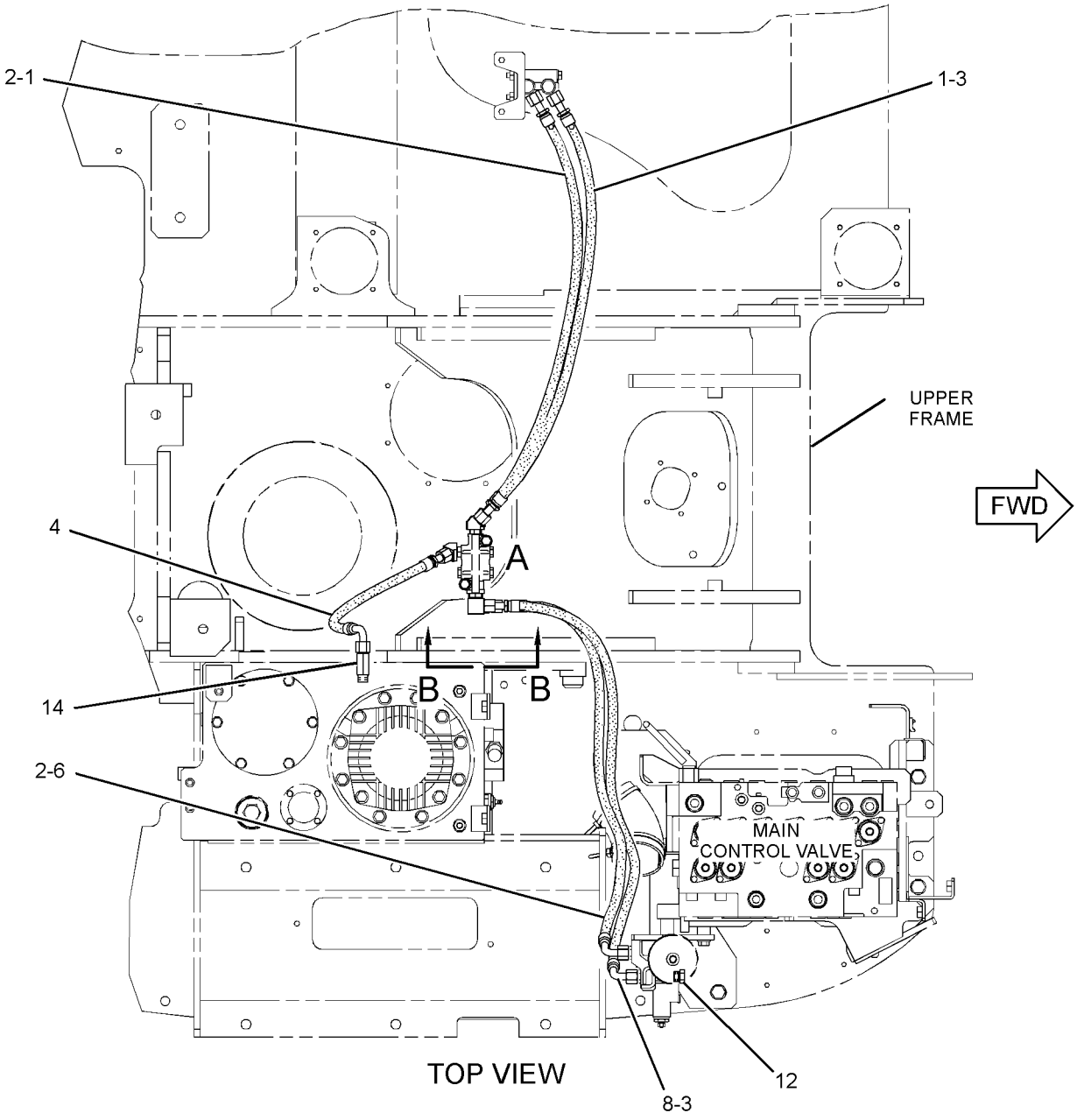

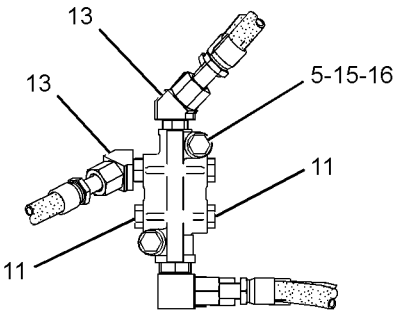

VIEW OF AREA A

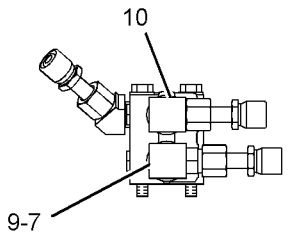

VIEW B-B

GRAPHIC #1 **<END>** g01514610

HYDRAULIC SYSTEM

282-7228 LINES GP-PUMP

S/N: BYJ1-UP; PDP1-UP

PART OF 270-5956, 270-5957 HYDRAULIC AR

SMCS-5057 **i02978372**

NOTE	REF NO	GRAPHIC REF	PART NUMBER	QTY	PART NAME 1 2 3 4 5 6 (PRODUCT LEVEL)	SEE PAGE
	1	1	**8T-4985**	4	CLAMP-HOSE	
	2	1	**285-2598**	1	TUBE AS	
	3	1	**285-2603**	1	GROMMET	
	4	1	**285-2604**	1	GROMMET	
I	5	1	**285-2605**	1	HOSE AS	
I	6	1	**285-2609**	1	HOSE AS	
	7	1	**285-2863**	1	HOSE	
	8	1	**296-7224**	1	PLATE AS	
M	9	1	**108-1781**	4	BOLT-SOCKET HEAD (M12X1.75X35-MM)	
	10	1	*148-8408*	1	PLUG AS	
		1	**3D-2824**	1	SEAL-O-RING	
		1	**9S-4183**	1	PLUG-O-RING	
	11	1	*150-4049*	2	ELBOW AS	
					(EACH INCLUDES)	
		1	**6V-9746**	1	SEAL-O-RING	
		1	**7M-8485**	1	SEAL-O-RING	
		1	**8T-4149**	1	ELBOW	
	12	1	**6J-2680**	1	SEAL-O-RING	
	13	1	**8T-4121**	3	WASHER-HARD (11X21X2.5-MM THK)	
M	14	1	**8T-4195**	4	BOLT (M10X1.5X30-MM)	
	15	1	**319-9958**	1	SPACER	
	16	1	**319-9938**	1	PLATE AS	
	17	1	**131-5879**	1	WASHER (11X32X3-MM THK)	

I-REFER TO HYDRAULIC INFORMATION SYSTEM
M-METRIC PART

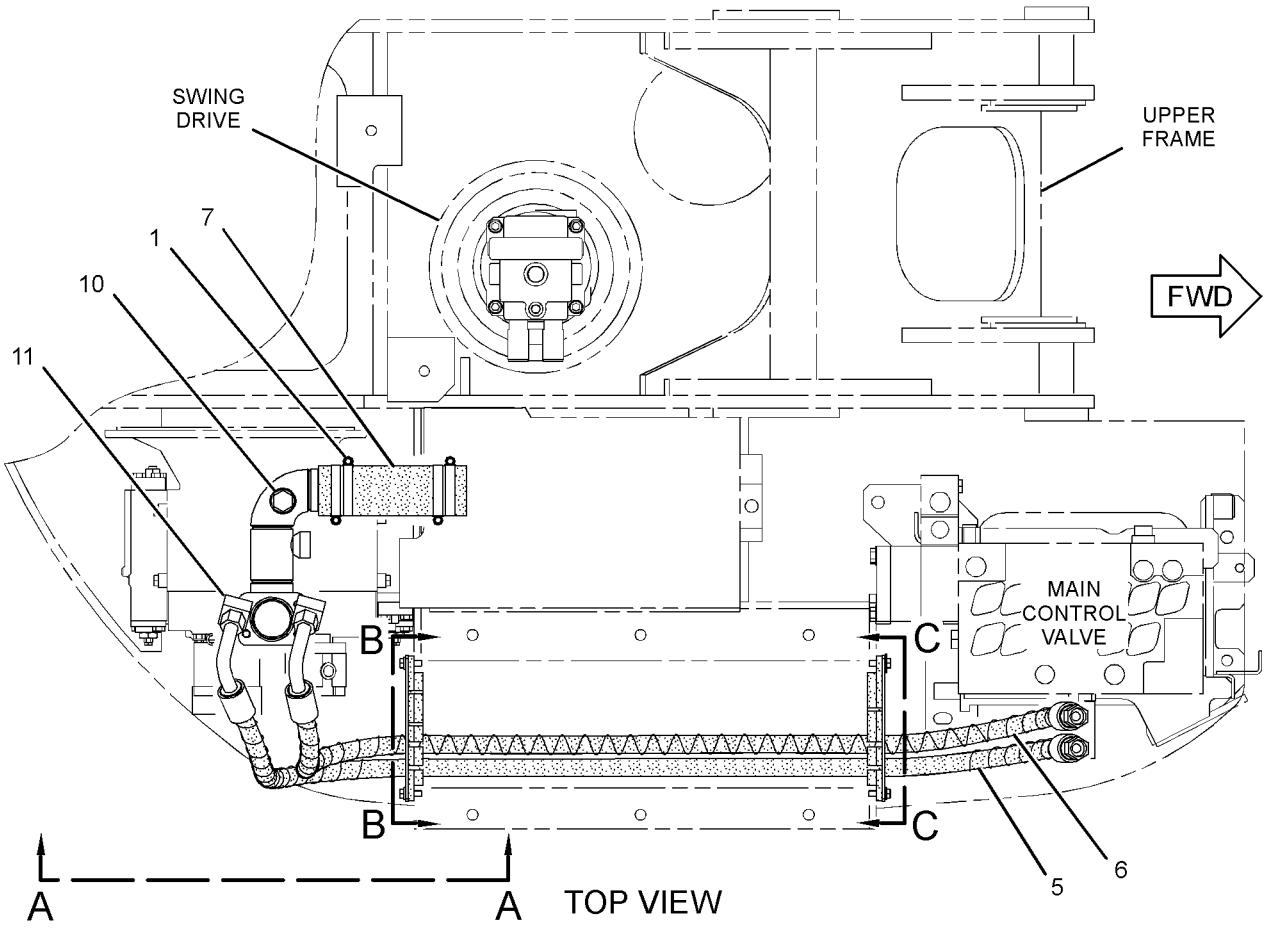

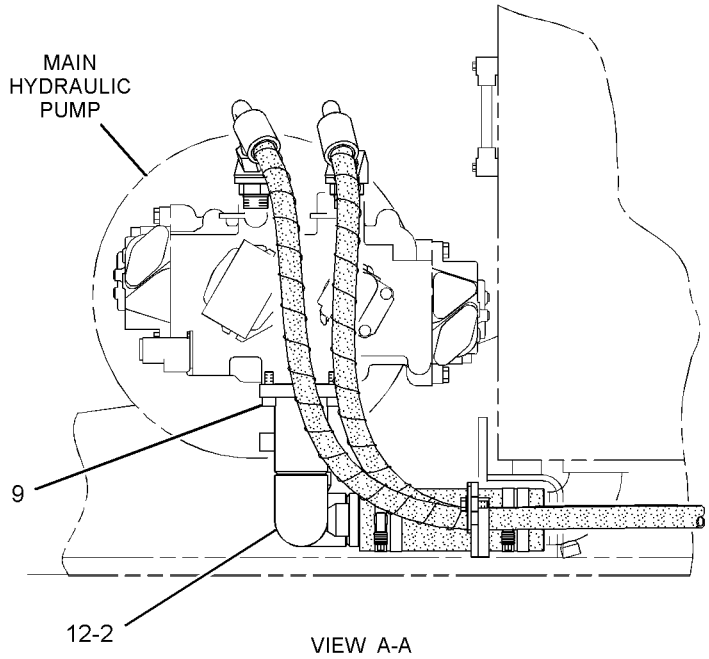

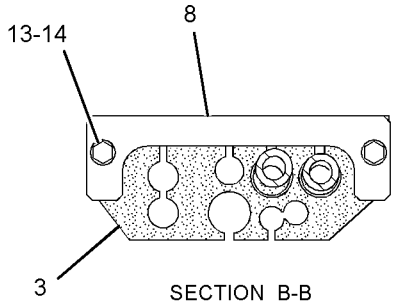

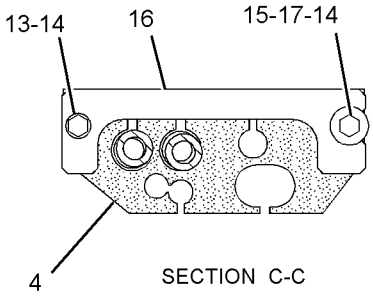

GRAPHIC #1 **<END>** g01513887

HYDRAULIC SYSTEM

282-7262 LINES GP-PUMP—SYSTEM 20, WORK TOOL PRIORITY

S/N: BYJ1-UP; PDP1-UP
PART OF 270-5996 CONTROL AR-AUXILIARY
AN ATTACHMENT

SMCS-5057 **i02975150**

NOTE	REF NO	GRAPHIC REF	PART NUMBER	QTY	PART NAME 1 2 3 4 5 6 (PRODUCT LEVEL)	SEE PAGE
I	1	1	**282-7154**	1	HOSE AS	
	2	1	*286-6468*	1	ELBOW AS	
		1	**6V-9746**	1	SEAL-O-RING	
		1	**7M-8485**	1	SEAL-O-RING	
		1	**286-6469**	1	ELBOW	
	3	1	*286-6499*	2	CONNECTOR AS	
					(EACH INCLUDES)	
		1	**6V-9746**	1	SEAL-O-RING	
		1	**7M-8485**	1	SEAL-O-RING	
		1	**184-9330**	1	CONNECTOR	
	4	1	**289-5528**	1	SUPPORT AS	
I	5	1	**289-5531**	1	HOSE AS	
I	6	1	**289-5535**	1	HOSE AS	
I	7	1	**289-5543**	1	HOSE AS	
	8	1	**310-0037**	1	VALVE GP-PRIORITY (FLOW DIVIDER VALVE)	
I	9	1	**320-0025**	1	HOSE AS	
	10	1	**085-9310**	2	SPACER (16.6X32X26-MM THK)	
	11	1	*148-8360*	5	ELBOW AS	
					(EACH INCLUDES)	
		1	**6V-9182**	1	ELBOW	
		1	**6V-9746**	1	SEAL-O-RING	
		1	**7M-8485**	1	SEAL-O-RING	
	12	1	*148-8392*	1	ELBOW AS	
		1	**6V-9746**	1	SEAL-O-RING	
		1	**6V-9853**	1	ELBOW	
	13	1	*148-8435*	1	TEE AS	
		1	**3J-1907**	1	SEAL-O-RING	
		1	**6V-8397**	2	SEAL-O-RING	
		1	**6V-8781**	1	TEE-FACE SEAL	
	14	1	**5P-1076**	4	WASHER-HARD (13.5X30X4-MM THK)	
M	15	1	**8T-4140**	2	BOLT (M16X2X60-MM)	
M	16	1	**8T-5412**	4	BOLT (M12X1.75X140-MM)	

I-REFER TO HYDRAULIC INFORMATION SYSTEM
M-METRIC PART

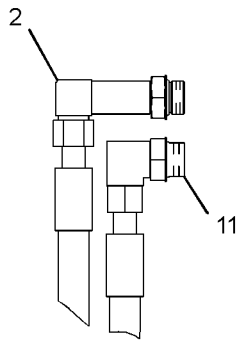

VIEW B-B

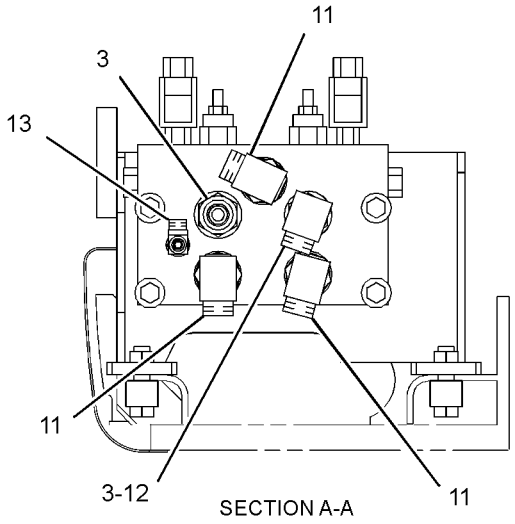

SECTION A-A

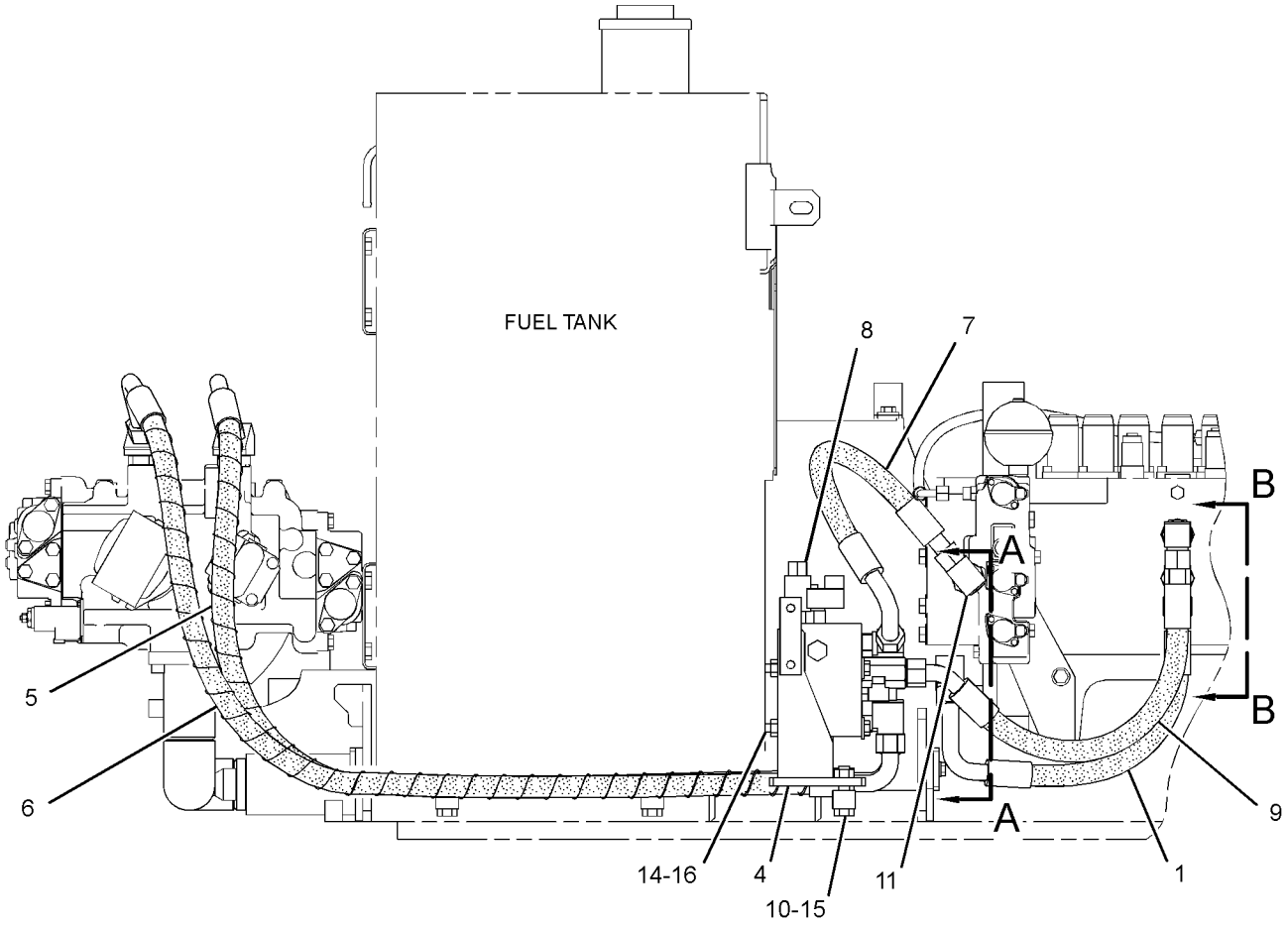

RIGHT SIDE VIEW

GRAPHIC #1 **<END>** g01513777

HYDRAULIC SYSTEM

282-7271 LINES GP-PUMP

S/N: BYJ1-UP; PDP1-UP
PART OF 270-6001 CONTROL AR-AUXILIARY
AN ATTACHMENT

SMCS-5057 **i02957112**

NOTE	REF NO	GRAPHIC REF	PART NUMBER	QTY	PART NAME 1 2 3 4 5 6 (PRODUCT LEVEL)	SEE PAGE
	1	1	**6V-0852**	1	CAP-DUST	
	2	1	**7K-1181**	6	STRAP-CABLE	
	3	1	*148-8447*	1	TEE AS-SWIVEL	
		1	**7J-9108**	1	SEAL-O-RING	
		1	**7X-0872**	1	TEE-SWIVEL	
I	4	1	**207-6269**	1	HOSE AS	
	5	1	*250-1454*	1	TEE AS	
		1	**3D-2824**	1	SEAL-O-RING	
		1	**6V-9746**	1	SEAL-O-RING	
		1	**7J-9108**	1	SEAL-O-RING	
		1	**118-4569**	1	TEE	
	6	1	**266-0982**	2	GUARD	
I	7	1	**286-6749**	1	HOSE AS	
I	8	1	**286-6752**	1	HOSE AS	
	9	1	*148-8315*	1	CONNECTOR AS	
		1	**2M-9780**	1	SEAL-O-RING	
		1	**6V-8642**	1	CONNECTOR	
		1	**7J-9108**	1	SEAL-O-RING	
	10	1	*148-8355*	1	ELBOW AS	
		1	**5K-9090**	1	SEAL-O-RING	
		1	**6V-9005**	1	ELBOW	
		1	**7M-8485**	1	SEAL-O-RING	
	11	1	*148-8362*	1	ELBOW AS	
		1	**3D-2824**	1	SEAL-O-RING	
		1	**5K-9090**	1	SEAL-O-RING	
		1	**8T-6684**	1	ELBOW	
	12	1	*148-8382*	1	ELBOW AS	
		1	**3D-2824**	1	SEAL-O-RING	
		1	**7J-9108**	1	SEAL-O-RING	
		1	**8T-0404**	1	ELBOW	
	13	1	*148-8393*	1	ELBOW AS	
		1	**6V-9852**	1	ELBOW	
		1	**7J-9108**	1	SEAL-O-RING	
	14	1	*155-3504*	1	ELBOW AS	
		1	**2M-9780**	1	SEAL-O-RING	
		1	**6V-9003**	1	ELBOW	
		1	**7J-9108**	1	SEAL-O-RING	
	15	1	*164-5567*	1	COUPLER AS-QUICK DISCONNECT	
		1	**3J-1907**	1	SEAL-O-RING	
		1	**6V-3965**	1	FITTING (QUICK DISCONNECT)	

I-REFER TO HYDRAULIC INFORMATION SYSTEM

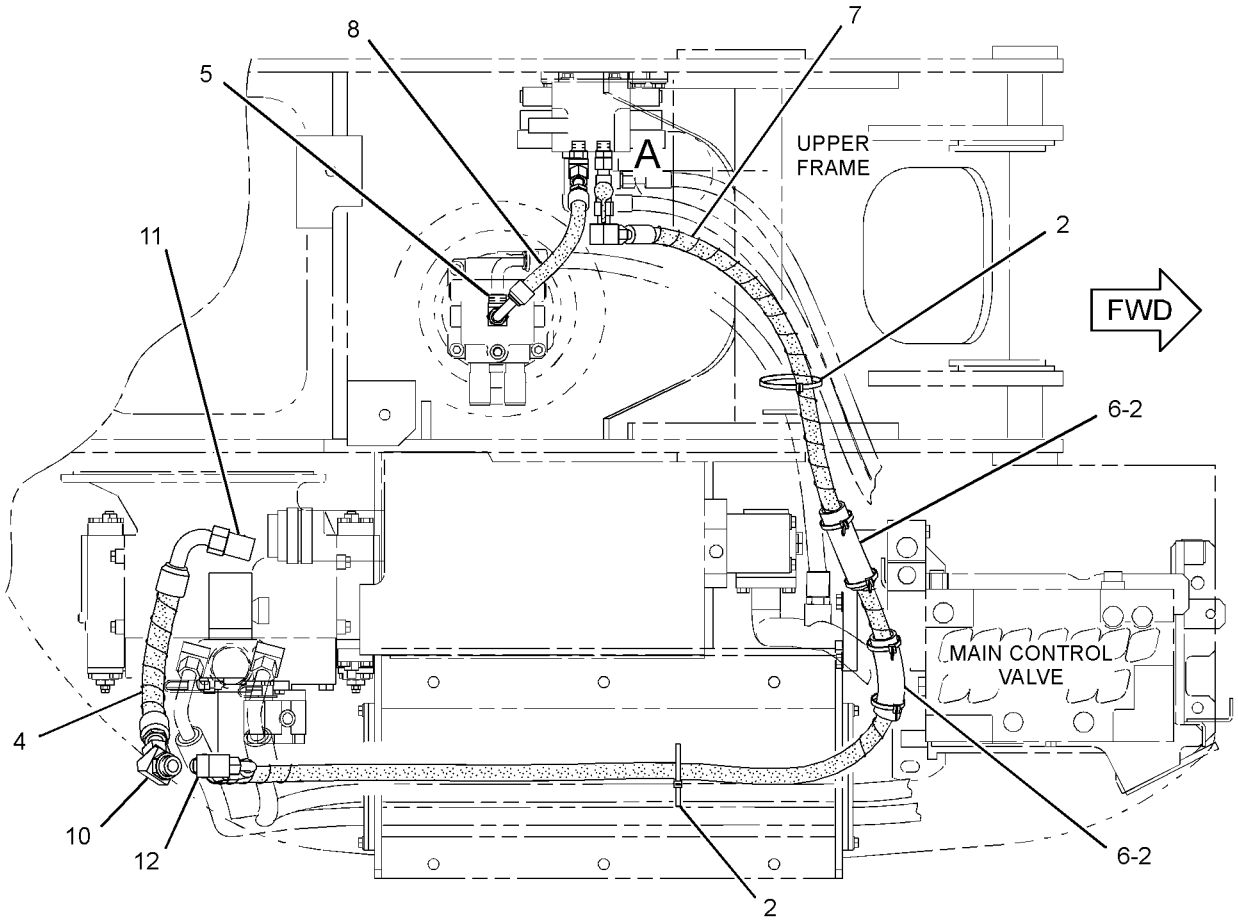

TOP VIEW

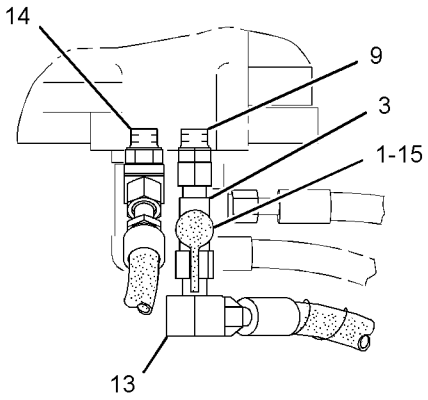

VIEW OF AREA A

GRAPHIC #1 **<END>** g01514399

HYDRAULIC SYSTEM

282-7281 LINES GP-RETURN

S/N: BYJ1-UP; PDP1-UP
AN ATTACHMENT

SMCS-5057 **i02979464**

NOTE	REF NO	GRAPHIC REF	PART NUMBER	QTY	PART NAME 1 2 3 4 5 6 (PRODUCT LEVEL)	SEE PAGE
	1	1	**5P-5148**	3	STRAP-TIE	
	2	1	**7K-1181**	5	STRAP-CABLE	
I	3	1	**320-0106**	1	HOSE AS	
	4	1	*148-8444*	1	TEE AS-SWIVEL	
		1	**6V-8398**	2	SEAL-O-RING	
		1	**6V-9837**	1	TEE-SWIVEL	

I-REFER TO HYDRAULIC INFORMATION SYSTEM

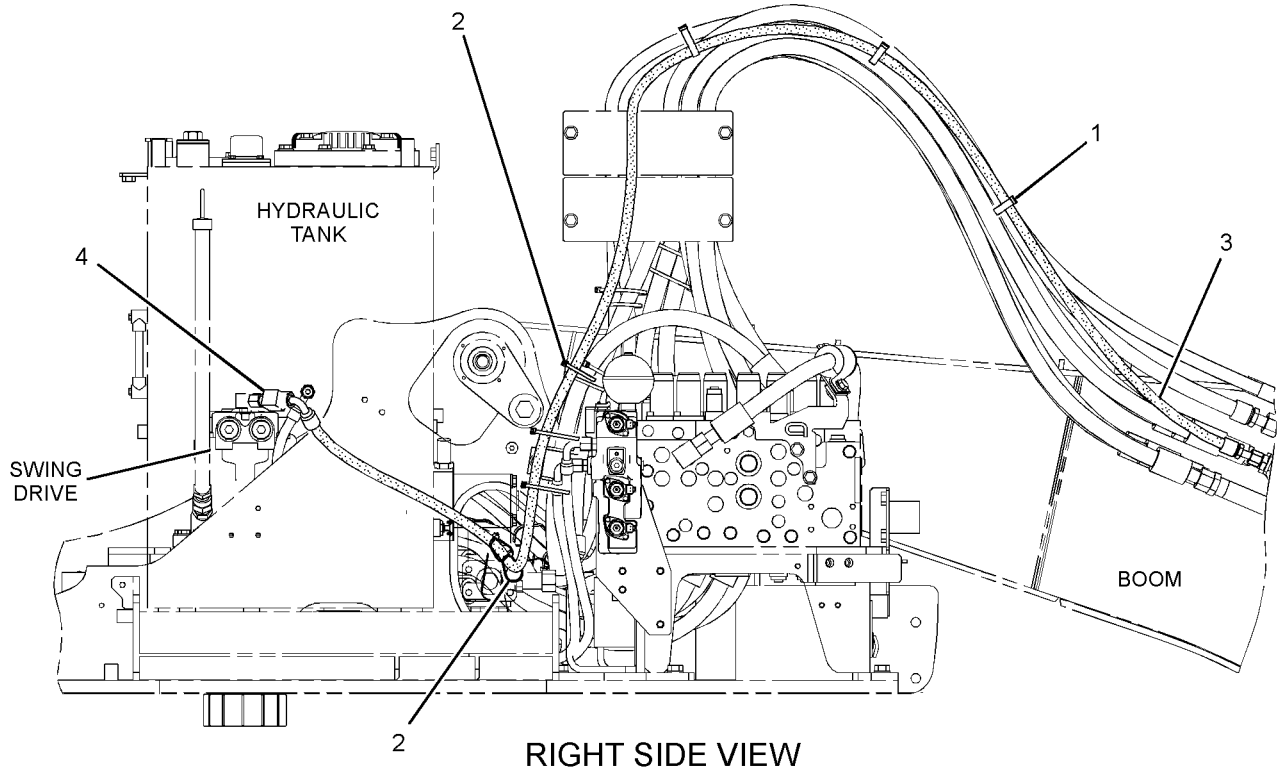

RIGHT SIDE VIEW

GRAPHIC #1 **<END>** g01513387

HYDRAULIC SYSTEM

294-6363 LINES GP-RETURN & FILTER—HAMMER FILTER

S/N: BYJ1-UP; PDP1-UP
PART OF 260-7199 FILTER AR-HYDRAULIC
AN ATTACHMENT

SMCS-5057 **i02910781**

NOTE	REF NO	GRAPHIC REF	PART NUMBER	QTY	PART NAME 1 2 3 4 5 6 (PRODUCT LEVEL)	SEE PAGE
	1	1	**093-1293**	1	CLAMP	
I	2	1	**199-1767**	1	HOSE AS	
Y	3	1	**224-1687**	1	FILTER GP-OIL (HYDRAULIC)	348
	4	1	**316-4057**	1	SUPPORT AS	
	5	1	**302-9541**	1	TUBE AS	
I	6	1	**302-9542**	1	HOSE AS	
	7	1	*148-8335*	1	CONNECTOR AS	
		1	**5K-9090**	1	SEAL-O-RING	
		1	**6V-8635**	1	CONNECTOR	
		1	**7M-8485**	1	SEAL-O-RING	
	8	1	*148-8357*	1	ELBOW AS	
		1	**5K-9090**	1	SEAL-O-RING	
		1	**6V-9008**	1	ELBOW	
		1	**7M-8485**	1	SEAL-O-RING	
	9	1	**5K-9090**	1	SEAL-O-RING	
M	10	1	**8T-4139**	4	BOLT (M12X1.75X30-MM)	
	11	1	**8T-4223**	9	WASHER-HARD (13.5X25.5X3-MM THK)	
M	12	1	**8T-4910**	1	BOLT (M12X1.75X60-MM)	
M	13	1	**8T-4956**	4	BOLT (M12X1.75X35-MM)	

I-REFER TO HYDRAULIC INFORMATION SYSTEM
M-METRIC PART
Y-SEPARATE ILLUSTRATION

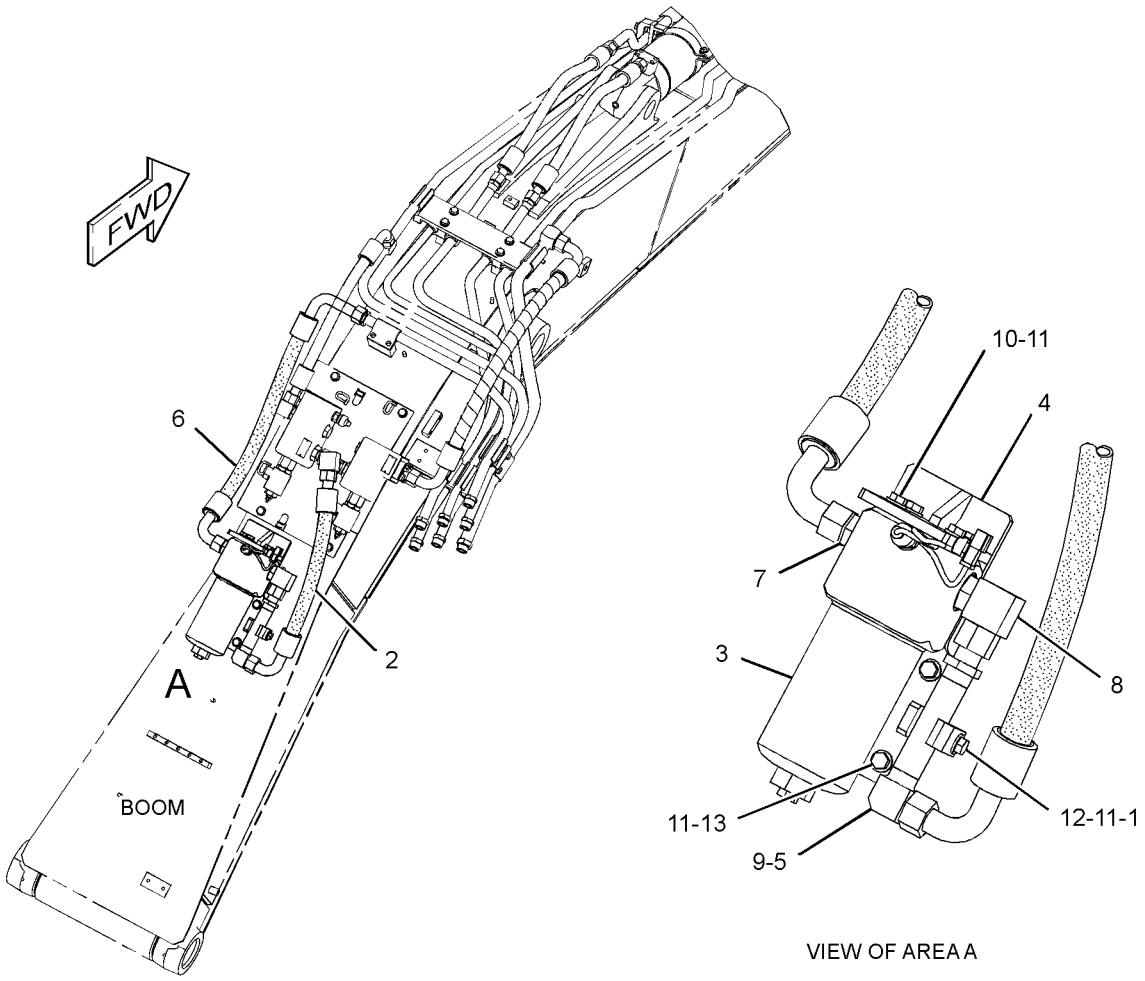

GRAPHIC #1 **<END>** g01449031

HYDRAULIC SYSTEM

179-7600 LINES GP-STICK

S/N: BYJ1-UP; PDP1-UP
3.0-M (9.8-FT)
PART OF 260-7059 STICK AR
AN ATTACHMENT

SMCS-5057, 5458 **i02809993**

NOTE	REF NO	GRAPHIC REF	PART NUMBER	QTY	PART NAME 1 2 3 4 5 6 (PRODUCT LEVEL)	SEE PAGE
I	1	1	**124-1305**	1	HOSE AS	
I	2	1	**123-2729**	1	HOSE AS	
	3	1	**8C-3205**	2	FLANGE-HALF	
	4	1	**4J-5267**	2	SEAL-O-RING	
	5	1	**131-9850**	1	BLOCK	
M	6	1	**8T-5005**	4	BOLT (M10X1.5X70-MM)	
	7	1	**8T-4121**	4	WASHER-HARD (11X21X2.5-MM THK)	

I-REFER TO HYDRAULIC INFORMATION SYSTEM
M-METRIC PART

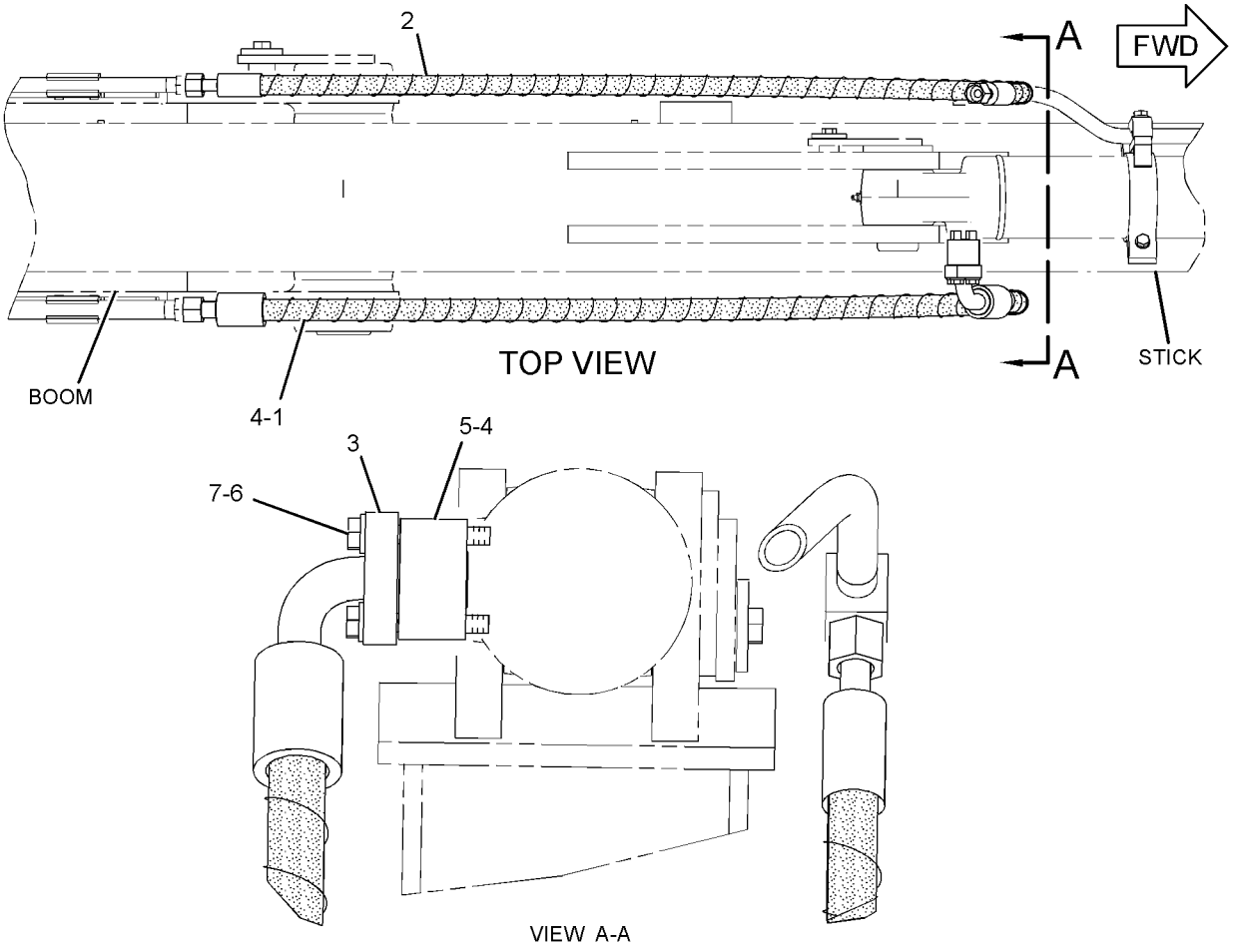

GRAPHIC #1 **<END>** g01405695

HYDRAULIC SYSTEM

179-7601 LINES GP-STICK

S/N: BYJ1-UP; PDP1-UP
2.5-M (8.2-FT)
PART OF 260-7062 STICK AR
AN ATTACHMENT

SMCS-5057, 5458 **i02781247**

NOTE	REF NO	GRAPHIC REF	PART NUMBER	QTY	PART NAME 1 2 3 4 5 6 (PRODUCT LEVEL)	SEE PAGE
I	1	1	**104-8999**	1	HOSE AS	
I	2	1	**124-0838**	1	HOSE AS	
	3	1	**8C-3205**	2	FLANGE-HALF	
	4	1	**4J-5267**	2	SEAL-O-RING	
	5	1	**131-9850**	1	BLOCK	
M	6	1	**8T-5005**	4	BOLT (M10X1.5X70-MM)	
	7	1	**8T-4121**	4	WASHER-HARD (11X21X2.5-MM THK)	

I-REFER TO HYDRAULIC INFORMATION SYSTEM
M-METRIC PART

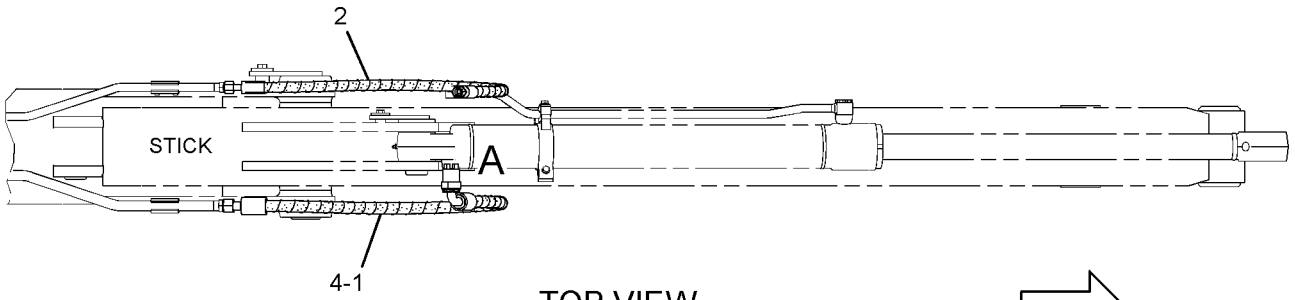

TOP VIEW

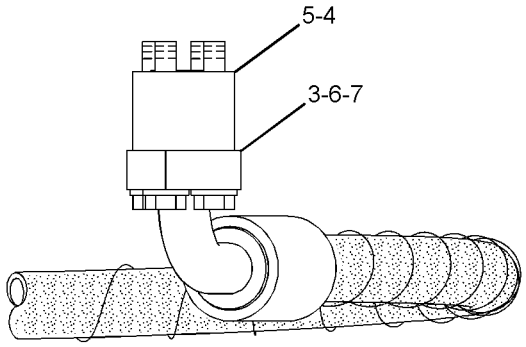

VIEW OF AREA A

GRAPHIC #1 **<END>** g01408915

HYDRAULIC SYSTEM

208-3070 LINES GP-STICK–OFFSET

S/N: BYJ1-UP; PDP1-UP
PART OF 260-7193 STICK AR-HOE
AN ATTACHMENT

SMCS-5057, 5458 **i02814172**

NOTE	REF NO	GRAPHIC REF	PART NUMBER	QTY	PART NAME 1 2 3 4 5 6 (PRODUCT LEVEL)	SEE PAGE
	1	1	**221-4723**	2	HOSE AS	

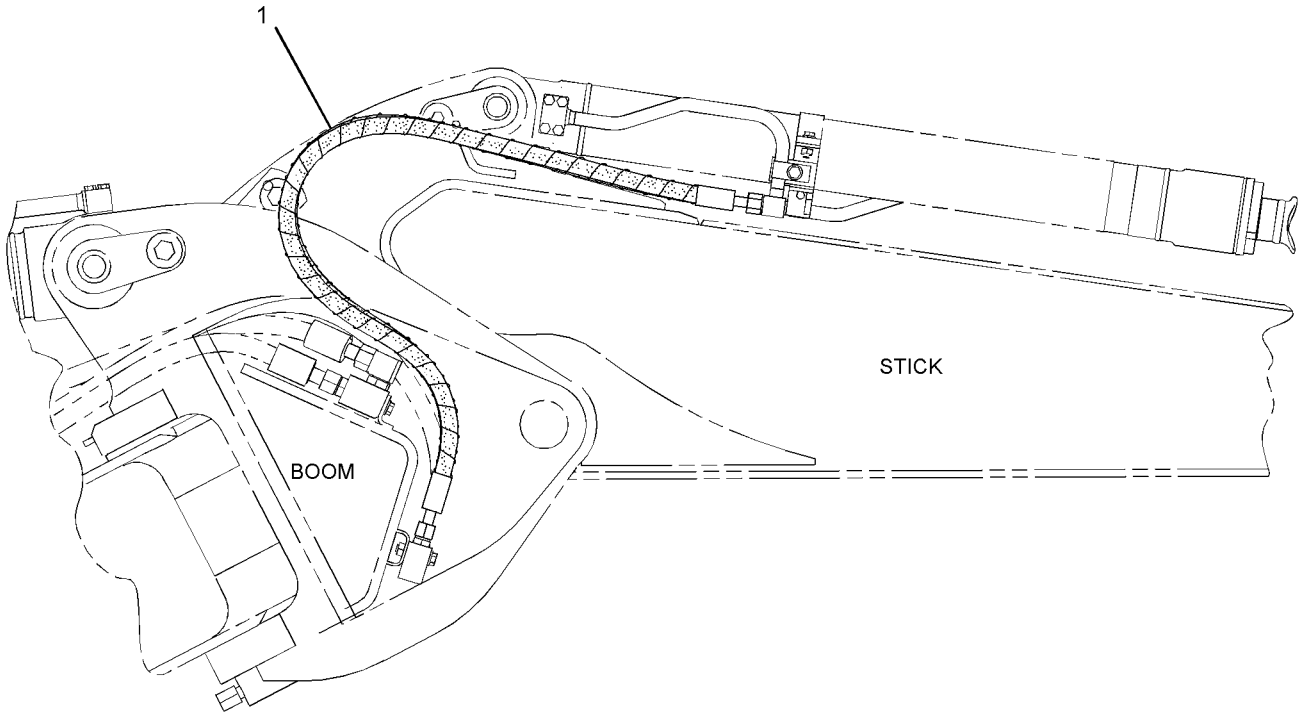

RIGHT SIDE VIEW

GRAPHIC #1 **<END>** g01415443

HYDRAULIC SYSTEM

278-6680 LINES GP-STICK

S/N: BYJ1-UP; PDP1-UP
PART OF 260-7060 STICK AR-HOE
AN ATTACHMENT

SMCS-5057, 5458 **i02828682**

NOTE	REF NO	GRAPHIC REF	PART NUMBER	QTY	PART NAME 1 2 3 4 5 6 (PRODUCT LEVEL)	SEE PAGE
I	1	1	**123-2729**	1	HOSE AS	
I	2	1	**124-1305**	1	HOSE AS	
	3	1	**131-9850**	1	BLOCK	
	4	1	**4J-5267**	2	SEAL-O-RING	
	5	1	**8C-3205**	2	FLANGE-HALF	
	6	1	**8T-4121**	4	WASHER-HARD (11X21X2.5-MM THK)	
M	7	1	**8T-5005**	4	BOLT (M10X1.5X70-MM)	

I-REFER TO HYDRAULIC INFORMATION SYSTEM
M-METRIC PART

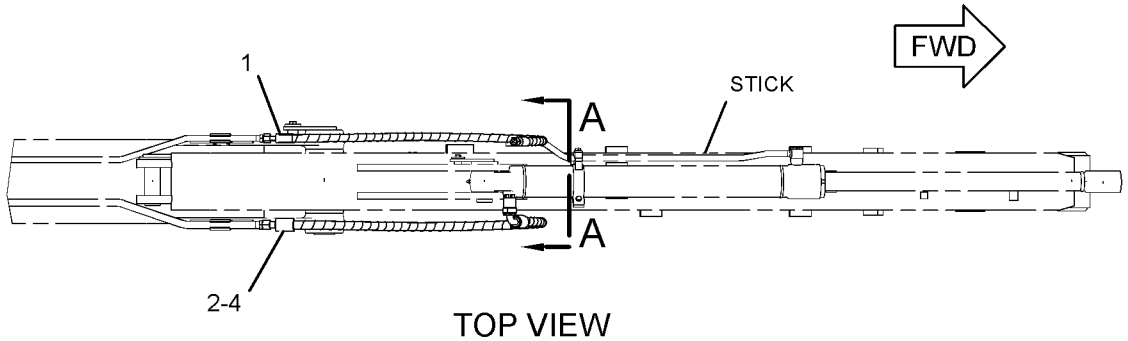

TOP VIEW

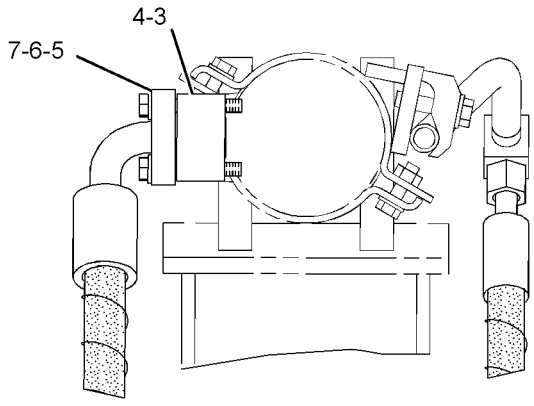

VIEW A-A

GRAPHIC #1 **<END>** g01412229

194-8989 LINES GP-STICK CYLINDER

S/N: BYJ1-UP; PDP1-UP
PART OF 289-7711 CYLINDER & LINES GP-STICK
AN ATTACHMENT

SMCS-5458 **i02890956**

NOTE	REF NO	GRAPHIC REF	PART NUMBER	QTY	PART NAME 1 2 3 4 5 6 (PRODUCT LEVEL)	SEE PAGE
	1	1	**6V-9746**	2	SEAL-O-RING	
	2	1	**4J-5267**	2	SEAL-O-RING	
	3	1	**109-5816**	1	ELBOW	
M	4	1	**8T-4185**	8	BOLT (M10X1.5X50-MM)	
	5	1	**194-9124**	1	TUBE AS	
M	6	1	**8T-4910**	1	BOLT (M12X1.75X60-MM)	
	7	1	**8T-4223**	1	WASHER-HARD (13.5X25.5X3-MM THK)	
	8	1	**093-1292**	1	CLAMP	
	9	1	**121-6219**	1	SUPPORT AS	
	10	1	**8T-4121**	2	WASHER-HARD (11X21X2.5-MM THK)	
M	11	1	**8T-4196**	2	BOLT (M10X1.5X35-MM)	
	12	1	**121-6220**	1	SUPPORT AS	

M-METRIC PART

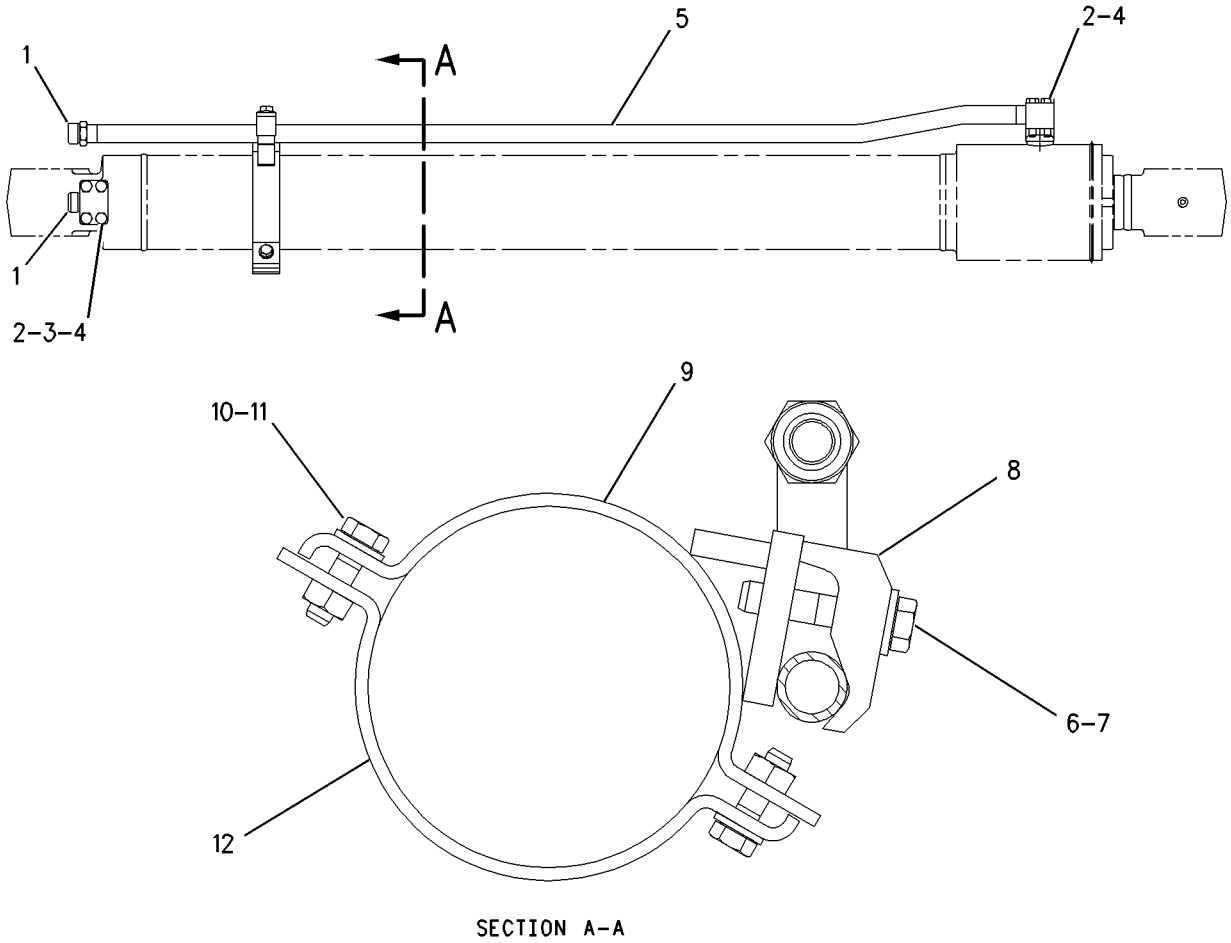

SECTION A-A

GRAPHIC #1 **<END>** g00856269

294-6250 LINES GP-STICK CYLINDER—LOWERING CONTROL

S/N: BYJ1-UP; PDP1-UP
PART OF 297-0200 VALVE AR-CHECK & RELIEF
AN ATTACHMENT

SMCS-5458 **i02997910**

NOTE	REF NO	GRAPHIC REF	PART NUMBER	QTY	PART NAME 1 2 3 4 5 6 (PRODUCT LEVEL)	SEE PAGE
	1	1	**093-1294**	1	CLAMP	
	2	1	**121-6220**	1	SUPPORT AS	
	3	1	**193-6496**	1	SUPPORT AS	
	4	1	**197-2198**	1	SUPPORT AS	
	5	1	**202-7144**	1	SUPPORT AS	
Y	6	1	**297-0189**	1	VALVE GP-LOAD CONTROL (STICK)	545
	7	1	**302-9302**	1	TUBE AS	
	8	1	**302-9303**	1	TUBE AS	
	9	1	**302-9305**	1	TUBE AS	
	10	1	**093-1292**	1	CLAMP	
	11	1	*148-8325*	1	CONNECTOR AS	
		1	**3J-1907**	1	SEAL-O-RING	
		1	**4J-5477**	1	SEAL-O-RING	
		1	**6V-8641**	1	CONNECTOR	
	12	1	*148-8347*	1	ELBOW AS	
		1	**3D-2824**	1	SEAL-O-RING	
		1	**6V-9007**	1	ELBOW	
		1	**6V-9746**	1	SEAL-O-RING	
	13	1	*148-8368*	1	ELBOW AS	
		1	**3J-1907**	1	SEAL-O-RING	
		1	**4J-5477**	1	SEAL-O-RING	
		1	**6V-8627**	1	ELBOW	
	14	1	*148-8407*	2	PLUG AS	
					(EACH INCLUDES)	
		1	**3J-1907**	1	SEAL-O-RING	
		1	**9S-4191**	1	PLUG-O-RING	
	15	1	**4J-5267**	1	SEAL-O-RING	
M	16	1	**280-2747**	4	BOLT-SOCKET HEAD (M10X1.5X60-MM)	
	17	1	**5P-4116**	2	WASHER-HARD (8.8X20.5X2-MM THK)	
	18	1	**6V-8397**	2	SEAL-O-RING	
	19	1	**6V-9746**	1	SEAL-O-RING	
	20	1	**8T-4121**	7	WASHER-HARD (11X21X2.5-MM THK)	
M	21	1	**8T-4186**	1	BOLT (M10X1.5X40-MM)	
M	22	1	**8T-4189**	2	BOLT (M8X1.25X20-MM)	
M	23	1	**8T-4196**	6	BOLT (M10X1.5X35-MM)	
	24	1	**8T-4223**	1	WASHER-HARD (13.5X25.5X3-MM THK)	
M	25	1	**8T-4910**	1	BOLT (M12X1.75X60-MM)	

M-METRIC PART
Y-SEPARATE ILLUSTRATION

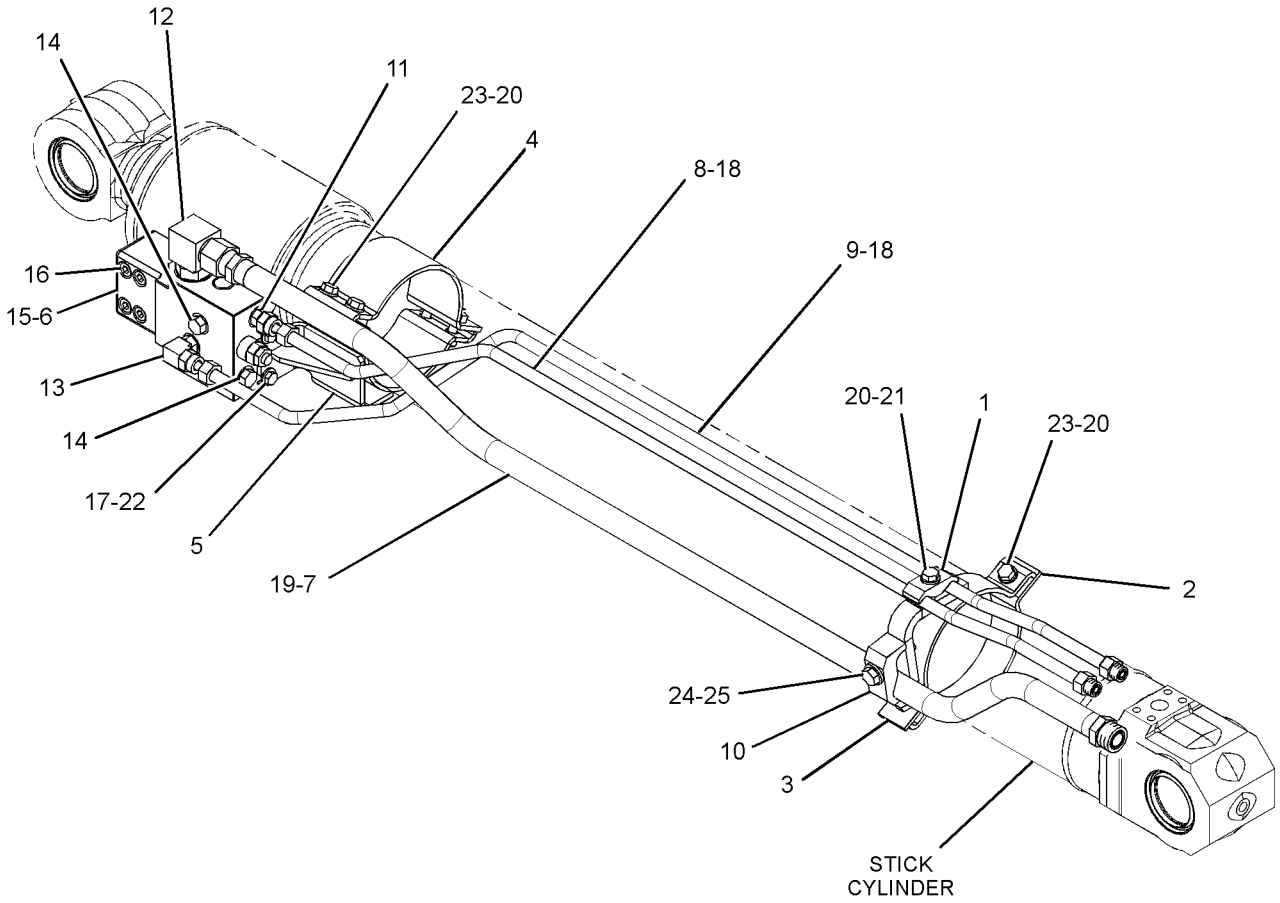

GRAPHIC #1 **<END>** g01407727

HYDRAULIC SYSTEM

282-7290 LINES GP-SWING MOTOR—FINE SWING

S/N: BYJ1-UP; PDP1-UP
PART OF 260-7204 VALVE AR-SWING
AN ATTACHMENT

SMCS-5057 **i02961305**

NOTE	REF NO	GRAPHIC REF	PART NUMBER	QTY	PART NAME 1 2 3 4 5 6 (PRODUCT LEVEL)	SEE PAGE
I	1	1	**202-1695**	1	HOSE AS	
I	2	1	**292-7261**	1	HOSE AS	
	3	1	*148-8326*	1	CONNECTOR AS	
		1	**3J-7354**	1	SEAL-O-RING	
		1	**6V-8397**	1	SEAL-O-RING	
		1	**6V-9872**	1	CONNECTOR	
	4	1	*148-8367*	1	ELBOW AS	
		1	**6V-8397**	1	SEAL-O-RING	
		1	**6V-9850**	1	ELBOW	
	5	1	*148-8382*	1	ELBOW AS	
		1	**3D-2824**	1	SEAL-O-RING	
		1	**7J-9108**	1	SEAL-O-RING	
		1	**8T-0404**	1	ELBOW	
	6	1	*155-3504*	1	ELBOW AS	
		1	**2M-9780**	1	SEAL-O-RING	
		1	**6V-9003**	1	ELBOW	
		1	**7J-9108**	1	SEAL-O-RING	

I-REFER TO HYDRAULIC INFORMATION SYSTEM

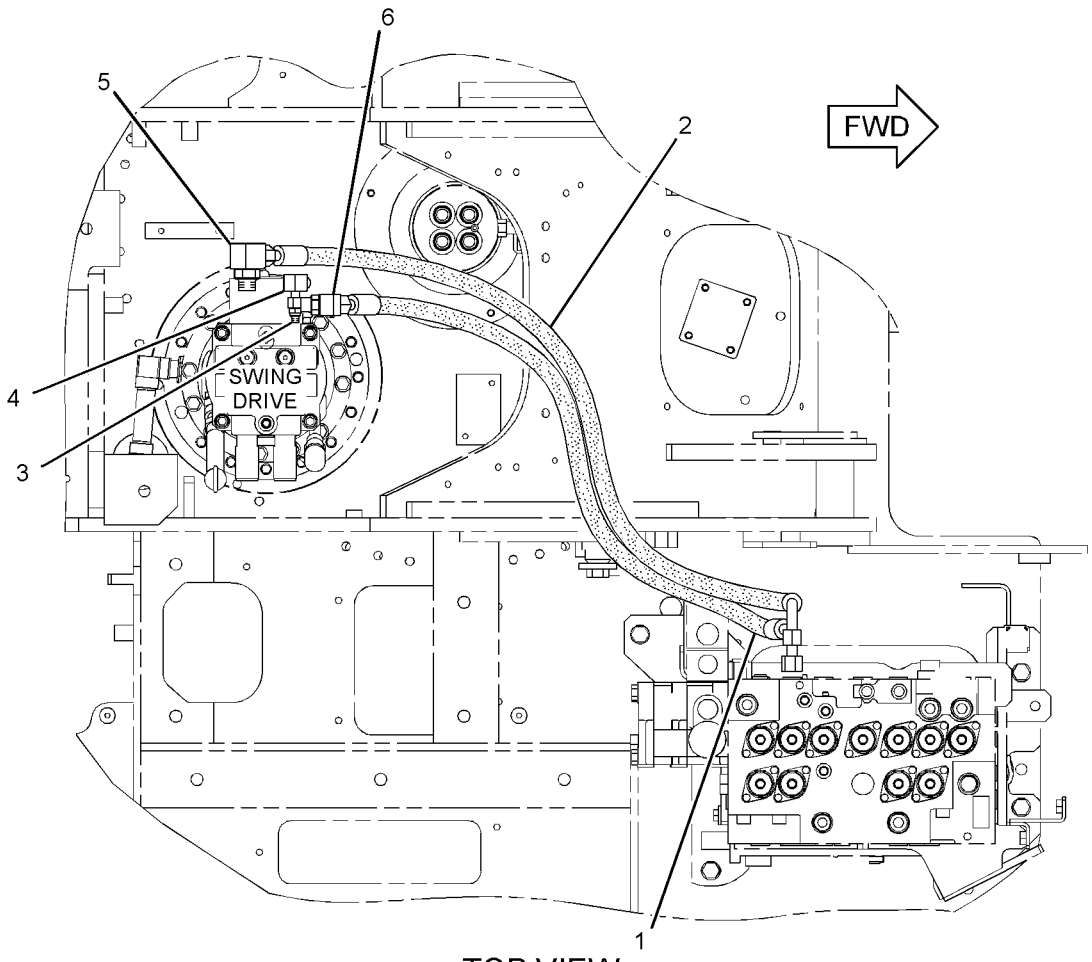

TOP VIEW

GRAPHIC #1

<END>

g01509713

HYDRAULIC SYSTEM

278-6511 LINES GP-TRAVEL MOTOR

S/N: PDP1-UP

PART OF 270-5956 HYDRAULIC AR

SMCS-5057, 5058 **i02796644**

NOTE	REF NO	GRAPHIC REF	PART NUMBER	QTY	PART NAME 1 2 3 4 5 6 (PRODUCT LEVEL)	SEE PAGE
	1	1	**5I-4365**	2	GROMMET	
	2	1	**5I-4366**	2	GROMMET	
I	3	1	**7I-1303**	4	HOSE AS	
Y	4	1	**162-4696**	1	SWIVEL GP	526
I	5	1	**179-7770**	2	HOSE AS	
I	6	1	**179-7771**	2	HOSE AS	
	7	1	*267-4063*	2	CONNECTOR AS	
					(EACH INCLUDES)	
		1	**3J-1907**	1	SEAL-O-RING	
		1	**4J-5477**	1	SEAL-O-RING	
		1	**156-8801**	1	CONNECTOR	
	8	1	*148-8325*	2	CONNECTOR AS	
					(EACH INCLUDES)	
		1	**3J-1907**	1	SEAL-O-RING	
		1	**4J-5477**	1	SEAL-O-RING	
		1	**6V-8641**	1	CONNECTOR	
	9	1	*148-8327*	8	CONNECTOR AS	
					(EACH INCLUDES)	
		1	**3D-2824**	1	SEAL-O-RING	
		1	**6V-8637**	1	CONNECTOR	
		1	**6V-9746**	1	SEAL-O-RING	
	10	1	*148-8340*	2	CONNECTOR AS	
					(EACH INCLUDES)	
		1	**3K-0360**	1	SEAL-O-RING	
		1	**6V-8398**	1	SEAL-O-RING	
		1	**6V-8639**	1	CONNECTOR	
	11	1	*148-8436*	1	TEE AS	
		1	**3K-0360**	1	SEAL-O-RING	
		1	**6V-8398**	2	SEAL-O-RING	
		1	**6V-8775**	1	TEE-FACE SEAL	
	12	1	**7K-1181**	4	STRAP-CABLE	
	13	1	**8T-4121**	4	WASHER-HARD (11X21X2.5-MM THK)	
M	14	1	**8T-4137**	4	BOLT (M10X1.5X20-MM)	
B	15	1	**1U-8846**		SEALANT-GASKET	

B-USE AS REQUIRED
I-REFER TO HYDRAULIC INFORMATION SYSTEM
M-METRIC PART
Y-SEPARATE ILLUSTRATION

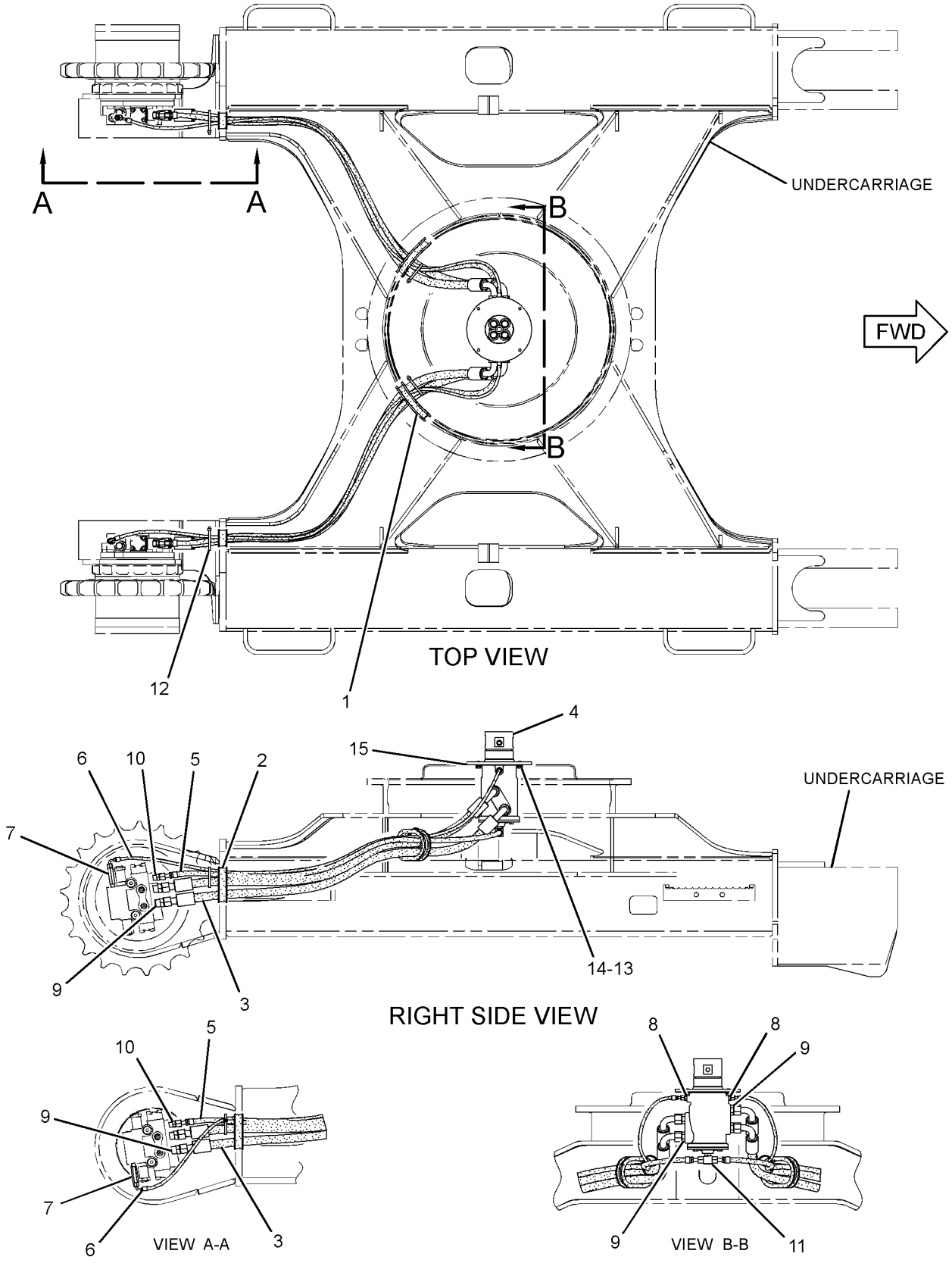

GRAPHIC #1 **<END>** g01400455

HYDRAULIC SYSTEM

278-6512 LINES GP-TRAVEL MOTOR

S/N: BYJ1-UP

PART OF 270-5957 HYDRAULIC AR

SMCS-5057, 5058 **i02807807**

NOTE	REF NO	GRAPHIC REF	PART NUMBER	QTY	PART NAME 1 2 3 4 5 6 (PRODUCT LEVEL)	SEE PAGE
	1	1	**5I-4365**	2	GROMMET	
	2	1	**5I-4366**	2	GROMMET	
I	3	1	**7I-1303**	4	HOSE AS	
Y	4	1	**162-4696**	1	SWIVEL GP	526
I	5	1	**179-7778**	2	HOSE AS	
I	6	1	**179-7779**	2	HOSE AS	
	7	1	*267-4063*	2	CONNECTOR AS	
					(EACH INCLUDES)	
		1	**3J-1907**	1	SEAL-O-RING	
		1	**4J-5477**	1	SEAL-O-RING	
		1	**156-8801**	1	CONNECTOR	
	8	1	*148-8325*	2	CONNECTOR AS	
					(EACH INCLUDES)	
		1	**3J-1907**	1	SEAL-O-RING	
		1	**4J-5477**	1	SEAL-O-RING	
		1	**6V-8641**	1	CONNECTOR	
	9	1	*148-8327*	8	CONNECTOR AS	
					(EACH INCLUDES)	
		1	**3D-2824**	1	SEAL-O-RING	
		1	**6V-8637**	1	CONNECTOR	
		1	**6V-9746**	1	SEAL-O-RING	
	10	1	*148-8340*	2	CONNECTOR AS	
					(EACH INCLUDES)	
		1	**3K-0360**	1	SEAL-O-RING	
		1	**6V-8398**	1	SEAL-O-RING	
		1	**6V-8639**	1	CONNECTOR	
	11	1	*148-8436*	1	TEE AS	
		1	**3K-0360**	1	SEAL-O-RING	
		1	**6V-8398**	2	SEAL-O-RING	
		1	**6V-8775**	1	TEE-FACE SEAL	
	12	1	**7K-1181**	4	STRAP-CABLE	
	13	1	**8T-4121**	4	WASHER-HARD (11X21X2.5-MM THK)	
M	14	1	**8T-4137**	4	BOLT (M10X1.5X20-MM)	
B	15	1	**1U-8846**		SEALANT-GASKET	

B-USE AS REQUIRED
I-REFER TO HYDRAULIC INFORMATION SYSTEM
M-METRIC PART
Y-SEPARATE ILLUSTRATION

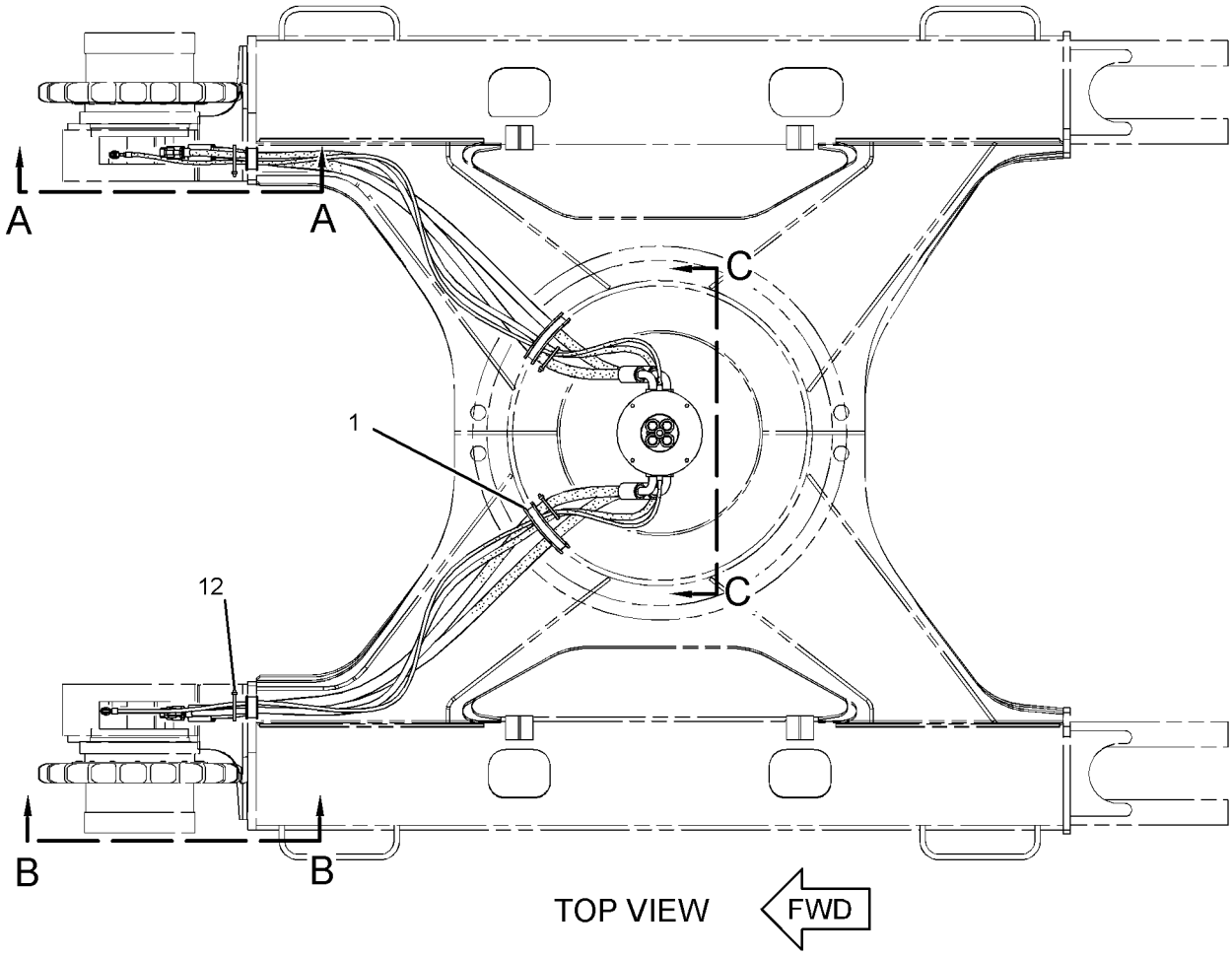

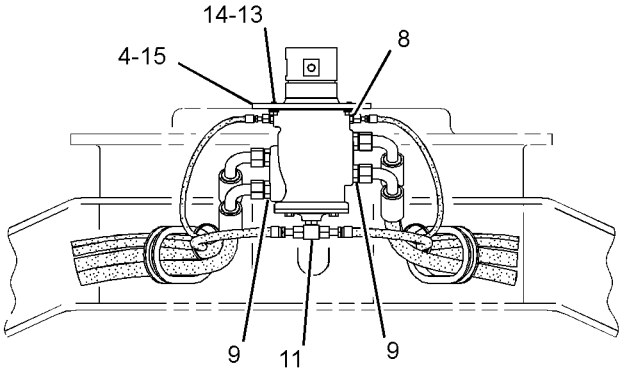

VIEW C-C

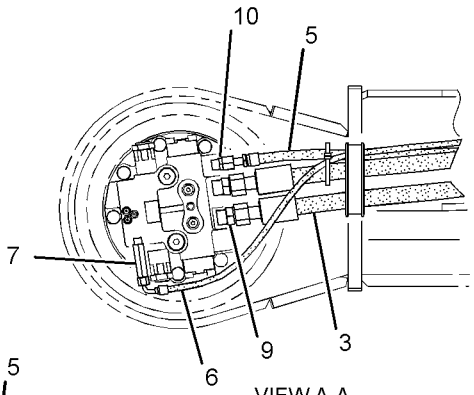

VIEW A-A

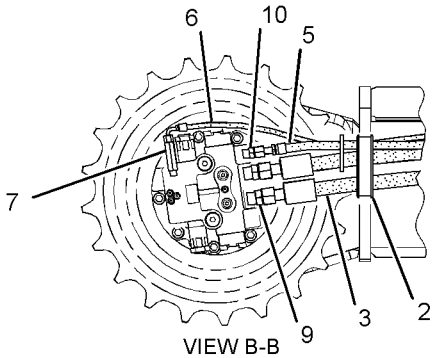

VIEW B-B

GRAPHIC #1 **<END>** g01402831

215-5037 MANIFOLD GP-CONTROL—PILOT OIL SUPPLY

S/N: BYJ1-UP; PDP1-UP

PART OF 282-7234 LINES GP-PILOT

SMCS-5264 **i02092079**

NOTE	PART NUMBER	QTY	PART NAME 1 2 3 4 5 6 (PRODUCT LEVEL)	SEE PAGE
Y	*239-8998*	1	MANIFOLD GP-CONTROL (PILOT OIL SUPPLY) (STEEL BODY)	496
			-OR-	
Y	*239-8697*	1	MANIFOLD GP-CONTROL (PILOT OIL SUPPLY) (ALUMINUM BODY)	495
Y-SEPARATE ILLUSTRATION				

<END>

239-8697 MANIFOLD GP-CONTROL—PILOT OIL SUPPLY

S/N: BYJ1-UP; PDP1-UP
ALUMINUM BODY
PART OF 215-5037 MANIFOLD GP-CONTROL

SMCS-5264 **i02092727**

NOTE	REF NO	GRAPHIC REF	PART NUMBER	QTY	PART NAME 1 2 3 4 5 6 (PRODUCT LEVEL)	SEE PAGE
Y	1	1	**121-1491**	1	VALVE GP-SOLENOID (SWING BRAKE RELEASE)	587
Y	2	1	**121-1491**	1	VALVE GP-SOLENOID (HYDRAULIC LOCKOUT)	587
Y	3	1	**121-1491**	1	VALVE GP-SOLENOID (TRAVEL SPEED)	587
	4	1	**197-0196**	1	VALVE-CHECK	
	5	1	**197-0199**	1	SPRING	
	6	1	**197-0273**	1	SPRING	
Z	7	1		1	MANIFOLD GP-CONTROL	
	8	1	**3J-1907**	1	SEAL-O-RING	
	9	1	**3K-0360**	4	SEAL-O-RING	
	10	1	**4J-7533**	6	SEAL-O-RING	
M	11	1	**7I-2272**	6	BOLT (M5X0.8X12-MM)	
	12	1	**9S-8001**	6	PLUG-O-RING	
	13	1	**9S-8004**	1	PLUG-O-RING	
	14	1	**9S-8005**	4	PLUG-O-RING	

M-METRIC PART
Y-SEPARATE ILLUSTRATION
Z-NOT SERVICED SEPARATELY

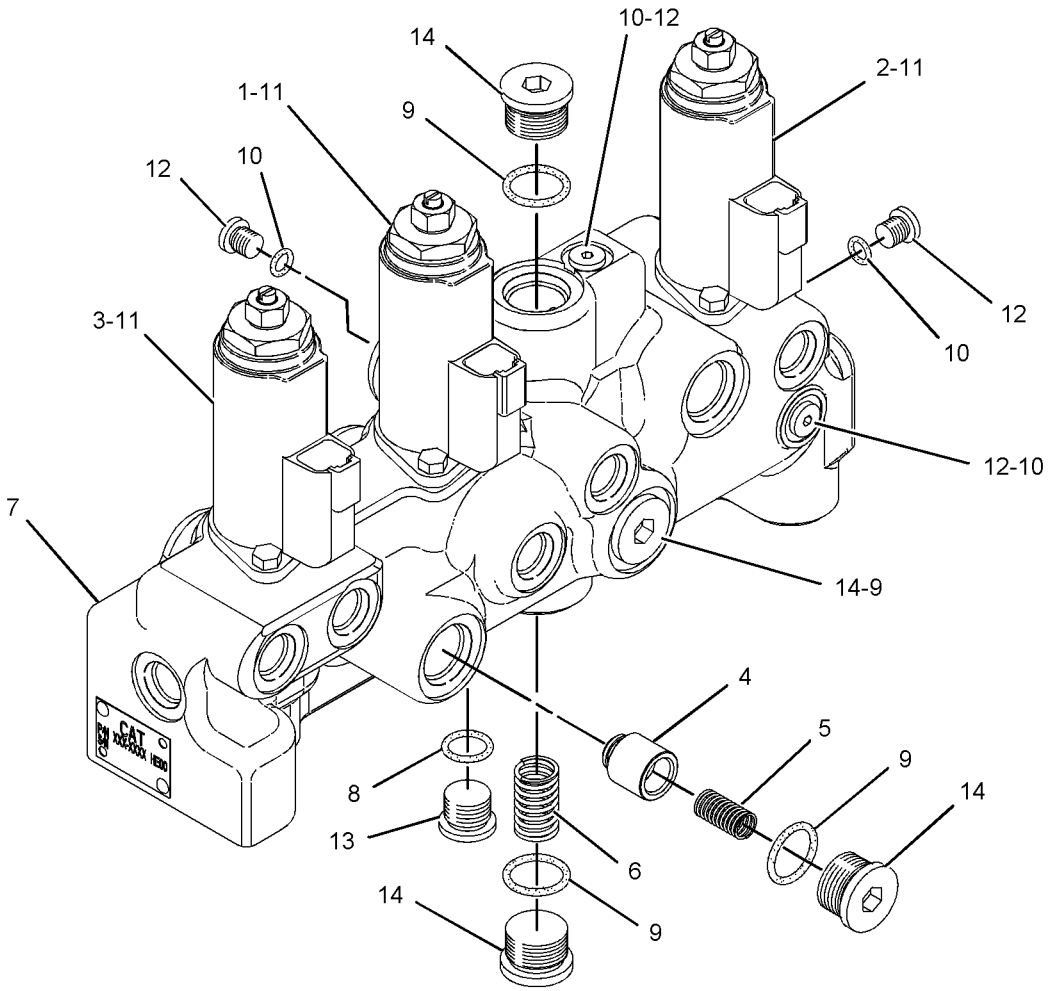

GRAPHIC #1 **<END>** g01084474

239-8998 MANIFOLD GP-CONTROL—PILOT OIL SUPPLY

S/N: BYJ1-UP; PDP1-UP
STEEL BODY
PART OF 215-5037 MANIFOLD GP-CONTROL

SMCS-5264 **i02092174**

NOTE	REF NO	GRAPHIC REF	PART NUMBER	QTY	PART NAME 1 2 3 4 5 6 (PRODUCT LEVEL)	SEE PAGE
Y	1	1	**121-1491**	1	VALVE GP-SOLENOID (SWING BRAKE RELEASE)	587
Y	2	1	**121-1491**	1	VALVE GP-SOLENOID (HYDRAULIC LOCKOUT)	587
Y	3	1	**121-1491**	1	VALVE GP-SOLENOID (TRAVEL SPEED)	587
	4	1	**197-0196**	1	VALVE-CHECK	
Z	5	1		1	MANIFOLD GP-CONTROL	
	6	1	**197-0199**	1	SPRING	
	7	1	**197-0273**	1	SPRING	
	8	1	**3K-0360**	3	SEAL-O-RING	
M	9	1	**7I-2272**	6	BOLT (M5X0.8X12-MM)	
	10	1	**7M-7410**	2	PLUG-PIPE	
	11	1	**8T-6759**	6	PLUG-PIPE	
	12	1	**9S-8005**	3	PLUG-O-RING	

M-METRIC PART
Y-SEPARATE ILLUSTRATION
Z-NOT SERVICED SEPARATELY

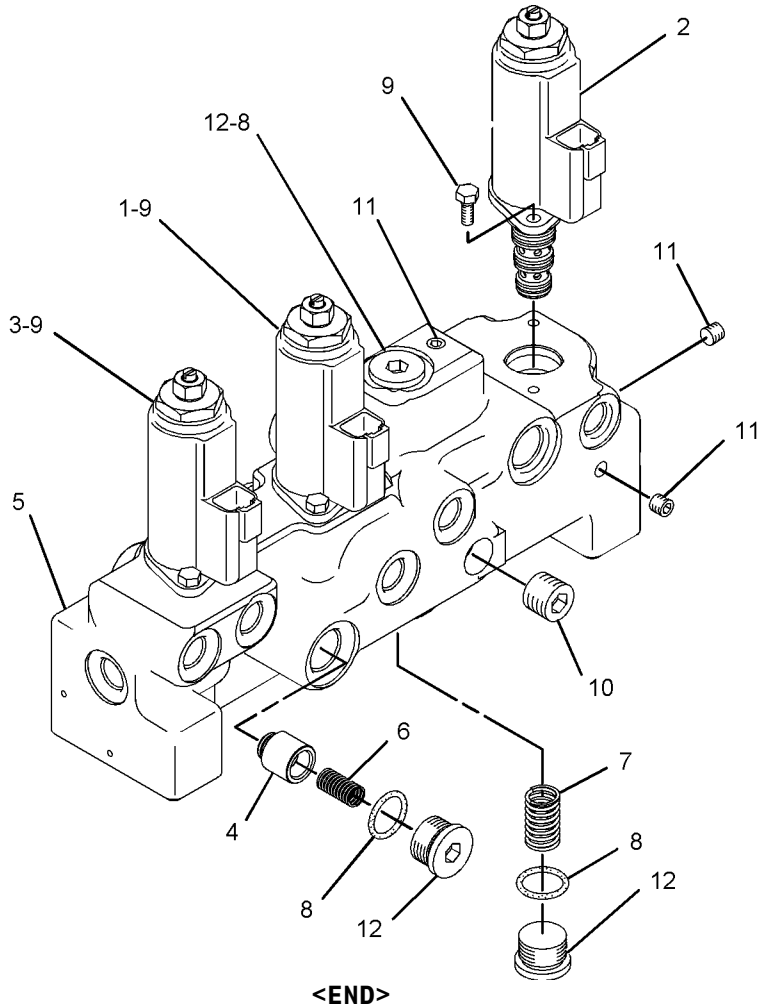

GRAPHIC #1 **<END>** g01083316

316-8903 MOTOR GP-HYDRAULIC–AIR CONDITIONER CONDENSER

S/N: BYJ1-UP; PDP1-UP

PART OF 316-8809 CONDENSER GP-REFRIGERANT

SMCS-5058, 5061 **i02956563**

NOTE	REF NO	GRAPHIC REF	PART NUMBER	QTY	PART NAME 1 2 3 4 5 6 (PRODUCT LEVEL)	SEE PAGE
	1	1	**236-1908**	1	MOTOR AS	
	2	1	**236-1909**	1	FAN	
	3	1	**316-8904**	1	GUARD AS	
M	4	1	**214-3967**	3	BOLT (M6X1X16-MM)	
	5	1	**8T-4205**	1	WASHER-HARD (7.2X14.5X2-MM THK)	
	6	1	**140-4722**	1	NUT (M5X0.8-THD)	

M-METRIC PART

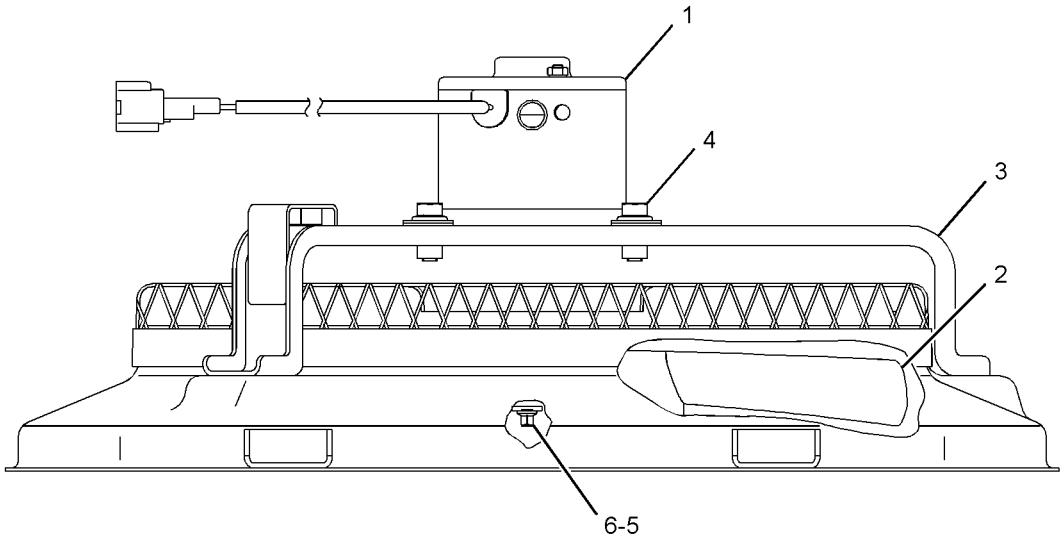

GRAPHIC #1 **<END>** g01507887

HYDRAULIC SYSTEM

274-2636 MOTOR GP-PISTON

S/N: BYJ1-UP; PDP1-UP

PART OF 267-6845 DRIVE GP-SWING

SMCS-5058 **i03010005**

NOTE	REF NO	GRAPHIC REF	PART NUMBER	QTY	PART NAME 1 2 3 4 5 6 (PRODUCT LEVEL)	SEE PAGE
	1	1	**096-5932**	2	PLUG	
	2	1	**099-0320**	1	BUSHING	
	3	1	**099-0321**	1	SEAL-LIP TYPE	
	4	1	**099-0322**	1	BEARING-ROLLER	
	5	1	**7I-0057**	1	SPRING	
	6	1	**099-4749**	1	PLATE-CAM	
	7	1	**7I-0058**	1	PLATE-RETAINER	
	8	1	**200-3335**	1	PISTON AS	
	9	1	**099-6530**	3	PLATE-FRICTION	
	10	1	**099-6531**	3	PLATE-SEPARATOR	
	11	1	**099-6532**	1	SEAL-O-RING	
	12	1	**099-6535**	1	PISTON-BRAKE	
	13	1	**6F-4718**	2	SEAL-O-RING	
	14	1	**099-0328**	16	SPRING	
	15	1	**099-0329**	2	PIN	
	16	1	**9S-4191**	3	PLUG-O-RING	
	17	1	**3J-1907**	3	SEAL-O-RING	
	18	1	**099-0330**	4	SPRING	
	19	1	**099-0331**	4	RING	
	20	1	**099-0332**	4	BUSHING	
	21	1	**099-0333**	1	PLATE-VALVE	
	22	1	**099-0334**	1	BEARING AS-NEEDLE	
	23	1	**099-0335**	1	RING-RETAINING	
	24	1	**123-2143**	1	BARREL AS	
	25	1	**194-8401**	1	HOUSING	
	26	1	**283-6098**	2	VALVE AS	
	27	1	**095-1784**	2	RING-BACKUP	
	28	1	**095-1585**	2	SEAL-O-RING	
	29	1	**095-1580**	2	SEAL-O-RING	
	30	1	**194-8400**	1	HEAD	
	31	1	**095-1594**	4	SEAL-O-RING	
	32	1	**142-5276**	2	VALVE GP-RELIEF	
M	33	1	**8T-0347**	4	BOLT-SOCKET HEAD (M14X1.5X45-MM)	
	34	1	**096-5933**	2	VALVE-CHECK (MAKEUP)	
	35	1	**095-1789**	2	RING	
	36	1	**096-5934**	2	SPRING	
					AVAILABLE REPAIR KIT(S):	
			123-2145	1	KIT-SEAL (PISTON MOTOR)	

M-METRIC PART

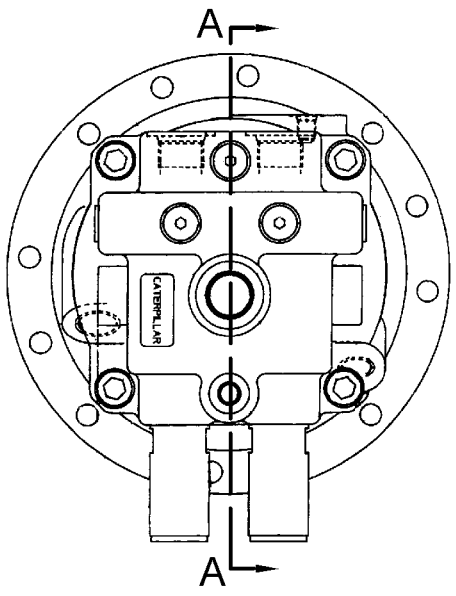

TOP VIEW

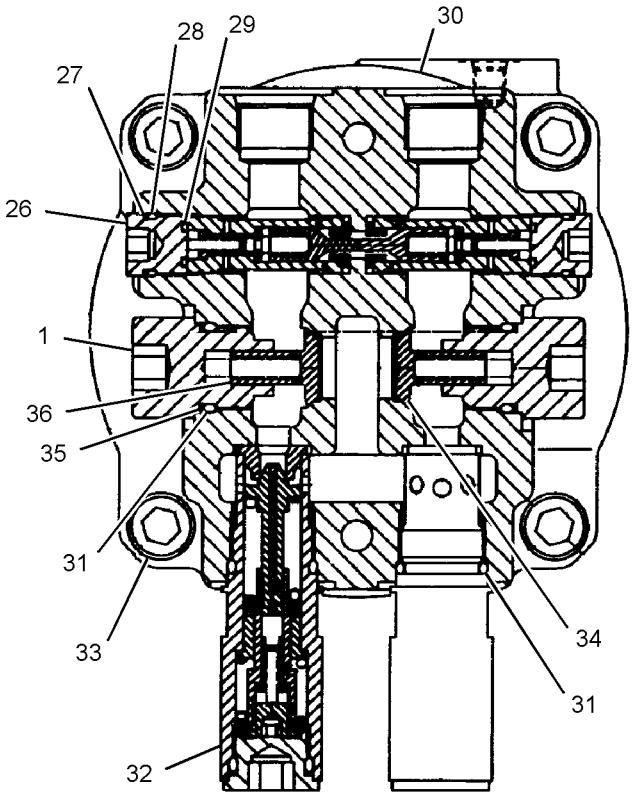

VIEW B-B

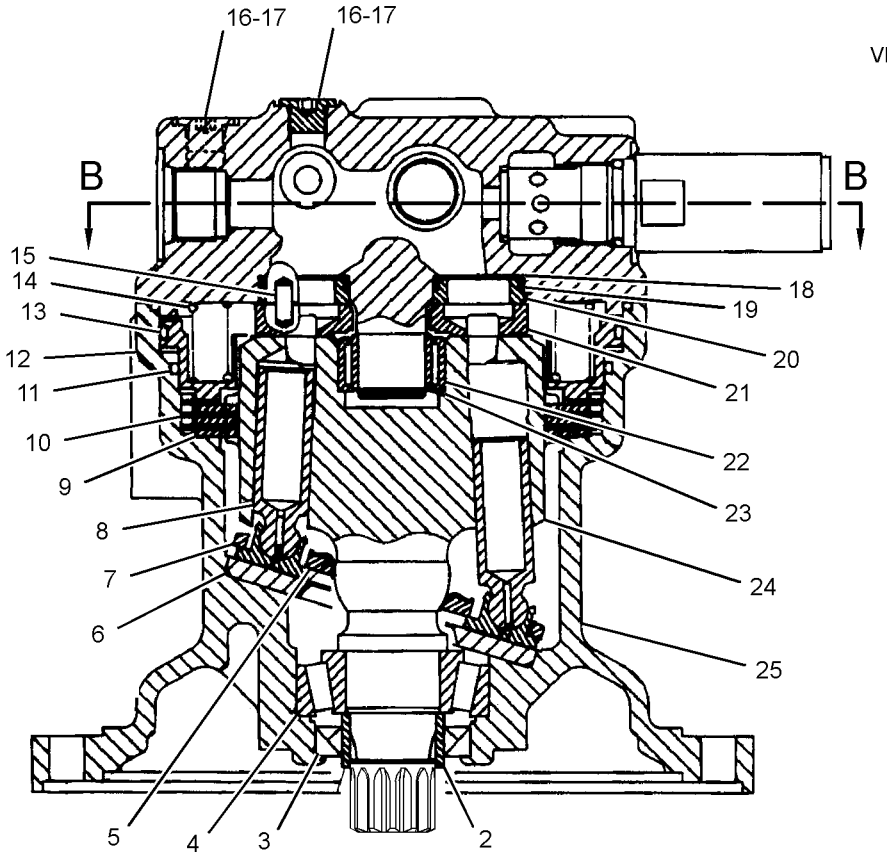

VIEW A-A

GRAPHIC #1 **<END>** g01524511

HYDRAULIC SYSTEM

274-2639 MOTOR GP-PISTON

S/N: BYJ1-UP; PDP1-UP
PART OF 267-6840 DRIVE GP-SWING
AN ATTACHMENT

SMCS-5058 **i02820452**

NOTE	REF NO	GRAPHIC REF	PART NUMBER	QTY	PART NAME 1 2 3 4 5 6 (PRODUCT LEVEL)	SEE PAGE
	1	1	**096-5932**	2	PLUG	
	2	1	**099-0320**	1	BUSHING	
J	3	1	**099-0321**	1	SEAL-LIP TYPE	
	4	1	**099-0322**	1	BEARING-ROLLER	
	5	1	**7I-0057**	1	SPRING	
	6	1	**099-4749**	1	PLATE-CAM	
	7	1	**7I-0058**	1	PLATE-RETAINER	
	8	1	**200-3335**	1	PISTON AS	
	9	1	**099-6530**	3	PLATE-FRICTION	
	10	1	**099-6531**	3	PLATE-SEPARATOR	
J	11	1	**099-6532**	1	SEAL-O-RING	
	12	1	**099-6535**	1	PISTON-BRAKE	
J	13	1	**6F-4718**	2	SEAL-O-RING	
	14	1	**099-0328**	16	SPRING	
	15	1	**099-0329**	2	PIN	
	16	1	**9S-4191**	3	PLUG-O-RING	
J	17	1	**3J-1907**	3	SEAL-O-RING	
	18	1	**099-0330**	4	SPRING	
	19	1	**099-0331**	4	RING	
	20	1	**099-0332**	4	BUSHING	
	21	1	**099-0333**	1	PLATE-VALVE	
	22	1	**099-0334**	1	BEARING AS-NEEDLE	
	23	1	**099-0335**	1	RING-RETAINING	
	24	1	**123-2143**	1	BARREL AS	
	25	1	**194-8401**	1	HOUSING	
	26	1	**283-6098**	2	VALVE AS	
J	27	1	**095-1784**	2	RING-BACKUP	
J	28	1	**095-1585**	2	SEAL-O-RING	
J	29	1	**095-1580**	2	SEAL-O-RING	
	30	1	**274-2565**	1	HEAD	
J	31	1	**095-1594**	4	SEAL-O-RING	
	32	1	**142-5276**	2	VALVE GP-RELIEF	
M	33	1	**8T-0347**	4	BOLT-SOCKET HEAD (M14X1.5X45-MM)	
	34	1	**096-5933**	2	VALVE-CHECK (MAKEUP)	
J	35	1	**095-1789**	2	RING	
	36	1	**096-5934**	2	SPRING	
					AVAILABLE REPAIR KIT(S):	
J			**123-2145**	1	KIT-SEAL (PISTON MOTOR)	

J-KIT MARKED J SERVICED PARTS MARKED J
M-METRIC PART

274-2639 MOTOR GP-PISTON *(contd.)* **i02820452**

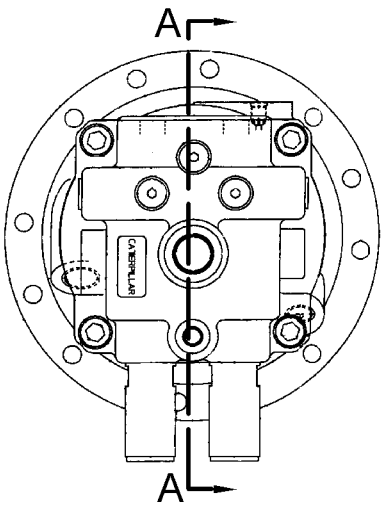

TOP VIEW

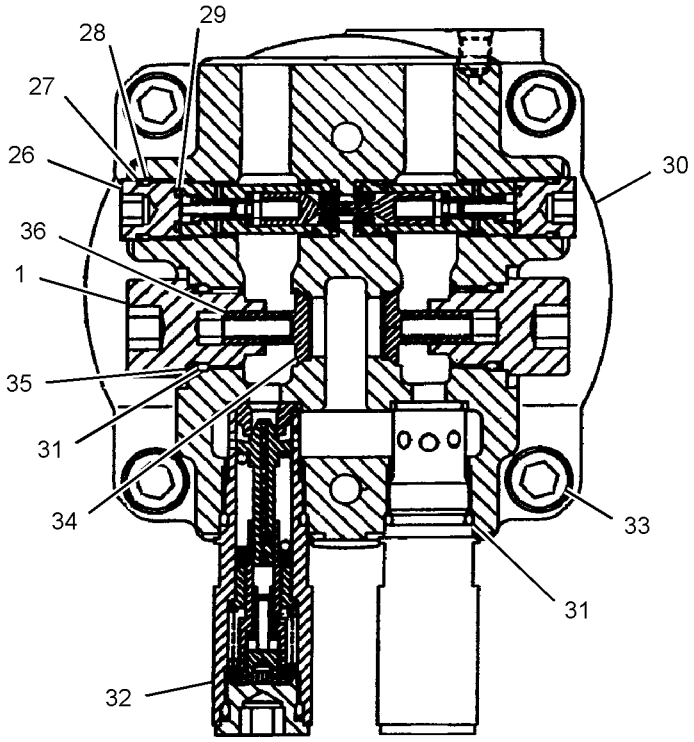

SECTION B-B

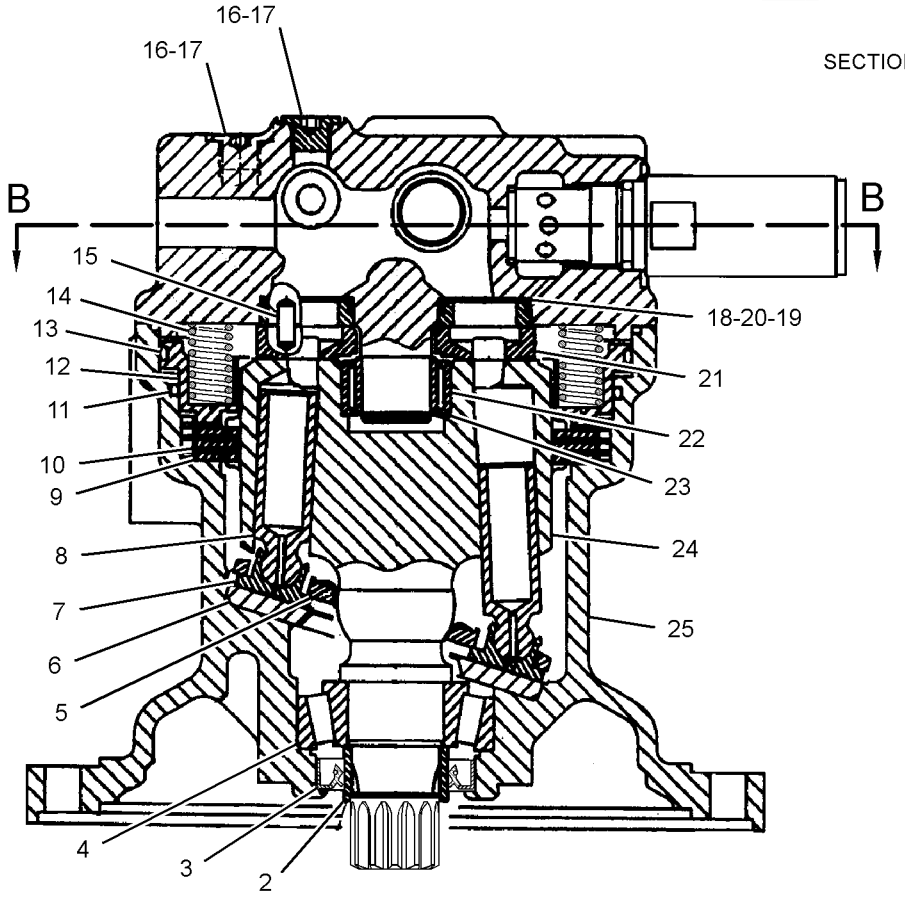

SECTION A-A

GRAPHIC #1 **<END>** g01492034

HYDRAULIC SYSTEM

277-6697 MOTOR GP-PISTON

S/N: BYJ1-UP; PDP1-UP

PART OF 277-6695 DRIVE GP-FINAL

SMCS-5058 **i02939289**

NOTE	REF NO	GRAPHIC REF	PART NUMBER	QTY	PART NAME 1 2 3 4 5 6 (PRODUCT LEVEL)	SEE PAGE
	1	1	**1H-8278**	1	SEAL-O-RING	
	2	1	**7Y-4224**	1	ORIFICE	
	3	1	**085-9769**	4	PIN	
	4	1	**087-4742**	1	VALVE	
	5	1	**095-1585**	1	SEAL-O-RING	
	6	1	**095-7380**	1	SPRING	
	7	1	**095-7382**	1	RETAINER	
	8	1	**096-1519**	1	SEAT	
	9	1	**165-2793**	1	RETAINER	
	10	1	**165-2799**	9	SPRING	
	11	1	**165-5803**	1	SHAFT	
	12	1	**165-5804**	1	BEARING-ROLLER	
	13	1	**165-5806**	2	PISTON	
	14	1	**165-5809**	9	PISTON AS	
	15	1	**165-5811**	1	BARREL AS	
	16	1	**165-5814**	4	PLATE-SEPARATOR	
	17	1	**165-5816**	1	GUIDE-PISTON	
	18	1	**165-5817**	1	PISTON-BRAKE	
	19	1	**165-5818**	8	SPRING	
	20	1	**165-5826**	1	SEAL-LIP TYPE	
	21	1	**165-5828**	2	KEY	
	22	1	**165-5831**	2	SPRING	
	23	1	**176-8131**	1	SPACER-SPECIAL	
	24	1	**176-8571**	1	BODY	
	25	1	**176-8573**	4	PLATE-FRICTION	
	26	1	**176-8579**	1	PLATE-CAM	
	27	1	**267-8084**	1	BEARING-NEEDLE	
	28	1	**9S-8005**	1	PLUG-O-RING	
	29	1	**298-5732**	1	RETAINER-BALL	
Y	30	1	**303-4484**	1	VALVE GP-TRAVEL COUNTERBALANCE	596
	31	1	**094-1875**	1	DOWEL	
	32	1	**094-1882**	7	PLUG	
M	33	1	**8T-4944**	9	BOLT-SOCKET HEAD (M16X2X40-MM)	
	34	1	**165-5819**	1	SEAL-O-RING	
	35	1	**165-5820**	1	RING-BACKUP	
	36	1	**165-5821**	1	SEAL-O-RING	
	37	1	**165-5822**	1	RING-BACKUP	
	38	1	**165-5823**	1	SEAL-O-RING	
	39	1	**165-5824**	1	RING-BACKUP	
	40	1	**3K-0360**	1	SEAL-O-RING	
	41	1	**8T-4240**	1	RING-RETAINING	

M-METRIC PART
Y-SEPARATE ILLUSTRATION

277-6697 MOTOR GP-PISTON *(contd.)* **i02939289**

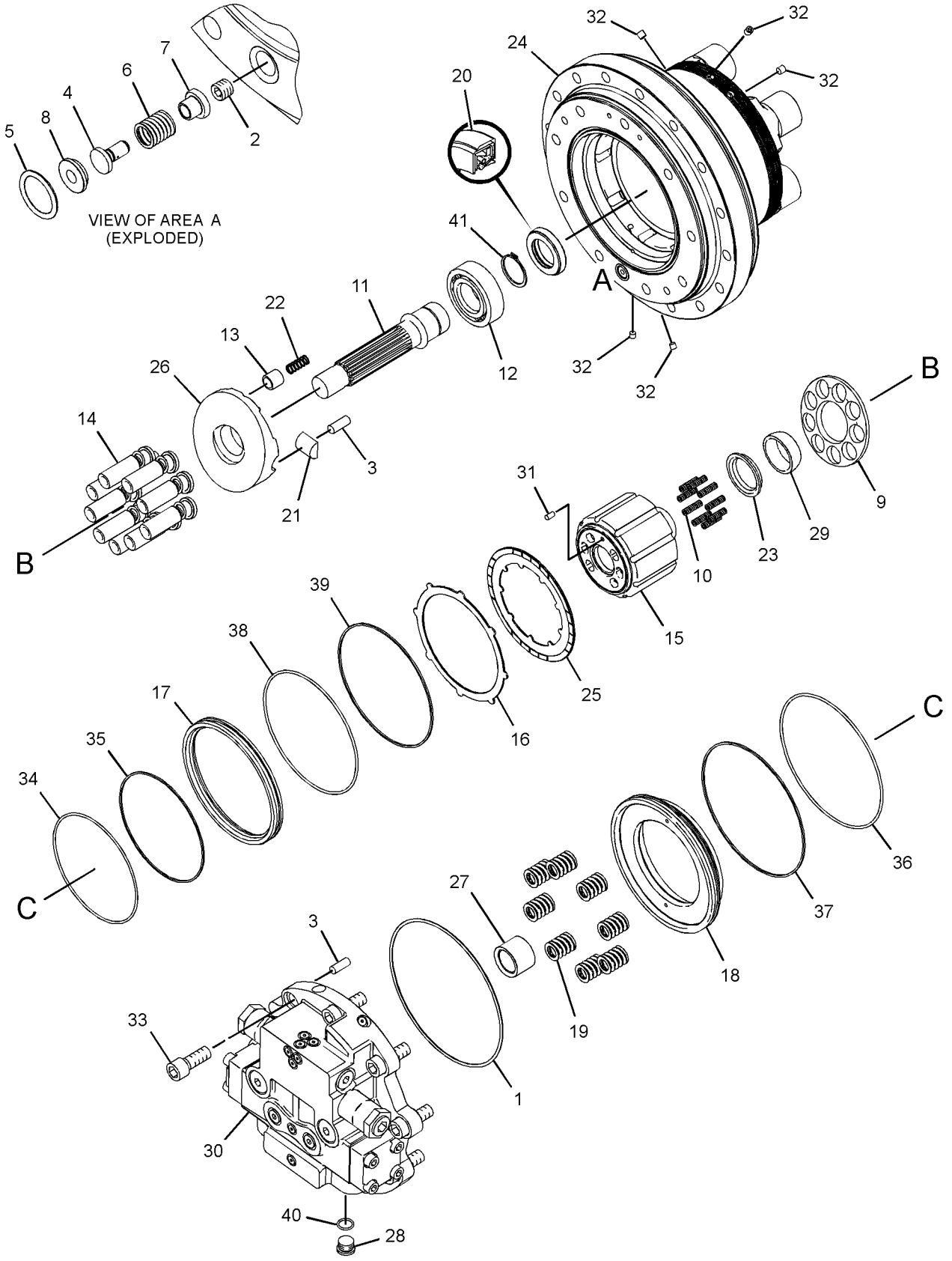

GRAPHIC #1 **<END>** g01444444

HYDRAULIC SYSTEM

316-3790 MOUNTING GP-LINES

S/N: BYJ1-UP; PDP1-UP
PART OF 294-6359, 294-6361, 321-0540, 321-8137 LINES AR-AUXILIARY HYDRAULIC,
321-8138 LINES AR-QUICK COUPLER
FOR USE WITH 4.3-M TO 4.6-M (14.1-FT TO 15.2-FT) AUXILIARY LINES
AN ATTACHMENT

SMCS-5057 **i02869737**

NOTE	REF NO	GRAPHIC REF	PART NUMBER	QTY	PART NAME 1 2 3 4 5 6 (PRODUCT LEVEL)	SEE PAGE
	1	1	**153-8800**	2	PLATE	
	2	1	**282-5691**	1	SUPPORT AS	
	3	1	**8T-4223**	4	WASHER-HARD (13.5X25.5X3-MM THK)	
M	4	1	**8T-4648**	4	BOLT (M12X1.75X70-MM)	

M-METRIC PART

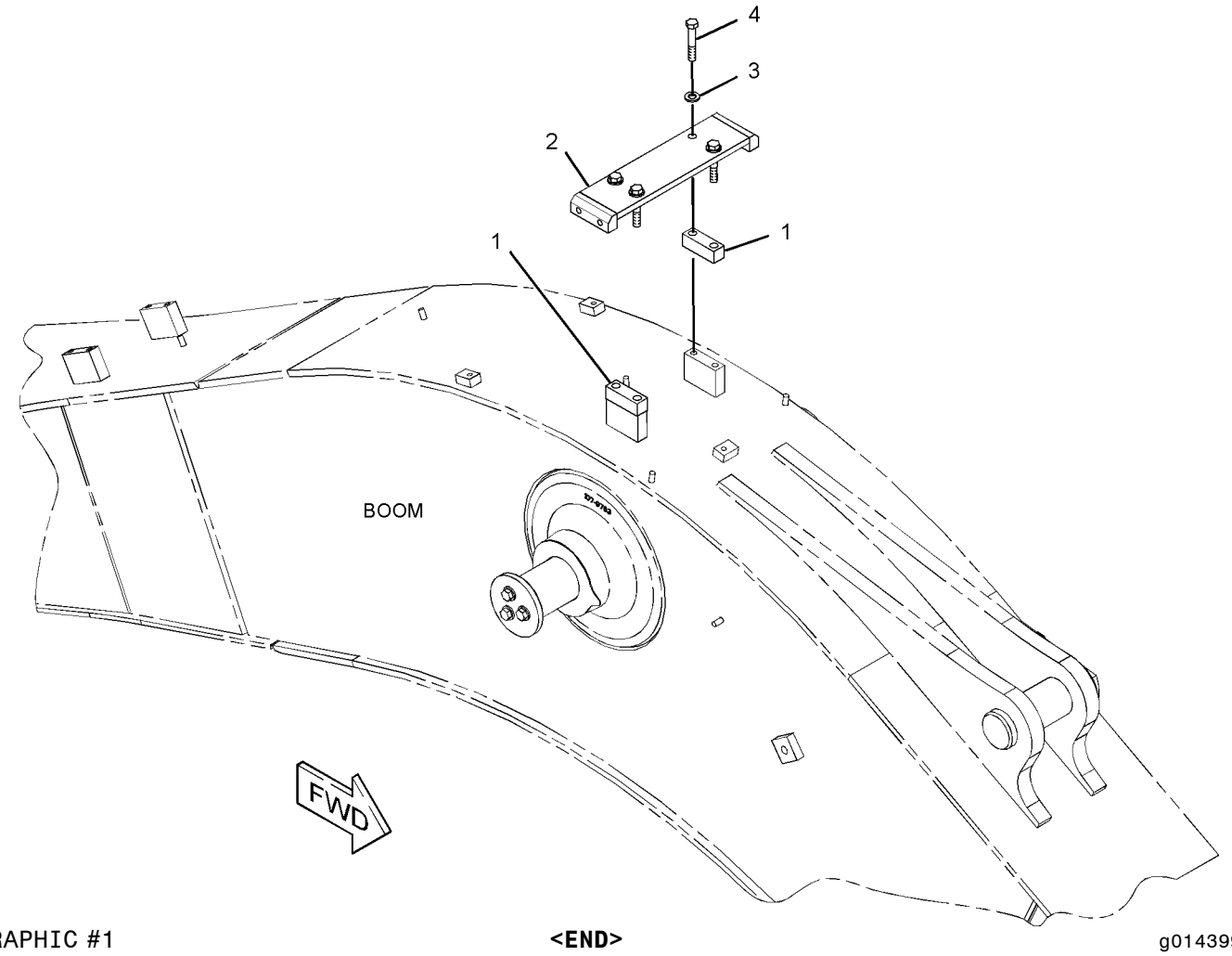

GRAPHIC #1 **<END>** g01439999

282-7221 MOUNTING GP-VALVE

S/N: BYJ1-UP; PDP1-UP

PART OF 270-5956, 270-5957 HYDRAULIC AR

SMCS-5051 **i02978369**

NOTE	REF NO	GRAPHIC REF	PART NUMBER	QTY	PART NAME 1 2 3 4 5 6 (PRODUCT LEVEL)	SEE PAGE
	1	1	**325-8784**	1	SUPPORT AS	
	2	1	**296-7033**	4	SPACER (17X30X28-MM THK)	
M	3	1	**100-3866**	4	BOLT-SELF-LOCKING (M16X2X40-MM)	
M	4	1	**8T-4140**	4	BOLT (M16X2X60-MM)	
	5	1	**9X-8257**	4	WASHER (17.5X30X3.5-MM THK)	

M-METRIC PART

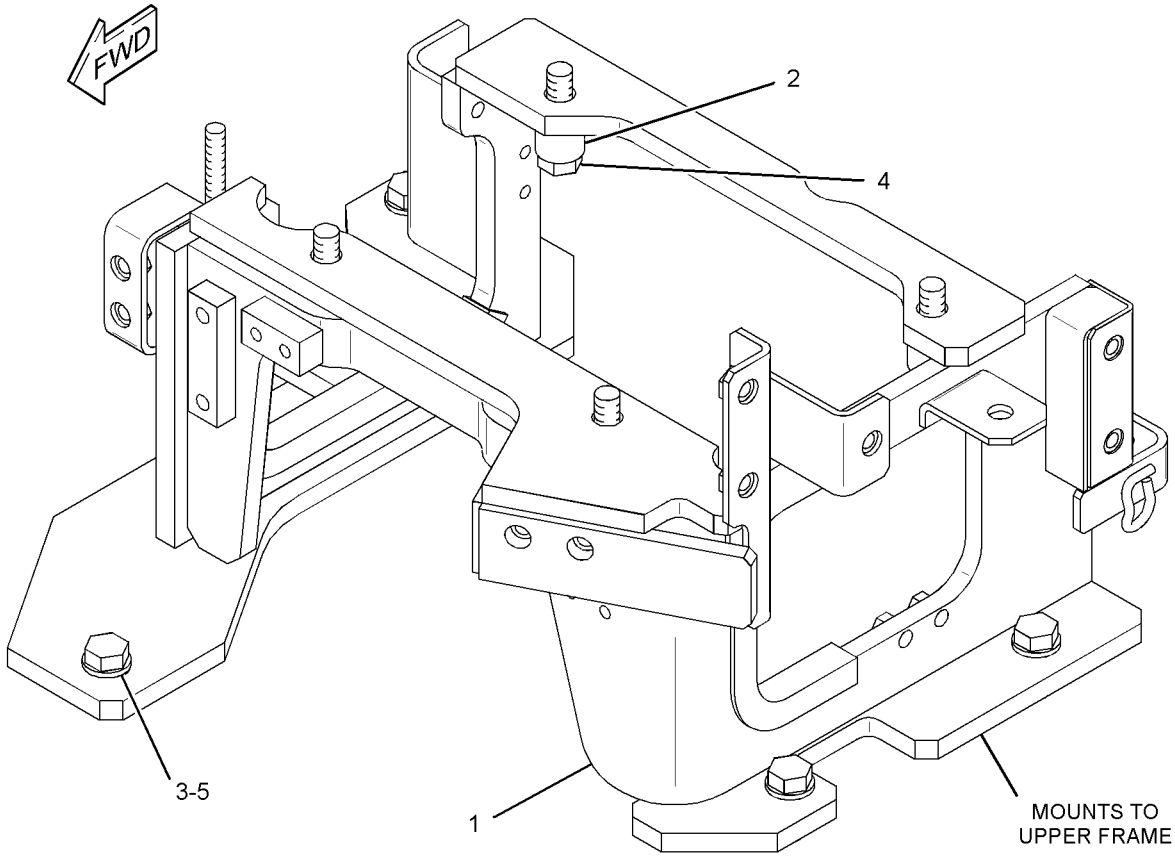

GRAPHIC #1 **<END>** g01513956

HYDRAULIC SYSTEM

259-0917 PUMP & MTG GP-AUXILIARY—MEDIUM PRESSURE

S/N: BYJ1-UP; PDP1-UP
PART OF 270-6001 CONTROL AR-AUXILIARY, 260-7212, 260-7213 INSTALLATION
AR-AUXILIARY
AN ATTACHMENT

SMCS-5070, 5073 **i02749965**

NOTE	REF NO	GRAPHIC REF	PART NUMBER	QTY	PART NAME 1 2 3 4 5 6 (PRODUCT LEVEL)	SEE PAGE
	1	1	**170-6738**	1	SPACER	
	2	1	**218-0557**	1	PUMP GP-GEAR	
	3	1	**222-2062**	1	COUPLING	
	4	1	**273-8315**	2	SEAL-O-RING	
	5	1	**8T-4121**	2	WASHER-HARD (11X21X2.5-MM THK)	
M	6	1	**8T-6466**	2	BOLT (M10X1.5X60-MM)	

M-METRIC PART

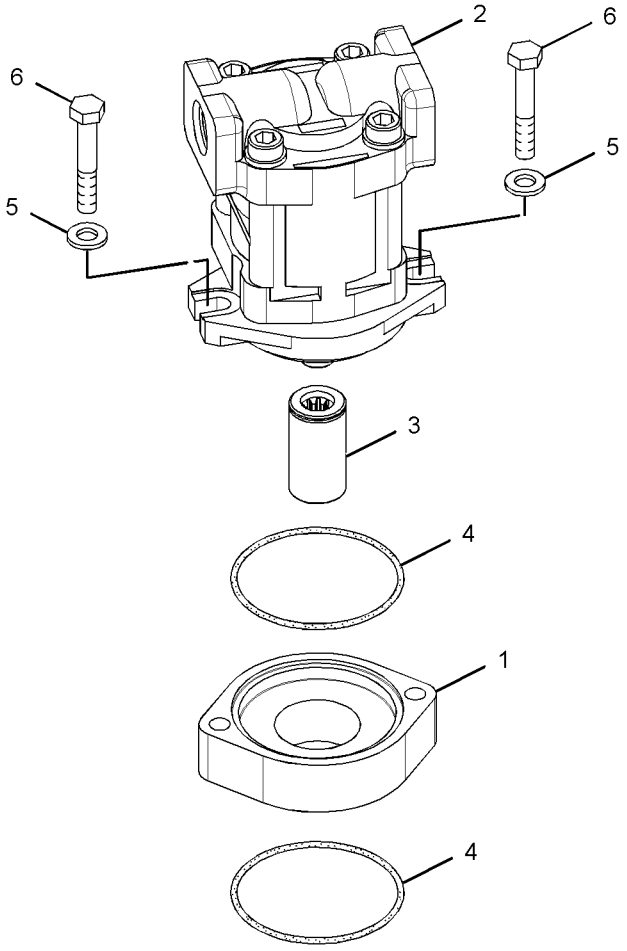

GRAPHIC #1 **<END>** g01379452

279-7721 PUMP & MTG GP-MAIN HYDRAULIC

S/N: BYJ1-UP; PDP1-UP

PART OF 270-5956, 270-5957 HYDRAULIC AR

SMCS-5070 **i02809006**

NOTE	REF NO	GRAPHIC REF	PART NUMBER	QTY	PART NAME 1 2 3 4 5 6 (PRODUCT LEVEL)	SEE PAGE
Y	1	1	*255-3027*	1	COUPLING GP-PUMP	313
Y	2	1	**311-7404**	1	PUMP GP-PISTON	508
	3	1	**8T-4121**	12	WASHER-HARD (11X21X2.5-MM THK)	
M	4	1	**8T-4195**	12	BOLT (M10X1.5X30-MM)	

M-METRIC PART
Y-SEPARATE ILLUSTRATION

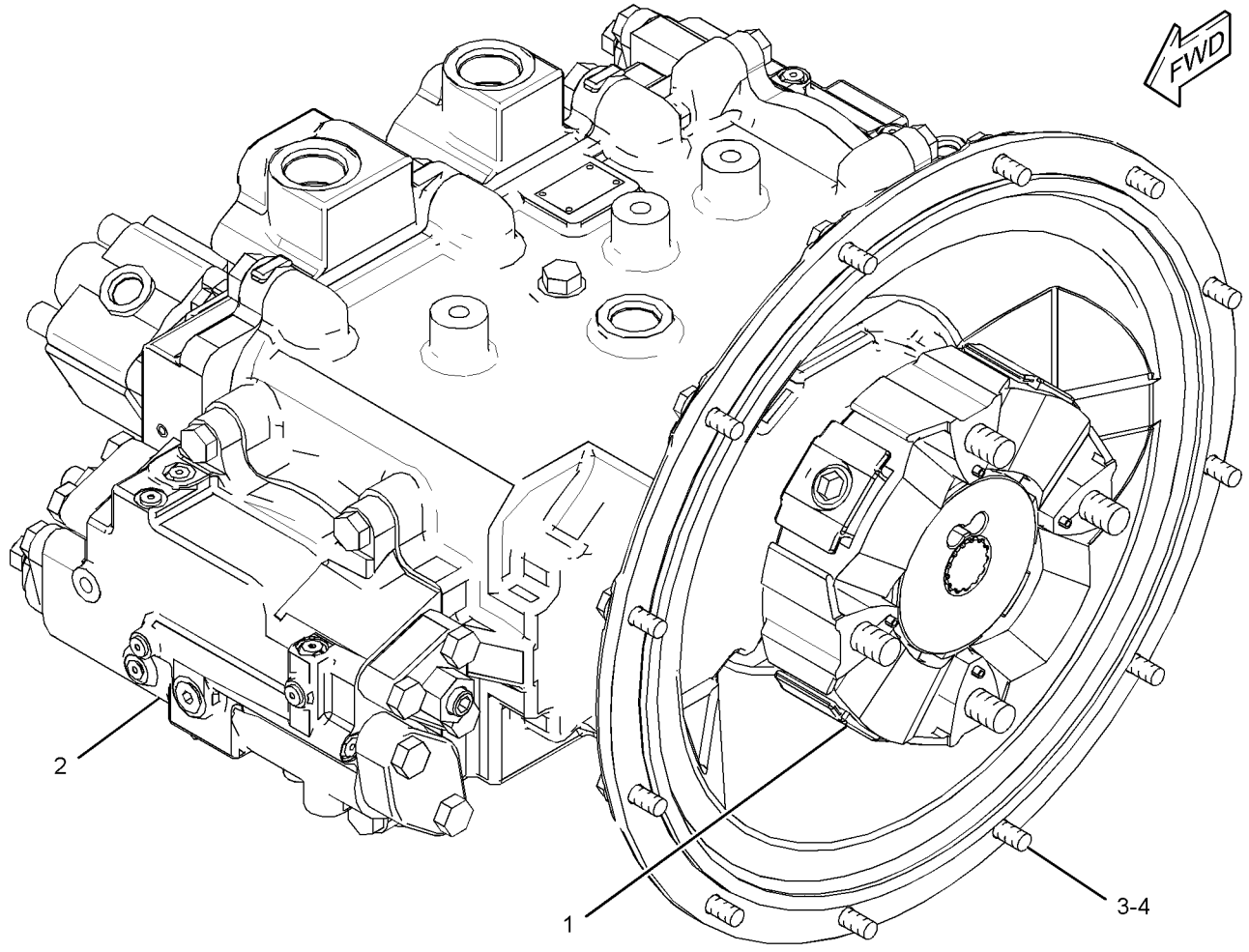

GRAPHIC #1 **<END>** g01405661

HYDRAULIC SYSTEM

311-7404 PUMP GP-PISTON

S/N: BYJ1-UP; PDP1-UP

PART OF 279-7721 PUMP & MTG GP-MAIN HYDRAULIC

SMCS-5070 **i02809005**

NOTE	REF NO	GRAPHIC REF	PART NUMBER	QTY	PART NAME 1 2 3 4 5 6 (PRODUCT LEVEL)	SEE PAGE
Y	1	1	**111-9916**	1	VALVE GP-SOLENOID	586
	2	2,3	**165-2793**	2	RETAINER	
	3	2,3	**165-2801**	2	BEARING-ROLLER	
	4	3	**165-2802**	1	SEAL-LIP TYPE	
	5	1	**165-2804**	1	FLANGE	
	6	3	**165-2805**	2	BLOCK	
	7	2	**165-3838**	1	BARREL AS	
	8	3	**165-3839**	1	BARREL AS	
	9	2,3	**165-3847**	18	PISTON AS	
	10	3	**165-3853**	1	COVER	
	11	1	**173-1203**	1	PUMP GP-GEAR	
	12	2,3	**176-8131**	2	SPACER-SPECIAL	
	13	3	**176-8132**	2	BEARING	
	14	2	**190-4896**	2	PLUG	
	15	2	**192-0573**	4	PIN-DOWEL	
	16	1	**199-0518**	2	SEAL-O-RING	
	17	2	**207-2985**	2	ORIFICE	
	18	1	**225-6216**	1	GASKET	
	19	3	**267-1628**	1	SHAFT-DRIVE	
	20	2	**267-1629**	1	SHAFT-DRIVEN	
	21	2,3	**267-8084**	2	BEARING-NEEDLE	
	22	3	**268-6263**	2	CAM	
	23	3	**268-6265**	1	PLATE	
	24	2	**269-2433**	4	BEARING-CRADLE	
Y	25	1	**282-9155**	2	HEAD GP-PUMP	352
	26	1	**282-9192**	1	CASE-FLANGE	
	27	2,3	**298-5732**	2	RETAINER-BALL	
	28	1	**311-7407**	1	BLOCK-PORT	
	30	1,3	**094-1875**	6	DOWEL	
	31	1	**094-1882**	12	PLUG	
	32	2	**095-1663**	1	SEAL-O-RING	
	34	2,3	**165-2799**	12	SPRING	
	35	1	**189-9763**	4	SEAL-O-RING	
	36	3	**1H-7339**	1	SEAL-O-RING	
	37	2,3	**1J-6472**	2	RING-RETAINING	
	38	2	**273-8320**	1	SEAL-O-RING	
	39	1,3	**3J-1907**	3	SEAL-O-RING	
	40	2,3	**6V-8144**	2	RING-RETAINING	
M	41	1	**7I-2272**	2	BOLT (M5X0.8X12-MM)	
M	42	1	**7X-2553**	5	BOLT (M16X2X40-MM)	
M	43	1	**7X-2556**	1	BOLT (M16X2X100-MM)	
	44	3	**8C-3338**	4	DOWEL	
	45	1	**8T-4121**	2	WASHER-HARD (11X21X2.5-MM THK)	
M	46	1	**8T-4136**	2	BOLT (M10X1.5X25-MM)	
M	47	3	**8T-4137**	2	BOLT (M10X1.5X20-MM)	
M	48	1	**8T-4139**	8	BOLT (M12X1.75X30-MM)	
M	49	1	**8T-4140**	2	BOLT (M16X2X60-MM)	
M	50	3	**8T-4185**	4	BOLT (M10X1.5X50-MM)	
M	51	1,3	**8T-7547**	4	BOLT (M8X1.25X30-MM)	
	52	3	**8T-9599**	1	RING-RETAINING	
	53	1,3	**9S-4191**	3	PLUG-O-RING	

M-METRIC PART
Y-SEPARATE ILLUSTRATION

311-7404 PUMP GP-PISTON *(contd.)* **i02809005**

REFER TO ALL ILLUSTRATIONS OF THIS GROUP FOR AUXILIARY VIEWS.

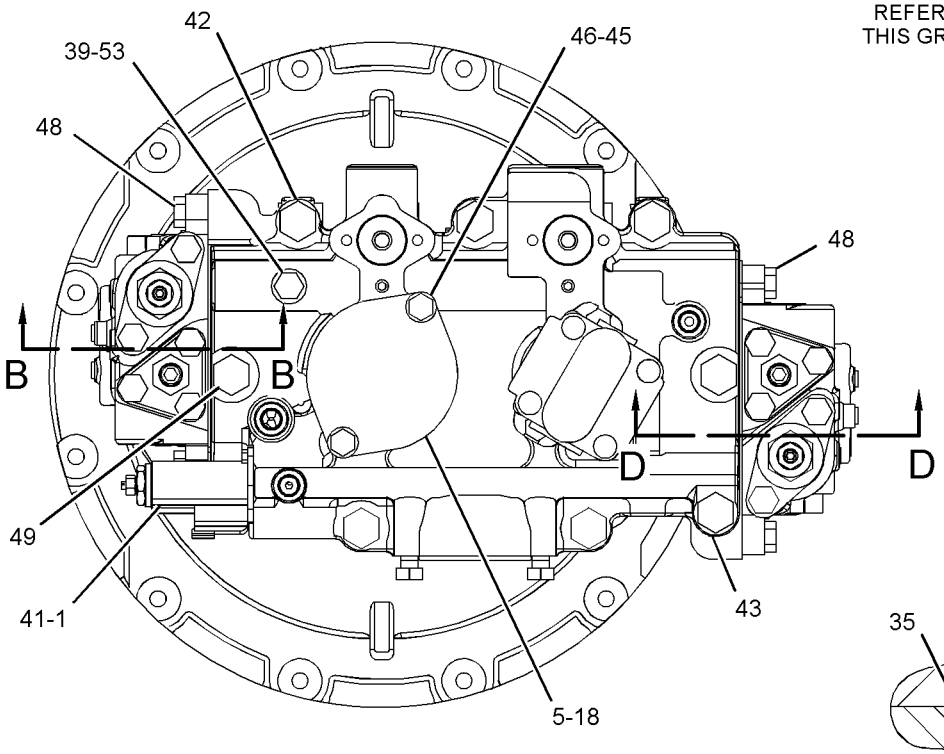

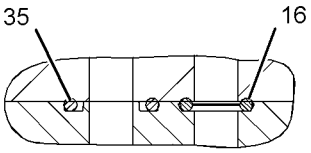

SECTION C-C

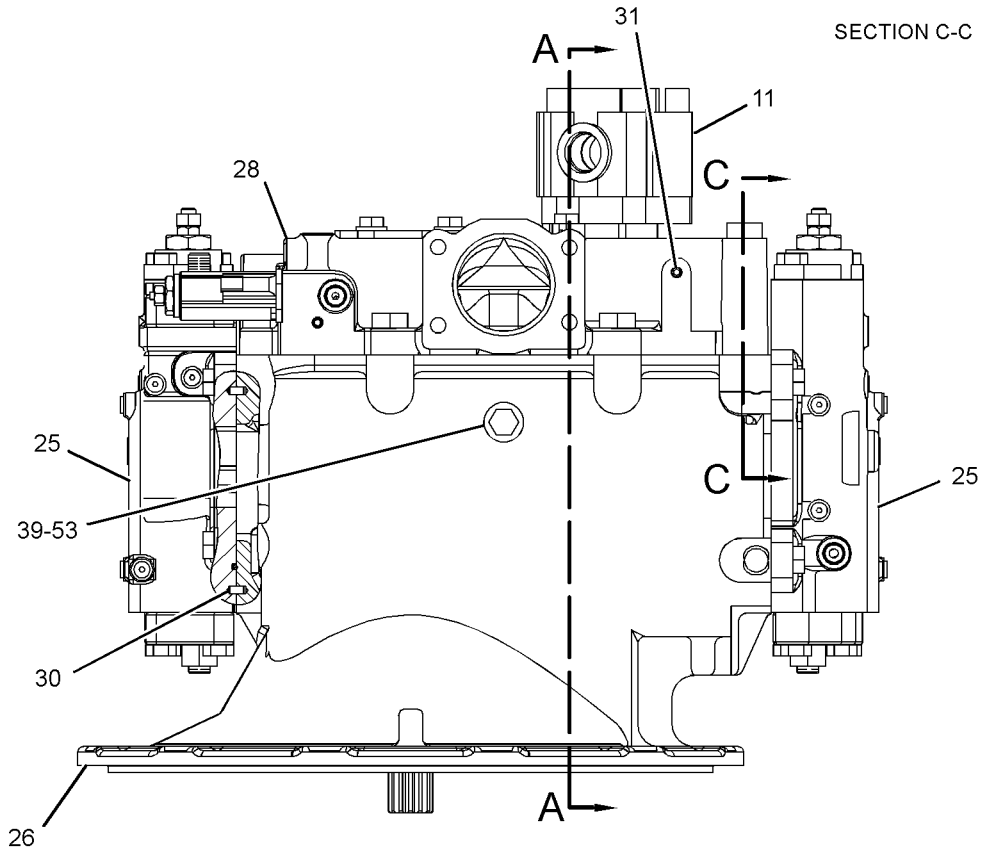

SECTION B-B

GRAPHIC #1 g01405467

REFER TO ALL ILLUSTRATIONS OF
THIS GROUP FOR AUXILIARY VIEWS.

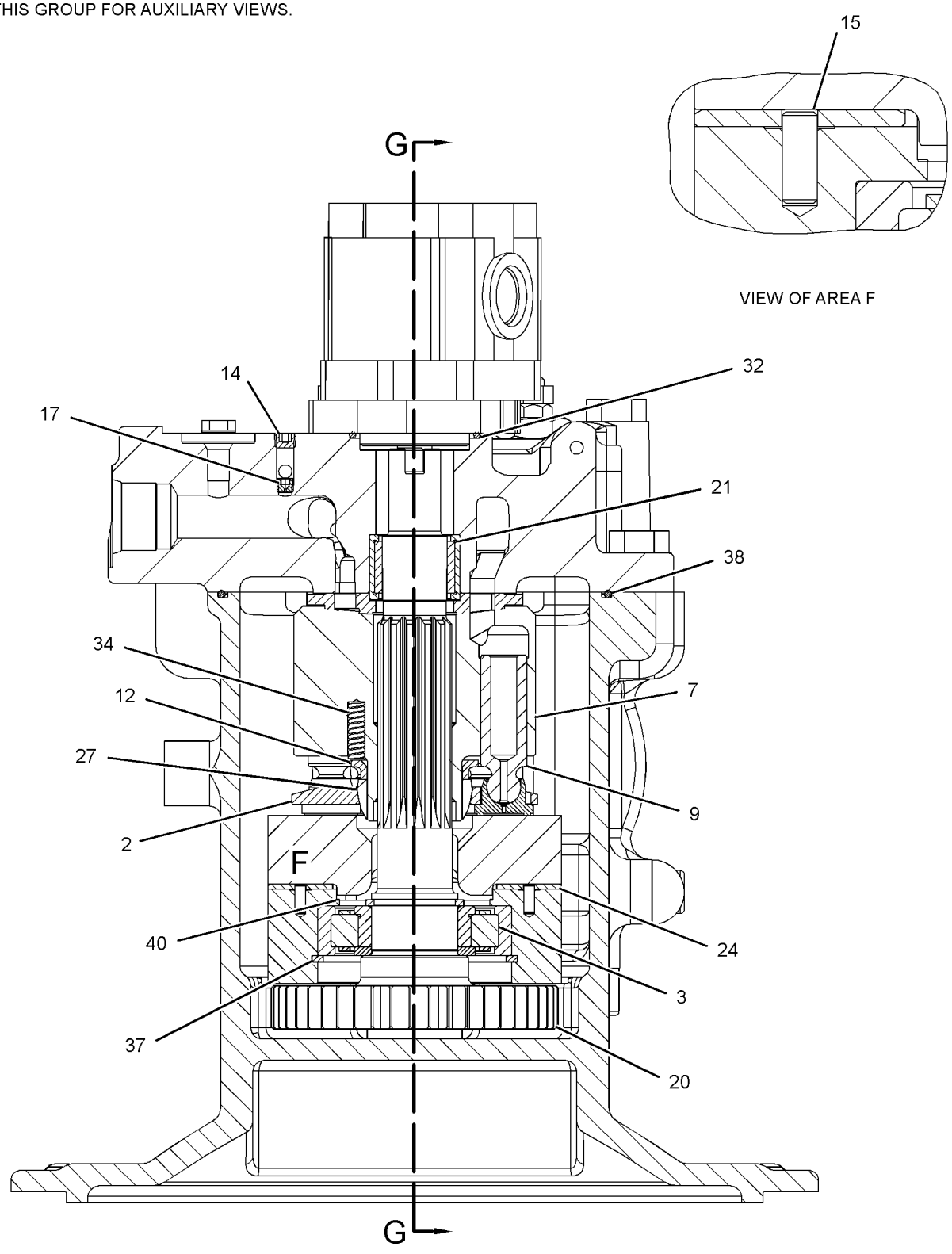

SECTION A-A

GRAPHIC #2

g01405285

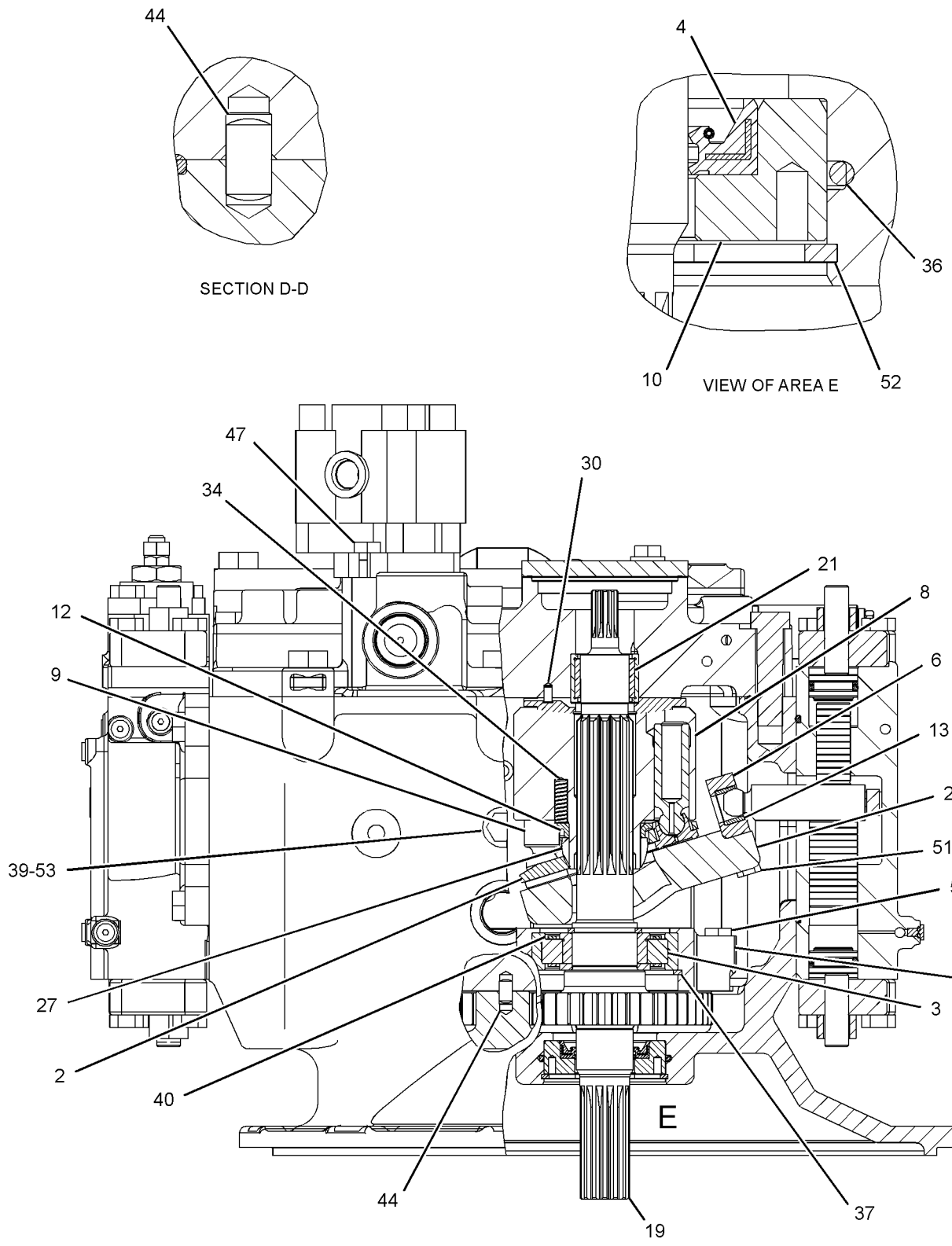

GRAPHIC #3 **<END>** g01405286

283-6102 SCREEN GP-HYDRAULIC

S/N: BYJ1-UP; PDP1-UP

PART OF 282-7220 TANK & FILTER GP-HYDRAULIC

SMCS-5068 **i02796637**

NOTE	REF NO	GRAPHIC REF	PART NUMBER	QTY	PART NAME 1 2 3 4 5 6 (PRODUCT LEVEL)	SEE PAGE
	1	1	**129-7784**	1	ROD	
	2	1	**209-6002**	1	SCREEN AS (HYDRAULIC TANK)	
	3	1	**259-0918**	1	GUIDE	
	4	1	**095-1552**	1	SEAL-O-RING	
	5	1	**095-6639**	1	SPRING	
M	6	1	**8T-4133**	2	NUT (M10X1.5-THD)	

M-METRIC PART

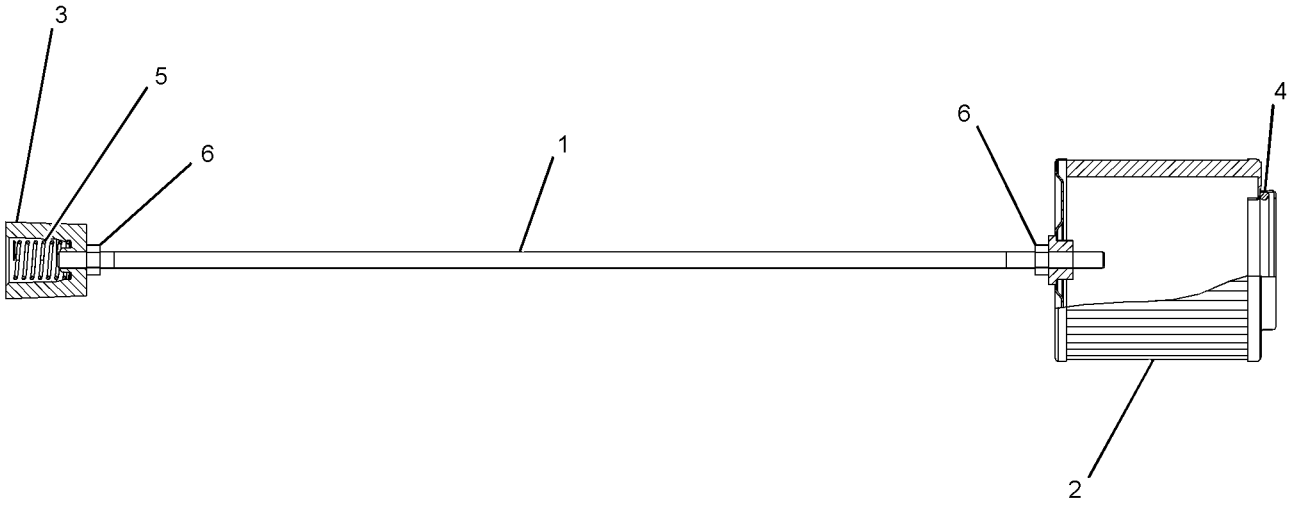

GRAPHIC #1 **<END>** g01400707

197-0173 SPOOL GP-CONTROL VALVE–WORK TOOL

S/N: BYJ1-UP; PDP1-UP

PART OF 285-1600, 310-0157 VALVE GP-CONTROL, 270-5960 VALVE GP-MAIN CONTROL

ALSO AN ATTACHMENT

SMCS-5051, 5464 **i01463920**

NOTE	REF NO	GRAPHIC REF	PART NUMBER	QTY	PART NAME 1 2 3 4 5 6 (PRODUCT LEVEL)	SEE PAGE
M	1	1	**197-0148**	1	BOLT-SHOULDER (M8X1.25X56.1-MM)	
	2	1	**7I-7203**	2	SEAT	
	3	1	**197-0151**	1	SPRING	
	4	1	**197-0150**	1	SPRING	
	5	1	**197-0149**	1	STOP	
	6	1	**197-0156**	1	SPOOL	

M-METRIC PART

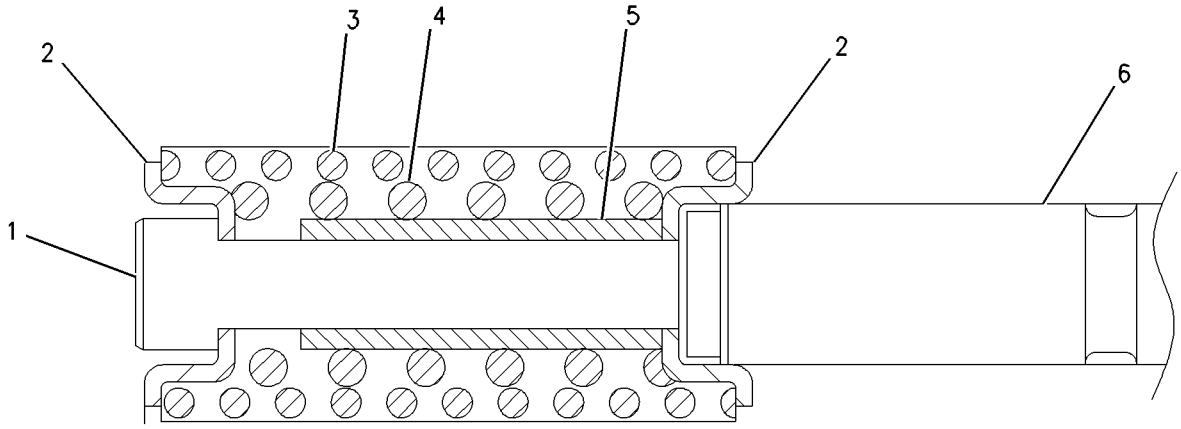

GRAPHIC #1 **<END>** g00766597

HYDRAULIC SYSTEM

197-0175 SPOOL GP-CONTROL VALVE–STICK II

S/N: BYJ1-172; PDP1-149
PART OF 270-5960 VALVE GP-MAIN CONTROL
ALSO AN ATTACHMENT

SMCS-5051, 5464 **i01463924**

NOTE	REF NO	GRAPHIC REF	PART NUMBER	QTY	PART NAME 1 2 3 4 5 6 (PRODUCT LEVEL)	SEE PAGE
M	1	1	**197-0148**	1	BOLT-SHOULDER (M8X1.25X56.1-MM)	
	2	1	**7I-7203**	2	SEAT	
	3	1	**197-0153**	1	SPRING	
	4	1	**197-0150**	1	SPRING	
	5	1	**197-0149**	1	STOP	
	6	1	**197-0158**	1	SPOOL	

M-METRIC PART

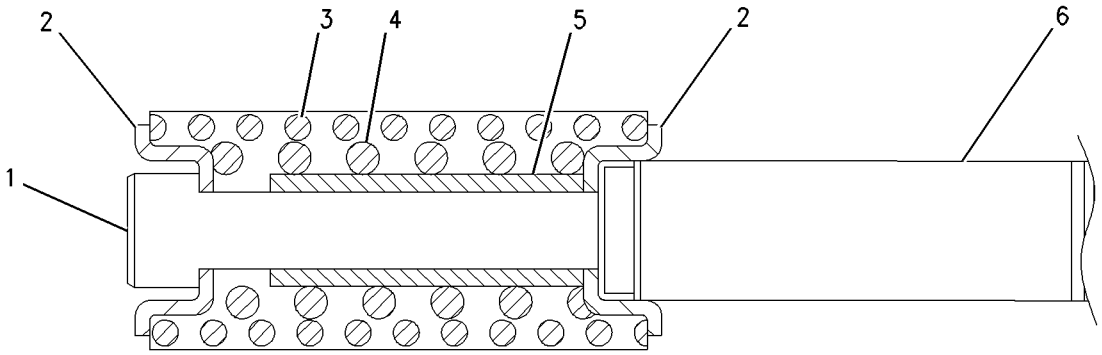

GRAPHIC #1 **<END>** g00766571

197-0178 SPOOL GP-CONTROL VALVE–BOOM I

S/N: BYJ1-UP; PDP1-UP
PART OF 270-5960 VALVE GP-MAIN CONTROL
ALSO AN ATTACHMENT

SMCS-5051, 5464 **i01463937**

NOTE	REF NO	GRAPHIC REF	PART NUMBER	QTY	PART NAME 1 2 3 4 5 6 (PRODUCT LEVEL)	SEE PAGE
M	1	1	**197-0148**	1	BOLT-SHOULDER (M8X1.25X56.1-MM)	
	2	1	**7I-7203**	2	SEAT	
	3	1	**197-0151**	1	SPRING	
	4	1	**197-0150**	1	SPRING	
	5	1	**197-0149**	1	STOP	
	6	1	**197-0162**	1	SPOOL	

M-METRIC PART

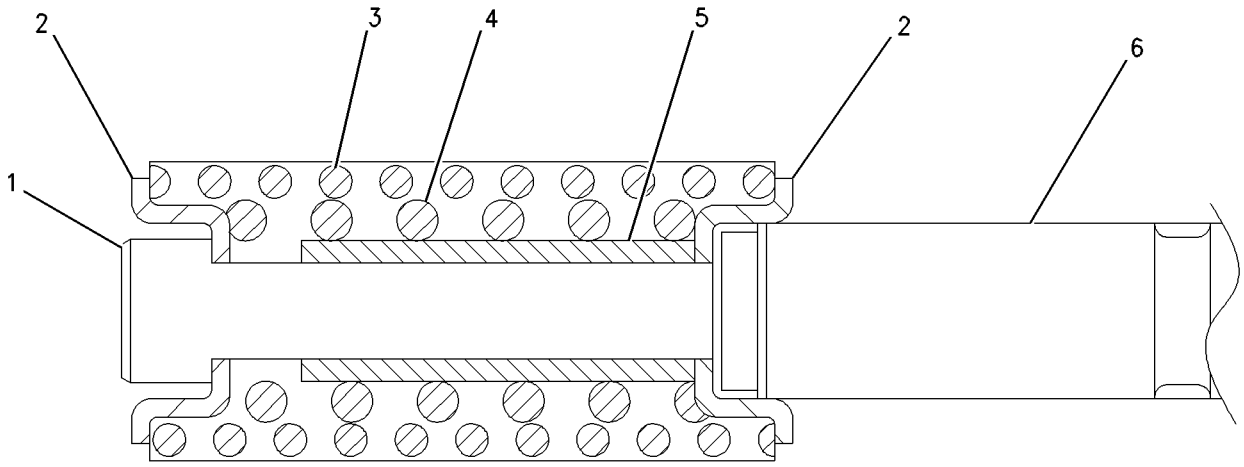

GRAPHIC #1 **<END>** g00766559

HYDRAULIC SYSTEM

197-0211 SPOOL GP-CONTROL VALVE–STICK I

S/N: BYJ1-UP; PDP1-UP
PART OF 270-5960 VALVE GP-MAIN CONTROL
ALSO AN ATTACHMENT

SMCS-5051, 5464 **i01463949**

NOTE	REF NO	GRAPHIC REF	PART NUMBER	QTY	PART NAME 1 2 3 4 5 6 (PRODUCT LEVEL)	SEE PAGE
M	1	1	**197-0148**	1	BOLT-SHOULDER (M8X1.25X56.1-MM)	
	2	1	**7I-7203**	2	SEAT	
	3	1	**197-0151**	1	SPRING	
	4	1	**197-0150**	1	SPRING	
	5	1	**197-0149**	1	STOP	
	6	1	**197-0212**	1	SPOOL	

M-METRIC PART

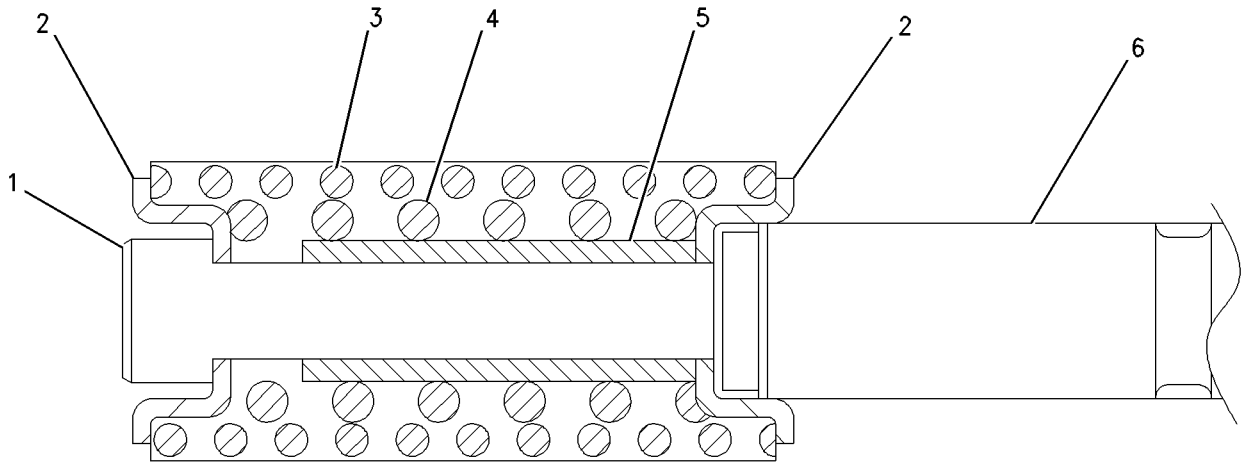

GRAPHIC #1 **<END>** g00766559

197-0213 SPOOL GP-CONTROL VALVE–BUCKET

S/N: BYJ1-UP; PDP1-UP
PART OF 270-5960 VALVE GP-MAIN CONTROL
ALSO AN ATTACHMENT

SMCS-5051, 5464 **i01463952**

NOTE	REF NO	GRAPHIC REF	PART NUMBER	QTY	PART NAME 1 2 3 4 5 6 (PRODUCT LEVEL)	SEE PAGE
M	1	1	**197-0148**	1	BOLT-SHOULDER (M8X1.25X56.1-MM)	
	2	1	**7I-7203**	2	SEAT	
	3	1	**197-0152**	1	SPRING	
	4	1	**197-0150**	1	SPRING	
	5	1	**197-0149**	1	STOP	
	6	1	**197-0214**	1	SPOOL	

M-METRIC PART

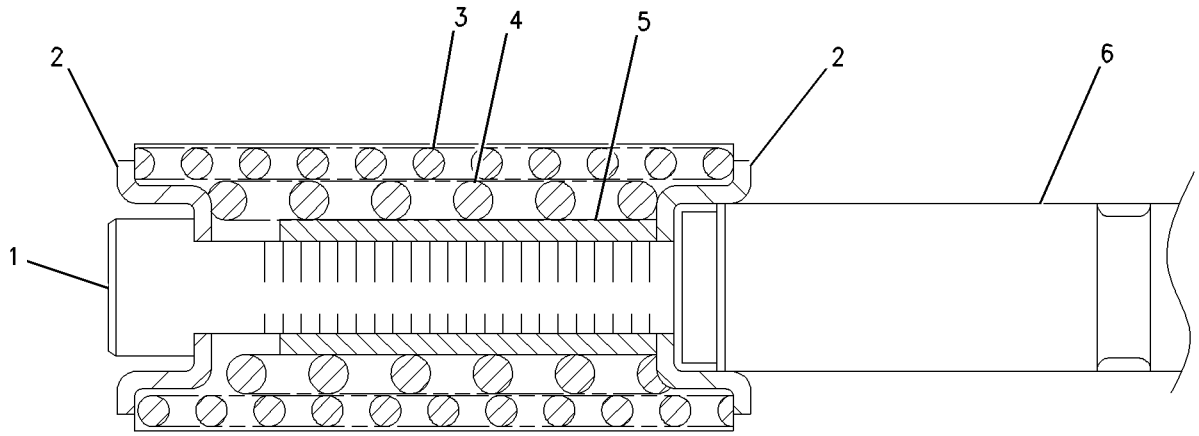

GRAPHIC #1 **<END>** g00767667

HYDRAULIC SYSTEM

197-0217 SPOOL GP-CONTROL VALVE–STICK

S/N: BYJ1-UP; PDP1-UP
PART OF 270-5960 VALVE GP-MAIN CONTROL
ALSO AN ATTACHMENT

SMCS-5051, 5464 **i01481681**

NOTE	REF NO	GRAPHIC REF	PART NUMBER	QTY	PART NAME 1 2 3 4 5 6 (PRODUCT LEVEL)	SEE PAGE
M	1	1	**197-0148**	1	BOLT-SHOULDER (M8X1.25X56.1-MM)	
	2	1	**7I-7203**	2	SEAT	
	3	1	**197-0151**	1	SPRING	
	4	1	**197-0150**	1	SPRING	
	5	1	**197-0149**	1	STOP	
	6	1	**197-0218**	1	SPOOL AS	

M-METRIC PART

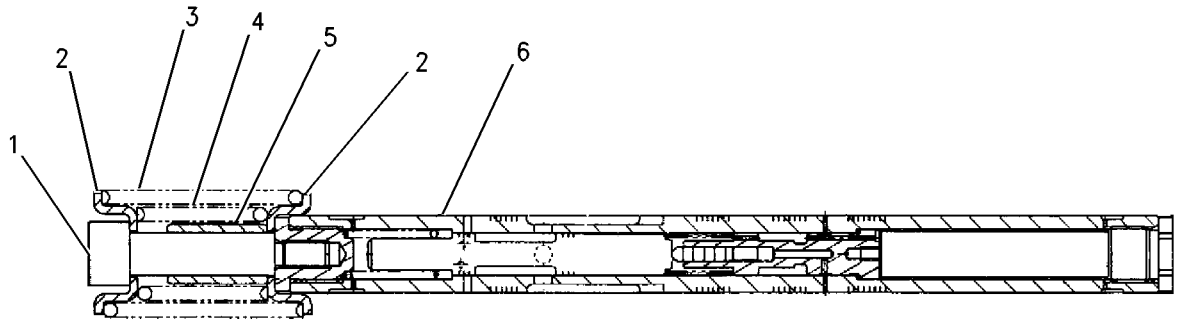

GRAPHIC #1 **<END>** g00790767

285-1504 SPOOL GP-CONTROL VALVE–COMBINED FLOW

S/N: BYJ1-UP; PDP1-UP
PART OF 270-5960 VALVE GP-MAIN CONTROL
ALSO AN ATTACHMENT

SMCS-5051, 5464 **i03016739**

NOTE	REF NO	GRAPHIC REF	PART NUMBER	QTY	PART NAME 1 2 3 4 5 6 (PRODUCT LEVEL)	SEE PAGE
	1	1	**297-0366**	1	STOP	
M	2	1	**197-0148**	1	BOLT-SHOULDER (M8X1.25X56.1-MM)	
	3	1	**7I-7203**	2	SEAT	
	4	1	**197-0151**	1	SPRING	
	5	1	**197-0150**	1	SPRING	

M-METRIC PART

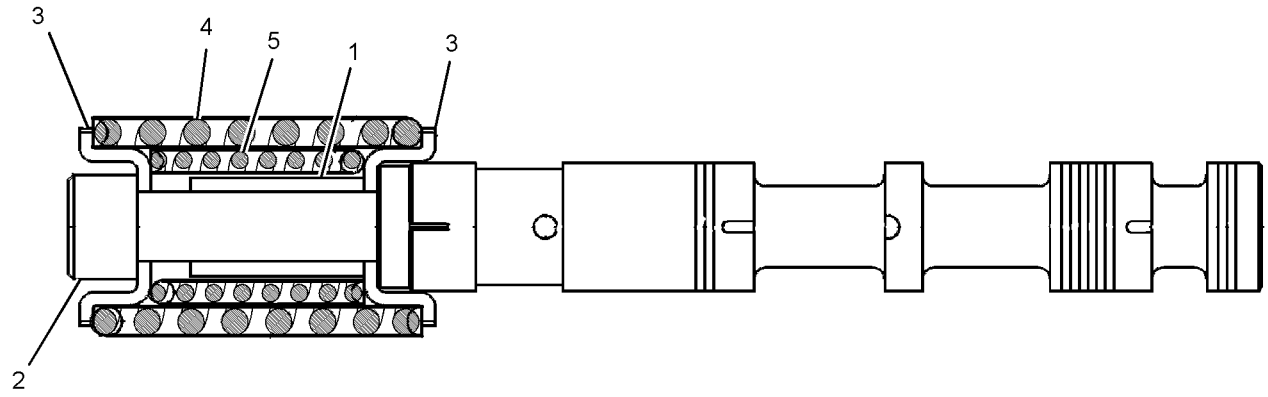

GRAPHIC #1 **<END>** g01424755

285-1505 SPOOL GP-CONTROL VALVE—SWING PRIORITY

S/N: BYJ1-UP; PDP1-UP

PART OF 270-5960 VALVE GP-MAIN CONTROL

ALSO AN ATTACHMENT

SMCS-5051, 5464 **i02776159**

NOTE	REF NO	GRAPHIC REF	PART NUMBER	QTY	PART NAME 1 2 3 4 5 6 (PRODUCT LEVEL)	SEE PAGE
	1	1	**285-1641**	1	SPOOL	
M	2	1	**197-0148**	1	BOLT-SHOULDER (M8X1.25X56.1-MM)	
	3	1	**7I-7203**	2	SEAT	
	4	1	**197-0151**	1	SPRING	
	5	1	**197-0150**	1	SPRING	
	6	1	**197-0149**	1	STOP	

M-METRIC PART

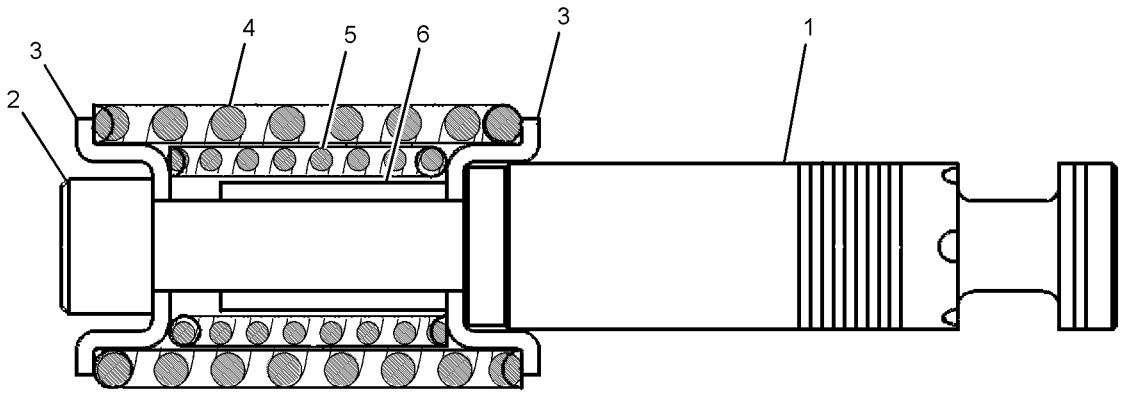

GRAPHIC #1 **<END>** g01390001

285-1630 SPOOL GP-CONTROL VALVE–TRAVEL

S/N: BYJ1-UP; PDP1-UP
PART OF 270-5960 VALVE GP-MAIN CONTROL
ALSO AN ATTACHMENT

SMCS-5051, 5464 **i02870314**

NOTE	REF NO	GRAPHIC REF	PART NUMBER	QTY	PART NAME 1 2 3 4 5 6 (PRODUCT LEVEL)	SEE PAGE
	1	1	**197-0149**	1	STOP	
M	2	1	**197-0148**	1	BOLT-SHOULDER (M8X1.25X56.1-MM)	
	3	1	**7I-7203**	2	SEAT	
	4	1	**197-0151**	1	SPRING	
	5	1	**197-0150**	1	SPRING	

M-METRIC PART

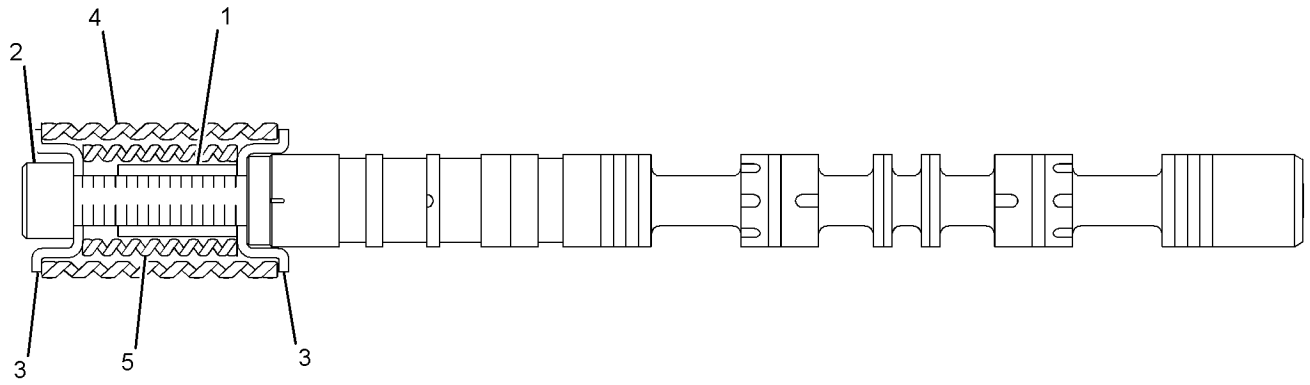

GRAPHIC #1 **<END>** g01424964

323-7566 SPOOL GP-CONTROL VALVE–BOOM II

S/N: BYJ1-UP; PDP1-UP

PART OF 270-5960 VALVE GP-MAIN CONTROL

ALSO AN ATTACHMENT

SMCS-5051, 5464 **i02978362**

NOTE	REF NO	GRAPHIC REF	PART NUMBER	QTY	PART NAME 1 2 3 4 5 6 (PRODUCT LEVEL)	SEE PAGE
	1	1	**197-0153**	1	SPRING	
	2	1	**7I-7203**	2	SEAT	
M	3	1	**197-0148**	1	BOLT-SHOULDER (M8X1.25X56.1-MM)	
	4	1	**197-0149**	1	STOP	
	5	1	**197-0150**	1	SPRING	

M-METRIC PART

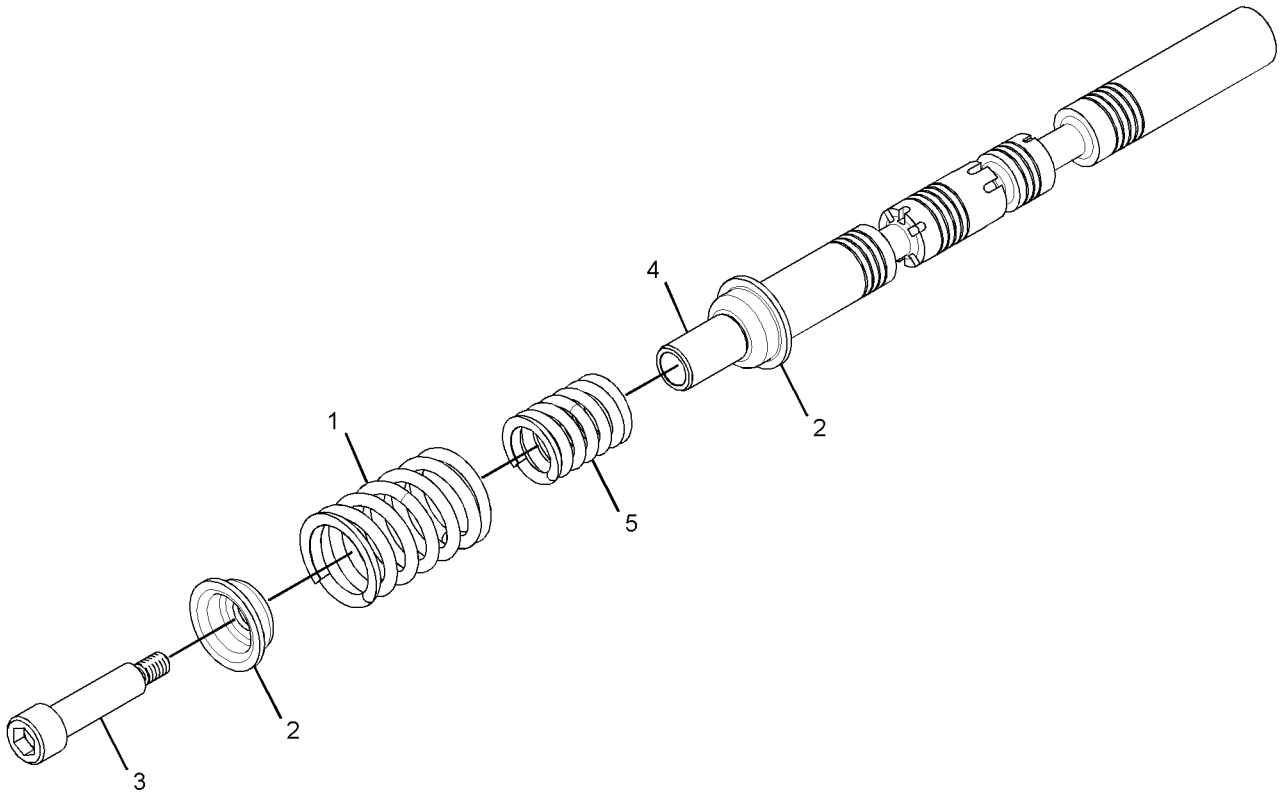

GRAPHIC #1 **<END>** g01514002

323-7639 SPOOL GP-CONTROL VALVE–STICK II

S/N: BYJ173-UP; PDP150-UP
PART OF 270-5960 VALVE GP-MAIN CONTROL
ALSO AN ATTACHMENT

SMCS-5051, 5464 **i03249120**

NOTE	REF NO	GRAPHIC REF	PART NUMBER	QTY	PART NAME 1 2 3 4 5 6 (PRODUCT LEVEL)	SEE PAGE
	1	1	**197-0153**	1	SPRING	
	2	1	**7I-7203**	2	SEAT	
M	3	1	**197-0148**	1	BOLT-SHOULDER (M8X1.25X56.1-MM)	
	4	1	**197-0149**	1	STOP	
	5	1	**197-0150**	1	SPRING	

M-METRIC PART

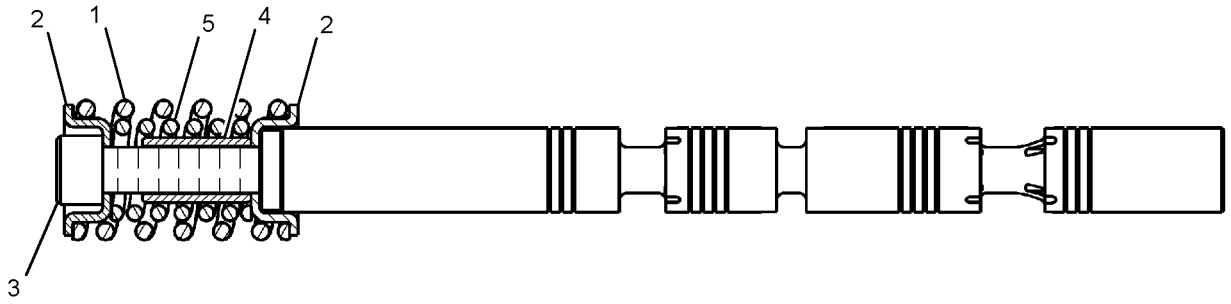

GRAPHIC #1 **<END>** g01658074

296-7225 SWIVEL & MOUNTING GP–BLADE

S/N: BYJ1-UP; PDP1-UP
PART OF 260-7212, 260-7213 INSTALLATION AR-AUXILIARY
AN ATTACHMENT

SMCS-5060 **i02820479**

NOTE	REF NO	GRAPHIC REF	PART NUMBER	QTY	PART NAME 1 2 3 4 5 6 (PRODUCT LEVEL)	SEE PAGE
Y	1	1	**162-4695**	1	SWIVEL GP	525
	2	1	**8T-4121**	4	WASHER-HARD (11X21X2.5-MM THK)	
M	3	1	**8T-4137**	4	BOLT (M10X1.5X20-MM)	
B	4	1	**1U-8846**		SEALANT-GASKET	

B-USE AS REQUIRED
M-METRIC PART
Y-SEPARATE ILLUSTRATION

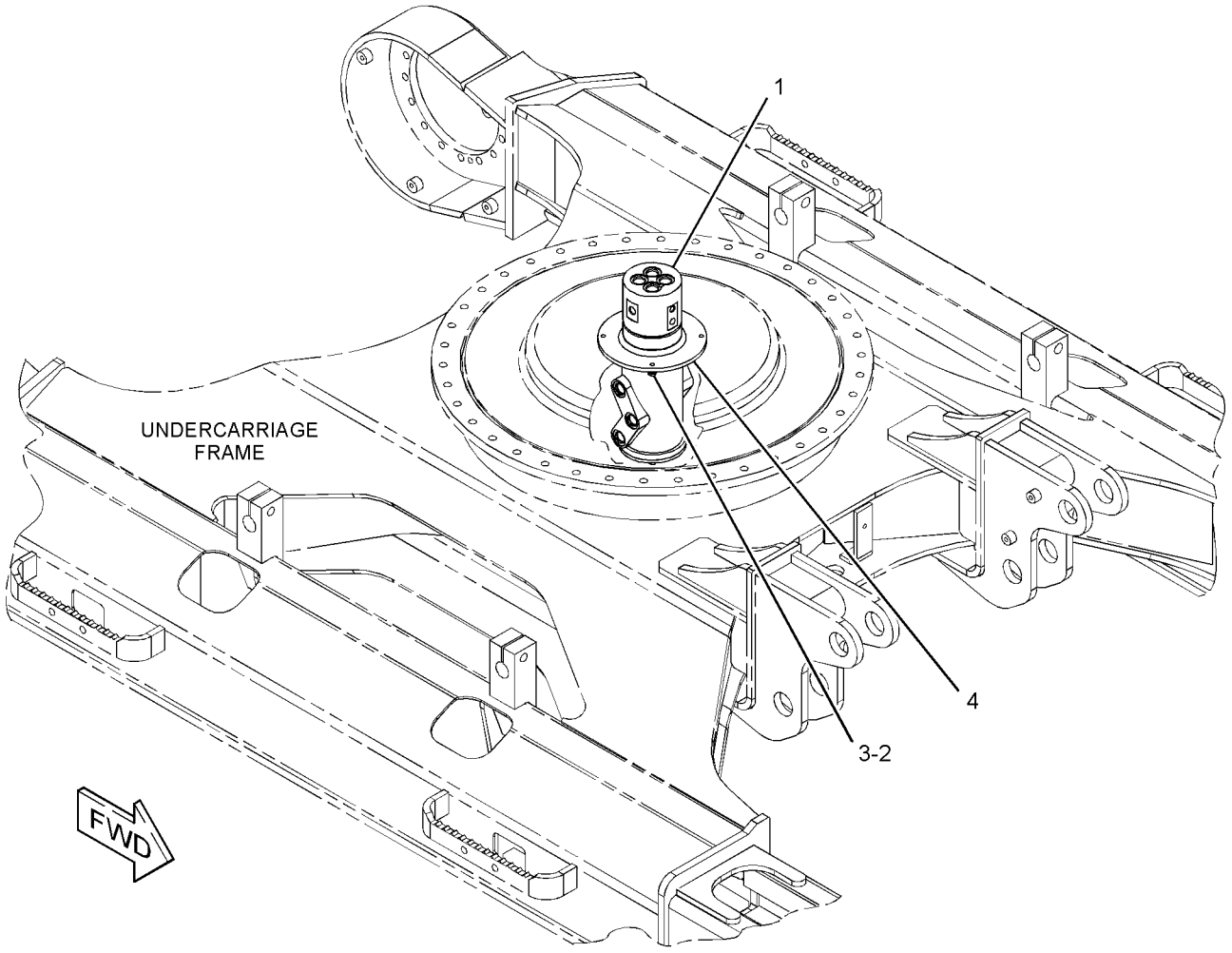

GRAPHIC #1 **<END>** g01417128

162-4695 SWIVEL GP

S/N: BYJ1-UP; PDP1-UP
PART OF 296-7225 SWIVEL & MOUNTING GP
AN ATTACHMENT

SMCS-5060 **i01460757**

NOTE	REF NO	GRAPHIC REF	PART NUMBER	QTY	PART NAME 1 2 3 4 5 6 (PRODUCT LEVEL)	SEE PAGE
M	1	1	**8T-4136**	6	BOLT (M10X1.5X25-MM)	
	2	1	**8T-4121**	2	WASHER-HARD (11X21X2.5-MM THK)	
	3	1	**5I-4363**	1	COVER	
	4	1	**095-1716**	1	SEAL-O-RING	
	5	1	**7I-7321**	1	RETAINER	
	6	1	**114-8249**	1	HOUSING	
	7	1	**159-7782**	7	SEAL	
	8	1	**095-1625**	3	SEAL-O-RING	
	9	1	**114-8250**	1	ROTOR	
	10	1	**8T-6759**	1	PLUG-PIPE	
	11	1	**3J-1907**	2	SEAL-O-RING	
	12	1	**9S-8004**	2	PLUG-O-RING	

M-METRIC PART

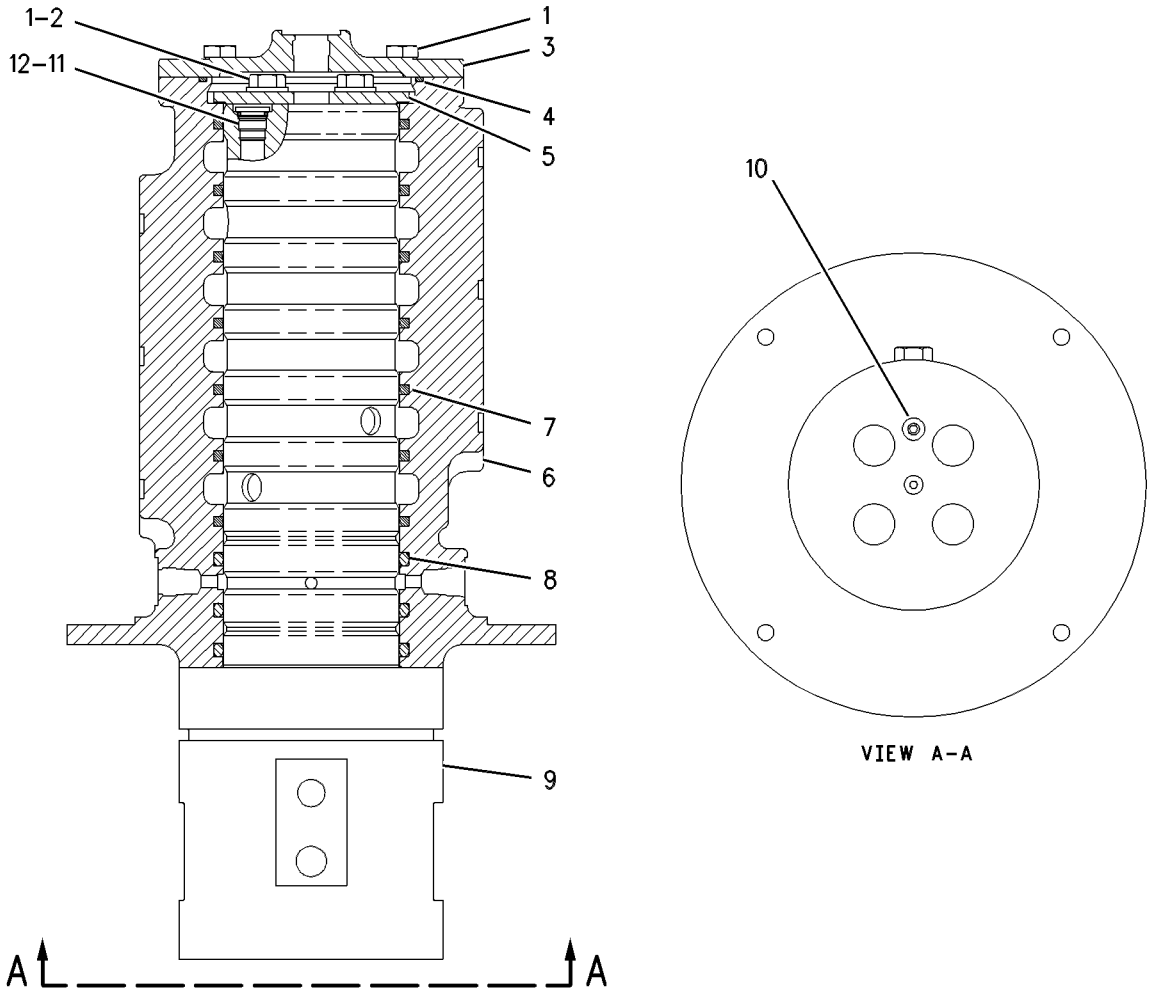

GRAPHIC #1 **<END>** g00548364

HYDRAULIC SYSTEM

162-4696 SWIVEL GP

S/N: BYJ1-UP; PDP1-UP

PART OF 278-6511, 278-6512 LINES GP-TRAVEL MOTOR

SMCS-5060 **i01108789**

NOTE	REF NO	GRAPHIC REF	PART NUMBER	QTY	PART NAME 1 2 3 4 5 6 (PRODUCT LEVEL)	SEE PAGE
M	1	1	**8T-4136**	6	BOLT (M10X1.5X25-MM)	
	2	1	**8T-4121**	2	WASHER-HARD (11X21X2.5-MM THK)	
	3	1	**5I-4363**	1	COVER	
	4	1	**095-1716**	1	SEAL-O-RING	
	5	1	**7I-7321**	1	RETAINER	
	6	1	**4I-7604**	1	HOUSING	
	7	1	**159-7782**	5	SEAL	
	8	1	**095-1625**	3	SEAL-O-RING	
	9	1	**4I-7605**	1	ROTOR	
	10	1	**8T-6759**	1	PLUG-PIPE	
	11	1	**3K-0360**	1	SEAL-O-RING	
	12	1	**9S-8005**	1	PLUG-O RING	

M-METRIC PART

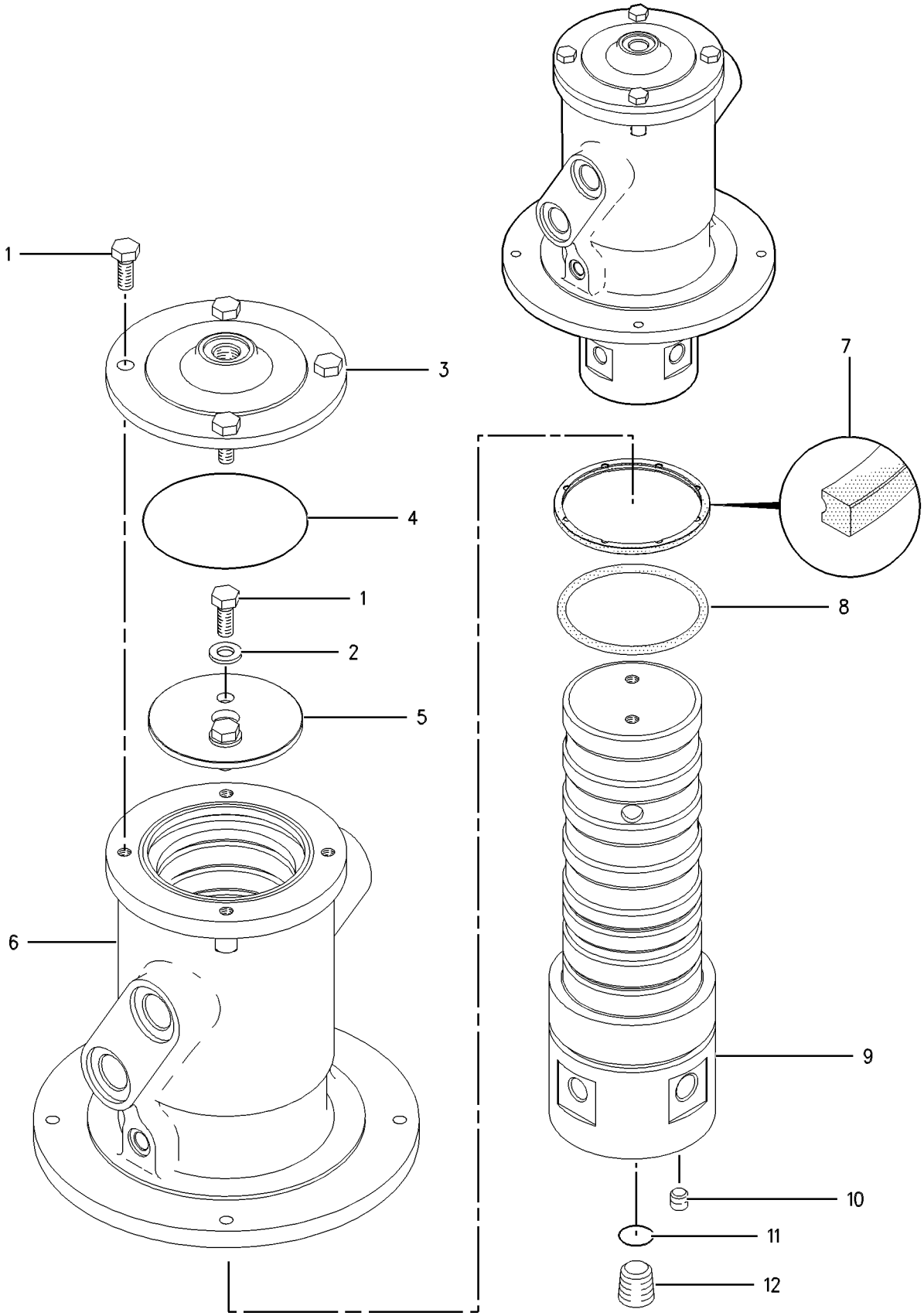

GRAPHIC #1 **<END>** g00590219

HYDRAULIC SYSTEM

282-7220 TANK & FILTER GP-HYDRAULIC

S/N: BYJ1-UP; PDP1-UP
110-L (24.2-US GAL)
PART OF 282-7218 TANK & MTG GP-HYDRAULIC

SMCS-5056, 5068 **i03010010**

NOTE	REF NO	GRAPHIC REF	PART NUMBER	QTY	PART NAME 1 2 3 4 5 6 (PRODUCT LEVEL)	SEE PAGE
	1	1	**4B-7739**	1	PLUG-DRAIN (HYDRAULIC TANK)	
	2	1	**4I-5394**	1	SENDER AS-TEMPERATURE (HYDRAULIC OIL)	
M		1	**4I-5490**	2	SCREW-MACHINE (M4X0.7X6-MM)	
		1	**095-0826**	2	LOCKWASHER	
	3	1	**8H-9819**	1	ADAPTER-PLUG	
	4	1	**170-9419**	1	SWITCH AS-PRESSURE (HYDRAULIC OIL)	
		1	**2M-9780**	1	SEAL-O-RING	
		1	**4I-0754**	1	SEAL-O-RING	
		1	**186-3735**	2	PIN-CONNECTOR (16-GA TO 18-GA)	
		1	**102-8802**	1	KIT-RECEPTACLE (2-PIN)	
					(INCLUDES RECEPTACLE AS & WEDGE)	
	5	1	**175-6035**	1	COVER	
	6	1	**175-6173**	1	PIPE	
	7	1	**175-6177**	1	FLANGE AS	
		1	**175-6176**	1	SEAL-O-RING	
Y	8	1	*188-4145*	1	FILTER GP-OIL (HYDRAULIC RETURN)	346
	9	1	**213-0677**	1	SWITCH AS-LIQUID LEVEL (HYDRAULIC OIL)	
		1	**102-8802**	1	KIT-RECEPTACLE (2-PIN)	
					(INCLUDES RECEPTACLE AS & WEDGE)	
		1	**9X-3401**	2	PIN-CONNECTOR (16-GA TO 18-GA)	
	10	1	**227-0590**	1	BREATHER GP (HYDRAULIC TANK)	
Y	11	1	**227-0620**	1	GAUGE GP-SIGHT (HYDRAULIC OIL LEVEL)	350
	13	1	**275-1788**	1	COVER AS	
Y	14	1	*283-6102*	1	SCREEN GP-HYDRAULIC (TANK)	512
	15	1	**207-6403**	1	PLUG	
	16	1	**207-6404**	1	WASHER (49.5X60.5X1.5-MM THK)	
	17	1	**095-1608**	1	SEAL-O-RING	
	18	1	**095-1725**	1	SEAL-O-RING	
	19	1	*155-3624*	1	PLUG AS	
		1	**3J-7354**	1	SEAL-O-RING	
		1	**9S-4182**	1	PLUG-O-RING	
	20	1	**1H-8278**	1	SEAL-O-RING	
	21	1	**2B-0858**	1	PLUG-PIPE	
	22	1	**2H-3934**	1	SEAL-O-RING	
	23	1	**3D-2824**	1	SEAL-O-RING	
	24	1	**3K-0360**	1	SEAL-O-RING	
	25	1	**4J-0527**	1	SEAL-O-RING	
	26	1	**4J-5267**	1	SEAL-O-RING	
	27	1	**4M-0189**	1	SEAL-O-RING	
M	28	1	**5C-9553**	4	BOLT (M6X1X16-MM)	
M	29	1	**8T-0273**	4	BOLT-SOCKET HEAD (M12X1.75X40-MM)	
	30	1	**8T-4121**	12	WASHER-HARD (11X21X2.5-MM THK)	
M	31	1	**8T-4136**	2	BOLT (M10X1.5X25-MM)	
M	32	1	**8T-4137**	10	BOLT (M10X1.5X20-MM)	
M	33	1	**8T-4194**	8	BOLT (M12X1.75X50-MM)	
	34	1	**8T-4223**	8	WASHER-HARD (13.5X25.5X3-MM THK)	
	35	1	**9X-8256**	4	WASHER (6.6X12X2-MM THK)	
	36	1	**307-5156**	1	LINER	

M-METRIC PART
Y-SEPARATE ILLUSTRATION

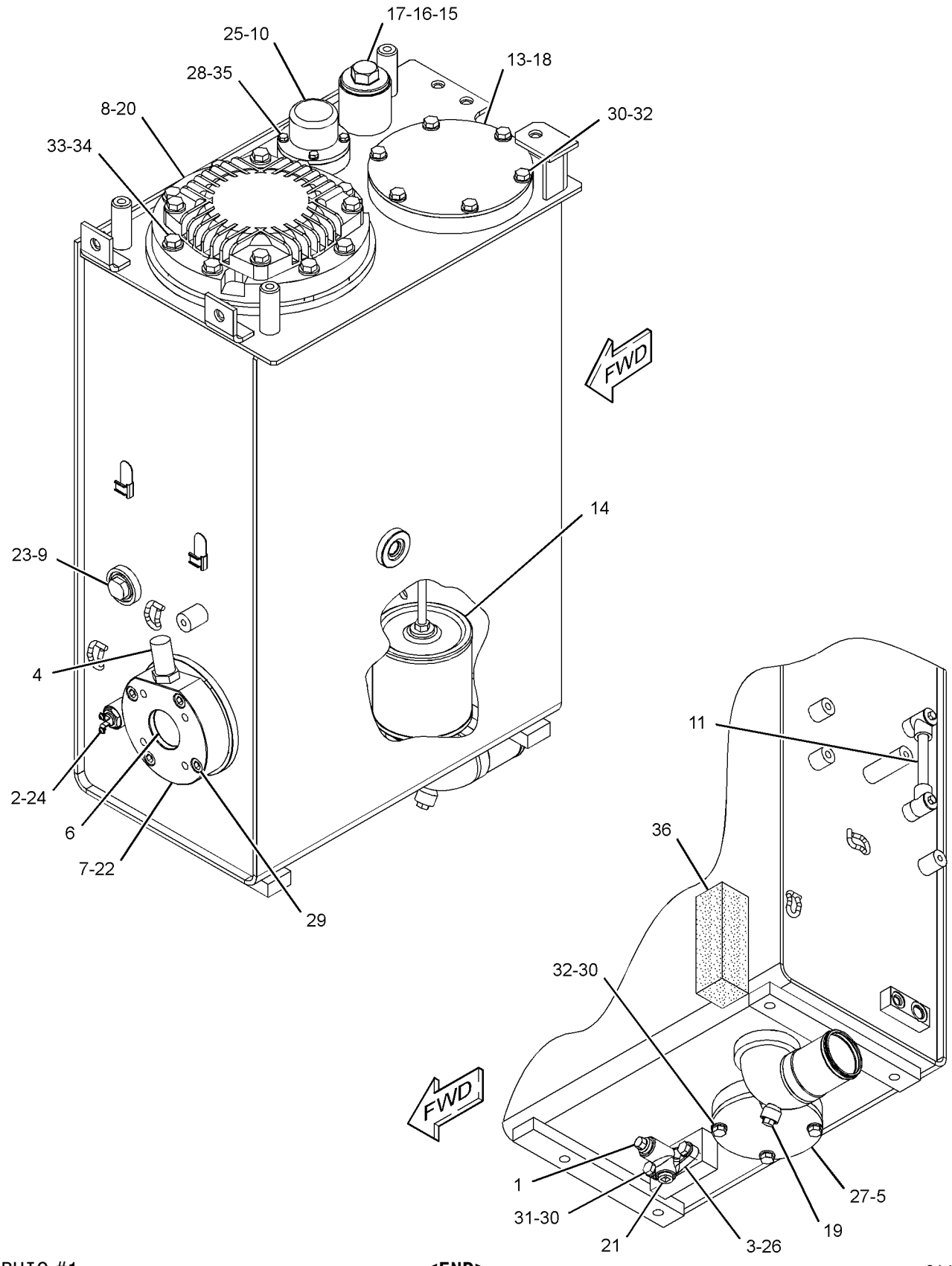

GRAPHIC #1 **<END>** g01441468

HYDRAULIC SYSTEM

282-7218 TANK & MTG GP-HYDRAULIC

S/N: BYJ1-UP; PDP1-UP

PART OF 270-5956, 270-5957 HYDRAULIC AR

SMCS-5056 **i02812757**

NOTE	REF NO	GRAPHIC REF	PART NUMBER	QTY	PART NAME 1 2 3 4 5 6 (PRODUCT LEVEL)	SEE PAGE
Y	1	1	**282-7219**	1	FILTER & LINES GP-HYDRAULIC	339
Y	2	1	**282-7220**	1	TANK & FILTER GP-HYDRAULIC	528
	3	1	**177-5987**	4	SPACER (17X35X56.5-MM THK)	
M	4	1	**7X-2555**	4	BOLT (M16X2X80-MM)	

M-METRIC PART
Y-SEPARATE ILLUSTRATION

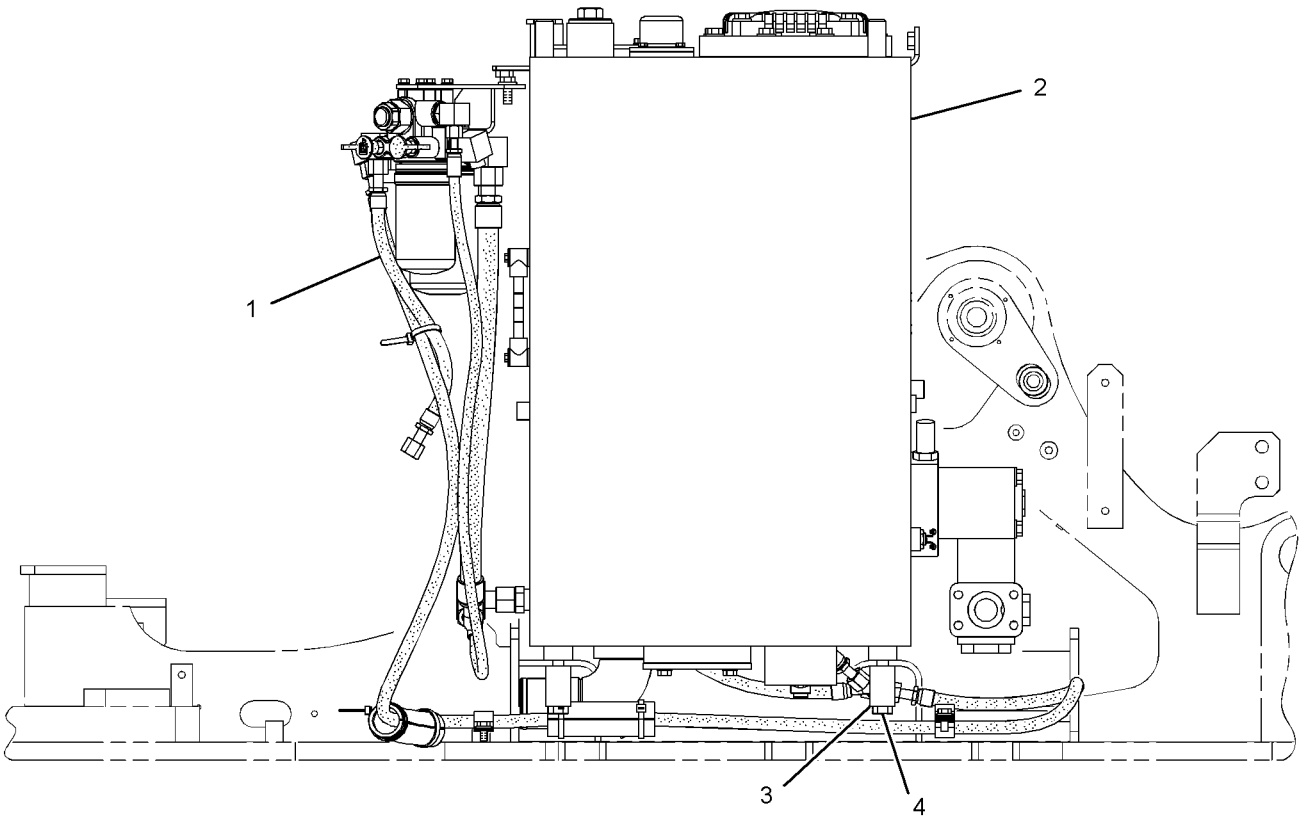

RIGHT SIDE VIEW

GRAPHIC #1 **<END>** g01409782

285-1761 VALVE & MTG GP-CONTROL

S/N: BYJ1-UP; PDP1-UP
PART OF 270-5996 CONTROL AR-AUXILIARY
AN ATTACHMENT

SMCS-5051 **i03036039**

NOTE	REF NO	GRAPHIC REF	PART NUMBER	QTY	PART NAME 1 2 3 4 5 6 (PRODUCT LEVEL)	SEE PAGE
Y	1	1	**270-5960**	1	VALVE GP-MAIN CONTROL	547
Y	2	1	**310-0157**	1	VALVE GP-CONTROL (2-PUMP, 1-WAY)	540
	3	1	**185-0508**	5	BOLT (M14X2X155-MM)	

Y-SEPARATE ILLUSTRATION

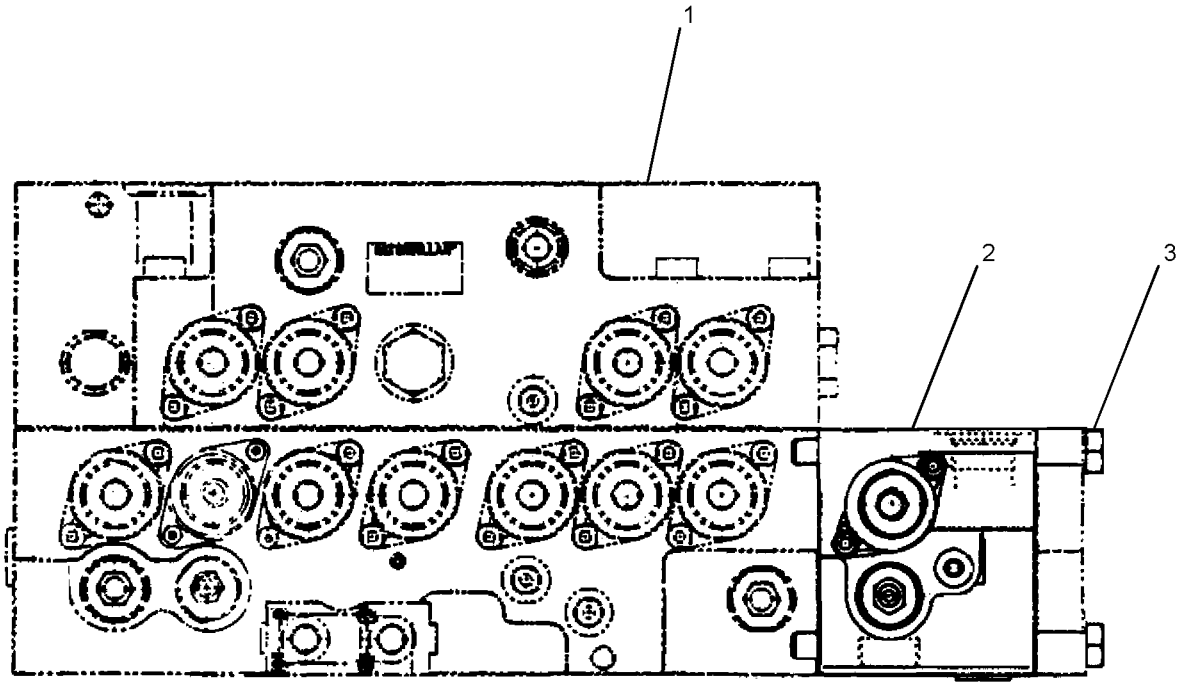

GRAPHIC #1 **<END>** g01502734

285-1759 VALVE & MTG GP-MAIN CONTROL

S/N: BYJ1-UP; PDP1-UP
PART OF 285-1677 CONTROL AR-AUXILIARY
AN ATTACHMENT

SMCS-5051 **i02900459**

NOTE	REF NO	GRAPHIC REF	PART NUMBER	QTY	PART NAME 1 2 3 4 5 6 (PRODUCT LEVEL)	SEE PAGE
Y	1	1	**270-5960**	1	VALVE GP-MAIN CONTROL	547
Y	2	1	**285-1600**	1	VALVE GP-CONTROL (MEDIUM PRESSURE)	538
M	3	1	**177-2768**	5	BOLT (M14X2X105-MM)	

M-METRIC PART
Y-SEPARATE ILLUSTRATION

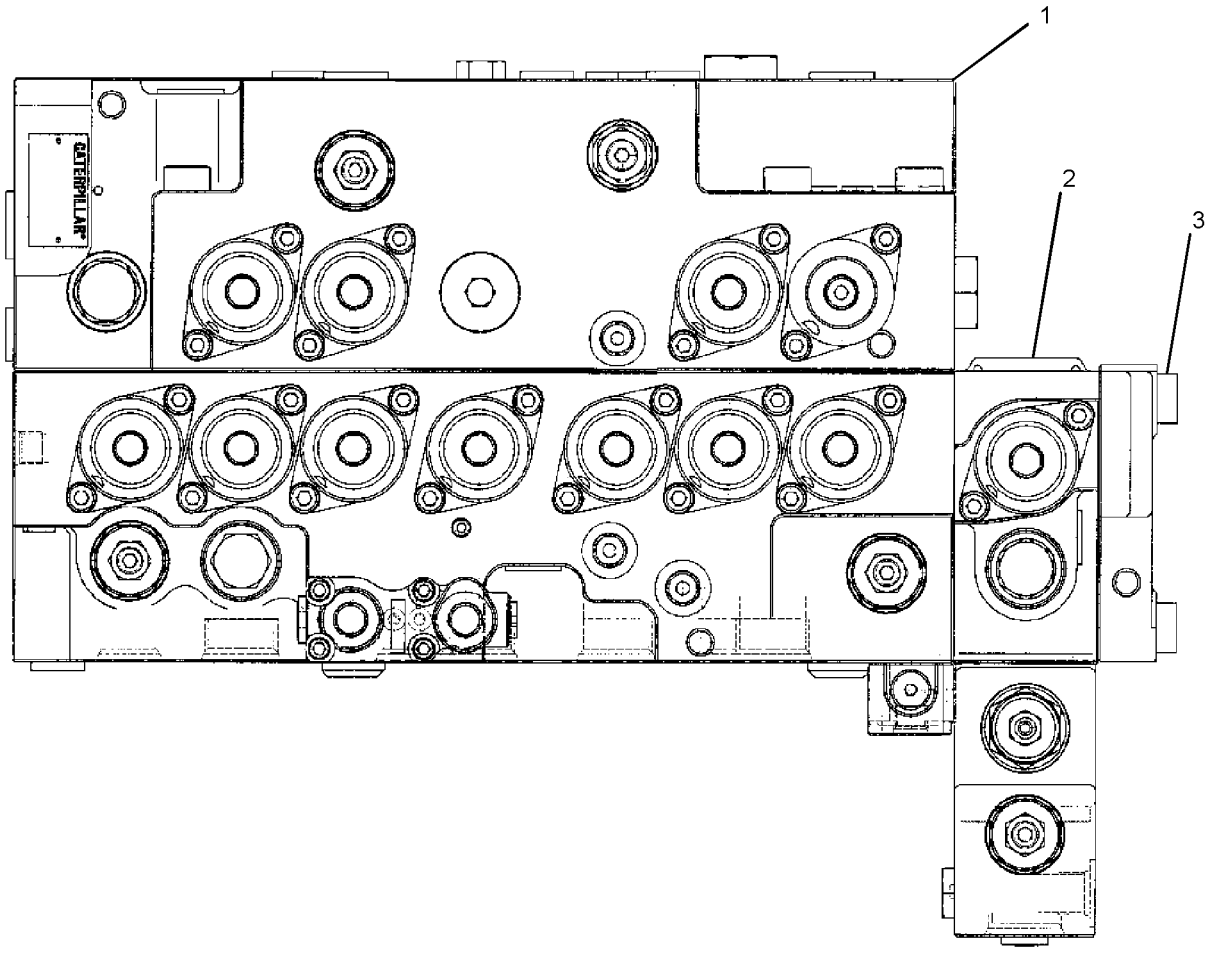

GRAPHIC #1 **<END>** g01491473

270-6065 VALVE AR–1-PIECE BOOM

S/N: BYJ1-UP; PDP1-UP
AN ATTACHMENT

SMCS-5051 **i02957129**

NOTE	PART NUMBER	QTY	PART NAME 1 2 3 4 5 6 (PRODUCT LEVEL)	SEE PAGE
Y	*247-7494*	1	FILM GP (CONTROL PATTERN, QUICK CHANGE)	821
Y	*282-7283*	1	LINES GP-PILOT	457

Y-SEPARATE ILLUSTRATION

<END>

297-0271 VALVE AR-ALT PATTERN CONTROL–1-PIECE BOOM

S/N: BYJ1-UP; PDP1-UP
AN ATTACHMENT

SMCS-5065 **i02957123**

NOTE	PART NUMBER	QTY	PART NAME 1 2 3 4 5 6 (PRODUCT LEVEL)	SEE PAGE
Y	*299-2664*	1	FASTENER GP-WIRING HARNESS	127
Y	*260-7006*	1	FILM GP (CONTROL PATTERN CHANGE, 2-WAY)	823
Y	*282-7282*	1	LINES GP-PILOT	454

Y-SEPARATE ILLUSTRATION

<END>

297-0199 VALVE AR-CHECK & RELIEF–BOOM LOWERING CONTROL

S/N: BYJ1-UP; PDP1-UP
FOR USE WITH 260-7189–PAGE 598
AN ATTACHMENT

SMCS-5117, 5453 **i02826345**

NOTE	PART NUMBER	QTY	PART NAME 1 2 3 4 5 6 (PRODUCT LEVEL)	SEE PAGE
Y	*282-7285*	1	LINES GP-BOOM CYLINDER (BOOM LOWERING CONTROL)	393
Y	*282-7286*	1	LINES GP-PILOT (BOOM LOWERING CONTROL)	461
Y	*275-6811*	1	WIRING GP-CAB	175
Y	*306-8395*	1	WIRING GP-CAB (OVERLOAD WARNING)	180

Y-SEPARATE ILLUSTRATION

<END>

297-0200 VALVE AR-CHECK & RELIEF–STICK LOWERING CONTROL VALVE

S/N: BYJ1-UP; PDP1-UP
FOR USE WITH 297-0199–PAGE 533
AN ATTACHMENT

SMCS-5117, 5453 **i02957121**

NOTE	PART NUMBER	QTY	PART NAME 1 2 3 4 5 6 (PRODUCT LEVEL)	SEE PAGE
Y	*282-5551*	1	LINES GP-BOOM (REACH BOOM, STICK LOAD CONTROL)	384
Y	*282-7288*	1	LINES GP-PILOT (STICK LOWERING CONTROL VALVE)	463
Y	*294-6250*	1	LINES GP-STICK CYLINDER (LOWERING CONTROL)	487

Y-SEPARATE ILLUSTRATION

<END>

323-7796 VALVE AR-CHECK & RELIEF–
BOOM LOWERING CONTROL VALVE
S/N: BYJ1-UP; PDP1-UP
FOR USE WITH 260-7189–PAGE 598
AN ATTACHMENT

SMCS-5117, 5453 **i03254240**

NOTE	PART NUMBER	QTY	PART NAME 1 2 3 4 5 6 (PRODUCT LEVEL)	SEE PAGE
Y	*314-3768*	1	FILM GP (OVERLOAD WARNING DEVICE)	829
Y	*282-7285*	1	LINES GP-BOOM CYLINDER (BOOM LOWERING CONTROL)	393
Y	*282-7286*	1	LINES GP-PILOT (BOOM LOWERING CONTROL)	461
Y	*328-0091*	1	WIRING GP-CAB	183
Y	*275-7126*	1	WIRING GP-OVERLOAD WARNING	204
Y-SEPARATE ILLUSTRATION				

<END>

260-7204 VALVE AR-SWING
S/N: BYJ1-UP; PDP1-UP
AN ATTACHMENT

SMCS-5480 **i03254241**

NOTE	PART NUMBER	QTY	PART NAME 1 2 3 4 5 6 (PRODUCT LEVEL)	SEE PAGE
Y	*267-6839*	1	DRIVE GP-SWING	334
Y	*282-7290*	1	LINES GP-SWING MOTOR (FINE SWING)	489
Y	*275-7117*	1	WIRING GP-FINE SWING	196
Y-SEPARATE ILLUSTRATION				

<END>

282-5894 VALVE AS-MANUAL–AUXILIARY, SHUTOFF

S/N: BYJ1-UP; PDP1-UP

PART OF 277-1169, 288-7392, 288-7398 LINES GP-AUXILIARY HYDRAULIC AN ATTACHMENT

SMCS-1329 **i03079367**

NOTE	REF NO	GRAPHIC REF	PART NUMBER	QTY	PART NAME 1 2 3 4 5 6 (PRODUCT LEVEL)	SEE PAGE
	1	1	**302-9466**	1	HANDLE	

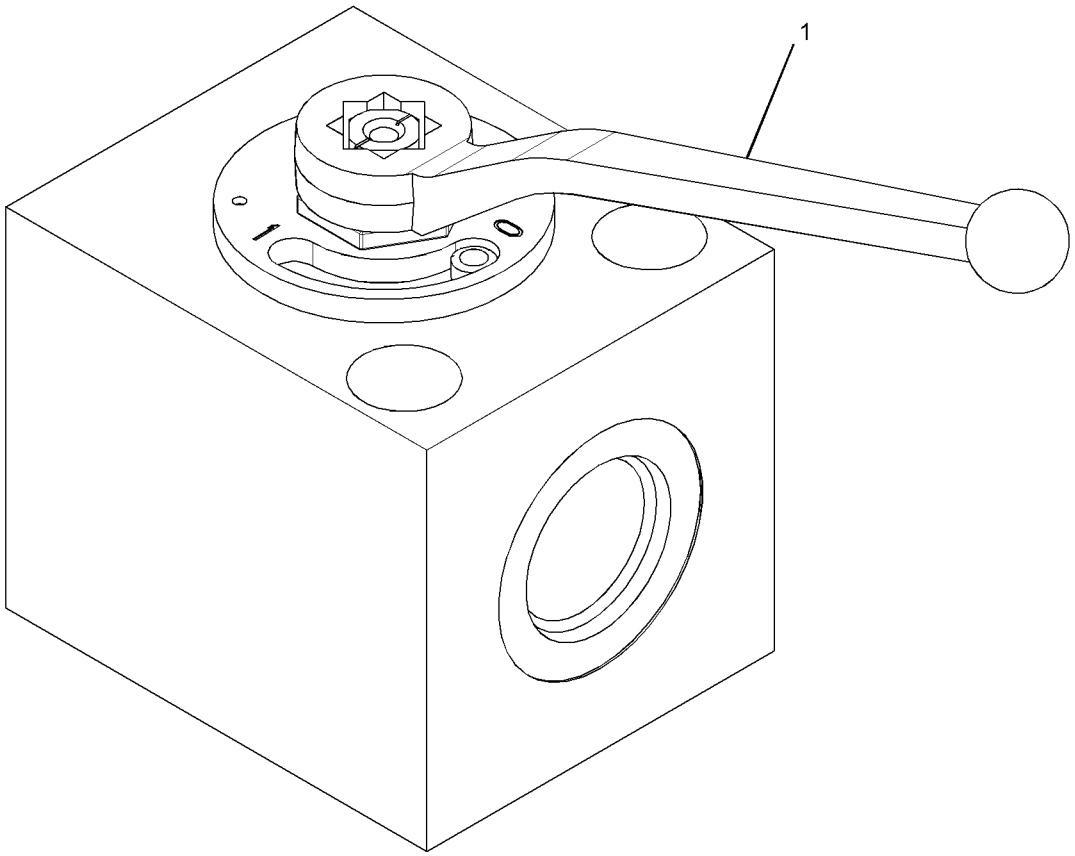

GRAPHIC #1 **<END>** g01562673

259-7545 VALVE GP-BANK–MEDIUM PRESSURE

S/N: BYJ1-UP; PDP1-UP
PART OF 282-7270 LINES GP-FRONT
AN ATTACHMENT

SMCS-5051 **i02749998**

NOTE	REF NO	GRAPHIC REF	PART NUMBER	QTY	PART NAME 1 2 3 4 5 6 (PRODUCT LEVEL)	SEE PAGE
	1	1	**102-8802**	2	KIT-RECEPTACLE (2-PIN)	
					(EACH INCLUDES RECEPTACLE AS & WEDGE)	
	2	1	**186-3735**	4	PIN-CONNECTOR (16-GA TO 18-GA)	
	3	1	**252-6601**	1	BLOCK AS	
	4	1	**252-6602**	1	BLOCK AS	
	5	1	**252-6603**	1	BLOCK AS	
	6	1	**102-7024**	1	VALVE GP-RELIEF (AUXILIARY PUMP)	
	7	1	**150-6351**	2	VALVE AS-RELIEF (LINE, MEDIUM PRESSURE)	
	8	1	**200-4856**	4	NUT	
	9	1	**093-3094**	2	ROD	
	10	1	**150-6348**	2	NUT	
	11	1	**093-3093**	1	ROD	

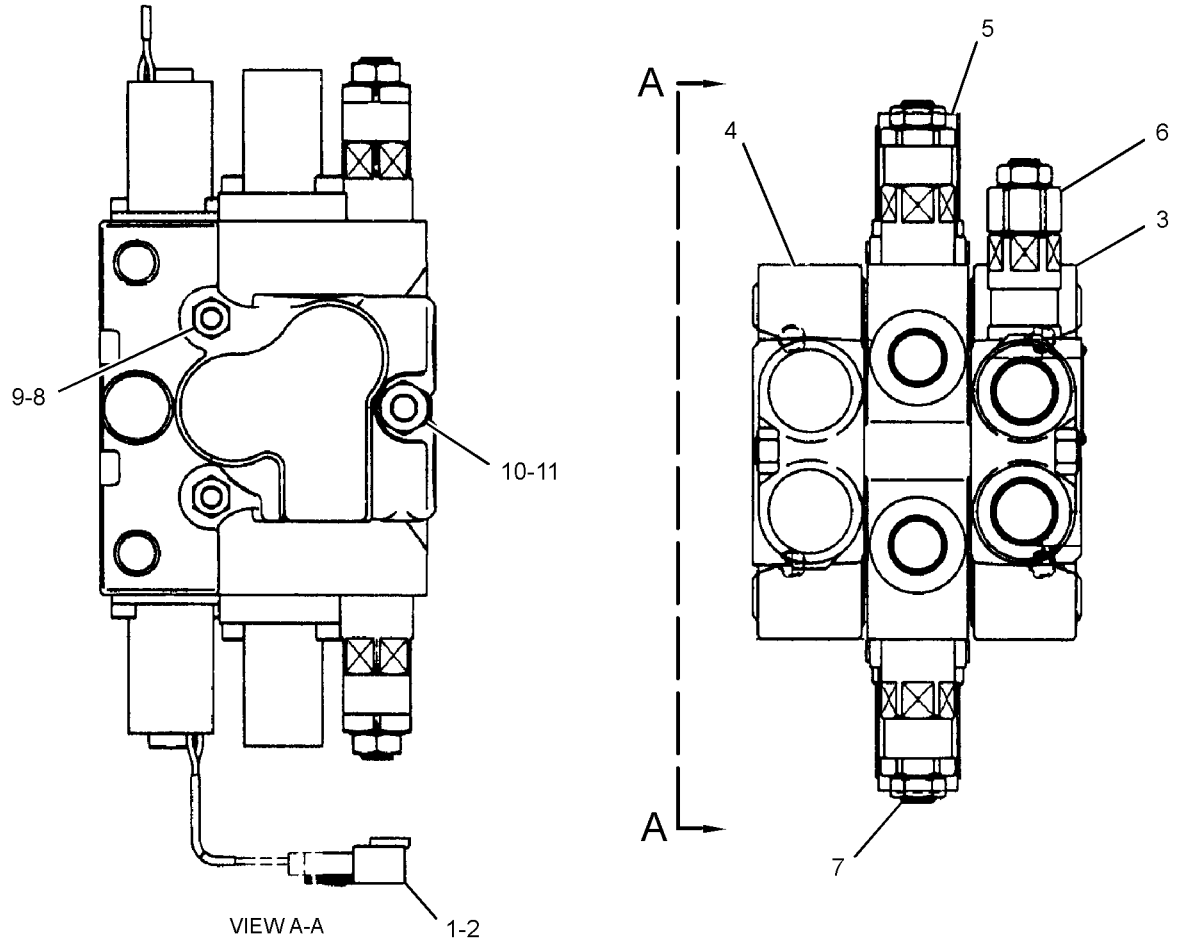

GRAPHIC #1 **<END>** g01381960

230-2720 VALVE GP-CHECK–RETURN FILTER

S/N: BYJ1-UP; PDP1-UP

PART OF 282-7219 FILTER & LINES GP-HYDRAULIC

SMCS-5067 **i02408069**

NOTE	REF NO	GRAPHIC REF	PART NUMBER	QTY	PART NAME 1 2 3 4 5 6 (PRODUCT LEVEL)	SEE PAGE
	1	1	**094-6526**	2	VALVE AS-CHECK	
	2	1	**190-7826**	1	PLUG	
	3	1	**095-1547**	1	SEAL-O-RING	
	4	1	**9S-4183**	1	PLUG-O-RING	
	5	1	**3D-2824**	1	SEAL-O-RING	
	6	1	**9S-4181**	1	PLUG-O-RING	
	7	1	**7M-8485**	1	SEAL-O-RING	

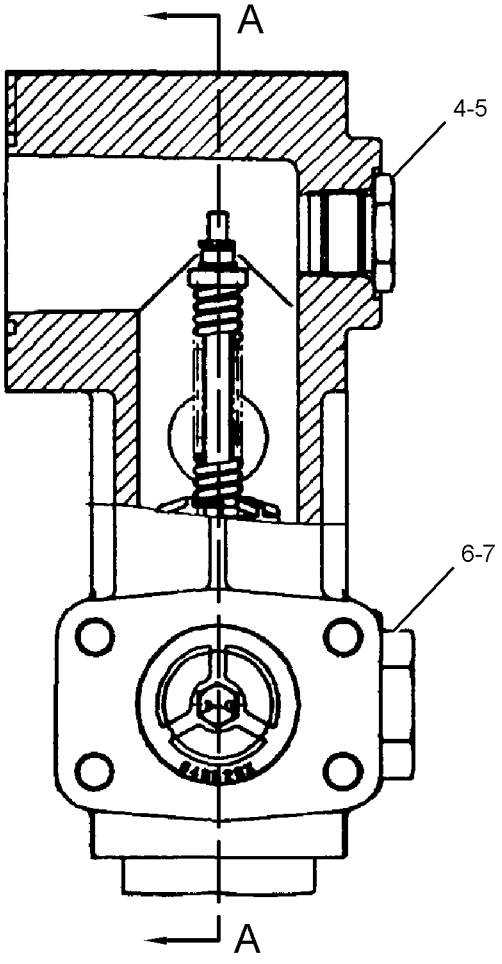

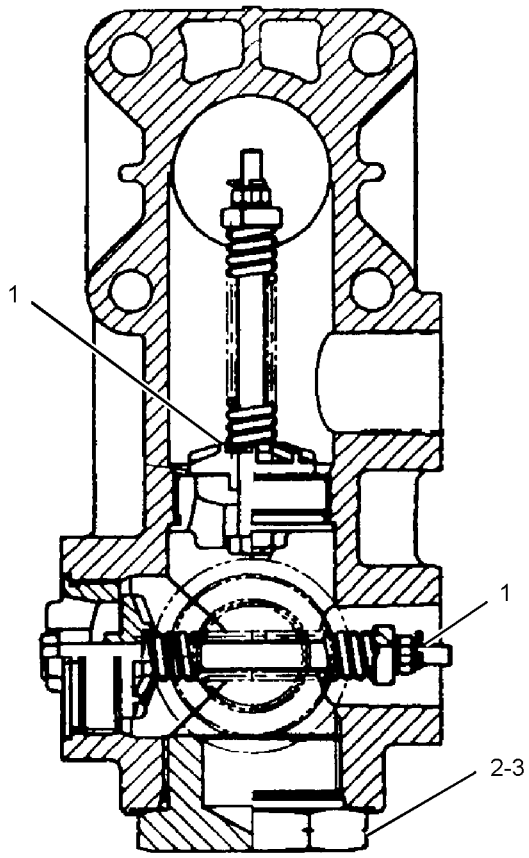

SECTION A-A

GRAPHIC #1 **<END>** g01208559

HYDRAULIC SYSTEM

285-1600 VALVE GP-CONTROL

S/N: BYJ1-UP; PDP1-UP
PART OF 285-1759 VALVE & MTG GP-MAIN CONTROL
AN ATTACHMENT

SMCS-5051 **i03254260**

NOTE	REF NO	GRAPHIC REF	PART NUMBER	QTY	PART NAME 1 2 3 4 5 6 (PRODUCT LEVEL)	SEE PAGE
	1	1	**9S-4185**	2	PLUG-O-RING	
	2	1	**7I-7204**	1	SEAL	
	3	1	**7I-7206**	1	PLUG	
	4	1	**7I-7207**	1	SPRING	
	5	1	**7I-7208**	1	VALVE-LOAD CHECK	
J	6	1	**165-9497**	2	VALVE GP-FLOW CONTROL (MEDIUM PRESSURE)	
	7	1	**170-9997**	2	PLUG	
M	8	1	**197-0165**	2	BOLT (M8X1.25X20-MM)	
	9	1	**197-0168**	1	COVER	
	10	1	**197-0170**	1	COVER	
Y	11	1	**197-0173**	1	SPOOL GP-CONTROL VALVE (WORK TOOL)	513
	12	1	**197-0225**	2	PLUG AS	
Y	13	1	**310-0063**	2	VALVE GP-RELIEF (LINE) (MEDIUM PRESSURE)	580
	14	1	**095-1578**	3	SEAL-O-RING	
	15	1	**095-1579**	2	SEAL-O-RING	
	16	1	**095-1586**	1	SEAL-O-RING	
	17	1	**095-1696**	2	SEAL-O-RING	
	18	1	**095-1698**	5	SEAL-O-RING	
	19	1	**095-1700**	1	SEAL-O-RING	
M	20	1	**197-0226**	8	BOLT-SOCKET HEAD (M10X1.5X75-MM)	
	21	1	**3K-0360**	2	SEAL-O-RING	
M	22	1	**5A-3604**	2	BOLT-SOCKET HEAD (M8X1.25X25-MM)	
					AVAILABLE REPAIR KIT(S):	
J			**185-0400**	1	KIT-SEAL (CONTROL VALVE)	
					(INCLUDES SEAL-O-RINGS & RING BACKUPS)	

J-KITS MARKED J SERVICES PARTS MARKED J
M-METRIC PART
Y-SEPARATE ILLUSTRATION

285-1600 VALVE GP-CONTROL *(contd.)* i03254260

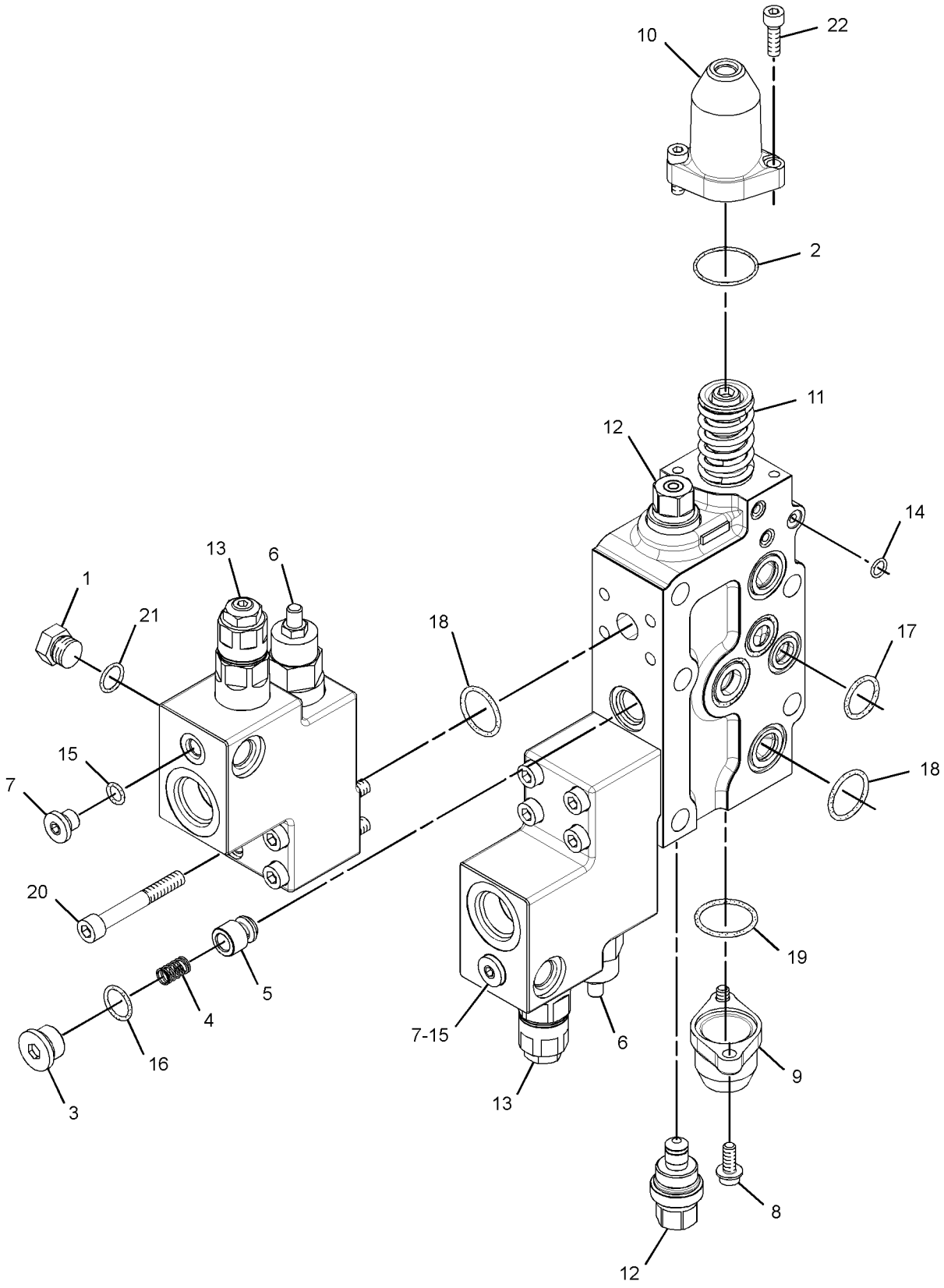

GRAPHIC #1 **<END>** g01502205

HYDRAULIC SYSTEM

310-0157 VALVE GP-CONTROL–2-PUMP, 1-WAY

S/N: BYJ1-UP; PDP1-UP

PART OF 285-1761 VALVE & MTG GP-CONTROL

AN ATTACHMENT

SMCS-5051 **i03022387**

NOTE	REF NO	GRAPHIC REF	PART NUMBER	QTY	PART NAME 1 2 3 4 5 6 (PRODUCT LEVEL)	SEE PAGE
M	1	1	**5A-3604**	2	BOLT-SOCKET HEAD (M8X1.25X25-MM)	
	2	1	**7I-7204**	1	SEAL	
	3	1	**7I-7206**	1	PLUG	
	4	1	**7I-7207**	1	SPRING	
	5	1	**7I-7208**	1	VALVE-LOAD CHECK	
	6	1	**170-9997**	1	PLUG	
M	7	1	**197-0165**	2	BOLT (M8X1.25X20-MM)	
	8	1	**197-0168**	1	COVER	
	9	1	**197-0170**	1	COVER	
Y	10	1	**197-0173**	1	SPOOL GP-CONTROL VALVE (WORK TOOL)	513
	11	1	**197-0225**	2	PLUG AS	
Y	12	1	**310-0062**	1	VALVE GP-RELIEF	579
	13	1	**095-1578**	3	SEAL-O-RING	
	14	1	**095-1579**	1	SEAL-O-RING	
	15	1	**095-1586**	1	SEAL-O-RING	
	16	1	**095-1698**	2	SEAL-O-RING	
	17	1	**095-1700**	1	SEAL-O-RING	

M-METRIC PART
Y-SEPARATE ILLUSTRATION

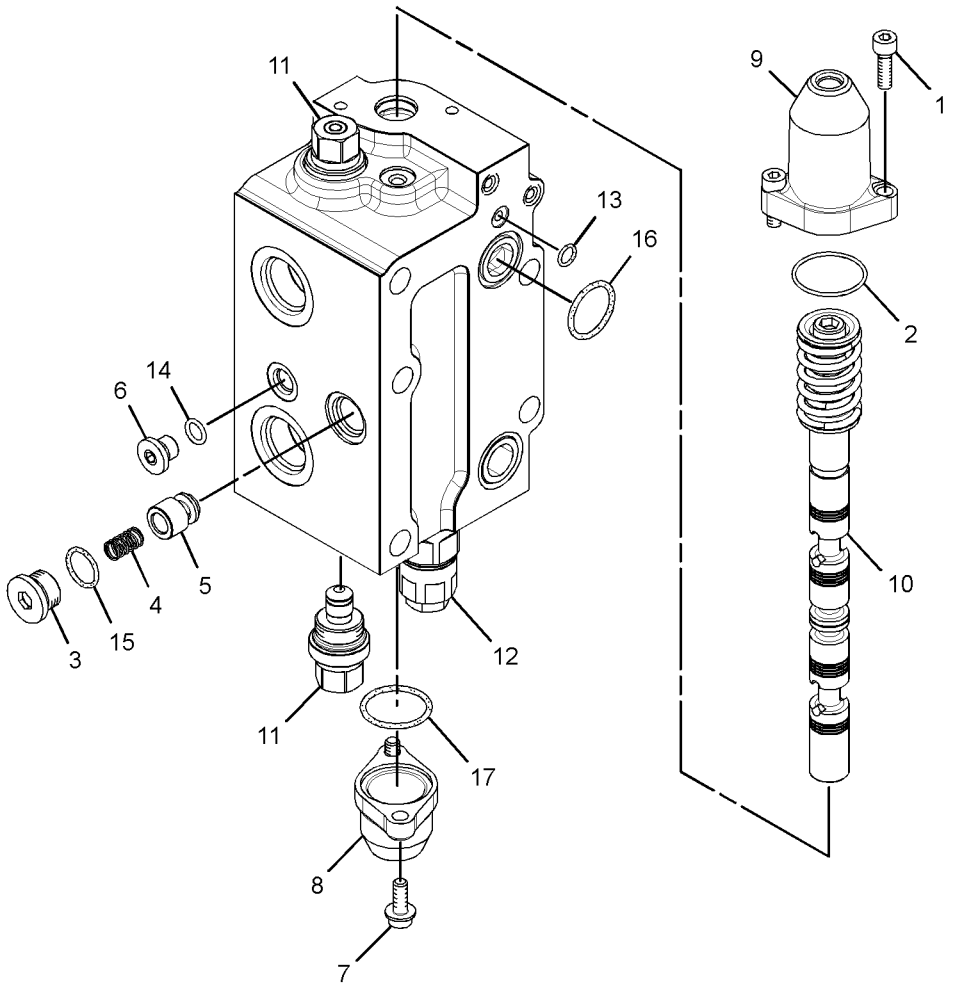

GRAPHIC #1 **<END>** g01622720

297-0187 VALVE GP-LOAD CONTROL–BOOM, LH

S/N: BYJ1-UP; PDP1-UP
PART OF 282-7285 LINES GP-BOOM CYLINDER
AN ATTACHMENT

SMCS-5067, 5117, 5147, 5811 **i02826280**

NOTE	REF NO	GRAPHIC REF	PART NUMBER	QTY	PART NAME 1 2 3 4 5 6 (PRODUCT LEVEL)	SEE PAGE
	1	1	**7J-9108**	1	SEAL-O-RING	
	6	1	**7I-8084**	3	PLUG	
	7	1	**5B-9304**	2	SCREW-DRIVE (NO 2X3/16-IN)	
	8	1	**095-1573**	1	SEAL-O-RING	
	9	1	**095-1584**	1	SEAL-O-RING	
	10	1	**095-1589**	1	SEAL-O-RING	
	11	1	**095-1590**	1	SEAL-O-RING	
	12	1	**095-1592**	1	SEAL-O-RING	
	13	1	**201-9285**	1	SEAT	
	14	1	**201-9287**	1	SPRING	
	15	1	**201-9288**	1	SPRING	
M	16	1	**201-9331**	1	SETSCREW (M12X1.75X19.5-MM)	
	17	1	**201-9291**	1	VALVE	
	18	1	**197-0145**	1	PLUG	
M	19	1	**201-9294**	1	PLUG	
	20	1	**201-9295**	1	PLUG	
M	21	1	**201-9330**	1	NUT (M12X1.75-THD)	
	22	1	**095-1582**	1	SEAL-O-RING	

M-METRIC PART

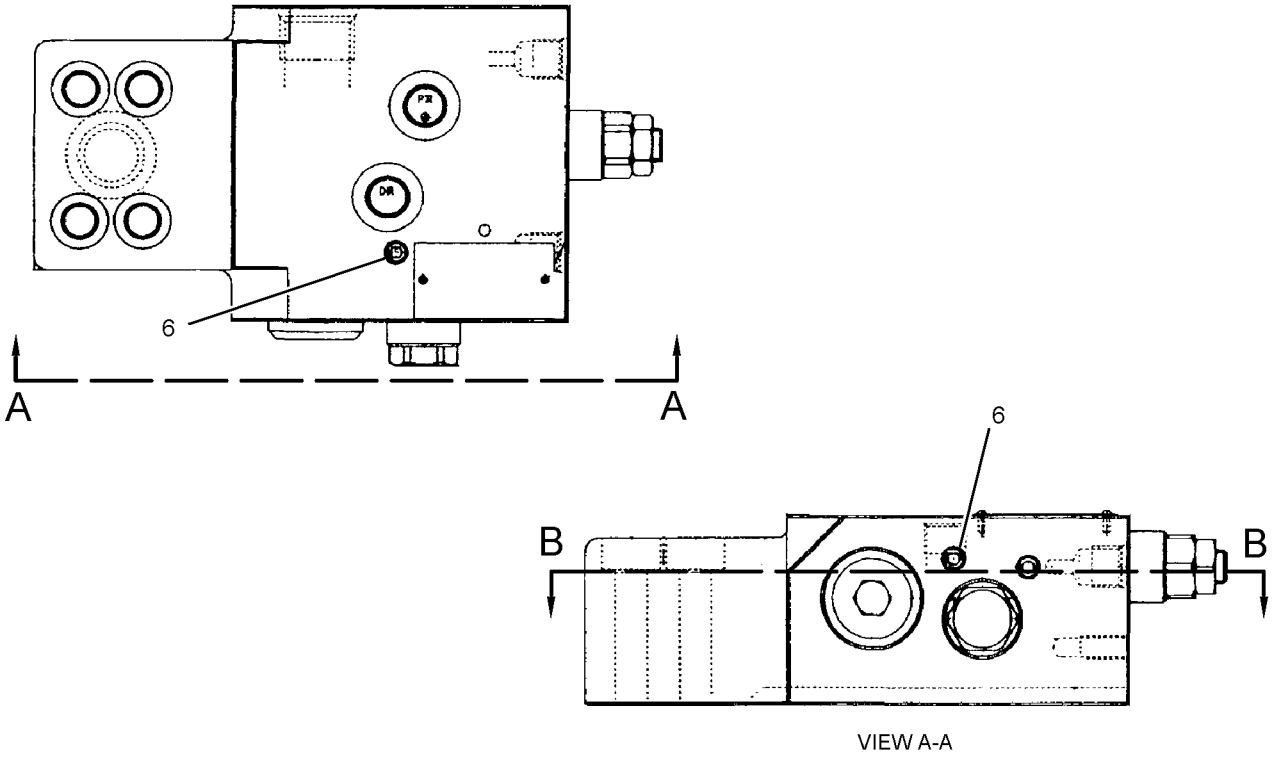

VIEW A-A

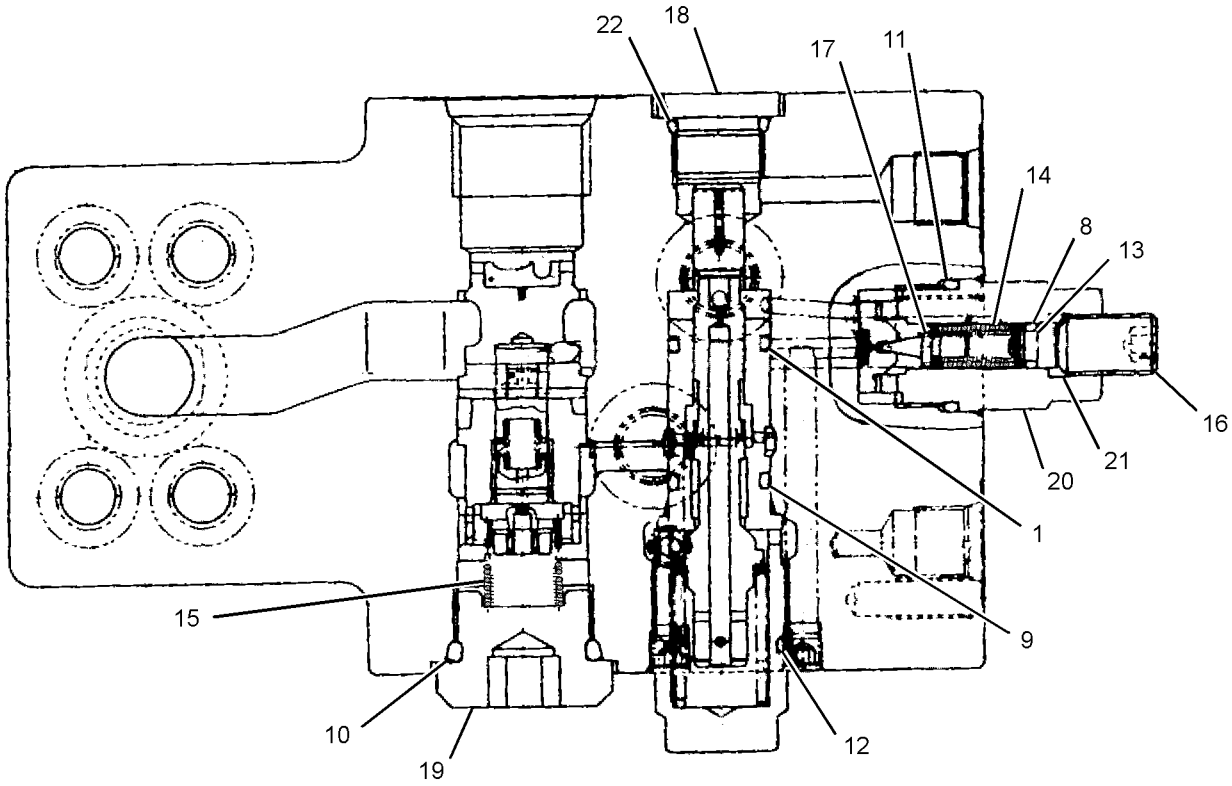

SECTION B-B

GRAPHIC #1 **<END>** g01491273

297-0188 VALVE GP-LOAD CONTROL–BOOM, RH

S/N: BYJ1-UP; PDP1-UP
PART OF 282-7285 LINES GP-BOOM CYLINDER
AN ATTACHMENT

SMCS-5067, 5117, 5147, 5811 **i02826329**

NOTE	REF NO	GRAPHIC REF	PART NUMBER	QTY	PART NAME 1 2 3 4 5 6 (PRODUCT LEVEL)	SEE PAGE
	1	1	**7J-9108**	1	SEAL-O-RING	
	6	1	**7I-8084**	3	PLUG	
	8	1	**095-1573**	1	SEAL-O-RING	
	9	1	**095-1584**	1	SEAL-O-RING	
	10	1	**095-1589**	1	SEAL-O-RING	
	11	1	**095-1590**	1	SEAL-O-RING	
	12	1	**095-1592**	1	SEAL-O-RING	
	13	1	**201-9285**	1	SEAT	
	14	1	**201-9287**	1	SPRING	
	15	1	**201-9288**	1	SPRING	
M	16	1	**201-9331**	1	SETSCREW (M12X1.75X19.5-MM)	
	17	1	**201-9291**	1	VALVE	
	18	1	**197-0145**	1	PLUG	
M	19	1	**201-9294**	1	PLUG	
	20	1	**201-9295**	1	PLUG	
M	21	1	**201-9330**	1	NUT (M12X1.75-THD)	
	22	1	**095-1582**	1	SEAL-O-RING	

M-METRIC PART

297-0188 VALVE GP-LOAD CONTROL *(contd.)* i02826329

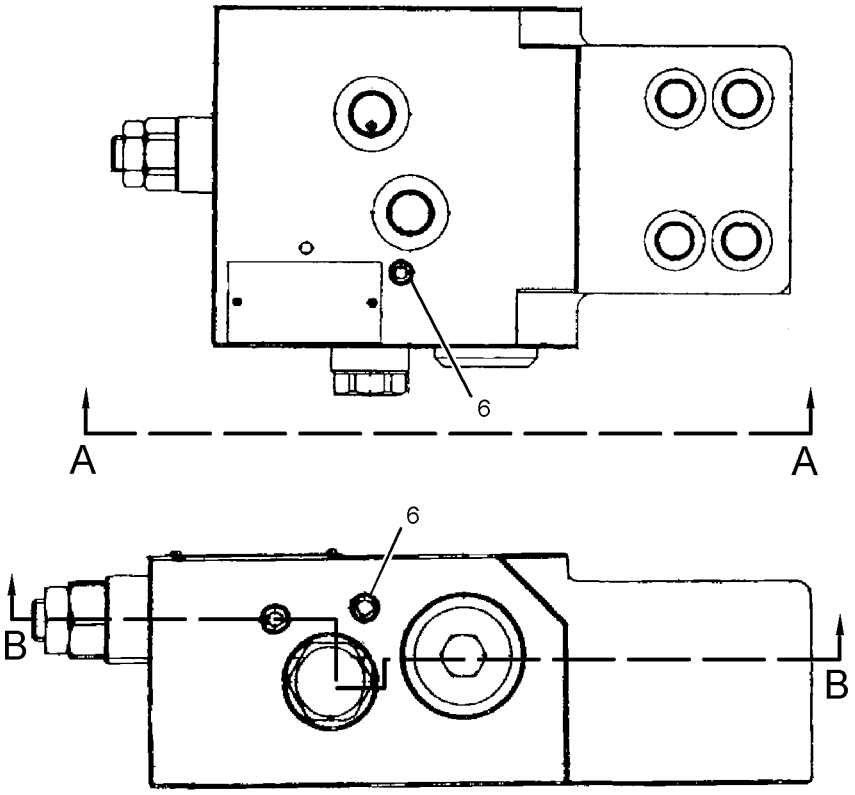

VIEW A-A

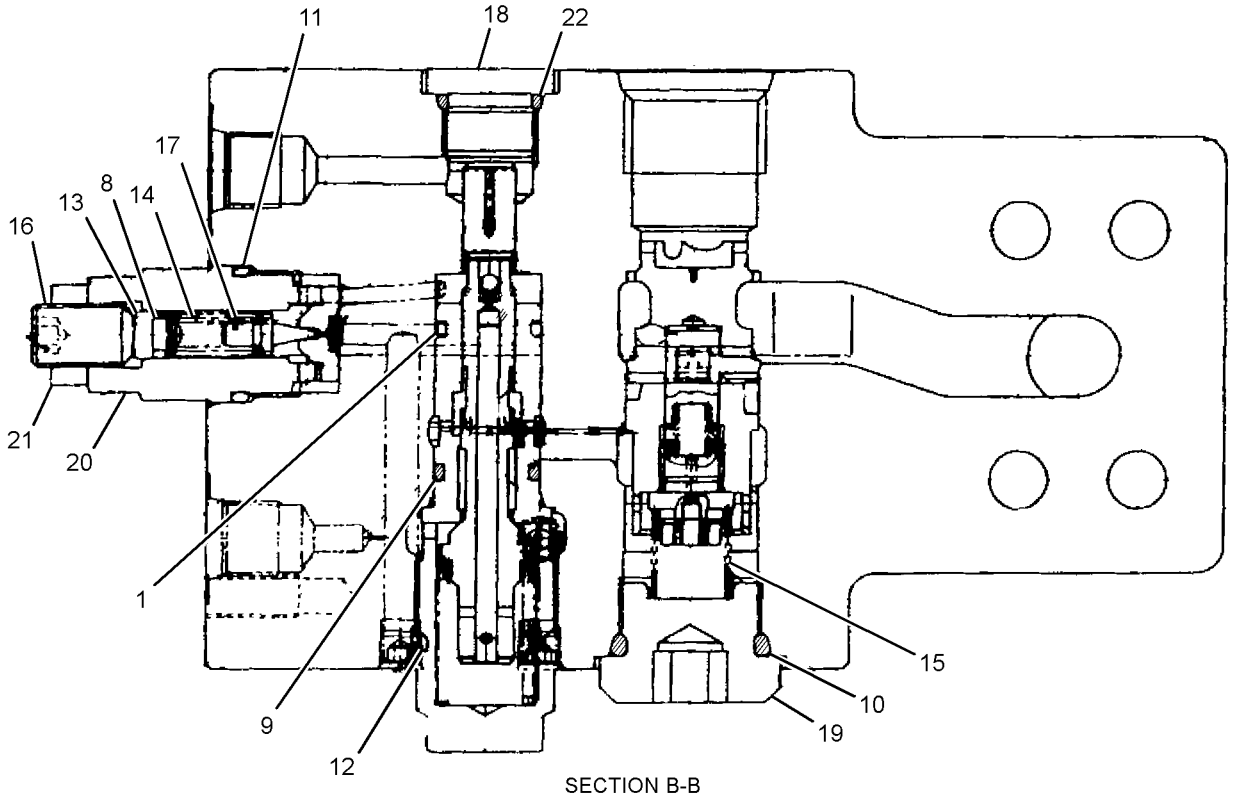

SECTION B-B

GRAPHIC #1 **<END>** g01502234

297-0189 VALVE GP-LOAD CONTROL–STICK

S/N: BYJ1-UP; PDP1-UP
PART OF 294-6250 LINES GP-STICK CYLINDER
AN ATTACHMENT

SMCS-5067, 5117, 5147, 5811 **i02812735**

NOTE	REF NO	GRAPHIC REF	PART NUMBER	QTY	PART NAME 1 2 3 4 5 6 (PRODUCT LEVEL)	SEE PAGE
	1	1	**7I-8084**	3	PLUG	
	2	1	**215-5023**	1	PISTON	
	3	1	**095-1584**	1	SEAL-O-RING	
	4	1	**197-0145**	1	PLUG	
	5	1	**201-9283**	1	SEAT AS	
	6	1	**095-1590**	1	SEAL-O-RING	
	7	1	**201-9291**	1	VALVE	
	8	1	**201-9287**	1	SPRING	
	9	1	**095-1573**	1	SEAL-O-RING	
	10	1	**201-9285**	1	SEAT	
M	11	1	**201-9331**	1	SETSCREW (M12X1.75X19.5-MM)	
M	12	1	**201-9330**	1	NUT (M12X1.75-THD)	
	13	1	**201-9295**	1	PLUG	
	14	1	**297-0687**	1	SPOOL AS	
	15	1	**095-1589**	1	SEAL-O-RING	
	16	1	**201-9290**	1	SPRING	
M	17	1	**201-9296**	1	PLUG	
M	18	1	**201-9294**	1	PLUG	
	19	1	**095-1592**	1	SEAL-O-RING	
	20	1	**201-9288**	1	SPRING	
	21	1	**209-5931**	1	VALVE AS	
	22	1	**095-1582**	1	SEAL-O-RING	
	23	1	**7J-9108**	1	SEAL-O-RING	

M-METRIC PART

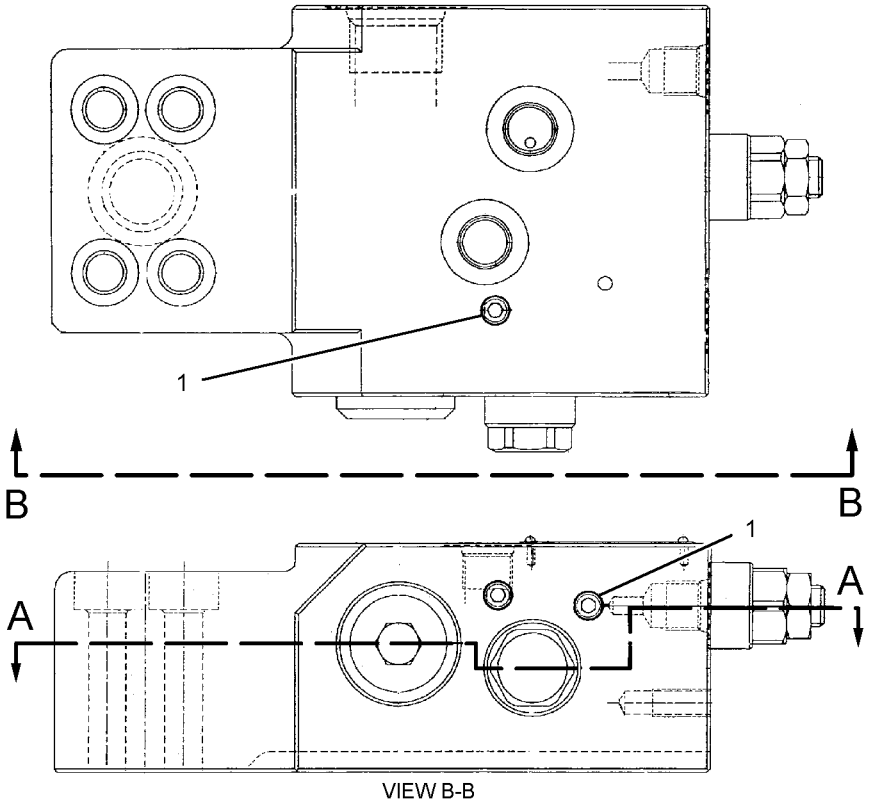

VIEW B-B

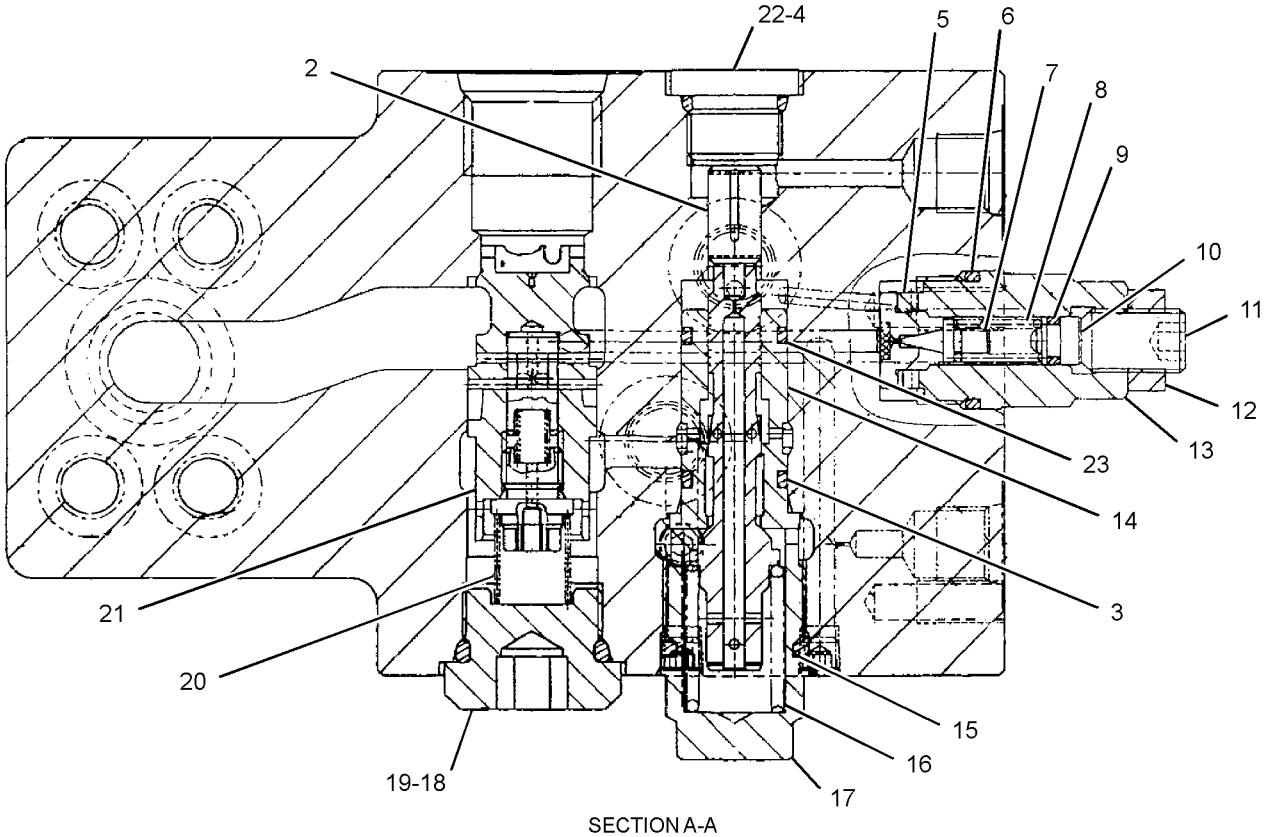

SECTION A-A

GRAPHIC #1 **<END>** g01402620

HYDRAULIC SYSTEM

270-5960 VALVE GP-MAIN CONTROL

S/N: BYJ1-172; PDP1-149
PART OF 270-5956, 270-5957 HYDRAULIC AR, 285-1761 VALVE & MTG GP-CONTROL, 285-1759 VALVE & MTG GP-MAIN CONTROL
ALSO AN ATTACHMENT

SMCS-5051 **i02889204**

NOTE	REF NO	GRAPHIC REF	PART NUMBER	QTY	PART NAME 1 2 3 4 5 6 (PRODUCT LEVEL)	SEE PAGE
	1	2	**9S-4183**	2	PLUG-O-RING	
	2	4	**7I-7192**	2	PLUG	
	3	2,3,4	**7I-7204**	12	SEAL	
	4	2,3,4	**7I-7206**	13	PLUG	
	5	2,3,4	**7I-7207**	13	SPRING	
	6	2,3,4	**7I-7208**	10	VALVE-LOAD CHECK	
	7	2,3	**7I-7235**	2	PLUG	
	8	3	**7I-7241**	2	ORIFICE	
	9	3	**7I-7250**	1	VALVE-LOAD CHECK	
	10	3,4	**7I-8084**	6	PLUG	
M	11	2	**085-9768**	5	BOLT (M14X2X40-MM)	
	12	3	**095-0965**	2	PLUG	
	13	3	**103-8411**	1	SPRING	
	14	3	**103-8412**	1	SPRING	
	15	3	**103-8413**	1	ROD	
	16	3	**105-7405**	2	SPRING	
	17	3	**131-5767**	2	PLUG	
	18	3	**131-5768**	2	VALVE-LOAD CHECK	
	19	2	**170-9997**	1	PLUG	
M	20	2	**197-0143**	3	BOLT (M14X2X95-MM)	
M	21	2	**197-0144**	13	BOLT (M14X2X130-MM)	
	22	1,2,3,4	**197-0145**	13	PLUG	
	23	4	**197-0146**	1	SPRING	
	24	4	**197-0147**	1	VALVE	
M	25	1	**197-0165**	20	BOLT (M8X1.25X20-MM)	
	26	3	**197-0166**	1	PLUG	
	27	2	**197-0167**	1	PLATE	
	28	2,3,4	**197-0168**	10	COVER	
	29	4	**197-0169**	2	VALVE AS	
	30	2,3,4	**197-0170**	10	COVER	
Y	31	2	**197-0173**	1	SPOOL GP-CONTROL VALVE (WORK TOOL)	513
Y	32	2	**197-0175**	1	SPOOL GP-CONTROL VALVE (STICK II)	514
Y	33	3	**197-0178**	1	SPOOL GP-CONTROL VALVE (BOOM I)	515
Y	34	3	**197-0211**	1	SPOOL GP-CONTROL VALVE (STICK I)	516
Y	35	4	**197-0213**	1	SPOOL GP-CONTROL VALVE (BUCKET)	517
Y	36	3	**197-0217**	1	SPOOL GP-CONTROL VALVE (STICK)	518
	37	2	**197-0225**	2	PLUG AS	
	38	1,3	**197-0272**	8	PLUG	
	39	3	**201-9271**	1	SPOOL AS	
	40	4	**215-4855**	2	VALVE AS-CHECK (MAKEUP)	
	41	3	**215-4872**	2	VALVE	
Y	42	3	**270-5978**	1	VALVE GP-RELIEF (MAIN)	576
	43	3	**285-1503**	2	COVER	
Y	44	3	**285-1504**	1	SPOOL GP-CONTROL VALVE (COMBINED FLOW)	519
Y	45	3	**285-1505**	1	SPOOL GP-CONTROL VALVE (SWING PRIORITY)	520
	46	2	**285-1506**	1	VALVE	
	47	2	**285-1507**	1	SPRING	
Y	48	3	**285-1630**	2	SPOOL GP-CONTROL VALVE (TRAVEL)	521
Y	49	3,4	**309-9973**	6	VALVE GP-RELIEF	578
Y	50	3	**323-7566**	1	SPOOL GP-CONTROL VALVE (BOOM II)	522
	51	2,4	**095-1578**	12	SEAL-O-RING	
	52	2	**095-1579**	1	SEAL-O-RING	
	53	1,2,3,4	**095-1582**	13	SEAL-O-RING	
	54	1,3,4	**095-1585**	11	SEAL-O-RING	

270-5960 VALVE GP-MAIN CONTROL *(contd.)* i02889204

NOTE	REF NO	GRAPHIC REF	PART NUMBER	QTY	PART NAME 1 2 3 4 5 6 (PRODUCT LEVEL)	SEE PAGE
	55	2,3,4	**095-1586**	15	SEAL-O-RING	
	56	2,3	**095-1592**	2	SEAL-O-RING	
	57	2,3,4	**095-1696**	8	SEAL-O-RING	
	58	2,4	**095-1698**	18	SEAL-O-RING	
	59	2,3,4	**095-1700**	10	SEAL-O-RING	
	60	2	**3D-2824**	2	SEAL-O-RING	
	61	3	**3J-1907**	1	SEAL-O-RING	
M	62	1,4	**5A-3604**	24	BOLT-SOCKET HEAD (M8X1.25X25-MM)	
	63	3	**9S-4191**	1	PLUG-O-RING	

M-METRIC PART
Y-SEPARATE ILLUSTRATION

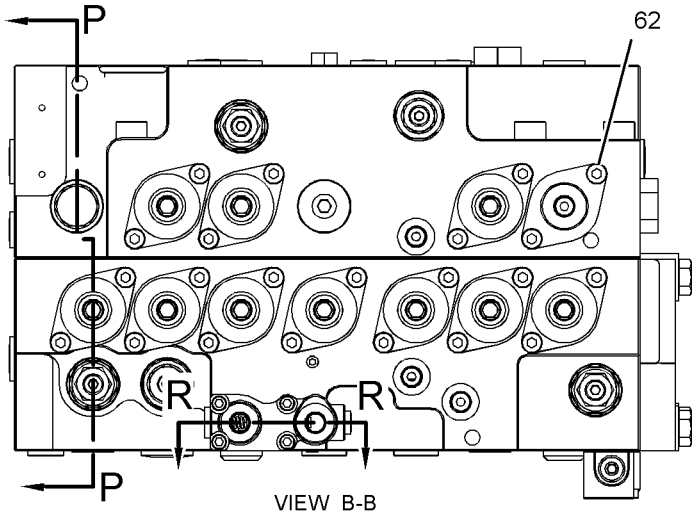

VIEW B-B

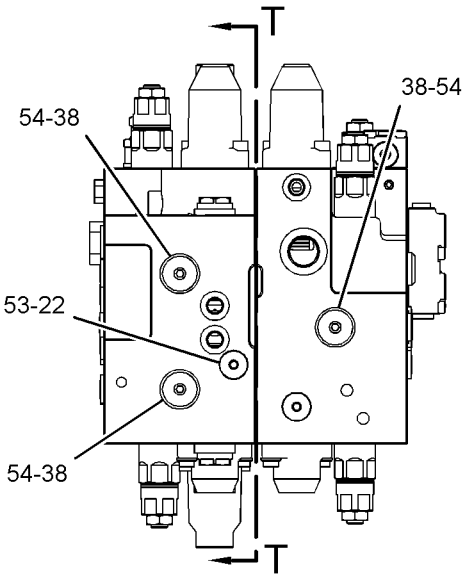

VIEW A-A

REFER TO ALL ILLUSTRATIONS OF
THIS GROUP FOR AUXILIARY VIEWS

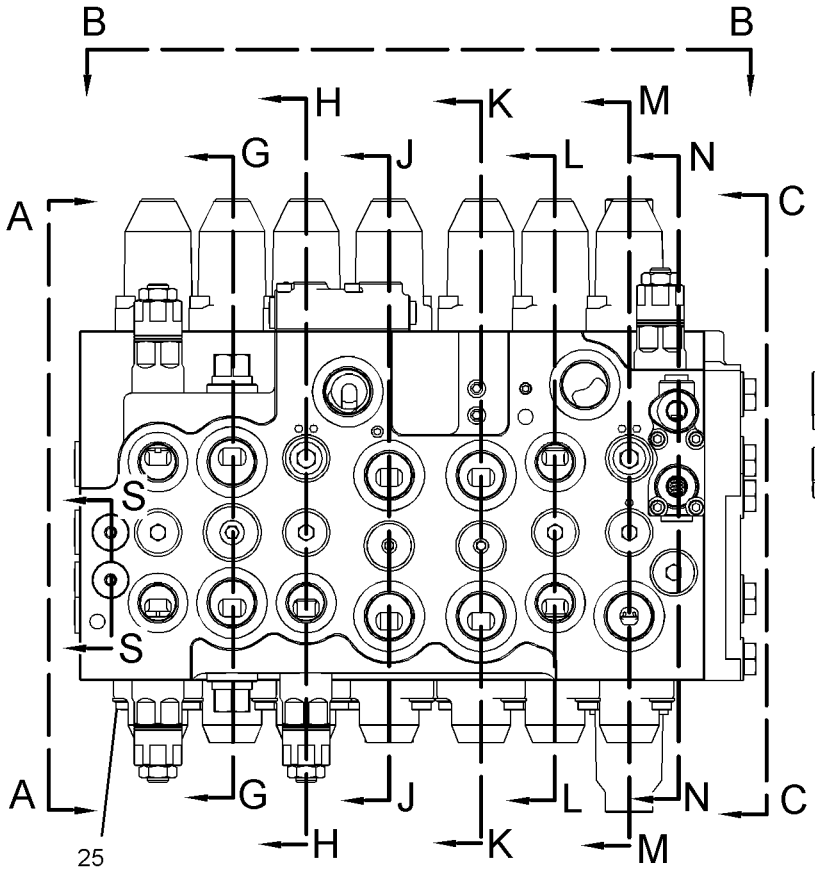

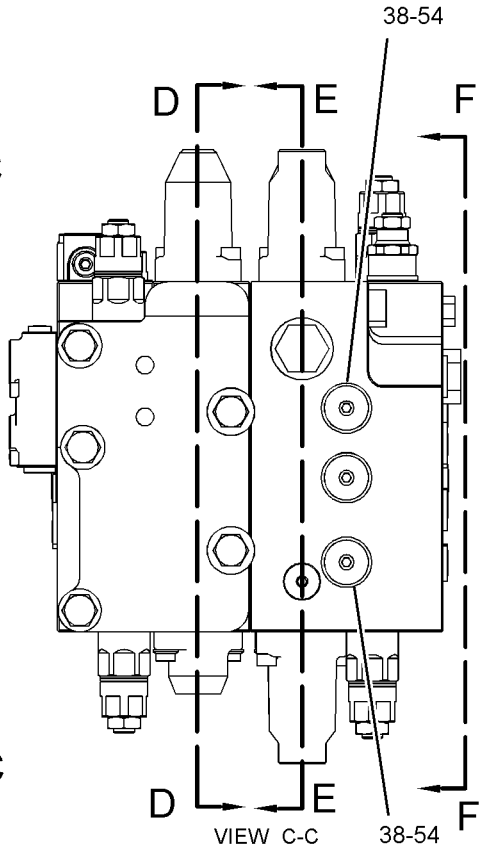

VIEW C-C

GRAPHIC #1

g01515049

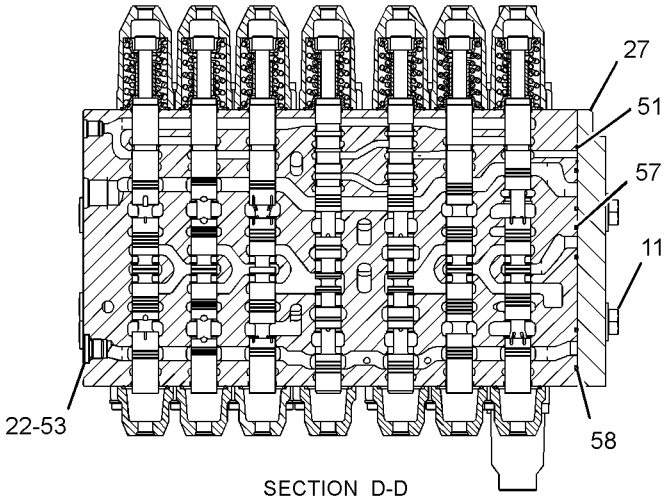

SECTION D-D

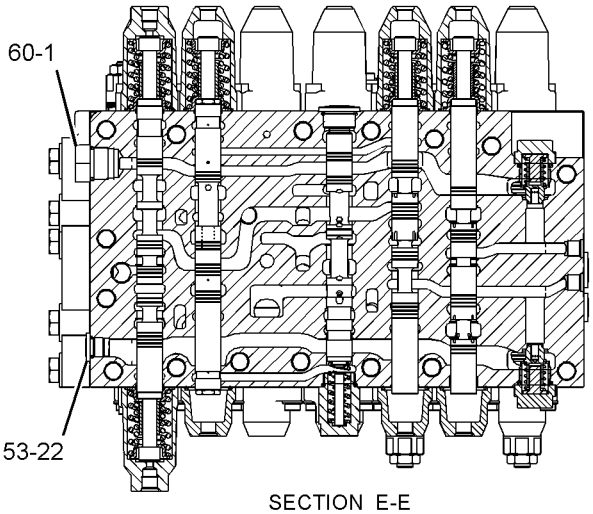

SECTION E-E

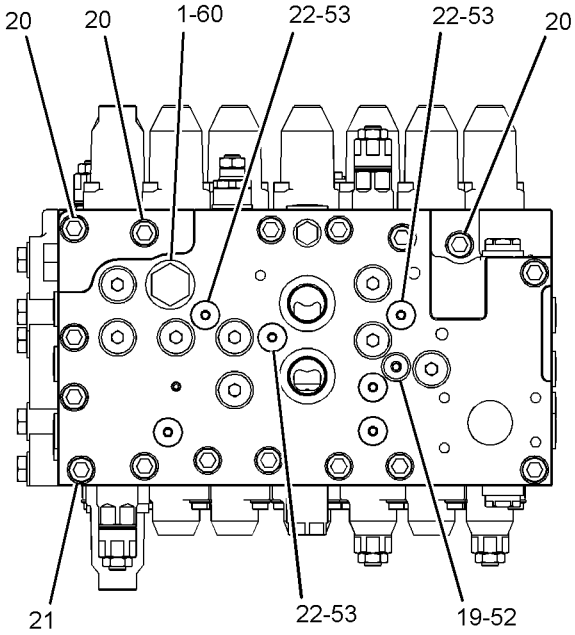

VIEW F-F

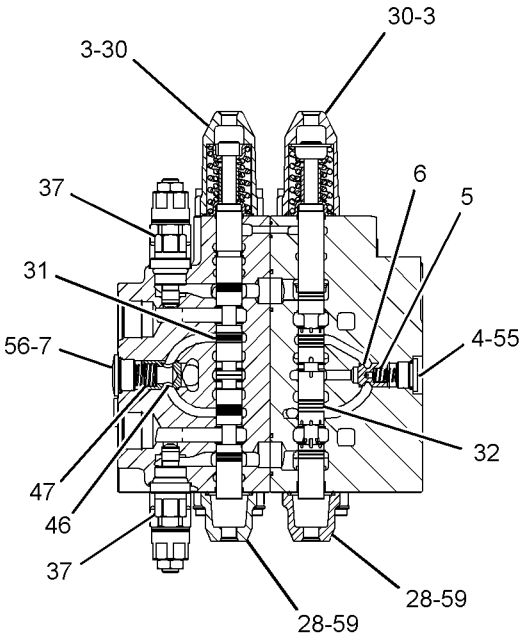

SECTION G-G

GRAPHIC #2

g01515050

270-5960 VALVE GP-MAIN CONTROL *(contd.)* i02889204

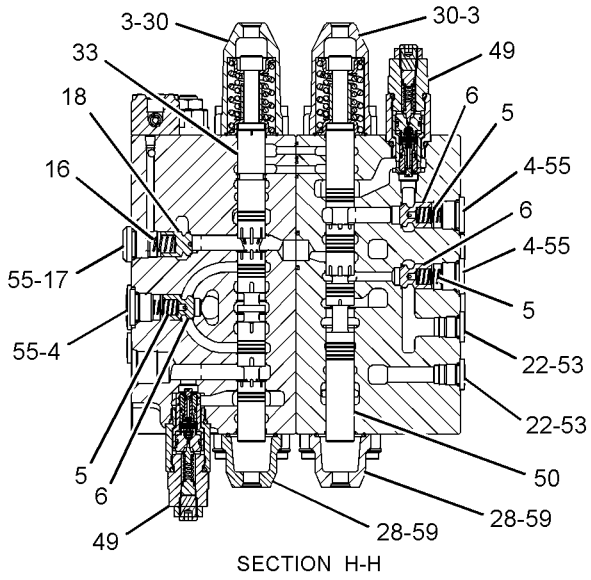

SECTION H-H

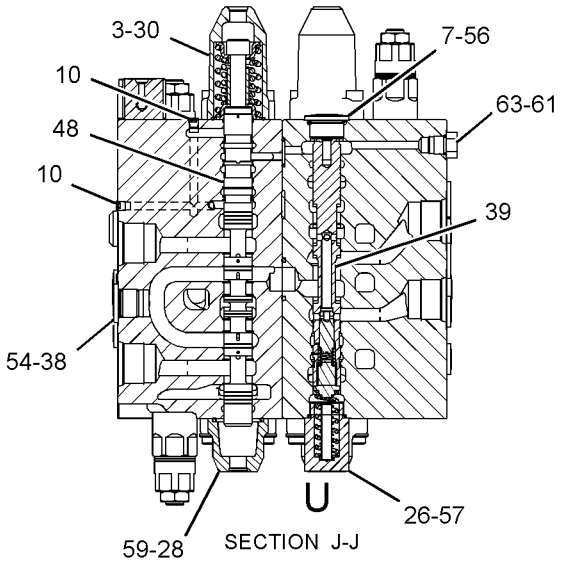

SECTION J-J

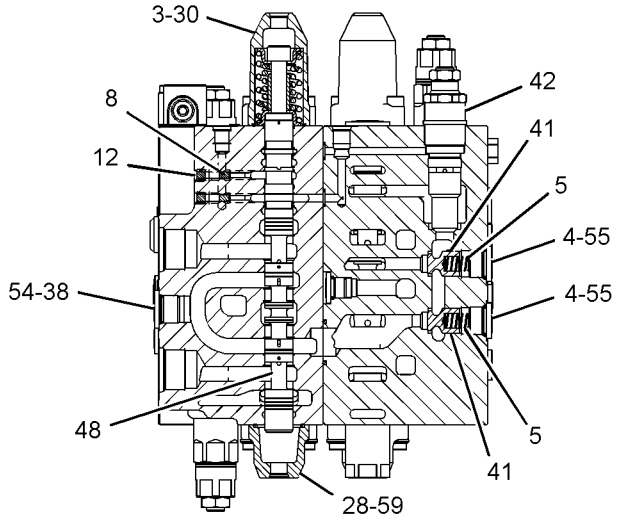

SECTION K-K

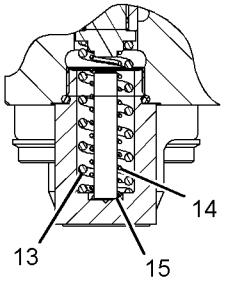

VIEW OF AREA U

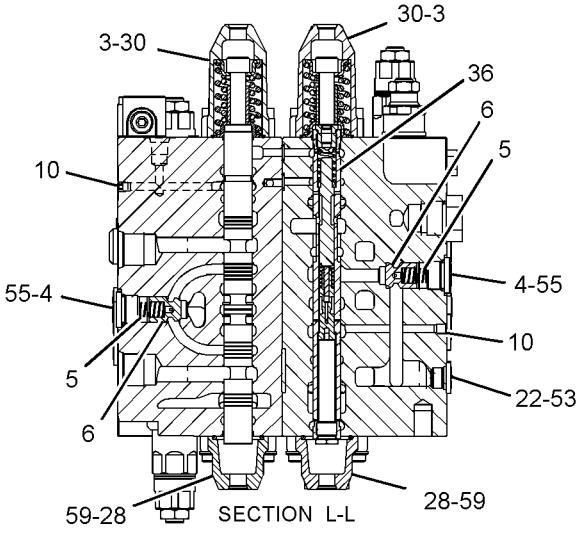

SECTION L-L

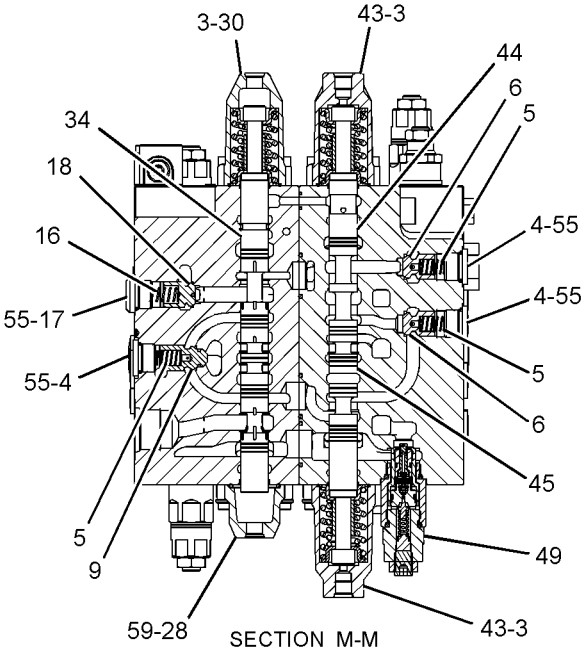

SECTION M-M

GRAPHIC #3

g01515051

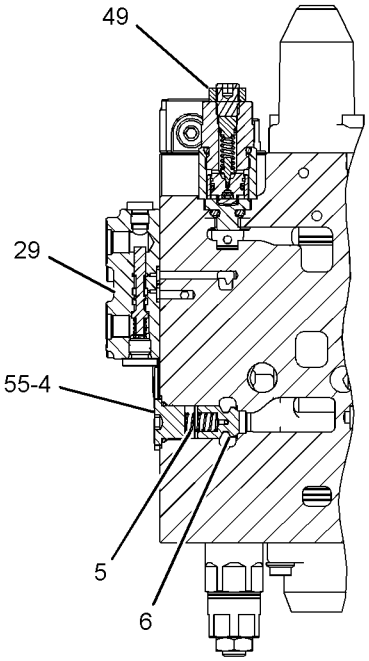

SECTION N-N

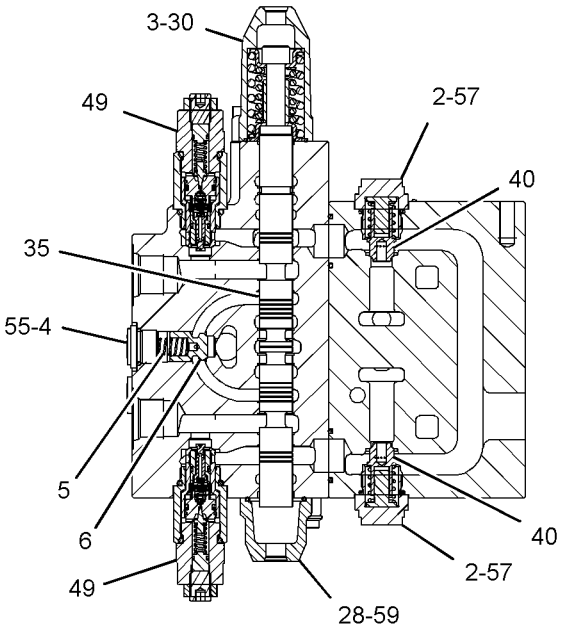

SECTION P-P

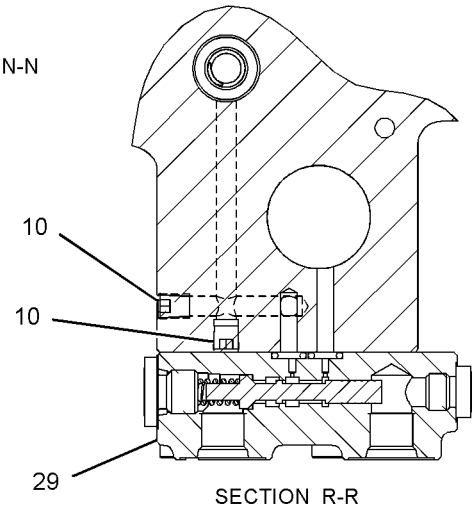

SECTION R-R

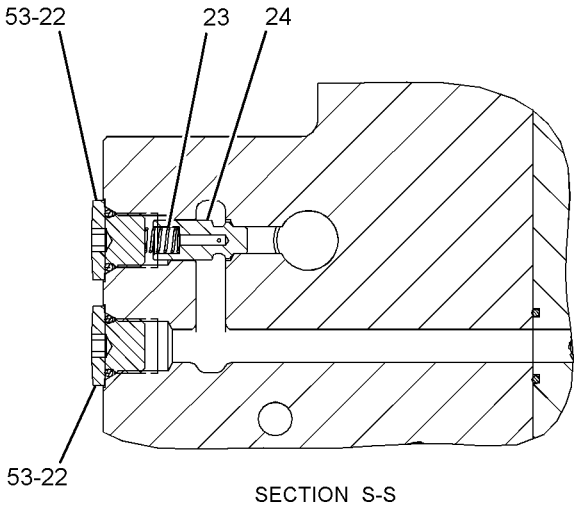

SECTION S-S

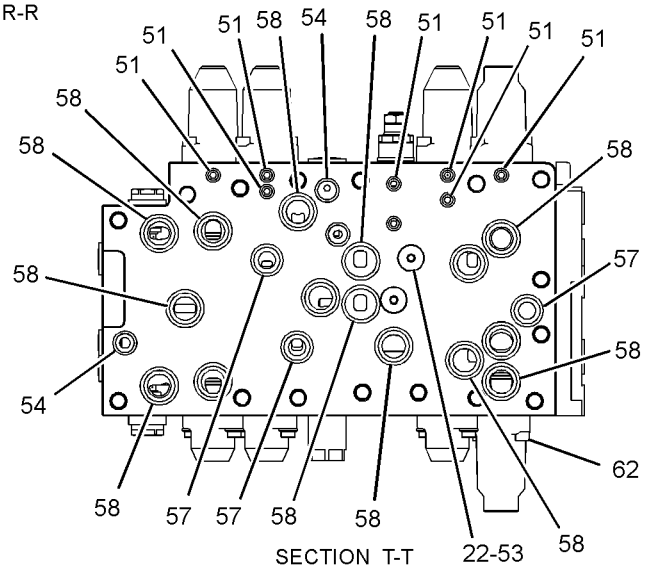

SECTION T-T

GRAPHIC #4 **<END>** g01515052

HYDRAULIC SYSTEM

270-5960 VALVE GP-MAIN CONTROL

S/N: BYJ173-UP; PDP150-UP

PART OF 270-5956, 270-5957 HYDRAULIC AR, 285-1761 VALVE & MTG GP-CONTROL, 285-1759 VALVE & MTG GP-MAIN CONTROL

ALSO AN ATTACHMENT

SMCS-5051 **i03249121**

NOTE	REF NO	GRAPHIC REF	PART NUMBER	QTY	PART NAME 1 2 3 4 5 6 (PRODUCT LEVEL)	SEE PAGE
	1	2	**9S-4183**	2	PLUG-O-RING	
	2	4	**7I-7192**	2	PLUG	
	3	2,3,4	**7I-7204**	12	SEAL	
	4	2,3,4	**7I-7206**	13	PLUG	
	5	2,3,4	**7I-7207**	13	SPRING	
	6	2,3,4	**7I-7208**	10	VALVE-LOAD CHECK	
	7	2,3	**7I-7235**	2	PLUG	
	8	3	**7I-7241**	2	ORIFICE	
	9	3	**7I-7250**	1	VALVE-LOAD CHECK	
	10	3,4	**7I-8084**	6	PLUG	
M	11	2	**085-9768**	5	BOLT (M14X2X40-MM)	
	12	3	**095-0965**	2	PLUG	
	13	3	**103-8411**	1	SPRING	
	14	3	**103-8412**	1	SPRING	
	15	3	**103-8413**	1	ROD	
	16	3	**105-7405**	2	SPRING	
	17	3	**131-5767**	2	PLUG	
	18	3	**131-5768**	2	VALVE-LOAD CHECK	
	19	2	**170-9997**	1	PLUG	
M	20	2	**197-0143**	3	BOLT (M14X2X95-MM)	
M	21	2	**197-0144**	13	BOLT (M14X2X130-MM)	
	22	1,2,3,4	**197-0145**	13	PLUG	
	23	4	**197-0146**	1	SPRING	
	24	4	**197-0147**	1	VALVE	
M	25	1	**197-0165**	20	BOLT (M8X1.25X20-MM)	
	26	3	**197-0166**	1	PLUG	
	27	2	**197-0167**	1	PLATE	
	28	2,3,4	**197-0168**	10	COVER	
	29	4	**197-0169**	2	VALVE AS	
	30	2,3,4	**197-0170**	10	COVER	
Y	31	2	**197-0173**	1	SPOOL GP-CONTROL VALVE (WORK TOOL)	513
CY	32	2	**323-7639**	1	SPOOL GP-CONTROL VALVE (STICK II)	523
Y	33	3	**197-0178**	1	SPOOL GP-CONTROL VALVE (BOOM I)	515
Y	34	3	**197-0211**	1	SPOOL GP-CONTROL VALVE (STICK I)	516
Y	35	4	**197-0213**	1	SPOOL GP-CONTROL VALVE (BUCKET)	517
Y	36	3	**197-0217**	1	SPOOL GP-CONTROL VALVE (STICK)	518
	37	2	**197-0225**	2	PLUG AS	
	38	1,3	**197-0272**	8	PLUG	
	39	3	**201-9271**	1	SPOOL AS	
	40	4	**215-4855**	2	VALVE AS-CHECK (MAKEUP)	
	41	3	**215-4872**	2	VALVE	
Y	42	3	**270-5978**	1	VALVE GP-RELIEF (MAIN)	576
	43	3	**285-1503**	2	COVER	
Y	44	3	**285-1504**	1	SPOOL GP-CONTROL VALVE (COMBINED FLOW)	519
Y	45	3	**285-1505**	1	SPOOL GP-CONTROL VALVE (SWING PRIORITY)	520
	46	2	**285-1506**	1	VALVE	
	47	2	**285-1507**	1	SPRING	
Y	48	3	**285-1630**	2	SPOOL GP-CONTROL VALVE (TRAVEL)	521
Y	49	3,4	**309-9973**	6	VALVE GP-RELIEF	578
Y	50	3	**323-7566**	1	SPOOL GP-CONTROL VALVE (BOOM II)	522
	51	2,4	**095-1578**	12	SEAL-O-RING	
	52	2	**095-1579**	1	SEAL-O-RING	
	53	1,2,3,4	**095-1582**	13	SEAL-O-RING	
	54	1,3,4	**095-1585**	11	SEAL-O-RING	

270-5960 VALVE GP-MAIN CONTROL *(contd.)* i03249121

NOTE	REF NO	GRAPHIC REF	PART NUMBER	QTY	PART NAME 1 2 3 4 5 6 (PRODUCT LEVEL)	SEE PAGE
	55	2,3,4	**095-1586**	15	SEAL-O-RING	
	56	2,3	**095-1592**	2	SEAL-O-RING	
	57	2,3,4	**095-1696**	8	SEAL-O-RING	
	58	2,4	**095-1698**	18	SEAL-O-RING	
	59	2,3,4	**095-1700**	10	SEAL-O-RING	
	60	2	**3D-2824**	2	SEAL-O-RING	
	61	3	**3J-1907**	1	SEAL-O-RING	
M	62	1,4	**5A-3604**	24	BOLT-SOCKET HEAD (M8X1.25X25-MM)	
	63	3	**9S-4191**	1	PLUG-O-RING	

C-CHANGE FROM PREVIOUS TYPE
M-METRIC PART
Y-SEPARATE ILLUSTRATION

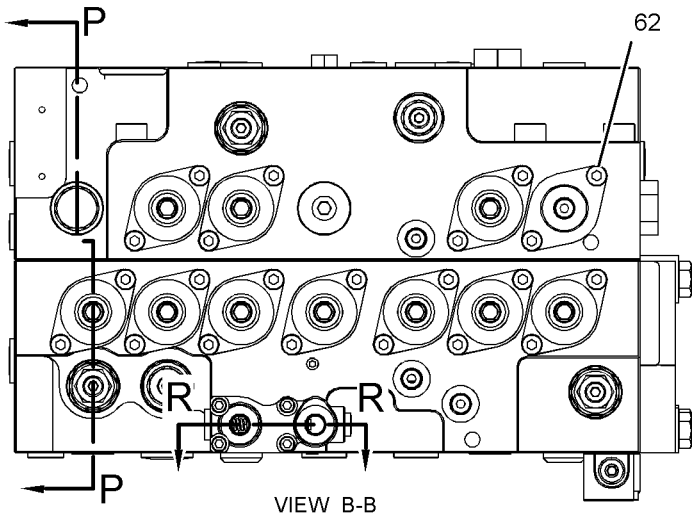

VIEW B-B

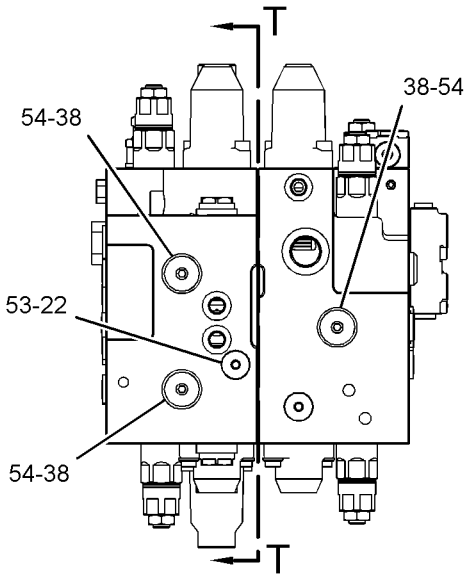

VIEW A-A

REFER TO ALL ILLUSTRATIONS OF
THIS GROUP FOR AUXILIARY VIEWS

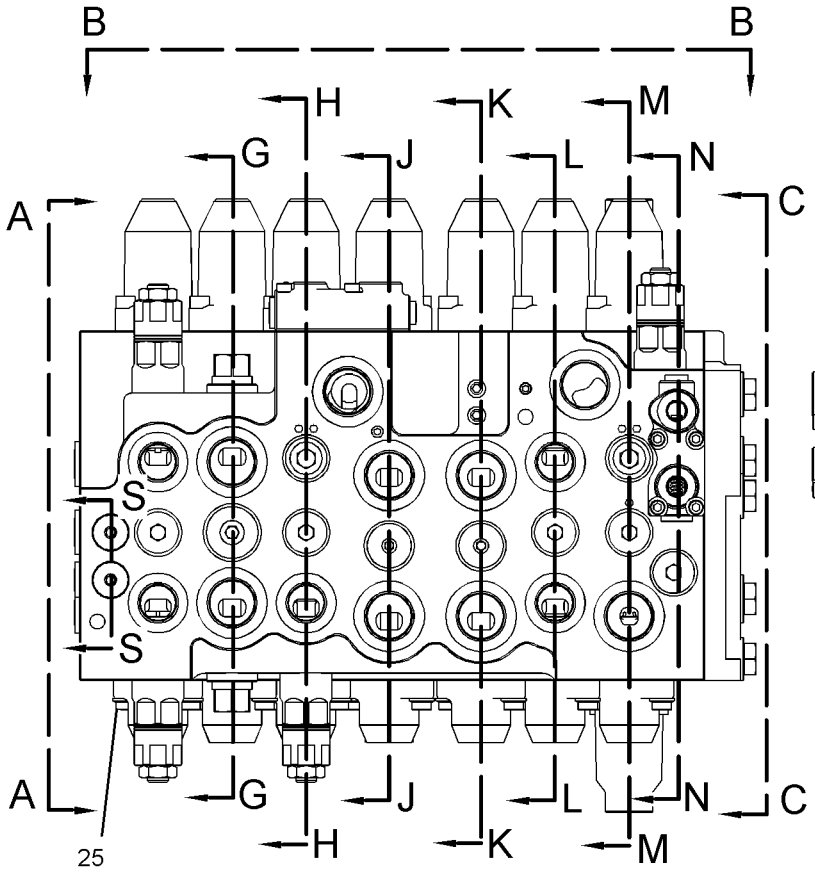

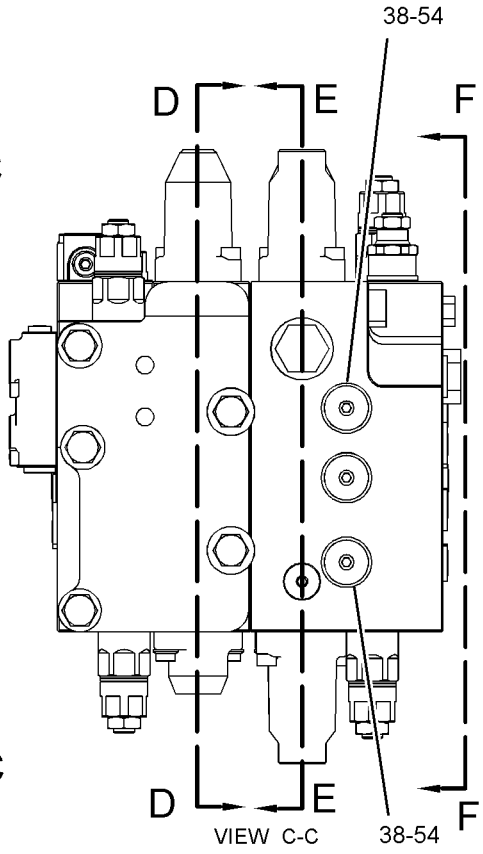

VIEW C-C

GRAPHIC #1

g01515049

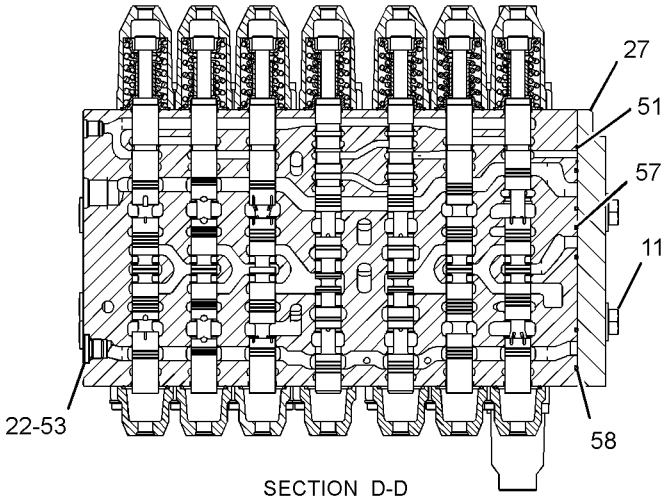

SECTION D-D

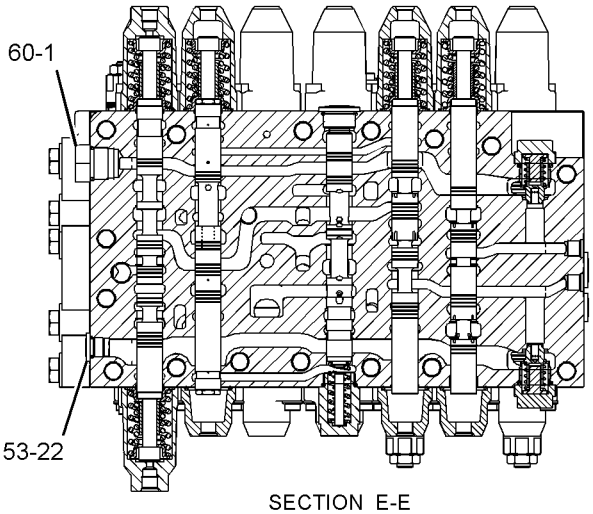

SECTION E-E

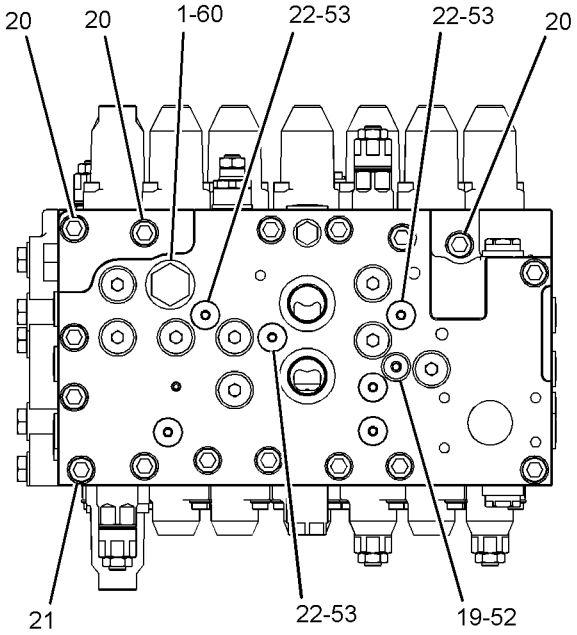

VIEW F-F

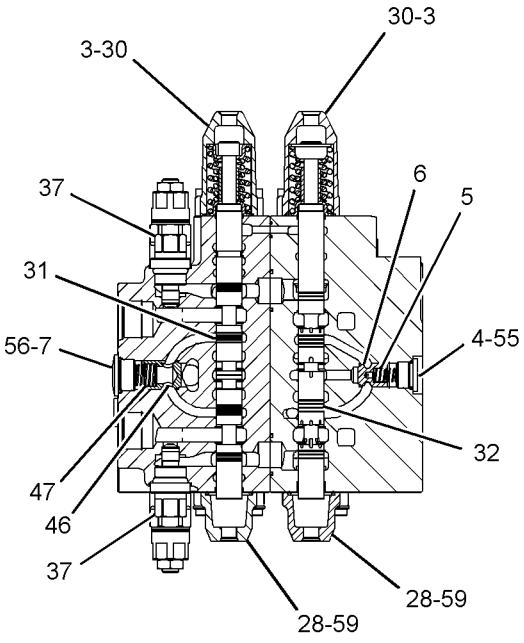

SECTION G-G

GRAPHIC #2

g01515050

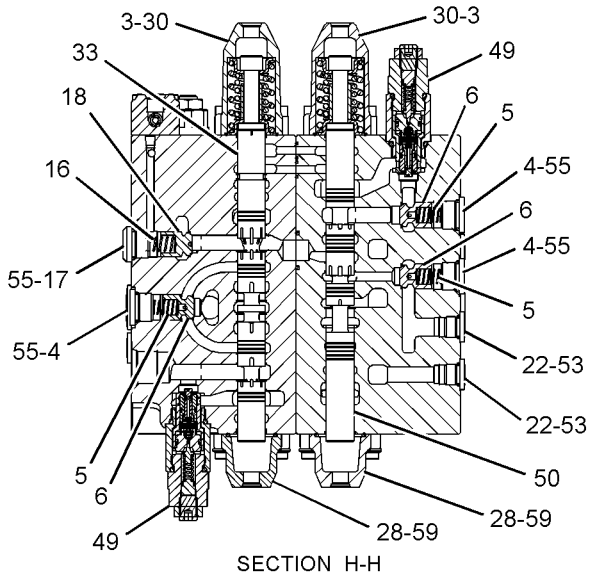

SECTION H-H

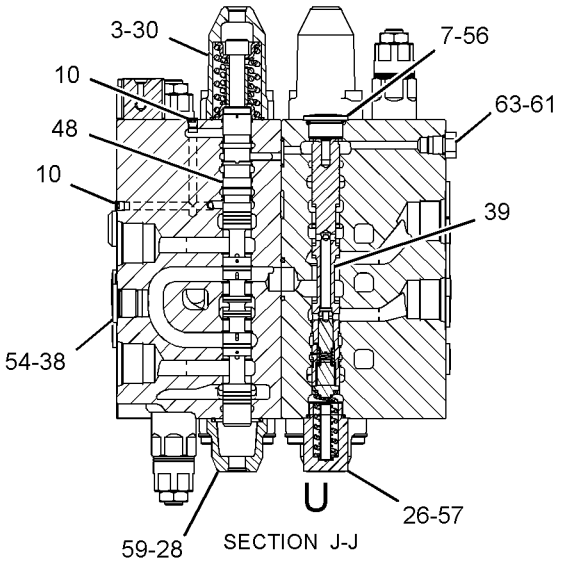

SECTION J-J

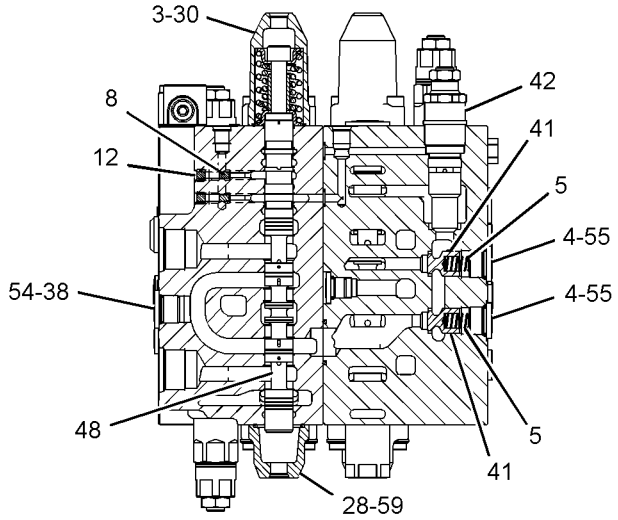

SECTION K-K

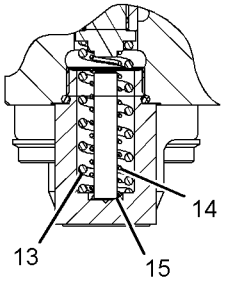

VIEW OF AREA U

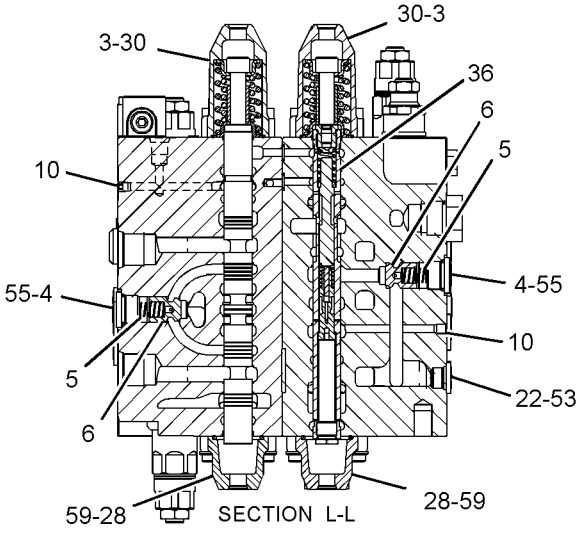

SECTION L-L

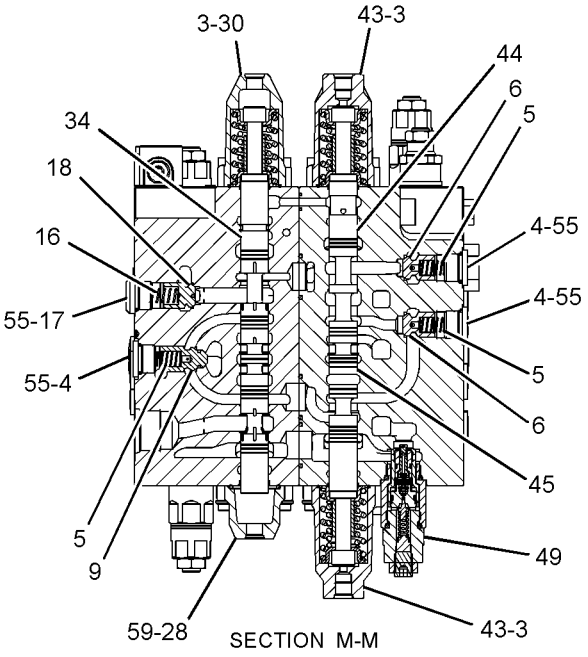

SECTION M-M

GRAPHIC #3

g01515051

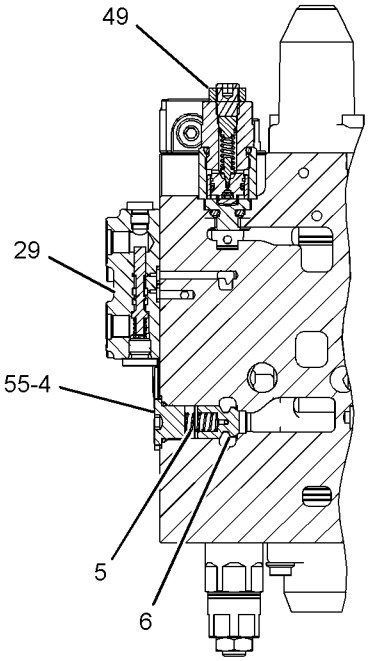

SECTION N-N

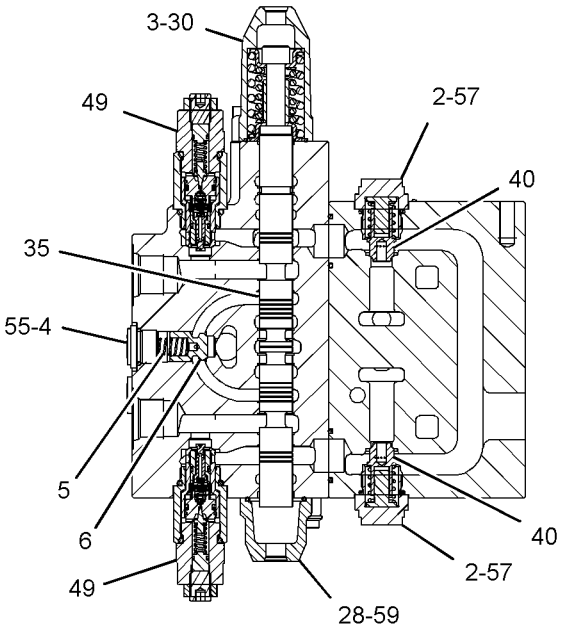

SECTION P-P

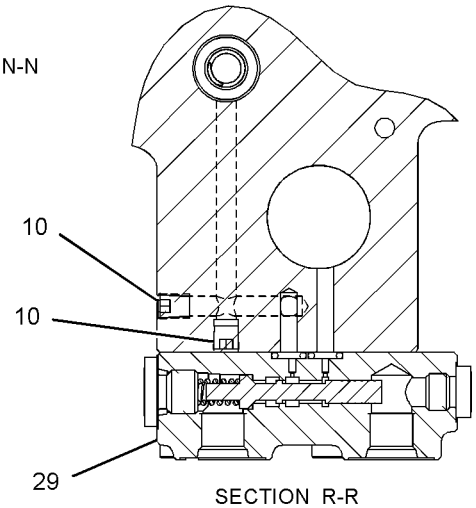

SECTION R-R

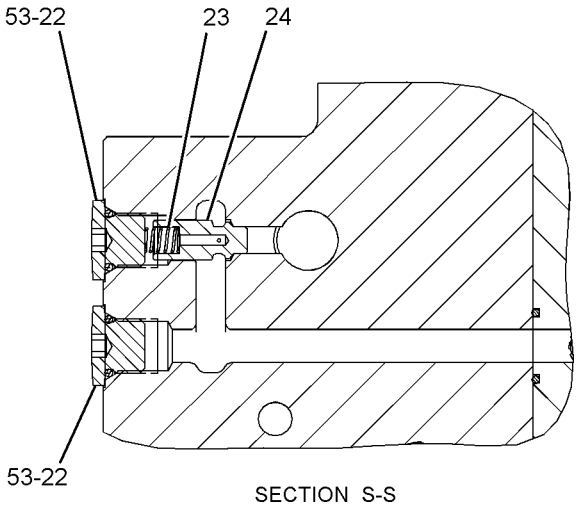

SECTION S-S

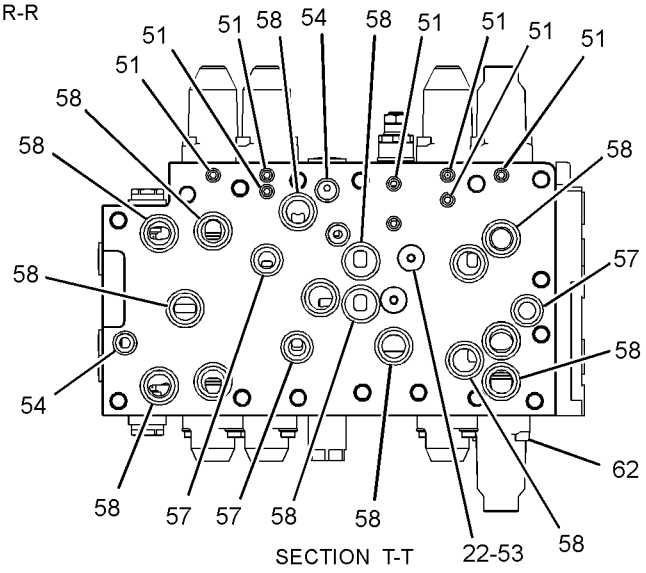

SECTION T-T

GRAPHIC #4 **<END>** g01515052

HYDRAULIC SYSTEM

165-9603 VALVE GP-PILOT

S/N: BYJ1-UP; PDP1-UP
PART OF 282-7283 LINES GP-PILOT
AN ATTACHMENT

SMCS-5059 **i02980407**

NOTE	REF NO	GRAPHIC REF	PART NUMBER	QTY	PART NAME 1 2 3 4 5 6 (PRODUCT LEVEL)	SEE PAGE
M	1	1	**6V-8202**	6	BOLT-SOCKET HEAD (M8X1.25X16-MM)	
	2	1	**095-1590**	1	SEAL-O-RING	
	3	1	**095-0965**	7	PLUG	
	4	1	**1F-0425**	1	BALL	
M	6	1	**6V-3938**	4	BOLT (M10X1.5X20-MM)	
	7	1	**171-0185**	1	COVER	
	8	1	**085-7081**	4	NEEDLE	
	9	1	**171-0184**	1	SPRING	
M	10	1	**8T-9533**	1	SETSCREW (M12X1.75-THD)	
	11	1	**006-6803**	1	BALL	
	12	1	**171-0183**	1	COVER	
	13	1	**095-1710**	2	SEAL-O-RING	
	14	1	**6I-6923**	1	SEAL	

M-METRIC PART

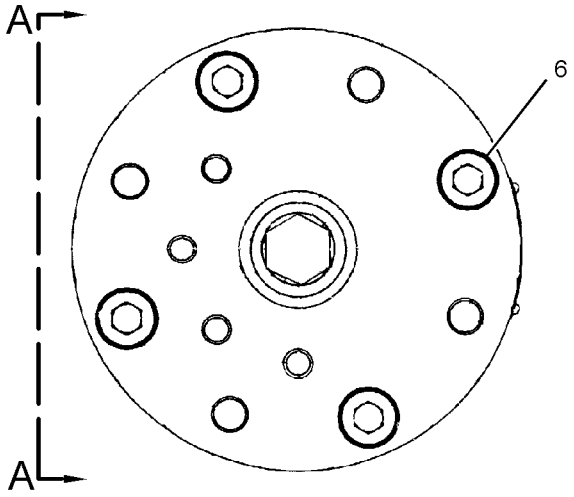

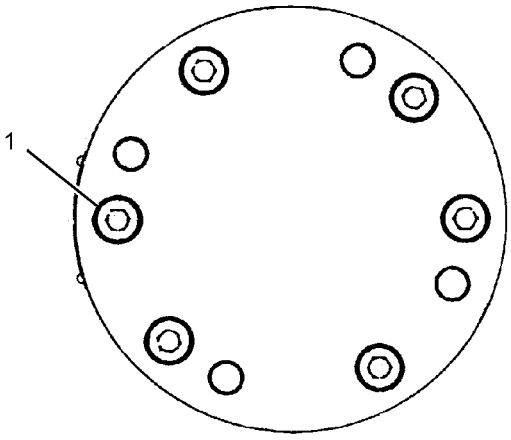

VIEW B-B

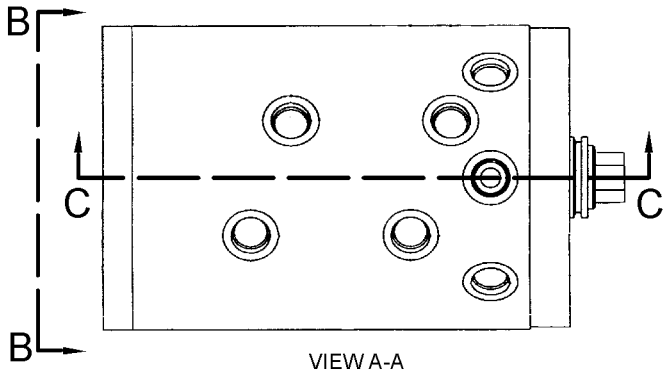

VIEW A-A

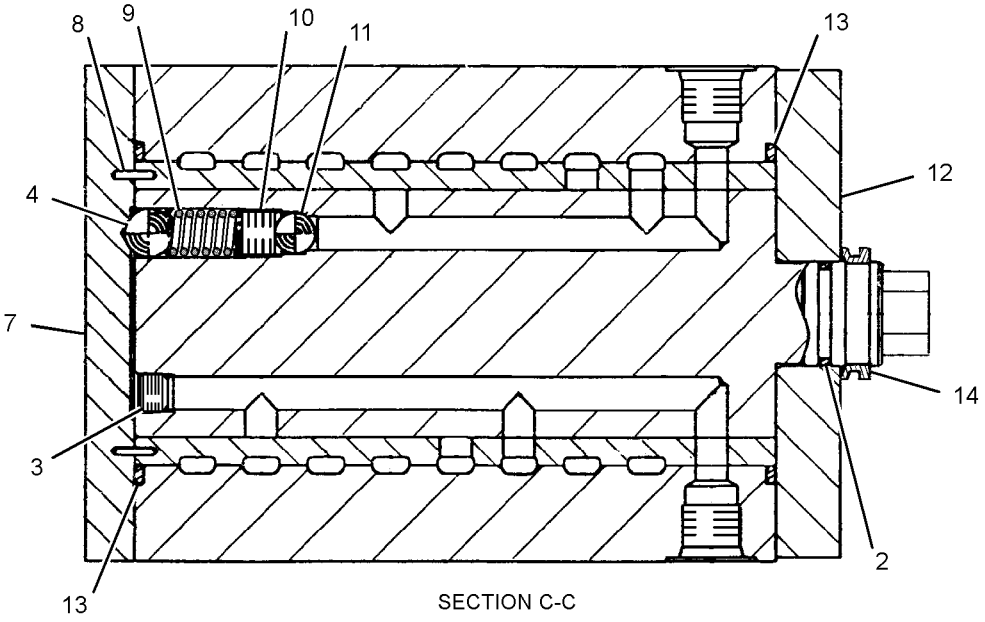

SECTION C-C

GRAPHIC #1 **<END>** g01514099

HYDRAULIC SYSTEM

190-7695 VALVE GP-PILOT

S/N: BYJ1-UP; PDP1-UP
PART OF 316-8852 CONTROL GP-BLADE
AN ATTACHMENT

SMCS-5059 **i02070449**

NOTE	REF NO	GRAPHIC REF	PART NUMBER	QTY	PART NAME 1 2 3 4 5 6 (PRODUCT LEVEL)	SEE PAGE
	1	1	**197-0758**	2	SCREW	
M	2	1	**9X-2537**	2	BOLT-SOCKET HEAD (M6X1X70-MM)	
	3	1	**198-8160**	1	COLLAR	
	4	1	**198-8165**	1	BOLT	
	5	1	**206-3290**	1	COVER AS	
	6	1	**198-8162**	2	HOLDER	
	7	1	**198-8168**	2	BALL	
	8	1	**206-3288**	1	PLATE	
M	9	1	**8T-1158**	2	BOLT-SOCKET HEAD (M8X1.25X20-MM)	
	10	1	**204-1974**	1	PIN	
	11	1	**204-1976**	1	LEVER AS	
M	12	1	**095-1260**	1	SETSCREW-SOCKET (M6X1X6-MM)	
	13	1	**198-8156**	1	BOOT	
	14	1	**198-7543**	2	GUIDE	
	15	1	**198-8167**	2	NUT	
	16	1	**198-8154**	2	SPRING	
	17	1	**198-8153**	2	SCREW	
	18	1	**198-8176**	2	ROD AS	
	19	1	**095-1578**	2	SEAL-O-RING	
	20	1	**198-8159**	2	SLEEVE	
	21	1	**095-1585**	2	SEAL-O-RING	
	22	1	**096-4535**	2	SLEEVE	
	23	1	**6I-6911**	2	SHIM	
	24	1	**6I-6912**	2	SHIM	
	25	1	**096-4543**	1	BOLT	
	26	1	**201-9394**	2	SPRING	
	27	1	**099-0361**	2	SHIM	
	28	1	**132-9046**	2	SHIM (0.1-MM THK)	
	29	1	**215-4893**	1	BODY AS	
	30	1	**198-8178**	1	BALL	
	31	1	**7I-2753**	1	SEAT	
	32	1	**102-0818**	3	PLUG	
	33	1	**3J-1907**	3	SEAL-O-RING	
	34	1	**198-8166**	2	WASHER	
	35	1	**198-8161**	2	SPRING	

M-METRIC PART

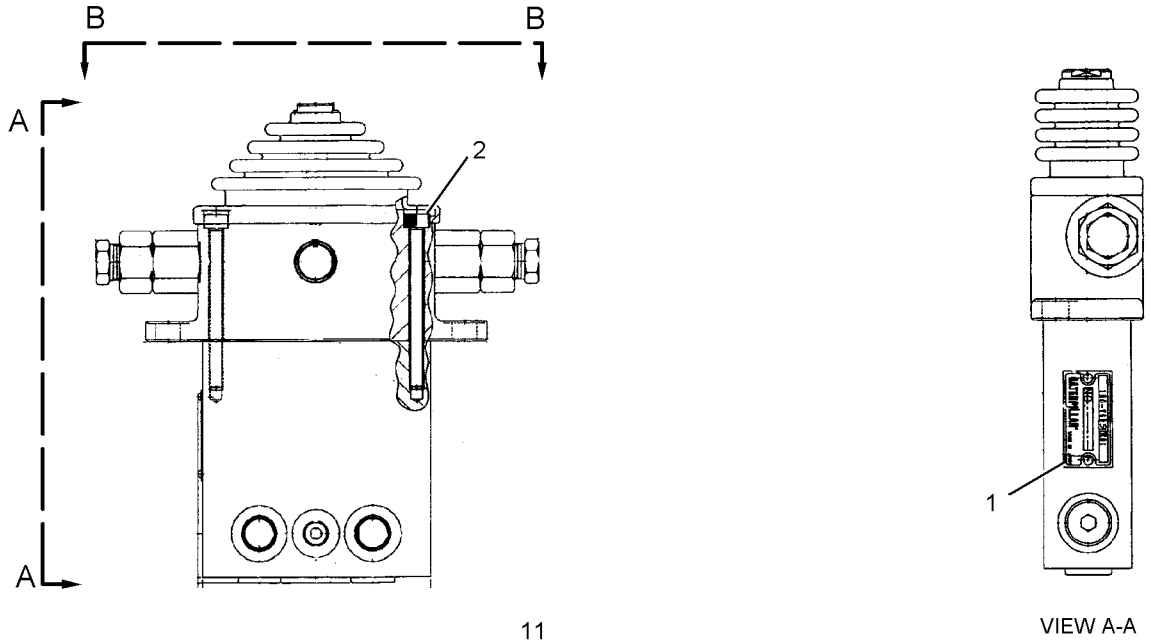

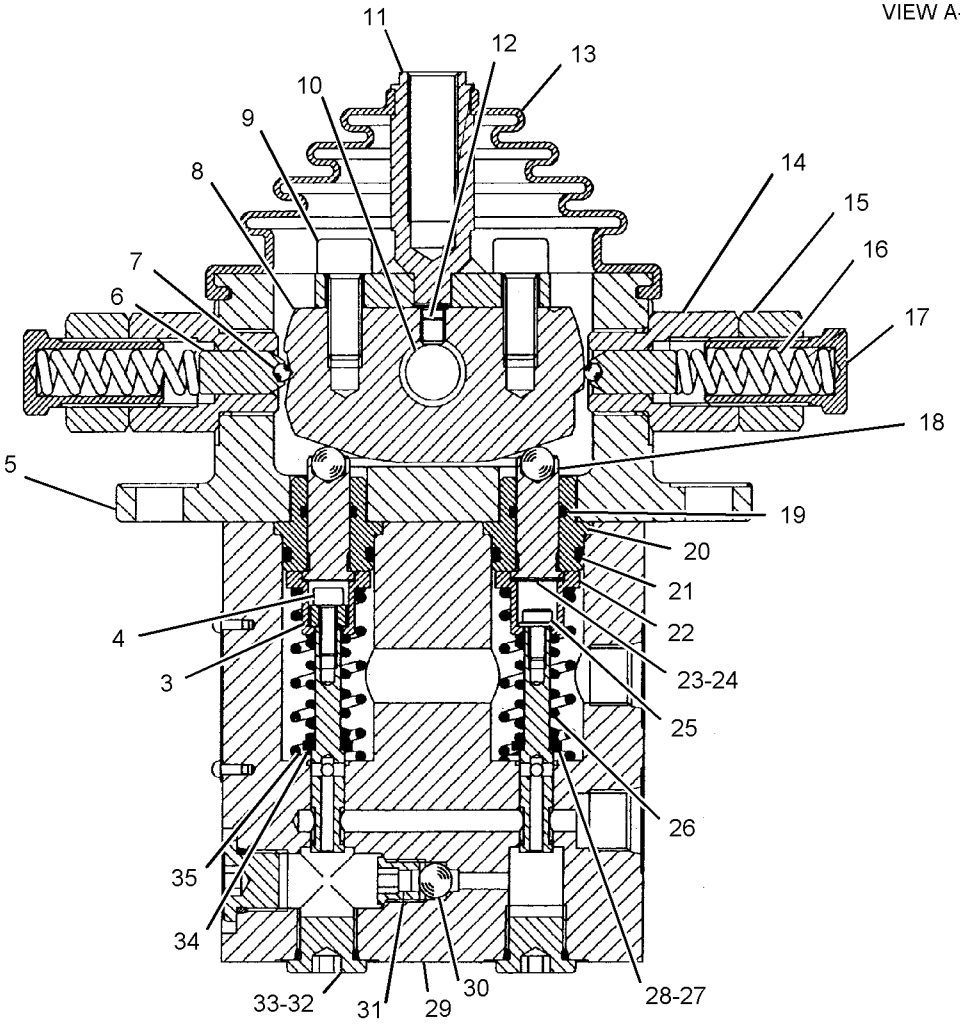

SECTION B-B

GRAPHIC #1 **<END>** g01079515

206-3305 VALVE GP-PILOT—JOYSTICK

S/N: BYJ1-UP; PDP1-UP
PART OF 259-7762, 259-7763, 259-7764, 259-7765 CONTROL GP-JOYSTICK
FIELD REPLACEMENT ORDER 297-0589—PAGE 570
AN ATTACHMENT

SMCS-5059 **i02174618**

NOTE	REF NO	GRAPHIC REF	PART NUMBER	QTY	PART NAME 1 2 3 4 5 6 (PRODUCT LEVEL)	SEE PAGE
	1	1	**165-9431**	1	PLATE	
	2	1	**4I-6365**	1	JOINT	
	3	1	**118-4087**	4	SPRING	
	4	1	**165-9444**	2	SEAT-SPRING	
					(USED WITH REF NO 7 OR 7A SPRINGS)	
					—OR—	
J		1	**244-8496**	2	SEAT-SPRING	
					(USED WITH REF NO 7B SPRINGS)	
					—OR—	
L		1	**244-8500**	2	SEAT-SPRING	
					(USED WITH REF NO 7C SPRINGS)	
	5	1	**096-1628**	4	PLUG	
	6	1	**165-9436**	2	SEAT	
	7	1	**165-9460**	2	SPRING (STANDARD)	
					—OR—	
	7A	1	**225-4815**	2	SPRING (OPTIONAL)	
					(REDUCES OPERATING FORCE FOR IMPROVED INCHING CONTROL)	
					—OR—	
J	7B	1	**244-8494**	2	SPRING (OPTIONAL)	
					(PROVIDES CONTROLLABILITY EQUAL TO A-SERIES MACHINES)	
					—OR—	
L	7C	1	**244-8498**	2	SPRING (OPTIONAL)	
					(PROVIDES CONTROLLABILITY COMPARABLE TO A AND B-SERIES MACHINES)	
	8	1	**165-9461**	4	SPRING (STANDARD)	
					—OR—	
		1	**190-7750**	4	SPRING (OPTIONAL)	
					(REDUCES OPERATING FORCE BY 30%)	
					—OR—	
		1	**190-7751**	4	SPRING (OPTIONAL)	
					(REDUCES OPERATING FORCE BY 20%)	
	9	1	**165-9439**	1	BUSHING	
	10	1	**165-9448**	1	SEAL-O-RING	
	11	1	**168-0794**	1	PLATE	
	12	1	**096-4498**	2	WASHER	
M	13	1	**6V-8337**	2	BOLT-SOCKET HEAD (M8X1.25X35-MM)	
	14	1	**171-0087**	1	BELLOWS	
M	15	1	**131-5915**	1	NUT-SPECIAL	
	16	1	**7Y-0468**	1	PIN-SPRING	
	17	1	**094-0876**	4	SEAL	
B	18	1	**099-6137**	4	WASHER (6.1X9X0.2-MM THK)	
	19	1	**165-9442**	2	SPRING (STANDARD)	
					—OR—	
	19A	1	**225-4816**	2	SPRING (OPTIONAL)	
					(REDUCES OPERATING FORCE FOR IMPROVED INCHING CONTROL)	
					—OR—	
J	19B	1	**244-8495**	2	SPRING (OPTIONAL)	
					(PROVIDES CONTROLLABILITY EQUAL TO A-SERIES MACHINES)	
					—OR—	

206-3305 VALVE GP-PILOT *(contd.)* i02174618

NOTE	REF NO	GRAPHIC REF	PART NUMBER	QTY	PART NAME 1 2 3 4 5 6 (PRODUCT LEVEL)	SEE PAGE
L	19C	1	**244-8499**	2	SPRING (OPTIONAL)	
					(PROVIDES CONTROLLABILITY COMPARABLE TO A AND B-SERIES MACHINES)	
	20	1	**165-9435**	2	SEAT	
	21	1	**095-1586**	4	SEAL-O-RING	
	22	1	**165-9443**	2	SEAT-SPRING	
					(USED WITH REF NO 19 OR 19A SPRINGS)	
					—OR—	
J		1	**244-8497**	2	SEAT-SPRING	
					(USED WITH REF NO 19B SPRINGS)	
					—OR—	
L		1	**244-8501**	2	SEAT-SPRING	
					(USED WITH REF NO 19C SPRINGS)	
	23	1	**165-9438**	1	PLATE	
	24	1	**118-4086**	4	ROD	

B-USE AS REQUIRED
J-PARTS MARKED J MUST BE USED TOGETHER AS A SET
L-PARTS MARKED L MUST BE USED TOGETHER AS A SET
M-METRIC PART

206-3305 VALVE GP-PILOT *(contd.)* **i02174618**

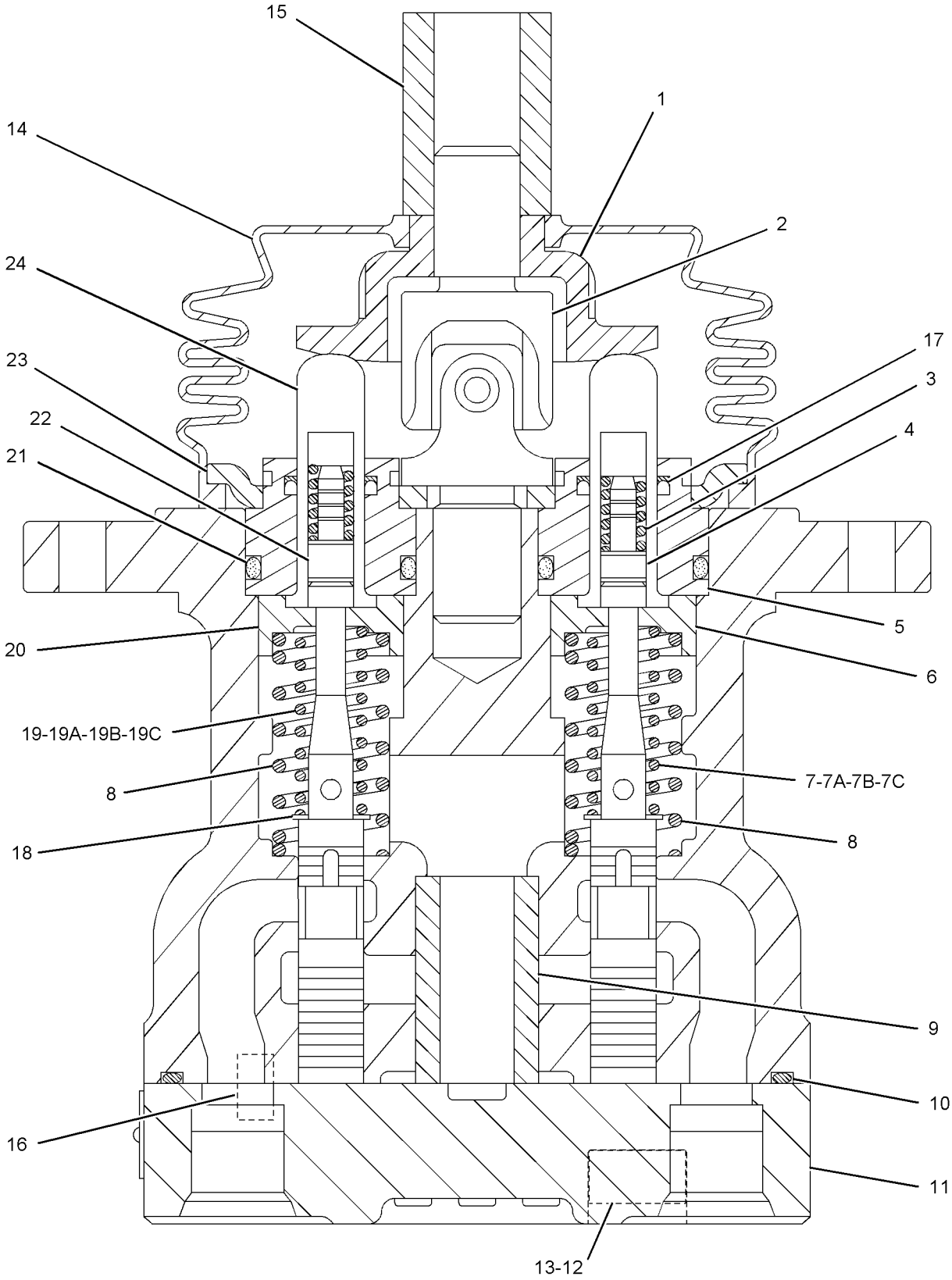

GRAPHIC #1 **<END>** g01102305

HYDRAULIC SYSTEM

270-5948 VALVE GP-PILOT–TRAVEL

S/N: BYJ1-UP; PDP1-UP

PART OF 282-7230 LINES GP-PILOT

SMCS-5059 **i02696671**

NOTE	REF NO	GRAPHIC REF	PART NUMBER	QTY	PART NAME 1 2 3 4 5 6 (PRODUCT LEVEL)	SEE PAGE
	1	1	**270-5950**	4	SPRING	
	2	1	**131-5818**	4	SPRING	
	3	1	**095-0936**	4	RING-RETAINING	
	4	1	**126-1865**	4	SPRING	
	5	1	**126-1866**	4	SPRING	
	6	1	**270-5949**	4	PISTON	
	7	1	**6V-8400**	4	SEAL-O-RING	
	8	1	**165-9463**	2	COVER	
	9	1	**165-9554**	4	PLUG	
	10	1	**119-5389**	4	PACKING	
	11	1	**165-9552**	4	PUSHROD	
M	12	1	**8T-4133**	4	NUT (M10X1.5-THD)	
M	13	1	**087-4710**	4	SETSCREW	
	14	1	**147-4131**	2	BOOT-PROTECTION	
	15	1	**087-5708**	2	PEDAL	
M	16	1	**8T-0343**	2	BOLT-SOCKET HEAD (M12X1.75X55-MM)	
	17	1	**119-5388**	4	CAP	
	18	1	**165-9553**	1	COVER	
	19	1	**119-5391**	4	SEAT	
	20	1	**153-5223**	12	BALL	
	21	1	**119-5392**	4	BUSHING	
	22	1	**165-9551**	4	SEAT	
	24	1	**099-6137**	4	WASHER	
	25	1	**099-6141**	4	WASHER (6.1X11X1.5-MM THK)	
	26	1	**099-6145**	2	CAMSHAFT	
	27	1	**099-6144**	4	BUSHING-TERMINAL	
M	28	1	**095-1260**	2	SETSCREW-SOCKET (M6X1X6-MM)	
M	29	1	**8T-1158**	2	BOLT-SOCKET HEAD (M8X1.25X20-MM)	
	30	1	**8T-6759**	2	PLUG-PIPE	

M-METRIC PART

270-5948 VALVE GP-PILOT *(contd.)* **i02696671**

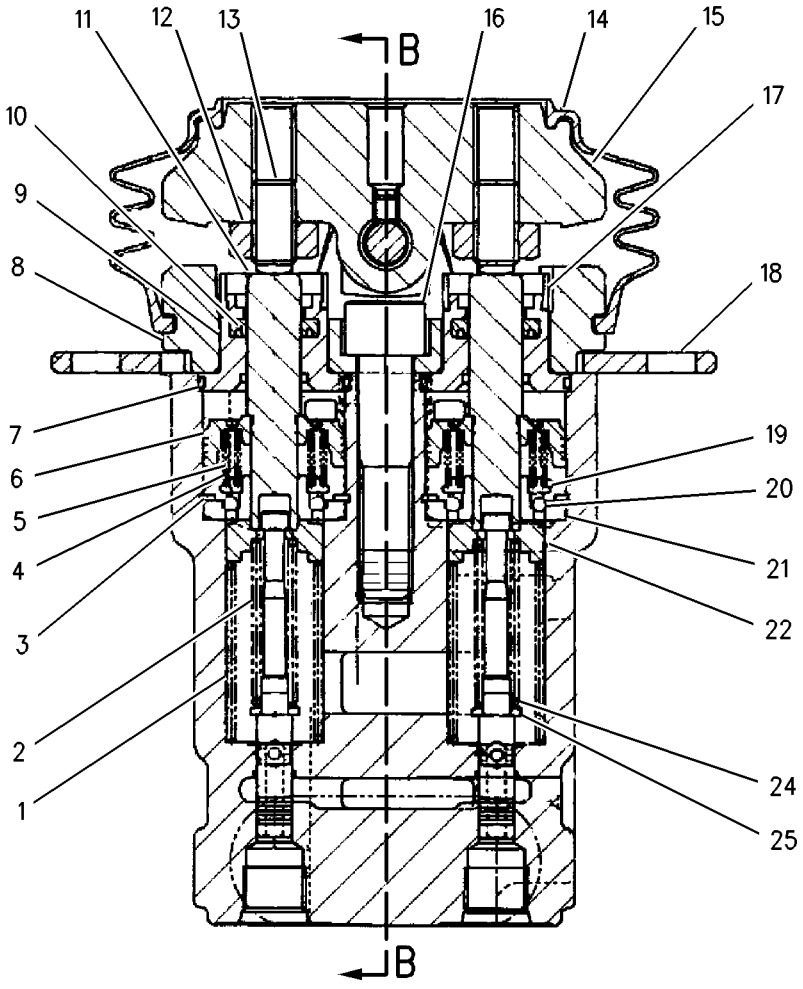

SECTION A-A

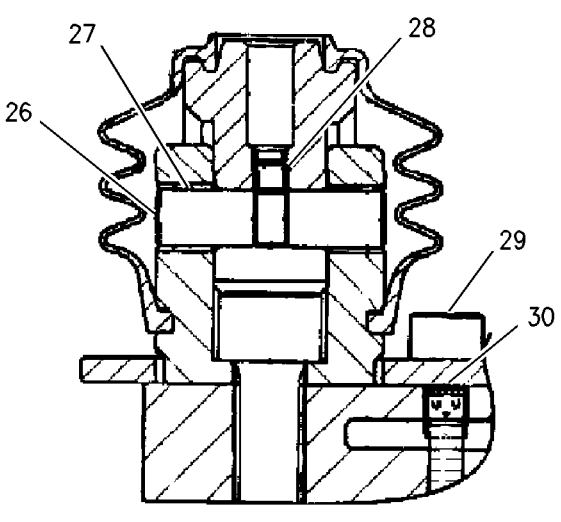

SECTION B-B

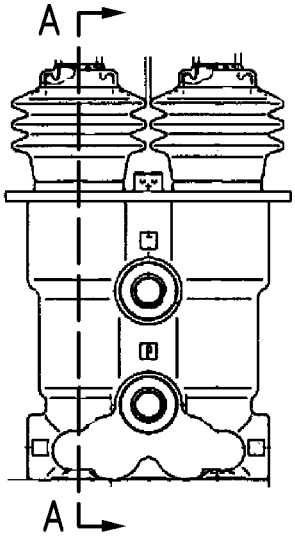

GRAPHIC #1 **<END>** g00857024

HYDRAULIC SYSTEM

297-0529 VALVE GP-PILOT–JOYSTICK

S/N: BYJ1-UP; PDP1-UP

PART OF 297-0532, 297-0533 CONTROL GP-JOYSTICK

AN ATTACHMENT

SMCS-5059 **i03017531**

NOTE	REF NO	GRAPHIC REF	PART NUMBER	QTY	PART NAME 1 2 3 4 5 6 (PRODUCT LEVEL)	SEE PAGE
	1	1	**270-5953**	4	SPRING	
	2	1	**095-1586**	4	SEAL-O-RING	
	3	1	**4I-6365**	1	JOINT	
	4	1	**094-0876**	4	SEAL	
	5	1	**096-1628**	4	PLUG	
B	6	1	**099-6137**	4	WASHER (6.1X9X0.2-MM THK)	
	7	1	**118-4086**	4	ROD	
	8	1	**118-4087**	4	SPRING	
M	9	1	**131-5915**	1	NUT-SPECIAL	
	10	1	**165-9431**	1	PLATE	
	11	1	**165-9435**	2	SEAT	
	12	1	**165-9436**	2	SEAT	
	13	1	**165-9438**	1	PLATE	
	14	1	**165-9442**	2	SPRING	
	15	1	**165-9443**	2	SEAT-SPRING	
	16	1	**165-9444**	2	SEAT-SPRING	
	17	1	**165-9460**	2	SPRING	
	18	1	**171-0087**	1	BELLOWS	

PARTS SHOWN IN GRAPHIC(S) WITHOUT A REFERENCE NUMBER ARE NOT SERVICED SEPARATELY

B-USE AS REQUIRED
M-METRIC PART

297-0529 VALVE GP-PILOT *(contd.)* **i03017531**

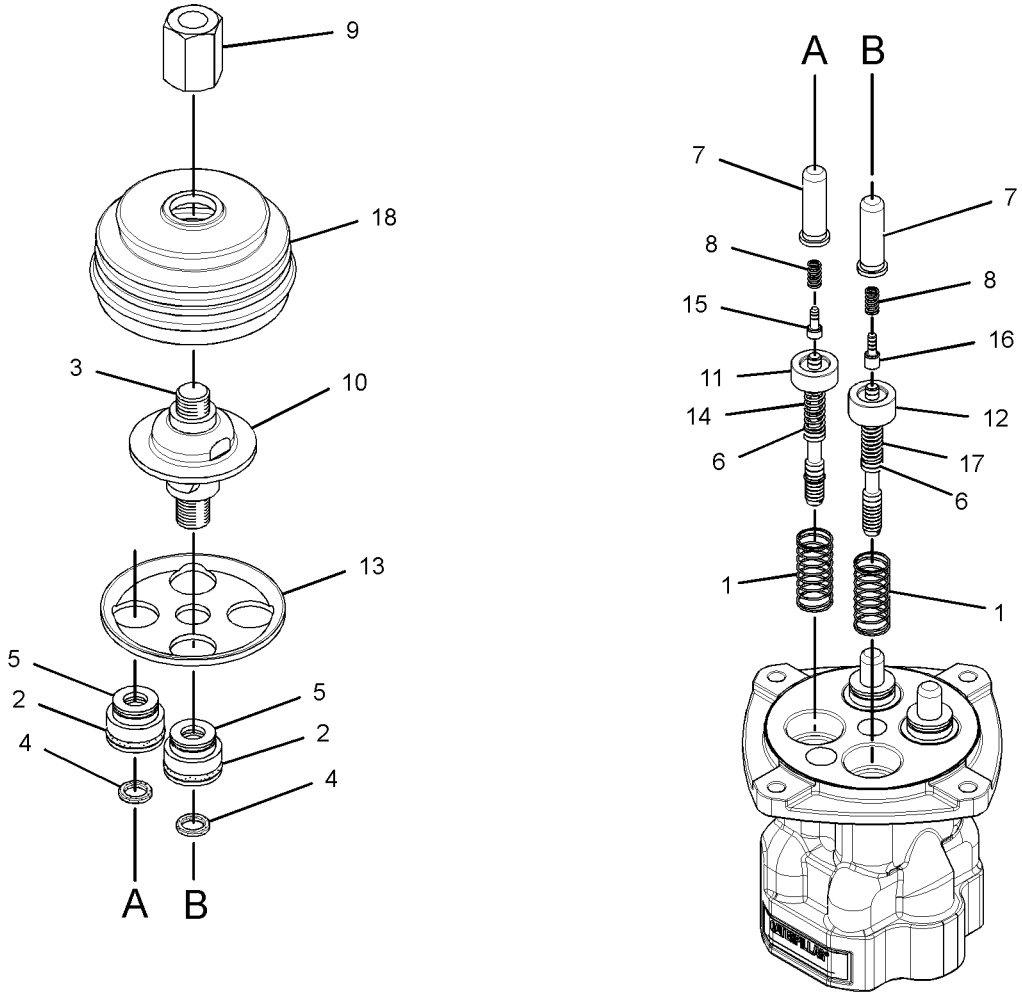

GRAPHIC #1 **<END>** g01528724

297-0589 VALVE GP-PILOT—JOYSTICK

S/N: BYJ1-UP; PDP1-UP
PART OF 323-7755, 323-7756 CONTROL GP-JOYSTICK, 323-7753, 323-7754 CONTROL
GP-PILOT OPERATED HYD
FIELD REPLACEMENT FOR 206-3305—PAGE 563
AN ATTACHMENT

SMCS-5059 **i03135570**

NOTE	REF NO	GRAPHIC REF	PART NUMBER	QTY	PART NAME 1 2 3 4 5 6 (PRODUCT LEVEL)	SEE PAGE
	1	1	**095-1586**	4	SEAL-O-RING	
	2	1	**4I-6365**	1	JOINT	
	3	1	**094-0876**	4	SEAL	
	4	1	**096-1628**	4	PLUG	
B	5	1	**099-6137**	4	WASHER (6.1X9X0.2-MM THK)	
	6	1	**118-4086**	4	ROD	
	7	1	**118-4087**	4	SPRING	
M	8	1	**131-5915**	1	NUT-SPECIAL	
	9	1	**165-9431**	1	PLATE	
	10	1	**165-9435**	2	SEAT	
	11	1	**165-9436**	2	SEAT	
	12	1	**165-9438**	1	PLATE	
	13	1	**165-9442**	2	SPRING	
	14	1	**165-9443**	2	SEAT-SPRING	
	15	1	**165-9444**	2	SEAT-SPRING	
	16	1	**165-9460**	2	SPRING	
	17	1	**165-9461**	4	SPRING	
	18	1	**171-0087**	1	BELLOWS	

B-USE AS REQUIRED
M-METRIC PART

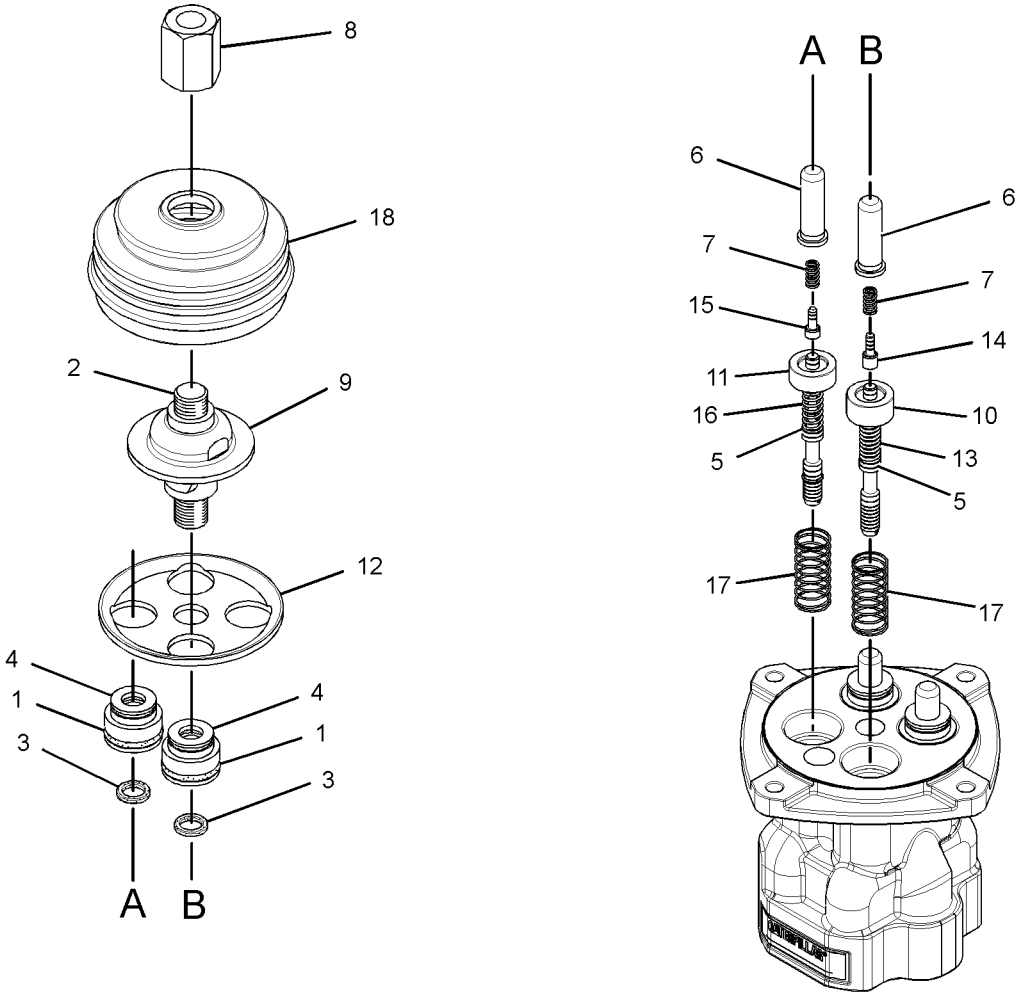

GRAPHIC #1 **<END>** g01528741

HYDRAULIC SYSTEM

310-0415 VALVE GP-PILOT—WITHOUT SHUTTLE

S/N: BYJ1-UP; PDP1-UP

PART OF 282-7230 LINES GP-PILOT

SMCS-5059 **i03127888**

NOTE	REF NO	GRAPHIC REF	PART NUMBER	QTY	PART NAME 1 2 3 4 5 6 (PRODUCT LEVEL)	SEE PAGE
	1	1	**087-5708**	2	PEDAL	
M	2	1	**095-0673**	2	BOLT-SOCKET HEAD (M12X1.75X60-MM)	
	3	1	**099-6137**	4	WASHER (6.1X9X0.2-MM THK)	
	4	1	**099-6141**	4	WASHER (6.1X11X1.5-MM THK)	
	5	1	**099-6144**	4	BUSHING-TERMINAL	
	6	1	**099-6145**	2	CAMSHAFT	
	7	1	**119-5388**	4	CAP	
	8	1	**119-5389**	4	PACKING	
	9	1	**119-5391**	4	SEAT	
	10	1	**126-1865**	4	SPRING	
	11	1	**126-1866**	4	SPRING	
	12	1	**131-5818**	4	SPRING	
	13	1	**147-4131**	2	BOOT-PROTECTION	
	14	1	**153-5223**	12	BALL	
	15	1	**165-9463**	2	COVER	
	16	1	**165-9552**	4	PUSHROD	
	17	1	**165-9553**	1	COVER	
	18	1	**165-9554**	4	PLUG	
	19	1	**270-5949**	4	PISTON	
	20	1	**270-5950**	4	SPRING	
	21	1	**310-0419**	4	SEAT	
	22	1	**310-0420**	4	SEAL-O-RING	
M	23	1	**087-4710**	4	SETSCREW	
M	24	1	**095-1260**	2	SETSCREW-SOCKET (M6X1X6-MM)	
	25	1	**095-1575**	2	SEAL-O-RING	
	26	1	**6V-8400**	4	SEAL-O-RING	
M	27	1	**8C-6965**	2	BOLT-SOCKET HEAD (M6X1X45-MM)	
M	28	1	**8T-1158**	2	BOLT-SOCKET HEAD (M8X1.25X20-MM)	
M	29	1	**8T-4133**	4	NUT (M10X1.5-THD)	

M-METRIC PART

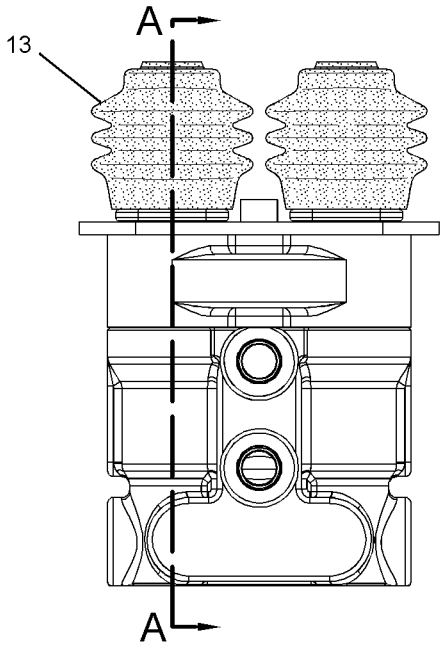

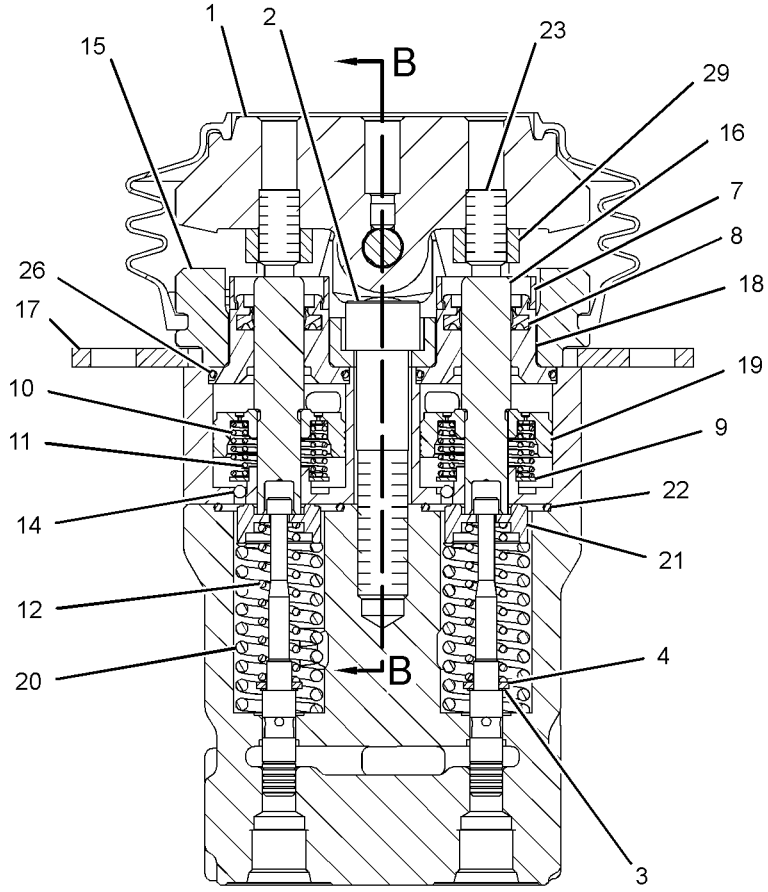

SECTION A-A

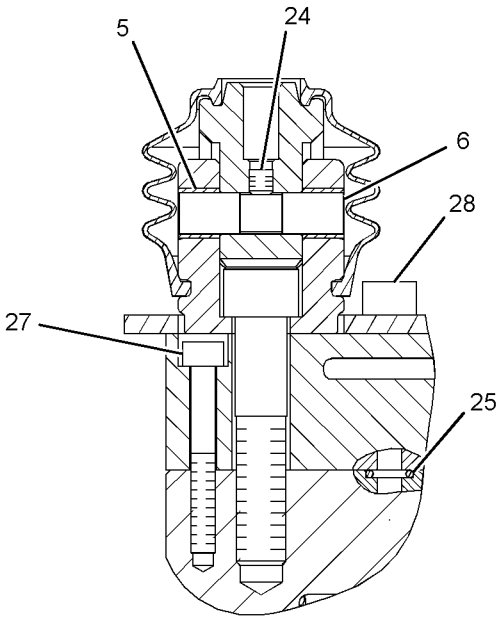

SECTION B-B

GRAPHIC #1 **<END>** g01620929

232-4102 VALVE GP-PRESSURE REDUCING–
BOOM, SWING PRIORITY
S/N: BYJ1-UP; PDP1-UP
PART OF 282-7234 LINES GP-PILOT

SMCS-5117 **i02160013**

NOTE	REF NO	GRAPHIC REF	PART NUMBER	QTY	PART NAME 1 2 3 4 5 6 (PRODUCT LEVEL)	SEE PAGE
	1	1	**111-9998**	2	PLUG	
	2	1	**095-1582**	2	SEAL-O-RING	
	3	1	**171-0127**	2	SEAT-SPRING	
	4	1	**185-0423**	2	STOP	
	5	1	**171-0126**	2	SEAT-SPRING	
	6	1	**171-0123**	2	PLUG	
M	7	1	**5C-7261**	2	NUT (M8X1.25-THD)	
M	8	1	**171-0124**	2	SETSCREW (M8X1.25X18-MM)	
	9	1	**095-1580**	2	SEAL-O-RING	
	10	1	**095-1590**	2	SEAL-O-RING	
	11	1	**171-0128**	2	SPRING	

M-METRIC PART

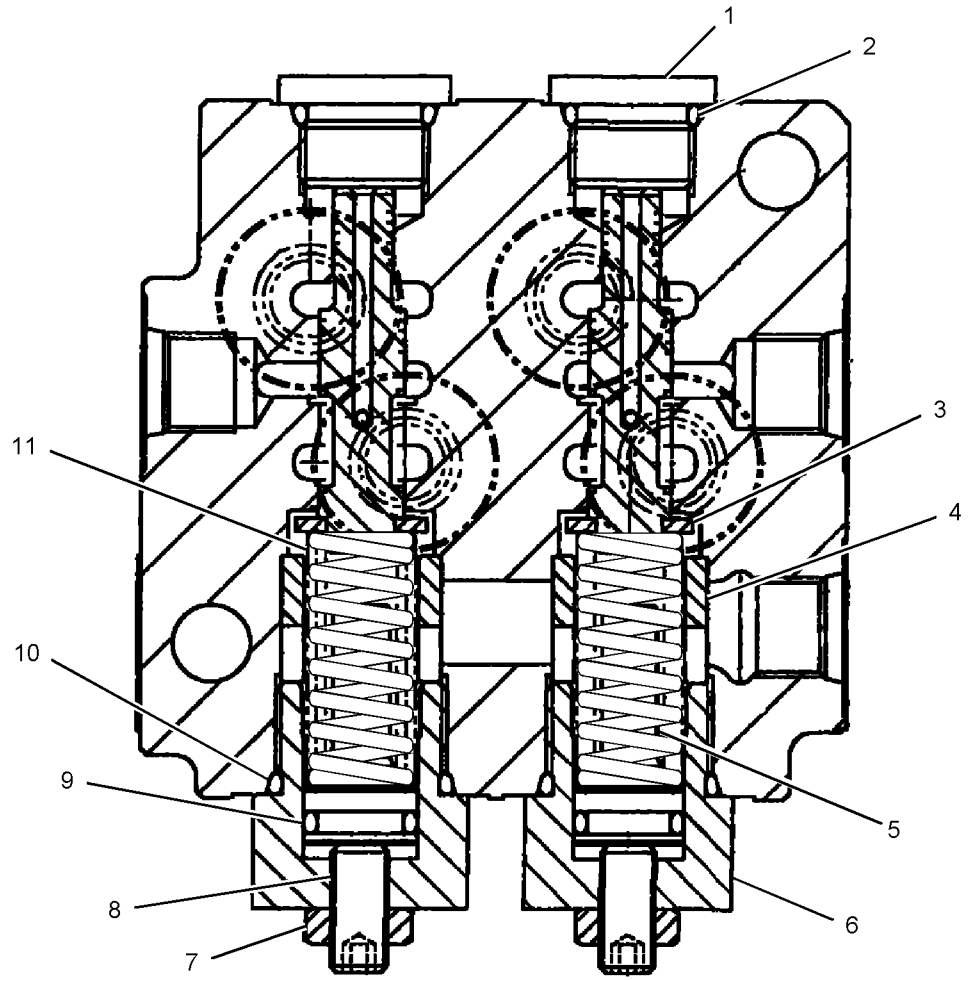

GRAPHIC #1 **<END>** g01095267

177-2653 VALVE GP-RELIEF—WITH BLOCK

S/N: BYJ1-UP; PDP1-UP
PART OF 282-5543 LINES GP-AUXILIARY HYDRAULIC
AN ATTACHMENT

SMCS-5069, 5117 **i03254261**

NOTE	REF NO	GRAPHIC REF	PART NUMBER	QTY	PART NAME 1 2 3 4 5 6 (PRODUCT LEVEL)	SEE PAGE
CY	1	1	**310-0394**	1	VALVE GP-RELIEF (PILOT OPERATED)	581
Z	2	1		1	BLOCK	

C-CHANGE FROM PREVIOUS TYPE
Y-SEPARATE ILLUSTRATION
Z-NOT SERVICED SEPARATELY

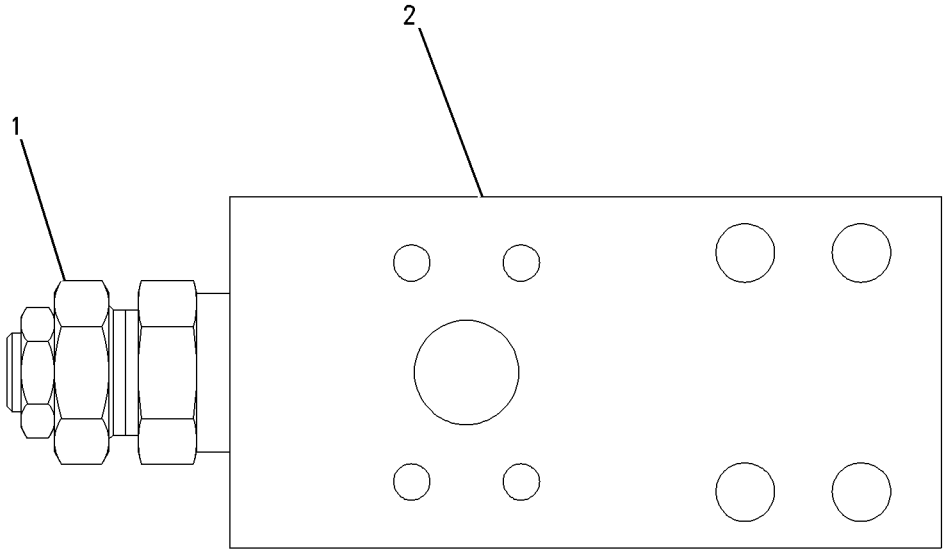

GRAPHIC #1 **<END>** g00684155

HYDRAULIC SYSTEM

270-5978 VALVE GP-RELIEF–MAIN

S/N: BYJ1-UP; PDP1-UP
PART OF 270-5960 VALVE GP-MAIN CONTROL
ALSO AN ATTACHMENT

SMCS-5069, 5117 **i02852735**

NOTE	REF NO	GRAPHIC REF	PART NUMBER	QTY	PART NAME 1 2 3 4 5 6 (PRODUCT LEVEL)	SEE PAGE
	1	1	**095-1575**	1	SEAL-O-RING	
	2	1	**7I-8096**	1	STOP	
M	3	1	**7I-8098**	1	SETSCREW (M14X1.5X34-MM)	
M	4	1	**6V-8821**	1	NUT (M14X1.5-THD)	
M	5	1	**7I-8100**	1	NUT (M24X1.3-THD)	
	6	1	**095-1584**	1	SEAL-O-RING	
	7	1	**7I-8087**	1	SPRING	
	8	1	**7I-8095**	1	RING	
	9	1	**7I-8081**	1	SPRING	
	10	1	**095-1593**	1	SEAL-O-RING	
	11	1	**095-1519**	1	SEAL-O-RING	
	12	1	**095-1783**	1	RING-BACKUP	
	13	1	**095-1582**	1	SEAL-O-RING	

M-METRIC PART

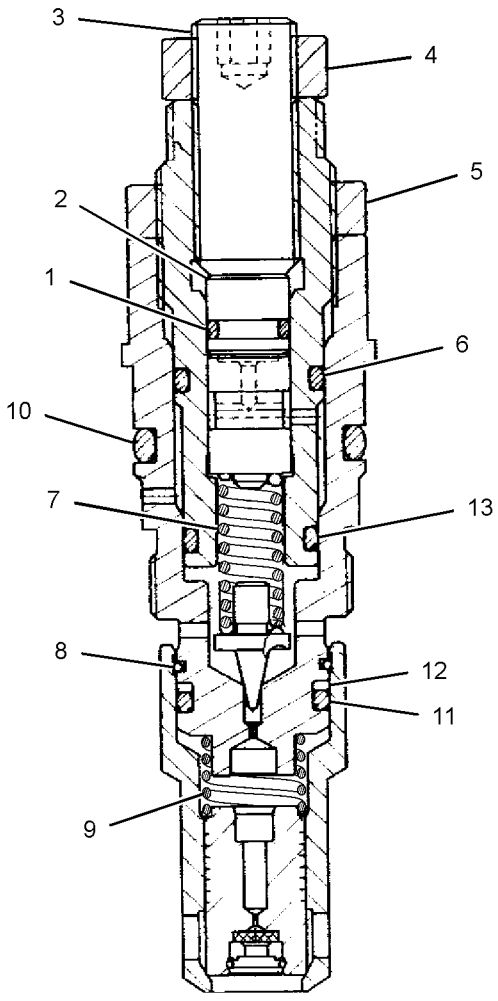

GRAPHIC #1 **<END>** g01426630

304-3961 VALVE GP-RELIEF—TRACTION CONTROL

S/N: BYJ1-UP; PDP1-UP

PART OF 303-4484 VALVE GP-TRAVEL COUNTERBALANCE

SMCS-5069, 5117 **i02827540**

NOTE	REF NO	GRAPHIC REF	PART NUMBER	QTY	PART NAME 1 2 3 4 5 6 (PRODUCT LEVEL)	SEE PAGE
M	1	1	**7Y-8436**	1	SETSCREW (M27X2X27-MM)	
	2	1	**114-0515**	1	SEAT	
	3	1	**114-0517**	1	PISTON	
	4	1	**165-5840**	1	STOP	
	6	1	**176-8590**	1	VALVE GP-RELIEF	
	7	1	**095-1586**	3	SEAL-O-RING	
	8	1	**095-1785**	3	RING-BACKUP	
	9	1	**121-1459**	2	RING-BACKUP	
	10	1	**165-5839**	1	SPRING	
	11	1	**4K-1388**	1	SEAL-O-RING	
M	12	1	**7Y-8437**	1	NUT (M27X2-THD)	

M-METRIC PART

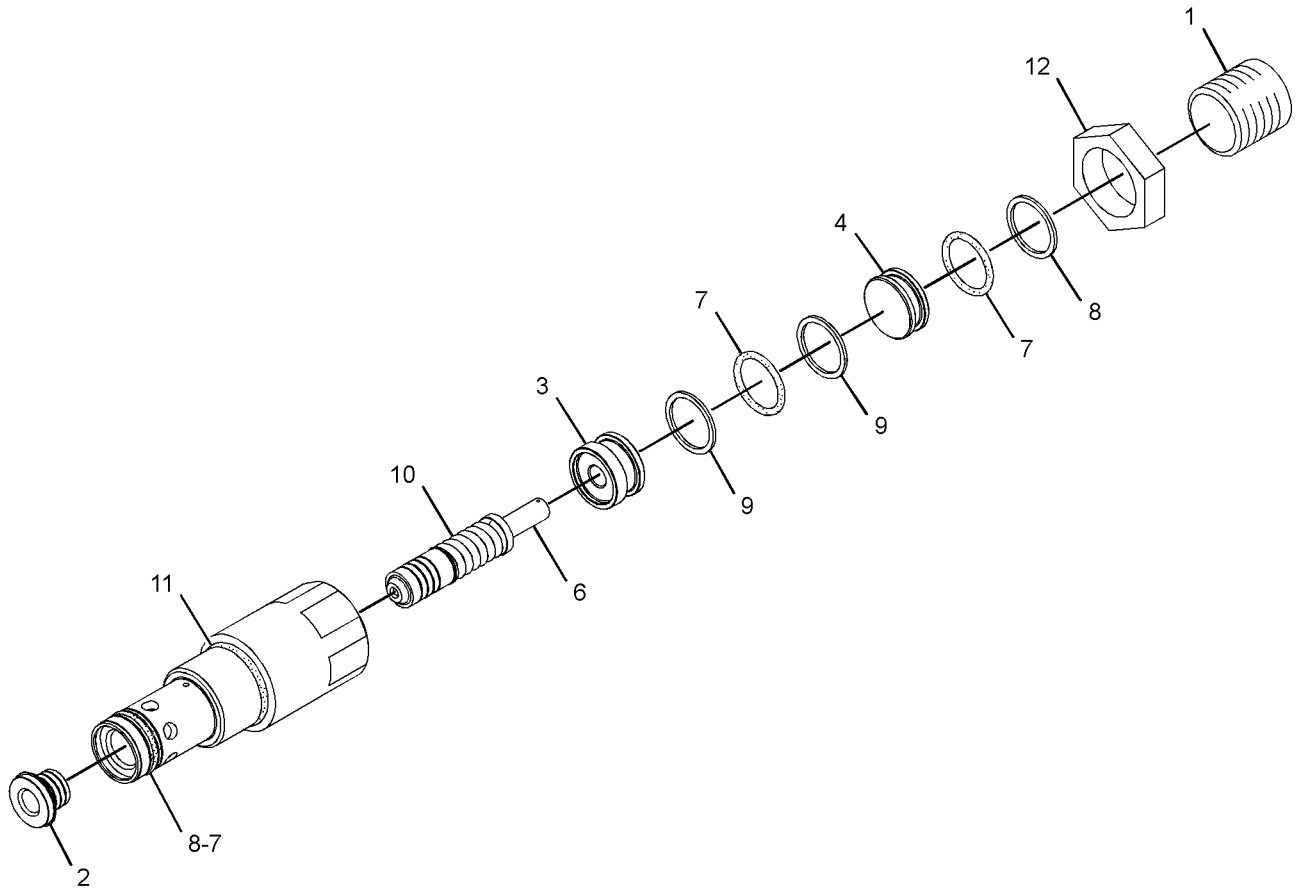

GRAPHIC #1 **<END>** g01413822

309-9973 VALVE GP-RELIEF–LINE

S/N: BYJ1-UP; PDP1-UP

PART OF 282-7249, 282-7259 LINES GP-FRONT, 270-5960 VALVE GP-MAIN CONTROL

ALSO AN ATTACHMENT

SMCS-5069, 5117 **i02852740**

NOTE	REF NO	GRAPHIC REF	PART NUMBER	QTY	PART NAME 1 2 3 4 5 6 (PRODUCT LEVEL)	SEE PAGE
	1	1	**095-1514**	1	SEAL-O-RING	
	2	1	**095-1519**	1	SEAL-O-RING	
	3	1	**095-1575**	1	SEAL-O-RING	
	4	1	**095-1591**	1	SEAL-O-RING	
	5	1	**095-1592**	1	SEAL-O-RING	
	6	1	**095-1783**	1	RING-BACKUP	
	7	1	**095-8024**	1	RING-BACKUP	

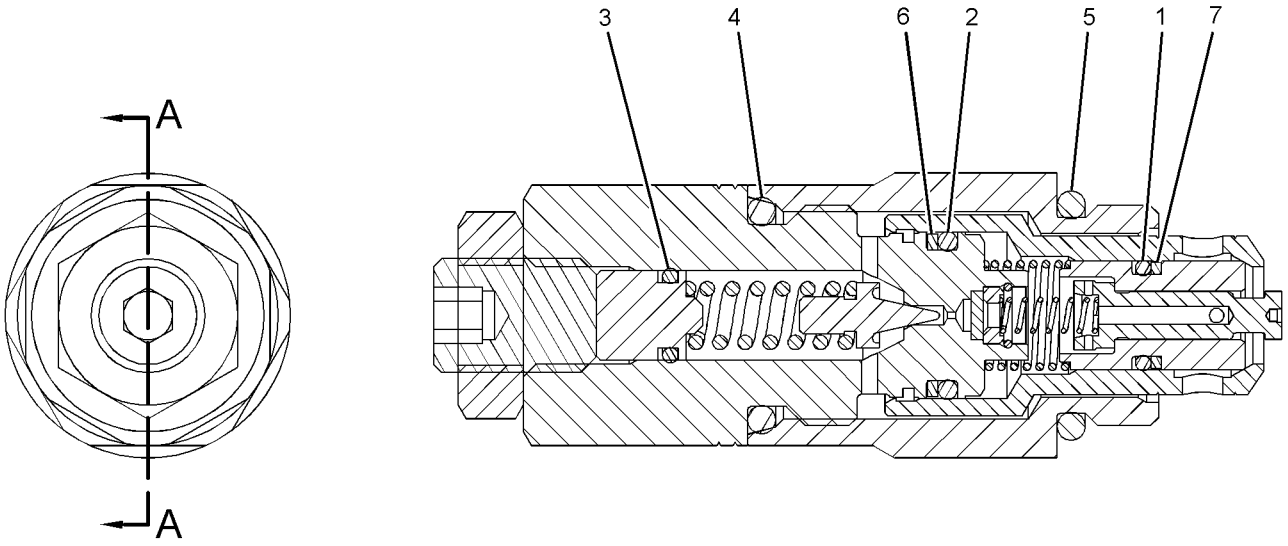

SECTION A-A

GRAPHIC #1 **<END>** g01425186

310-0062 VALVE GP-RELIEF

S/N: BYJ1-UP; PDP1-UP
PART OF 310-0157 VALVE GP-CONTROL
AN ATTACHMENT

SMCS-5069, 5117 **i02845986**

NOTE	REF NO	GRAPHIC REF	PART NUMBER	QTY	PART NAME 1 2 3 4 5 6 (PRODUCT LEVEL)	SEE PAGE
	1	1	**095-1514**	1	SEAL-O-RING	
	2	1	**095-1519**	1	SEAL-O-RING	
	3	1	**095-1575**	1	SEAL-O-RING	
	4	1	**095-1591**	1	SEAL-O-RING	
	5	1	**095-1592**	1	SEAL-O-RING	
	6	1	**095-1783**	1	RING-BACKUP	
	7	1	**095-8024**	1	RING-BACKUP	

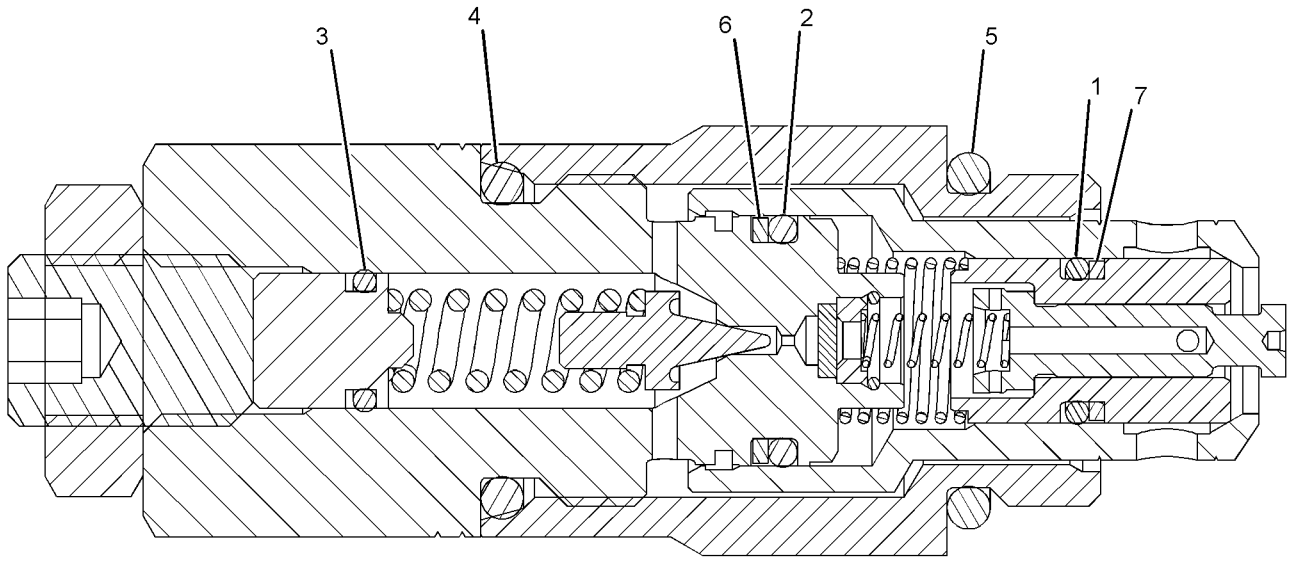

GRAPHIC #1 **<END>** g01419177

HYDRAULIC SYSTEM

310-0063 VALVE GP-RELIEF

S/N: BYJ1-UP; PDP1-UP
PART OF 285-1600 VALVE GP-CONTROL
AN ATTACHMENT

SMCS-5069, 5117 **i02862897**

NOTE	REF NO	GRAPHIC REF	PART NUMBER	QTY	PART NAME 1 2 3 4 5 6 (PRODUCT LEVEL)	SEE PAGE
	1	1	**095-1514**	1	SEAL-O-RING	
	2	1	**095-1519**	1	SEAL-O-RING	
	3	1	**095-1575**	1	SEAL-O-RING	
	4	1	**095-1591**	1	SEAL-O-RING	
	5	1	**095-1592**	1	SEAL-O-RING	
	6	1	**095-1783**	1	RING-BACKUP	
	7	1	**095-8024**	1	RING-BACKUP	

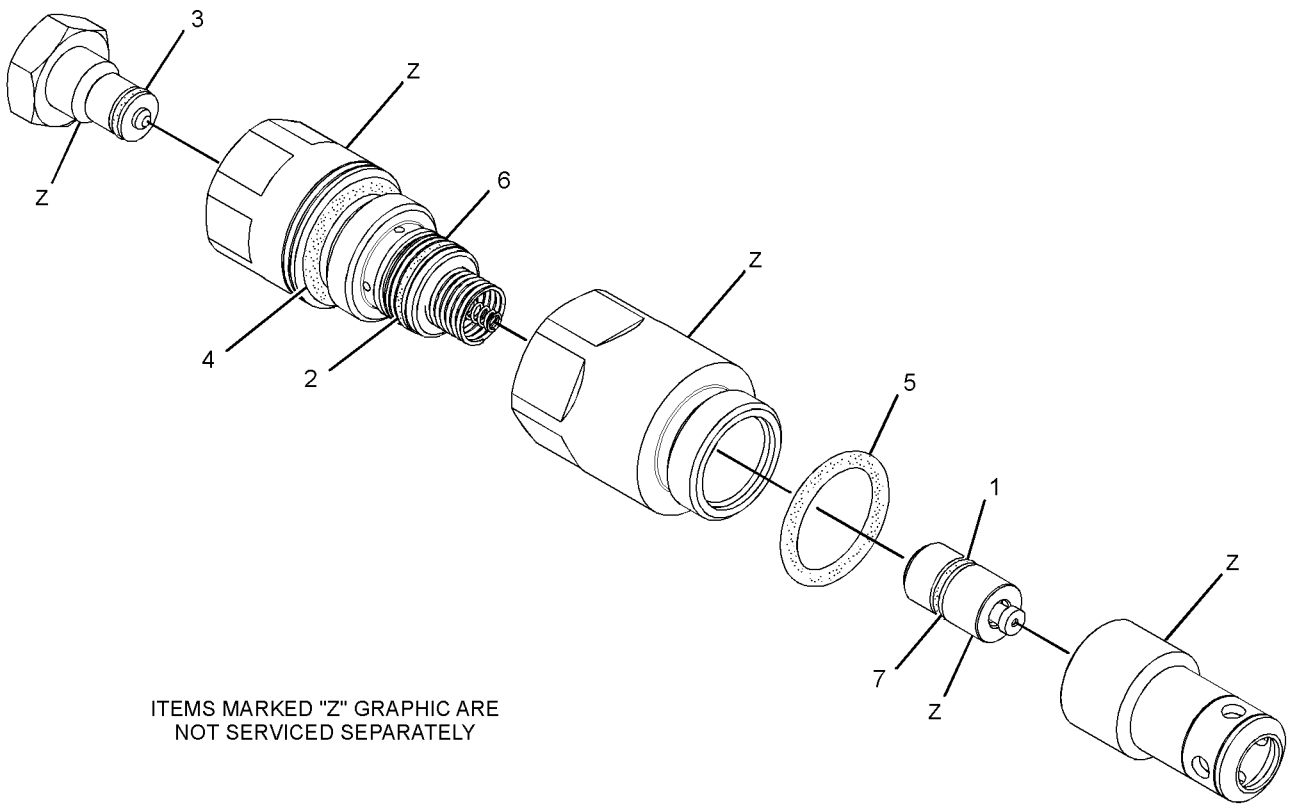

ITEMS MARKED "Z" GRAPHIC ARE
NOT SERVICED SEPARATELY

GRAPHIC #1 **<END>** g01439985

310-0394 VALVE GP-RELIEF–PILOT OPERATED

S/N: BYJ1-UP; PDP1-UP
PART OF 177-2653 VALVE GP-RELIEF
AN ATTACHMENT

SMCS-5069, 5117 **i02990240**

NOTE	REF NO	GRAPHIC REF	PART NUMBER	QTY	PART NAME 1 2 3 4 5 6 (PRODUCT LEVEL)	SEE PAGE
Z	1	1		1	VALVE GP-RELIEF	
	2	1	**6I-6795**	1	SPRING	
	3	1	**171-0034**	1	SEAT	
	4	1	**171-0037**	1	VALVE	
	5	1	**4I-3510**	1	SPRING	
	6	1	**171-0035**	1	HOLDER	
	7	1	**222-0085**	1	NUT (3/4-16-THD)	
	8	1	**171-0036**	1	ADJUSTER	
	9	1	**095-1579**	1	SEAL-O-RING	
	10	1	**6V-8218**	1	SEAL-O-RING	
	11	1	**095-1590**	1	SEAL-O-RING	
	12	1	**6V-8978**	1	SEAL-O-RING	
	13	1	**095-1786**	1	RING-BACKUP	
	14	1	**095-1587**	1	SEAL-O-RING	
	15	1	**3D-2824**	1	SEAL-O-RING	

Z-NOT SERVICED SEPARATELY

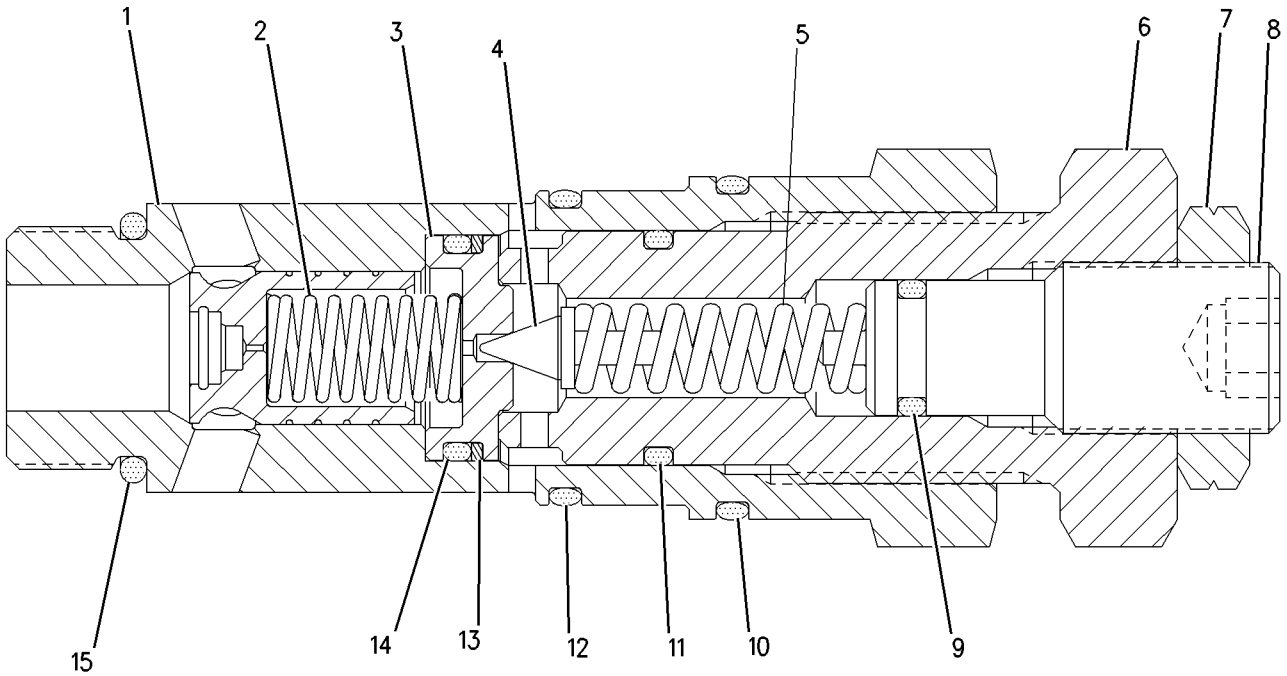

GRAPHIC #1 **<END>** g00927977

HYDRAULIC SYSTEM

123-2430 VALVE GP-SHUTTLE

S/N: BYJ1-UP; PDP1-UP

PART OF 282-7234 LINES GP-PILOT

SMCS-5079 **i01884911**

NOTE	REF NO	GRAPHIC REF	PART NUMBER	QTY	PART NAME 1 2 3 4 5 6 (PRODUCT LEVEL)	SEE PAGE
Z	1	1		1	BODY-VALVE	
	2	1	**4B-9783**	1	BALL	
	3	1	**3J-1907**	2	SEAL-O-RING	
	4	1	**123-2552**	2	CONNECTOR	

Z-NOT SERVICED SEPARATELY

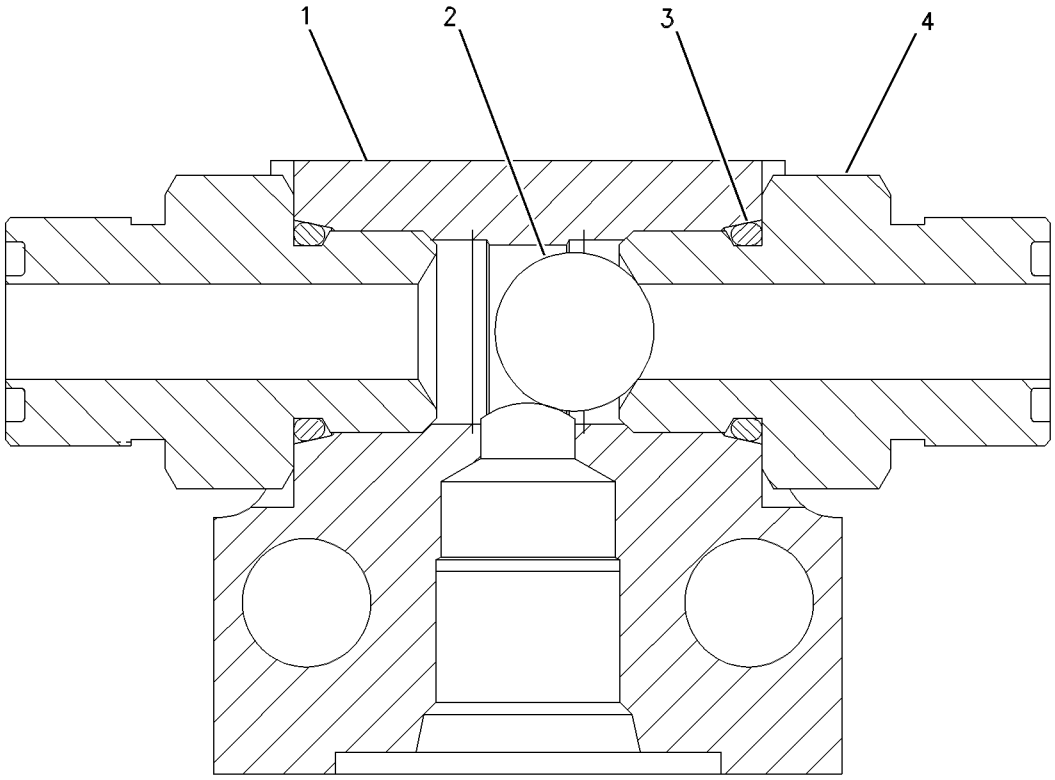

GRAPHIC #1 **<END>** g00652899

123-2549 VALVE GP-SHUTTLE–1-PUMP/2-PUMP

S/N: BYJ1-UP; PDP1-UP
PART OF 164-6980 VALVE GP-SHUTTLE
AN ATTACHMENT

SMCS-5079 **i02210148**

NOTE	REF NO	GRAPHIC REF	PART NUMBER	QTY	PART NAME 1 2 3 4 5 6 (PRODUCT LEVEL)	SEE PAGE
	1	1	**123-2511**	1	TEE	
	2	1	**4B-9783**	1	BALL	
	3	1	**123-2552**	2	CONNECTOR	
	4	1	**3J-1907**	2	SEAL-O-RING	

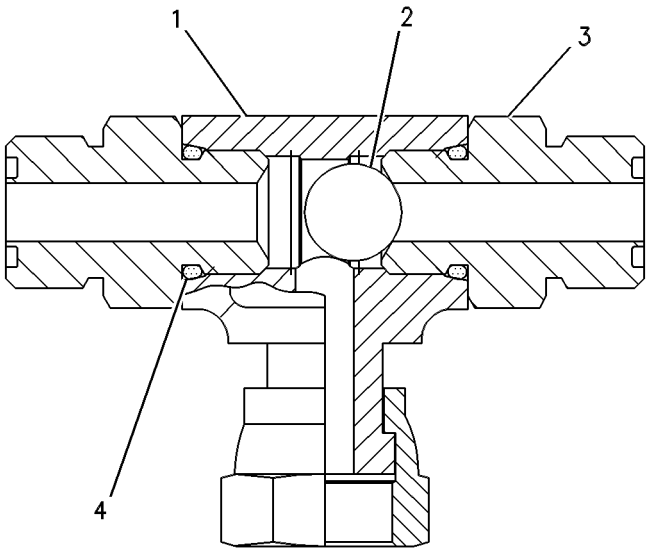

GRAPHIC #1 **<END>** g00274258

164-6980 VALVE GP-SHUTTLE

S/N: BYJ1-UP; PDP1-UP
PART OF 282-7252, 282-7261 LINES GP-PILOT
AN ATTACHMENT

SMCS-5079 **i03254262**

NOTE	PART NUMBER	QTY	PART NAME 1 2 3 4 5 6 (PRODUCT LEVEL)	SEE PAGE
Y	**123-2549**	1	VALVE GP-SHUTTLE (1-PUMP/2-PUMP)	583
	6V-8397	2	SEAL-O-RING	

Y-SEPARATE ILLUSTRATION

<END>

171-0198 VALVE GP-SHUTTLE

S/N: BYJ1-UP; PDP1-UP
PART OF 171-0188 VALVE GP-SOLENOID
AN ATTACHMENT

SMCS-5079 **i01269960**

NOTE	PART NUMBER	QTY	PART NAME 1 2 3 4 5 6 (PRODUCT LEVEL)	SEE PAGE
	185-0407	1	KIT-SEAL (SHUTTLE VALVE)	

<END>

185-0462 VALVE GP-SHUTTLE

S/N: BYJ1-UP; PDP1-UP
PART OF 282-7251 LINES GP-PILOT
AN ATTACHMENT

SMCS-5079 **i01612080**

NOTE	REF NO	GRAPHIC REF	PART NUMBER	QTY	PART NAME 1 2 3 4 5 6 (PRODUCT LEVEL)	SEE PAGE
	1	1	**7I-8084**	4	PLUG	
	2	1	**185-0463**	1	SEAT	
	3	1	**4B-9880**	7	BALL	
	4	1	**165-9464**	6	SEAT	
	5	1	**095-1578**	7	SEAL-O-RING	
	6	1	**107-6479**	7	PLUG	

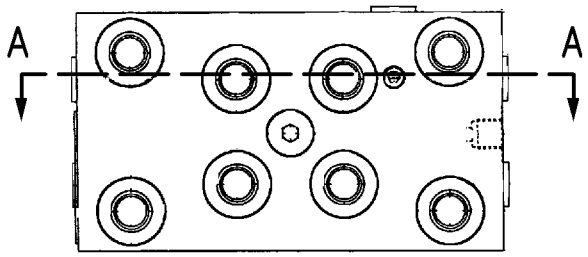

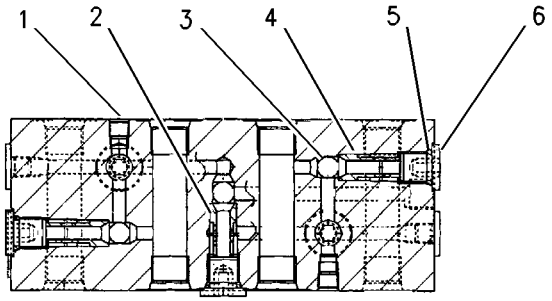

SECTION A-A

GRAPHIC #1 **<END>** g00699270

111-9916 VALVE GP-SOLENOID–PRESSURE REDUCING

S/N: BYJ1-UP; PDP1-UP

PART OF 311-7404 PUMP GP-PISTON, 171-0188, 259-7430 VALVE GP-SOLENOID, 270-5766, 297-0683 VALVE GP-SOLENOID & PRESS REDC

ALSO AN ATTACHMENT

SMCS-5479 **i02649387**

NOTE	REF NO	GRAPHIC REF	PART NUMBER	QTY	PART NAME 1 2 3 4 5 6 (PRODUCT LEVEL)	SEE PAGE
	1	1	**095-1750**	1	SEAL-O-RING	
	2	1	**6V-8398**	1	SEAL-O-RING	
	3	1	**095-1751**	1	SEAL-O-RING	
	4	1	**095-1586**	1	SEAL-O-RING	
M	5	1	**114-0623**	1	NUT AS (M6X1-THD)	

M-METRIC PART

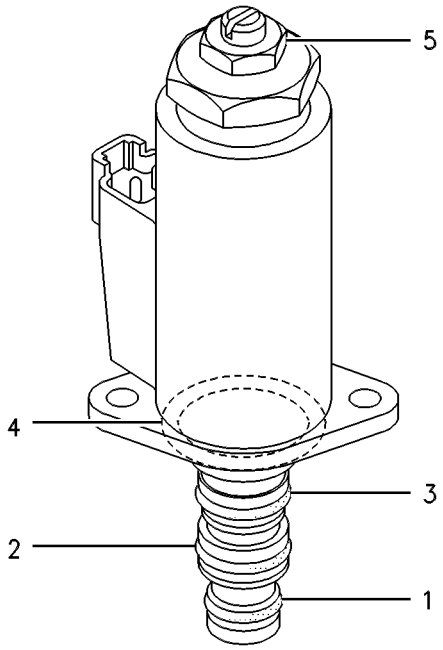

GRAPHIC #1 **<END>** g00258219

121-1491 VALVE GP-SOLENOID

S/N: BYJ1-UP; PDP1-UP

PART OF 239-8697, 239-8998 MANIFOLD GP-CONTROL

SMCS-5479 **i02196717**

NOTE	REF NO	GRAPHIC REF	PART NUMBER	QTY	PART NAME 1 2 3 4 5 6 (PRODUCT LEVEL)	SEE PAGE
	1	1	**095-1750**	1	SEAL-O-RING	
	2	1	**6V-8398**	1	SEAL-O-RING	
	3	1	**095-1751**	1	SEAL-O-RING	
	4	1	**095-1586**	1	SEAL-O-RING	
M	5	1	**114-0623**	1	NUT AS (M6X1-THD)	

M-METRIC PART

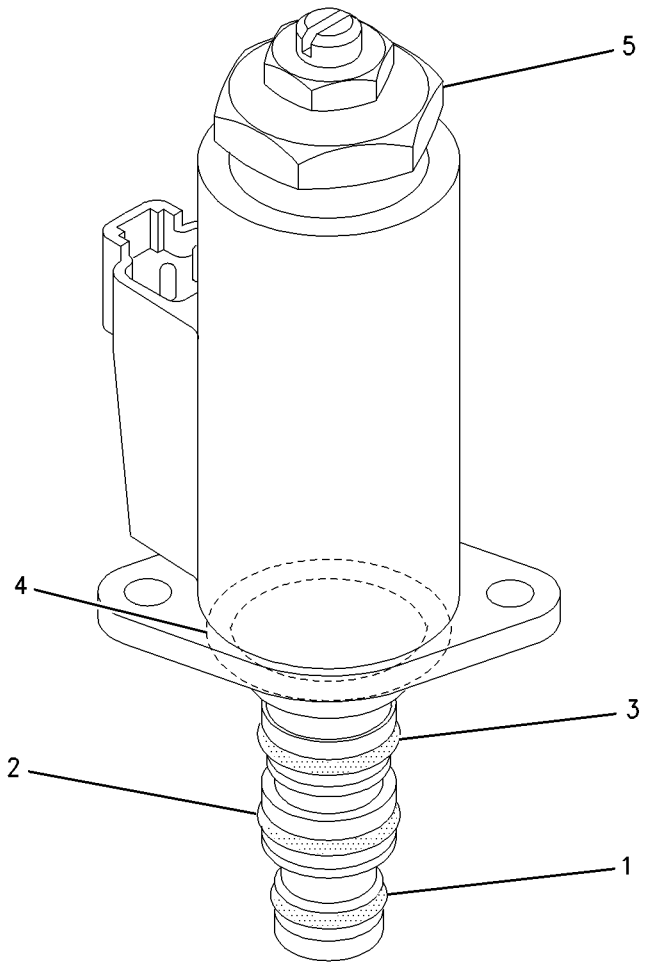

GRAPHIC #1 **<END>** g00928680

HYDRAULIC SYSTEM

121-6303 VALVE GP-SOLENOID

S/N: BYJ1-UP; PDP1-UP
PART OF 282-7252, 282-7261 LINES GP-PILOT
AN ATTACHMENT

SMCS-5479 **i01272110**

NOTE	REF NO	GRAPHIC REF	PART NUMBER	QTY	PART NAME 1 2 3 4 5 6 (PRODUCT LEVEL)	SEE PAGE
	1	1	**7I-8102**	1	VALVE AS	
	2	1	**121-6304**	1	COIL GP	
M	3	1	**099-0822**	2	BOLT-SOCKET HEAD (M5X0.8X10-MM)	
	4	1	**095-1519**	1	SEAL-O-RING	
	5	1	**7I-0986**	1	PLUG	
	6	1	**7I-7403**	1	SPRING	
	7	1	**095-1578**	1	SEAL-O-RING	

M-METRIC PART

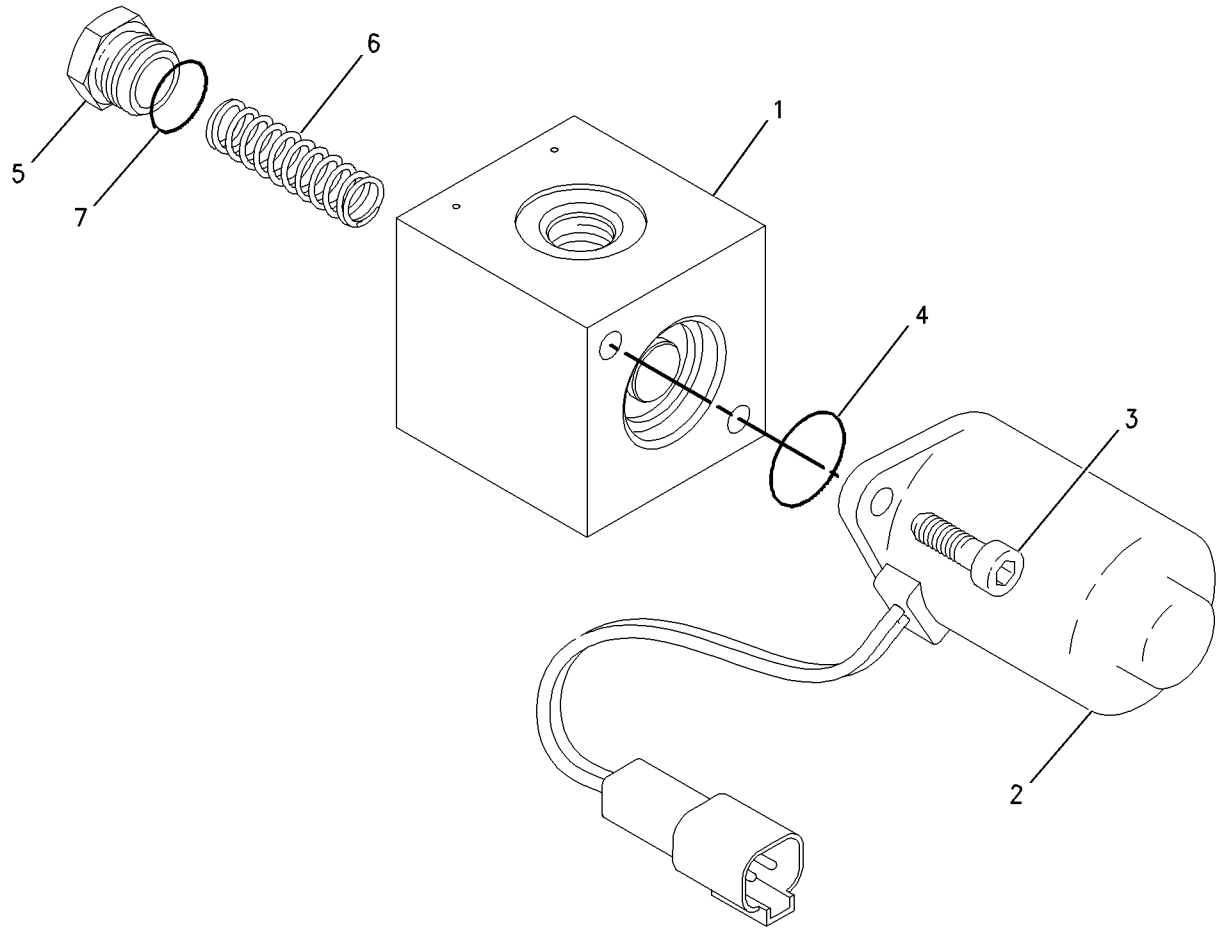

GRAPHIC #1 **<END>** g00685554

171-0188 VALVE GP-SOLENOID

S/N: BYJ1-UP; PDP1-UP
PART OF 282-7252, 282-7261 LINES GP-PILOT
AN ATTACHMENT

SMCS-5479 **i03255367**

NOTE	REF NO	GRAPHIC REF	PART NUMBER	QTY	PART NAME 1 2 3 4 5 6 (PRODUCT LEVEL)	SEE PAGE
Y	1	1	**111-9916**	1	VALVE GP-SOLENOID (PRESSURE REDUCING)	586
M	2	1	**8T-0288**	2	BOLT (M5X0.8X12-MM)	
Y	3	1	**171-0198**	2	VALVE GP-SHUTTLE	584
	4	1	**7I-8084**	6	PLUG	

M-METRIC PART
Y-SEPARATE ILLUSTRATION

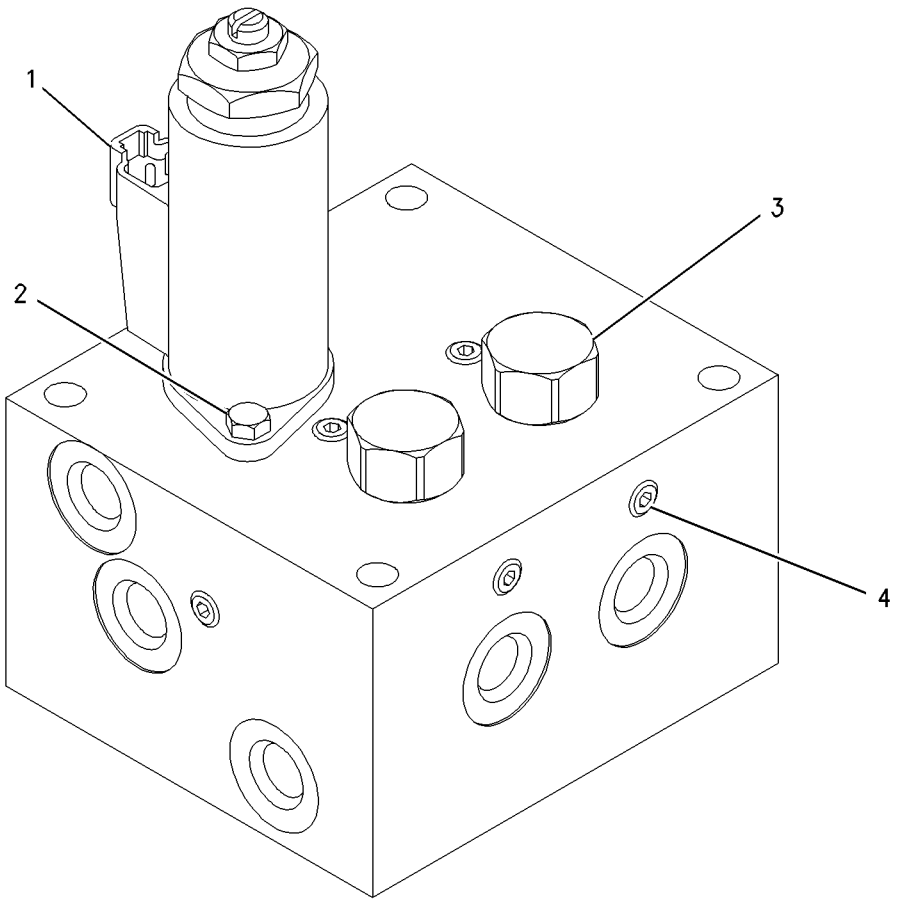

GRAPHIC #1 **<END>** g00681111

HYDRAULIC SYSTEM

185-0472 VALVE GP-SOLENOID

S/N: BYJ1-UP; PDP1-UP
PART OF 282-7261 LINES GP-PILOT
AN ATTACHMENT

SMCS-5479 **i01590630**

NOTE	REF NO	GRAPHIC REF	PART NUMBER	QTY	PART NAME 1 2 3 4 5 6 (PRODUCT LEVEL)	SEE PAGE
	1	1	*185-0473*	1	VALVE GP-CONTROL	
	2	1	**121-6304**	1	COIL GP	
M	3	1	**099-0822**	2	BOLT-SOCKET HEAD (M5X0.8X10-MM)	
	4	1	**095-1519**	1	SEAL-O-RING	
	5	1	**7I-0986**	1	PLUG	
	6	1	**7I-7403**	1	SPRING	
	7	1	**095-1578**	1	SEAL-O-RING	

M-METRIC PART

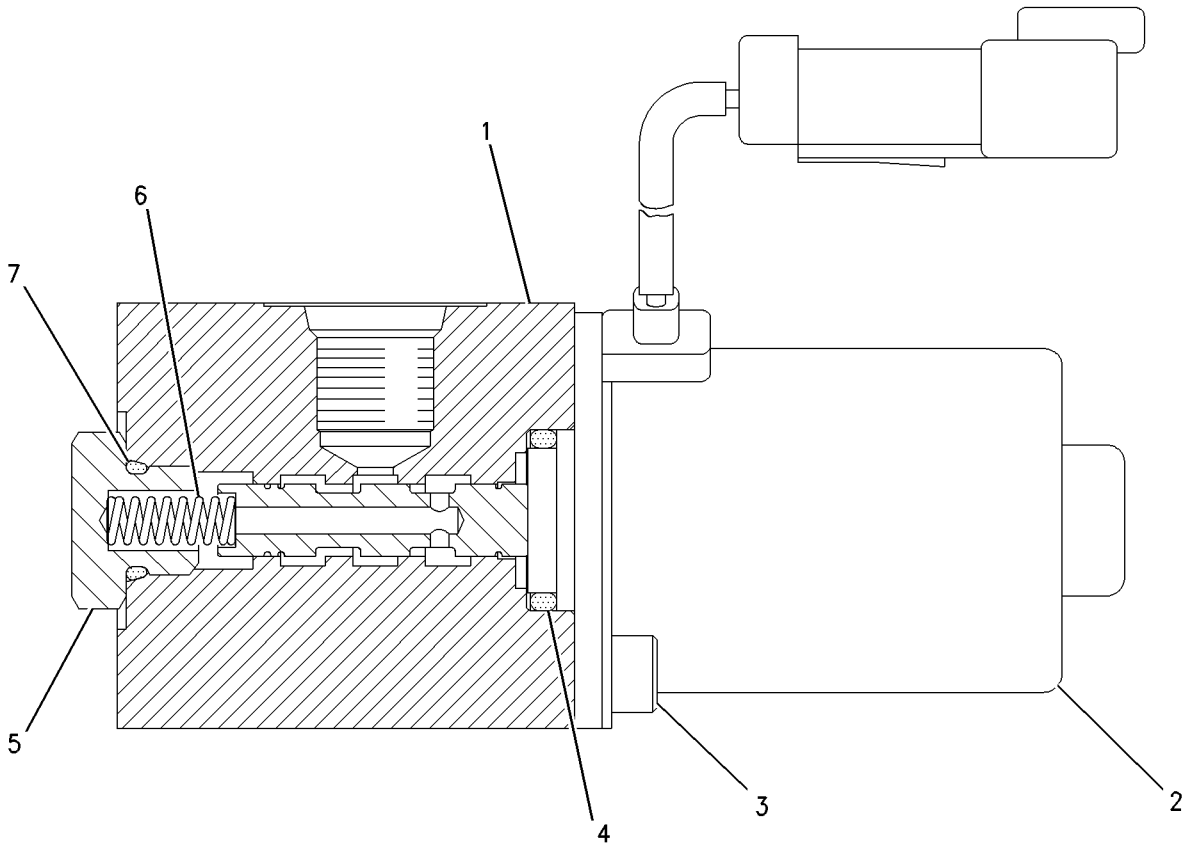

GRAPHIC #1 **<END>** g00804262

259-7430 VALVE GP-SOLENOID—PRESSURE REDUCING

S/N: BYJ1-UP; PDP1-UP
PART OF 282-7252, 292-7640 LINES GP-PILOT
AN ATTACHMENT

SMCS-5479 **i03196381**

NOTE	REF NO	GRAPHIC REF	PART NUMBER	QTY	PART NAME 1 2 3 4 5 6 (PRODUCT LEVEL)	SEE PAGE
M	1	1	**8T-0288**	4	BOLT (M5X0.8X12-MM)	
Y	2	1	**111-9916**	2	VALVE GP-SOLENOID (PRESSURE REDUCING)	586

M-METRIC PART
Y-SEPARATE ILLUSTRATION

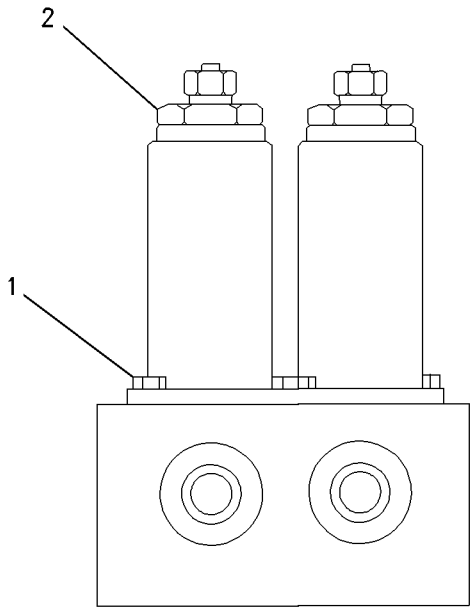

GRAPHIC #1 **<END>** g00785417

315-4412 VALVE GP-SOLENOID

S/N: BYJ1-UP; PDP1-UP
PART OF 326-4402 VALVE GP-SOLENOID
AN ATTACHMENT

SMCS-5479 **i02954227**

NOTE	REF NO	GRAPHIC REF	PART NUMBER	QTY	PART NAME 1 2 3 4 5 6 (PRODUCT LEVEL)	SEE PAGE
	1	1	**126-6514**	1	SEAL-O-RING	
	2	1	**126-6515**	1	SEAL-O-RING	
	3	1	**126-6516**	1	SEAL-O-RING	
	4	1	**095-1586**	1	SEAL-O-RING	

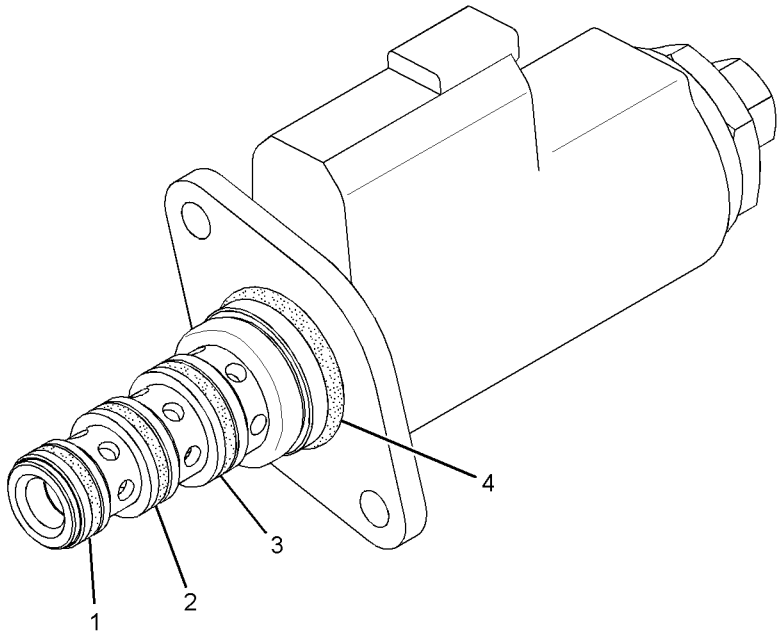

GRAPHIC #1 **<END>** g01456627

326-4402 VALVE GP-SOLENOID

S/N: BYJ1-UP; PDP1-UP
PART OF 267-6839 DRIVE GP-SWING
AN ATTACHMENT

SMCS-5479 **i03034887**

NOTE	REF NO	GRAPHIC REF	PART NUMBER	QTY	PART NAME 1 2 3 4 5 6 (PRODUCT LEVEL)	SEE PAGE
	1	1	**8T-6759**	2	PLUG-PIPE	
	2	1	**190-4896**	2	PLUG	
	3	1	**274-2694**	1	BLOCK	
	4	1	**283-6099**	2	ORIFICE	
Y	5	1	**315-4412**	1	VALVE GP-SOLENOID (24-VOLT) (FINE SWING)	592
M	6	1	**7I-2272**	2	BOLT (M5X0.8X12-MM)	

M-METRIC PART
Y-SEPARATE ILLUSTRATION

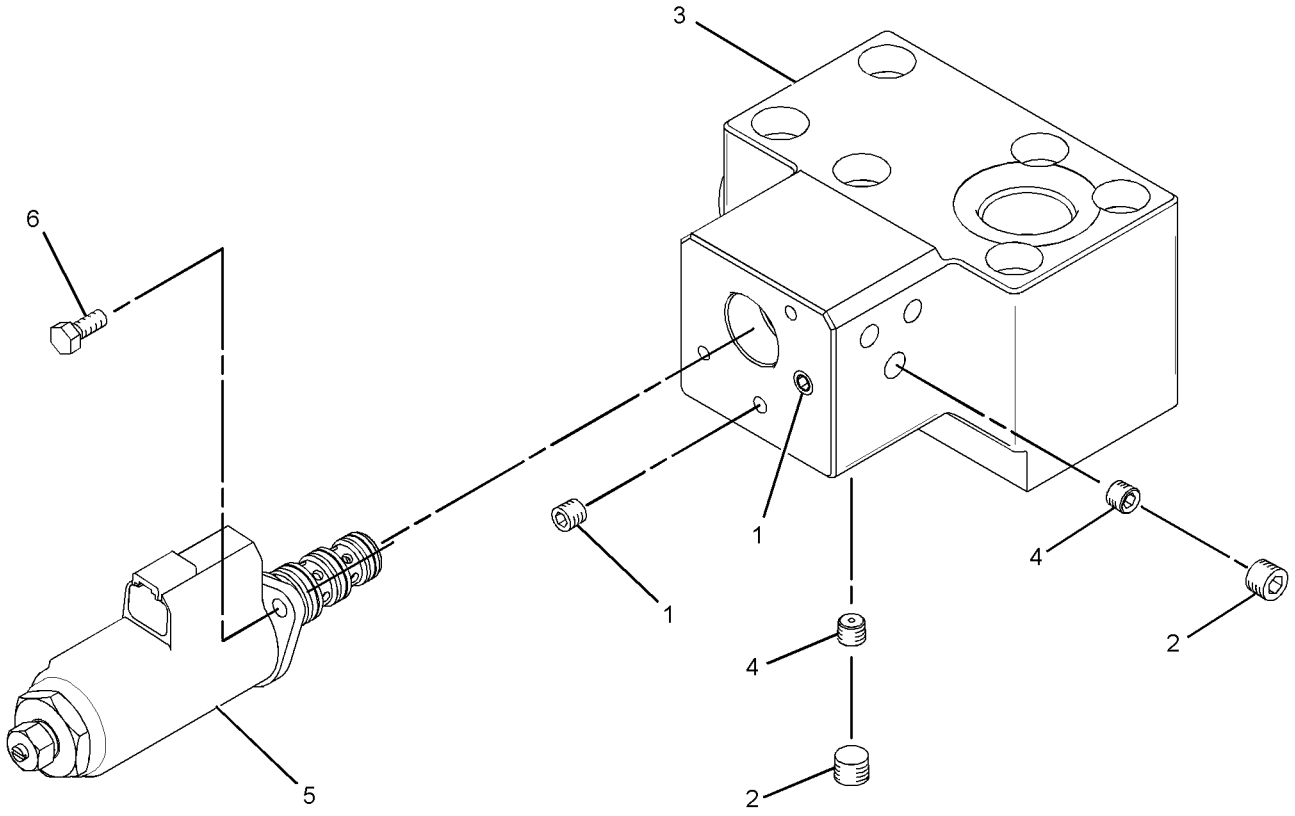

GRAPHIC #1 **<END>** g01550394

270-5766 VALVE GP-SOLENOID & PRESS REDC–

WORK TOOL CONTROL
S/N: BYJ1-UP; PDP1-UP
PART OF 282-7261 LINES GP-PILOT
AN ATTACHMENT

SMCS-5467, 5479 **i02747429**

NOTE	REF NO	GRAPHIC REF	PART NUMBER	QTY	PART NAME 1 2 3 4 5 6 (PRODUCT LEVEL)	SEE PAGE
M	1	1	**8T-0288**	6	BOLT (M5X0.8X12-MM)	
Y	2	1	**111-9916**	3	VALVE GP-SOLENOID (AUXILIARY, COMBINED FUNCTION)	586

M-METRIC PART
Y-SEPARATE ILLUSTRATION

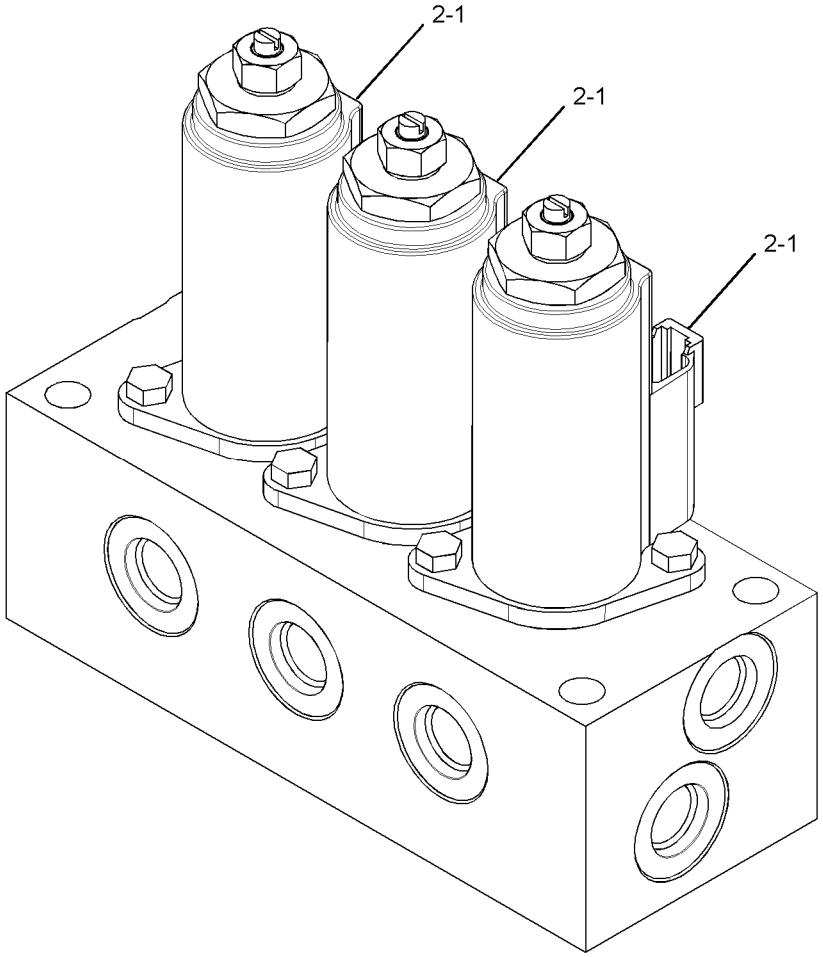

GRAPHIC #1 **<END>** g01382803

297-0683 VALVE GP-SOLENOID & PRESS REDC

S/N: BYJ1-UP; PDP1-UP
PART OF 282-7230 LINES GP-PILOT

SMCS-5467, 5479 **i02826163**

NOTE	REF NO	GRAPHIC REF	PART NUMBER	QTY	PART NAME 1 2 3 4 5 6 (PRODUCT LEVEL)	SEE PAGE
M	1	1	**8T-0288**	4	BOLT (M5X0.8X12-MM)	
	2	1	**7I-8084**	2	PLUG	
Y	3	1	**111-9916**	2	VALVE GP-SOLENOID	586
	4	1	**215-5032**	2	PLUG	
	5	1	**215-5033**	2	SPRING	
	6	1	**215-5034**	2	SEAT	
	7	1	**215-5035**	2	VALVE	
	8	1	**095-1579**	2	SEAL-O-RING	
	9	1	**4J-5477**	2	SEAL-O-RING	

M-METRIC PART
Y-SEPARATE ILLUSTRATION

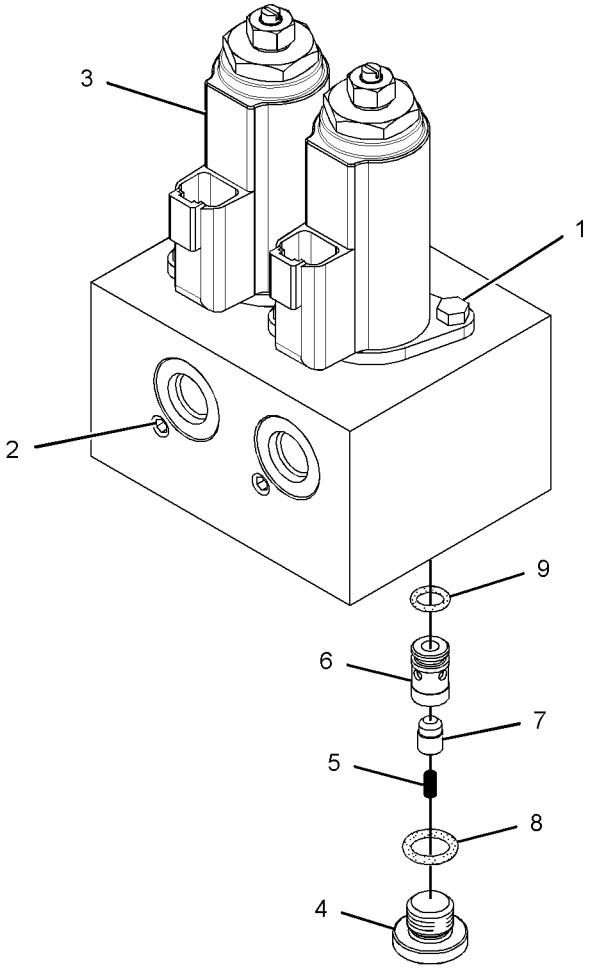

GRAPHIC #1 **<END>** g01414602

303-4484 VALVE GP-TRAVEL COUNTERBALANCE

S/N: BYJ1-UP; PDP1-UP
PART OF 277-6697 MOTOR GP-PISTON

SMCS-5811 **i02827539**

NOTE	REF NO	GRAPHIC REF	PART NUMBER	QTY	PART NAME 1 2 3 4 5 6 (PRODUCT LEVEL)	SEE PAGE
	1	1	**7Y-4224**	2	ORIFICE	
	2	1	**087-5631**	1	ORIFICE	
	3	1	**095-1585**	2	SEAL-O-RING	
	4	1	**119-5362**	2	SPRING	
	5	1	**119-5364**	2	PLUG	
	6	1	**129-7932**	2	GUIDE	
	7	1	**165-5837**	2	COVER	
	8	1	**165-5846**	2	VALVE	
	9	1	**165-5850**	1	SPRING	
	10	1	**176-8585**	1	SPOOL	
	11	1	**199-5152**	2	SPRING	
	12	1	*199-6408*	1	VALVE GP-COUNTERBALANCE	
		1	**199-6921**	1	SPOOL AS	
		1	**5H-1472**	2	BALL	
	13	1	**4T-9905**	1	ADAPTER	
Y	15	1	**304-3961**	2	VALVE GP-RELIEF (TRACTION CONTROL)	577
	16	1	**095-1701**	2	SEAL-O-RING	
	17	1	**2M-9780**	4	SEAL-O-RING	
	18	1	**3J-1907**	2	SEAL-O-RING	
	19	1	**3K-0360**	1	SEAL-O-RING	
	20	1	**4J-7533**	12	SEAL-O-RING	
M	22	1	**8T-9515**	8	BOLT-SOCKET HEAD (M10X1.5X40-MM)	
	23	1	**9S-8001**	12	PLUG-O-RING	
	24	1	**9S-8004**	2	PLUG-O-RING	
	25	1	**9S-8005**	1	PLUG-O-RING	
	26	1	**9S-8006**	1	PLUG-O-RING	

M-METRIC PART
Y-SEPARATE ILLUSTRATION

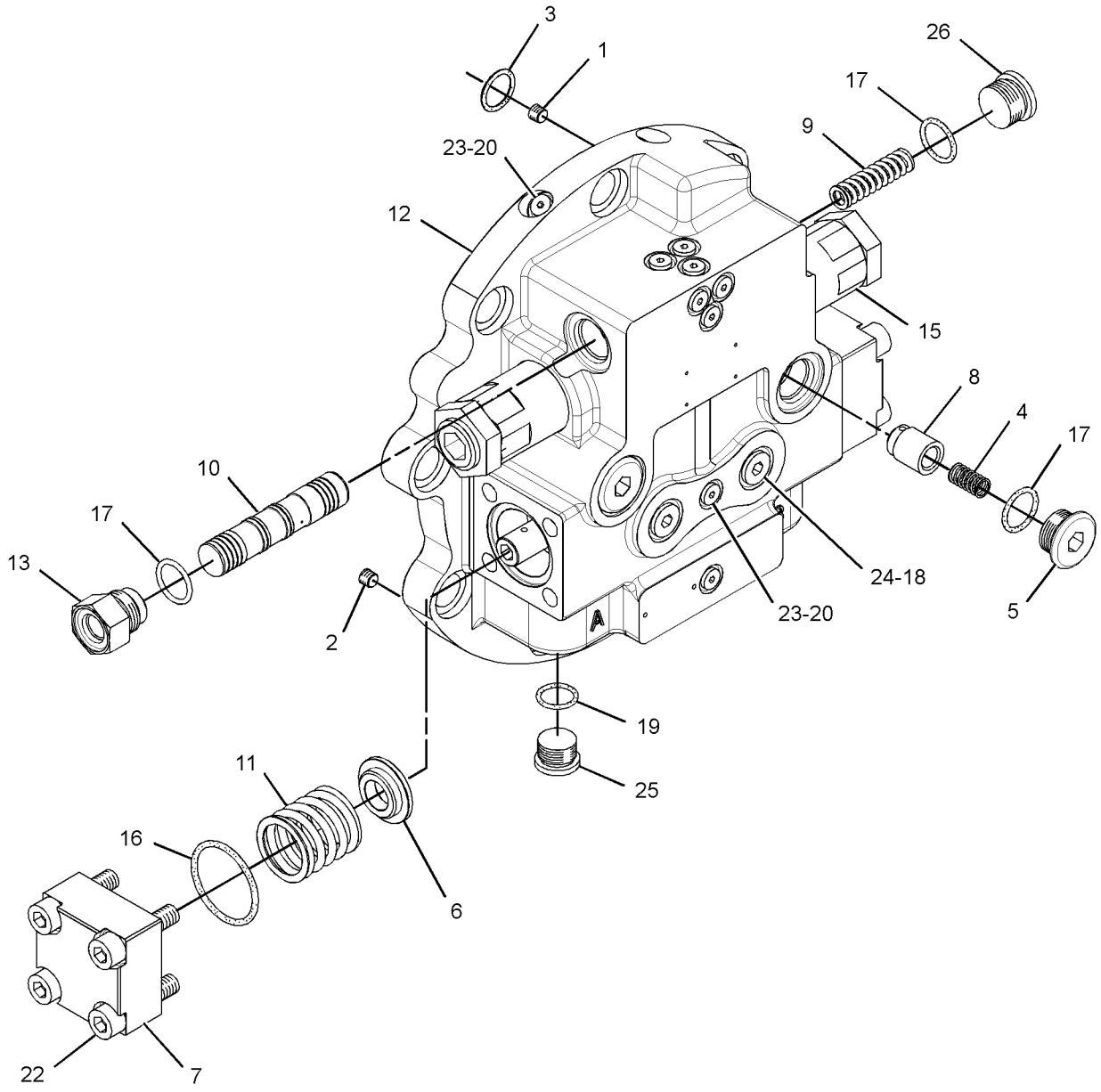

GRAPHIC #1 **<END>** g01442879

260-7189 BOOM AR-1 PIECE LONG

S/N: BYJ1-UP; PDP1-UP

AN ATTACHMENT

SMCS-6501 **i02961283**

NOTE	PART NUMBER	QTY	PART NAME 1 2 3 4 5 6 (PRODUCT LEVEL)	SEE PAGE
Y	*282-4498*	1	BOOM GP	599
Y	*289-7717*	1	CYLINDER & LINES GP-BOOM (LH)	314
Y	*289-7718*	1	CYLINDER & LINES GP-BOOM (RH)	314
Y	*289-7711*	1	CYLINDER & LINES GP-STICK	315
Y	*275-7113*	1	LIGHTING GP-FLOOD (1-PIECE BOOM)	134
Y	*319-9919*	1	LINES GP-BOOM	387
Y	*315-0920*	1	LINES GP-GREASE	605
Y	*279-7565*	1	SENSOR & MTG GP-POSITION (BOOM)	151

Y-SEPARATE ILLUSTRATION

<END>

282-4498 BOOM GP

S/N: BYJ1-UP; PDP1-UP
4.6-M (15-FT)
PART OF 260-7189 BOOM AR-1 PIECE LONG
AN ATTACHMENT

SMCS-6301, 6302, 6460, 6501, 6516, 6521, 6535, 6536 **i02826361**

NOTE	REF NO	GRAPHIC REF	PART NUMBER	QTY	PART NAME 1 2 3 4 5 6 (PRODUCT LEVEL)	SEE PAGE
	1	1	**1R-6225**	1	PIN AS	
	2	1	**1R-6226**	1	PIN AS	
	3	1	**4I-3309**	2	SPACER (82X110X3-MM THK)	
B	4	1	**093-0115**	1	SHIM (2-MM THK)	
	5	1	**093-0357**	1	WASHER (63X100X9-MM THK)	
B	6	1	**133-2425**	1	SHIM (0.5-MM THK)	
	7	1	**166-1486**	4	SHIM (2-MM THK)	
	8	1	**172-3080**	1	PIN	
	9	1	**282-4499**	1	BOOM & BEARING AS	
	9A	1	**273-6814**	2	BEARING-SLEEVE	
		1	**9R-4595**	8	BOSS (M12X1.75X30-MM)	
	10	1	**086-0297**	1	WASHER (13X50X6-MM THK)	
	11	1	**086-0298**	1	WASHER (19X60X9-MM THK)	
	12	1	**095-6824**	2	PLATE	
	13	1	**099-3600**	4	WASHER (12.7X30X4-MM THK)	
	14	1	**166-1494**	2	SEAL-LIP TYPE	
M	15	1	**7X-2552**	1	BOLT (M16X2X30-MM)	
M	16	1	**8T-4179**	1	BOLT (M12X1.75X20-MM)	
M	17	1	**8T-4192**	4	BOLT (M12X1.75X25-MM)	

B-USE AS REQUIRED
M-METRIC PART

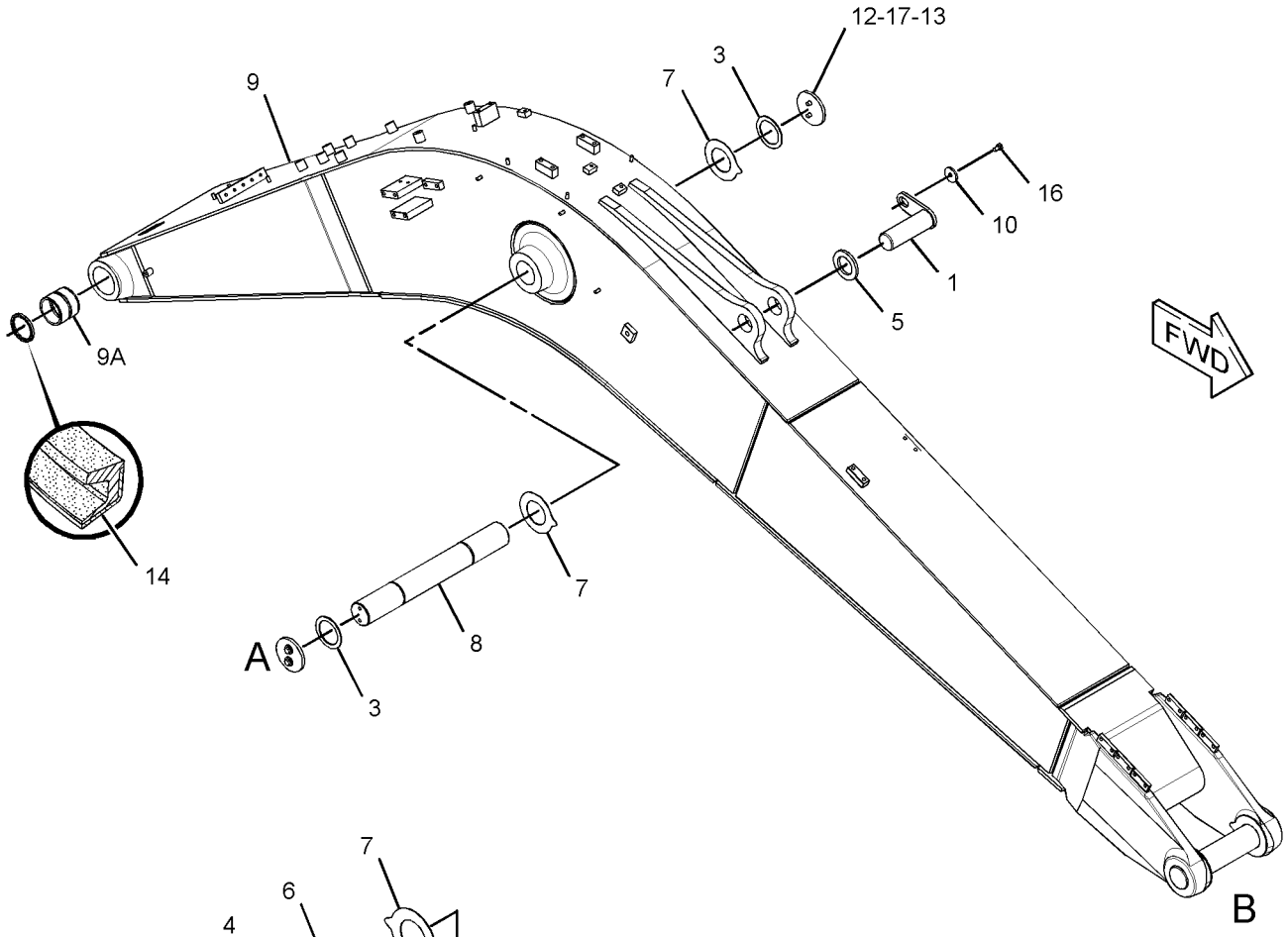

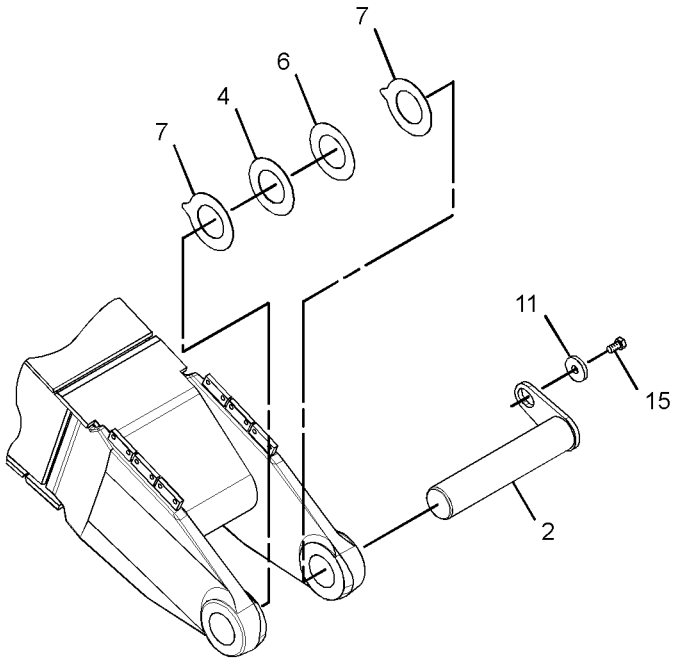

VIEW OF AREA B
(EXPLODED)

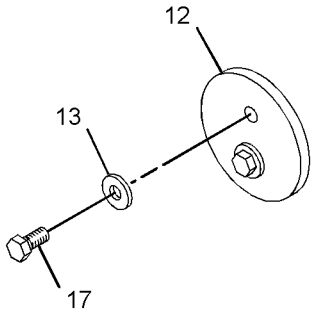

VIEW OF AREA A
(EXPLODED)

GRAPHIC #1 **<END>** g01521780

260-7212 INSTALLATION AR-AUXILIARY–
BLADE, HEAVY-DUTY UNDCRG
S/N: PDP1-UP
AN ATTACHMENT

i02975100

NOTE	PART NUMBER	QTY	PART NAME 1 2 3 4 5 6 (PRODUCT LEVEL)	SEE PAGE
Y	*316-8852*	1	CONTROL GP-BLADE	710
Y	*274-2678*	1	CYLINDER & LINES GP-BLADE (LH)	314
Y	*274-2679*	1	CYLINDER & LINES GP-BLADE (RH)	314
Y	**278-9352**	1	FRAME AS-UNDERCARRIAGE	275
Y	*199-4692*	1	GEAR & BEARING GP-SWING	243
Y	*289-7814*	1	GUARD GP-CYLINDER (BLADE)	351
Y	*282-7236*	1	LINES GP-BLADE CYLINDER	381
Y	*282-7296*	1	LINES GP-PILOT (BLADE)	465
Y	*202-1549*	1	PLATE & FILM GP	830
Y	*259-0917*	1	PUMP & MTG GP-AUXILIARY (MEDIUM PRESSURE)	506
Y	*296-7225*	1	SWIVEL & MOUNTING GP	524

Y-SEPARATE ILLUSTRATION

<END>

260-7213 INSTALLATION AR-AUXILIARY–
BLADE, LONG UNDERCARRIAGE
S/N: BYJ1-UP
AN ATTACHMENT

i02957162

NOTE	PART NUMBER	QTY	PART NAME 1 2 3 4 5 6 (PRODUCT LEVEL)	SEE PAGE
Y	*316-8852*	1	CONTROL GP-BLADE	710
Y	*274-2678*	1	CYLINDER & LINES GP-BLADE (LH)	314
Y	*274-2679*	1	CYLINDER & LINES GP-BLADE (RH)	314
Y	**278-9285**	1	FRAME AS-UNDERCARRIAGE	274
Y	*199-4692*	1	GEAR & BEARING GP-SWING	243
Y	*289-7814*	1	GUARD GP-CYLINDER (BLADE)	351
Y	*282-7236*	1	LINES GP-BLADE CYLINDER	381
Y	*282-7296*	1	LINES GP-PILOT (BLADE)	465
Y	*202-1549*	1	PLATE & FILM GP	830
Y	*259-0917*	1	PUMP & MTG GP-AUXILIARY (MEDIUM PRESSURE)	506
Y	*296-7225*	1	SWIVEL & MOUNTING GP	524

Y-SEPARATE ILLUSTRATION

<END>

IMPLEMENTS

251-2750 LINES GP-GREASE

S/N: BYJ1-UP; PDP1-UP
PART OF 260-7059 STICK AR
AN ATTACHMENT

SMCS-7510 **i02182887**

NOTE	REF NO	GRAPHIC REF	PART NUMBER	QTY	PART NAME 1 2 3 4 5 6 (PRODUCT LEVEL)	SEE PAGE
	1	1	**087-5840**	1	PLATE	
I	2	1	**101-2169**	1	HOSE AS	
I	3	1	**101-2170**	1	HOSE AS	
	4	1	**251-2627**	1	HOSE AS	
	5	1	**033-8248**	8	CLIP	
	6	1	**3B-8489**	3	FITTING-GREASE	
	7	1	**6K-6967**	2	ADAPTER-PIPE	
	8	1	**6V-3342**	2	ELBOW-PIPE	
	9	1	**7J-8611**	1	ELBOW-PIPE	
	10	1	**8T-4121**	9	WASHER-HARD (11X21X2.5-MM THK)	
M	11	1	**8T-4133**	8	NUT (M10X1.5-THD)	
M	12	1	**8T-4137**	1	BOLT (M10X1.5X20-MM)	

I-REFER TO HYDRAULIC INFORMATION SYSTEM
M-METRIC PART

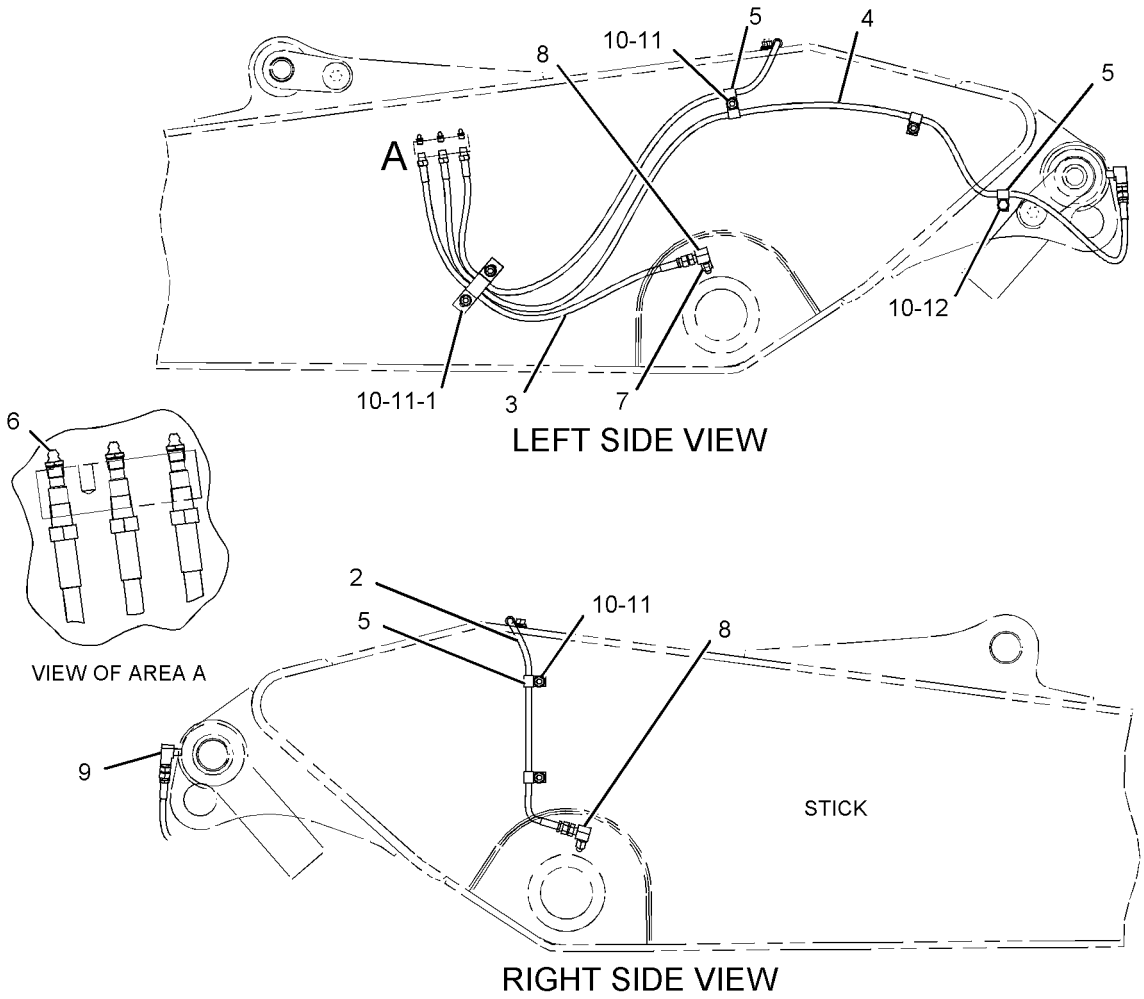

GRAPHIC #1 **<END>** g01116083

IMPLEMENTS

282-4688 LINES GP-GREASE

S/N: BYJ1-UP; PDP1-UP
PART OF 260-7060 STICK AR-HOE
AN ATTACHMENT

SMCS-7510 **i02828685**

NOTE	REF NO	GRAPHIC REF	PART NUMBER	QTY	PART NAME 1 2 3 4 5 6 (PRODUCT LEVEL)	SEE PAGE
	1	1	**6V-3342**	2	ELBOW-PIPE	
	2	1	**7J-8611**	1	ELBOW-PIPE	
	3	1	**087-5840**	1	PLATE	
I	4	1	**087-5899**	1	HOSE AS	
I	5	1	**290-9044**	1	HOSE AS	
I	6	1	**290-9045**	1	HOSE AS	
	7	1	**033-8248**	8	CLIP	
	8	1	**3B-8489**	3	FITTING-GREASE	
	9	1	**6K-6967**	2	ADAPTER-PIPE	
	10	1	**8T-4121**	8	WASHER-HARD (11X21X2.5-MM THK)	
M	11	1	**8T-4133**	8	NUT (M10X1.5-THD)	

I-REFER TO HYDRAULIC INFORMATION SYSTEM
M-METRIC PART

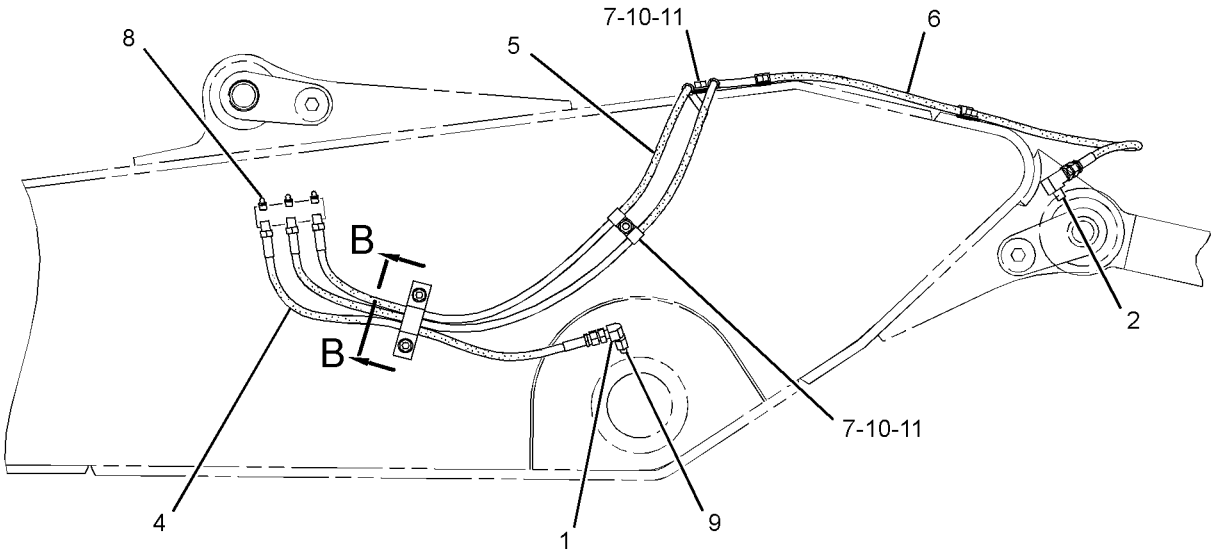

LEFT SIDE VIEW

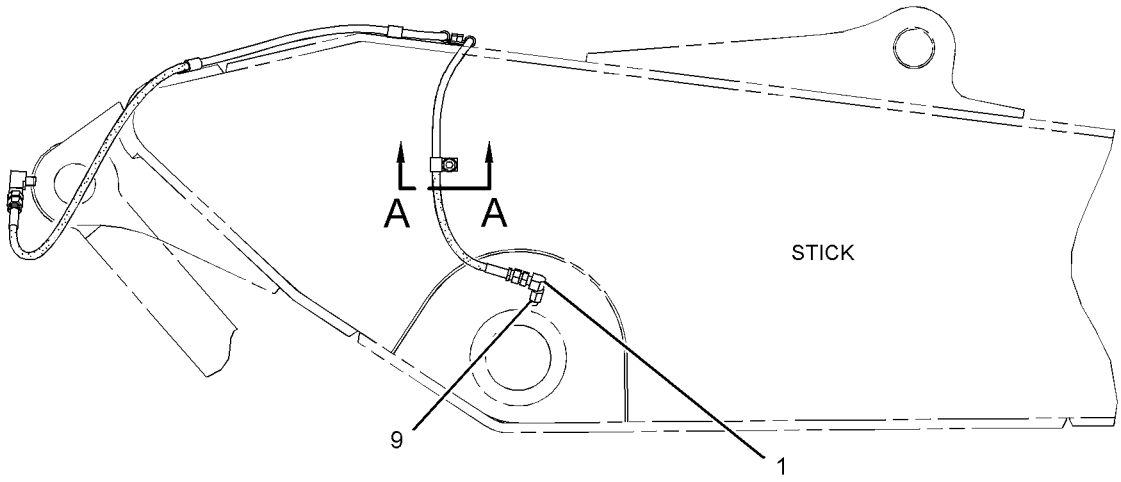

RIGHT SIDE VIEW

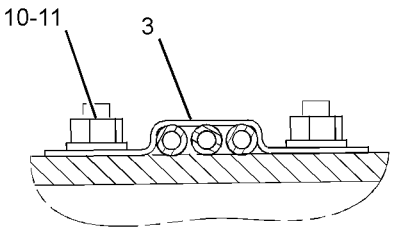

SECTION B-B

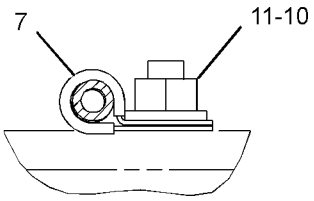

SECTION A-A

GRAPHIC #1 **<END>** g01413232

315-0920 LINES GP-GREASE

S/N: BYJ1-UP; PDP1-UP
PART OF 260-7189 BOOM AR-1 PIECE LONG
AN ATTACHMENT

SMCS-7510 **i02961284**

NOTE	REF NO	GRAPHIC REF	PART NUMBER	QTY	PART NAME 1 2 3 4 5 6 (PRODUCT LEVEL)	SEE PAGE
	1	1	**5K-9243**	2	ELBOW-FLARED	
	2	1	**166-1579**	2	CLIP	
I	3	1	**315-0921**	1	HOSE AS	
I	4	1	**315-0922**	2	HOSE AS	
	5	1	**315-0923**	1	TUBE AS	
	6	1	**315-0924**	1	TUBE AS	
	7	1	**033-8248**	4	CLIP	
	8	1	**3B-8489**	5	FITTING-GREASE	
	9	1	**6L-3616**	2	CONNECTOR (FLARED)	
	10	1	**8M-2772**	2	CLIP	
	11	1	**8T-4121**	8	WASHER-HARD (11X21X2.5-MM THK)	
M	12	1	**8T-4133**	5	NUT (M10X1.5-THD)	
M	13	1	**8T-4191**	3	BOLT (M10X1.5X16-MM)	
	14	1	**8T-6757**	5	PLUG-PIPE	

I-REFER TO HYDRAULIC INFORMATION SYSTEM
M-METRIC PART

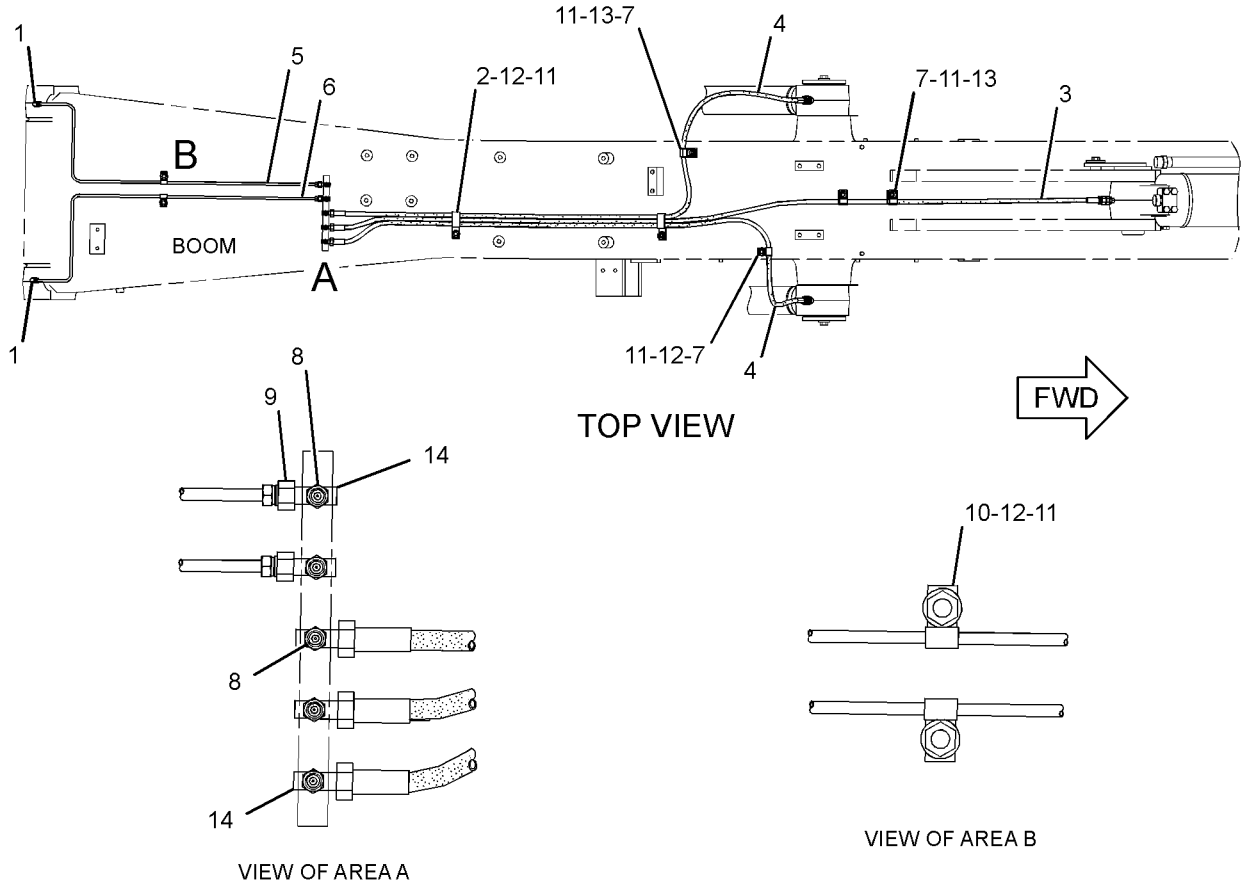

GRAPHIC #1 **<END>** g01513848

IMPLEMENTS

260-7065 LINKAGE AR-BUCKET—WITHOUT LIFTING EYE

S/N: BYJ1-UP; PDP1-UP

AN ATTACHMENT

SMCS-6513 **i02997474**

NOTE	PART NUMBER	QTY	PART NAME 1 2 3 4 5 6 (PRODUCT LEVEL)	SEE PAGE
Y	*289-7697*	1	CYLINDER & LINES GP-BUCKET	315
Y	*248-7837*	1	LINKAGE GP-BUCKET	609
Y-SEPARATE ILLUSTRATION				

<END>

260-7066 LINKAGE AR-BUCKET—WITHOUT LIFTING EYE

S/N: BYJ1-UP; PDP1-UP

AN ATTACHMENT

SMCS-6513 **i02997475**

NOTE	PART NUMBER	QTY	PART NAME 1 2 3 4 5 6 (PRODUCT LEVEL)	SEE PAGE
Y	*289-7697*	1	CYLINDER & LINES GP-BUCKET	315
Y	*248-7821*	1	LINKAGE GP-BUCKET	607
Y-SEPARATE ILLUSTRATION				

<END>

260-7067 LINKAGE AR-BUCKET—WITH LIFTING EYE

S/N: BYJ1-UP; PDP1-UP

AN ATTACHMENT

SMCS-6513 **i02796543**

NOTE	PART NUMBER	QTY	PART NAME 1 2 3 4 5 6 (PRODUCT LEVEL)	SEE PAGE
Y	*289-7697*	1	CYLINDER & LINES GP-BUCKET	315
Y	*278-9293*	1	LINKAGE GP-BUCKET	611
Y-SEPARATE ILLUSTRATION				

<END>

248-7821 LINKAGE GP-BUCKET

S/N: BYJ1-UP; PDP1-UP
PART OF 260-7066 LINKAGE AR-BUCKET
AN ATTACHMENT

SMCS-6513 **i02997357**

NOTE	REF NO	GRAPHIC REF	PART NUMBER	QTY	PART NAME 1 2 3 4 5 6 (PRODUCT LEVEL)	SEE PAGE
	1	1	**248-7822**	1	LINK	
	2	1	**248-7820**	1	PIN	
	3	1	**248-7824**	1	LINK & BEARING AS	
	3A	1	**248-7835**	2	BEARING-SLEEVE	
	3B	1	**229-1092**	2	BEARING-SLEEVE	
	4	1	**3B-8489**	5	FITTING-GREASE	
M	5	1	**096-4876**	2	NUT (M14X2-THD)	
M	6	1	**099-0707**	1	BOLT (M14X2X115-MM)	
	7	1	**248-7823**	1	LINK AS	
	8	1	**134-7178**	2	PIN	
	9	1	**086-0523**	2	PIN	
	10	1	**093-1342**	4	SEAL-O-RING	
	11	1	**235-7679**	4	SEAL-LIP TYPE	
	12	1	**248-7836**	2	SEAL-LIP TYPE	
	13	1	**166-1482**	2	SHIM (2-MM THK)	
	14	1	**134-7179**	2	RING	
	15	1	**7I-6843**	1	PIN	
M	16	1	**186-5644**	1	BOLT (M16X2X150-MM)	
M	17	1	**8T-4132**	2	NUT (M16X2-THD)	

M-METRIC PART

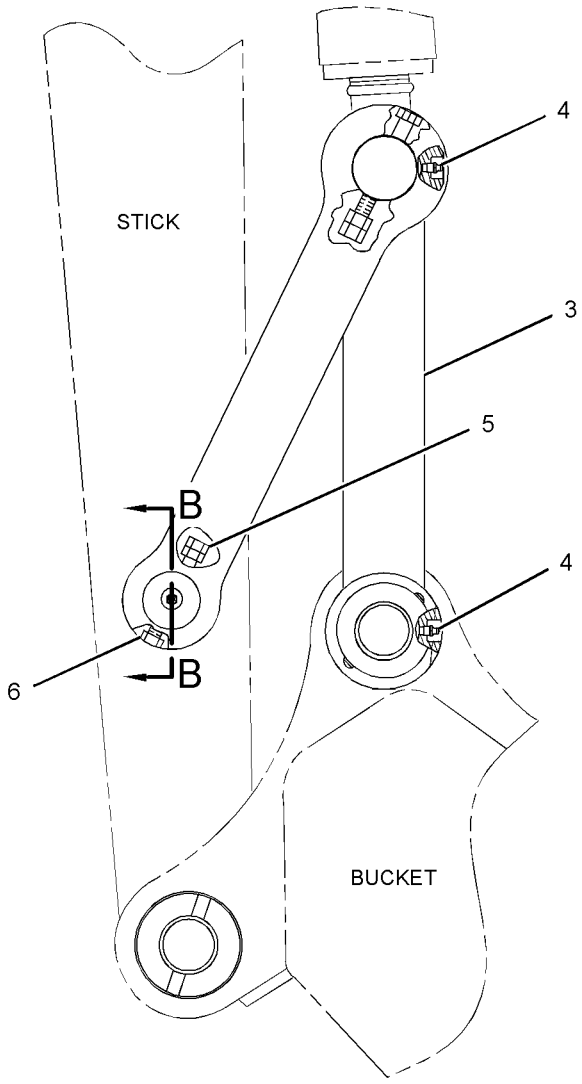

RIGHT SIDE VIEW

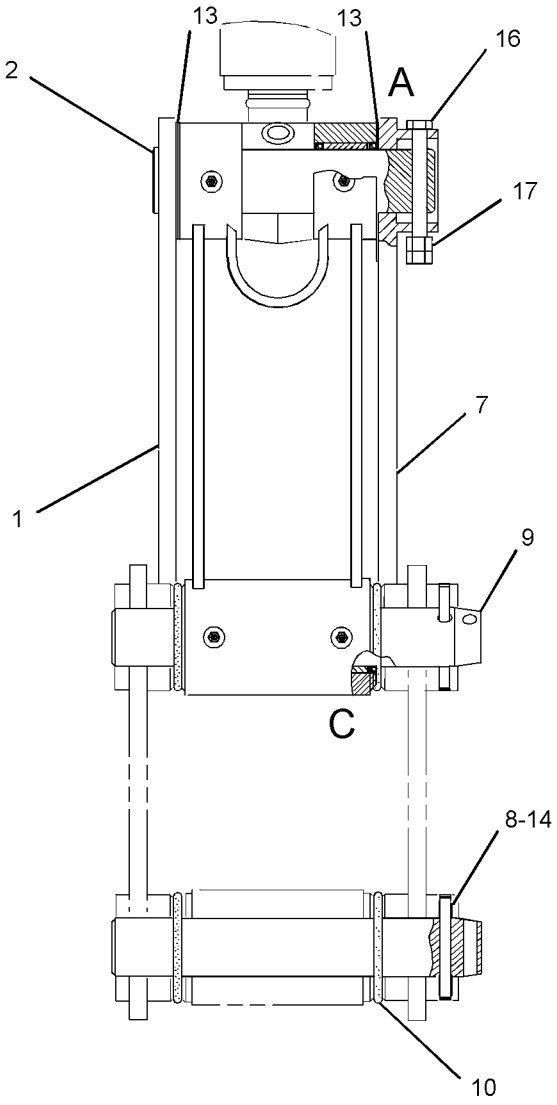

FRONT VIEW

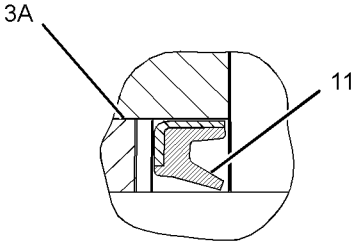

VIEW OF AREA A

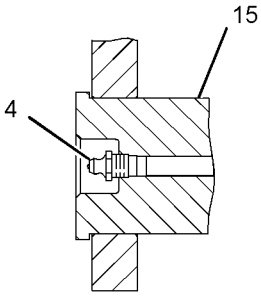

SECTION B-B

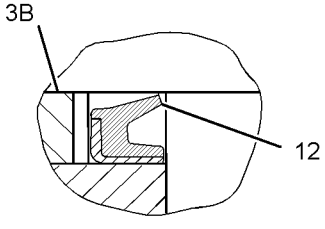

VIEW OF AREA C

GRAPHIC #1 **<END>** g01523536

248-7837 LINKAGE GP-BUCKET

S/N: BYJ1-UP; PDP1-UP
PART OF 260-7065 LINKAGE AR-BUCKET
AN ATTACHMENT

SMCS-6513 **i02997360**

NOTE	REF NO	GRAPHIC REF	PART NUMBER	QTY	PART NAME 1 2 3 4 5 6 (PRODUCT LEVEL)	SEE PAGE
	1	1	**248-7822**	1	LINK	
	2	1	**248-7820**	1	PIN	
	3	1	**248-7838**	1	LINK & BEARING AS	
	3A	1	**229-1092**	2	BEARING-SLEEVE	
	3B	1	**248-7835**	2	BEARING-SLEEVE	
	4	1	**3B-8489**	5	FITTING-GREASE	
M	5	1	**096-4876**	2	NUT (M14X2-THD)	
M	6	1	**099-0707**	1	BOLT (M14X2X115-MM)	
	7	1	**248-7823**	1	LINK AS	
	8	1	**134-7178**	2	PIN	
	9	1	**086-0523**	2	PIN	
	10	1	**093-1342**	4	SEAL-O-RING	
	11	1	**235-7679**	4	SEAL-LIP TYPE	
	12	1	**248-7836**	2	SEAL-LIP TYPE	
	13	1	**166-1482**	2	SHIM (2-MM THK)	
	14	1	**134-7179**	2	RING	
	15	1	**7I-6843**	1	PIN	
M	16	1	**186-5644**	1	BOLT (M16X2X150-MM)	
M	17	1	**8T-4132**	2	NUT (M16X2-THD)	

M-METRIC PART

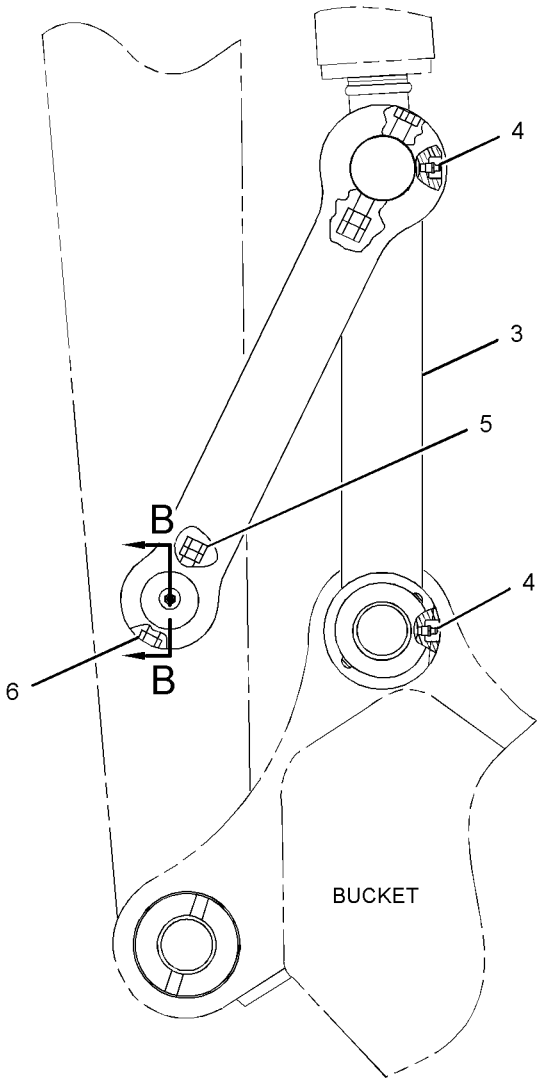

RIGHT SIDE VIEW

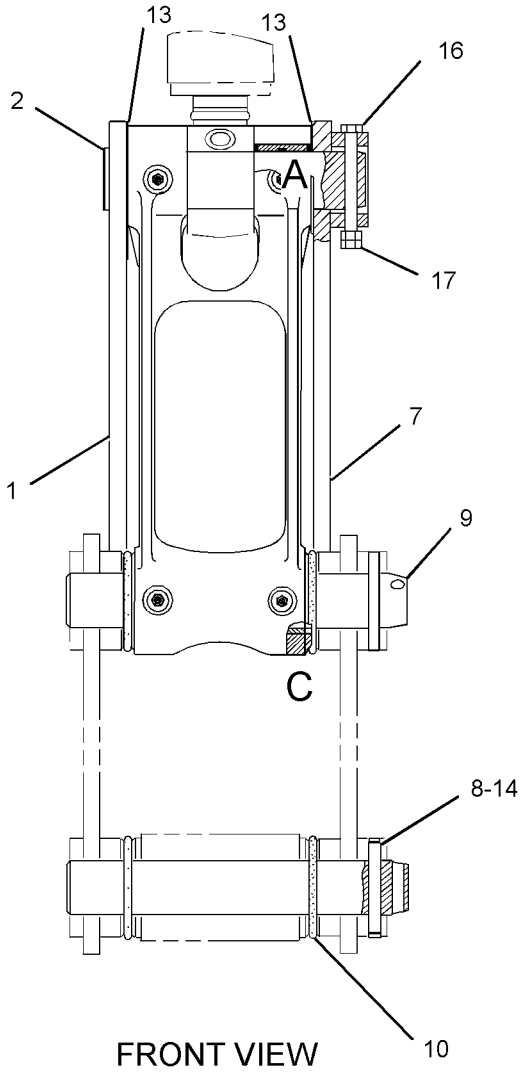

FRONT VIEW

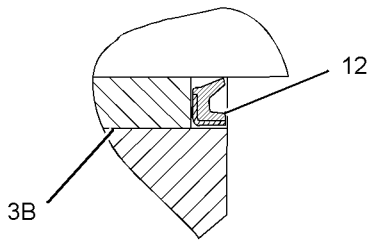

VIEW OF AREA C

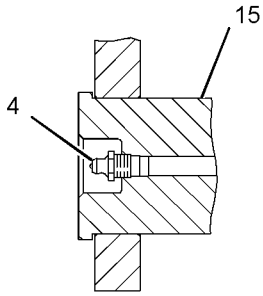

SECTION B-B

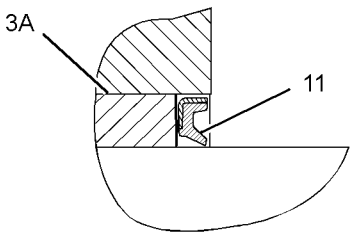

VIEW OF AREA A

GRAPHIC #1 **<END>** g01521489

278-9293 LINKAGE GP-BUCKET—WITH LIFTING EYE

S/N: BYJ1-UP; PDP1-UP
PART OF 260-7067 LINKAGE AR-BUCKET
AN ATTACHMENT

SMCS-6513 **i02796349**

NOTE	REF NO	GRAPHIC REF	PART NUMBER	QTY	PART NAME 1 2 3 4 5 6 (PRODUCT LEVEL)	SEE PAGE
	1	1	**3B-8489**	5	FITTING-GREASE	
	2	1	**7I-6843**	1	PIN	
	3	1	**086-0523**	2	PIN	
M	4	1	**096-4876**	6	NUT (M14X2-THD)	
	5	1	**166-1482**	2	SHIM (2-MM THK)	
M	6	1	**236-6365**	1	BOLT (M16X2X150-MM)	
	7	1	**235-7679**	4	SEAL-LIP TYPE	
	8	1	**248-7820**	1	PIN	
	9	1	**248-7822**	1	LINK	
	10	1	**248-7823**	1	LINK AS	
	11	1	**248-7836**	2	SEAL-LIP TYPE	
	12	1	**282-4503**	1	LINK & BEARING AS	
	12A	1	**248-7835**	2	BEARING-SLEEVE	
	12B	1	**229-1092**	2	BEARING-SLEEVE	
	13	1	**093-1342**	4	SEAL-O-RING	
M	14	1	**099-0707**	1	BOLT (M14X2X115-MM)	
M	15	1	**099-0724**	2	BOLT (M14X2X145-MM)	
M	16	1	**8T-4132**	2	NUT (M16X2-THD)	

M-METRIC PART

278-9293 **LINKAGE GP-BUCKET** *(contd.)* **i02796349**

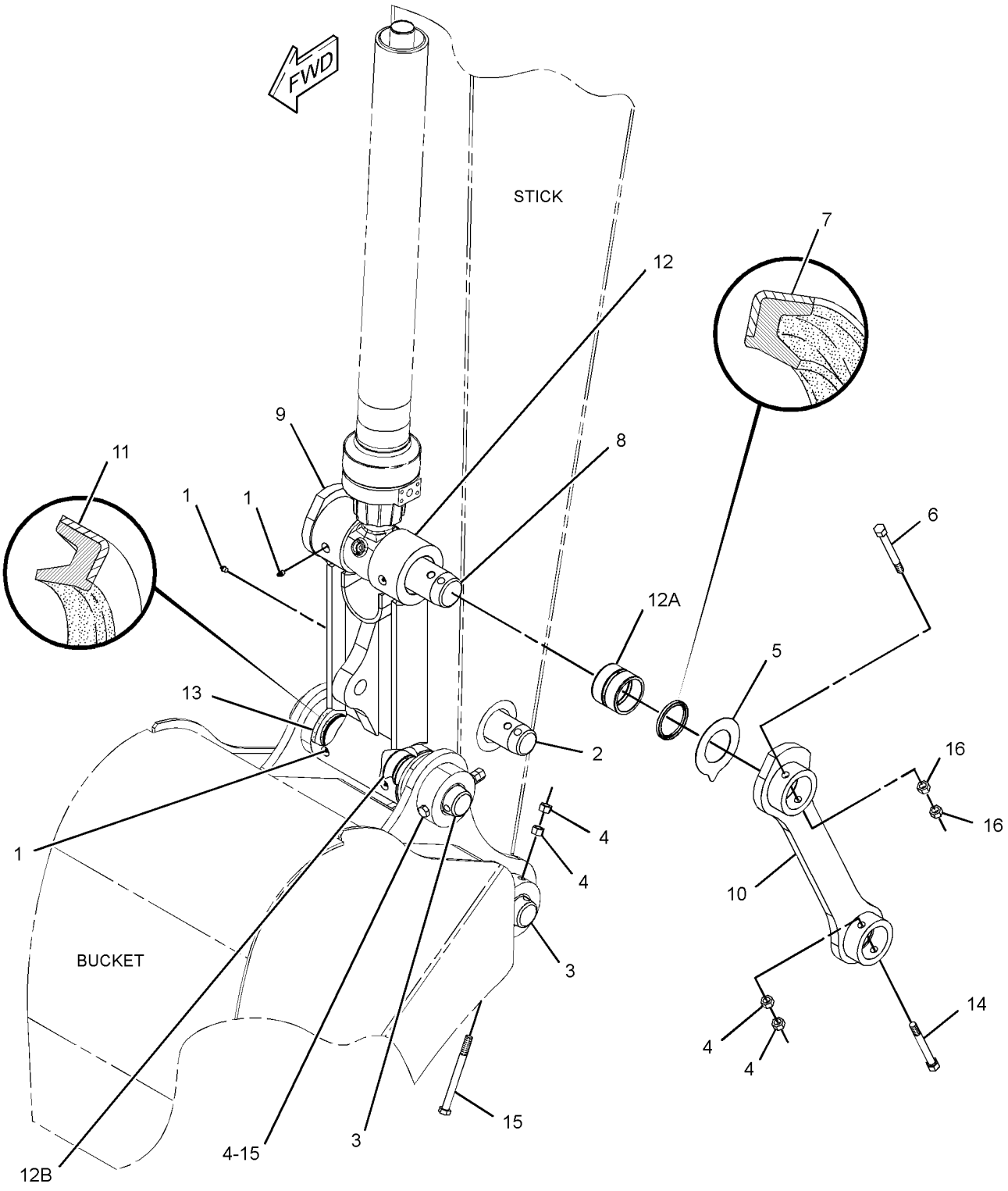

GRAPHIC #1 **<END>** g01400008

282-5540 LINKAGE GP-BUCKET—COUPLER

S/N: BYJ1-UP; PDP1-UP

PART OF 282-5536, 282-5537, 282-5538, 282-5539 COUPLER AR-QUICK

AN ATTACHMENT

SMCS-6513 **i02906298**

NOTE	REF NO	GRAPHIC REF	PART NUMBER	QTY	PART NAME 1 2 3 4 5 6 (PRODUCT LEVEL)	SEE PAGE
	1	1	**3B-8489**	5	FITTING-GREASE	
	2	1	**7I-6843**	1	PIN	
	3	1	**086-0523**	2	PIN	
M	4	1	**096-4876**	6	NUT (M14X2-THD)	
	5	1	**166-1482**	2	SHIM (2-MM THK)	
M	6	1	**236-6365**	1	BOLT (M16X2X150-MM)	
	7	1	**235-7679**	4	SEAL-LIP TYPE	
	8	1	**248-7820**	1	PIN	
	9	1	**248-7822**	1	LINK	
	10	1	**248-7823**	1	LINK AS	
	11	1	**248-7836**	2	SEAL-LIP TYPE	
	12	1	**282-4503**	1	LINK & BEARING AS	
	12A	1	**248-7835**	2	BEARING-SLEEVE	
	12B	1	**229-1092**	2	BEARING-SLEEVE	
	13	1	**093-1342**	4	SEAL-O-RING	
M	14	1	**099-0707**	1	BOLT (M14X2X115-MM)	
	15	1	**248-5474**	2	BOLT (M14X2X160-MM)	
M	16	1	**8T-4132**	2	NUT (M16X2-THD)	

M-METRIC PART

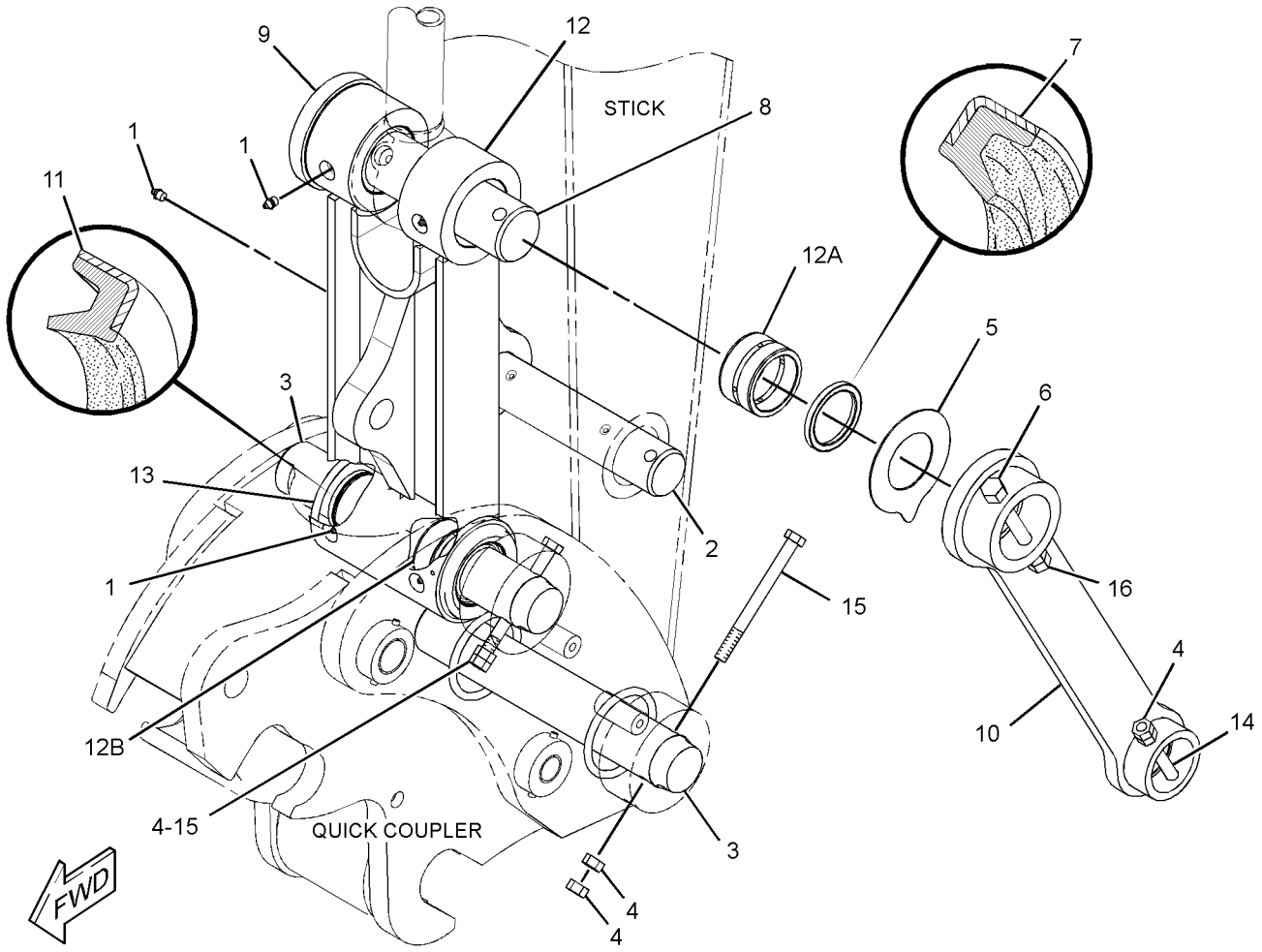

GRAPHIC #1 **<END>** g01446716

IMPLEMENTS

260-7059 STICK AR

S/N: BYJ1-UP; PDP1-UP
3.0-M (9.8-FT) REACH
AN ATTACHMENT

SMCS-6502 **i02808076**

NOTE	PART NUMBER	QTY	PART NAME 1 2 3 4 5 6 (PRODUCT LEVEL)	SEE PAGE
Y	*251-2750*	1	LINES GP-GREASE	602
Y	*179-7600*	1	LINES GP-STICK	482
Y	*278-9287*	1	STICK GP-HOE	616
Y-SEPARATE ILLUSTRATION				

<END>

260-7062 STICK AR—WITH AUXILIARY

S/N: BYJ1-UP; PDP1-UP
2.5-M (8.2-FT) REACH
AN ATTACHMENT

SMCS-6502 **i03254263**

NOTE	PART NUMBER	QTY	PART NAME 1 2 3 4 5 6 (PRODUCT LEVEL)	SEE PAGE
Y	*179-7601*	1	LINES GP-STICK	483
Y	*278-9290*	1	STICK GP-HOE	618
Y-SEPARATE ILLUSTRATION				

<END>

260-7060 STICK AR-HOE—REACH

S/N: BYJ1-UP; PDP1-UP
2.8-M (9.1-FT)
AN ATTACHMENT

SMCS-6502 **i02828687**

NOTE	PART NUMBER	QTY	PART NAME 1 2 3 4 5 6 (PRODUCT LEVEL)	SEE PAGE
Y	*282-4688*	1	LINES GP-GREASE	603
Y	*278-6680*	1	LINES GP-STICK	485
Y	*278-9288*	1	STICK GP-HOE	617
Y-SEPARATE ILLUSTRATION				

<END>

IMPLEMENTS

260-7193 STICK AR-HOE—OFFSET BOOM

S/N: BYJ1-UP; PDP1-UP

2.1-M (6.8-FT)

FOR USE WITH BOOM AR-HYDRAULIC POWER OFFSET LINKAGE AR FOR HYDRAULIC POWER OFFSET BOOM

AN ATTACHMENT

SMCS-6502 **i02814168**

NOTE	PART NUMBER	QTY	PART NAME 1 2 3 4 5 6 (PRODUCT LEVEL)	SEE PAGE
Y	*157-9168*	1	GUARD GP-FRONT (STICK)	248
Y	*208-3070*	1	LINES GP-STICK (OFFSET)	484
Y	*157-9162*	1	SENSOR & MTG GP-POSITION (STICK)	150
Y	*282-4588*	1	STICK GP-HOE	620

Y-SEPARATE ILLUSTRATION

<END>

278-9287 STICK GP-HOE

S/N: BYJ1-UP; PDP1-UP
3.0-M (9.8-FT) REACH
PART OF 260-7059 STICK AR
AN ATTACHMENT

SMCS-6502 **i02808081**

NOTE	REF NO	GRAPHIC REF	PART NUMBER	QTY	PART NAME 1 2 3 4 5 6 (PRODUCT LEVEL)	SEE PAGE
	1	1	**1R-6225**	1	PIN AS	
	2	1	**093-0357**	2	WASHER (63X100X9-MM THK)	
	3	1	**127-3913**	1	PIN AS	
	4	1	**166-1481**	2	SHIM (2-MM THK)	
	5	1	**166-1492**	2	SEAL-LIP TYPE	
	6	1	**248-7836**	2	SEAL-LIP TYPE	
	7	1	**294-1442**	1	STICK & BEARING AS	
	7A	1	**229-1091**	2	BEARING-SLEEVE	
	7B	1	**229-1095**	2	BEARING-SLEEVE	
	7C	1	**273-6814**	2	BEARING-SLEEVE	
	8	1	**086-0297**	2	WASHER (13X50X6-MM THK)	
	9	1	**166-1494**	2	SEAL-LIP TYPE	
	10	1	**3B-8489**	3	FITTING-GREASE	
M	11	1	**8T-4179**	2	BOLT (M12X1.75X20-MM)	

M-METRIC PART

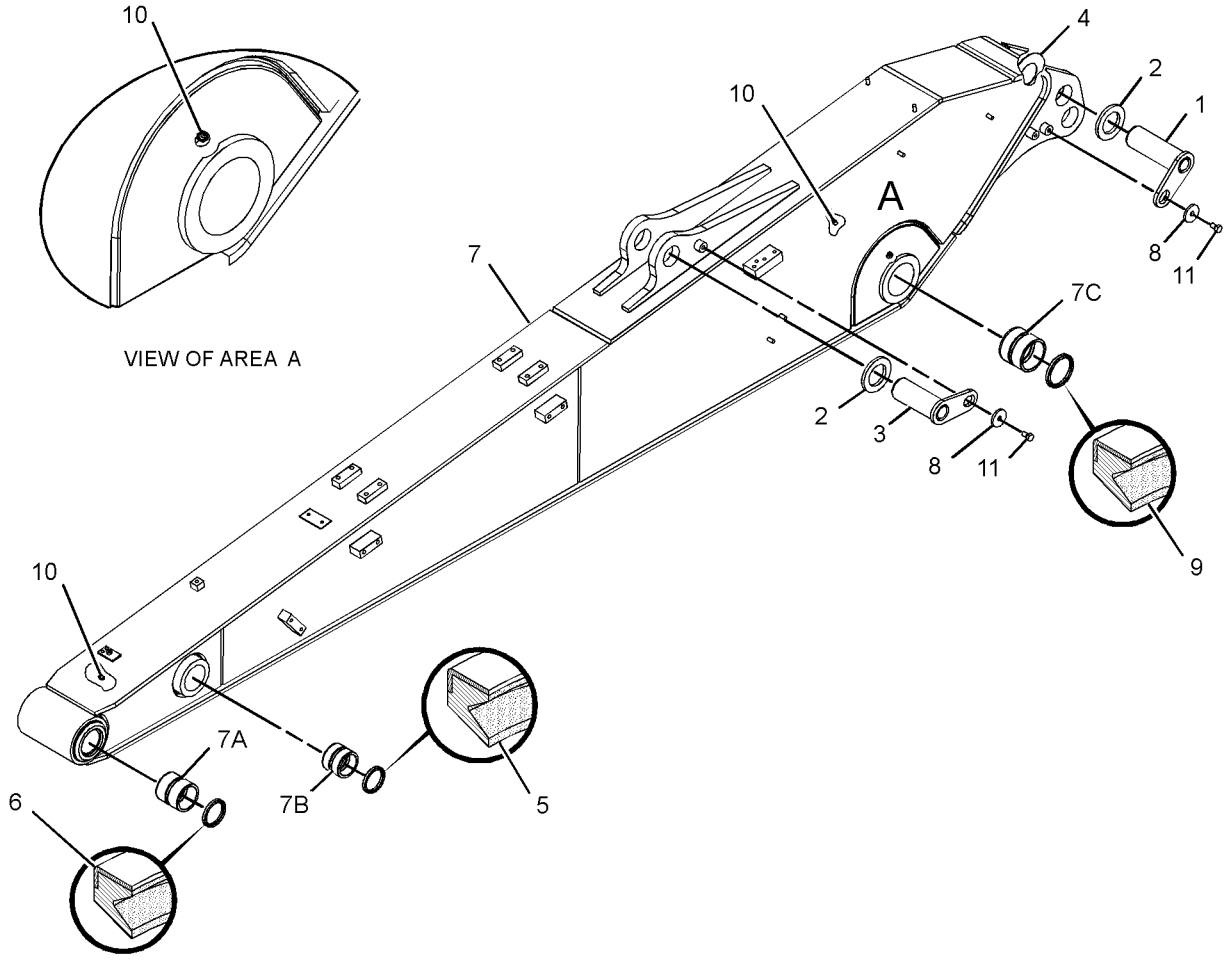

GRAPHIC #1 **<END>** g01406898

278-9288 STICK GP-HOE

S/N: BYJ1-UP; PDP1-UP
2.8-M (9.1-FT)
PART OF 260-7060 STICK AR-HOE
AN ATTACHMENT

SMCS-6502 **i02828684**

NOTE	REF NO	GRAPHIC REF	PART NUMBER	QTY	PART NAME 1 2 3 4 5 6 (PRODUCT LEVEL)	SEE PAGE
	1	1	**1R-6225**	1	PIN AS	
	2	1	**093-0357**	2	WASHER (63X100X9-MM THK)	
	3	1	**127-3913**	1	PIN AS	
	4	1	**166-1481**	2	SHIM (2-MM THK)	
	5	1	**166-1492**	2	SEAL-LIP TYPE	
	6	1	**248-7836**	2	SEAL-LIP TYPE	
	7	1	*284-7105*	1	STICK & BEARING AS	
	7A	1	**229-1091**	2	BEARING-SLEEVE	
	7B	1	**229-1095**	2	BEARING-SLEEVE	
	7C	1	**273-6814**	2	BEARING-SLEEVE	
	8	1	**086-0297**	2	WASHER (13X50X6-MM THK)	
	9	1	**166-1494**	2	SEAL-LIP TYPE	
	10	1	**3B-8489**	1	FITTING-GREASE	
M	11	1	**8T-4179**	2	BOLT (M12X1.75X20-MM)	

M-METRIC PART

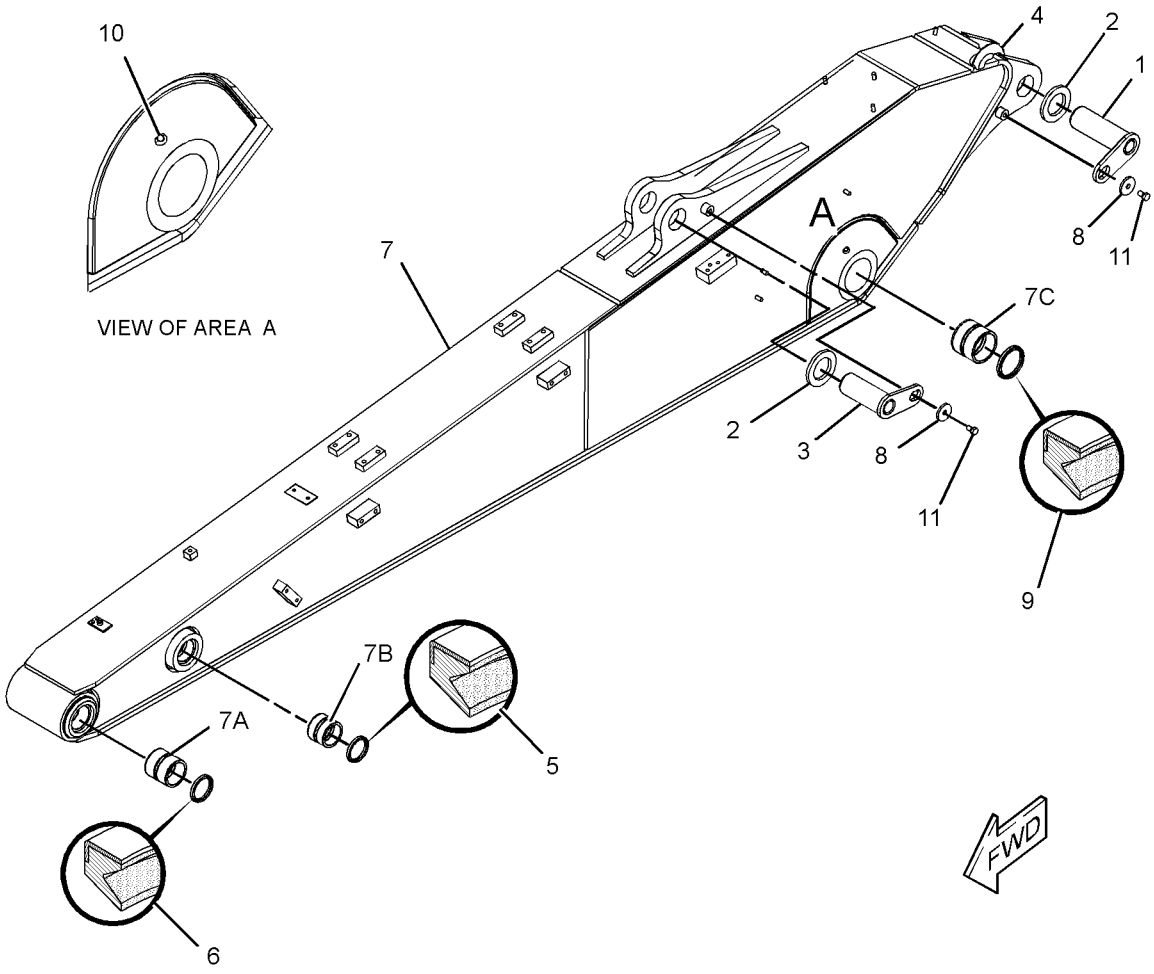

GRAPHIC #1 **<END>** g01413405

278-9290 STICK GP-HOE—WITH AUXILIARY

S/N: BYJ1-UP; PDP1-UP
2.5-M (8.2-FT) REACH
PART OF 260-7062 STICK AR
AN ATTACHMENT

SMCS-6502 **i02808266**

NOTE	REF NO	GRAPHIC REF	PART NUMBER	QTY	PART NAME 1 2 3 4 5 6 (PRODUCT LEVEL)	SEE PAGE
	1	1	**1R-6225**	1	PIN AS	
	2	1	**093-0357**	2	WASHER (63X100X9-MM THK)	
	3	1	**127-3913**	1	PIN AS	
	4	1	**166-1481**	2	SHIM (2-MM THK)	
	5	1	**166-1492**	2	SEAL-LIP TYPE	
	6	1	**248-7836**	2	SEAL-LIP TYPE	
	7	1	**294-1445**	1	STICK & BEARING AS	
	7A	1	**229-1091**	2	BEARING-SLEEVE	
	7B	1	**229-1095**	2	BEARING-SLEEVE	
	7C	1	**273-6814**	2	BEARING-SLEEVE	
	8	1	**086-0297**	2	WASHER (13X50X6-MM THK)	
	9	1	**166-1494**	2	SEAL-LIP TYPE	
	10	1	**3B-8489**	3	FITTING-GREASE	
M	11	1	**8T-4179**	2	BOLT (M12X1.75X20-MM)	

M-METRIC PART

278-9290 **STICK GP-HOE** *(contd.)* **i02808266**

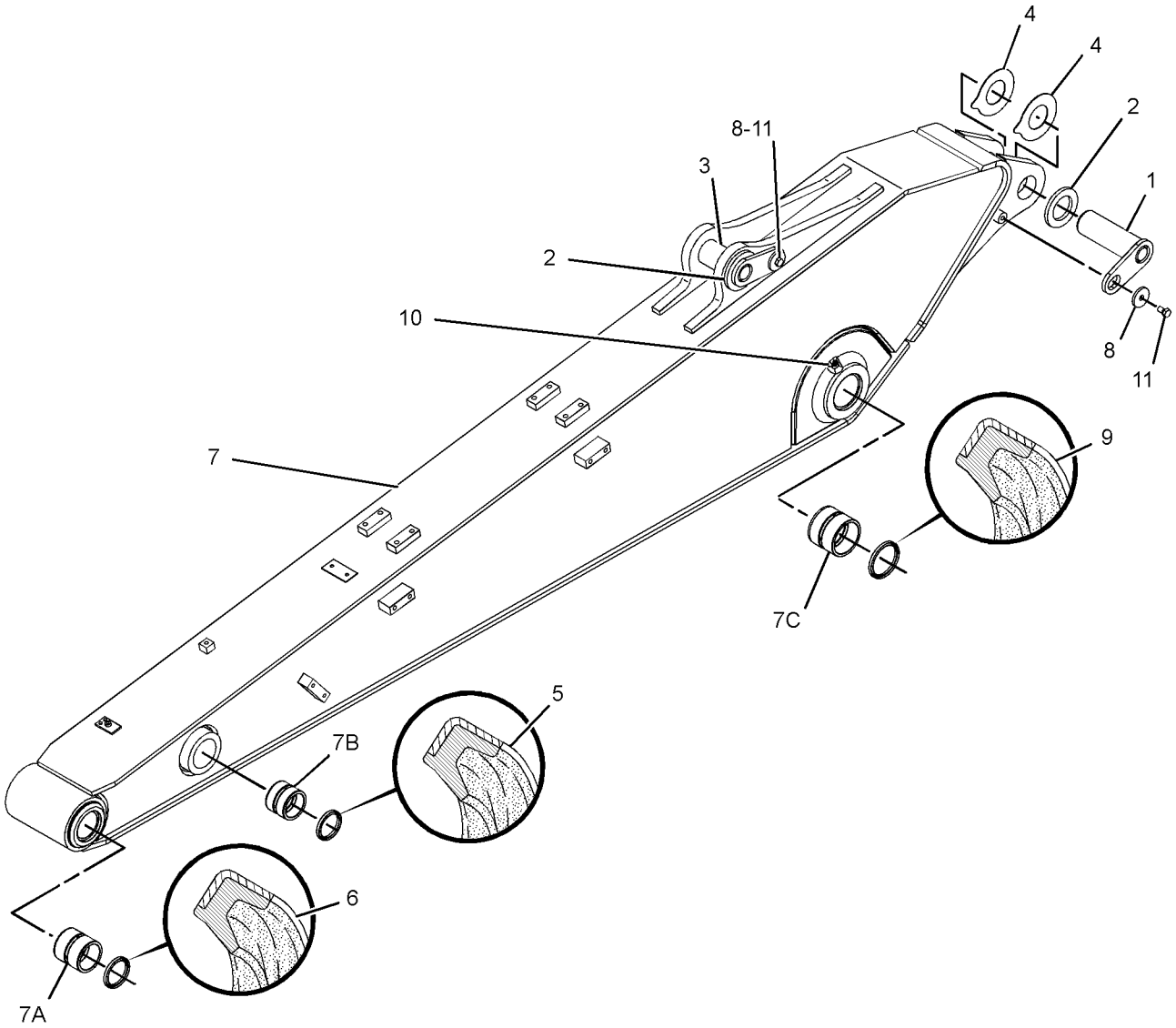

GRAPHIC #1 **<END>** g01406805

IMPLEMENTS

282-4588 STICK GP-HOE

S/N: BYJ1-UP; PDP1-UP
2.1-M (6.8-FT)
PART OF 260-7193 STICK AR-HOE
AN ATTACHMENT

SMCS-6502 **i02814148**

NOTE	REF NO	GRAPHIC REF	PART NUMBER	QTY	PART NAME 1 2 3 4 5 6 (PRODUCT LEVEL)	SEE PAGE
	1	1	**1R-6229**	1	PIN AS	
	2	1	**3B-8489**	3	FITTING-GREASE	
	3	1	**093-0349**	1	WASHER (22X60X6-MM THK)	
	4	1	**118-5982**	1	SPACER (73X105X14-MM THK)	
	5	1	**166-1482**	2	SHIM (2-MM THK)	
	6	1	**166-1492**	2	SEAL-LIP TYPE	
	7	1	**166-1494**	2	SEAL-LIP TYPE	
	8	1	**203-7437**	1	PIN AS	
	9	1	**203-7439**	1	WASHER (63X100X8-MM THK)	
	10	1	**248-7836**	2	SEAL-LIP TYPE	
	11	1	**294-1384**	1	STICK & BEARING AS	
	11A	1	**229-1091**	2	BEARING-SLEEVE	
	11B	1	**229-1095**	2	BEARING-SLEEVE	
	11C	1	**241-7379**	2	BEARING-SLEEVE	
	12	1	**086-0297**	1	WASHER (13X50X6-MM THK)	
	13	1	**8T-4123**	1	WASHER (22X35X3.5-MM THK)	
M	14	1	**8T-4179**	1	BOLT (M12X1.75X20-MM)	
M	15	1	**8T-4780**	1	BOLT (M20X2.5X30-MM)	

M-METRIC PART

282-4588 **STICK GP-HOE** *(contd.)* **i02814148**

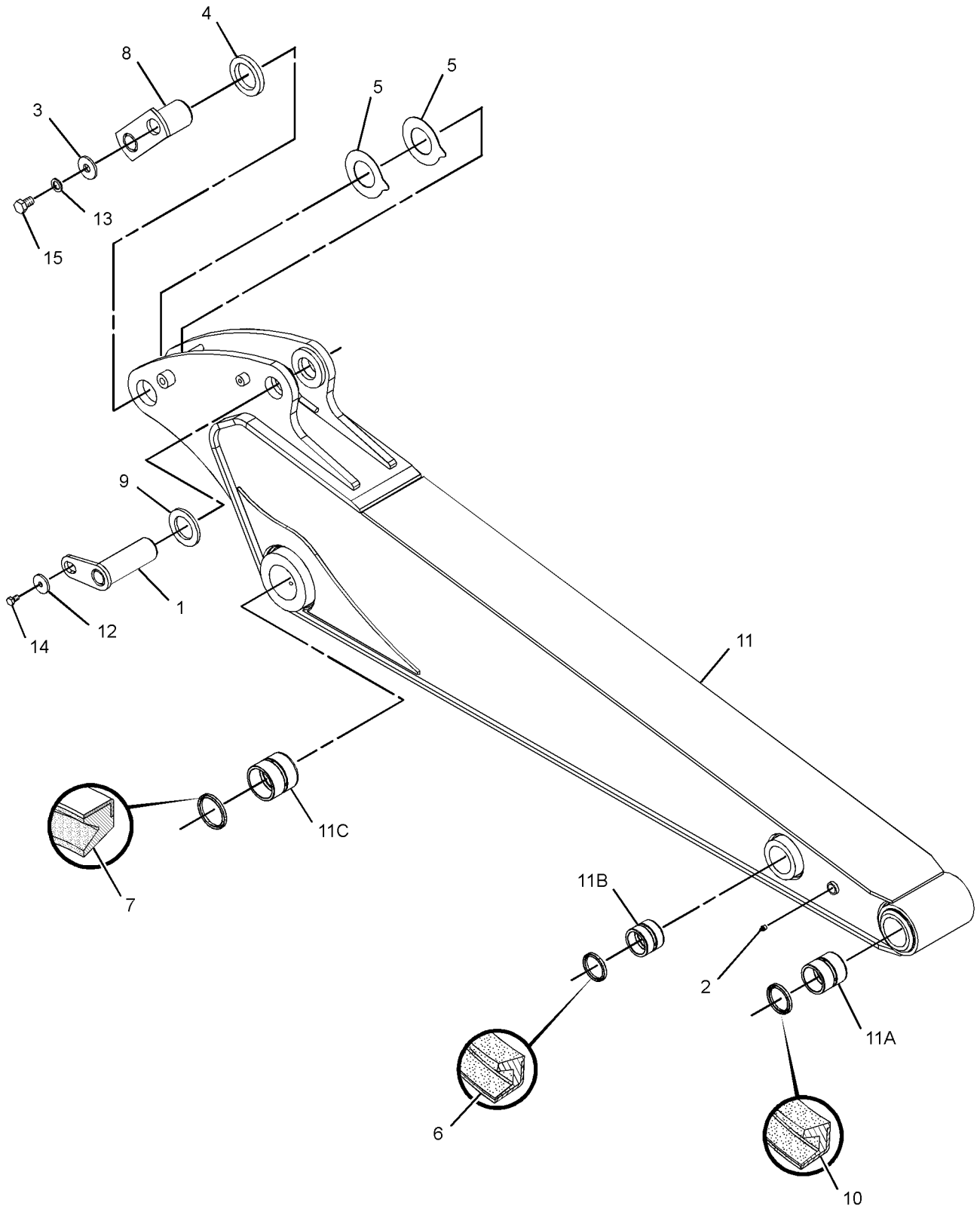

GRAPHIC #1 **<END>** g01413427

4I-6914 ADJUSTER GP-BUCKET

S/N: BYJ1-UP; PDP1-UP

PART OF 226-1316, 229-7564, 229-7577, 229-7648, 229-7651, 229-7654, 229-7657, 229-7660, 229-7678, 229-7685 BUCKET & ADJUSTER GP AN ATTACHMENT

SMCS-6513, 6700 **i01225392**

NOTE	REF NO	GRAPHIC REF	PART NUMBER	QTY	PART NAME 1 2 3 4 5 6 (PRODUCT LEVEL)	SEE PAGE
B	1	1	**086-0416**	6	SHIM (1-MM THK)	
B	2	1	**086-0415**	4	SHIM (0.5-MM THK)	
	3	1	**085-9769**	1	PIN	
	4	1	**085-8828**	1	PLATE	
M	5	1	**8T-4183**	4	BOLT (M12X1.75X40-MM)	
	6	1	**8T-4223**	4	WASHER-HARD (13.5X25.5X3-MM THK)	
	7	1	**086-0414**	1	FLANGE	

B-USE AS REQUIRED
M-METRIC PART

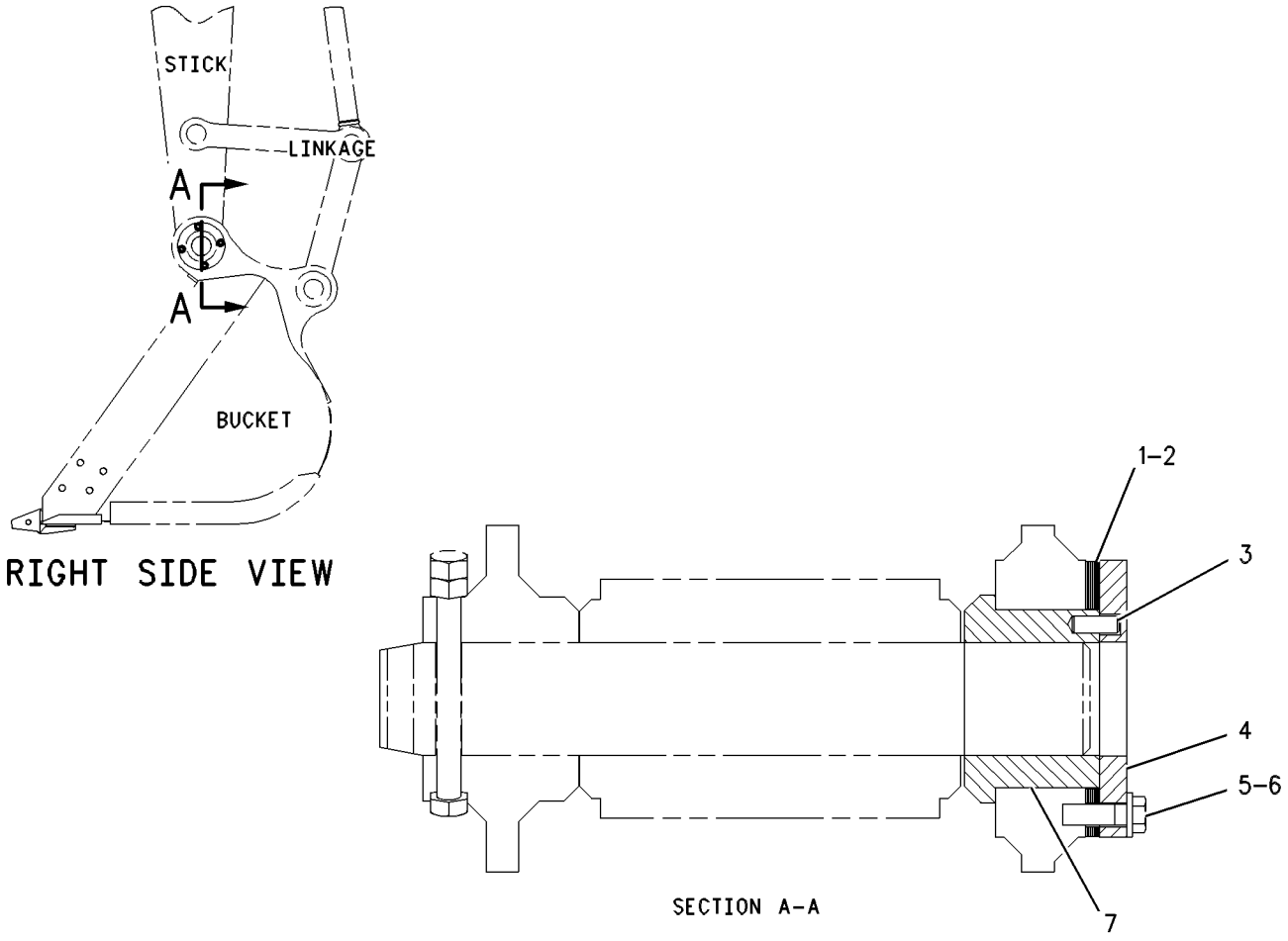

GRAPHIC #1 **<END>** g00658085

282-4576 BLADE & MOUNTING GP

S/N: BYJ1-UP; PDP1-UP
2490-MM (98-IN) WIDE
AN ATTACHMENT

SMCS-6060 **i02818884**

NOTE	REF NO	GRAPHIC REF	PART NUMBER	QTY	PART NAME 1 2 3 4 5 6 (PRODUCT LEVEL)	SEE PAGE
	1	1	**3J-7283**	2	FITTING-GREASE	
B	2	1	**093-0065**	12	SHIM (1-MM THK)	
B	3	1	**093-0097**	6	SHIM (2-MM THK)	
	4	1	**093-0357**	6	WASHER (63X100X9-MM THK)	
B	5	1	**099-7091**	6	SHIM (1.5-MM THK)	
	6	1	**127-3913**	6	PIN AS	
	7	1	**166-1492**	4	SEAL-LIP TYPE	
Y	8	1	**282-4577**	1	BLADE GP-STRAIGHT	628
	9	1	**086-0297**	6	WASHER (13X50X6-MM THK)	
M	10	1	**8T-4179**	6	BOLT (M12X1.75X20-MM)	

B-USE AS REQUIRED
M-METRIC PART
Y-SEPARATE ILLUSTRATION

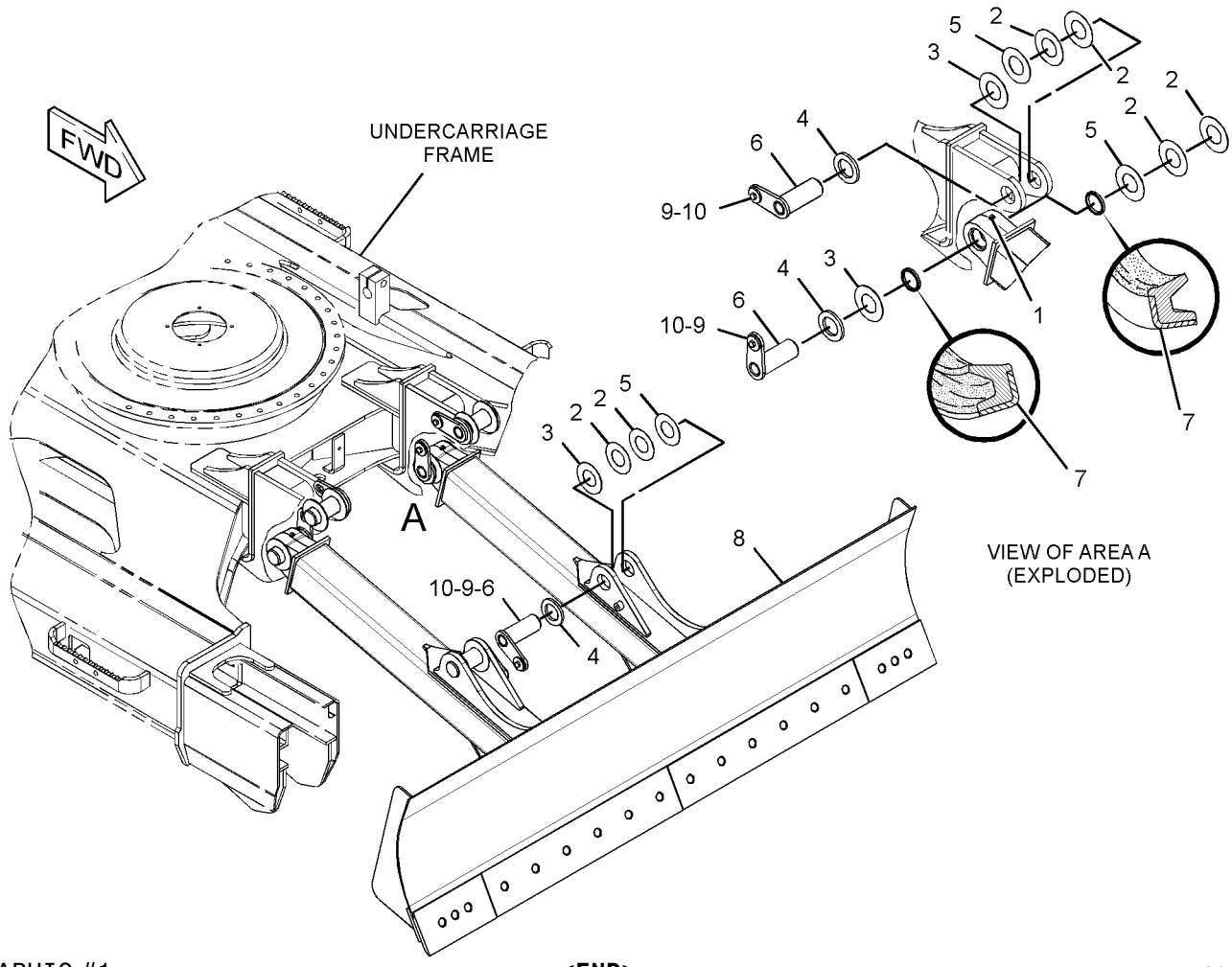

GRAPHIC #1 **<END>** g01411278

WORK TOOLS

282-4579 BLADE & MOUNTING GP

S/N: BYJ1-UP; PDP1-UP
2590-MM (101.9-IN) WIDE
AN ATTACHMENT

SMCS-6060 **i02818886**

NOTE	REF NO	GRAPHIC REF	PART NUMBER	QTY	PART NAME 1 2 3 4 5 6 (PRODUCT LEVEL)	SEE PAGE
	1	1	**3J-7283**	2	FITTING-GREASE	
B	2	1	**093-0065**	12	SHIM (1-MM THK)	
B	3	1	**093-0097**	6	SHIM (2-MM THK)	
	4	1	**093-0357**	6	WASHER (63X100X9-MM THK)	
B	5	1	**099-7091**	6	SHIM (1.5-MM THK)	
	6	1	**127-3913**	1	PIN AS	
	7	1	**166-1492**	4	SEAL-LIP TYPE	
Y	8	1	*282-4580*	1	BLADE GP-STRAIGHT	629
	9	1	**086-0297**	6	WASHER (13X50X6-MM THK)	
M	10	1	**8T-4179**	6	BOLT (M12X1.75X20-MM)	

B-USE AS REQUIRED
M-METRIC PART
Y-SEPARATE ILLUSTRATION

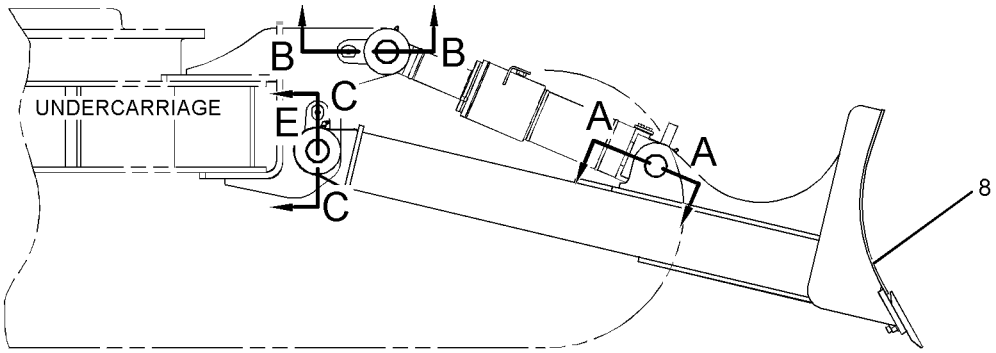

RIGHT SIDE VIEW

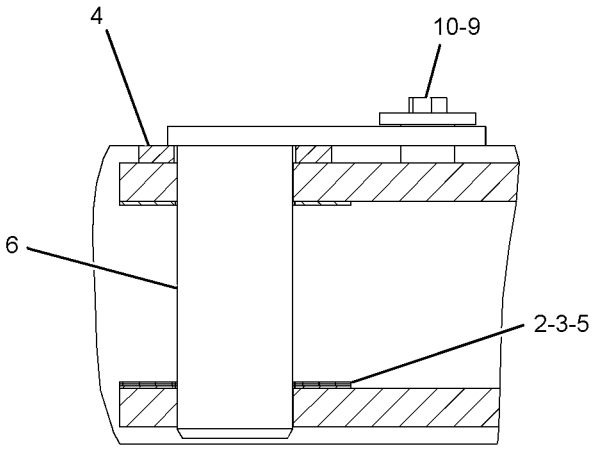

SECTION A-A

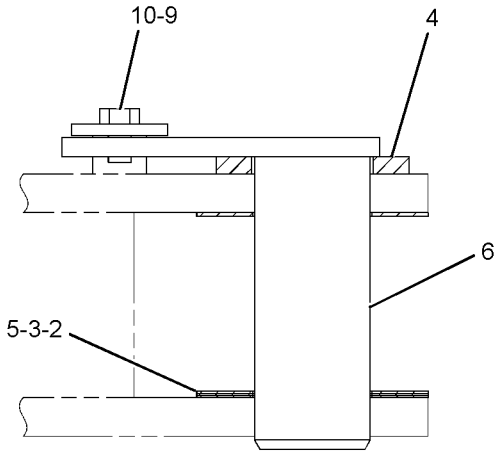

SECTION B-B

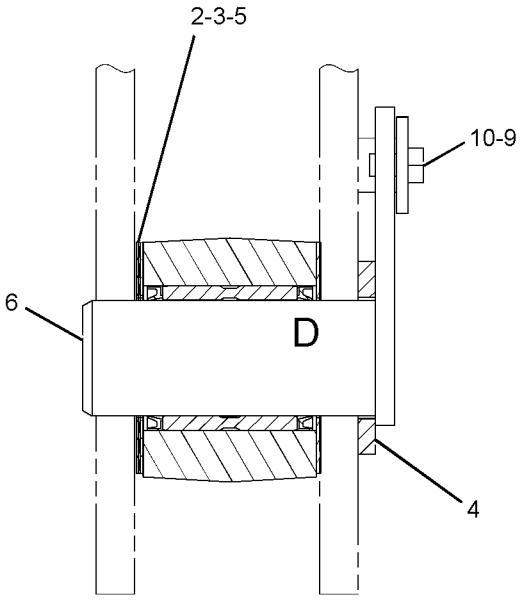

SECTION C-C

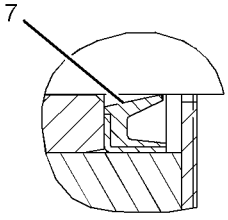

VIEW OF AREA D

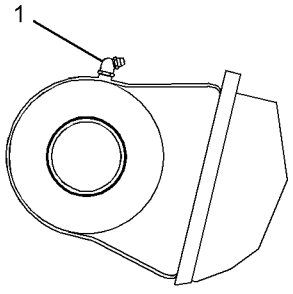

VIEW OF AREA E

GRAPHIC #1 **<END>** g01423523

WORK TOOLS

282-4582 BLADE & MOUNTING GP

S/N: BYJ1-UP; PDP1-UP
2690-MM (105.9-IN) WIDE
AN ATTACHMENT

SMCS-6060 **i02818907**

NOTE	REF NO	GRAPHIC REF	PART NUMBER	QTY	PART NAME 1 2 3 4 5 6 (PRODUCT LEVEL)	SEE PAGE
	1	1	**3J-7283**	2	FITTING-GREASE	
B	2	1	**093-0065**	12	SHIM (1-MM THK)	
B	3	1	**093-0097**	6	SHIM (2-MM THK)	
	4	1	**093-0357**	6	WASHER (63X100X9-MM THK)	
B	5	1	**099-7091**	6	SHIM (1.5-MM THK)	
	6	1	**127-3913**	6	PIN AS	
	7	1	**166-1492**	4	SEAL-LIP TYPE	
Y	8	1	*282-4583*	1	BLADE GP-STRAIGHT	630
	9	1	**086-0297**	6	WASHER (13X50X6-MM THK)	
M	10	1	**8T-4179**	6	BOLT (M12X1.75X20-MM)	

B-USE AS REQUIRED
M-METRIC PART
Y-SEPARATE ILLUSTRATION

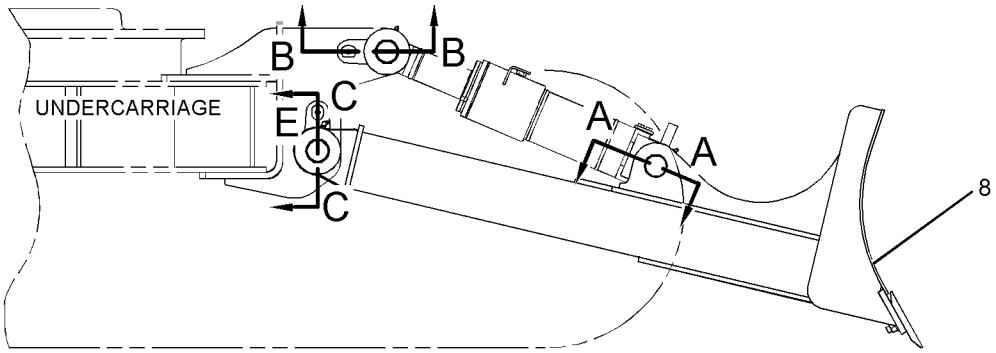

RIGHT SIDE VIEW

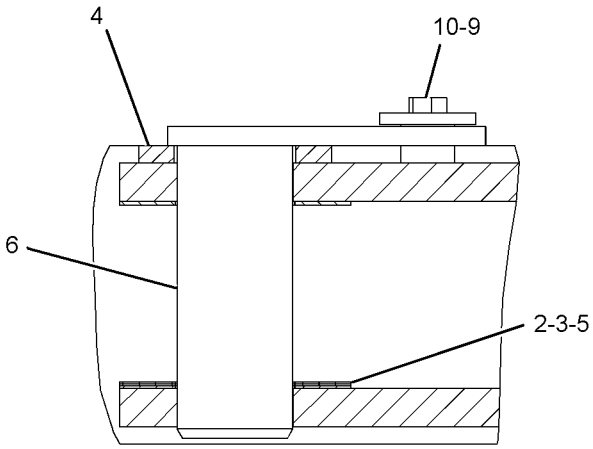

SECTION A-A

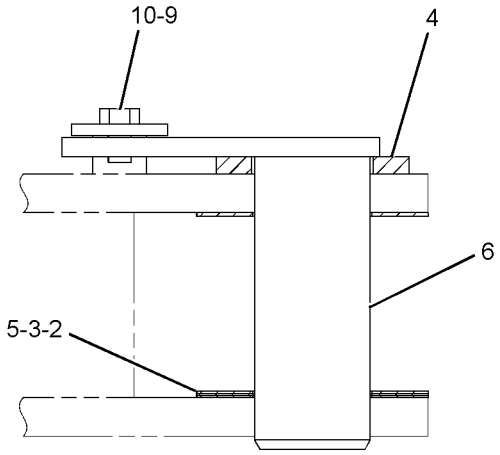

SECTION B-B

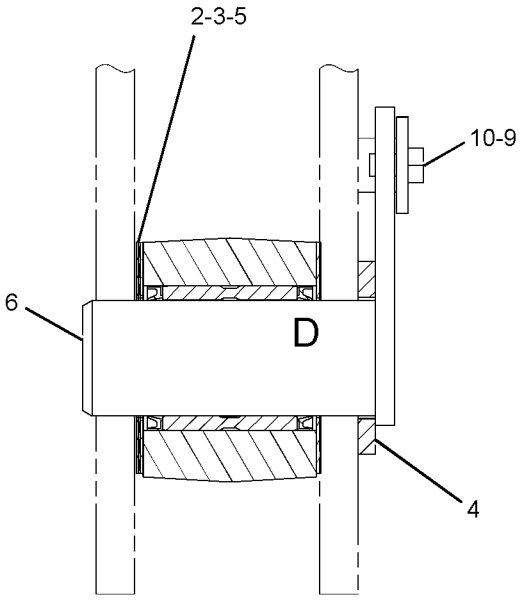

SECTION C-C

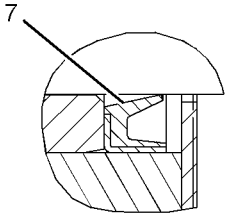

VIEW OF AREA D

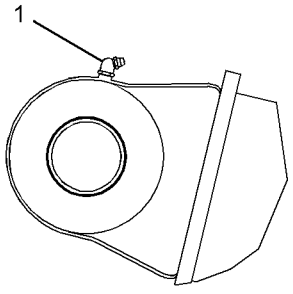

VIEW OF AREA E

GRAPHIC #1 **<END>** g01423523

282-4577 BLADE GP-STRAIGHT

S/N: BYJ1-UP; PDP1-UP
2490-MM (98-IN) WIDE
PART OF 282-4576 BLADE & MOUNTING GP
AN ATTACHMENT

SMCS-6060 **i02818885**

NOTE	REF NO	GRAPHIC REF	PART NUMBER	QTY	PART NAME 1 2 3 4 5 6 (PRODUCT LEVEL)	SEE PAGE
	1	1	**4T-6229**	2	BIT-END	
	2	1	**3Q-2034**	2	EDGE-CUTTING	
	3	1	**282-4578**	1	BLADE & BEARING AS	
	3A	1	**273-6945**	2	BEARING-SLEEVE	
	4	1	**3F-5108**	18	BOLT-PLOW (5/8-11X2.25-IN)	
	5	1	**4K-0367**	18	NUT-FULL (5/8-11-THD)	
	6	1	**5P-8247**	18	WASHER-HARD (17X32X3.5-MM THK)	

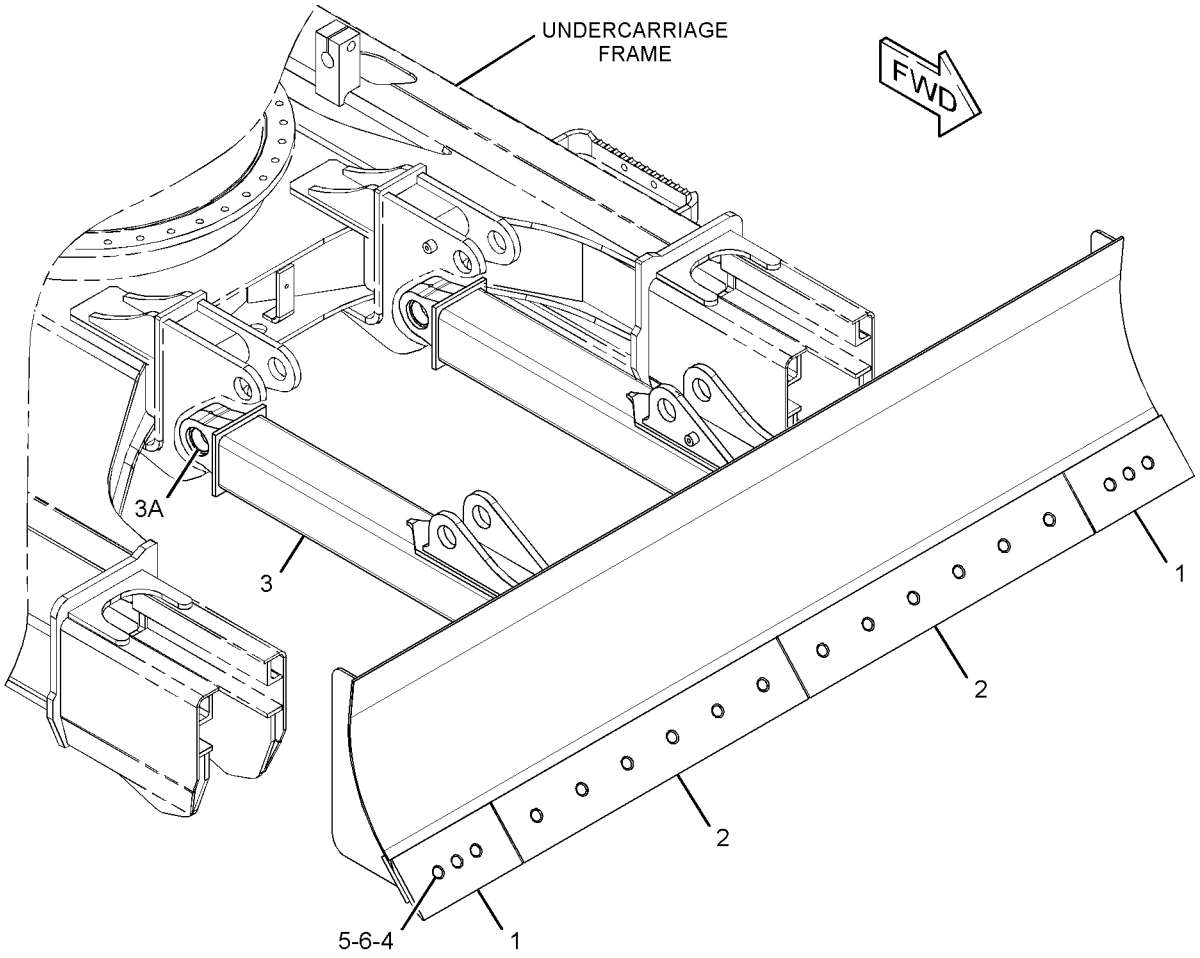

GRAPHIC #1 **<END>** g01411671

282-4580 BLADE GP-STRAIGHT

S/N: BYJ1-UP; PDP1-UP
2590-MM (101.9-IN) WIDE
PART OF 282-4579 BLADE & MOUNTING GP
AN ATTACHMENT

SMCS-6060 **i02818887**

NOTE	REF NO	GRAPHIC REF	PART NUMBER	QTY	PART NAME 1 2 3 4 5 6 (PRODUCT LEVEL)	SEE PAGE
	1	1	**4T-6229**	2	BIT-END	
	2	1	**140-6836**	2	EDGE-CUTTING	
	3	1	**282-4581**	1	BLADE & BEARING AS	
	3A	1	**273-6945**	2	BEARING-SLEEVE	
	4	1	**3F-5108**	18	BOLT-PLOW (5/8-11X2.25-IN)	
	5	1	**4K-0367**	18	NUT-FULL (5/8-11-THD)	
	6	1	**5P-8247**	18	WASHER-HARD (17X32X3.5-MM THK)	

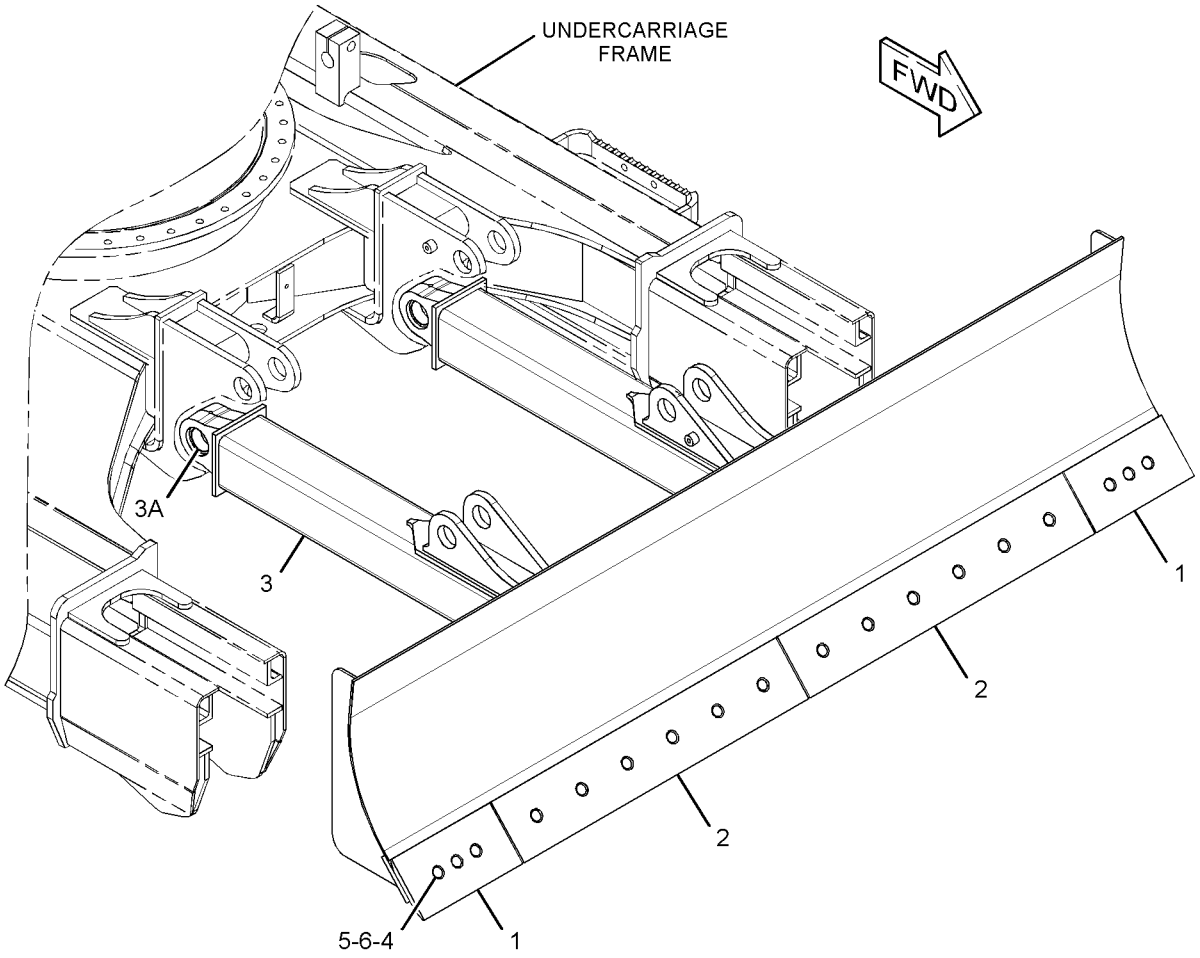

GRAPHIC #1 **<END>** g01411671

282-4583 BLADE GP-STRAIGHT

S/N: BYJ1-UP; PDP1-UP
2690-MM (105.9-IN) WIDE
PART OF 282-4582 BLADE & MOUNTING GP
AN ATTACHMENT

SMCS-6060 **i02818908**

NOTE	REF NO	GRAPHIC REF	PART NUMBER	QTY	PART NAME 1 2 3 4 5 6 (PRODUCT LEVEL)	SEE PAGE
	1	1	**4T-6229**	2	BIT-END	
	2	1	**140-2187**	2	EDGE-CUTTING	
	3	1	**282-4584**	1	BLADE & BEARING AS	
	3A	1	**273-6945**	2	BEARING-SLEEVE	
	4	1	**3F-5108**	18	BOLT-PLOW (5/8-11X2.25-IN)	
	5	1	**4K-0367**	18	NUT-FULL (5/8-11-THD)	
	6	1	**5P-8247**	18	WASHER-HARD (17X32X3.5-MM THK)	

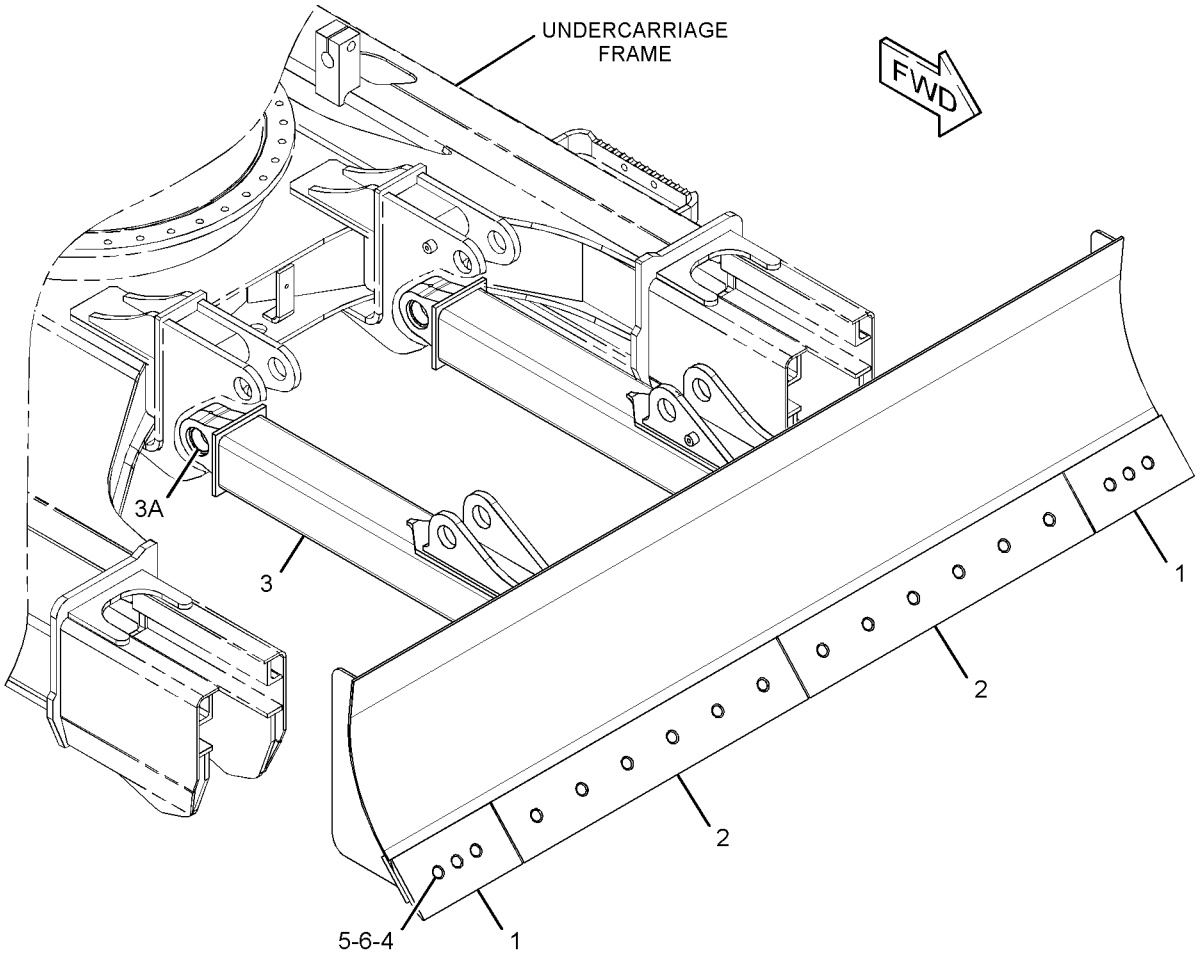

GRAPHIC #1 **<END>** g01411671

226-1316 BUCKET & ADJUSTER GP—GENERAL PURPOSE

S/N: BYJ1-UP; PDP1-UP
458-MM (18-IN) X .2-CU M (.3-CU YD) CAPACITY. J-250 ADAPTERS, (3X)
AN ATTACHMENT

SMCS-6503, 6513 **i01893739**

NOTE	PART NUMBER	QTY	PART NAME 1 2 3 4 5 6 (PRODUCT LEVEL)	SEE PAGE
Y	**4I-6914**	1	ADJUSTER GP-BUCKET	622
Y	**226-1317**	1	BUCKET AS-GENERAL PURPOSE	640
Y-SEPARATE ILLUSTRATION				

<END>

229-7564 BUCKET & ADJUSTER GP—HEAVY-DUTY ROCK

S/N: BYJ1-UP; PDP1-UP
930-MM (36-IN) WIDE X .5-CU M (.7-CU YD) CAPACITY. J-300 ADAPTERS, (5X)
AN ATTACHMENT

SMCS-6503, 6513 **i02859838**

NOTE	PART NUMBER	QTY	PART NAME 1 2 3 4 5 6 (PRODUCT LEVEL)	SEE PAGE
Y	**4I-6914**	1	ADJUSTER GP-BUCKET	622
Y	**305-1597**	1	BUCKET AS-HEAVY DUTY ROCK	648
Y-SEPARATE ILLUSTRATION				

<END>

229-7577 BUCKET & ADJUSTER GP—HEAVY-DUTY ROCK

S/N: BYJ1-UP; PDP1-UP
1082-MM (42-IN) WIDE X .6-CU M (.8-CU YD) CAPACITY. J-300 ADAPTERS, (5X)
AN ATTACHMENT

SMCS-6503, 6513 **i02877682**

NOTE	PART NUMBER	QTY	PART NAME 1 2 3 4 5 6 (PRODUCT LEVEL)	SEE PAGE
Y	**4I-6914**	1	ADJUSTER GP-BUCKET	622
Y	**305-1602**	1	BUCKET AS-HEAVY DUTY ROCK	649
Y-SEPARATE ILLUSTRATION				

<END>

229-7648 BUCKET & ADJUSTER GP—GENERAL PURPOSE

S/N: BYJ1-UP; PDP1-UP
600-MM (24-IN) WIDE X .3-CU M (.4-CU YD) CAPACITY. J-250 ADAPTERS, (4X)
AN ATTACHMENT

SMCS-6503, 6513 **i02880071**

NOTE	PART NUMBER	QTY	PART NAME 1 2 3 4 5 6 (PRODUCT LEVEL)	SEE PAGE
Y	**4I-6914**	1	ADJUSTER GP-BUCKET	622
Y	**305-1583**	1	BUCKET AS-GENERAL PURPOSE	641
Y-SEPARATE ILLUSTRATION				

<END>

229-7651 BUCKET & ADJUSTER GP—GENERAL PURPOSE

S/N: BYJ1-UP; PDP1-UP
750-MM (30-IN) WIDE X .4-CU M (.5-CU YD) CAPACITY . J-250 ADAPTERS, (5X)
AN ATTACHMENT

SMCS-6503, 6513 **i02880076**

NOTE	PART NUMBER	QTY	PART NAME 1 2 3 4 5 6 (PRODUCT LEVEL)	SEE PAGE
Y	**4I-6914**	1	ADJUSTER GP-BUCKET	622
Y	**305-1595**	1	BUCKET AS-GENERAL PURPOSE	642

Y-SEPARATE ILLUSTRATION

<END>

229-7654 BUCKET & ADJUSTER GP—GENERAL PURPOSE

S/N: BYJ1-UP; PDP1-UP
905-MM (36-IN) WIDE X .5-CU M (.7-CU YD) CAPACITY. J-250 ADAPTERS, (6X)
AN ATTACHMENT

SMCS-6503, 6513 **i02880078**

NOTE	PART NUMBER	QTY	PART NAME 1 2 3 4 5 6 (PRODUCT LEVEL)	SEE PAGE
Y	**4I-6914**	1	ADJUSTER GP-BUCKET	622
Y	**305-1600**	1	BUCKET AS-GENERAL PURPOSE	643

Y-SEPARATE ILLUSTRATION

<END>

229-7657 BUCKET & ADJUSTER GP—GENERAL PURPOSE

S/N: BYJ1-UP; PDP1-UP
1057-MM (42-IN) WIDE X .6-CU M (.8-CU YD) CAPACITY. J-250 ADAPTERS, (7X)
AN ATTACHMENT

SMCS-6503, 6513 **i02883371**

NOTE	PART NUMBER	QTY	PART NAME 1 2 3 4 5 6 (PRODUCT LEVEL)	SEE PAGE
Y	**4I-6914**	1	ADJUSTER GP-BUCKET	622
Y	**305-1605**	1	BUCKET AS-GENERAL PURPOSE	644

Y-SEPARATE ILLUSTRATION

<END>

229-7660 BUCKET & ADJUSTER GP—GENERAL PURPOSE

S/N: BYJ1-UP; PDP1-UP
1209-MM (48-IN) WIDE X .7-CU M (1-CU YD) CAPACITY. J-250 ADAPTERS, (7X)
AN ATTACHMENT

SMCS-6503, 6513 **i02883399**

NOTE	PART NUMBER	QTY	PART NAME 1 2 3 4 5 6 (PRODUCT LEVEL)	SEE PAGE
Y	**4I-6914**	1	ADJUSTER GP-BUCKET	622
Y	**305-1627**	1	BUCKET AS-GENERAL PURPOSE	645

Y-SEPARATE ILLUSTRATION

<END>

229-7678 BUCKET & ADJUSTER GP—HEAVY-DUTY ROCK

S/N: BYJ1-UP; PDP1-UP
625-MM (24-IN) WIDE X .3-CU M (.4-CU YD) CAPACITY. J-300 ADAPTERS, (3X)
AN ATTACHMENT

SMCS-6503, 6513 **i02888821**

NOTE	PART NUMBER	QTY	PART NAME 1 2 3 4 5 6 (PRODUCT LEVEL)	SEE PAGE
Y	**4I-6914**	1	ADJUSTER GP-BUCKET	622
Y	**305-1580**	1	BUCKET AS-HEAVY DUTY ROCK	646

Y-SEPARATE ILLUSTRATION

<END>

229-7685 BUCKET & ADJUSTER GP—HEAVY DUTY ROCK

S/N: BYJ1-UP; PDP1-UP
775-MM (30-IN) WIDE X .4-CU M (.5-CU YD) CAPACITY. J-300 ADAPTERS, (4X)
AN ATTACHMENT

SMCS-6503, 6513 **i02880708**

NOTE	PART NUMBER	QTY	PART NAME 1 2 3 4 5 6 (PRODUCT LEVEL)	SEE PAGE
Y	**4I-6914**	1	ADJUSTER GP-BUCKET	622
Y	**305-1592**	1	BUCKET AS-HEAVY DUTY ROCK	647

Y-SEPARATE ILLUSTRATION

<END>

WORK TOOLS

327-3600 BUCKET AS

S/N: BYJ1-UP; PDP1-UP
458-MM (18-IN) WIDE X 0.3-CU M (0.3-CU YD) CAPACITY. K-250 ADAPTERS, (3X)
PART OF 327-3599 BUCKET GP
AN ATTACHMENT

SMCS-6001, 6101 **i03144442**

NOTE	REF NO	GRAPHIC REF	PART NUMBER	QTY	PART NAME 1 2 3 4 5 6 (PRODUCT LEVEL)	SEE PAGE
	1	1	**226-1311**	1	EDGE AS	
	1A	1	**8P-9770**	1	PLATE	
	1B	1	**119-3253**	3	ADAPTER-TIP (J-250, 2-STRAP, CENTER)	
	2	1	**2C-9259**	1	PLATE-IDENTIFICATION (CAT)	
	3	1	**216-5841**	2	PLATE-WEAR	
	4	1	**226-1320**	3	PLATE	
	5	1	**226-1319**	1	PLATE	
	6	1	**327-3601**	1	PLATE AS-HINGE	

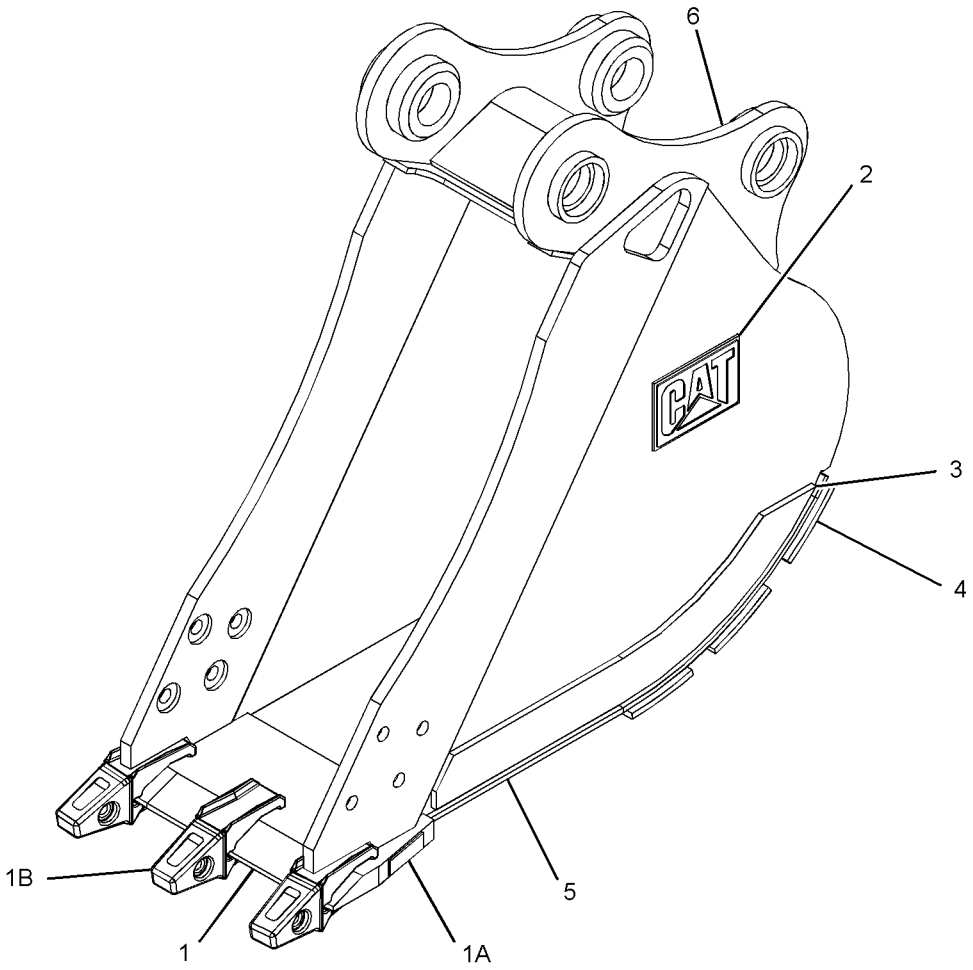

GRAPHIC #1 **<END>** g01623016

WORK TOOLS

327-3603 BUCKET AS

S/N: BYJ1-UP; PDP1-UP
610-MM (24-IN) WIDE X 0.3-CU M (0.4-CU YD) CAPACITY. K-250 ADAPTERS, (4X)
PART OF 327-3602 BUCKET GP
AN ATTACHMENT

SMCS-6001, 6101 **i03144475**

NOTE	REF NO	GRAPHIC REF	PART NUMBER	QTY	PART NAME 1 2 3 4 5 6 (PRODUCT LEVEL)	SEE PAGE
	1	1	**229-7650**	1	EDGE AS	
	1A	1	**8P-9770**	1	PLATE	
	1B	1	**119-3253**	4	ADAPTER-TIP (J-250, 2-STRAP, CENTER)	
	2	1	**2C-9259**	1	PLATE-IDENTIFICATION (CAT)	
	3	1	**216-5841**	2	PLATE-WEAR	
	4	1	**216-5838**	3	PLATE-WEAR	
	5	1	**216-5837**	1	PLATE-WEAR	
	6	1	**327-3604**	1	PLATE AS-BOX	

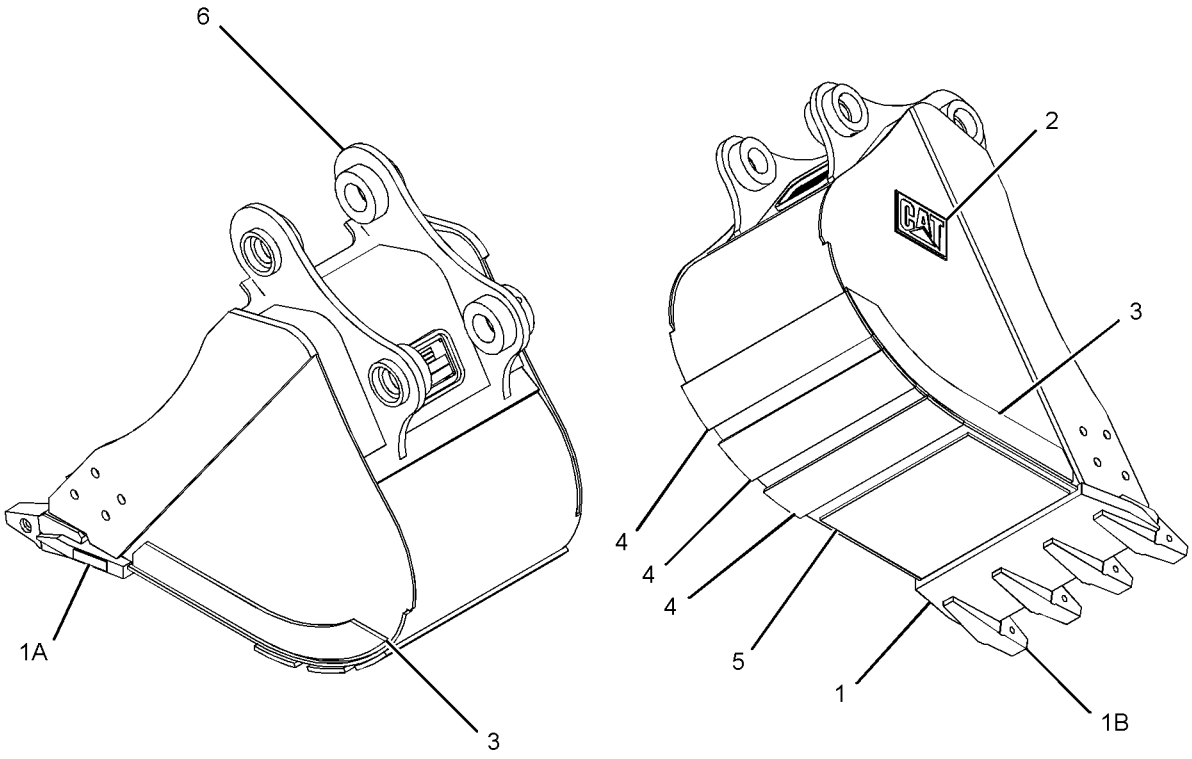

GRAPHIC #1 **<END>** g01624127

327-3606 BUCKET AS

S/N: BYJ1-UP; PDP1-UP
760-MM (30-IN) WIDE X 0.4-CU M (0.5-CU YD) CAPACITY. J-250 ADAPTERS, (5X)
PART OF 327-3605 BUCKET GP
AN ATTACHMENT

SMCS-6001, 6101 **i03144502**

NOTE	REF NO	GRAPHIC REF	PART NUMBER	QTY	PART NAME 1 2 3 4 5 6 (PRODUCT LEVEL)	SEE PAGE
	1	1	**229-7653**	1	EDGE AS	
	1A	1	**8P-9770**	1	PLATE	
	1B	1	**119-3253**	5	ADAPTER-TIP (J-250, 2-STRAP, CENTER)	
	2	1	**2C-9259**	1	PLATE-IDENTIFICATION (CAT)	
	3	1	**216-5841**	2	PLATE-WEAR	
	4	1	**216-5848**	3	PLATE-WEAR	
	5	1	**216-5847**	1	PLATE-WEAR	
	6	1	**327-3607**	1	PLATE AS-BOX	

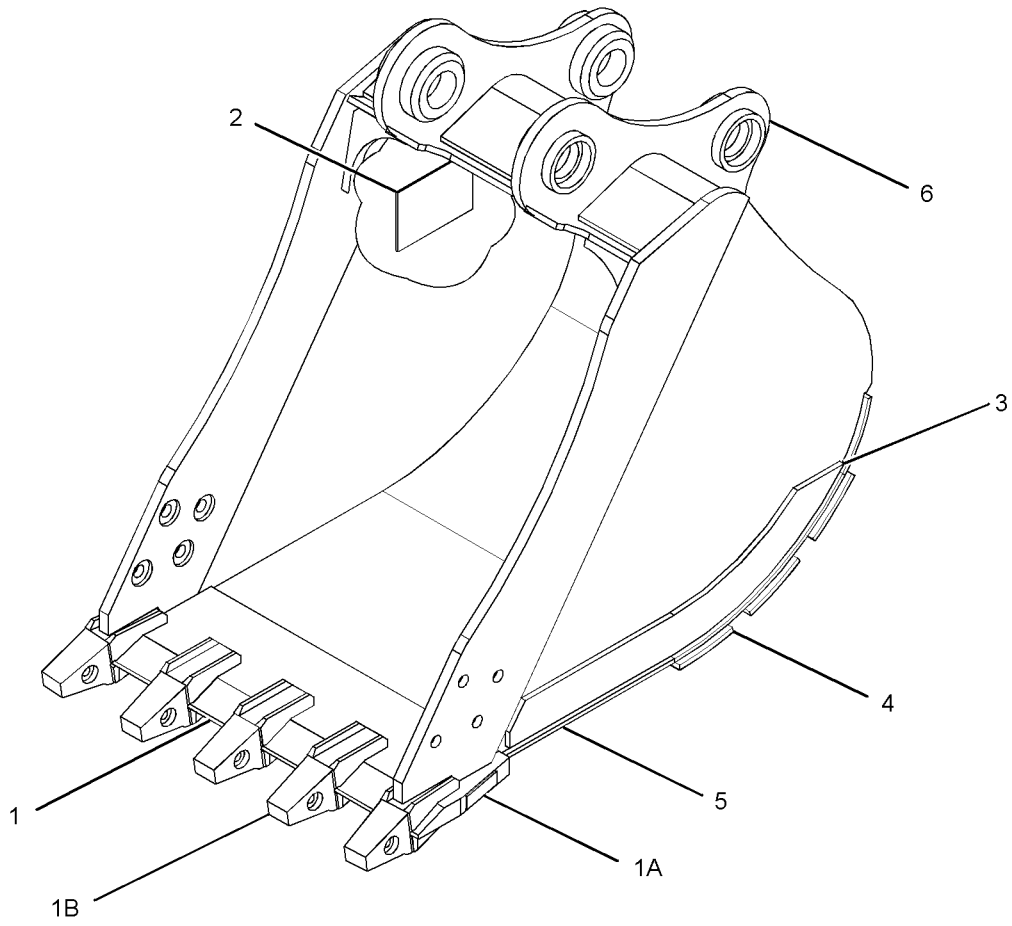

GRAPHIC #1 **<END>** g01627301

327-3609 BUCKET AS

S/N: BYJ1-UP; PDP1-UP
915-MM (36-IN) WIDE X 0.5-CU M (0.7-CU YD) CAPACITY. J-250 ADAPTERS, (6X)
PART OF 327-3608 BUCKET GP
AN ATTACHMENT

SMCS-6001, 6101 **i03144561**

NOTE	REF NO	GRAPHIC REF	PART NUMBER	QTY	PART NAME 1 2 3 4 5 6 (PRODUCT LEVEL)	SEE PAGE
	1	1	**229-7656**	1	EDGE AS	
	1A	1	**8P-9770**	1	PLATE	
	1B	1	**119-3253**	6	ADAPTER-TIP (J-250, 2-STRAP, CENTER)	
	2	1	**2C-9259**	1	PLATE-IDENTIFICATION (CAT)	
	3	1	**216-5841**	2	PLATE-WEAR	
	4	1	**216-5884**	3	PLATE-WEAR	
	5	1	**216-5883**	1	PLATE-WEAR	
	6	1	**327-3610**	1	PLATE AS-BOX	

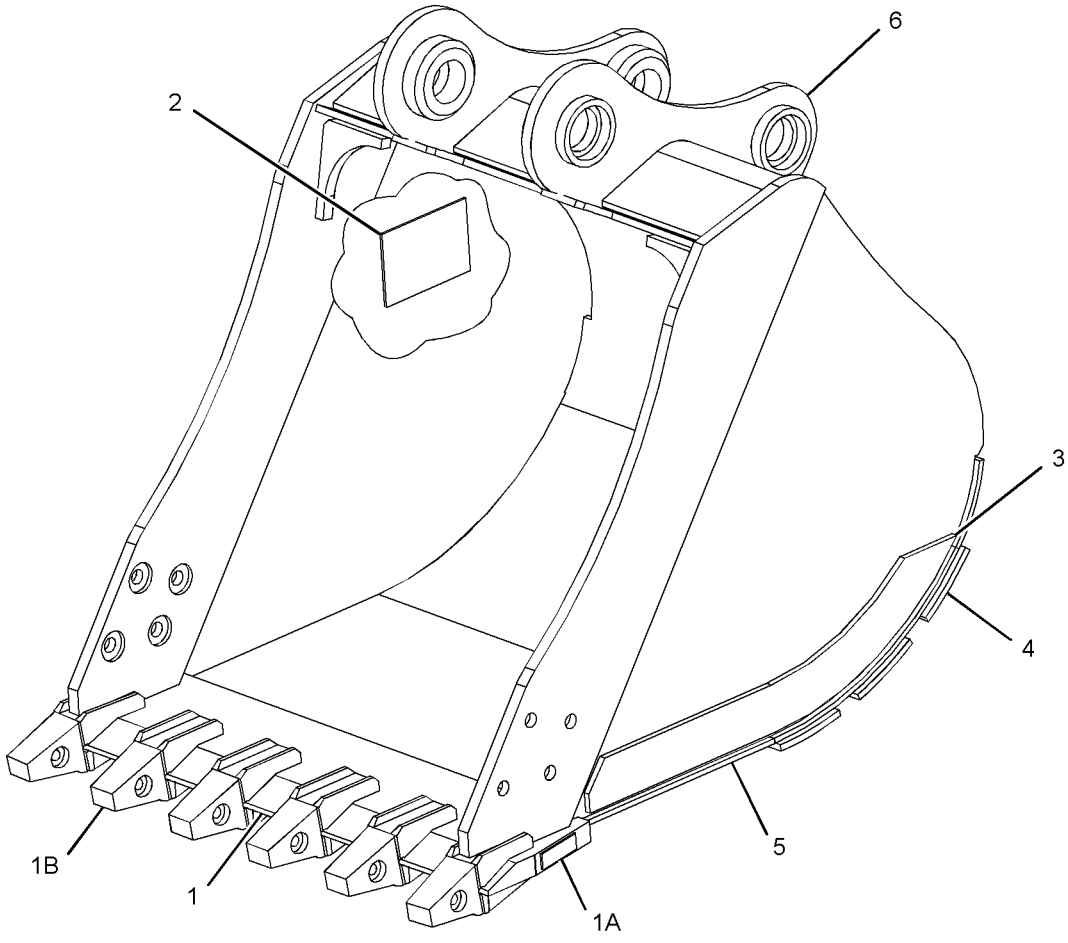

GRAPHIC #1 **<END>** g01627469

327-3612 BUCKET AS

S/N: BYJ1-UP; PDP1-UP
1067-MM (42-IN) WIDE X 0.6-CU M (0.8-CU YD) CAPACITY. J-250 ADAPTERS, (7X)
PART OF 327-3611 BUCKET GP
AN ATTACHMENT

SMCS-6001, 6101 **i03144569**

NOTE	REF NO	GRAPHIC REF	PART NUMBER	QTY	PART NAME 1 2 3 4 5 6 (PRODUCT LEVEL)	SEE PAGE
	1	1	**229-7659**	1	EDGE AS	
	1A	1	**8P-9770**	1	PLATE	
	1B	1	**119-3253**	7	ADAPTER-TIP (J-250, 2-STRAP, CENTER)	
	2	1	**327-3613**	1	PLATE AS-BOX	
	3	1	**216-5841**	2	PLATE-WEAR	
	4	1	**216-5886**	1	PLATE-WEAR	
	5	1	**216-5887**	3	PLATE-WEAR	
	6	1	**2C-9259**	1	PLATE-IDENTIFICATION (CAT)	

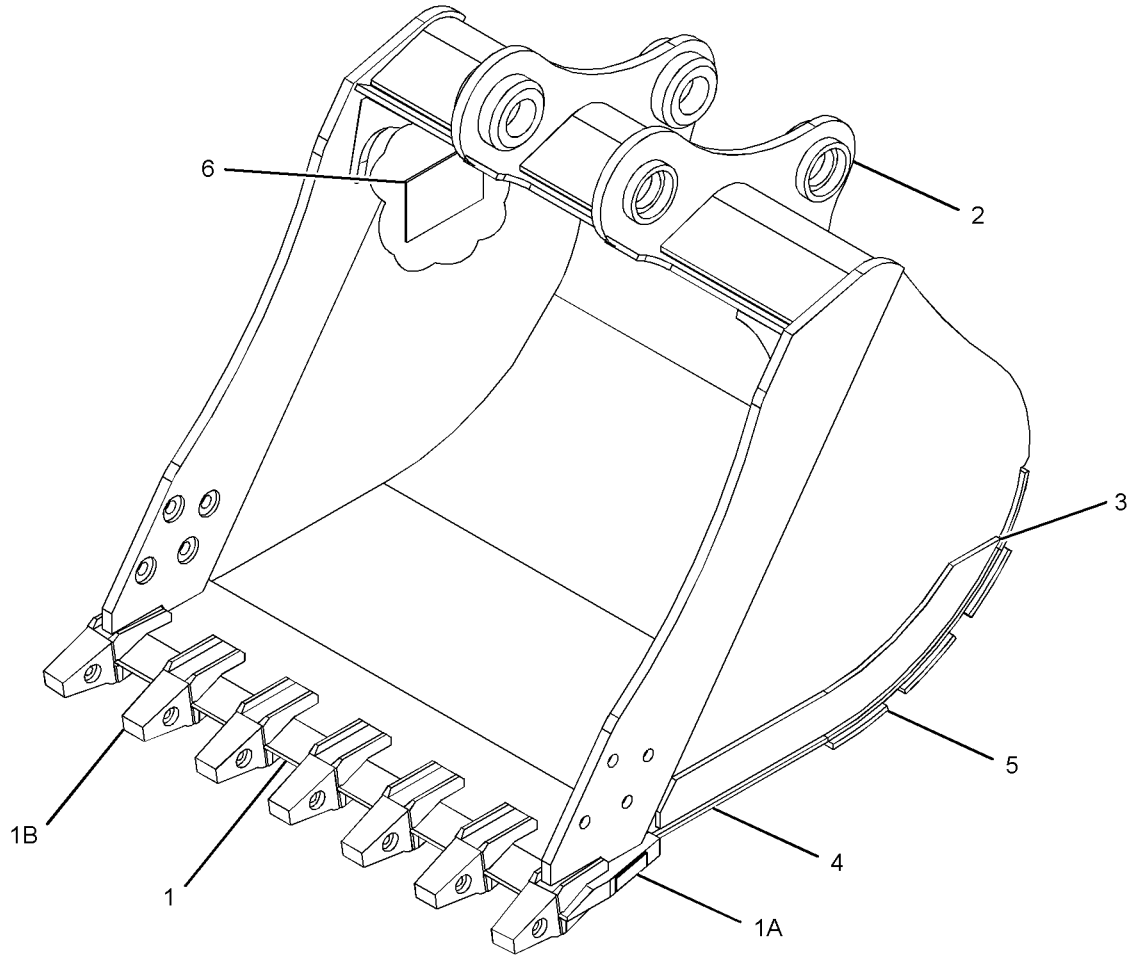

GRAPHIC #1 **<END>** g01627852

WORK TOOLS

167-0279 BUCKET AS-DITCH CLEANING

S/N: BYJ1-UP; PDP1-UP
1500-MM (59-IN) WIDE X 1-CU M (1.3-CU YD) CAPACITY
PART OF 327-3649 BUCKET GP-DITCH CLEANING
AN ATTACHMENT

SMCS-6526 **i03100248**

NOTE	REF NO	GRAPHIC REF	PART NUMBER	QTY	PART NAME 1 2 3 4 5 6 (PRODUCT LEVEL)	SEE PAGE
	1	1	**167-0261**	1	EDGE	
	2	1	**2C-9259**	2	PLATE-IDENTIFICATION (CAT)	

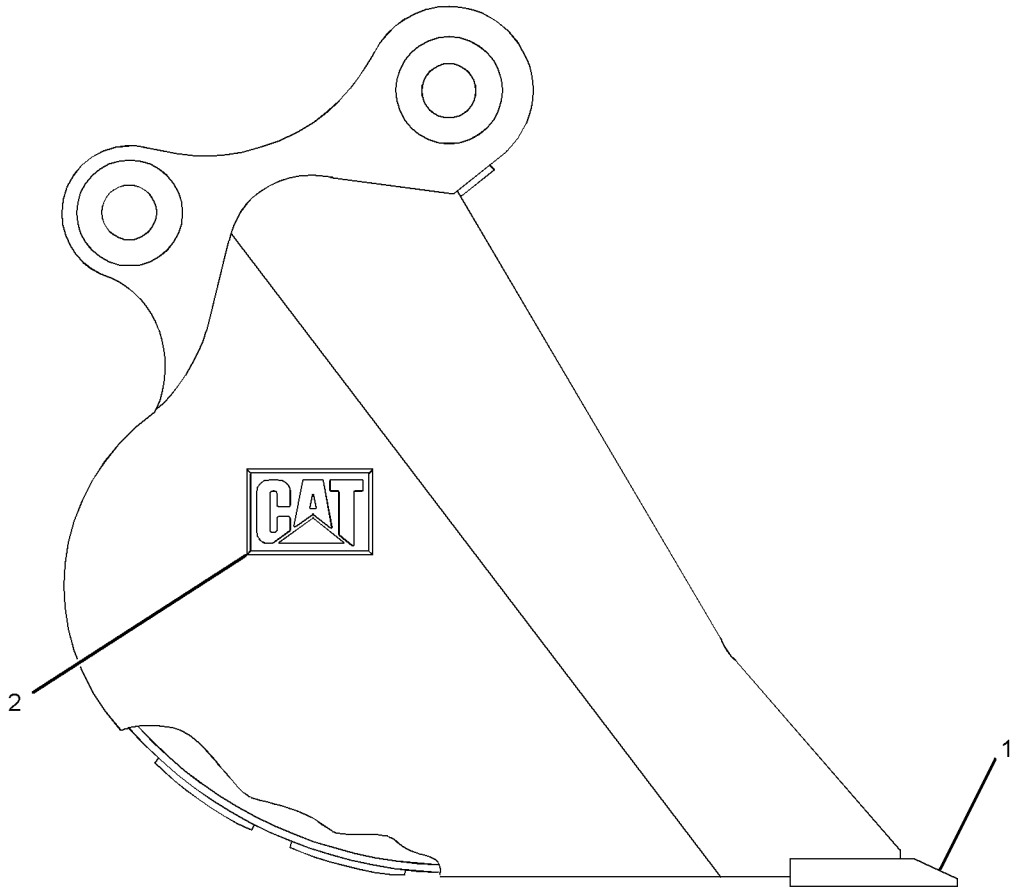

GRAPHIC #1 **<END>** g01627513

226-1317 BUCKET AS-GENERAL PURPOSE

S/N: BYJ1-UP; PDP1-UP
458-MM (18-IN) WIDE X .3-CUM (.3-CU YD) CAPACITY. J-250 ADAPTERS, (3X)
PART OF 226-1316 BUCKET & ADJUSTER GP
AN ATTACHMENT

SMCS-6101 **i01893738**

NOTE	REF NO	GRAPHIC REF	PART NUMBER	QTY	PART NAME 1 2 3 4 5 6 (PRODUCT LEVEL)	SEE PAGE
	1	1	**226-1311**	1	EDGE AS	
	1A	1	**119-3253**	3	ADAPTER-TIP (J-250, 2-STRAP, CENTER)	
	1B	1	**8P-9770**	1	PLATE	
	2	1	**226-1319**	1	PLATE	
	3	1	**226-1320**	3	PLATE	

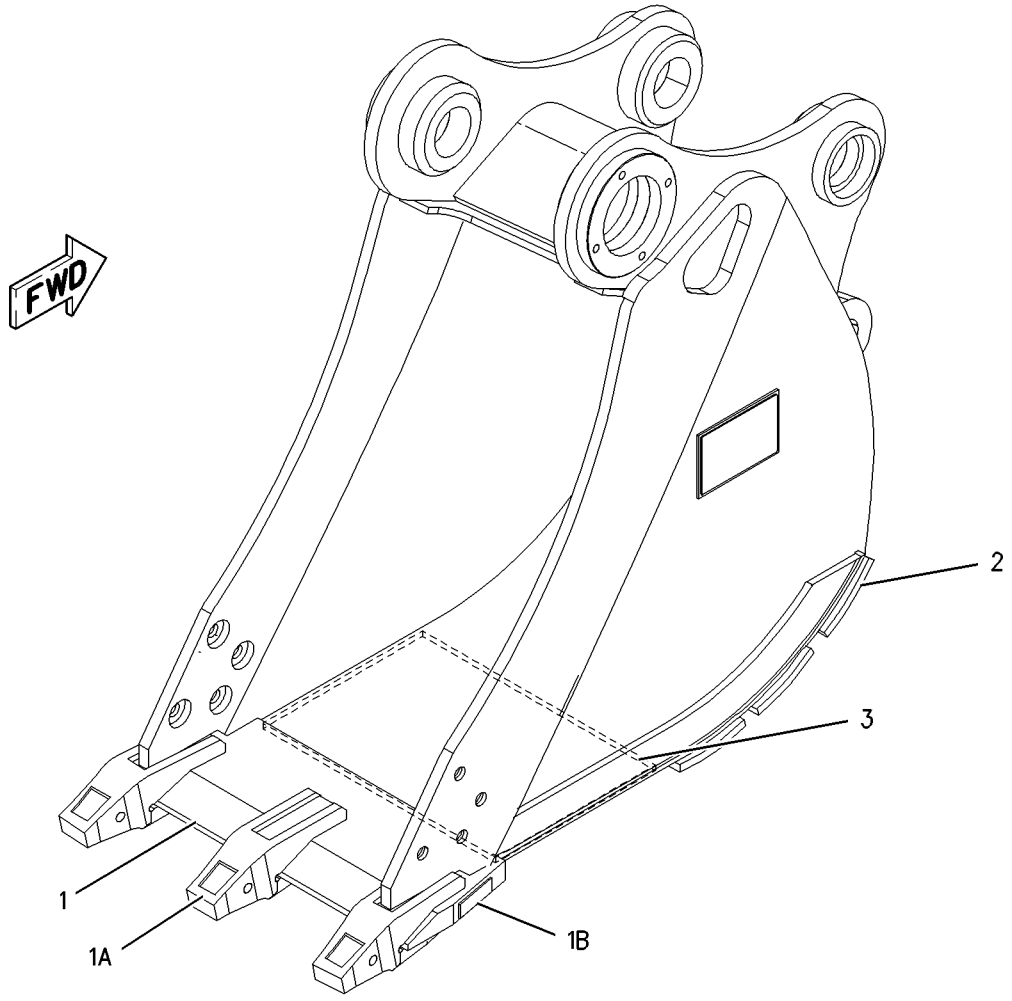

GRAPHIC #1 **<END>** g00987069

305-1583 BUCKET AS-GENERAL PURPOSE

S/N: BYJ1-UP; PDP1-UP
600-MM (24-IN) WIDE X 0.3-CU M (0.4-CU YD) CAPACITY. J-250 ADAPTERS, (4X)
PART OF 229-7648 BUCKET & ADJUSTER GP
AN ATTACHMENT

SMCS-6101 **i02880069**

NOTE	REF NO	GRAPHIC REF	PART NUMBER	QTY	PART NAME 1 2 3 4 5 6 (PRODUCT LEVEL)	SEE PAGE
	1	1	**229-7650**	1	EDGE AS	
	1A	1	**119-3253**	4	ADAPTER-TIP (J-250, 2-STRAP, CENTER)	
	1B	1	**8P-9770**	1	PLATE	
	2	1	**216-5837**	1	PLATE-WEAR	
	3	1	**216-5838**	3	PLATE-WEAR	
	4	1	**2C-9259**	1	PLATE-IDENTIFICATION (CAT)	
	5	1	**216-5841**	2	PLATE-WEAR	

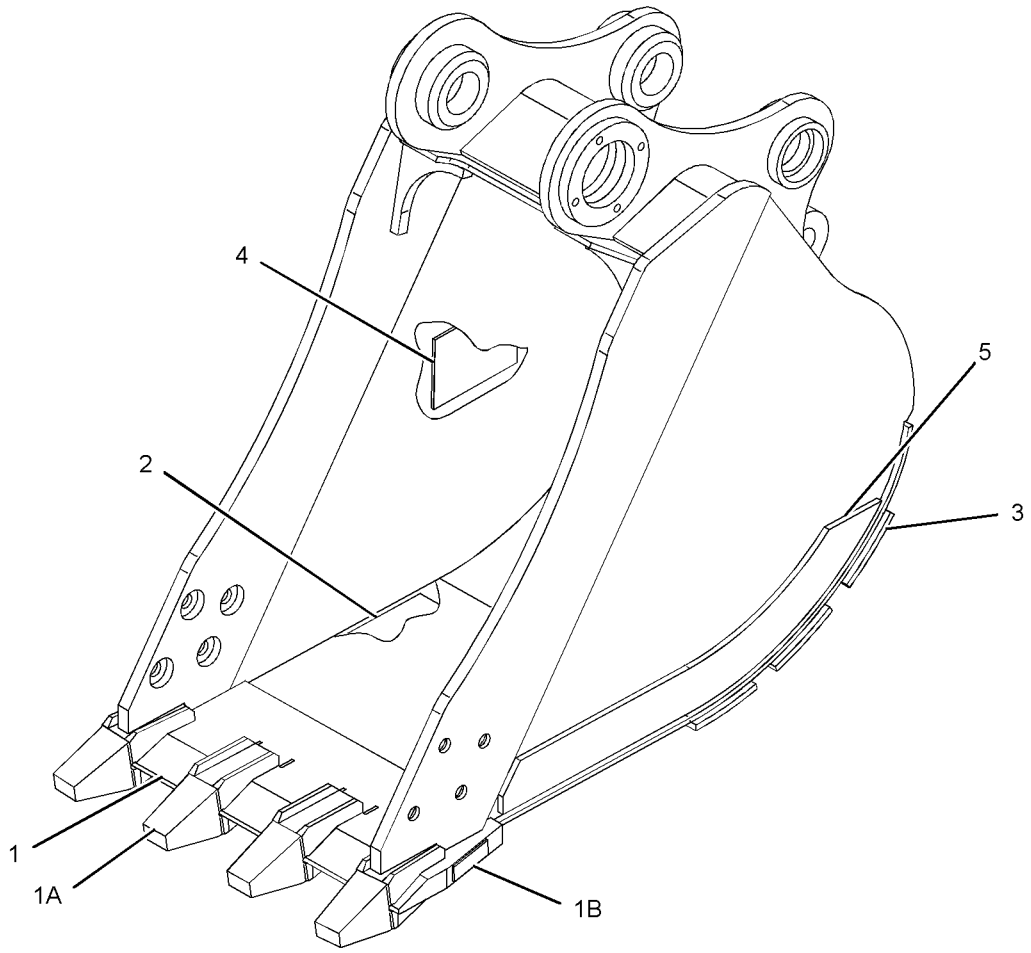

GRAPHIC #1 **<END>** g01440141

WORK TOOLS

305-1595 BUCKET AS-GENERAL PURPOSE

S/N: BYJ1-UP; PDP1-UP
750-MM (30-IN) WIDE X 0.4-CU M (0.5-CU YD) CAPACITY. J-250 ADAPTERS, (5X)
PART OF 229-7651 BUCKET & ADJUSTER GP
AN ATTACHMENT

SMCS-6101 **i02880075**

NOTE	REF NO	GRAPHIC REF	PART NUMBER	QTY	PART NAME 1 2 3 4 5 6 (PRODUCT LEVEL)	SEE PAGE
	1	1	**229-7653**	1	EDGE AS	
	1A	1	**119-3253**	5	ADAPTER-TIP (J-250, 2-STRAP, CENTER)	
	1B	1	**8P-9770**	1	PLATE	
	2	1	**216-5847**	1	PLATE-WEAR	
	3	1	**216-5848**	3	PLATE-WEAR	
	4	1	**2C-9259**	1	PLATE-IDENTIFICATION (CAT)	

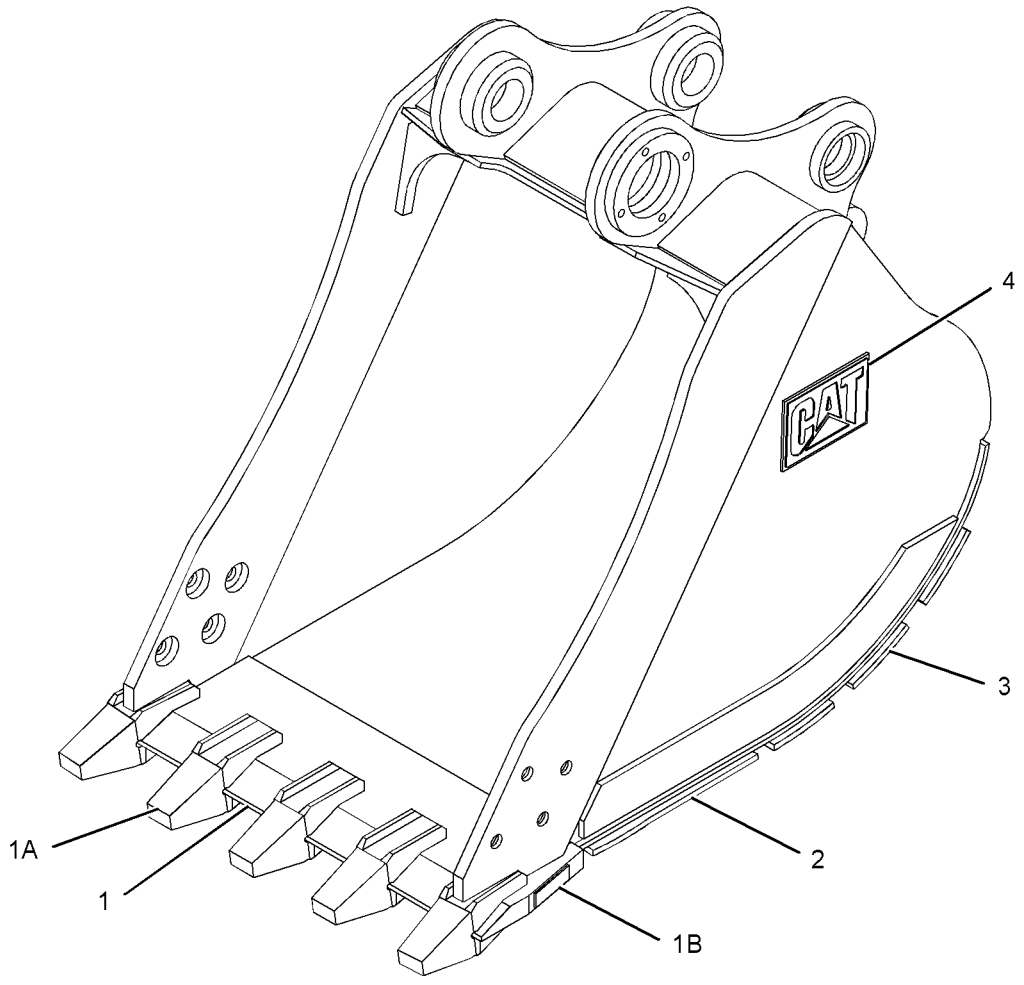

GRAPHIC #1 **<END>** g01435443

305-1600 BUCKET AS-GENERAL PURPOSE

S/N: BYJ1-UP; PDP1-UP
905-MM (36-IN) WIDE X 0.5-CU M (0.7-CU YD) CAPACITY. J-250 ADAPTERS, (6X)
PART OF 229-7654 BUCKET & ADJUSTER GP
AN ATTACHMENT

SMCS-6101 **i02880077**

NOTE	REF NO	GRAPHIC REF	PART NUMBER	QTY	PART NAME 1 2 3 4 5 6 (PRODUCT LEVEL)	SEE PAGE
	1	1	**229-7656**	1	EDGE AS	
	1A	1	**119-3253**	6	ADAPTER-TIP (J-250, 2-STRAP, CENTER)	
	1B	1	**8P-9770**	1	PLATE	
	2	1	**216-5883**	1	PLATE-WEAR	
	3	1	**216-5884**	3	PLATE-WEAR	
	4	1	**2C-9259**	1	PLATE-IDENTIFICATION (CAT)	
	5	1	**216-5841**	2	PLATE-WEAR	

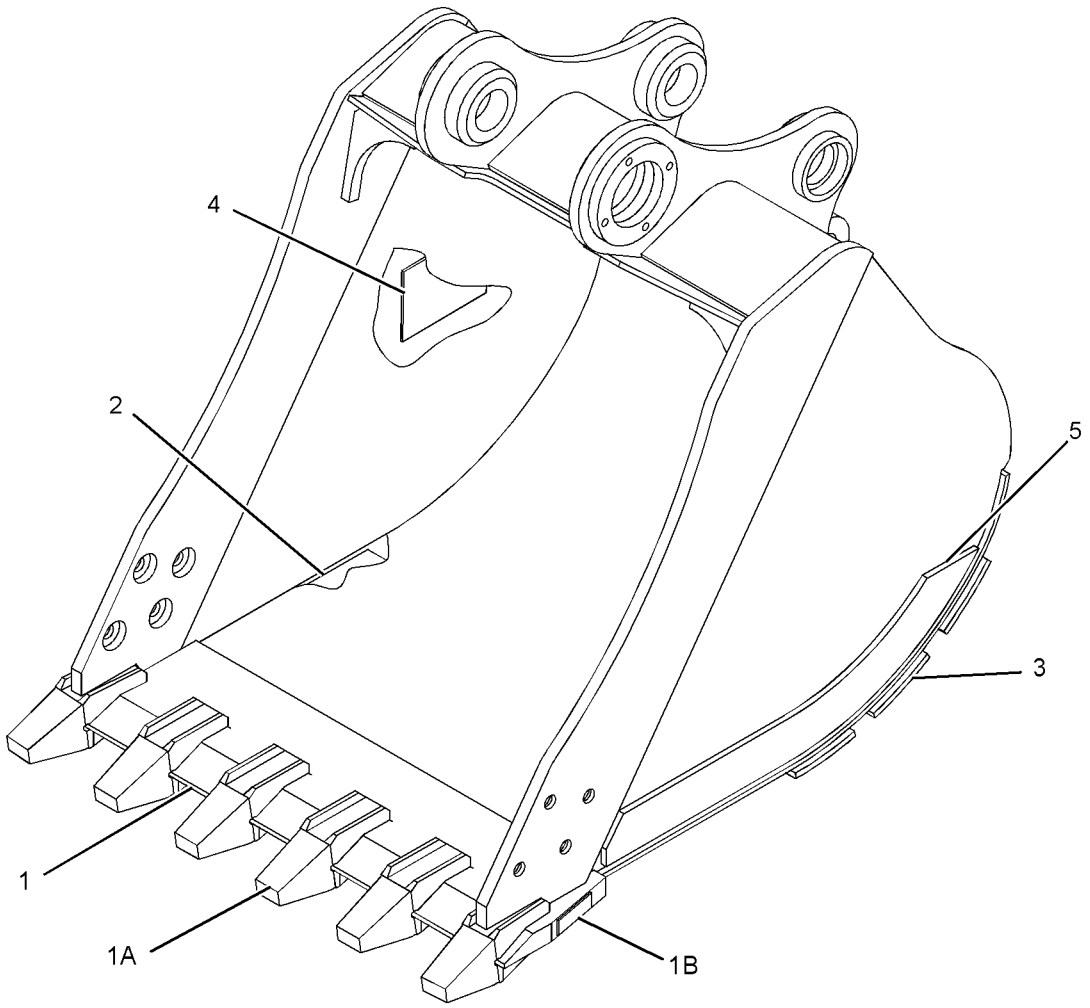

GRAPHIC #1 **<END>** g01440159

WORK TOOLS

305-1605 BUCKET AS-GENERAL PURPOSE

S/N: BYJ1-UP; PDP1-UP
1057-MM (42-IN) WIDE X 0.6-CU M (0.8-CU YD) CAPACITY. J-250 ADAPTERS, (7X)
PART OF 229-7657 BUCKET & ADJUSTER GP
AN ATTACHMENT

SMCS-6101 **i02883370**

NOTE	REF NO	GRAPHIC REF	PART NUMBER	QTY	PART NAME 1 2 3 4 5 6 (PRODUCT LEVEL)	SEE PAGE
	1	1	**229-7659**	1	EDGE AS	
	1A	1	**8P-9770**	1	PLATE	
	1B	1	**119-3253**	7	ADAPTER-TIP (J-250, 2-STRAP, CENTER)	
	2	1	**216-5886**	1	PLATE-WEAR	
	3	1	**216-5887**	3	PLATE-WEAR	
	4	1	**216-5841**	2	PLATE-WEAR	
	5	1	**2C-9259**	1	PLATE-IDENTIFICATION (CAT)	

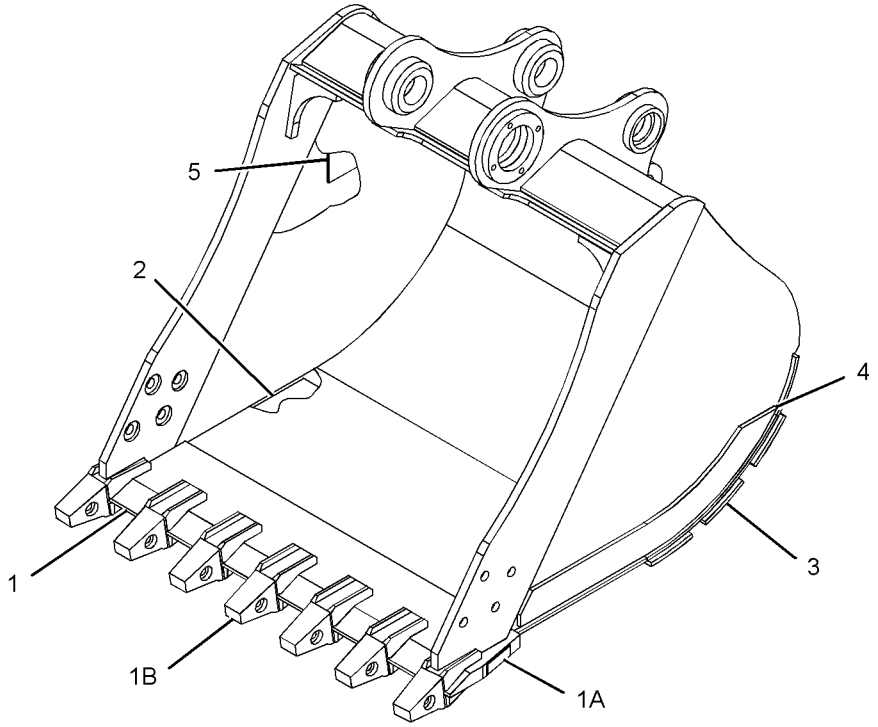

GRAPHIC #1 **<END>** g01436269

305-1627 BUCKET AS-GENERAL PURPOSE

S/N: BYJ1-UP; PDP1-UP
1209-MM (48-IN) WIDE X 0.7-CU M (0.9-CU YD) CAPACITY. J-250 ADAPTERS, (7X)
PART OF 229-7660 BUCKET & ADJUSTER GP
AN ATTACHMENT

SMCS-6101 **i02883400**

NOTE	REF NO	GRAPHIC REF	PART NUMBER	QTY	PART NAME 1 2 3 4 5 6 (PRODUCT LEVEL)	SEE PAGE
	1	1	**229-7662**	1	EDGE AS	
	1A	1	**8P-9770**	1	PLATE	
	1B	1	**119-3253**	7	ADAPTER-TIP (J-250, 2-STRAP, CENTER)	
	2	1	**216-5889**	1	PLATE	
	3	1	**216-5890**	3	PLATE	
	4	1	**216-5841**	2	PLATE-WEAR	
	5	1	**2C-9259**	1	PLATE-IDENTIFICATION (CAT)	

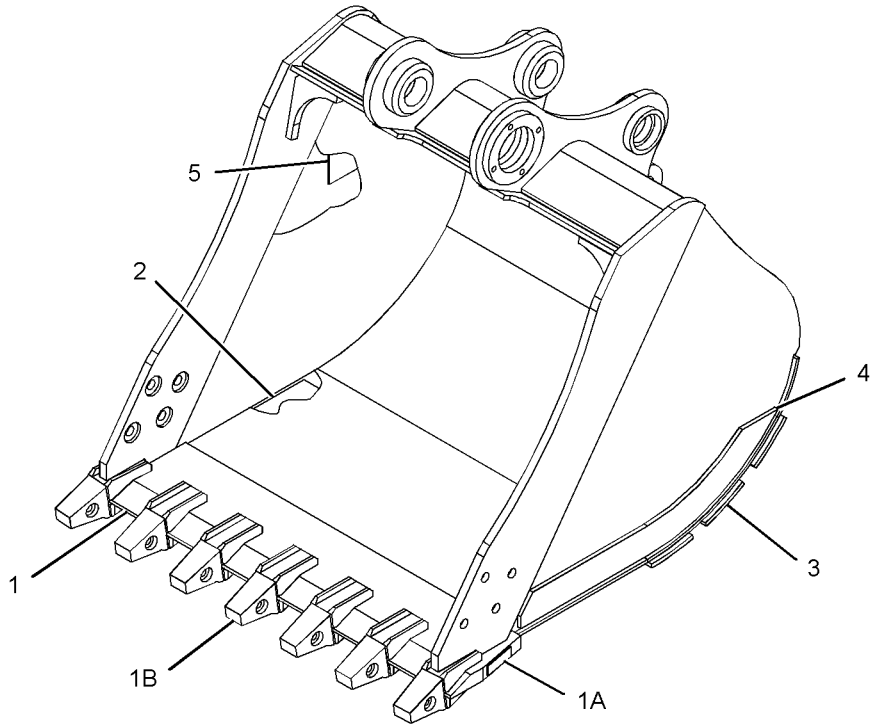

GRAPHIC #1 **<END>** g01436316

305-1580 BUCKET AS-HEAVY DUTY ROCK

S/N: BYJ1-UP; PDP1-UP
625-MM (24-IN) WIDE X 0.3-CU M (0.4-CU YD) CAPACITY. J-300 ADAPTERS (3X)
PART OF 229-7678 BUCKET & ADJUSTER GP
AN ATTACHMENT

SMCS-6102 **i02888823**

NOTE	REF NO	GRAPHIC REF	PART NUMBER	QTY	PART NAME 1 2 3 4 5 6 (PRODUCT LEVEL)	SEE PAGE
	1	1	**229-7683**	1	EDGE AS	
	1A	1	**8E-9490**	3	ADAPTER-TIP (J-300, 2-STRAP, CENTER)	
	1B	1	**8P-9770**	1	PLATE	
	2	1	**229-7573**	2	PLATE-WEAR	
	3	1	**229-7680**	1	PLATE-REINFORCEMENT	
	4	1	**229-7681**	3	PLATE-WEAR	
	5	1	**229-7682**	1	PLATE-WEAR	
	6	1	**2C-9259**	1	PLATE-IDENTIFICATION (CAT)	

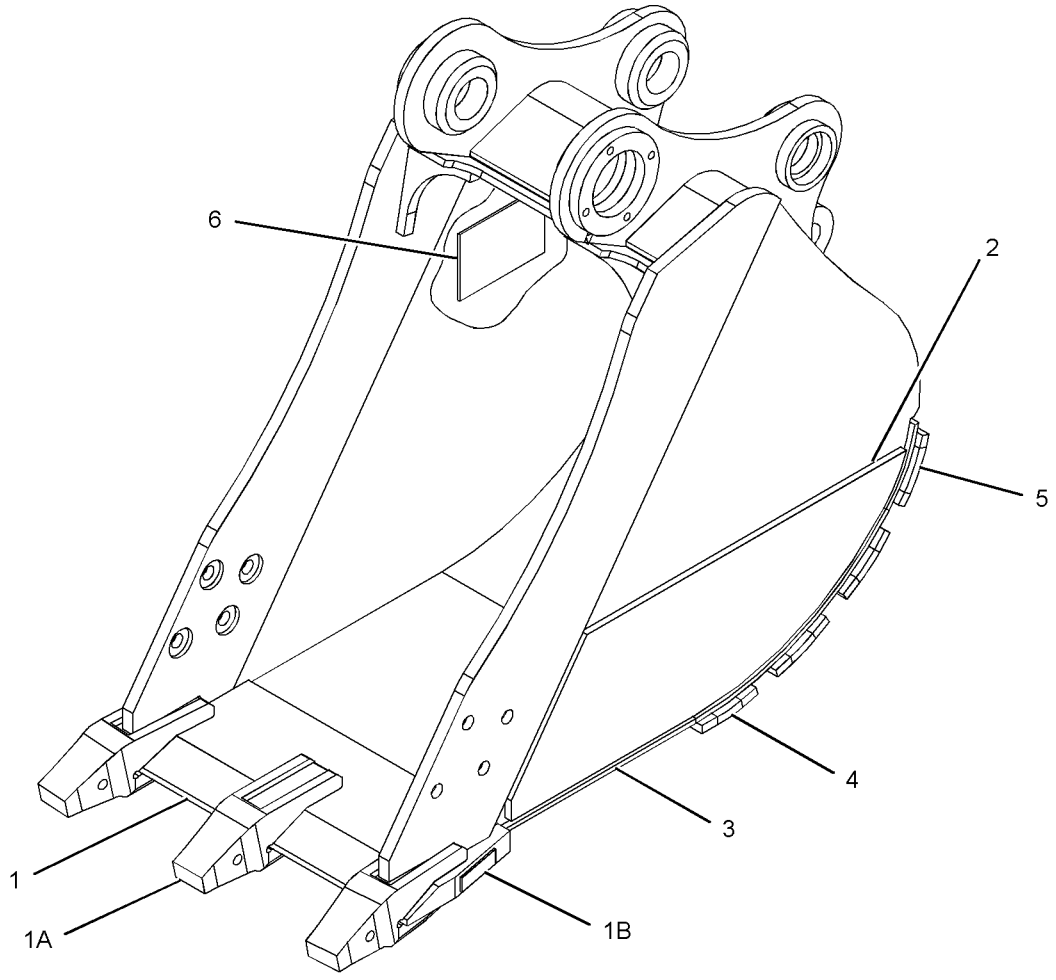

GRAPHIC #1 **<END>** g01439742

WORK TOOLS

305-1592 BUCKET AS-HEAVY DUTY ROCK

S/N: BYJ1-UP; PDP1-UP
775-MM (30-IN) WIDE X 0.4-CU M (0.5-CU YD) CAPACITY. J-300 ADAPTERS, (4X)
PART OF 229-7685 BUCKET & ADJUSTER GP
AN ATTACHMENT

SMCS-6102 **i02880703**

NOTE	REF NO	GRAPHIC REF	PART NUMBER	QTY	PART NAME 1 2 3 4 5 6 (PRODUCT LEVEL)	SEE PAGE
	1	1	**229-7690**	1	EDGE AS	
	1A	1	**8E-9490**	4	ADAPTER-TIP (J-300, 2-STRAP, CENTER)	
	1B	1	**8P-9770**	1	PLATE	
	2	1	**229-7687**	1	PLATE-WEAR	
	3	1	**229-7688**	3	PLATE-WEAR	
	4	1	**229-7689**	1	PLATE-WEAR	
	5	1	**2C-9259**	1	PLATE-IDENTIFICATION (CAT)	

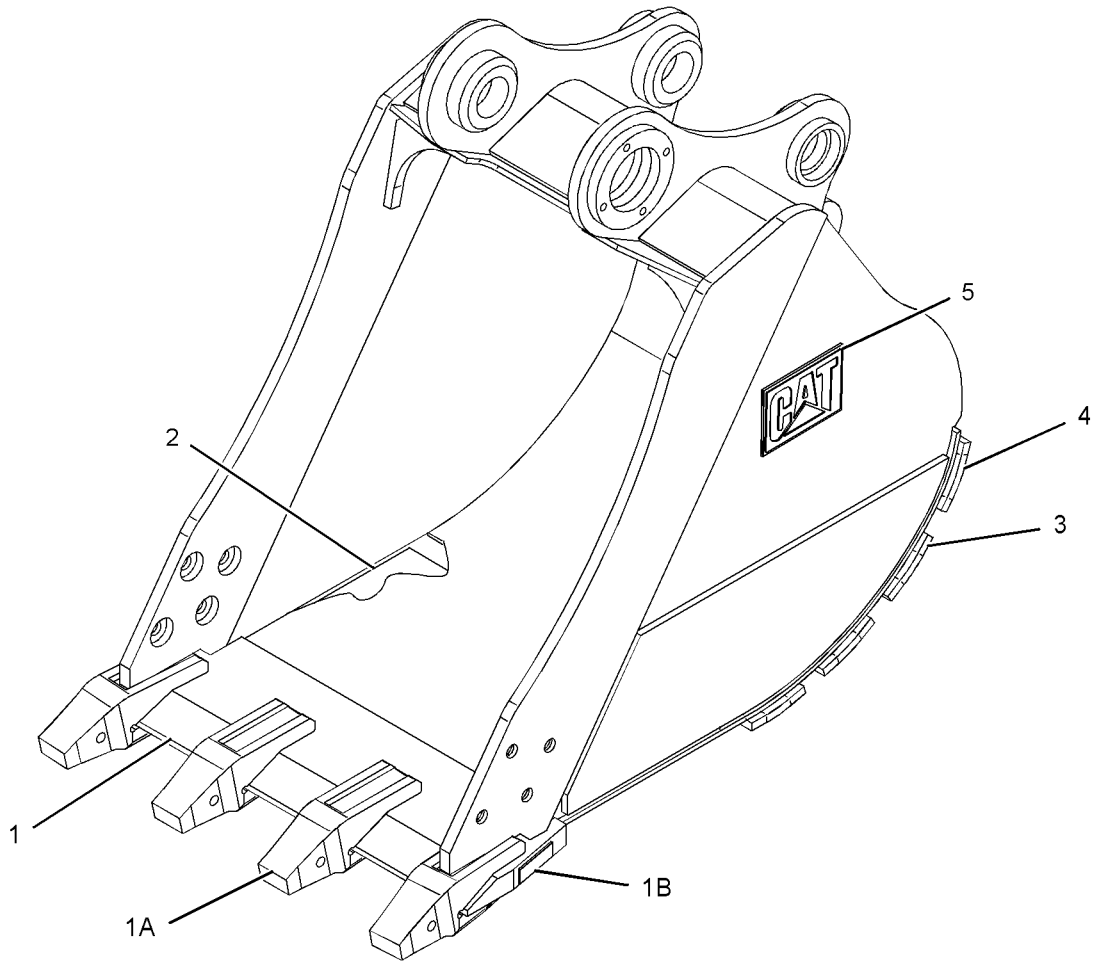

GRAPHIC #1 **<END>** g01435457

305-1597 BUCKET AS-HEAVY DUTY ROCK

S/N: BYJ1-UP; PDP1-UP
930-MM (36-IN) WIDE X 0.5-CU M (0.7-CU YD) CAPACITY. J-300 ADAPTERS, (5X)
PART OF 229-7564 BUCKET & ADJUSTER GP
AN ATTACHMENT

SMCS-6102 **i02859839**

NOTE	REF NO	GRAPHIC REF	PART NUMBER	QTY	PART NAME 1 2 3 4 5 6 (PRODUCT LEVEL)	SEE PAGE
	1	1	**229-7566**	1	PLATE-WEAR	
	2	1	**229-7567**	3	PLATE-WEAR	
	3	1	**229-7568**	1	EDGE AS	
	3A	1	**8E-9490**	5	ADAPTER-TIP (J-300, 2-STRAP, CENTER)	
	3B	1	**8P-9770**	1	PLATE	
	4	1	**229-7634**	1	PLATE-WEAR	
	5	1	**2C-9259**	1	PLATE-IDENTIFICATION (CAT)	

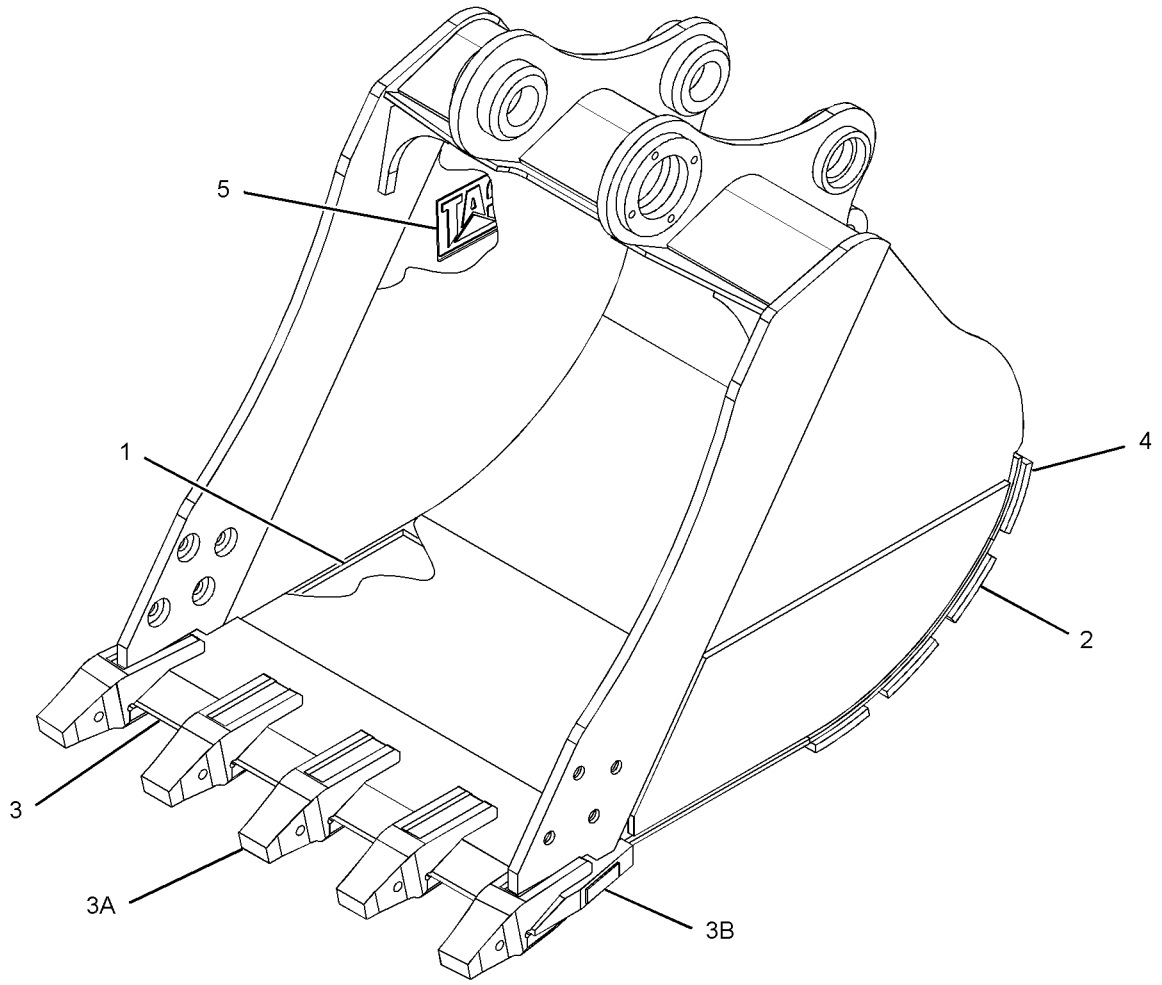

GRAPHIC #1 **<END>** g01426056

WORK TOOLS

305-1602 BUCKET AS-HEAVY DUTY ROCK

S/N: BYJ1-UP; PDP1-UP
1082-MM (42-IN) WIDE X 0.6-CU M (0.8-CU YD) CAPACITY. J-300 ADAPTERS, (5X)
PART OF 229-7577 BUCKET & ADJUSTER GP
AN ATTACHMENT

SMCS-6102 **i02877683**

NOTE	REF NO	GRAPHIC REF	PART NUMBER	QTY	PART NAME 1 2 3 4 5 6 (PRODUCT LEVEL)	SEE PAGE
	1	1	**229-7628**	1	EDGE AS	
	1A	1	**8E-9490**	5	ADAPTER-TIP (J-300, 2-STRAP, CENTER)	
	1B	1	**8P-9770**	1	PLATE	
	2	1	**229-7626**	1	PLATE-WEAR	
	3	1	**229-7627**	3	PLATE-WEAR	
	4	1	**229-7637**	1	PLATE-WEAR	
	5	1	**2C-9259**	1	PLATE-IDENTIFICATION (CAT)	
	6	1	**229-7573**	2	PLATE-WEAR	

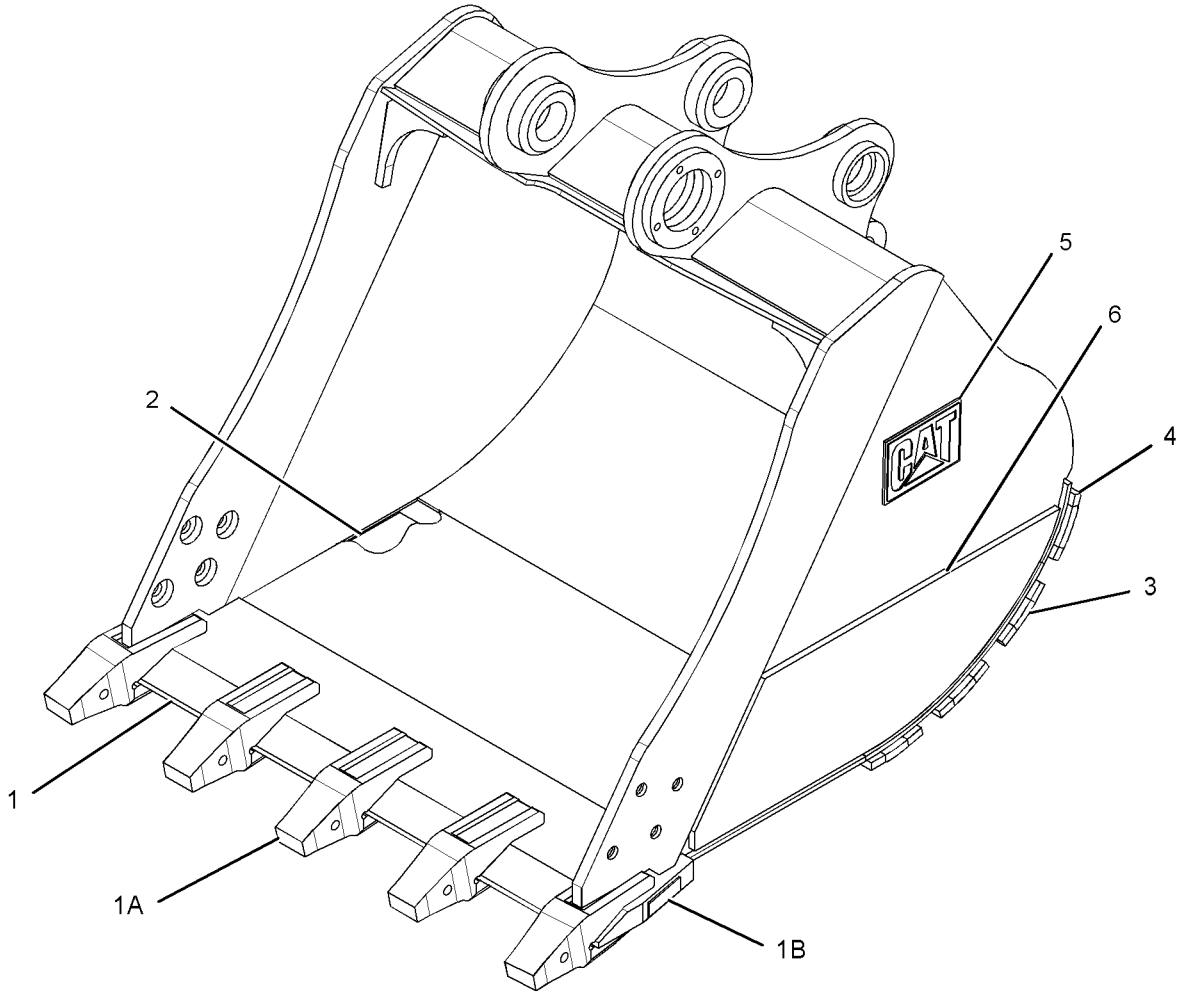

GRAPHIC #1 **<END>** g01440031

327-3599 BUCKET GP

S/N: BYJ1-UP; PDP1-UP
458-MM (18-IN) WIDE X 0.3-CU M (0.3-CU YD) CAPACITY. K-250 ADAPTERS, (3X)
AN ATTACHMENT

SMCS-6101, 6102, 6103, 6104, 6110, 6503, 6515, 6803, 6805, 6822 **i03144429**

NOTE	PART NUMBER	QTY	PART NAME 1 2 3 4 5 6 (PRODUCT LEVEL)	SEE PAGE
Y	**327-3600**	1	BUCKET AS	634
Y	*2C-9548*	1	PIN GP-BUCKET	654
Y	*4I-7343*	1	SIDECUTTER GP	656
Y	*9J-3169*	3	TIP GP-LONG	657
Y-SEPARATE ILLUSTRATION				

<END>

327-3602 BUCKET GP

S/N: BYJ1-UP; PDP1-UP
610-MM (24-IN) WIDE X 0.3-CU M (0.4-CU YD) CAPACITY. K-250 ADAPTERS, (4X)
AN ATTACHMENT

SMCS-6101, 6102, 6103, 6104, 6110, 6503, 6515, 6803, 6805, 6822 **i03144466**

NOTE	PART NUMBER	QTY	PART NAME 1 2 3 4 5 6 (PRODUCT LEVEL)	SEE PAGE
Y	**327-3603**	1	BUCKET AS	635
Y	*2C-9548*	1	PIN GP-BUCKET	654
Y	*4I-7343*	1	SIDECUTTER GP	656
Y	*9J-3169*	4	TIP GP-LONG	657
Y-SEPARATE ILLUSTRATION				

<END>

327-3605 BUCKET GP

S/N: BYJ1-UP; PDP1-UP
760-MM (30-IN) WIDE X 0.4-CU M (0.5-CU YD) CAPACITY. J-250 ADAPTERS, (5X)
AN ATTACHMENT

SMCS-6101, 6102, 6103, 6104, 6110, 6503, 6515, 6803, 6805, 6822 **i03144483**

NOTE	PART NUMBER	QTY	PART NAME 1 2 3 4 5 6 (PRODUCT LEVEL)	SEE PAGE
Y	**327-3606**	1	BUCKET AS	636
Y	*2C-9548*	1	PIN GP-BUCKET	654
Y	*4I-7343*	1	SIDECUTTER GP	656
Y	*9J-3169*	5	TIP GP-LONG	657
Y-SEPARATE ILLUSTRATION				

<END>

327-3608 BUCKET GP

S/N: BYJ1-UP; PDP1-UP
915-MM (36-IN) WIDE X 0.5-CU M (0.7-CU YD) CAPACITY. J-250 ADAPTERS, (6X)
AN ATTACHMENT

SMCS-6101, 6102, 6103, 6104, 6110, 6503, 6515, 6803, 6805, 6822 **i03144525**

NOTE	PART NUMBER	QTY	PART NAME 1 2 3 4 5 6 (PRODUCT LEVEL)	SEE PAGE
Y	**327-3609**	1	BUCKET AS	637
Y	*2C-9548*	1	PIN GP-BUCKET	654
Y	*4I-7343*	1	SIDECUTTER GP	656
Y	*9J-3169*	6	TIP GP-LONG	657

Y-SEPARATE ILLUSTRATION

<END>

327-3611 BUCKET GP

S/N: BYJ1-UP; PDP1-UP
1067-MM (42-IN) WIDE X 0.6-CU M (0.8-CU YD) CAPACITY. J-250 ADAPTERS, (7X)
AN ATTACHMENT

SMCS-6101, 6102, 6103, 6104, 6110, 6503, 6515, 6803, 6805, 6822 **i03144567**

NOTE	PART NUMBER	QTY	PART NAME 1 2 3 4 5 6 (PRODUCT LEVEL)	SEE PAGE
Y	**327-3612**	1	BUCKET AS	638
Y	*2C-9548*	1	PIN GP-BUCKET	654
Y	*4I-7343*	1	SIDECUTTER GP	656
Y	*9J-3169*	7	TIP GP-LONG	657

Y-SEPARATE ILLUSTRATION

<END>

327-3649 BUCKET GP-DITCH CLEANING

S/N: BYJ1-UP; PDP1-UP
1500-MM (59-IN) WIDE X 1-CU M (1.3-CU YD) CAPACITY
AN ATTACHMENT

SMCS-6526 **i03100252**

NOTE	PART NUMBER	QTY	PART NAME 1 2 3 4 5 6 (PRODUCT LEVEL)	SEE PAGE
Y	**167-0279**	1	BUCKET AS-DITCH CLEANING	639
Y	*167-0316*	1	EDGE GP-CUTTING	654
Y	*2C-9548*	1	PIN GP-BUCKET	654

Y-SEPARATE ILLUSTRATION

<END>

WORK TOOLS

282-5536 COUPLER AR-QUICK

S/N: BYJ1-UP; PDP1-UP
AN ATTACHMENT

SMCS-1408, 5057, 6129 **i02864051**

NOTE	PART NUMBER	QTY	PART NAME 1 2 3 4 5 6 (PRODUCT LEVEL)	SEE PAGE
Y	*289-7697*	1	CYLINDER & LINES GP-BUCKET	315
Y	*253-6396*	1	LINES GP-COUPLER	405
Y	*282-5540*	1	LINKAGE GP-BUCKET	613
Y	*253-6406*	1	PIN GP-COUPLER	655

Y-SEPARATE ILLUSTRATION

<END>

282-5537 COUPLER AR-QUICK

S/N: BYJ1-UP; PDP1-UP
AN ATTACHMENT

SMCS-1408, 5057, 6129 **i02864054**

NOTE	PART NUMBER	QTY	PART NAME 1 2 3 4 5 6 (PRODUCT LEVEL)	SEE PAGE
Y	*289-7697*	1	CYLINDER & LINES GP-BUCKET	315
Y	*253-6396*	1	LINES GP-COUPLER	405
Y	*282-5540*	1	LINKAGE GP-BUCKET	613

Y-SEPARATE ILLUSTRATION

<END>

282-5538 COUPLER AR-QUICK—WITH COUPLER PIN

S/N: BYJ1-UP; PDP1-UP
AN ATTACHMENT

SMCS-1408, 5057, 6129 **i02957128**

NOTE	PART NUMBER	QTY	PART NAME 1 2 3 4 5 6 (PRODUCT LEVEL)	SEE PAGE
Y	*289-7787*	1	CYLINDER & LINES GP-BUCKET	315
Y	*253-6396*	1	LINES GP-COUPLER	405
Y	*282-5540*	1	LINKAGE GP-BUCKET	613
Y	*253-6406*	1	PIN GP-COUPLER	655

Y-SEPARATE ILLUSTRATION

<END>

282-5539 COUPLER AR-QUICK—WITHOUT COUPLER PIN

S/N: BYJ1-UP; PDP1-UP
AN ATTACHMENT

SMCS-1408, 5057, 6129 **i02957126**

NOTE	PART NUMBER	QTY	PART NAME 1 2 3 4 5 6 (PRODUCT LEVEL)	SEE PAGE
Y	*289-7787*	1	CYLINDER & LINES GP-BUCKET	315
Y	*253-6396*	1	LINES GP-COUPLER	405
Y	*282-5540*	1	LINKAGE GP-BUCKET	613

Y-SEPARATE ILLUSTRATION

<END>

236-4153 COUPLER GP-QUICK

S/N: BYJ1-UP; PDP1-UP
PART OF 253-6396 LINES GP-COUPLER
AN ATTACHMENT

SMCS-1408, 5057, 6129 **i02785034**

NOTE	REF NO	GRAPHIC REF	PART NUMBER	QTY	PART NAME 1 2 3 4 5 6 (PRODUCT LEVEL)	SEE PAGE
Y	1	1	**273-4147**	1	CYLINDER GP-COUPLER	329
	2	1	**256-9793**	1	HOOK	
	3	1	**256-9792**	1	PIN	
	4	1	**256-9790**	1	PIN	
	5	1	**256-9791**	1	PIN	
	6	1	**3B-8489**	4	FITTING-GREASE	
	7	1	**201-3663**	1	SPRING	
	8	1	**184-7495**	1	BEARING	
	9	1	**256-9788**	1	BAR	
	10	1	**273-4148**	1	BAR	
	11	1	**256-9786**	2	CLIP	
	12	1	**256-9787**	4	CLIP	
	13	1	**273-4149**	1	PLATE-RETAINING	
M	14	1	**8C-6364**	2	BOLT-SOCKET HEAD (M5X0.8X14-MM)	
Z	15	1		1	COUPLER AS-QUICK	

M-METRIC PART
Y-SEPARATE ILLUSTRATION
Z-NOT SERVICED SEPARATELY

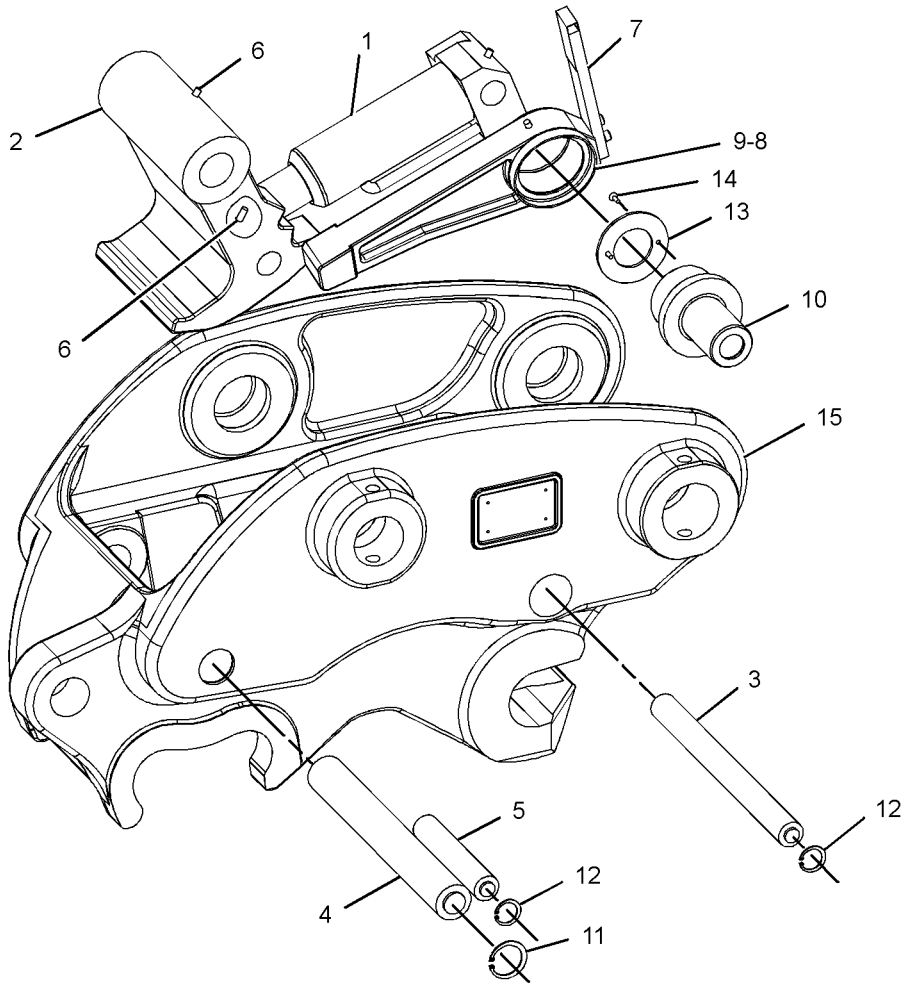

GRAPHIC #1 **<END>** g01203214

WORK TOOLS

167-0316 EDGE GP-CUTTING

S/N: BYJ1-UP; PDP1-UP
PART OF 327-3649 BUCKET GP-DITCH CLEANING
AN ATTACHMENT

SMCS-6801 **i03095383**

NOTE	PART NUMBER	QTY	PART NAME 1 2 3 4 5 6 (PRODUCT LEVEL)	SEE PAGE
	5J-4771	6	BOLT-PLOW (3/4-10X2.75-IN)	
	4T-3009	1	EDGE-CUTTING	
	2J-3506	6	NUT-FULL (3/4-10-THD)	

<END>

2C-9548 PIN GP-BUCKET

S/N: BYJ1-UP; PDP1-UP
PART OF 327-3599, 327-3602, 327-3605, 327-3608, 327-3611 BUCKET GP, 327-3649 BUCKET GP-DITCH CLEANING
AN ATTACHMENT

SMCS-6108 **i03100240**

NOTE	PART NUMBER	QTY	PART NAME 1 2 3 4 5 6 (PRODUCT LEVEL)	SEE PAGE
M	**099-0724**	2	BOLT (M14X2X145-MM)	
M	**096-4876**	4	NUT (M14X2-THD)	
	2C-9460	2	PIN	

M-METRIC PART

<END>

253-6406 PIN GP-COUPLER

S/N: BYJ1-UP; PDP1-UP
PART OF 282-5536, 282-5538 COUPLER AR-QUICK
AN ATTACHMENT

SMCS-6129 **i02210463**

NOTE	REF NO	GRAPHIC REF	PART NUMBER	QTY	PART NAME 1 2 3 4 5 6 (PRODUCT LEVEL)	SEE PAGE
	1	1	**086-0523**	2	PIN	
M	2	1	**096-4876**	4	NUT (M14X2-THD)	
M	3	1	**099-0724**	2	BOLT (M14X2X145-MM)	

M-METRIC PART

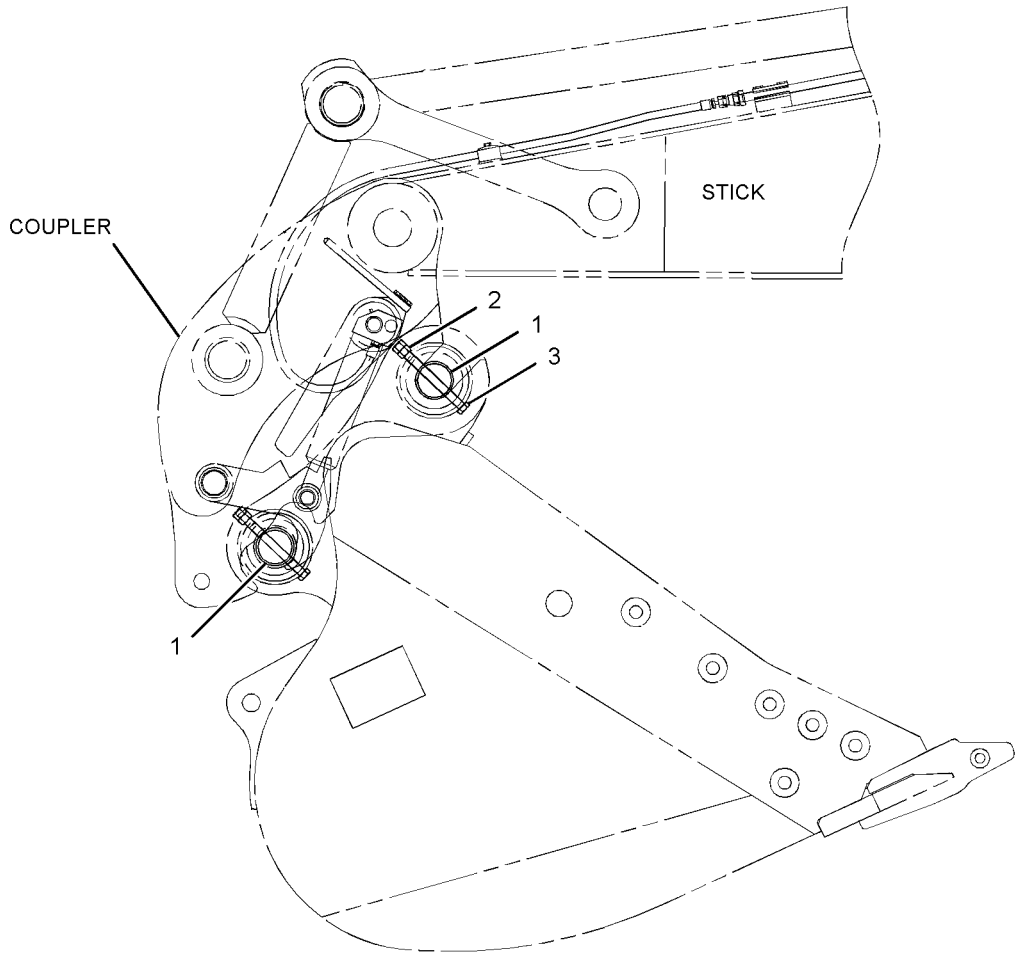

LEFT SIDE VIEW

GRAPHIC #1 **<END>** g01118540

WORK TOOLS

4I-7343 SIDECUTTER GP

S/N: BYJ1-UP; PDP1-UP

PART OF 327-3599, 327-3602, 327-3605, 327-3608, 327-3611 BUCKET GP

AN ATTACHMENT

SMCS-6813 **i01662690**

NOTE	REF NO	GRAPHIC REF	PART NUMBER	QTY	PART NAME 1 2 3 4 5 6 (PRODUCT LEVEL)	SEE PAGE
	1	1	**7Y-0204**	1	SIDECUTTER-RH	
	2	1	**7Y-0203**	1	SIDECUTTER-LH	
M	3	1	**096-7074**	8	BOLT	
M	4	1	**093-7676**	8	NUT	

M-METRIC PART

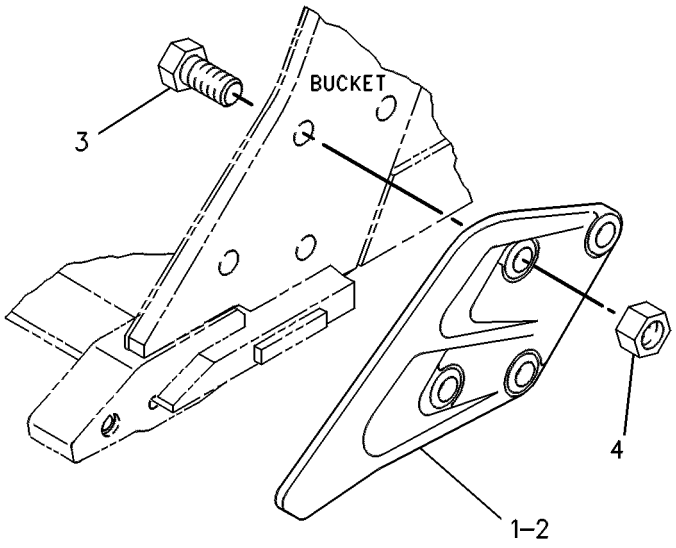

GRAPHIC #1 **<END>** g00245085

WORK TOOLS

9J-3169 TIP GP-LONG

S/N: BYJ1-UP; PDP1-UP

PART OF 327-3599, 327-3602, 327-3605, 327-3608, 327-3611 BUCKET GP

AN ATTACHMENT

SMCS-6805 **i01668173**

NOTE	REF NO	GRAPHIC REF	PART NUMBER	QTY	PART NAME 1 2 3 4 5 6 (PRODUCT LEVEL)	SEE PAGE
	1	1	**8E-6258**	1	PIN	
	2	1	**8E-6259**	1	RETAINER AS	
	3	1	**1U-3252**	1	TIP-LONG	

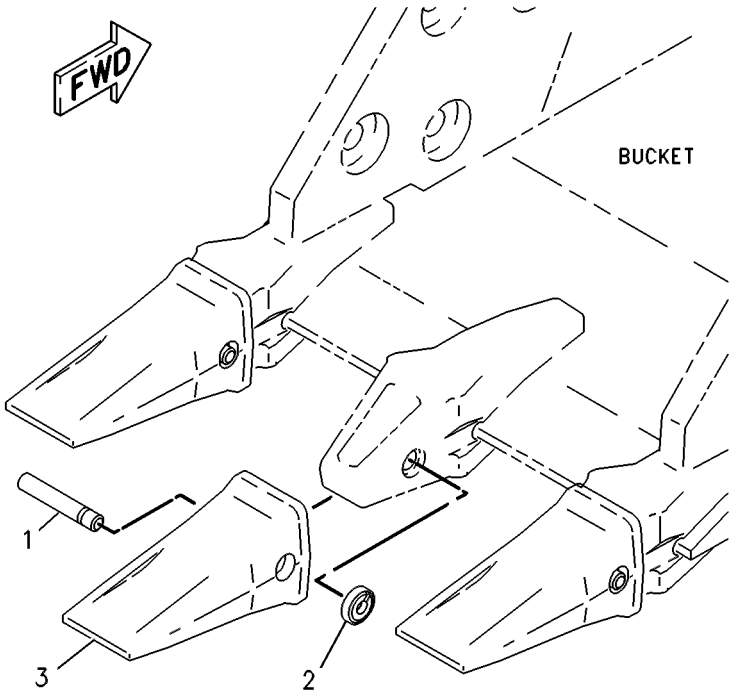

GRAPHIC #1 **<END>** g00117668

OPERATOR STATION

316-8899 AIR CONDITIONER & MOUNTING GP

S/N: BYJ1-UP; PDP1-UP
PART OF 316-8898 AIR CONDITIONER AR
AN ATTACHMENT

SMCS-7320 **i03212415**

NOTE	REF NO	GRAPHIC REF	PART NUMBER	QTY	PART NAME 1 2 3 4 5 6 (PRODUCT LEVEL)	SEE PAGE
	1	1	**3S-2093**	4	STRAP-CABLE	
	2	1	**111-4836**	1	CLIP	
	3	1	**235-8874**	1	SENSOR-TEMPERATURE (AMBIENT AIR)	
	4	1	**235-8875**	1	BRACKET	
	5	1	**259-7369**	1	HARNESS AS-SENSOR (AIR TEMPERATURE)	
	6	1	**259-7371**	1	BRACKET AS	
	7	1	**273-5148**	1	SUPPORT-RUBBER	
	8	1	**273-5149**	1	STRIP	
	9	1	**284-4440**	1	TUBE AS	
	10	1	**293-1294**	1	PANEL AS-CONTROL	
Y	11	1	**316-8900**	1	DISTRIBUTOR GP-AIR	732
	12	1	**319-1551**	1	AIR CONDITIONER GP	
M	13	1	**095-0742**	1	SCREW-MACHINE (M6X1X16-MM)	
	14	1	**119-5026**	4	SCREW-PAN HEAD (10-16X0.63-IN)	
M	15	1	**5C-9553**	1	BOLT (M6X1X16-MM)	
	16	1	**5P-4116**	4	WASHER-HARD (8.8X20.5X2-MM THK)	
M	17	1	**6V-7357**	1	BOLT (M6X1X25-MM)	
M	18	1	**8C-8451**	1	BOLT (M6X1X40-MM)	
	19	1	**8T-4121**	3	WASHER-HARD (11X21X2.5-MM THK)	
M	20	1	**8T-4137**	1	BOLT (M10X1.5X20-MM)	
M	21	1	**8T-4189**	4	BOLT (M8X1.25X20-MM)	
M	22	1	**8T-4191**	2	BOLT (M10X1.5X16-MM)	
	23	1	**8Y-6967**	2	LOUVER AS	
	24	1	**9X-8256**	4	WASHER (6.6X12X2-MM THK)	
	25	1	**327-6636**	2	GUARD	

M-METRIC PART
Y-SEPARATE ILLUSTRATION

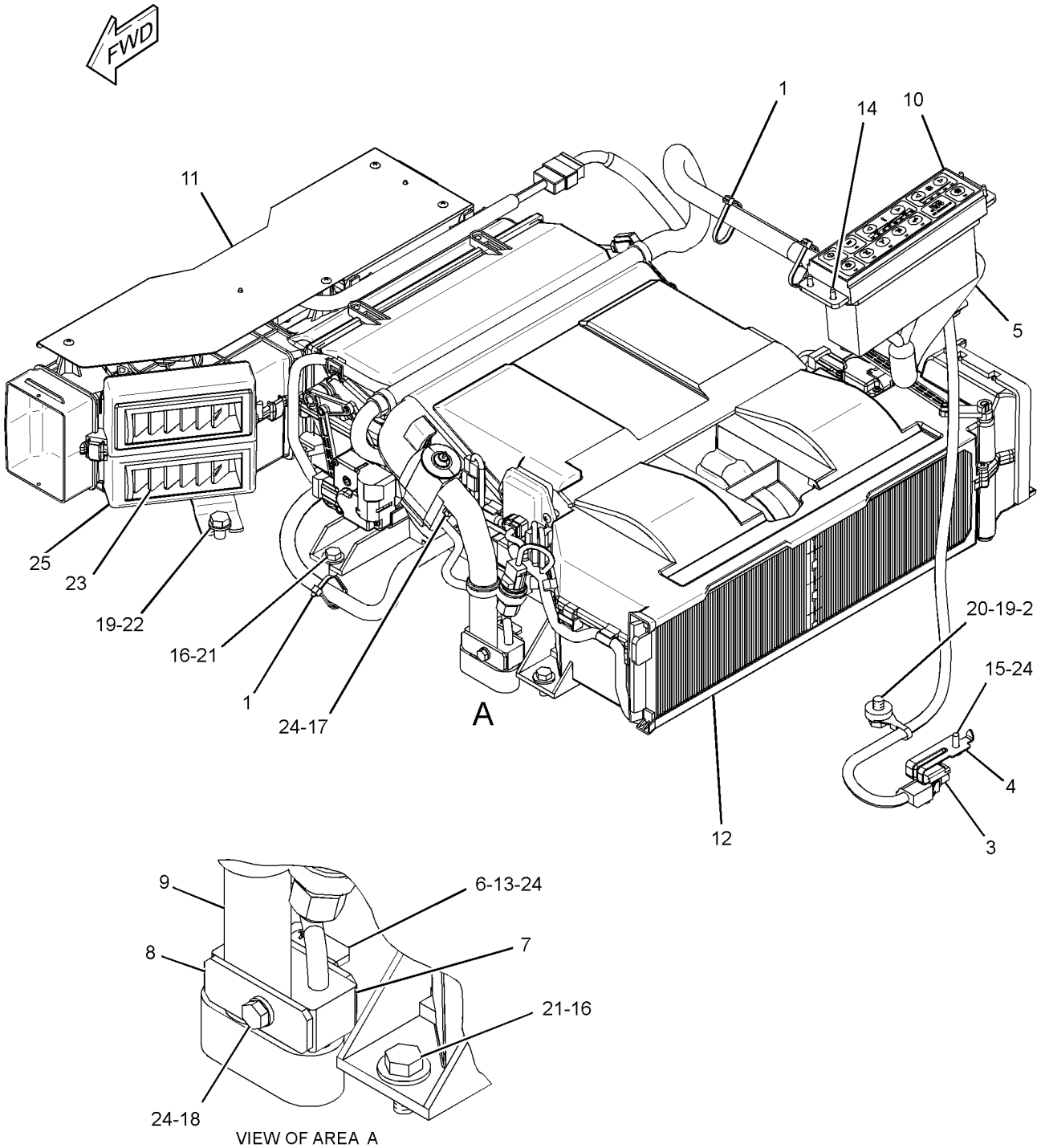

GRAPHIC #1 **<END>** g01640358

OPERATOR STATION

316-8898 AIR CONDITIONER AR

S/N: BYJ1-UP; PDP1-UP
FOR USE WITH REMOTE CONDENSER
AN ATTACHMENT

SMCS-7320 **i02976212**

NOTE	PART NUMBER	QTY	PART NAME 1 2 3 4 5 6 (PRODUCT LEVEL)	SEE PAGE
Y	*316-8899*	1	AIR CONDITIONER & MOUNTING GP	658
Y	*284-4465*	1	DUCT GP-CAB AIR	741

Y-SEPARATE ILLUSTRATION

<END>

OPERATOR STATION

284-4439 AIR CONDITIONER GP

S/N: BYJ1-UP; PDP1-UP
PART OF 293-1235 HEATER & MTG GP-CAB
AN ATTACHMENT

SMCS-7320 **i03010022**

NOTE	REF NO	GRAPHIC REF	PART NUMBER	QTY	PART NAME 1 2 3 4 5 6 (PRODUCT LEVEL)	SEE PAGE
	1	1	**113-3467**	1	SEAL-O-RING	
	2	1	**124-4042**	2	RELAY (BLOWER MOTOR)	
	3	1	**124-4046**	1	THERMISTOR	
	4	1	**225-5731**	13	SCREW-TAPPING	
	5	1	**229-9017**	6	SCREW-TAPPING	
	6	1	**229-9020**	2	SCREW-TAPPING	
	7	1	**229-9137**	1	BLOWER GP-CAB	
	8	1	**229-9165**	1	CLIP	
	9	1	**235-8888**	1	INSULATOR	
	10	1	**284-4568**	1	FILTER ELEMENT-CAB AIR	
	11	1	**305-0400**	1	CORE AS-EVAPORATOR	
	12	1	**305-0401**	1	CORE AS-HEATER	
	13	1	**305-0402**	1	VALVE AS-EXPANSION	
	14	1	**305-0403**	1	DAMPER	
	15	1	**305-0404**	1	DAMPER	
	16	1	**305-0405**	1	DAMPER	
	17	1	**305-0406**	1	LEVER	
	18	1	**305-0407**	1	LEVER	
	19	1	**305-0408**	1	LEVER	
	20	1	**305-0409**	1	LEVER	
	21	1	**305-0410**	1	LEVER	
	22	1	**305-0411**	1	ROD	
	23	1	**305-0412**	1	ROD	
	24	1	**305-0413**	1	ROD	
	25	1	**305-0414**	2	MOTOR AS	
	26	1	**305-0415**	1	CONTROL AS	
	27	1	**305-0416**	1	THERMISTOR	
	28	1	**305-0417**	1	THERMISTOR	
	29	1	**305-0418**	1	HARNESS AS-HEATER & AIR COND	
	30	1	**305-0419**	1	HOLDER	
	31	1	**305-0420**	1	BRACKET	
	32	1	**305-0421**	1	INSULATION	
	33	1	**305-0422**	1	INSULATION	
	34	1	**305-0423**	1	CLIP	
	35	1	**305-0424**	1	CLIP	
	36	1	**305-0425**	1	PACKING	
	37	1	**305-0426**	1	PACKING	
	38	1	**305-0427**	1	PACKING	
	39	1	**305-0428**	1	PACKING	
	40	1	**113-3468**	1	SEAL-O-RING	
M	41	1	**8T-0266**	2	BOLT-SOCKET HEAD (M5X0.8X40-MM)	
M	42	1	**8T-4171**	1	BOLT (M6X1X12-MM)	
	43	1	**9X-8256**	1	WASHER (6.6X12X2-MM THK)	

M-METRIC PART

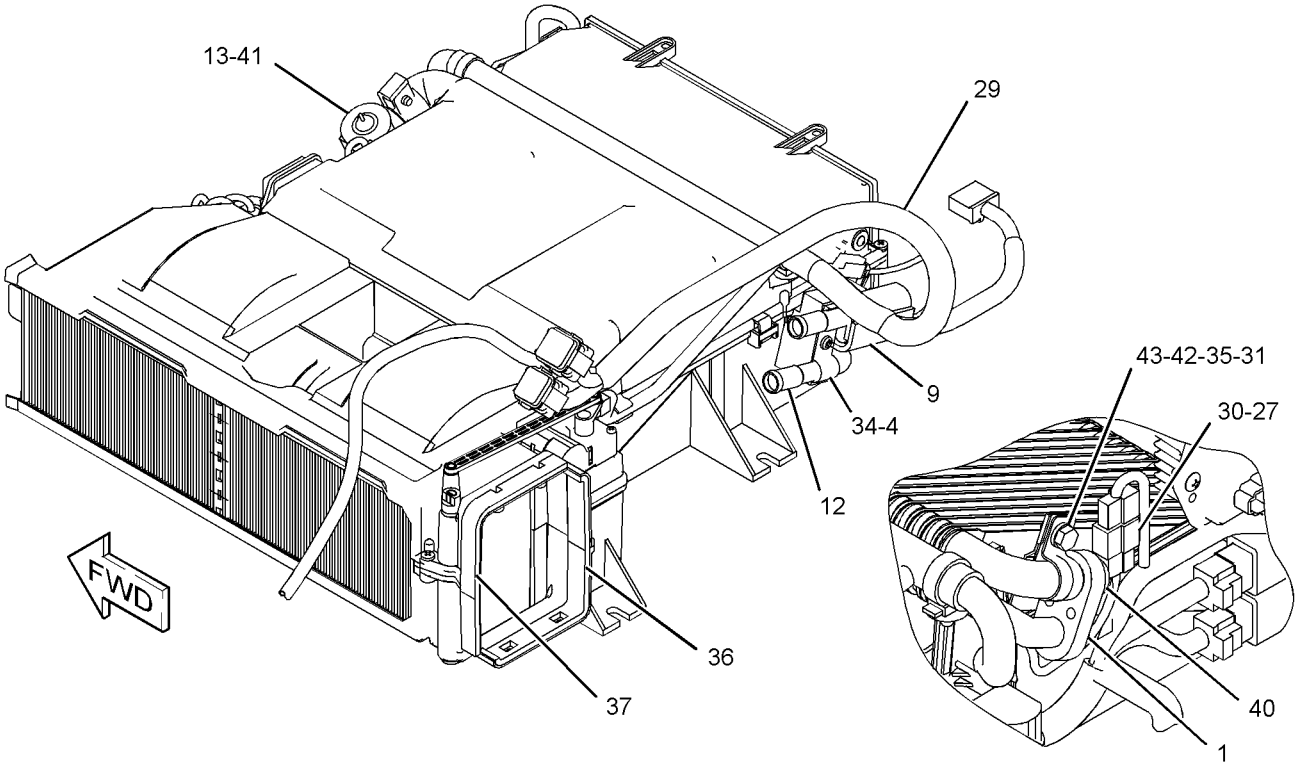

VIEW OF AREA A
(INSULATION AND BRACKET
REMOVED FOR CLARITY)

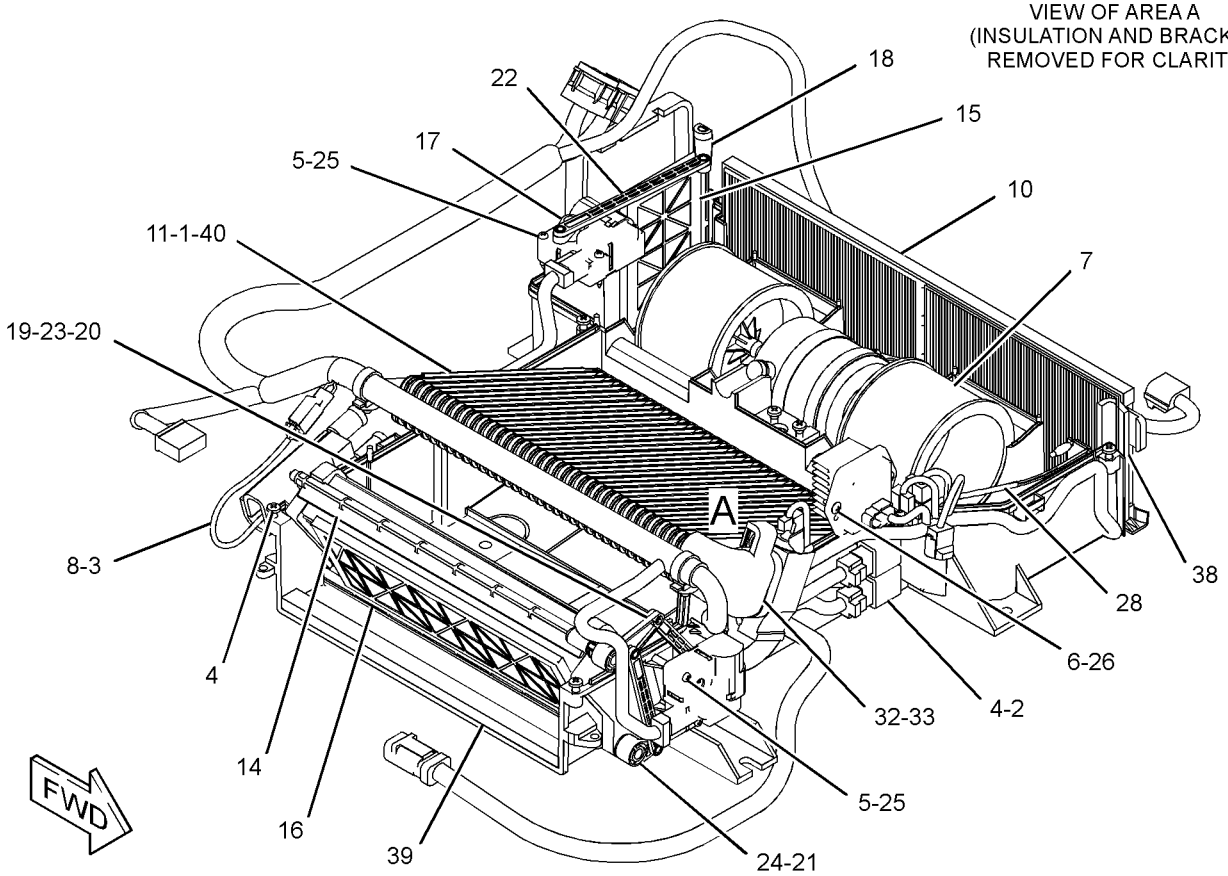

(COVER REMOVED FOR CLARITY)

GRAPHIC #1

<END>

g01411020

OPERATOR STATION

259-7346 ARMREST GP–RH

S/N: BYJ1-UP; PDP1-UP

PART OF 259-7348 CONSOLE GP-OPERATOR

SMCS-7307 **i02488350**

NOTE	REF NO	GRAPHIC REF	PART NUMBER	QTY	PART NAME 1 2 3 4 5 6 (PRODUCT LEVEL)	SEE PAGE
	1	1	**171-7325**	3	SCREW-TAPPING	
M	2	1	**185-8286**	2	SCREW-MACHINE (M4X0.7X8-MM)	
	3	1	**235-8951**	1	SUPPORT AS	
	4	1	**235-8996**	1	COVER	
	5	1	**235-8997**	1	KNOB	
	6	1	**279-3161**	1	CUSHION	

M-METRIC PART

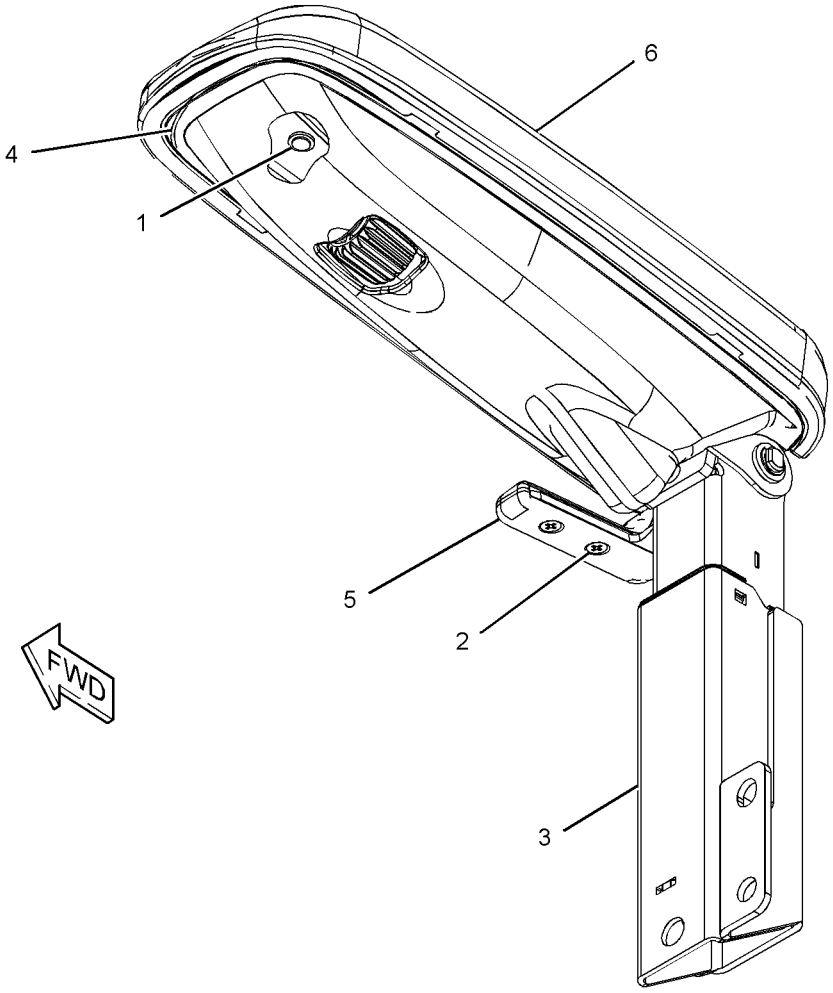

GRAPHIC #1 **<END>** g01217218

OPERATOR STATION

259-7347 ARMREST GP–LH

S/N: BYJ1-UP; PDP1-UP

PART OF 284-4569 CONSOLE GP-OPERATOR

SMCS-7307 **i02488397**

NOTE	REF NO	GRAPHIC REF	PART NUMBER	QTY	PART NAME 1 2 3 4 5 6 (PRODUCT LEVEL)	SEE PAGE
	1	1	**171-7325**	3	SCREW-TAPPING	
M	2	1	**185-8286**	2	SCREW-MACHINE (M4X0.7X8-MM)	
	3	1	**235-8952**	1	SUPPORT AS	
	4	1	**235-8996**	1	COVER	
	5	1	**235-8998**	1	KNOB	
	6	1	**259-7345**	1	CUSHION	

M-METRIC PART

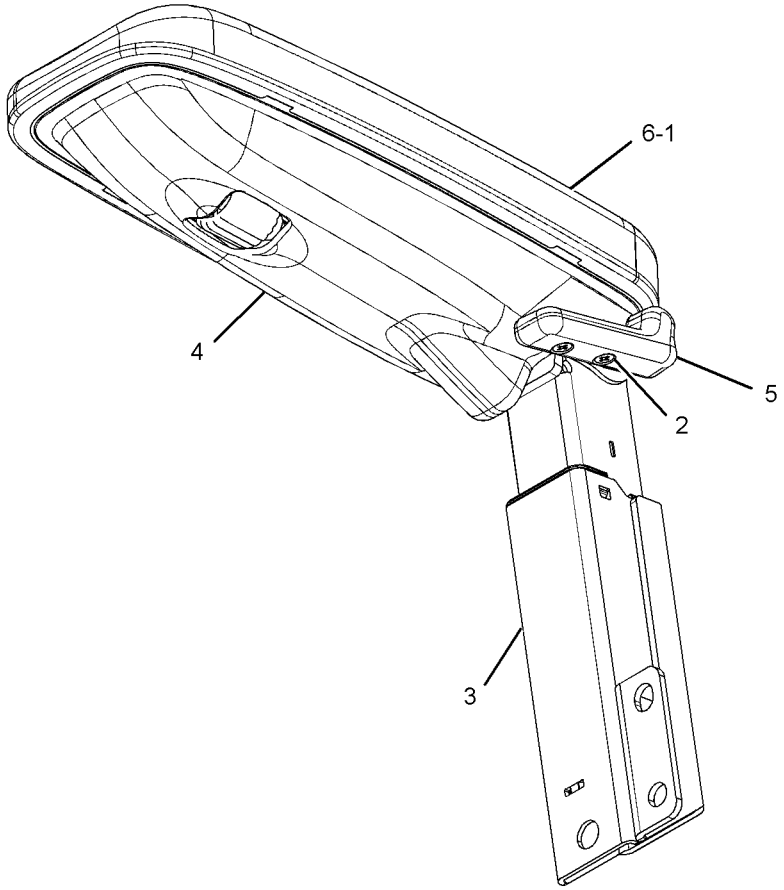

GRAPHIC #1 **<END>** g01210886

OPERATOR STATION

259-7295 BRACKET GP-MIRROR

S/N: BYJ1-UP; PDP1-UP
PART OF 259-7277 CAB GP, 259-7275 CAB GP-ENCLOSED ROPS
AN ATTACHMENT

SMCS-7319 **i02612533**

NOTE	REF NO	GRAPHIC REF	PART NUMBER	QTY	PART NAME 1 2 3 4 5 6 (PRODUCT LEVEL)	SEE PAGE
	1	1	**2U-2552**	5	LOCKWASHER	
M	2	1	**6V-5683**	3	BOLT (M6X1X16-MM)	
M	3	1	**9X-6153**	2	BOLT (M6X1X10-MM)	
Z	4	1		1	BRACKET-MIRROR	

M-METRIC PART
Z-NOT SERVICED SEPARATELY

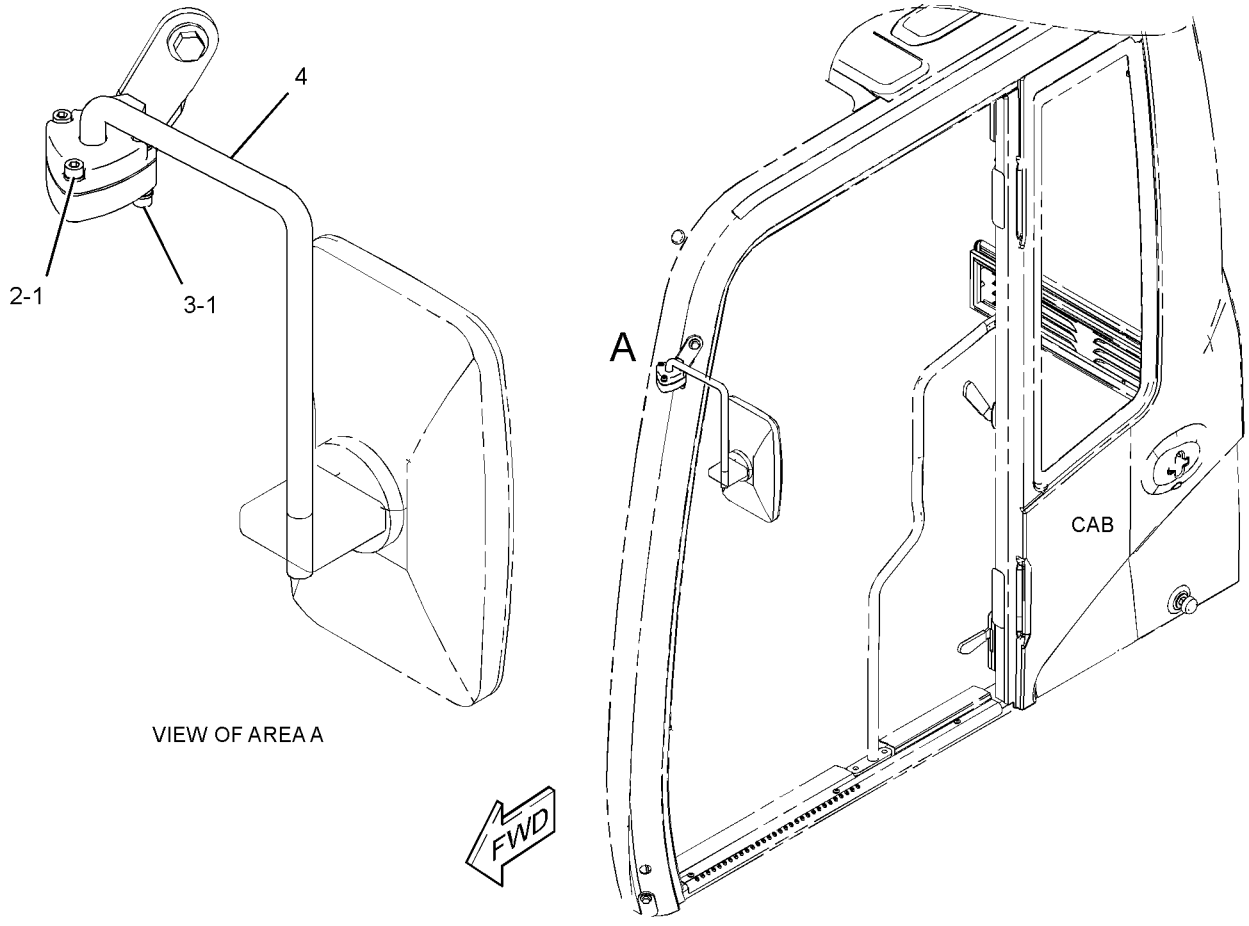

VIEW OF AREA A

GRAPHIC #1 **<END>** g01307553

OPERATOR STATION

259-7274 CAB GP

S/N: BYJ1-UP; PDP1-UP
AN ATTACHMENT

SMCS-7301, 7325 **i02738398**

NOTE	REF NO	GRAPHIC REF	PART NUMBER	QTY	PART NAME 1 2 3 4 5 6 (PRODUCT LEVEL)	SEE PAGE
Y	1	1	**259-7275**	1	CAB GP-ENCLOSED ROPS	683
M	2	1	**8T-6868**	2	BOLT (M12X1.75X80-MM)	
M	3	1	**8T-4179**	3	BOLT (M12X1.75X20-MM)	
M	4	1	**8T-4139**	3	BOLT (M12X1.75X30-MM)	
	5	1	**8T-4223**	8	WASHER-HARD (13.5X25.5X3-MM THK)	

M-METRIC PART
Y-SEPARATE ILLUSTRATION

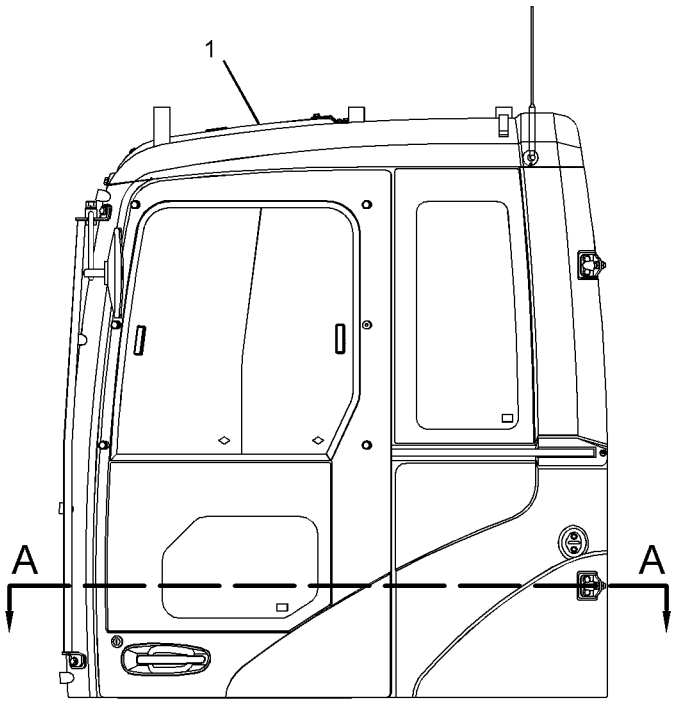

LEFT SIDE VIEW

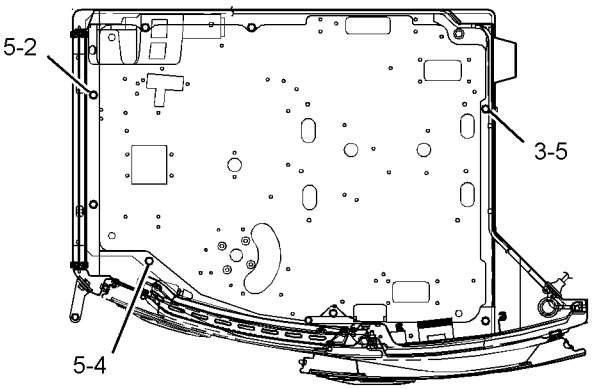

SECTION A-A

GRAPHIC #1 **<END>** g01373932

OPERATOR STATION

259-7276 CAB GP

S/N: BYJ1-UP; PDP1-UP
AN ATTACHMENT

SMCS-7301, 7325 **i02711894**

NOTE	REF NO	GRAPHIC REF	PART NUMBER	QTY	PART NAME 1 2 3 4 5 6 (PRODUCT LEVEL)	SEE PAGE
Y	1	1	**259-7277**	1	CAB GP	668
M	2	1	**8T-6868**	2	BOLT (M12X1.75X80-MM)	
M	3	1	**8T-4179**	3	BOLT (M12X1.75X20-MM)	
M	4	1	**8T-4139**	3	BOLT (M12X1.75X30-MM)	
C	5	1	**8T-4223**	8	WASHER-HARD (13.5X25.5X3-MM THK)	

C-CHANGE FROM PREVIOUS TYPE
M-METRIC PART
Y-SEPARATE ILLUSTRATION

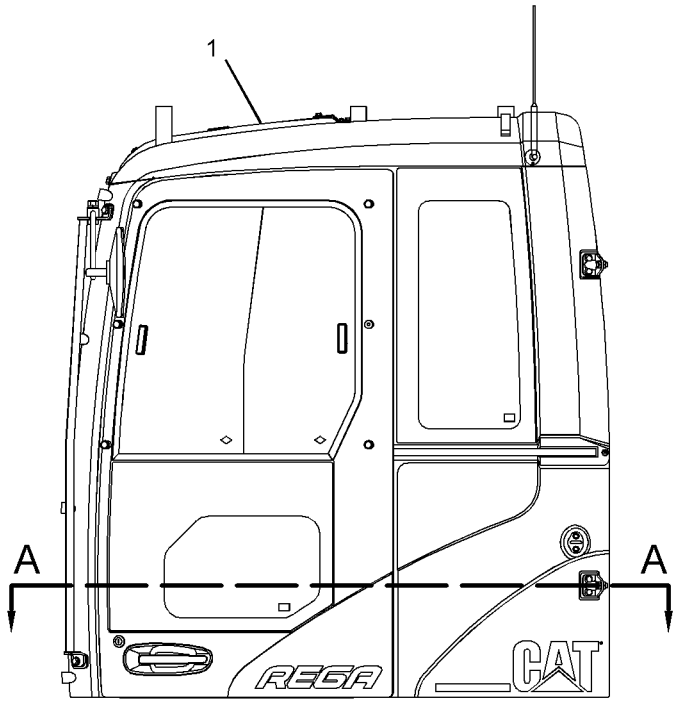

LEFT SIDE VIEW

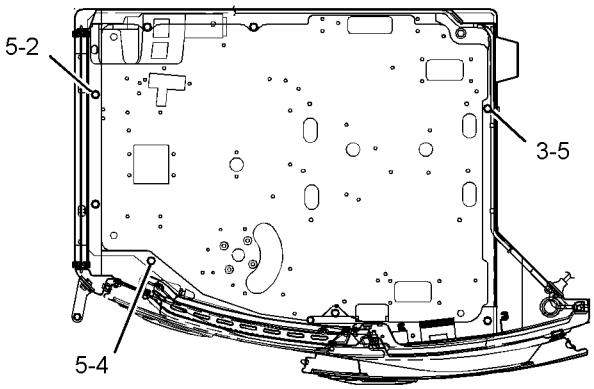

SECTION A-A

GRAPHIC #1 **<END>** g01362739

OPERATOR STATION

259-7277 CAB GP

S/N: BYJ1-UP; PDP1-UP
PART OF 259-7276 CAB GP
AN ATTACHMENT
TYPE 1

SMCS-7301, 7325 **i02826221**

NOTE	REF NO	GRAPHIC REF	PART NUMBER	QTY	PART NAME 1 2 3 4 5 6 (PRODUCT LEVEL)	SEE PAGE
M	1	1	**6V-9672**	2	SCREW-MACHINE (M4X0.7X16-MM)	
Y	2	1	**273-5202**	1	DOOR GP-CAB	737
Y	3	1	**196-1432**	1	WINDOW GP-FRONT	812
Y	4	1	**273-5214**	1	HATCH GP-ROOF	754
	5	1	**196-1466**	1	GLASS	
	6	1	**210-5789**	1	GLASS	
	7	1	**196-1468**	1	SEAL	
	8	1	**210-5790**	1	GLASS	
	9	1	**196-1470**	1	SEAL	
	10	1	**210-5791**	1	GLASS	
	11	1	**196-1511**	1	SEAL	
	12	3	**127-3940**	1	RING	
	13	1	**210-5808**	1	SEAL	
	14	1	**4I-3090**	3	SEAL	
	15	4	**196-1472**	1	SEAL	
	16	4	**196-1473**	1	SEAL	
	17	4	**196-1474**	1	SEAL	
	18	4	**207-0204**	1	SEAL	
	19	4	**273-5173**	1	LINER	
	20	2,4	**185-8205**	14	CLIP	
	21	4	**273-5174**	1	VISOR AS	
		4	**235-8929**	2	HANDLE	
	22	4	**207-0150**	1	RAIL	
	23	4	**207-0151**	1	RAIL	
	24	2	**273-5175**	1	COVER AS	
	25	2	**8Y-6967**	3	LOUVER AS	
	26	2	**8Y-6352**	1	LOUVER AS	
	27	2	**128-2158**	1	GROMMET	
	28	2	**273-5176**	1	CUP HOLDER	
	29	2	**273-5177**	1	BRACKET AS	
	30	2	**273-5178**	1	BRACKET	
	31	2	**196-1503**	2	DAMPER AS	
	32	2	**102-7142**	4	RING	
	33	4	**196-1475**	1	RAIL	
	34	1	**273-5198**	1	COVER	
	35	2	**196-1477**	1	RAIL	
	36	2	**196-1478**	1	RAIL	
	37	1,3	**196-1479**	3	STRIKER	
	38	1	**196-1526**	2	SHIM (1.6-MM THK)	
	39	3	**196-1480**	1	STRIKER	
	40	3	**196-1531**	1	SHIM (2.3-MM THK)	
	41	3	**196-1481**	1	BRACKET	
	42	4	**127-3947**	2	BUMPER	
	43	4	**196-1482**	2	BRACKET	
	44	4	**139-6403**	1	STOP	
	45	3	**273-5205**	1	STOP	
	46	3	**207-0205**	1	SPACER-SPECIAL	
	47	4	**127-3928**	2	STRIKER	
	48	2	**196-1484**	1	STOP	
	49	2	**196-1485**	1	STOP	
	50	3	**196-1548**	1	GUIDE	
	51	3	**196-1549**	1	GUIDE	
	52	3	**196-1486**	2	STOP	
	53	3	**196-1488**	2	STOP	

NOTE	REF NO	GRAPHIC REF	PART NUMBER	QTY	PART NAME 1 2 3 4 5 6 (PRODUCT LEVEL)	SEE PAGE
	54	2	**4I-4253**	1	HOLDER-GLASS	
	55	2	**196-1529**	1	BRACKET	
	56	2	**196-1550**	1	BRACKET AS	
	57	2	**6I-5340**	1	HOLDER-GLASS	
	58	2	**6I-5339**	1	HOLDER-GLASS	
	59	2	**207-0237**	1	BRACKET AS	
	60	4	**4I-4282**	2	STOPPER	
M	61	1	**8T-4195**	2	BOLT (M10X1.5X30-MM)	
M	62	1	**207-0211**	4	BOLT (M10X1.5X25-MM)	
M	63	2	**9X-2040**	4	SCREW-TRUSS HEAD (M10X1.5X25-MM)	
M	64	3,4	**9X-2041**	6	SCREW-TRUSS HEAD (M10X1.5X20-MM)	
M	65	1	**8T-4137**	6	BOLT (M10X1.5X20-MM)	
M	66	1,3	**8T-4189**	6	BOLT (M8X1.25X20-MM)	
	67	2	**207-0209**	5	GROMMET	
M	68	2,3	**8C-7505**	6	SCREW-FLAT HEAD (M8X1.25X20-MM)	
M	69	2	**3E-8020**	2	SCREW-TRUSS HEAD (M6X1X25-MM)	
	70	2	**096-0721**	1	LAMP GP-DOME (CAB)	
		2	**099-0864**	1	BODY	
		2	**099-0865**	1	LAMP (DOME)	
		2	**099-0866**	1	COVER	
	71	3	**117-6306**	1	SWITCH (WINDOW POSITION)	
	72	3	**196-1528**	1	BRACKET	
	73	1	**087-8484**	1	GROMMET	
M	74	2	**9X-2045**	2	SCREW-TRUSS HEAD (M6X1X20-MM)	
M	75	2,4	**9X-2043**	3	SCREW-TRUSS HEAD (M6X1X14-MM)	
	76	1	**273-5203**	1	HANDRAIL AS	
	77	2	**273-5182**	1	HANDHOLD AS	
	78	2	**196-1491**	1	HANDLE	
	79	3	**127-3925**	1	HOOK	
	80	2	**196-1492**	1	PLUG	
	81	3	**273-5195**	1	COVER AS	
	82	3	**196-1552**	1	BRACKET	
	83	3	**273-5180**	1	BRACKET	
	84	4	**196-1493**	1	COVER	
	85	2	**196-1533**	1	COVER	
	86	2	**196-1535**	1	COVER	
	87	2	**196-1532**	1	COVER	
	88	4	**273-5183**	1	COVER AS (SWITCH, RH PANEL)	
	89	2	**273-5184**	1	BRACKET AS	
	90	2	**273-5185**	1	SUPPORT AS	
	91	2	**273-5200**	1	BOX AS	
	92	3	**273-5189**	1	COVER AS-ACCESS	
	93	4	**273-5190**	1	COVER	
	94	4	**273-5164**	1	CAP	
M	95	1,2	**128-2135**	5	SCREW-TRUSS HEAD (M6X1X13-MM)	
	96	3	**273-5192**	1	COVER AS-ACCESS	
	97	3	**9X-8256**	2	WASHER (6.6X12X2-MM THK)	
	98	2	**273-5194**	1	SUPPORT AS	
M	99	3	**8T-4127**	12	SCREW-MACHINE (M5X0.8X20-MM)	
M	100	2,3	**8T-6693**	4	SCREW-MACHINE (M5X0.8X16-MM)	
M	101	3	**095-0736**	1	SCREW-MACHINE (M5X0.8X10-MM)	
M	102	3	**185-8181**	2	SCREW (M4X0.7X10-MM)	
M	103	3	**095-0755**	2	SCREW-MACHINE (M4X0.07X12-MM)	
	104	4	**121-1125**	4	PLUG-BEZEL	
M	105	4	**095-1207**	4	NUT (M12X1.75-THD)	
M	106	3,4	**8T-4133**	2	NUT (M10X1.5-THD)	
	107	1,3,4	**8T-4224**	9	WASHER-HARD (8.8X16X2-MM THK)	
	108	4	**8T-4223**	4	WASHER-HARD (13.5X25.5X3-MM THK)	
	109	3	**207-0207**	1	CABLE AS	

259-7277 **CAB GP** *(contd.)* **i02826221**

NOTE	REF NO	GRAPHIC REF	PART NUMBER	QTY	PART NAME 1 2 3 4 5 6 (PRODUCT LEVEL)	SEE PAGE
	110	1	**8T-4121**	8	WASHER-HARD (11X21X2.5-MM THK)	
E	111	2	**201-4441**		SEAL (8-CM)	
	112	3	**207-0210**	4	GROMMET	
M	113	2,3,4	**9X-2042**	75	SCREW-TRUSS HEAD (M6X1X12-MM)	
	114	1	**207-0208**	1	GROMMET-RUBBER	
	115	4	**170-9360**	1	GROMMET	
Y	116	2	*273-5344*	1	WIPER GP-WINDOW	814
M	117	4	**5C-7261**	3	NUT (M8X1.25-THD)	
	118	1	**156-6617**	1	MIRROR	
Y	119	1	**259-7295**	1	BRACKET GP-MIRROR	665
M	120	1	**8T-4779**	1	BOLT (M16X2X35-MM)	
	121	1	**3B-4510**	1	LOCKWASHER	
	122	1	**9X-8257**	7	WASHER (17.5X30X3.5-MM THK)	
M	123	1	**8T-4190**	6	BOLT (M16X2X25-MM)	
	124	3	**7Y-5434**	2	SPEAKER AS	
					(EACH INCLUDES)	
		3	**7Y-3951**	2	TERMINAL (FEMALE)	
		3	**7Y-3954**	1	CONNECTOR-PLUG	
M	125	3	**6V-9492**	8	SCREW-MACHINE (M4X0.7X25-MM)	
	126	1	**230-0183**	1	CAP	

E-ORDER BY THE CENTIMETER
M-METRIC PART
Y-SEPARATE ILLUSTRATION

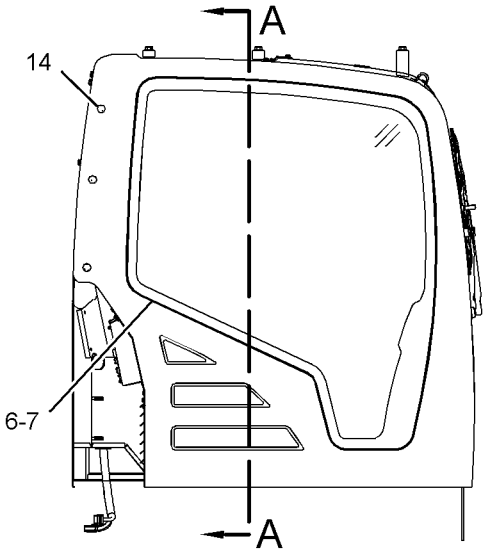

RIGHT SIDE VIEW

REFER TO ALL ILLUSTRATIONS OF THIS GROUP FOR AUXILIARY VIEWS

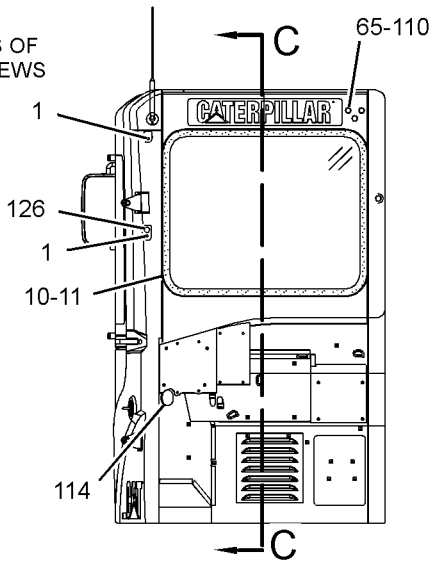

REAR VIEW

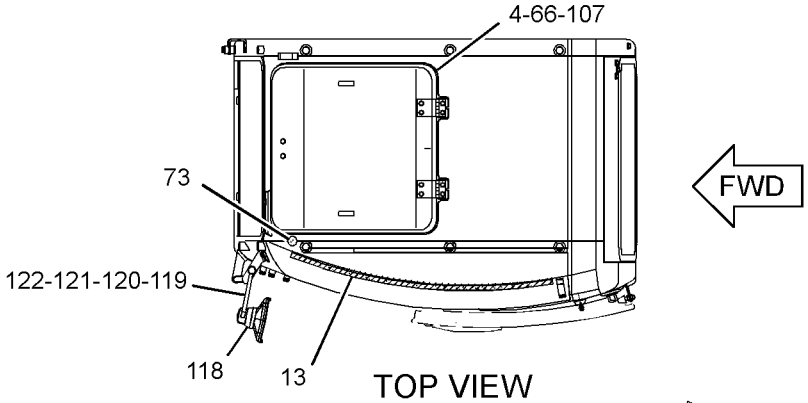

TOP VIEW

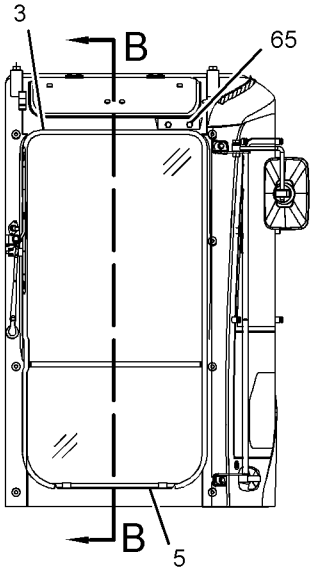

FRONT VIEW

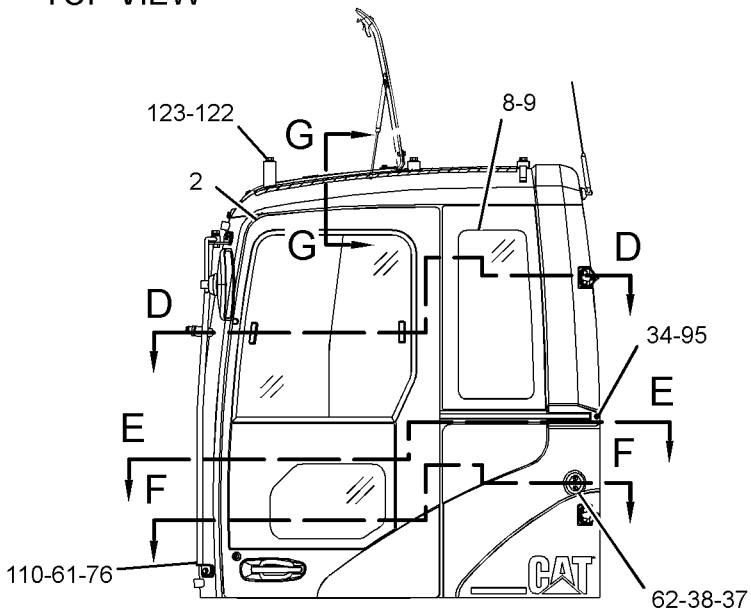

LEFT SIDE VIEW

GRAPHIC #1

g01507254

REFER TO ALL ILLUSTRATIONS OF THIS GROUP FOR AUXILIARY VIEWS

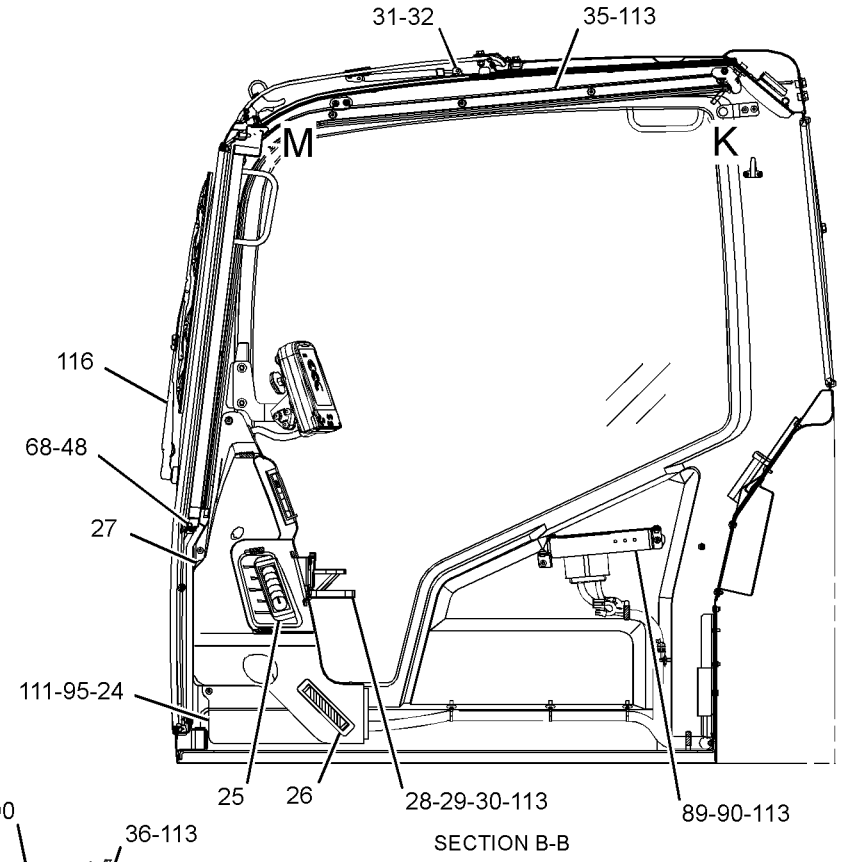

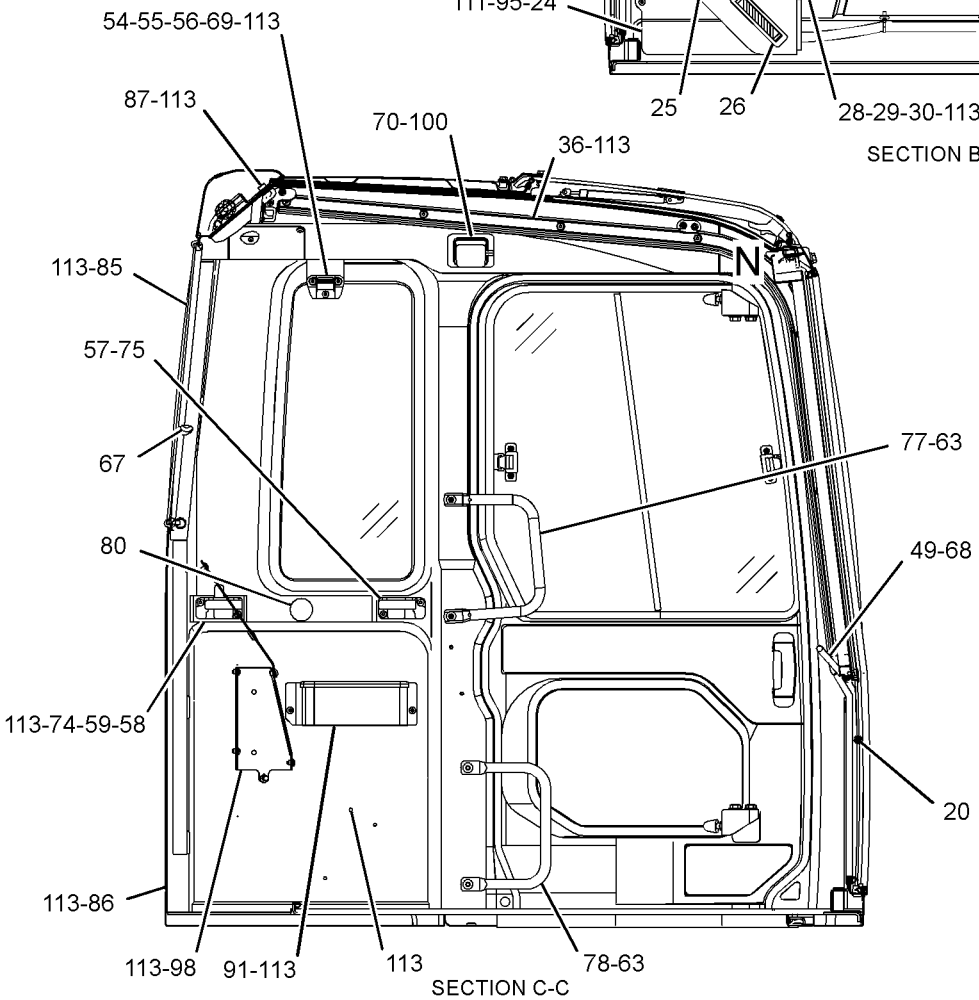

GRAPHIC #2

g01507437

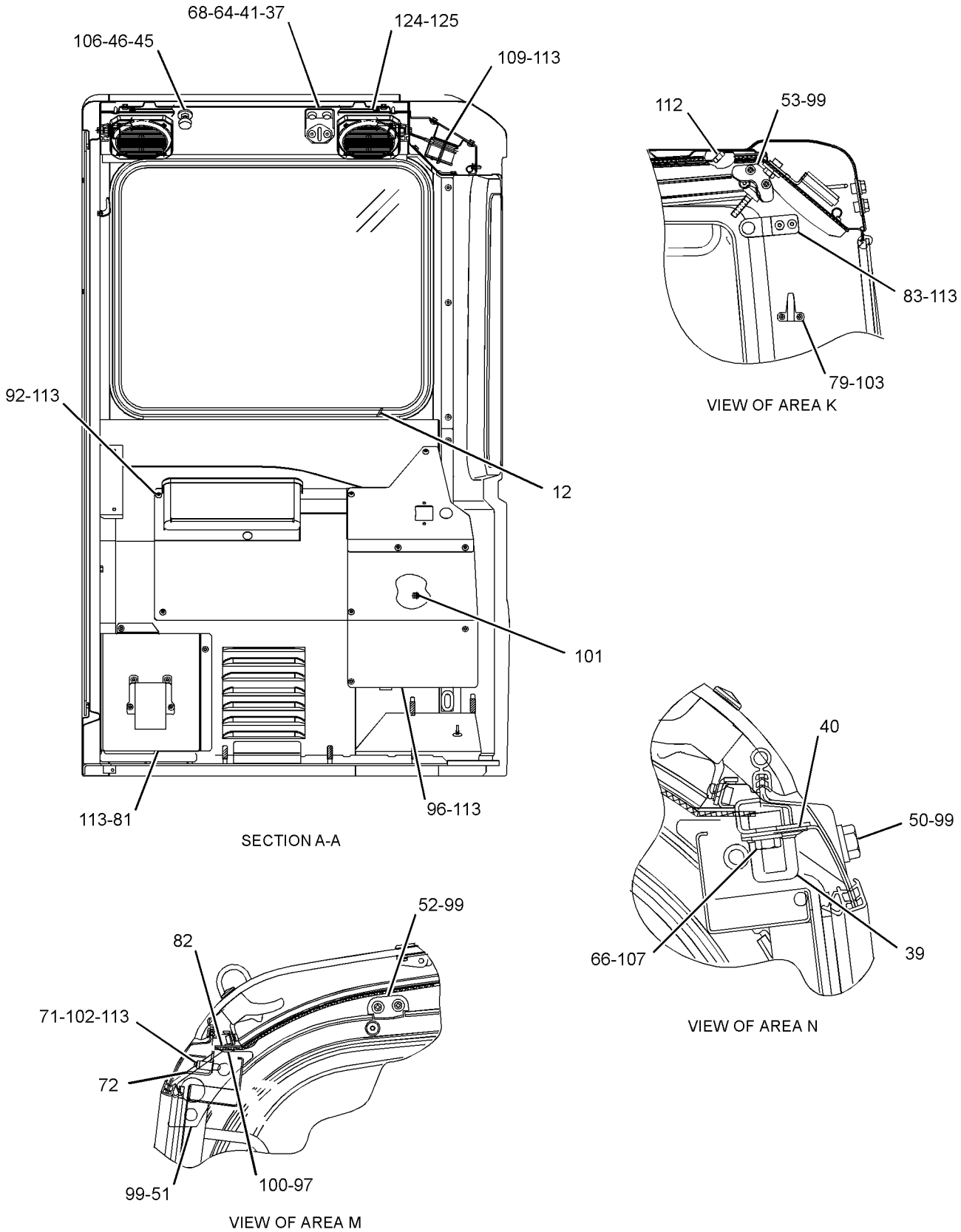

GRAPHIC #3

g01367164

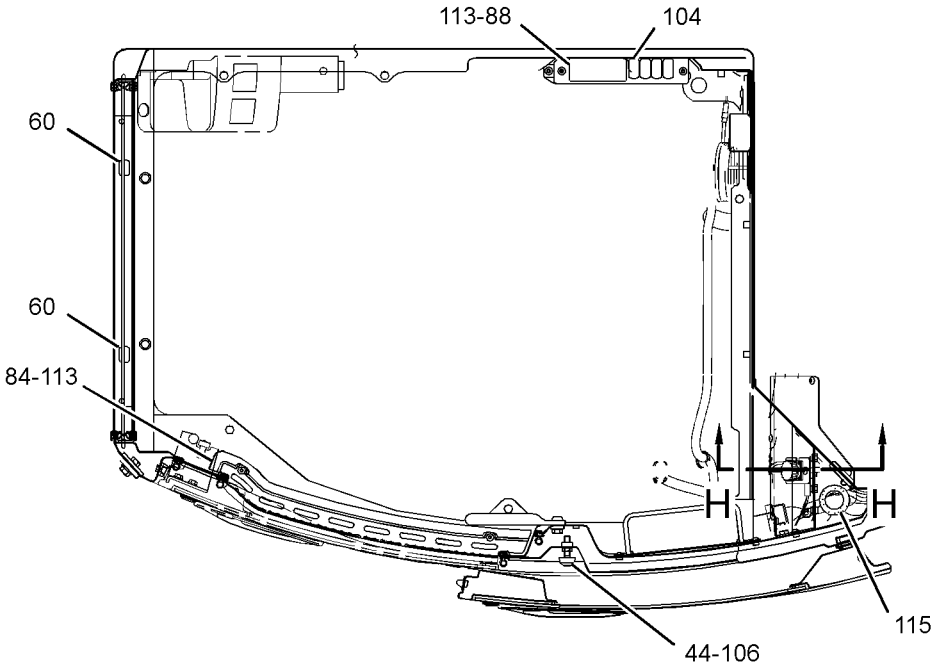

SECTION F-F

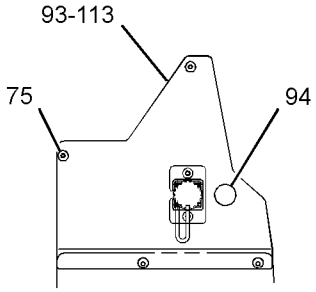

VIEW J-J

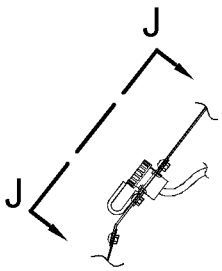

SECTION H-H

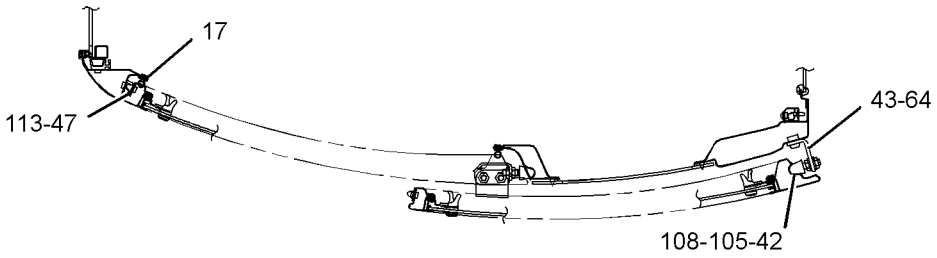

SECTION D-D

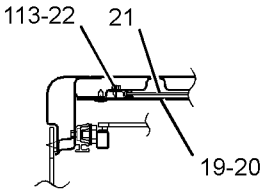

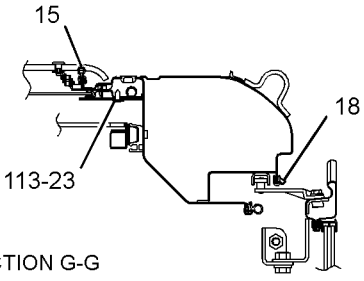

SECTION G-G

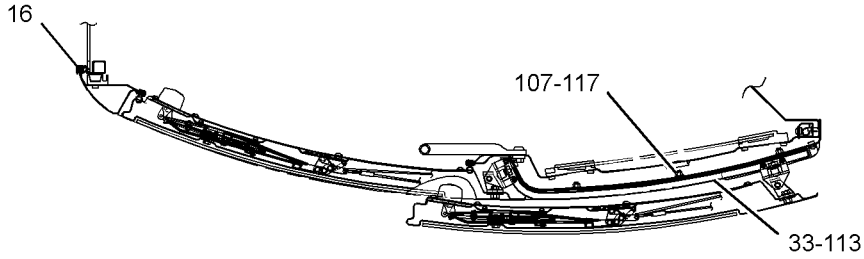

SECTION E-E

GRAPHIC #4 **<END>** g01367010

OPERATOR STATION

259-7277 CAB GP

S/N: BYJ1-UP; PDP1-UP
PART OF 259-7276 CAB GP
AN ATTACHMENT
TYPE 2

SMCS-7301, 7325 **i03144679**

NOTE	REF NO	GRAPHIC REF	PART NUMBER	QTY	PART NAME 1 2 3 4 5 6 (PRODUCT LEVEL)	SEE PAGE
M	1	1	**6V-9672**	2	SCREW-MACHINE (M4X0.7X16-MM)	
Y	2	1	**273-5202**	1	DOOR GP-CAB	737
Y	3	1	**196-1432**	1	WINDOW GP-FRONT	812
Y	4	1	*273-5214*	1	HATCH GP-ROOF	754
	5	1	**196-1466**	1	GLASS	
	6	1	**210-5789**	1	GLASS	
	7	1	**196-1468**	1	SEAL	
	8	1	**210-5790**	1	GLASS	
	9	1	**196-1470**	1	SEAL	
	10	1	**210-5791**	1	GLASS	
	11	1	**196-1511**	1	SEAL	
	12	3	**127-3940**	1	RING	
	13	1	**210-5808**	1	SEAL	
	14	1	**4I-3090**	3	SEAL	
	15	4	**196-1472**	1	SEAL	
	16	4	**196-1473**	1	SEAL	
	17	4	**196-1474**	1	SEAL	
	18	4	**207-0204**	1	SEAL	
	19	4	**273-5173**	1	LINER	
	20	2,4	**185-8205**	14	CLIP	
	21	4	**273-5174**	1	VISOR AS	
		4	**235-8929**	2	HANDLE	
	22	4	**207-0150**	1	RAIL	
	23	4	**207-0151**	1	RAIL	
	24	2	**273-5175**	1	COVER AS	
	25	2	**8Y-6967**	3	LOUVER AS	
	26	2	**8Y-6352**	1	LOUVER AS	
	27	2	**128-2158**	1	GROMMET	
	28	2	**273-5176**	1	CUP HOLDER	
	29	2	**273-5177**	1	BRACKET AS	
	30	2	**273-5178**	1	BRACKET	
	31	2	**196-1503**	2	DAMPER AS	
	32	2	**102-7142**	4	RING	
	33	4	**196-1475**	1	RAIL	
	34	1	**273-5198**	1	COVER	
	35	2	**196-1477**	1	RAIL	
	36	2	**196-1478**	1	RAIL	
	37	1,3	**196-1479**	3	STRIKER	
	38	1	**196-1526**	2	SHIM (1.6-MM THK)	
	39	3	**196-1480**	1	STRIKER	
	40	3	**196-1531**	1	SHIM (2.3-MM THK)	
	41	3	**196-1481**	1	BRACKET	
	42	4	**127-3947**	2	BUMPER	
	43	4	**196-1482**	2	BRACKET	
	44	4	**139-6403**	1	STOP	
	45	3	**273-5205**	1	STOP	
	46	3	**207-0205**	1	SPACER-SPECIAL	
	47	4	**127-3928**	2	STRIKER	
	48	2	**196-1484**	1	STOP	
	49	2	**196-1485**	1	STOP	
	50	3	**196-1548**	1	GUIDE	
	51	3	**196-1549**	1	GUIDE	
	52	3	**196-1486**	2	STOP	
	53	3	**196-1488**	2	STOP	

OPERATOR STATION

259-7277 **CAB GP** *(contd.)* **i03144679**

NOTE	REF NO	GRAPHIC REF	PART NUMBER	QTY	PART NAME 1 2 3 4 5 6 (PRODUCT LEVEL)	SEE PAGE
	54	2	**4I-4253**	1	HOLDER-GLASS	
	55	2	**196-1529**	1	BRACKET	
	56	2	**196-1550**	1	BRACKET AS	
	57	2	**6I-5340**	1	HOLDER-GLASS	
	58	2	**6I-5339**	1	HOLDER-GLASS	
	59	2	**207-0237**	1	BRACKET AS	
	60	4	**4I-4282**	2	STOPPER	
M	61	1	**8T-4195**	2	BOLT (M10X1.5X30-MM)	
M	62	1	**207-0211**	4	BOLT (M10X1.5X25-MM)	
M	63	2	**9X-2040**	4	SCREW-TRUSS HEAD (M10X1.5X25-MM)	
M	64	3,4	**9X-2041**	6	SCREW-TRUSS HEAD (M10X1.5X20-MM)	
M	65	1	**8T-4137**	6	BOLT (M10X1.5X20-MM)	
M	66	1,3	**8T-4189**	6	BOLT (M8X1.25X20-MM)	
	67	2	**207-0209**	5	GROMMET	
M	68	2,3	**8C-7505**	6	SCREW-FLAT HEAD (M8X1.25X20-MM)	
M	69	2	**3E-8020**	2	SCREW-TRUSS HEAD (M6X1X25-MM)	
	70	2	**096-0721**	1	LAMP GP-DOME (CAB)	
		2	**099-0864**	1	BODY	
		2	**099-0865**	1	LAMP (DOME)	
		2	**099-0866**	1	COVER	
	71	3	**117-6306**	1	SWITCH (WINDOW POSITION)	
	72	3	**196-1528**	1	BRACKET	
	73	1	**087-8484**	1	GROMMET	
M	74	2	**9X-2045**	2	SCREW-TRUSS HEAD (M6X1X20-MM)	
M	75	2,4	**9X-2043**	3	SCREW-TRUSS HEAD (M6X1X14-MM)	
	76	1	**273-5203**	1	HANDRAIL AS	
	77	2	**273-5182**	1	HANDHOLD AS	
	78	2	**196-1491**	1	HANDLE	
	79	3	**127-3925**	1	HOOK	
	80	2	**196-1492**	1	PLUG	
	81	3	**273-5195**	1	COVER AS	
	82	3	**196-1552**	1	BRACKET	
	83	3	**273-5180**	1	BRACKET	
	84	4	**196-1493**	1	COVER	
	85	2	**196-1533**	1	COVER	
	86	2	**196-1535**	1	COVER	
	87	2	**196-1532**	1	COVER	
	88	4	**273-5183**	1	COVER AS (SWITCH, RH PANEL)	
	89	2	**273-5184**	1	BRACKET AS	
	90	2	**273-5185**	1	SUPPORT AS	
	91	2	**273-5200**	1	BOX AS	
	92	3	**273-5189**	1	COVER AS-ACCESS	
	93	4	**273-5190**	1	COVER	
	94	4	**273-5164**	1	CAP	
M	95	1,2	**128-2135**	5	SCREW-TRUSS HEAD (M6X1X13-MM)	
	96	3	**273-5192**	1	COVER AS-ACCESS	
	97	3	**9X-8256**	2	WASHER (6.6X12X2-MM THK)	
	98	2	**273-5194**	1	SUPPORT AS	
M	99	3	**8T-4127**	12	SCREW-MACHINE (M5X0.8X20-MM)	
M	100	2,3	**8T-6693**	4	SCREW-MACHINE (M5X0.8X16-MM)	
M	101	3	**095-0736**	1	SCREW-MACHINE (M5X0.8X10-MM)	
M	102	3	**6V-5210**	2	SCREW-MACHINE (M4X0.7X10-MM)	
M	103	3	**095-0755**	2	SCREW-MACHINE (M4X0.07X12-MM)	
	104	4	**121-1125**	4	PLUG-BEZEL	
M	105	4	**095-1207**	4	NUT (M12X1.75-THD)	
M	106	3,4	**8T-4133**	2	NUT (M10X1.5-THD)	
	107	1,3,4	**8T-4224**	9	WASHER-HARD (8.8X16X2-MM THK)	
	108	4	**8T-4223**	4	WASHER-HARD (13.5X25.5X3-MM THK)	
	109	3	**207-0207**	1	CABLE AS	

259-7277 **CAB GP** ***(contd.)*** **i03144679**

NOTE	REF NO	GRAPHIC REF	PART NUMBER	QTY	PART NAME 1 2 3 4 5 6 (PRODUCT LEVEL)	SEE PAGE
	110	1	**8T-4121**	8	WASHER-HARD (11X21X2.5-MM THK)	
E	111	2	**201-4441**		SEAL (8-CM)	
	112	3	**207-0210**	4	GROMMET	
M	113	2,3,4	**9X-2042**	75	SCREW-TRUSS HEAD (M6X1X12-MM)	
	114	1	**207-0208**	1	GROMMET-RUBBER	
	115	4	**170-9360**	1	GROMMET	
Y	116	2	*273-5344*	1	WIPER GP-WINDOW	814
M	117	4	**5C-7261**	3	NUT (M8X1.25-THD)	
CY	118	1	**327-6550**	1	MIRROR GP-REAR VIEW	770
Y	119	1	**259-7295**	1	BRACKET GP-MIRROR	665
M	120	1	**8T-4779**	1	BOLT (M16X2X35-MM)	
	121	1	**3B-4510**	1	LOCKWASHER	
	122	1	**9X-8257**	7	WASHER (17.5X30X3.5-MM THK)	
M	123	1	**8T-4190**	6	BOLT (M16X2X25-MM)	
	124	3	**7Y-5434**	2	SPEAKER AS	
					(EACH INCLUDES)	
		3	**7Y-3951**	2	TERMINAL (FEMALE)	
		3	**7Y-3954**	1	CONNECTOR-PLUG	
M	125	3	**6V-9492**	8	SCREW-MACHINE (M4X0.7X25-MM)	
	126	1	**230-0183**	1	CAP	

C-CHANGE FROM PREVIOUS TYPE
E-ORDER BY THE CENTIMETER
M-METRIC PART
Y-SEPARATE ILLUSTRATION

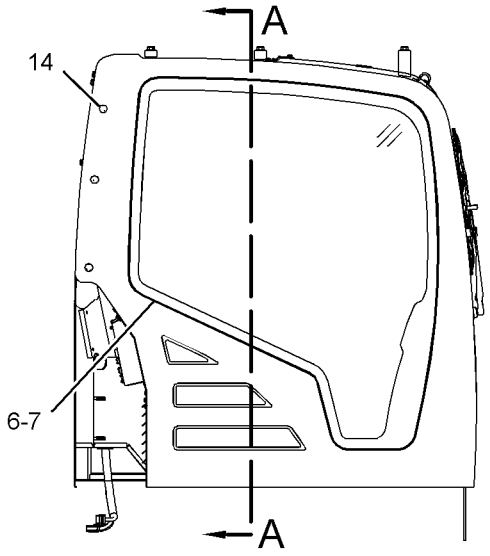

RIGHT SIDE VIEW

REFER TO ALL ILLUSTRATIONS OF THIS GROUP FOR AUXILIARY VIEWS

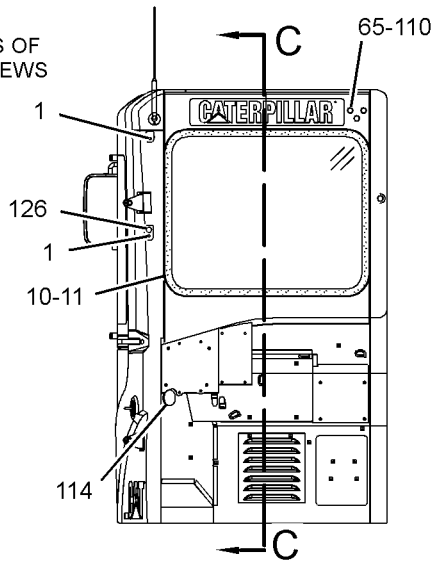

REAR VIEW

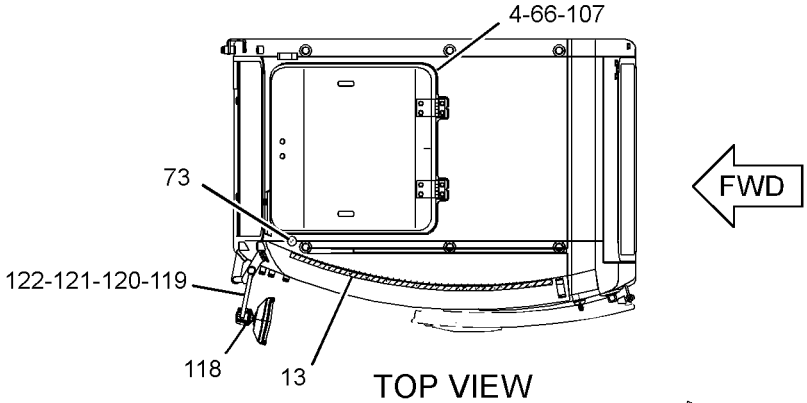

TOP VIEW

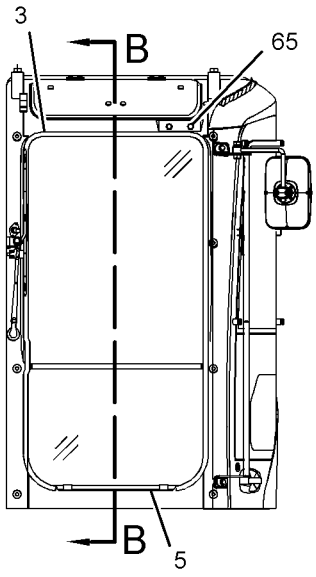

FRONT VIEW

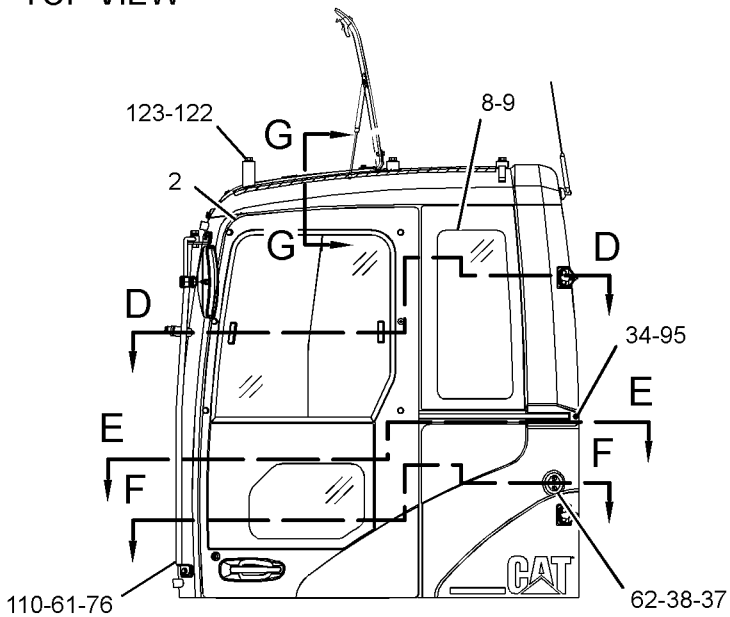

LEFT SIDE VIEW

GRAPHIC #1

g01626126

REFER TO ALL ILLUSTRATIONS OF THIS GROUP FOR AUXILIARY VIEWS

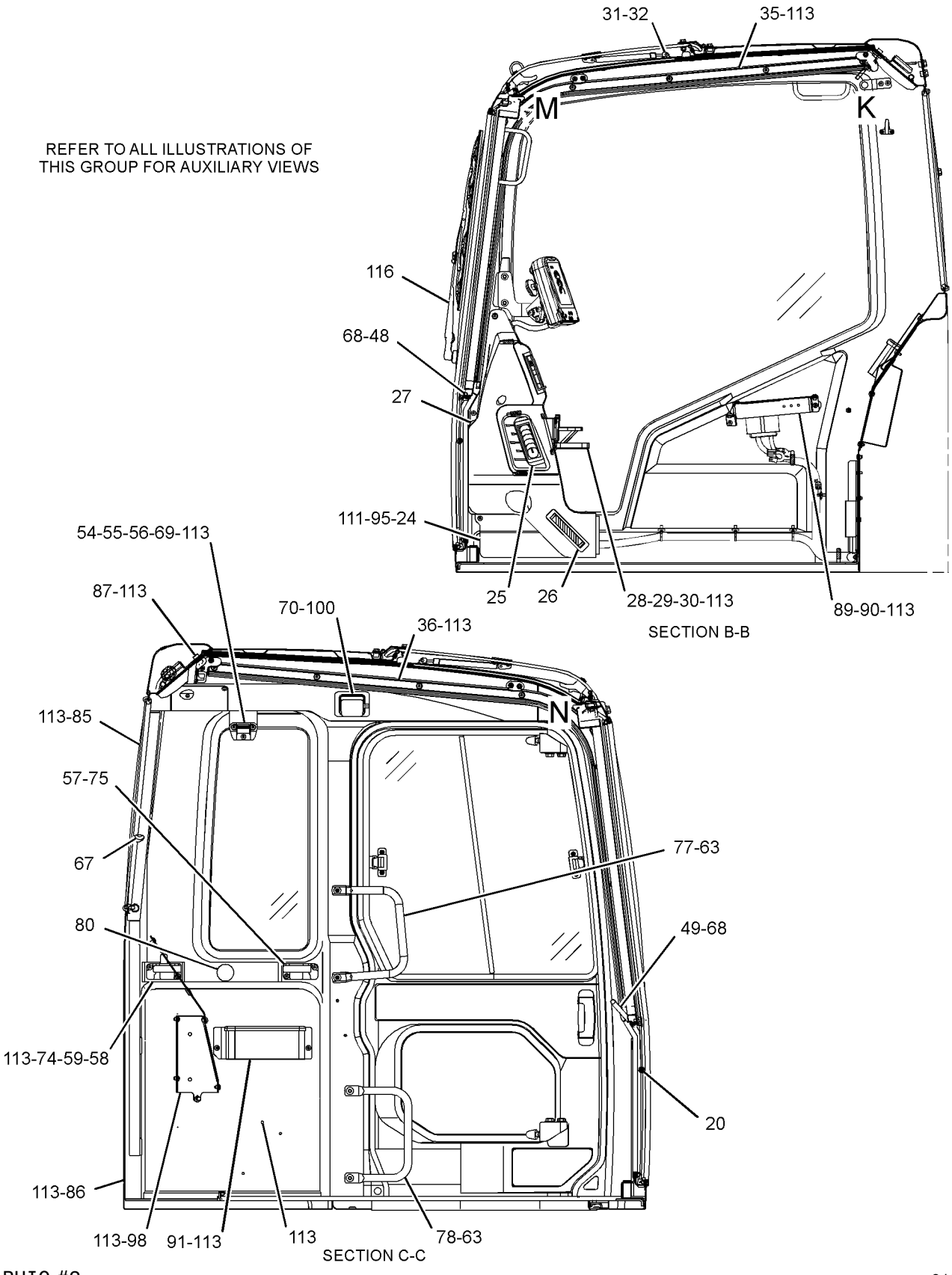

GRAPHIC #2

g01507437

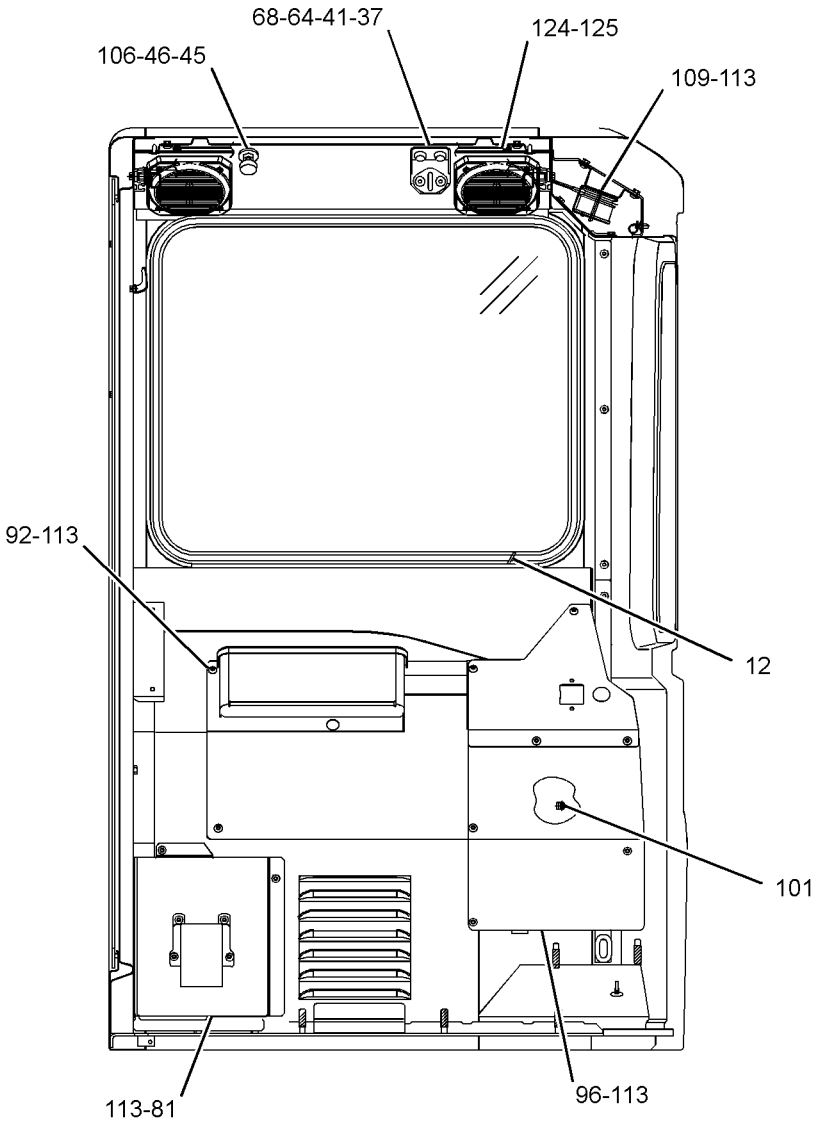

SECTION A-A

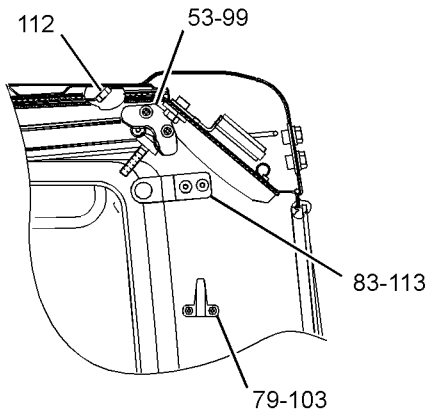

VIEW OF AREA K

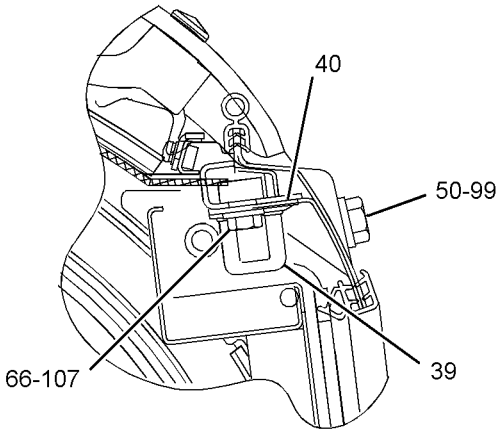

VIEW OF AREA N

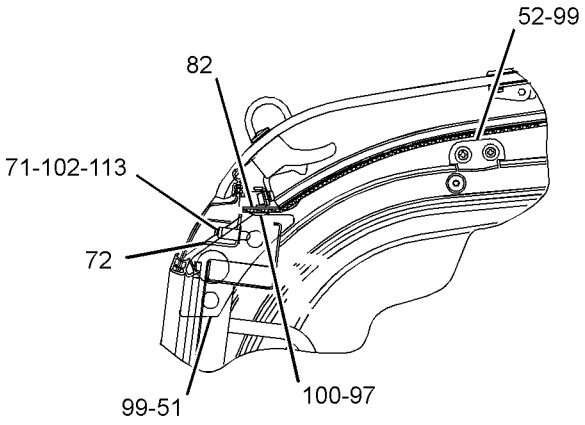

VIEW OF AREA M

GRAPHIC #3

g01367164

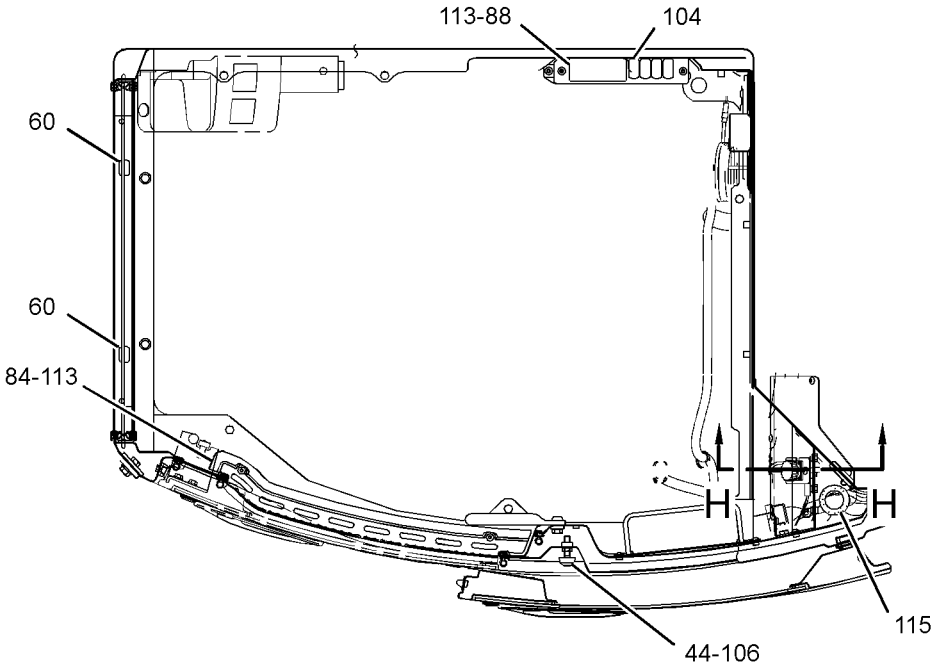

SECTION F-F

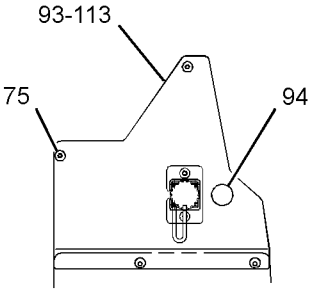

VIEW J-J

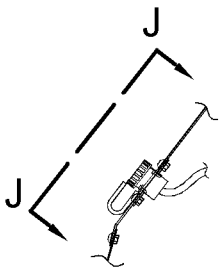

SECTION H-H

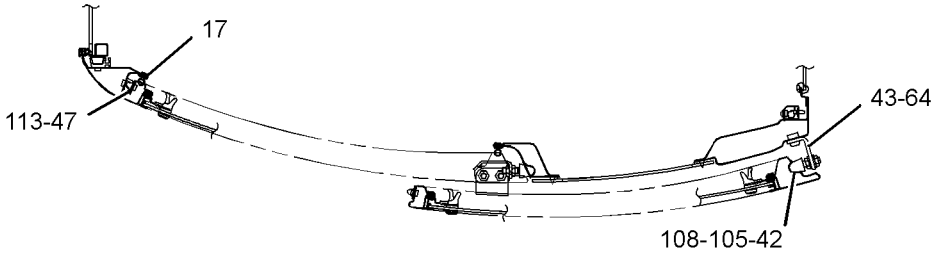

SECTION D-D

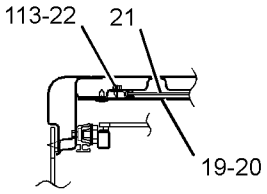

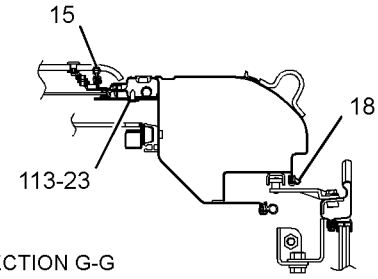

SECTION G-G

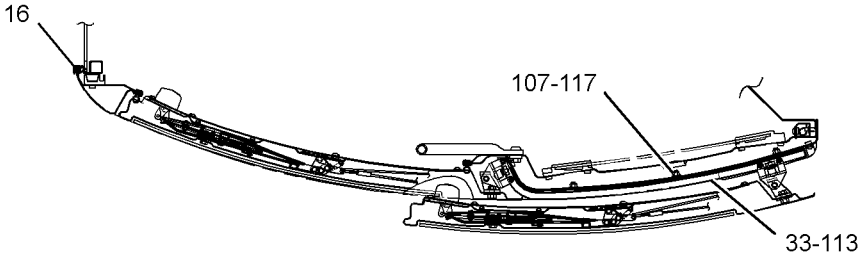

SECTION E-E

GRAPHIC #4 **<END>** g01367010

OPERATOR STATION

293-1285 CAB GP

S/N: BYJ1-UP; PDP1-UP

FIELD REPLACEMENT FOR 259-7275—PAGE 683

SMCS-7301, 7325 **i02836975**

NOTE	REF NO	GRAPHIC REF	PART NUMBER	QTY	PART NAME 1 2 3 4 5 6 (PRODUCT LEVEL)	SEE PAGE
Y	1	1	**259-7275**	1	CAB GP-ENCLOSED ROPS	683
M	2	1	**8T-4779**	3	BOLT (M16X2X35-MM)	
M	3	1	**8T-7338**	1	BOLT (M16X2X45-MM)	
	4	1	**9X-8257**	4	WASHER (17.5X30X3.5-MM THK)	

M-METRIC PART
Y-SEPARATE ILLUSTRATION

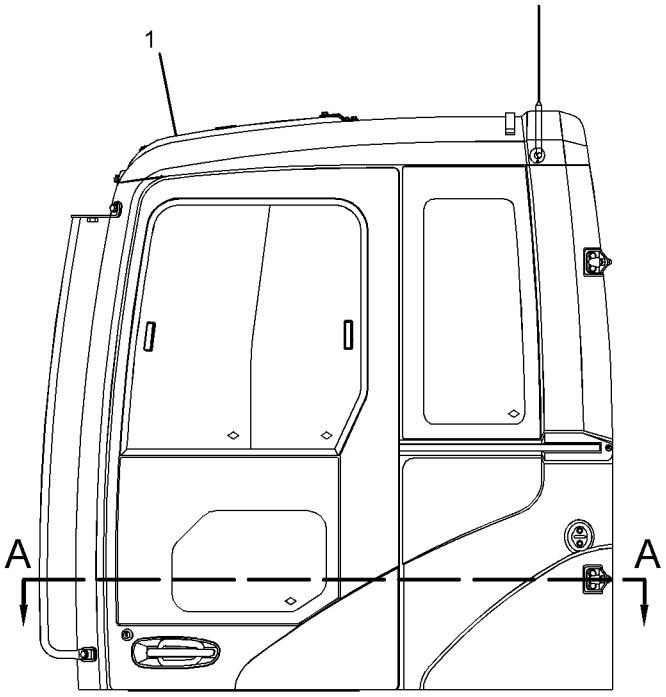

LEFT SIDE VIEW

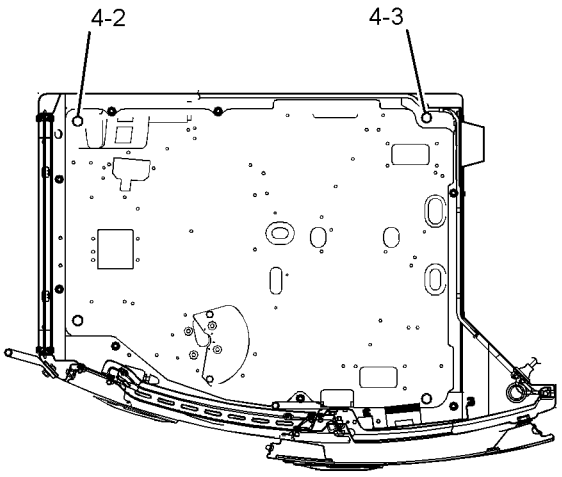

SECTION A-A

GRAPHIC #1 **<END>** g01423984

OPERATOR STATION

259-7275 CAB GP-ENCLOSED ROPS

S/N: BYJ1-UP; PDP1-UP
PART OF 259-7274, 293-1285 CAB GP
FIELD REPLACEMENT ORDER 293-1285—PAGE 682
AN ATTACHMENT
TYPE 1

SMCS-7301, 7325 **i03010024**

NOTE	REF NO	GRAPHIC REF	PART NUMBER	QTY	PART NAME 1 2 3 4 5 6 (PRODUCT LEVEL)	SEE PAGE
Z	1	1		1	CAB AS	
Y	2	1	**273-5171**	1	DOOR GP-CAB	734
Y	3	1	**196-1432**	1	WINDOW GP-FRONT	812
Y	4	1	**273-5214**	1	HATCH GP-ROOF	754
	5	1	**196-1466**	1	GLASS	
	6	1	**196-1467**	1	GLASS	
	7	1	**196-1468**	1	SEAL	
	8	1	**196-1469**	1	GLASS	
	9	1	**196-1470**	1	SEAL	
	10	1	**196-1471**	1	GLASS	
	11	1	**196-1511**	1	SEAL	
	12	2	**127-3940**	1	RING	
	13	1	**210-5808**	1	SEAL	
	14	1	**4I-3090**	3	SEAL	
	15	3	**196-1472**	1	SEAL	
	16	3	**196-1473**	1	SEAL	
	17	3	**196-1474**	1	SEAL	
	18	3	**207-0204**	1	SEAL	
	19	3	**273-5173**	1	LINER	
	20	2,3	**185-8205**	14	CLIP	
	21	3	**273-5174**	1	VISOR AS	
		3	**235-8929**	2	HANDLE	
	22	3	**207-0150**	1	RAIL	
	23	3	**207-0151**	1	RAIL	
	24	2	**273-5175**	1	COVER AS	
	25	2	**8Y-6967**	3	LOUVER AS	
	26	2	**8Y-6352**	1	LOUVER AS	
	27	2	**128-2158**	1	GROMMET	
	28	2	**273-5176**	1	CUP HOLDER	
	29	2	**273-5177**	1	BRACKET AS	
	30	2	**273-5178**	1	BRACKET	
	31	2	**196-1503**	2	DAMPER AS	
	32	2	**102-7142**	4	RING	
	33	3	**196-1475**	1	RAIL	
	34	1	**273-5198**	1	COVER	
	35	2	**196-1477**	1	RAIL	
	36	2	**196-1478**	1	RAIL	
	37	1,2	**196-1479**	3	STRIKER	
	38	1	**196-1526**	2	SHIM (1.6-MM THK)	
	39	2	**196-1480**	1	STRIKER	
	40	2	**196-1531**	1	SHIM (2.3-MM THK)	
	41	2	**196-1481**	1	BRACKET	
	42	3	**127-3947**	2	BUMPER	
	43	3	**196-1482**	2	BRACKET	
	44	3	**139-6403**	1	STOP	
	45	2	**273-5205**	1	STOP	
	46	2	**207-0205**	1	SPACER-SPECIAL	
	47	3	**127-3928**	2	STRIKER	
	48	2	**196-1484**	1	STOP	
	49	2	**196-1485**	1	STOP	
	50	2	**196-1548**	1	GUIDE	
	51	2	**196-1549**	1	GUIDE	
	52	2	**196-1486**	2	STOP	

NOTE	REF NO	GRAPHIC REF	PART NUMBER	QTY	PART NAME 1 2 3 4 5 6 (PRODUCT LEVEL)	SEE PAGE
	53	2	**196-1488**	2	STOP	
	54	2	**4I-4253**	1	HOLDER-GLASS	
	55	2	**196-1529**	1	BRACKET	
	56	2	**196-1550**	1	BRACKET AS	
	57	2	**6I-5340**	1	HOLDER-GLASS	
	58	2	**6I-5339**	1	HOLDER-GLASS	
	59	2	**207-0237**	1	BRACKET AS	
	60	3	**4I-4282**	2	STOPPER	
M	61	1	**8T-4195**	2	BOLT (M10X1.5X30-MM)	
M	62	1	**207-0211**	4	BOLT (M10X1.5X25-MM)	
M	63	2	**9X-2040**	4	SCREW-TRUSS HEAD (M10X1.5X25-MM)	
M	64	2,3	**9X-2041**	6	SCREW-TRUSS HEAD (M10X1.5X20-MM)	
M	65	1	**8T-4137**	6	BOLT (M10X1.5X20-MM)	
M	66	1,2	**8T-4189**	6	BOLT (M8X1.25X20-MM)	
	67	2	**207-0209**	5	GROMMET	
M	68	2	**8C-7505**	6	SCREW-FLAT HEAD (M8X1.25X20-MM)	
M	69	2	**3E-8020**	2	SCREW-TRUSS HEAD (M6X1X25-MM)	
	70	2	**096-0721**	1	LAMP GP-DOME (CAB)	
	70A	2	**099-0864**	1	BODY	
	70B	2	**099-0865**	1	LAMP (DOME)	
	70C	2	**099-0866**	1	COVER	
	71	2	**117-6306**	1	SWITCH (WINDOW LOWER LIMIT)	
	72	2	**196-1528**	1	BRACKET	
	73	1	**087-8484**	1	GROMMET	
M	74	2	**9X-2045**	2	SCREW-TRUSS HEAD (M6X1X20-MM)	
M	75	2,3	**9X-2043**	3	SCREW-TRUSS HEAD (M6X1X14-MM)	
	76	1	**273-5203**	1	HANDRAIL AS	
	77	2	**273-5182**	1	HANDHOLD AS	
	78	2	**196-1491**	1	HANDLE	
	79	2	**127-3925**	1	HOOK	
	80	2	**196-1492**	1	PLUG	
	81	2	**273-5195**	1	COVER AS	
	82	2	**196-1552**	1	BRACKET	
	83	2	**273-5180**	1	BRACKET	
	84	3	**196-1493**	1	COVER	
	85	2	**196-1533**	1	COVER	
	86	2	**196-1535**	1	COVER	
	87	2	**196-1532**	1	COVER	
	88	3	**273-5183**	1	COVER AS (SWITCH, RH PANEL)	
	89	2	**273-5184**	1	BRACKET AS	
	90	2	**273-5185**	1	SUPPORT AS	
	91	2	**273-5200**	1	BOX AS	
	92	2	**273-5189**	1	COVER AS-ACCESS	
	93	3	**273-5190**	1	COVER	
	94	3	**273-5164**	1	CAP	
M	95	1,2	**128-2135**	5	SCREW-TRUSS HEAD (M6X1X13-MM)	
	96	2	**273-5192**	1	COVER AS-ACCESS	
	97	2	**9X-8256**	2	WASHER (6.6X12X2-MM THK)	
	98	2	**273-5194**	1	SUPPORT AS	
M	99	2	**8T-4127**	12	SCREW-MACHINE (M5X0.8X20-MM)	
M	100	2	**8T-6693**	4	SCREW-MACHINE (M5X0.8X16-MM)	
M	101	2	**095-0736**	1	SCREW-MACHINE (M5X0.8X10-MM)	
M	102	2	**185-8181**	2	SCREW (M4X0.7X10-MM)	
M	103	2	**095-0755**	2	SCREW-MACHINE (M4X0.07X12-MM)	
	104	3	**121-1125**	4	PLUG-BEZEL	
M	105	3	**095-1207**	4	NUT (M12X1.75-THD)	
M	106	2,3	**8T-4133**	2	NUT (M10X1.5-THD)	
	107	1,2,3	**8T-4224**	9	WASHER-HARD (8.8X16X2-MM THK)	
	108	3	**8T-4223**	4	WASHER-HARD (13.5X25.5X3-MM THK)	

259-7275 **CAB GP-ENCLOSED ROPS** *(contd.)* **i03010024**

NOTE	REF NO	GRAPHIC REF	PART NUMBER	QTY	PART NAME 1 2 3 4 5 6 (PRODUCT LEVEL)	SEE PAGE
	109	2	**207-0207**	1	CABLE AS	
	110	1	**8T-4121**	8	WASHER-HARD (11X21X2.5-MM THK)	
E	111	2	**201-4441**		SEAL (8-CM)	
	112	2	**207-0210**	4	GROMMET	
M	113	2,3	**9X-2042**	75	SCREW-TRUSS HEAD (M6X1X12-MM)	
	114	1	**207-0208**	1	GROMMET-RUBBER	
	115	3	**170-9360**	1	GROMMET	
Y	116	2	*273-5344*	1	WIPER GP-WINDOW	814
M	117	3	**5C-7261**	3	NUT (M8X1.25-THD)	
	118	1	**156-6617**	1	MIRROR	
Y	119	1	*259-7295*	1	BRACKET GP-MIRROR	665
M	120	1	**8T-4779**	1	BOLT (M16X2X35-MM)	
	121	1	**3B-4510**	1	LOCKWASHER	
	122	1	**9X-8257**	7	WASHER (17.5X30X3.5-MM THK)	
M	123	1	**8T-4190**	6	BOLT (M16X2X25-MM)	
	124	2	**7Y-5434**	2	SPEAKER AS	
M	125	2	**6V-9492**	8	SCREW-MACHINE (M4X0.7X25-MM)	
	126	1	**230-0183**	1	CAP	
M	127	1	**6V-9672**	2	SCREW-MACHINE (M4X0.7X16-MM)	

E-ORDER BY THE CENTIMETER
M-METRIC PART
Y-SEPARATE ILLUSTRATION
Z-NOT SERVICED SEPARATELY

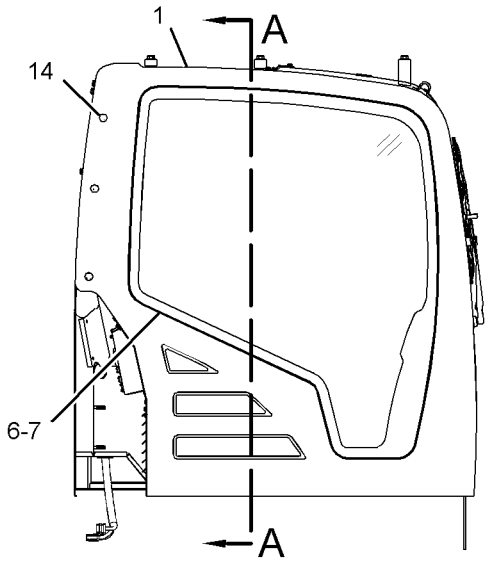

RIGHT SIDE VIEW

REFER TO ALL ILLUSTRATIONS OF THIS GROUP FOR AUXILIARY VIEWS

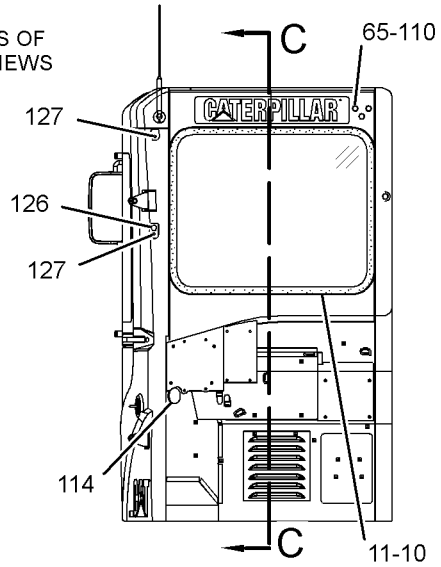

REAR VIEW

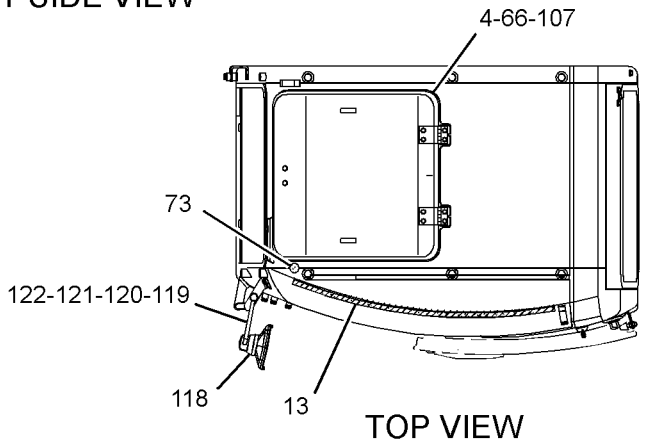

TOP VIEW

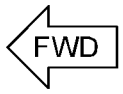

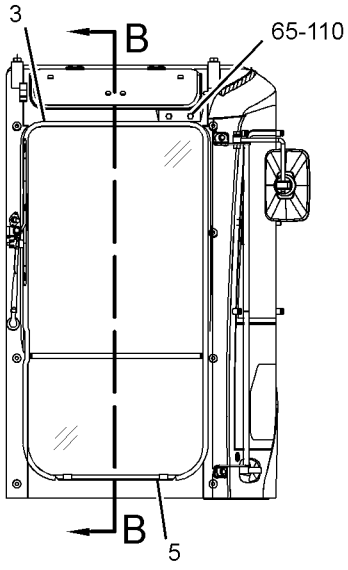

FRONT VIEW

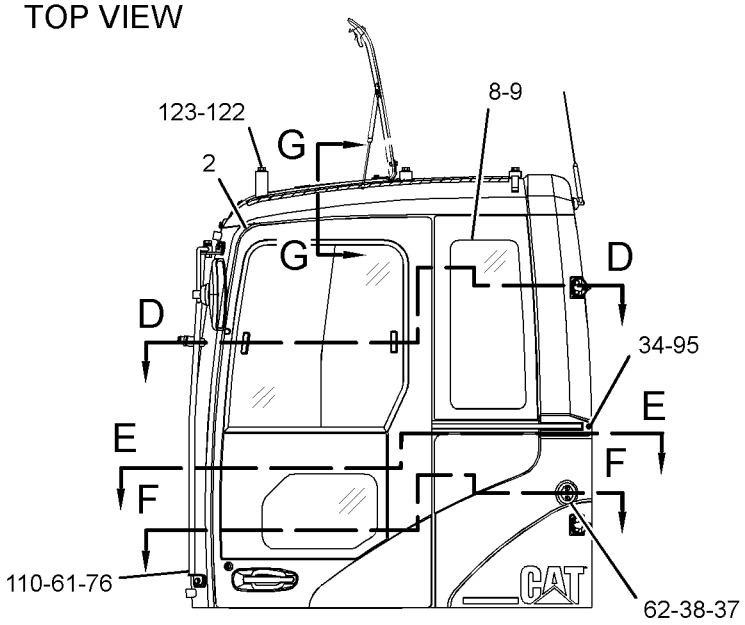

LEFT SIDE VIEW

GRAPHIC #1

g01504514

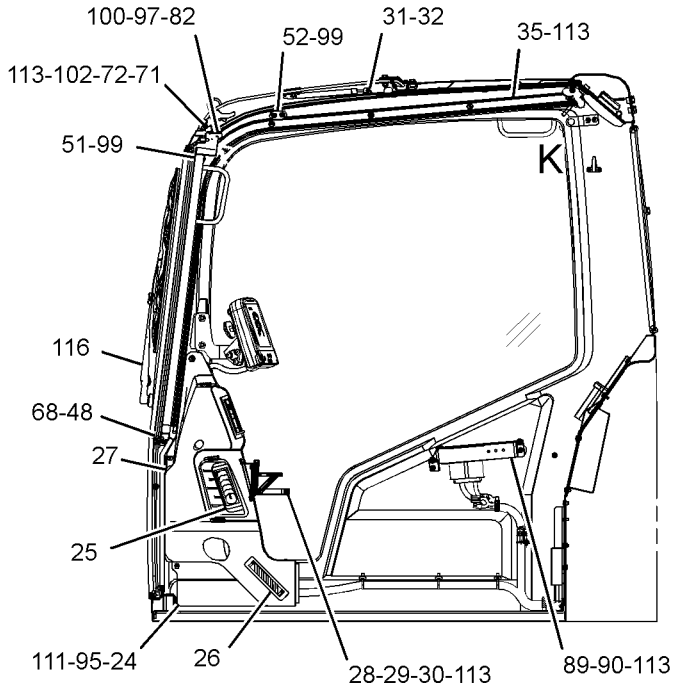

SECTION B-B

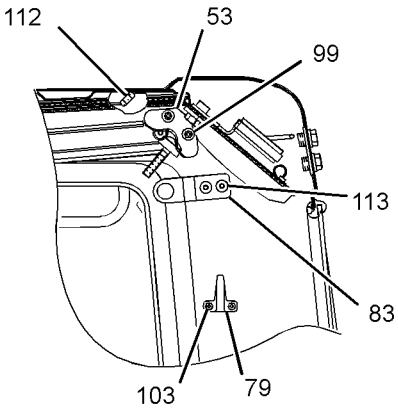

VIEW OF AREA K

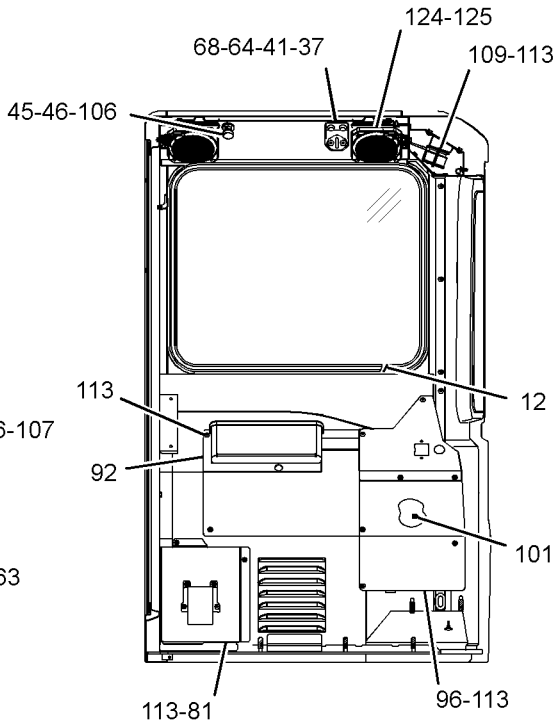

SECTION A-A

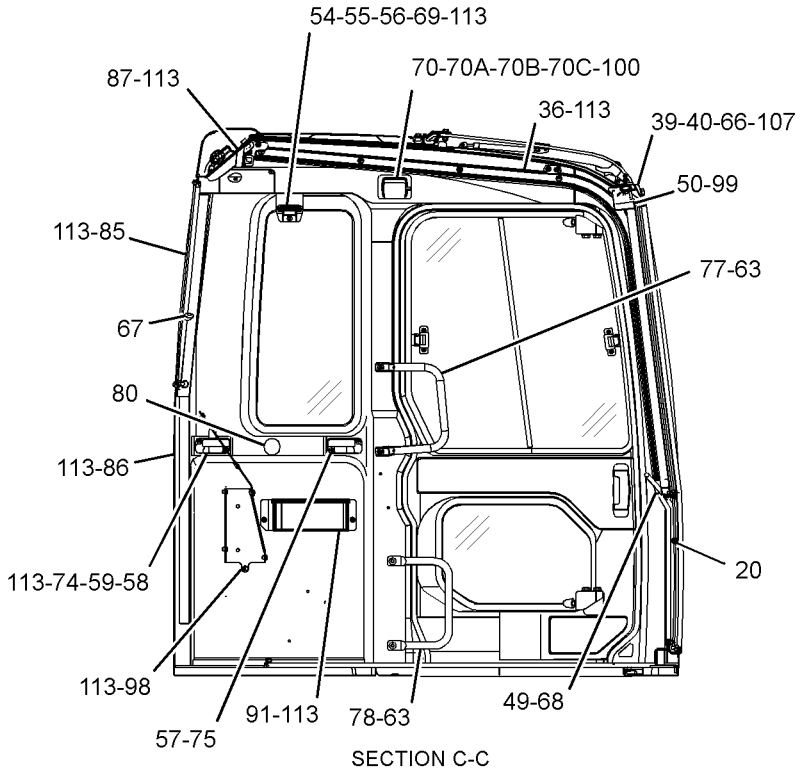

SECTION C-C

GRAPHIC #2

g01504953

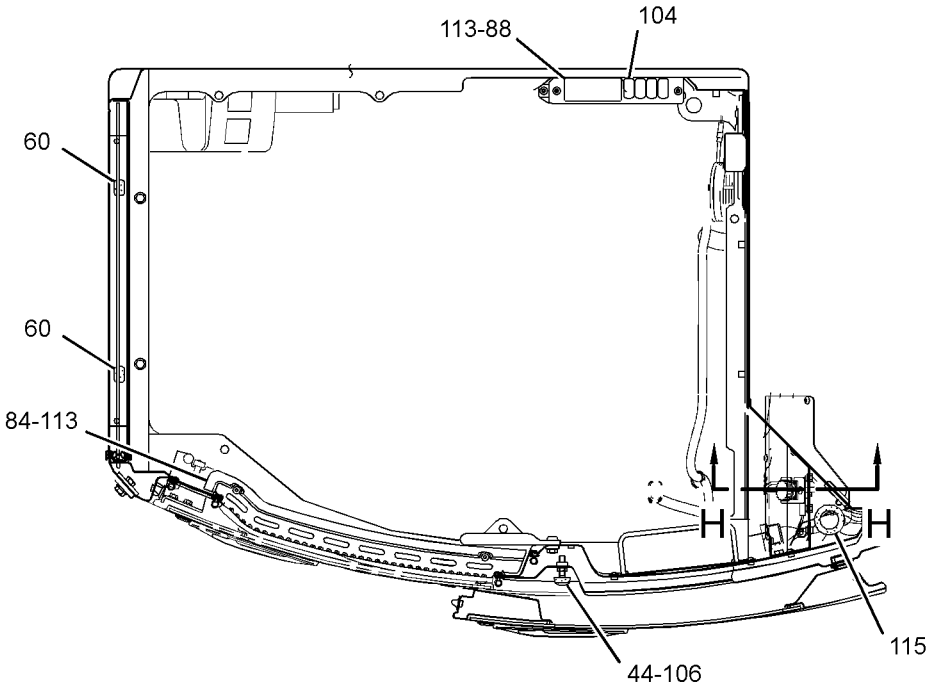

SECTION F-F

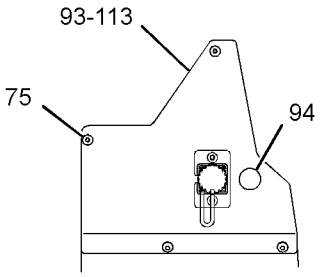

VIEW J-J

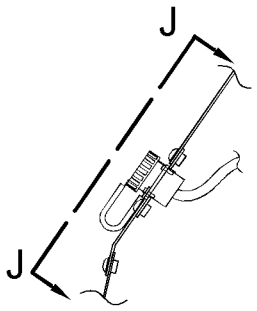

SECTION H-H

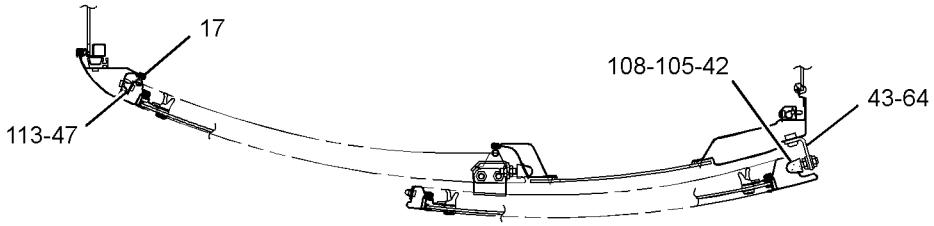

SECTION D-D

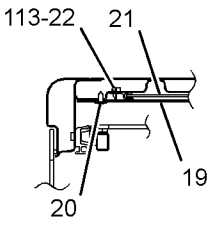

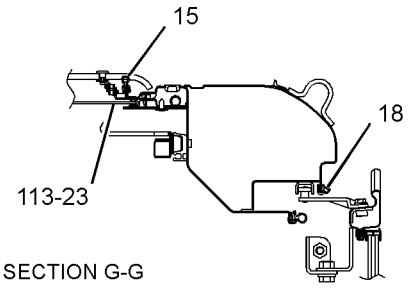

SECTION G-G

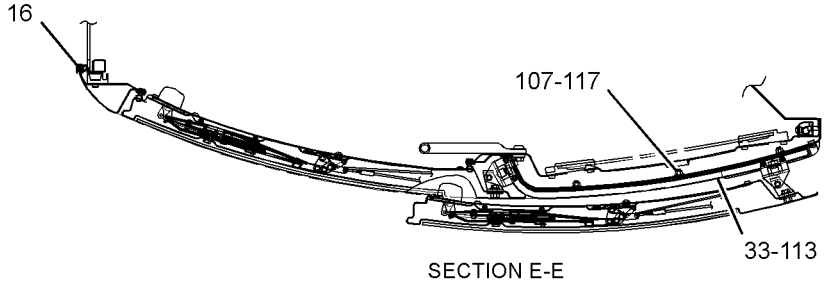

SECTION E-E

GRAPHIC #3 **<END>** g01505354

OPERATOR STATION

259-7275 CAB GP-ENCLOSED ROPS

S/N: BYJ1-UP; PDP1-UP
PART OF 259-7274, 293-1285 CAB GP
FIELD REPLACEMENT ORDER 293-1285—PAGE 682
AN ATTACHMENT
TYPE 2

SMCS-7301, 7325 **i03144685**

NOTE	REF NO	GRAPHIC REF	PART NUMBER	QTY	PART NAME 1 2 3 4 5 6 (PRODUCT LEVEL)	SEE PAGE
M	1	1	**6V-8672**	2	SCREW-MACHINE (M2.5X0.45X16-MM)	
Y	2	1	**273-5171**	1	DOOR GP-CAB	734
Y	3	1	**196-1432**	1	WINDOW GP-FRONT	812
Y	4	1	*273-5214*	1	HATCH GP-ROOF	754
	5	1	**196-1466**	1	GLASS	
	6	1	**196-1467**	1	GLASS	
	7	1	**196-1468**	1	SEAL	
	8	1	**196-1469**	1	GLASS	
	9	1	**196-1470**	1	SEAL	
	10	1	**196-1471**	1	GLASS	
	11	1	**196-1511**	1	SEAL	
	12	2	**127-3940**	1	RING	
	13	1	**210-5808**	1	SEAL	
	14	1	**4I-3090**	3	SEAL	
	15	3	**196-1472**	1	SEAL	
	16	3	**196-1473**	1	SEAL	
	17	3	**196-1474**	1	SEAL	
	18	3	**207-0204**	1	SEAL	
	19	3	**273-5173**	1	LINER	
	20	2,3	**185-8205**	14	CLIP	
	21	3	**273-5174**	1	VISOR AS	
		3	**235-8929**	2	HANDLE	
	22	3	**207-0150**	1	RAIL	
	23	3	**207-0151**	1	RAIL	
	24	2	**273-5175**	1	COVER AS	
	25	2	**8Y-6967**	3	LOUVER AS	
	26	2	**8Y-6352**	1	LOUVER AS	
	27	2	**128-2158**	1	GROMMET	
	28	2	**273-5176**	1	CUP HOLDER	
	29	2	**273-5177**	1	BRACKET AS	
	30	2	**273-5178**	1	BRACKET	
	31	2	**196-1503**	2	DAMPER AS	
	32	2	**102-7142**	4	RING	
	33	3	**196-1475**	1	RAIL	
	34	1	**273-5198**	1	COVER	
	35	2	**196-1477**	1	RAIL	
	36	2	**196-1478**	1	RAIL	
	37	1,2	**196-1479**	3	STRIKER	
	38	1	**196-1526**	2	SHIM (1.6-MM THK)	
	39	2	**196-1480**	1	STRIKER	
	40	2	**196-1531**	1	SHIM (2.3-MM THK)	
	41	2	**196-1481**	1	BRACKET	
	42	3	**127-3947**	2	BUMPER	
	43	3	**196-1482**	2	BRACKET	
	44	3	**139-6403**	1	STOP	
	45	2	**273-5205**	1	STOP	
	46	2	**207-0205**	1	SPACER-SPECIAL	
	47	3	**127-3928**	2	STRIKER	
	48	2	**196-1484**	1	STOP	
	49	2	**196-1485**	1	STOP	
	50	2	**196-1548**	1	GUIDE	
	51	2	**196-1549**	1	GUIDE	
	52	2	**196-1486**	2	STOP	

NOTE	REF NO	GRAPHIC REF	PART NUMBER	QTY	PART NAME 1 2 3 4 5 6 (PRODUCT LEVEL)	SEE PAGE
	53	2	**196-1488**	2	STOP	
	54	2	**4I-4253**	1	HOLDER-GLASS	
	55	2	**196-1529**	1	BRACKET	
	56	2	**196-1550**	1	BRACKET AS	
	57	2	**6I-5340**	1	HOLDER-GLASS	
	58	2	**6I-5339**	1	HOLDER-GLASS	
	59	2	**207-0237**	1	BRACKET AS	
	60	3	**4I-4282**	2	STOPPER	
M	61	1	**8T-4195**	2	BOLT (M10X1.5X30-MM)	
M	62	1	**207-0211**	4	BOLT (M10X1.5X25-MM)	
M	63	2	**9X-2040**	4	SCREW-TRUSS HEAD (M10X1.5X25-MM)	
M	64	2,3	**9X-2041**	6	SCREW-TRUSS HEAD (M10X1.5X20-MM)	
M	65	1	**8T-4137**	6	BOLT (M10X1.5X20-MM)	
M	66	1,2	**8T-4189**	6	BOLT (M8X1.25X20-MM)	
	67	2	**207-0209**	5	GROMMET	
M	68	2	**8C-7505**	6	SCREW-FLAT HEAD (M8X1.25X20-MM)	
M	69	2	**3E-8020**	2	SCREW-TRUSS HEAD (M6X1X25-MM)	
	70	2	**096-0721**	1	LAMP GP-DOME (CAB)	
	70A	2	**099-0864**	1	BODY	
	70B	2	**099-0865**	1	LAMP (DOME)	
	70C	2	**099-0866**	1	COVER	
	71	2	**117-6306**	1	SWITCH (WINDOW LOWER LIMIT)	
	72	2	**196-1528**	1	BRACKET	
	73	1	**087-8484**	1	GROMMET	
M	74	2	**9X-2045**	2	SCREW-TRUSS HEAD (M6X1X20-MM)	
M	75	2,3	**9X-2043**	3	SCREW-TRUSS HEAD (M6X1X14-MM)	
	76	1	**273-5203**	1	HANDRAIL AS	
	77	2	**273-5182**	1	HANDHOLD AS	
	78	2	**196-1491**	1	HANDLE	
	79	2	**127-3925**	1	HOOK	
	80	2	**196-1492**	1	PLUG	
	81	2	**273-5195**	1	COVER AS	
	82	2	**196-1552**	1	BRACKET	
	83	2	**273-5180**	1	BRACKET	
	84	3	**196-1493**	1	COVER	
	85	2	**196-1533**	1	COVER	
	86	2	**196-1535**	1	COVER	
	87	2	**196-1532**	1	COVER	
	88	3	**273-5183**	1	COVER AS (SWITCH, RH PANEL)	
	89	2	**273-5184**	1	BRACKET AS	
	90	2	**273-5185**	1	SUPPORT AS	
	91	2	**273-5200**	1	BOX AS	
	92	2	**273-5189**	1	COVER AS-ACCESS	
	93	3	**273-5190**	1	COVER	
	94	3	**273-5164**	1	CAP	
M	95	1,2	**128-2135**	5	SCREW-TRUSS HEAD (M6X1X13-MM)	
	96	2	**273-5192**	1	COVER AS-ACCESS	
	97	2	**9X-8256**	2	WASHER (6.6X12X2-MM THK)	
	98	2	**273-5194**	1	SUPPORT AS	
M	99	2	**8T-4127**	12	SCREW-MACHINE (M5X0.8X20-MM)	
M	100	2	**8T-6693**	4	SCREW-MACHINE (M5X0.8X16-MM)	
M	101	2	**095-0736**	1	SCREW-MACHINE (M5X0.8X10-MM)	
M	102	2	**6V-5210**	2	SCREW-MACHINE (M4X0.7X10-MM)	
M	103	2	**095-0755**	2	SCREW-MACHINE (M4X0.07X12-MM)	
	104	3	**121-1125**	4	PLUG-BEZEL	
M	105	3	**095-1207**	4	NUT (M12X1.75-THD)	
M	106	2,3	**8T-4133**	2	NUT (M10X1.5-THD)	
	107	1,2,3	**8T-4224**	9	WASHER-HARD (8.8X16X2-MM THK)	
	108	3	**8T-4223**	4	WASHER-HARD (13.5X25.5X3-MM THK)	

259-7275 **CAB GP-ENCLOSED ROPS** *(contd.)* **i03144685**

NOTE	REF NO	GRAPHIC REF	PART NUMBER	QTY	PART NAME 1 2 3 4 5 6 (PRODUCT LEVEL)	SEE PAGE
	109	2	**207-0207**	1	CABLE AS	
	110	1	**8T-4121**	8	WASHER-HARD (11X21X2.5-MM THK)	
E	111	2	**201-4441**		SEAL (8-CM)	
	112	2	**207-0210**	4	GROMMET	
M	113	2,3	**9X-2042**	75	SCREW-TRUSS HEAD (M6X1X12-MM)	
	114	1	**207-0208**	1	GROMMET-RUBBER	
	115	3	**170-9360**	1	GROMMET	
Y	116	2	*273-5344*	1	WIPER GP-WINDOW	814
M	117	3	**5C-7261**	3	NUT (M8X1.25-THD)	
CY	118	1	**327-6550**	1	MIRROR GP-REAR VIEW	770
Y	119	1	**259-7295**	1	BRACKET GP-MIRROR	665
M	120	1	**8T-4779**	1	BOLT (M16X2X35-MM)	
	121	1	**3B-4510**	1	LOCKWASHER	
	122	1	**9X-8257**	7	WASHER (17.5X30X3.5-MM THK)	
M	123	1	**8T-4190**	6	BOLT (M16X2X25-MM)	
	124	2	**7Y-5434**	2	SPEAKER AS	
					(EACH INCLUDES)	
		2	**7Y-3951**	2	TERMINAL (FEMALE)	
		2	**7Y-3954**	1	CONNECTOR-PLUG	
M	125	2	**6V-9492**	8	SCREW-MACHINE (M4X0.7X25-MM)	
	126	1	**230-0183**	1	CAP	

C-CHANGE FROM PREVIOUS TYPE
E-ORDER BY THE CENTIMETER
M-METRIC PART
Y-SEPARATE ILLUSTRATION

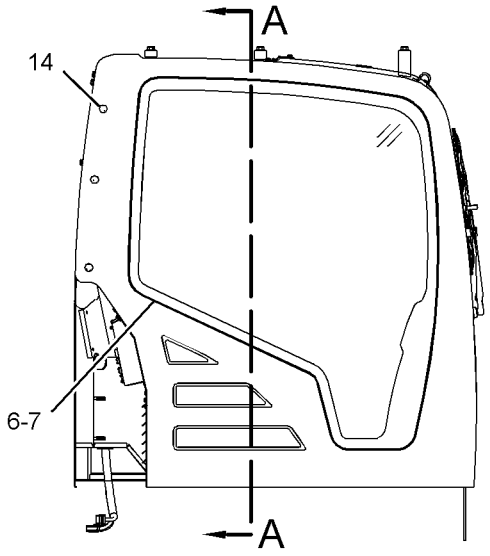

RIGHT SIDE VIEW

REFER TO ALL ILLUSTRATIONS OF THIS GROUP FOR AUXILIARY VIEWS

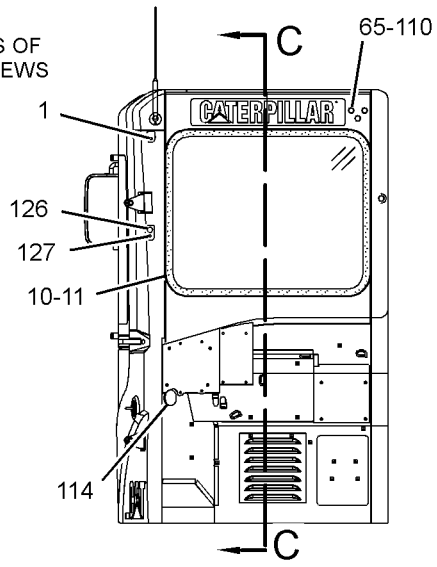

REAR VIEW

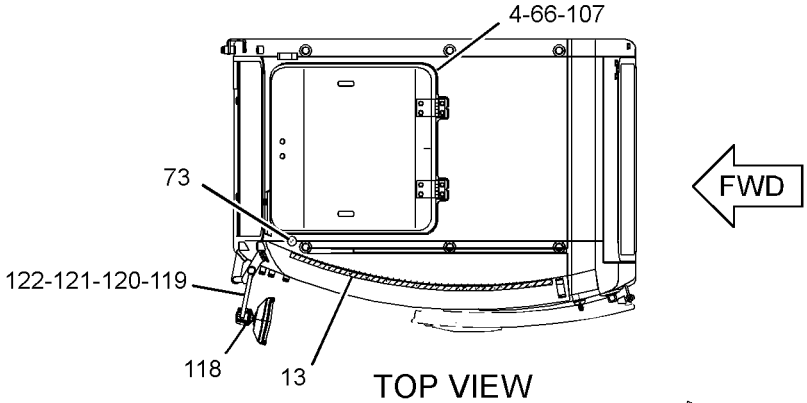

TOP VIEW

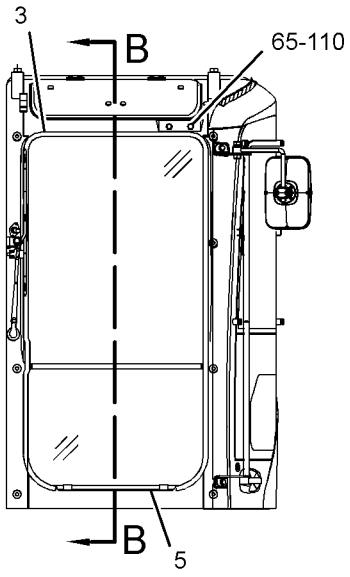

FRONT VIEW

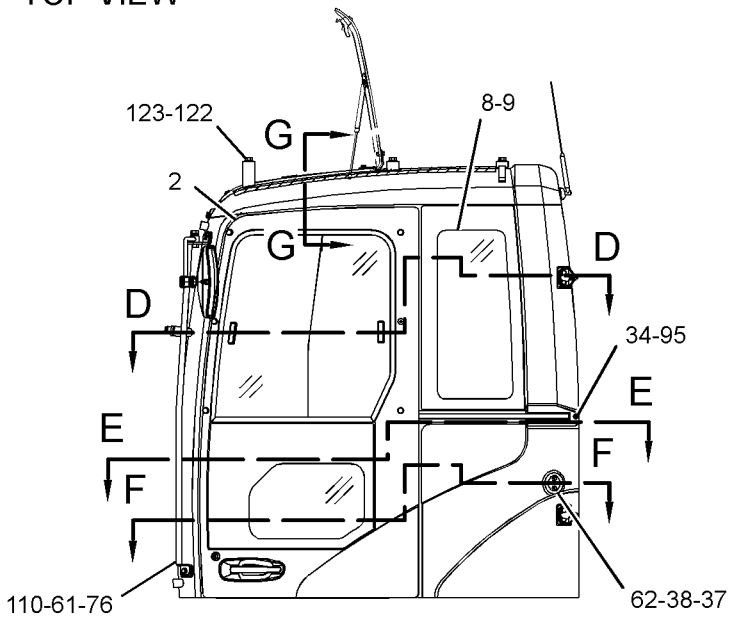

LEFT SIDE VIEW

GRAPHIC #1

g01627445

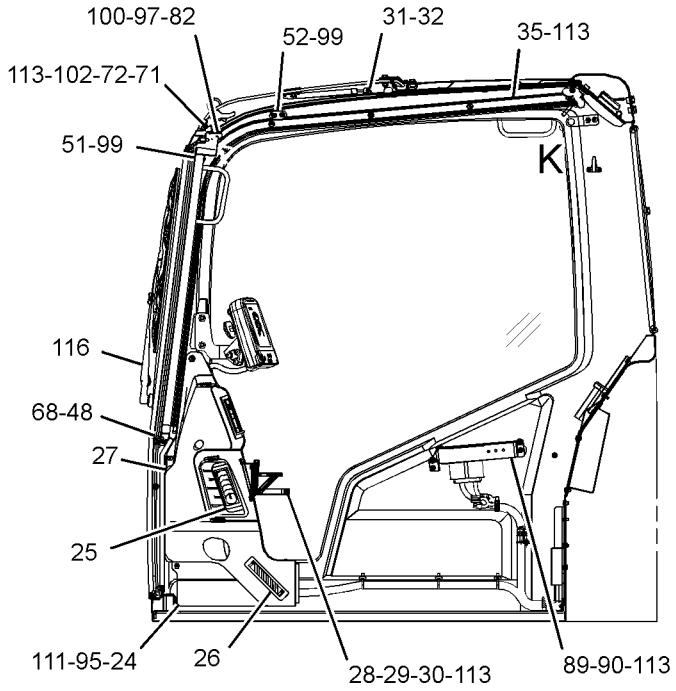

SECTION B-B

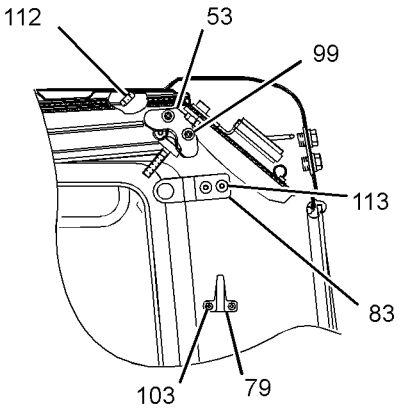

VIEW OF AREA K

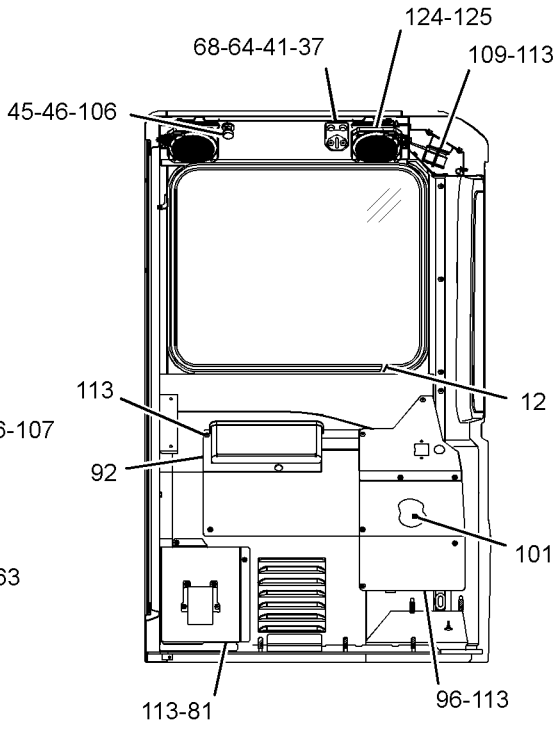

SECTION A-A

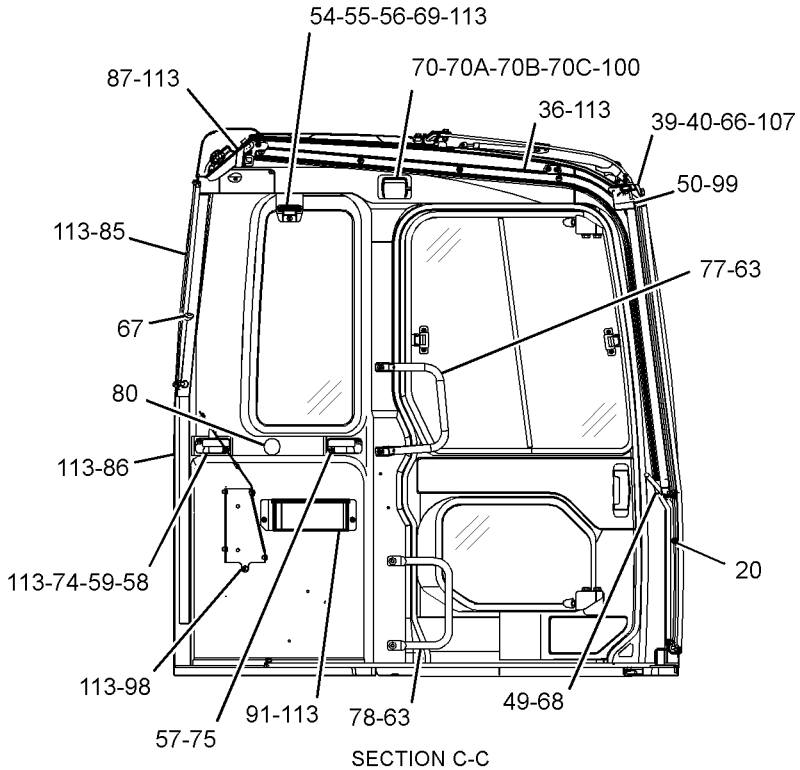

SECTION C-C

GRAPHIC #2

g01504953

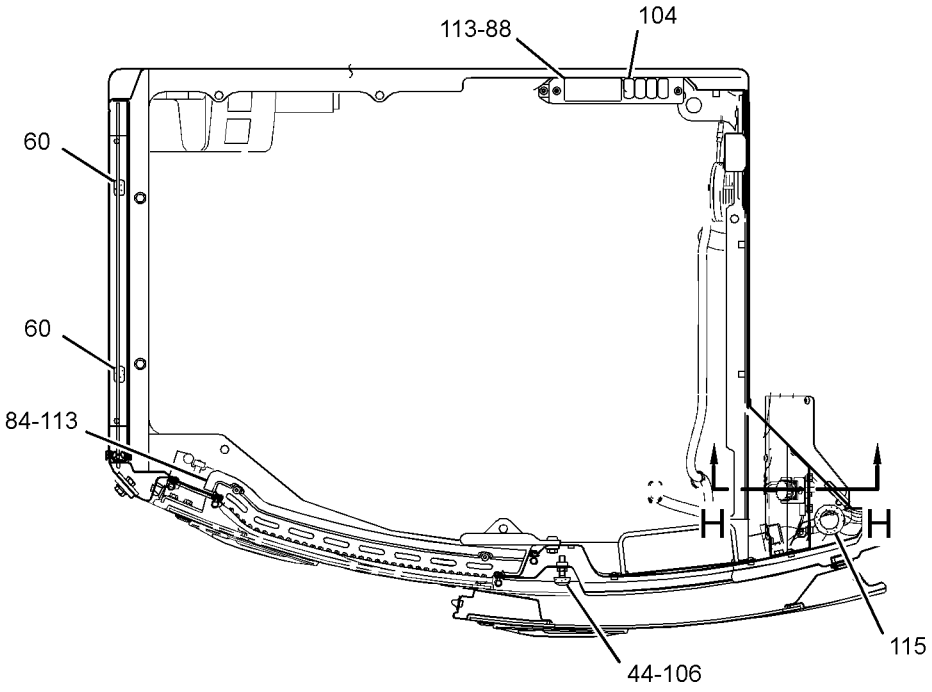

SECTION F-F

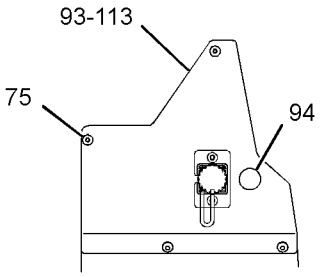

VIEW J-J

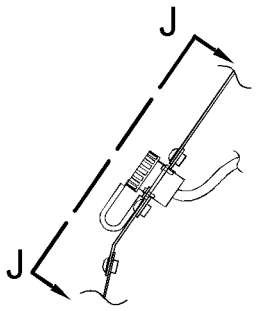

SECTION H-H

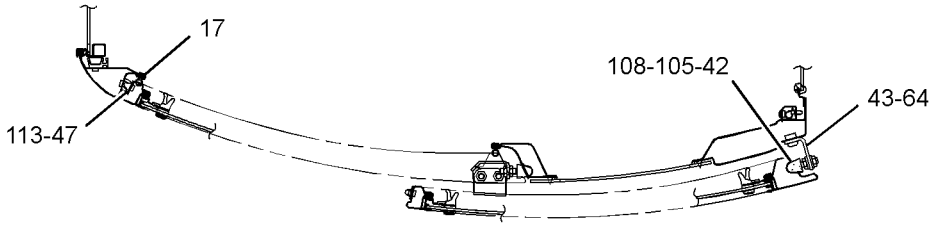

SECTION D-D

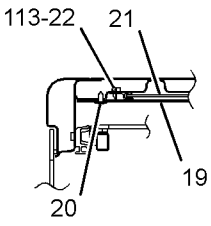

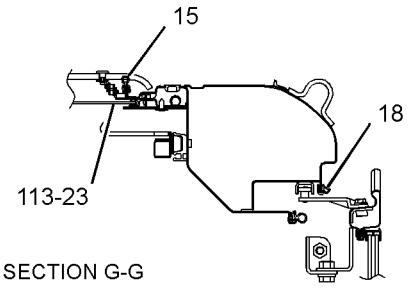

SECTION G-G

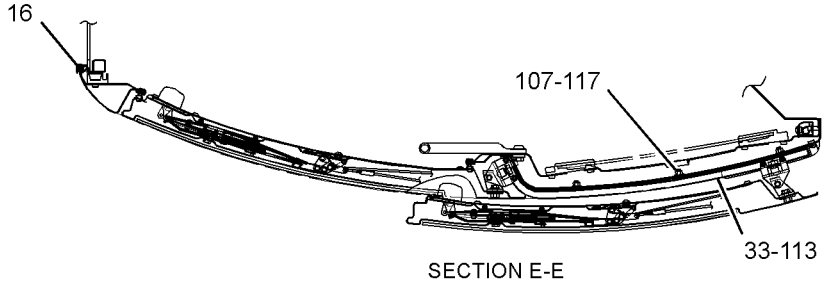

SECTION E-E

GRAPHIC #3 **<END>** g01505354

OPERATOR STATION

279-7776 COMPRESSOR GP-REFRIGERANT

S/N: BYJ1-UP; PDP1-UP

PART OF 279-7768 INSTALLATION AR-ENGINE

SMCS-1802 **i03189602**

NOTE	REF NO	GRAPHIC REF	PART NUMBER	QTY	PART NAME 1 2 3 4 5 6 (PRODUCT LEVEL)	SEE PAGE
	1	1	**118-9863**	1	PULLEY	
	2	1	**201-3888**	1	SPACER	
	3	1	**255-3016**	1	V-BELT (REFRIGERANT COMPRESSOR)	
Y	4	1	**255-3018**	1	PULLEY GP-IDLER	41
	5	1	**259-7245**	1	COMPRESSOR GP-REFRIGERANT	
		1	**9W-0852**	2	PIN-CONNECTOR (14-GA)	
		1	**243-4505**	1	RECEPTACLE AS-CONNECTOR (2-PIN)	
	6	1	**297-7778**	1	BRACKET AS	
	7	1	**5P-4116**	1	WASHER-HARD (8.8X20.5X2-MM THK)	
M	8	1	**7X-2538**	4	BOLT (M8X1.25X100-MM)	
	9	1	**8T-4121**	7	WASHER-HARD (11X21X2.5-MM THK)	
M	10	1	**8T-4172**	3	BOLT (M10X1.5X80-MM)	
M	11	1	**8T-4184**	2	BOLT (M12X1.75X45-MM)	
	12	1	**8T-4223**	2	WASHER-HARD (13.5X25.5X3-MM THK)	
	13	1	**8T-4224**	4	WASHER-HARD (8.8X16X2-MM THK)	
M	14	1	**8T-6466**	4	BOLT (M10X1.5X60-MM)	

M-METRIC PART
Y-SEPARATE ILLUSTRATION

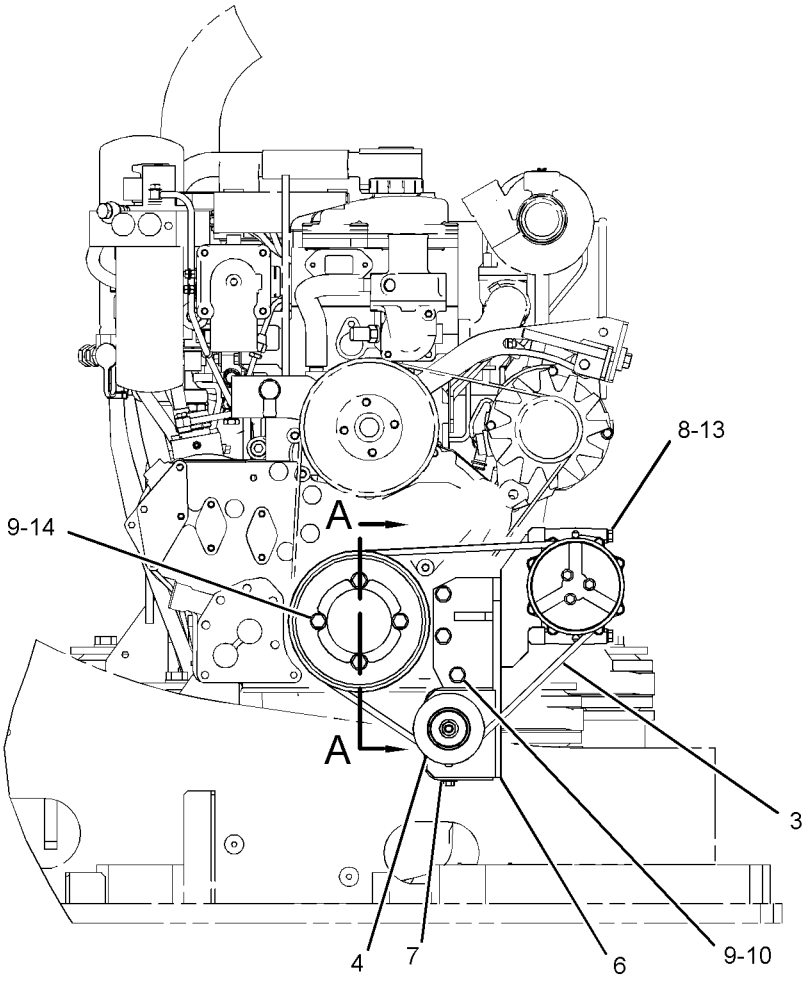

LEFT SIDE VIEW

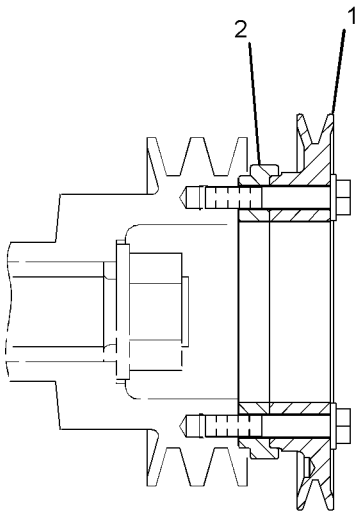

SECTION A-A

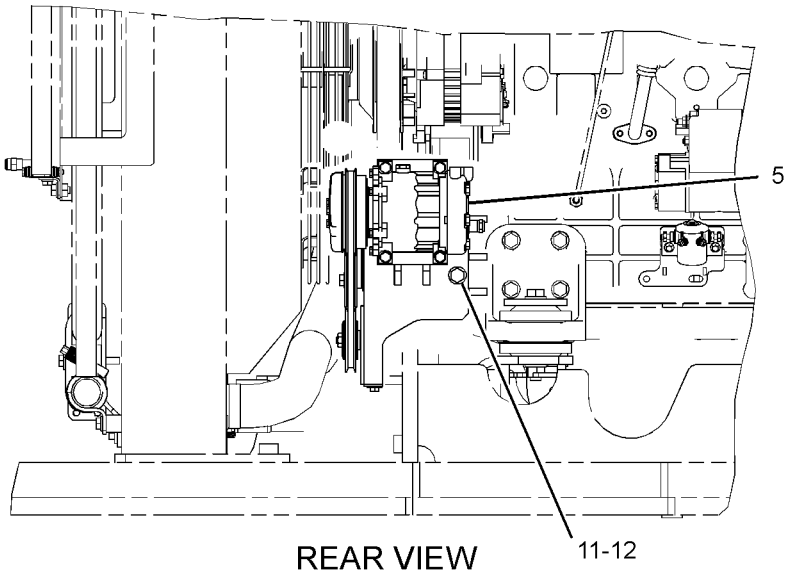

REAR VIEW

GRAPHIC #1 **<END>** g01414079

316-8808 CONDENSER & MTG GP-REFRIGERANT

S/N: BYJ1-UP; PDP1-UP

PART OF 279-7768 INSTALLATION AR-ENGINE

SMCS-1805 **i02954222**

NOTE	REF NO	GRAPHIC REF	PART NUMBER	QTY	PART NAME 1 2 3 4 5 6 (PRODUCT LEVEL)	SEE PAGE
Y	1	1	**316-8809**	1	CONDENSER GP-REFRIGERANT	698
M	2	1	**8T-4200**	6	BOLT (M8X1.25X16-MM)	
	3	1	**8T-4224**	6	WASHER-HARD (8.8X16X2-MM THK)	

M-METRIC PART
Y-SEPARATE ILLUSTRATION

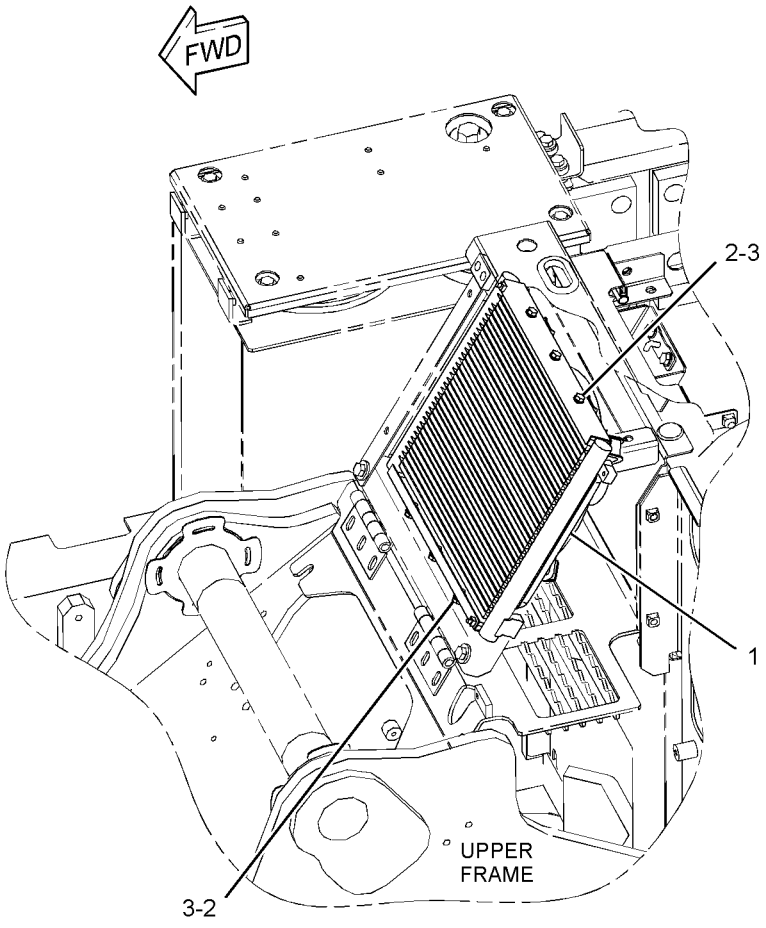

GRAPHIC #1 **<END>** g01507832

OPERATOR STATION

316-8809 CONDENSER GP-REFRIGERANT

S/N: BYJ1-UP; PDP1-UP

PART OF 316-8808 CONDENSER & MTG GP-REFRIGERANT

SMCS-1805 **i02954223**

NOTE	REF NO	GRAPHIC REF	PART NUMBER	QTY	PART NAME 1 2 3 4 5 6 (PRODUCT LEVEL)	SEE PAGE
	1	1	**316-8902**	1	CONDENSER AS-REFRIGERANT	
Y	2	1	**316-8903**	1	MOTOR GP-HYDRAULIC (AIR CONDITIONER CONDENSER)	497
	3	1	**8T-4205**	8	WASHER-HARD (7.2X14.5X2-MM THK)	
M	4	1	**8T-4970**	4	BOLT (M6X1X14-MM)	

M-METRIC PART
Y-SEPARATE ILLUSTRATION

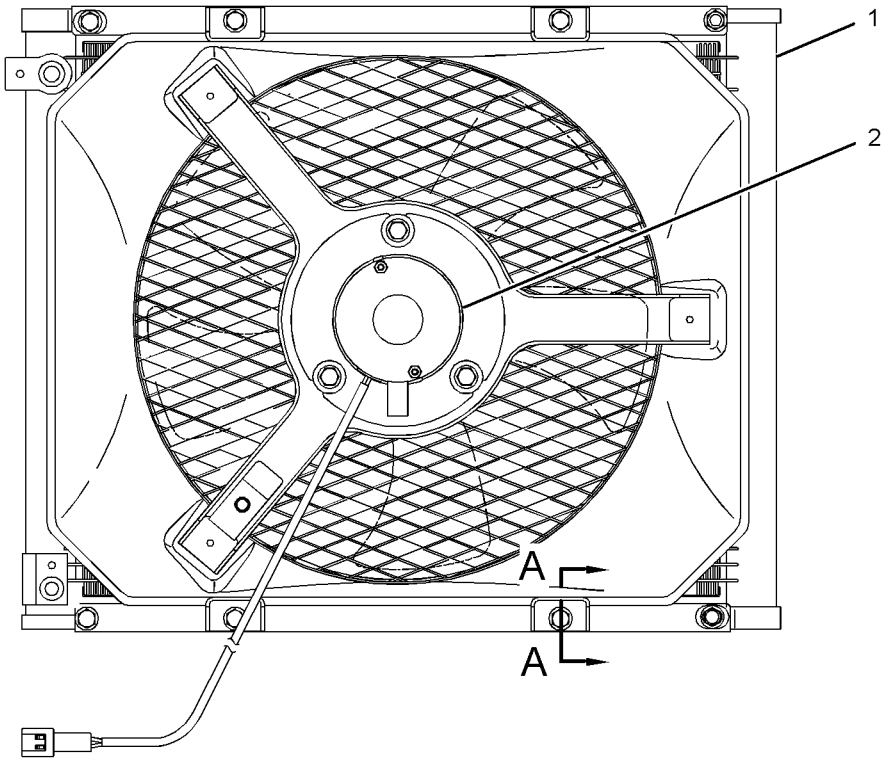

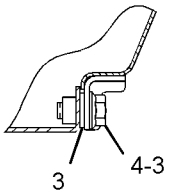

SECTION A-A

GRAPHIC #1 **<END>** g01507864

OPERATOR STATION

259-7246 CONSOLE GP-OPERATOR

S/N: BYJ1-UP; PDP1-UP
PART OF 273-5406 OPERATOR AR

SMCS-5258 **i02706036**

NOTE	REF NO	GRAPHIC REF	PART NUMBER	QTY	PART NAME 1 2 3 4 5 6 (PRODUCT LEVEL)	SEE PAGE
CY	1	1	*284-4569*	1	CONSOLE GP-OPERATOR (LH)	702
Y	2	1	*259-7348*	1	CONSOLE GP-OPERATOR (RH)	700
C	3	1	**7Y-8170**	2	GROMMET	
	4	1	**273-5158**	4	SUPPORT	
C	5	1	**8T-4121**	6	WASHER-HARD (11X21X2.5-MM THK)	
CM	6	1	**8T-4191**	6	BOLT (M10X1.5X16-MM)	
M	7	1	**9X-2043**	16	SCREW-TRUSS HEAD (M6X1X14-MM)	
	8	1	**176-1913**	2	GUARD	
	9	1	**7K-1181**	6	STRAP-CABLE	

C-CHANGE FROM PREVIOUS TYPE
M-METRIC PART
Y-SEPARATE ILLUSTRATION

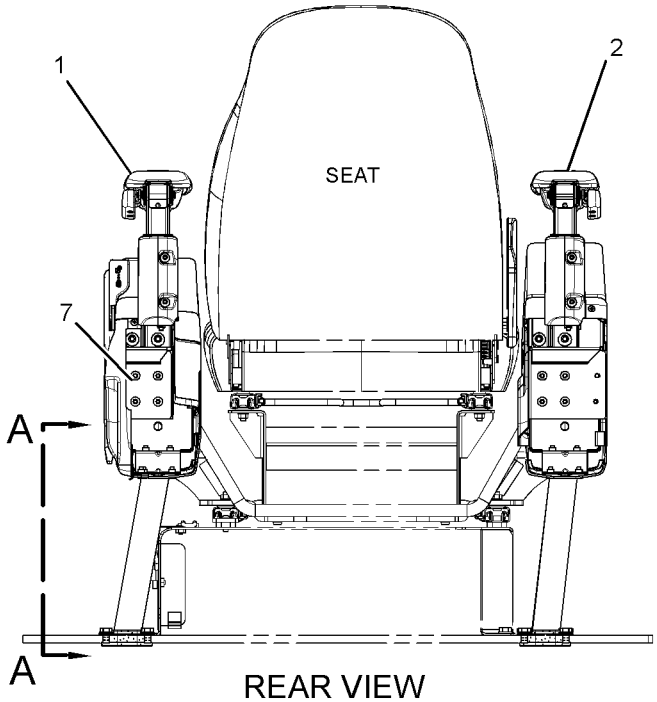

REAR VIEW

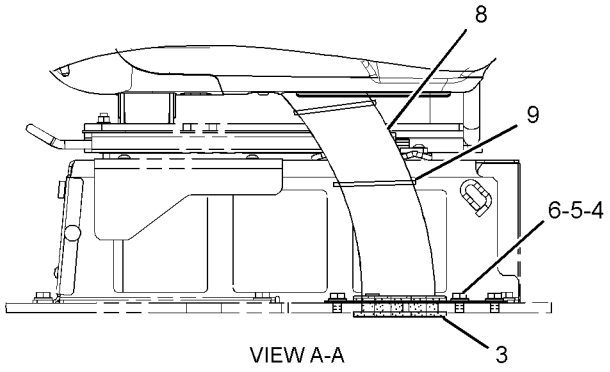

VIEW A-A

GRAPHIC #1 **<END>** g01369532

OPERATOR STATION

259-7348 CONSOLE GP-OPERATOR—RH

S/N: BYJ1-UP; PDP1-UP

PART OF 259-7246 CONSOLE GP-OPERATOR

SMCS-5258 **i02488237**

NOTE	REF NO	GRAPHIC REF	PART NUMBER	QTY	PART NAME 1 2 3 4 5 6 (PRODUCT LEVEL)	SEE PAGE
M	1	1	**128-2135**	4	SCREW-TRUSS HEAD (M6X1X13-MM)	
	2	1	**185-8284**	1	COVER	
	3	1	**234-6579**	2	NUT-SPEED	
	4	1	**234-6580**	2	CAP	
	5	1	**234-6602**	1	COVER	
	6	1	**234-6604**	1	COVER	
	7	1	**234-6608**	1	COVER	
	8	1	**234-6609**	1	COVER	
	9	1	**234-6610**	1	COVER	
	10	1	**235-8914**	4	NUT-SPEED	
	11	1	**235-8966**	2	BASE-MOUNTING	
	12	1	**245-7790**	2	SCREW-TAPPING	
	13	1	**245-7926**	1	SUPPORT AS	
	14	1	**245-7948**	4	SCREW-TAPPING	
Y	15	1	**259-7346**	1	ARMREST GP (RH)	663
M	16	1	**9X-2041**	3	SCREW-TRUSS HEAD (M10X1.5X20-MM)	

M-METRIC PART
Y-SEPARATE ILLUSTRATION

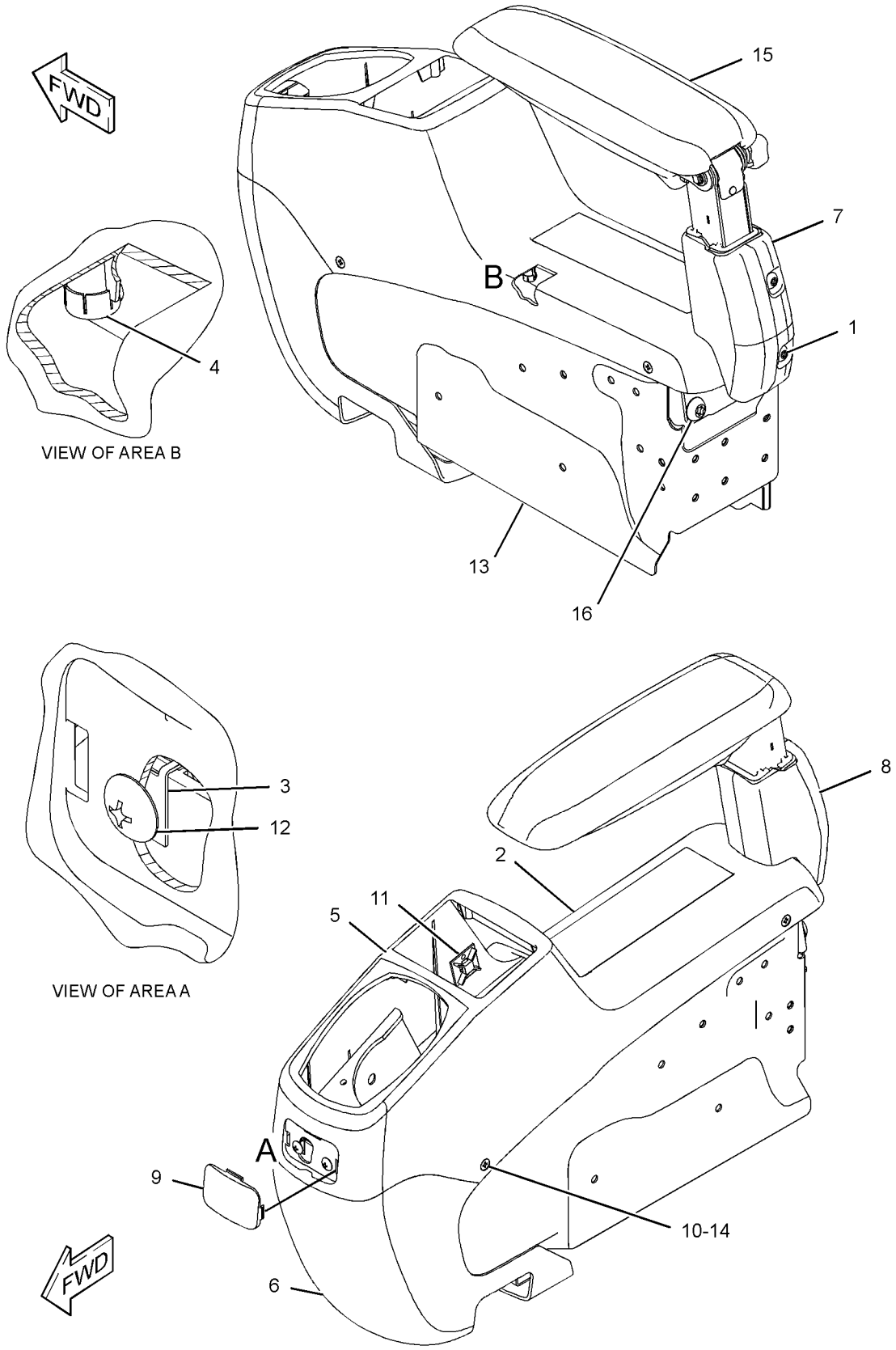

GRAPHIC #1 **<END>** g01217107

OPERATOR STATION

284-4569 CONSOLE GP-OPERATOR–LH

S/N: BYJ1-UP; PDP1-UP

PART OF 259-7246 CONSOLE GP-OPERATOR

SMCS-5258 **i02706086**

NOTE	REF NO	GRAPHIC REF	PART NUMBER	QTY	PART NAME 1 2 3 4 5 6 (PRODUCT LEVEL)	SEE PAGE
M	1	1	**128-2135**	5	SCREW-TRUSS HEAD (M6X1X13-MM)	
	2	1	**171-7325**	3	SCREW-TAPPING	
	3	1	**234-6579**	6	NUT-SPEED	
	4	1	**234-6580**	4	CAP	
	5	1	**234-6603**	1	COVER	
	6	1	**234-6605**	1	COVER	
	7	1	**234-6608**	1	COVER	
	8	1	**234-6609**	1	COVER	
	9	1	**234-6610**	1	COVER	
	10	1	**234-6612**	1	COVER	
	11	1	**234-6614**	1	COVER	
	12	1	**235-8914**	4	NUT-SPEED	
	13	1	**235-8965**	1	GUARD	
	14	1	**245-7790**	3	SCREW-TAPPING	
Y	15	1	**245-7932**	1	SWITCH GP-POSITION (HYDRAULIC LOCKOUT)	162
	16	1	**245-7948**	7	SCREW-TAPPING	
	17	1	**259-7202**	1	ASHTRAY	
Y	18	1	**259-7347**	1	ARMREST GP (LH)	664
	19	1	**284-4570**	1	SUPPORT AS	
M	20	1	**9X-2041**	3	SCREW-TRUSS HEAD (M10X1.5X20-MM)	
M	21	1	**9X-2042**	2	SCREW-TRUSS HEAD (M6X1X12-MM)	

M-METRIC PART
Y-SEPARATE ILLUSTRATION

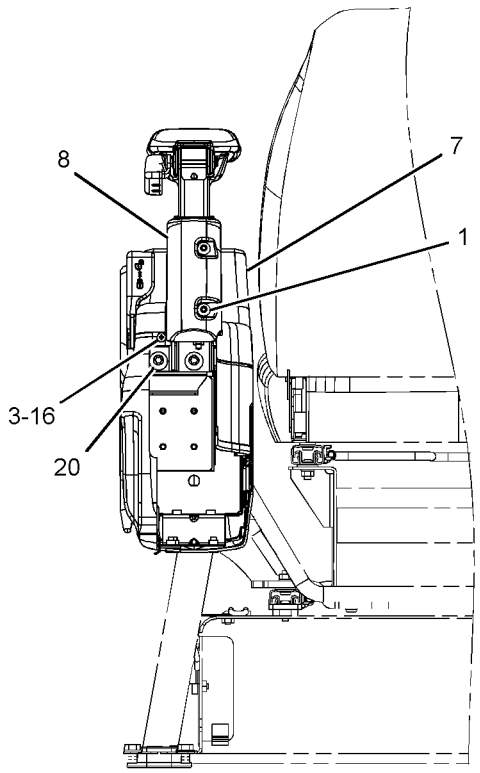

REAR VIEW

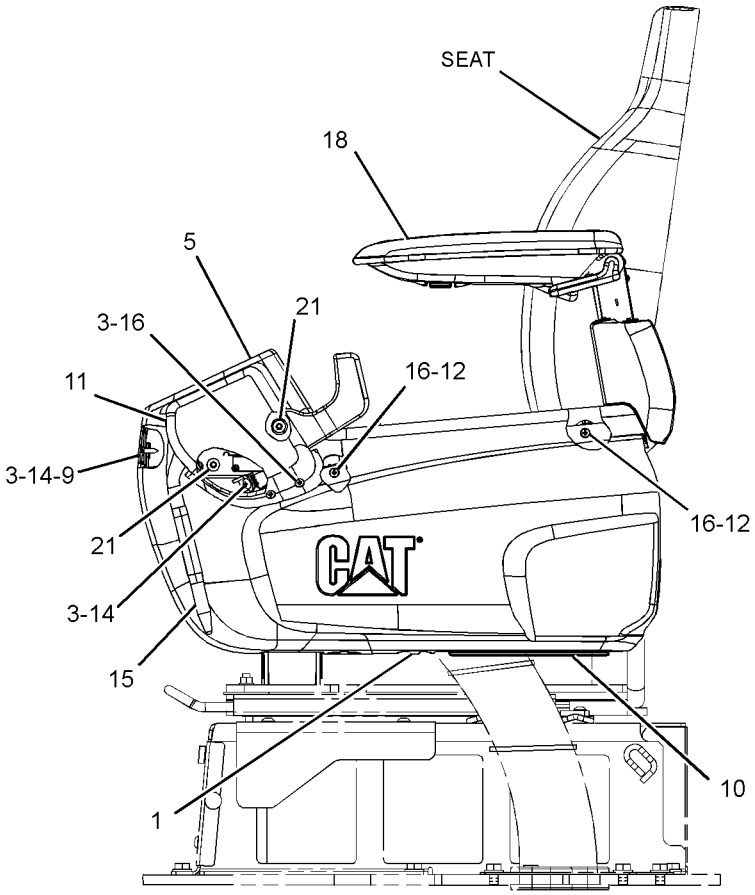

LEFT SIDE VIEW

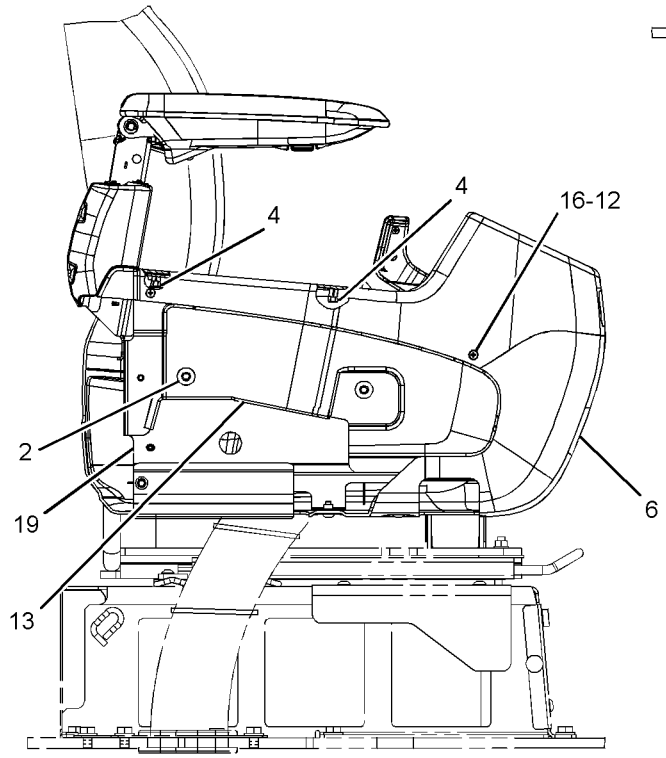

RIGHT SIDE VIEW

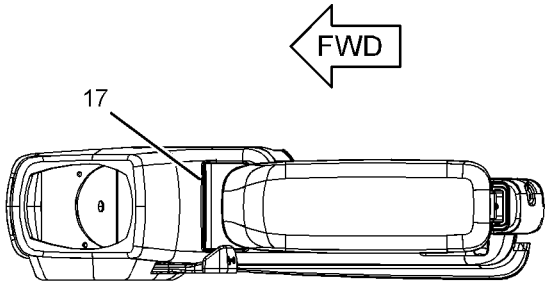

TOP VIEW

GRAPHIC #1 **<END>** g01369655

OPERATOR STATION

259-7598 CONTROL & MTG GP-JOYSTICK—WITH SLIDE CONTROL

S/N: BYJ1-UP; PDP1-UP
PART OF 255-5843 CONTROL AR-AUXILIARY
AN ATTACHMENT

SMCS-5063, 5705 **i02431334**

NOTE	REF NO	GRAPHIC REF	PART NUMBER	QTY	PART NAME 1 2 3 4 5 6 (PRODUCT LEVEL)	SEE PAGE
Y	1	1	**259-7763**	1	CONTROL GP-JOYSTICK (LH)	720
Y	2	1	**259-7762**	1	CONTROL GP-JOYSTICK (RH)	719
M	3	1	**6V-7357**	6	BOLT (M6X1X25-MM)	
	4	1	**9X-8256**	6	WASHER (6.6X12X2-MM THK)	

M-METRIC PART
Y-SEPARATE ILLUSTRATION

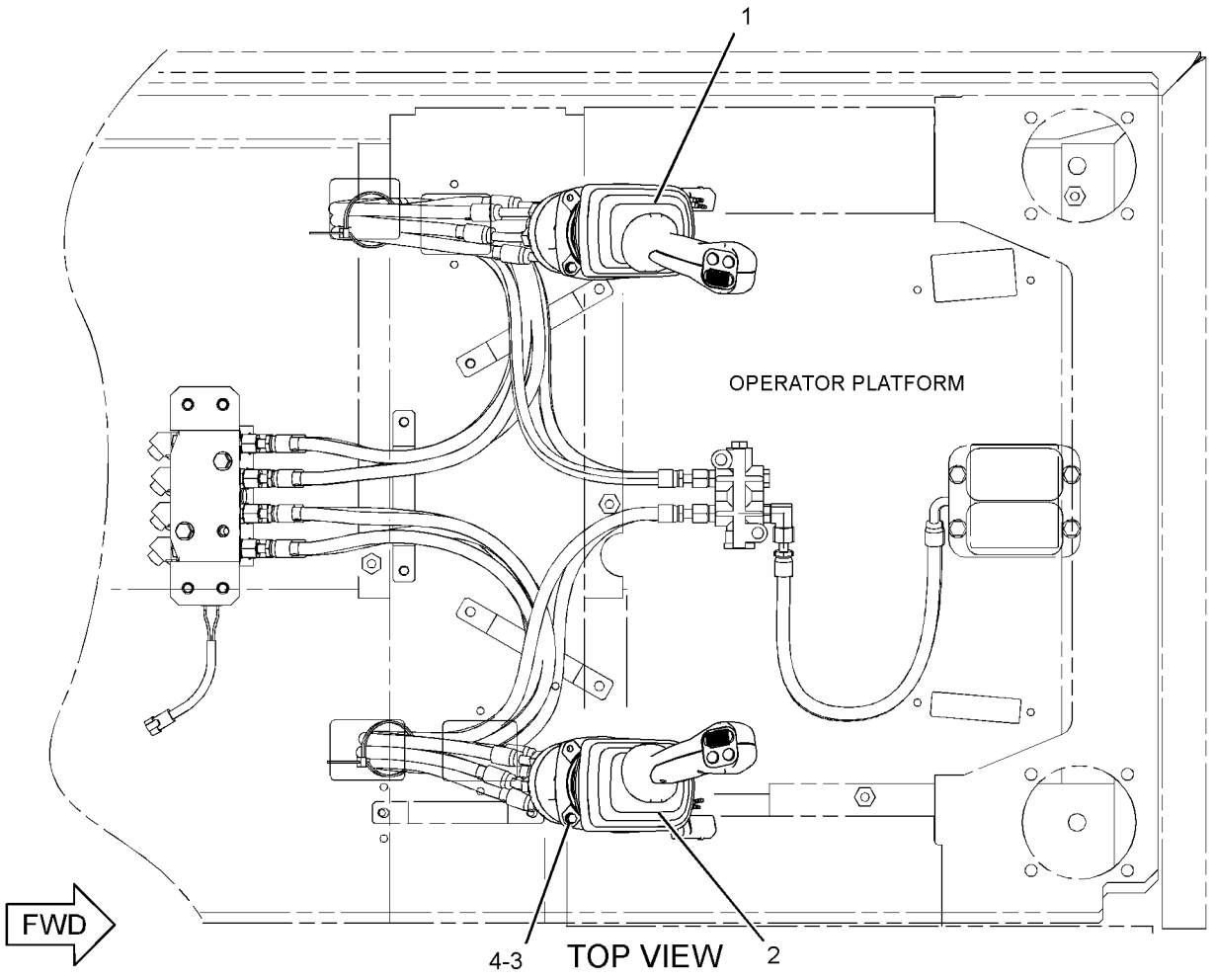

GRAPHIC #1

<END>

g01236540

259-7599 CONTROL & MTG GP-JOYSTICK–
3-BUTTON, TRIGGER SWITCH
S/N: BYJ1-UP; PDP1-UP
PART OF 255-5844 CONTROL AR-AUXILIARY
AN ATTACHMENT

SMCS-5063, 5705 **i03040444**

NOTE	REF NO	GRAPHIC REF	PART NUMBER	QTY	PART NAME 1 2 3 4 5 6 (PRODUCT LEVEL)	SEE PAGE
Y	1	1	**259-7765**	1	CONTROL GP-JOYSTICK (LH)	722
Y	2	1	**259-7764**	1	CONTROL GP-JOYSTICK (RH)	721
M	3	1	**6V-7357**	6	BOLT (M6X1X25-MM)	
	4	1	**9X-8256**	6	WASHER (6.6X12X2-MM THK)	

M-METRIC PART
Y-SEPARATE ILLUSTRATION

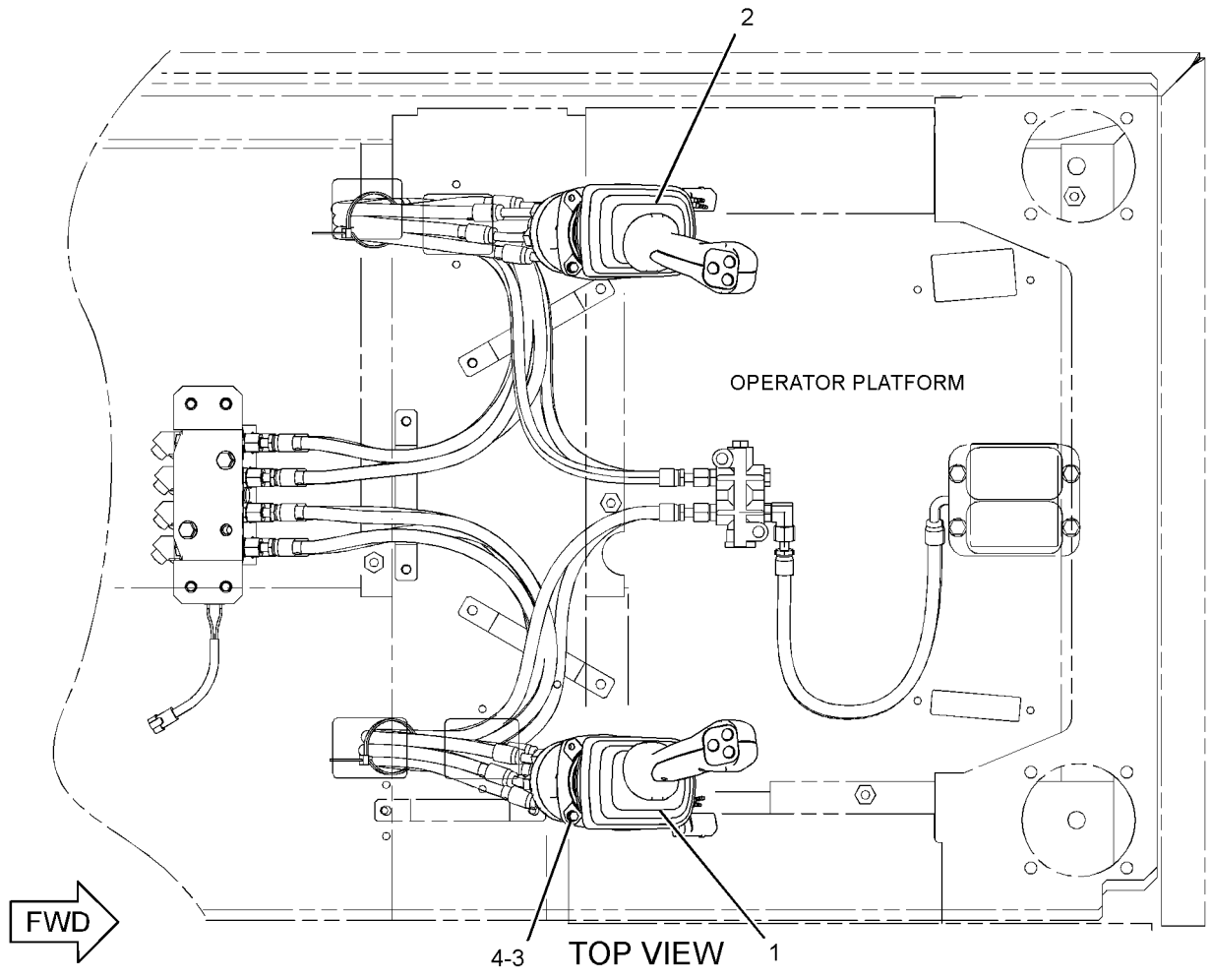

GRAPHIC #1

<END>

g01263586

OPERATOR STATION

310-0078 CONTROL & MTG GP-JOYSTICK

S/N: BYJ1-UP; PDP1-UP
AN ATTACHMENT

SMCS-5063, 5705 **i03031921**

NOTE	REF NO	GRAPHIC REF	PART NUMBER	QTY	PART NAME 1 2 3 4 5 6 (PRODUCT LEVEL)	SEE PAGE
Y	1	1	**297-0532**	1	CONTROL GP-JOYSTICK (RH)	723
Y	2	1	**297-0533**	1	CONTROL GP-JOYSTICK (LH)	724
M	3	1	**6V-7357**	6	BOLT (M6X1X25-MM)	
	4	1	**9X-8256**	6	WASHER (6.6X12X2-MM THK)	

M-METRIC PART
Y-SEPARATE ILLUSTRATION

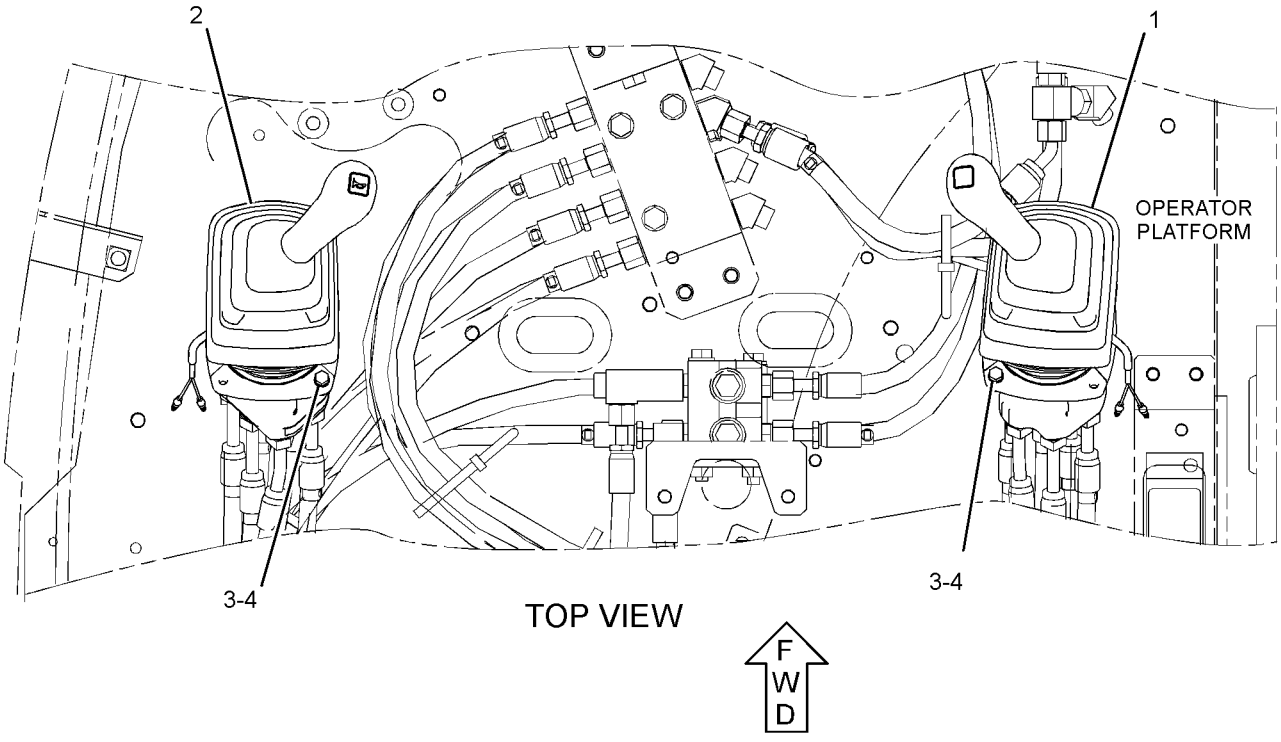

GRAPHIC #1 **<END>** g01442248

OPERATOR STATION

323-7698 CONTROL & MTG GP-JOYSTICK—WITH SLIDE CONTROL

S/N: BYJ1-UP; PDP1-UP
PART OF 323-7766 CONTROL AR-AUXILIARY
AN ATTACHMENT

SMCS-5063, 5705 **i03156386**

NOTE	REF NO	GRAPHIC REF	PART NUMBER	QTY	PART NAME 1 2 3 4 5 6 (PRODUCT LEVEL)	SEE PAGE
Y	1	1	**323-7753**	1	CONTROL GP-PILOT OPERATED HYD (RH)	728
Y	2	1	**323-7754**	1	CONTROL GP-PILOT OPERATED HYD (LH)	729
M	3	1	**6V-7357**	6	BOLT (M6X1X25-MM)	
	4	1	**9X-8256**	6	WASHER (6.6X12X2-MM THK)	

M-METRIC PART
Y-SEPARATE ILLUSTRATION

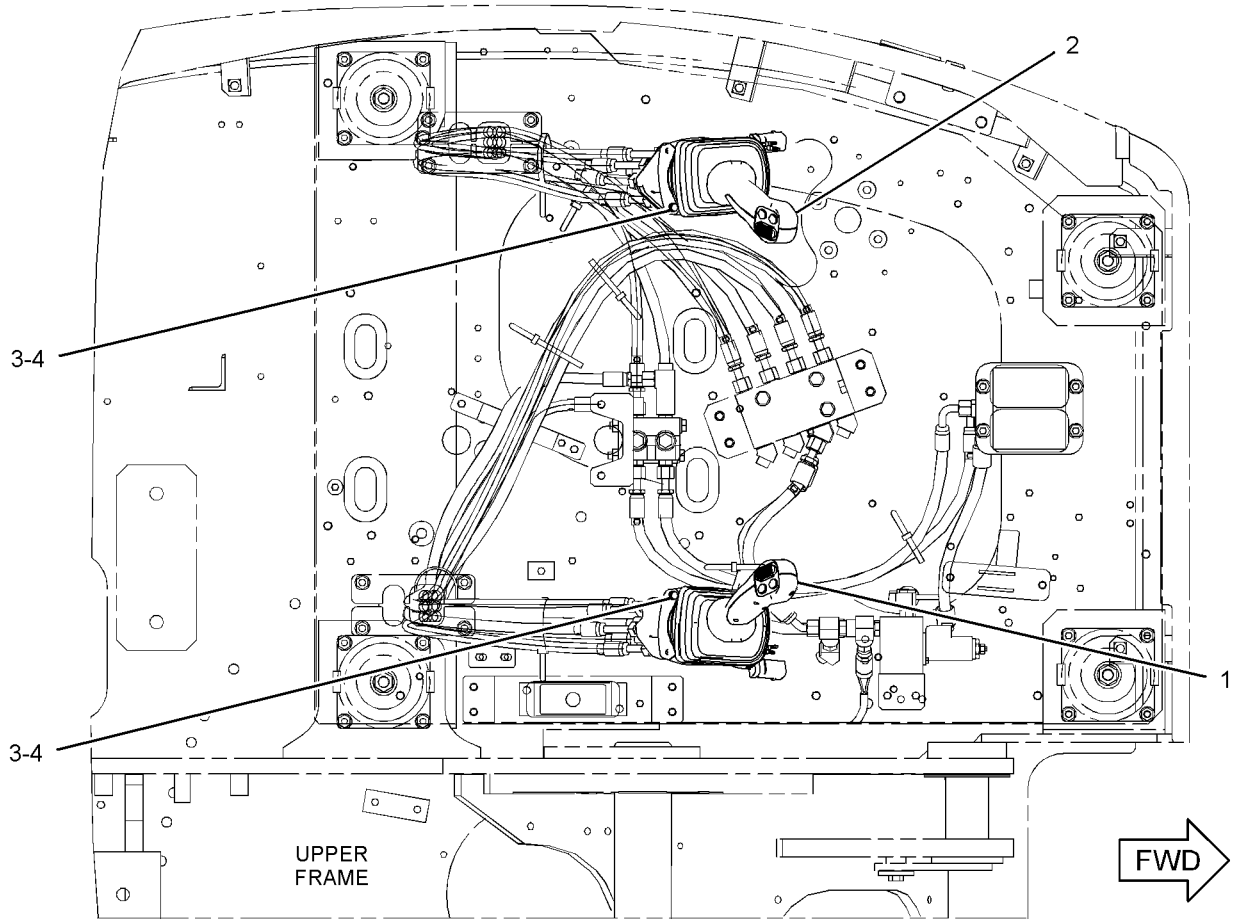

TOP VIEW

GRAPHIC #1 **<END>** g01623801

OPERATOR STATION

323-7699 CONTROL & MTG GP-JOYSTICK—4-SWITCH, JOYSTICK

S/N: BYJ1-UP; PDP1-UP
PART OF 323-7767 CONTROL AR-AUXILIARY
AN ATTACHMENT

SMCS-5063, 5705 **i03149702**

NOTE	REF NO	GRAPHIC REF	PART NUMBER	QTY	PART NAME 1 2 3 4 5 6 (PRODUCT LEVEL)	SEE PAGE
Y	1	1	**323-7755**	1	CONTROL GP-JOYSTICK (RH)	725
Y	2	1	**323-7756**	1	CONTROL GP-JOYSTICK (LH)	726
M	3	1	**6V-7357**	6	BOLT (M6X1X25-MM)	
	4	1	**9X-8256**	6	WASHER (6.6X12X2-MM THK)	

M-METRIC PART
Y-SEPARATE ILLUSTRATION

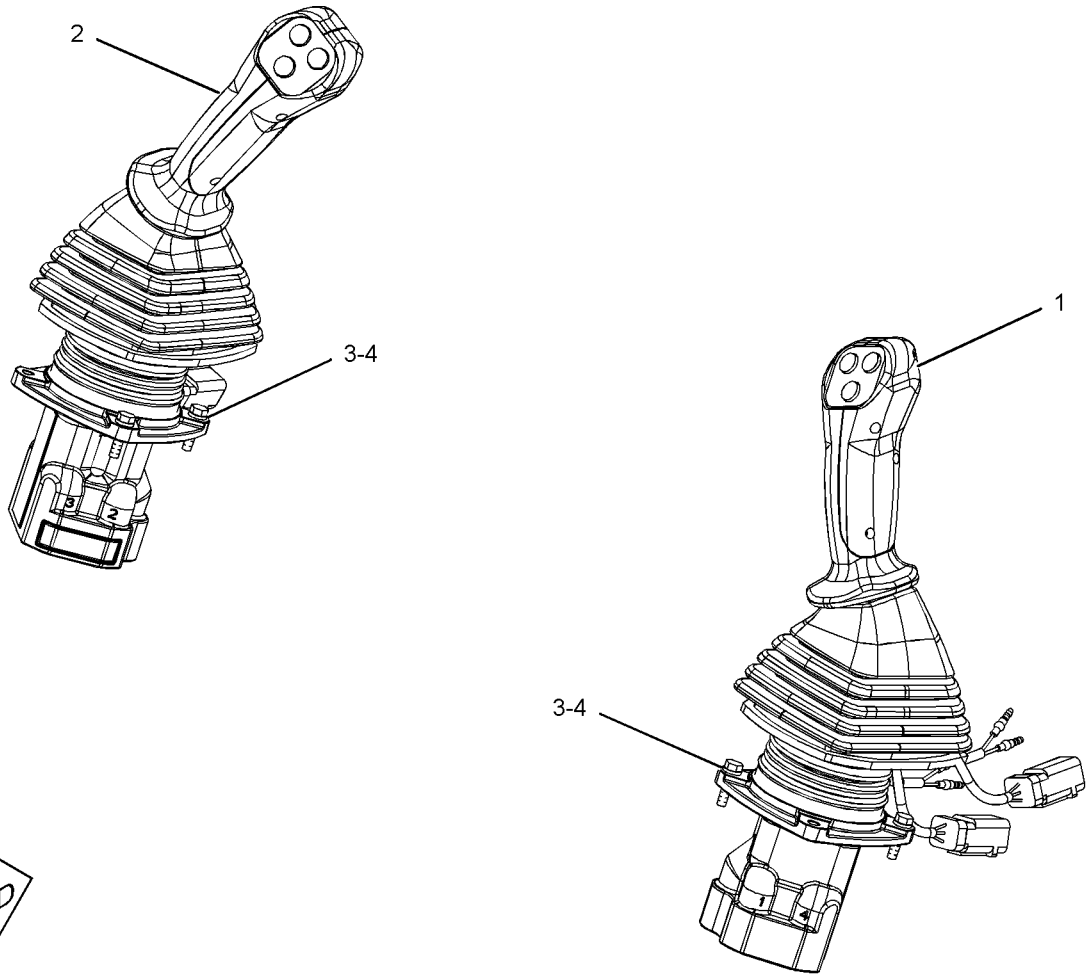

GRAPHIC #1 **<END>** g01627899

OPERATOR STATION

221-8885 CONTROL & MTG GP-PEDAL—RH

S/N: BYJ1-UP; PDP1-UP
PART OF 259-7857 CONTROL AR-AUXILIARY
AN ATTACHMENT

SMCS-5462 **i02841493**

NOTE	REF NO	GRAPHIC REF	PART NUMBER	QTY	PART NAME 1 2 3 4 5 6 (PRODUCT LEVEL)	SEE PAGE
	1	1	**5I-7090**	1	CHAIN AS	
	2	1	**122-9611**	1	PEDAL-RUBBER (RH)	
	3	1	**128-2173**	1	PIN	
	4	1	**153-8719**	1	PEDAL AS	
CY	5	1	**309-5808**	1	CONTROL GP-PEDAL (ELECTRIC)	727
	6	1	**227-7736**	1	SUPPORT AS	
M	7	1	**095-0735**	2	SCREW-MACHINE (M5X0.8X8-MM)	
M	8	1	**7X-2536**	2	BOLT (M8X1.25X14-MM)	
	9	1	**8T-0114**	1	PIN-SPRING	
	10	1	**8T-4121**	3	WASHER-HARD (11X21X2.5-MM THK)	
M	11	1	**8T-4136**	2	BOLT (M10X1.5X25-MM)	
M	12	1	**8T-4191**	1	BOLT (M10X1.5X16-MM)	
	13	1	**8T-4224**	2	WASHER-HARD (8.8X16X2-MM THK)	

C-CHANGE FROM PREVIOUS TYPE
M-METRIC PART
Y-SEPARATE ILLUSTRATION

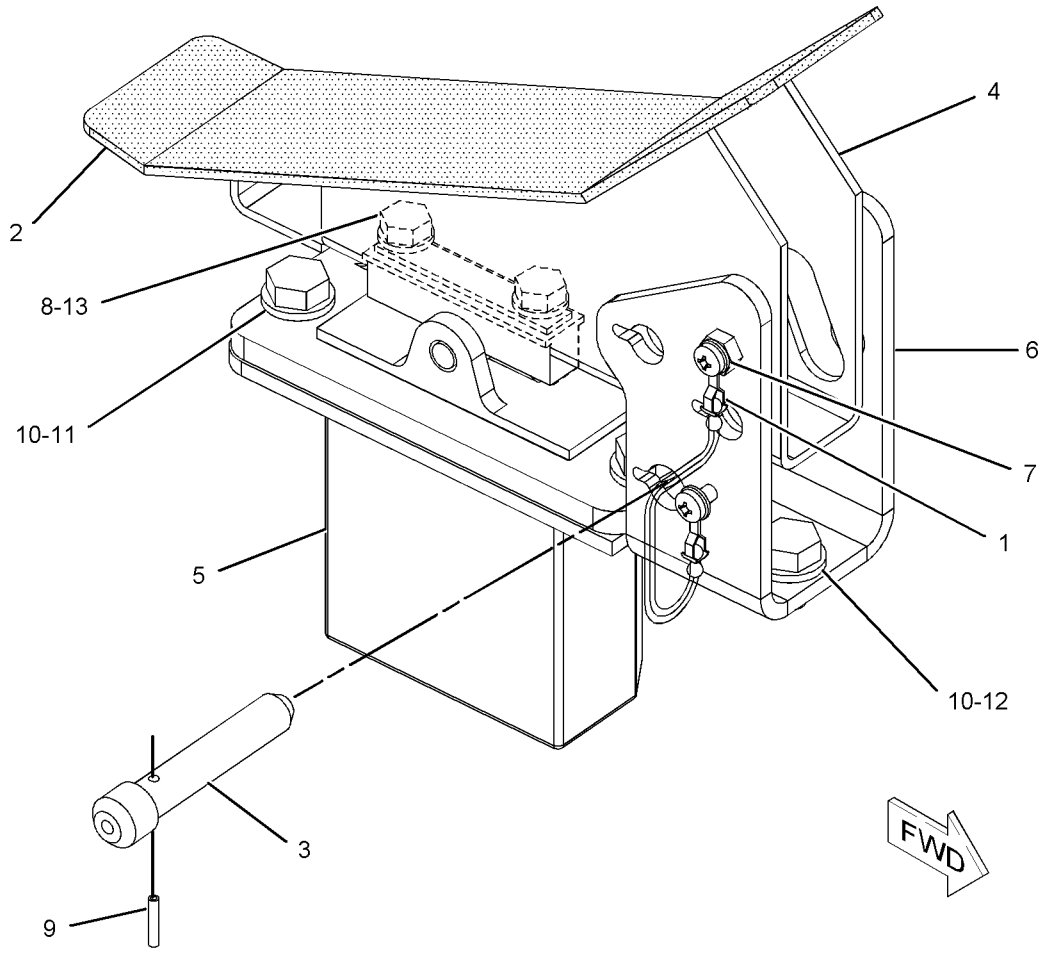

GRAPHIC #1 **<END>** g01073054

OPERATOR STATION

316-8852 CONTROL GP-BLADE

S/N: BYJ1-UP; PDP1-UP
PART OF 260-7212, 260-7213 INSTALLATION AR-AUXILIARY
AN ATTACHMENT

SMCS-5063 **i02957163**

NOTE	REF NO	GRAPHIC REF	PART NUMBER	QTY	PART NAME 1 2 3 4 5 6 (PRODUCT LEVEL)	SEE PAGE
	1	1	**178-5528**	1	KNOB	
	2	1	**189-2816**	1	SUPPORT AS	
Y	3	1	**190-7695**	1	VALVE GP-PILOT	561
	4	1	**273-5160**	1	LEVER AS	
	5	1	**316-8863**	1	INSULATION	
	6	1	**8T-4121**	6	WASHER-HARD (11X21X2.5-MM THK)	
M	7	1	**8T-4137**	4	BOLT (M10X1.5X20-MM)	
M	8	1	**8T-4139**	1	BOLT (M12X1.75X30-MM)	
M	9	1	**8T-4195**	2	BOLT (M10X1.5X30-MM)	
	10	1	**8T-4223**	1	WASHER-HARD (13.5X25.5X3-MM THK)	

M-METRIC PART
Y-SEPARATE ILLUSTRATION

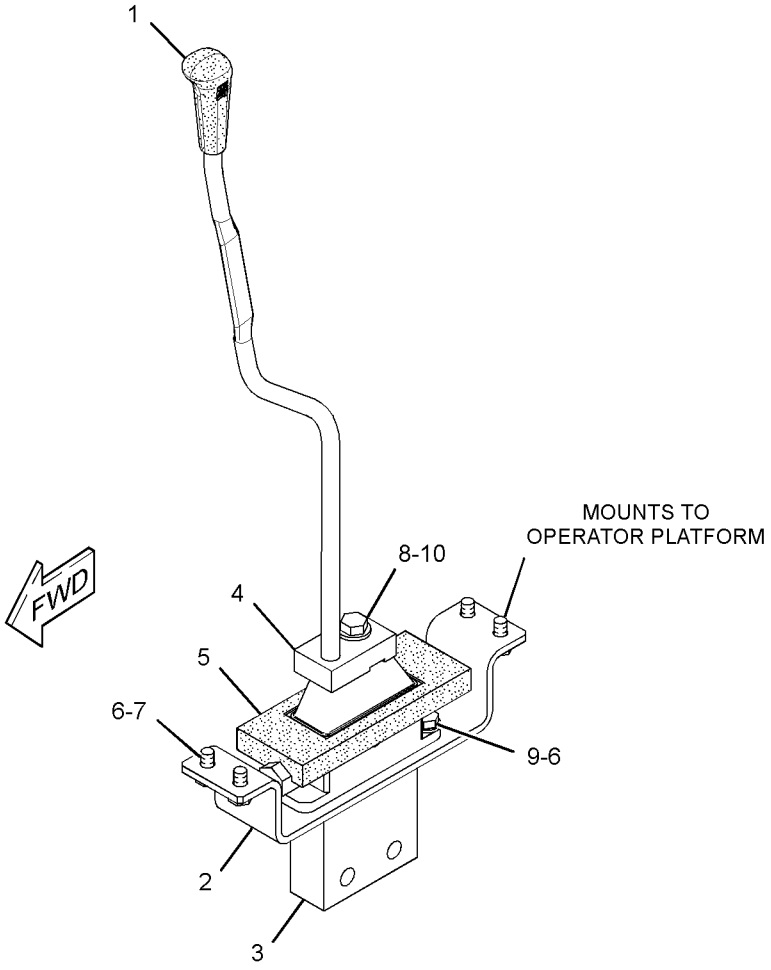

GRAPHIC #1 **<END>** g01508613

OPERATOR STATION

259-7859 CONTROL GP-FOOT—WORK TOOL

S/N: BYJ1-UP; PDP1-UP
PART OF 259-7858 CONTROL AR-AUXILIARY
AN ATTACHMENT

SMCS-1435 **i03010031**

NOTE	REF NO	GRAPHIC REF	PART NUMBER	QTY	PART NAME 1 2 3 4 5 6 (PRODUCT LEVEL)	SEE PAGE
	1	1	*205-1339*	1	SWITCH GP-PEDAL (WORK TOOL)	
		1	**2Q-4703**	1	SWITCH AS-FOOT	
		1	**205-1340**	1	HARNESS AS-OPERATOR CONTROLS	
		1	**2L-8075**	2	TERMINAL (14-GA TO 16-GA, NO. 8 SCREW)	
		1	**155-2270**	1	KIT-CONNECTING PLUG (2-PIN)	
					(INCLUDES PLUG AS,WEDGE & INTERFACE SEAL)	
	2	1	**270-5729**	1	COVER	
	3	1	**1A-0621**	1	GROMMET	
	4	1	**8T-4121**	2	WASHER-HARD (11X21X2.5-MM THK)	
M	5	1	**8T-4191**	2	BOLT (M10X1.5X16-MM)	

M-METRIC PART

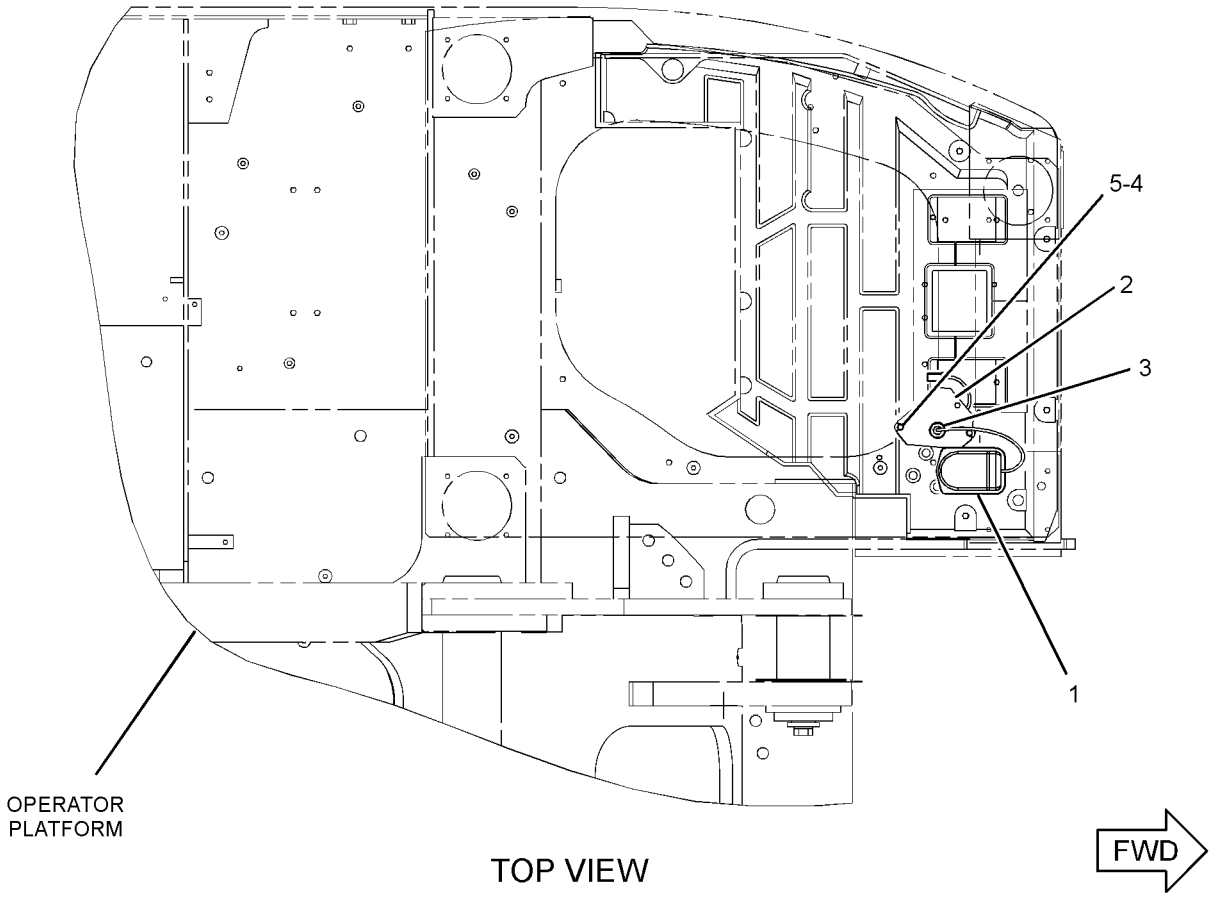

TOP VIEW

GRAPHIC #1 **<END>** g01265322

OPERATOR STATION

235-8969 CONTROL GP-HANDLE—JOYSTICK, LH

S/N: BYJ1-UP; PDP1-UP

PART OF 297-0533 CONTROL GP-JOYSTICK

AN ATTACHMENT

SMCS-5705 **i02923993**

NOTE	REF NO	GRAPHIC REF	PART NUMBER	QTY	PART NAME 1 2 3 4 5 6 (PRODUCT LEVEL)	SEE PAGE
	1	1	**124-4010**	1	LEVER	
	2	1	**235-8971**	1	BOOT	
	3	1	**245-7842**	1	KNOB AS	
M		1	**6I-5298**	1	SCREW-TAPPING	
		1	**124-4009**	1	SHAFT	
		1	**222-0225**	1	SWITCH AS-PUSH BUTTON (HORN)	
M	4	1	**096-2617**	2	SCREW-MACHINE (M5X0.8X6-MM)	

M-METRIC PART

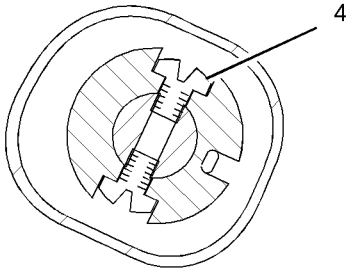

SECTION B-B

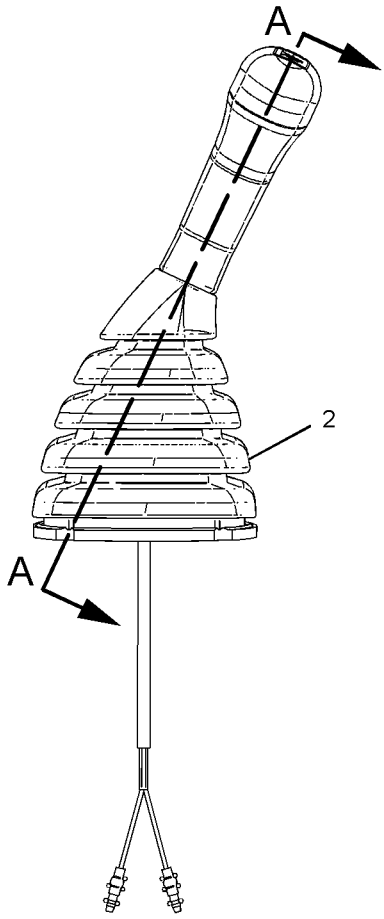

LEFT SIDE VIEW

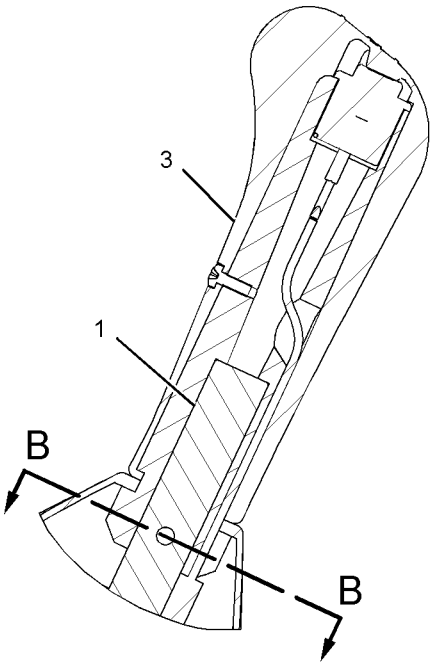

SECTION A-A

GRAPHIC #1 **<END>** g01082395

OPERATOR STATION

235-8970 CONTROL GP-HANDLE–JOYSTICK, RH

S/N: BYJ1-UP; PDP1-UP
PART OF 297-0532 CONTROL GP-JOYSTICK
AN ATTACHMENT

SMCS-5705 **i02924011**

NOTE	REF NO	GRAPHIC REF	PART NUMBER	QTY	PART NAME 1 2 3 4 5 6 (PRODUCT LEVEL)	SEE PAGE
	1	1	**124-4010**	1	LEVER	
	2	1	**235-8972**	1	BOOT	
	3	1	**245-7844**	1	KNOB AS	
M		1	**6I-5298**	1	SCREW-TAPPING	
		1	**124-4009**	1	SHAFT	
		1	**222-0225**	1	SWITCH AS-PUSH BUTTON (MANUAL LOW IDLE)	
M	4	1	**096-2617**	2	SCREW-MACHINE (M5X0.8X6-MM)	

M-METRIC PART

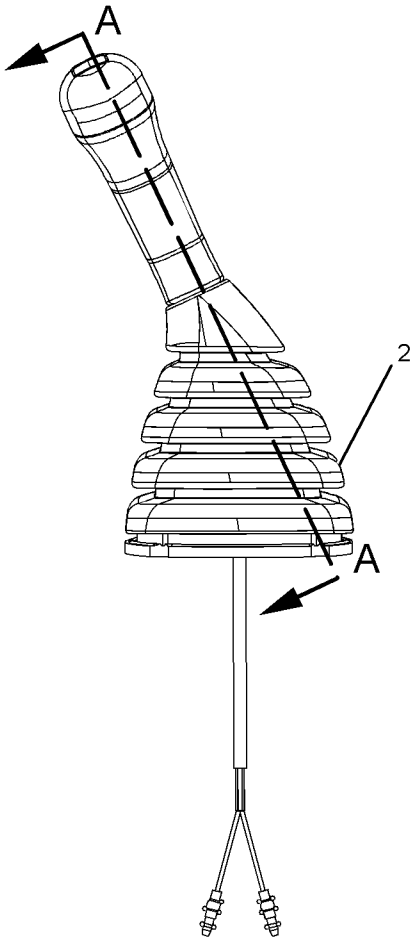

RIGHT SIDE VIEW

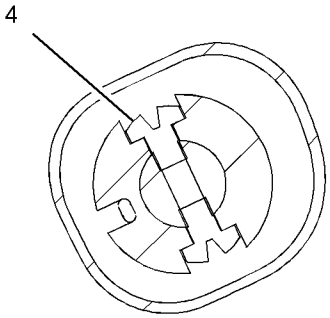

SECTION B-B

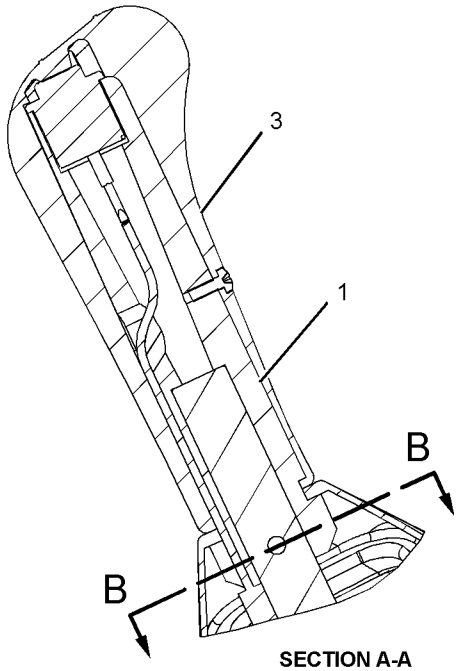

SECTION A-A

GRAPHIC #1 **<END>** g01082427

260-2109 CONTROL GP-HANDLE—JOYSTICK, RH

S/N: BYJ1-UP; PDP1-UP
2-BUTTON, SLIDE, TRIGGER SW
PART OF 259-7762 CONTROL GP-JOYSTICK
AN ATTACHMENT

SMCS-5705 **i02865889**

NOTE	REF NO	GRAPHIC REF	PART NUMBER	QTY	PART NAME 1 2 3 4 5 6 (PRODUCT LEVEL)	SEE PAGE
M	1	1	**7Y-8463**	1	NUT (M14X2-THD)	
	2	1	**117-8683**	1	PIN-SPRING	
	3	1	**260-2111**	1	LEVER	
	4	1	**297-4589**	1	CONTROL GP-HANDLE (RH)	
		1	**247-2693**	1	RECEPTACLE AS-CONNECTOR (6-PIN)	
		1	**9X-3401**	6	PIN-CONNECTOR (16-GA TO 18-GA)	
					—OR—	
		1	**126-1767**	6	PIN-CONNECTOR (14-GA)	
	5	1	**305-0332**	1	BOOT	

M-METRIC PART

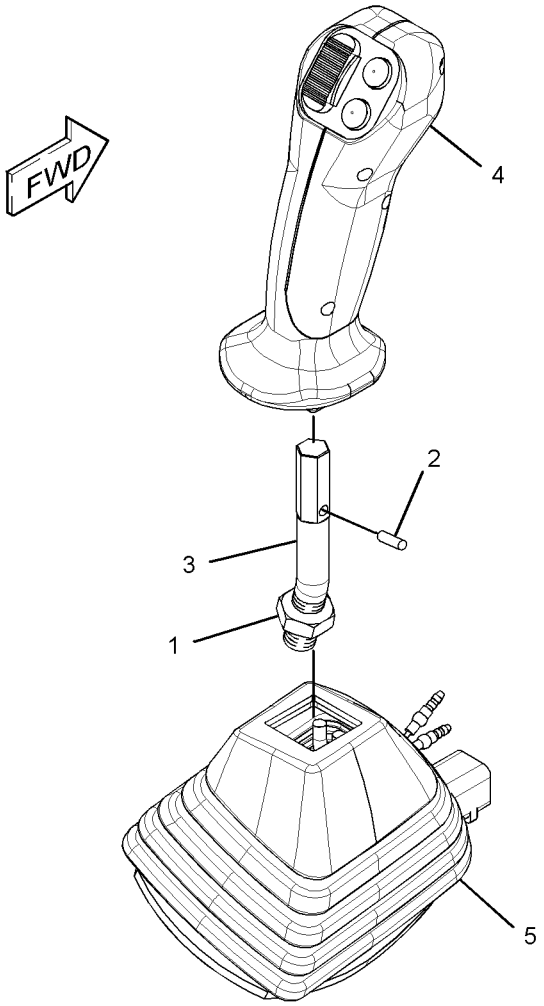

GRAPHIC #1

<END>

g01436256

OPERATOR STATION

260-2110 CONTROL GP-HANDLE–JOYSTICK, LH

S/N: BYJ1-UP; PDP1-UP
PART OF 259-7763 CONTROL GP-JOYSTICK
AN ATTACHMENT

SMCS-5705 **i02865875**

NOTE	REF NO	GRAPHIC REF	PART NUMBER	QTY	PART NAME 1 2 3 4 5 6 (PRODUCT LEVEL)	SEE PAGE
M	1	1	**7Y-8463**	1	NUT (M14X2-THD)	
	2	1	**117-8683**	1	PIN-SPRING	
	3	1	**260-2111**	1	LEVER	
C	4	1	**297-4590**	1	CONTROL GP-HANDLE (LH)	
		1	**9X-3401**	6	PIN-CONNECTOR (16-GA TO 18-GA)	
					–OR–	
		1	**126-1767**	6	PIN-CONNECTOR (14-GA)	
		1	**247-2693**	1	RECEPTACLE AS-CONNECTOR (6-PIN)	
	5	1	**305-0331**	1	BOOT	

C-CHANGE FROM PREVIOUS TYPE
M-METRIC PART

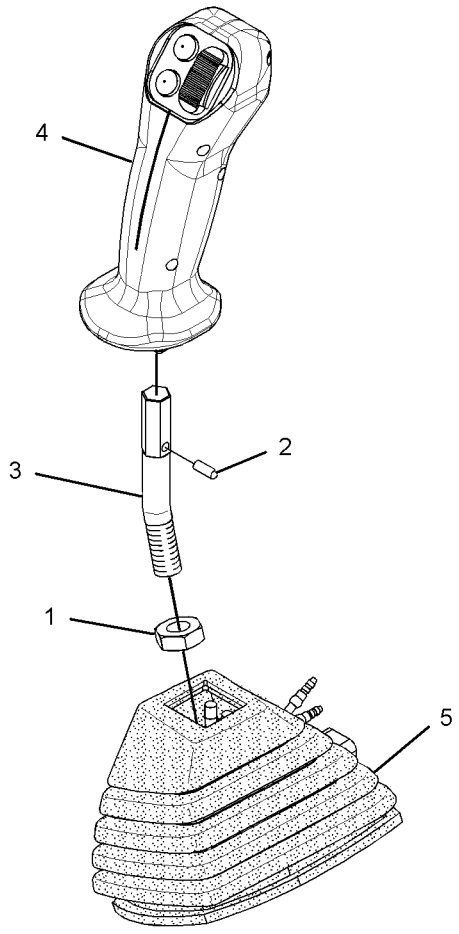

GRAPHIC #1 **<END>** g01428094

OPERATOR STATION

260-2127 CONTROL GP-HANDLE–JOYSTICK, RH

S/N: BYJ1-UP; PDP1-UP

PART OF 259-7764 CONTROL GP-JOYSTICK

AN ATTACHMENT

SMCS-5705 **i02865870**

NOTE	REF NO	GRAPHIC REF	PART NUMBER	QTY	PART NAME 1 2 3 4 5 6 (PRODUCT LEVEL)	SEE PAGE
M	1	1	**7Y-8463**	1	NUT (M14X2-THD)	
	2	1	**117-8683**	1	PIN-SPRING	
	3	1	**260-2111**	1	LEVER	
	4	1	**297-4595**	1	CONTROL GP-HANDLE (RH)	
		1	**8T-8737**	2	PLUG-SEAL	
		1	**9X-3401**	4	PIN-CONNECTOR (16-GA TO 18-GA)	
					–OR–	
		1	**126-1767**	4	PIN-CONNECTOR (14-GA)	
		1	**247-2693**	1	RECEPTACLE AS-CONNECTOR (6-PIN)	
	5	1	**305-0332**	1	BOOT	

M-METRIC PART

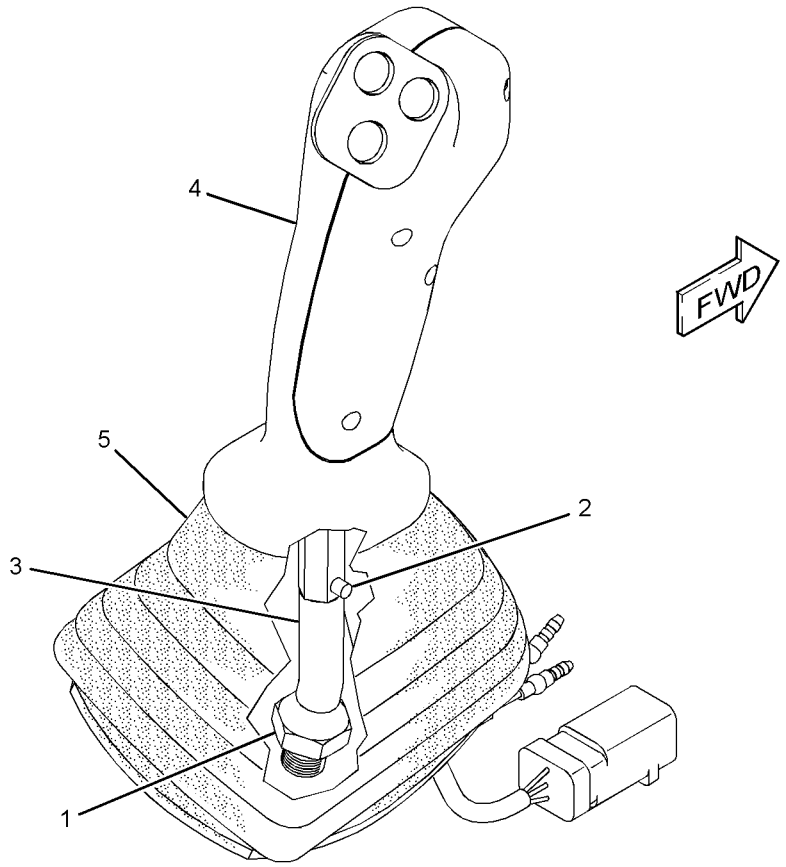

GRAPHIC #1 **<END>** g01430928

OPERATOR STATION

260-2128 CONTROL GP-HANDLE–JOYSTICK, LH

S/N: BYJ1-UP; PDP1-UP
PART OF 259-7765 CONTROL GP-JOYSTICK
AN ATTACHMENT

SMCS-5705 **i02865871**

NOTE	REF NO	GRAPHIC REF	PART NUMBER	QTY	PART NAME 1 2 3 4 5 6 (PRODUCT LEVEL)	SEE PAGE
M	1	1	**7Y-8463**	1	NUT (M14X2-THD)	
	2	1	**117-8683**	1	PIN-SPRING	
	3	1	**305-0331**	1	BOOT	
	4	1	**297-4595**	1	CONTROL GP-HANDLE (LH)	
		1	**8T-8737**	2	PLUG-SEAL	
		1	**9X-3401**	4	PIN-CONNECTOR (16-GA TO 18-GA)	
					–OR–	
		1	**126-1767**	4	PIN-CONNECTOR (14-GA)	
		1	**247-2693**	1	RECEPTACLE AS-CONNECTOR (6-PIN)	
	5	1	**260-2111**	1	LEVER	

M-METRIC PART

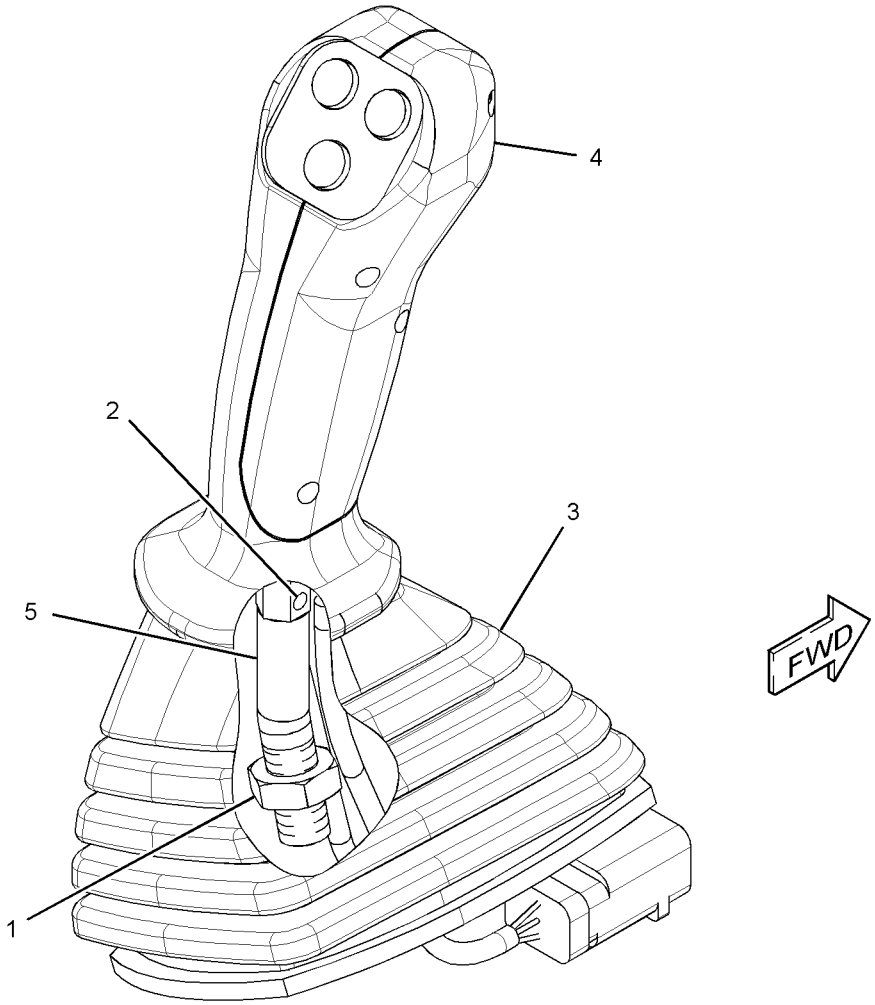

GRAPHIC #1 **<END>** g01436267

OPERATOR STATION

170-9497 CONTROL GP-HYDRAULIC PEDAL–TRAVEL

S/N: BYJ1-UP; PDP1-UP

PART OF 273-5406 OPERATOR AR

SMCS-5059, 5063 **i02997569**

NOTE	REF NO	GRAPHIC REF	PART NUMBER	QTY	PART NAME 1 2 3 4 5 6 (PRODUCT LEVEL)	SEE PAGE
	1	1	**096-6166**	2	WASHER-HARD (4.5X9X1-MM THK)	
M	2	1	**095-0728**	2	SCREW-MACHINE (M4X0.7X12-MM)	
	3	1	**8T-4121**	12	WASHER-HARD (11X21X2.5-MM THK)	
M	4	1	**8T-4136**	4	BOLT (M10X1.5X25-MM)	
M	5	1	**8T-4191**	8	BOLT (M10X1.5X16-MM)	
	6	1	**142-5546**	2	KNOB	
	7	1	**117-6356**	2	STEP AS	
	8	1	**122-9610**	2	STEP	
	9	1	**170-9499**	1	LEVER AS (LH)	
	10	1	**170-9498**	1	LEVER AS (RH)	
	11	1	**122-9608**	1	PEDAL-RUBBER (RH)	
	12	1	**117-6350**	1	PEDAL AS (RH)	
	13	1	**122-9609**	1	PEDAL-RUBBER (LH)	
	14	1	**117-6349**	1	PEDAL AS (LH)	

M-METRIC PART

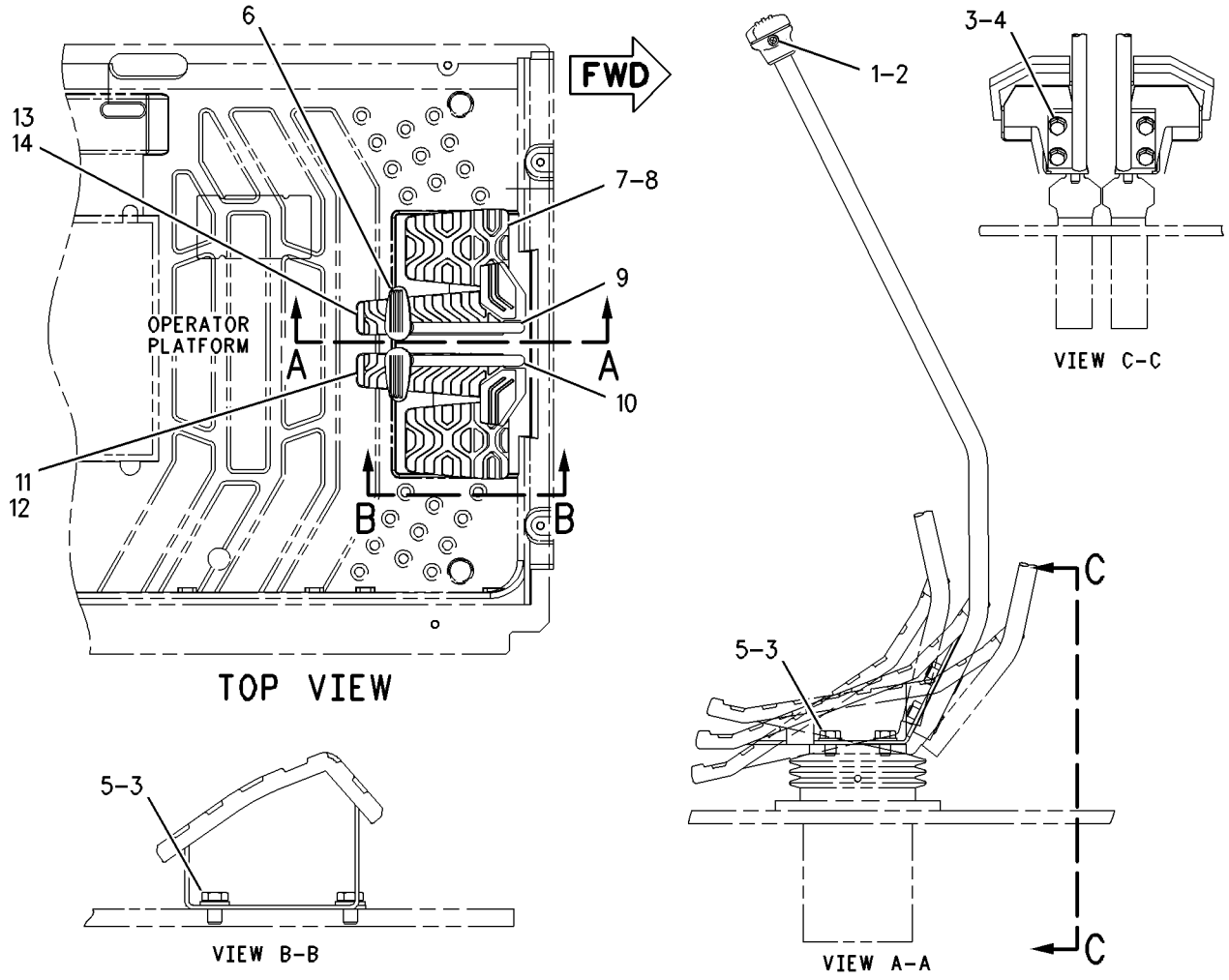

GRAPHIC #1 **<END>** g00672963

259-7762 CONTROL GP-JOYSTICK–RH

S/N: BYJ1-UP; PDP1-UP
PART OF 259-7598 CONTROL & MTG GP-JOYSTICK
AN ATTACHMENT

SMCS-5705 **i02922535**

NOTE	REF NO	GRAPHIC REF	PART NUMBER	QTY	PART NAME 1 2 3 4 5 6 (PRODUCT LEVEL)	SEE PAGE
	1	1	**6K-0806**	1	STRAP-CABLE	
Y	2	1	**206-3305**	1	VALVE GP-PILOT (JOYSTICK)	563
Y	3	1	**260-2109**	1	CONTROL GP-HANDLE (JOYSTICK, RH)	714

Y-SEPARATE ILLUSTRATION

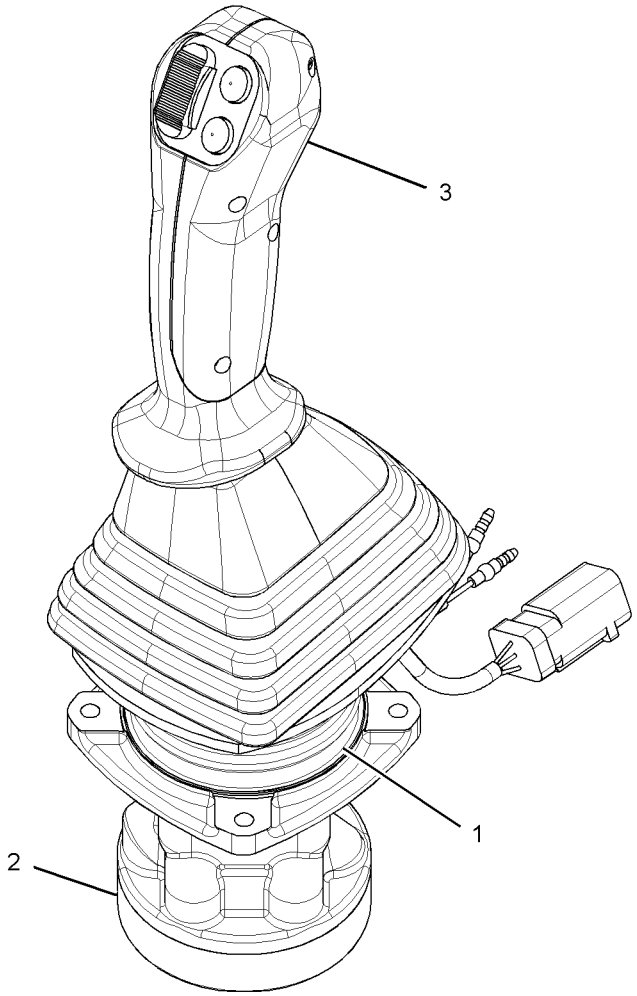

GRAPHIC #1

<END>

g01453642

OPERATOR STATION

259-7763 CONTROL GP-JOYSTICK–LH

S/N: BYJ1-UP; PDP1-UP
PART OF 259-7598 CONTROL & MTG GP-JOYSTICK
AN ATTACHMENT

SMCS-5705 **i02922536**

NOTE	REF NO	GRAPHIC REF	PART NUMBER	QTY	PART NAME 1 2 3 4 5 6 (PRODUCT LEVEL)	SEE PAGE
	1	1	**6K-0806**	1	STRAP-CABLE	
Y	2	1	**206-3305**	1	VALVE GP-PILOT (JOYSTICK)	563
Y	3	1	**260-2110**	1	CONTROL GP-HANDLE (JOYSTICK, LH)	715

Y-SEPARATE ILLUSTRATION

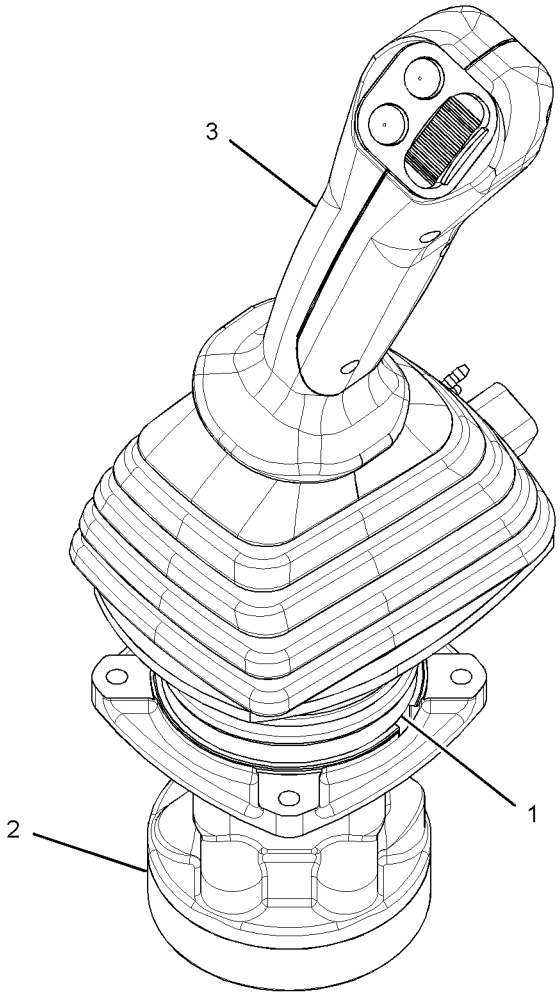

GRAPHIC #1 **<END>** g01453715

OPERATOR STATION

259-7764 CONTROL GP-JOYSTICK–RH

S/N: BYJ1-UP; PDP1-UP
PART OF 259-7599 CONTROL & MTG GP-JOYSTICK
AN ATTACHMENT

SMCS-5705 **i03016372**

NOTE	REF NO	GRAPHIC REF	PART NUMBER	QTY	PART NAME 1 2 3 4 5 6 (PRODUCT LEVEL)	SEE PAGE
Y	1	1	**206-3305**	1	VALVE GP-PILOT (JOYSTICK)	563
Y	2	1	**260-2127**	1	CONTROL GP-HANDLE (JOYSTICK, RH)	716
	3	1	**6K-0806**	1	STRAP-CABLE	

Y-SEPARATE ILLUSTRATION

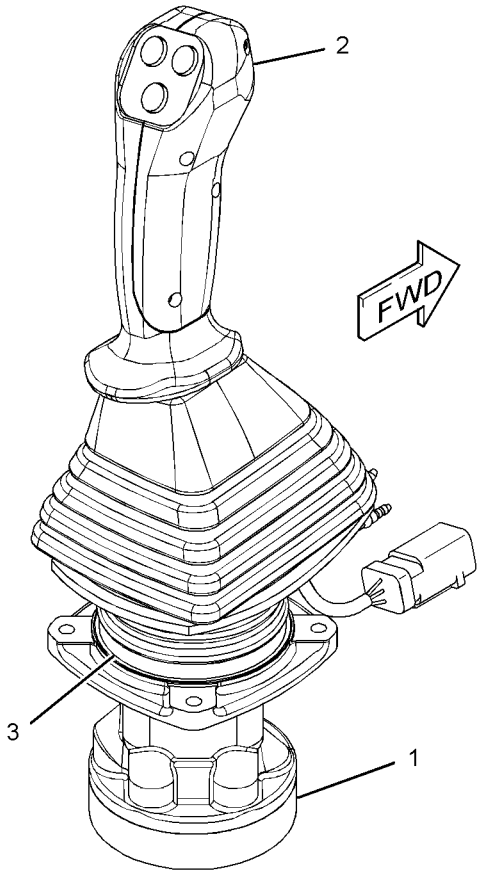

GRAPHIC #1 **<END>** g01525041

OPERATOR STATION

259-7765 CONTROL GP-JOYSTICK–LH

S/N: BYJ1-UP; PDP1-UP
PART OF 259-7599 CONTROL & MTG GP-JOYSTICK
AN ATTACHMENT

SMCS-5705 **i03016371**

NOTE	REF NO	GRAPHIC REF	PART NUMBER	QTY	PART NAME 1 2 3 4 5 6 (PRODUCT LEVEL)	SEE PAGE
Y	1	1	**206-3305**	1	VALVE GP-PILOT (JOYSTICK)	563
Y	2	1	**260-2128**	1	CONTROL GP-HANDLE (JOYSTICK, LH)	717
	3	1	**6K-0806**	1	STRAP-CABLE	

Y-SEPARATE ILLUSTRATION

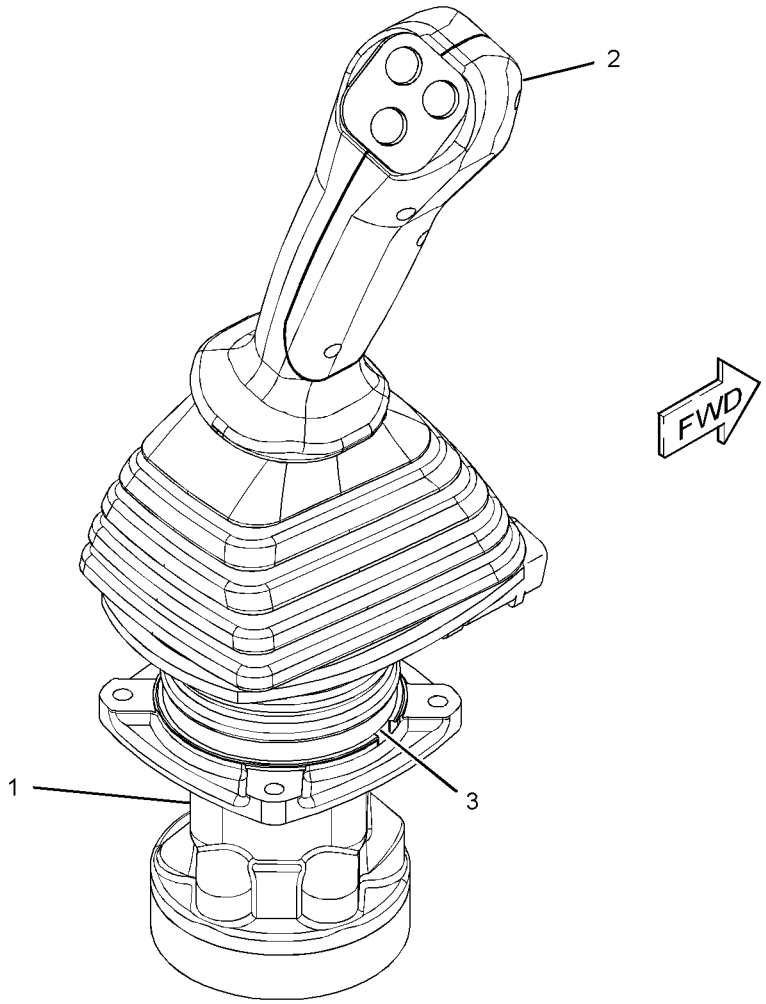

GRAPHIC #1 **<END>** g01525010

OPERATOR STATION

297-0532 CONTROL GP-JOYSTICK–RH

S/N: BYJ1-UP; PDP1-UP
PART OF 310-0078 CONTROL & MTG GP-JOYSTICK
AN ATTACHMENT

SMCS-5705 **i03010035**

NOTE	REF NO	GRAPHIC REF	PART NUMBER	QTY	PART NAME 1 2 3 4 5 6 (PRODUCT LEVEL)	SEE PAGE
M	1	1	**7Y-8463**	1	NUT (M14X2-THD)	
Y	2	1	**235-8970**	1	CONTROL GP-HANDLE (JOYSTICK, RH)	713
Y	3	1	**297-0529**	1	VALVE GP-PILOT (JOYSTICK)	568
	4	1	**6K-0806**	1	STRAP-CABLE	

M-METRIC PART
Y-SEPARATE ILLUSTRATION

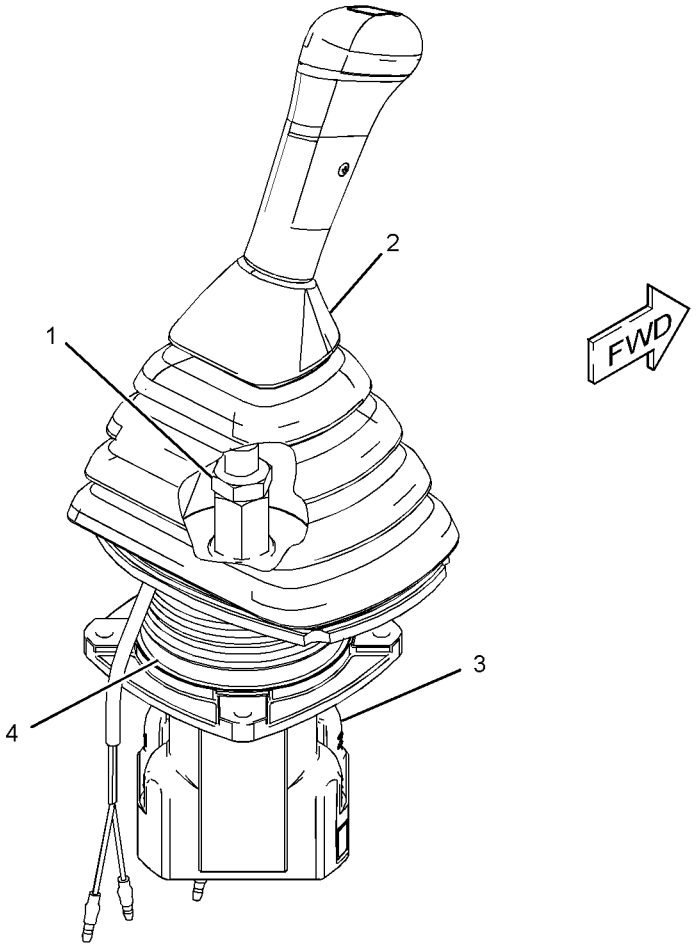

GRAPHIC #1 **<END>** g01452407

OPERATOR STATION

297-0533 CONTROL GP-JOYSTICK–LH

S/N: BYJ1-UP; PDP1-UP
PART OF 310-0078 CONTROL & MTG GP-JOYSTICK
AN ATTACHMENT

SMCS-5705 **i03010036**

NOTE	REF NO	GRAPHIC REF	PART NUMBER	QTY	PART NAME 1 2 3 4 5 6 (PRODUCT LEVEL)	SEE PAGE
M	1	1	**7Y-8463**	1	NUT (M14X2-THD)	
Y	2	1	**235-8969**	1	CONTROL GP-HANDLE (JOYSTICK, LH)	712
Y	3	1	**297-0529**	1	VALVE GP-PILOT (JOYSTICK)	568
	4	1	**6K-0806**	1	STRAP-CABLE	

M-METRIC PART
Y-SEPARATE ILLUSTRATION

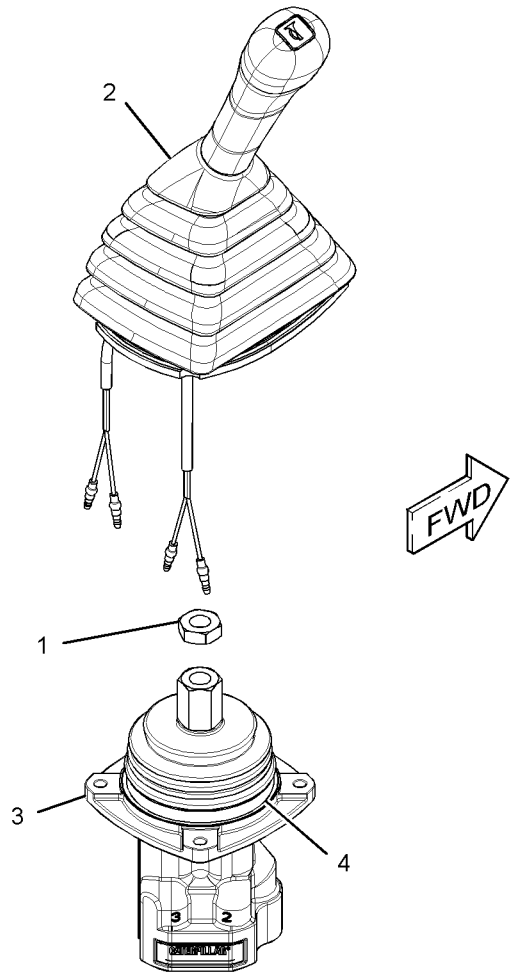

GRAPHIC #1 **<END>** g01452496

OPERATOR STATION

323-7755 CONTROL GP-JOYSTICK–RH

S/N: BYJ1-UP; PDP1-UP
PART OF 323-7699 CONTROL & MTG GP-JOYSTICK
AN ATTACHMENT

SMCS-5705 **i03149711**

NOTE	REF NO	GRAPHIC REF	PART NUMBER	QTY	PART NAME 1 2 3 4 5 6 (PRODUCT LEVEL)	SEE PAGE
	1	1	**6K-0806**	1	STRAP-CABLE	
M	2	1	**7Y-8463**	1	NUT (M14X2-THD)	
Y	3	1	**297-0589**	1	VALVE GP-PILOT	570
	4	1	**297-4595**	1	CONTROL GP-HANDLE	
		1	**8T-8737**	2	PLUG-SEAL	
		1	**9X-3401**	4	PIN-CONNECTOR (16-GA TO 18-GA)	
					–OR–	
		1	**126-1767**	4	PIN-CONNECTOR (14-GA)	
		1	**247-2693**	1	RECEPTACLE AS-CONNECTOR (6-PIN)	
	5	1	**317-9216**	1	LEVER	
	6	1	**323-6669**	1	BOOT	
	7	1	**117-8683**	1	PIN-SPRING	

M-METRIC PART
Y-SEPARATE ILLUSTRATION

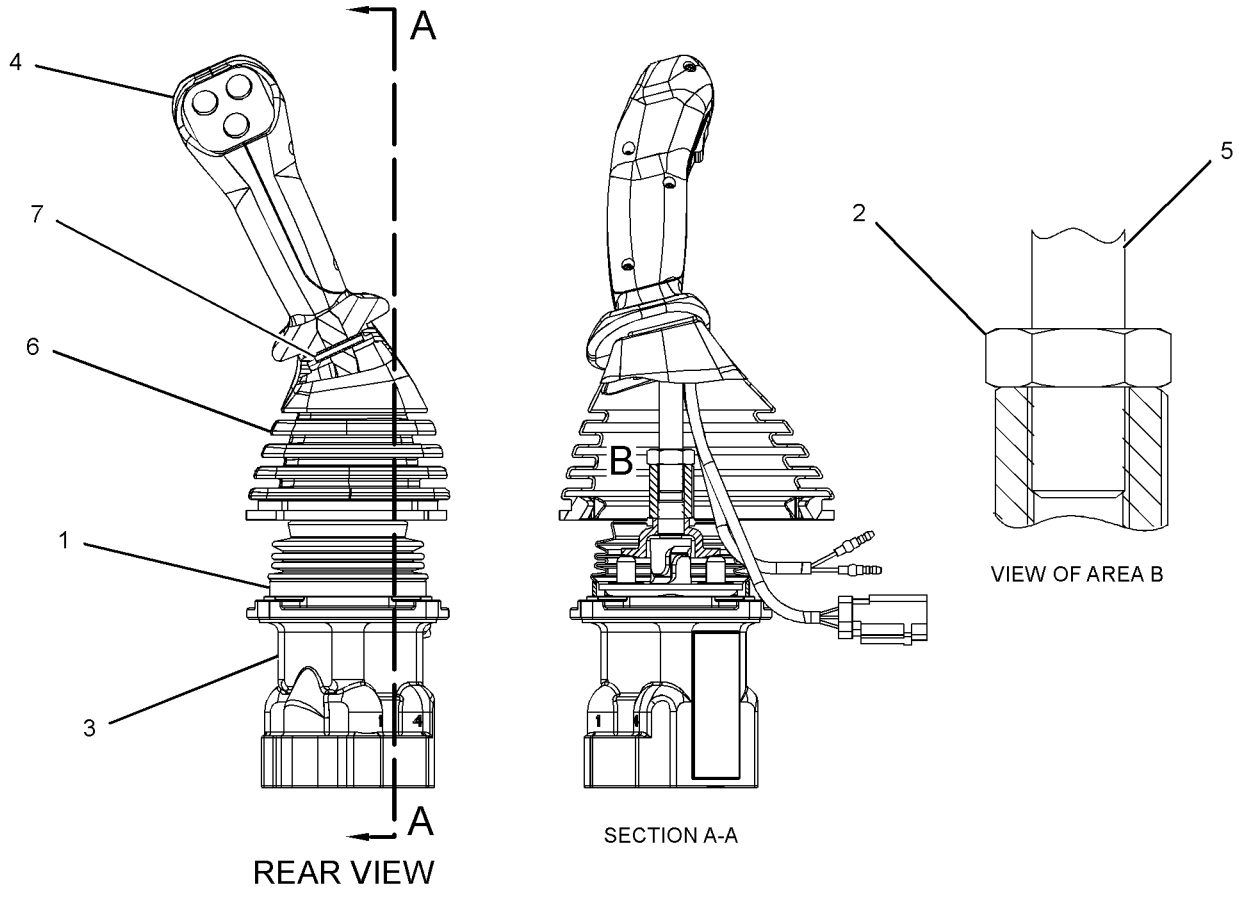

GRAPHIC #1 **<END>** g01625928

OPERATOR STATION

323-7756 CONTROL GP-JOYSTICK–LH

S/N: BYJ1-UP; PDP1-UP
PART OF 323-7699 CONTROL & MTG GP-JOYSTICK
AN ATTACHMENT

SMCS-5705 **i03149709**

NOTE	REF NO	GRAPHIC REF	PART NUMBER	QTY	PART NAME 1 2 3 4 5 6 (PRODUCT LEVEL)	SEE PAGE
	1	1	**6K-0806**	1	STRAP-CABLE	
M	2	1	**7Y-8463**	1	NUT (M14X2-THD)	
Y	3	1	**297-0589**	1	VALVE GP-PILOT	570
	4	1	**297-4595**	1	CONTROL GP-HANDLE	
		1	**8T-8737**	2	PLUG-SEAL	
		1	**9X-3401**	4	PIN-CONNECTOR (16-GA TO 18-GA)	
					–OR–	
		1	**126-1767**	4	PIN-CONNECTOR (14-GA)	
		1	**247-2693**	1	RECEPTACLE AS-CONNECTOR (6-PIN)	
	5	1	**317-9570**	1	LEVER	
	6	1	**323-6670**	1	BOOT	
	7	1	**117-8683**	1	PIN-SPRING	

M-METRIC PART
Y-SEPARATE ILLUSTRATION

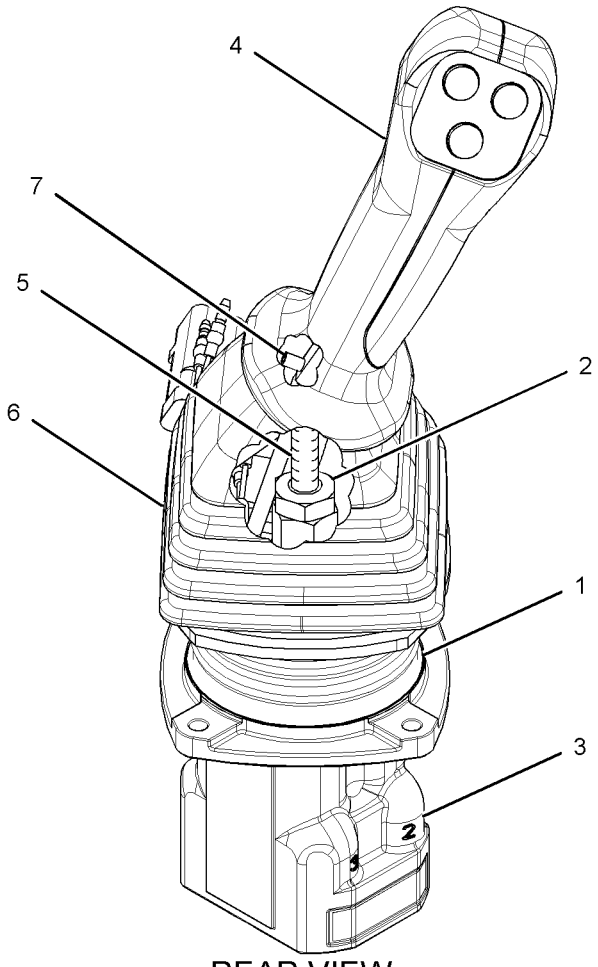

REAR VIEW

GRAPHIC #1

<END>

g01633855

OPERATOR STATION

309-5808 CONTROL GP-PEDAL–ELECTRIC

S/N: BYJ1-UP; PDP1-UP
PART OF 221-8885 CONTROL & MTG GP-PEDAL
AN ATTACHMENT

SMCS-1435, 5702 **i02840265**

NOTE	REF NO	GRAPHIC REF	PART NUMBER	QTY	PART NAME 1 2 3 4 5 6 (PRODUCT LEVEL)	SEE PAGE
	1	1	**8T-8737**	1	PLUG-SEAL	
	2	1	**9X-3401**	5	PIN-CONNECTOR (16-GA TO 18-GA)	
					–OR–	
		1	**126-1767**	5	PIN-CONNECTOR (14-GA)	
	3	1	**247-2693**	1	RECEPTACLE AS-CONNECTOR (6-PIN)	
	4	1	**247-5112**	1	BOOT	

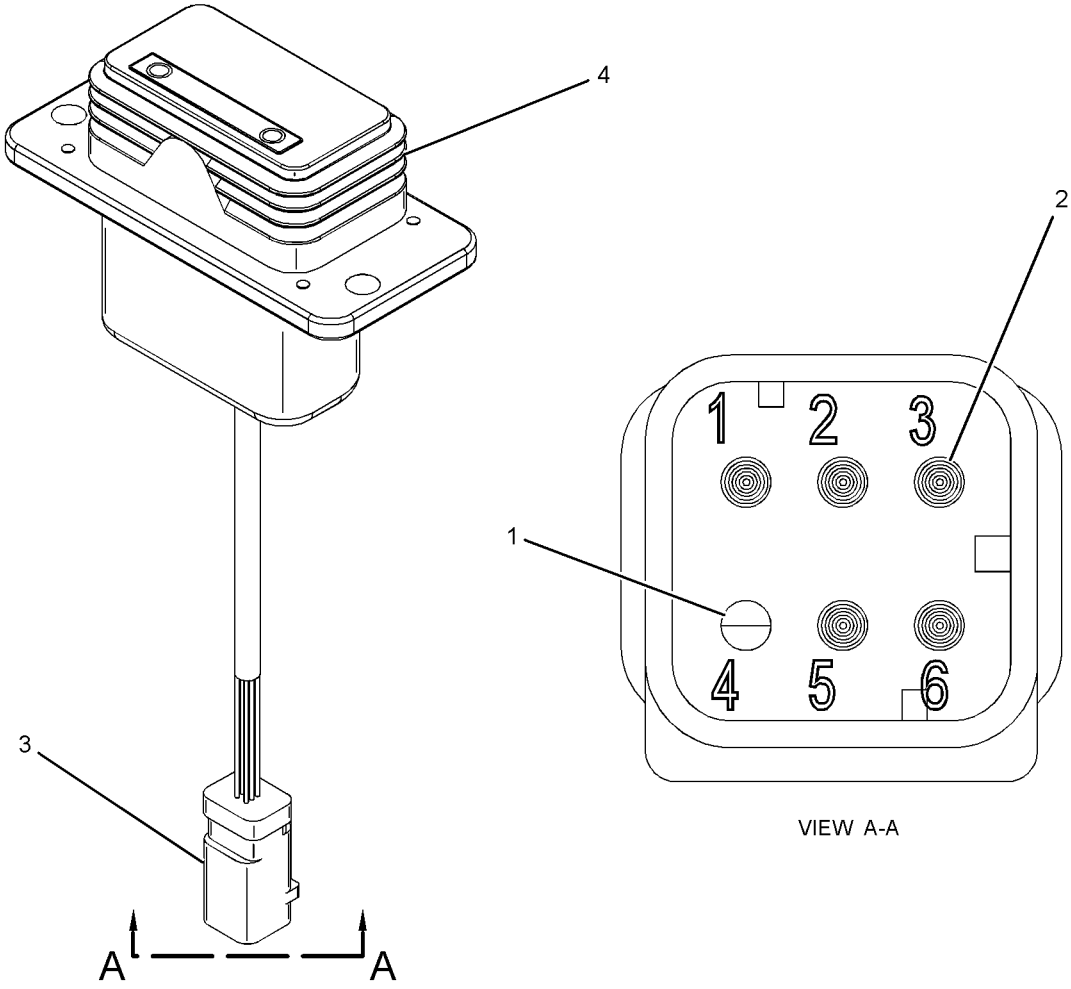

VIEW A-A

GRAPHIC #1 **<END>** g01219365

OPERATOR STATION

323-7753 CONTROL GP-PILOT OPERATED HYD–RH

S/N: BYJ1-UP; PDP1-UP
PART OF 323-7698 CONTROL & MTG GP-JOYSTICK
AN ATTACHMENT

SMCS-5059 **i03254280**

NOTE	REF NO	GRAPHIC REF	PART NUMBER	QTY	PART NAME 1 2 3 4 5 6 (PRODUCT LEVEL)	SEE PAGE
	1	1	**6K-0806**	1	STRAP-CABLE	
M	2	1	**7Y-8463**	1	NUT (M14X2-THD)	
Y	3	1	**297-0589**	1	VALVE GP-PILOT (JOYSTICK)	570
	4	1	**297-4589**	1	CONTROL GP-HANDLE	
		1	**9X-3401**	6	PIN-CONNECTOR (16-GA TO 18-GA)	
					–OR–	
		1	**126-1767**	6	PIN-CONNECTOR (14-GA)	
		1	**247-2693**	1	RECEPTACLE AS-CONNECTOR (6-PIN)	
	5	1	**317-9216**	1	LEVER	
	6	1	**323-6669**	1	BOOT	
	7	1	**117-8683**	1	PIN-SPRING	

M-METRIC PART
Y-SEPARATE ILLUSTRATION

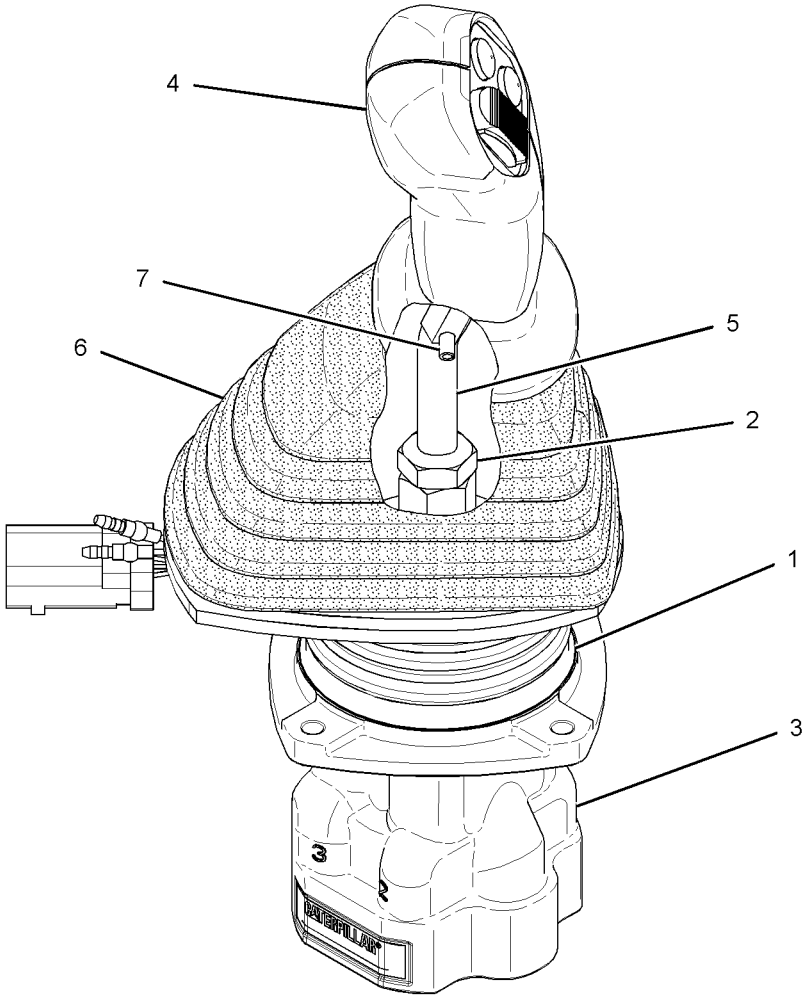

GRAPHIC #1 **<END>** g01622335

OPERATOR STATION

323-7754 CONTROL GP-PILOT OPERATED HYD–LH

S/N: BYJ1-UP; PDP1-UP
PART OF 323-7698 CONTROL & MTG GP-JOYSTICK
AN ATTACHMENT

SMCS-5059 **i03156402**

NOTE	REF NO	GRAPHIC REF	PART NUMBER	QTY	PART NAME 1 2 3 4 5 6 (PRODUCT LEVEL)	SEE PAGE
	1	1	**6K-0806**	1	STRAP-CABLE	
M	2	1	**7Y-8463**	1	NUT (M14X2-THD)	
Y	3	1	**297-0589**	1	VALVE GP-PILOT	570
	4	1	**297-4590**	1	CONTROL GP-HANDLE (LH)	
		1	**9X-3401**	6	PIN-CONNECTOR (16-GA TO 18-GA)	
					-OR-	
		1	**126-1767**	6	PIN-CONNECTOR (14-GA)	
		1	**247-2693**	1	RECEPTACLE AS-CONNECTOR (6-PIN)	
	5	1	**317-9570**	1	LEVER	
	6	1	**323-6670**	1	BOOT	
	7	1	**117-8683**	1	PIN-SPRING	

M-METRIC PART
Y-SEPARATE ILLUSTRATION

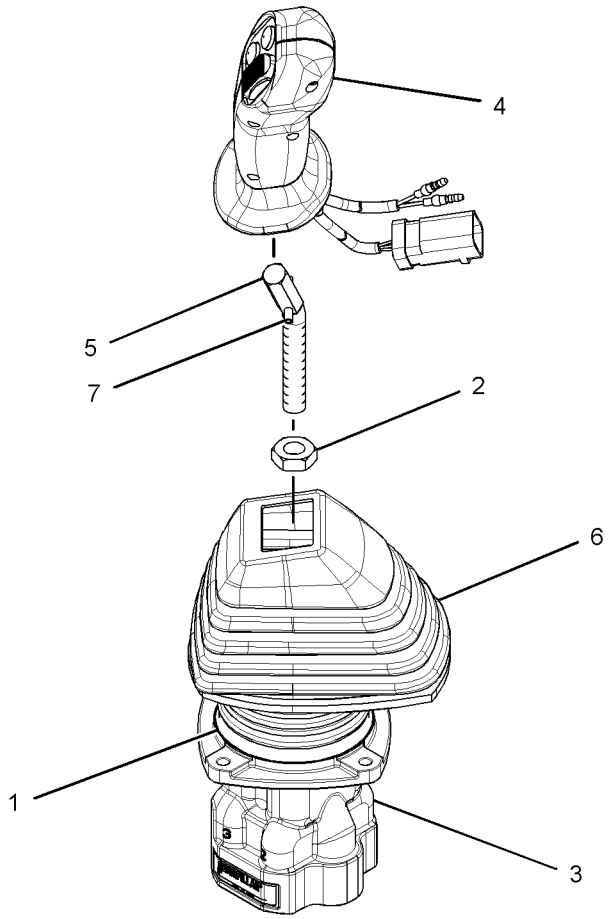

GRAPHIC #1 **<END>** g01623319

OPERATOR STATION

260-2173 CONTROL GP-UNPRGMED MONITOR

S/N: BYJ1-UP; PDP1-UP
PART OF 260-2211 MONITOR GP-OPERATOR
FIELD REPLACEMENT ORDER 319-4355–PAGE 775

SMCS-7610 **i02908838**

NOTE	REF NO	GRAPHIC REF	PART NUMBER	QTY	PART NAME 1 2 3 4 5 6 (PRODUCT LEVEL)	SEE PAGE
	1	1	**247-2694**	1	RECEPTACLE AS-CONNECTOR (12-PIN)	
	2	1	**247-2695**	1	RECEPTACLE AS-CONNECTOR (12-PIN)	
	3	1	**9X-3401**	17	PIN-CONNECTOR (16-GA TO 18-GA)	
	4	1	**8T-8737**	7	PLUG-SEAL	

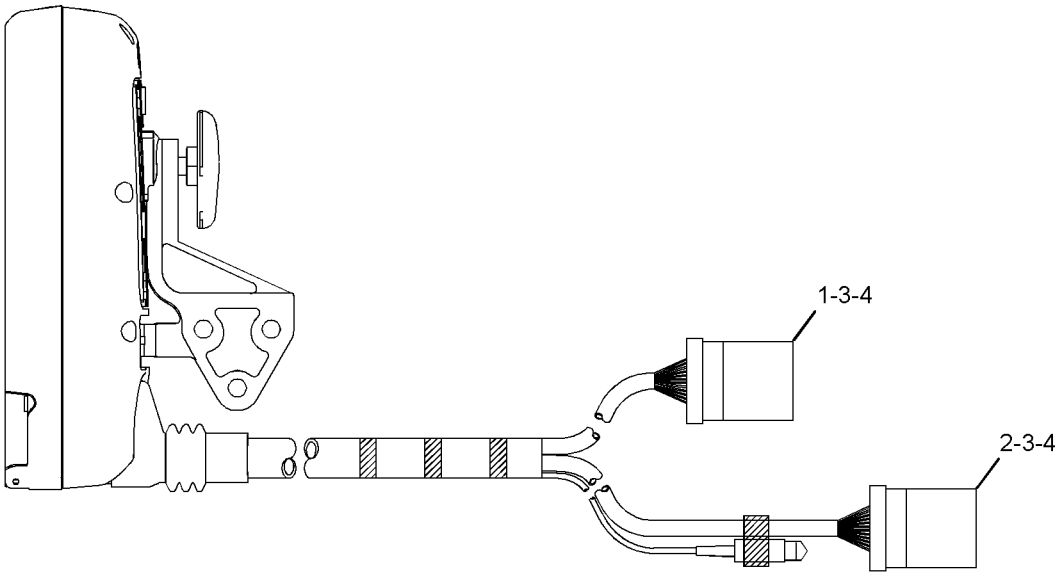

RIGHT SIDE VIEW

GRAPHIC #1 **<END>** g01250939

OPERATOR STATION

313-8163 COVER GP-PLATFORM

S/N: BYJ1-UP; PDP1-UP

PART OF 278-3974 HOOD & GUARD GP

SMCS-7253, 7301 **i02957171**

NOTE	REF NO	GRAPHIC REF	PART NUMBER	QTY	PART NAME 1 2 3 4 5 6 (PRODUCT LEVEL)	SEE PAGE
	1	1	**2S-1647**	1	GROMMET	
	2	1	**096-4129**	2	CUSHION	
	4	1	**8T-0328**	4	WASHER-HARD (5.5X10X1-MM THK)	
M	5	1	**8T-6693**	4	SCREW-MACHINE (M5X0.8X16-MM)	

M-METRIC PART

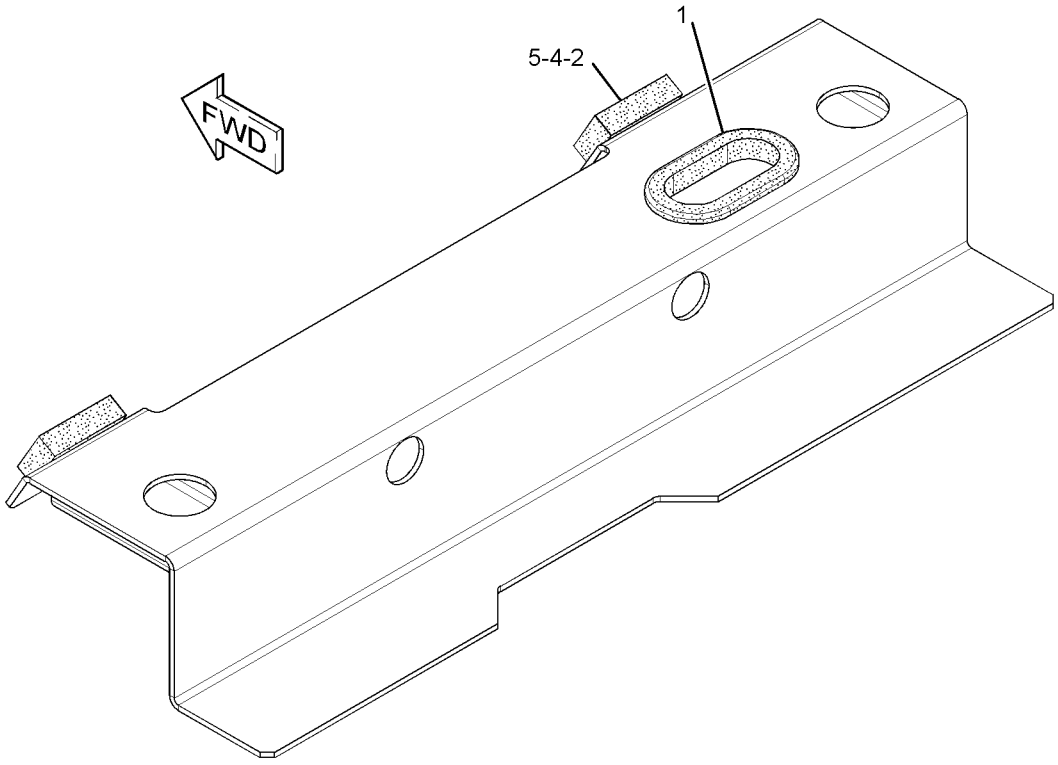

GRAPHIC #1 **<END>** g01508694

OPERATOR STATION

316-8900 DISTRIBUTOR GP-AIR

S/N: BYJ1-UP; PDP1-UP

PART OF 316-8899 AIR CONDITIONER & MOUNTING GP, 293-1235 HEATER & MTG GP-CAB

AN ATTACHMENT

SMCS-5927, 7304, 7320 **i02978564**

NOTE	REF NO	GRAPHIC REF	PART NUMBER	QTY	PART NAME 1 2 3 4 5 6 (PRODUCT LEVEL)	SEE PAGE
	1	1	**5I-3605**	8	CLAMP	
	2	1	**229-9017**	3	SCREW-TAPPING	
	3	1	**229-9054**	4	SCREW-TAPPING	
	4	1	**229-9160**	2	PACKING	
	5	1	**229-9161**	2	PACKING	
	6	1	**229-9162**	4	SCREW-TAPPING	
	7	1	**229-9170**	1	HARNESS AS-WIRING (IGNITION)	
	8	1	**229-9171**	1	DAMPER	
	9	1	**229-9172**	1	DAMPER	
	10	1	**229-9173**	1	DAMPER	
	11	1	**229-9174**	1	LEVER	
	12	1	**229-9175**	1	LEVER	
	13	1	**229-9176**	1	LEVER	
	14	1	**229-9177**	1	LEVER	
	15	1	**229-9178**	1	LEVER	
	16	1	**229-9179**	1	PLATE-LINK	
	17	1	**229-9180**	1	PLATE-LINK	
	18	1	**229-9181**	1	ROD	
	19	1	**229-9182**	1	ROD	
	20	1	**229-9183**	1	ROD	
	21	1	**229-9184**	3	BUSHING	
	22	1	**229-9185**	6	CLAMP	
	23	1	**229-9186**	3	SCREW	
	24	1	**235-8892**	1	SPRING	
	25	1	**305-0321**	1	COVER	
	26	1	**316-8901**	1	MOTOR	

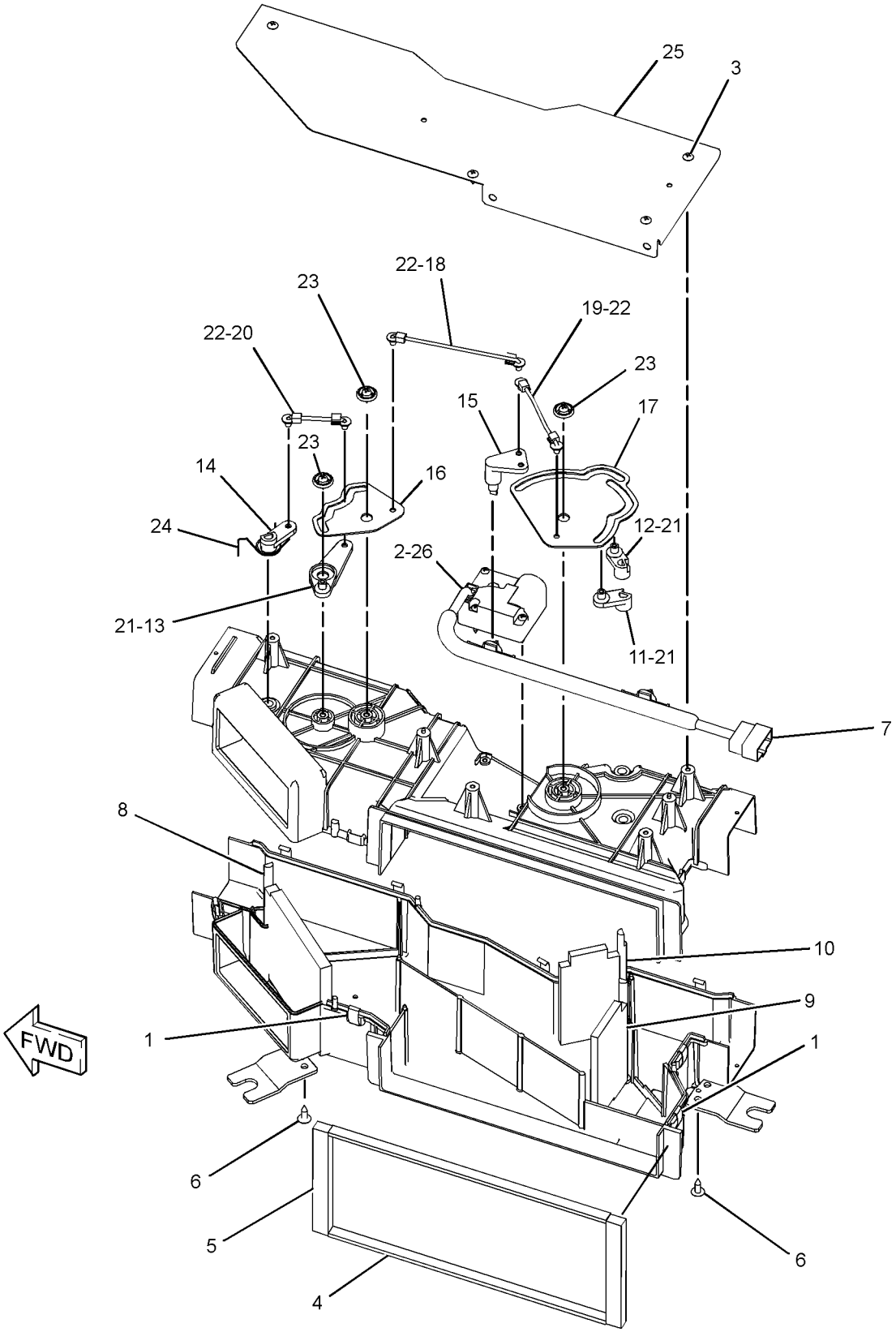

GRAPHIC #1 **<END>** g01513331

OPERATOR STATION

273-5171 DOOR GP-CAB

S/N: BYJ1-UP; PDP1-UP
PART OF 259-7275 CAB GP-ENCLOSED ROPS
AN ATTACHMENT

SMCS-7308 **i02488972**

NOTE	REF NO	GRAPHIC REF	PART NUMBER	QTY	PART NAME 1 2 3 4 5 6 (PRODUCT LEVEL)	SEE PAGE
	1	1,2	**127-3991**	7	SNAP	
	2	1,2	**196-1444**	1	LOCK AS	
M	3	1,2	**9X-2042**	25	SCREW-TRUSS HEAD (M6X1X12-MM)	
	4	1	**201-4528**	2	SEAL	
	5	2	**196-1446**	1	ROLLER AS	
	6	1,2	**8T-4224**	7	WASHER-HARD (8.8X16X2-MM THK)	
M	7	1,2	**8T-4189**	7	BOLT (M8X1.25X20-MM)	
Y	8	1	**196-1436**	1	WINDOW GP-CAB	807
	9	1	**196-1541**	7	SPACER	
	10	1	**207-0212**	1	TAPE	
	11	1	**196-1542**	1	SEAL	
	12	2	**139-6497**	2	CLIP	
	13	1	**196-1438**	1	SEAL	
	14	1	**207-0213**	2	BOLT (M6X1X10-MM)	
	15	1	**196-1439**	1	HANDLE AS	
	16	1	**196-1441**	1	LOCK AS	
	17	1	**196-1437**	1	GLASS	
	18	1	**196-1443**	1	LOCK AS	
	19	1	**196-1445**	1	ROLLER AS	
	20	1	**196-1538**	1	SHIM	
	21	1,2	**185-9133**	2	BUMPER	
	22	1	**196-1449**	1	BRACKET	
M	23	1,2	**8T-4244**	4	NUT (M12X1.75-THD)	
M	24	1,2	**8T-4192**	4	BOLT (M12X1.75X25-MM)	
	25	1,2	**8T-4223**	4	WASHER-HARD (13.5X25.5X3-MM THK)	
	26	1	**273-5204**	1	HANDLE AS	
M	27	1	**9X-2043**	2	SCREW-TRUSS HEAD (M6X1X14-MM)	
	28	1	**196-1447**	1	ROLLER AS	
	29	2	**196-1462**	1	COVER	
	30	2	**196-1460**	1	ROD	
	31	2	**196-1451**	1	LINK AS	
	32	2	**196-1457**	1	ROD	
	33	2	**196-1458**	1	ROD	
M	34	2	**5C-8312**	6	NUT (M4X0.7-THD)	
	35	2	**096-6166**	6	WASHER-HARD (4.5X9X1-MM THK)	
	36	2	**196-1456**	1	ROD	
	37	2	**196-1455**	1	ROD	
	38	2	**196-1442**	1	LINK AS	
M	39	2	**095-0736**	4	SCREW-MACHINE (M5X0.8X10-MM)	
	40	2	**196-1454**	1	ROD	
	41	2	**196-1450**	1	LINK AS	
	42	2	**196-1452**	1	ROD	
	43	2	**196-1453**	1	ROD	
	44	2	**196-1463**	1	COVER	
	45	2	**196-1539**	1	SEAL	
	46	1		1	DOOR AS	
	47	2	**196-1459**	1	ROD	
	48	2	**196-1448**	1	BRACKET	
	49	2	**127-3959**	2	SHIM	
	50	2	**127-3958**	2	STRIKER	
	51	2	**196-1461**	1	CLIP	

M-METRIC PART
Y-SEPARATE ILLUSTRATION

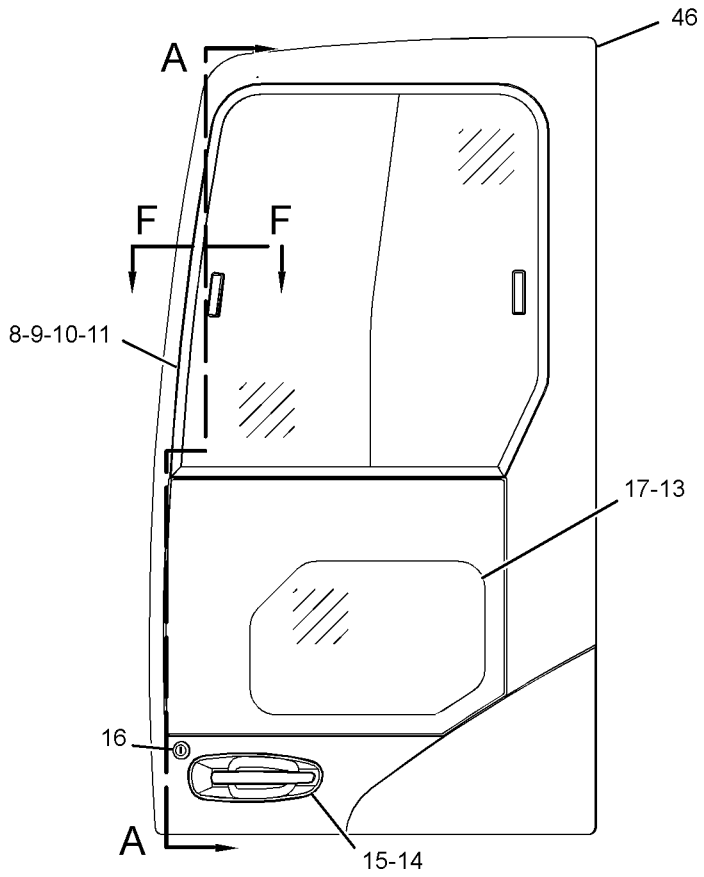

LEFT SIDE VIEW

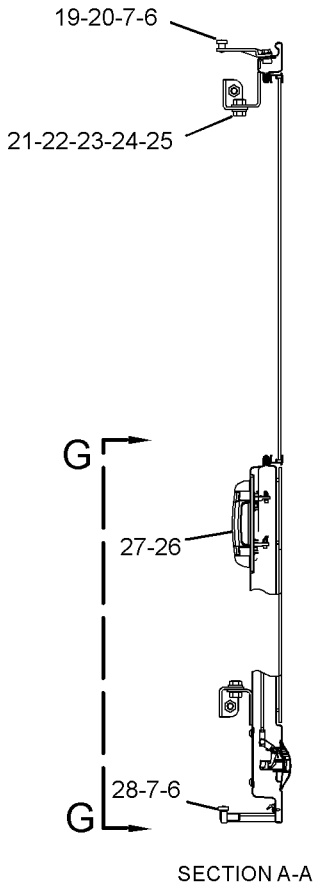

SECTION A-A

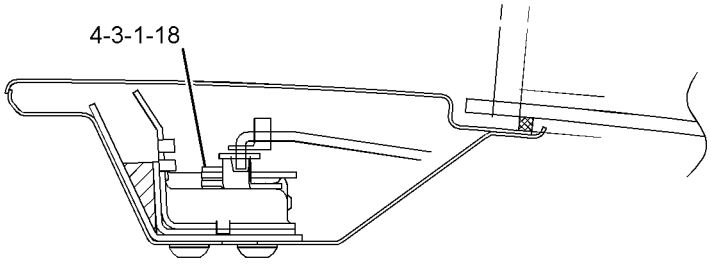

SECTION E-E

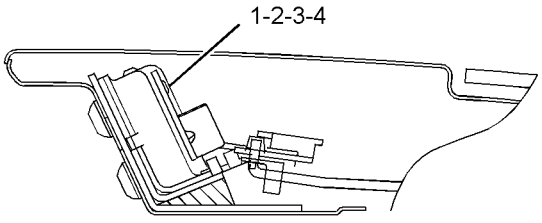

SECTION D-D

REFER TO ALL ILLUSTRATIONS OF THIS GROUP FOR AUXILIARY VIEWS

GRAPHIC #1

g01250822

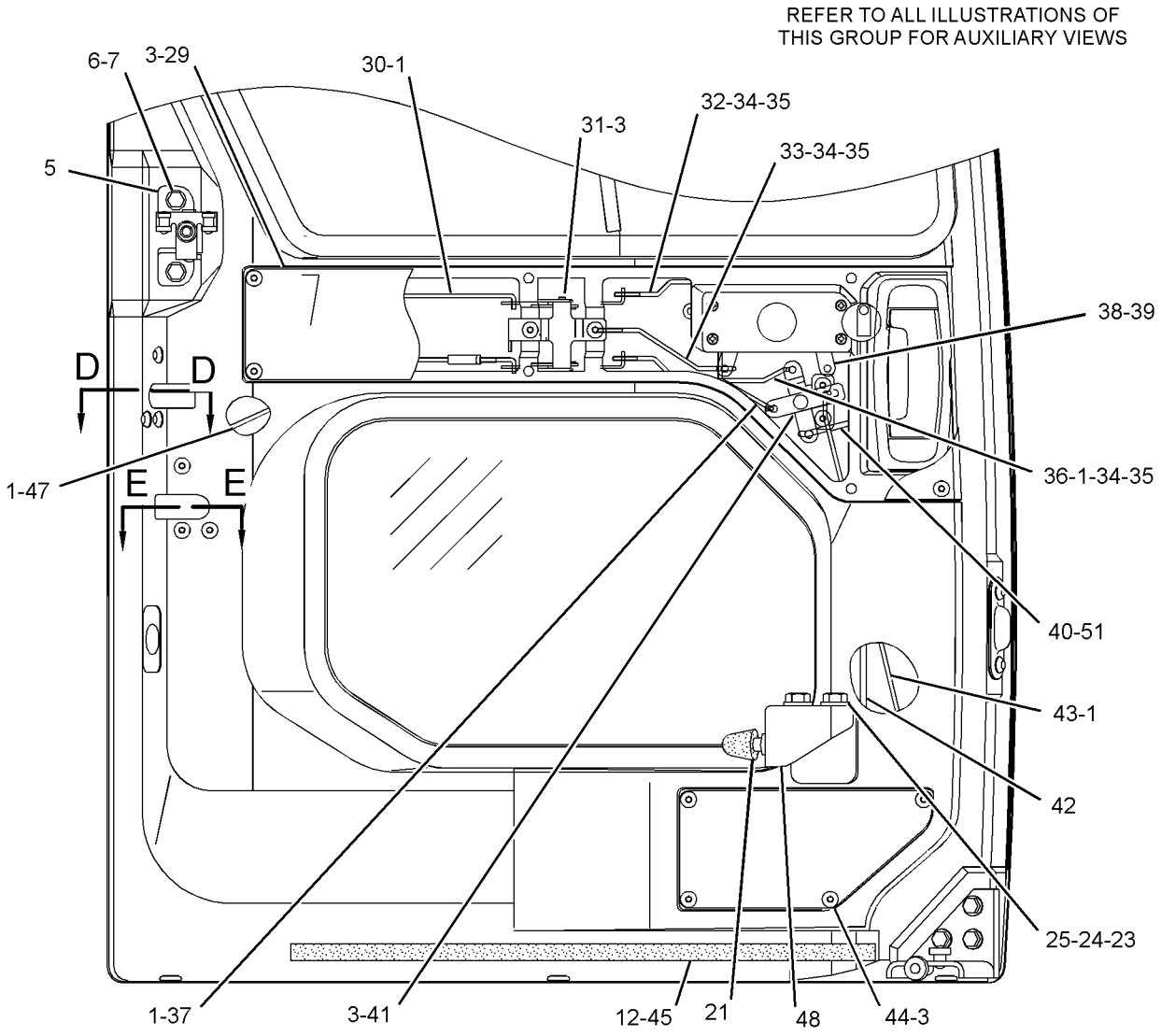

VIEW G-G

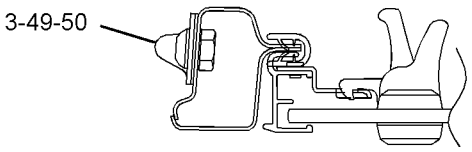

SECTION F-F

GRAPHIC #2 **<END>** g01250824

OPERATOR STATION

273-5202 DOOR GP-CAB

S/N: BYJ1-UP; PDP1-UP
PART OF 259-7277 CAB GP
AN ATTACHMENT

SMCS-7308 **i02486462**

NOTE	REF NO	GRAPHIC REF	PART NUMBER	QTY	PART NAME 1 2 3 4 5 6 (PRODUCT LEVEL)	SEE PAGE
	1	1,2	**127-3991**	7	SNAP	
	2	1,2	**196-1444**	1	LOCK AS	
M	3	1,2	**9X-2042**	25	SCREW-TRUSS HEAD (M6X1X12-MM)	
	4	1	**201-4528**	2	SEAL	
	5	2	**196-1446**	1	ROLLER AS	
	6	1,2	**8T-4224**	7	WASHER-HARD (8.8X16X2-MM THK)	
M	7	1,2	**8T-4189**	7	BOLT (M8X1.25X20-MM)	
Y	8	1	**196-1436**	1	WINDOW GP-CAB	807
	9	1	**196-1541**	7	SPACER	
	10	1	**207-0212**	1	TAPE	
	11	1	**196-1542**	1	SEAL	
	12	2	**139-6497**	2	CLIP	
	13	1	**196-1438**	1	SEAL	
	14	1	**207-0213**	2	BOLT (M6X1X10-MM)	
	15	1	**196-1439**	1	HANDLE AS	
	16	1	**196-1441**	1	LOCK AS	
	17	1	**210-5792**	1	GLASS	
	18	1	**196-1443**	1	LOCK AS	
	19	1	**196-1445**	1	ROLLER AS	
	20	1	**196-1538**	1	SHIM	
	21	1,2	**185-9133**	2	BUMPER	
	22	1	**196-1449**	1	BRACKET	
M	23	1,2	**8T-4244**	4	NUT (M12X1.75-THD)	
M	24	1,2	**8T-4192**	4	BOLT (M12X1.75X25-MM)	
	25	1,2	**8T-4223**	4	WASHER-HARD (13.5X25.5X3-MM THK)	
	26	1	**273-5204**	1	HANDLE AS	
M	27	1	**9X-2043**	2	SCREW-TRUSS HEAD (M6X1X14-MM)	
	28	1	**196-1447**	1	ROLLER AS	
	29	2	**196-1462**	1	COVER	
	30	2	**196-1460**	1	ROD	
	31	2	**196-1451**	1	LINK AS	
	32	2	**196-1457**	1	ROD	
	33	2	**196-1458**	1	ROD	
M	34	2	**5C-8312**	6	NUT (M4X0.7-THD)	
	35	2	**096-6166**	6	WASHER-HARD (4.5X9X1-MM THK)	
	36	2	**196-1456**	1	ROD	
	37	2	**196-1455**	1	ROD	
	38	2	**196-1442**	1	LINK AS	
M	39	2	**095-0736**	4	SCREW-MACHINE (M5X0.8X10-MM)	
	40	2	**196-1454**	1	ROD	
	41	2	**196-1450**	1	LINK AS	
	42	2	**196-1452**	1	ROD	
	43	2	**196-1453**	1	ROD	
	44	2	**196-1463**	1	COVER	
	45	2	**196-1539**	1	SEAL	
	46	1		1	DOOR AS	
	47	2	**196-1459**	1	ROD	
	48	2	**196-1448**	1	BRACKET	
	49	2	**127-3959**	2	SHIM	
	50	2	**127-3958**	2	STRIKER	
	51	2	**196-1461**	1	CLIP	

M-METRIC PART
Y-SEPARATE ILLUSTRATION

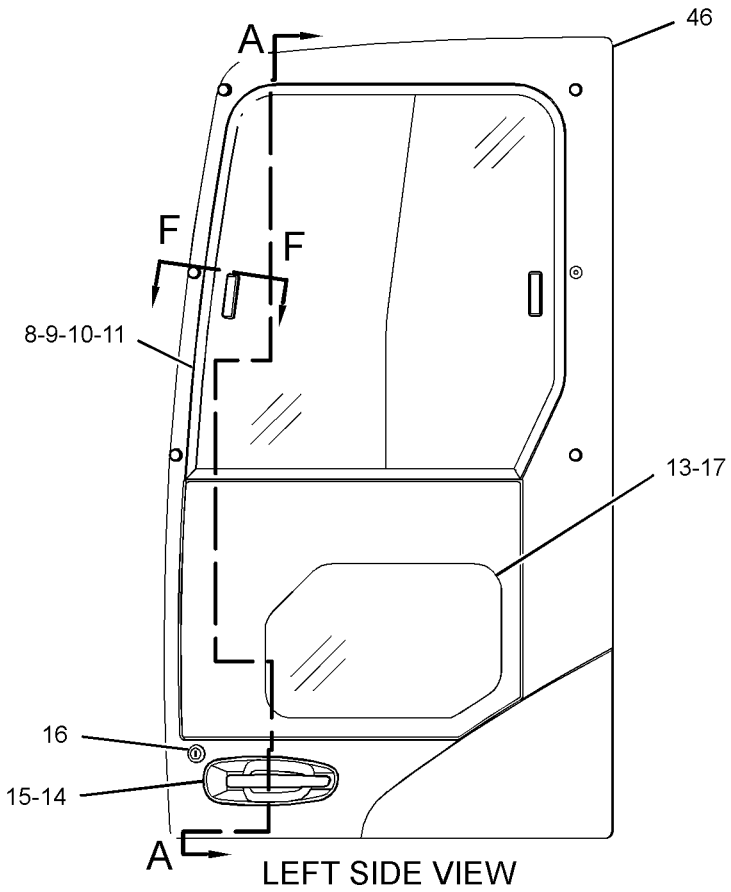

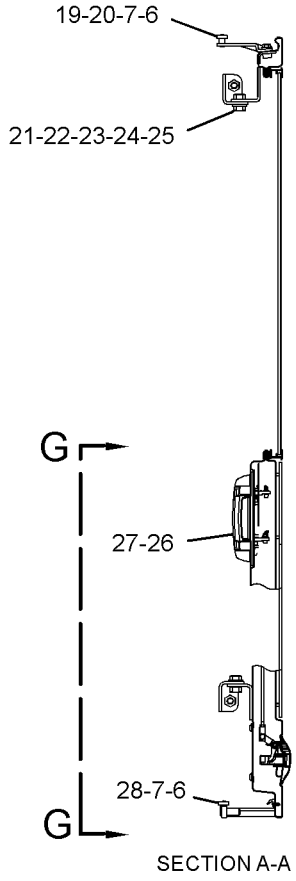

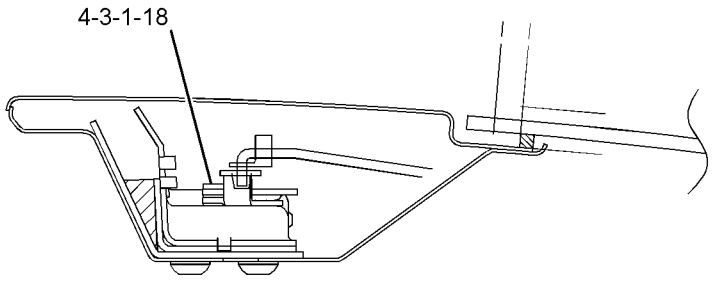

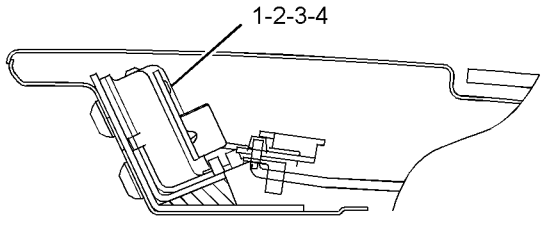

REFER TO ALL ILLUSTRATIONS OF THIS GROUP FOR AUXILIARY VIEWS

GRAPHIC #1

g01253828

REFER TO ALL ILLUSTRATIONS OF
THIS GROUP FOR AUXILIARY VIEWS

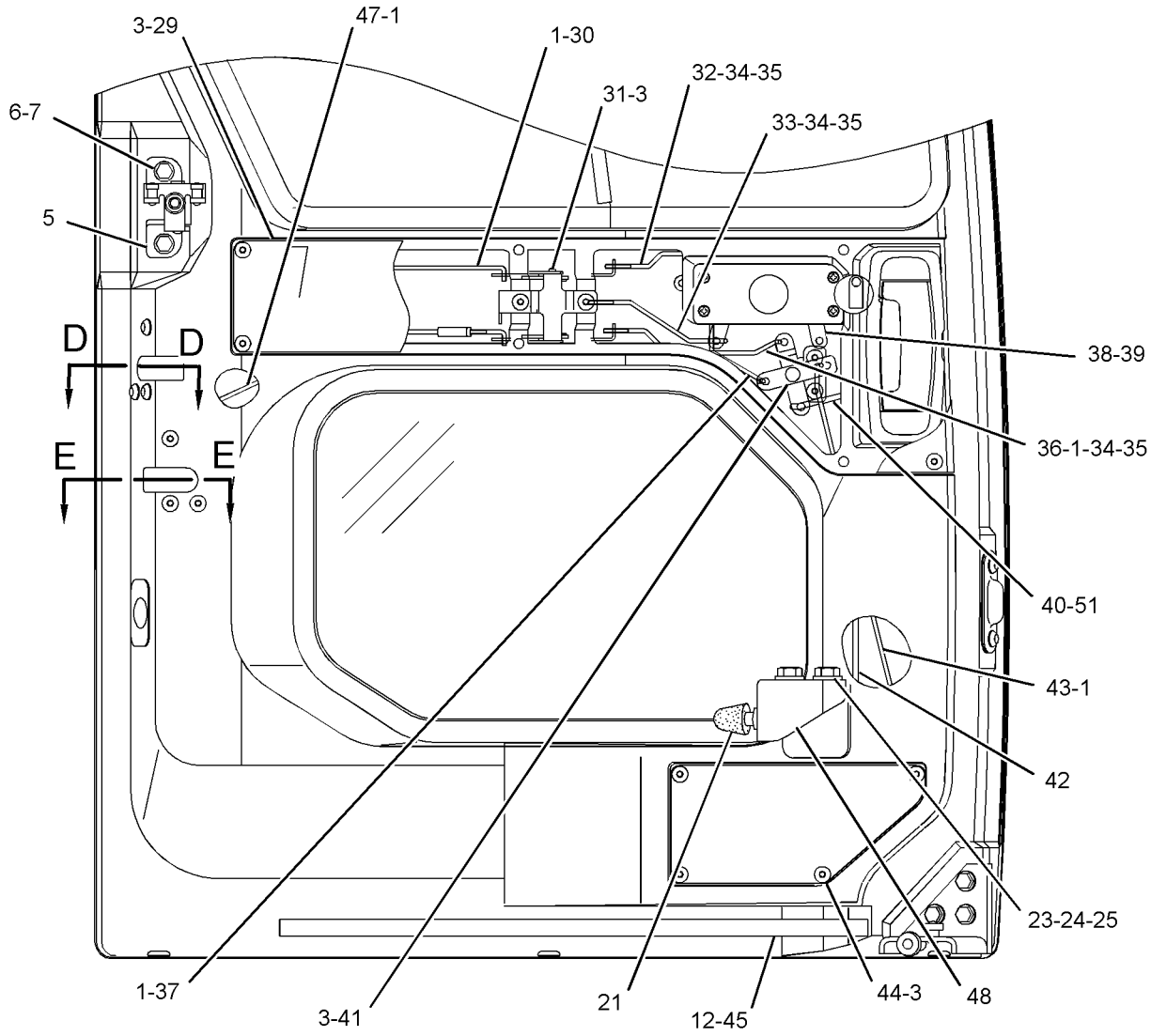

SECTION G-G

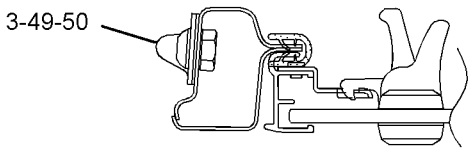

SECTION F-F

GRAPHIC #2 **<END>** g01253829

OPERATOR STATION

201-4543 DUCT GP-CAB AIR

S/N: BYJ1-UP; PDP1-UP
PART OF 284-4465 DUCT GP-CAB AIR
AN ATTACHMENT

SMCS-734D **i02826212**

NOTE	REF NO	GRAPHIC REF	PART NUMBER	QTY	PART NAME 1 2 3 4 5 6 (PRODUCT LEVEL)	SEE PAGE
	1	1	**201-4547**	1	INSULATOR	
	2	1	**201-4548**	1	INSULATOR	

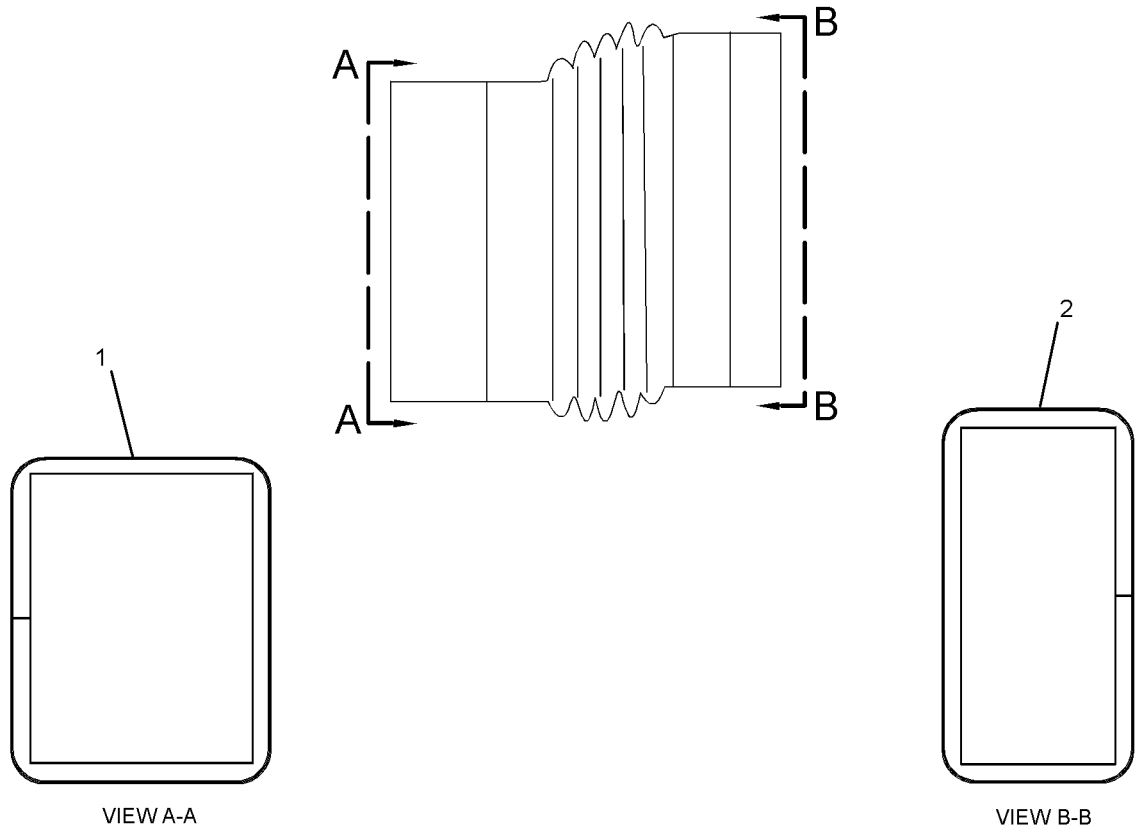

VIEW A-A VIEW B-B

GRAPHIC #1 **<END>** g01413298

OPERATOR STATION

284-4465 DUCT GP-CAB AIR

S/N: BYJ1-UP; PDP1-UP
PART OF 316-8898 AIR CONDITIONER AR, 316-8942 HEATER AR-CAB
AN ATTACHMENT

SMCS-734D **i03010041**

NOTE	REF NO	GRAPHIC REF	PART NUMBER	QTY	PART NAME 1 2 3 4 5 6 (PRODUCT LEVEL)	SEE PAGE
Y	1	1	**201-4543**	1	DUCT GP-CAB AIR	740
	2	1	**201-4560**	1	CUSHION	
	3	1	**229-9028**	2	CLIP	
	4	1	**273-5150**	1	DUCT GP-CAB AIR	
		1	**201-4545**	1	INSULATOR	
	5	1	**273-5152**	1	DUCT GP-CAB AIR	
		1	**201-4546**	1	INSULATOR	
	6	1	**273-5165**	1	COVER AS	
Y	7	1	**284-4466**	1	DUCT GP-CAB AIR	742
	8	1	**284-4496**	1	FILTER ELEMENT-CAB AIR	
	9	1	**8T-4121**	2	WASHER-HARD (11X21X2.5-MM THK)	
M	10	1	**8T-4191**	2	BOLT (M10X1.5X16-MM)	
	11	1	**8Y-6967**	2	LOUVER AS	
M	12	1	**9X-2042**	2	SCREW-TRUSS HEAD (M6X1X12-MM)	
M	13	1	**9X-2044**	3	SCREW-TRUSS HEAD (M6X1X16-MM)	

M-METRIC PART
Y-SEPARATE ILLUSTRATION

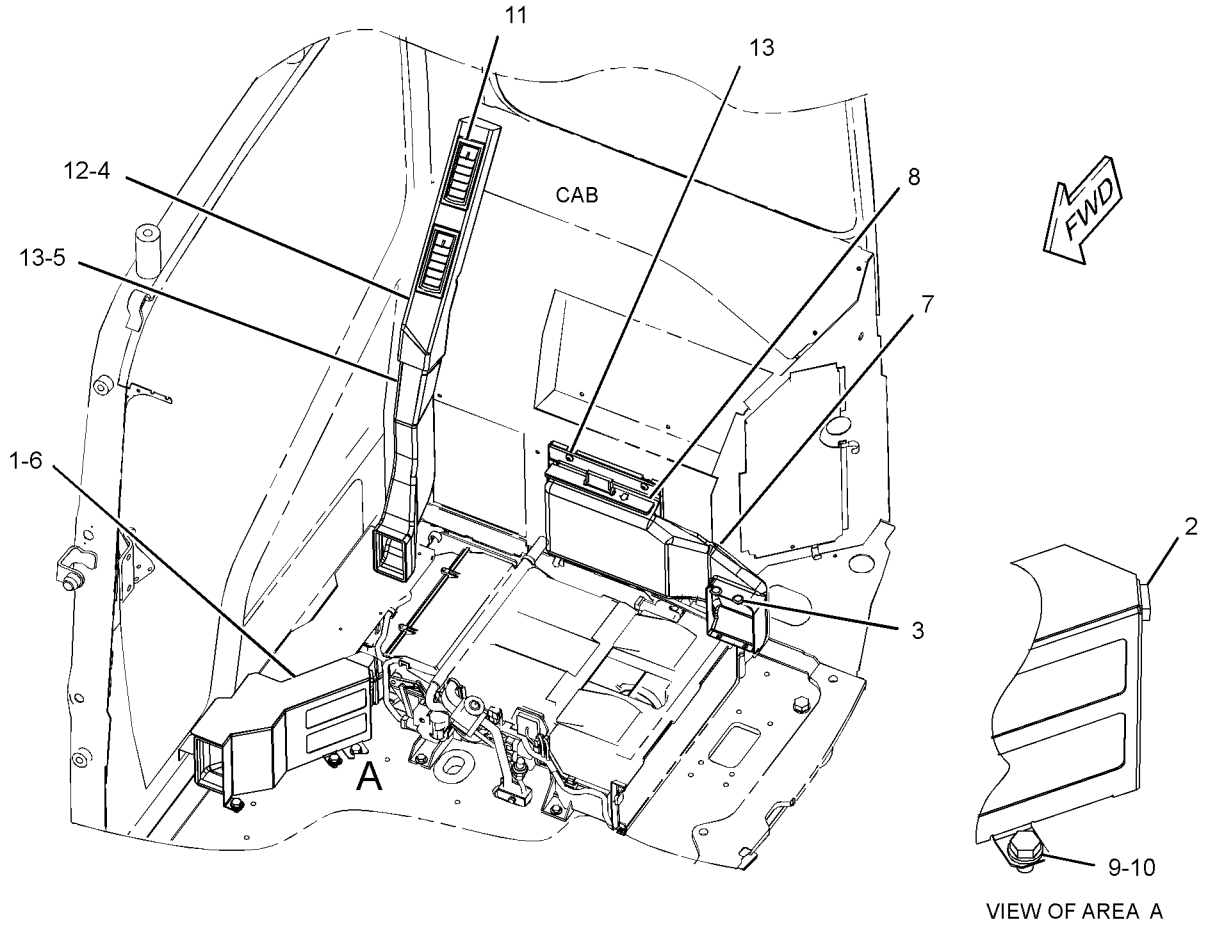

VIEW OF AREA A

GRAPHIC #1 **<END>** g01420111

OPERATOR STATION

284-4466 DUCT GP-CAB AIR

S/N: BYJ1-UP; PDP1-UP
PART OF 284-4465 DUCT GP-CAB AIR
AN ATTACHMENT

SMCS-734D **i02826210**

NOTE	REF NO	GRAPHIC REF	PART NUMBER	QTY	PART NAME 1 2 3 4 5 6 (PRODUCT LEVEL)	SEE PAGE
	1	1	**305-0311**	1	INSULATION	
	2	1	**293-1314**	1	INSULATION	
	3	1	**305-0260**	1	INSULATION	
	4	1	**305-0309**	1	INSULATION	
	5	1	**305-0310**	1	INSULATION	

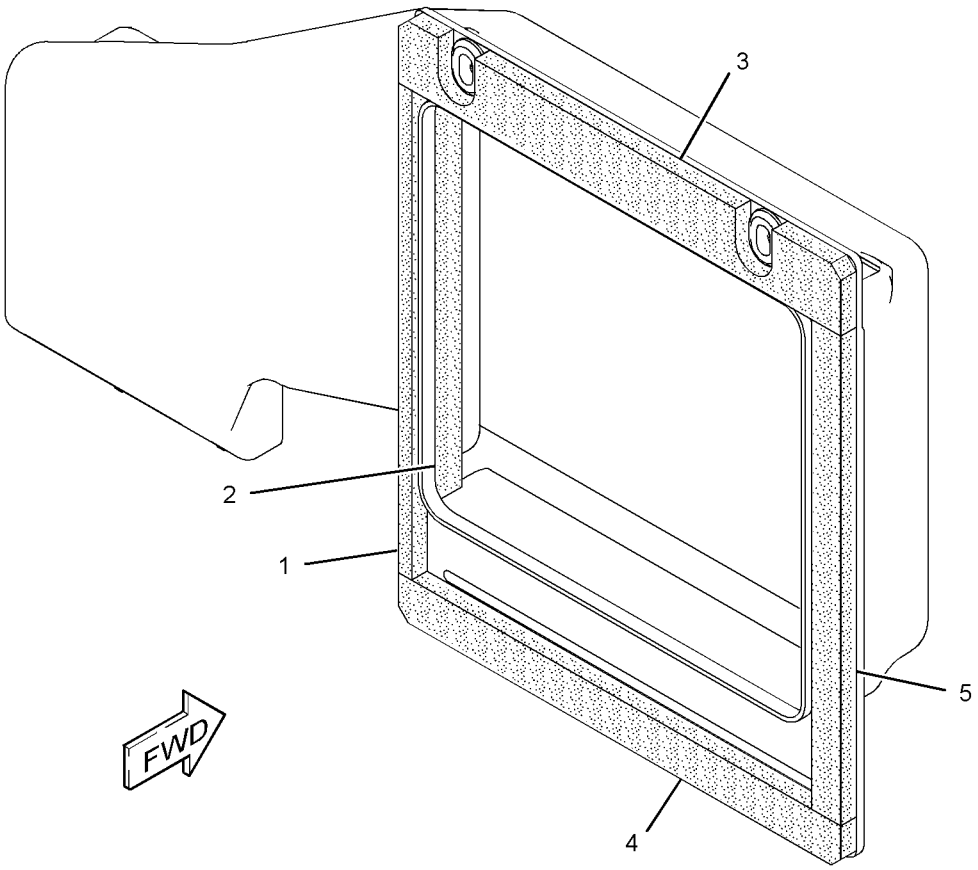

GRAPHIC #1 **<END>** g01413392

OPERATOR STATION

273-5297 FLOOR MAT GP

S/N: BYJ1-UP; PDP1-UP

FIELD REPLACEMENT FOR 273-5298—PAGE 744: FOR 273-5299—PAGE 745

AN ATTACHMENT

SMCS-7265, 726M **i02523559**

NOTE	REF NO	GRAPHIC REF	PART NUMBER	QTY	PART NAME 1 2 3 4 5 6 (PRODUCT LEVEL)	SEE PAGE
					(NO SERVICED PARTS)	

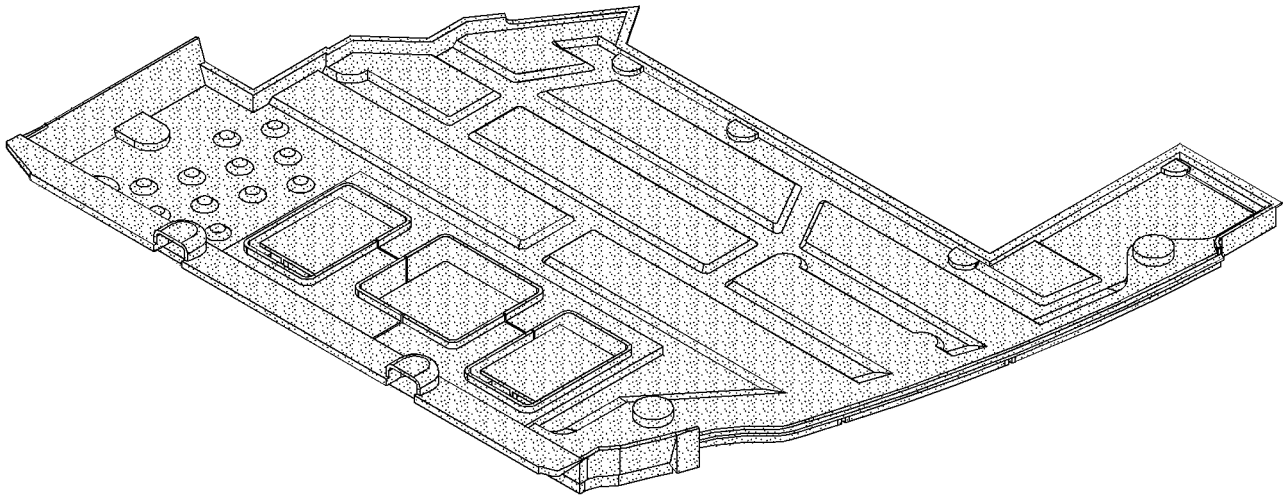

GRAPHIC #1 **<END>** g01264415

OPERATOR STATION

273-5298 FLOOR MAT GP

S/N: BYJ1-UP; PDP1-UP

FIELD REPLACEMENT ORDER 273-5297—PAGE 743. FOR USE WITH RH ATTACHMENT PEDAL AN ATTACHMENT

SMCS-7265, 726M **i02512363**

NOTE	REF NO	GRAPHIC REF	PART NUMBER	QTY	PART NAME 1 2 3 4 5 6 (PRODUCT LEVEL)	SEE PAGE
					(NO SERVICED PARTS)	

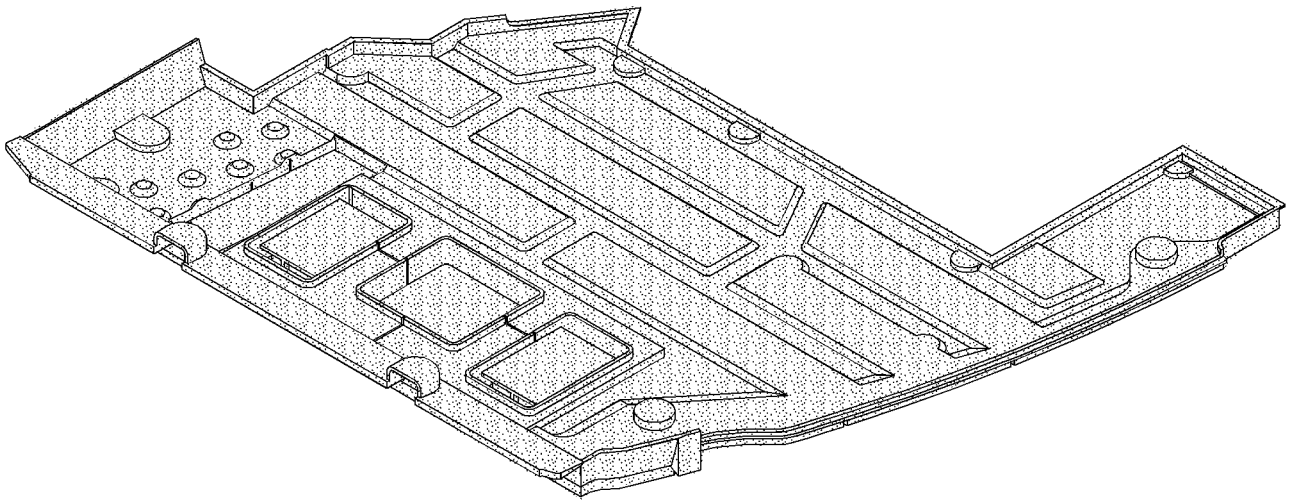

GRAPHIC #1 **<END>** g01264492

OPERATOR STATION

273-5299 FLOOR MAT GP

S/N: BYJ1-UP; PDP1-UP

FIELD REPLACEMENT ORDER 273-5297—PAGE 743. FOR USE WITH RH ATTACHMENT PEDAL AN ATTACHMENT

SMCS-7265, 726M **i02512362**

NOTE	REF NO	GRAPHIC REF	PART NUMBER	QTY	PART NAME 1 2 3 4 5 6 (PRODUCT LEVEL)	SEE PAGE
					(NO SERVICED PARTS)	

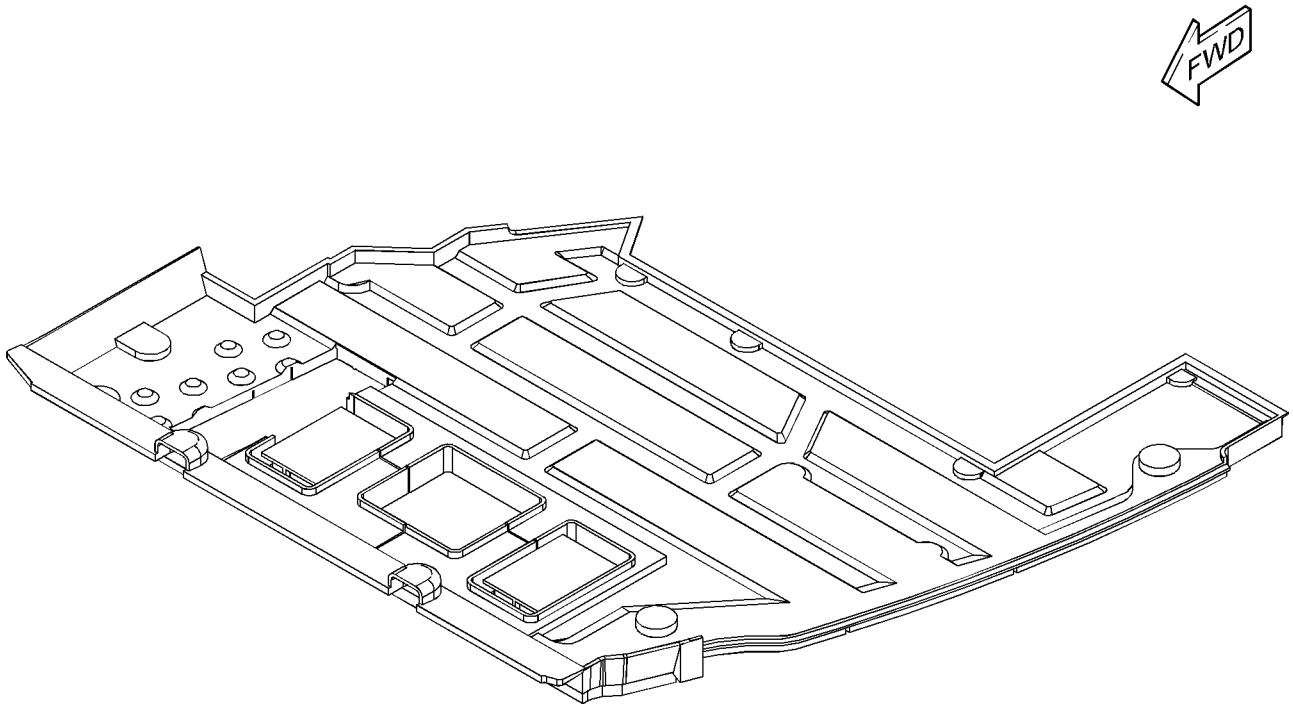

GRAPHIC #1 **<END>** g01264434

OPERATOR STATION

235-9030 GUARD AR-OVERHEAD

S/N: BYJ1-UP; PDP1-UP
FOGS
AN ATTACHMENT

SMCS-7159 **i02203383**

NOTE	PART NUMBER	QTY	PART NAME 1 2 3 4 5 6 (PRODUCT LEVEL)	SEE PAGE
Y	*235-9032*	1	GUARD GP-FRONT WINDOW	747
Y	*235-9031*	1	GUARD GP-OVERHEAD	748

Y-SEPARATE ILLUSTRATION

<END>

260-7197 GUARD AR-VANDALISM

S/N: BYJ1-UP; PDP1-UP
AN ATTACHMENT

SMCS-7315 **i02819103**

NOTE	PART NUMBER	QTY	PART NAME 1 2 3 4 5 6 (PRODUCT LEVEL)	SEE PAGE
Y	*273-5280*	1	GUARD GP-VANDALISM	749
Y	*278-3983*	1	STORAGE GP-VANDALISM GUARD	268

Y-SEPARATE ILLUSTRATION

<END>

260-7198 GUARD AR-VANDALISM

S/N: BYJ1-UP; PDP1-UP
AN ATTACHMENT

SMCS-7315 **i02826489**

NOTE	PART NUMBER	QTY	PART NAME 1 2 3 4 5 6 (PRODUCT LEVEL)	SEE PAGE
Y	*284-4527*	1	GUARD GP-VANDALISM (CAB WINDOW)	750
Y	*278-3983*	1	STORAGE GP-VANDALISM GUARD	268

Y-SEPARATE ILLUSTRATION

<END>

OPERATOR STATION

235-9032 GUARD GP-FRONT WINDOW

S/N: BYJ1-UP; PDP1-UP
PART OF 235-9030 GUARD AR-OVERHEAD
AN ATTACHMENT

SMCS-7182, 7315 **i03184642**

NOTE	REF NO	GRAPHIC REF	PART NUMBER	QTY	PART NAME 1 2 3 4 5 6 (PRODUCT LEVEL)	SEE PAGE
C	1	1	**219-0305**	1	FILM-WARNING (NO WELD, NO DRILL, READ OMM)	
	2	1	**327-6613**	1	FRAME AS	
C	3	1	**298-4195**	1	FILM-CERTIFICATION (OPS GUARD, READ OMM, ENGLISH)	
					—OR—	
C			**298-4254**	1	FILM-CERTIFICATION (OPS GUARD, READ OMM, JAPANESE)	
M	4	1	**8T-4192**	6	BOLT (M12X1.75X25-MM)	
	5	1	**8T-4223**	6	WASHER-HARD (13.5X25.5X3-MM THK)	

C-CHANGE FROM PREVIOUS TYPE
M-METRIC PART

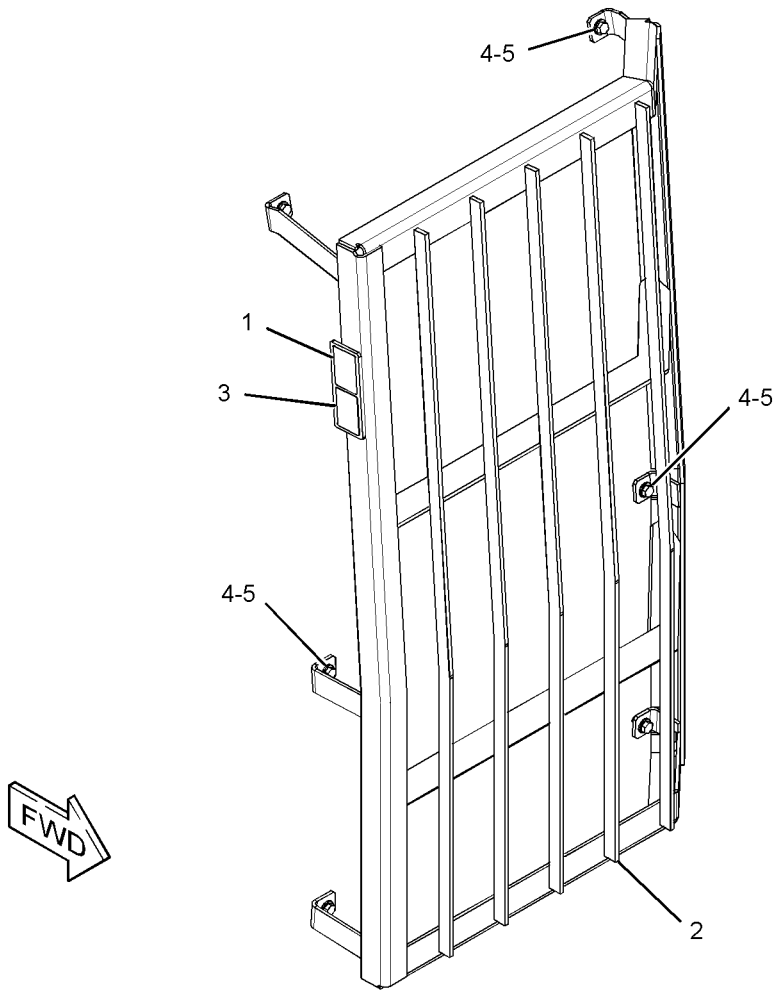

GRAPHIC #1 **<END>** g01426041

OPERATOR STATION

235-9031 GUARD GP-OVERHEAD

S/N: BYJ1-UP; PDP1-UP
PART OF 235-9030 GUARD AR-OVERHEAD
AN ATTACHMENT

SMCS-7159 **i02837146**

NOTE	REF NO	GRAPHIC REF	PART NUMBER	QTY	PART NAME 1 2 3 4 5 6 (PRODUCT LEVEL)	SEE PAGE
BC	1	1	**219-0305**	1	FILM-WARNING (NO WELD, NO DRILL, READ OMM)	
	2	1	**240-4986**	1	GUARD AS	
BC	3	1	**298-4196**	1	FILM-CERTIFICATION (OPS GUARD, READ OMM)	
					—OR—	
BC			**298-4255**	1	FILM-CERTIFICATION (OPS GUARD, READ OMM)	
M	4	1	**7X-2557**	2	BOLT (M16X2X140-MM)	
M	5	1	**7X-2558**	4	BOLT (M16X2X150-MM)	
	6	1	**9X-8257**	6	WASHER (17.5X30X3.5-MM THK)	

B-USE AS REQUIRED
C-CHANGE FROM PREVIOUS TYPE
M-METRIC PART

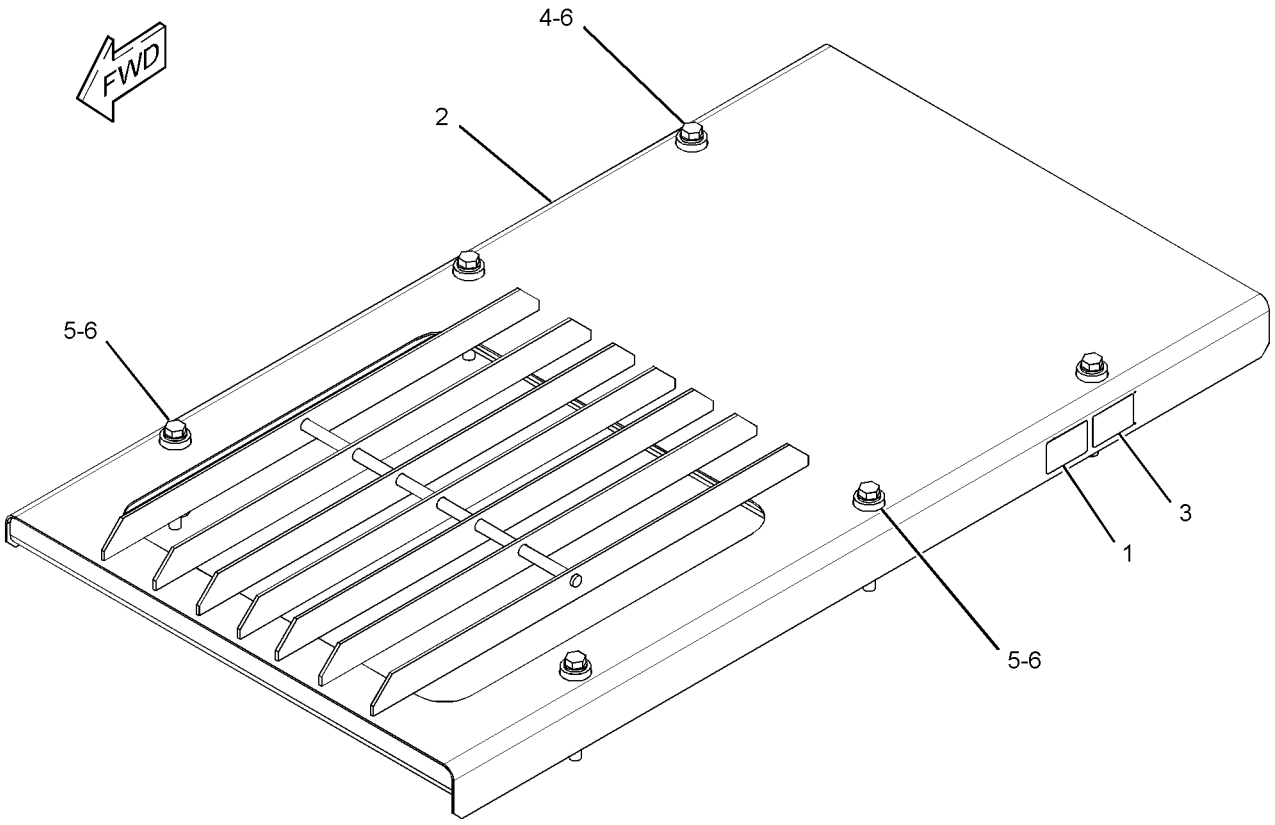

GRAPHIC #1 **<END>** g01425907

OPERATOR STATION

273-5280 GUARD GP-VANDALISM

S/N: BYJ1-UP; PDP1-UP
PART OF 260-7197 GUARD AR-VANDALISM
AN ATTACHMENT

SMCS-7315 **i02475943**

NOTE	REF NO	GRAPHIC REF	PART NUMBER	QTY	PART NAME 1 2 3 4 5 6 (PRODUCT LEVEL)	SEE PAGE
	1	1	**122-9595**	6	PIN	
	2	1	**122-9596**	1	PIN	
	3	1	**273-5281**	1	GUARD AS	
		1	**240-5025**	2	HINGE	
		1	**240-5026**	12	RIVET	
	4	1	**273-5284**	1	GUARD AS	
		1	**240-5025**	2	HINGE	
		1	**240-5026**	12	RIVET	
	5	1	**273-5287**	1	GUARD AS	
		1	**240-5025**	2	HINGE	
		1	**240-5026**	12	RIVET	
	6	1	**273-5290**	1	GUARD AS	
		1	**240-5025**	2	HINGE	
		1	**240-5026**	12	RIVET	
	7	1	**273-5293**	1	GUARD AS	
		1	**240-5025**	2	HINGE	
		1	**240-5026**	12	RIVET	
M	8	1	**8T-4200**	2	BOLT (M8X1.25X16-MM)	
	9	1	**8T-4224**	2	WASHER-HARD (8.8X16X2-MM THK)	

M-METRIC PART

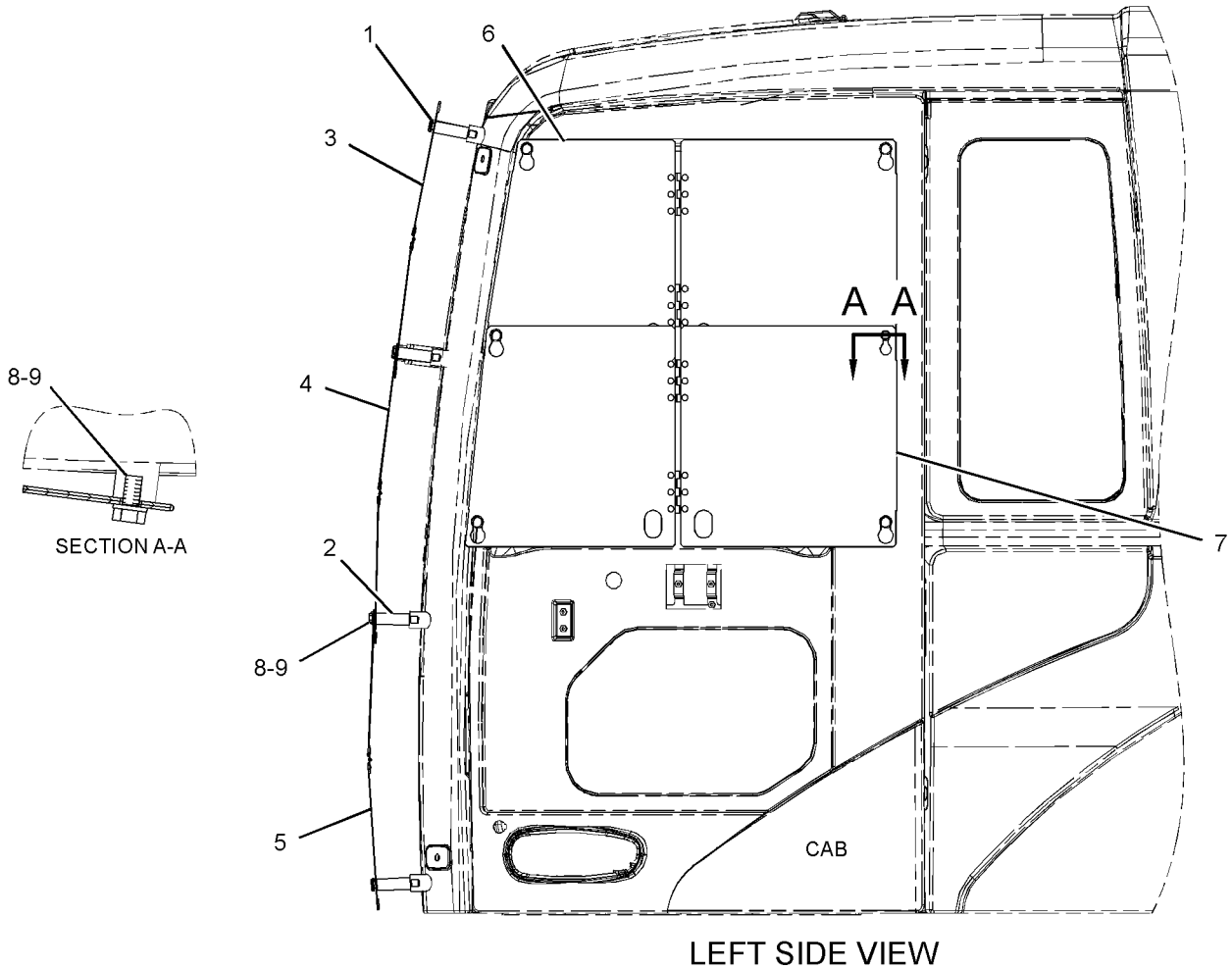

LEFT SIDE VIEW

GRAPHIC #1 **<END>** g01267473

OPERATOR STATION

284-4527 GUARD GP-VANDALISM—CAB WINDOW

S/N: BYJ1-UP; PDP1-UP
PART OF 260-7198 GUARD AR-VANDALISM
AN ATTACHMENT

SMCS-7315 **i02836795**

NOTE	REF NO	GRAPHIC REF	PART NUMBER	QTY	PART NAME 1 2 3 4 5 6 (PRODUCT LEVEL)	SEE PAGE
	1	1	**122-9595**	4	PIN	
	2	1	**122-9596**	1	PIN	
	3	1	**273-5284**	1	GUARD AS	
	4	1	**273-5287**	1	GUARD AS	
	5	1	**273-5290**	1	GUARD AS	
	6	1	**273-5293**	1	GUARD AS	
	7	1	**284-4528**	1	GUARD AS	
					(EACH GUARD AS INCLUDES)	
		1	**240-5025**	2	HINGE	
		1	**240-5026**	12	RIVET	
	8	1	**284-4531**	1	BRACKET AS	
M	9	1	**8T-4138**	4	BOLT (M6X1X20-MM)	
M	10	1	**8T-4200**	2	BOLT (M8X1.25X16-MM)	
	11	1	**8T-4224**	2	WASHER-HARD (8.8X16X2-MM THK)	

M-METRIC PART

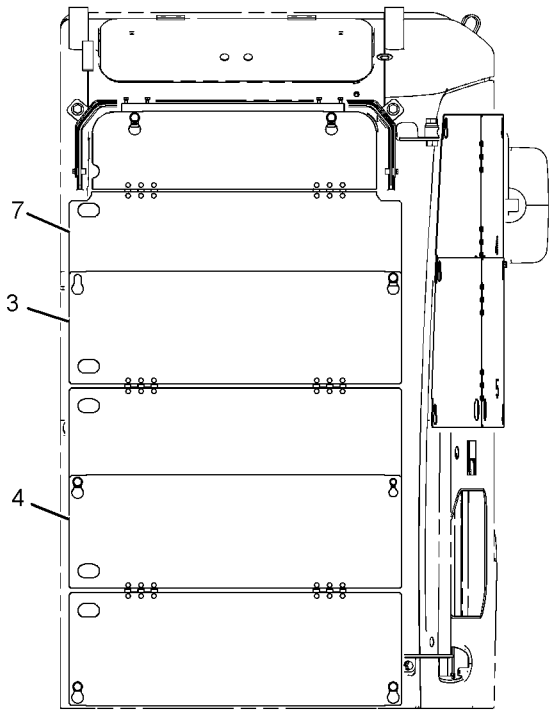

FRONT VIEW

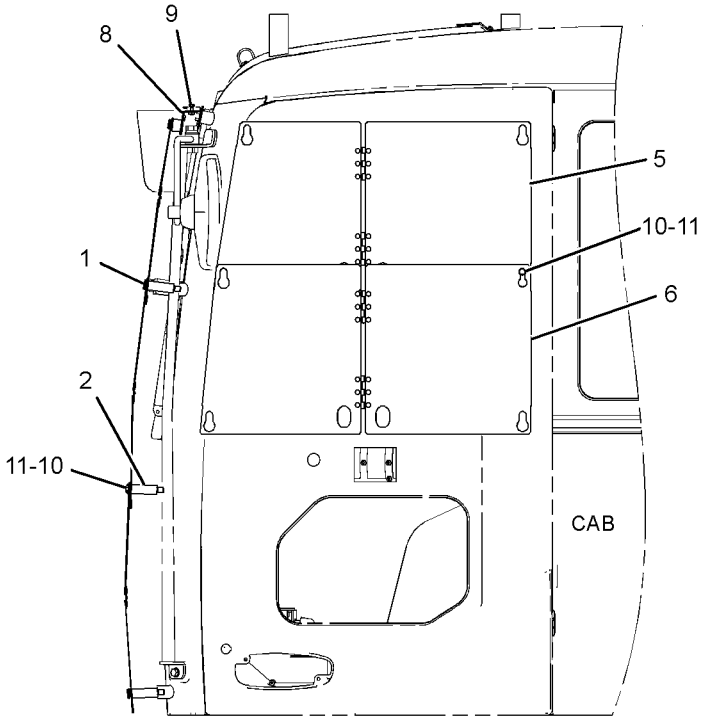

LEFT SIDE VIEW

GRAPHIC #1 **<END>** g01421231

OPERATOR STATION

214-1252 GUARD GP-WINDOW

S/N: BYJ1-UP; PDP1-UP
AN ATTACHMENT
TYPE 1

SMCS-7182, 7315 **i01662122**

NOTE	REF NO	GRAPHIC REF	PART NUMBER	QTY	PART NAME 1 2 3 4 5 6 (PRODUCT LEVEL)	SEE PAGE
M	1	1	**8T-4192**	6	BOLT (M12X1.75X25-MM)	
	2	1	**8T-4223**	6	WASHER-HARD (13.5X25.5X3-MM THK)	
	3	1	**207-0268**	1	FRAME AS	

M-METRIC PART

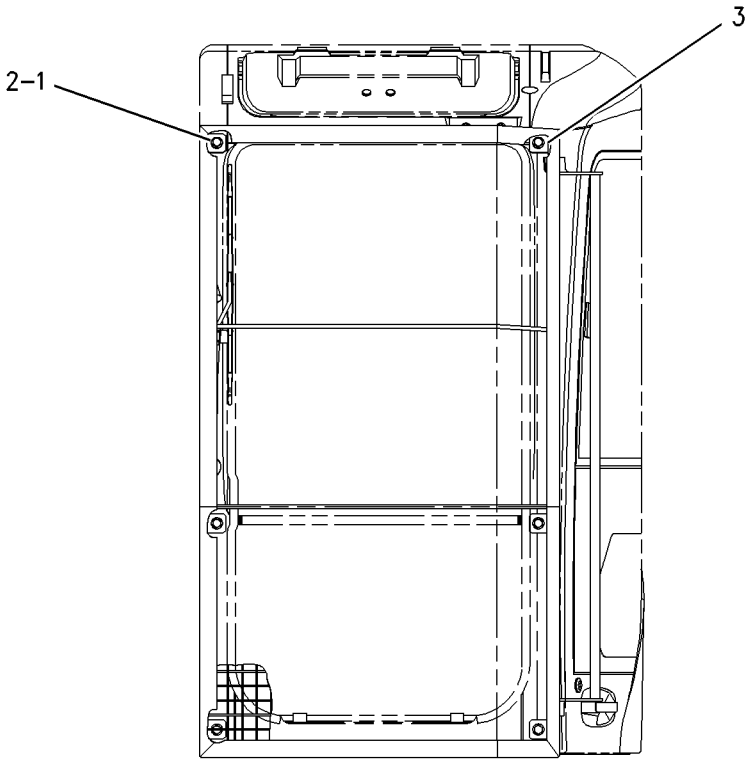

FRONT VIEW

GRAPHIC #1 **<END>** g00858456

OPERATOR STATION

214-1252 GUARD GP-WINDOW

S/N: BYJ1-UP; PDP1-UP
AN ATTACHMENT
TYPE 2

SMCS-7182, 7315 **i03160820**

NOTE	REF NO	GRAPHIC REF	PART NUMBER	QTY	PART NAME 1 2 3 4 5 6 (PRODUCT LEVEL)	SEE PAGE
C	1	1	**316-8946**	1	FRAME AS	
M	2	1	**8T-4192**	6	BOLT (M12X1.75X25-MM)	
	3	1	**8T-4223**	6	WASHER-HARD (13.5X25.5X3-MM THK)	

C-CHANGE FROM PREVIOUS TYPE
M-METRIC PART

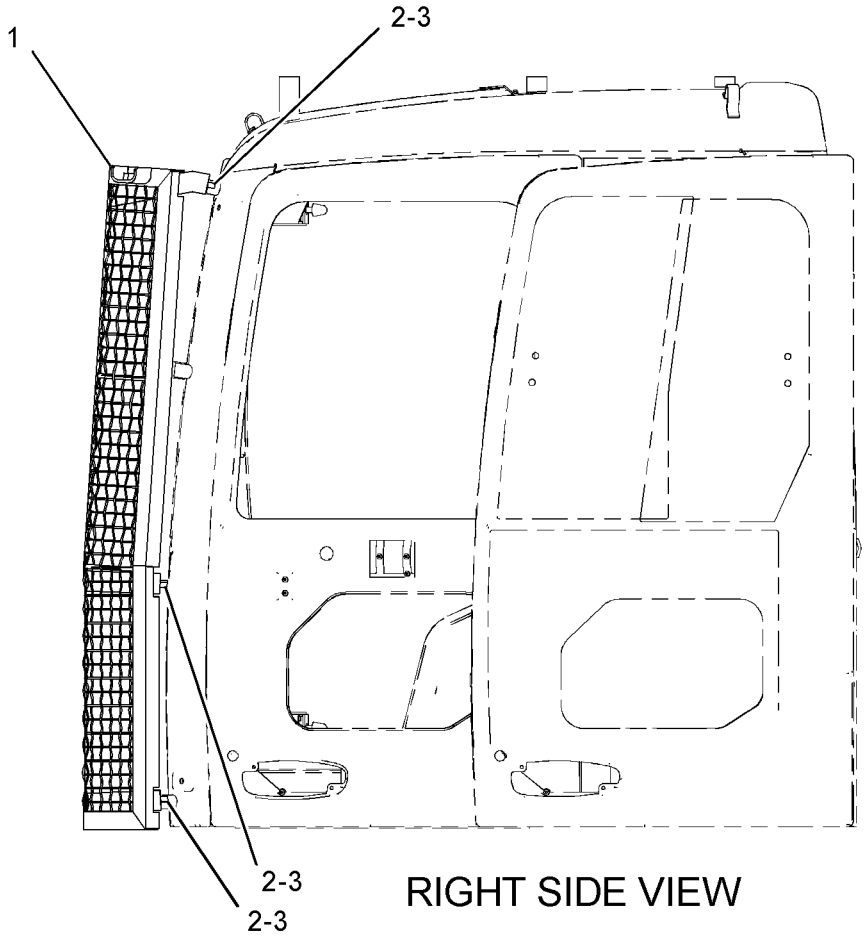

RIGHT SIDE VIEW

GRAPHIC #1 **<END>** g01626138

OPERATOR STATION

214-1253 GUARD GP-WINDOW

S/N: BYJ1-UP; PDP1-UP
AN ATTACHMENT

SMCS-7182, 7315 **i01662131**

NOTE	REF NO	GRAPHIC REF	PART NUMBER	QTY	PART NAME 1 2 3 4 5 6 (PRODUCT LEVEL)	SEE PAGE
M	1	1	**8T-4192**	4	BOLT (M12X1.75X25-MM)	
	2	1	**8T-4223**	4	WASHER-HARD (13.5X25.5X3-MM THK)	
	3	1	**210-5784**	1	FRAME AS	

M-METRIC PART

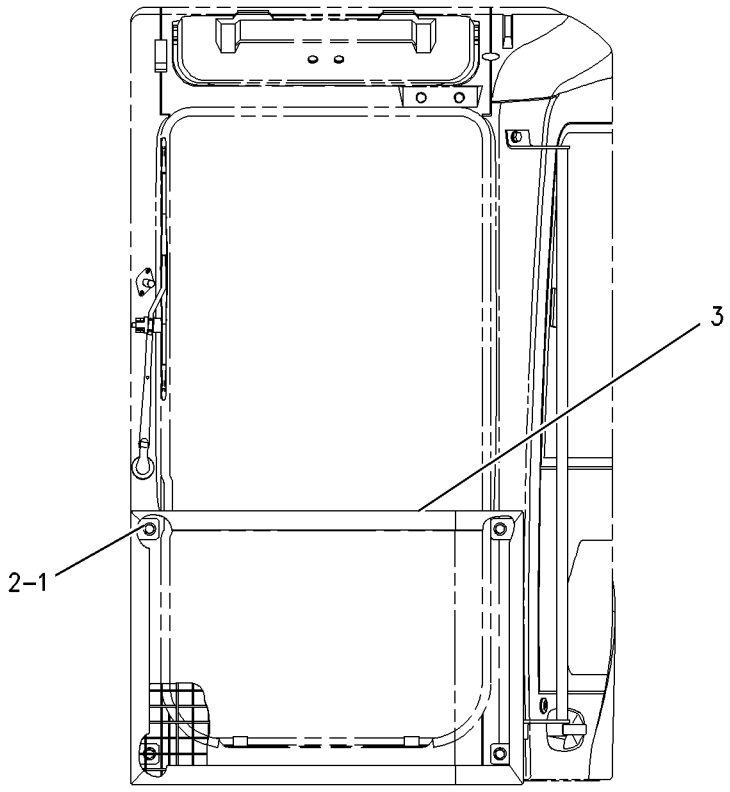

FRONT VIEW

GRAPHIC #1 **<END>** g00858451

OPERATOR STATION

273-5214 HATCH GP-ROOF

S/N: BYJ1-UP; PDP1-UP
PART OF 259-7277 CAB GP, 259-7275 CAB GP-ENCLOSED ROPS
AN ATTACHMENT

SMCS-7303 **i02486465**

NOTE	REF NO	GRAPHIC REF	PART NUMBER	QTY	PART NAME 1 2 3 4 5 6 (PRODUCT LEVEL)	SEE PAGE
	1	1	**196-1559**	2	RETAINER	
	2	1	**201-4493**	2	PACKING	
M	3	1	**9X-2043**	2	SCREW-TRUSS HEAD (M6X1X14-MM)	
	4	1	**259-7352**	1	CATCH	
	5	1	**207-0233**	1	COVER	
	6	1	**207-0242**	4	SEAL	
	7	1	**207-0241**	2	RETAINER	
	8	1	**273-5215**	4	SCREW	
	9	1	**196-1546**	1	BRACKET	
	10	1	**196-1544**	2	HINGE AS	
	11	1	**207-0235**	4	NUT AS (M8X1.25-THD)	
	12	1	**8T-4224**	8	WASHER-HARD (8.8X16X2-MM THK)	
	13	1	**127-3933**	4	PACKING	
M	14	1	**8T-7547**	4	BOLT (M8X1.25X30-MM)	
	15	1	**207-0234**	2	SEAL	
	16	1	**210-5830**	1	BRACKET	

M-METRIC PART

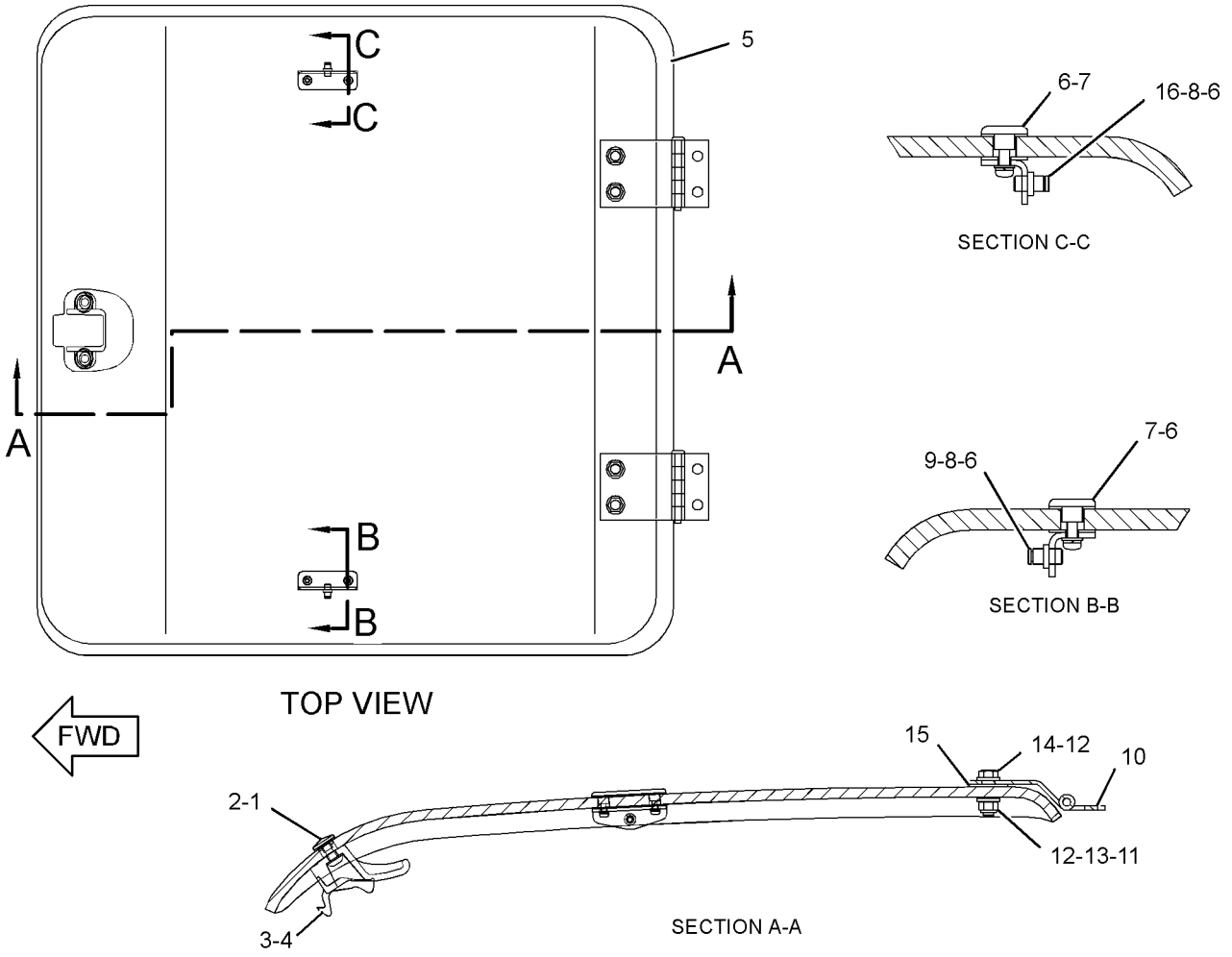

GRAPHIC #1 **<END>** g01252565

OPERATOR STATION

293-1235 HEATER & MTG GP-CAB

S/N: BYJ1-UP; PDP1-UP
PART OF 316-8942 HEATER AR-CAB
AN ATTACHMENT

SMCS-7304 **i03192355**

NOTE	REF NO	GRAPHIC REF	PART NUMBER	QTY	PART NAME 1 2 3 4 5 6 (PRODUCT LEVEL)	SEE PAGE
	1	1	**3S-2093**	5	STRAP-CABLE	
	2	1	**111-4836**	1	CLIP	
	3	1	**235-8874**	1	SENSOR-TEMPERATURE (AMBIENT AIR)	
	4	1	**235-8875**	1	BRACKET	
Y	5	1	**316-8900**	1	DISTRIBUTOR GP-AIR	732
	6	1	**259-7369**	1	HARNESS AS-SENSOR (AIR TEMPERATURE)	
	7	1	**273-5276**	1	COVER AS	
Y	8	1	**284-4439**	1	AIR CONDITIONER GP	661
	9	1	**293-1295**	1	PANEL AS-CONTROL	
M	10	1	**095-0742**	1	SCREW-MACHINE (M6X1X16-MM)	
	11	1	**119-5026**	4	SCREW-PAN HEAD (10-16X0.63-IN)	
M	12	1	**5C-9553**	1	BOLT (M6X1X16-MM)	
	13	1	**5P-4116**	4	WASHER-HARD (8.8X20.5X2-MM THK)	
	14	1	**8T-4121**	3	WASHER-HARD (11X21X2.5-MM THK)	
M	15	1	**8T-4137**	1	BOLT (M10X1.5X20-MM)	
M	16	1	**8T-4189**	4	BOLT (M8X1.25X20-MM)	
M	17	1	**8T-4191**	2	BOLT (M10X1.5X16-MM)	
	18	1	**8Y-6967**	2	LOUVER AS	
	19	1	**9X-8256**	2	WASHER (6.6X12X2-MM THK)	
	20	1	**327-6636**	2	GUARD	

M-METRIC PART
Y-SEPARATE ILLUSTRATION

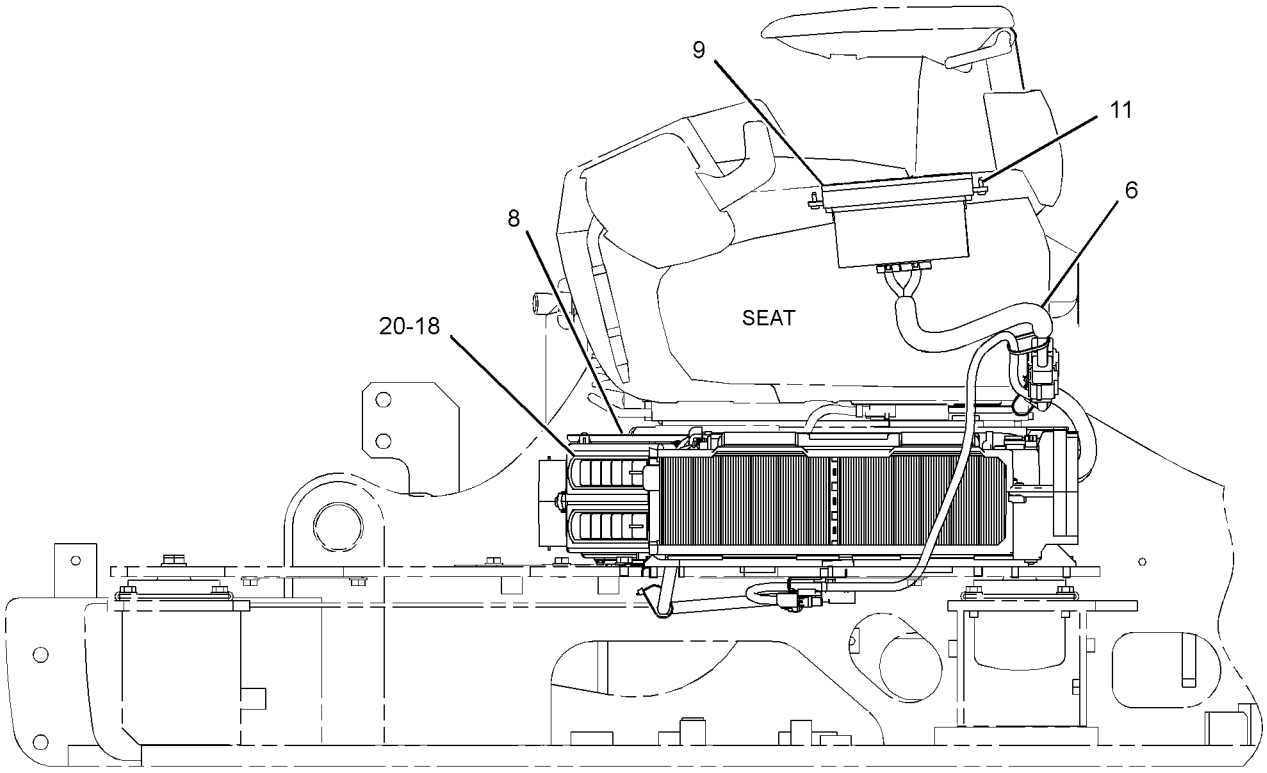

LEFT SIDE VIEW

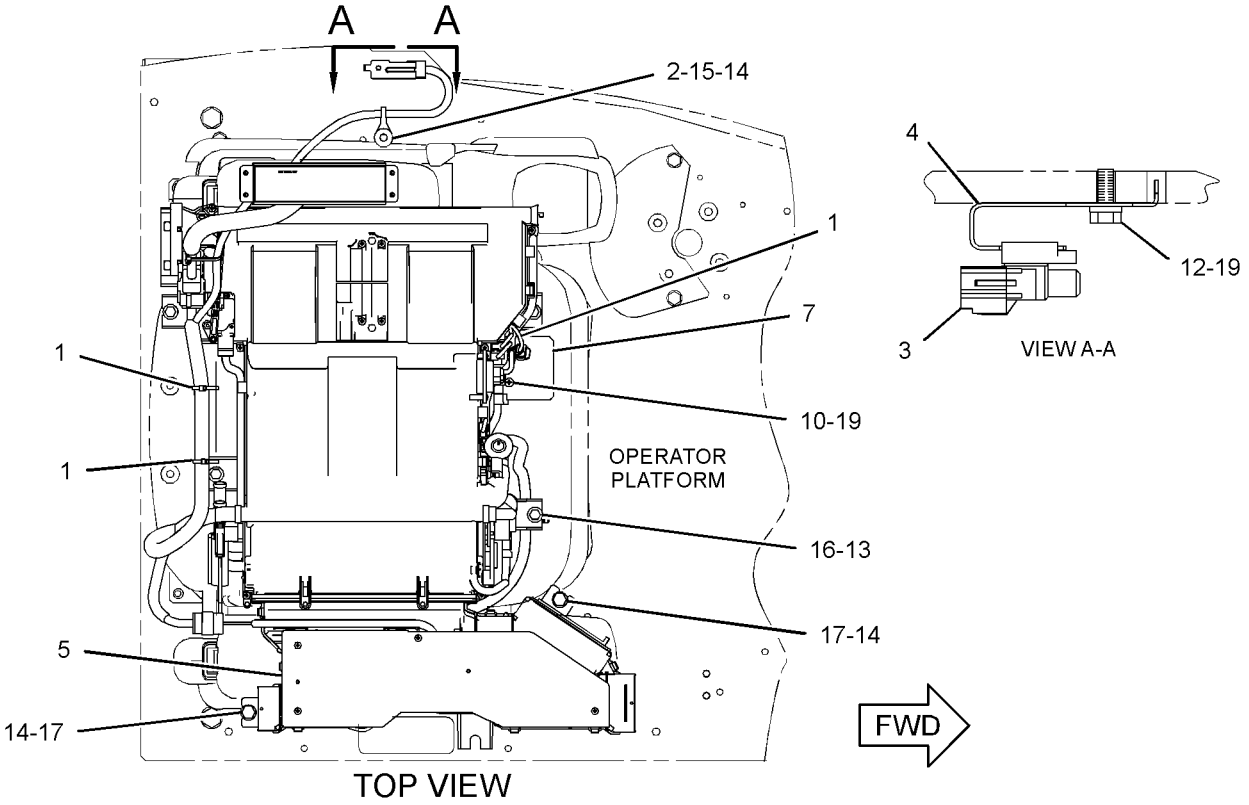

TOP VIEW

GRAPHIC #1 **<END>** g01629096

OPERATOR STATION

316-8942 HEATER AR-CAB

S/N: BYJ1-UP; PDP1-UP
AN ATTACHMENT

SMCS-7304 **i02962122**

NOTE	PART NUMBER	QTY	PART NAME 1 2 3 4 5 6 (PRODUCT LEVEL)	SEE PAGE
Y	*284-4465*	1	DUCT GP-CAB AIR	741
Y	*293-1235*	1	HEATER & MTG GP-CAB	755
Y	*293-1236*	1	LINES GP-HEATER	766

Y-SEPARATE ILLUSTRATION

<END>

OPERATOR STATION

275-6981 HORN GP-ELECTRIC

S/N: BYJ1-UP; PDP1-UP

PART OF 260-7182, 260-7183 CHASSIS AR

SMCS-7402 **i02811979**

NOTE	REF NO	GRAPHIC REF	PART NUMBER	QTY	PART NAME 1 2 3 4 5 6 (PRODUCT LEVEL)	SEE PAGE
Y	1	1	*275-6982*	1	HORN GP-ELECTRIC	759
	2	1	**8T-4121**	2	WASHER-HARD (11X21X2.5-MM THK)	
M	3	1	**8T-4191**	2	BOLT (M10X1.5X16-MM)	

M-METRIC PART
Y-SEPARATE ILLUSTRATION

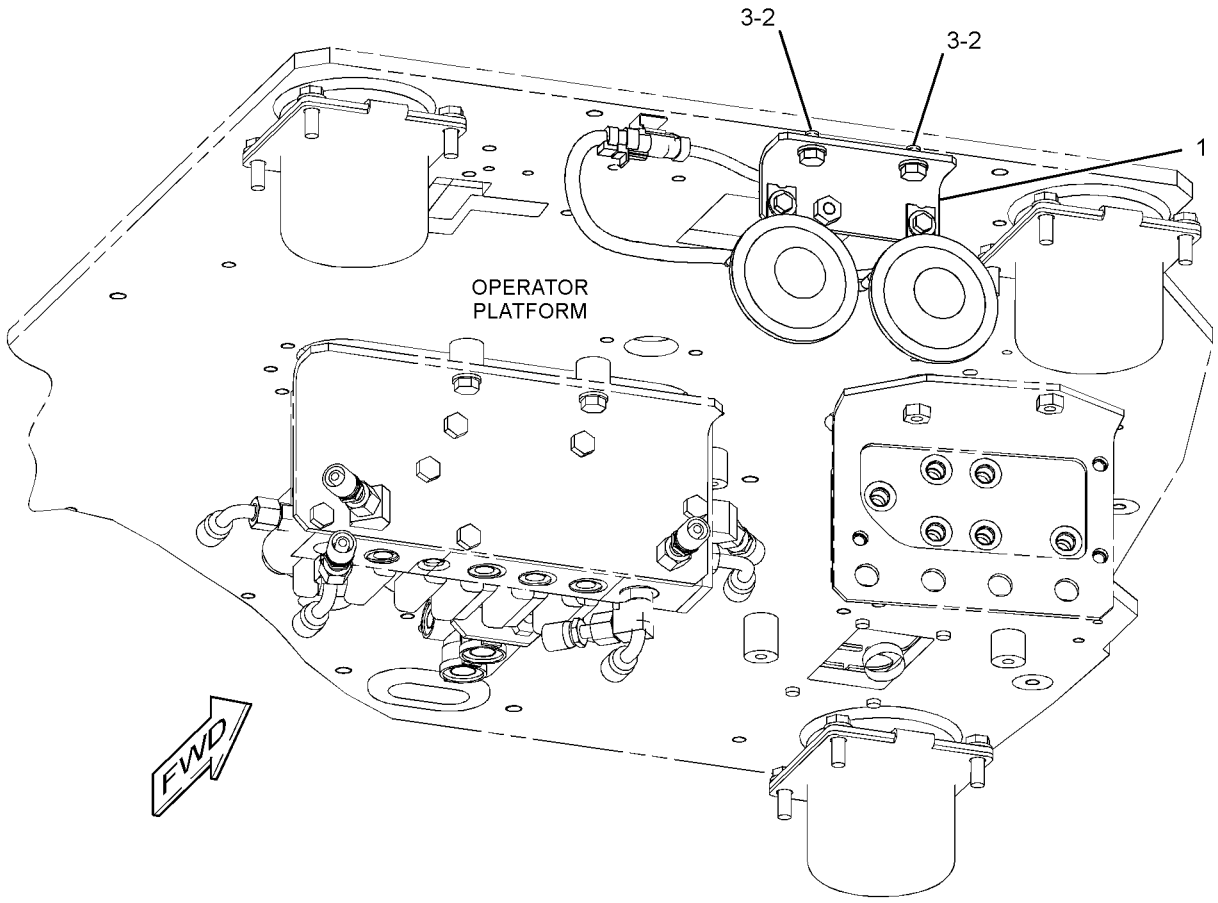

GRAPHIC #1 **<END>** g01415285

OPERATOR STATION

275-6982 HORN GP-ELECTRIC

S/N: BYJ1-UP; PDP1-UP

PART OF 275-6981 HORN GP-ELECTRIC

SMCS-7402 **i02811980**

NOTE	REF NO	GRAPHIC REF	PART NUMBER	QTY	PART NAME 1 2 3 4 5 6 (PRODUCT LEVEL)	SEE PAGE
	1	1	**7K-1181**	1	STRAP-CABLE	
	2	1	**7Y-3919**	1	HORN AS (24-VOLT)	
		1	**095-0826**	2	LOCKWASHER	
M		1	**095-7930**	2	SCREW-MACHINE (M4X0.07X6-MM)	
	3	1	**7Y-3920**	1	HORN AS (24-VOLT)	
		1	**095-0826**	2	LOCKWASHER	
M		1	**095-7930**	2	SCREW-MACHINE (M4X0.07X6-MM)	
	4	1	**275-6983**	1	HARNESS AS-ALARM	
	5	1	**275-6984**	1	BRACKET AS	
	6	1	**132-5789**	1	CLIP	
	7	1	**8T-4121**	3	WASHER-HARD (11X21X2.5-MM THK)	
M	8	1	**8T-4137**	3	BOLT (M10X1.5X20-MM)	

M-METRIC PART

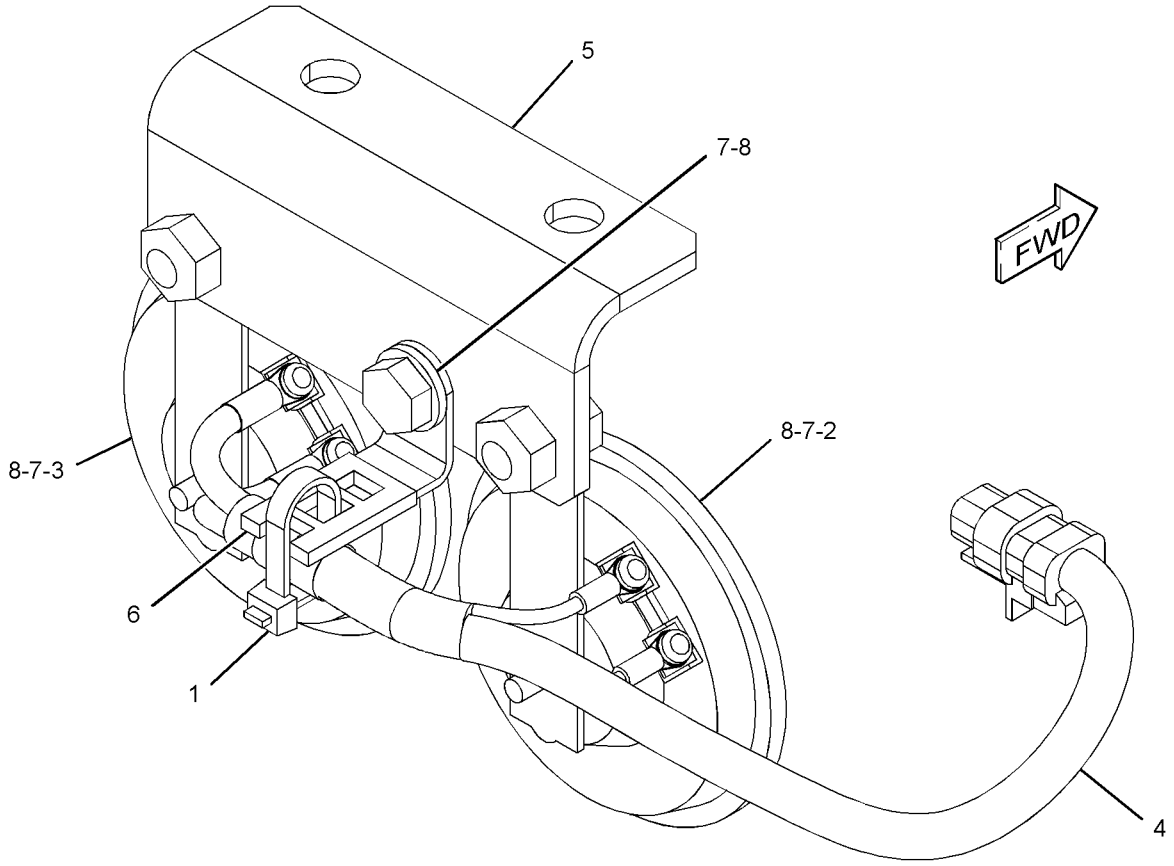

GRAPHIC #1 **<END>** g01415332

OPERATOR STATION

330-8750 INSTALLATION AR

S/N: BYJ1-UP; PDP1-UP
FOR USE WITH 327-6559—PAGE 771, 327-6550—PAGE 770
AN ATTACHMENT

SMCS-1405, 1802, 1805, 1808, 7174, 7304, 7319, 7320, 7348, 734D **i03254281**

NOTE	PART NUMBER	QTY	PART NAME 1 2 3 4 5 6 (PRODUCT LEVEL)	SEE PAGE
Y	*330-8751*	1	INSTALLATION AR (CAMERA)	760
Y	*330-1321*	1	MIRROR GP-REAR VIEW (SIDE)	773

Y-SEPARATE ILLUSTRATION

<END>

330-8751 INSTALLATION AR—CAMERA

S/N: BYJ1-UP; PDP1-UP
PART OF 330-8750 INSTALLATION AR
AN ATTACHMENT

SMCS-1405, 1802, 1805, 1808, 7174, 7304, 7319, 7320, 7348, 734D **i03254282**

NOTE	PART NUMBER	QTY	PART NAME 1 2 3 4 5 6 (PRODUCT LEVEL)	SEE PAGE
Y	*303-2787*	1	FILM GP (WORK AREA VISUAL SYSTEM, REAR)	828
Y	*330-1319*	1	MOUNTING GP-CAMERA	140
Y	*328-0081*	1	WIRING GP-CAB (REAR VISION CAMERA)	182
Y	*328-0082*	1	WIRING GP-CAMERA (WORK AREA VISUAL SYSTEM)	184

Y-SEPARATE ILLUSTRATION

<END>

OPERATOR STATION

251-0538 INSTALLATION GP-RADIO

S/N: BYJ1-UP; PDP1-UP

PART OF 273-5406 OPERATOR AR

SMCS-7338 **i02996046**

NOTE	REF NO	GRAPHIC REF	PART NUMBER	QTY	PART NAME 1 2 3 4 5 6 (PRODUCT LEVEL)	SEE PAGE
	1	1	**3S-2093**	2	STRAP-CABLE	
	2	1	**7K-1181**	2	STRAP-CABLE	
M	3	1	**095-0736**	2	SCREW-MACHINE (M5X0.8X10-MM)	
	4	1	**238-2260**	1	CABLE	
	5	1	**306-8802**	1	RADIO-AM/FM	
	6	1	**259-4914**	1	BRACKET AS	
	7	1	**119-5026**	2	SCREW-PAN HEAD (10-16X0.63-IN)	

M-METRIC PART

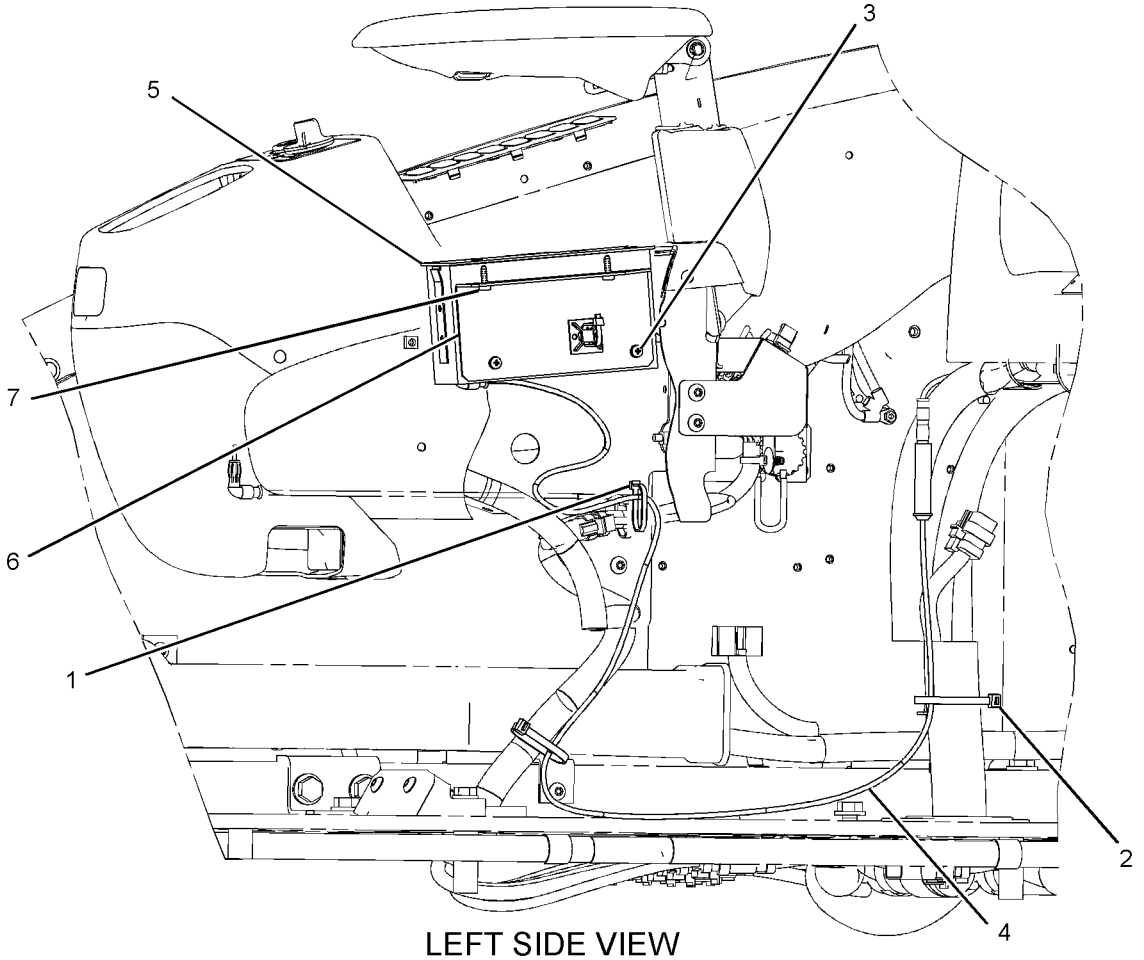

LEFT SIDE VIEW

GRAPHIC #1 **<END>** g01520813

OPERATOR STATION

316-8807 LINES GP-AIR CONDITIONER

S/N: BYJ1-UP; PDP1-UP

PART OF 260-7182, 260-7183 CHASSIS AR

SMCS-1808 **i02984340**

NOTE	REF NO	GRAPHIC REF	PART NUMBER	QTY	PART NAME 1 2 3 4 5 6 (PRODUCT LEVEL)	SEE PAGE
	1	1	**4I-4580**	1	FITTING	
	2	2	**7I-0375**	1	ELBOW	
	3	1	**122-9605**	2	TUBE	
	4	1,2	**155-7024**	2	SPACER-SPECIAL	
	5	2	**229-8997**	1	RECEIVER DRYER AS	
	6	2	**229-8998**	1	BRACKET AS	
	7	1,2	**235-9014**	8	CLAMP-HOSE	
	8	2	**284-4434**	1	HOSE AS	
		2	**113-3468**	1	SEAL-O-RING	
		2	**245-7851**	1	PLUG	
	9	1	**284-4435**	1	BRACKET AS	
	10	1	**284-4443**	1	BRACKET AS	
	11	1	**293-1233**	1	HOSE AS	
		1	**113-3468**	2	SEAL-O-RING	
	12	1	**305-0441**	2	BAND-MARKER (HS)	
	13	1,2	**305-0442**	2	BAND-MARKER (HR)	
	14	2	**316-8801**	1	HOSE AS	
		2	**113-3467**	1	SEAL-O-RING	
		2	**245-7850**	1	PLUG	
	15	2	**316-8802**	1	HOSE AS	
E		2	**145-8495**		GUARD (35-CM)	
		2	**113-3467**	2	SEAL-O-RING	
	16	1	**316-8803**	1	HOSE AS	
E		1	**7I-7439**		GUARD (40-CM)	
		1	**121-7063**	2	SEAL-O-RING	
	17	1	**316-8804**	1	HOSE AS	
		1	**121-7063**	2	SEAL-O-RING	
	18	2	**095-0827**	2	LOCKWASHER	
	19	2	**225-5800**	2	CLAMP	
	20	1	**4S-1962**	4	CLIP	
M	21	2	**5C-9553**	4	BOLT (M6X1X16-MM)	
	22	2	**5K-3294**	3	CLIP	
	24	1	**5P-9297**	1	CLIP	
	25	1,2	**6D-1641**	5	CLIP	
	26	1,2	**6D-4244**	2	CLIP	
M	27	2	**6V-7357**	4	BOLT (M6X1X25-MM)	
	28	1,2	**8M-2773**	7	CLIP	
M	29	1	**8T-3647**	2	BOLT (M8X1.25X80-MM)	
	30	1,2	**8T-4121**	16	WASHER-HARD (11X21X2.5-MM THK)	
M	31	1,2	**8T-4136**	5	BOLT (M10X1.5X25-MM)	
M	32	1,2	**8T-4137**	13	BOLT (M10X1.5X20-MM)	
M	33	1	**8T-4191**	1	BOLT (M10X1.5X16-MM)	
	34	1,2	**8T-4224**	5	WASHER-HARD (8.8X16X2-MM THK)	
M	35	1	**8T-4971**	1	BOLT (M6X1X30-MM)	
M	36	1,2	**8T-7547**	3	BOLT (M8X1.25X30-MM)	
	37	1,2	**9X-8256**	9	WASHER (6.6X12X2-MM THK)	
E	38	2	**305-0432**		GUARD (10-CM)	
E	41	1	**225-5714**		GUARD (35-CM)	
E	41A	1	**225-5714**		GUARD (40-CM)	
E	41B	1	**225-5714**		GUARD (20-CM EACH)	
E	42	1	**5P-0767**		HOSE (200-CM)	
E	42A	2	**5P-0767**		HOSE (52-CM)	
E	42B	2	**5P-0767**		HOSE (42-CM)	
E	42C	2	**5P-0767**		HOSE (130-CM)	
	43	2	**225-5799**	2	HOSE-DRAIN	
E	44	2	**225-5707**		GUARD (40-CM)	

316-8807 **LINES GP-AIR CONDITIONER** *(contd.)* **i02984340**

NOTE	REF NO	GRAPHIC REF	PART NUMBER	QTY	PART NAME 1 2 3 4 5 6 (PRODUCT LEVEL)	SEE PAGE
	45	2	**7X-7729**	3	WASHER (11X25X3-MM THK)	

E-ORDER BY THE CENTIMETER
M-METRIC PART

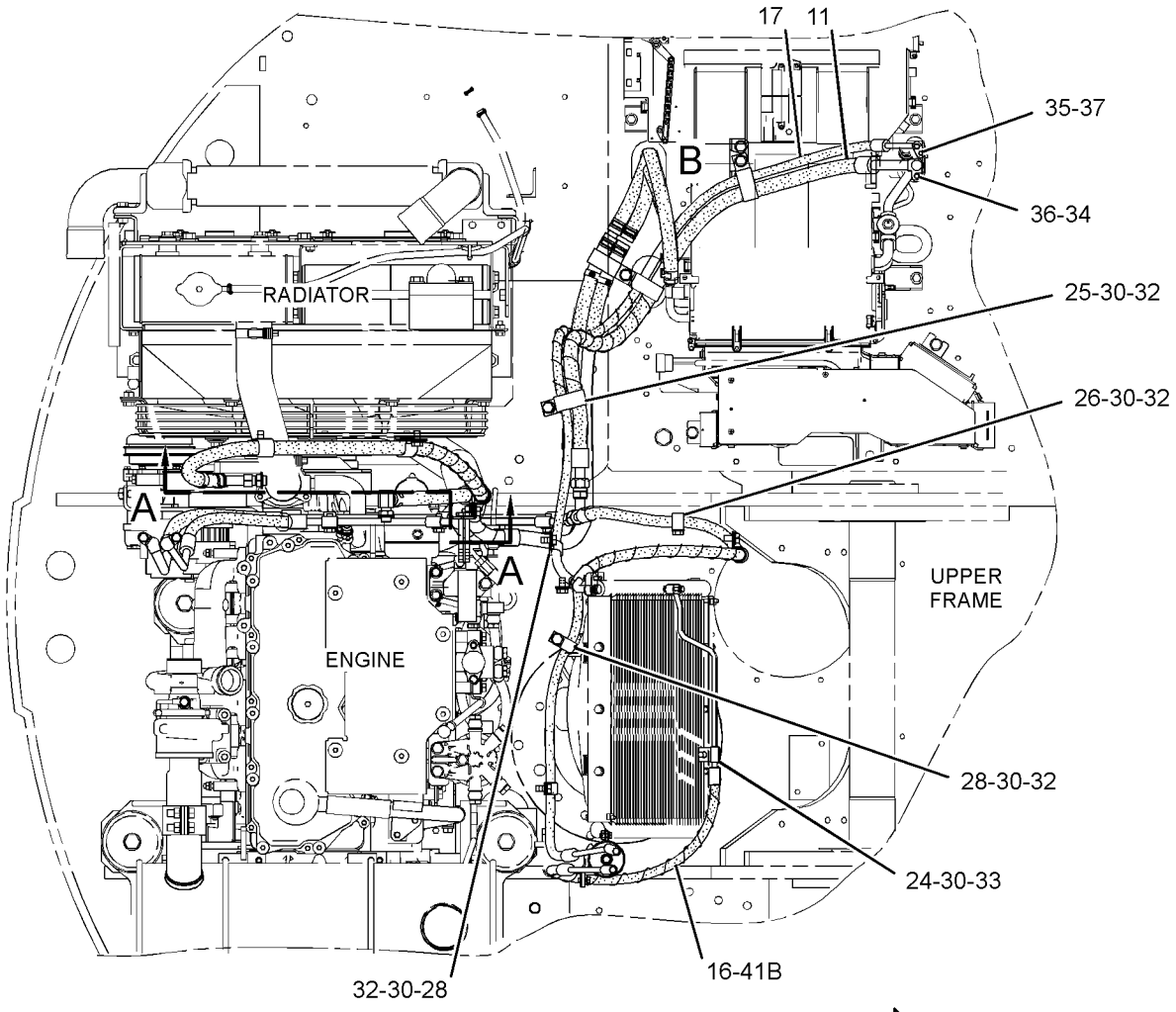

TOP VIEW

FWD

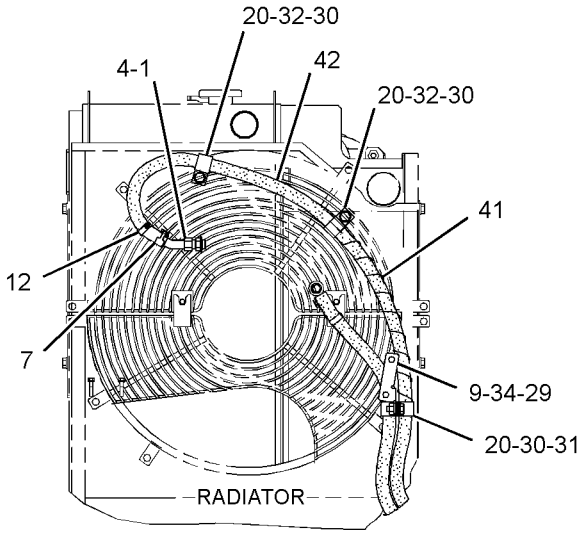

SECTION A-A

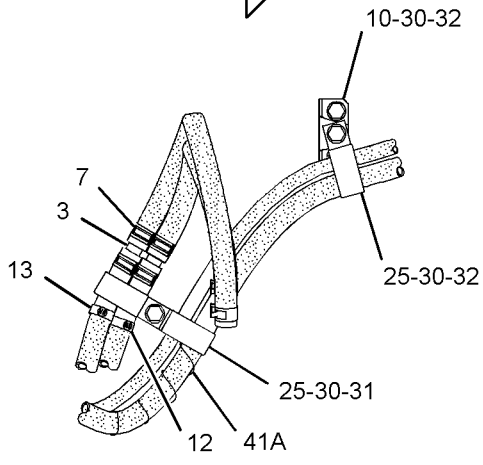

VIEW OF AREA B

GRAPHIC #1

g01519243

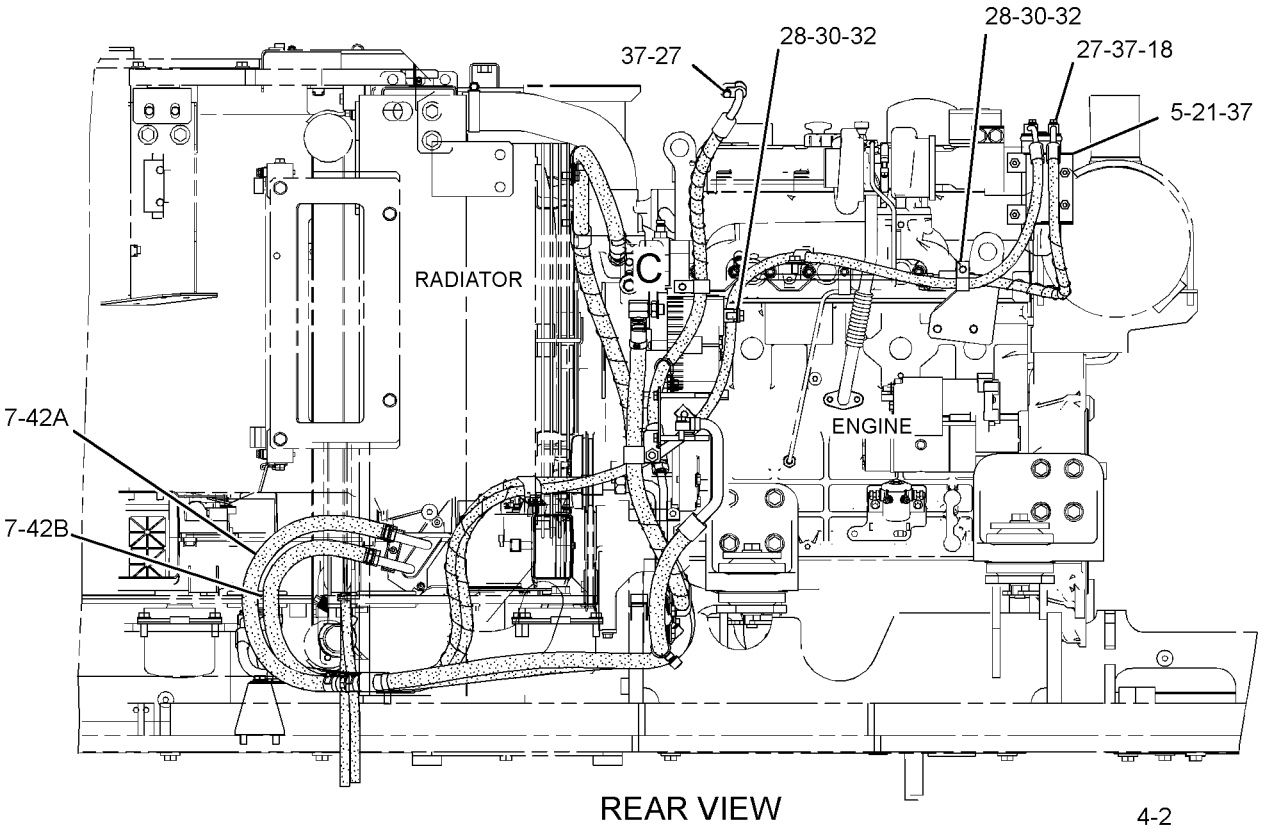

REAR VIEW

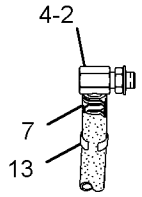

VIEW OF AREA C

RIGHT SIDE VIEW

GRAPHIC #2

<END>

g01519244

OPERATOR STATION

293-1236 LINES GP-HEATER

S/N: BYJ1-UP; PDP1-UP
PART OF 316-8942 HEATER AR-CAB
AN ATTACHMENT

SMCS-1812, 7304 **i02885233**

NOTE	REF NO	GRAPHIC REF	PART NUMBER	QTY	PART NAME 1 2 3 4 5 6 (PRODUCT LEVEL)	SEE PAGE
	1	1	**4I-4580**	1	FITTING	
	2	1	**7I-0375**	1	ELBOW	
	3	1	**122-9605**	2	TUBE	
	4	1	**155-7024**	2	SPACER-SPECIAL	
	5	1	**235-9014**	8	CLAMP-HOSE	
	6	1	**283-2893**	1	RECEPTACLE AS	
		1	**8T-8737**	2	PLUG-SEAL	
		1	**243-4505**	1	RECEPTACLE AS-CONNECTOR (2-PIN)	
	7	1	**284-4435**	1	BRACKET AS	
	8	1	**4S-1962**	4	CLIP	
	9	1	**6D-1641**	2	CLIP	
M	10	1	**8T-3647**	2	BOLT (M8X1.25X80-MM)	
	11	1	**8T-4121**	5	WASHER-HARD (11X21X2.5-MM THK)	
M	12	1	**8T-4136**	1	BOLT (M10X1.5X25-MM)	
M	13	1	**8T-4137**	4	BOLT (M10X1.5X20-MM)	
	14	1	**8T-4224**	2	WASHER-HARD (8.8X16X2-MM THK)	
E	15	1	**225-5714**		GUARD (35-CM)	
E	16	1	**5P-0767**		HOSE (200-CM)	
E	16A	1	**5P-0767**		HOSE (52-CM)	
E	16B	1	**5P-0767**		HOSE (42-CM)	
E	16C	1	**5P-0767**		HOSE (130-CM)	
	17	1	**305-0441**	2	BAND-MARKER (HS)	
	18	1	**305-0442**	2	BAND-MARKER (HR)	

E-ORDER BY THE CENTIMETER
M-METRIC PART

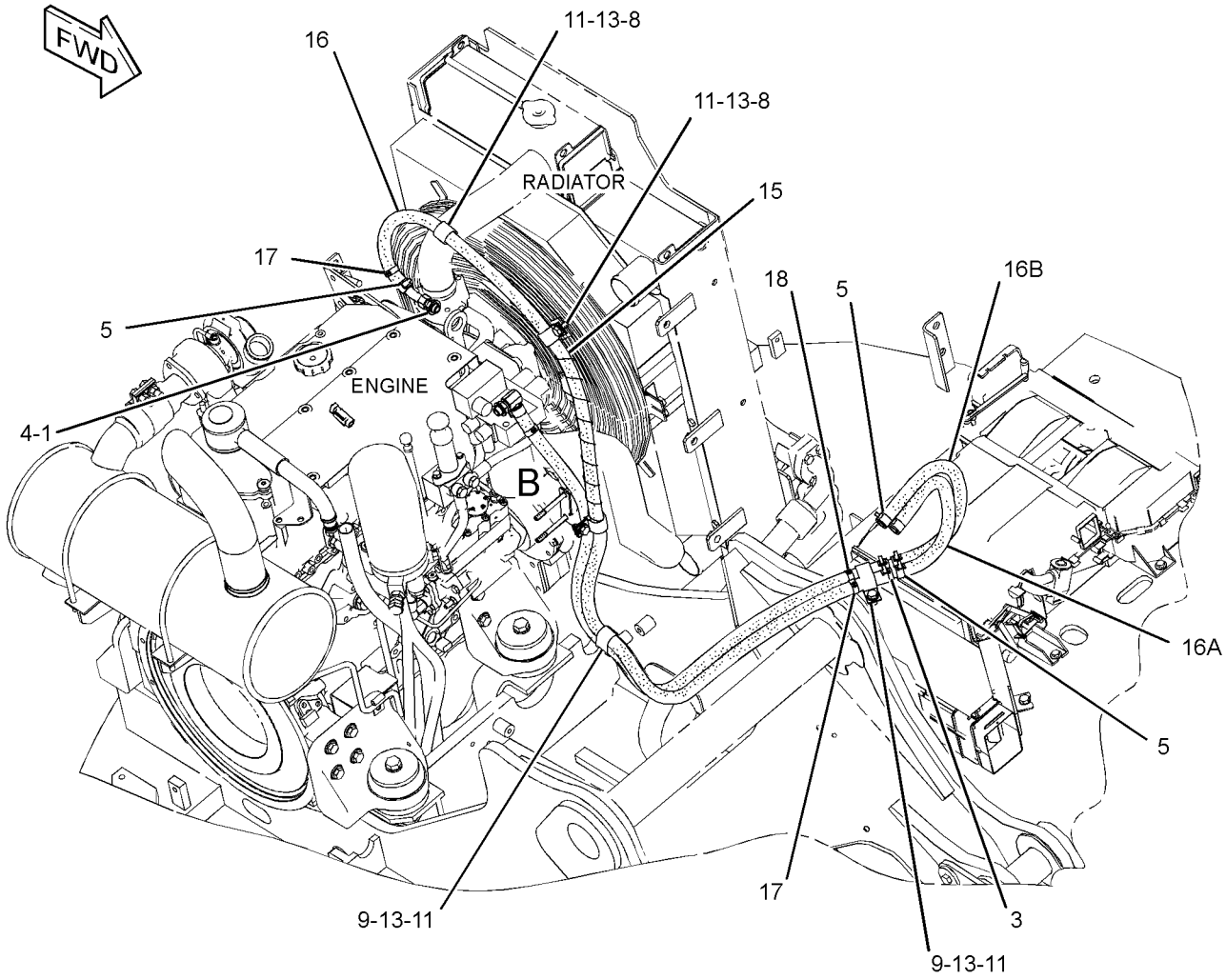

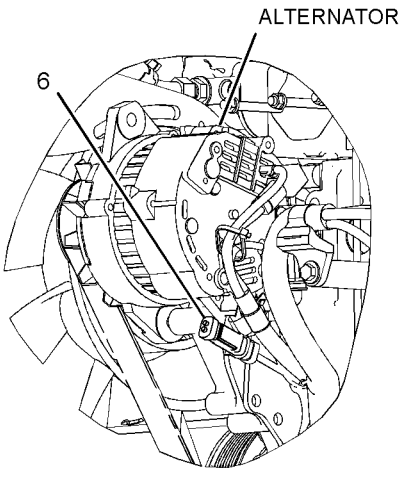

REAR VIEW
(RIGHT SIDE)

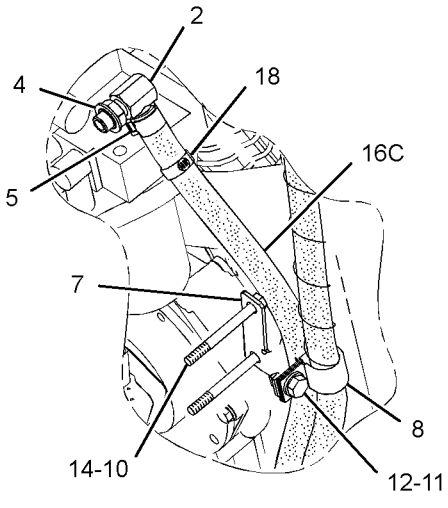

VIEW OF AREA B

GRAPHIC #1 **<END>** g01507493

OPERATOR STATION

7Y-0059 LITERATURE GP

S/N: BYJ1-UP; PDP1-UP

PART OF 260-7182, 260-7183 CHASSIS AR

SMCS-7300 **i01809351**

NOTE	PART NUMBER	QTY	PART NAME 1 2 3 4 5 6 (PRODUCT LEVEL)	SEE PAGE
	099-3645	1	CABLE-LANYARD	
	5P-8500	2	KEY	
	5P-7958	2	SLEEVE-CABLE SPLICE	

<END>

OPERATOR STATION

278-3976 MIRROR GP-REAR VIEW

S/N: BYJ1-UP; PDP1-UP

PART OF 260-7182, 260-7183 CHASSIS AR

SMCS-7319 **i02811975**

NOTE	REF NO	GRAPHIC REF	PART NUMBER	QTY	PART NAME 1 2 3 4 5 6 (PRODUCT LEVEL)	SEE PAGE
M	1	1	**135-8572**	2	BOLT AS (M12X1.75X20-MM)	
	2	1	**162-3548**	1	MIRROR	
	3	1	**286-6157**	1	SUPPORT AS	

M-METRIC PART

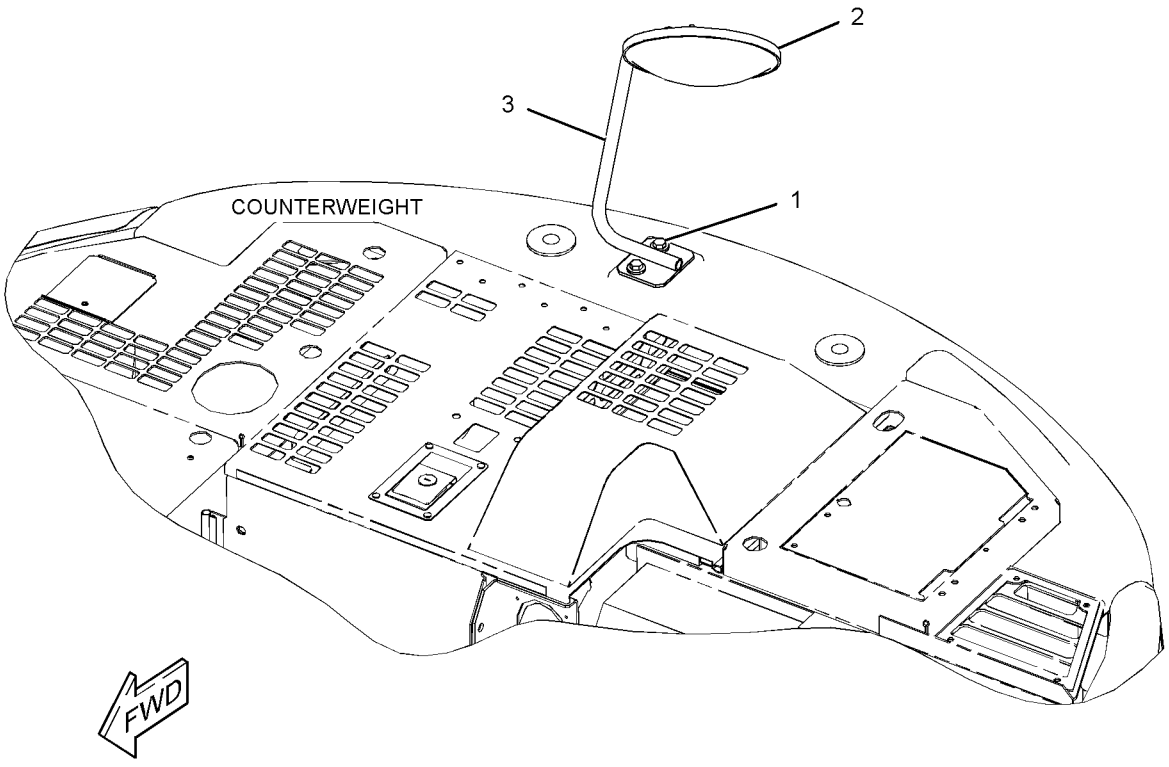

GRAPHIC #1 **<END>** g01428828

OPERATOR STATION

327-6550 MIRROR GP-REAR VIEW

S/N: BYJ1-UP; PDP1-UP

PART OF 259-7277 CAB GP, 259-7275 CAB GP-ENCLOSED ROPS, 327-6559, 327-6560 MIRROR GP-REAR VIEW

AN ATTACHMENT

SMCS-7319 **i03185260**

NOTE	REF NO	GRAPHIC REF	PART NUMBER	QTY	PART NAME 1 2 3 4 5 6 (PRODUCT LEVEL)	SEE PAGE
M	1	1	**8T-0269**	2	BOLT-SOCKET HEAD (M6X1X20-MM)	
	2	1	**9X-8256**	2	WASHER (6.6X12X2-MM THK)	

M-METRIC PART

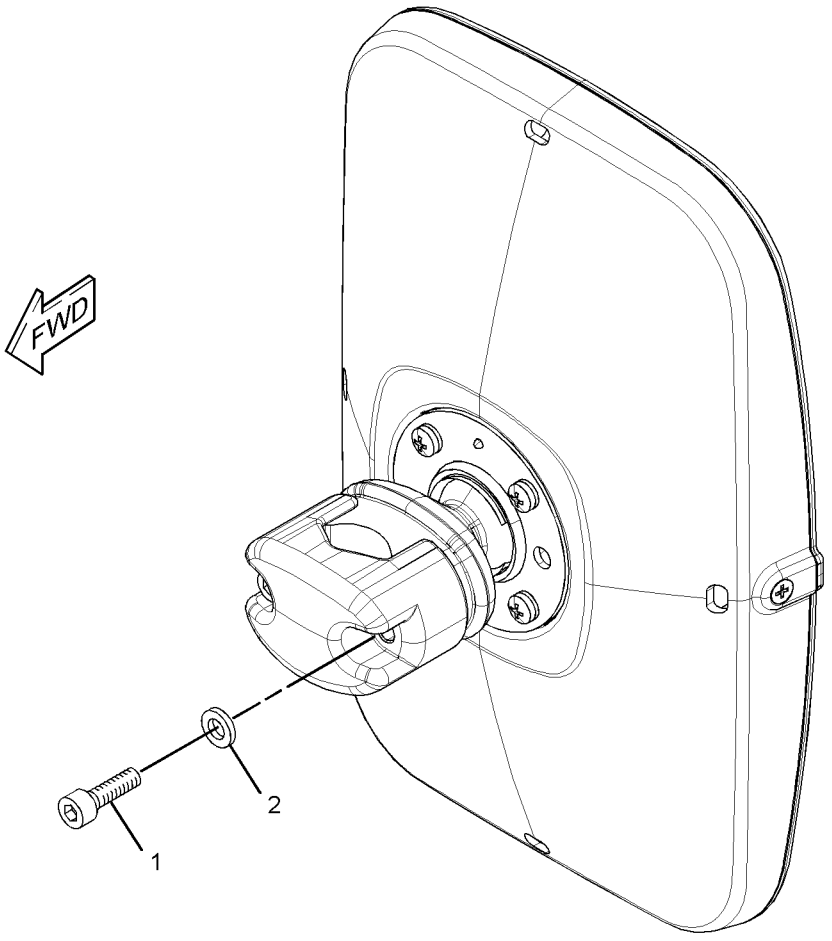

GRAPHIC #1 **<END>** g01615528

OPERATOR STATION

327-6559 MIRROR GP-REAR VIEW

S/N: BYJ1-UP; PDP1-UP
CANNOT BE USED WITH 214-1252—PAGE 751, 235-9032—PAGE 747
AN ATTACHMENT

SMCS-7319 **i03144604**

NOTE	REF NO	GRAPHIC REF	PART NUMBER	QTY	PART NAME 1 2 3 4 5 6 (PRODUCT LEVEL)	SEE PAGE
Y	1	1	**327-6550**	1	MIRROR GP-REAR VIEW	770
	2	1	**327-6576**	1	SUPPORT AS	
	3	1	**3B-4510**	1	LOCKWASHER	
M	4	1	**7X-2555**	1	BOLT (M16X2X80-MM)	
	5	1	**9X-8257**	1	WASHER (17.5X30X3.5-MM THK)	

M-METRIC PART
Y-SEPARATE ILLUSTRATION

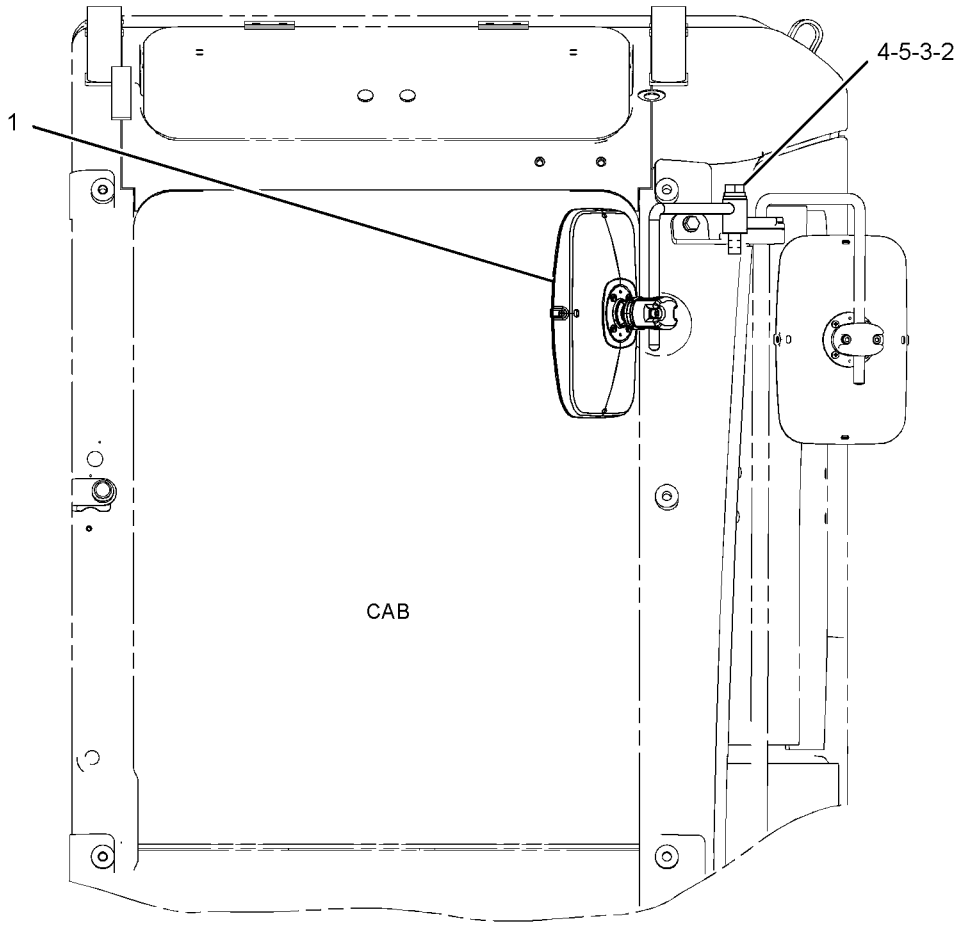

FRONT VIEW

GRAPHIC #1 **<END>** g01625034

OPERATOR STATION

327-6560 MIRROR GP-REAR VIEW

S/N: BYJ1-UP; PDP1-UP
FOR USE WITH 214-1252—PAGE 751, 235-9032—PAGE 747
AN ATTACHMENT

SMCS-7319 **i03144596**

NOTE	REF NO	GRAPHIC REF	PART NUMBER	QTY	PART NAME 1 2 3 4 5 6 (PRODUCT LEVEL)	SEE PAGE
Y	1	1	**327-6550**	1	MIRROR GP-REAR VIEW	770
	2	1	**327-6576**	1	SUPPORT AS	
	3	1	**3B-4510**	1	LOCKWASHER	
M	4	1	**7X-2555**	1	BOLT (M16X2X80-MM)	
	5	1	**9X-8257**	1	WASHER (17.5X30X3.5-MM THK)	

M-METRIC PART
Y-SEPARATE ILLUSTRATION

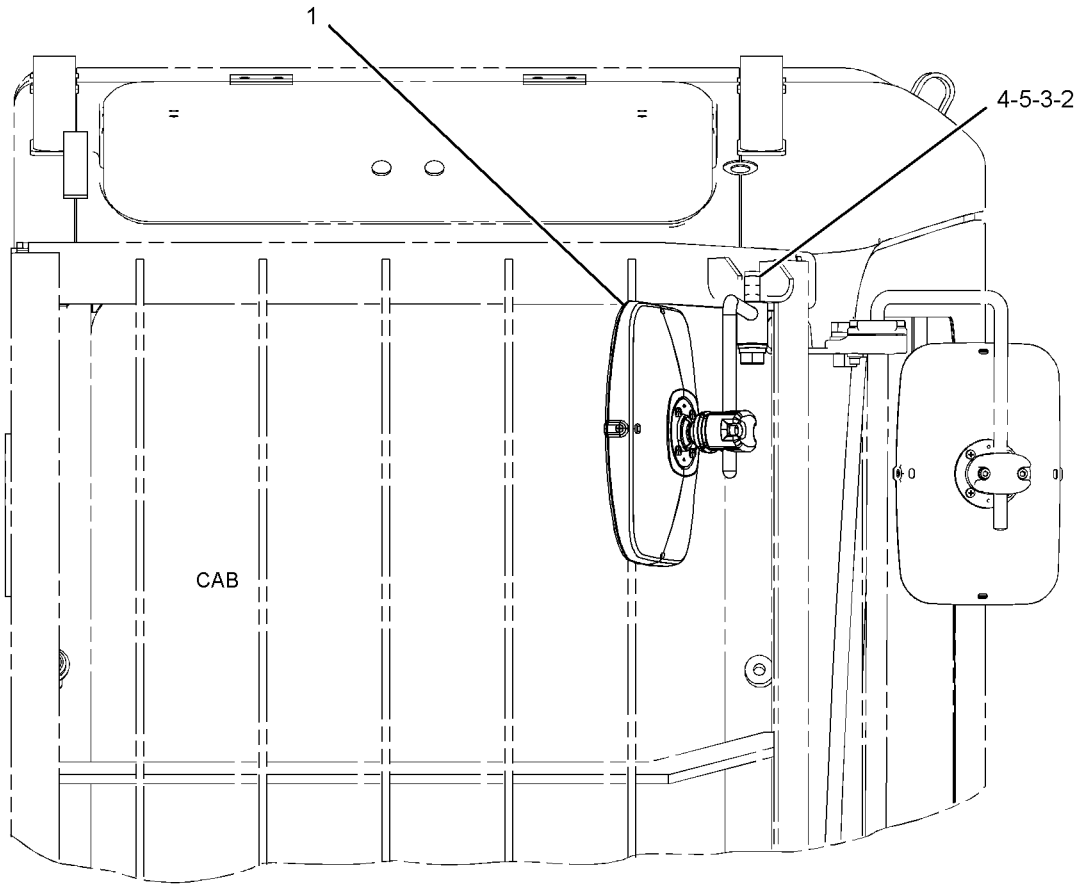

FRONT VIEW

GRAPHIC #1 **<END>** g01625042

OPERATOR STATION

330-1321 MIRROR GP-REAR VIEW—SIDE

S/N: BYJ1-UP; PDP1-UP
PART OF 330-8750 INSTALLATION AR
AN ATTACHMENT

SMCS-7319 **i03148107**

NOTE	REF NO	GRAPHIC REF	PART NUMBER	QTY	PART NAME 1 2 3 4 5 6 (PRODUCT LEVEL)	SEE PAGE
	1	1	**327-3062**	1	MIRROR GP-REAR VIEW	
M		1	**8T-0269**	2	BOLT-SOCKET HEAD (M6X1X20-MM)	
		1	**9X-8256**	2	WASHER (6.6X12X2-MM THK)	
	2	1	**327-3063**	1	MIRROR GP-REAR VIEW	
M		1	**8T-0269**	2	BOLT-SOCKET HEAD (M6X1X20-MM)	
		1	**9X-8256**	2	WASHER (6.6X12X2-MM THK)	
	3	1	**330-1322**	1	TUBE AS	

M-METRIC PART

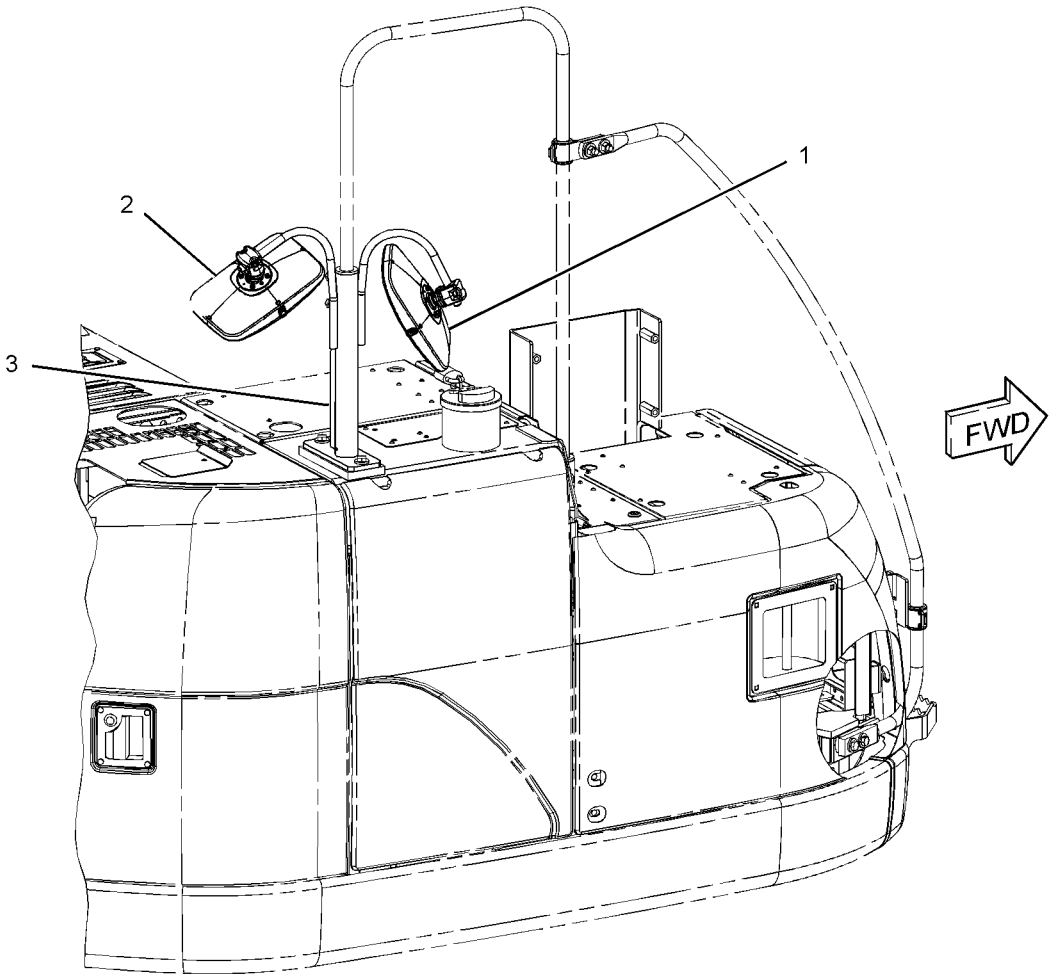

GRAPHIC #1 **<END>** g01627532

OPERATOR STATION

260-2211 MONITOR GP-OPERATOR

S/N: BYJ1-UP; PDP1-UP

PART OF 273-5406 OPERATOR AR

SMCS-7490 **i02488521**

NOTE	REF NO	GRAPHIC REF	PART NUMBER	QTY	PART NAME 1 2 3 4 5 6 (PRODUCT LEVEL)	SEE PAGE
Y	1	1	**260-2173**	1	CONTROL GP-UNPRGMED MONITOR	730
	2	1	**270-5507**	1	BRACKET	
M	3	1	**9X-2040**	2	SCREW-TRUSS HEAD (M10X1.5X25-MM)	
M	4	1	**9X-2046**	3	SCREW-TRUSS HEAD (M6X1X35-MM)	
	5	1	**216-1980**	1	GROMMET	

M-METRIC PART
Y-SEPARATE ILLUSTRATION

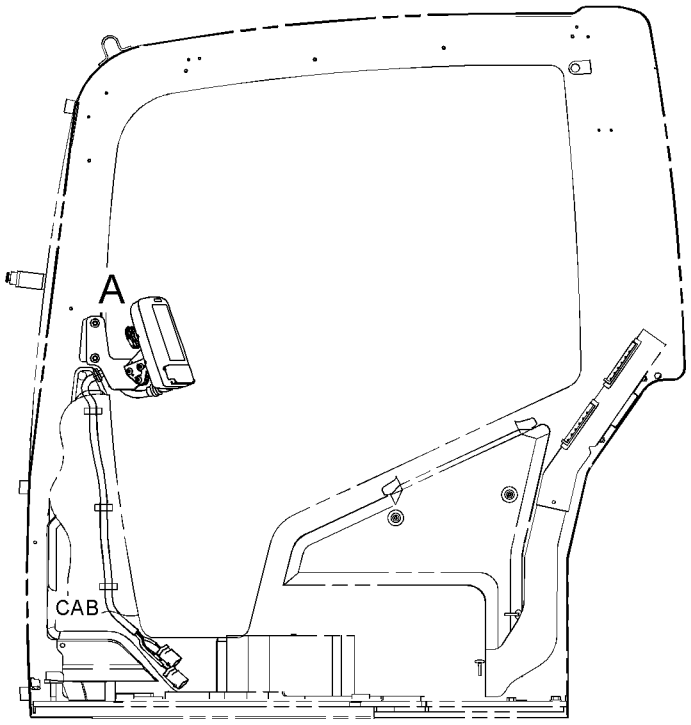

LEFT SIDE VIEW

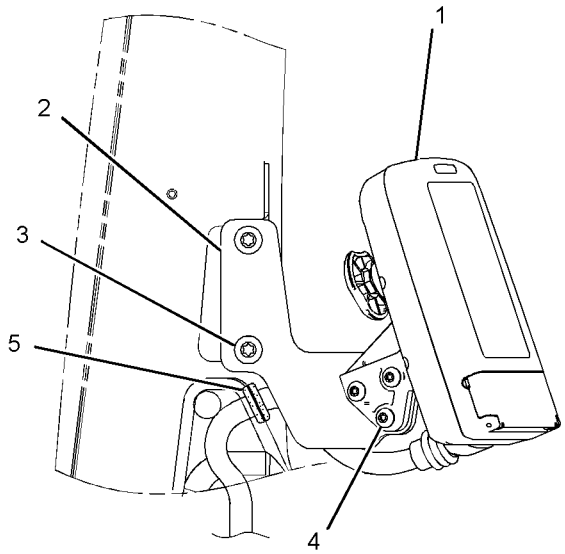

VIEW OF AREA A

GRAPHIC #1 **<END>** g01250817

OPERATOR STATION

319-4355 MONITOR GP-OPERATOR

S/N: BYJ1-UP; PDP1-UP

FIELD REPLACEMENT FOR 260-2173—PAGE 730

SMCS-7490 **i03091564**

NOTE	REF NO	GRAPHIC REF	PART NUMBER	QTY	PART NAME 1 2 3 4 5 6 (PRODUCT LEVEL)	SEE PAGE
	1	1	**247-2694**	1	RECEPTACLE AS-CONNECTOR (12-PIN)	
	2	1	**247-2695**	1	RECEPTACLE AS-CONNECTOR (12-PIN)	
	3	1	**9X-3401**	17	PIN-CONNECTOR (16-GA TO 18-GA)	
					—OR—	
		1	**126-1767**	17	PIN-CONNECTOR (14-GA)	
	4	1	**8T-8737**	7	PLUG-SEAL	

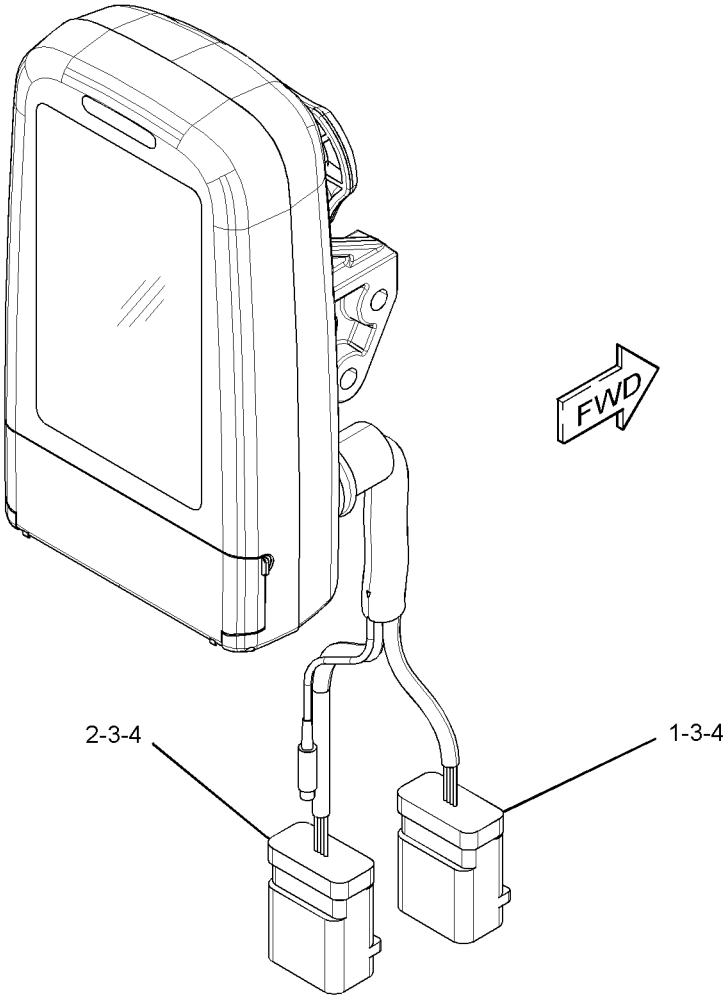

GRAPHIC #1 **<END>** g01578913

OPERATOR STATION

305-0366 MOUNTING GP-PLATFORM

S/N: BYJ1-UP; PDP1-UP

PART OF 260-7182, 260-7183 CHASSIS AR

SMCS-7253 **i02811990**

NOTE	REF NO	GRAPHIC REF	PART NUMBER	QTY	PART NAME 1 2 3 4 5 6 (PRODUCT LEVEL)	SEE PAGE
	1	1	**196-1601**	4	MOUNT AS	
	2	1	**8T-4121**	16	WASHER-HARD (11X21X2.5-MM THK)	
M	3	1	**8T-4195**	16	BOLT (M10X1.5X30-MM)	

M-METRIC PART

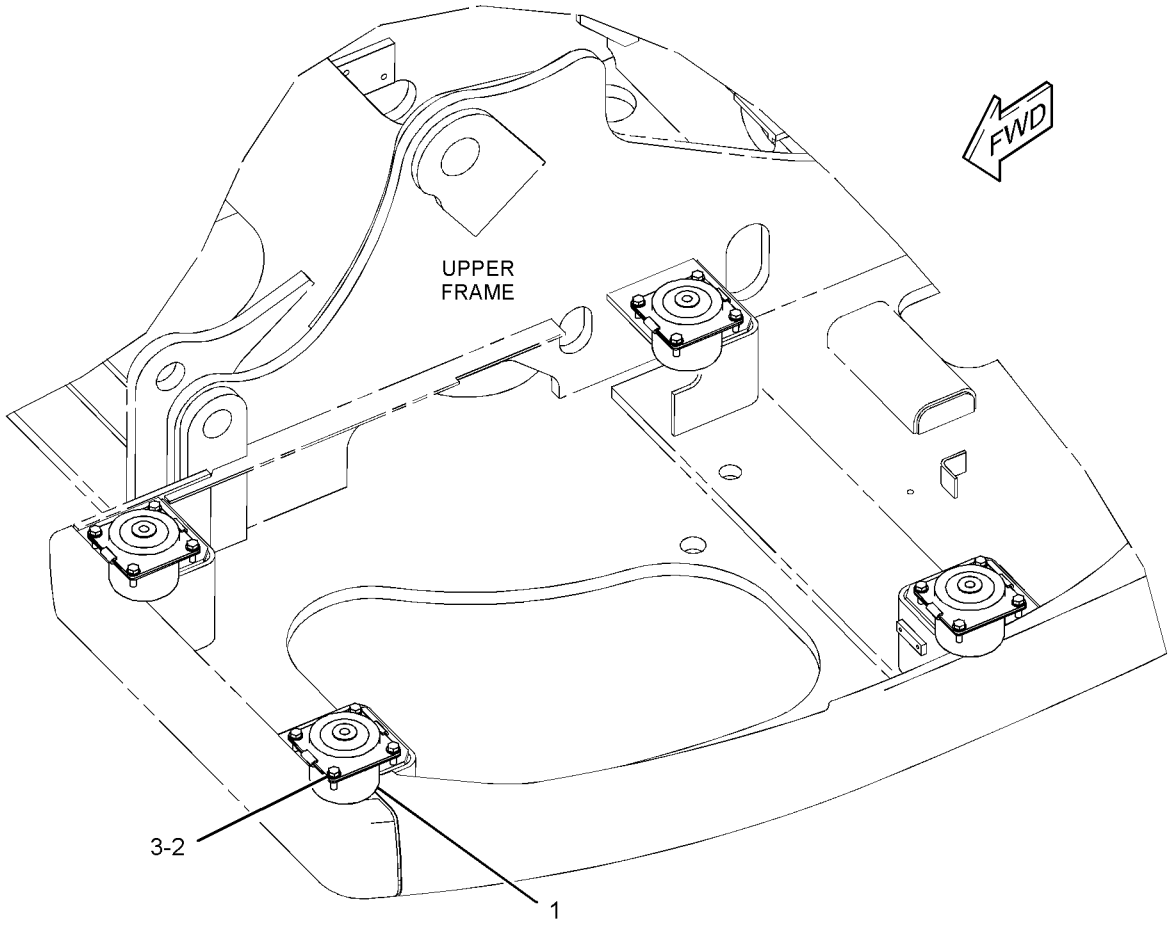

GRAPHIC #1 **<END>** g01417144

OPERATOR STATION

273-5406 OPERATOR AR

S/N: BYJ1-UP; PDP1-UP

PART OF 260-7182, 260-7183 CHASSIS AR

SMCS-7301 **i02811841**

NOTE	PART NUMBER	QTY	PART NAME 1 2 3 4 5 6 (PRODUCT LEVEL)	SEE PAGE
Y	*259-7246*	1	CONSOLE GP-OPERATOR	699
Y	*260-2212*	1	CONTROL & MTG GP-MACHINE	119
Y	*170-9497*	1	CONTROL GP-HYDRAULIC PEDAL (TRAVEL)	718
Y	*251-0538*	1	INSTALLATION GP-RADIO (AM, FM)	761
Y	*260-2211*	1	MONITOR GP-OPERATOR	774
Y	*306-8369*	1	PANEL GP-SWITCH	149
Y	*284-4456*	1	PLATFORM GP-OPERATOR	778
Y	*284-4459*	1	SUPPORT GP-SEAT	800
Y	*275-7111*	1	WIRING GP-CAB	176
Y	*275-7108*	1	WIRING GP-CONSOLE	189

Y-SEPARATE ILLUSTRATION

<END>

OPERATOR STATION

284-4456 PLATFORM GP-OPERATOR

S/N: BYJ1-UP; PDP1-UP

PART OF 273-5406 OPERATOR AR

SMCS-7253 **i02960077**

NOTE	REF NO	GRAPHIC REF	PART NUMBER	QTY	PART NAME 1 2 3 4 5 6 (PRODUCT LEVEL)	SEE PAGE
	1	1	**316-8817**	1	INSULATION	
	2	1	**7Y-8170**	1	GROMMET	
	3	1	**189-2825**	1	COVER	
	4	1	**189-2832**	1	COVER	
	5	1	**196-1425**	1	STRIP	
	6	1	**316-8818**	1	INSULATION	
	7	1	**284-4457**	1	PLATFORM AS	
	8	1	**8T-4121**	8	WASHER-HARD (11X21X2.5-MM THK)	
M	9	1	**8T-4191**	8	BOLT (M10X1.5X16-MM)	
M	10	1	**8T-4779**	3	BOLT (M16X2X35-MM)	
M	11	1	**8T-7338**	1	BOLT (M16X2X45-MM)	
	12	1	**9X-8257**	4	WASHER (17.5X30X3.5-MM THK)	
	13	1	**316-8819**	1	INSULATION	

M-METRIC PART

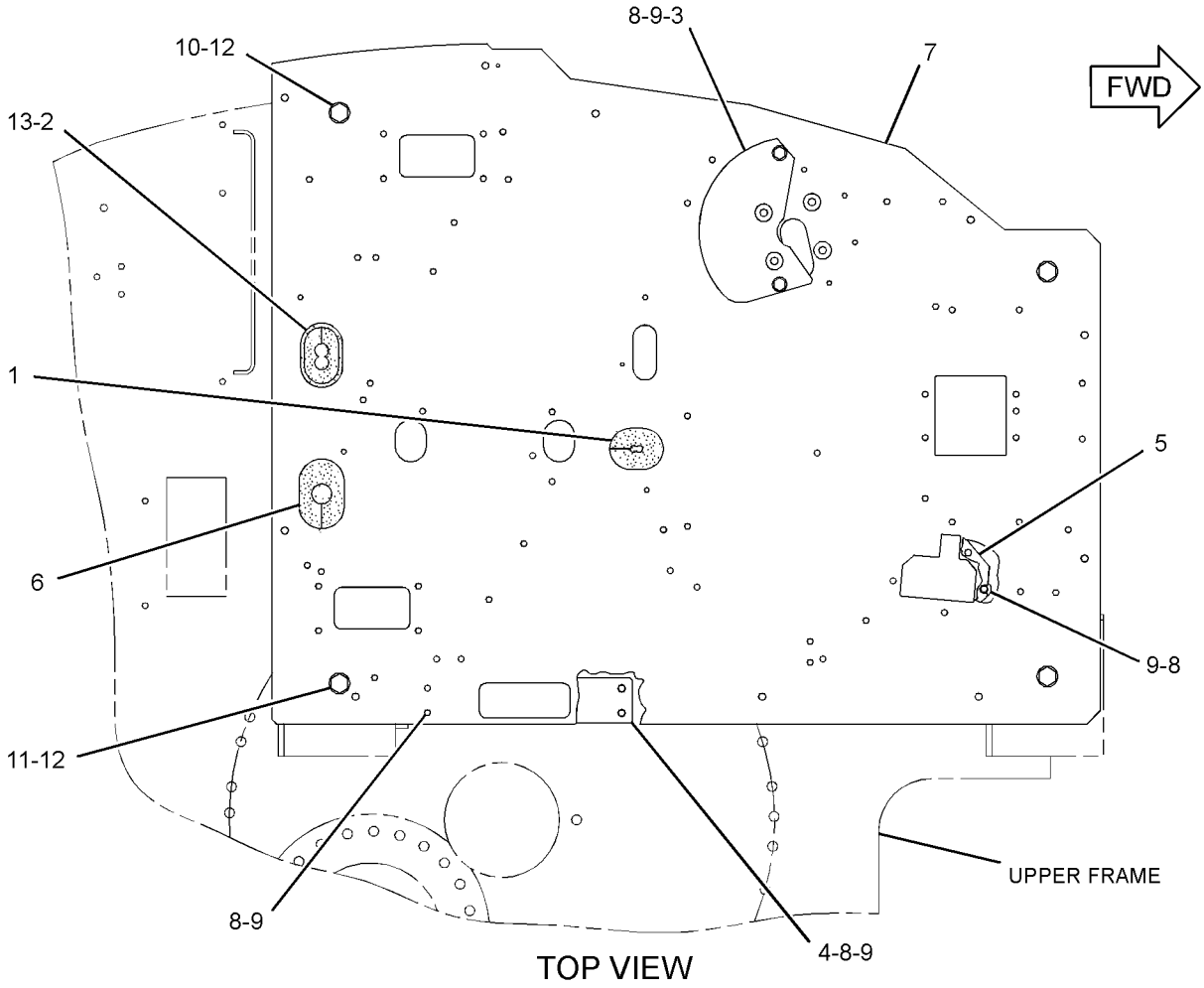

TOP VIEW

GRAPHIC #1

<END>

g01513756

235-9020 SEAT BELT GP–RETRACTABLE

S/N: BYJ1-UP; PDP1-UP
PART OF 240-5039 SEAT BELT GP
AN ATTACHMENT

SMCS-7327 **i02212218**

NOTE	REF NO	GRAPHIC REF	PART NUMBER	QTY	PART NAME 1 2 3 4 5 6 (PRODUCT LEVEL)	SEE PAGE
	1	1	**8S-4724**	1	BOLT (7/16-20X2.25-IN)	
	2	1	**8S-4723**	1	BOLT (7/16-20X1.5-IN)	
	3	1	**8S-0934**	1	LOCKNUT-FLANGE (7/16-20-THD)	

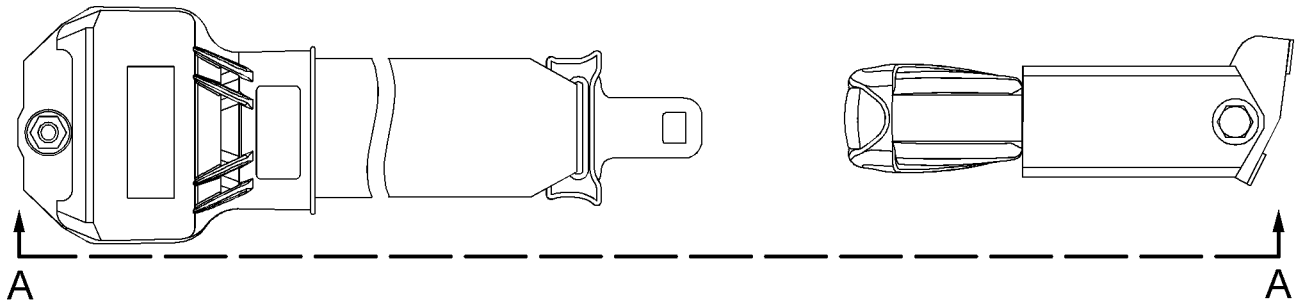

TOP VIEW

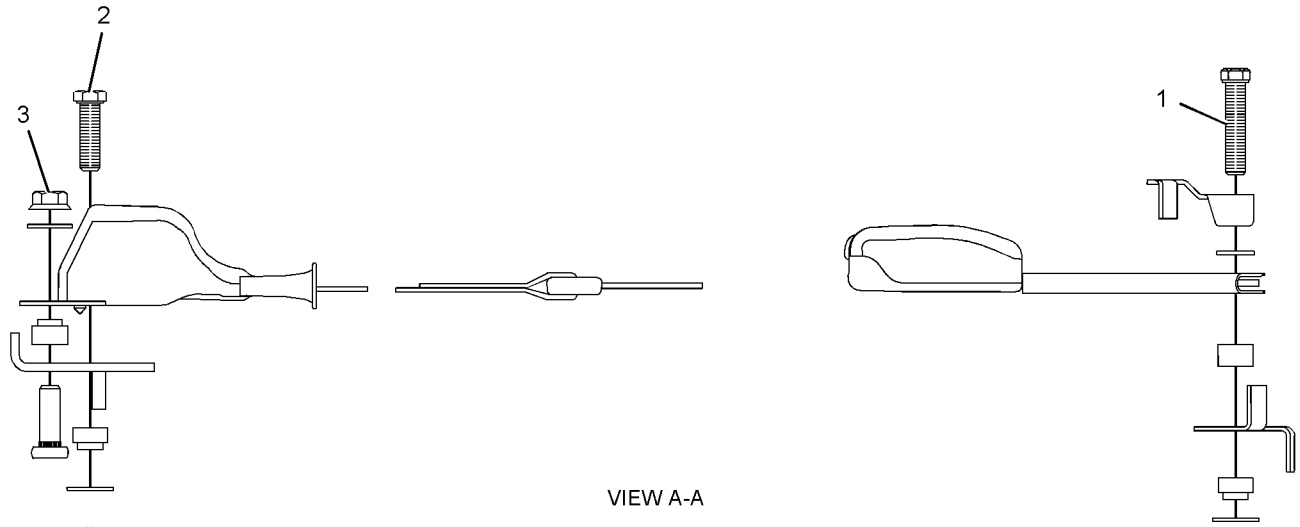

VIEW A-A

GRAPHIC #1 **<END>** g01131817

OPERATOR STATION

240-5037 SEAT BELT GP–RETRACTABLE, 46-MM

S/N: BYJ1-UP; PDP1-UP

AN ATTACHMENT

SMCS-7327 **i02578051**

NOTE	REF NO	GRAPHIC REF	PART NUMBER	QTY	PART NAME 1 2 3 4 5 6 (PRODUCT LEVEL)	SEE PAGE
Y	1	1	**273-5446**	1	SEAT BELT GP (RETRACTABLE, 46-MM)	782

Y-SEPARATE ILLUSTRATION

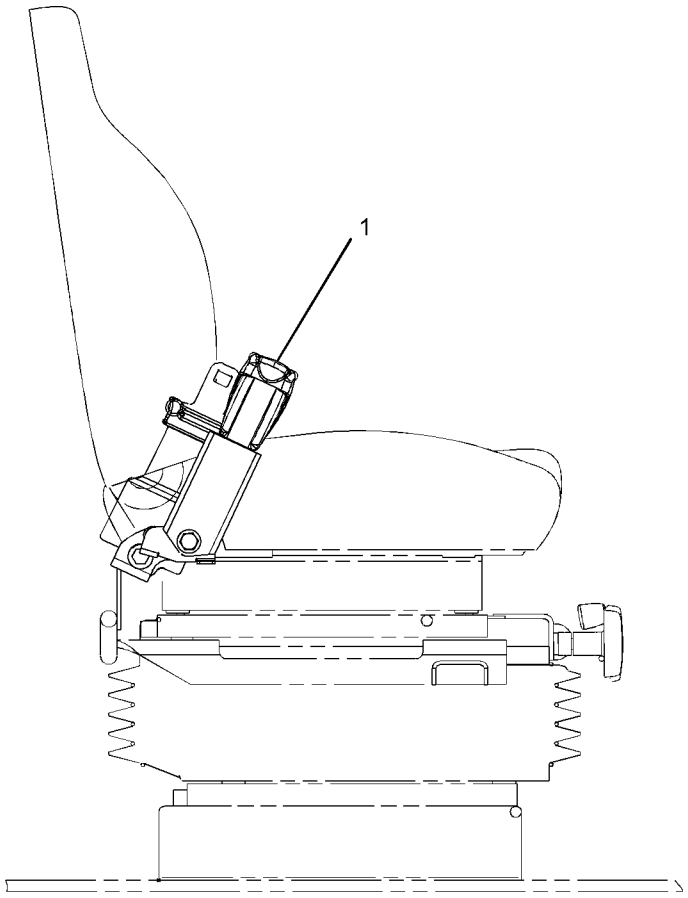

RIGHT SIDE VIEW

GRAPHIC #1

<END>

g01071615

OPERATOR STATION

240-5039 SEAT BELT GP—RETRACTABLE, 3-IN

S/N: BYJ1-UP; PDP1-UP

AN ATTACHMENT

SMCS-7327 **i02497564**

NOTE	REF NO	GRAPHIC REF	PART NUMBER	QTY	PART NAME 1 2 3 4 5 6 (PRODUCT LEVEL)	SEE PAGE
Y	1	1	**235-9020**	1	SEAT BELT GP (RETRACTABLE, 3-IN)	779

Y-SEPARATE ILLUSTRATION

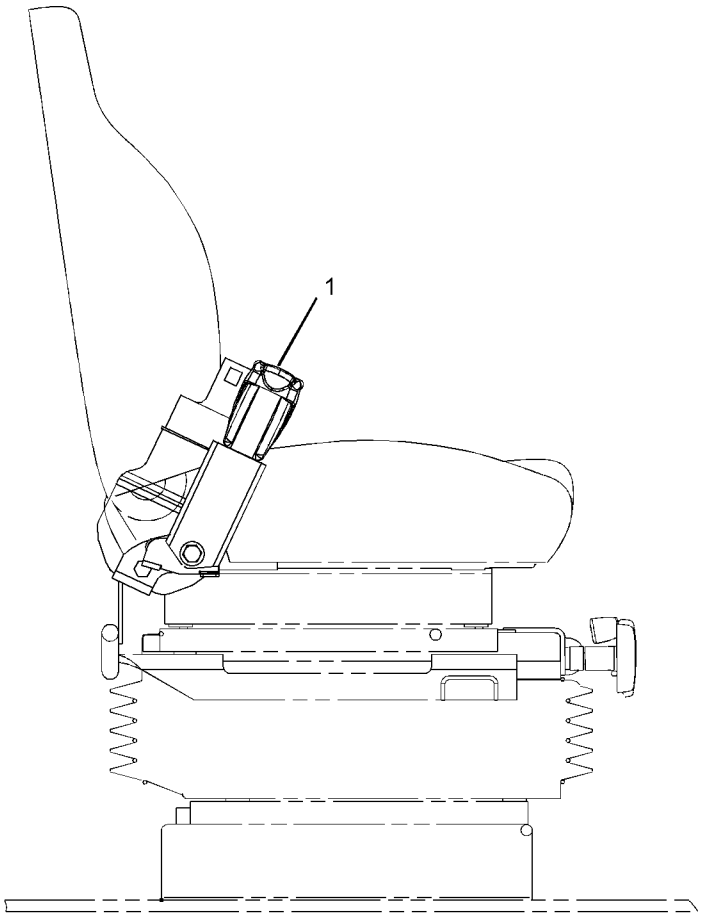

RIGHT SIDE VIEW

GRAPHIC #1

<END>

g01071676

OPERATOR STATION

273-5446 SEAT BELT GP–RETRACTABLE, 46-MM

S/N: BYJ1-UP; PDP1-UP
PART OF 240-5037 SEAT BELT GP
AN ATTACHMENT

SMCS-7327 **i02578052**

NOTE	REF NO	GRAPHIC REF	PART NUMBER	QTY	PART NAME 1 2 3 4 5 6 (PRODUCT LEVEL)	SEE PAGE
	1	1	**8S-4724**	1	BOLT (7/16-20X2.25-IN)	
	2	1	**8S-4723**	1	BOLT (7/16-20X1.5-IN)	
	3	1	**8S-0934**	1	LOCKNUT-FLANGE (7/16-20-THD)	

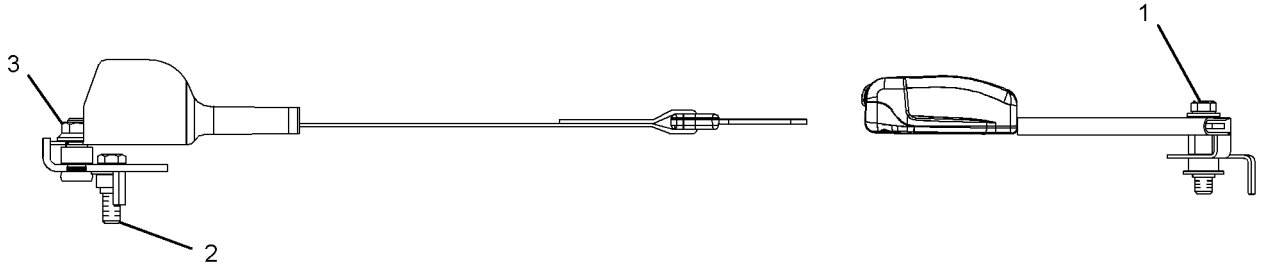

GRAPHIC #1 **<END>** g01253938

OPERATOR STATION

305-0466 SEAT BELT GP–RETRACTABLE

S/N: BYJ1-UP; PDP1-UP

AN ATTACHMENT

SMCS-7327 **i03090282**

NOTE	REF NO	GRAPHIC REF	PART NUMBER	QTY	PART NAME 1 2 3 4 5 6 (PRODUCT LEVEL)	SEE PAGE
	1	1	**327-6540**	1	SEAT BELT GP	

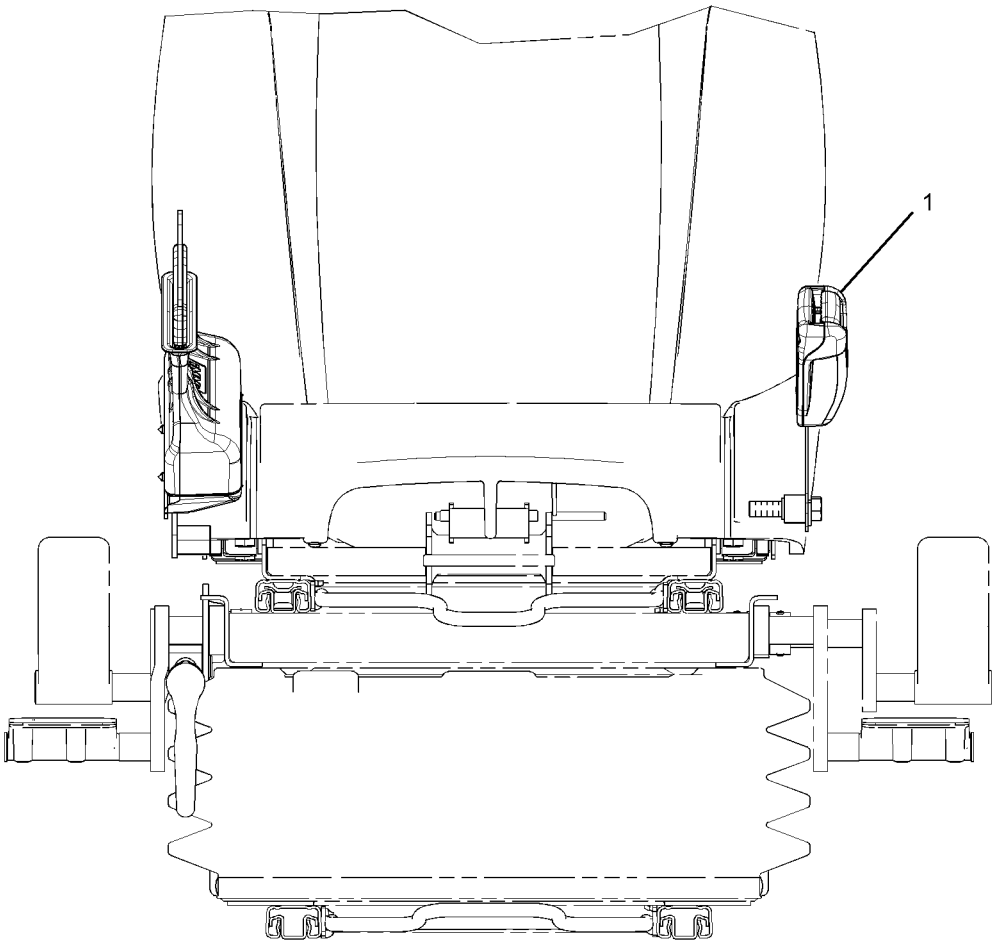

FRONT VIEW

GRAPHIC #1 **<END>** g01576875

OPERATOR STATION

273-5411 SEAT GP

S/N: BYJ1-UP; PDP1-UP
AN ATTACHMENT

SMCS-7312 **i02485744**

NOTE	REF NO	GRAPHIC REF	PART NUMBER	QTY	PART NAME 1 2 3 4 5 6 (PRODUCT LEVEL)	SEE PAGE
Y	1	1	*273-5412*	1	SEAT GP	785
M	2	1	**6V-8202**	4	BOLT-SOCKET HEAD (M8X1.25X16-MM)	

M-METRIC PART
Y-SEPARATE ILLUSTRATION

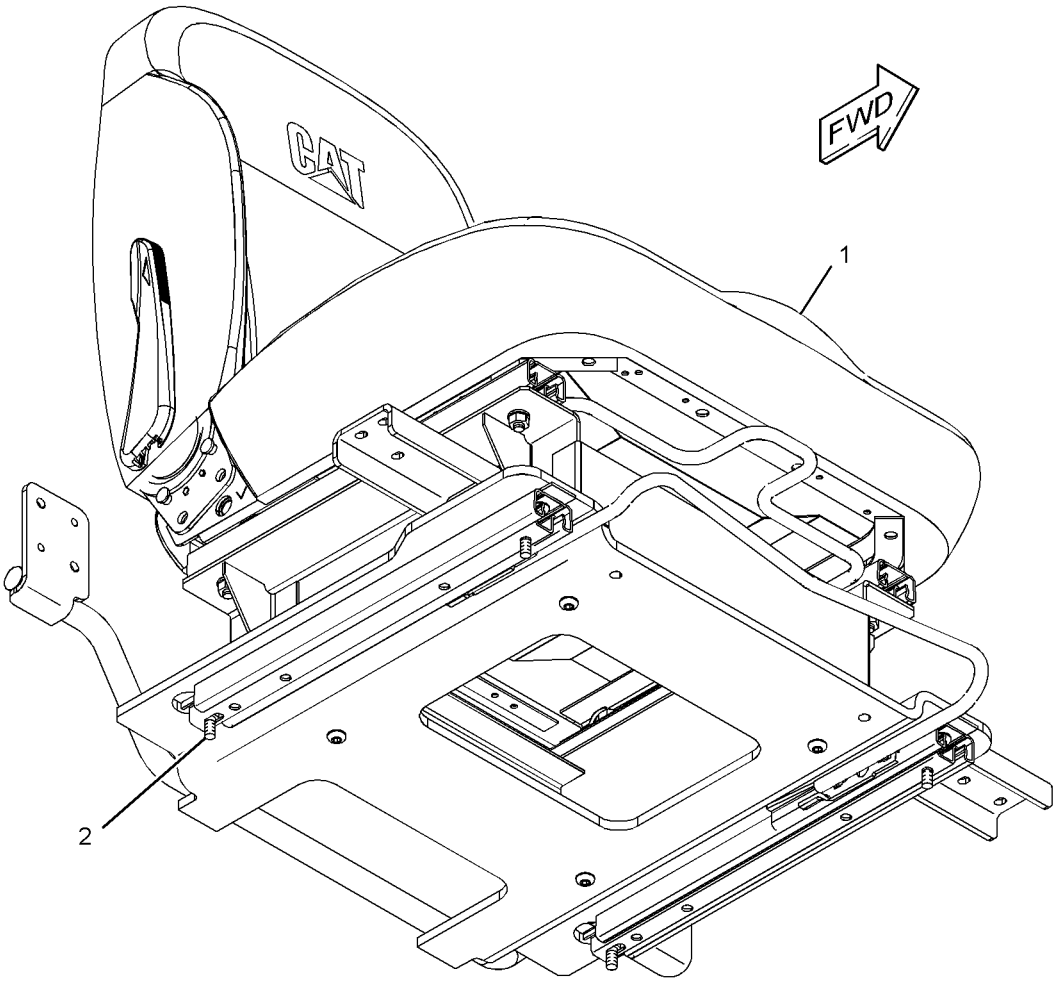

GRAPHIC #1 **<END>** g01261955

OPERATOR STATION

273-5412 SEAT GP

S/N: BYJ1-UP; PDP1-UP
PART OF 273-5411 SEAT GP
AN ATTACHMENT

SMCS-7312 **i02485745**

NOTE	REF NO	GRAPHIC REF	PART NUMBER	QTY	PART NAME 1 2 3 4 5 6 (PRODUCT LEVEL)	SEE PAGE
M	1	1	**198-3899**	4	SCREW-BUTTON HEAD (M8X1.25X20-MM)	
Y	2	1	**273-5413**	1	SEAT GP	786
Y	3	1	**273-5414**	1	SUPPORT GP-SEAT	799
M	4	1	**5C-7261**	4	NUT (M8X1.25-THD)	
	5	1	**8T-4224**	4	WASHER-HARD (8.8X16X2-MM THK)	

M-METRIC PART
Y-SEPARATE ILLUSTRATION

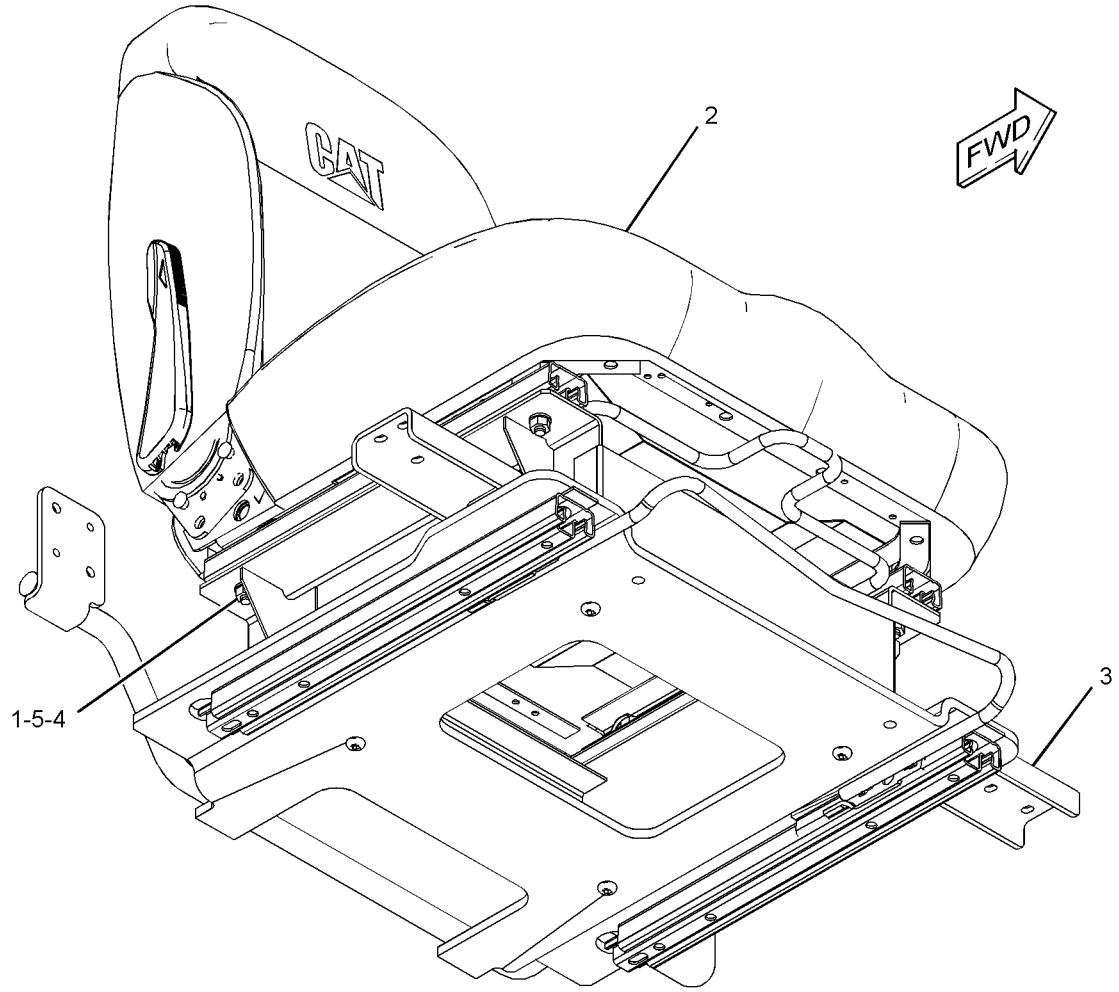

GRAPHIC #1 **<END>** g01261033

OPERATOR STATION

273-5413 SEAT GP

S/N: BYJ1-UP; PDP1-UP
CLOTH
PART OF 273-5412 SEAT GP
AN ATTACHMENT

SMCS-7312 **i03137361**

NOTE	REF NO	GRAPHIC REF	PART NUMBER	QTY	PART NAME 1 2 3 4 5 6 (PRODUCT LEVEL)	SEE PAGE
	1	1	**284-4478**	1	KIT-SEAT	
					(INCLUDES LEVER KIT, SPACERS & BOLTS)	
	2	1	**284-4484**	1	KIT-ADJUSTER	
					(INCLUDES SPACERS & BOLTS	

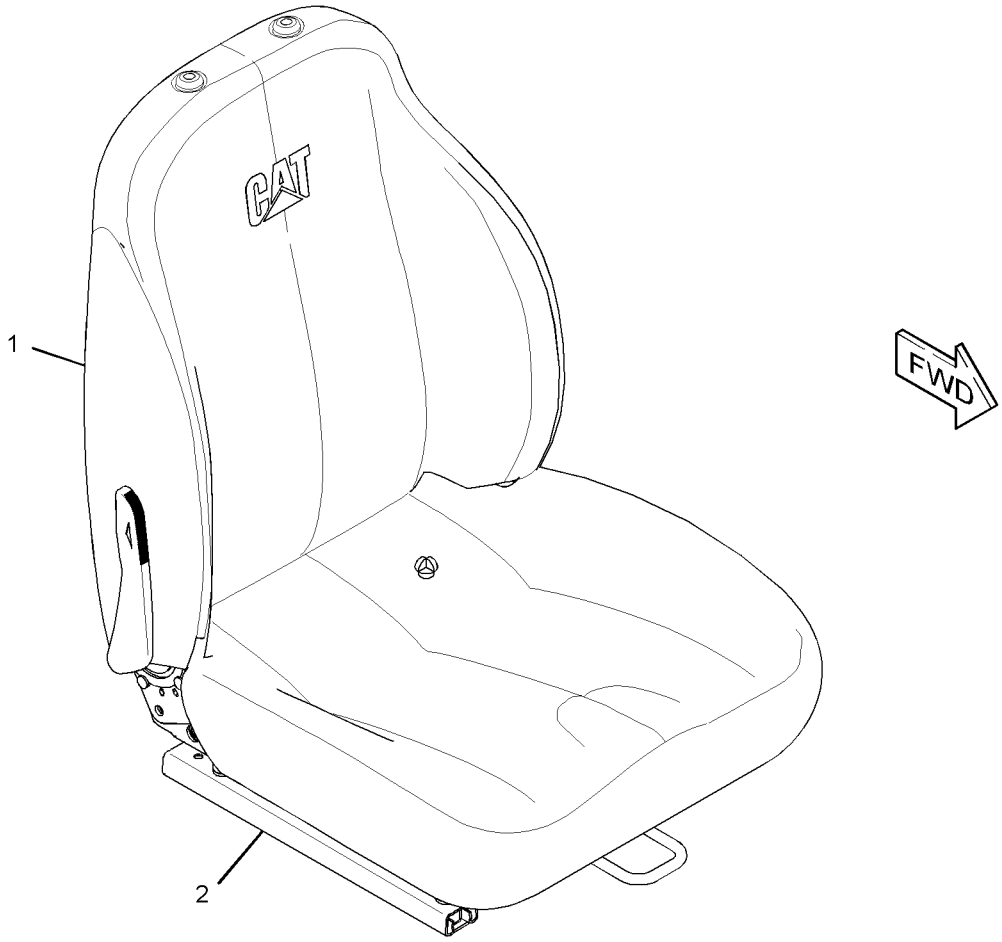

GRAPHIC #1 **<END>** g01616937

OPERATOR STATION

273-5415 SEAT GP

S/N: BYJ1-UP; PDP1-UP
AN ATTACHMENT

SMCS-7312 **i02485749**

NOTE	REF NO	GRAPHIC REF	PART NUMBER	QTY	PART NAME 1 2 3 4 5 6 (PRODUCT LEVEL)	SEE PAGE
Y	1	1	*273-5416*	1	SEAT GP	788
M	2	1	**6V-8202**	4	BOLT-SOCKET HEAD (M8X1.25X16-MM)	

M-METRIC PART
Y-SEPARATE ILLUSTRATION

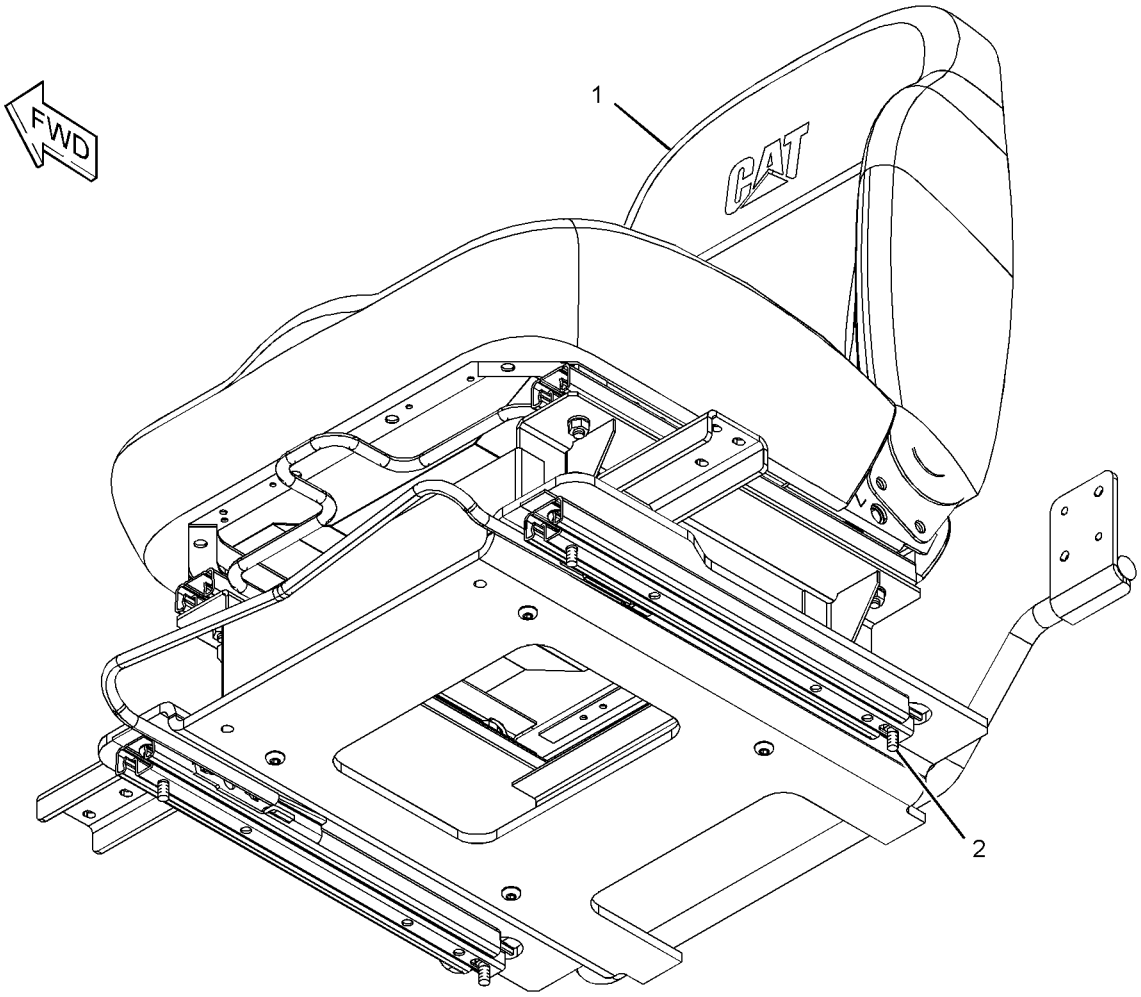

GRAPHIC #1 **<END>** g01253220

OPERATOR STATION

273-5416 SEAT GP

S/N: BYJ1-UP; PDP1-UP
PART OF 273-5415 SEAT GP
AN ATTACHMENT

SMCS-7312 **i02485750**

NOTE	REF NO	GRAPHIC REF	PART NUMBER	QTY	PART NAME 1 2 3 4 5 6 (PRODUCT LEVEL)	SEE PAGE
M	1	1	**198-3899**	4	SCREW-BUTTON HEAD (M8X1.25X20-MM)	
Y	2	1	**273-5414**	1	SUPPORT GP-SEAT	799
Y	3	1	**273-5417**	1	SEAT GP	789
M	4	1	**5C-7261**	4	NUT (M8X1.25-THD)	
	5	1	**8T-4224**	4	WASHER-HARD (8.8X16X2-MM THK)	

M-METRIC PART
Y-SEPARATE ILLUSTRATION

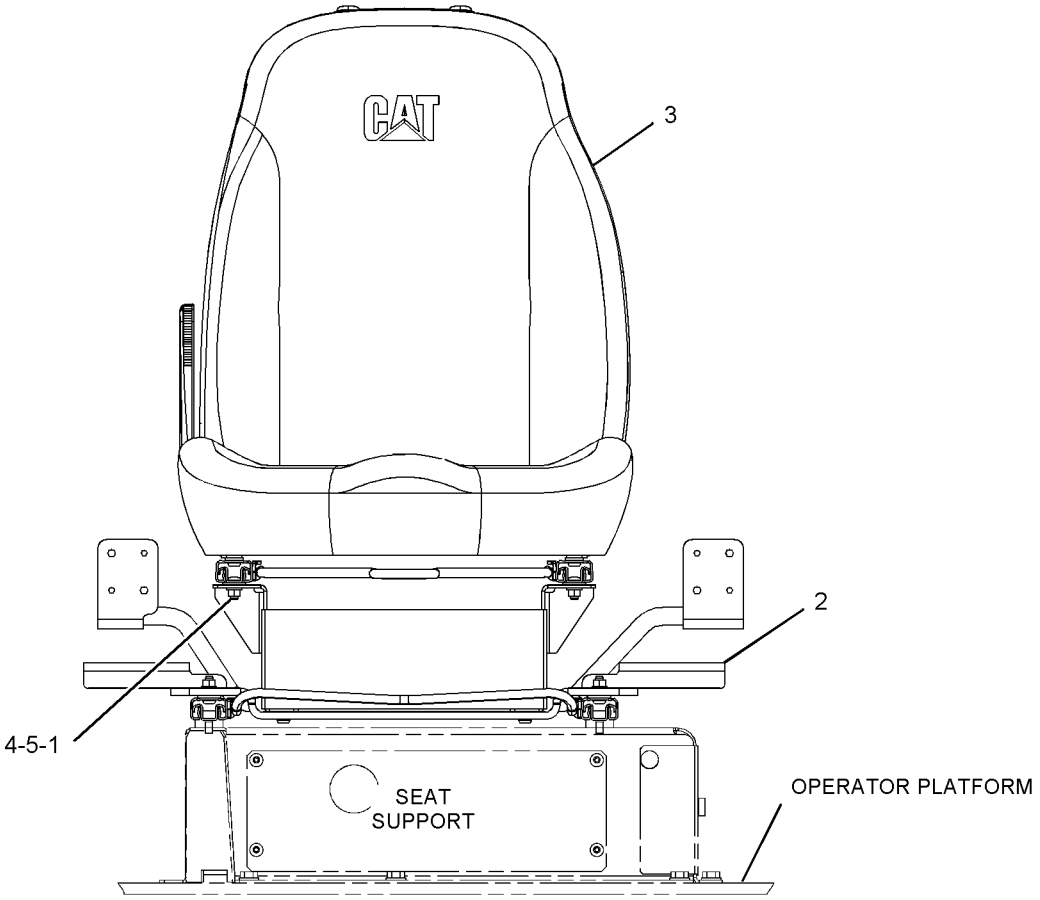

FRONT VIEW

GRAPHIC #1 **<END>** g01261981

OPERATOR STATION

273-5417 SEAT GP

S/N: BYJ1-UP; PDP1-UP
CLOTH
PART OF 273-5416 SEAT GP
AN ATTACHMENT

SMCS-7312 **i03137360**

NOTE	REF NO	GRAPHIC REF	PART NUMBER	QTY	PART NAME 1 2 3 4 5 6 (PRODUCT LEVEL)	SEE PAGE
	1	1	**284-4479**	1	KIT-SEAT	
					(INCLUDES LEVER KIT, SPACERS & BOLTS)	
	2	1	**284-4484**	1	KIT-ADJUSTER	
					(INCLUDES SPACERS & BOLTS)	

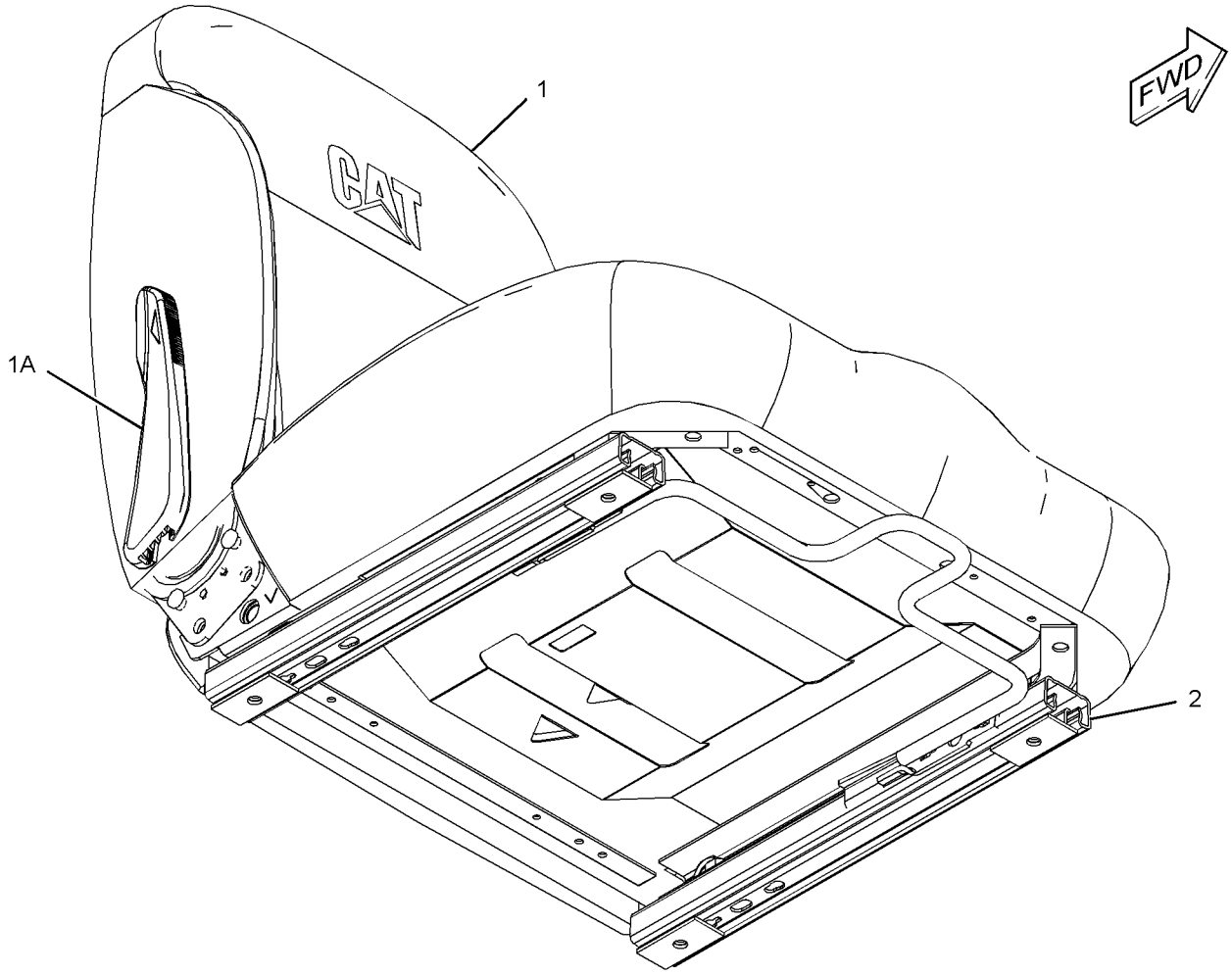

GRAPHIC #1 **<END>** g01255031

OPERATOR STATION

273-5418 SEAT GP

S/N: BYJ1-UP; PDP1-UP
AN ATTACHMENT

SMCS-7312 **i02485771**

NOTE	REF NO	GRAPHIC REF	PART NUMBER	QTY	PART NAME 1 2 3 4 5 6 (PRODUCT LEVEL)	SEE PAGE
Y	1	1	*273-5419*	1	SEAT GP	791
M	2	1	**6V-8202**	4	BOLT-SOCKET HEAD (M8X1.25X16-MM)	

M-METRIC PART
Y-SEPARATE ILLUSTRATION

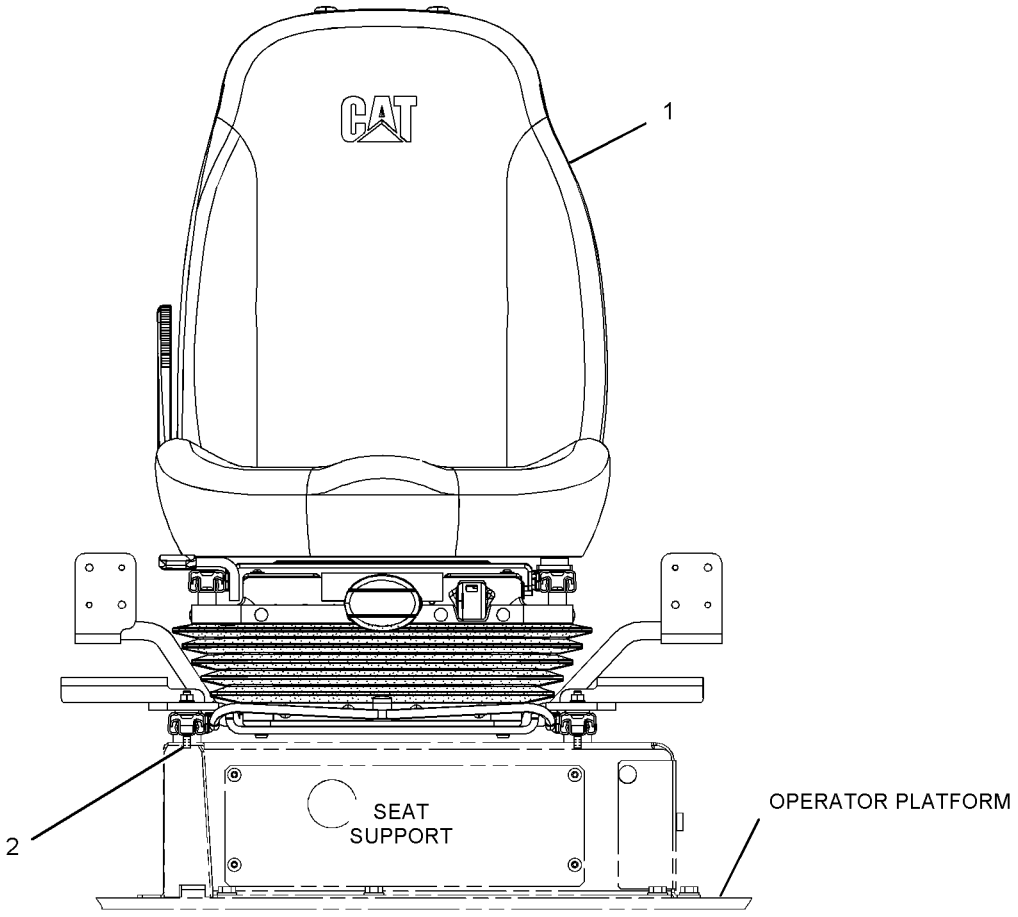

FRONT VIEW

GRAPHIC #1

<END>

g01261939

OPERATOR STATION

273-5419 SEAT GP

S/N: BYJ1-UP; PDP1-UP
PART OF 273-5418 SEAT GP
AN ATTACHMENT

SMCS-7312 **i02485772**

NOTE	REF NO	GRAPHIC REF	PART NUMBER	QTY	PART NAME 1 2 3 4 5 6 (PRODUCT LEVEL)	SEE PAGE
Y	1	1	**273-5420**	1	SUSPENSION GP-SEAT	802
Y	2	1	**273-5432**	1	SEAT GP	795
M	3	1	**284-4403**	4	SCREW-BUTTON HEAD (M8X1.25X16-MM)	

M-METRIC PART
Y-SEPARATE ILLUSTRATION

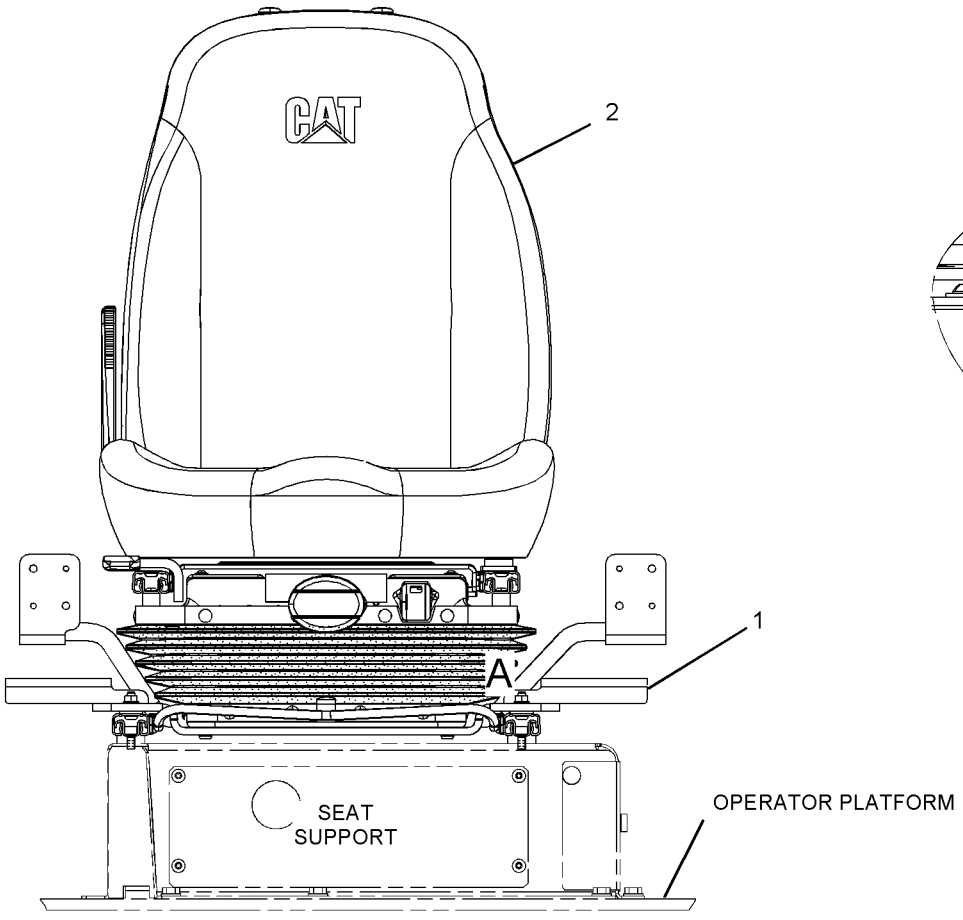

FRONT VIEW

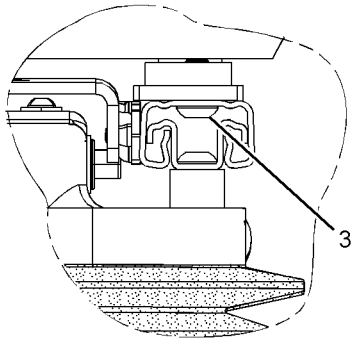

VIEW OF AREA A

GRAPHIC #1 **<END>** g01259769

OPERATOR STATION

273-5423 SEAT GP

S/N: BYJ1-UP; PDP1-UP
CLOTH
PART OF 273-5422 SEAT GP-SUSPENSION
AN ATTACHMENT

SMCS-7312 **i02503815**

NOTE	REF NO	GRAPHIC REF	PART NUMBER	QTY	PART NAME 1 2 3 4 5 6 (PRODUCT LEVEL)	SEE PAGE
	1	1	**284-4481**	1	KIT-SEAT	
	1A	1	**178-5659**	1	HANDLE (LUMBAR SUPPORT ADJUSTER)	
	1B	1	**229-9094**	1	HEADREST AS-SEAT	
	1C	1	**245-7887**	1	LEVER-CONTROL	
M		1	**245-7898**	4	SCREW-BUTTON HEAD (M8X1.25X25-MM)	
	2	1	**284-4483**	1	KIT-SEAT SUPPORT	
M		1	**245-7898**	4	SCREW-BUTTON HEAD (M8X1.25X25-MM)	

M-METRIC PART

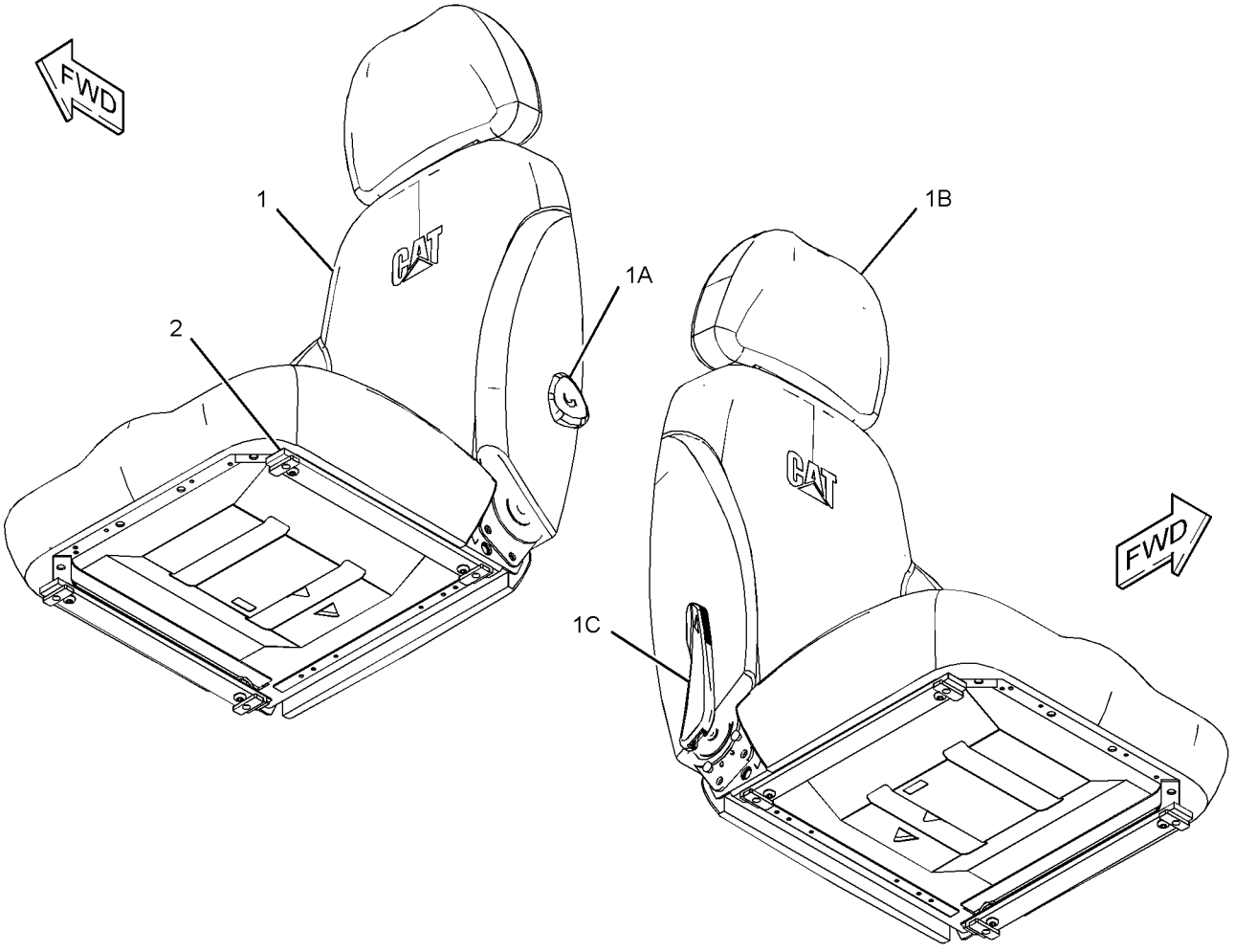

GRAPHIC #1 **<END>** g01261055

OPERATOR STATION

273-5425 SEAT GP

S/N: BYJ1-UP; PDP1-UP
PART OF 273-5424 SEAT GP-SUSPENSION
AN ATTACHMENT

SMCS-7312 **i02485786**

NOTE	REF NO	GRAPHIC REF	PART NUMBER	QTY	PART NAME 1 2 3 4 5 6 (PRODUCT LEVEL)	SEE PAGE
	1	1	**7I-2673**	1	STRAP-CABLE	
Y	2	1	**273-5426**	1	SEAT GP	794
Y	3	1	**273-5427**	1	SUSPENSION GP-SEAT	803
M	4	1	**284-4403**	4	SCREW-BUTTON HEAD (M8X1.25X16-MM)	

M-METRIC PART
Y-SEPARATE ILLUSTRATION

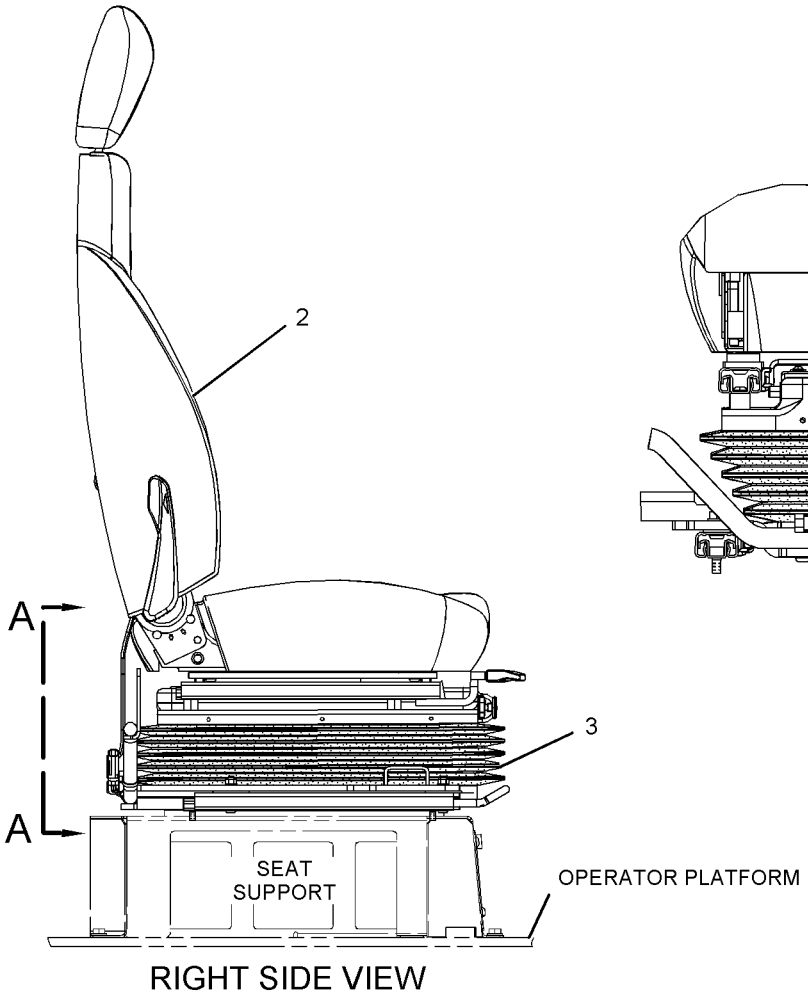

RIGHT SIDE VIEW

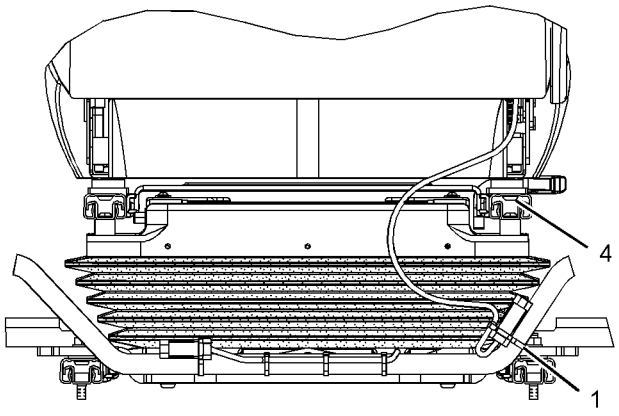

VIEW A-A

GRAPHIC #1 **<END>** g01259696

OPERATOR STATION

273-5426 SEAT GP

S/N: BYJ1-UP; PDP1-UP
CLOTH
PART OF 273-5425 SEAT GP
AN ATTACHMENT

SMCS-7312 **i02503819**

NOTE	REF NO	GRAPHIC REF	PART NUMBER	QTY	PART NAME 1 2 3 4 5 6 (PRODUCT LEVEL)	SEE PAGE
	1	1	**284-4482**	1	KIT-SEAT	
	1A	1	**178-5659**	1	HANDLE (LUMBAR SUPPORT ADJUSTER)	
	1B	1	**229-9094**	1	HEADREST AS-SEAT	
	1C	1	**245-7887**	1	LEVER-CONTROL	
M		1	**245-7898**	4	SCREW-BUTTON HEAD (M8X1.25X25-MM)	
	2	1	**284-4483**	1	KIT-SEAT SUPPORT	
M		1	**245-7898**	4	SCREW-BUTTON HEAD (M8X1.25X25-MM)	

M-METRIC PART

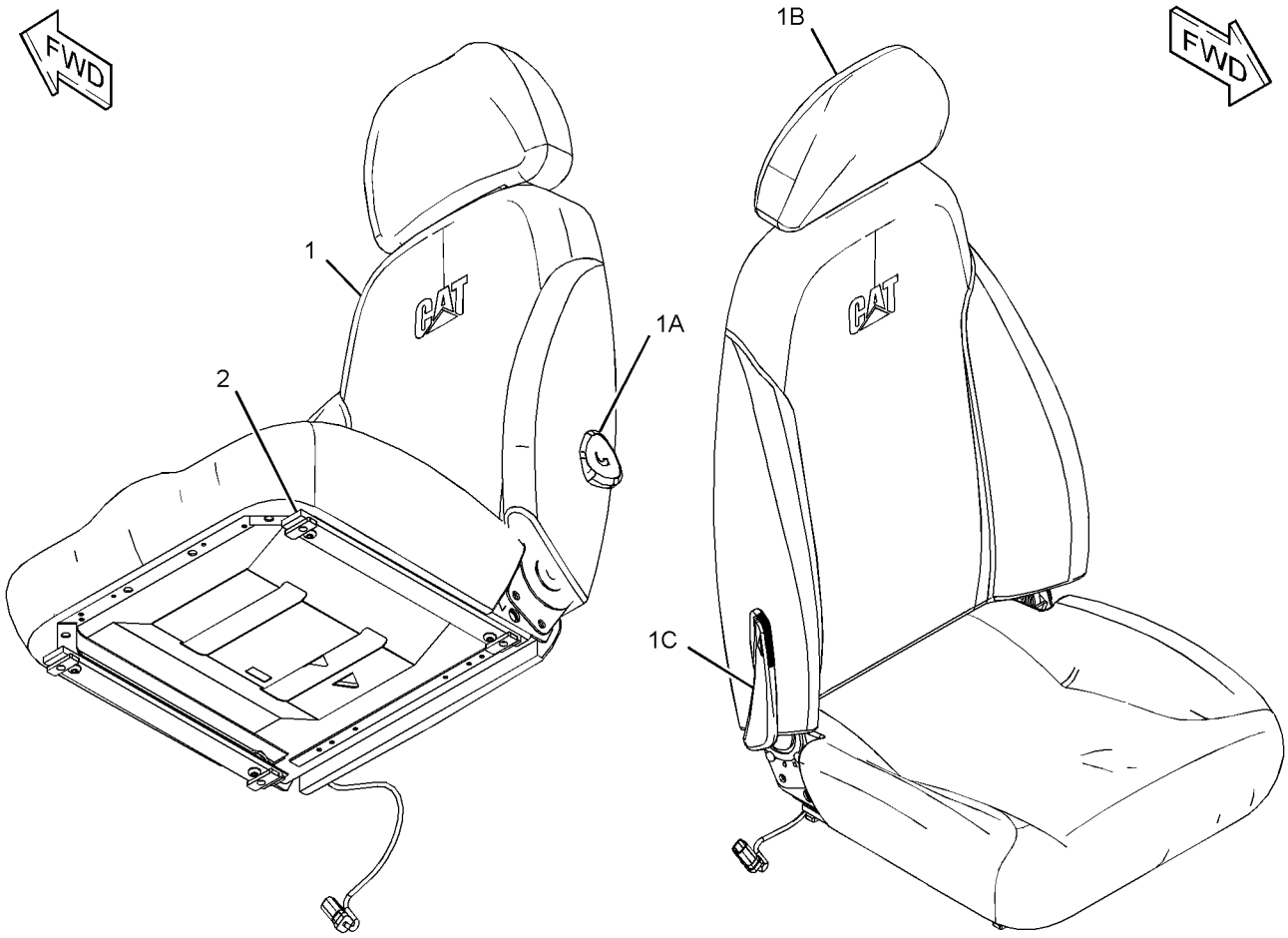

GRAPHIC #1 **<END>** g01261179

OPERATOR STATION

273-5432 SEAT GP

S/N: BYJ1-UP; PDP1-UP
CLOTH
PART OF 273-5419 SEAT GP
AN ATTACHMENT

SMCS-7312 **i02503816**

NOTE	REF NO	GRAPHIC REF	PART NUMBER	QTY	PART NAME 1 2 3 4 5 6 (PRODUCT LEVEL)	SEE PAGE
	1	1	**284-4480**	1	KIT-SEAT	
	1A	1	**245-7887**	1	LEVER-CONTROL	
M		1	**245-7898**	4	SCREW-BUTTON HEAD (M8X1.25X25-MM)	
	2	1	**284-4483**	1	KIT-SEAT SUPPORT	
M		1	**245-7898**	4	SCREW-BUTTON HEAD (M8X1.25X25-MM)	

M-METRIC PART

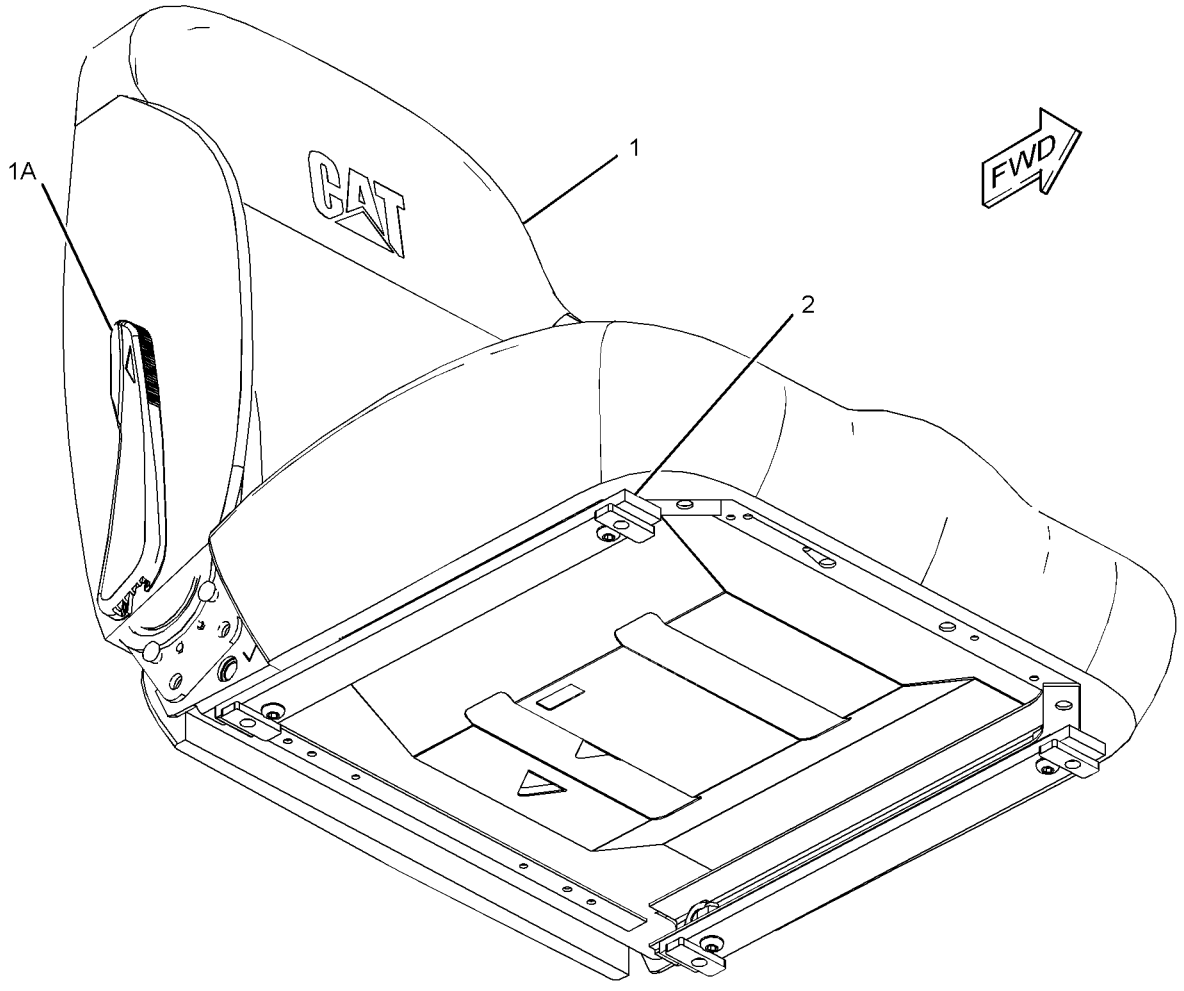

GRAPHIC #1 **<END>** g01261180

OPERATOR STATION

273-5421 SEAT GP-SUSPENSION

S/N: BYJ1-UP; PDP1-UP
AN ATTACHMENT

SMCS-7324, 7336 **i02485775**

NOTE	REF NO	GRAPHIC REF	PART NUMBER	QTY	PART NAME 1 2 3 4 5 6 (PRODUCT LEVEL)	SEE PAGE
Y	1	1	*273-5422*	1	SEAT GP-SUSPENSION	797
M	2	1	**6V-8202**	4	BOLT-SOCKET HEAD (M8X1.25X16-MM)	

M-METRIC PART
Y-SEPARATE ILLUSTRATION

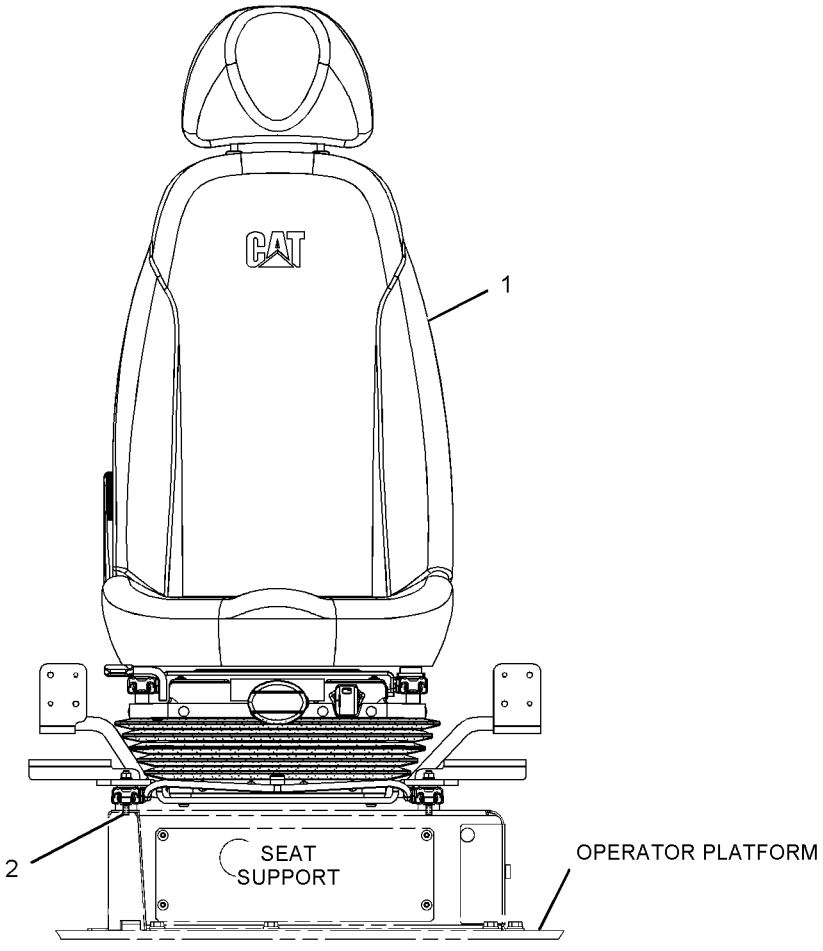

FRONT VIEW

GRAPHIC #1

<END>

g01261941

OPERATOR STATION

273-5422 SEAT GP-SUSPENSION

S/N: BYJ1-UP; PDP1-UP
PART OF 273-5421 SEAT GP-SUSPENSION
AN ATTACHMENT

SMCS-7324, 7336 **i02485777**

NOTE	REF NO	GRAPHIC REF	PART NUMBER	QTY	PART NAME 1 2 3 4 5 6 (PRODUCT LEVEL)	SEE PAGE
Y	1	1	**273-5420**	1	SUSPENSION GP-SEAT	802
Y	2	1	**273-5423**	1	SEAT GP	792
M	3	1	**284-4403**	4	SCREW-BUTTON HEAD (M8X1.25X16-MM)	

M-METRIC PART
Y-SEPARATE ILLUSTRATION

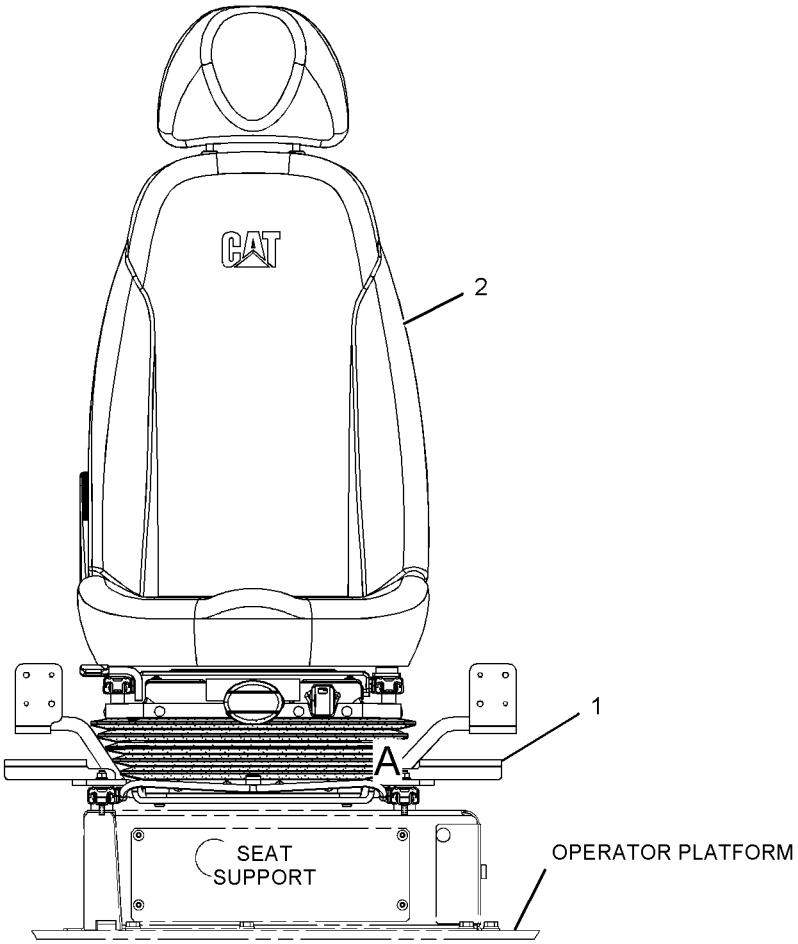

FRONT VIEW

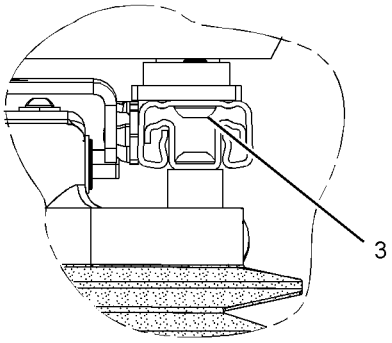

VIEW OF AREA A

GRAPHIC #1 **<END>** g01259725

OPERATOR STATION

273-5424 SEAT GP-SUSPENSION

S/N: BYJ1-UP; PDP1-UP
AN ATTACHMENT

SMCS-7324, 7336 **i02485784**

NOTE	REF NO	GRAPHIC REF	PART NUMBER	QTY	PART NAME 1 2 3 4 5 6 (PRODUCT LEVEL)	SEE PAGE
	1	1	**238-2211**	1	SWITCH AS-ROCKER (HEATED SEAT)	
		1	**167-3542**	1	CONNECTOR-RECEPTACLE	
		1	**167-3543**	4	TERMINAL	
Y	2	1	*273-5425*	1	SEAT GP	793
M	3	1	**6V-8202**	4	BOLT-SOCKET HEAD (M8X1.25X16-MM)	

M-METRIC PART
Y-SEPARATE ILLUSTRATION

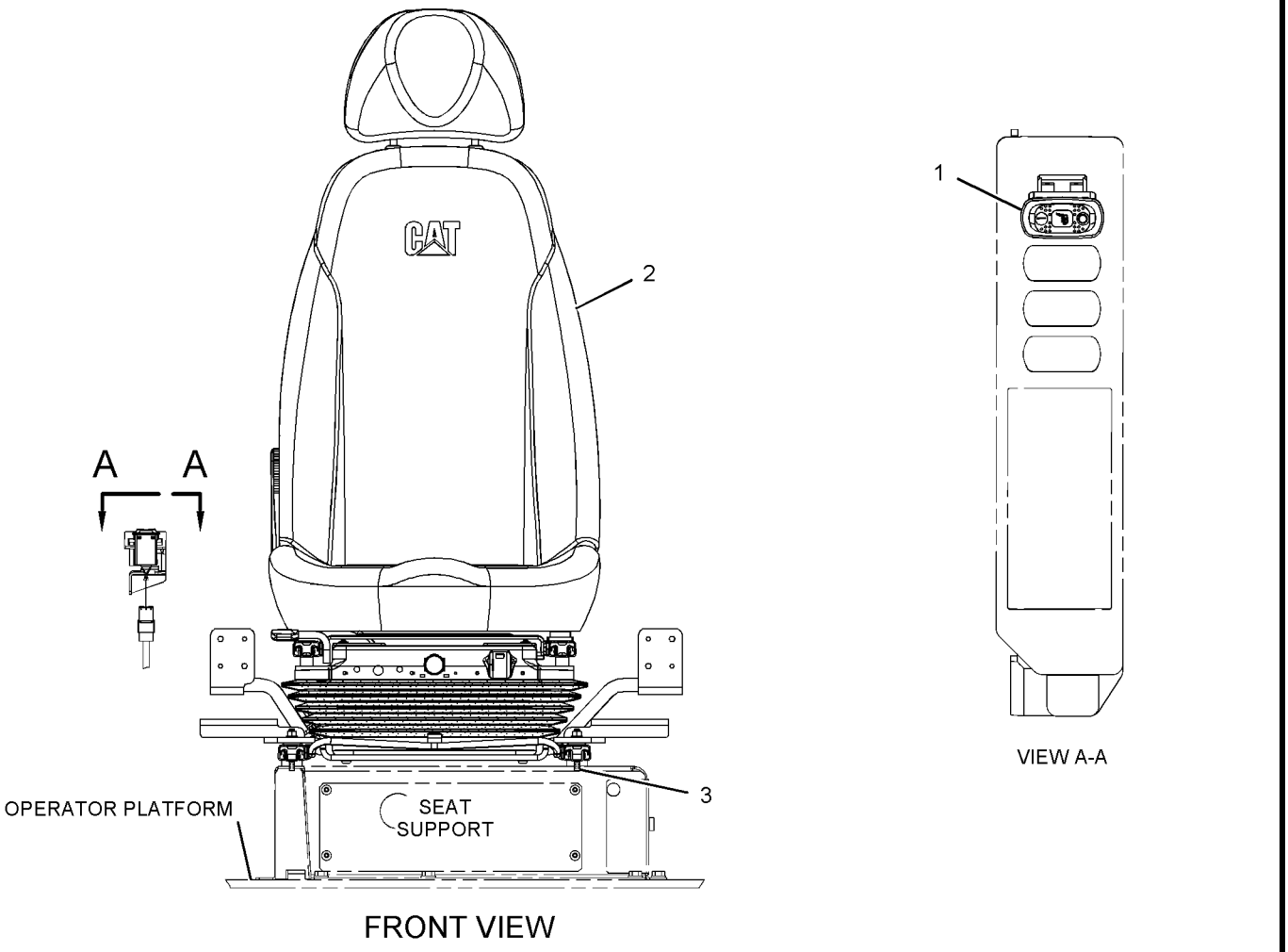

GRAPHIC #1 **<END>** g01259568

OPERATOR STATION

273-5414 SUPPORT GP-SEAT

S/N: BYJ1-UP; PDP1-UP
PART OF 273-5412, 273-5416 SEAT GP
AN ATTACHMENT

SMCS-7321 **i02523502**

NOTE	REF NO	GRAPHIC REF	PART NUMBER	QTY	PART NAME 1 2 3 4 5 6 (PRODUCT LEVEL)	SEE PAGE
M	1	1	**245-7898**	8	SCREW-BUTTON HEAD (M8X1.25X25-MM)	
	2	1	**284-4396**	1	SUPPORT AS	
	3	1	**284-4399**	1	SUPPORT AS	
M	4	1	**5C-7261**	8	NUT (M8X1.25-THD)	
	5	1	**8T-4224**	8	WASHER-HARD (8.8X16X2-MM THK)	
	6	1	**268-5151**	1	RAIL AS	

M-METRIC PART

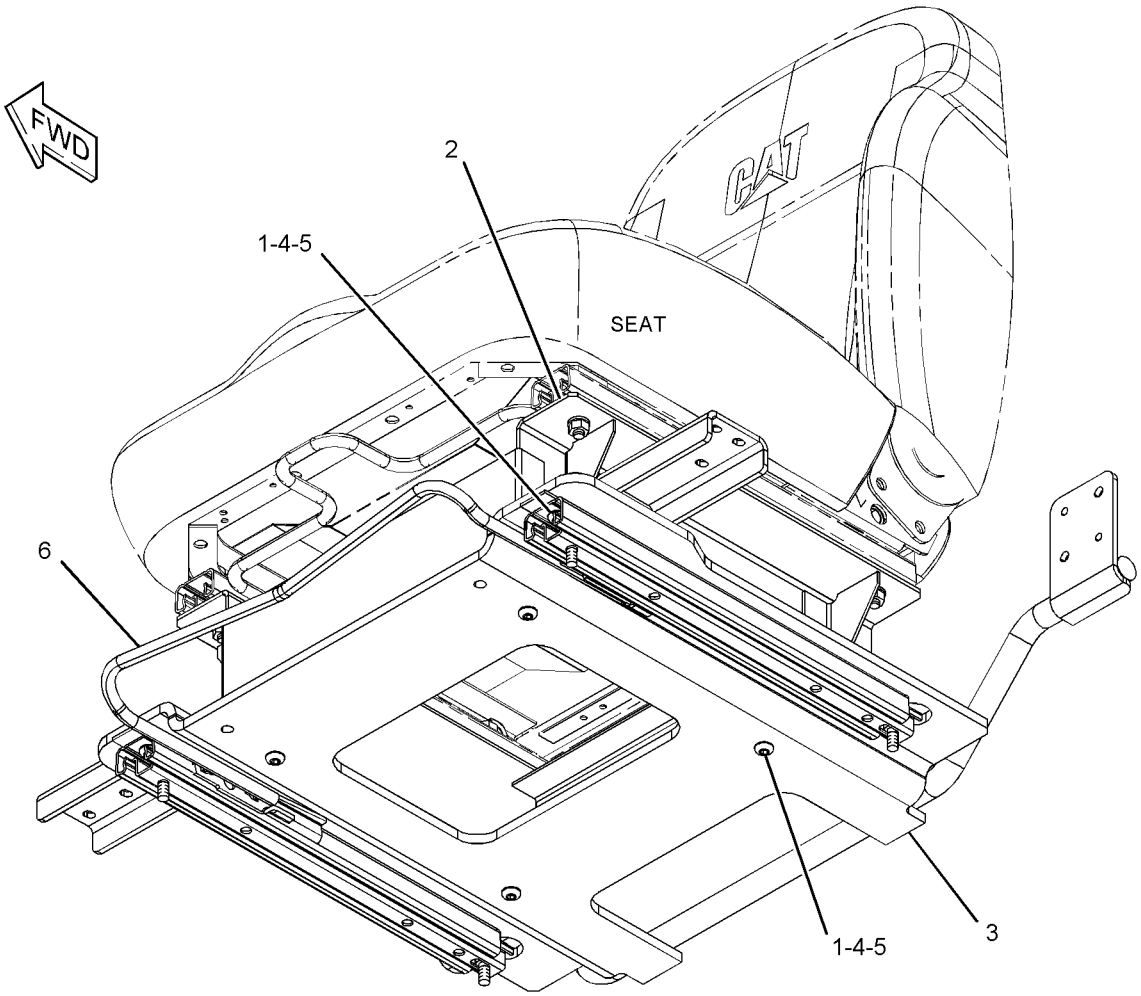

GRAPHIC #1 **<END>** g01264871

OPERATOR STATION

284-4459 SUPPORT GP-SEAT

S/N: BYJ1-UP; PDP1-UP

PART OF 273-5406 OPERATOR AR

SMCS-7321 **i02811837**

NOTE	REF NO	GRAPHIC REF	PART NUMBER	QTY	PART NAME 1 2 3 4 5 6 (PRODUCT LEVEL)	SEE PAGE
Y	1	1	*284-4460*	1	SUPPORT GP-SEAT	801
	2	1	**8T-4121**	6	WASHER-HARD (11X21X2.5-MM THK)	
M	3	1	**8T-4191**	6	BOLT (M10X1.5X16-MM)	

M-METRIC PART
Y-SEPARATE ILLUSTRATION

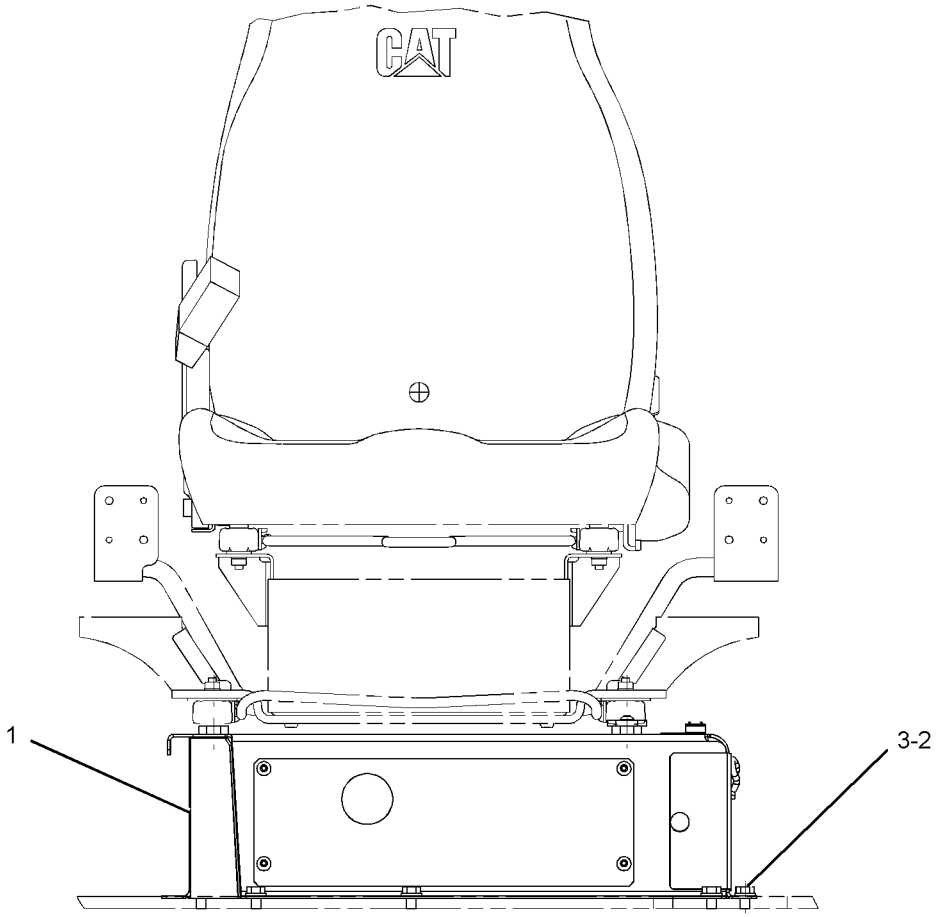

FRONT VIEW

GRAPHIC #1

<END>

g01411101

OPERATOR STATION

284-4460 SUPPORT GP-SEAT

S/N: BYJ1-UP; PDP1-UP

PART OF 284-4459 SUPPORT GP-SEAT

SMCS-7321 **i02811836**

NOTE	REF NO	GRAPHIC REF	PART NUMBER	QTY	PART NAME 1 2 3 4 5 6 (PRODUCT LEVEL)	SEE PAGE
M	1	1	**201-4440**	1	SCREW (M6X1X12-MM)	
	2	1	**259-7331**	1	COVER AS-ACCESS	
	3	1	**259-7333**	1	COVER AS-ACCESS	
	4	1	**259-7335**	1	PLATE	
	5	1	**284-4461**	1	SUPPORT AS	
M	6	1	**9X-2042**	4	SCREW-TRUSS HEAD (M6X1X12-MM)	
M	7	1	**9X-2043**	1	SCREW-TRUSS HEAD (M6X1X14-MM)	

M-METRIC PART

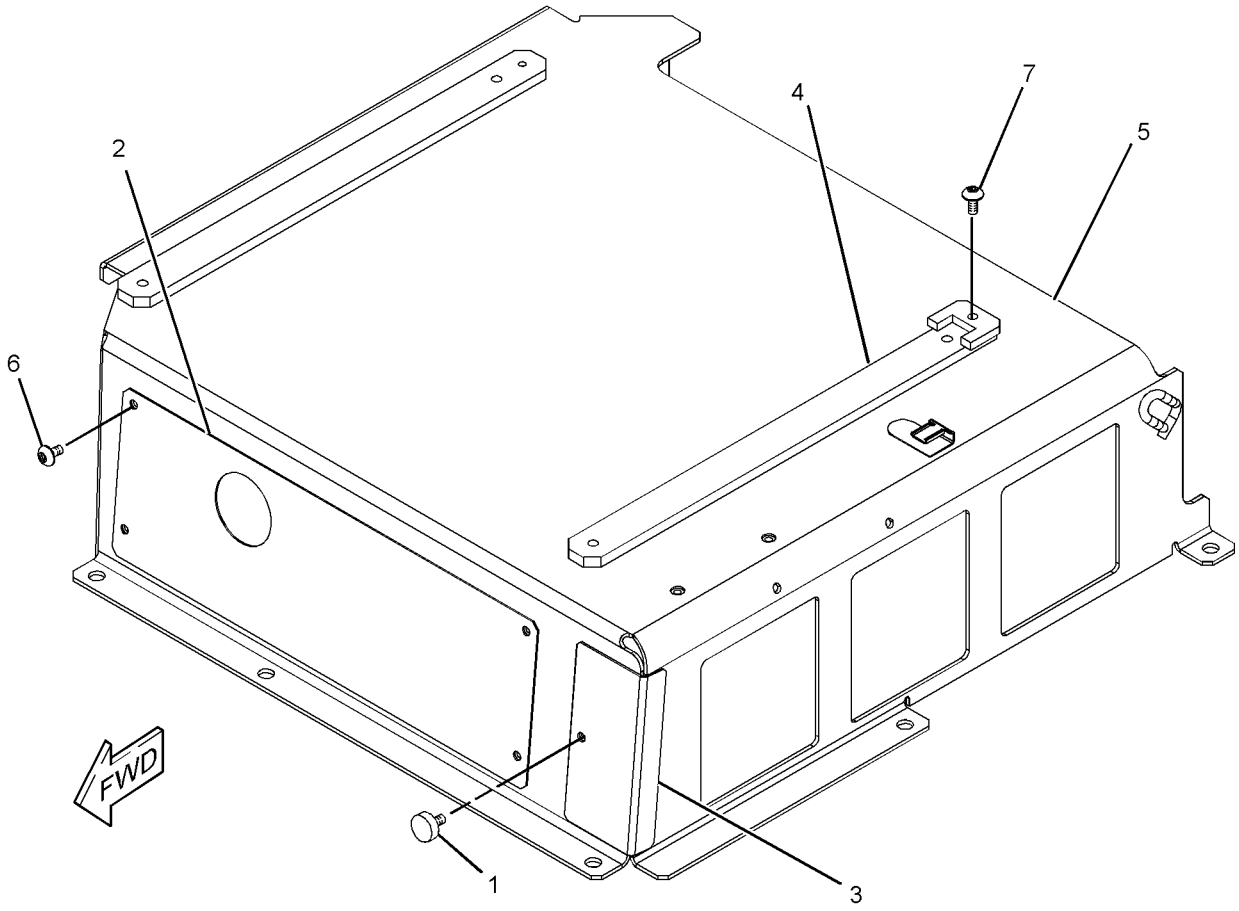

GRAPHIC #1 **<END>** g01411186

OPERATOR STATION

273-5420 SUSPENSION GP-SEAT

S/N: BYJ1-UP; PDP1-UP
PART OF 273-5419 SEAT GP, 273-5422 SEAT GP-SUSPENSION
AN ATTACHMENT

SMCS-7324 **i02747491**

NOTE	REF NO	GRAPHIC REF	PART NUMBER	QTY	PART NAME 1 2 3 4 5 6 (PRODUCT LEVEL)	SEE PAGE
	1	1	**284-4399**	1	SUPPORT AS	
	2	1	**242-8768**	1	COVER AS	
	3	1	**268-5151**	1	RAIL AS	
M	3A	1	**245-7898**	4	SCREW-BUTTON HEAD (M8X1.25X25-MM)	
M	3B	1	**5C-7261**	4	NUT (M8X1.25-THD)	
	3C	1	**8T-4224**	4	WASHER-HARD (8.8X16X2-MM THK)	
	4	1	**284-4485**	1	KIT-SUSPENSION	
		1	**209-4280**	1	CYLINDER-DAMPER	
M	4A	1	**245-7898**	4	SCREW-BUTTON HEAD (M8X1.25X25-MM)	
M	4B	1	**5C-7261**	8	NUT (M8X1.25-THD)	
	4C	1	**8T-4224**	8	WASHER-HARD (8.8X16X2-MM THK)	
	4D	1	**201-4532**	4	SCREW-BUTTON HEAD (M8X1.25X40-MM)	
	5	1	**284-4487**	1	KIT-SEAT ADJUSTER	
	5A	1	**201-4532**	4	SCREW-BUTTON HEAD (M8X1.25X40-MM)	
M	5B	1	**5C-7261**	4	NUT (M8X1.25-THD)	
	5C	1	**8T-4224**	4	WASHER-HARD (8.8X16X2-MM THK)	
					J-PARTS INCLUDED IN SUSPENSION KIT & ADJUSTER KIT	

M-METRIC PART

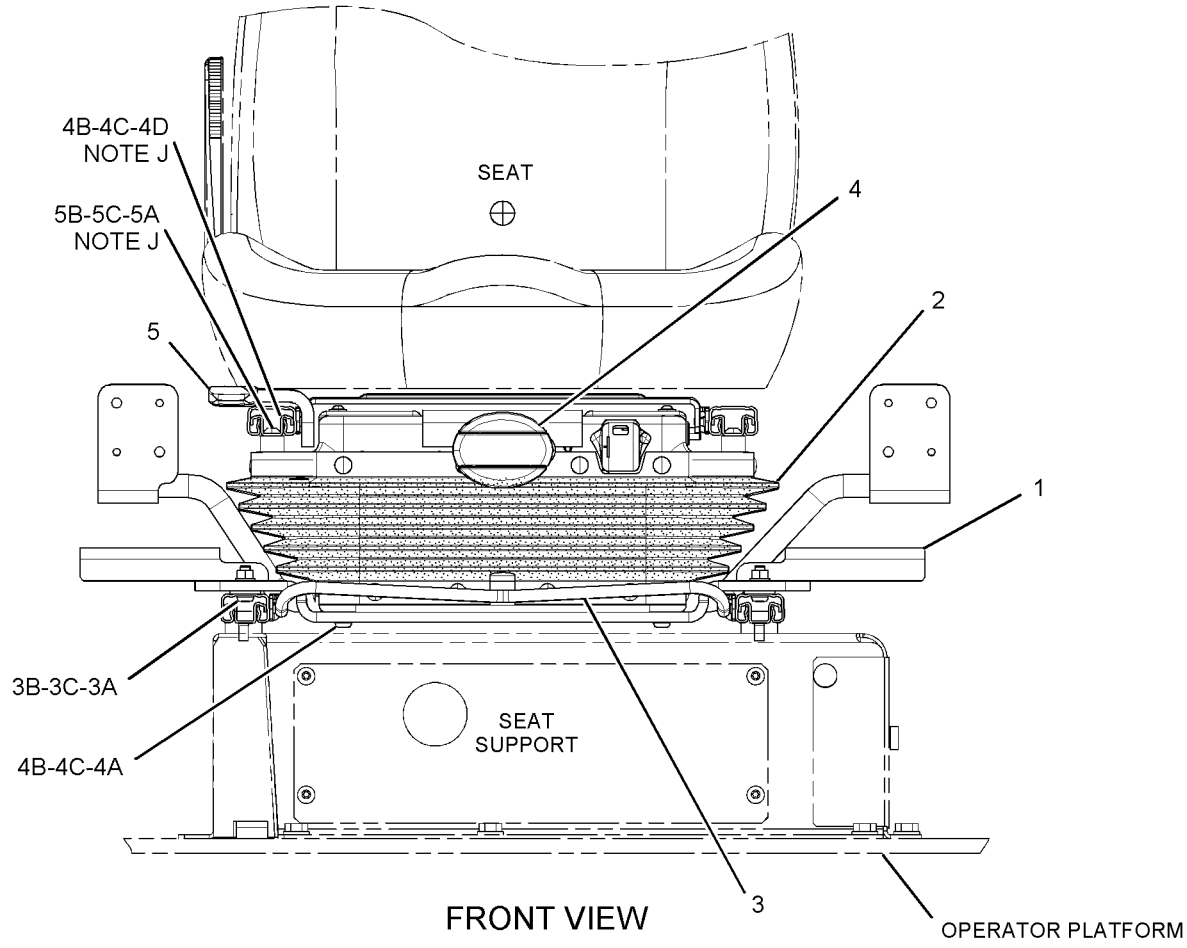

GRAPHIC #1 **<END>** g01378281

OPERATOR STATION

273-5427 SUSPENSION GP-SEAT

S/N: BYJ1-UP; PDP1-UP
PART OF 273-5425 SEAT GP
AN ATTACHMENT

SMCS-7324 **i02753633**

NOTE	REF NO	GRAPHIC REF	PART NUMBER	QTY	PART NAME 1 2 3 4 5 6 (PRODUCT LEVEL)	SEE PAGE
	1	1	**3S-2093**	3	STRAP-CABLE	
	2	1	**7I-2673**	1	STRAP-CABLE	
J	3	1	**242-8768**	1	COVER AS	
	4	1	**284-4487**	1	KIT-SEAT ADJUSTER	
		1	**201-4532**	4	SCREW-BUTTON HEAD (M8X1.25X40-MM)	
M		1	**5C-7261**	4	NUT (M8X1.25-THD)	
		1	**8T-4224**	4	WASHER-HARD (8.8X16X2-MM THK)	
	5	1	**268-5151**	1	RAIL AS	
M	5A	1	**5C-7261**	4	NUT (M8X1.25-THD)	
		1	**8T-4224**	4	WASHER-HARD (8.8X16X2-MM THK)	
M		1	**245-7898**	4	SCREW-BUTTON HEAD (M8X1.25X25-MM)	
	6	1	**284-4399**	1	SUPPORT AS	
Y	7	1	**284-4486**	1	SUSPENSION GP-SEAT	804
					AVAILABLE REPAIR KIT(S):	
J				1	KIT-CLIP (SEAT)	

J-KIT MARKED J AVAILABLE FOR PART MARKED J
M-METRIC PART
Y-SEPARATE ILLUSTRATION

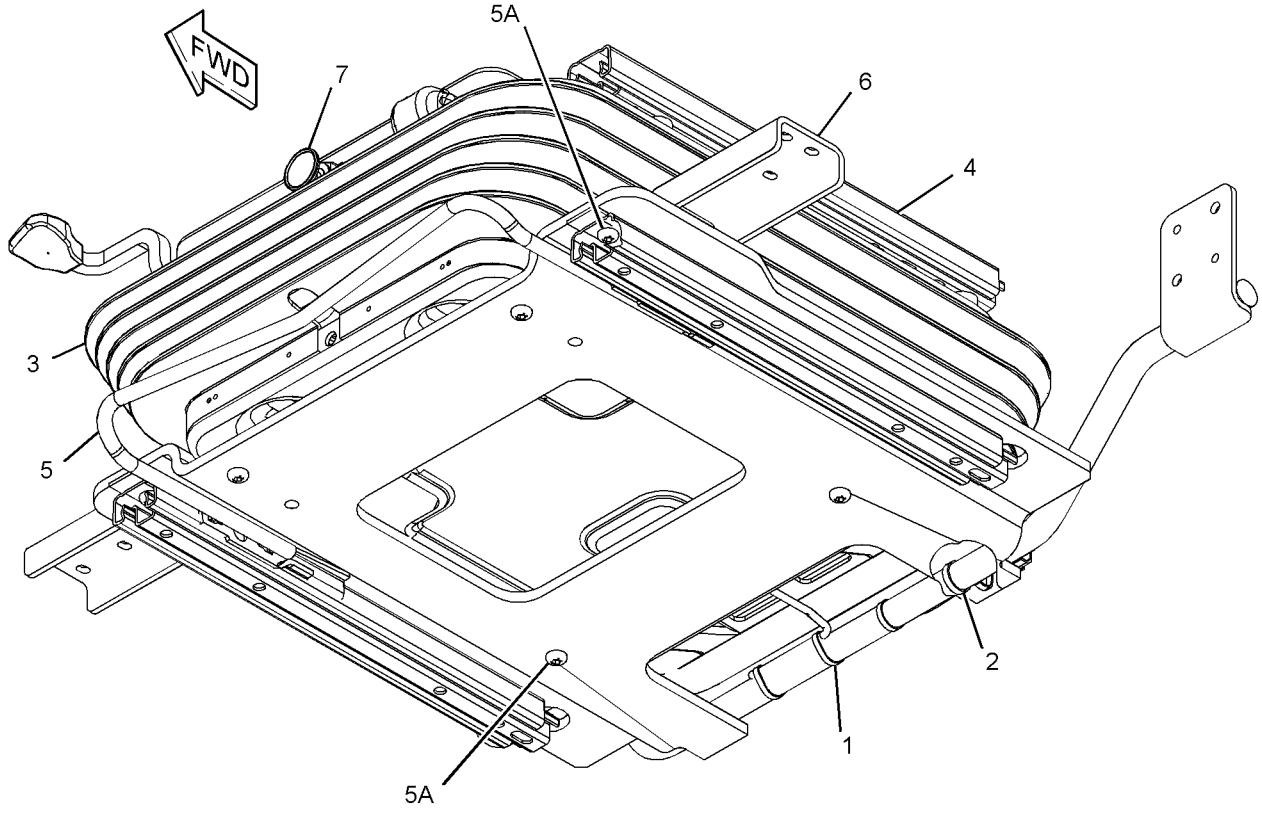

GRAPHIC #1 **<END>** g01265830

OPERATOR STATION

284-4486 SUSPENSION GP-SEAT

S/N: BYJ1-UP; PDP1-UP
PART OF 273-5427 SUSPENSION GP-SEAT
AN ATTACHMENT

SMCS-7324 **i02528278**

NOTE	REF NO	GRAPHIC REF	PART NUMBER	QTY	PART NAME 1 2 3 4 5 6 (PRODUCT LEVEL)	SEE PAGE
	1	1	**209-0348**	1	DAMPER (SUSPENSION)	
M	2	1	**245-7898**	4	SCREW-BUTTON HEAD (M8X1.25X25-MM)	
	3	1	**273-5386**	1	VALVE AS-AIR	
	4	1	**201-4532**	4	SCREW-BUTTON HEAD (M8X1.25X40-MM)	
M	5	1	**5C-7261**	8	NUT (M8X1.25-THD)	
	6	1	**8T-4224**	8	WASHER-HARD (8.8X16X2-MM THK)	

M-METRIC PART

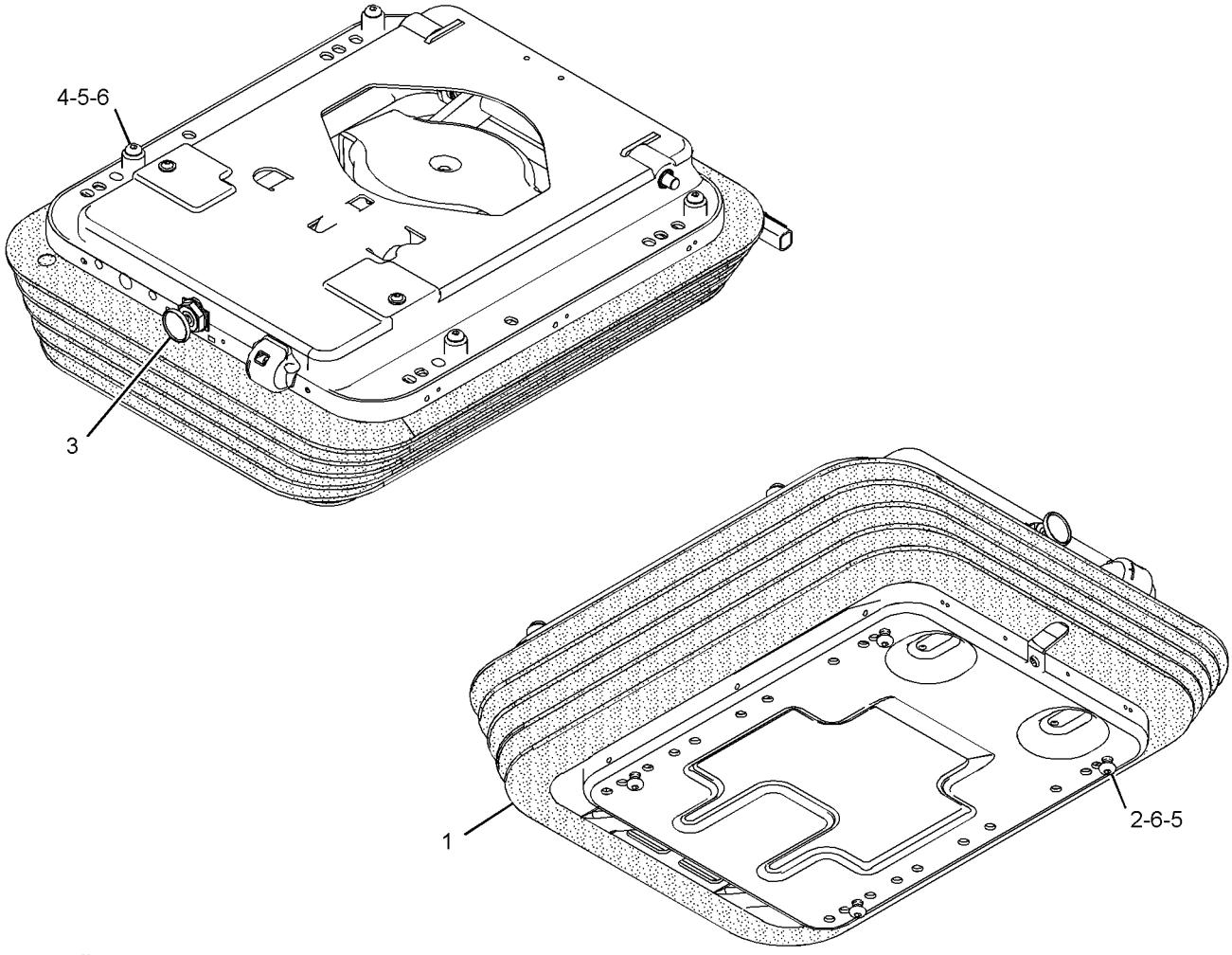

GRAPHIC #1 **<END>** g01265832

OPERATOR STATION

284-4533 VISOR GP-PROTECTION

S/N: BYJ1-UP; PDP1-UP
AN ATTACHMENT

SMCS-7340 **i02617959**

NOTE	REF NO	GRAPHIC REF	PART NUMBER	QTY	PART NAME 1 2 3 4 5 6 (PRODUCT LEVEL)	SEE PAGE
M	1	1	**4I-5049**	6	NUT-SPACER (M6X1-THD)	
	3	1	**284-4534**	1	VISOR	
	4	1	**284-4535**	1	BRACKET AS	
M	5	1	**6V-7357**	6	BOLT (M6X1X25-MM)	
	6	1	**7X-0605**	2	WASHER-HARD (13X28X1.6-MM THK)	
M	7	1	**8T-4179**	2	BOLT (M12X1.75X20-MM)	
	8	1	**9X-8256**	6	WASHER (6.6X12X2-MM THK)	
	9	1	**5P-8309**		SEAL (1.1-M)	

M-METRIC PART

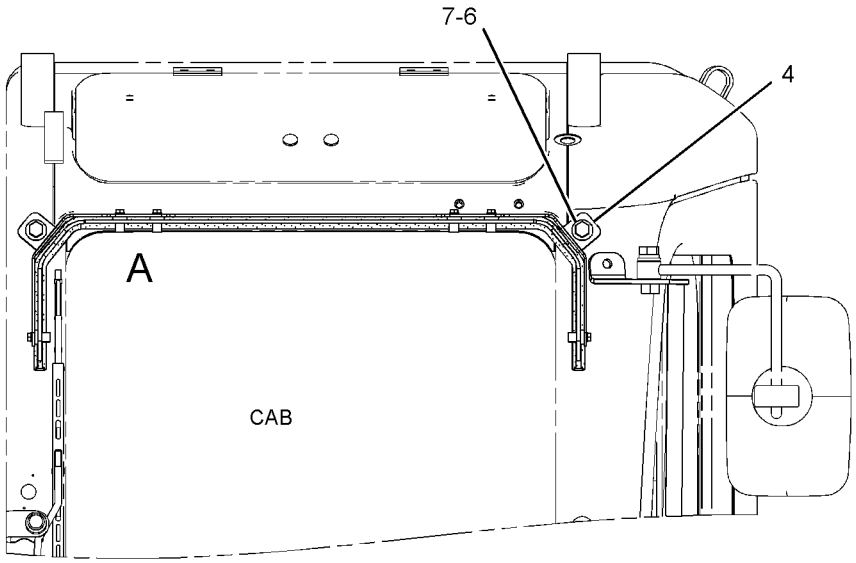

FRONT VIEW

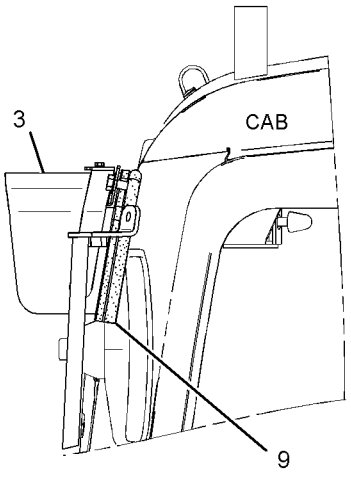

LEFT SIDE VIEW

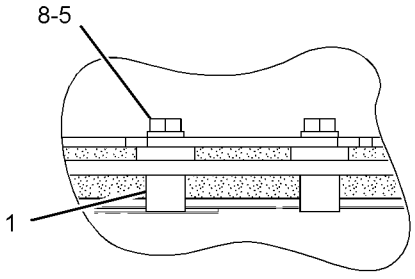

VIEW OF AREA A

GRAPHIC #1 **<END>** g01318840

OPERATOR STATION

189-3465 WASHER GP-WINDOW

S/N: BYJ1-UP; PDP1-UP

PART OF 260-7182, 260-7183 CHASSIS AR

SMCS-7306 **i02409067**

NOTE	REF NO	GRAPHIC REF	PART NUMBER	QTY	PART NAME 1 2 3 4 5 6 (PRODUCT LEVEL)	SEE PAGE
E	1	1	**144-0195**		HOSE (240-CM)	
	2	1	**178-5601**	1	TANK AS-WINDOW WASHER	
M	3	1	**5C-9553**	2	BOLT (M6X1X16-MM)	
	4	1	**9X-8256**	2	WASHER (6.6X12X2-MM THK)	
	5	1	**7Y-3474**	1	VALVE AS-CHECK (WINDOW WASHER)	
	6	1	**3S-2093**	1	STRAP-CABLE	

E-ORDER BY THE CENTIMETER
M-METRIC PART

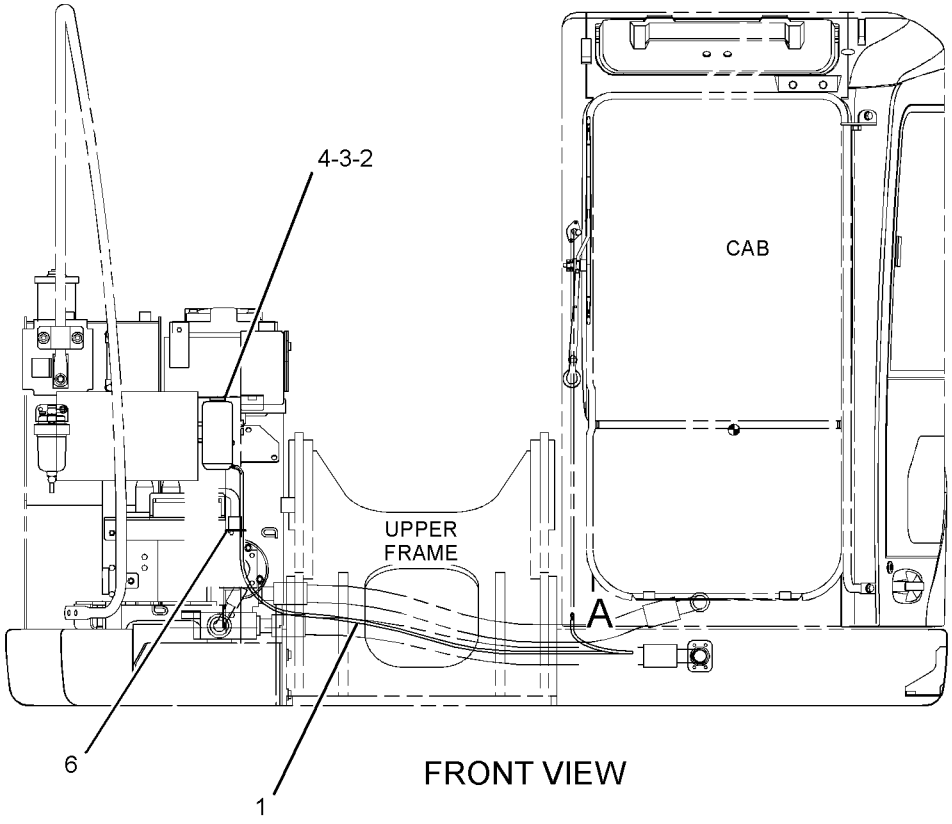

FRONT VIEW

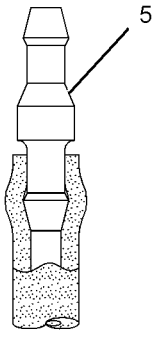

VIEW OF AREA A

GRAPHIC #1 **<END>** g01208232

OPERATOR STATION

196-1436 WINDOW GP-CAB

S/N: BYJ1-UP; PDP1-UP
PART OF 273-5171, 273-5202 DOOR GP-CAB
AN ATTACHMENT

SMCS-7310 **i01667875**

NOTE	REF NO	GRAPHIC REF	PART NUMBER	QTY	PART NAME 1 2 3 4 5 6 (PRODUCT LEVEL)	SEE PAGE
	1	1	**214-1236**	1	SEAL	
	2	1	**214-1234**	1	GLASS	
	3	1	**085-6444**	2	LATCH GP-FRONT WINDOW	
					(EACH INCLUDES)	
		1	**085-6447**	1	RETAINER	
M		1	**085-6448**	2	SCREW-TAPPING	
		1	**085-6449**	1	PACKING	
	4	1	**214-1238**	1	CHANNEL	
	5	1	**214-1239**	1	SEAL	
	6	1	**214-1235**	1	GLASS	
	7	1	**214-1242**	2	STOP	
	8	1	**214-1237**	1	SEAL	
	9	1	**214-1241**	1	STOP	
	10	1	**214-1240**	1	STOP	
	11	1	**214-1233**	1	FRAME AS	

M-METRIC PART

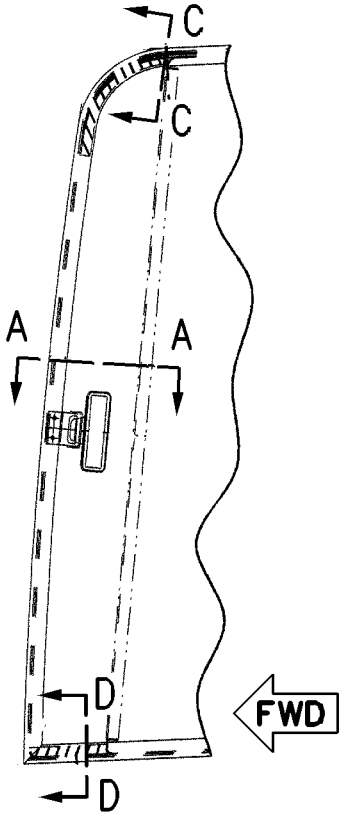

VIEW G-G

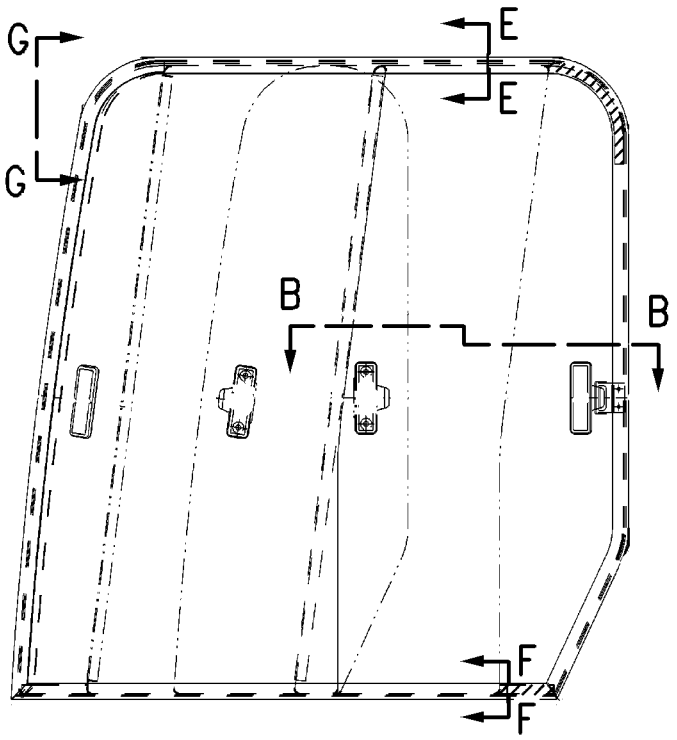

TOP VIEW

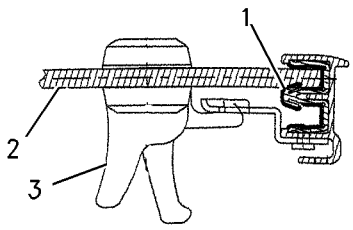

SECTION A-A

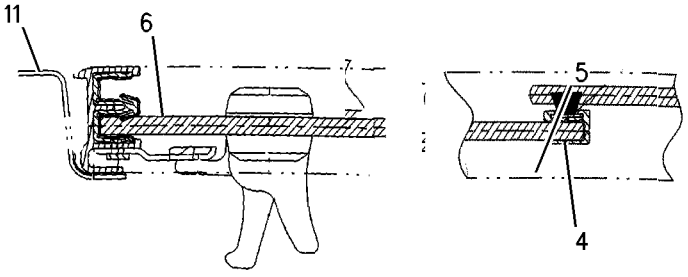

SECTION B-B

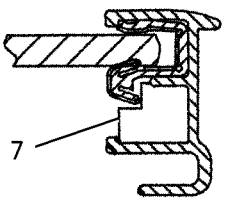

SECTION C-C

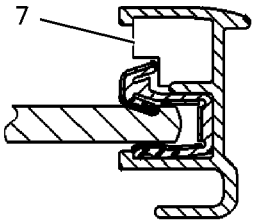

SECTION E-E

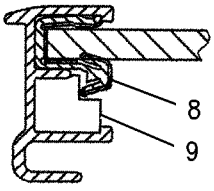

SECTION D-D

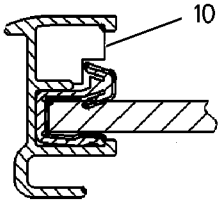

SECTION F-F

GRAPHIC #1 **<END>** g00861411

259-7278 WINDOW GP-CAB–REAR

S/N: BYJ1-UP; PDP1-UP
PART OF 259-7338 WINDOW GP-CAB
AN ATTACHMENT

SMCS-7310 **i02522130**

NOTE	REF NO	GRAPHIC REF	PART NUMBER	QTY	PART NAME 1 2 3 4 5 6 (PRODUCT LEVEL)	SEE PAGE
Y	1	1	**259-7279**	1	WINDOW GP-CAB	810
	2	1	**259-7317**	1	PLATE	
	3	1	**259-7318**	1	SEAL	
M	4	1	**9X-2042**	2	SCREW-TRUSS HEAD (M6X1X12-MM)	

M-METRIC PART
Y-SEPARATE ILLUSTRATION

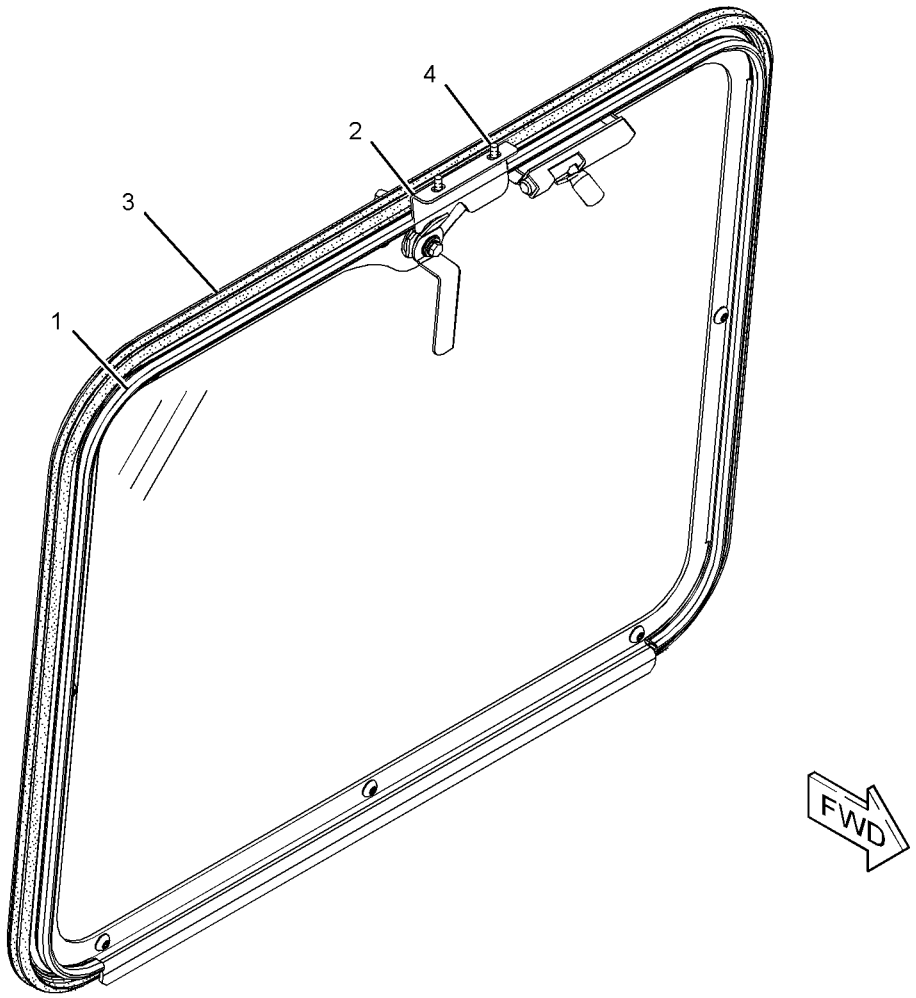

GRAPHIC #1 **<END>** g01264716

OPERATOR STATION

259-7279 WINDOW GP-CAB

S/N: BYJ1-UP; PDP1-UP
PART OF 259-7278 WINDOW GP-CAB
AN ATTACHMENT

SMCS-7310 **i02522131**

NOTE	REF NO	GRAPHIC REF	PART NUMBER	QTY	PART NAME 1 2 3 4 5 6 (PRODUCT LEVEL)	SEE PAGE
	1	1	**196-1559**	8	RETAINER	
	2	1	**201-4493**	16	PACKING	
	3	1	**207-0149**	1	COVER	
	4	1	**259-7319**	1	SEAL	
	5	1	**259-7320**	1	PIN	
	6	1	**259-7321**	1	PIN	
	7	1	**259-7322**	1	HANDLE	
	8	1	**259-7323**	1	PACKING	
	9	1	**259-7324**	1	HANDLE AS	
	10	1	**259-7325**	1	GLASS	
	11	1	**259-7326**	1	FRAME AS	
M	12	1	**9X-2042**	8	SCREW-TRUSS HEAD (M6X1X12-MM)	

M-METRIC PART

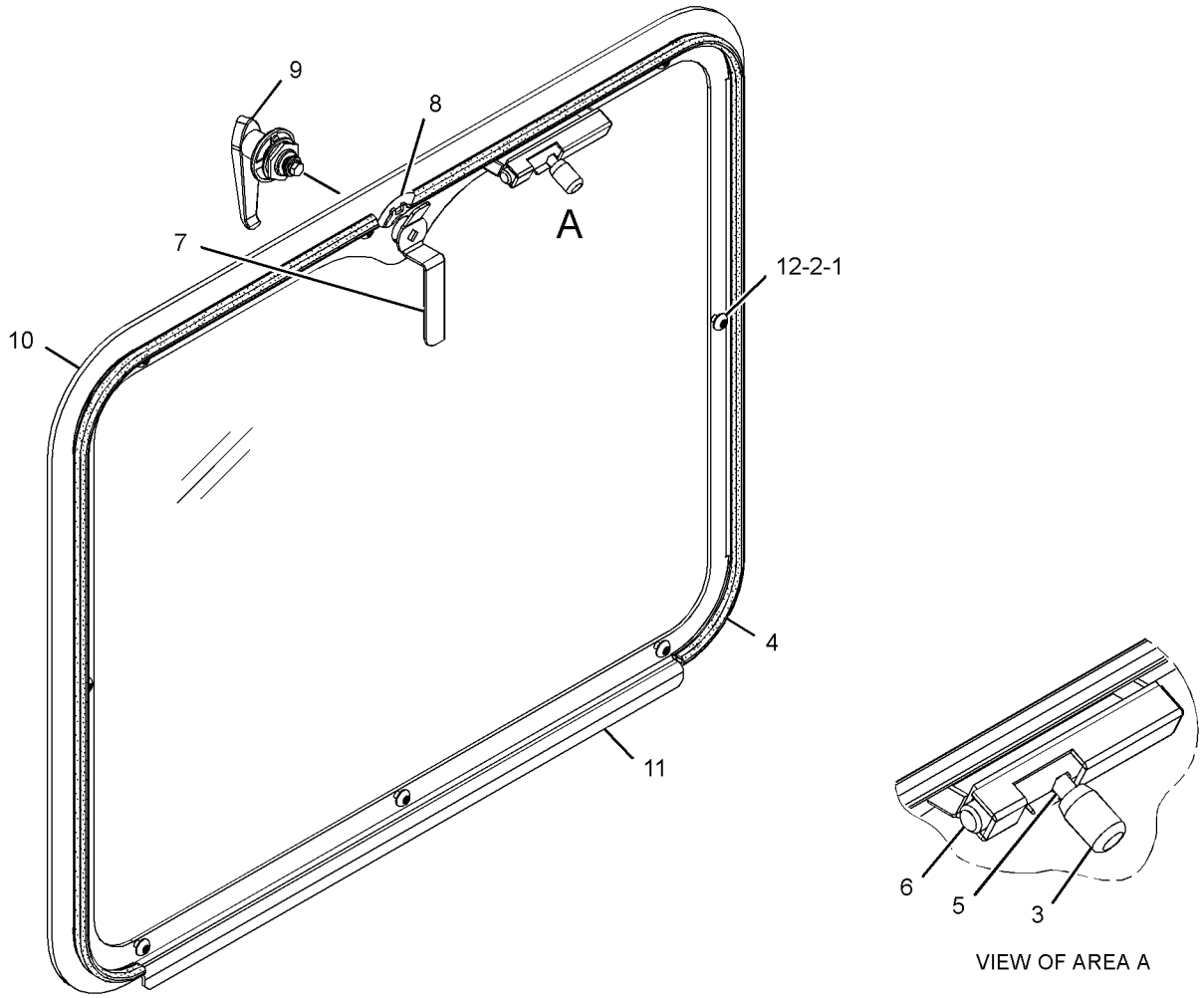

GRAPHIC #1 **<END>** g01264568

OPERATOR STATION

259-7338 WINDOW GP-CAB

S/N: BYJ1-UP; PDP1-UP
AN ATTACHMENT

SMCS-7310 **i03254283**

NOTE	PART NUMBER	QTY	PART NAME 1 2 3 4 5 6 (PRODUCT LEVEL)	SEE PAGE
Y	*186-1305*	1	FILM GP (SECONDARY EXIT)	816
Y	*259-7278*	1	WINDOW GP-CAB (REAR)	809

Y-SEPARATE ILLUSTRATION

<END>

OPERATOR STATION

196-1432 WINDOW GP-FRONT

S/N: BYJ1-UP; PDP1-UP
PART OF 259-7277 CAB GP, 259-7275 CAB GP-ENCLOSED ROPS
AN ATTACHMENT

SMCS-7340 **i02216504**

NOTE	REF NO	GRAPHIC REF	PART NUMBER	QTY	PART NAME 1 2 3 4 5 6 (PRODUCT LEVEL)	SEE PAGE
	1	1	**196-1557**	1	ROD	
	2	1	**207-0215**	1	BRACKET AS	
M	3	1	**9X-2041**	4	SCREW-TRUSS HEAD (M10X1.5X20-MM)	
	4	1	**127-4001**	3	SNAP	
	5	1	**196-1556**	1	LEVER AS	
M	6	1	**9X-2042**	7	SCREW-TRUSS HEAD (M6X1X12-MM)	
	7	1	**196-1499**	1	LATCH	
	8	1	**196-1537**	1	BRACKET	
	9	1	**127-3991**	2	SNAP	
	10	1	**132-7625**	1	LOCK AS	
	11	1	**207-0214**	1	LOCK AS	
M	12	1	**8T-4133**	2	NUT (M10X1.5-THD)	
	13	1	**127-3987**	2	STOP	
J	14	1	**196-1494**	1	FRAME AS	
J	15	1	**196-1496**	1	SEAL	
J	16	1	**196-1536**	1	PLATE	
J	17	1	**196-1497**	1	SEAL	
JM	18	1	**7Y-5292**	5	SCREW-TRUSS HEAD	
	19	1	**251-2806**	2	ROLLER	
J	20	1	**196-1495**	1	GLASS	
	21	1	**251-2807**	2	ROLLER	
	22	1	**196-1558**	1	ROD	
	23	1	**9X-8256**	2	WASHER (6.6X12X2-MM THK)	
	24	1	**8T-0328**	2	WASHER-HARD (5.5X10X1-MM THK)	
	25	1	**207-0238**	4	SHIM (1.2-MM)	
					AVAILABLE REPAIR KIT(S):	
J			**240-5027**	1	WINDOW AS	

J-AS MARKED J SERVICES PART(S) MARKED J
M-METRIC PART

196-1432 WINDOW GP-FRONT *(contd.)* **i02216504**

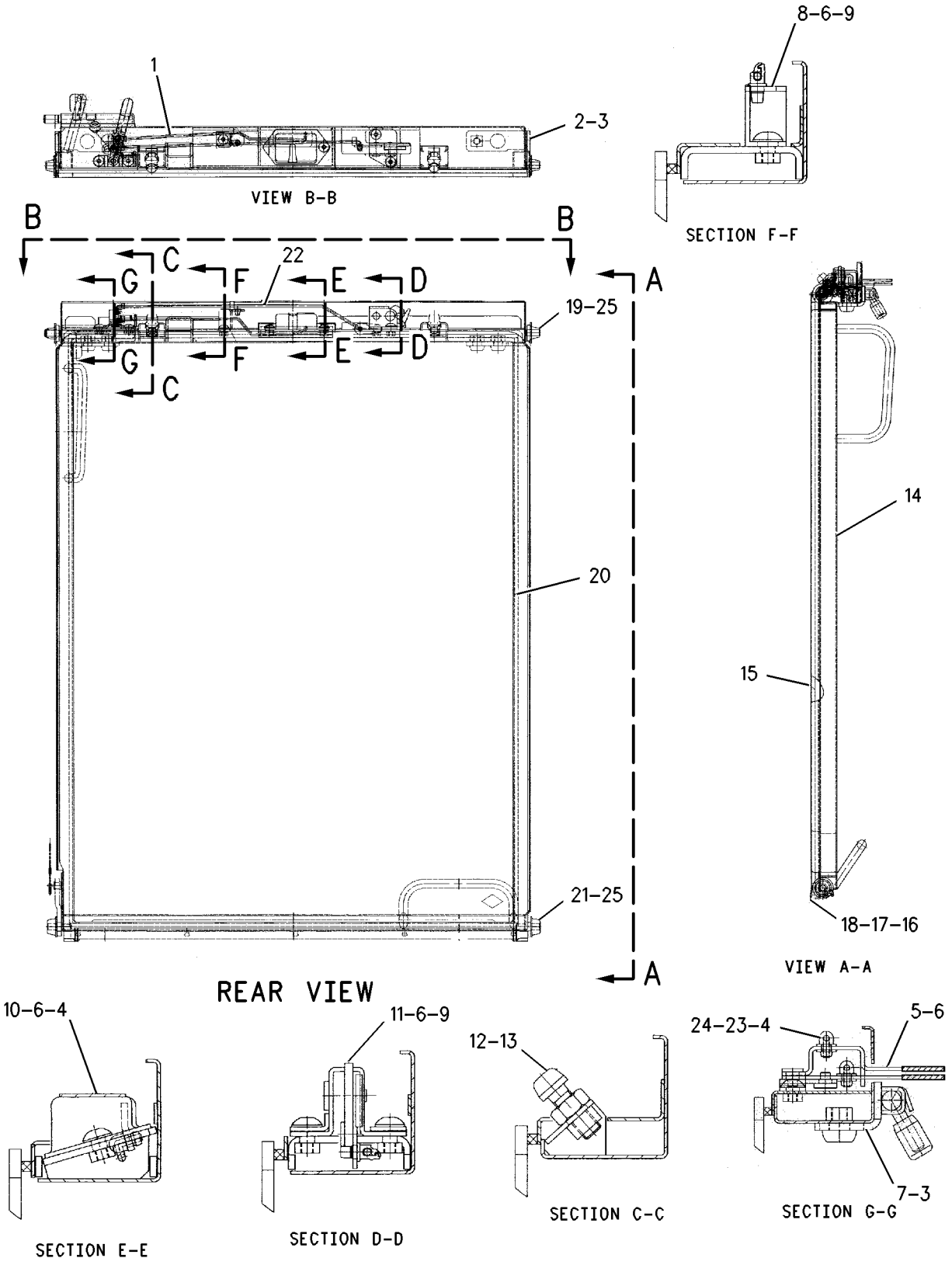

GRAPHIC #1 **<END>** g00861412

OPERATOR STATION

273-5344 WIPER GP-WINDOW

S/N: BYJ1-UP; PDP1-UP

PART OF 259-7277 CAB GP, 259-7275 CAB GP-ENCLOSED ROPS

AN ATTACHMENT

SMCS-7305 **i02486466**

NOTE	REF NO	GRAPHIC REF	PART NUMBER	QTY	PART NAME 1 2 3 4 5 6 (PRODUCT LEVEL)	SEE PAGE
	1	1	**196-1505**	1	MOTOR AS-WINDOW WIPER	
		1	**196-1518**	1	PACKING	
		1	**196-1521**	2	WASHER (18X32X5.5-MM THK)	
		1	**196-1522**	1	NUT (M18X1-THD)	
		1	**201-4503**	1	CAP	
	2	1	**196-1506**	1	ARM GP-WINDOW WIPER	
		1	**196-1507**	1	STOP	
		1	**201-4508**	2	SCREW AS (M3.5X0.6X11-MM)	
	3	1	**196-1508**	1	BLADE AS-WIPER (550-MM)	
	4	1	**196-1509**	1	STOP	
	5	1	**196-1510**	1	NOZZLE	
	6	1	**259-7282**	1	CONTROL GP-WASHER & WIPER	
	7	1	**273-5196**	1	BRACKET	
	8	1	**273-5197**	1	COVER	
M	9	1	**128-2135**	1	SCREW-TRUSS HEAD (M6X1X13-MM)	
M	10	1	**5C-7261**	1	NUT (M8X1.25-THD)	
M	11	1	**6V-5210**	2	SCREW-MACHINE (M4X0.7X10-MM)	
M	12	1	**8T-4189**	5	BOLT (M8X1.25X20-MM)	
	13	1	**8T-4224**	5	WASHER-HARD (8.8X16X2-MM THK)	
M	14	1	**9X-2042**	4	SCREW-TRUSS HEAD (M6X1X12-MM)	
E	15	1	**144-0195**		HOSE (150-CM)	

E-ORDER BY THE CENTIMETER
M-METRIC PART

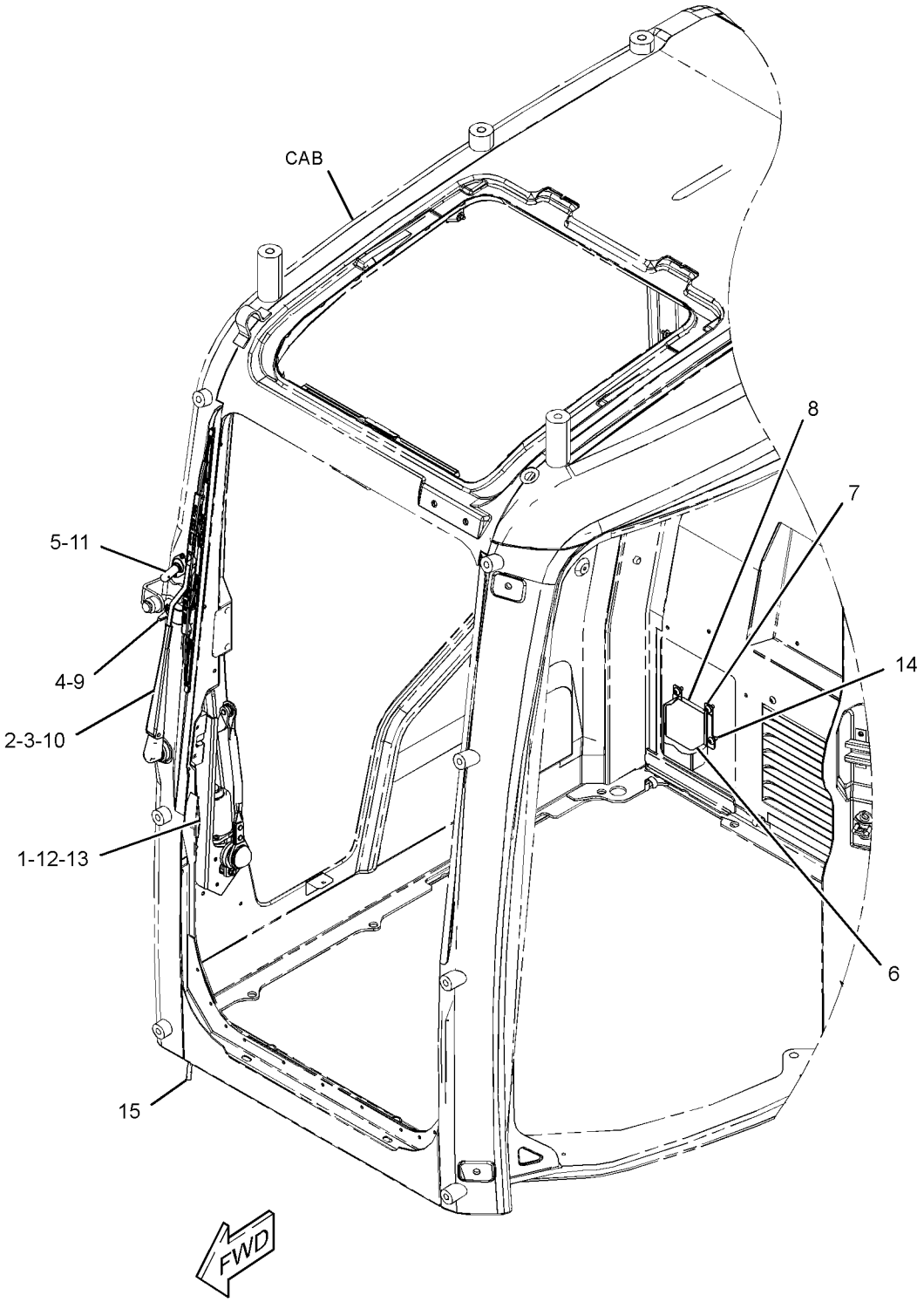

GRAPHIC #1 **<END>** g01251961

186-1305 FILM GP–SECONDARY EXIT

S/N: BYJ1-UP; PDP1-UP
PART OF 259-7338 WINDOW GP-CAB
AN ATTACHMENT

SMCS-7405, 7557 **i02514314**

NOTE	REF NO	GRAPHIC REF	PART NUMBER	QTY	PART NAME 1 2 3 4 5 6 (PRODUCT LEVEL)	SEE PAGE
	1	1	**224-1943**	1	FILM-INSTRUCTION (ALTERNATE EXIT, REMOVE WINDOW)	

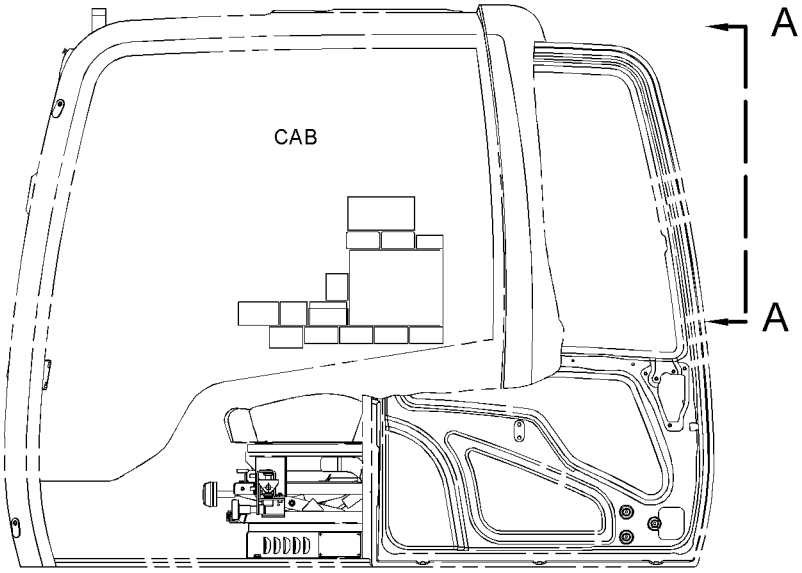

LEFT SIDE VIEW

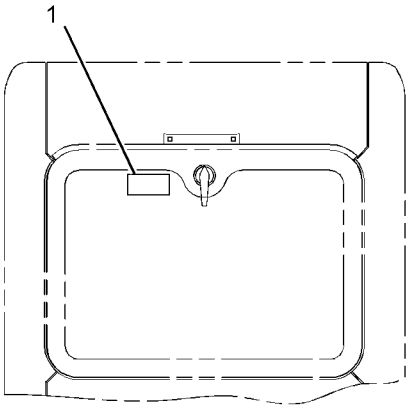

VIEW A-A

GRAPHIC #1 **<END>** g01274365

247-7410 FILM GP–OPERATOR CONTROLS, NOTICE

S/N: BYJ1-UP; PDP1-UP
PART OF 255-5843, 323-7766 CONTROL AR-AUXILIARY
AN ATTACHMENT

SMCS-7405, 7557 **i02426165**

NOTE	REF NO	GRAPHIC REF	PART NUMBER	QTY	PART NAME 1 2 3 4 5 6 (PRODUCT LEVEL)	SEE PAGE
	1	1	**250-8054**	1	FILM-NOTICE (HAMMER, READ OMM)	
	2	1	**260-6941**	1	FILM-INFORMATION (OPERATOR CONTROLS, READ OMM)	

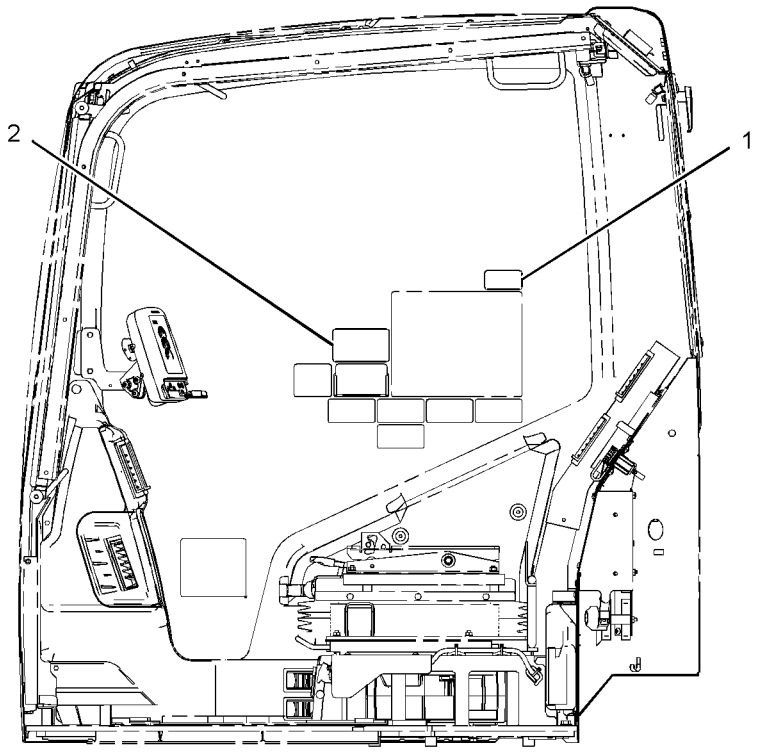

LEFT SIDE VIEW
(328D MODELS)

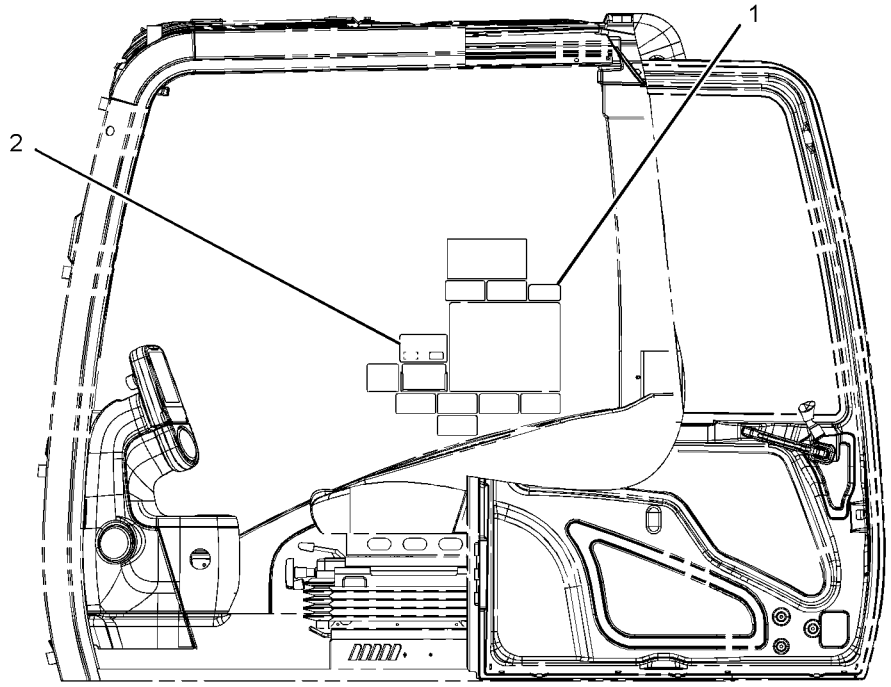

LEFT SIDE VIEW
(ALL OTHER MODELS)

GRAPHIC #1 **<END>** g01246655

SERVICE EQUIPMENT AND SUPPLIES

247-7411 FILM GP–OPERATOR CONTROLS, NOTICE

S/N: BYJ1-UP; PDP1-UP
PART OF 255-5844, 323-7767 CONTROL AR-AUXILIARY
AN ATTACHMENT

SMCS-7405, 7557 **i02433607**

NOTE	REF NO	GRAPHIC REF	PART NUMBER	QTY	PART NAME 1 2 3 4 5 6 (PRODUCT LEVEL)	SEE PAGE
	1	1	**260-6942**	1	FILM-INFORMATION (OPERATOR CONTROLS, READ OMM)	
	2	1	**250-8054**	1	FILM-NOTICE (HAMMER, READ OMM)	

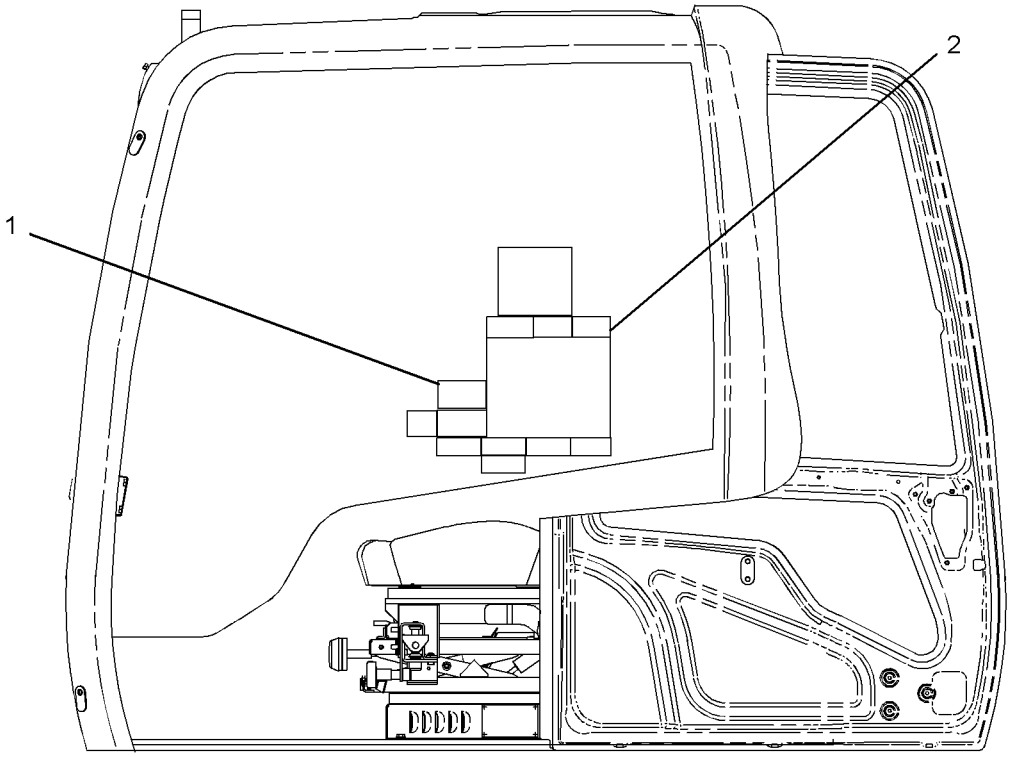

LEFT SIDE VIEW

GRAPHIC #1 **<END>** g01212938

247-7465 FILM GP–HAMMER CONTROL, FOOT SWITCH

S/N: BYJ1-UP; PDP1-UP

PART OF 259-7858 CONTROL AR-AUXILIARY

AN ATTACHMENT

SMCS-7405, 7557 **i02424961**

NOTE	REF NO	GRAPHIC REF	PART NUMBER	QTY	PART NAME 1 2 3 4 5 6 (PRODUCT LEVEL)	SEE PAGE
	1	1	**176-2815**	1	FILM-INSTRUCTION (HAMMER CONTROL)	
	2	1	**250-8054**	1	FILM-NOTICE (HAMMER, READ OMM)	

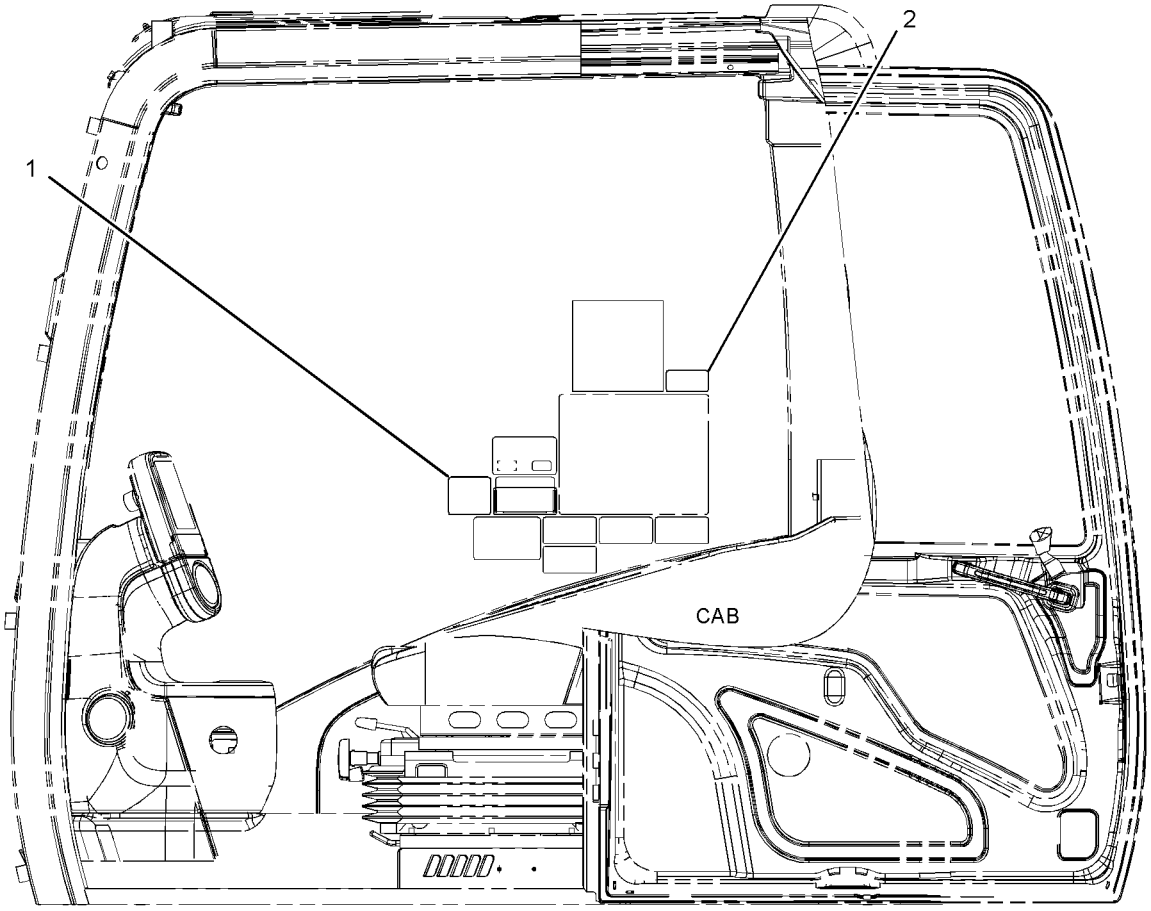

LEFT SIDE VIEW

GRAPHIC #1

<END>

g01157047

247-7494 FILM GP—CONTROL PATTERN, QUICK CHANGE

S/N: BYJ1-UP; PDP1-UP
4-WAY
PART OF 270-6065 VALVE AR
AN ATTACHMENT

SMCS-7405, 7557 **i02414960**

NOTE	REF NO	GRAPHIC REF	PART NUMBER	QTY	PART NAME 1 2 3 4 5 6 (PRODUCT LEVEL)	SEE PAGE
	1	1	**4I-2885**	1	CASE	
	2	1	**109-1839**	1	FILM-INSTRUCTION (OPERATOR CONTROLS, READ OMM)	
	3	1	**214-4531**	1	PLATE-INSTRUCTION (OPERATOR CONTROLS, READ OMM) (MHI, SCM PATTERNS)	
	4	1	**214-4532**	1	PLATE-INSTRUCTION (OPERATOR CONTROLS, READ OMM) (KOBELCO, SAE PATTERNS)	
	5	1	**257-4547**	1	FILM-WARNING (CRUSH HAZARD, READ OMM, INTL)	

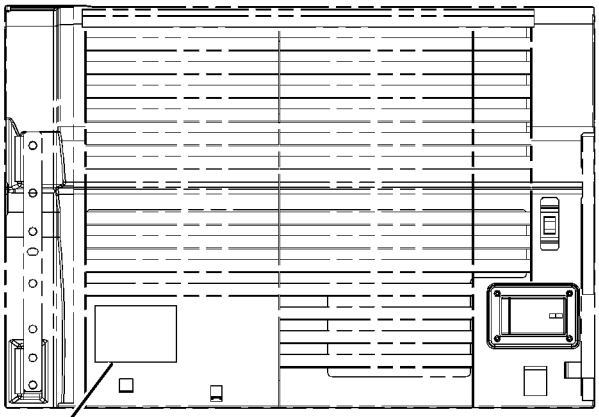

INSIDE VIEW OF RADIATOR DOOR

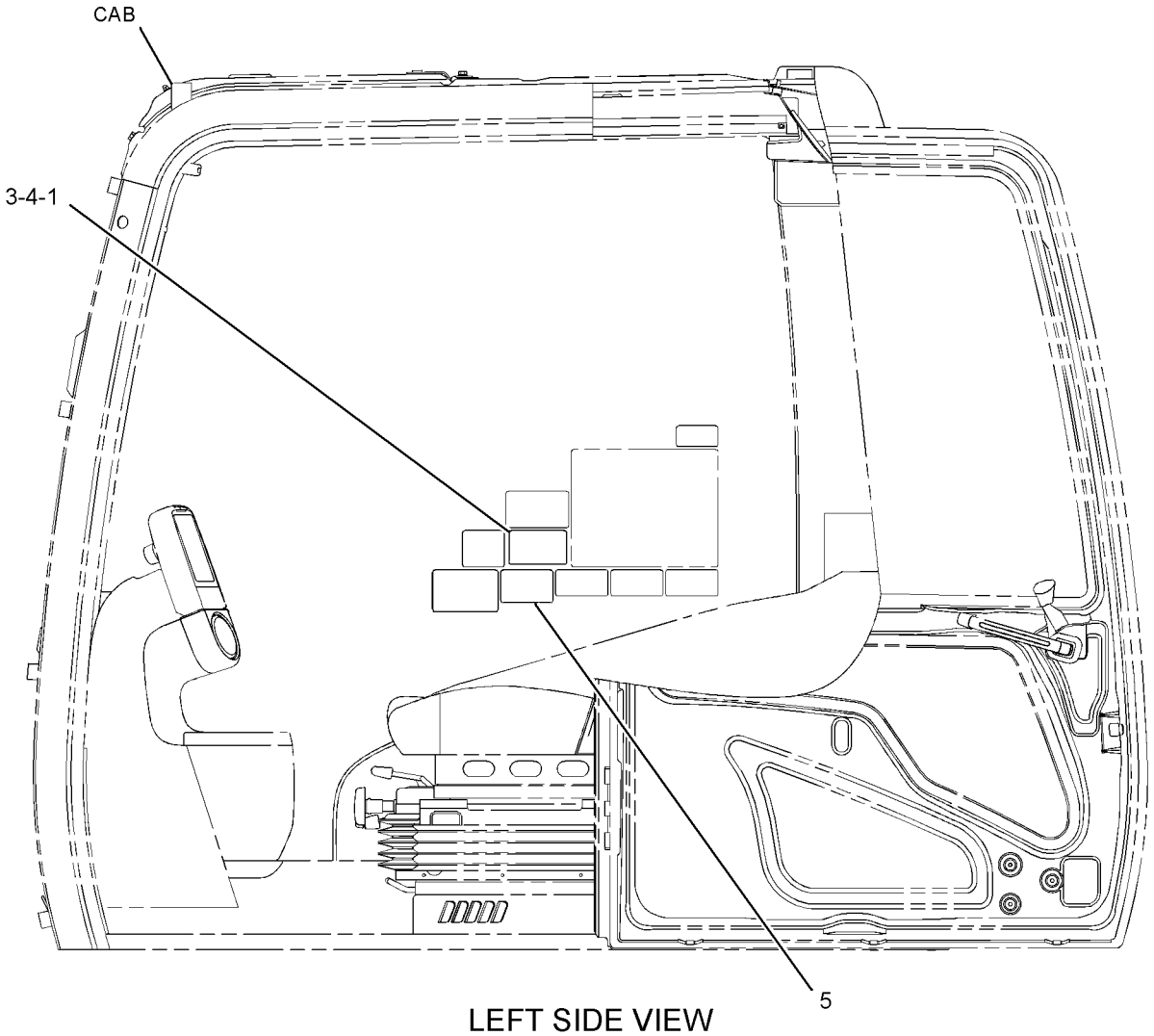

LEFT SIDE VIEW

GRAPHIC #1 **<END>** g01238061

260-7006 FILM GP—CONTROL PATTERN CHANGE, 2-WAY

S/N: BYJ1-UP; PDP1-UP
PART OF 297-0271 VALVE AR-ALT PATTERN CONTROL
AN ATTACHMENT

SMCS-7405, 7557 **i02724704**

NOTE	REF NO	GRAPHIC REF	PART NUMBER	QTY	PART NAME 1 2 3 4 5 6 (PRODUCT LEVEL)	SEE PAGE
	1	1	**4I-2885**	1	CASE	
	2	1	**255-3171**	1	PLATE-INSTRUCTION (CONTROL PATTERN CHANGE)	
	3	1	**255-3173**	1	FILM-WARNING (CRUSH HAZARD, READ OMM, INTL)	
					—OR—	
		1	**257-5015**	1	FILM-WARNING (CRUSH HAZARD, READ OMM, U.S.)	

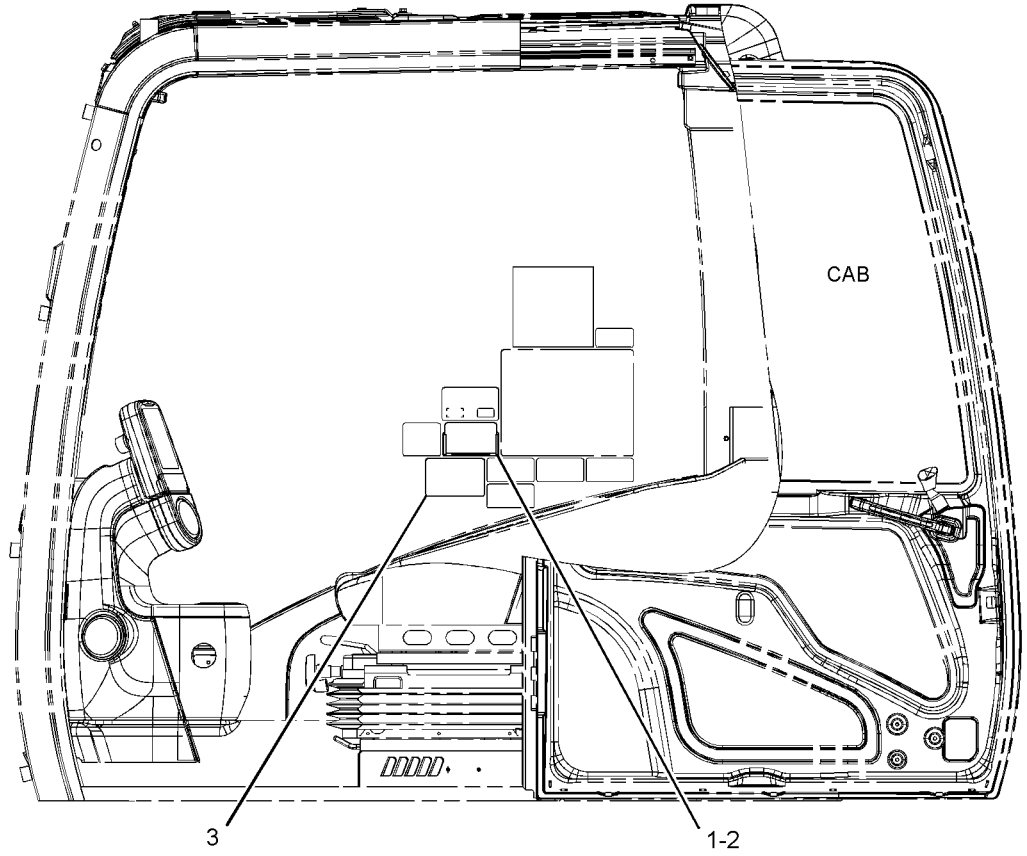

LEFT SIDE VIEW

GRAPHIC #1 **<END>** g01367678

SERVICE EQUIPMENT AND SUPPLIES

264-8565 FILM GP—WORK TOOL CONTROL, RH PEDAL

S/N: BYJ1-UP; PDP1-UP
PART OF 259-7857 CONTROL AR-AUXILIARY
AN ATTACHMENT

SMCS-7405, 7557 **i02486251**

NOTE	REF NO	GRAPHIC REF	PART NUMBER	QTY	PART NAME 1 2 3 4 5 6 (PRODUCT LEVEL)	SEE PAGE
	1	1	**260-6945**	1	FILM-INSTRUCTION (OPERATOR CONTROL PEDALS)	
	2	1	**250-8054**	1	FILM-NOTICE (HAMMER, READ OMM)	

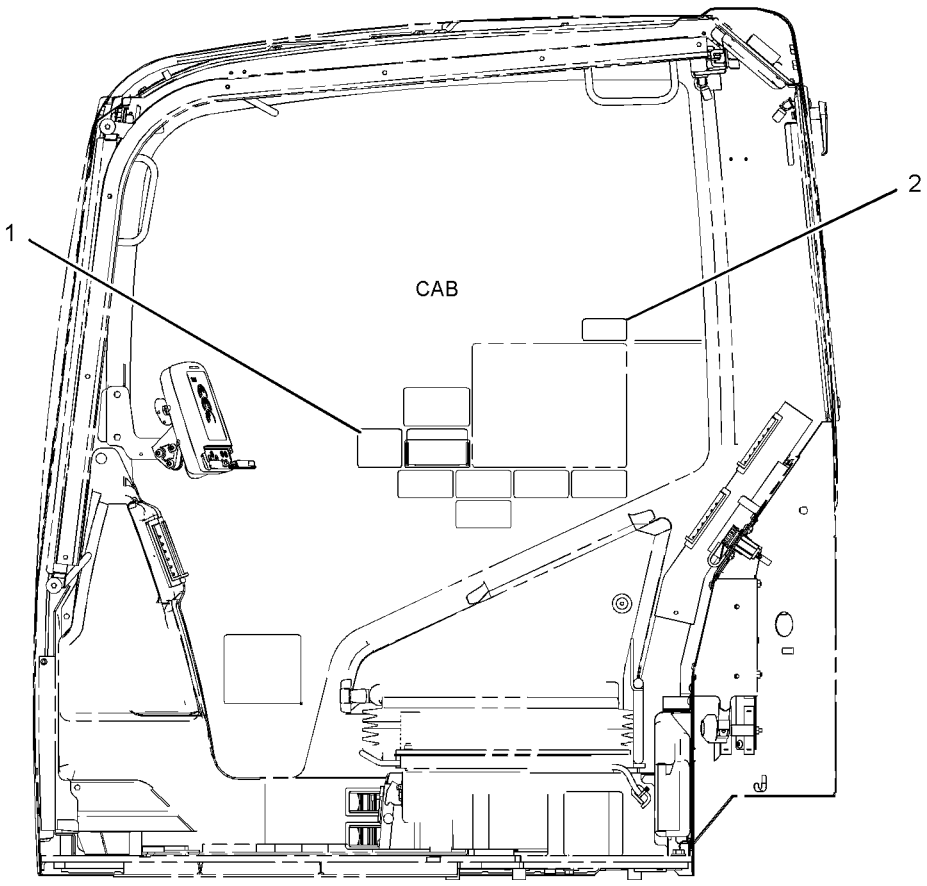

LEFT SIDE VIEW

GRAPHIC #1 **<END>** g01262660

SERVICE EQUIPMENT AND SUPPLIES

282-5705 FILM GP—QUICK COUPLER

S/N: BYJ1-UP; PDP1-UP
PART OF 282-5547 CONTROL AR-COUPLER
AN ATTACHMENT

SMCS-7405, 7557 **i02817497**

NOTE	REF NO	GRAPHIC REF	PART NUMBER	QTY	PART NAME 1 2 3 4 5 6 (PRODUCT LEVEL)	SEE PAGE
	1	1	**268-4530**	1	FILM-WARNING (CRUSH HAZARD, READ OMM, U.S.)	
					—OR—	
		1	**269-0120**	1	FILM-WARNING (CRUSH HAZARD, READ OMM, INTL)	
	2	1	**268-4531**	1	FILM-INSTRUCTION (COUPLER OPERATION)	
	3	1	**268-8872**	1	FILM-WARNING (CRUSH HAZARD, READ OMM, U.S.)	
					—OR—	
		1	**269-0121**	1	FILM-WARNING (CRUSH HAZARD, READ OMM, INTL)	

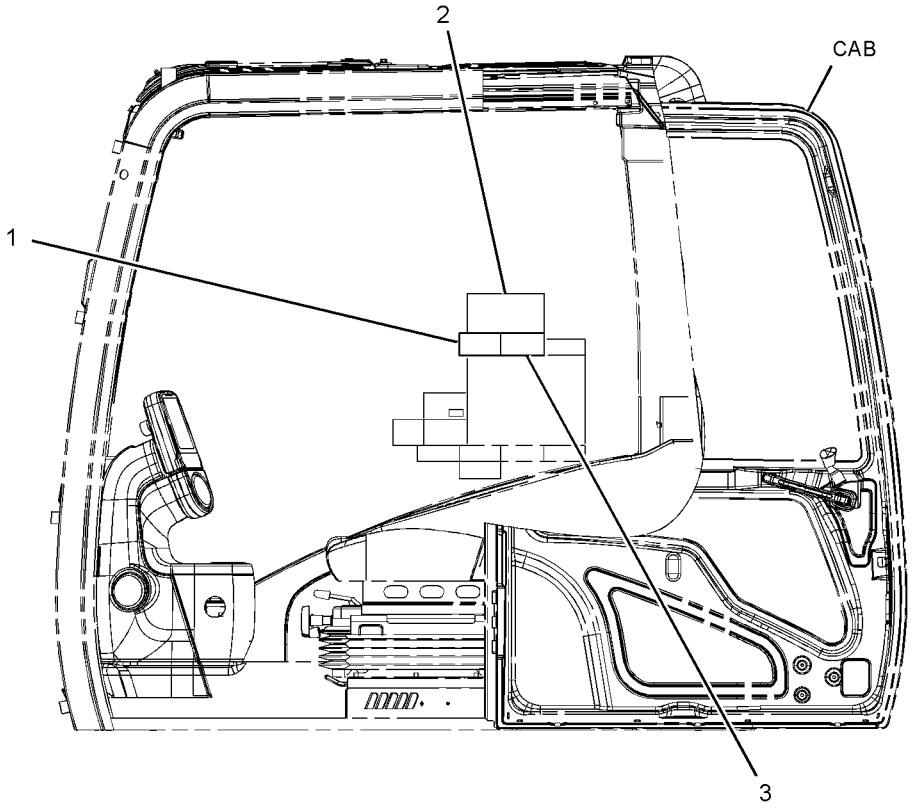

LEFT SIDE VIEW

GRAPHIC #1 **<END>** g01238116

SERVICE EQUIPMENT AND SUPPLIES

301-2573 FILM GP–FUEL TRANSFER PUMP

S/N: BYJ1-UP; PDP1-UP

PART OF 260-7221, 301-2607 PUMP AR-FUEL TRANSFER

AN ATTACHMENT

SMCS-7405, 7557 **i02883995**

NOTE	REF NO	GRAPHIC REF	PART NUMBER	QTY	PART NAME 1 2 3 4 5 6 (PRODUCT LEVEL)	SEE PAGE
B	1	1,2	**309-3872**	1	FILM-WARNING (EXPLOSION HAZARD, READ OMM)	

B-USE AS REQUIRED

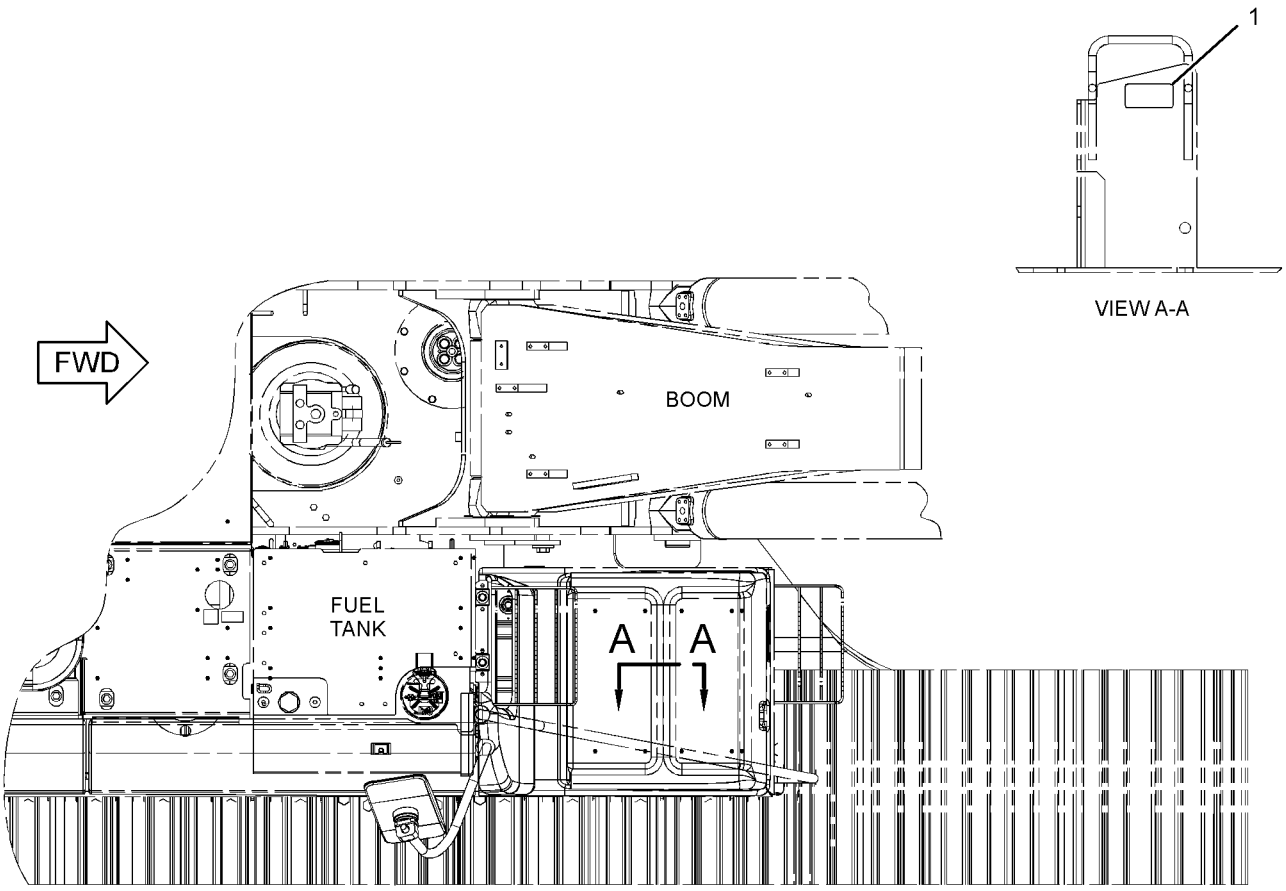

TOP VIEW
(315D & 319D)

GRAPHIC #1 g01441356

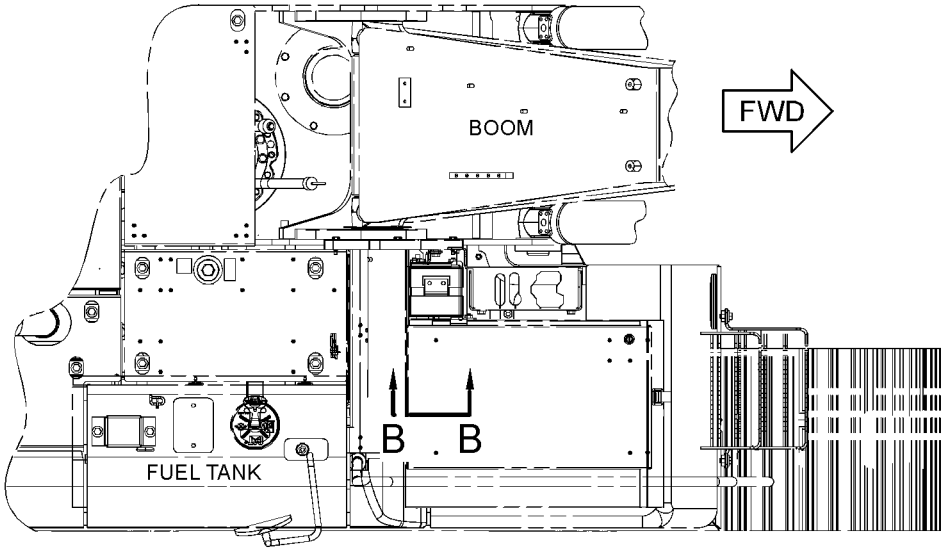

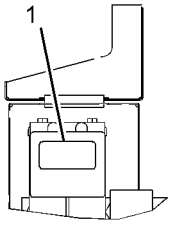

VIEW B-B

TOP VIEW
(311D)

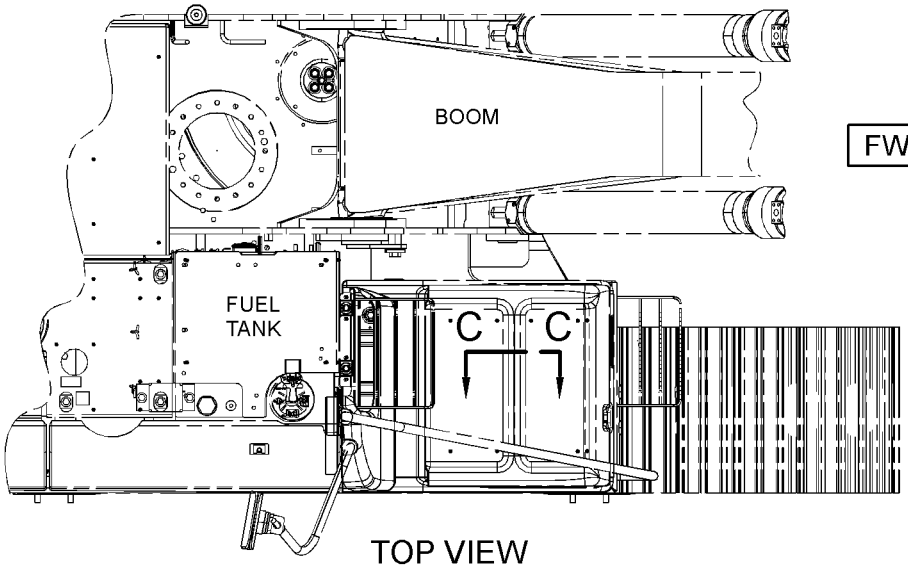

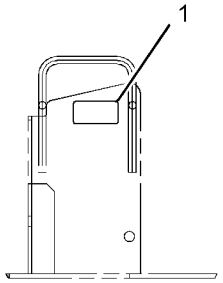

VIEW C-C

TOP VIEW
(312D)

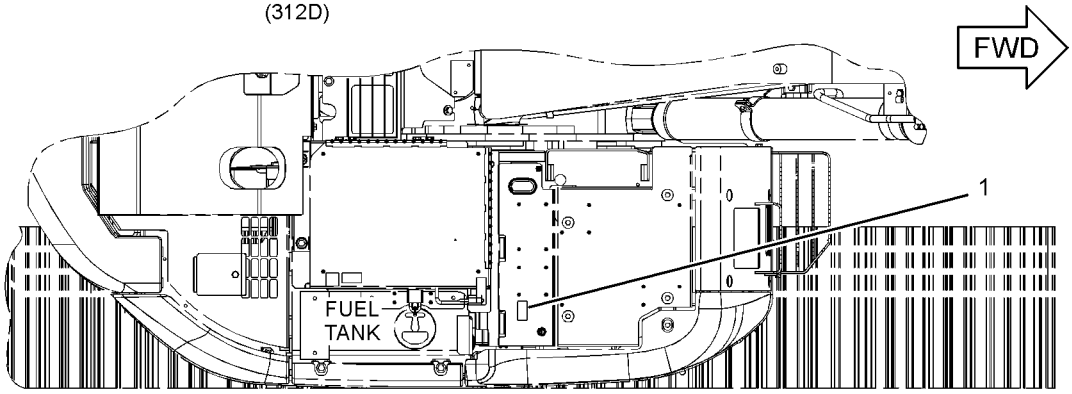

TOP VIEW
(314D)

GRAPHIC #2 **<END>** g01441201

SERVICE EQUIPMENT AND SUPPLIES

303-2787 FILM GP—WORK AREA VISUAL SYSTEM, REAR

S/N: BYJ1-UP; PDP1-UP
PART OF 330-8751 INSTALLATION AR
AN ATTACHMENT

SMCS-7405, 7557 **i03128324**

NOTE	REF NO	GRAPHIC REF	PART NUMBER	QTY	PART NAME 1 2 3 4 5 6 (PRODUCT LEVEL)	SEE PAGE
	1	1	**319-9152**	1	FILM-INSTRUCTION (BATTERY LIFE, CAMERA)	

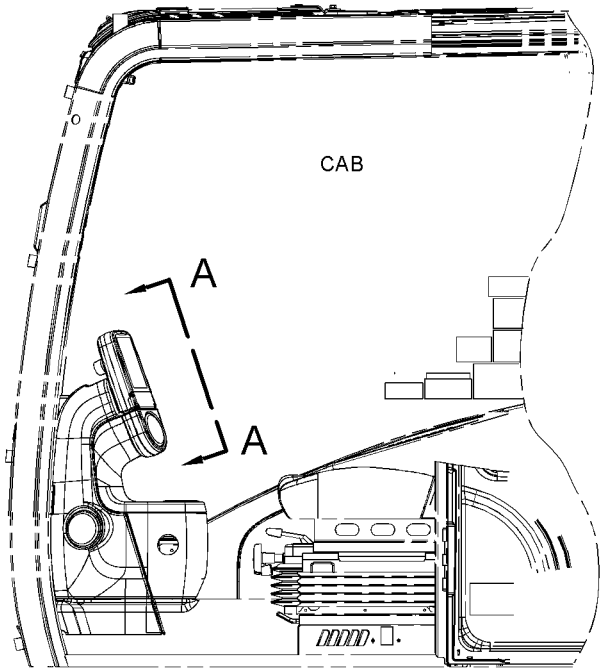

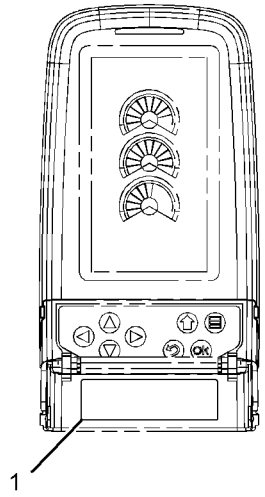

VIEW A-A

LEFT SIDE VIEW

GRAPHIC #1 **<END>** g01620358

SERVICE EQUIPMENT AND SUPPLIES

314-3768 FILM GP–OVERLOAD WARNING DEVICE

S/N: BYJ1-UP; PDP1-UP
PART OF 323-7796 VALVE AR-CHECK & RELIEF
AN ATTACHMENT

SMCS-7405, 7557 **i03113101**

NOTE	REF NO	GRAPHIC REF	PART NUMBER	QTY	PART NAME 1 2 3 4 5 6 (PRODUCT LEVEL)	SEE PAGE
	1	1	**322-4582**	1	FILM-WARNING (TIPPING HAZARD, READ OMM)	
					(LOCATE ON RIGHT SIDE CAB WINDOW)	

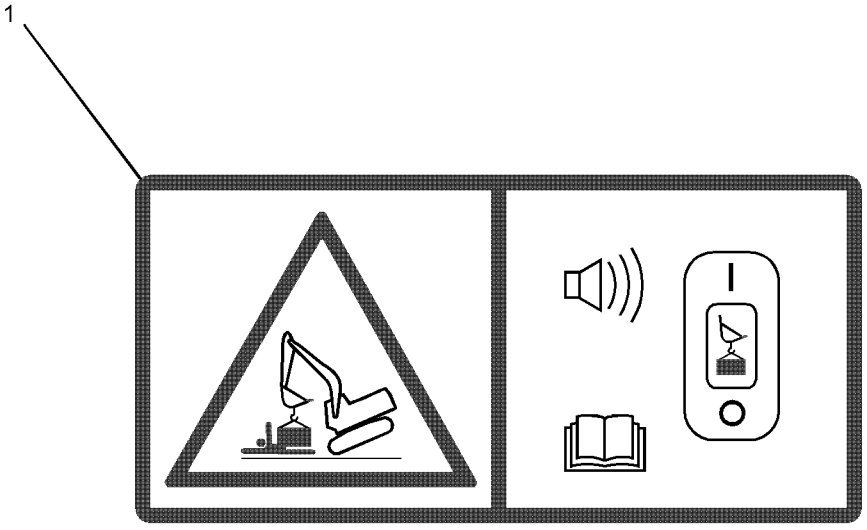

GRAPHIC #1 **<END>** g01622349

SERVICE EQUIPMENT AND SUPPLIES

202-1549 PLATE & FILM GP

S/N: BYJ1-UP; PDP1-UP
BLADE
PART OF 260-7212, 260-7213 INSTALLATION AR-AUXILIARY
AN ATTACHMENT

SMCS-7405, 7557 **i01665599**

NOTE	REF NO	GRAPHIC REF	PART NUMBER	QTY	PART NAME 1 2 3 4 5 6 (PRODUCT LEVEL)	SEE PAGE
	1	1	**102-5474**	1	FILM-INSTRUCTION (BLADE)	

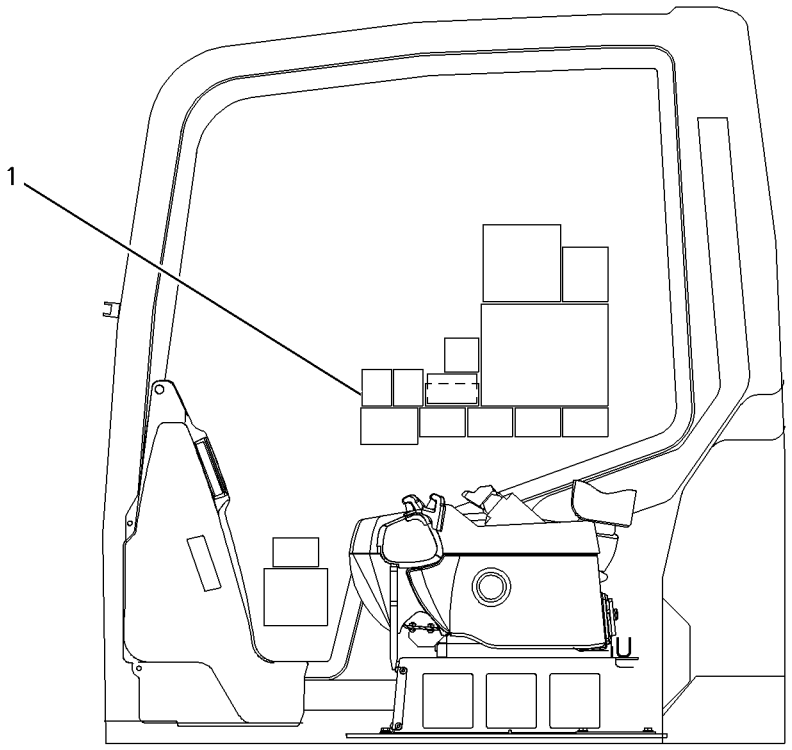

LEFT SIDE VIEW

GRAPHIC #1 **<END>** g00860165

SERVICE EQUIPMENT AND SUPPLIES

260-7220 PLATE & FILM GP

S/N: BYJ1-UP; PDP1-UP
PART OF 330-8767, 330-8768 PLATE & FILM GP
AN ATTACHMENT

SMCS-7405, 7557 **i02820536**

NOTE	REF NO	GRAPHIC REF	PART NUMBER	QTY	PART NAME 1 2 3 4 5 6 (PRODUCT LEVEL)	SEE PAGE
	1	2	**224-8945**	1	FILM-WARNING (DO NOT USE ETHER, U.S)	
	2	2	**225-0313**	1	FILM-WARNING (JUMP START, READ OMM, U.S.)	
	3	1,2	**225-4256**	2	FILM-WARNING (HOT FLUID UNDER PRESSURE, U.S.)	
	4	2	**257-7460**	2	FILM-WARNING (MACHINE SWING, CRUSHING, U.S.)	
	5	2	**224-7717**	1	FILM-WARNING (SEAT BELT, U.S.)	
	6	2	**225-3305**	1	FILM-WARNING (UNIVERSAL, READ OMM, U.S.)	
	7	2	**228-9253**	1	FILM-WARNING (ELECTRICAL HAZARD, U.S.)	
	8	2	**242-1589**	1	FILM-WARNING (FRONT WINDOW, READ OMM, U.S.)	
	9	2	**267-4495**	1	FILM-WARNING (CRUSH HAZARD, READ OMM, U.S.)	

REFER TO ALL ILLUSTRATIONS OF
THIS GROUP FOR AUXILIARY VIEWS

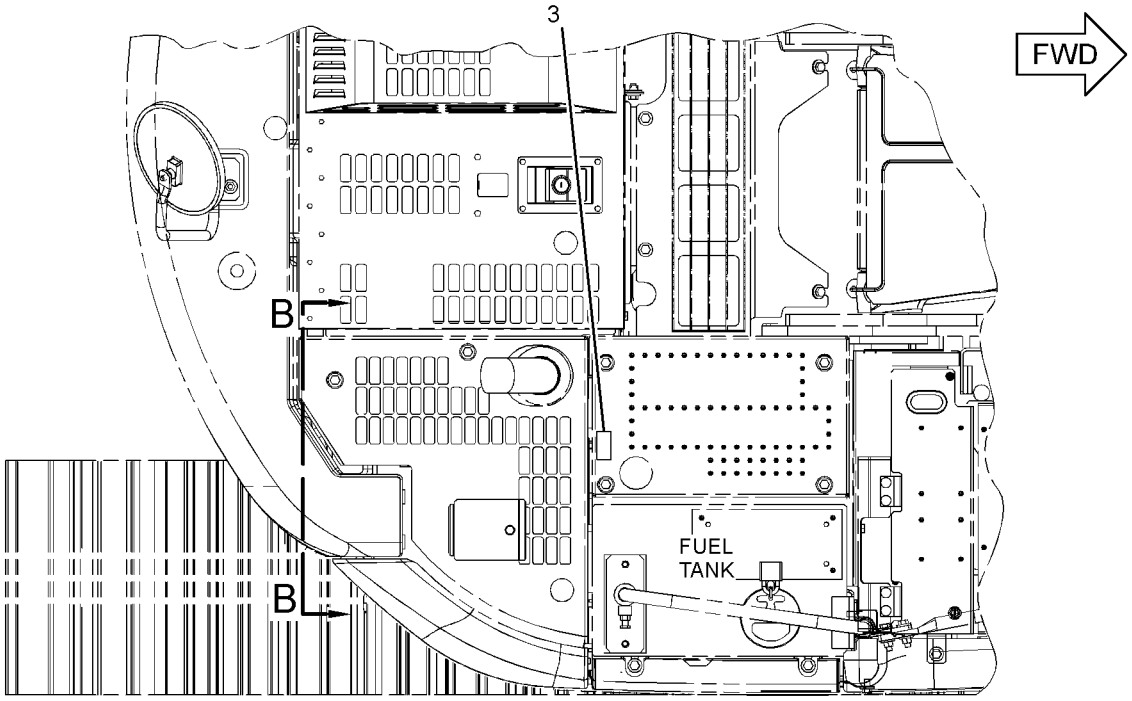

TOP VIEW

GRAPHIC #1 g01488933

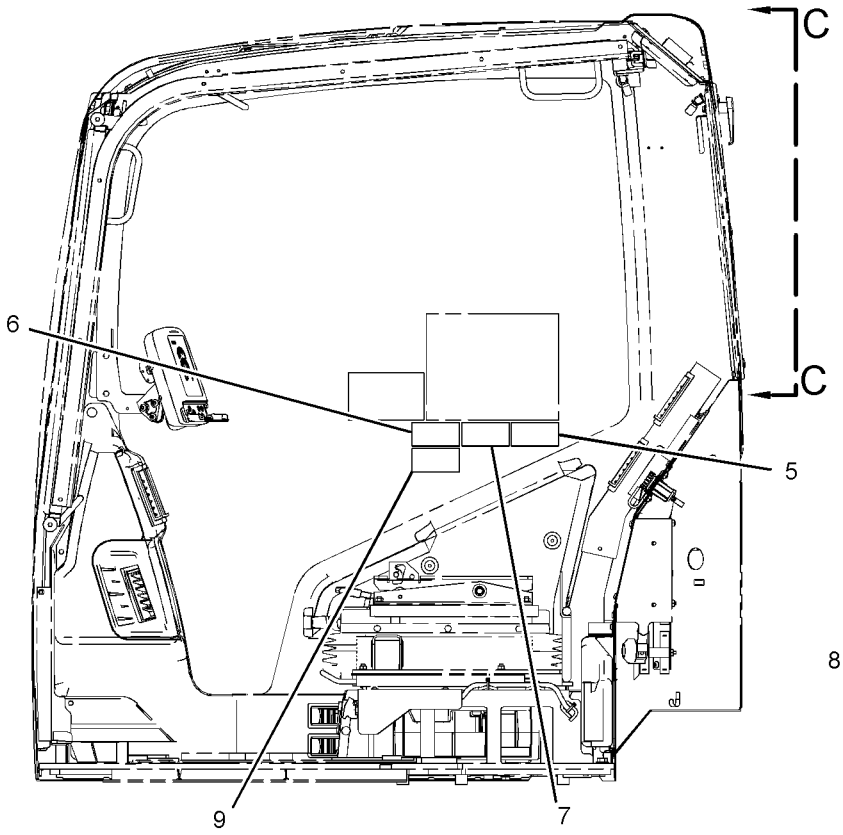

LEFT SIDE VIEW
(CAB)

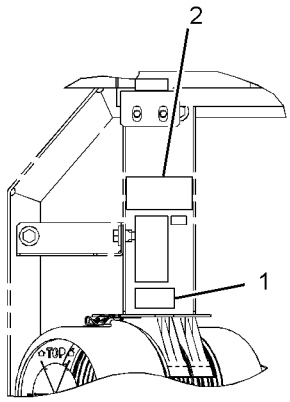

VIEW B-B

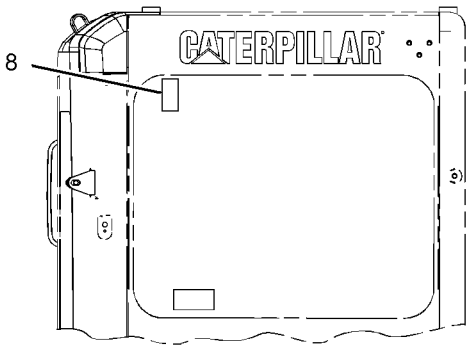

VIEW C-C

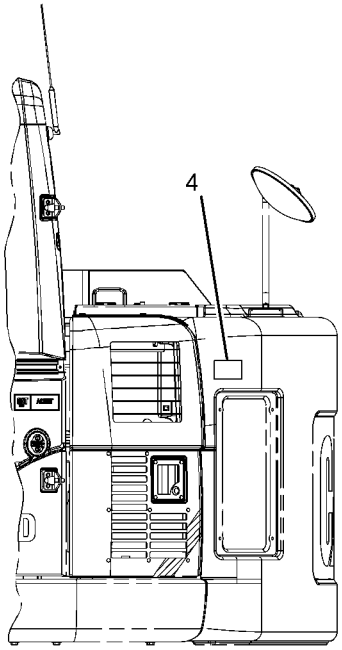

LEFT SIDE VIEW

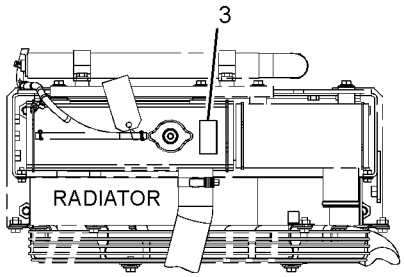

VIEW A-A

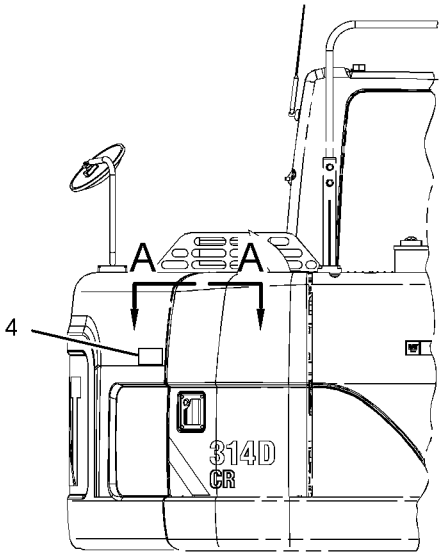

RIGHT SIDE VIEW

GRAPHIC #2 **<END>** g01488934

SERVICE EQUIPMENT AND SUPPLIES

283-8808 PLATE & FILM GP

S/N: PDP1-UP

PART OF 260-7182 CHASSIS AR

SMCS-7405, 7557 **i03169077**

NOTE	REF NO	GRAPHIC REF	PART NUMBER	QTY	PART NAME 1 2 3 4 5 6 (PRODUCT LEVEL)	SEE PAGE
	1	1,2	**1P-2807**	4	FILM-INFORMATION (LIFT EYE LOCATION)	
	2	3	**4I-8472**	1	FILM-INSTRUCTION (OPERATOR CONTROLS, READ OMM)	
	3	3	**7X-7644**	2	FILM-INFORMATION (TIE-DOWN)	
	4	3	**8T-6842**	1	FILM-INSTRUCTION (PULL RING, ALTERNATE EXIT)	
	5	2	**134-7258**	1	FILM-INFORMATION (EXTENDED LIFE COOLANT,READ OMM)	
	6	2	**144-9126**	1	FILM-INSTRUCTION (OIL)	
	7	3	**146-6747**	1	FILM-INFORMATION (24-VOLT)	
	8	1,2	**167-7270**	4	FILM-INSTRUCTION (NO STEP)	
	9	3	**187-0661**	1	FILM-INSTRUCTION (ALTERNATE EXIT)	
	10	2	**190-5386**	2	FILM-STRIPE (ROUND RED REFLECTIVE)	
	11	2	**199-9466**	1	FILM-IDENTIFICATION (CATERPILLAR)	
	12	3	**214-7915**	1	FILM-INSTRUCTION (ENGINE SHUTOFF)	
	13	3	**221-8045**	1	FILM-WARNING (SEAT BELT, INTERNATIONAL)	
	14	3	**223-9818**	1	FILM-INSTRUCTION (WINDOW CLEANING, READ OMM)	
	15	3	**224-0554**	1	FILM-WARNING (UNIVERSAL, READ OMM, INTL)	
	16	3	**224-8946**	1	FILM-WARNING (NO ETHER SPRAY/AIR INTK, INTL)	
	17	3	**225-0312**	1	FILM-WARNING (JUMP START, READ OMM)	
	18	1,2	**225-4257**	2	FILM-WARNING (HOT FLUID UNDER PRESS, INTL)	
	19	3	**228-9254**	1	FILM-WARNING (ELEC HAZARD, READ OMM, INTL)	
	20	3	**229-0887**	1	FILM-INFORMATION (AIR CLEANER)	
	21	2	**239-6986**	1	PLATE-IDENTIFICATION (MACHINE)	
	22	1	**242-1510**	1	FILM-INSTRUCTION (HYDRAULIC OIL CHECK)	
	23	3	**242-1588**	1	FILM-WARNING (FRONT WINDOW, READ OMM, INTL)	
	24	1	**242-6092**	1	FILM-WARNING (ACCUMULATOR PRESSURE)	
	25	2	**247-7438**	1	FILM-IDENTIFICATION (ELECTRICAL CIRCUIT BREAKER)	
	26	1,2	**253-0861**	2	FILM-INFORMATION (CAT POWER, ACERT TECHNOLOGY)	
	27	1,2	**257-7461**	2	FILM-WARNING (MACHINE SWING, CRUSHING, INTL)	
	28	3	**264-8757**	1	FILM-INSTRUCTION (THROTTLE)	
	29	3	**266-5431**	1	FILM-WARNING (CRUSH HAZARD, READ OMM, INTL)	
	30	1	**283-9074**	1	FILM-IDENTIFICATION (CAT, RH)	
	31	2	**283-9075**	1	FILM-IDENTIFICATION (CAT, LH)	
E	32	1	**290-1908**		FILM-STRIPE (40-CM EACH)	
	33	1,2	**301-2412**	2	FILM-IDENTIFICATION (314D CR)	
	34	2	**301-2414**	1	FILM-IDENTIFICATION (FUSE PANEL)	
	36	2	**301-2421**	1	FILM-IDENTIFICATION (CAT)	
	37	3	**310-6252**	1	FILM-INSTRUCTION (BACKUP CONTROL, READ OMM)	

E-ORDER BY THE CENTIMETER

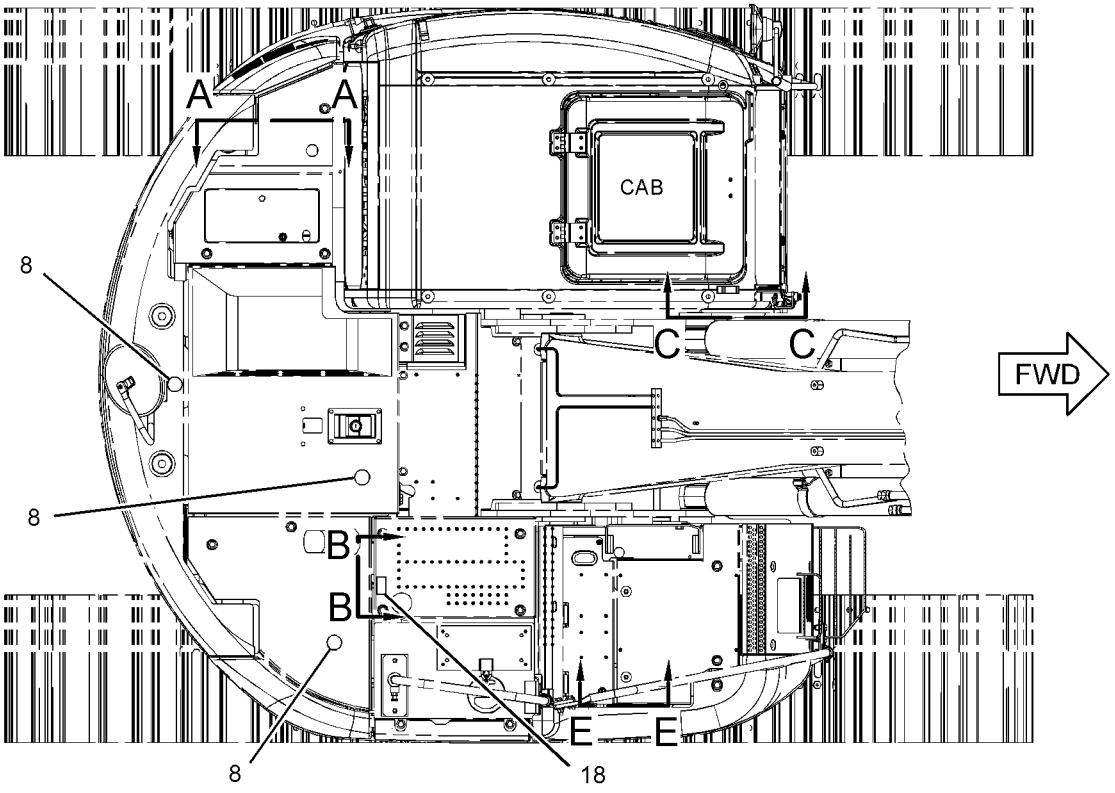

TOP VIEW

REFER TO ALL ILLUSTRATIONS OF
THIS GROUP FOR AUXILIARY VIEWS

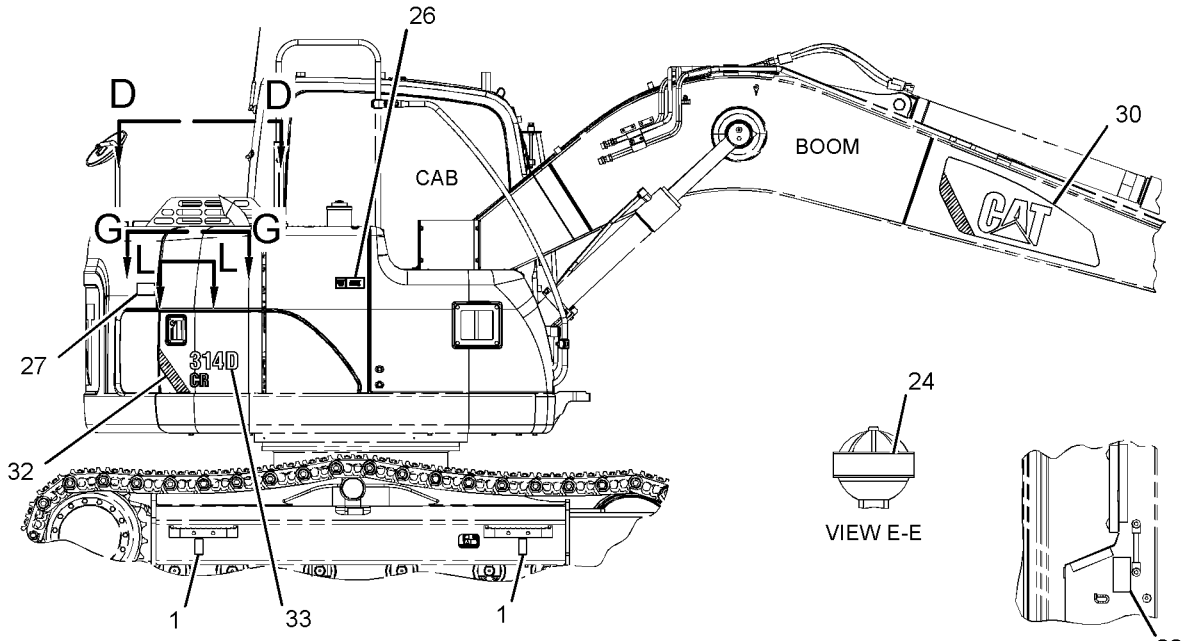

RIGHT SIDE VIEW

GRAPHIC #1

g01421334

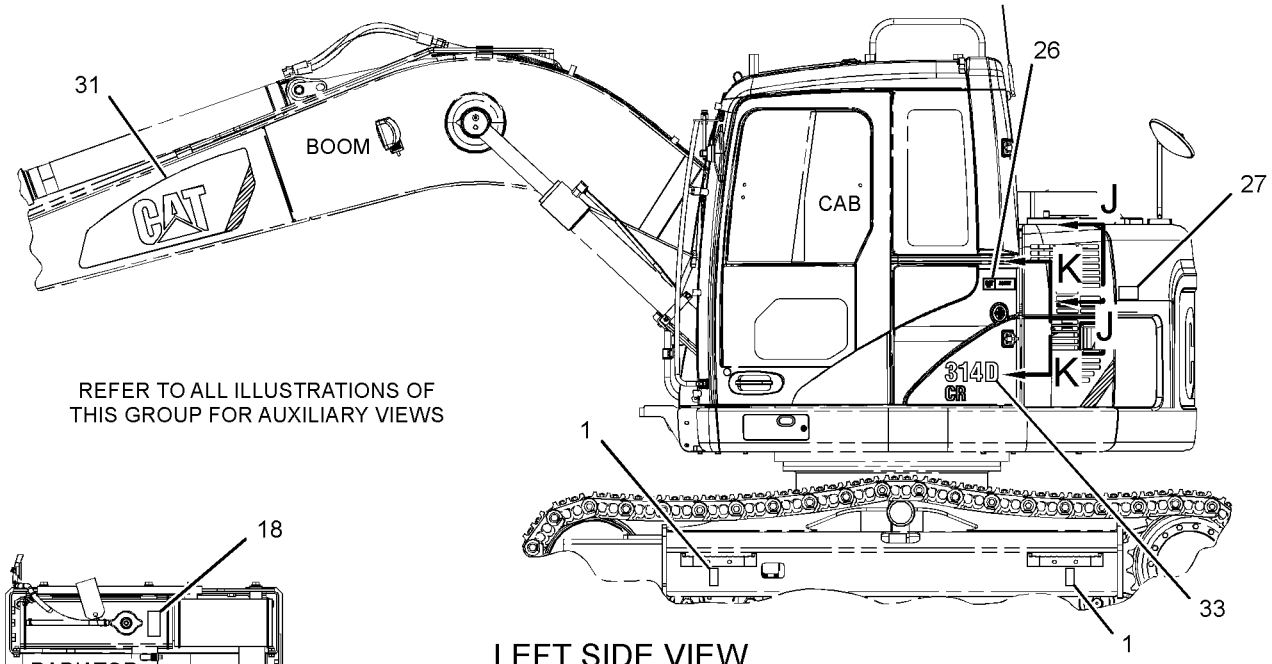

LEFT SIDE VIEW

VIEW G-G

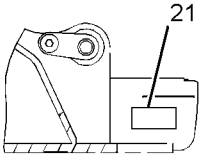

VIEW C-C

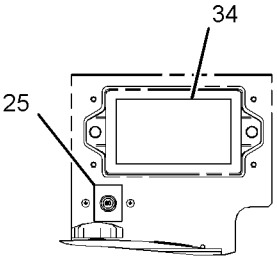

VIEW K-K

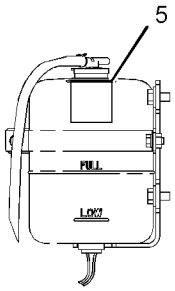

VIEW A-A

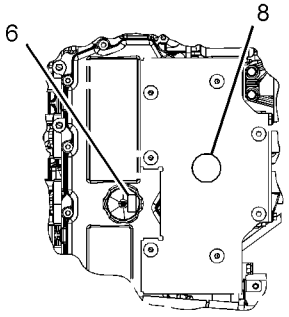

VIEW L-L

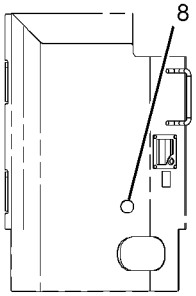

VIEW D-D
(EAME)

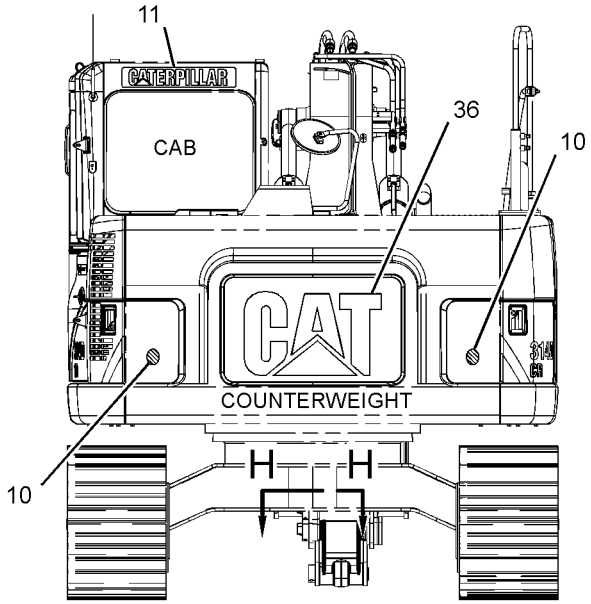

REAR VIEW

GRAPHIC #2 g01421335

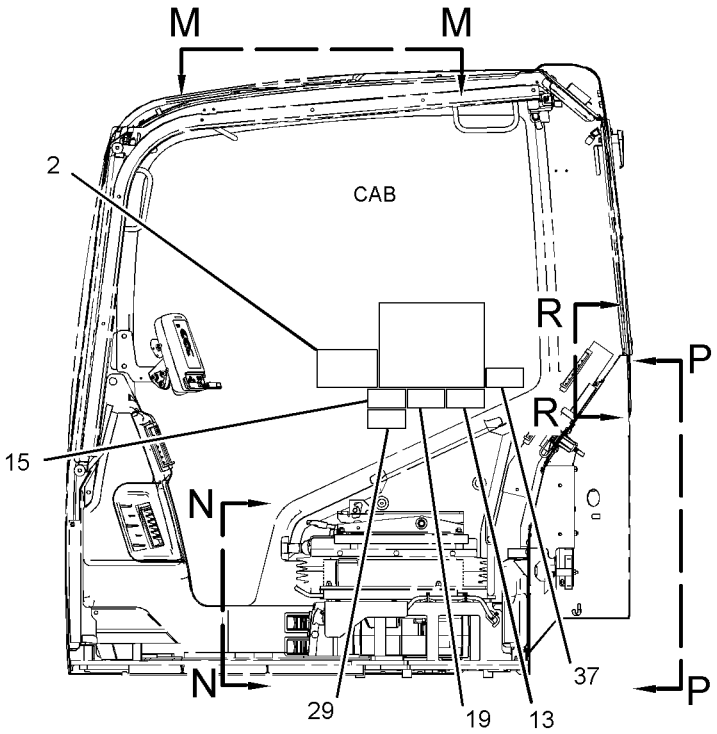

LEFT SIDE VIEW

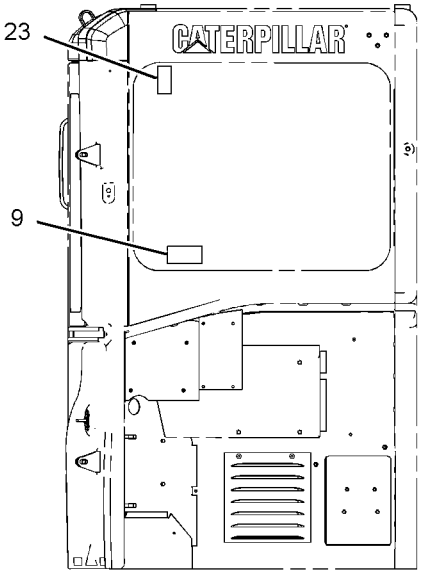

REAR VIEW
(CAB)

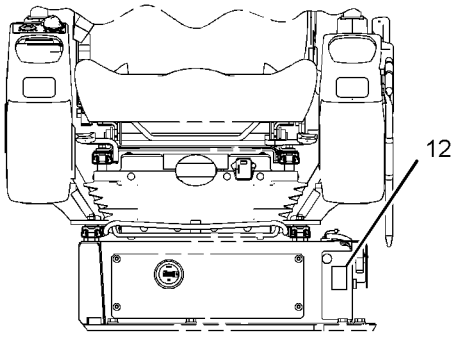

VIEW N-N

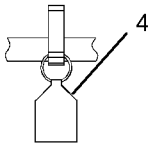

VIEW R-R

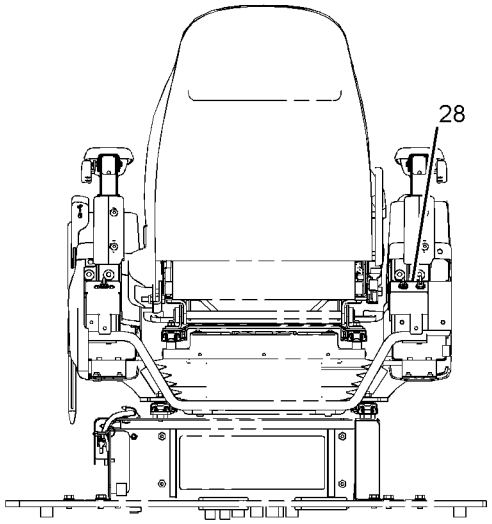

VIEW P-P

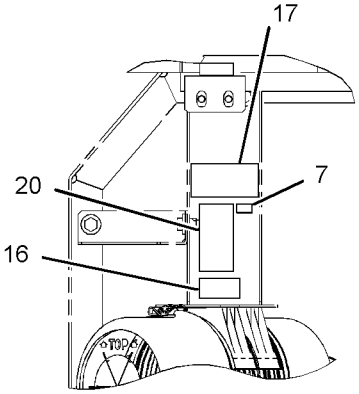

VIEW J-J

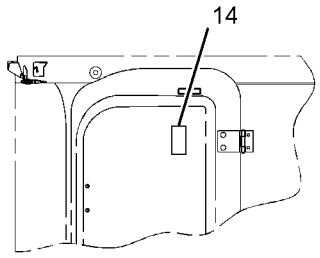

VIEW M-M

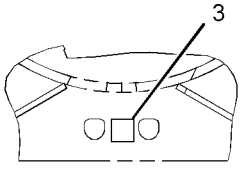

VIEW H-H

GRAPHIC #3 **<END>** g01623203

SERVICE EQUIPMENT AND SUPPLIES

283-8809 PLATE & FILM GP

S/N: BYJ1-UP

PART OF 260-7183 CHASSIS AR

SMCS-7405, 7557 **i03169061**

NOTE	REF NO	GRAPHIC REF	PART NUMBER	QTY	PART NAME 1 2 3 4 5 6 (PRODUCT LEVEL)	SEE PAGE
	1	1,2	**1P-2807**	4	FILM-INFORMATION (LIFT EYE LOCATION)	
	2	3	**4I-8472**	1	FILM-INSTRUCTION (OPERATOR CONTROLS, READ OMM)	
	3	3	**7X-7644**	2	FILM-INFORMATION (TIE-DOWN)	
	4	3	**8T-6842**	1	FILM-INSTRUCTION (PULL RING, ALTERNATE EXIT)	
	5	2	**134-7258**	1	FILM-INFORMATION (EXTENDED LIFE COOLANT,READ OMM)	
	6	2	**144-9126**	1	FILM-INSTRUCTION (OIL)	
	7	3	**146-6747**	1	FILM-INFORMATION (24-VOLT)	
	8	1,2	**167-7270**	4	FILM-INSTRUCTION (NO STEP)	
	9	3	**187-0661**	1	FILM-INSTRUCTION (ALTERNATE EXIT)	
	10	2	**190-5386**	2	FILM-STRIPE (ROUND RED REFLECTIVE)	
	11	2	**199-9466**	1	FILM-IDENTIFICATION (CATERPILLAR)	
	12	3	**214-7915**	1	FILM-INSTRUCTION (ENGINE SHUTOFF)	
	13	3	**221-8045**	1	FILM-WARNING (SEAT BELT, INTERNATIONAL)	
	14	3	**223-9818**	1	FILM-INSTRUCTION (WINDOW CLEANING, READ OMM)	
	15	3	**224-0554**	1	FILM-WARNING (UNIVERSAL, READ OMM, INTL)	
	16	3	**224-8946**	1	FILM-WARNING (NO ETHER SPRAY/AIR INTK, INTL)	
	17	3	**225-0312**	1	FILM-WARNING (JUMP START, READ OMM)	
	18	1,2	**225-4257**	2	FILM-WARNING (HOT FLUID UNDER PRESS, INTL)	
	19	3	**228-9254**	1	FILM-WARNING (ELEC HAZARD, READ OMM, INTL)	
	20	3	**229-0887**	1	FILM-INFORMATION (AIR CLEANER)	
	21	2	**239-6986**	1	PLATE-IDENTIFICATION (MACHINE)	
	22	1	**242-1510**	1	FILM-INSTRUCTION (HYDRAULIC OIL CHECK)	
	23	3	**242-1588**	1	FILM-WARNING (FRONT WINDOW, READ OMM, INTL)	
	24	1	**242-6092**	1	FILM-WARNING (ACCUMULATOR PRESSURE)	
	25	2	**247-7438**	1	FILM-IDENTIFICATION (ELECTRICAL CIRCUIT BREAKER)	
	26	1,2	**253-0861**	2	FILM-INFORMATION (CAT POWER, ACERT TECHNOLOGY)	
	27	1,2	**257-7461**	2	FILM-WARNING (MACHINE SWING, CRUSHING, INTL)	
	28	3	**264-8757**	1	FILM-INSTRUCTION (THROTTLE)	
	29	3	**266-5431**	1	FILM-WARNING (CRUSH HAZARD, READ OMM, INTL)	
	30	1	**283-9074**	1	FILM-IDENTIFICATION (CAT, RH)	
	31	2	**283-9075**	1	FILM-IDENTIFICATION (CAT, LH)	
E	32	1,2	**290-1908**		FILM-STRIPE (40-CM EACH)	
	33	1,2	**301-2413**	2	FILM-IDENTIFICATION (314D LCR)	
	34	2	**301-2414**	1	FILM-IDENTIFICATION (FUSE PANEL)	
	36	2	**301-2421**	1	FILM-IDENTIFICATION (CAT)	
	37	3	**310-6252**	1	FILM-INSTRUCTION (BACKUP CONTROL, READ OMM)	

E-ORDER BY THE CENTIMETER

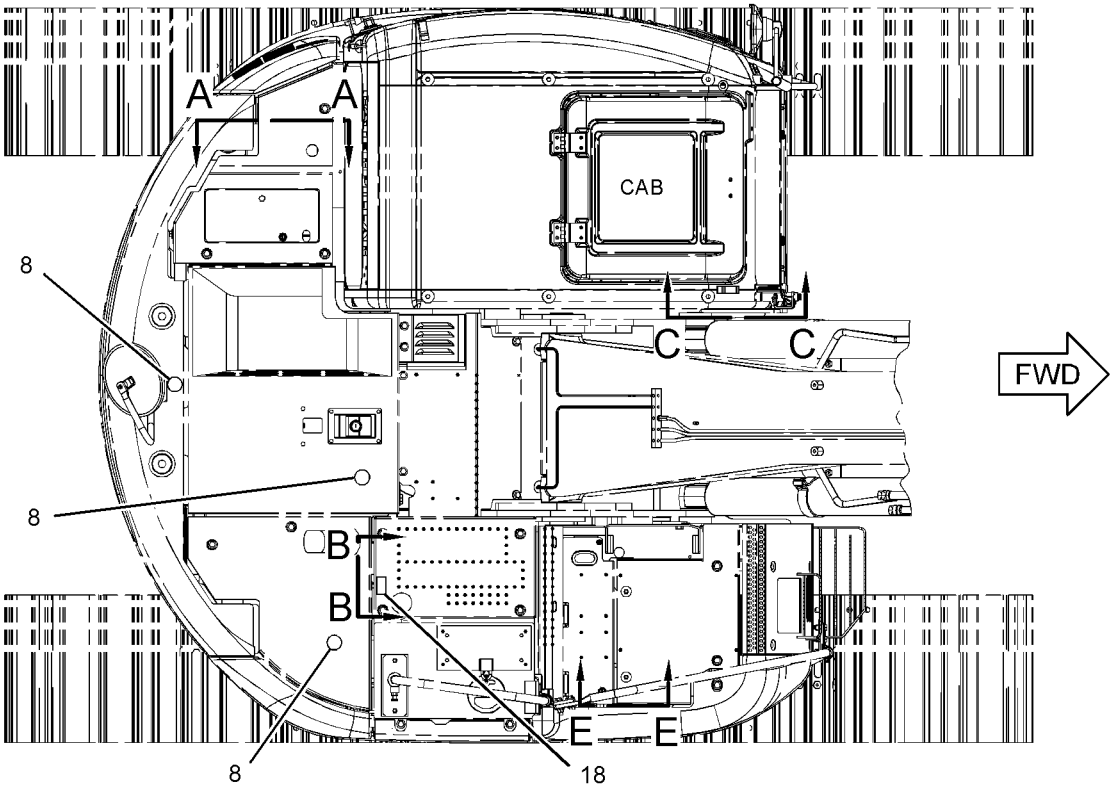

TOP VIEW

REFER TO ALL ILLUSTRATIONS OF
THIS GROUP FOR AUXILIARY VIEWS

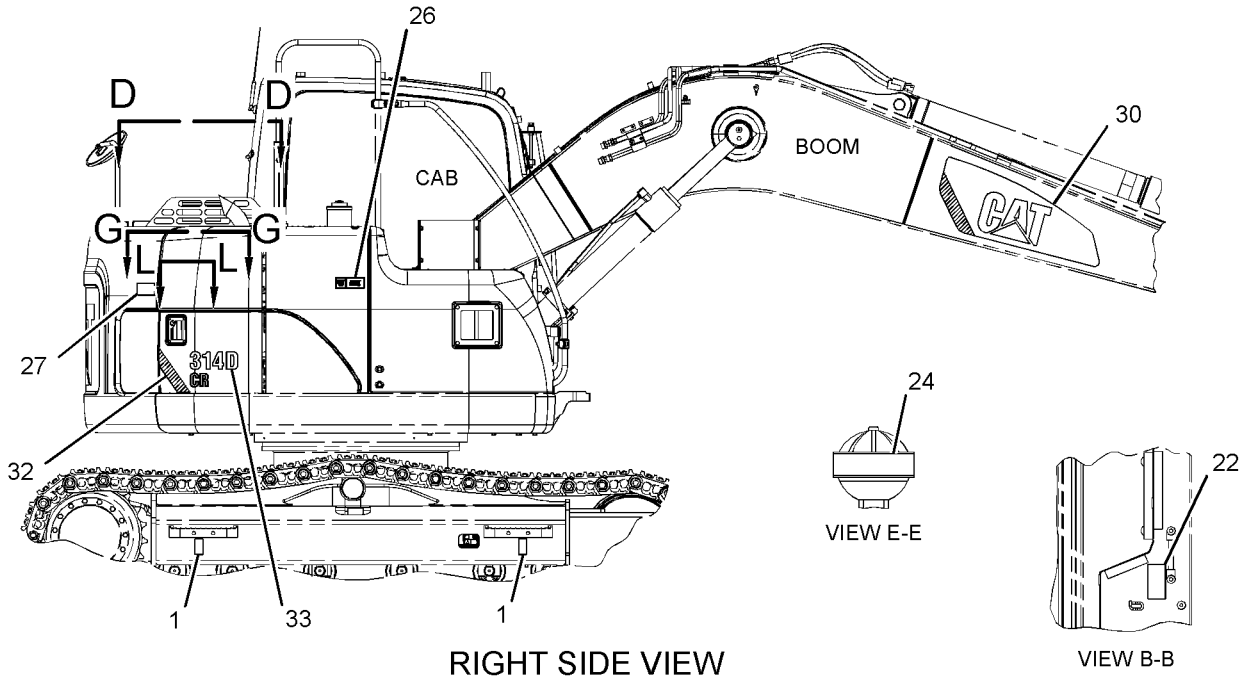

RIGHT SIDE VIEW

GRAPHIC #1

g01423595

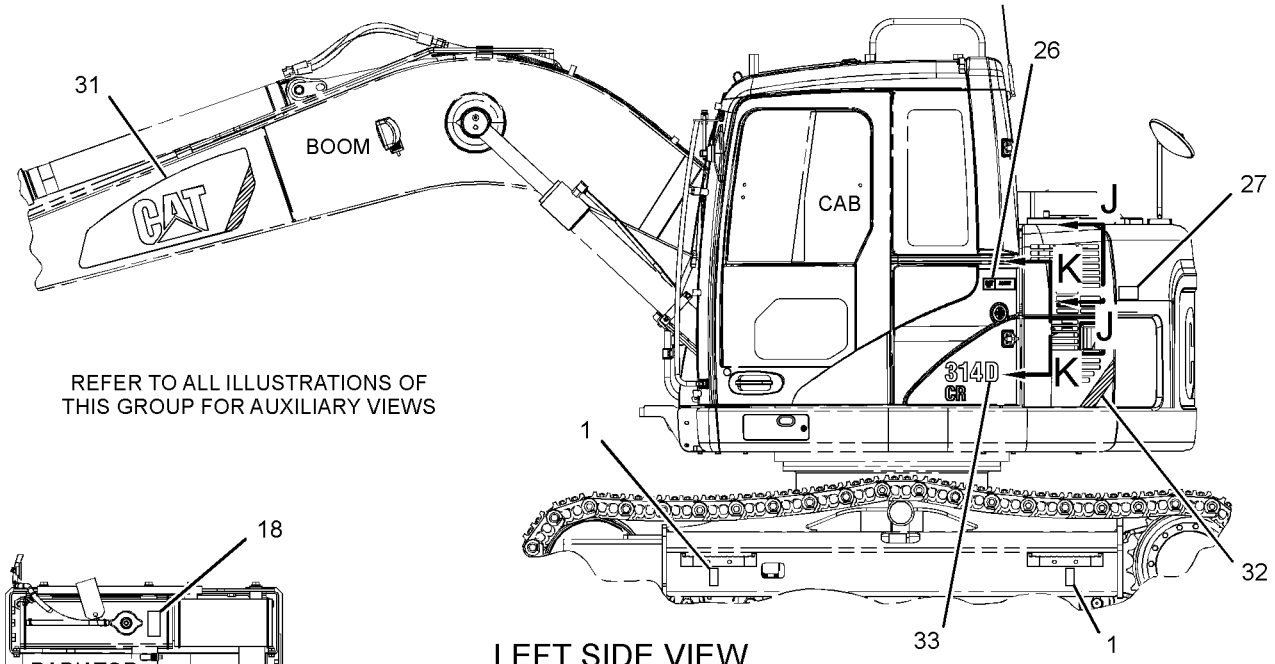

LEFT SIDE VIEW

VIEW G-G

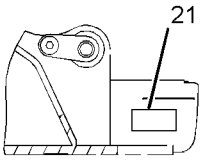

VIEW C-C

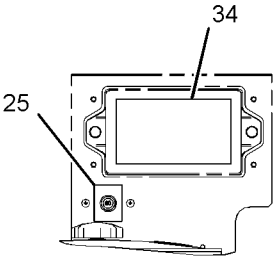

VIEW K-K

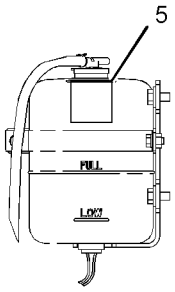

VIEW A-A

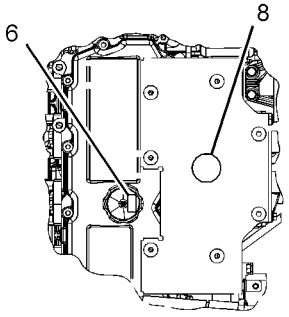

VIEW L-L

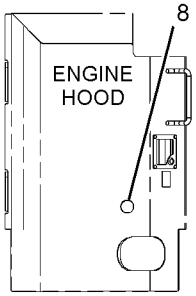

VIEW D-D
(EAME)

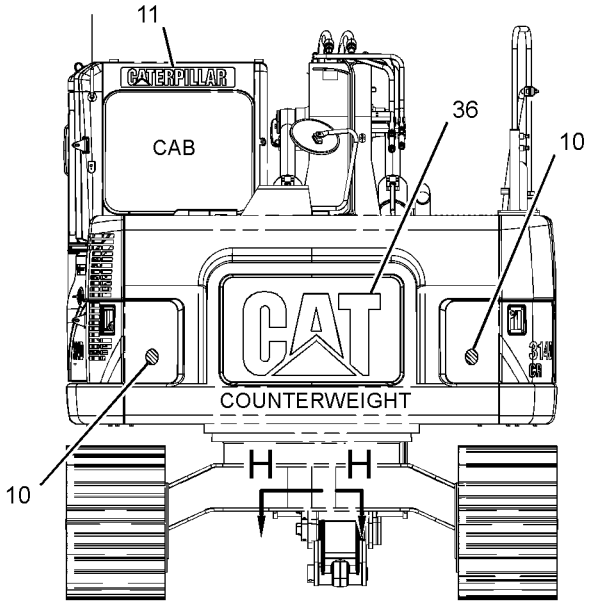

REAR VIEW

GRAPHIC #2

g01423597

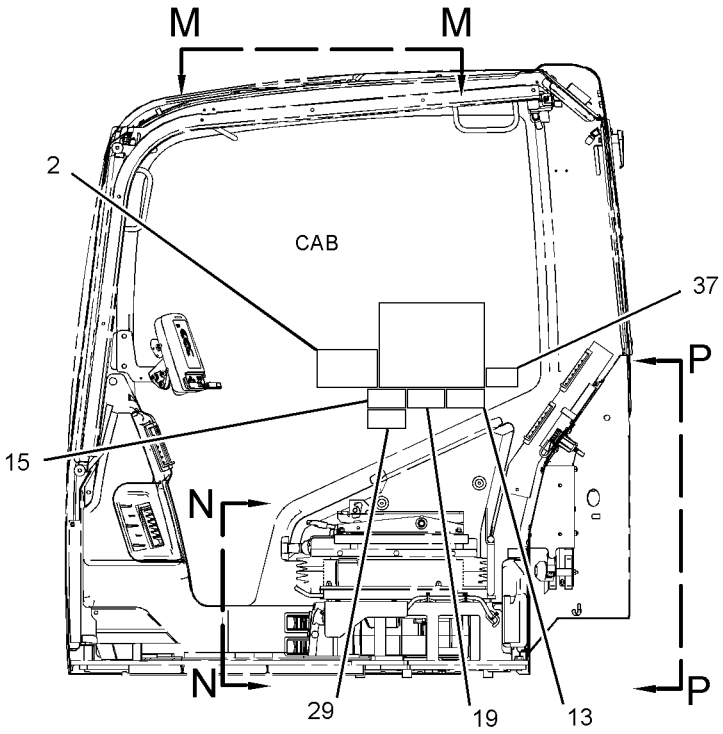

LEFT SIDE VIEW

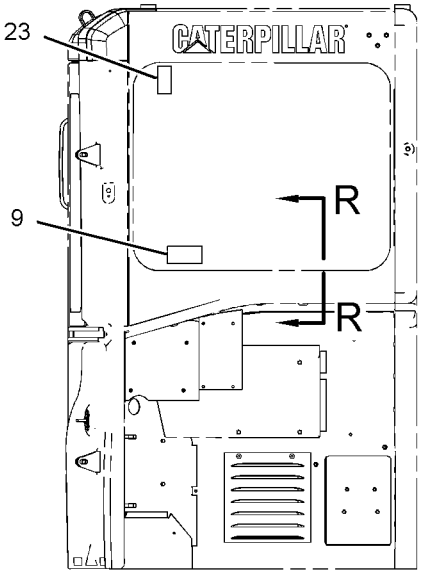

REAR VIEW
(CAB)

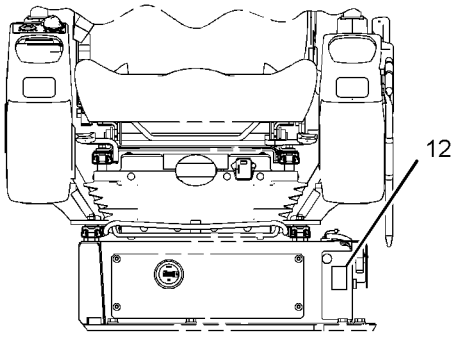

VIEW N-N

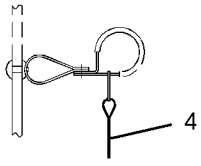

VIEW R-R

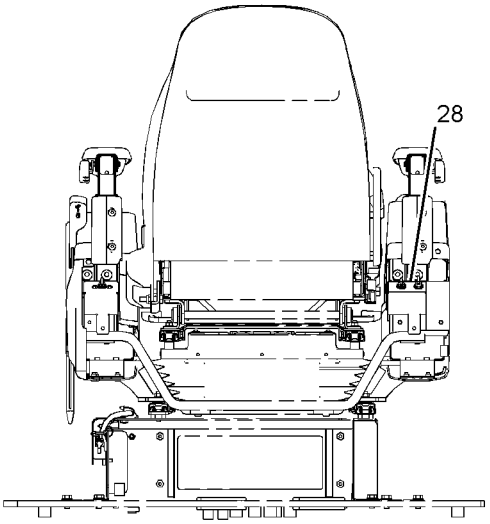

VIEW P-P

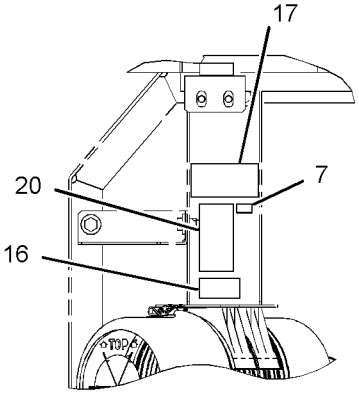

VIEW J-J

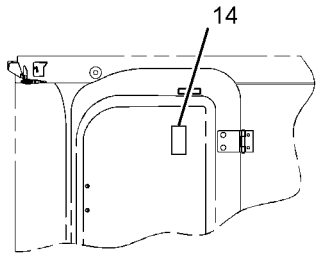

VIEW M-M

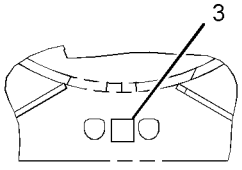

VIEW H-H

GRAPHIC #3 **<END>** g01623219

SERVICE EQUIPMENT AND SUPPLIES

330-8767 PLATE & FILM GP

S/N: PDP1-UP
U.S. MARKET
AN ATTACHMENT

SMCS-7405, 7557 **i03144663**

NOTE	REF NO	GRAPHIC REF	PART NUMBER	QTY	PART NAME 1 2 3 4 5 6 (PRODUCT LEVEL)	SEE PAGE
	1	1	**330-8720**	1	FILM-LIFTING CAP	
					(ON RIGHT SIDE CAB WINDOW)	
FY			*260-7220*	1	PLATE & FILM GP	831

F-NOT SHOWN
Y-SEPARATE ILLUSTRATION

1

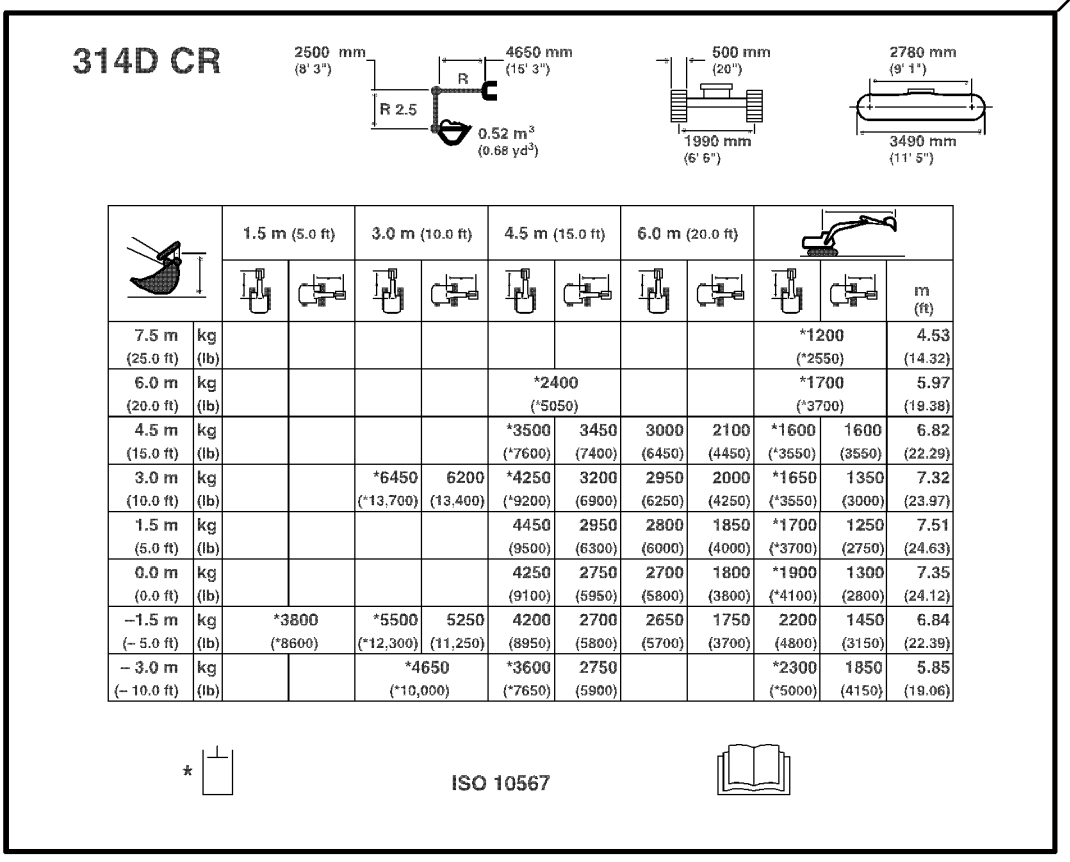

		1.5 m (5.0 ft)		3.0 m (10.0 ft)		4.5 m (15.0 ft)		6.0 m (20.0 ft)				
												m (ft)
7.5 m (25.0 ft)	kg (lb)									*1200 (*2550)		4.53 (14.32)
6.0 m (20.0 ft)	kg (lb)					*2400 (*5050)				*1700 (*3700)		5.97 (19.38)
4.5 m (15.0 ft)	kg (lb)					*3500 (*7600)	3450 (7400)	3000 (6450)	2100 (4450)	*1600 (*3550)	1600 (3550)	6.82 (22.29)
3.0 m (10.0 ft)	kg (lb)			*6450 (*13,700)	6200 (13,400)	*4250 (*9200)	3200 (6900)	2950 (6250)	2000 (4250)	*1650 (*3550)	1350 (3000)	7.32 (23.97)
1.5 m (5.0 ft)	kg (lb)					4450 (9500)	2950 (6300)	2800 (6000)	1850 (4000)	*1700 (*3700)	1250 (2750)	7.51 (24.63)
0.0 m (0.0 ft)	kg (lb)					4250 (9100)	2750 (5950)	2700 (5800)	1800 (3800)	*1900 (*4100)	1300 (2800)	7.35 (24.12)
–1.5 m (– 5.0 ft)	kg (lb)	*3800 (*8600)		*5500 (*12,300)	5250 (11,250)	4200 (8950)	2700 (5800)	2650 (5700)	1750 (3700)	2200 (4800)	1450 (3150)	6.84 (22.39)
– 3.0 m (– 10.0 ft)	kg (lb)			*4650 (*10,000)		*3600 (*7650)	2750 (5900)			*2300 (*5000)	1850 (4150)	5.85 (19.06)

* ISO 10567

GRAPHIC #1 **<END>** g01626184

SERVICE EQUIPMENT AND SUPPLIES

330-8768 PLATE & FILM GP

S/N: BYJ1-UP
U.S. MARKET
AN ATTACHMENT

SMCS-7405, 7557 **i03144665**

NOTE	REF NO	GRAPHIC REF	PART NUMBER	QTY	PART NAME 1 2 3 4 5 6 (PRODUCT LEVEL)	SEE PAGE
	1	1	**330-8721**	1	FILM-INFORMATION (LIFTING CAPACITIES, READ OMM)	
FY			*260-7220*	1	PLATE & FILM GP	831

F-NOT SHOWN
Y-SEPARATE ILLUSTRATION

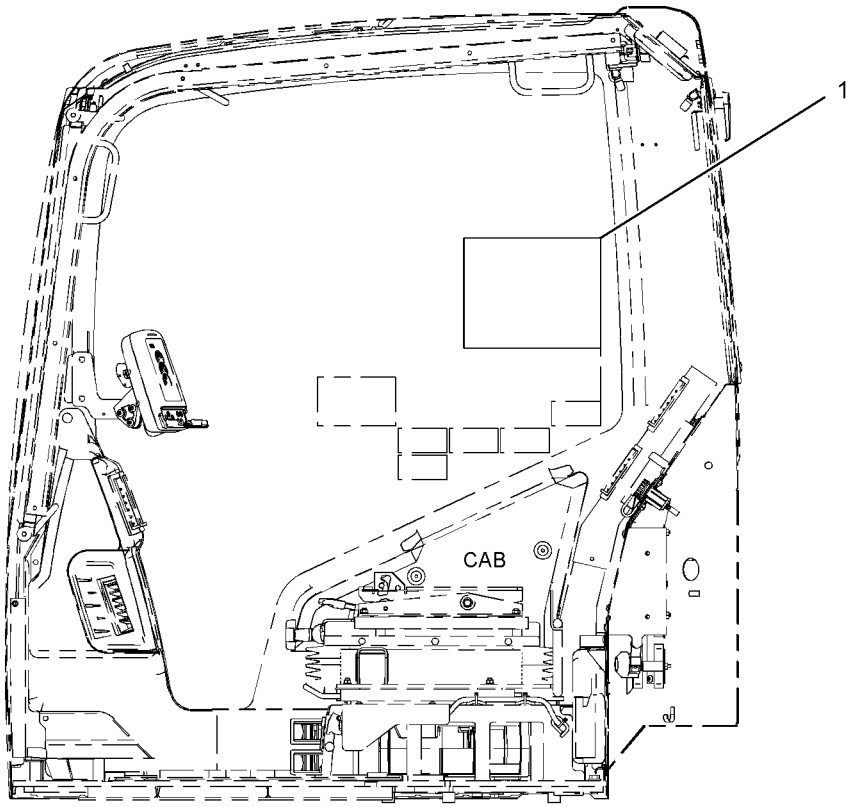

LEFT SIDE VIEW

GRAPHIC #1 **<END>** g01642068

PART NUMBER INDEX

Part	Page
1	
1A-0621	711
1B-5174	334
	337
1F-0425	559
1H-3244	141
1H-3338	161
1H-7339	508
1H-8278	502
	528
1J-6472	508
1K-8850	229
1P-2807	833
	837
1P-3703	358
	362
	364
	368
	371
	375
1P-4578	422
1R-0739	46
1R-0751	76
1R-6009	294
	296
1R-6010	295
	297
1R-6225	599
	616
	617
	618
1R-6226	599
1R-6229	239
	620
1R-6573	80
1R-9953	62
1S-7251	168
1S-7252	105
1U-3252	657
1U-8846	208
	210
	241
	243
	332
	490
	492
	524
2	
2A-5222	49
2B-0858	528
2B-0941	65
2C-9259	634
	635
	636
	637
	638
	639
	641
	642
	643
	644
	645
	646
	647
	648
	649
2C-9460	654
2C-9548	650
	651
	▶654
2G-1830	168
2H-3814	55
2H-3922	159
2H-3934	528
2H-9247	352
2J-3506	654
2L-8075	711
2L-8076	163
2M-9780	339
	381
	477
	489
	528
	596
2P-2537	46
2Q-4703	711
2S-1647	215
	216
	238
	731
2S-3440	45
	53
2S-4078	89
	96
	98
	163
2S-5926	292
2T-2991	46
2U-2552	665
2U-5338	329
3	
3B-0551	96
	98
3B-4501	132
3B-4505	42
	50
	53
3B-4510	670
	677
	685
	691
	771
	772
3B-4618	215
	217
	253
	257
3B-8489	241
	243
	316
	317
	318
	319
	320
	602
	603
	605
	607
	609
	611
	613
	616
	617
	618
	620
	653
3D-2824	163
	339
	362
	364
	368
	381
	388
	389
	393
	397
	399
	411
	413
	420
	440
	473
	477
	487
	489
	490
	492
	528
	537
	548
	554
	581
3D-2891	352
3D-4603	288
3E-2310	425
	429
	432
	445
	449
	461
3E-2338	208
3E-3371	162
	362
	368
3E-3383	164
3E-4297	344
3E-5169	205
3E-7410	424
	428
	434
	445
	449
3E-8020	669
	676
	684
	690
3E-8320	105
3F-5108	628
	629
	630
3F-9556	160
3J-1907	81
	94
	96
	98
	100
	339
	352
	381
	388
	393
	405
	417
	418
	424
	425
	428
	429
	432
	434
	435
	436
	440
	441
	443
	445
	446
	449
	450
	454
	455
	457
	461
	463
	465
	467
	469
	471
	475
	477
	487
	490
	492
	495
	498
	500
	508
	525
	548
	554
	561
	582
	583
	596
3J-7283	623
	624
	626
3J-7354	339
	388
	405
	489
	528
3K-0360	308

▶ **PRIMARY REFERENCE**

PART NUMBER INDEX

Part	Page	Part	Page	Part	Page	Part	Page
	334		761		465	4I-7477	283
	337		803	4I-1878	454		284
	339		806	4I-2733	236	4I-7478	283
	360	3S-8664	134	4I-2885	821		284
	362	3T-0849	150		823	4I-7488	279
	368		151	4I-3038	162	4I-7511	241
	373	3T-5760	105	4I-3090	668	4I-7512	241
	377	3T-7528	344		675	4I-7538	293
	382	3V-0046	405		683		294
	389				689		295
	393			4I-3144	136		296
	415	**4**			139		297
	417			4I-3309	599		299
	420	4B-2049	163	4I-3510	581	4I-7604	526
	425	4B-4158	289	4I-3573	434	4I-7605	526
	429		290	4I-3941	434	4I-8267	304
	435	4B-4276	141	4I-4253	669	4I-8472	833
	440	4B-5984	334		676		837
	471		337		684	4I-9521	417
	490	4B-7739	528		690		424
	492	4B-9783	582	4I-4282	669		428
	495		583		676		432
	496	4B-9880	585		684		434
	502	4D-1836	205		690		449
	526	4D-7733	81	4I-4580	762		454
	528	4D-7735	81		766		457
	538	4D-8123	138	4I-5049	805		463
	596	4D-8948	184	4I-5394	528		469
3K-8107	136	4H-6112	334	4I-5459	136	4I-9522	417
	139		337		139		424
3P-1896	20	4I-0378	94	4I-5461	136		428
3P-9847	57		96		139		432
3Q-2034	628		98	4I-5490	528		434
3S-2093	65	4I-0379	81	4I-5795	432		449
	87	4I-0754	528		469		457
	89	4I-0797	434	4I-5862	303		467
	105	4I-0800	454	4I-6054	432		471
	122	4I-0806	432		457	4I-9523	424
	126		445	4I-6365	563		428
	127		449		568		432
	129	4I-0821	434		570		434
	136		454	4I-6391	449		445
	138		457	4I-6914	▶622		449
	143		469		631		454
	145	4I-0836	434		632		457
	147	4I-1037	457		633		463
	150	4I-1095	387	4I-7326	241		467
	155	4I-1536	▶303		243		469
	162		306	4I-7337	▶279		471
	167	4I-1539	303		281	4I-9524	424
	170	4I-1674	387		282		428
	172	4I-1676	362	4I-7343	650		432
	174		364		651		434
	176		368		▶656		449
	184	4I-1688	449	4I-7345	285		457
	186	4I-1704	434		286		465
	187	4I-1739	339		▶287	4I-9525	417
	188		434	4I-7444	241		424
	190		445	4I-7446	241		428
	191		449		243		432
	197	4I-1751	434	4I-7472	212		434
	198	4I-1760	434	4I-7475	283		443
	205	4I-1780	434		284		454
	658	4I-1783	434	4I-7476	283		457
	755		445		284		469

▶ PRIMARY REFERENCE

PART NUMBER INDEX

Part	Page
4I-9526	424
	428
	432
	457
	469
4I-9527	424
	428
	432
	434
	443
	445
	449
	454
	457
	465
4I-9528	424
	428
	432
	434
	457
	465
4I-9664	20
	25
	26
4J-0522	422
4J-0527	339
	399
	420
	528
4J-5267	379
	380
	391
	392
	393
	395
	396
	482
	483
	485
	486
	487
	528
4J-5477	401
	403
	406
	408
	410
	417
	487
	490
	492
	595
4J-7533	344
	352
	495
	596
4K-0367	628
	629
	630
4K-1388	577
4K-8501	229
4L-7124	141
4M-0189	528
4N-9170	241
	243
4P-7428	105
	126
	203
4P-7429	106
	172
4P-7581	105
4P-8134	106
4S-1962	762
	766
4T-3009	654
4T-6229	628
	629
	630
4T-9905	596
5A-3604	85
	538
	540
	548
	554
5B-5947	44
5B-9304	541
5C-2889	132
5C-2890	83
	141
	150
	161
5C-6074	163
5C-6108	87
	▶163
5C-7261	16
	50
	168
	574
	670
	677
	685
	691
	785
	788
	799
	802
	803
	804
	814
5C-8312	734
	737
5C-9553	59
	87
	89
	446
	450
	528
	658
	755
	762
	806
5D-8159	59
5H-1472	596
5I-3046	330
5I-3605	732
5I-4076	457
	463
5I-4363	525
	526
5I-4365	490
	492
5I-4366	490
	492
5I-4396	434
5I-4915	25
5I-4940	45
5I-4983	29
5I-4993	36
5I-5005	27
5I-5038	48
5I-5078	76
5I-5087	67
5I-5181	23
5I-5597	69
	71
5I-5607	36
5I-6125	293
	294
	295
	296
	297
	298
	299
	300
5I-7090	709
5I-7505	20
5I-7525	20
5I-7528	20
5I-7529	20
5I-7540	39
	40
5I-7549	67
5I-7550	67
5I-7558	30
5I-7561	49
5I-7588	23
5I-7599	35
5I-7601	67
5I-7607	29
5I-7610	30
5I-7623	49
5I-7630	42
5I-7632	30
5I-7633	69
	71
	74
5I-7639	69
	71
5I-7642	48
5I-7645	45
5I-7646	53
5I-7650	15
5I-7654	23
5I-7656	30
5I-7660	29
5I-7663	36
5I-7667	37
5I-7677	68
5I-7678	68
5I-7683	30
5I-7691	50
5I-7696	55
5I-7697	55
5I-7724	20
5I-7725	45
5I-7735	53
5I-7750	32
5I-7784	23
5I-7785	23
5I-7786	23
5I-7787	23
5I-7788	23
5I-7789	23
5I-7842	36
5I-7848	69
	71
5I-7862	50
5I-7864	44
5I-7867	53
5I-7896	30
5I-7933	74
5I-7937	69
	71
5I-7941	73
5I-7942	73
5I-7985	103
5I-7987	103
5I-7997	103
5I-8009	20
5I-8010	53
5I-8021	68
5I-8023	68
5I-8056	53
5I-8058	49
	76
5I-8066	44
5I-8067	36
5I-8080	103
5I-8086	103
5I-8087	103
5I-8088	103
5I-8089	103
5I-8090	103
5I-8091	103
5I-8094	103
5I-8095	103
5I-8097	103
5I-8098	103
5I-8124	73
5I-8270	105
5I-8416	▶304
	306
5I-8670	342
5I-8825	454
5I-9368	105
5J-4771	654
5K-3294	762
5K-8451	339
5K-9090	362
	364
	368
	381
	477
	480
5K-9243	241
	243

5

▶ **PRIMARY REFERENCE**

PART NUMBER INDEX

Part	Page	Part	Page	Part	Page	Part	Page
	605		630		725		707
5L-4758	346	5P-8309	261		726		708
5L-6326	55		264		728		762
5P-0747	105		266		729		805
	168		805	6K-6967	602	6V-7658	287
5P-0761	105	5P-8500	91		603		344
	168		213	6K-8178	81	6V-7660	288
5P-0767	762		768		436	6V-7726	208
	766	5P-8874	393	6L-3616	605	6V-8097	278
5P-1075	16	5P-9297	135	6V-0400	358	6V-8144	508
5P-1076	66		762		371	6V-8185	141
	247	5P-9617	46		375	6V-8186	160
	249	5P-9909	57	6V-0683	436	6V-8187	141
	250	5Q-4212	406		446	6V-8202	559
	253		407		450		784
	257		408	6V-0852	339		787
	277		410		381		790
	278	5Q-4213	407		393		796
	351				417		798
	475				425	6V-8213	334
5P-1442	65	**6**			429	6V-8218	581
	81				432	6V-8231	35
5P-3779	303	6C-6760	360		441		36
	305		373		445		69
5P-4115	106		377		450		71
5P-4116	102	6D-1641	46		469	6V-8236	30
	106		339		477	6V-8337	563
	487		762	6V-1874	389	6V-8362	166
	658		766		411	6V-8378	160
	695	6D-4244	762		413	6V-8397	339
	755	6D-4636	81	6V-2369	141		384
5P-4325	425	6F-4718	498	6V-2722	113		385
	429		500		168		388
5P-4924	81	6F-4855	350	6V-3342	602		393
	94	6F-7045	159		603		401
	96	6F-7556	30	6V-3938	559		403
	98	6F-7557	30	6V-3965	339		406
5P-4961	65	6G-2263	105		381		408
5P-5148	397	6I-1418	118		393		410
	411	6I-5298	712		417		417
	413		713		425		418
	415	6I-5339	669		429		424
	417		676		432		425
	420		684		441		428
	479		690		446		429
5P-5623	102	6I-5340	669		450		432
5P-7174	57		676		469		434
5P-7175	81		684		477		435
5P-7462	436		690	6V-5049	155		436
	446	6I-6449	288	6V-5210	132		440
	450	6I-6451	288		676		443
5P-7463	436	6I-6477	279		690		445
	446	6I-6549	288		814		446
	450	6I-6590	279	6V-5215	15		449
5P-7468	389	6I-6795	581		30		450
	411	6I-6911	561		76		454
	413	6I-6912	561	6V-5266	46		455
5P-7469	389	6I-6923	559	6V-5391	352		457
	411	6J-2680	473	6V-5645	141		461
	413	6K-0806	719	6V-5683	665		463
5P-7958	268		720	6V-7357	150		465
	768		721		658		467
5P-8196	46		722		704		469
5P-8247	628		723		705		475
	629		724		706		487

PART NUMBER INDEX

Part	Page	Part	Page	Part	Page	Part	Page
	489		487	6V-8978	581		339
	584		490	6V-8987	425		358
6V-8398	339		492		429		362
	360	6V-8642	381		454		364
	366		477		457		368
	373	6V-8672	689	6V-8994	384		371
	377	6V-8713	381		385		375
	388		397		401		381
	389	6V-8716	397	6V-9001	425		386
	401		420		429		387
	403	6V-8721	339		435		388
	406	6V-8722	382		440		389
	407	6V-8723	339		443		397
	408	6V-8724	388		446		399
	410		393		450		411
	415		417		454		413
	417		425		457		420
	420		429		467		440
	425		432		469		441
	429		435	6V-9002	339		473
	435		440		440		475
	440		446	6V-9003	381		477
	461		450		477		486
	471		454		489		487
	479		457	6V-9004	440		490
	490		465	6V-9005	381		492
	492		467		477	6V-9832	364
	586		469	6V-9007	339	6V-9836	393
	587	6V-8775	417		362		465
6V-8400	566		420		364	6V-9837	479
	572		490		368	6V-9840	364
6V-8467	327		492		388	6V-9844	440
6V-8554	401	6V-8781	425		399	6V-9850	435
6V-8625	339		429		411		465
	415		432		413		489
	420		435		420	6V-9851	388
	425		446		440		415
	429		450		487	6V-9852	46
	471		454	6V-9008	480		381
6V-8627	487		461	6V-9168	384		477
6V-8632	382		463		385	6V-9853	339
6V-8635	480		475		401		411
6V-8636	393	6V-8782	389		425		413
	418	6V-8785	362		429		475
	425		368		455	6V-9854	362
	429	6V-8821	576		457		364
	432	6V-8823	216	6V-9182	399		368
	435		232		420	6V-9872	489
	443		234		475	6V-9873	440
	446		238	6V-9200	388	6V-9874	339
	450	6V-8932	346	6V-9491	143	6W-2464	405
	454	6V-8934	401		145	6W-6005	105
	457	6V-8935	401		147		
	465		403	6V-9492	670		
	469		406		677	**7**	
6V-8637	46		408		685		
	368		410		691	7C-1493	46
	440		417	6V-9632	87	7F-0560	113
	490	6V-8936	403	6V-9672	176	7G-1060	205
	492		406		668	7H-3171	279
6V-8639	435		408		675		287
	471		410		685	7I-0057	498
	490		417	6V-9673	174		500
	492	6V-8942	420	6V-9746	334	7I-0058	498
6V-8641	417	6V-8943	420		337		500

► **PRIMARY REFERENCE**

PART NUMBER INDEX

Part	Page	Part	Page	Part	Page	Part	Page
7I-0375	762	7I-7626	332		176		475
	766	7I-7632	332		180		477
7I-0986	588	7I-7633	332		182		480
	590	7I-7634	332		183		537
7I-1303	490	7I-7635	332		184	7N-0718	105
	492	7I-7636	332		186		▶159
7I-2272	495	7I-7638	332		187	7N-2353	167
	496	7I-7639	332		188		179
	508	7I-7640	332		190	7N-3718	135
	593	7I-7641	332		191	7T-1099	413
7I-2673	57	7I-7642	332		195	7T-6799	166
	129	7I-7643	332		196	7W-9028	46
	134	7I-7644	332		198	7X-0605	805
	135	7I-7645	332		199	7X-0796	30
	138	7I-7646	332		200		35
	176	7I-7647	332		202		36
	793	7I-7648	332		203		52
	803	7I-7649	332		205	7X-0818	441
7I-2753	561	7I-8081	576		339	7X-0872	381
7I-6843	607	7I-8084	541		381		477
	609		543		384	7X-2459	461
	611		545		385	7X-2533	130
	613		547		388	7X-2534	106
7I-7192	547		553		393	7X-2536	709
	553		585		397	7X-2538	695
7I-7203	513		589		399	7X-2548	203
	514		595		401	7X-2549	362
	515	7I-8087	576		411		364
	516	7I-8095	576		413		366
	517	7I-8096	576		415		368
	518	7I-8098	576		417		407
	519	7I-8100	576		420	7X-2552	599
	520	7I-8102	588		422	7X-2553	508
	521	7J-8611	602		424	7X-2555	57
	522		603		428		241
	523	7J-9108	366		432		243
7I-7204	538		379		434		285
	540		380		440		286
	547		381		443		530
	553		382		445		771
7I-7206	538		387		449		772
	540		389		457	7X-2556	508
	547		391		461	7X-2557	748
	553		392		463	7X-2558	748
7I-7207	538		393		465	7X-2619	106
	540		395		467		141
	547		396		469		170
	553		397		477		176
7I-7208	538		420		479	7X-2621	106
	540		477		490	7X-3164	360
	547		489		492		373
	553		541		699		377
7I-7235	547		543		759	7X-6315	120
	553		545		761	7X-7644	833
7I-7241	547	7K-1181	87	7M-7410	496		837
	553		89	7M-8485	208	7X-7729	57
7I-7250	547		102		362		253
	553		105		368		257
7I-7321	525		125		381		368
	526		126		397		763
7I-7403	588		127		399	7Y-0059	1
	590		141		411		2
7I-7439	465		149		413		▶768
	762		170		420	7Y-0203	656
7I-7625	332		172		473	7Y-0204	656

▶ PRIMARY REFERENCE

PART NUMBER INDEX

Part	Page	Part	Page	Part	Page	Part	Page
7Y-0466	312		685		647		174
7Y-0468	312		691		648		176
	313	7Y-5458	164		649		731
	563		165	8F-1434	160		812
7Y-1900	312	7Y-5464	164	8H-5303	159	8T-0337	216
7Y-1901	312		165	8H-5306	159	8T-0343	566
7Y-1902	312	7Y-5493	141	8H-9819	528	8T-0347	498
7Y-1904	312	7Y-8167	81	8J-1256	106		500
7Y-1976	57		105	8J-9236	163	8T-0357	241
	59	7Y-8170	699	8M-2772	605		243
7Y-2155	287		778	8M-2773	81	8T-0404	381
7Y-2158	287	7Y-8379	434		762		389
7Y-2159	287	7Y-8436	577	8N-0869	105		393
7Y-2162	287	7Y-8437	577		168		397
7Y-3283	106	7Y-8463	714	8P-9770	634		477
7Y-3474	806		715		635		489
7Y-3732	358		716		636	8T-1158	208
	362		717		637		561
	364		723		638		566
	368		724		640		572
	371		725		641	8T-1159	287
	375		726		642	8T-1687	415
7Y-3919	759		728		643		420
7Y-3920	759		729		644	8T-1889	106
7Y-3950	167				645	8T-1890	106
7Y-3951	670				646	8T-1905	417
	677	**8**			647		425
	691				648		429
7Y-3954	670	8C-3111	150		649		432
	677	8C-3205	482	8S-0934	779		436
	691		483		782		446
7Y-3955	167		485	8S-0948	170		450
7Y-3962	87	8C-3338	508		191		455
	89	8C-3445	46	8S-1812	163		463
7Y-3963	87	8C-3446	46	8S-1814	163		465
	89		339	8S-1815	163	8T-2920	250
7Y-3964	87	8C-3451	339	8S-2634	168	8T-3490	65
	89	8C-5607	130	8S-4723	779		81
7Y-3965	87	8C-5608	117		782		395
	89		130	8S-4724	779	8T-3518	113
7Y-3966	87	8C-5917	168		782	8T-3519	113
	89	8C-5918	105	8T-0075	339	8T-3647	762
7Y-3967	87	8C-6358	113		435		766
	89	8C-6364	653		440	8T-4121	46
7Y-4193	457	8C-6561	405		446		52
7Y-4224	502	8C-6874	334		450		55
	596		337		454		57
7Y-4387	432	8C-6965	572		467		59
	457	8C-7505	669		469		64
7Y-4868	358		676	8T-0077	471		65
	362		684	8T-0078	368		66
	364		690	8T-0114	709		69
	366	8C-8400	388	8T-0266	661		71
	369	8C-8431	463	8T-0269	770		76
	371	8C-8451	117		773		81
	375		658	8T-0273	528		87
	387	8C-8988	393	8T-0288	589		89
7Y-5088	434		435		591		106
	445		469		594		129
	449	8C-8992	249		595		131
7Y-5226	106		250	8T-0328	94		134
7Y-5238	399		277		96		135
7Y-5292	812	8E-6258	657		98		140
7Y-5434	670	8E-6259	657		100		141
	677	8E-9490	646		106		155

► **PRIMARY REFERENCE**

PART NUMBER INDEX

Part	Page	Part	Page	Part	Page	Part	Page
	168		602		219		602
	170		603		221		658
	176		605		225		669
	191		658		241		676
	196		670		243		684
	205		677		254		690
	215		685		258		710
	216		691		340		755
	217		695		360		759
	218		699		373		762
	219		709		377		766
	221		710		389	8T-4138	129
	225		711		399		150
	229		718		436		750
	232		741		441	8T-4139	66
	233		755		443		106
	234		758		450		248
	241		759		455		340
	243		762		469		360
	332		766		508		362
	340		776		525		364
	360		778		526		366
	366		800		528		369
	373	8T-4122	285		709		371
	377		286		718		373
	379	8T-4123	620		762		375
	380	8T-4127	669		766		377
	389		676	8T-4137	30		387
	391		684		32		389
	392		690		46		401
	395	8T-4132	352		57		403
	396		607		59		406
	399		609		65		407
	406		611		81		408
	408		613		87		410
	410	8T-4133	66		89		411
	415		81		106		413
	417		106		134		436
	422		134		136		451
	425		135		139		480
	429		176		140		508
	436		216		141		666
	441		229		168		667
	443		232		196		710
	446		234		205	8T-4140	91
	450		352		208		281
	455		366		215		282
	457		512		217		475
	469		566		233		505
	471		572		289		508
	473		602		290	8T-4149	473
	482		603		340	8T-4171	106
	483		605		369		136
	485		669		389		141
	486		676		425		291
	487		684		429		661
	490		690		443	8T-4172	30
	492		812		446		436
	506	8T-4136	46		450		695
	507		64		457	8T-4174	33
	508		81		490	8T-4175	57
	524		129		492		93
	525		131		508	8T-4176	364
	526		172		524		366
	528		218		528	8T-4177	446

PART NUMBER INDEX

Part	Page
	451
8T-4178	471
8T-4179	106
	239
	599
	616
	617
	618
	620
	623
	624
	626
	666
	667
	805
8T-4182	106
	379
	380
	391
	392
	395
	396
	436
	446
	451
8T-4183	352
	382
	415
	417
	622
8T-4184	247
	346
	358
	362
	364
	369
	371
	375
	695
8T-4185	57
	106
	208
	360
	366
	373
	377
	379
	380
	417
	486
	508
8T-4186	46
	487
8T-4189	59
	87
	89
	340
	346
	425
	429
	441
	457
	487
	658
	669
	676
	684
	690
	734
	737
	755
	814
8T-4190	134
	135
	138
	670
	677
	685
	691
8T-4191	20
	23
	106
	170
	191
	205
	415
	436
	605
	658
	699
	709
	711
	718
	741
	755
	758
	762
	778
	800
8T-4192	254
	258
	351
	352
	360
	362
	364
	369
	373
	377
	389
	411
	413
	436
	446
	599
	734
	737
	747
	751
	752
	753
8T-4193	210
8T-4194	230
	250
	254
	258
	379
	380
	382
	391
	392
	395
	396
	528
8T-4195	52
	59
	81
	87
	89
	106
	155
	205
	332
	371
	375
	406
	408
	410
	473
	507
	669
	676
	684
	690
	710
	776
8T-4196	46
	65
	358
	379
	380
	391
	392
	395
	396
	422
	446
	451
	486
	487
8T-4197	46
8T-4198	425
	429
8T-4199	102
	196
	241
	243
8T-4200	57
	61
	85
	195
	697
	749
	750
8T-4205	141
	497
	698
8T-4223	32
	33
	106
	132
	192
	203
	215
	217
	248
	254
	258
	336
	338
	340
	346
	358
	360
	362
	364
	366
	369
	371
	373
	375
	377
	379
	380
	382
	384
	385
	386
	387
	389
	391
	392
	395
	396
	401
	403
	406
	407
	408
	410
	411
	413
	415
	417
	422
	436
	446
	451
	480
	486
	487
	504
	528
	622
	666
	667
	669
	676
	684
	690
	695
	710
	734
	737
	747
	751
	752
	753
8T-4224	17
	46

► **PRIMARY REFERENCE**

PART NUMBER INDEX

Part	Page
	57
	59
	61
	87
	89
	118
	151
	168
	195
	196
	238
	340
	346
	382
	425
	429
	441
	446
	669
	676
	684
	690
	695
	697
	709
	734
	737
	749
	750
	754
	762
	766
	785
	788
	799
	802
	803
	804
	814
8T-4226	106
8T-4240	502
8T-4241	330
8T-4244	132
	250
	252
	253
	257
	407
	734
	737
8T-4648	360
	373
	377
	504
8T-4779	276
	670
	677
	682
	685
	691
	778
8T-4780	239
	620
8T-4896	358
	371
	375
8T-4908	50
	168
	238
8T-4910	358
	366
	369
	371
	375
	407
	480
	486
	487
8T-4944	502
8T-4956	33
	358
	362
	364
	369
	399
	422
	480
8T-4970	115
	346
	698
8T-4971	762
8T-4984	57
	64
8T-4985	66
	473
8T-5001	340
8T-5005	482
	483
	485
8T-5041	336
	338
	362
	364
	369
	384
	385
8T-5092	386
	401
8T-5412	475
8T-5413	229
8T-5878	285
	286
8T-5917	105
8T-6411	141
8T-6429	313
8T-6466	87
	89
	106
	389
	506
	695
8T-6684	381
	477
8T-6685	106
8T-6693	176
	669
	676
	684
	690
	731
8T-6703	57
	64
	399
	422
8T-6726	61
8T-6757	605
8T-6759	496
	525
	526
	566
	593
8T-6763	320
8T-6842	833
	837
8T-6868	387
	407
	666
	667
8T-6870	53
	446
	451
	469
8T-6876	388
	461
8T-7338	210
	212
	267
	682
	778
8T-7352	106
8T-7547	46
	382
	508
	754
	762
8T-7930	384
	385
8T-7964	42
8T-7971	360
	373
	377
8T-8729	151
8T-8737	164
	165
	716
	717
	725
	726
	727
	730
	766
	775
8T-8887	417
	467
8T-8899	46
8T-9515	596
8T-9533	559
8T-9598	38
	55
8T-9599	508
8T-9756	105
8T-9757	105
8Y-4804	216
8Y-6352	668
	675
	683
	689
8Y-6967	658
	668
	675
	683
	689
	741
	755

9

Part	Page
9B-4499	163
9B-7233	166
9F-2167	397
9F-5644	159
9G-0002	105
9G-0003	105
9G-0004	105
	168
9G-0005	105
9G-4343	141
9G-7641	143
	145
	147
	▶166
9G-8451	141
9G-8909	105
9J-3169	650
	651
	▶657
9L-9188	46
9M-2307	253
	257
	263
9M-5732	253
	257
	263
9M-7958	87
	89
9M-8406	65
	81
9R-4595	599
9S-4180	344
9S-4181	397
	537
9S-4182	528
9S-4183	362
	368
	399
	473
	537
	547
	553
9S-4185	420
	471
	538
9S-4188	46
9S-4191	425
	429
	435
	440
	450
	471

▶ **PRIMARY REFERENCE**

PART NUMBER INDEX

Part	Page
	487
	498
	500
	508
	548
	554
9S-6130	96
	98
9S-8001	352
	495
	596
9S-8004	81
	495
	525
	596
9S-8005	495
	496
	502
	526
	596
9S-8006	596
9V-3659	229
9W-0742	▶113
	168
9W-0852	695
9W-1442	141
9W-1446	141
9W-3340	329
9X-1813	102
9X-2040	669
	676
	684
	690
	774
9X-2041	669
	676
	684
	690
	700
	702
	812
9X-2042	173
	176
	179
	180
	183
	190
	205
	670
	677
	685
	691
	702
	734
	737
	741
	801
	809
	810
	812
	814
9X-2043	669
	676
	684
	690
	699
	734
	737
	754
	801
9X-2044	741
9X-2045	669
	676
	684
	690
9X-2046	774
9X-2085	471
9X-2201	66
9X-2480	119
9X-2537	561
9X-3401	94
	96
	98
	165
	362
	368
	428
	443
	445
	454
	465
	528
	714
	715
	716
	717
	725
	726
	727
	728
	729
	730
	775
9X-3402	435
9X-3404	112
9X-3463	132
9X-3592	321
	323
	330
9X-6153	665
9X-6165	117
	130
9X-6580	420
9X-6582	403
	406
	408
	410
	417
9X-7298	327
9X-7301	325
9X-8256	59
	83
	87
	89
	106
	115
	119
	129
	136
	141
	150
	151
	170
	176
	446
	451
	528
	658
	661
	669
	676
	684
	690
	704
	705
	706
	707
	708
	755
	762
	770
	773
	805
	806
	812
9X-8257	33
	57
	134
	135
	138
	210
	267
	276
	505
	670
	677
	682
	685
	691
	748
	771
	772
	778
9X-8600	75
9X-9896	117

0

Part	Page
003-7764	81
	94
	96
	98
006-5490	81
006-5707	87
	89
006-6803	559
012-0380	161
033-5853	46
033-6038	46
033-8248	602
	603
	605
061-7539	76
085-6444	807
085-6447	807
085-6448	807
085-6449	807
085-7081	559
085-7356	417
	424
	428
	432
	434
	440
	445
	449
	454
	457
	461
085-8828	622
085-9310	91
	241
	243
	475
085-9429	103
085-9513	19
085-9768	547
	553
085-9769	502
	622
086-0297	239
	599
	616
	617
	618
	620
	623
	624
	626
086-0298	599
086-0299	239
086-0414	622
086-0415	622
086-0416	622
086-0523	607
	609
	611
	613
	655
087-4402	445
087-4408	449
087-4454	304
	▶305
087-4456	▶306
	308
087-4531	417
	449
087-4575	305
087-4576	305
087-4577	305
087-4587	388
087-4683	162
087-4710	566
	572
087-4742	502
087-5631	596
087-5708	566
	572
087-5761	457

▶ **PRIMARY REFERENCE**

PART NUMBER INDEX

Part	Page	Part	Page	Part	Page	Part	Page
087-5762	434	093-3094	536		684		596
087-5766	425	093-5432	59		690	095-1586	538
	429	093-6089	332	095-1260	561		540
	467	093-7521	349		566		548
087-5767	469	093-7676	656		572		554
087-5768	425	094-0580	208	095-1299	241		564
	429	094-0876	563		243		568
087-5771	440		568	095-1386	81		570
087-5774	434		570	095-1514	578		577
087-5775	465	094-1875	352		579		586
087-5780	457		502		580		587
087-5840	602		508	095-1519	350		592
	603	094-1881	352		576	095-1587	581
087-5899	603	094-1882	502		578	095-1589	541
087-8484	669		508		579		543
	676	094-2080	141		580		545
	684	094-4628	15		588	095-1590	342
	690		19		590		541
087-8894	254	094-6526	537	095-1547	537		543
	258	094-7134	37	095-1552	512		545
087-8895	253	094-7154	37	095-1573	541		559
	257	094-7516	37		543		574
091-3474	42	094-7741	20		545		581
	67	094-9267	50	095-1575	572	095-1591	578
091-5928	329	094-9424	20		576		579
091-9035	435	094-9525	42		578		580
	449	094-9725	76		579	095-1592	411
093-0065	239	094-9950	157		580		413
	623	094-9980	157	095-1578	538		541
	624	095-0085	157		540		543
	626	095-0410	157		547		545
093-0083	239	095-0673	572		553		548
093-0097	239	095-0728	718		561		554
	623	095-0735	176		585		578
	624		709		588		579
	626	095-0736	94		590		580
093-0115	239		96	095-1579	538	095-1593	576
	599		98		540	095-1594	498
093-0349	620		669		547		500
093-0357	239		676		553	095-1596	342
	599		684		581	095-1608	528
	616		690		595	095-1625	525
	617		734	095-1580	498		526
	618		737		500	095-1627	325
	623		761		574	095-1628	321
	624	095-0742	658	095-1581	334		323
	626		755	095-1582	348		330
093-1291	366	095-0755	669		541	095-1662	279
	379		676		543	095-1663	346
	380		684		545		508
	395		690		547	095-1674	325
	396	095-0757	346		553	095-1676	321
093-1292	486	095-0826	528		574		323
	487		759		576		330
093-1293	480	095-0827	762	095-1584	342	095-1681	344
093-1294	487	095-0863	283		541	095-1682	346
093-1295	381		284		543	095-1696	538
	391	095-0893	332		545		548
	392	095-0910	129		576		554
093-1342	607	095-0936	566	095-1585	498	095-1698	334
	609	095-0965	547		500		538
	611		553		502		540
	613		559		547		548
093-1519	327	095-1207	669		553		554
093-3093	536		676		561	095-1700	538

► **PRIMARY REFERENCE**

PART NUMBER INDEX

Part	Page
	540
	548
	554
095-1701	292
	596
095-1710	559
095-1713	327
095-1716	525
	526
095-1717	348
095-1725	528
095-1750	586
	587
095-1751	586
	587
095-1777	440
095-1783	576
	578
	579
	580
095-1784	498
	500
095-1785	577
095-1786	581
095-1788	352
095-1789	498
	500
095-2005	20
095-2038	76
095-2039	20
	23
	83
095-2040	36
095-2927	292
095-6639	512
095-6824	599
095-7101	292
095-7380	502
095-7382	502
095-7930	254
	258
	759
095-8024	578
	579
	580
095-8575	44
095-8638	67
095-8799	17
	85
096-0061	115
096-0684	253
	257
096-0721	669
	676
	684
	690
096-1024	30
096-1043	298
	300
096-1054	321
	323
	330
096-1519	502
096-1628	563
	568
	570
096-2500	76
096-2501	23
	27
	192
096-2617	712
	713
096-3467	325
096-3741	20
	42
096-3872	216
096-4035	57
	59
096-4129	731
096-4276	292
096-4498	563
096-4535	561
096-4543	561
096-4876	607
	609
	611
	613
	654
	655
096-4879	291
096-4883	399
096-5766	388
096-5932	498
	500
096-5933	498
	500
096-5934	498
	500
096-6073	348
096-6166	143
	145
	147
	176
	254
	258
	718
	734
	737
096-7074	656
096-8139	321
	323
	330
096-8490	68
096-8569	17
096-8619	53
096-9260	83
096-9278	176
096-9435	30
096-9528	30
096-9532	30
	53
099-0159	279
099-0160	279
099-0163	279
099-0172	292
099-0173	292
099-0183	287
099-0193	288
099-0194	288
099-0195	288
099-0233	332
099-0235	332
099-0320	498
	500
099-0321	498
	500
099-0322	498
	500
099-0328	498
	500
099-0329	498
	500
099-0330	498
	500
099-0331	498
	500
099-0332	498
	500
099-0333	498
	500
099-0334	498
	500
099-0335	498
	500
099-0361	561
099-0600	327
099-0653	283
	284
099-0660	325
099-0661	325
099-0674	325
099-0681	321
	323
	330
099-0695	321
	323
099-0707	607
	609
	611
	613
099-0724	611
	654
	655
099-0822	588
	590
099-0864	669
	676
	684
	690
099-0865	669
	676
	684
	690
099-0866	669
	676
	684
	690
099-0913	243
099-3600	230
	253
	257
	599
099-3645	768
099-3649	435
099-3669	352
099-3671	352
099-4420	20
099-4437	76
	83
099-4460	192
099-4707	33
099-4739	287
099-4749	498
	500
099-5041	76
	83
099-5399	327
099-5400	327
099-6109	352
099-6110	352
099-6111	352
099-6112	352
099-6113	352
099-6115	352
099-6137	563
	566
	568
	570
	572
099-6141	566
	572
099-6144	566
	572
099-6145	566
	572
099-6418	235
	236
	261
099-6530	498
	500
099-6531	498
	500
099-6532	498
	500
099-6535	498
	500
099-7091	623
	624
	626
099-7241	401
	425
	429
	454
	457
099-7857	235
	236
099-8232	364
	1
100-3866	505
101-2169	602
101-2170	602
101-7403	358
	371
	375
101-7404	364
	450
101-9848	230

► **PRIMARY REFERENCE**

PART NUMBER INDEX

Part	Page	Part	Page	Part	Page	Part	Page
102-0818	561		428		105		323
102-1279	358		434		123	120-0044	150
102-5420	112		465		124		151
102-5474	830	107-7640	329		125	120-7199	271
102-5689	253	108-1781	473		134		▶276
	257	108-7313	432		172	120-8071	180
102-7024	536	108-7351	471		191		183
102-7142	668	108-7372	457		196	120-9027	162
	675	108-7387	432		205	121-0307	46
	683	108-7516	424	116-0243	136	121-0987	174
	689		428		139	121-1029	81
102-8802	101		434	117-1385	85	121-1125	180
	102		445	117-6306	669		183
	136		449		676		669
	141	108-7572	432		684		676
	145	109-1839	821		690		684
	160	109-5815	397	117-6349	718		690
	161	109-5816	486	117-6350	718	121-1459	577
	424	109-5821	411	117-6356	718	121-1491	495
	428		413	117-8683	714		496
	443	111-0988	434		715		▶587
	445	111-4799	162		716	121-5203	243
	450	111-4836	105		717	121-5204	243
	454		134		725	121-6217	391
	465		135		726		392
	528		172		728	121-6219	486
	536		196		729	121-6220	486
102-8803	136		205	118-4086	564		487
	150		658		568	121-6222	395
	151		755		570	121-6223	395
	162	111-4837	105	118-4087	563		396
102-8804	154		141		568	121-6303	445
102-8805	164		168		570		449
103-8411	547		170	118-4569	381		▶588
	553	111-4838	105		477	121-6304	588
103-8412	547	111-4839	105	118-5982	620		590
	553	111-9916	508	118-9863	695	121-6369	471
103-8413	547		▶586	118-9941	33	121-7063	762
	553		589	119-3253	634	122-4021	87
103-8441	330		591		635	122-5420	379
103-8442	330		594		636		380
103-9011	25		595		637	122-5500	379
104-8161	205	111-9998	574		638		380
104-8768	454	113-2829	339		640	122-9595	749
104-8771	432	113-3467	661		641		750
104-8780	432		762		642	122-9596	749
	434	113-3468	661		643		750
104-8783	432		762		644	122-9605	762
104-8950	457	114-0515	577		645		766
104-8999	483	114-0517	577	119-5026	143	122-9608	718
105-3479	360	114-0623	586		145	122-9609	718
	373		587		147	122-9610	718
	377	114-0750	325		658	122-9611	709
105-6701	87	114-0753	327		755	123-2002	330
	89	114-0755	321		761	123-2003	346
105-7398	330		323	119-5362	596	123-2143	498
105-7405	547		330	119-5364	596		500
	553	114-8223	332	119-5388	566	123-2145	498
106-0107	145	114-8224	332		572		500
	▶164	114-8249	525	119-5389	566	123-2430	434
106-0210	164	114-8250	525		572		▶582
	165	115-3667	457	119-5391	566	123-2431	434
106-8715	388	115-8647	269		572		440
107-6479	585	116-0114	141	119-5392	566	123-2511	417
107-6631	424	116-0118	46	119-5445	321		583

▶ PRIMARY REFERENCE

PART NUMBER INDEX

Part	Page
123-2549	▶583
	584
123-2552	582
	583
123-2729	482
	485
123-9950	321
	323
124-0838	483
124-1008	388
	434
124-1212	339
124-1305	482
	485
124-4009	712
	713
124-4010	712
	713
124-4042	661
124-4046	661
125-1551	321
	323
125-2947	55
125-2950	30
125-2968	36
125-2983	76
125-2994	32
	▶103
125-2995	103
125-4726	176
125-7876	141
126-1767	165
	362
	368
	428
	443
	454
	465
	714
	715
	716
	717
	725
	726
	727
	728
	729
	775
126-1768	435
126-1865	566
	572
126-1866	566
	572
126-6514	592
126-6515	592
126-6516	592
126-6872	393
	424
	428
	445
	449
	463
	469
126-7574	120
127-3913	616
	617
	618
	623
	624
	626
127-3925	669
	676
	684
	690
127-3928	668
	675
	683
	689
127-3933	754
127-3940	668
	675
	683
	689
127-3947	668
	675
	683
	689
127-3958	734
	737
127-3959	734
	737
127-3987	812
127-3991	734
	737
	812
127-4001	812
127-4618	141
127-5937	157
127-5939	157
127-5940	157
127-5941	157
127-5943	157
127-5944	157
127-5947	157
127-5948	157
127-5949	157
127-5950	157
127-5952	157
127-5953	157
128-2135	669
	676
	684
	690
	700
	702
	814
128-2158	668
	675
	683
	689
128-2173	709
128-4411	94
	96
	98
128-7624	362
	368
129-3348	252
129-3400	420
129-7784	512
129-7932	596
130-7596	19
131-5767	547
	553
131-5768	547
	553
131-5818	566
	572
131-5879	473
131-5915	563
	568
	570
131-8901	62
131-8902	62
131-8903	62
131-8915	61
131-9850	482
	483
	485
132-1829	▶101
	176
132-5789	87
	89
	106
	170
	172
	191
	195
	203
	759
132-7625	812
132-9046	561
133-2425	239
	599
133-2554	276
133-2717	239
133-5813	424
	428
	432
	434
	449
	463
133-6686	327
134-3284	134
	135
	138
134-3299	81
134-3344	105
134-4126	120
134-6918	454
134-7178	607
	609
134-7179	607
	609
134-7258	833
	837
134-7721	150
	151
134-7722	151
135-2366	157
135-2369	35
135-2370	35
135-2381	103
135-2382	103
135-2403	50
135-2407	52
135-3980	401
	403
	407
135-8572	87
	89
	230
	253
	257
	769
135-8573	46
	184
	230
	250
	253
	257
	268
135-8574	245
	246
135-8575	93
	214
	230
	253
	257
135-8577	230
	250
	434
135-8578	250
135-9003	393
136-0139	218
	219
	221
	225
137-2255	16
137-2292	252
137-2294	252
137-2813	▶249
137-2853	249
137-2854	249
137-3623	344
137-3624	344
137-3625	344
137-3626	344
	346
137-3628	344
	346
137-5541	76
137-6114	293
	299
139-1762	381
139-1765	381
139-1773	379
	380
139-5345	141
139-6403	668
	675
	683
	689
139-6497	734
	737
139-7814	20
140-0866	102
	136
	139
	141
140-2187	630

▶ **PRIMARY REFERENCE**

PART NUMBER INDEX

Part	Page
140-4722	497
140-6836	629
142-5276	498
	500
142-5546	718
143-4254	457
143-8025	327
143-8027	321
	323
	330
143-8031	325
143-8150	325
143-8151	321
	323
	330
143-9397	129
144-0195	806
	814
144-0367	66
144-1636	164
	393
	424
	450
144-9126	833
	837
145-5106	306
	▶307
145-8495	762
146-0334	105
146-6747	833
	837
147-4131	566
	572
148-4685	241
	243
148-8307	393
148-8315	381
	477
148-8324	339
148-8325	417
	487
	490
	492
148-8326	489
148-8327	368
	440
	490
	492
148-8335	480
148-8336	393
	418
	424
	429
	432
	435
	443
	445
	450
	454
	457
	465
	469
148-8338	339
	435
	440
	446
	450
	454
	457
	467
	469
	470
	492
148-8339	397
	420
148-8340	435
	471
	490
	492
148-8341	381
	397
148-8342	382
148-8347	339
	362
	364
	368
	388
	399
	411
	413
	420
	440
	487
148-8352	362
	364
	368
148-8353	425
	429
	435
	440
	443
	446
	450
	454
	457
	467
	469
148-8354	339
	440
148-8355	381
	477
148-8357	480
148-8360	399
	420
	475
148-8361	388
148-8362	381
	477
148-8364	339
	415
	420
	425
	429
	471
148-8365	388
	461
148-8366	425
	429
	454
	457
148-8367	435
	465
	489
148-8368	487
148-8370	388
	415
148-8371	393
	435
	469
148-8372	339
148-8374	339
148-8378	388
	393
	417
	425
	429
	432
	435
	440
	446
	450
	454
	457
	465
	467
	469
148-8382	381
	389
	393
	397
	477
	489
148-8392	339
	411
	413
	475
148-8393	381
	477
148-8407	425
	429
	435
	440
	450
	471
	487
148-8408	362
	368
	399
	473
148-8411	420
	471
148-8413	401
148-8414	420
148-8415	403
	406
	408
	410
	417
148-8418	420
148-8419	401
	403
	406
	408
	410
	417
148-8428	389
148-8429	364
148-8431	362
	368
148-8433	393
	465
148-8435	425
	429
	432
	435
	446
	450
	454
	461
	463
	475
148-8436	417
	420
	490
	492
148-8443	461
148-8444	479
148-8447	381
	477
149-1738	360
	366
	373
	377
	387
149-5050	170
149-5452	384
	385
	401
150-3024	81
	94
	96
	98
150-3036	417
	425
	429
	432
	436
	446
	450
	455
	463
	465
150-3058	463
150-4027	425
	429
	432
	445
	449
	461
150-4037	440
150-4043	440
150-4048	382
150-4049	473
150-6348	536
150-6351	536
151-6641	65
151-9751	272
	273
152-2938	46
152-2939	46
153-2521	▶132
	133
	134

▶ PRIMARY REFERENCE

PART NUMBER INDEX

Part	Page	Part	Page	Part	Page	Part	Page
	135	163-6758	141	165-2804	508		568
	136	163-6795	176	165-2805	508		570
	138		180	165-3838	508	165-9448	563
	139		183	165-3839	508	165-9460	563
153-4906	46		188	165-3847	508		568
153-5223	566		190	165-3853	508		570
	572	164-4180	397	165-5803	502	165-9461	563
153-6237	440	164-4858	▶75	165-5804	502		570
153-6249	417		94	165-5806	502	165-9463	566
	467		96	165-5809	502		572
153-8719	709		98	165-5811	502	165-9464	585
153-8800	504	164-5546	424	165-5814	502	165-9497	538
153-8867	366		428	165-5816	502	165-9551	566
154-9024	53		434	165-5817	502	165-9552	566
155-0576	118		445	165-5818	502		572
155-2260	188		449	165-5819	502	165-9553	566
155-2270	145	164-5567	339	165-5820	502		572
	154		381	165-5821	502	165-9554	566
	435		393	165-5822	502		572
	711		417	165-5823	502	165-9603	457
155-2274	131		425	165-5824	502		▶559
	145		429	165-5826	502	166-1481	616
	174		432	165-5828	502		617
155-3504	381		441	165-5831	502		618
	477		446	165-5837	596	166-1482	607
	489		450	165-5839	577		609
155-3624	528		469	165-5840	577		611
155-7024	762		477	165-5846	596		613
	766	164-5590	339	165-5850	596		620
156-6617	670	164-5606	368	165-5854	208	166-1486	599
	685	164-5608	415	165-5855	208	166-1492	316
156-8801	490		420	165-5856	208		317
	492	164-5624	471	165-5857	208		318
156-8845	417	164-5628	424	165-5859	208		319
157-0670	53		428	165-5860	208		320
157-9162	▶150		434	165-5864	208		616
	615		465	165-5865	208		617
157-9163	150	164-5629	424	165-5866	208		618
157-9165	150		428	165-5867	208		620
157-9167	150		434	165-5868	208		623
157-9168	▶248		445	165-9283	327		624
	615		449	165-9284	325		626
158-8987	339	164-6874	417	165-9285	321	166-1494	318
	▶342		424		323		599
159-4700	307		428		330		616
159-7782	525		432	165-9431	563		617
	526		434		568		618
161-6987	129		440		570		620
162-3548	769		445	165-9435	564	166-1579	605
162-4304	283		449		568	167-0261	639
	284		454		570	167-0279	▶639
162-4305	283		457	165-9436	563		651
	284		461		568	167-0316	651
162-4306	283	164-6980	445		570		▶654
	284		449	165-9438	564	167-3542	175
162-4307	283		▶584		568		180
	284	164-6981	▶308		570		183
162-4635	216		434	165-9439	563		196
162-4695	524	164-8908	471	165-9442	563		798
	▶525	165-2793	502		568	167-3543	175
162-4696	490		508		570		180
	492	165-2799	502	165-9443	564		183
	▶526		508		568		196
163-6704	136	165-2801	508		570		798
163-6711	190	165-2802	508	165-9444	563	167-3593	176

▶ **PRIMARY REFERENCE**

PART NUMBER INDEX

Part	Page
167-7270	833
	837
168-0794	563
168-1587	235
	236
168-1968	393
	424
	428
	445
	449
	463
	469
168-6728	211
	▶212
168-9759	424
	428
	471
169-5549	▶332
	336
	338
169-7904	271
	▶277
169-7905	277
169-8089	298
169-8091	298
	300
170-3014	261
	265
170-6738	506
170-6929	105
170-6993	132
170-9324	143
170-9360	670
	677
	685
	691
170-9372	141
170-9373	141
170-9417	132
170-9418	132
170-9419	528
170-9497	▶718
	777
170-9498	718
170-9499	718
170-9841	327
170-9842	325
170-9843	321
	323
	330
170-9857	327
170-9858	325
170-9859	321
	323
	330
170-9946	321
	323
170-9997	538
	540
	547
	553
171-0034	581
171-0035	581
171-0036	581
171-0037	581
171-0087	563
	568
	570
171-0123	574
171-0124	574
171-0126	574
171-0127	574
171-0128	574
171-0183	559
171-0184	559
171-0185	559
171-0188	445
	450
	▶589
171-0198	▶584
	589
171-0596	362
	368
	393
171-2208	141
171-3369	57
171-7325	663
	664
	702
171-9420	334
	337
172-3080	599
172-8406	329
172-8488	329
173-1170	352
173-1203	508
173-3350	325
173-3351	325
173-3358	330
173-3389	352
173-3510	346
173-3513	344
173-3515	344
173-3516	344
173-3517	344
173-3529	344
174-7220	352
174-7221	352
174-7222	352
174-7791	132
174-9570	▶79
	81
175-6035	528
175-6173	528
175-6174	346
175-6175	346
175-6176	346
	528
175-6177	528
175-6178	346
176-1913	699
176-2815	820
176-4472	467
176-4569	445
	449
176-4863	▶293
176-4864	▶294
176-4865	▶295
	302
176-4866	▶296
176-4867	▶297
	302
176-4869	▶298
176-4870	▶283
	293
	294
	295
	298
176-4871	▶284
	296
	297
	299
	300
176-4872	283
	284
176-4979	36
176-8131	502
	508
176-8132	508
176-8571	502
176-8573	502
176-8574	208
176-8579	502
176-8585	596
176-8590	577
177-2553	344
177-2617	346
177-2619	346
177-2620	346
177-2621	346
177-2623	346
177-2625	346
177-2653	364
	▶575
177-2768	532
177-5879	250
177-5880	250
177-5987	93
	530
177-8506	410
177-8659	403
177-9778	81
178-2334	154
178-2335	154
178-2345	▶154
	155
178-5528	710
178-5601	806
178-5659	792
	794
178-5789	16
178-5801	230
	253
	257
178-5870	250
178-5871	250
178-5883	420
	471
178-6460	81
178-6537	30
178-6538	30
178-6543	37
178-6544	37
178-6545	37
178-6554	67
178-6572	50
178-6599	32
178-6600	32
178-6601	32
178-6633	55
178-6634	55
178-6635	55
178-6636	55
179-3029	▶299
179-5030	407
179-5764	291
179-7580	449
179-7598	315
	▶395
179-7599	395
179-7600	▶482
	614
179-7601	▶483
	614
179-7602	314
	▶379
179-7603	379
179-7604	314
	▶380
179-7605	380
179-7770	490
179-7771	490
179-7778	492
179-7779	492
179-7874	381
179-7875	381
179-9618	346
179-9806	344
180-3861	132
184-2421	334
	337
184-7495	653
184-8580	216
184-8862	261
184-8874	235
	236
184-9330	475
184-9336	424
	428
185-0169	352
185-0400	538
185-0407	584
185-0423	574
185-0462	443
	▶585
185-0463	585
185-0472	449
	▶590
185-0473	590
185-0508	531
185-2793	44
185-8181	669
	684
185-8205	668
	675
	683
	689
185-8284	700
185-8286	162
	663

▶ PRIMARY REFERENCE

PART NUMBER INDEX

Part	Page
	664
185-8977	52
185-9123	▶278
185-9124	278
185-9125	278
185-9133	734
	737
185-9208	143
	145
	147
186-1305	811
	▶816
186-3735	89
	101
	102
	136
	141
	145
	150
	154
	160
	161
	528
	536
186-3736	154
186-5644	607
	609
187-0661	833
	837
187-6692	375
187-7171	346
187-9788	364
188-4142	▶344
	346
188-4143	344
188-4145	▶346
	528
189-2816	710
189-2817	457
189-2825	778
189-2832	778
189-3465	1
	2
	▶806
189-9377	46
189-9763	352
	508
190-4896	508
	593
190-5283	87
	89
190-5386	833
	837
190-5830	76
190-6821	254
	258
190-7674	352
190-7695	▶561
	710
190-7750	563
190-7751	563
190-7826	537
190-9775	75
191-0862	208
191-2543	210
191-2544	241
	243
191-2595	▶210
	211
191-2596	▶241
	271
191-2599	332
191-2600	332
191-2601	332
191-2602	332
191-2603	332
191-2604	332
191-2605	332
191-2607	332
191-2608	332
191-2609	332
191-2610	332
191-2611	332
191-2612	332
191-2613	332
191-2614	332
191-2615	332
191-2665	241
	243
191-2691	334
	337
192-0573	352
	508
192-2376	352
193-6496	487
193-6606	366
	407
193-9776	156
	▶229
193-9793	229
194-8400	498
194-8401	498
	500
194-8989	315
	▶486
194-9040	388
194-9041	388
194-9077	388
194-9079	397
194-9081	397
194-9118	391
194-9120	392
194-9122	391
194-9123	392
194-9124	486
194-9127	245
195-8212	30
195-8225	30
195-8256	83
195-8322	49
195-8351	48
196-1425	778
196-1432	668
	675
	683
	689
	▶812
196-1436	734
	737
	▶807
196-1437	734
196-1438	734
	737
196-1439	734
	737
196-1441	734
	737
196-1442	734
	737
196-1443	734
	737
196-1444	734
	737
196-1445	734
	737
196-1446	734
	737
196-1447	734
	737
196-1448	734
	737
196-1449	734
	737
196-1450	734
	737
196-1451	734
	737
196-1452	734
	737
196-1453	734
	737
196-1454	734
	737
196-1455	734
	737
196-1456	734
	737
196-1457	734
	737
196-1458	734
	737
196-1459	734
	737
196-1460	734
	737
196-1461	734
	737
196-1462	734
	737
196-1463	734
	737
196-1466	668
	675
	683
	689
196-1467	683
	689
196-1468	668
	675
	683
	689
196-1469	683
	689
196-1470	668
	675
	683
	689
196-1471	683
	689
196-1472	668
	675
	683
	689
196-1473	668
	675
	683
	689
196-1474	668
	675
	683
	689
196-1475	668
	675
	683
	689
196-1477	668
	675
	683
	689
196-1478	668
	675
	683
	689
196-1479	668
	675
	683
	689
196-1480	668
	675
	683
	689
196-1481	668
	675
	683
	689
196-1482	668
	675
	683
	689
196-1484	668
	675
	683
	689
196-1485	668
	675
	683
	689
196-1486	668
	675
	683
	689
196-1488	668
	675
	684
	690
196-1491	669
	676
	684
	690
196-1492	669

▶ **PRIMARY REFERENCE**

PART NUMBER INDEX

Part	Page
	676
	684
	690
196-1493	669
	676
	684
	690
196-1494	812
196-1495	812
196-1496	812
196-1497	812
196-1499	812
196-1503	668
	675
	683
	689
196-1505	814
196-1506	814
196-1507	814
196-1508	814
196-1509	814
196-1510	814
196-1511	668
	675
	683
	689
196-1518	814
196-1521	814
196-1522	814
196-1526	668
	675
	683
	689
196-1528	669
	676
	684
	690
196-1529	669
	676
	684
	690
196-1531	668
	675
	683
	689
196-1532	669
	676
	684
	690
196-1533	669
	676
	684
	690
196-1535	669
	676
	684
	690
196-1536	812
196-1537	812
196-1538	734
	737
196-1539	734
	737
196-1541	734
	737
196-1542	734
	737
196-1544	754
196-1546	754
196-1548	668
	675
	683
	689
196-1549	668
	675
	683
	689
196-1550	669
	676
	684
	690
196-1552	669
	676
	684
	690
196-1556	812
196-1557	812
196-1558	812
196-1559	754
	810
196-1601	776
196-7973	152
196-8012	69
	71
196-8013	69
	71
196-8014	69
	71
196-8015	69
	71
196-8059	59
196-8174	57
196-8200	59
196-8366	30
	49
	50
197-0143	547
	553
197-0144	547
	553
197-0145	541
	543
	545
	547
	553
197-0146	547
	553
197-0147	547
	553
197-0148	513
	514
	515
	516
	517
	518
	519
	520
	521
	522
	523
197-0149	513
	514
	515
	516
	517
	518
	520
	521
	522
	523
197-0150	513
	514
	515
	516
	517
	518
	519
	520
	521
	522
	523
197-0151	513
	515
	516
	518
	519
	520
	521
197-0152	517
197-0153	514
	522
	523
197-0156	513
197-0158	514
197-0162	515
197-0165	538
	540
	547
	553
197-0166	547
	553
197-0167	547
	553
197-0168	538
	540
	547
	553
197-0169	547
	553
197-0170	538
	540
	547
	553
197-0173	▶513
	538
	540
	547
	553
197-0175	▶514
	547
197-0178	▶515
	547
	553
197-0196	495
	496
197-0199	495
	496
197-0211	▶516
	547
	553
197-0212	516
197-0213	▶517
	547
	553
197-0214	517
197-0217	▶518
	547
	553
197-0218	518
197-0225	538
	540
	547
	553
197-0226	538
197-0272	547
	553
197-0273	495
	496
197-0758	561
197-2150	387
	407
197-2198	487
197-4330	141
198-0370	406
	408
	410
198-0799	403
198-1978	388
198-1982	399
198-2003	434
	445
	449
	457
198-2066	387
198-2295	253
	257
198-2317	235
198-2318	235
198-2330	388
198-3899	785
	788
198-7543	561
198-8153	561
198-8154	561
198-8156	561
198-8159	561
198-8160	561
198-8161	561
198-8162	561
198-8165	561
198-8166	561
198-8167	561
198-8168	561
198-8176	561
198-8178	561
199-0518	508
199-1767	480
199-2187	42
199-2188	42
199-2189	42

▶ PRIMARY REFERENCE

PART NUMBER INDEX

Part	Page
199-2241	76
199-4692	▶243
	601
199-5152	596
199-6408	596
199-6921	596
199-9466	833
	837
2	
200-3244	352
200-3255	352
200-3335	498
	500
200-4856	536
201-3663	653
201-3888	695
201-4440	801
201-4441	670
	677
	685
	691
201-4493	754
	810
201-4503	814
201-4508	814
201-4528	734
	737
201-4532	802
	803
	804
201-4543	▶740
	741
201-4545	741
201-4546	741
201-4547	740
201-4548	740
201-4560	741
201-9271	547
	553
201-9283	545
201-9285	541
	543
	545
201-9287	541
	543
	545
201-9288	541
	543
	545
201-9290	545
201-9291	541
	543
	545
201-9294	541
	543
	545
201-9295	541
	543
	545
201-9296	545
201-9299	344
201-9330	541
	543
	545
201-9331	541
	543
	545
201-9394	561
202-1549	601
	▶830
202-1695	489
202-1718	388
202-1741	232
	234
202-1766	253
	257
202-4004	105
202-7000	362
	368
202-7144	487
203-5292	268
203-7437	620
203-7439	620
204-0894	59
204-0991	59
204-1002	59
204-1071	66
204-1086	208
204-1611	105
	195
	203
	204
204-1673	168
204-1936	105
204-1974	561
204-1976	561
204-2762	344
205-0826	145
	147
205-1339	711
205-1340	711
205-4285	174
205-6716	46
205-6788	27
205-8257	145
206-3288	561
206-3290	561
206-3305	▶563
	719
	720
	721
	722
206-5162	130
206-5208	147
207-0149	810
207-0150	668
	675
	683
	689
207-0151	668
	675
	683
	689
207-0204	668
	675
	683
	689
207-0205	668
	675
	683
	689
207-0207	669
	676
	685
	691
207-0208	670
	677
	685
	691
207-0209	669
	676
	684
	690
207-0210	174
	670
	677
	685
	691
207-0211	669
	676
	684
	690
207-0212	734
	737
207-0213	734
	737
207-0214	812
207-0215	812
207-0233	754
207-0234	754
207-0235	754
207-0237	669
	676
	684
	690
207-0238	812
207-0241	754
207-0242	754
207-0268	751
207-2985	508
207-6269	381
	477
207-6403	528
207-6404	528
207-6418	445
208-3070	▶484
	615
208-3072	396
208-3075	396
208-3106	397
208-3107	388
	413
208-3110	411
	413
208-3238	434
208-3286	236
208-3287	235
	236
208-9277	160
209-0348	804
209-4280	802
209-5582	160
209-5931	545
209-6002	512
210-5784	753
210-5789	668
	675
210-5790	668
	675
210-5791	668
	675
210-5792	737
210-5808	668
	675
	683
	689
210-5830	754
211-6246	230
	253
	257
211-6257	388
211-6406	248
211-6411	151
212-2837	239
212-5326	358
212-5402	434
212-8489	67
212-8491	71
212-8521	103
212-8571	30
212-8572	30
213-0677	36
	528
213-9100	102
213-9433	76
214-1233	807
214-1234	807
214-1235	807
214-1236	807
214-1237	807
214-1238	807
214-1239	807
214-1240	807
214-1241	807
214-1242	807
214-1252	▶751
	▶752
214-1253	▶753
214-3967	497
214-4531	821
214-4532	821
214-7915	833
	837
214-8098	250
215-4855	547
	553
215-4872	547
	553
215-4893	561
215-4909	342
215-5023	545
215-5032	595
215-5033	595
215-5034	595
215-5035	595
215-5037	434
	▶494

▶ **PRIMARY REFERENCE**

PART NUMBER INDEX

Part	Page
216-1980	774
216-5837	635
	641
216-5838	635
	641
216-5841	634
	635
	636
	637
	638
	641
	643
	644
	645
216-5847	636
	642
216-5848	636
	642
216-5883	637
	643
216-5884	637
	643
216-5886	638
	644
216-5887	638
	644
216-5889	645
216-5890	645
216-6485	406
216-6676	348
216-6677	348
216-6678	348
217-5589	50
218-0404	130
218-0557	506
218-1061	469
218-1336	432
218-4246	208
218-4247	208
218-8054	254
	258
219-0305	747
	748
220-8678	79
221-4723	484
221-4807	434
221-4882	434
	457
221-8045	833
	837
221-8859	362
	368
	393
221-8874	119
221-8885	308
	▶709
221-8912	440
222-0085	581
222-0225	712
	713
222-2062	506
222-8238	50
222-8292	30
223-7577	▶160
	192
223-9818	833
	837
224-0554	833
	837
224-1685	348
224-1687	▶348
	480
224-1943	816
224-7717	831
224-8945	831
224-8946	833
	837
225-0224	352
225-0225	352
225-0312	833
	837
225-0313	831
225-3305	831
225-4256	831
225-4257	833
	837
225-4539	388
225-4815	563
225-4816	563
225-5707	762
225-5714	762
	766
225-5731	661
225-5799	762
225-5800	762
225-6216	508
226-0294	232
	234
226-0326	216
226-0341	232
	234
	238
226-1311	634
	640
226-1316	▶631
226-1317	631
	▶640
226-1319	634
	640
226-1320	634
	640
227-0292	440
227-0361	401
227-0590	528
227-0620	▶350
	528
227-6227	334
	337
227-7575	149
227-7736	709
228-7092	46
228-9253	831
228-9254	833
	837
229-0887	833
	837
229-1019	422
229-1021	422
229-1078	241
	243
229-1079	241
	243
229-1091	616
	617
	618
	620
229-1092	607
	609
	611
	613
229-1095	616
	617
	618
	620
229-3218	76
229-7564	▶631
229-7566	648
229-7567	648
229-7568	648
229-7573	646
	649
229-7577	▶631
229-7626	649
229-7627	649
229-7628	649
229-7634	648
229-7637	649
229-7648	▶631
229-7650	635
	641
229-7651	▶632
229-7653	636
	642
229-7654	▶632
229-7656	637
	643
229-7657	▶632
229-7659	638
	644
229-7660	▶632
229-7662	645
229-7678	▶633
229-7680	646
229-7681	646
229-7682	646
229-7683	646
229-7685	▶633
229-7687	647
229-7688	647
229-7689	647
229-7690	647
229-8997	762
229-8998	762
229-9017	661
	732
229-9020	661
229-9028	741
229-9054	732
229-9094	792
	794
229-9137	661
229-9160	732
229-9161	732
229-9162	732
229-9165	661
229-9170	732
229-9171	732
229-9172	732
229-9173	732
229-9174	732
229-9175	732
229-9176	732
229-9177	732
229-9178	732
229-9179	732
229-9180	732
229-9181	732
229-9182	732
229-9183	732
229-9184	732
229-9185	732
229-9186	732
230-0183	670
	677
	685
	691
230-1340	129
230-1341	129
230-2720	339
	▶537
230-4011	188
232-1693	105
232-4102	434
	▶574
233-0891	105
233-1277	19
233-1279	157
233-1280	157
233-2854	228
	264
	265
	266
234-1156	143
	145
	147
234-1158	143
234-3344	87
	89
234-4796	48
234-6579	700
	702
234-6580	700
	702
234-6602	700
234-6603	702
234-6604	700
234-6605	702
234-6608	700
	702
234-6609	700
	702
234-6610	700
	702
234-6612	702
234-6614	702
235-7520	272
	273
235-7679	319
	607

▶ PRIMARY REFERENCE

PART NUMBER INDEX

Part	Page	Part	Page	Part	Page	Part	Page
	609		449	245-7844	713	248-7259	285
	611	239-6604	67	245-7850	762		286
	613	239-6626	41	245-7851	762		▶288
235-7764	▶267	239-6627	41	245-7887	792	248-7260	288
	302	239-6630	41		794	248-7261	288
235-7765	267	239-6631	41		795	248-7262	288
235-8874	658	239-6632	41	245-7898	792	248-7268	271
	755	239-6659	69		794		▶286
235-8875	658	239-6681	103		795	248-7269	271
	755	239-6986	833		799		▶285
235-8888	661		837		802	248-7284	312
235-8892	732	239-7352	188		803	248-7812	94
235-8914	700	239-8697	494		804		96
	702		▶495	245-7926	700		98
235-8929	668	239-8998	494	245-7932	▶162	248-7820	607
	675		▶496		702		609
	683	240-4986	748	245-7939	162		611
	689	240-5025	749	245-7948	700		613
235-8951	663		750		702	248-7821	606
235-8952	664	240-5026	749	245-9205	57		▶607
235-8965	702		750	245-9212	59	248-7822	607
235-8966	129	240-5027	812	245-9216	59		609
	700	240-5037	▶780	245-9217	59		611
235-8969	▶712	240-5039	▶781	245-9218	59		613
	724	241-1933	268	246-2641	91	248-7823	607
235-8970	▶713	241-7379	620		213		609
	723	242-1510	833	247-2693	188		611
235-8971	712		837		714		613
235-8972	713	242-1588	833		715	248-7824	607
235-8996	663		837		716	248-7835	607
	664	242-1589	831		717		609
235-8997	663	242-6092	833		725		611
235-8998	664		837		726		613
235-9014	762	242-8768	802		727	248-7836	607
	766		803		728		609
235-9020	▶779	243-4505	89		729		611
	781		94	247-2694	730		613
235-9030	▶746		96		775		616
235-9031	746		98	247-2695	730		617
	▶748		174		775		618
235-9032	746		188	247-5112	727		620
	▶747		695	247-6019	85	248-7837	606
236-1908	497		766	247-7410	308		▶609
236-1909	497	243-4508	165		310	248-7838	609
236-2848	424	243-4509	131		▶817	248-7857	327
	428	243-4510	188	247-7411	308	248-7881	16
236-3257	350	244-5247	▶300		311	248-7882	16
236-3258	350	244-5263	393		▶819	248-7923	266
236-3259	350	244-5264	393	247-7438	833	250-1440	360
236-4153	405	244-8494	563		837		373
	▶653	244-8495	563	247-7465	309		377
236-6365	611	244-8496	563		▶820	250-1454	381
	613	244-8497	564	247-7494	533		477
237-1250	269	244-8498	563		▶821	250-8054	817
238-0112	152	244-8499	564	248-5474	613		819
238-0118	152	244-8500	563	248-7172	292		820
238-0120	85	244-8501	564	248-7184	271		824
	152	245-2337	▶401		▶280	251-0538	▶761
238-2211	798	245-2338	401	248-7191	291		777
238-2212	196	245-2342	▶403	248-7194	291	251-0542	▶143
238-2215	175	245-2343	403	248-7197	292	251-0543	145
	180	245-5232	381	248-7200	289	251-0544	130
238-2260	761	245-7790	700		290		▶145
238-2501	105		702	248-7203	289		▶147
238-6189	445	245-7842	712		290	251-2627	602

▶ **PRIMARY REFERENCE**

PART NUMBER INDEX

Part	Page
251-2750	▶602
	614
251-2806	812
251-2807	812
251-2836	228
251-2874	226
251-4162	114
252-4598	105
252-6601	536
252-6602	536
252-6603	536
253-0861	833
	837
253-1346	289
	290
253-2111	141
253-6276	362
	364
	368
253-6396	▶405
	652
253-6406	652
	▶655
253-6694	375
255-2971	14
	▶63
255-2972	63
255-2973	63
255-2974	63
255-2981	63
255-3016	695
255-3018	▶41
	695
255-3020	41
255-3021	41
255-3022	41
255-3027	▶313
	507
255-3171	823
255-3173	823
255-5843	▶308
255-5844	▶308
256-9786	653
256-9787	653
256-9788	653
256-9790	653
256-9791	653
256-9792	653
256-9793	653
257-4547	821
257-5015	823
257-7460	831
257-7461	833
	837
258-5906	253
	257
259-0917	310
	▶506
	601
259-0918	512
259-4883	176
259-4914	761
259-5050	▶112
	156
259-5081	176
259-5082	176
259-5274	105
	▶161
259-5295	▶122
	308
	310
	311
259-5303	105
259-7180	173
259-7202	702
259-7219	179
259-7245	695
259-7246	▶699
	777
259-7274	▶666
259-7275	666
	682
	▶683
	▶689
259-7276	▶667
259-7277	667
	▶668
	▶675
259-7278	▶809
	811
259-7279	809
	▶810
259-7282	814
259-7295	▶665
	670
	677
	685
	691
259-7317	809
259-7318	809
259-7319	810
259-7320	810
259-7321	810
259-7322	810
259-7323	810
259-7324	810
259-7325	810
259-7326	810
259-7331	801
259-7333	801
259-7335	801
259-7338	▶811
259-7345	664
259-7346	▶663
	700
259-7347	▶664
	702
259-7348	699
	▶700
259-7352	754
259-7369	658
	755
259-7371	658
259-7430	445
	469
	▶591
259-7545	415
	▶536
259-7598	308
	▶704
259-7599	308
	▶705
259-7762	704
	▶719
259-7763	704
	▶720
	841
259-7764	705
	▶721
259-7765	705
	▶722
259-7857	▶308
259-7858	▶309
259-7859	309
	▶711
260-2109	▶714
	719
260-2110	▶715
	720
260-2111	714
	715
	716
	717
260-2127	▶716
	721
260-2128	▶717
	722
260-2171	2
	3
	▶121
260-2173	▶730
	774
260-2180	440
260-2191	440
260-2211	▶774
	777
260-2212	▶119
	777
260-5656	80
260-6692	100
260-6941	817
260-6942	819
260-6945	824
260-7006	533
	▶823
260-7059	▶614
260-7060	▶614
260-7062	▶614
260-7065	▶606
260-7066	▶606
260-7067	▶606
260-7176	▶2
260-7177	▶3
260-7182	▶1
	2
260-7183	▶2
	3
260-7185	2
	▶271
260-7186	3
	▶271
260-7189	▶598
260-7193	▶615
260-7197	▶746
260-7198	▶746
260-7199	▶343
260-7204	▶534
260-7207	▶51
260-7212	▶601
260-7213	▶601
260-7220	▶831
	841
	842
260-7221	▶86
260-7222	86
	▶87
	▶89
260-9174	397
261-3223	184
262-1421	117
	▶120
263-9088	▶120
	129
264-8565	308
	▶824
264-8757	833
	837
265-2385	246
265-2388	246
265-3613	14
	▶57
265-3615	14
	▶64
265-3621	57
265-3642	59
266-0136	152
266-0982	105
	339
	381
	477
266-5431	833
	837
266-6203	33
266-6204	33
266-6231	52
266-6280	▶312
	313
266-6303	33
266-6304	33
266-7940	388
266-7941	388
267-1626	352
267-1628	508
267-1629	508
267-4051	417
267-4063	490
	492
267-4495	831
267-6744	334
	337
267-6786	334
	337
267-6827	2
	3
	▶211
267-6839	▶334
	534
267-6840	334
	▶336
267-6844	211
	▶337

▶ PRIMARY REFERENCE

PART NUMBER INDEX

Part	Page	Part	Page	Part	Page	Part	Page
267-6845	337		368		675	273-5198	668
	▶338	270-5729	711		683		675
267-6874	334	270-5757	362		689		683
	337		368	273-5175	668		689
267-6876	334	270-5766	449		675	273-5200	669
	337		▶594		683		676
267-7693	179	270-5948	424		689		684
267-7694	179		▶566	273-5176	668		690
267-7764	▶188	270-5949	566		675	273-5202	668
	189		572		683		675
267-7773	▶173	270-5950	566		689		▶737
	311		572	273-5177	668	273-5203	669
267-7775	▶174	270-5953	568		675		676
267-7801	▶123	270-5956	2		683		684
	308		▶355		689		690
267-7802	▶124	270-5957	3	273-5178	668	273-5204	734
	309		▶355		675		737
267-7898	188	270-5960	355		683	273-5205	668
267-7901	174		531		689		675
267-7931	176		532	273-5180	669		683
267-7933	205		▶547		676		689
267-7935	176		▶553		684	273-5214	668
267-7937	205	270-5978	547		690		675
267-7939	190		553	273-5182	669		683
267-7950	205		▶576		676		689
267-7952	186	270-5993	▶309		684		▶754
	187	270-5996	▶309		690	273-5215	754
267-7965	173	270-6001	▶310	273-5183	669	273-5276	755
267-7976	143	270-6065	▶533		676	273-5280	746
267-7977	145	270-6259	118		684		▶749
	147	270-6338	53		690	273-5281	749
267-8055	105	272-0709	87	273-5184	669	273-5284	749
267-8084	502		89		676		750
	508	272-0710	87		684	273-5287	749
268-1964	205		89		690		750
268-4201	352	272-4471	424	273-5185	669	273-5290	749
268-4203	352		428		676		750
268-4530	825	272-4474	443		684	273-5293	749
268-4531	825	272-4558	424		690		750
268-5145	388		428	273-5187	180	273-5297	▶743
268-5151	799	272-4774	35		183	273-5298	▶744
	802		▶157	273-5188	180	273-5299	▶745
	803	273-4147	▶329		183	273-5344	670
268-6263	508		653	273-5189	669		677
268-6265	508	273-4148	653		676		685
268-6886	366	273-4149	653		684		691
268-8872	825	273-5148	658		690		▶814
269-0120	825	273-5149	658	273-5190	669	273-5386	804
269-0121	825	273-5150	741		676	273-5406	1
269-1649	271	273-5152	741		684		2
	▶272	273-5158	699		690		▶777
	274	273-5160	710	273-5192	669	273-5411	▶784
269-1651	272	273-5164	669		676	273-5412	784
269-1652	272		676		684		▶785
269-1653	271		684		690	273-5413	785
	▶273		690	273-5194	669		▶786
	275	273-5165	741		676	273-5414	785
269-1655	273	273-5171	683		684		788
269-1656	273		689		690		▶799
269-2433	508		▶734	273-5195	669	273-5415	▶787
270-5320	79	273-5173	668		676	273-5416	787
270-5460	131		675		684		▶788
270-5507	774		683		690	273-5417	788
270-5664	454		689	273-5196	814		▶789
270-5672	362	273-5174	668	273-5197	814	273-5418	▶790

▶ **PRIMARY REFERENCE**

PART NUMBER INDEX

Part	Page	Part	Page	Part	Page	Part	Page
273-5419	790	275-1444	435	277-0917	371	278-6768	445
	▶791	275-1624	435	277-1169	▶358		449
273-5420	791	275-1788	528	277-1170	▶360	278-6905	465
	797	275-6811	▶175	277-1172	▶406	278-6907	393
	▶802		533	277-1251	408	278-6920	207
273-5421	▶796	275-6981	1	277-6695	▶207		▶208
273-5422	796		2		211	278-9274	239
	▶797		▶758	277-6697	207	278-9285	▶274
273-5423	▶792	275-6982	758		▶502		601
	797		▶759	278-1980	208	278-9287	614
273-5424	▶798	275-6983	759	278-3874	1		▶616
273-5425	▶793	275-6984	759		2	278-9288	614
	798	275-7014	1		▶91		▶617
273-5426	793		2	278-3875	91	278-9290	614
	▶794		▶133		▶94		▶618
273-5427	793	275-7106	1	278-3971	1	278-9293	606
	▶803		2		2		▶611
273-5432	791		▶105		▶218	278-9352	▶275
	▶795	275-7108	▶189		▶219		601
273-5446	780		777	278-3972	218	279-3161	663
	▶782	275-7109	203		▶220	279-7555	2
273-6772	1	275-7110	189	278-3973	1		3
	2		▶190		2		▶120
	▶239	275-7111	▶176		▶245	279-7565	▶151
273-6773	239		777	278-3974	1		598
273-6810	327	275-7112	▶179		2	279-7721	355
273-6811	325		309		▶253		▶507
273-6812	330	275-7113	▶134		▶257	279-7750	157
273-6813	325		598	278-3975	1	279-7759	2
273-6814	599	275-7114	▶135		2		3
	616	275-7115	▶102		▶250		▶8
	617	275-7116	▶136	278-3976	1	279-7764	▶4
	618	275-7117	▶196		2		9
273-6945	321		534		▶769		11
	323	275-7118	▶125	278-3977	1		13
	628		311		2	279-7766	▶5
	629	275-7121	▶168		▶81		8
	630	275-7122	86	278-3979	214		10
273-8315	506		▶197		▶216		12
273-8316	352		▶198	278-3980	1	279-7768	2
273-8317	352	275-7123	128		2		3
273-8318	352		▶186		▶230		▶14
273-8320	508	275-7124	128	278-3981	1	279-7771	14
274-2565	500		▶187		2		▶66
274-2636	338	275-7126	▶204		▶247	279-7772	14
	▶498		534	278-3982	▶246		▶33
274-2639	336	275-7127	168	278-3983	▶268	279-7773	14
	▶500	275-7128	168		746		▶65
274-2678	▶314	275-7129	168	278-3995	▶221	279-7776	14
	601	275-7141	105	278-3996	221		▶695
274-2679	▶314	275-7142	105		▶222	279-7777	▶9
	601	275-7169	▶170	278-3997	86		51
274-2680	314		309		▶92	279-7779	8
	▶316	275-7170	▶191	278-3998	92		10
274-2681	314		309		▶96		12
	▶317	275-7171	▶202	278-6511	355		▶39
274-2682	316		310		▶490	279-7780	▶155
	▶321	275-7172	▶203	278-6512	355	279-7787	67
274-2683	317		310		▶492	279-7815	6
	▶323	275-7174	▶126	278-6626	435		▶10
274-2694	593		343	278-6680	▶485	279-7816	▶11
274-6720	152	275-7180	▶138		614		51
274-6721	152	275-7190	▶167	278-6756	362	279-7817	7
275-1442	434		173		364		▶12
275-1443	434	275-7191	167		368	279-7818	▶13

▶ PRIMARY REFERENCE

PART NUMBER INDEX

Part	Page	Part	Page	Part	Page	Part	Page
	51		▶386	282-7262	309	283-4715	352
279-7850	▶6	282-5755	360		▶475	283-5926	325
279-7851	▶7	282-5772	371	282-7270	310	283-5927	325
279-7859	15	282-5894	358		▶415	283-5939	330
279-7880	33		371	282-7271	310	283-5940	330
279-7881	33		375		▶477	283-5952	327
280-2747	393		▶535	282-7281	▶479	283-5953	327
	487	282-5902	362	282-7282	▶454	283-5971	325
281-3462	64		364		533	283-5972	330
281-3463	64		368	282-7283	▶457	283-6040	325
281-3464	64	282-7046	388		533	283-6080	321
281-3465	64	282-7092	417	282-7285	▶393	283-6081	323
281-3571	57		435		533	283-6083	321
281-3580	57		445		534		323
281-6847	352		449	282-7286	▶461	283-6098	498
282-4498	598	282-7154	475		533		500
	▶599	282-7166	424		534	283-6099	593
282-4499	599		428	282-7288	▶463	283-6102	▶512
282-4503	611	282-7192	387		533		528
	613	282-7193	387	282-7290	▶489	283-6179	327
282-4576	▶623	282-7218	355		534	283-8803	▶51
282-4577	623		▶530	282-7296	▶465	283-8804	▶51
	▶628	282-7219	▶339		601	283-8808	1
282-4578	628		530	282-7300	311		▶833
282-4579	▶624	282-7220	▶528		▶417	283-8809	2
282-4580	624		530	282-7509	387		▶837
	▶629	282-7221	355	282-7510	387	283-8848	▶302
282-4581	629		▶505	282-8567	192	283-8952	87
282-4582	▶626	282-7223	355	282-9155	▶352		89
282-4583	626		▶397		508	283-9034	▶302
	▶630	282-7225	355	282-9192	508	283-9074	833
282-4584	630		▶388	283-1224	160		837
282-4588	615	282-7226	355	283-2647	▶139	283-9075	833
	▶620		▶399	283-2797	186		837
282-4688	▶603	282-7227	355	283-2800	94	284-4396	799
	614		▶422		96	284-4399	799
282-5482	407	282-7228	355		98		802
282-5527	366		▶473	283-2802	134		803
282-5528	366	282-7230	355	283-2807	135	284-4403	791
282-5536	▶652		▶424	283-2811	197		793
282-5537	▶652		▶428	283-2812	196		797
282-5538	▶652	282-7232	355	283-2813	196	284-4434	762
282-5539	▶652		▶432	283-2846	170	284-4435	762
282-5540	▶613	282-7234	355		191		766
	652		▶434	283-2856	172	284-4439	▶661
282-5541	356	282-7235	355	283-2857	170		755
	▶362		▶440		191	284-4440	658
282-5543	356	282-7236	▶381	283-2867	▶172	284-4443	762
	▶364		601		356	284-4456	777
282-5544	356	282-7237	314	283-2881	105		▶778
	▶366		▶391	283-2888	105	284-4457	778
282-5546	357	282-7238	314	283-2893	766	284-4459	777
	▶407		▶392	283-2951	202		▶800
282-5547	▶311	282-7248	315	283-3074	190	284-4460	800
282-5551	▶384		▶396	283-3738	94		▶801
	▶385	282-7249	309		96	284-4461	801
	533		▶411		98	284-4465	660
282-5633	▶408	282-7251	309	283-3831	86		▶741
282-5691	504		▶443		▶213		757
282-5705	311	282-7252	309	283-3969	216	284-4466	741
	▶825		▶445	283-3970	216		▶742
282-5711	366	282-7259	309	283-4049	245	284-4478	786
282-5730	356		▶413	283-4050	245	284-4479	789
	▶368	282-7261	309	283-4051	245	284-4480	795
282-5731	309		▶449	283-4053	245	284-4481	792

▶ **PRIMARY REFERENCE**

PART NUMBER INDEX

Part	Page
284-4482	794
284-4483	792
	794
	795
284-4484	786
	789
284-4485	802
284-4486	803
	▶804
284-4487	802
	803
284-4496	741
284-4527	746
	▶750
284-4528	750
284-4531	750
284-4533	▶805
284-4534	805
284-4535	805
284-4568	661
284-4569	699
	▶702
284-4570	702
284-7105	617
284-8532	129
285-1328	411
	413
285-1503	547
	553
285-1504	▶519
	547
	553
285-1505	▶520
	547
	553
285-1506	547
	553
285-1507	547
	553
285-1600	532
	▶538
285-1630	▶521
	547
	553
285-1641	520
285-1677	▶310
285-1759	310
	▶532
285-1761	309
	▶531
285-2566	339
285-2593	388
285-2594	391
285-2595	392
285-2598	473
285-2603	473
285-2604	473
285-2605	473
285-2609	473
285-2616	388
285-2621	388
285-2622	388
285-2623	388
285-2626	397
285-2630	397
285-2634	397
285-2638	397
285-2642	397
285-2646	397
285-2650	397
285-2654	469
285-2656	445
	449
285-2661	445
285-2663	440
	457
285-2673	422
285-2678	399
285-2680	399
285-2682	422
285-2685	422
285-2688	422
285-2715	449
285-2744	393
285-2855	399
285-2863	473
285-2869	449
	465
285-2897	381
285-2900	415
286-3683	118
286-4271	▶114
	115
286-6026	247
286-6028	237
286-6030	238
286-6032	232
	234
286-6038	253
	257
286-6039	253
	257
286-6041	253
	257
286-6042	253
	257
286-6053	253
	257
286-6056	230
286-6058	230
286-6059	230
286-6060	253
	257
286-6061	230
286-6063	215
286-6064	215
286-6065	213
286-6067	▶238
	247
286-6068	253
	257
	▶262
286-6069	▶232
	253
286-6070	253
	257
	▶261
286-6071	253
	257
	▶263
286-6074	253
	257
	▶264
286-6075	253
	257
286-6076	253
	257
	▶265
286-6077	253
	257
286-6078	▶233
	253
	257
286-6081	▶227
	230
286-6082	▶228
	253
	257
286-6083	253
	257
	▶266
286-6084	213
	▶215
286-6088	262
286-6089	262
286-6090	262
286-6091	262
286-6092	262
286-6093	262
286-6095	261
286-6097	261
286-6098	261
286-6102	264
286-6104	253
	257
286-6106	227
286-6107	227
286-6108	228
286-6109	228
286-6110	266
286-6111	266
286-6112	263
286-6113	232
	234
286-6114	232
	234
286-6125	▶93
	309
286-6153	226
286-6154	264
286-6155	265
286-6157	769
286-6159	250
	▶252
286-6160	252
286-6162	253
	257
286-6164	253
	257
286-6165	253
	257
286-6166	253
	257
286-6167	253
	257
286-6168	253
	257
286-6172	253
	257
286-6178	▶16
	230
286-6179	▶226
	253
	257
286-6205	220
286-6208	218
	219
	221
	225
286-6209	218
	219
	221
	225
286-6210	220
	222
	223
	224
286-6211	220
	222
	223
	224
286-6212	220
286-6213	220
286-6214	220
286-6431	411
	413
286-6433	411
	413
286-6437	411
	413
286-6441	411
	413
286-6468	399
	475
286-6469	399
	475
286-6476	388
286-6499	475
286-6532	445
	449
286-6722	310
	▶467
286-6737	415
286-6749	381
	477
286-6752	477
286-6796	413
286-6797	413
286-6804	449
286-6805	449
286-6806	449
286-6812	449
286-6815	449
287-0118	65
288-7392	▶371
288-7393	▶373
288-7395	▶410
288-7398	▶375
288-7399	▶377
288-7688	358

▶ **PRIMARY REFERENCE**

PART NUMBER INDEX

Part	Page	Part	Page	Part	Page	Part	Page
	371		606		▶420	294-1743	36
288-7689	358		652	292-7640	310	294-1747	37
	371	289-7698	315		▶469	294-1748	37
288-7690	358		▶319	293-1233	762	294-1751	19
	371	289-7699	319	293-1235	▶755	294-1753	28
	375		▶327		757	294-1754	28
288-7691	358	289-7700	327	293-1236	757	294-1755	28
	371	289-7702	327		▶766	294-1756	28
	375	289-7711	▶315	293-1285	▶682	294-1757	28
288-7692	360		598	293-1294	658	294-1766	49
	373	289-7712	315	293-1295	755	294-1767	48
288-7693	360		▶320	293-1314	742	294-1768	48
	373	289-7713	320	293-7110	238		192
	377		▶330		247	294-1774	45
288-7694	360	289-7714	330	293-7111	247	294-1775	45
	373	289-7716	330	293-7114	263		118
	377	289-7717	▶314	293-7115	264	294-1777	53
288-7696	360		598	293-7116	238	294-1778	53
	373	289-7718	▶314	293-7117	230	294-1780	53
	377		598		▶269	294-1784	38
288-7698	406	289-7719	314	294-1384	620	294-1785	38
	410		▶318	294-1442	616	294-1786	38
288-7699	406	289-7720	318	294-1445	618		42
	410		▶325	294-1683	26	294-1788	83
288-7709	373	289-7721	325	294-1684	42	294-1796	80
288-7721	375	289-7733	325	294-1685	42	294-1800	80
288-7722	377	289-7743	327	294-1686	42	294-1802	83
288-7723	377	289-7787	▶315	294-1687	42	294-1803	80
288-7727	408		652	294-1688	42	294-1804	76
288-7730	408	289-7814	▶351	294-1689	42		152
289-5494	396		601	294-1693	42	294-1805	80
289-5514	450	289-7815	351	294-1698	42	294-1808	83
289-5517	450	289-7816	351	294-1699	42	294-1809	76
289-5528	475	289-8082	330	294-1700	17	294-1810	76
289-5531	475	289-8194	339		68	294-1811	76
289-5535	475		▶349	294-1702	42	294-1812	83
289-5543	475	289-8195	349	294-1708	17	294-1819	76
289-5651	424	290-1908	833	294-1710	17	294-1820	76
	428		837	294-1711	17	294-1821	17
289-5652	424	290-9044	603	294-1712	17		76
	428	290-9045	603	294-1713	17	294-1822	76
289-5653	424	290-9428	176	294-1714	17	294-1831	76
	428	290-9438	51	294-1716	15	294-1834	85
289-5654	424		▶121	294-1720	20	294-1836	85
	428	290-9439	121	294-1721	20	294-1837	76
289-5655	424	290-9440	121	294-1722	20	294-1838	76
	428	290-9459	120	294-1723	23	294-1839	85
289-5656	424	290-9460	120	294-1724	23	294-1841	85
	428	291-7509	138	294-1726	29	294-1842	85
289-5657	424	291-7702	▶131		30	294-1843	85
	428	291-7712	1		44	294-1844	76
289-5658	424		2	294-1728	30	294-1845	76
	428		▶205	294-1729	30	294-1846	85
289-5709	450	291-7741	170	294-1731	30	294-1850	35
289-5737	417	291-7742	170	294-1732	30	294-1851	35
289-5742	417	291-7756	170	294-1733	30	294-1855	157
289-6786	253	291-7791	179	294-1734	30	294-1857	157
	257	292-3751	85	294-1735	30	294-1858	157
289-6791	264	292-7183	454	294-1737	29	294-1860	32
289-6794	230	292-7233	469	294-1738	29	294-1861	32
289-6862	226	292-7261	489		39	294-6250	▶487
289-6863	226	292-7321	471		40		533
289-6864	253	292-7357	435		50	294-6359	▶356
	257	292-7360	440		55	294-6361	▶356
289-7697	▶315	292-7638	310	294-1739	29	294-6363	343

▶ **PRIMARY REFERENCE**

PART NUMBER INDEX

Part	Page
	▶480
294-6519	375
294-7251	29
	30
295-9127	85
296-4618	192
296-4619	192
296-4621	152
	192
296-4631	152
296-4633	152
296-4637	4
	5
	▶35
296-4651	4
	5
	▶28
296-4655	4
	5
	▶55
296-4663	37
296-4672	20
296-4673	28
296-4689	26
296-4692	17
296-4694	17
296-4695	17
296-4696	17
296-4699	▶20
	23
296-4700	30
296-4701	29
296-4703	36
296-4710	19
296-4713	27
296-4714	68
296-4716	67
296-4725	49
296-4726	49
296-4727	50
296-4728	44
296-4729	44
296-4733	53
296-4738	▶38
	39
	40
296-4739	38
296-4740	83
296-4741	83
296-4742	83
296-4743	83
296-4744	83
296-4747	83
296-4748	83
296-4749	76
296-4750	76
296-4752	76
296-4753	76
296-4754	76
296-4755	192
296-4758	32
296-4759	32
296-4761	118
296-4762	118
296-4766	192
296-4777	4
	5
	▶49
296-4782	4
	5
	▶50
296-4783	4
	5
	▶27
296-4784	4
	5
	▶26
296-4786	4
	5
	▶17
296-4787	4
	5
	▶23
296-4788	4
	5
	▶30
296-4789	4
	5
	▶19
296-4790	4
	5
	▶68
296-4791	4
	5
	▶67
296-4792	4
	5
	▶44
296-4793	4
	5
	▶83
296-4794	4
	5
	▶76
296-4795	4
	5
	▶53
296-4796	4
	5
	▶37
296-4798	4
	5
	▶32
296-4800	4
	5
	▶118
296-4801	4
	5
	▶192
296-4802	4
	5
	▶152
296-4803	4
	5
	▶29
296-4812	83
296-5750	411
	413
296-6944	388
296-6946	388
296-6948	388
296-7033	505
296-7059	420
	471
296-7197	397
296-7201	381
296-7214	399
296-7223	445
296-7224	473
296-7225	▶524
	601
296-7226	445
296-7229	445
296-7276	454
297-0187	393
	▶541
297-0188	393
	▶543
297-0189	487
	▶545
297-0199	▶533
297-0200	▶533
297-0271	▶533
297-0366	519
297-0529	▶568
	723
	724
297-0532	706
	▶723
297-0533	706
	▶724
297-0589	▶570
	725
	726
	728
	729
297-0683	424
	428
	▶595
297-0687	545
297-4589	714
	728
297-4590	715
	729
297-4595	716
	717
	725
	726
297-7646	30
297-7647	30
297-7648	37
297-7649	37
297-7650	37
297-7655	53
297-7657	83
297-7658	83
297-7660	76
297-7661	76
297-7706	76
297-7778	695
297-7809	66
297-7839	52
297-9133	292
297-9134	292
297-9137	291
297-9138	280
	▶281
297-9139	280
	▶282
297-9140	281
	▶289
297-9141	282
	▶290
297-9142	289
	290
	▶291
297-9143	291
	▶292
297-9161	291
298-2893	262
298-2894	262
298-2895	262
298-2896	253
	257
298-2897	253
	257
298-2906	262
298-2910	232
	234
298-2914	253
	257
	▶270
298-2917	232
	234
298-2918	264
298-2919	253
	257
298-2920	228
298-2922	16
298-2924	253
	257
298-2925	253
	257
298-2927	▶217
	268
298-2928	▶235
	253
	257
298-2929	235
298-2930	235
298-2932	215
298-2934	232
	234
298-2937	232
	234
298-2942	261
298-3052	215
	217
298-3055	217
298-3147	81
	▶100
298-3185	218
	219
	221
	225
298-3257	100
298-3258	100
298-4105	▶156
298-4195	747
298-4196	748

▶ PRIMARY REFERENCE

PART NUMBER INDEX

Part	Page
298-4254	747
298-4255	748
298-5732	502
	508
299-2664	▶127
	533
299-2690	131
299-3061	204
3	
301-0091	168
301-0589	129
301-2412	833
301-2413	837
301-2414	833
	837
301-2421	833
	837
301-2477	87
	89
301-2478	87
	89
301-2524	87
	89
301-2526	87
	89
301-2527	87
	89
301-2573	86
	▶826
301-2587	▶128
301-2588	▶128
301-2607	▶86
301-6874	352
301-8294	352
301-9823	216
	232
	234
	238
302-2877	454
302-2889	465
302-2890	385
302-3118	393
302-3236	420
302-3243	420
302-3245	420
302-3246	420
302-3250	420
302-8203	364
302-9302	487
302-9303	487
302-9305	487
302-9451	407
302-9454	407
302-9465	362
	364
	368
302-9466	535
302-9484	362
	364
	368
302-9487	362
	368
302-9491	362
	368
302-9541	480
302-9542	480
302-9635	384
302-9636	384
	385
302-9861	401
303-2787	760
	▶828
303-4484	502
	▶596
303-6261	68
303-9644	246
303-9646	246
303-9929	245
303-9933	94
	96
	98
303-9937	94
	96
	98
303-9939	246
303-9940	246
304-0041	81
304-0042	81
304-3961	▶577
	596
305-0260	742
305-0309	742
305-0310	742
305-0311	742
305-0321	732
305-0331	715
	717
305-0332	714
	716
305-0366	1
	2
	▶776
305-0400	661
305-0401	661
305-0402	661
305-0403	661
305-0404	661
305-0405	661
305-0406	661
305-0407	661
305-0408	661
305-0409	661
305-0410	661
305-0411	661
305-0412	661
305-0413	661
305-0414	661
305-0415	661
305-0416	661
305-0417	661
305-0418	661
305-0419	661
305-0420	661
305-0421	661
305-0422	661
305-0423	661
305-0424	661
305-0425	661
305-0426	661
305-0427	661
305-0428	661
305-0432	762
305-0441	762
	766
305-0442	762
	766
305-0466	▶783
305-1580	633
	▶646
305-1583	631
	▶641
305-1592	633
	▶647
305-1595	632
	▶642
305-1597	631
	▶648
305-1600	632
	▶643
305-1602	631
	▶649
305-1605	632
	▶644
305-1627	632
	▶645
305-4680	4
	5
	▶85
305-4691	68
305-4730	65
305-4739	65
305-4746	42
305-4747	42
305-4750	42
305-4751	42
305-4758	15
305-4766	▶25
	26
305-4767	17
305-4768	17
305-4769	73
305-4771	45
305-4772	83
305-4883	25
305-4884	25
305-4885	25
305-4886	76
305-4891	192
305-4892	44
305-4895	192
305-4896	192
305-4897	192
305-4898	192
305-4900	76
305-4901	76
305-4902	76
305-4921	▶73
	74
305-4927	42
305-4929	42
305-4931	42
305-4954	4
	5
	▶42
305-4955	4
	5
	▶15
305-4965	73
305-7604	57
	▶59
305-7605	59
305-7606	59
305-7607	59
305-7608	59
305-7609	59
305-7610	59
305-7611	59
305-7612	59
305-7613	59
305-7615	59
305-7617	59
305-7618	59
305-7619	59
305-7620	59
305-7621	59
305-7622	59
305-7623	59
305-7624	59
305-7627	57
305-7628	57
305-7629	57
306-1143	368
306-1219	364
306-1223	364
306-1230	386
306-1265	366
306-8369	▶149
	777
306-8379	205
306-8395	▶180
	533
306-8400	180
	183
306-8526	105
306-8568	187
306-8606	1
	2
	▶199
306-8677	200
306-8768	▶200
306-8781	105
306-8802	761
307-5099	424
	428
307-5100	443
	450
307-5103	443
307-5126	454
307-5153	424
	428
307-5156	528
307-5157	411
	413
307-7664	226
307-7665	253
	257
307-7725	93

▶ **PRIMARY REFERENCE**

PART NUMBER INDEX

Part	Page
307-7731	93
	▶98
307-8027	81
307-8028	81
307-8029	81
307-8030	81
307-9371	208
309-3872	826
309-5764	▶130
309-5768	435
309-5769	424
	428
	443
	445
	450
	454
	465
309-5808	709
	▶727
309-5886	128
	▶129
309-5891	▶117
	128
309-9973	411
	413
	547
	553
	▶578
310-0037	475
310-0062	540
	▶579
310-0063	538
	▶580
310-0078	▶706
310-0157	531
	▶540
310-0234	381
310-0394	575
	▶581
310-0415	428
	▶572
310-0419	572
310-0420	572
310-4980	208
310-6252	833
	837
310-9477	66
310-9489	37
310-9490	37
310-9491	37
310-9494	4
	5
	▶36
310-9519	33
310-9520	33
310-9528	68
310-9529	76
310-9530	76
310-9531	76
310-9532	26
310-9537	83
310-9538	39
	40
310-9539	73
310-9549	4
	5
	▶52
310-9550	5
	▶69
310-9551	4
	▶71
310-9565	46
310-9566	46
310-9575	66
310-9585	4
	5
	▶48
310-9586	4
	5
	▶45
310-9591	39
310-9592	39
310-9594	36
310-9595	36
310-9596	48
310-9597	45
310-9609	4
	5
	▶80
310-9614	4
	5
	▶74
310-9621	62
310-9622	62
310-9629	14
	▶46
310-9630	46
310-9688	192
310-9698	14
	▶61
310-9700	61
	▶62
310-9776	9
	11
	13
	▶40
310-9777	40
310-9778	40
311-6631	83
311-7404	507
	▶508
311-7407	508
312-2645	89
313-7833	▶115
	140
313-8034	222
313-8133	254
	258
313-8134	254
	258
313-8136	▶237
	247
313-8137	237
313-8138	237
	238
313-8139	237
313-8140	238
313-8141	238
313-8142	238
313-8143	262
313-8144	232
	234
313-8145	238
313-8146	264
313-8147	230
313-8149	218
	219
	221
	225
313-8150	▶236
	253
	257
313-8151	236
313-8161	254
	258
313-8162	261
313-8163	254
	258
	▶731
313-8164	254
	258
314-3768	534
	▶829
315-0920	598
	▶605
315-0921	605
315-0922	605
315-0923	605
315-0924	605
315-2759	5
315-4412	▶592
	593
316-3790	356
	357
	▶504
316-3874	366
316-3875	366
316-4057	480
316-4076	405
316-4077	405
316-8801	762
316-8802	762
316-8803	762
316-8804	762
316-8807	1
	2
	▶762
316-8808	14
	▶697
316-8809	697
	▶698
316-8817	778
316-8818	778
316-8819	778
316-8852	601
	▶710
316-8863	710
316-8898	▶660
316-8899	▶658
	660
316-8900	658
	▶732
	755
316-8901	732
316-8902	698
316-8903	▶497
	698
316-8904	497
316-8942	▶757
316-8946	752
317-4883	339
317-4884	440
317-9216	725
	728
317-9570	726
	729
319-0870	1
	2
	▶195
319-1032	190
319-1164	195
319-1200	106
319-1214	106
319-1281	198
319-1405	105
	▶141
	200
319-1406	141
319-1407	141
319-1414	141
319-1422	176
319-1551	658
319-4249	129
319-4355	▶775
319-4420	143
	147
	▶165
319-9152	828
319-9902	388
319-9916	450
319-9918	450
319-9919	▶387
	598
319-9938	473
319-9940	445
319-9943	445
319-9946	435
319-9949	435
319-9955	417
319-9958	473
319-9973	435
319-9977	425
	429
319-9978	424
	428
319-9981	424
	428
319-9986	388
320-0019	▶471
320-0025	475
320-0039	471
320-0049	422
320-0050	411
	413
320-0060	461
320-0063	461
320-0066	432
320-0078	422
320-0080	422
320-0082	422

▶ PRIMARY REFERENCE

PART NUMBER INDEX

Part	Page
320-0096	381
320-0106	479
320-0109	463
320-0112	463
320-0179	397
320-0182	397
320-5392	115
320-5396	140
320-5434	254
	258
320-5435	254
	258
320-5444	270
320-5447	230
320-5448	230
320-5451	254
	258
320-5452	254
	258
320-5453	254
	258
320-5478	222
	223
	224
320-5479	222
	223
	224
320-5480	222
	223
	224
320-5763	1
	2
	▶214
320-5769	215
	217
320-5770	215
320-5771	215
321-0540	▶356
321-8137	▶356
321-8138	▶357
322-4582	829
323-6669	725
	728
323-6670	726
	729
323-7566	▶522
	547
	553
323-7639	▶523
	553
323-7698	310
	▶707
323-7699	311
	▶708
323-7753	707
	▶728
323-7754	707
	▶729
323-7755	708
	▶725
323-7756	708
	▶726
323-7766	▶310
323-7767	▶311
323-7796	▶534
324-3963	46
324-5643	199
324-5647	200
324-5761	89
325-8784	505
325-8785	435
325-8796	339
325-8885	420
325-8886	420
325-8889	420
326-1644	79
326-4402	334
	▶593
327-3062	773
327-3063	773
327-3092	217
327-3093	217
327-3095	268
327-3096	217
327-3097	217
327-3098	217
327-3099	217
327-3145	230
327-3179	245
327-3182	246
327-3599	▶650
327-3600	▶634
	650
327-3601	634
327-3602	▶650
327-3603	▶635
	650
327-3604	635
327-3605	▶650
327-3606	▶636
	650
327-3607	636
327-3608	▶651
327-3609	▶637
	651
327-3610	637
327-3611	▶651
327-3612	▶638
	651
327-3613	638
327-3649	▶651
327-6540	783
327-6550	677
	691
	▶770
	771
	772
327-6559	▶771
327-6560	▶772
327-6576	771
	772
327-6613	747
327-6636	658
	755
327-7485	121
327-7486	121
328-0021	143
	147
328-0028	183
328-0081	▶182
	760
328-0082	▶184
	760
328-0083	182
328-0091	▶183
	534
328-2035	417
328-4823	362
	364
328-4828	362
	364
	368
329-6218	368
330-1319	▶140
	760
330-1321	760
	▶773
330-1322	773
330-1608	▶234
	257
330-3408	120
330-3409	120
330-3410	120
330-8720	841
330-8721	842
330-8750	▶760
330-8751	760
330-8767	▶841
330-8768	▶842
333-5078	219
	▶223
333-5079	223
333-5080	▶224
	225
333-5081	224
333-5082	140
333-5085	▶225

▶ **PRIMARY REFERENCE**

MEMORANDA



© 2008 CATERPILLAR
ALL RIGHTS RESERVED

CAT, CATERPILLAR, THEIR RESPECTIVE LOGOS, “CATERPILLAR YELLOW” AND THE POWER EDGE TRADE DRESS, AS WELL AS CORPORATE AND PRODUCT IDENTITY USED HEREIN, ARE TRADEMARKS OF CATERPILLAR AND MAY NOT BE USED WITHOUT PERMISSION.

PRINTED IN JAPAN