RUTHZIL TRATOR COMERCIAL DE PEÇAS LTDA 11 97083-6812 ROLANDO CITRANGULO

SETEMBRO 1994

315B
315B L
Hydraulic Excavator

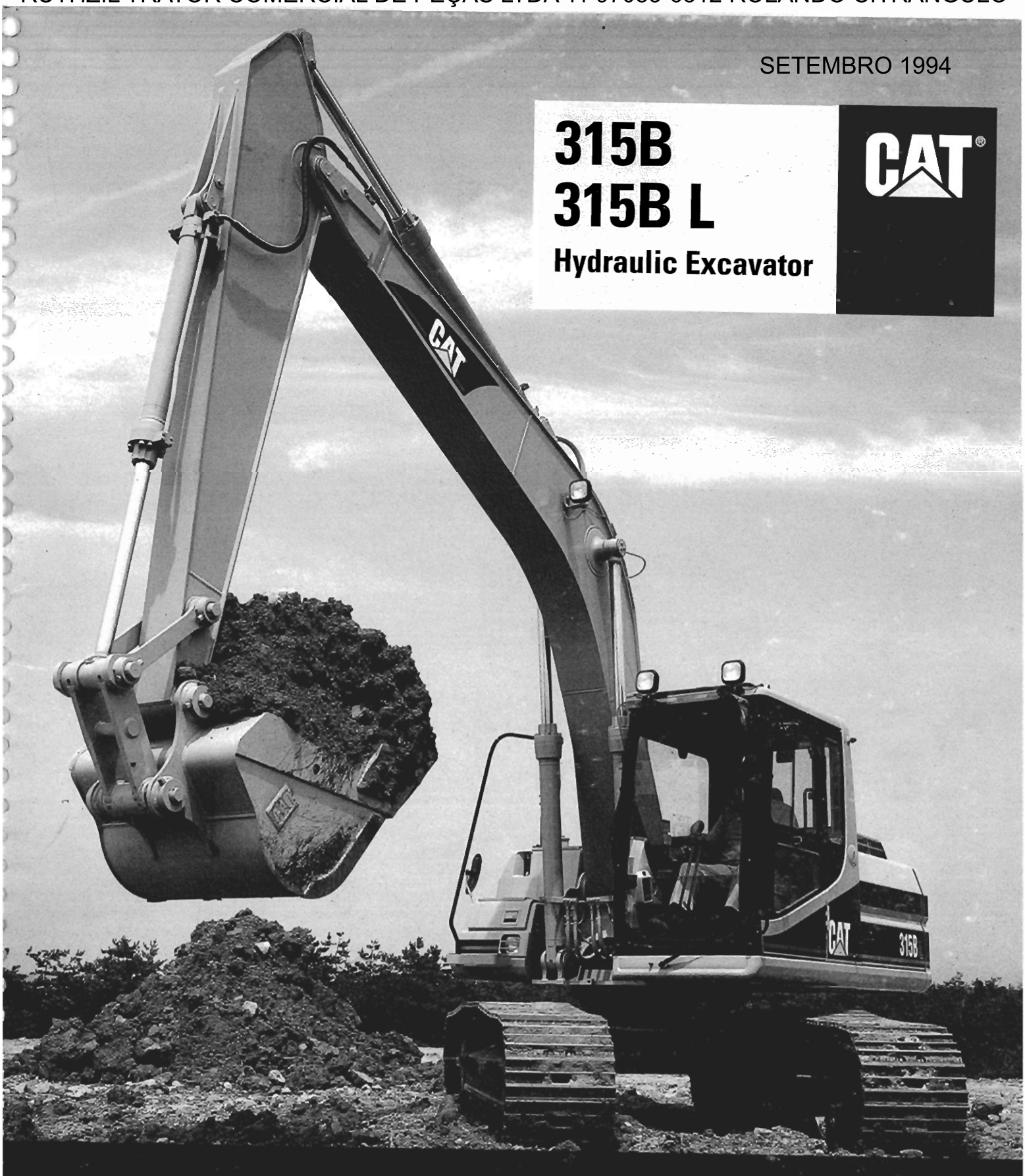

Operating weight up to:		
315B	16 300 kg	35,900 lb
315B L	16 700 kg	37,000 lb
Travel Speed (maximum)	5.5 km/h	3.4 mph
Cat® 3046T Diesel Engine (Gross)	76 kW	102 hp
(Flywheel power)	74 kW	99 hp

315B Hydraulic Excavator

Improved performance and rugged durability combine to maximize productivity.

Operator Station

✔ *Roomy, quiet, automatically climate controlled cab has excellent sightlines to the work area* to help keep operator fatigue low and production up throughout the entire shift. **pg. 4-5**

Serviceability

Simplified service through many ground level service points, improved filtration and filter access, and electronic diagnostics means increased productivity. **pg. 6**

Electronic Control System

Maximizes fuel efficiency and performance by maintaining the optimum balance between engine speed and hydraulic demand. **pg. 7**

Improved performance.
Better controllability, higher stick and bucket forces, increased lift capacity, simplified service and a more comfortable operator station increase your productivity and lower your operating costs.

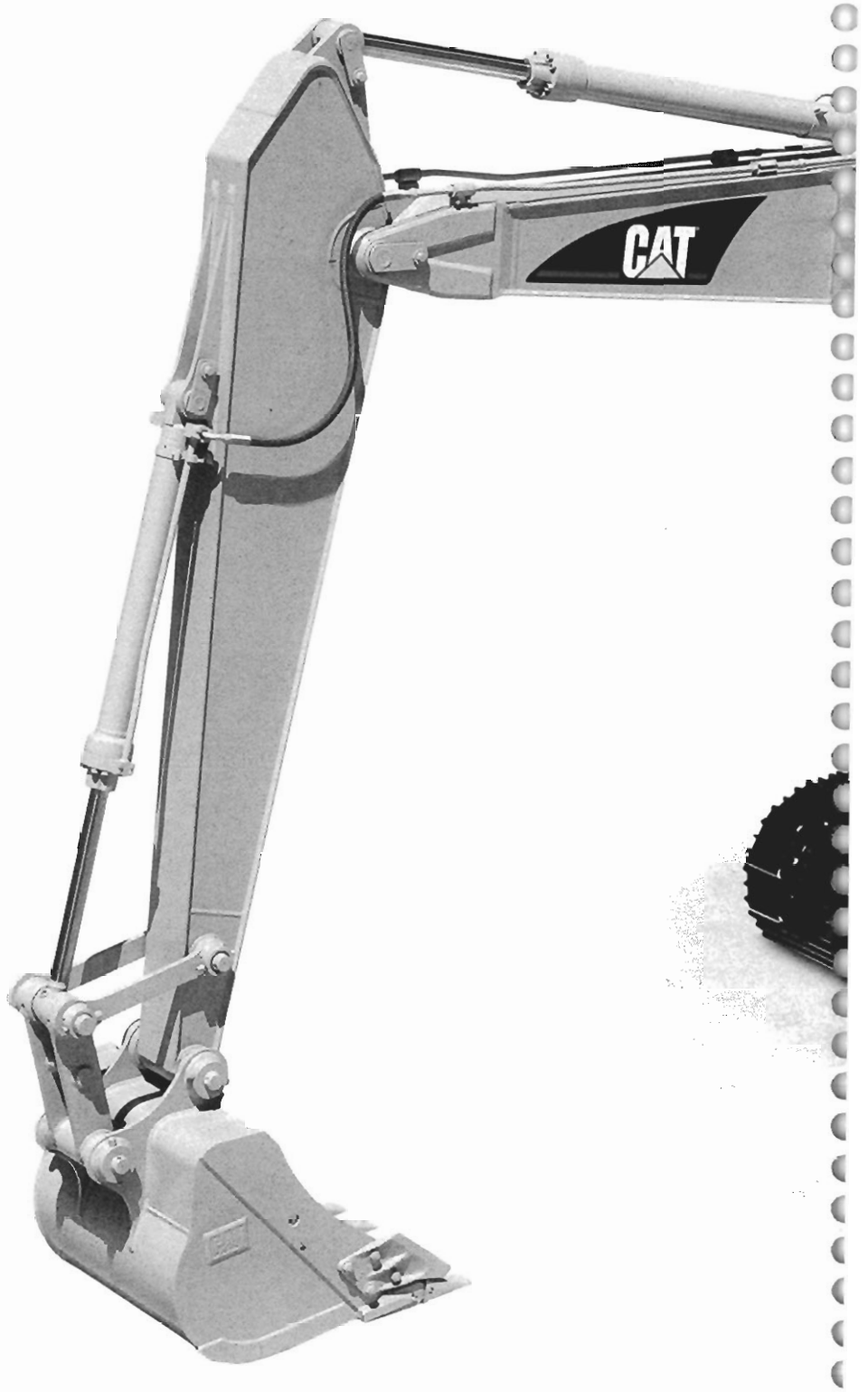

Hydraulics

✔ *New higher pressure Caterpillar® hydraulics provide increased break-out and crowd forces to maximize bucket loads and decrease cycle times.* The Cat Electronic Power Control System allows smooth, efficient operation. **pg. 8**

Engine

The 315B is powered by the Cat 3046T engine. This engine includes several design features which enhance performance, efficiency and reliability. **pg. 9**

Undercarriage

Cat designed excavator undercarriage is stable, durable and low maintenance.

✔ *New smoother track roller frames are easier to clean.* **pg. 10**

Booms and Sticks

Three sticks are available to meet your needs. A selection of buckets helps tailor the machine to your application. **pg. 11**

Structures

Caterpillar design and manufacturing techniques assure outstanding durability and service life from these important components. **pg. 11**



✔ *New feature*

Operator Station

Designed for comfort and ease of operation.





This operator work station is quiet with ergonomic control placement and convenient adjustments, low lever and pedal effort, ergonomic seat design, and highly efficient ventilation. The result is a cab that puts the operator firmly and comfortably in control which can translate into greater productivity.

Excellent viewing area through large, wide windows. A large push-open skylight provides upward visibility. The upper front windshield features a pillar mounted wiper to provide unobstructed front viewing.

The upper left side door window can slide open. The lower window provides a view to the tracks and the ground next to the machine. The rear window offers a good view behind and to the left, aided by a low engine hood profile.

Greater control convenience. Each of the controls is positioned within easy reach of the operator.

The double wall, pressed cab shell is mounted to the swing frame using viscous mounts for reduced sound and vibrations.

1 **Caterpillar Electronic Control System panel** includes fuel level, hydraulic oil temperature and engine coolant temperature gauges, machine condition indicators and operator controls in a single console for ease of use (refer to Electronic Control System on page 7).

2 **Ventilation system.** At the touch of a switch, the operator can choose between fresh, recirculated or (optional) air conditioning.

3 **Joysticks control all implements** and swing functions with minimal effort. The integrated joystick consoles adjust to operator preference. Joystick consoles are suspended as part of the seat arrangement.

4 **Dial throttle** with ten settings for simple, precise engine speed adjustment.

5 **Hand or foot actuated travel controls** allow the operator to move the excavator while working the front-end. Hand levers are easily removable.

6 **Hydraulic activation control lever** deactivates hydraulic functions and prevents start-up when the operator exits the cab.

7 **The fully adjustable standard suspension seat** includes an impressive range of comfort features. It has fore/aft height and weight adjustments and a retractable seat belt.

Serviceability

Simplified service and maintenance features save time and money.

Faster, easier maintenance means improved uptime and a better value.

More ground level service points for fuel-water separator, battery, radiator fluid level, window washer fluid level and pilot system filter.

Improved filters and filter locations makes maintenance easier.

- Hydraulic capsule filter moved to outside hydraulic tank. New design avoids spills and contamination during replacement. Indicator in cab signals when the filter needs to be replaced, extending filter service life. This system includes a Scheduled Oil Sampling port to simplify sampling.
- Radial seal air cleaner has double layered filter core for better filtration. No tools required to change. Operator is alerted to clogs.
- Engine oil filter is located higher in the engine compartment for easier access.
- Pilot hydraulic system filter keeps contaminates away from the pilot system.

Design and layout improvements translate to ease of use.

- Front linkage pin puller holes promote easier disassembly of front linkage.
- Cotter pin retained track master pin simplifies disassembly and assembly.

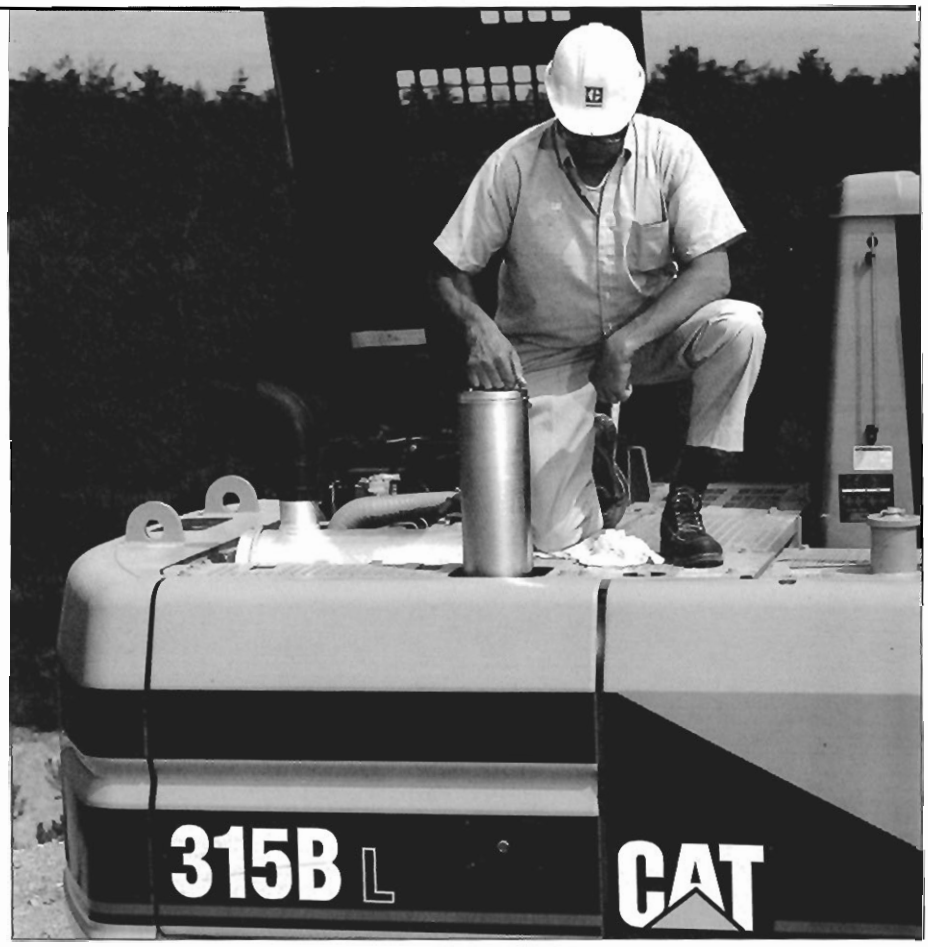

Water separator removes water from fuel even when under pressure and is located in the pump compartment.

Remote greasing block on the boom and two grease points for the swing bearing deliver grease to hard to reach locations.

Electronic Power Unit Control has diagnostic capabilities for Cat dealer's use.

- Dealer service technicians can quickly and easily diagnose and adjust machine components, maximizing uptime.

Electronic Control System

The Electronic Control System manages the engine and hydraulics for maximum performance.

Electronic Power Unit Control System controls state-of-the-art hydraulics and engine performance for maximized productivity, increased fuel efficiency, and lower emission and sound levels.

Automatic Engine Speed Control reduces engine speed to 1300 rpm during light-load or no-load applications. Button on right control lever engages low idle function reducing engine speed to 1100 rpm. Press again to return to previous setting.

Electronic Engine Underspeed Control balances engine and hydraulic output for maximum performance and fuel efficiency.

- It adjusts hydraulic pump output to maintain engine rpm in optimum range.
- 100 percent of engine power is available for the hydraulic system.

Operator control panel allows optimization of performance in all applications. The high contrast back-lit liquid crystal display includes:

1 Power Mode Selector changes engine power and speed at the touch of a button.

- **Economy Mode** sets engine power at 90 percent and is used during normal and utility operations to reduce fuel consumption and sound levels.
- **Power Up Mode** sets engine power at 100 percent for high production truck loading, trenching, and high-speed travel.

Work Mode Selector matches hydraulic characteristics to the application.

2 Boom Priority Mode gives priority flow to the boom for deep trenching and truck loading, where there is significant boom movement relative to swing.



3 Swing Priority Mode gives swing flow priority and is especially suited to sidewall digging.

4 Fine Control Mode optimizes hydraulic pump output for applications like slope finishing or precision lifting which require smoother control.

5 User Mode allows the operator to choose from three submodes:

- **Tamping Mode** adjusts boom speed and force to keep machine motion at a minimum when compacting material with the bucket.
- **Hammer Mode** allows pump flow and hydraulic pressure adjustments to enhance hammer effectiveness.
- **Customer Mode** allows a customized combination of a work mode, power mode, and hydraulic output to be selected, recorded, and recalled for later use.

Machine monitoring system uses a progression of indicators, action lamps, and alarms to inform the operator of machine conditions.

Service Mode of the Electronic Power Unit Control delivers fast, detailed diagnosis of machine conditions improving uptime (refer to Serviceability).

Hydraulics

Caterpillar hydraulics deliver power and control to keep material moving at high volume.

Dramatically increased control responsiveness aids operation and improves cycle time.

- Control movements better matched to hydraulic action for improved operator performance.
- Improved swing damping restrains drift and improves positioning during finishing and lifting applications.

Nine percent increase in hydraulic relief pressure increases stick and bucket forces for better productivity, nine percent higher lift capacity (at lifting points limited by hydraulic pressure) and a wider range of workable material.

Hydraulic cross-sensing system improves productivity with faster implement speeds and quicker, stronger pivot turns.

- 100 percent of engine horsepower deliverable as hydraulic power.
- Full power to a single motor for strong, fast turns. Balanced power to two pumps for straight travel.

Boom regeneration circuit diverts oil to lower the boom. Pumps have all pressure and flow available for other circuits.

Stick regeneration circuit diverts oil to assist stick-in operation. Flow from the pumps can be directed to other circuits, saving energy.



Pump flow decreases when controls are in neutral for reduced fuel consumption and sound.

Auxiliary hydraulic valve is standard on the 315B for use with optional hydraulic circuits.

Hydraulic cylinder snubbers at rod-end of boom cylinders and both ends of stick cylinders cushion shocks, reduce sound and increase cylinder life.

Cat XT hose meets the critical flexibility and strength demands of the 315B.

- O-ring face seal couplings provide positive sealing for reliable, leak-free connections.

Cat 3046T Engine

The six cylinder turbo-charged engine is built for power, reliability, economy and low emissions.

Automatic Engine Control with convenient one-touch command (refer to page 7). Three-stage control maximizes fuel efficiency and reduces sound levels.

- When placed in the "OFF" mode, if a no-load condition or light-load condition continues more than three seconds, the automatic engine control reduces engine speed by 100 rpm.
- When placed in the "ON" mode, if a no-load condition or light-load condition continues more than three seconds, the automatic engine control reduces engine speed from high idle to 1300 rpm.
- At any time, the operator can activate a switch on the top of the right control lever to reduce the engine speed to 1100 rpm. This feature, referred to as one-touch idle, can be used both to conserve fuel and to reduce engine sound levels. Activate switch again to return to previous level.

Efficient, direct injection fuel system means lower operating costs.

Turbo-charged to increase engine power by burning fuel with greater efficiency.

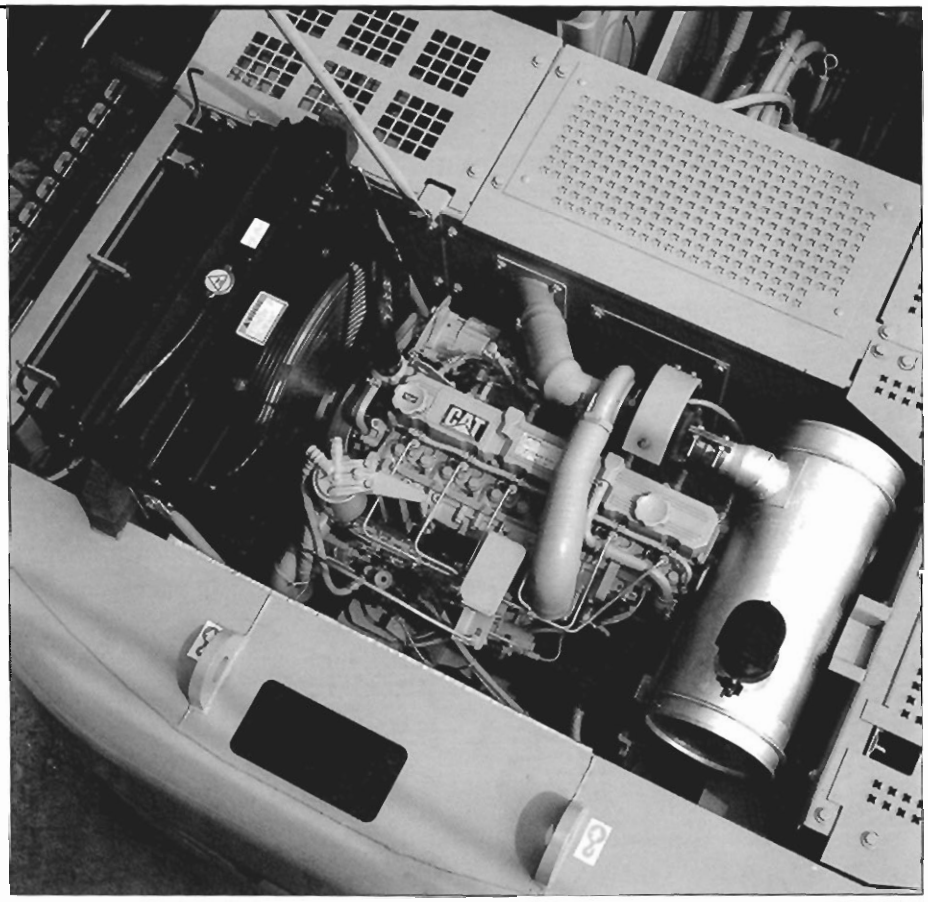

Eight balance, one-piece, forged crankshaft enhances balance and decreases vibration and is induction hardened to improve abrasion resistance.

Heat resistant aluminum alloy pistons have a short compression height, reducing weight and improving efficiency.

Forged, high carbon steel connecting rods with smaller connecting rod to crank radius ratio results in a lightweight, powerful, compact engine.

Undercarriage

Durable undercarriage absorbs stresses and provides excellent stability.

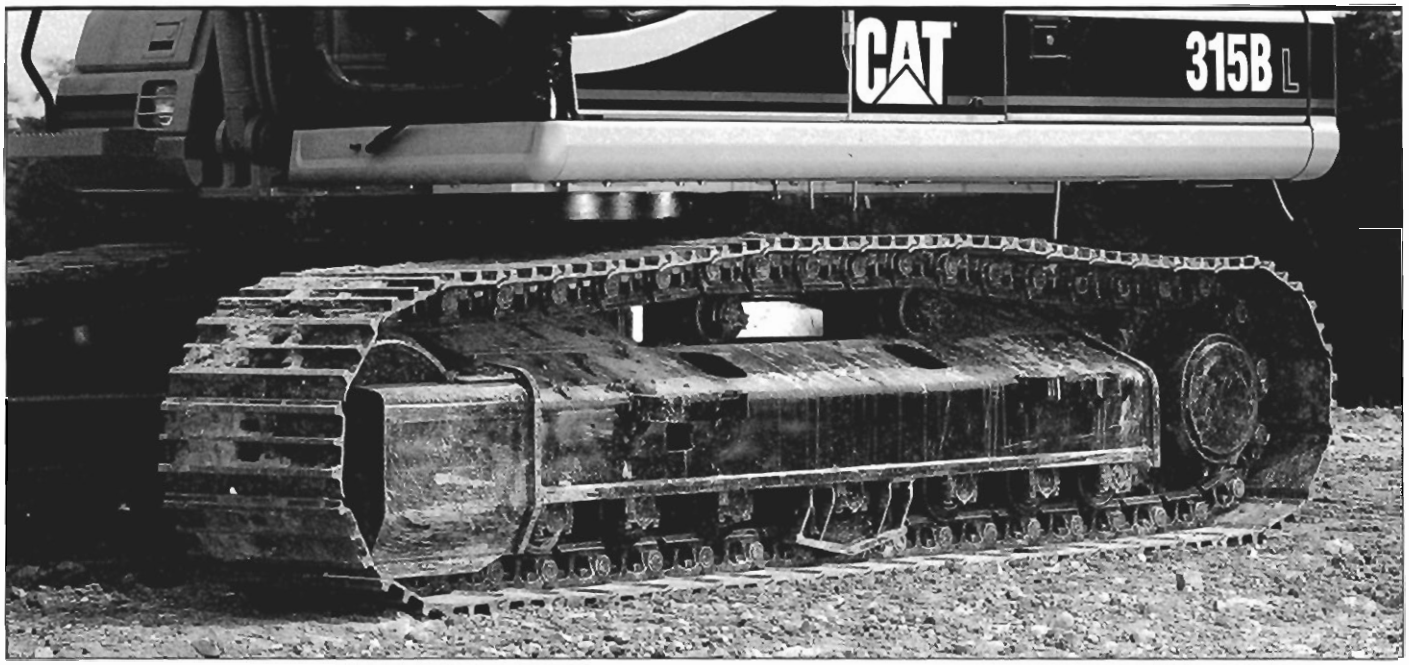

Precision robotic welding helps ensure quality welds. These welds increase rigidity, reduce internal stresses and enhance durability for the chassis and track roller frames.

Heavy-duty, X-shaped chassis design. Cat undercarriage components are purposely oversized to offer heavy-duty performance and durability.

Strutted track links are sealed for longer life. Track rollers, carrier rollers and idlers are also sealed and lubricated for excellent service life.

Smoother auto shifting two-speed travel motors offer top travel speeds and plenty of pull on slopes or turns.

Two undercarriage choices:

Standard (STD) undercarriage is well suited for applications that require frequent repositioning of the machine, have restricted working space, or have uneven or rocky terrain.

Long (L) undercarriage maximizes stability and lifting capacity. Long and sturdy undercarriage offers a very stable work platform.

The elimination of the ledge at carbody and roller frame juncture reduces material build-up and makes digging out easier.

Standard idler guards maintain track alignment. Optional center section guards (standard on the 315B L) are available for additional protection on side slopes.

Booms and Sticks

The 315B has designed-in flexibility to help bring higher versatility and efficiency to your jobs.

Select the right combination for the job with your Cat dealer and you'll help ensure top production from the start.

Caterpillar excavator booms and sticks are built for performance and long service life.

- Large, welded, box-section structures with thick, multi-plate fabrications in high-stress areas.
- Construction allows structures to flex and dissipate stresses.

The choice of three sticks plus a wide selection of buckets and attachments, means the 315B offers several combinations of reach and digging forces for optimum versatility.

Choose from a variety of work tools such as hammers, compactors, grapples or crushers. Ask your Cat dealer for information on attachments or special configurations.

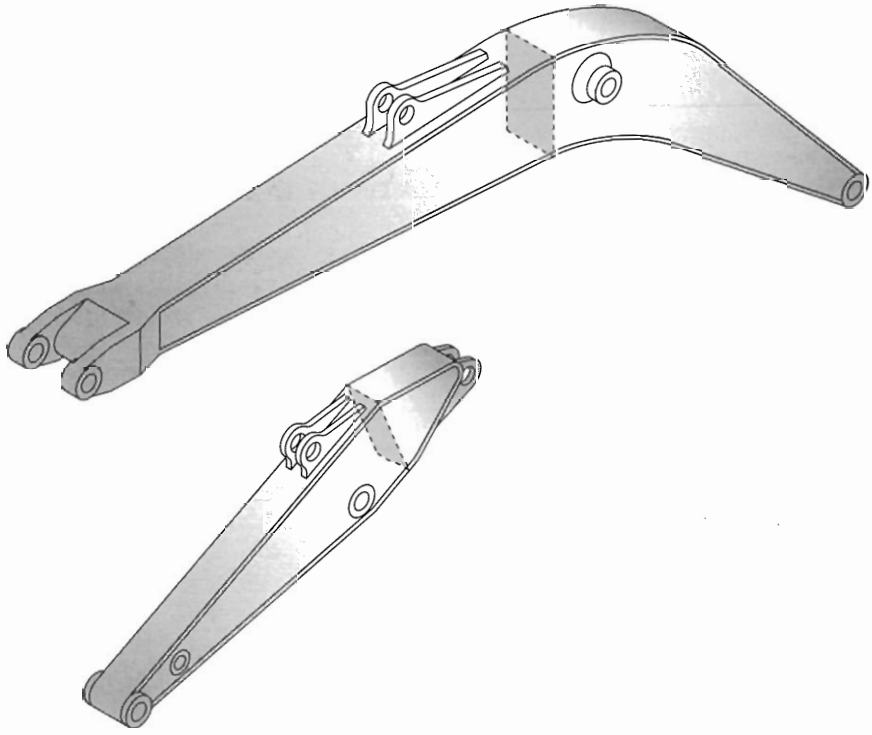

Structures

The 315B structural components are the backbone of the machine's durability.

Advanced carbody design stands up in the toughest applications.

- Modified X-shaped, box-section carbody provides excellent resistance to torsional bending.
- Upper structure weight and stresses are distributed evenly across the full length of the track roller frame.
- Smooth transitions and long welds reduce stresses at the carbody-to-roller frame junctions for excellent durability.
- Robot welding ensures consistent, high-quality welds throughout the manufacturing process.

Robot-welded track roller frames are press-formed, pentagonal units that deliver exceptional strength and service life.

Rugged main frame is designed for maximum durability and efficient use of materials.

- Outer frame utilizes curved side rails, which are die-formed, for excellent uniformity and strength throughout the length.
- Box-section channels improve upper frame rigidity under the cab.
- Inverted U-channels span the width of the main frame and are formed, rather than fabricated, for superior strength and reduced weight.
- Boom tower and main rails are constructed of solid, high-tensile strength steel plates.
- Boom foot and engine mount areas reinforced for additional strength.
- Sheet metal supporting structure is improved by integrating the mounting into upper frame structure.

Complete Customer Support

Cat dealer services help you operate longer with lower costs.



Your Cat dealer offers a wide range of services that can be set up under a customer support agreement when you purchase your equipment. To help you get the best return on your investment, the dealer will help you choose a plan that can cover everything from machine and attachment selection to replacement.

Selection. Make detailed comparisons of the machines you are considering before you buy. What are the job requirements? What production is needed? What is the true cost of lost production? Your Cat dealer can give you precise answers to these questions.

Purchase. Look past initial price. Consider the financing options available as well as day-to-day operating costs. This is also the time to look at dealer services that can be included in the cost of the machine to yield lower equipment owning and operating costs over the long run.

Operation. Improving operating techniques can boost your profits. Your Cat dealer has training videotapes, literature and other ideas to help you increase productivity.

Maintenance. What is the cost of preventive maintenance? More and more equipment buyers are planning for effective maintenance before buying equipment. Choose from your dealer's wide range of maintenance services at the time you purchase your machine. Repair option programs guarantee the cost of repairs up front. Diagnostic programs such as Scheduled Oil Sampling and Technical Analysis help you avoid unscheduled repairs.

Replacement. Repair, rebuild or replace? Your Cat dealer can help you evaluate the cost involved so you can make the right choice.

Product support. You will find nearly all parts at our dealer parts counter. Cat dealers utilize a worldwide computer network to find in-stock parts to minimize machine down time. Save money with remanufactured components. You receive the same warranty and reliability as new products at cost savings of 40 to 70 percent.

Engine

Caterpillar 3046T turbo-charged six cylinder diesel engine.

Ratings at 2100 rpm*	kW	hp
Gross power	76	102
Net power	74	99

The following ratings apply at 2100 rpm when tested under the specified standard conditions for the specified standard:

Net power	kW	hp
Caterpillar	74	99
ISO 9249	74	99
SAE J1349	74	99
EEC 80/1269	74	99

Dimensions

Bore	94 mm	3.70 in
Stroke	120 mm	4.72 in
Displacement	5.0 liters	305 in³

***Power rating conditions**

- based on standard air conditions of 25°C (77°F) and 99 kPa (29.32 in Hg) dry barometer
- used 35° API gravity fuel having an LHV of 42 780 kJ/kg (18,390 Btu/lb) when used at 30°C (86°F) [ref. a fuel density of 838.9 g/L (7.001 lb/U.S. gal)]
- net power advertised is the power available at the flywheel when the engine is equipped with fan, air cleaner, muffler, and alternator
- no engine derating required below 1500 m (5000 ft) altitude

Features

- fuel injectors control fuel delivery more efficiently, resulting in better performance, fuel economy, and reduced noise and smoke
- 24-volt electric system with 50-amp alternator and two 100-amp/hr batteries
- low profile, heat-resistant, aluminum alloy pistons
- high carbon, steel forged connecting rods
- precision cast cylinder head with helical intake ports
- one-piece, induction hardened forged alloy crankshaft

Hydraulic System

Two variable displacement, axial-piston pumps power the boom, stick, swing, bucket, auxiliary and travel circuits. One single-section, gear-type pump powers the pilot circuit.

Main Implement System	
Maximum flow	2 x 132 liters/min (2 x 35 gpm)
Maximum pressure	
Implements	350 kg/cm² (4980 psi)
Travel	350 kg/cm² (4980 psi)
Swing	235 kg/cm² (3340 psi)

Pilot System	
Maximum flow	17 liters/min (4.5 gpm)
Maximum pressure	40 kg/cm³ (570 psi)

Cylinders, Bore and Stroke	
Boom (2)	110 x 1193 mm (4.3" x 47")
Stick (1)	120 x 1131 mm (4.8" x 52.4")
Bucket (1)	100 x 1048 mm (4.0" x 41.3")

Features

- main hydraulic pumps are electronically controlled and dependent on engine speed
- power modes match hydraulic output to application severity
- XT hose

Drive

Drive system is fully hydrostatic.

Ratings		
Maximum drawbar pull	131 kN	(29,480 lb)
Maximum travel speed	5.5 km/h	(3.4 mph)

Features

- each track is driven by one independent, automatic shifting, two-speed axial piston motor via integral planetary final drives
- each drive module is well integrated into the roller frame for total protection

Brakes

Meets the following standards:
SAE J1026 APR90

Service and parking brake features

- wet, multiple-disc brakes are used on the final drive input shafts
- spring-applied, hydraulically released
- actuating a travel control simultaneously releases the brakes
- when the controls are released, the brakes automatically apply

Buckets

Buckets have tapered sides, angled corner teeth, dual radius curvature, horizontal wear strips, and holes for optional side cutters.

Width*		Capacity		Number	Weight with Teeth		Tip Radius	
mm	in	m^3	yd^3	of Teeth	kg	lbs	mm	in
610	24	0.37	0.48	3	419	924	1340	53
760	30	0.49	0.64	4	471	1038	1340	53
930	36	0.60	0.78	5	517	1140	1340	53
1070	42	0.69	0.90	6	566	1248	1340	53
1220	48	0.84	1.09	6	609	1343	1340	53

				Recommended Maximum Material Density					
Width*		Capacity		Short Stick		Medium Stick		Long Stick	
mm	in	m^3	yd^3	kg/m^3	lbs/yd^3	kg/m^3	lbs/yd^3	kg/m^3	lbs/yd^3
610	24	0.38	0.50	1800	3000	1800	3000	1800	3000
760	30	0.50	0.65	1800	3000	1800	3000	1800	3000
930	36	0.61	0.80	1800	3000	1800	3000	1500	2500
1070	42	0.69	0.90	1800	3000	1500	2500	1200	2000
1220	48	0.84	1.10	1500	2500	1200	2000	Not recommended	

For densities of other materials see Caterpillar Performance Handbook

* Width across bucket sidewalls. For cutting width add 75 mm (3")

Steering

Two rocker pedals with detachable hand levers control steering and travel functions.

Controls

- controls are pilot-operated for reduced efforts
- left pedal and lever control left track; right pedal and lever control right track
- when idlers are in front, pushing both pedals or levers forward moves the excavator straight ahead
- when the idlers are in front, rocking both pedals or pulling both levers backward moves the excavator straight back
- moving one pedal or lever more than the other, either forward or backward, results in a gradual turn
- moving one pedal or lever forward and the other pedal or lever backward counter-rotates the tracks for spot turns

Undercarriage

Caterpillar designed and built track-type undercarriage.

Track Width	Ground Pressure	
	315B	315B L
500 mm (20") triple grouser	48 kPa (7.02 psi)	33 kPa (6.63 psi)
600 mm (24") triple grouser	41 kPa (6.00 psi)	39 kPa (5.75 psi)
700 mm (28") triple grouser	35 kPa (5.13 psi)	33 kPa (4.87 psi)

Implement Controls

Two joystick hand levers actuate boom, stick, bucket and swing (SAE pattern).

Boom/Bucket Controls (right joystick)

- move forward and backward to lower and raise boom
- move left and right to control bucket curl and dump
- button on top is one-touch low idle

Stick/Swing Controls (left joystick)

- move forward and backward to move stick out and in
- move left and right to control direction of swing
- button on top controls horn

Other Features

- oblique movement of either lever operates two functions simultaneously
- manually applied lever on left console cuts off pilot pressure for joysticks and travel controls and electrical power for engine starting circuit

Service Refill Capacities

	L	Gallons
Fuel Tank	280	74
Cooling System	19	5
Engine Oil	13.0	3.4
Swing Drive	3.0	0.80
Final Drive (each)	2.6	0.70
Hydraulic System (including tank)	188	48.9
Hydraulic Tank	105	27.3

Swing Mechanism

Hydrostatic with independent planetary reduction.

Ratings	
Swing Torque	38.5 kN•m (28,420 lb ft)
Swing Speed	10.1 rpm

Features

- the swing mechanism is driven by a pinion gear sealed in a grease bath through a double-reduction planetary gear set

Dimensions

All dimensions are approximate.

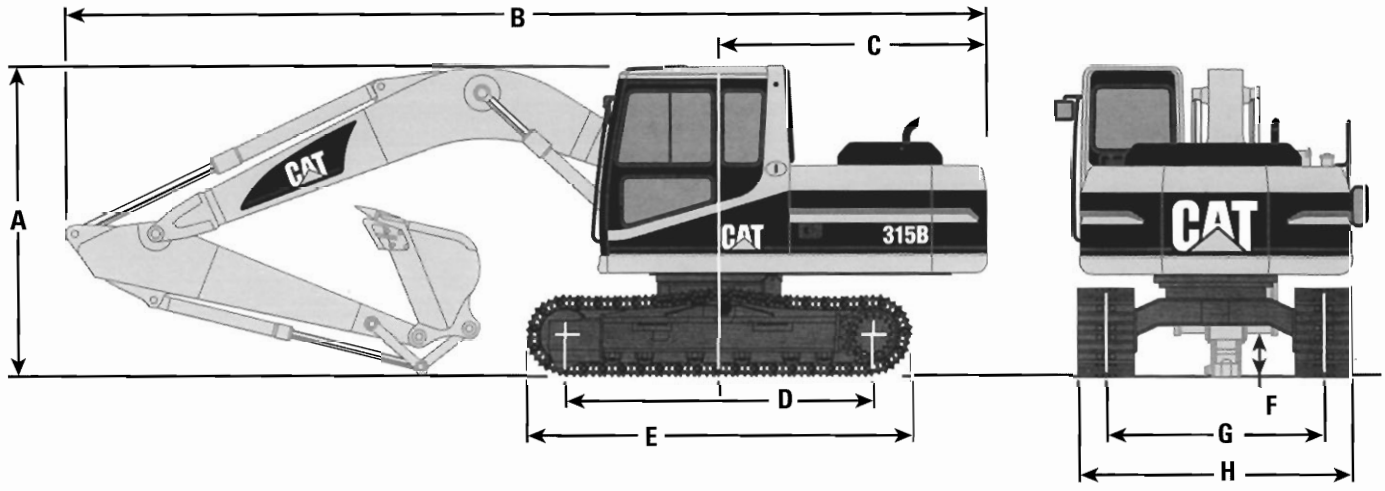

		2250 mm (7'5") Stick	2600 mm (8'6") Stick	3100 mm (10'2") Stick
A	Shipping height	2780 mm (9'1.4")	2860 mm (9'4.6")	2990 mm (9'9.7")
B	Shipping length	8470 mm (27'9.5")	8500 mm (27'10.6")	8520 mm (27'11.4")
C	Tail swing radius	2450 mm (8'0.5")	2450 mm (8'0.5")	2450 mm (8'0.5")
D	Length to centers of rollers			
	315B	2880 mm (9'5")	2880 mm (9'5")	2880 mm (9'5")
	315B L	3170 mm (10'5")	3170 mm (10'5")	3170 mm (10'5")
E	Track length			
	315B	3685 mm (12'1")	3685 mm (12'1")	3685 mm (12'1")
	315B L	3970 mm (13'0.5")	3970 mm (13'0.5")	3970 mm (13'0.5")
F	Ground clearance	460 mm (18")	460 mm (18")	460 mm (18")
G	Track gauge	1990 mm (6'6")	1990 mm (6'6")	1990 mm (6'6")
H	Transport width	with 500 mm (20") 2490 mm (8'2")	with 600 mm (24") 2590 mm (8'6")	with 700 mm (28") 2690 mm (8'10")

Machine Weights

Caterpillar designed and built track-type undercarriage.

Track Width		Operating Weight (Short Stick)		Machine Weight (Medium Stick)		Operating Weight (Long Stick)	
3 15B	500 mm (20") triple grouser	15 800 kg	(34,800 lb)	15 800 kg	(34,800 lb)	15 900 kg	(35,000 lb)
	600 mm (24") triple grouser	16 020 kg	(35,280 lb)	16 020 kg	(35,280 lb)	16 120 kg	(35,480 lb)
	700 mm (28") triple grouser	16 220 kg	(35,720 lb)	16 220 kg	(35,720 lb)	16 320 kg	(35,920 lb)
3 15B L	500 mm (20") triple grouser	16 160 kg	(35,670 lb)	16 160 kg	(35,670 lb)	16 260 kg	(35,870 lb)
	600 mm (24") triple grouser	16 400 kg	(36,200 lb)	16 400 kg	(36,200 lb)	16 500 kg	(36,400 lb)
	700 mm (28") triple grouser	16 610 kg	(36,670 lb)	16 610 kg	(36,670 lb)	16 710 kg	(36,870 lb)

Working Ranges

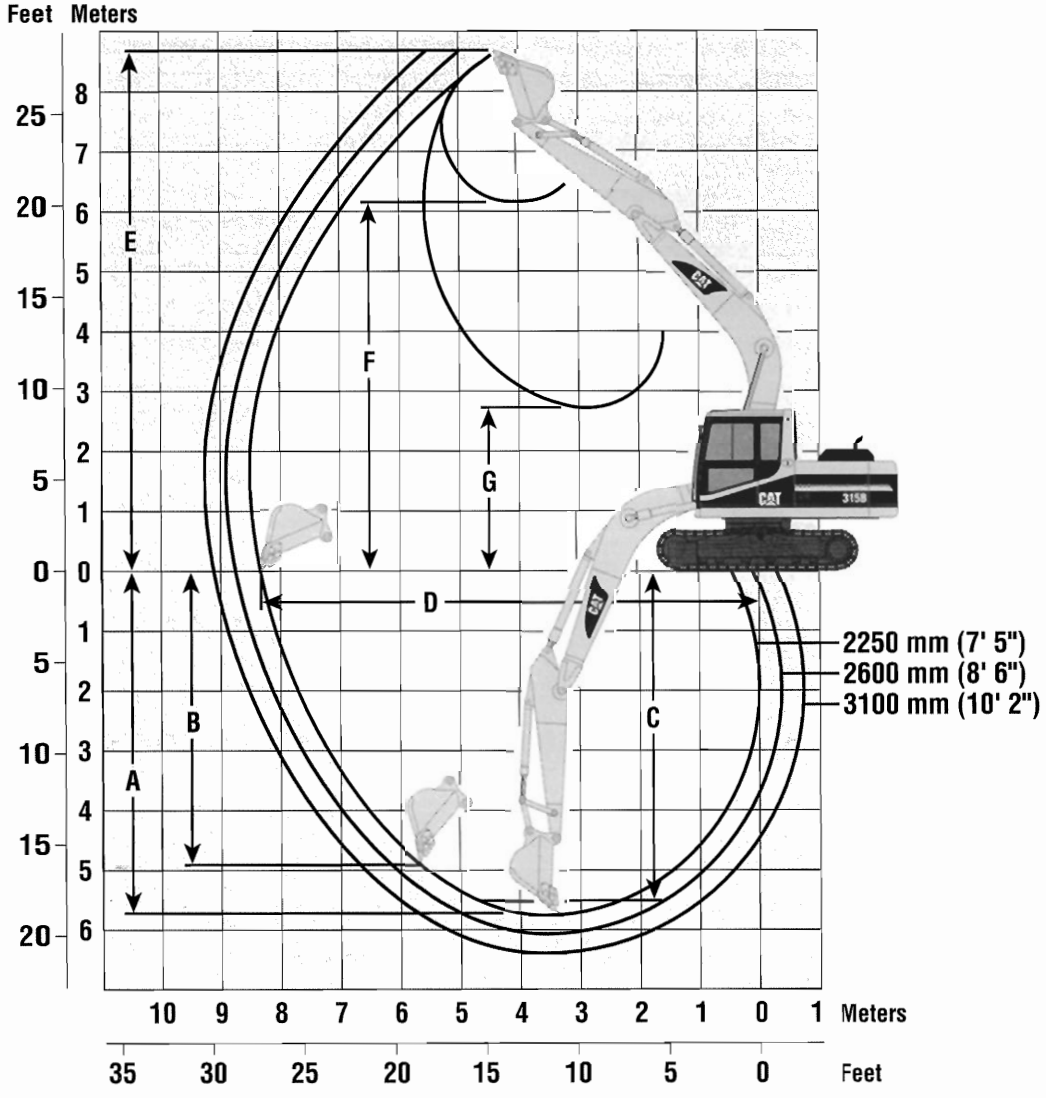

Stick Length	3100 mm (10'2") Stick	2600 mm (8'6") Stick	2250 mm (7'5") Stick
A Maximum Digging Depth	6555 mm (21'6")	6055 mm (19'10")	5705 mm (18'9")
B Maximum Reach at Ground Level	9140 mm (30'0")	8740 mm (28'8")	8420 mm (27'7")
C Maximum Cutting Height	8970 mm (29'5")	8910 mm (29'3")	8735 mm (28'8")
D Maximum Loading Height	6410 mm (21'0")	6320 mm (20'9")	6150 mm (20'2")
E Minimum Loading Height	1840 mm (6'0")	2340 mm (7'8")	2690 mm (8'10")
F Maximum Depth Cut for 2440 mm (8') Level Bottom	6330 mm (20'9")	5825 mm (19'1")	5455 mm (17'11")
G Maximum Vertical Wall Digging Depth	5570 mm (18'3")	5335 mm (17'6")	4930 mm (16'2")
Stick Digging Force (SAE)	68 kN (15,280 lb)	76 kN (17,080 lb)	84 kN (18,880 lb)
Bucket Digging Force (SAE)	99 kN (22,250 lb)	99 kN (22,250 lb)	99 kN (22,250 lb)

Standard Equipment

Standard and optional equipment may vary. Consult your Caterpillar dealer for specifics.

Alternator, 50-amp
Automatic engine speed control
Automatic swing parking brake
Auxiliary hydraulic valve
Cab
- Ash tray with cigar lighter
- Coat hook
- Drink holder
- Floor mat
- Heater and defroster
- Horn
- Instrument panel with gauges
  - Gauges and indicator lights for fuel level, coolant temperature and hydraulic oil temperature
- Joysticks, adjustable pilot-operated
- Light, interior
- Literature compartment
- Low fuel indicator light
- Metal roof hatch
- Positive filtered ventilation
- Seat, suspension, fully adjustable
- Seat belt, retractable
- Storage compartment suitable for a lunch box cooler
- Travel control pedals
  - Two-speed auto shift travel
- Windshield wiper and washer

Counterweight, 3000 kg (6600 lb)
Door locks and caps locks with Caterpillar one-key security system
Hydraulic neutralizer lever for all controls
Light, working, frame mounted, one
Mirrors, frame and cab
Muffler
Pre-start monitoring system
Power Mode Selector
Power train
- CAT 3046T Diesel engine with 24-volt electric starting and air intake heater

Undercarriage
- Hydraulic track adjusters
- Track-type sealed undercarriage
- Idler section track guiding guards
- 315B 500 mm (20") triple grouser shoes
- 315B L 600 mm (24") triple grouser shoes and center section track guiding guards

Work Mode Selector

Optional Equipment

Optional equipment may vary. Consult your Caterpillar dealer for specifics.

Air conditioner, with automatic climate control
Alarm, travel (required in U.S.)
Boom, with light, left side
Boom lowering check valve
Buckets
Bucket linkage
Bucket sidecutters and tips
Bumpers, steel side protectors
Cabs, optional:
- Cab, with polycarbonate windows (required in the U.S.)
- Cab, with radio mount and vandal bosses

Cooling, high ambient 52°C (125°F)
Fuel tank, additional capacity (20 hr)
Guards:
- Center section track guiding, for 315B (standard on 315B L)
- Heavy-duty bottom
- Track guiding, front section
- Track guiding, rear section
- Vandalism protection

Hand control pattern changer:
- 2 ways (SAE/STD BHL)

Headrest for standard seat
Hydraulic arrangements, auxiliary:
- Single function arrangement
- Double function arrangement
- Combined function arrangement, includes two pump flow
- Two pump flow arrangement

Hydraulic lines, auxiliary for boom and sticks
Lights, working, cab mounted, two
Power supply, 12V-5A
Radio, AM/FM, stereo
Rain protection, cab front
Seat, suspension, fully adjustable KAB524
Skylight, push-open
Starting aid, cold weather
Starting system, cold weather
Sticks:
- 3100 mm (10'2")
- 2600 mm (8'6")
- 2250 mm (7'5")

Sun visor, windshield
Track:
- 500 mm (20") triple grouser
- 600 mm (24") triple grouser
- 700 mm (28") triple grouser

Water separator
Wiper and washer, lower windshield

Lift Capacities - 2250 mm (7'5") Stick, 500 mm (20") Shoes, Standard Undercarriage

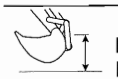 Load Point Height

 Load at Maximum Reach

 Load Radius Over Front

 Load Radius Over Side

2.25 STICK – 2250 mm (7'5")
BUCKET – 0.69 m³ (0.9 yd³)

UNDERCARRIAGE – Standard
SHOES – 500 mm (20") triple grouser

BOOM – 5200 mm (16'9")

		1.5 m/5.0 ft		3.0 m/10.0 ft		4.5 m/15.0 ft		6.0 m/20.0 ft				
												m ft
7.5 m **25.0 ft**	kg **lb**									*2000 ***4400**	*2000 ***4400**	5.80 **18.55**
6.0 m **20.0 ft**	kg **lb**							*3150 ***6900**	2750 **6100**	*1800 ***3950**	*1800 ***3950**	7.15 **23.25**
4.5 m **15.0 ft**	kg **lb**					*4300 ***9250**	*4300 ***9250**	3900 **8350**	2700 **5750**	*1750 ***3900**	1650 **3650**	7.89 **25.81**
3.0 m **10.0 ft**	kg **lb**			*8650 ***18,350**	7850 **16,950**	*5550 ***11,900**	4150 **8900**	3750 **8100**	2600 **5550**	*1850 ***4000**	1450 **3200**	8.23 **26.97**
1.5 m **5.0 ft**	kg **lb**					5700 **12,250**	3800 **8150**	3600 **7750**	2450 **5200**	*2000 ***4350**	1400 **3100**	8.22 **26.96**
Ground Line	kg **lb**			*5500 ***12,700**	*5500 ***12,700**	5450 **11,700**	3600 **7700**	3500 **7450**	2300 **4950**	*2250 ***5000**	1500 **3250**	7.86 **25.80**
–1.5 m **–5.0 ft**	kg **lb**	*5300 ***11,850**	*5300 ***11,850**	*9600 ***21,850**	6700 **14,350**	5400 **11,550**	3500 **7550**	3450 **7350**	2300 **4900**	2700 **5900**	1800 **3900**	7.11 **23.28**
–3.0 m **–10.0 ft**	kg **lb**	*9650 ***21,700**	*9650 ***21,700**	*10 050 ***21,700**	6850 **14,750**	5450 **11,700**	3600 **7650**			*3250 ***7000**	2550 **5700**	5.79 **18.79**
–4.5 m **–15.0 ft**	kg **lb**			*7000 ***15,400**	*7000 ***15,400**					*5000 ***11,350**	4450 **10,600**	4.08 **12.69**

Lift Capacities - 2600 mm (8'6") Stick, 500 mm (20") Shoes, Standard Undercarriage

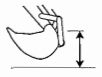 Load Point Height

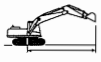 Load at Maximum Reach

 Load Radius Over Front

 Load Radius Over Side

2.6 STICK – 2600 mm (8'6")
BUCKET – 0.69 m³ (0.9 yd³)

UNDERCARRIAGE – Standard
SHOES – 500 mm (20") triple grouser

BOOM – 5200 mm (16'9")

		1.5 m/5.0 ft		3.0 m/10.0 ft		4.5 m/15.0 ft		6.0 m/20.0 ft		7.5 m/25.0 ft				
														m ft
7.5 m **25.0 ft**	kg **lb**											*1700 ***3700**	*1700 ***3700**	6.27 **20.15**
6.0 m **20.0 ft**	kg **lb**							*3250 ***6650**	2800 **6000**			*1550 ***3350**	*1550 ***3350**	7.52 **24.48**
4.5 m **15.0 ft**	kg **lb**							*3650 ***7900**	2750 **5850**			*1500 ***3300**	*1500 ***3300**	8.22 **26.90**
3.0 m **10.0 ft**	kg **lb**			*7650 ***16,300**	*7650 ***16,300**	*5150 ***11,050**	4200 **9050**	3800 **8100**	2600 **5550**	2550 ***5200**	1700 **3600**	*1550 ***3400**	1350 **2950**	8.54 **28.01**
1.5 m **5.0 ft**	kg **lb**			*5600 ***13,450**	*5600 ***13,450**	5750 **12,350**	3850 **8250**	3600 **7750**	2450 **5200**	2500 **5300**	1650 **3500**	*1700 ***3700**	1300 **2850**	8.53 **28.01**
Ground Line	kg **lb**			*5900 ***13,600**	*5900 ***13,600**	5500 **11,750**	3600 **7700**	3500 **7450**	2300 **4950**	2400 **5300**	1600 **3450**	*1950 ***4250**	1350 **3000**	8.20 **26.90**
–1.5 m **–5.0 ft**	kg **lb**	*4900 ***10,900**	*4900 ***10,900**	*9000 ***20,500**	6650 **14,250**	5350 **11,500**	3500 **7500**	3400 **7300**	2250 **4800**			*2400 ***5250**	1600 **3500**	7.49 **24.52**
–3.0 m **–10.0 ft**	kg **lb**	*8450 ***19,000**	*8450 ***19,000**	*10 550 ***22,800**	6800 **14,550**	5400 **11,600**	3500 **7550**	3450 **7400**	2300 **4900**			3300 **7350**	2200 **4900**	6.26 **20.36**
–4.5 m **–15.0 ft**	kg **lb**			*8000 ***17,000**	7100 **15,250**	*5200 ***11,400**	3700 **8150**					*4900 ***10,800**	3550 **8100**	4.65 **14.92**

* Indicates that the load is limited by hydraulic capacity rather than tipping capacity. Lift capacity ratings are based on SAE standard J1097. Rated loads do not exceed 87% of hydraulic lifting capacity or 75% of tipping capacity.

Lift Capacities - 3100 mm (10'2") Stick, 500 mm (20") Shoes, Standard Undercarriage

 Load Point Height

 Load at Maximum Reach

 Load Radius Over Front

 Load Radius Over Side

3.1 STICK – 3100 mm (10'2")
BUCKET – 0.49 m³ (0.64 yd³)

UNDERCARRIAGE – Standard
SHOES – 500 mm (20") triple grouser

BOOM – 5200 mm (16'9")

		1.5 m/5.0 ft		3.0 m/10.0 ft		4.5 m/15.0 ft		6.0 m/20.0 ft		7.5 m/25.0 ft				
														m ft
7.5 m **25.0 ft**	kg **lb**											*1500 ***3300**	*1500 ***3300**	6.84 **22.05**
6.0 m **20.0 ft**	kg **lb**							*3000 ***6500**	2900 **6200**			*1400 ***3050**	*1400 ***3050**	7.98 **25.99**
4.5 m **15.0 ft**	kg **lb**							*3300 ***7200**	2850 **6050**	*2250 ***4100**	1850 **3850**	*1400 ***3000**	*1400 ***3000**	8.64 **28.26**
3.0 m **10.0 ft**	kg **lb**			*6350 ***14,000**	*6350 ***14,000**	*4600 ***9900**	4350 **9350**	*3900 **8300**	2700 **5750**	2600 **5600**	1750 **3750**	*1450 ***3150**	1300 **2800**	8.94 **29.31**
1.5 m **5.0 ft**	kg **lb**			*9800 ***21,300**	7300 **15,750**	5850 **12,600**	3950 **8450**	3700 **7900**	2500 **5350**	2550 **5400**	1700 **3600**	*1550 ***3450**	1250 **2700**	8.93 **29.30**
Ground Line	kg **lb**			*7000 ***16,100**	6700 **14,400**	5500 **11,850**	3600 **7750**	3500 **7500**	2350 **5000**	2450 **5250**	1600 **3450**	*1800 ***3950**	1300 **2800**	8.61 **28.26**
–1.5 m **–5.0 ft**	kg **lb**	*4750 ***10,600**	*4750 ***10,600**	*8900 ***20,300**	6550 **14,050**	5350 **11,450**	3450 **7450**	3400 **7300**	2250 **4800**	2400 **5300**	1600 **3450**	*2200 ***4850**	1450 **3200**	7.95 **26.03**
–3.0 m **–10.0 ft**	kg **lb**	*7600 ***17,000**	*7600 ***17,000**	11 000 **23,600**	6600 **14,250**	5350 **11,450**	3450 **7400**	3400 **7300**	2250 **4800**			2850 **6350**	1900 **4250**	6.82 **22.22**
–4.5 m **–15.0 ft**	kg **lb**	*11 500 ***26,000**	*11 500 ***26,000**	*9100 ***19,500**	6900 **14,800**	5500 **11,800**	3600 **7750**					*3000 ***7300**	*3000 ***7300**	4.89 **15.69**

Should the chart below have 600 mm shoes to match the following charts on pg 20?

Lift Capacities - 2250 mm (7'5") Stick, 600 mm (24") Shoes, Long Undercarriage

 Load Point Height

 Load at Maximum Reach

 Load Radius Over Front

 Load Radius Over Side

2.25 STICK – 2250 mm (7'5")
BUCKET – 0.69 m³ (0.9 yd³)

UNDERCARRIAGE – Long
SHOES – 600 mm (24") triple grouser

BOOM – 5200 mm (16'9")

		1.5 m/5.0 ft		3.0 m/10.0 ft		4.5 m/15.0 ft		6.0 m/20.0 ft				
												m ft
7.5 m **25.0 ft**	kg **lb**									*2000 ***4400**	*2000 ***4400**	5.80 **18.55**
6.0 m **20.0 ft**	kg **lb**							*3150 ***6900**	2850 **6300**	*1800 ***3950**	*1800 ***3950**	7.15 **23.25**
4.5 m **15.0 ft**	kg **lb**					*4300 ***9250**	*4300 ***9250**	*3900 ***8550**	2800 **6000**	*1750 ***3900**	1700 **3800**	7.89 **25.81**
3.0 m **10.0 ft**	kg **lb**			*8650 ***18,350**	8100 **17,500**	*5550 ***11,900**	4300 **9200**	4450 **9500**	2700 **5750**	*1850 ***4000**	1550 **3250**	8.23 **26.97**
1.5 m **5.0 ft**	kg **lb**					6800 **14,600**	3950 **8450**	4250 **9150**	2550 **5400**	*2000 ***4350**	1500 **3250**	8.22 **26.96**
Ground Line	kg **lb**			*5500 ***12,700**	*5500 ***12,700**	6550 **14,050**	3700 **7850**	4150 **8850**	2400 **5200**	*2250 ***5000**	1550 **3450**	7.86 **25.80**
–1.5 m **–5.0 ft**	kg **lb**	*5300 ***11,850**	*5300 ***11,850**	*9600 ***21,850**	6950 **14,900**	6450 **13,850**	3650 **7850**	4100 **8750**	2400 **5100**	*2800 ***6150**	1850 **4100**	7.11 **23.28**
–3.0 m **–10.0 ft**	kg **lb**	*9650 ***21,700**	*9650 ***21,700**	*10 050 ***21,700**	7100 **15,250**	6550 **14,000**	3700 **8000**			*3250 ***7000**	2650 **5900**	5.79 **18.79**
–4.5 m **–15.0 ft**	kg **lb**			*7000 ***15,400**	*7000 ***15,400**					*5000 ***11,350**	4600 **11,000**	4.08 **12.69**

* Indicates that the load is limited by hydraulic capacity rather than tipping capacity. Lift capacity ratings are based on SAE standard J1097. Rated loads do not exceed 87% of hydraulic lifting capacity or 75% of tipping capacity.

Lift Capacities - 2600 mm (8'6") Stick, 600 mm (24") Shoes, Long Undercarriage

 Load Point Height

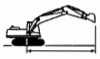 Load at Maximum Reach

 Load Radius Over Front

 Load Radius Over Side

2.6 STICK – 2600 mm (8'6")
BUCKET – 0.69 m³ (0.9 yd³)

UNDERCARRIAGE – Long
SHOES – 600 mm (24") triple grouser

BOOM – 5200 mm (16'9")

		1.5 m/5.0 ft		3.0 m/10.0 ft		4.5 m/15.0 ft		6.0 m/20.0 ft		7.5 m/25.0 ft				
														m ft
7.5 m	kg											*1700	*1700	6.27
25.0 ft	**lb**											***3700**	***3700**	**20.15**
6.0 m	kg							*3250	2900			*1550	*1550	7.52
20.0 ft	**lb**							***6650**	**6200**			***3350**	***3350**	**24.48**
4.5 m	kg							*3650	2850			*1500	*1500	8.22
15.0 ft	**lb**							***7900**	**6200**			***3300**	***3300**	**26.90**
3.0 m	kg			*7650	*7650	*5150	4350	*4200	2700	*2900	1800	*1550	1400	8.54
10.0 ft	**lb**			***16,300**	***16,300**	***11,050**	**9350**	***9100**	**5750**	***5200**	**3750**	***3400**	**3100**	**28.01**
1.5 m	kg			*5600	*5600	*6500	4000	4300	2550	2950	1800	*1700	1350	8.53
5.0 ft	**lb**			***13,450**	***13,450**	***14,000**	**8550**	**9150**	**5450**	**6300**	**3650**	***3700**	**3000**	**28.01**
Ground	kg			*5900	*5900	6550	3750	4150	2400	2900	1650	*1950	1450	8.20
Line	**lb**			***13,600**	***13,600**	**14,050**	**8000**	**8850**	**5150**	**6350**	**3650**	***4250**	**3150**	**26.90**
–1.5 m	kg	*4900	*4900	*9000	6900	6450	3650	4050	2350			*2400	1700	7.49
–5.0 ft	**lb**	***10,900**	***10,900**	***20,500**	**14,800**	**13,800**	**7800**	**8700**	**5000**			***5250**	**3700**	**24.52**
–3.0 m	kg	*8450	*8450	*10 550	7050	6500	3650	4100	2400			*3350	2300	6.26
–10.0 ft	**lb**	***19,000**	***19,000**	***22,800**	**15,100**	**13,900**	**7850**	**8800**	**5100**			***7450**	**5100**	**20.36**
–4.5 m	kg			*8000	7350	*5200	3850					*4900	3700	4.65
–15.0 ft	**lb**			***17,000**	**15,800**	***11,400**	**8400**					***10,800**	**8400**	**14.92**

Lift Capacities - 3100 mm (10'2") Stick, 600 mm (24") Shoes, Long Undercarriage

 Load Point Height

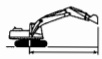 Load at Maximum Reach

 Load Radius Over Front

 Load Radius Over Side

3.1 STICK – 3100 mm (10'2")
BUCKET – 0.49 m³ (0.64 yd³)

UNDERCARRIAGE – Long
SHOES – 600 mm (24") triple grouser

BOOM – 5200 mm (16'9")

		1.5 m/5.0 ft		3.0 m/10.0 ft		4.5 m/15.0 ft		6.0 m/20.0 ft		7.5 m/25.0 ft				
														m ft
7.5 m	kg											*1500	*1500	6.84
25.0 ft	**lb**											***3300**	***3300**	**22.05**
6.0 m	kg							*3000	*3000			*1400	*1400	7.98
20.0 ft	**lb**							***6500**	**6400**			***3050**	***3050**	**25.99**
4.5 m	kg							*3300	2950	*2250	1900	*1400	*1400	8.64
15.0 ft	**lb**							***7200**	**6250**	***4100**	**4000**	***3000**	***3000**	**28.26**
3.0 m	kg			*6350	*6350	*4600	4500	*3900	2800	3100	1850	*1450	1350	8.94
10.0 ft	**lb**			***14,000**	***14,000**	***9900**	**9650**	***8400**	**5950**	**6600**	**3900**	***3150**	**2950**	**29.31**
1.5 m	kg			*9800	7550	*6050	4050	4350	2600	3000	1750	*1550	1300	8.93
5.0 ft	**lb**			***21,300**	**16,250**	***13,050**	**8750**	**9300**	**5500**	**6400**	**3750**	***3450**	**2800**	**29.30**
Ground	kg			*7000	6950	6600	3750	4150	2450	2900	1700	*1800	1350	8.61
Line	**lb**			***16,100**	**14,950**	**14,150**	**8100**	**8900**	**5200**	**6250**	**3600**	***3950**	**2950**	**28.26**
–1.5 m	kg	*4750	*4750	*8900	6800	6450	3750	4050	2350	2850	1650	*2200	1550	7.95
–5.0 ft	**lb**	***10,600**	***10,600**	***20,300**	**14,600**	**13,750**	**7750**	**8700**	**5000**	**6300**	**3600**	***4850**	**3350**	**26.03**
–3.0 m	kg	*7600	*7600	*11 100	6900	6400	3600	4050	2350			*2050	2000	6.82
–10.0 ft	**lb**	***17,000**	***17,000**	***23,950**	**14,750**	**13,750**	**7750**	**8700**	**5000**			***6750**	**4400**	**22.22**
–4.5 m	kg	*11 500	*11 500	*9100	7150	*6100	3750					*3000	*3000	4.89
–15.0 ft	**lb**	***26,000**	***26,000**	***19,500**	**15,350**	***12,950**	**8050**					***7300**	***7300**	**15.69**

* Indicates that the load is limited by hydraulic capacity rather than tipping capacity. Lift capacity ratings are based on SAE standard J1097. Rated loads do not exceed 87% of hydraulic lifting capacity or 75% of tipping capacity.

Lift Capacities - 2250 mm (7'5") Stick, 700 mm (28") Shoes, Standard Undercarriage

 Load Point Height

 Load at Maximum Reach

 Load Radius Over Front

 Load Radius Over Side

2.25 STICK – 2250 mm (7'5")
BUCKET – 0.69 m³ (0.9 yd³)

UNDERCARRIAGE – Standard
SHOES – 700 mm (28") triple grouser

BOOM – 5200 mm (16'9")

		1.5 m/5.0 ft		3.0 m/10.0 ft		4.5 m/15.0 ft		6.0 m/20.0 ft				
												m ft
7.5 m	kg									*2000	*2000	5.80
25.0 ft	**lb**									***4400**	***4400**	**18.55**
6.0 m	kg							*3150	2850	*1800	*1800	7.15
20.0 ft	**lb**							***6900**	**6250**	***3950**	***3950**	**23.25**
4.5 m	kg					*4300	*4300	*3900	2800	*1750	1700	7.89
15.0 ft	**lb**					***9250**	***9250**	***8550**	**5950**	***3900**	**3750**	**25.81**
3.0 m	kg			*8650	8050	*5550	4250	3850	2650	*1850	1500	8.23
10.0 ft	**lb**			***18,350**	**17,350**	***11,900**	**9150**	**8300**	**5700**	***4000**	**3300**	**26.97**
1.5 m	kg					5850	3900	3700	2500	*2000	1450	8.22
5.0 ft	**lb**					**12,600**	**8400**	**7950**	**5350**	***4350**	**3200**	**26.96**
Ground	kg			*5500	*5500	5600	3700	3600	2400	*2250	1550	7.86
Line	**lb**			***12,700**	***12,700**	**12,050**	**7900**	**7700**	**5100**	***5000**	**3400**	**25.80**
–1.5 m	kg	*5300	*5300	*9600	6900	5550	3600	3550	2350	2750	1850	7.11
–5.0 ft	**lb**	***11,850**	***11,850**	***21,850**	**14,750**	**11,900**	**7750**	**7600**	**5050**	**6100**	**4050**	**23.28**
–3.0 m	kg	*9650	*9650	*10 050	7050	5600	3700			*3250	2600	5.79
–10.0 ft	**lb**	***21,700**	***21,700**	***21,700**	**15,100**	**12,050**	**7900**			***7000**	**5850**	**18.79**
–4.5 m	kg			*7000	*7000					*5000	4550	4.08
–15.0 ft	**lb**			***15,400**	***15,400**					***11,350**	**10,900**	**12.69**

Lift Capacities - 2600 mm (8'6") Stick, 700 mm (28") Shoes, Standard Undercarriage

 Load Point Height

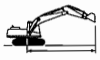 Load at Maximum Reach

 Load Radius Over Front

 Load Radius Over Side

2.6 STICK – 2600 mm (8'6")
BUCKET – 0.69 m³ (0.9 yd³)

UNDERCARRIAGE – Standard
SHOES – 700 mm (28") triple grouser

BOOM – 5200 mm (16'9")

		1.5 m/5.0 ft		3.0 m/10.0 ft		4.5 m/15.0 ft		6.0 m/20.0 ft		7.5 m/25.0 ft				
														m ft
7.5 m	kg											*1700	*1700	6.27
25.0 ft	**lb**											***3700**	***3700**	**20.15**
6.0 m	kg							*3250	2850			*1550	*1550	7.52
20.0 ft	**lb**							***6650**	**6150**			***3350**	***3350**	**24.48**
4.5 m	kg							*3650	2800			*1500	*1500	8.22
15.0 ft	**lb**							***7900**	**6000**			***3300**	***3300**	**26.90**
3.0 m	kg			*7650	*7650	*5150	4300	3900	2650	2600	1750	*1550	1400	8.54
10.0 ft	**lb**			***16,300**	***16,300**	***11,050**	**9250**	**8350**	**5700**	***5200**	**3700**	***3400**	**3050**	**28.01**
1.5 m	kg			*5600	*5600	5900	3950	3700	2500	2550	1700	*1700	1350	8.53
5.0 ft	**lb**			***13,450**	***13,450**	**12,700**	**8450**	**7950**	**5350**	**5450**	**3600**	***3700**	**2950**	**28.01**
Ground	kg			*5900	*5900	5650	3700	3600	2400	2500	1650	*1950	1400	8.20
Line	**lb**			***13,600**	***13,600**	**12,050**	**7900**	**7650**	**5100**	**5500**	**3600**	***4250**	**3100**	**26.90**
–1.5 m	kg	*4900	*4900	*9000	6850	5500	3600	3500	2300			*2400	1650	7.49
–5.0 ft	**lb**	***10,900**	***10,900**	***20,500**	**14,650**	**11,850**	**7700**	**7500**	**4950**			***5250**	**3650**	**24.52**
–3.0 m	kg	*8450	*8450	*10 550	6950	5550	3600	3550	2350			*3350	2250	6.26
–10.0 ft	**lb**	***19,000**	***19,000**	***22,800**	**14,950**	**11,900**	**7750**	**7600**	**5050**			***7450**	**5050**	**20.36**
–4.5 m	kg			*8000	7300	*5200	3800					*4900	3650	4.65
–15.0 ft	**lb**			***17,000**	**15,650**	***11,400**	**8400**					***10,800**	**8300**	**14.92**

* Indicates that the load is limited by hydraulic capacity rather than tipping capacity. Lift capacity ratings are based on SAE standard J1097. Rated loads do not exceed 87% of hydraulic lifting capacity or 75% of tipping capacity.

Lift Capacities - 3100 mm (10'2") Stick, 700 mm (28") Shoes, Standard Undercarriage

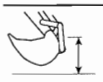 Load Point Height

 Load at Maximum Reach

 Load Radius Over Front

 Load Radius Over Side

3.1 STICK – 3100 mm (10'2")
BUCKET – 0.49 m³ (0.64 yd³)

UNDERCARRIAGE – Standard
SHOES – 700 mm (28") triple grouser

BOOM – 5200 mm (16'9")

		1.5 m/5.0 ft		3.0 m/10.0 ft		4.5 m/15.0 ft		6.0 m/20.0 ft		7.5 m/25.0 ft				
														m ft
7.5 m 25.0 ft	kg lb											*1500 *3300	*1500 *3300	6.84 22.05
6.0 m 20.0 ft	kg lb							*3000 *6500	2950 6350			*1400 *3050	*1400 *3050	7.98 25.99
4.5 m 15.0 ft	kg lb							*3300 *7200	2900 6200	*2250 *4100	1900 4000	*1400 *3000	*1400 *3000	8.64 28.26
3.0 m 10.0 ft	kg lb			*6350 *14,000	*6350 *14,000	*4600 *9900	4450 9550	*3900 *8400	2750 5900	2700 5750	1850 3900	*1450 *3150	1300 2900	8.94 29.31
1.5 m 5.0 ft	kg lb			*9800 *21,300	7500 16,100	6000 12,900	4050 8650	3800 8100	2550 5550	2600 5550	1750 3700	*1550 *3450	1250 2800	8.93 29.30
Ground Line	kg lb			*7000 *16,100	6900 14,800	5650 12,150	3700 8000	3600 7750	2400 5150	2550 5400	1650 3550	*1800 *3950	1300 2900	8.61 28.26
–1.5 m –5.0 ft	kg lb	*4750 *10,600	*4750 *10,600	*8900 *20,300	6750 14,450	5500 11,800	3550 7650	3500 7500	2300 4950	2500 5450	1650 3550	*2200 *4850	1500 3300	7.95 26.03
–3.0 m –10.0 ft	kg lb	*7600 *17,000	*7600 *17,000	*11 100 *23,950	6800 14,600	5500 11,750	3550 7650	3550 7550	2300 4950			2950 6550	1950 4350	6.82 22.22
–4.5 m –15.0 ft	kg lb	*11 500 *26,000	*11 500 *26,000	*9100 *19,500	7050 15,200	5600 12,100	3700 7950					*3000 *7300	*3000 *7300	4.89 15.69

Lift Capacities - 2250 mm (7'5") Stick, 700 mm (28") Shoes, Long Undercarriage

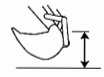 Load Point Height

 Load at Maximum Reach

 Load Radius Over Front

 Load Radius Over Side

2.25 STICK – 2250 mm (7'5")
BUCKET – 0.69 m³ (0.9 yd³)

UNDERCARRIAGE – Long
SHOES – 700 mm (28") triple grouser

BOOM – 5200 mm (16'9")

		1.5 m/5.0 ft		3.0 m/10.0 ft		4.5 m/15.0 ft		6.0 m/20.0 ft				
												m ft
7.5 m 25.0 ft	kg lb									*2000 *4400	*2000 *4400	5.80 18.55
6.0 m 20.0 ft	kg lb							*3150 *6900	2900 6350	*1800 *3950	*1800 *3950	7.15 23.25
4.5 m 15.0 ft	kg lb					*4300 *9250	*4300 *9250	*3900 *8550	2850 6050	*1750 *3900	1750 3850	7.89 25.81
3.0 m 10.0 ft	kg lb			*8650 *18,350	8200 17,700	*5550 *11,900	4350 9350	*4450 9600	2700 5800	*1850 *4000	1550 3400	8.23 26.97
1.5 m 5.0 ft	kg lb					*6800 *14,650	4000 8600	4300 9250	2550 5500	*2000 *4350	1500 3300	8.22 26.96
Ground Line	kg lb			*5500 *12,700	*5500 *12,700	6650 14,200	3700 7950	4200 9000	2450 5250	*2250 *5000	1600 3500	7.86 25.80
–1.5 m –5.0 ft	kg lb	*5300 *11,850	*5300 *11,850	*9600 *21,850	7050 15,100	6550 14,000	3700 7900	4150 8900	2400 5150	*2800 *6150	1900 4150	7.11 23.28
–3.0 m –10.0 ft	kg lb	*9650 *21,700	*9650 *21,700	*10 050 *21,700	7200 15,450	6600 14,200	3750 8100			*3250 *7000	2700 6000	5.79 18.79
–4.5 m –15.0 ft	kg lb			*7000 *15,400	*7000 *15,400					*5000 *11,350	4650 11,150	4.08 12.69

* Indicates that the load is limited by hydraulic capacity rather than tipping capacity. Lift capacity ratings are based on SAE standard J1097. Rated loads do not exceed 87% of hydraulic lifting capacity or 75% of tipping capacity.

Lift Capacities - 2600 mm (8'6") Stick, 700 mm (28") Shoes, Long Undercarriage

 Load Point Height
 Load at Maximum Reach
 Load Radius Over Front
 Load Radius Over Side

2.6 STICK – 2600 mm (8'6")
BUCKET – 0.69 m³ (0.9 yd³)

UNDERCARRIAGE – Long
SHOES – 700 mm (28") triple grouser

BOOM – 5200 mm (16'9")

		1.5 m/5.0 ft		3.0 m/10.0 ft		4.5 m/15.0 ft		6.0 m/20.0 ft		7.5 m/25.0 ft				
														m ft
7.5 m	kg											*1700	*1700	6.27
25.0 ft	**lb**											***3700**	***3700**	**20.15**
6.0 m	kg							*3250	2950			*1550	*1550	7.52
20.0 ft	**lb**							***6650**	**6250**			***3350**	***3350**	**24.48**
4.5 m	kg							*3650	2850			*1550	*1550	8.22
15.0 ft	**lb**							***7900**	**6100**			***3300**	***3300**	**26.90**
3.0 m	kg			*7650	*7650	*5150	4400	*4200	2750	*2900	1800	*1550	1450	8.54
10.0 ft	**lb**			***16,300**	***16,300**	***11,050**	**9450**	***9100**	**5850**	***5200**	**3800**	***3400**	**3150**	**28.01**
1.5 m	kg			*5600	*5600	*6500	4050	4350	2600	3000	1750	*1700	1400	8.53
5.0 ft	**lb**			***13,450**	***13,450**	***14,000**	**8650**	**9300**	**5500**	**6400**	**3700**	***3700**	**3050**	**28.01**
Ground	kg			*5900	*5900	6650	3800	4200	2450	2950	1700	*1950	1450	8.20
Line	**lb**			***13,600**	***13,600**	**14,250**	**8100**	**8950**	**5250**	**6400**	**3700**	***4250**	**3200**	**26.90**
–1.5 m	kg	*4900	*4900	*9000	7000	6550	3700	4100	2400			*2400	1700	7.49
–5.0 ft	**lb**	***10,900**	***10,900**	***20,500**	**15,000**	**14,000**	**7900**	**8800**	**5100**			***5250**	**3750**	**24.52**
–3.0 m	kg	*8450	*8450	*10 550	7150	6550	3700	4150	2400			*3350	2350	6.26
–10.0 ft	**lb**	***19,000**	***19,000**	***22,800**	**15,250**	**14,050**	**7950**	**8900**	**5200**			***7450**	**5200**	**20.36**
–4.5 m	kg			*8000	7450	*5200	3900					*4900	3750	4.65
–15.0 ft	**lb**			***17,000**	**16,000**	***11,400**	**8600**					***10,800**	**8500**	**14.92**

Lift Capacities - 3100 mm (10'2") Stick, 700 mm (28") Shoes, Long Undercarriage

 Load Point Height
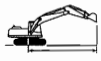 Load at Maximum Reach
 Load Radius Over Front
 Load Radius Over Side

3.1 STICK – 3100 mm (10'2")
BUCKET – 0.49 m³ (0.64 yd³)

UNDERCARRIAGE – Long
SHOES – 700 mm (28") triple grouser

BOOM – 5200 mm (16'9")

		1.5 m/5.0 ft		3.0 m/10.0 ft		4.5 m/15.0 ft		6.0 m/20.0 ft		7.5 m/25.0 ft				
														m ft
7.5 m	kg											*1500	*1500	6.84
25.0 ft	**lb**											***3300**	***3300**	**22.05**
6.0 m	kg							*3000	*3000			*1400	*1400	7.98
20.0 ft	**lb**							***6500**	***6500**			***3050**	***3050**	**25.99**
4.5 m	kg							*3300	2950	*2250	1950	*1400	*1400	8.64
15.0 ft	**lb**							***7200**	**6350**	***4100**	**4100**	***3000**	***3000**	**28.26**
3.0 m	kg			*6350	*6350	*4600	4550	*3900	2800	3150	1900	*1450	1350	8.94
10.0 ft	**lb**			***14,000**	***14,000**	***9900**	**9750**	***8400**	**6050**	***6650**	**4000**	***3150**	**3000**	**29.31**
1.5 m	kg			*9800	7600	*6050	4100	4400	2650	3050	1800	*1550	1300	8.93
5.0 ft	**lb**			***21,300**	**16,450**	***13,050**	**8850**	**9400**	**5650**	**6500**	**3800**	***3450**	**2850**	**29.30**
Ground	kg			*7000	*7000	6700	3800	4200	2450	2950	1700	*1800	1350	8.61
Line	**lb**			***16,100**	**15,150**	**14,350**	**8200**	**9050**	**5300**	**6300**	**3650**	***3950**	**3000**	**28.26**
–1.5 m	kg	*4750	*4750	*8900	6900	6500	3650	4100	2400	2900	1700	*2200	1550	7.95
–5.0 ft	**lb**	***10,600**	***10,600**	***20,300**	**14,800**	**13,950**	**7850**	**8800**	**5100**	**6400**	**3650**	***4850**	**3400**	**26.03**
–3.0 m	kg	*7600	*7600	*11 100	7000	6500	3650	4100	2350			*3050	2000	6.82
–10.0 ft	**lb**	***17,000**	***17,000**	***23,950**	**14,950**	**13,950**	**7850**	**8800**	**5100**			***6750**	**4500**	**22.22**
–4.5 m	kg	*11 500	*11 500	*9100	7250	*6100	3800					*3000	*3000	4.89
–15.0 ft	**lb**	***26,000**	***26,000**	***19,500**	**15,550**	***12,950**	**8150**					***7300**	***7300**	**15.69**

* Indicates that the load is limited by hydraulic capacity rather than tipping capacity. Lift capacity ratings are based on SAE standard J1097. Rated loads do not exceed 87% of hydraulic lifting capacity or 75% of tipping capacity.

315B Hydraulic Excavator

© 1997 Caterpillar
Printed in U.S.A.

AEHQ5282-01 (11-97)
Replaces AEHQ5282

Materials and specifications are subject to change without notice.

CATERPILLAR®

CATERPILLAR®

XEBP7224
September 1994

Parts

315 315L
Track-Type Excavators

Powered by 3046 Engine

4YM1-Up(Vehicle)
6YM1-Up(Vehicle)
5XK1-Up(Engine)

CATERPILLAR®

XEBP7224
September 1994

315 315L
Track-Type Excavators

Powered by 3046 Engine

SERIAL NUMBER
4YM1-Up(Vehicle)
6YM1-Up(Vehicle)
5XK1-Up(Engine)

LUFER INDÚSTRIA MECÂNICA LTDA.
DIRCEU JATCZAK ROSA
Gerente de Vendas

© 1994 Caterpillar
All Rights Reserved
TECHNICAL INFORMATION DIVISION
MARKETING SUPPORT SERVICES

HOW TO USE THE PARTS BOOK Caterpillar Parts Books include illustrations of the groups or assemblies which make up the machine. These illustrations show the standard components plus many of the attachments available for the machine.

The alphabetical index located in the front part of the book should be used to determine the page number on which specific illustrations are shown. Reference to those pages will identify each of the individual serviceable parts.

Captions The caption under each illustration identifies the part number and name of the group or assembly shown. If more than one illustration is included for any group, the caption identifies the specific machine serial numbers to which each illustration applies. In some cases it is not possible to determine the specific machine serial numbers to which different illustrations are applicable. In those cases the caption identifies the illustration as "First Type", "Second Type", etc. Reference to the actual group or assembly is necessary in those cases to determine which illustration should be used.

Captions provide additional information such as page numbers where illustrations of sub assemblies are shown, information reguarding quantities used and other information intended to assist the user in determining parts needs.

Indented Part Names Within each illustration is a parts list identifying each serviceable part in the illustration. When a part name is indented in this list, it means that serviceable item is a part of the serviceable item under which it is indented.

Abbreviations and Symbols

▲ ●	Used to call attention to additional information shown elsewhere within the illustration.	
R.H.	Right Hand	Refers to the side of the machine as viewed from the operator's compartment.
L.H.	Left Hand	
C	Indicates changes from the previous illustration of the same group or assembly.	
O.D.	Outside Diameter	
I.D.	Inside Diameter	
N/S	Not Serviced	
Assem.	Assembly	
in.	Inch	
ft	Foot	
cm	Centimetre	
dm	Decimetre	

Abbreviations of Wire Colors

RD : Red	BR : Brown
WH : White	GN : Green
OR : Orenge	BU : Blue
YL : Yellow	T : Tan
PK : Pink	DK/BU : Dark Blue
BK : Black	DK/GN : Dark Green
GY : Gray	LT/BU : Light Blue
PU : Purple	LT/GN : Light Gree

Note: Continuing improvement and advancement of product design may cause changes to your machine which may not be included in this publication. Each publication is reviewed and revised, as required, to update and include these changes in later editions.

Whenever a question arises regarding your Caterpillar product, or this publication, please consult your Caterpillar dealer for the latest available information.

UTILISATION DU CATALOGUE DE PIÈCES

Les Catalogues de pièces Caterpillar comportent des illustrations des groupes ou ensembles qui composent la machine. Ces illustrations représentent les composants standard et nombre des accessoires disponibles.

Au début du catalogue figure un index alphabétique qui renvoie aux pages et illustrations correspondantes. Toutes les pieces du moteur avec leur numero figurent dans ces pages.

Légendes

Chaque illustration comporte une légende comprenant le numéro de pièce et la désignation du groupe ou celle de l ensemble. Si à un groupe donné correspondent plusieurs illustrations, la légende indiquera le numéro de série de chaque machine spécifique. Parfois, il n'est pas possible de savoir à quels numéros de série spécifiques de la machine se rapportent les différentes illustrations. Dans ce cas, les legendes comportent la mention "Premier type", "Deuxième type", etc. Pour déterminer quelles illustrations utiliser, il faudra connaître la réference du groupe ou de l'ensemble correspondant.

Les legendes indiquent également les numéros de page des plans des sous-ensembles, les quantités utilisées et autres renseignements destinés à aider l'utilisateur à déterminer quelles sont les pièces nécessaires.

Désignations de pièces en retrait

Chaque illustration comporte la liste des pièces qui la constituent et que l'on peut se procurer. Lorsqu'une désignation de pièce est en retrait, cela veut dire que l'article en regard fait partie de l'ensemble sous lequel il figure.

Abréviations et symboles

▲	Symboles utilisés pour attirer l'attention	
•	sur une information supplémentaire figurant ailleurs dans l'illustration	
R.H.	Côté droit	Se réfère au côte
L.H.	Côté gauche	de la machine vu du poste de conduite
C	Modifications de l'illustration antérieure du même groupe ou ensemble.	
O.D.	Diamètre extérieur	
I.D.	Diamètre intérieur	
N/S	Non fourni	
Assem.	Ensemble	
in.	pouce	
ft	pied	
cm	centimètre	
dm	décimètre	

Abréviations des couleurs de câbles

RD :	Rouge	BR :	Marron
WH :	Blanc	GN :	Vert
OR :	Orange	BU :	Bleu
YL :	Jaune	T :	Brun
PK :	Rose	DK/BU :	Bleu foncé
BK :	Noir	DK/GN :	Vert foncé
GY :	Gris	LT/BU :	Bleu clair
PU :	Violet	LT/GN :	Vert clair

NOTA:
En raison du progrès technique et des améliorations continuelles apportées au matériel, votre machine comporte peut-être des modifications qui n'apparaissent pas dans la présente publication. Les éditions ultérieures seront revues et corrigées en conséquence.

En cas de doute sur un détail de votre machine Caterpillar ou sur le texte de la présente publication, adressez-vous à votre concessionnaire Caterpillar.

OMO USAR ESTE CATALOGO

>s Catálogos de Piezas Caterpillar tienen ilustraciones de
s grupos o conjuntos que componen la máquina. Estas
straciones muestran los componentes estándar y mu-
ios de los accesorios disponibles para la máquina.

e debe utilizar el índice alfabético al frente de este catálo-
> para determinar el número de página donde se encuen-
an ilustraciones específicas. Dichas páginas identifican
s piezas utilizables.

tulos

título debajo de cada ilustración identifica el número de
eza y el nombre del grupo o del conjunto indicado. Si se
cluye más de una ilustración de cualquier grupo, el título
entifica números de serie de las máquinas correspon-
entes a cada ilustración. En algunos casos no es posible
eterminar los números de serie de las máquinas corres-
>ndientes a las diferentes ilustraciones. En esos casos, el
ulo identifica la ilustración como "Primer tipo", "Segundo
>o", etc. Es necesario referirse al grupo o conjunto en sí
ara determinar cuál ilustración se debe utilizar.

>s títulos proveen información adicional: los números de
s páginas en que aparecen las ilustraciones de los sub-
>njuntos, las cantidades utilizadas y demás información
ara ayudar al usuario a determinar las piezas necesarias.

>mbres de Pieza sangrados

n cada ilustración hay una lista de piezas que identifica las
ezas utilizables en la ilustración. Cuando el nombre de
ıa pieza está sangrado en esta lista, significa que esta
eza forma parte de la pieza utilizable inmediatamente
riba.

Abreviaturas y símbolos

▲	Utilizado para indicar que hay información	
•	adicional al respecto en alguna otra parte de la ilustracion.	
R.H.	Lado derecho	Se refiere al lado
L.H.	Lado izquierdo	de la máquina visto desde el compartimiento del operador.
C	Indica cambios de la ilustración anterior del mismo grupo o conjunto.	
O.D.	Diámetro exterior	
I.D.	Diámetro interior	
N/S	No se suministra	
Assem.	Conjunto	
in.	Pulgada	
ft	Pie	
cm	Centímetro	
dm	Decímetro	

Abreviaciones de los colores de cables

RD :	Rojo	BR :	Marrón
WH :	Blanco	GN :	Verde
OR :	Anaranjado	BU :	Azul
YL :	Amarillo	T :	Habano
PK :	Rosado	DK/BU :	Azul oscuro
BK :	Negro	DK/GN :	Verde oscuro
GY :	Gris	LT/BU :	Azul claro
PU :	Morado	LT/GN :	Verde claro

NOTA:
Las continuas mejoras y adelantos en diseño podrían originar cambios a su máquina que no se incluyan en esta publicación. Cada publicación es analizada y revisada para actualizar e incluir estos cambios en ediciones subsecuentes.

Cuando tenga alguna pregunta acerca de su producto Caterpillar o de esta publicación, consulte al distribuidor Caterpillar para obtener la información más reciente.

MODEL VIEW

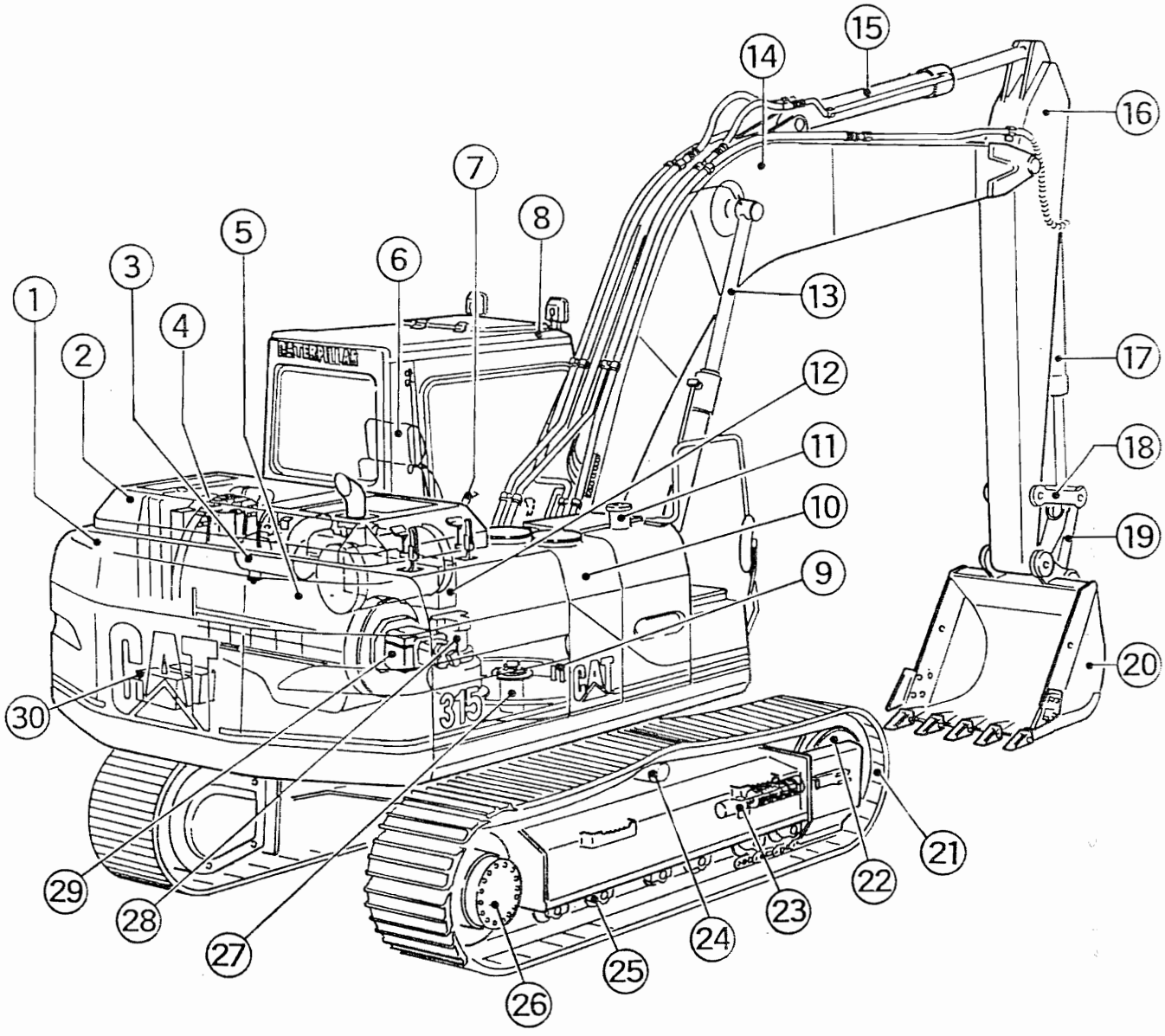

	PAGE		PAGE		PAGE
(1) Counterweight	124	(11) Fuel Tank	54	(21) Track	135.02
(2) Engine Hood	112	(12) Control Valve	212	(22) Idler	129
(3) Air Cleaner	43	(13) Boom Cylinder	154	(23) Track Adjuster	130
(4) Radiator & Oil Cooler	34	(14) Boom	307	(24) Carrier Roller	134
(5) Engine	11	(15) Stick Cylinder	155	(25) Track Roller	134
(6) Operator Seat	274	(16) Stick	309	(26) Final Drive	101
(7) Control Lever	224	(17) Bucket Cylinder	156	(27) Swivel	207
(8) Cab	231	(18) Link	313	(28) Pump	141
(9) Swing Bearing	126	(19) Rod	313	(29) Swing Drive	106
(10) Hydraulic Tank	138	(20) Bucket	317	(30) Battery	56

REPLACEMENT ITEMS

The following chart provides a convenient listing of those items which require occasional replacement during normal operation or maintenance.

	PART NO.	QTY. USED	PAGE NO.
BATTERY—12 VOLT	3T-5760	2	57
BLADE AS—WIPER	4I-6839	1	248
CAP—OIL FILLER	114-6875	1	23
CAP AS—RADIATOR	7Y-1889	1	35
ELEMENT—HYDRAULIC TANK	094-3229	1	139
ELEMENT AS—AIR	4I-7575	1	43
FILTER AS—ENGINE OIL	1R-0734	1	32
FILTER AS—FUEL	5I-7951	1	49
FILTER AS—PUMP LINE	5I-8670	1	139
FUSE (10 AMP)	9W-1442	16	69
FUSE (15 AMP)	9W-1441	3	69
FUSE (20 AMP)	9W-1446	2	69
GASKET—VALVE COVER	107-0969	1	23
HOSES—RADIATOR	102-3891 109-9510	1 1	34 34
LAMP—FLOOD (BULB)	9X-3463	1	99
LAMP—ROOM (24VOLT 5WATT)	096-0721	1	235
REGULATOR—WATER TEMP	103-2808	1	37
SCREEN AS—HYDRAULIC TANK	095-5620	1	140
SEAT BELT	8Y-6856	1	274
VALVE AS—HYDRAULIC TANK	094-1416	1	139
VEE BELT—FAN & ALTERNATOR	9L-6654	1	25

LIST OF ATTACHMENTS

The following chart provides a convenient listing of attachments with their reference page numbers as a quick reference for parts ordering.

Consists of :		Page
116-8263	ADDITIONAL TANK	55.01
105-9377	AIR CONDITIONER	287
	AUXILIARY HYDRAULIC LINES GROUPS	
	BASE MACHINE HYDRAULIC LINES	
7I-8557	Common	179
7I-8556	Double Action	178
7I-8555	Single Action	178
7I-8559	2 Pumps Flow	177
7I-8560	BOOM LINE GROUP (R—Boom)	163
	STICK LINE GROUP	
7I-8569	R2.25 Stick	167
7I-8566	R2.6 Stick	167
102-5319	BOOM (R—Boom 5100mm)	303
102-0934	BOOM LOWERING CHECK VALVES	216
	BUCKET	
	FOR EXCAVATION	
106-6758	610MM Wide - 0.28 Cu.M. - Adapter Size J300	316
106-6760	760MM Wide - 0.39 Cu.M. - Adapter Size J300	316
106-6768	930MM Wide - 0.52 Cu.M. - Adapter Size J300	315
106-6764	1070MM Wide - 0.63 Cu.M. - Adapter Size J300	315
106-6766	1220MM Wide - 0.74 Cu.M. - Adapter Size J300	314
102-5346	BUCKET LINKAGE	306
	CAB	
102-8322	TEMPERED GLASS	235.07
102-8319	WITH POLYCARBONATE GLASS	235.01
105-9882	COLD WEATHER STARTING KIT	74
102-5325	FUEL TRANSFER PUMP	55.01
116-8264	GUARD, BOTTOM (HEAVY DUTY)	121
61-5468	GUARD, FRONT WINDSHIELD	262
	GUARD, TRACK GUIDING	
106-6774	FOR FRONT (315)	133
106-6775	FOR FRONT (315L)	132.02
106-6772	FOR SPROCKET END (315)	132
106-6773	FOR SPROCKET END (315L)	132.01
7Y-9548	HEADREST	286

LIST OF ATTACHMENTS

Consists of :		Page
	LIGHT	
4I-5415	R - BOOM RIGHT	96
7Y-8189	WORKING (Cab Mounted)	98
	PAINT & LUBRICANT (TRANSFER) - FILMS	
109-1791	French	330.04
109-1792	Spanish	330.10
6I-5387	RAIN PROTECTOR (Cab Front)	260
5I-3651	SEAT (KAB 414)	275
7Y-0729	SIDECUTTER	320
	STICK	
102-5322	R2.25 STICK	305
102-5321	R2.6 STICK	305
102-5320	R3.1 STICK	304
102-8811	SUN SHADE (For Skylight)	259
6I-5438	SUN VISOR (For Windshield)	261
	TIP	
	ADAPTER SIZE J300	
8E-3756	Abrasion. Heavy Duty	323
9J-3167	Long	321
8E-3751	Long. Heavy Duty	321
3G-3237	Penetration	323
9W-9188	Sharp - Center	324
9W-9189	Sharp - Corner	324
9J-3175	Short	322
4T-2215	Wide	322
102-5491	TOOL KIT	325
	TRACK	
	TRIPLE GROUSER SHOES	
102-8125	500MM (315L)	135.02
102-8122	600MM (315)	136
102-8123	700MM (315)	137
102-8127	700MM (315L)	137.01
5I-8354	TRAVEL ALARM	94
	VANDALISM GUARD	
102-5340	FOR W/O RAIN PROTECTOR	262.01
116-8265	FOR W/RAIN PROTECTOR	262.01
103-0360	WATER SEPARATOR - FUEL	53
6I-5457	WIPER, LOWER WINDOW	254

INDEX

Name Page

A

ACCUMULATOR GP 152
ADJUSTER GP—BUCKET 320
AIR CLEANER 43
AIR CONDITIONER LINES 292
ALARM GP—BASIC 246
ALARM GP—TRAVEL 94
ALTERNATOR GP 91
ALTERNATOR GP—CHARGING 92
ASSIST GP—WINDSHIELD 241

B

BATTERY & WIRING 56
74
BOOM AR—1 PIECE 303
BOOM GP 307
BOOM LINES 162
BOTTLE GP—WINDSHIELD WASHER 251
253
BOX GP—MOUNTING & 262.04
264.01
BOX GP—STORAGE 242
264
264.02
BUCKET AS 317
BUCKET GP—ADJUSTER & 314

C

CAB GP 231
CABLE AS 60
76
CAMSHAFT GP 20
CARRIER AS—PLANET 108
CARRIER ROLLER 134
CLEANER GP—AIR 43
COMPRESSOR GP—REFRIGERANT 294
CONDENSER GP—MOUNTING & 288
CONDITIONER AR 287
CONDITIONER GP—AIR 290
CONDITIONER GP—MOUNTING & 289
CONSOLE GP 270
CONSOLE GP—OPERATOR 269
CONTROL AR—AUXILIARY 178
CONTROL GP—ELECTRONIC 247
CONTROL GP—GOVERNOR 48
CONTROL GP—HYDRAULIC 210

Name Page

CONTROL GP—PILOT OPERATED HYDRAULIC 208
CONVERTER GP—ELECTRICAL 266
COOLER GP—ENGINE OIL 38
COUNTERWEIGHT GP 124
COUPLING GP—PUMP 142
COVER GP 250
COVER GP—VALVE MECHANISM 23
CRANKSHAFT GP 16
CYLINDER BLOCK AS 14
CYLINDER BLOCK GP 16
CYLINDER GP 157
CYLINDER GP—SEAL & 154
CYLINDER HEAD GP 21

D

DOOR GP 119
DOOR GP—CAB 236
240
DRIVE GP—FINAL 101
104
DRIVE GP—SWING 103
106
DUCT GP—AIR 297
DUCT GP—DEFROST 296

E

ENGINE AR 11
EXTENSION GP—EXHAUST 44

F

FAN GP—SUCTION 36
FASTENER GP 100
FILM GP 327
331
FILTER GP—FUEL 49
FILTER GP—OIL 32
FLYWHEEL GP 17
FRAME AS—UNDERCARRIAGE 128
FRAME GP—UPPER 127
FRONT LINES 191
FUEL LINES 52
FUMES DISPOSAL GP 33

ame Page

G

AUGE GP—OIL LEVEL 32
EAR GP—BEARING & 126
EAR GP—FRONT 23
LOW PLUG GP 90
OVERNOR CONTROL 48
REASE LINES 161
UARD & HOOD 112
UARD AR—VANDALISM 262.01
UARD GP—BOTTOM 120
UARD GP—SWIVEL 123
UARD GP—TRACK GUIDE 132
UARD GP—TRACK MOTOR 135
UARD GP—VANDALISM 262.02

H

ANDRAIL GP 124
ARNESS AS 62
70
80
84
244
267
ATCH GP 238
EADREST AS—SEAT 286
EATER GP 299
EATER GP—CAB 295
EATER LINES 302
OOD AS 118
OOD GP—GUARD & 112
ORN GP—ELECTRIC 95
OUSING GP—FLYWHEEL 17
OUSING GP—FRONT 24
YDLAULIC CONTROL—PILOT OPERATED ... 208

I

LER GP—FRONT 129
ISTALLATION AR—AUXILIARY 177
ISTALLATION AR—ENGINE 11
ISTRUMENT GP 93

L

AMP GP—FLOOD 99
FTING GP 27

Name Page

LIGHTING GP 95
LINES AR—AUXILIARY HYDRAULIC 163
167
LINES GP—AIR 45
LINES GP—AIR CONDITIONER 292
LINES GP—AUXILIARY HYDRAULIC 170
LINES GP—BOOM 162
LINES GP—BOOM CYLINDER 160
LINES GP—DRAIN 28
LINES GP—FRONT 191
LINES GP—FUEL 52
LINES GP—FUEL FILTER 50
LINES GP—FUEL INJECTION 51
LINES GP—GREASE 161
LINES GP—HEATER 302
LINES GP—PILOT 180
LINES GP—PUMP 176
LINES GP—RETURN & FILTER 198
LINES GP—STICK 164
LINES GP—SWING MOTOR 200
LINES GP—TRACK MOTOR 174
LINES GP—WATER 37
LINK AS—TRACK 137
LINKAGE AR—BUCKET 306
LINKAGE GP—BUCKET 313
LITERATURE GP—OWNER & OPERATOR 286
LUBRICANT GP—PAINT & 328

M

MANIFOLD GP—EXHAUST 39
MANIFOLD GP—INLET 42
MECHANISM GP—VALVE 22
MIRROR GP—REAR VIEW 263
MOTOR AS 249
MOTOR AS—WIPER 257
MOTOR GP—PISTON 202
MOUNTING GP—ATTACHMENT 325
MOUNTING GP—CONTROL 77
MOUNTING GP—ENGINE 29
MOUNTING GP—VALVE 211
MUFFLER GP 46

N

NAME PLATES & FILMS 328

Name Page

O

OPERATOR CONSOLE 269

P

PAN GP—OIL 26
PANEL GP—CIRCUIT BREAKER 68
PILOT LINES 180
PISTON & ROD GP 19
PLATFORM GP—OPERATOR 110
PULLEY GP 25
PULLEY GP—CRANKSHAFT 25
PUMP AR—FUEL TRANSFER 55.01
PUMP GP—DOUBLE—PISTON 143
PUMP GP—FUEL INJECTION 47
PUMP GP—FUEL TRANSFER 55.02
PUMP GP—HYDRAULIC 144
PUMP GP—MOUNTING & 141
PUMP GP—OIL 31
PUMP GP—PISTON & GEAR 146
PUMP GP—WATER 36

R

RADIATOR GP—OIL COOLER & 34
RECOIL GP—TRACK ADJUSTER & 130
REFRIGERANT COMPRESSOR 294
RETURN & FILTER LINES 198
ROLLER AR—TRACK & CARRIER 132.02
ROLLER GP—CARRIER 134
ROLLER GP—TRACK SINGLE FLANGE 134

S

SCREEN GP 140
SEAT AR 275
SEAT AS—UPPER 280
SEAT GP 274
SEAT GP—BASIC 276
SEPARATOR GP—WATER 53
SIDECUTTER GP 320
SPROCKET GP—NON—SEGMENTED 102
STARTING MOTOR GP—ELECTRIC 90
STICK AR—HOE 304
STICK GP—HOE 309
STICK LINES 164
SUPPORT GP—SEAT 274

Name Page

SUSPENSION AS 282
SWING MOTOR LINES 200
SWITCH AS—DISC 73
75
SWITCH AS—ROTARY 83
SWITCH AS—TOGGLE 82
SWITCH GP—HEAT START 83
SWIVEL GP 207

T

TANK AR—ADDITIONAL 55.01
TANK AS 252
TANK GP—FILTER & 139
TANK GP—FUEL 55
55.04
TANK GP—MOUNTING & 54
55.03
138
TIP GP 321
TOOL AR 325
TOOL GP 326
TRACK GP 135.02
TRACK LINK 137
TRACK MOTOR LINES 174
TRACK SINGLE FLANGE ROLLER 134
TURBOCHARGER GP 40

V

VALVE AR—BOOM LOWERING 216
VALVE GP—BANK 212
VALVE GP—CHECK 220
VALVE GP—CHECK & RELIEF 219
VALVE GP—FLOW CONTROL 216
229
VALVE GP—MANIFOLD & REDUCING 222
VALVE GP—PILOT 223
VALVE GP—PRESSURE &
FLOW COMPENSATOR 148
VALVE GP—RELIEF 206
228
VALVE GP—RELIEF PILOT 217
230
VALVE GP—SELECTOR 218
VISOR GP—CAB 261
VISOR GP—PROTECTIVE 259

Name Page

W

WASHER GP 255
WASHER GP—WINDSHIELD 251
WINDOW AS—DOOR 237
WINDSHIELD GP 248
WIPER AR—LOWER 254
WIPER GP 248
WIPER GP—WASHER & 256
WIRING GP 94.01
258
WIRING GP—BATTERY & 56
74
WIRING GP—CONSOLE 77

INDEX ALPHABÉTIQUE

Désignation	Page
A	
Accouplement de pompe	142
Accumulateur	152
Air – Filtre	43
Alternateur (ass)	91
Alternateur de charge	92
Appuie-tête du siège	286
Arbre à cames	20
Autocollants (ass)	327, 331
Avertisseur - groupe de base	246
Avertisseur de translation	94
B	
Barbotin sans segments	102
Batterie et câblage	56
Bielle et piston	19
Blindage de joint tournant	123
Blindage inférieur (ass)	120
Bloc-cylindres (ass)	16
Bloc-cylindres (ens)	14
Bougie de préchauffage	90
Boulonnerie	100
Bras rétro (ass)	309
Bras retro (version)	304
C	
Cabine	231
Câblage (ens)	60, 76
Câblage	94.01, 258
Câblage de la console	77
Câblage et batterie	56, 74
Cache-soupapes (ass)	23
Canalisations AV	191
Canalisations d'air	45
Canalisations d'eau	37
Canalisations d'injection de carburant	51
Canalisations de bras	164
Canalisations de carburant	52
Canalisations de chauffage	302
Canalisations de filtre à carburant	50
Canalisations de flèche	162
Canalisations de graissage	161
Canalisations de moteur d'orientation	200
Canalisations de moteur des chaînes	174
Canalisations de pompe	176
Canalisations de retour et filtre	198
Canalisations de vidange	28
Canalisations du bras	164
Canalisations du climatiseur	292
Canalisations du moteur d'orientation	200
Canalisations du moteur des chaînes	174
Canalisations du vérin de flèche	160
Canalisations hydrauliques auxiliaires (ass)	170
Canalisations hydrauliques auxiliaires (version)	163, 167
Canalisations pilote	180
Capot (ens)	118
Capot et protection	112
Carburant – Canalisations	52
Carter AV	24
Carter d'huile	26
Carter de volant	17
Chaînes	135.02
Chaînes – Maillon	137
Châssis de tourelle (ass)	127
Châssis porteur (ass)	128
Chauffage de cabine	295
Clapet de décharge	206, 228
Clapet de décharge et anti-retour	219
Clapet de décharge à commande pilote	217, 230
Clapet de retenue	220
Clapet de retenue d'abaissement de flèche	216
Climatiseur (ass)	290
Climatiseur (version)	287
Climatiseur et montage	289
Climatiseur – Canalisations	292
Coffre de rangement	242, 264, 264.02
Coffre de rangement et montage	262.04, 264.01
Collecteur d'admission	42
Collecteur d'échappement	39
Collecteur et soupape réductrice	222
Commande auxiliaire	178
Commande de régulateur	48
Commande hydraulique	210
Commande hydraulique pilote	208
Commande électronique	247
Commandes – Montage	77
Compresseur (ass)	352.01
Compresseur de réfrigérant	294
Condensateur et montage	288
Conduit d'air	294
Conduit du dégivreur	296
Console	270
Console de conduite	269
Contacteur de départ	83
Contrepoids	124
Convertisseur électrique	266
Couteaux latéraux	320
Couvercle (ass)	250
Culasse	21
Culbuterie	22
D	
Démarreur électrique	90
Disjoncteur – Panneau	68
Distributeur (ass)	212
Distributeur de débit	216, 229
Documentation – Guides du propriétaire et d'utilisation	286
E	
Echappement – Rallonge	44
Eclairage (ass)	95

INDEX ALPHABÉTIQUE

ésignation	Page
cran	140
ngrenage AV	23
ngrenage et coussinet	126
ntraînement d'orientation	103, 106
quipement accessoire – Montage	325
ssuie-glace	248
ssuie-glace inférieur (version)	254
ssuie-glace/lave-glace pare-brise	256
vacuation des gaz de carter	33

F

aisceau de câbles	62, 70, 80, 84, 244, 267
iltre à air	43
iltre à carburant	49
iltre à huile	32
lèche	307
lèche monobloc	303

G

alet inférieur à boudin simple	134
alet supérieur (ass)	134
alet supérieur	134
alets supérieur (version)	132.02
lace de portière	237
odet	317
odet – Vérin de réglage	314
raissage – Canalisations	161
roupe d'orientation	207
uides protecteurs de chaîne	132

H

uile moteur – filtre	32
uile moteur – refroidisseur	38

I

nstruments	93
nterrupteur circulaire	73, 75
nterrupteur rotatif	83
nterrupteur à bascule	82

J

auge de niveau d'huile	32

K

laxon électrique	95

L

ave-glace	255
ave-glace pare-brise	251
Levage (ass)	27
Lubrifiants et peintures	328

M

Maillon de chaîne	137
Main-courante	124
Montage auxiliaire	177
Montage du moteur	11, 29
Moteur (ens)	249
Moteur	11
Moteur d'essuie-glace (ens)	257
Moteur à pistons	202

O

Outil (ass)	326
Outil (version)	325

P

Pare-brise	248
Pare-brise – Ressort amortisseur (ass)	241
Peintures et lubrifiants	328
Phares	99
Piston et bielle	19
Plaques signalétiques et autocollants	328
Plate-forme de cabine	110
Pointe	321
Pompe d'alimentation (ass)	55.02
Pompe d'alimentation (version)	55.01
Pompe d'injection de carburant	47
Pompe et montage	141
Pompe hydraulique	144
Pompe – Accouplement	142
Pompe à eau	36
Pompe à huile	31
Pompe à piston double	143
Pompe à pistons et engrenages	146
Porte-satellites	108
Portière (ass)	119
Portière de cabine	236, 240
Poulie	25
Poulie de vilebrequin	25
Protecteur de glace	342
Protection anti-vandalisme (ass)	262.02
Protection anti-vandalisme (version)	262.01
Protection de moteur de chaînes	135
Protection et capot	112

R

Radiateur et refroidisseur d'huile	34
Rallonge d'échappement	44
Réchauffeur	299
Réducteur de roue	101, 104
Réfrigérant – Compresseur	294

INDEX ALPHABÉTIQUE

Désignation	Page
Refroidisseur d'huile moteur	38
Réglage des chaînes et mécanisme amortisseur	130
Réglage du godet	320
Régulateur – Commande	48
Réservoir	252
Réservoir additionnel	55.01
Réservoir de lave-glace	251. 253
Réservoir et filtre	139
Réservoir et montage	54. 55.03
Réservoir à carburant	55. 55.04
Rétroviseur	263
Roue AV	129

S

Séparateur d'eau	53
Siège (ass)	274
Siège (ens)	280
Siège (version)	275
Siège – Assemblage de base	276
Silencieux	46
Soupape pilote	223
Soupape régulatrice de pression et débit	148
Soupape sélectrice	218
Soupapes – Montage	211
Support de siège	274
Suspension	282

T

Timonerie de godet (ass)	313
Timonerie de godet (version)	306
Turbocompresseur	40

V

Ventilateur aspirant	36
Vérin	157
Vérin et joint (ass)	154
Vilebrequin	16
Visière de protection contre la pluie	259
Visière – Cabine	261
Volant	17
Volet (ass)	338

INDICE

ombre	Página
A	
ceite del motor – enfriador del	38
condicionador (config)	287
condicionador de aire	290
condicionador de aire – Tuberias del	292
condicionador y montaje	289
coplamiento de bomba	142
cumulador	152
ire – Filtro de	43
justador del cucharon	320
larma de desplazamiento	94
larma – grupo básico	246
lternador	91
lternador de carga	92
povacabeza del asiento del operador	286
rbol de levas	20
siento (config)	275
siento (conj)	280
siento (gr)	274
siento básico (gr)	276
B	
astidor de la superestructura (gr)	127
astidor del tren de rodaje	128
ateria y cables	56
iela y pistón	19
loque motor (conj)	14
loque motor (gr)	16
ocina eléctrica	95
omba de aceite	31
omba de inyección de combustible	47
omba de pistones y engranajes	146
omba de transferencia de combustible	55.01, 55.02
omba del agua	36
omba doble de pistones	143
omba hidráulica	144
omba y montaje	141
omba – Acoplamiento de	142
razo de retroexcavador (config)	304
razo de retroexcavador (gr)	309
ujia incandescente	90
C	
abina	231
ables - Conjunto de	60, 76
ables	94.01, 258
ables de la consola	77
ables y batería	56, 74
adena – Eslabón	137
adenas	135.02
aja de almacenamiento	242, 264, 264.02
aja de volante	17
aja delantera	24
aja y montaje	262.04, 264.01

Nombre	Página
Calcomanías (gr)	327, 331
Calcomanías y placas de identificación	328
Calefacción	299
Calefacción de la cabina	295
Calefacción – Tuberías de la	302
Capó	118
Capó y protector	112
Cigüeñal	16
Cilindro	157
Cilindro y sello (gr)	154
Colector del cárter	26
Combustible – Tuberías de	52
Compresor de refrigerante	294
Compuerta	238
Condensador y montaje	288
Conducto de aire	297
Conducto de desempañamiento	296
Consola	270
Consola del operador	269
Contrapeso	124
Control auxiliar	178
Control del regulador	48
Control electrónico	247
Control hidráulico	210
Control hidráulico de servomando	208
Convertidor eléctrico	266
Cucharón	317
Cucharón – Ajustador del	314
Culata de cilindros	21
E	
Enfriador de aceite del motor	38
Engranaje delantero	23
Engranaje y cojinete	126
Engrase – Tuberías de	161
Escape de gases	33
Escape – Extensión del	44
Eslabón de cadena	137
Extensión del escape	44
F	
Filtro	140
Filtro de aceite	32
Filtro de aire	43
Filtro de combustible	49
G	
Grupo de levantamiento	27
Grupo de válvulas	212
H	
Herramienta (config)	325
Herramienta (gr)	326

INDICE

Nombre Página

I

Indicador del nivel de aceite 32
Instalación auxiliar (config) 177
Instalación del motor 11
Instrumentos (gr) 93
Interruptor de calentamiento de arranque .....
Interruptor de disco 73, 75
Interruptor de volquete 82
Interruptor rotatorio 83

L

Lavador 255
Lavaparabrisas 251
Limpia y lavaparabrisas 258
Limpiador (gr) 248
Limpiaparabrisas inferior (config) 254
Literatura – Grupo de manuales de propiedad y operación 286
Lubricantes y pinturas 328
Luces (gr) 95

M

Mando de rotación 103, 106
Mando final 101, 104
Mazo de cables 62, 70, 80, 84, 244, 267
Mecanismo de válvulas 22
Montaje de accesorios 325
Montaje de los controles 77
Montaje de válvula 211
Montaje del motor 29
Motor (conj) 249
Motor 11
Motor de arranque eléctrico 90
Motor de pistones 202
Motor del limpiaparabrisas 257
Motor – Instalación del 11
Múltiple de admisión 42
Múltiple de escape 39
Múltiple y válvula reductora 222

O

Orejetas 320

P

Panel del disyuntor de circuito 68
Parabrisas (gr) 248
Parabrisas – Resorte amortiguador (gr) 241
Pasamanos 124
Pinturas y lubricantes 410
Plataforma de la cabina 110

Nombre Página

Pluma 307
Pluma de una pieza (config) 303
Pluma – Tuberías de la 162
Polea 25
Polea de cigüeñal 25
Portasatélites 108
Protección contra el vandalismo (config) 262.01
Protector contra el vandalismo (gr) 262.02
Protector de la unión giratoria 123
Protector del motor de las cadenas 135
Protector guia de cadena 132
Protector inferior (gr) 120
Protector y capó 112
Puerta (gr) 119
Puerta de la cabina 236, 240
Punta 321

R

Radiador y enfriador de aceite 34
Recipiente del lavaparabrisas 251, 253
Reflectores 99
Refrigerante – Compresor de 294
Regulador – Control del 48
Resorte tensor y ajustador de la cadena 130
Retrovisor 263
Rodillo de una pestaña 134
Rodillo superior 134
Rodillo superior de cadenas 132.02, 134
Rotación (gr) 207
Rueda guia delantera 129
Rueda motriz sin segmentos 102

S

Separador de agua 53
Silenciador 46
Soporte del asiento 274
Suspensión 282

T

Tanque (conj) 252
Tanque adicional 55.01
Tanque de combustible 55, 55.04
Tanque y filtro 139
Tanque y montaje 54, 55.03, 138
Tapa (gr) 250
Tapa del mecanismo de válvulas 23
Tornillería 100
Tuberías auxiliares hidráulicas (gr) 163, 167, 170
Tuberías de agua 37
Tuberías de aire 45
Tuberías de combustible 52
Tuberías de drenaje 28
Tuberías de engrase 161

INDICE

Nombre	Página
Tuberias de inyección de combustible	51
Tuberias de la bomba	176
Tuberias de la calefacción	302
Tuberias de la pluma	162
Tuberias de retorno y del filtro	198
Tuberias de servomando	180
Tuberías del acondicionador de aire	292
Tuberias del brazo	164
Tuberias del cilindro de la pluma	160
Tuberías del filtro de combustible	50
Tuberias del filtro y de retorno	198
Tuberias del motor de las cadenas	174
Tuberias del motor de rotacion	200
Tuberias delanteras	191
Turboalimentador	40

V

Nombre	Página
Válvula compensadora de presión y caudal	148
Válvula de alivio	206, 228
Válvula de alivio de servomando	217, 230
Válvula de control de caudal	216, 229
Válvula de retención	220
Válvula de retención de bajada de la pluma	216
Válvula de retención y alivio	219
Válvula de servomando	223
Válvula selectora	218
Válvulas (gr)	212
Varillaje del cucharón (config)	306
Varillaje del cucharón (gr)	313
Ventana de la puerta	237
Ventilador de succión	36
Visera de la cabina	261
Visera – Grupo de protección	259
Volante	17

NAME OF ENGINE PARTS

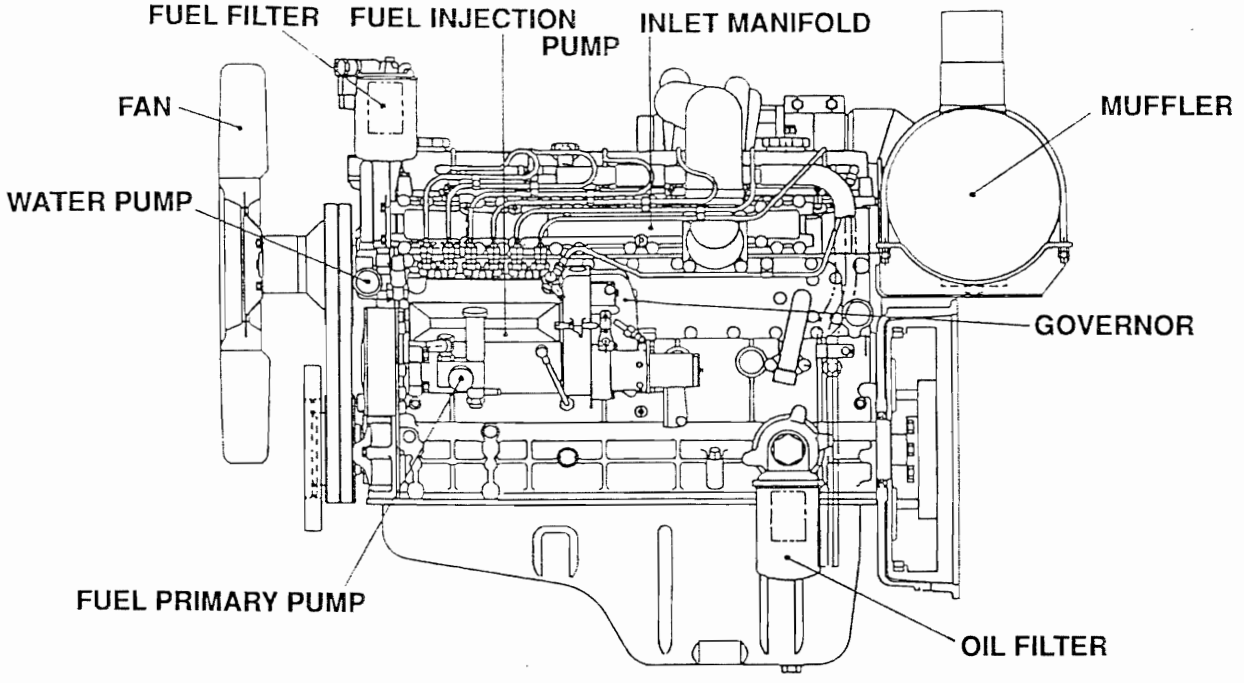

LEFT SIDE VIEW

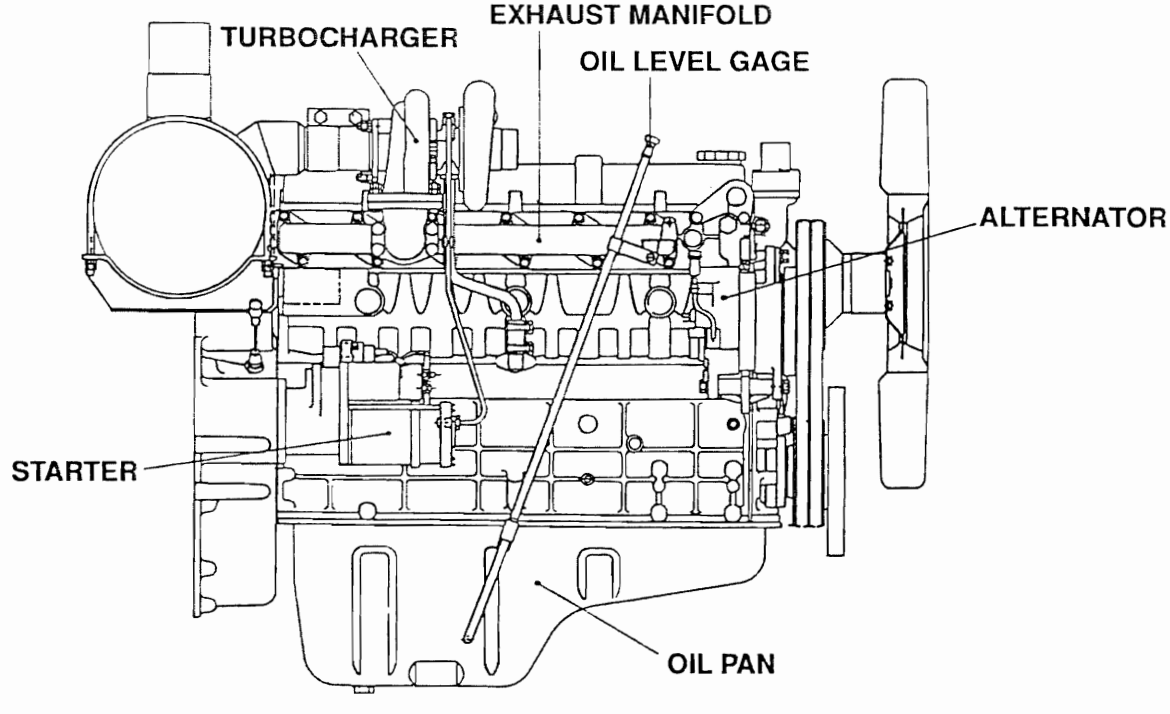

RIGHT SIDE VIEW

BASIC ENGINE

Consists of :

			Page
1	5I-8150	FAN GP-SUCTION	36
1	5I-8151	MUFFLER GP	46
1	117-1896	ENGINE AR	12
1	5I-8152	INSTRUMENT GP	93

H41478E

102-3830 ENGINE AR

Consists of :

			Page
1	102-3832	LINES GP-AIR	45
1	102-3833	RADIATOR GP-OIL COOLER &	34
1	7Y-1583	EXTENSION GP-EXHAUST	44
1	109-9452	CLEANER GP-AIR	43
1	102-3836	MOUNTING GP-ENGINE	29
1	102-3837	LINES GP-DRAIN	28

H41567E

102-3841 INSTALLATION AR-ENGINE

ENGINE ARRANGEMENT

			PAGE
1	1166730	ALTERNATOR GP	91
1	1169987	CAMSHAFT GP	20
1	1068262	COOLER GP-ENGINE OIL	38
1	1068248	COVER GP-VALVE MECHANISM	23
1	1169988	CRANKSHAFT GP	16
1	1068230	CYLINDER BLOCK GP	16
1	1068249	CYLINDER HEAD GP	21
1	1166727	FILTER GP-FUEL	49
1	1166723	FILTER GP-OIL	32
1	1166715	FLYWHEEL GP	17
1	1068265	FUMES DISPOSAL GP	33
1	1166720	GAUGE GP-OIL LEVEL	32
1	1166710	GEAR GP-FRONT	23
1	1166728	GLOW PLUG GP	90
1	1166718	HOUSING GP-FLYWHEEL	17
1	1166713	HOUSING GP-FRONT	24

582068

ENGINE ARRANGEMENT

			PAGE
1	1068236	LIFTING GP	27
1	1166726	LINES GP-FUEL FILTER	50
1	1068268	LINES GP-FUEL INJECTION	51
1	1166725	LINES GP-WATER	37
1	1068270	MANIFOLD GP-EXHAUST	39
1	1068266	MANIFOLD GP-INLET	42
1	1068238	MECHANISM GP-VALVE	22
1	1166722	PAN GP-OIL	26
1	1068232	PISTON & ROD GP	19
1	1166712	PULLEY GP	25
1	1166711	PULLEY GP-CRANKSHAFT	25
1	1166708	PUMP GP-FUEL INJECTION	47
1	1068269	PUMP GP-OIL	31
1	1166724	PUMP GP-WATER	36
1	1166731	STARTING MOTOR GP-ELECTRIC	90
1	1166709	TURBOCHARGER GP	40

GASKET KITS AVAILABLE:

1	1073732	KIT-BOTTOM GASKET
1	1073731	KIT-TOP GASKET

582068

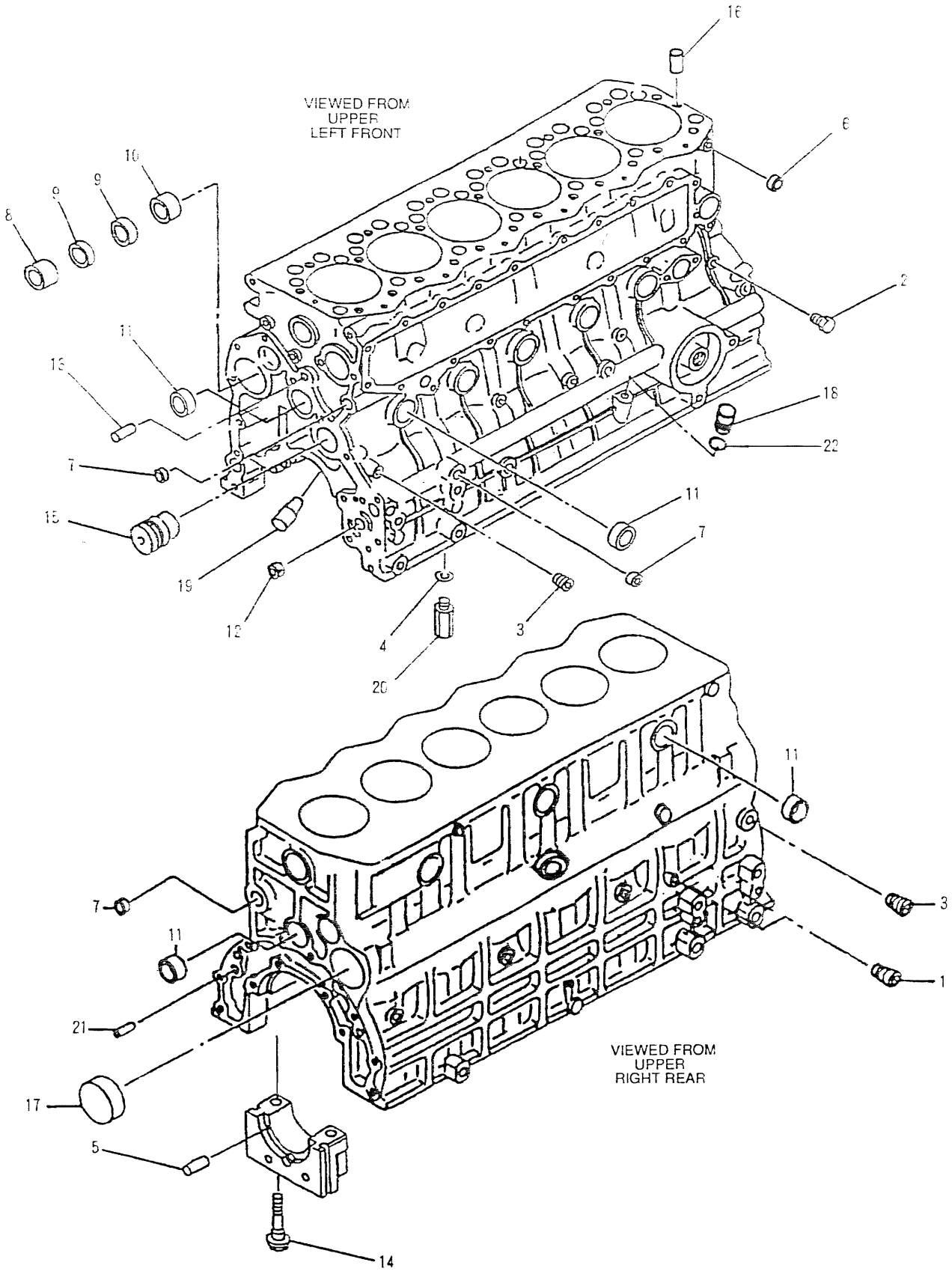

1073675 CYLINDER BLOCK AS

Part of 1068230 Block listed on Page 16

BASIC ENGINE

NOTE	No.	PART No.	QTY	PART NAME	NOTE	No.	PART No.	QTY	PART NAME
	1	4D-3118	3	PLUG					
	2	5M-6213	1	PLUG					
	3	9F-2247	8	PLUG					
	4	101-6680	1	GASKET					
	5	103-2229	6	PIN					
	6	103-2424	1	CAP					
	7	103-2425	8	CAP					
	8	103-2815	1	BUSHING					
	9	103-2816	2	BUSHING					
	10	103-2817	1	BUSHING					
	11	103-7698	15	PLUG					
	12	103-9062	1	BUSHING					
	13	103-9275	2	PIN					
	14	103-9276	14	BOLT					
	15	103-9703	1	SHAFT					
	16	104-1218	2	PIN					
	17	5I-7525	1	PLUG					
	18	107-3667	1	PLUG					
	19	107-3669	6	JET					
	20	107-3672	1	VALVE AS (RELIEF)					
	21	099-4420	2	PIN					
	22	103-2453	1	O-RING					

H39465E

1073675 CYLINDER BLOCK AS

Part of 1068230 Block listed on Page 16

BASIC ENGINE

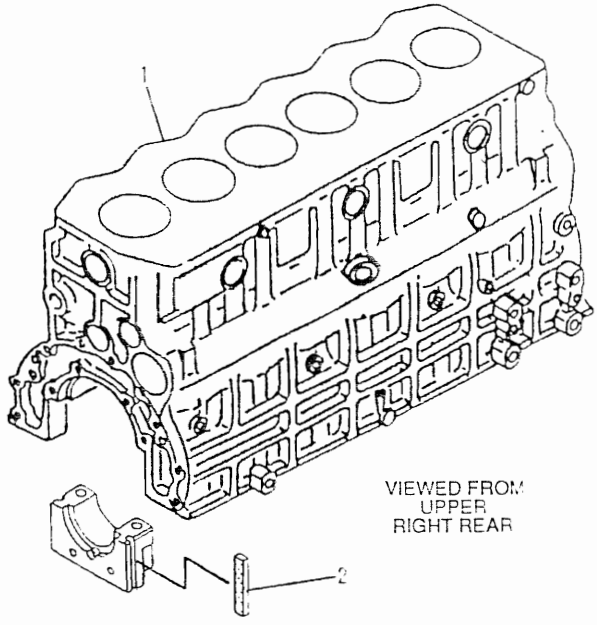

NOTE	REF NO	PART NUMBER	QTY	PART NAME
Y	1	1073675	1	BLOCK AS
	2	1039279	2	SEAL-SIDE

Y-SEPARATE ILLUSTRATION

H39463E

1201 **1068230 CYLINDER BLOCK GP**

1073675 – Page 14

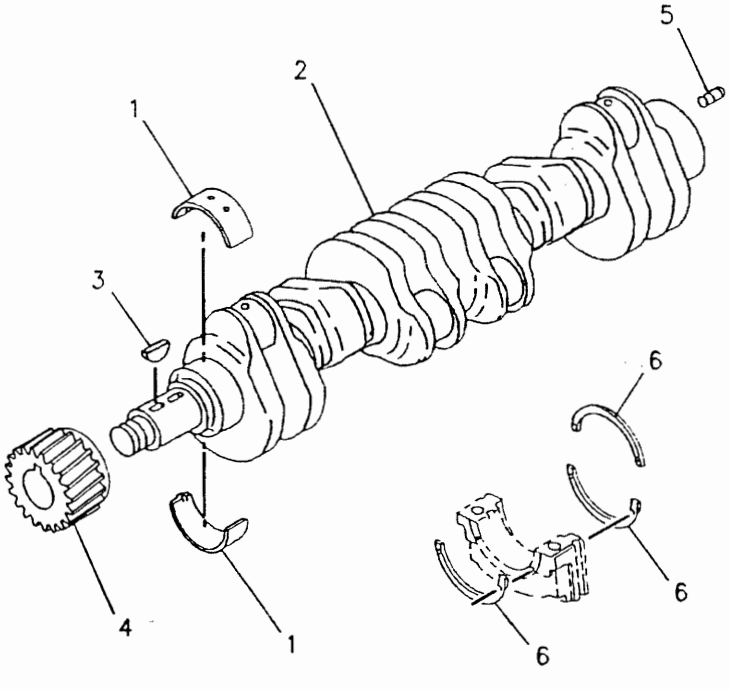

NOTE	REF NO	PART NUMBER	QTY	PART NAME
	1	1070991	1	BEARING SET-MAIN (STANDARD)
		1145609	1	BEARING SET-MAIN (.25MM US)
		1145610	1	BEARING SET-MAIN (.50MM US)
		1145611	1	BEARING SET-MAIN (.75MM US)
	2	1172830	1	CRANKSHAFT AS
	3	1032235	1	KEY-WOODRUFF
	4	1172829	1	GEAR
	5	1041219	1	PIN-DOWEL
	6	1039288	3	PLATE-THRUST (STANDARD)
		1039289	3	PLATE-THRUST
		1039290	3	PLATE-THRUST

R- 582083

1202 **1169988 CRANKSHAFT GP**

BASIC ENGINE

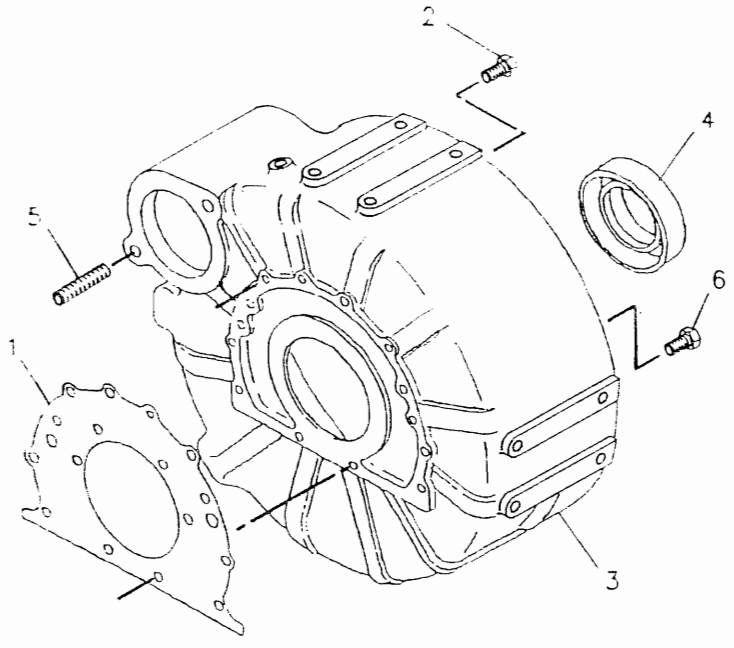

NOTE	REF NO	PART NUMBER	QTY	PART NAME
	1	1039280	1	GASKET-REAR
	2	1016492	10	BOLT
	3	1175016	1	HOUSING-FLYWHEEL
	4	1175015	1	SEAL AS-OIL
	5	942524	2	STUD
	6	1041199	2	BOLT

R- 582119

1157 1166718 HOUSING GP-FLYWHEEL

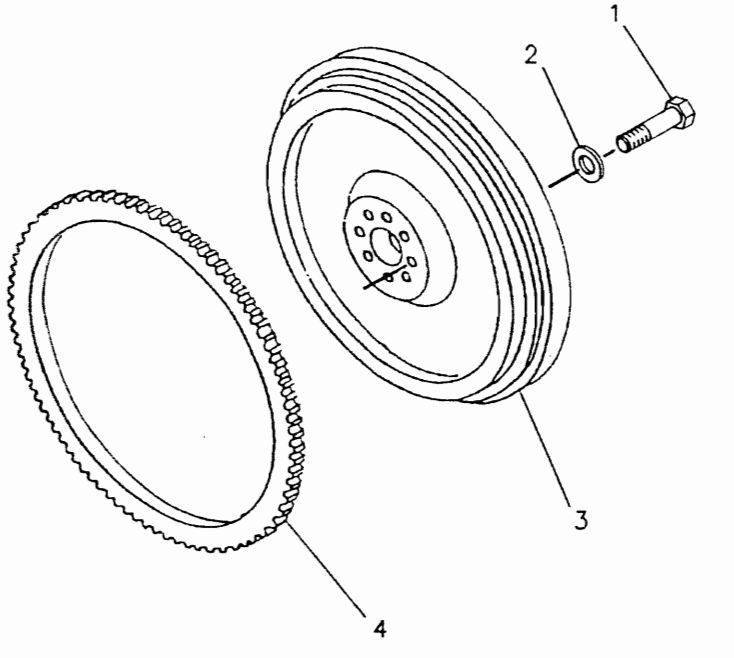

NOTE	REF NO	PART NUMBER	QTY	PART NAME
	1	1032146	6	BOLT
	2	5P8245	6	WASHER
	3	1174025	1	FLYWHEEL AS
	4	1174026	1	GEAR

R- 582123

1156 1166715 FLYWHEEL GP

MEMORANDA

BASIC ENGINE

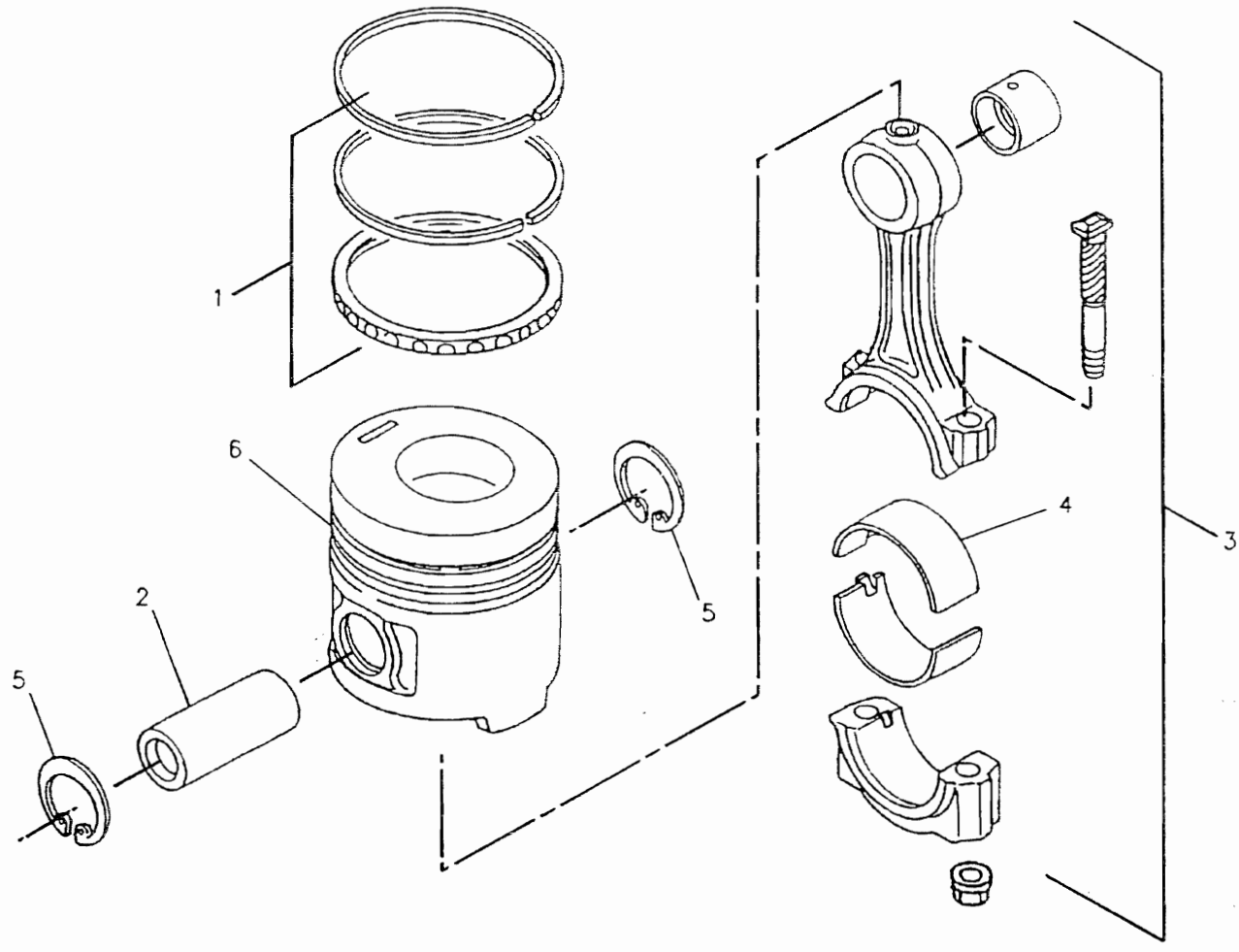

NOTE	REF NO	PART NUMBER	QTY	PART NAME
	1	1032857	6	RING SET-PISTON
		1032858	6	RING SET-PISTON (.25 MM O/S)
		1032859	6	RING SET-PISTON (.50 MM O/S)
	2	1039679	6	PIN-PISTON
	3	1039680	6	ROD AS-CONNECTING
	4	1039683	12	BEARING-CONNECTING ROD
		1039684	12	BEARING-CONNECTING ROD (.25 MM U/S)
		1039685	12	BEARING-CONNECTING ROD (.50 MM U/S)
		1039686	12	BEARING-CONNECTING ROD (.75 MM U/S)
	5	1041236	12	RING-SNAP
	6	1070984	6	PISTON
		1078255	6	PISTON (.25 MM O/S)
		1078256	6	PISTON (.50 MM O/S)

R- 560012

1225

1068232 PISTON & ROD GP

BASIC ENGINE

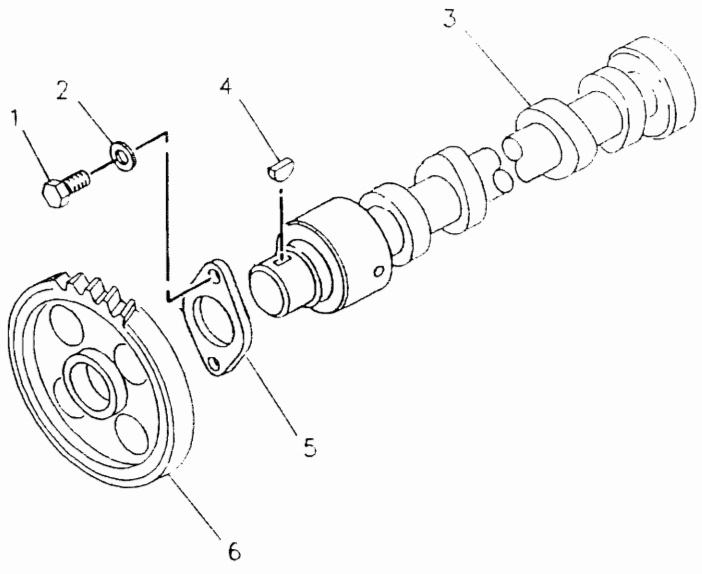

NOTE	REF NO	PART NUMBER	QTY	PART NAME
M	1	6V5215	2	BOLT
	2	9M1974	2	WASHER-HARD
	3	1078369	1	CAMSHAFT AS
	4	1032235	1	KEY-WOODRUFF
	5	1039098	1	PLATE-THRUST
	6	1172827	1	GEAR

M-METRIC PART

R- 582080

1210 1169987 CAMSHAFT GP

BASIC ENGINE

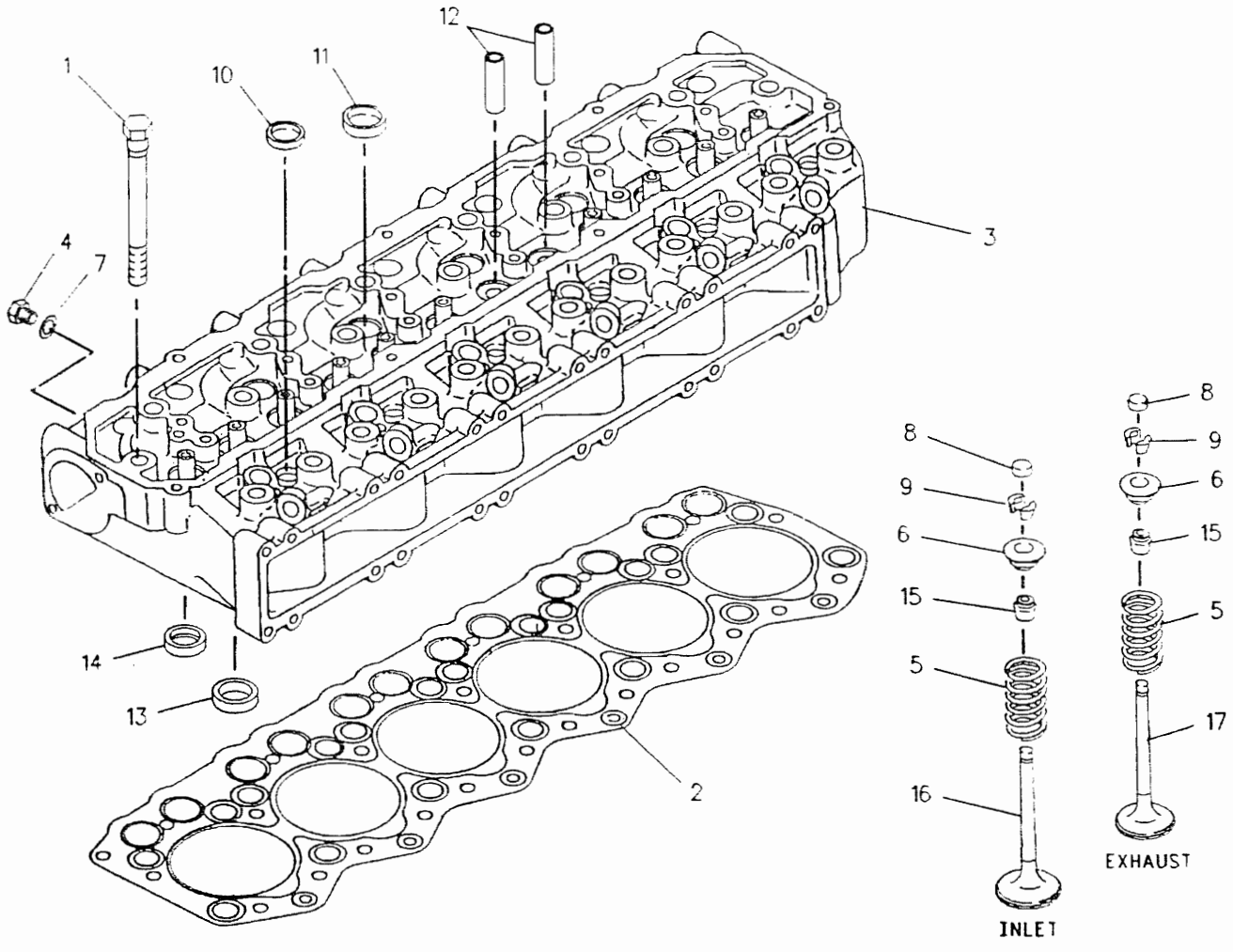

NOTE	REF NO	PART NUMBER	QTY	PART NAME	NOTE	REF NO	PART NUMBER	QTY	PART NAME
	1	1039246	25	BOLT-CYLINDER HEAD					
	2	1070979	1	GASKET-CYLINDER HEAD					
	3	1070978	1	CYLINDER HEAD AS					
		1070980	1	HEAD					
	4	1032309	2	PLUG-DRAIN					
	5	1032782	12	SPRING					
	6	1032784	12	RETAINER					
	7	1032797	2	GASKET					
	8	1032802	12	CAP					
	9	1032826	24	COTTER-VALVE					
	10	1039010	12	CAP-SEALING					
	11	1039011	11	CAP-SEALING					
	12	1039247	12	GUIDE-VALVE					
	13	1039252	6	SEAT-VALVE					
	14	1039253	6	SEAT-VALVE					
	15	1039260	12	SEAL-VALVE STEM					
	16	1039269	6	VALVE-INLET					
	17	1039270	6	VALVE-EXHAUST					

R- 559534

1100

1068249 CYLINDER HEAD GP

BASIC ENGINE

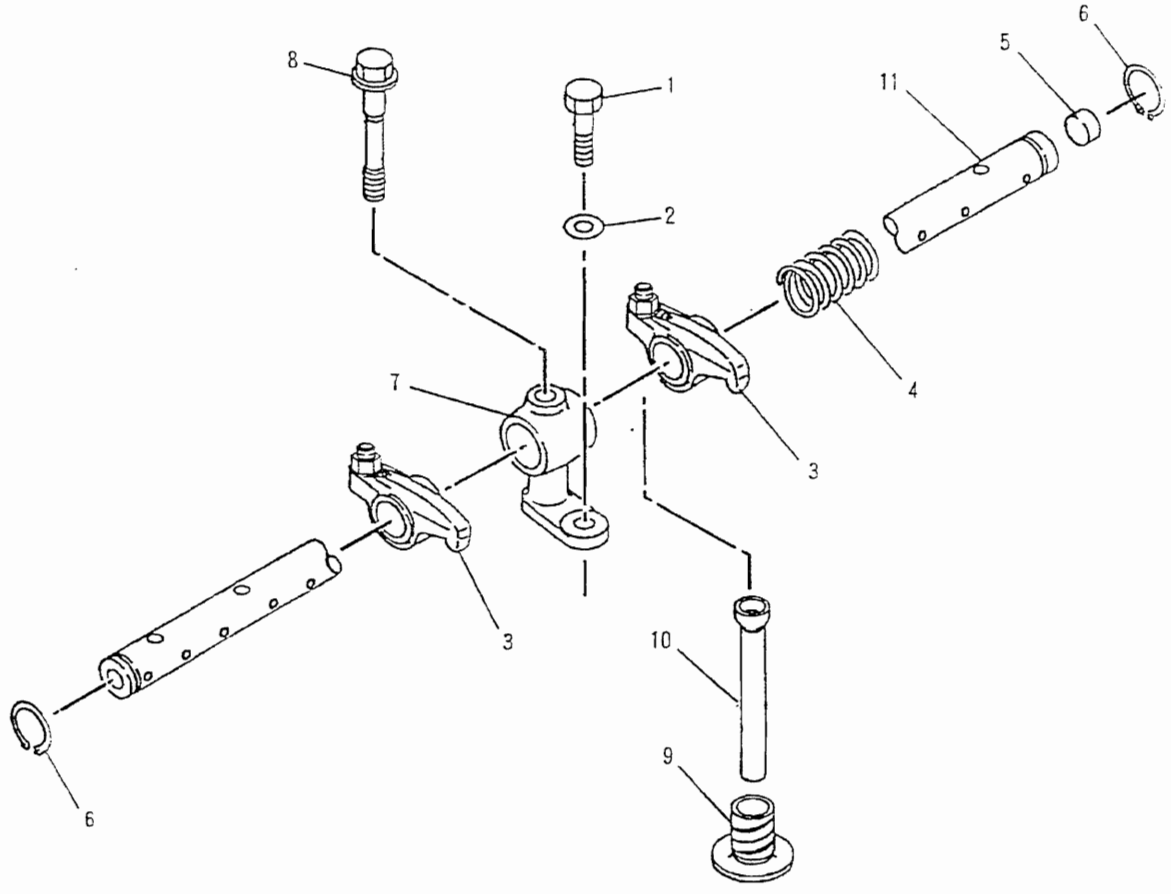

NOTE	REF NO	PART NUMBER	QTY	PART NAME	NOTE	REF NO	PART NUMBER	QTY	PART NAME
M	1	6V3940	6	BOLT					
	2	9M1974	6	WASHER-HARD					
	3	1039256	12	ROCKER					
	4	1039258	6	SPRING-ROCKER					
	5	1039265	2	PLUG-ROCKER ARM SHAFT					
	6	1039266	2	RING-SNAP					
	7	1039267	6	BRACKET-ROCKER ARM SHAFT					
	8	1039268	6	BOLT-ROCKER BRACKET					
	9	1039272	12	TAPPET					
	10	1039273	12	ROD-PUSH					
	11	1070981	1	SHAFT AS					

M-METRIC PART

H39460E

1102 1068238 MECHANISM GP-VALVE

BASIC ENGINE

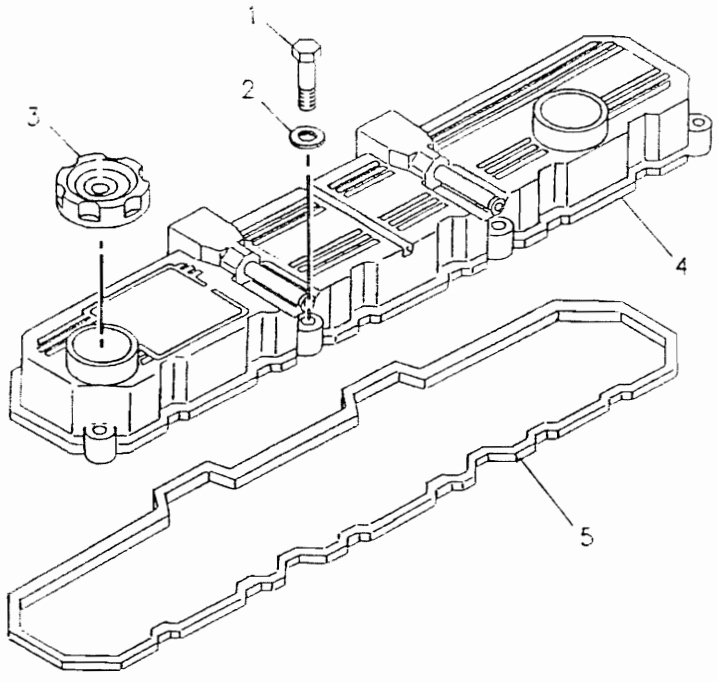

NOTE	REF NO	PART NUMBER	QTY	PART NAME
M	1	6V5219	7	BOLT
	2	9M1974	7	WASHER-HARD
	3	1146875	1	CAP
	4	1070970	1	COVER AS-VALVE
	5	1070969	1	GASKET

M-METRIC PART

R- 582277

1107 **1068248 COVER GP-VALVE MECHANISM**

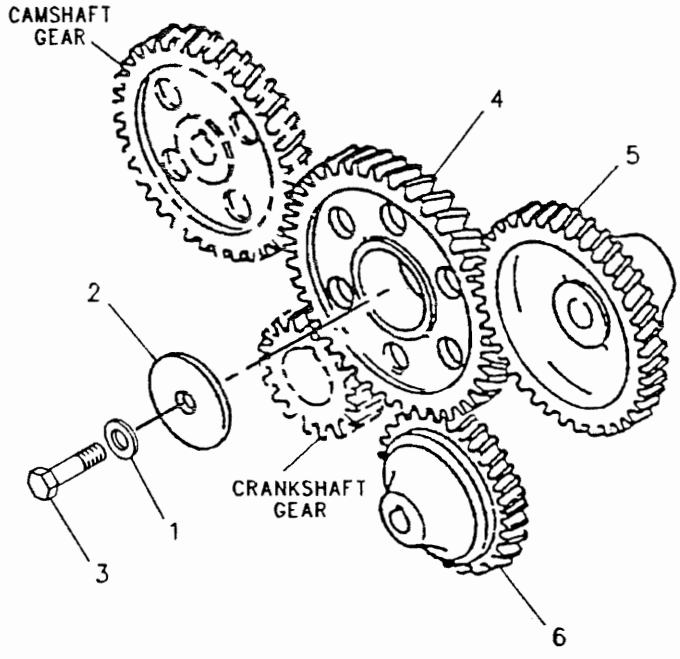

NOTE	REF NO	PART NUMBER	QTY	PART NAME
	1	6V5839	1	WASHER
	2	1039845	1	PLATE-THRUST
	3	1016490	1	BOLT
	4	1173283	1	GEAR AS-IDLER
	5	1173284	1	GEAR-PUMP
	6	1173285	1	GEAR-PUMP

R- 582141

1206 **1166710 GEAR GP-FRONT**

BASIC ENGINE

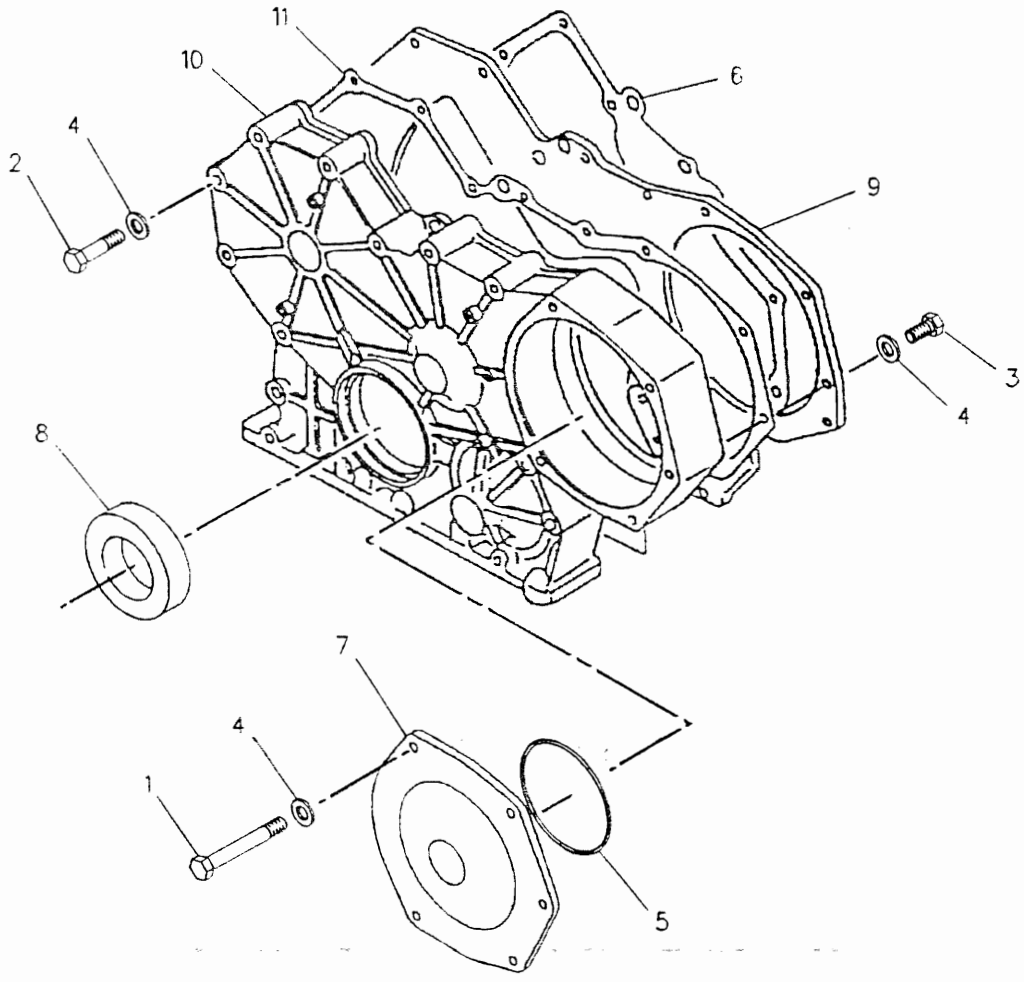

NOTE	REF NO	PART NUMBER	QTY	PART NAME	NOTE	REF NO	PART NUMBER	QTY	PART NAME
M	1	5P8347	5	BOLT					
M	2	8T0100	13	BOLT					
M	3	6V5217	5	BOLT					
	4	9M1974	19	WASHER-HARD					
	5	1039086	1	SEAL-O-RING					
	6	1039277	1	GASKET-FRONT PLATE					
	7	1039671	1	COVER-TIMING GEAR					
	8	1041229	1	SEAL-OIL					
	9	1173448	1	PLATE					
	10	1173446	1	HOUSING-GEAR					
	11	1173447	1	GASKET					

M-METRIC PART

R- 582128

1151 1166713 HOUSING GP-FRONT

BASIC ENGINE

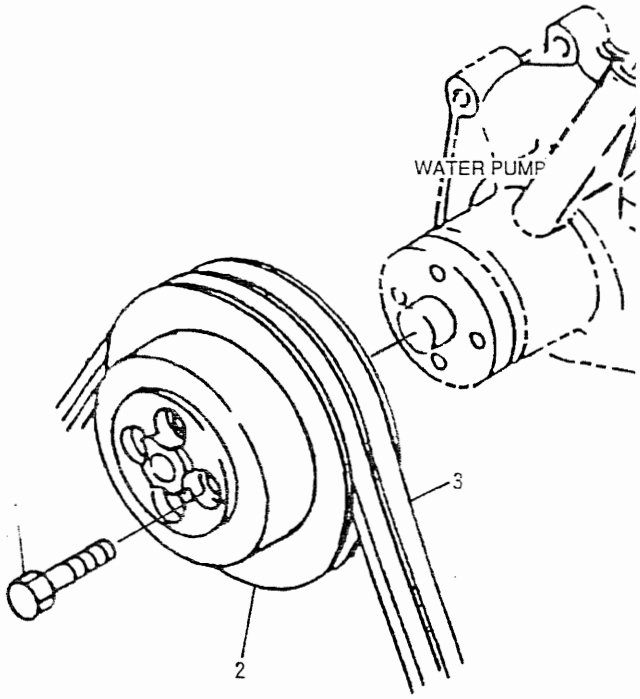

NOTE	REF NO	PART NUMBER	QTY	PART NAME
M	1	6V5215	4	BOLT
	2	1175035	1	PULLEY
	3	9L6654	1	V-BELT SET (TWO BELTS)

M-METRIC PART

H39480E

1166712 PULLEY GP

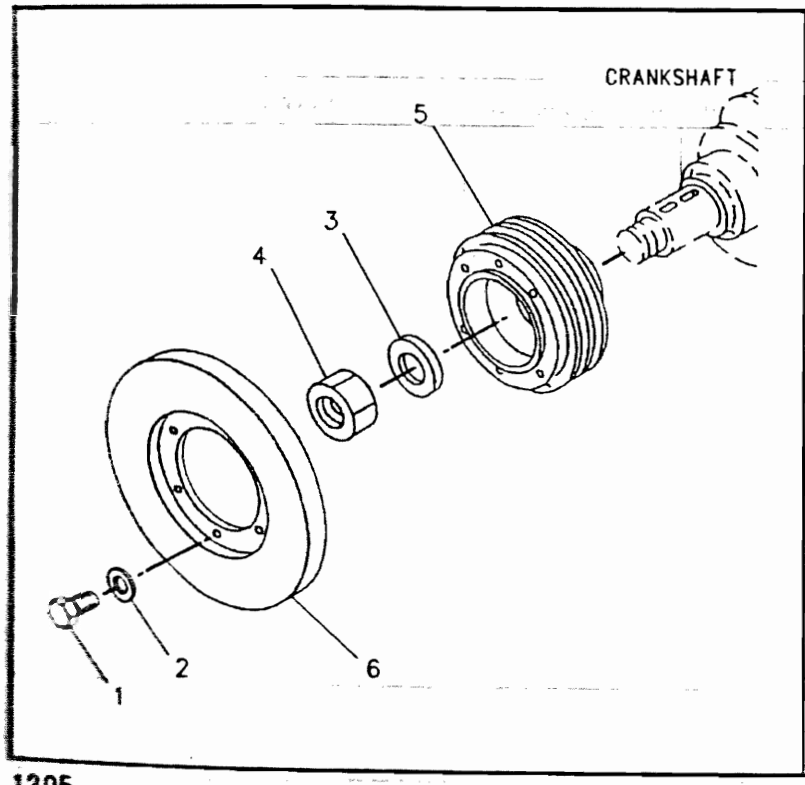

NOTE	REF NO	PART NUMBER	QTY	PART NAME
M	1	6V6317	6	BOLT
	2	6V5839	6	WASHER
	3	1039840	1	SPACER
	4	1041213	1	NUT-JAM
	5	1173568	1	PULLEY
	6	1084075	1	DAMPER

M-METRIC PART

R- 582138

1205

1166711 PULLEY GP-CRANKSHAFT

BASIC ENGINE

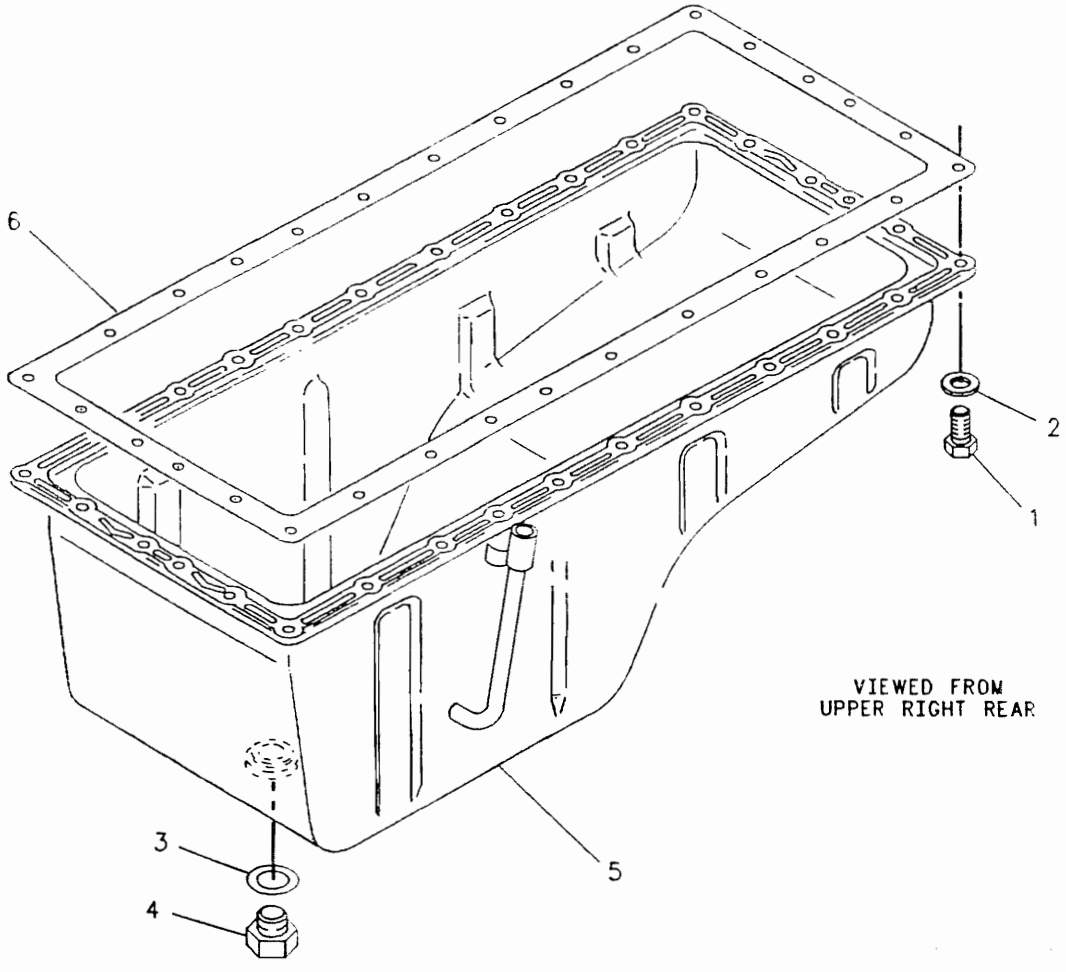

NOTE	REF NO	PART NUMBER	QTY	PART NAME	NOTE	REF NO	PART NUMBER	QTY	PART NAME
M	1	6V5215	30	BOLT					
	2	9M1974	30	WASHER-HARD					
	3	1016681	1	GASKET					
	4	1177869	1	PLUG					
	5	1177868	1	PAN-OIL					
	6	1074906	1	GASKET					

M-METRIC PART

R- 582115

1166722 PAN GP-OIL

BASIC ENGINE

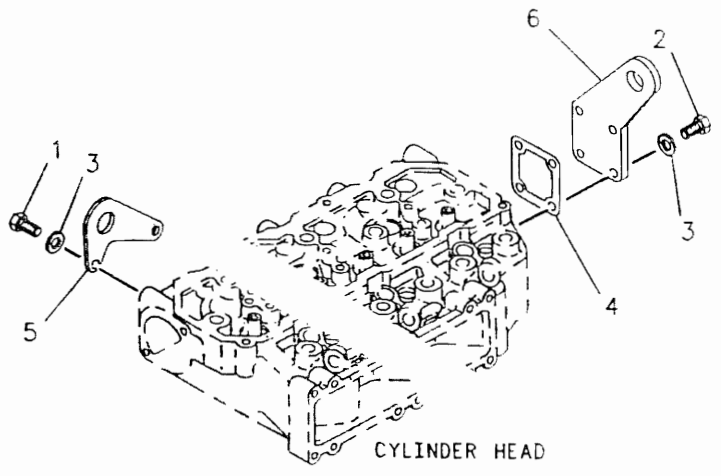

NOTE	REF NO	PART NUMBER	QTY	PART NAME
	1	6V5215	2	BOLT
	2	6V5217	4	BOLT
	3	9M1974	6	WASHER-HARD
	4	1039249	1	GASKET-HEAD
	5	1039250	1	EYE-FRONT LIFTING
	6	1039251	1	EYE-REAR LIFTING

R- 559503

1122

1068236 LIFTING GP

BASIC ENGINE

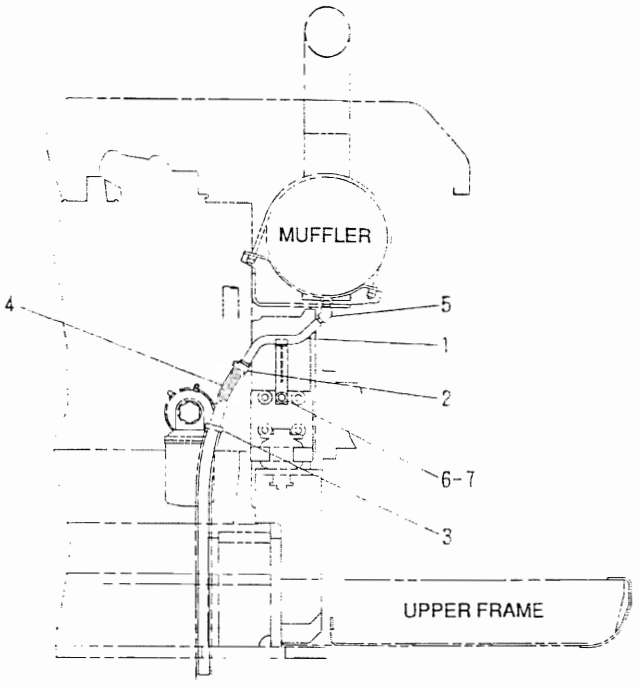

NOTE	No.	PART No.	QTY	PART NAME
	1	102-3897	1	PIPE AS
	2	5D-1026	1	CLAMP
	3	096-0061	1	STRAP
E	4	5P-0767		HOSE・・・(70cm
	5	7Y-1229	1	CONNECTOR
	6	7X-7729	1	WASHER
	7	8T-4137	1	BOLT (20mm LONG)

E-ORDER BY THE CENTIMETER

H41313E

102-3837 LINES GP-DRAIN

BASIC ENGINE

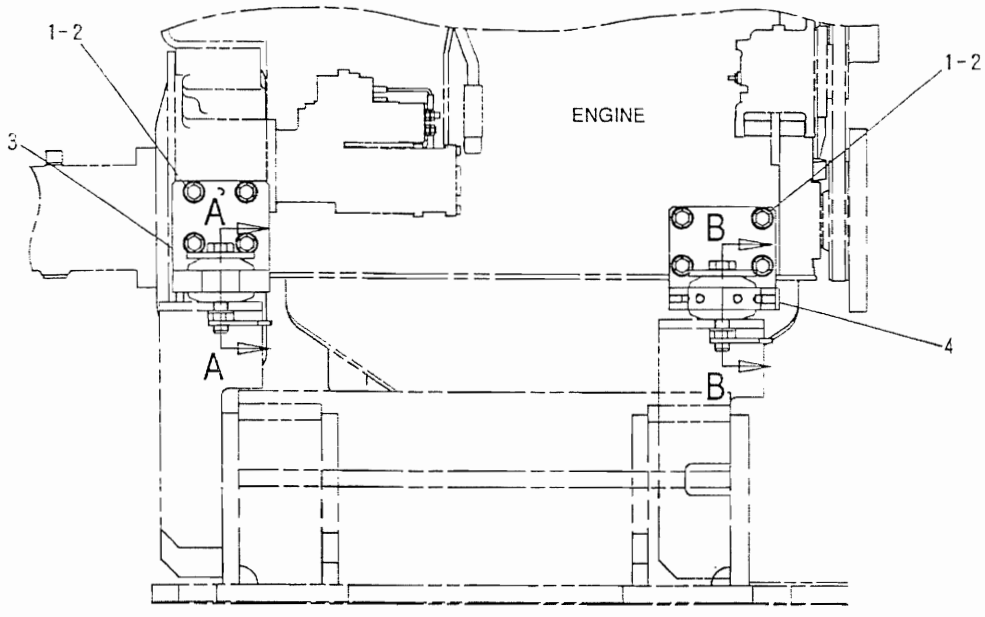

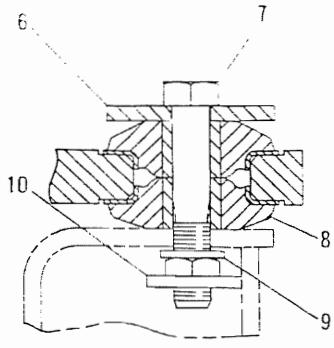

A－A

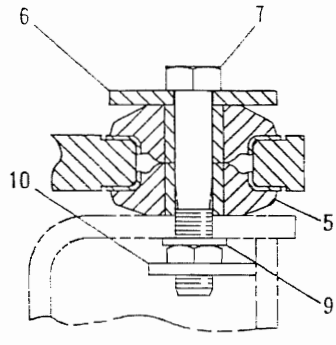

B－B

NOTE	No.	PART No.	QTY	PART NAME	NOTE	No.	PART No.	QTY	PART NAME
	1	8T-4223	16	WASHER					
	2	8T-4183	16	BOLT (40mm LONG)					
	3	102-3848	2	BRACKET AS					
	4	102-3845	1	BRACKET AS (RH)					
		102-3844	1	BRACKET AS (LH)					
	5	41-7500	4	MOUNT					
	6	7Y-1734	4	WASHER					
	7	7X-2566	4	BOLT (110mm LONG)					
	8	41-7433	4	MOUNT					
	9	8T-4123	4	WASHER					
	10	109-9285	4	SUPPORT AS					

H41312E

102-3836 MOUNTING GP-ENGINE

MEMORANDA

LUBRICATION SYSTEM

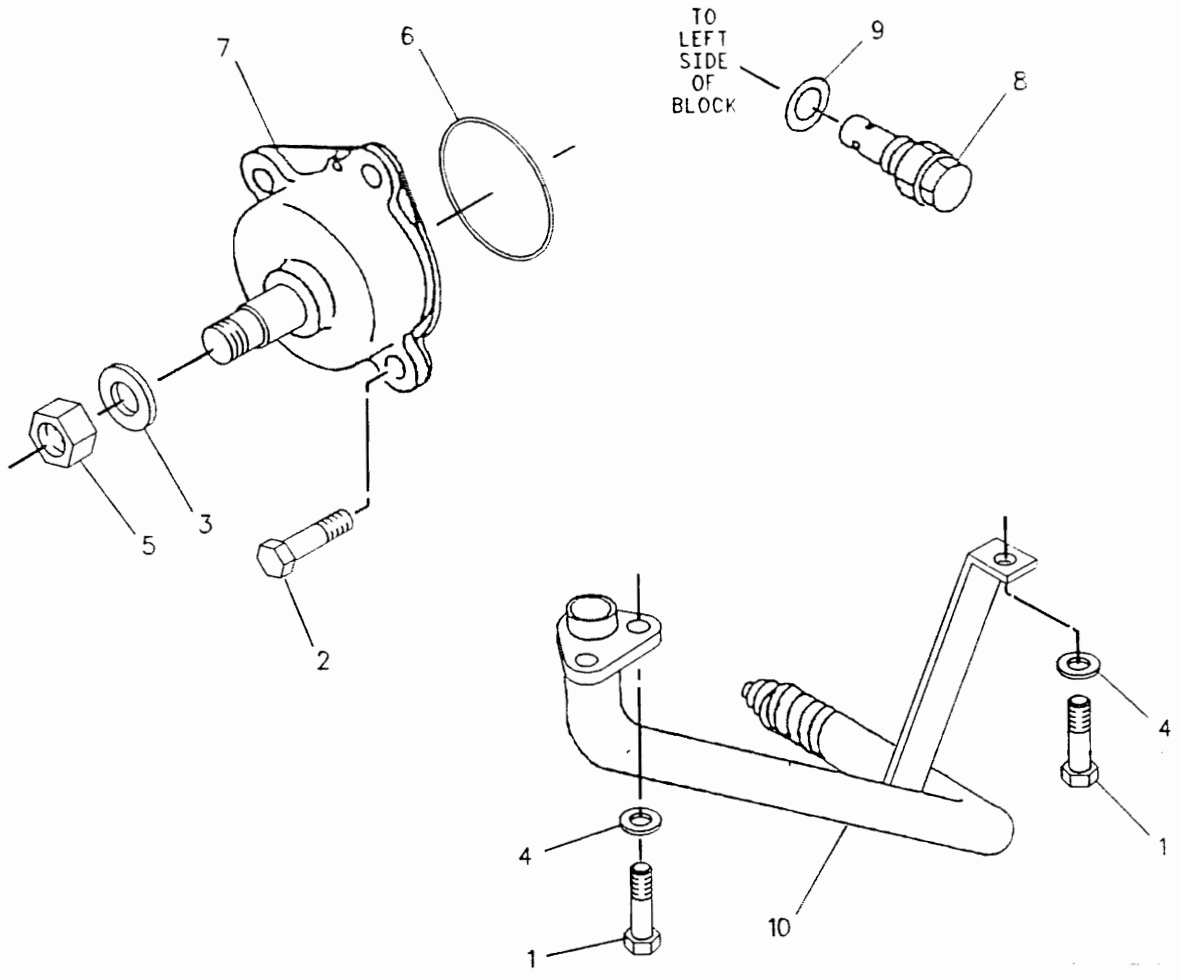

NOTE	REF NO	PART NUMBER	QTY	PART NAME	NOTE	REF NO	PART NUMBER	QTY	PART NAME
M	1	6V5215	3	BOLT					
M	2	6V5217	4	BOLT					
	3	6V5839	1	WASHER					
	4	9M1974	3	WASHER-HARD					
	5	1016544	1	NUT					
	6	1039083	1	SEAL-O-RING					
	7	1131141	1	PUMP AS-OIL					
	8	1039725	1	VALVE AS					
	9	1041244	1	GASKET					
B	10	1178135	1	TUBE AS-SUCTION					

B-USE AS REQUIRED
M-METRIC PART

R- 582281

1304

1068269 PUMP GP-OIL

LUBRICATION SYSTEM

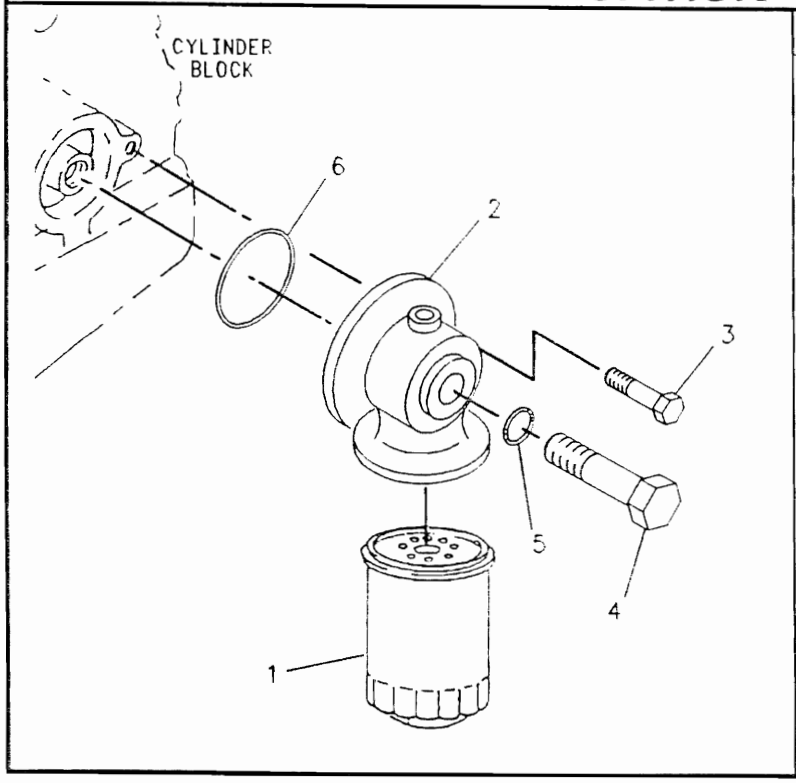

NOTE	REF NO	PART NUMBER	QTY	PART NAME
	1	1R0734	1	FILTER AS-OIL
	2	1099918	1	BASE-OIL FILTER
M	3	6V5217	1	BOLT
	4	1072174	1	BOLT
	5	951528	1	SEAL-O-RING
	6	951671	1	SEAL-O-RING

M-METRIC PART

R- 582114

1166723 FILTER GP-OIL

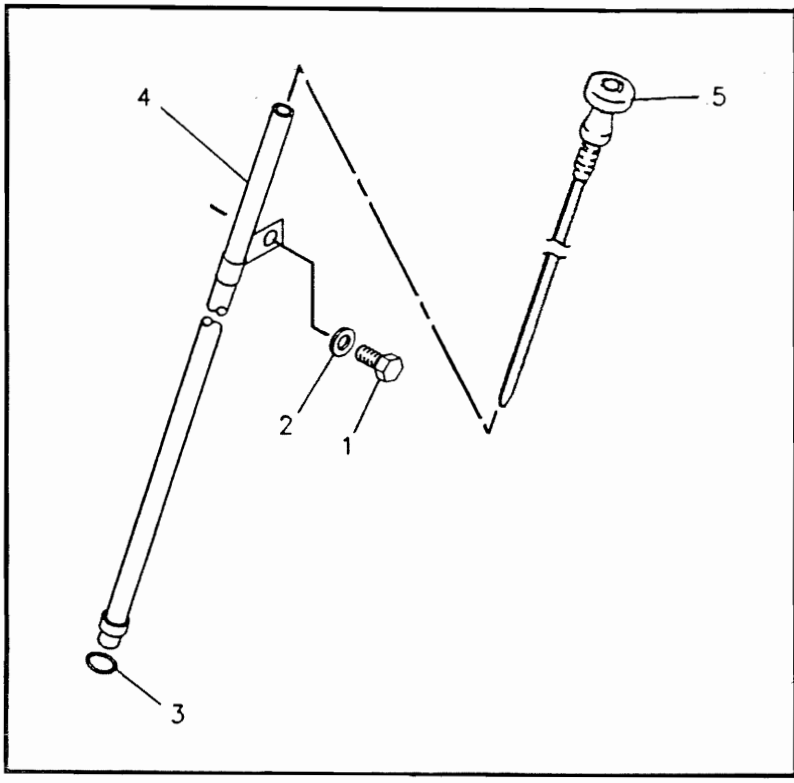

NOTE	REF NO	PART NUMBER	QTY	PART NAME
M	1	6V5215	1	BOLT
	2	9M1974	1	WASHER-HARD
	3	1032453	1	SEAL-O-RING
	4	1177518	1	TUBE AS-GUIDE
	5	1177521	1	GAUGE-OIL LEVEL

M-METRIC PART

R- 582117

1166720 GAUGE GP-OIL LEVEL

LUBRICATION SYSTEM

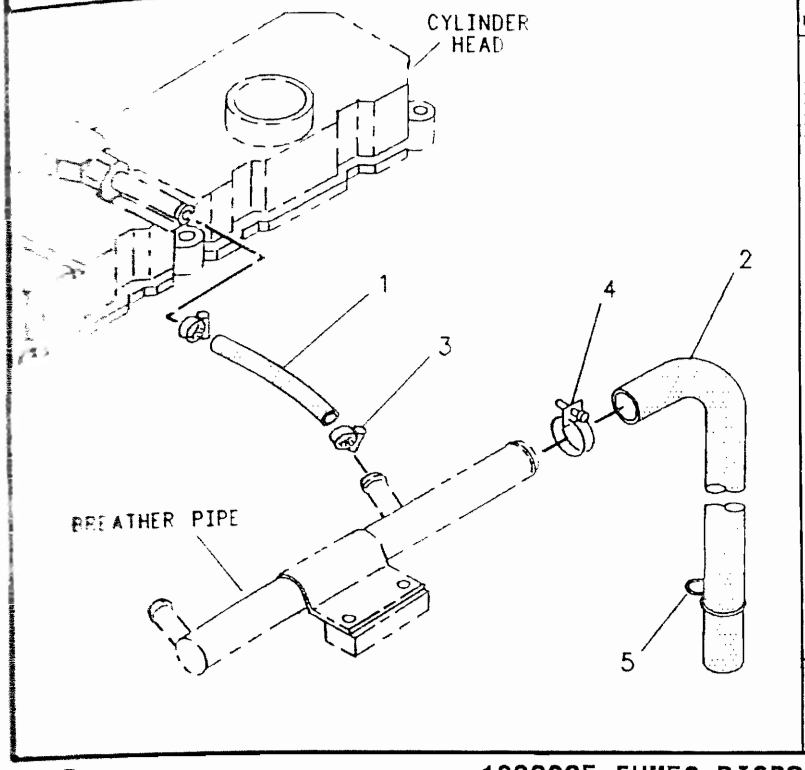

NOTE	REF NO	PART NUMBER	QTY	PART NAME
	1	1073643	1	HOSE
	2	1073644	1	HOSE
Z	3		2	CLIP
Z	4		1	CLIP
Z	5		1	STAY

Z-NOT SERVICED SEPARATELY

R- 559524

1317

1068265 FUMES DISPOSAL GP

COOLING SYSTEM

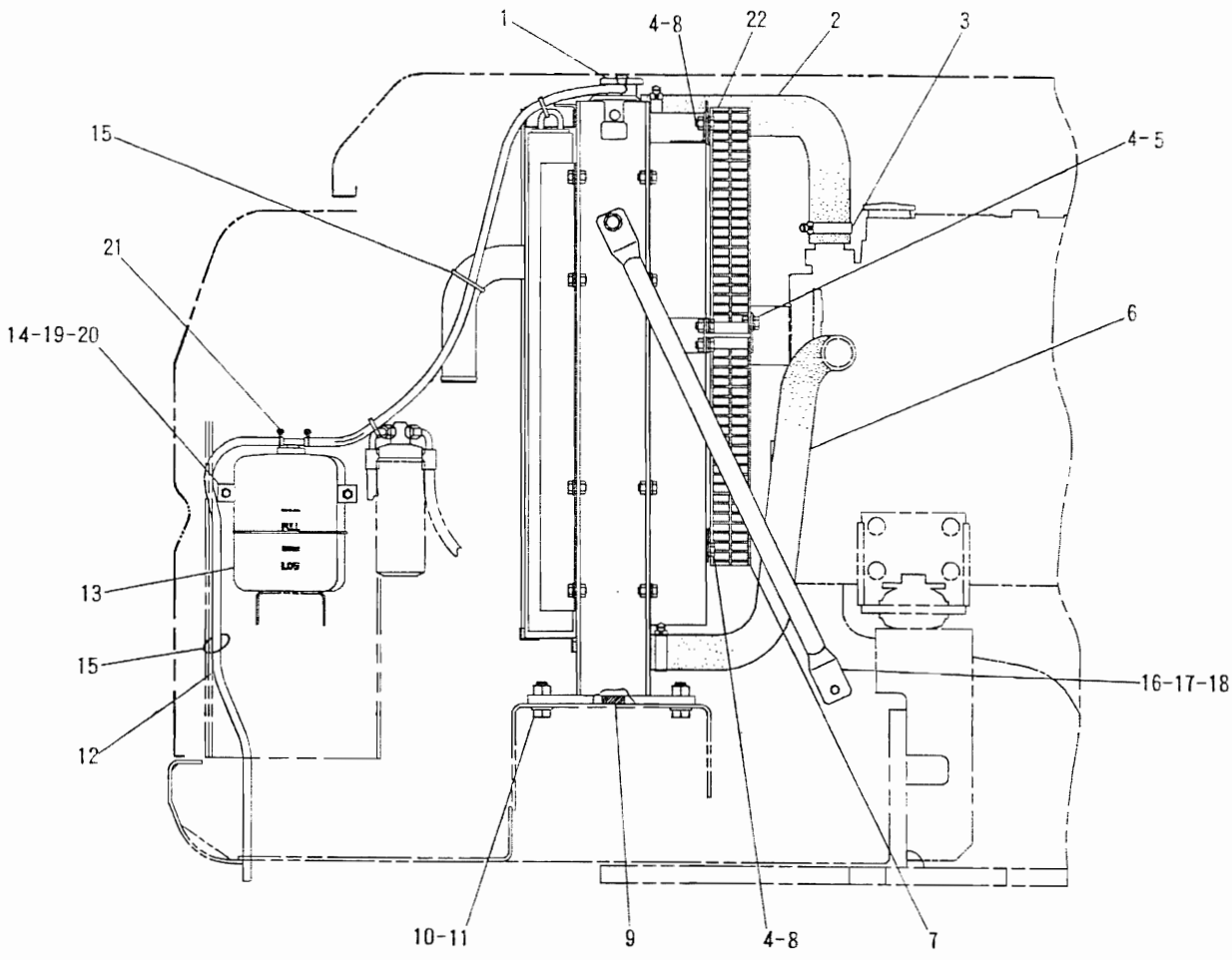

NOTE	No.	PART No.	QTY	PART NAME	NOTE	No.	PART No.	QTY	PART NAME
Y	1	102-3834	1	RADIATOR GP		20	8T-4200	2	BOLT (16mm LONG)
	2	102-3891	1	HOSE		21	096-4035	1	CLIP
	3	5P-0597	4	CLAMP		22	102-3930	1	GUARD AS
	4	8T-4121	10	WASHER					
	5	8T-4191	2	BOLT (16mm LONG)					
	6	109-9510	1	HOSE					
	7	102-3931	1	GUARD AS					
	8	8T-4137	8	BOLT (20mm LONG)					
D	9	6V-5030		SEAL・・・(0.7m)					
	10	9X-8257	4	WASHER					
	11	7X-2553	4	BOLT (40mm LONG)					
E	12	7Y-1976		HOSE・・・(70cm)					
	13	096-5819	1	TANK AS					
		096-5820	1	CAP AS					
	14	099-6607	1	BAND					
	15	096-0061	4	STRAP					
	16	8T-4223	4	WASHER					
	17	8T-4192	4	BOLT (25mm LONG)					
	18	099-4705	2	BRACE					
	19	8T-4224	2	WASHER					

D-ORDER BY THE METER
E-ORDER BY THE CENTIMETER
Y-SEE SEPARATE ILLUSTRATION

H41608E

102-3833 RADIATOR GP-OIL COOLER &

102-3834 – Page 35

COOLING SYSTEM

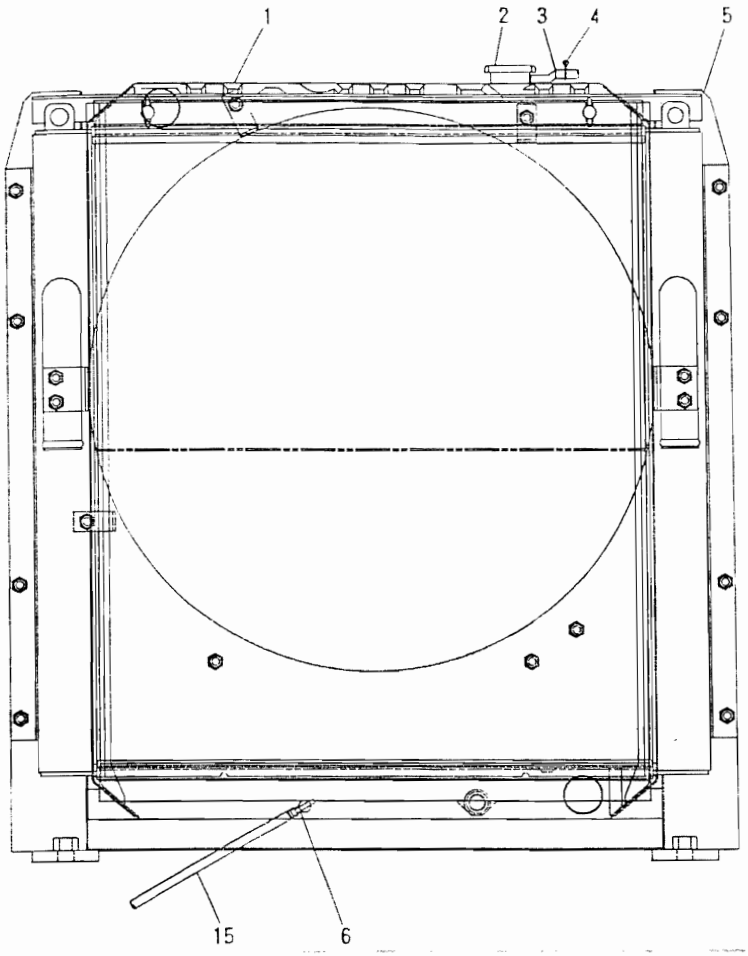

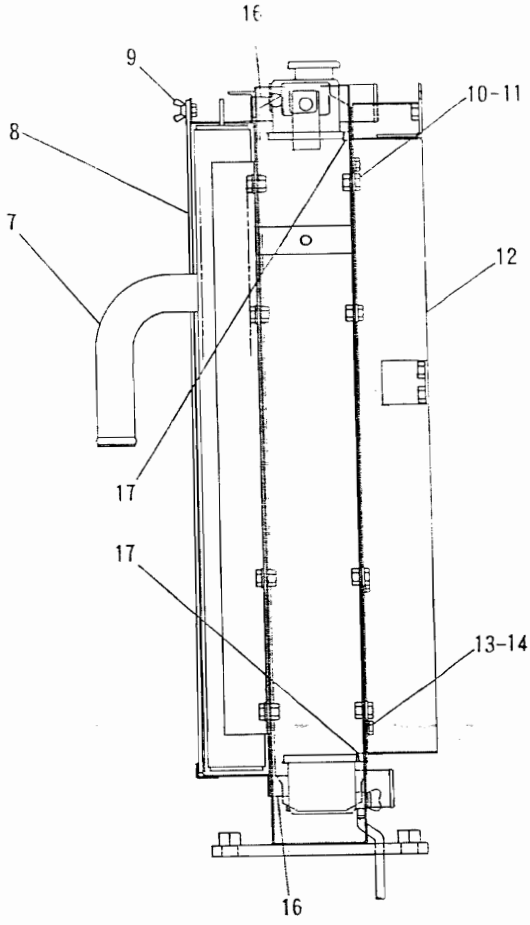

NOTE	No.	PART No.	QTY	PART NAME	NOTE	No.	PART No.	QTY	PART NAME
	1	109-9287	1	CORE AS					
	2	7Y-1889	1	CAP AS					
E	3	7Y-1976		HOSE・・・(90cm)					
	4	1P-4278	1	CLAMP					
	5	109-9289	1	FRAME AS					
	6	093-5432	1	COCK AS					
	7	109-9288	1	CORE AS					
	8	096-4182	1	SCREEN AS					
	9	096-4034	2	BOLT					
	10	8T-4137	16	BOLT (20mm LONG)					
	11	8T-4121	16	WASHER					
	12	109-9290	1	SHROUD AS					
	13	8T-4200	6	BOLT (16mm LONG)					
	14	8T-4224	6	WASHER					
E	15	7Y-1976		HOSE・・・(40cm)					
D	16	5P-5755		SEAL・・・(0.6m×2)					
D	17	5P-0806		SEAL・・・(0.55m×2)					

D-ORDER BY THE METER
E-ORDER BY THE CENTIMETER

H41609E

102-3834 RADIATOR GP-OIL COOLER & (BASIC)

Part of 102-3833 Radiator listed on Page 34

COOLING SYSTEM

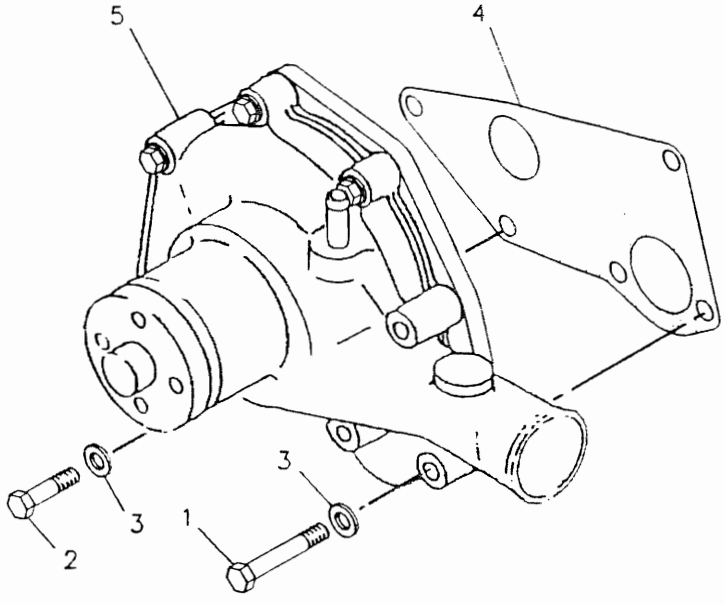

NOTE	REF NO	PART NUMBER	QTY	PART NAME
M	1	6V3918	3	BOLT
M	2	8T0100	2	BOLT
	3	9M1974	5	WASHER-HARD
	4	1175032	1	GASKET-WATER PUMP
	5	1175033	1	PUMP AS-WATER

M-METRIC PART

R- 582109

1166724 PUMP GP-WATER

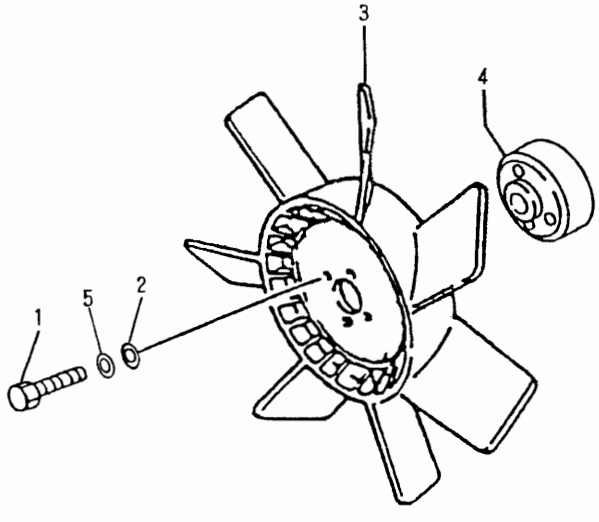

NOTE	No.	PART No.	QTY	PART NAME
	1	5I-4969	4	BOLT (70mm LONG)
	2	8T-4121	4	WASHER
	3	5I-7894	1	FAN
	4	5I-8153	1	SPACER
	5	7X-0796	4	LOCKWASHER

H39599E

5I-8150 FAN GP-SUCTION

COOLING SYSTEM

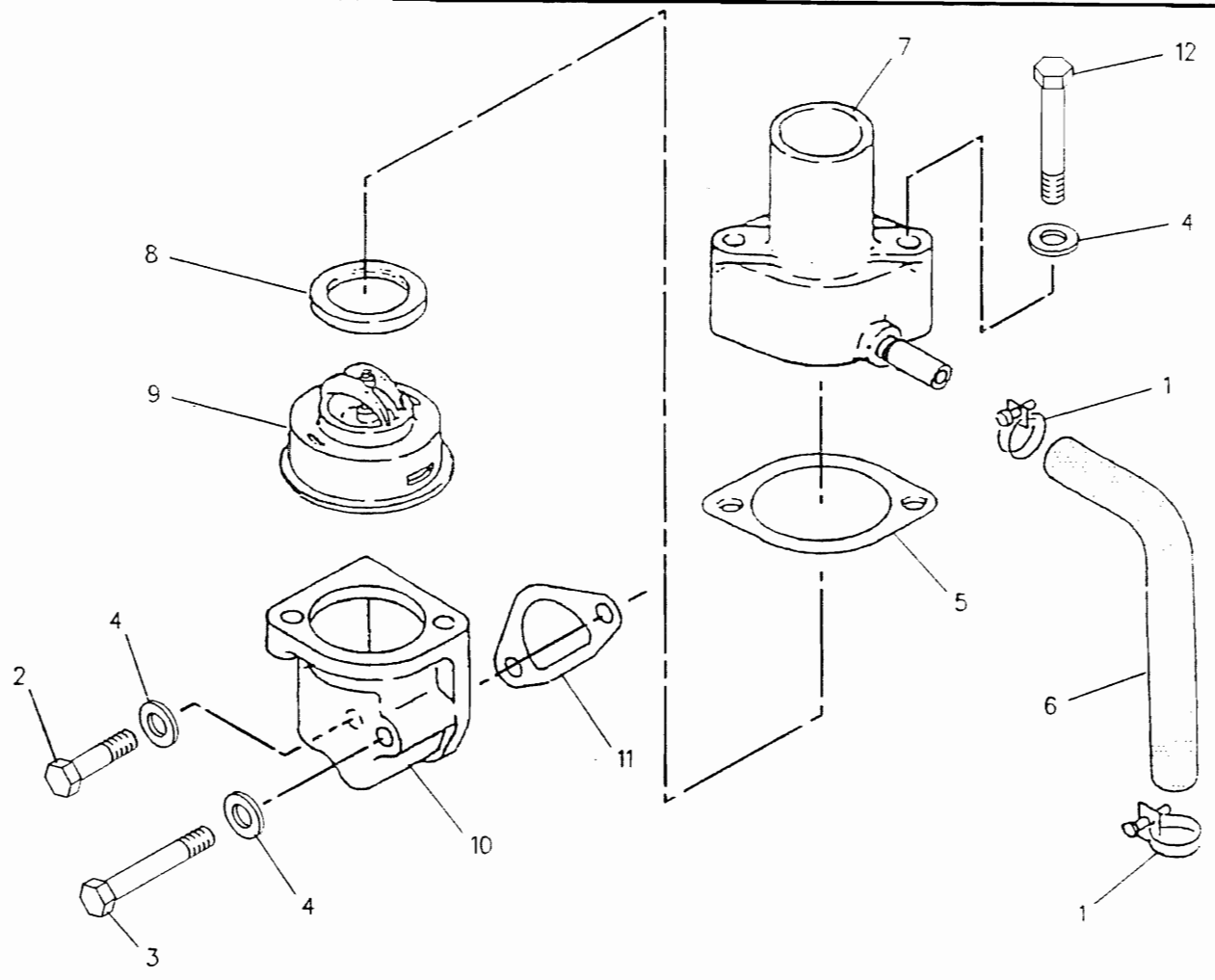

NOTE	REF NO	PART NUMBER	QTY	PART NAME	NOTE	REF NO	PART NUMBER	QTY	PART NAME
	1	5D1026	2	CLAMP-HOSE					
M	2	6V3940	1	BOLT					
M	3	5P8347	1	BOLT					
	4	9M1974	4	WASHER-HARD					
	5	1032895	1	GASKET					
	6	1175024	1	HOSE					
	7	953569	1	COVER-THERMOSTAT					
	8	1032804	1	GASKET					
	9	1032808	1	THERMOSTAT					
	10	1175023	1	HOUSING AS					
	11	1132050	1	GASKET					
M	12	8T0276	2	BOLT					

M-METRIC PART

R- 582111

1380 1166725 LINES GP-WATER

COOLING SYSTEM

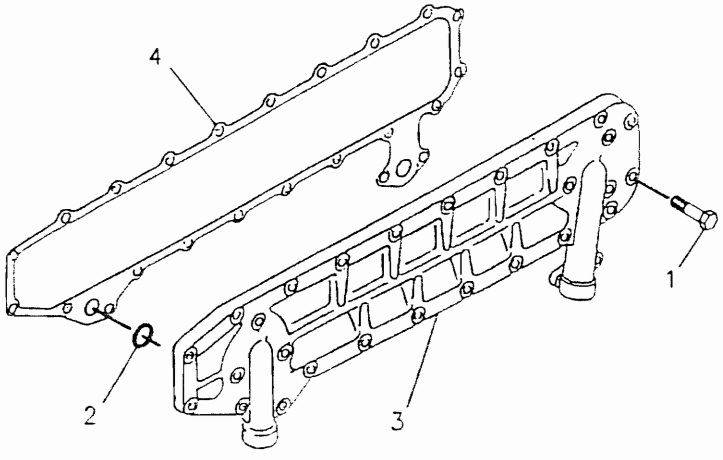

NOTE	REF NO	PART NUMBER	QTY	PART NAME
M	1	6V5215	24	BOLT
	2	951525	2	SEAL-O-RING
	3	1072167	1	COOLER-OIL
	4	1072169	1	GASKET

M-METRIC PART

R- 559542

1378 **1068262 COOLER GP-ENGINE OIL**

AIR INLET AND EXHAUST SYSTEM

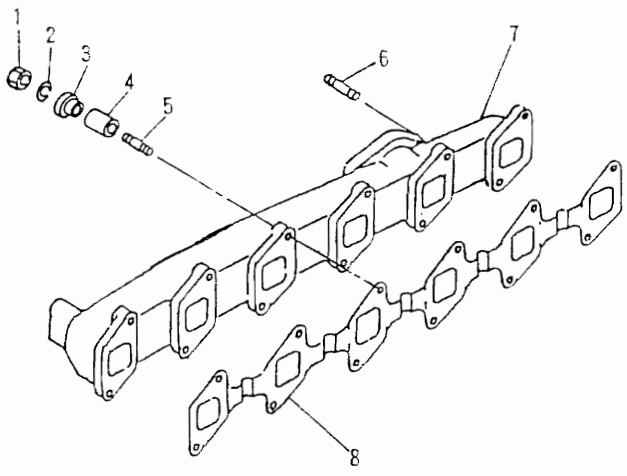

NOTE	No.	PART No.	QTY	PART NAME
	1	5P-7970	12	NUT
	2	9M-1974	12	WASHER
	3	5P-8013	12	WASHER
	4	119-7217	12	SPACER
	5	6V-8176	12	STUD
	6	2W-9403	4	STUD
	7	107-4908	1	MANIFOLD
	8	107-4909	1	GASKET

H39596E

1068270 MANIFOLD GP-EXHAUST

AIR INLET AND EXHAUST SYSTEM

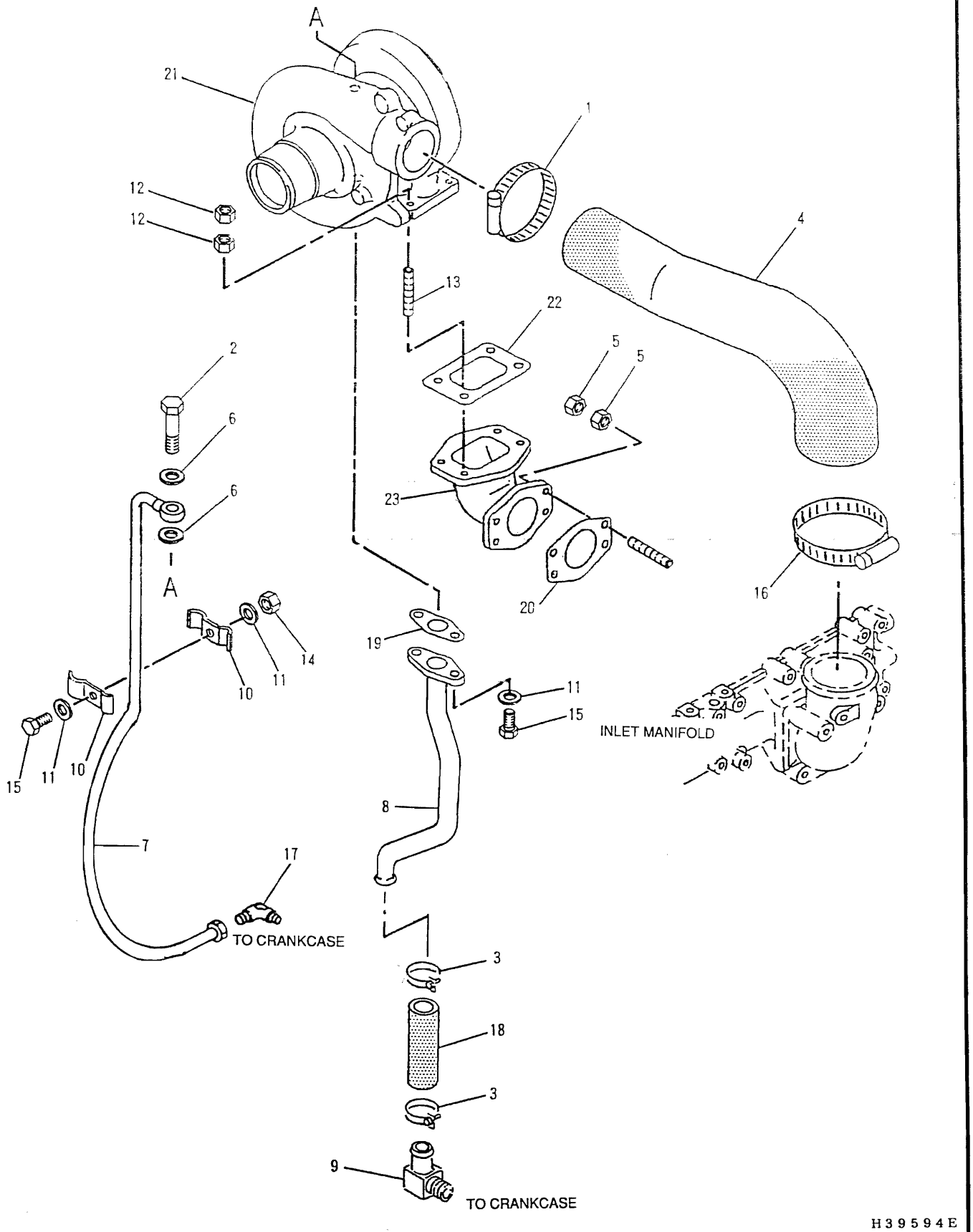

1052 **1166709 TURBOCHARGER GP**

AIR INLET AND EXHAUST SYSTEM

NOTE	REF NO	PART NUMBER	QTY	PART NAME
	1	2J6540	1	CLAMP
	2	5I7623	1	BOLT
	3	2S3440	2	CLAMP-HOSE
	4	1076341	1	HOSE
M	5	2Y5829	8	NUT
	6	4K0831	2	WASHER
	7	1132051	1	PIPE
	8	1132052	1	PIPE
	9	5I5076	1	ELBOW
	10	5I5077	2	CLAMP
	11	5P0537	4	WASHER
M	12	5P7970	8	NUT
M	13	9X8901	4	STUD
M	14	6V8225	1	NUT
M	15	6V8837	3	BOLT
	16	9M7959	1	CLAMP
	17	5I7504	1	ELBOW
E	18	5P1519		HOSE (10CM)
	19	5I7689	1	GASKET
	20	1052954	1	GASKET-EXHAUST
	21	1177867	1	TURBOCHARGER
	22	1076339	1	GASKET
	23	1076340	1	ELBOW

E-ORDER BY THE CENTIMETER
M-METRIC PART

H39595E

1052

1166709 TURBOCHARGER GP

AIR INLET AND EXHAUST SYSTEM

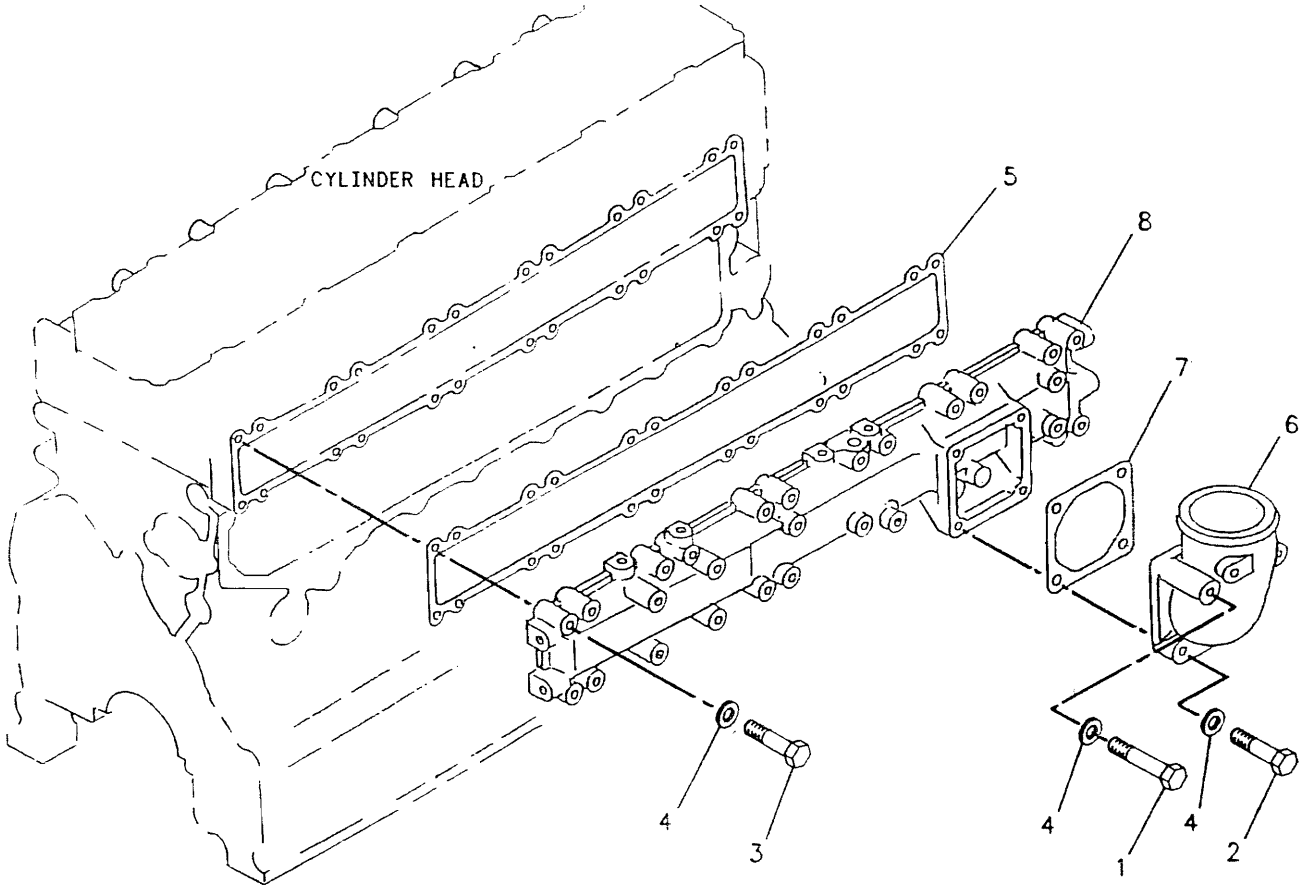

NOTE	REF NO	PART NUMBER	QTY	PART NAME	NOTE	REF NO	PART NUMBER	QTY	PART NAME
M	1	5P8347	2	BOLT					
M	2	6V3940	2	BOLT					
M	3	6V5219	24	BOLT					
	4	9M1974	28	WASHER-HARD					
	5	1073664	1	GASKET					
	6	1078253	1	ELBOW					
	7	1078254	1	GASKET					
	8	1078360	1	MANIFOLD-INLET					

M-METRIC PART

R- 559544

1058 1068266 MANIFOLD GP-INLET

INTAKE AND EXHAUST SYSTEM

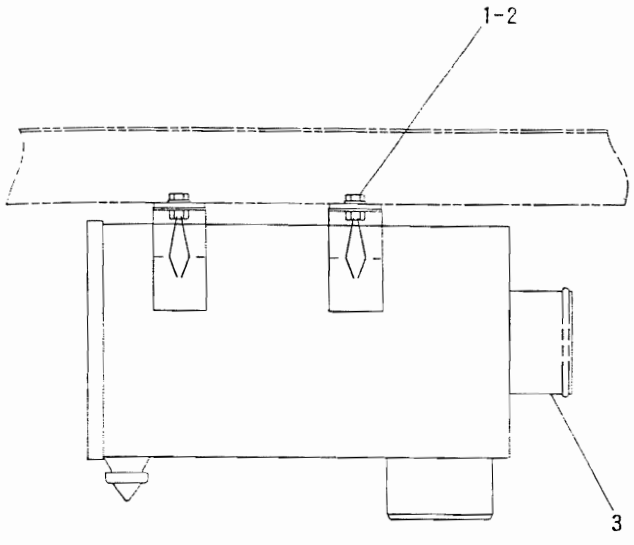

NOTE	No.	PART No.	QTY	PART NAME
	1	8T-4137	4	BOLT (20mm LONG)
	2	8T-4121	4	WASHER
Y	3	109-9451	1	CLEANER GP

Y-SEE SEPARATE ILLUSTRATION

H41568E

109-9452 CLEANER GP-AIR (E)

109-9451 — Page 43

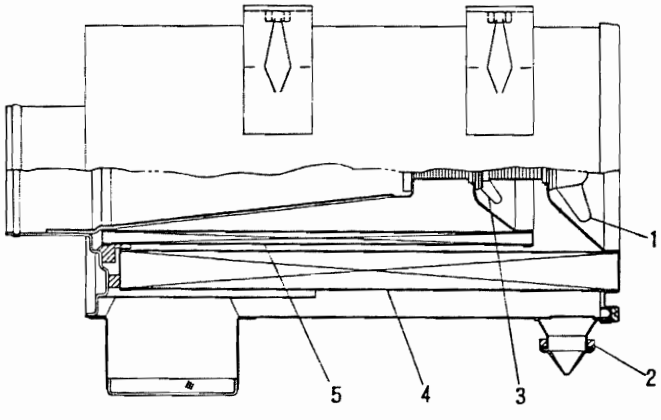

NOTE	No.	PART No.	QTY	PART NAME
	1	096-4176	1	NUT AS
	2	096-4177	1	VALVE
	3	6N-7675	1	NUT AS
	4	4I-7575	1	ELEMENT AS
	5	6I-6582	1	ELEMENT AS

H41569E

109-9451 CLEANER GP-AIR (BASIC)

Part of 109-9452 Cleaner listed on Page 43

INTAKE AND EXHAUST SYSTEM

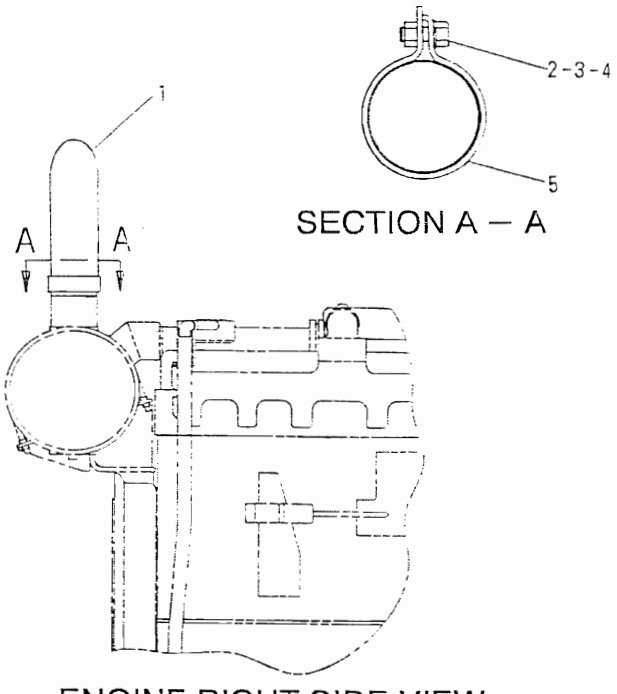

SECTION A — A

ENGINE RIGHT SIDE VIEW

NOTE	No.	PART No.	QTY	PART NAME
	1	096-4204	1	PIPE AS
	2	8T-4183	1	BOLT (40mm LONG
	3	8T-4223	1	WASHER
	4	8T-4244	1	NUT
	5	41-7554	1	CLAMP

H32255E

7Y-1583 EXTENSION GP-EXHAUST

INTAKE AND EXHAUST SYSTEM

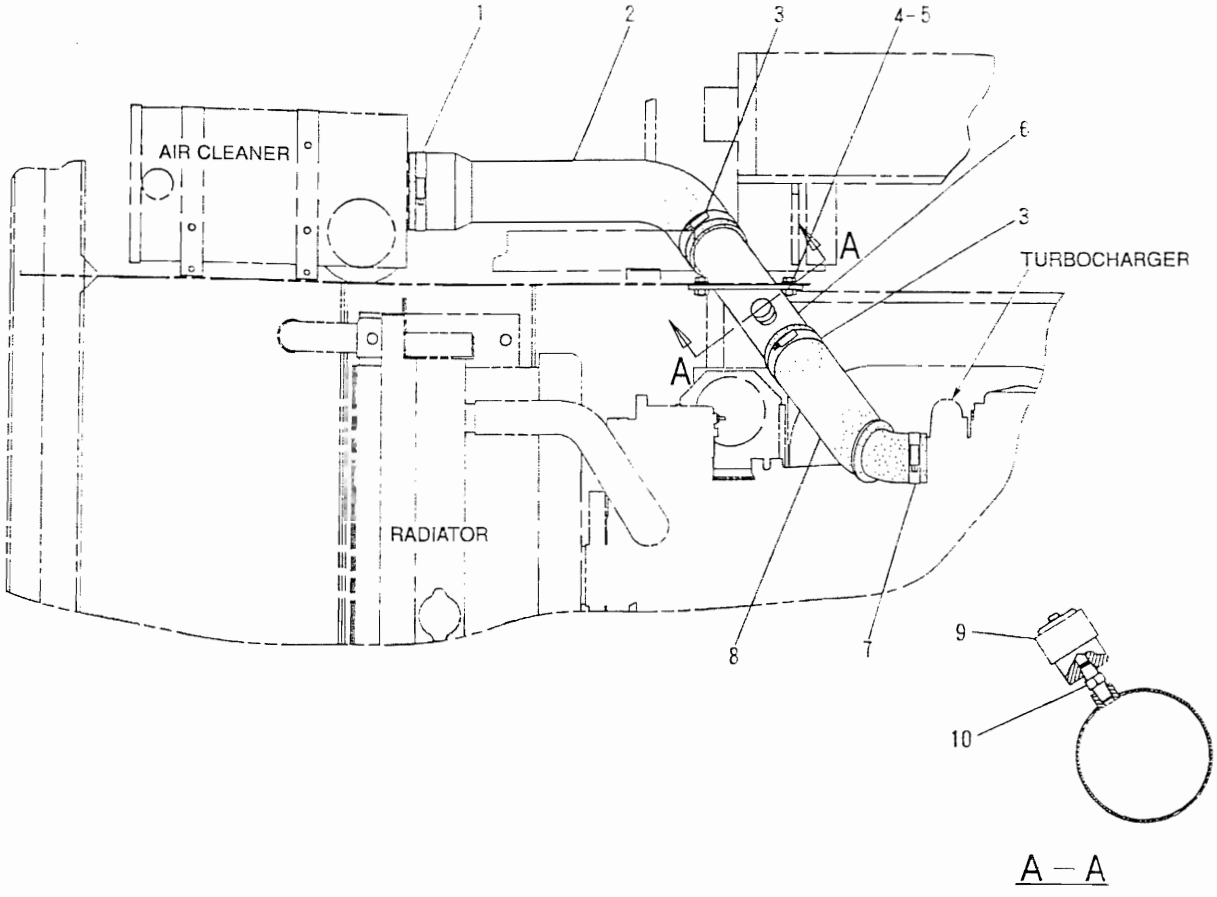

A – A

NOTE	No.	PART No.	QTY	PART NAME	NOTE	No.	PART No.	QTY	PART NAME
	1	5P-1717	1	CLAMP					
	2	102-3883	1	HOSE					
	3	6V-3582	2	CLAMP					
	4	8T-4121	4	WASHER					
	5	8T-4137	4	BOLT (20mm LONG)					
	6	102-3885	1	PIPE AS					
	7	5P-4868	1	CLAMP					
	8	102-3884	1	HOSE					
	9	096-5028	1	INDICATOR					
	10	5L-3233	1	FITTING					

H41311E

102-3832 LINES GP-AIR

INTAKE AND EXHAUST SYSTEM

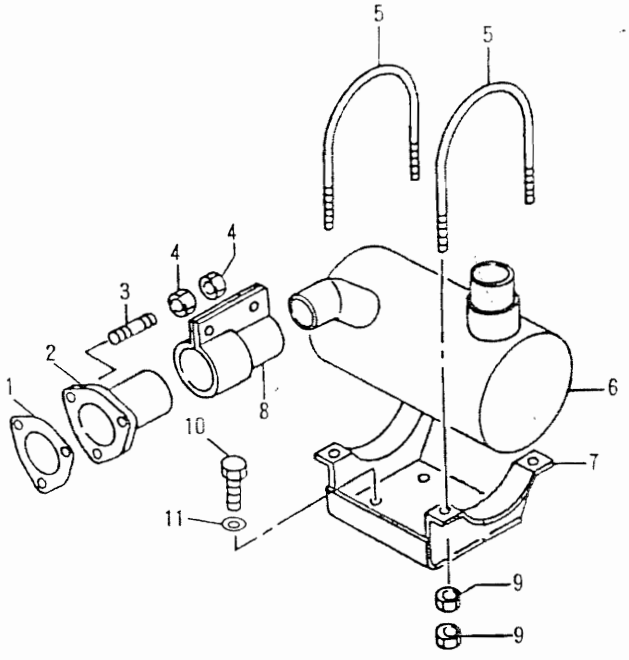

NOTE	No.	PART No.	QTY	PART NAME
	1	5I-7679	1	GASKET
	2	5I-7854	1	PIPE
	3	5I-6024	3	STUD
	4	5I-7633	6	NUT
	5	5I-7680	2	U-BOLT
	6	5I-8155	1	MUFFLER
	7	5I-8156	1	BRACKET
	8	5I-7639	1	CLAMP AS
	9	6V-8231	8	NUT
	10	8T-4137	4	BOLT (20mm LONG)
	11	7X-0796	4	LOCKWASHER

H39598E

5I-8151 MUFFLER GP

FUEL SYSTEM

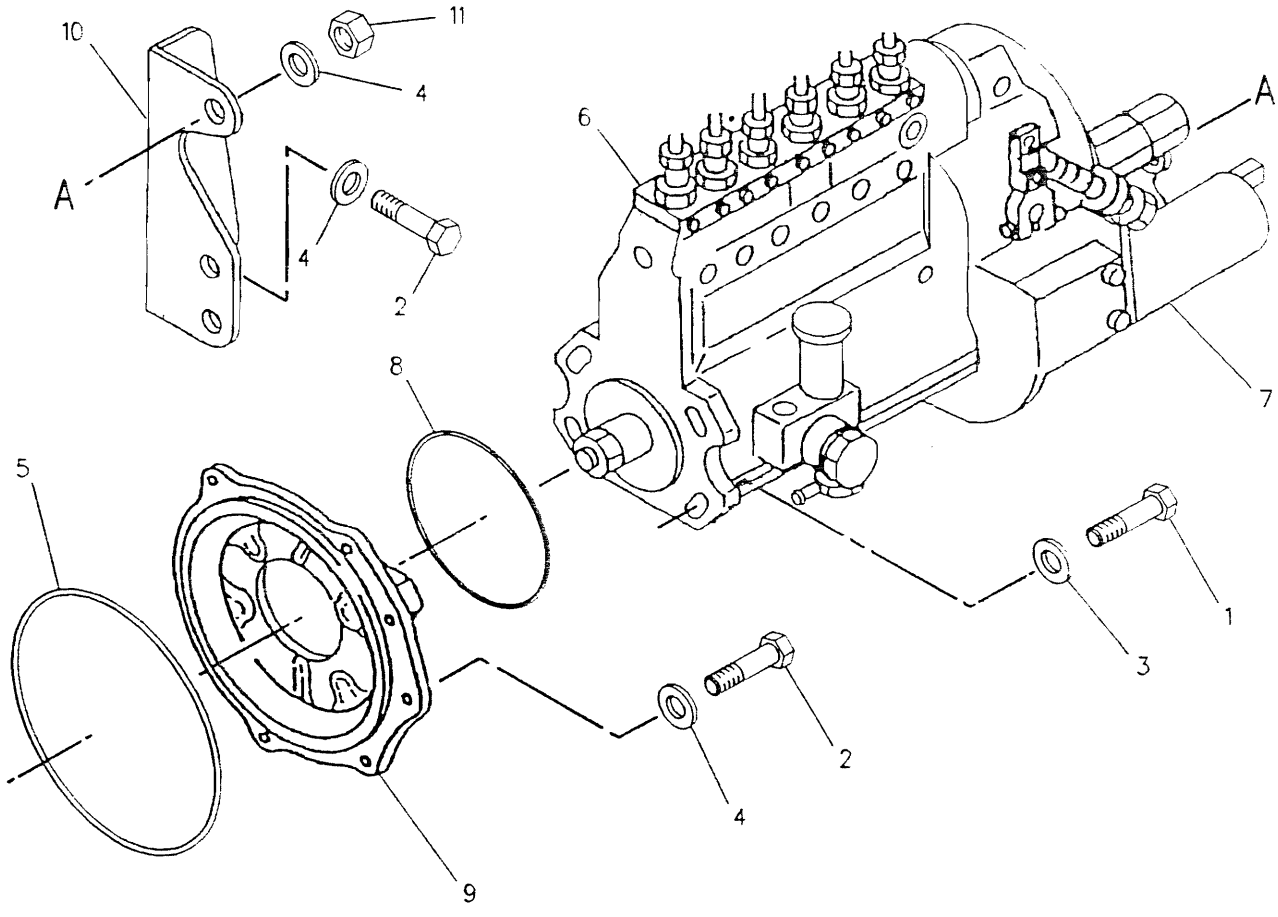

NOTE	REF NO	PART NUMBER	QTY	PART NAME	NOTE	REF NO	PART NUMBER	QTY	PART NAME
M	1	6V3822	4	BOLT					
M	2	6V5217	2	BOLT					
	3	6V5839	4	WASHER					
	4	9M1974	3	WASHER-HARD					
	5	1039086	1	SEAL-O-RING					
	6	1179170	1	PUMP AS-FUEL INJECTION					
		1179186	1	PUMP GP-FUEL TFR & PRIMING					
	7	1179343	1	SOLENOID AS					
	8	1078529	1	GASKET					
	9	1078530	1	ADAPTER					
	10	1078531	1	BRACKET					
M	11	5P7970	1	NUT					

M-METRIC PART

R- 582103

1166708 PUMP GP-FUEL INJECTION

FUEL SYSTEM AND GOVERNOR

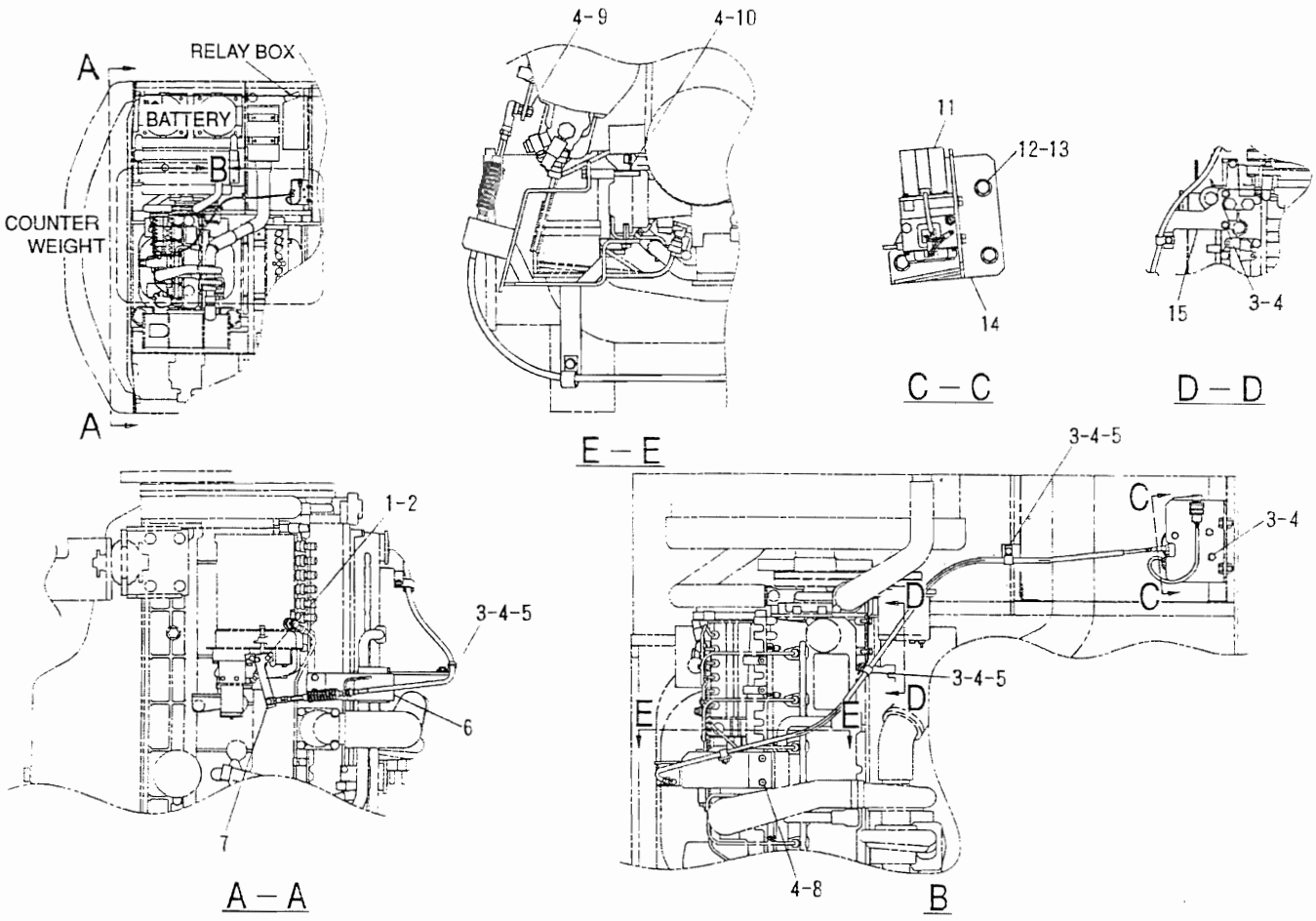

NOTE	No.	PART No.	QTY	PART NAME	NOTE	No.	PART No.	QTY	PART NAME
	1	5C-9553	2	BOLT (16mm LONG)		15	106-0079	1	BRACKET AS
	2	9X-8256	2	WASHER					
	3	8T-4189	8	BOLT (20mm LONG)					
	4	8T-4224	14	WASHER					
	5	8M-2770	3	CLIP					
	6	106-0076	1	BRACKET AS					
	7	106-0067	1	LEVER					
	8	7X-2537	2	BOLT (35mm LONG)					
	9	5C-7261	1	NUT					
	10	8T-3647	2	BOLT (80mm LONG)					
	11	106-0080	1	MOTOR AS					
		7N-7779	3	SOCKET					
		7N-7780	2	PIN					
		7Y-5560	1	COVER					
		7Y-5561	1	PACKING					
		9G-3672	1	HOUSING					
	12	8T-4192	3	BOLT (25mm LONG)					
	13	8T-4223	3	WASHER					
	14	106-0220	1	BRACKET AS					
		9G-9155	1	CLIP					

H41610E

102-8045 CONTROL GP-GOVERNOR (V)

FUEL SYSTEM

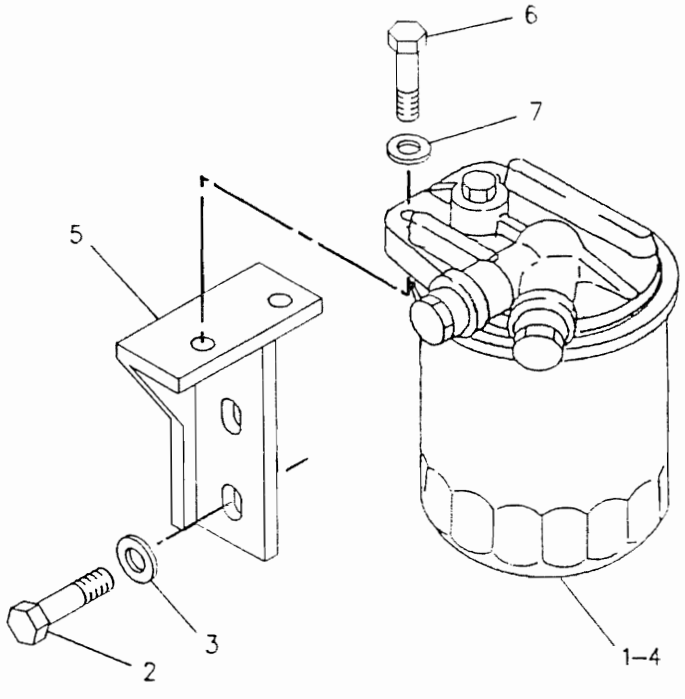

NOTE	REF NO	PART NUMBER	QTY	PART NAME
	1	5I7951	1	ELEMENT
M	2	6V5217	2	BOLT
	3	9M1974	2	WASHER-HARD
	4	947998	1	HEAD
	5	1181223	1	BRACKET
	6	1016492	2	BOLT
	7	6V5839	2	WASHER

M-METRIC PART

R- 582098

1166727 FILTER GP-FUEL

FUEL SYSTEM

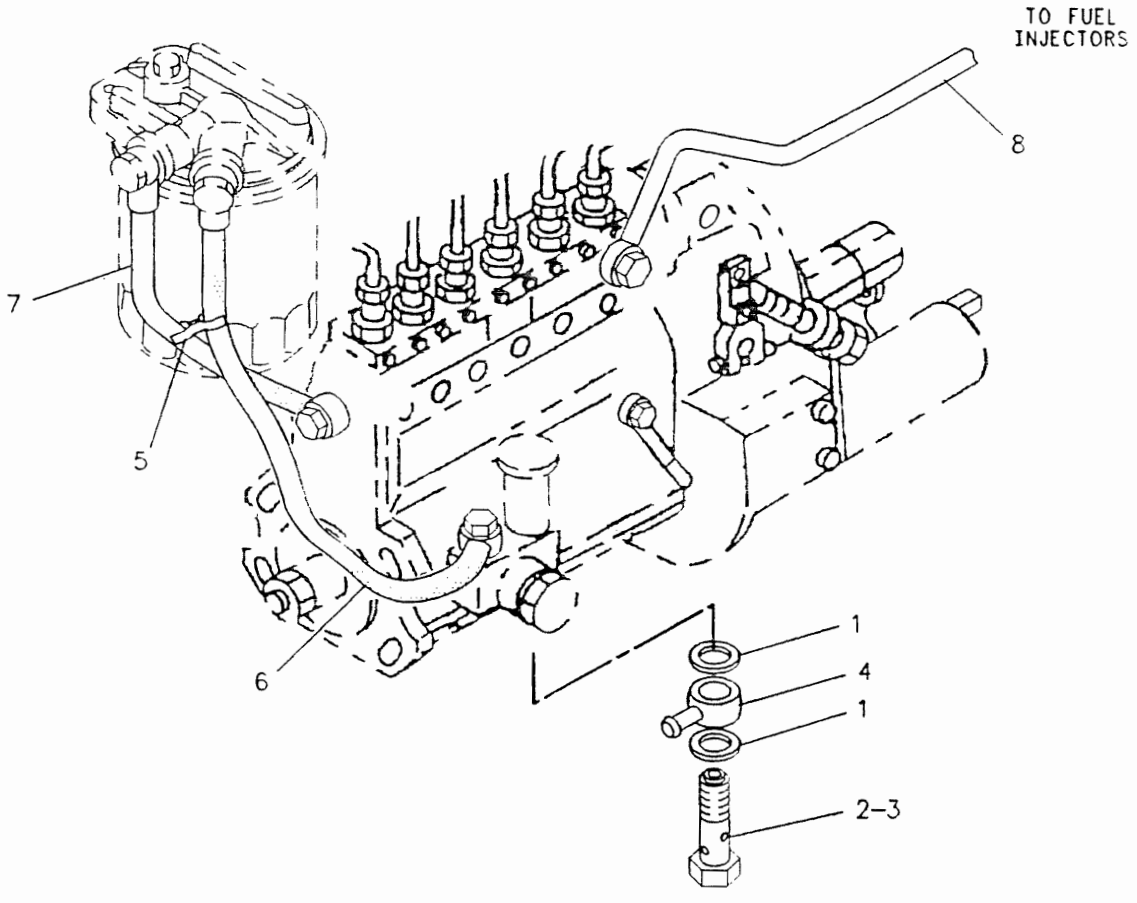

NOTE	REF NO	PART NUMBER	QTY	PART NAME	NOTE	REF NO	PART NUMBER	QTY	PART NAME
	1	952040	2	WASHER					
	2	952309	1	FILTER					
	3	952310	1	EYEBOLT					
	4	957034	1	NIPPLE					
	5	1146814	1	CLAMP					
	6	1176430	1	HOSE					
	7	1176431	1	HOSE					
	8	1177523	1	TUBE AS					

R- 582102

1166726 LINES GP-FUEL FILTER

FUEL SYSTEM

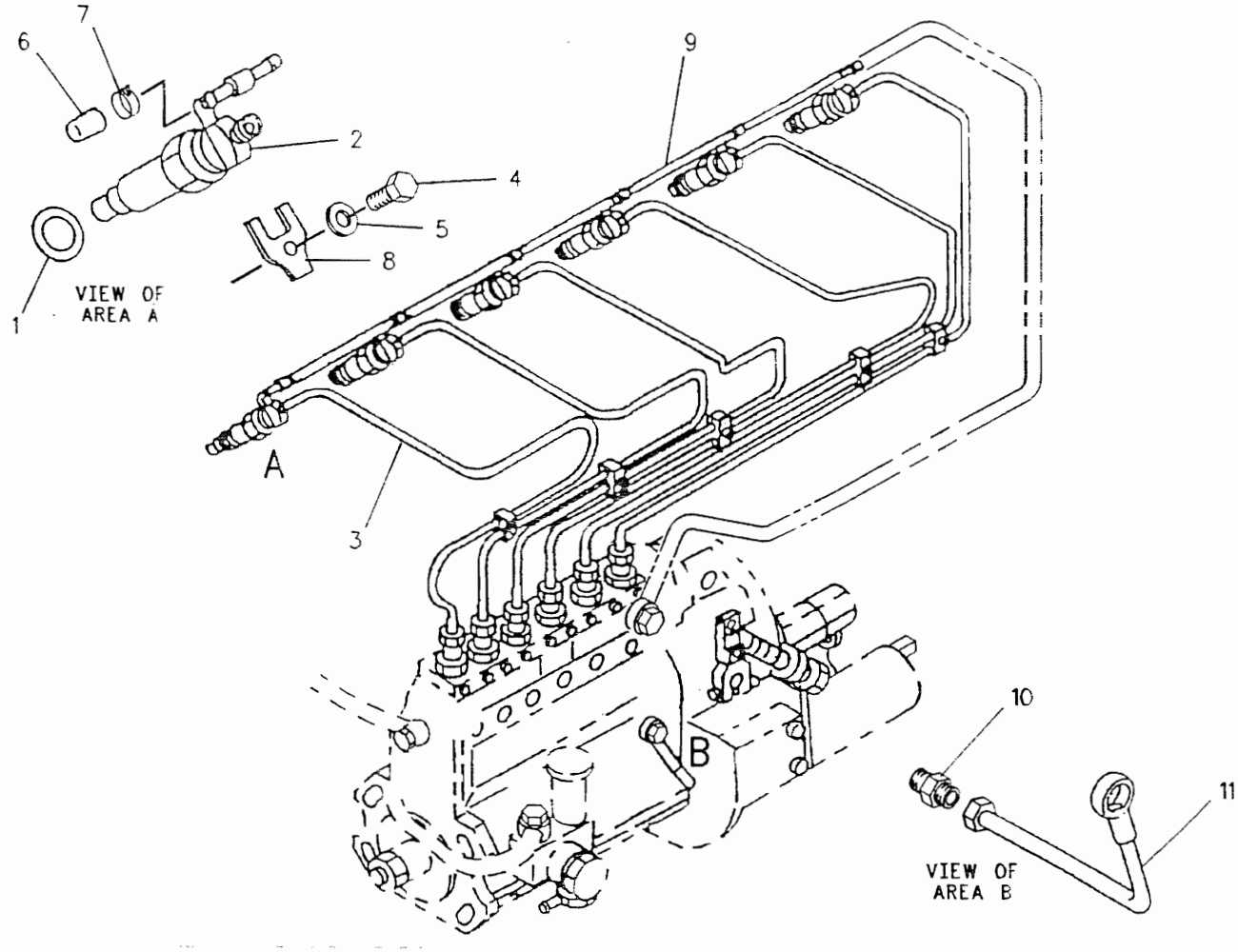

NOTE	REF NO	PART NUMBER	QTY	PART NAME	NOTE	REF NO	PART NUMBER	QTY	PART NAME
	1	1R6573	6	GASKET					
	2	1073648	6	NOZZLE AS					
	3	1073650	1	LINES SET					
M	4	6V2317	6	BOLT					
	5	9M1974	6	WASHER-HARD					
	6	947235	1	CAP					
	7	960174	13	CLIP-HOSE					
	8	1130363	6	SUPPORT					
	9	1130364	6	HOSE					
	10	1130365	1	CONNECTOR					
	11	1130366	1	TUBE AS					

M-METRIC PART

R- 582279

1252 1068268 LINES GP-FUEL INJECTION

FUEL SYSTEM AND GOVERNOR

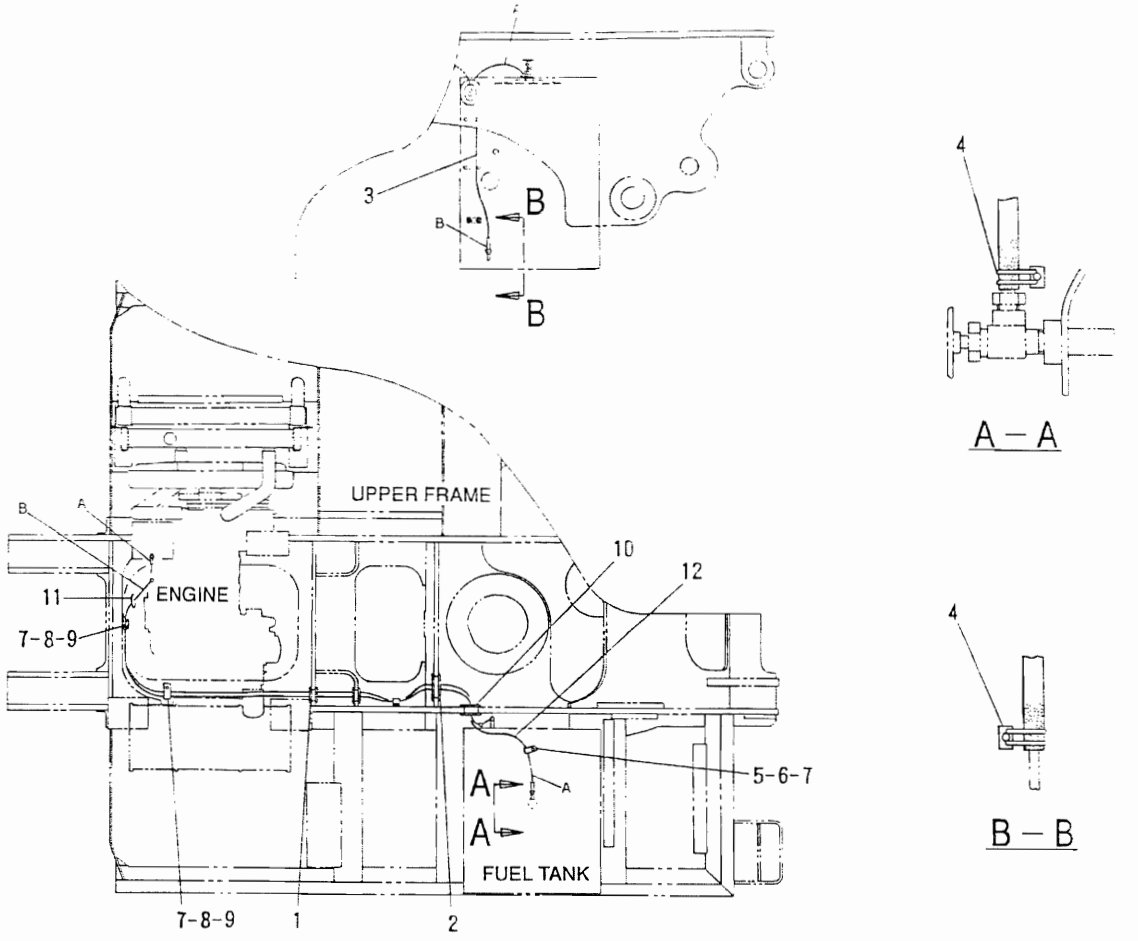

NOTE	No.	PART No.	QTY	PART NAME	NOTE	No.	PART No.	QTY	PART NAME
	1	093-2063	2	GROMMET					
	2	108-7303	1	GROMMET					
E	3	103-2529		HOSE・・・(330cm)					
	4	095-0960	4	CLAMP					
	5	9M-8406	1	CLIP					
	6	8T-4137	1	BOLT (20mm LONG)					
	7	8T-4121	4	WASHER					
	8	8T-4133	3	NUT					
	9	5K-8451	3	CLIP					
	10	7Y-8167	1	GROMMET					
	11	7K-1181	1	STRAP					
E	12	103-2529		HOSE・・・(270cm)					

E-ORDER BY THE CENTIMETERE

H41659E

103-0350 LINES GP-FUEL

FUEL SYSTEM AND GOVERNOR

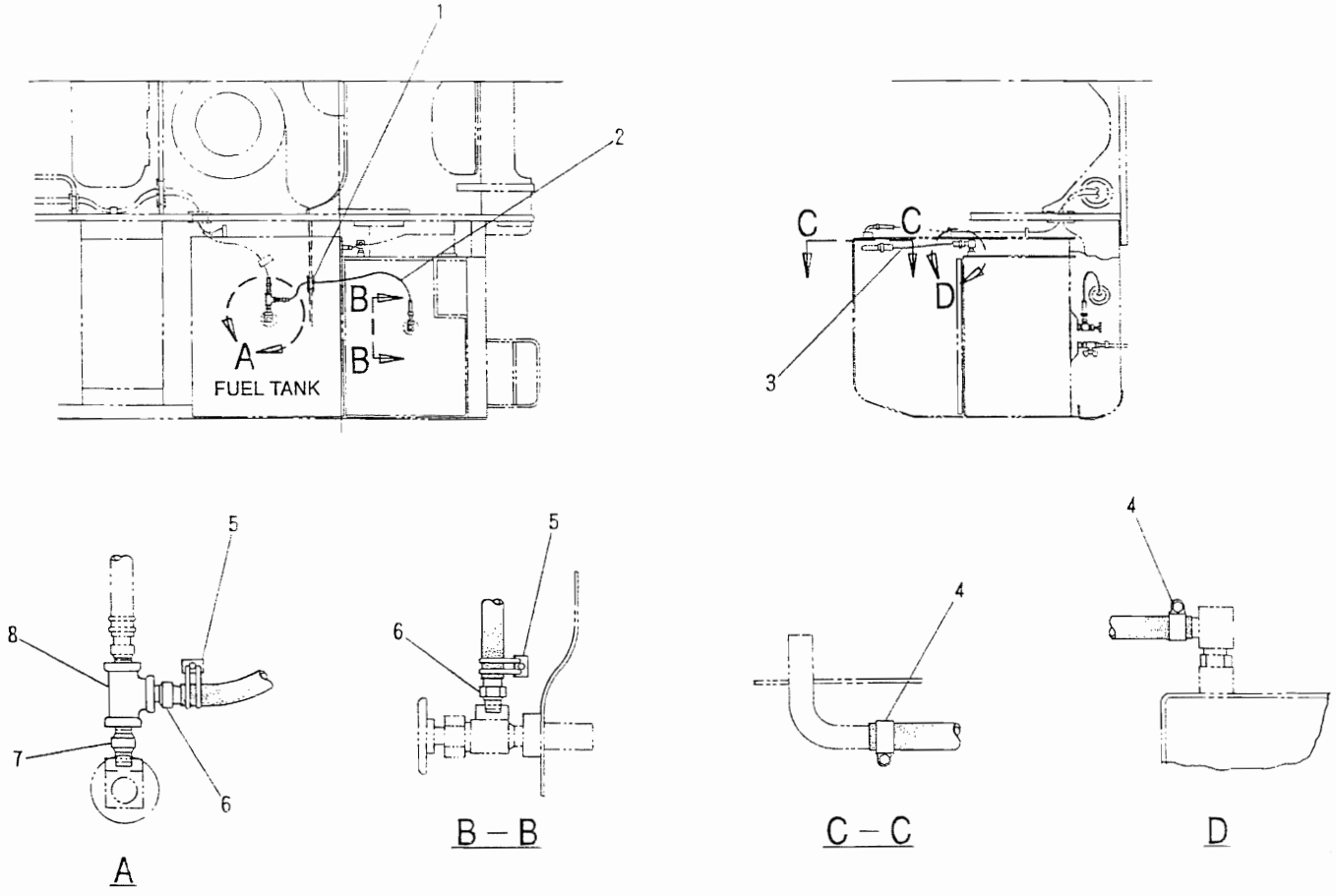

NOTE	No.	PART No.	QTY	PART NAME	NOTE	No.	PART No.	QTY	PART NAME
	1	093-2068	1	GROMMET					
E	2	103-2529		HOSE・・・(65cm)					
E	3	5P-0743		HOSE・・・(34cm)					
	4	095-1388	2	CLAMP					
	5	095-0960	2	CLAMP					
	6	003-7764	2	END					
	7	004-6683	1	NIPPLE					
	8	6B-2982	1	TEE					

E-ORDER BY THE CENTIMETERE

H41603E

109-2048 LINES GP-FUEL (B)

Part of 116-8263 Tank Ar listed on Page 55.01

An Attachment

MEMORANDA

FUEL SYSTEM AND GOVERNOR

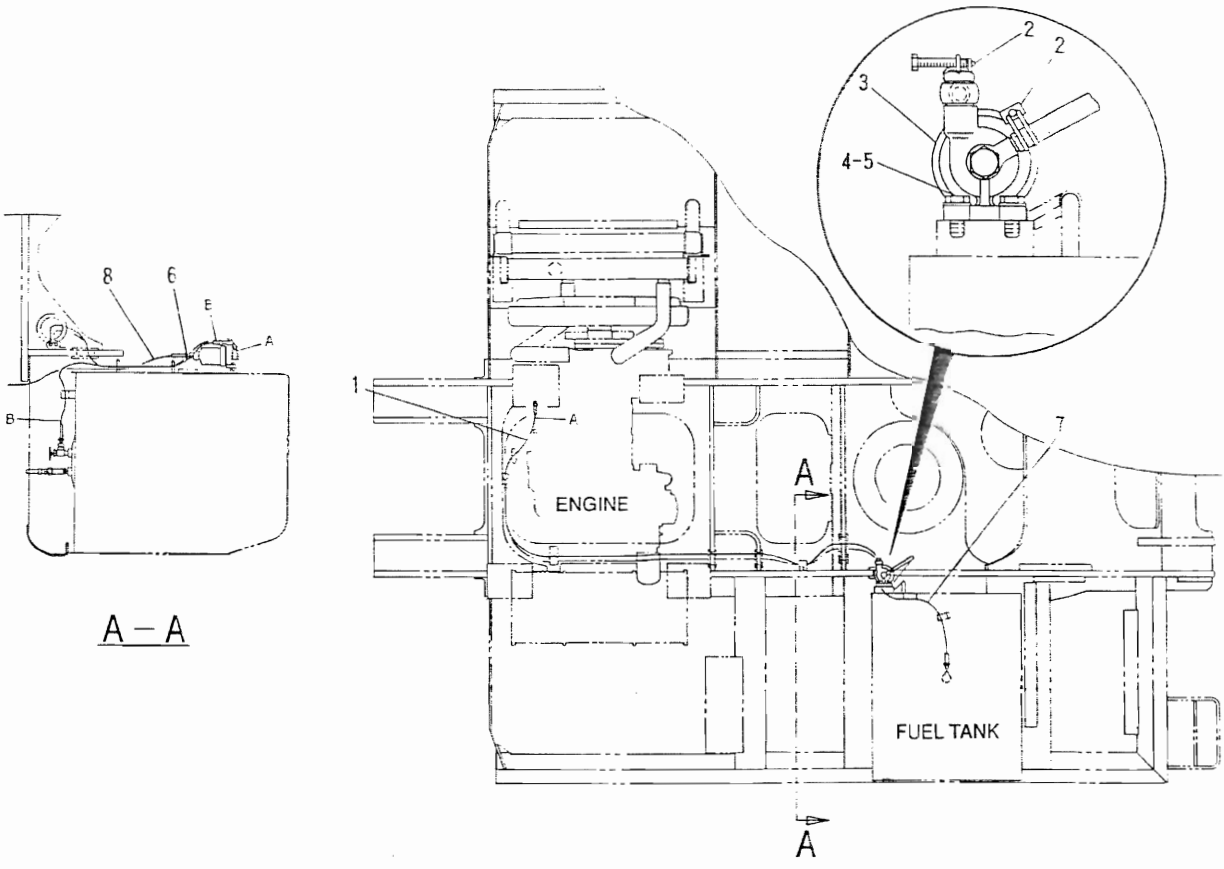

NOTE	No.	PART No.	QTY	PART NAME	NOTE	No.	PART No.	QTY	PART NAME
E	1	103-2529		HOSE・・・(320cm)					
	2	095-0960	2	CLAMP					
	3	108-9139	1	SEPARATOR					
	4	8T-4136	2	BOLT (25mm LONG)					
	5	8T-4121	2	WASHER					
	6	6S-8620	1	CLAMP					
E	7	103-2529		HOSE・・・(110cm)					
E	8	103-2529		HOSE・・・(70cm)					

ORDER BY THE CENTIMETER

H41611E

103-0360 SEPARATOR GP-WATER
An Attachment

FUEL SYSTEM AND GOVERNOR

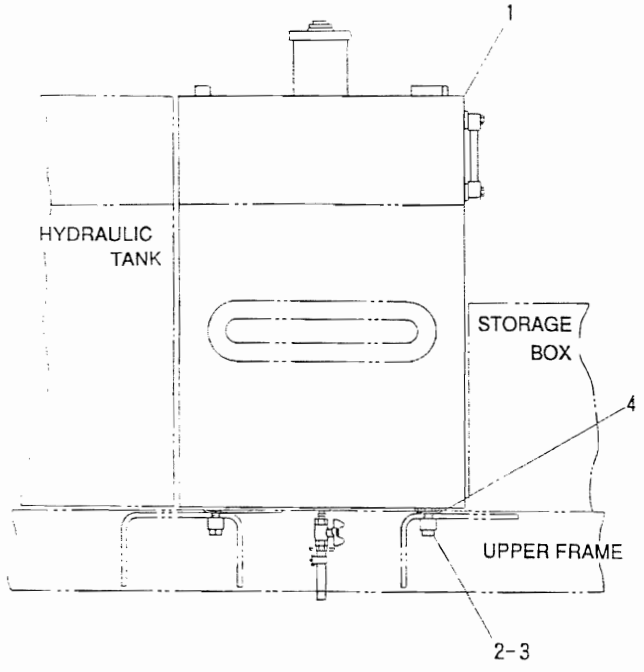

NOTE	No.	PART No.	QTY	PART NAME
Y	1	103-0347	1	TANK GP
	2	8T-4140	4	BOLT (60mm LONG
	3	61-6123	4	SPACER
B	4	087-8740	4	SHIM (0.4mm THICK)
B		087-8737	4	SHIM (2.0mm THICK)
B		087-8738	4	SHIM (1.0mm THICK)

B-USE AS REQUIRED
Y-SEE SEPARATE ILLUSTRATION

H41231E

103-0346 TANK GP-MOUNTING & (A)

103-0347 – Page 55

FUEL SYSTEM AND GOVERNOR

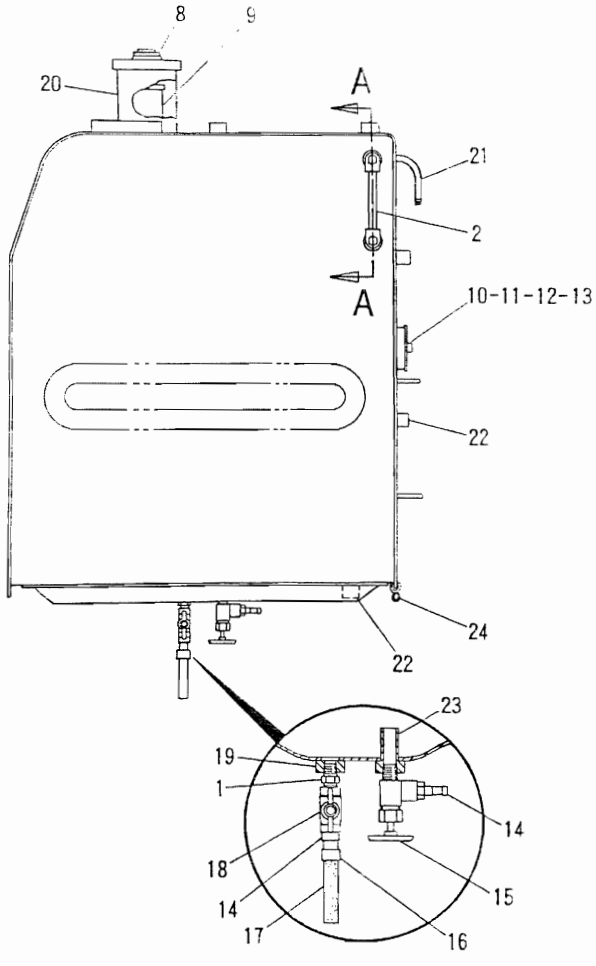

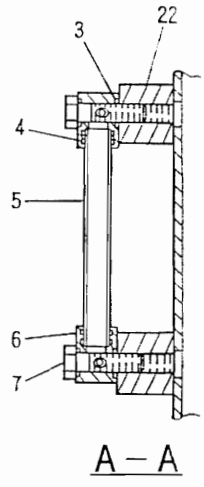

A－A

NOTE	No.	PART No.	QTY	PART NAME	NOTE	No.	PART No.	QTY	PART NAME
	1	004-6683	1	NIPPLE		18	4I-0379	1	VALVE
	2	7Y-2398	1	GAUGE AS		19	6B-8692	1	BOSS
	3	095-1514	4	SEAL		20	096-3937	1	FILLER
	4	095-1517	4	SEAL		21	4I-0050	1	PIPE
	5	4I-0123	1	PIPE		22	9R-3924	4	BOSS
	6	7Y-4754	2	BLOCK		23	4I-0137	1	ADAPTER
	7	094-3247	2	BOLT	D	24	5P-8309		SEAL・・・(0.2m)
	8	086-1781	1	CAP AS					
	9	5I-4510	1	STRAINER					
	10	105-9993	1	SENSOR					
		7N-9737	1	HOUSING					
		7N-7779	1	SOCKET					
		7N-7780	1	PIN					
	11	4I-0378	1	PACKING					
	12	095-0736	5	SCREW					
	13	8T-0328	5	WASHER					
	14	003-7764	2	END					
	15	9N-3666	1	VALVE AS					
	16	095-1388	1	CLAMP					
E	17	103-2529		HOSE・・・(9cm)					

D-ORDER BY THE METER
E-ORDER BY THE CENTIMETER

H412321

103-0347 TANK GP-FUEL (250L)

Part of 103-0346 Tank listed on Page 54

FUEL SYSTEM AND GOVERNOR

Consists of :

			Page
1	103-0351	PUMP GP-FUEL TRANSFER	55. 02
1	103-0352	BOX GP-MTG &	264. 01
1	105-9885	WIRING GP	94. 01
1	109-2075	TANK GP-MTG &	55. 03
1	116-8371	GUARD GP	121

H41605E

102-5325 PUMP AR-FUEL TRANSFER
An Attachment

Consists of :

			Page
1	103-0358	TANK GP-MTG &	55. 03
1	109-1835	FILM GP	327
1	109-2048	LINES GP-FUEL	52. 01
1	109-2062	FRAME AS-UPPER	127. 01
1	109-2075	TANK GP	55. 03
1	111-4756	LIGHTING GP	98. 01
1	116-8371	GUARD GP	121

H41606E

116-8263 TANK AR-ADDITIONAL
An Attachment

FUEL SYSTEM AND GOVERNOR

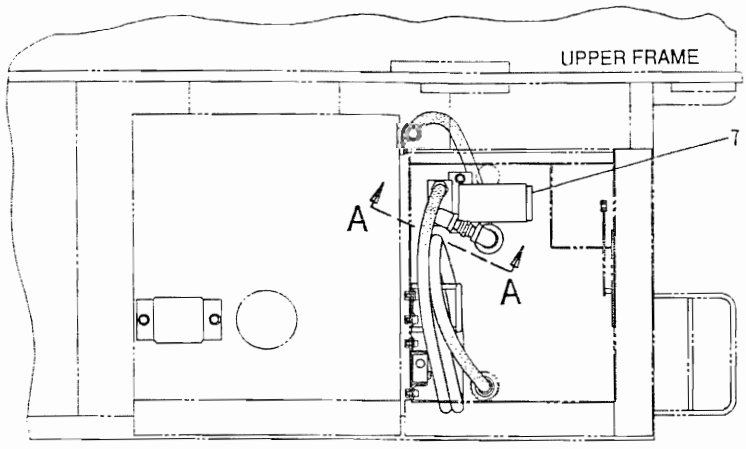

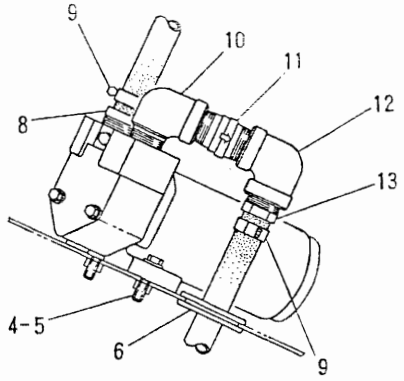

A – A

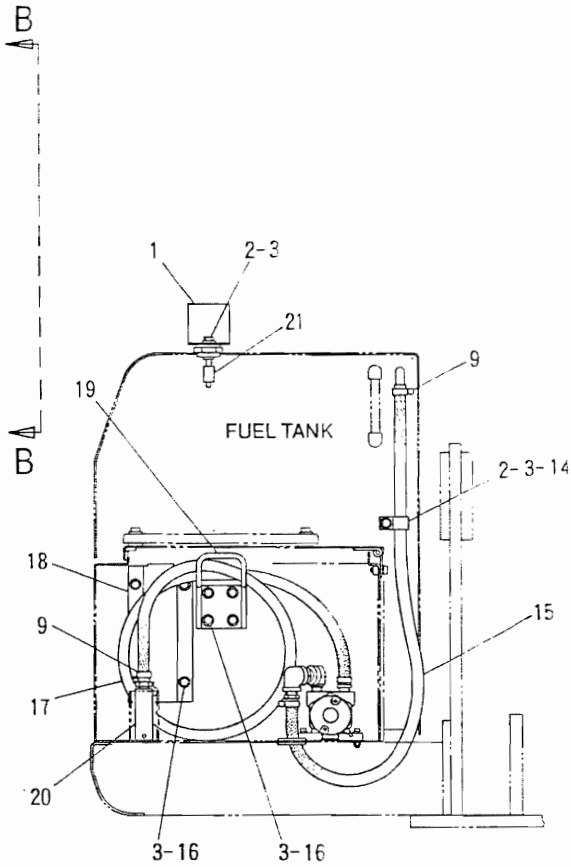

B – B

NOTE	No.	PART No.	QTY	PART NAME	NOTE	No.	PART No.	QTY	PART NAME
	1	4I-0062	1	COVER		21	5C-6108	1	SWITCH AS
	2	8T-4137	3	BOLT (20mm LONG)					
	3	8T-4121	11	WASHER					
	4	7X-2537	2	BOLT (35mm LONG)					
	5	8T-4224	2	WASHER					
	6	096-3872	1	GROMMET					
	7	6C-5572	1	PUMP GP					
	8	005-7898	1	CONNECTOR					
	9	2S-3440	4	CLAMP					
	10	003-9163	1	ELBOW					
	11	4I-8443	1	VALVE					
	12	1K-6937	1	ELBOW					
	13	6D-3534	1	CONNECTOR					
	14	4S-1962	1	CLIP					
E	15	5P-0743		HOSE・・・(110cm)					
	16	8T-4191	8	BOLT (16mm LONG)					
E	17	103-2555		HOSE・・・(300cm)					
	18	4I-2632	1	COVER AS					
	19	4I-8444	1	SUPPORT AS					
	20	5C-0746	1	STRAINER AS					

E-ORDER BY THE CENTIMETER

H41601E

103-0351 PUMP GP-FUEL TRANSFER (B)

Part of 102-5325 Pump Ar listed on Page 55.01
An Attachment

FUEL SYSTEM AND GOVERNOR

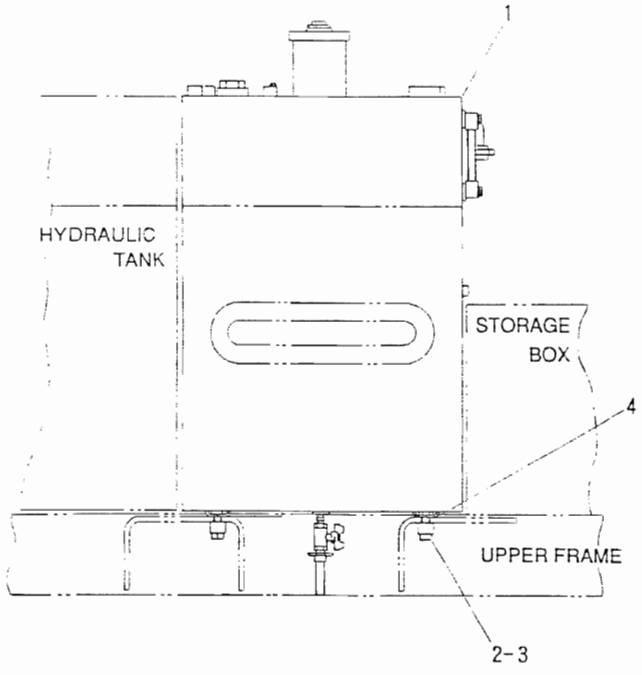

NOTE	No.	PART No.	QTY	PART NAME
Y	1	109-2076	1	TANK GP
	2	8T-4140	4	BOLT (60mm LONG
	3	6I-6123	4	SPACER
B	4	087-8740	4	SHIM (0.4mm THICK
B		087-8737	4	SHIM (2.0mm THICK
B		087-8738	4	SHIM (1.0mm THICK

B-USE AS REQUIRED
Y-SEE SEPARATE ILLUSTRATION

H41599E

109-2075 TANK GP-MOUNTING & (A)

Part of 102-5325 Pump Ar and 116-8263 Tank Ar listed on Page 55.01
109-2076 – Page 55.04
An Attachment

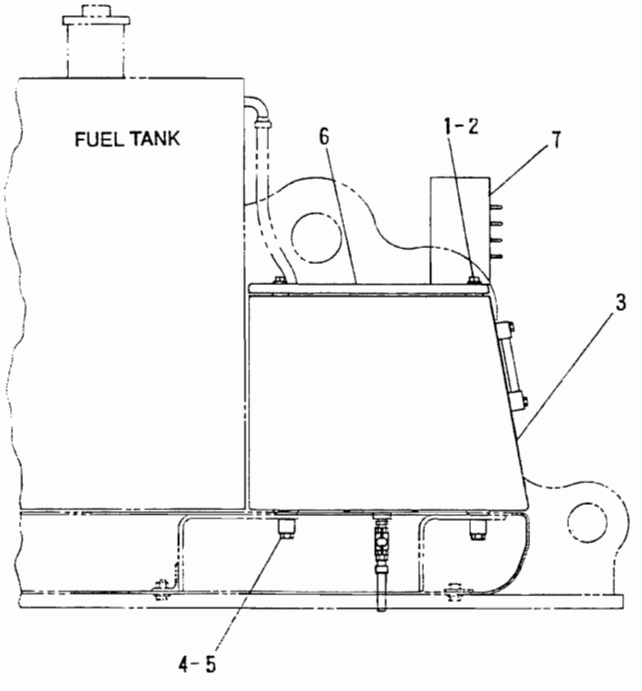

NOTE	No.	PART No.	QTY	PART NAME
	1	8T-4179	4	BOLT (20mm LONG)
	2	8T-4223	4	WASHER
Y	3	103-0579	1	TANK GP
	4	8T-4140	4	BOLT (60mm LONG)
	5	6I-6123	4	SPACER
	6	103-0588	1	SHEET
	7	103-0585	1	COVER AS

Y-SEE SEPARATE ILLUSTRATION

H41596E

103-0358 TANK GP-MOUNTING & (A)

Part of 116-8263 Tank Ar listed on Page 55.01
103-0579 – Page 55.05
An Attachment

FUEL SYSTEM AND GOVERNOR

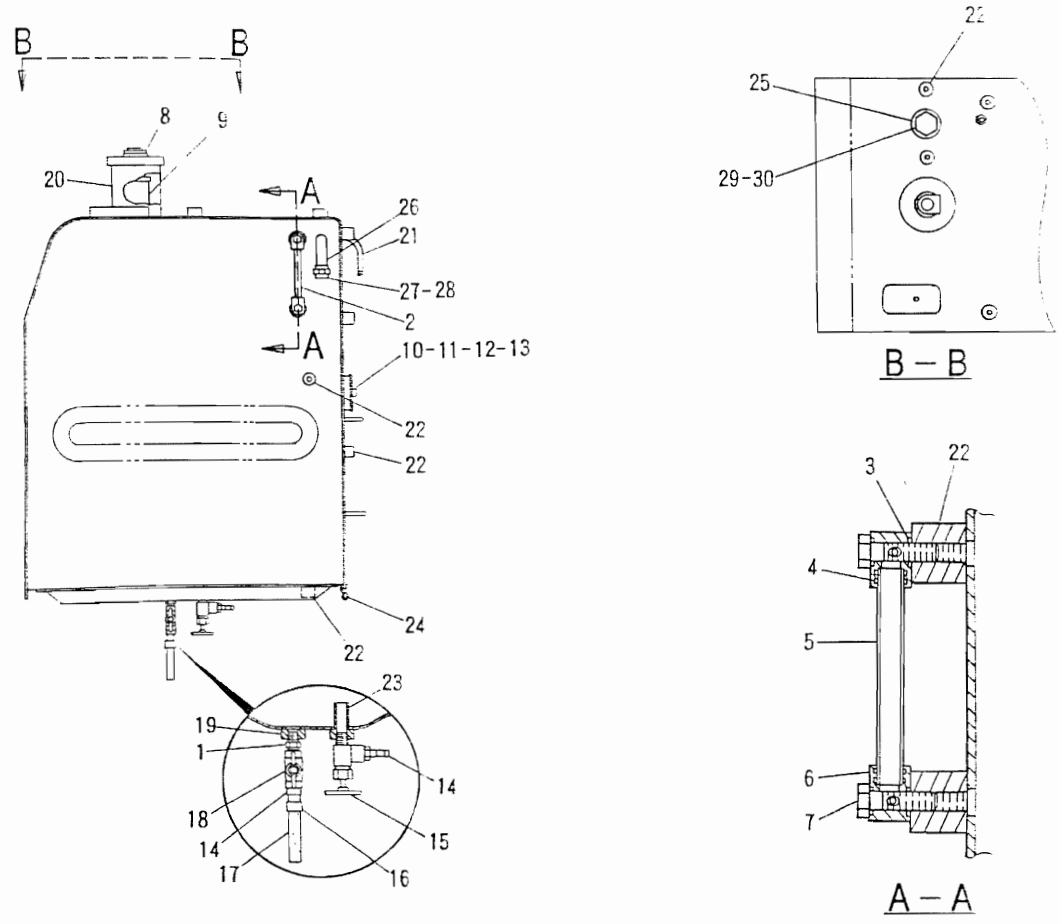

NOTE	No.	PART No.	QTY	PART NAME	NOTE	No.	PART No.	QTY	PART NAME
	1	004-6683	1	NIPPLE		18	4I-0379	1	VALVE
	2	7Y-2398	1	GAUGE AS		19	6B-8692	1	BOSS
	3	095-1514	4	SEAL		20	096-3937	1	FILLER
	4	095-1517	4	SEAL		21	4I-0050	1	PIPE
	5	4I-0123	1	PIPE		22	9R-3924	9	BOSS
	6	7Y-4754	2	BLOCK		23	4I-0137	1	ADAPTER
	7	094-3247	2	BOLT	D	24	5P-8309		SEAL・・・(0.2m)
	8	086-1781	1	CAP AS		25	8J-9208	1	BOSS
	9	5I-4510	1	STRAINER		26	7Y-2262	1	PIPE
	10	105-9993	1	SENSOR		27	087-3832	1	CAP
		7N-9737	1	HOUSING		28	2S-3440	1	CLAMP
		7N-7779	1	SOCKET		29	9S-6130	1	PLUG
		7N-7780	1	PIN		30	2S-4078	1	SEAL
	11	4I-0378	1	PACKING					
	12	095-0736	5	SCREW					
	13	8T-0328	5	WASHER					
	14	003-7764	2	END					
	15	9N-3666	1	VALVE AS					
	16	095-1388	1	CLAMP					
E	17	103-2529		HOSE・・・(9cm)					

D-ORDER BY THE METER
E-ORDER BY THE CENTIMETER

H41600E

109-2076 TANK GP-FUEL (250L)

Part of 109-2075 Tank listed on Page 55.03
An Attachment

FUEL SYSTEM AND GOVERNOR

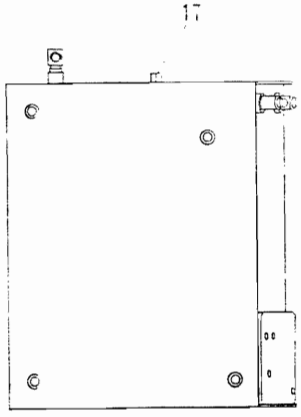

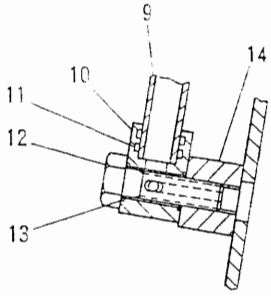

A – A

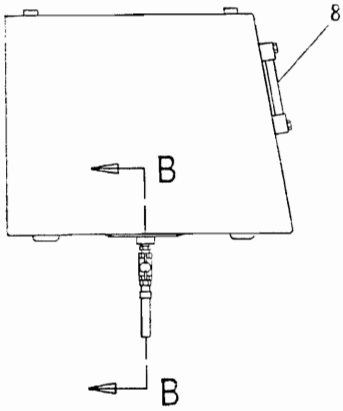

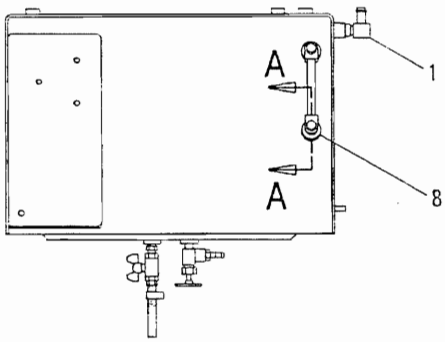

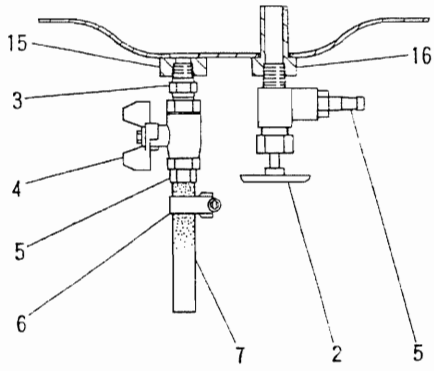

B – B

NOTE	No.	PART No.	QTY	PART NAME	NOTE	No.	PART No.	QTY	PART NAME
	1	7I-0375	1	ELBOW					
	2	9N-3666	1	VALVE AS					
	3	004-6683	1	NIPPLE					
	4	4I-0379	1	VALVE					
	5	003-7764	2	END					
	6	095-1388	1	CLAMP					
E	7	5P-1442		HOSE・・・(9cm)					
	8	7Y-2398	1	GAUGE AS					
	9	4I-0123	1	PIPE					
	10	7Y-4754	2	BLOCK					
	11	095-1517	4	SEAL					
	12	094-3247	2	BOLT					
	13	095-1514	4	SEAL					
	14	9R-3924	2	BOSS					
	15	6B-8962	1	BOSS					
	16	4I-0137	1	ADAPTER					
	17	6I-6429	1	BOSS					

E-ORDER BY THE CENTIMETER

H41604E

103-0579 TANK GP-FUEL (90L)

Part of 103-0358 Tank listed on Page 55.03

An Attachment

MEMORANDA

ELECTRICAL SYSTEM

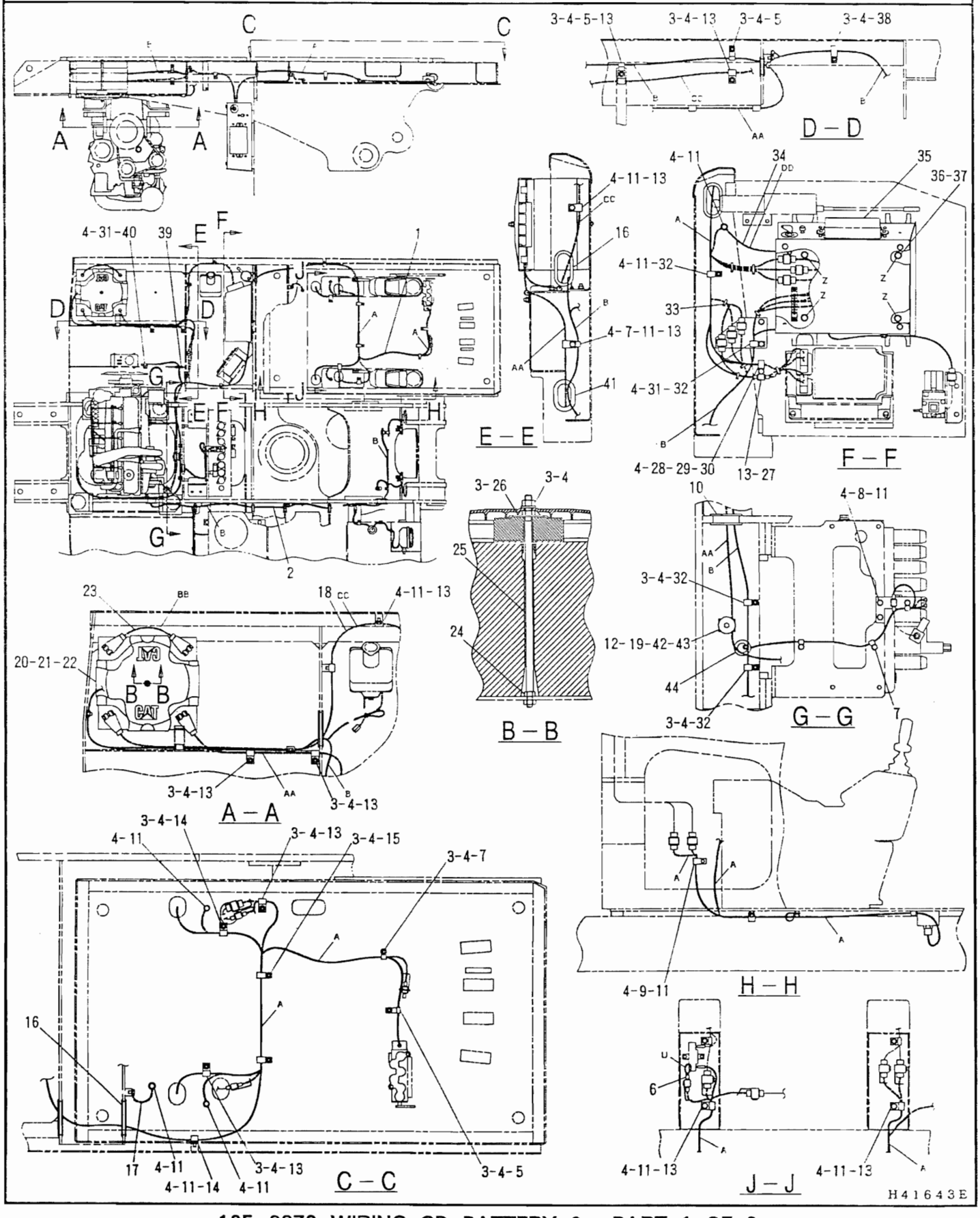

105-9876 WIRING GP-BATTERY & -PART 1 OF 2

7Y-3946, 7Y-3947 – Page 60, 105-9916 – Page 61, 116-0139 – Page 62, 105-9878 – Page 66, 105-9901 – Page 68

ELECTRICAL SYSTEM

NOTE	No.	PART No.	QTY	PART NAME	NOTE	No.	PART No.	QTY	PART NAME
Y	1	105-9878	1	HARNESS AS					
Y	2	116-0139	1	HARNESS AS					
	3	8T-4133	17	NUT					
	4	8T-4121	38	WASHER					
	5	4D-8123	3	CLIP					
	6	106-0027	1	HARNESS AS					
		7N-7779	1	SOCKET					
		7N-7780	1	PIN					
		7N-9738	1	HOUSING					
	7	4D-7794	5	CLIP					
	8	4I-5494	1	BRACKET AS					
		9G-9151	3	CLIP					
	9	8M-2773	1	CLIP					
	10	7Y-8165	1	GROMMET					
	11	8T-4191	18	BOLT (16mm LONG)					
	12	8T-4185	1	BOLT (50mm LONG)					
	13	6D-3479	12	CLIP					
	14	6D-4636	2	CLIP					
	15	7C-4354	2	CLIP					
	16	7Y-3196	3	GROMMET					
	17	7G-1060	1	STRAP AS					
Y	18	105-9916	1	CABLE AS					
	19	6G-2263	1	SPACER					
	20	3T-5760	2	BATTERY					
	21	6W-6005	1	HOLDDOWN					
	22	5I-8270	1	COVER					
Y	23	7Y-3946	1	CABLE AS					
	24	5C-7261	1	NUT					
	25	5I-8304	1	ROD					
	26	8T-4226	1	WASHER					
	27	9G-9152	1	CLIP					
	28	102-7886	1	SLEEVE					
	29	8T-4198	1	BOLT (100mm LONG)					
	30	1S-0994	1	CLIP					
	31	8T-4137	3	BOLT (20mm LONG)					
	32	6D-4244	4	CLIP					
	33	3S-2093	7	STRAP					
Y	34	7Y-3947	1	CABLE AS					
Y	35	105-9901	1	PANEL GP					
	36	8T-4179	4	BOLT (20mm LONG)					
	37	8T-4223	4	WASHER					
	38	6V-1889	1	CLIP					
	39	7Y-8169	1	GROMMET					
	40	9G-9150	1	CLIP					
	41	7Y-5497	1	GROMMET					
	42	2G-8767	2	WASHER					
	43	6G-2256	1	CLAMP					
	44	093-2063	1	GROMMET					

Y-SEE SEPARATE ILLUSTRATION

H41644E

105-9876 WIRING GP-BATTERY & -PART 1 OF 2

7Y-3946, 7Y-3947 – Page 60, 105-9916 – Page 61, 116-0139 – Page 62, 105-9878 – Page 66, 105-9901 – Page 68

ELECTRICAL SYSTEM

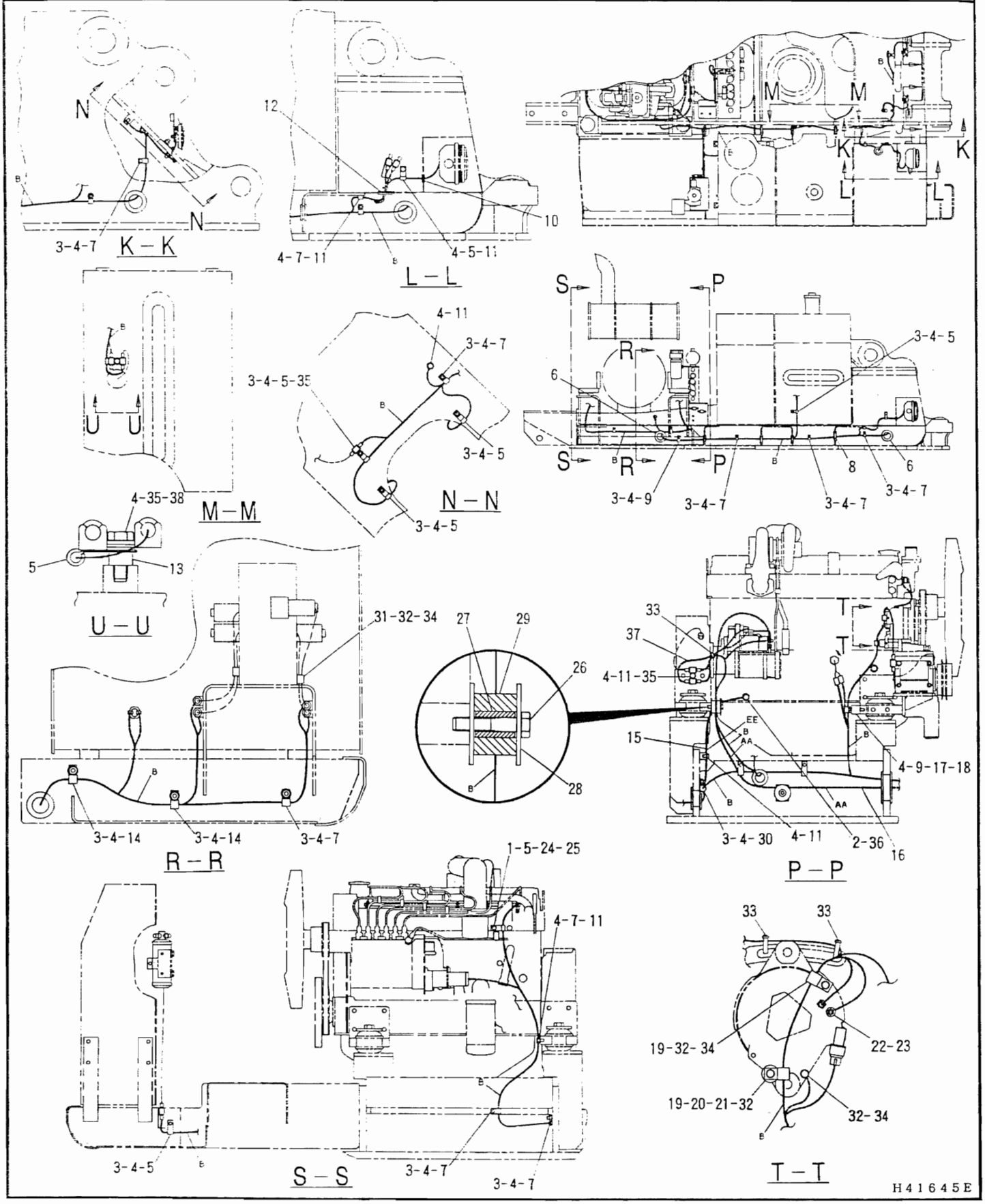

105-9876 WIRING GP-BATTERY & -PART 2 OF 2

105-9915 – Page 61

ELECTRICAL SYSTEM

NOTE	No.	PART No.	QTY	PART NAME	NOTE	No.	PART No.	QTY	PART NAME
	1	8T-6912	1	BOLT (50mm LONG)					
	2	7X-2548	1	BOLT (16mm LONG)					
	3	8T-4133	19	NUT					
	4	8T-4121	27	WASHER					
	5	4D-8123	10	CLIP					
	6	7Y-8167	2	GROMMET					
	7	4D-7794	10	CLIP					
	8	093-2068	4	GROMMET					
	9	8M-2773	3	CLIP					
	10	7Y-8172	1	GROMMET					
	11	8T-4191	6	BOLT (16mm LONG)					
	12	096-3872	1	GROMMET					
	13	3S-8536	1	SPACER					
	14	8M-2770	2	CLIP					
	15	4I-5429	1	CABLE AS					
		1S-7251	2	TERMINAL					
E		5P-0747		CABLE ··· (28cm)					
Y	16	105-9915	1	CABLE AS					
	17	6E-1435	1	SPACER					
	18	8T-4182	1	BOLT (45mm LONG)					
	19	8J-1256	2	CLIP					
	20	8T-4971	1	BOLT (30mm LONG)					
	21	4J-9448	1	LUG					
	22	5C-2874	1	NUT					
	23	8T-0328	1	WASHER					
	24	039-2280	1	SPACER					
	25	8T-4224	1	WASHER					
	26	8T-4185	1	BOLT (50mm LONG)					
	27	6G-2263	1	SPACER					
	28	2G-8767	2	WASHER					
	29	6G-2256	1	CLAMP					
	30	1S-0994	1	CLIP					
	31	2V-3216	2	CLIP					
	32	9X-8256	5	WASHER					
	33	3S-2093	3	STRAP					
	34	8T-4171	4	BOLT (12mm LONG)					
	35	9G-9150	5	CLIP					
	36	8T-4223	1	WASHER					
	37	116-0140	1	HARNESS AS					
		7N-7780	1	PIN					
		7N-7779	1	SOCKET					
		7N-9737	1	HOUSING					
		2L-8075	1	TERMINAL					
	38	8T-4195	1	BOLT					

E-ORDER BY THE CENTIMETER
Y-SEE SEPARATE ILLUSTRATION

H41646E

105-9876 WIRING GP-BATTERY & -PART 2 OF 2

105-9915 – Page 61

ELECTRICAL SYSTEM

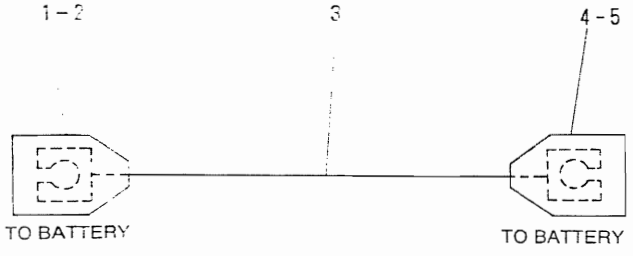

NOTE	No.	PART No.	QTY	PART NAME
	1	3S-6049	1	TERMINAL AS
		1M-6119	1	BOLT
		1M-6120	1	NUT
	2	8N-1725	1	COVER
E	3	5P-0747		CABLE··· (31cm)
	4	3S-6050	1	TERMINAL AS
		1M-6119	1	BOLT
		1M-6120	1	NUT
	5	7N-5274	1	COVER

E-ORDER BY THE CENTIMETER

H31264E

7Y-3946 CABLE AS

Part of 105-9876 and 105-9882 Wiring listed on Pages 57 and 74

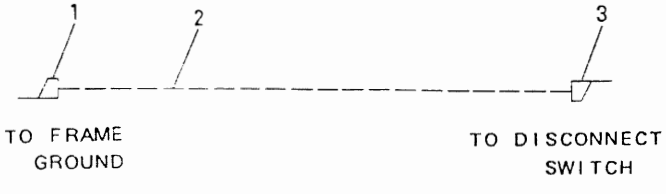

NOTE	No.	PART No.	QTY	PART NAME
	1	1S-7252	1	TERMINAL
E	2	5P-0747		CABLE··· (30cm)
	3	1S-7251	1	TERMINAL

E-ORDER BY THE CENTIMETER

H32161E

7Y-3947 CABLE AS

Part of 105-9876 Wiring listed on Page 57

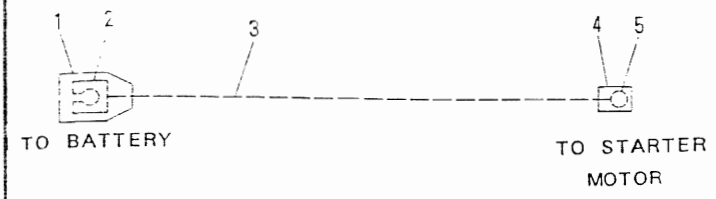

NOTE	No.	PART No.	QTY	PART NAME
	1	8N-1725	1	COVER
	2	3S-6049	1	TERMINAL AS
		1M-6119	1	BOLT
		1M-6120	1	NUT
E	3	5P-0761		CABLE・・・(245cm)
	4	8N-0869	1	COVER
	5	1S-7252	1	TERMINAL

E-ORDER BY THE CENTIMETER

H41272E

105-9915 CABLE AS

Part of 105-9876 Wiring listed on Page 59

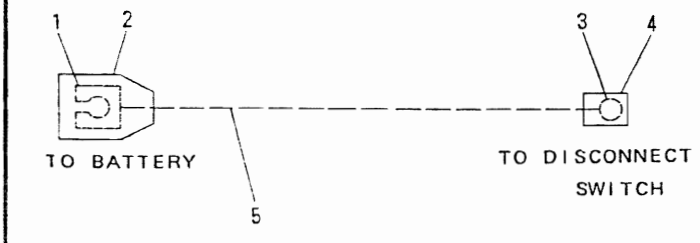

NOTE	No.	PART No.	QTY	PART NAME
	1	3S-6050	1	TERMINAL AS
		1M-6119	1	BOLT
		1M-6120	1	NUT
	2	7N-5274	1	COVER
	3	1S-7252	1	TERMINAL
	4	9G-8909	1	COVER
E	5	5P-0747		CABLE・・・(182cm)

E-ORDER BY THE CENTIMETER

H41273E

105-9916 CABLE AS

Part of 105-9876 Wiring listed on Page 57

ELECTRICAL SYSTEM

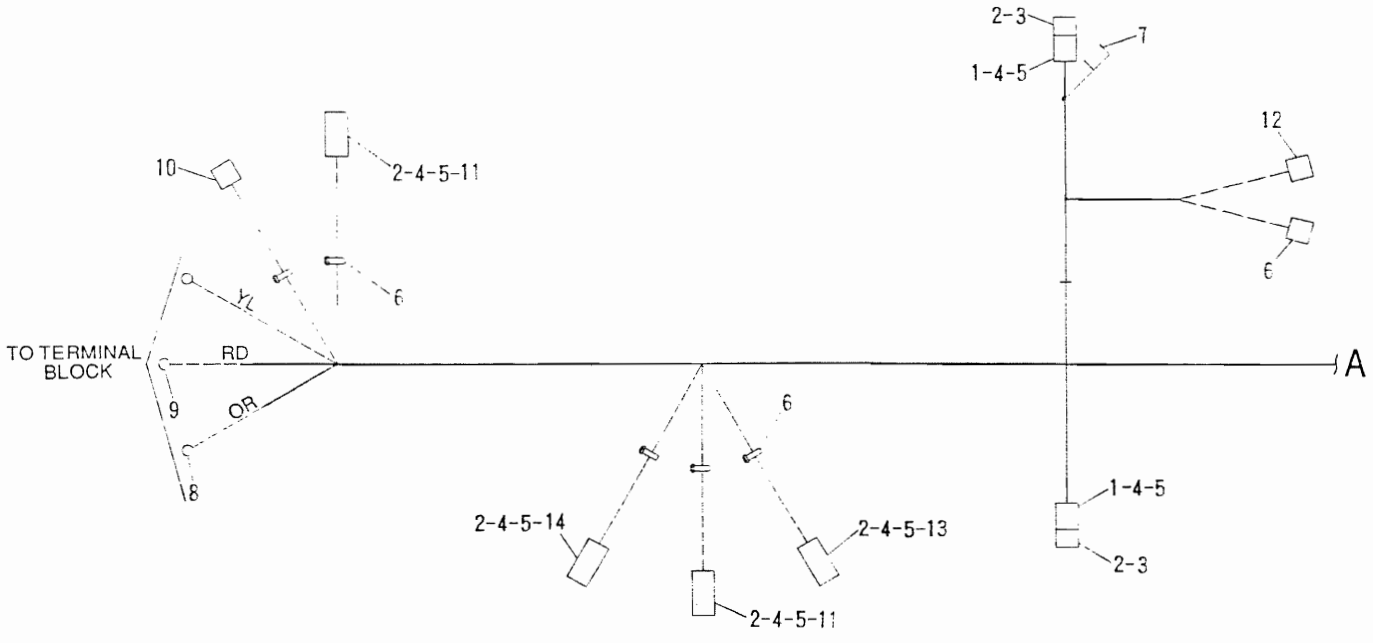

NOTE	No.	PART No.	QTY	PART NAME	NOTE	No.	PART No.	QTY	PART NAME
	1	7N-9738	2	HOUSING					
	2	9G-3695	10	PLUG					
	3	7N-9737	2	HOUSING					
	4	7N-7779	17	SOCKET					
	5	7N-7780	17	PIN					
	6	3S-2093	6	STRAP					
	7	3T-3048	1	CLIP AS					
	8	2L-8050	2	TERMINAL					
	9	9G-4343	1	TERMINAL					
	10	7Y-3958	1	CONNECTOR					
	11	9G-3667	2	HOUSING					
	12	9X-0196	2	TERMINAL AS					
	13	9G-3677	1	HOUSING					
	14	9G-3673	1	HOUSING					

H41245E

116-0139 HARNESS AS-PART 1 OF 3

Part of 105-9876 Wiring listed on Page 57

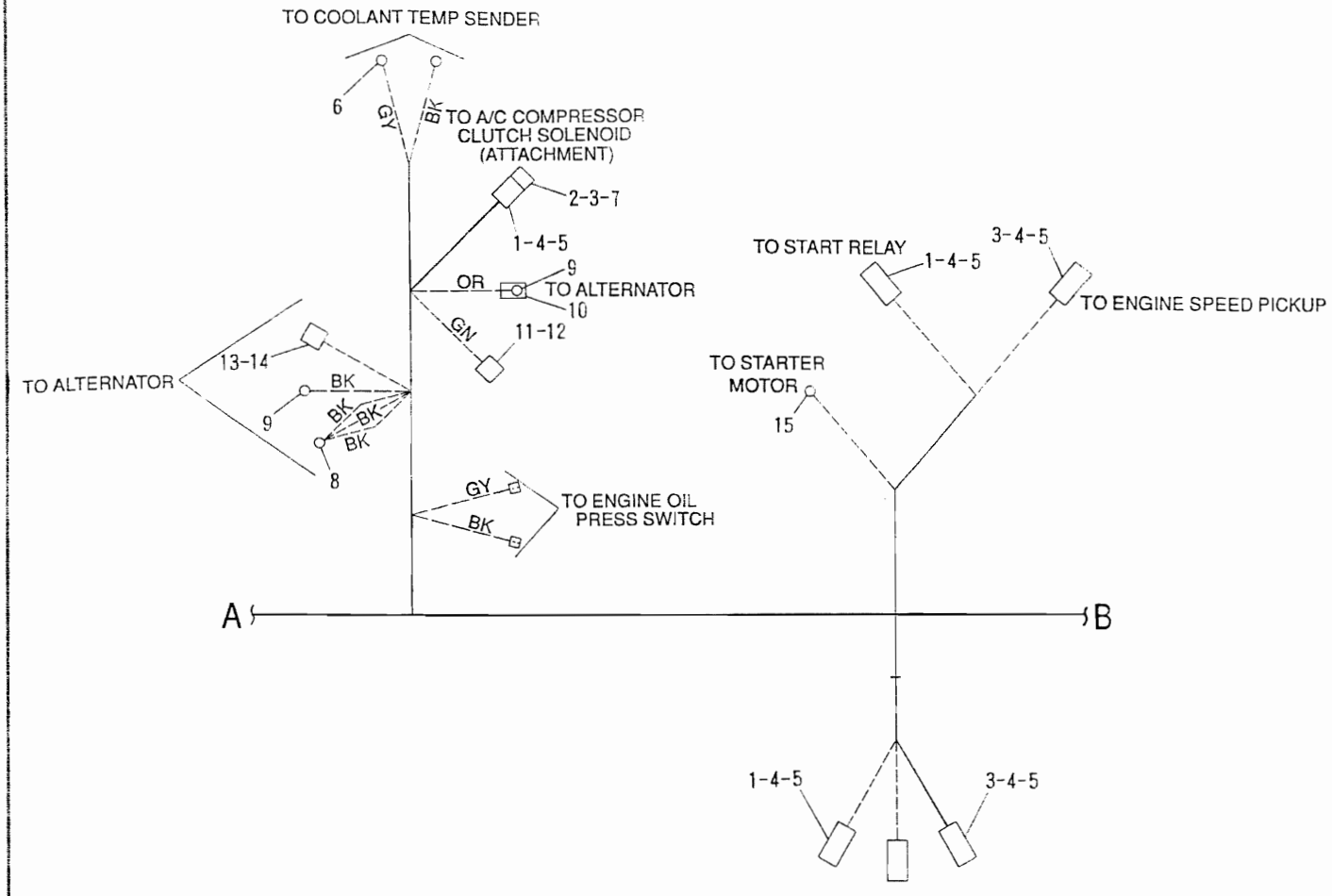

NOTE	No.	PART No.	QTY	PART NAME	NOTE	No.	PART No.	QTY	PART NAME
	1	7N-9738	4	HOUSING					
	2	9G-3695	2	PLUG					
	3	7N-9737	3	HOUSING					
	4	7N-7779	6	SOCKET					
	5	7N-7780	6	PIN					
	6	2L-8075	2	TERMINAL					
	7	3S-2093	1	STRAP					
	8	2L-8067	1	TERMINAL					
	9	2L-8050	2	TERMINAL					
	10	8T-8799	1	BOOT					
	11	7Y-3995	1	CONNECTOR					
	12	7Y-3996	1	TERMINAL					
	13	7Y-3821	2	SOCKET					
	14	7Y-3820	1	HOUSING					
	15	9G-4336	1	TERMINAL					

H41642E

116-0139 HARNESS AS-PART 2 OF 3

Part of 105-9876 Wiring listed on Page 57

ELECTRICAL SYSTEM

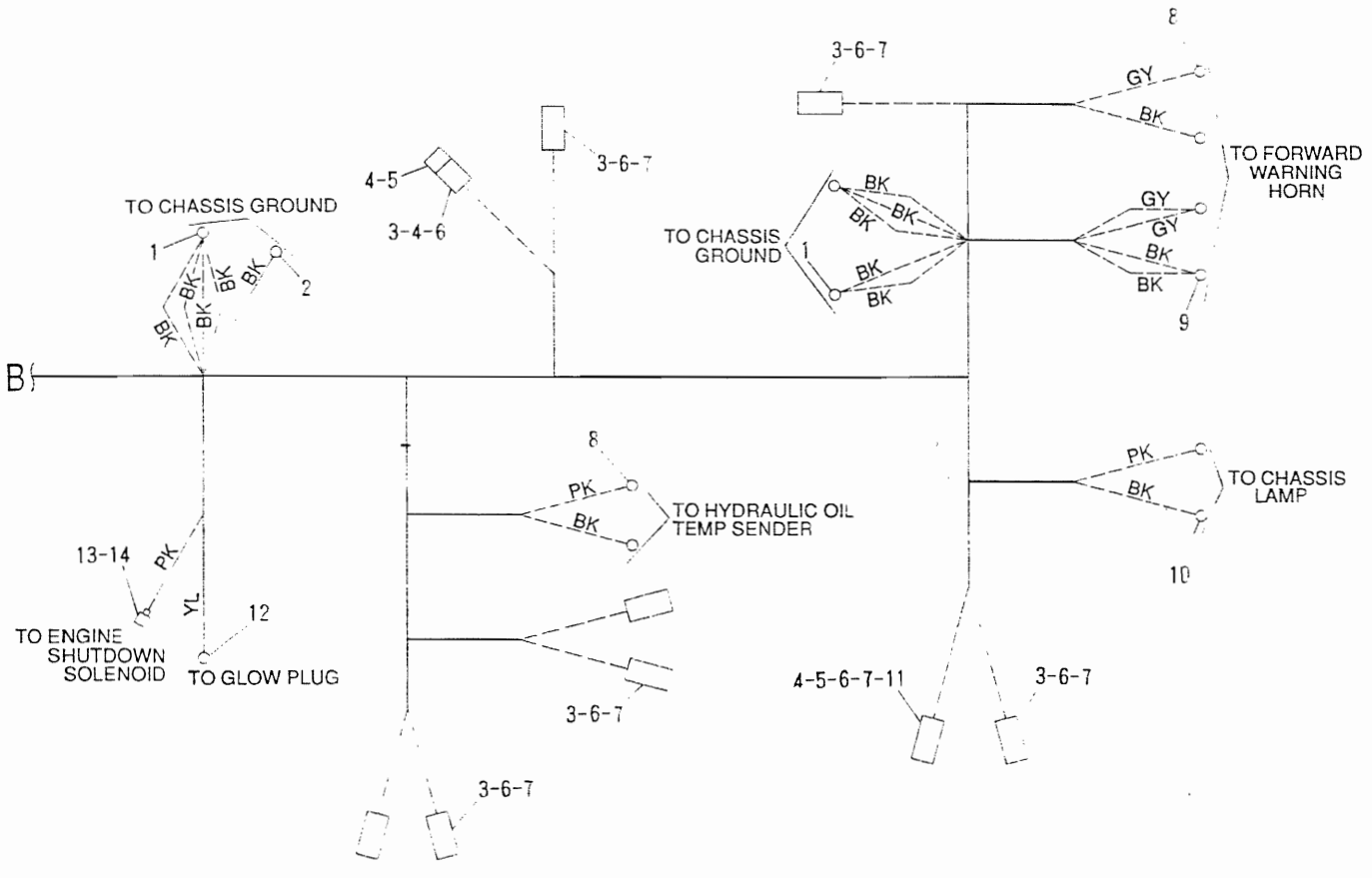

NOTE	No.	PART No.	QTY	PART NAME	NOTE	No.	PART No.	QTY	PART NAME
	1	3T-4696	3	TERMINAL					
	2	3T-4692	1	TERMINAL					
	3	7N-9738	9	HOUSING					
	4	9G-3695	7	PLUG					
	5	7N-9737	3	HOUSING					
	6	7N-7779	9	SOCKET					
	7	7N-7780	8	PIN					
	8	2L-8075	4	TERMINAL					
	9	2L-8065	2	TERMINAL					
	10	2L-8075	2	TERMINAL					
	11	3S-2093	1	STRAP					
	12	2L-8049	1	TERMINAL AS					
	13	6T-6505	1	HOUSING					
	14	6T-6506	1	TERMINAL					

H41247E

116-0139 HARNESS AS-PART 3 OF 3

Part of 105-9876 Wiring listed on Page 57

MEMORANDA

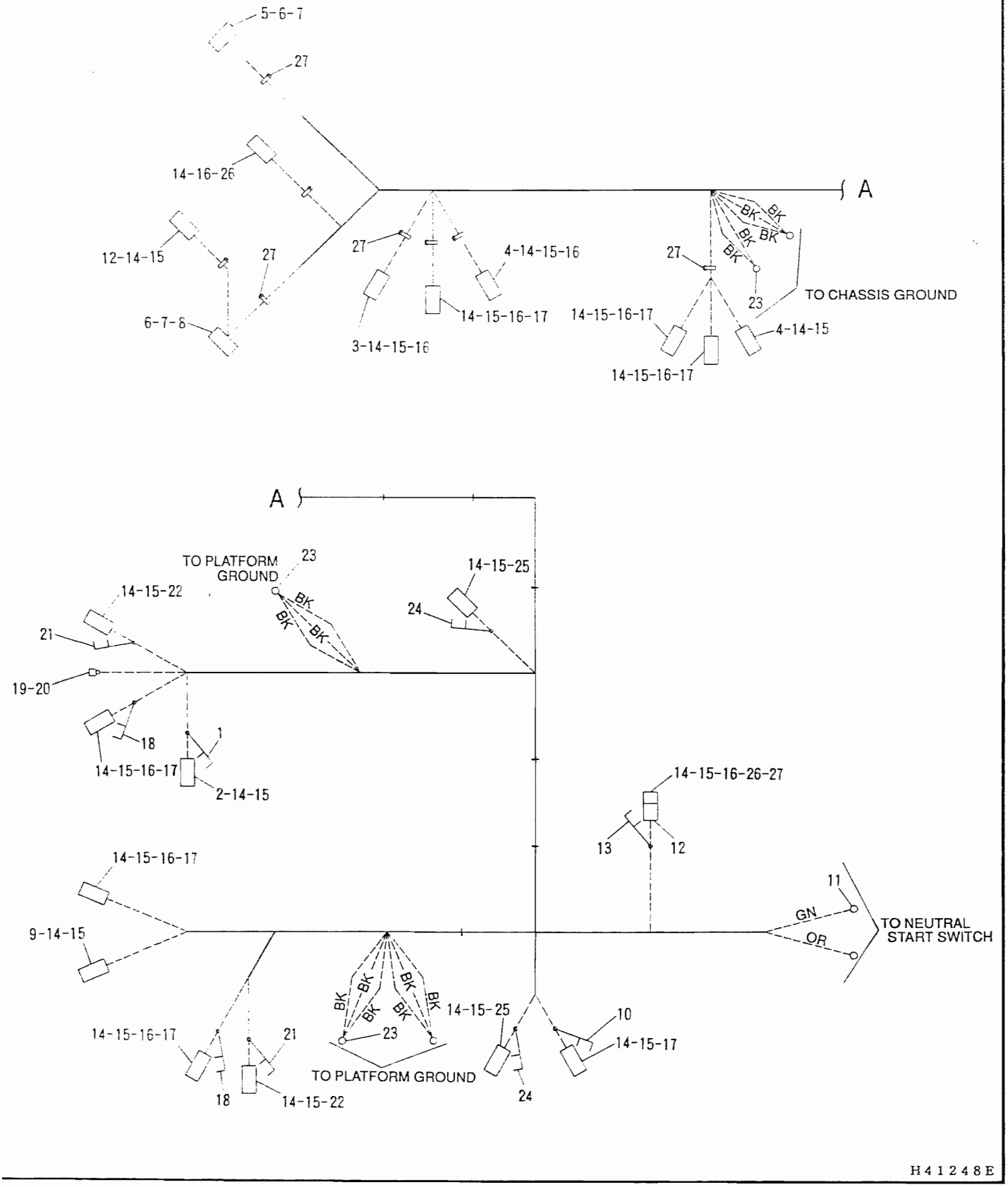

H41248E

105-9878 HARNESS AS

Part of 105-9876 Wiring listed on Page 57

ELECTRICAL SYSTEM

NOTE	No.	PART No.	QTY	PART NAME	NOTE	No.	PART No	QTY	PART NAME
	1	9G-2264	1	CLIP					
	2	7N-9737	1	HOUSING					
	3	9G-3671	1	HOUSING					
	4	9G-3667	2	HOUSING					
	5	7X-6222	1	PLUG AS					
		3E-4367	1	RING					
		3E-8558	1	BOLT					
		9X-3265	2	SEAL					
	6	9W-0844	44	SOCKET					
	7	8T-8737	20	PLUG					
	8	8T-9834	1	PLUG AS					
	9	9G-3676	1	HOUSING					
	10	3T-3046	1	CLIP AS					
	11	2L-8075	2	TERMINAL					
	12	7N-8204	2	HOUSING					
	13	3T-3045	1	CLIP AS					
	14	7N-7780	57	PIN					
	15	7N-7779	53	SOCKET					
	16	9G-3695	25	PLUG					
	17	9G-3673	7	HOUSING					
	18	9G-3659	2	CLIP					
	19	6T-6505	1	HOUSING					
	20	6T-6506	1	TERMINAL					
	21	9G-3658	2	CLIP					
	22	9G-3678	2	HOUSING					
	23	3T-4696	5	TERMINAL					
	24	3T-3048	2	CLIP AS					
		3T-0009	1	STRAP					
		9G-9151	1	CLIP					
	25	7N-9738	2	HOUSING					
	26	7N-8205	2	HOUSING					
	27	3S-2093	9	STRAP					

H41249E

105-9878 HARNESS AS

Part of 105-9876 Wiring listed on Page 57

ELECTRICAL SYSTEM

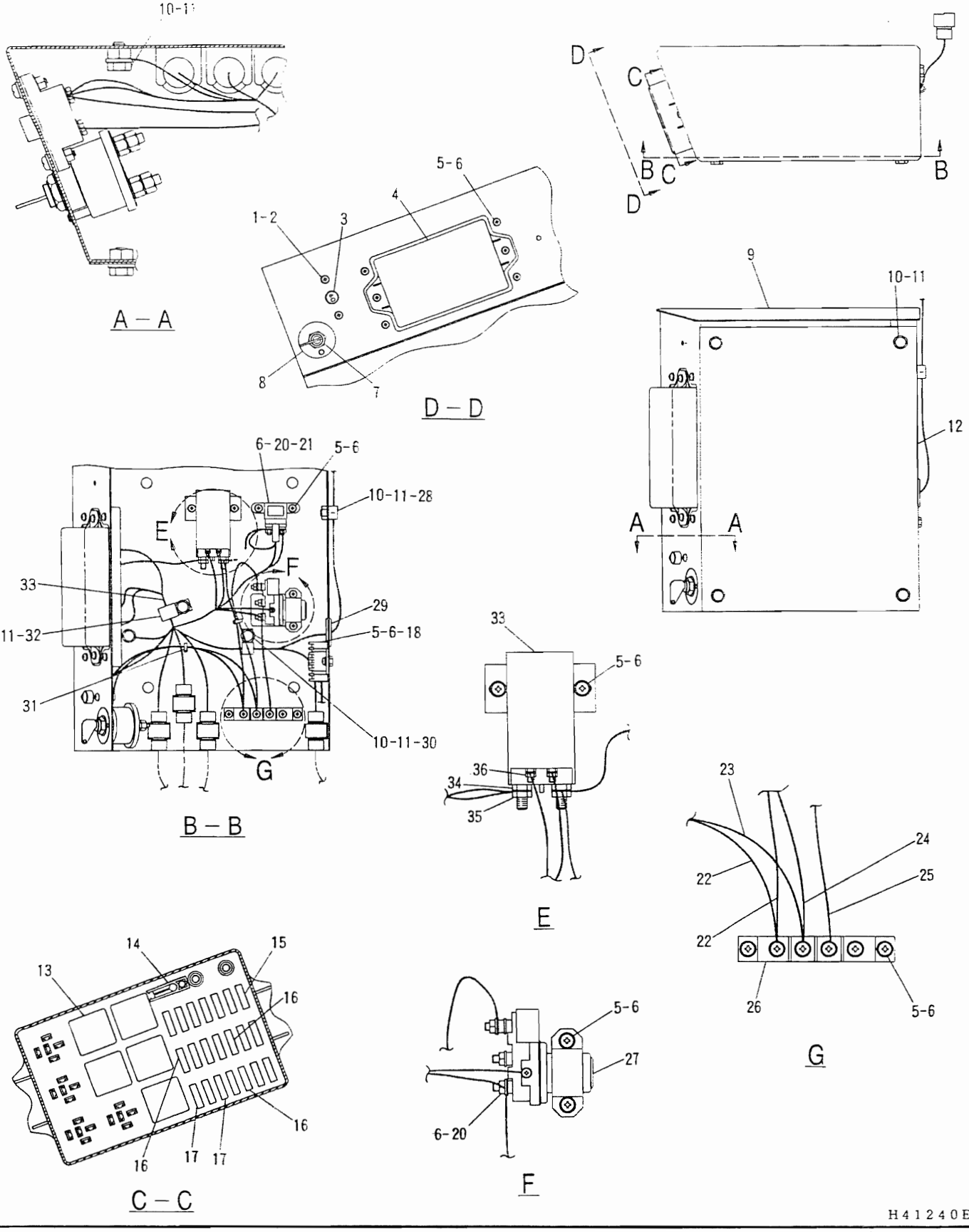

H41240E

105-9901 PANEL GP-CIRCUIT BREAKER

Part of 105-9876 Wiring listed on Page 57
105-9902 – Page 70, 7N-0718 – Page 73

ELECTRICAL SYSTEM

NOTE	No.	PART No.	QTY	PART NAME	NOTE	No.	PART No.	QTY	PART NAME
	1	6V-5645	2	SCREW					
	2	8T-0328	2	WASHER					
	3	9S-0174	1	BREAKER AS					
		6V-8365	2	SCREW					
		1H-3244	2	LOCKWASHER					
	4	7Y-5492	1	COVER					
	5	8T-6411	20	SCREW					
	6	9X-8256	24	WASHER					
Y	7	7N-0718	1	SWITCH AS (DISCONECT)					
	8	8H-8648	1	PLATE					
	9	4I-5441	1	BRACKET AS					
		3T-0049	4	CLIP					
	10	8T-4191	8	BOLT (16mm LONG)					
	11	8T-4121	8	WASHER					
	12	4I-5444	1	COVER					
	13	7Y-5490	5	RELAY					
	14	7Y-5493	1	TOOL					
	15	9W-1442	16	FUSE (10A)					
	16	9W-1441	3	FUSE (15A)					
	17	9W-1446	2	FUSE (20A)					
	18	094-2080	1	RELAY					
Y	19	105-9902	1	HARNESS AS					
	20	5C-2890	4	NUT					
	21	9X-8124	1	SWITCH AS (STARTER RELAY)					
		8T-4134	2	NUT					
	22	4I-5448	2	WIRE AS					
		2L-8050	1	TERMINAL					
		2L-8051	1	TERMINAL					
	23	4I-5447	1	WIRE AS					
		2L-8050	2	TERMINAL					
	24	105-9919	1	WIRE AS					
		2L-8050	1	TERMINAL					
		2L-8058	1	TERMINAL					
	25	105-9903	1	WIRE AS					
		2L-8050	1	TERMINAL					
		2L-8058	1	TERMINAL					
	26	7Y-5499	1	BLOCK AS					
	27	085-5353	1	RELAY (HEATER)					
	28	6V-3265	1	CLIP					
	29	5P-9135	1	GROMMET					
	30	8M-2770	1	CLIP					
	31	3S-2093	2	STRAP					
	32	1S-0994	1	CLIP					
	33	3T-0376	1	SWITCH AS (MAIN RELAY)					
	34	4F-2294	2	NUT					
	35	6V-8186	2	NUT					
	36	6V-8378	2	NUT					

Y-SEE SEPARATE ILLUSTRATION

H41241E

105-9901 PANEL GP-CIRCUIT BREAKER

Part of 105-9876 Wiring listed on Page 57
105-9902 – Page 70, 7N-0718 – Page 73

ELECTRICAL SYSTEM

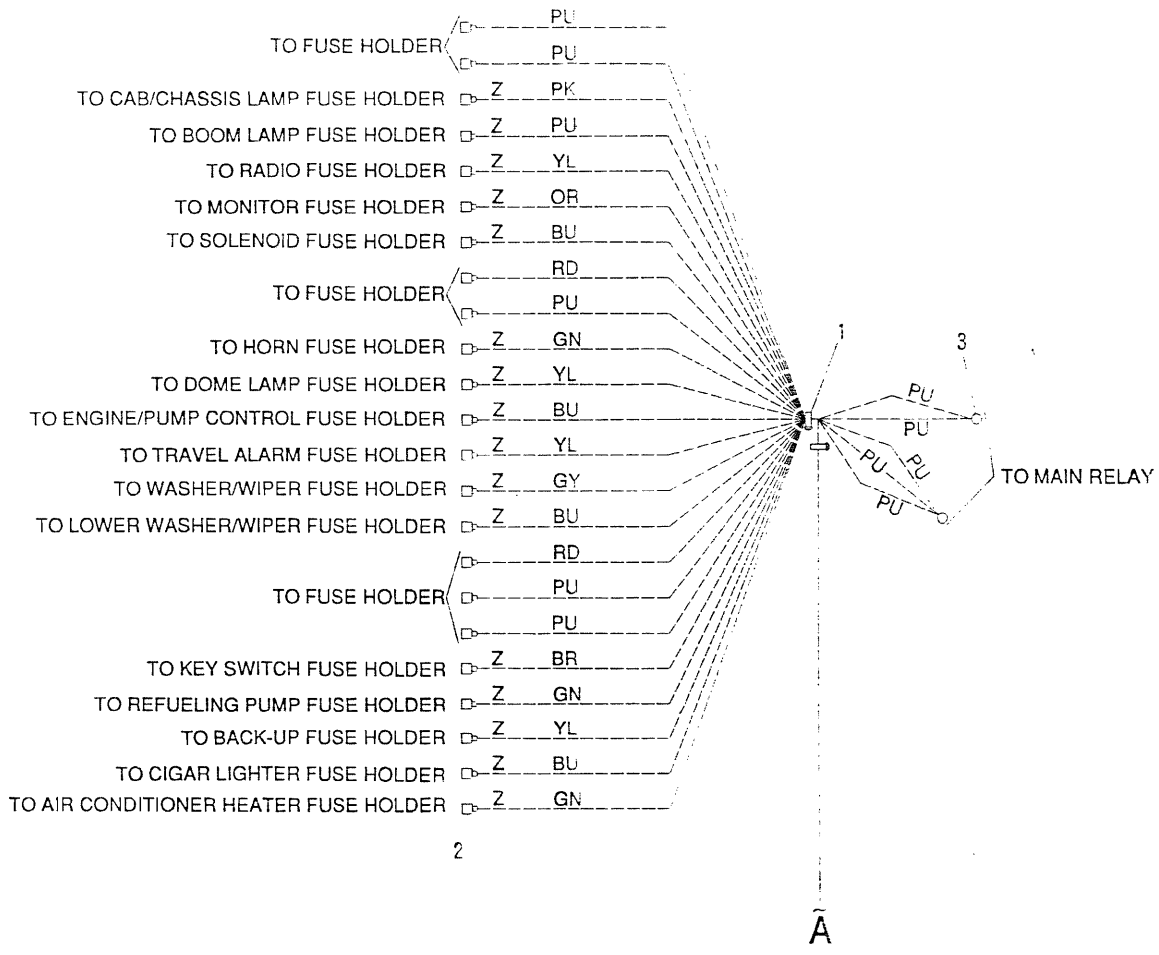

NOTE	No.	PART No.	QTY	PART NAME	NOTE	No.	PART No.	QTY	PART NAME
	1	3S-2093	2	STRAP					
	2	7Y-5494	16	TERMINAL					
	3	1G-2044	2	TERMINAL					

H41242E

105-9902 HARNESS AS-PART 1 OF 3

Part of 105-9901 Panel listed on Page 69

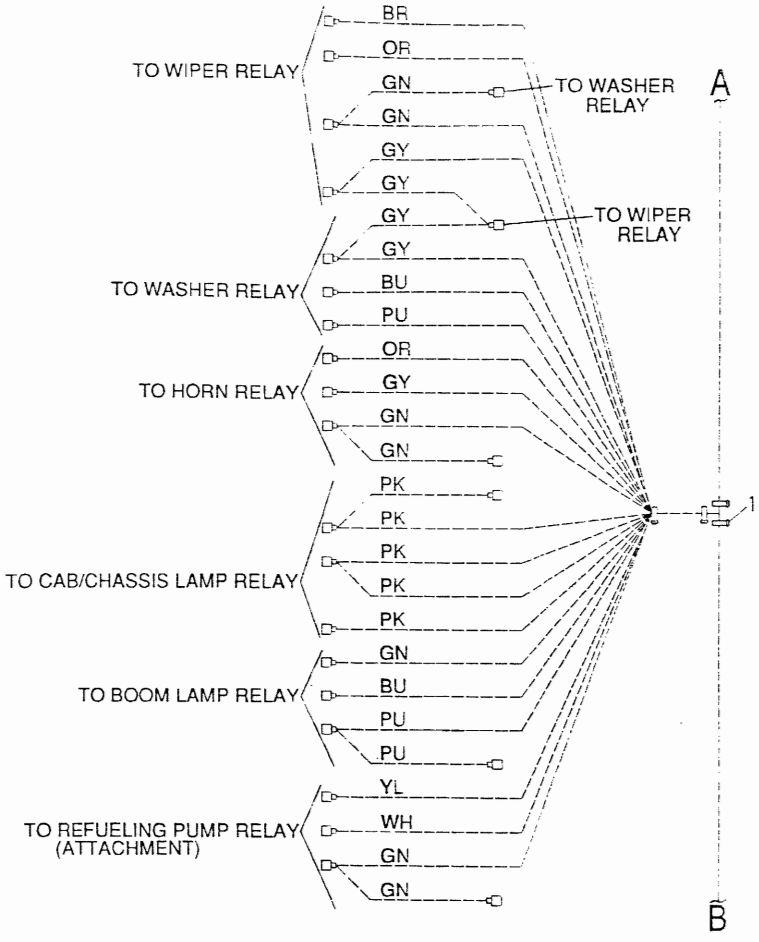

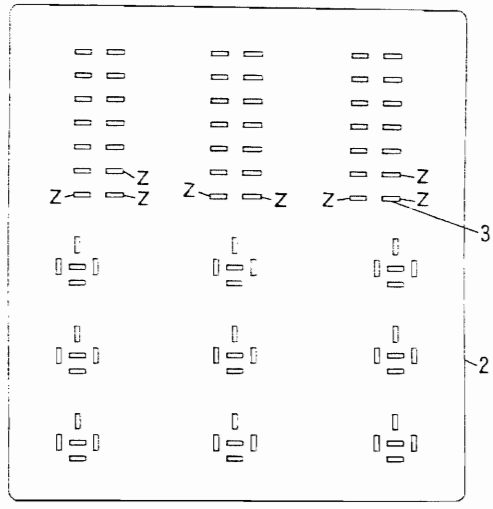

FRONT VIEW

NOTE	No.	PART No.	QTY	PART NAME	NOTE	No.	PART No.	QTY	PART NAME
	1	3S-2093	4	STRAP					
	2	7Y-5491	1	BASE					
	3	7Y-5494	8	TERMINAL					

H41243E

105-9902 HARNESS AS-PART 2 OF 3

Part of 105-9901 Panel listed on Page 69

ELECTRICAL SYSTEM

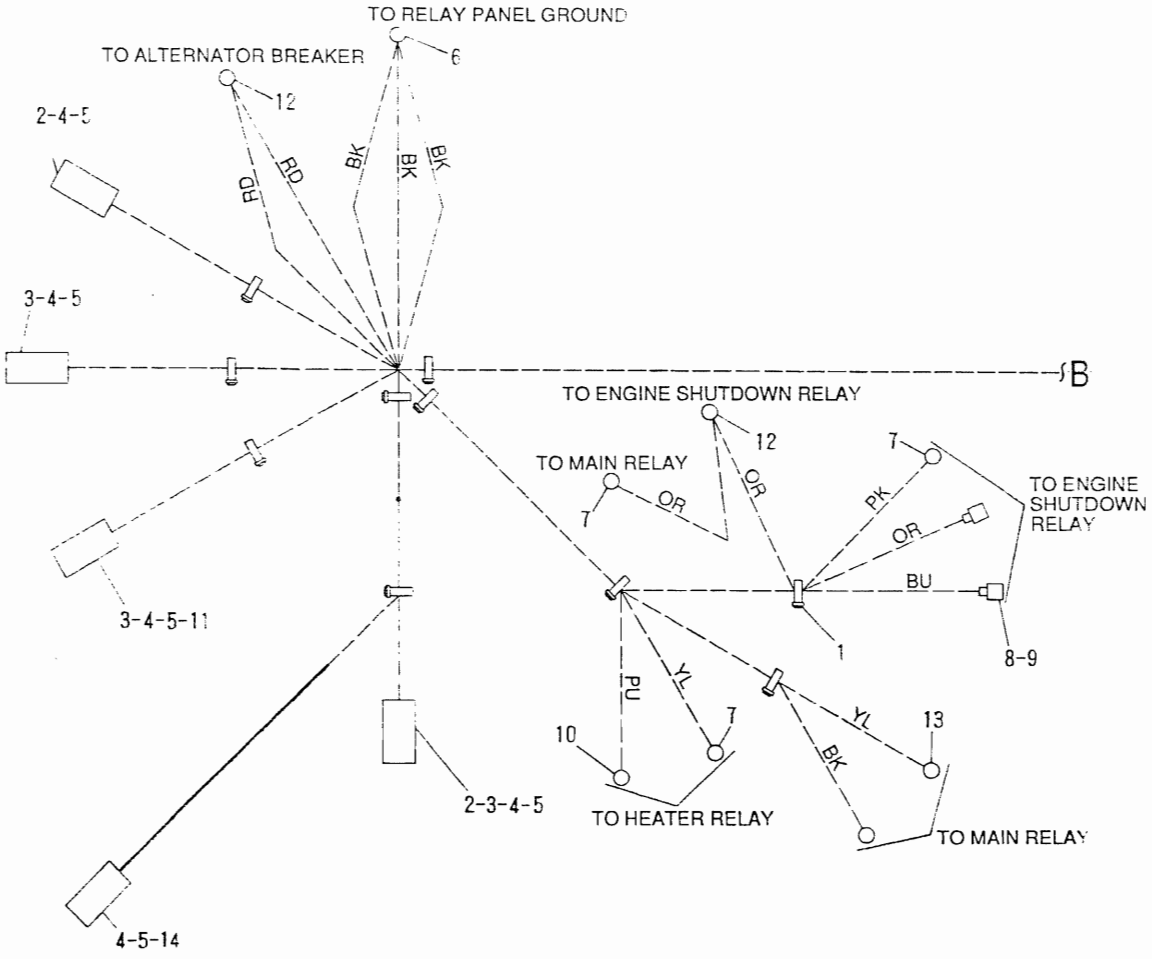

NOTE	No.	PART No.	QTY	PART NAME	NOTE	No.	PART No.	QTY	PART NAME
	1	3S-2093	10	STRAP					
	2	9G-3673	2	HOUSING					
	3	9G-3695	5	PLUG					
	4	7N-7780	22	PIN					
	5	7N-7779	23	SOCKET					
	6	3T-4696	1	TERMINAL					
	7	2L-8077	3	TERMINAL					
	8	6T-6505	2	HOUSING					
	9	6T-6506	2	TERMINAL					
	10	2L-8075	1	TERMINAL					
	11	9G-3667	2	HOUSING					
	12	2L-8067	2	TERMINAL					
	13	2L-8076	2	TERMINAL					
	14	9G-3678	1	HOUSING					

H41244E

105-9902 HARNESS AS-PART 3 OF 3

Part of 105-9901 Panel listed on Page 69

ELECTRICAL SYSTEM

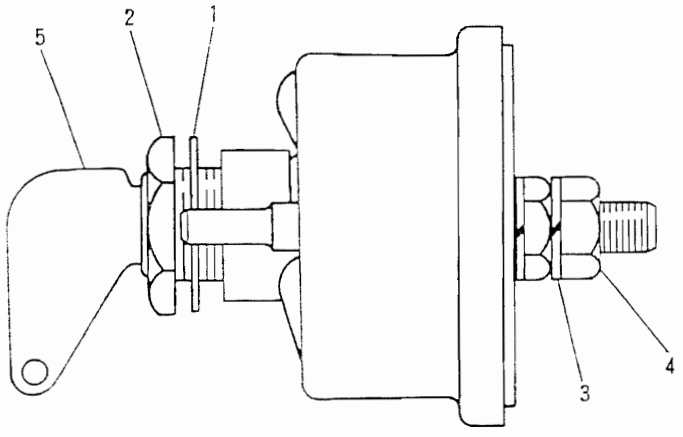

NOTE	No.	PART No.	QTY	PART NAME
	1	2H-3922	1	LOCKWASHER
	2	8H-5303	1	NUT
	3	9F-5644	2	LOCKWASHER
	4	6F-7045	2	NUT
	5	8H-5306	1	KEY

H30050E

7N-0718 SWITCH AS-DISC

Part of 105-9901 Panel listed on Page 69

ELECTRICAL SYSTEM

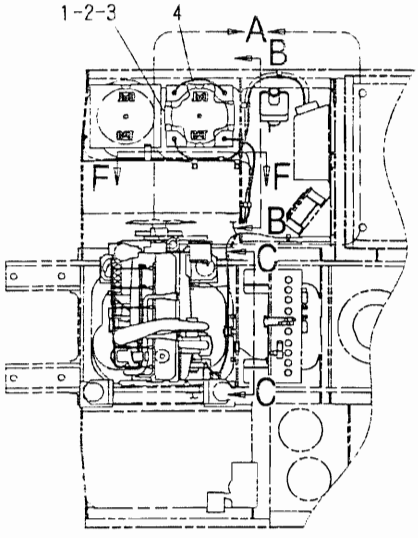

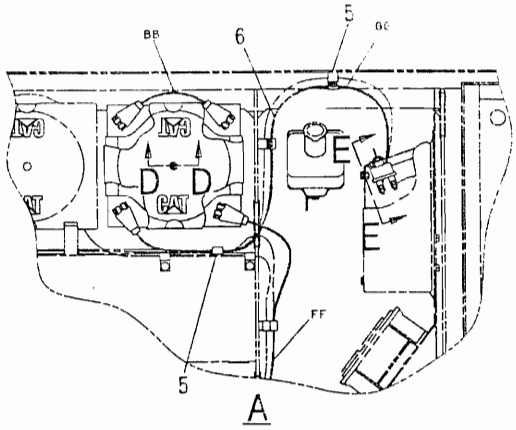

A

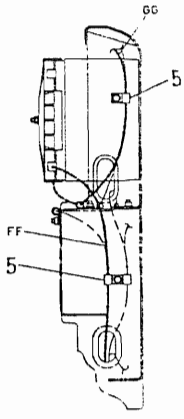

B – B

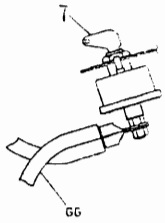

E – E

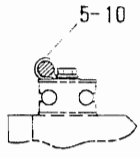

G – G

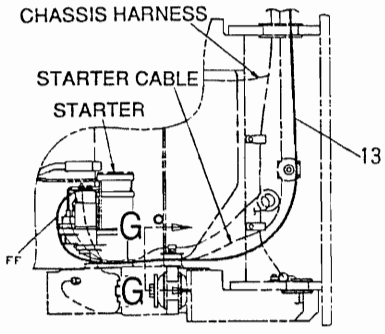

C – C

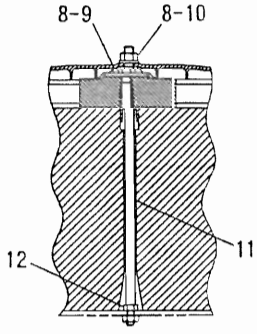

D – D

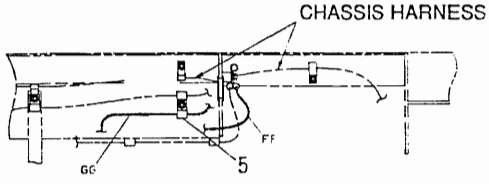

F – F

NOTE	No.	PART No.	QTY	PART NAME	NOTE	No.	PART No.	QTY	PART NAME
	1	3T-5760	2	BATTERY					
	2	6W-6005	1	HOLDDOWN					
	3	5I-8270	1	COVER					
Y	4	7Y-3946	1	CABLE AS					
	5	6D-3479	5	CLIP					
Y	6	105-9918	1	CABLE AS					
Y	7	7N-0719	1	SWITCH AS					
	8	8T-4133	2	NUT					
	9	8T-4226	1	WASHER					
	10	8T-4121	2	WASHER					
	11	5I-8304	1	ROD					
	12	5C-7261	1	NUT					
Y	13	105-9917	1	CABLE AS					

Y-SEE SEPARATE ILLUSTRATION

H41611E

105-9882 WIRING GP-BATTERY & (COLD)

7Y-3946 – Page 60, 7N-0719 – Page 75, 105-9917, 105-9918 – Page 76

An Attachment

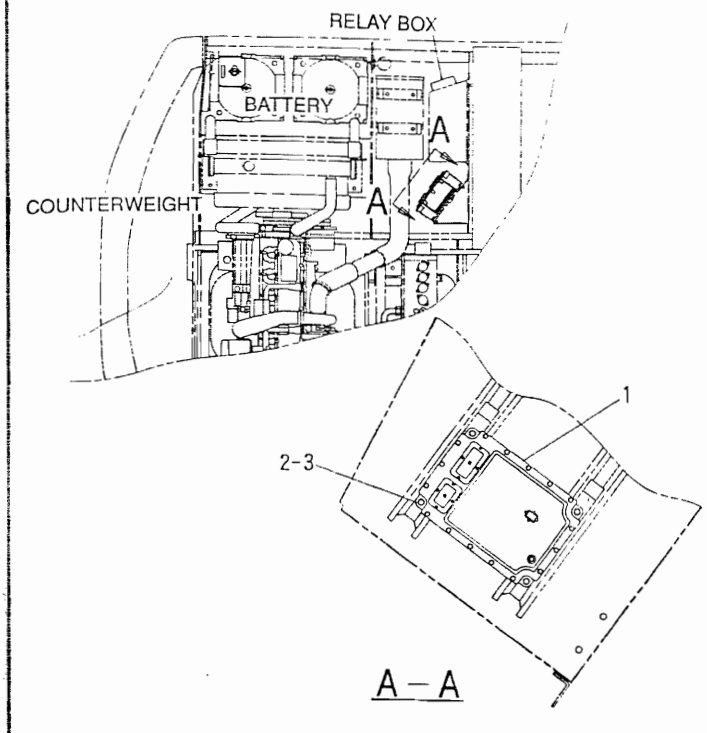

NOTE	No.	PART No.	QTY	PART NAME
	1	102-8044	1	CONTROL GP
		8T-9833	1	RECEPTACLE
	2	8T-4224	4	WASHER
	3	8T-4908	4	BOLT (25mm LONG)

H41276E

102-8043 MOUNTING GP-CONTROL

Consists of :

			Page
1	4I-5412	WIRERING GP-CONSOLE (RH)	79
1	4I-5380	WIRERING GP-CONSOLE (LH)	78

H32024E

4I-5410 WIRING GP-CONSOLE

ELECTRICAL SYSTEM

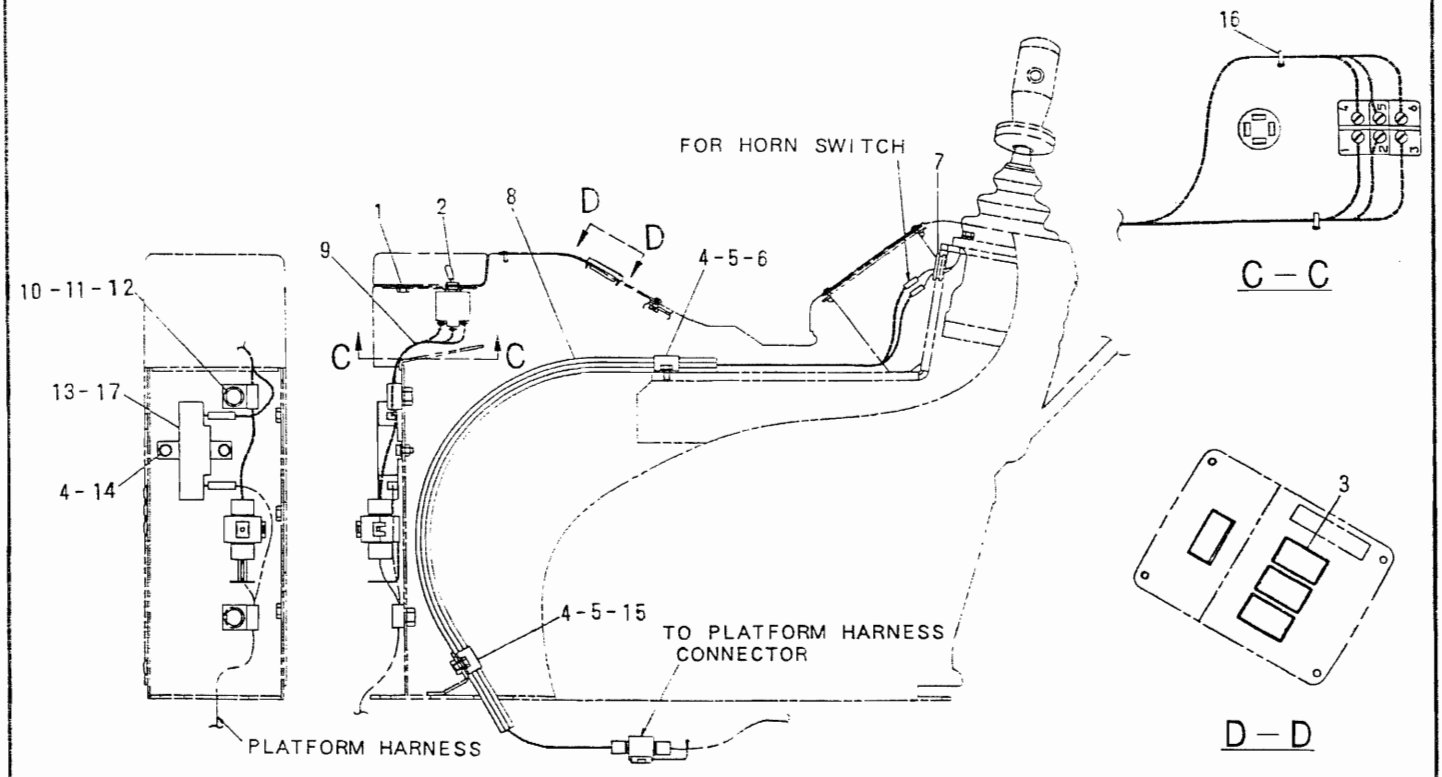

NOTE	No.	PART No.	QTY	PART NAME	NOTE	No.	PART No.	QTY	PART NAME
	1	3V-4694	1	PLUG					
Y	2	3T-4405	1	SWITCH AS (BACK UP)					
	3	7Y-8246	4	PLUG					
	4	9X-8256	5	WASHER					
	5	8T-4171	3	BOLT (12mm LONG)					
	6	7Y-8233	1	BRACKET					
	7	7Y-8172	1	GROMMET					
Y	8	7Y-3868	1	HARNESS AS					
Y	9	4I-5411	1	HARNESS AS					
	10	8T-4121	1	WASHER					
	11	8T-4191	1	BOLT (16mm LONG)					
	12	5P-9297	1	CLIP					
	13	102-8015	1	RESISTOR AS					
	14	5C-9553	2	BOLT (16mm LONG)					
	15	7Y-8234	1	BRACKET					
	16	3S-2093	2	STRAP					
	17	102-8018	1	COVER					

Y-SEE SEPARATE ILLUSTRATION

H41280E

4I-5380 WIRING GP-CONSOLE (LH)

Part of 4I-5410 Wiring listed on Page 77
4I-5411, 7Y-3868 – Page 80, 3T-4405 – Page 82

ELECTRICAL SYSTEM

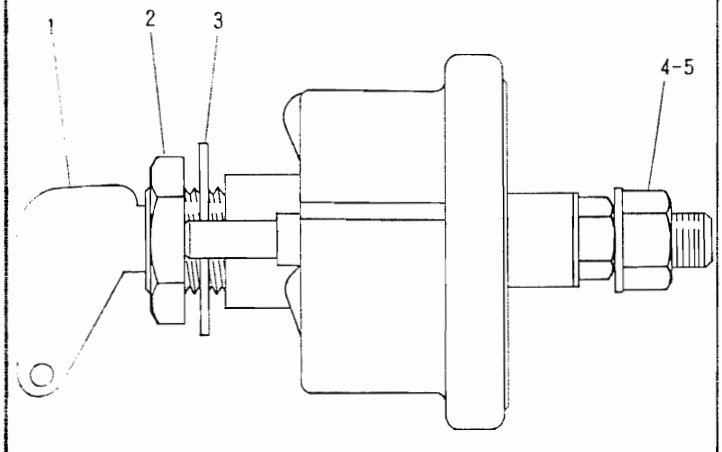

NOTE	No.	PART No.	QTY	PART NAME
	1	8H-5306	1	KEY
	2	8H-5303	1	NUT
	3	2H-3922	1	LOCKWASHER
	4	9F-5644	2	LOCKWASHER
	5	6F-7045	2	NUT

H30051E

7N-0719 SWITCH AS-DISC

Part of 105-9882 Wiring listed on Page 74

An Attachment



NOTE	No.	PART No.	QTY	PART NAME
	1	3S-6049	1	TERMINAL AS
		1M-6119	1	BOLT
		1M-6120	1	NUT
	2	8N-1725	1	COVER
E	3	5P-0761		CABLE・・・(210cm)
	4	1S-7252	1	TERMINAL

E-ORDER BY THE CENTIMETER

H41378E

105-9917 CABLE AS

Part of 105-9882 Wiring listed on Page 74

An Attachment



NOTE	No.	PART No.	QTY	PART NAME
	1	3S-6050	1	TERMINAL AS
		1M-6119	1	BOLT
		1M-6120	1	NUT
	2	7N-5274	1	COVER
E	3	5P-0747		CABLE・・・(151cm)
	4	1S-7252	1	TERMINAL

E-ORDER BY THE CENTIMETER

H41379E

105-9918 CABLE AS

Part of 105-9882 Wiring listed on Page 74

An Attachment

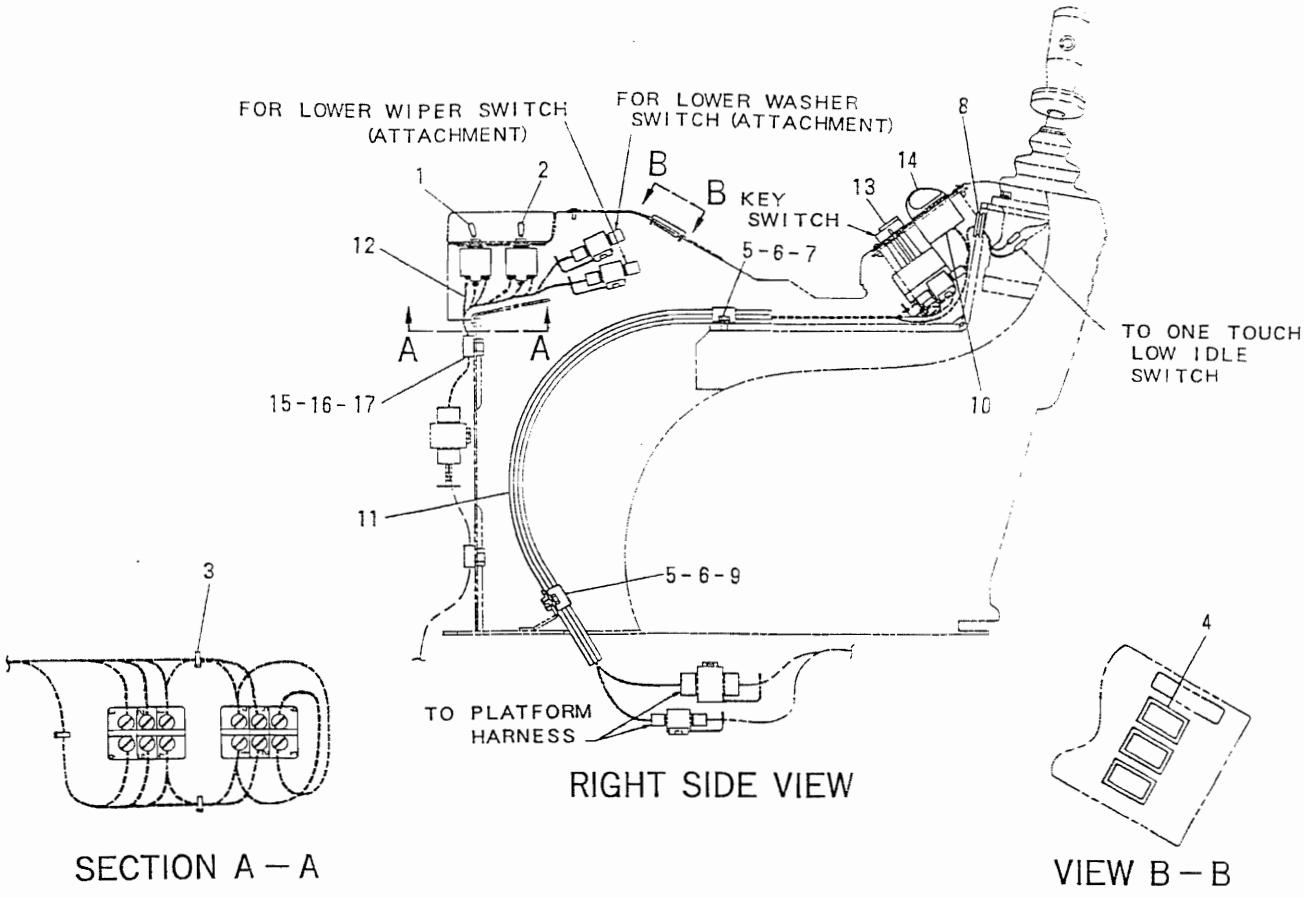

NOTE	No.	PART No.	QTY	PART NAME	NOTE	No.	PART No.	QTY	PART NAME
Y	1	3T-4405	1	SWITCH AS (BACK UP)					
Y	2	7N-8008	1	SWITCH AS (BACK UP)					
	3	3S-2093	3	STRAP					
	4	7Y-8246	3	PLUG					
	5	9X-8256	3	WASHER					
	6	8T-4171	3	BOLT (12mm LONG)					
	7	7Y-8233	1	BRACKET					
	8	7Y-8172	1	GROMMET					
	9	7Y-8234	1	BRACKET					
Y	10	7Y-5465	1	SWITCH AS (ACCELERATOR)					
Y	11	7Y-3922	1	HARNESS AS					
Y	12	4I-5463	1	HARNESS AS					
Y	13	7Y-3918	1	SWITCH GP (ENGINE STARTER)					
	14	7Y-9390	1	KNOB					
	15	8T-4121	1	WASHER					
	16	8T-4191	1	BOLT (16mm LONG)					
	17	4K-8864	1	CLIP					

Y-SEE SEPARATE ILLUSTRATION

H32025E

4I-5412 WIRING GP-CONSOLE (RH)

Part of 4I-5410 Wiring listed on Page 77

3T-4405, 7N-8008 – Page 82, 7Y-5465, 7Y-3918 – Page 83, 4I-5463 – Page 84, 7Y-3922 – Page 87

ELECTRICAL SYSTEM

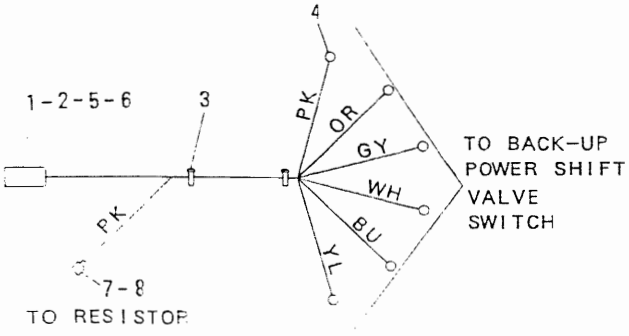

NOTE	No.	PART No.	QTY	PART NAME
	1	7N-7779	2	SOCKET
	2	9G-3667	1	HOUSING
	3	3S-2093	2	STRAP
	4	5P-2321	6	TERMINAL
	5	9G-3695	5	PLUG
	6	7N-7780	3	PIN
	7	6T-6505	1	HOUSING
	8	6T-6506	1	TERMINAL

H33931E

4I-5411 HARNESS AS

Part of 4I-5380 Wiring listed on Page 78

Consists of :

Page

1 4I-5493 HARNESS AS (AV WIRE) 81

1 4I-5499 HARNESS AS (SXL WIRE) 81

H33929E

7Y-3868 HARNESS AS

Part of 4I-5380 Wiring listed on Page 78

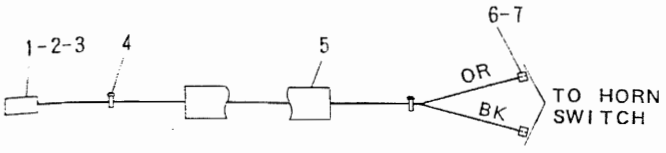

NOTE	No.	PART No.	QTY	PART NAME
	1	7N-7779	1	SOCKET
	2	7N-7780	1	PIN
	3	7N-9737	1	HOUSING
	4	1S-9593	2	STRAP
	5	7Y-8244	1	HOSE
	6	7Y-3963	2	TERMINAL
	7	7Y-3965	2	TUBE

H32546E

4I-5493 HARNESS AS

Part of 7Y-3868 Harness listed on Page 80

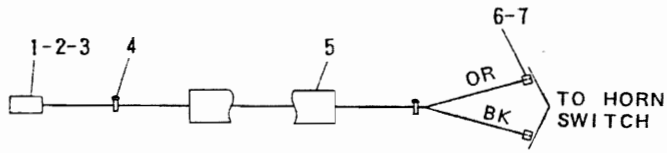

NOTE	No.	PART No.	QTY	PART NAME
	1	7N-7779	1	SOCKET
	2	7N-7780	1	PIN
	3	7N-9737	1	HOUSING
	4	1S-9593	2	STRAP
	5	7Y-8244	1	HOSE
	6	7Y-3963	2	TERMINAL
	7	7Y-3965	2	TUBE

H32546E

4I-5499 HARNESS AS

Part of 7Y-3868 Harness listed on Page 80

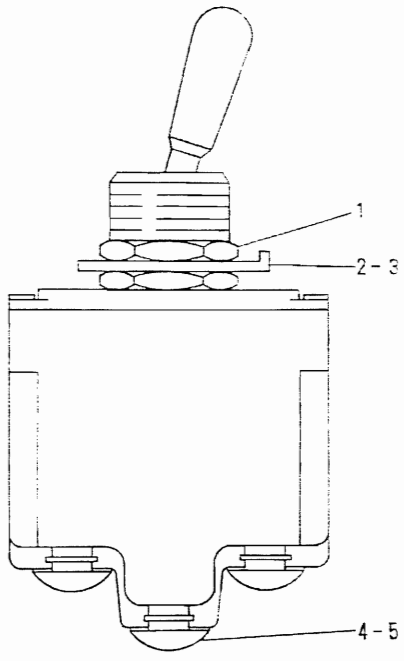

NOTE	No.	PART No.	QTY	PART NAME
	1	6T-3631	2	NUT
	2	6T-3632	1	LOCKWASHER
	3	6T-3633	1	RING
	4	6V-8374	6	SCREW
	5	3L-8187	6	LOCKWASHER

H30001E

3T-4405 SWITCH AS-TOGGLE

Part of 4I-5380 and 4I-5412 Wiring listed on Pages 78 and 79

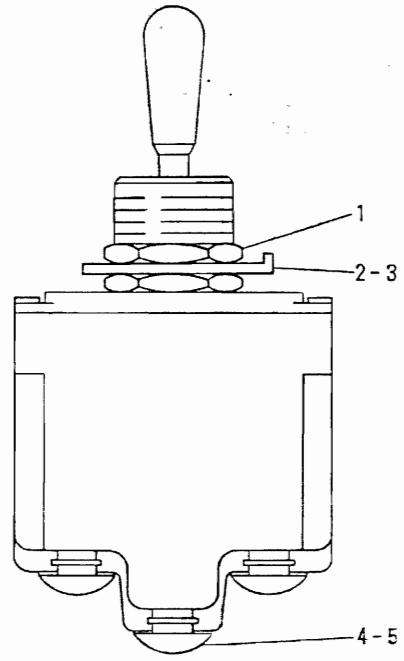

NOTE	No.	PART No.	QTY	PART NAME
	1	6T-3631	2	NUT
	2	6T-3632	1	LOCKWASHER
	3	6T-3633	1	RING
	4	6V-8374	6	SCREW
	5	3L-8187	6	LOCKWASHER

H30052E

7N-8008 SWITCH AS-TOGGLE

Part of 4I-5412 Wiring listed on Page 79

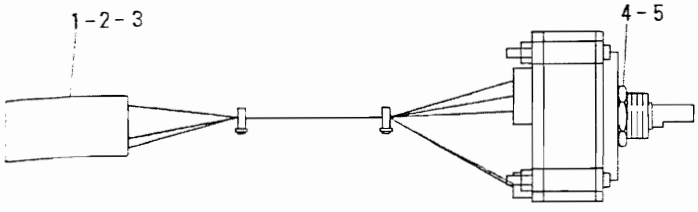

NOTE	No.	PART No.	QTY	PART NAME
	1	7N-7779	3	SOCKET
	2	7N-7780	2	PIN
	3	9G-3672	1	HOUSING
	4	7Y-5458	1	NUT
	5	7Y-5464	1	WASHER

H30211E

7Y-5465 SWITCH AS-ROTARY

Part of 4I-5412 Wiring listed on Page 79

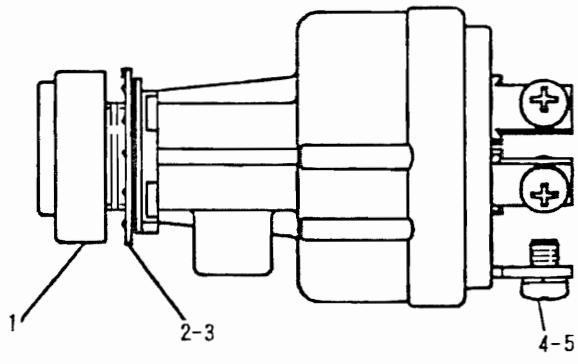

NOTE	No.	PART No.	QTY	PART NAME
	1	5I-8276	1	NUT
	2	5I-8275	1	LOCKWASHER
	3	5I-8274	1	WASHER
	4	095-0735	6	SCREW
	5	096-0192	6	LOCKWASHER

H33869E

7Y-3918 SWITCH GP-HEAT START

Part of 4I-5412 Wiring listed on Page 79

ELECTRICAL SYSTEM

Consists of

			Page
1	4I-5421	HARNESS AS (AV WIRE)	85
1	4I-5423	HARNESS AS (SXL WIRE)	86

H33934E

4I-5463 HARNESS AS

Part of 4I-5412 Wiring listed on Page 79

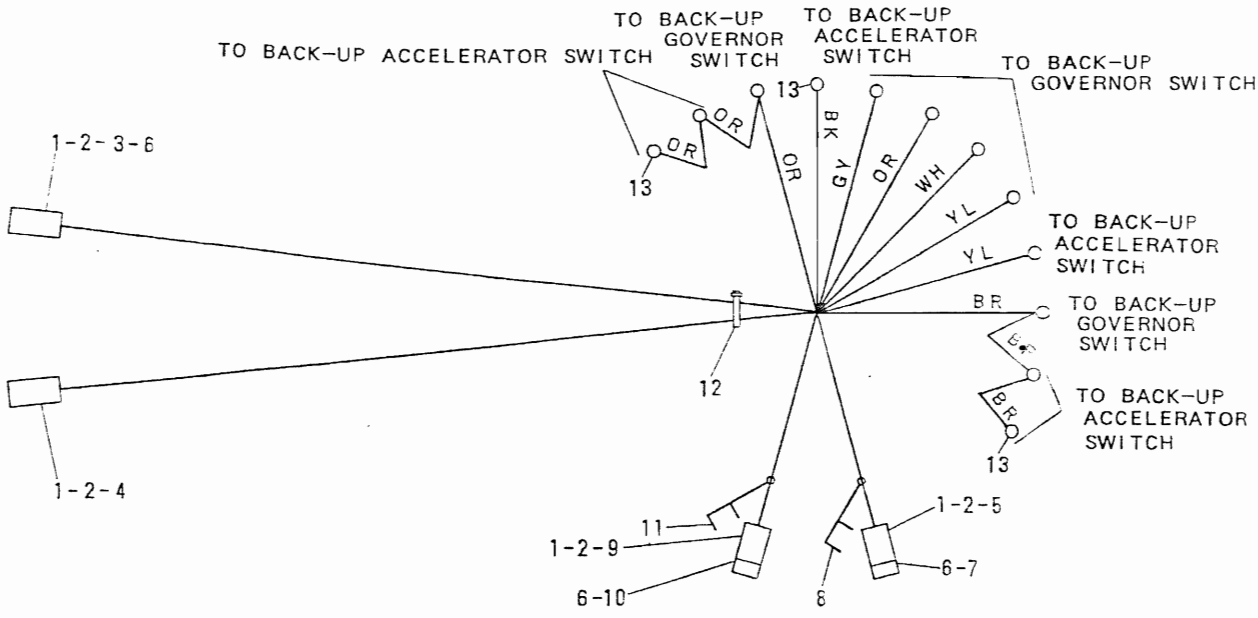

NOTE	No.	PART No.	QTY	PART NAME	NOTE	No.	PART No.	QTY	PART NAME
	1	7N-7779	9	SOCKET					
	2	7N-7780	9	PIN					
	3	9G-3667	1	HOUSING					
	4	9G-3672	1	HOUSING					
	5	7N-9738	1	HOUSING					
	6	9G-3695	7	PLUG					
	7	7N-9737	1	HOUSING					
	8	9G-2264	1	CLIP					
	9	7N-7781	1	HOUSING					
	10	7N-7782	1	HOUSING					
	11	9G-2265	1	CLIP					
	12	3S-2093	1	STRAP					
	13	5P-2321	8	TERMINAL					

H33935E

4I-5421 HARNESS AS

Part of 4I-5463 Harness listed on Page 84

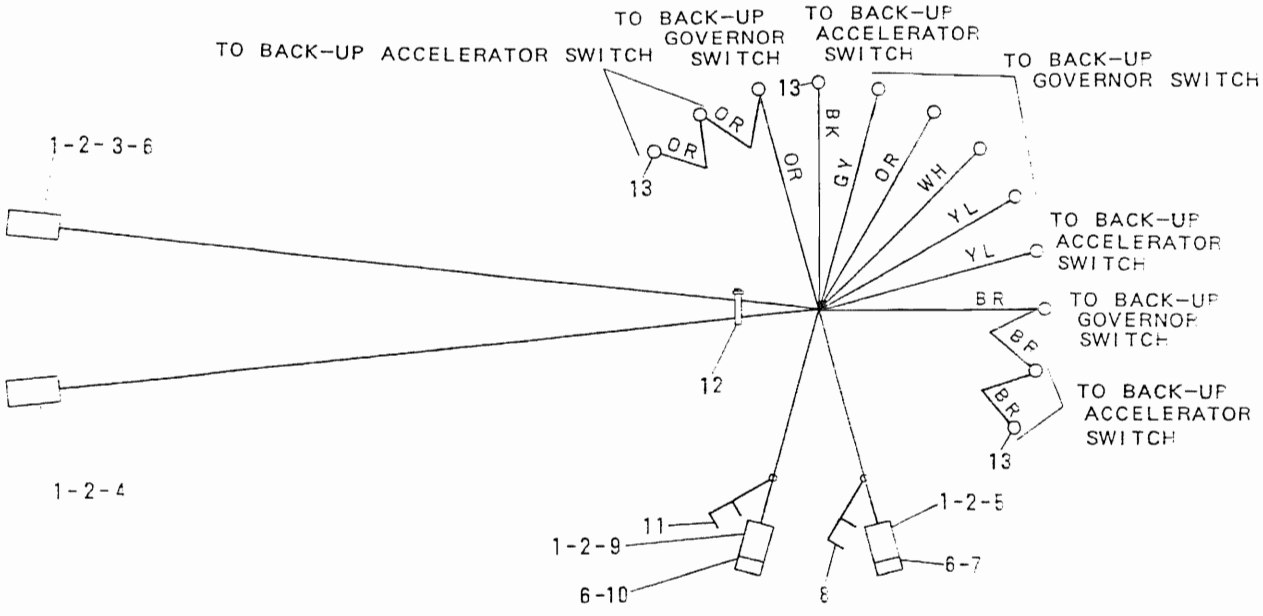

NOTE	No.	PART No.	QTY	PART NAME	NOTE	No.	PART No.	QTY	PART NAME
	1	7N-7779	9	SOCKET					
	2	7N-7780	9	PIN					
	3	9G-3667	1	HOUSING					
	4	9G-3672	1	HOUSING					
	5	7N-9738	1	HOUSING					
	6	9G-3695	7	PLUG					
	7	7N-9737	1	HOUSING					
	8	9G-2264	1	CLIP					
	9	7N-7781	1	HOUSING					
	10	7N-7782	1	HOUSING					
	11	9G-2265	1	CLIP					
	12	3S-2093	1	STRAP					
	13	5P-2321	8	TERMINAL					

H33935E

4I-5423 HARNESS AS

Part of 4I-5463 Harness listed on Page 84

Consists of :

			Page
1	4I-5430	HARNESS AS (AV WIRE)	88
1	4I-5431	HARNESS AS (SXL WIRE)	89

H33932E

7Y-3922 HARNESS AS

Part of 4I-5412 Wiring listed on Page 79

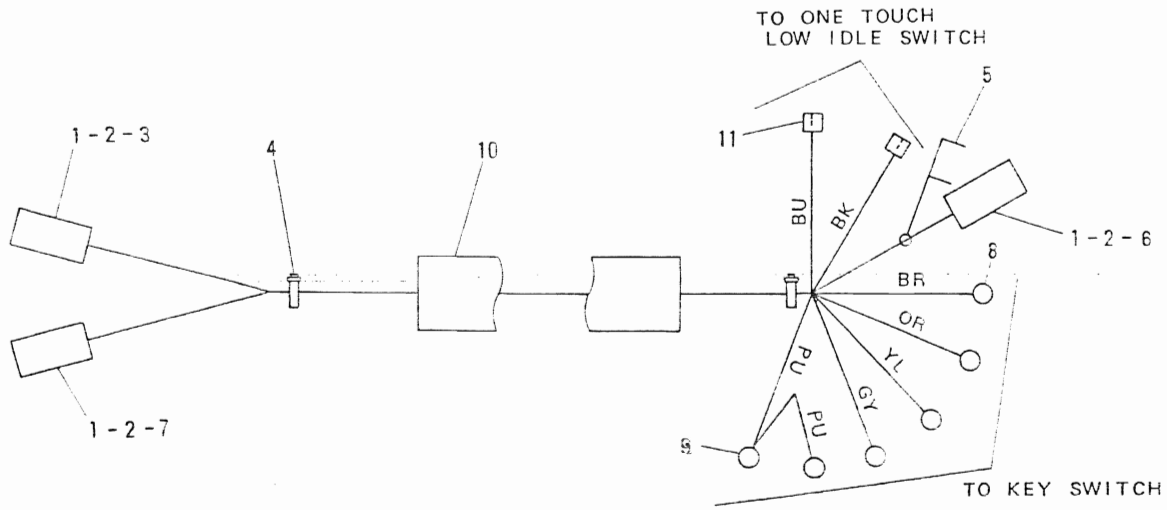

NOTE	No.	PART No.	QTY	PART NAME	NOTE	No.	PART No.	QTY	PART NAME
	1	7N-7779	8	SOCKET					
	2	7N-7780	9	PIN					
	3	7N-9737	1	HOUSING					
	4	3S-2093	2	STRAP					
	5	9G-3658	1	CLIP					
	6	9G-3678	1	HOUSING					
	7	9G-3667	1	HOUSING					
	8	2L-8077	5	TERMINAL					
	9	2L-8067	1	TERMINAL					
	10	7Y-8244	1	HOSE					
	11	7Y-3963	2	TERMINAL					
		7Y-3965	2	TUBE					

H39399E

4I-5430 HARNESS AS

Part of 7Y-3922 Harness listed on Page 87

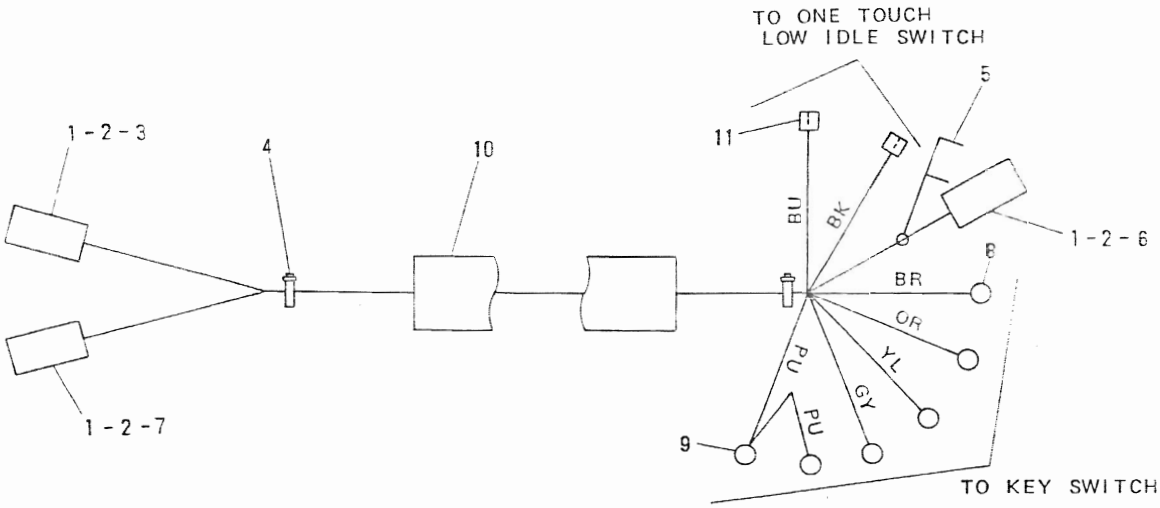

NOTE	No.	PART No.	QTY	PART NAME	NOTE	No.	PART No.	QTY	PART NAME
	1	7N-7779	8	SOCKET					
	2	7N-7780	9	PIN					
	3	7N-9737	1	HOUSING					
	4	3S-2093	2	STRAP					
	5	9G-3658	1	CLIP					
	6	9G-3678	1	HOUSING					
	7	9G-3667	1	HOUSING					
	8	2L-8077	5	TERMINAL					
	9	2L-8067	1	TERMINAL					
	10	7Y-8244	1	HOSE					
	11	7Y-3963	2	TERMINAL					
		7Y-3965	2	TUBE					

H39399E

4I-5431 HARNESS AS

Part of 7Y-3922 Harness listed on Page 87

ELECTRICAL SYSTEM

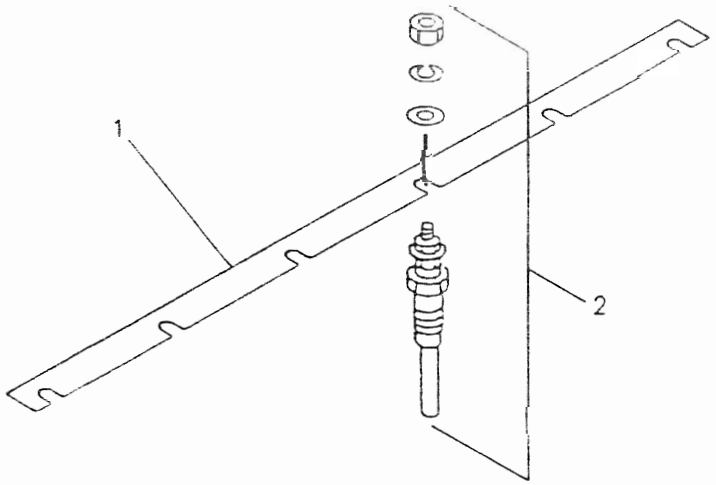

NOTE	REF NO	PART NUMBER	QTY	PART NAME
	1	1073660	1	BAR-CONNECTOR
	2	1169985	6	GLOW PLUG

R- 582090

1412

1166728 GLOW PLUG GP

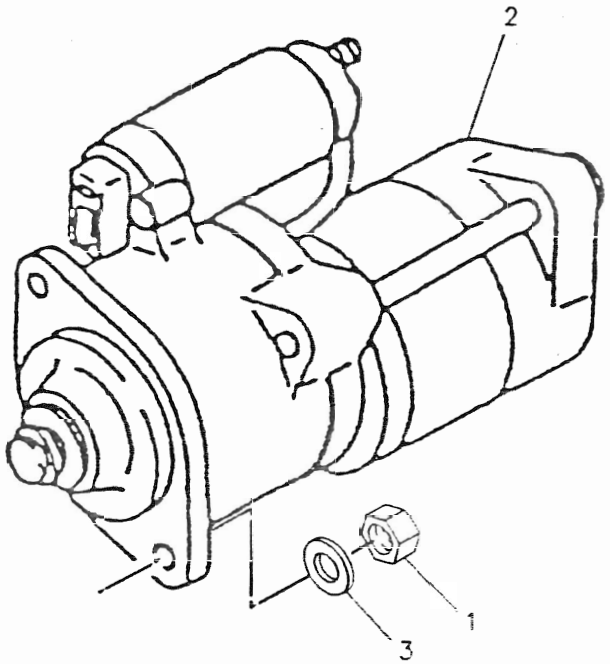

NOTE	REF NO	PART NUMBER	QTY	PART NAME
M	1	2Y5829	2	NUT
	2	5I8158	1	STARTING MOTOR GP-ELECTRIC
	3	6V5839	2	WASHER

M-METRIC PART

R- 582140

1166731 STARTING MOTOR GP-ELECTRIC

ELECTRICAL SYSTEM

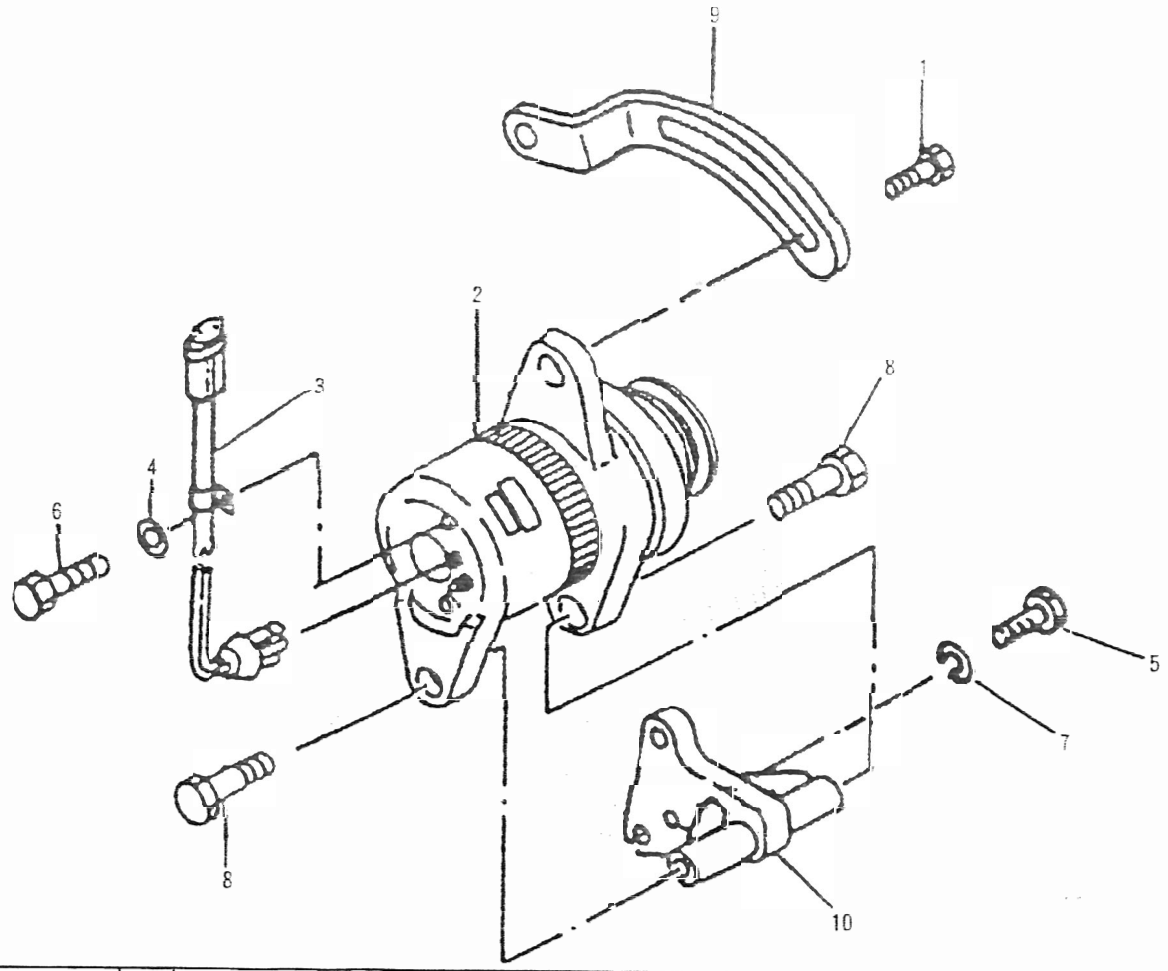

NOTE	REF NO	PART NUMBER	QTY	PART NAME	NOTE	REF NO	PART NUMBER	QTY	PART NAME
	1	5I5181	1	BOLT					
Y	2	5I7982	1	ALTERNATOR GP-CHARGING					
	3	5I7983	1	CONNECTOR AS					
	4	5P0537	1	WASHER					
M	5	6V5217	1	BOLT					
M	6	8T0639	1	BOLT					
	7	9M1974	1	WASHER-HARD					
	8	994483	2	BOLT					
	9	1179010	1	STRAP-ADJUSTING					
	10	1179011	1	BRACKET					

M-METRIC PART
Y-SEPARATE ILLUSTRATION

H39481E

1166730 ALTERNATOR GP
5I7982 – Page 92

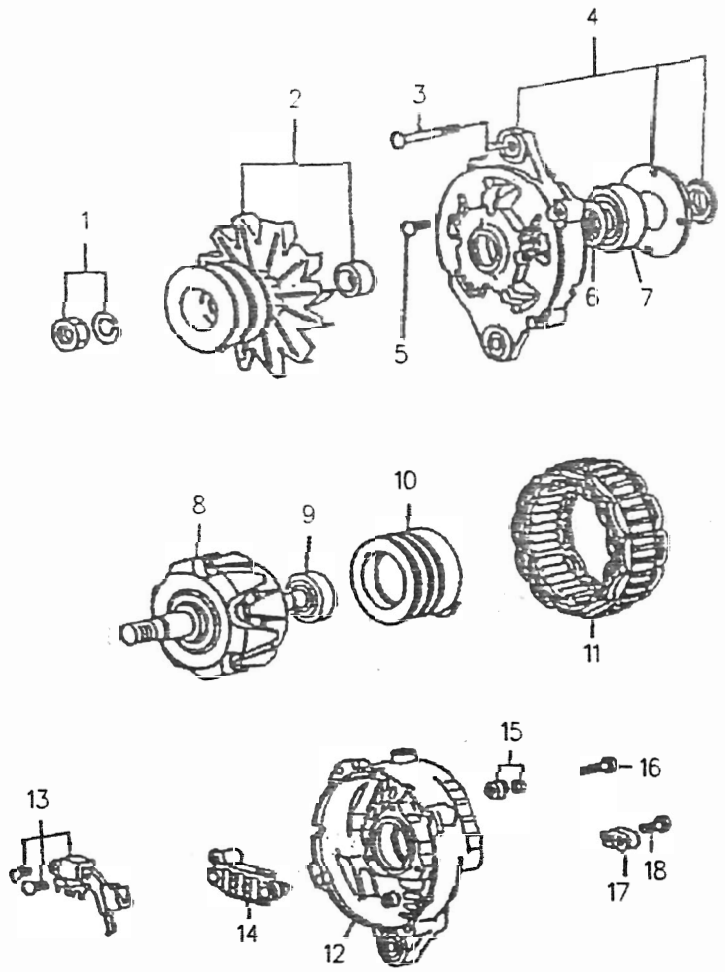

NOTE	REF NO	PART NUMBER	QTY	PART NAME	NOTE	REF NO	PART NUMBER	QTY	PART NAME
	1	993913	1	NUT SET					
	2	5I7984	1	PULLEY AS					
	3	5I7985	1	SETSCREW					
	4	5I7986	1	BRACKET AS					
	5	5I7987	1	SETSCREW					
	6	5I7988	1	SEAL					
	7	5I7989	1	BEARING					
	8	5I7990	1	ROTOR AS					
	9	5I7991	1	BEARING					
	10	5I7992	1	COIL AS					
	11	5I7993	1	STATOR					
	12	5I7994	1	BRACKET AS					
	13	5I7995	1	REGULATOR SET					
	14	5I7996	1	RECTIFIER AS					
	15	859429	1	NUT SET					
	16	5I7997	1	SETSCREW					
	17	5I7998	1	MOLDBOARD					
	18	5I7999	1	SETSCREW					

R- 582076

1405

5I7982 ALTERNATOR GP-CHARGING

Part of 1166730 Alternator listed on Page 91

ELECTRICAL SYSTEM

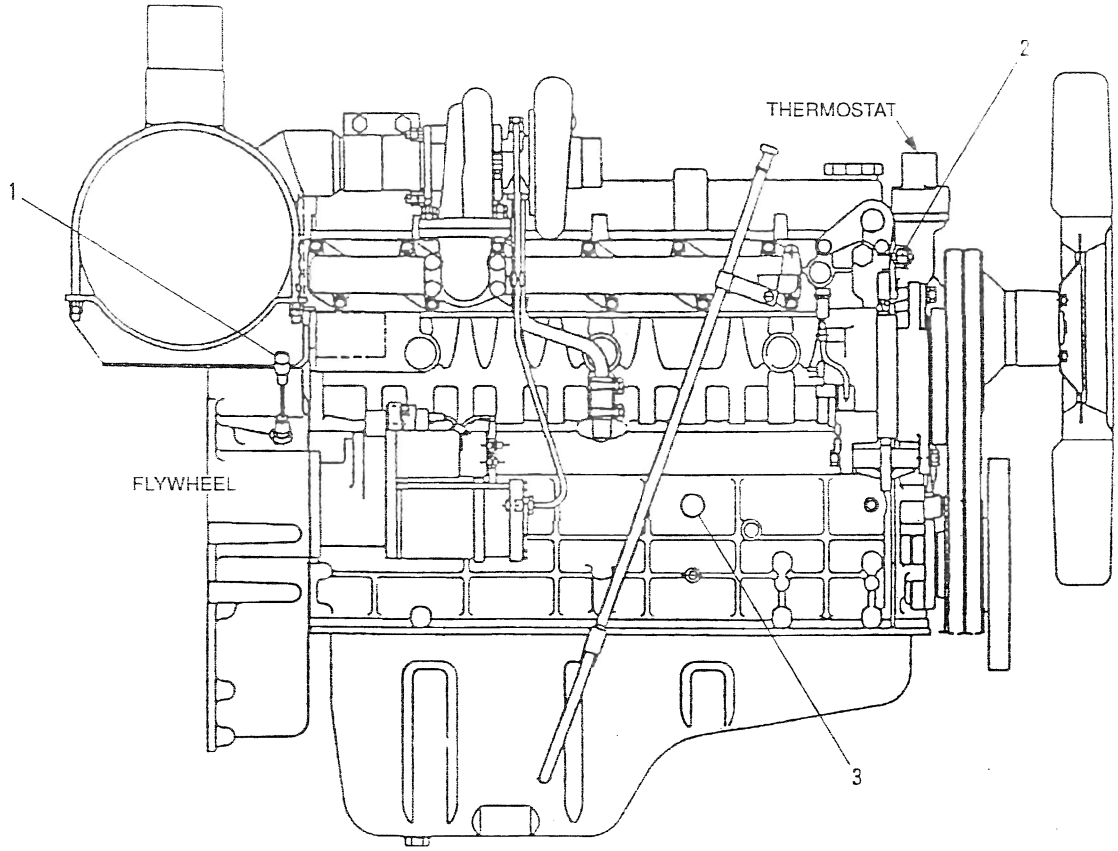

RIGHT SIDE VIEW OF ENGINE

NOTE	No.	PART No.	QTY	PART NAME	NOTE	No.	PART No.	QTY	PART NAME
	1	5I-7579	1	SENSOR					
	2	5I-7578	1	SENDER					
	3	5I-8005	1	SWITCH (OIL PRESSURE)					

H39491E

5I-8152 INSTURMENT GP

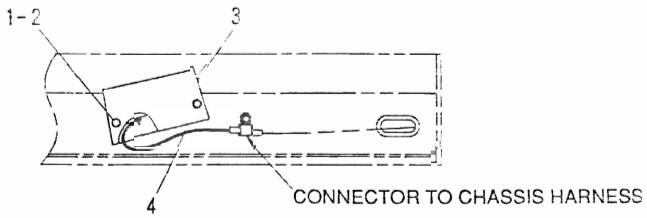

A – A

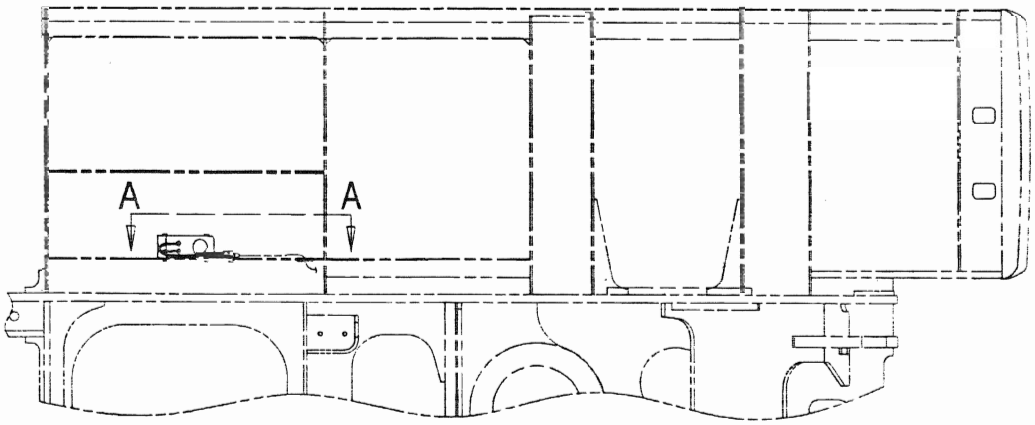

NOTE	No.	PART No.	QTY	PART NAME	NOTE	No.	PART No.	QTY	PART NAME
	1	7X-2538	2	BOLT (100mm LONG)					
	2	8T-4224	2	WASHER					
	3	3T-1815	1	ALARM					
	4	9G-6259	1	WIRE AS					
		5P-1475	2	TERMINAL					
		7N-7779	1	SOCKET					
		7N-7780	1	PIN					
		7N-9737	1	HOUSING					

H39040E

5I-8354 ALARM GP-TRAVEL
An Attachment

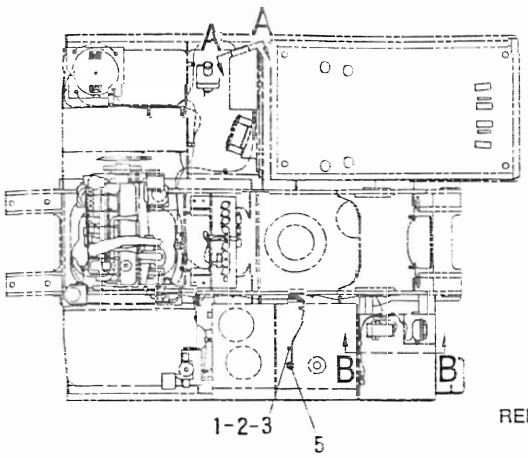

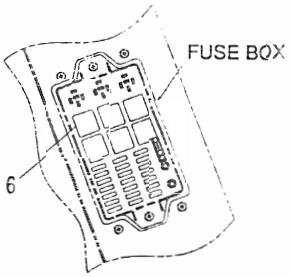

A – A

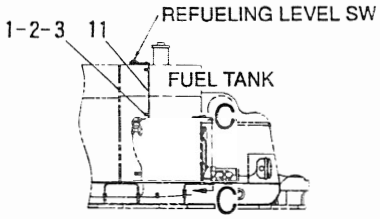

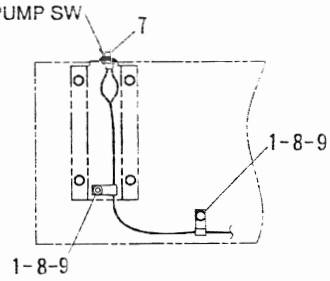

C – C

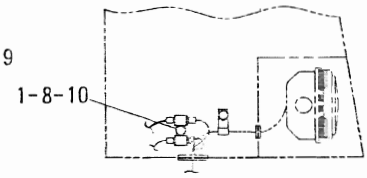

B – B

NOTE	No.	PART No.	QTY	PART NAME	NOTE	No.	PART No.	QTY	PART NAME
	1	8T-4121	7	WASHER					
	2	8T-4133	4	NUT					
	3	8M-2772	4	CLIP					
	5	8T-0328	1	WASHER					
	6	7Y-5490	1	RELAY					
	7	4I-5389	1	SWITCH AS					
		6T-9442	1	SWITCH AS					
		7N-7779	1	SOCKET					
		7N-7780	1	PIN					
		7N-9737	1	HOUSING					
	8	8T-4191	3	BOLT (16mm LONG)					
	9	4D-8123	2	CLIP					
	10	9G-9150	2	CLIP					
	11	5I-8258	1	WIRE AS					
		7N-7780	1	PIN					
		7N-9737	1	HOUSING					
		9G-3695	1	PLUG					

H41595E

105-9885 WIRING GP (REFUELING PUMP)

Part of 102-5325 Pump Ar listed on Page 55.01

An Attachment

MEMORANDA

ELECTRICAL SYSTEM

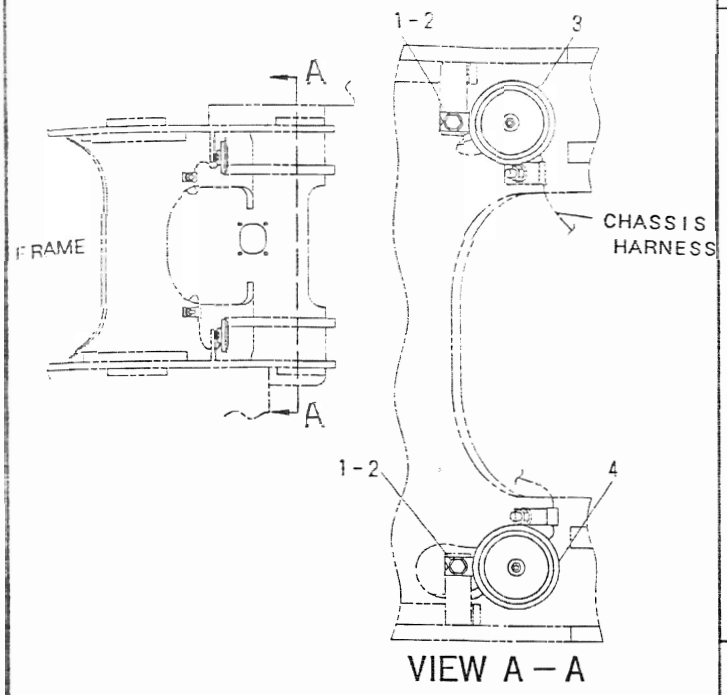

NOTE	No.	PART No.	QTY	PART NAME
	1	8T-4191	2	BOLT (16mm LONG)
	2	8T-4121	2	WASHER
	3	7Y-3919	1	HORN AS
		095-7930	2	SCREW
		095-0826	2	WASHER
	4	7Y-3920	1	HORN AS
		095-7930	2	SCREW
		095-0826	2	WASHER

H32008E

4I-5408 HORN GP-ELECTRIC

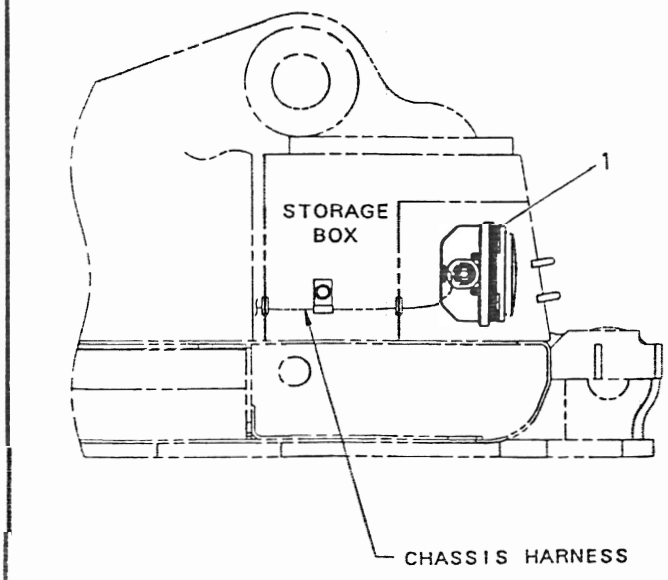

NOTE	No.	PART No.	QTY	PART NAME
Y	1	5I-8251	1	LAMP GP

Y-SEE SEPARATE ILLUSTRATION

H37266E

4I-5409 LIGHTING GP- (CHASSIS)

5I-8251 – Page 99

ELECTRICAL SYSTEM

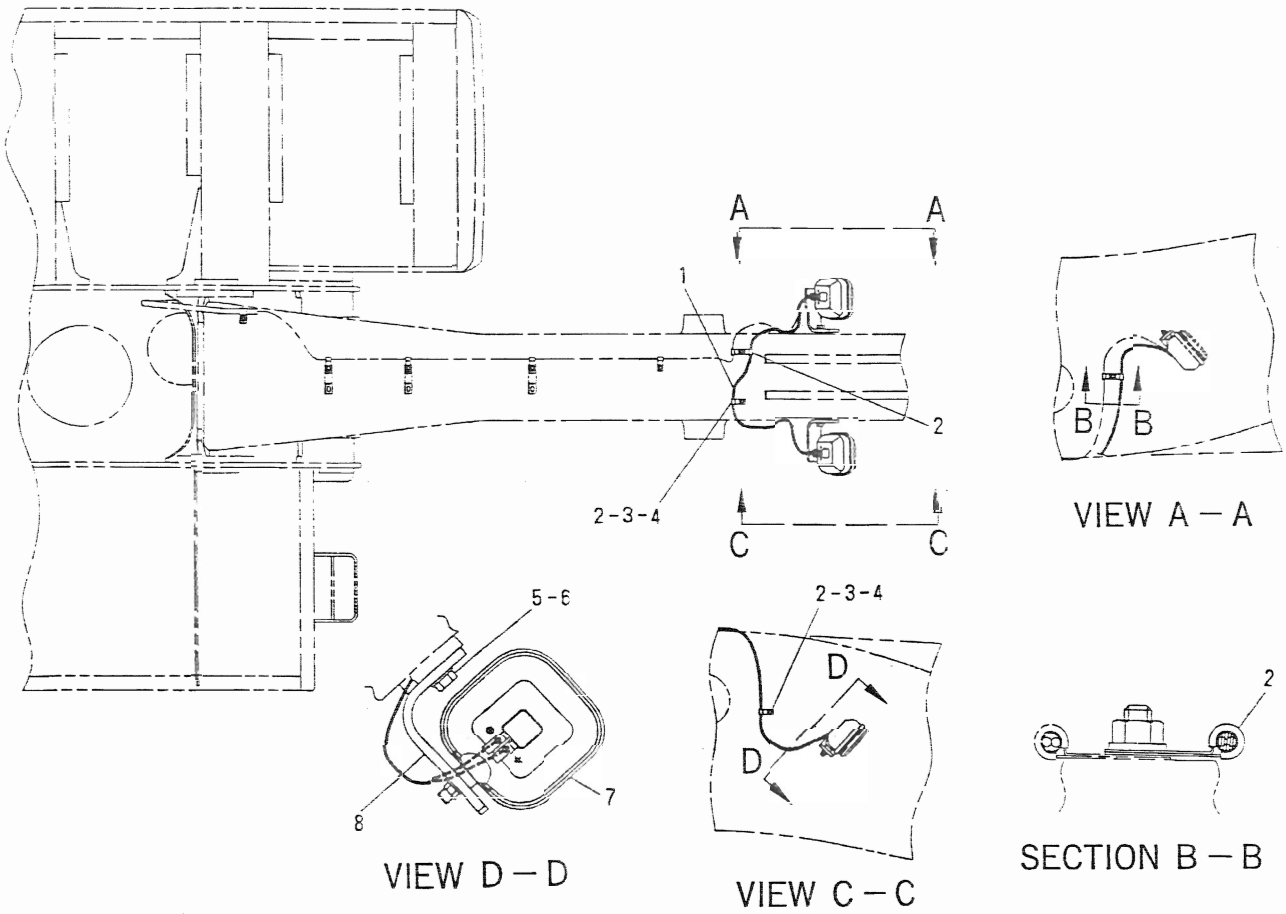

NOTE	No.	PART No.	QTY	PART NAME	NOTE	No.	PART No.	QTY	PART NAME
	1	7Y-3994	1	HARNESS AS					
		2L-8075	1	TERMINAL					
	2	4D-8123	4	CLIP					
	3	8T-4133	2	NUT					
	4	8T-4121	2	WASHER					
	5	8T-4190	1	BOLT (25mm LONG)					
	6	9X-8257	1	WASHER					
Y	7	5I-8250	1	LAMP GP					
	8	5I-8273	1	BRACKET					

Y-SEE SEPARATE ILLUSTRATION

H32141E

4I-5415 LIGHTING GP- (BOOM RH)

5I-8250 – Page 99
An Attachment

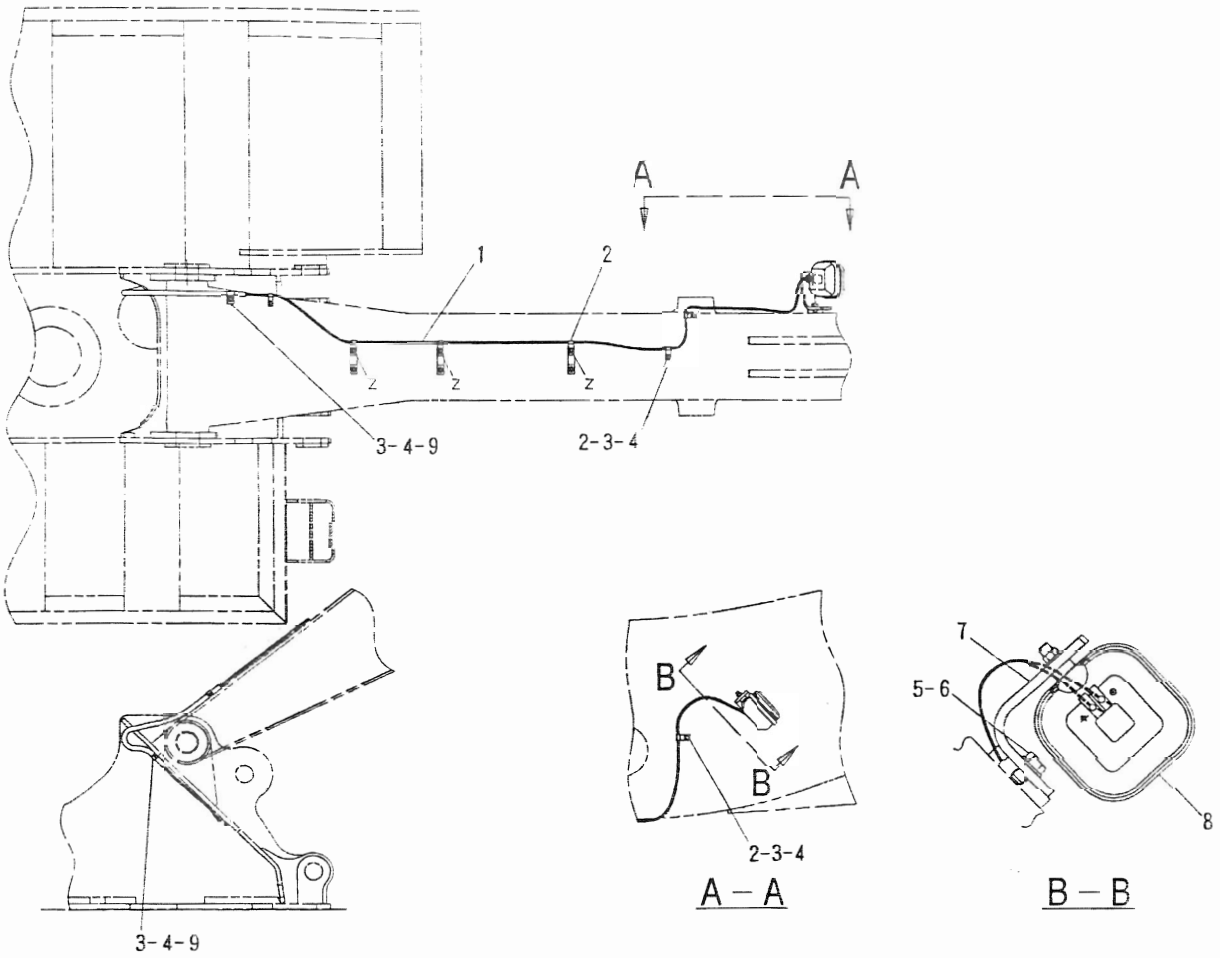

NOTE	No.	PART No.	QTY	PART NAME	NOTE	No.	PART No.	QTY	PART NAME
	1	105-9880	1	HARNESS AS					
		7N-7779	1	SOCKET					
		7N-7780	1	PIN					
		7N-9737	1	HOUSING					
E		5P-0721		HOSE・・・(65㎝)					
		2L-8075	2	TERMINAL					
	2	4D-8123	7	CLIP					
	3	8T-4133	6	NUT					
	4	8T-4121	6	WASHER					
	5	8T-4190	1	BOLT(25㎜ LONG)					
	6	9X-8257	1	WASHER					
	7	5I-8273	1	BRACKET					
Y	8	5I-8250	1	LAMP GP					
	9	8M-2773	2	CLIP					

E-ORDER BY THE CENTIMETER
Y-SEE SEPARATE ILLUSTRATION

H4I352E

105-9881 LIGHTING GP- (BOOM LH)

Part of 102-5319 R-Boom Ar listed on Page 303
5I-8250 – Page 99
An Attachment

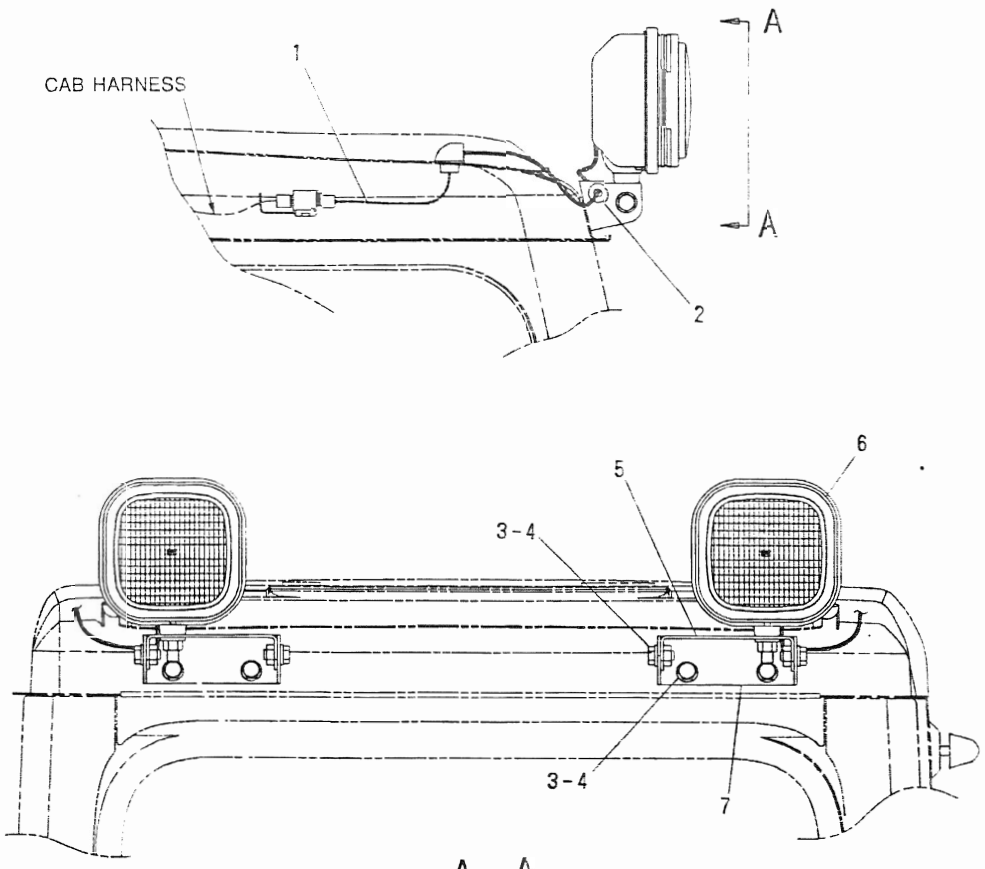

A – A

NOTE	No.	PART No.	QTY	PART NAME	NOTE	No.	PART No.	QTY	PART NAME
	1	7Y-8245	2	HARNESS AS					
		2L-8075	2	TERMINAL					
D		5P-5995		TUBE・・・(0.3m)					
		7N-7779	1	SOCKET					
		7N-7780	1	PIN					
		7N-9737	1	HOUSING					
	2	3K-8107	2	GROMMET					
	3	41-3144	8	WASHER					
	4	41-3123	8	BOLT					
	5	41-5459	2	BRACKET AS					
Y	6	51-8250	2	LAMP GP					
	7	41-5461	2	BRACKET					

D-ORDER BY THE METER
Y-SEE SEPARATE ILLUSTRATION

H33557E

7Y-8189 LIGHTING GP-(CAB)

51-8250 – Page 99
An Attachment

ELECTRICAL SYSTEM

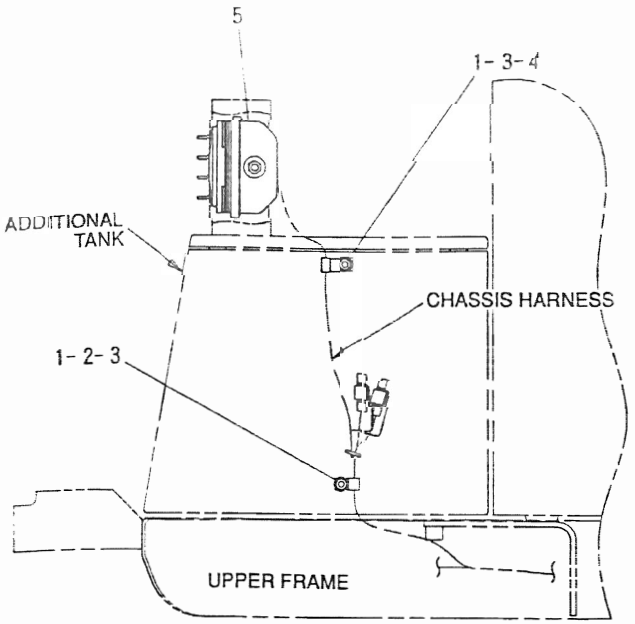

NOTE	No.	PART No.	QTY	PART NAME
	1	8T-4133	2	NUT
	2	4D-7794	1	CLIP
	3	8T-4121	2	WASHER
	4	4D-8123	1	CLIP
Y	5	51-8251	1	LAMP GP

Y-SEE SEPARATE ILLUSTRATION

H41594E

111-4756 LIGHTING GP-(ADDITIONAL TANK)

Part of 116-8263 Tank Ar listed on Page 55.01

51-8251 – Page 99

An Attachment

MEMORANDA

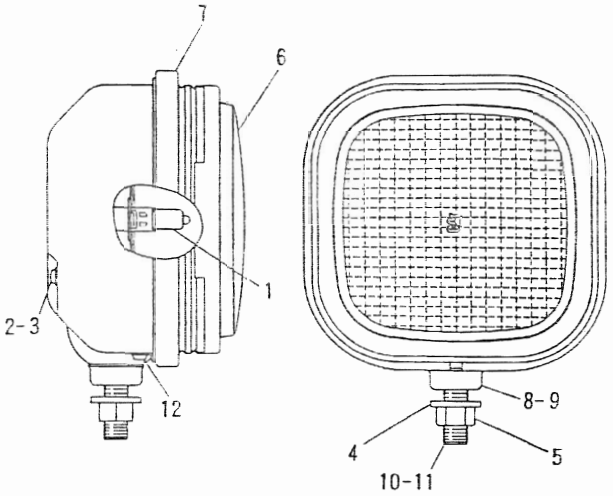

NOTE	No.	PART No.	QTY	PART NAME
	1	9X-3463	1	BLUB
	2	6V-5210	2	SCREW
	3	3B-4501	2	LOCKWASHER
	4	8T-4223	1	WASHER
	5	9X-8488	1	NUT
	6	106-0001	1	LENS AS
	7	106-0002	1	BAND
	8	106-0003	1	RING (RUBBER)
	9	106-0004	1	RING
	10	106-0005	1	SEAT
	11	7Y-5286	1	BOLT
	12	7Y-5288	2	SCREW

H41274E

5I-8251 LAMP GP-FLOOD (24V) (HORIZONTAL RH)

Part of 4I-5409 and 111-4756 Lighting listed on Pages 95 and 98.01

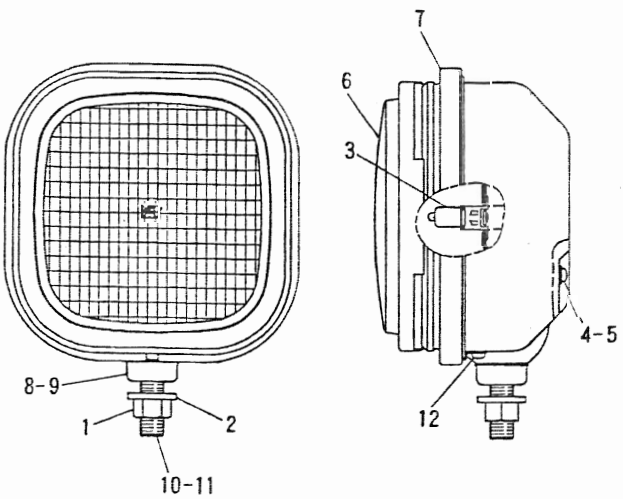

NOTE	No.	PART No.	QTY	PART NAME
	1	9X-8488	1	NUT
	2	8T-4223	1	WASHER
	3	9X-3463	1	BLUB
	4	6V-5210	2	SCREW
	5	3B-4501	2	LOCKWASHER
	6	106-0001	1	LENS AS
	7	106-0002	1	BAND
	8	106-0003	1	RING (RUBBER)
	9	106-0004	1	RING
	10	106-0005	1	SEAT
	11	7Y-5286	1	BOLT
	12	7Y-5288	2	SCREW

H41353E

5I-8250 LAMP GP-FLOOD (24V) (VERTICAL)

Part of 4I-5415, 105-9881 and 7Y-8189 Lighting listed on Pages 96, 97 and 98
An Attachment

POWER TRAIN

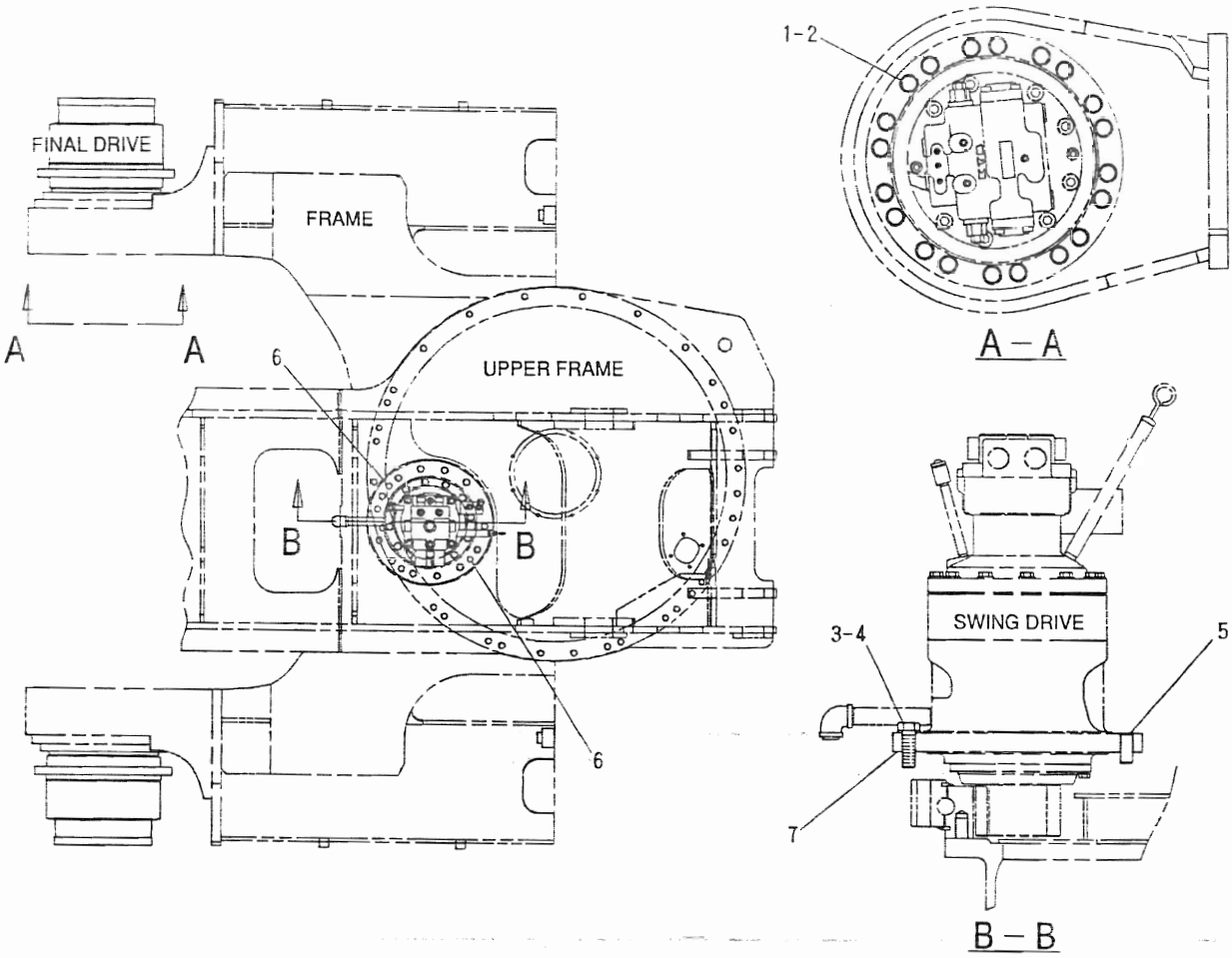

NOTE	No.	PART No.	QTY	PART NAME	NOTE	No.	PART No.	QTY	PART NAME
	1	8T-4140	40	BOLT (60mm LONG)					
	2	9X-8257	40	WASHER					
	3	7X-2563	13	BOLT (60mm LONG)					
	4	8T-4123	13	WASHER					
	5	095-7993	1	DOWEL					
	6	2Y-5503	2	CORK					
B	7	1U-8846		GASKET MAKER・・・(15mℓ)					

B-USE AS REQUIRED

H41318E

102-6434 FASTENER GP

POWER TRAIN

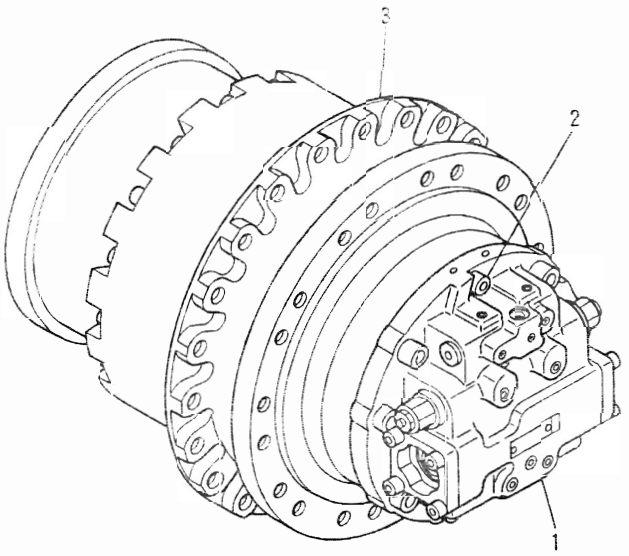

NOTE	No.	PART No.	QTY	PART NAME
Y	1	107-6553	1	MOTOR GP
	2	7X-3345	2	BOLT (85㎜ LONG)
Y	3	102-6500	1	DRIVE GP

Y-SEE SEPARATE ILLUSTRATION

H41319E

102-6433 DRIVE GP-FINAL (D) (W/MOTOR)-2 REQUIRED

102-6500 — Page 104, 107-6553 — Page 202

POWER TRAIN

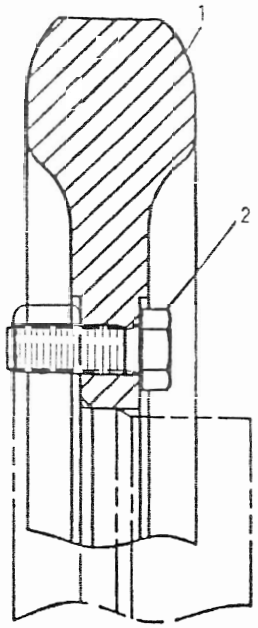

NOTE	No.	PART No.	QTY	PART NAME
	1	102-8134	1	SPROCKET
	2	8T-4193	22	BOLT (50mm LONG)

H41317E

102-8130 SPROCKET GP-NON-SEGMENTED (B)-2 REQUIRED

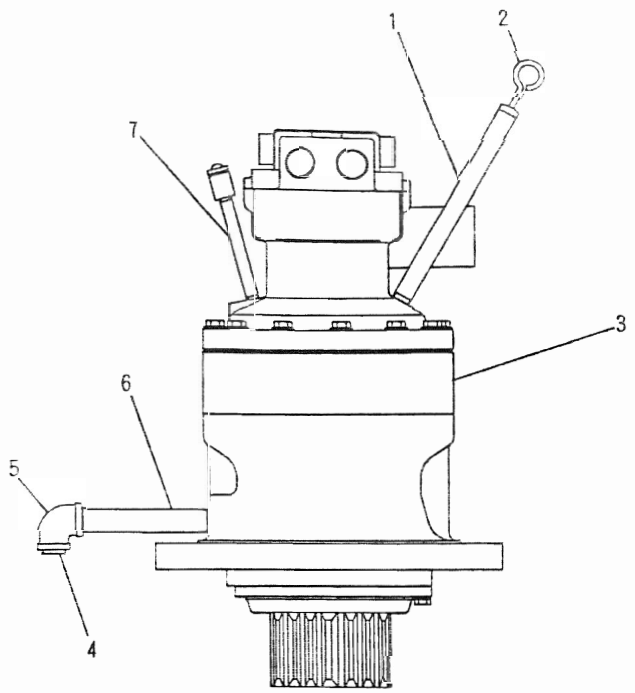

NOTE	No.	PART No.	QTY	PART NAME
	1	7I-7762	1	PIPE
	2	094-1540	1	GAUGE
Y	3	102-6438	1	DRIVE GP
	4	1B-5174	1	PLUG
	5	4B-5984	1	ELBOW
	6	4I-7470	1	NIPPLE
	7	4I-7509	1	BREATHER AS

Y-SEE SEPARATE ILLUSTRATION

H41324E

102-6437 DRIVE GP-SWING (A) (W/MOTOR)

102-6438 – Page 103

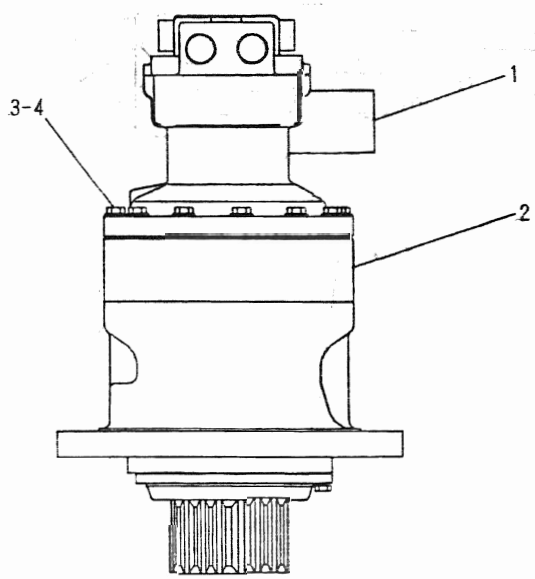

NOTE	No.	PART No.	QTY	PART NAME
Y	1	7I-8267	1	MOTOR GP
Y	2	102-6439	1	DRIVE GP
	3	8T-5041	12	BOLT (120mm LONG)
	4	8T-4223	12	WASHER

Y-SEE SEPARATE ILLUSTRATION

H41441E

102-6438 DRIVE GP-SWING

Part of 102-6437 Drive listed on Page 103

102-6439 – Page 106, 7I-8267 – Page 204

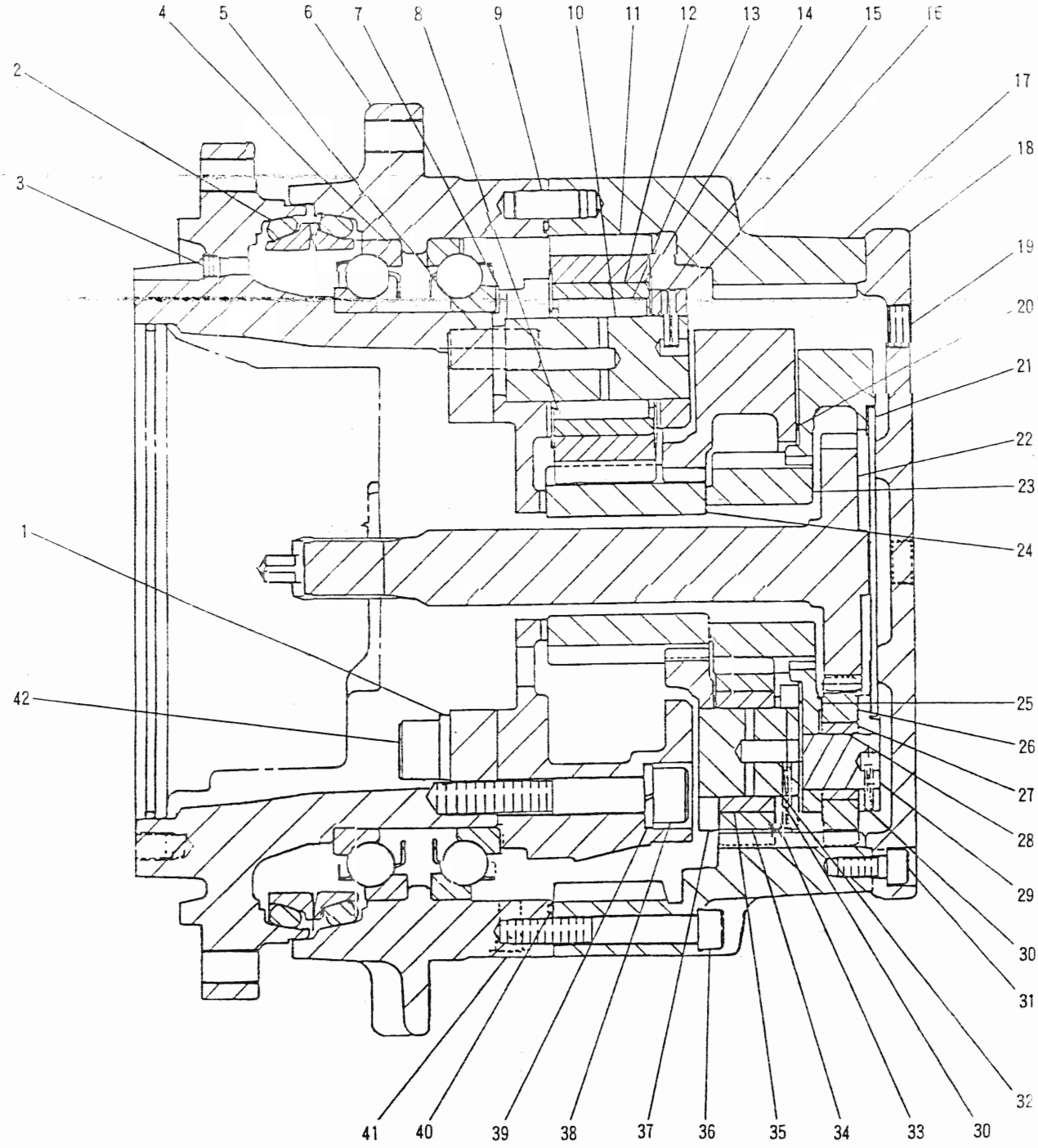

H41320E

102-6500 DRIVE GP-FINAL (D) (W/O MOTOR)

Part of 102-6433 Drive listed on Page 101

POWER TRAIN

NOTE	No.	PART No.	QTY	PART NAME	NOTE	No.	PART No.	QTY	PART NAME
	1	102-6533	3	PLATE					
	2	096-8039	1	SEAL					
	3	096-5971	1	PLUG					
	4	102-6525	2	BEARING					
	5	102-6532	3	PIN					
	6	102-6526	1	HOUSING					
	7	102-6544	1	SHIM KIT					
	8	102-6517	6	COLLAR					
	9	102-6536	3	PIN					
	10	102-6515	3	SHAFT					
	11	102-6513	3	GEAR					
	12	102-6516	3	BUSHING					
	13	102-6514	51	ROLLER					
	14	102-6518	6	WASHER					
	15	102-6519	3	PIN					
	16	102-6512	1	CARRIER					
	17	102-6534	1	GEAR					
	18	102-6542	1	COVER					
	19	095-0968	3	PLUG					
	20	102-6521	1	PLATE					
	21	102-6545	1	PLATE KIT					
	22	102-6520	1	GEAR					
	23	102-6522	1	GEAR					
	24	102-6523	1	GEAR					
	25	102-6502	1	CARRIER					
	26	102-6503	3	GEAR					
	27	093-4391	6	WASHER					
	28	093-5133	3	BEARING					
	29	102-6504	3	SHAFT					
	30	095-7945	6	PIN					
	31	6V-3938	16	BOLT					
	32	102-6509	3	SHAFT					
	33	102-6510	6	WASHER					
	34	102-6507	3	GEAR					
	35	102-6508	3	BEARING					
	36	8C-8729	16	BOLT (80mm LONG)					
	37	102-6506	1	CARRIER					
	38	3E-8008	3	BOLT					
	39	095-0819	3	LOCKWASHER					
	40	102-6535	1	SEAL					
	41	095-0966	1	PLUG					
	42	096-7265	12	BOLT					

H41321E

102-6500 DRIVE GP-FINAL (D) (W/O MOTOR)

Part of 102-6433 Drive listed on Page 101

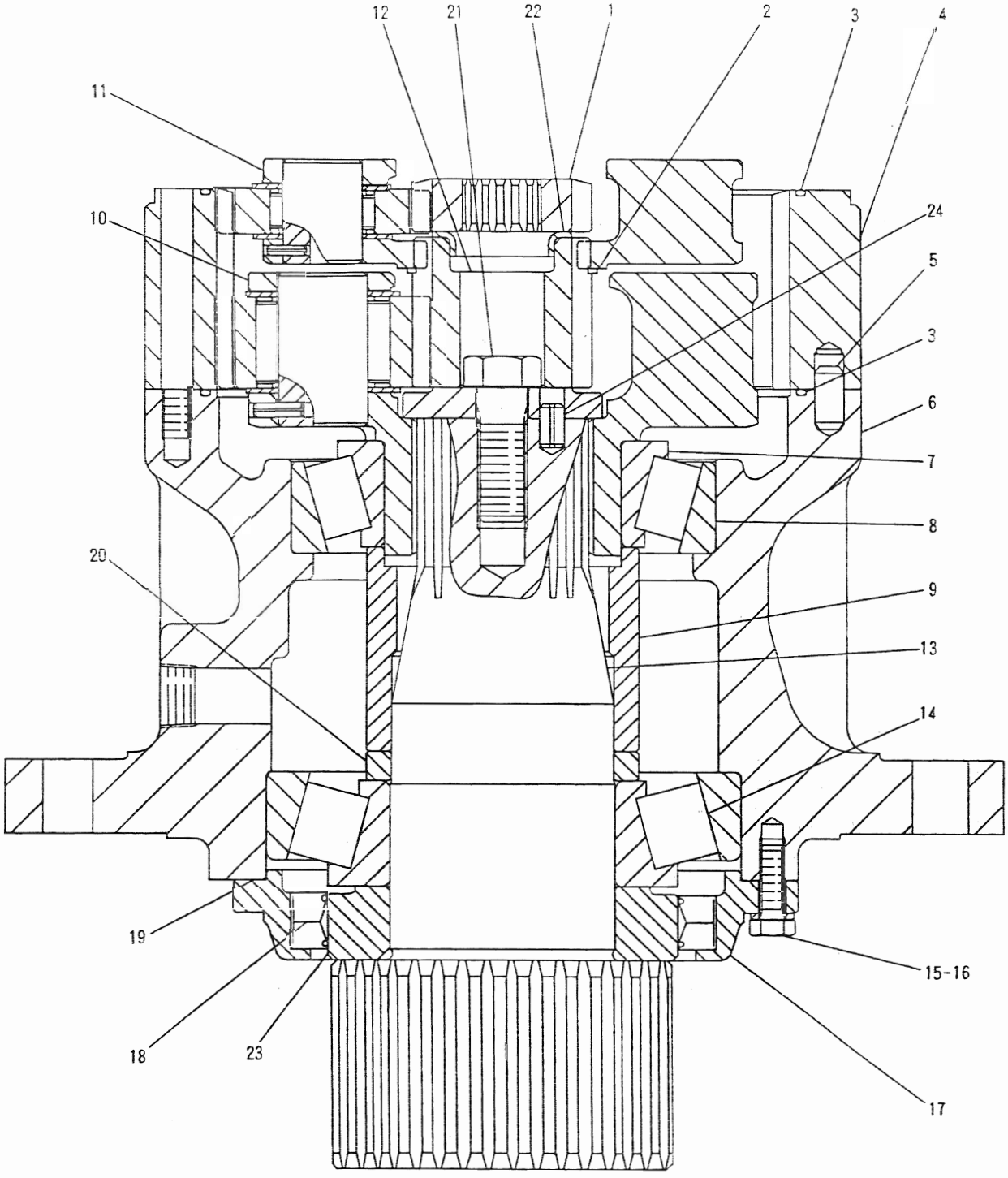

102-6439 DRIVE GP-SWING (A)

Part of 102-6438 Drive listed on Page 103
114-1326, 108-9188 – Page 108

POWER TRAIN

NOTE	No.	PART No.	QTY	PART NAME	NOTE	No.	PART No.	QTY	PART NAME
	1	7I-7627	1	GEAR (14 TEETH)					
	2	093-6087	1	RING					
	3	093-6088	2	SEAL					
	4	110-7203	1	GEAR					
	5	093-6089	2	DOWEL					
	6	102-6389	1	HOUSING					
	7	114-3470	1	CONE					
	8	114-3471	1	CUP					
B	9	102-6472	1	SPACER					
B		102-6473	1	SPACER					
B		102-6474	1	SPACER					
B		102-6475	1	SPACER					
Y	10	114-1326	1	CARRIER AS					
Y	11	108-9188	1	CARRIER AS					
	12	093-8768	1	GEAR (22 TEETH)					
	13	114-1325	1	SHAFT					
	14	102-6461	1	BEARING AS					
	15	8T-4195	8	BOLT (30mm LONG)					
	16	8T-4121	8	WASHER					
	17	102-6494	1	CAGE					
	18	102-6495	1	SEAL					
B	19	1U-8846		GASKET MAKER・・・(3mℓ)					
B	20	102-6477	1	SPACER (9.8mm THICK)					
B		102-6478	1	SPACER (9.85mm THICK)					
B		102-6479	1	SPACER (9.9mm THICK)					
B		102-6480	1	SPACER (9.95mm THICK)					
B		102-6481	1	SPACER (10.0mm THICK)					
B		102-6482	1	SPACER (10.025mm THICK)					
B		102-6483	1	SPACER (10.05mm THICK)					
B		102-6484	1	SPACER (10.075mm THICK)					
B		102-6485	1	SPACER (10.1mm THICK)					
B		102-6486	1	SPACER (10.125mm THICK)					
B		102-6487	1	SPACER (10.15mm THICK)					
B		102-6488	1	SPACER (10.175mm THICK)					
B		102-6489	1	SPACER (10.2mm THICK)					
B		102-6490	1	SPACER (10.225mm THICK)					
B		102-6491	1	SPACER (10.25mm THICK)					
B		102-6492	1	SPACER (10.275mm THICK)					
B		102-6493	1	SPACER (10.3mm THICK)					
	21	114-8224	1	BOLT					
	22	093-6098	1	WASHER					
	23	102-6388	1	SPACER					
	24	095-0893	1	PIN					

B-USE AS REQUIRED
Y-SEE SEPARATE ILLUSTRATION

H41613E

102-6439 DRIVE GP-SWING (A)

Part of 102-6438 Drive listed on Page 103
114-1326, 108-9188 – Page 108

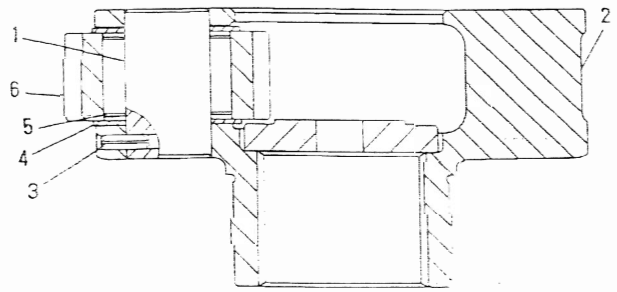

NOTE	No.	PART No.	QTY	PART NAME
	1	7I-7786	3	SHAFT
	2	102-6386	1	CARRIER
	3	8C-3347	3	PIN
	4	7I-7782	6	WASHER
	5	7I-7783	3	BEARING
	6	7I-7784	3	GEAR (26 TEETH)

H41614E

114-1326 CARRIER AS-PLANET

Part of 102-6439 Drive listed on Page 107

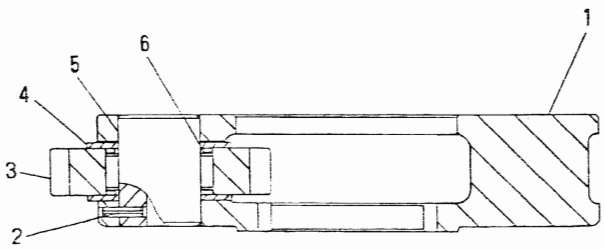

NOTE	No.	PART No.	QTY	PART NAME
	1	7I-7785	1	CARRIER
	2	096-8056	3	PIN
	3	7I-7789	3	GEAR (26 TEETH)
	4	7I-7788	6	WASHER
	5	7I-7787	3	SHAFT
	6	7I-7791	3	BEARING

H32365E

108-9188 CARRIER AS-PLANET

Part of 102-6439 Drive listed on Page 107

CHASSIS AND UNDERCARRIAGE

NOTE	No.	PART No.	QTY	PART NAME	NOTE	No.	PART No.	QTY	PART NAME
	1	111-0963	1	PLATFORM AS					
	2	9X-8257	12	WASHER					
	3	8T-4175	6	BOLT (90mm LONG					
B	4	7Y-3127	12	SHIM (0.6mm THICK)					
B		7Y-3118	6	SHIM (1.2mm THICK)					
	5	6I-5087	1	GROMMET					
	6	099-7172	12	MOUNT					
	7	5I-3202	6	BUSHING					
	8	7Y-0623	6	NUT					
	9	099-7313	12	CASE					
	10	5I-3251	6	SLEEVE					
	11	7I-0337	2	GROMMET					
	12	4I-3266	2	STRIP					
	13	7Y-3196	2	GROMMET					
	14	6I-5086	1	GROMMET					
	15	8T-4137	2	BOLT (20mm LONG)					
	16	8T-4121	10	WASHER					
	17	7Y-3281	2	GROMMET					
	18	113-2849	1	FLOORMAT					
	19	8T-4191	4	BOLT (16mm LONG)					
	20	111-1149	1	COVER AS					

B USE AS REQUIRED

H41279E

110-5624 PLATFORM GP-OPERATOR

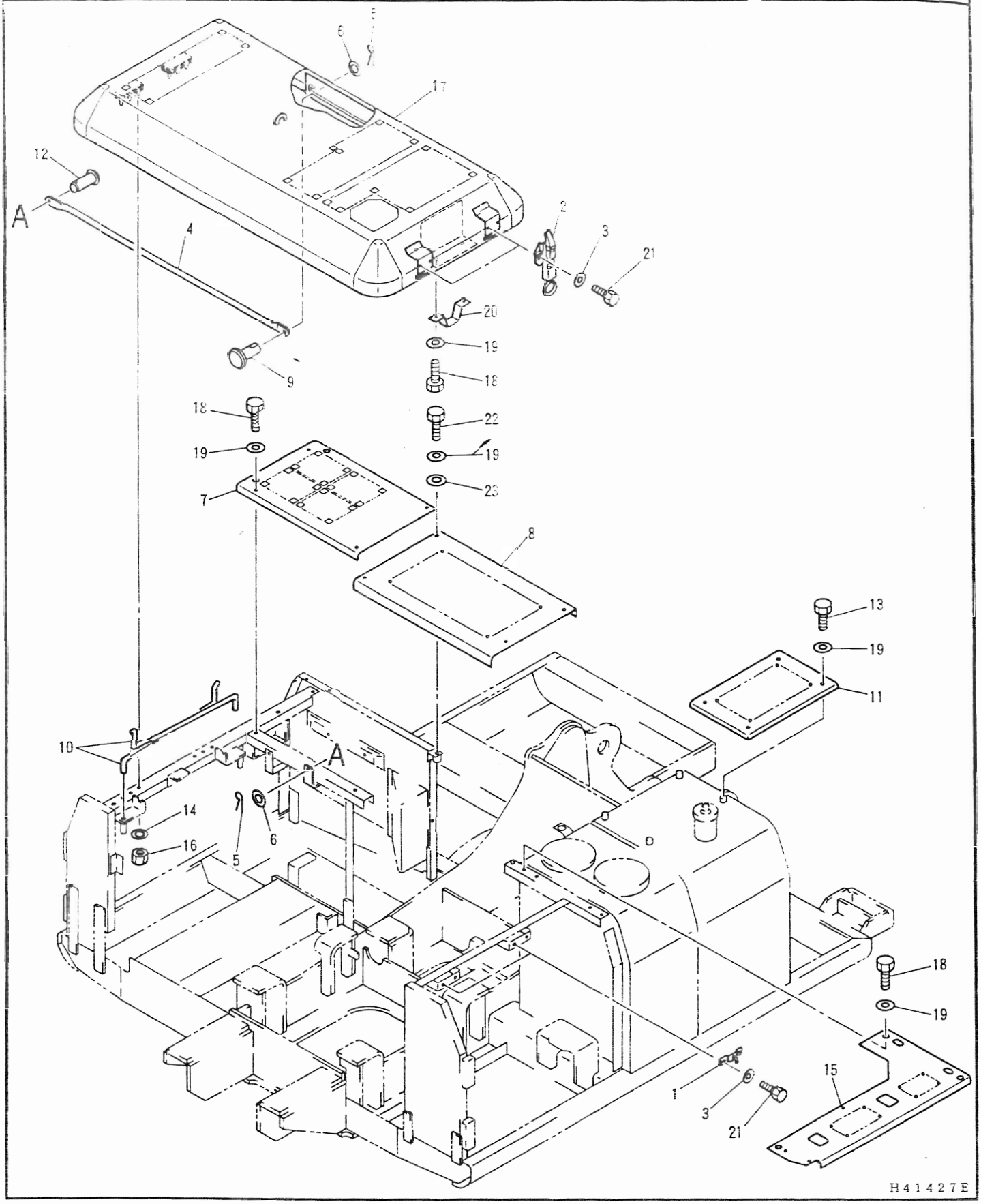

103-0345 HOOD GP-GUARD & (A)-PART 1 OF 3

103-0449 – Page 118

CHASSIS AND UNDERCARRIAGE

NOTE	No.	PART No.	QTY	PART NAME	NOTE	No.	PART No.	QTY	PART NAME
	1	4I-0118	2	HOOK					
	2	4I-0117	2	FASTENER					
	3	8T-4224	8	WASHER					
	4	103-0530	1	SUPPORT					
	5	096-3774	2	PIN					
	6	8T-4121	2	WASHER					
	7	103-0445	1	SHEET AS					
	8	103-0446	1	COVER AS					
	9	096-3781	1	PIN					
	10	102-7729	2	SPRING					
	11	103-0450	1	COVER					
	12	095-1319	1	PIN					
	13	8T-4179	4	BOLT (20mm LONG)					
	14	8T-4223	6	WASHER					
	15	109-2051	1	COVER AS					
		103-0447	1	SHEET					
	16	8T-4244	6	NUT					
Y	17	103-0449	1	HOOD AS					
	18	8T-4192	14	BOLT (25mm LONG)					
	19	5P-1076	22	WASHER					
	20	109-2041	1	GUIDE AS					
	21	8T-4200	8	BOLT (16mm LONG)					
	22	8T-4139	4	BOLT (30mm LONG)					
	23	099-1426	4	SPACER					

Y-SEE SEPARATE ILLUSTRATION

H41428E

103-0345 HOOD GP-GUARD & (A)-PART 1 OF 3

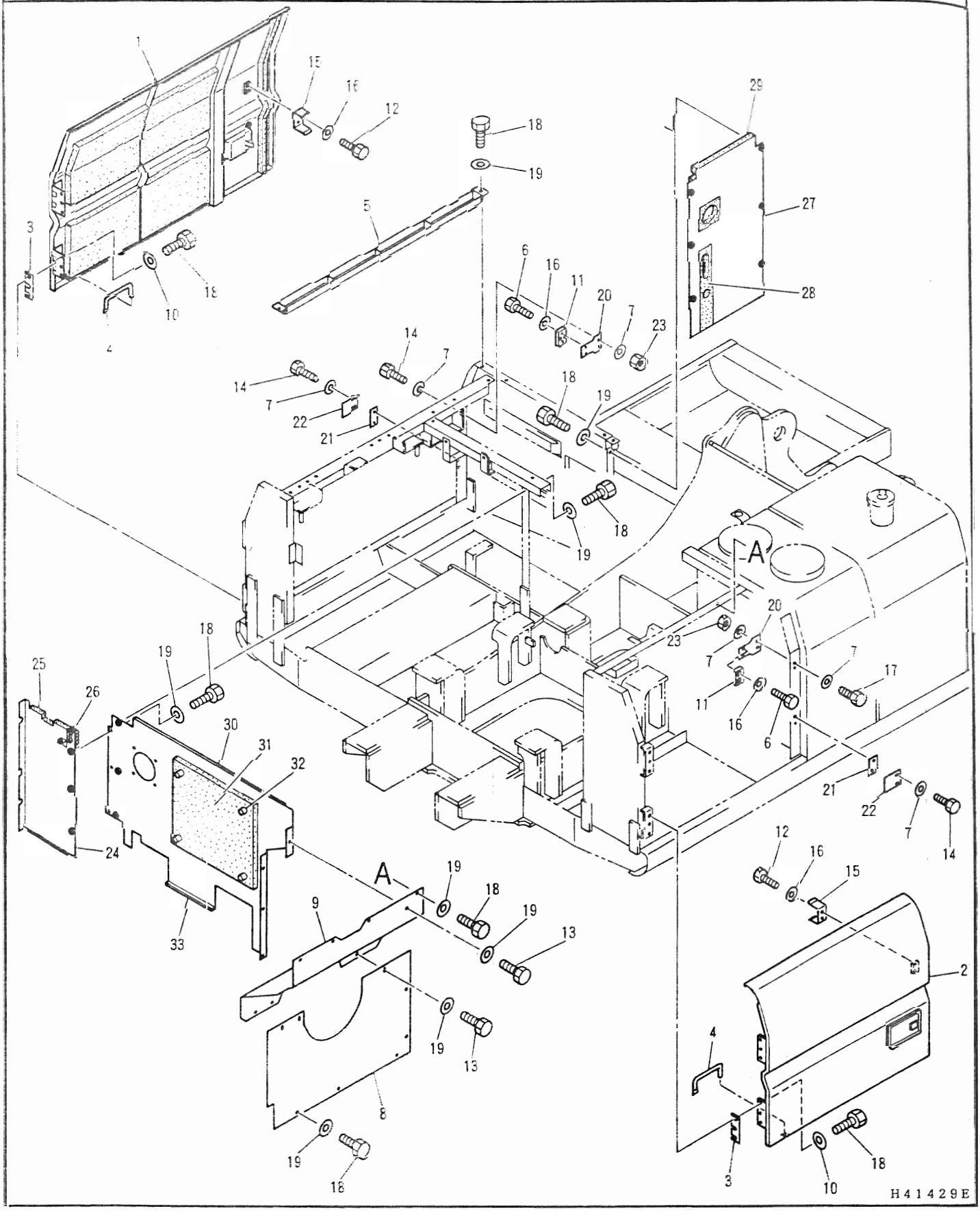

103-0345 HOOD GP-GUARD & (A)-PART 2 OF 3

103-0443, 103-0448 – Page 119

CHASSIS AND UNDERCARRIAGE

NOTE	No.	PART No.	QTY	PART NAME	NOTE	No.	PART No.	QTY	PART NAME
Y	1	103-0443	1	DOOR GP					
Y	2	103-0448	2	DOOR GP					
B	3	102-5689	4	SHIM (2.0mm THICK)					
B		096-0684	4	SHIM (0.8mm THICK)					
	4	102-5673	2	ROD					
	5	103-0444	1	COVER AS					
	6	8T-0269	4	BOLT (20mm LONG)					
	7	5P-4115	12	WASHER					
	8	103-0456	1	SHEET AS					
	9	103-0455	1	SHEET AS					
	10	8T-4223	12	WASHER					
	11	6I-6033	2	STOPPER					
	12	5C-9553	4	BOLT (16mm LONG)					
	13	8T-4179	7	BOLT (20mm LONG)					
	14	8T-4138	6	BOLT (20mm LONG)					
	15	4I-8019	2	SUPPORT					
	16	9X-8256	8	WASHER					
	17	6V-7357	2	BOLT (25mm LONG)					
	18	8T-4192	33	BOLT (25mm LONG)					
	19	5P-1076	28	WASHER					
	20	102-5080	2	STRIP					
B	21	087-3909	2	SHIM (2.0mm THICK)					
B		087-3908	2	SHIM (1.0mm THICK)					
	22	4I-0082	2	PLATE					
	23	5C-2890	4	NUT					
	24	103-0451	1	SHEET AS					
	25	103-0518	1	LINER					
	26	103-0577	1	LINER					
	27	116-8366	1	SHEET AS					
	28	103-0521	1	LINER					
	29	103-0522	1	LINER					
	30	103-0454	1	SHEET AS					
	31	4I-0240	1	LINER					
	32	6P-2216	5	CAP					
▲	33	7Y-8555		SEAL・・・(3dm)					

B-USE AS REQUIRED
Y-SEE SEPARATE ILLUSTRATION
▲-ORDER BY THE DECIMETER

H41657E

103-0345 HOOD GP-GUARD & (A)-PART 2 OF 3

103-0443, 103-0448 — Page 119

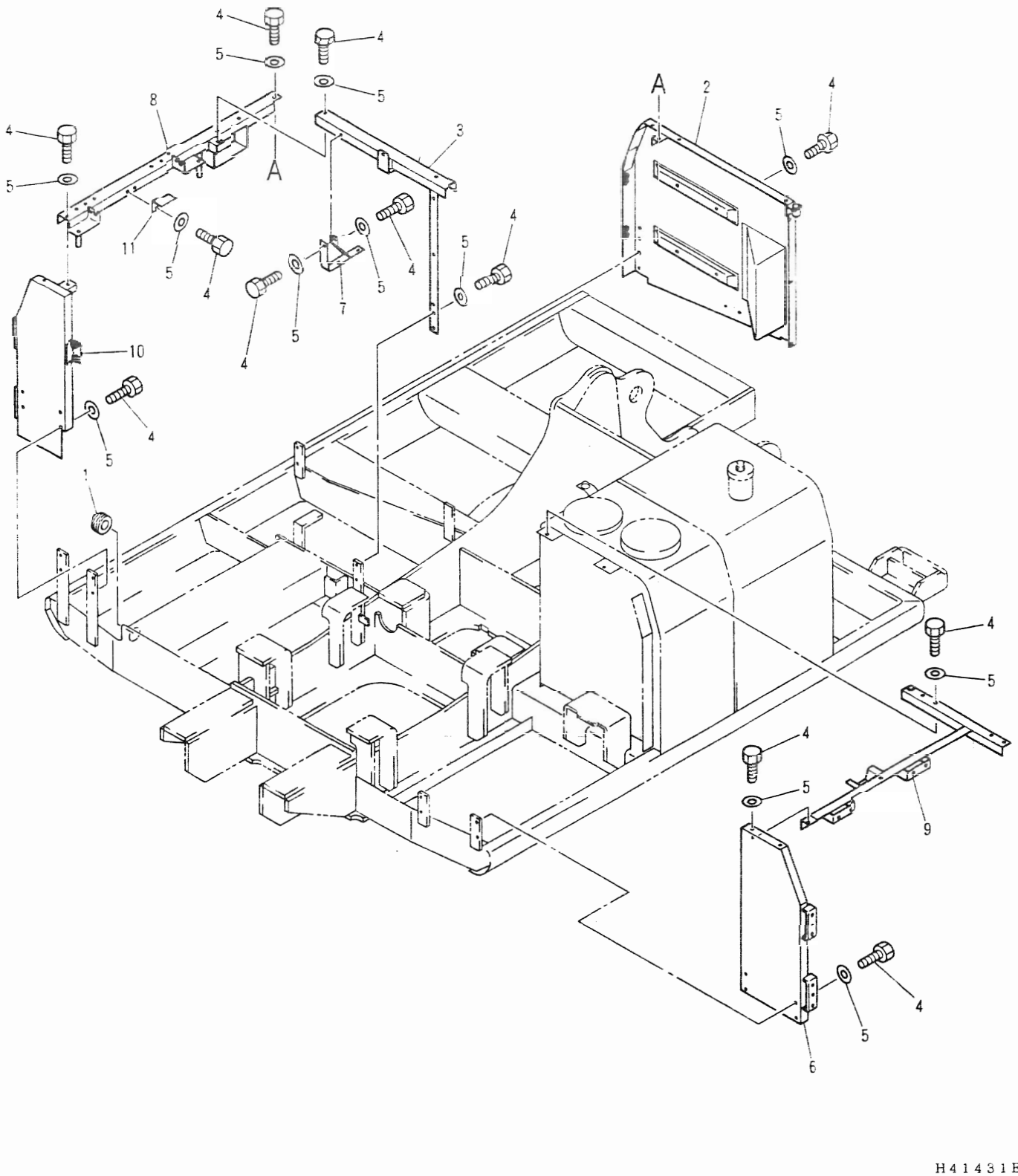

103-0345 HOOD GP-GUARD & (A)-PART 3 OF 3

CHASSIS AND UNDERCARRIAGE

NOTE	No.	PART No.	QTY	PART NAME	NOTE	No.	PART No.	QTY	PART NAME
	1	7I-1542	1	GROMMET					
	2	116-8365	1	SUPPORT AS					
	3	103-0412	1	SUPPORT AS					
	4	8T-4192	21	BOLT (25㎜ LONG)					
	5	5P-1076	21	WASHER					
	6	103-0421	1	SUPPORT AS					
	7	103-0405	1	SUPPORT AS					
	8	103-0407	1	SUPPORT AS					
	9	103-0423	1	SUPPORT AS					
	10	103-0416	1	SUPPORT AS					
	11	109-1985	1	ANGLE					

H41658E

103-0345 HOOD GP-GUARD & (A)-PART 3 OF 3

CHASSIS AND UNDERCARRIAGE

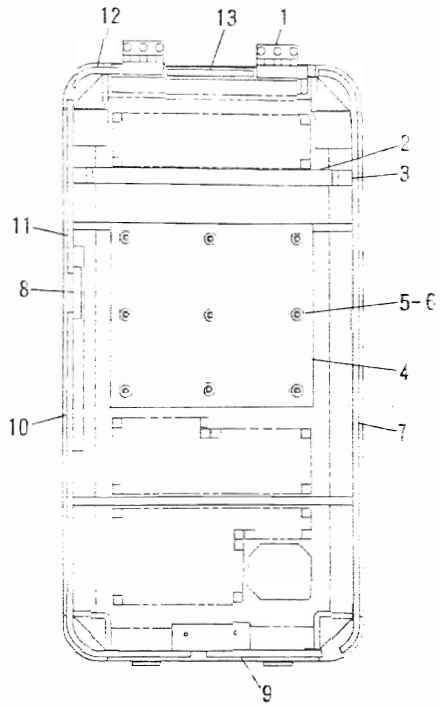

NOTE	No.	PART No.	QTY	PART NAME
	1	4I-7948	1	HINGE AS
	2	103-0476	1	LINER
	3	103-0497	2	LINER AS
	4	7Y-2680	1	LINER
	5	4I-7924	9	WASHER
	6	6P-2216	9	CAP
▲	7	5P-0815		SEAL・・・(19.3dm)
D	8	5P-5962		SEAL・・・(0.2m)
▲	9	5P-0815		SEAL・・・(3.6dm)
▲	10	5P-0815		SEAL・・・(14.3dm)
▲	11	5P-0815		SEAL・・・(5.6dm)
▲	12	5P-0815		SEAL・・・(1.8dm)
▲	13	5P-0815		SEAL・・・(2.8dm)

D-ORDER BY THE METER
▲-ORDER BY THE DECIMETER

H41435E

103-0449 HOOD AS

Part of 103-0345 Hood listed on Page 113

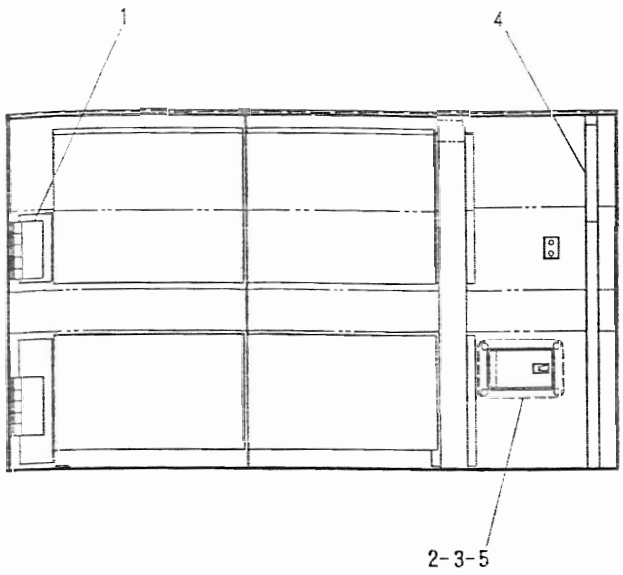

NOTE	No.	PART No.	QTY	PART NAME
	1	7Y-2881	2	HINGE
	2	41-8438	4	SCREW
	3	099-6418	4	NUT
	4	103-0494	1	LINER
	5	41-8436	1	LOCK AS
		099-6415	1	LOCK AS

H41413E

103-0443 DOOR GP

Part of 103-0345 Hood listed on Page 115

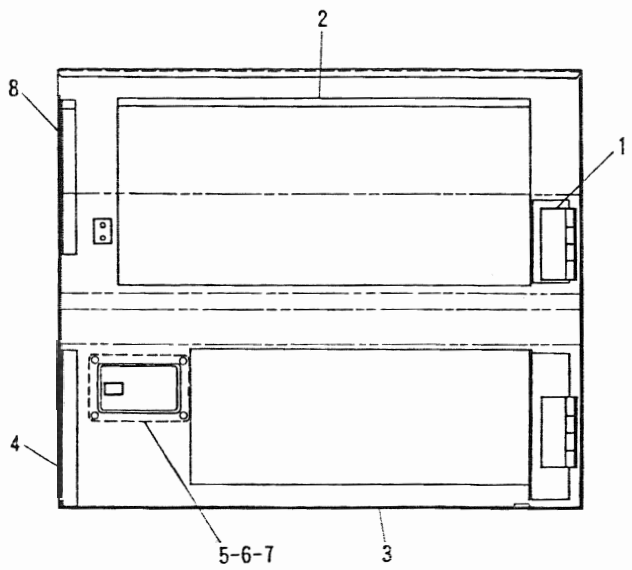

NOTE	No.	PART No.	QTY	PART NAME
	1	7Y-2881	2	HINGE
	2	103-0470	1	LINER
	3	103-0471	1	LINER
	4	61-6269	1	LINER
		099-6415	1	LOCK AS
	5	41-8436	1	LOCK AS
	6	41-8438	4	SCREW
	7	099-6418	4	NUT
	8	61-6297	1	LINER

H41414E

103-0448 DOOR GP

Part of 103-0345 Hood listed on Page 115

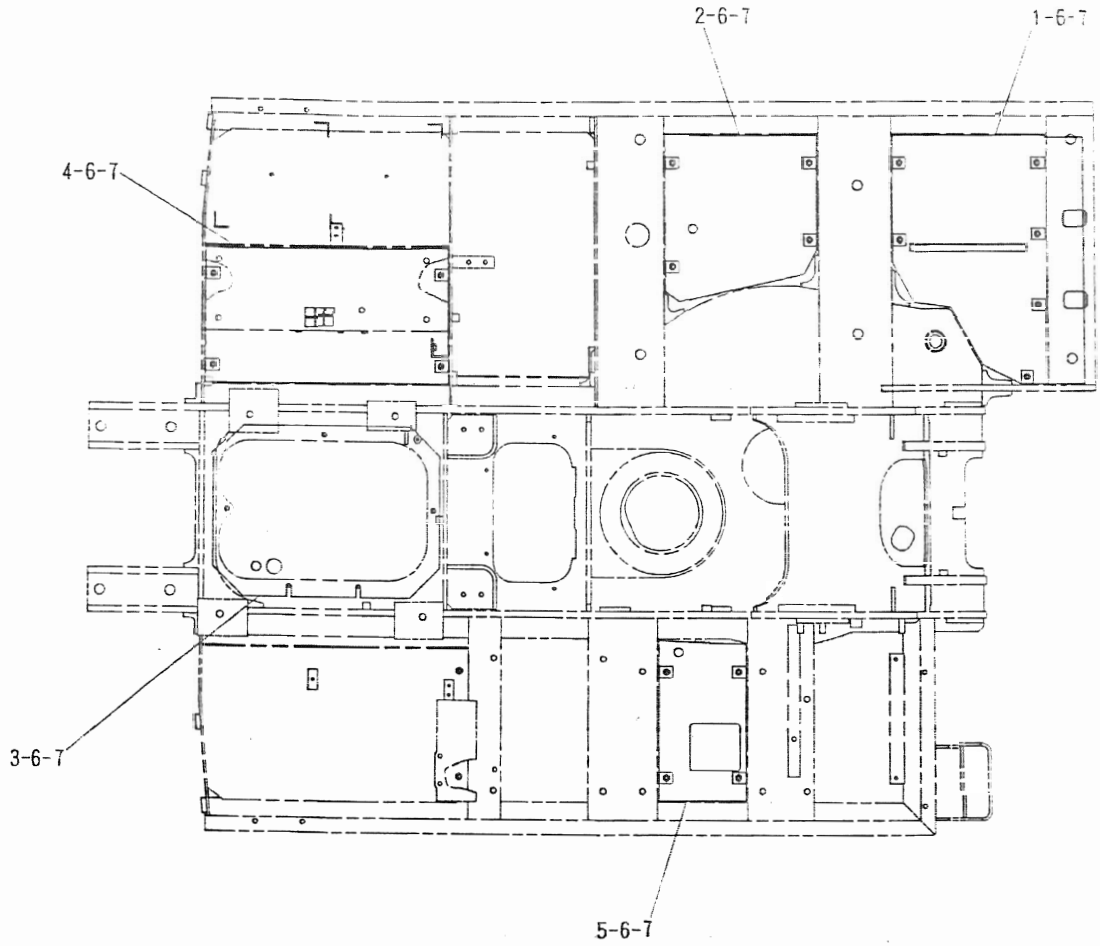

NOTE	No.	PART No.	QTY	PART NAME	NOTE	No.	PART No.	QTY	PART NAME
	1	103-0458	1	SHEET AS					
	2	103-0460	1	SHEET					
	3	103-0461	1	SHEET					
	4	103-0463	1	SHEET					
	5	103-0464	1	SHEET					
	6	099-4691	23	BOLT (25mm LONG)					
	7	5P-1076	23	WASHER					

H41229E

103-0344 GUARD GP-BOTTOM (C)

Part of 116-8371 Guard listed on Page 121

Consists of :

Page

1 106-6776 GUARD GP-SWIVEL 123

1 109-2064 GUARD GP-BOTTOM 122

H41453E

116-8264 GUARD AR-BOTTOM (HEAVY DUTY)

An Attachment

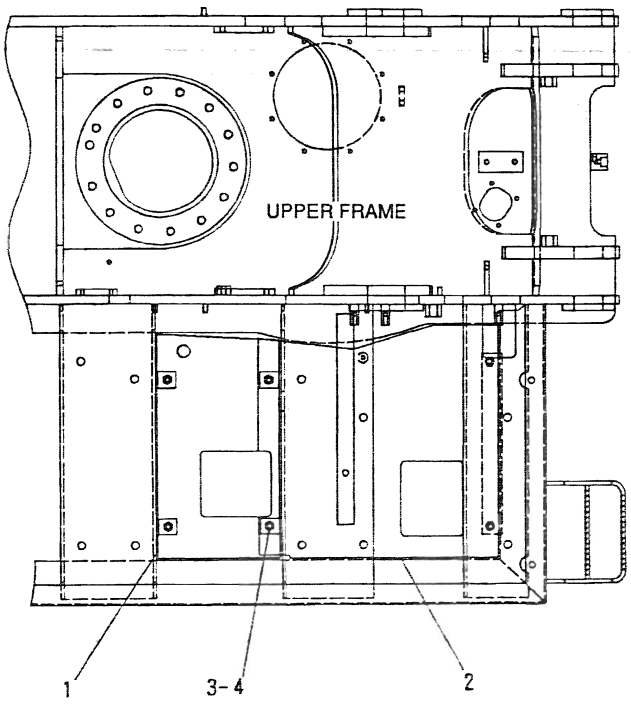

NOTE	No.	PART No.	QTY	PART NAME
Y	1	103-0344	1	GUARD GP
	2	116-8370	1	SHEET
	3	8C-8992	2	BOLT (30mm LONG)
	4	5P-1076	2	WASHER

Y-SEE SEPARATE ILLUSTRATION

H41602E

116-8371 GUARD GP-BOTTOM (ADDITIONAL TANK)

Part of 102-5325 Pump Ar and 116-8263 Tank Ar listed on Page 55.01

103-0344 – Page 120

An Attachment

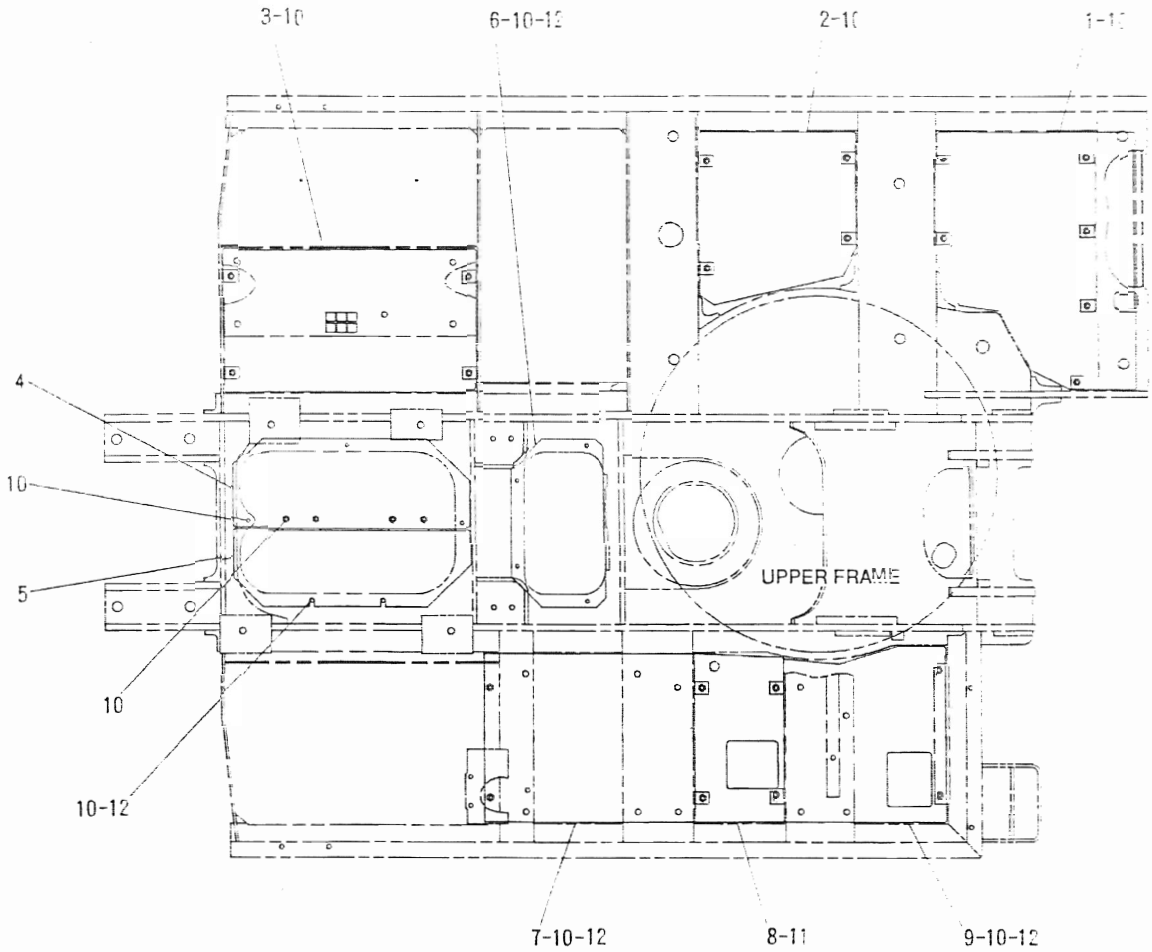

NOTE	No.	PART No.	QTY	PART NAME	NOTE	No.	PART No.	QTY	PART NAME
	1	109-2018	1	PLATE AS					
	2	109-2020	1	PLATE AS					
	3	109-2024	1	PLATE AS					
	4	109-2022	1	PLATE AS					
	5	109-2030	1	PLATE AS					
		099-7857	2	HINGE					
	6	109-2047	1	PLATE AS					
	7	109-2026	1	PLATE AS					
	8	109-2027	1	PLATE					
	9	109-2028	1	PLATE AS					
	10	8C-8992	31	BOLT (30mm LONG)					
	11	3E-8004	4	BOLT (45mm LONG)					
	12	5P-1076	12	WASHER					

H41452E

109-2064 GUARD GP-BOTTOM (HEAVY DUTY)

Part of 116-8264 Guard Ar listed on Page 121
An Attachment

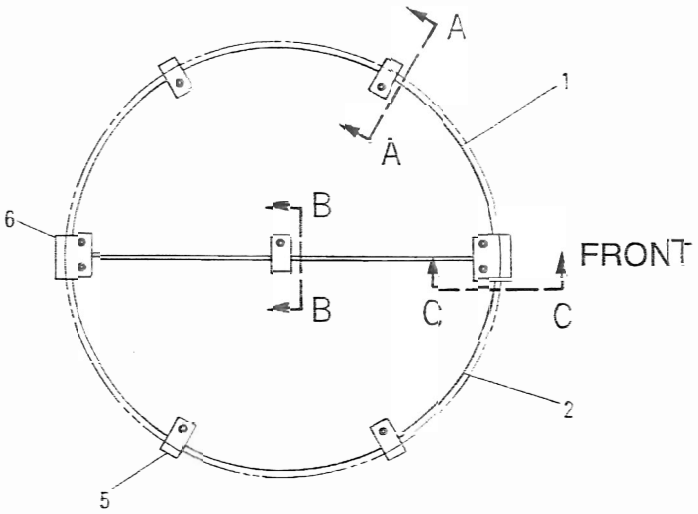

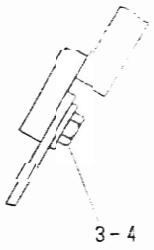

A – A

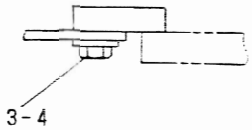

C – C

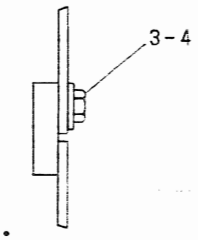

B – B

NOTE	No.	PART No.	QTY	PART NAME	NOTE	No.	PART No.	QTY	PART NAME
	1	5I-3534	1	COVER AS					
	2	099-3502	1	COVER AS					
	3	099-4691	9	BOLT (25mm LONG)					
	4	5P-1076	9	WASHER					
	5	7Y-3430	4	PLATE					
	6	7Y-3431	2	PLATE					

H41454E

106-6776 GUARD GP-SWIVEL
Part of 116-8264 Guard Ar listed on Page 121
An Attachment

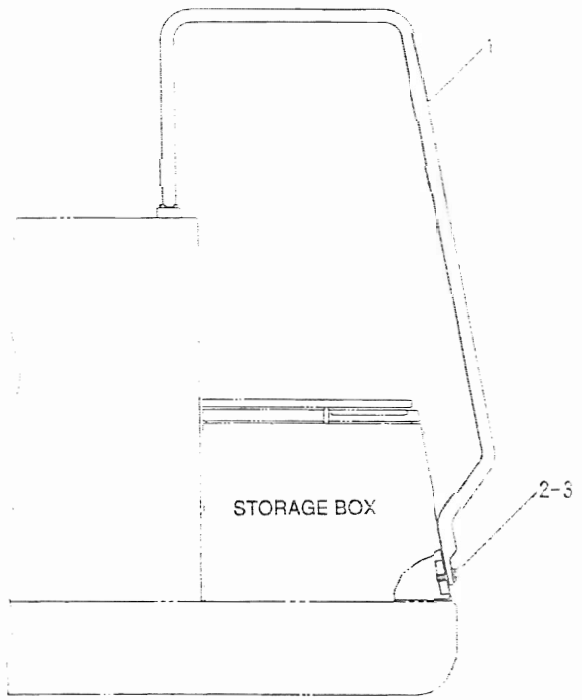

NOTE	No.	PART No.	QTY	PART NAME
	1	41-1943	1	HANDRAIL
	2	099-4691	2	BOLT (25mm LONG)
	3	5P-1076	2	WASHER

H41230E

087-3670 HANDRAIL GP (A)

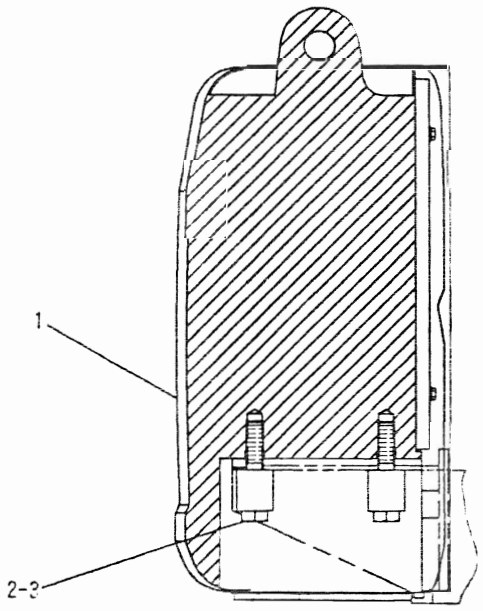

NOTE	No.	PART No.	QTY	PART NAME
Y	1	109-2054	1	COUNTERWEIGHT GP
	2	7X-2585	4	BOLT (100mm LONG)
	3	6I-6646	4	SPACER

Y-SEE SEPARATE ILLUSTRATION

H41570E

103-0341 COUNTERWEIGHT GP

109-2054 - Page 125

CHASSIS AND UNDERCARRIAGE

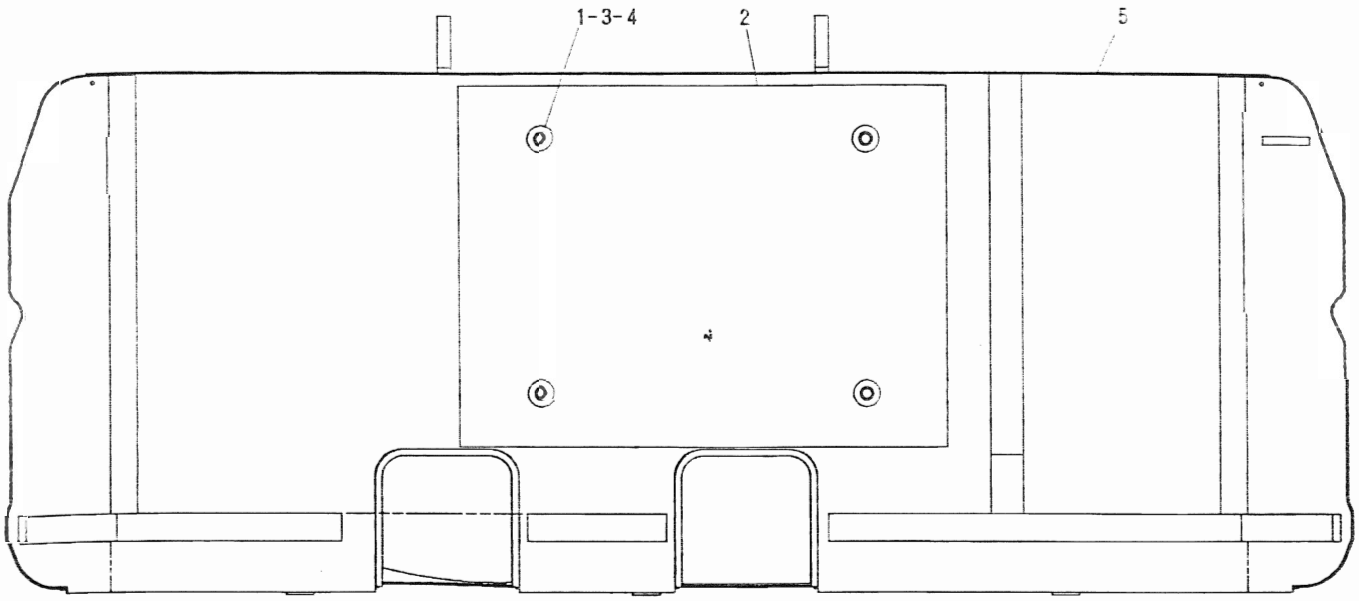

NOTE	No.	PART No.	QTY	PART NAME	NOTE	No.	PART No.	QTY	PART NAME
	1	8T-4179	4	BOLT (20mm LONG)					
	2	103-0440	1	LINER					
	3	8T-4223	4	WASHER (25.5mm OD)					
	4	7Y-2292	4	WASHER (50mm OD)					
	5	109-2057	1	COUNTERWEIGHT AS					

H41571E

109-2054 COUNTERWEIGHT GP (BASIC)

Part of 103-0341 Counterweight listed on Page 124

CHASSIS AND UNDERCARRIAGE

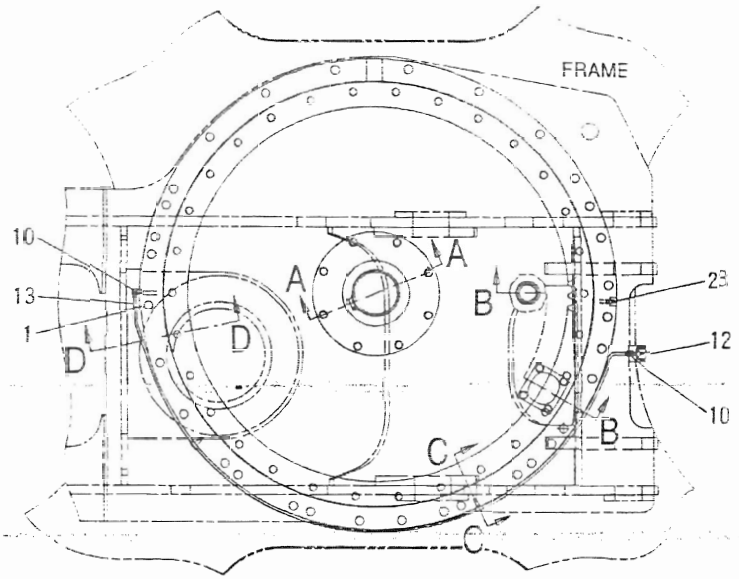

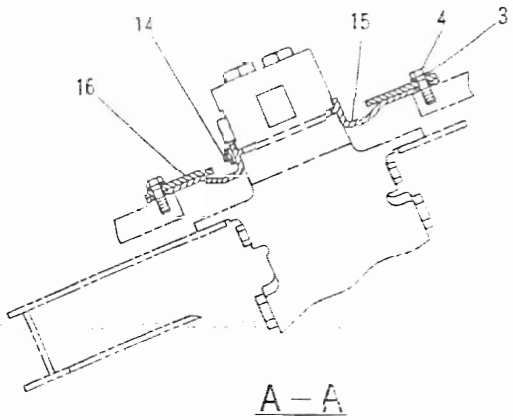

A – A

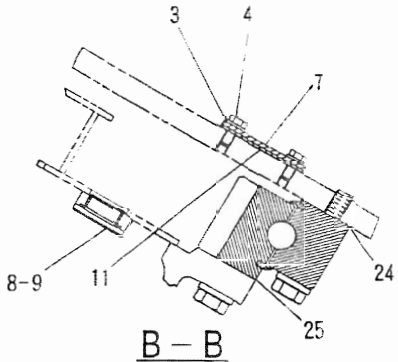

B – B

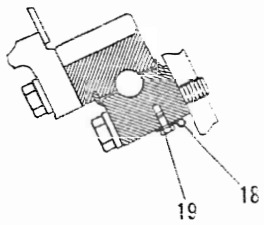

C – C

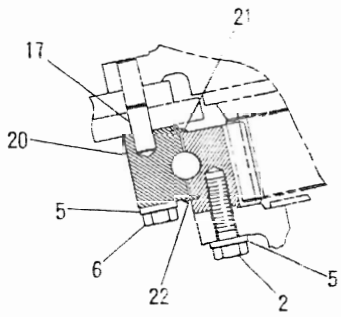

D – D

NOTE	No.	PART No.	QTY	PART NAME
	1	2Y-5503	1	CORK
	2	6V-3532	30	BOLT (60mm LONG)
	3	8T-4121	12	WASHER
	4	8T-4136	12	BOLT (25mm LONG)
	5	085-9311	62	SPACER
	6	8T-0362	32	BOLT (110mm LONG)
	7	4I-7326	1	STRIP
	8	096-6095	1	PLUG
	9	095-1608	1	SEAL
	10	5K-9243	2	ELBOW
	11	4I-7446	1	GASKET
	12	3B-8489	1	FITTING
	13	102-6449	1	TUBE AS
	14	4I-7512	1	CLAMP
	15	4I-7444	1	BOOT
	16	4I-7511	1	RETAINER
	17	095-7993	1	DOWEL
	18	4N-9170	2	CLIP
	19	8T-4199	2	BOLT (12mm LONG)

NOTE	No.	PART No.	QTY	PART NAME
	20	102-6436	1	GEAR GP
E	21	6W-7687		SEAL・・・(347cm)
E	22	6W-7687		SEAL・・・(345cm)
	23	3B-8489	1	FITTING
B	24	1U-8846		GASKET MAKER・・・(143mℓ)
B	25	1U-8846		GASKET MAKER・・・(130mℓ)

B-USE AS REQUIRED
E-ORDER BY THE CENTIMETER

H41292E

102-6435 GEAR GP-BEARING & (BASIC)

CHASSIS AND UNDERCARRIAGE

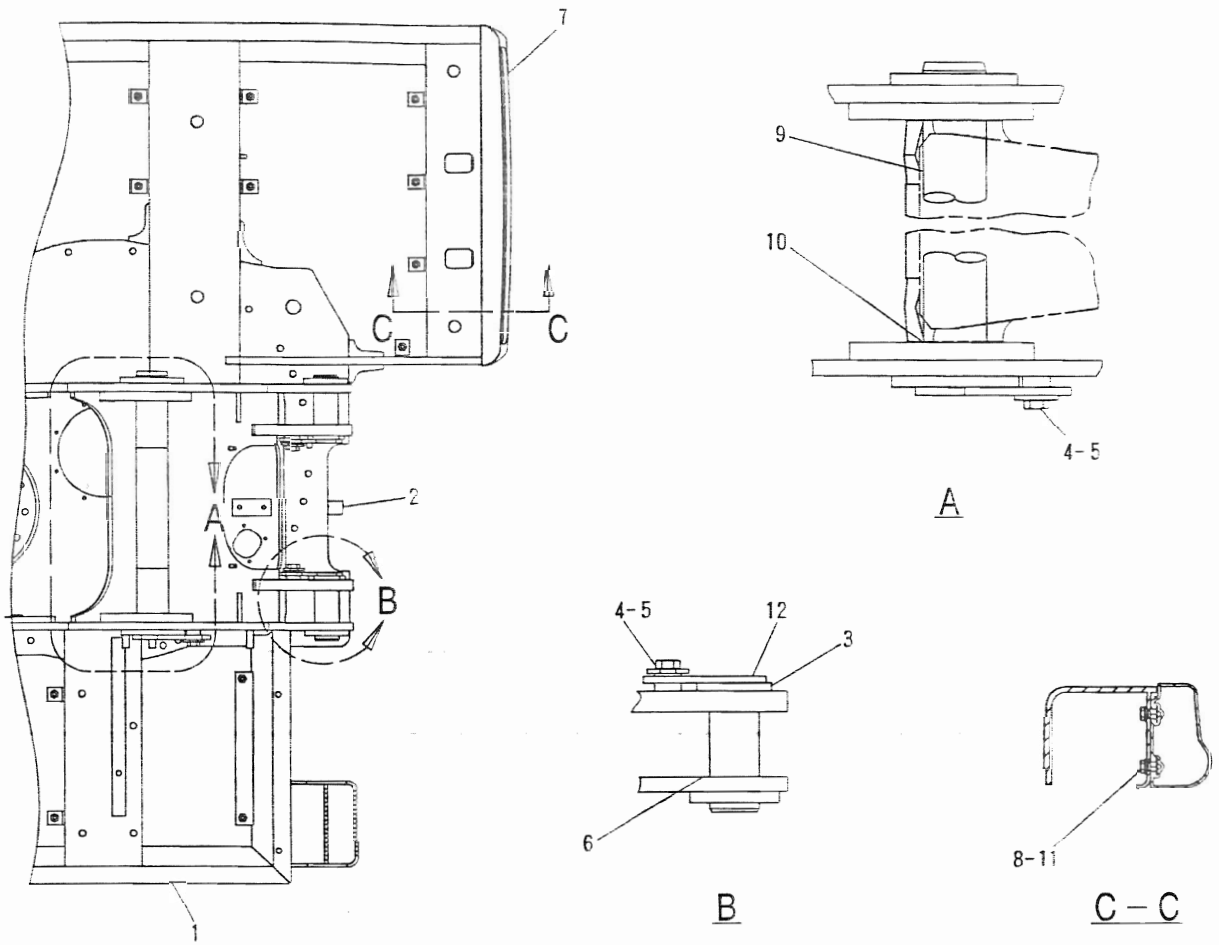

NOTE	No.	PART No.	QTY	PART NAME	NOTE	No.	PART No.	QTY	PART NAME
	1	106-6736	1	FRAME AS					
	2	7Y-0633	1	BOSS					
	3	093-0369	2	SPACER					
	4	8T-4780	3	BOLT (30mm LONG)					
	5	093-0349	3	WASHER					
B	6	093-0118	2	SHIM (2.0mm THICK)					
B		7Y-2496	4	SHIM (1.6mm THICK)					
B		093-0086	2	SHIM (1.0mm THICK)					
	7	7I-6670	1	BUMPER					
	8	8T-4195	4	BOLT (30mm LONG)					
	9	107-9732	1	PIN AS					
B	10	7Y-2497	2	SHIM (1.6mm THICK)					
B		093-0084	1	SHIM (1.0mm THICK)					
B		093-0116	1	SHIM (2.0mm THICK)					
	11	8T-4121	4	WASHER					
	12	107-9739	2	PIN AS					

B-USE AS REQUIRED

H41647E

106-6735 FRAME GP-UPPER

CHASSIS AND UNDERCARRIAGE

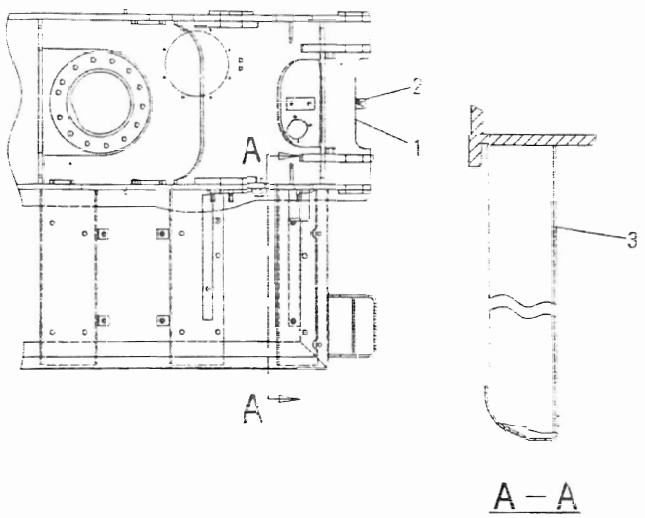

NOTE	No.	PART No.	QTY	PART NAME
	1	106-6736	1	FRAME AS
	2	7Y-0633	1	BOSS
	3	109-2069	1	ANGLE

H41607E

109-2062 FRAME AS-UPPER

Part of 116-8263 Tank Ar listed on Page 55.01

An Attachment

MEMORANDA

CHASSIS AND UNDERCARRIAGE

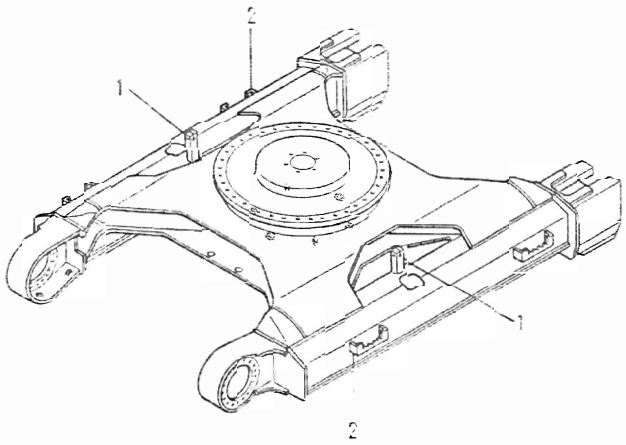

NOTE	No.	PART No.	QTY	PART NAME
	1	7Y-1811	2	BRACKET
	2	106-6744	4	STEP

H41666E

109-8507 FRAME AS-UNDERCARRIAGE

S/N 4YM1 – Up

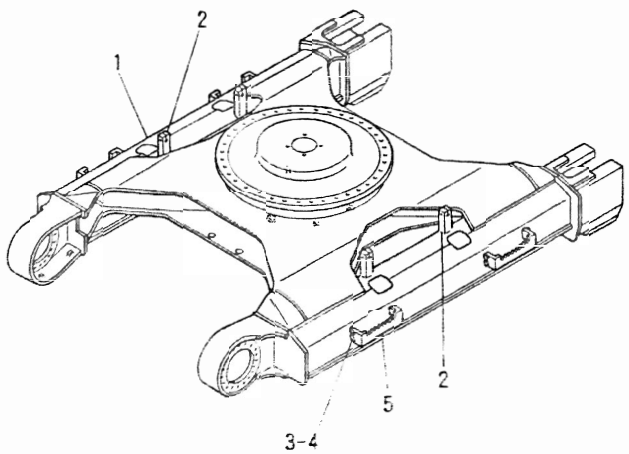

注記	No.	部品番号	数量	部品名称
	1	110-9933	1	FRAME AS
	2	7Y-1811	4	BRACKET
	3	8T-4223	16	WASHER
	4	8T-4956	16	BOLT (35mm LONG)
	5	113-2357	4	STEP

H41615E

115-2631 FRAME GP-UNDERCARRIAGE

S/N 6YM1 – Up

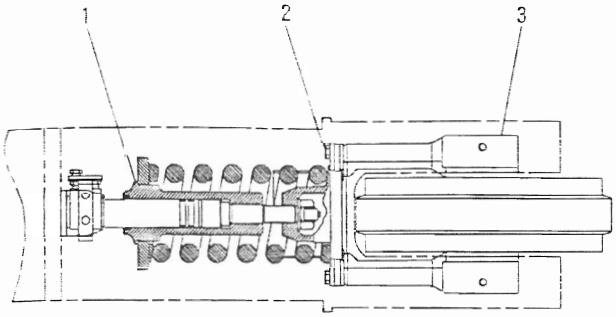

NOTE	No.	PART No.	QTY	PART NAME
Y	1	102-8117	1	RECOIL GP (LH)
Y		102-8118	1	RECOIL GP (RH)
	2	8T-4193	8	BOLT (50mm LONG)
Y	3	113-2907	2	IDLER GP

Y-SEE SEPARATE ILLUSTRATION

H41293E

102-8087 IDLER GP-FRONT (A)

113-2907 – Page 129, 102-8117, 102-8118 – Page 130

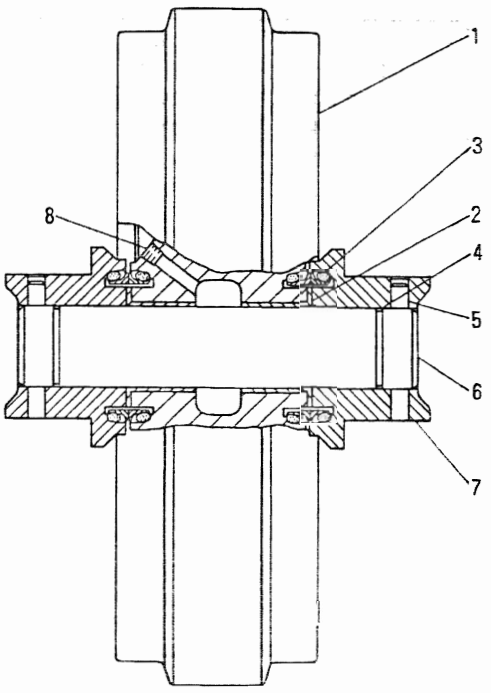

NOTE	No.	PART No.	QTY	PART NAME
	1	115-4926	1	IDLER AS
	2	8E-4359	2	BEARING
	3	9W-7225	2	SEAL GP
	4	6V-7658	2	SEAL
	5	9W-9455	2	PIN
	6	9W-9451	1	SHAFT
	7	115-3701	2	BEARING
	8	7H-3171	1	PLUG

H38469E

113-2907 IDLER GP-FRONT (BASIC)

Part of 102-8087 Idler listed on Page 129

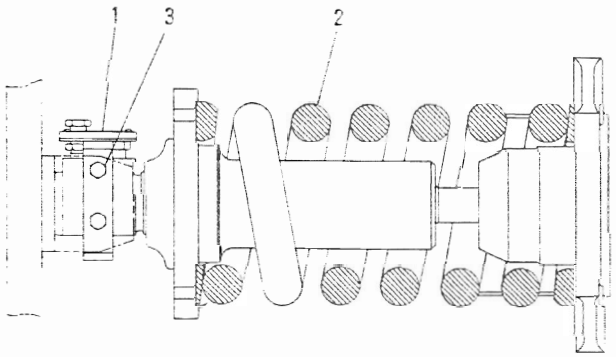

NOTE	No.	PART No.	QTY	PART NAME
	1	113-2820	1	PLATE AS
		4B-4158	4	SCREW
		5P-9891	1	PLATE
Y	2	102-8114	1	RECOIL GP
	3	8T-4137	2	BOLT (20mm LONG)

Y-SEE SEPARATE ILLUSTRATION

H41295E

102-8117 RECOIL GP-TRACK ADJUSTER & (RH)

Part of 102-8087 Idler listed on Page 129
102-8114 – Page 131

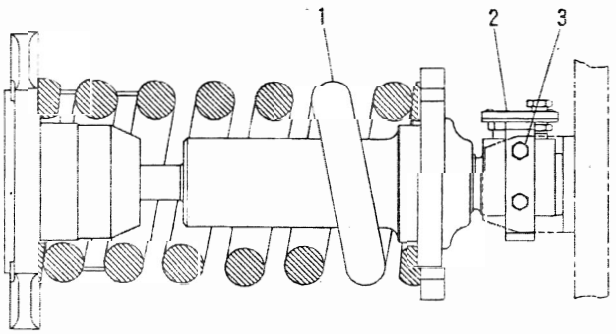

NOTE	No.	PART No.	QTY	PART NAME
Y	1	102-8114	1	RECOIL GP
	2	113-2820	1	PLATE AS
		4B-4158	4	SCREW
		5P-9891	1	PLATE
	3	8T-4137	2	BOLT (20mm LONG)

Y-SEE SEPARATE ILLUSTRATION

H41296E

102-8118 RECOIL GP-TRACK ADJUSTER & (LH)

Part of 102-8087 Idler listed on Page 129
102-8114 – Page 131

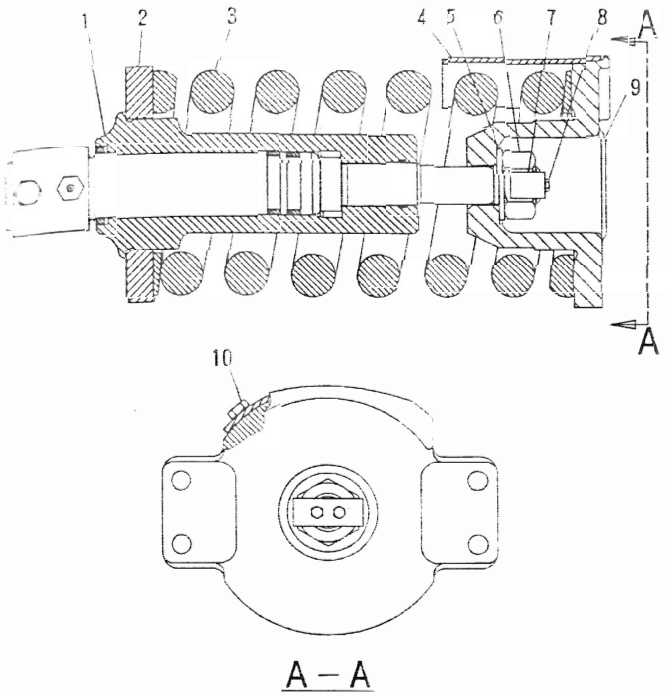

NOTE	No.	PART No.	QTY	PART NAME
Y	1	102-8165	1	RECOIL GP
	2	7Y-1883	1	PLATE
	3	102-8139	1	SPRING
	4	7Y-1781	1	COVER
	5	9X-8259	1	WASHER
	6	096-4879	1	NUT
	7	7Y-1686	1	STRIP
	8	8T-4171	2	BOLT (12mm LONG)
	9	7Y-1598	1	SUPPORT
	10	8T-4179	2	BOLT (20mm LONG)

Y-SEE SEPARATE ILLUSTRATION

H41297E

102-8114 RECOIL GP-TRACK ADJUSTER & (A)

Part of 102-8117 and 102-8118 Idler listed on Page 130
102-8165 – Page 131

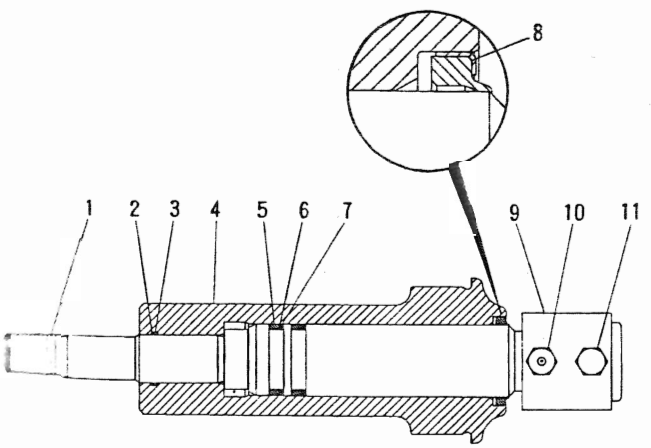

NOTE	No.	PART No.	QTY	PART NAME
	1	7Y-1685	1	ROD
	2	096-4276	1	RING
	3	095-1701	1	SEAL
	4	7Y-1780	1	CYLINDER
	5	095-1612	2	SEAL
	6	093-1515	2	RING
	7	096-4275	2	RING
	8	093-1435	1	SEAL
	9	7Y-1687	1	PISTON AS
	10	2S-5925	1	VALVE
	11	2S-5926	1	VALVE

H41298E

102-8165 RECOIL GP-TRACK ADJUSTER & (A)

Part of 102-8114 Idler listed on Page 131

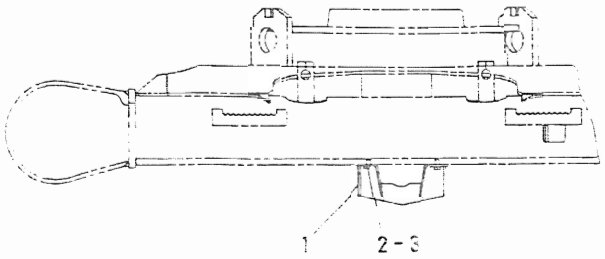

NOTE	No.	PART No.	QTY	PART NAME
	1	099-1432	1	GUARD AS
	2	8T-5460	4	BOLT (40mm LONG)
	3	8T-4123	4	WASHER

H31425E

087-5908 GUARD GP-TRACK GUIDE-2 REQUIRED

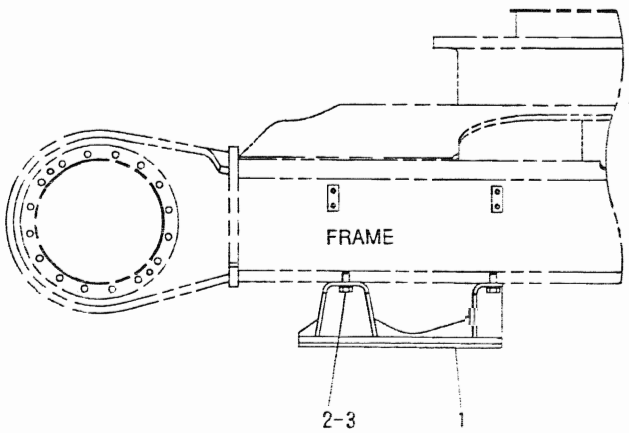

NOTE	No.	PART No.	QTY	PART NAME
	1	111-0104	2	GUARD AS
	2	8T-5460	8	BOLT (40mm LONG)
	3	8T-4123	8	WASHER

H41380E

106-6772 GUARD GP-TRACK GUIDE (SPROCKET)

S/N 4YM1 – Up
An Attachment

CHASSIS AND UNDERCARRIAGE

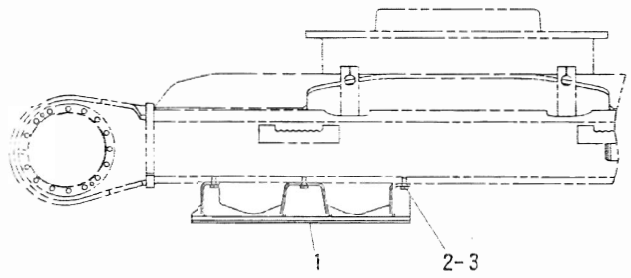

NOTE	No.	PART No.	QTY	PART NAME
	1	111-0106	2	GUARD AS
	2	8T-5460	12	BOLT (40㎜ LONG)
	3	8T-4123	12	WASHER

H41572E

106-6773 GUARD GP-TRACK GUIDE (SPROCKET)

S/N 6YM1 – Up

An Attachment

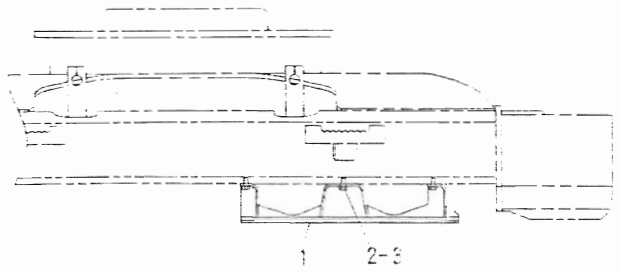

NOTE	No.	PART No.	QTY	PART NAME
	1	111-0106	2	GUARD AS
	2	8T-5460	12	BOLT (40mm LONG)
	3	8T-4123	12	WASHER

H41573E

106-6775 GUARD GP-TRACK GUIDE (2 PIECE-FRONT)

S/N 6YM1 – Up
An Attachment

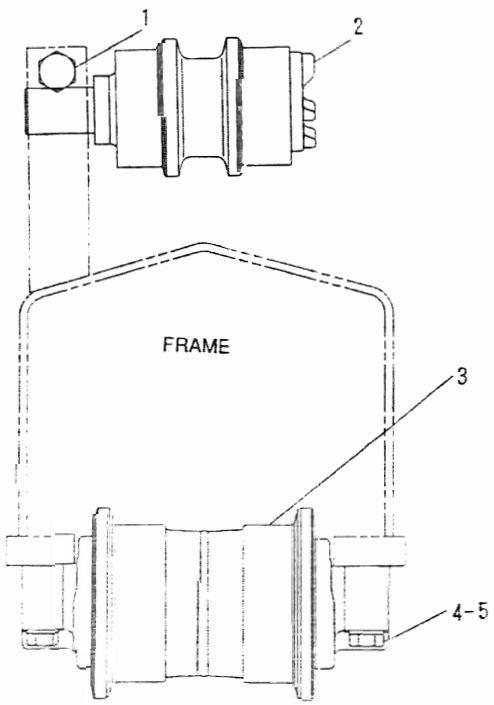

NOTE	No.	PART No.	QTY	PART NAME
	1	8T-5878	4	BOLT (80mm LONG)
Y	2	8E-5600	4	ROLLER GP
Y	3	8E-5034	14	ROLLER GP
	4	7X-2565	56	BOLT (100mm LONG)
	5	8T-4123	56	WASHER

Y-SEE SEPARATE ILLUSTRATION

H41649E

102-8120 ROLLER AR-TRACK & CARRIER

S/N 6YM1 – Up
8E-5034, 8E-5600 – Page 134

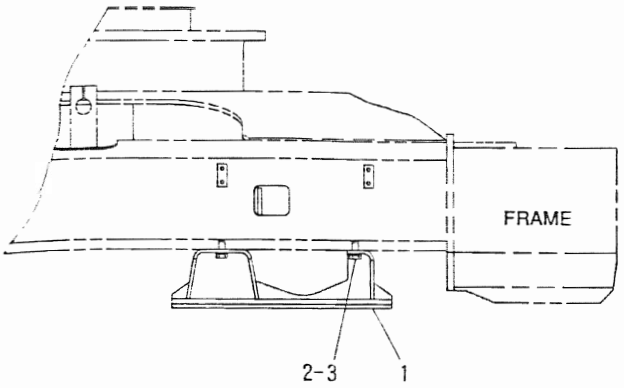

NOTE	No.	PART No.	QTY	PART NAME
	1	111-0105	2	GUARD AS
	2	8T-5460	8	BOLT (40mm LONG)
	3	8T-4123	8	WASHER

H41382E

106-6774 GUARD GP-TRACK GUIDE (2 PIECE-FRONT)

S/N 4YM1 – Up
An Attachment

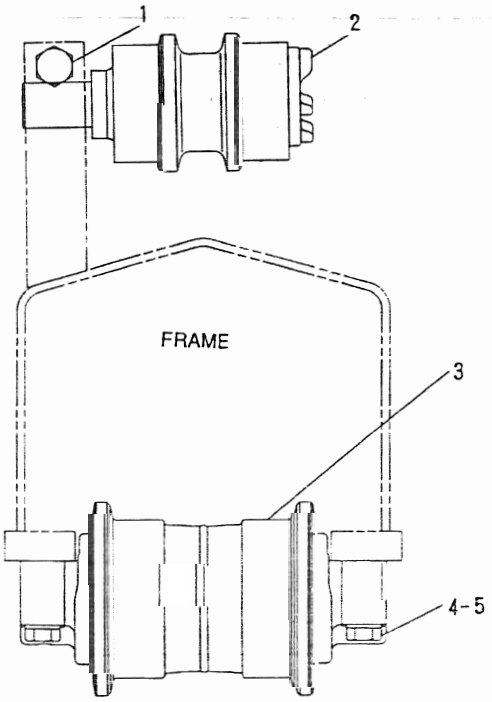

NOTE	No.	PART No.	QTY	PART NAME
	1	8T-5878	4	BOLT (80mm LONG)
Y	2	8E-5600	2	ROLLER GP
Y	3	8E-5034	12	ROLLER GP
	4	7X-2565	48	BOLT (100mm LONG)
	5	8T-4123	48	WASHER

Y-SEE SEPARATE ILLUSTRATION

H41299E

102-8119 ROLLER AIR-TRACK & CARRIER

S/N 4YM1 – Up
8E-5034, 8E-5600 – Page 134

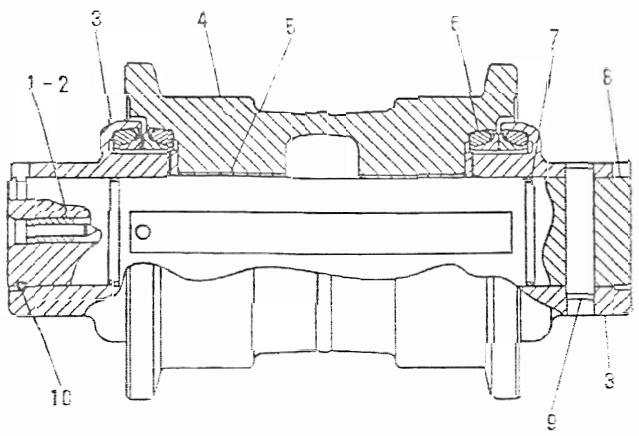

NOTE	No.	PART No.	QTY	PART NAME
	1	5G-2247	1	STOPPER
	2	6Y-0473	1	PLUG
	3	8E-5037	2	COLLAR
	4	8E-5032	1	ROLLER AS
	5	8E-5599	2	BEARING
	6	9W-7220	2	SEAL GP
	7	7F-8268	2	SEAL
	8	8E-5035	1	SHAFT
	9	3E-3217	1	PIN
	10	8E-5031	1	RING

H38093E

8E-5034 ROLLER GP-TRACK SINGLE FLANGE

Part of 102-8120 and 102-8119 Roller Ar listed on Pages 132.02 and 133

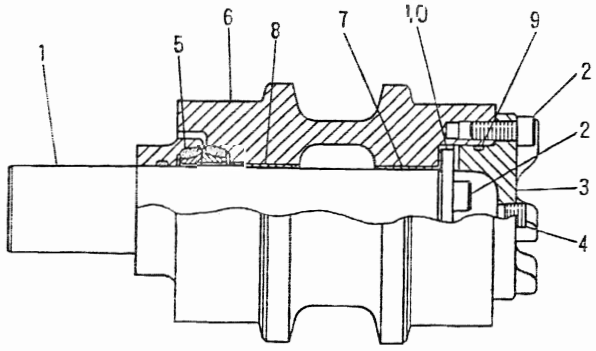

NOTE	No.	PART No.	QTY	PART NAME
	1	8E-5601	1	SHAFT AS
	2	8T-1159	5	BOLT (25mm LONG)
	3	8E-5605	1	COVER
	4	7H-3171	1	PLUG
	5	8E-5609	1	SEAL GP
	6	8E-5602	1	ROLLER AS
	7	8E-6793	1	BEARING
	8	8E-6792	1	BEARING
	9	6V-7661	1	SEAL
	10	8E-5606	1	RETAINER

H38092E

8E-5600 ROLLER GP-CARRIER

Part of 102-8120 and 102-8119 Roller Ar listed on Pages 132.02 and 133

CHASSIS AND UNDERCARRIAGE

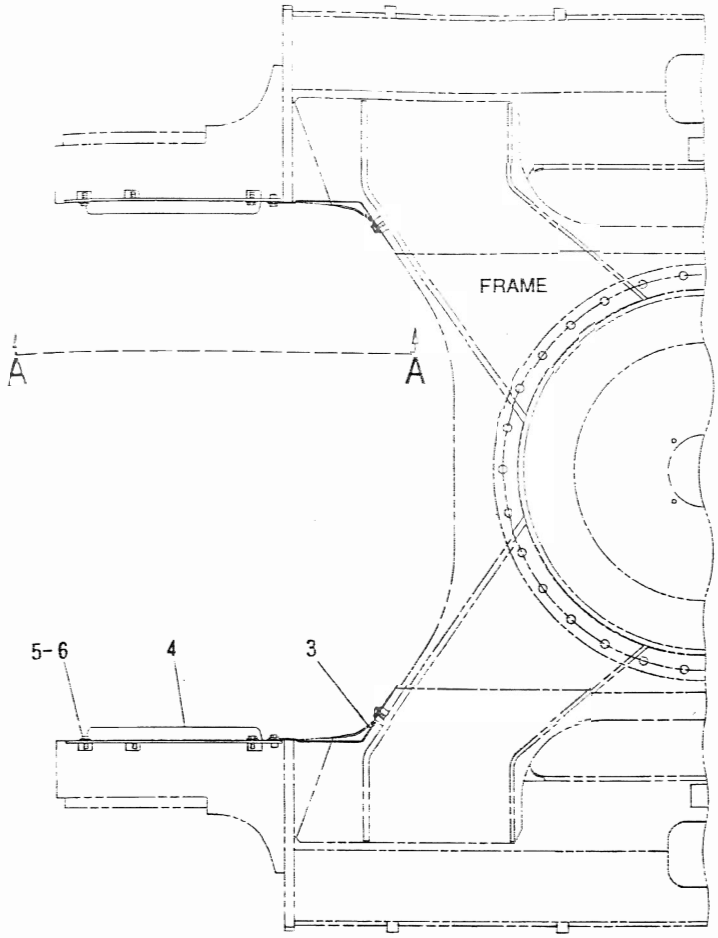

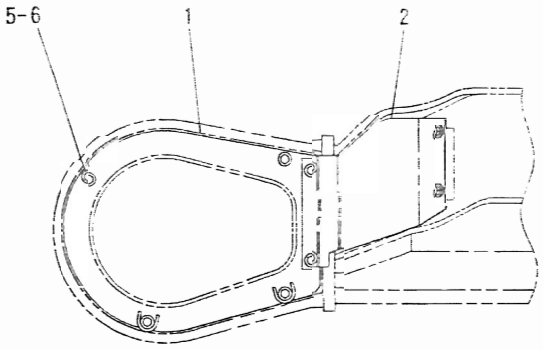

A – A

NOTE	No.	PART No.	QTY	PART NAME	NOTE	No.	PART No.	QTY	PART NAME
	1	4I-4699	1	COVER AS					
	2	107-9894	1	PLATE					
	3	107-9893	1	PLATE					
	4	4I-4700	1	COVER AS					
	5	099-4691	16	BOLT (25mm LONG)					
	6	5P-1076	16	WASHER					

H41305E

106-6747 GUARD GP-TRACK MOTOR

S/N 4YM1 – Up

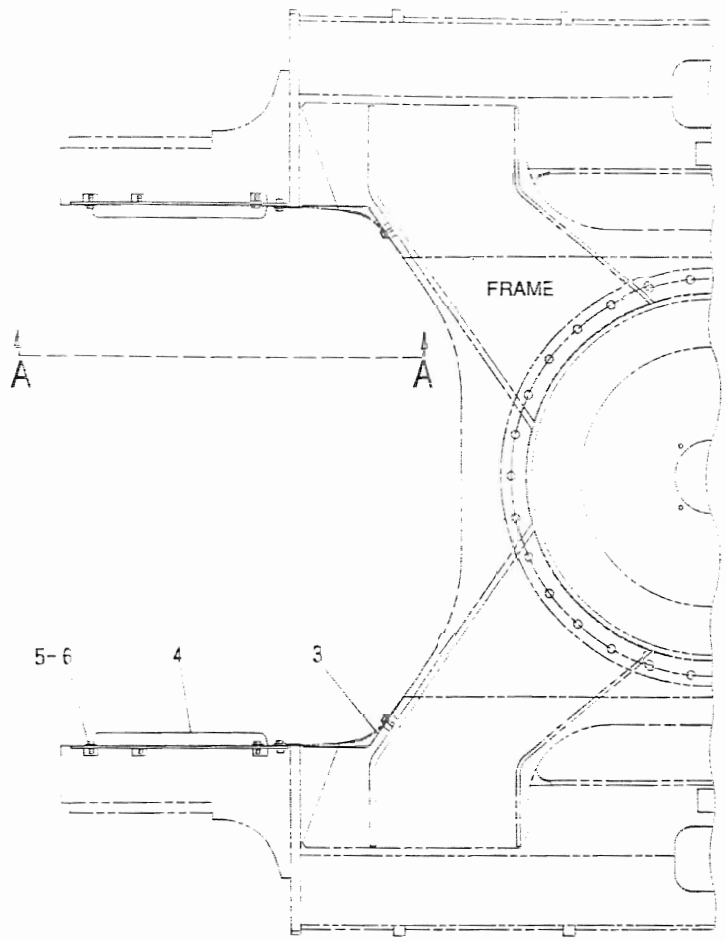

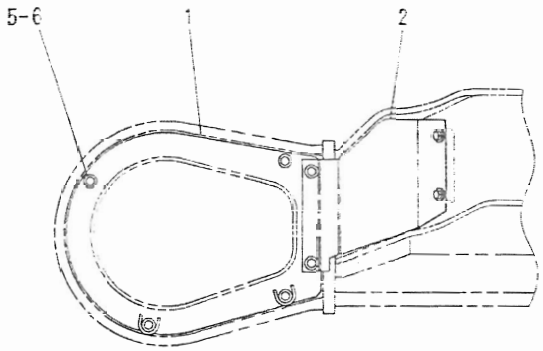

A – A

NOTE	No.	PART No.	QTY	PART NAME	NOTE	No.	PART No.	QTY	PART NAME
	1	4I-4699	1	COVER AS					
	2	111-0037	1	PLATE					
	3	111-0036	1	PLATE					
	4	4I-4700	1	COVER AS					
	5	099-4691	16	BOLT (25mm LONG)					
	6	5P-1076	16	WASHER					

H41575E

111-0035 GUARD GP-TRACK MOTOR

S/N 6YM1 – Up

Consists of :

			Page
1	102-8129	LINK AS-TRACK	137.01
176	9W-3619	BOLT	
44	9W-9349	SHOE	
176	9W-3361	NUT	

H41578E

102-8125 TRACK GP-500MM (20 IN.) TRIPLE GROUSER SHOE-2 REQUIRED
S/N 6YM1 – Up
An Attachment

Consists of :

			Page
1	102-8129	LINK AS-TRACK	137.01
176	9W-3619	BOLT	
44	9W-9350	SHOE	
176	9W-3361	NUT	

H41579E

102-8126 TRACK GP-600MM (24 IN.) TRIPLE GROUSER SHOE-2 REQUIRED

Consists of :

			Page
1	102-8124	LINK AS-TRACK	137
164	9W-3619	BOLT	
41	9W-9349	SHOE	
164	9W-3361	NUT	

H41301E

102-8121 TRACK GP-500MM (20 IN.) TRIPLE GROUSER SHOE-2 REQUIRED

S/N 4YM1 – Up

Consists of :

			Page
1	102-8124	LINK AS-TRACK	137
164	9W-3619	BOLT	
41	9W-9350	SHOE	
164	9W-3361	NUT	

H41426E

102-8122 TRACK GP-600MM (24 IN.) TRIPLE GROUSER SHOE-2 REQUIRED

S/N 4YM1 – Up
An Attachment

Consists of :

			Page
1	102-8124	LINK AS-TRACK	137
164	9W-3619	BOLT	
41	118-2238	SHOE	
164	9W-3361	NUT	

H41663E

102-8123 TRACK GP-700MM (28 IN.) TRIPLE GROUSER SHOE-2 REQUIRED

S/N 4YM1 – Up
An Attachment

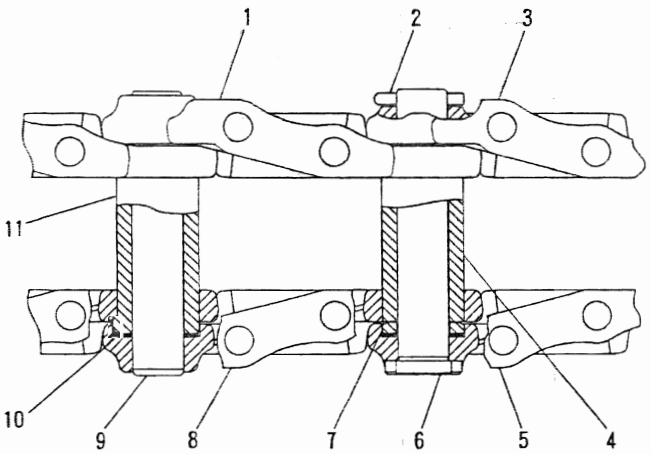

NOTE	No.	PART No.	QTY	PART NAME
	1	9W-3138	40	LINK (LH)
	2	095-0863	1	COTTER
	3	8E-8586	1	LINK (LH)
	4	117-1372	1	BUSHING
	5	8E-8585	1	LINK (RH)
	6	8E-8587	1	PIN
	7	5S-0754	2	SPACER
	8	9W-3137	40	LINK (RH)
	9	6Y-8186	40	PIN
	10	5S-0709	164	WASHER
	11	117-1371	40	BUSHING

H41664E

102-8124 LINK AS-TRACK

S/N 4YM1 – Up
Part of 102-8121, 102-8122 and 102-8123 Track listed on Pages 136 and 137

Consists of :

			Page
1	102-8129	LINK AS-TRACK	137.01
176	9W-3619	BOLT	
44	118-2238	SHOE	
176	9W-3361	NUT	

H41576E

102-8127 TRACK GP-700MM (28 IN.) TRIPLE GROUSER SHOE-2 REQUIRED

S/N 6YM1 – Up
An Attachment

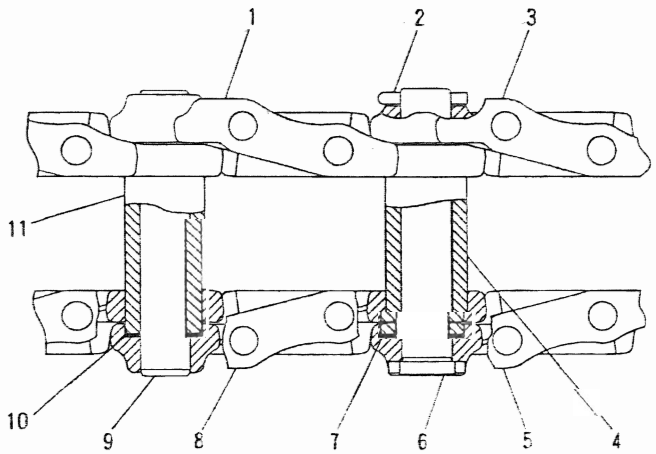

NOTE	No.	PART No.	QTY	PART NAME
	1	9W-3138	40	LINK (LH)
	2	095-0863	1	COTTER
	3	8E-8586	1	LINK (LH)
	4	6Y-0923	1	BUSHING
	5	8E-8585	1	LINK (RH)
	6	8E-8587	1	PIN
	7	5S-0754	2	SPACER
	8	9W-3137	40	LINK (RH)
	9	6Y-8186	40	PIN
	10	5S-0709	164	WASHER
	11	6Y-0922	40	BUSHING

H41577E

102-8129 LINK AS-TRACK

S/N 6YM1 – Up
Part of 102-8125, 102-8126 and 102-8127 Track listed on Pages 135.02 and 137.01

MEMORANDA

HYDRAULIC SYSTEM

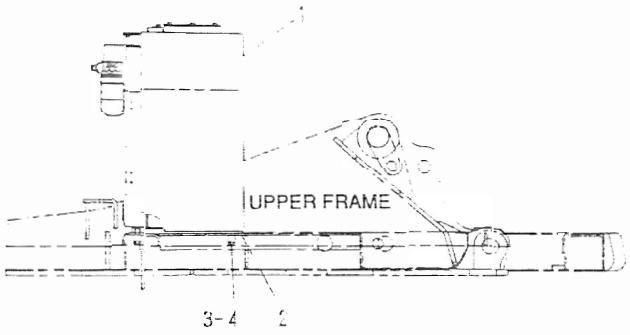

NOTE	No.	PART No.	QTY	PART NAME
Y	1	114-0681	1	TANK GP
B	2	087-8737	4	SHIM (2.0mm THICK)
B		087-8738	4	SHIM (1.0mm THICK)
B		087-8740	4	SHIM (0.4mm THICK)
	3	8T-4193	4	BOLT (50mm LONG)
	4	61-6123	4	SPACER

B-USE AS REQUIRED
Y-SEE SEPARATE ILLUSTRATION

H41332E

105-7494 TANK GP-MOUNTING & (HYDRAULIC)

114-0681 – Page 139

HYDRAULIC SYSTEM

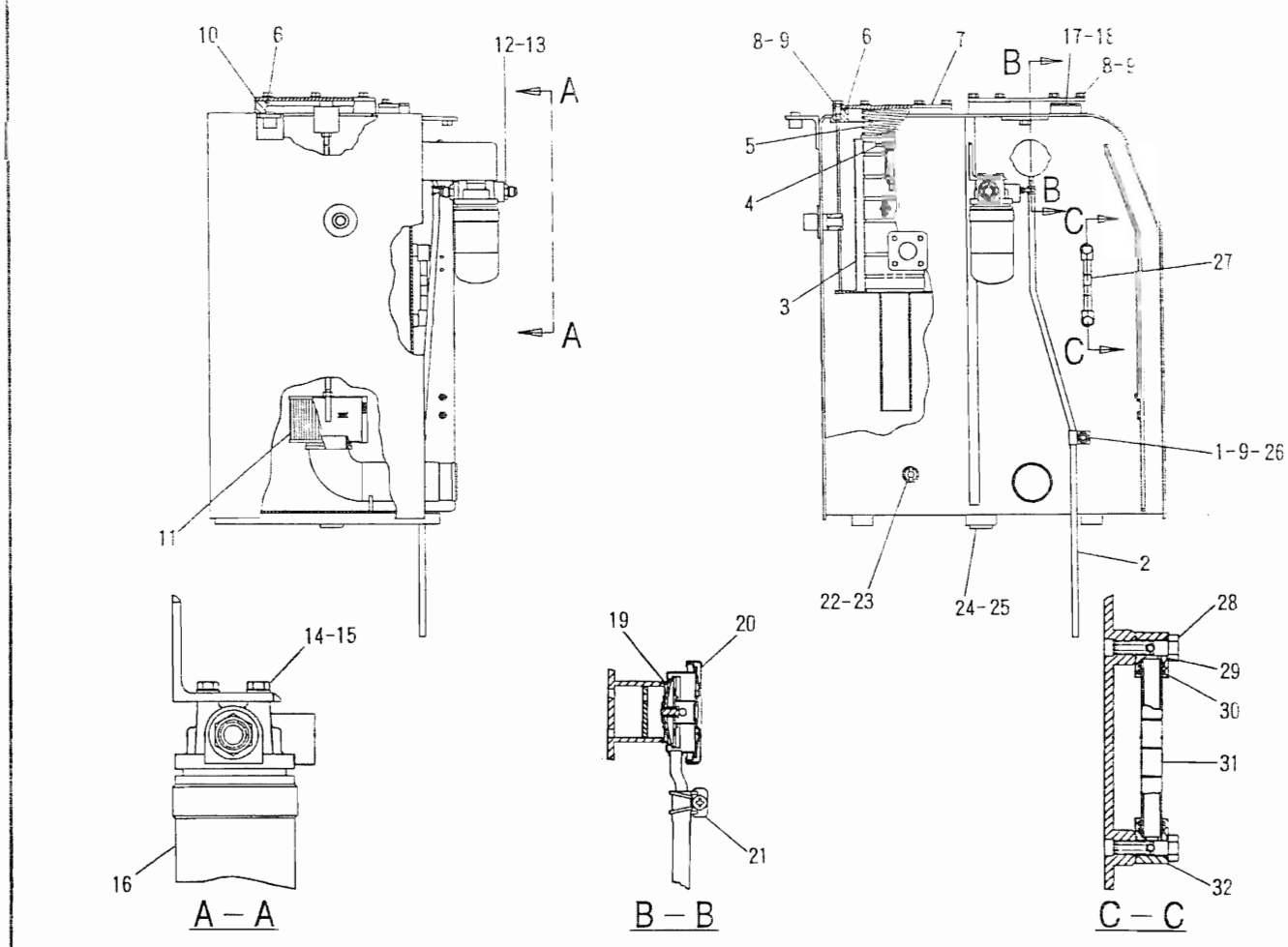

NOTE	No.	PART No.	QTY	PART NAME	NOTE	No.	PART No.	QTY	PART NAME
	1	5P-9299	1	CLIP		19	099-4273	1	GASKET
	2	7I-1316	1	HOSE		20	4I-3745	1	CAP
	3	094-3229	1	ELEMENT		21	7Y-5282	1	CLAMP
	4	094-1416	1	VALVE AS		22	4I-5394	1	SENDER
	5	094-3232	1	SPRING		23	3K-0360	1	SEAL
	6	095-1730	2	SEAL		24	9J-7031	1	PLUG
	7	093-1588	1	COVER		25	5M-2057	1	SEAL
	8	8T-4137	12	BOLT (20mm LONG)		26	8T-4133	1	NUT
	9	8T-4121	13	WASHER		27	094-3245	1	GAUGE AS
	10	7Y-4714	1	COVER AS		28	094-3247	2	BOLT
		093-1588	1	COVER		29	095-1514	4	SEAL
Y	11	107-6418	1	SCREEN GP		30	095-1517	4	SEAL
	12	030-8194	2	CONNECTOR		31	096-4754	1	PIPE
	13	2M-9780	2	SEAL		32	7Y-4754	2	BLOCK
	14	8T-4200	4	BOLT (16mm LONG)					
	15	8T-4224	4	WASHER					
	16	4I-6078	1	FILTER GP					
		5I-8670	1	FILTER AS					
	17	4I-0722	1	PLUG					
	18	095-1608	1	SEAL					

Y-SEE SEPARATE ILLUSTRATION

H41333E

114-0681 TANK GP-FILTER & -180L

Part of 105-7494 Tank listed on Page 138
107-6418 – Page 140

HYDRAULIC SYSTEM



NOTE	No.	PART No.	QTY	PART NAME
	1	095-6641	1	GUIDE
	2	095-6639	1	SPRING
	3	096-2915	1	ROD
	4	8T-4133	2	NUT
	5	095-5620	1	SCREEN AS
	6	095-1552	1	SEAL

H41648E

107-6418 SCREEN GP

Part of 114-0681 Tank listed on Page 139

HYDRAULIC SYSTEM

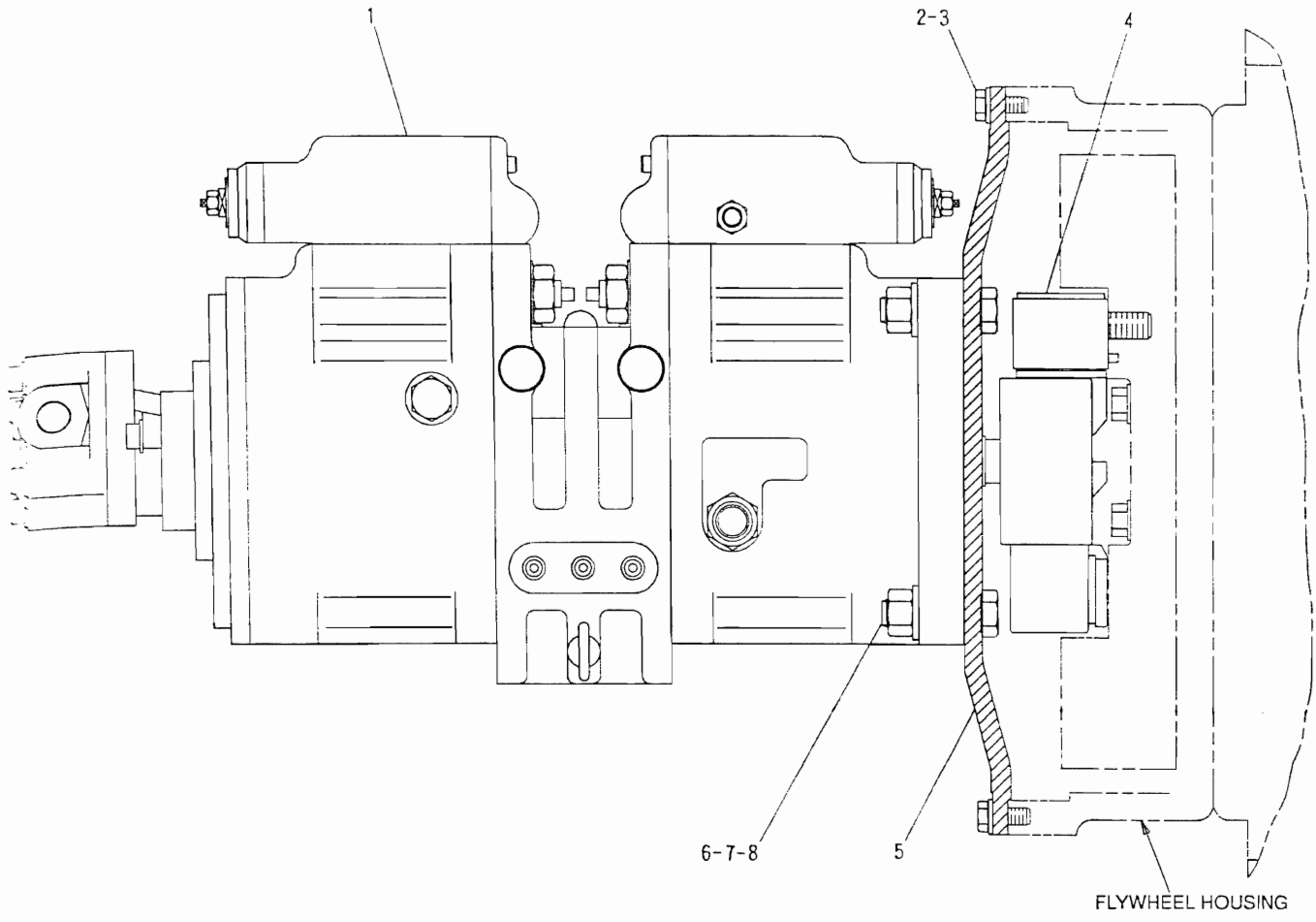

NOTE	No.	PART No.	QTY	PART NAME	NOTE	No.	PART No.	QTY	PART NAME
Y	1	105-7321	1	PUMP GP					
	2	8T-4136	12	BOLT (25mm LONG)					
	3	8T-4121	12	WASHER					
Y	4	102-3829	1	COUPLING GP					
	5	102-3858	1	COVER					
	6	8T-4140	4	BOLT (60mm LONG)					
	7	8T-4132	4	NUT					
	8	9X-8257	4	WASHER					

Y-SEE SEPARATE ILLUSTRATION

H41335E

102-3828 PUMP GP-MOUNTING &

102-3829 – Page 142, 105-7321 – Page 146

HYDRAULIC SYSTEM

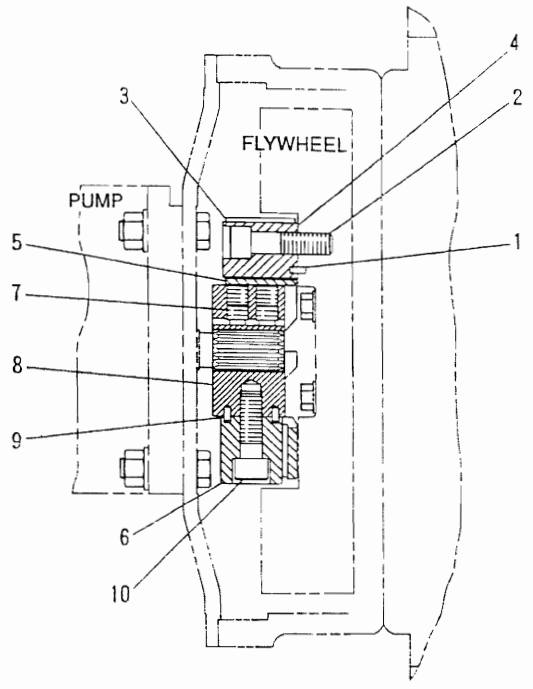

NOTE	No.	PART No.	QTY	PART NAME
	1	7Y-0468	4	PIN
	2	7Y-1905	4	BOLT (60mm LONG)
	3	102-3856	1	COUPLING AS
	4	7Y-1900	4	INSERT
	5	7Y-1901	1	ELEMENT
	6	7Y-1902	4	INSERT
	7	7Y-0466	2	SETSCREW
	8	102-3857	1	HUB
	9	7Y-0468	8	PIN
	10	7Y-1904	4	BOLT (50mm LONG)

H41337E

102-3829 COUPLING GP-PUMP

Part of 102-3828 Pump listed on Page 141

HYDRAULIC SYSTEM

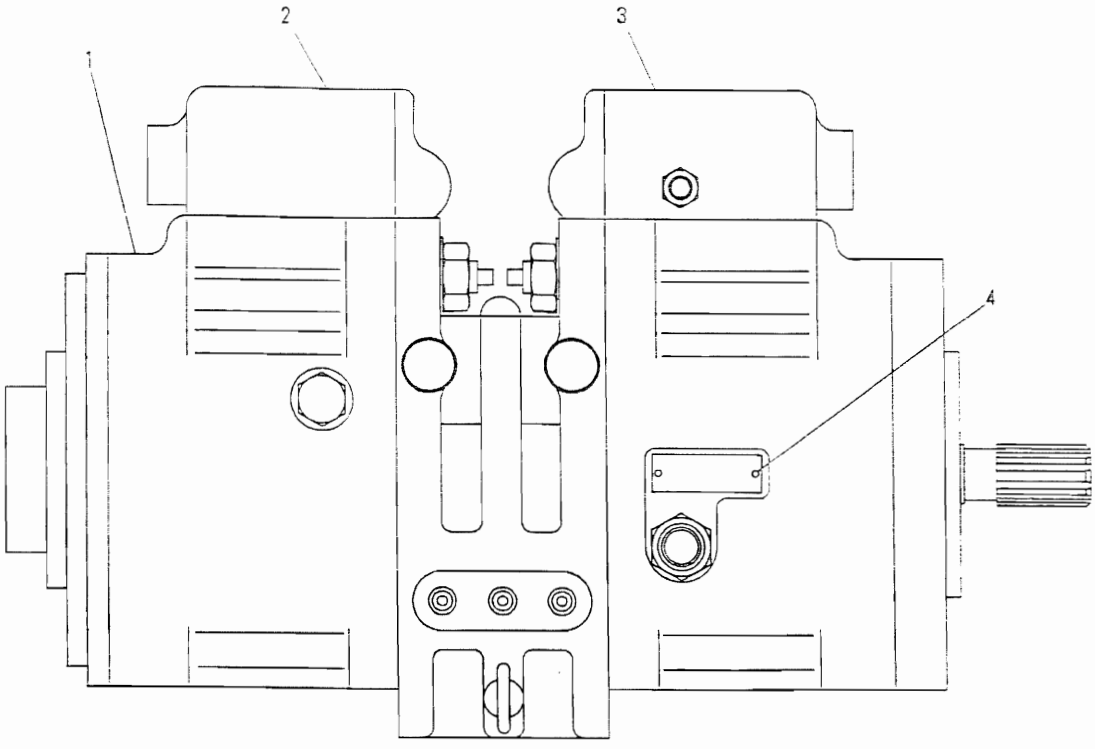

NOTE	No.	PART No.	QTY	PART NAME	NOTE	No.	PART No.	QTY	PART NAME
Y	1	111-9978	1	PUMP GP					
Y	2	107-6638	1	VALVE GP					
Y	3	107-6637	1	VALVE GP					
	4	5B-9304	2	SCREW					

Y-SEE SEPARATE ILLUSTRATION

H41345

105-7322 PUMP GP-DOUBLE-PISTON (SLIPPER)

Part of 102-7321 Pump listed on Page 146

111-9978 – Page 144, 107-6637 – Page 148, 107-6638 – Page 150

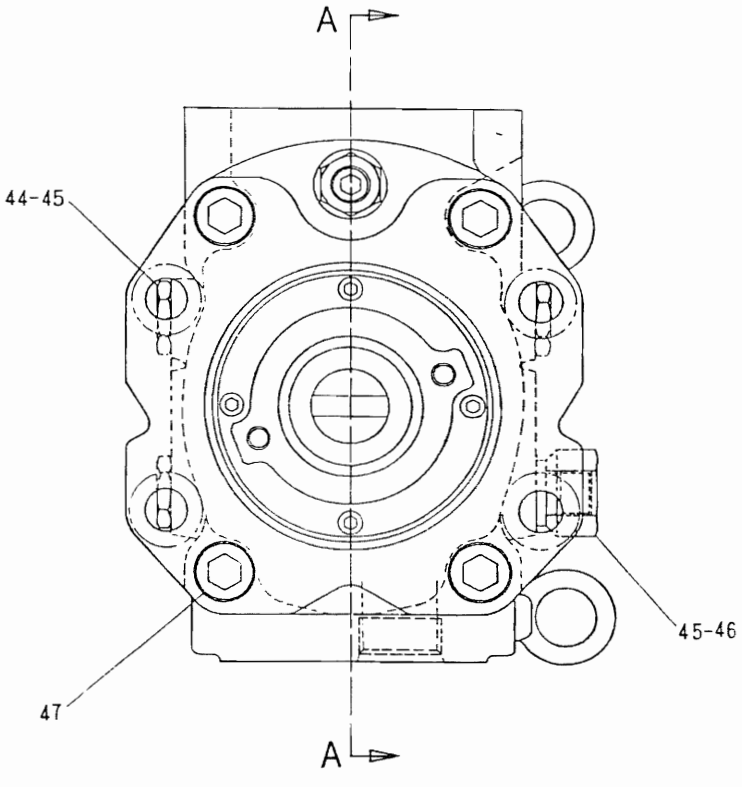

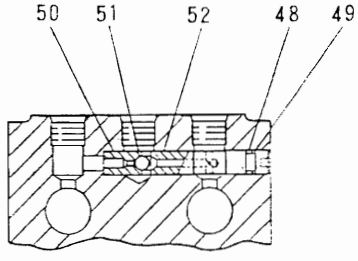

B – B

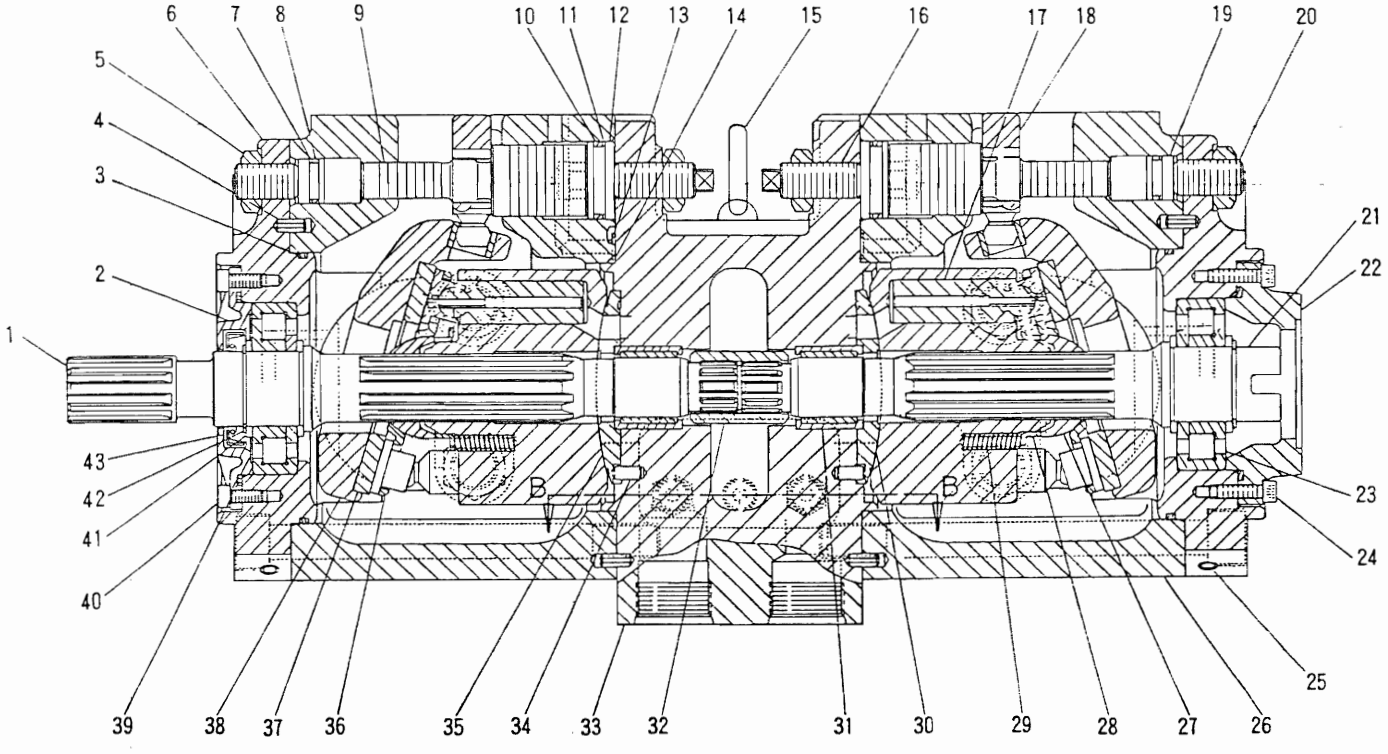

A – A

H41343E

111-9978 PUMP GP-HYDRAULIC

Part of 105-7322 Pump listed on Page 143

HYDRAULIC SYSTEM

	PART No.	QTY	PART NAME	NOTE	No.	PART No.	QTY	PART NAME
	51-8749	1	SHAFT					
	51-8761	1	COVER					
	095-1716	2	SEAL					
	095-0882	4	PIN					
	095-1209	4	NUT					
	51-8760	2	SUPPORT					
	095-1783	2	RING					
	095-1584	2	SEAL					
	51-8766	2	PISTON					
	095-1698	2	SEAL					
	51-8770	2	RING					
	51-8767	2	STOPPER					
	095-1575	18	SEAL					
	095-1717	2	SEAL					
	51-8772	2	EYE					
	51-8774	2	SETSCREW					
	51-8778	2	PISTON AS					
	71-1282	9	PISTON AS					
	51-8782	2	PIN AS					
	51-8768	2	STOPPER					
	51-8773	2	SETSCREW					
	51-8750	1	SHAFT					
	51-8762	1	COVER					
	51-8818	2	BEARING					
	8T-0269	4	BOLT (20mm LONG)					
	8T-6759	15	PLUG					
	51-8763	2	BODY					
	51-8756	2	RETAINER					
	51-8758	2	SPACER					
	51-8757	18	SPRING					
	51-8780	1	BARREL AS					
	51-8816	2	BEARING					
	51-8751	1	COUPLING					
	51-8764	1	BLOCK					
	096-0014	2	PIN					
	51-8779	1	BARREL AS					
	51-8755	2	PLATE					
	51-8759	2	PLATE					
	51-8781	2	PLATE AS					
	095-1711	2	SEAL					
	6V-5683	4	BOLT (16mm LONG)					
	51-8754	4	SPACER					
	6V-5200	2	RING					
	51-8769	1	SEAL					
	096-3150	3	PLUG					
	095-1585	4	SEAL					
	51-8775	1	ADAPTER					
	102-2562	8	BOLT (180mm LONG)					
	095-1574	1	SEAL					
	95-1777	1	RING					
	8771	1	SEAT					
	1472	1	BALL					
	8765	1	STOPPER					

H41344E

111-9978 PUMP GP-HYDRAULIC

Part of 105-7322 Pump listed on Page 143

HYDRAULIC SYSTEM

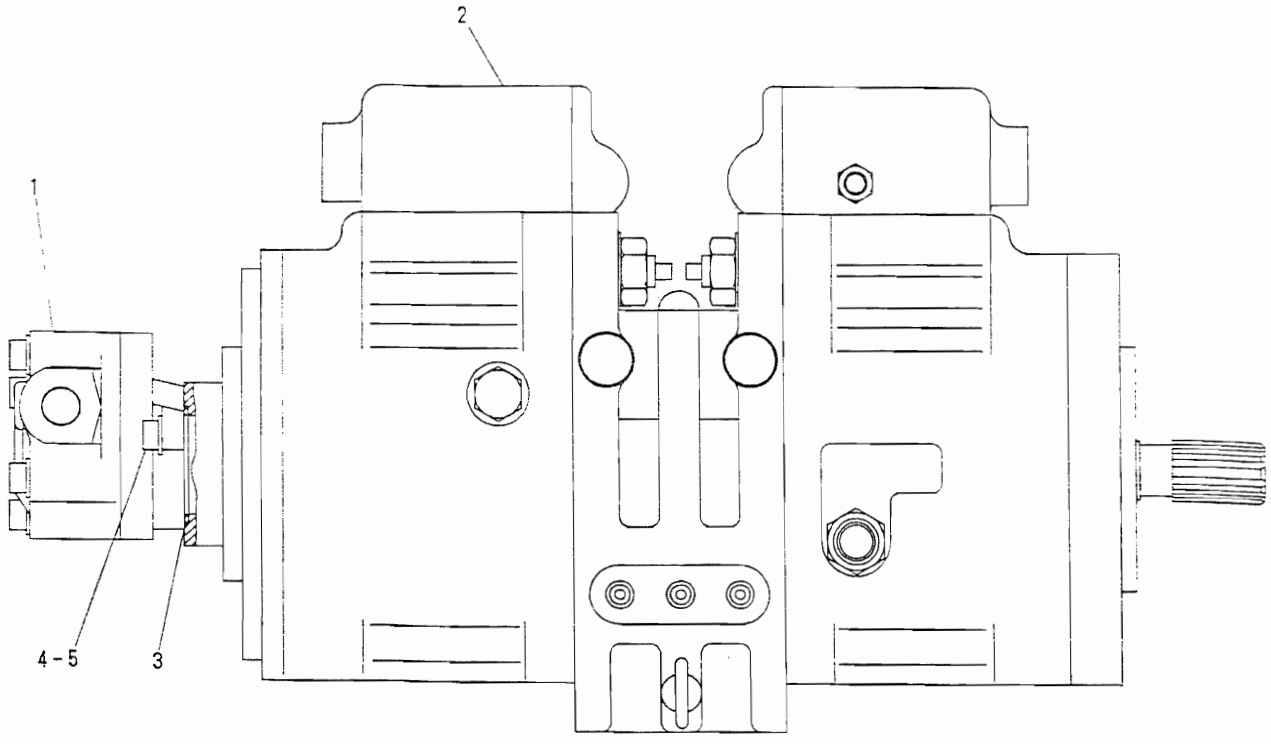

NOTE	No.	PART No.	QTY	PART NAME	NOTE	No.	PART No.	QTY	PART NAME
	1	41-1023	1	PUMP GP					
Y	2	105-7322	1	PUMP GP					
	3	095-1663	1	SEAL					
	4	8T-1159	4	BOLT (25mm LONG)					
	5	8T-4121	4	WASHER					

Y-SEE SEPARATE ILLUSTRATION

H41388E

105-7321 PUMP GP-PISTON (SLIPPER) & GEAR

Part of 102-3828 Pump listed on Page 141
105-7322 – Page 143

MEMORANDA

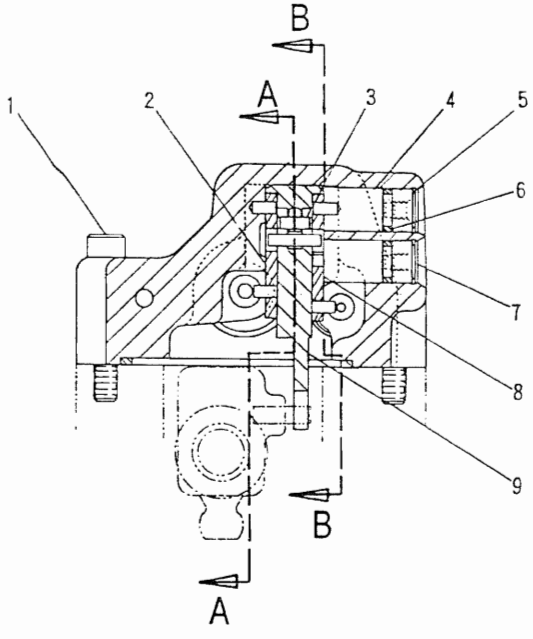

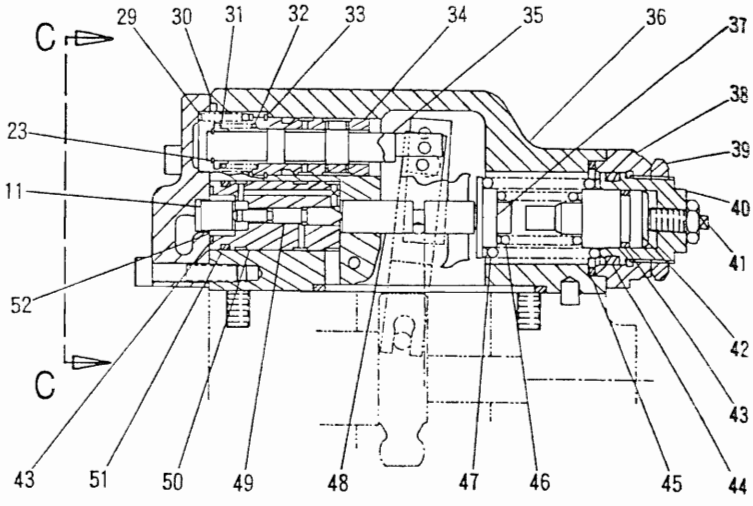

A – A

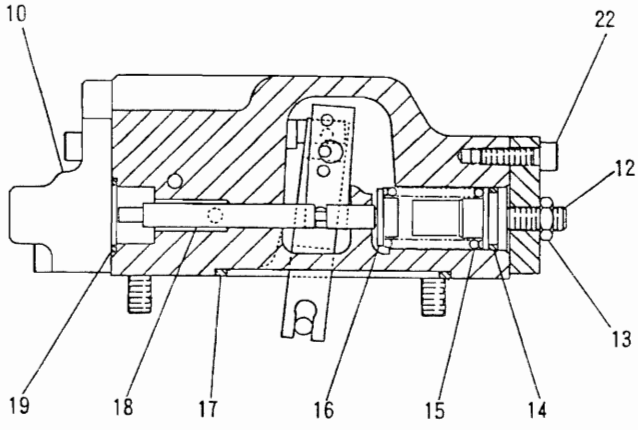

B – B

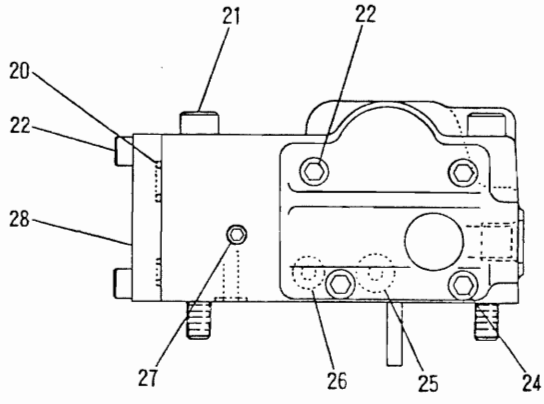

C – C

H41339E

107-6637 VALVE GP-PRESSURE & FLOW COMPENSATOR

Part of 105-7322 Pump listed on Page 143

HYDRAULIC SYSTEM

No.	PART No.	QTY	PART NAME	NOTE	No.	PART No.	QTY	PART NAME
1	3E-8025	2	BOLT (50mm LONG)					
2	5I-8787	1	LEVER AS					
3	5I-8815	1	PIN					
4	5I-8789	1	PLUG AS					
5	5I-8814	2	RING					
6	095-1579	2	SEAL					
7	5I-8790	1	PLUG					
8	5I-8788	1	LEVER AS					
9	5I-8786	1	LEVER AS					
10	5I-8802	1	COVER					
11	5I-8819	1	PIN					
12	5I-8820	1	SETSCREW					
13	5C-7261	2	NUT					
14	095-1585	1	SEAL					
15	5I-8806	1	SPRING					
16	5I-8804	1	SEAT					
17	095-1709	1	SEAL					
18	5I-8803	1	PISTON					
19	095-1590	1	SEAL					
20	095-1581	1	SEAL					
21	6V-8213	2	BOLT (70mm LONG)					
22	8T-0269	10	BOLT (20mm LONG)					
23	096-2323	1	RING					
24	8T-8442	2	BOLT (30mm LONG)					
25	095-1578	1	SEAL					
26	095-1575	9	SEAL					
27	8T-6759	5	PLUG					
28	5I-8812	1	COVER					
29	5I-8811	1	SPRING					
30	095-1696	1	SEAL					
31	5I-8809	1	SEAT					
32	5I-8810	1	SPRING					
33	5I-8813	1	RING					
34	5I-8807	1	SLEEVE					
35	5I-8808	1	SPOOL					
36	108-9128	1	BODY AS					
37	5I-8794	1	SEAT					
38	5I-8799	1	COVER					
39	5I-8800	1	NUT					
40	5I-8798	1	SCREW					
41	5I-8821	1	SCREW					
42	5I-8797	1	RETAINER					
43	095-1584	2	SEAL					
44	095-1594	1	SEAL					
45	095-1700	1	SEAL					
46	5I-8796	1	SPRING					
47	5I-8795	1	SPRING					
48	5I-8793	1	ROD					
49	5I-8791	1	PISTON					
50	5I-8792	1	CASE					
51	095-1586	1	SEAL					
52	5I-8801	1	SLEEVE					

H41667E

107-6637 VALVE GP-PRESSURE & FLOW COMPENSATOR

Part of 105-7322 Pump listed on Page 143

HYDRAULIC SYSTEM

Consists of :

Page

1 4I-1536 ACCUMULATOR GP 152

-OR-

1 7Y-4444 ACCUMULATOR GP

-OR-

1 5I-8416 ACCUMULATOR GP 153

H33868E

087-4456 ACCUMULATOR GP

Part of 104-9164 Lines listed on Page 183

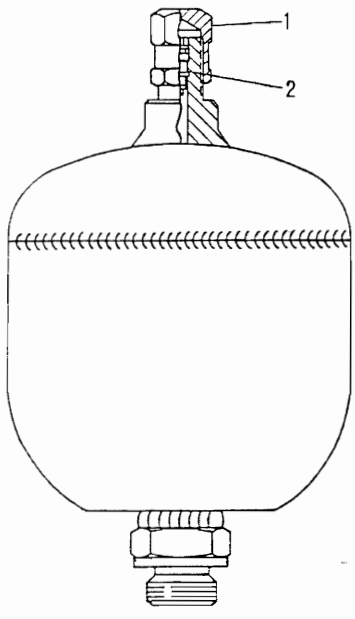

NOTE	No.	PART No.	QTY	PART NAME
	1	4I-5862	1	CAP
	2	4I-1539	1	CORE
	3	5P-3779	1	TAG

H30021E

4I-1536 ACCUMULATOR GP

Part of 087-4456 Accumulator listed on Page 152

HYDRAULIC SYSTEM

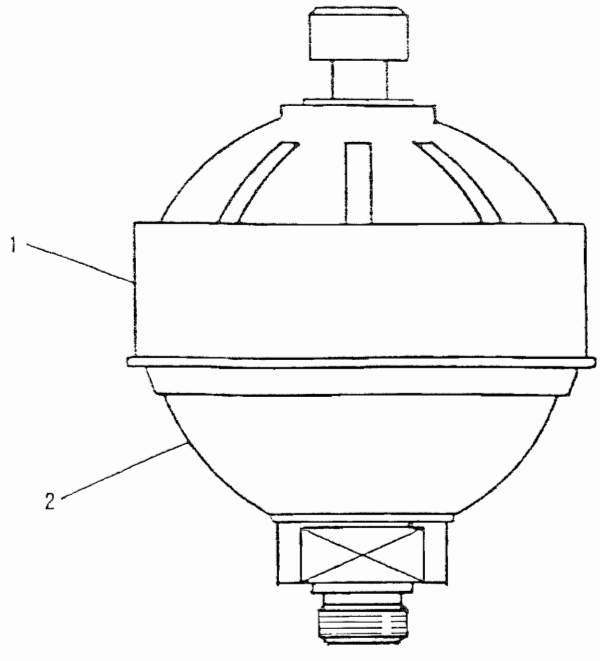

NOTE	No.	PART No.	QTY	PART NAME
	1	41-8267	1	CAP
Y	2	087-4454	1	ACCUMULATOR GP

Y-SEE SEPARATE ILLUSTRATION

H33322E

5I-8416 ACCUMULATOR GP

Part of 087-4456 Accumulator listed on Page 152
087-4454 – Page 153

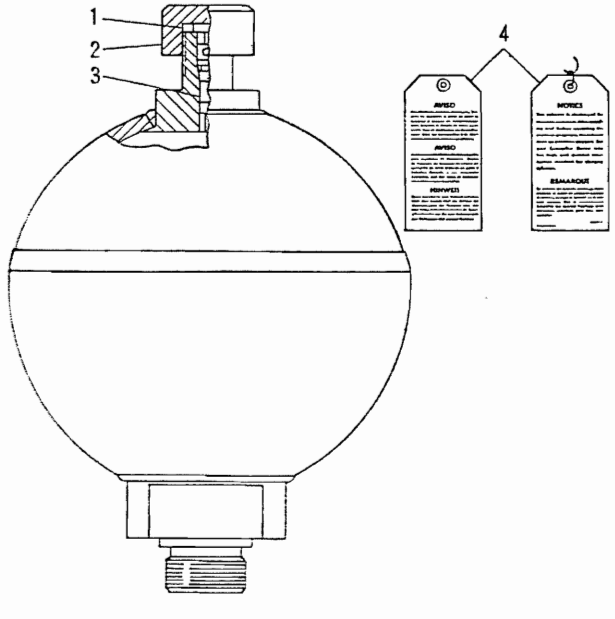

NOTE	No.	PART No.	QTY	PART NAME
	1	087-4577	1	SEAL
	2	087-4576	1	CAP
	3	087-4575	1	CORE
	4	5P-3779	1	TAG

H30297E

087-4454 ACCUMULATOR GP

Part of 5I-8416 Accumulator listed on Page 153

HYDRAULIC SYSTEM

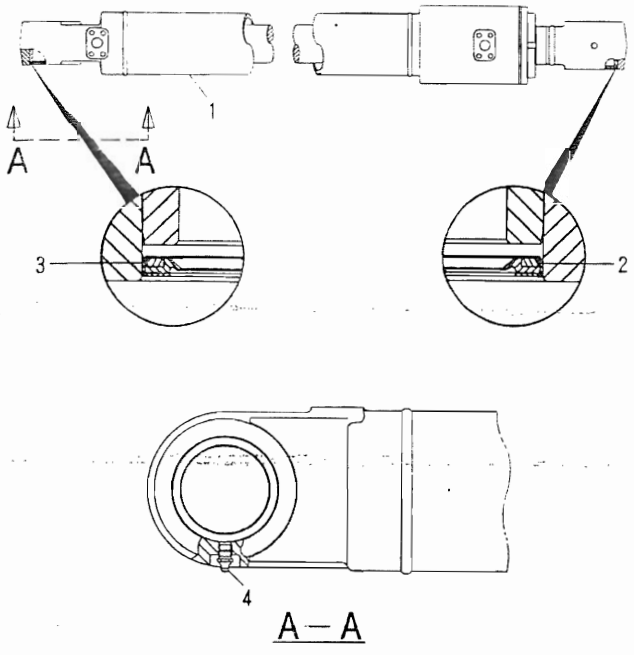

NOTE	No.	PART No.	QTY	PART NAME
Y	1	105-7336	1	CYLINDER GP
	2	096-0854	2	SEAL
	3	093-1434	2	SEAL
	4	3B-8489	1	FITTING

Y-SEE SEPARATE ILLUSTRATION

H41348E

105-7335 CYLINDER GP-SEAL &

Part of 102-5319 R-Boom Ar listed on Page 303
105-7336 – Page 157
An Attachment

HYDRAULIC SYSTEM

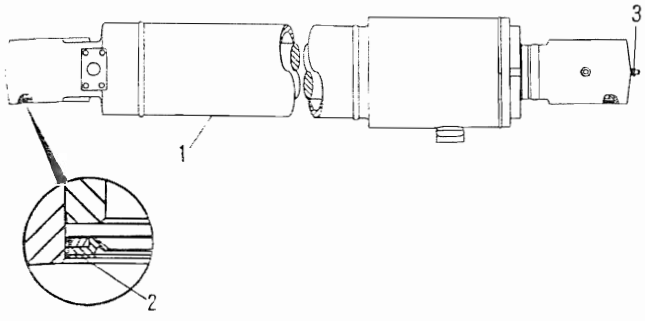

NOTE	No.	PART No.	QTY	PART NAME
Y	1	105-7362	1	CYLINDER GP
	2	093-1434	4	SEAL
	3	3B-8489	1	FITTING

Y-SEE SEPARATE ILLUSTRATION

H41350E

105-7361 CYLINDER GP-SEAL &

Part of 102-5319 R-Boom Ar listed on Page 303

105-7362 – Page 158

An Attachment

HYDRAULIC SYSTEM

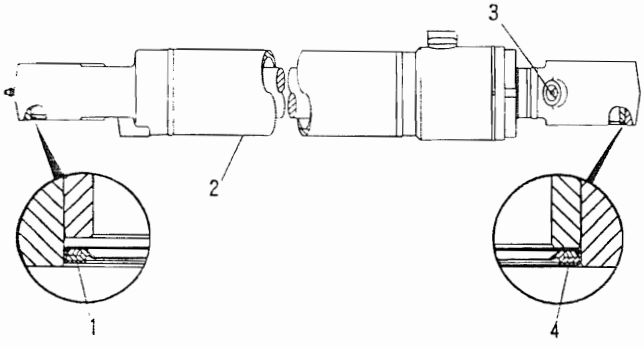

NOTE	No.	PART No.	QTY	PART NAME
	1	093-1434	2	SEAL
Y	2	105-7381	1	CYLINDER GP
	3	3B-8489	2	FITTING
	4	096-0854	2	SEAL

Y-SEE SEPARATE ILLUSTRATION

H41365E

105-7380 CYLINDER GP-SEAL &

Part of 102-5346 Linkage Ar listed on Page 306
105-7381 – Page 159
An Attachment

HYDRAULIC SYSTEM

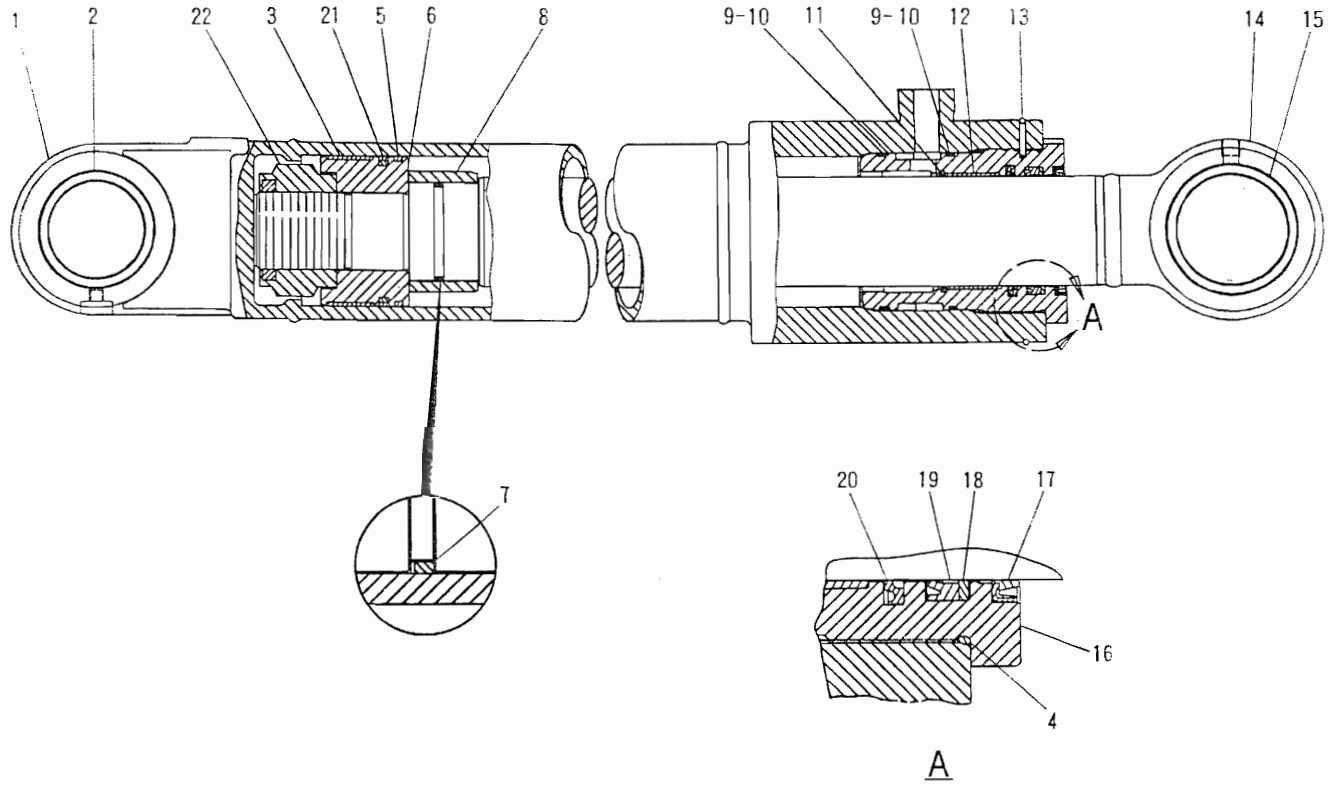

NOTE	No.	PART No.	QTY	PART NAME	NOTE	No.	PART No.	QTY	PART NAME
	1	105-7337	1	CYLINDER AS		21	9X-7301	1	SEAL AS
	2	116-3588	1	BEARING		22	41-5913	1	LOCKNUT
	3	105-7354	1	RING					THE FOLLOWING REPAIR
	4	095-1675	1	SEAL					KIT IS AVAILABLE:
	5	105-2629	1	RING			105-7359	1	SEAL KIT
	6	105-7355	1	PISTON					
	7	103-8341	1	RING					
	8	103-8340	1	STOP					
	9	095-1716	2	SEAL					
	10	105-7360	3	RING					
	11	096-8139	1	RING					
	12	093-1814	1	BEARING					
	13	105-7357	1	RING					
	14	105-7343	1	ROD AS					
	15	41-0700	1	BEARING					
	16	105-7356	1	HEAD					
	17	116-3387	1	SEAL					
	18	096-1054	1	RING					
	19	093-1479	1	SEAL					
	20	093-1484	1	SEAL					

H41665E

105-7336 CYLINDER GP-110MM (4.33 IN.) BORE × 1193MM (47.0 IN.) STROKE-Y

Part of 105-7335 Cylinder listed on Page 154

An Attachment

HYDRAULIC SYSTEM

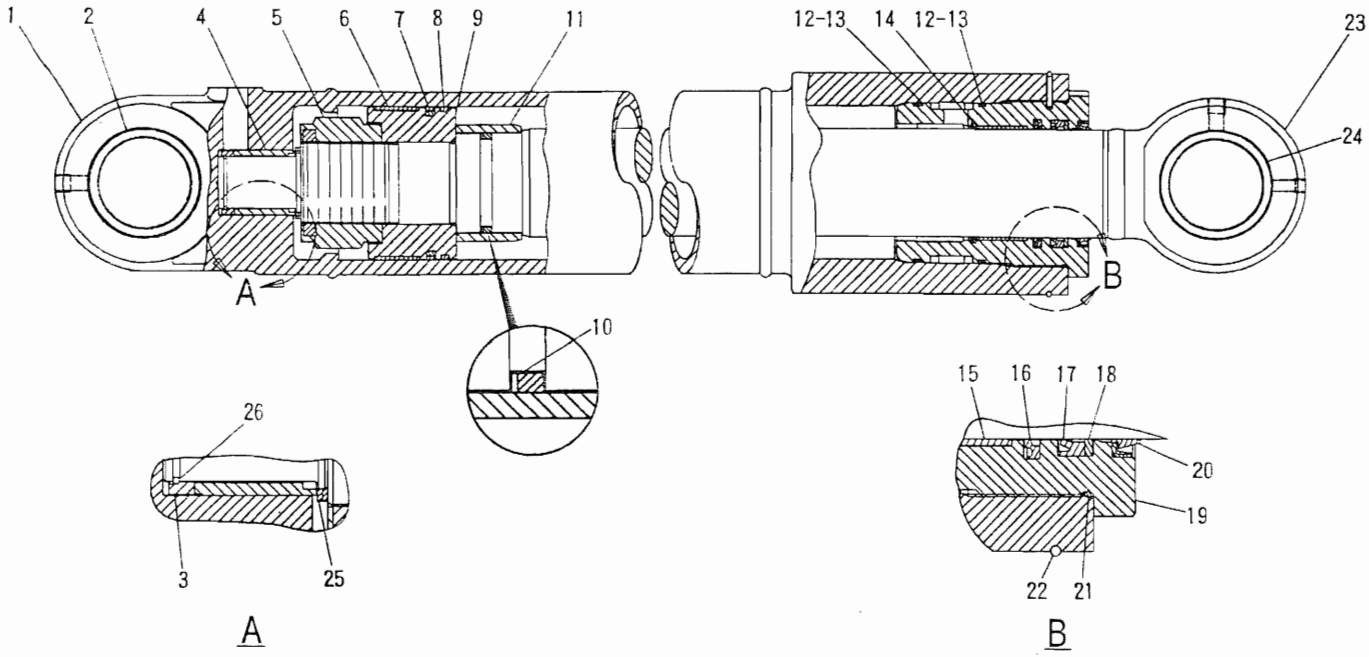

NOTE	No.	PART No.	QTY	PART NAME	NOTE	No.	PART No.	QTY	PART NAME
	1	114-0473	1	CYLINDER AS		21	8T-4894	1	SEAL
	2	105-7366	1	BEARING		22	105-7377	1	RING
	3	103-8442	1	RING		23	114-0475	1	ROD AS
	4	103-8443	1	STOP		24	105-7366	1	BEARING
	5	087-5504	1	LOCKNUT		25	8T-4241	2	RING
	6	087-5505	1	RING		26	103-8441	1	RING
	7	9X-3592	1	SEAL AS					THE FOLLOWING REPAIR
	8	105-7342	1	RING					KIT IS AVAILABLE:
	9	71-7184	1	PISTON			105-7379	1	SEAL KIT
	10	61-6786	1	RING					
	11	105-7374	1	STOP					
	12	095-1718	2	SEAL					
	13	105-7375	3	RING					
	14	7Y-5119	1	RING					
	15	093-1824	1	BEARING					
	16	7Y-5118	1	SEAL					
	17	7Y-5117	1	SEAL					
	18	7Y-5116	1	RING					
	19	105-7376	1	HEAD					
	20	114-0644	1	SEAL					

H41351E

105-7362 CYLINDER GP-120MM (4.72 IN.) BORE × 1331MM (52.4 IN.) STROKE-Y

Part of 105-7361 Cylinder listed on Page 155

An Attachment

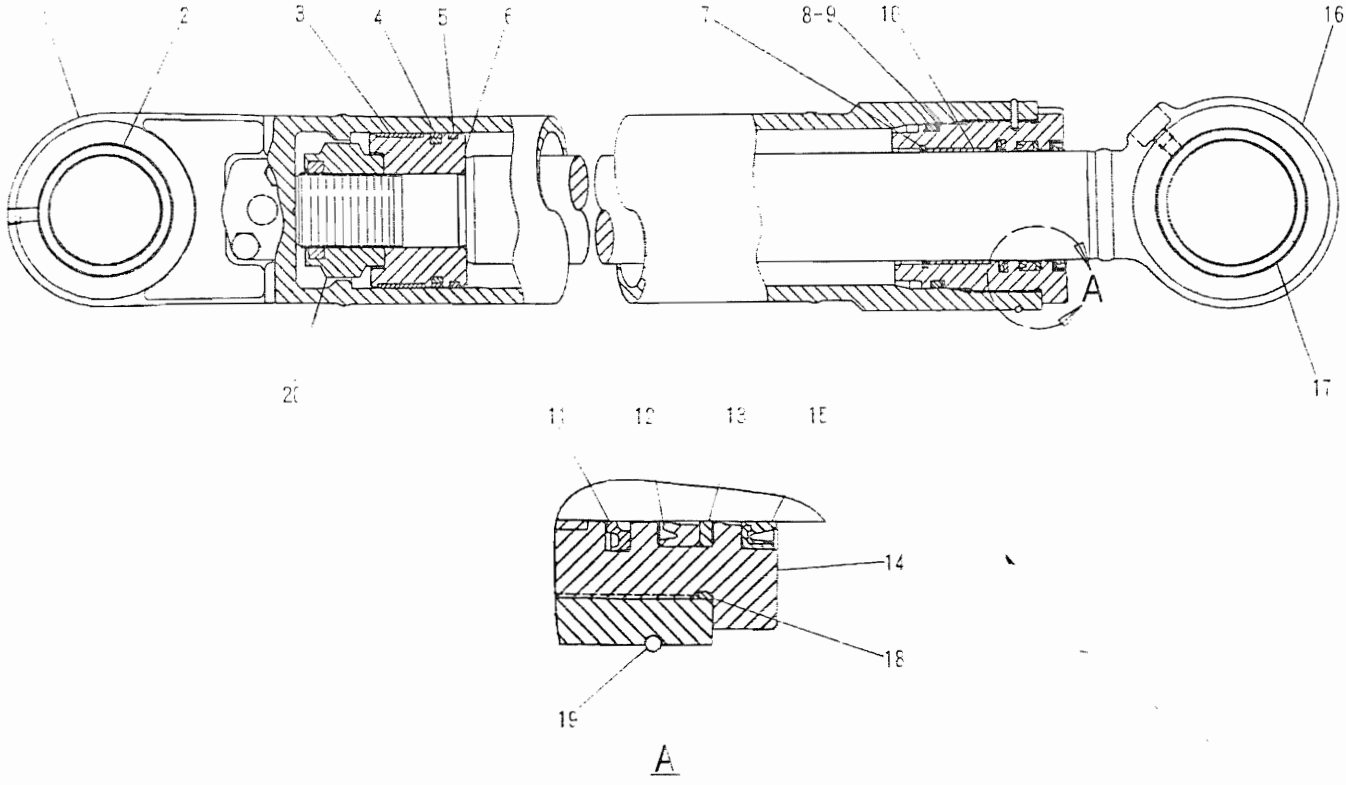

NOTE	No.	PART No.	QTY	PART NAME	NOTE	No.	PART No.	QTY	PART NAME
	1	105-7382	1	CYLINDER AS					THE FOLLOWING REPAIR
	2	105-7385	1	BEARING					KIT IS AVAILABLE:
	3	093-1605	1	RING			105-7397	1	SEAL KIT
	4	9X-7298	1	SEAL AS					
	5	105-7388	1	RING					
	6	7I-7185	1	PISTON					
	7	099-5400	1	RING					
	8	095-1626	1	SEAL					
	9	105-7393	1	RING					
	10	093-1812	1	BEARING					
	11	093-1483	1	SEAL					
	12	093-1477	1	SEAL					
	13	093-1519	1	RING					
	14	105-7394	1	HEAD					
	15	116-3389	1	SEAL					
	16	105-7389	1	ROD AS					
	17	4I-0453	1	BEARING					
	18	095-1673	1	SEAL					
	19	105-7395	1	RING					
	20	7I-1018	1	LOCKNUT					

H41366E

105-7381 CYLINDER GP-100MM (3.94 IN.) BORE × 1048MM (41.3 IN.) STROKE-Y

Part of 105-7380 Cylinder listed on Page 156

An Attachment

HYDRAULIC SYSTEM

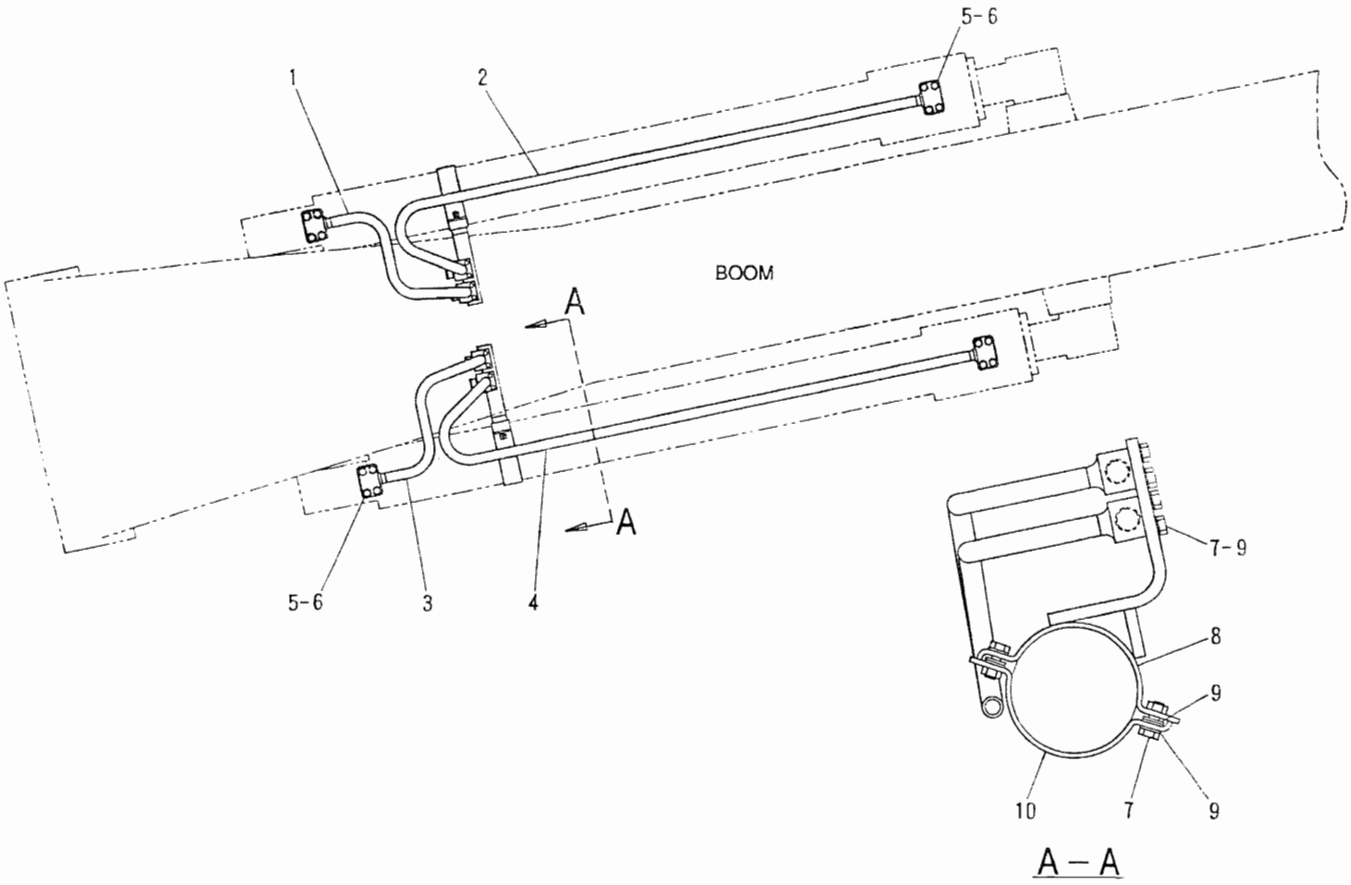

NOTE	No.	PART No.	QTY	PART NAME	NOTE	No.	PART No.	QTY	PART NAME
	1	107-6421	1	TUBE AS					
	2	107-6422	1	TUBE AS					
	3	107-6423	1	TUBE AS					
	4	107-6424	1	TUBE AS					
	5	8T-4182	16	BOLT (45mm LONG)					
	6	4J-5267	4	SEAL					
	7	8T-4195	12	BOLT (30mm LONG)					
	8	107-1403	2	SUPPORT AS					
	9	8T-4121	20	WASHER					
	10	104-8845	2	SUPPORT AS					

H41346E

104-9167 LINES GP-BOOM CYLINDER

Part of 102-5319 R-Boom Ar listed on Page 303

An Attachment

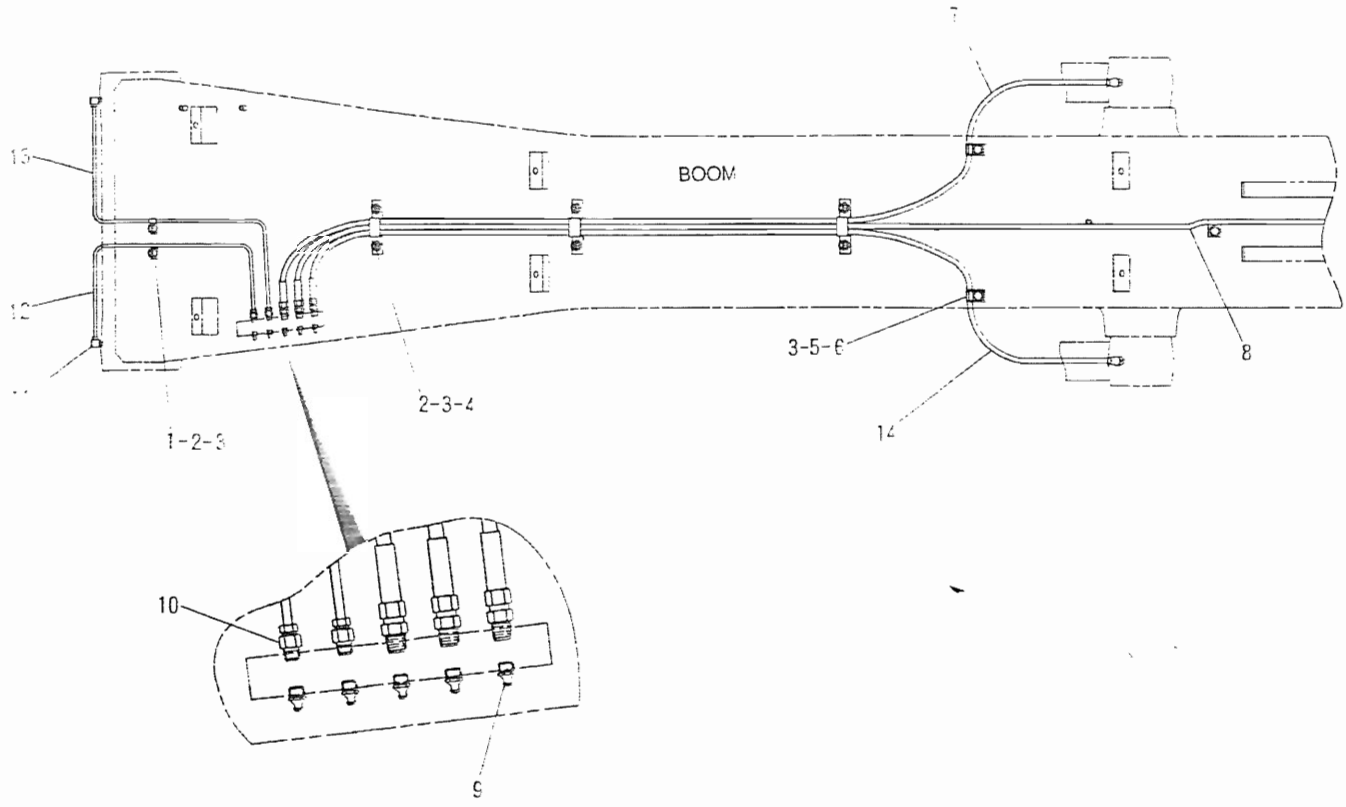

NOTE	No.	PART No.	QTY	PART NAME	NOTE	No.	PART No.	QTY	PART NAME
	1	8M-2772	2	CLIP					
	2	8T-4133	8	NUT					
	3	8T-4121	11	WASHER					
	4	087-5840	3	PLATE					
	5	033-8248	3	CLIP					
	6	8T-4191	3	BOLT (16mm LONG)					
	7	105-6458	1	HOSE					
	8	113-2128	1	HOSE					
	9	3B-8489	5	FITTING					
	10	6L-3616	2	CONNECTOR					
	11	5K-9243	2	ELBOW					
	12	107-9742	1	TUBE AS					
	13	107-9743	1	TUBE AS					
	14	41-6610	1	HOSE AS					

H41355E

106-6750 LINES GP-GREASE

Part of 102-5319 R-Boom Ar listed on Page 303
An Attachment

HYDRAULIC SYSTEM

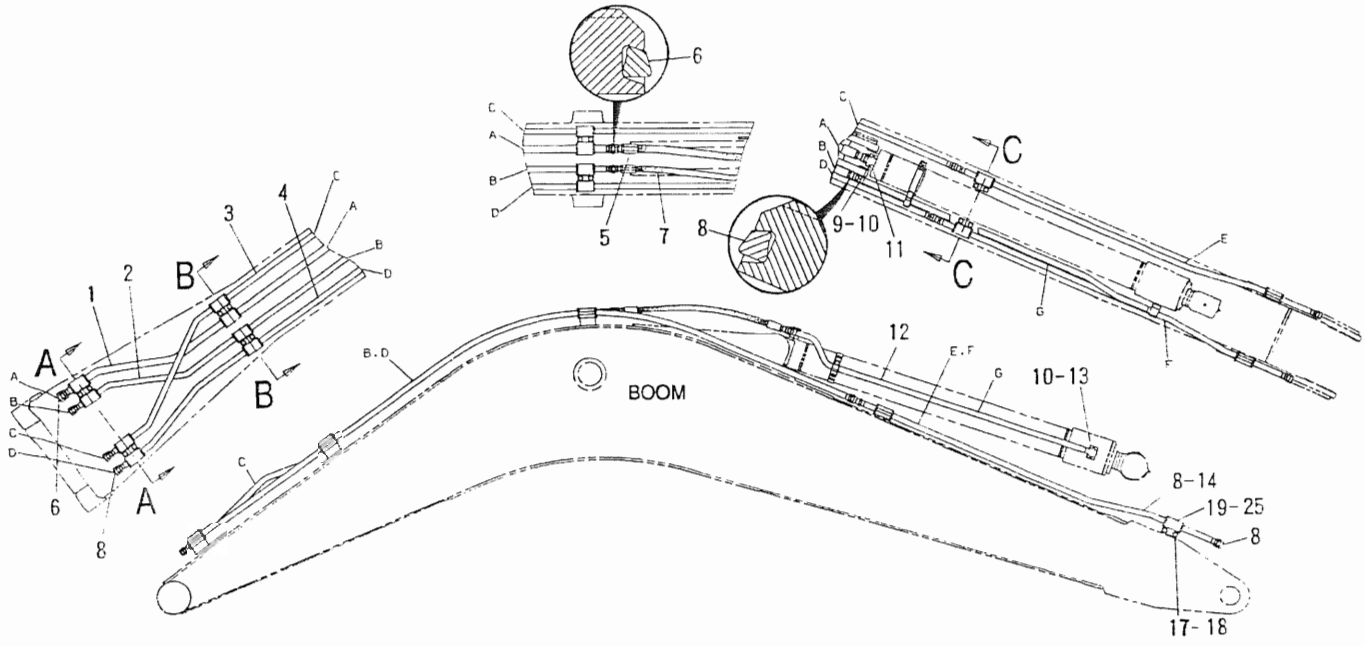

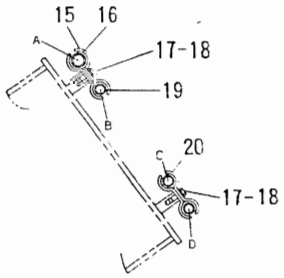

A – A

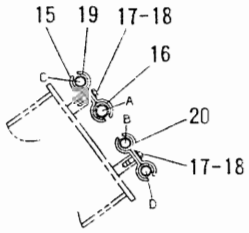

B – B

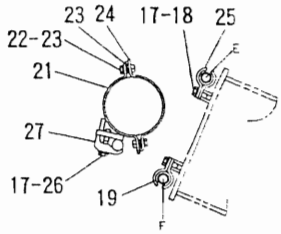

C – C

NOTE	No.	PART No.	QTY	PART NAME	NOTE	No.	PART No.	QTY	PART NAME
	1	115-8651	1	TUBE AS		21	107-1404	1	SUPPORT AS
	2	115-8652	1	TUBE AS		22	8T-4195	2	BOLT (30mm LONG)
	3	115-8698	1	TUBE AS		23	8T-4121	6	WASHER
	4	115-8654	1	TUBE AS		24	107-1405	1	SUPPORT AS
	5	4I-3823	1	HOSE AS		25	115-8980	8	CLIP
	6	4I-8891	3	SEAL		26	8T-4910	1	BOLT (60mm LONG)
	7	4I-3820	1	HOSE AS		27	093-1292	1	CLAMP
	8	4I-8889	9	SEAL					
	9	107-1400	1	ELBOW					
	10	4J-5267	2	SEAL					
	11	8T-6466	4	BOLT (60mm LONG)					
	12	107-1531	1	TUBE AS					
	13	8T-4185	4	BOLT (50mm LONG)					
	14	115-8655	2	TUBE AS					
	15	115-8982	6	CLIP					
	16	115-8758	3	GROMMET					
	17	8T-4223	21	WASHER					
	18	8T-4139	20	BOLT (30mm LONG)					
	19	115-8757	13	GROMMET					
	20	115-8981	6	CLIP					

H41616E

115-8729 LINES GP-BOOM

Part of 102-5319 R-Boom Ar listed on Page 303

An Attachment

Consists of :

			Page
1	7I-8562	BOOM GP	308
1	7I-8561	LINE GP-AUXILIARY HYDRAULIC	171

H41398E

7I-8560 LINES AR-AUXILIARY HYDRAULIC (R-BOOM)

An Attachment

HYDRAULIC SYSTEM

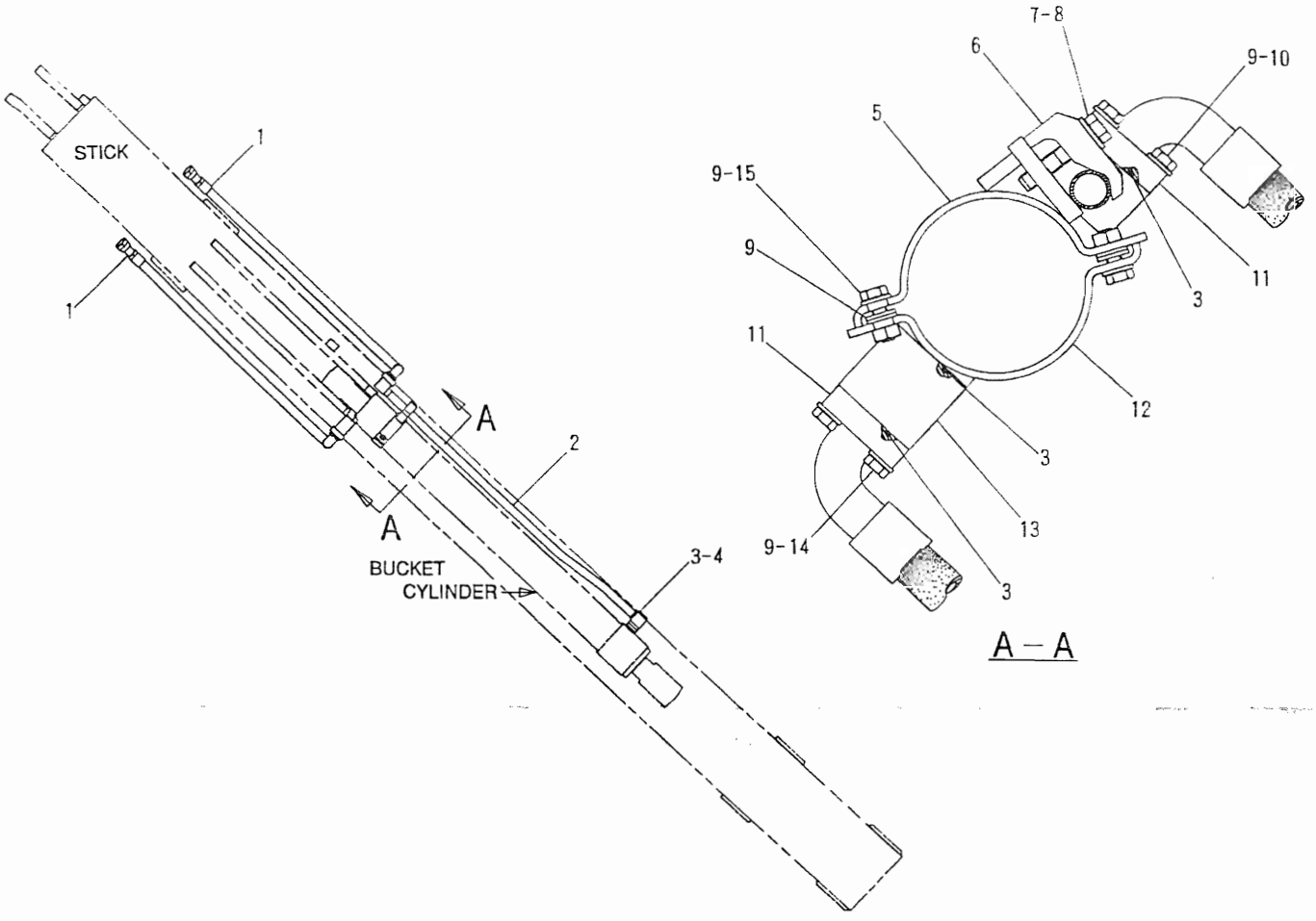

NOTE	No.	PART No.	QTY	PART NAME	NOTE	No.	PART No.	QTY	PART NAME
	1	115-8620	2	HOSE AS					
	2	107-1532	1	TUBE AS					
	3	4J-5267	4	SEAL					
	4	8T-4185	4	BOLT (50mm LONG)					
	5	108-7329	1	SUPPORT AS					
	6	093-1292	1	CLAMP					
	7	8T-4223	1	WASHER					
	8	8T-4910	1	BOLT (60mm LONG)					
	9	8T-4121	14	WASHER					
	10	8T-4196	4	BOLT (35mm LONG)					
	11	1P-4576	4	FLANGE					
	12	108-7330	1	SUPPORT AS					
	13	107-1464	1	BLOCK					
	14	8T-4178	4	BOLT (90mm LONG)					
	15	8T-4195	2	BOLT (30mm LONG)					

H41406E

104-9169 LINES GP-STICK

Part of 102-5320 R3.1 Stick Ar listed on Page 304

An Attachment

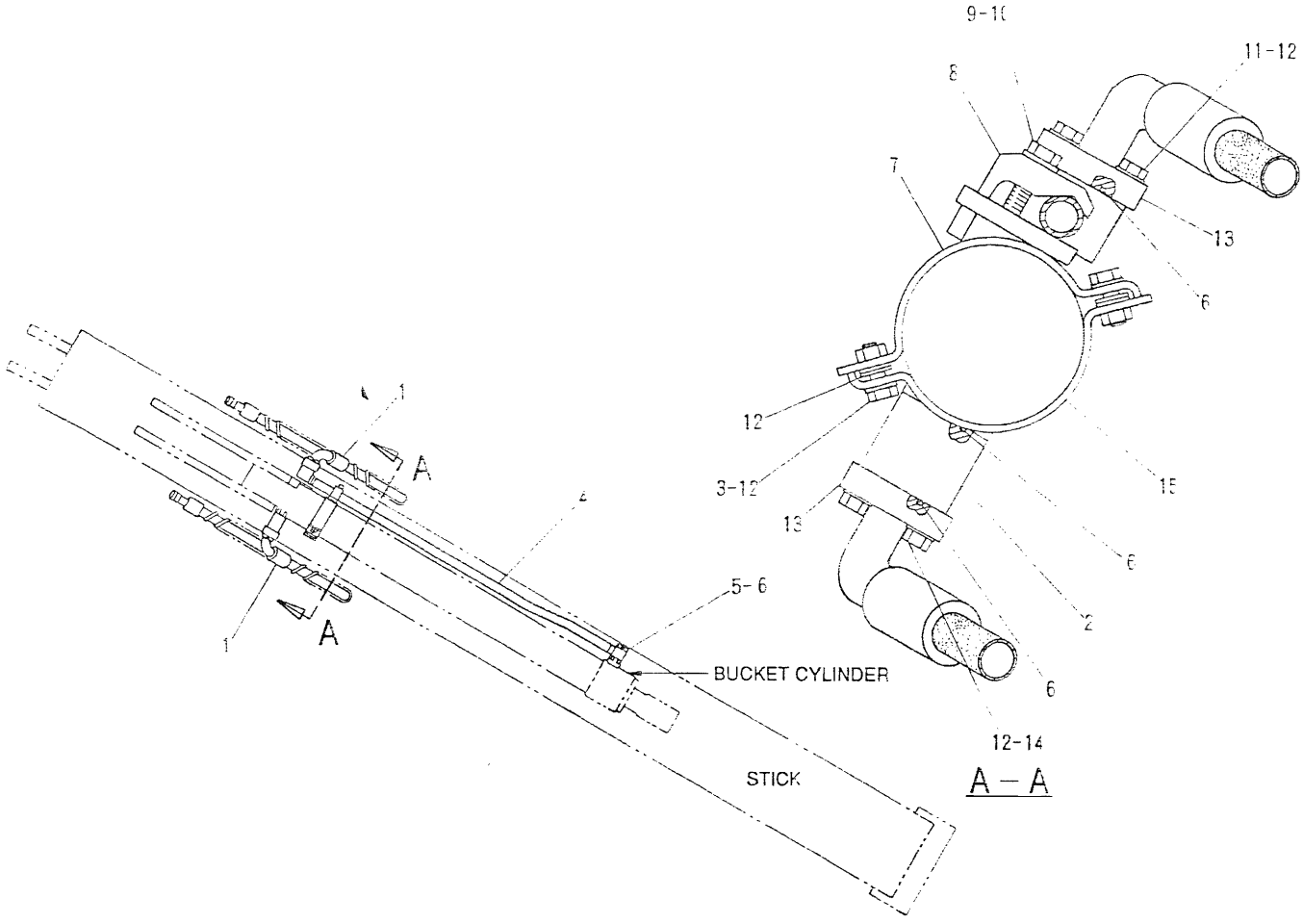

NOTE	No.	PART No.	QTY	PART NAME	NOTE	No.	PART No.	QTY	PART NAME
	1	107-1642	2	HOSE AS					
	2	107-1464	1	BLOCK					
	3	8T-4195	2	BOLT (80mm LONG)					
	4	107-1532	1	TUBE AS					
	5	8T-4185	4	BOLT (50mm LONG)					
	6	4J-5267	4	SEAL					
	7	108-7329	1	SUPPORT AS					
	8	093-1292	1	CLAMP					
	9	8T-4223	1	WASHER					
	10	8T-4910	1	BOLT (60mm LONG)					
	11	8T-4196	4	BOLT (35mm LONG)					
	12	8T-4121	14	WASHER					
	13	1P-4576	4	FLANGE					
	14	8T-4178	4	BOLT (90mm LONG)					
	15	108-7330	1	SUPPORT AS					

H41443E

104-9170 LINES GP-STICK

Part of 102-5321 R2.6 Stick Ar listed on Page 305
An Attachment

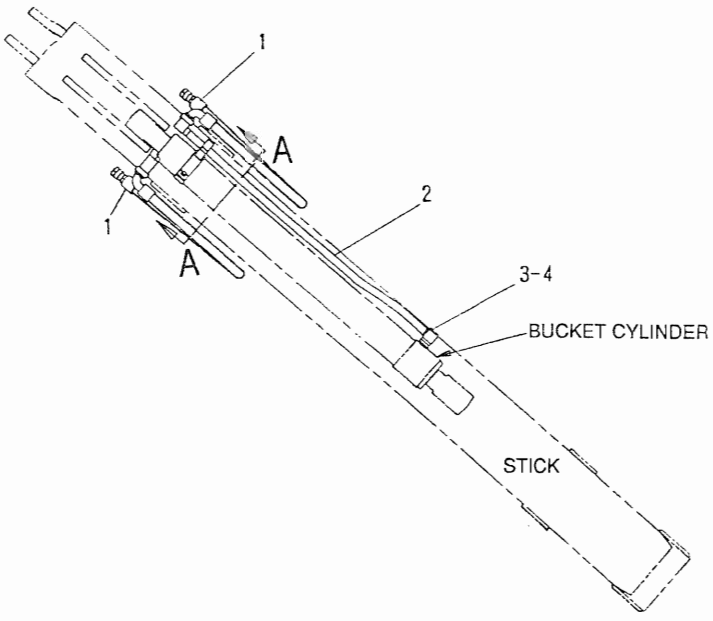

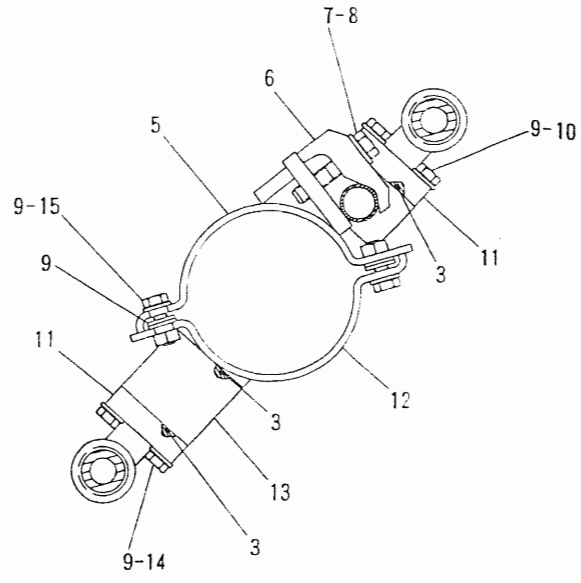

A – A

NOTE	No.	PART No.	QTY	PART NAME	NOTE	No.	PART No.	QTY	PART NAME
	1	104-8999	2	HOSE AS					
	2	107-1532	1	TUBE AS					
	3	4J-5267	4	SEAL					
	4	8T-4185	4	BOLT (50mm LONG)					
	5	108-7329	1	SUPPORT AS					
	6	093-1292	1	CLAMP					
	7	8T-4223	1	WASHER					
	8	8T-4910	1	BOLT (60mm LONG)					
	9	8T-4121	14	WASHER					
	10	8T-4196	4	BOLT (35mm LONG)					
	11	1P-4576	4	FLANGE					
	12	108-7330	1	SUPPORT AS					
	13	107-1464	1	BLOCK					
	14	8T-4178	4	BOLT (90mm LONG)					
	15	8T-4195	2	BOLT (30mm LONG)					

H41304E

104-9171 LINES GP-STICK

Part of 102-5322 R2.25 Stick Ar listed on Page 305

An Attachment

Consists of :

			Page
1	7I-8568	STICK GP	312
1	109-6001	LINE GP-AUXILIARY HYDRAULIC	172

H41399E

7I-8566 LINES AR-AUXILIARY HYDRAULIC (R2.6 STICK)
An Attachment

Consists of :

			Page
1	109-6001	LINE GP-AUXILIARY HYDRAULIC	172
1	7I-8571	STICK GP	312.01

H41308E

7I-8569 LINES AR-AUXILIARY HYDRAULIC (R2.25 STICK)
An Attachment

MEMORANDA

MEMORANDA

HYDRAULIC SYSTEM

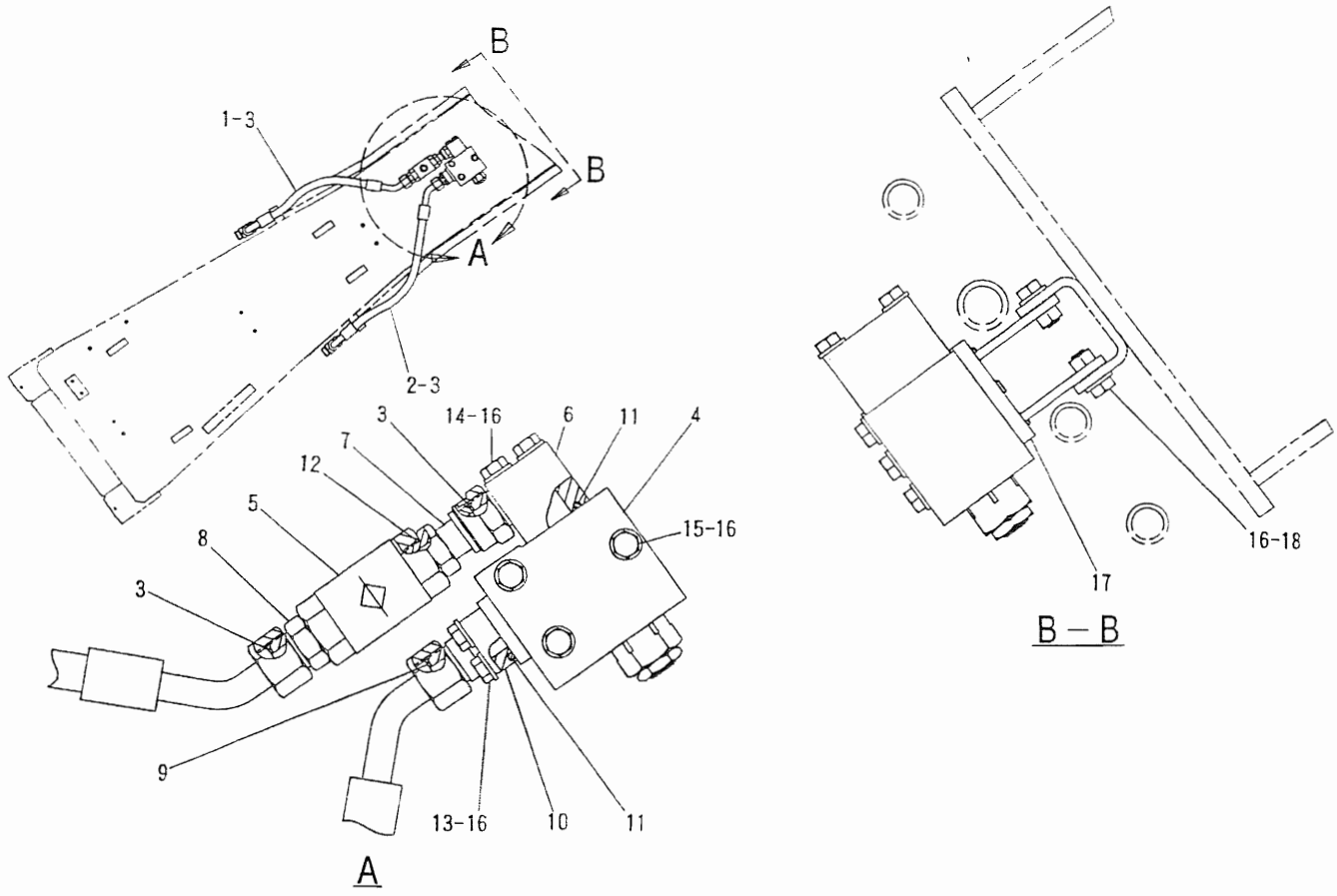

NOTE	No.	PART No.	QTY	PART NAME	NOTE	No.	PART No.	QTY	PART NAME
	1	7I-8303	1	HOSE AS					
	2	7I-8306	1	HOSE AS					
	3	4I-8889	4	SEAL					
Y	4	085-8724	1	VALVE GP					
	5	7I-1215	1	VALVE AS					
		6I-6916	1	HANDLE					
	6	7I-8309	1	ELBOW					
	7	7I-8310	1	COUPLING AS					
	8	4I-8979	1	CONNECTOR					
	9	6V-9746	1	SEAL					
	10	4I-1683	1	FLANGE					
	11	1P-3703	2	SEAL					
	12	3D-2824	2	SEAL					
	13	8T-4186	4	BOLT (40mm LONG)					
	14	8T-6466	4	BOLT (60mm LONG)					
	15	8T-4178	3	BOLT (90mm LONG)					
	16	8T-4121	15	WASHER					
	17	116-8976	1	SUPPORT AS					
	18	8T-4136	4	BOLT (50mm LONG)					

Y-SEE SEPARATE ILLUSTRATION

H41617E

109-6059 LINES GP-AUXILIARY HYDRAULIC (COMMON/R-BOOM)

Part of 7I-8557 Control Ar listed on Page 179
085-8724 – Page 228
An Attachment

HYDRAULIC SYSTEM

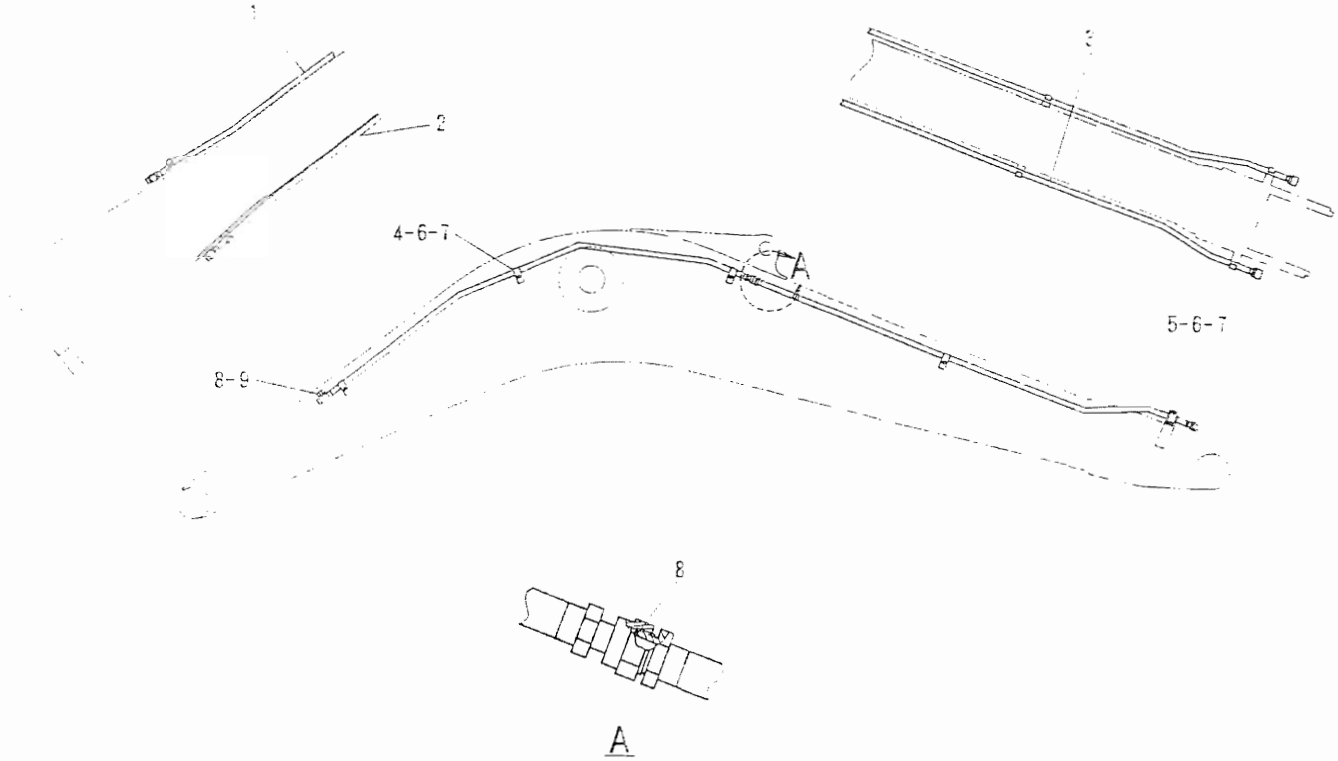

NOTE	No.	PART No.	QTY	PART NAME	NOTE	No.	PART No.	QTY	PART NAME
	1	109-5998	1	TUBE AS					
	2	109-5999	1	TUBE AS					
	3	109-6000	2	TUBE AS					
	4	093-1292	8	CLAMP					
	5	093-1300	2	CLAMP					
	6	8T-4910	12	BOLT (60mm LONG)					
	7	8T-4223	12	WASHER					
	8	41-8889	4	SEAL					
	9	6V-9832	2	CAP AS					

H41401E

7I-8561 LINES GP-AUXILIARY HYDRAULIC (R-BOOM)

Part of 7I-8560 Lines Ar listed on Page 168
An Attachment

HYDRAULIC SYSTEM

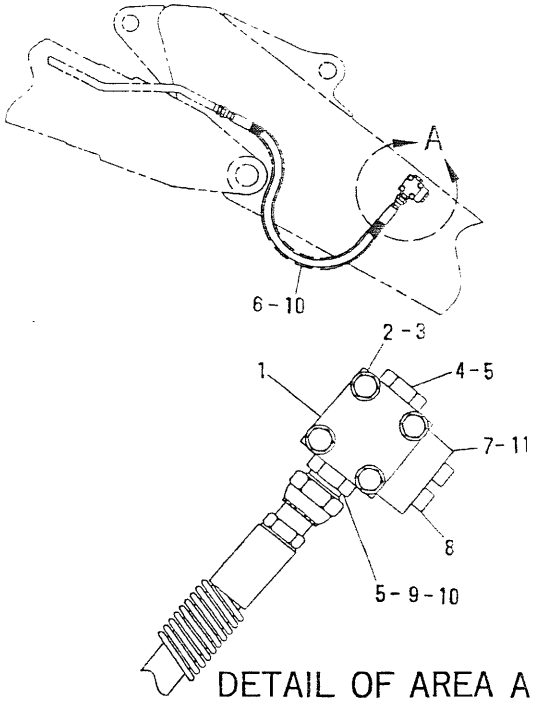

DETAIL OF AREA A

NOTE	No.	PART No.	QTY	PART NAME
	1	7I-8315	2	ADAPTER
	2	8T-4178	8	BOLT (90mm LONG)
	3	8T-4121	8	WASHER
	4	9S-4183	2	PLUG
	5	3D-2824	4	SEAL (23.47mm ID)
	6	7I-0076	2	HOSE AS
	7	1P-3703	2	SEAL
	8	8T-9515	8	BOLT (40mm LONG)
	9	4I-8979	2	CONNECTOR
	10	4I-8889	4	SEAL (19.80mm ID)
	11	7Y-6007	2	COVER

H41400E

109-6001 LINES GP-AUXILIARY HYDRAULIC

Part of 7I-8566 and 7I-8569 Lines Ar listed on Page 167

An Attachment

MEMORANDA

HYDRAULIC SYSTEM

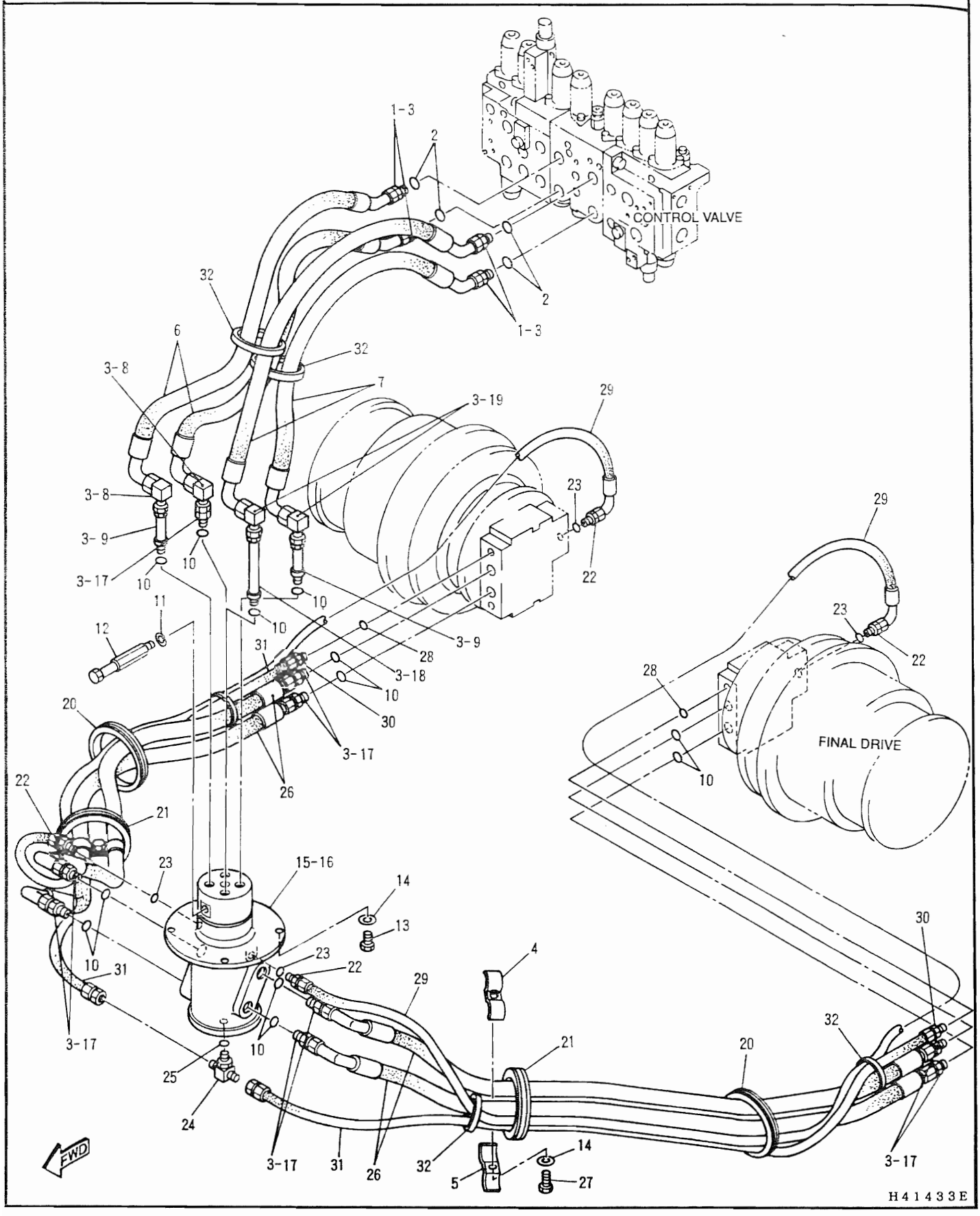

104-9157 LINES GP-TRACK MOTOR

S/N 4YM1 – Up

41-7603 – Page 207

HYDRAULIC SYSTEM

NOTE	No.	PART No.	QTY	PART NAME	NOTE	No.	PART No.	QTY	PART NAME
	1	4I-8977	4	CONNECTOR					
	2	7M-8485	4	SEAL					
	3	4I-8889	20	SEAL					
	4	7I-1152	2	CLIP AS					
	5	7I-1151	2	CLIP					
	6	113-6467	2	HOSE AS					
	7	113-6471	2	HOSE AS					
	8	103-1328	2	ELBOW					
	9	104-9223	2	CONNECTOR					
	10	3D-2824	12	SEAL					
	11	3G-8856	1	WASHER					
	12	4I-7870	1	ROD					
	13	8T-4137	4	BOLT (20mm LONG)					
	14	8T-4121	6	WASHER					
Y	15	4I-7603	1	SWIVEL GP					
B	16	1U-8846		GASKET MAKER・・・(2mℓ)					
	17	4I-8979	9	CONNECTOR					
	18	104-9224	1	CONNECTOR					
	19	7I-7413	2	ELBOW					
	20	108-7303	2	GROMMET					
	21	108-7304	2	GROMMET					
	22	2P-1314	4	CONNECTOR					
	23	3J-1907	4	SEAL					
	24	031-2582	1	TEE					
	25	3K-0360	1	SEAL					
	26	108-7109	4	HOSE AS					
	27	8T-4195	2	BOLT (30mm LONG)					
	28	2M-9780	2	SEAL					
	29	104-9149	2	HOSE AS					
	30	030-8194	2	CONNECTOR					
	31	7I-0175	2	HOSE AS					
	32	7K-1181	6	STRAP					

B-USE AS REQUIRED
Y-SEE SEPARATE ILLUSTRATION

H41434E

104-9157 LINES GP-TRACK MOTOR

S/N 4YM1 – Up
4I-7603 – Page 207

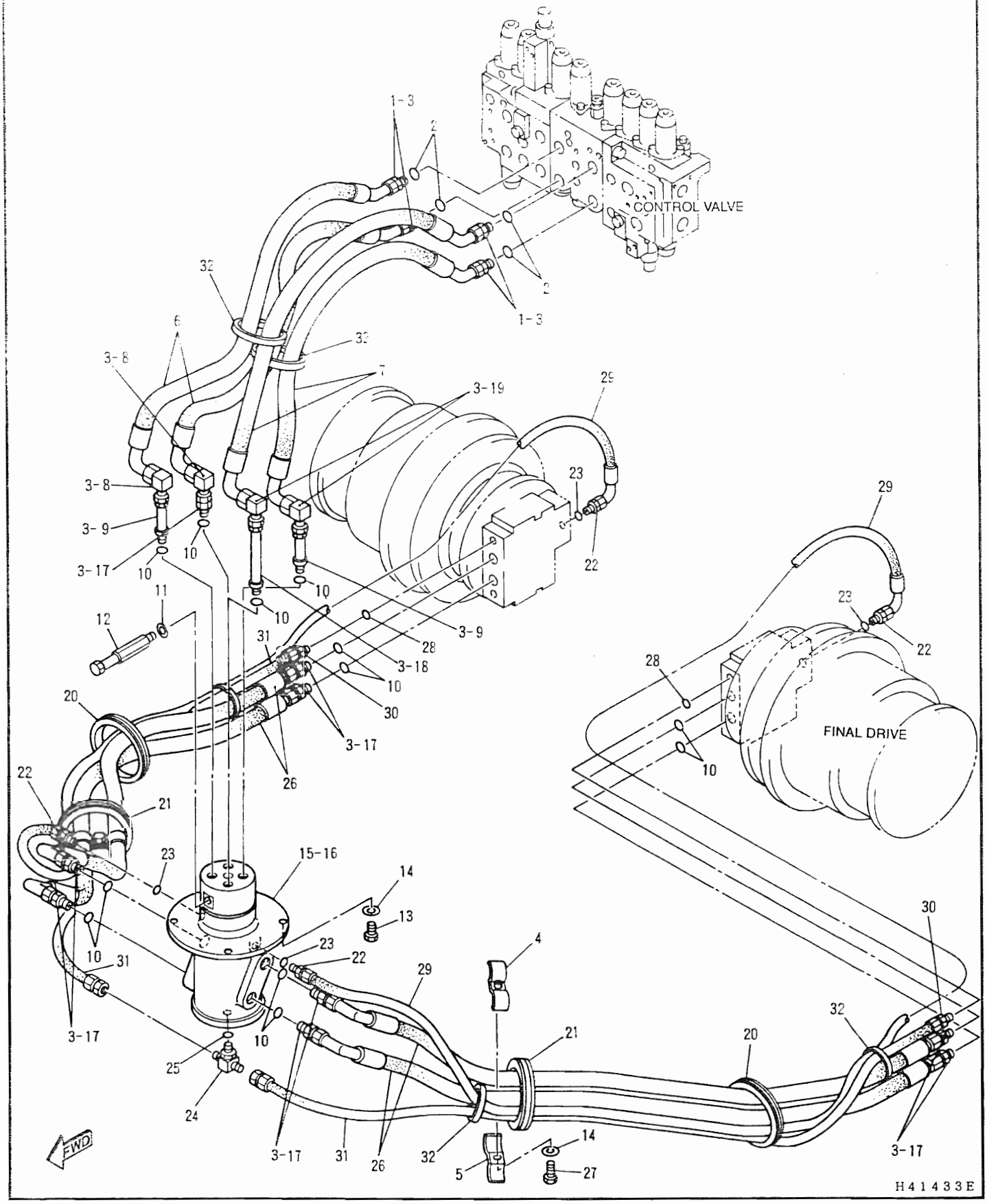

104-9192 LINES GP-TRACK MOTOR

S/N 6YM1 – Up

4I-7603 – Page 207

HYDRAULIC SYSTEM

NOTE	No.	PART No.	QTY	PART NAME	NOTE	No.	PART No.	QTY	PART NAME
	1	4I-8977	4	CONNECTOR					
	2	7M-8485	4	SEAL					
	3	4I-8889	20	SEAL					
	4	7I-1152	2	CLIP AS					
	5	7I-1151	2	CLIP					
	6	113-6467	2	HOSE AS					
	7	113-6471	2	HOSE AS					
	8	103-1328	2	ELBOW					
	9	104-9223	2	CONNECTOR					
	10	3D-2824	12	SEAL					
	11	3G-8856	1	WASHER					
	12	4I-7870	1	ROD					
	13	8T-4137	4	BOLT (20mm LONG)					
	14	8T-4121	6	WASHER					
Y	15	4I-7603	1	SWIVEL GP					
B	16	1U-8846		GASKET MAKER・・・(2mℓ)					
	17	4I-8979	9	CONNECTOR					
	18	104-9224	1	CONNECTOR					
	19	7I-7413	2	ELBOW					
	20	108-7303	2	GROMMET					
	21	108-7304	2	GROMMET					
	22	2P-1314	4	CONNECTOR					
	23	3J-1907	4	SEAL					
	24	031-2582	1	TEE					
	25	3K-0360	1	SEAL					
	26	108-7119	4	HOSE AS					
	27	8T-4195	2	BOLT (30mm LONG)					
	28	2M-9780	2	SEAL					
	29	108-7123	2	HOSE AS					
	30	030-8194	2	CONNECTOR					
	31	5I-3127	2	HOSE AS					
	32	7K-1181	6	STRAP					

B-USE AS REQUIRED
Y-SEE SEPARATE ILLUSTRATION

H41650E

104-9192 LINES GP-TRACK MOTOR

S/N 6YM1 – Up
4I-7603 – Page 207

HYDRAULIC SYSTEM

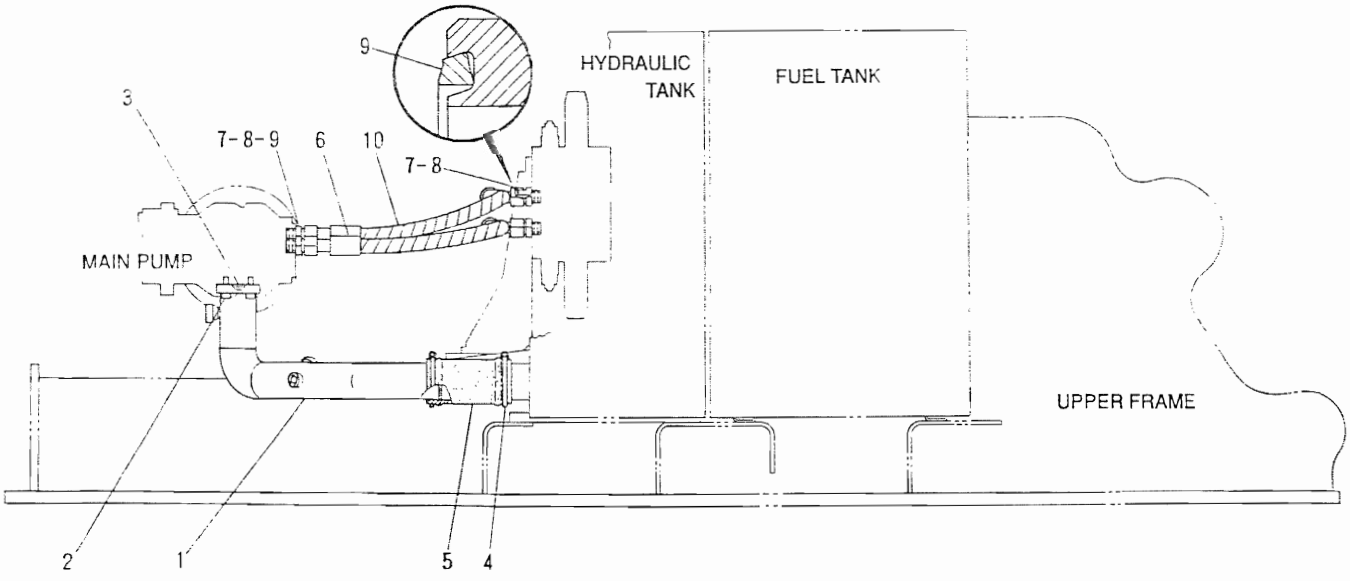

NOTE	No.	PART No.	QTY	PART NAME	NOTE	No.	PART No.	QTY	PART NAME
	1	107-1556	1	PIPE AS					
	2	6V-8200	4	BOLT (35mm LONG)					
	3	6J-2680	1	SEAL					
	4	095-1394	2	CLAMP					
	5	111-6716	1	HOSE					
	6	113-6572	1	HOSE AS					
	7	41-8977	4	CONNECTOR					
	8	7M-8485	4	SEAL					
	9	41-8889	4	SEAL					
	10	113-6576	1	HOSE AS					

H41331E

104-9161 LINES GP-PUMP (A)

HYDRAULIC SYSTEM

Consists of :

		Page
1	104-9183 LINES GP-FRONT	196
1	104-9184 LINES GP-PILOT	189

H41465E

7I-8559 INSTALLATION AR-AUXILIARY
An Attachment

Consists of :

			Page
1	104-9173	LINES GP-FRONT	192
1	104-9174	LINES GP-PILOT	184
1	110-5645	CONTROL GP-HYDRAULIC	210
1	7I-1699	FILM GP	331

H41660E

7I-8555 CONTROL AR-AUXILIARY (SINGLE ACTION)
An Attachment

Consists of :

			Page
1	7I-1697	FILM GP	331
1	104-9176	LINES GP-FRONT	193
1	104-9177	LINES GP-PILOT	185
1	110-5645	CONTROL GP-HYDRAULIC	210

H41459E

7I-8556 CONTROL AR-AUXILIARY (DOUBLE ACTION)
An Attachment

HYDRAULIC SYSTEM

Consists of :

			Page
1	104-9179	LINES GP-FRONT	194
1	104-9180	LINES GP-PILOT	188
1	104-9181	LINES GP-PILOT	186
1	102-5418	FILM GP	332
1	109-6059	LINES GP-AUXILIARY HYDRAULIC	170
1	110-5645	CONTROL GP-HYDRAULIC	210

H41651E

7I-8557 CONTROL AR-AUXILIARY (COMMON)
An Attachment

HYDRAULIC SYSTEM

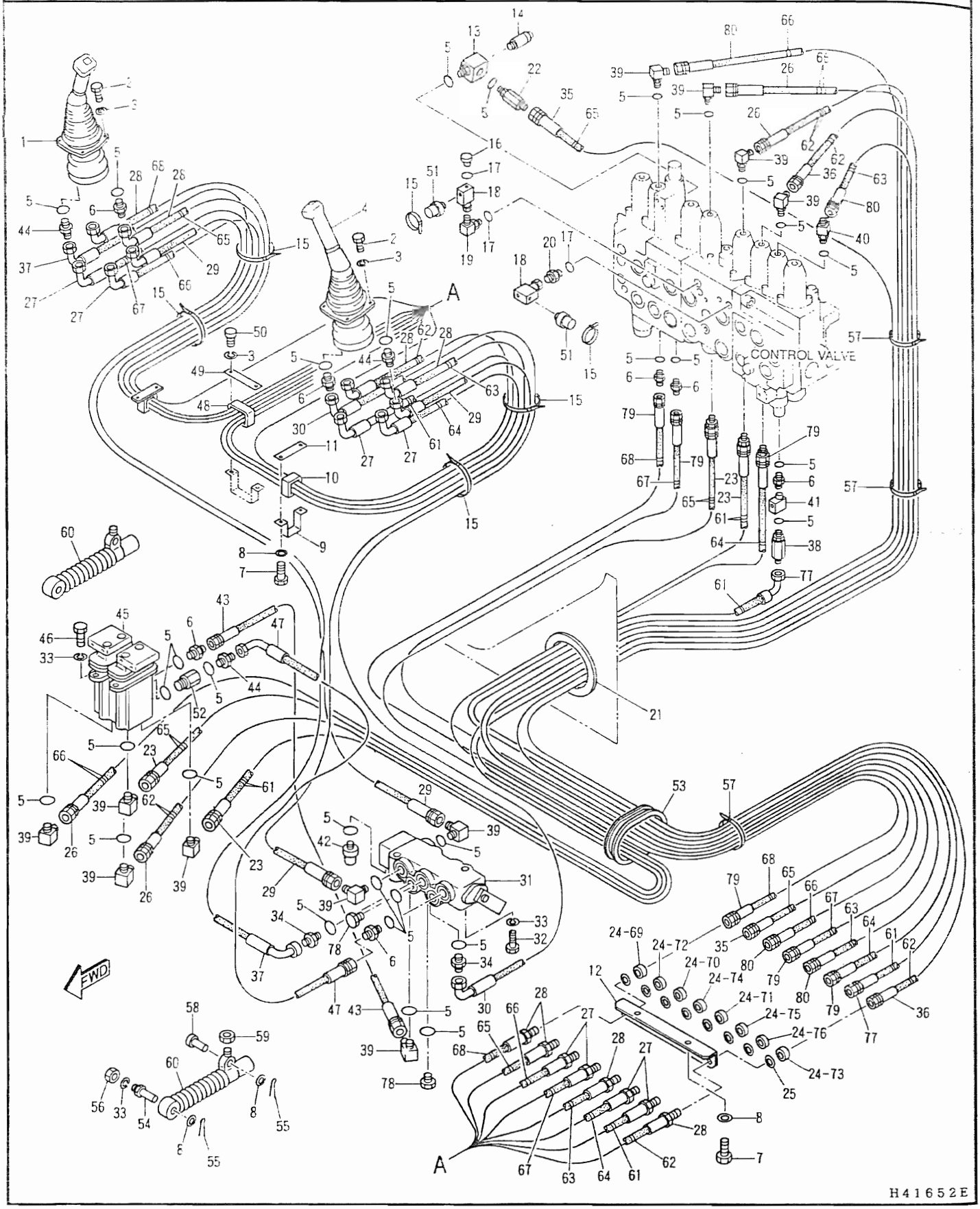

104-9162 LINES GP- PILOT (A)

087-5054 – Page 218, 111-1028 – Page 223, 110-5620, 110-5621 – Page 224, 105-7266, 105-7267 – Page 229

HYDRAULIC SYSTEM

NOTE	No.	PART No.	QTY	PART NAME
Y	1	110-5620	1	VALVE GP
	2	6V-7357	6	BOLT (25mm LONG)
	3	9X-8256	10	WASHER
Y	4	110-5621	1	VALVE GP
	5	3J-1907	42	SEAL
	6	2R-6806	18	CONNECTOR
	7	8T-4200	6	BOLT (16mm LONG)
	8	8T-4224	10	WASHER
	9	4I-3940	2	SUPPORT
	10	4I-3944	2	GROMMET
	11	087-5554	2	STRIP
	12	5I-8725	1	SUPPORT
	13	7I-8273	1	FITTING
	14	102-8042	1	SWITCH AS
		7N-7779	1	SOCKET
		7N-7780	1	PIN
		7N-9738	1	HOUSING
	15	096-0061	7	STRAP
	16	9S-4182	1	PLUG
	17	3J-7354	3	SEAL
	18	5I-4075	2	FITTING
	19	030-7946	1	ELBOW
	20	3J-7352	1	CONNECTOR
	21	108-7303	1	GROMMET
Y	22	105-7267	1	VALVE GP
	23	4I-1455	2	HOSE AS
	24	2P-1279	8	LOCKNUT
	25	9X-8257	8	WASHER
	26	4I-6242	2	HOSE AS
	27	7I-1178	4	HOSE AS
	28	7I-1177	4	HOSE AS
	29	4I-1841	2	HOSE AS
	30	5I-4009	1	HOSE AS
Y	31	087-5054	1	VALVE GP
	32	8T-5005	2	BOLT (70mm LONG)
	33	8T-4121	8	WASHER
	34	030-7936	2	CONNECTOR
	35	4I-1419	1	HOSE AS
	36	4I-6233	1	HOSE AS
	37	4I-1703	1	HOSE AS
Y	38	105-7266	1	VALVE GP
	39	030-7947	11	ELBOW
	40	6M-6853	1	TEE
	41	5I-3190	1	FITTING
	42	9W-2150	1	SWITCH AS
	43	4I-1404	1	HOSE AS
	44	107-6630	3	CONNECTOR
Y	45	111-1028	1	VALVE GP
	46	8T-4137	4	BOLT (20mm LONG)
	47	5I-3103	1	HOSE AS
	48	087-4508	2	GROMMET
	49	087-4509	2	STRIP
	50	5C-9553	4	BOLT (16mm LONG)
	51	102-8041	2	SWITCH AS
		7N-7779	1	SOCKET
		7N-7780	1	PIN
		7N-9737	1	HOUSING
	52	108-7507	1	CONNECTOR
	53	107-1677	1	GROMMET
	54	099-4754	2	PIN
	55	095-0843	4	COTTER
	56	8T-4133	2	NUT
	57	7K-1181	4	STRAP
	58	095-1316	2	PIN
	59	5C-7261	2	NUT
	60	4I-6211	2	SPRING AS
		4I-6446	1	SPRING AS
		099-4753	1	BOLT
	61	4I-9521	8	BAND
	62	4I-9522	8	BAND
	63	4I-9523	4	BAND
	64	4I-9524	4	BAND
	65	4I-9525	8	BAND
	66	4I-9526	8	BAND
	67	4I-9527	4	BAND
	68	4I-9528	4	BAND
	69	096-6078	1	TAPE
	70	096-6079	1	TAPE
	71	096-6080	1	TAPE
	72	096-6081	1	TAPE
	73	096-6082	1	TAPE
	74	096-6083	1	TAPE
	75	096-6084	1	TAPE
	76	096-6085	1	TAPE
	77	108-7252	1	HOSE AS
	78	9S-4191	2	PLUG
	79	5I-3127	3	HOSE AS
	80	4I-1413	2	HOSE AS

Y-SEE SEPARATE ILLUSTRATION

H41653E

104-9162 LINES GP- PILOT (A)

087-5054 – Page 218, 111-1028 – Page 223, 110-5620, 110-5621 – Page 224, 105-7266, 105-7267 – Page 229

HYDRAULIC SYSTEM

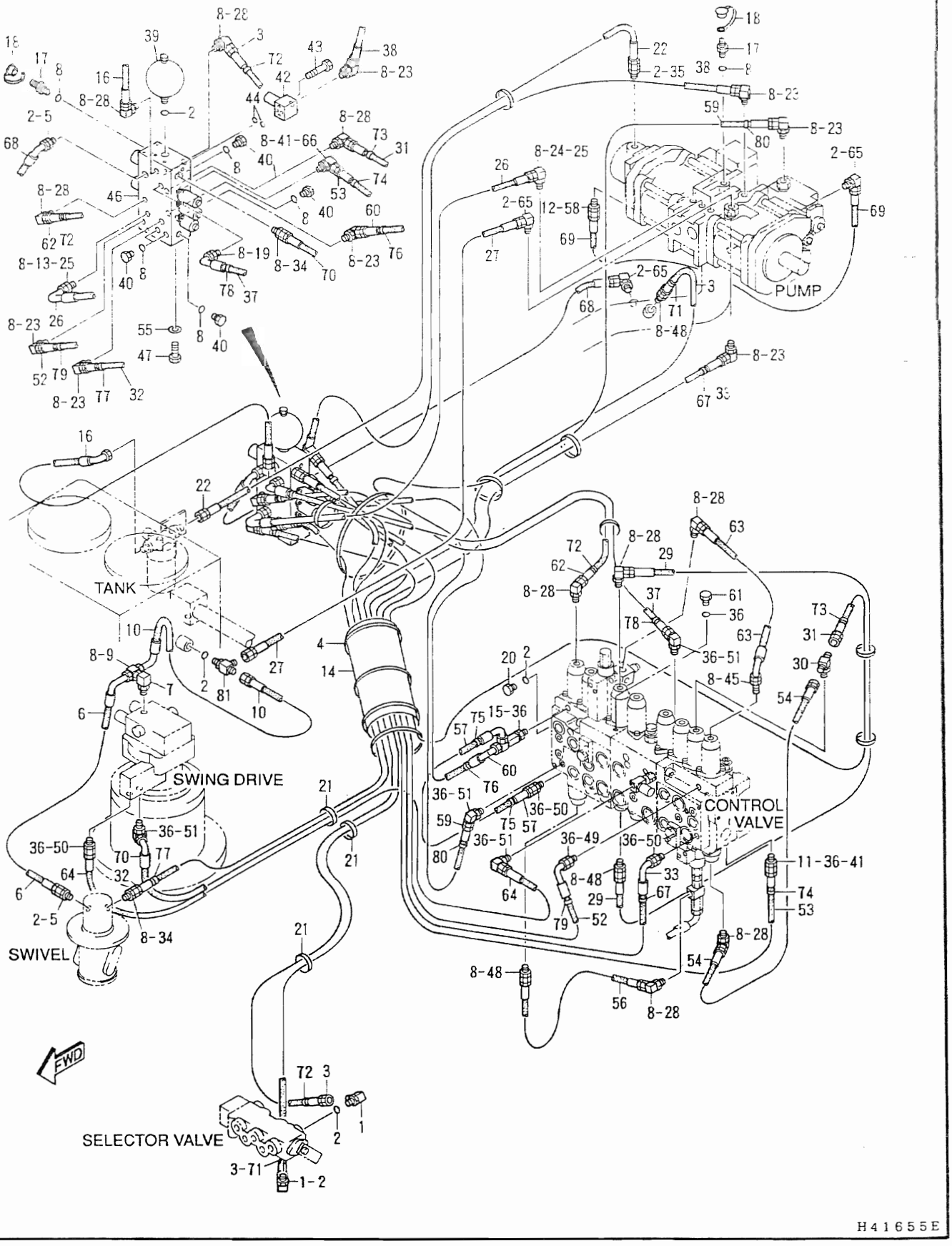

104-9164 LINES GP-PILOT (C)

087-4456 – Page 152, 118-4111 – Page 222

HYDRAULIC SYSTEM

NOTE	No.	PART No.	QTY	PART NAME
	1	005-4362	2	ELBOW
	2	3K-0360	11	SEAL
	3	107-1591	2	HOSE AS
	4	7K-1181	5	STRAP
	5	8M-0505	2	CONNECTOR
	6	4I-1464	1	HOSE AS
	7	4K-6297	1	ELBOW
	8	3J-1907	36	SEAL
	9	5P-3166	1	TEE
	10	115-8570	1	HOSE AS
	11	6V-8647	1	CONNECTOR
	12	3D-2824	1	SEAL
	13	6V-8636	1	CONNECTOR
	14	103-1384	1	GUARD
	15	104-9200	1	TEE
	16	107-1597	1	HOSE AS
	17	6V-3965	4	NIPPLE AS
	18	6V-0852	4	CAP
	19	107-6910	1	CONNECTOR
	20	9S-4185	1	PLUG
	21	096-0061	4	STRAP
	22	5I-3124	1	HOSE AS
	23	7J-4026	7	ELBOW
	24	6V-8724	1	ELBOW
	25	6V-8397	2	SEAL
	26	107-1612	1	HOSE AS
	27	5I-3112	1	HOSE AS
	28	030-7947	9	ELBOW
	29	7I-0181	1	HOSE AS
	30	053-0700	1	TEE
	31	7I-0172	1	HOSE AS
	32	7I-0918	1	HOSE AS
	33	107-1603	1	HOSE AS
	34	2P-1314	2	CONNECTOR
	35	030-8188	1	CONNECTOR
	36	3J-7354	11	SEAL
	37	108-7261	1	HOSE AS
	38	7I-0924	1	HOSE AS
Y	39	087-4456	1	ACCUMULATOR GP
	40	9S-4191	5	PLUG
	41	4J-5477	2	SEAL
	42	5I-8368	1	VALVE AS
		7N-7779	1	SOCKET
		7N-7780	1	PIN
		7N-9737	1	HOUSING
	43	8T-9534	2	BOLT (50mm LONG)
	44	6V-5586	2	SEAL
	45	7I-8221	1	STOPPER
Y	46	118-4111	1	VALVE GP
	47	8T-4139	3	BOLT (30mm LONG)
	48	2R-6806	3	CONNECTOR
	49	9K-5469	1	CONNECTOR
	50	3J-7352	3	CONNECTOR
	51	030-7946	4	ELBOW
	52	7I-0933	1	HOSE AS
	53	103-1348	1	HOSE AS
	54	7I-0196	1	HOSE AS
	55	5P-1076	3	WASHER
	56	7I-0184	1	HOSE AS
	57	103-1457	1	HOSE AS
	58	030-8189	1	CONNECTOR
	59	107-1609	1	HOSE AS
	60	7I-0942	1	HOSE AS
	61	9S-4182	1	PLUG
	62	103-1434	1	HOSE AS
	63	7I-0193	1	HOSE AS
	64	7I-0927	1	HOSE AS
	65	030-7948	3	ELBOW
	66	6V-8627	1	ELBOW
	67	4I-9538	2	BAND
	68	5I-3118	1	HOSE AS
	69	7I-0903	1	HOSE AS
	70	111-6725	1	HOSE AS
	71	4I-9522	2	BAND
	72	4I-9527	4	BAND
	73	4I-9528	2	BAND
	74	4I-9531	2	BAND
	75	4I-9532	2	BAND
	76	4I-9533	2	BAND
	77	4I-9534	2	BAND
	78	4I-9535	2	BAND
	79	4I-9536	2	BAND
	80	4I-9537	2	BAND
	81	030-7959	1	TEE

Y-SEE SEPARATE ILLUSTRATION

H41656E

104-9164 LINES GP-PILOT (C)

087-4456 – Page 152, 118-4111 – Page 222

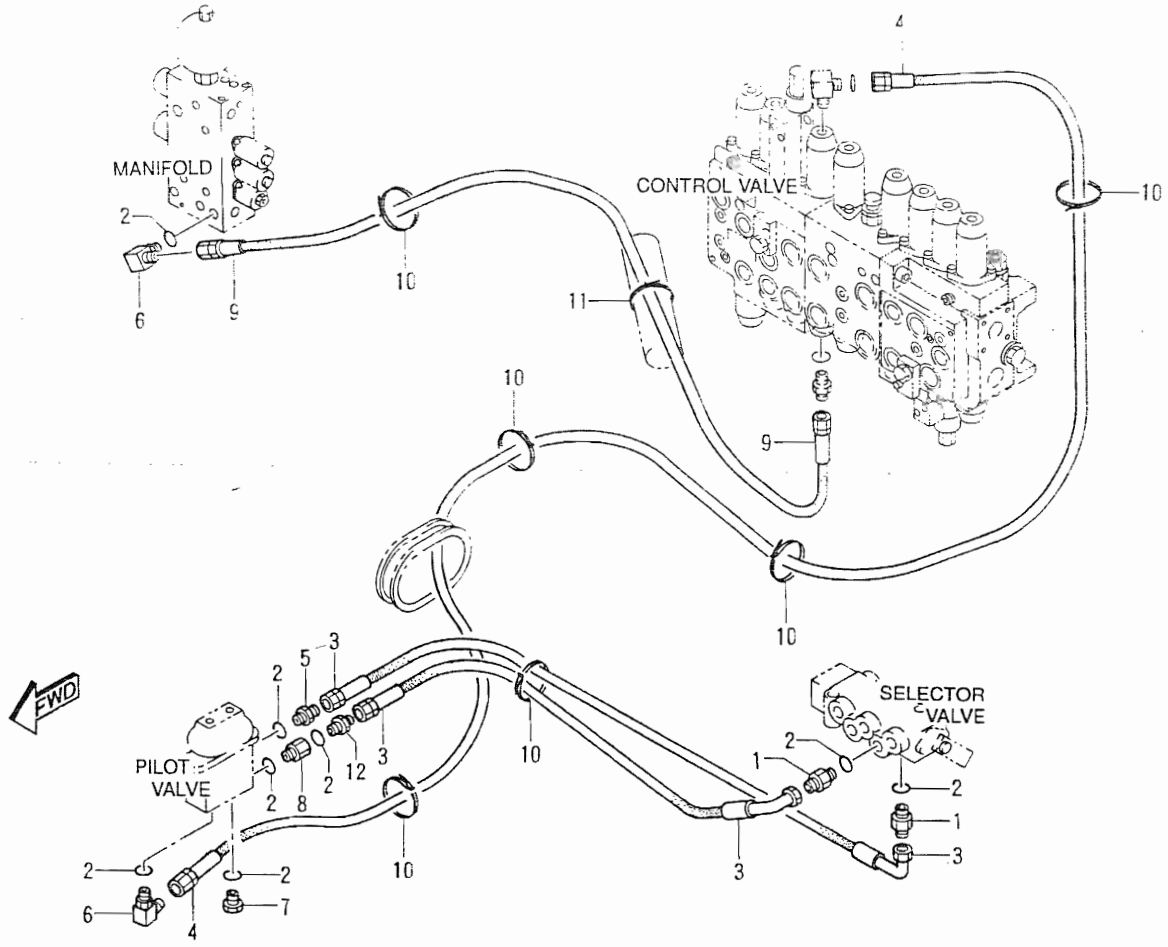

NOTE	No.	PART No.	QTY	PART NAME	NOTE	No.	PART No.	QTY	PART NAME
	1	030-7936	2	CONNECTOR					
	2	3J-1907	8	SEAL					
	3	4I-1425	2	HOSE AS					
	4	4I-6242	1	HOSE AS					
	5	2R-6806	1	CONNECTOR					
	6	030-7947	2	ELBOW					
	7	9S-4191	1	PLUG					
	8	108-7507	1	CONNECTOR					
	9	7I-0187	1	HOSE AS					
	10	096-0061	6	STRAP					
	11	7K-1181	1	STRAP					
	12	107-6630	1	CONNECTOR					

H41417E

104-9174 LINES GP-PILOT (A) (SINGLE ACTION/1 PUMP CIRCUIT)

Part of 7I-8555 Control Ar listed on Page 178
An Attachment

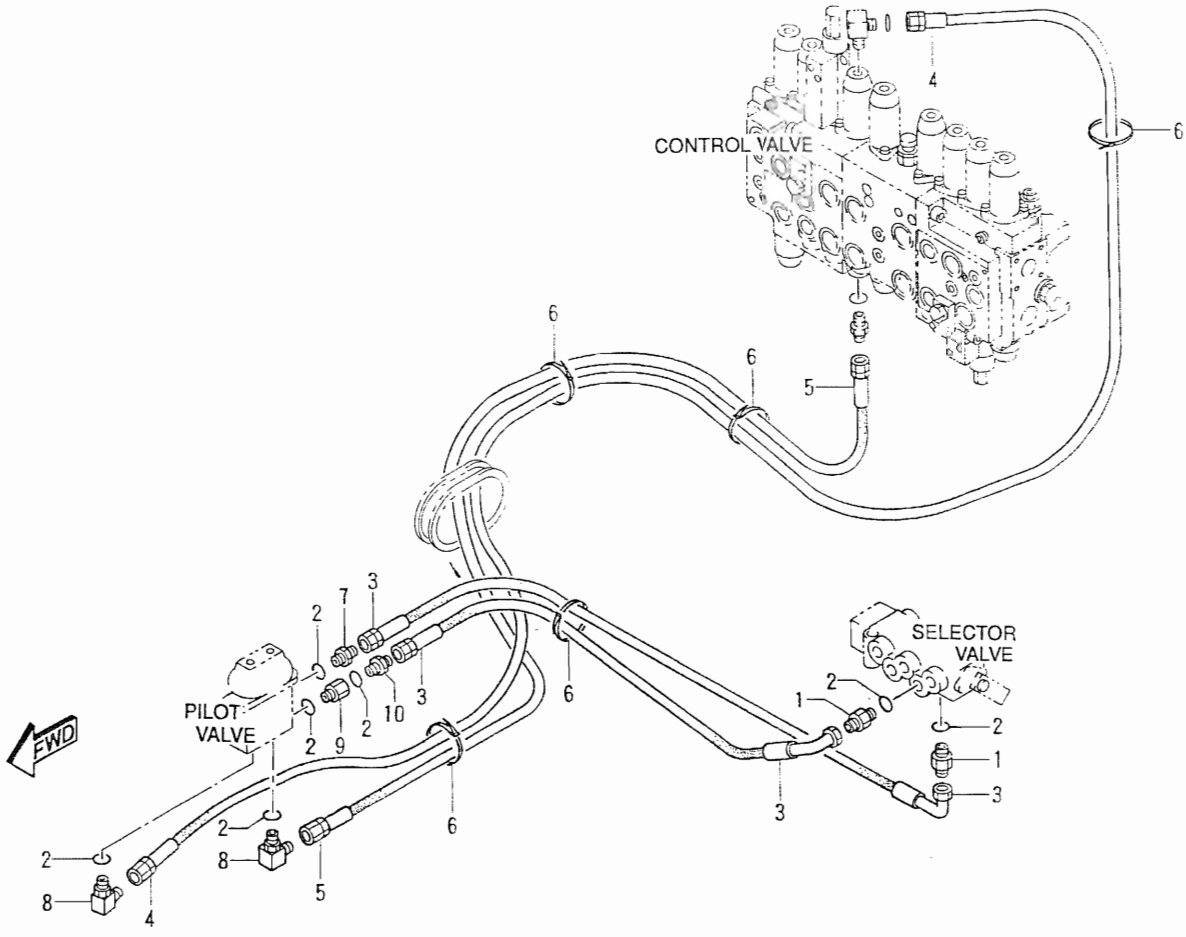

NOTE	No.	PART No.	QTY	PART NAME	NOTE	No.	PART No.	QTY	PART NAME
	1	030-7936	2	CONNECTOR					
	2	3J-1907	7	SEAL					
	3	4I-1425	2	HOSE AS					
	4	4I-6242	1	HOSE AS					
	5	4I-1455	1	HOSE AS					
	6	096-0061	5	STRAP					
	7	2R-6806	1	CONNECTOR					
	8	030-7947	2	ELBOW					
	9	108-7507	1	CONNECTOR					
	10	107-6630	1	CONNECTOR					

H41457E

104-9177 LINES GP-PILOT (A) (DOUBLE ACTION/1 PUMP CIRCUIT)

Part of 7I-8556 Control Ar listed on Page 178

An Attachment

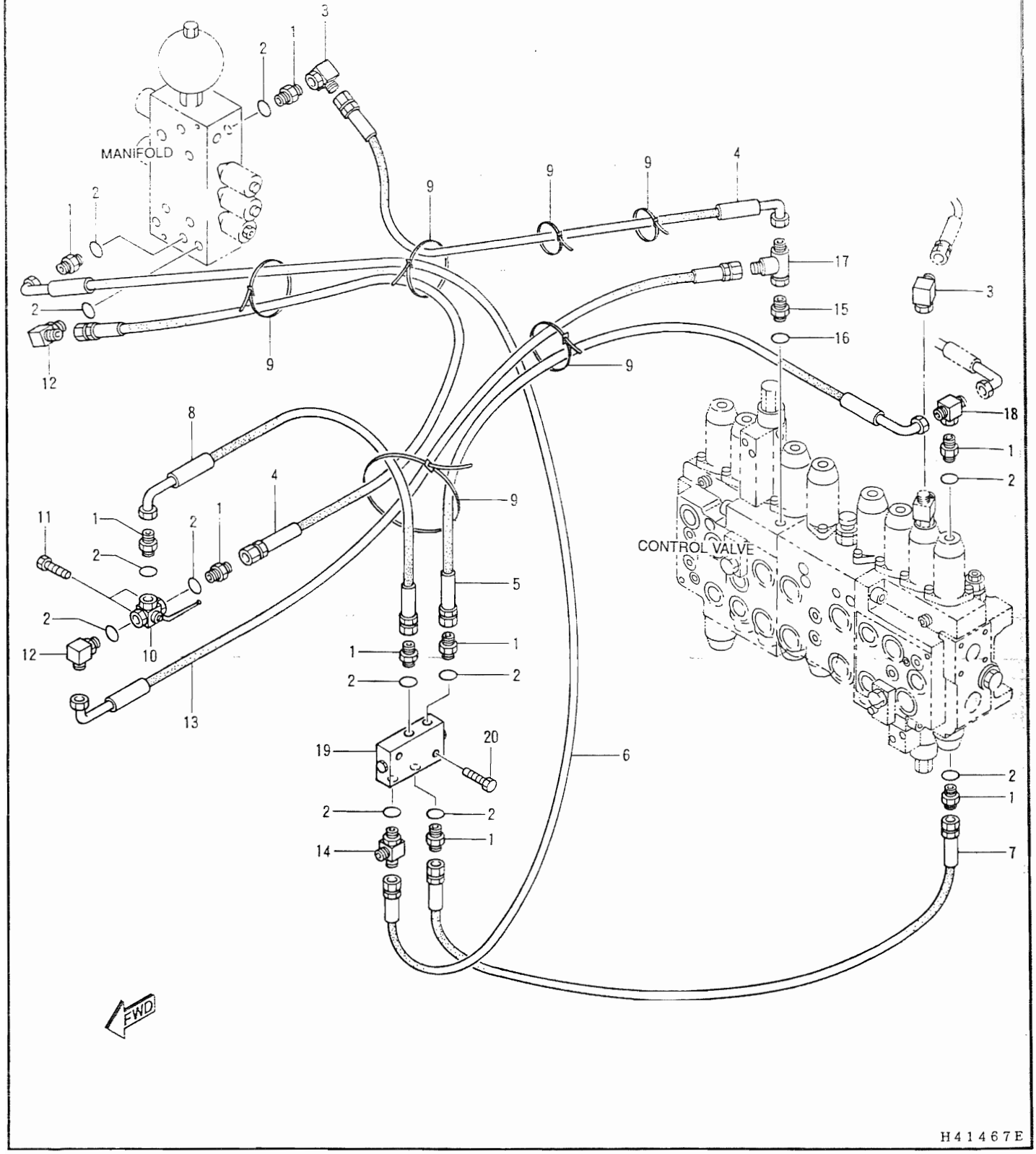

104-9181 LINES GP-PILOT (C) (COMMON PIPING/2 PUMP CIRCUIT)

Part of 71-8557 Control Ar listed on Page 179

41-0894 – Page 227

An Attachment

HYDRAULIC SYSTEM

NOTE	No.	PART No.	QTY	PART NAME
	1	2R-6806	9	CONNECTOR
	2	3J-1907	12	SEAL
	3	6K-9194	2	ELBOW
	4	4I-1428	2	HOSE AS
	5	5I-3109	1	HOSE AS
	6	5I-4487	1	HOSE AS
	7	7I-0181	1	HOSE AS
	8	4I-7769	1	HOSE AS
	9	096-0061	6	STRAP
	10	4I-6363	1	VALVE AS (BALL VALVE)
		6I-6915	1	HANDLE
	11	8T-4138	2	BOLT (20mm LONG)
	12	030-7947	2	ELBOW
	13	4I-7675	1	HOSE AS
	14	6M-6853	1	TEE
	15	030-3978	1	CONNECTOR
	16	3J-7354	1	SEAL
	17	7I-7530	1	TEE
	18	053-0700	1	TEE
Y	19	4I-0894	1	VALVE GP
	20	8T-4197	2	BOLT (40mm LONG)

Y-SEE SEPARATE ILLUSTRATION

H41468E

104-9181 LINES GP-PILOT (C) (COMMON PIPING/2 PUMP CIRCUIT)

Part of 7I-8557 Control Ar listed on Page 179
4I-0894 – Page 227
An Attachment

HYDRAULIC SYSTEM

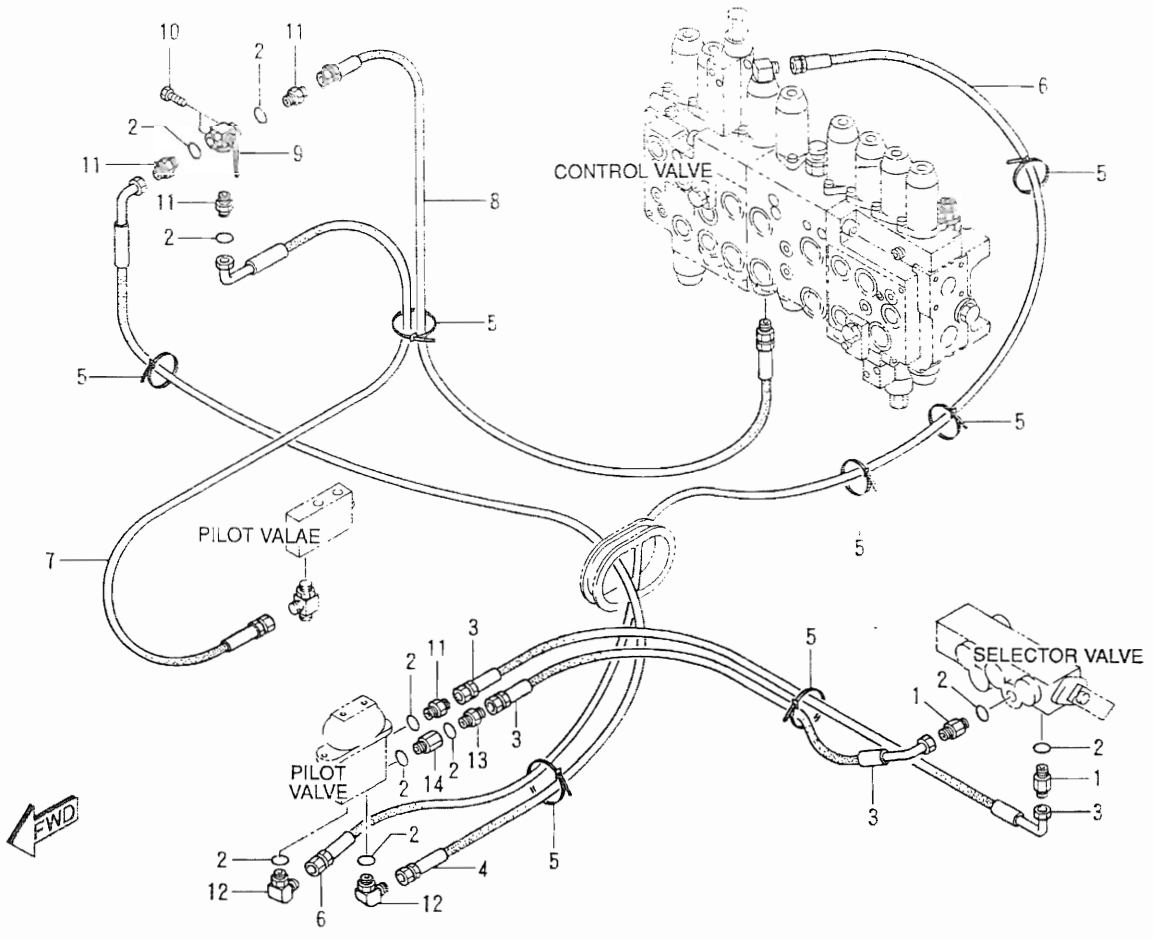

NOTE	No.	PART No.	QTY	PART NAME	NOTE	No.	PART No.	QTY	PART NAME
	1	030-7936	2	CONNECTOR					
	2	3J-1907	10	SEAL					
	3	41-7769	2	HOSE AS					
	4	102-1166	1	HOSE AS					
	5	096-0061	7	STRAP					
	6	41-6242	1	HOSE AS					
		61-6915	1	HANDLE					
	7	41-7684	1	HOSE AS					
	8	41-3778	1	HOSE AS					
	9	41-6363	1	VALVE AS (BALL VALVE)					
	10	8T-4138	2	BOLT (20mm LONG)					
	11	2R-6806	4	CONNECTOR					
	12	030-7947	2	ELBOW					
	13	107-6630	1	CONNECTOR					
	14	108-7507	1	CONNECTOR					

H41469E

104-9180 LINES GP-PILOT (A) (COMMON PIPING/2 PUMPS CIRCUIT)

Part of 71-8557 Control Ar listed on Page 179

An Attachment

HYDRAULIC SYSTEM

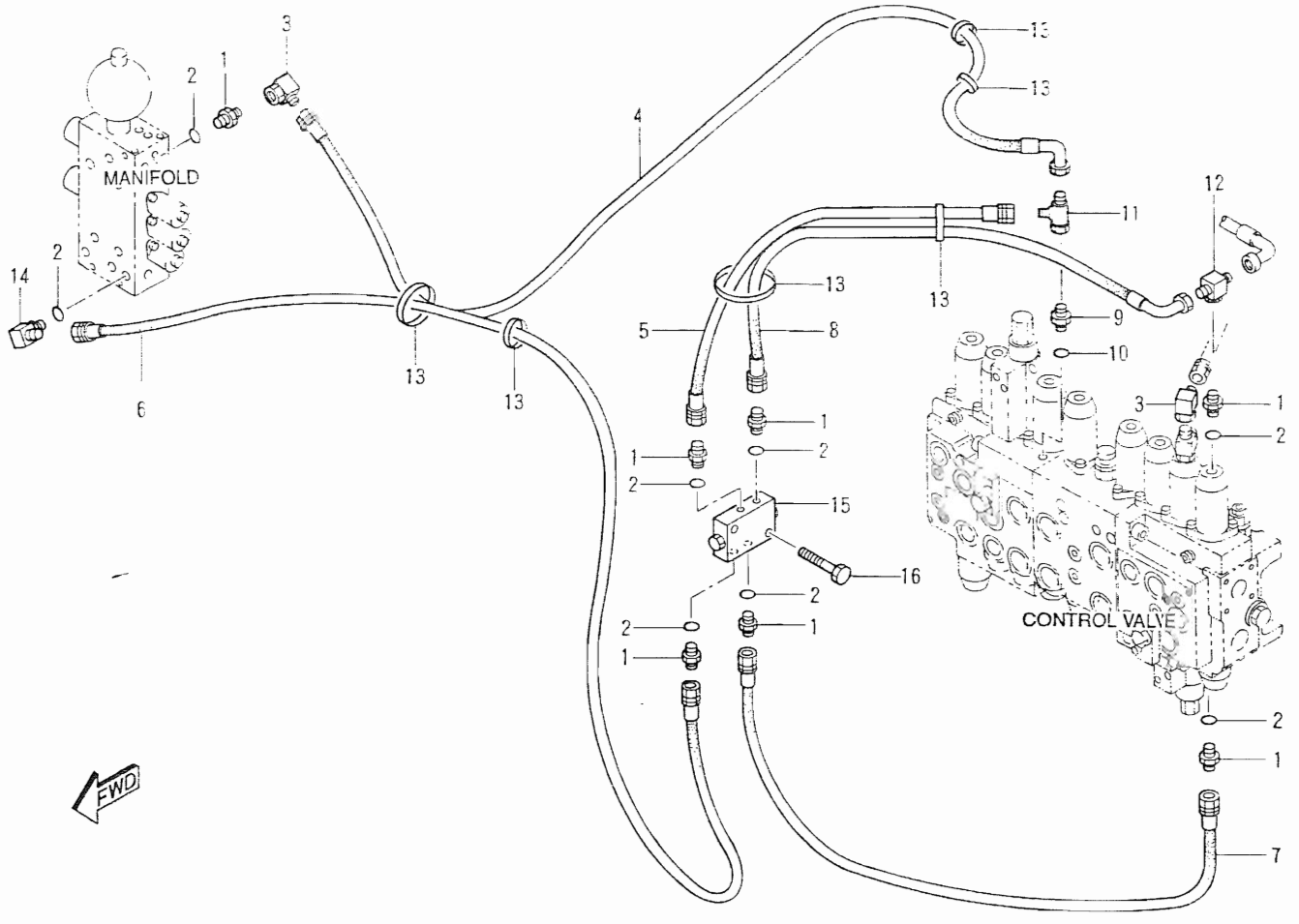

NOTE	No.	PART No.	QTY	PART NAME	NOTE	No.	PART No.	QTY	PART NAME
	1	2R-6806	7	CONNECTOR					
	2	3J-1907	8	SEAL					
	3	6K-9194	2	ELBOW					
	4	4I-1428	1	HOSE AS					
	5	5I-3124	1	HOSE AS					
	6	5I-4487	1	HOSE AS					
	7	7I-0181	1	HOSE AS					
	8	5I-3109	1	HOSE AS					
	9	030-3978	1	CONNECTOR					
	10	3J-7354	1	SEAL					
	11	7I-7530	1	TEE					
	12	053-0700	1	TEE					
	13	096-0061	6	STRAP					
	14	030-7947	1	ELBOW					
Y	15	4I-0894	1	VALVE GP					
	16	8T-4197	2	BOLT (40mm LONG)					

Y-SEE SEPARATE ILLUSTRATION

H41466E

104-9184 LINES GP-PILOT (C) (2 PUMP FLOW)

Part of 7I-8559 Installation Ar listed on Page 177

4I-0894 – Page 227

An Attachment

HYDRAULIC SYSTEM

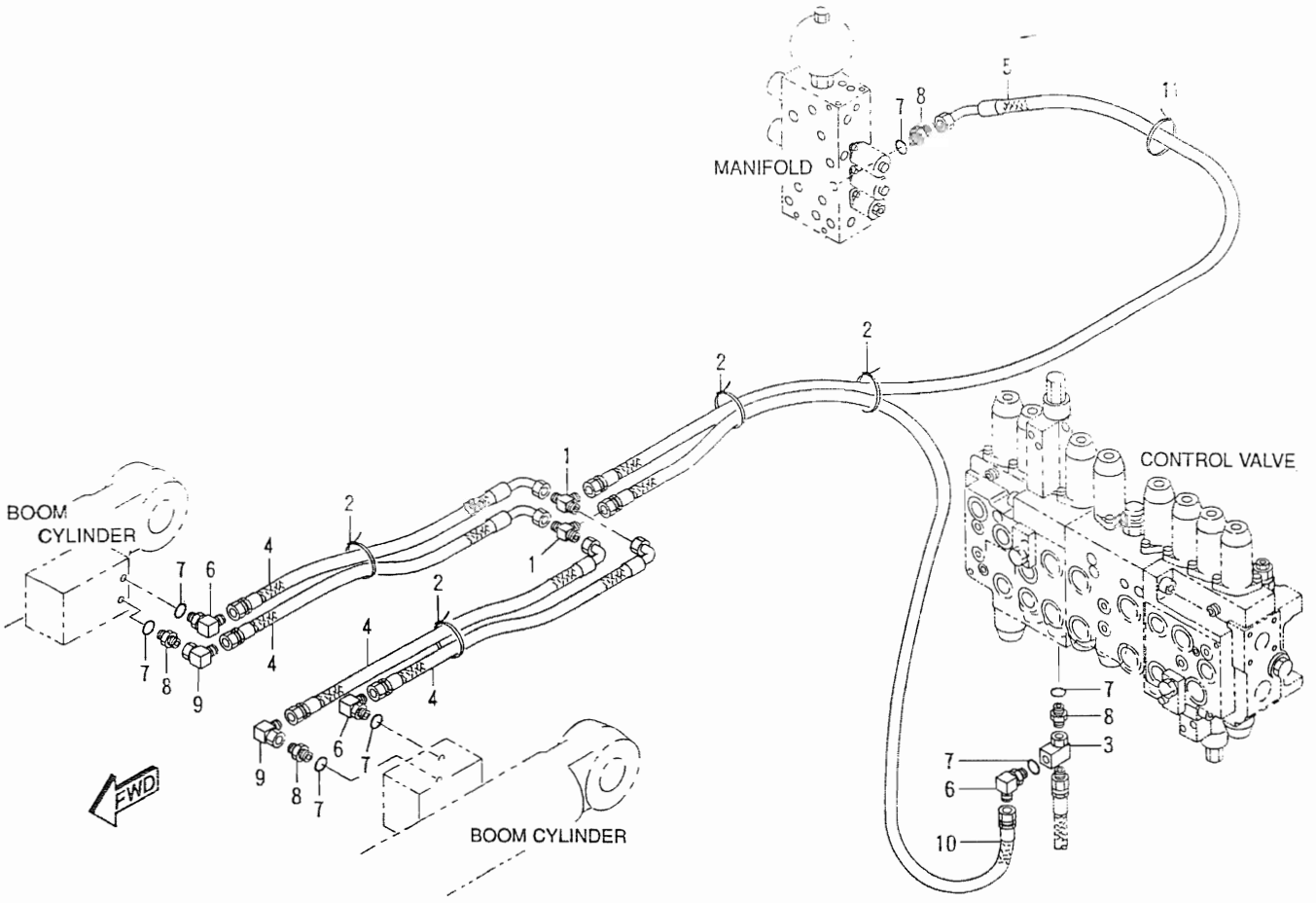

NOTE	No.	PART No.	QTY	PART NAME	NOTE	No.	PART No.	QTY	PART NAME
	1	4S-3652	2	TEE					
	2	096-0061	4	STRAP					
	3	5I-3190	1	FITTING					
	4	4I-3787	4	HOSE AS					
	5	5I-3136	1	HOSE AS					
	6	030-7947	3	ELBOW					
	7	3J-1907	7	SEAL					
	8	2R-6806	4	CONNECTOR					
	9	6K-9194	2	ELBOW					
	10	103-1434	1	HOSE AS					
	11	7K-1181	1	STRAP					

H41476E

104-9188 LINES GP-PILOT (C) (BOOM LOWERING)

Part of 102-0934 Valve Ar listed on Page 216

An Attachment

HYDRAULIC SYSTEM

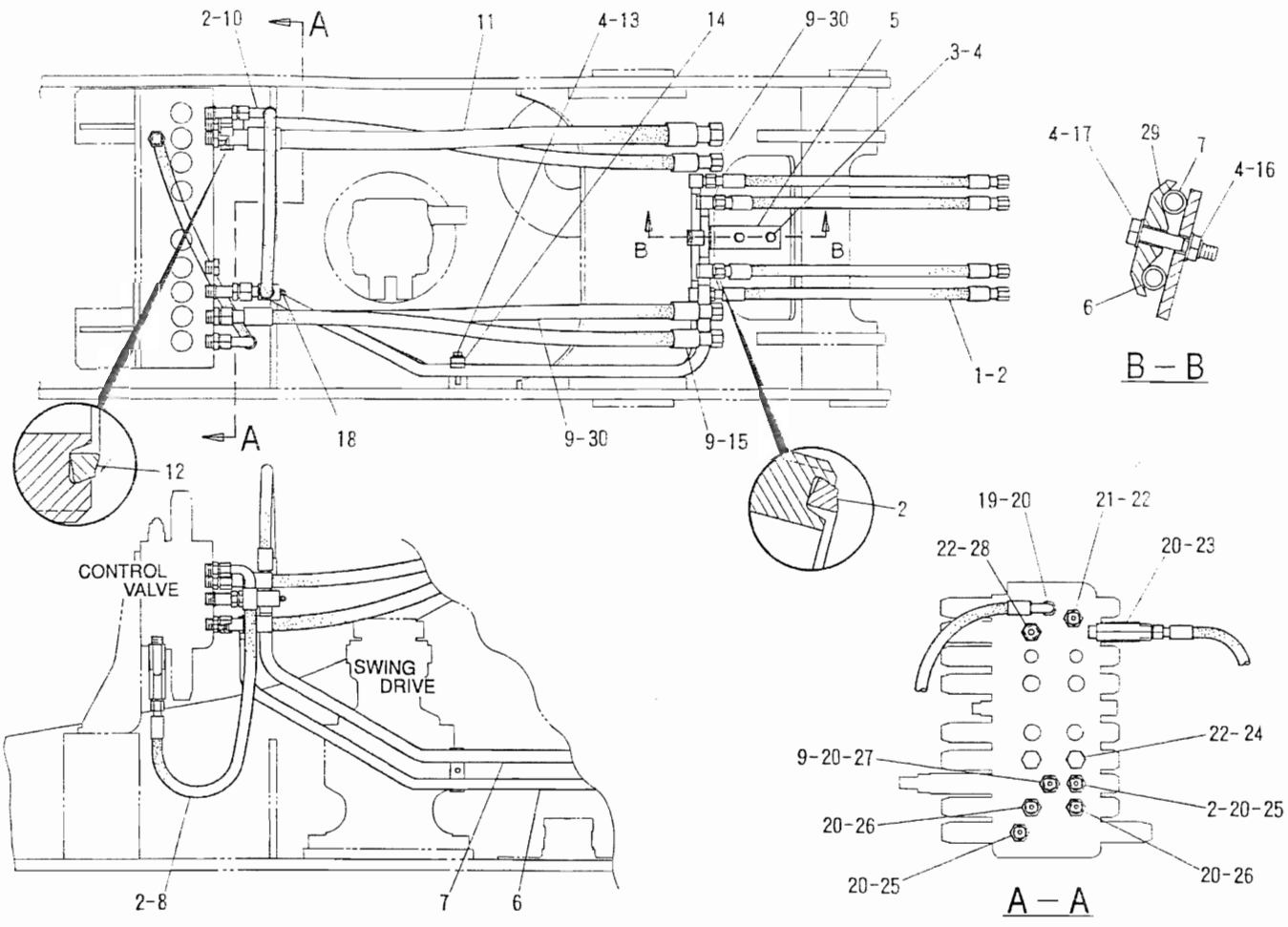

NOTE	No.	PART No.	QTY	PART NAME	NOTE	No.	PART No.	QTY	PART NAME
	1	111-6712	4	HOSE AS		21	4I-8977	1	CONNECTOR
	2	4I-8888	13	SEAL		22	7M-8485	4	SEAL
	3	8T-4192	2	BOLT (25mm LONG)		23	7I-1055	1	CONNECTOR
	4	8T-4223	5	WASHER		24	9S-4181	2	PLUG
	5	108-7178	1	PLATE		25	4I-8980	2	CONNECTOR
	6	107-1466	1	TUBE AS		26	4I-8979	2	CONNECTOR
	7	107-1467	1	TUBE AS		27	7I-1096	1	CONNECTOR
	8	111-6708	1	HOSE AS		28	4I-7756	1	CONNECTOR
	9	4I-8889	4	SEAL		29	093-1296	1	CLAMP
	10	111-6710	1	HOSE AS		30	7I-8017	2	HOSE AS
	11	4I-5648	1	HOSE AS					
	12	4I-8891	1	SEAL					
	13	8T-4910	1	BOLT (60mm LONG)					
	14	099-5408	1	CLAMP					
	15	4I-1077	1	HOSE AS					
	16	096-4884	1	NUT					
	17	8T-4648	1	BOLT (70mm LONG)					
	18	9F-2167	1	SCREW					
	19	4I-8984	1	CONNECTOR					
	20	3D-2824	7	SEAL					

H41328E

104-9159 LINES GP-FRONT

HYDRAULIC SYSTEM

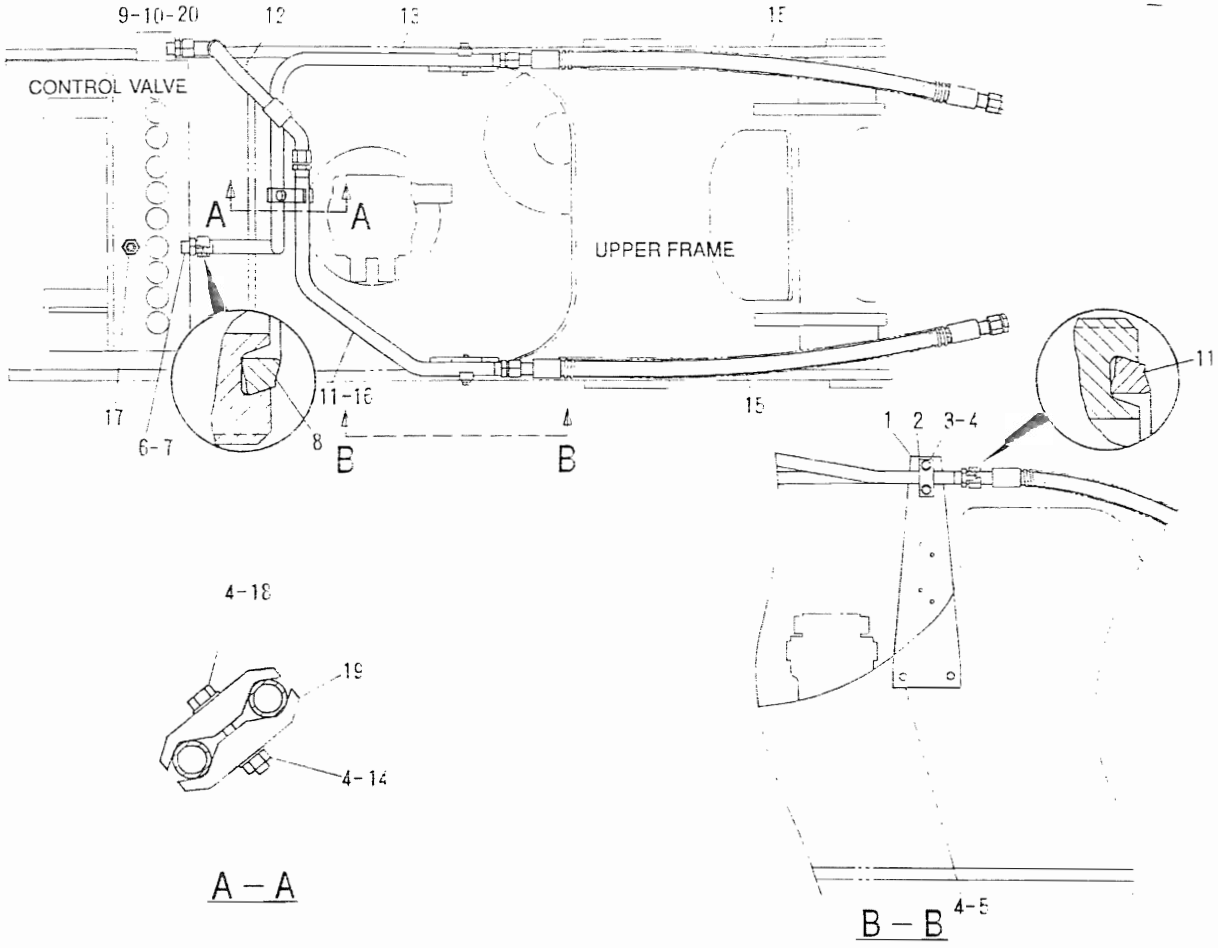

NOTE	No.	PART No.	QTY	PART NAME	NOTE	No.	PART No.	QTY	PART NAME
	1	113-6501	2	PLATE					
	2	093-1300	2	CLAMP					
	3	8T-4910	4	BOLT (60mm LONG)					
	4	8T-4223	10	WASHER					
	5	8T-4139	4	BOLT (30mm LONG)					
	6	41-7756	1	CONNECTOR					
	7	7M-8485	1	SEAL					
	8	41-8891	1	SEAL					
	9	6V-8637	1	CONNECTOR					
	10	3D-2824	1	SEAL (23.47mm ID)					
	11	41-8889	5	SEAL					
	12	71-7435	1	HOSE AS					
	13	108-7493	1	TUBE AS					
	14	8T-4244	1	NUT					
	15	108-7497	2	HOSE AS					
	16	108-7511	1	TUBE AS					
Y	17	105-7460	1	VALVE GP					
	18	8T-4648	1	BOLT (70mm LONG)					
	19	093-1296	2	CLAMP					
	20	6V-9746	1	SEAL (18.77mm ID)					

Y-SEE SEPARATE ILLUSTRATION

H41371E

104-9173 LINES GP-FRONT (SINGLE ACTION/1 PUMP CIRCUIT)

Part of 71-8555 Control Ar listed on Page 178

105-7460 – Page 230

An Attachment

HYDRAULIC SYSTEM

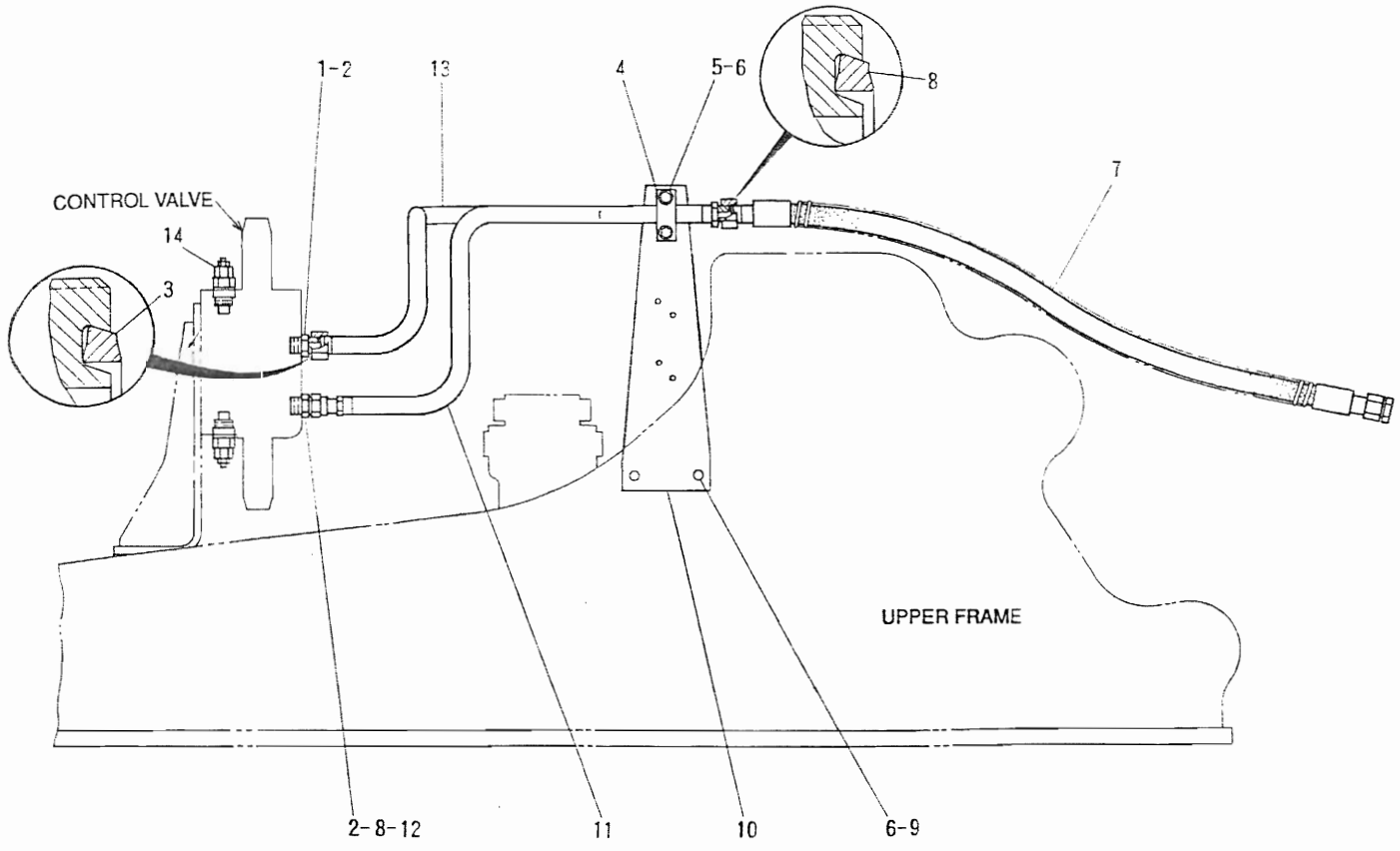

NOTE	No.	PART No.	QTY	PART NAME	NOTE	No.	PART No.	QTY	PART NAME
	1	4I-7756	1	CONNECTOR					
	2	7M-8485	2	SEAL					
	3	4I-8891	1	SEAL					
	4	093-1300	2	CLAMP					
	5	8T-4910	4	BOLT (60mm LONG)					
	6	8T-4223	8	WASHER					
	7	108-7497	2	HOSE AS					
	8	4I-8889	5	SEAL					
	9	8T-4139	4	BOLT (30mm LONG)					
	10	113-6501	2	PLATE					
	11	108-7513	1	TUBE AS					
	12	4I-8977	1	CONNECTOR					
	13	108-7493	1	TUBE AS					
Y	14	107-6917	2	VALVE GP					

Y-SEE SEPARATE ILLUSTRATION

H41455E

104-9176 LINES GP-FRONT (DOUBLE ACTION/1 PUMP CIRCUIT)

Part of 7I-8556 Control Ar listed on Page 178
107-6917 – Page 217
An Attachment

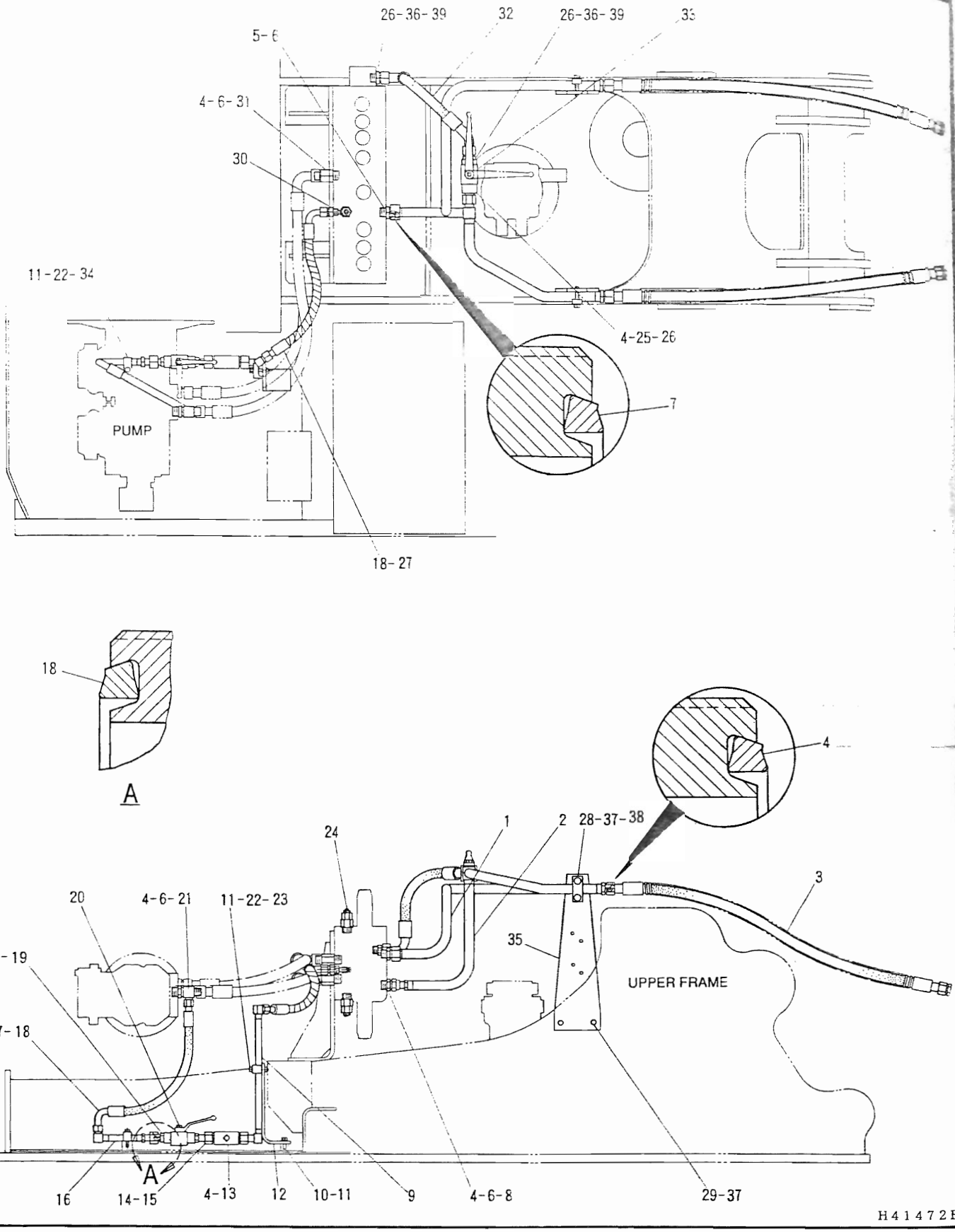

104-9179 LINES GP-FRONT (COMMON PIPING/2 PUMPS CIRCUIT)

Part of 7I-8557 Control Ar listed on Page 179
107-6917 – Page 217, 7I-7490 – Page 220, 7I-1285 – Page 221
An Attachment

HYDRAULIC SYSTEM

NOTE	No.	PART No.	QTY	PART NAME	NOTE	No.	PART No.	QTY	PART NAME
	1	108-7493	1	TUBE AS					
	2	108-7494	1	TUBE AS					
	3	108-7497	2	HOSE AS					
	4	4I-8889	11	SEAL					
	5	4I-7756	1	CONNECTOR					
	6	7M-8485	5	SEAL (29.74mm ID)					
	7	4I-8891	1	SEAL					
	8	4I-8977	1	CONNECTOR					
	9	115-8802	1	TUBE AS					
	10	8T-4195	2	BOLT (30mm LONG)					
	11	8T-4121	4	WASHER					
	12	108-7451	1	SUPPORT AS					
Y	13	7I-1285	1	VALVE GP					
	14	7I-1036	1	COUPLING AS					
	15	3K-0360	2	SEAL					
	16	7I-7485	1	TUBE AS					
	17	7I-7427	1	HOSE AS					
	18	4I-8888	5	SEAL					
	19	7I-0047	1	CONNECTOR					
	20	4I-6188	1	VALVE AS					
		6I-6915	1	HANDLE					
	21	6I-6885	1	TEE					
	22	093-1291	2	CLAMP					
	23	8T-6466	1	BOLT (60mm LONG)					
Y	24	107-6917	2	VALVE GP					
	25	4I-8979	1	CONNECTOR					
	26	3D-2824	3	SEAL (23.47mm ID)					
	27	115-8600	1	HOSE AS					
	28	093-1300	2	CLAMP					
	29	8T-4139	4	BOLT (30mm LONG)					
Y	30	7I-7490	1	VALVE GP					
	31	7I-0048	2	CONNECTOR					
	32	7I-7435	1	HOSE AS					
	33	7I-1215	1	VALVE AS					
		6I-6916	1	HANDLE					
	34	8T-4182	1	BOLT (45mm LONG)					
	35	113-6501	2	PLATE					
	36	6V-9746	2	SEAL (18.77mm ID)					
	37	8T-4223	8	WASHER					
	38	8T-4910	4	BOLT (60mm LONG)					
	39	6V-8637	2	CONNECTOR					

Y-SEE SEPARATE ILLUSTRATION

H41473E

104-9179 LINES GP-FRONT (COMMON PIPING/2 PUMPS CIRCUIT)

Part of 7I-8557 Control Ar listed on Page 179
107-6917 – Page 217, 7I-7490 – Page 220, 7I-1285 – Page 221
An Attachment

HYDRAULIC SYSTEM

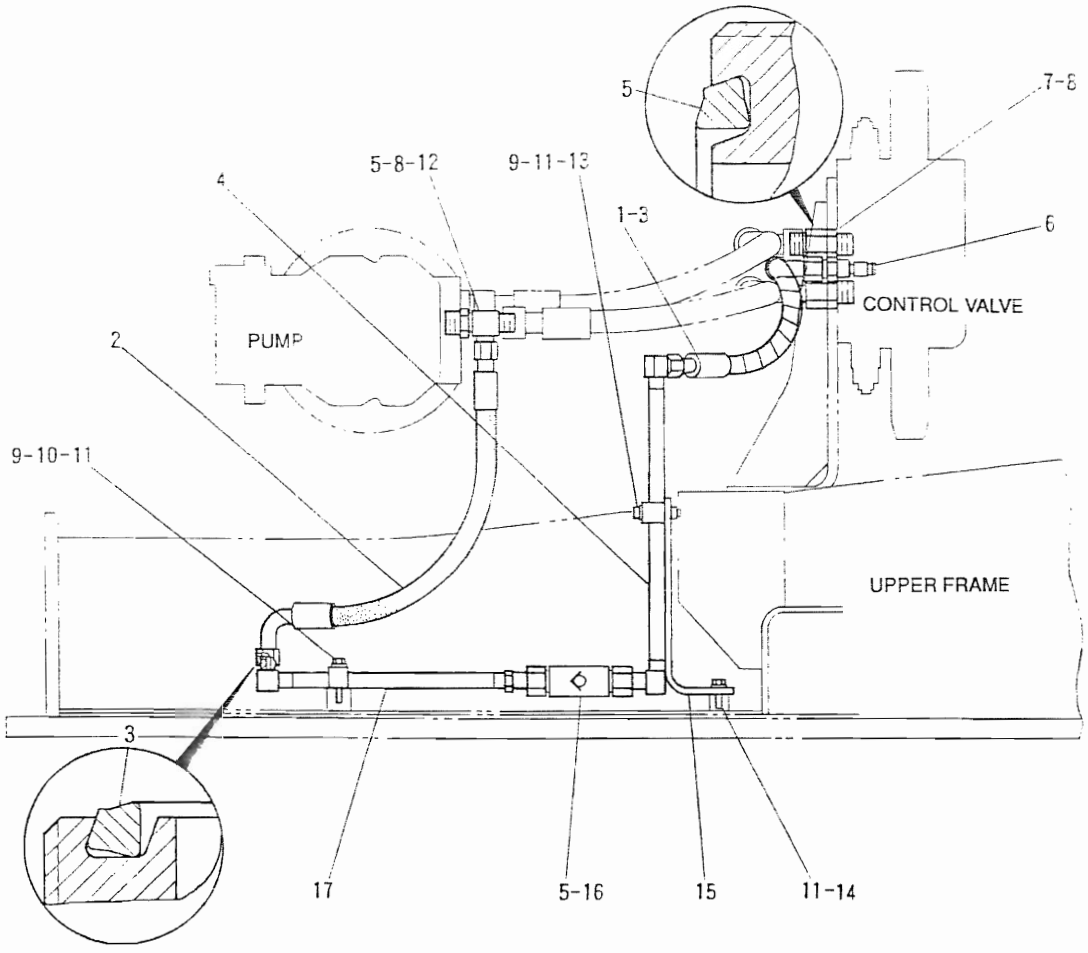

NOTE	No.	PART No.	QTY	PART NAME	NOTE	No.	PART No.	QTY	PART NAME
	1	115-8600	1	HOSE AS					
	2	7I-7427	1	HOSE AS					
	3	4I-8888	4	SEAL					
	4	115-8802	1	TUBE AS					
	5	4I-8889	5	SEAL					
Y	6	7I-7490	1	VALVE GP					
	7	7I-0048	2	CONNECTOR					
	8	7M-8485	3	SEAL					
	9	093-1291	2	CLAMP					
	10	8T-4182	1	BOLT (45mm LONG)					
	11	8T-4121	4	WASHER					
	12	6I-6885	1	TEE					
	13	8T-6466	1	BOLT (60mm LONG)					
	14	8T-4195	2	BOLT (30mm LONG)					
	15	108-7451	1	SUPPORT AS					
Y	16	7I-1285	1	VALVE GP					
	17	7I-8113	1	TUBE AS					

Y-SEE SEPARATE ILLUSTRATION

H41463E

104-9183 LINES GP-FRONT (2 PUMP FLOW)

Part of 7I-8559 Installation Ar listed on Page 177
7I-7490 — Page 220, 7I-1285 — Page 221
An Attachment

HYDRAULIC SYSTEM

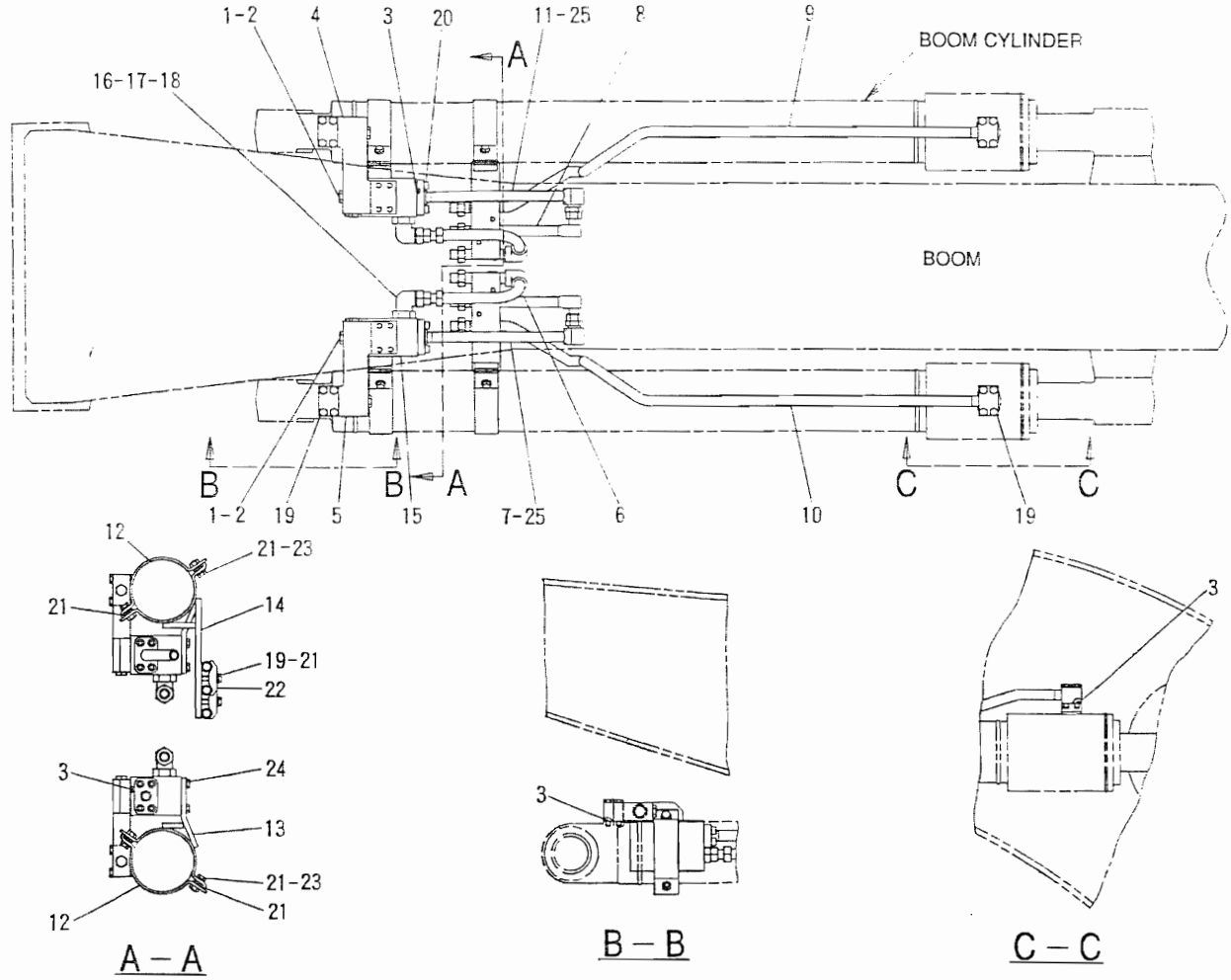

NOTE	No.	PART No.	QTY	PART NAME	NOTE	No.	PART No.	QTY	PART NAME
	1	9S-4185	6	PLUG		21	8T-4121	28	WASHER
	2	3K-0360	6	SEAL		22	096-5766	4	CLAMP
	3	4J-5267	8	SEAL		23	8T-4195	8	BOLT (30mm LONG)
	4	108-7425	1	BLOCK		24	8T-5436	8	BOLT (130mm LONG)
	5	108-7424	1	BLOCK		25	41-8888	2	SEAL
	6	108-7418	2	PIPE AS					
	7	108-7420	1	TUBE AS					
	8	108-7421	2	TUBE AS					
	9	108-7422	1	TUBE AS					
	10	108-7423	1	TUBE AS					
	11	108-7419	1	TUBE AS					
	12	104-8845	4	SUPPORT AS					
	13	108-7440	2	SUPPORT AS					
	14	108-7436	2	SUPPORT AS					
Y	15	086-1936	2	VALVE AS					
	16	6V-9182	2	ELBOW					
	17	7M-8485	2	SEAL					
	18	6V-9746	2	SEAL					
	19	8T-4185	20	BOLT (50mm LONG)					
	20	9X-6032	8	BOLT (30mm LONG)					

Y-SEE SEPARATE ILLUSTRATION

H41477E

104-9186 LINES GP-FRONT (BOOM LOWERING)

Part of 102-0934 Valve Ar listed on Page 216
086-1936 – Page 219
An Attachment

HYDRAULIC SYSTEM

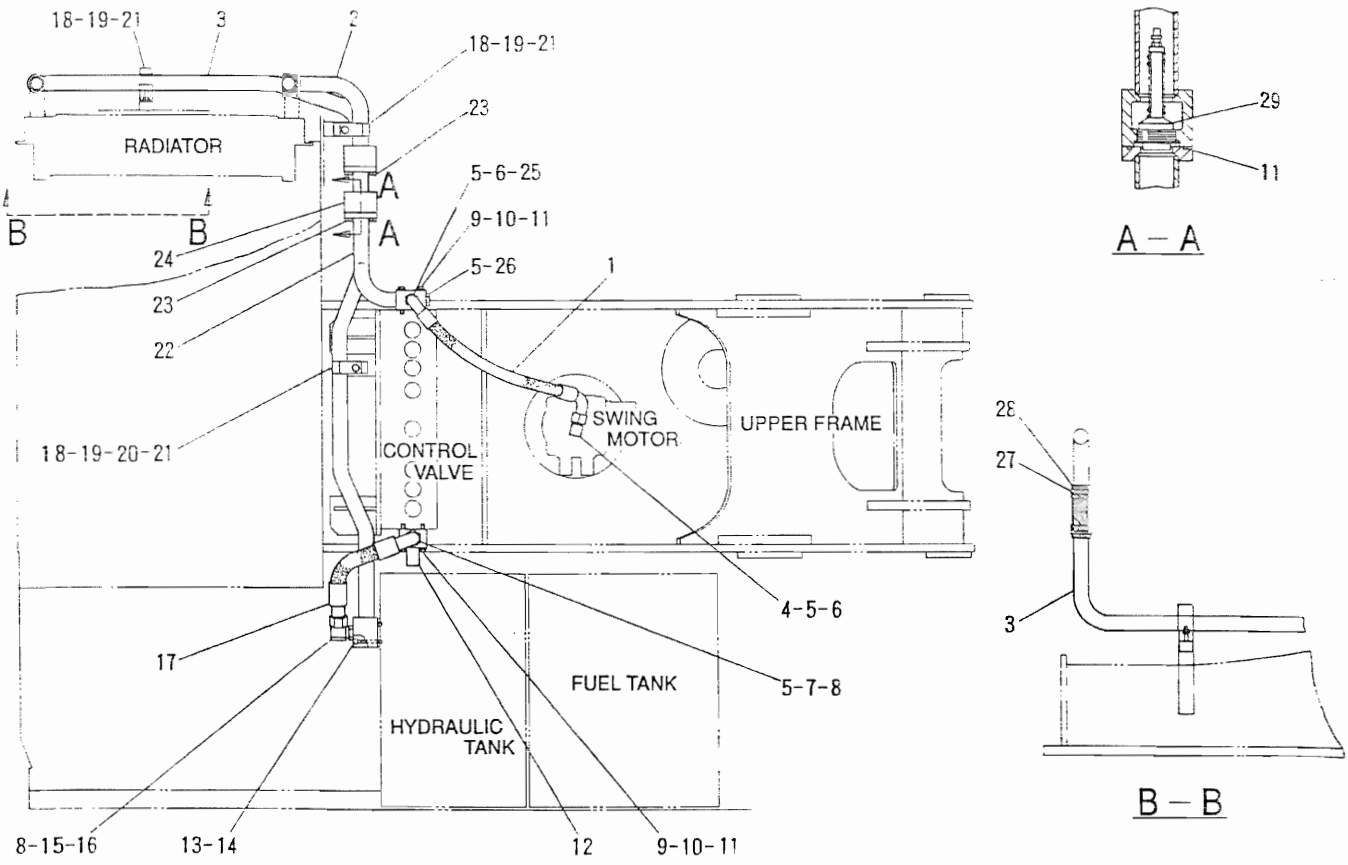

NOTE	No.	PART No.	QTY	PART NAME	NOTE	No.	PART No.	QTY	PART NAME
	1	107-1475	1	HOSE AS		21	8T-4176	3	BOLT (90mm LONG)
	2	107-1554	1	PIPE AS		22	107-1550	1	PIPE AS
	3	107-1548	1	PIPE AS		23	8T-4136	8	BOLT (25mm LONG)
	4	6V-9007	1	ELBOW		24	107-1552	1	PIPE AS
	5	3D-2824	4	SEAL (23.47mm ID)		25	6V-8637	1	CONNECTOR
	6	6V-9746	2	SEAL (18.77mm ID)		26	9S-4183	1	PLUG
	7	6V-8714	1	CONNECTOR		27	095-1392	4	CLAMP
	8	5K-9090	2	SEAL (23.52mm ID)		28	113-6402	2	HOSE
	9	8T-5005	8	BOLT (70mm LONG)		29	51-4128	2	VALVE AS
	10	8T-4121	12	WASHER					
	11	4J-0526	4	SEAL					
Y	12	71-1001	1	VALVE GP					
	13	095-0658	4	BOLT (70mm LONG)					
	14	4J-0523	1	SEAL					
	15	6V-9008	1	ELBOW					
	16	7M-8485	1	SEAL (29.74mm ID)					
	17	113-6397	1	HOSE AS					
	18	8T-4223	4	WASHER					
	19	096-2369	3	CLAMP					
	20	096-4884	1	NUT					

Y-SEE SEPARATE ILLUSTRATION

H41329E

104-9160 LINES GP-RETURN & FILTER

71-1001 – Page 220

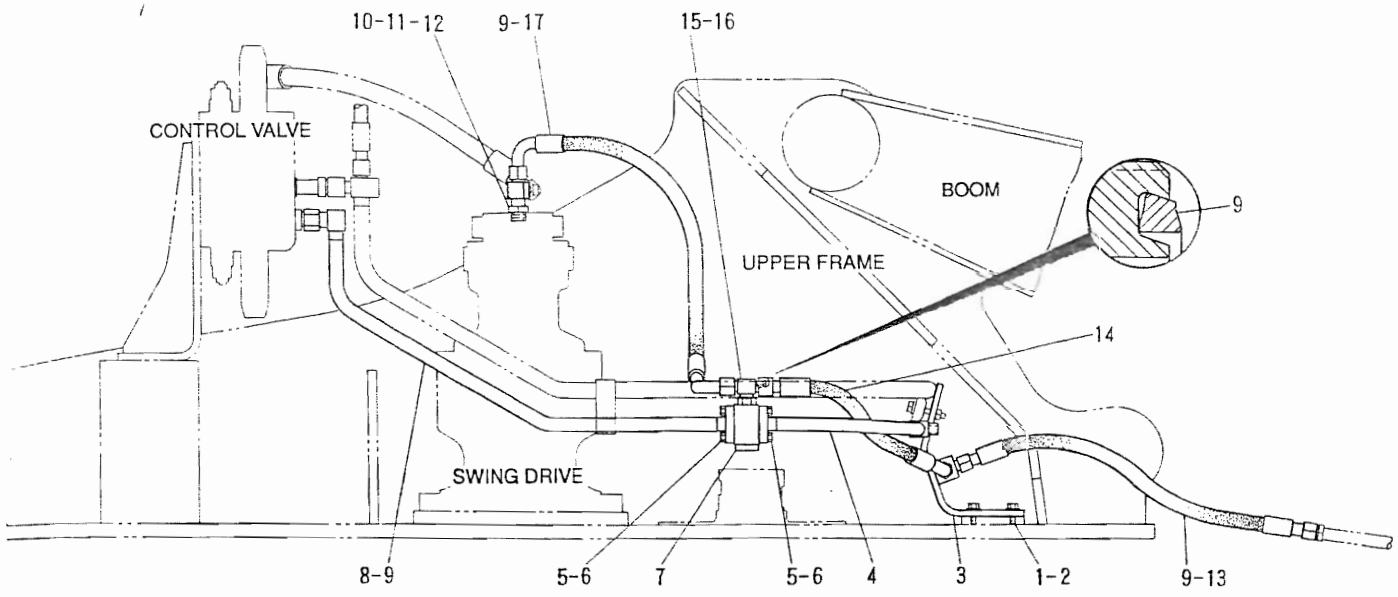

NOTE	No.	PART No.	QTY	PART NAME	NOTE	No.	PART No.	QTY	PART NAME
	1	8T-4192	2	BOLT (25㎜ LONG)					
	2	8T-4223	2	WASHER					
	3	108-7454	1	PIPE AS					
	4	108-7447	1	TUBE AS					
	5	8T-4195	8	BOLT (30㎜ LONG)					
	6	4J-5267	2	SEAL					
Y	7	7I-7496	1	VALVE GP					
	8	115-8734	1	TUBE AS					
	9	4I-8888	7	SEAL					
	10	108-7453	1	TEE					
	11	3D-2824	1	SEAL (23.47㎜ ID)					
	12	4I-8889	1	SEAL					
	13	102-1133	2	HOSE AS					
	14	102-1130	1	HOSE AS					
	15	102-0772	1	TEE					
	16	3K-0360	1	SEAL					
	17	108-7441	1	HOSE AS					

Y-SEE SEPARATE ILLUSTRATION

H41475E

104-9187 LINES GP-RETURN & FILTER (BOOM LOWERING)

Part of 102-0934 Valve Ar listed on Page 216
7I-7496 – Page 221
An Attachment

HYDRAULIC SYSTEM

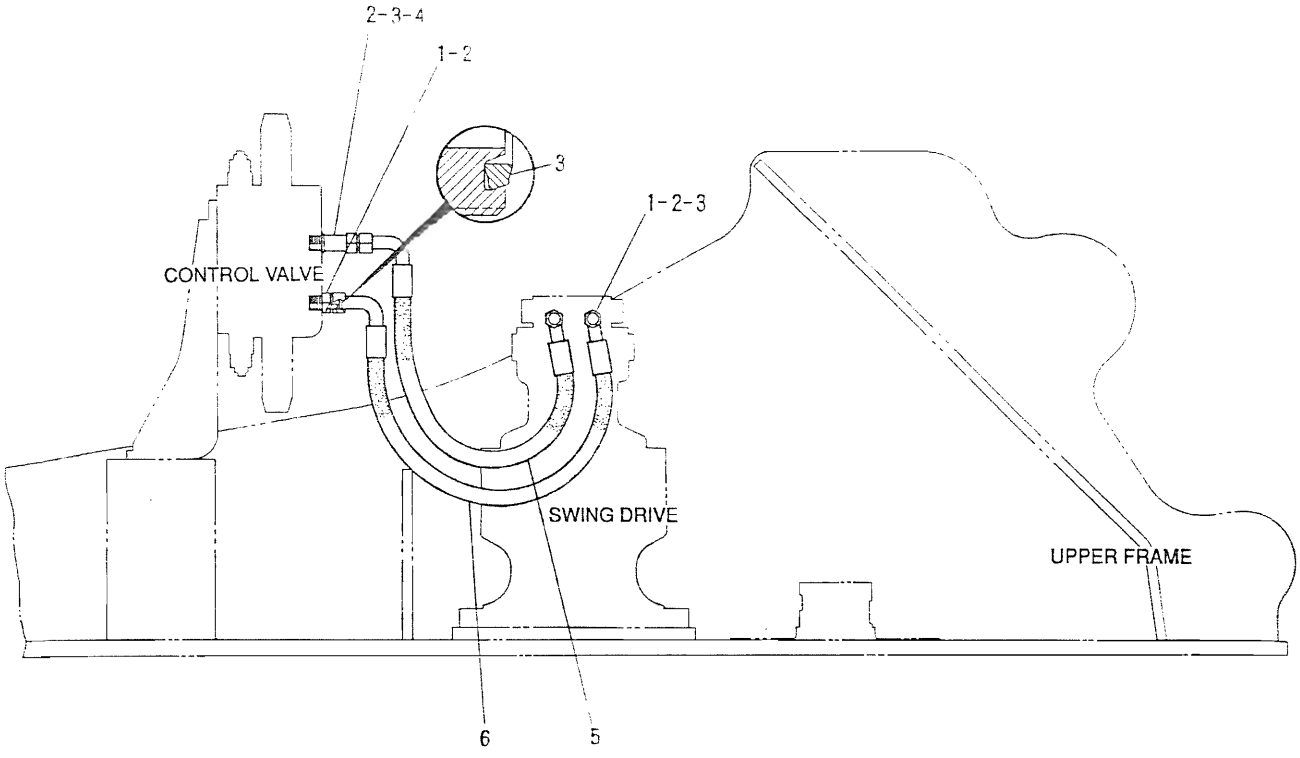

NOTE	No.	PART No.	QTY	PART NAME	NOTE	No.	PART No.	QTY	PART NAME
	1	4I-8980	3	CONNECTOR					
	2	3D-2824	4	SEAL					
	3	4I-8888	4	SEAL					
	4	4I-8984	1	CONNECTOR					
	5	107-1522	1	HOSE AS					
	6	71-8287	1	HOSE AS					

H41327E

104-9158 LINES GP-SWING MOTOR (A)

MEMORANDA

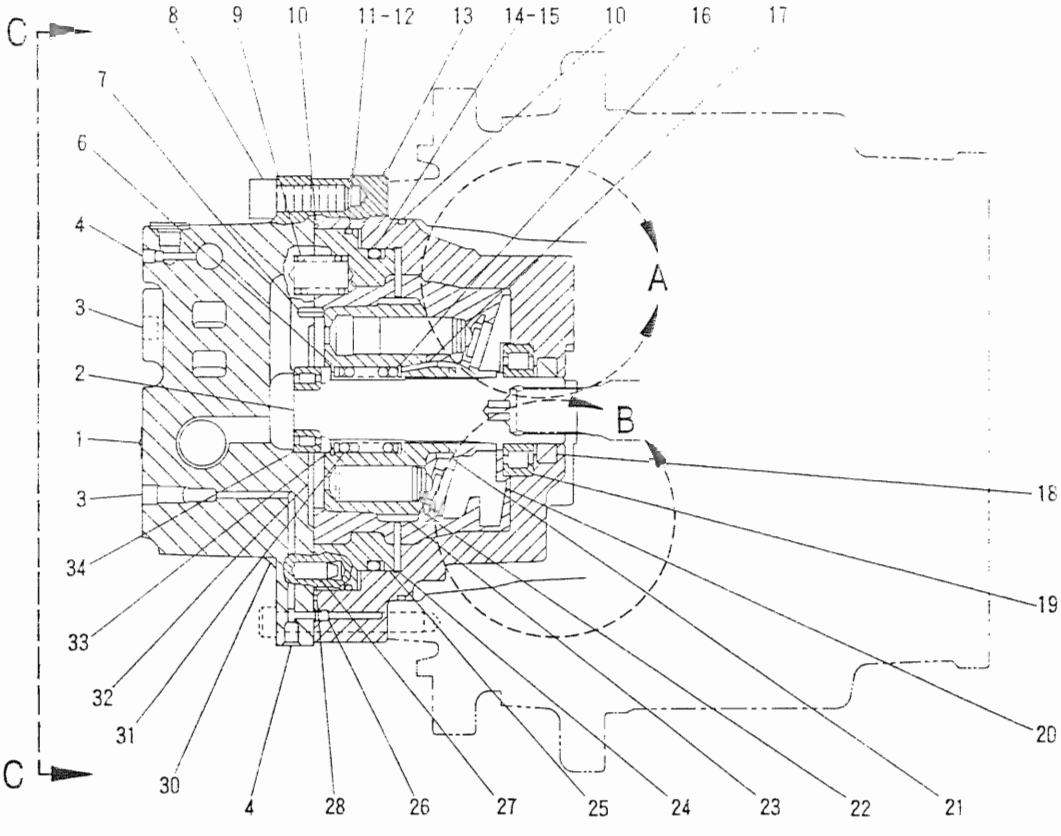

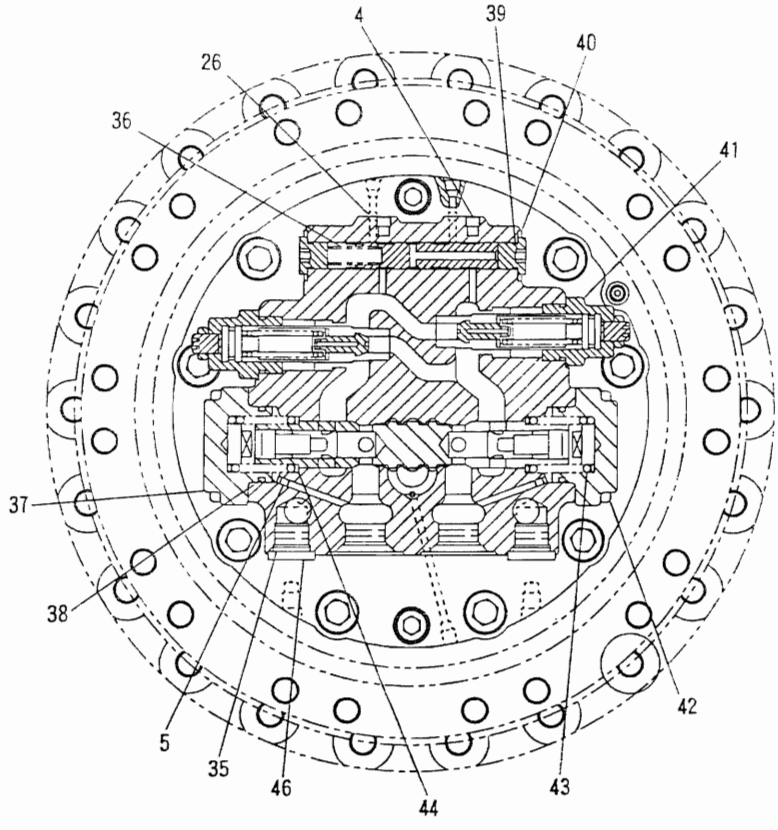

C – C

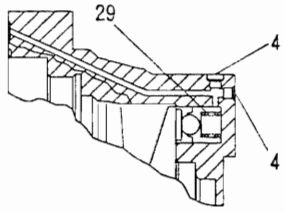

A

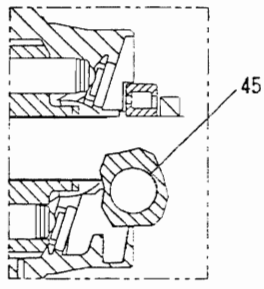

B

H41322E

107-6553 MOTOR GP-PISTON (SLIPPER)

Part of 102-6433 Drive listed on Page 101
71-1044 – Page 206

HYDRAULIC SYSTEM

NOTE	No.	PART No.	QTY	PART NAME	NOTE	No.	PART No.	QTY	PART NAME
	1	095-7419	2	SCREW					
	2	107-6556	1	SHAFT AS					
		107-6559	1	SHAFT					
		107-6560	1	PIN					
	3	095-0966	5	PLUG					
	4	8T-6759	12	PLUG					
	5	105-2611	2	ORIFICE					
	6	099-7075	1	RING					
	7	096-0014	1	PIN					
	8	8T-4944	8	BOLT (40mm LONG)					
	9	099-7077	8	SPRING					
	10	099-7116	2	SEAL					
	11	099-7152	1	RING					
	12	099-7076	1	SEAL					
	13	107-6562	1	CASE AS					
	14	099-7198	1	RING					
	15	095-1730	1	SEAL					
	16	099-7144	1	RING					
	17	099-7147	3	PIN					
	18	115-3031	1	SEAL					
	19	115-2411	1	BEARING					
	20	107-6554	1	PLATE					
	21	099-7148	1	BUSHING					
	22	099-7149	1	PLATE					
	23	099-7200	1	BARREL AS					
	24	099-7151	1	PLATE					
	25	099-7196	1	PISTON					
	26	099-5349	3	ORIFICE					
	27	093-7919	4	PIN					
	28	095-1578	3	SEAL					
	29	107-6557	2	SPRING					
	30	107-6561	1	COVER AS					
	31	107-6555	1	SPRING					
	32	099-7114	1	PLATE					
	33	099-7146	1	RING					
	34	115-2410	1	BEARING					
	35	095-1585	2	SEAL					
	36	7I-1041	1	SPRING					
	37	093-8008	2	COVER					
	38	095-1701	2	SEAL					
	39	095-1582	2	SEAL					
	40	099-7197	2	PLUG					
Y	41	7I-1044	2	VALVE GP					
	42	9X-6032	8	BOLT (30mm LONG)					
	43	099-7079	2	SPRING					
	44	093-8005	2	SEAT					
	45	1F-8359	2	BALL					
	46	7I-1032	2	PLUG					

Y-SEE SEPARATE ILLUSTRATION

H41323

107-6553 MOTOR GP-PISTON (SLIPPER)

Part of 102-6433 Drive listed on Page 101

7I-1044 – Page 206

HYDRAULIC SYSTEM

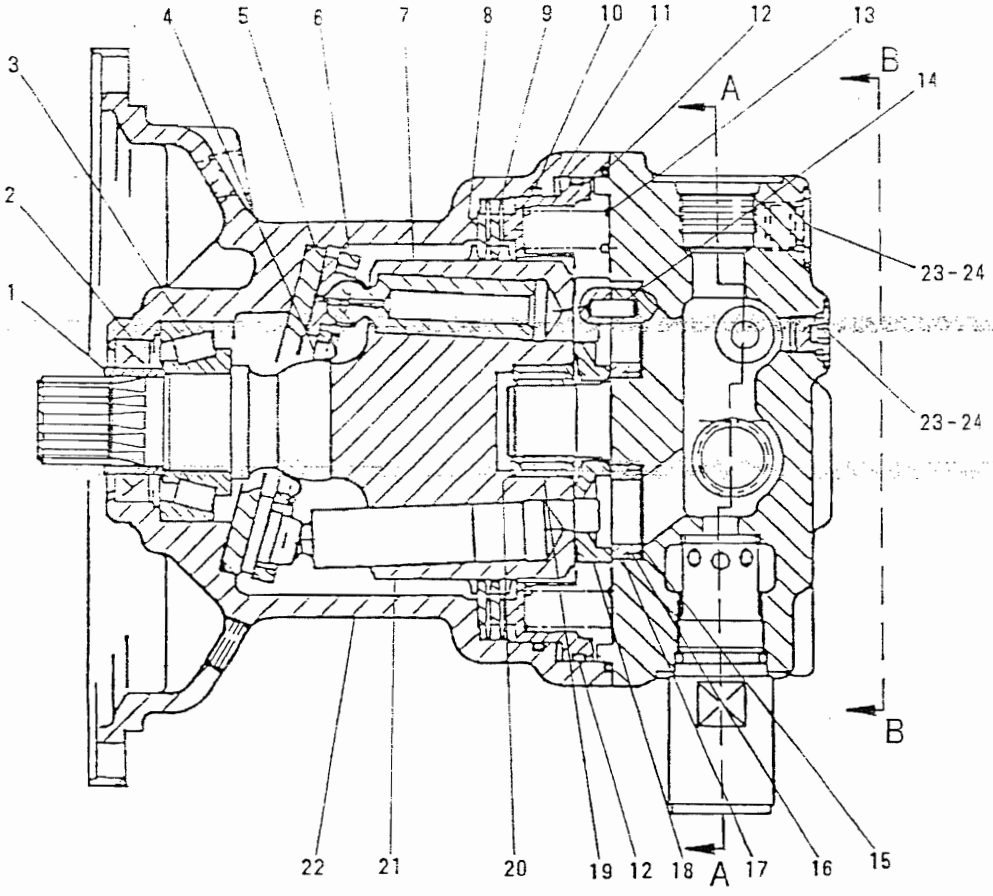

NOTE	No.	PART No.	QTY	PART NAME	NOTE	No.	PART No.	QTY	PART NAME
	1	099-0320	1	BUSHING		21	099-6533	1	BARREL AS
	2	099-0321	1	SEAL		22	102-0896	1	HOUSING
	3	099-0322	1	BEARING		23	095-1579	3	SEAL
	4	7I-0057	1	SPRING		24	099-0371	3	PLUG
	5	099-4749	1	PLATE					
	6	7I-0058	1	PLATE					
	7	7I-1180	1	PISTON AS					
	8	099-6530	2	PLATE					
	9	099-6531	2	PLATE					
	10	099-6532	1	SEAL					
	11	099-6535	1	PISTON					
	12	6F-4718	2	SEAL					
	13	099-0328	16	SPRING					
	14	099-0329	2	PIN					
	15	099-0330	4	SPRING					
	16	099-0331	4	RING					
	17	099-0332	4	BUSHING					
	18	099-0333	1	PLATE					
	19	099-0334	1	BEARING					
	20	099-0335	1	RING					

H32367E

7I-8267 MOTOR GP-PISTON (SLIPPER) - PART 1 OF 2

Part of 102-6438 Drive listed on Page 103

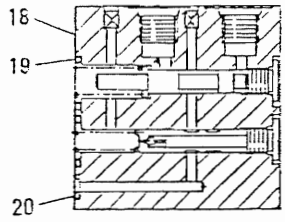

SECTION C — C

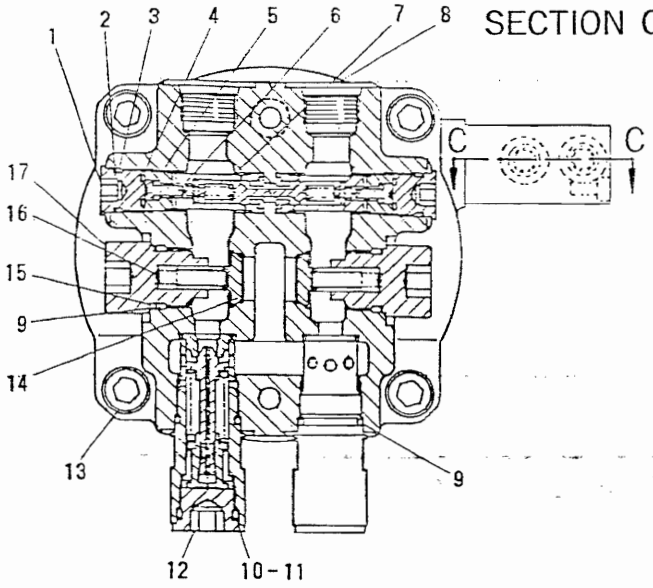

SECTION A — A

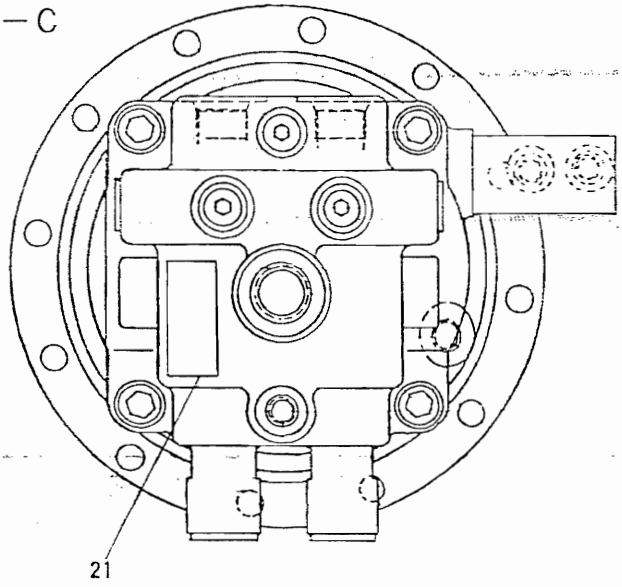

VIEW B — B

NOTE	No.	PART No.	QTY	PART NAME	NOTE	No.	PART No.	QTY	PART NAME
	1	7I-0060	2	PLUG		21	7I-0168	1	PLATE
	2	095-1784	2	RING					THE FOLLOWING REPAI
	3	095-1585	2	SEAL					KIT IS AVAILABLE:
	4	095-1580	2	SEAL			102-0898	1	SEAL KIT
	5	7I-0061	2	VALVE					
	6	7I-0062	2	SPRING					
	7	7I-0063	2	SLEEVE AS					
	8	7I-0064	1	HEAD					
	9	095-1594	4	SEAL					
	10	095-1592	2	SEAL					
	11	095-1788	2	RING					
	12	099-7690	2	VALVE GP					
	13	8T-0347	4	BOLT					
	14	096-5933	2	VALVE					
	15	095-1789	2	RING					
	16	096-5934	2	SPRING					
	17	096-5932	2	PLUG					
	18	7I-0066	1	VALVE GP					
	19	4J-5268	2	SEAL					
	20	6V-5586	1	SEAL					

H32368

7I-8267 MOTOR GP-PISTON (SLIPPER) - PART 2 OF 2

Part of 102-6438 Drive listed on Page 103

HYDRAULIC SYSTEM

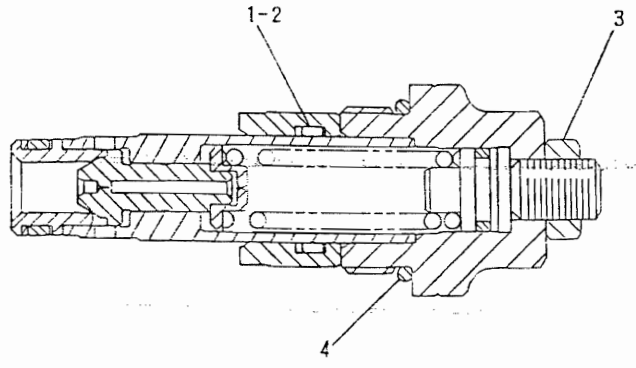

NOTE	No	PART No	QTY	PART NAME
	1	095-1786	2	RING
	2	095-1587	1	SEAL
	3	8T-4244	1	NUT
	4	7M-8485	1	SEAL

H41442E

7I-1044 VALVE GP-RELIEF (DIRECT OPERATED)

Part of 107-6553 Motor listed on Page 203

HYDRAULIC SYSTEM

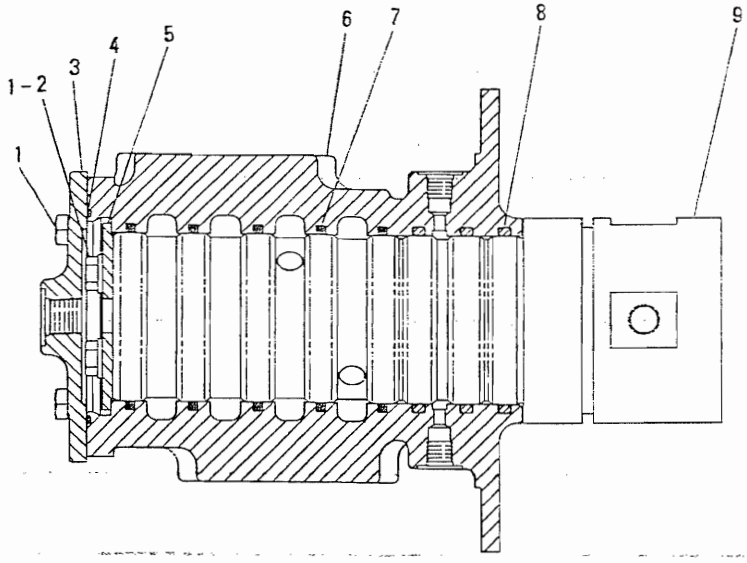

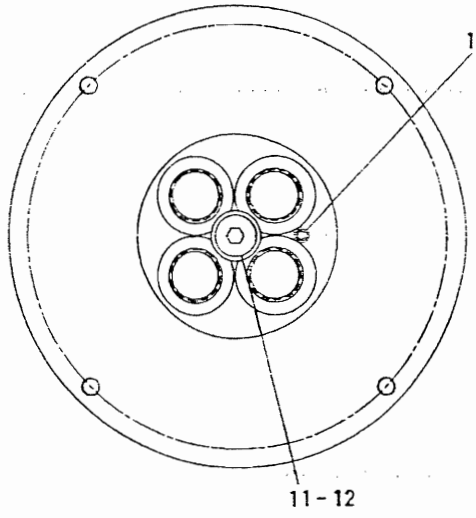

NOTE	No.	PART No.	QTY	PART NAME	NOTE	No.	PART No.	QTY	PART NAME
	1	8T-4136	6	BOLT (25㎜ LONG)					
	2	8T-4121	2	WASHER					
	3	5I-4363	1	COVER					
	4	095-1716	1	SEAL					
	5	7I-7321	1	RETAINER					
	6	4I-7604	1	HOUSING					
	7	096-4615	5	SEAL					
	8	095-1625	3	SEAL					
	9	4I-7605	1	ROTOR					
	10	8T-6759	1	PLUG					
	11	3K-0360	1	SEAL					
	12	9S-8005	1	PLUG					

H3206

4I-7603 SWIVEL GP

Part of 104-9157 and 104-9192 Lines listed on Pages 175 and 175.02

HYDRAULIC SYSTEM

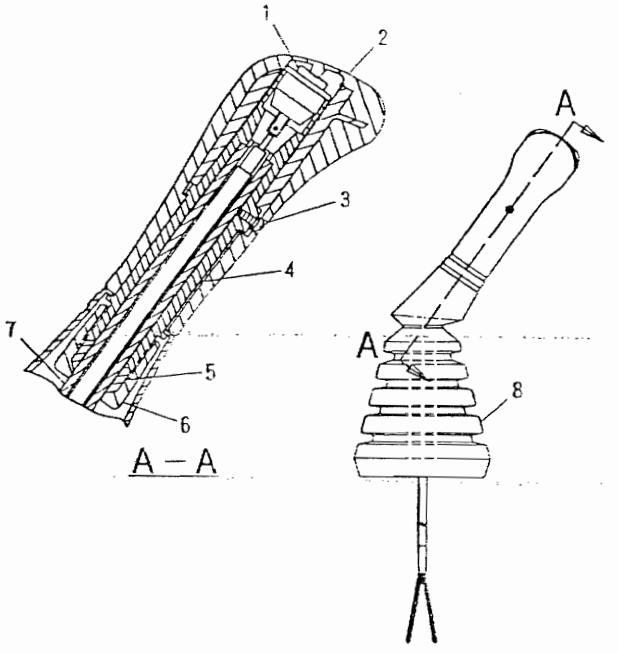

NOTE	No.	PART No.	QTY	PART NAME
	1	6I-5088	1	SWITCH AS (LOWIDLE)
	2	6I-5256	1	KNOB
	3	6I-5298	1	SCREW
	4	6I-5258	1	SHAFT
	5	6I-5259	1	SLEEVE
	6	7I-6773	1	NUT
	7	114-8186	1	LEVER
	8	6I-5275	1	PLATE

H38543E

111-0945 CONTROL GP-PILOT OPERATED HYDRAULIC

Part of 110-5620 Valve listed on Page 224

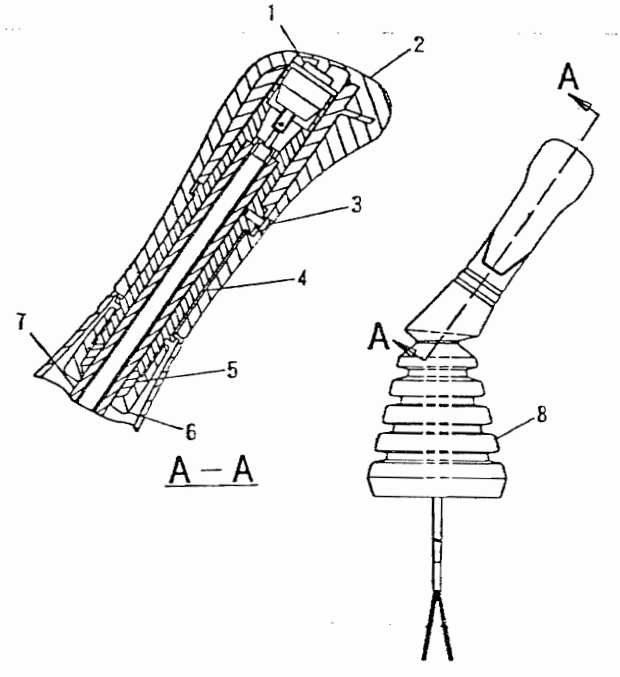

NOTE	No.	PART No.	QTY	PART NAME
	1	6I-5088	1	SWITCH AS (HORN)
	2	6I-5255	1	KNOB
	3	6I-5298	1	SCREW
	4	6I-5258	1	SHAFT
	5	6I-5259	1	SLEEVE
	6	7I-6773	1	NUT
	7	114-8186	1	LEVER
	8	6I-5275	1	BOOT

H38544E

111-0946 CONTROL GP-PILOT OPERATED HYDRAULIC

Part of 110-5621 Valve listed on Page 224

HYDRAULIC SYSTEM

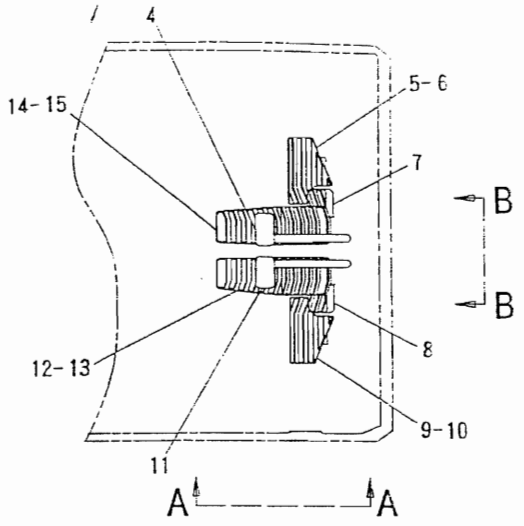

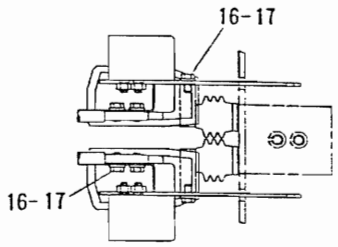

B－B

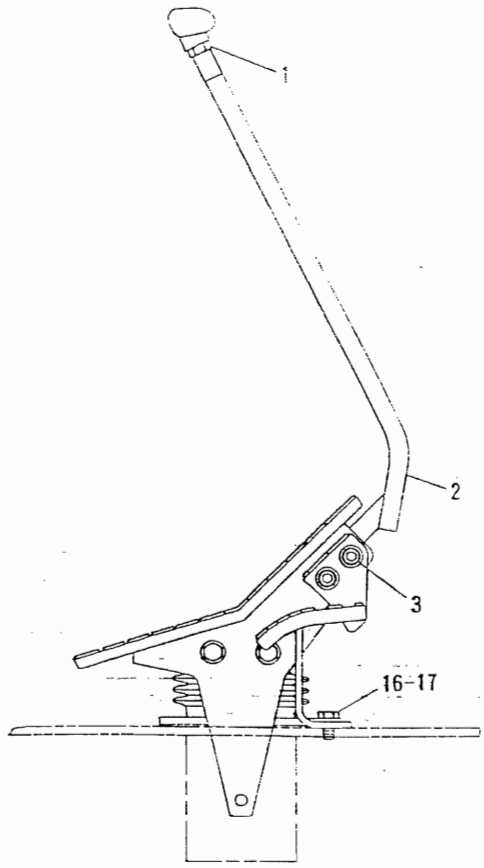

A－A

NOTE	No.	PART No.	QTY	PART NAME	NOTE	No.	PART No.	QTY	PART NAME
	1	096-6331	2	NUT					
	2	7I-6960	2	LEVER AS					
	3	095-0658	4	BOLT (70mm LONG)					
	4	096-6332	1	KNOB (LH)					
	5	4I-1317	1	PLATE AS (LH)					
	6	4I-1297	1	PEDAL (LH)					
	7	4I-1291	1	PEDAL (LH)					
	8	4I-1290	1	PEDAL (RH)					
	9	4I-1292	1	PLATE AS (RH)					
	10	4I-1298	1	PEDAL (RH)					
	11	096-6333	1	KNOB (RH)					
	12	7I-6785	1	PEDAL					
	13	111-1000	1	PEDAL AS					
	14	7I-6786	1	PEDAL					
	15	111-0994	1	PEDAL AS					
	16	4I-3144	12	WASHER					
	17	4I-3123	12	BOLT (20mm LONG)					

HYDRAULIC SYSTEM

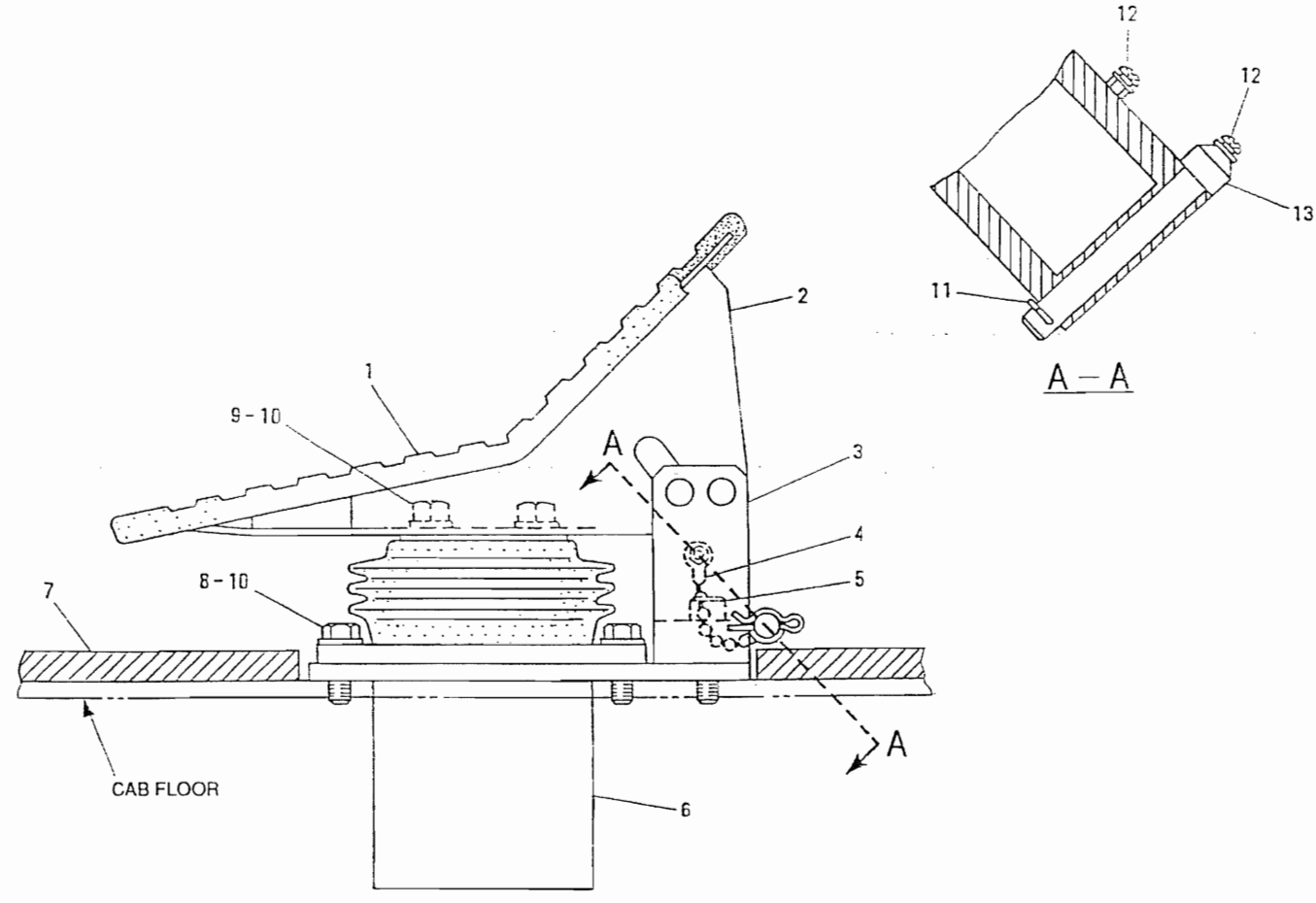

NOTE	No.	PART No.	QTY	PART NAME	NOTE	No.	PART No.	QTY	PART NAME
	1	7I-6785	1	RUBBER					
	2	7I-8436	1	PEDAL AS					
	3	7Y-5753	1	SUPPORT AS					
	4	5I-7090	1	CHAIN AS					
	5	8T-0271	1	BOLT (35mm LONG)					
Y	6	087-5675	1	VALVE GP					
	7	109-6137	1	FLOOR MAT					
	8	8T-4136	2	BOLT (25mm LONG)					
	9	8T-4137	2	BOLT (20mm LONG)					
	10	8T-4121	4	WASHER					
	11	7Y-4717	1	PIN					
	12	095-0735	2	SCREW					
	13	7Y-5757	1	PIN					

Y-SEE SEPARATE ILLUSTRATION

H41

110-5645 CONTROL GP-HYDRAULIC

Part of 7I-8555, 7I-8556 and 7I-8557 Control Ar listed on Pages 178 and 179

087-5675 – Page 226

An Attachment

HYDRAULIC SYSTEM

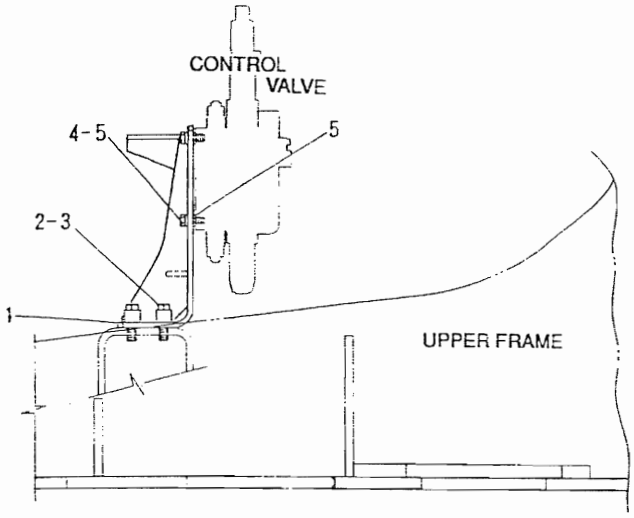

NOTE	No.	PART No.	QTY	PART NAME
	1	102-0940	1	BRACKET AS
	2	8T-4140	4	BOLT (60㎜ LONG)
	3	6I-6123	4	SPACER
	4	8T-4956	4	BOLT (35㎜ LONG)
	5	8T-4223	8	WASHER

H4133

102-0983 MOUNTING GP-VALVE

HYDRAULIC SYSTEM

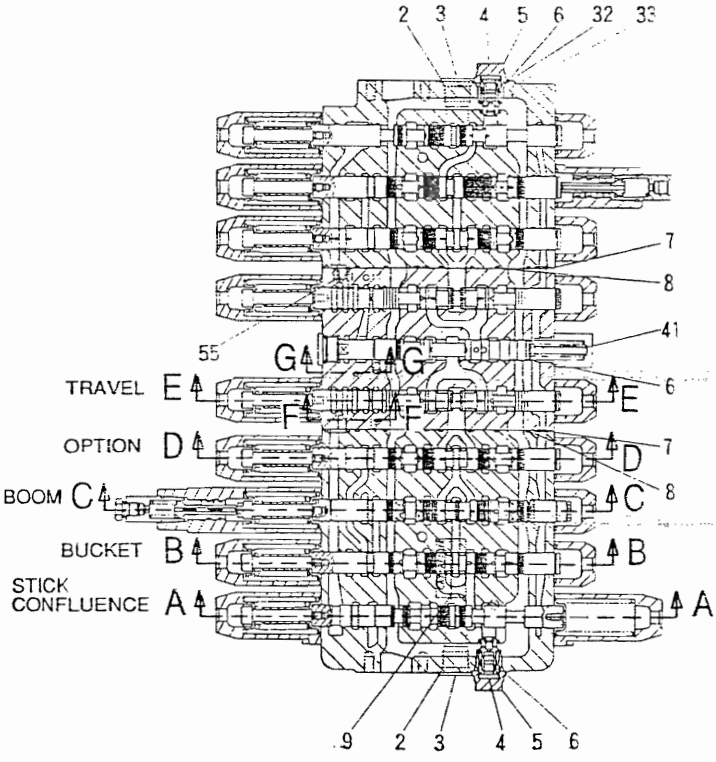

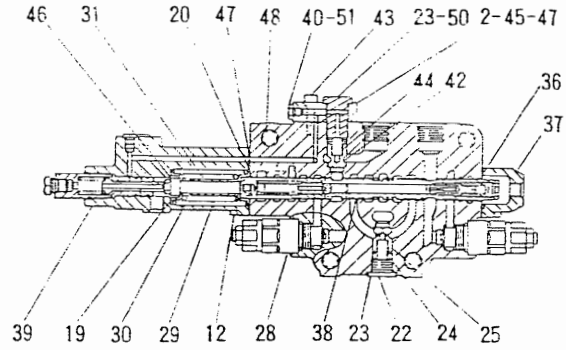

C – C

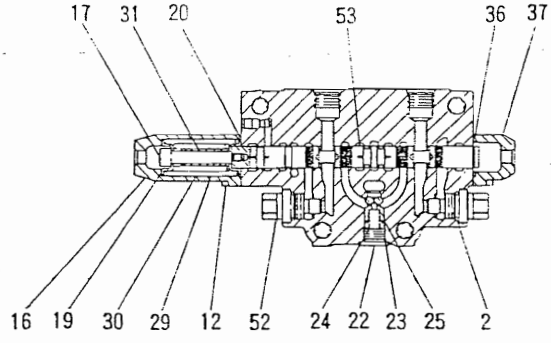

D – D

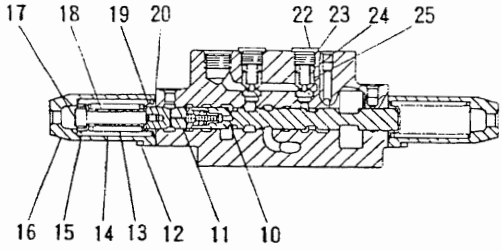

A – A

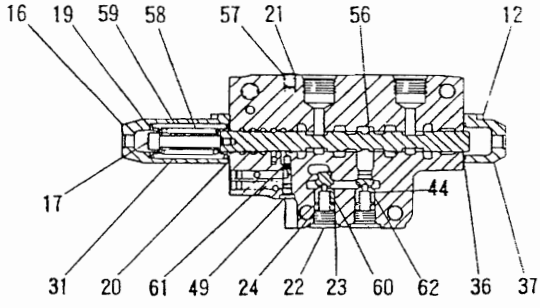

E – E

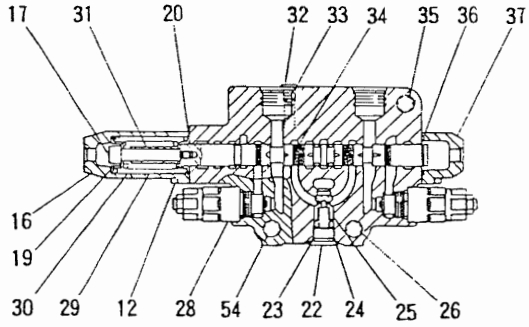

B – B

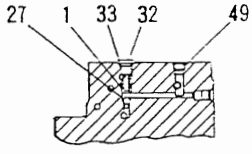

G – G

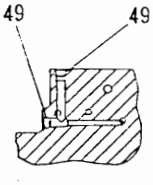

F – F

H41618E

105-7423 VALVE GP-BANK-PART 1 OF 2

107-6917 – Page 217

HYDRAULIC SYSTEM

NOTE	No.	PART No.	QTY	PART NAME	NOTE	No.	PART No.	QTY	PART NAME
	1	7I-7259	1	SEAT		54	7I-8088	1	BOLT
	2	095-1592	5	SEAL (23.7mm ID)		55	7I-8084	3	PLUG
	3	7I-7190	2	PLUG		56	116-3666	1	SPOOL
	4	7I-7191	2	VALVE GP		57	9S-4182	1	PLUG
	5	7I-7192	2	PLUG		58	7I-7244	1	SPRING
	6	095-1696	3	SEAL		59	7I-7243	1	SPRING
	7	095-1580	11	SEAL		60	7I-7242	1	VALVE
	8	095-1698	10	SEAL		61	7I-7241	1	ORIFICE
	9	5B-9304	2	SCREW		62	114-8218	1	VALVE
	10	116-3670	1	SPOOL					
	11	116-3664	1	SPACER					
	12	5A-3604	21	BOLT (25mm LONG)					
	13	7I-7197	1	SPRING					
	14	7I-7198	2	SPRING					
	15	7I-7199	1	SEAL					
	16	7I-7200	5	COVER					
	17	7I-7201	4	BOLT					
	18	7I-7202	1	STOPPER					
	19	7I-7203	10	SEAT					
	20	7I-7204	6	SEAL					
	21	3J-7354	1	SEAL					
	22	7I-7206	7	PLUG					
	23	095-1586	8	SEAL					
	24	7I-7207	6	SPRING					
	25	7I-7208	5	VALVE					
	26	7Y-5243	1	BOLT					
	27	7I-7258	1	BALL					
Y	28	107-6917	4	VALVE GP					
	29	7I-7212	3	SPRING					
	30	7I-7213	3	SPRING					
	31	7I-7214	4	STOPPER					
	32	7I-7215	3	PLUG					
	33	095-1578	3	SEAL					
	34	116-3665	1	SPOOL					
	35	102-2562	1	BOLT (180mm LONG)					
	36	095-1700	4	SEAL					
	37	7I-7218	4	COVER					
	38	116-3662	1	SPOOL AS					
	39	7I-7220	1	COVER					
	40	096-3021	1	SEAL					
	41	103-8414	1	PLUG					
	42	105-7404	1	VALVE					
	43	6V-5192	1	BOLT (30mm LONG)					
	44	105-7405	2	SPRING					
	45	105-7406	1	COVER					
	46	7I-7227	1	BOLT					
	47	095-1574	4	SEAL (6.8mm ID)					
	48	7I-1026	1	BOLT (130mm LONG)					
	49	7I-7229	5	PLUG					
	50	105-7403	1	PLUG					
	51	105-7408	1	PLUG					
	52	7I-7232	2	PLUG					
	53	116-3667	1	SPOOL					

Y SEE SEPARATE ILLUSTRATION

H41619

105-7423 VALVE GP-BANK-PART 1 OF 2

107-6917 Page 217

HYDRAULIC SYSTEM

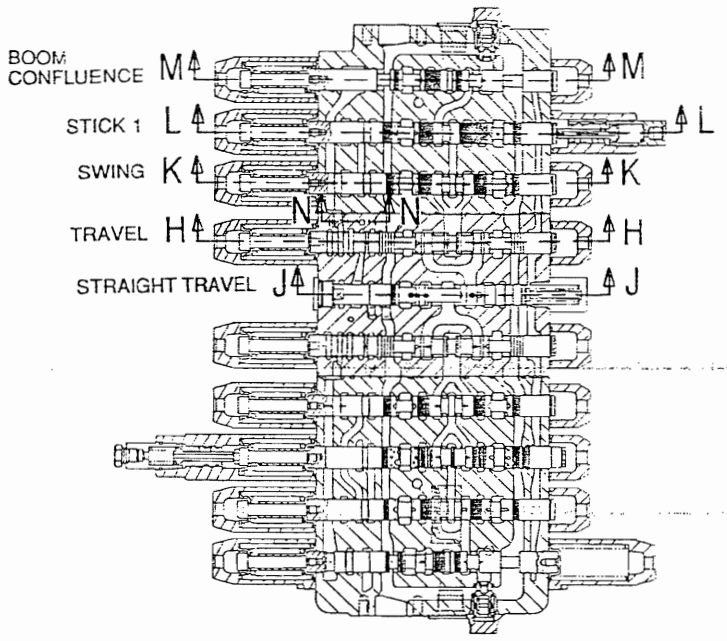

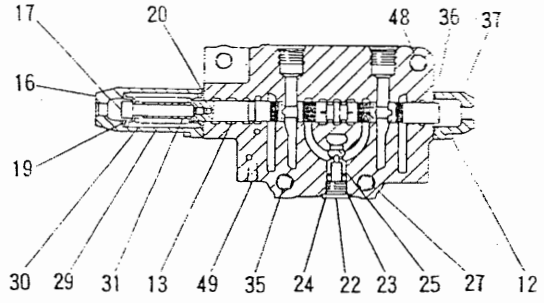

K – K

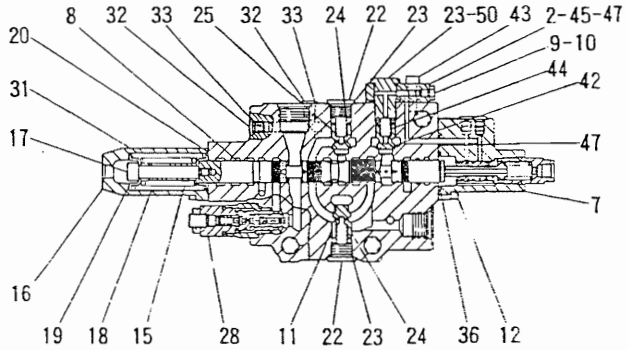

L – L

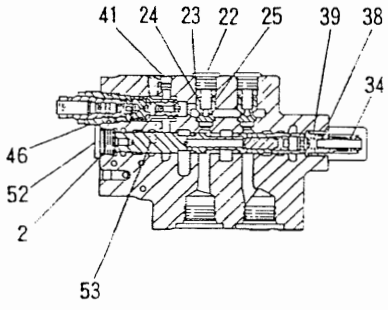

J – J

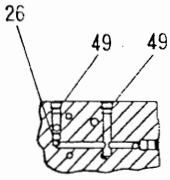

N – N

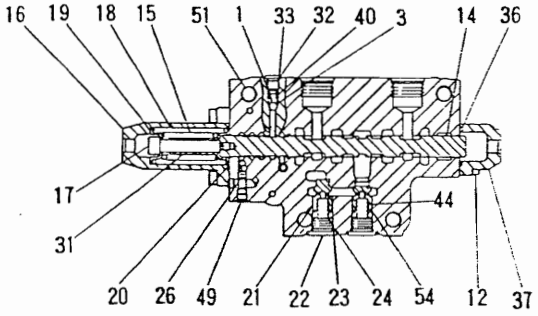

H – H

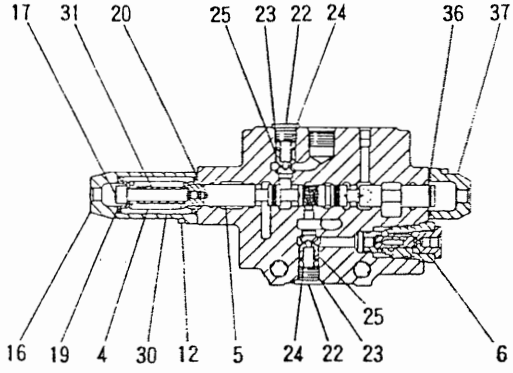

M – M

H41620E

105-7423 VALVE GP-BANK-PART 2 OF 2

118-4098 – Page 216, 107-6917, 107-6918 – Page 217

HYDRAULIC SYSTEM

NOTE	No.	PART No.	QTY	PART NAME	NOTE	No.	PART No.	QTY	PART NAME
	1	103-8408	1	SEAT		54	114-8218	1	VALVE
	2	095-1592	2	SEAL (23.7mm ID					
	3	7I-7258	1	BALL					
	4	7I-7257	1	SPRING					
	5	116-3663	1	SPOOL					
Y	6	118-4098	1	VALVE GP					
	7	7I-7254	1	COVER					
	8	116-3669	1	SPOOL					
	9	096-3021	1	SEAL					
	10	105-7408	1	PLUG					
	11	7I-7250	1	VALVE					
	12	5A-3604	17	BOLT (25mm LONG)					
	13	116-3668	1	SPOOL					
	14	116-3666	1	SPOOL					
	15	7I-7244	2	SPRING					
	16	7I-7200	4	COVER					
	17	7I-7201	4	BOLT					
	18	7I-7243	2	SPRING					
	19	7I-7203	8	SEAT					
	20	7I-7204	4	SEAL					
	21	7I-7242	1	VALVE					
	22	7I-7206	9	PLUG					
	23	095-1586	10	SEAL					
	24	7I-7207	8	SPRING					
	25	7I-7208	6	VALVE					
	26	7I-7241	2	ORIFICE					
	27	7I-7210	1	BOLT					
Y	28	107-6917	2	VALVE GP					
	29	7I-7212	1	SPRING					
	30	7I-7213	2	SPRING					
	31	7I-7214	4	STOPPER					
	32	7I-7215	3	PLUG					
	33	095-1578	3	SEAL					
	34	103-8413	1	ROD					
	35	102-2562	1	BOLT (180mm LONG)					
	36	095-1700	4	SEAL					
	37	7I-7218	3	COVER					
	38	103-8412	1	SPRING					
	39	103-8411	1	SPRING					
	40	7I-7221	1	SPRING					
	41	7I-7237	1	PLUG					
	42	105-7404	1	VALVE					
	43	6V-5192	1	BOLT (30mm LONG)					
	44	105-7405	2	SPRING					
	45	105-7406	1	COVER					
Y	46	107-6918	1	VALVE GP					
	47	095-1574	3	SEAL (6.8mm ID)					
	48	7I-1026	1	BOLT (130mm LONG)					
	49	7I-7229	5	PLUG					
	50	105-7403	1	PLUG					
	51	8T-0348	1	BOLT (50mm LONG)					
	52	7I-7235	1	PLUG					
	53	103-8406	1	SPOOL AS					

Y - SEE SEPARATE ILLUSTRATION

H4162

105-7423 VALVE GP-BANK-PART 2 OF 2

118-4098 – Page 216, 107-6917, 107-6918 – Page 217

HYDRAULIC SYSTEM

Consists of .

Page

1 104-9186 LINES GP-FRONT 197

1 104-9187 LINES GP-RETURN & 199

1 104-9188 LINES GP-PILOT 190

H41474E

102-0934 VALVE AR-BOOM LOWERING

An Attachment

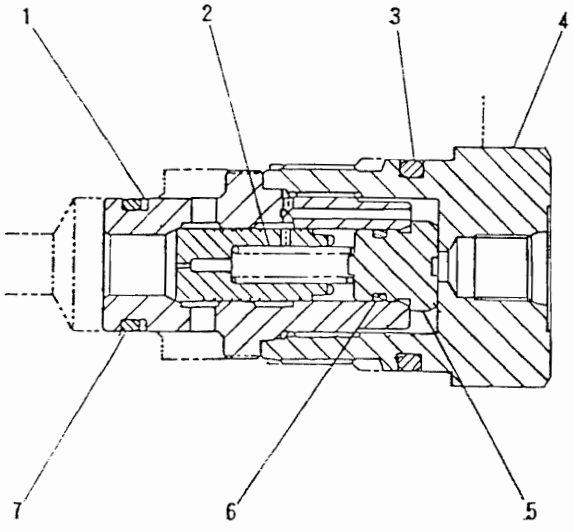

NOTE	No.	PART No.	QTY	PART NAME
	1	095-1784	1	RING
	2	71-8078	1	SPRING
	3	095-1596	1	SEAL
	4	118-4162	1	PLUG
	5	118-4163	1	SEAT
	6	095-1576	1	SEAL
	7	095-1585	1	SEAL

H41622E

118-4098 VALVE GP-FLOW CONTROL

Part of 105-7423 Valve listed on Page 215

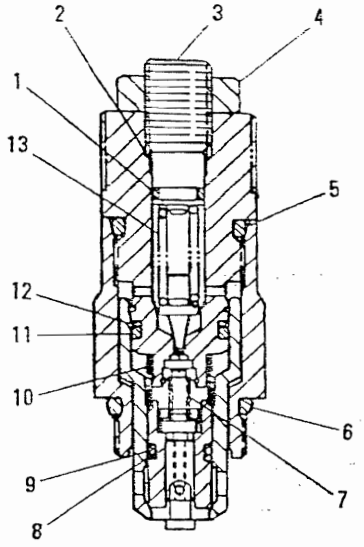

NOTE	No.	PART No.	QTY	PART NAME
	1	095-1575	1	SEAL
	2	7I-8090	1	SEAT
	3	7I-8091	1	SETSCREW
	4	7I-8092	1	NUT
	5	095-1591	1	SEAL
	6	095-1592	1	SEAL
	7	7I-8082	1	SPRING
	8	095-8024	1	RING
	9	095-1514	1	SEAT
	10	7I-8081	1	SPRING
	11	095-1519	1	SEAL
	12	095-1783	1	RING
	13	7I-8087	1	SPRING

H35689

107-6917 VALVE GP-RELIEF PILOT

Part of 104-9176, 104-9179 Lines and 105-7423 Valve listed on Pages 193, 195 and 213

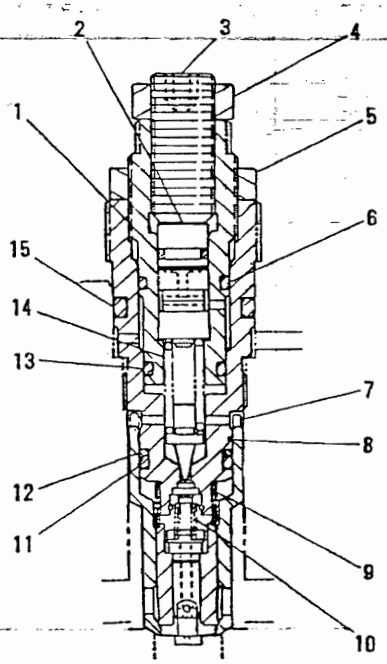

NOTE	No.	PART No.	QTY	PART NAME
	1	095-1575	1	SEAL
	2	7I-8096	1	STOPPER
	3	7I-8098	1	SETSCREW
	4	7I-8092	1	NUT
	5	7I-8100	1	NUT
	6	095-1584	1	SEAL
	7	7I-8097	1	SPACER
	8	7I-8095	1	RING
	9	7I-8081	1	SPRING
	10	7I-8082	1	SPRING
	11	095-1519	1	SEAL
	12	095-1783	1	RING
	13	095-1582	1	SEAL
	14	7I-8087	1	SPRING
	15	095-1593	1	SEAL

H35726E

107-6918 VALVE GP-RELIEF PILOT (PILOT OPERATED)

Part of 105-7423 Valve listed on Page 215

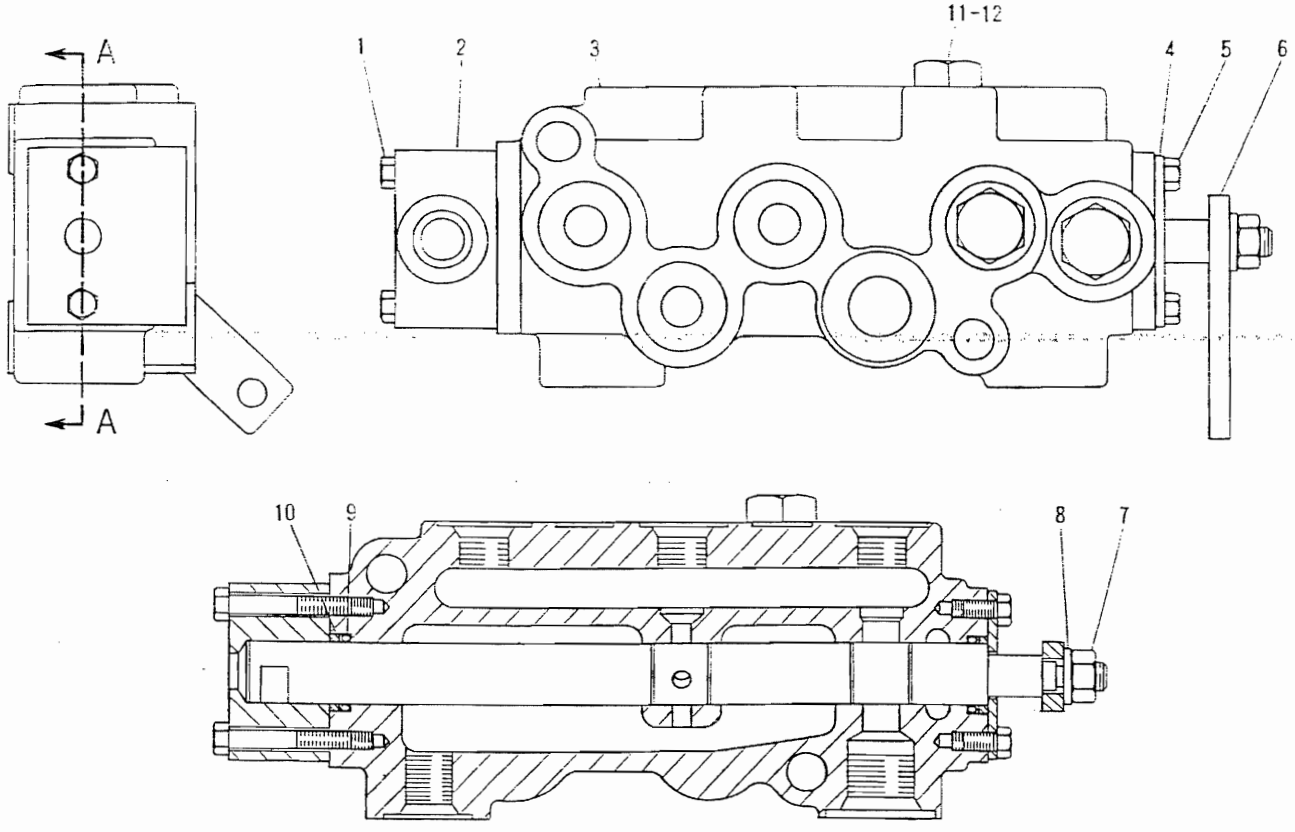

SECTION A – A

NOTE	No.	PART No.	QTY	PART NAME	NOTE	No.	PART No.	QTY	PART NAME
	1	6V-2314	2	BOLT (35㎜ LONG)					
	2	4I-6156	1	BLOCK					
	3	087-5088	1	VALVE GP					
	4	087-4973	1	RETAINER					
	5	8T-0287	2	BOLT (10㎜ LONG)					
	6	087-4975	1	LEVER					
	7	5C-7261	1	NUT					
	8	095-0815	1	LOCKWASHER					
	9	8T-0211	2	SEAL					
	10	096-5965	2	RING					
	11	9S-4191	3	PLUG					
	12	3J-1907	3	SEAL					

H33377E

087-5054 VALVE GP-SELECTOR

Part of 104-9162 Lines listed on Page 181

HYDRAULIC SYSTEM

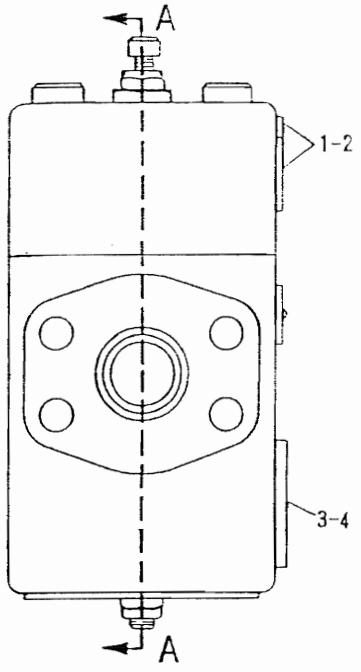

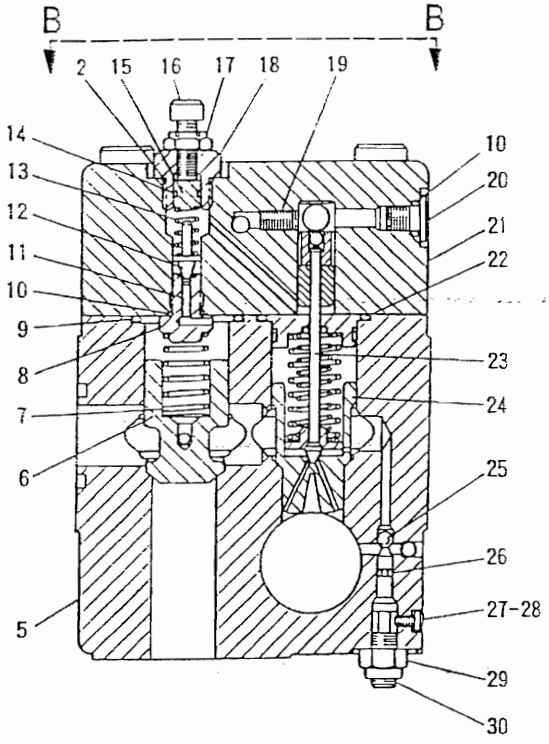

A – A

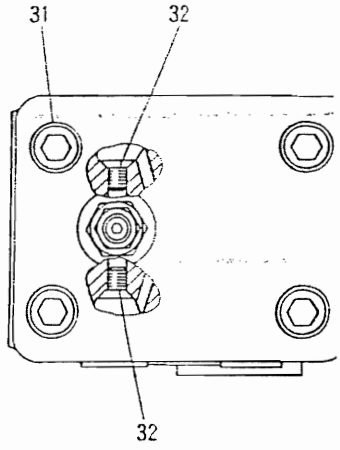

B – B

NOTE	No.	PART No.	QTY	PART NAME	NOTE	No.	PART No.	QTY	PART NAME
	1	9S-8004	2	PLUG		21	087-4659	1	COVER
	2	3J-1907	3	SEAL		22	099-8232	1	SEAL
	3	9S-9334	1	PLUG		23	085-6551	1	STEM AS
	4	7M-8485	1	SEAL		24	085-6546	1	VALVE
	5	087-4668	1	BODY		25	087-4662	1	BALL
	6	087-4669	1	VALVE		26	085-7537	1	SEAL
	7	065-9051	1	SPRING		27	087-4665	1	BOLT (8mm LONG)
	8	087-4671	1	PLUG		28	087-4683	1	LOCKWASHER
	9	085-7539	1	SEAL		29	087-4666	1	LOCKNUT
	10	7J-0204	2	SEAL		30	087-4667	1	PISTON
	11	087-4673	1	PIN		31	8T-0341	4	BOLT (60mm LONG)
	12	087-4674	1	VALVE		32	087-4680	2	PLUG
	13	087-4675	1	SPRING					
	14	6V-5722	1	SEAL					
	15	087-4676	1	PISTON					
	16	087-4677	1	BOLT (19mm LONG)					
	17	087-4678	1	LOCKNUT					
	18	087-4679	1	PLUG					
	19	087-4660	1	ORIFICE					
	20	9S-8007	1	PLUG					

H3550

086-1936 VALVE GP-CHECK & RELIEF

Part of 104-9186 Lines listed on Page 197

An Attachment

HYDRAULIC SYSTEM

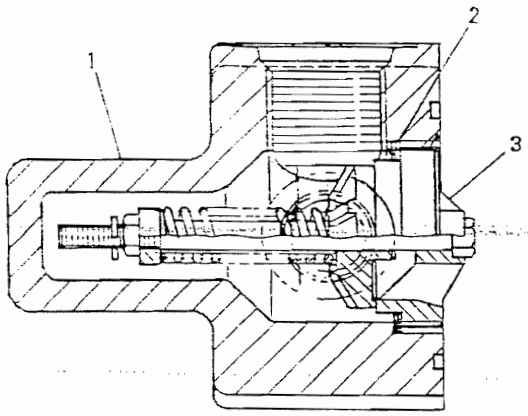

NOTE	No.	PART No.	QTY	PART NAME
	1	7I-8246	1	BODY
	2	7I-8245	1	RING
	3	7I-8244	1	VALVE AS

H35692E

7I-1001 VALVE GP-CHECK (C)

Part of 104-9160 Lines listed on Page 198

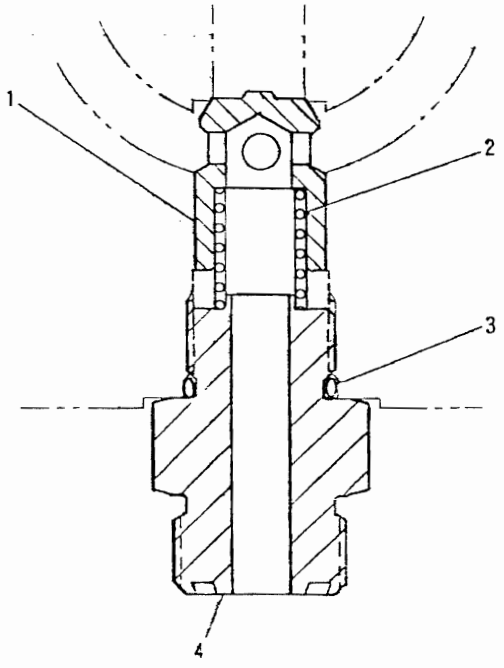

NOTE	No.	PART No.	QTY	PART NAME
	1	102-0860	1	VALVE
	2	102-0860	1	SPRING
	3	6V-7970	1	SEAL
	4	7I-8080	1	CONNECTOR

H41464E

7I-7490 VALVE GP-CHECK (C)

Part of 104-9179 and 104-9183 Lines listed on Pages 195 and 196

An Attachment

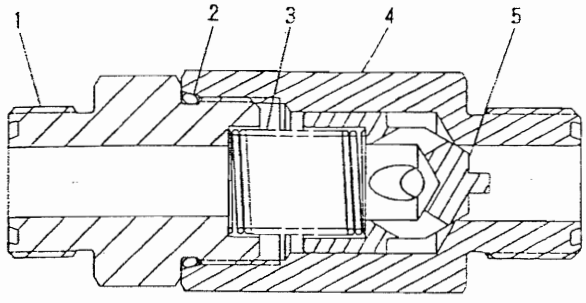

NOTE	No.	PART No.	QTY	PART NAME
	1	7I-1284	1	CONNECTOR
	2	7M-8485	1	SEAL
	3	099-6954	1	SPRING
	4	7I-1283	1	BODY
	5	099-6953	1	VALVE

H32119

7I-1285 VALVE GP-CHECK (C)

Part of 104-9179 and 104-9183 Lines listed on Pages 195 and 196
An Attachment

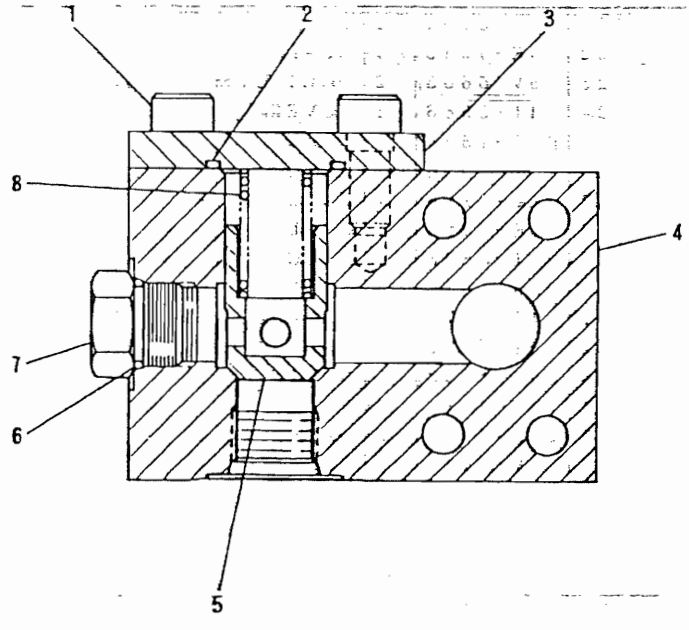

NOTE	No.	PART No.	QTY	PART NAME
	1	8T-4136	4	BOLT (25㎜ LONG)
	2	4J-5267	1	SEAL
	3	102-0730	1	COVER
	4	7I-7261	1	BODY
	5	7I-7494	1	VALVE
	6	3K-0360	1	SEAL
	7	9S-4185	1	PLUG
	8	7I-7495	1	SPRING

H355001

7I-7496 VALVE GP-CHECK (C)

Part of 104-9187 Lines listed on Page 199
An Attachment

HYDRAULIC SYSTEM

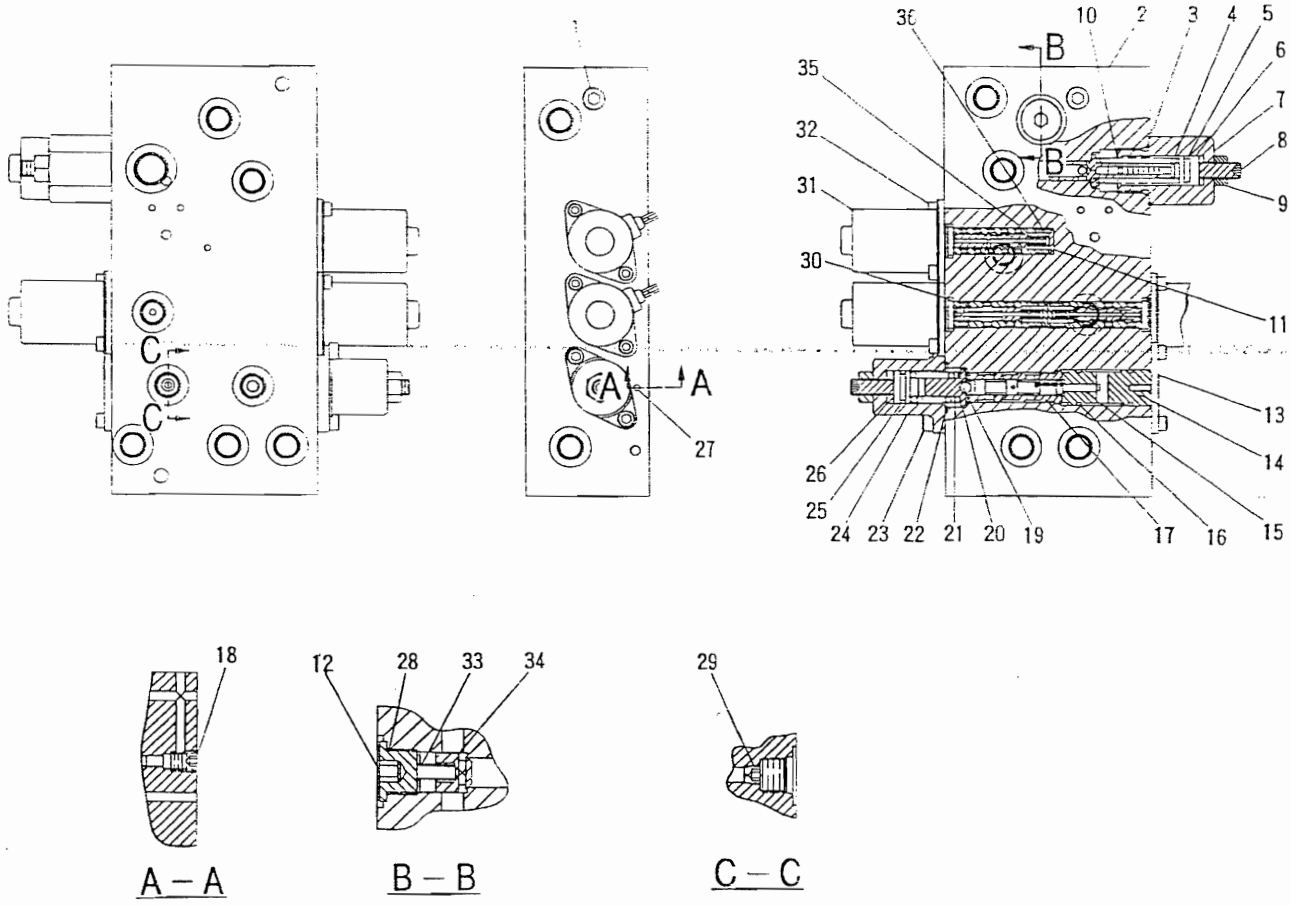

NOTE	No.	PART No.	QTY	PART NAME	NOTE	No.	PART No.	QTY	PART NAME
	1	7H-3171	8	PLUG		21	5I-3191	1	SPRING
	2	107-6633	1	VALVE GP		22	4K-4986	1	SEAL
	3	095-1592	1	SEAL		23	6V-5683	2	BOLT (16mm LONG)
	4	096-1595	1	SPRING		24	4I-5666	1	COVER
	5	095-1582	1	SEAL		25	095-1584	1	SEAL
	6	4I-5657	1	PLUG		26	4I-8916	1	PLUG
	7	7Y-5009	1	CARTRIDGE		27	1M-6718	7	BALL
	8	4I-8915	2	SETSCREW		28	3K-0360	1	SEAL
	9	2Y-5829	2	NUT		29	4I-5668	1	PLUG
	10	096-1596	1	SPOOL		30	095-1519	3	SEAL
	11	102-0913	3	STOPPER		31	4I-5674	3	SOLENOID AS
	12	7Y-5010	1	PLUG		32	099-0822	8	BOLT (10mm LONG)
	13	4I-5658	1	PLATE		33	096-1598	1	SPRING
	14	118-4126	1	PLUG		34	7Y-5011	1	VALVE
	15	118-4127	1	PISTON		35	096-6166	3	WASHER
	16	095-1585	2	SEAL		36	7Y-4447	3	SPRING
	17	5I-3194	1	VALVE GP					
	18	4D-0514	1	PLUG					
	19	3D-2891	1	BALL					
	20	4I-5664	1	STOPPER					

H41654E

118-4111 VALVE GP-MANIFOLD & REDUCING

Part of 104-9164 Lines listed on Page 183

HYDRAULIC SYSTEM

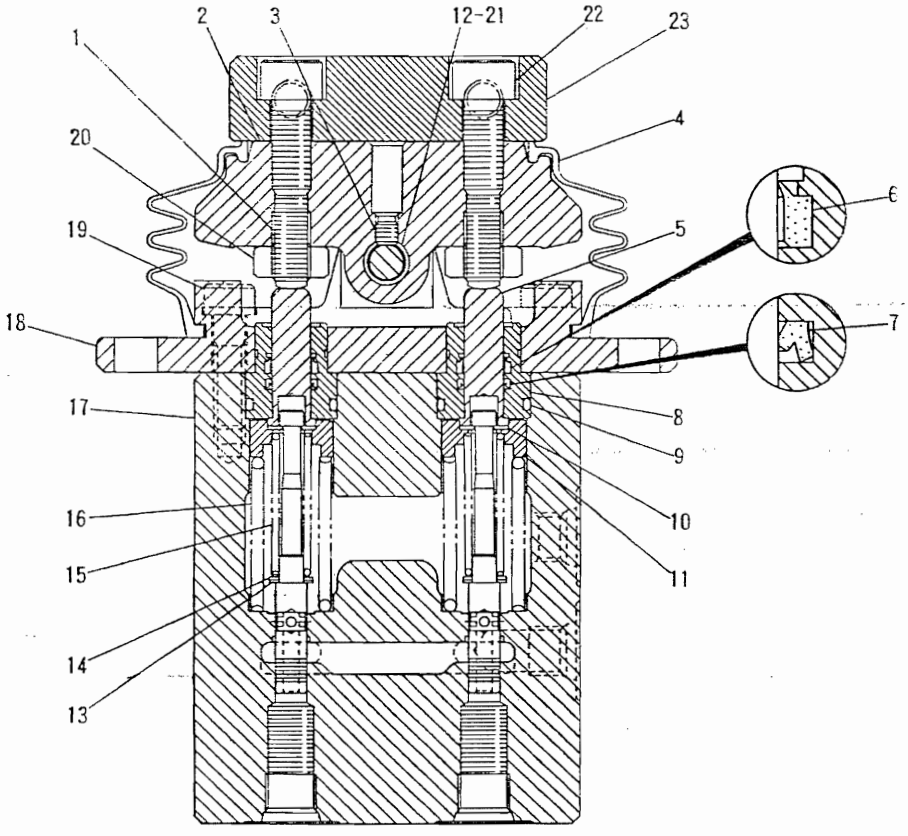

NOTE	No.	PART No.	QTY	PART NAME	NOTE	No.	PART No.	QTY	PART NAME
	1	087-4710	4	SETSCREW		21	099-6144	4	BUSHING
	2	087-5708	2	PEDAL		22	8T-1159	4	BOLT (25㎜ LONG)
	3	095-1260	2	SETSCREW		23	111-0999	2	BLOCK
	4	087-5709	2	BELLOW					
	5	087-4704	4	ROD					
	6	099-6135	4	SCRAPER					
	7	094-0876	4	SEAL					
	8	087-4703	4	PLUG					
	9	095-1586	4	SEAL					
	10	099-6136	8	WASHER					
	11	099-6140	4	SEAT					
	12	099-6145	2	CAMSHAFT					
	13	099-6141	4	WASHER					
	14	099-6137	4	WASHER					
	15	099-6142	4	SPRING					
	16	087-4707	4	SPRING					
	17	111-1212	2	HOUSING					
	18	087-5707	2	COVER					
	19	087-4448	4	BOLT (30㎜ LONG)					
	20	096-4874	4	NUT					

H38239

111-1028 VALVE GP-PILOT

Part of 104-9162 Lines listed on Page 181

HYDRAULIC SYSTEM

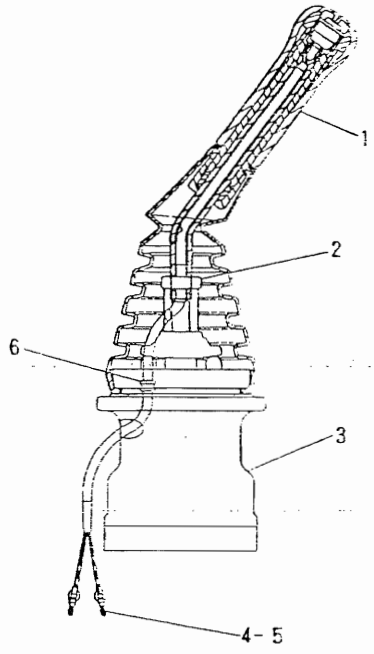

NOTE	No.	PART No.	QTY	PART NAME
Y	1	111-0945	1	CONTROL GP
	2	7Y-8463	1	NUT
Y	3	6I-6934	1	VALVE GP
	4	6K-0613	2	TERMINAL
	5	087-4970	2	SLEEVE
	6	087-4589	1	GROMMET

Y-SEE SEPARATE ILLUSTRATION

H39224E

110-5620 VALVE GP-PILOT

Part of 104-9162 Lines listed on Page 181
111-0945 — Page 208, 6I-6934 — Page 225

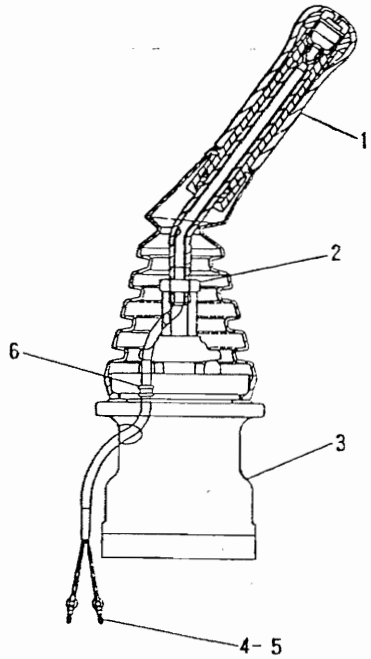

NOTE	No.	PART No.	QTY	PART NAME
Y	1	111-0946	1	CONTROL GP
	2	7Y-8463	1	NUT
Y	3	6I-6934	1	VALVE GP
	4	6K-0613	2	TERMINAL
	5	087-4970	2	SLEEVE
	6	087-4589	1	GROMMET

Y-SEE SEPARATE ILLUSTRATION

H39226E

110-5621 VALVE GP-PILOT

Part of 104-9162 Lines listed on Page 181
111-0946 — Page 208, 6I-6934 — Page 225

HYDRAULIC SYSTEM

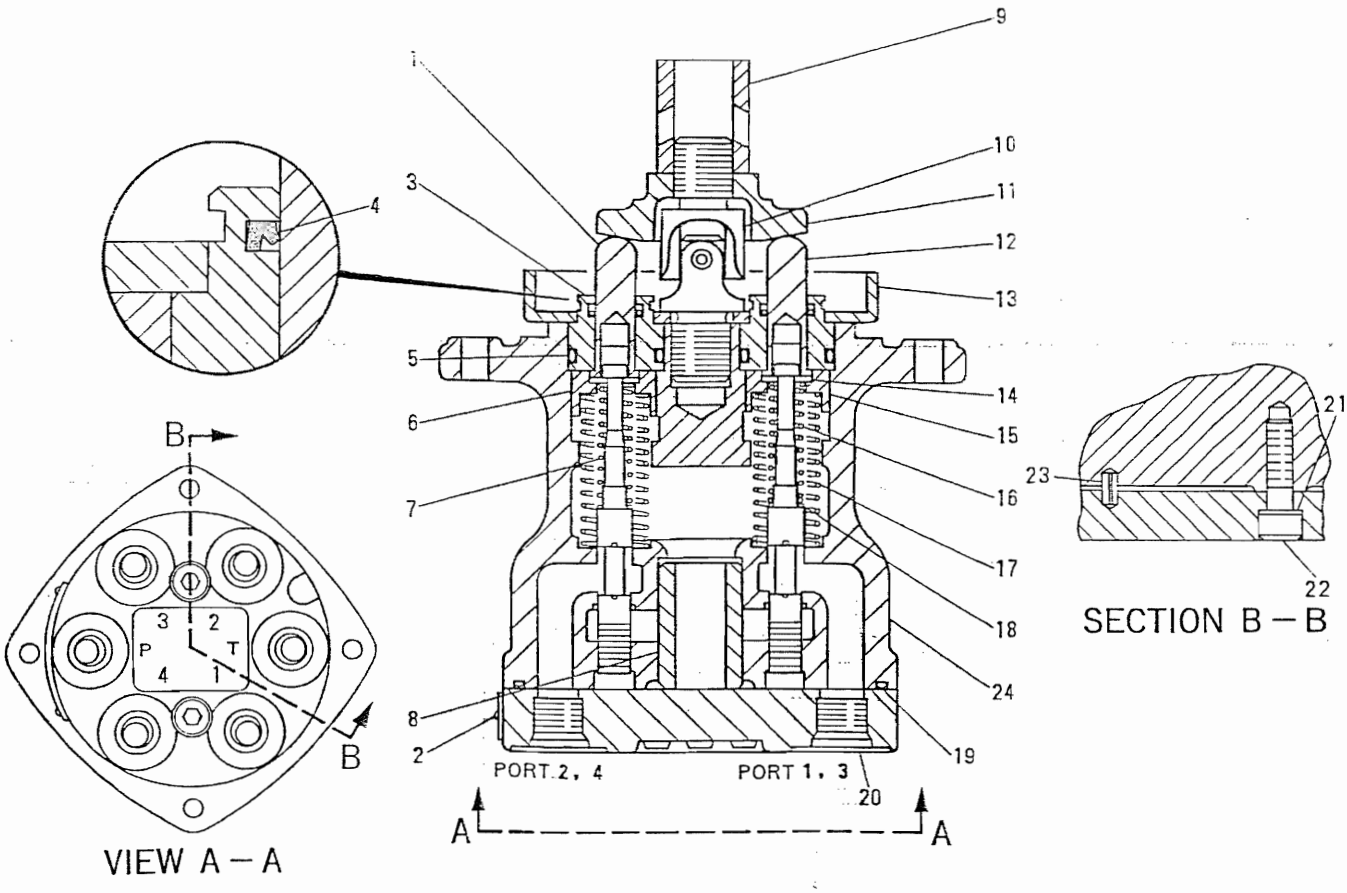

NOTE	No.	PART No.	QTY	PART NAME	NOTE	No.	PART No.	QTY	PART NAME
	1	114-8241	2	ROD		21	096-4498	2	WASHER
	2	5B-9304	2	SCREW		22	6V-5192	2	BOLT (30mm LONG)
	3	096-1628	4	PLUG		23	7Y-0468	1	PIN
	4	094-0876	4	SEAL		24	4I-6369	1	BODY AS
	5	095-1586	4	SEAL					
	6	096-4503	2	SEAT					
	7	4I-6370	2	SPRING					
	8	096-1622	1	BUSHING					
	9	096-1611	1	NUT					
	10	4I-6365	1	JOINT					
	11	4I-6366	1	PLATE					
	12	114-8242	2	ROD					
	13	094-0872	1	PLATE					
	14	099-6136	8	WASHER					
	15	096-4500	2	SEAT					
	16	4I-6367	2	SPRING					
	17	4I-6368	4	SPRING					
B	18	099-6137	4	WASHER (0.2mm THICK)					
	19	096-1621	1	SEAL					
	20	087-4969	1	PLATE					

B USE AS REQUIRED

H4162

6I-6934 VALVE GP-PILOT

Part of 110-5620 and 110-5621 Valve listed on Page 224

HYDRAULIC SYSTEM

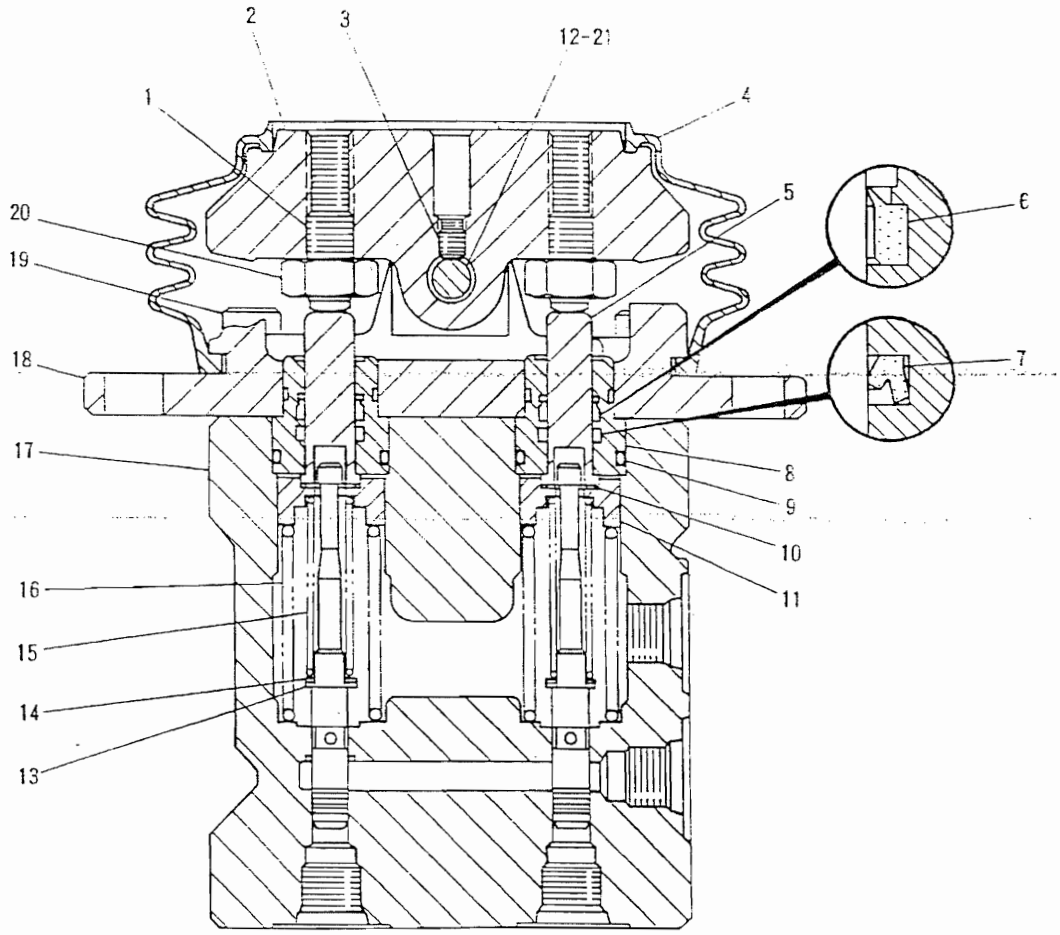

NOTE	No.	PART No.	QTY	PART NAME	NOTE	No.	PART No.	QTY	PART NAME
	1	087-4710	2	SETSCREW		21	099-6144	2	BUSHING
	2	087-5708	1	PEDAL					
	3	095-1260	1	SETSCREW					
	4	087-5709	1	BELLOWS					
	5	087-4704	2	ROD					
	6	099-6135	2	SCRAPER					
	7	094-0876	2	SEAL					
	8	087-4703	2	PLUG					
	9	095-1586	2	SEAL					
	10	099-6136	4	WASHER					
	11	099-6140	2	SEAT					
	12	099-6145	1	CAMSHAFT					
	13	099-6141	2	WASHER					
	14	099-6137	2	WASHER					
	15	099-6142	2	SPRING					
	16	087-4707	2	SPRING					
	17	099-6132	1	HOUSING					
	18	087-5707	1	COVER					
	19	087-4448	2	BOLT (30mm LONG)					
	20	8T-4133	2	NUT					

H32110E

087-5675 VALVE GP-PILOT

Part of 110-5645 Control listed on Page 210
An Attachment

HYDRAULIC SYSTEM

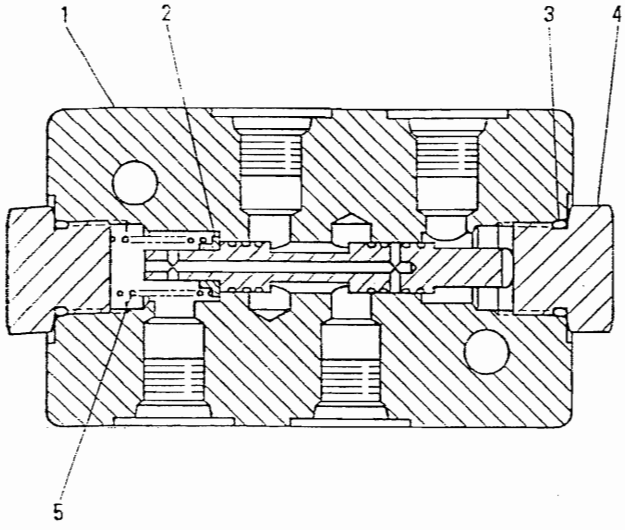

NOTE	No.	PART No.	QTY	PART NAME
	1	4I-0895	1	VALVE GP
	2	096-3376	1	GUIDE
	3	3K-0360	2	SEAL
	4	9S-4185	2	PLUG
	5	096-3375	1	SPRING

H30011

4I-0894 VALVE GP-PILOT (B)

Part of 104-9181 and 104-9184 Lines listed on Pages 187 and 189

An Attachment

HYDRAULIC SYSTEM

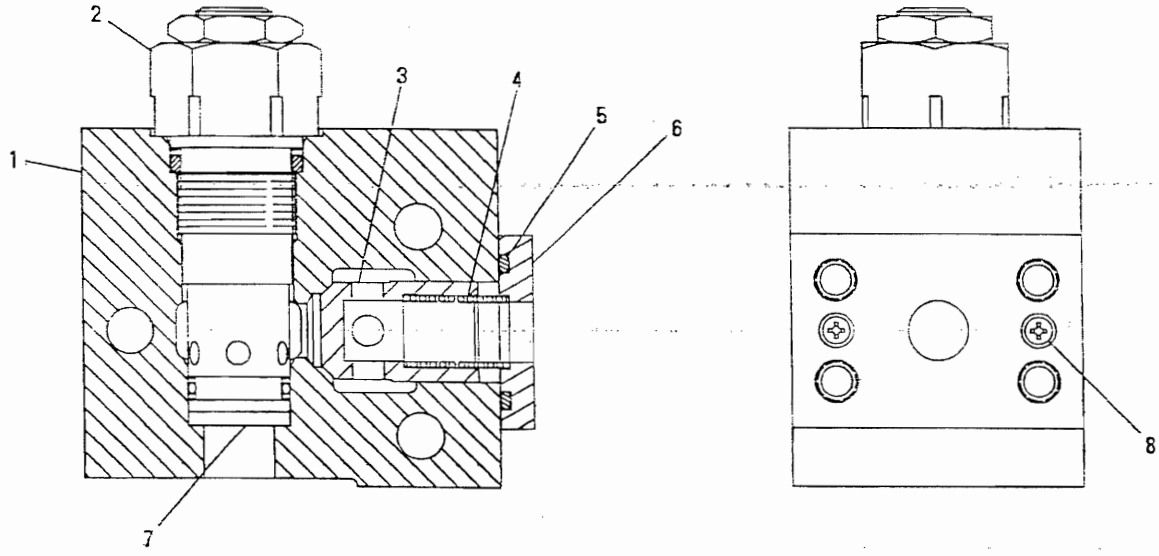

NOTE	No.	PART No.	QTY	PART NAME	NOTE	No.	PART No.	QTY	PART NAME
	1	085-8720	1	BODY					
Y	2	5I-7083	1	VALVE AS					
	3	094-0848	1	VALVE					
	4	093-9473	1	SPRING					
	5	095-1600	1	SEAL					
	6	085-4792	1	RETAINER					
	7	096-1548	1	SPACER					
	8	095-0728	2	SCREW					

Y-SEE SEPARATE ILLUSTRATION

H35713E

085-8724 VALVE GP-RELIEF

Part of 109-6059 Lines listed on Page 170
An Attachment

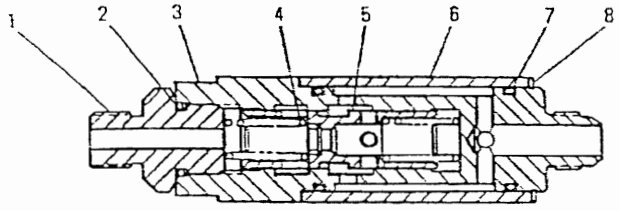

NOTE	No.	PART No.	QTY	PART NAME
	1	6I-6904	1	CONNECTOR
	2	095-1582	1	SEAL
	3	6I-6908	1	BODY
	4	099-0365	2	SPRING
	5	099-0367	1	PLUNGER AS
	6	6I-6907	1	SLEEVE
	7	095-1587	2	SEAL
	8	6V-8754	1	RING

H35697

105-7266 VALVE GP-FLOW CONTROL

Part of 104-9162 Lines listed on Page 181

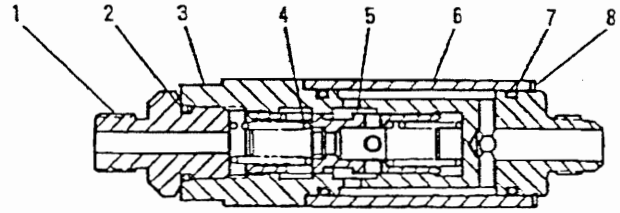

NOTE	No.	PART No.	QTY	PART NAME
	1	6I-6904	1	CONNECTOR
	2	095-1582	1	SEAL
	3	6I-6908	1	BODY
	4	099-0365	2	SPRING
	5	5I-6881	1	PLUNGER AS
	6	6I-6907	1	SLEEVE
	7	095-1587	2	SEAL
	8	6V-8754	1	RING

H35698

105-7267 VALVE GP-FLOW CONTROL

Part of 104-9162 Lines listed on Page 181

HYDRAULIC SYSTEM

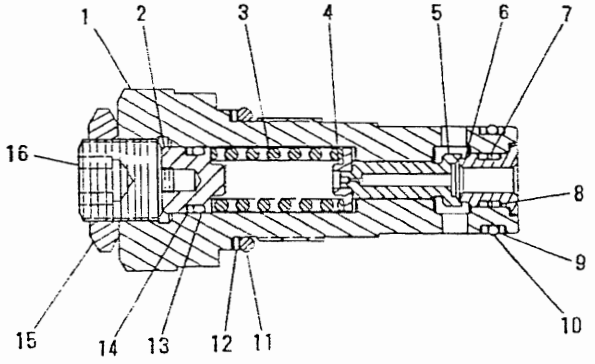

NOTE	No.	PART No.	QTY	PART NAME
	1	096-4033	1	BODY
	2	096-1552	1	PLUG
	3	096-1551	1	SPRING
	4	096-1550	1	RETAINER
	5	7Y-4419	1	VALVE
	6	096-5918	1	SEAT
	7	095-1578	1	SEAL
	8	095-8024	2	RING
	9	095-1787	2	RING
	10	095-1590	1	SEAL
	11	095-1595	1	SEAL
	12	095-1790	1	RING
	13	095-1580	1	SEAL
	14	095-9258	1	RING
	15	096-1554	1	NUT
	16	096-1553	1	SCREW

H35714E

105-7460 VALVE GP-RELIEF PILOT

Part of 104-9173 Lines listed on Page 192

An Attachment

CAB, GAUGES AND ACCESSORIES

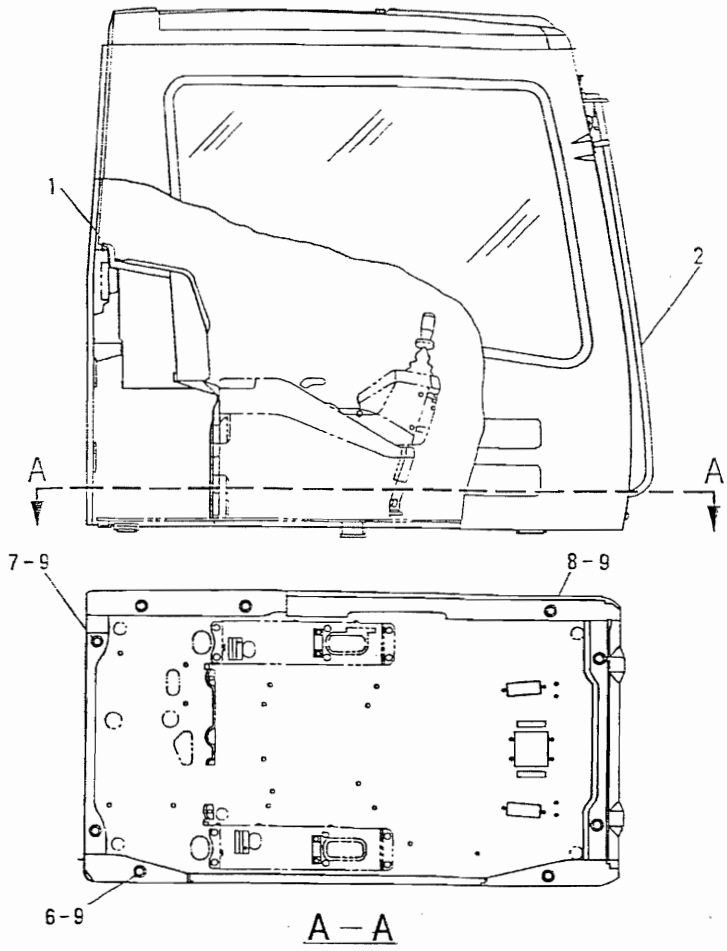

A—A

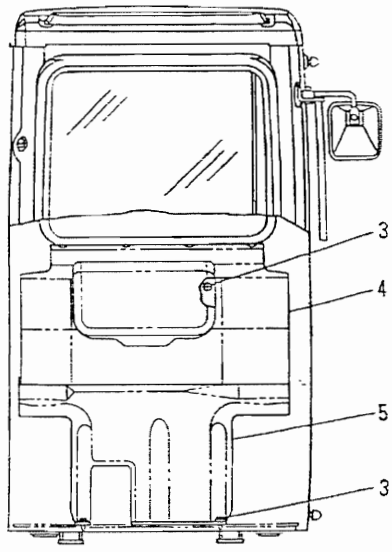

NOTE	No.	PART No.	QTY	PART NAME	NOTE	No.	PART No.	QTY	PART NAME
	1	9X-2044	4	SCREW					
Y	2	102-8317	1	CAB GP					
	3	9X-2041	6	SCREW					
Y	4	4I-6631	1	COVER GP					
	5	7I-0241	1	COVER AS					
		6I-5368	1	RUBBER					
		7I-0242	1	COVER					
	6	8T-6868	4	BOLT (80mm LONG)					
	7	7X-2549	4	BOLT (100mm LONG)					
	8	8T-4139	1	BOLT (30mm LONG)					
	9	8T-4223	9	WASHER					

Y-SEE SEPARATE ILLUSTRATION

H37381

102-8316 CAB GP

102-8317 — Page 231.01, 4I-6631 — Page 250

CAB, GAUGES AND ACCESSORIES

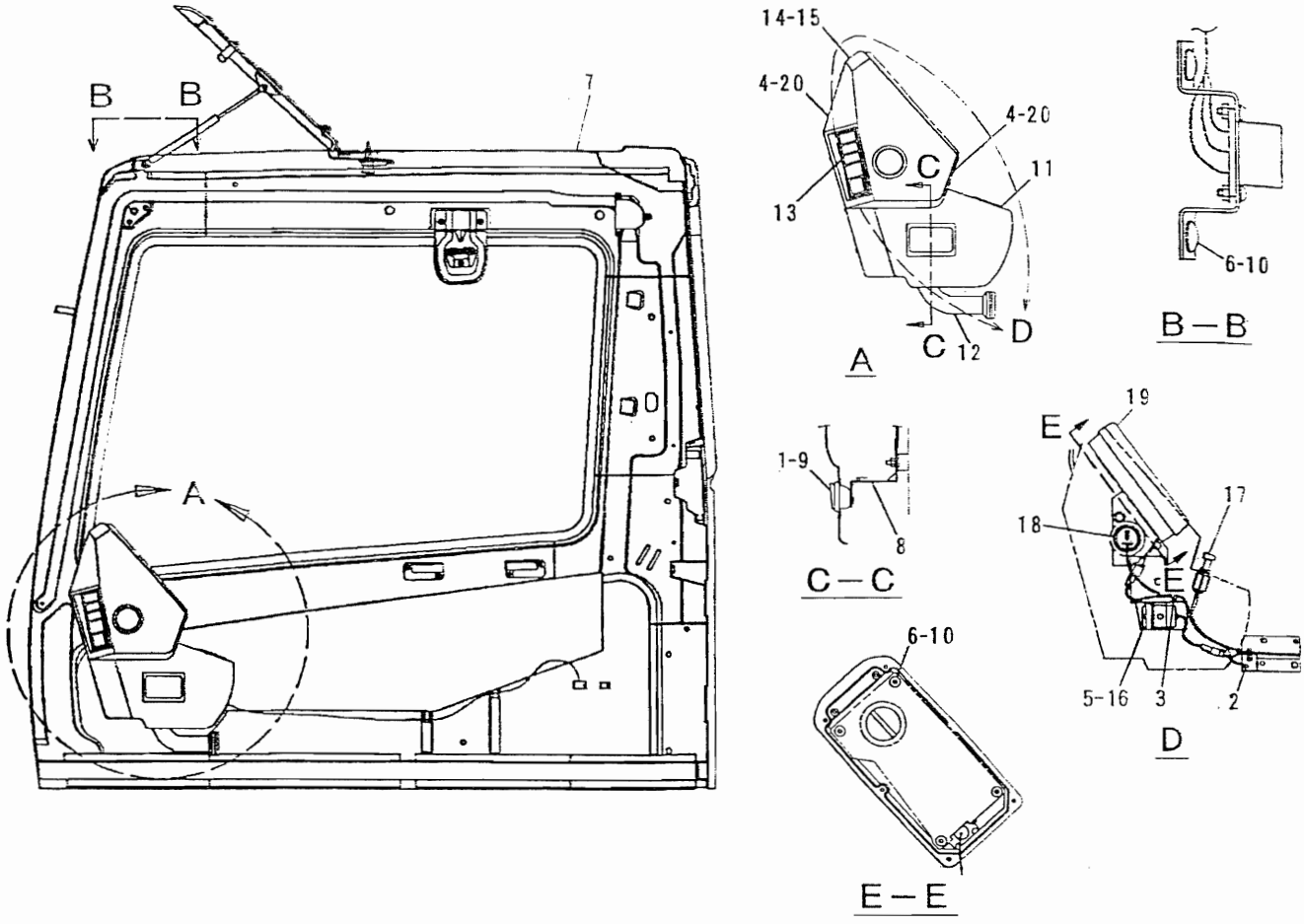

NOTE	No.	PART No.	QTY	PART NAME	NOTE	No.	PART No.	QTY	PART NAME
	1	4I-3043	2	SCREW					
	2	095-0736	1	SCREW					
	3	4I-3039	1	CLIP					
	4	7Y-5293	7	NUT					
Y	5	3E-6328	1	ALARM GP					
	6	095-0742	6	SCREW					
Y	7	113-2840	1	CAB GP					
	8	113-2782	1	BRACKET AS					
	9	096-6561	1	ASHTRAY AS					
	10	095-0827	6	LOCKWASHER					
	11	111-1148	1	HOLDER					
	12	113-2785	1	DUCT					
	13	51-3707	1	LOUVER					
	14	111-1147	1	COVER					
	15	111-1146	1	COVER					
	16	9X-2041	1	SCREW					
	17	9W-0335	1	LIGHTER AS					
	18	9W-1494	1	METER KIT					
Y	19	7Y-5500	1	CONTROL GP					
	20	7Y-5295	7	SCREW					

Y-SEE SEPARATE ILLUSTRATION

H37988E

102-8317 CAB GP-BASIC

Part of 102-8316 Cab listed on Page 231

113-2840 – Page 232, 3E-6328 – Page 246, 7Y-5500 – Page 247

MEMORANDA

CAB, GAUGES AND ACCESSORIES

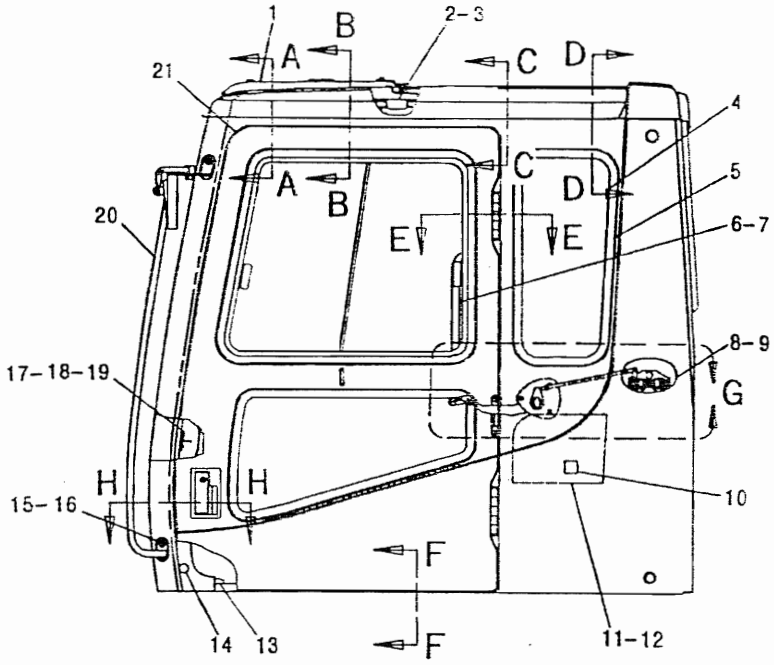

LEFT SIDE VIEW

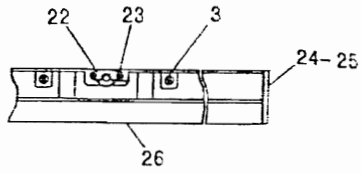

SECTION A – A

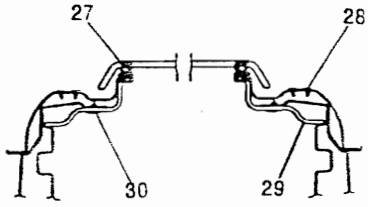

SECTION B – B

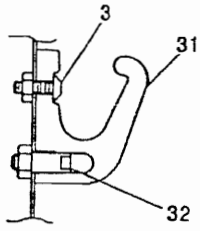

SECTION C – C

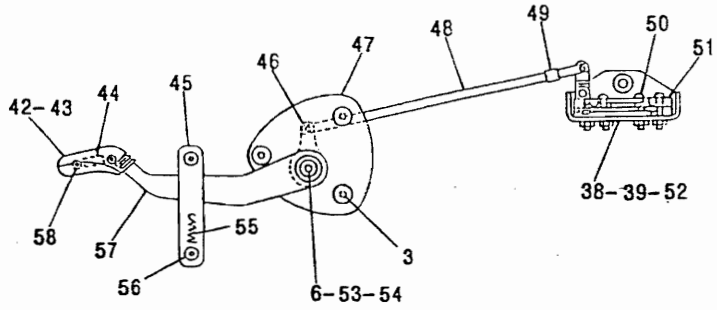

DETAIL OF AREA G

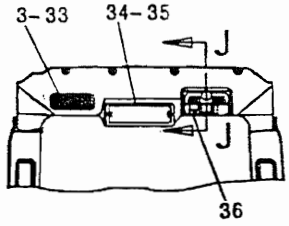

VIEW D – D

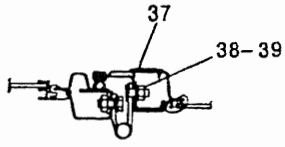

SECTION E – E

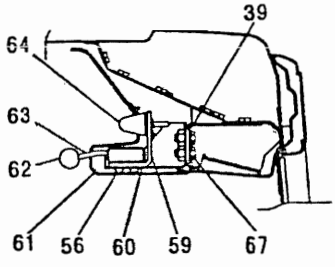

SECTION J – J

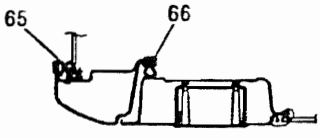

SECTION H – H

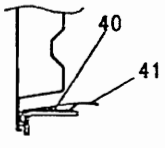

SECTION F – F

H37989E

113-2840 CAB GP-BASIC-PART 1 OF 2

Part of 102-8317 Cab listed on Page 231.01

41-6973 – Page 236, 41-1273 – Page 238

CAB, GAUGES AND ACCESSORIES

NOTE	No.	PART No	QTY	PART NAME
Y	1	4I-1273	1	HATCH GP
	2	4I-3080	1	STOPPER
	3	9X-2044	15	SCREW
	4	4I-1186	1	GLASS
	5	4I-6829	1	SEAL
	6	9X-2041	3	SCREW
	7	105-9503	1	HANDLE AS
	8	4I-4273	1	COVER
	9	4I-4392	3	CLIP
	10	4I-3045	1	SPACER
	11	4I-3087	2	CLIP
	12	4I-3053	1	LINER
	13	4I-4330	2	SEAL
	14	4I-3090	3	SEAL
	15	4I-3123	2	BOLT (20mm LONG)
	16	4I-3144	2	WASHER
	17	4I-3066	1	STRIKER
	18	100-3573	2	SCREW
	19	1R-5998	2	LOCKWASHER
	20	105-9556	1	HANDLE AS
Y	21	4I-6973	1	DOOR GP
	22	099-3603	1	CATCH
	23	096-6562	2	SCREW
	24	4I-6841	1	SPACER
	25	4I-6842	1	SPACER
	26	4I-4448	1	COVER
	27	4I-4353	1	SEAL
	28	087-8484	2	GROMMET
	29	113-2828	1	LINER
	30	4I-3089	4	CLIP
	31	6V-8928	1	HOOK
	32	4I-1223	1	PIN
	33	4I-4407	1	COVER
	34	4I-5034	2	CLIP
	35	4I-4241	1	PLATE
	36	7I-1660	1	FILM
	37	4I-3096	1	GROMMET
	38	8T-4133	9	NUT
	39	8T-4121	12	WASHER
	40	099-0823	3	SCREW
	41	4I-6857	1	GUARD
	42	7Y-3184	1	KNOB
	43	7Y-3185	1	KNOB
	44	4I-0420	1	STRIP
	45	4I-1206	2	GUIDE
	46	4I-4252	1	BRACKET AS
	47	6I-5402	1	BRACKET AS
	48	4I-4251	1	ROD
	49	6V-7636	2	PIN AS
	50	9X-2046	4	SCREW
	51	8Y-5728	1	LATCH AS
	52	4I-4228	1	BRACKET AS
	53	6I-5475	2	WASHER (40mm OD)
	54	099-3607	1	WASHER (30mm OD)
	55	4I-3063	1	SPRING
	56	9X-2045	6	SCREW
	57	6I-5419	1	LEVER
	58	3E-9874	2	SCREW
	59	4I-3078	1	BRACKET
	60	4I-4224	1	BRACKET AS
	61	4I-4280	1	COVER
	62	102-7688	1	KNOB
	63	8Y-5745	1	LATCH AS
	64	4I-1271	1	STOPPER
▲	65	7Y-7360		SEAL・・・(2.9dm×2)
E	66	3E-6647		SEAL・・・(369cm)
	67	8T-4137	3	BOLT (20mm LONG)

E-ORDER BY THE CENTIMETER
Y-SEE SEPARATE ILLUSTRATION
▲-ORDER BY THE DECIMETER

H37990E

113-2840 CAB GP-BASIC-PART 1 OF 2

Part of 102-8317 Cab listed on Page 231.01
4I-6973 – Page 236, 4I-1273 – Page 238

CAB, GAUGES AND ACCESSORIES

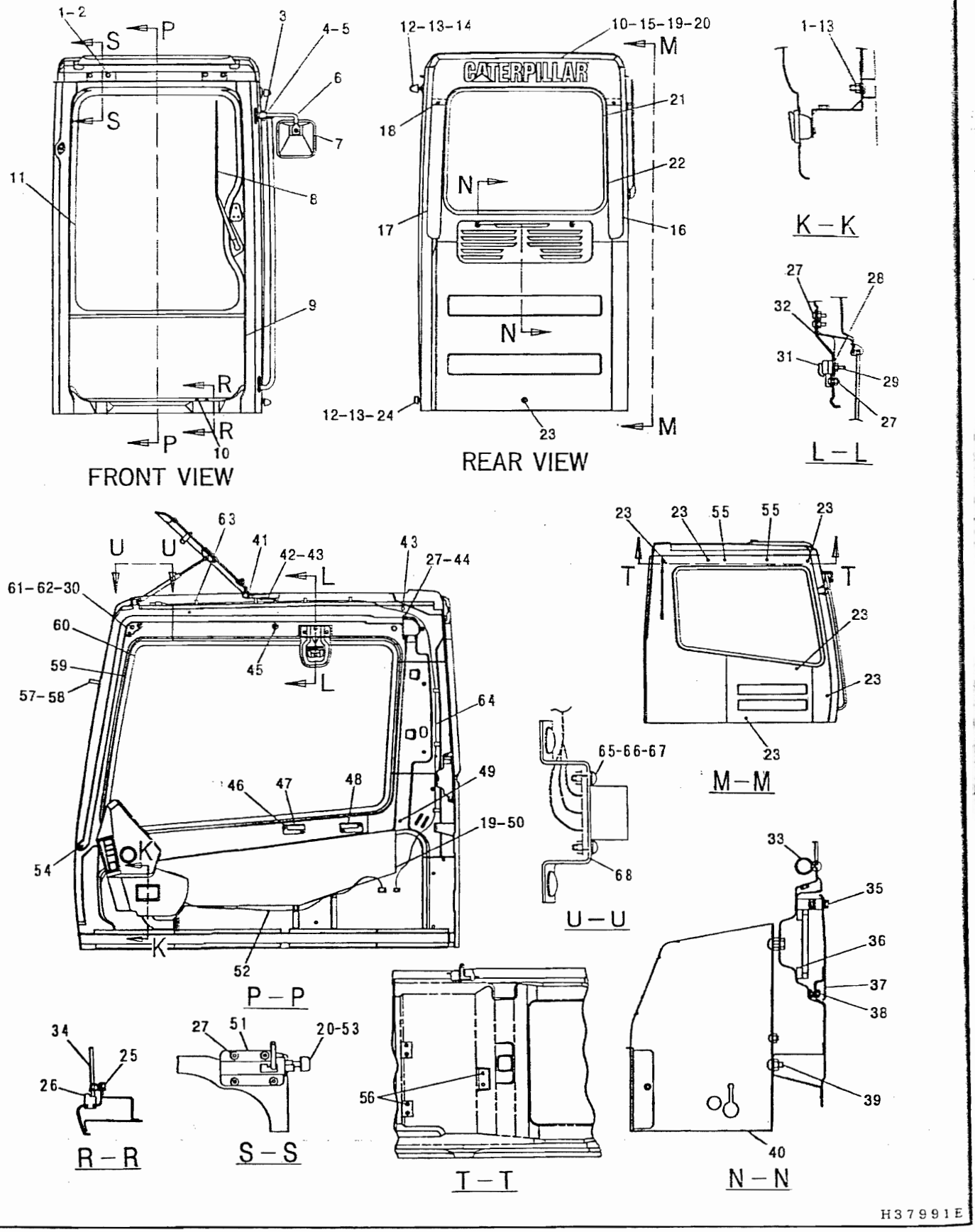

113-2840 CAB GP-BASIC-PART 2 OF 2

Part of 102-8317 Cab listed on Page 231.01

4I-4388 – Page 241, 6I-5444 – Page 242, 5I-8216 – Page 244, 111-4712 – Page 245, 6I-5141, 4I-6977 – Page 248

CAB, GAUGES AND ACCESSORIES

NOTE	No.	PART No.	QTY	PART NAME
	1	8T-4121	8	WASHER
	2	8T-4137	4	BOLT (20mm LONG)
	3	100-8122	1	BOLT (50mm LONG)
	4	3E-9402	1	WASHER
	5	3E-9404	1	LOCKWASHER
	6	4I-5042	1	SUPPORT AS
	7	5P-6872	1	MIRROR
Y	8	4I-6977	1	WIPER GP
	9	4I-4287	1	SEAL
	10	3E-9871	4	BOLT AS
		5C-9553	1	BOLT (16mm LONG)
		8H-3481	1	LOCKWASHER
		9X-8256	1	WASHER
Y	11	6I-5141	1	WINDSHIELD GP
	12	4B-4278	2	WASHER
	13	8T-4133	6	NUT
	14	7Y-8561	1	BUMPER
	15	4I-4403	1	COVER AS
	16	6I-5409	1	COVER (RH)
	17	6I-5410	1	COVER (LH)
	18	4I-4315	4	CLIP
	19	4I-3087	8	CLIP
	20	3E-9873	3	SCREW
	21	6I-5416	1	GLASS
E	22	3E-8298		SEAL··· (247cm)
	23	4I-3090	7	SEAL
	24	4I-1205	1	BUMPER
	25	4I-4409	1	SEAL AS
E		3E-6647		SEAL··· (83cm)
	26	4I-4282	2	STOPPER
	27	9X-2044	10	SCREW
	28	4I-4243	1	PLATE AS
	29	3E-8020	2	SCREW
	30	4I-4222	2	HOLDER AS
	31	4I-4253	1	HOLDER
	32	6I-5440	1	BRACKET
	33	099-3629	1	RING
	34	6I-5417	1	GLASS
	35	3E-9869	2	BOLT AS
		8T-4224	1	WASHER
		8T-7547	1	BOLT (30mm LONG)
E	36	6I-5470		SEAL··· (150cm)
	37	105-9555	1	SCREW
▲	38	7Y-7360		SEAL··· (0.5dm)
	39	9X-2041	4	SCREW
Y	40	6I-5444	1	BOX GP
	41	105-2169	4	BOLT AS
		8T-4200	1	BOLT (16mm LONG)
		8T-4224	1	WASHER
	42	096-0721	1	LIGHT
	43	4I-3043	3	SCREW
Y	44	4I-4388	1	ASSIST GP
	45	4I-5031	1	GROMMET
	46	9X-2045	4	SCREW
	47	6I-5339	1	HOLDER
	48	6I-5340	1	HOLDER
	49	7Y-7364	1	GROMMET
	50	111-1145	1	LINER
	51	4I-4372	1	LATCH AS
Y	52	111-4712	1	HARNESS AS
	53	4I-4385	1	ROLLER
	54	4I-4260	2	STOPPER
	55	4I-3047	2	GROMMET
	56	102-8347	6	PLUG
	57	4I-5032	1	NOZZLE AS
		099-0862	1	HOSE
		085-8037	1	NOZZLE
		105-9526	1	ADAPTER AS
		105-9527	1	PACKING
	58	3E-9872	2	SCREW AS
		095-0728	1	SCREW
		096-6166	1	WASHER
	59	4I-4441	1	SEAL
	60	4I-5043	1	GLASS
	61	1R-5998	4	LOCKWASHER
	62	100-3573	4	SCREW
	63	4I-3039	11	CLIP
Y	64	5I-8216	1	HARNESS AS
	65	096-3881	2	SCREW
	66	3C-6969	2	NUT
	67	4I-3038	4	WASHER
	68	4I-3037	1	BRACKET

E-ORDER BY THE CENTIMETER
Y-SEE SEPARATE ILLUSTRATION
▲-ORDER BY THE DECIMETER

H37992F

113-2840 CAB GP-BASIC-PART 2 OF 2

Part of 102-8317 Cab listed on Page 231.01

4I-4388 – Page 241, 6I-5444 – Page 242, 5I-8216 – Page 244, 111-4712 – Page 245, 6I-5141, 4I-6977 – Page 248

CAB, GAUGES AND ACCESSORIES

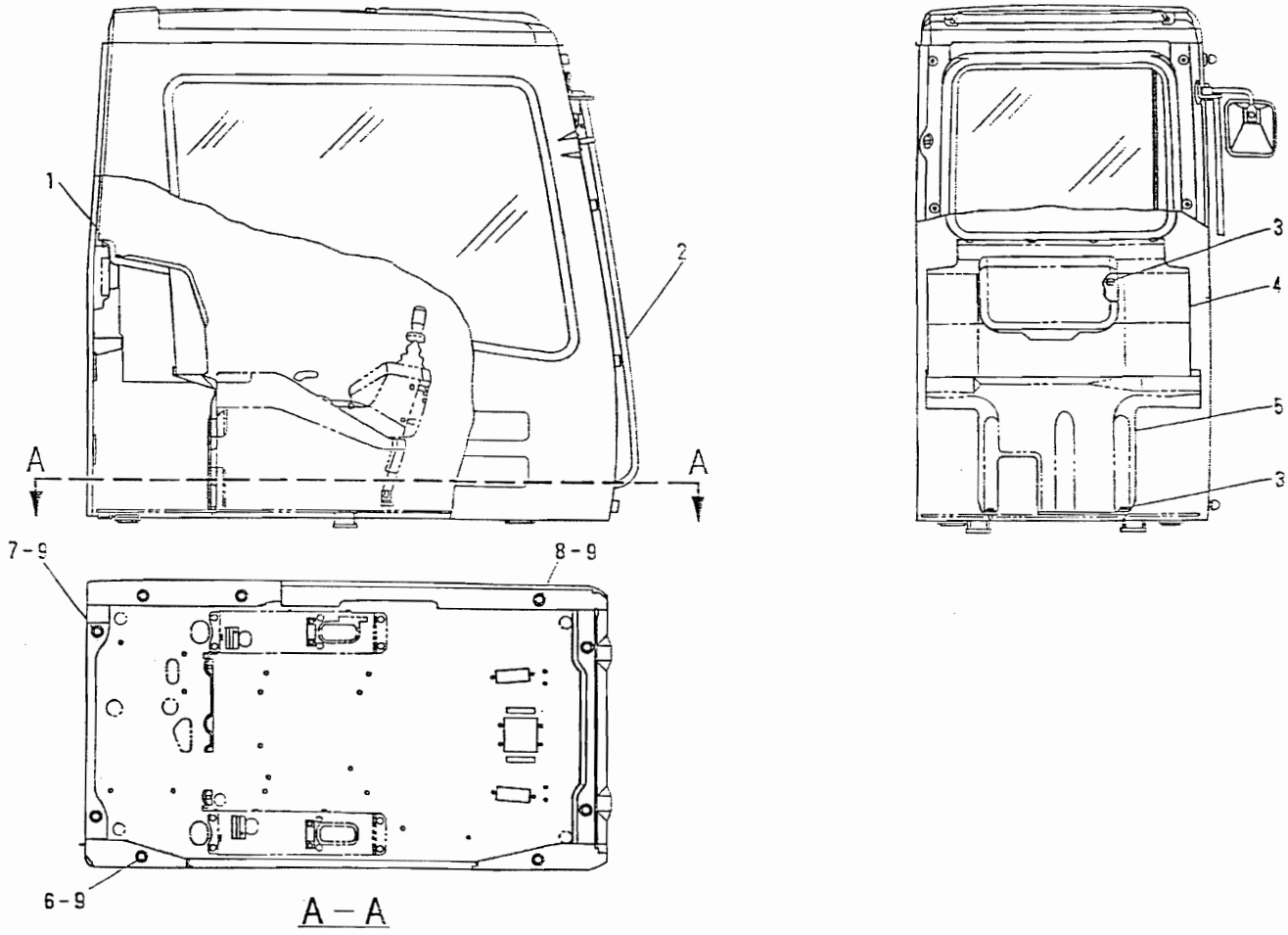

NOTE	No.	PART No.	QTY	PART NAME	NOTE	No.	PART No.	QTY	PART NAME
	1	9X-2044	4	SCREW					
Y	2	102-8320	1	CAB GP					
	3	9X-2041	6	SCREW					
Y	4	4I-6631	1	COVER GP					
	5	7I-0241	1	COVER AS					
		6I-5368	1	RUBBER					
		7I-0242	1	COVER					
	6	8T-6868	4	BOLT (80mm LONG)					
	7	7X-2549	4	BOLT (100mm LONG)					
	8	8T-4139	1	BOLT (30mm LONG)					
	9	8T-4223	9	WASHER					

Y-SEE SEPARATE ILLUSTRATION

H37482E

102-8319 CAB GP (ATCH 1)

102-8320 – Page 235.02, 4I-6631 – Page 250

An Attachment

CAB. GAUGES AND ACCESSORIES

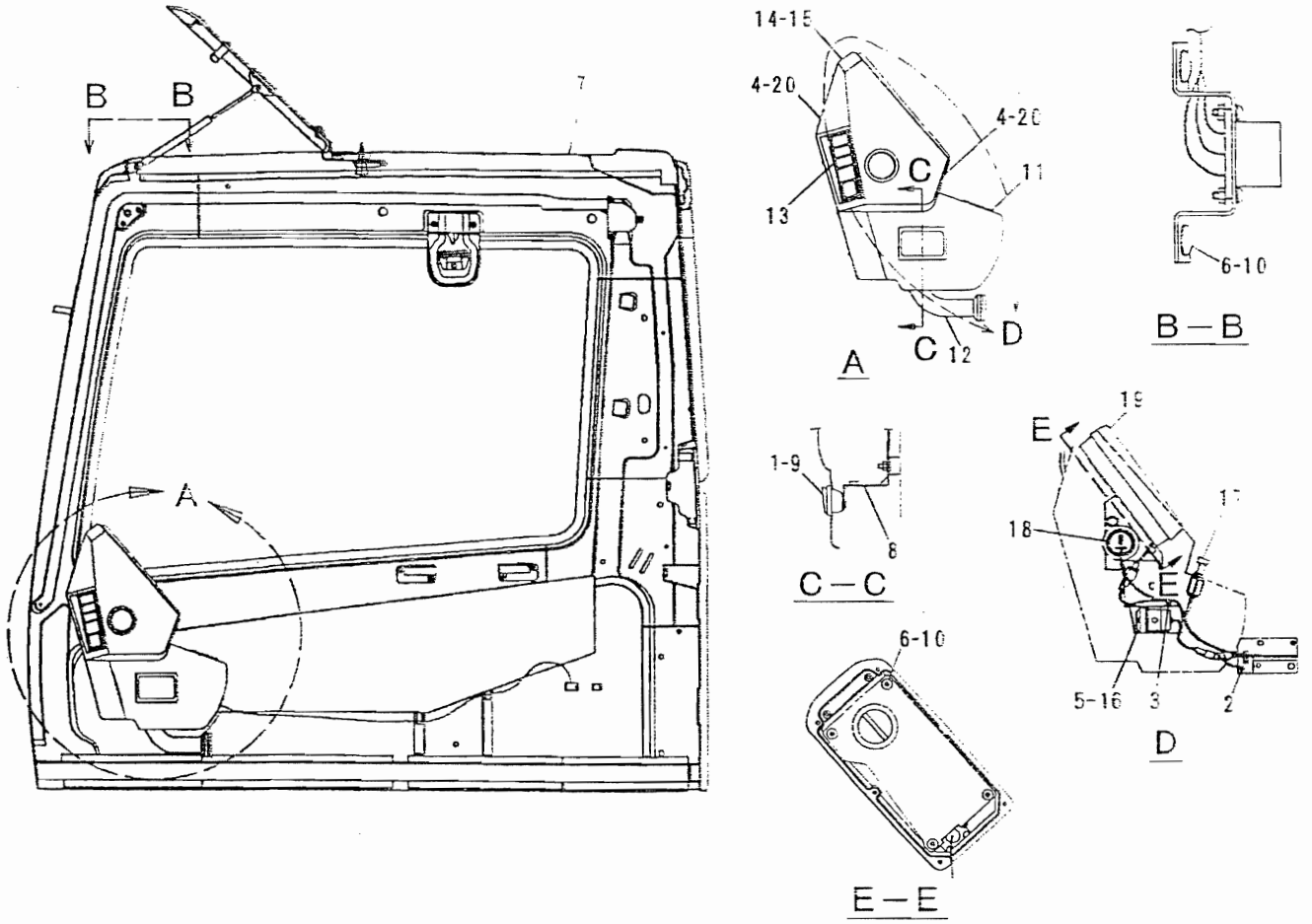

NOTE	No.	PART No.	QTY	PART NAME	NOTE	No.	PART No.	QTY	PART NAME
	1	4I-3043	2	SCREW					
	2	095-0736	1	SCREW					
	3	4I-3039	1	CLIP					
	4	7Y-5293	7	NUT					
Y	5	3E-6328	1	ALARM GP					
	6	095-0742	6	SCREW					
Y	7	113-2841	1	CAB GP					
	8	113-2782	1	BRACKET AS					
	9	096-6561	1	ASHTRAY AS					
	10	095-0827	6	LOCKWASHER					
	11	111-1148	1	HOLDER					
	12	113-2785	1	DUCT					
	13	5I-3707	1	LOUVER					
	14	111-1147	1	COVER					
	15	111-1146	1	COVER					
	16	9X-2041	1	SCREW					
	17	9W-0335	1	LIGHTER AS					
	18	9W-1494	1	METER KIT					
Y	19	7Y-5500	1	CONTROL GP					
	20	7Y-5295	7	SCREW					

Y-SEE SEPARATE ILLUSTRATION

H37993E

102-8320 CAB GP-BASIC

Part of 102-8319 Cab listed on Page 235.01
113-2841 – Page 235.03, 3E-6328 – Page 246, 7Y-5500 – Page 247
An Attachment

CAB. GAUGES AND ACCESSORIES

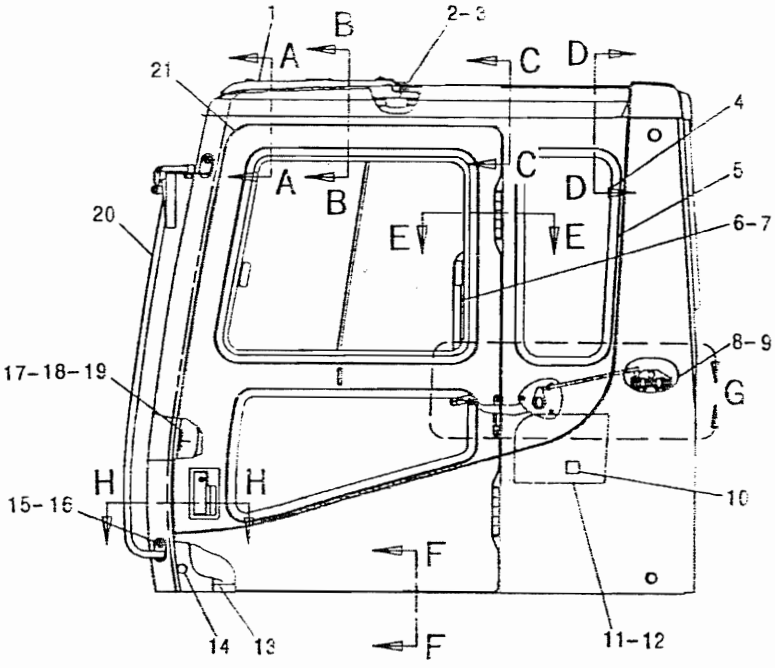

LEFT SIDE VIEW

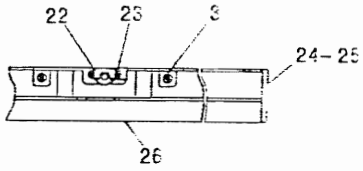

SECTION A – A

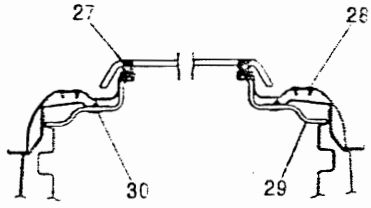

SECTION B – B

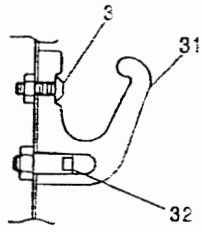

SECTION C – C

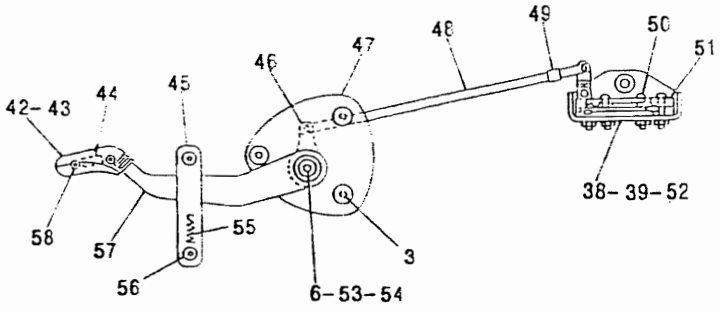

DETAIL OF AREA G

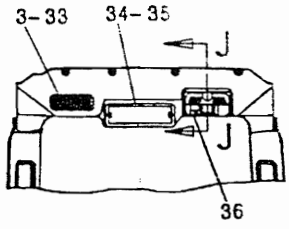

VIEW D – D

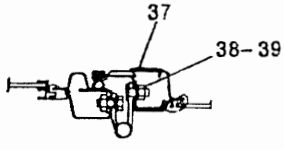

SECTION E – E

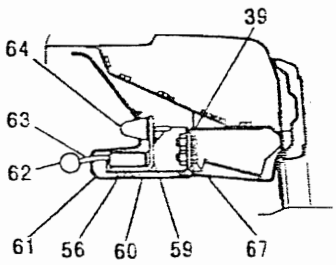

SECTION J – J

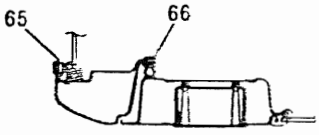

SECTION H – H

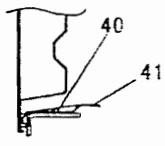

SECTION F – F

H37989E

113-2841 CAB GP-BASIC-PART 1 OF 2

Part of 102-8320 Cab listed on Page 235.02

41-1273 – Page 238, 4I-6974 – Page 240, 7Y-8104 – Page 265

An Attachment

CAB. GAUGES AND ACCESSORIES

NOTE	No.	PART No.	QTY	PART NAME
Y	1	4I-1273	1	HATCH GP
	2	4I-3080	1	STOPPER
	3	9X-2044	15	SCREW
	4	4I-1186	1	GLASS
	5	4I-6829	1	SEAL
	6	9X-2041	3	SCREW
	7	6I-5436	1	HANDLE AS
	8	4I-4273	1	COVER
	9	4I-4392	3	CLIP
	10	4I-3045	1	SPACER
	11	4I-3087	2	CLIP
	12	4I-3053	1	LINER
	13	4I-4330	2	SEAL
	14	4I-3090	3	SEAL
	15	4I-3123	2	BOLT (20mm LONG)
	16	4I-3144	2	WASHER
	17	4I-3066	1	STRIKER
	18	100-3573	2	SCREW
	19	1R-5998	2	LOCKWASHER
	20	4I-4206	1	HANDLE AS
Y	21	4I-6974	1	DOOR GP
	22	099-3603	1	CATCH
	23	096-6562	2	SCREW
	24	4I-6841	1	SPACER
	25	6V-6842	1	SPACER
	26	4I-4448	1	COVER
	27	4I-4353	1	SEAL
	28	087-8484	2	GROMMET
	29	113-2828	1	LINER
	30	4I-3089	4	CLIP
	31	6V-8928	1	HOOK
	32	4I-1223	1	PIN
	33	4I-4407	1	COVER
Y	34	7Y-8104	1	MOUNTING GP
	35	4I-4241	1	PLATE
	36	7I-1660	1	FILM
	37	4I-3096	1	GROMMET
	38	8T-4133	9	NUT
	39	8T-4121	12	WASHER
	40	099-0823	3	SCREW
	41	4I-6857	1	GUARD
	42	7Y-3184	1	KNOB
	43	7Y-3185	1	KNOB
	44	4I-0420	1	STRIP
	45	4I-1206	2	GUIDE
	46	4I-4252	1	BRACKET AS
	47	6I-5402	1	BRACKET AS
	48	4I-4251	1	ROD
	49	6V-7636	2	PIN AS
	50	9X-2046	4	SCREW
	51	8Y-5728	1	LATCH AS
	52	4I-4228	1	BRACKET AS
	53	6I-5475	2	WASHER (40mm OD)
	54	099-3607	1	WASHER (30mm OD)
	55	4I-3063	1	SPRING
	56	9X-2045	6	SCREW
	57	6I-5419	1	LEVER
	58	3E-9874	2	SCREW
	59	4I-3078	1	BRACKET
	60	4I-4224	1	BRACKET AS
	61	4I-4280	1	COVER
	62	102-7688	1	KNOB
	63	8Y-5745	1	LATCH AS
	64	4I-1271	1	STOPPER
▲	65	7Y-7360		SEAL・・・(2.9dm×2)
E	66	3E-6647		SEAL・・・(369cm)
	67	8T-4137	3	BOLT (20mm LONG)

E-ORDER BY THE CENTIMETER
Y-SEE SEPARATE ILLUSTRATION
▲-ORDER BY THE DECIMETER

H379941

113-2841 CAB GP-BASIC-PART 1 OF 2

Part of 102-8320 Cab listed on Page 235.02
4I-1273 – Page 238, 4I-6974 – Page 240, 7Y-8104 – Page 265
An Attachment

CAB, GAUGES AND ACCESSORIES

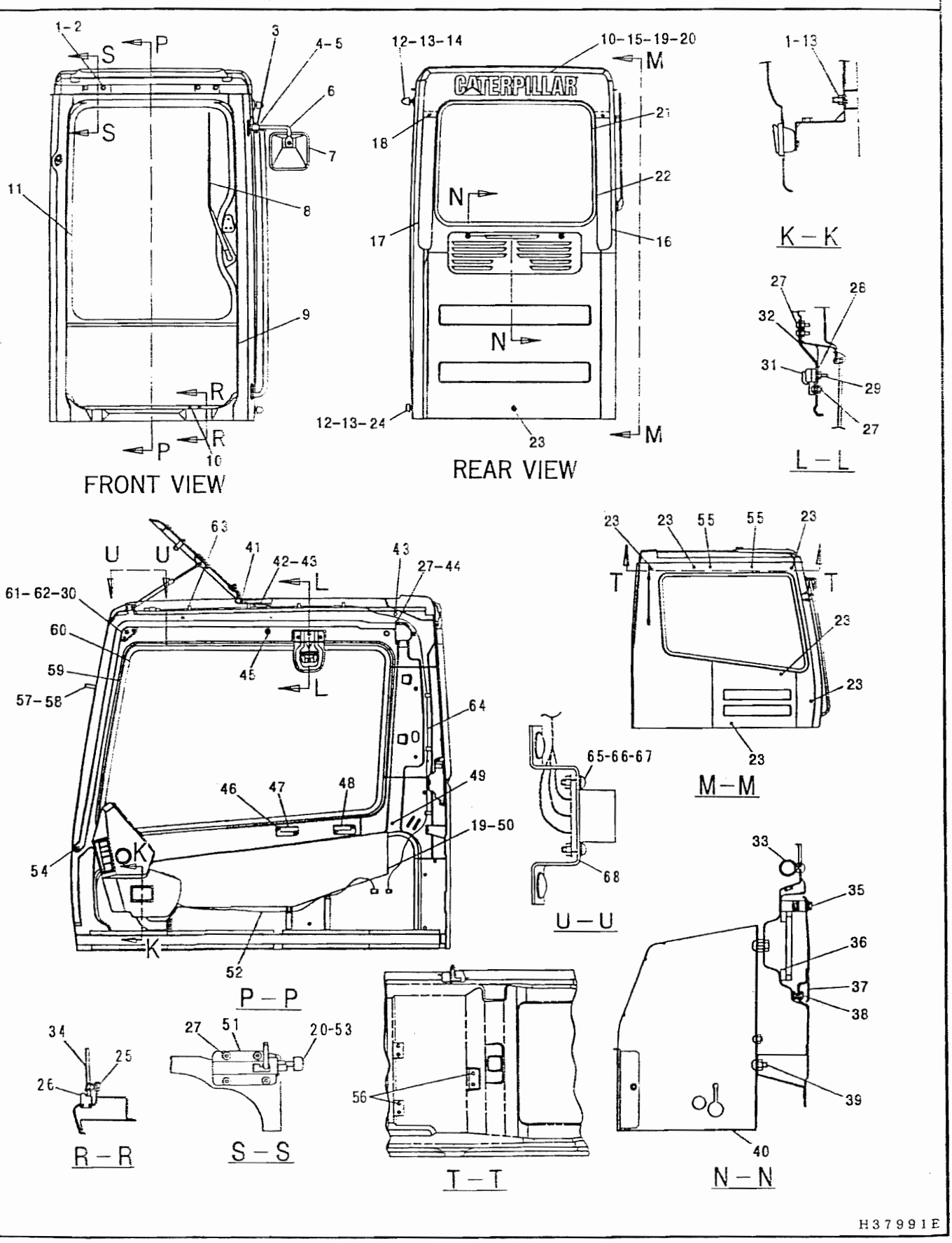

113-2841 CAB GP-BASIC-PART 2 OF 2

Part of 102-8320 Cab listed on Page 235.02

4I-4388 – Page 241, 6I-5444 – Page 242, 5I-8216 – Page 244, 111-4712 – Page 245, 6I-5141, 4I-6977-Page 248

An Attachment

CAB, GAUGES AND ACCESSORIES

NOTE	No.	PART No.	QTY	PART NAME
	1	8T-4121	8	WASHER
	2	8T-4137	4	BOLT (20mm LONG)
	3	100-8122	1	BOLT (50mm LONG)
	4	3E-9402	1	WASHER
	5	3E-9404	1	LOCKWASHER
	6	4I-5042	1	SUPPORT AS
	7	5P-6872	1	MIRROR
Y	8	4I-6977	1	WIPER GP
	9	4I-4287	1	SEAL
	10	3E-9871	4	BOLT AS
		5C-9553	1	BOLT (16mm LONG)
		8H-3481	1	LOCKWASHER
		9X-8256	1	WASHER
Y	11	6I-5141	1	WINDSHIELD GP
	12	4B-4278	2	WASHER
	13	8T-4133	6	NUT
	14	7Y-8561	1	BUMPER
	15	4I-4403	1	COVER AS
	16	6I-5409	1	COVER (RH)
	17	6I-5410	1	COVER (LH)
	18	4I-4315	4	CLIP
	19	4I-3087	8	CLIP
	20	3E-9873	3	SCREW
	21	6I-5424	1	GLASS
E	22	3E-8298		SEAL・・・(247cm)
	23	4I-3090	7	SEAL
	24	4I-1205	1	BUMPER
	25	4I-4409	1	SEAL AS
E		3E-6647		SEAL・・・(83cm)
	26	4I-4282	2	STOPPER
	27	9X-2044	10	SCREW
	28	4I-4243	1	PLATE AS
	29	3E-8020	2	SCREW
	30	4I-4222	2	HOLDER AS
	31	4I-4253	1	HOLDER
	32	6I-5440	1	BRACKET
	33	099-3629	1	RING
	34	6I-5417	1	GLASS
	35	3E-9869	2	BOLT AS
		8T-4224	1	WASHER
		8T-7547	1	BOLT (30mm LONG)
E	36	6I-5470		SEAL・・・(150cm)
	37	105-9539	1	SCREW
▲	38	7Y-7360		SEAL・・・(0.5dm)
	39	9X-2041	4	SCREW
Y	40	6I-5444	1	BOX GP
	41	105-2169	4	BOLT AS
		8T-4200	1	BOLT (16mm LONG)
		8T-4224	1	WASHER
	42	096-0721	1	LIGHT
	43	4I-3043	3	SCREW
Y	44	4I-4388	1	ASSIST GP
	45	4I-5031	1	GROMMET
	46	9X-2045	4	SCREW
	47	6I-5339	1	HOLDER
	48	6I-5340	1	HOLDER
	49	7Y-7364	1	GROMMET
	50	111-1145	1	LINER
	51	4I-4372	1	LATCH AS
Y	52	111-4712	1	HARNESS AS
	53	4I-4385	1	ROLLER
	54	4I-4260	2	STOPPER
	55	4I-3047	2	GROMMET
	56	102-8347	6	PLUG
	57	4I-5032	1	NOZZLE AS
		099-0862	1	HOSE
		085-8037	1	NOZZLE
		105-9526	1	ADAPTER AS
		105-9527	1	PACKING
	58	3E-9872	2	SCREW AS
		095-0728	1	SCREW
		096-6166	1	WASHER
	59	6I-5414	1	SEAL
	60	4I-5044	1	GLASS
	61	1R-5998	4	LOCKWASHER
	62	100-3573	4	SCREW
	63	4I-3039	11	CLIP
Y	64	5I-8216	1	HARNESS AS
	65	096-3881	2	SCREW
	66	3C-6969	2	NUT
	67	4I-3038	4	WASHER
	68	4I-3037	1	BRACKET

E-ORDER BY THE CENTIMETER
Y-SEE SEPARATE ILLUSTRATION
▲-ORDER BY THE DECIMETER

H37995E

113-2841 CAB GP-BASIC-PART 2 OF 2

Part of 102-8320 Cab listed on Page 235.02

4I-4388 – Page 241, 6I-5444 – Page 242, 5I-8216 – Page 244, 111-4712 – Page 245, 6I-5141, 4I-6977 - Page 248

An Attachment

CAB. GAUGES AND ACCESSORIES

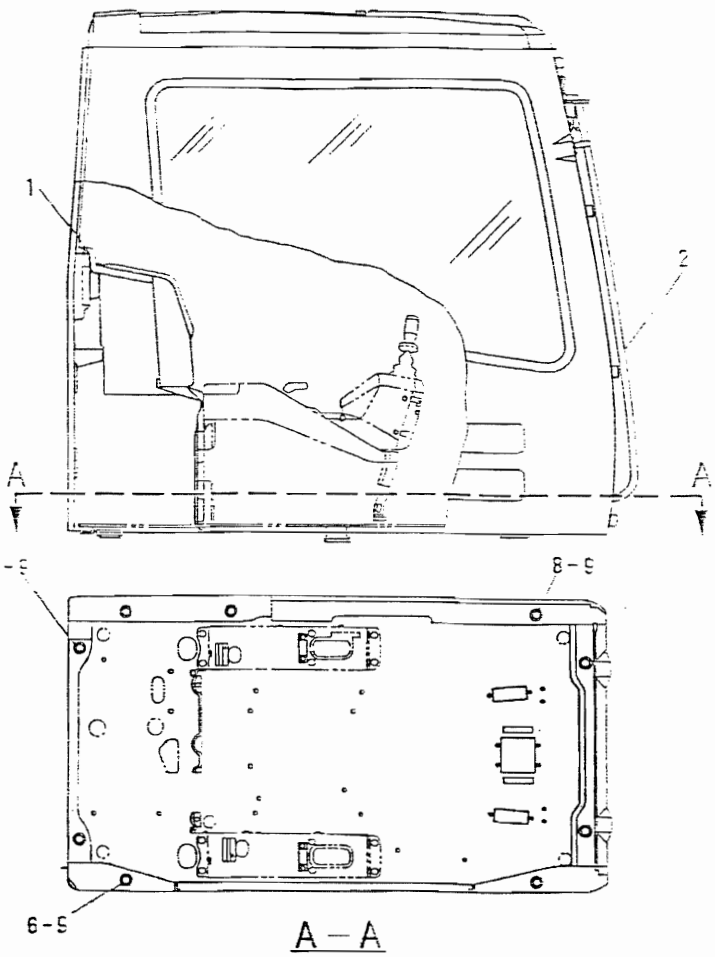

A – A

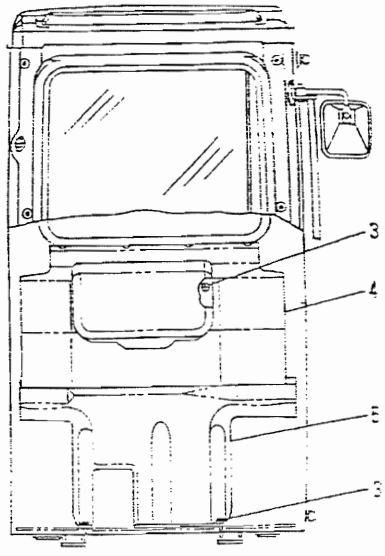

NOTE	No.	PART No.	QTY	PART NAME	NOTE	No.	PART No.	QTY	PART NAME
	1	9X-2044	4	SCREW					
Y	2	102-8323	1	CAB GP					
	3	9X-2041	6	SCREW					
Y	4	4I-6631	1	COVER GP					
	5	7I-0241	1	COVER AS					
		6I-5368	1	RUBBER					
		7I-0242	1	COVER					
	6	8T-6868	4	BOLT (80mm LONG)					
	7	7X-2549	4	BOLT (100mm LONG)					
	8	8T-4139	1	BOLT (30mm LONG)					
	9	8T-4223	9	WASHER					

Y-SEE SEPARATE ILLUSTRATION

H37485E

102-8322 CAB GP (ATCH 2)

102-8323 – Page 235.08, 4I-6631 – Page 250

An Attachment

CAB, GAUGES AND ACCESSORIES

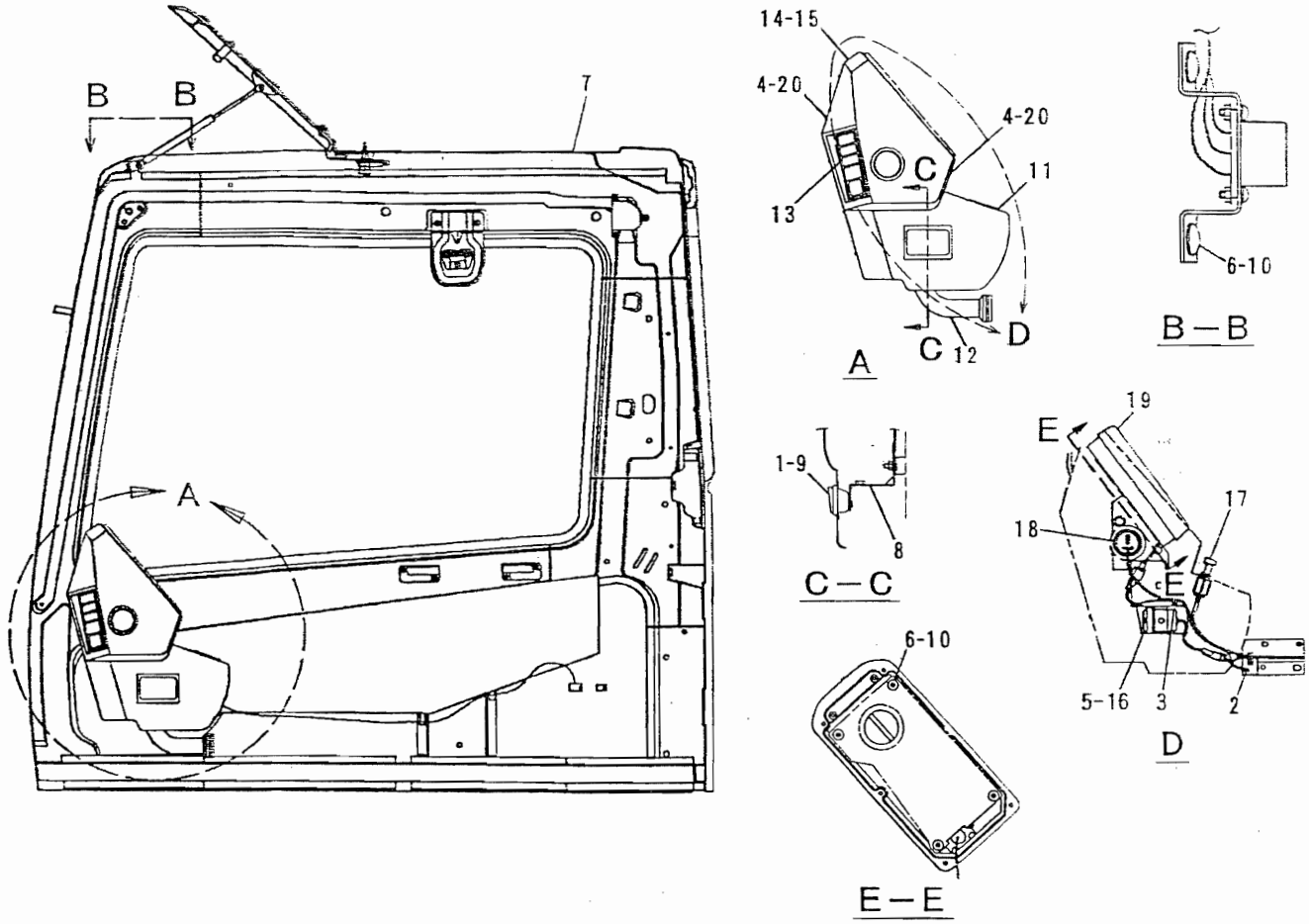

NOTE	No.	PART No.	QTY	PART NAME	NOTE	No.	PART No.	QTY	PART NAME
	1	4I-3043	2	SCREW					
	2	095-0736	1	SCREW					
	3	4I-3039	1	CLIP					
	4	7Y-5293	7	NUT					
Y	5	3E-6328	1	ALARM GP					
	6	095-0742	6	SCREW					
Y	7	113-2842	1	CAB GP					
	8	113-2782	1	BRACKET AS					
	9	096-6561	1	ASHTRAY AS					
	10	095-0827	6	LOCKWASHER					
	11	111-1148	1	HOLDER					
	12	113-2785	1	DUCT					
	13	5I-3707	1	LOUVER					
	14	111-1147	1	COVER					
	15	111-1146	1	COVER					
	16	9X-2041	1	SCREW					
	17	9W-0335	1	LIGHTER AS					
	18	9W-1494	1	METER KIT					
Y	19	7Y-5500	1	CONTROL GP					
	20	7Y-5295	7	SCREW					

Y-SEE SEPARATE ILLUSTRATION

H37988I

102-8323 CAB GP-BASIC

Part of 102-8322 Cab listed on Page 235.07
113-2842 — Page 235.09, 3E-6328 — Page 246, 7Y-5500 — Page 247
An Attachment

CAB, GAUGES AND ACCESSORIES

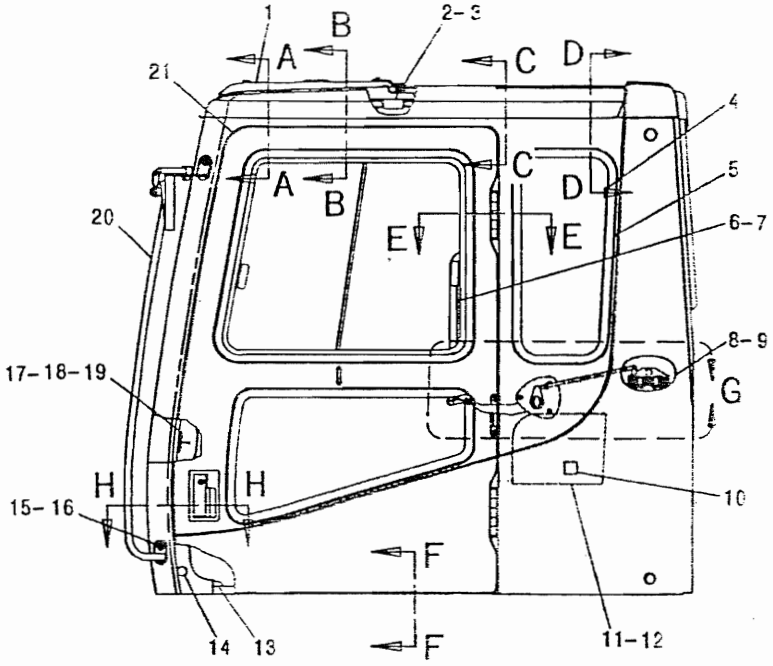

LEFT SIDE VIEW

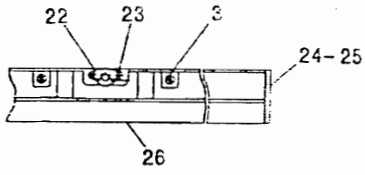

SECTION A – A

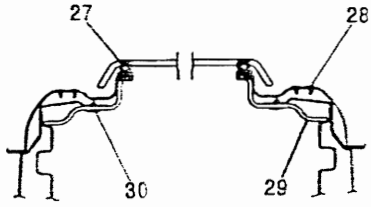

SECTION B – B

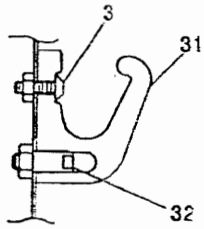

SECTION C – C

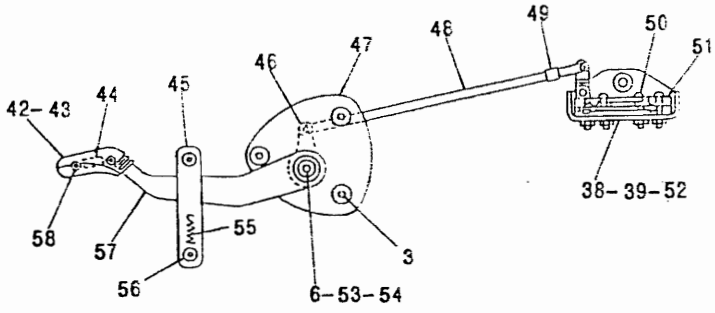

DETAIL OF AREA G

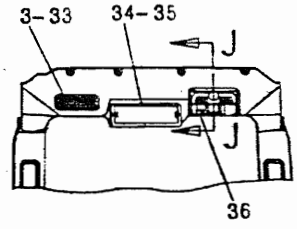

VIEW D – D

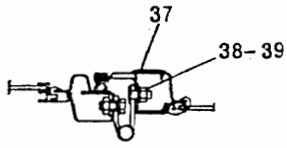

SECTION E – E

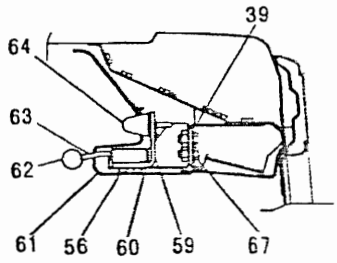

SECTION J – J

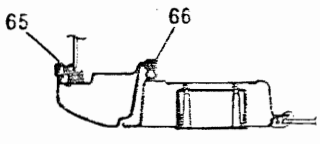

SECTION H – H

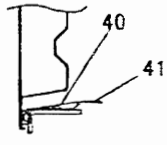

SECTION F – F

H37989E

113-2842 CAB GP-BASIC-PART 1 OF 2

Part of 102-8323 Cab listed on Page 235.08

41-6973 – Page 236, 41-1273 – Page 238, 7Y-8104 – Page 265

An Attachment

CAB, GAUGES AND ACCESSORIES

NOTE	No.	PART No.	QTY	PART NAME
Y	1	4I-1273	1	HATCH GP
	2	4I-3080	1	STOPPER
	3	9X-2044	15	SCREW
	4	4I-1186	1	GLASS
	5	4I-6829	1	SEAL
	6	9X-2041	3	SCREW
	7	6I-5436	1	HANDLE AS
	8	4I-4273	1	COVER
	9	4I-4392	3	CLIP
	10	4I-3045	1	SPACER
	11	4I-3087	2	CLIP
	12	4I-3053	1	LINER
	13	4I-4330	2	SEAL
	14	4I-3090	3	SEAL
	15	4I-3123	2	BOLT (20mm LONG)
	16	4I-3144	2	WASHER
	17	4I-3066	1	STRIKER
	18	100-3573	2	SCREW
	19	1R-5998	2	LOCKWASHER
	20	4I-4206	1	HANDLE AS
Y	21	4I-6973	1	DOOR GP
	22	099-3603	1	CATCH
	23	096-6562	2	SCREW
	24	4I-6841	1	SPACER
	25	4I-6842	1	SPACER
	26	4I-4448	1	COVER
	27	4I-4353	1	SEAL
	28	087-8484	2	GROMMET
	29	113-2828	1	LINER
	30	4I-3089	4	CLIP
	31	6V-8928	1	HOOK
	32	4I-1223	1	PIN
	33	4I-4407	1	COVER
Y	34	7Y-8104	1	MOUNTING GP
	35	4I-4241	1	PLATE
	36	7I-1660	1	FILM
	37	4I-3096	1	GROMMET
	38	8T-4133	9	NUT
	39	8T-4121	12	WASHER
	40	099-0823	3	SCREW
	41	4I-6857	1	GUARD
	42	7Y-3184	1	KNOB
	43	7Y-3185	1	KNOB
	44	4I-0420	1	STRIP
	45	4I-1206	2	GUIDE
	46	4I-4252	1	BRACKET AS
	47	6I-5402	1	BRACKET AS
	48	4I-4251	1	ROD
	49	6V-7636	2	PIN AS
	50	9X-2046	4	SCREW
	51	8Y-5728	1	LATCH AS
	52	4I-4228	1	BRACKET AS
	53	6I-5475	2	WASHER (40mm OD)
	54	099-3607	1	WASHER (30mm OD)
	55	4I-3063	1	SPRING
	56	9X-2045	6	SCREW
	57	6I-5419	1	LEVER
	58	3E-9874	2	SCREW
	59	4I-3078	1	BRACKET
	60	4I-4224	1	BRACKET AS
	61	4I-4280	1	COVER
	62	102-7688	1	KNOB
	63	8Y-5745	1	LATCH AS
	64	4I-1271	1	STOPPER
▲	65	7Y-7360		SEAL・・・(2.9dm×2)
E	66	3E-6647		SEAL・・・(369cm)
	67	8T-4137	3	BOLT (20mm LONG)

E-ORDER BY THE CENTIMETER
Y-SEE SEPARATE ILLUSTRATION
▲-ORDER BY THE DECIMETER

H37996E

113-2842 CAB GP-BASIC-PART 1 OF 2

Part of 102-8323 Cab listed on Page 235.08
4I-6973 – Page 236, 4I-1273 – Page 238, 7Y-8104 – Page 265
An Attachment

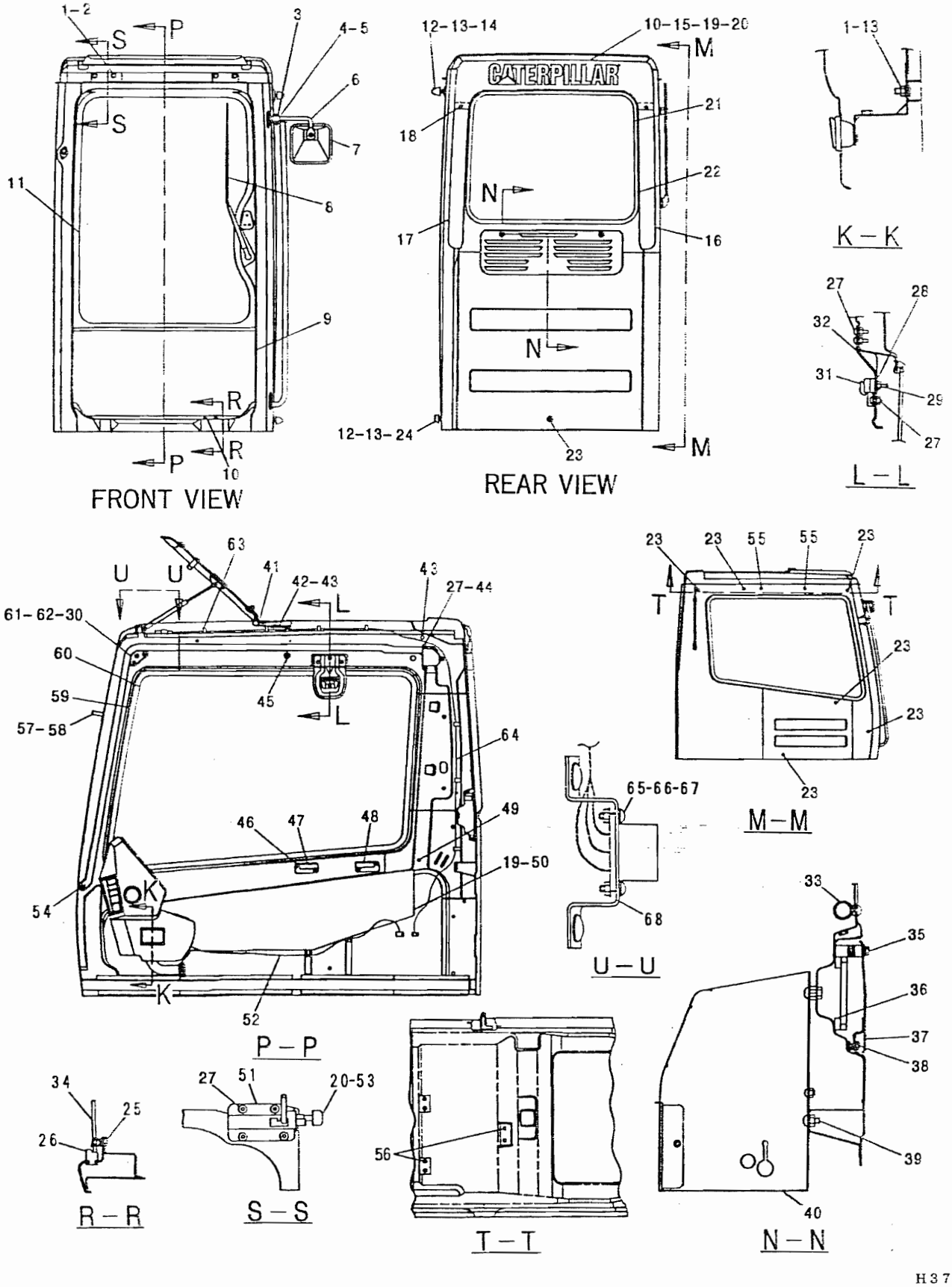

113-2842 CAB GP-BASIC-PART 2 OF 2

Part of 102-8323 Cab listed on Page 235.08

4I-4388 – Page 241, 6I-5444 – Page 242, 5I-8216 – Page 244, 111-4712 – Page 245, 6I-5141, 4I-6977-Page 248

An Attachment

CAB, GAUGES AND ACCESSORIES

NOTE	No.	PART No.	QTY	PART NAME
	1	8T-4121	8	WASHER
	2	8T-4137	4	BOLT (20mm LONG)
	3	100-8122	1	BOLT (50mm LONG)
	4	3E-9402	1	WASHER
	5	3E-9404	1	LOCKWASHER
	6	4I-5042	1	SUPPORT AS
	7	5P-6872	1	MIRROR
Y	8	4I-6977	1	WIPER GP
	9	4I-4287	1	SEAL
	10	3E-9871	4	BOLT AS
		5C-9553	1	BOLT (16mm LONG)
		8H-3481	1	LOCKWASHER
		9X-8256	1	WASHER
Y	11	6I-5141	1	WINDSHIELD GP
	12	4B-4278	2	WASHER
	13	8T-4133	6	NUT
	14	7Y-8561	1	BUMPER
	15	4I-4403	1	COVER AS
	16	6I-5409	1	COVER (RH)
	17	6I-5410	1	COVER (LH)
	18	4I-4315	4	CLIP
	19	4I-3087	8	CLIP
	20	3E-9873	3	SCREW
	21	6I-5416	1	GLASS
E	22	3E-8298		SEAL··· (247cm)
	23	4I-3090	7	SEAL
	24	4I-1205	1	BUMPER
	25	4I-4409	1	SEAL AS
E		3E-6647		SEAL··· (83cm)
	26	4I-4282	2	STOPPER
	27	9X-2044	10	SCREW
	28	4I-4243	1	PLATE AS
	29	3E-8020	2	SCREW
	30	4I-4222	2	HOLDER AS
	31	4I-4253	1	HOLDER
	32	6I-5440	1	BRACKET
	33	099-3629	1	RING
	34	6I-5417	1	GLASS
	35	3E-9869	2	BOLT AS
		8T-4224	1	WASHER
		8T-7547	1	BOLT (30mm LONG)
E	36	6I-5470		SEAL··· (150cm)
	37	105-9539	1	COVER AS
▲	38	7Y-7360		SEAL··· (0.5dm)
	39	9X-2041	4	SCREW
Y	40	6I-5444	1	BOX GP
	41	105-2169	4	BOLT AS
		8T-4200	1	BOLT (16mm LONG)
		8T-4224	1	WASHER
	42	096-0721	1	LIGHT
	43	4I-3043	3	SCREW
Y	44	4I-4388	1	ASSIST GP
	45	4I-5031	1	GROMMET
	46	9X-2045	4	SCREW
	47	6I-5339	1	HOLDER
	48	6I-5340	1	HOLDER
	49	7Y-7364	1	GROMMET
	50	111-1145	1	LINER
	51	4I-4372	1	LATCH AS
Y	52	111-4712	1	HARNESS AS
	53	4I-4385	1	ROLLER
	54	4I-4260	2	STOPPER
	55	4I-3047	2	GROMMET
	56	102-8347	6	PLUG
	57	4I-5032	1	NOZZLE AS
		099-0862	1	HOSE
		085-8037	1	NOZZLE
		105-9526	1	ADAPTER AS
		105-9527	1	PACKING
	58	3E-9872	2	SCREW AS
		095-0728	1	SCREW
		096-6166	1	WASHER
	59	4I-4441	1	SEAL
	60	4I-5043	1	GLASS
	61	1R-5998	4	LOCKWASHER
	62	100-3573	4	SCREW
	63	4I-3039	11	CLIP
Y	64	5I-8216	1	HARNESS AS
	65	096-3881	2	SCREW
	66	3C-6969	2	NUT
	67	4I-3038	4	WASHER
	68	4I-3037	1	BRACKET

E-ORDER BY THE CENTIMETER
Y-SEE SEPARATE ILLUSTRATION
▲-ORDER BY THE DECIMETER

H37997

113-2842 CAB GP-BASIC-PART 2 OF 2

Part of 102-8323 Cab listed on Page 235.08

4I-4388 – Page 241, 6I-5444 – Page 242, 5I-8216 – Page 244, 111-4712 – Page 245, 6I-5141, 4I-6977 - Page 248

An Attachment

CAB. GAUGES AND ACCESSORIES

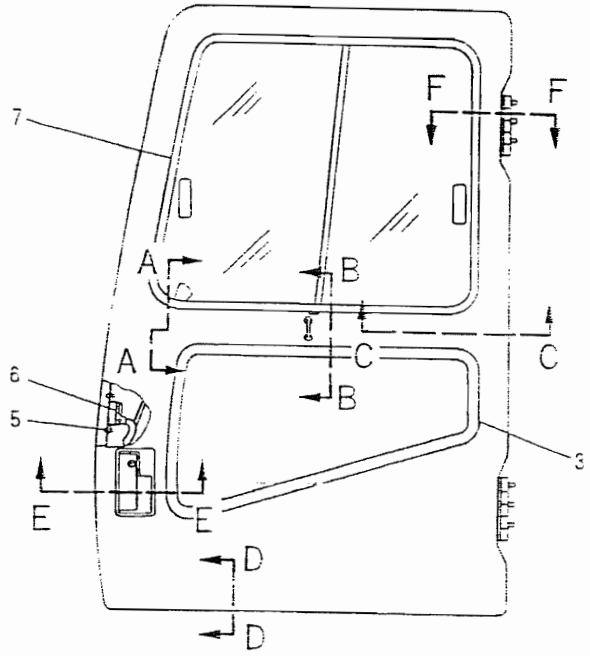

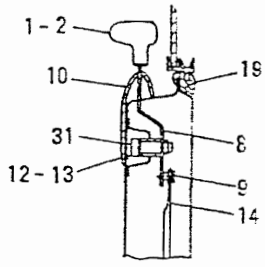

SECTION A—A

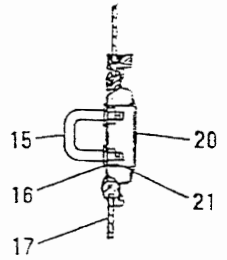

SECTION B—B

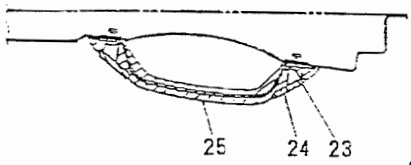

SECTION C—C



SECTION D—D

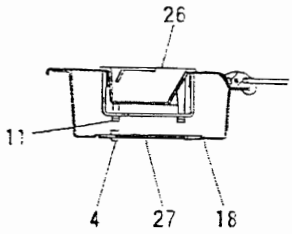

SECTION E—E

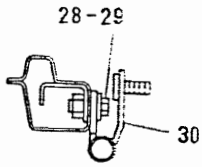

SECTION F—F

NOTE	No.	PART No.	QTY	PART NAME	NOTE	No.	PART No.	QTY	PART NAME
	1	4I-4286	1	KNOB		16	8T-4224	2	WASHER
	2	096-2622	2	SCREW		17	4I-1185	1	GLASS
	3	4I-6832	1	SEAL	E	18	4I-5030		SEAL · · · (70cm)
	4	102-3560	4	SCREW AS	E	19	3E-8297		SEAL · · · (280cm)
		095-0742	1	SCREW		20	4I-3097	1	GROMMET
		095-0827	1	LOCKWASHER		21	096-3884	2	NUT
	5	9X-2044	3	SCREW		22	4I-1274	1	SEAL
	6	4I-4255	1	LOCK AS		23	101-8899	4	SCREW AS
Y	7	4I-6966	1	WINDOW AS			095-0742	1	SCREW
	8	4I-4254	1	HANDLE AS			095-0827	1	LOCKWASHER
	9	4I-3067	1	PIN		24	4I-3072	4	CAP
		4I-3068	1	BUSHING		25	4I-3071	2	HANDLE
		4I-3069	1	WASHER		26	8Y-4820	1	HANDLE AS
		4I-3070	1	SPRING		27	4I-4213	1	COVER
	10	4I-4332	1	COVER		28	8T-4136	6	BOLT (25mm LONG)
	11	4I-6833	4	BOLT		29	8T-4121	6	WASHER
	12	4I-4334	2	SCREW		30	4I-1268	2	HINGE AS
	13	4I-4357	2	GROMMET		31	4I-3124	1	BOLT
	14	4I-4250	1	ROD AS					
	15	4I-4244	1	HOOK					

E-ORDER BY THE CENTIMETER
Y-SEE SEPARATE ILLUSTRATION

H35866E

4I-6973 DOOR GP-CAB

Part of 113-2840 and 113-2842 Cab listed on Pages 233 and 235.10
4I-6966 — Page 237

CAB, GAUGES AND ACCESSORIES

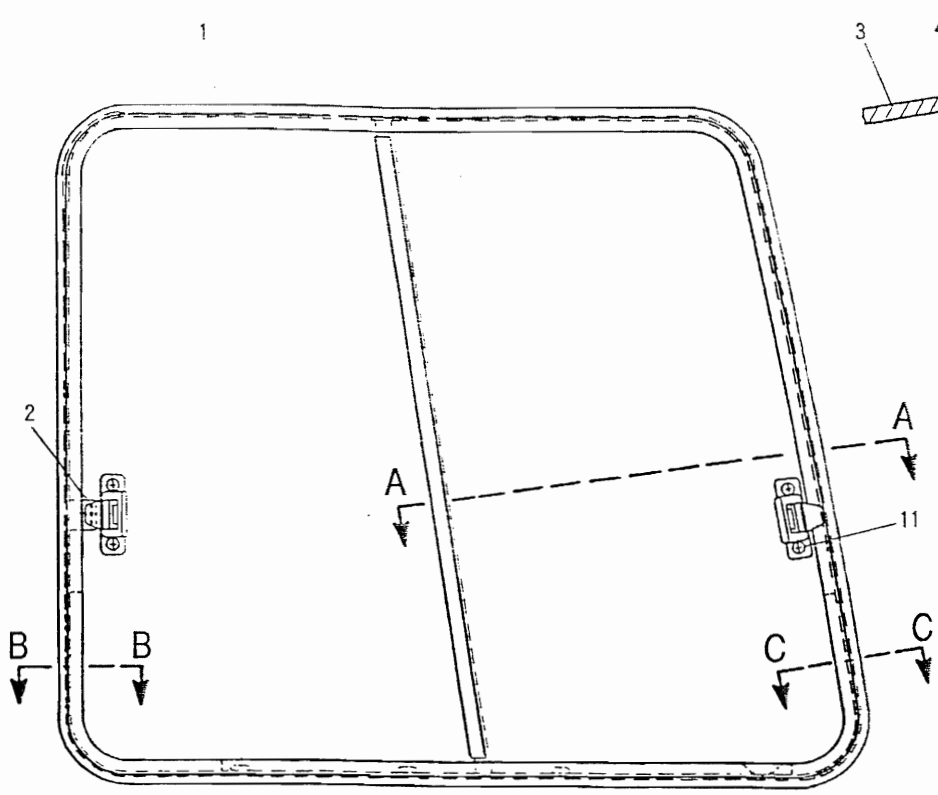

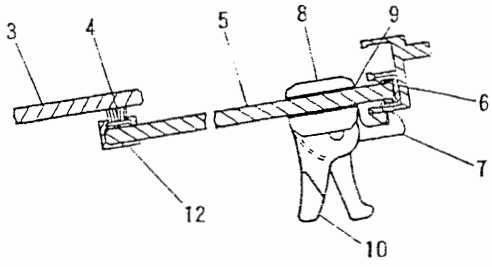

SECTION A – A

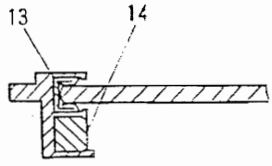

SECTION B – B

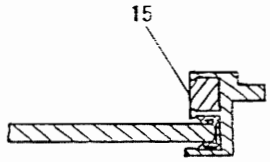

SECTION C – C

NOTE	No.	PART No.	QTY	PART NAME
	1	41-6967	1	FRAME AS
	2	41-4300	1	CATCH
		099-0139	3	RIVET
	3	41-6968	1	GLASS
	4	41-6856	1	SEAL
	5	41-6969	1	GLASS
	6	41-6972	1	SEAL
	7	085-6444	2	LOCK AS
		085-6445	1	LOCK
	8	085-6447	1	RETAINER
	9	085-6449	1	PACKING
	10	085-6446	1	LOCK
	11	085-6448	2	SCREW
	12	41-6970	1	CHANNEL
	13	41-6971	1	SEAL
▲	14	41-4307		BUMPER・・・(3dm)
▲	15	41-4307		BUMPER・・・(2dm)

▲-ORDER BY THE DECIMETER

H35257

41-6966 WINDOW AS-DOOR

Part of 41-6973 and 41-6974 Door listed on Pages 236 and 240

CAB. GAUGES AND ACCESSORIES

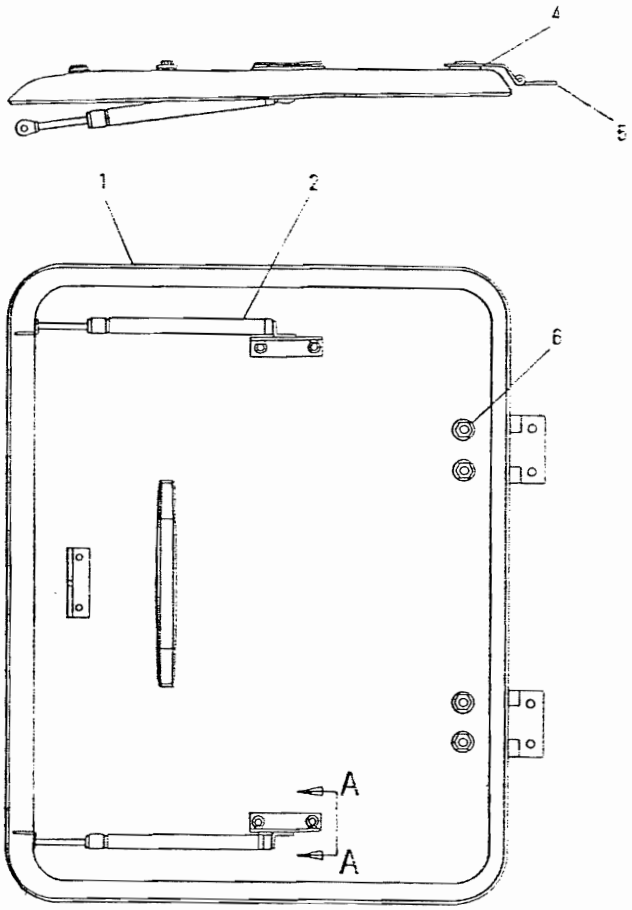

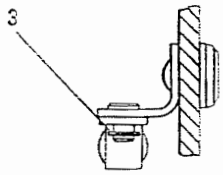

SECTION A — A

NOTE	No.	PART No.	QTY	PART NAME	NOTE	No.	PART No.	QTY	PART NAME
Y	1	4I-4204	1	HATCH GP					
	2	099-3506	2	SPRING AS					
	3	2Y-5685	4	RING					
	4	4I-1260	2	PACKING					
	5	6I-5338	2	HINGE AS					
	6	6I-5342	4	NUT					

Y-SEE SEPARATE ILLUSTRATION

H31645E

4I-1273 HATCH GP

Part of 113-2840, 113-2841 and 113-2842 Cab listed on Pages 233, 235.04 and 235.10

4I-4204 — Page 239

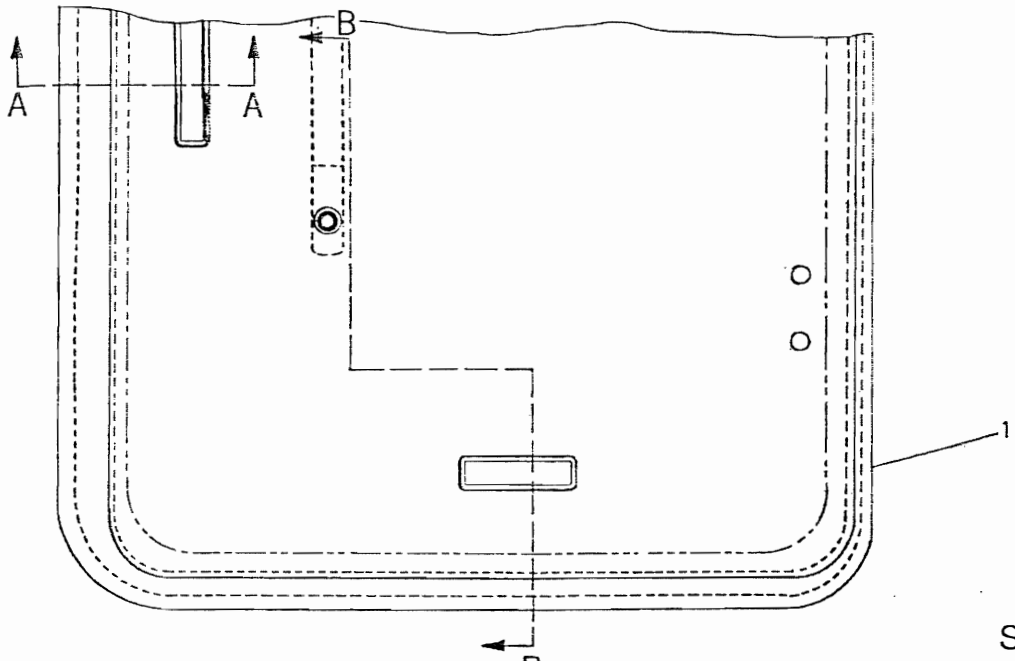

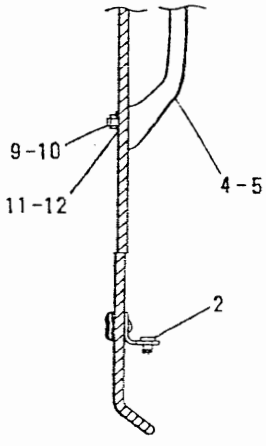

SECTION B — B

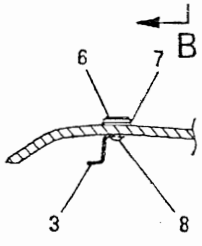

SECTION A — A

NOTE	No.	PART No.	QTY	PART NAME	NOTE	No.	PART No.	QTY	PART NAME
	1	4I-4205	1	COVER					
	2	4I-4242	2	BRACKET AS					
	3	6I-5432	1	CATCH					
	4	4I-3071	1	HANDLE					
	5	4I-3072	2	CAP					
	6	4I-4361	3	RETAINER					
	7	085-6449	3	PACKING					
	8	100-2881	6	SCREW					
	9	8T-4134	2	NUT					
	10	101-8900	2	SCREW AS					
		8T-6412	1	SCREW					
		095-0827	1	LOCKWASHER					
	11	9X-8256	2	WASHER					
	12	4I-3054	2	PACKING					

H33810E

4I-4204 HATCH GP

Part of 4I-1273 Hatch listed on Page 238

CAB, GAUGES AND ACCESSORIES

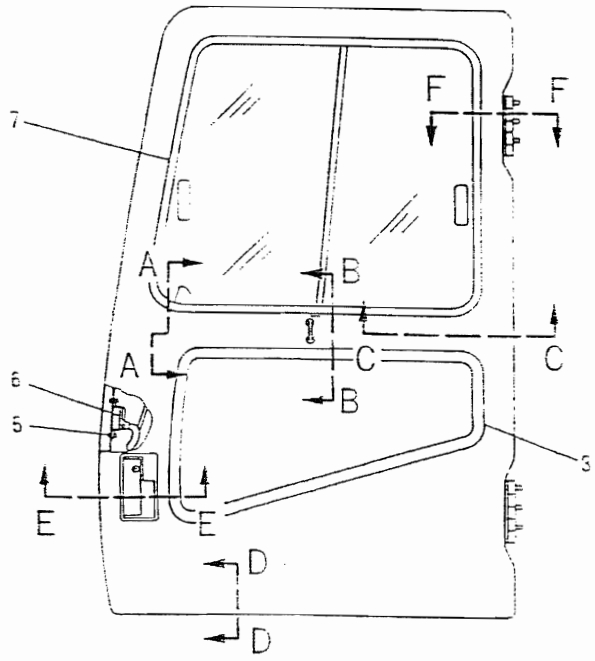

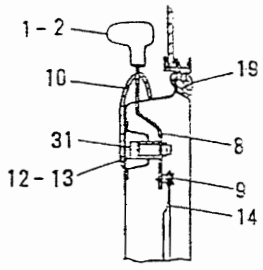

SECTION A — A

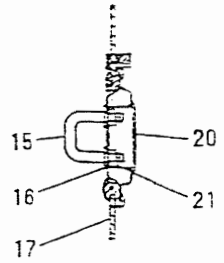

SECTION B — B

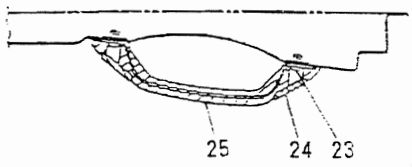

SECTION C — C



SECTION D — D

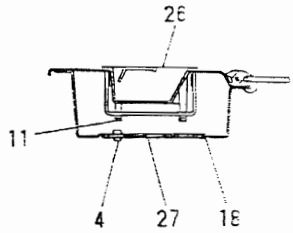

SECTION E — E

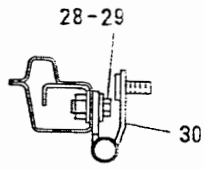

SECTION F — F

NOTE	No.	PART No.	QTY	PART NAME
	1	4I-4286	1	KNOB
	2	096-2622	2	SCREW
	3	4I-6832	1	SEAL
	4	102-3560	4	SCREW AS
		095-0742	1	SCREW
		095-0827	1	LOCKWASHER
	5	9X-2044	3	SCREW
	6	4I-4255	1	LOCK AS
Y	7	4I-6966	1	WINDOW AS
	8	4I-4254	1	HANDLE AS
	9	4I-3067	1	PIN
		4I-3068	1	BUSHING
		4I-3069	1	WASHER
		4I-3070	1	SPRING
	10	4I-4332	1	COVER
	11	4I-6833	4	BOLT
	12	4I-4334	2	SCREW
	13	4I-4357	2	GROMMET
	14	4I-4250	1	ROD AS
	15	4I-4244	1	HOOK
	16	8T-4224	2	WASHER
	17	4I-1190	1	GLASS
E	18	4I-5030		SEAL ··· (70cm)
E	19	3E-8297		SEAL ··· (280cm)
	20	4I-3097	1	GROMMET
	21	096-3884	2	NUT
	22	4I-1274	1	SEAL
	23	101-8899	4	SCREW AS
		095-0742	1	SCREW
		095-0827	1	LOCKWASHER
	24	4I-3072	4	CAP
	25	4I-3071	2	HANDLE
	26	8Y-4820	1	HANDLE AS
	27	4I-4213	1	COVER
	28	8T-4136	6	BOLT (25mm LONG)
	29	8T-4121	6	WASHER
	30	4I-1268	2	HINGE AS
	31	4I-3124	1	BOLT

E-ORDER BY THE CENTIMETER
Y-SEE SEPARATE ILLUSTRATION

H35867E

4I-6974 DOOR GP-CAB

Part of 113-2841 Cab listed on Page 235.04
4I-6966 — Page 237
An Attachment

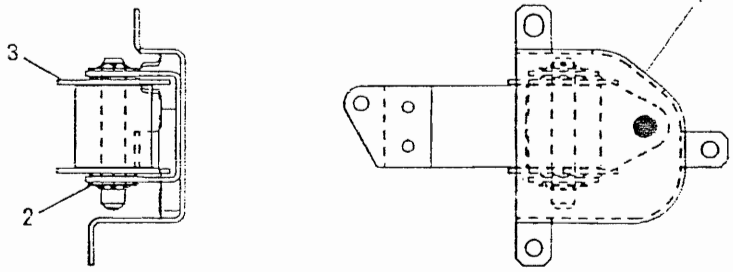

NOTE	No.	PART No.	QTY	PART NAME	NOTE	No.	PART No.	QTY	PART NAME
	1	4I-4373	1	BRACKET AS					
	2	4I-3255	2	RETAINER					
	3	4I-4411	1	SPRING AS					

H35193E

4I-4388 ASSIST GP-WINDSHIELD

Part of 113-2840, 113-2841 and 113-2842 Cab listed on Pages 235, 235.06 and 235.12

CAB, GAUGES AND ACCESSORIES

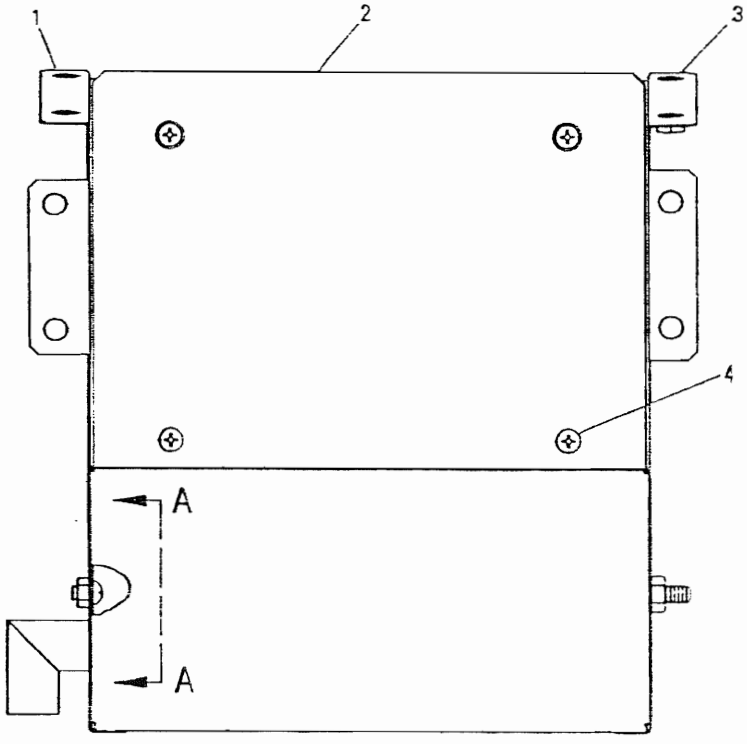

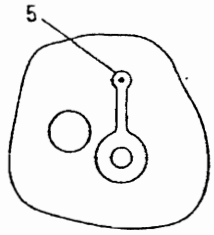

VIEW A – A

NOTE	No.	PART No.	QTY	PART NAME	NOTE	No.	PART No.	QTY	PART NAME
	1	6I-5445	1	PANEL AS					
	2	6I-5443	1	PANEL					
	3	6I-5446	1	PANEL AS					
	4	095-0744	4	SCREW					
	5	4I-3081	1	CAP					

H35194E

6I-5444 BOX GP-STORAGE

Part of 113-2840, 113-2841 and 113-2842 Cab listed on Pages 235, 235.06 and 235.12

MEMORANDA

CAB, GAUGES AND ACCESSORIES

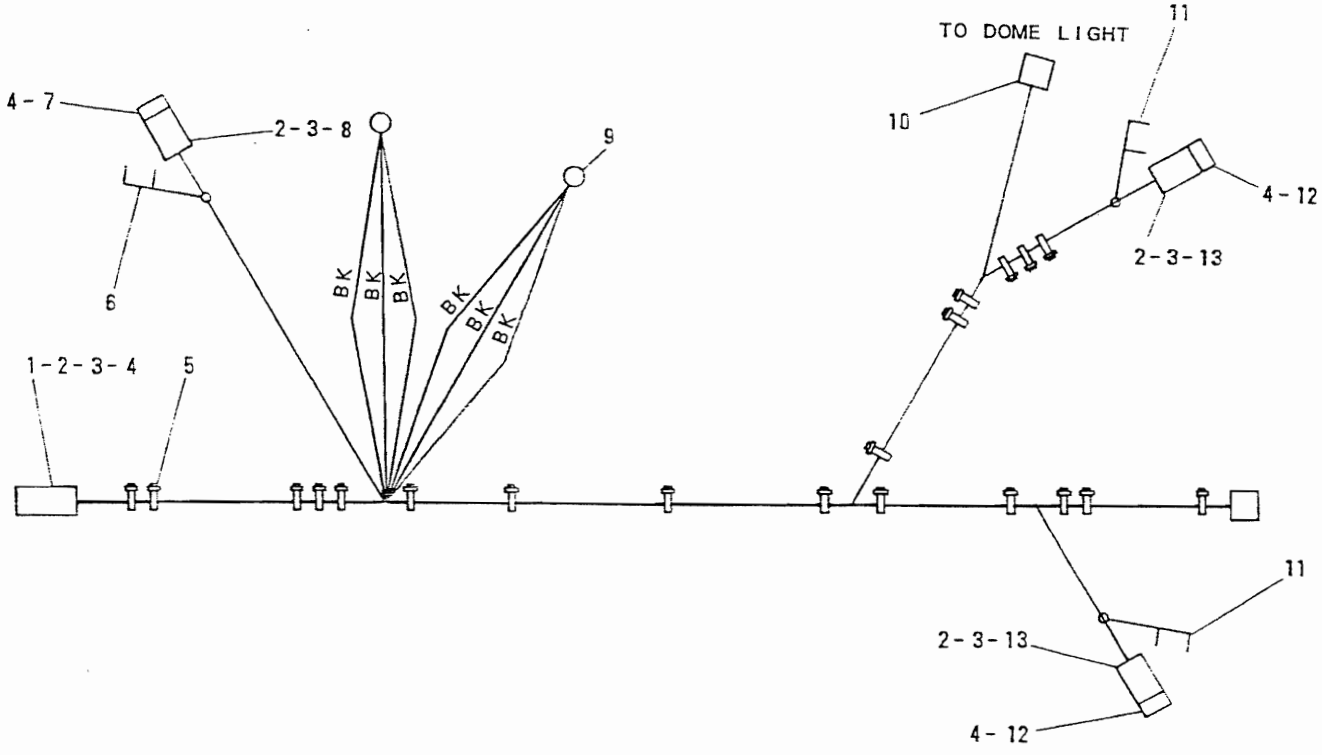

NOTE	No.	PART No.	QTY	PART NAME	NOTE	No.	PART No.	QTY	PART NAME
	1	9G-3667	1	HOUSING					
	2	7N-7780	8	PIN					
	3	7N-7779	7	SOCKET					
	4	9G-3695	11	PLUG					
	5	1S-9593	21	STRAP					
	6	9G-2265	1	CLIP					
	7	7N-8205	1	HOUSING					
	8	7N-8204	1	HOUSING					
	9	2L-8066	2	TERMINAL					
	10	9X-0196	1	TERMINAL AS					
	11	9G-2264	2	CLIP					
	12	7N-9737	2	HOUSING					
	13	7N-9738	2	HOUSING					

H35776E

5I-8216 HARNESS AS

Part of 113-2840, 113-2841 and 113-2842 Cab listed on Pages 235, 235.06 and 235.12

CAB, GAUGES AND ACCESSORIES

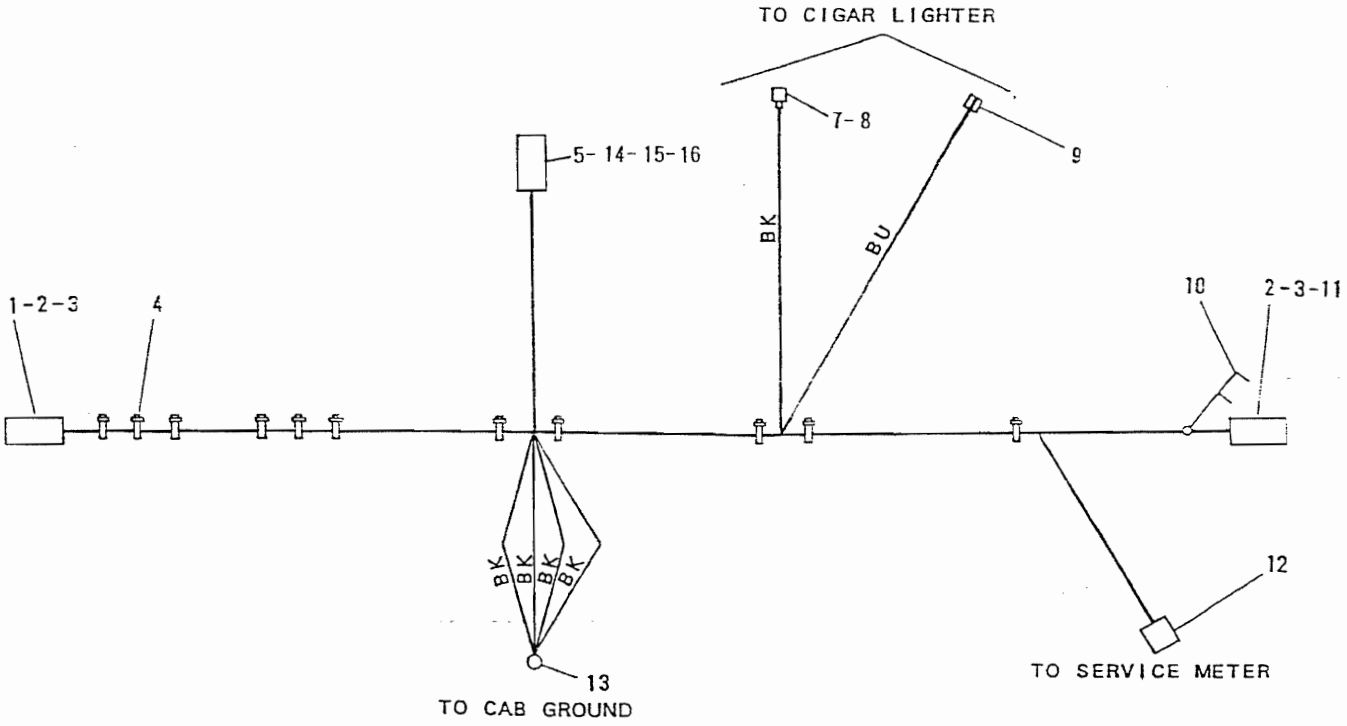

NOTE	No.	PART No.	QTY	PART NAME	NOTE	No.	PART No.	QTY	PART NAME
	1	9G-3670	1	HOUSING					
	2	7N-7780	6	PIN					
	3	7N-7779	5	SOCKET					
	4	1S-9593	11	STRAP					
	5	3E-3362	1	WEDGE					
	6	7N-9738	1	HOUSING					
	7	6T-6505	1	HOUSING					
	8	6T-6506	1	TERMINAL					
	9	5P-6271	1	CONNECTOR AS					
	10	9G-2265	1	CLIP					
	11	7N-8204	1	HOUSING					
	12	9X-0196	1	TERMINAL AS					
	13	2L-8066	1	TERMINAL					
	14	9W-0844	2	SOCKET					
	15	102-8807	1	PLUG KIT					
	16	102-8812	1	SEAL					

H37488E

111-4712 HARNESS AS

Part of 113-2840, 113-2841 and 113-2842 Cab listed on Pages 235, 235.06 and 235.12

CAB, GAUGES AND ACCESSORIES

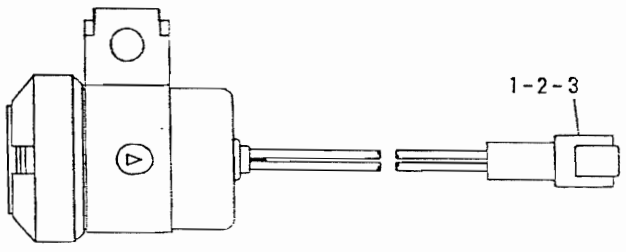

NOTE	No.	PART No.	QTY	PART NAME
	1	102-8802	1	RECEPTACLE KIT
	2	3E-3365	1	WEDGE
	3	8T-8729	2	PIN

H35774E

3E-6328 ALARM GP-BASIC

Part of 102-8317, 102-8320 and 102-8323 Cab listed on Pages 231.01, 235.02 and 235.08

CAB, GAUGES AND ACCESSORIES

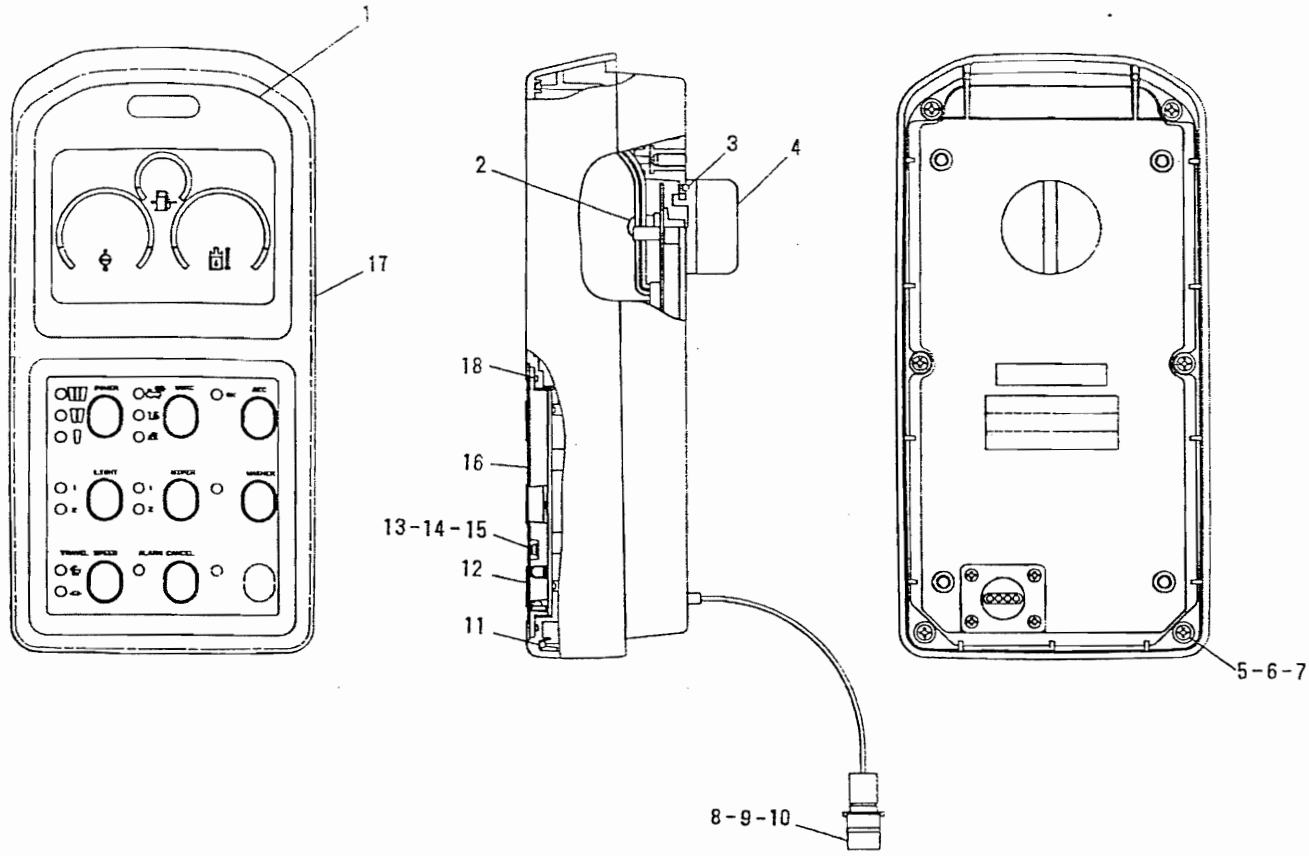

NOTE	No.	PART No.	QTY	PART NAME	NOTE	No.	PART No.	QTY	PART NAME
	1	5I-8337	1	LENS					
	2	5I-8306	1	BULB AS					
	3	5I-8309	1	SEAL					
	4	5I-8310	1	PLUG					
	5	096-6166	6	WASHER					
	6	3B-4501	6	LOCKWASHER					
	7	6V-5210	6	SCREW					
	8	7N-7779	2	SOCKET					
	9	7N-7780	2	PIN					
	10	7N-8205	1	HOUSING					
	11	5I-8308	1	SEAL					
	12	5I-8315	1	SEAT					
	13	096-5962	8	WASHER					
	14	9B-1117	8	LOCKWASHER					
	15	6V-9671	8	SCREW					
	16	5I-8314	1	SWITCH AS (MONITOR)					
	17	5I-8311	1	COVER					
	18	5I-8312	1	SEAL					

H41409E

7Y-5500 CONTROL GP-ELECTRONIC (INSTRUMENT PANEL)

Part of 102-8317, 102-8320 and 102-8323 Cab listed on Pages 231.01, 235.02 and 235.08

CAB, GAUGES AND ACCESSORIES

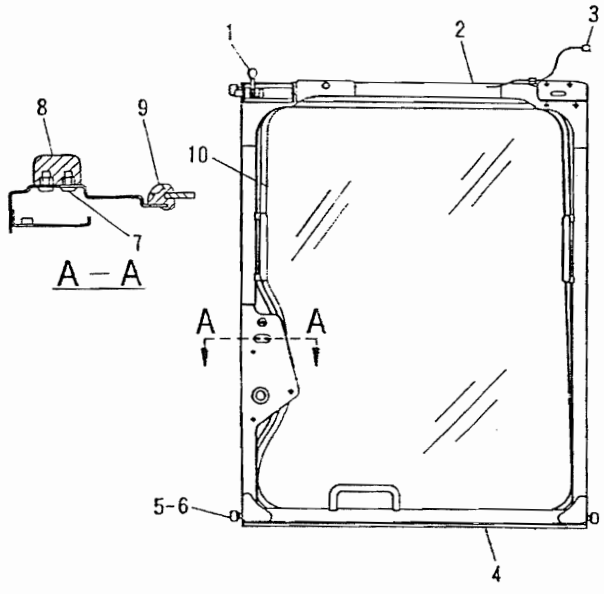

NOTE	No.	PART No.	QTY	PART NAME
	1	096-4085	1	RUBBER
	2	4I-4370	1	FRAME AS
	3	5I-8217	1	HARNESS AS
E	4	3E-6648		SEAL・・・(84cm)
	5	4I-4385	3	ROLLER
	6	8T-4121	3	WASHER
	7	9X-2044	3	SCREW
	8	6I-5476	1	STOPPER
	9	105-9524	1	SEAL
	10	6I-5412	1	GLASS

E-ORDER BY THE CENTIMETER

H41284E

6I-5141 WINDSHIELD GP (BASIC)

Part of 113-2840, 113-2841 and 113-2842 Cab listed on Pages 235, 235.06 and 235.12

Consists of :

Page

1 4I-6840 ARM AS

1 4I-6839 BLADE AS

1 113-2917 MOTOR AS・・・

CAB, GAUGES AND ACCESSORIES

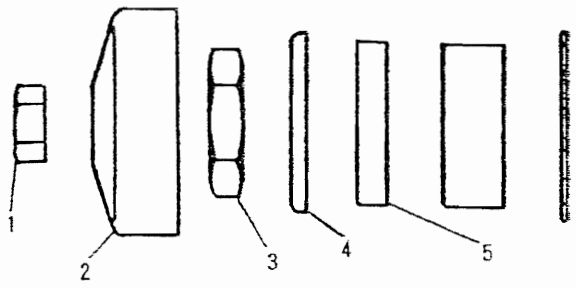

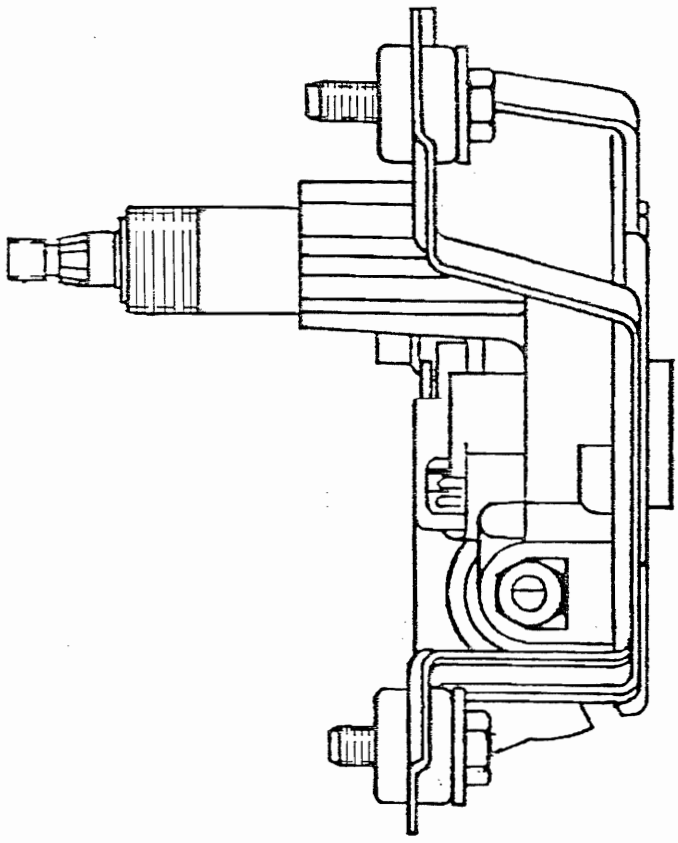

NOTE	No.	PART No.	QTY	PART NAME	NOTE	QTY	PART No.	QTY	PART NAME
	1	6I-5494	1	NUT					
	2	096-4830	1	CAP					
	3	6I-5492	1	NUT					
	4	6I-5491	1	WASHER					
	5	6I-5490	1	PACKING					

H35266E

113-2917 MOTOR AS

Part of 4I-6977 Wiper listed on Page 248

CAB, GAUGES AND ACCESSORIES

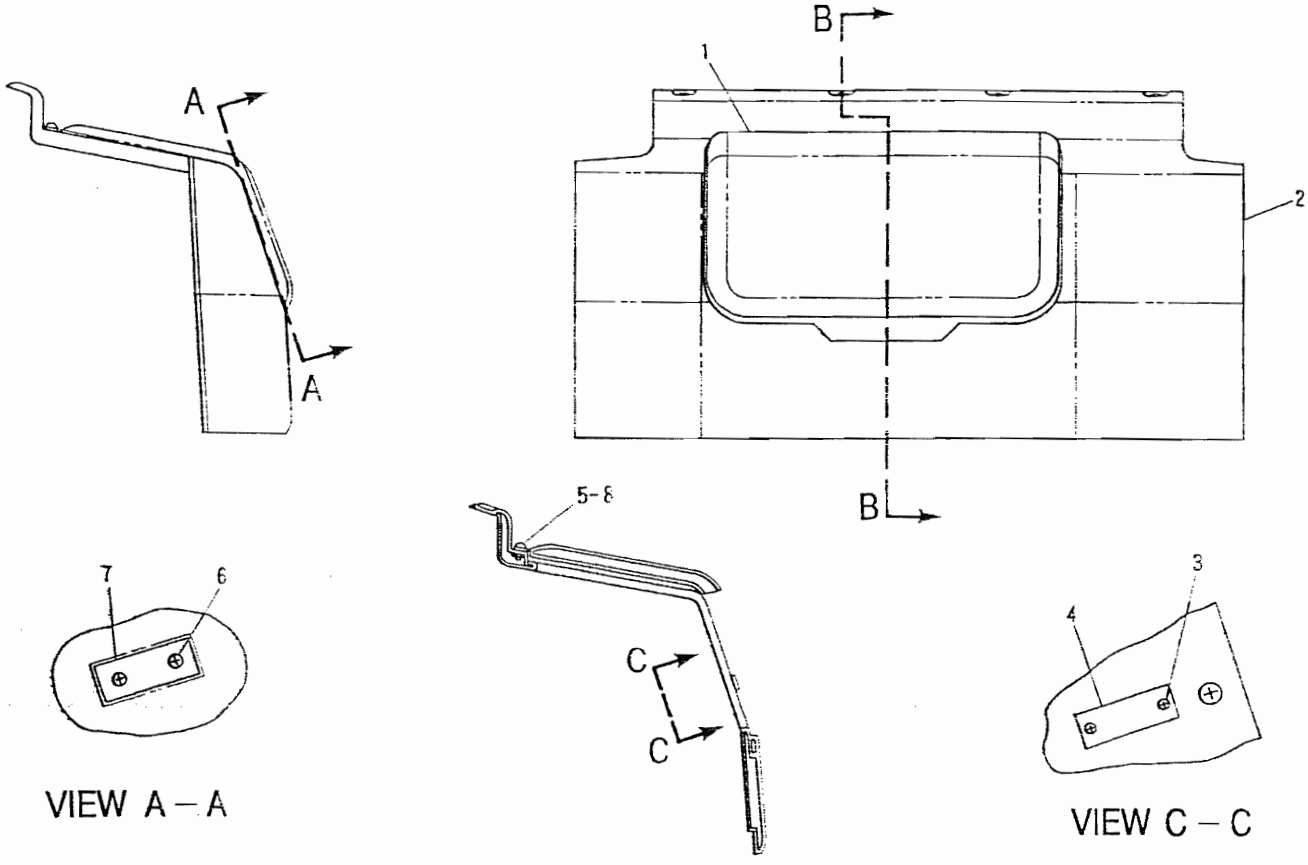

VIEW A – A

SECTION B – B

VIEW C – C

NOTE	No.	PART No.	QTY	PART NAME	NOTE	No.	PART No.	QTY	PART NAME
	1	4I-5293	1	COVER					
	2	4I-5292	1	COVER					
	3	095-0723	2	SCREW					
	4	4I-5294	1	MAGNET					
	5	9X-2044	3	SCREW					
	6	3E-4320	2	SCREW					
	7	4I-6577	1	STRIP					
	8	100-7689	3	NUT AS					

H35260E

4I-6631 COVER GP

Part of 102-8316, 102-8319 and 102-8322 Cab listed on Pages 231, 235.01 and 235.07

CAB, GAUGES AND ACCESSORIES

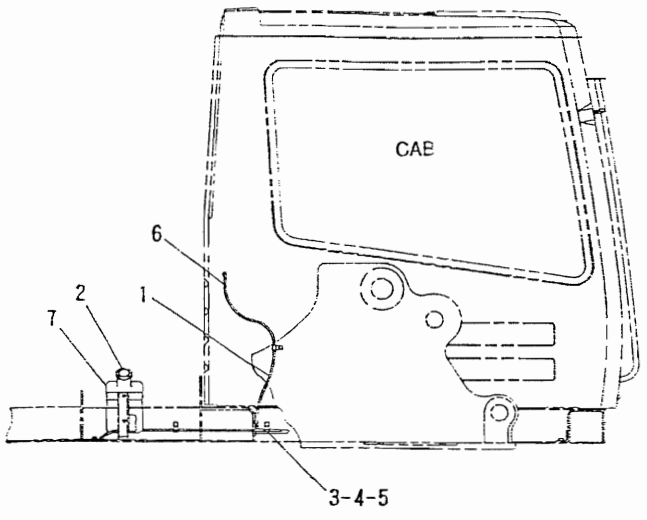

NOTE	No.	PART No.	QTY	PART NAME
D	1	5P-5992		HOSE - - - (2.9m)
	2	6V-2679	1	FILM
	3	6V-3265	6	CLIP
	4	8T-4121	6	WASHER
	5	8T-4133	6	NUT
	6	7Y-3474	1	VALVE AS
Y	7	4I-0457	1	BOTTLE GP

D-ORDER BY THE METER
Y-SEE SEPARATE ILLUSTRATION

H412781

6I-5428 WASHER GP-WINDSHIELD

4I-0457 – Page 251

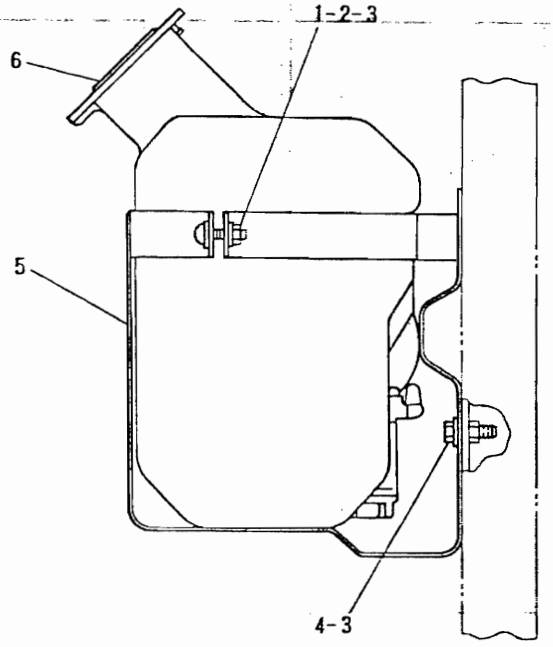

NOTE	No.	PART No.	QTY	PART NAME
	1	8T-6412	1	SCREW
	2	8T-4134	1	NUT
	3	9X-8256	4	WASHER
	4	8T-4138	2	BOLT (20mm LONG)
	5	4I-0458	1	SUPPORT AS
Y	6	4I-0559	1	TANK AS

Y-SEE SEPARATE ILLUSTRATION

H304C3E

4I-0457 BOTTLE GP-WINDSHIELD WASHER (1 PUMP)

Part of 6I-5428 Washer listed on Page 251

4I-0559 – Page 252

CAB. GAUGES AND ACCESSORIES

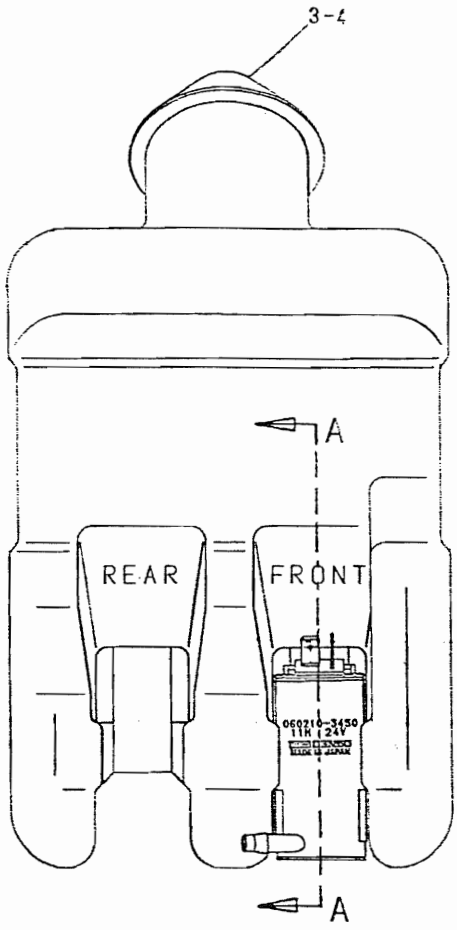

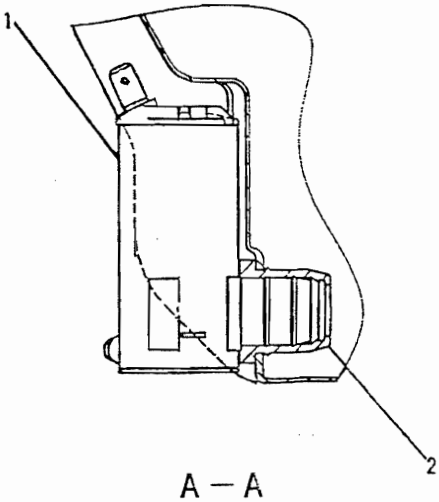

A—A

NOTE	No.	PART No.	QTY	PART NAME	NOTE	No.	PART No.	QTY	PART NAME
	1	7T-8890	1	PUMP AS					
	2	8T-5914	1	GROMMET					
	3	3W-6398	1	CAP					
	4	3W-6399	1	PACKING					

H36226E

4I-0559 TANK AS

Part of 4I-0457 Bottle listed on Page 251

CAB. GAUGES AND ACCESSORIES

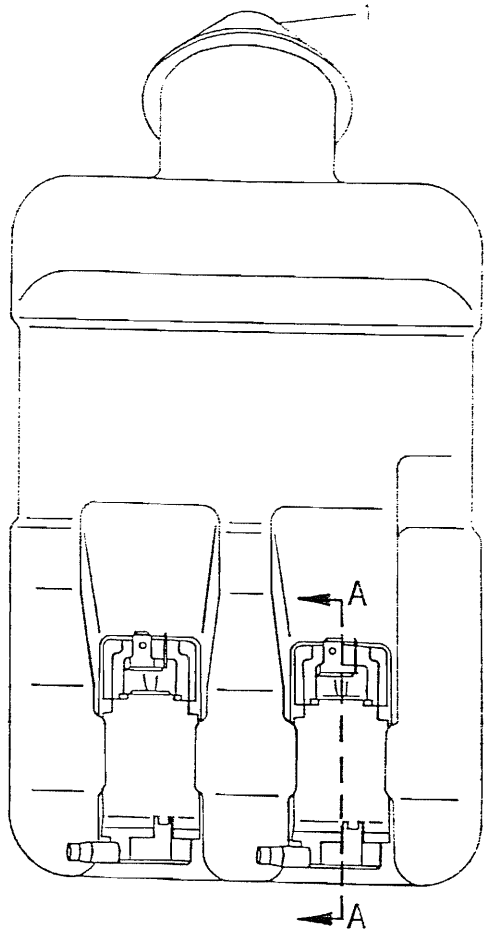

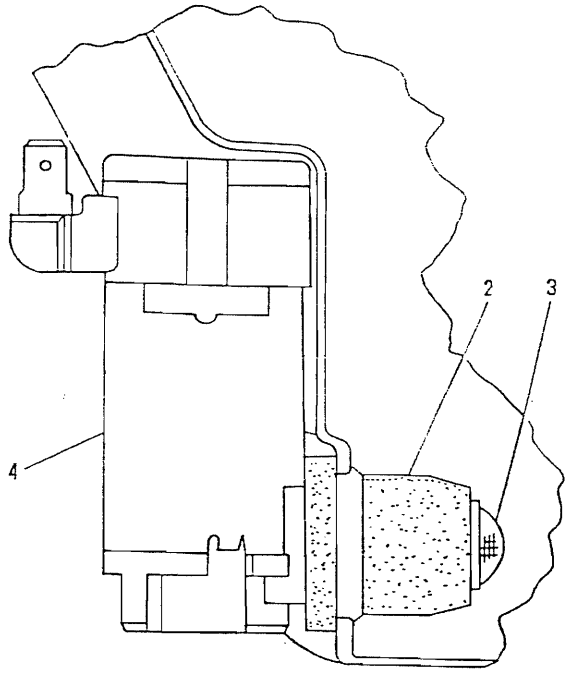

SECTION A – A

NOTE	No.	PART No.	QTY	PART NAME	NOTE	No.	PART No.	QTY	PART NAME
	1	3W-6398	1	CAP					
		3W-6399	1	PACKING					
	2	8T-5914	2	GROMMET					
	3	8T-5913	2	FILTER					
	4	7T-8890	2	PUMP AS					

H3128

8R-1774 BOTTLE GP-WINDSHIELD WASHER (2 PUMPS)

Part of 6I-5458 Washer listed on Page 255
An Attachment

CAB. GAUGES AND ACCESSORIES

Consists of :

			Page
1	6I-5146	WIPER GP-WASHER &	256
1	7Y-8102	WIRING GP	258
1	6I-5458	WASHER GP	255

H41395E

6I-5457 WIPER AR-LOWER
An Attachment

CAB, GAUGES AND ACCESSORIES

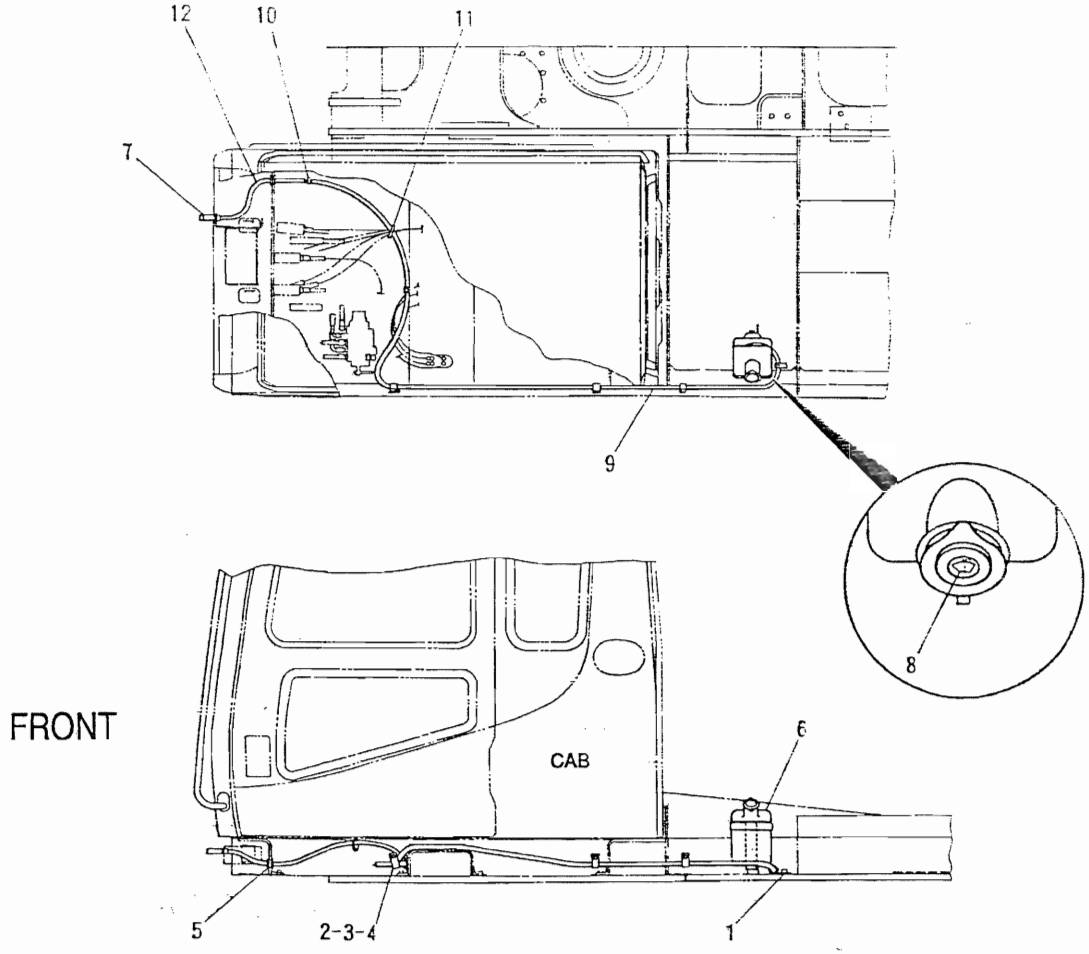

NOTE	No.	PART No.	QTY	PART NAME	NOTE	No.	PART No.	QTY	PART NAME
	1	7S-4244	3	CLIP					
	2	6V-3265	2	CLIP					
	3	8T-4121	2	WASHER					
	4	8T-4133	2	NUT					
	5	2M-3433	1	GROMMET					
Y	6	8R-1774	1	BOTTLE GP					
	7	085-8037	1	NOZZLE					
	8	6V-2679	1	FILM					
D	9	5P-5992		HOSE･･･(3.2m)					
	10	7Y-3474	1	VALVE AS					
	11	096-0061	1	STRAP					
D	12	5P-5992		HOSE･･･(0.3m)					

D-ORDER BY THE METER
Y-SEE SEPARATE ILLUSTRATION

H41394E

6I-5458 WASHER GP (LOWER)

Part of 6I-5457 Wiper Ar listed on Page 254
8R-1774 – Page 253
An Attachment

CAB, GAUGES AND ACCESSORIES

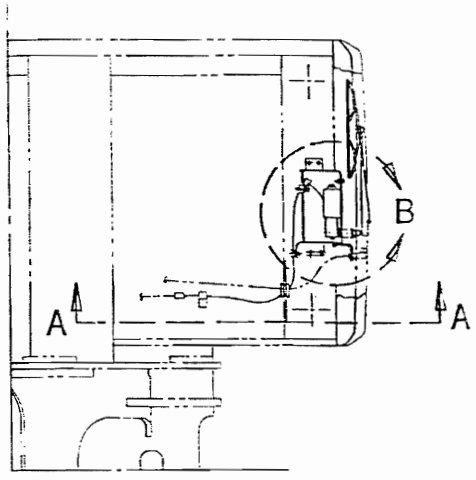

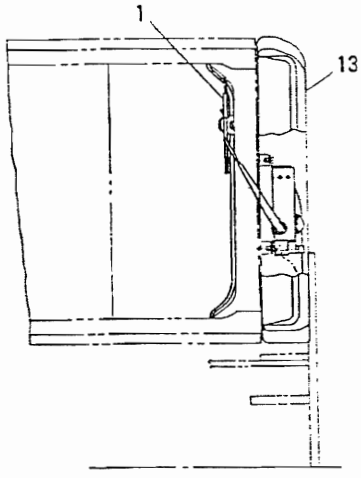

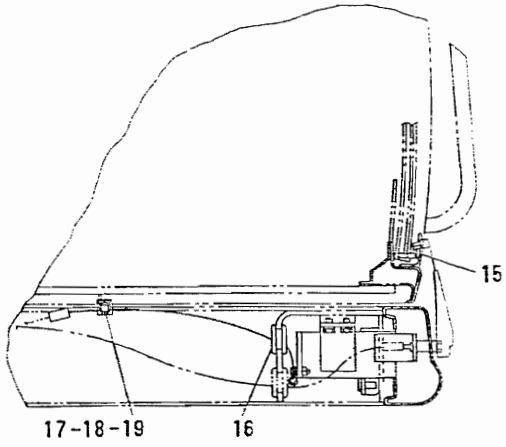

SECTION A — A

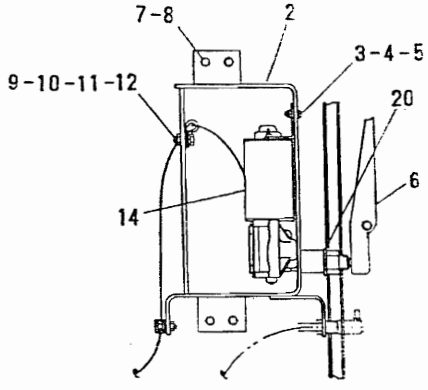

DETAIL OF AREA B

NOTE	No.	PART No.	QTY	PART NAME	NOTE	No.	PART No.	QTY	PART NAME
	1	4I-5021	1	BLADE AS					
	2	111-6397	1	BRACKET AS					
	3	6V-9672	2	SCREW					
	4	5C-8312	2	NUT					
	5	096-6166	4	WASHER					
	6	4I-5020	1	ARM AS					
	7	8T-4200	4	BOLT (16㎜ LONG)					
	8	8T-4224	4	WASHER					
	9	5C-9553	2	BOLT (16㎜ LONG)					
	10	5C-2890	2	NUT					
	11	9X-8256	2	WASHER					
	12	2V-3216	2	CLIP					
	13	7I-6714	1	BUMPER					
Y	14	4I-5019	1	MOTOR AS					
	15	4I-1163	1	BRACKET					
	16	2D-1290	1	GROMMET					
	17	8T-4121	1	WASHER					
	18	8T-4133	1	NUT					
	19	5P-9297	1	CLIP					
	20	9X-8257	1	WASHER					

Y-SEE SEPARATE ILLUSTRATION

H41407E

6I-5146 WIPER GP-WASHER & (LOWER)

Part of 6I-5457 Wiper Ar listed on Page 254
4I-5019 — Page 257
An Attachment

CAB, GAUGES AND ACCESSORIES

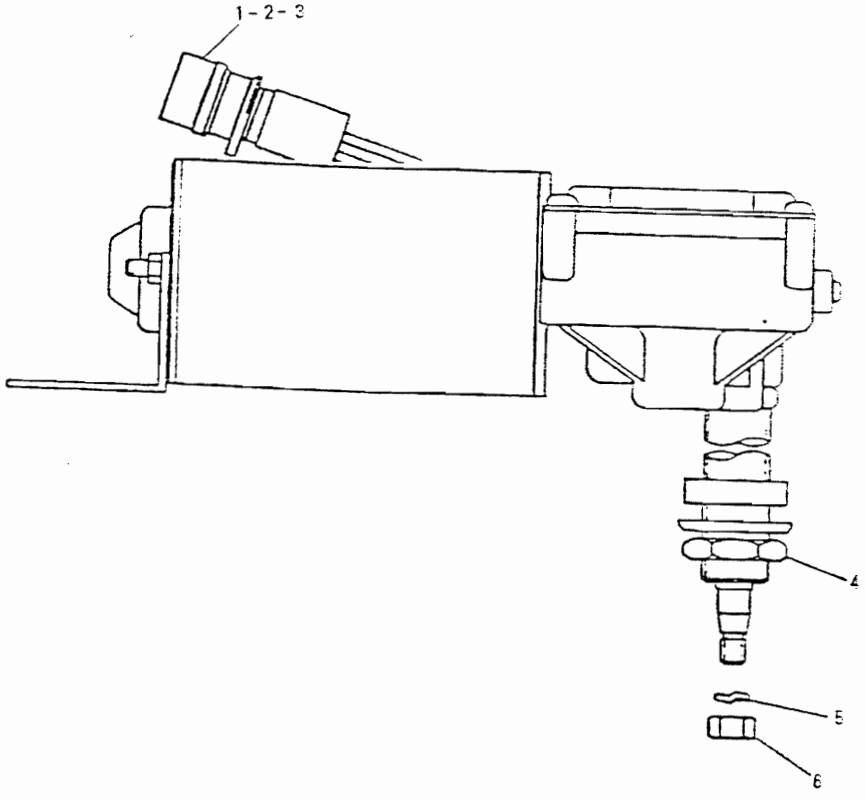

NOTE	No.	PART No.	QTY	PART NAME	NOTE	No.	PART No.	QTY	PART NAME
	1	7N-7780	2	PIN					
	2	7N-7779	2	SOCKET					
	3	7N-8205	1	HOUSING					
	4	6I-5497	1	NUT					
	5	6I-5496	1	WASHER					
	6	6I-5495	1	NUT					

H355501

4I-5019 MOTOR AS-WIPER

Part of 6I-5146 Wiper listed on Page 256
An Attachment

CAB. GAUGES AND ACCESSORIES

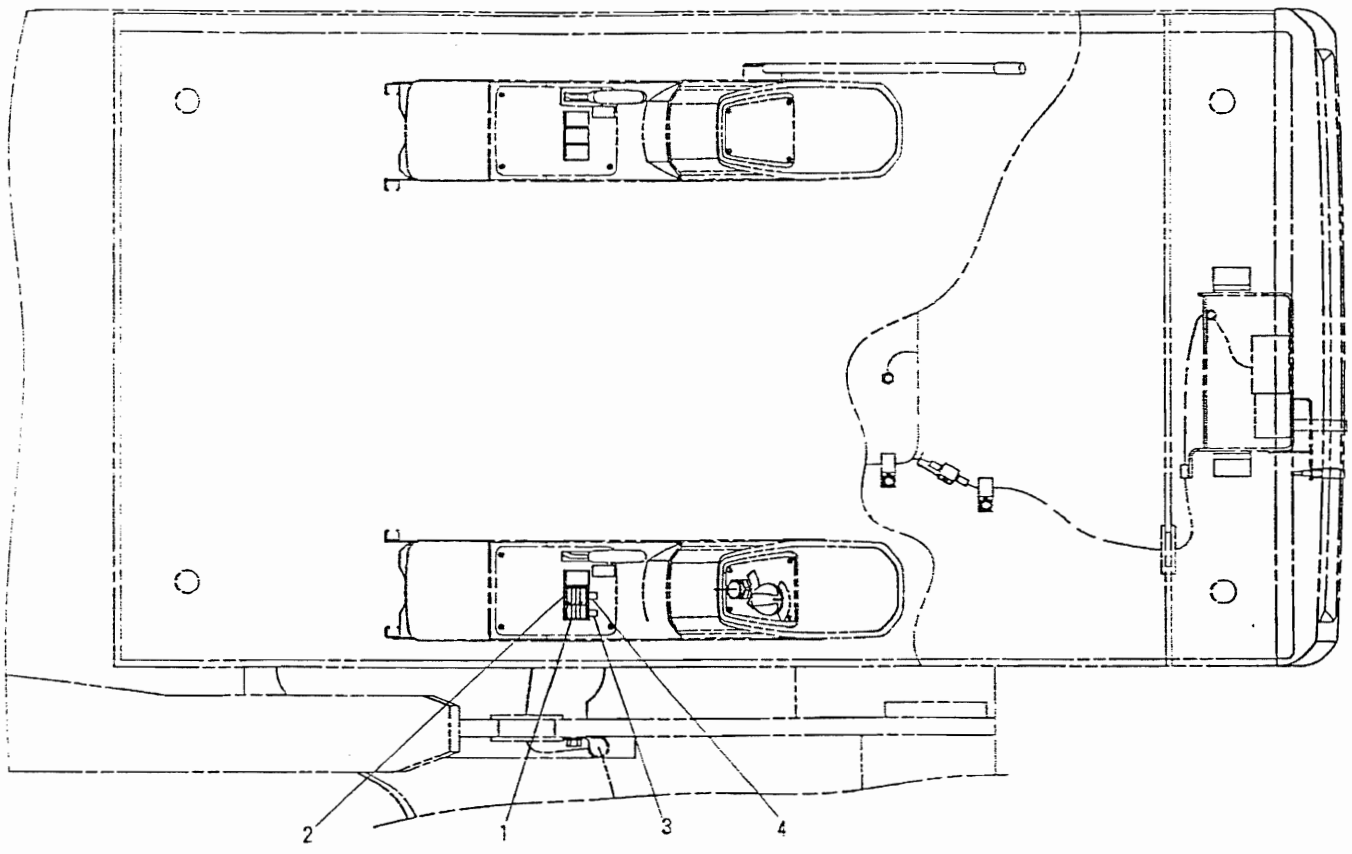

NOTE	No.	PART No.	QTY	PART NAME	NOTE	No.	PART No.	QTY	PART NAME
	1	7X-6387	1	SWITCH AS (WASHER)					
		7N-9737	1	HOUSING					
		7N-7780	1	PIN					
		7N-7779	1	SOCKET					
	2	7X-6388	1	SWITCH AS (WIPER)					
		7N-7782	1	HOUSING					
		7N-7780	1	PIN					
		7N-7779	2	SOCKET					
	3	7I-0722	1	FILM					
	4	7I-0721	1	FILM					

H31650E

7Y-8102 WIRING GP (LOWER WIPER)

Part of 6I-5457 Wiper Ar listed on Page 254

An Attachment

CAB, GAUGES AND ACCESSORIES

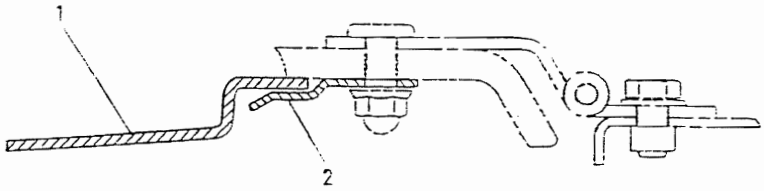

A – A

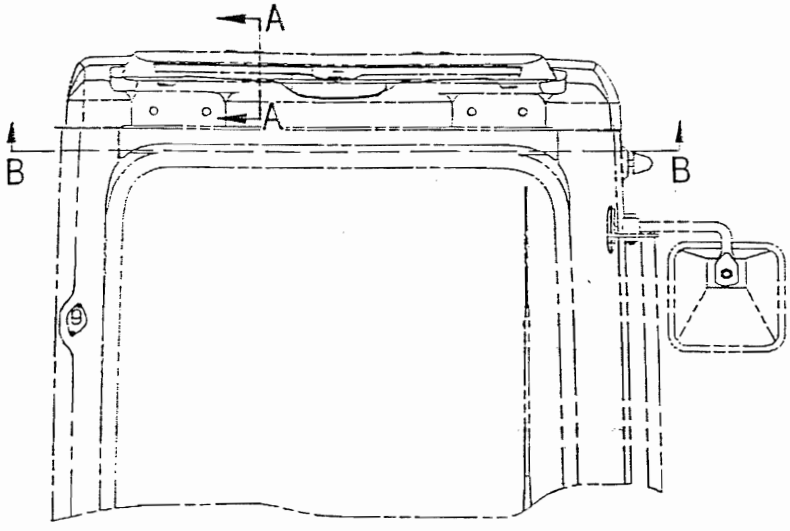

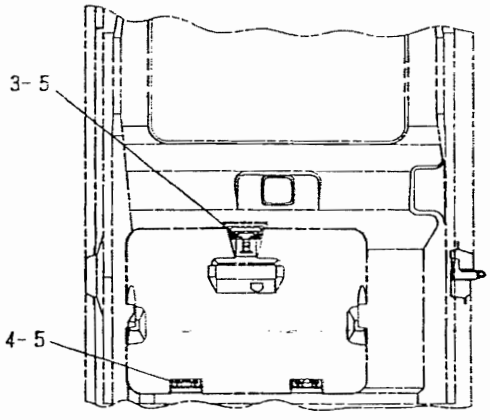

B – B

NOTE	No.	PART No.	QTY	PART NAME	NOTE	No.	PART No.	QTY	PART NAME
	1	102-8312	1	VISOR AS					
		6I-5331	4	RIVET					
		6I-5330	1	LATCH					
	2	6I-5277	2	PLATE					
	3	102-8314	1	BRACKET					
	4	102-8315	2	BRACKET					
	5	9X-2044	6	SCREW					

H37391E

102-8311 VISOR GP-PROTECTIVE (SUN-SHADE)
An Attachment

CAB. GAUGES AND ACCESSORIES

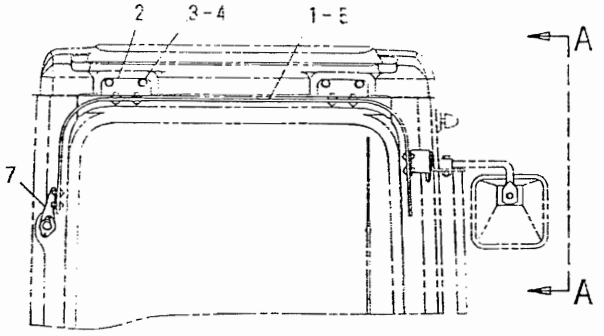

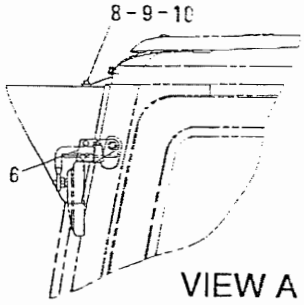

VIEW A — A

NOTE	No.	PART No.	QTY	PART NAME
E	1	3E-8268		TRIM・・・(131cm)
	2	4I-5039	2	BRACKET
	3	8T-4137	4	BOLT (20mm LONG)
	4	8T-4121	4	WASHER
	5	6I-5388	1	VISOR
	6	4I-5041	1	BRACKET
	7	4I-5040	1	BRACKET
	8	6V-7357	8	BOLT (25mm LONG)
	9	9X-8256	8	WASHER
	10	4I-5049	8	NUT

E-ORDER BY THE CENTIMETER

H31407E

6I-5387 VISOR GP-PROTECTIVE (RAIN)

An Attachment

CAB, GAUGES AND ACCESSORIES

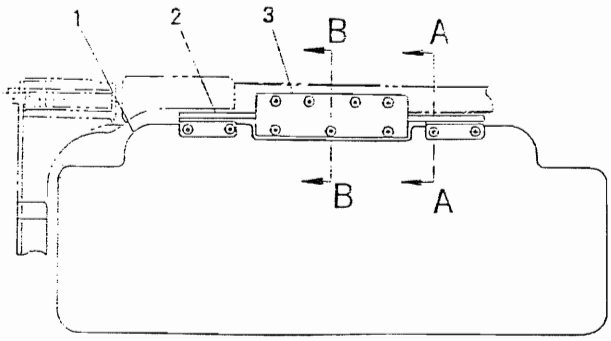

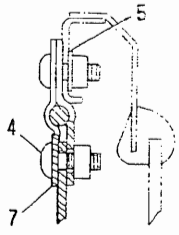

SECTION A – A

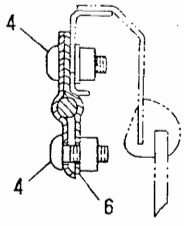

SECTION B – B

NOTE	No.	PART No.	QTY	PART NAME
	1	6I-5439	1	VISOR
	2	4I-5037	1	BRACKET AS
	3	6I-5123	1	PLATE
	4	9X-2044	11	SCREW
	5	4I-7032	1	PLATE AS
	6	6I-5121	1	PLATE AS
	7	6I-5126	2	STRIP

H3140

6I-5438 VISOR GP-CAB (SUN)
An Attachment

CAB, GAUGES AND ACCESSORIES

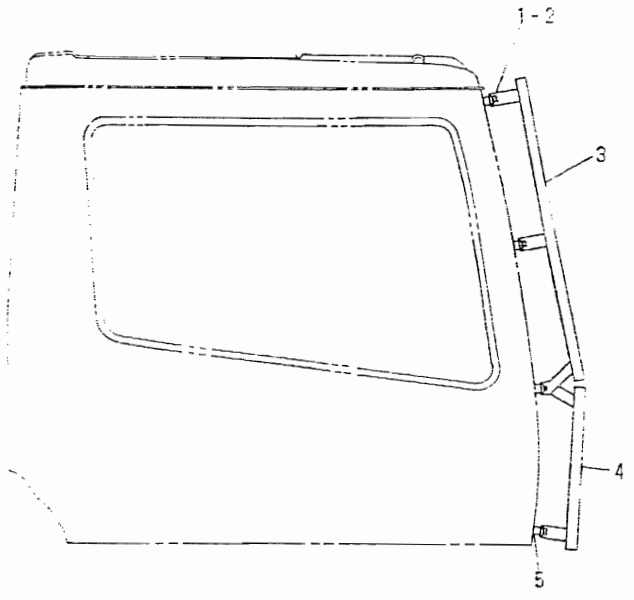

NOTE	No.	PART No.	QTY	PART NAME
	1	8T-4192	8	BOLT (25㎜ LONG
	2	8T-4223	8	WASHER
	3	6I-5448	1	FRAME AS
	4	6I-5453	1	FRAME AS
	5	4I-6602	8	BOSS

H35128E

6I-5468 GUARD GP-WINDOW (A)
An Attachment

CAB, GAUGES AND ACCESSORIES

Consists of :

			Page
1	103-0545	BOX GP-MOUNTING &	262.04
1	51-3241	GUARD GP-VANDALISM	262.02

H4159

102-5340 GUARD AR-VANDALISM
An Attachment

Consists of :

			Page
1	103-0545	BOX GP-MOUNTING &	262.04
1	61-5392	GUARD GP-VANDALISM	262.03

H41592

116-8265 GUARD AR-VANDALISM
An Attachment

CAB. GAUGES AND ACCESSORIES

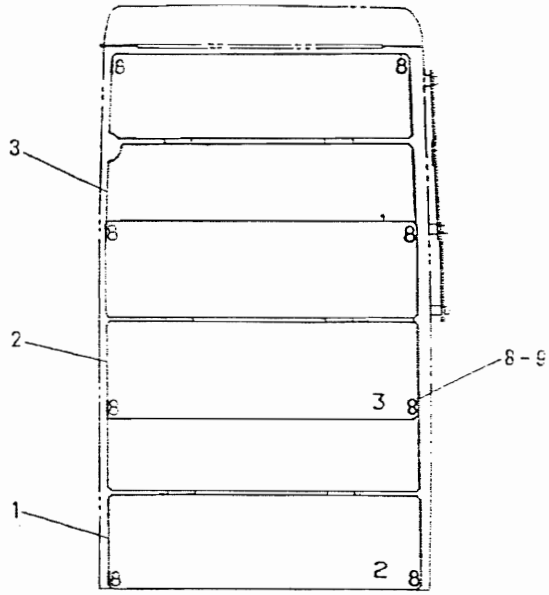

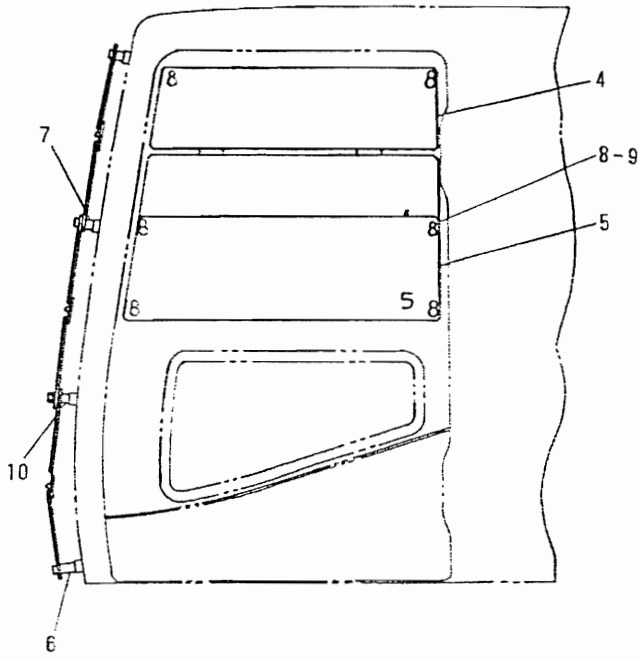

NOTE	No.	PART No.	QTY	PART NAME	NOTE	No.	PART No.	QTY	PART NAME
	1	5I-3245	1	GUARD AS					
		8H-2282	2	HINGE					
	2	5I-3248	1	GUARD AS					
		8H-2282	2	HINGE					
	3	5I-3242	1	GUARD AS					
		8H-2282	2	HINGE					
	4	4I-3232	1	GUARD AS					
		8H-2282	2	HINGE					
	5	4I-3235	1	SHEET					
	6	4I-6899	2	PIN					
	7	4I-1212	5	PIN					
	8	8T-4199	2	BOLT (12mm LONG)					
	9	8T-4224	2	WASHER					
	10	4I-1213	1	PIN					

H35121E

5I-3241 GUARD GP-VANDALISM

Part of 102-5340 Guard Ar listed on Page 262.01

An Attachment

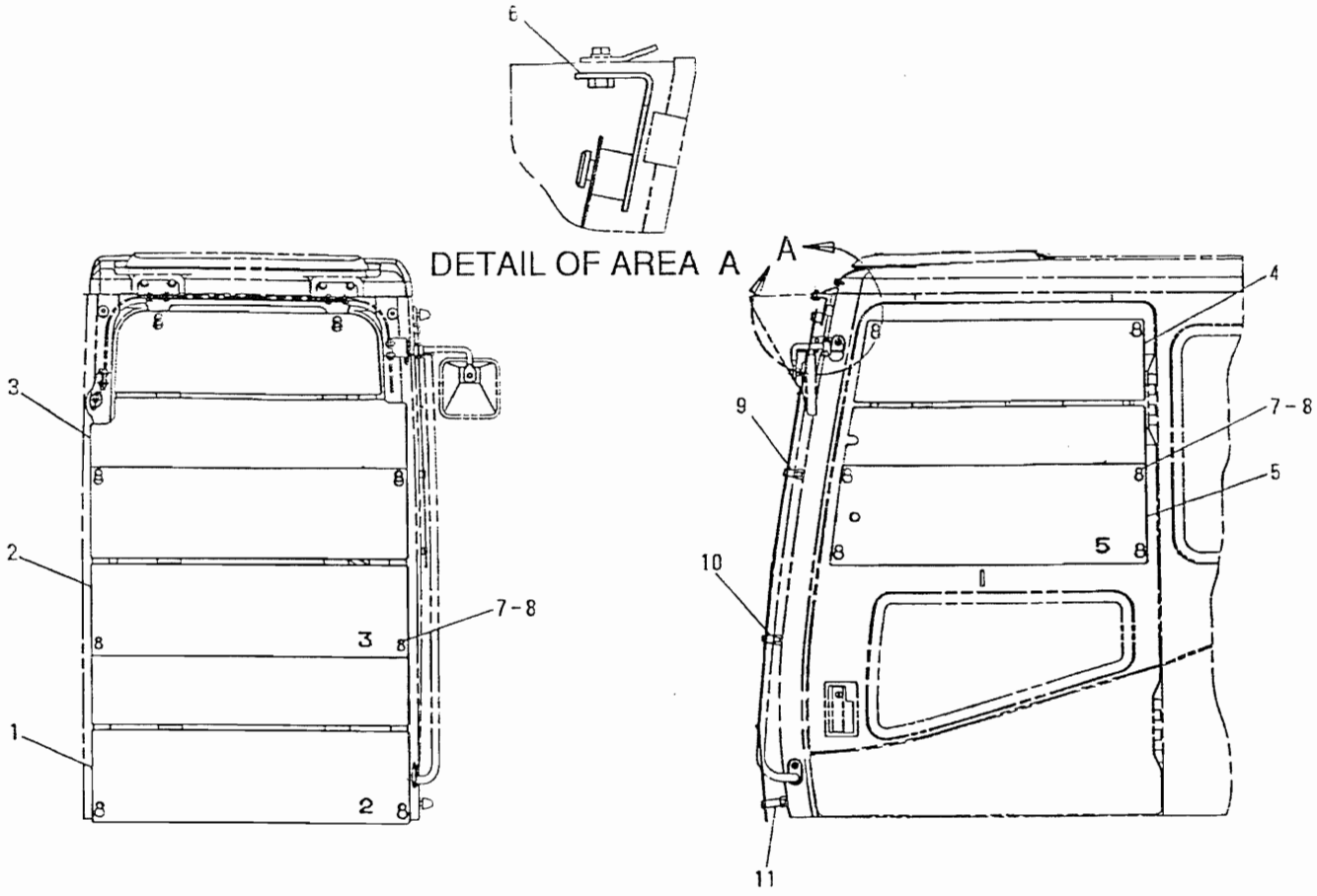

NOTE	No.	PART No.	QTY	PART NAME	NOTE	No.	PART No.	QTY	PART NAME
	1	5I-3245	1	GUARD AS					
		8H-2282	2	HINGE					
	2	5I-3248	1	GUARD AS					
		8H-2282	2	HINGE					
	3	6I-5393	1	GUARD AS					
		8H-2282	2	HINGE					
	4	4I-3232	1	GUARD AS					
		8H-2282	2	HINGE					
	5	4I-3235	1	SHEET					
	6	6I-5356	1	BRACKET AS					
	7	8T-4199	2	BOLT					
	8	8T-4224	2	WASHER					
	9	4I-1212	3	PIN					
	10	4I-1213	1	PIN					
	11	4I-6899	2	PIN					

H35123

6I-5392 GUARD GP-VANDALISM (FOR VISOR GP)

Part of 116-8265 Guard Ar listed on Page 262.01
An Attachment

CAB, GAUGES AND ACCESSORIES

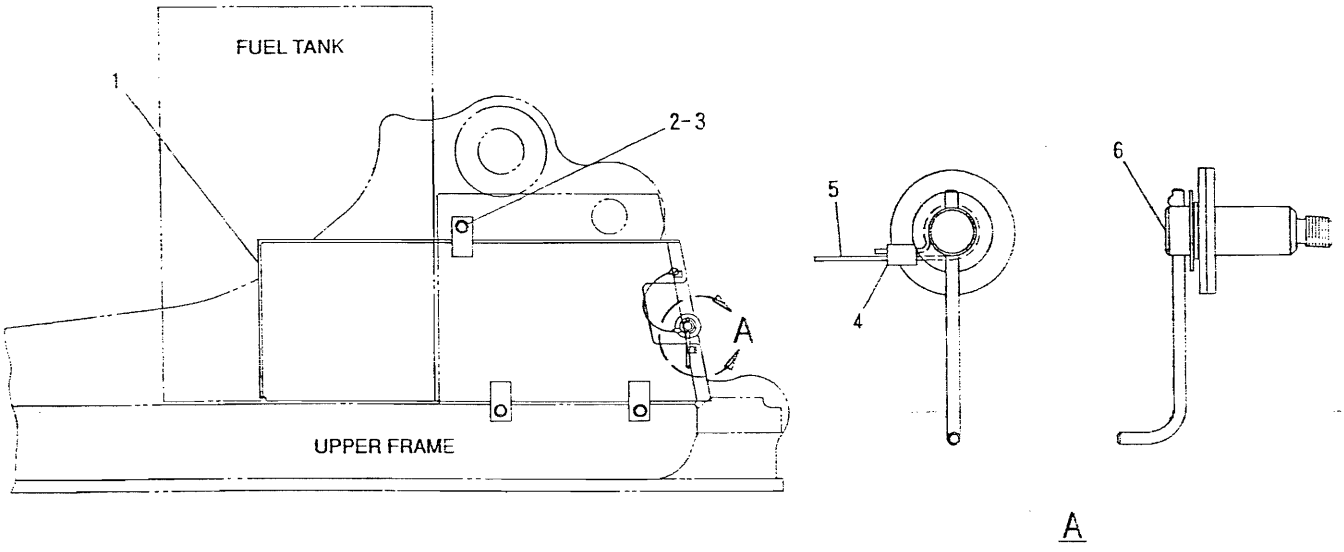

NOTE	No.	PART No.	QTY	PART NAME	NOTE	No.	PART No.	QTY	PART NAME
	1	103-0546	1	BOX AS					
	2	8T-4136	3	BOLT (25㎜ LONG)					
	3	8T-4121	3	WASHER					
	4	5P-7958	2	SLEEVE					
	5	41-2881	1	LANYARD					
	6	102-5713	1	BOLT AS					

H41593E

103-0545 BOX GP-MOUNTING &

Part of 102-5340 and 116-8265 Guard Ar listed on Page 262.01

An Attachment

CAB, GAUGES AND ACCESSORIES

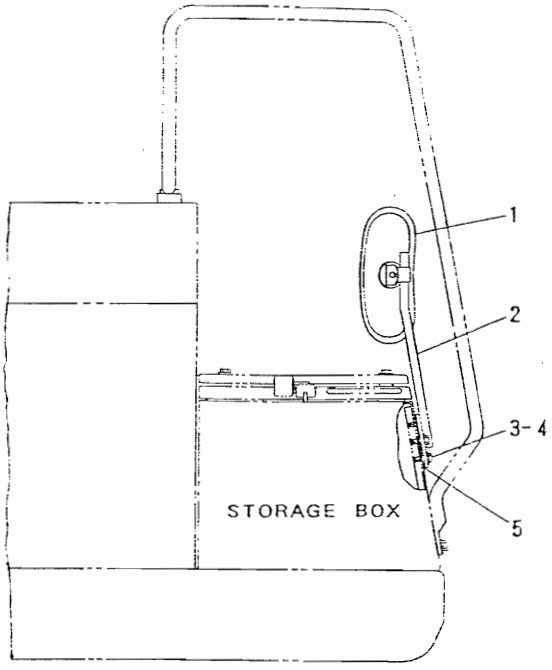

NOTE	No.	PART No.	QTY	PART NAME
	1	099-4298	1	MIRROR
	2	109-7505	1	SUPPORT AS
	3	8T-4139	3	BOLT (30mm LONG)
	4	5P-1076	3	WASHER
	5	109-7530	1	SHIM

H39221I

109-7504 MIRROR GP-REAR VIEW

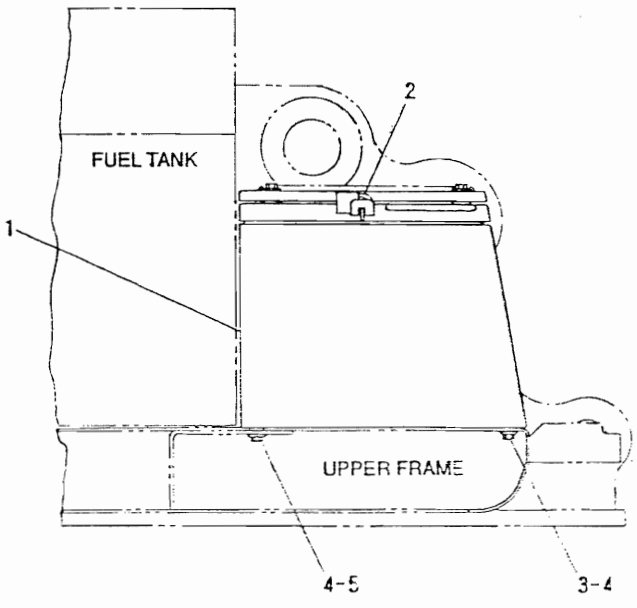

NOTE	No.	PART No.	QTY	PART NAME
Y	1	103-0349	1	BOX GP
	2	5P-8501	1	PADLOCK
	3	8C-8992	2	BOLT (30mm LONG)
	4	5P-1076	3	WASHER
	5	099-4691	1	BOLT (25mm LONG)

Y-SEE SEPARATE ILLUSTRATION

H41233E

103-0348 BOX GP-MOUNTING &

103-0349 – Page 264

CAB, GAUGES AND ACCESSORIES

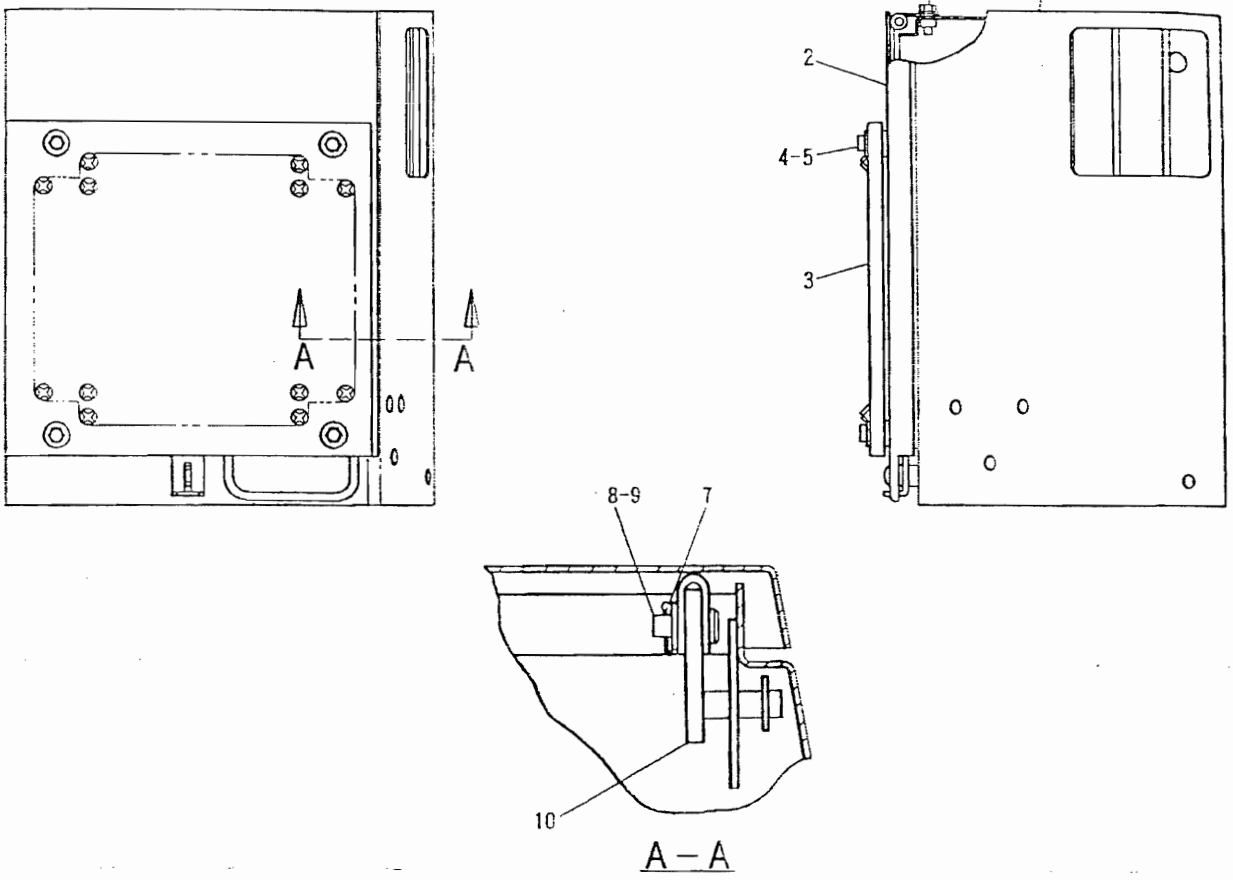

NOTE	No.	PART No.	QTY	PART NAME	NOTE	No.	PART No.	QTY	PART NAME
	1	103-0378	1	BODY AS					
	2	4I-1915	1	DOOR AS					
D		3E-6573		SEAL・・・(0.5m)					
	3	4I-1922	1	SEAT					
	4	8T-4192	8	BOLT (25mm LONG)					
	5	5P-1076	4	WASHER					
	6	8T-4223	4	WASHER					
	7	095-0843	1	COTTER					
	8	096-3780	1	PIN					
	9	8T-4224	1	WASHER					
	10	4I-2187	1	SUPPORT AS					

D-ORDER BY THE METER

H41234E

103-0349 BOX GP-STORAGE

Part of 103-0348 Box listed on Page 263

CAB, GAUGES AND ACCESSORIES

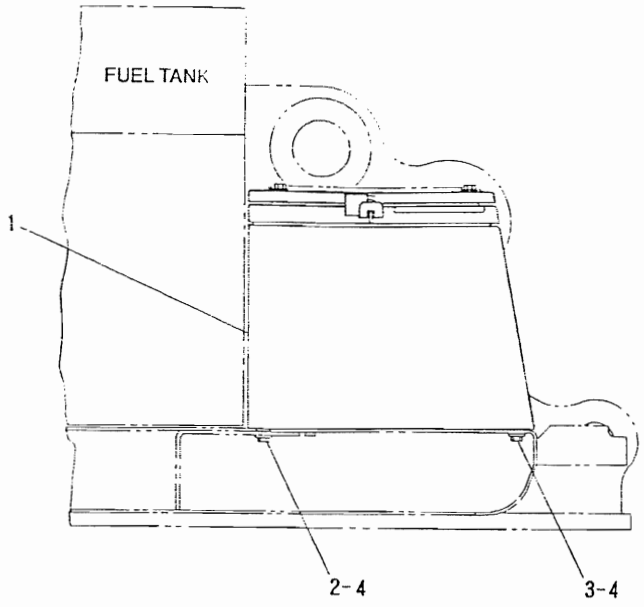

NOTE	No.	PART No.	QTY	PART NAME
Y	1	109-2071	1	BOX GP
	2	099-4691	1	BOLT (25㎜ LONG)
	3	8C-8992	2	BOLT (30㎜ LONG)
	4	5P-1076	3	WASHER

Y-SEE SEPARATE ILLUSTRATION

H41597

103-0352 BOX GP-MOUNTING &

Part of 102-5325 Pump Ar listed on Page 55.01
109-2071 – Page 264.02
An Attachment

CAB. GAUGES AND ACCESSORIES

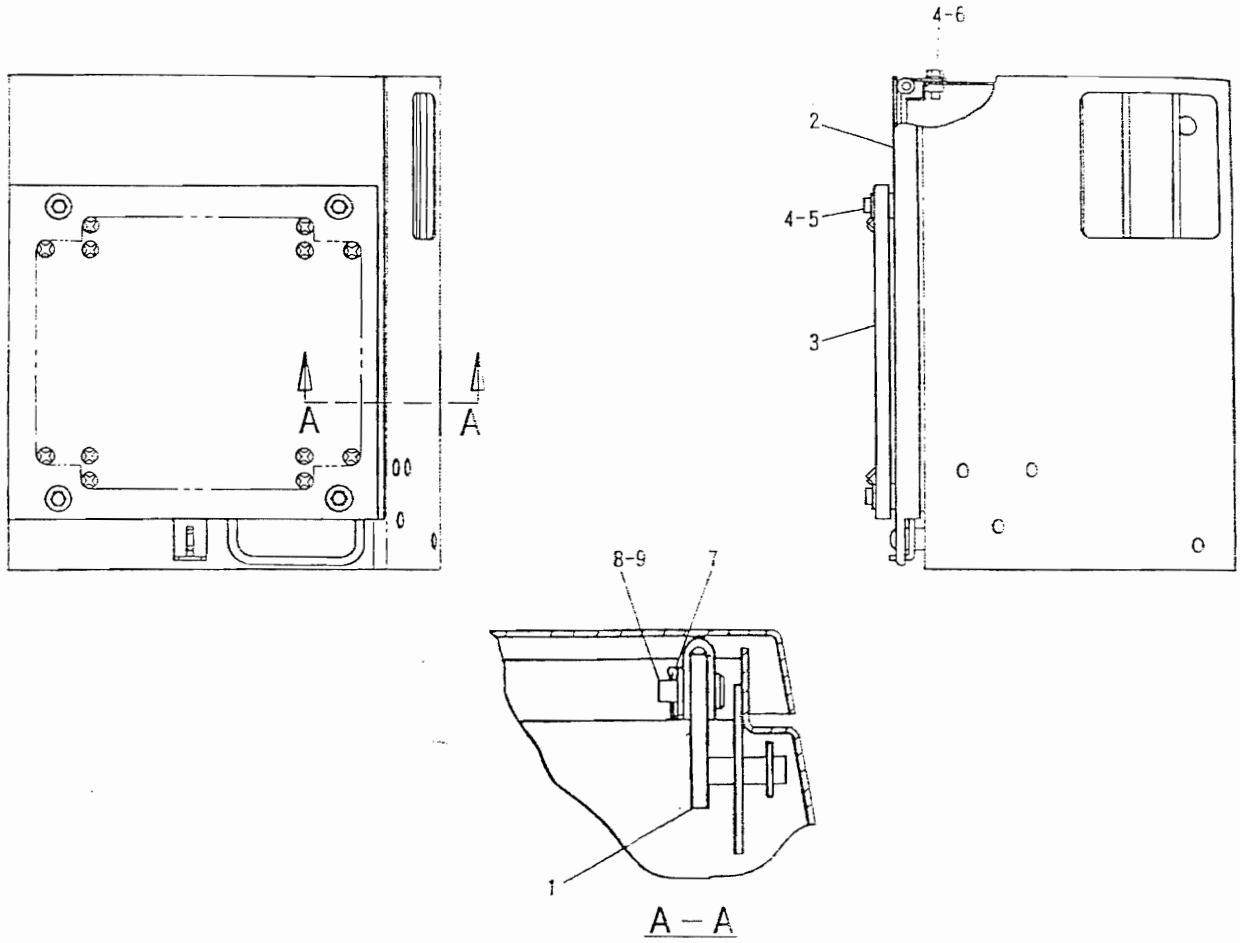

NOTE	No.	PART No.	QTY	PART NAME	NOTE	No.	PART No.	QTY	PART NAME
	1	4I-2187	1	SUPPORT AS					
	2	4I-1915	1	DOOR AS					
D		3E-6573		SEAL・・・(0.5m)					
	3	4I-1922	1	SEAT					
	4	8T-4192	8	BOLT (25mm LONG)					
	5	5P-1076	4	WASHER					
	6	8T-4223	4	WASHER					
	7	095-0843	1	COTTER					
	8	096-3780	1	PIN					
	9	8T-4224	1	WASHER					

D-ORDER BY THE METER

H41598E

109-2071 BOX GP-STORAGE

Part of 103-0352 Box listed on Page 264.01
An Attachment

CAB, GAUGES AND ACCESSORIES

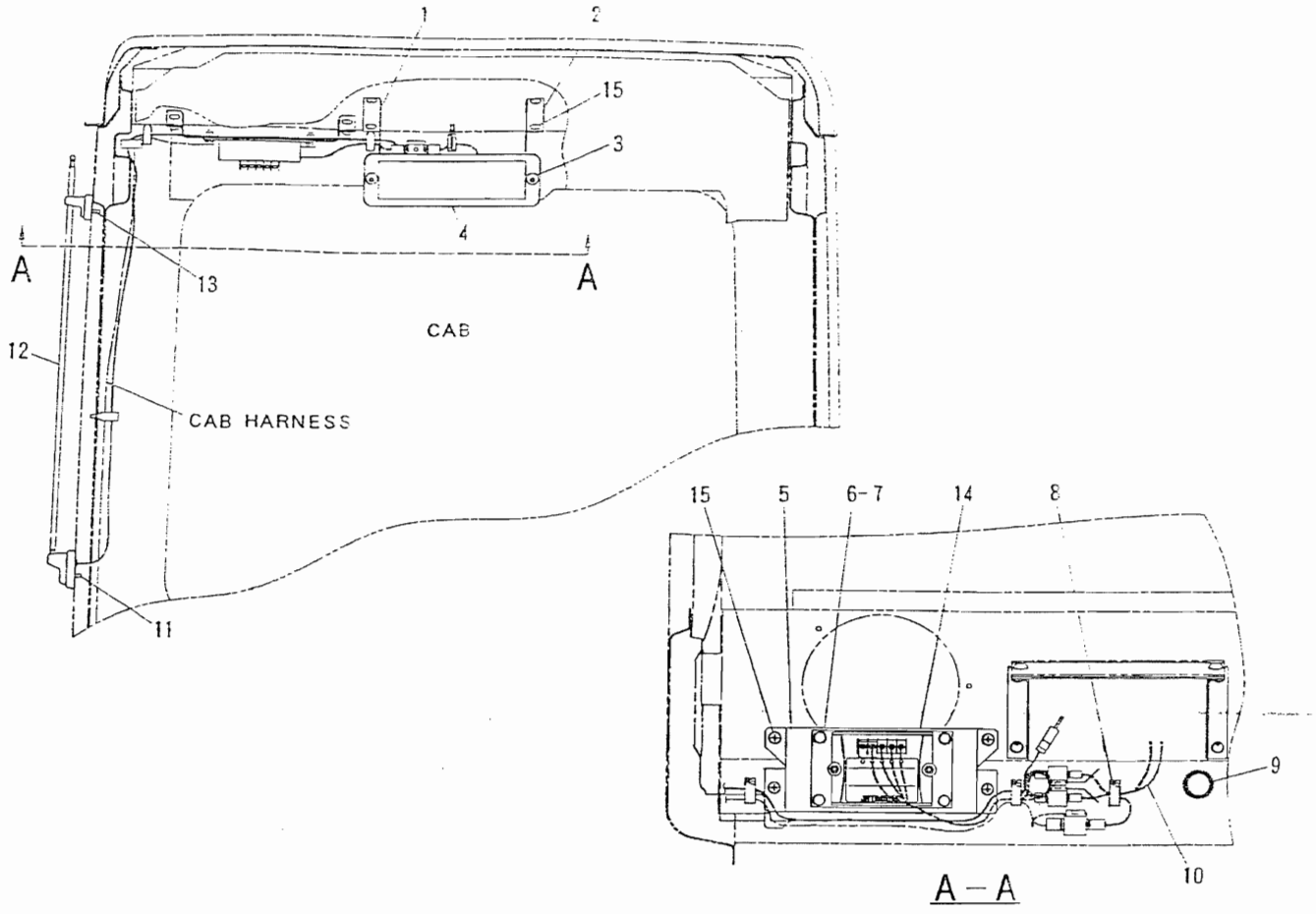

NOTE	No.	PART No.	QTY	PART NAME	NOTE	No.	PART No.	QTY	PART NAME
	1	4I-4237	1	BRACKET AS					
	2	4I-4239	1	BRACKET AS					
	3	9X-2044	2	SCREW					
	4	4I-3042	1	PLATE					
	5	4I-3044	1	BRACKET					
	6	8T-4171	4	BOLT (12mm LONG)					
	7	9X-8256	4	WASHER					
	8	4I-3039	1	CLIP					
E	9	4I-3064		GUARD・・・(19cm)					
Y	10	7Y-8105	1	HARNESS AS					
	11	6V-9492	1	SCREW					
	12	106-0036	1	ANTENNA AS					
	13	6V-9491	1	SCREW					
Y	14	114-7143	1	CONVERTER GP					
	15	101-8899	8	SCREW					

E-ORDER BY THE CENTIMETER
Y-SEE SEPARATE ILLUSTRATION

H37825

7Y-8104 MOUNTING GP-RADIO

Part of 113-2841 and 113-2842 Cab listed on Pages 235.04 and 235.10
114-7143 — Page 266, 7Y-8105 — Page 267
An Attachment

CAB. GAUGES AND ACCESSORIES

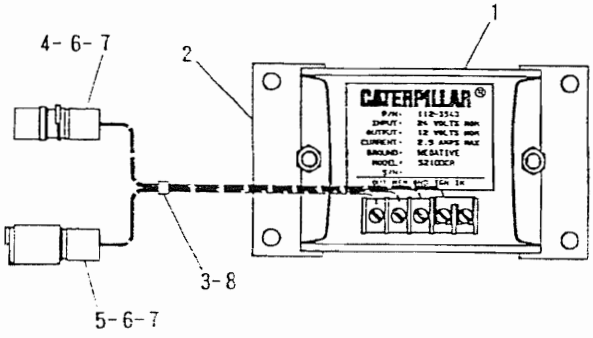

NOTE	No.	PART No.	QTY	PART NAME
	1	112-3543	1	CONVERTER
	2	112-3544	2	PLATE AS
	3	112-3635	1	HARNESS AS
	4	7N-9737	1	HOUSING
	5	7N-7781	1	HOUSING
	6	7N-7779	2	SOCKET
	7	7N-7780	3	PIN
	8	8L-8413	2	STRAP

H37826E

114-7143 CONVERTER GP-ELECTRICAL (24V TO 12V) (2.5 AMP)

Part of 7Y-8104 Mounting listed on Page 265

An Attachment

CAB, GAUGES AND ACCESSORIES

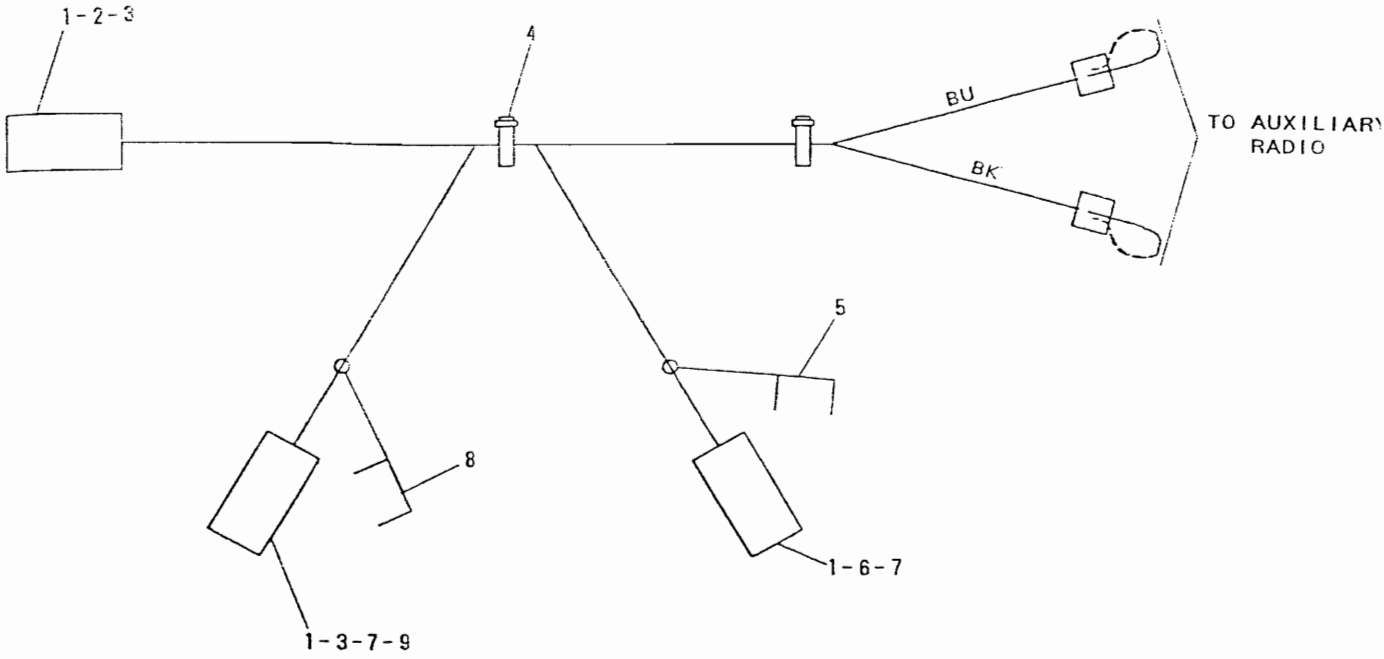

NOTE	No.	PART No.	QTY	PART NAME	NOTE	No.	PART No.	QTY	PART NAME
	1	7N-7780	4	PIN					
	2	7N-8205	1	HOUSING					
	3	9G-3695	3	PLUG					
	4	1S-9593	2	STRAP					
	5	9G-2264	1	CLIP					
	6	7N-9738	1	HOUSING					
	7	7N-7779	2	SOCKET					
	8	9G-2265	1	CLIP					
	9	7N-7782	1	HOUSING					

H306701

7Y-8105 HARNESS AS

Part of 7Y-8104 Mounting listed on Page 265
An Attachment

MEMORANDA

CAB, GAUGES AND ACCESSORIES

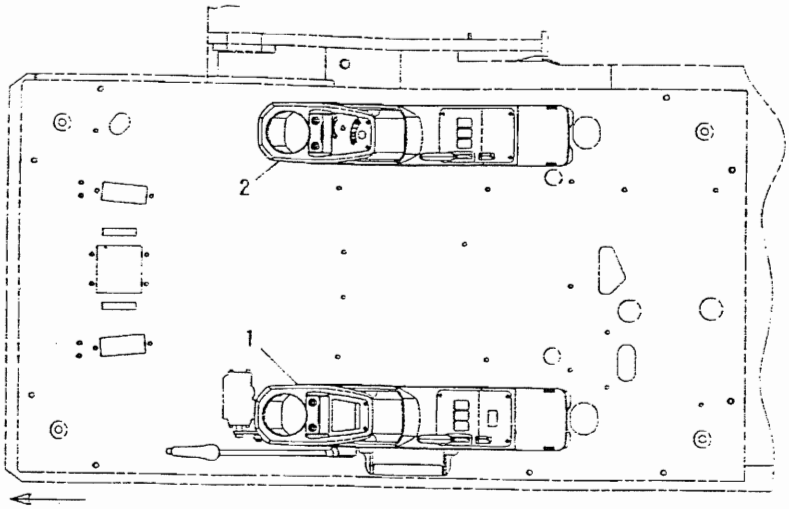

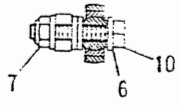

A – A

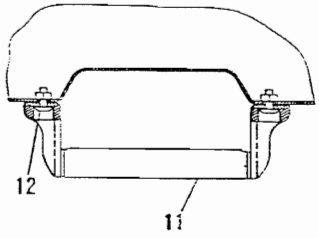

B – B

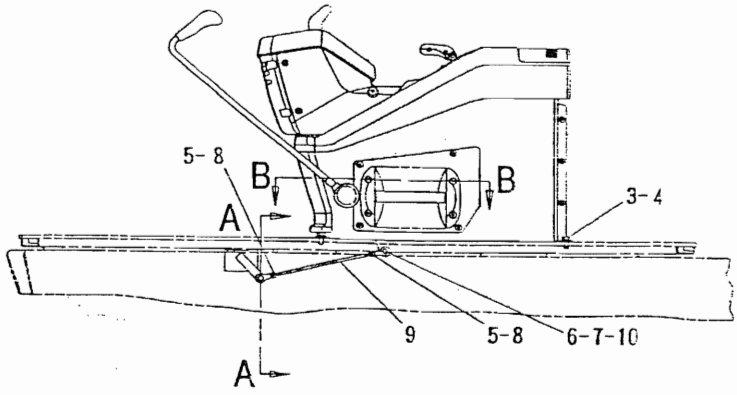

NOTE	No.	PART No.	QTY	PART NAME	NOTE	No.	PART No.	QTY	PART NAME
Y	1	110-5623	1	CONSOLE GP (LH)					
Y	2	4I-3306	1	CONSOLE GP (RH)					
	3	8T-4137	12	BOLT (20mm LONG)					
	4	8T-4121	12	WASHER					
	5	8C-3111	2	ROD END					
	6	9X-8256	7	WASHER					
	7	099-0492	2	NUT					
	8	5C-2890	2	NUT					
	9	3W-8437	1	ROD					
	10	8T-4971	2	BOLT (30mm LONG)					
	11	5I-3287	1	GRIP					
	12	9X-2044	4	SCREW					

Y-SEE SEPARATE ILLUSTRATION

H39229E

110-5640 CONSOLE GP-OPERATOR

4I-3306 – Page 270, 110-5623 – Page 272

CAB. GAUGES AND ACCESSORIES

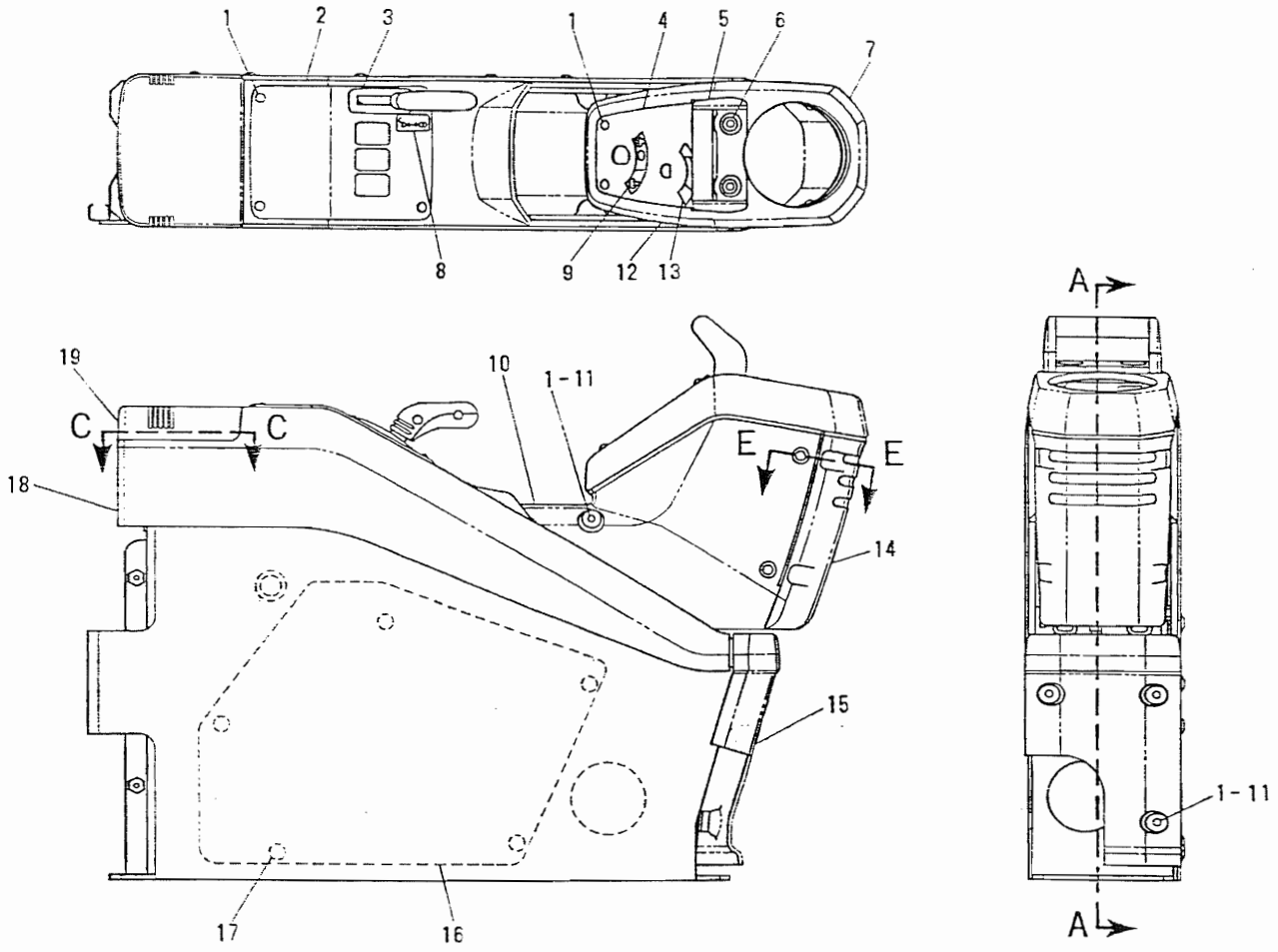

NOTE	No.	PART No.	QTY	PART NAME	NOTE	No.	PART No.	QTY	PART NAME
	1	7Y-3173	15	SCREW					
	2	7Y-3093	1	PANEL					
	3	100-7709	1	COVER					
	4	4I-3166	1	PANEL					
	5	4I-1282	1	GRIP					
	6	7Y-7394	2	SCREW					
	7	7Y-3155	1	COVER					
	8	4I-0088	1	FILM					
	9	4I-1995	1	FILM					
	10	7Y-3165	1	COVER AS					
	11	8F-1326	7	WASHER					
	12	7Y-3154	1	COVER					
	13	4I-0087	1	FILM					
	14	7Y-3156	1	COVER					
	15	4I-1100	1	COVER					
	16	7Y-3020	1	COVER					
	17	9X-2044	5	SCREW					
	18	7Y-3191	1	PANEL					
	19	7Y-3268	1	COVER					

H35473E

4I-3306 CONSOLE GP-PART 1 OF 2

Part of 110-5640 Console listed on Page 269

CAB. GAUGES AND ACCESSORIES

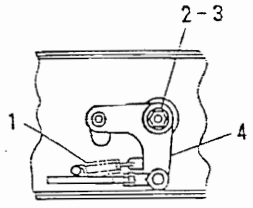

VIEW B – B

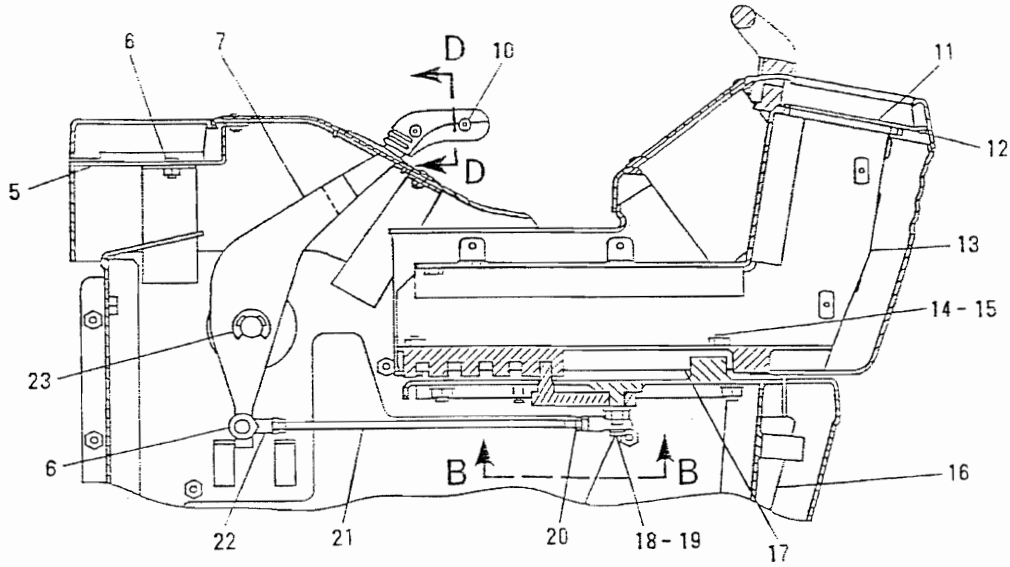

SECTION A – A

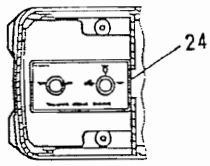

SECTION C – C

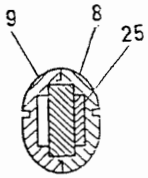

SECTION D – D

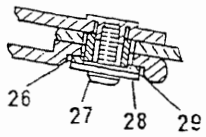

SECTION E – E

NOTE	No.	PART No.	QTY	PART NAME	NOTE	No.	PART No.	QTY	PART NAME
	1	4H-3521	1	SPRING		21	7Y-3133	1	ROD
	2	096-4883	1	NUT		22	8C-3111	2	ROD END
	3	8T-4121	1	WASHER		23	6V-9824	1	RING
	4	7Y-3082	1	LEVER AS		24	4I-0085	1	FILM
	5	7Y-3273	1	PANEL AS		25	4I-0420	1	STRIP
	6	9X-2044	3	SCREW		26	7Y-3271	4	PIPE
	7	7Y-3036	1	LEVER		27	7Y-3173	4	SCREW
	8	7Y-3185	1	KNOB		28	7Y-3282	4	WASHER
	9	7Y-3184	1	KNOB		29	7Y-3272	4	SPACER
	10	7Y-3248	2	SCREW					
	11	7Y-3168	1	PLATE					
	12	6V-5210	2	SCREW					
	13	7Y-3094	1	SUPPORT AS					
	14	8T-4200	4	BOLT (16mm LONG)					
	15	8T-4224	4	WASHER					
	16	7Y-3095	1	SUPPORT AS					
	17	096-3909	2	ADJUSTER					
	18	9X-8256	2	WASHER					
	19	5C-9553	1	BOLT (16mm LONG)					
	20	5C-2890	2	NUT					

H39374I

4I-3306 CONSOLE GP-PART 2 OF 2

Part of 110-5640 Console listed on Page 269

CAB. GAUGES AND ACCESSORIES

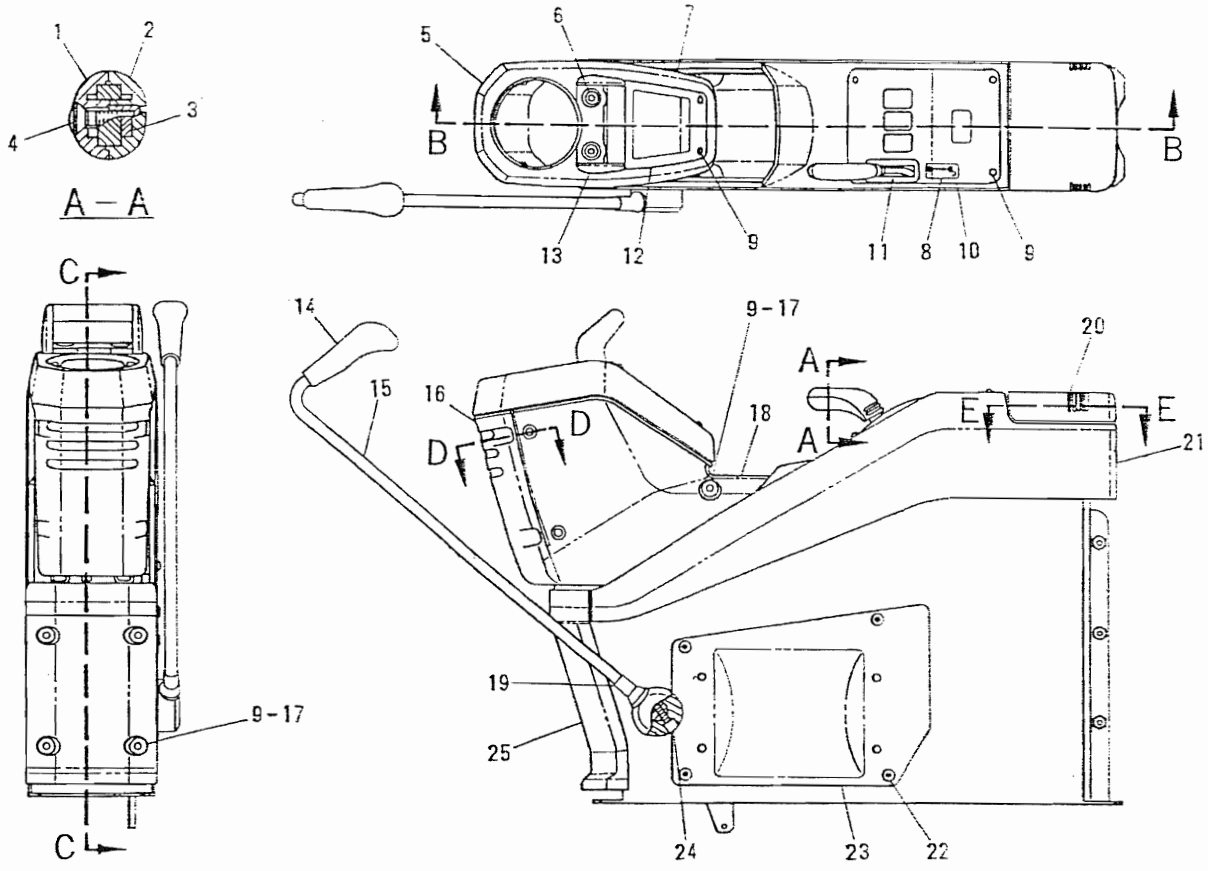

NOTE	No.	PART No.	QTY	PART NAME	NOTE	No.	PART No.	QTY	PART NAME
	1	7Y-3184	1	KNOB		21	7Y-3191	1	PANEL
	2	7Y-3185	1	KNOB		22	9X-2044	4	SCREW
	3	4I-0420	1	STRIP		23	5I-3285	1	COVER AS
	4	7Y-3248	2	SCREW		24	9X-2843	1	BOLT (25mm LONG)
	5	7Y-3155	1	COVER		25	7Y-3267	1	COVER
	6	7Y-7394	2	SCREW					
	7	7Y-3154	1	COVER					
	8	4I-0088	1	FILM					
	9	7Y-3173	16	SCREW					
	10	102-8292	1	PANEL					
	11	100-7709	1	COVER					
	12	110-5528	1	COVER					
	13	41-1282	1	GRIP					
	14	110-5602	1	KNOB					
	15	110-5560	1	LEVER AS					
	16	7Y-3156	1	COVER					
	17	8F-1326	8	WASHER					
	18	7Y-3165	1	COVER AS					
	19	110-5601	1	CAP					
	20	7Y-3268	1	COVER					

H39352E

110-5623 CONSOLE GP-PART 1 OF 2

Part of 110-5640 Console listed on Page 269

CAB. GAUGES AND ACCESSORIES

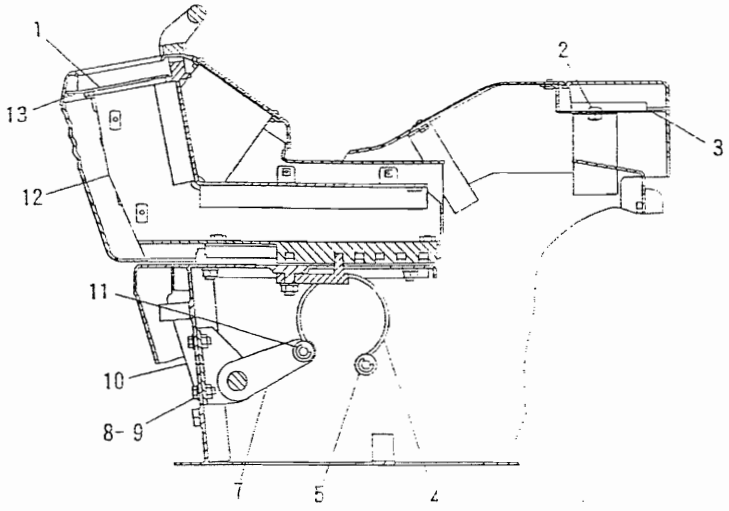

SECTION B — B

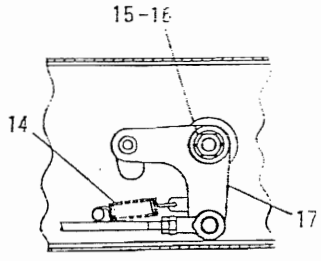

VIEW F — F

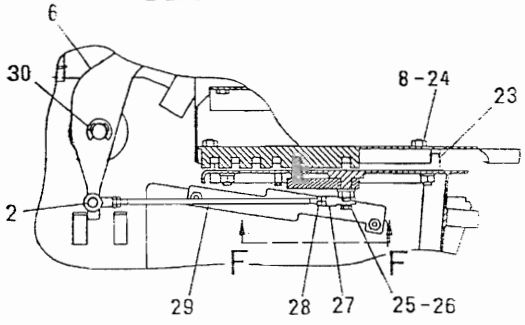

SECTION C — C

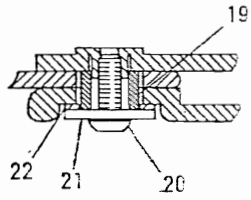

SECTION D — D

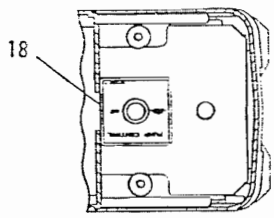

SECTION E — E

NOTE	No.	PART No.	QTY	PART NAME	NOTE	No.	PART No.	QTY	PART NAME
	1	7Y-3168	1	PLATE		21	7Y-3282	4	WASHER
	2	9X-2044	3	SCREW		22	7Y-3272	4	SPACER
	3	7Y-3273	1	PANEL AS		23	096-3909	2	ADJUSTER
	4	111-1121	1	SPRING		24	8T-4200	4	BOLT (16mm LONG)
	5	111-1122	2	BUSHING		25	9X-8256	2	WASHER
	6	7Y-3036	1	LEVER		26	5C-9553	1	BOLT (16mm LONG)
	7	5I-3316	1	LEVER AS		27	8C-3111	2	ROD END
	8	8T-4224	7	WASHER		28	5C-2890	2	NUT
	9	8T-4189	3	BOLT (20mm LONG)		29	7Y-3133	1	ROD
	10	5I-3282	1	SUPPORT AS		30	6V-9824	1	RING
	11	6V-8491	2	RING					
	12	7Y-3080	1	SUPPORT AS					
	13	6V-5210	2	SCREW					
	14	4H-3521	1	SPRING					
	15	096-4883	1	NUT					
	16	8T-4121	1	WASHER					
	17	7Y-3082	1	LEVER AS					
	18	4I-0084	1	FILM					
	19	7Y-3271	4	PIPE					
	20	7Y-3173	4	SCREW					

H393561

110-5623 CONSOLE GP-PART 2 OF 2

Part of 110-5640 Console listed on Page 269

CAB. GAUGES AND ACCESSORIES

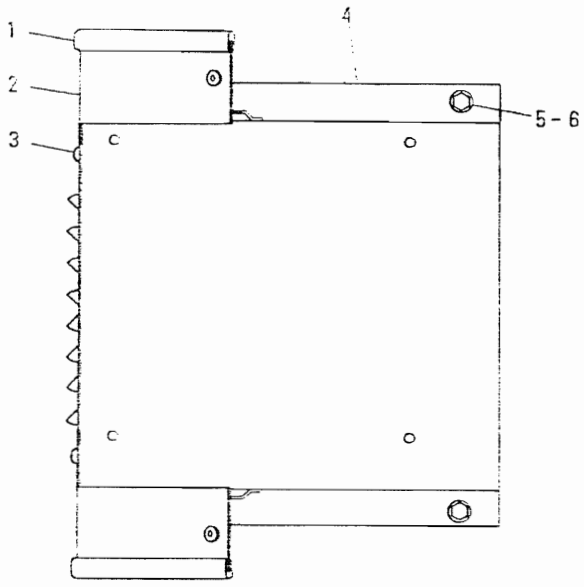

TOP VIEW

NOTE	No.	PART No.	QTY	PART NAME
D	1	5P-9205		SEAL ・・・ (0.3㎜×2.
	2	5I-3695	1	COVER
	3	9X-2042	6	SCREW
	4	5I-3696	1	SUPPORT AS
	5	8T-4137	4	BOLT (20㎜ LONG)
	6	8T-4121	4	WASHER

D-ORDER BY THE METER

H30126E

087-5864 SUPPORT GP-SEAT

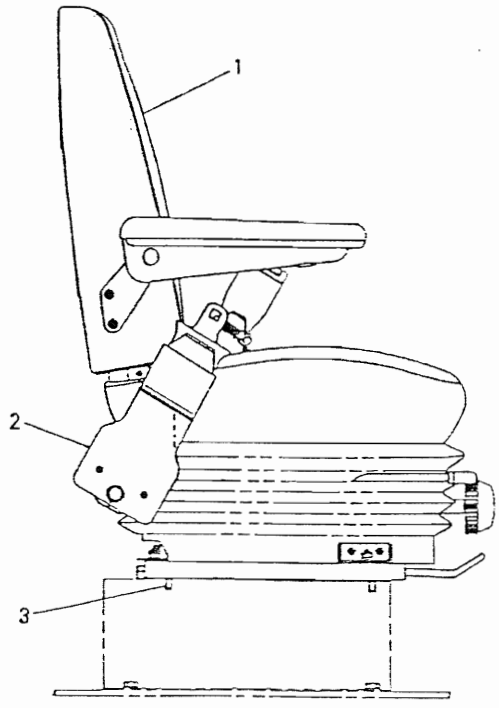

NOTE	No.	PART No.	QTY	PART NAME
Y	1	5I-3648	1	SEAT GP
	2	8Y-6856	1	BELT GP
	3	6V-8202	4	BOLT

Y-SEE SEPARATE ILLUSTRATION

H33507E

7Y-3286 SEAT GP (A)

5I-3648 – Page 276

CAB, GAUGES AND ACCESSORIES

Consists of :

Page

1 5I-3650 SEAT GP 278

H31086

5I-3651 SEAT AR
An Attachment

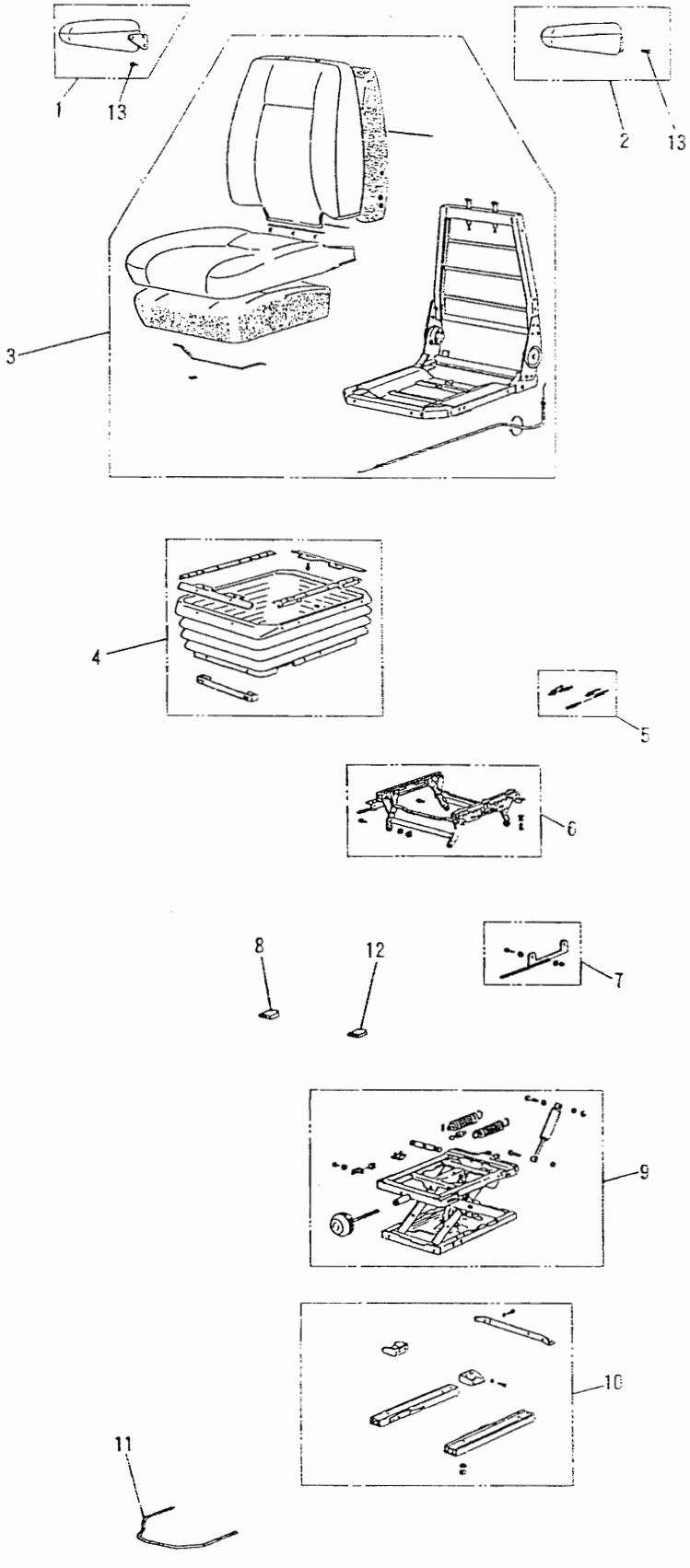

5I-3648 SEAT GP-BASIC

Part of 7Y-3286 Seat listed on Page 274
6I-5382 – Page 280, 4I-9797 – Page 282

CAB. GAUGES AND ACCESSORIES

NOTE	No.	PART No.	QTY	PART NAME
	1	7I-6768	1	CUSHION KIT
	2	7I-6767	1	CUSHION KIT
Y	3	6I-5382	1	SEAT AS
	4	7I-6764	1	COVER KIT
	5	7I-6766	1	SPRING KIT
	6	100-7695	1	RISER KIT
	7	100-7692	1	LATCH KIT
	8	105-9338	1	HANDLE
Y	9	4I-9797	1	SUSPENSION AS
	10	7I-6760	1	ADJUSTER KIT
	11	7I-6969	1	HANDLE
	12	105-9339	1	HANDLE
	13	8C-7506	4	SCREW

Y-SEE SEPARATE ILLUSTRATION

H41282E

5I-3648 SEAT GP-BASIC

Part of 7Y-3286 Seat listed on Page 274
6I-5382 – Page 280, 4I-9797 – Page 282

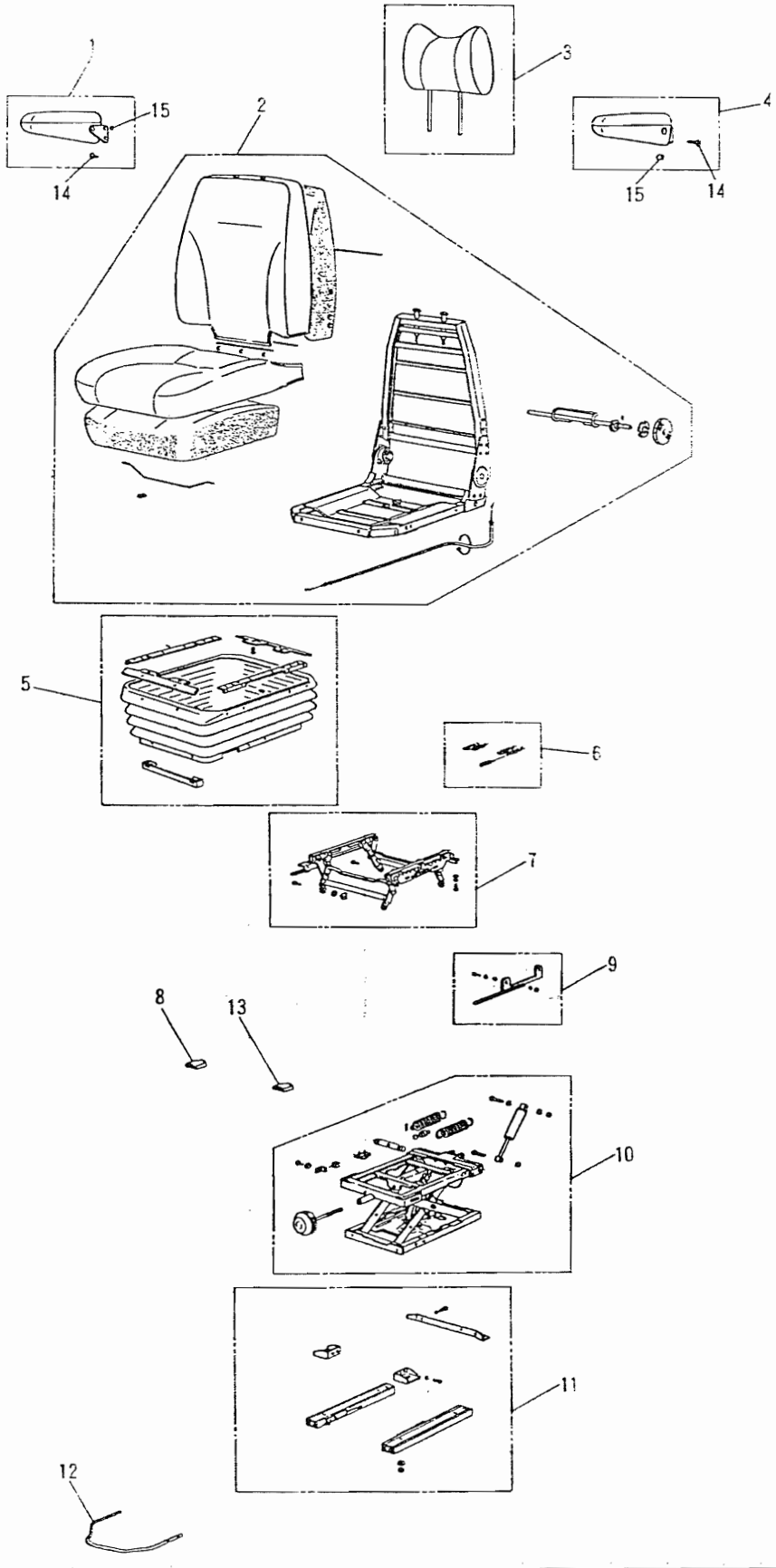

H41392E

5I-3650 SEAT GP-BASIC

Part of 5I-3651 Seat Ar listed on Page 275
6I-5381 – Page 281, 4I-9797 – Page 282
An Attachment

CAB, GAUGES AND ACCESSORIES

NOTE	No.	PART No.	QTY	PART NAME	NOTE	No.	PART No.	QTY	PART NAME
	1	101-2305	1	CUSHION KIT					
Y	2	6I-5381	1	SEAT AS					
	3	6I-5378	1	HEADREST KIT					
	4	101-2306	1	CUSHION KIT					
	5	6I-5375	1	COVER KIT					
	6	7I-6889	1	SPRING KIT					
	7	7I-6765	1	RISER KIT					
	8	105-9338	1	HANDLE					
	9	7I-6763	1	LATCH KIT					
Y	10	4I-9797	1	SUSPENSION AS					
	11	7I-6760	1	ADJUSTER KIT					
	12	7I-6969	1	HANDLE					
	13	105-9339	1	HANDLE					
	14	114-3350	4	SCREW					
	15	030-7621	4	SPACER					

Y-SEE SEPARATE ILLUSTRATION

H413931

5I-3650 SEAT GP-BASIC

Part of 5I-3651 Seat Ar listed on Page 275
6I-5381 – Page 281, 4I-9797 – Page 282
An Attachment

CAB. GAUGES AND ACCESSORIES

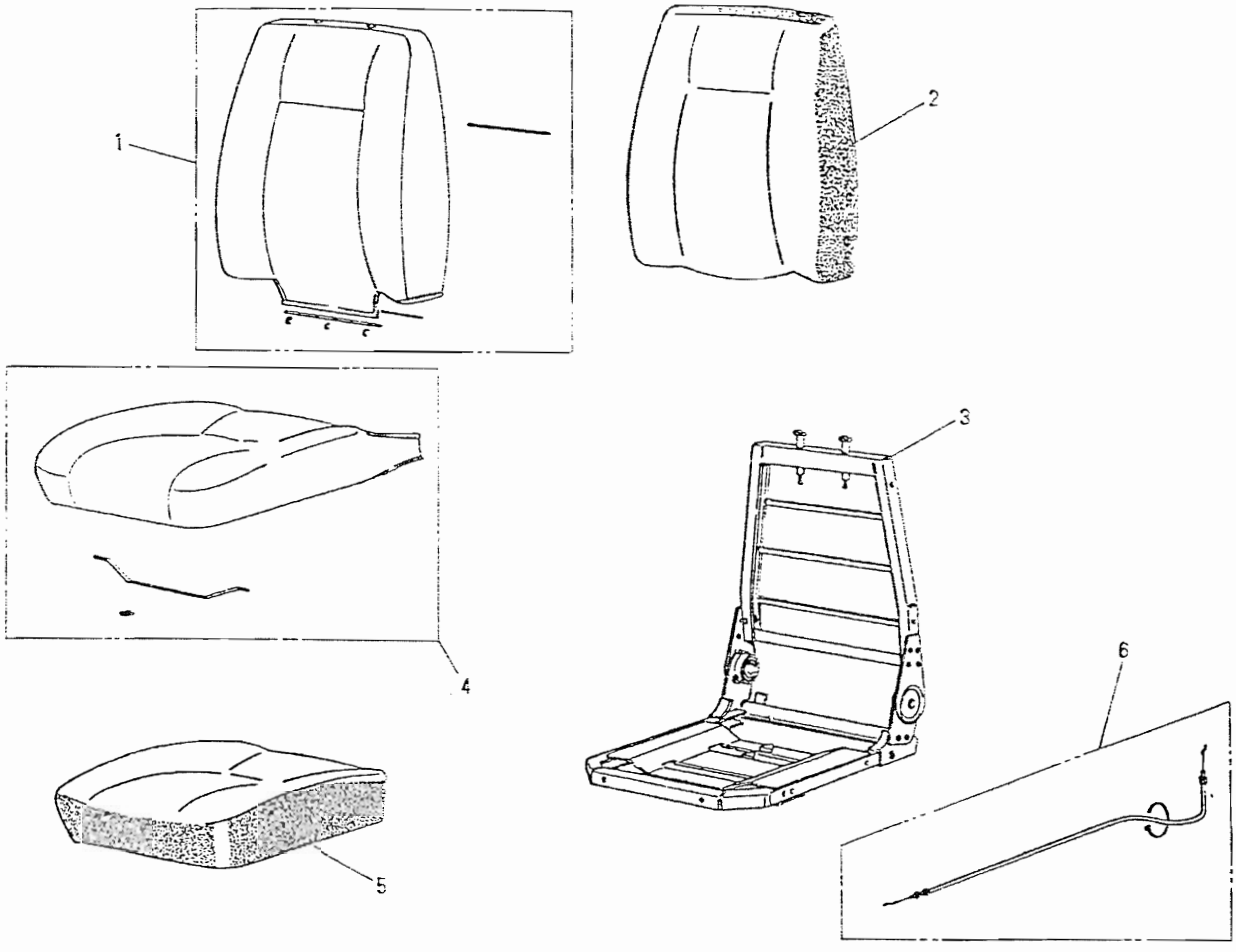

NOTE	No.	PART No.	QTY	PART NAME	NOTE	No.	PART No.	QTY	PART NAME
	1	7I-6757	1	COVER KIT					
	2	7I-6755	1	FOAM KIT					
	3	7I-6759	1	FRAME KIT					
	4	7I-6758	1	COVER KIT					
	5	4Y-6540	1	FOAM KIT					
	6	7I-6756	1	CABLE KIT					

H33515E

6I-5382 SEAT AS-UPPER

Part of 5I-3648 Seat listed on Page 277

CAB. GAUGES AND ACCESSORIES

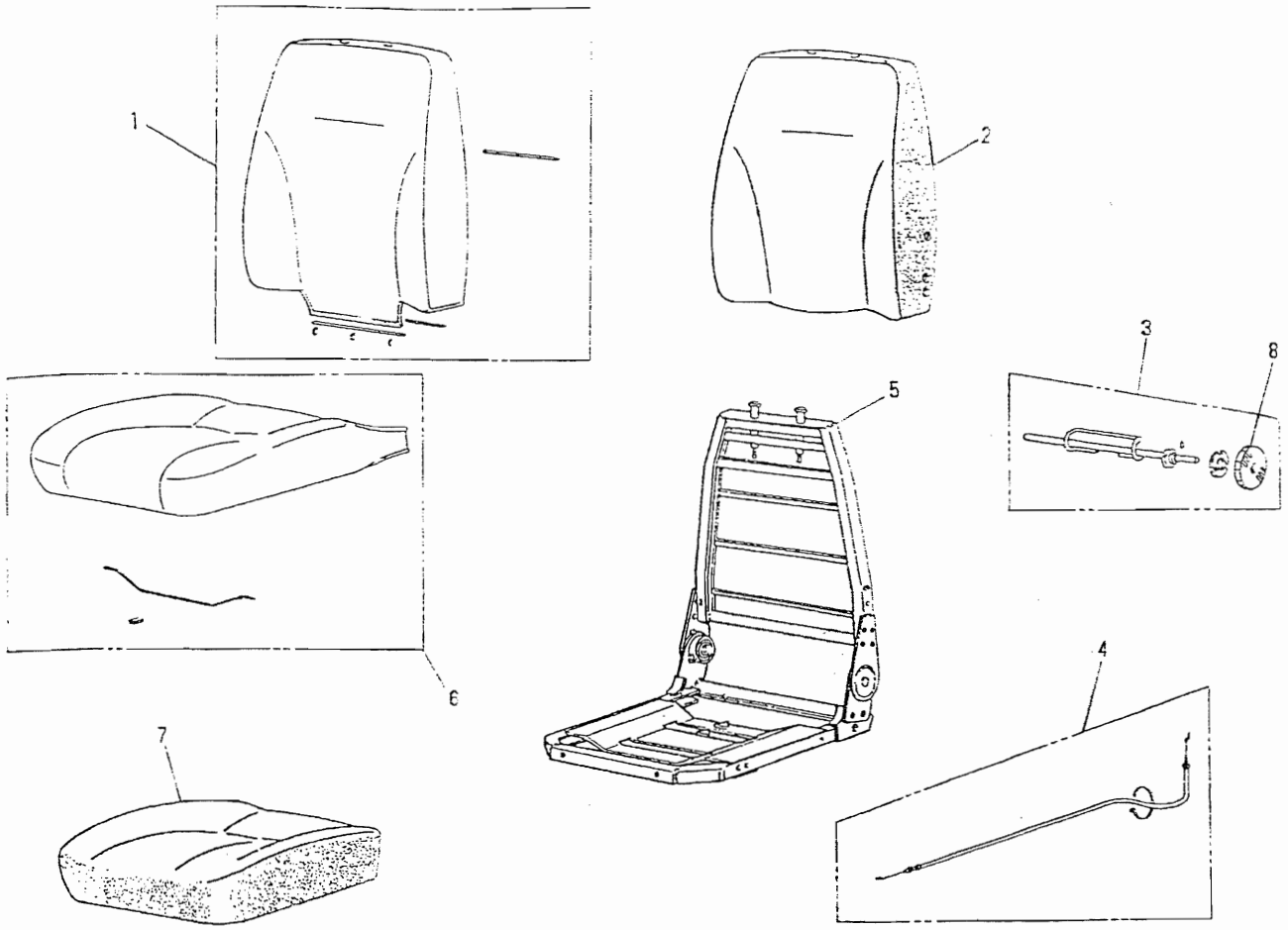

NOTE	No.	PART No.	QTY	PART NAME	NOTE	No.	PART No.	QTY	PART NAME
	1	7I-6886	1	COVER KIT					
	2	6I-5380	1	FOAM KIT					
	3	8Y-5711	1	SUPPORT KIT					
	4	7I-6756	1	CABLE KIT					
	5	7I-6888	1	FRAME KIT					
	6	7I-6887	1	COVER KIT					
	7	6I-5379	1	FOAM KIT					
	8	105-9340	1	HANDLE					

H349421

6I-5381 SEAT AS-UPPER

Part of 51-3650 Seat listed on Page 279

An Attachment

CAB, GAUGES AND ACCESSORIES

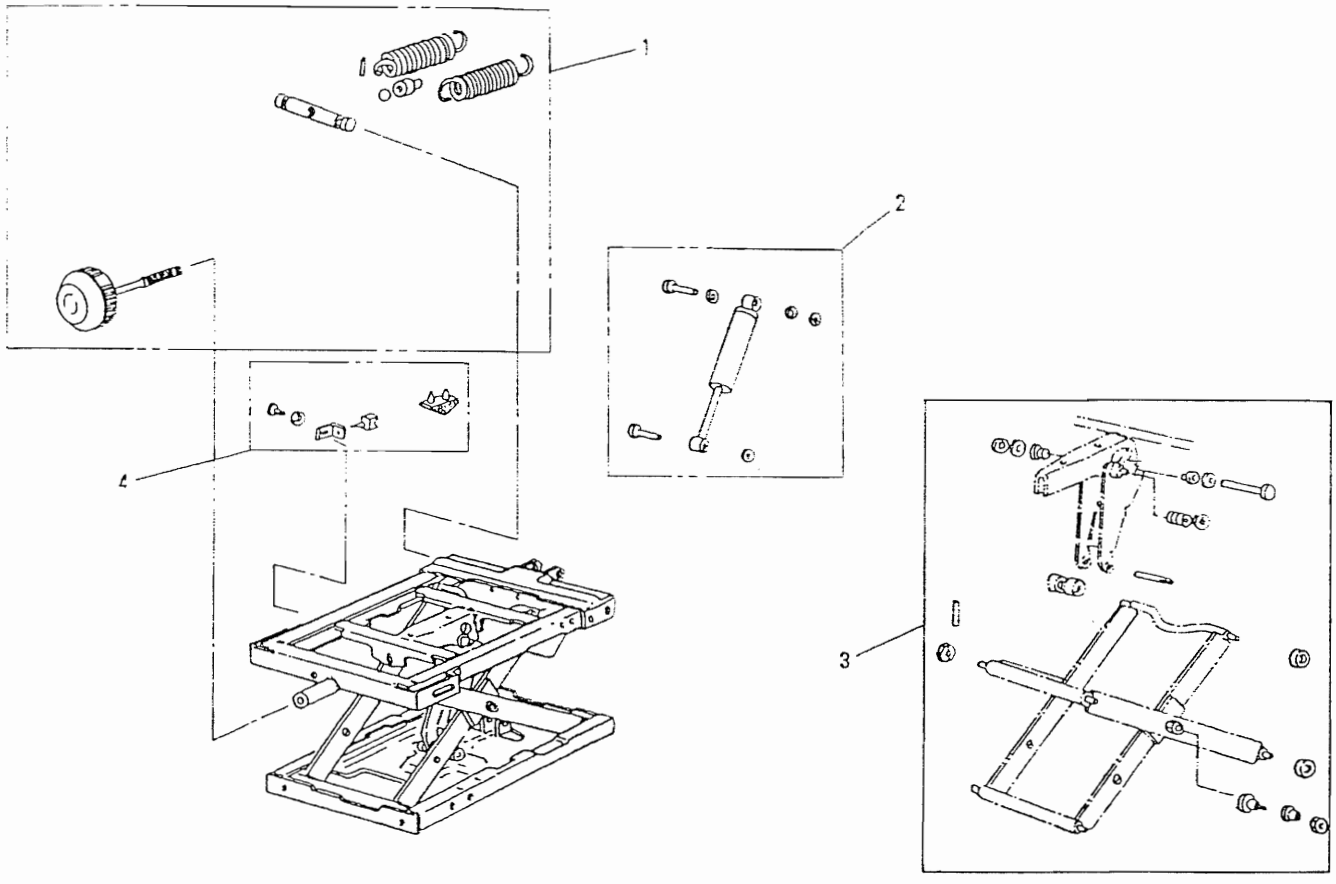

NOTE	No.	PART No.	QTY	PART NAME	NOTE	No.	PART No.	QTY	PART NAME
	1	8Y-5706	1	ADJUSTER KIT					
	2	4I-9798	1	DAMPER KIT					
	3	8Y-5709	1	BEARING KIT					
	4	8Y-5705	1	STOP KIT					

H41283E

4I-9797 SUSPENSION AS

Part of 5I-3648 and 5I-3650 Seat listed on Pages 277 and 279

MEMORANDA

MEMORANDA

MEMORANDA

CAB. GAUGES AND ACCESSORIES

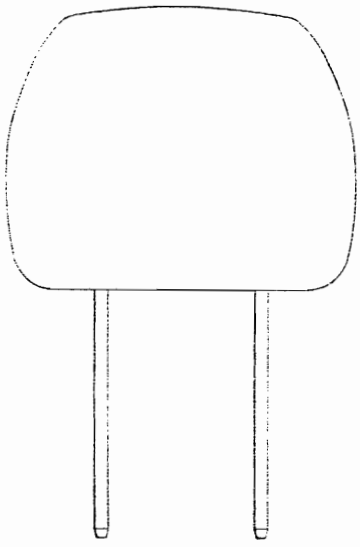

NOTE	No.	PART No.	QTY	PART NAME

H30295E

7Y-9548 HEADREST AS-SEAT
An Attachment

Consists of :

Page

2	5P-7958	SLEEVE
2	5P-8500	KEY
1	6V-2405	ENVELOPE
1	099-3645	CABLE

H34926E

7Y-0059 LITERATURE GP-OWNER & OPERATOR

CAB, GAUGES AND ACCESSORIES

Consists of :

		Page
1 105-9372	CONDITIONER GP-MOUNTING &	289
1 105-9378	LINES GP-AIR CONDITIONER	292
1 105-9379	CONDENSER GP-MOUNTING &	288
1 109-9398	COMPRESSOR GP-REFRIGERANT	294

H41580

105-9377 CONDITIONER AR
An Attachment

CAB. GAUGES AND ACCESSORIES

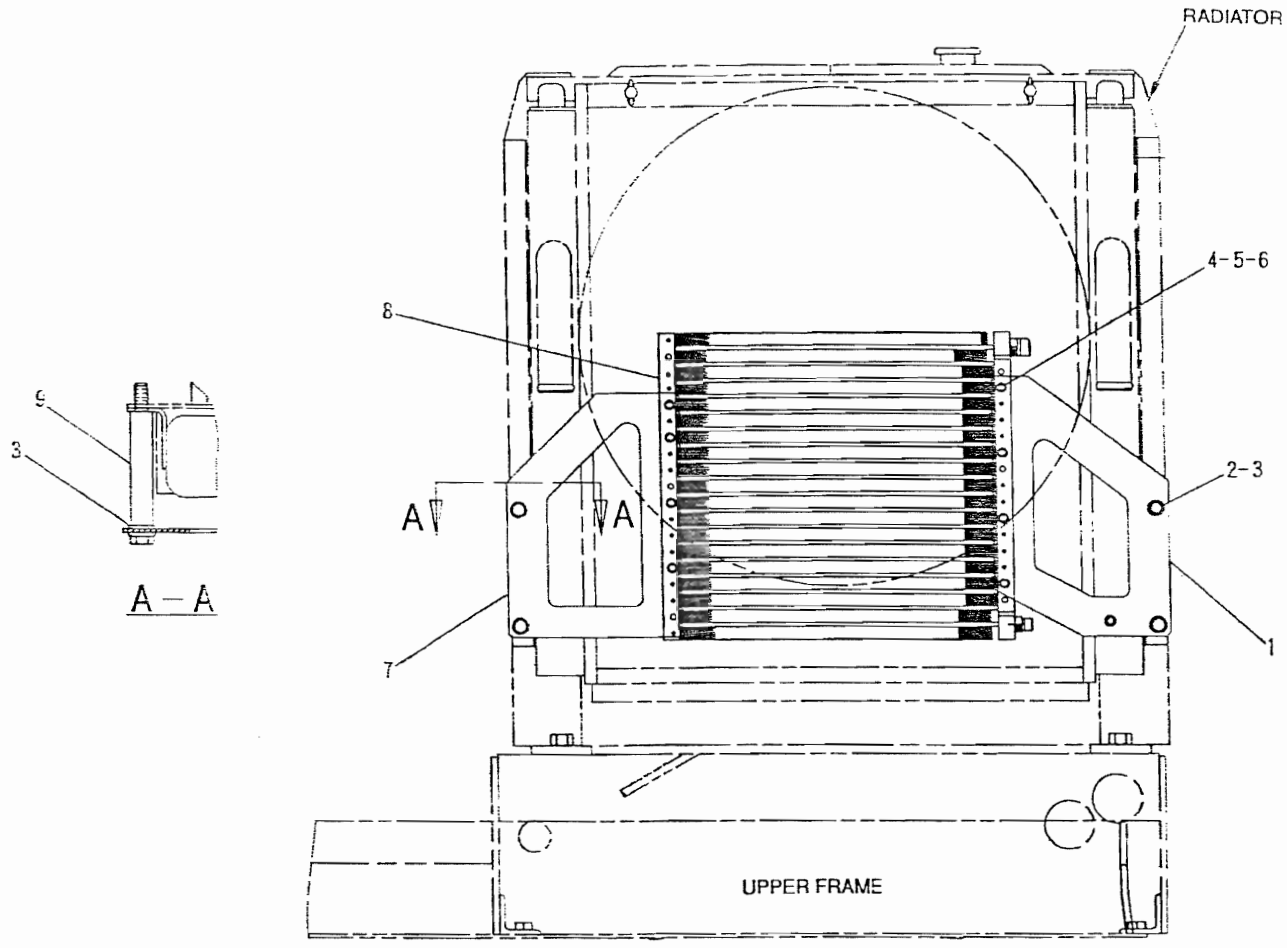

NOTE	No.	PART No.	QTY	PART NAME	NOTE	No.	PART No.	QTY	PART NAME
	1	113-3434	1	BRACKET AS					
	2	7X-2543	4	BOLT (120mm LONG)					
	3	8T-4121	5	WASHER					
	4	7X-2534	8	BOLT (50mm LONG)					
	5	095-0827	8	LOCKWASHER					
	6	9X-8256	8	WASHER					
	7	113-3436	1	BRACKET AS					
	8	105-9407	1	CONDENSER AS					
	9	71-6750	4	SLEEVE					

H41581E

105-9379 CONDENSER GP-MOUNTING &

Part of 105-9377 Conditioner listed on Page 287

An Attachment

CAB, GAUGES AND ACCESSORIES

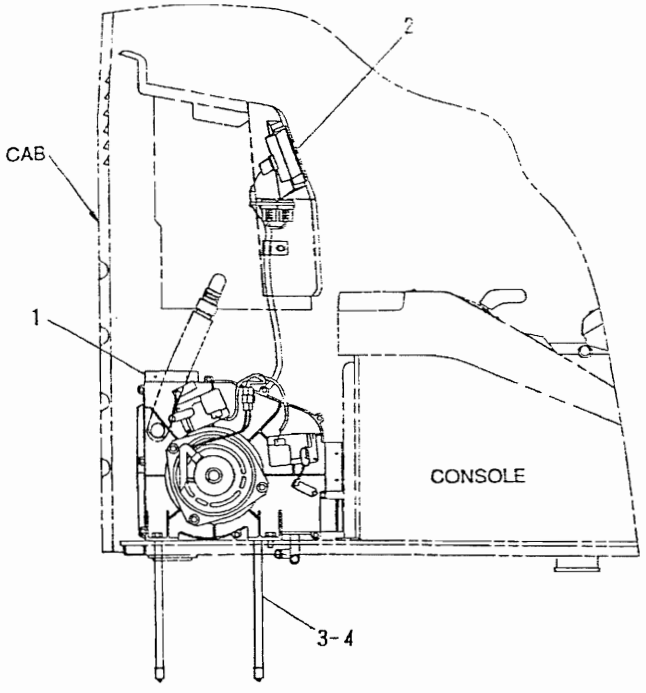

NOTE	No.	PART No.	QTY	PART NAME
Y	1	105-9406	1	CONDITIONER GP
	2	113-2941	1	PANEL
	3	4I-0471	2	HOSE
	4	4I-6544	2	CLAMP

Y-SEE SEPARATE ILLUSTRATION

H41582

105-9372 CONDITIONER GP-MOUNTING &

Part of 105-9377 Conditioner listed on Page 287
105-9406 – Page 290
An Attachment

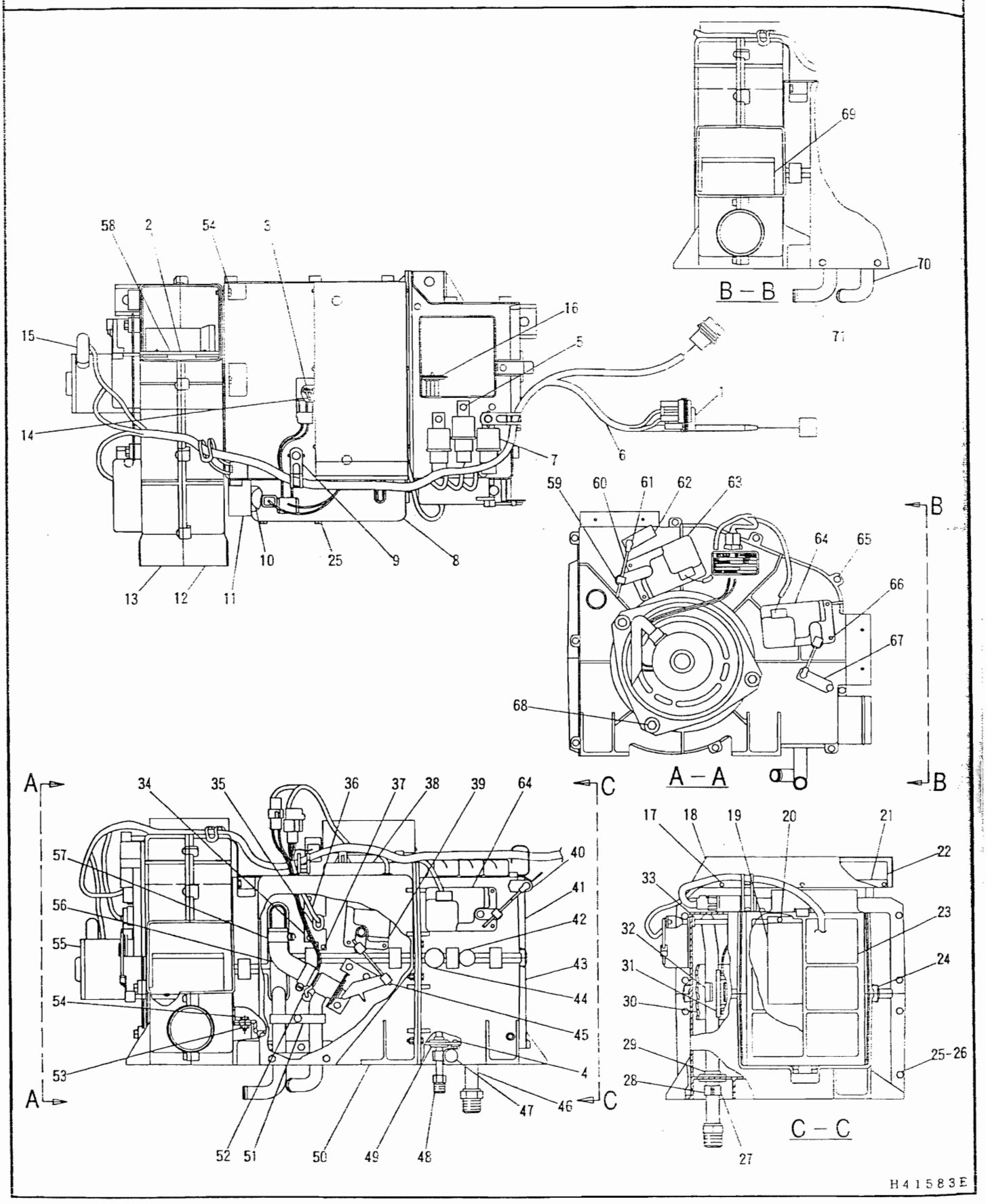

105-9406 CONDITIONER GP-AIR (BASIC)

Part of 105-9372 Conditioner listed on Page 289

An Attachment

CAB, GAUGES AND ACCESSORIES

NOTE	No.	PART No.	QTY	PART NAME
	1	7I-6621	2	FUSE
	2	5I-3608	1	SEAL
	3	5I-3606	1	CLIP
	4	7Y-5287	1	SCREW
	5	5I-3639	12	SCREW
	6	5I-3567	1	HARNESS AS
	7	5I-3604	4	RELAY
	8	5I-3571	1	COVER
	9	5I-3607	3	CLAMP
	10	5I-3596	1	GROMMET
	11	5I-3599	1	BRACKET
	12	5I-3562	1	CASE
	13	5I-3561	1	CASE
	14	099-6746	1	THERMISTOR
	15	7I-0253	1	HOSE
	16	105-9509	1	VALVE AS
	17	7I-0251	10	SCREW
	18	7I-0213	1	COVER
	19	5I-3588	1	DAMPER AS
	20	5I-3640	8	SCREW
	21	5I-3600	1	BRACKET
	22	5I-3583	1	CONTROL AS
	23	5I-3572	1	FILTER
	24	5I-3605	11	CLAMP
	25	5I-3609	13	BOLT
	26	5I-3613	10	NUT
	27	5I-3584	1	CLIP
	28	5I-3585	1	CLIP
	29	5I-3595	1	GROMMET
	30	96-0783	3	INSULATOR
	31	5I-3569	1	BRACKET
	32	5I-3582	1	CLAMP
	33	5I-3612	1	RING
	34	5I-3601	1	BRACKET
	35	5I-3593	1	GROMMET
	36	5I-3570	1	RESISTOR
	37	5I-3638	2	SCREW
	38	5I-3557	1	CASE
	39	5I-3564	1	MOTOR AS
	40	5I-3578	1	ROD
	41	5I-3559	1	CASE
	42	5I-3597	1	GROMMET
	43	5I-3560	1	CASE
	44	5I-3592	1	GROMMET
	45	5I-3575	1	ROD AS
	46	105-9507	1	CORE AS
	47	5I-3598	1	GROMMET
	48	105-9508	1	PIPE
	49	5I-3594	1	GROMMET
	50	5I-3558	1	CASE
	51	5I-3586	1	CLIP
	52	5I-3591	1	GROMMET
	53	5I-3614	3	NUT
	54	5I-3610	6	BOLT
	55	5I-3566	1	MOTOR AS
		115-3811	1	FAN
	56	5I-3602	1	HOSE
	57	5I-3603	2	CLAMP
	58	5I-3587	1	DAMPER AS
	59	5I-3581	5	CLAMP
	60	5I-3576	3	ROD
	61	5I-3580	3	CLAMP
	62	5I-3577	1	ROD
	63	5I-3563	1	MOTOR AS
	64	5I-3565	2	MOTOR AS
	65	5I-3616	9	SCREW
	66	5I-3615	16	SCREW
	67	5I-3579	1	ROD
	68	5I-3611	3	BOLT
	69	5I-3589	1	DAMPER AS
	70	5I-3568	1	VALVE
	71	5I-3556	1	CORE AS

H41584

105-9406 CONDITIONER GP-AIR (BASIC)

Part of 105-9372 Conditioner listed on Page 289

An Attachment

CAB, GAUGES AND ACCESSORIES

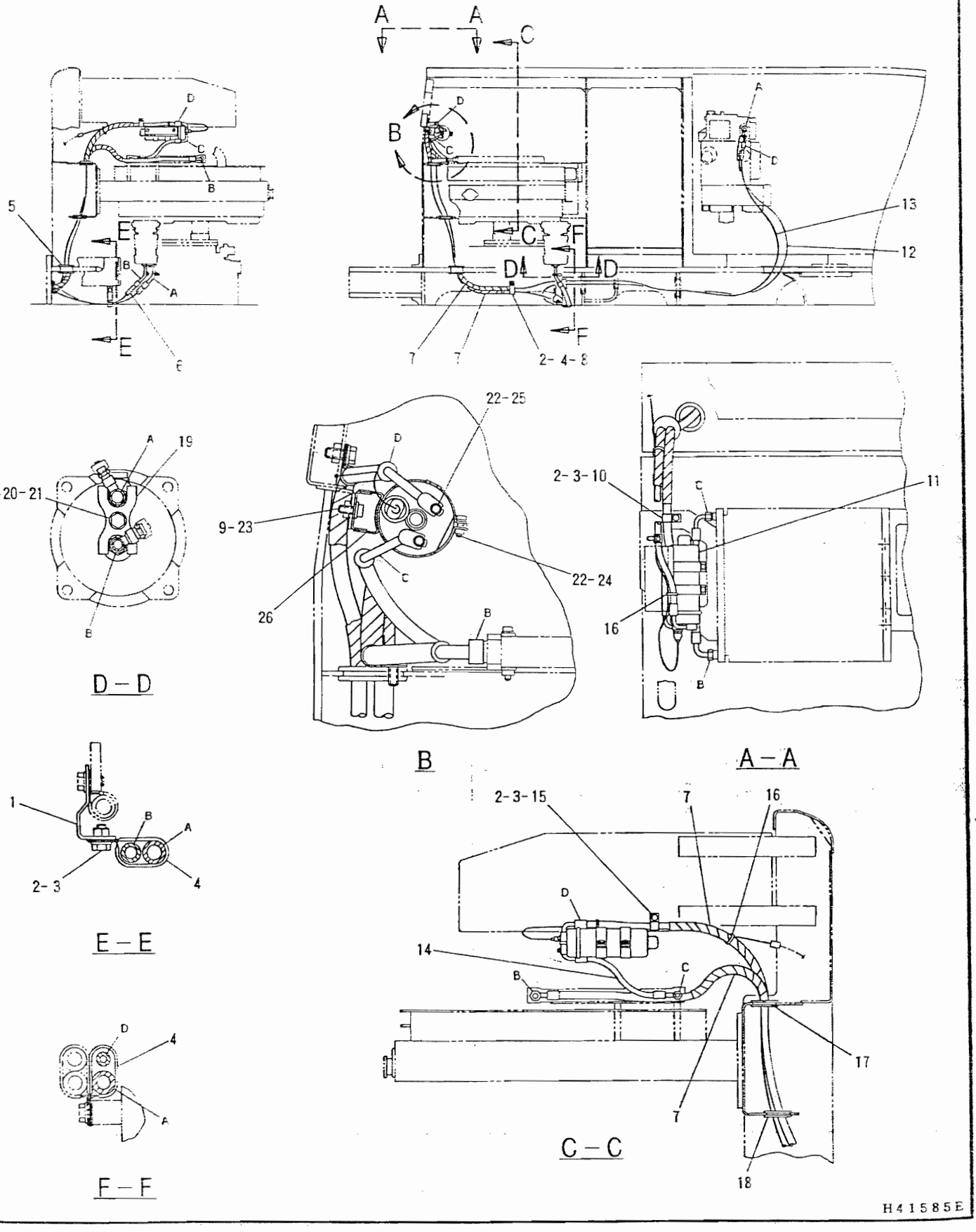

105-9378 LINES GP-AIR CONDITIONER

Part of 105-9377 Conditioner Ar listed on Page 287

An Attachment

CAB. GAUGES AND ACCESSORIES

NOTE	No.	PART No.	QTY	PART NAME	NOTE	No.	PART No.	QTY	PART NAME
	1	113-3472	1	BRACKET AS					
	2	8T-4121	5	WASHER					
	3	8T-4137	3	BOLT (20mm LONG)					
	4	6D-1641	3	CLIP					
	5	7Y-8167	1	GROMMET					
	6	113-3470	1	HOSE AS					
		113-3467	1	SEAL					
E	7	113-3438		GUARD··· (120cm)					
	8	8T-4133	1	NUT					
	9	8T-4200	2	BOLT (16mm LONG)					
	10	6D-4246	1	CLIP					
	11	105-9408	1	RECEIVER AS					
	12	113-3469	1	HOSE AS					
		113-3468	1	SEAL					
	13	105-9433	1	HOSE AS					
	14	113-3471	1	HOSE AS					
		113-3466	2	SEAL					
	15	9M-8406	1	CLIP					
	16	096-0061	2	STRAP					
	17	5I-3827	1	GROMMET					
	18	093-2064	1	GROMMET					
	19	105-9411	1	SUPPORT					
	20	7F-6998	1	LOCKWASHER					
	21	8T-4136	1	BOLT (25mm LONG)					
	22	9X-8256	4	WASHER					
	23	8T-4224	2	WASHER					
	24	5C-9553	2	BOLT (16mm LONG)					
	25	6V-7357	2	BOLT (25mm LONG)					
	26	105-9412	1	BRACKET AS					

E-ORDER BY THE CENTIMETER

H41586

105-9378 LINES GP-AIR CONDITIONER

Part of 105-9377 Conditioner Ar listed on Page 287

An Attachment

CAB, GAUGES AND ACCESSORIES

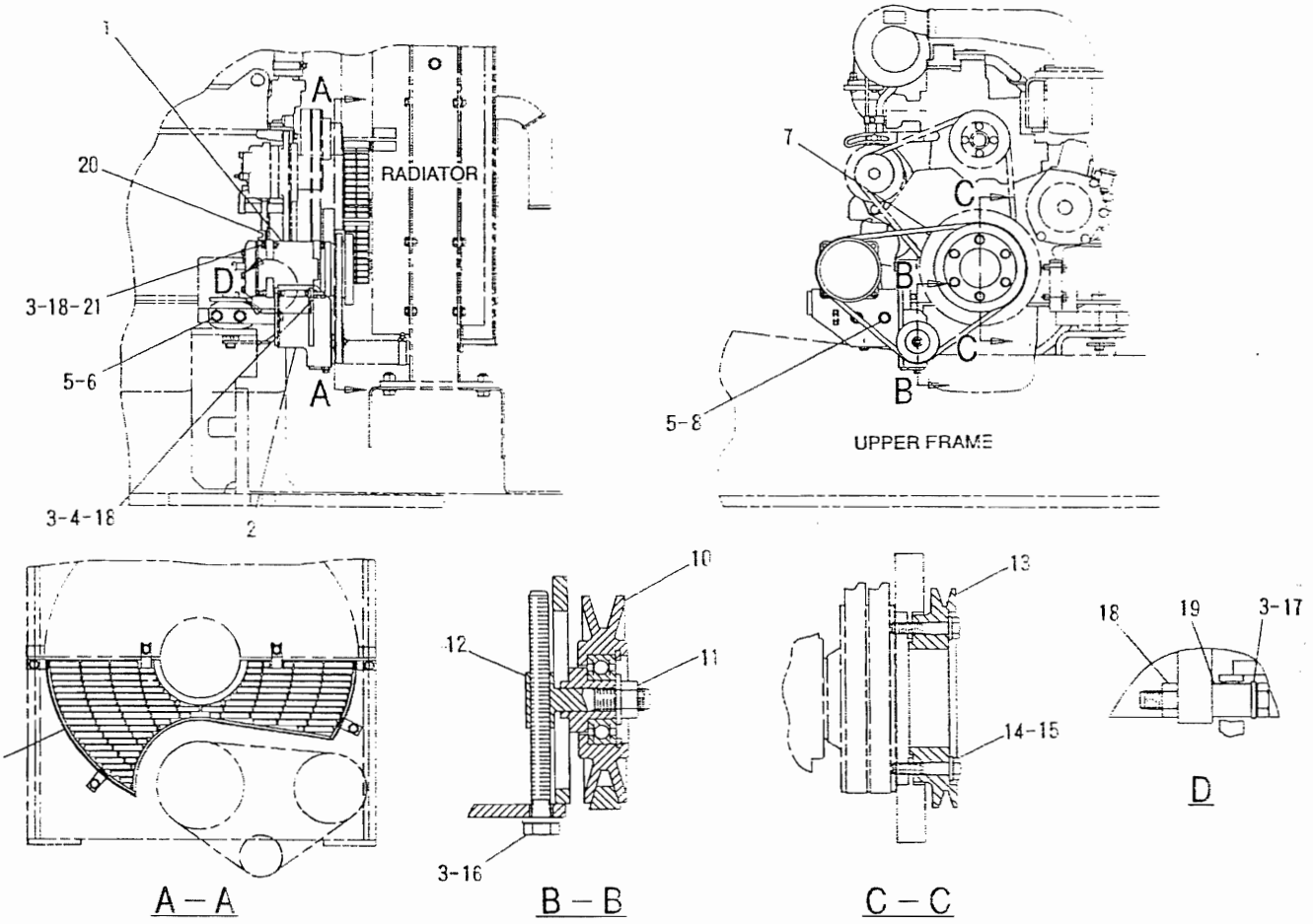

NOTE	No.	PART No.	QTY	PART NAME	NOTE	No.	PART No.	QTY	PART NAME
Y	1	117-6319	1	COMPRESSOR GP		21	8T-7547	1	BOLT (30mm LONG)
	2	109-9382	1	BRACKET AS					
	3	8T-4224	6	WASHER					
	4	7X-2537	2	BOLT (35mm LONG)					
	5	5P-1076	4	WASHER					
	6	8T-4192	2	BOLT (25mm LONG)					
	7	4L-6060	1	V-BELT					
	8	8T-4194	2	BOLT (50mm LONG)					
	9	102-3929	1	GUARD AS					
	10	085-4772	1	PULLEY AS					
	11	085-4771	1	NUT					
	12	085-4774	1	SHAFT					
	13	109-9387	1	PULLEY					
	14	8T-4121	6	WASHER					
	15	8T-4185	6	BOLT (50mm LONG)					
	16	085-4773	1	BOLT					
	17	7X-0818	2	BOLT (45mm LONG)					
	18	5C-7261	5	NUT					
	19	7N-9070	2	SPACER					
	20	9G-9150	1	CLIP					

Y-SEE SEPARATE ILLUSTRATION

H41587E

109-9398 COMPRESSOR GP-REFRIGERANT

Part of 105-9377 Conditioner Ar listed on Page 287

117-6319 – Page 294.01

An Attachment

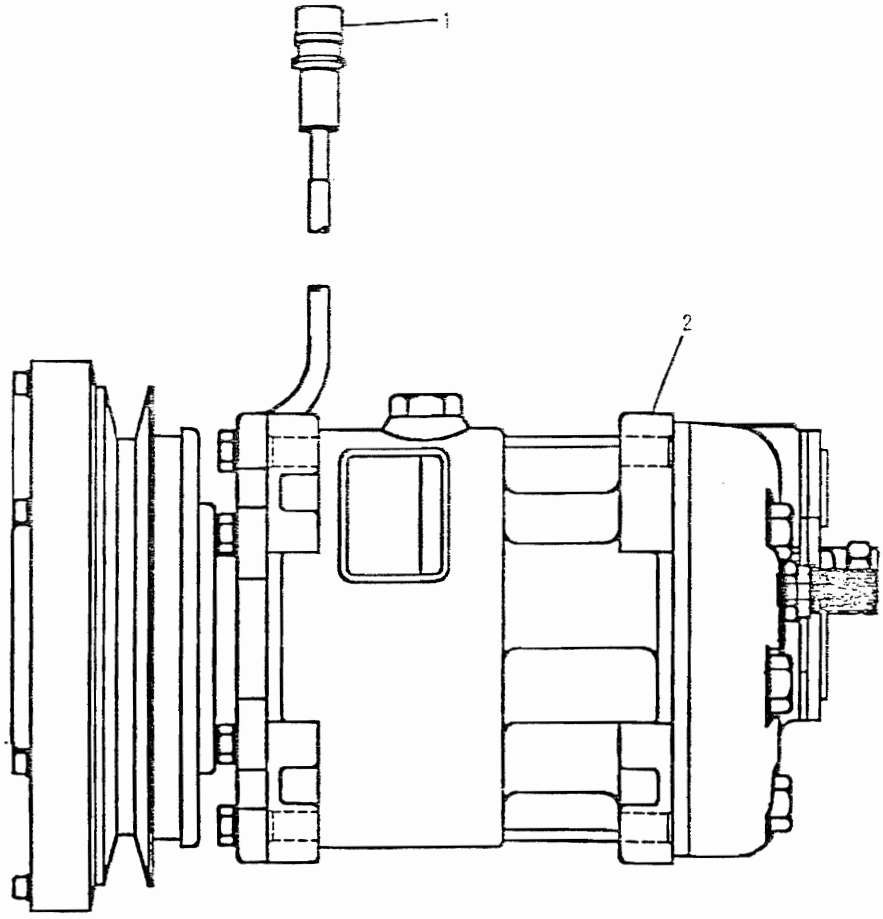

NOTE	No.	PART No.	QTY	PART NAME	NOTE	No.	PART No.	QTY	PART NAME
	1	102-0347	1	COIL AS					
		7N-7779	1	SOCKET					
		7N-7780	1	PIN					
		7N-9737	1	HOUSING					
	2	3E-3658	1	COMPRESSOR AS					
		7T-4532	1	PLUG AS					
		9X-7385	2	SEAL					

H375821

117-6319 COMPRESSOR GP-CLUTCH & REFRIGERANT (BASIC)

Part of 109-9398 Compressor listed on Page 294

An Attachment

MEMORANDA

CAB, GAUGES AND ACCESSORIES

Consists of :

			Page
1	087-5871	HEATER GP (BASIC)	299
1	087-5873	DUCT GP-DEFROST (BASIC)	296
1	41-1170	DUCT GP-AIR (BASIC)	298
1	41-0491	DUCT GP-AIR (HEATER)	297
1	71-0262	DUCT GP-AIR (AIR CONDITIONER)	298

H33394E

71-0261 HEATER GP-CAB

CAB. GAUGES AND ACCESSORIES

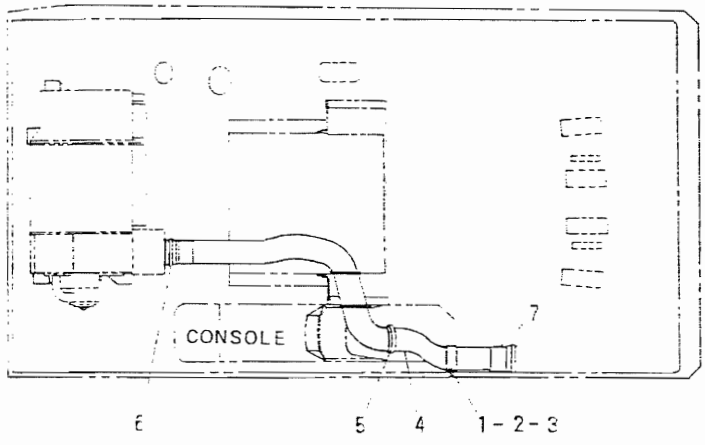

NOTE	No.	PART No.	QTY	PART NAME
	1	7I-6631	1	CLIP
	2	8T-4137	1	BOLT (20mm LONG)
	3	8T-4121	1	WASHER
	4	5I-8955	1	HOSE
D	5	6V-5738		TRIM··· (0.8m)
	6	4I-6993	2	CLAMP
	7	5I-8956	2	CONNECTOR

D-ORDER BY THE METER

H32239E

087-5873 DUCT GP-DEFROST (BASIC)

Part of 7I-0261 Heater listed on Page 295

CAB, GAUGES AND ACCESSORIES

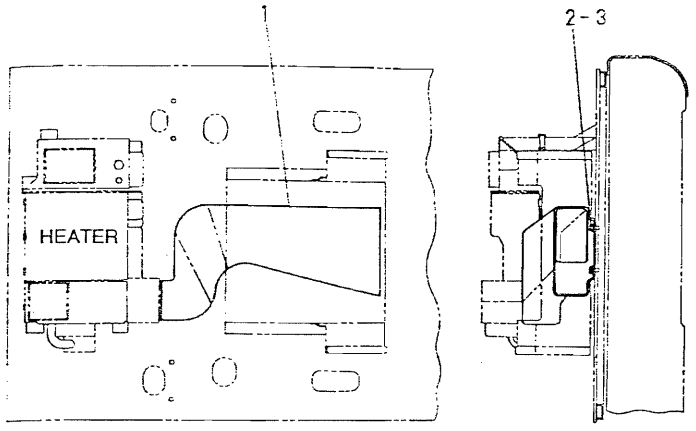

NOTE	No.	PART No.	QTY	PART NAME
	1	4I-0492	1	DUCT
	2	8T-4137	2	BOLT (20mm LONG)
	3	8T-4121	2	WASHER

H3000

4I-0491 DUCT GP-AIR (HEATER)

Part of 7I-0261 Heater listed on Page 295

CAB, GAUGES AND ACCESSORIES

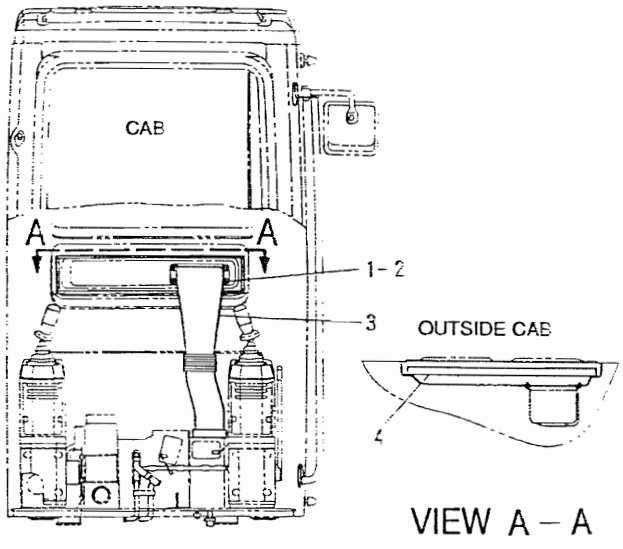

NOTE	No.	PART No.	QTY	PART NAME
	1	9X-2044	4	SCREW
	2	9X-8256	4	WASHER
	3	4I-1251	1	DUCT
	4	4I-1278	1	FILTER

H30421E

4I-1170 DUCT GP-AIR (BASIC)

Part of 7I-0261 Heater listed on Page 295

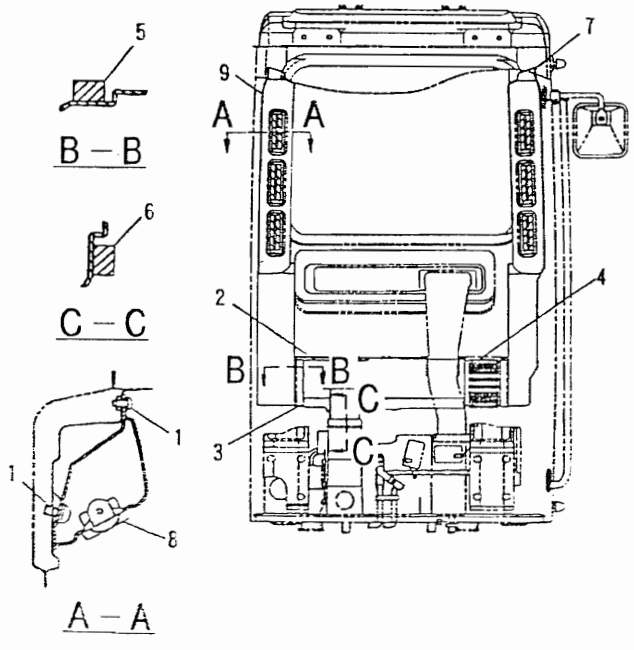

NOTE	No.	PART No.	QTY	PART NAME
	1	9X-2044	8	SCREW
	2	7I-6734	1	DUCT AS
		7I-6740	1	INSULATOR
	3	7I-6716	1	DUCT
	4	7I-7617	1	DUCT
	5	105-9533	2	INSULATOR
	6	105-9534	1	INSULATOR
	7	7I-6735	1	DUCT AS
		4I-5209	1	DUCT
		6I-5331	3	RIVET
		7I-6739	1	COVER
	8	7T-4306	6	LOUVER AS
	9	7I-1681	1	DUCT AS
		4I-5208	1	DUCT
		6I-5331	3	RIVET
		7I-1682	1	COVER

H37218E

7I-0262 DUCT GP-AIR (AIR CONDITIONER)

Part of 7I-0261 Heater listed on Page 295

CAB, GAUGES AND ACCESSORIES

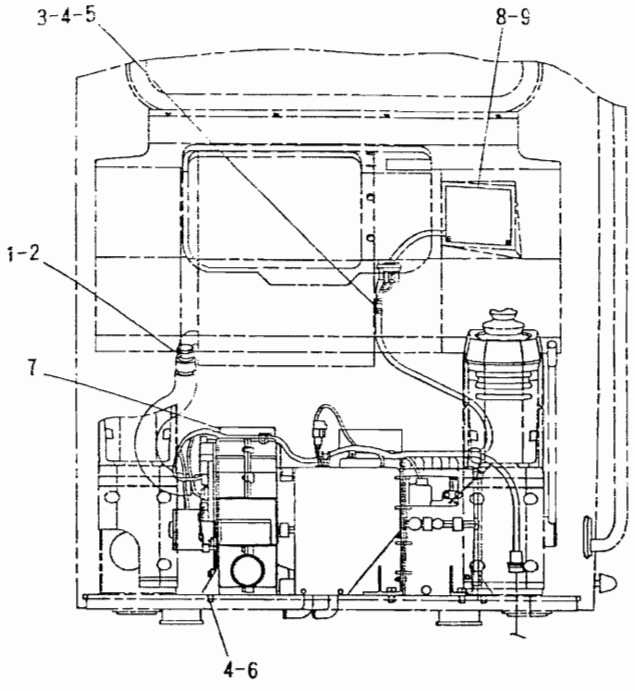

NOTE	No.	PART No.	QTY	PART NAME
	1	4I-3400	1	HOSE
	2	4I-6600	2	CLAMP
	3	8M-2773	1	CLIP
	4	8T-4121	6	WASHER
	5	8T-4133	1	NUT
	6	8T-4137	5	BOLT (20mm LONG)
Y	7	4I-1275	1	HEATER GP
	8	113-2909	1	PANEL
	9	7Y-7389	2	SCREW

Y-SEE SEPARATE ILLUSTRATION

H41588E

087-5871 HEATER GP (BASIC)

Part of 71-0261 Heater listed on Page 295
41-1275 – Page 300

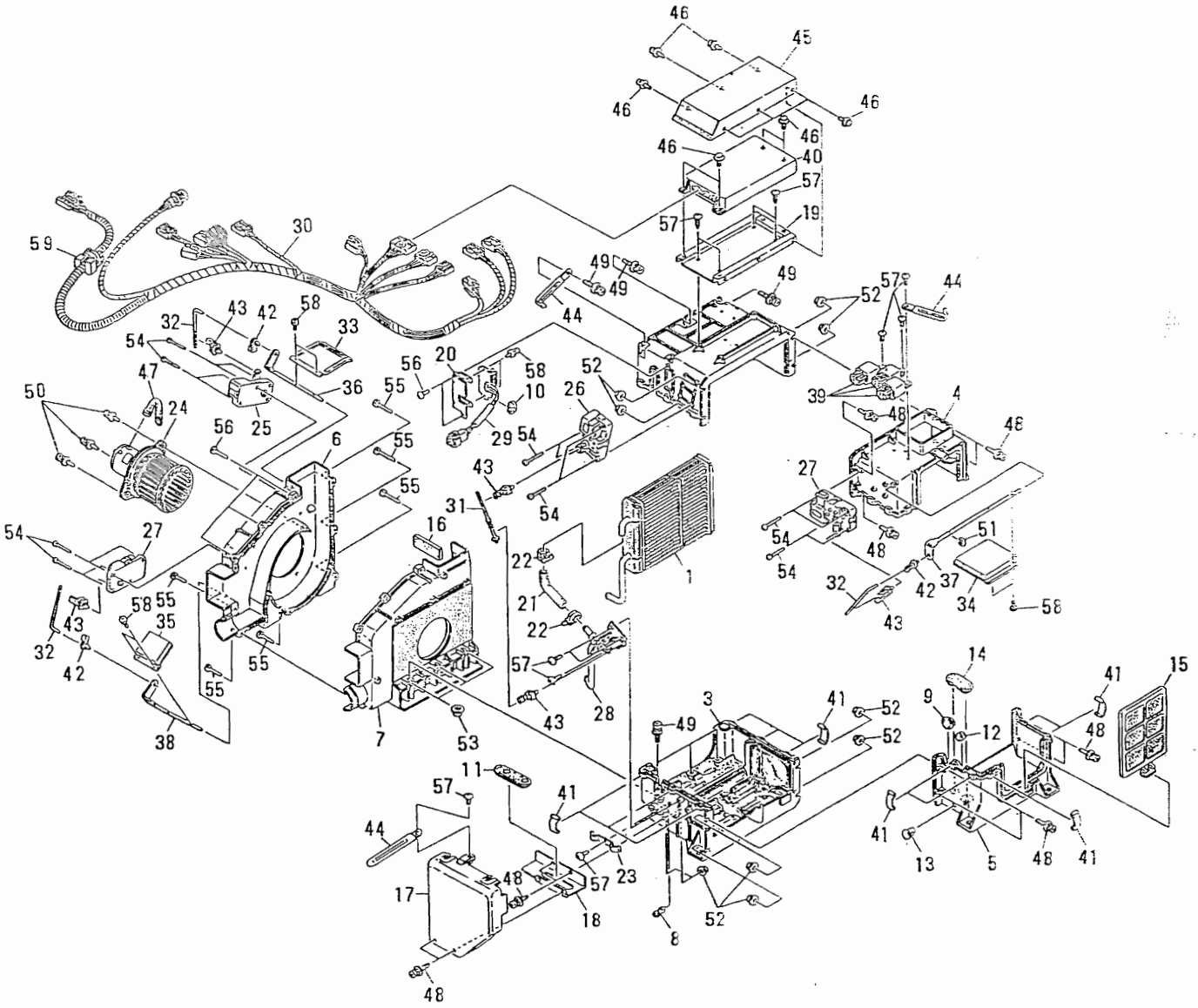

41-1275 HEATER GP

Part of 087-5871 Heater listed on Page 299

CAB, GAUGES AND ACCESSORIES

NOTE	No.	PART No.	QTY	PART NAME
	1	5I-3556	1	CORE AS
	2	5I-3557	1	CASE
	3	5I-3642	1	CASE
	4	5I-3559	1	CASE
	5	5I-3560	1	CASE
	6	5I-3561	1	CASE
	7	5I-3562	1	CASE
	8	5I-3643	1	GROMMET
	9	5I-3592	1	GROMMET
	10	5I-3593	1	GROMMET
	11	5I-3596	1	GROMMET
	12	5I-3597	1	GROMMET
	13	5I-3598	1	GROMMET
	14	5I-3644	1	GROMMET
	15	5I-3572	1	FILTER
	16	5I-3608	1	SEAL
	17	5I-3571	1	COVER
	18	5I-3599	1	BRACKET
	19	5I-3600	1	BRACKET
	20	5I-3601	1	BRACKET
	21	5I-3602	1	HOSE
	22	5I-3603	2	CLAMP
	23	5I-3586	1	BRACKET
	24	5I-3566	1	MOTOR AS
	25	5I-3563	1	MOTOR AS
	26	5I-3564	1	MOTOR AS
	27	5I-3565	2	MOTOR AS
	28	5I-3568	1	VALVE
	29	5I-3570	1	RESISTOR
	30	5I-3645	1	HARNESS AS
	31	5I-3575	1	ROD AS
	32	5I-3576	3	ROD
	33	5I-3587	1	DAMPER AS
	34	5I-3588	1	DAMPER AS
	35	5I-3589	1	DAMPER AS
	36	5I-3577	1	ROD
	37	5I-3578	1	ROD
	38	5I-3579	1	ROD
	39	5I-3604	3	RELAY
	40	5I-3646	1	CONTROLLER
	41	5I-3605	11	CLAMP
	42	5I-3580	3	CLAMP
	43	5I-3581	5	CLAMP
	44	5I-3607	3	CLAMP
	45	7I-0213	1	COVER
	46	7I-0251	10	SCREW
	47	7I-0253	1	HOSE
	48	5I-3609	12	BOLT
	49	5I-3610	6	BOLT
	50	5I-3611	3	BOLT
	51	5I-3612	1	RING
	52	5I-3613	10	NUT
	53	5I-3614	3	NUT
	54	5I-3615	16	SCREW
	55	5I-3616	9	SCREW
	56	5I-3638	2	SCREW
	57	5I-3639	12	SCREW
	58	5I-3640	8	SCREW
	59	7I-6621	2	FUSE

H33878

4I-1275 HEATER GP

Part of 087-5871 Heater listed on Page 299

CAB. GAUGES AND ACCESSORIES

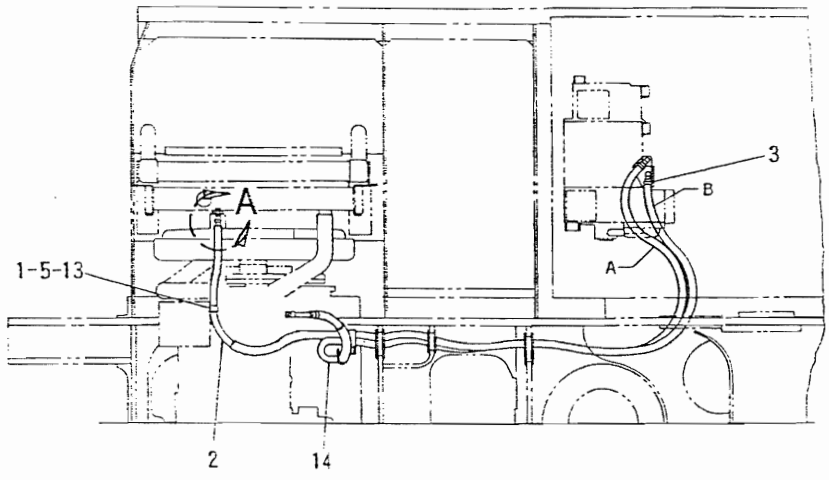

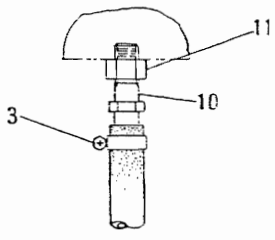

A

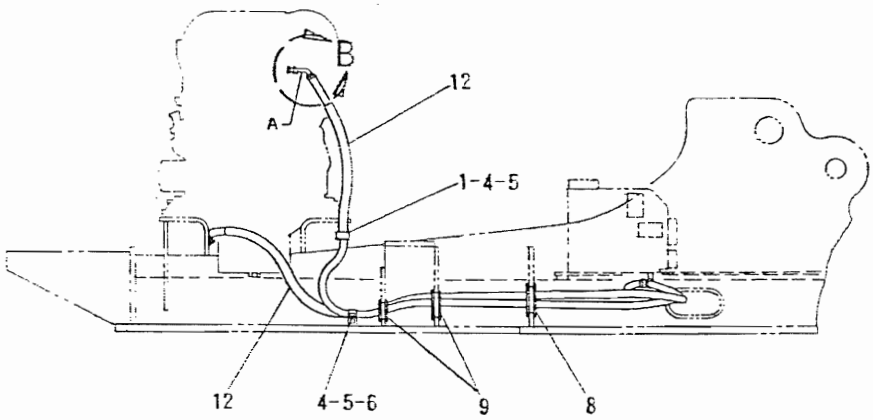

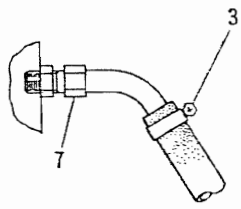

B

NOTE	No.	PART No.	QTY	PART NAME	NOTE	No.	PART No.	QTY	PART NAME
	1	7C-4354	2	CLIP					
E	2	5P-0767		HOSE··· (255cm)					
	3	5D-1026	4	CLAMP					
	4	8T-4137	2	BOLT (20mm LONG)					
	5	8T-4121	3	WASHER					
	6	6D-1641	1	CLIP					
	7	4I-4579	1	NIPPLE					
	8	7Y-4529	1	GROMMET					
	9	8D-0482	2	GROMMET					
	10	105-9516	1	JOINT					
	11	8T-4132	1	NUT					
	12	111-6381	2	GUARD					
	13	8T-4133	1	NUT					
E	14	5P-0767		HOSE··· (265cm)					

E-ORDER BY THE CENTIMETER

H41451E

105-9376 LINES GP-HEATER

BOOM, STICKS, LINKAGE AND BUCKETS

Consists of :

			Page
1	105-9881	LIGHTING GP- (BOOM LH)	97
1	106-6749	BOOM GP	307
1	106-6750	LINES GP-GREASE	161
2	105-7335	CYLINDER GP-SEAL &	154
1	105-7361	CYLINDER GP-SEAL &	155
1	104-9167	LINES GP-BOOM CYLINDER	160
1	115-8729	LINES GP-BOOM	162

H41356

102-5319 R-BOOM AR-1 PIECE
An Attachment

BOOM. STICKS. LINKAGE AND BUCKETS

Consists of :

			Page
1	106-6751	STICK GP-HOE	309
1	104-9169	LINES GP-STICK	164

H41357E

102-5320 R3.1 STICK AR-HOE
An Attachment

BOOM, STICKS, LINKAGE AND BUCKETS

Consists of .

			Page
1	106-6753	STICK GP-HOE	310
1	104-9170	LINES GP-STICK	165

H41359

102-5321 R2.6 STICK AR-HOE
An Attachment

Consists of :

			Page
1	106-6754	STICK GP-HOE	311
1	104-9171	LINES GP-STICK	166

H41330

102-5322 R2.25 STICK AR-HOE
An Attachment

BOOM, STICKS, LINKAGE AND BUCKETS

Consists of :

			Page
1	111-0085	LINKAGE GP-BUCKET	313
1	105-7380	CYLINDER GP-SEAL &	156

H41589E

102-5346 LINKAGE AR-BUCKET
An Attachment

BOOM. STICKS. LINKAGE AND BUCKETS

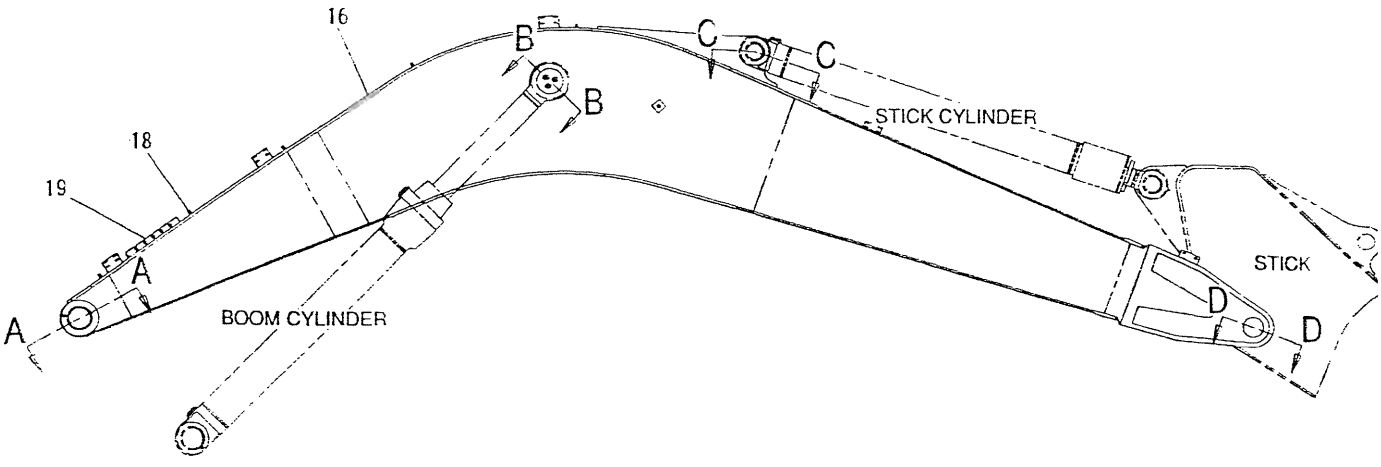

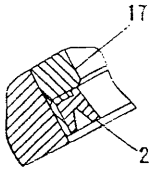

A – A

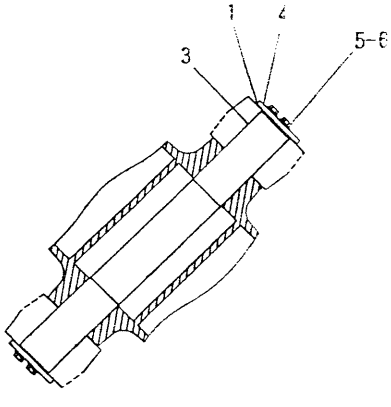

B – B

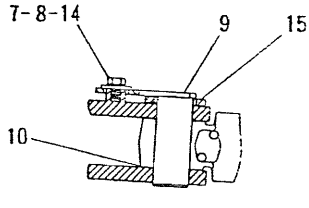

C – C

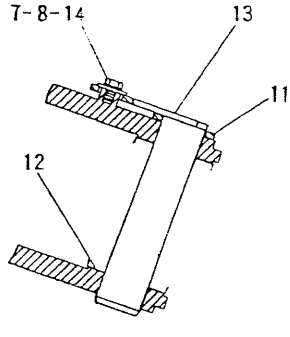

D – D

NOTE	No.	PART No.	QTY	PART NAME	NOTE	No.	PART No.	QTY	PART NAME
	1	4I-3309	2	SPACER		16	107-9730	1	BOOM AS
	2	7X-4803	2	SEAL		17	107-9741	2	BEARING
	3	107-9734	1	PIN		18	7Y-9477	15	STUD
	4	4I-3308	2	PLATE		19	7Y-2580	1	MANIFOLD
	5	8T-4956	6	BOLT (35mm LONG)					
	6	8T-4223	6	WASHER					
	7	8T-4780	2	BOLT (30mm LONG)					
	8	093-0349	2	WASHER (60mm OD)					
	9	4I-4811	1	PIN AS					
B	10	093-0086	2	SHIM (1.0mm THICK)					
B		093-0118	1	SHIM (2.0mm THICK)					
B		7Y-2496	1	SHIM (1.6mm THICK)					
	11	093-0366	1	SPACER					
B	12	093-0084	2	SHIM (1.0mm THICK)					
B		093-0116	1	SHIM (2.0mm THICK)					
B		7Y-2497	1	SHIM (1.6mm THICK)					
	13	107-9737	1	PIN AS					
	14	8T-4123	2	WASHER (35mm OD)					
	15	093-0369	1	SPACER					

"-" USE AS REQUIRED

H413541

106-6749 R-BOOM GP (B) 5100 MM (16.7 FT.)

Part of 102-5319 R-Boom Ar listed on Page 303
An Attachment

BOOM, STICKS, LINKAGE AND BUCKETS

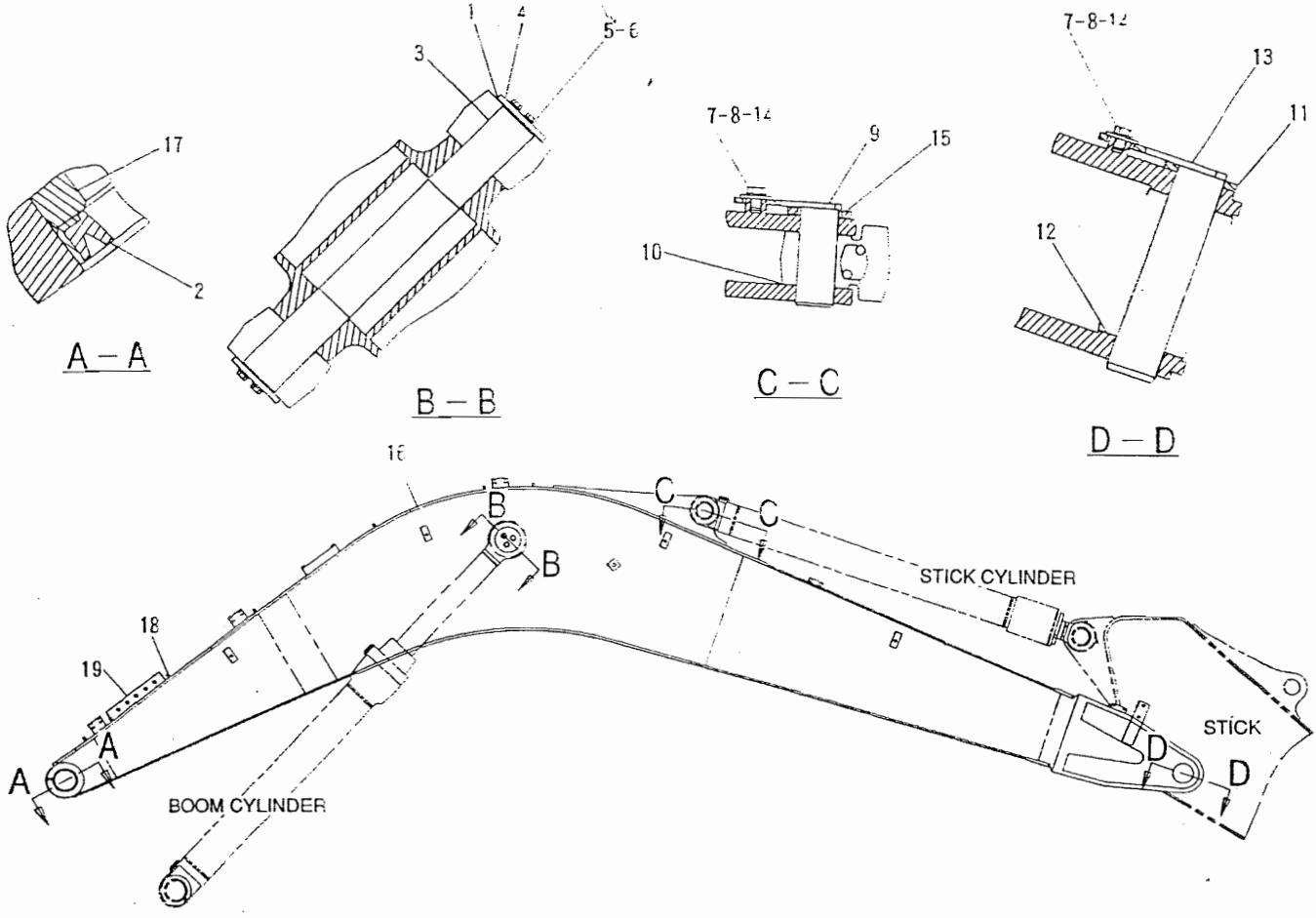

NOTE	No.	PART No.	QTY	PART NAME	NOTE	No.	PART No.	QTY	PART NAME
	1	4I-3309	2	SPACER		16	7I-8625	1	BOOM AS
	2	7X-4803	2	SEAL		17	107-9741	2	BEARING
	3	107-9734	1	PIN		18	7Y-9477	15	STUD
	4	4I-3308	2	PLATE		19	7Y-2580	1	MANIFOLD
	5	8T-4956	6	BOLT (35mm LONG)					
	6	8T-4223	6	WASHER					
	7	8T-4780	2	BOLT (30mm LONG)					
	8	093-0349	2	WASHER (60mm OD)					
	9	4I-4811	1	PIN AS					
B	10	093-0086	2	SHIM (1.0mm THICK)					
B		093-0118	1	SHIM (2.0mm THICK)					
B		7Y-2496	1	SHIM (1.6mm THICK)					
	11	093-0366	1	SPACER					
B	12	093-0084	2	SHIM (1.0mm THICK)					
B		093-0116	1	SHIM (2.0mm THICK)					
B		7Y-2497	1	SHIM (1.6mm THICK)					
	13	107-9737	1	PIN AS					
	14	8T-4123	2	WASHER (35mm OD)					
	15	093-0369	1	SPACER					

B-USE AS REQUIRED

H41402E

7I-8562 R-BOOM GP (D)

Part of 7I-8560 Lines Ar listed on Page 163

An Attachment

BOOM, STICKS, LINKAGE AND BUCKETS

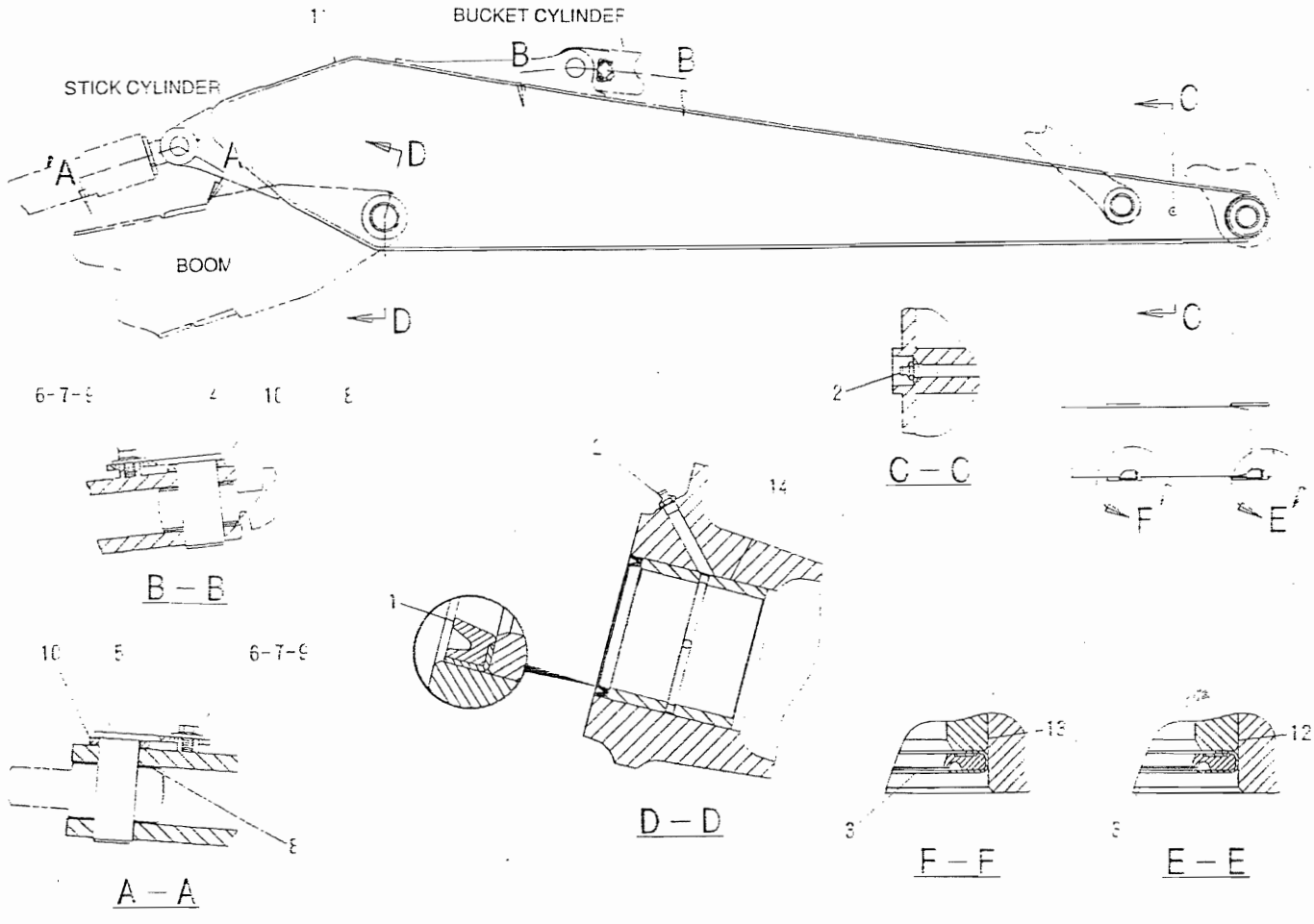

NOTE	No.	PART No.	QTY	PART NAME
	1	7X-4803	2	SEAL
	2	3E-8489	3	FITTING
	3	093-1434	4	SEAL
	4	107-9852	1	PIN AS
	5	41-4811	1	PIN AS
	6	8T-4780	2	BOLT (30mm LONG)
	7	093-0349	2	WASHER (60mm OD
B	8	093-0086	4	SHIM (1.0mm THICK
B		7Y-2496	2	SHIM (1.6mm THICK
B		093-0118	2	SHIM (2.0mm THICK
	9	8T-4123	2	WASHER (35mm OD
	10	093-0369	2	SPACER
	11	115-2675	1	STICK AS
	12	107-9845	2	BEARING
	13	7Y-2395	2	BEARING
	14	7Y-2396	2	BEARING

B-USE AS REQUIRED

H41358E

106-6751 R3.1 STICK GP-HOE (10.2 FT.)

Part of 102-5320 Stick Ar listed on Page 304
An Attachment

BOOM. STICKS. LINKAGE AND BUCKETS

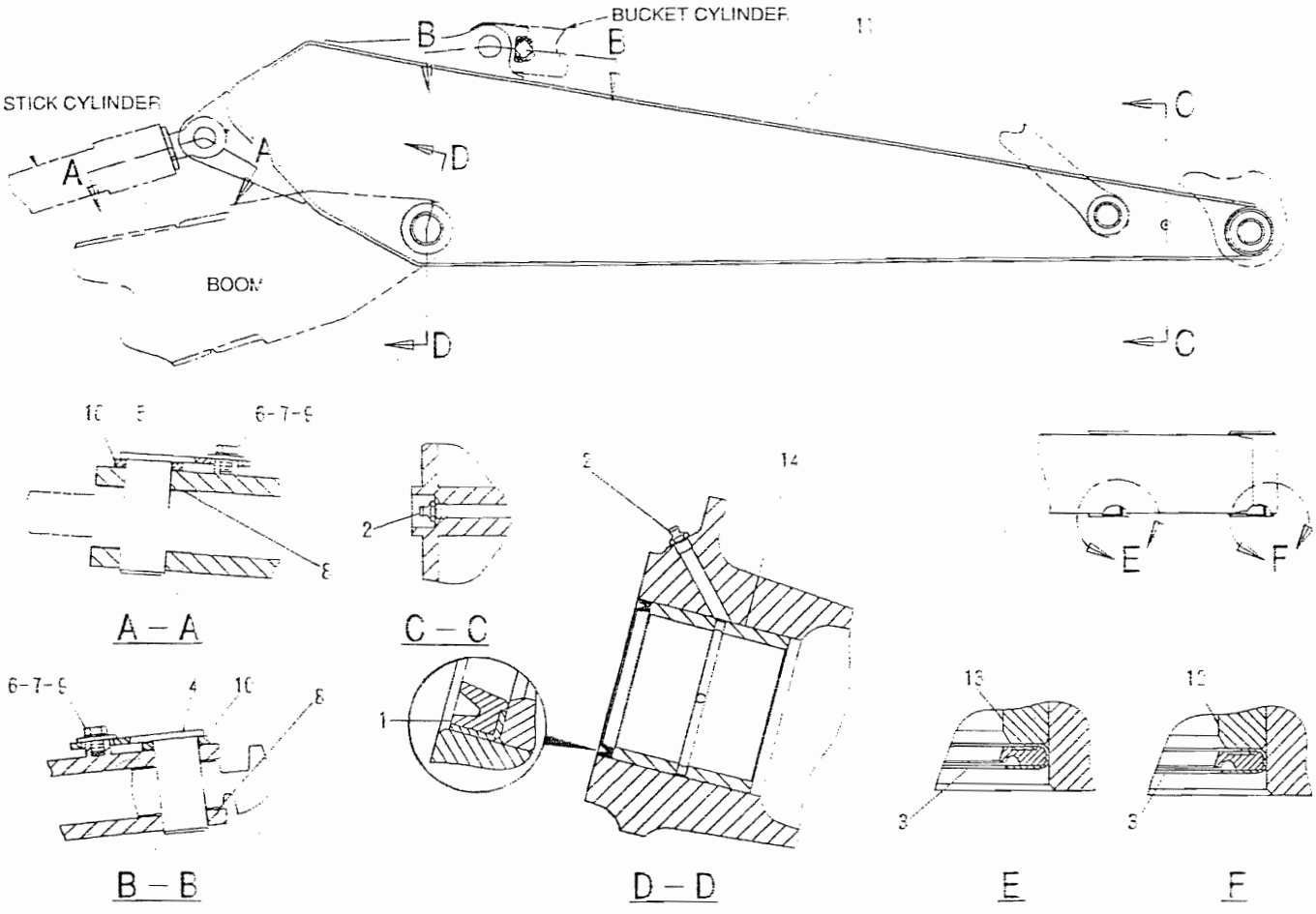

NOTE	No.	PART No.	QTY	PART NAME
	1	7X-4803	2	SEAL
	2	3B-8489	3	FITTING
	3	093-1434	4	SEAL
	4	107-9852	1	PIN AS
	5	41-4811	1	PIN AS
	6	8T-4780	2	BOLT (30mm LONG
	7	093-0349	2	WASHER (60mm OD
B	8	093-0086	4	SHIM (1.0mm THICK
B		7Y-2496	2	SHIM (1.6mm THICK
B		093-0118	2	SHIM (2.0mm THICK
	9	8T-4123	2	WASHER (35mm OD)
	10	093-0369	2	SPACER
	11	107-9844	1	STICK AS
	12	107-9845	2	BEARING
	13	7Y-2395	2	BEARING
	14	7Y-2396	2	BEARING

B-USE AS REQUIRED

H41361E

106-6753 R2.6 STICK GP-HOE (8.5 FT.)

Part of 102-5321 Stick Ar listed on Page 305

An Attachment

BOOM, STICKS, LINKAGE AND BUCKETS

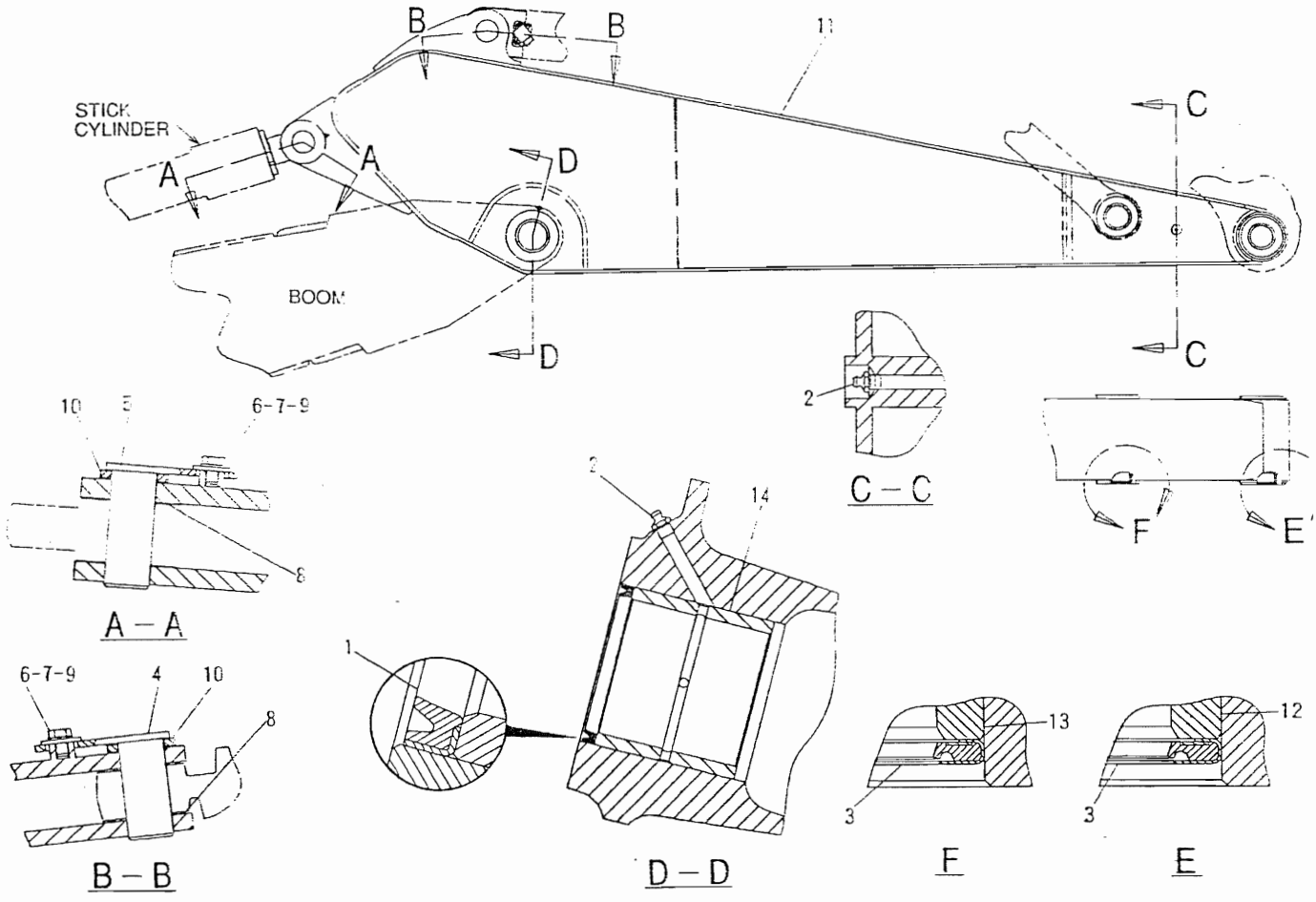

NOTE	No.	PART No.	QTY	PART NAME	NOTE	No.	PART No.	QTY	PART NAME
	1	7X-4803	2	SEAL					
	2	3B-8489	3	FITTING					
	3	093-1434	4	SEAL					
	4	107-9852	1	PIN AS					
	5	4I-4811	1	PIN AS					
	6	8T-4780	2	BOLT (30mm LONG)					
	7	093-0349	2	WASHER					
B	8	093-0086	4	SHIM (1.0mm THICK)					
B		7Y-2496	2	SHIM (1.6mm THICK)					
B		093-0118	2	SHIM (2.0mm THICK)					
	9	8T-4123	2	WASHER (35mm OD)					
	10	093-0369	2	SPACER					
	11	117-5391	1	STICK AS					
	12	107-9845	2	BEARING					
	13	7Y-2395	2	BEARING					
	14	7Y-2396	2	BEARING					

B-USE AS REQUIRED

H41489

106-6754 R2.25 STICK GP-HOE (7.4 FT.)

Part of 102-5322 Stick Ar listed on Page 305
An Attachment

BOOM, STICKS, LINKAGE AND BUCKETS

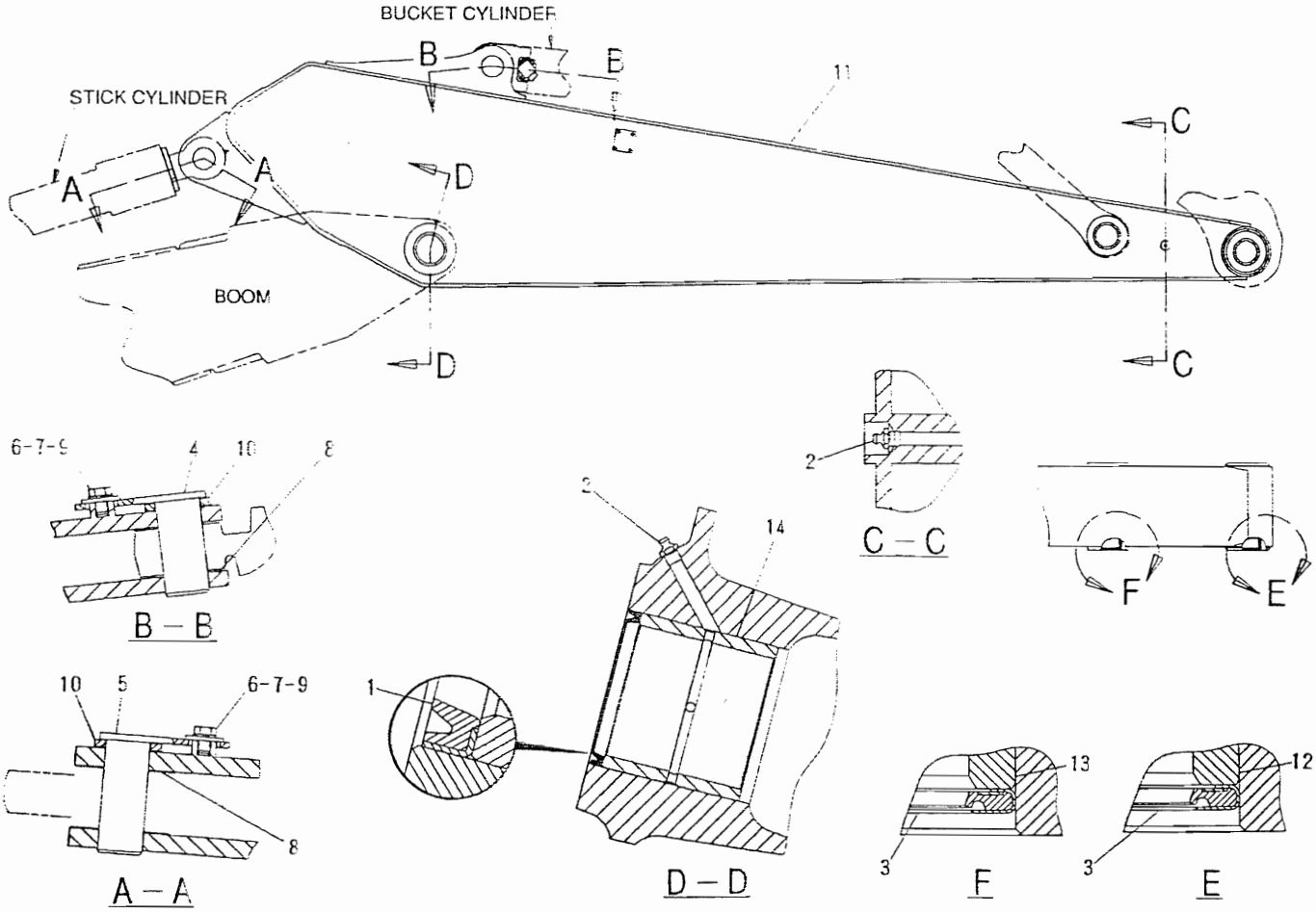

NOTE	No.	PART No.	QTY	PART NAME	NOTE	No.	PART No.	QTY	PART NAME
	1	7X-4803	2	SEAL					
	2	3B-8489	3	FITTING					
	3	093-1434	4	SEAL					
	4	107-9852	1	PIN AS					
	5	4I-4811	1	PIN AS					
	6	8T-4780	2	BOLT (30mm LONG)					
	7	093-0349	2	WASHER (60mm OD					
B	8	093-0086	4	SHIM (1.0mm THICK					
B		7Y-2496	2	SHIM (1.6mm THICK)					
B		093-0118	2	SHIM (2.0mm THICK)					
	9	8T-4123	2	WASHER (35mm OD					
	10	093-0369	2	SPACER					
	11	7I-8605	1	STICK AS					
	12	107-9845	2	BEARING					
	13	7Y-2395	2	BEARING					
	14	7Y-2396	2	BEARING					

B-USE AS REQUIRED

H41403

7I-8568 R2.6 STICK GP (AUXILIARY) (8.5 FT.)

Part of 7I-8566 Lines Ar listed on Page 167

An Attachment

BOOM. STICKS. LINKAGE AND BUCKETS

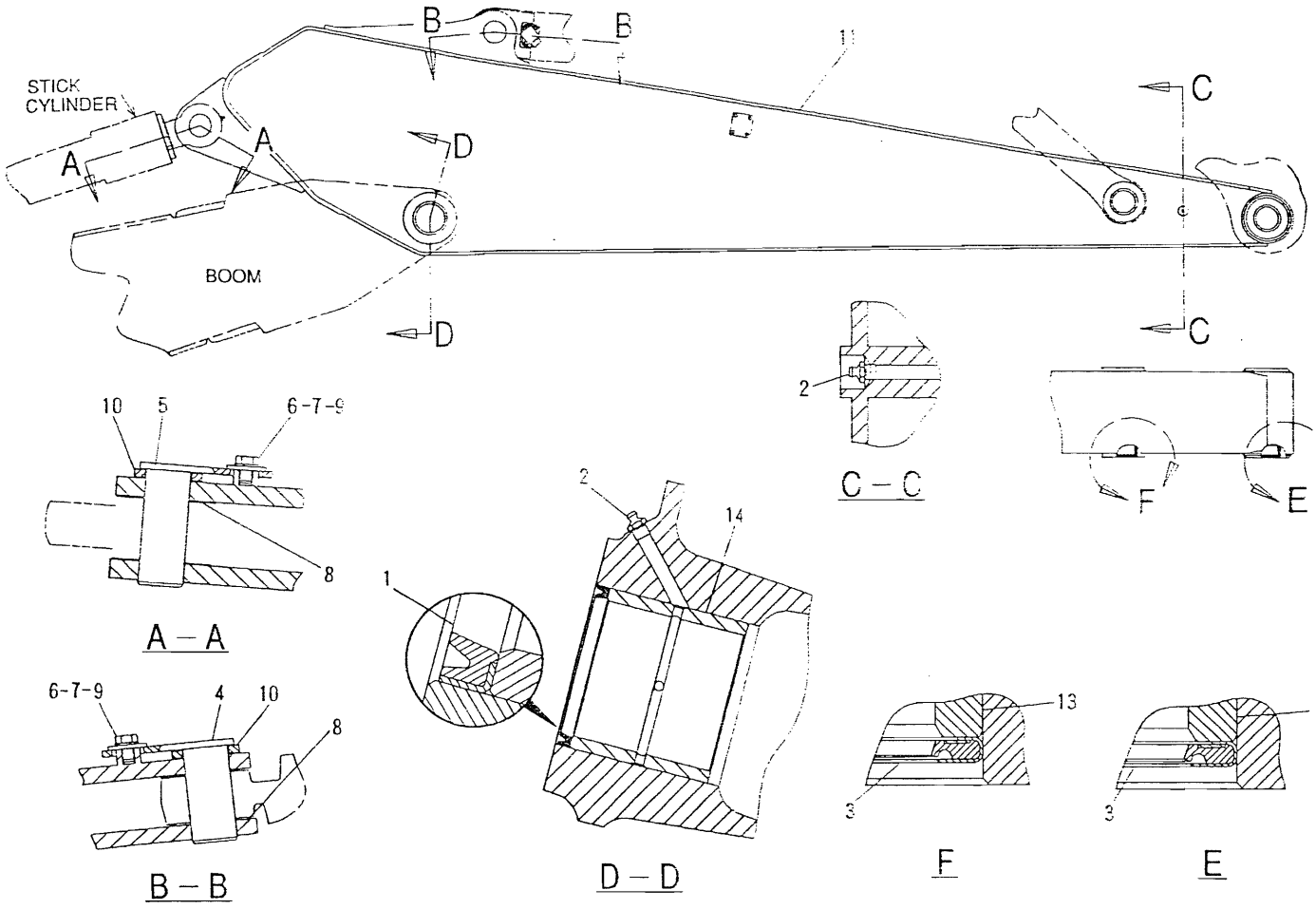

NOTE	No.	PART No.	QTY	PART NAME	NOTE	No.	PART No.	QTY	PART NAME
	1	7X-4803	2	SEAL					
	2	3B-8489	3	FITTING					
	3	093-1434	4	SEAL					
	4	107-9852	1	PIN AS					
	5	41-4811	1	PIN AS					
	6	8T-4780	2	BOLT (30㎜ LONG)					
	7	093-0349	2	WASHER (60㎜ OD)					
B	8	093-0086	4	SHIM (1.0㎜ THICK)					
B		7Y-2496	2	SHIM (1.6㎜ THICK)					
B		093-0118	2	SHIM (2.0㎜ THICK)					
	9	8T-4123	2	WASHER (35㎜ OD)					
	10	093-0369	2	SPACER					
	11	7I-8605	1	STICK AS					
	12	107-9845	2	BEARING					
	13	7Y-2395	2	BEARING					
	14	7Y-2396	2	BEARING					

B-USE AS REQUIRED

H414901

7I-8571 R2.25 STICK GP (AUXILIARY) (7.4 FT.)

Part of 7I-8569 Lines Ar listed on Page 167
An Attachment

MEMORANDA

4YM00356

BOOM, STICKS, LINKAGE AND BUCKETS

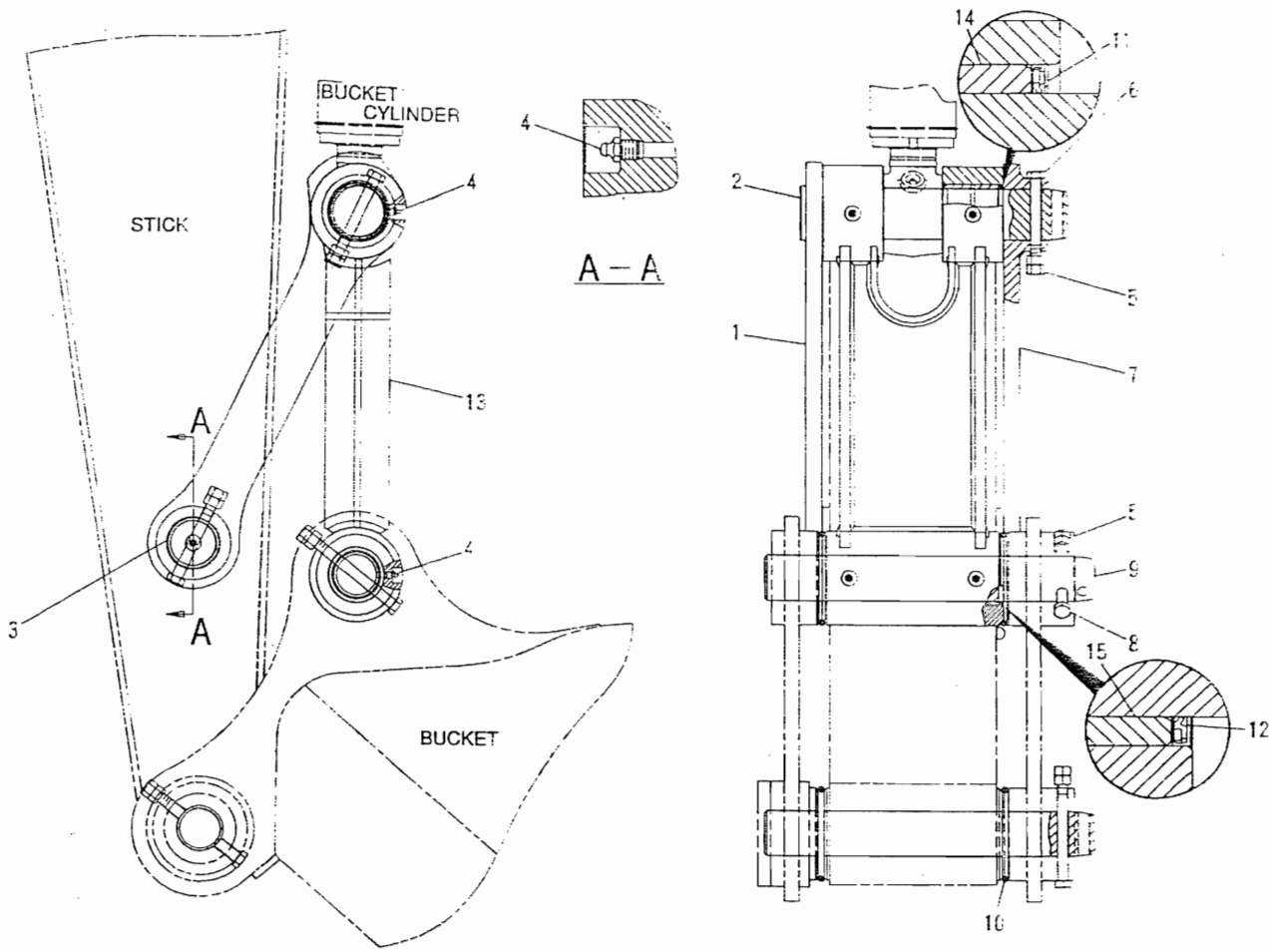

NOTE	No.	PART No.	QTY	PART NAME	NOTE	No.	PART No.	QTY	PART NAME
	1	087-5802	1	LINK					
	2	106-6876	1	PIN					
	3	106-6877	1	PIN					
	4	3B-8489	5	FITTING					
	5	8T-4132	8	NUT					
	6	7X-2558	2	BOLT (150mm LONG)					
	7	087-5803	1	LINK AS					
	8	8T-6385	2	BOLT (180mm LONG)					
	9	106-6878	2	PIN					
	10	107-9976	4	SEAL					
	11	096-0854	4	SEAL					
	12	093-1434	2	SEAL					
	13	117-5506	1	LINK AS					
	14	41-0453	2	BEARING					
	15	106-6872	2	BEARING					

H41590

111-0085 LINKAGE GP-BUCKET

Part of 102-5346 Linkage Ar listed on Page 306

An Attachment

BOOM, STICKS, LINKAGE AND BUCKETS

Consists of :

			Page
1	106-6757	ADJUSTER GP-BUCKET	320
1	106-6767	BUCKET AS	317

H41483E

106-6766 BUCKET GP-ADJUSTER & (1220 X-0.74)
An Attachment

BOOM, STICKS, LINKAGE AND BUCKETS

Consists of :

			Page
1	106-6757	ADJUSTER GP-BUCKET	320
1	106-6765	BUCKET AS	318

H41485

106-6764 BUCKET GP-ADJUSTER & (1070 X-0.63)
An Attachment

Consists of :

			Page
1	106-6757	ADJUSTER GP-BUCKET	320
1	115-2758	BUCKET AS	318

H41460E

106-6768 BUCKET GP-ADJUSTER & (930 X-0.52)
An Attachment

BOOM, STICKS, LINKAGE AND BUCKETS

Consists of :

			Page
1	106-6761	BUCKET AS	319
1	106-6757	ADJUSTER GP-BUCKET	320

H41479E

106-6760 BUCKET GP-ADJUSTER & (760 X-0.39)
An Attachment

Consists of :

			Page
1	106-6757	ADJUSTER GP-BUCKET	320
1	106-6759	BUCKET AS	319

H41481E

106-6758 BUCKET GP-ADJUSTER & (610 X-0.28)
An Attachment

X

BOOM. STICKS. LINKAGE AND BUCKETS

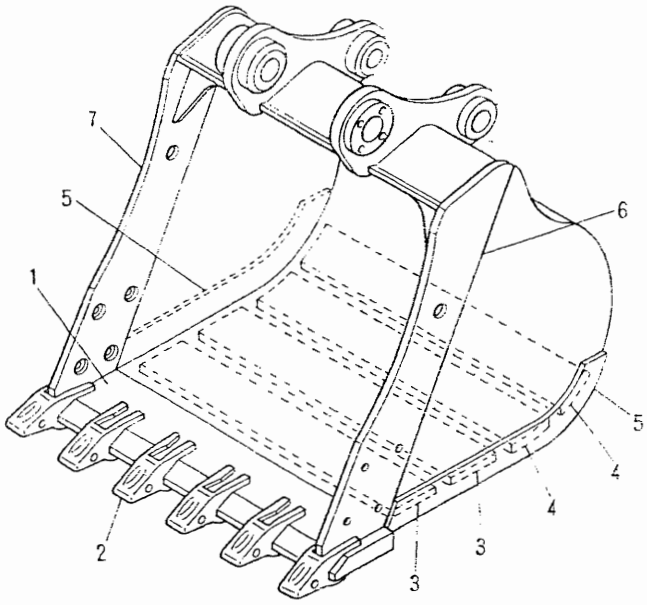

NOTE	No.	PART No.	QTY	PART NAME
	1	117-5386	1	EDGE AS
	2	8E-9490	6	ADAPTER
	3	117-5388	2	PLATE
	4	117-5389	2	PLATE
	5	107-9790	2	PLATE
	6	115-2766	1	PLATE
	7	115-2764	1	PLATE

H41484

106-6767 BUCKET AS-EXCAVATION

1220 MM (48.0 In.) Wide – 0.74 Cu.M.(0.97 Cu.Yd.) - Adapter Size J300
Part of 106-6766 Bucket listed on Page 314
An Attachment

BOOM, STICKS, LINKAGE AND BUCKETS

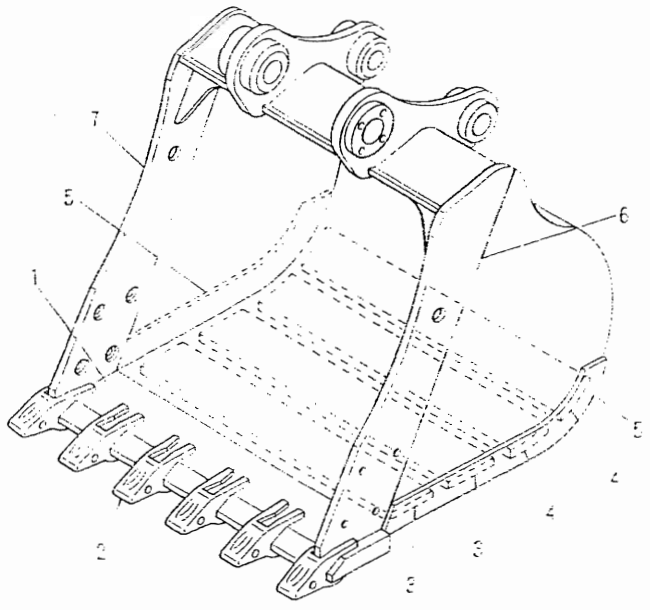

NOTE	No.	PART No.	QTY	PART NAME
	1	117-5377	1	EDGE AS
	2	8E-9490	6	ADAPTER
	3	117-5380	2	PLATE
	4	117-5379	2	PLATE
	5	107-9790	2	PLATE
	6	115-2766	1	PLATE
	7	115-2764	1	PLATE

H41486E

106-6765 BUCKET AS-EXCAVATION

1070 MM (42.1 In.) Wide – 0.63 Cu.M.(0.82 Cu.Yd.) - Adapter Size J300
Part of 106-6764 Bucket listed on Page 315
An Attachment

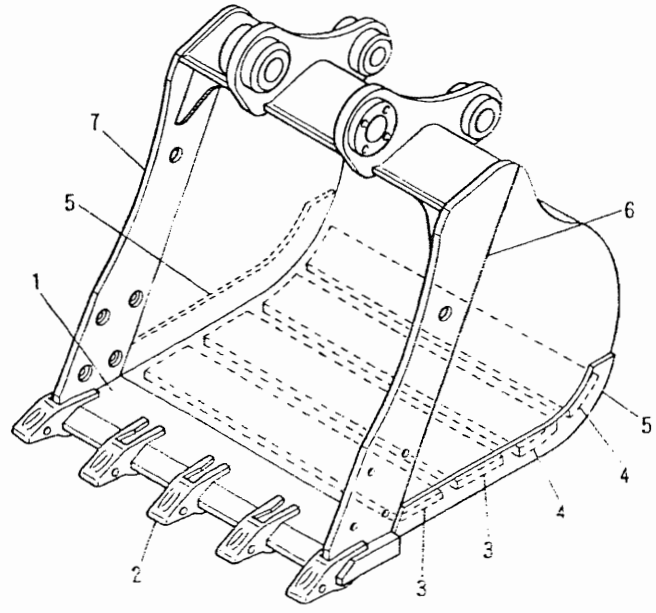

NOTE	No.	PART No.	QTY	PART NAME
	1	115-2767	1	EDGE AS
	2	8E-9490	5	ADAPTER
	3	115-2773	2	PLATE
	4	115-2774	2	PLATE
	5	107-9790	2	PLATE
	6	115-2766	1	PLATE
	7	115-2764	1	PLATE

H41462E

115-2758 BUCKET AS-EXCAVATION

930 MM (36.6 In.) Wide – 0.52 Cu.M.(0.68 Cu.Yd.) - Adapter Size J300
Part of 106-6768 Bucket listed on Page 315
An Attachment

BOOM, STICKS, LINKAGE AND BUCKETS

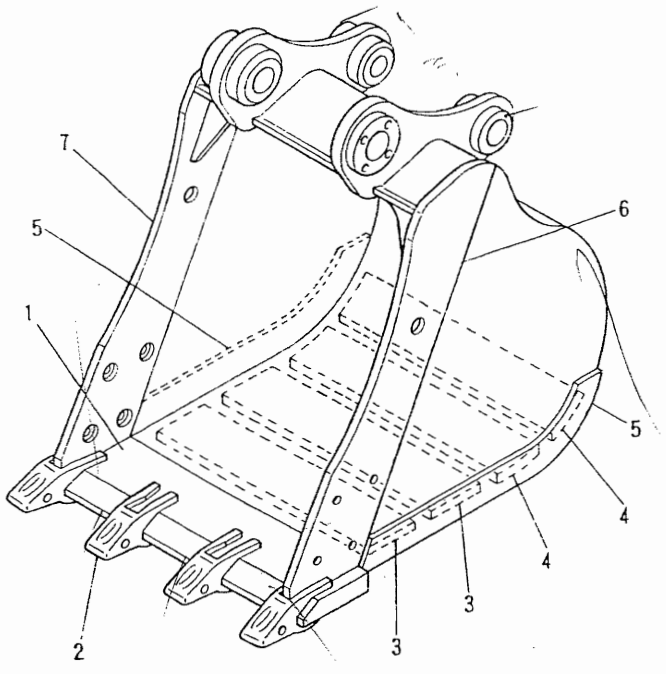

NOTE	No.	PART No.	QTY	PART NAME
	1	115-2901	1	EDGE AS
	2	8E-9490	4	ADAPTER
	3	115-2906	2	PLATE
	4	115-2905	2	PLATE
	5	107-9790	2	PLATE
	6	115-2766	1	PLATE
	7	115-2764	1	PLATE

H41480E

106-6761 BUCKET AS-EXCAVATION

760 MM (29.9 In.) Wide – 0.39 Cu.M.(0.51 Cu.Yd.) - Adapter Size J300
Part of 106-6760 Bucket listed on Page 316
An Attachment

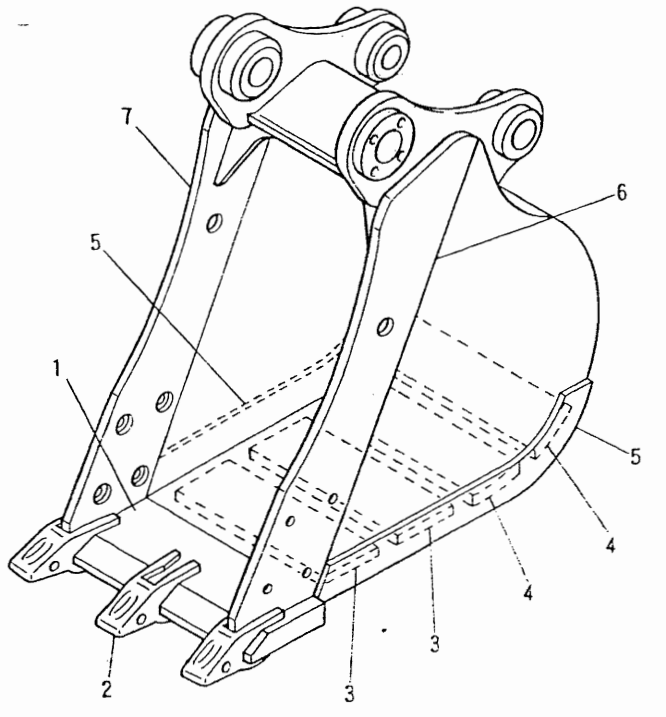

NOTE	No.	PART No.	QTY	PART NAME
	1	115-2891	1	EDGE AS
	2	8E-9490	3	ADAPTER
	3	115-2893	2	PLATE
	4	115-2890	2	PLATE
	5	107-9790	2	PLATE
	6	115-2766	1	PLATE
	7	115-2764	1	PLATE

H41482E

106-6759 BUCKET AS-EXCAVATION

610 MM (24.0 In.) Wide – 0.28 Cu.M.(0.37 Cu.Yd.) - Adapter Size J300
art of 106-6758 Bucket listed on Page 316
An Attachment

BOOM, STICKS, LINKAGE AND BUCKETS

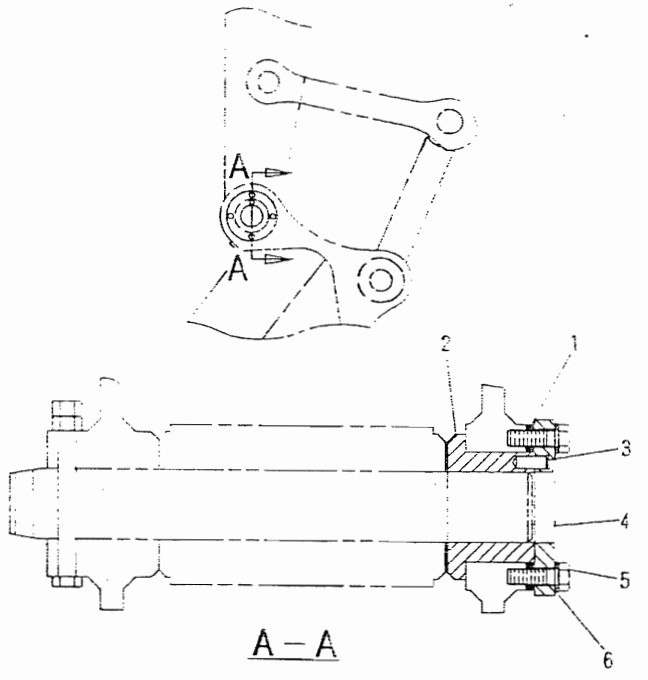

NOTE	No.	PART No.	QTY	PART NAME
B	1	107-9965	6	SHIM (1.0mm THICK)
B		107-9966	4	SHIM (0.5mm THICK)
	2	107-9968	1	FLANGE
	3	7Y-7685	1	PIN
	4	107-9967	1	PLATE
	5	8T-4193	4	BOLT (50mm LONG)
	6	9X-8257	4	WASHER

B-USE AS REQUIRED

H41396E

106-6757 ADJUSTER GP-BUCKET

Part of 106-6766, 106-6764, 106-6768, 106-6760, 106-6758 Bucket listed on Pages 314, 315 and 316

An Attachment

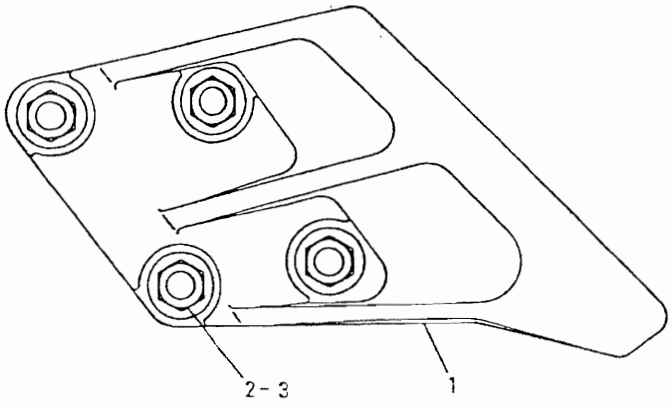

NOTE	No.	PART No.	QTY	PART NAME
	1	096-4747	1	SIDECUTTER (LH)
		096-4748	1	SIDECUTTER (RH)
	2	8T-0380	8	BOLT (60mm LONG)
	3	7X-0851	8	NUT

H30094E

7Y-0729 SIDECUTTER GP (B FAMILY)

An Attachment

BOOM, STICKS, LINKAGE AND BUCKETS

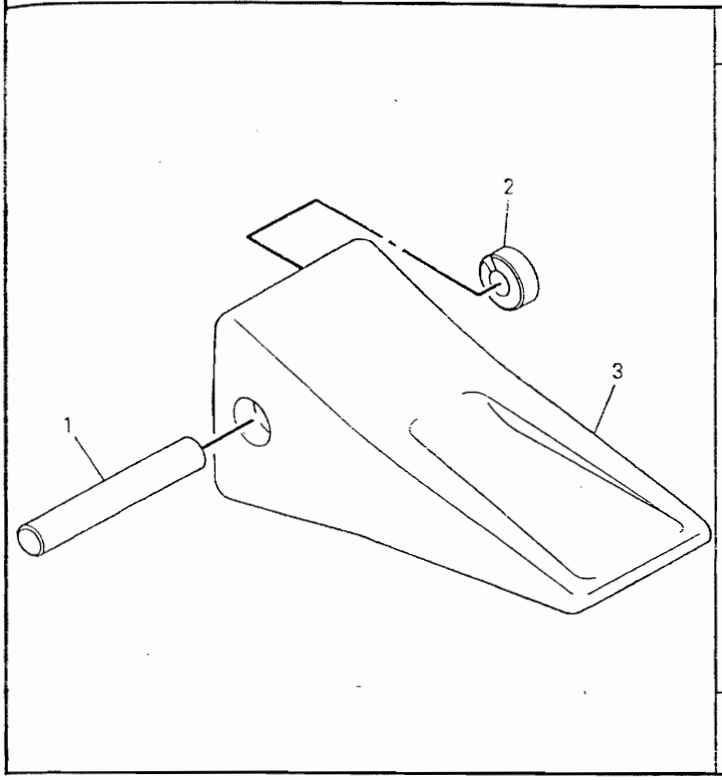

NOTE	No.	PART No.	QTY	PART NAME
	1	9J-2308	1	PIN
	2	8E-6259	1	RETAINER AS
	3	1U-3302	1	TIP

H41397

9J-3167 TIP GP-LONG

Adaper Size J300

An Attachment

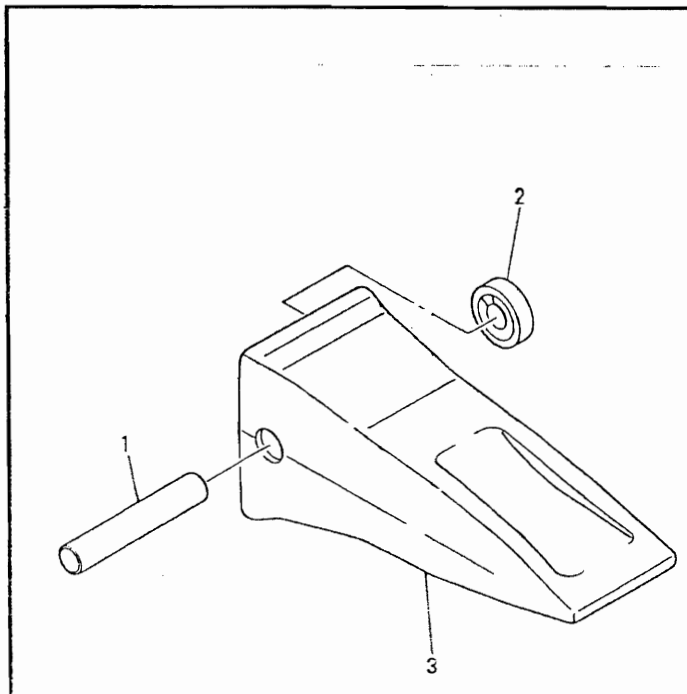

NOTE	No.	PART No.	QTY	PART NAME
	1	9J-2308	1	PIN
	2	8E-6259	1	RETAINER AS
	3	9N-4302	1	TIP

H312701

8E-3751 TIP GP-LONG, HEAVY DUTY

Adaper Size J300

An Attachment

BOOM, STICKS, LINKAGE AND BUCKETS

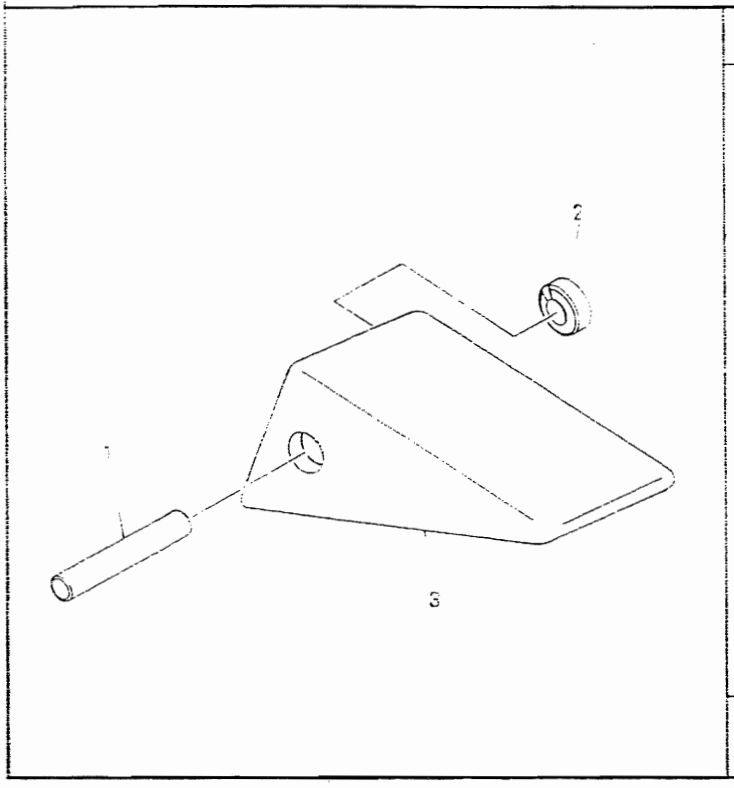

NOTE	No.	PART No.	QTY	PART NAME
	1	9J-2308	1	PIN
	2	8E-6259	1	RETAINER AS
	3	1U-3301	1	TIP

H33684E

9J-3175 TIP GP-SHORT

Adaper Size J300
An Attachment

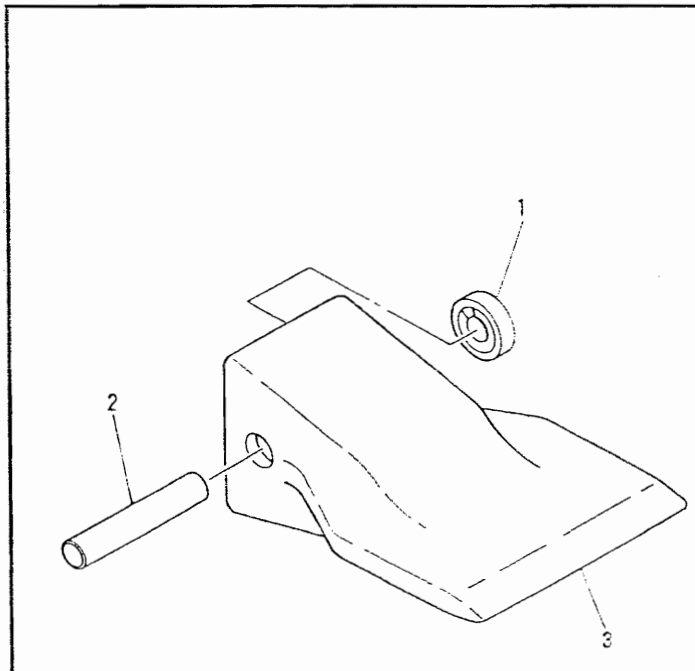

NOTE	No.	PART No.	QTY	PART NAME
	1	8E-6259	1	RETAINER AS
	2	9J-2308	1	PIN
	3	1U-3301	1	TIP

H31084E

4T-2215 TIP GP-WIDE

Adaper Size J300
An Attachment

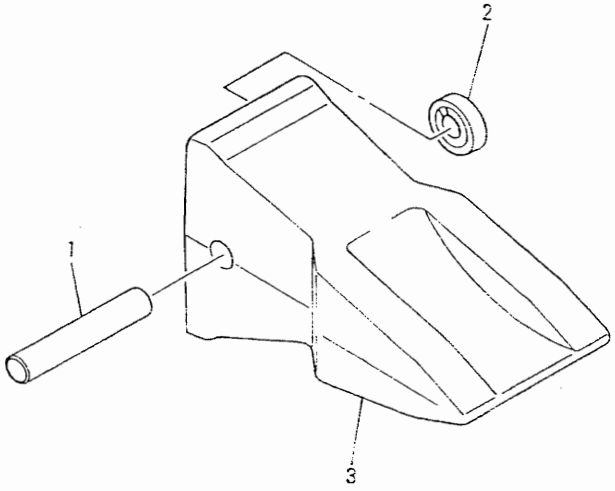

NOTE	No.	PART No.	QTY	PART NAME
	1	9J-2308	1	PIN
	2	8E-6259	1	RETAINER AS
	3	9N-4303	1	TIP

H31272

8E-3756 TIP GP-ABRASION, HEAVY DUTY

Adaper Size J300
An Attachment

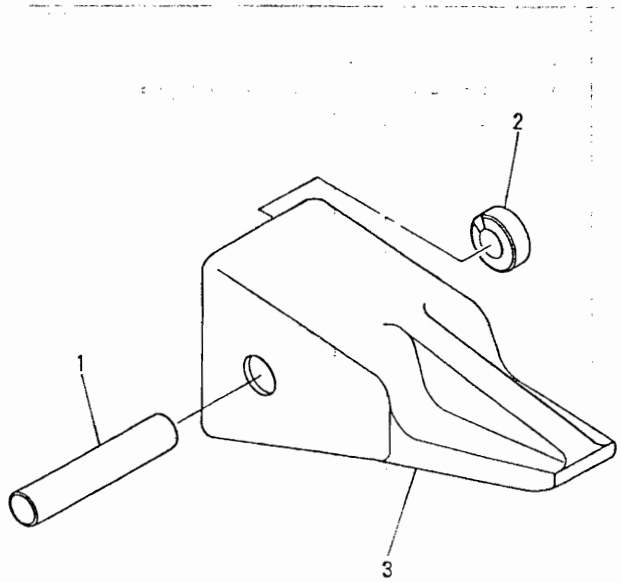

NOTE	No.	PART No.	QTY	PART NAME
	1	9J-2308	1	PIN
	2	8E-6259	1	RETAINER AS
	3	9J-4309	1	TIP

H33447E

3G-3237 TIP GP-PENETRATION

Adaper Size J300
An Attachment

BOOM, STICKS, LINKAGE AND BUCKETS

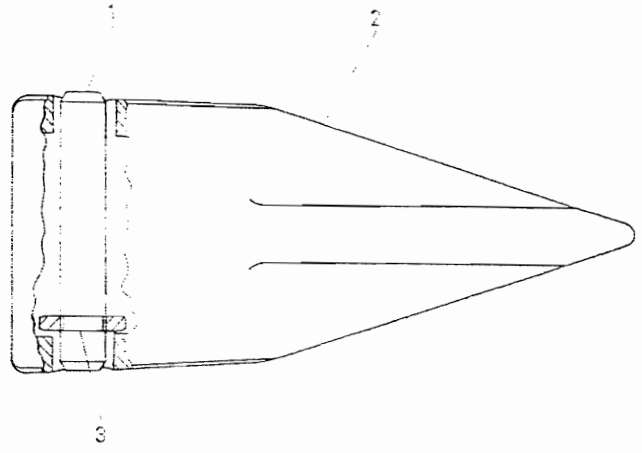

TOP VIEW

NOTE	No.	PART No.	QTY	PART NAME
	1	9J-2308	1	PIN
	2	9W-8309	1	TIP
	3	8E-6259	1	RETAINER AS

H31286E

9W-9188 TIP GP-SHARP CENTER

Adaper Size J300
An Attachment

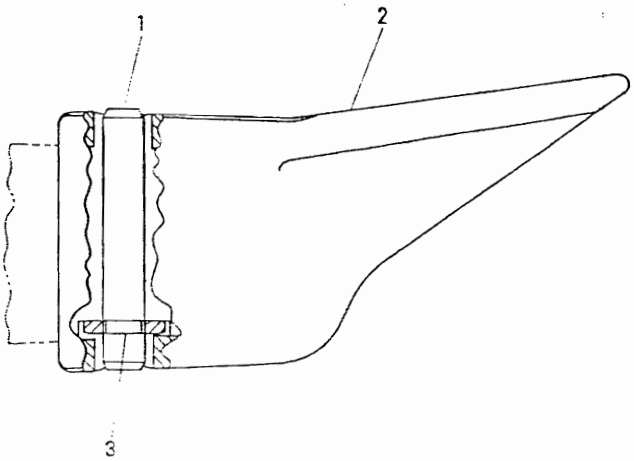

TOP VIEW

NOTE	No.	PART No.	QTY	PART NAME
	1	9J-2308	1	PIN
	2	9W-8308	1	TIP
	3	8E-6259	1	RETAINER AS

H31287E

9W-9189 TIP GP-SHARP CORNER

Adaper Size J300
An Attachment

SERVICE EQUIPMENT AND SUPPLIES

Consists of :

Page

1 118-2991 MOUNTING GP-ATTACHMENT 325

1 102-5495 TOOL GP 326

H41625

102-5491 TOOL AR
An Attachment

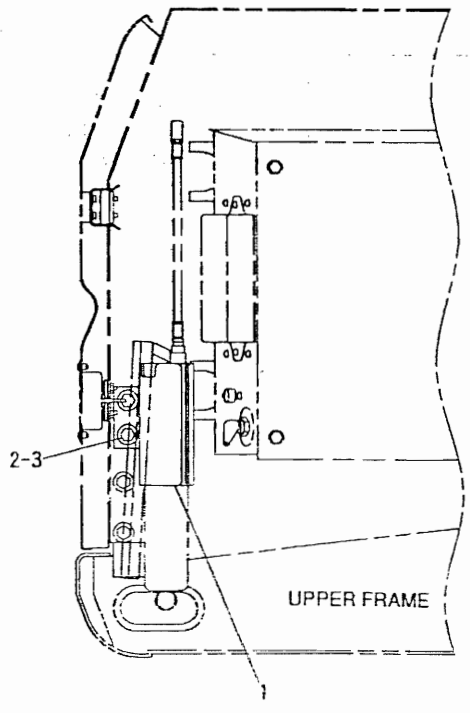

NOTE	No.	PART No.	QTY	PART NAME
	1	118-2992	1	BRACKET AS
	2	8T-4192	2	BOLT (25mm LONG)
	3	5P-1076	2	WASHER

H41624

118-2991 MOUNTING GP-ATTACHMENT
Part of 102-5491 Tool Ar listed on Page 325
An Attachment

SERVICE EQUIPMENT AND SUPPLIES

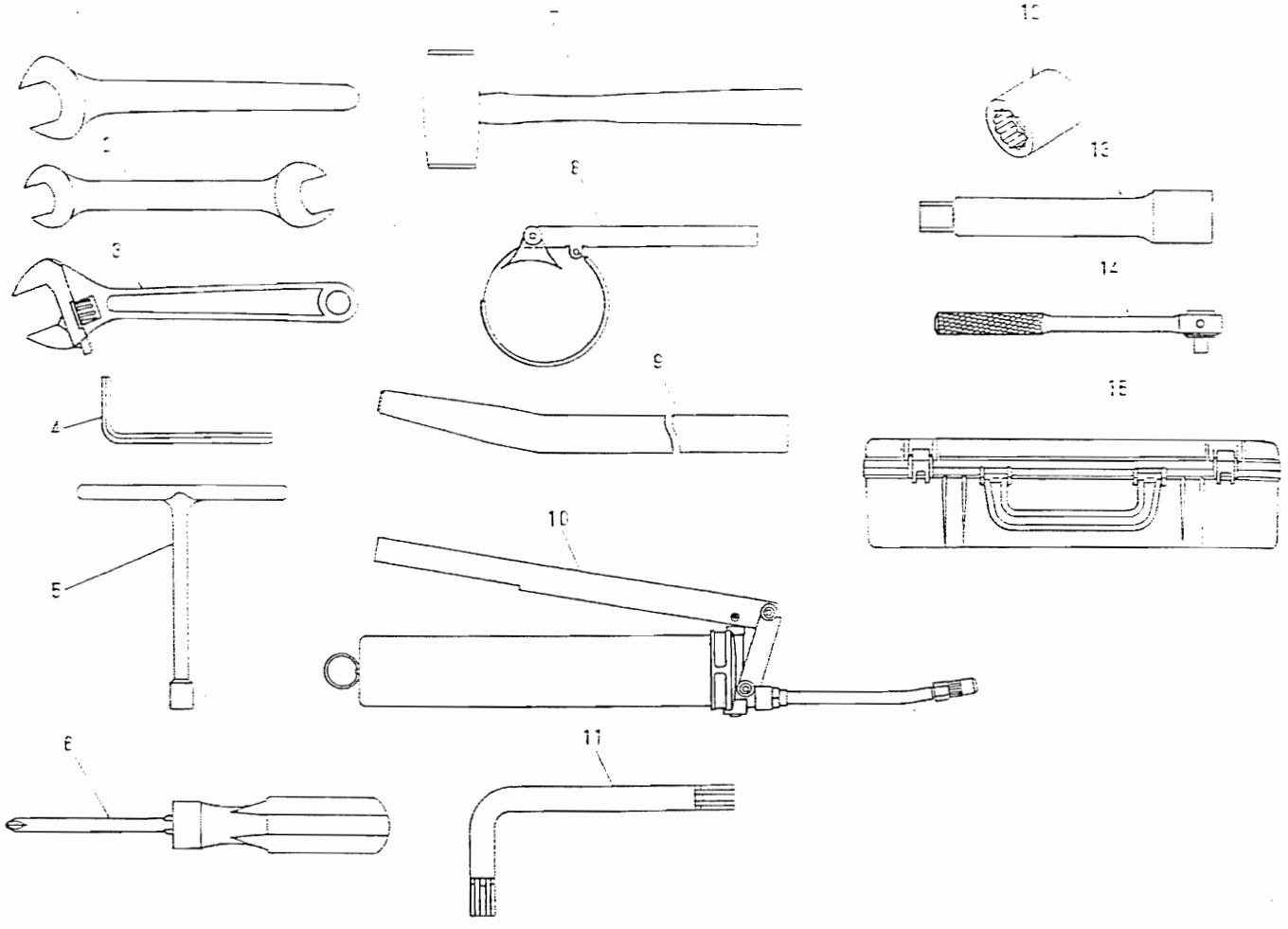

NOTE	No.	PART No.	QTY	PART NAME
	1	099-6966	1	WRENCH (32mm)
		095-1056	1	WRENCH (36mm)
		095-1057	1	WRENCH (41mm)
	2	099-3245	1	WRENCH (16×18mm)
		095-1833	1	WRENCH (19×22mm)
		099-3246	1	WRENCH (21×24mm)
		095-1836	1	WRENCH (27×30mm)
	3	7I-6395	1	WRENCH (200mm)
	4	095-1078	1	WRENCH (4mm)
		095-1079	1	WRENCH (5mm)
		095-1080	1	WRENCH (6mm)
		095-1081	1	WRENCH (8mm)
		095-1082	1	WRENCH (10mm)
		095-1084	1	WRENCH (14mm)
	5	7Y-6108	1	WRENCH (11mm)
	6	095-1855	1	DRIVER
	7	095-1857	1	HAMMER
	8	099-3659	1	WRENCH
	9	093-7638	1	BAR
	10	099-7464	1	GUN

NOTE	No.	PART No.	QTY	PART NAME
A		4Y-0426	1	GREACE (BELLOWS)
A		3Y-7597	1	GREACE (FOR WINTER TIME)
A		1P-0808	1	GREACE (PAPER TUBE)
	11	41-2604	1	WRENCH (6mm)
		41-2605	1	WRENCH (10mm)
	12	095-1064	1	SOCKET (10mm)
		095-1066	1	SOCKET (13mm)
		099-3248	1	SOCKET (16mm)
		095-1068	1	SOCKET (17mm)
		099-3249	1	SOCKET (18mm)
		095-1070	1	SOCKET (22mm)
		095-1071	1	SOCKET (24mm)
		096-8251	1	SOCKET (30mm)
	13	099-3250	1	EXTENSION
	14	095-1852	1	RATCHET
	15	7Y-0070	1	BOX

A-NOT PART OF THIS GROUP

H41386E

102-5495 TOOL GP

Part of 102-5491 Tool Ar listed on Page 325

An Attachment

SERVICE EQUIPMENT AND SUPPLIES

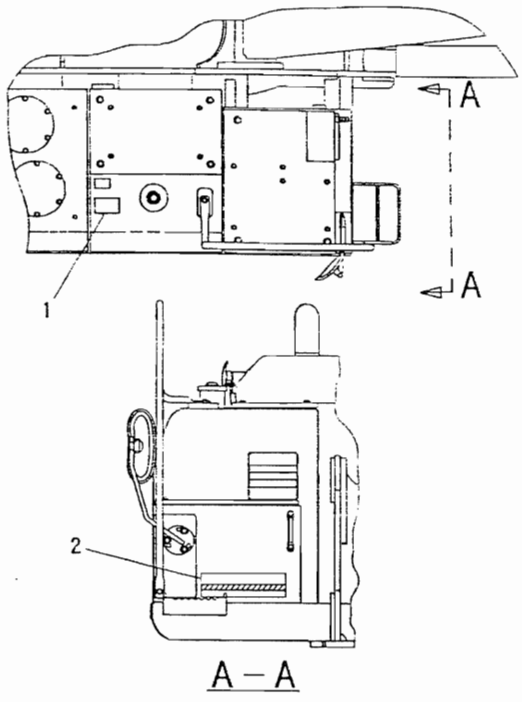

NOTE	No.	PART No.	QTY	PART NAME
	1	104-4885	1	FILM (INSTRUCTION)
	2	102-5402	1	FILM (STRIPE)

H416401

109-1835 FILM GP

Part of 116-8263 Tank Ar listed on Page 55.01

An Attachment

SERVICE EQUIPMENT AND SUPPLIES

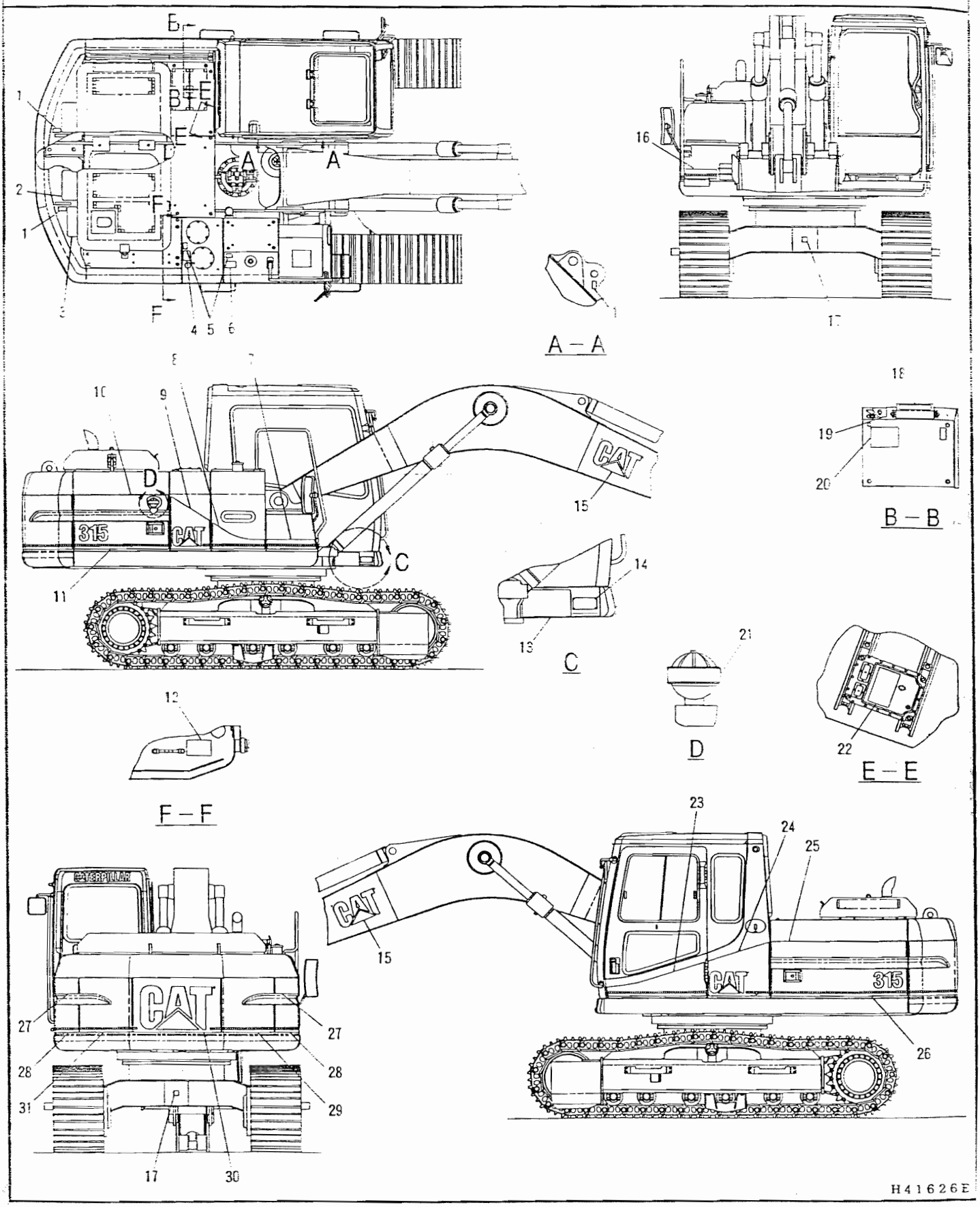

H41626E

102-5421 LUBRICANT GP-PAINT & (A)-PART 1 OF 2

S/N 4YM1 – Up

SERVICE EQUIPMENT AND SUPPLIES

NOTE	No.	PART No.	QTY	PART NAME	NOTE	No.	PART No.	QTY	PART NAME
	1	1P-2807	4	FILM(SYMBOL)					
	2	093-2237	1	TREAD					
	3	093-2238	2	TREAD					
	4	7Y-0013	1	FILM(WARNING					
	5	7Y-0012	2	FILM(WARNING)					
	6	7I-0611	1	FILM(INSTRUCTION)					
	7	102-4886	1	FILM(STRIPE					
	8	109-1814	1	FILM(STRIPE					
	9	109-1813	1	FILM(CAT)					
	10	109-1809	1	FILM(STRIPE					
	11	109-1810	1	FILM(315)					
	12	7Y-0014	1	FILM(INSTRUCTION)					
	13	109-1804	1	FILM(NOTICE					
	14	4B-4158	4	SCREW					
	15	086-1199	2	FILM(CAT					
	16	109-1815	1	FILM(STRIPE)					
	17	7X-7644	2	FILM(TIE DOWN)					
	18	7I-0678	1	FILM(INSTRUCTION)					
	19	4I-2927	1	FILM(CIRCUIT BREAKER)					
	20	6V-4611	1	FILM(WARNING)					
	21	7Y-0066	1	FILM(WARNING)					
	22	7Y-6187	1	FILM(NOTICE)					
	23	102-4822	1	FILM(STRIPE)					
	24	102-4823	1	FILM(CAT)					
	25	109-1805	1	FILM(STRIPE)					
	26	109-1806	1	FILM(315)					
	27	7I-6271	2	FILM(STRIPE)					
	28	102-5395	2	FILM(STRIPE)					
	29	102-5397	1	FILM(STRIPE)					
	30	102-4831	1	FILM(CAT)					
	31	102-5396	1	FILM(STRIPE)					

102-5421 LUBRICANT GP-PAINT & (A)-PART 1 OF 2

S/N 4YM1 – Up

SERVICE EQUIPMENT AND SUPPLIES

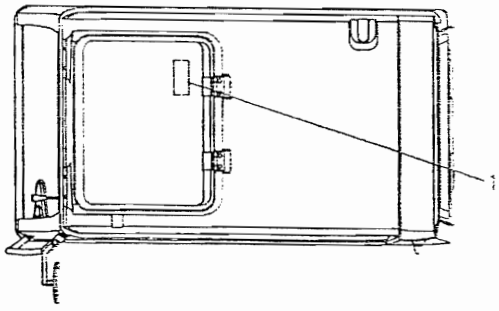

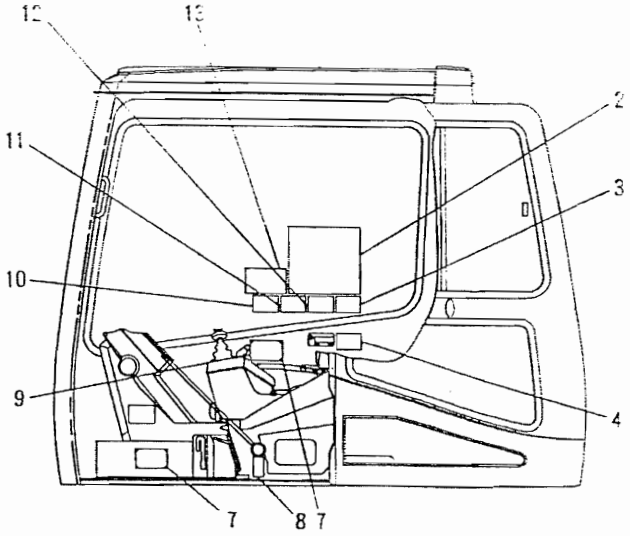

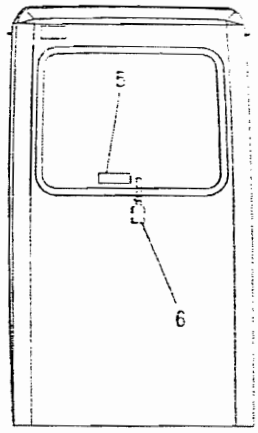

NOTE	No.	PART No.	QTY	PART NAME	NOTE	No.	PART No.	QTY	PART NAME
	1	8T-1915	1	FILM (NOTICE)					
	2	109-1799	1	FILM (LIFTING CAP)					
	3	1R-6245	1	FILM (WARNING)					
	4	4I-8088	1	FILM (NOTICE)					
	5	8T-6843	1	FILM (EMERGENCY EXIT)					
	6	8T-6842	1	FILM (INSTRUCTION)					
	7	4B-4158	8	SCREW					
	8	4I-8089	1	LABEL (LEVER LOCK)					
	9	7Y-0001	1	FILM (WARNING)					
	10	7I-0624	1	FILM (WARNING)					
	11	7Y-0003	1	FILM (WARNING)					
	12	7Y-0005	1	FILM (WARNING)					
	13	4I-8472	1	FILM (INSTRUCTION)					

H41634E

102-5421 LUBRICANT GP-PAINT & (A)-PART 2 OF 2

S/N 4YM1 – Up

MEMORANDA

SERVICE EQUIPMENT AND SUPPLIES

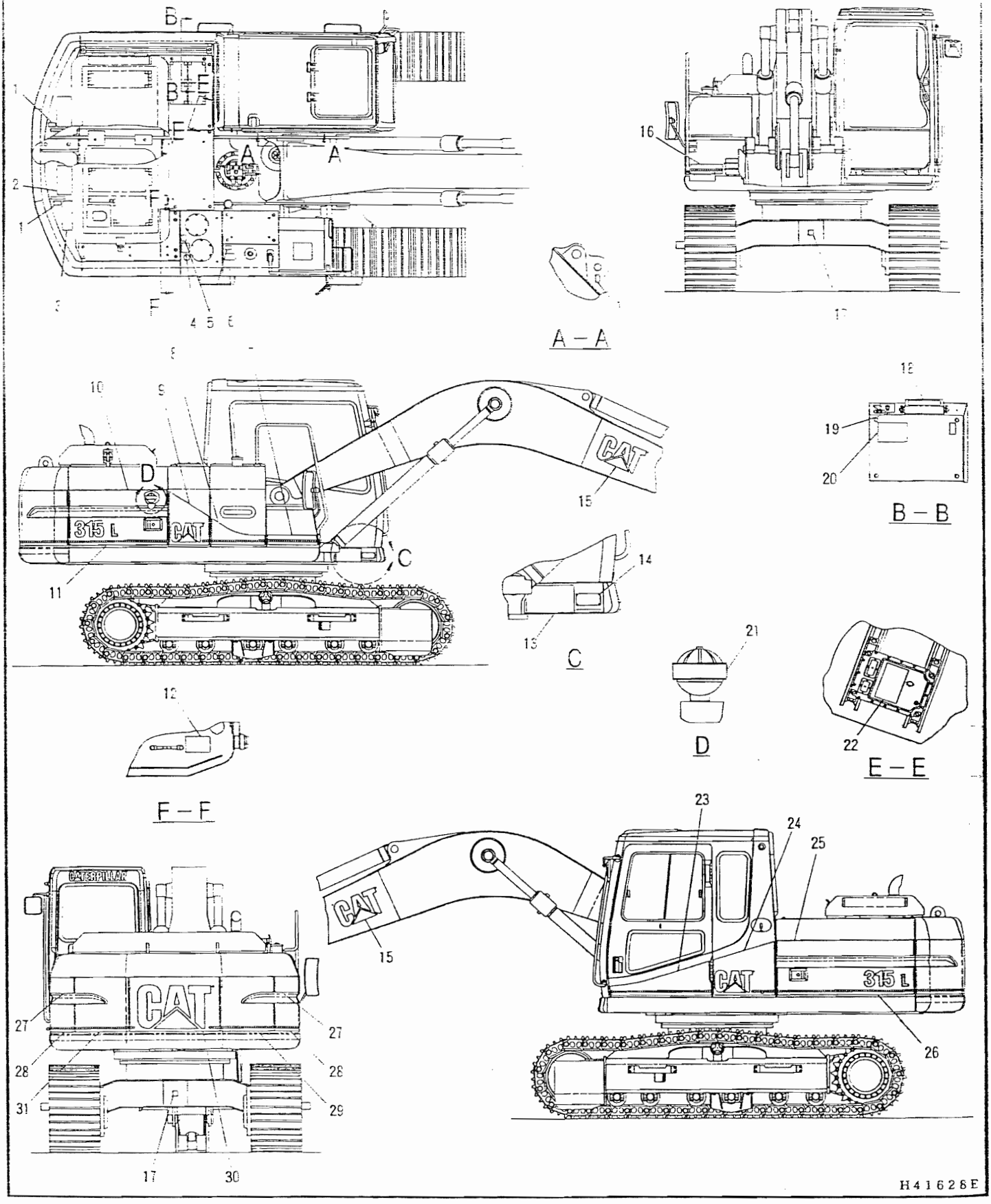

109-1790 LUBRICANT GP-PAINT & (A)-PART 1 OF 2

S/N 6YM1 – Up

SERVICE EQUIPMENT AND SUPPLIES

NOTE	No.	PART No.	QTY	PART NAME	NOTE	No.	PART No.	QTY	PART NAME
	1	1P-2807	4	FILM (SYMBOL)					
	2	093-2237	1	TREAD					
	3	093-2238	2	TREAD					
	4	7Y-0013	1	FILM (WARNING)					
	5	7Y-0012	2	FILM (WARNING)					
	6	7I-0611	1	FILM (INSTRUCTION)					
	7	102-4886	1	FILM (STRIPE)					
	8	109-1814	1	FILM (STRIPE)					
	9	109-1813	1	FILM (CAT)					
	10	109-1809	1	FILM (STRIPE)					
	11	109-1811	1	FILM (315L)					
	12	7Y-0014	1	FILM (INSTRUCTION)					
	13	109-1804	1	FILM (NOTICE)					
	14	4B-4158	4	SCREW					
	15	086-1199	2	FILM (CAT)					
	16	109-1815	1	FILM (STRIPE)					
	17	7X-7644	2	FILM (TIE DOWN)					
	18	7I-0678	1	FILM (INSTRUCTION)					
	19	4I-2927	1	FILM (CIRCUIT BREAKER)					
	20	6V-4611	1	FILM (WARNING)					
	21	7Y-0066	1	FILM (WARNING)					
	22	7Y-6187	1	FILM (NOTICE)					
	23	102-4822	1	FILM (STRIPE)					
	24	102-4823	1	FILM (CAT)					
	25	109-1805	1	FILM (STRIPE)					
	26	109-1807	1	FILM (315L)					
	27	7I-6271	2	FILM (STRIPE)					
	28	102-5395	2	FILM (STRIPE)					
	29	102-5397	1	FILM (STRIPE)					
	30	102-4831	1	FILM (CAT)					
	31	102-5396	1	FILM (STRIPE)					

H41629

109-1790 LUBRICANT GP-PAINT & (A)-PART 1 OF 2

S/N 6YM1 – Up

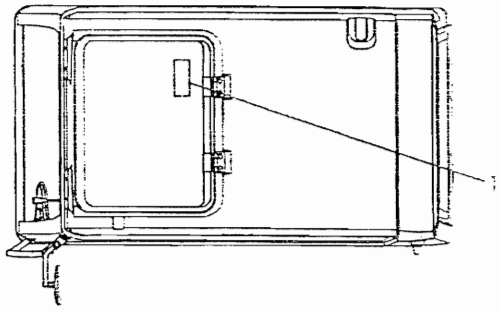

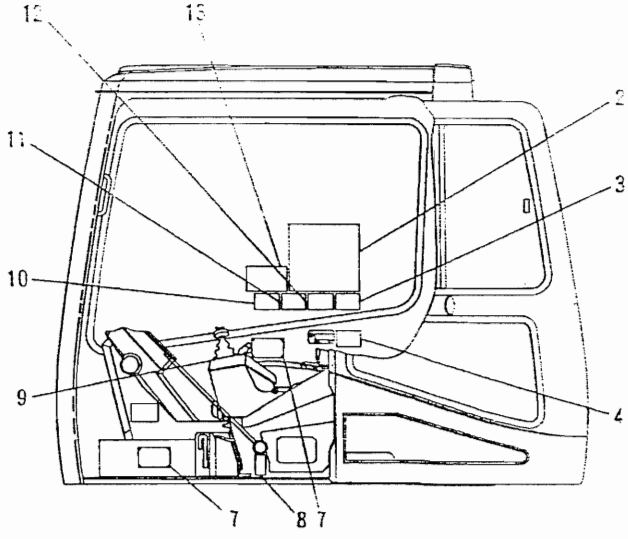

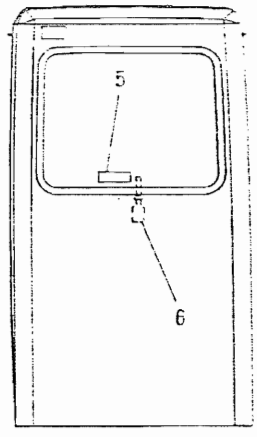

NOTE	No.	PART No.	QTY	PART NAME	NOTE	No.	PART No.	QTY	PART NAME
	1	8T-1915	1	FILM (NOTICE)					
	2	109-1802	1	FILM (LIFTING CAP)					
	3	1R-6245	1	FILM (WARNING)					
	4	4I-8088	1	FILM (NOTICE)					
	5	8T-6843	1	FILM (EMERGENCY EXIT)					
	6	8T-6842	1	FILM (INSTRUCTION)					
	7	4B-4158	8	SCREW					
	8	4I-8089	1	LABEL (LEVER LOCK)					
	9	7Y-0001	1	FILM (WARNING)					
	10	7I-0624	1	FILM (WARNING)					
	11	7Y-0003	1	FILM (WARNING)					
	12	7Y-0005	1	FILM (WARNING)					
	13	4I-8472	1	FILM (INSTRUCTION)					

H41635E

109-1790 LUBRICANT GP-PAINT & (A)-PART 2 OF 2

S/N 6YM1 – Up

MEMORANDA

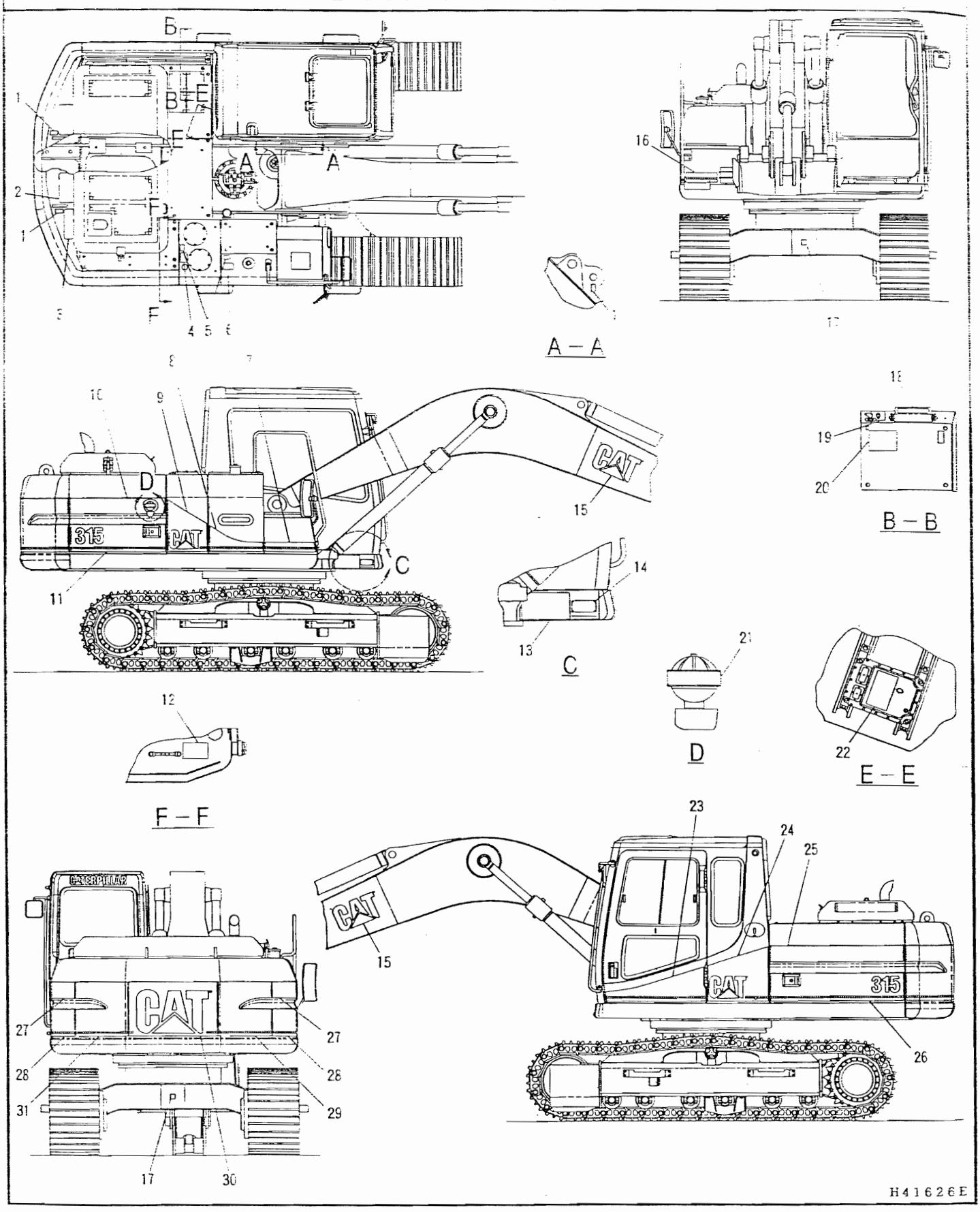

H41626E

109-1791 LUBRICANT GP-PAINT & (B) (FRENCH)-PART 1 OF 2

S/N 4YM1 – Up

An Attachment

SERVICE EQUIPMENT AND SUPPLIES

NOTE	No.	PART No.	QTY	PART NAME	NOTE	No.	PART No.	QTY	PART NAME
A	1	1P-2807	4	FILM (SYMBOL					
A	2	093-2237	1	TREAD					
A	3	093-2238	2	TREAD					
	4	7Y-0040	1	FILM (WARNING					
	5	7Y-0039	2	FILM (WARNING					
	6	7I-0612	1	FILM (INSTRUCTION)					
A	7	102-4886	1	FILM (STRIPE					
A	8	109-1814	1	FILM (STRIPE					
A	9	109-1813	1	FILM (CAT					
A	10	109-1809	1	FILM (STRIPE					
A	11	109-1810	1	FILM (315					
	12	7Y-0041	1	FILM (INSTRUCTION					
A	13	109-1804	1	FILM (NOTICE					
A	14	4B-4158	4	SCREW					
A	15	086-1199	2	FILM (CAT					
A	16	109-1815	1	FILM (STRIPE					
A	17	7X-7644	2	FILM (TIE DOWN					
	18	102-5405	1	FILM (INSTRUCTION					
A	19	4I-2927	1	FILM (CIRCUIT BREAKER)					
	20	6V-4612	1	FILM (WARNING					
	21	7Y-0068	1	FILM (WARNING					
	22	4I-8157	1	FILM (NOTICE					
A	23	102-4822	1	FILM (STRIPE					
A	24	102-4823	1	FILM (CAT					
A	25	109-1805	1	FILM (STRIPE					
A	26	109-1806	1	FILM (315					
A	27	7I-6271	2	FILM (STRIPE					
A	28	102-5395	2	FILM (STRIPE					
A	29	102-5397	1	FILM (STRIPE					
A	30	102-4831	1	FILM (CAT					
A	31	102-5396	1	FILM (STRIPE,					

A-NOT PART OF THIS GROUP

H41630

109-1791 LUBRICANT GP-PAINT & (B) (FRENCH) - PART 1 OF 2

S/N 4YM1 – Up

An Attachment

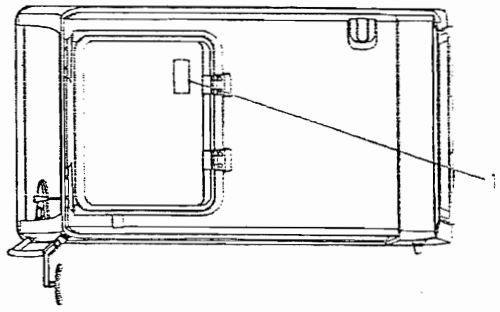

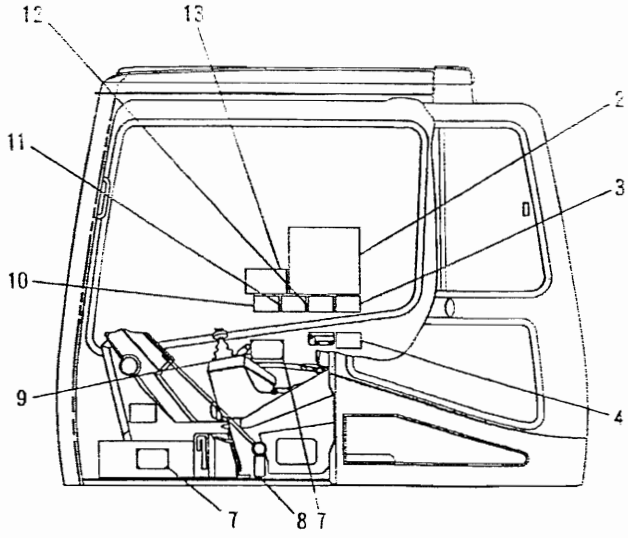

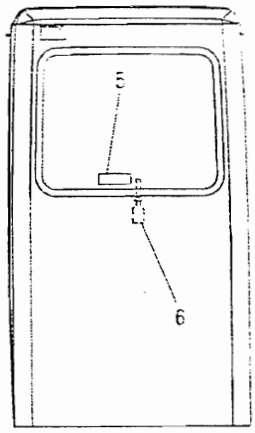

NOTE	No.	PART No.	QTY	PART NAME	NOTE	No.	PART No.	QTY	PART NAME
	1	8T-1962	1	FILM (NOTICE)					
A	2	109-1799	1	FILM (LIFTING CAP)					
	3	1R-6246	1	FILM (WARNING)					
	4	4I-8459	1	FILM (NOTICE)					
	5	8T-7829	1	FILM (EMERGENCY EXIT)					
A	6	8T-6842	1	FILM (INSTRUCTION)					
A	7	4B-4158	8	SCREW					
A	8	4I-8089	1	LABEL (LEVER LOCK)					
	9	7Y-0030	1	FILM (WARNING)					
	10	7I-0625	1	FILM (WARNING)					
	11	7Y-0032	1	FILM (WARNING)					
	12	7Y-0034	1	FILM (WARNING)					
A	13	4I-8472	1	FILM (INSTRUCTION)					

A-NOT PART OF THIS GROUP

H41636E

109-1791 LUBRICANT GP-PAINT & (B) (FRENCH) - PART 2 OF 2

S/N 4YM1 – Up
An Attachment

MEMORANDA

SERVICE EQUIPMENT AND SUPPLIES

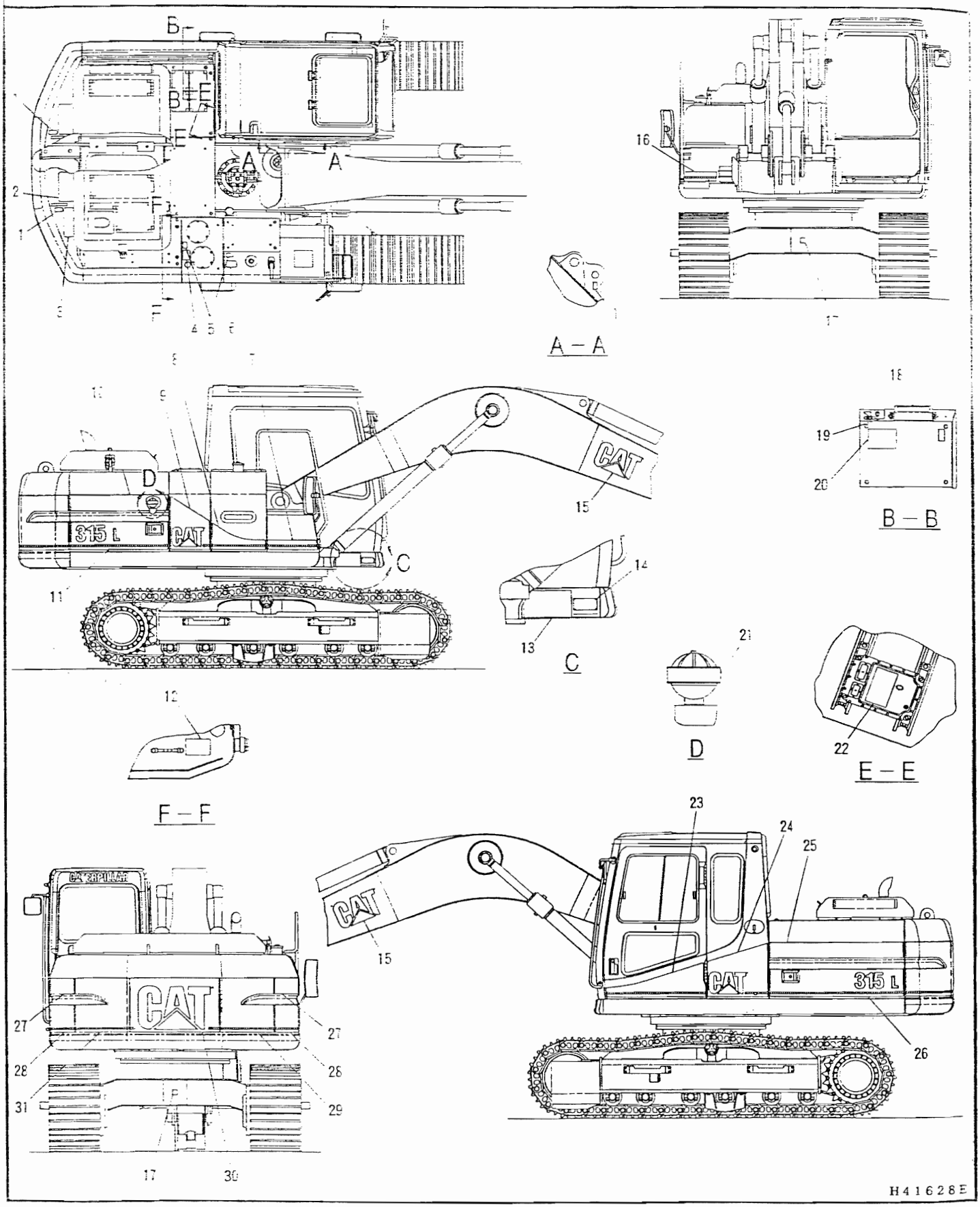

109-1791 LUBRICANT GP-PAINT & (B) (FRENCH)-PART 1 OF 2

S/N 6YM1 – Up

An Attachment

SERVICE EQUIPMENT AND SUPPLIES

NOTE	No.	PART No.	QTY	PART NAME	NOTE	No.	PART No.	QTY	PART NAME
A	1	1P-2807	4	FILM (SYMBOL)					
A	2	093-2237	1	TREAD					
A	3	093-2238	2	TREAD					
	4	7Y-0040	1	FILM (WARNING)					
	5	7Y-0039	2	FILM (WARNING)					
	6	7I-0612	1	FILM (INSTRUCTION)					
A	7	102-4886	1	FILM (STRIPE)					
A	8	109-1814	1	FILM (STRIPE)					
A	9	109-1813	1	FILM (CAT)					
A	10	109-1809	1	FILM (STRIPE)					
A	11	109-1811	1	FILM (315L)					
	12	7Y-0041	1	FILM (INSTRUCTION)					
A	13	109-1804	1	FILM (NOTICE)					
A	14	4B-4158	4	SCREW					
A	15	086-1199	2	FILM (CAT)					
A	16	109-1815	1	FILM (STRIPE)					
A	17	7X-7644	2	FILM (TIE DOWN)					
	18	102-5405	1	FILM (INSTRUCTION)					
A	19	4I-2927	1	FILM (CIRCUIT BREAKER)					
	20	6V-4612	1	FILM (WARNING)					
	21	7Y-0068	1	FILM (WARNING)					
	22	4I-8157	1	FILM (NOTICE)					
A	23	102-4822	1	FILM (STRIPE)					
A	24	102-4823	1	FILM (CAT)					
A	25	109-1805	1	FILM (STRIPE)					
A	26	109-1807	1	FILM (315L)					
A	27	7I-6271	2	FILM (STRIPE)					
A	28	102-5395	2	FILM (STRIPE)					
A	29	102-5397	1	FILM (STRIPE)					
A	30	102-4831	1	FILM (CAT)					
A	31	102-5396	1	FILM (STRIPE)					

A-NOT PART OF THIS GROUP

H4163

109-1791 LUBRICANT GP-PAINT & (B) (FRENCH) - PART 1 OF 2

S/N 6YM1 – Up

An Attachment

SERVICE EQUIPMENT AND SUPPLIES

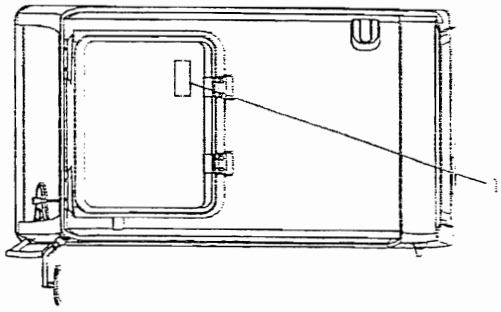

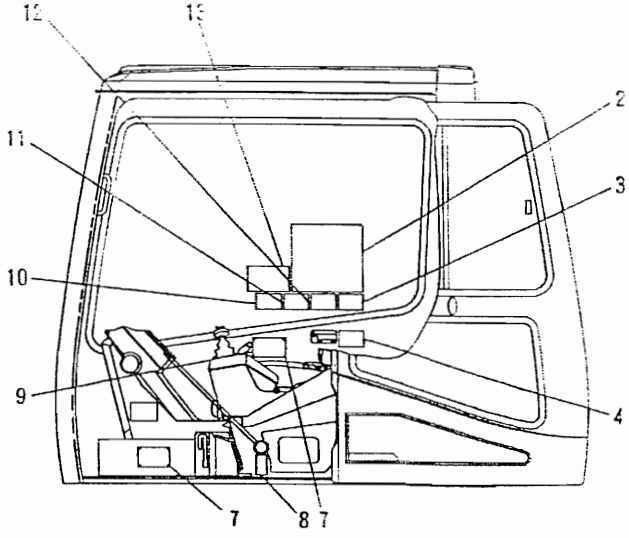

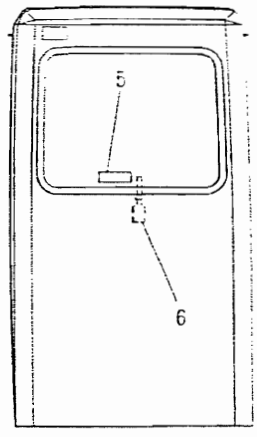

NOTE	No.	PART No.	QTY	PART NAME	NOTE	No.	PART No.	QTY	PART NAME
	1	8T-1962	1	FILM (NOTICE)					
A	2	109-1802	1	FILM (LIFTING CAP)					
	3	1R-6246	1	FILM (WARNING)					
	4	4I-8459	1	FILM (NOTICE)					
	5	8T-7829	1	FILM (EMERGENCY EXIT)					
A	6	8T-6842	1	FILM (INSTRUCTION)					
A	7	4B-4158	8	SCREW					
A	8	4I-8089	1	LABEL (LEVER LOCK)					
	9	7Y-0030	1	FILM (WARNING)					
	10	7I-0625	1	FILM (WARNING)					
	11	7Y-0032	1	FILM (WARNING)					
	12	7Y-0034	1	FILM (WARNING)					
A	13	4I-8472	1	FILM (INSTRUCTION)					

A-NOT PART OF THIS GROUP

H41638E

109-1791 LUBRICANT GP-PAINT & (B) (FRENCH) - PART 2 OF 2

S/N 6YM1 – Up

An Attachment

MEMORANDA

SERVICE EQUIPMENT AND SUPPLIES

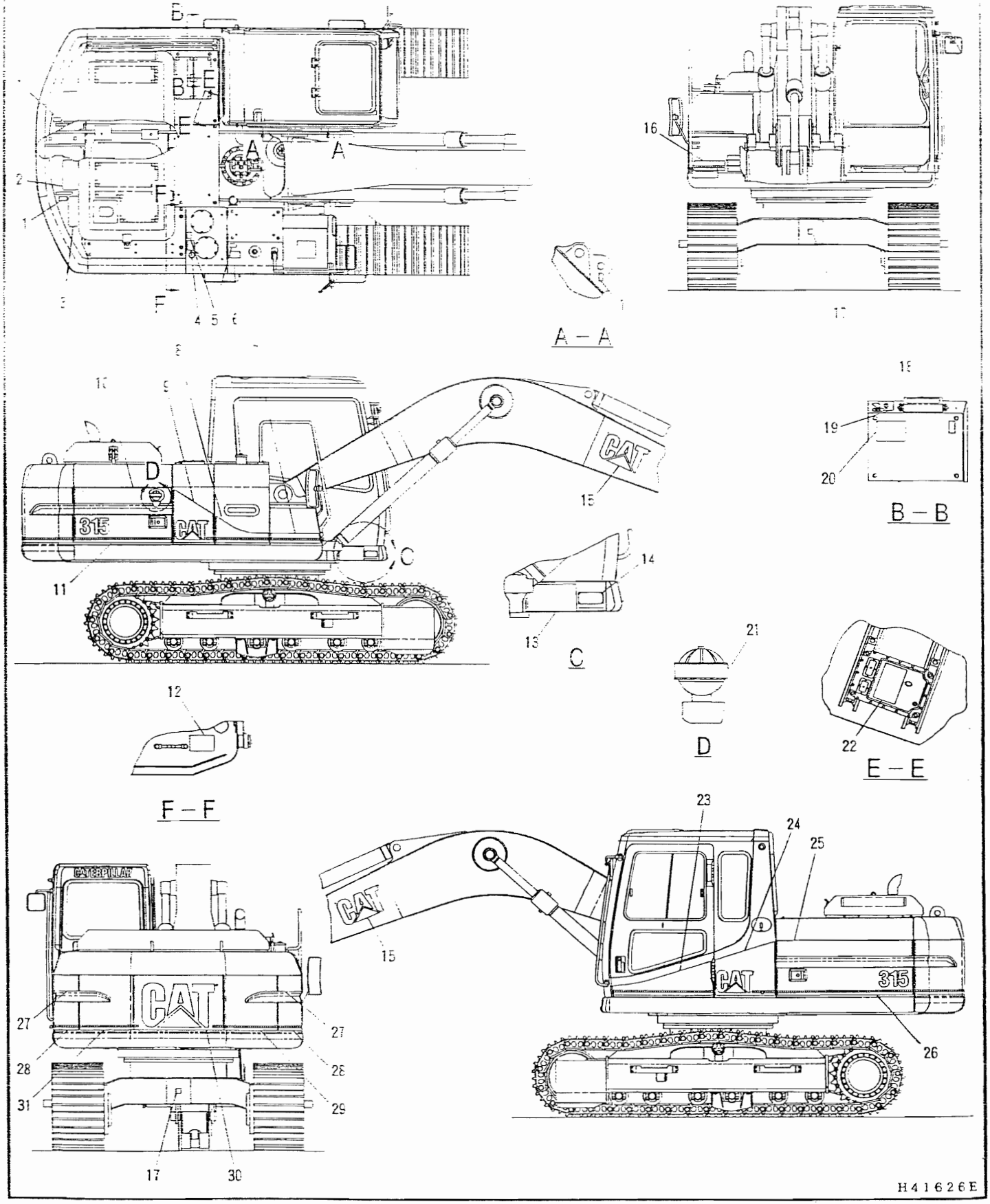

109-1792 LUBRICANT GP-PAINT & (B) (SPANISH) - PART 1 OF 2

S/N 4YM1 – Up

An Attachment

SERVICE EQUIPMENT AND SUPPLIES

NOTE	No.	PART No.	QTY	PART NAME	NOTE	No.	PART No.	QTY	PART NAME
A	1	1P-2807	4	FILM (SYMBOL)					
A	2	093-2237	1	TREAD					
A	3	093-2238	2	TREAD					
	4	7Y-0027	1	FILM (WARNING)					
	5	7Y-0026	2	FILM (WARNING)					
	6	7I-0613	1	FILM (INSTRUCTION)					
A	7	102-4886	1	FILM (STRIPE					
A	8	109-1814	1	FILM (STRIPE)					
A	9	109-1813	1	FILM (CAT					
A	10	109-1809	1	FILM (STRIPE					
A	11	109-1810	1	FILM (315					
	12	7Y-0028	1	FILM (INSTRUCTION)					
A	13	109-1804	1	FILM (NOTICE)					
A	14	4B-4158	4	SCREW					
A	15	086-1199	2	FILM (CAT)					
A	16	109-1815	1	FILM (STRIPE					
A	17	7X-7644	2	FILM (TIE DOWN					
	18	102-5406	1	FILM (INSTRUCTION)					
A	19	4I-2927	1	FILM (CIRCUIT BREAKER)					
	20	6V-4613	1	FILM (WARNING)					
	21	7Y-0067	1	FILM (WARNING)					
	22	4I-8163	1	FILM (NOTICE)					
A	23	102-4822	1	FILM (STRIPE)					
A	24	102-4823	1	FILM (CAT)					
A	25	109-1805	1	FILM (STRIPE)					
A	26	109-1806	1	FILM (315)					
A	27	7I-6271	2	FILM (STRIPE)					
A	28	102-5395	2	FILM (STRIPE)					
A	29	102-5397	1	FILM (STRIPE)					
A	30	102-4831	1	FILM (CAT)					
A	31	102-5396	1	FILM (STRIPE)					

A-NOT PART OF THIS GROUP

H4163

109-1792 LUBRICANT GP-PAINT & (B) (SPANISH) - PART 1 OF 2

S/N 4YM1 – Up

An Attachment

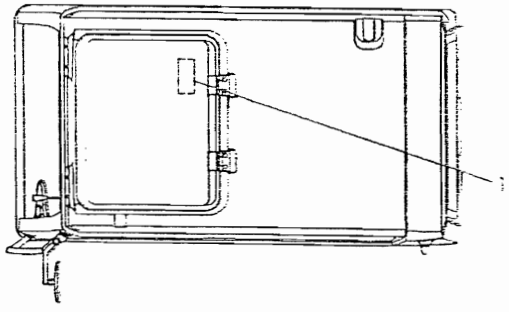

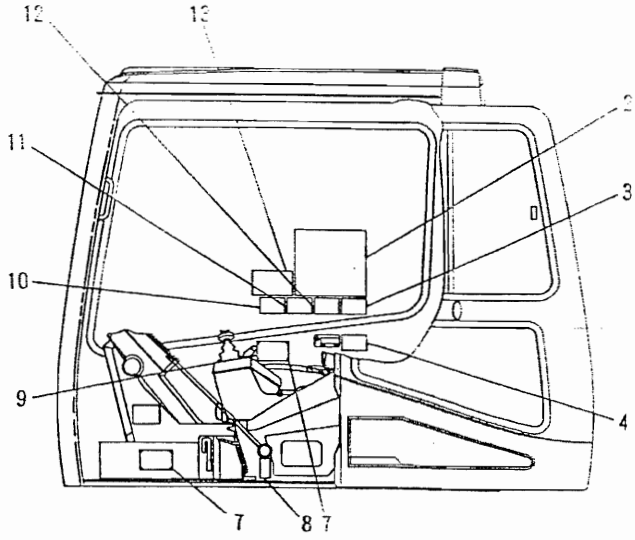

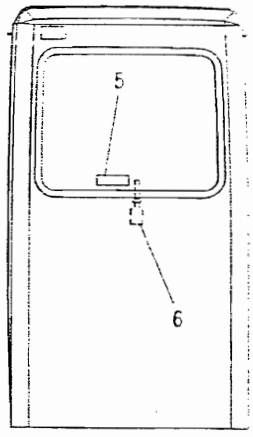

NOTE	No.	PART No.	QTY	PART NAME	NOTE	No.	PART No.	QTY	PART NAME
	1	8T-1963	1	FILM (NOTICE)					
A	2	109-1799	1	FILM (LIFTING CAP)					
	3	1R-6247	1	FILM (WARNING)					
	4	4I-8460	1	FILM (NOTICE)					
	5	8T-7830	1	FILM (EMERGENCY EXIT)					
A	6	8T-6842	1	FILM (INSTRUCTION)					
A	7	4B-4158	8	SCREW					
A	8	4I-8089	1	LABEL (LEVER LOCK)					
	9	7Y-0017	1	FILM (WARNING)					
	10	7I-0626	1	FILM (WARNING)					
	11	7Y-0019	1	FILM (WARNING)					
	12	7Y-0021	1	FILM (WARNING)					
A	13	4I-8472	1	FILM (INSTRUCTION)					

A-NOT PART OF THIS GROUP

H41637E

109-1792 LUBRICANT GP-PAINT & (B) (SPANISH)-PART 2 OF 2

S/N 4YM1 – Up

An Attachment

MEMORANDA

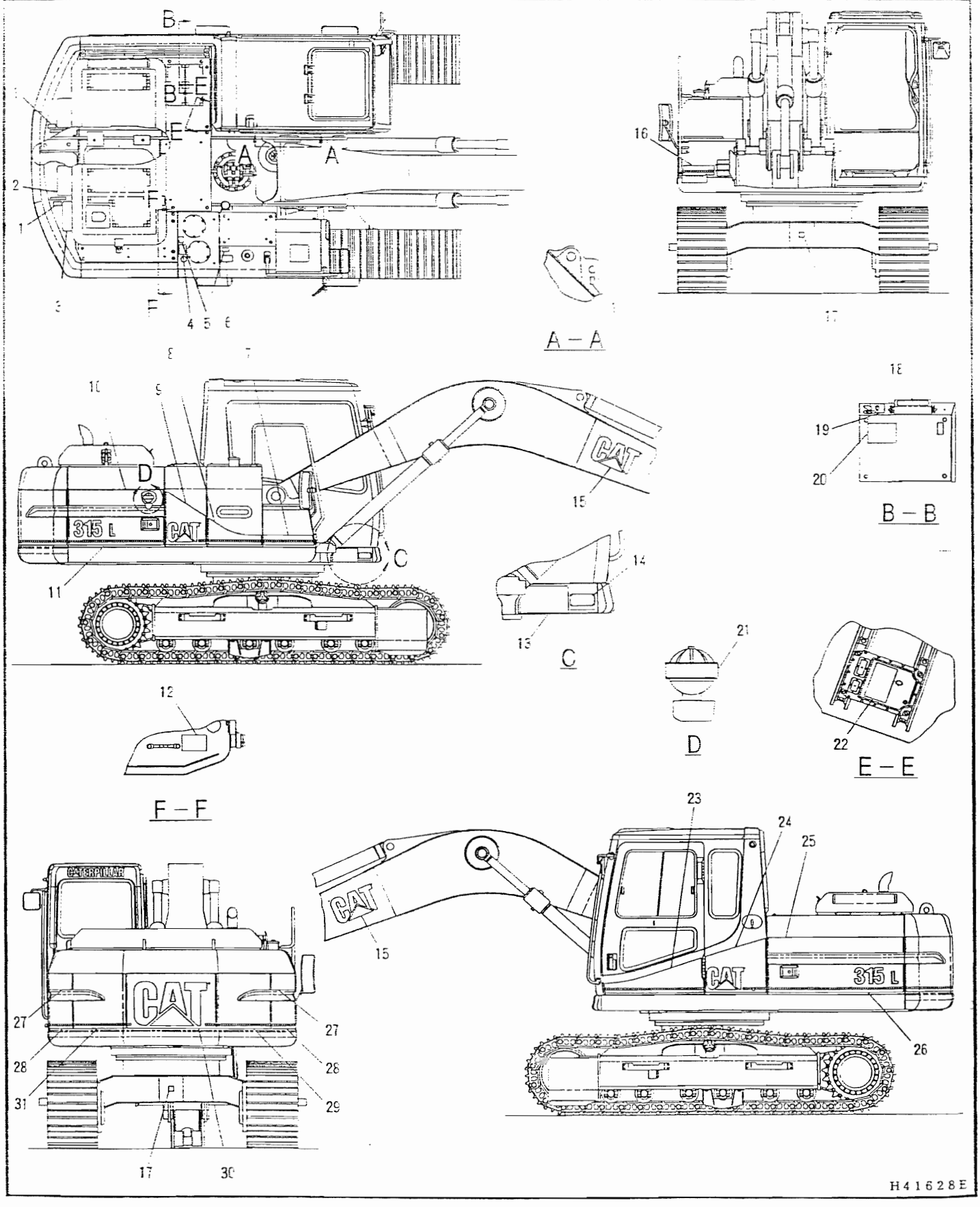

H41628E

109-1792 LUBRICANT GP-PAINT & (B) (SPANISH) - PART 1 OF 2

S/N 6YM1 – Up

An Attachment

SERVICE EQUIPMENT AND SUPPLIES

NOTE	No.	PART No.	QTY	PART NAME	NOTE	No.	PART No.	QTY	PART NAME
A	1	1P-2807	4	FILM (SYMBOL)					
A	2	093-2237	1	TREAD					
A	3	093-2238	2	TREAD					
	4	7Y-0027	1	FILM (WARNING)					
	5	7Y-0026	2	FILM (WARNING)					
	6	7I-0613	1	FILM (INSTRUCTION)					
A	7	102-4886	1	FILM (STRIPE)					
A	8	109-1814	1	FILM (STRIPE)					
A	9	109-1813	1	FILM (CAT)					
A	10	109-1809	1	FILM (STRIPE)					
A	11	109-1811	1	FILM (315L)					
	12	7Y-0028	1	FILM (INSTRUCTION)					
A	13	109-1804	1	FILM (NOTICE)					
A	14	4B-4158	4	SCREW					
A	15	086-1199	2	FILM (CAT)					
A	16	109-1815	1	FILM (STRIPE)					
A	17	7X-7644	2	FILM (TIE DOWN)					
	18	102-5406	1	FILM (INSTRUCTION)					
A	19	4I-2927	1	FILM (CIRCUIT BREAKER)					
	20	6V-4613	1	FILM (WARNING)					
	21	7Y-0067	1	FILM (WARNING)					
	22	4I-8163	1	FILM (NOTICE)					
A	23	102-4822	1	FILM (STRIPE)					
A	24	102-4823	1	FILM (CAT)					
A	25	109-1805	1	FILM (STRIPE)					
A	26	109-1807	1	FILM (315L)					
A	27	7I-6271	2	FILM (STRIPE)					
A	28	102-5395	2	FILM (STRIPE)					
A	29	102-5397	1	FILM (STRIPE)					
A	30	102-4831	1	FILM (CAT)					
A	31	102-5396	1	FILM (STRIPE)					

A-NOT PART OF THIS GROUP

H4163

109-1792 LUBRICANT GP-PAINT & (B) (SPANISH) - PART 1 OF 2

S/N 6YM1 – Up

An Attachment

SERVICE EQUIPMENT AND SUPPLIES

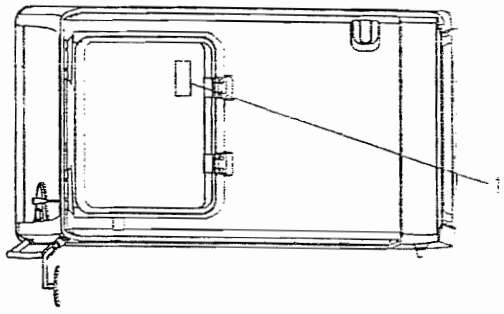

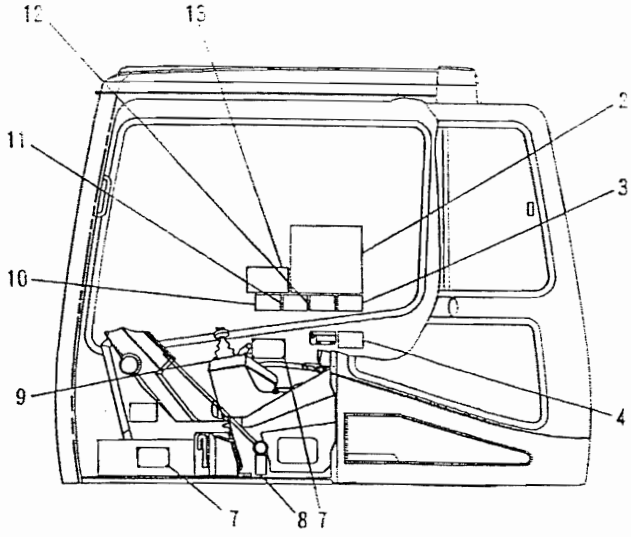

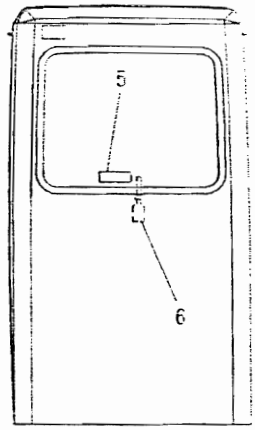

NOTE	No.	PART No.	QTY	PART NAME	NOTE	No.	PART No.	QTY	PART NAME
	1	8T-1963	1	FILM (NOTICE)					
A	2	109-1802	1	FILM (LIFTING CAP)					
	3	1R-6247	1	FILM (WARNING)					
	4	4I-8460	1	FILM (NOTICE)					
	5	8T-7830	1	FILM (EMERGENCY EXIT)					
A	6	8T-6842	1	FILM (INSTRUCTION)					
A	7	4B-4158	8	SCREW					
A	8	4I-8089	1	LABEL (LEVER LOCK)					
	9	7Y-0017	1	FILM (WARNING)					
	10	7I-0626	1	FILM (WARNING)					
	11	7Y-0019	1	FILM (WARNING)					
	12	7Y-0021	1	FILM (WARNING)					
A	13	4I-8472	1	FILM (INSTRUCTION)					

A-NOT PART OF THIS GROUP

H41639E

109-1792 LUBRICANT GP-PAINT & (B) (SPANISH)-PART 2 OF 2

S/N 6YM1 – Up
An Attachment

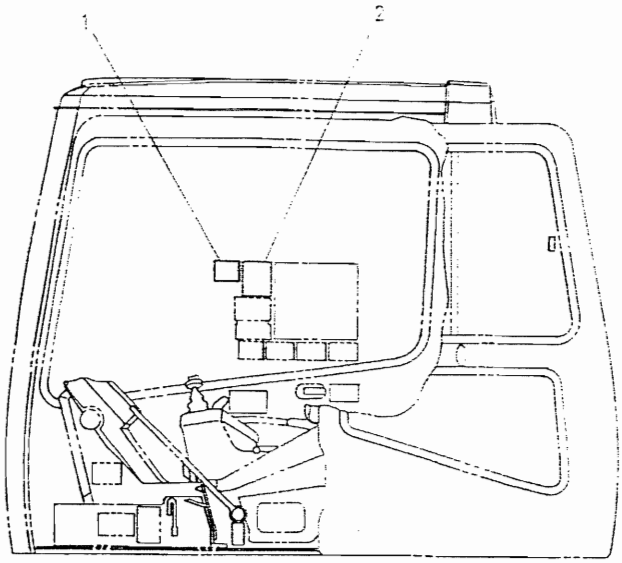

NOTE	No.	PART No.	QTY	PART NAME
	1	6I-6034	1	FILM (INSTRUCTION)
	2	7I-1565	1	FILM (NOTICE)
A		7I-1601	1	FILM (FRENCH)
A		7I-1602	1	FILM (SPANISH)

A-NOT PART OF THIS GROUP

H416411

7I-1699 FILM GP (CONTROL AR-AUXILIARY-SINGLEACTION)

Part of 7I-8555 Control Ar listed on Page 178
An Attachment

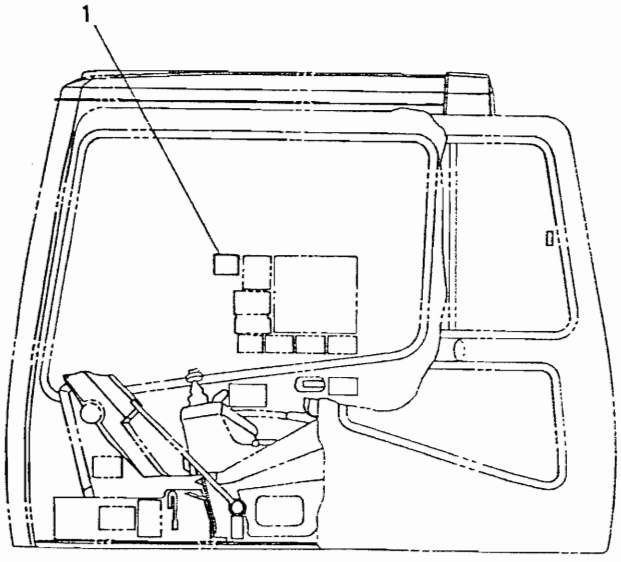

NOTE	No.	PART No.	QTY	PART NAME
	1	6I-6035	1	FILM (INSTRUCTION)

H36024E

7I-1697 FILM GP (CONTROL AR-AUXILIARY-DOUBLEACTION)

Part of 7I-8556 Control Ar listed on Page 178
An Attachment

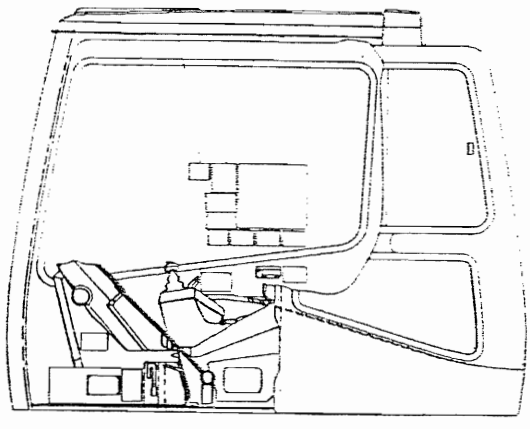

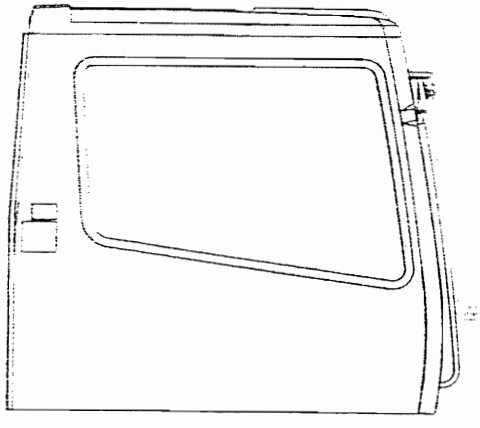

NOTE	No.	PART No.	QTY	PART NAME	NOTE	No.	PART No.	QTY	PART NAME
	1	61-6034	1	FILM (INSTRUCTION)					
	2	61-6035	1	FILM (INSTRUCTION)					
	3	71-1565	1	FILM (NOTICE)					
A		71-1601	1	FILM (FRENCH)					
A		71-1602	1	FILM (SPANISH)					

A-NOT PART OF THIS GROUP

H37092E

102-5418 FILM GP (CONTROL AR-AUXILIARY-COMMON)

Part of 71-8557 Control Ar listed on Page 179

An Attachment

PART NUMBER INDEX

Part No.	Page
1	
1B-5174	103
1F-8359	203
1G-2044	70
1H-3244	69
1K-6937	55.02
1M-6119	60
	61
	76
1M-6120	60
	61
	76
1M-6718	222
1P-0808	326
1P-2807	329
	330.02
	330.05
	330.08
	330.11
	330.14
1P-3703	170
	172
1P-4278	35
1P-4576	164
	165
	166
1R-0734	32
1R-5396	151
1R-5998	233
	235
	235.04
	235.06
	235.10
	235.12
1R-6245	330
	330.03
1R-6246	330.06
	330.09
1R-6247	330.12
	330.15
1R-6573	51
1S-0994	57
	59
	69
1S-7251	59
	60
1S-7252	60
	61
	76
1S-9593	81
	244
	245
	267
1U-3301	322
1U-3302	321
2	
2D-1290	256
2G-8767	57
	59
2H-3922	73
	75
2J-6540	41
2L-8049	64
2L-8050	62
	63
	69
2L-8051	69
2L-8058	69
2L-8065	64
2L-8066	244
	245
2L-8067	63
	72
	88
	89
2L-8075	59
	63
	64
	67
	72
	96
	97
	98
2L-8076	72
2L-8077	72
	88
	89
2M-3433	255
2M-9780	139
	175
	175.02
2P-1279	181
2P-1314	175
	175.02
	183
2R-6806	181
	183
	184
	185
	187
	188
	189
	190
2S-3440	41
	55.02
	55.04
2S-4078	55.04
2S-5925	131
2S-5926	131
2V-3216	59
	256
2W-9403	39
2Y-5503	100
	126
2Y-5685	238
2Y-5829	41
	90
	222
3	
3B-4501	99
	247
3B-8489	126
	154

PART NUMBER INDEX

Part No	Page
	155
	156
	161
	309
	310
	311
	312
	312. 01
	313
3C-6969	233
	235. 06
	235. 12
3D-2824	170
	172
	175
	175. 02
	183
	191
	192
	195
	198
	199
	200
3D-2891	222
3E-3217	134
3E-3362	245
3E-3365	246
3E-4320	250
3E-4367	67
3E-6328	231. 01
	235. 02
	235. 08
	246
3E-8004	122
3E-8008	105
3E-8020	235
	235. 06
	235. 12
3E-8025	149
	151
3E-8268	260
3E-8558	67
3E-9402	235
	235. 06
	235. 12
3E-9404	235
	235. 06
	235. 12
3E-9869	235
	235. 06
	235. 12
3E-9871	235
	235. 06
	235. 12
3E-9872	235
	235. 06
	235. 12
3E-9873	235
	235. 06
	235. 12
3E-9874	233
	235. 04
	235. 10
3G-3237	323
3G-8856	175
	175. 02
3J-1907	175
	175. 02
	181
	183
	184
	185
	187
	188
	189
	190
	218
	219
3J-7352	181
	183
3J-7354	181
	183
	187
	189
	213
3K-0360	139
	175
	175. 02
	183
	195
	197
	199
	207
	221
	223
	227
3K-8107	98
3L-8187	82
3S-2093	57
	59
	62
	63
	64
	67
	69
	70
	71
	72
	78
	79
	80
	85
	86
	88
	89
3S-6049	60
	61
	76
3S-6050	60
	61
	76
3S-8536	59
3T-0009	67
3T-0049	69
3T-0376	69
3T-1815	94
3T-3045	67
3T-3046	67
3T-3048	62
	67
3T-4405	78
	79

PART NUMBER INDEX

Part No	Page
	82
3T-4692 ·····	64
3T-4696 ·····	64
	67
	72
3T-5760 ·····	57
	74
3V-4694 ·····	78
3W-6396 ·····	252
	253
3W-6399 ·····	252
	253
3W-8437 ·····	269
3Y-7597 ·····	326
4	
4B-4158 ·····	130
	329
	330
	330.02
	330.03
	330.05
	330.06
	330.08
	330.09
	330.11
	330.12
	330.14
	330.15
4B-4278 ·····	235
	235.06
	235.12
4B-5984 ·····	103
4D-0514 ·····	222
4D-3118 ·····	15
4D-7794 ·····	57
	59
	98.01
4D-8123 ·····	57
	59
	94.01
	96
	97
	98.01
4F-2294 ·····	69
4H-3521 ·····	271
	273
4I-0050 ·····	55
	55.04
4I-0062 ·····	55.02
4I-0082 ·····	115
4I-0084 ·····	273
4I-0085 ·····	271
4I-0087 ·····	270
4I-0088 ·····	270
	272
4I-0117 ·····	113
4I-0118 ·····	113
4I-0123 ·····	55
	55.04
	55.05
4I-0137 ·····	55
	55.04
	55.05
4I-0240 ·····	115
4I-0378 ·····	55
	55.04
4I-0379 ·····	55
	55.04
	55.05
4I-0420 ·····	233
	235.04
	235.10
4I-0453 ·····	159
	313
4I-0457 ·····	251
4I-0458 ·····	251
4I-0471 ·····	289
4I-0491 ·····	295
	297
4I-0492 ·····	297
4I-0559 ·····	251
	252
4I-0700 ·····	157
4I-0722 ·····	139
4I-0894 ·····	187
	189
	227
4I-0895 ·····	227
4I-1023 ·····	146
4I-1077 ·····	191
4I-1100 ·····	270
4I-1163 ·····	256
4I-1170 ·····	295
	298
4I-1185 ·····	236
4I-1186 ·····	233
	235.04
	235.10
4I-1190 ·····	240
4I-1205 ·····	235
	235.06
	235.12
4I-1206 ·····	233
	235.04
	235.10
4I-1212 ·····	262.02
	262.03
4I-1213 ·····	262.02
	262.03
4I-1223 ·····	233
	235.04
	235.10
4I-1251 ·····	298
4I-1260 ·····	238
4I-1268 ·····	236
	240
4I-1271 ·····	233
	235.04
	235.10
4I-1273 ·····	233
	235.04
	235.10
	238
4I-1274 ·····	236
	240
4I-1275 ·····	299
	301

PART NUMBER INDEX

Part No.	Page
41-1278	298
41-1282	270
	275
41-1290	209
41-1291	209
41-1292	209
41-1297	209
41-1298	209
41-1317	209
41-1404	181
41-1413	181
41-1419	181
41-1425	184
	185
41-1428	187
	189
41-1455	181
	185
41-1464	183
41-1536	152
41-1539	152
41-1683	170
41-1703	181
41-1841	181
41-1915	264
	264. 02
41-1922	264
	264. 02
41-1943	124
41-1995	270
41-2187	264
	264. 02
41-2604	326
41-2605	326
41-2632	55. 02
41-2881	262. 04
41-2927	329
	330. 02
	330. 05
	330. 08
	330. 11
	330. 14
41-3037	235
	235. 06
41-3038	235
	235. 06
	235. 12
41-3039	231. 01
	235
	235. 02
	235. 06
	235. 08
	235. 12
41-3043	231. 01
	235
	235. 02
	235. 06
	235. 08
	235. 12
41-3045	233
	235. 04
	235. 10
41-3047	235
	235. 06
	235. 12
41-3053	233
	235. 04
	235. 10
41-3054	239
41-3063	233
	235. 04
	235. 10
41-3066	233
	235. 04
	235. 10
41-3067	236
	240
41-3068	236
	240
41-3069	236
	240
41-3070	236
	240
41-3071	236
	239
	240
41-3072	236
	239
	240
41-3076	233
	235. 04
	235. 10
41-3080	233
	235. 04
	235. 10
41-3081	242
41-3087	233
	235
	235. 04
	235. 06
	235. 10
	235. 12
41-3089	233
	235. 04
	235. 10
41-3090	233
	235
	235. 04
	235. 06
	235. 10
	235. 12
41-3096	233
	235. 04
	235. 10
41-3097	236
	240
41-3123	98
	209
	233
	235. 04
	235. 10
41-3124	236
	240
41-3144	98
	209
	233
	235. 04
	235. 10
41-3166	270
41-3232	262. 02
	262. 03

PART NUMBER INDEX

Part No.	Page
4I-3235	262.02
	262.03
4I-3255	241
4I-3266	111
4I-3306	269
	270
	271
4I-3308	307
	308
4I-3309	307
	308
4I-3400	299
4I-3745	139
4I-3778	188
4I-3787	190
4I-3820	162
4I-3823	162
4I-3940	181
4I-3944	181
4I-4204	238
	239
4I-4205	239
4I-4206	235.04
	235.10
4I-4213	236
	240
4I-4222	235
	235.06
	235.12
4I-4224	233
	235.04
	235.10
4I-4228	233
	235.04
	235.10
4I-4241	233
	235.04
	235.10
4I-4242	239
4I-4243	235
	235.06
	235.12
4I-4244	236
	240
4I-4250	236
	240
4I-4251	233
	235.04
	235.10
4I-4252	233
	235.04
	235.10
4I-4253	235
	235.06
	235.12
4I-4254	236
	240
4I-4255	236
	240
4I-4260	235
	235.06
	235.12
4I-4273	233
	235.04
	235.10
4I-4280	233
	235.04
	235.10
4I-4282	235
	235.06
	235.12
4I-4286	236
	240
4I-4287	235
	235.06
	235.12
4I-4300	237
4I-4307	237
4I-4315	235
	235.06
	235.12
4I-4330	233
	235.04
	235.10
4I-4332	236
	240
4I-4334	236
	240
4I-4353	233
	235.04
	235.10
4I-4357	236
	240
4I-4361	239
4I-4370	248
4I-4372	235
	235.06
	235.12
4I-4373	241
4I-4385	235
	235.06
	235.12
	248
4I-4388	235
	235.06
	235.12
	241
4I-4392	233
	235.04
	235.10
4I-4403	235
	235.06
	235.12
4I-4407	233
	235.04
	235.10
4I-4409	235
	235.06
	235.12
4I-4411	241
4I-4441	235
	235.12
4I-4448	233
	235.04
	235.10
4I-4579	302
4I-4699	135
	135.01
4I-4700	135
	135.01
4I-4811	307
	308

PART NUMBER INDEX

Part No.	Page
	309
	310
	311
	312
	312.01
4I-5019	250
	257
4I-5020	256
4I-5021	256
4I-5031	235
	235.08
	235.12
4I-5032	235
	235.08
	235.12
4I-5034	233
4I-5037	261
4I-5039	260
4I-5040	260
4I-5041	260
4I-5042	235
	235.06
	235.12
4I-5043	235
	235.12
4I-5044	235.06
4I-5049	260
4I-5208	298
4I-5209	298
4I-5292	250
4I-5293	250
4I-5294	250
4I-5380	78
4I-5389	94.01
4I-5394	139
4I-5408	95
4I-5409	95
4I-5410	77
4I-5411	78
	80
4I-5412	77
	79
4I-5415	96
4I-5421	84
	85
4I-5425	84
	86
4I-5429	59
4I-5430	87
	88
4I-5431	87
	89
4I-5441	69
4I-5444	69
4I-5447	69
4I-5448	69
4I-5459	98
4I-5461	98
4I-5463	79
	84
4I-5493	80
	81
4I-5494	57
4I-5499	80
	81
4I-5648	191
4I-5657	222
4I-5658	222
4I-5664	222
4I-5666	222
4I-5668	222
4I-5674	222
4I-5862	152
4I-5913	157
4I-6078	139
4I-6156	218
4I-6188	195
4I-6211	181
4I-6233	181
4I-6242	181
	184
	185
	188
4I-6363	187
	188
4I-6365	225
4I-6366	225
4I-6367	225
4I-6368	225
4I-6369	225
4I-6370	225
4I-6446	181
4I-6544	289
4I-6577	250
4I-6600	299
4I-6610	161
4I-6631	231
	235.01
	235.07
	250
4I-6829	233
	235.04
	235.10
4I-6832	236
	240
4I-6833	236
	240
4I-6839	248
4I-6840	248
4I-6841	233
	235.04
	235.10
4I-6842	233
	235.10
4I-6856	237
4I-6857	233
	235.04
	235.10
4I-6899	262.02
	262.03
4I-6966	236
	237
	240
4I-6967	237
4I-6968	237
4I-6969	237
4I-6970	237
4I-6971	237
4I-6972	237
4I-6973	233
	235.10
	236

PART NUMBER INDEX

Part No.	Page
4I-6974	235. 04
	240
4I-6977	235
	235. 06
	235. 12
	248
4I-6993	296
4I-7032	261
4I-7326	126
4I-7433	29
4I-7444	126
4I-7446	126
4I-7470	103
4I-7500	29
4I-7509	103
4I-7511	126
4I-7512	126
4I-7554	44
4I-7575	43
4I-7603	175
	175. 02
	207
4I-7604	207
4I-7605	207
4I-7675	187
4I-7684	188
4I-7756	191
	192
	193
	195
4I-7769	187
	188
4I-7870	175
	175. 02
4I-7924	118
4I-7948	118
4I-8019	115
4I-8088	330
	330. 03
4I-8089	330
	330. 03
	330. 06
	330. 09
	330. 12
	330. 15
4I-8157	330. 05
	330. 08
4I-8163	330. 11
	330. 14
4I-8267	153
4I-8436	119
4I-8438	119
4I-8443	55. 02
4I-8444	55. 02
4I-8459	330. 06
	330. 09
4I-8460	330. 12
	330. 15
4I-8472	330
	330. 03
	330. 06
	330. 09
	330. 12
	330. 15
4I-8888	191
	195
	196
	197
	199
	200
4I-8889	162
	170
	171
	172
	175
	175. 02
	176
	191
	192
	193
	195
	196
	199
4I-8891	162
	191
	192
	193
	195
4I-8915	222
4I-8916	222
4I-8977	175
	175. 02
	176
	191
	193
	195
4I-8979	170
	172
	175
	175. 02
	191
	193
	195
4I-8980	191
	200
4I-8984	191
	200
4I-9521	181
4I-9522	181
	183
4I-9523	181
4I-9524	181
4I-9525	181
4I-9526	181
4I-9527	181
	183
4I-9528	181
	183
4I-9531	183
4I-9532	183
4I-9533	183
4I-9534	183
4I-9535	183
4I-9536	183
4I-9537	183
4I-9538	183
4I-9797	277
	279
	282
4I-9798	282
4J-0523	198
4J-0526	198
4J-5267	160

PART NUMBER INDEX

Part No.	Page
	161
	164
	163
	166
	197
	199
	221
4J-5268	203
4J-5477	183
4J-9448	59
4K-0833	41
4K-4986	222
4K-6297	183
4K-8864	79
4L-6060	294
4N-9170	126
4S-1962	55. 02
4S-3652	190
4T-2215	322
4Y-0426	326
4Y-6540	280
5	
5A-3604	213
	215
5B-9304	143
	213
	225
5C-0746	55. 02
5C-2874	59
5C-2890	69
	115
	256
	269
	271
	273
5C-6108	55. 02
5C-7261	48
	57
	74
	149
	151
	181
	218
	294
5C-8312	256
5C-9559	48
	78
	113
	181
	235
	235. 06
	235. 11
	256
	271
	273
5D-1026	28
	37
	302
5G-2247	134
5H-1472	145
5I-3103	181
5I-3109	187
	189
5I-3112	183
5I-3118	183
5I-3124	183
	189
5I-3127	175. 02
	181
5I-3136	190
5I-3190	181
	190
5I-3191	222
5I-3194	222
5I-3202	111
5I-3241	262. 01
	262. 02
5I-3242	262. 02
5I-3245	262. 02
	262. 03
5I-3248	262. 02
	262. 03
5I-3251	111
5I-3282	273
5I-3285	272
5I-3287	269
5I-3316	273
5I-3469	248
5I-3534	123
5I-3556	291
	301
5I-3557	291
	301
5I-3558	291
5I-3559	291
	301
5I-3560	291
	301
5I-3561	291
	301
5I-3562	291
	301
5I-3563	291
	301
5I-3564	291
	301
5I-3565	291
	301
5I-3566	291
	301
5I-3567	291
5I-3568	291
	301
5I-3569	291
5I-3570	291
	301
5I-3571	291
	301
5I-3572	291
	301
5I-3575	291
	301
5I-3576	291
	301
5I-3577	291
	301
5I-3578	291
	301

PART NUMBER INDEX

Part No.	Page	Part No.	Page	Part No.	Page
5I-3579 ·····	291		301	5I-4009 ·····	181
	301	5I-3606 ·····	291	5I-4075 ·····	181
5I-3580 ·····	291	5I-3607 ·····	291	5I-4128 ·····	198
	301		301	5I-4363 ·····	207
5I-3581 ·····	291	5I-3608 ·····	291	5I-4487 ·····	187
	301		301		189
5I-3582 ·····	291	5I-3609 ·····	291	5I-4510 ·····	55
5I-3583 ·····	291		301		55.04
5I-3584 ·····	291	5I-3610 ·····	291	5I-4969 ·····	36
5I-3585 ·····	291		301	5I-5076 ·····	41
5I-3586 ·····	291	5I-3611 ·····	291	5I-5077 ·····	41
	301		301	5I-5181 ·····	91
5I-3587 ·····	291	5I-3612 ·····	291	5I-6024 ·····	46
	301		301	5I-6881 ·····	229
5I-3588 ·····	291	5I-3613 ·····	291	5I-7083 ·····	228
	301		301	5I-7090 ·····	210
5I-3589 ·····	291	5I-3614 ·····	291	5I-7504 ·····	41
	301		301	5I-7525 ·····	15
5I-3591 ·····	291	5I-3615 ·····	291	5I-7578 ·····	93
5I-3592 ·····	291		301	5I-7579 ·····	93
	301	5I-3616 ·····	291	5I-7623 ·····	41
5I-3593 ·····	291		301	5I-7633 ·····	46
	301	5I-3638 ·····	291	5I-7639 ·····	46
5I-3594 ·····	291		301	5I-7679 ·····	46
5I-3595 ·····	291	5I-3639 ·····	291	5I-7680 ·····	46
5I-3596 ·····	291		301	5I-7689 ·····	41
	301	5I-3640 ·····	291	5I-7854 ·····	46
5I-3597 ·····	291		301	5I-7894 ·····	36
	301	5I-3642 ·····	301	5I-7951 ·····	149
5I-3598 ·····	291	5I-3643 ·····	301	5I-7982 ·····	91
	301	5I-3644 ·····	301		92
5I-3599 ·····	291	5I-3645 ·····	301	5I-7983 ·····	91
	301	5I-3646 ·····	301	5I-7984 ·····	92
5I-3600 ·····	291	5I-3648 ·····	274	5I-7985 ·····	92
	301		277	5I-7986 ·····	92
5I-3601 ·····	291	5I-3650 ·····	275	5I-7987 ·····	92
	301		279	5I-7988 ·····	92
5I-3602 ·····	291	5I-3651 ·····	275	5I-7989 ·····	92
	301	5I-3695 ·····	274	5I-7990 ·····	92
5I-3603 ·····	291	5I-3696 ·····	274	5I-7991 ·····	92
	301	5I-3707 ·····	231.01	5I-7992 ·····	92
5I-3604 ·····	291		235.02	5I-7993 ·····	92
	301		235.08	5I-7994 ·····	92
5I-3605 ·····	291	5I-3827 ·····	293	5I-7995 ·····	92

PART NUMBER INDEX

Part No	Page	Part No	Page	Part No	Page
51-7996 ·····	92	51-8314 ·····	247		151
51-7997 ·····	92	51-8315 ·····	247	51-8789 ·····	149
51-7998 ·····	92	51-8337 ·····	247		151
51-7999 ·····	92	51-8354 ·····	94	51-8790 ·····	149
51-8005 ·····	93	51-8368 ·····	183		151
51-8013 ·····	39	51-8416 ·····	152	51-8791 ·····	149
51-8150 ·····	11		153		151
	36	51-8670 ·····	139	51-8792 ·····	149
51-8151 ·····	11	51-8725 ·····	181		151
	46	51-8749 ·····	145	51-8793 ·····	149
51-8152 ·····	11	51-8750 ·····	145		151
	93	51-8751 ·····	145	51-8794 ·····	149
51-8153 ·····	36	51-8754 ·····	145		151
51-8155 ·····	46	51-8755 ·····	145	51-8795 ·····	149
51-8156 ·····	46	51-8756 ·····	145		151
51-8158 ·····	90	51-8757 ·····	145	51-8796 ·····	149
51-8216 ·····	235	51-8758 ·····	145		151
	235.06	51-8759 ·····	145	51-8797 ·····	149
	235.12	51-8760 ·····	145		151
	244	51-8761 ·····	145	51-8798 ·····	149
51-8217 ·····	248	51-8762 ·····	145		151
51-8250 ·····	96	51-8763 ·····	145	51-8799 ·····	149
	97	51-8764 ·····	145		151
	98	51-8765 ·····	145	51-8800 ·····	149
	99	51-8766 ·····	145		151
51-8251 ·····	95	51-8767 ·····	145	51-8801 ·····	149
	98.01	51-8768 ·····	145		151
	99	51-8769 ·····	145	51-8802 ·····	149
51-8258 ·····	94.01	51-8770 ·····	145		151
51-8270 ·····	57	51-8771 ·····	145	51-8803 ·····	149
	74	51-8772 ·····	145		151
51-8273 ·····	96	51-8773 ·····	145	51-8804 ·····	149
	97	51-8774 ·····	145		151
51-8274 ·····	83	51-8775 ·····	145	51-8806 ·····	149
51-8275 ·····	83	51-8778 ·····	145		151
51-8276 ·····	83	51-8779 ·····	145	51-8807 ·····	149
51-8304 ·····	57	51-8780 ·····	145		151
	74	51-8781 ·····	145	51-8808 ·····	149
51-8306 ·····	247	51-8782 ·····	145		151
51-8308 ·····	247	51-8786 ·····	149	51-8809 ·····	149
51-8309 ·····	247		151		151
51-8310 ·····	247	51-8787 ·····	149	51-8810 ·····	149
51-8311 ·····	247		151		151
51-8312 ·····	247	51-8788 ·····	149	51-8811 ·····	149

PART NUMBER INDEX

Part No.	Page
	151
5I-8812	149
5I-8813	149
	151
5I-8814	149
	151
5I-8815	149
	151
5I-8816	145
5I-8818	145
5I-8819	149
	151
5I-8820	149
	151
5I-8821	149
	151
5I-8955	296
5I-8956	296
5K-8451	52
5K-9090	198
5K-9243	126
	161
5L-3233	45
5M-2057	139
5M-6213	15
5P-0537	41
5P-0597	34
5P-0815	118
5P-1076	113
	115
	117
	120
	121
	122
	123
	124
	135
	135.01
	183
	263
	264
	264.01
	264.02
	294
	325
5P-1475	94
5P-1519	41
5P-1717	45
5P-2321	80
	85
	86
5P-3166	183
5P-3779	152
	153
5P-4115	115
5P-4868	45
5P-5992	251
5P-6271	245
5P-6872	235
	235.06
	235.12
5P-7958	262.04
	286
5P-7970	39
	41
	47
5P-8245	17
5P-8347	24
	37
	42
5P-8500	286
5P-8501	263
5P-9135	69
5P-9205	274
5P-9297	78
	256
5P-9299	139
5P-9537	91
5P-9891	130
5S-0709	137
	137.01
5S-0754	137
	137.01
6B-2982	52.01
6B-8692	55
	55.04
6B-8962	55.05
6C-5572	55.02
6D-1641	293
	302
6D-3479	57
	74
6D-3534	55.02
6D-4244	57
6D-4246	293
6D-4636	57
6E-1435	59
6F-4718	204
6F-7045	73
	75
6G-2256	57
	59
6G-2263	57
	59
6I-5086	111
6I-5087	111
6I-5088	208
6I-5121	261
6I-5123	261
6I-5126	261
6I-5141	235
	235.06
	235.12
	248
6I-5146	254
	256
6I-5255	208
6I-5256	208
6I-5258	208
6I-5259	208
6I-5275	208
6I-5277	259
6I-5298	208
6I-5330	259
6I-5331	259
	298
6I-5338	238
6I-5339	235

6

PART NUMBER INDEX

Part No.	Page
	235. 06
	235. 12
6I-5340	238
	235. 06
	235. 12
6I-5342	238
6I-5356	262. 03
6I-5368	231
	235. 01
	235. 07
6I-5373	279
6I-5378	279
6I-5379	281
6I-5380	281
6I-5381	279
	281
6I-5382	277
	280
6I-5387	260
6I-5388	260
6I-5392	262. 01
	262. 03
6I-5393	262. 03
6I-5402	233
	235. 04
	235. 10
6I-5409	235
	235. 06
	235. 12
6I-5410	235
	235. 06
	235. 12
6I-5412	248
6I-5414	235. 06
6I-5416	235
	235. 12
6I-5417	235
	235. 06
	235. 12
6I-5419	233
	235. 04
	235. 10
6I-5424	235. 06
6I-5428	251
6I-5432	239
6I-5436	235. 04
	235. 10
6I-5438	261
6I-5439	261
6I-5440	238
	235. 06
	235. 12
6I-5443	242
6I-5444	238
	235. 06
	235. 12
6I-5445	242
6I-5446	242
6I-5457	254
6I-5458	254
	255
6I-5475	233
	235. 04
	235. 10
6I-5476	248
6I-5490	249
6I-5491	249
6I-5492	249
6I-5494	249
6I-5495	257
6I-5496	257
6I-5497	257
6I-6033	115
6I-6034	331
	332
6I-6035	331
	332
6I-6123	54
	55. 03
	138
	211
6I-6269	119
6I-6297	119
6I-6429	55. 05
6I-6582	43
6I-6646	124
6I-6786	158
6I-6885	195
	196
6I-6904	229
6I-6907	229
6I-6908	229
6I-6915	187
	188
	195
6I-6916	170
	195
6I-6934	224
	225
6J-2680	176
6K-0613	224
6K-9194	187
	189
	190
6L-3616	161
6M-6853	181
	187
6N-7675	43
6P-2216	115
	118
6S-8620	53
6T-3631	82
6T-3632	82
6T-3633	82
6T-6505	64
	67
	72
	80
	245
6T-6506	64
	67
	72
	80
	245
6T-9442	94. 01
6V-0852	183
6V-1889	57
6V-2314	218
6V-2317	51
6V-2405	286
6V-2679	251

PART NUMBER INDEX

Part No.	Page
	255
6V-3265 ·····	69
	251
	255
6V-3532 ·····	126
6V-3582 ·····	45
6V-3822 ·····	47
6V-3918 ·····	36
6V-3938 ·····	105
6V-3940 ·····	22
	37
	42
6V-3965 ·····	183
6V-4611 ·····	329
	330. 02
6V-4612 ·····	330. 05
	330. 08
6V-4613 ·····	330. 11
	330. 14
6V-5192 ·····	213
	215
	225
6V-5200 ·····	145
6V-5210 ·····	99
	247
	271
	273
6V-5215 ·····	20
	25
	26
	27
	31
	32
	38
6V-5217 ·····	24
	27
	31
	32
	47
	49
	91
6V-5219 ·····	23
	42
6V-5586 ·····	183
6V-5645 ·····	69
6V-5683 ·····	145
	222
6V-5722 ·····	219
6V-5839 ·····	23
	25
	31
	47
	49
	90
6V-6317 ·····	25
6V-6842 ·····	235. 04
6V-7357 ·····	115
	181
	260
	293
6V-7636 ·····	233
	235. 04
	235. 10
6V-7658 ·····	129
6V-7661 ·····	134
6V-7970 ·····	220
6V-8176 ·····	39
6V-8186 ·····	69
6V-8200 ·····	176
6V-8202 ·····	274
6V-8213 ·····	149
	151
6V-8225 ·····	41
6V-8231 ·····	46
6V-8365 ·····	69
6V-8374 ·····	82
6V-8378 ·····	69
6V-8397 ·····	183
6V-8491 ·····	273
6V-8627 ·····	183
6V-8636 ·····	183
6V-8637 ·····	192
	195
	198
6V-8647 ·····	183
6V-8714 ·····	198
6V-8724 ·····	183
6V-8754 ·····	229
6V-8837 ·····	41
6V-8928 ·····	233
	235. 04
	235. 10
6V-9007 ·····	198
6V-9008 ·····	198
6V-9182 ·····	197
6V-9671 ·····	247
6V-9672 ·····	256
6V-9746 ·····	170
	192
	195
	197
	198
6V-9824 ·····	271
	273
6V-9832 ·····	171
6W-6005 ·····	57
	74
6Y-0473 ·····	134
6Y-0922 ·····	137. 01
6Y-0923 ·····	137. 01
6Y-8186 ·····	137
	137. 01
7C-4354 ·····	57
	302
7F-6998 ·····	293
7F-8268 ·····	134
7G-1060 ·····	57
7H-3171 ·····	129
	134
	222
7I-0047 ·····	195
7I-0048 ·····	195
	196
7I-0057 ·····	204
7I-0058 ·····	204
7I-0060 ·····	205
7I-0061 ·····	205

PART NUMBER INDEX

Part No	Page
71-0062	205
71-0063	205
71-0064	205
71-0066	205
71-0076	172
71-0168	205
71-0172	183
71-0175	175
71-0181	186
	187
	189
71-0184	183
71-0187	184
71-0193	183
71-0196	183
71-0213	291
	301
71-0241	231
	235. 01
	235. 07
71-0242	231
	235. 01
	235. 07
71-0251	291
	301
71-0253	291
	301
71-0261	295
71-0262	295
	298
71-0337	111
71-0375	55. 05
71-0611	329
	330. 02
71-0612	330. 05
	330. 08
71-0613	330. 11
	330. 14
71-0624	330
	330. 03
71-0625	330. 06
	330. 09
71-0626	330. 12
	330. 15
71-0678	329
	330. 02
71-0721	258
71-0722	258
71-0903	183
71-0916	183
71-0924	183
71-0927	183
71-0933	183
71-0942	183
71-1001	198
	220
71-1018	155
71-1026	213
	215
71-1032	203
71-1036	195
71-1041	203
71-1044	203
	206
71-1055	191
71-1096	191
71-1151	175
	175. 02
71-1152	175
	175. 02
71-1177	181
71-1178	181
71-1180	204
71-1215	170
	195
71-1282	145
71-1283	221
71-1284	221
71-1285	195
	196
	221
71-1316	139
71-1542	117
71-1565	331
	332
71-1601	331
	332
71-1602	331
	332
71-1660	233
	235. 04
	235. 10
71-1681	298
71-1682	298
71-1697	178
	331
71-1699	178
	331
71-6271	329
	330. 02
	330. 05
	330. 08
	330. 11
	330. 14
71-6395	326
71-6621	291
	301
71-6631	296
71-6670	127
71-6714	256
71-6716	298
71-6734	298
71-6735	298
71-6739	298
71-6740	298
71-6750	288
71-6755	280
71-6756	280
	281
71-6757	280
71-6758	280
71-6759	280
71-6760	277
	279
71-6763	279
71-6764	277
71-6765	279
71-6766	277
71-6767	277
71-6768	277
71-6773	208
71-6785	209

PART NUMBER INDEX

Part No.	Page	Part No.	Page	Part No.	Page
	210	71-7221 ·····	215	71-7783 ·····	108
71-6786 ·····	209	71-7227 ·····	213	71-7784 ·····	108
71-6886 ·····	281	71-7229 ·····	213	71-7785 ·····	108
71-6887 ·····	281		215	71-7786 ·····	108
71-6888 ·····	281	71-7232 ·····	213	71-7787 ·····	108
71-6889 ·····	279	71-7235 ·····	215	71-7788 ·····	108
71-6960 ·····	209	71-7237 ·····	215	71-7789 ·····	108
71-6969 ·····	277	71-7241 ·····	213	71-7791 ·····	108
	279		215	71-8017 ·····	191
71-7184 ·····	158	71-7242 ·····	213	71-8078 ·····	216
71-7185 ·····	159		215	71-8080 ·····	220
71-7190 ·····	213	71-7243 ·····	213	71-8081 ·····	217
71-7191 ·····	213		215	71-8082 ·····	217
71-7192 ·····	213	71-7244 ·····	213	71-8084 ·····	213
71-7197 ·····	213		215	71-8087 ·····	217
71-7198 ·····	213	71-7250 ·····	215	71-8088 ·····	213
71-7199 ·····	213	71-7254 ·····	215	71-8090 ·····	217
71-7200 ·····	213	71-7257 ·····	215	71-8091 ·····	217
	215	71-7258 ·····	213	71-8092 ·····	217
71-7201 ·····	213		215	71-8095 ·····	217
	215	71-7259 ·····	213	71-8096 ·····	217
71-7202 ·····	213	71-7261 ·····	221	71-8097 ·····	217
71-7203 ·····	213	71-7321 ·····	207	71-8098 ·····	217
	215	71-7413 ·····	175	71-8100 ·····	217
71-7204 ·····	213		175.02	71-8113 ·····	196
	215	71-7427 ·····	195	71-8221 ·····	183
71-7206 ·····	213		196	71-8244 ·····	220
	215	71-7435 ·····	192	71-8245 ·····	220
71-7207 ·····	213		195	71-8246 ·····	220
	215	71-7479 ·····	151	71-8267 ·····	103
71-7208 ·····	213	71-7485 ·····	195		204
	215	71-7490 ·····	195		205
71-7210 ·····	215		196	71-8273 ·····	181
71-7212 ·····	213		220	71-8287 ·····	200
	215	71-7494 ·····	221	71-8303 ·····	170
71-7213 ·····	213	71-7495 ·····	221	71-8306 ·····	170
	215	71-7496 ·····	199	71-8309 ·····	170
71-7214 ·····	213		221	71-8310 ·····	170
	215	71-7530 ·····	187	71-8315 ·····	172
71-7215 ·····	213		189	71-8436 ·····	210
	215	71-7617 ·····	298	71-8555 ·····	178
71-7218 ·····	213	71-7627 ·····	107	71-8556 ·····	178
	215	71-7762 ·····	103	71-8557 ·····	179
71-7220 ·····	213	71-7782 ·····	108	71-8559 ·····	177

PART NUMBER INDEX

Part No.	Page
7J-8566 ·····	161
7J-8567 ·····	161
	171
7J-8568 ·····	163
	308
7J-8569 ·····	167
7J-8568 ·····	167
	312
7J-8569 ·····	167
7J-8571 ·····	167
	312. 01
7J-8603 ·····	311
	312. 01
7J-8625 ·····	308
7J-0204 ·····	219
7J-4026 ·····	183
7K-1181 ·····	51
	175
	175. 02
	181
	183
	184
	190
7M-8485 ·····	175
	175. 02
	176
	191
	192
	193
	195
	196
	197
	198
	206
	219
	221
7N-0718 ·····	69
	73
7N-0719 ·····	74
	75
7N-5274 ·····	60
	61
	76
7N-7779 ·····	48
	53
	55. 04
	57
	59
	62
	63
	64
	67
	72
	80
	81
	83
	85
	86
	88
7N-7780 ·····	48
	55
	55. 04
	57
	59
	62
	63
	64
	67
	72
	80
	81
	83
	85
	86
	88
	89
	94
	94. 01
	97
	98
	181
	183
	244
	245
	247
	257
	258
	266
	267
7N-7781 ·····	85
	86
	266
7N-7782 ·····	85
	86
	258
	267
7N-8008 ·····	79
	82
7N-8204 ·····	67
	244
	245
7N-8205 ·····	67
	244
	247
	257
	267
7N-9070 ·····	294
7N-9737 ·····	55
	55. 04
	59
	62
	63
	64
	67
	81
	85
	86
	88

PART NUMBER INDEX

Part No.	Page
	85
	94
	94. 01
	97
	98
	181
	183
	244
	258
	266
7N-9738	57
	62
	63
	64
	67
	85
	86
	181
	244
	245
	267
7S-4244	255
7T-4306	298
7T-8890	252
	253
7X-0796	36
	46
7X-0818	294
7X-0851	320
7X-2534	288
7X-2537	48
	55. 02
	294
7X-2538	94
7X-2543	288
7X-2548	59
7X-2549	231
	235. 01
	235. 07
7X-2553	34
7X-2558	313
7X-2563	100
7X-2565	132. 02
	133
7X-2566	29
7X-2585	124
7X-3345	101
7X-4803	307
	308
	309
	310
	311
	312
	312. 01
7X-6222	67
7X-6387	258
7X-6388	258
7X-7644	329
	330. 02
	330. 05
	330. 08
	330. 11
	330. 14
7X-7729	28
7Y-0001	330
	330. 03
7Y-0003	330
	330. 03
7Y-0005	330
	330. 03
7Y-0012	329
	330. 02
7Y-0013	329
	330. 02
7Y-0014	329
	330. 02
7Y-0017	330. 12
	330. 15
7Y-0019	330. 12
	330. 15
7Y-0021	330. 12
	330. 15
7Y-0026	330. 11
	330. 14
7Y-0027	330. 11
	330. 14
7Y-0028	330. 11
	330. 14
7Y-0030	330. 06
	330. 09
7Y-0032	330. 06
	330. 09
7Y-0034	330. 06
	330. 09
7Y-0039	330. 05
	330. 08
7Y-0040	330. 05
	330. 08
7Y-0041	330. 05
	330. 08
7Y-0059	286
7Y-0066	329
	330. 02
7Y-0067	330. 11
	330. 14
7Y-0068	330. 05
	330. 08
7Y-0070	326
7Y-0466	142
7Y-0468	142
	225
7Y-0623	111
7Y-0633	127
	127. 01
7Y-0729	320
7Y-1229	28
7Y-1583	11
	44
7Y-1598	131
7Y-1685	131
7Y-1686	131
7Y-1687	131
7Y-1734	29
7Y-1780	131
7Y-1781	131
7Y-1811	128
7Y-1883	131
7Y-1889	35
7Y-1900	142
7Y-1901	142
7Y-1902	142
7Y-1904	142

PART NUMBER INDEX

Part No.	Page
7Y-1905	142
7Y-2262	55. 04
7Y-2292	123
7Y-2395	309
	310
	311
	312
	312. 01
7Y-2396	309
	310
	311
	312
	312. 01
7Y-2398	55
	55. 04
	55. 05
7Y-2496	127
	307
	308
	309
	310
	311
	312
	312. 01
7Y-2497	127
	307
	308
7Y-2580	307
	308
7Y-2680	118
7Y-2881	119
7Y-3020	270
7Y-3036	271
	273
7Y-3080	273
7Y-3082	271
	273
7Y-3093	270
7Y-3094	271
7Y-3095	271
7Y-3116	111
7Y-3127	111
7Y-3133	271
	273
7Y-3154	270
	272
7Y-3155	270
	272
7Y-3156	270
	272
7Y-3165	270
	272
7Y-3168	271
	273
7Y-3173	270
	271
	272
	273
7Y-3184	233
	235. 04
	235. 10
	271
	272
7Y-3185	233
	235. 04
	235. 10
	271
	272
7Y-3191	270
	272
7Y-3196	57
	111
7Y-3248	271
	272
7Y-3267	272
7Y-3268	270
	272
7Y-3271	271
	273
7Y-3272	271
	273
7Y-3273	271
	273
7Y-3281	111
7Y-3282	271
	273
7Y-3286	274
7Y-3430	123
7Y-3431	123
7Y-3474	251
	255
7Y-3820	63
7Y-3821	63
7Y-3868	78
	80
7Y-3918	79
	83
7Y-3919	93
7Y-3920	93
7Y-3922	79
	87
7Y-3946	57
	60
	74
7Y-3947	57
	60
7Y-3958	62
7Y-3963	81
	88
	89
7Y-3965	81
	88
	89
7Y-3994	96
7Y-3995	63
7Y-3996	63
7Y-4419	230
7Y-4444	152
7Y-4447	222
7Y-4529	302
7Y-4714	139
7Y-4717	210
7Y-4754	55
	55. 04
	55. 05
	139
7Y-5009	222
7Y-5010	222
7Y-5011	222
7Y-5116	158
7Y-5117	158
7Y-5118	158

PART NUMBER INDEX

Part No.	Page
7Y-5119	158
7Y-5243	213
7Y-5282	139
7Y-5286	99
7Y-5287	291
7Y-5288	99
7Y-5293	231. 01
	235. 02
	235. 08
7Y-5295	231. 01
	235. 02
	235. 08
7Y-5458	83
7Y-5464	83
7Y-5465	79
	83
7Y-5490	69
	94. 01
7Y-5491	71
7Y-5492	69
7Y-5493	69
7Y-5494	70
	71
7Y-5497	57
7Y-5499	69
7Y-5500	231. 01
	235. 02
	235. 08
	247
7Y-5560	48
7Y-5561	48
7Y-5753	210
7Y-5757	210
7Y-6007	172
7Y-6108	326
7Y-6187	329
	330. 02
7Y-7360	233
	235
	235. 04
	235. 06
	235. 10
	235. 12
7Y-7364	235
	235. 06
	235. 12
7Y-7389	299
7Y-7394	270
	272
7Y-7685	320
7Y-8102	254
	258
7Y-8104	235. 04
	235. 10
7Y-8105	267
7Y-8165	57
7Y-8167	52
	59
	293
7Y-8169	57
7Y-8172	59
	78
	79
7Y-8189	98
7Y-8233	78
	79
7Y-8234	78
	79
7Y-8244	81
	88
	89
7Y-8245	98
7Y-8246	78
	79
7Y-8463	224
7Y-8555	115
7Y-8561	235
	235. 06
	235. 12
7Y-9390	79
7Y-9477	307
	308
7Y-9548	286
8C-3111	269
8C-3347	108
8C-7506	277
8C-8729	105
8C-8992	121
	122
	263
	264. 01
8D-0482	302
8E-3751	321
8E-3756	323
8E-4359	129
8E-5031	134
8E-5032	134
8E-5034	132. 02
	133
	134
8E-5035	134
8E-5037	134
8E-5599	134
8E-5600	132. 02
	133
	134
8E-5601	134
8E-5602	134
8E-5605	134
8E-5606	134
8E-5609	134
8E-6259	321
	322
	323
	324
8E-6792	134
8E-6793	134
8E-8585	137
	137. 01
8E-8586	137
	137. 01
8E-8587	137
	137. 01
8E-9490	317
	318
	319

PART NUMBER INDEX

Part No.	Page
8F-1326	270
	272
8H-2282	262. 02
	262. 03
8H-3481	233
	235. 06
	235. 12
8H-5305	73
	75
8H-5306	72
	75
8H-8648	69
8J-1256	59
8J-9208	55. 04
8L-8413	266
8M-0505	183
8M-2770	48
	59
	69
8M-2772	94. 01
	161
8M-2773	57
	59
	97
	299
8N-0869	61
8N-1725	60
	61
	76
8R-1774	253
	255
8T-0100	24
	36
8T-0211	218
8T-0269	115
	145
	149
	151
8T-0271	210
8T-0276	37
8T-0287	218
8T-0328	55
	55. 04
	59
	69
	94. 01
8T-0341	219
8T-0347	205
8T-0348	215
8T-0362	126
8T-0380	320
8T-0639	91
8T-1159	134
	146
	223
8T-1915	330
	330. 08
8T-1962	330. 06
	330. 09
8T-1963	330. 12
	330. 15
8T-3647	48
8T-4121	34
	35
	36
	43
	45
	52
	53
	55. 02
	57
	59
	69
	74
	78
	79
	94. 01
	95
	96
	97
	98. 01
	107
	111
	113
	126
	127
	139
	141
	146
	160
	161
	162
	164
	165
	166
	170
	172
	175
	175. 02
	181
	193
	196
	197
	198
	207
	210
	233
	235
	235. 04
	235. 06
	235. 10
	235. 12
	236
	240
	248
	251
	255
	256
	260
	262. 04
	269
	271
	273
	274
	288
	293
	294
	296
	297
	299
	302
8T-4123	29

PART NUMBER INDEX

Part No.	Page
	100
	132
	132. 01
	132. 02
	133
	307
	308
	309
	310
	311
	312
	312. 01
8T-4132 ·····	141
	302
	313
8T-4133 ·····	52
	57
	59
	74
	94. 01
	96
	97
	98. 01
	139
	140
	161
	181
	226
	233
	235
	235. 04
	235. 06
	235. 10
	235. 12
	251
	255
	256
	293
	299
	302
8T-4134 ·····	69
	239
	251
8T-4136 ·····	53

Part No.	Page
	126
	141
	170
	198
	207
	210
	221
	236
	240
	262. 04
	293
8T-4137 ·····	28
	34
	35
	43
	45
	46
	52
	55. 02
	57
	111
	130
	139
	175
	175. 02
	181
	210
	233
	235
	235. 04
	235. 06
	235. 10
	235. 12
	260
	269
	274
	293
	296
	297
	299
	302
8T-4138 ·····	115
	187
	188

Part No.	Page
	251
8T-4139 ·····	113
	162
	183
	192
	193
	195
	231
	235. 01
	235. 07
	263
8T-4140 ·····	54
	55. 03
	100
	141
	211
8T-4171 ·····	59
	78
	79
	131
8T-4175 ·····	111
8T-4176 ·····	198
8T-4178 ·····	164
	165
	166
	170
	172
8T-4179 ·····	55. 03
	57
	113
	115
	125
	131
8T-4182 ·····	59
	160
	195
	196
8T-4183 ·····	29
	44
8T-4185 ·····	57
	59
	162
	164
	165

PART NUMBER INDEX

Part No.	Page
	166
	197
	294
8T-4186 ·····	170
8T-4189 ·····	48
	273
8T-4190 ·····	96
	97
8T-4191 ·····	34
	55.01
	57
	59
	69
	78
	79
	94.01
	95
	111
	161
8T-4192 ·····	34
	48
	113
	115
	117
	191
	199
	264
	264.02
	294
	325
8T-4193 ·····	102
	129
	138
	320
8T-4194 ·····	294
8T-4195 ·····	59
	107
	127
	160
	162
	164
	165
	166
	175
	175.01
	193
	196
	197
	199
8T-4196 ·····	164
	165
	166
8T-4197 ·····	187
	189
8T-4198 ·····	57
8T-4199 ·····	126
	262.01
	262.03
8T-4200 ·····	34
	35
	113
	139
	181
	235
	235.06
	235.12
	256
	271
	273
	293
8T-4223 ·····	29
	34
	44
	48
	55.03
	57
	59
	99
	103
	113
	115
	125
	128
	162
	164
	165
	166
	171
	191
	192
	193
	195
	198
	199
	211
	231
	235.01
	235.07
	264
	264.02
	307
	308
8T-4224 ·····	34
	35
	48
	55.02
	59
	77
	94
	113
	139
	181
	235
	235.06
	235.12
	236
	240
	256
	262.02
	262.03
	264
	264.02
	271
	273
	293
	294
8T-4226 ·····	57
	74
8T-4241 ·····	158
8T-4244 ·····	44
	113
	192

PART NUMBER INDEX

Part No.	Page
	206
8T-4648 ·····	191
	192
8T-4780 ·····	127
	307
	308
	309
	310
	311
	312
	312. 01
8T-4894 ·····	158
8T-4908 ·····	77
8T-4910 ·····	162
	164
	165
	166
	171
	191
	192
	193
	195
8T-4944 ·····	203
8T-4956 ·····	128
	211
	307
	308
8T-4971 ·····	59
	269
8T-5005 ·····	181
	198
8T-5041 ·····	103
8T-5436 ·····	197
8T-5460 ·····	132
	132. 01
	132. 02
	133
8T-5878 ·····	132. 02
	133
8T-5913 ·····	253
8T-5914 ·····	252
	253
8T-6385 ·····	313
8T-6411 ·····	69
8T-6412 ·····	239
	251
8T-6466 ·····	162
	170
	195
	196
8T-6759 ·····	145
	149
	151
	203
	207
8T-6842 ·····	330
	330. 03
	330. 06
	330. 09
	330. 12
	330. 15
8T-6843 ·····	330
	330. 03
8T-6868 ·····	231
	235. 01
	235. 07
8T-6912 ·····	59
8T-7547 ·····	235
	235. 06
	235. 12
	294
8T-7829 ·····	330. 06
	330. 09
8T-7830 ·····	330. 12
	330. 15
8T-8442 ·····	149
	151
8T-8729 ·····	246
8T-8737 ·····	67
8T-8799 ·····	63
8T-9515 ·····	172
8T-9534 ·····	183
8T-9833 ·····	77
8T-9834 ·····	67
8Y-4820 ·····	236
	240
8Y-5705 ·····	282
8Y-5706 ·····	282
8Y-5709 ·····	282
8Y-5711 ·····	281
8Y-5728 ·····	233
	235. 04
	235. 10
8Y-5745 ·····	233
	235. 04
	235. 10
8Y-6856 ·····	274
9B-1117 ·····	247
9F-2167 ·····	191
9F-2247 ·····	15
9F-5644 ·····	73
	75
9G-2264 ·····	67
	85
	86
	244
	267
9G-2265 ·····	85
	86
	244
	245
	267
9G-3658 ·····	67
	88
	89
9G-3659 ·····	67
9G-3667 ·····	62
	67
	72
	80
	85
	86
	88
	89
	244
9G-3670 ·····	245
9G-3671 ·····	67
9G-3672 ·····	48

PART NUMBER INDEX

Part No.	Page
	83
	85
	86
9G-3673	61
	67
	71
9G-3676	67
9G-3677	61
9G-3678	67
	72
	88
	89
9G-3695	62
	63
	64
	67
	72
	80
	85
	86
	94. 01
	244
	267
9G-4336	63
9G-4343	62
9G-6259	94
9G-8909	61
9G-9150	57
	59
	94. 01
	294
9G-9151	57
	67
9G-9152	57
9G-9155	48
9J-2308	321
	322
	323
	324
9J-3167	321
9J-3175	322
9J-4309	323
9J-7031	139
9K-5469	183
9L-6654	23
9M-1974	20
	22
	23
	24
	26
	27
	31
	32
	36
	37
	39
	42
	47
	49
	51
	91
9M-7959	41
9M-8406	52
	293
9N-3666	55
	55. 04
	55. 05
9N-4302	321
9N-4303	323
9R-3924	55
	55. 04
	55. 05
9S-0174	69
9S-4181	191
9S-4182	181
	183
	213
9S-4183	172
	198
9S-4185	183
	197
	221
	227
9S-4191	181
	183
	184
	218
9S-6130	55. 04
9S-8004	219
9S-8005	207
9S-8007	219
9S-9334	219
9W-0335	231. 01
	235. 02
	235. 08
9W-0844	67
	245
9W-1441	69
9W-1442	69
9W-1446	69
9W-1494	231. 01
	235. 02
	235. 08
9W-2150	181
9W-3137	137
	137. 01
9W-3138	137
	137. 01
9W-3361	135. 02
	136
	137
9W-3619	135. 02
	136
	137
9W-7220	134
9W-7225	129
9W-8308	324
9W-8309	324
9W-9188	324
9W-9189	324
9W-9349	135. 02
	136
9W-9350	135. 02
	136
9W-9451	129
9W-9455	129
9X-0196	62
	244
	245
9X-2041	231
	231. 01
	233

PART NUMBER INDEX

Part No.	Page
	235
	235. 01
	235. 02
	235. 04
	235. 06
	235. 07
	235. 08
	235. 10
	235. 12
9X-2042 ·····	274
9X-2044 ·····	231
	232
	235
	235. 01
	235. 04
	235. 06
	235. 07
	235. 10
	235. 12
	236
	240
	248
	250
	259
	261
	269
	270
	271
	272
	273
	298
9X-2045 ·····	233
	235
	235. 04
	235. 06
	235. 10
	235. 12
9X-2046 ·····	233
	235. 04
	235. 10
9X-2843 ·····	272
9X-3265 ·····	67
9X-3463 ·····	99
9X-3592 ·····	158
9X-6032 ·····	197
	203
9X-7298 ·····	159
9X-7301 ·····	157
9X-8124 ·····	69
9X-8256 ·····	48
	59
	69
	78
	79
	115
	181
	235
	235. 06
	235. 12
	239
	251
	256
	260
	269
	271
	273
	288
	293
	298
9X-8257 ·····	34
	96
	97
	100
	111
	141
	181
	256
	320
9X-8259 ·····	131
9X-8488 ·····	99
9X-8901 ·····	41
96-0783 ·····	291
0	
003-7764 ·····	52. 01
	55
003-9163 ·····	55. 02
004-6683 ·····	52. 01
	55
	55. 04
	55. 05
005-4362 ·····	183
005-7898 ·····	55. 02
030-3978 ·····	187
	189
030-7621 ·····	279
030-7936 ·····	181
	184
	185
	188
030-7946 ·····	181
	183
030-7947 ·····	181
	183
	184
	185
	187
	188
	189
	190
030-7948 ·····	183
030-7959 ·····	183
030-8188 ·····	183
030-8189 ·····	183
030-8194 ·····	139
	175
	175. 02
031-2582 ·····	175
	175. 02
033-8248 ·····	161
039-2280 ·····	59
053-0700 ·····	183
	187
	189
065-9051 ·····	219
085-4771 ·····	294
085-4772 ·····	294
085-4773 ·····	294

PART NUMBER INDEX

Part No.	Page	Part No.	Page	Part No.	Page
085-4774	294	087-4575	153	087-5708	223
085-4792	228	087-4576	153		226
085-5353	69	087-4577	153	087-5709	223
085-6444	237	087-4589	224		226
085-6445	237	087-4659	219	087-5802	313
085-6446	237	087-4660	219	087-5803	313
085-6447	237	087-4662	219	087-5840	161
085-6448	237	087-4665	219	087-5864	274
085-6449	237	087-4666	219	087-5871	295
	239	087-4667	219		299
085-6546	219	087-4668	219	087-5873	295
085-6551	219	087-4669	219		296
085-7537	219	087-4671	219	087-5908	132
085-7539	219	087-4673	219	087-8484	233
085-8037	235	087-4674	219		235.04
	235.06	087-4675	219		235.10
	235.12	087-4676	219	087-8737	54
	255	087-4677	219		55.03
085-8720	228	087-4678	219		138
085-8724	170	087-4679	219	087-8738	54
	228	087-4680	219		55.03
085-9311	126	087-4683	219		138
085-9429	92	087-4703	223	087-8740	54
086-1199	329		226		55.03
	330.02	087-4704	223		138
	330.05		226	093-0084	127
	330.08	087-4707	223		307
	330.11		226		308
	330.14	087-4710	223	093-0086	127
086-1781	55		226		307
	55.04	087-4969	225		308
086-1936	197	087-4970	224		309
	219	087-4973	218		310
087-3670	124	087-4975	218		311
087-3832	55.04	087-5054	181		312
087-3908	115		218		312.01
087-3909	115	087-5088	218	093-0116	127
087-4448	223	087-5504	158		307
	226	087-5505	158		308
087-4454	153	087-5554	181	093-0118	127
087-4456	152	087-5675	210		307
	183		226		308
087-4508	181	087-5707	223		309
087-4509	181		226		310

PART NUMBER INDEX

Part No.	Page
	311
	312
	312. 01
093-0349 ·····	127
	307
	308
	309
	310
	311
	312
	312. 01
093-0366 ·····	307
	308
093-0369 ·····	127
	307
	308
	309
	310
	311
	312
	312. 01
093-1291 ·····	195
	196
093-1292 ·····	162
	164
	165
	166
	171
093-1296 ·····	191
	192
093-1300 ·····	171
	192
	193
	195
093-1434 ·····	154
	155
	156
	309
	310
	311
	312
	312. 01
	313
093-1435 ·····	131
093-1477 ·····	159
093-1479 ·····	157
093-1483 ·····	159
093-1484 ·····	157
093-1515 ·····	131
093-1519 ·····	159
093-1588 ·····	139
093-1605 ·····	159
093-1812 ·····	159
093-1814 ·····	157
093-1824 ·····	158
093-2063 ·····	52
	57
093-2064 ·····	293
093-2068 ·····	52. 01
	59
093-2237 ·····	329
	330. 02
	330. 05
	330. 08
	330. 11
	330. 14
093-2238 ·····	329
	330. 02
	330. 05
	330. 08
	330. 11
	330. 14
093-4391 ·····	105
093-5133 ·····	105
093-5432 ·····	35
093-6087 ·····	107
093-6088 ·····	107
093-6089 ·····	107
093-6098 ·····	107
093-7638 ·····	326
093-7919 ·····	203
093-8005 ·····	203
093-8008 ·····	203
093-8768 ·····	107
093-9473 ·····	228
094-0848 ·····	228
094-0872 ·····	225
094-0876 ·····	223
	225
	226
094-1416 ·····	139
094-1540 ·····	103
094-2080 ·····	69
094-2514 ·····	17
094-3229 ·····	139
094-3232 ·····	139
094-3245 ·····	139
094-3247 ·····	55
	55. 04
	55. 05
	139
094-7235 ·····	51
094-7998 ·····	49
095-0658 ·····	198
	209
095-0723 ·····	250
095-0728 ·····	228
	235
	235. 06
	235. 12
095-0735 ·····	83
	210
095-0736 ·····	55
	55. 04
	231. 01
	235. 02
	235. 08
095-0742 ·····	231. 01
	235. 02
	235. 08
	236
	240
095-0744 ·····	242
095-0815 ·····	218
095-0819 ·····	105
095-0826 ·····	95
095-0827 ·····	231. 01
	235. 02
	235. 08
	236
	239
	240

PART NUMBER INDEX

Part No.	Page	Part No.	Page	Part No.	Page
	288		55. 04		216
095-0843 ·····	181		55. 05		222
	264		139	095-1586 ·····	149
	264. 02	095-1519 ·····	217		151
095-0863 ·····	137		222		213
	137. 01	095-1525 ·····	38		215
095-0882 ·····	145	095-1528 ·····	32		223
095-0893 ·····	107	095-1552 ·····	140		225
095-0960 ·····	52	095-1574 ·····	145		226
	52. 01		213	095-1587 ·····	206
	53		215		229
095-0966 ·····	105	095-1575 ·····	145	095-1590 ·····	149
	203		149		151
095-0968 ·····	105		151		230
095-1056 ·····	326		217	095-1591 ·····	217
095-1057 ·····	326	095-1576 ·····	216	095-1592 ·····	205
095-1064 ·····	326	095-1578 ·····	149		213
095-1066 ·····	326		151		215
095-1068 ·····	326		203		217
095-1070 ·····	326		213		222
095-1071 ·····	326		215	095-1593 ·····	217
095-1078 ·····	326		230	095-1594 ·····	149
095-1079 ·····	326	095-1579 ·····	149		151
095-1080 ·····	326		151		205
095-1081 ·····	326		204	095-1595 ·····	230
095-1082 ·····	326	095-1580 ·····	205	095-1596 ·····	216
095-1084 ·····	326		213	095-1600 ·····	228
095-1209 ·····	145		230	095-1608 ·····	126
095-1260 ·····	223	095-1581 ·····	149		139
	226		151	095-1612 ·····	131
095-1316 ·····	181	095-1582 ·····	203	095-1625 ·····	207
095-1319 ·····	113		217	095-1626 ·····	159
095-1388 ·····	52. 01		222	095-1663 ·····	146
	55		229	095-1671 ·····	32
	55. 04	095-1584 ·····	145	095-1673 ·····	159
	55. 05		149	095-1675 ·····	157
095-1392 ·····	198		151	095-1696 ·····	149
095-1394 ·····	178		217		151
095-1514 ·····	55		222		213
	55. 04	095-1585 ·····	145	095-1698 ·····	145
	55. 05		149		213
	139		151	095-1700 ·····	149
	217		203		151
095-1517 ·····	55		205		213

PART NUMBER INDEX

Part No.	Page	Part No.	Page	Part No.	Page
	215	096-0014	145		215
095-1701	131		203	096-3150	145
	203	096-0061	28	096-3375	227
095-1709	149		34	096-3376	227
	151		181	096-3774	113
095-1711	145		183	096-3780	264
095-1716	157		184		264.02
	207		185	096-3781	113
095-1717	145		187	096-3872	55.02
095-1718	145		188		59
	158		189	096-3881	235
095-1730	139		190		235.06
	203		255		235.12
095-1777	145		293	096-3884	236
095-1783	145	096-0174	51		240
	217	096-0192	83	096-3909	271
095-1784	205	096-0684	115		273
	216	096-0721	235	096-3937	55
095-1786	206		235.06		55.04
095-1787	230		235.12	096-4033	230
095-1788	205	096-0854	154	096-4034	35
095-1789	205		156	096-4035	34
095-1790	230		313	096-4085	248
095-1833	326	096-1054	157	096-4176	43
095-1836	326	096-1548	228	096-4177	43
095-1852	326	096-1550	230	096-4182	35
095-1855	326	096-1551	230	096-4204	44
095-1857	326	096-1552	230	096-4275	131
095-2040	50	096-1553	230	096-4276	131
095-2309	50	096-1554	230	096-4498	225
095-2310	50	096-1595	222	096-4500	225
095-3569	37	096-1596	222	096-4503	225
095-5620	140	096-1598	222	096-4615	207
095-6639	140	096-1611	225	096-4747	320
095-6641	140	096-1621	225	096-4748	320
095-7034	50	096-1622	225	096-4754	139
095-7419	203	096-1628	225	096-4830	249
095-7930	95	096-2323	149	096-4874	223
095-7945	105		151	096-4879	131
095-7993	100	096-2369	198	096-4883	271
	126	096-2622	236		273
095-8024	217		240	096-4884	191
	230	096-2915	140		198
095-9258	230	096-3021	213	096-5028	45

PART NUMBER INDEX

Part No	Page	Part No	Page	Part No	Page
096-5766	197	099-0329	204		123
096-5819	34	099-0330	204		124
096-5820	34	099-0331	204		135
096-5918	230	099-0332	204		135. 01
096-5932	205	099-0333	204		263
096-5933	205	099-0334	204		264. 01
096-5934	205	099-0335	204	099-4705	34
096-5962	247	099-0365	229	099-4749	204
096-5965	218	099-0367	229	099-4753	181
096-5971	105	099-0371	204	099-4754	181
096-6078	181	099-0492	269	099-5349	203
096-6079	181	099-0822	222	099-5400	159
096-6080	181	099-0823	233	099-5408	191
096-6081	181		235. 04	099-6132	226
096-6082	181		235. 10	099-6135	223
096-6083	181	099-0862	235		226
096-6084	181		235. 06	099-6136	223
096-6085	181		235. 12		225
096-6095	126	099-1426	113		226
096-6166	222	099-1432	132	099-6137	223
	235	099-3245	326		225
	235. 06	099-3246	326		226
	235. 12	099-3248	326	099-6140	223
	247	099-3249	326		226
	256	099-3250	326	099-6141	223
096-6331	209	099-3502	123		226
096-6332	209	099-3506	238	099-6142	223
096-6333	209	099-3603	233		226
096-6561	231. 01		235. 04	099-6144	223
	235. 02		235. 10		226
	235. 08	099-3607	233	099-6145	223
096-6562	233		235. 04		226
	235. 04		235. 10	099-6415	119
	235. 10	099-3629	235	099-6418	119
096-7265	105		235. 06	099-6530	204
096-8039	105		235. 12	099-6531	204
096-8056	108	099-3645	286	099-6532	204
096-8139	157	099-3659	326	099-6533	204
096-8251	326	099-3913	92	099-6535	204
099-0139	237	099-4273	139	099-6607	34
099-0320	204	099-4298	263	099-6746	291
099-0321	204	099-4420	15	099-6953	221
099-0322	204	099-4483	91	099-6954	221
099-0328	204	099-4691	120	099-6966	326

PART NUMBER INDEX

Part No	Page	Part No	Page	Part No	Page
099-7075 ·····	203	101-2306 ·····	279	102-3848 ·····	29
099-7076 ·····	203	101-6490 ·····	23	102-3856 ·····	142
099-7077 ·····	203	101-6492 ·····	17	102-3857 ·····	142
099-7079 ·····	203		49	102-3858 ·····	141
099-7114 ·····	203	101-6544 ·····	31	102-3883 ·····	45
099-7116 ·····	203	101-6680 ·····	15	102-3884 ·····	45
099-7144 ·····	203	101-6681 ·····	26	102-3885 ·····	45
099-7146 ·····	203	101-8899 ·····	236	102-3891 ·····	34
099-7147 ·····	203		240	102-3897 ·····	28
099-7148 ·····	203	101-8900 ·····	239	102-3929 ·····	294
099-7149 ·····	203	102-0730 ·····	221	102-3930 ·····	34
099-7151 ·····	203	102-0772 ·····	199	102-3931 ·····	34
099-7152 ·····	203	102-0860 ·····	220	102-4822 ·····	329
099-7172 ·····	111	102-0896 ·····	204		330.02
099-7196 ·····	203	102-0898 ·····	205		330.05
099-7197 ·····	203	102-0913 ·····	222		330.08
099-7198 ·····	203	102-0934 ·····	216		330.11
099-7200 ·····	203	102-0940 ·····	211		330.14
099-7313 ·····	111	102-0983 ·····	211	102-4823 ·····	329
099-7464 ·····	326	102-1130 ·····	199		330.02
099-7690 ·····	205	102-1133 ·····	199		330.05
099-7857 ·····	122	102-1166 ·····	188		330.08
099-8232 ·····	219	102-2562 ·····	145		330.11
			213		330.14
			215	102-4831 ·····	329
1		102-3560 ·····	236		330.02
			240		330.05
100-2881 ·····	239	102-3828 ·····	141		330.08
	248	102-3829 ·····	141		330.11
100-3573 ·····	233		142		330.14
	235	102-3830 ·····	11	102-4886 ·····	329
	235.04	102-3832 ·····	11		330.02
	235.06		45		330.05
	235.10	102-3833 ·····	11		330.08
	235.12		34		330.11
100-7689 ·····	250	102-3834 ·····	34		330.14
100-7692 ·····	277		35	102-5080 ·····	115
100-7695 ·····	277	102-3836 ·····	11	102-5319 ·····	303
100-7709 ·····	270		29	102-5320 ·····	304
	272	102-3837 ·····	11	102-5321 ·····	305
100-8122 ·····	235		28	102-5322 ·····	305
	235.06	102-3841 ·····	11	102-5325 ·····	55.01
	235.12	102-3844 ·····	29	102-5340 ·····	262.01
101-2305 ·····	279	102-3845 ·····	29	102-5346 ·····	306

PART NUMBER INDEX

Part No	Page	Part No	Page	Part No	Page
102-5395 ·····	329	102-6449 ·····	126	102-6521 ·····	105
	330. 02	102-6461 ·····	107	102-6522 ·····	105
	330. 05	102-6472 ·····	107	102-6523 ·····	105
	330. 08	102-6473 ·····	107	102-6525 ·····	105
	330. 11	102-6474 ·····	107	102-6526 ·····	105
	330. 14	102-6475 ·····	107	102-6532 ·····	105
102-5396 ·····	329	102-6477 ·····	107	102-6533 ·····	105
	330. 02	102-6478 ·····	107	102-6534 ·····	105
	330. 05	102-6479 ·····	107	102-6535 ·····	105
	330. 08	102-6480 ·····	107	102-6536 ·····	105
	330. 11	102-6481 ·····	107	102-6542 ·····	105
	330. 14	102-6482 ·····	107	102-6544 ·····	105
102-5397 ·····	329	102-6483 ·····	107	102-6545 ·····	105
	330. 02	102-6484 ·····	107	102-7688 ·····	233
	330. 05	102-6485 ·····	107		235. 04
	330. 08	102-6486 ·····	107		235. 10
	330. 11	102-6487 ·····	107	102-7729 ·····	113
	330. 14	102-6488 ·····	107	102-7886 ·····	57
102-5402 ·····	327	102-6489 ·····	107	102-8015 ·····	78
102-5405 ·····	330. 05	102-6490 ·····	107	102-8018 ·····	78
	330. 08	102-6491 ·····	107	102-8041 ·····	181
102-5406 ·····	330. 11	102-6492 ·····	107	102-8042 ·····	181
	330. 14	102-6493 ·····	107	102-8043 ·····	77
102-5418 ·····	179	102-6494 ·····	107	102-8044 ·····	77
	332	102-6495 ·····	107	102-8045 ·····	48
102-5421 ·····	329	102-6500 ·····	101	102-8087 ·····	129
	330		105	102-8114 ·····	130
102-5491 ·····	325	102-6502 ·····	105		131
102-5495 ·····	325	102-6503 ·····	105	102-8117 ·····	129
	326	102-6504 ·····	105		130
102-5673 ·····	115	102-6506 ·····	105	102-8118 ·····	129
102-5689 ·····	115	102-6507 ·····	105		130
102-5713 ·····	262. 04	102-6508 ·····	105	102-8119 ·····	133
102-6386 ·····	108	102-6509 ·····	105	102-8120 ·····	132. 02
102-6388 ·····	107	102-6510 ·····	105	102-8121 ·····	136
102-6389 ·····	107	102-6512 ·····	105	102-8122 ·····	136
102-6433 ·····	101	102-6513 ·····	105	102-8123 ·····	137
102-6434 ·····	100	102-6514 ·····	105	102-8124 ·····	136
102-6435 ·····	126	102-6515 ·····	105		137
102-6436 ·····	126	102-6516 ·····	105	102-8125 ·····	135. 02
102-6437 ·····	103	102-6517 ·····	105	102-8126 ·····	135. 02
102-6438 ·····	103	102-6518 ·····	105	102-8127 ·····	137. 01
102-6439 ·····	103	102-6519 ·····	105	102-8129 ·····	135. 02
	107	102-6520 ·····	105		137. 01

PART NUMBER INDEX

Part No	Page	Part No	Page	Part No	Page
101-8131 ·····	102	103-0378 ·····	264	103-0588 ·····	55. 03
102-8134 ·····	102	103-0405 ·····	117	103-1328 ·····	175
102-8139 ·····	131	103-0407 ·····	117		175. 02
102-8165 ·····	131	103-0412 ·····	117	103-1346 ·····	183
102-8295 ·····	272	103-0416 ·····	117	103-1384 ·····	183
102-8311 ·····	259	103-0421 ·····	117	103-1434 ·····	183
102-8312 ·····	259	103-0423 ·····	117		190
102-8314 ·····	259	103-0440 ·····	125	103-1457 ·····	183
102-8315 ·····	259	103-0443 ·····	115	103-2146 ·····	17
102-8316 ·····	231		119	103-2229 ·····	15
102-8317 ·····	231	103-0444 ·····	115	103-2235 ·····	16
	231. 01	103-0445 ·····	113		20
102-8319 ·····	235. 01	103-0446 ·····	113	103-2309 ·····	21
102-8320 ·····	235. 01	103-0447 ·····	113	103-2424 ·····	15
	235. 02	103-0448 ·····	115	103-2425 ·····	15
102-8322 ·····	235. 07		119	103-2453 ·····	15
102-8323 ·····	235. 07	103-0449 ·····	113		32
	235. 08		118	103-2529 ·····	53
102-8347 ·····	235	103-0450 ·····	113	103-2782 ·····	21
	235. 06	103-0451 ·····	115	103-2784 ·····	21
	235. 12	103-0454 ·····	115	103-2797 ·····	21
102-8802 ·····	246	103-0455 ·····	115	103-2802 ·····	21
102 8807 ·····	245	103-0456 ·····	115	103-2804 ·····	37
102-8812 ·····	245	103-0458 ·····	120	103-2808 ·····	37
103-0341 ·····	124	103-0460 ·····	120	103-2815 ·····	15
103-0344 ·····	120	103-0461 ·····	120	103-2816 ·····	15
	121	103-0463 ·····	120	103-2817 ·····	15
103-0345 ·····	113	103-0464 ·····	120	103-2826 ·····	21
	115	103-0470 ·····	119	103-2857 ·····	19
	117	103-0471 ·····	119	103-2858 ·····	19
103-0346 ·····	54	103-0476 ·····	118	103-2859 ·····	19
103-0347 ·····	54	103-0494 ·····	119	103-2895 ·····	37
	55	103-0497 ·····	118	103-7698 ·····	15
103-0348 ·····	263	103-0518 ·····	115	103-8340 ·····	157
103-0349 ·····	263	103-0521 ·····	115	103-8341 ·····	157
	264	103-0522 ·····	115	103-8406 ·····	215
103-0350 ·····	52	103-0530 ·····	113	103-8408 ·····	215
103-0351 ·····	55. 01	103-0545 ·····	262. 01	103-8411 ·····	215
	55. 02		262. 04	103-8412 ·····	215
103-0352 ·····	55. 01	103-0546 ·····	262. 04	103-8413 ·····	215
	264. 01	103-0577 ·····	115	103-8414 ·····	213
103-0358 ·····	55. 01	103-0579 ·····	55. 03	103-8441 ·····	158
	55. 03		55. 05	103-8442 ·····	158
103-0360 ·····	53	103-0585 ·····	55. 03	103-8443 ·····	158

PART NUMBER INDEX

Part No.	Page	Part No.	Page	Part No.	Page
103-9010	21	104-1199	17		189
103-9011	21	104-1213	25	104-9186	197
103-9062	13	104-1218	15		216
103-9083	31	104-1219	16	104-9187	199
103-9086	24	104-1229	24		216
	47	104-1236	19	104-9188	190
103-9098	20	104-1244	31		216
103-9246	21	104-4885	327	104-9192	175, 02
103-9247	21	104-8845	160	104-9200	183
103-9249	27		197	104-9223	175
103-9250	27	104-8999	166		175, 02
103-9251	27	104-9149	175	104-9224	175
103-9252	21	104-9157	175		175, 02
103-9253	21	104-9158	200	105-2169	235
103-9256	22	104-9159	191		235, 06
103-9258	22	104-9160	198		235, 12
103-9260	21	104-9161	176	105-2611	203
103-9265	22	104-9162	181	105-2629	157
103-9266	22	104-9164	183	105-2954	41
103-9267	22	104-9167	160	105-6458	161
103-9268	22		303	105-7266	181
103-9270	21	104-9169	164		229
103-9272	22		304	105-7267	181
103-9273	22	104-9170	165		229
103-9275	15		305	105-7321	141
103-9276	15	104-9171	166		146
103-9277	24		305	105-7322	143
103-9279	16	104-9173	178		146
103-9280	17		192	105-7335	154
103-9288	16	104-9174	178		303
103-9289	16		184	105-7336	154
103-9290	16	104-9176	178		157
103-9369	21		193	105-7337	157
103-9671	24	104-9177	178	105-7342	158
103-9679	19		185	105-7343	157
103-9680	19	104-9179	179	105-7354	157
103-9683	19		195	105-7355	157
103-9684	19	104-9180	179	105-7356	157
103-9685	19		188	105-7357	157
103-9686	19	104-9181	179	105-7359	157
103-9703	15		187	105-7360	157
103-9725	31	104-9183	177	105-7361	155
103-9840	25		196		303
103-9845	23	104-9184	177	105-7362	155

PART NUMBER INDEX

Part No	Page
	158
105-7366 ·····	158
105-7374 ·····	158
105-7375 ·····	158
105-7376 ·····	158
105-7377 ·····	158
105-7379 ·····	158
105-7380 ·····	156
	306
105-7381 ·····	156
	159
105-7382 ·····	159
105-7385 ·····	159
105-7388 ·····	159
105-7389 ·····	159
105-7393 ·····	159
105-7394 ·····	159
105-7395 ·····	159
105-7397 ·····	159
105-7403 ·····	213
	215
105-7404 ·····	213
	215
105-7405 ·····	213
	215
105-7406 ·····	213
	215
105-7408 ·····	213
	215
105-7423 ·····	213
	215
105-7460 ·····	192
	230
105-7494 ·····	138
105-9338 ·····	277
	279
105-9339 ·····	277
	279
105-9340 ·····	281
105-9372 ·····	287
	289
105-9376 ·····	302
105-9377 ·····	287
105-9378 ·····	287
105-9379 ·····	287
	293
105-9406 ·····	289
	291
105-9407 ·····	288
105-9408 ·····	293
105-9411 ·····	293
105-9412 ·····	293
105-9433 ·····	293
105-9503 ·····	232
105-9507 ·····	291
105-9508 ·····	291
105-9509 ·····	291
105-9516 ·····	302
105-9524 ·····	248
105-9526 ·····	235
	235.06
	235.12
105-9527 ·····	235
	235.06
	235.12
105-9533 ·····	298
105-9534 ·····	298
105-9539 ·····	235.06
	235.12
105-9555 ·····	235
105-9556 ·····	233
105-9876 ·····	57
	59
105-9878 ·····	57
	67
105-9880 ·····	97
105-9881 ·····	97
	303
105-9882 ·····	74
105-9885 ·····	55.01
	94.01
105-9901 ·····	57
	69
105-9902 ·····	69
	70
	71
	72
105-9903 ·····	69
105-9915 ·····	59
	61
105-9916 ·····	57
	61
105-9917 ·····	74
	76
105-9918 ·····	74
	76
105-9919 ·····	69
105-9993 ·····	55
	55.04
106-0001 ·····	99
106-0002 ·····	99
106-0003 ·····	99
106-0004 ·····	99
106-0005 ·····	99
106-0027 ·····	57
106-0067 ·····	48
106-0076 ·····	48
106-0079 ·····	48
106-0080 ·····	48
106-0220 ·····	48
106-6735 ·····	127
106-6736 ·····	127
	127.01
106-6744 ·····	128
106-6747 ·····	135
106-6749 ·····	303
	307
106-6750 ·····	161
	303
106-6751 ·····	304
	309
106-6753 ·····	305
	310
106-6754 ·····	305
	311
106-6757 ·····	314
	315
	316
	320
106-6758 ·····	316
106-6759 ·····	316

PART NUMBER INDEX

Part No	Page	Part No	Page	Part No	Page
	319		39	107-3664 ·····	42
106-6760 ·····	316	107-0969 ·····	23	107-3667 ·····	15
106-6761 ·····	316	107-0970 ·····	23	107-3669 ·····	15
	319	107-0978 ·····	21	107-3672 ·····	15
106-6764 ·····	315	107-0979 ·····	21	107-3675 ·····	15
106-6765 ·····	315	107-0980 ·····	21		16
	318	107-0981 ·····	22	107-3731 ·····	13
106-6766 ·····	314	107-0984 ·····	19	107-3732 ·····	13
106-6767 ·····	314	107-0991 ·····	16	107-4906 ·····	26
	317	107-1400 ·····	162	107-4908 ·····	39
106-6768 ·····	315	107-1403 ·····	160	107-4909 ·····	39
106-6772 ·····	132	107-1404 ·····	162	107-6339 ·····	41
106-6773 ·····	132. 01	107-1405 ·····	162	107-6340 ·····	41
106-6774 ·····	133	107-1464 ·····	164	107-6341 ·····	41
106-6775 ·····	132. 02		165	107-6418 ·····	139
106-6776 ·····	121		166		140
	123	107-1466 ·····	191	107-6421 ·····	160
106-6872 ·····	313	107-1467 ·····	191	107-6422 ·····	160
106-6876 ·····	313	107-1475 ·····	198	107-6423 ·····	160
106-6877 ·····	313	107-1522 ·····	200	107-6424 ·····	160
106-6878 ·····	313	107-1531 ·····	162	107-6553 ·····	101
106-8230 ·····	12	107-1532 ·····	164		203
	16		165	107-6554 ·····	203
106-8232 ·····	13		166	107-6555 ·····	203
	19	107-1548 ·····	198	107-6556 ·····	203
106-8236 ·····	13	107-1550 ·····	198	107-6557 ·····	203
	27	107-1552 ·····	198	107-6559 ·····	203
106-8238 ·····	13	107-1554 ·····	198	107-6560 ·····	203
	22	107-1556 ·····	176	107-6561 ·····	203
106-8248 ·····	12	107-1591 ·····	183	107-6562 ·····	203
	23	107-1597 ·····	183	107-6630 ·····	181
106-8249 ·····	12	107-1603 ·····	183		184
	21	107-1609 ·····	183		185
106-8262 ·····	12	107-1612 ·····	183		188
	38	107-1642 ·····	165	107-6633 ·····	222
106-8265 ·····	12	107-1677 ·····	181	107-6637 ·····	143
	33	107-2167 ·····	38		149
106-8266 ·····	13	107-2169 ·····	38	107-6638 ·····	143
	42	107-2174 ·····	32		151
106-8268 ·····	13	107-3643 ·····	33	107-6910 ·····	183
	51	107-3644 ·····	33	107-6917 ·····	193
106-8269 ·····	13	107-3648 ·····	51		195
	31	107-3650 ·····	51		213
106-8270 ·····	13	107-3660 ·····	90		215

PART NUMBER INDEX

Part No.	Page
	217
107-6918 ·····	215
	217
107-8253 ·····	42
107-8254 ·····	42
107-8255 ·····	19
107-8256 ·····	19
107-8360 ·····	42
107-8369 ·····	20
107-8529 ·····	47
107-8530 ·····	47
107-8531 ·····	47
107-9730 ·····	307
107-9732 ·····	127
107-9734 ·····	307
	308
107-9737 ·····	307
	308
107-9739 ·····	127
107-9741 ·····	307
	308
107-9742 ·····	161
107-9743 ·····	161
107-9790 ·····	317
	318
	319
107-9844 ·····	310
107-9845 ·····	309
	310
	311
	312
	312.01
107-9852 ·····	309
	310
	311
	312
	312.01
107-9893 ·····	135
107-9894 ·····	135
107-9965 ·····	320
107-9966 ·····	320
107-9967 ·····	320
107-9968 ·····	320
107-9976 ·····	313
108-4076 ·····	25
108-7109 ·····	175
108-7119 ·····	175.02
108-7123 ·····	175.02
108-7178 ·····	191
108-7252 ·····	181
108-7261 ·····	183
108-7303 ·····	52
	175
	175.02
	181
108-7304 ·····	175
	175.02
108-7329 ·····	164
	165
	166
108-7330 ·····	164
	165
	166
108-7418 ·····	197
108-7419 ·····	197
108-7420 ·····	197
108-7421 ·····	197
108-7422 ·····	197
108-7423 ·····	197
108-7424 ·····	197
108-7425 ·····	197
108-7436 ·····	197
108-7440 ·····	197
108-7441 ·····	199
108-7447 ·····	199
108-7451 ·····	195
	196
108-7453 ·····	199
108-7454 ·····	199
108-7493 ·····	192
	193
	195
108-7494 ·····	195
108-7497 ·····	192
	193
	195
108-7507 ·····	181
	184
108-7511 ·····	192
108-7515 ·····	193
108-9128 ·····	149
	151
108-9139 ·····	53
108-9188 ·····	107
	108
109-1790 ·····	330.02
	330.03
109-1791 ·····	330.05
	330.06
	330.08
	330.09
109-1792 ·····	330.11
	330.12
	330.14
	330.15
109-1799 ·····	330
	330.06
	330.12
109-1802 ·····	330.03
	330.09
	330.15
109-1804 ·····	329
	330.02
	330.05
	330.08
	330.11
	330.14
109-1805 ·····	329
	330.02
	330.05
	330.08
	330.11
	330.14
109-1806 ·····	329
	330.05
	330.11
109-1807 ·····	330.02
	330.08
	330.14
109-1809 ·····	329

PART NUMBER INDEX

Part No	Page	Part No	Page	Part No	Page
	330. 02	109-2051	113	110-5602	272
	330. 05	109-2054	124	110-5610	209
	330. 08		125	110-5620	181
	330. 11	109-2057	125		224
	330. 14	109-2062	55. 01	110-5621	181
109-1810	329		127. 01		224
	330. 05	109-2064	121	110-5623	269
	330. 11		122		272
109-1811	330. 02	109-2069	127. 01		273
	330. 08	109-2071	264. 01	110-5624	111
	330. 14		264. 02	110-5640	269
109-1813	329	109-2075	55. 01	110-5645	178
	330. 02		55. 03		179
	330. 05	109-2076	55. 03		210
	330. 08		55. 04	110-7203	107
	330. 11	109-5998	171	110-9933	128
	330. 14	109-5999	171	111-0035	135. 01
109-1814	329	109-6000	171	111-0036	135. 01
	330. 02	109-6001	167	111-0037	135. 01
	330. 05		172	111-0085	306
	330. 08	109-6059	170		313
	330. 11		179	111-0104	132
	330. 14	109-6137	210	111-0105	133
109-1815	329	109-7504	263	111-0106	132. 01
	330. 02	109-7505	263		132. 02
	330. 05	109-7530	263	111-0945	208
	330. 08	109-8507	128		224
	330. 11	109-9285	29	111-0946	208
	330. 14	109-9287	35		224
109-1835	55. 01	109-9288	35	111-0963	111
	327	109-9289	35	111-0994	209
109-1985	117	109-9290	35	111-0999	223
109-2018	122	109-9382	294	111-1000	209
109-2020	122	109-9387	294	111-1028	181
109-2022	122	109-9398	287		223
109-2024	122		294	111-1121	273
109-2026	122	109-9451	43	111-1122	273
109-2027	122	109-9452	11	111-1145	235
109-2028	122		43		235. 06
109-2030	122	109-9510	34		235. 12
109-2041	113	109-9918	32	111-1146	231. 01
109-2047	122	110-5528	272		235. 02
109-2048	52. 01	110-5560	272		235. 08
	55. 01	110-5601	272	111-1147	231. 01

LUBER INDÚSTRIA MECÂNICA LTDA.
DIRCEU JATCZAK ROSA
Gerente de Vendas

PART NUMBER INDEX

Part No.	Page
	235. 01
	235. 08
111-1148 ·····	231. 01
	235. 01
	235. 08
111-1149 ·····	111
111-1212 ·····	223
111-4712 ·····	235
	235. 06
	235. 12
	243
111-4756 ·····	55. 01
	98. 01
111-6381 ·····	302
111-6397 ·····	256
111-6708 ·····	191
111-6710 ·····	191
111-6712 ·····	191
111-6716 ·····	176
111-6725 ·····	183
111-9978 ·····	143
	145
112-3543 ·····	266
112-3544 ·····	266
112-3635 ·····	266
113-0363 ·····	51
113-0364 ·····	51
113-0365 ·····	51
113-0366 ·····	51
113-1141 ·····	31
113-2050 ·····	37
113-2051 ·····	41
113-2052 ·····	41
113-2128 ·····	161
113-2357 ·····	128
113-2782 ·····	231. 01
	235. 02
	235. 08
113-2785 ·····	231. 01
	235. 02
	235. 08
113-2820 ·····	130
113-2828 ·····	233
	235. 04
113-2840 ·····	231. 01
	233
	235
113-2842 ·····	235. 02
	235. 04
	235. 06
113-2843 ·····	235. 08
	235. 10
	235. 12
113-2845 ·····	111
113-2907 ·····	129
113-2909 ·····	299
113-2917 ·····	248
	249
113-2941 ·····	289
113-3434 ·····	288
113-3436 ·····	288
113-3466 ·····	293
113-3467 ·····	293
113-3468 ·····	293
113-3469 ·····	293
113-3470 ·····	293
113-3471 ·····	293
113-3472 ·····	293
113-6397 ·····	198
113-6402 ·····	198
113-6467 ·····	175
	175. 02
113-6471 ·····	175
	175. 02
113-6501 ·····	192
	193
	195
113-6572 ·····	176
113-6576 ·····	176
114-0473 ·····	158
114-0475 ·····	158
114-0644 ·····	158
114-0681 ·····	138
	139
114-1325 ·····	107
114-1326 ·····	107
	108
114-3356 ·····	279
114-3470 ·····	107
114-3471 ·····	107
114-5609 ·····	16
114-5610 ·····	16
114-5611 ·····	16
114-6814 ·····	50
114-6875 ·····	23
114-7143 ·····	266
114-8186 ·····	208
114-8216 ·····	213
	215
114-8224 ·····	107
114-8241 ·····	225
114-8242 ·····	225
115-2410 ·····	203
115-2411 ·····	203
115-2631 ·····	128
115-2675 ·····	309
115-2758 ·····	315
	318
115-2764 ·····	317
	318
	319
115-2766 ·····	317
	318
	319
115-2767 ·····	318
115-2773 ·····	318
115-2774 ·····	318
115-2890 ·····	319
115-2891 ·····	319
115-2893 ·····	319
115-2901 ·····	319
115-2905 ·····	319
115-2906 ·····	319
115-3031 ·····	203
115-3701 ·····	129
115-3811 ·····	291
115-4926 ·····	129
115-8570 ·····	183
115-8600 ·····	195
	196
115-8620 ·····	164

PART NUMBER INDEX

Part No.	Page
115-8651	162
115-8652	162
115-8654	162
115-8655	162
115-8698	162
115-8729	162
	303
115-8734	199
115-8757	162
115-8758	162
115-8802	196
	196
115-8980	162
115-8981	162
115-8982	162
116-0139	57
	62
	63
	64
116-0140	59
116-3387	157
116-3389	159
116-3588	157
116-3662	213
116-3663	215
116-3664	213
116-3665	213
116-3666	213
	215
116-3667	213
116-3668	215
116-3669	215
116-3670	213
116-6708	13
	47
116-6709	13
	41
116-6710	12
	23
116-6711	13
	25
116-6712	25
116-6713	12
	24
116-6715	12
	17
116-6718	12
	17
116-6720	12
	32
116-6721	13
116-6722	13
	26
116-6723	12
	32
116-6724	13
	36
116-6725	13
	37
116-6726	13
	50
116-6727	12
	49
116-6728	12
	90
116-6730	12
	91
116-6731	13
	90
116-8263	55.01
116-8264	121
116-8265	262.01
116-8365	117
116-8366	115
116-8370	121
116-8371	55.01
	121
116-8976	170
116-9985	90
116-9987	12
	20
116-9988	12
	16
117-1371	137
117-1372	137
117-1896	11
	12
	13
117-2827	20
117-2829	16
117-2830	16
117-3283	23
117-3284	23
117-3285	23
117-3446	24
117-3447	24
117-3448	24
117-3568	25
117-4025	17
117-4026	17
117-5015	17
117-5016	17
117-5023	37
117-5024	37
117-5032	36
117-5033	36
117-5035	25
117-5377	318
117-5379	318
117-5380	318
117-5386	317
117-5388	317
117-5389	317
117-5391	311
117-5506	313
117-6319	294
117-6430	50
117-6431	50
117-7518	32
117-7521	32
117-7523	50
117-7867	41
117-7868	26
117-7869	26
117-9010	91
117-9011	91
117-9135	31
117-9170	47
117-9186	47
117-9343	47
118-1223	49
118-2238	137

LUFER INDÚSTRIA MECÂNICA LTDA.

DIRCEU JATCZAK ROSA
Gerente de Vendas

PART NUMBER INDEX

Part No.	Page	Part No.	Page	Part No.	Page
118-299_	3[illegible]				
118-2991	3[illegible]				
118-4098	2[illegible]				
	2[illegible]				
118-4111	18[illegible]				
	2[illegible]				
118-4126	2[illegible]				
118-4127	2[illegible]				
118-4162	9[illegible]				
118-4163	9[illegible]				
119-7217	3[illegible]				

SPECIFICATIONS

(SUBJECT TO CHANGE WITHOUT NOTICE

	4YM1-Up	6YM1-Up
Weight, shipping (approximate)	15330kg (33726 lbs)	15960kg (35112 lbs

(4YM : With R-Boom (5.1m) [16'5"] R2.6m (8'6") Stick, 0.63m³ Bucket and 500mm (1'8") shoes
| 6YM : With R-Boom (5.1m) [16'5"], R3.1m (10'2") Stick, 0.52m³ Bucket and 600mm (2') shoes

DIMENSIONS

Length (with stick retracted and bucket curled)	8500mm (27'10")	8510mm (27'11")
Length (with stick and bucket fully extended and touching ground)	11190mm (36' 8")	11590mm (38')
Height (to top of cab)	2880mm (9' 5")	←
Width	2490mm (8' 2")	2590mm (8' 6")
Ground Clearance	440mm (1' 5")	←
Maximum Digging Depth	6055mm (19'10")	6555mm (21' 6")
Maximum Bucket Reach	8740mm (28' 8")	9140mm (30')
Maximum Load Height	8910mm (29' 3")	8970mm (29' 5")

With one-piece or two-piece boom fully extended.

REFILL CAPACITIES (approximate)

Compartment or System	Liters	U.S. Gallons	Imperial Gallons
Cooling System	17.3	4.5	3.8
Coolant Reservoir	1.5	0.4	0.3
Engine Crankcase and Filter	13	3.4	2.9
Fuel Tank	250	66	55
Final Drives—			
Special Application (each side)	2.6	0.7	0.6
Hydraulic System	188	49.6	41.3
Hydraulic Tank	90	23.7	19.8
Swing Drive	3	0.8	0.7

ATTACHMENTS

Additional equipment such as boom, stick, buckets, sidecutters, tips, boom lighting, full-length track guiding guards, carbody guard, etc., are available at extra cost. Consult your Caterpillar Dealer.

MACHINE SERIAL NUMBER PLATE LOCATION

Refer to nameplate and films.

LUFER INDÚSTRIA MECÂNICA LTDA.

DIRCEU JATCZAK ROSA
Gerente de Vendas