CATERPILLAR®

SEBP4861-02
September 2008

RUTHZIL TRATOR COMERCIAL DE PEÇAS LTDA 11 97083-6812 ROLANDO

Parts Manual

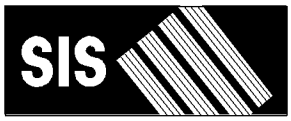

See "General Information" for New Parts Manual Features.

315D L Excavator

CJN1-Up (Machine)
JKH1-Up (Engine)

Powered By C4.2 Engine

Product and Dealer Information

Note: For product identification plate locations, see the section “Product Identification Information” in the Operation and Maintenance Manual.

Delivery Date: _____

Product Information

Model: _____

Product Identification Number: _____

Engine Serial Number: _____

Transmission Serial Number: _____

Generator Serial Number: _____

Attachment Serial Numbers: _____

Attachment Information: _____

Customer Equipment Number: _____

Dealer Equipment Number: _____

Dealer Information

Name: _____ Branch: _____

Address: _____

_____

_____

	Dealer Contact	Phone Number	Hours
Sales:	_____	_____	_____
Parts:	_____	_____	_____
Service:	_____	_____	_____

MEMORANDA

TABLE OF CONTENTS

Name	Page
GENERAL INFORMATION	A5
REPAIR ALTERNATIVES	A8
SUPPLEMENTAL COOLANT ADDITIVES	A9
MAINTENANCE PARTS	A10
INDEX	A13
MACHINE ARRANGEMENT	1
CHASSIS AR	1
GENERAL AR	1
SPECIAL AR	2
ENGINE ARRANGEMENT	6
ENGINE AR	6
ENGINE AR-COMPLETE	9
INSTALLATION AR-ENGINE	12
BASIC ENGINE	13
CAMSHAFT GP	13
COVER GP-VALVE MECHANISM	14
CRANKSHAFT GP	16
CYLINDER BLOCK GP	17
CYLINDER HEAD AS	22
CYLINDER HEAD GP	23
FLYWHEEL GP	24
GEAR GP-FRONT	25
HOUSING GP-FLYWHEEL	26
HOUSING GP-FRONT	27
MOUNTING GP-ALTERNATOR	29
MOUNTING GP-ENGINE	30
MOUNTING GP-STARTING MOTOR	32
PAN GP-OIL	33
PISTON & ROD GP	35
PULLEY AS-IDLER	36
PULLEY GP-FAN & ALT DRIVE	37
PULLEY GP-IDLER	38
VALVE MECHANISM GP	39
LUBRICATION SYSTEM	41
ADAPTER GP-REMOTE OIL FILTER	41
BREATHER GP	42
FILTER & MTG GP-ENGINE OIL	43
LINES GP-ENGINE OIL	48
LINES GP-ENGINE OIL DRAIN	49
LINES GP-TURBOCHARGER OIL	50
COOLING SYSTEM	51
COOLER GP-ENGINE OIL	51
COOLING AR-HIGH AMBIENT TEMP	52
FAN GP-SUCTION	53
LINES GP-WATER	54
PUMP GP-WATER	56
RADIATOR & HYD OIL COOLER GP	58
AIR INLET AND EXHAUST SYSTEM	63
AIR CLEANER & MOUNTING GP	63
AIR CLEANER GP	64
LINES GP-AIR	70
LINES GP-MUFFLER DRAIN	73
MANIFOLD GP-EXHAUST	74
MANIFOLD GP-INLET	75
MUFFLER GP	76
TURBOCHARGER GP	78
FUEL SYSTEM	80
CAP GP-FUEL FILLER	80
FILTER GP-FUEL	81
FILTER GP-WATER SEP & FUEL	84
INJECTOR GP-FUEL	85
LINES GP-FUEL	87
LINES GP-FUEL INJECTION	90
PUMP & MTG GP-FUEL TRANSFER	92
PUMP AR-FUEL TRANSFER	93
PUMP GP-FUEL TRANSFER	94
TANK & MTG GP-FUEL	99
TANK GP-FUEL	103
VALVE GP-FUEL SHUTOFF	122
ELECTRICAL AND STARTING SYSTEM	123
ALARM GP	123
ALARM GP-TRAVEL	124
ALTERNATOR GP-CHARGING	125
BATTERY & WIRING GP	127
BATTERY GP	139
BLOCK GP-JUNCTION	140
CAMERA & MOUNTING GP	141
CAMERA GP	142
CONTROL & MTG GP-COMMUNICATION	145
CONTROL & MTG GP-ENGINE ELEK	149
CONTROL & MTG GP-MACHINE	150
CONTROL GP-COMMUNICATION	151
CONTROL GP-UNPROGRAMMED	152
ELECTRONICS GP-COMMUNICATION	153
ELECTRONICS GP-MACHINE	153
ELECTRONICS GP-MONITOR	154
FASTENER GP-WIRING HARNESS	155
INSTALLATION AR-COMMUNICATION	160
INSTALLATION GP-SECURITY	161
KIT-BRACKET	163
LAMP GP-FLOOD	164
LIGHTING GP-CHASSIS	167
LIGHTING GP-FLOOD	168
MOUNTING GP-CONTROL	177
MOUNTING GP-SENSOR	179
PANEL & MTG GP-CIRCUIT BREAKER	180

TABLE OF CONTENTS

Name	Page
PANEL GP-CIRCUIT BREAKER	181
PANEL GP-SWITCH	183
SENSOR & MTG GP-POSITION	191
SENSOR GP-ENGINE	193
SENSOR GP-LIQUID LEVEL	195
SENSOR GP-POSITION	197
STARTING MOTOR GP-ELECTRIC	198
SWITCH GP-DISCONNECT	200
SWITCH GP-MAGNETIC	201
SWITCH GP-POSITION	203
SWITCH GP-REFUELING	204
SWITCH GP-ROTARY	205
SWITCH GP-START	207
SWITCH GP-TOGGLE	208
SWITCH GP-WIPER	209
WIRING GP-AUX START RECEPTACLE	210
WIRING GP-AUXILIARY CONTROL	212
WIRING GP-CAB	216
WIRING GP-CHASSIS	228
WIRING GP-COMMUNICATION	230
WIRING GP-CONSOLE	235
WIRING GP-CONVERTER	239
WIRING GP-ELECTRONIC CONTROL	242
WIRING GP-FINE SWING	245
WIRING GP-FUEL PUMP	246
WIRING GP-GRADE CONTROL	248
WIRING GP-HEATER	251
WIRING GP-HYDRAULIC CONTROL	254
WIRING GP-MEDIUM PRESSURE	255
WIRING GP-OVERLOAD WARNING	257
WIRING GP-PLATFORM	260
WIRING GP-COUPLER	264
WIRING GP-QUICK COUPLER	265
POWER TRAIN	267
FINAL DRIVE GP	267
DRIVE GP-FINAL	270
POWER TRAIN AR	272
SPROCKET GP	273
FRAME AND BODY	274
BOX & MOUNTING GP	274
BOX GP-STORAGE	275
BUMPER GP	277
COUNTERWEIGHT GP	278
COVER AS-SOUND SUPPRESSION	287
COVER GP-ACCESS	290
COVER GP-SIDE	291
DOOR GP-ACCESS	293
FENDER & COVER GP	310
FRAME GP-UPPER	312
GEAR & BEARING GP-SWING	315
GUARD GP-BOTTOM	317
GUARD GP-FRONT	319
GUARD GP-SWIVEL	320
HANDRAIL GP	321
HOOD & GUARD GP	322
HOOD AR	329
HOOD GP	330
HOOD GP-ENGINE	332
INSULATION GP-SOUND SUPPR	338
SHEET AS-SOUND SUPPRESSION	339
STEP GP	344
STORAGE GP-VANDALISM GUARD	346
SUPPORT AS-ENCLOSURE	347
UNDERCARRIAGE	352
FRAME AR-UNDERCARRIAGE	352
FRAME AS-UNDERCARRIAGE	353
GUARD GP-TRACK GUIDE	354
GUARD GP-TRAVEL MOTOR	357
IDLER GP-FRONT	358
LINK AS-TRACK	365
ROLLER AR-TRACK & CARRIER	366
ROLLER GP-TRACK CARRIER	367
ROLLER GP-TRACK-SINGLE FLANGE	368
TRACK ADJUSTER & RECOIL GP	369
TRACK GP	377
HYDRAULIC SYSTEM	381
ACCUMULATOR GP-HYDRAULIC	381
CONTROL AR-AUXILIARY	389
CONTROL AR-COUPLER	392
COUPLING GP-FLEXIBLE	393
COUPLING GP-PUMP	394
CYLINDER & LINES GP-BOOM	395
CYLINDER & LINES GP	395
CYLINDER & LINES GP-BUCKET	396
CYLINDER & LINES GP	396
CYLINDER & LINES GP-BUCKET	397
CYLINDER & LINES GP-STICK	397
CYLINDER & SEAL GP-BOOM	398
CYLINDER & SEAL GP-BUCKET	400
CYLINDER & SEAL GP-STICK	405
CYLINDER GP-BOOM	408
CYLINDER GP-BUCKET	412
CYLINDER GP-COUPLER	422
CYLINDER GP-STICK	423
DRIVE GP-SWING	429
FASTENER GP-SWING & FINAL DR	436
FILTER & VALVE GP-PILOT	438
FILTER AR-HYDRAULIC	442
FILTER GP-OIL	443
FITTING GP-HYDRAULIC	447
GAUGE GP-SIGHT	448
GUARD GP-CYLINDER	449
HEAD GP-PUMP	451
HYDRAULIC AR	453
LINES GP-AUXILIARY HYDRAULIC	454

TABLE OF CONTENTS

Name	Page
LINES GP-BOOM	469
LINES GP-BOOM CYLINDER	472
LINES GP-BUCKET CYLINDER	478
LINES GP-COUPLER	480
LINES GP-FRONT	489
LINES GP-HYDRAULIC	542
LINES GP-HYDRAULIC OIL COOLER	546
LINES GP-PILOT	547
LINES GP-PUMP	611
LINES GP-STICK	621
LINES GP-STICK CYLINDER	626
LINES GP-SWING MOTOR	630
LINES GP-TRAVEL MOTOR	631
MANIFOLD GP-CONTROL	635
MOTOR & MTG GP-TRAVEL	638
MOTOR GP-SWING	640
MOTOR GP-TRAVEL	644
MOUNTING GP-MAIN CONTROL VALVE	651
PUMP & MTG GP-AUXILIARY	652
PUMP & MTG GP-MAIN HYDRAULIC	653
PUMP GP-PISTON	654
SCREEN GP-HYDRAULIC	657
SPOOL GP-CONTROL VALVE	658
SWIVEL GP	664
TANK & FILTER GP-HYDRAULIC	666
TANK & MTG GP-HYDRAULIC	669
VALVE & LINES GP-PILOT	670
VALVE & MTG GP-CONTROL	671
VALVE AR-ALT PATTERN CONTROL	675
VALVE AR-CHECK & RELIEF	675
VALVE AR-SWING	676
VALVE AS-MANUAL	677
VALVE GP-BANK	678
VALVE GP-CHECK	679
VALVE GP-CONTROL	680
VALVE GP-COUPLER	691
VALVE GP-LOAD CONTROL	693
VALVE GP-MAIN CONTROL	699
VALVE GP-PILOT	706
VALVE GP-PILOT RELIEF	717
VALVE GP-PRESSURE REDUCING	718
VALVE GP-RELIEF	719
VALVE GP-SELECTOR	726
VALVE GP-SHUTTLE	728
VALVE GP-SOLENOID	733
VALVE GP-SOLENOID & MANIFOLD	745
VALVE GP-SOLENOID & PRESS REDC	747
VALVE GP-TRAVEL COUNTERBALANCE	751
IMPLEMENTS	752
BOOM AR	752
BOOM AR-1 PIECE LONG	752
BOOM GP	754
BOOM GP-1 PIECE	756
BOOM GP	758
LINES GP-GREASE	762
LINKAGE AR-BUCKET	763
LINKAGE GP-BUCKET	765
STICK AR-HOE	768
STICK AR-REACH	771
STICK GP-HOE	772
WORK TOOLS	786
ADJUSTER GP-BUCKET	786
BUCKET & ADJUSTER GP	787
BUCKET AS-EXCAVATION	794
BUCKET AS-GENERAL PURPOSE	797
BUCKET AS-HEAVY DUTY ROCK	807
BUCKET AS-UTILITY	818
BUCKET GP-GENERAL PURPOSE	819
BUCKET GP-UTILITY	820
COUPLER AR-QUICK	821
COUPLER AR	821
COUPLER GP-QUICK	822
EDGE GP-CUTTING	823
PIN GP-BUCKET	823
PIN GP-COUPLER	824
SIDECUTTER GP	825
TIP GP-DOUBLE SPIKE	826
TIP GP-EXTRA-DUTY	827
TIP GP-GENERAL PURPOSE	829
TIP GP-PENETRATION	831
TIP GP-PENETRATION PLUS	833
TIP GP-SHARP	835
TIP GP-SPIKE	836
TIP GP-TWIN SHARP	837
TIP GP-WIDE	838
TIP-LEVELING EDGE	840
OPERATOR STATION	841
ADJUSTER GP-SEAT	841
AIR CONDITIONER & MOUNTING GP	843
AIR CONDITIONER AR	847
AIR CONDITIONER GP	848
ARMREST GP	854
BRACKET GP-MIRROR	856
BRACKET GP-MOUNTING	857
CAB GP	858
COIL GP-EVAPORATOR	886
COMPRESSOR GP-REFRIGERANT	888
CONDENSER & MTG GP-REFRIGERANT	890
CONDENSER GP-REFRIGERANT	891
CONSOLE GP-OPERATOR	892
CONTROL & MTG GP-JOYSTICK	898
CONTROL & MTG GP-PEDAL	903
CONTROL GP-FOOT	904

TABLE OF CONTENTS

Name	Page
CONTROL GP-HANDLE	905
CONTROL GP-HEAT & AIR COND	911
CONTROL GP-HYDRAULIC PEDAL	912
CONTROL GP-JOYSTICK	914
CONTROL GP-PEDAL	924
COVER GP-CAB	925
COVER GP-STORAGE	926
DOOR & MTG GP-CAB	927
DOOR GP-CAB	928
DUCT GP-CAB AIR	939
FLOOR MAT	940
FLOOR MAT GP	948
FRAME GP-UPPER FRONT WINDOW	954
GUARD AR-OVERHEAD	956
GUARD AR-VANDALISM	956
GUARD GP-FRONT WINDOW	957
GUARD GP-OVERHEAD	964
GUARD GP-VANDALISM	966
HATCH GP-ROOF	968
HEADREST AS-SEAT	970
HEATER & MTG GP-CAB	973
HEATER AR-CAB	977
HORN GP-ELECTRIC	978
INSTALLATION AR	980
INSTALLATION GP-RADIO	981
KIT-CONSOLE ADJUSTMENT	985
KIT-SEAT SUSPENSION	986
LEVER GP-AIR & TEMP CONTROL	989
LINES GP-AIR CONDITIONER	990
LINES GP-HEATER	993
LITERATURE GP	995
MIRROR GP	996
MIRROR GP-REAR VIEW	998
MONITOR & MTG GP-OPERATOR	1002
MONITOR GP-OPERATOR	1003
MOUNTING GP-ANTENNA	1004
MOUNTING GP-PLATFORM	1008
OPERATOR AR	1010
PEDAL AR-AUXILIARY	1010
PEDAL AR-THIRD	1010
PLATFORM GP-OPERATOR	1011
SCREEN GP-SUN	1012
SEAT & MOUNTING GP	1013
SEAT BELT GP	1017
SEAT GP	1023
SEAT GP-SUSPENSION	1034
SUPPORT GP-SEAT	1045
SUSPENSION GP-SEAT	1046
VISOR GP-CAB	1053
VISOR GP-PROTECTION	1054
WASHER GP-WINDOW	1055
WINDOW AS-FRONT	1058
WINDOW GP-CAB	1059
WINDOW GP-DOOR	1068
WINDOW GP-REAR	1070
WIPER & WASHER GP-WINDOW	1073
WIPER AR-WINDOW	1075
WIPER GP-WINDOW	1076
SERVICE EQUIPMENT AND SUPPLIES	1078
FILM GP	1078
PLATE & FILM GP	1095
PART NUMBER INDEX	B1

GENERAL INFORMATION

1. MACHINE IDENTIFICATION

Caterpillar machines are identified by Product Identification Numbers (PIN). Some components included in a machine may be identified by Serial Numbers (S/N). Typical components that will be serialized include engines, transmissions, bulldozers, and rippers. The machine and engine are further identified by arrangement numbers and in some cases modification numbers. These numbers are shown on the product identification plate(s) and on the master plate in the operator's compartment.

Caterpillar dealers need all of these numbers to determine accurate parts identification.

SIS *New Feature*

Effective First Quarter 2001 the Caterpillar Product Identification Number (PIN) changed from 8 to 17 characters. In an effort to provide uniform equipment identification, Caterpillar and other construction equipment manufacturers are moving to comply with the latest version of the product identification numbering standard. Non-road machine PINs are defined by ISO 10261. The new PIN format will apply to all Caterpillar machines and generator sets. The PIN plates and frame marking will display the 17 character PIN. The new format will look like the following:

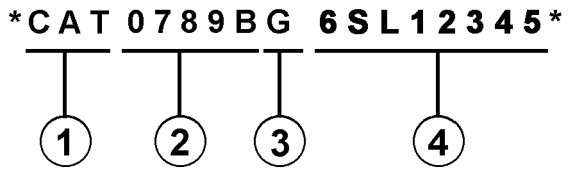

Where:

1. Caterpillar's World Manufacturing Code (characters 1-3)

2. Machine Descriptor (characters 4-8)

3. Check Character (character 9)

4. Machine Indicator Section (MIS) or Product Sequence Number (characters 10-17). These were previously referred to as the Serial Number.

Machines and generator sets produced before First Quarter 2001 will maintain their 8 character PIN format.

Components such as engines, transmissions, axles, etc. and work tools will continue to use an 8 character Serial Number (S/N).

2. ORDERING PARTS

⚠ WARNING

When replacement parts are required for this product Caterpillar recommends using Caterpillar replacement parts or parts with equivalent specifications including, but not limited to, physical dimensions, type, strength and material.

Failure to heed this warning can lead to premature failures, product damage, personal injury or death.

Quality Caterpillar replacement parts are available from Caterpillar dealers throughout the world. Their parts inventories are up to date and include all parts normally required to protect your investment in Caterpillar machines. Dealers may offer repair kits or remanufactured parts to allow selection of the most effective repair alternative for a particular situation. When ordering parts, your order should specify the quantity, part number, part name, and the serial number/product identification number of the machine for which the parts are needed.

3. PARTS MANUAL ORGANIZATION

Product information in this manual is presented as "information elements" that represent all of the components for the specific model. Engine Arrangement and Seat Group are examples of information elements. The information elements are organized alphabetically by part name and secondarily by part number within each major section of the manual.

4. TABLE OF CONTENTS

A table of contents (TOC) is found at the beginning of the manual. The TOC lists each section of the manual with a complete list of all information elements organized as they appear in the manual. Page numbers are provided for quick reference to detailed parts identification illustrations and serviceable consist lists.

5. MAINTENANCE PARTS INDEX

The Maintenance Parts Index, located near the beginning of the manual, references most frequently used maintenance part numbers, providing description, quantity, usage and page number. This information is organized alphabetically by part description.

6. INDEX

The index located near the front of the manual is an alphabetical listing of all information elements included in the manual. Page numbers are provided for quick reference to detailed parts identification illustrations and serviceable consist lists.

7. PART NUMBER INDEX

A numerical index listing all part numbers and the corresponding page number(s) appears at the back of the manual.

8. CAPTIONS

Captions located at the beginning of each information element identify the part number and part name along with additional descriptive information. PIN and S/N information found in each caption should be used to select correct information for a specific machine. Field replacement options, identification of optional attachment components, and where used ("part of") information is also provided.

The first line of a caption is shown in larger type font to indicate the beginning of an information element. Captions for additional pages that may be required to illustrate an information element will be shown in standard type font and will include the term *(contd.)* .

9. NON-SERVICED PARTS

In some instances it is necessary to display non-serviced parts that are a link to a lower level serviceable consist lists. These non-serviced part numbers are shown in *italic* type indicating that they are not available.

10. PARTS LIST REFERENCE NUMBERS

Numbers shown in the Ref No column correspond to numbers used in the associated graphic(s). An alphabetic suffix may be added to a reference number to identify lower level consist items. Numbers shown in the Graphic Ref column refer to the graphic number identifier displayed in the lower left corner of each illustration. The Graphic Ref number may be used in combination with the item Ref No to determine the correct part number. There may be intentional omission of a Ref No in a consist list as information is updated to reflect the latest serviceable part numbers.

11. INDENTED PART NAMES

When a part name is indented in a parts list, it is part of (included in) the group or assembly under which it is indented.

12. ILLUSTRATION REFERENCE LETTERS

When necessary, illustrations contain reference letters (A, B, C etc.) that are intended to track lines and harnesses from one point to another. They are also used to show where to reconnect illustrations that have been separated.

13. ABBREVIATIONS AND SYMBOLS

O.D. – Outside Diameter
I.D. – Inside Diameter
A – Not Part Of This Group
B – Use As Required
C – Change From Previous Type
D – Order By The Meter
E – Order By The Centimeter
F – Not Shown
G – Order By The Inch
I – Refer To Hydraulic Information System
M – Metric Part
R – Remfg Part May Be Available
Y – Separate Illustration
Z – Not Serviced Separately

SIS *New Feature*

14. DESCRIPTION OF TYPE CHANGES

Type - A type is defined as any configuration change that requires an additional Information Element for an Arrangement, Group, or Assembly. If serial number breaks for types are not available, a type # (Type 1, Type 2, etc.) will be displayed in the caption. These "type" changes are identified with a "C" note (change from previous type) in the Parts List. Only the "types" that apply to this Parts Manual will be included. Additional types may exist causing "C" notes to appear on an Information Element when no other types are shown.

15.<END>

This symbol indicates the end of an information element.

NOTE:

Continuing improvement and advancement of product design may cause changes to your machine which may not be included in this publication. Whenever a question arises regarding your caterpillar product or this publication, please consult your caterpillar dealer for the latest available information.

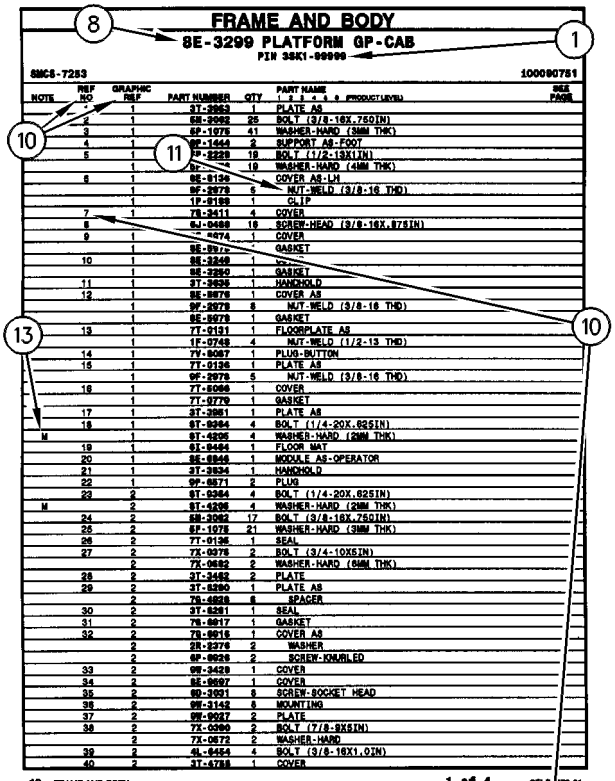
FRAME AND BODY
8E-3299 PLATFORM GP-CAB
PIN 3SK1-99999
SMCS-7253
100090751
NOTE REF NO GRAPHIC REF PART NUMBER QTY PART NAME (PRODUCT LEVEL) SEE PAGE
1 1 3T-2953 1 PLATE AS
2 1 6E-2992 25 BOLT (3/8-16X.750IN)
3 1 6F-1976 41 WASHER-HARD (38MM THK)
4 1 9F-1444 2 SUPPORT AS-FOOT
5 1 7P-2229 19 BOLT (1/2-13X1IN)
1 19 WASHER-HARD (41MM THK)
6 1 8E-9136 COVER AS-LH
1 6F-2978 5 NUT-WELD (3/8-16 THD)
1 1P-9188 1 CLIP
7 1 7S-2411 4 COVER
8 6J-0498 18 SCREW-HEAD (3/8-16X.875IN)
9 1 1 COVER
1 GASKET
10 1 1
1 1
11 1 1 HANDHOLD
12 1 1 COVER AS
1 6F-2978 8 NUT-WELD (3/8-16 THD)
1 GASKET
13 1 1 FLOORPLATE AS
1 1F-0748 4 NUT-WELD (1/2-13 THD)
14 1 1 PLUG-BUTTON
15 1 1 PLATE AS
1 6F-2978 5 NUT-WELD (3/8-16 THD)
16 1 1 COVER
1 GASKET
17 1 1 PLATE AS
18 1 4 BOLT (1/4-20X.625IN)
M 1 4 WASHER-HARD (20MM THK)
19 1 1 FLOOR MAT
20 1 1 MODULE AS-OPERATOR
21 1 1 HANDHOLD
22 1 2 PLUG
23 2 4 BOLT (1/4-20X.625IN)
M 2 4 WASHER-HARD (20MM THK)
24 2 17 BOLT (3/8-16X.750IN)
25 2 21 WASHER-HARD (38MM THK)
26 2 1 SEAL
27 2 2 BOLT (3/4-10X5IN)
2 WASHER-HARD (64MM THK)
28 2 2 PLATE
29 2 1 PLATE AS
2 8 SPACER
30 2 1 SEAL
31 2 1 GASKET
32 2 1 COVER AS
2 WASHER
2 2 SCREW-KNURLED
33 2 1 COVER
34 2 1 COVER
35 2 8 SCREW-SOCKET HEAD
36 2 8 MOUNTING
37 2 2 PLATE
38 2 2 BOLT (7/8-9X5IN)
2 WASHER-HARD
39 2 4 BOLT (3/8-16X1.0IN)
40 2 1 COVER
12 FRAME AND BODY
1 of 4
SELP4570-01

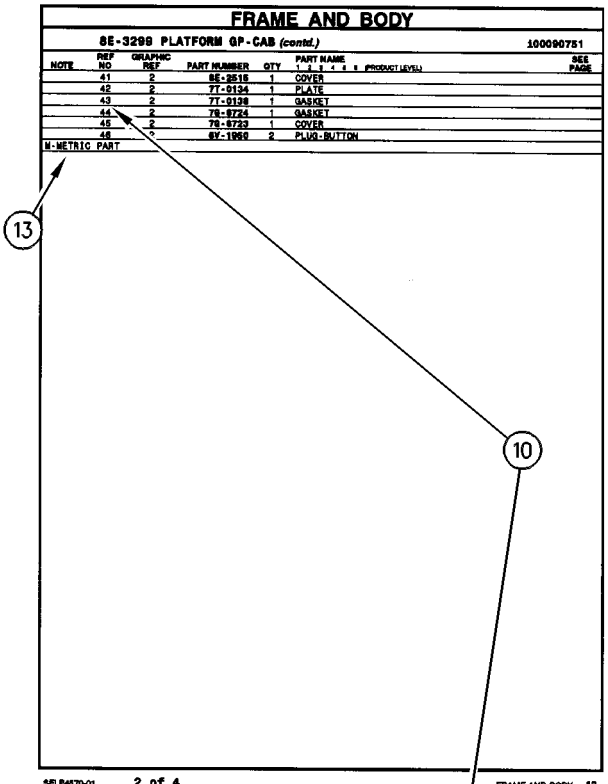
FRAME AND BODY
8E-3299 PLATFORM GP-CAB (contd.)
100090751
NOTE REF NO GRAPHIC REF PART NUMBER QTY PART NAME (PRODUCT LEVEL) SEE PAGE
41 2 6E-2516 1 COVER
42 2 7T-0134 1 PLATE
43 2 7T-0138 1 GASKET
44 2 7S-9724 1 GASKET
45 2 7S-8723 1 COVER
46 2 6V-1950 2 PLUG-BUTTON
M-METRIC PART
SELP4570-01
2 of 4
FRAME AND BODY 13

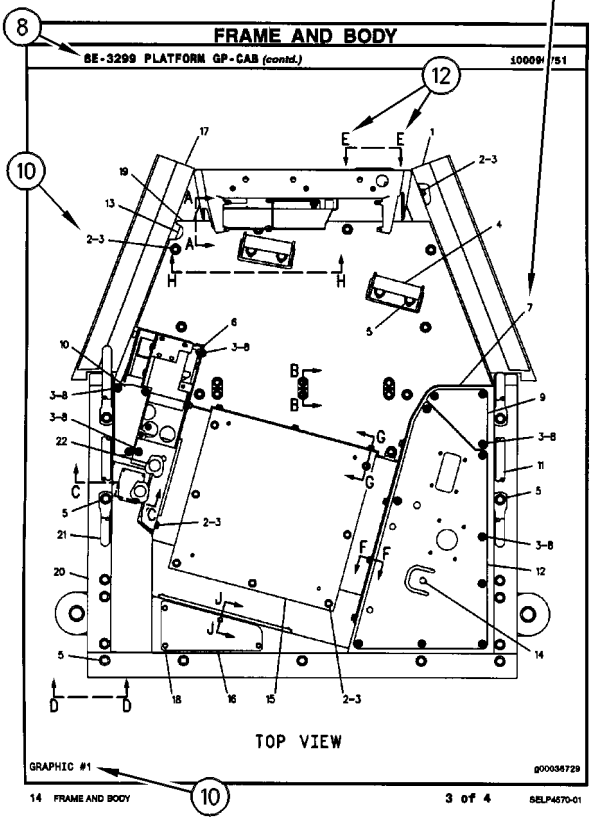
FRAME AND BODY
8E-3299 PLATFORM GP-CAB (contd.)
100090751
TOP VIEW
GRAPHIC #1
g00036729
14 FRAME AND BODY
3 of 4
SELP4570-01

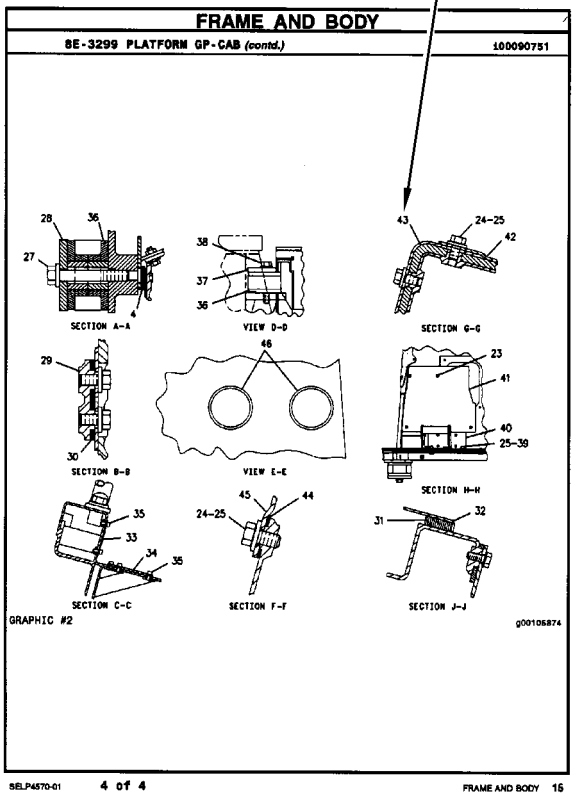
FRAME AND BODY
8E-3299 PLATFORM GP-CAB (contd.)
100090751
SECTION A-A
VIEW D-D
SECTION G-G
SECTION B-B
VIEW E-E
SECTION H-H
SECTION C-C
SECTION F-F
SECTION J-J
GRAPHIC #2
g00105874
SELP4570-01
4 of 4
FRAME AND BODY 15

REPAIR ALTERNATIVES

REMANUFACTURED COMPONENTS

As an option when making repairs consider Caterpillar Remanufactured Components. Components that are available through the Caterpillar Remanufactured Program are identified three ways in the parts book:

- with the letter R in the note field of the parts list
- with an R* at the beginning of the first line of the caption
- with an *R at the end of the first line of the caption

Typical components included in the Remanufacturing Program include:

ALTERNATORS
CONNECTING RODS
CRANKSHAFTS - UNDERSIZE
CRANKSHAFTS - UPGRADE TO NEW
CYLINDER HEADS
ELECTRONIC CONTROL MODULES (ECM)
ELECTRONIC SENSORS
FUEL INJECTORS
FUEL NOZZLES
FUEL PUMPS
GOVERNORS
OIL PUMPS
PISTONS
SHORT BLOCKS
STARTERS
TURBOCHARGERS - COMPLETE
TURBOCHARGER CARTRIDGES
WATER PUMPS

Caterpillar Remanufactured engines for many engine arrangements are also available.

SUPPLEMENTAL COOLANT ADDITIVES

CUSTOMER BENEFITS:

Protects against cavitation, foam, erosion, corrosion, and scale buildup in cooling systems.

- Provides measured coolant conditioner.

DESCRIPTION:

Additives deplete from the coolant with normal operation. For this reason, Supplemental Coolant Additives (SCA) must be added to all heavy duty coolants at regular intervals. In addition, when not using a fully formulated, pre-charged antifreeze, like Caterpillar's DEAC, an initial charge of SCA must be added to the cooling system. The amount of SCA added to the system is dependent on the capacity of the system.

The SCA for initial fill is provided as a liquid. SCA's for maintenance intervals are available in liquid form and as a spin-on element. (No Spin-on available for 3600 Family of Engines)

NOTE:

The amount of SCA added at initial fill is not the same as the amount added at maintenance intervals.

The coolant additive elements can be used with any ethylene or propylene glycol type antifreeze which meets ASTM D4985 or ASTM D5345 Specifications.

NOTE:

For use with standard heavy duty coolant only, not for use with Extended Life Coolant.

PARTS NEEDED:

Cooling System Capacity		Liquid SCA at Initial Fill	Liquid SCA at Maintenance*	Spin-on SCA Maintenance Element*
Liters	Gallons			
22-30	(6-8)	3P-2044 (1)	6V-3542 (1)	111-2370 (1)
30-38	(8-10)	3P-2044 (1) 6V-3542 (1)	111-2372 (1)	111-2369 (1)
38-49	(10-13)	3P-2044 (1) 8T-1589 (1)	111-2372 (1)	111-2369 (1)
49-64	(13-17)	3P-2044 (2)	8T-1589 (1)	9N-3368 (1)
64-83	(17-22)	3P-2044 (2) 8T-1589 (1)	111-2372 (1) 6V-3542 (1)	111-2371 (1)
83-114	(22-30)	3P-2044 (3) 8T-1589 (1)	3P-2044 (1)	9N-3718 (1)
114-163	(30-43)	3P-2044 (5)	3P-2044 (1) 6V-3542 (1)	111-2371 (2)
163-242	(43-64)	3P-2044 (8)	3P-2044 (2)	9N-3718 (2)

** Normal maintenance period is 250 hrs. See your Operation and Maintenance Manual for complete coolant maintenance instructions.*

( ) Indicates quantity required.

MAINTENANCE PARTS

DESCRIPTION	PART NUMBER	QTY	WHERE USED	PAGE
AIR INLET AND EXHAUST SYSTEM				
FILTER ELEMENT AS-AIR (PRIMARY)	135-5788	1	AIR CLEANER GP	64
		1	AIR CLEANER GP	68
	152-7217	1	AIR CLEANER GP	67
		1	AIR CLEANER GP	69
FILTER ELEMENT AS-AIR (SECONDARY)	135-5787	1	AIR CLEANER GP	64
		1	AIR CLEANER GP	68
	152-7219	1	AIR CLEANER GP	67
		1	AIR CLEANER GP	69
BASIC ENGINE				
BELT-SERPENTINE	296-4737	1	PULLEY GP-FAN & ALT DRIVE	37
CAP (ENGINE OIL FILLER)	294-1708	1	COVER GP-VALVE MECHANISM	14
GASKET (VALVE COVER)	296-4694	1	COVER GP-VALVE MECHANISM	14
PLUG-DRAIN (ENGINE OIL PAN)	5I-5607	1	PAN GP-OIL	33
COOLING SYSTEM				
CAP AS (COOLANT RECOVERY)	171-3369	1	RADIATOR & HYD OIL COOLER GP	58
CAP AS-RADIATOR	245-9212	1	RADIATOR & HYD OIL COOLER GP	60
GASKET (WATER TEMPERATURE REGULATOR)	294-1780	1	LINES GP-WATER	54
	5I-7735	1	LINES GP-WATER	54
HOSE (LOWER RADIATOR)	245-9369	1	RADIATOR & HYD OIL COOLER GP	58
HOSE (UPPER RADIATOR)	245-9368	1	RADIATOR & HYD OIL COOLER GP	58
REGULATOR-TEMPERATURE (COOLANT)	5I-8010	1	LINES GP-WATER	54
SCREEN AS (HYDRAULIC OIL COOLER)	281-3532	1	RADIATOR & HYD OIL COOLER GP	60
SCREEN AS (RADIATOR)	281-3531	1	RADIATOR & HYD OIL COOLER GP	60

MAINTENANCE PARTS

DESCRIPTION	PART NUMBER	QTY	WHERE USED	PAGE
ELECTRICAL AND STARTING SYSTEM				
BATTERY (12-VOLT, MAINTENANCE FREE, WET)	3T-5760	2	BATTERY & WIRING GP	127
		2	BATTERY & WIRING GP	133
	9X-3404	2	BATTERY GP	139
CIRCUIT BREAKER AS (60-AMPERE) (ALTERNATOR)	171-2208	1	PANEL GP-CIRCUIT BREAKER	181
CIRCUIT BREAKER AS (80-AMPERE) (MAIN)	171-2210	1	PANEL GP-CIRCUIT BREAKER	181
FUSE (10-AMPERE)	113-8490	20	WIRING GP-CAB	216
FUSE (15-AMPERE)	113-8491	5	WIRING GP-CAB	216
FUSE (15-AMPERE) (ACCUGRADE, SOLENOID RESISTOR)	113-8491	1	WIRING GP-CAB	225
FUSE (20-AMPERE)	113-8492	3	WIRING GP-CAB	216
FUSE (25-AMPERE)	113-8493	3	WIRING GP-CAB	216
FUSE (30-AMPERE)	124-3548	2	WIRING GP-CAB	216
FUSE (5-AMPERE)	141-2759	7	WIRING GP-CAB	216
KEY (BATTERY DISCONNECT)	8H-5306	1	SWITCH GP-DISCONNECT	200
KEY AS-ELECTRONIC (SECURITY)	206-5162	2	INSTALLATION GP-SECURITY	161
LAMP AS (24-VOLT, 3-WATT)	170-9324	1	PANEL GP-SWITCH	183
		1	PANEL GP-SWITCH	185
LAMP-HALOGEN (24-VOLT, 65-WATT)	9X-3463	1	LAMP GP-FLOOD	164
		1	LAMP GP-FLOOD	165
		1	LAMP GP-FLOOD	166
		1	LIGHTING GP-FLOOD	170
LAMP-HALOGEN (24-VOLT, 65-WATT) (CANOPY)	9X-3463	1	LIGHTING GP-FLOOD	173
FUEL SYSTEM				
CAP GP-FUEL FILLER (EXTREME SERVICE, LOCKABLE)	164-4858	1	TANK GP-FUEL	104
		1	TANK GP-FUEL	106
		1	TANK GP-FUEL	108
		1	TANK GP-FUEL	110
		1	TANK GP-FUEL	113
		1	TANK GP-FUEL	115
		1	TANK GP-FUEL	118
		1	TANK GP-FUEL	120
FILTER (ADVANCED EFFICIENCY) (FUEL)	1R-0751	2	FILTER GP-FUEL	81
FILTER AS-WATER SEP & FUEL (PRIMARY)	326-1644	1	FILTER GP-WATER SEP & FUEL	84
GASKET (FUEL PRIMING PUMP)	294-1820	1	FILTER GP-FUEL	81
KEY	5P-8500	1	TANK & MTG GP-FUEL	102
STRAINER AS-FUEL (FLOAT GAUGE)	303-9933	1	TANK GP-FUEL	104
		1	TANK GP-FUEL	106
		1	TANK GP-FUEL	108
		1	TANK GP-FUEL	110
		1	TANK GP-FUEL	113
		1	TANK GP-FUEL	115
		1	TANK GP-FUEL	118
		1	TANK GP-FUEL	120

MAINTENANCE PARTS

DESCRIPTION	PART NUMBER	QTY	WHERE USED	PAGE
HYDRAULIC SYSTEM				
BREATHER (SWING DRIVE)	4H-6112	1	DRIVE GP-SWING	432
		1	DRIVE GP-SWING	433
		1	DRIVE GP-SWING	434
BREATHER AS	267-6744	1	DRIVE GP-SWING	432
		1	DRIVE GP-SWING	433
		1	DRIVE GP-SWING	434
BREATHER GP (HYDRAULIC TANK)	227-0590	1	TANK & FILTER GP-HYDRAULIC	666
FILTER ELEMENT AS-OIL (HYDRAULIC)	216-6676	1	FILTER GP-OIL	443
	266-7796	1	FILTER GP-OIL	445
FILTER-OIL (ADVANCED EFFICIENCY) (HYDRAULIC)	5I-8670	1	FILTER & VALVE GP-PILOT	439
FILTER-OIL (ADVANCED EFFICIENCY) (HYDRAULIC, CASE DRAIN)	093-7521	1	FILTER GP-OIL	446
FILTER-OIL (ADVANCED EFFICIENCY) (HYDRAULIC, PILOT)	5I-8670	1	FILTER & VALVE GP-PILOT	441
FILTER-OIL (ULTRA HIGH EFFICIENCY) (HYDRAULIC, PILOT)	126-1813	1	FILTER & VALVE GP-PILOT	440
PLUG-DRAIN (HYDRAULIC TANK)	4B-7739	2	TANK & FILTER GP-HYDRAULIC	666
SCREEN AS (HYDRAULIC TANK)	209-6002	1	SCREEN GP-HYDRAULIC	657
LUBRICATION SYSTEM				
BREATHER (CRANKCASE)	5I-7725	1	BREATHER GP	42
FILTER AS-ENGINE OIL (STANDARD EFFICIENCY)	1R-0739	1	FILTER & MTG GP-ENGINE OIL	43
		1	FILTER & MTG GP-ENGINE OIL	46
OPERATOR STATION				
BLADE AS-WIPER (275-MM) (LOWER)	4I-5021	1	WIPER & WASHER GP-WINDOW	1073
BLADE AS-WIPER (600-MM) (UPPER)	161-3670	1	WIPER GP-WINDOW	1076
CAP AS (WINDOW WASHER)	178-5431	1	WASHER GP-WINDOW	1055
FILTER ELEMENT-CAB AIR	293-1184	1	DUCT GP-CAB AIR	939
FILTER ELEMENT-CAB AIR (AIR CONDITIONER)	245-7823	1	AIR CONDITIONER GP	848
		1	AIR CONDITIONER GP	851
FUSE (5-AMPERE) (RADIO)	141-2759	1	INSTALLATION GP-RADIO	982
LAMP (24-VOLT, 10-WATT) (DOME)	201-4417	1	CAB GP	872
		1	CAB GP	876
LAMP AS-DOME	176-1986	1	CAB GP	872
		1	CAB GP	876
RECEIVER DRYER AS (REFRIGERANT)	176-1902	1	LINES GP-AIR CONDITIONER	990
SEAT BELT GP	327-6540	1	SEAT BELT GP	1021
	327-6541	1	SEAT BELT GP	1022
SEAT BELT GP (RETRACTABLE, 3-IN)	235-9020	1	SEAT BELT GP	1019
SEAT BELT GP (RETRACTABLE, 46-MM)	273-5446	1	SEAT BELT GP	1018
V-BELT (REFRIGERANT COMPRESSOR)	255-3016	1	COMPRESSOR GP-REFRIGERANT	888

INDEX

Name	Page
A	
ACCUMULATOR GP-HYDRAULIC–CHARGED	381, 382, 383, 384, 385, 386
ACCUMULATOR GP-HYDRAULIC–UNCHARGED	387, 388
ADAPTER GP-REMOTE OIL FILTER–ENGINE	41
ADJUSTER GP-BUCKET	786
ADJUSTER GP-SEAT (UPPER SLIDE)	1046, 1047
ADJUSTER GP-SEAT–LOWER SLIDE	842
ADJUSTER GP-SEAT–UPPER SLIDE	841
AFTERCOOLER AS	60
AIR CLEANER & MOUNTING GP	63
AIR CLEANER GP	64, 65, 66, 67, 68, 69
AIR CONDITIONER & MOUNTING GP	843, 845
AIR CONDITIONER AR	847
AIR CONDITIONER GP	848, 851
ALARM GP	123, 124
ALARM GP-TRAVEL	124
ALTERNATOR GP-CHARGING	125
ARMREST GP–LH	855
ARMREST GP–RH	854
B	
BATTERY & WIRING GP	127, 133
BATTERY (12-VOLT, MAINTENANCE FREE, WET)	127, 133, 139
BATTERY GP–COLD WEATHER	139
BELT-SERPENTINE	37
BLADE AS-WIPER (275-MM) (LOWER)	1073
BLADE AS-WIPER (600-MM) (UPPER)	1076
BLOCK GP-JUNCTION	140
BLOCK GP-JUNCTION (BATTERY)	140
BOOM AR–ACCUGRADE	752
BOOM AR-1 PIECE LONG	752
BOOM AR-1 PIECE LONG–HEAVY-DUTY	753
BOOM GP	754, 760
BOOM GP–ACCUGRADE READY	758
BOOM GP-1 PIECE	756
BOX & MOUNTING GP	274
BOX GP-STORAGE	275
BRACKET GP-MIRROR	856
BRACKET GP-MOUNTING	1046
BRACKET GP-MOUNTING (SUSPENSION SEAT)	1047
BRACKET GP-MOUNTING–SUSPENSION SEAT	857
BREATHER (CRANKCASE)	42
BREATHER (SWING DRIVE)	432, 433, 434
BREATHER AS	432, 433, 434
BREATHER GP (HYDRAULIC TANK)	666
BREATHER GP–CRANKCASE	42
BUCKET & ADJUSTER GP–EXCAVATION	788, 789, 790
BUCKET & ADJUSTER GP–GENERAL PURPOSE	787, 788
BUCKET & ADJUSTER GP–HEAVY-DUTY ROCK	791, 792, 793
BUCKET AS-EXCAVATION	794, 795, 796
BUCKET AS-GENERAL PURPOSE	797, 798, 799, 800, 801, 802, 803, 804, 805, 806
BUCKET AS-HEAVY DUTY ROCK	807, 808, 809, 810, 811, 812, 813, 815, 816, 817
BUCKET AS-HEAVY DUTY ROCK–D-FAMILY	814

INDEX

Name	Page
BUCKET AS-UTILITY–DITCH CLEANING	818
BUCKET GP-GENERAL PURPOSE	819, 820
BUCKET GP-UTILITY–DITCH CLEANING	820
BUMPER GP–SIDE	277

C

Name	Page
CAB GP	858, 860, 862, 864, 866, 868, 882, 884
CAB GP–EXTERIOR	872, 876
CAB GP–INTERIOR	870, 880
CAMERA & MOUNTING GP	141
CAMERA GP	142, 143
CAMSHAFT GP	13
CAP (ENGINE OIL FILLER)	14
CAP AS (COOLANT RECOVERY)	58
CAP AS (WINDOW WASHER)	1055
CAP AS-RADIATOR	60
CAP GP-FUEL FILLER (EXTREME SERVICE, LOCKABLE)	104, 106, 108, 110, 113, 115, 118, 120
CAP GP-FUEL FILLER–EXTREME SERVICE, LOCKABLE	80
CHASSIS AR	1
CIRCUIT BREAKER AS (60-AMPERE) (ALTERNATOR)	181
CIRCUIT BREAKER AS (80-AMPERE) (MAIN)	181
COIL GP-EVAPORATOR	886
COMPRESSOR GP-REFRIGERANT	888, 889
CONDENSER & MTG GP-REFRIGERANT	890
CONDENSER GP-REFRIGERANT	891
CONSOLE GP-OPERATOR	892
CONSOLE GP-OPERATOR–LH	896
CONSOLE GP-OPERATOR–RH	894
CONTROL & MTG GP-COMMUNICATION–PRODUCT LINK	145
CONTROL & MTG GP-COMMUNICATION–PRODUCT LINK 121SR	147
CONTROL & MTG GP-COMMUNICATION–PRODUCT LINK 321SR	146
CONTROL & MTG GP-ENGINE ELEK	149
CONTROL & MTG GP-JOYSTICK	902
CONTROL & MTG GP-JOYSTICK–3-BUTTON, TRIGGER SWITCH	900, 901
CONTROL & MTG GP-JOYSTICK–WITH SLIDE CONTROL	898, 899
CONTROL & MTG GP-MACHINE	150
CONTROL & MTG GP-PEDAL–LH	903
CONTROL AR-AUXILIARY	391
CONTROL AR-AUXILIARY–AUX PUMP, MEDIUM PRESS VALVE	390, 391
CONTROL AR-AUXILIARY–COMBINED FUNCTION	389
CONTROL AR-AUXILIARY–FOOT SWITCH	391
CONTROL AR-AUXILIARY–JOYSTICK WITH SLIDE CONTROL	389
CONTROL AR-AUXILIARY–JOYSTICK, 3-BUTTON, TRIGGER SW	389
CONTROL AR-AUXILIARY–MEDIUM PRESSURE	390
CONTROL AR-AUXILIARY–SYSTEM 23, COMBINED FUNCTION	390
CONTROL AR-COUPLER	392
CONTROL AR-COUPLER–UNIVERSAL QUICK COUPLER	392
CONTROL GP-COMMUNICATION–PRODUCT LINK 121SR	151
CONTROL GP-FOOT–LH	904
CONTROL GP-HANDLE–JOYSTICK, LH	905, 908, 910
CONTROL GP-HANDLE–JOYSTICK, RH	906, 907, 909
CONTROL GP-HEAT & AIR COND–AIR INLET	911
CONTROL GP-HYDRAULIC PEDAL	913
CONTROL GP-HYDRAULIC PEDAL–TRAVEL	912
CONTROL GP-JOYSTICK–LH	915, 917, 919, 921, 923
CONTROL GP-JOYSTICK–RH	914, 916, 918, 920, 922
CONTROL GP-PEDAL–ELECTRIC	924
CONTROL GP-UNPROGRAMMED	149, 150

INDEX

Name	Page
	152
CONTROL-REFUELING PUMP	98
COOLER GP-ENGINE OIL	51
COOLING AR-HIGH AMBIENT TEMP	52
CORE AS-ENGINE OIL COOLER	51
CORE AS-HEATER	848
	851
CORE AS-OIL COOLER (HYDRAULIC)	60
CORE AS-RADIATOR	60
COUNTERWEIGHT GP	278
	279
	280
	281
	282
	283
	284
	286
COUPLER AR–WITH COUPLER PIN	821
COUPLER AR–WITHOUT COUPLER PIN	821
COUPLER AR-QUICK–WITH COUPLER PIN	821
COUPLER AR-QUICK–WITHOUT COUPLER PIN	821
COUPLER GP-QUICK	822
COUPLING GP-FLEXIBLE	393
COUPLING GP-PUMP	394
COVER AS-SOUND SUPPRESSION	289
COVER AS-SOUND SUPPRESSION–AIR CLEANER	287
COVER AS-SOUND SUPPRESSION–HYDRAULIC TANK	288
COVER GP-ACCESS–UPPER	290
COVER GP-CAB–REAR	925
COVER GP-SIDE–FUEL TANK, HYDRAULIC TANK	292
COVER GP-SIDE–HYDRAULIC TANK	291
COVER GP-STORAGE	926
COVER GP-VALVE MECHANISM	14
CRANKSHAFT GP	16
CYLINDER & LINES GP	396
CYLINDER & LINES GP–LH	395
CYLINDER & LINES GP–RH	395
CYLINDER & LINES GP-BOOM–LH	395
CYLINDER & LINES GP-BOOM–RH	395
CYLINDER & LINES GP-BUCKET	396
	397
CYLINDER & LINES GP-STICK	397
CYLINDER & SEAL GP-BOOM	398
	399
CYLINDER & SEAL GP-BUCKET	400
	401
	402
	403
	404
CYLINDER & SEAL GP-STICK	405
	406
	407
CYLINDER BLOCK GP	17
	20
CYLINDER GP-BOOM	408
	410
CYLINDER GP-BUCKET	412
	414
	416
	418
	420
CYLINDER GP-COUPLER	422
CYLINDER GP-STICK	423
	425
	427
CYLINDER HEAD AS	22
CYLINDER HEAD GP	23

D

DOOR & MTG GP-CAB	927
DOOR GP-ACCESS	295
DOOR GP-ACCESS–HIGH AMBIENT	304
DOOR GP-ACCESS–LH	306
DOOR GP-ACCESS–MAIN PUMP	307
DOOR GP-ACCESS–PRECLEANER	299
	300
	301
	302
	303
DOOR GP-ACCESS–PUMP	294
DOOR GP-ACCESS–RADIATOR	308
DOOR GP-ACCESS–RADIATOR, LH	293
	296
	298
DOOR GP-ACCESS–RADIATOR, RH	297
DOOR GP-CAB	928
	930
	932
	935
	938
DRIVE GP-FINAL	270
DRIVE GP-FINAL–WITH MOTOR, BIODEGRADABLE OIL	272
DRIVE GP-SWING–WITH MOTOR	429
	432
	433
	434
	435
DRIVE GP-SWING–WITHOUT MOTOR	430
DUCT GP-CAB AIR	939

E

EDGE GP-CUTTING	823

INDEX

Name	Page
ELECTRONICS GP-COMMUNICATION–PRODUCT LINK 300	153
ELECTRONICS GP-MACHINE	154
ELECTRONICS GP-MACHINE–HIGH AMBIENT	153
ELECTRONICS GP-MONITOR	154
ENGINE AR	6 7 8
ENGINE AR-COMPLETE	9 10 11
FAN GP-SUCTION	53
FASTENER GP-SWING & FINAL DR	436
FASTENER GP-WIRING HARNESS–CONTROL PATTERN CHANGE, 2-WAY	155
FASTENER GP-WIRING HARNESS–FOOT SWITCH	157
FASTENER GP-WIRING HARNESS–JOYSTICK	158
FASTENER GP-WIRING HARNESS–PEDAL CONTROL	156
FASTENER GP-WIRING HARNESS–WORK AREA VISUAL SYSTEM, REAR	159
FENDER & COVER GP	310 311
FILM GP	1089 1094
FILM GP–CONTROL PATTERN CHANGE, 2-WAY	1086
FILM GP–CONTROL PATTERN CHANGE, 4-WAY	1084
FILM GP–FUEL TRANSFER PUMP	1090
FILM GP–HAMMER CONTROL, FOOT SWITCH	1083
FILM GP–OPERATOR CONTROLS, NOTICE	1079 1081
FILM GP–OVERLOAD WARNING DEVICE	1093
FILM GP–PEDAL, LH	1082
FILM GP–QUICK COUPLER	1087 1088
FILM GP–SECONDARY EXIT	1078
FILM GP–WORK AREA VISUAL SYSTEM, REAR	1092
FILM-CERTIFICATION (OPS GUARD, READ OMM)	964
FILM-CERTIFICATION (OPS GUARD, READ OMM, ENGLISH)	962
FILM-IDENTIFICATION (BIODEGRADABLE HYDRAULIC OIL)	272
FILM-IDENTIFICATION (ELECTRONIC CONTROL MODULE)	153
FILM-INFORMATION (24-VOLT)	1095 1099
FILM-INSTRUCTION (COLD WEATHER)	139
FILM-INSTRUCTION (MACHINE SECURITY, CONSOLE)	187 189
FILM-INSTRUCTION (OIL FILTER REMOVAL, HYD TANK)	445
FILM-INSTRUCTION (OPERATOR CONTROLS, READ OMM)	1010 1082
FILM-INSTRUCTION (PULL RING, ALTERNATE EXIT)	1095 1099
FILM-WARNING (HIGH PRESSURE CYLINDER)	385
FILM-WARNING (HOT FLUID UNDER PRESSURE, U.S.)	1103
FILM-WARNING (HOT SURFACE, HANDS CLEAR)	1095 1099
FILM-WARNING (NO WELD, NO DRILL, READ OMM)	962
FILM-WARNING (PRODUCT LINK RADIO, INTL)	147 177
FILM-WARNING (PRODUCT LINK RADIO, U.S.)	147 177
FILM-WARNING (SEAT BELT, U.S.)	1103
FILTER & MTG GP-ENGINE OIL	43 46
FILTER & VALVE GP-PILOT–HYDRAULIC OIL	438 439 440 441
FILTER (ADVANCED EFFICIENCY) (FUEL)	81
FILTER AR-HYDRAULIC	442
FILTER AS-ENGINE OIL (STANDARD EFFICIENCY)	43 46
FILTER AS-WATER SEP & FUEL (PRIMARY)	84
FILTER ELEMENT AS-AIR (PRIMARY)	64 67 68 69
FILTER ELEMENT AS-AIR (SECONDARY)	64 67 68 69
FILTER ELEMENT AS-OIL (HYDRAULIC)	443 445
FILTER ELEMENT-CAB AIR	939
FILTER ELEMENT-CAB AIR (AIR CONDITIONER)	848

F

INDEX

Name	Page
	851
FILTER GP-FUEL	81
FILTER GP-OIL–HYDRAULIC	443
FILTER GP-OIL–HYDRAULIC, CASE DRAIN	446
FILTER GP-OIL–HYDRAULIC, MAIN RETURN	444
	445
FILTER GP-WATER SEP & FUEL	84
FILTER-OIL (ADVANCED EFFICIENCY) (HYDRAULIC)	439
FILTER-OIL (ADVANCED EFFICIENCY) (HYDRAULIC, CASE DRAIN)	446
FILTER-OIL (ADVANCED EFFICIENCY) (HYDRAULIC, PILOT)	441
FILTER-OIL (ULTRA HIGH EFFICIENCY) (HYDRAULIC, PILOT)	440
FINAL DRIVE GP	267
	270
	272
FINAL DRIVE GP–WITH MOTOR	268
	269
FITTING GP-HYDRAULIC	447
FLOOR MAT	940
	941
	942
	943
	944
	945
	946
	947
FLOOR MAT GP	948
	949
	950
	951
	952
FLOOR MAT GP–ACCUGRADE	953
FLYWHEEL GP	24
FRAME AR-UNDERCARRIAGE	352
FRAME AS-UNDERCARRIAGE	353
FRAME GP-UPPER	312
FRAME GP-UPPER–ACCUGRADE	313
FRAME GP-UPPER FRONT WINDOW	954
FUSE (10-AMPERE)	216
FUSE (15-AMPERE)	216
FUSE (15-AMPERE) (ACCUGRADE, SOLENOID RESISTOR)	225
FUSE (20-AMPERE)	216
FUSE (25-AMPERE)	216
FUSE (30-AMPERE)	216
FUSE (5-AMPERE)	216
FUSE (5-AMPERE) (RADIO)	982

G

GASKET (FUEL PRIMING PUMP)	81
GASKET (VALVE COVER)	14
GASKET (WATER TEMPERATURE REGULATOR)	54
GAUGE GP-SIGHT–HYDRAULIC OIL LEVEL	448
GAUGE-OIL LEVEL (DIPSTICK) (ENGINE)	33
GAUGE-OIL LEVEL (DIPSTICK, SWING DRIVE)	433
	434
GAUGE-OIL LEVEL (DIPSTICK, SWING DRIVE) (POWER TRAIN OIL)	432
GEAR & BEARING GP-SWING	315
GEAR GP-FRONT	25
GENERAL AR	1
GUARD AR-OVERHEAD–FOG	956
GUARD AR-VANDALISM	956
GUARD GP-BOTTOM	317
GUARD GP-BOTTOM–HEAVY-DUTY	318
GUARD GP-CYLINDER	449
GUARD GP-FRONT	319
GUARD GP-FRONT WINDOW	962
GUARD GP-FRONT WINDOW–FULL	957
	959
GUARD GP-FRONT WINDOW–LOWER	961
GUARD GP-OVERHEAD	964
GUARD GP-SWIVEL	320
GUARD GP-TRACK GUIDE	354
GUARD GP-TRACK GUIDE–FRONT	356
GUARD GP-TRACK GUIDE–SPROCKET	355
GUARD GP-TRAVEL MOTOR	357
GUARD GP-VANDALISM–CAB	966
	967

H

HANDRAIL GP–FRONT, RH	321
HARNESS AS (OVERLOAD WARNING)	258
HARNESS AS-AUXILIARY	227
HARNESS AS-CAB	216
	225
HARNESS AS-CHASSIS	127
	133
	228
HARNESS AS-CONSOLE	189
HARNESS AS-CONSOLE (LH)	235
HARNESS AS-CONSOLE (RH)	183
	185
	187
	237
HARNESS AS-CONTROL	222
	233
HARNESS AS-CONTROL (ENGINE START, PUMP CONTROL)	251
	253
HARNESS AS-CONTROL (GRADE CONTROL)	248
	250

INDEX

Name	Page
HARNESS AS-CONTROL (PRODUCT LINK)	230
HARNESS AS-CONTROL (SERVICE CONNECTOR)	230, 232
HARNESS AS-ENGINE	242
HARNESS AS-ENGINE (FUEL INJECTORS)	242
HARNESS AS-HEATER	973, 975
HARNESS AS-HEATER & AIR COND	848, 851
HARNESS AS-HEATER & AIR COND (AIR CONDITIONER, LOW SIDE)	843, 845
HARNESS AS-HEATER & AIR COND (CONTROL PANEL SWITCHES)	843, 845, 973, 975
HARNESS AS-LIGHTING (BOOM, LH)	175
HARNESS AS-LIGHTING (BOOM, RH)	176
HARNESS AS-LIGHTING (CAB FLOODLIGHT)	168, 171
HARNESS AS-LIGHTING (CAB FLOODLIGHTS, FRONT)	170, 173
HARNESS AS-OPERATOR CONTROLS	904
HARNESS AS-PLATFORM	260
HARNESS AS-POWER (RADIO)	982
HARNESS AS-PUMP	128, 222, 246, 247, 254
HARNESS AS-QUICK COUPLER	223
HARNESS AS-RADIO	984
HARNESS AS-SOLENOID	225, 265, 266
HARNESS AS-SWITCH (SECONDARY SHUTDOWN)	260
HARNESS AS-VALVE	212, 214, 245, 255, 256, 257
HARNESS AS-WIRING	163, 227, 247
HARNESS AS-WIRING (CAB)	223
HARNESS AS-WIRING (HORN)	979
HARNESS AS-WIRING (QUICK COUPLER SWITCH)	208
HARNESS AS-WIRING (SERVICE CONNECTOR)	230, 232
HATCH GP-ROOF	968, 969
HEAD GP-PUMP	451
HEADREST AS-SEAT	971, 972
HEADREST AS-SEAT–CLOTH	970
HEATER & MTG GP-CAB	973, 975
HEATER (24-VOLT)	75
HEATER AR-CAB	977
HOOD & GUARD GP	322, 323, 324, 325
HOOD & GUARD GP–HIGH AMBIENT	327, 328
HOOD AR–PRECLEANER	329
HOOD GP–ACCUGRADE READY	330, 331
HOOD GP-ENGINE	332, 335, 336
HOOD GP-ENGINE–HIGH AMBIENT	333, 334
HORN GP-ELECTRIC	978, 979
HOSE (LOWER RADIATOR)	58
HOSE (UPPER RADIATOR)	58
HOUSING GP-FLYWHEEL	26
HOUSING GP-FRONT	27
HYDRAULIC AR	453

I

Name	Page
IDLER GP-FRONT	358, 359, 362
IDLER GP-FRONT–LH	361, 364
IDLER GP-FRONT–RH	360, 363
INDICATOR AS-AIR FILTER CHANGE (AIR RESTRICTION)	64, 67, 68, 69
INJECTOR GP-FUEL	85, 86
INSTALLATION AR	980
INSTALLATION AR–CAMERA	980
INSTALLATION AR-COMMUNICATION–PRODUCT LINK 121SR	160

INDEX

Name	Page
INSTALLATION AR-COMMUNICATION–PRODUCT LINK 321SR	160
INSTALLATION AR-ENGINE	12
INSTALLATION GP-RADIO	981
	982
	984
INSTALLATION GP-SECURITY	161
INSULATION GP-SOUND SUPPR	338
K	
KEY	102
KEY (BATTERY DISCONNECT)	200
KEY AS-ELECTRONIC (SECURITY)	161
KIT-BRACKET–PRODUCT LINK 121SR, 321SR	163
KIT-CONSOLE ADJUSTMENT	985
KIT-SEAT SUSPENSION	987
	988
KIT-SEAT SUSPENSION–SEAT HEIGHT	986
L	
LAMP (24-VOLT, 10-WATT) (DOME)	872
	876
LAMP AS (24-VOLT, 3-WATT)	183
	185
LAMP AS-DOME	872
	876
LAMP GP-FLOOD	164
	165
	166
	170
LAMP GP-FLOOD (CANOPY)	173
LAMP-HALOGEN (24-VOLT, 65-WATT)	164
	165
	166
	170
LAMP-HALOGEN (24-VOLT, 65-WATT) (CANOPY)	173
LEVER AS	191
LEVER GP-AIR & TEMP CONTROL	989
LIGHTING GP-CHASSIS–FRONT, RH	167
LIGHTING GP-FLOOD (BOOM, LH)	2
	3
	752
	753
LIGHTING GP-FLOOD–BOOM, LH	175
LIGHTING GP-FLOOD–BOOM, RH	176
LIGHTING GP-FLOOD–CAB	168
	171
LIGHTING GP-FLOOD–CAB GUARD	170
	173
LINES GP-AIR	70
	72
LINES GP-AIR CONDITIONER	990
LINES GP-AUXILIARY HYDRAULIC	466
LINES GP-AUXILIARY HYDRAULIC–HIGH PRESSURE	457
	460
	463
LINES GP-AUXILIARY HYDRAULIC–HIGH PRESSURE, REACH BOOM	454
LINES GP-AUXILIARY HYDRAULIC–MEDIUM PRESSURE	458
	461
	464
	467
LINES GP-AUXILIARY HYDRAULIC–REACH BOOM	455
LINES GP-BOOM	469
LINES GP-BOOM CYLINDER	474
LINES GP-BOOM CYLINDER–BOOM LOWERING CONTROL	476
LINES GP-BOOM CYLINDER–LH	472
LINES GP-BOOM CYLINDER–RH	473
LINES GP-BOOM–STICK LOWERING CONTROL VALVE	471
LINES GP-BUCKET CYLINDER	478
	479
LINES GP-COUPLER	481
	483
	484
	486
	487
	488
LINES GP-COUPLER–REACH BOOM	480
LINES GP-ENGINE OIL	48
LINES GP-ENGINE OIL DRAIN–OIL PAN	49
LINES GP-FRONT	489
	491
	518
LINES GP-FRONT–HAMMER, RETURN	520
LINES GP-FRONT–MEDIUM PRESSURE	516
LINES GP-FRONT–QUICK COUPLER	493
	497
	501
LINES GP-FRONT–SYSTEM 20, WORK TOOL PRIORITY	505
	509
	513
LINES GP-FRONT–SYSTEM 23, COMBINED FUNCTION	530
	534
	538
	541
LINES GP-FRONT–UNIVERSAL QUICK COUPLER	522
	526
LINES GP-FUEL	87

INDEX

Name	Page
LINES GP-FUEL INJECTION	90
LINES GP-GREASE	762
LINES GP-HEATER	993
LINES GP-HYDRAULIC	542
	544
LINES GP-HYDRAULIC OIL COOLER	546
LINES GP-MUFFLER DRAIN	73
LINES GP-PILOT	567
LINES GP-PILOT–4-WAY	572
LINES GP-PILOT–ACCUGRADE, CAB	585
LINES GP-PILOT–ACCUGRADE, CONTROL VALVE	587
LINES GP-PILOT–BOOM LOWERING CONTROL VALVE	609
LINES GP-PILOT–CONTROL PATTERN CHANGE, 2-WAY	574
LINES GP-PILOT–FILTER, PILOT PUMP	559
LINES GP-PILOT–MAIN CONTROL VALVE	551
	555
LINES GP-PILOT–MAIN CONTROL VALVE, MANIFOLD	590
LINES GP-PILOT–MEDIUM PRESSURE	569
LINES GP-PILOT–PILOT CONTROL	580
	582
LINES GP-PILOT–PRESSURE SUPPLY	578
LINES GP-PILOT–PUMP CONTROL, SHUTTLE VALVE	547
LINES GP-PILOT–STICK LOWERING CONTROL	577
LINES GP-PILOT–SYSTEM 20, WORK TOOL PRIORITY	597
	603
LINES GP-PILOT–SYSTEM 23, COMBINED FUNCTION	561
	564
LINES GP-PILOT–THIRD PEDAL, MAIN CTL VALVE	571
LINES GP-PILOT–THIRD PEDAL, STRAIGHT TRAVEL	549
LINES GP-PUMP	615
	619
LINES GP-PUMP–OUTPUT, HYD OIL CLR BYPASS	611
LINES GP-PUMP–SUPPLY, MAIN PUMP	613
LINES GP-PUMP–SYSTEM 20, WORK TOOL PRIORITY	617
LINES GP-STICK	621
	622
	623
	624
	625
LINES GP-STICK CYLINDER	626
	629
LINES GP-STICK CYLINDER–STICK LOWERING CONTROL VALVE	627
LINES GP-SWING MOTOR	630
LINES GP-TRAVEL MOTOR–LONG CARRIAGE	631
	633
LINES GP-TURBOCHARGER OIL	50
LINES GP-WATER	54
LINK AS-TRACK	365
LINKAGE AR-BUCKET–ACCUGRADE	764
LINKAGE AR-BUCKET–WITH LIFTING EYE	763
LINKAGE GP-BUCKET–COUPLER	767
LINKAGE GP-BUCKET–WITH LIFTING EYE	765
LITERATURE GP	995

M

MANIFOLD GP-CONTROL–PILOT OIL SUPPLY	635
	636
	637
MANIFOLD GP-EXHAUST	74
MANIFOLD GP-INLET	75
MIRROR GP	996
	997
MIRROR GP-REAR VIEW	999
	1000
	1001
MIRROR GP-REAR VIEW–FRONT, RH	998
MODULE GP-INTERFACE (KEY)	161
MONITOR & MTG GP-OPERATOR	1002
	1010
MONITOR GP-OPERATOR	1003
MOTOR & MTG GP-TRAVEL	638
	639
MOTOR AS (WIPER)	1076
MOTOR GP-SWING	640
	642
MOTOR GP-TRAVEL	644
	647
MOUNTING GP-ALTERNATOR	29
MOUNTING GP-ANTENNA	1004
	1006
MOUNTING GP-ANTENNA–PRODUCT LINK	1007
MOUNTING GP-CONTROL–PRODUCT LINK 121SR	177
MOUNTING GP-ENGINE	30
MOUNTING GP-MAIN CONTROL VALVE	651
MOUNTING GP-PLATFORM	1008
MOUNTING GP-SENSOR–BODY TILT SENSOR, GPS RECEIVER	179
MOUNTING GP-STARTING MOTOR	32
MUFFLER GP	76

O

OPERATOR AR	1010

INDEX

Name	Page
P	
PADLOCK GP	99
	102
PAN GP-OIL	33
PANEL & MTG GP-CIRCUIT BREAKER	180
PANEL GP-CIRCUIT BREAKER	181
PANEL GP-SWITCH–ENGINE SPEED, START	183
	185
	187
	189
PEDAL AR-AUXILIARY–LH	1010
PEDAL AR-THIRD	1010
PIN GP-BUCKET	823
PIN GP-COUPLER	824
PISTON & ROD GP	35
PLATE & FILM GP	1095
	1099
	1103
	1105
PLATE-IDENTIFICATION (CAT)	802
	803
	804
	805
	806
PLATE-WARNING (HIGH PRESSURE CYLINDER)	369
	370
	373
	374
PLATFORM GP-OPERATOR	1011
PLUG-DRAIN (ENGINE OIL PAN)	33
PLUG-DRAIN (HYDRAULIC TANK)	666
POWER TRAIN AR	272
PROBE AS-LIQUID LEVEL (WATER SEPARATOR)	195
PULLEY AS-IDLER	36
PULLEY GP-FAN & ALT DRIVE	37
PULLEY GP-IDLER	38
PUMP & MTG GP-AUXILIARY–MEDIUM PRESSURE	652
PUMP & MTG GP-FUEL TRANSFER	92
PUMP & MTG GP-MAIN HYDRAULIC	653
PUMP AR-FUEL TRANSFER	93
PUMP GP-FUEL TRANSFER	92
	94
	96
	98
PUMP GP-GEAR	654
PUMP GP-PISTON	654
PUMP GP-WATER	56
R	
RADIATOR & HYD OIL COOLER GP	58
	60
RECEIVER DRYER AS (REFRIGERANT)	990
REGULATOR AS-VOLTAGE	125
REGULATOR-TEMPERATURE (COOLANT)	54
RELAY (24-VOLT) (BOOM FLOODLIGHT)	216
RELAY (24-VOLT) (CAB FLOODLIGHT)	216
RELAY (24-VOLT) (CHASSIS LIGHT)	216
RELAY (24-VOLT) (HORN)	216
RELAY (24-VOLT) (NEUTRAL START)	216
RELAY (24-VOLT) (QUICK COUPLER LOCK ON)	223
RELAY (24-VOLT) (QUICK COUPLER LOCK PRIORITY)	223
RELAY (24-VOLT) (QUICK COUPLER LOCK)	223
RELAY (24-VOLT) (START CONTROL)	233
RELAY (24-VOLT) (TRAVEL ALARM)	216
RELAY (24-VOLT) (WORK TOOL)	222
RELAY (BLOWER)	911
RELAY (COMPRESSOR CLUTCH)	911
RELAY AS (WIPER)	1076
ROLLER AR-TRACK & CARRIER	366
ROLLER GP-TRACK CARRIER	367
ROLLER GP-TRACK-SINGLE FLANGE	368
S	
SCREEN AS (HYDRAULIC OIL COOLER)	60
SCREEN AS (HYDRAULIC TANK)	657
SCREEN AS (RADIATOR)	60
SCREEN GP-HYDRAULIC–OIL	657
SCREEN GP-SUN	1012
SEAL GP-DUO-CONE	270
SEAT & MOUNTING GP–HIGH BACK, TILT	1014
	1015
	1016
SEAT & MOUNTING GP–LOW BACK WITH TILT	1013
SEAT BELT GP	1021
	1022
SEAT BELT GP (RETRACTABLE, 3-IN)	1019
SEAT BELT GP (RETRACTABLE, 46-MM)	1018
SEAT BELT GP–RETRACTABLE	1017
	1021
	1022
SEAT BELT GP–RETRACTABLE, 3-IN	1019
SEAT BELT GP–RETRACTABLE, 46-MM	1018
	1020
SEAT GP	1031
	1042
	1043
SEAT GP–HIGH BACK, TILT	1024
	1032
SEAT GP–HIGH BACK, WITH HEATER	1025
	1033
SEAT GP–LOW BACK WITH TILT	1023

INDEX

Name	Page
SEAT GP–LOW BACK, TILT	1027, 1029
SEAT GP–LOW BACK, VINYL	1026, 1028, 1030
SEAT GP-SUSPENSION–AIR SUSP, HIGH BACK, WITH HTR	1036, 1038
SEAT GP-SUSPENSION–HIGH BACK, TILT	1035, 1042, 1043
SEAT GP-SUSPENSION–HIGH BACK, WITH HEATER	1040, 1044
SEAT GP-SUSPENSION–LOW BACK, TILT	1034, 1039, 1041
SENDER AS-TEMPERATURE (HYDRAULIC OIL)	666
SENSOR & MTG GP-POSITION–BOOM	191
SENSOR & MTG GP-POSITION–STICK	192
SENSOR AS (AMBIENT AIR TEMP)	848, 851
SENSOR AS-LIQUID LEVEL (WATER SEPARATOR)	195
SENSOR AS-PRESSURE	587
SENSOR AS-PRESSURE (1-PUMP/2-PUMP, 1-WAY FLOW)	505, 509, 513
SENSOR AS-PRESSURE (BOOM CYLINDER)	476
SENSOR AS-PRESSURE (MAIN HYDRAULIC PUMP)	559
SENSOR AS-PRESSURE (WORK TOOL)	541
SENSOR AS-TEMPERATURE (AIR)	911
SENSOR AS-TEMPERATURE (COOLANT)	848, 851
SENSOR GP-ENGINE	193
SENSOR GP-FUEL LEVEL	104, 106, 108, 110, 113, 115, 118, 120
SENSOR GP-LIQUID LEVEL (WATER IN FUEL)	196
SENSOR GP-LIQUID LEVEL–WATER IN FUEL	195
SENSOR GP-LIQUID LEVEL–WATER SEPARATOR	196
SENSOR GP-POSITION	197
SENSOR GP-POSITION (BOOM)	191
SENSOR GP-POSITION (BUCKET)	416
SENSOR GP-POSITION (STICK)	192
SENSOR GP-PRESSURE (AIR INLET MANIFOLD)	193
SENSOR GP-PRESSURE (ENGINE OIL)	193
SENSOR GP-PRESSURE (FUEL MANIFOLD)	193
SENSOR GP-PRESSURE (FUEL)	193
SENSOR GP-SPEED (ENGINE)	193
SENSOR GP-SPEED (FUEL PUMP)	92
SENSOR GP-TEMPERATURE (AIR INLET)	193
SENSOR GP-TEMPERATURE (ENGINE COOLANT)	193
SENSOR GP-TEMPERATURE (FUEL)	193
SENSOR-TEMPERATURE (AMBIENT AIR)	843, 845, 973, 975
SERVICE GP-COMMUNICATION (PRODUCT LINK 300)	153
SHEET AS-SOUND SUPPRESSION	339, 340, 341, 342, 343
SIDECUTTER GP	825
SOFTWARE GP-COMMUNICATION (PRODUCT LINK 121SR)	151
SOFTWARE GP-COMMUNICATION (PRODUCT LINK 300)	153
SOFTWARE GP-MACHINE	154
SOFTWARE GP-MONITOR	154
SPECIAL AR	3, 4, 5
SPECIAL AR–ACCUGRADE	2, 3, 4
SPOOL GP-CONTROL VALVE	659
SPOOL GP-CONTROL VALVE–BUCKET CYLINDER	661
SPOOL GP-CONTROL VALVE–STICK REGENERATION	663
SPOOL GP-CONTROL VALVE–SWING	660
SPOOL GP-CONTROL VALVE–SWING PRIORITY	662
SPOOL GP-CONTROL VALVE–WORK TOOL	658
SPRING AS-GAS	962
SPROCKET GP	273
STARTING MOTOR GP-ELECTRIC	198
STEP GP	344, 345
STICK AR-HOE	768, 769, 770
STICK AR-HOE–HEAVY-DUTY	770
STICK AR-HOE–REACH	769

INDEX

Name	Page
STICK AR-HOE–REACH, ACCUGRADE READY	770
STICK AR-REACH	771
STICK GP-HOE	772
	773
	774
	775
	776
	777
	778
	779
	783
	785
STICK GP-HOE–ACCUGRADE READY	780
	781
STICK GP-HOE–AUXILIARY, QUICK CPLR, REACH	784
STORAGE GP-VANDALISM GUARD	346
STRAINER AS-FUEL (FLOAT GAUGE)	104
	106
	108
	110
	113
	115
	118
	120
SUN VISOR	1053
SUPPORT AS-ENCLOSURE	347
	348
	349
	350
	351
SUPPORT GP-SEAT	1045
SUSPENSION GP-SEAT	1041
	1042
	1043
	1044
	1046
	1048
	1049
	1050
	1051
	1052
SUSPENSION GP-SEAT–AIR	1047
SWITCH (LIQUID LEVEL) (FUEL)	204
SWITCH (WINDOW LOWER LIMIT)	1059
SWITCH AS (FILTER BYPASS)	443
SWITCH AS-FOOT (WORK TOOL)	904
SWITCH AS-LIMIT (HYDRAULIC LOCKOUT)	203
SWITCH AS-LIQUID LEVEL (ENGINE OIL)	33
SWITCH AS-LIQUID LEVEL (FUEL TANK SHUTOFF)	96
SWITCH AS-LIQUID LEVEL (HYDRAULIC TANK)	666
SWITCH AS-MAGNETIC (24-VOLT) (AIR INLET HEATER RELAY)	251
SWITCH AS-MAGNETIC (24-VOLT) (MAIN RELAY)	216
SWITCH AS-PRESSURE (HYDRAULIC OIL)	666
SWITCH AS-PRESSURE (IMPLEMENT)	551
	555
SWITCH AS-PRESSURE (IMPLEMENT, SWING)	547
SWITCH AS-PRESSURE (PILOT, BOOM UP)	562
	564
	590
	597
	604
SWITCH AS-PRESSURE (REFRIGERANT)	990
SWITCH AS-PRESSURE (SWING)	574
SWITCH AS-PUSH BUTTON (HORN)	905
SWITCH AS-PUSH BUTTON (MANUAL LOW IDLE)	906
SWITCH AS-ROCKER (FINE SWING)	216
	245
SWITCH AS-ROCKER (HEATED SEAT)	1036
	1040
SWITCH AS-ROCKER (LEVELING)	217
SWITCH AS-ROCKER (LOWER WASHER)	209
SWITCH AS-ROCKER (OVERLOAD WARNING)	257
	258
SWITCH AS-ROCKER (RADIO MUTE)	982
	984
SWITCH AS-ROCKER (WIPER, LOWER)	209
SWITCH AS-ROLLER (LOWER WASHER/WIPER, DISABLE)	1073
SWITCH AS-TOGGLE (ACCUGRADE BACKUP)	225
SWITCH AS-TOGGLE (AUTO/MANUAL ENG SPEED CONTROL)	237
SWITCH AS-TOGGLE (MANUAL ENGINE SPEED CONTROL)	237
SWITCH AS-TOGGLE (QUICK COUPLER)	208
	223
SWITCH AS-TOGGLE (SECONDARY SHUTDOWN)	260
SWITCH AS-TOGGLE (WORK TOOL PRIORITY)	222
SWITCH GP-DISCONNECT–BATTERY	200
SWITCH GP-MAGNETIC (24-VOLT) (AIR INLET HEATER RELAY)	201
SWITCH GP-MAGNETIC–AIR INLET HEATER RELAY	201
SWITCH GP-MAGNETIC–START RELAY	202
SWITCH GP-POSITION–HYDRAULIC LOCKOUT	203
SWITCH GP-REFUELING–FUEL TANK SHUTOFF	204

INDEX

Name	Page
SWITCH GP-ROTARY (THROTTLE POSITION)	183, 185, 187, 189
SWITCH GP-ROTARY–THROTTLE POSITION	205, 206
SWITCH GP-START–ENGINE, KEY	207
SWITCH GP-TOGGLE (QUICK COUPLER)	223
SWITCH GP-TOGGLE–QUICK COUPLER	208
SWITCH GP-WIPER–LOWER	209
SWITCH-MAGNETIC (24-VOLT) (START RELAY)	216
SWIVEL GP	664

T

Name	Page
TANK & FILTER GP-HYDRAULIC	666
TANK & MTG GP-FUEL	99, 100, 101, 102
TANK & MTG GP-HYDRAULIC	669
TANK GP-FUEL	103, 104, 106, 108, 110, 112, 113, 115, 117, 118, 120
TIP GP-DOUBLE SPIKE–K-90	826
TIP GP-EXTRA-DUTY–K-80	828
TIP GP-EXTRA-DUTY–K-90	827
TIP GP-GENERAL PURPOSE–K-80	830
TIP GP-GENERAL PURPOSE–K-90	829
TIP GP-PENETRATION	832
TIP GP-PENETRATION–K-90	831
TIP GP-PENETRATION PLUS	833, 834
TIP GP-SHARP	835
TIP GP-SPIKE–K-90	836
TIP GP-TWIN SHARP	837
TIP GP-WIDE	839
TIP GP-WIDE–K-90	838
TIP-LEVELING EDGE–K-80	840
TRACK ADJUSTER & RECOIL GP	371, 372, 375, 376
TRACK ADJUSTER & RECOIL GP–LH	370, 374
TRACK ADJUSTER & RECOIL GP–RH	369, 373
TRACK GP–2-REQUIRED	377, 378, 379
TRACK GP–WITH STEP	380
TURBOCHARGER GP	78, 79

V

Name	Page
V-BELT (REFRIGERANT COMPRESSOR)	888
VALVE & LINES GP-PILOT–4-WAY PATTERN	670
VALVE & MTG GP-CONTROL	673, 674
VALVE & MTG GP-CONTROL–MEDIUM PRESSURE	671, 672
VALVE AR-ALT PATTERN CONTROL–CONTROL PATTERN CHANGE, 2-WAY	675
VALVE AR-CHECK & RELIEF–BOOM LOWERING CONTROL	675
VALVE AR-CHECK & RELIEF–BOOM LOWERING CONTROL VALVE	675
VALVE AR-CHECK & RELIEF–STICK LOWERING CONTROL	675
VALVE AR-SWING–FINE SWING	676
VALVE AS-MANUAL–AUXILIARY, SHUTOFF	677
VALVE AS-RELIEF (ENGINE OIL PRESSURE)	41
VALVE AS-RELIEF (LINE, MEDIUM PRESSURE)	678
VALVE GP-BANK–MEDIUM PRESSURE	678
VALVE GP-CHECK (HYD CYLINDER, QUICK COUPLER)	422
VALVE GP-CHECK–COOLER BYPASS	679
VALVE GP-CONTROL	685
VALVE GP-CONTROL–2-PUMP, 1-WAY	682, 690
VALVE GP-CONTROL–BOOM I	687
VALVE GP-CONTROL–BOOM II	688
VALVE GP-CONTROL–MEDIUM PRESSURE	680
VALVE GP-CONTROL–STICK I	689
VALVE GP-CONTROL–STICK II	684
VALVE GP-COUPLER–QUICK COUPLER	691
VALVE GP-FLOW CONTROL (MEDIUM PRESSURE)	680, 685
VALVE GP-FLUID SAMPLING (ENGINE COOLANT)	54
VALVE GP-FUEL SHUTOFF	122
VALVE GP-LOAD CONTROL–BOOM LOWERING CONTROL, LH	693
VALVE GP-LOAD CONTROL–BOOM LOWERING CONTROL, RH	695

INDEX

Name	Page
VALVE GP-LOAD CONTROL–STICK CYLINDER	697
VALVE GP-MAIN CONTROL	699
VALVE GP-PILOT (ALT PATTERN CONTROL, 2-WAY)	574
VALVE GP-PILOT (THIRD PEDAL, STRAIGHT TRAVEL)	913
VALVE GP-PILOT–JOYSTICK	706
	711
	713
VALVE GP-PILOT RELIEF (HYDRAULIC FILTER)	439
	440
	441
VALVE GP-PILOT RELIEF–LINE	717
VALVE GP-PILOT–TRAVEL	709
VALVE GP-PILOT–WITHOUT SHUTTLE	715
VALVE GP-PRESSURE REDUCING (QUICK COUPLER)	691
VALVE GP-PRESSURE REDUCING–BOOM PRIORITY	718
VALVE GP-RELIEF	505
	530
	721
	722
	723
	724
	725
	751
VALVE GP-RELIEF (AUXILIARY PUMP)	678
VALVE GP-RELIEF–CROSSOVER	719
VALVE GP-RELIEF–MAIN	720
VALVE GP-SELECTOR–ALT PATTERN CONTROL, 4-WAY	726
VALVE GP-SHUTTLE	728
	729
	731
VALVE GP-SHUTTLE–1-PUMP/2-PUMP	730
VALVE GP-SHUTTLE–PILOT	732
VALVE GP-SOLENOID	734
	735
	736
	737
	738
	743
	749
	750
VALVE GP-SOLENOID & MANIFOLD	745
VALVE GP-SOLENOID & MANIFOLD (QUICK COUPLER)	493
	497
	501
VALVE GP-SOLENOID & MANIFOLD–QUICK COUPLER	746
VALVE GP-SOLENOID & PRESS REDC	749
	750
VALVE GP-SOLENOID & PRESS REDC (BOOM LOWERING CONTROL)	590
VALVE GP-SOLENOID & PRESS REDC (WORK TOOL CONTROL)	597
	603
VALVE GP-SOLENOID & PRESS REDC–BOOM LOWERING CONTROL	747
VALVE GP-SOLENOID & PRESS REDC–WORK TOOL CONTROL	748
VALVE GP-SOLENOID & RELIEF (AUXILIARY, COMBINED FN, LH)	505
	509
	513
	541
VALVE GP-SOLENOID & RELIEF (AUXILIARY, COMBINED FN, RH)	505
	509
	513
	541
VALVE GP-SOLENOID (24-VOLT) (FINE SWING)	744
VALVE GP-SOLENOID (AUXILIARY, 1-WAY/2-WAY FLOW)	747
VALVE GP-SOLENOID (AUXILIARY, COMBINED FUNCTION)	748
VALVE GP-SOLENOID (FINE SWING)	433
VALVE GP-SOLENOID (HYDRAULIC LOCKOUT)	636
	637
VALVE GP-SOLENOID (NEG FLOW CONT, PROPN RED VALVE)	562
	564
	597
	603
VALVE GP-SOLENOID (PRESSURE REDUCING)	561
	564
	569
	654
	738
	741
VALVE GP-SOLENOID (QUICK COUPLER PIN)	740
VALVE GP-SOLENOID (QUICK COUPLER)	691
VALVE GP-SOLENOID (SWING BRAKE RELEASE)	636
	637
VALVE GP-SOLENOID (SYSTEM 24, COMBINED FUNCTION)	561
	564
VALVE GP-SOLENOID (TRAVEL SPEED)	636
	637
VALVE GP-SOLENOID (WORK TOOL PRIORITY)	597

INDEX

Name	Page
	603
VALVE GP-SOLENOID–FINE SWING	742
	744
VALVE GP-SOLENOID–NEGATIVE FLOW CONTROL	739
VALVE GP-SOLENOID–PRESSURE REDUCING	733
	741
VALVE GP-SOLENOID–QUICK COUPLER	740
VALVE GP-TRAVEL COUNTERBALANCE	751
VALVE MECHANISM GP	39
VALVE-FILL	372
	376
VALVE-RELIEF	372
	376
VISOR GP-CAB	1053
VISOR GP-PROTECTION–RAIN	1054

W

Name	Page
WASHER GP-WINDOW	1055
WASHER GP-WINDOW–LOWER	1056
WINDOW AS-FRONT–UPPER	1058
WINDOW GP-CAB	1067
WINDOW GP-CAB–FRONT, LOWER	1062
WINDOW GP-CAB–FRONT, UPPER	1059
WINDOW GP-CAB–LOWER	1063
WINDOW GP-CAB–REAR	1065
WINDOW GP-CAB–SIDE, REAR	1066
WINDOW GP-DOOR	1068
WINDOW GP-REAR	1070
	1072
WIPER & WASHER GP-WINDOW–LOWER	1073
WIPER AR-WINDOW	1075
WIPER GP-WINDOW–FRONT, UPPER	1076
WIRING GP-AUX START RECEPTACLE–JUMP START	210
WIRING GP-AUXILIARY CONTROL–SYSTEM 20, WORK TOOL PRIORITY	214
WIRING GP-AUXILIARY CONTROL–SYSTEM 23, COMBINED FUNCTION	212
WIRING GP-CAB	216
WIRING GP-CAB–ACCUGRADE READY	225
WIRING GP-CAB–COUPLER	223
WIRING GP-CAB–REAR VISION CAMERA	227
WIRING GP-CAB–SYSTEM 20, WORK TOOL PRIORITY	222
WIRING GP-CHASSIS–ACCUGRADE READY	228
WIRING GP-COMMUNICATION	233
WIRING GP-COMMUNICATION–PRODUCT LINK 121SR	232
WIRING GP-COMMUNICATION–PRODUCT LINK 321SR	230
WIRING GP-CONSOLE	236
WIRING GP-CONSOLE–LH	235
WIRING GP-CONSOLE–RH	237
WIRING GP-CONVERTER	239
	241
WIRING GP-COUPLER	264
WIRING GP-ELECTRONIC CONTROL	242
WIRING GP-FINE SWING	245
WIRING GP-FUEL PUMP–REFUELING PUMP	246
	247
WIRING GP-GRADE CONTROL–ACCUGRADE, BOOM	248
WIRING GP-GRADE CONTROL–ACCUGRADE, STICK	250
WIRING GP-HEATER	251
	253
WIRING GP-HYDRAULIC CONTROL–RETURN FILTER	254
WIRING GP-MEDIUM PRESSURE	255
	256
WIRING GP-OVERLOAD WARNING	257
	258
WIRING GP-PLATFORM	260
WIRING GP-PLATFORM–ACCUGRADE READY	263
WIRING GP-QUICK COUPLER	265
	266

MACHINE ARRANGEMENT

260-6960 CHASSIS AR

S/N: CJN1-UP

PART OF 260-6952 GENERAL AR

SMCS-7000 **i03003752**

NOTE	PART NUMBER	QTY	PART NAME 1 2 3 4 5 6 (PRODUCT LEVEL)	SEE PAGE
Y	*259-5159*	1	BATTERY & WIRING GP	127
Y	*244-8039*	1	BOX & MOUNTING GP	274
Y	*262-2256*	1	COUNTERWEIGHT GP	278
Y	*244-8041*	1	FENDER & COVER GP	310
Y	*260-2458*	1	FRAME GP-UPPER	312
Y	*262-2258*	1	GUARD GP-BOTTOM	317
Y	*170-2602*	1	HANDRAIL GP (FRONT, RH)	321
Y	*262-2265*	1	HOOD & GUARD GP	322
Y	*275-6874*	1	HORN GP-ELECTRIC	978
Y	*4I-5409*	1	LIGHTING GP-CHASSIS (FRONT, RH)	167
Y	*301-2545*	1	INSULATION GP-SOUND SUPPR	338
Y	*259-7194*	1	LINES GP-AIR CONDITIONER	990
Y	*262-2261*	1	LINES GP-FUEL	87
Y	*7Y-0059*	1	LITERATURE GP	995
Y	*142-3836*	1	MIRROR GP-REAR VIEW (FRONT, RH)	998
Y	*245-7811*	1	MOUNTING GP-PLATFORM	1008
Y	*259-7193*	1	OPERATOR AR	1010
Y	*260-6968*	1	PLATE & FILM GP	1095
Y	*262-2259*	1	TANK & MTG GP-FUEL	99
Y	*319-1398*	1	WIRING GP-HEATER	253
			S/N: CJN308-UP	

Y-SEPARATE ILLUSTRATION

<END>

260-6952 GENERAL AR

S/N: CJN1-UP

SMCS-7000 **i02853562**

NOTE	PART NUMBER	QTY	PART NAME 1 2 3 4 5 6 (PRODUCT LEVEL)	SEE PAGE
Y	*260-6960*	1	CHASSIS AR	1
Y	*290-9444*	1	ELECTRONICS GP-MACHINE	154
Y	*221-8861*	1	ELECTRONICS GP-MONITOR	154
Y	**279-7746**	1	ENGINE AR-COMPLETE	11
Y	*260-6975*	1	FRAME AR-UNDERCARRIAGE	352
Y	*259-7547*	1	HYDRAULIC AR	453
Y	*279-7748*	1	INSTALLATION AR-ENGINE	12
Y	*267-6738*	1	POWER TRAIN AR	272

Y-SEPARATE ILLUSTRATION

<END>

MACHINE ARRANGEMENT

301-2479 SPECIAL AR–ACCUGRADE

S/N: CJN1-UP

AN ATTACHMENT

SMCS-7000 **i02846252**

NOTE	PART NUMBER	QTY	PART NAME 1 2 3 4 5 6 (PRODUCT LEVEL)	SEE PAGE
Y	*303-8845*	1	BOOM GP	758
Y	*298-2991*	1	COUNTERWEIGHT GP	281
Y	*259-0837*	1	CYLINDER & LINES GP-BOOM (LH)	395
Y	*259-0838*	1	CYLINDER & LINES GP-BOOM (RH)	395
Y	*310-1782*	1	CYLINDER & LINES GP-BUCKET	397
Y	*259-0841*	1	CYLINDER & LINES GP-STICK	397
Y	*273-5358*	1	FLOOR MAT GP	952
Y	*297-7558*	1	FRAME GP-UPPER	313
Y	*295-9562*	1	GUARD GP-CYLINDER	449
Y	*210-3821*	1	GUARD GP-FRONT	319
Y	*303-9791*	1	HOOD GP	330
Y	*259-5163*	1	LIGHTING GP-FLOOD (BOOM, LH)	175
Y	*260-8220*	1	LINES GP-BOOM	469
Y	*174-8529*	1	LINES GP-GREASE	762
Y	*289-5749*	1	LINES GP-PILOT (ACCUGRADE, CAB)	585
Y	*289-5750*	1	LINES GP-PILOT (ACCUGRADE, CONTROL VALVE)	587
Y	*264-1603*	1	LINKAGE GP-BUCKET (WITH LIFTING EYE)	765
Y	*270-5603*	1	MOUNTING GP-ANTENNA (ACCUGRADE)	1004
Y	*297-4468*	1	MOUNTING GP-SENSOR	179
Y	*297-4469*	1	SENSOR & MTG GP-POSITION (BOOM)	191
Y	*297-4470*	1	SENSOR & MTG GP-POSITION (STICK)	192
Y	*299-2697*	1	WIRING GP-CAB (ACCUGRADE READY)	225
Y	*299-2696*	1	WIRING GP-CHASSIS	228
Y	*299-2698*	1	WIRING GP-GRADE CONTROL (ACCUGRADE, BOOM)	248
Y	*299-2699*	1	WIRING GP-GRADE CONTROL (ACCUGRADE, STICK)	250
Y	*306-8398*	1	WIRING GP-PLATFORM	263
	290-9378	1	PANEL-CONTROL (SWITCH)	

Y-SEPARATE ILLUSTRATION

<END>

MACHINE ARRANGEMENT

301-2517 SPECIAL AR–ACCUGRADE

S/N: CJN1-UP
AN ATTACHMENT

SMCS-7000 **i02846247**

NOTE	PART NUMBER	QTY	PART NAME 1 2 3 4 5 6 (PRODUCT LEVEL)	SEE PAGE
Y	*303-8845*	1	BOOM GP	758
Y	*259-0837*	1	CYLINDER & LINES GP-BOOM (LH)	395
Y	*259-0838*	1	CYLINDER & LINES GP-BOOM (RH)	395
Y	*310-1782*	1	CYLINDER & LINES GP-BUCKET	397
Y	*259-0841*	1	CYLINDER & LINES GP-STICK	397
Y	*297-7558*	1	FRAME GP-UPPER	313
Y	*295-9562*	1	GUARD GP-CYLINDER	449
Y	*210-3821*	1	GUARD GP-FRONT	319
Y	*303-9985*	1	HOOD GP	331
Y	*259-5163*	1	LIGHTING GP-FLOOD (BOOM, LH)	175
Y	*260-8220*	1	LINES GP-BOOM	469
Y	*174-8529*	1	LINES GP-GREASE	762
Y	*289-5749*	1	LINES GP-PILOT (ACCUGRADE, CAB)	585
Y	*289-5750*	1	LINES GP-PILOT (ACCUGRADE, CONTROL VALVE)	587
Y	*264-1603*	1	LINKAGE GP-BUCKET (WITH LIFTING EYE)	765
Y	*297-4469*	1	SENSOR & MTG GP-POSITION (BOOM)	191
Y	*297-4470*	1	SENSOR & MTG GP-POSITION (STICK)	192
Y	*299-2697*	1	WIRING GP-CAB (ACCUGRADE READY)	225
Y	*299-2696*	1	WIRING GP-CHASSIS	228
Y	*299-2698*	1	WIRING GP-GRADE CONTROL (ACCUGRADE, BOOM)	248
Y	*299-2699*	1	WIRING GP-GRADE CONTROL (ACCUGRADE, STICK)	250
Y	*306-8398*	1	WIRING GP-PLATFORM	263
	290-9378	1	PANEL-CONTROL (SWITCH)	

Y-SEPARATE ILLUSTRATION

<END>

301-2565 SPECIAL AR

S/N: CJN1-UP
CHINA
FOR USE WITH 500-MM (19.6-IN) TRACK SHOES
AN ATTACHMENT

SMCS-7000 **i02852821**

NOTE	PART NUMBER	QTY	PART NAME 1 2 3 4 5 6 (PRODUCT LEVEL)	SEE PAGE
Y	*298-4281*	1	FILM GP	1089
	305-0395	1	HANDLE AS	

Y-SEPARATE ILLUSTRATION

<END>

MACHINE ARRANGEMENT

301-2566 SPECIAL AR

S/N: CJN1-UP
CHINA
FOR USE WITH 600-MM (23.6-IN) TRACK SHOES
AN ATTACHMENT

SMCS-7000 **i02988426**

NOTE	PART NUMBER	QTY	PART NAME 1 2 3 4 5 6 (PRODUCT LEVEL)	SEE PAGE
Y	*298-4281*	1	FILM GP	1089
Y	*235-7764*	2	STEP GP	344
Y-SEPARATE ILLUSTRATION				

<END>

301-2567 SPECIAL AR

S/N: CJN1-UP
CHINA
FOR USE WITH 700-MM (27.5-IN) TRACK SHOES
AN ATTACHMENT

SMCS-7000 **i02852809**

NOTE	PART NUMBER	QTY	PART NAME 1 2 3 4 5 6 (PRODUCT LEVEL)	SEE PAGE
Y	*298-4281*	1	FILM GP	1089
Y	*308-8881*	2	STEP GP	345
	305-0395	1	HANDLE AS	
Y-SEPARATE ILLUSTRATION				

<END>

330-8775 SPECIAL AR—ACCUGRADE

S/N: CJN1-UP
FOR USE WITH 330-8777—PAGE 752, 330-8778—PAGE 764, 330-8779—PAGE 953, 301-2463—PAGE 770, 301-2461—PAGE 770. CANNOT BE USED WITH COUNTERWEIGHT GP (EXTRA)
AN ATTACHMENT

SMCS-7000 **i03149642**

NOTE	PART NUMBER	QTY	PART NAME 1 2 3 4 5 6 (PRODUCT LEVEL)	SEE PAGE
Y	*298-2991*	1	COUNTERWEIGHT GP	281
Y	*297-7558*	1	FRAME GP-UPPER	313
Y	*303-9791*	1	HOOD GP	330
Y	*289-5749*	1	LINES GP-PILOT (ACCUGRADE, CAB)	585
Y	*289-5750*	1	LINES GP-PILOT (ACCUGRADE, CONTROL VALVE)	587
Y	*270-5603*	1	MOUNTING GP-ANTENNA (ACCUGRADE)	1004
Y	*297-4468*	1	MOUNTING GP-SENSOR	179
Y	*297-4469*	1	SENSOR & MTG GP-POSITION	191
Y	*299-2697*	1	WIRING GP-CAB (ACCUGRADE READY)	225
Y	*299-2696*	1	WIRING GP-CHASSIS	228
Y	*299-2698*	1	WIRING GP-GRADE CONTROL (ACCUGRADE, BOOM)	248
Y	*299-2699*	1	WIRING GP-GRADE CONTROL (ACCUGRADE, STICK)	250
Y	*306-8398*	1	WIRING GP-PLATFORM	263
	290-9378	1	PANEL-CONTROL (SWITCH)	
Y-SEPARATE ILLUSTRATION				

<END>

MACHINE ARRANGEMENT

330-8810 SPECIAL AR

S/N: CJN1-UP
CHINA MARKET
FOR USE WITH 600-MM (23.6-IN) TRACK SHOE
AN ATTACHMENT

SMCS-7000 **i03252862**

NOTE	PART NUMBER	QTY	PART NAME 1 2 3 4 5 6 (PRODUCT LEVEL)	SEE PAGE
Y	*314-3848*	1	FILM GP	1094
Y	*235-7764*	2	STEP GP	344

Y-SEPARATE ILLUSTRATION

<END>

ENGINE ARRANGEMENT

272-4817 ENGINE AR

S/N: JKH1-UP

PART OF 272-4822, 279-7714, 279-7746 ENGINE AR-COMPLETE

ALSO AN ATTACHMENT

SMCS-1000 **i02975742**

NOTE	PART NUMBER	QTY	PART NAME 1 2 3 4 5 6 (PRODUCT LEVEL)	SEE PAGE
Y	*296-4792*	1	ADAPTER GP-REMOTE OIL FILTER	41
Y	*296-4778*	1	BREATHER GP	42
Y	*305-4955*	1	CAMSHAFT GP	13
Y	*296-4800*	1	CONTROL & MTG GP-ENGINE ELEK	149
Y	*296-4782*	1	COOLER GP-ENGINE OIL	51
Y	*296-4786*	1	COVER GP-VALVE MECHANISM	14
Y	*296-4789*	1	CRANKSHAFT GP	16
Y	*296-4787*	1	CYLINDER BLOCK GP	20
Y	*296-4784*	1	CYLINDER HEAD GP	23
Y	*296-4797*	1	FAN GP-SUCTION	53
Y	*296-4794*	1	FILTER GP-FUEL	81
Y	*296-4783*	1	FLYWHEEL GP	24
Y	*296-4651*	1	GEAR GP-FRONT	25
Y	*296-4803*	1	HOUSING GP-FLYWHEEL	26
Y	*296-4788*	1	HOUSING GP-FRONT	27
Y	*310-9608*	1	INJECTOR GP-FUEL	86
Y	*296-4781*	1	LINES GP-ENGINE OIL	48
Y	*296-4793*	1	LINES GP-FUEL INJECTION	90
Y	*296-4777*	1	LINES GP-TURBOCHARGER OIL	50
Y	*296-4795*	1	LINES GP-WATER	54
Y	*296-4791*	1	MANIFOLD GP-EXHAUST	74
Y	*296-4790*	1	MANIFOLD GP-INLET	75
Y	*296-4798*	1	MOUNTING GP-ALTERNATOR	29
Y	*296-4637*	1	MOUNTING GP-STARTING MOTOR	32
Y	*305-4926*	1	MUFFLER GP	76
Y	*296-4780*	1	PAN GP-OIL	33
Y	*296-4796*	1	PISTON & ROD GP	35
Y	*305-4680*	1	PUMP & MTG GP-FUEL TRANSFER	92
Y	*296-4655*	1	PUMP GP-WATER	56
Y	*296-4802*	1	SENSOR GP-ENGINE	193
Y	*310-9616*	1	TURBOCHARGER GP	78
Y	*305-4954*	1	VALVE MECHANISM GP	39
Y	*296-4801*	1	WIRING GP-ELECTRONIC CONTROL	242
	276-5007	1	ELECTRONICS GP-ENGINE RATINGS	
			PLEASE USE THE GASKET KIT LINK IN SIS OR CONTACT YOUR LOCAL DEALER FOR THE LATEST GASKET KIT INFORMATION	

Y-SEPARATE ILLUSTRATION

ENGINE ARRANGEMENT

279-7856 ENGINE AR

S/N: CJN1-UP

AN ATTACHMENT

SMCS-1000 **i02686273**

NOTE	PART NUMBER	QTY	PART NAME 1 2 3 4 5 6 (PRODUCT LEVEL)	SEE PAGE
Y	**272-4822**	1	ENGINE AR-COMPLETE	9

Y-SEPARATE ILLUSTRATION

ENGINE ARRANGEMENT

279-7857 ENGINE AR

S/N: CJN1-UP

AN ATTACHMENT

SMCS-1000 **i02686197**

NOTE	PART NUMBER	QTY	PART NAME 1 2 3 4 5 6 (PRODUCT LEVEL)	SEE PAGE
Y	**279-7714**	1	ENGINE AR-COMPLETE	10

Y-SEPARATE ILLUSTRATION

ENGINE ARRANGEMENT

272-4822 ENGINE AR-COMPLETE

S/N: CJN1-UP
PART OF 279-7856 ENGINE AR
AN ATTACHMENT

SMCS-1000 **i02794015**

NOTE	PART NUMBER	QTY	PART NAME 1 2 3 4 5 6 (PRODUCT LEVEL)	SEE PAGE
Y	*272-4817*	1	ENGINE AR	6
Y	*272-4819*	1	PULLEY GP-FAN & ALT DRIVE	37

Y-SEPARATE ILLUSTRATION

ENGINE ARRANGEMENT

279-7714 ENGINE AR-COMPLETE

S/N: CJN1-UP
PART OF 279-7857 ENGINE AR
AN ATTACHMENT

SMCS-1000 **i02793817**

NOTE	PART NUMBER	QTY	PART NAME 1 2 3 4 5 6 (PRODUCT LEVEL)	SEE PAGE
Y	*272-4817*	1	ENGINE AR	6
Y	*272-4819*	1	PULLEY GP-FAN & ALT DRIVE	37

Y-SEPARATE ILLUSTRATION

ENGINE ARRANGEMENT

279-7746 ENGINE AR-COMPLETE

S/N: CJN1-UP

PART OF 260-6952 GENERAL AR

SMCS-1000 **i02766262**

NOTE	PART NUMBER	QTY	PART NAME 1 2 3 4 5 6 (PRODUCT LEVEL)	SEE PAGE
Y	*272-4817*	1	ENGINE AR	6
Y	*272-4819*	1	PULLEY GP-FAN & ALT DRIVE	37

Y-SEPARATE ILLUSTRATION

ENGINE ARRANGEMENT

279-7748 INSTALLATION AR-ENGINE

S/N: CJN1-UP

PART OF 260-6952 GENERAL AR

SMCS-1000 **i02942313**

NOTE	PART NUMBER	QTY	PART NAME 1 2 3 4 5 6 (PRODUCT LEVEL)	SEE PAGE
Y	*255-3033*	1	AIR CLEANER & MOUNTING GP	63
Y	*255-3032*	1	COMPRESSOR GP-REFRIGERANT	888
Y	*259-7195*	1	CONDENSER & MTG GP-REFRIGERANT	890
Y	*255-3037*	1	LINES GP-ENGINE OIL DRAIN	49
			S/N: CJN1-162	
Y	*279-7744*	1	FILTER & MTG GP-ENGINE OIL	43
			S/N: CJN1-161	
Y	*310-9572*	1	FILTER & MTG GP-ENGINE OIL	46
			S/N: CJN162-UP	
Y	*255-3031*	1	LINES GP-AIR	72
Y	*245-9312*	1	LINES GP-AIR	70
Y	*255-3036*	1	LINES GP-MUFFLER DRAIN	73
Y	*255-3035*	1	MOUNTING GP-ENGINE	30
Y	*245-9310*	1	RADIATOR & HYD OIL COOLER GP	58

Y-SEPARATE ILLUSTRATION

305-4955 CAMSHAFT GP

S/N: JKH1-UP
PART OF 272-4817 ENGINE AR
ALSO AN ATTACHMENT

SMCS-1210 **i02790536**

NOTE	REF NO	GRAPHIC REF	PART NUMBER	QTY	PART NAME 1 2 3 4 5 6 (PRODUCT LEVEL)	SEE PAGE
	1	1	**305-4758**	1	CAMSHAFT	
	2	1	**279-7859**	8	TAPPET	
	3	1	**294-1716**	8	PUSHROD	
	4	1	**094-4628**	1	KEY	
	5	1	**5I-7650**	1	PLATE	
M	6	1	**6V-5215**	2	BOLT (M8X1.25X16-MM)	

M-METRIC PART

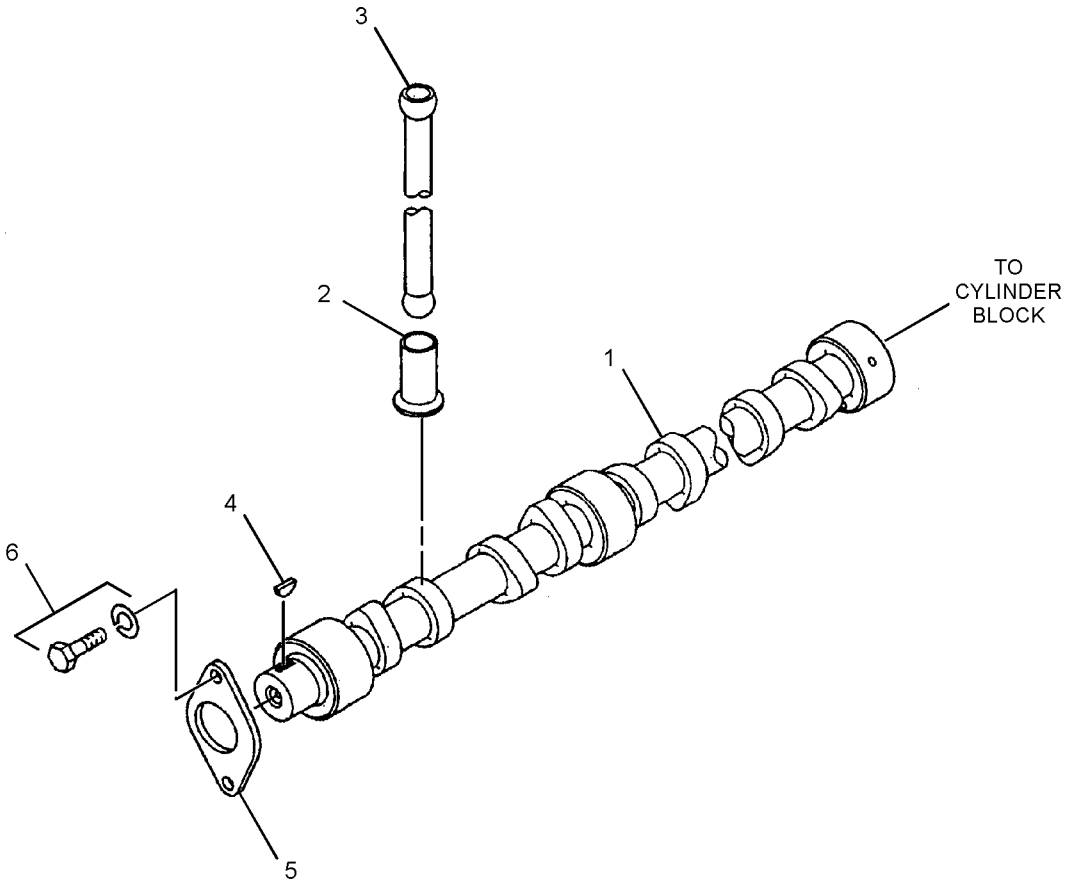

GRAPHIC #1 **<END>** g01405446

BASIC ENGINE

296-4786 COVER GP-VALVE MECHANISM

S/N: JKH1-UP
PART OF 272-4817 ENGINE AR
ALSO AN ATTACHMENT

SMCS-1107 **i03021616**

NOTE	REF NO	GRAPHIC REF	PART NUMBER	QTY	PART NAME 1 2 3 4 5 6 (PRODUCT LEVEL)	SEE PAGE
	1	1	**305-4767**	1	BASE-ROCKER ARM	
	2	1	**296-4692**	1	COVER-ROCKER	
	3	1	**305-4768**	1	GASKET	
	4	1	**296-4694**	1	GASKET (VALVE COVER)	
	5	1	**296-4695**	1	COVER	
	6	1	**294-1708**	1	CAP (ENGINE OIL FILLER)	
	7	1	**296-4696**	1	BRACKET	
	8	1	**294-1710**	6	BOLT (M6X1X16.2-MM)	
	9	1	**294-1711**	12	WASHER	
	10	1	**096-8569**	2	BOLT (140-MM LG)	
	11	1	**294-1712**	1	SEAL	
	12	1	**8T-4224**	7	WASHER-HARD (8.8X16X2-MM THK)	
	13	1	**294-1713**	12	BOLT (M8X1.25X38.3-MM)	
	14	1	**294-1700**	12	BOLT (M8X1.25X108.3-MM)	
	15	1	**095-8799**	5	BOLT (M8X1.25X30.5-MM)	
	16	1	**294-1821**	2	BOLT (M8X1.25X35.5-MM)	
	17	1	**294-1714**	2	STUD	

296-4786 **COVER GP-VALVE MECHANISM** *(contd.)* **i03021616**

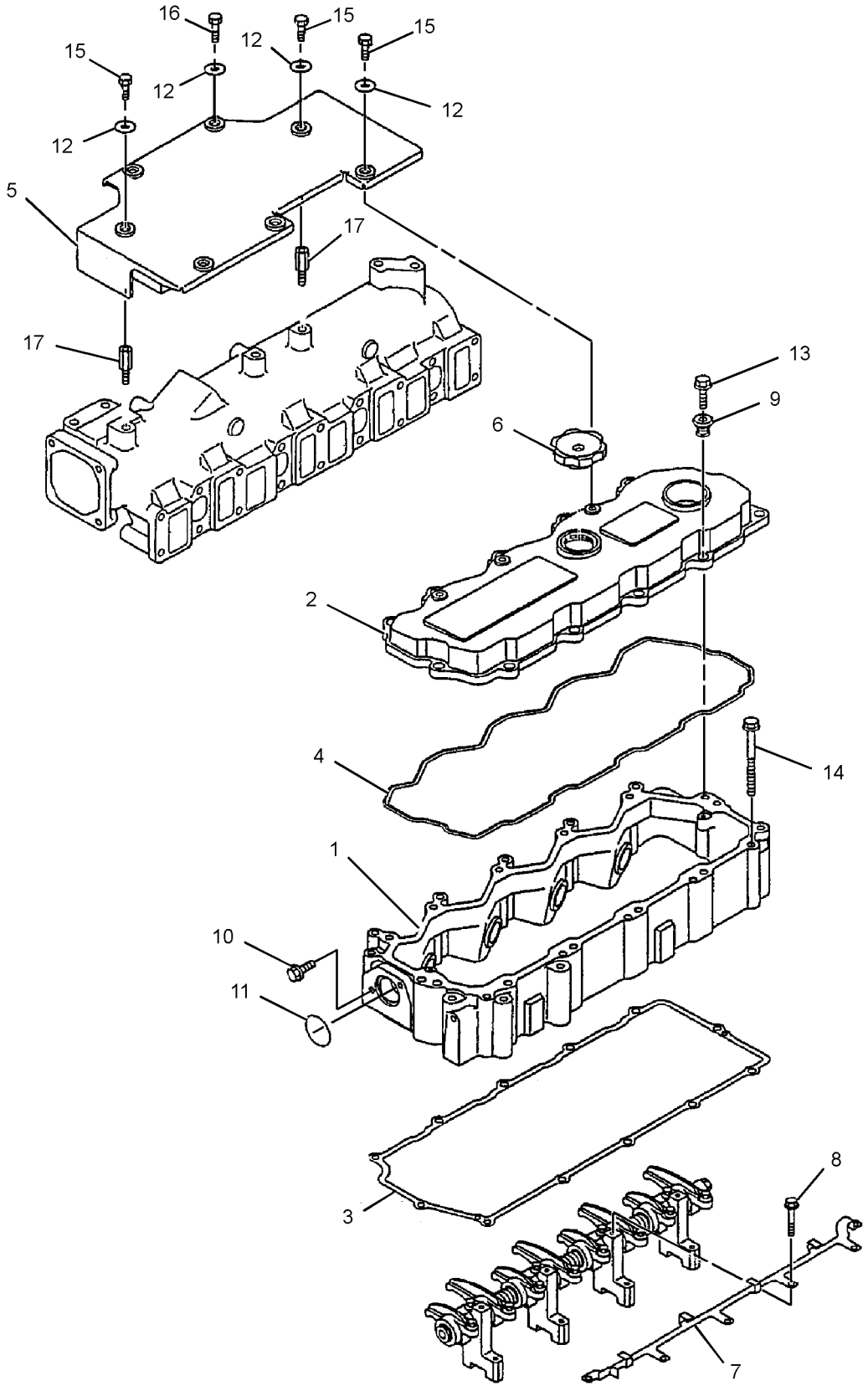

GRAPHIC #1 **<END>** g01404286

BASIC ENGINE

296-4789 CRANKSHAFT GP

S/N: JKH1-UP
PART OF 272-4817 ENGINE AR
ALSO AN ATTACHMENT

SMCS-1202 **i02710559**

NOTE	REF NO	GRAPHIC REF	PART NUMBER	QTY	PART NAME 1 2 3 4 5 6 (PRODUCT LEVEL)	SEE PAGE
	1	1	**296-4710**	1	CRANKSHAFT AS	
	1A	1	**294-1751**	1	GEAR (31-TEETH)	
	1B	1	**130-7596**	1	NUT	
	1C	1	**085-9513**	2	PIN	
	1D	1	**094-4628**	2	KEY	
	2	1	**233-1277**	1	PLATE	

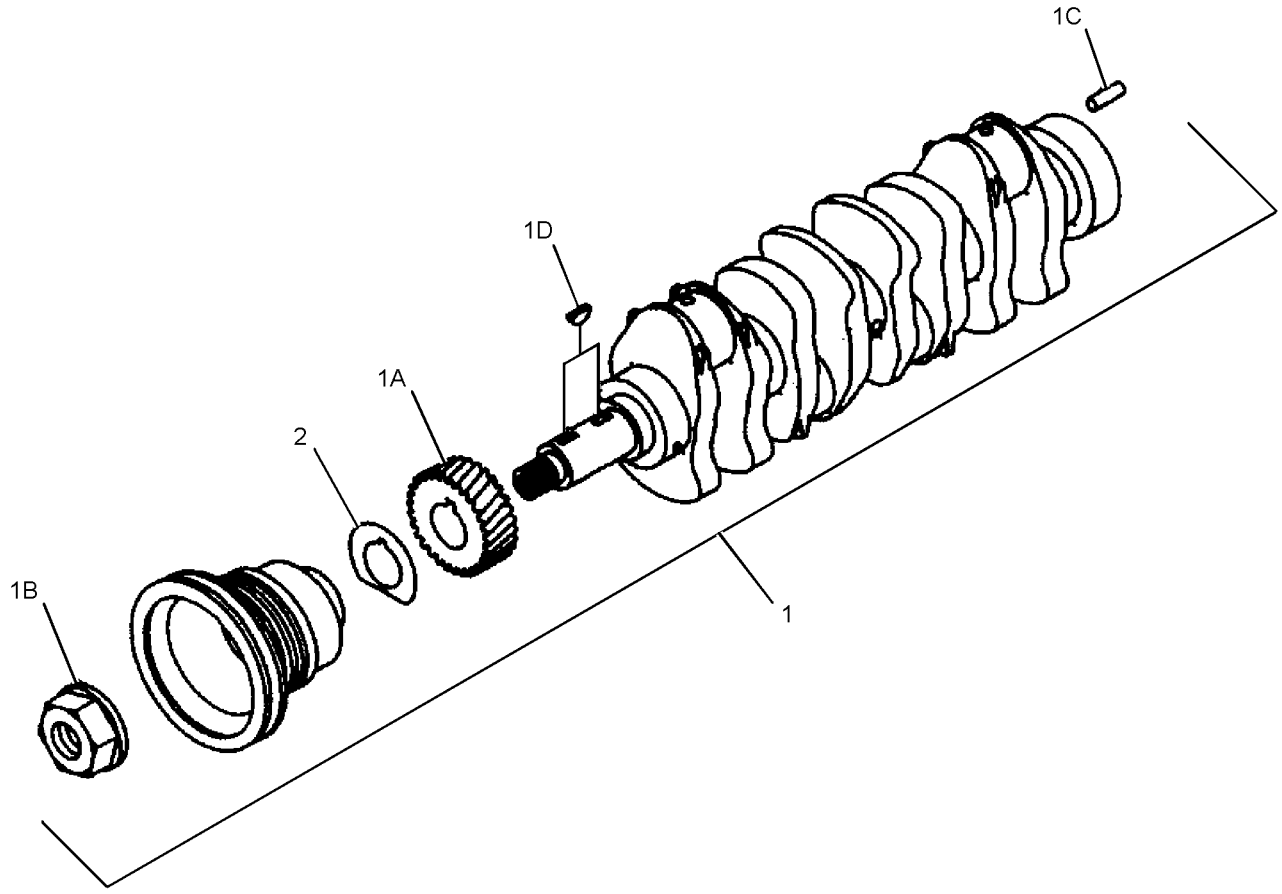

GRAPHIC #1 **<END>** g01403342

296-4699 CYLINDER BLOCK GP

S/N: JKH1-UP
PART OF 296-4787 CYLINDER BLOCK GP
ALSO AN ATTACHMENT

SMCS-1201 **i02975503**

NOTE	REF NO	GRAPHIC REF	PART NUMBER	QTY	PART NAME 1 2 3 4 5 6 (PRODUCT LEVEL)	SEE PAGE
	1	2	**4I-9664**	2	PIN	
	5	2	**5I-8009**	1	BUSHING	
	6	1	**5I-7528**	1	BUSHING	
	7	1	**5I-7529**	1	BUSHING	
	8	1	**3P-1896**	10	PLUG-CUP	
M	9	2	**094-7741**	10	BOLT-BEARING CAP (M14X2X120-MM)	
	10	2	**095-2005**	2	CAP	
	11	1	**096-3741**	7	CAP	
	12	1	**294-1720**	2	SEAL	
	13	2	**294-1722**	4	JET	
	14	1	**5I-7525**	1	PLUG	
	15	1	**5I-7505**	8	PLUG	
	16	2	**294-1721**	1	SHAFT	
	17	2	**5I-7724**	2	PIN	
	18	2	**095-2039**	1	WASHER-SPECIAL	
M	19	2	**8T-4191**	1	BOLT (M10X1.5X16-MM)	
	20	2	**099-4420**	2	PIN	
	21	1	**296-4672**	6	PIN	
	22	2	**139-7814**	4	VALVE	
	23	2	**094-9424**	8	GASKET	

M-METRIC PART

296-4699 CYLINDER BLOCK GP *(contd.)* **i02975503**

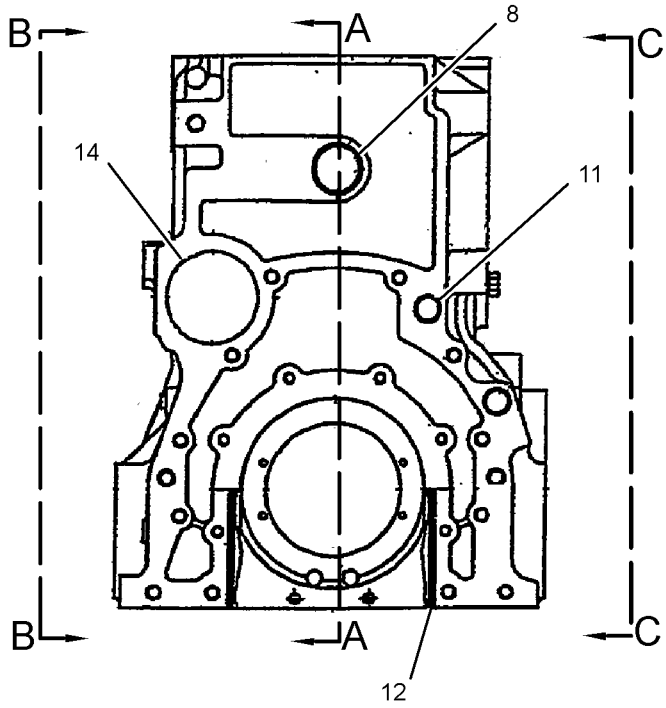

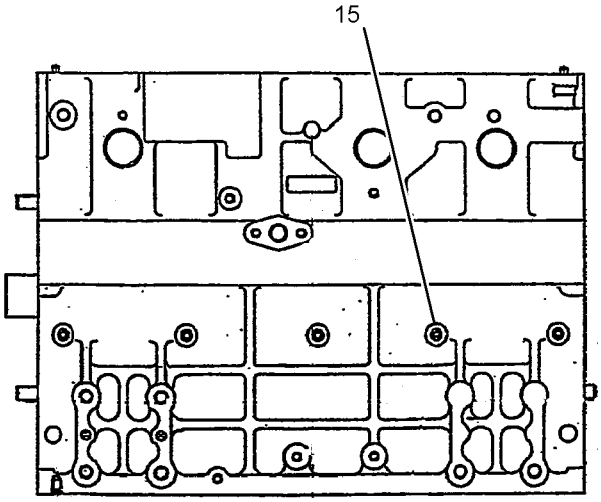

VIEW B-B

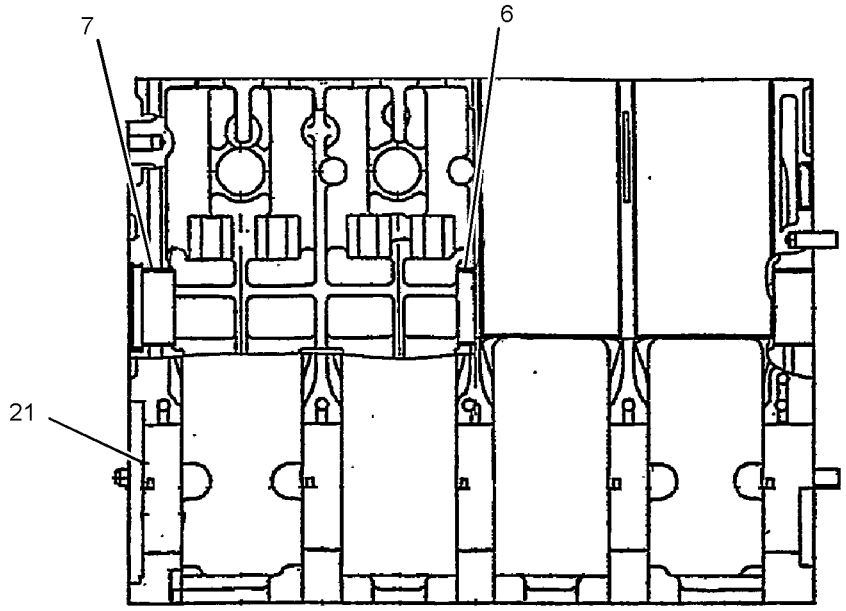

SECTION A-A

GRAPHIC #1 g01504593

296-4699 CYLINDER BLOCK GP *(contd.)* **i02975503**

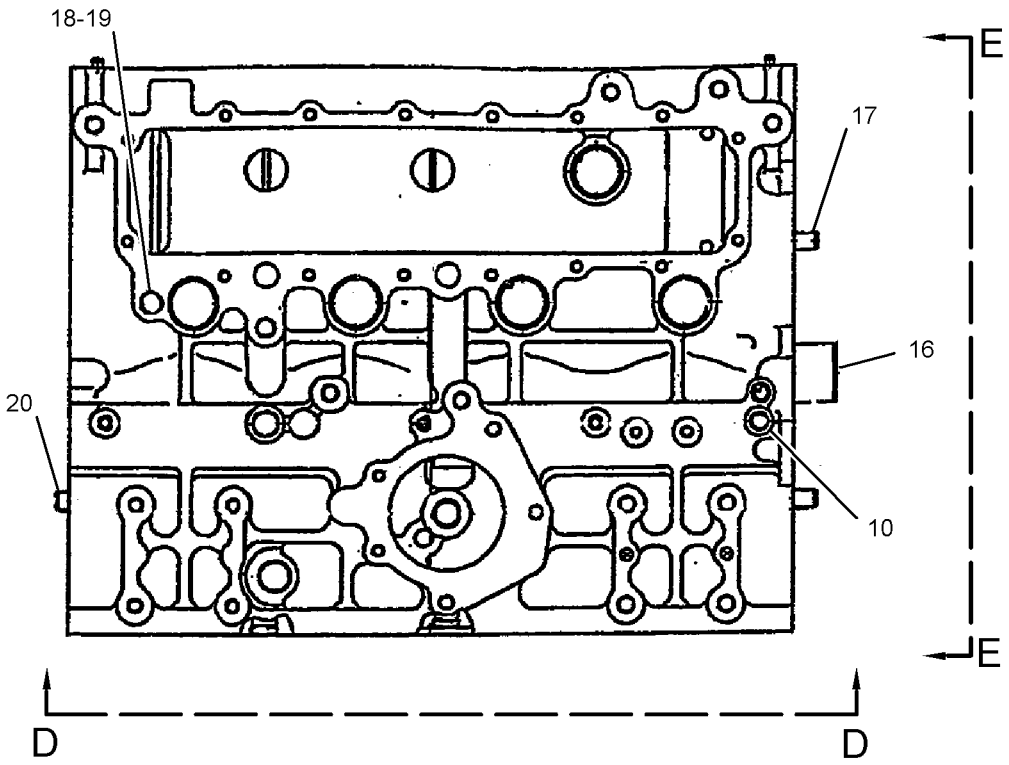

VIEW C-C

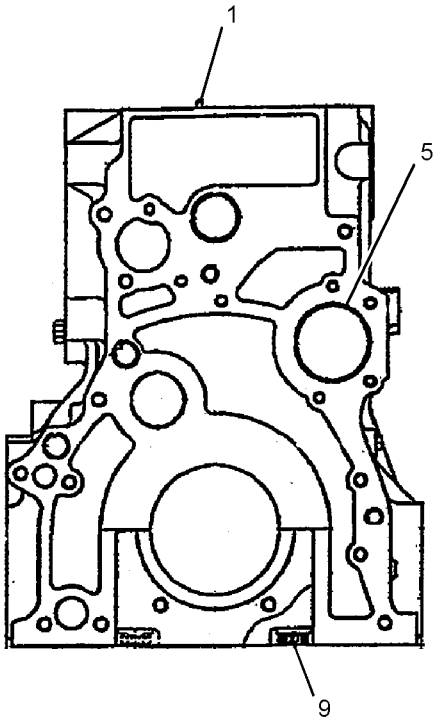

VIEW E-E

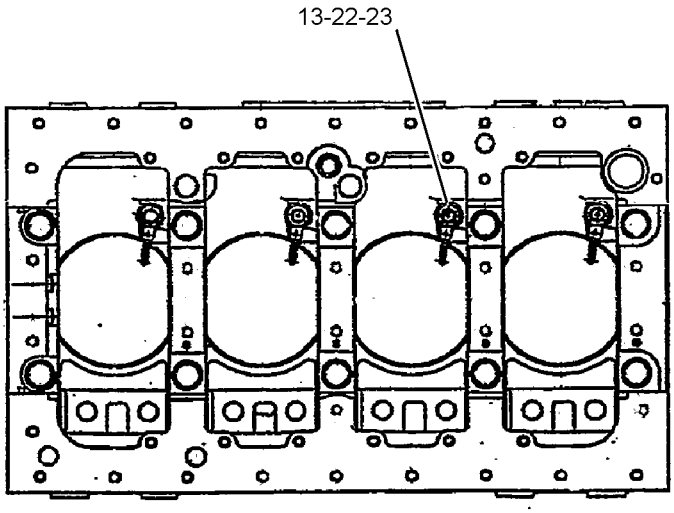

VIEW D-D

GRAPHIC #2 **<END>** g01378474

BASIC ENGINE

296-4787 CYLINDER BLOCK GP

S/N: JKH1-UP
PART OF 272-4817 ENGINE AR
ALSO AN ATTACHMENT

SMCS-1201 **i02837568**

NOTE	REF NO	GRAPHIC REF	PART NUMBER	QTY	PART NAME 1 2 3 4 5 6 (PRODUCT LEVEL)	SEE PAGE
	1	1	**294-1723**	1	EYE	
	2	1	**294-1724**	1	EYE	
	3	1	**5I-5181**	4	BOLT	
	5	1	**096-2501**	4	LOCKWASHER	
M	6	1	**8T-4191**	1	BOLT (M10X1.5X16-MM)	
	7	1	**095-2039**	1	WASHER-SPECIAL	
	8	1	**5I-7654**	3	PLATE (STANDARD)	
AB			**5I-7787**	3	PLATE (0.15-MM OS)	
AB			**5I-7788**	3	PLATE (0.3-MM OS)	
AB			**5I-7789**	3	PLATE (0.45-MM OS)	
	9	1	**5I-7588**	5	SET-BEARING (STANDARD)	
AB			**5I-7784**	5	SET-BEARING (0.25-MM US)	
AB			**5I-7785**	5	SET-BEARING (0.5-MM US)	
AB			**5I-7786**	5	SET-BEARING (0.75-MM US)	
Y	10	1	**296-4699**	1	CYLINDER BLOCK GP (WITH BEARINGS)	17

A-NOT PART OF THIS GROUP
B-USE AS REQUIRED
M-METRIC PART
Y-SEPARATE ILLUSTRATION

296-4787 **CYLINDER BLOCK GP** *(contd.)* **i02837568**

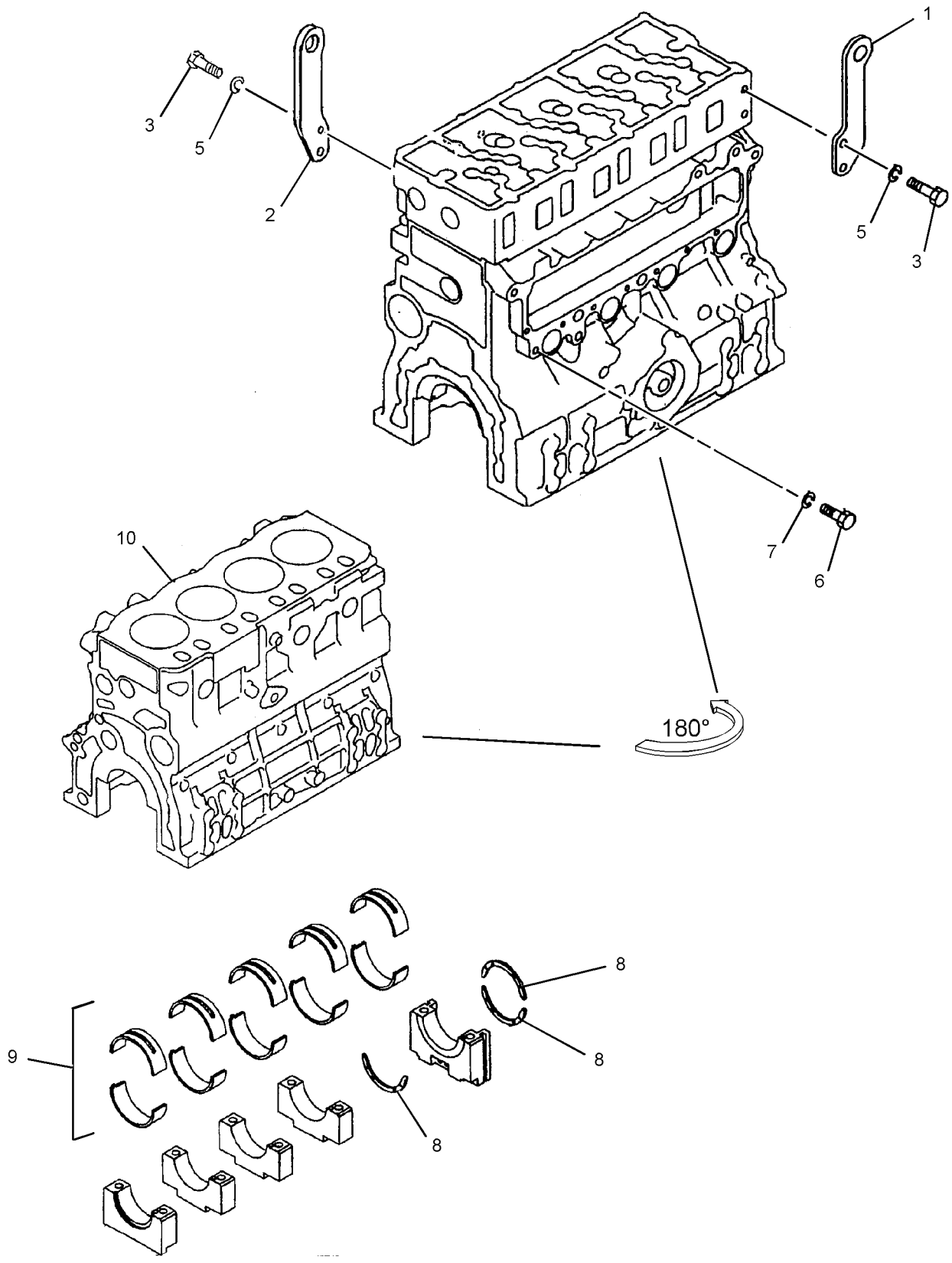

GRAPHIC #1 **<END>** g01370920

305-4766 CYLINDER HEAD AS

S/N: JKH1-UP
PART OF 296-4784 CYLINDER HEAD GP
ALSO AN ATTACHMENT

SMCS-1100 **i02996131**

NOTE	REF NO	GRAPHIC REF	PART NUMBER	QTY	PART NAME 1 2 3 4 5 6 (PRODUCT LEVEL)	SEE PAGE
	1	1	**305-4883**	8	SEAT	
	2	1	**305-4884**	8	SEAT	
	3	1	**305-4885**	16	GUIDE	
	4	1	**103-9011**	8	CAP-SEALING	
	5	1	**5I-4915**	7	CAP	
	6	1	**4I-9664**	2	PIN	

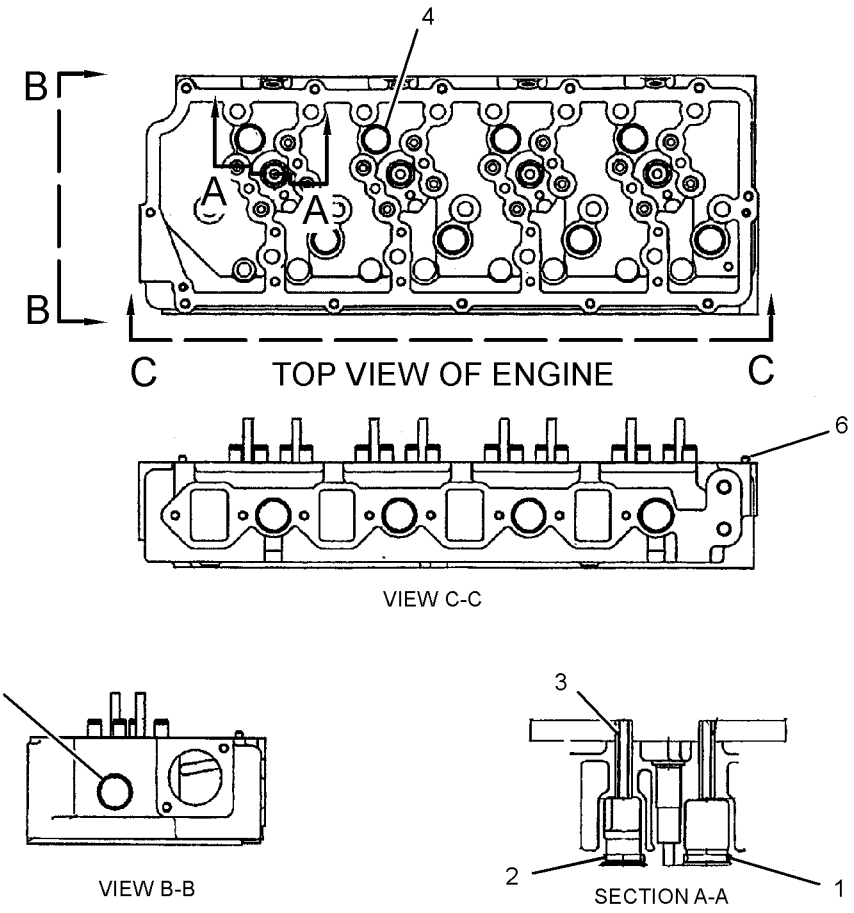

GRAPHIC #1 **<END>** g01520316

BASIC ENGINE

296-4784 CYLINDER HEAD GP

S/N: JKH1-UP
PART OF 272-4817 ENGINE AR
ALSO AN ATTACHMENT

SMCS-1100 **i02981660**

NOTE	REF NO	GRAPHIC REF	PART NUMBER	QTY	PART NAME 1 2 3 4 5 6 (PRODUCT LEVEL)	SEE PAGE
Y	1	1	**305-4766**	1	CYLINDER HEAD AS	22
	2	1	**296-4689**	1	GASKET	
	3	1	**294-1683**	17	BOLT	
	4	1	**4I-9664**	2	PIN	
	5	1	**310-9532**	8	GUIDE	

Y-SEPARATE ILLUSTRATION

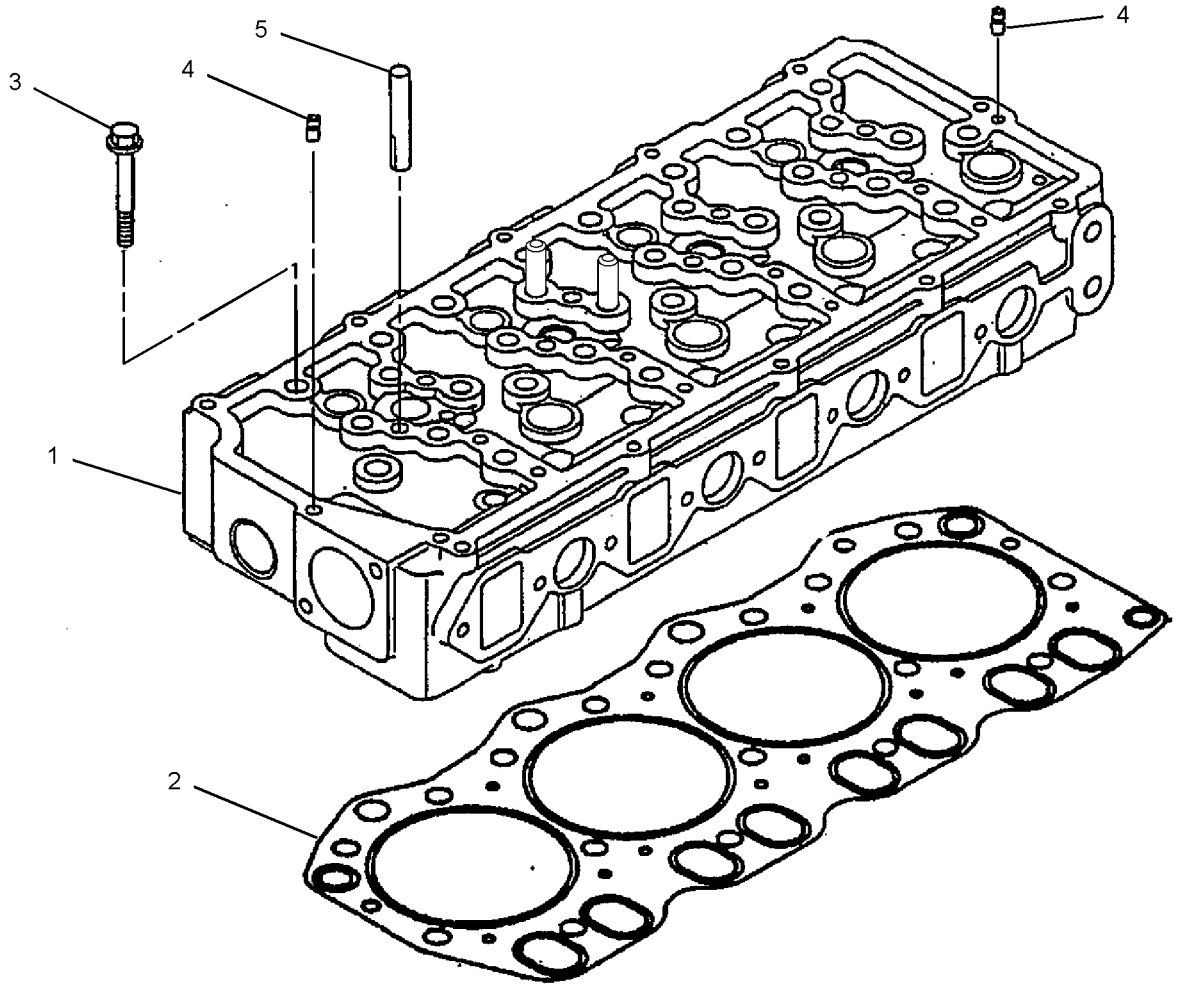

GRAPHIC #1 **<END>** g01366148

BASIC ENGINE

296-4783 FLYWHEEL GP

S/N: JKH1-UP
PART OF 272-4817 ENGINE AR
ALSO AN ATTACHMENT

SMCS-1156 **i02710560**

NOTE	REF NO	GRAPHIC REF	PART NUMBER	QTY	PART NAME 1 2 3 4 5 6 (PRODUCT LEVEL)	SEE PAGE
	1	1	**296-4713**	1	FLYWHEEL AS	
	1A	1	**205-6788**	1	GEAR (127-TEETH)	
	2	1	**5I-5005**	6	BOLT (M12X1.25X35-MM)	
	3	1	**096-2501**	6	LOCKWASHER	

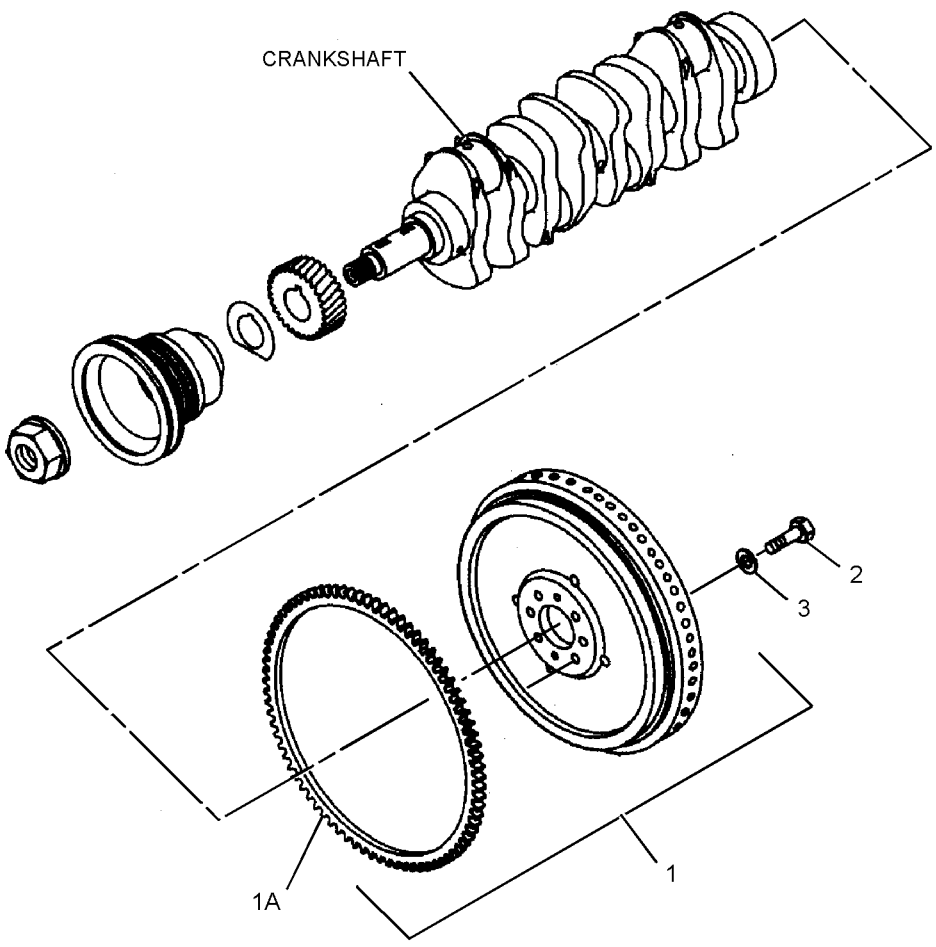

GRAPHIC #1 **<END>** g01403322

BASIC ENGINE

296-4651 GEAR GP-FRONT

S/N: JKH1-UP
PART OF 272-4817 ENGINE AR
ALSO AN ATTACHMENT

SMCS-1151, 1162, 1206 **i02981450**

NOTE	REF NO	GRAPHIC REF	PART NUMBER	QTY	PART NAME 1 2 3 4 5 6 (PRODUCT LEVEL)	SEE PAGE
	1	1	*294-1753*	1	GEAR AS-IDLER (69-TEETH)	
	1A	1	**296-4673**	1	BUSHING	
	2	1	**294-1754**	1	GEAR (62-TEETH)	
	3	1	**294-1755**	1	GEAR (62-TEETH)	
	4	1	**294-1756**	1	PLATE	
	5	1	**294-1757**	1	BOLT	

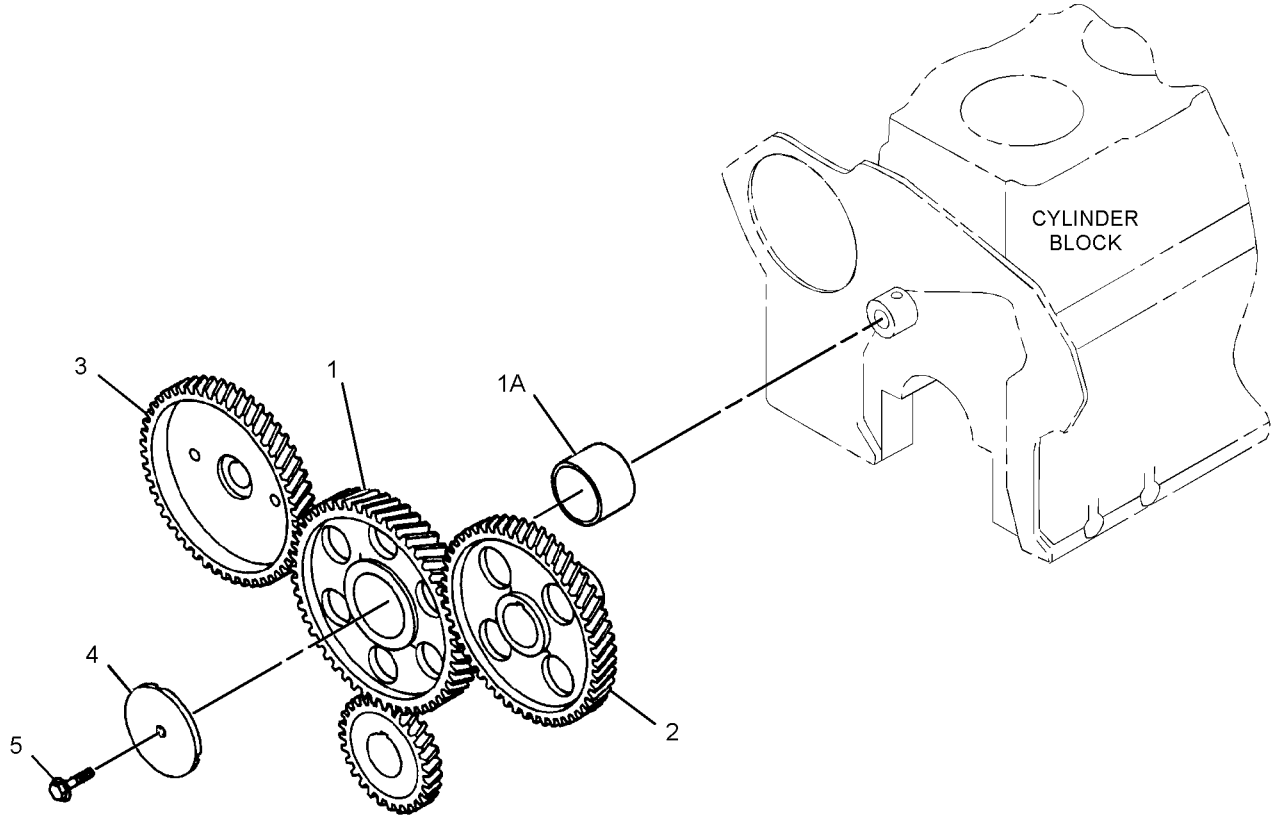

GRAPHIC #1 **<END>** g01317830

296-4803 HOUSING GP-FLYWHEEL

S/N: JKH1-UP
PART OF 272-4817 ENGINE AR
ALSO AN ATTACHMENT

SMCS-1157 **i02943494**

NOTE	REF NO	GRAPHIC REF	PART NUMBER	QTY	PART NAME 1 2 3 4 5 6 (PRODUCT LEVEL)	SEE PAGE
	1	1	**296-4701**	1	HOUSING	
	2	1	**5I-7660**	1	SEAL AS	
	4	1	**5I-4983**	2	STUD	
	6	1	**294-1737**	8	BOLT (M8X1.25X35.5-MM)	
	7	1	**294-1738**	2	BOLT (M10X1.5X32-MM)	
M	8	1	**294-1726**	10	BOLT (M10X1.5X37-MM)	
	9	1	**294-1739**	1	GASKET	
	10	1	**5I-7607**	1	PLUG	
M	11	1	**294-7251**	1	BOLT AS (M8X20X1-MM)	

M-METRIC PART

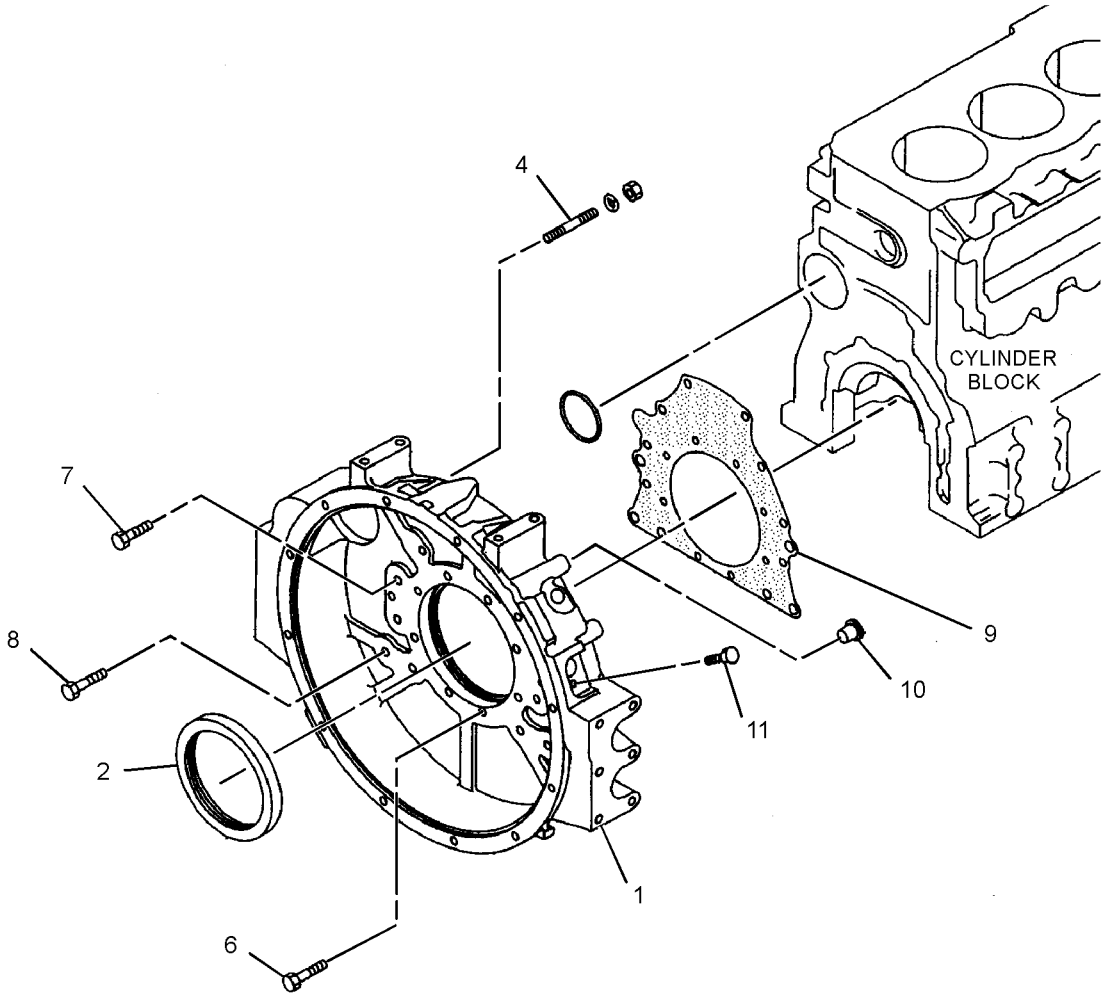

GRAPHIC #1 **<END>** g01458955

BASIC ENGINE

296-4788 HOUSING GP-FRONT

S/N: JKH1-UP
PART OF 272-4817 ENGINE AR
ALSO AN ATTACHMENT

SMCS-1151, 1162, 1206 **i02830615**

NOTE	REF NO	GRAPHIC REF	PART NUMBER	QTY	PART NAME 1 2 3 4 5 6 (PRODUCT LEVEL)	SEE PAGE
	1	1	**222-8292**	1	POINTER	
	2	1	**294-1731**	1	BOLT (M8X1.25X19.5-MM)	
	3	1	**6V-8236**	1	PIN-SPRING	
	4	1	**294-1732**	1	PLATE	
M	5	1	**6V-5215**	2	BOLT (M8X1.25X16-MM)	
	6	1	**297-7646**	2	BOLT (M8X1.25X95.5-MM)	
	7	1	**178-6538**	1	COVER AS	
M	8	1	**8T-4137**	6	BOLT (M10X1.5X20-MM)	
M	9	1	**5I-7610**	1	BOLT (M10X1.5X20-MM)	
	10	1	**297-7647**	6	BOLT (M10X1.5X77-MM)	
M	11	1	**8T-4172**	2	BOLT (M10X1.5X80-MM)	
	12	1	**5I-7896**	4	BOLT (M8X1.25X95-MM)	
	13	1	**7X-0796**	6	LOCKWASHER	
	14	1	**294-1733**	1	GASKET	
	15	1	**294-1734**	1	GASKET	
	16	1	**212-8571**	1	COVER	
	17	1	**212-8572**	1	GASKET	
	18	1	**196-8366**	1	BOLT	
	19	1	**294-1735**	5	BOLT (M8X1.25X90.5-MM)	
M	20	1	**294-7251**	6	BOLT AS (M8X20X1-MM)	
M	21	1	**294-1726**	3	BOLT (M10X1.5X37-MM)	
	22	1	**096-9435**	1	PLUG	
	23	1	**096-9532**	1	WASHER (15.8X22.5X2-MM THK)	
	24	1	**096-9528**	1	SEAL-O-RING	
	25	1	**6F-7556**	2	COVER	
	26	1	**5I-7632**	1	PIPE	
	27	1	**296-4700**	1	BODY AS	
	27A	1	**294-1728**	1	GEAR	
	27B	1	**125-2950**	1	GEAR AS (9-TEETH)	
	27C	1	**195-8225**	1	CAP (MAIN BEARING)	
	30	1	**294-1729**	1	GEAR AS	
	31	1	**5I-7656**	1	SEAL	
	32	1	**6F-7557**	2	GASKET	
	33	1	**5I-7683**	1	SPINDLE	
	34	1	**178-6537**	1	GASKET	
	35	1	**5I-7558**	1	GEAR AS (9-TEETH)	
	36	1	**096-1024**	1	BOLT AS	
	37	1	**195-8212**	1	PLUG	

M-METRIC PART

296-4788 **HOUSING GP-FRONT** *(contd.)* **i02830615**

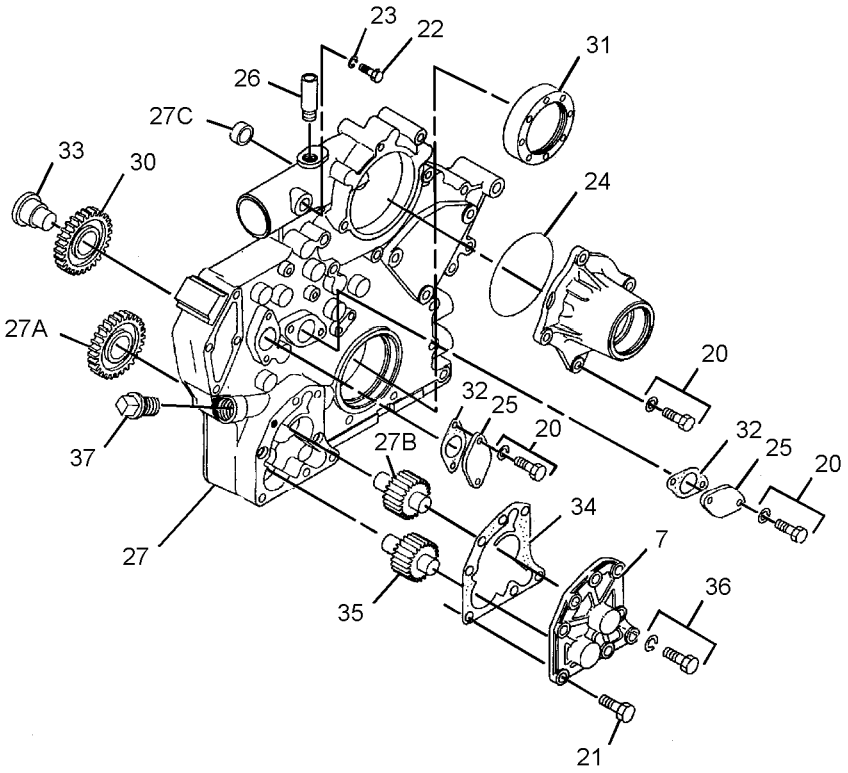

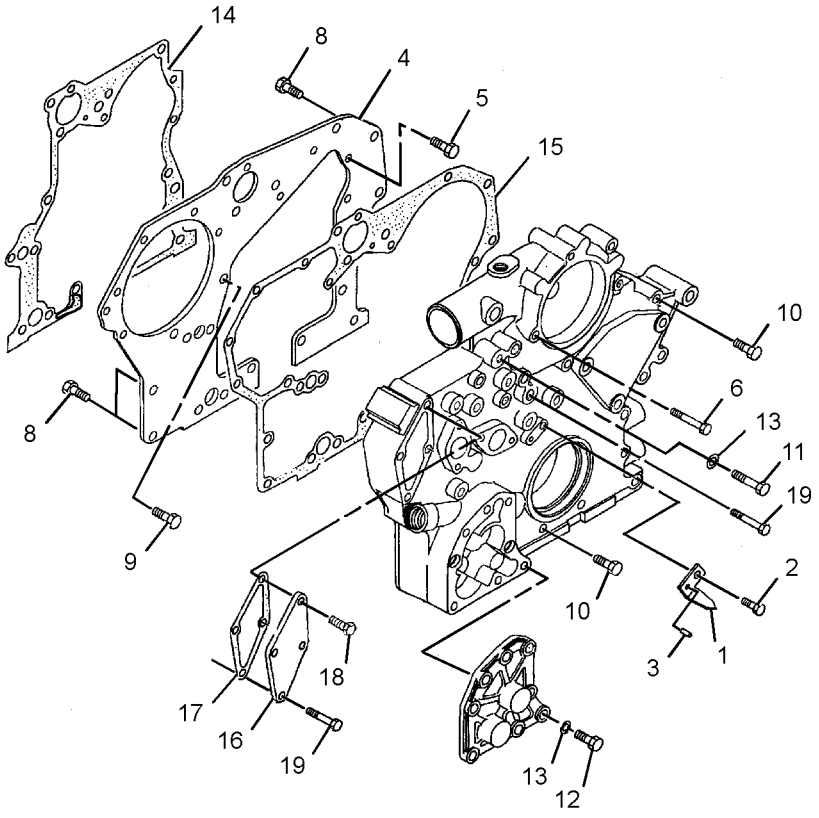

GRAPHIC #1 **<END>** g01413014

296-4798 MOUNTING GP-ALTERNATOR

S/N: JKH1-UP
PART OF 272-4817 ENGINE AR
ALSO AN ATTACHMENT

SMCS-1405 **i02944511**

NOTE	REF NO	GRAPHIC REF	PART NUMBER	QTY	PART NAME 1 2 3 4 5 6 (PRODUCT LEVEL)	SEE PAGE
	1	1	**178-6600**	1	PULLER	
	2	1	**296-4758**	1	PLATE	
	3	1	**5I-7750**	2	WASHER (12.5X25X8-MM THK)	
	4	1	**294-1860**	1	BOLT	
M	5	1	**8T-4137**	1	BOLT (M10X1.5X20-MM)	
M	6	1	**294-1861**	2	BOLT (M12X1.75X30-MM)	
	7	1	**8T-4223**	1	WASHER-HARD (13.5X25.5X3-MM THK)	
	8	1	**296-4759**	1	BOLT	
	9	1	**178-6599**	1	WASHER	
	10	1	**178-6601**	1	RING	
Y	11	1	**125-2994**	1	ALTERNATOR GP-CHARGING	125

M-METRIC PART
Y-SEPARATE ILLUSTRATION

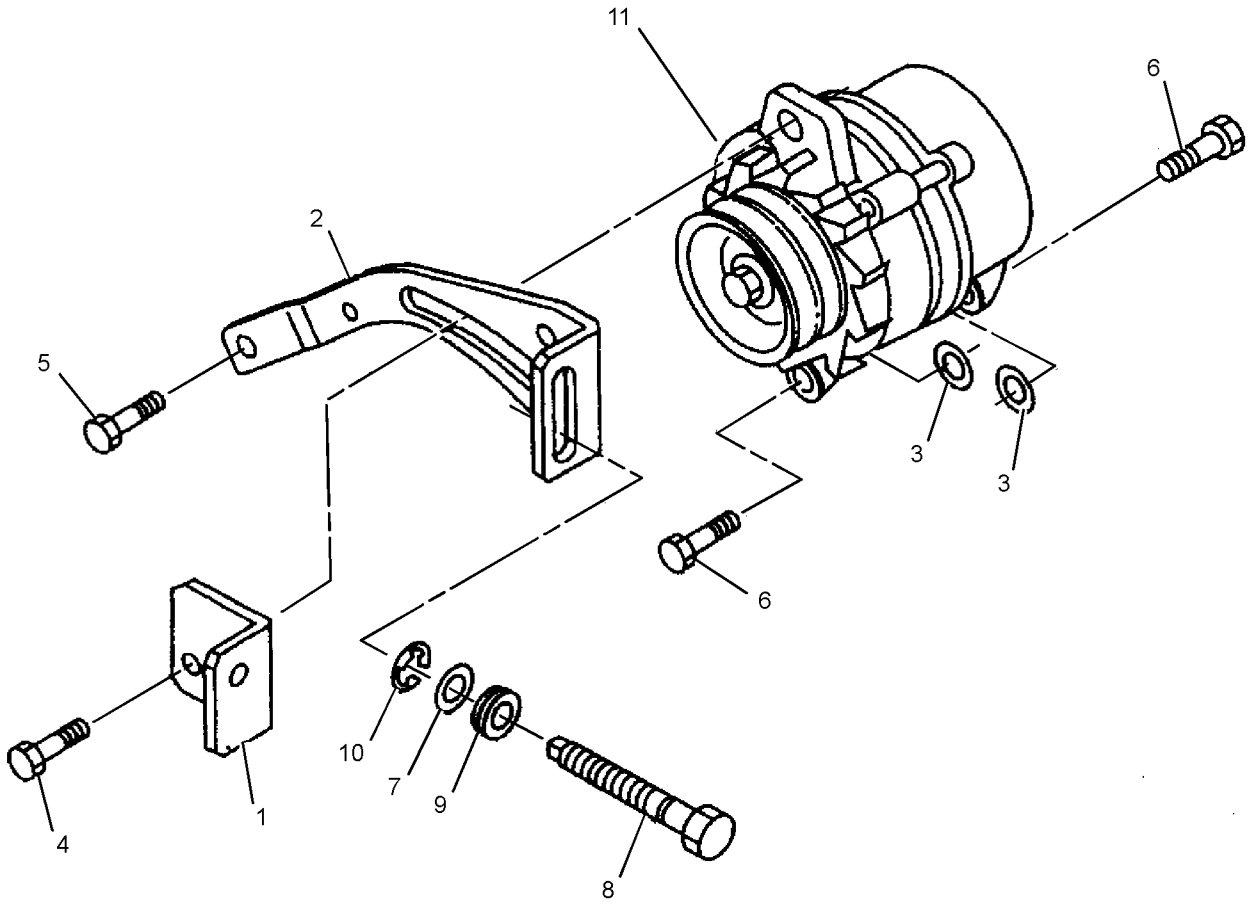

GRAPHIC #1 **<END>** g01459034

BASIC ENGINE

255-3035 MOUNTING GP-ENGINE

S/N: CJN1-UP

PART OF 279-7748 INSTALLATION AR-ENGINE

SMCS-1152 **i02600442**

NOTE	REF NO	GRAPHIC REF	PART NUMBER	QTY	PART NAME 1 2 3 4 5 6 (PRODUCT LEVEL)	SEE PAGE
	1	1	**099-4707**	4	WASHER (16.5X90X9-MM THK)	
	2	1	**118-9941**	4	SUPPORT AS	
	3	1	**266-6203**	1	BRACKET-FRONT (RH)	
	4	1	**266-6204**	1	BRACKET-FRONT (LH)	
	5	1	**266-6205**	1	BRACKET-REAR (RH)	
	6	1	**266-6206**	1	BRACKET-REAR (LH)	
	7	1	**266-6258**	2	MOUNT-RUBBER	
	8	1	**266-6259**	2	MOUNT-RUBBER	
	9	1	**266-6303**	2	MOUNT-RUBBER	
	10	1	**266-6304**	2	MOUNT-RUBBER	
M	11	1	**8T-4174**	4	BOLT (M16X2X120-MM)	
	12	1	**8T-4223**	16	WASHER-HARD (13.5X25.5X3-MM THK)	
M	13	1	**8T-4956**	16	BOLT (M12X1.75X35-MM)	
	14	1	**9X-8257**	8	WASHER (17.5X30X3.5-MM THK)	

M-METRIC PART

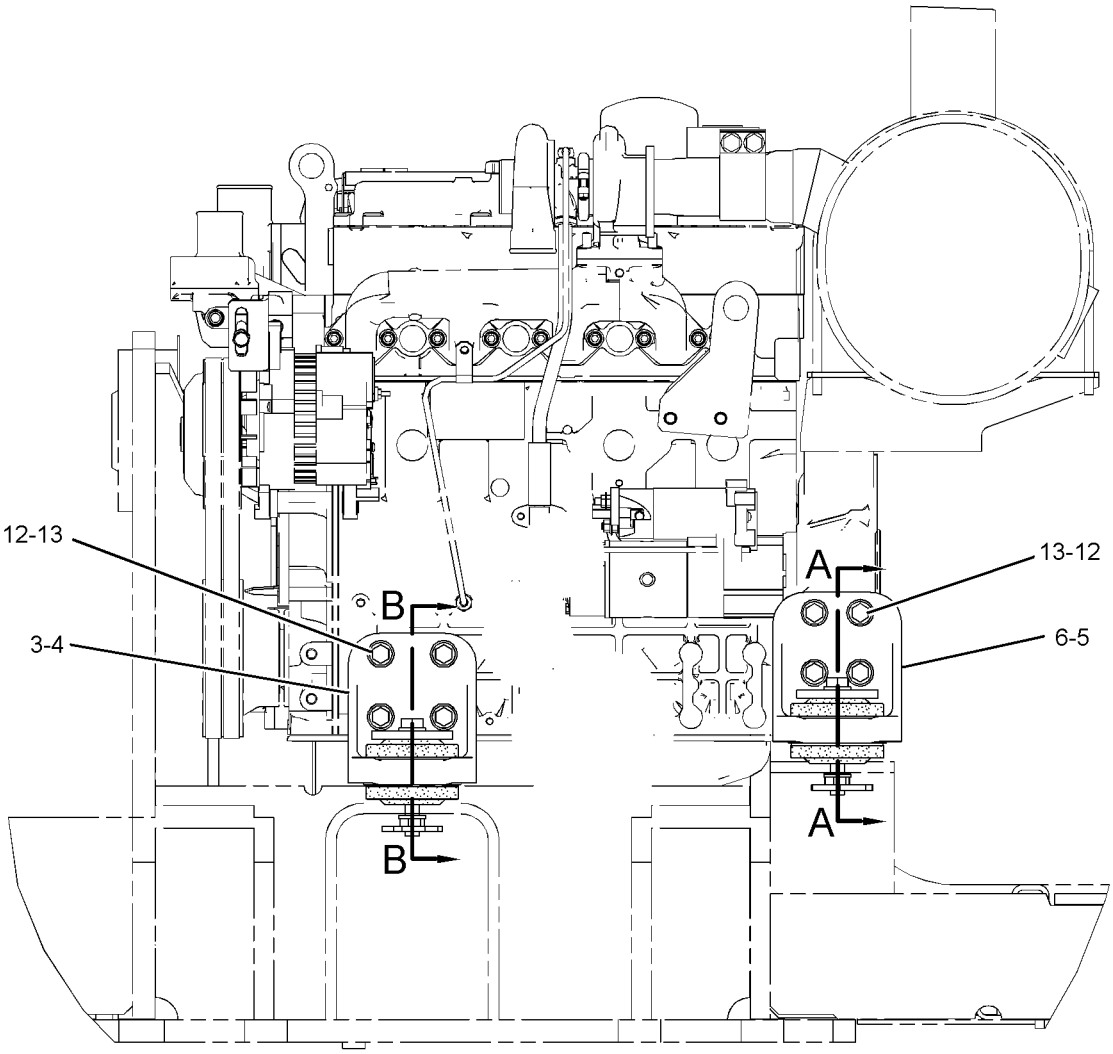

LEFT SIDE VIEW

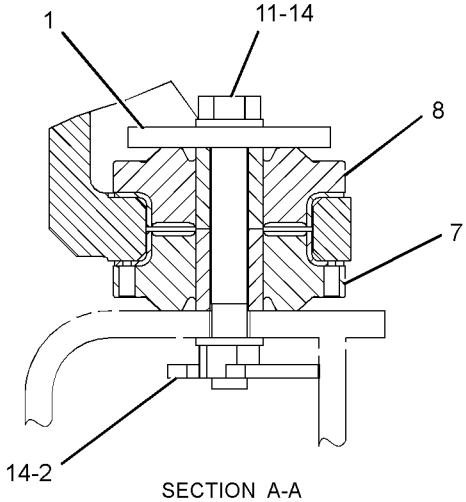

SECTION A-A

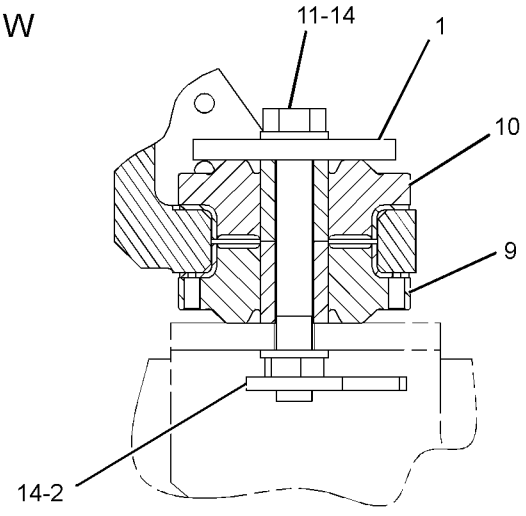

SECTION B-B

GRAPHIC #1 **<END>** g01305307

296-4637 MOUNTING GP-STARTING MOTOR

S/N: JKH1-UP
PART OF 272-4817 ENGINE AR
ALSO AN ATTACHMENT

SMCS-1453 **i02936172**

NOTE	REF NO	GRAPHIC REF	PART NUMBER	QTY	PART NAME 1 2 3 4 5 6 (PRODUCT LEVEL)	SEE PAGE
	1	1	**5I-7599**	1	SEAL-O-RING	
	2	1	**135-2369**	1	COVER	
M	3	1	**135-2370**	1	BOLT (M5X0.8X25-MM)	
	4	1	**294-1850**	1	WASHER	
	5	1	**294-1851**	1	WASHER	
Y	6	1	**272-4774**	1	STARTING MOTOR GP-ELECTRIC	198
M	7	1	**6V-8231**	2	NUT (M10X1.25-THD)	
	8	1	**7X-0796**	2	LOCKWASHER	

M-METRIC PART
Y-SEPARATE ILLUSTRATION

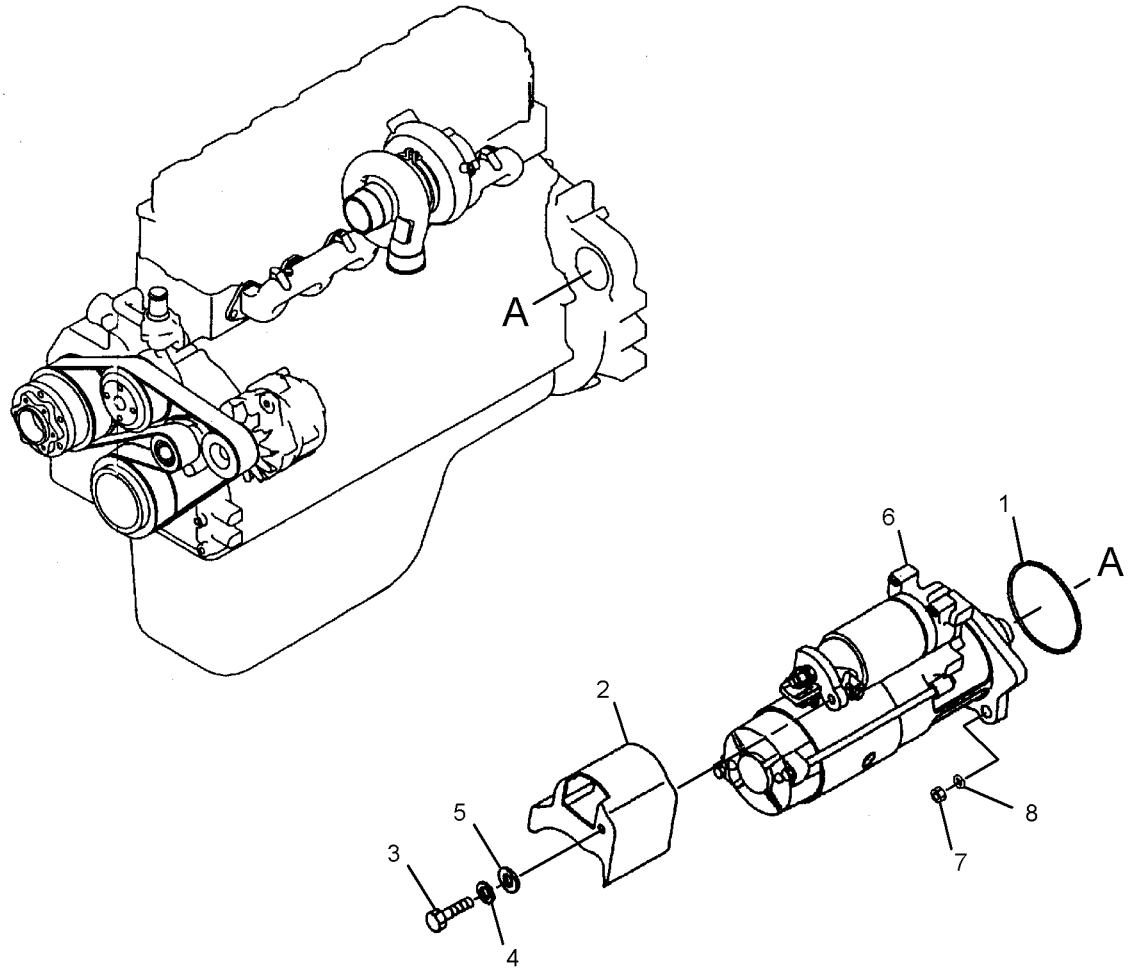

GRAPHIC #1 **<END>** g01456158

296-4780 PAN GP-OIL

S/N: JKH1-UP
PART OF 272-4817 ENGINE AR
ALSO AN ATTACHMENT

SMCS-1302 **i02710579**

NOTE	REF NO	GRAPHIC REF	PART NUMBER	QTY	PART NAME 1 2 3 4 5 6 (PRODUCT LEVEL)	SEE PAGE
	1	1	**296-4702**	1	GUIDE	
	2	1	**296-4703**	16	BOLT	
	3	1	**5I-7663**	12	BOLT (M8X1.25X16-MM)	
	4	1	**7X-0796**	1	LOCKWASHER	
M	5	1	**6V-8231**	1	NUT (M10X1.25-THD)	
	6	1	**296-4704**	1	PAN AS	
	7	1	**183-8176**	1	VALVE	
	8	1	**5I-8067**	1	WASHER-SEALING	
	9	1	**5I-5607**	1	PLUG-DRAIN (ENGINE OIL PAN)	
	10	1	**095-2040**	1	WASHER	
	11	1	**296-4706**	1	GAUGE-OIL LEVEL (DIPSTICK) (ENGINE)	
	12	1	**5I-7842**	1	GASKET	
	13	1	**213-0677**	1	SWITCH AS-LIQUID LEVEL (ENGINE OIL)	
		1	**102-8802**	1	KIT-RECEPTACLE (2-PIN)	
					(INCLUDES RECEPTACLE AS & WEDGE)	
	14	1	**125-2968**	1	SEAL	
	15	1	**5I-4993**	1	SEAL	
	16	1	**5I-8110**	1	ELBOW	

M-METRIC PART

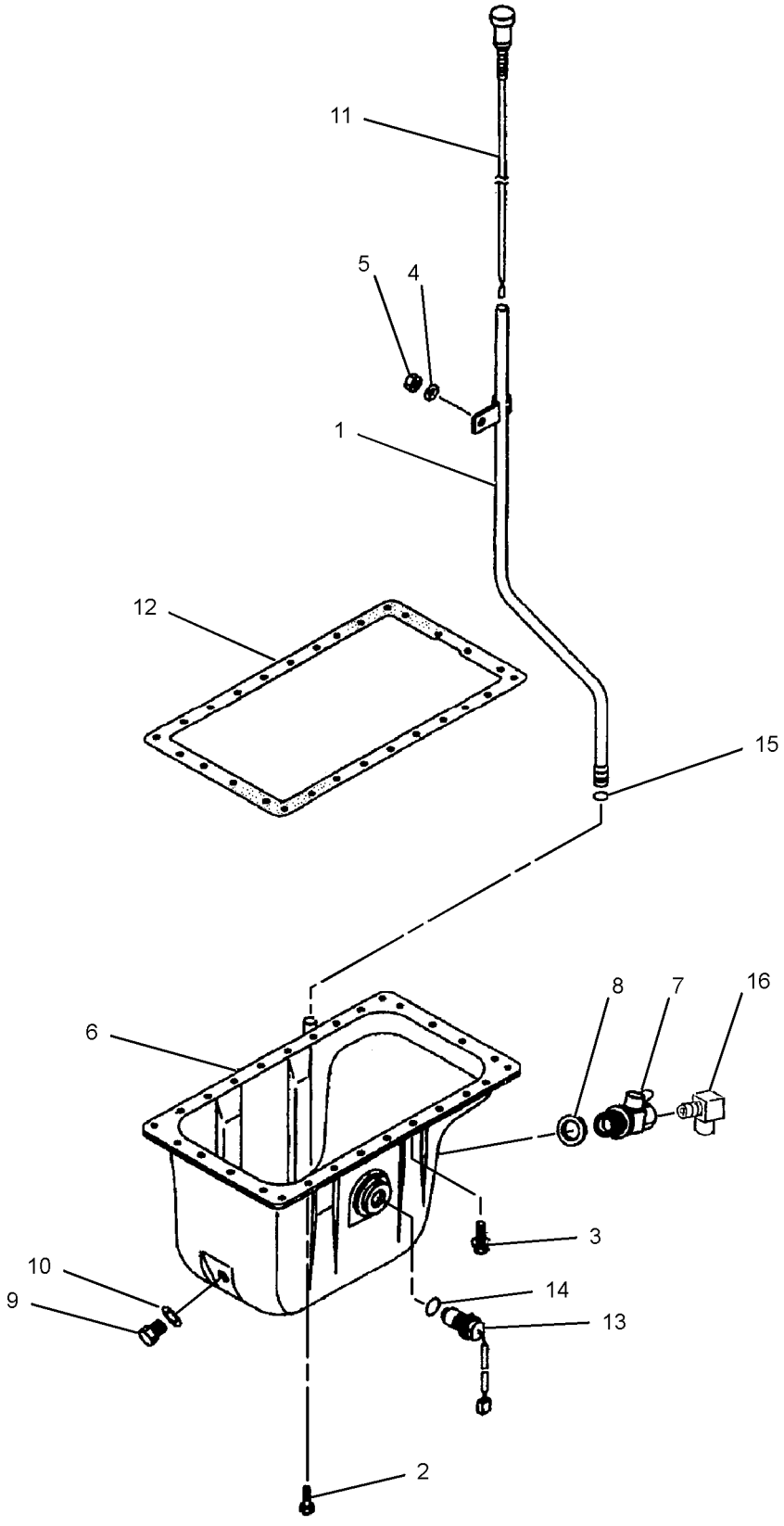

GRAPHIC #1 **<END>** g01404257

296-4796 PISTON & ROD GP

S/N: JKH1-UP
PART OF 272-4817 ENGINE AR
ALSO AN ATTACHMENT

SMCS-1225 **i02710557**

NOTE	REF NO	GRAPHIC REF	PART NUMBER	QTY	PART NAME 1 2 3 4 5 6 (PRODUCT LEVEL)	SEE PAGE
	1	1	**310-9489**	4	PISTON (STANDARD)	
AB			**310-9490**		PISTON (0.25-MM OS)	
AB			**310-9491**		PISTON (0.5-MM OS)	
	2	1	**094-7134**	4	PIN	
	3	1	**5I-7667**	8	RING	
J	4	1	**178-6543**	4	SET-PISTON RING (STANDARD)	
ABJ			**178-6544**		SET-PISTON RING (0.25-MM OS)	
ABJ			**178-6545**		SET-PISTON RING (0.5-MM OS)	
	5	1	**294-1747**	4	ROD AS	
					(EACH INCLUDES)	
	5A	1	**094-7154**	2	BOLT (M12X1.25-1X85-MM)	
	5B	1	**094-7516**	2	NUT (M12X1.25-THD)	
	5C	1	**296-4663**	1	BUSHING	
	6	1	**294-1748**	8	BEARING	
AB		1	**297-7648**		BEARING (0.25-MM US)	
AB		1	**297-7649**		BEARING (0.50-MM US)	
AB		1	**297-7650**		BEARING (0.75-MM US)	

A-NOT PART OF THIS GROUP
B-USE AS REQUIRED
J-INCLUDES COMPLETE SET OF RINGS FOR ONE PISTON

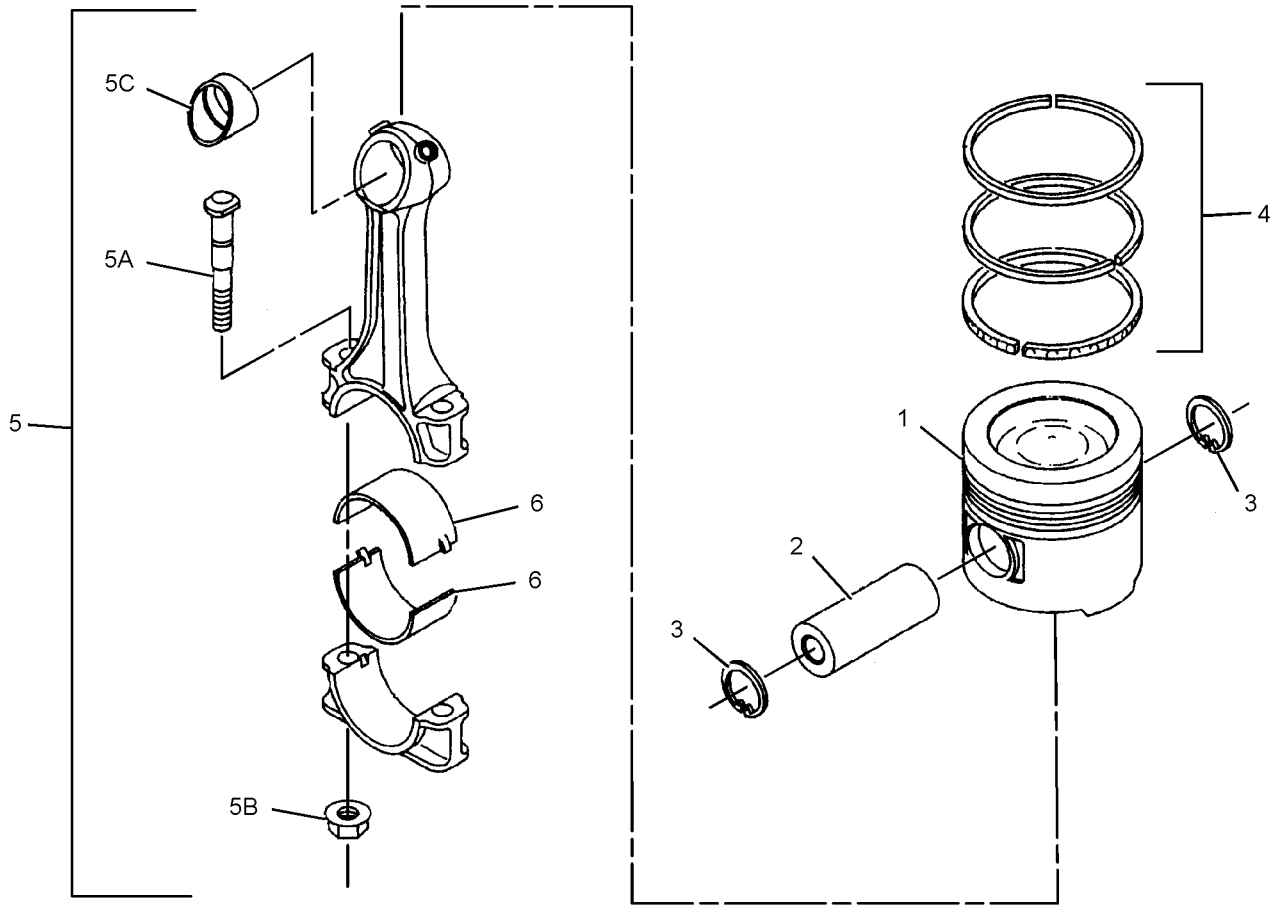

GRAPHIC #1 **<END>** g01403170

296-4738 PULLEY AS-IDLER

S/N: CJN1-UP
PART OF 272-4819 PULLEY GP-FAN & ALT DRIVE
ALSO AN ATTACHMENT

SMCS-1358 **i02719552**

NOTE	REF NO	GRAPHIC REF	PART NUMBER	QTY	PART NAME 1 2 3 4 5 6 (PRODUCT LEVEL)	SEE PAGE
	1	1	**296-4739**	1	BRACKET	
	2	1	**294-1784**	1	PULLEY	
	3	1	**294-1785**	2	BEARING	
	4	1	**294-1786**	1	RING	
	5	1	**8T-9598**	2	RING-RETAINING	

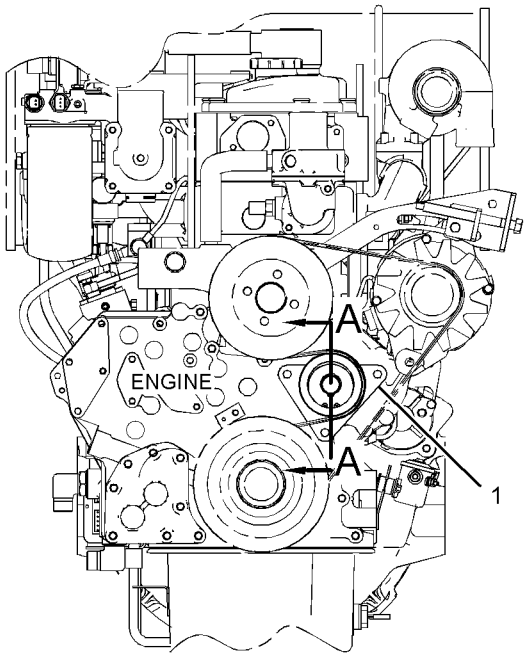

LEFT SIDE VIEW

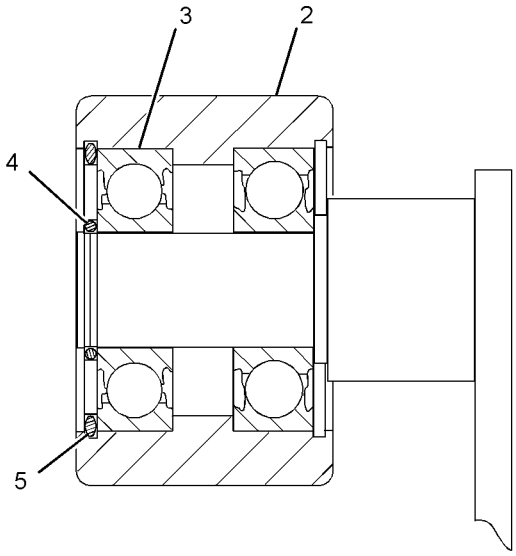

SECTION A-A

GRAPHIC #1 **<END>** g01367875

272-4819 PULLEY GP-FAN & ALT DRIVE

S/N: CJN1-UP

PART OF 272-4822, 279-7714, 279-7746 ENGINE AR-COMPLETE

ALSO AN ATTACHMENT

SMCS-1359 **i02719541**

NOTE	REF NO	GRAPHIC REF	PART NUMBER	QTY	PART NAME 1 2 3 4 5 6 (PRODUCT LEVEL)	SEE PAGE
	1	1	**296-4712**	1	PULLEY AS	
		1	**5I-7540**	1	SLEEVE	
	2	1	**296-4731**	1	PULLEY	
	3	1	**296-4737**	1	BELT-SERPENTINE	
Y	4	1	**296-4738**	1	PULLEY AS-IDLER	36

Y-SEPARATE ILLUSTRATION

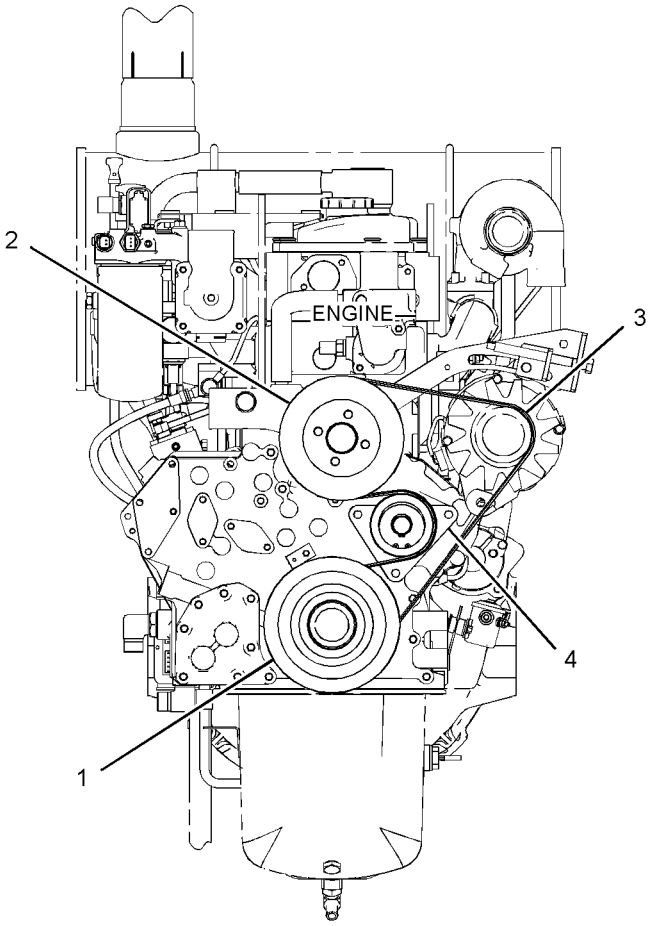

LEFT SIDE VIEW

GRAPHIC #1 **<END>** g01367896

255-3018 PULLEY GP-IDLER

S/N: CJN1-UP

PART OF 255-3032 COMPRESSOR GP-REFRIGERANT

SMCS-1358 **i02674719**

NOTE	REF NO	GRAPHIC REF	PART NUMBER	QTY	PART NAME 1 2 3 4 5 6 (PRODUCT LEVEL)	SEE PAGE
M	1	1	**255-3022**	1	NUT (M10X1.25-THD)	
	2	1	**239-6626**	1	PULLEY-IDLER	
M	3	1	**239-6627**	1	BOLT (M8X1.25X110-MM)	
	4	1	**239-6632**	1	RING-SNAP	
	5	1	**255-3020**	1	SHAFT	
	6	1	**255-3021**	1	WASHER	
	7	1	**239-6630**	1	COLLAR	
	8	1	**239-6631**	1	BEARING AS-BALL	

M-METRIC PART

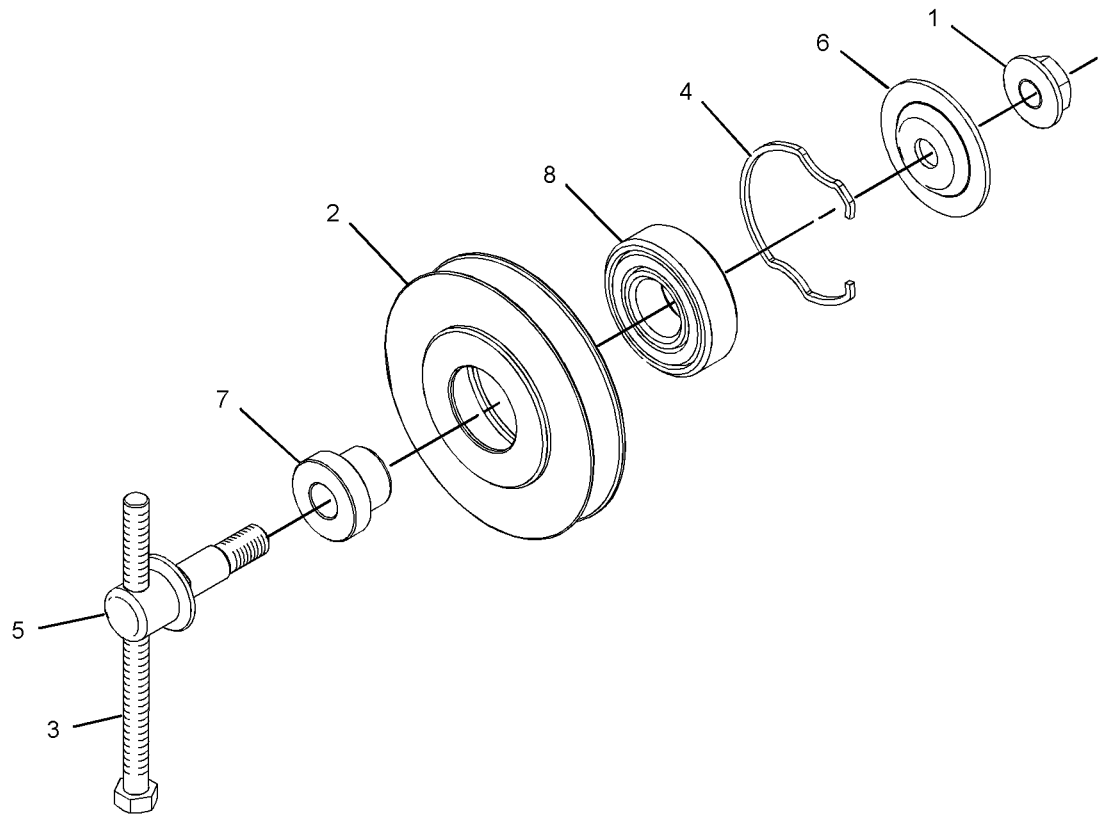

GRAPHIC #1 **<END>** g01277313

305-4954 VALVE MECHANISM GP

S/N: JKH1-UP
PART OF 272-4817 ENGINE AR
ALSO AN ATTACHMENT

SMCS-1209 **i02790534**

NOTE	REF NO	GRAPHIC REF	PART NUMBER	QTY	PART NAME 1 2 3 4 5 6 (PRODUCT LEVEL)	SEE PAGE
	1	1	**294-1684**	8	VALVE-INLET	
	2	1	**294-1685**	8	VALVE-EXHAUST	
	3	1	**294-1686**	4	BASE-ROCKER ARM	
	4	1	**294-1687**	4	BRIDGE-EXHAUST	
	5	1	**5I-7630**	8	CAP	
	6	1	**294-1688**	16	SPRING	
	7	1	**294-1689**	8	SCREW	
M	8	1	**8T-7964**	8	NUT (M6X1-THD)	
	9	1	**199-2188**	32	PIN-COTTER	
	10	1	**199-2189**	16	SEAL-VALVE STEM	
	11	1	**199-2187**	16	RETAINER	
	12	1	**305-4750**	4	BRACKET	
	13	1	**305-4751**	3	SPRING	
	14	1	**294-1693**	1	PIPE	
	15	1	**305-4931**	1	SHAFT AS-ROCKER ARM	
		1	**096-3741**	1	CAP	
	16	1	**305-4929**	4	ROCKER ARM AS	
M		1	**091-3474**	1	NUT (M8X1.25-THD)	
		1	**094-9525**	1	SCREW	
	17	1	**305-4927**	4	ROCKER ARM AS	
M		1	**091-3474**	1	NUT (M8X1.25-THD)	
		1	**094-9525**	1	SCREW	
	18	1	**294-1698**	2	WASHER	
	19	1	**294-1699**	4	BOLT	
	20	1	**305-4746**	4	BOLT	
	21	1	**294-1786**	2	RING	
	22	1	**294-1702**	1	BOLT	
	23	1	**3B-4505**	4	LOCKWASHER	
	24	1	**305-4747**	4	WASHER	

M-METRIC PART

305-4954 **VALVE MECHANISM GP** *(contd.)* **i02790534**

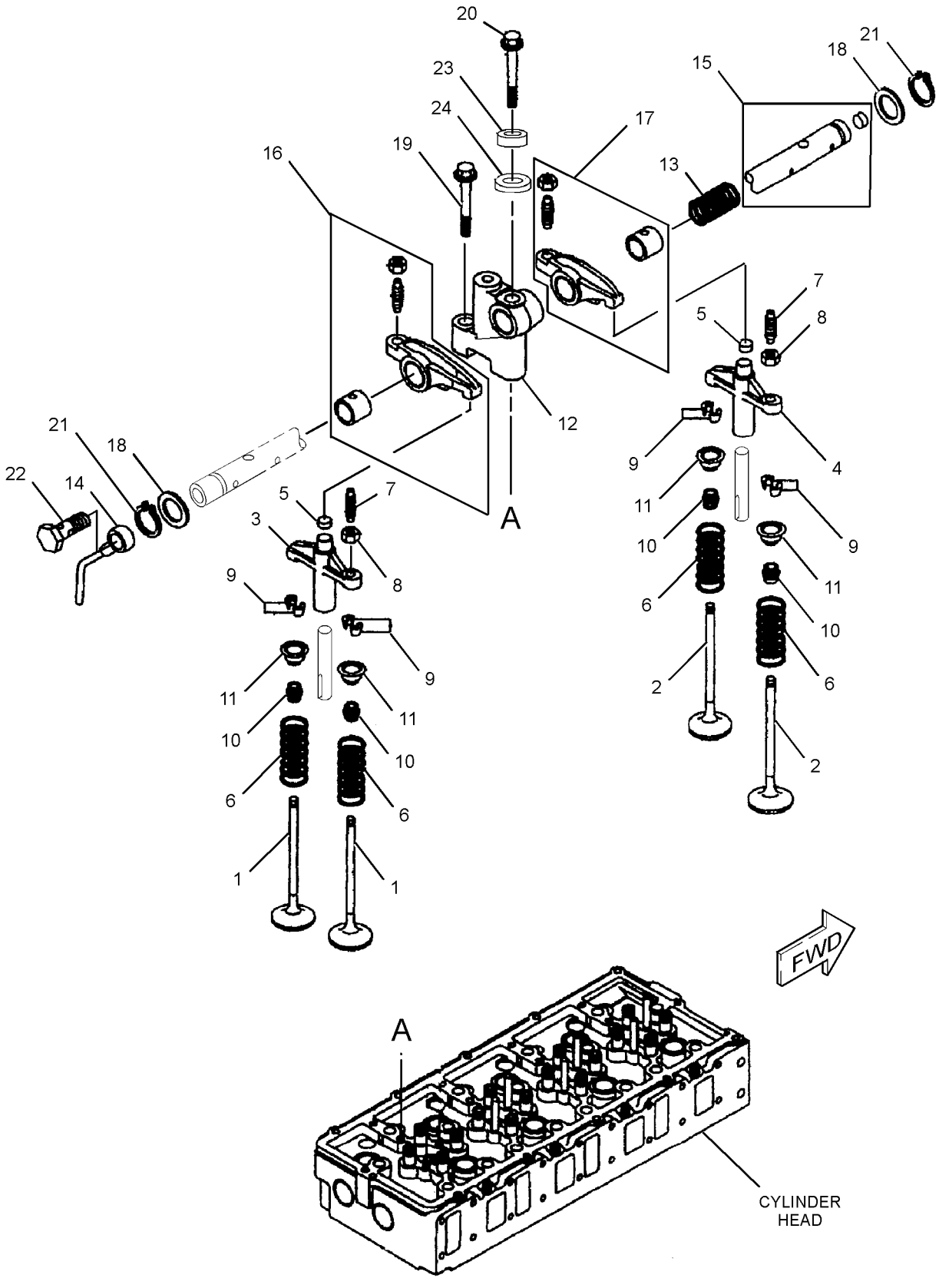

GRAPHIC #1

<END>

g01406102

296-4792 ADAPTER GP-REMOTE OIL FILTER–ENGINE

S/N: JKH1-UP
PART OF 272-4817 ENGINE AR
ALSO AN ATTACHMENT

SMCS-1308 **i03021634**

NOTE	REF NO	GRAPHIC REF	PART NUMBER	QTY	PART NAME 1 2 3 4 5 6 (PRODUCT LEVEL)	SEE PAGE
	1	1	**5I-7864**	1	GASKET	
	2	1	**296-4728**	1	COVER AS	
	2A	1	**185-2793**	2	ELBOW	
	2B	1	**296-4729**	1	COVER	
	2C	1	**305-4892**	2	SEAL-O-RING	
	3	1	**5B-5947**	1	GASKET	
	4	1	**5I-8066**	1	VALVE AS-RELIEF (ENGINE OIL PRESSURE)	
M	5	1	**294-1726**	3	BOLT (M10X1.5X37-MM)	
	6	1	**095-8575**	2	BOLT AS	

M-METRIC PART

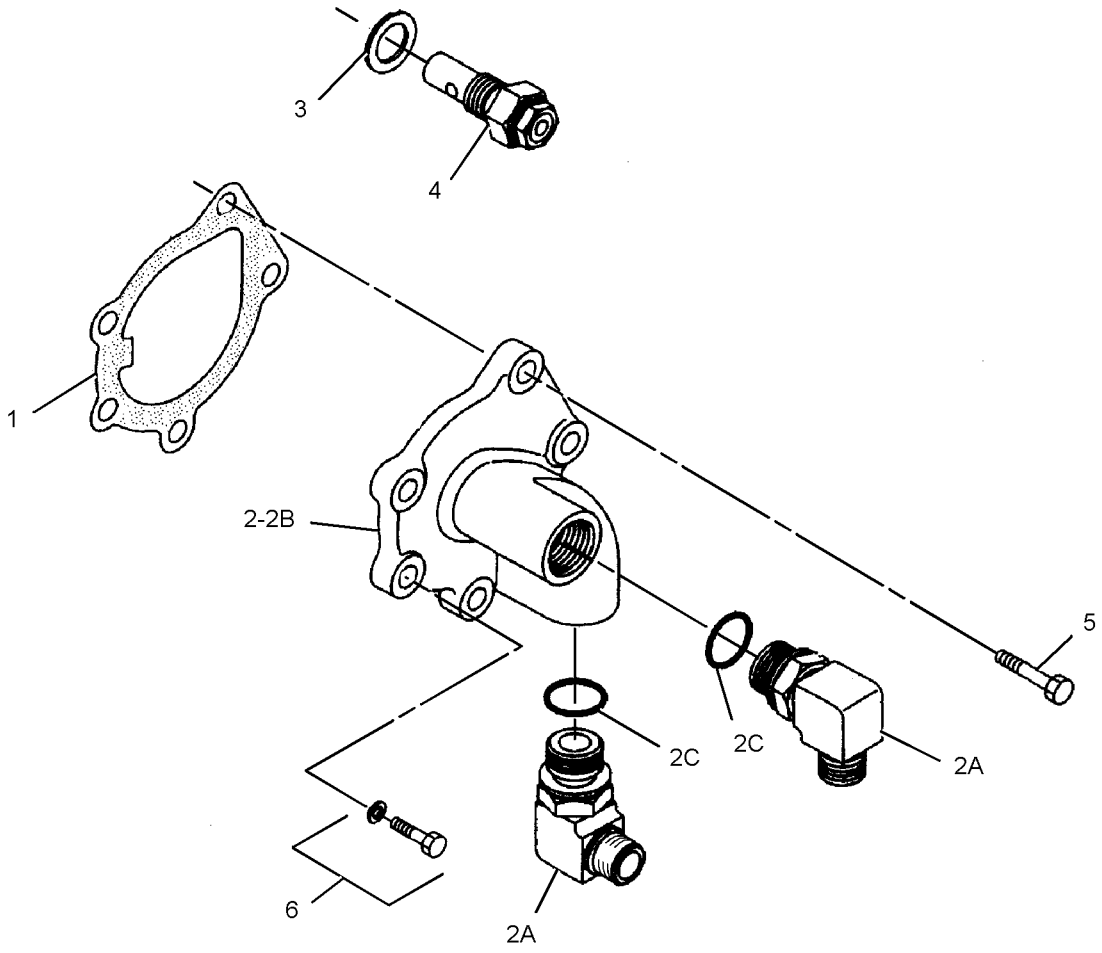

GRAPHIC #1 **<END>** g01403262

LUBRICATION SYSTEM

296-4778 BREATHER GP–CRANKCASE

S/N: JKH1-UP
PART OF 272-4817 ENGINE AR
ALSO AN ATTACHMENT

SMCS-1317 **i02768246**

NOTE	REF NO	GRAPHIC REF	PART NUMBER	QTY	PART NAME 1 2 3 4 5 6 (PRODUCT LEVEL)	SEE PAGE
	1	1	**305-4770**	1	HOSE	
	2	1	**294-1774**	1	SEAL-O-RING	
	3	1	**5I-7725**	1	BREATHER (CRANKCASE)	
	4	1	**2S-3440**	3	CLAMP-HOSE	
	5	1	**5I-7645**	1	PIPE	
	6	1	**294-1775**	2	BOLT (M10X1.5X23-MM)	
	7	1	**5I-4940**	1	TUBE (FUMES DISPOSAL)	
	8	1	**305-4771**	1	CLIP	

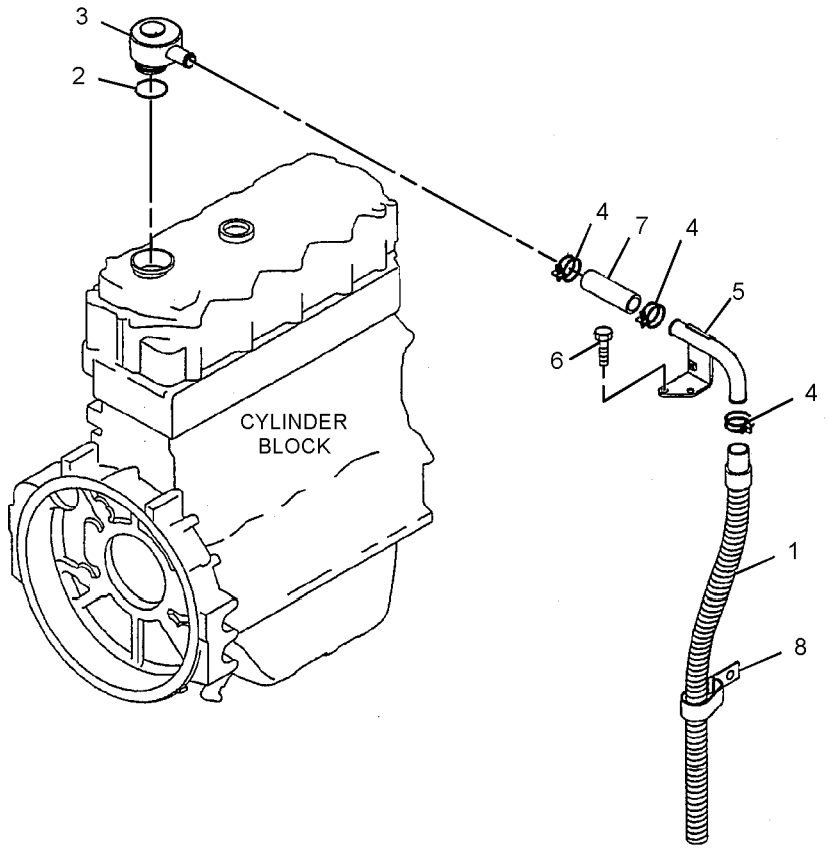

GRAPHIC #1 **<END>** g01363280

279-7744 FILTER & MTG GP-ENGINE OIL

S/N: CJN1-161

PART OF 279-7748 INSTALLATION AR-ENGINE

SMCS-1306, 1308 **i03242690**

NOTE	REF NO	GRAPHIC REF	PART NUMBER	QTY	PART NAME 1 2 3 4 5 6 (PRODUCT LEVEL)	SEE PAGE
	1	1	**6V-5266**	3	SEAL-O-RING	
	2	1	**7C-1493**	1	VALVE AS-BYPASS (ENGINE OIL COOLER)	
	3	1	**7W-9028**	1	BASE AS-OIL FILTER	
		1	**2P-2537**	1	STUD-HOLLOW	
	4	2	**8C-3445**	1	CAP-DUST (FLUID SAMPLING VALVE)	
	5	1	**9L-9188**	1	SPRING-VALVE	
	6	1	**121-0307**	1	BASE	
	7	2	**152-2938**	2	SEAL-O-RING	
	8	1	**296-4804**	1	SUPPORT AS	
	9	2	**287-0212**	1	PLATE AS	
I	10	2	**305-4761**	1	HOSE AS	
I	11	2	**305-4762**	1	HOSE AS	
	12	1	**1R-0739**	1	FILTER AS-ENGINE OIL (STANDARD EFFICIENCY)	
	13	1	**152-2939**	1	SEAL-O-RING	
	14	1	**2T-2991**	1	CONNECTOR	
	15	1	**189-9377**	1	SEAL-O-RING	
	16	2	**153-4906**	1	SEAL-O-RING	
	17	2	**033-5853**	1	SEAL-O-RING	
	18	1	**6V-8637**	1	CONNECTOR	
	19	1	**033-6038**	2	SEAL-O-RING	
M	20	1	**5P-8196**	1	PLUG	
	21	2	**5P-9617**	1	ADAPTER	
	22	1	**6D-1641**	4	CLIP	
	23	1	**228-7092**	3	SEAL-O-RING	
	24	2	**7X-7729**	3	WASHER (11X25X3-MM THK)	
	25	2	**8C-3446**	1	VALVE-FLUID SAMPLING (ENGINE OIL)	
	26	1	**8T-4121**	9	WASHER-HARD (11X21X2.5-MM THK)	
M	27	1,2	**8T-4136**	5	BOLT (M10X1.5X25-MM)	
M	28	1	**8T-4137**	3	BOLT (M10X1.5X20-MM)	
M	29	2	**8T-4195**	1	BOLT (M10X1.5X30-MM)	
M	30	1	**8T-4196**	3	BOLT (M10X1.5X35-MM)	
M	31	2	**8T-4197**	3	BOLT (M8X1.25X40-MM)	
	32	2	**8T-4224**	5	WASHER-HARD (8.8X16X2-MM THK)	
M	33	2	**8T-7547**	2	BOLT (M8X1.25X30-MM)	
	34	1	**8T-8899**	1	ELBOW	
	35	1	**9S-4188**	1	PLUG	

I-REFER TO HYDRAULIC INFORMATION SYSTEM
M-METRIC PART

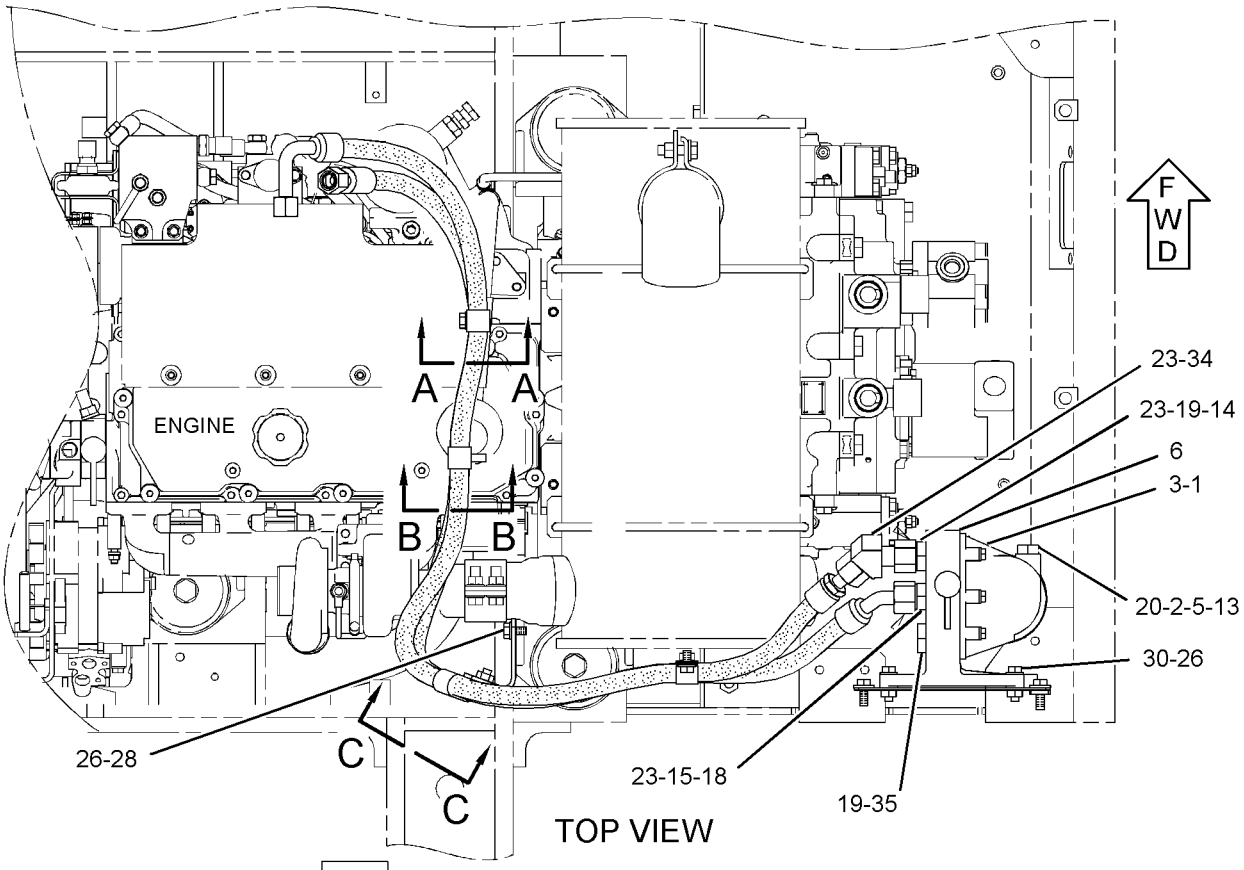

TOP VIEW

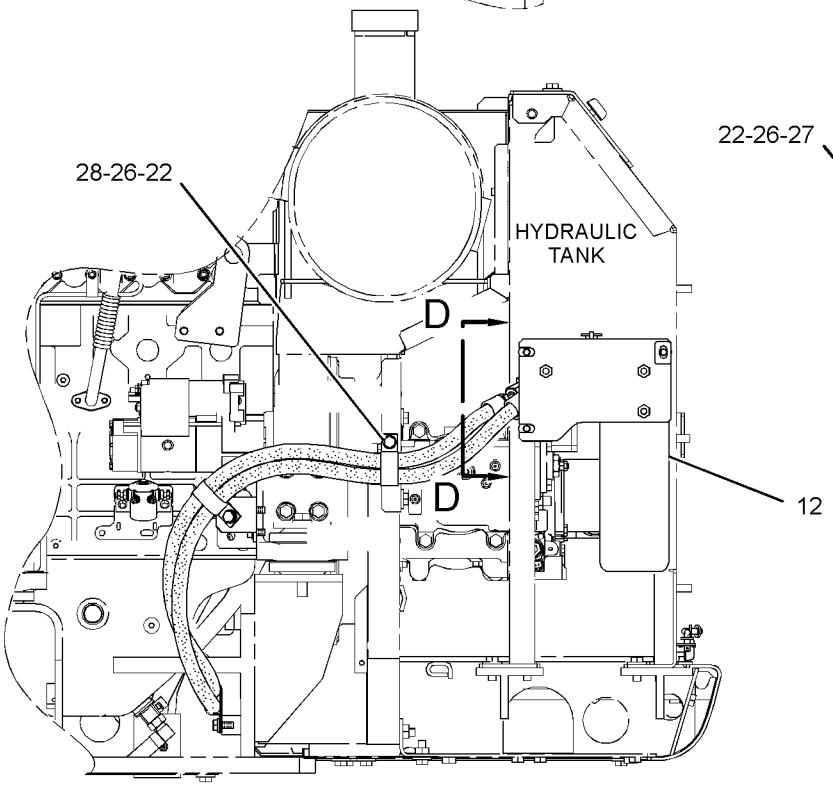

REAR VIEW

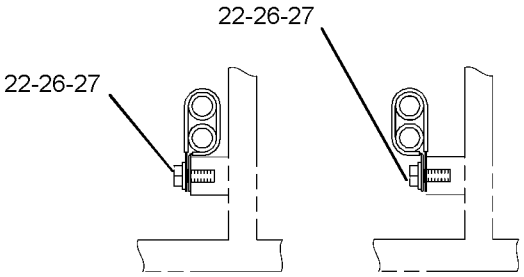

SECTION A-A SECTION B-B

REFER TO ALL ILLUSTRATIONS OF THIS GROUP FOR AUXILIARY VIEWS

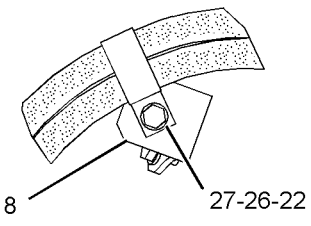

VIEW C-C

GRAPHIC #1 g01306523

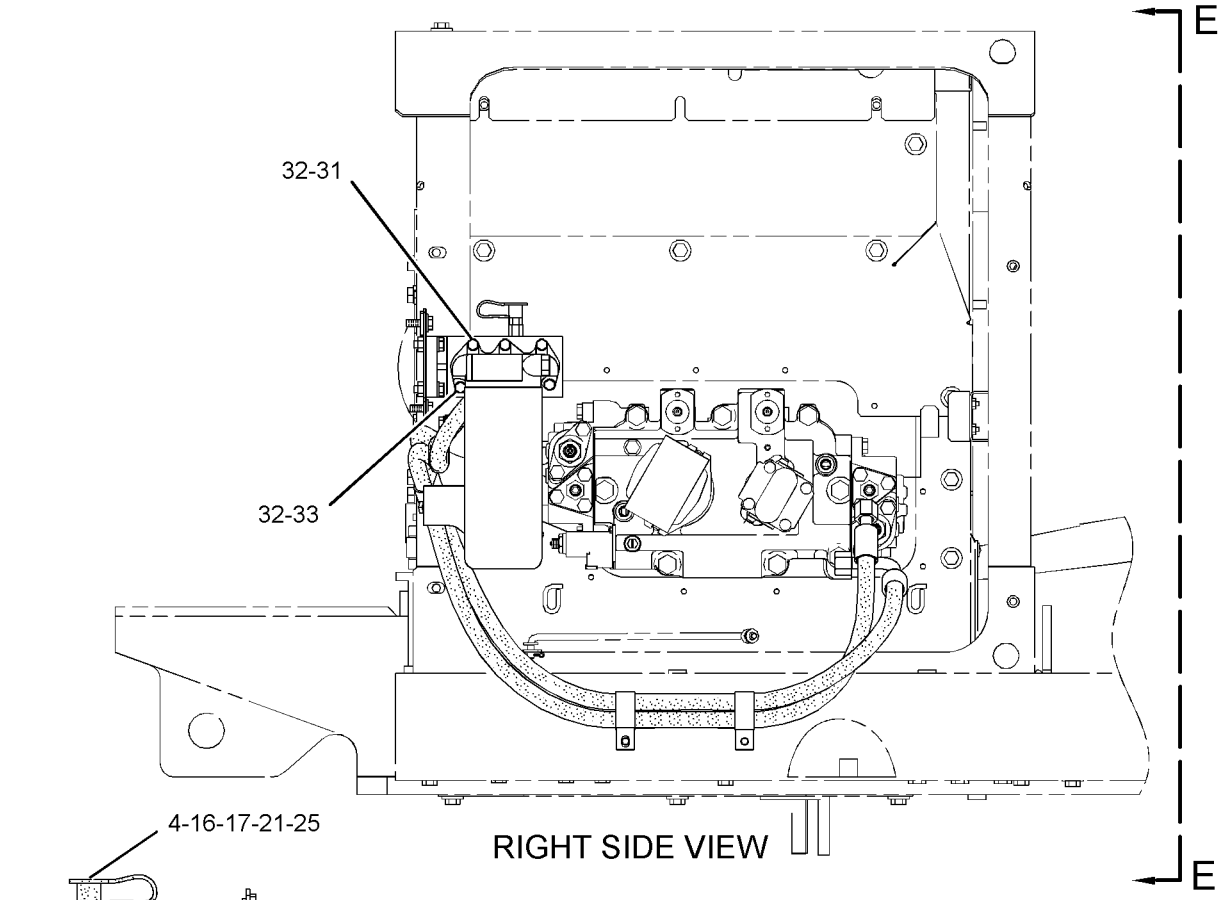

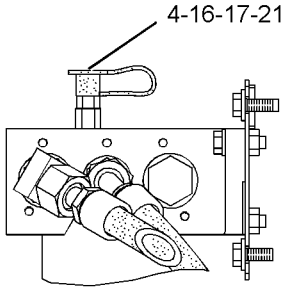

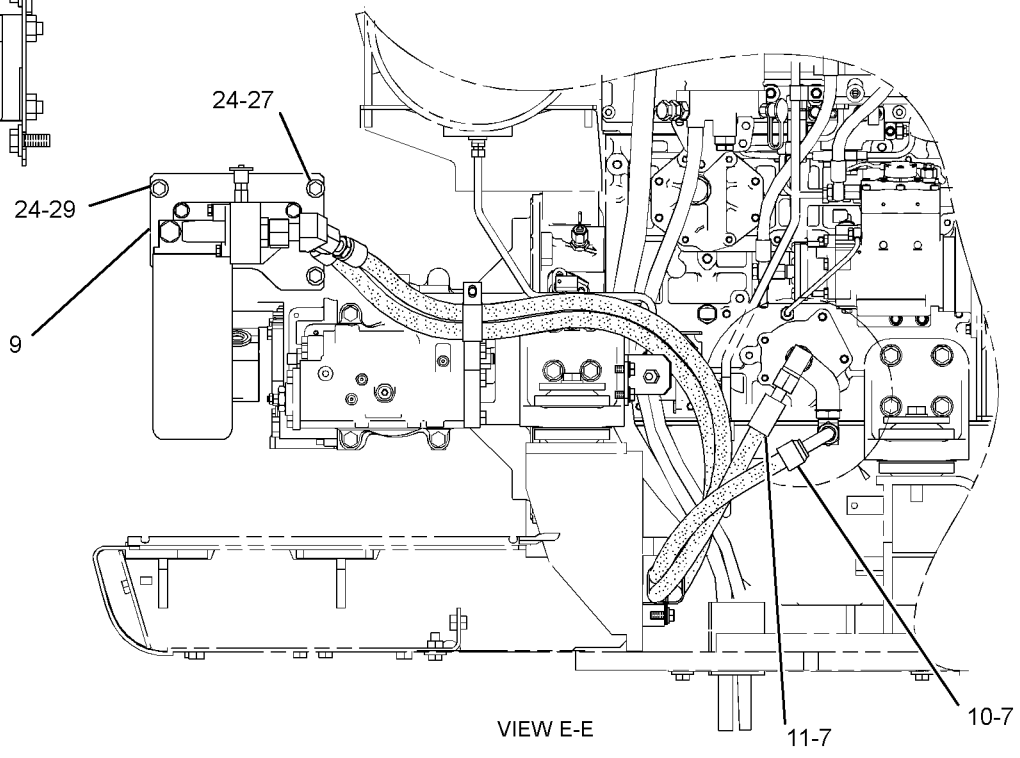

GRAPHIC #2 **<END>** g01306524

LUBRICATION SYSTEM

310-9572 FILTER & MTG GP-ENGINE OIL

S/N: CJN1-UP

PART OF 279-7748 INSTALLATION AR-ENGINE

SMCS-1306, 1308 **i03097842**

NOTE	REF NO	GRAPHIC REF	PART NUMBER	QTY	PART NAME 1 2 3 4 5 6 (PRODUCT LEVEL)	SEE PAGE
	1	1	**7C-1493**	1	VALVE AS-BYPASS	
	2	1	**7W-9028**	1	BASE AS-OIL FILTER	
	3	1	**8C-3445**	1	CAP-DUST	
	4	1	**9L-9188**	1	SPRING-VALVE	
	5	1	**121-0307**	1	BASE	
	6	1	**152-2938**	2	SEAL-O-RING	
	7	1	**152-2939**	1	SEAL-O-RING	
	8	1	**287-0212**	1	PLATE AS	
	9	1	**296-4804**	1	SUPPORT AS	
	10	1	**310-9573**	1	HOSE AS	
	11	1	**310-9574**	1	HOSE AS	
	12	1	**033-5853**	1	SEAL-O-RING	
	13	1	**033-6038**	2	SEAL-O-RING	
	14	1	**153-4906**	1	SEAL-O-RING	
	15	1	**189-9377**	1	SEAL-O-RING	
	16	1	**1R-0739**	1	FILTER AS-ENGINE OIL (STANDARD EFFICIENCY)	
	17	1	**228-7092**	3	SEAL-O-RING	
	18	1	**2T-2991**	1	CONNECTOR	
M	19	1	**5P-8196**	1	PLUG	
	20	1	**5P-9617**	1	ADAPTER	
	21	1	**6D-1641**	4	CLIP	
	22	1	**6V-5266**	3	SEAL-O-RING	
	23	1	**6V-8637**	1	CONNECTOR	
	24	1	**7X-7729**	3	WASHER (11X25X3-MM THK)	
	25	1	**8C-3446**	1	VALVE-FLUID SAMPLING	
	26	1	**8T-4121**	9	WASHER-HARD (11X21X2.5-MM THK)	
M	27	1	**8T-4136**	5	BOLT (M10X1.5X25-MM)	
M	28	1	**8T-4137**	3	BOLT (M10X1.5X20-MM)	
M	29	1	**8T-4195**	1	BOLT (M10X1.5X30-MM)	
M	30	1	**8T-4196**	3	BOLT (M10X1.5X35-MM)	
M	31	1	**8T-4197**	3	BOLT (M8X1.25X40-MM)	
	32	1	**8T-4224**	5	WASHER-HARD (8.8X16X2-MM THK)	
M	33	1	**8T-7547**	2	BOLT (M8X1.25X30-MM)	
	34	1	**8T-8899**	1	ELBOW	
	35	1	**9S-4188**	1	PLUG	
E	36	1	**7I-1024**		GUARD-HOSE (67-CM)	
	37	1	**7K-1181**	1	STRAP-CABLE	

E-ORDER BY THE CENTIMETER
M-METRIC PART

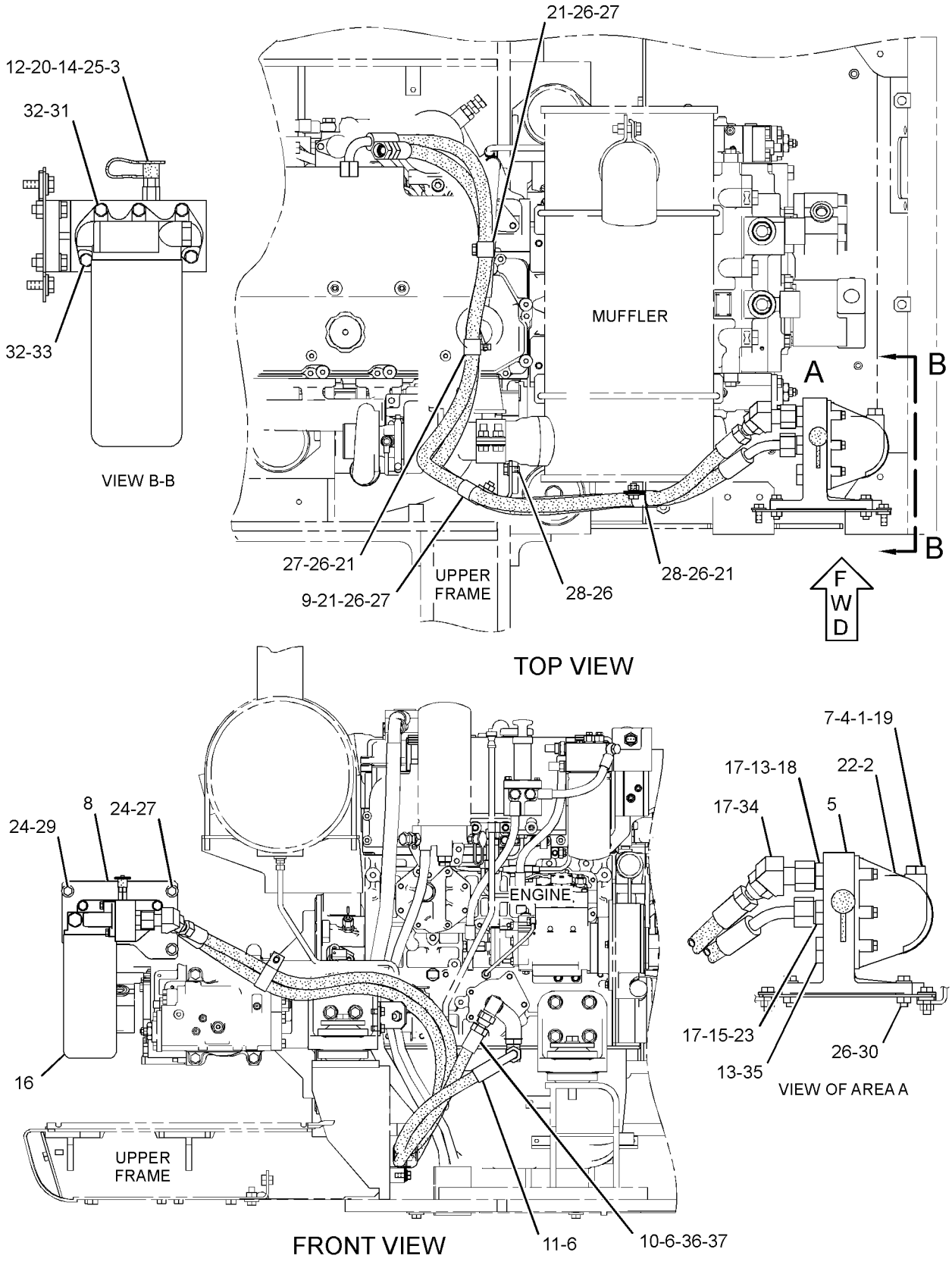

GRAPHIC #1 **<END>** g01576113

LUBRICATION SYSTEM

296-4781 LINES GP-ENGINE OIL

S/N: JKH1-UP
PART OF 272-4817 ENGINE AR
ALSO AN ATTACHMENT

SMCS-1307 **i02710578**

NOTE	REF NO	GRAPHIC REF	PART NUMBER	QTY	PART NAME 1 2 3 4 5 6 (PRODUCT LEVEL)	SEE PAGE
	1	1	**294-1767**	1	VALVE	
	2	1	**196-8019**	1	STRAINER	
	3	1	**5I-7642**	1	PLATE	
M	5	1	**195-8351**	1	BOLT AS (M6X1X16-MM)	
	6	1	**294-1768**	2	BOLT	
	7	1	**5I-5038**	1	SEAL-O-RING	
	8	1	**234-4796**	1	GASKET	

M-METRIC PART

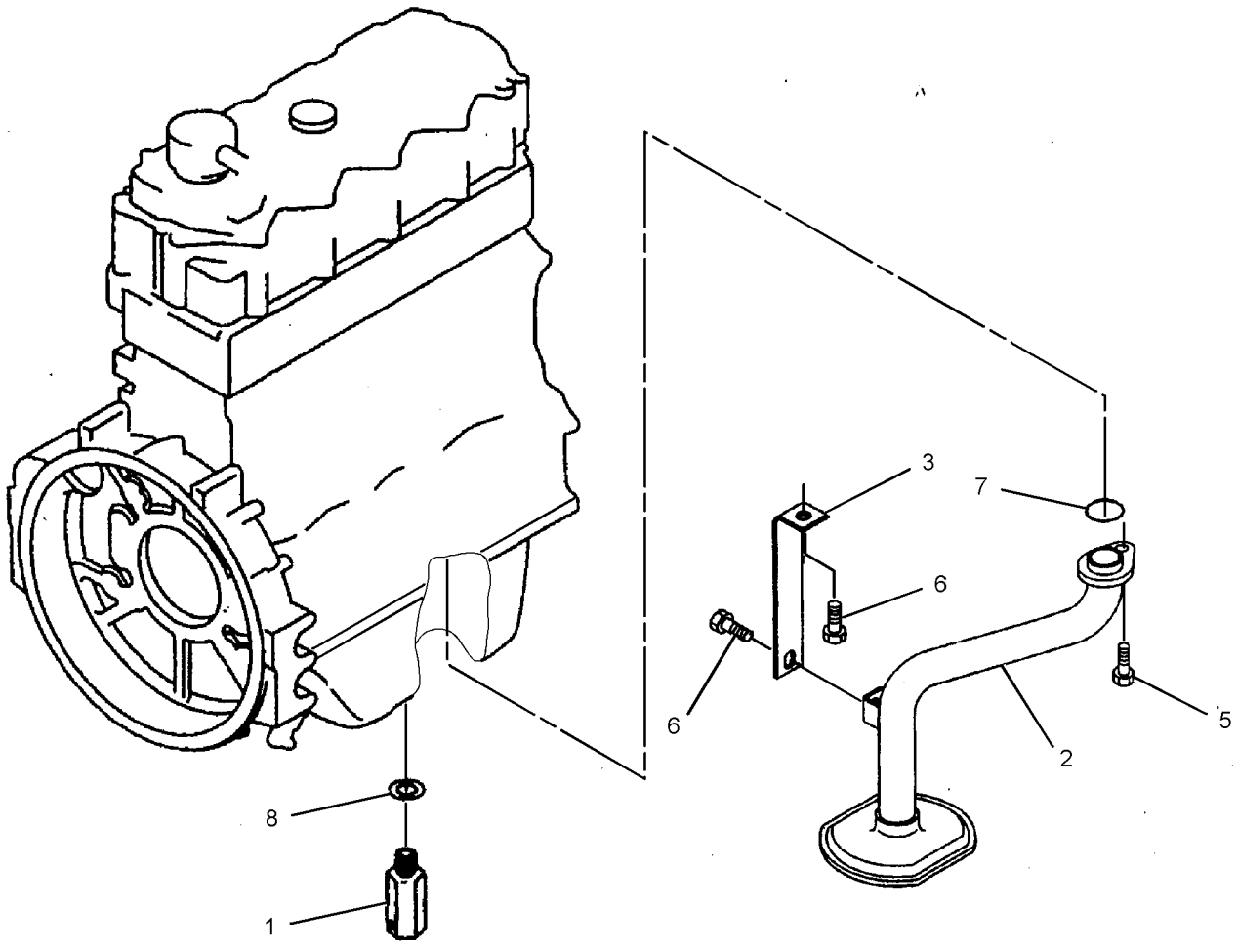

GRAPHIC #1 **<END>** g01366117

255-3037 LINES GP-ENGINE OIL DRAIN–OIL PAN

S/N: CJN1-162

PART OF 279-7748 INSTALLATION AR-ENGINE

SMCS-1307 **i02599037**

NOTE	REF NO	GRAPHIC REF	PART NUMBER	QTY	PART NAME 1 2 3 4 5 6 (PRODUCT LEVEL)	SEE PAGE
	1	1	**095-1388**	1	CLAMP-HOSE	
E	2	1	**5P-0743**		HOSE (7-CM)	

E-ORDER BY THE CENTIMETER

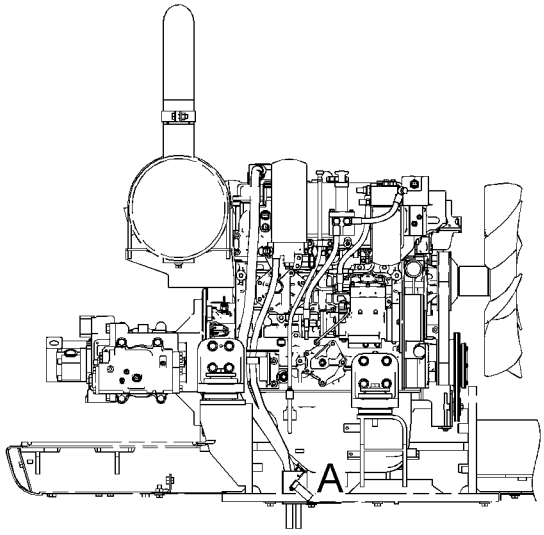

FRONT VIEW

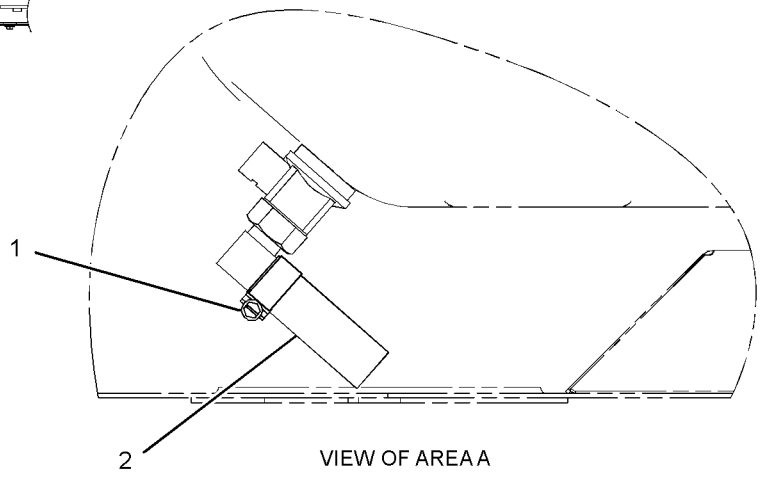

VIEW OF AREA A

GRAPHIC #1 **<END>** g01311917

LUBRICATION SYSTEM

296-4777 LINES GP-TURBOCHARGER OIL

S/N: JKH1-UP
PART OF 272-4817 ENGINE AR
ALSO AN ATTACHMENT

SMCS-1052 **i03254760**

NOTE	REF NO	GRAPHIC REF	PART NUMBER	QTY	PART NAME 1 2 3 4 5 6 (PRODUCT LEVEL)	SEE PAGE
	1	1	**296-4725**	1	PIPE	
	2	1	**296-4726**	1	PIPE	
	3	1	**294-1766**	1	GASKET	
	4	1	**195-8322**	2	BOLT (M6X1X16-MM)	
	5	1	**2A-5222**	2	WASHER (10.3X15.9X1-IN)	
	6	1	**5I-7623**	1	BOLT (M10X1.25X20-MM)	
	7	1	**5I-8058**	1	CONNECTOR	
	8	1	**5I-7561**	1	GASKET	
	9	1	**196-8366**	2	BOLT	

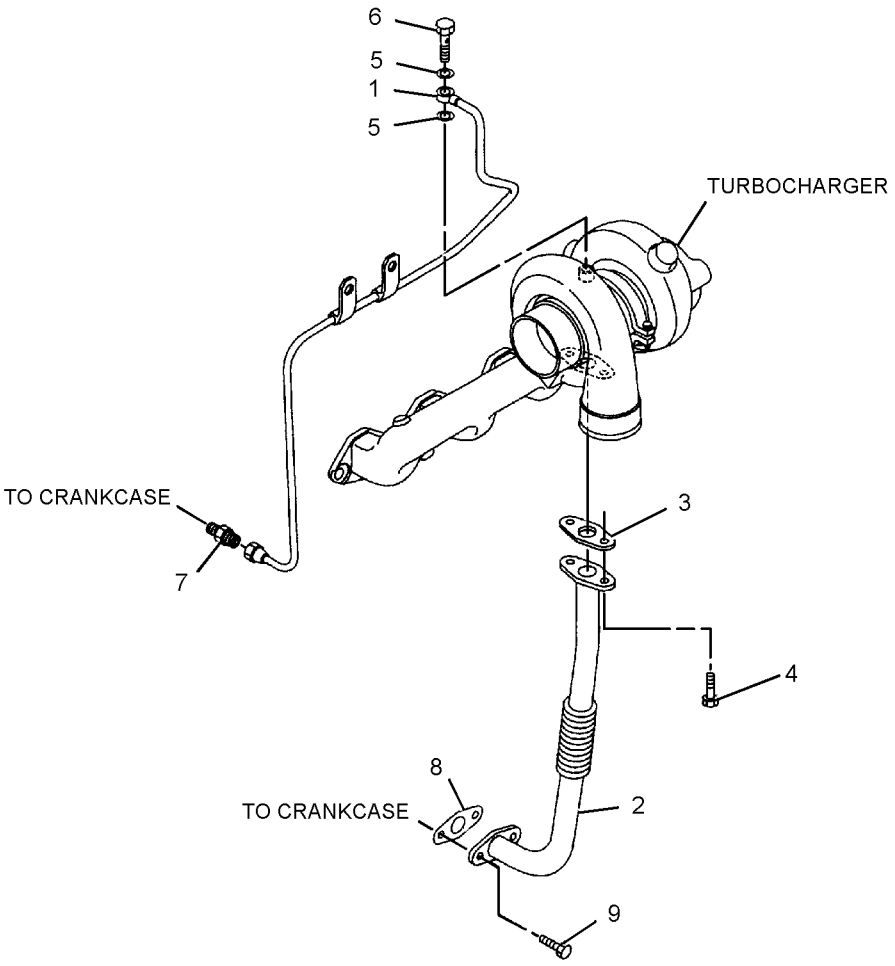

GRAPHIC #1 **<END>** g01403341

296-4782 COOLER GP-ENGINE OIL

S/N: JKH1-UP
PART OF 272-4817 ENGINE AR
ALSO AN ATTACHMENT

SMCS-1378 **i03021637**

NOTE	REF NO	GRAPHIC REF	PART NUMBER	QTY	PART NAME 1 2 3 4 5 6 (PRODUCT LEVEL)	SEE PAGE
	1	1	**196-8366**	3	BOLT	
M	2	1	**8T-4908**	9	BOLT (M8X1.25X25-MM)	
	3	1	**296-4727**	1	COVER AS	
	3A	1	**178-6572**	2	PLUG	
	4	1	**135-2403**	1	CORE AS-ENGINE OIL COOLER	
M	5	1	**5C-7261**	4	NUT (M8X1.25-THD)	
	6	1	**3B-4505**	4	LOCKWASHER	
	7	1	**5I-7862**	1	GASKET	
	8	1	**5I-7691**	2	GASKET	
	9	1	**222-8238**	1	COVER	
	10	1	**217-5589**	1	GASKET	
	11	1	**094-9267**	4	BOLT (M8X1.25X60.5-MM)	
	12	1	**294-1738**	4	BOLT (M10X1.5X32-MM)	

M-METRIC PART

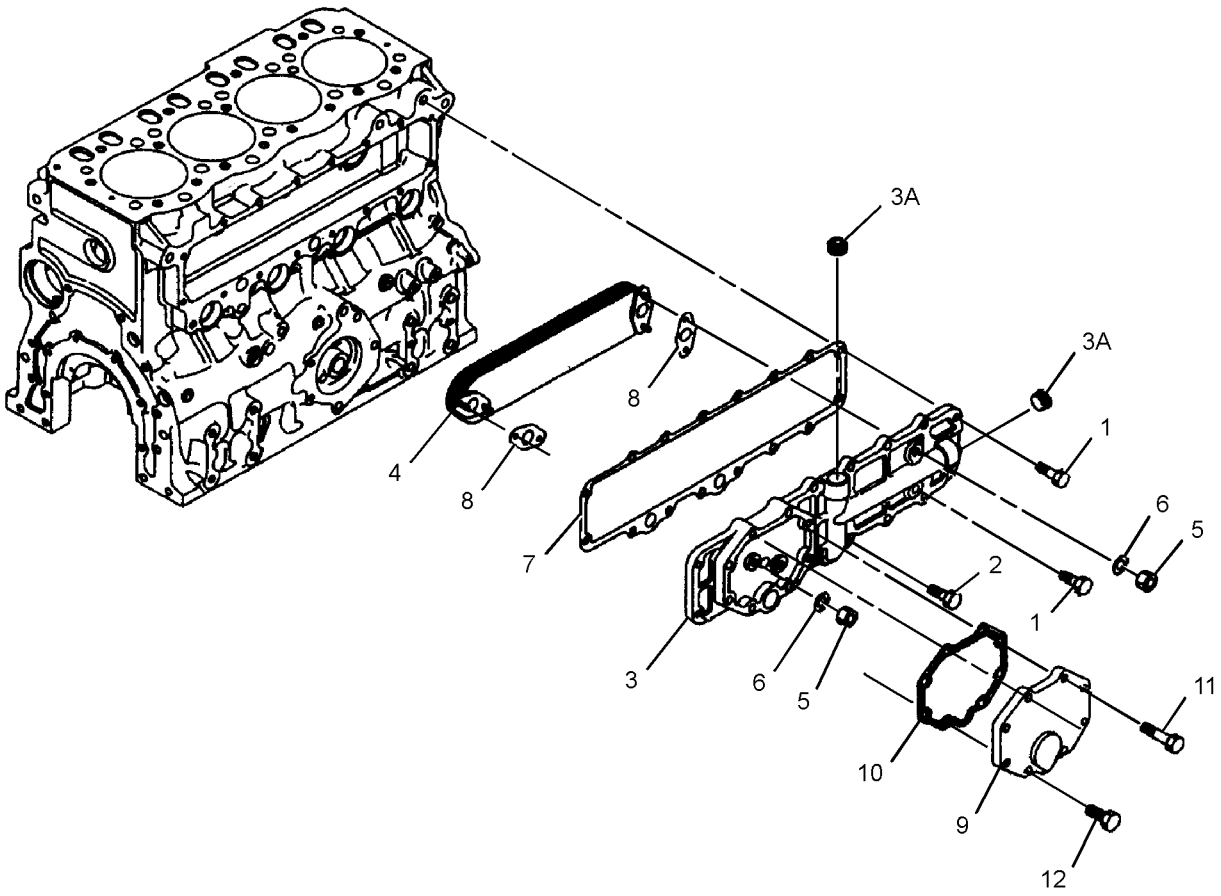

GRAPHIC #1 **<END>** g01403263

COOLING SYSTEM

260-7009 COOLING AR-HIGH AMBIENT TEMP

S/N: CJN1-UP

AN ATTACHMENT

SMCS-1350 **i02753382**

NOTE	PART NUMBER	QTY	PART NAME 1 2 3 4 5 6 (PRODUCT LEVEL)	SEE PAGE
Y	*290-9441*	1	ELECTRONICS GP-MACHINE (HIGH AMBIENT)	153
Y	*273-8085*	1	HOOD & GUARD GP (HIGH AMBIENT)	327

Y-SEPARATE ILLUSTRATION

<END>

COOLING SYSTEM

296-4797 FAN GP-SUCTION

S/N: JKH1-UP
PART OF 272-4817 ENGINE AR
ALSO AN ATTACHMENT

SMCS-1356 **i02958481**

NOTE	REF NO	GRAPHIC REF	PART NUMBER	QTY	PART NAME 1 2 3 4 5 6 (PRODUCT LEVEL)	SEE PAGE
	1	1	**217-5513**	1	FAN (7-BLADE)	
	2	1	**297-7830**	1	SPACER	
	3	1	**296-4736**	4	BOLT	
	4	1	**8T-4121**	4	WASHER-HARD (11X21X2.5-MM THK)	
	5	1	**7X-0796**	4	LOCKWASHER	

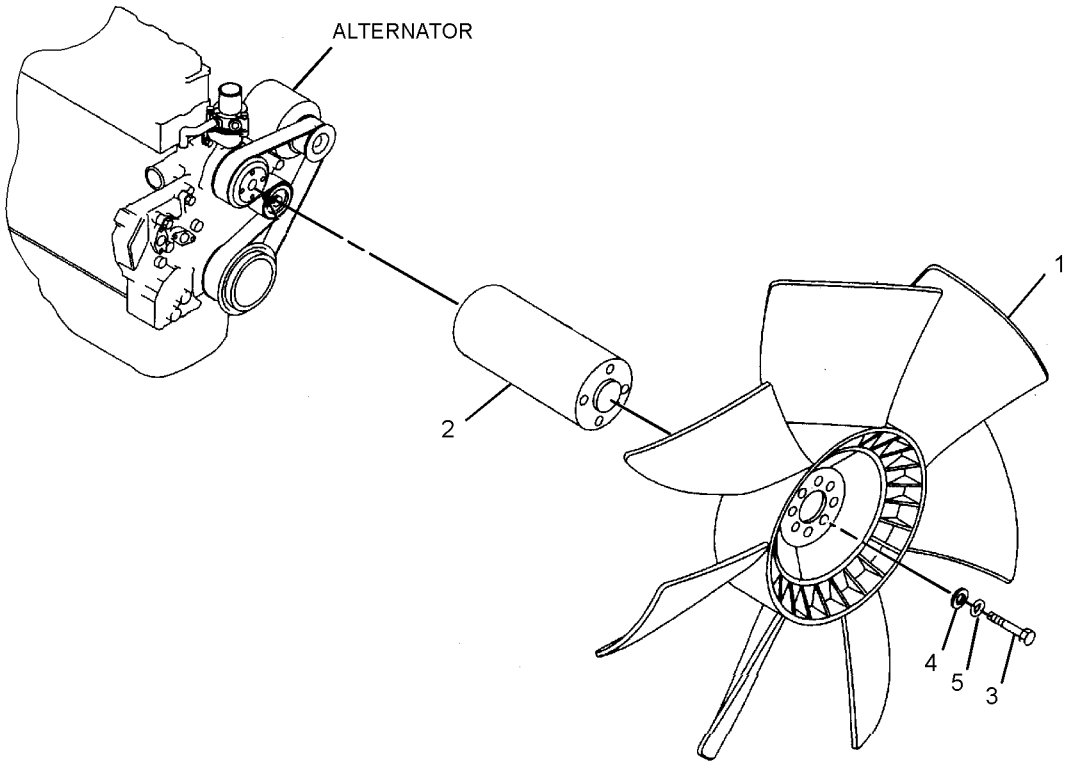

GRAPHIC #1 **<END>** g01511316

COOLING SYSTEM

296-4795 LINES GP-WATER

S/N: JKH1-UP
PART OF 272-4817 ENGINE AR
ALSO AN ATTACHMENT

SMCS-1355, 1380 **i02857243**

NOTE	REF NO	GRAPHIC REF	PART NUMBER	QTY	PART NAME 1 2 3 4 5 6 (PRODUCT LEVEL)	SEE PAGE
	1	1	**5I-7867**	1	COVER AS	
	2	1	**154-9024**	1	VALVE GP-FLUID SAMPLING (ENGINE COOLANT)	
	3	1	**157-0670**	1	CAP-DUST	
	4	1	**5I-7646**	1	ELBOW	
	5	1	**294-1777**	2	GASKET (WATER TEMPERATURE REGULATOR)	
	6	1	**5I-8056**	2	PLUG	
	7	1	**096-9532**	2	WASHER (15.8X22.5X2-MM THK)	
	8	1	*270-6338*	1	BOLT AS	
M		1	**8T-6870**	1	BOLT (M8X1.25X70-MM)	
		1	**3B-4505**	1	LOCKWASHER	
	9	1	**294-1778**	1	HOSE	
	10	1	**5I-8010**	1	REGULATOR-TEMPERATURE (COOLANT)	
	11	1	**5I-7735**	1	GASKET (WATER TEMPERATURE REGULATOR)	
	12	1	**096-8619**	3	BOLT	
	13	1	**297-7655**	1	BOLT	
	14	1	**3B-4505**	1	LOCKWASHER	
	15	1	**2S-3440**	2	CLAMP-HOSE	
	16	1	**294-1780**	1	GASKET (WATER TEMPERATURE REGULATOR)	
	17	1	**296-4733**	1	SPACER	

M-METRIC PART

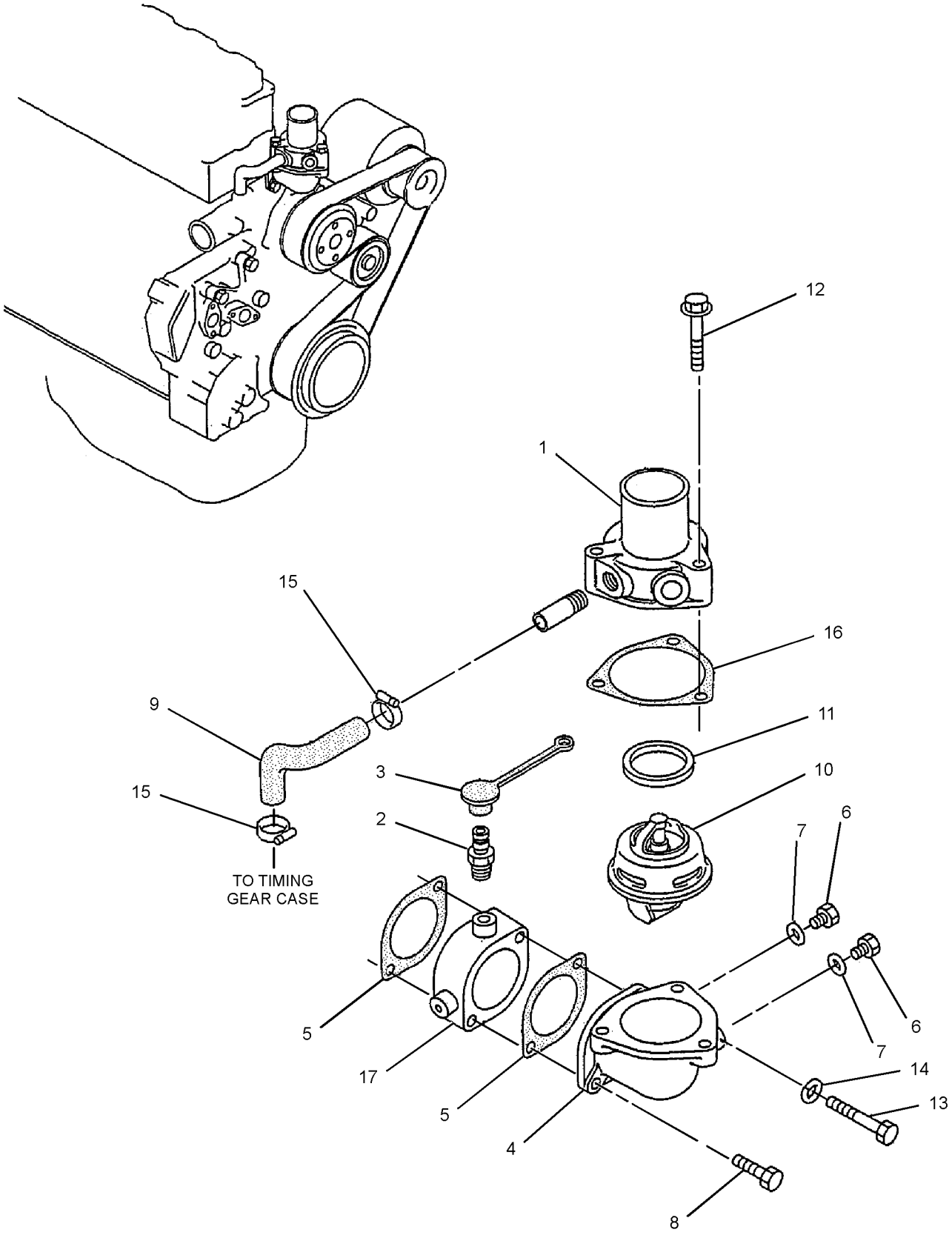

GRAPHIC #1 **<END>** g01415123

COOLING SYSTEM

296-4655 PUMP GP-WATER

S/N: JKH1-UP
PART OF 272-4817 ENGINE AR
ALSO AN ATTACHMENT

SMCS-1361 **i02618456**

NOTE	REF NO	GRAPHIC REF	PART NUMBER	QTY	PART NAME 1 2 3 4 5 6 (PRODUCT LEVEL)	SEE PAGE
	1	1	**178-6633**	1	PUMP GP-WATER	
	1A	1	**5I-7696**	1	FLANGE	
	1B	1	**178-6635**	1	SHAFT	
	1C	1	**8T-9598**	1	RING-RETAINING	
	1D	1	**5L-6326**	1	BALL BEARING (62-MM OD)	
	1E	1	**178-6634**	1	IMPELLER	
	1F	1	**5I-7697**	1	SPACER (28-MM)	
	1G	1	**2H-3814**	1	BALL BEARING (52-MM OD)	
	1H	1	**125-2947**	1	WASHER (1-MM THK)	
	1J	1	**178-6636**	1	SEAL	
	2	1	**294-1738**	7	BOLT	
	3	1	**8T-4121**	4	WASHER-HARD (11X21X2.5-MM THK)	

296-4655 **PUMP GP-WATER** *(contd.)* **i02618456**

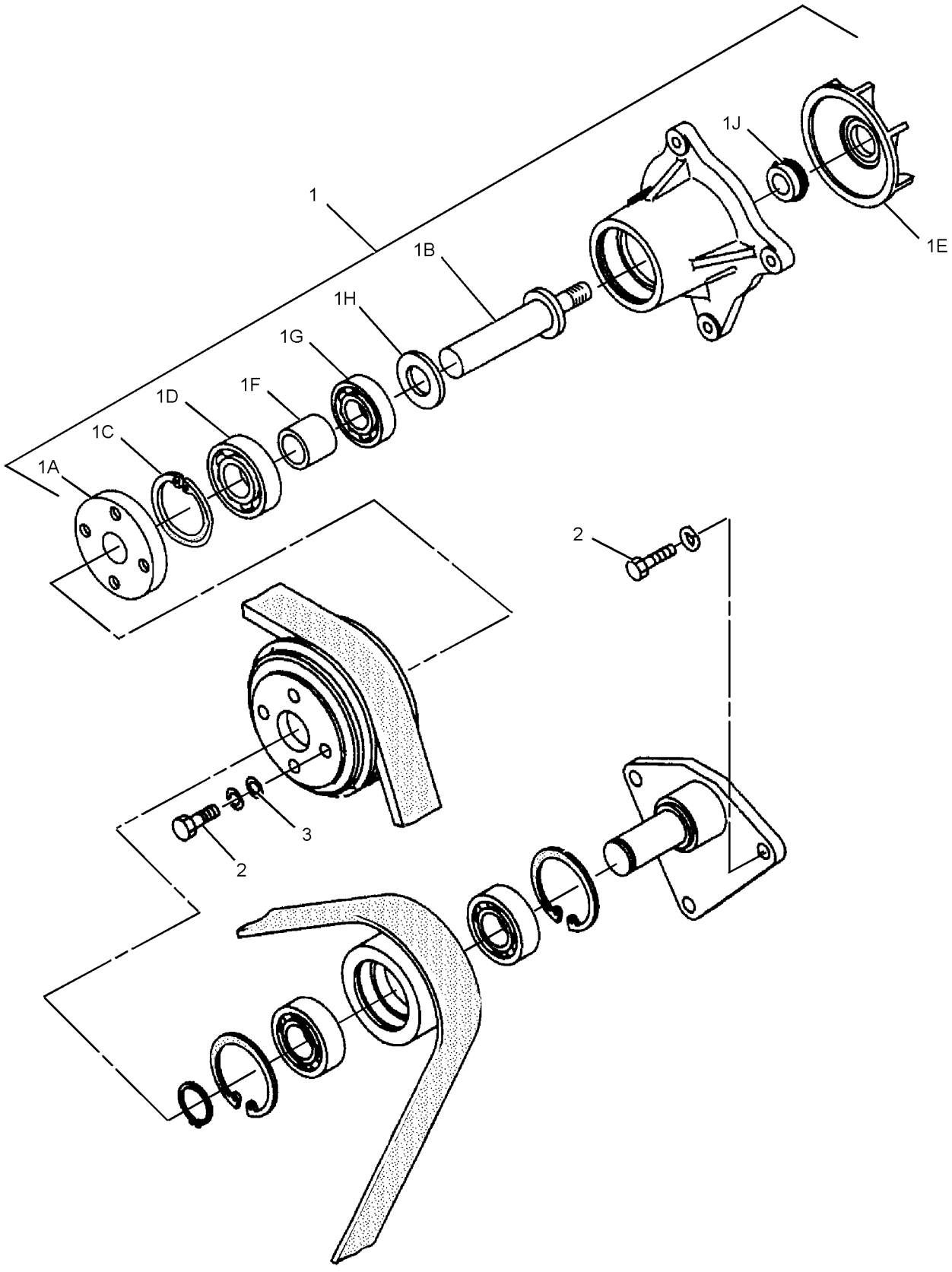

GRAPHIC #1 **<END>** g01316735

COOLING SYSTEM

245-9310 RADIATOR & HYD OIL COOLER GP

S/N: CJN1-UP

PART OF 279-7748 INSTALLATION AR-ENGINE

SMCS-1351 **i02791364**

NOTE	REF NO	GRAPHIC REF	PART NUMBER	QTY	PART NAME 1 2 3 4 5 6 (PRODUCT LEVEL)	SEE PAGE
	1	1	**3S-2093**	5	STRAP-CABLE	
	2	1	**7K-1181**	1	STRAP-CABLE	
	3	1	**8T-4984**	1	CLAMP-HOSE	
	4	1	**096-4035**	1	CLIP	
	5	1	**171-9077**	1	BAND	
	6	1	**178-6450**	4	SPACER (17X35X30-MM THK)	
	7	1	**245-9205**	1	TANK AS-COOLANT (RECOVERY)	
		1	**171-3369**	1	CAP AS (COOLANT RECOVERY)	
Y	8	1	**245-9311**	1	RADIATOR & HYD OIL COOLER GP	60
	9	1	**245-9368**	1	HOSE (UPPER RADIATOR)	
	10	1	**245-9369**	1	HOSE (LOWER RADIATOR)	
	11	1	**245-9370**	1	GUARD AS-FAN (UPPER)	
	12	1	**265-3489**	1	GUARD AS-FAN (LOWER)	
	13	1	**265-3490**	1	BRACKET AS	
	14	1	**265-3623**	1	PLATE	
	15	1	**281-3590**	1	SEAL	
	16	1	**281-3491**	1	SEAL	
	17	1	**281-3492**	1	SEAL	
	18	1	**3P-9847**	1	CLIP	
	19	1	**5P-1076**	3	WASHER-HARD (13.5X30X4-MM THK)	
M	20	1	**7X-2554**	4	BOLT (M16X2X70-MM)	
	21	1	**7X-4780**	1	GROMMET	
	22	1	**7X-7729**	12	WASHER (11X25X3-MM THK)	
	23	1	**8T-4121**	1	WASHER-HARD (11X21X2.5-MM THK)	
M	24	1	**8T-4136**	2	BOLT (M10X1.5X25-MM)	
M	25	1	**8T-4137**	11	BOLT (M10X1.5X20-MM)	
M	26	1	**8T-4139**	3	BOLT (M12X1.75X30-MM)	
M	27	1	**8T-4200**	2	BOLT (M8X1.25X16-MM)	
	28	1	**8T-4224**	2	WASHER-HARD (8.8X16X2-MM THK)	
E	29	1	**7Y-1976**		HOSE-WATER (39-CM)	
D	30	1	**5P-5935**		SEAL (0.1-M)	
D	31	1	**5P-7174**		SEAL (0.8-M)	
D	32	1	**5P-9909**		SEAL (0.2-M)	
D	32A	1	**5P-9909**		SEAL (0.8-M)	
	33	1	**8T-6703**	3	CLAMP-HOSE	

D-ORDER BY THE METER
E-ORDER BY THE CENTIMETER
M-METRIC PART
Y-SEPARATE ILLUSTRATION

245-9310 **RADIATOR & HYD OIL COOLER GP** *(contd.)* **i02791364**

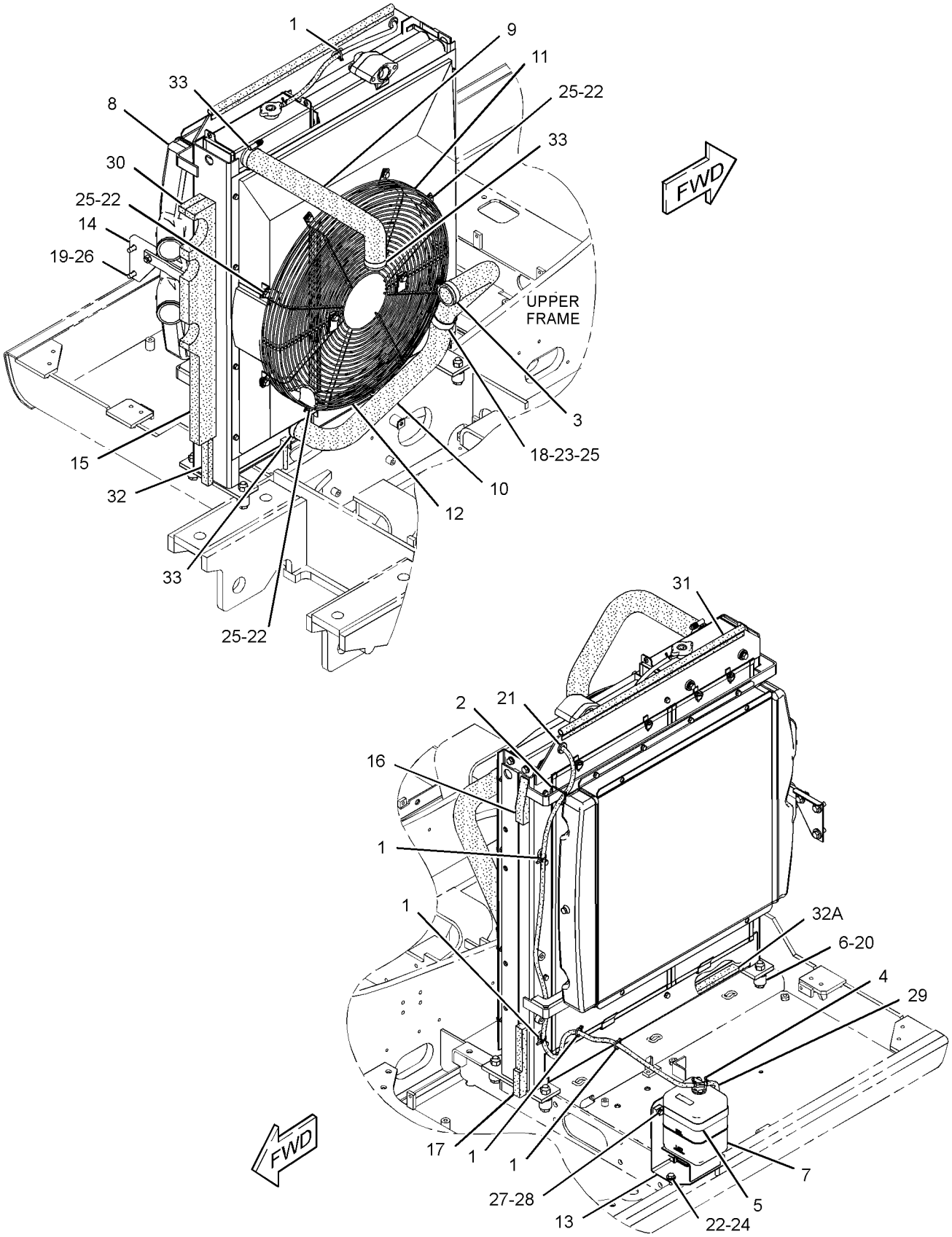

GRAPHIC #1 **<END>** g01368660

COOLING SYSTEM

245-9311 RADIATOR & HYD OIL COOLER GP

S/N: CJN1-UP

PART OF 245-9310 RADIATOR & HYD OIL COOLER GP

SMCS-1351 **i03129822**

NOTE	REF NO	GRAPHIC REF	PART NUMBER	QTY	PART NAME 1 2 3 4 5 6 (PRODUCT LEVEL)	SEE PAGE
	1	2	**5D-8159**	4	PIN AS	
M	2	1	**093-5432**	1	VALVE AS-DRAIN (COOLANT)	
	3	2	**096-4035**	2	CLIP	
	4	2	**210-8117**	2	SEAL	
	5	2	**245-9212**	1	CAP AS-RADIATOR	
	6	2	**245-9216**	2	BOSS	
	7	2	**245-9217**	2	CUSHION-RUBBER	
	8	2	**245-9218**	2	CUSHION-RUBBER	
	9	1	**265-3629**	1	SEAL	
	10	1,2	**265-3630**	2	SEAL	
	11	1,2	**265-3632**	3	SEAL	
	12	2	**281-3524**	1	CORE AS-RADIATOR	
	13	2	**281-3525**	1	CORE AS-OIL COOLER (HYDRAULIC)	
	14	2	**281-3526**	1	AFTERCOOLER AS	
	15	2	**281-3527**	1	FRAME AS	
	16	2	**281-3528**	2	SEAL	
	17	1	**281-3529**	1	SHROUD AS-RADIATOR	
	18	1	**281-3530**	2	SEAL	
	19	2	**281-3531**	1	SCREEN AS (RADIATOR)	
	20	2	**281-3532**	1	SCREEN AS (HYDRAULIC OIL COOLER)	
	21	1	**281-3533**	2	SHEET-RUBBER	
	22	1	**095-1543**	2	SEAL-O-RING	
	23	2	**8T-4121**	2	WASHER-HARD (11X21X2.5-MM THK)	
M	24	1,2	**8T-4189**	22	BOLT (M8X1.25X20-MM)	
M	25	2	**8T-4195**	2	BOLT (M10X1.5X30-MM)	
	26	1,2	**8T-4224**	22	WASHER-HARD (8.8X16X2-MM THK)	
E	27	2	**7Y-1976**		HOSE-WATER (220-CM)	
E	27A	1	**7Y-1976**		HOSE-WATER (8-CM)	

E-ORDER BY THE CENTIMETER
M-METRIC PART

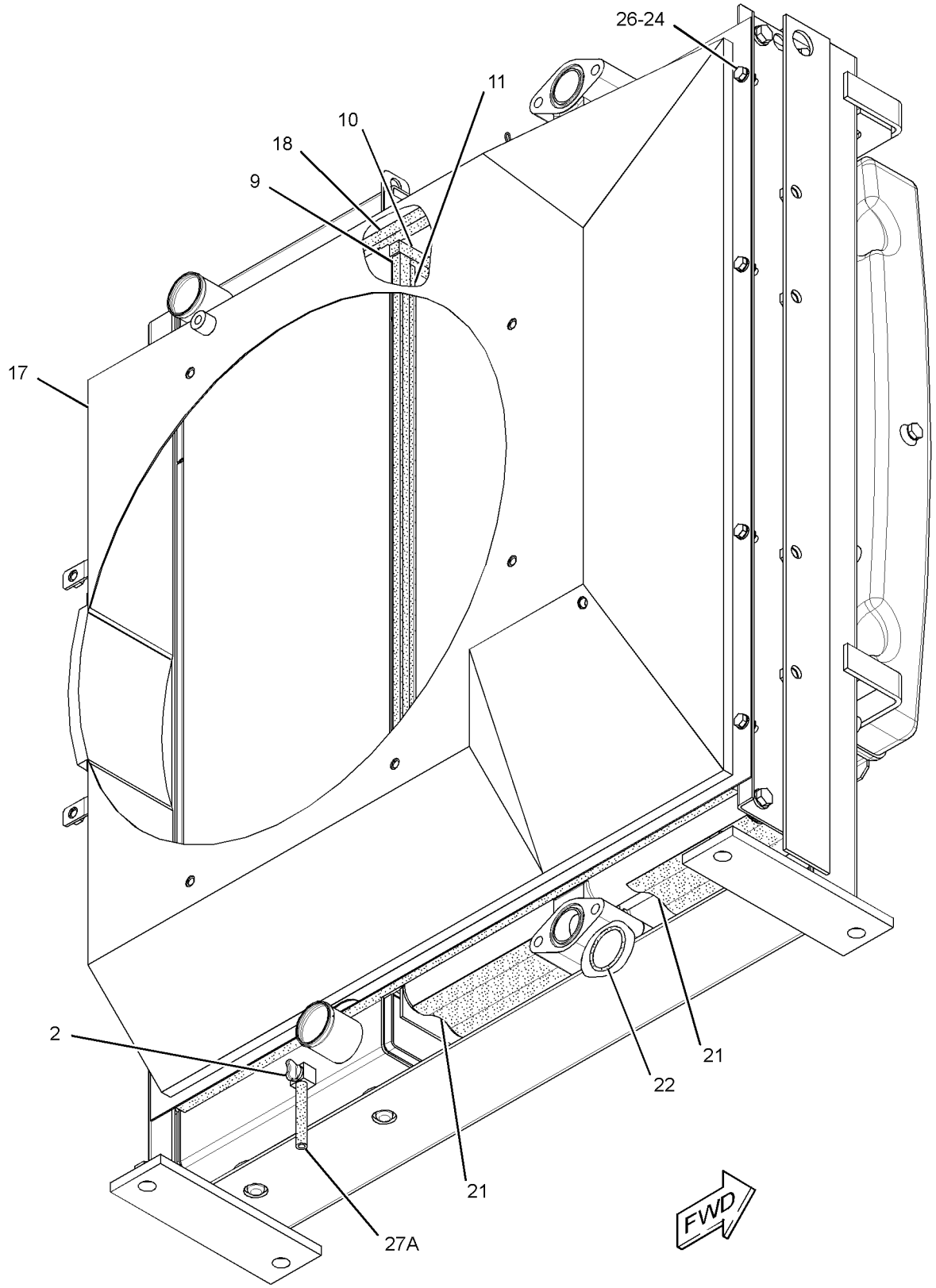

GRAPHIC #1 g01610594

245-9311 **RADIATOR & HYD OIL COOLER GP** ***(contd.)*** **i03129822**

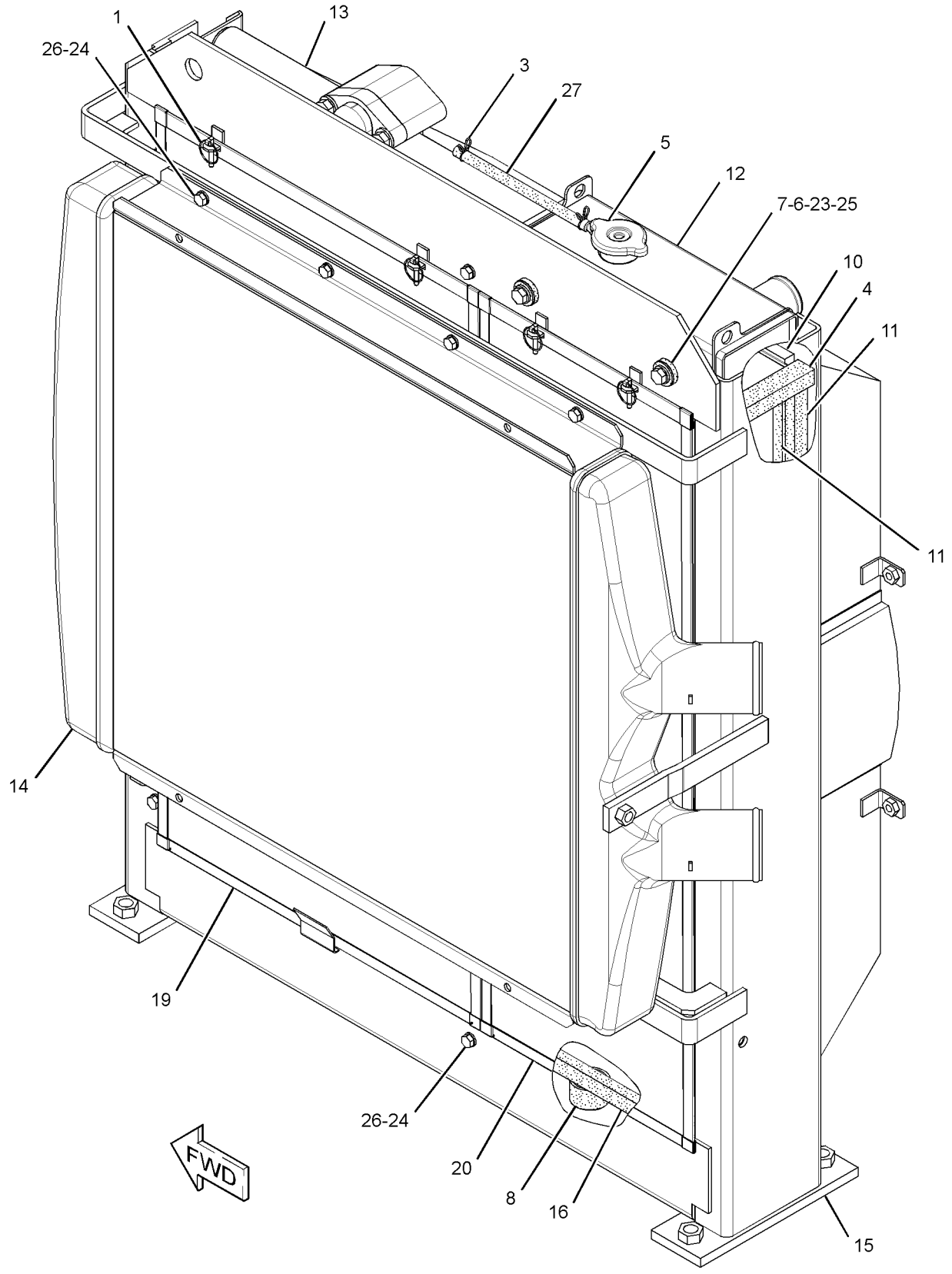

GRAPHIC #2 **<END>** g01368653

AIR INLET AND EXHAUST SYSTEM

255-3033 AIR CLEANER & MOUNTING GP

S/N: CJN1-UP

PART OF 279-7748 INSTALLATION AR-ENGINE

SMCS-1051, 1054, 7452 **i02600437**

NOTE	REF NO	GRAPHIC REF	PART NUMBER	QTY	PART NAME 1 2 3 4 5 6 (PRODUCT LEVEL)	SEE PAGE
Y	1	1	**212-8642**	1	AIR CLEANER GP	64
	2	1	**8T-4121**	4	WASHER-HARD (11X21X2.5-MM THK)	
M	3	1	**8T-4137**	4	BOLT (M10X1.5X20-MM)	

M-METRIC PART
Y-SEPARATE ILLUSTRATION

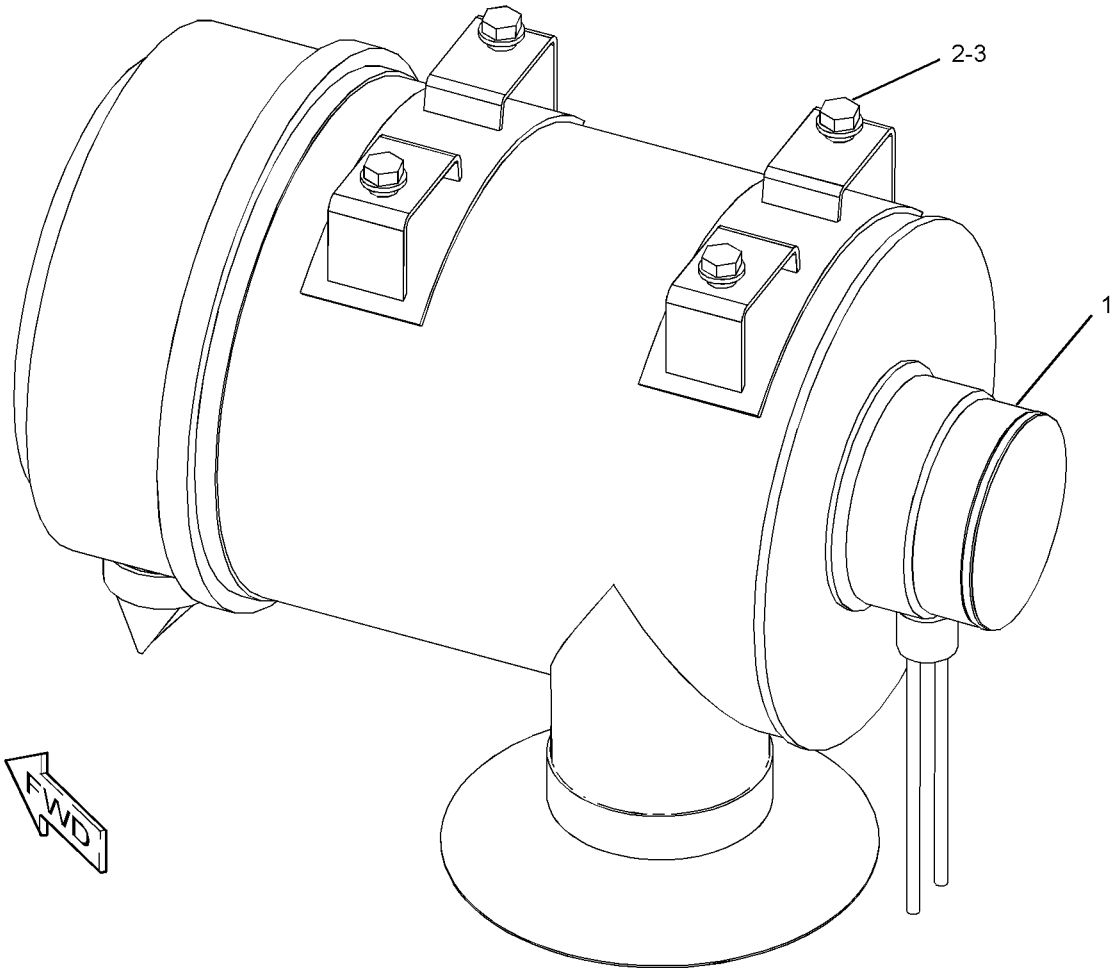

GRAPHIC #1 **<END>** g01312108

212-8642 AIR CLEANER GP

S/N: CJN1-UP
PART OF 255-3033 AIR CLEANER & MOUNTING GP
FIELD REPLACEMENT ORDER 310-9663—PAGE 68

SMCS-1051, 1054 **i02500668**

NOTE	REF NO	GRAPHIC REF	PART NUMBER	QTY	PART NAME 1 2 3 4 5 6 (PRODUCT LEVEL)	SEE PAGE
	1	1	**135-5786**	1	SEAL	
	2	1	**135-5787**	1	FILTER ELEMENT AS-AIR (SECONDARY)	
	3	1	**135-5788**	1	FILTER ELEMENT AS-AIR (PRIMARY)	
	4	1	**135-5784**	1	COVER AS	
	4A	1	**135-5700**	3	LATCH	
	5	1	**096-4177**	1	VALVE-EVACUATION	
	6	1	**255-2966**	1	INDICATOR AS-AIR FILTER CHANGE (AIR RESTRICTION)	

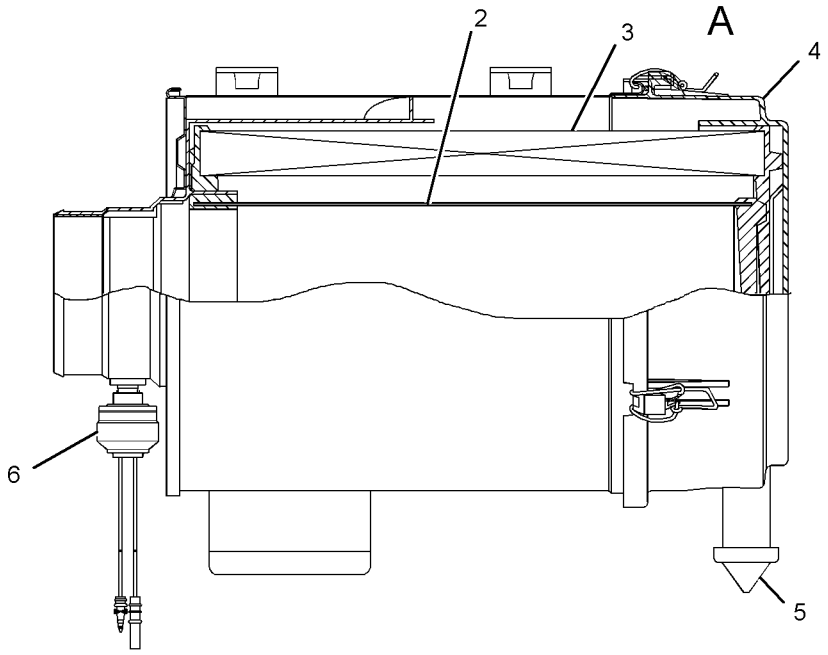

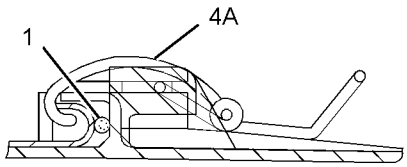

VIEW OF AREA A

GRAPHIC #1 **<END>** g01293792

AIR INLET AND EXHAUST SYSTEM

272-4665 AIR CLEANER GP

S/N: CJN1-UP
PART OF 260-7076 HOOD AR
AN ATTACHMENT
TYPE 1

SMCS-1051, 1054 **i02752976**

NOTE	REF NO	GRAPHIC REF	PART NUMBER	QTY	PART NAME 1 2 3 4 5 6 (PRODUCT LEVEL)	SEE PAGE
	1	1	**122-1162**	1	CLAMP	
	2	1	**130-6857**	1	PRECLEANER AS	
		1	**1M-7250**	1	BOWL	
		1	**9M-9439**	1	COVER AS	
Y	3	1	**272-4667**	1	AIR CLEANER GP	67
	4	1	**279-7834**	1	TUBE AS	
	5	1	**8T-4121**	4	WASHER-HARD (11X21X2.5-MM THK)	
M	6	1	**8T-4133**	1	NUT (M10X1.5-THD)	
M	7	1	**8T-4137**	3	BOLT (M10X1.5X20-MM)	
M	8	1	**8T-4185**	1	BOLT (M10X1.5X50-MM)	

M-METRIC PART
Y-SEPARATE ILLUSTRATION

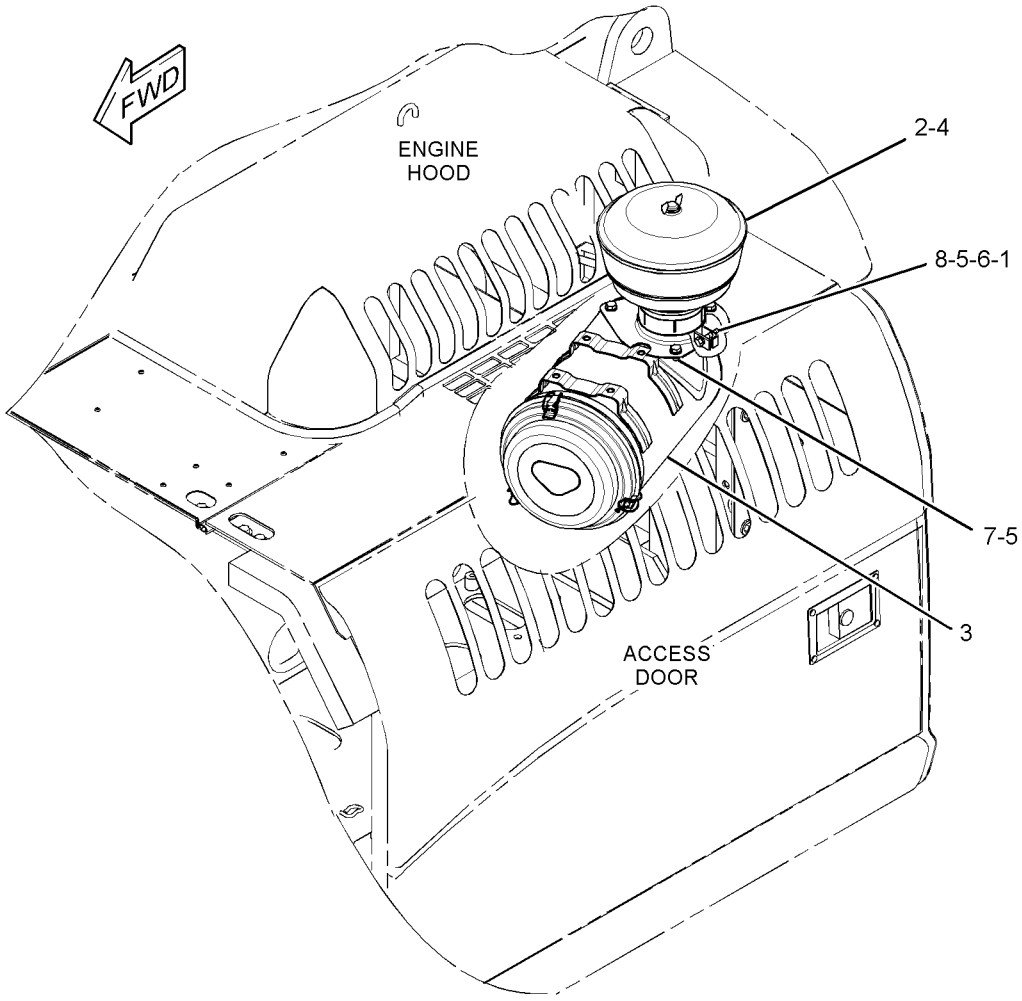

GRAPHIC #1 **<END>** g01381732

AIR INLET AND EXHAUST SYSTEM

272-4665 AIR CLEANER GP

S/N: CJN1-UP
PART OF 260-7076 HOOD AR
AN ATTACHMENT
TYPE 2

SMCS-1051, 1054 **i03026083**

NOTE	REF NO	GRAPHIC REF	PART NUMBER	QTY	PART NAME 1 2 3 4 5 6 (PRODUCT LEVEL)	SEE PAGE
	1	1	**122-1162**	1	CLAMP	
	2	1	**130-6857**	1	PRECLEANER AS	
		1	**1M-7250**	1	BOWL	
		1	**9M-9439**	1	COVER AS	
CY	3	1	**310-9675**	1	AIR CLEANER GP	69
	4	1	**279-7834**	1	TUBE AS	
	5	1	**8T-4121**	4	WASHER-HARD (11X21X2.5-MM THK)	
M	6	1	**8T-4133**	1	NUT (M10X1.5-THD)	
M	7	1	**8T-4137**	3	BOLT (M10X1.5X20-MM)	
M	8	1	**8T-4185**	1	BOLT (M10X1.5X50-MM)	

C-CHANGE FROM PREVIOUS TYPE
M-METRIC PART
Y-SEPARATE ILLUSTRATION

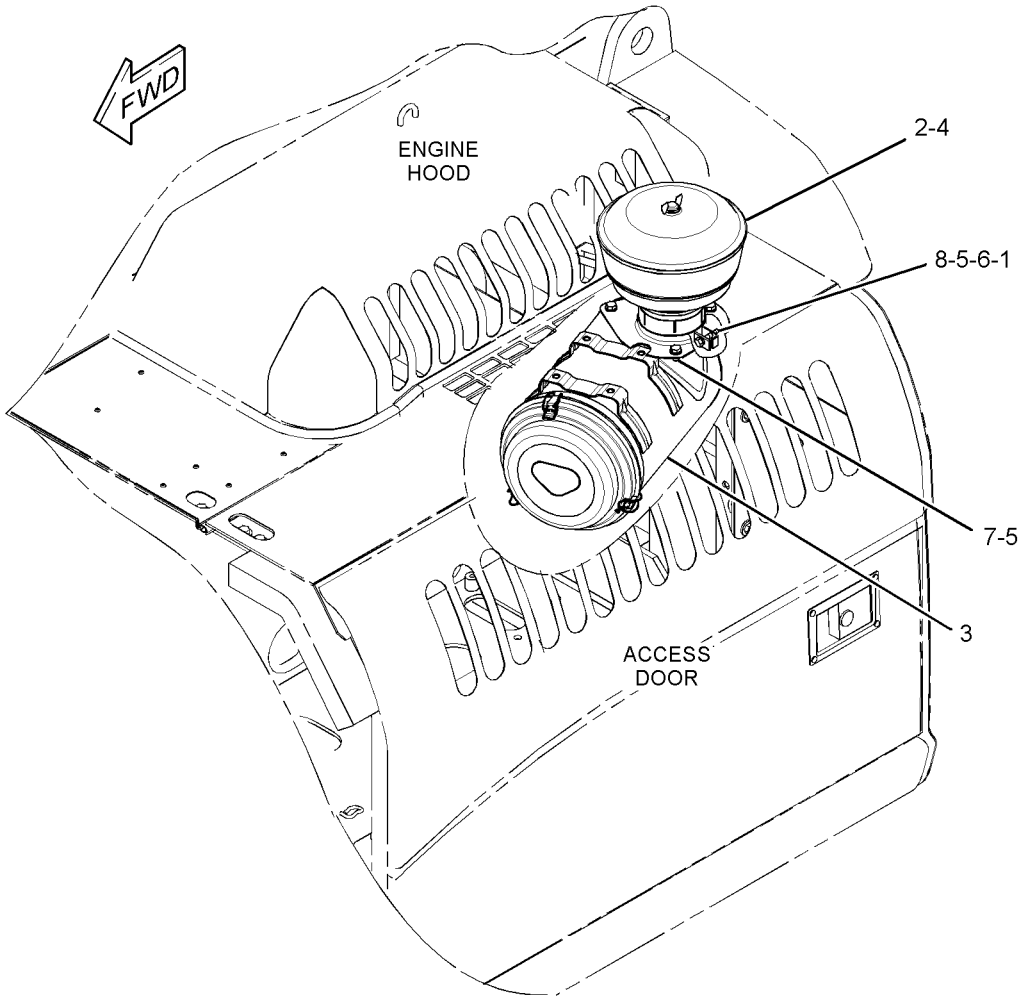

GRAPHIC #1 **<END>** g01381732

272-4667 AIR CLEANER GP

S/N: CJN1-UP
PART OF 272-4665 AIR CLEANER GP
AN ATTACHMENT

SMCS-1051, 1054 **i02752979**

NOTE	REF NO	GRAPHIC REF	PART NUMBER	QTY	PART NAME 1 2 3 4 5 6 (PRODUCT LEVEL)	SEE PAGE
	1	1	**152-7217**	1	FILTER ELEMENT AS-AIR (PRIMARY)	
	2	1	**152-7219**	1	FILTER ELEMENT AS-AIR (SECONDARY)	
	3	1	**159-6003**	1	COVER AS	
	4	1	**255-2966**	1	INDICATOR AS-AIR FILTER CHANGE (AIR RESTRICTION)	
	5	1	**5L-3233**	1	FITTING	

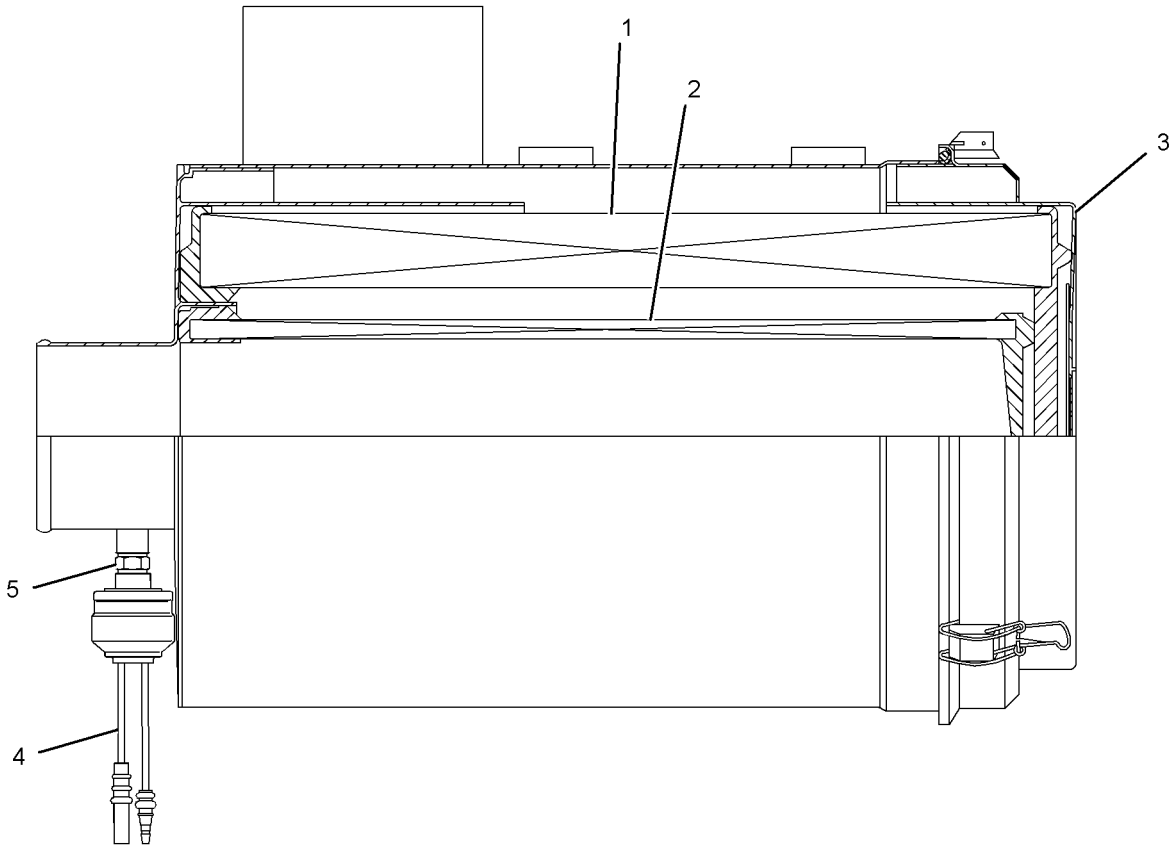

GRAPHIC #1 **<END>** g01121445

AIR INLET AND EXHAUST SYSTEM

310-9663 AIR CLEANER GP

S/N: CJN1-UP

FIELD REPLACEMENT FOR 212-8642—PAGE 64

SMCS-1051, 1054 **i02897538**

NOTE	REF NO	GRAPHIC REF	PART NUMBER	QTY	PART NAME 1 2 3 4 5 6 (PRODUCT LEVEL)	SEE PAGE
	1	1	**135-5787**	1	FILTER ELEMENT AS-AIR (SECONDARY)	
	2	1	**135-5788**	1	FILTER ELEMENT AS-AIR (PRIMARY)	
	3	1	**135-5784**	1	COVER AS	
	3A	1	**135-5700**	3	LATCH	
	4	1	**096-4177**	1	VALVE-EVACUATION	
	5	1	**255-2966**	1	INDICATOR AS-AIR FILTER CHANGE (AIR RESTRICTION)	
	6	1	**135-5786**	1	SEAL	
	7	1	**7I-2673**	1	STRAP-CABLE	

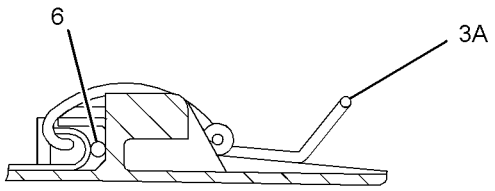

VIEW OF AREA B

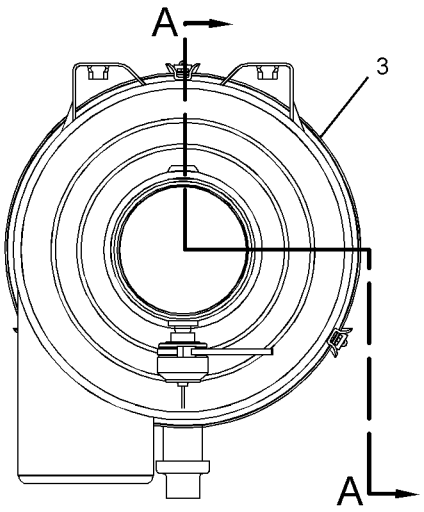

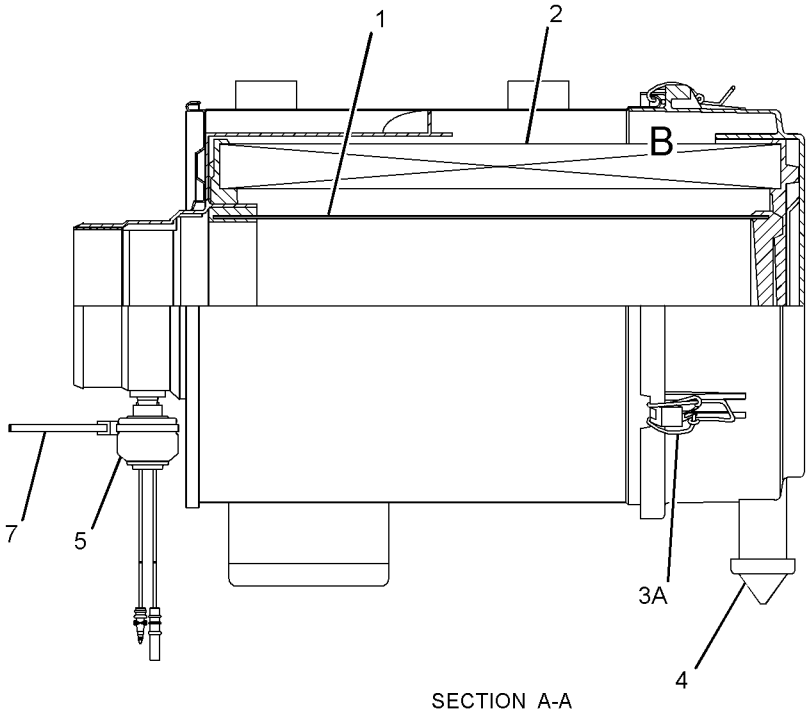

SECTION A-A

GRAPHIC #1 **<END>** g01443052

AIR INLET AND EXHAUST SYSTEM

310-9675 AIR CLEANER GP

S/N: CJN1-UP

PART OF 272-4665 AIR CLEANER GP

AN ATTACHMENT

SMCS-1051, 1054 **i03026084**

NOTE	REF NO	GRAPHIC REF	PART NUMBER	QTY	PART NAME 1 2 3 4 5 6 (PRODUCT LEVEL)	SEE PAGE
	1	1	**5L-3233**	1	FITTING	
	2	1	**7I-2673**	1	STRAP-CABLE	
	3	1	**152-7217**	1	FILTER ELEMENT AS-AIR (PRIMARY)	
	4	1	**152-7219**	1	FILTER ELEMENT AS-AIR (SECONDARY)	
	5	1	**159-6003**	1	COVER AS	
	6	1	**255-2966**	1	INDICATOR AS-AIR FILTER CHANGE (AIR RESTRICTION)	

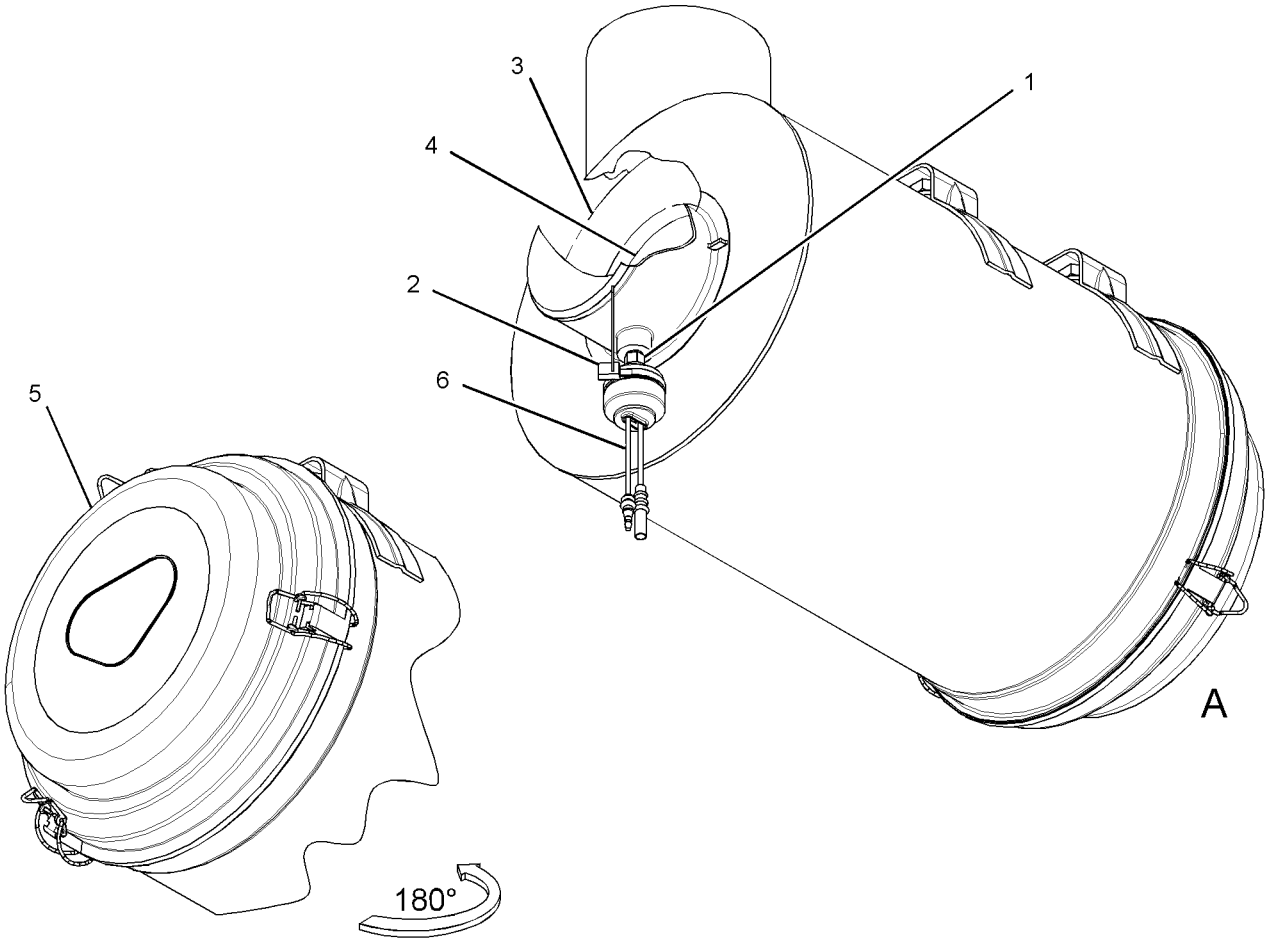

VIEW OF AREA A

GRAPHIC #1 **<END>** g01537473

AIR INLET AND EXHAUST SYSTEM

245-9312 LINES GP-AIR

S/N: CJN1-UP

PART OF 279-7748 INSTALLATION AR-ENGINE

SMCS-1071 **i03097923**

NOTE	REF NO	GRAPHIC REF	PART NUMBER	QTY	PART NAME 1 2 3 4 5 6 (PRODUCT LEVEL)	SEE PAGE
	1	1	**8T-4984**	3	CLAMP-HOSE	
	2	1	**8T-6703**	1	CLAMP-HOSE	
	3	1	**144-0367**	2	CLAMP-HOSE	
	4	1	**265-3494**	1	HOSE	
	5	1	**305-7601**	1	TUBE AS	
	6	1	**281-3572**	1	PLATE AS	
	7	1	**281-3640**	1	HOSE	
	8	1	**305-7662**	1	HOSE	
	9	1	**184-5394**	1	CLIP	
	10	1	**8T-4121**	5	WASHER-HARD (11X21X2.5-MM THK)	
M	11	1	**8T-4136**	4	BOLT (M10X1.5X25-MM)	
M	12	1	**8T-4137**	1	BOLT (M10X1.5X20-MM)	

M-METRIC PART

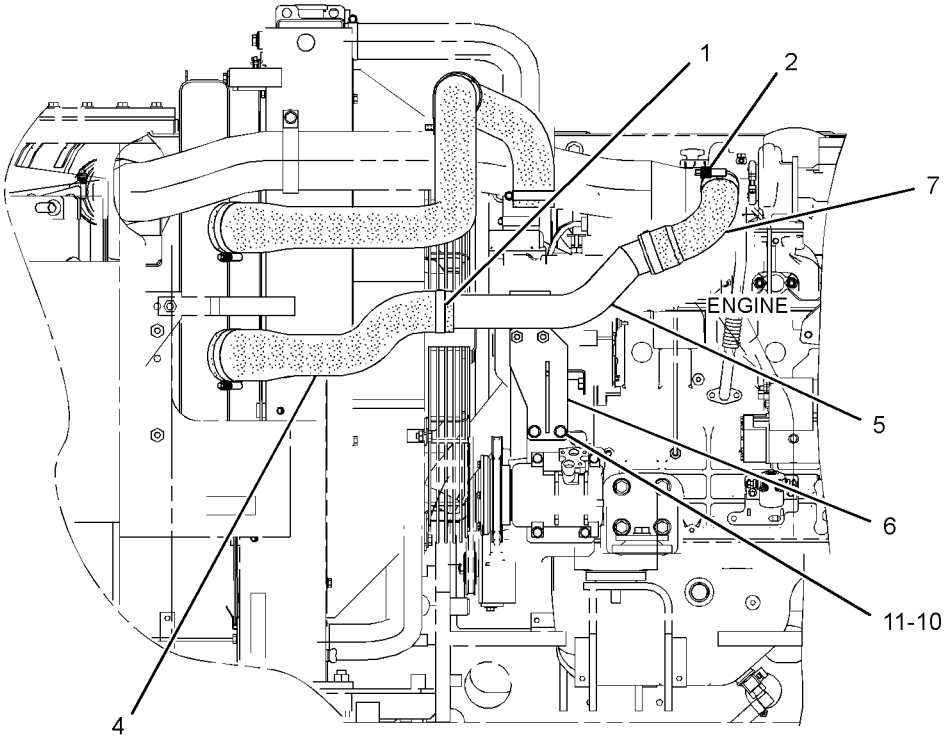

REAR VIEW

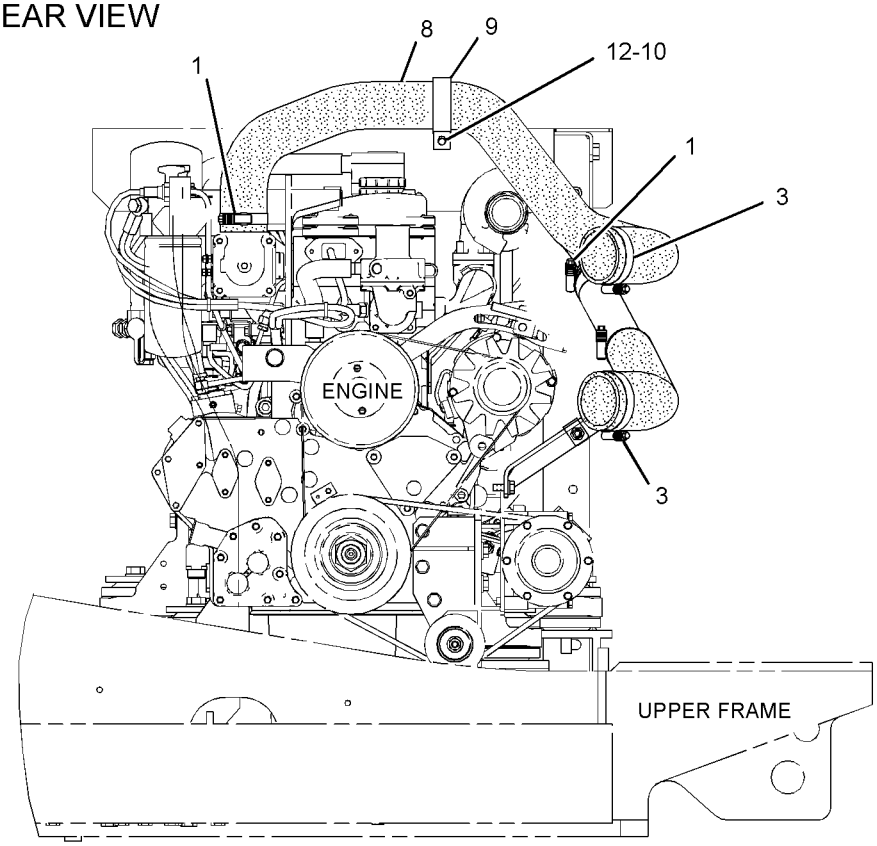

LEFT SIDE VIEW

GRAPHIC #1 **<END>** g01454275

AIR INLET AND EXHAUST SYSTEM

255-3031 LINES GP-AIR

S/N: CJN1-UP

PART OF 279-7748 INSTALLATION AR-ENGINE

SMCS-1071 **i02791363**

NOTE	REF NO	GRAPHIC REF	PART NUMBER	QTY	PART NAME 1 2 3 4 5 6 (PRODUCT LEVEL)	SEE PAGE
	1	1	**144-0367**	1	CLAMP-HOSE	
	2	1	**8T-4986**	1	CLAMP-HOSE	
	3	1	**305-4961**	1	HOSE-AIR	
	4	1	**305-4960**	1	CLAMP AS	
M	5	1	**8T-4136**	2	BOLT (M10X1.5X25-MM)	
	6	1	**7X-7729**	2	WASHER (11X25X3-MM THK)	

M-METRIC PART

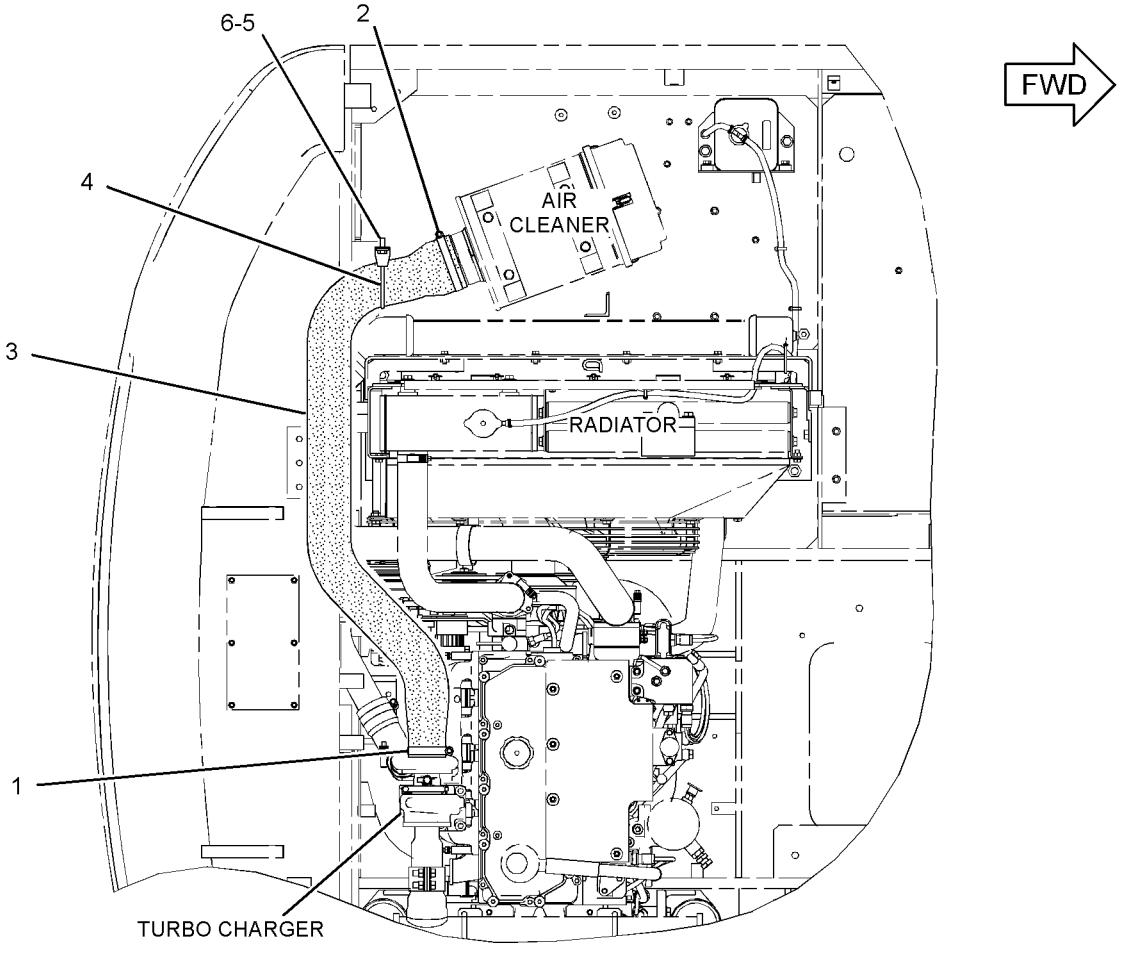

TOP VIEW

GRAPHIC #1 **<END>** g01400102

AIR INLET AND EXHAUST SYSTEM

255-3036 LINES GP-MUFFLER DRAIN

S/N: CJN1-UP

PART OF 279-7748 INSTALLATION AR-ENGINE

SMCS-1062 **i03129908**

NOTE	REF NO	GRAPHIC REF	PART NUMBER	QTY	PART NAME 1 2 3 4 5 6 (PRODUCT LEVEL)	SEE PAGE
	1	1	**279-7784**	1	TUBE AS	
	2	1	**171-9073**	1	CLIP	
	3	1	**5P-4961**	1	CLAMP-HOSE	
	4	1	**8T-4121**	1	WASHER-HARD (11X21X2.5-MM THK)	
M	5	1	**8T-4191**	1	BOLT (M10X1.5X16-MM)	
E	6	1	**5P-1442**		HOSE (57-CM)	
	7	1	**3S-2093**	2	STRAP-CABLE	

E-ORDER BY THE CENTIMETER
M-METRIC PART

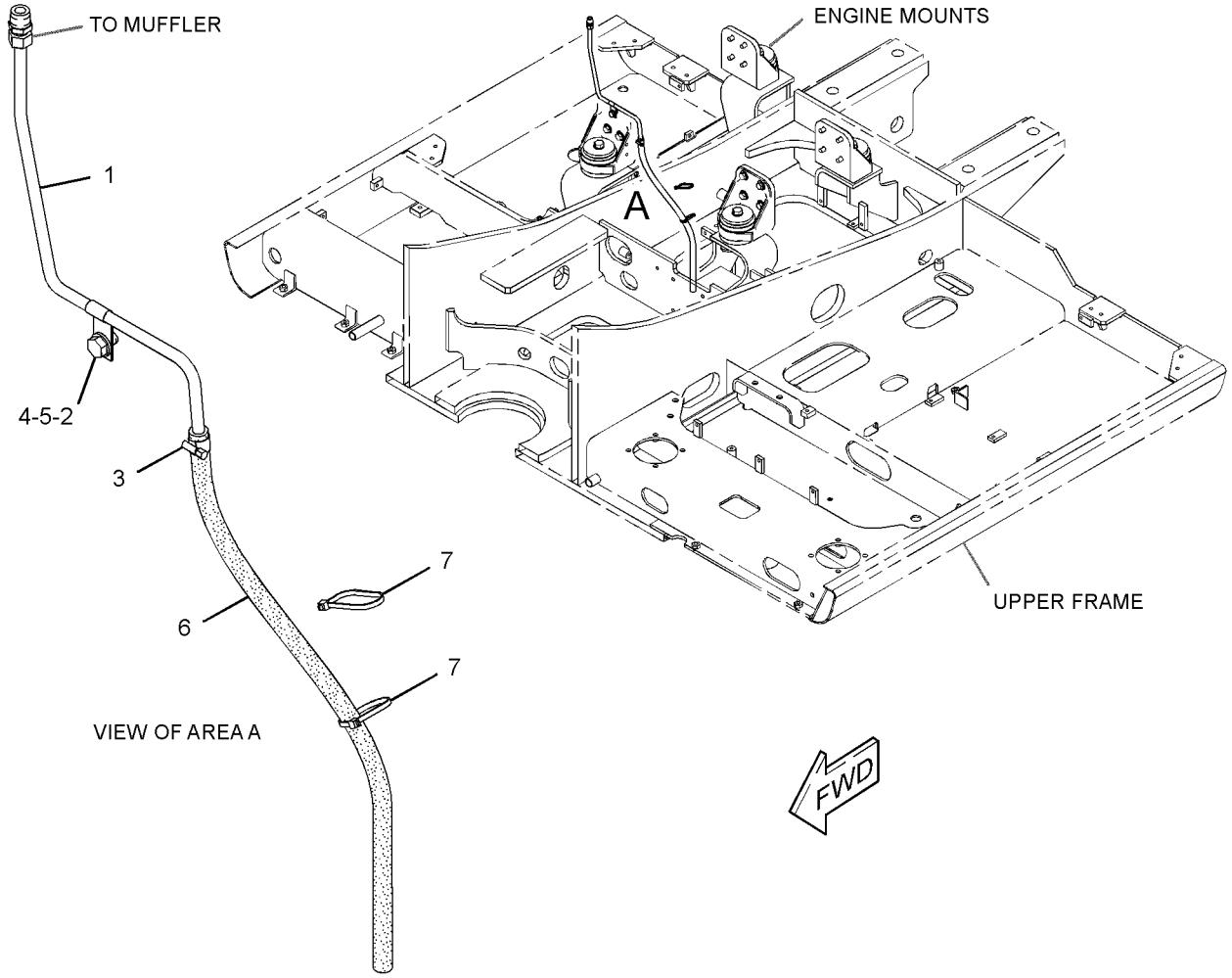

GRAPHIC #1 **<END>** g01620829

296-4791 MANIFOLD GP-EXHAUST

S/N: JKH1-UP
PART OF 272-4817 ENGINE AR
ALSO AN ATTACHMENT

SMCS-1059 **i02944497**

NOTE	REF NO	GRAPHIC REF	PART NUMBER	QTY	PART NAME 1 2 3 4 5 6 (PRODUCT LEVEL)	SEE PAGE
	1	1	**279-7787**	1	MANIFOLD-EXHAUST	
	2	1	**296-4716**	2	GASKET	
M	3	1	**178-6554**	4	STUD (M10X1.5X15-MM, M10X1.25X20-MM)	
	6	1	**5I-7549**	8	STUD (M8X1.25X86-MM)	
	7	1	**5I-7550**	7	SPACER	
	8	1	**239-6604**	8	WASHER	
	9	1	**212-8489**	8	NUT	
	10	1	**095-8638**	1	WASHER-SPRING	
	11	1	**5I-7601**	1	SPACER	
M	12	1	**091-3474**	1	NUT (M8X1.25-THD)	
	13	1	**5I-5087**	1	PLUG	

M-METRIC PART

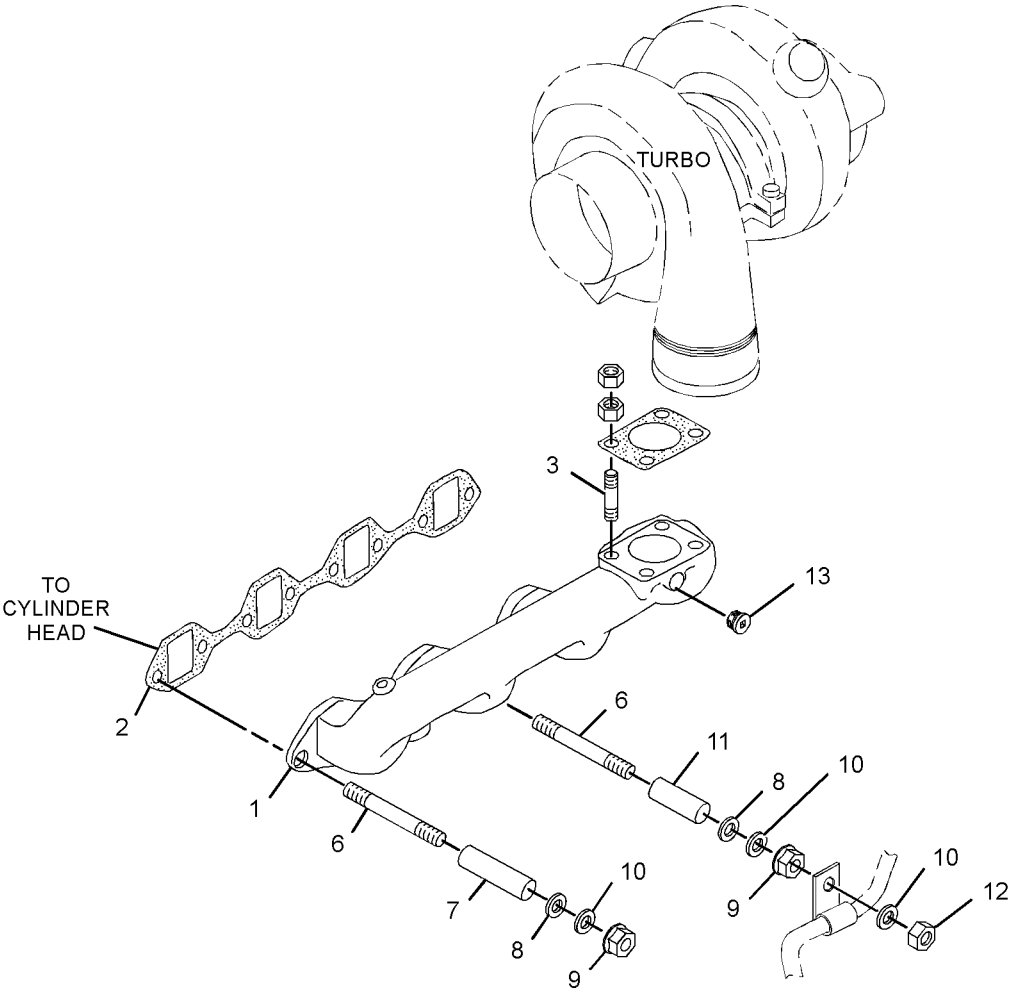

GRAPHIC #1 **<END>** g01459018

296-4790 MANIFOLD GP-INLET

S/N: JKH1-UP
PART OF 272-4817 ENGINE AR
ALSO AN ATTACHMENT

SMCS-1058, 1090 **i03156081**

NOTE	REF NO	GRAPHIC REF	PART NUMBER	QTY	PART NAME 1 2 3 4 5 6 (PRODUCT LEVEL)	SEE PAGE
	1	1	**296-4714**	1	GASKET	
	2	1	**096-8490**	7	BOLT	
	3	1	**294-1700**	11	BOLT (M8X1.25X108.3-MM)	
	4	1	**5I-8021**	1	ELBOW AS	
		1	**5I-8023**	1	PLUG	
	5	1	**5I-7678**	1	GASKET	
	6	1	**303-6261**	4	BOLT	
	7	1	**310-9528**	1	MANIFOLD	
	8	1	**5I-7677**	1	GASKET	
	9	1	**305-4691**	1	HEATER (24-VOLT)	

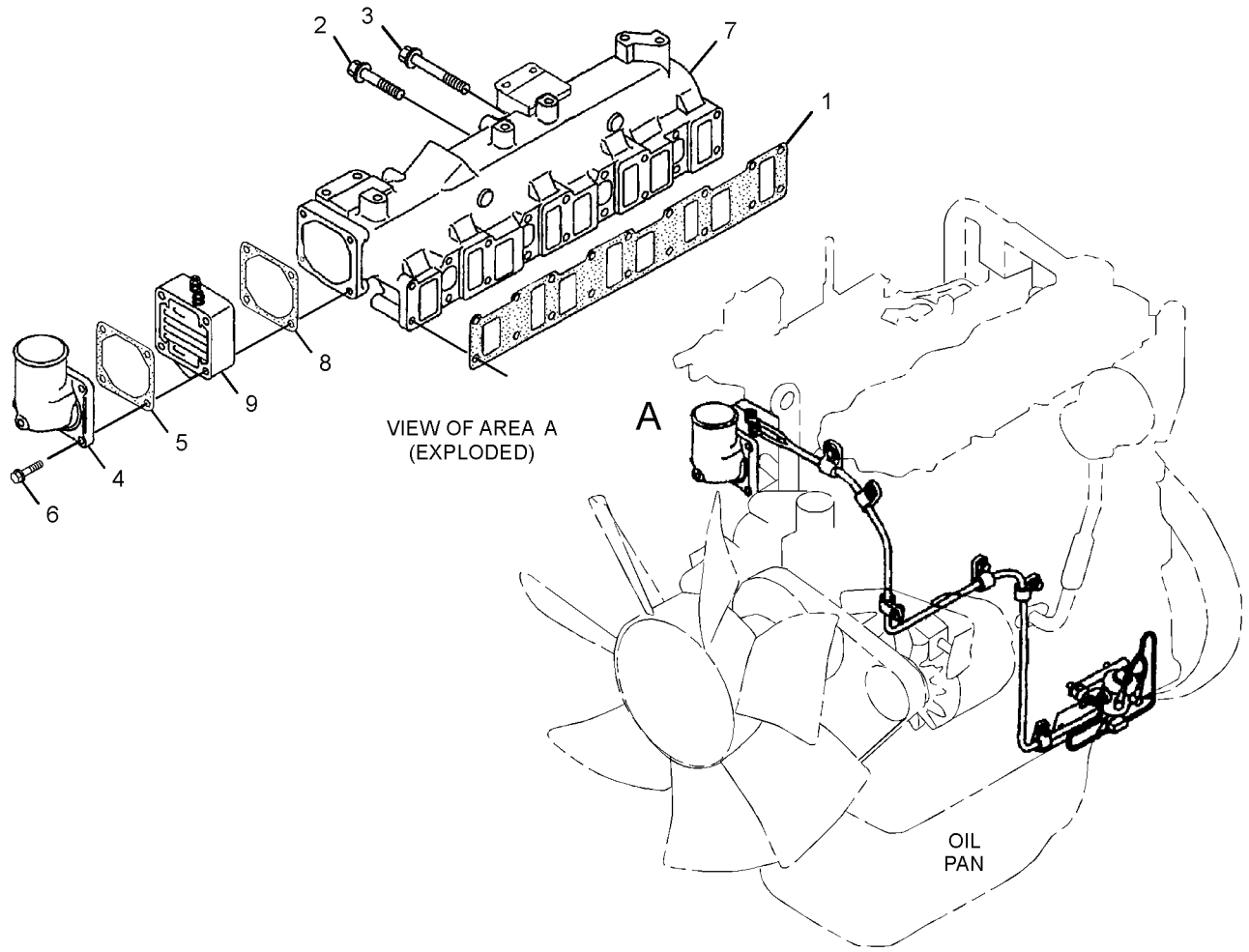

GRAPHIC #1 **<END>** g01414473

AIR INLET AND EXHAUST SYSTEM

305-4926 MUFFLER GP

S/N: JKH1-UP
PART OF 272-4817 ENGINE AR
ALSO AN ATTACHMENT

SMCS-1062 **i02810372**

NOTE	REF NO	GRAPHIC REF	PART NUMBER	QTY	PART NAME 1 2 3 4 5 6 (PRODUCT LEVEL)	SEE PAGE
	1	1	**305-4925**	1	MUFFLER	
	2	1	**212-8583**	2	U-BOLT	
	3	1	**296-4718**	1	BRACKET	
	4	1	**296-4719**	1	BRACKET	
M	5	1	**8T-4137**	4	BOLT (M10X1.5X20-MM)	
M	6	1	**6V-8231**	8	NUT (M10X1.25-THD)	
	7	1	**296-4720**	1	PIPE	
	8	1	**5I-7937**	1	GASKET	
	9	1	**196-8015**	3	STUD	
	10	1	**5I-7633**	6	NUT (M10X1.25-THD)	
	11	1	**094-7583**	1	CLAMP AS	
	12	1	**8T-4121**	8	WASHER-HARD (11X21X2.5-MM THK)	

M-METRIC PART

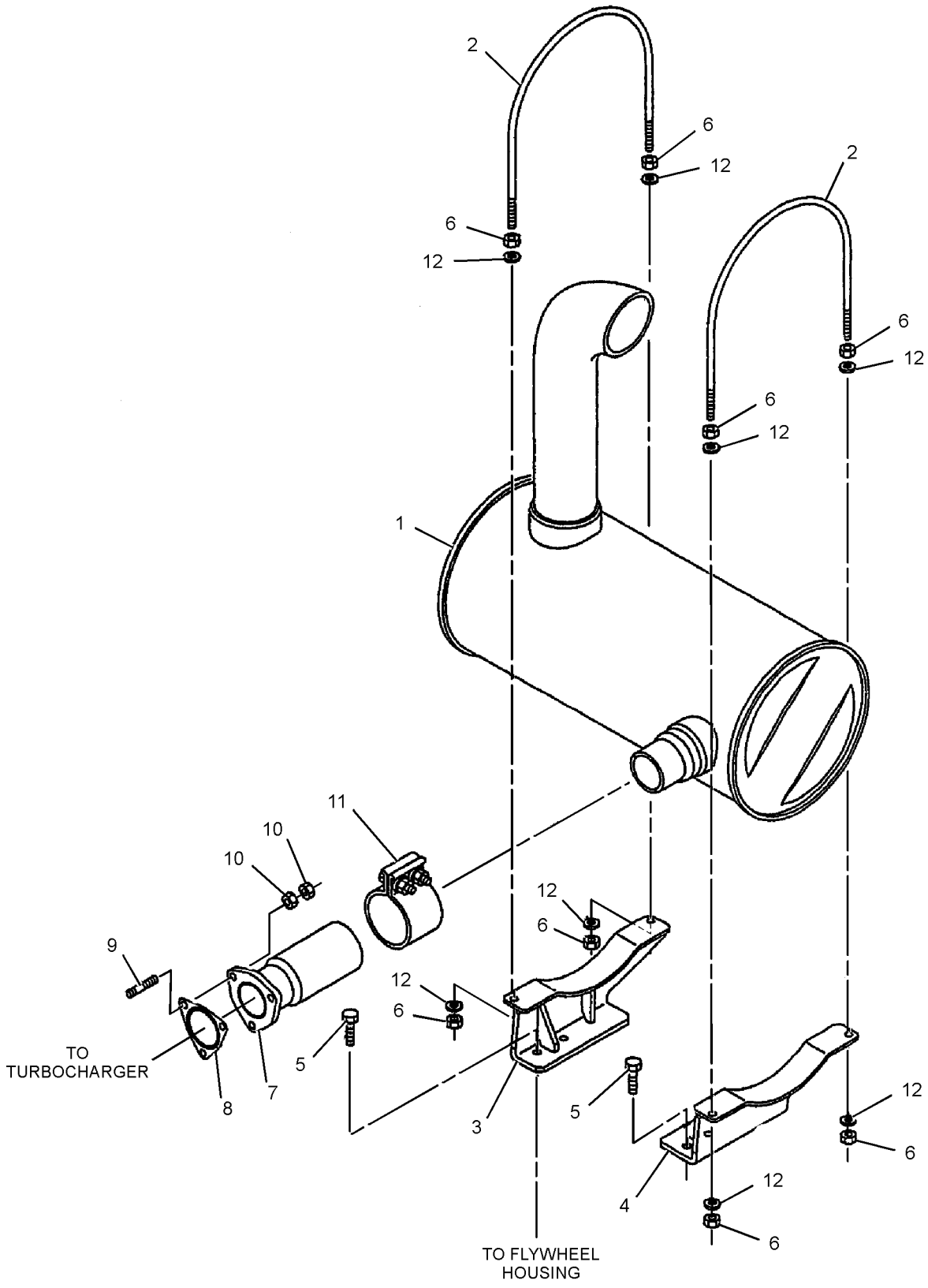

GRAPHIC #1 **<END>** g01402739

AIR INLET AND EXHAUST SYSTEM

310-9616 TURBOCHARGER GP

S/N: JKH1-UP
PART OF 272-4817 ENGINE AR
ALSO AN ATTACHMENT

SMCS-1052, 1053 **i02975850**

NOTE	REF NO	GRAPHIC REF	PART NUMBER	QTY	PART NAME 1 2 3 4 5 6 (PRODUCT LEVEL)	SEE PAGE
	1	1	**5I-7633**	8	NUT (M10X1.25-THD)	
	2	1	**5I-7933**	1	GASKET	
Y	3	1	**310-9695**	1	TURBOCHARGER GP	79

Y-SEPARATE ILLUSTRATION

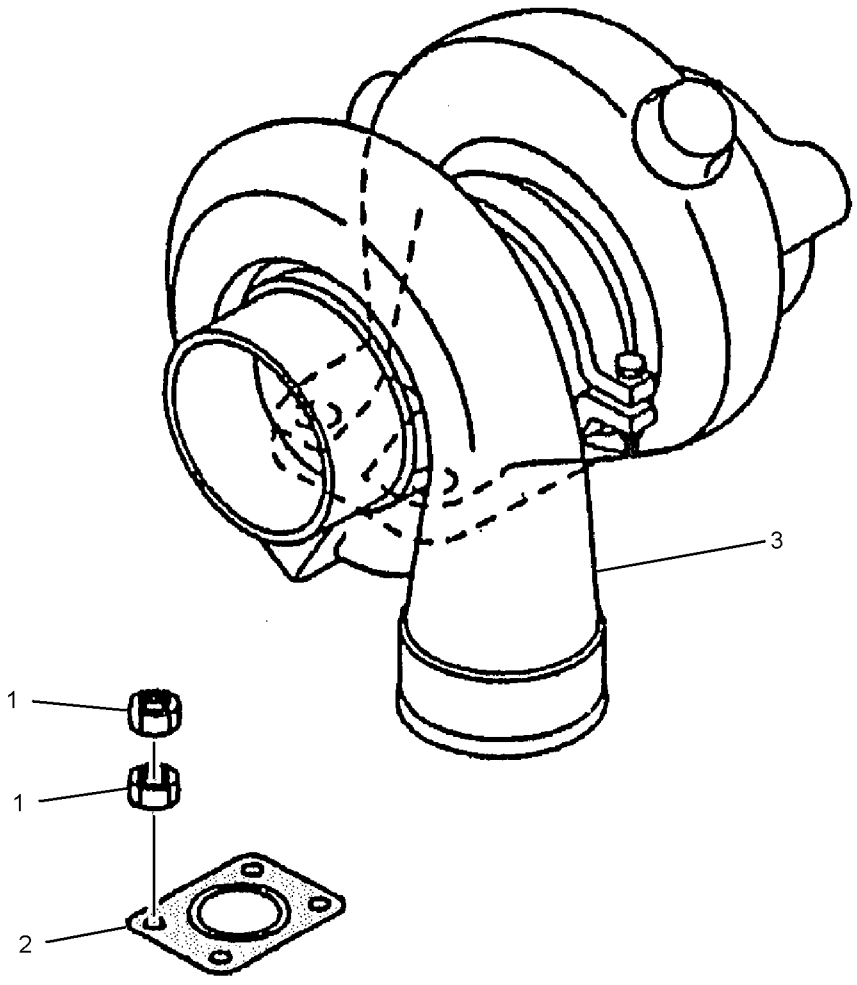

GRAPHIC #1 **<END>** g01506439

AIR INLET AND EXHAUST SYSTEM

310-9695 TURBOCHARGER GP

S/N: JKH1-UP
PART OF 310-9616 TURBOCHARGER GP
ALSO AN ATTACHMENT

SMCS-1052, 1053 **i02975861**

NOTE	REF NO	GRAPHIC REF	PART NUMBER	QTY	PART NAME 1 2 3 4 5 6 (PRODUCT LEVEL)	SEE PAGE
	1	1	**305-4769**	1	CARTRIDGE AS	
	2	1	**5I-7941**	1	RING	
	3	1	**5I-8124**	1	SEAL	
	4	1	**310-9701**	1	COVER	
	5	1	**296-4724**	1	HOUSING	
	6	1	**5I-7942**	1	COUPLING AS	

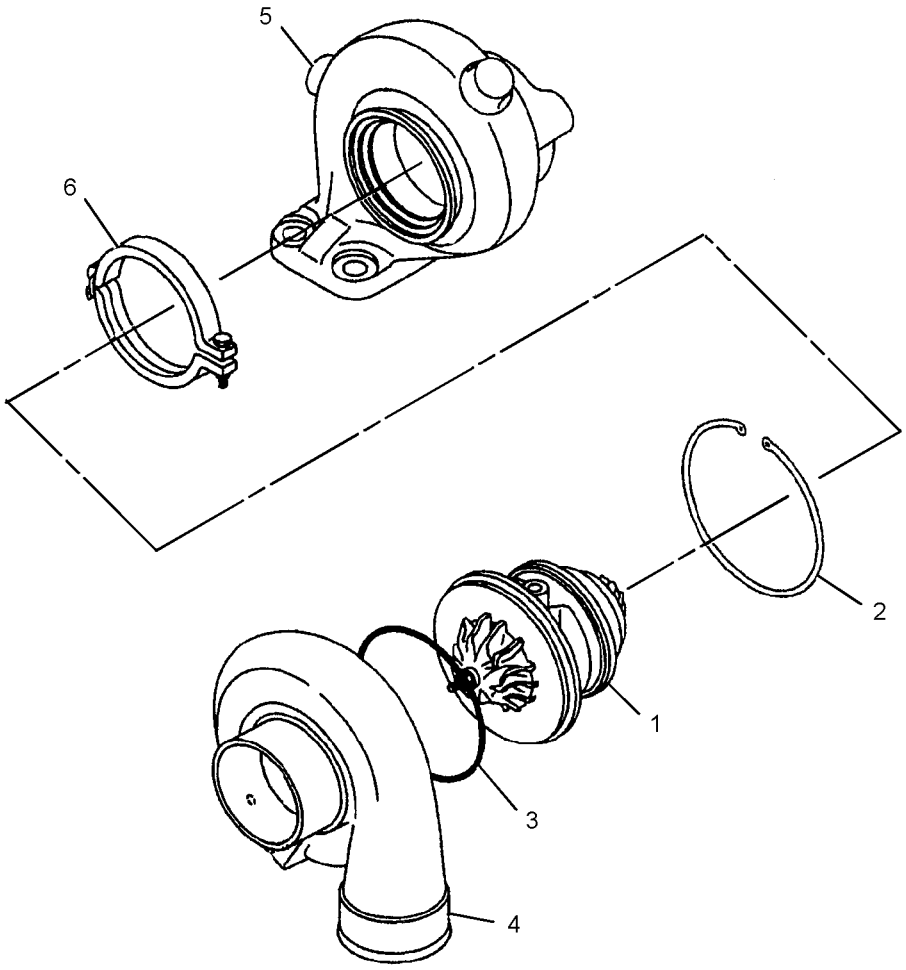

GRAPHIC #1 **<END>** g01506113

164-4858 CAP GP-FUEL FILLER–EXTREME SERVICE, LOCKABLE

S/N: CJN1-UP

PART OF 330-1564, 330-1566, 330-1569, 330-1571 TANK GP-FUEL

AN ATTACHMENT

SMCS-1273 **i02959244**

NOTE	REF NO	GRAPHIC REF	PART NUMBER	QTY	PART NAME 1 2 3 4 5 6 (PRODUCT LEVEL)	SEE PAGE
	1	1	**9X-8600**	1	SEAL-O-RING	
	2	1	**190-9775**	1	COVER AS-FILTER	

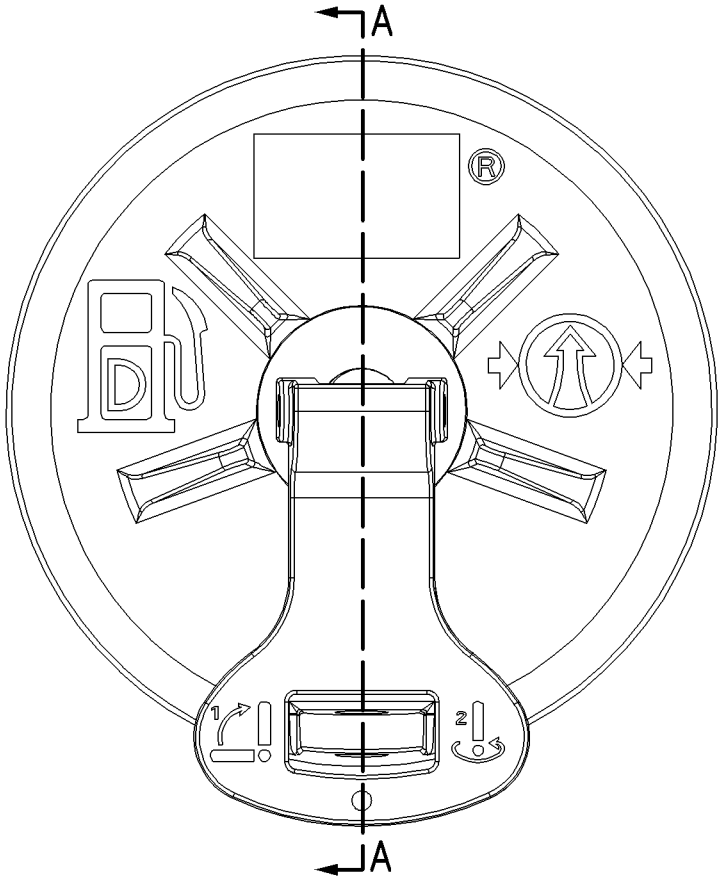

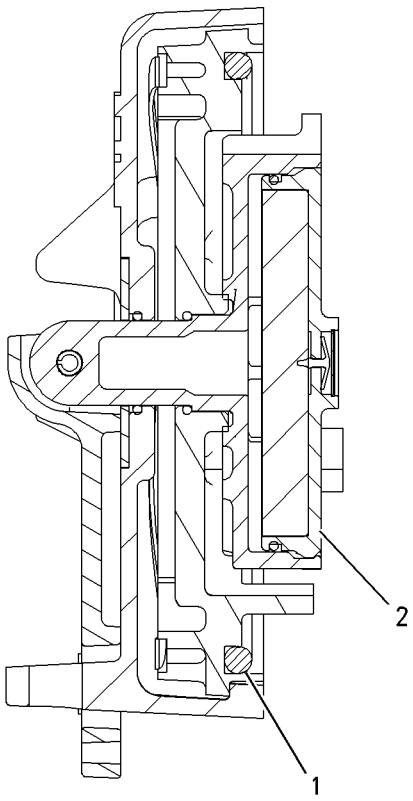

SECTION A-A

GRAPHIC #1 **<END>** g00849812

296-4794 FILTER GP-FUEL

S/N: JKH1-UP
PART OF 272-4817 ENGINE AR
ALSO AN ATTACHMENT

SMCS-1261 **i03013641**

NOTE	REF NO	GRAPHIC REF	PART NUMBER	QTY	PART NAME 1 2 3 4 5 6 (PRODUCT LEVEL)	SEE PAGE
	1	1,2	**099-4437**	19	GASKET	
	2	1,2	**099-5041**	8	BOLT (M14X1.5X27-MM)	
	3	2	**294-1811**	2	WASHER	
	4	1	**296-4749**	1	HOSE	
	5	1	**137-5541**	1	PUMP AS-FUEL PRIMING	
		1	**061-7539**	1	SEAL-O-RING	
		1	**229-3218**	2	VALVE AS	
	6	1	**294-1820**	1	GASKET (FUEL PRIMING PUMP)	
	7	1	**199-2241**	1	BOLT	
	8	1	**294-1821**	1	BOLT (M8X1.25X35.5-MM)	
	9	1	**294-1822**	1	BASE	
	10	1	**296-4750**	4	BOLT	
	11	1	**1R-0751**	2	FILTER (ADVANCED EFFICIENCY) (FUEL)	
	12	1	**305-4886**	1	HOSE	
	13	1	**296-4752**	1	BRACKET	
	14	1	**296-4753**	2	BOLT	
	15	1	**8T-4121**	2	WASHER-HARD (11X21X2.5-MM THK)	
	17	1	**294-1819**	1	HOSE	
	18	1	**296-4754**	1	TUBE	
	19	1	**190-5830**	1	TUBE	
	20	1	**094-9725**	2	PLUG	
	21	1	**310-9529**	1	BRACKET	
	22	1	**310-9530**	1	HOSE	
	23	1	**095-2038**	2	WASHER (7.8X13.5X2-MM THK)	
M	24	1	**213-9433**	2	BOLT (M10X1.5X45-MM)	
	25	2	**294-1838**	1	BRACKET	
	26	1	**294-1831**	3	CLAMP	
	27	1	**310-9531**	1	CLAMP	
	28	1	**297-7706**	2	BOLT (M6X1X64-MM)	
	29	1	**096-2500**	2	LOCKWASHER	
	30	1	**5I-5078**	2	NUT	
	33	2	**294-1809**	1	BOLT	
	34	2	**294-1844**	1	BOLT (M12X1.75X28-MM)	
	35	2	**294-1845**	1	BOLT (M12X1.25X38-MM)	
	37	2	**297-7660**	1	NUT	
	38	2	**5I-8058**	1	CONNECTOR	
	39	2	**297-7661**	1	CONNECTOR	
	40	2	**294-1810**	2	CONNECTOR	
M	41	2	**6V-5215**	2	BOLT (M8X1.25X16-MM)	
	43	2	**294-1837**	1	BRACKET	
	44	2	**305-4901**	1	SEAL-O-RING	
	45	2	**305-4902**	1	CONNECTOR	
	46	2	**305-4900**	1	PIPE	
	48	2	**125-2983**	1	FITTING	
	49	2	**294-1804**	3	SEAL-O-RING	

M-METRIC PART

296-4794 **FILTER GP-FUEL** *(contd.)* **i03013641**

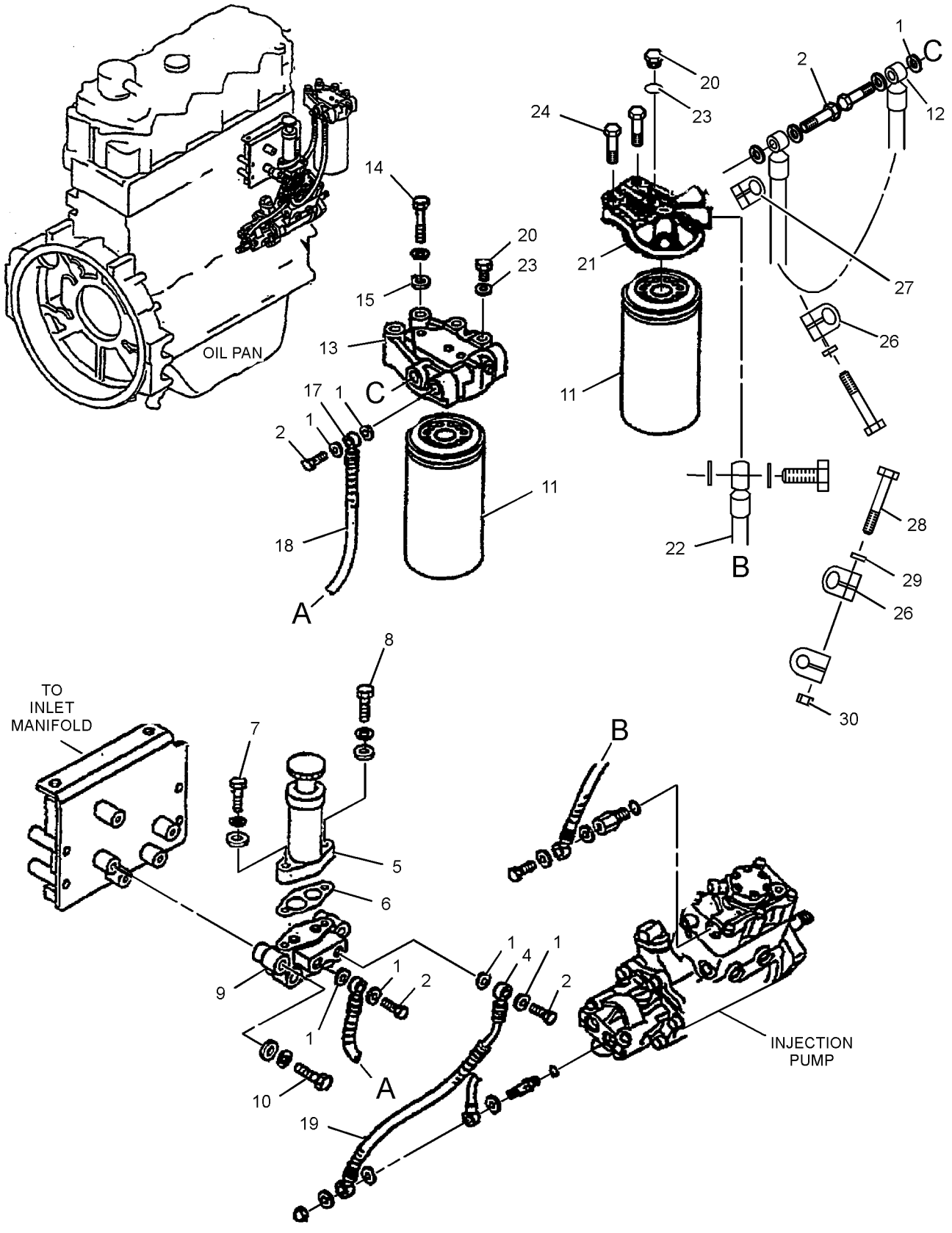

GRAPHIC #1 g01433207

296-4794 **FILTER GP-FUEL** *(contd.)* **i03013641**

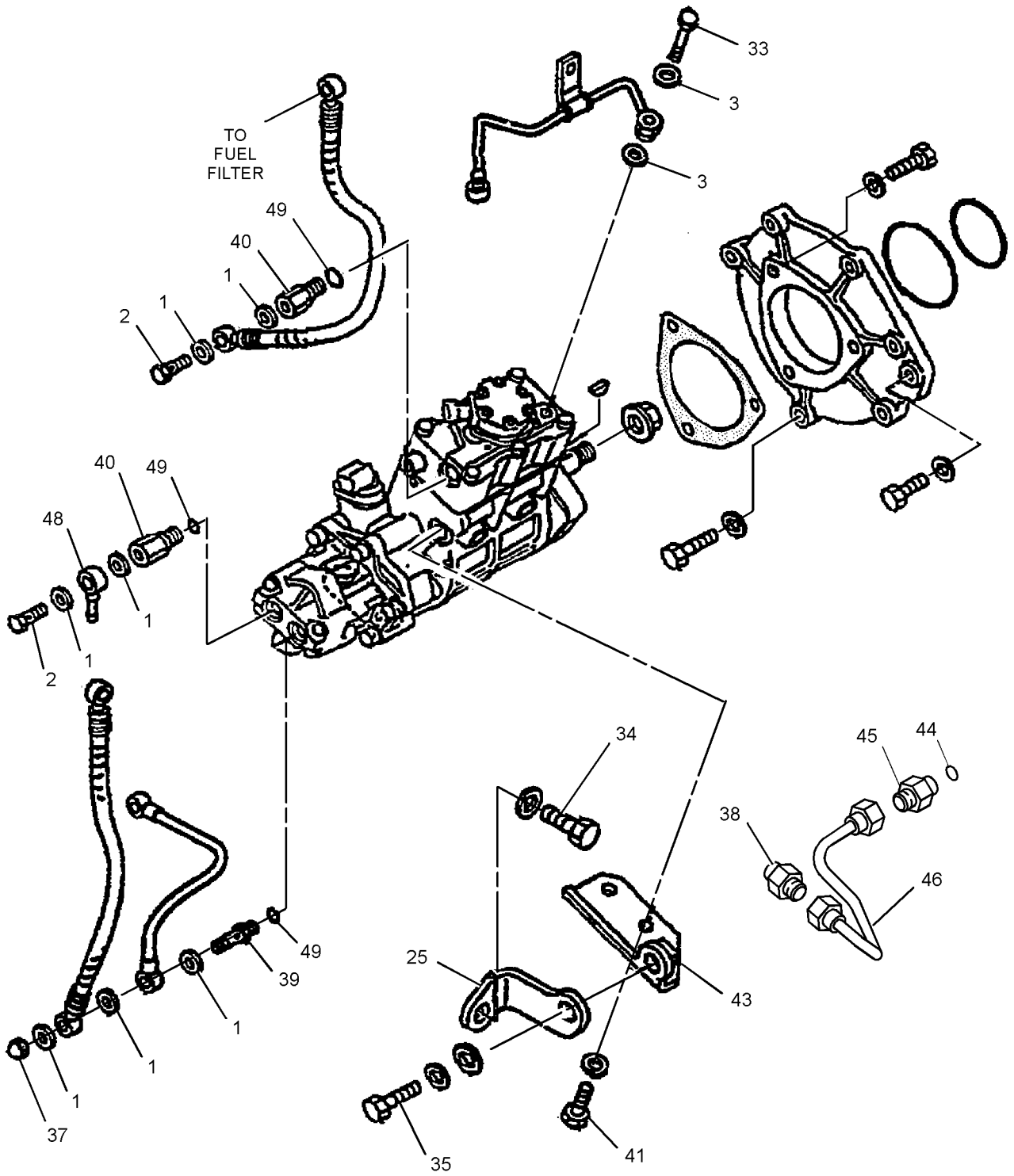

GRAPHIC #2 **<END>** g01433208

174-9570 FILTER GP-WATER SEP & FUEL

S/N: CJN1-UP

PART OF 262-2261 LINES GP-FUEL

SMCS-1261, 1263 **i03181950**

NOTE	REF NO	GRAPHIC REF	PART NUMBER	QTY	PART NAME 1 2 3 4 5 6 (PRODUCT LEVEL)	SEE PAGE
	1	1	**326-1644**	1	FILTER AS-WATER SEP & FUEL (PRIMARY)	
	1A	1	**220-8678**	1	SEAL-RING (FUEL, WATER SEPARATOR)	
	2	1	**270-5320**	1	BOWL AS (FUEL, WATER SEPARATOR)	

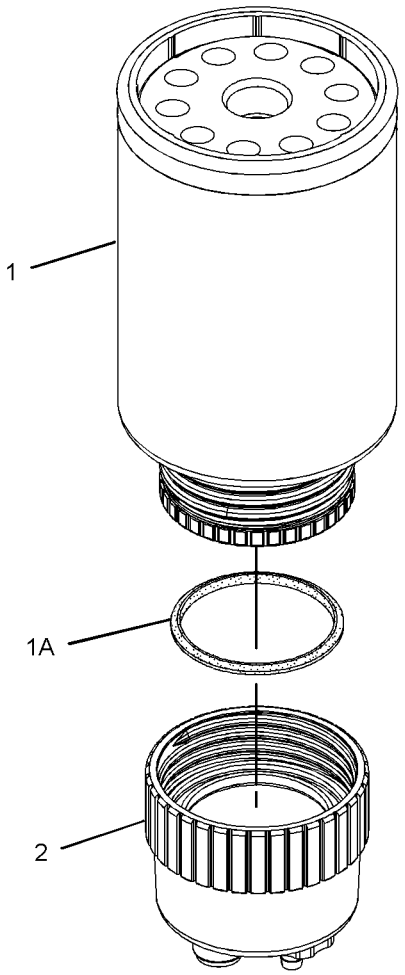

GRAPHIC #1

<END>

g01179858

295-9140 INJECTOR GP-FUEL

S/N: JKH1-UP

PART OF 310-9608 INJECTOR GP-FUEL

ALSO AN ATTACHMENT

SMCS-1251, 1254, 1290, 1713 **i02809826**

NOTE	PART NUMBER	QTY	PART NAME 1 2 3 4 5 6 (PRODUCT LEVEL)	SEE PAGE
			(NO SERVICED PARTS)	

<END>

310-9608 INJECTOR GP-FUEL

S/N: JKH1-UP
PART OF 272-4817 ENGINE AR
ALSO AN ATTACHMENT

SMCS-1251, 1254, 1290, 1713 **i02830586**

NOTE	REF NO	GRAPHIC REF	PART NUMBER	QTY	PART NAME 1 2 3 4 5 6 (PRODUCT LEVEL)	SEE PAGE
Y	1	1	**295-9140**	4	INJECTOR GP-FUEL	85
	2	1	**294-1796**	4	WASHER-SPECIAL	
	3	1	**294-1800**	4	SUPPORT	
	4	1	**294-1803**	4	SEAL-O-RING	
	5	1	**1R-6573**	4	GASKET	
M	6	1	**294-1805**	4	BOLT (M8X1.25X43-MM)	

M-METRIC PART
Y-SEPARATE ILLUSTRATION

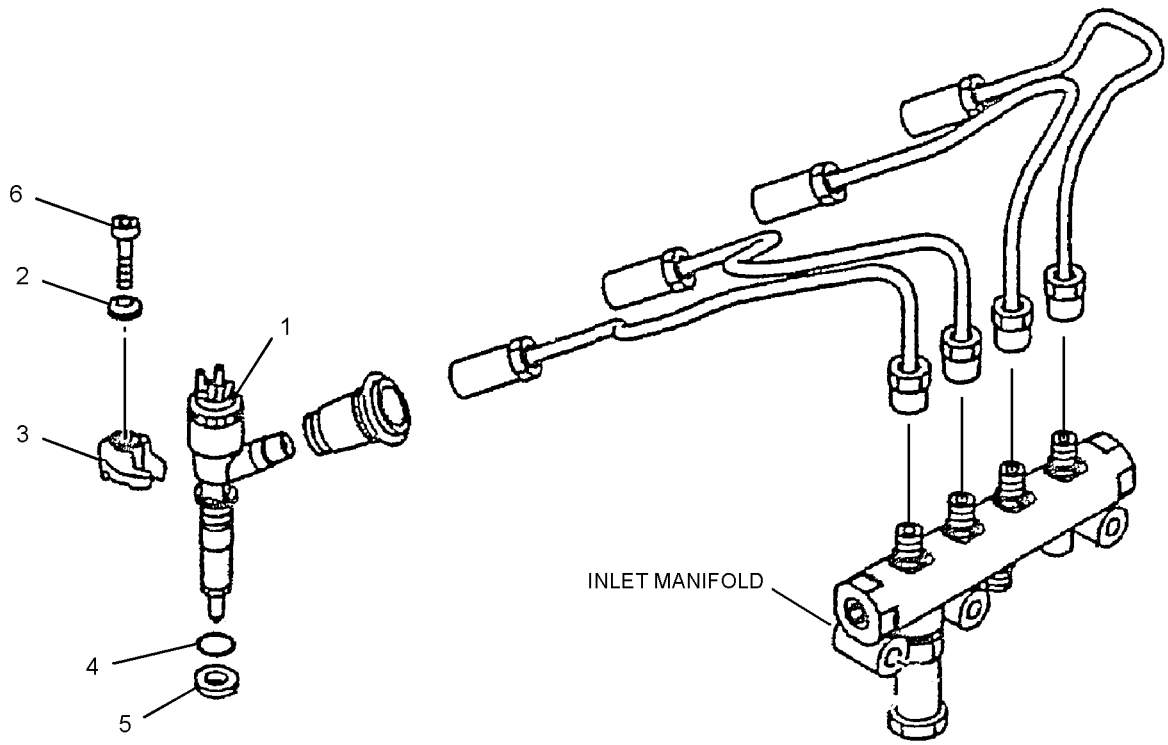

GRAPHIC #1 **<END>** g01413012

FUEL SYSTEM

262-2261 LINES GP-FUEL

S/N: CJN1-UP

PART OF 260-6960 CHASSIS AR

SMCS-1274 **i02791361**

NOTE	REF NO	GRAPHIC REF	PART NUMBER	QTY	PART NAME 1 2 3 4 5 6 (PRODUCT LEVEL)	SEE PAGE
	1	2	**4I-0379**	1	VALVE-MANUAL (DRAIN, FUEL TANK)	
	2	2	**5P-7175**	1	FITTING-STRAIGHT	
	3	2	**7Y-8167**	1	GROMMET	
	4	2	**7Y-8170**	1	GROMMET	
	5	2	**003-7764**	2	END-HOSE	
	6	1,2	**095-1386**	9	CLAMP-HOSE	
M	7	2	**135-8573**	6	BOLT AS (M12X1.75X25-MM)	
	8	2	*150-3024*	1	ELBOW AS	
		2	**3J-1907**	1	SEAL-O-RING	
		2	**5P-4924**	1	ELBOW	
Y	9	2	*174-9570*	1	FILTER GP-WATER SEP & FUEL (PRIMARY)	84
	10	2	**177-9778**	1	BASE AS	
		2	**9S-4167**	1	STUD-HOLLOW (1-14X1.47-IN)	
	11	2	**270-9628**	1	SHEET AS	
E	11A	2	**3E-8268**		TRIM (18-CM)	
	11B	2	**093-2064**	1	GROMMET	
	12	2	**273-7765**	1	HOSE	
Y	13	2	**298-3147**	1	VALVE GP-FUEL SHUTOFF	122
	14	1	**304-0041**	1	BRACKET AS	
	15	1	**307-7879**	1	HOSE AS	
	16	2	**307-7880**	1	HOSE AS	
	17	2	**307-7915**	1	HOSE AS	
	18	2	**307-8125**	1	GROMMET	
	19	1	**093-2068**	1	GROMMET	
	20	2	**3J-1907**	5	SEAL-O-RING	
	21	1	**5I-8307**	1	GROMMET	
	22	1,2	**5K-8451**	6	CLIP	
	23	1	**6D-4636**	2	CLIP	
	24	1,2	**6K-8178**	5	CLIP	
	25	1,2	**8T-4121**	26	WASHER-HARD (11X21X2.5-MM THK)	
M	26	1,2	**8T-4133**	1	NUT (M10X1.5-THD)	
M	27	1,2	**8T-4136**	6	BOLT (M10X1.5X25-MM)	
M	28	1,2	**8T-4137**	15	BOLT (M10X1.5X20-MM)	
M	29	2	**8T-4195**	4	BOLT (M10X1.5X30-MM)	
	30	1,2	**9M-8406**	8	CLIP	
	31	2	**9S-8004**	5	PLUG-O-RING	
E	32	2	**5P-1442**		HOSE (30-CM)	
E	32A	1	**5P-1442**		HOSE (149-CM)	

E-ORDER BY THE CENTIMETER
M-METRIC PART
Y-SEPARATE ILLUSTRATION

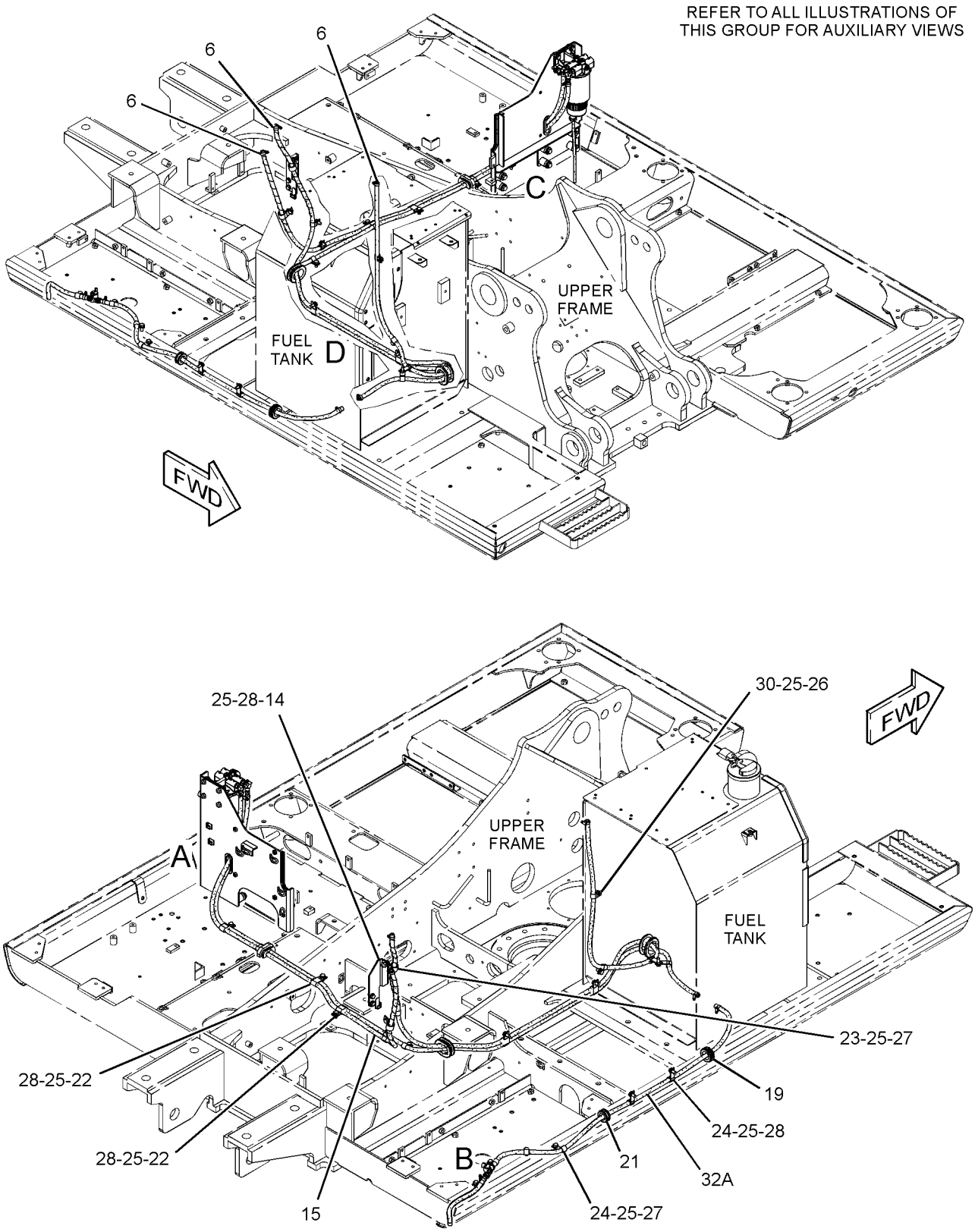

GRAPHIC #1

g01409667

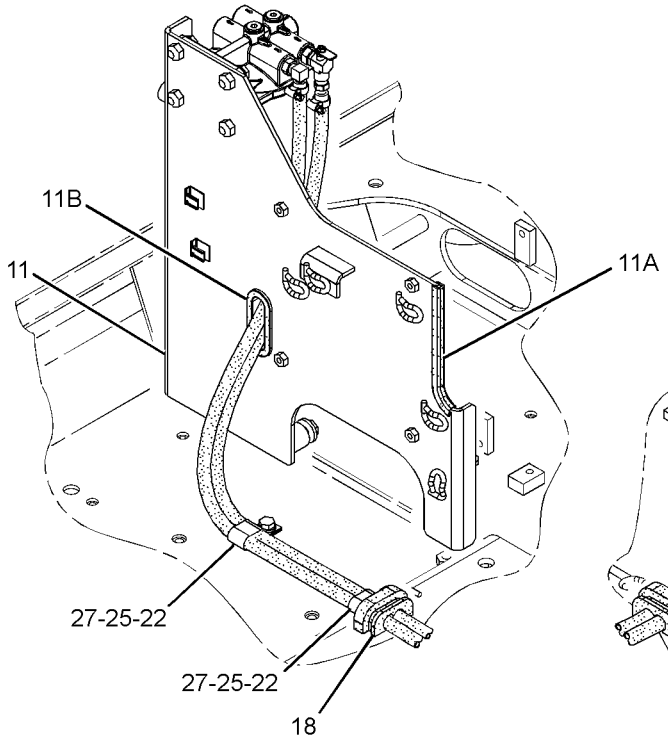

VIEW OF AREA A

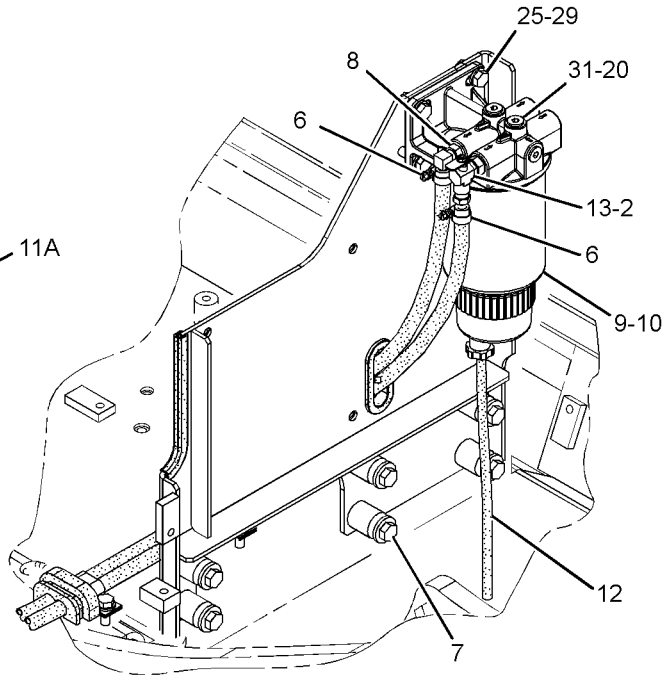

VIEW OF AREA C

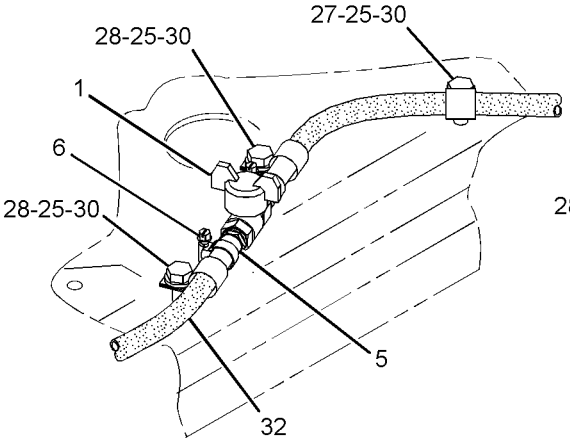

VIEW OF AREA B

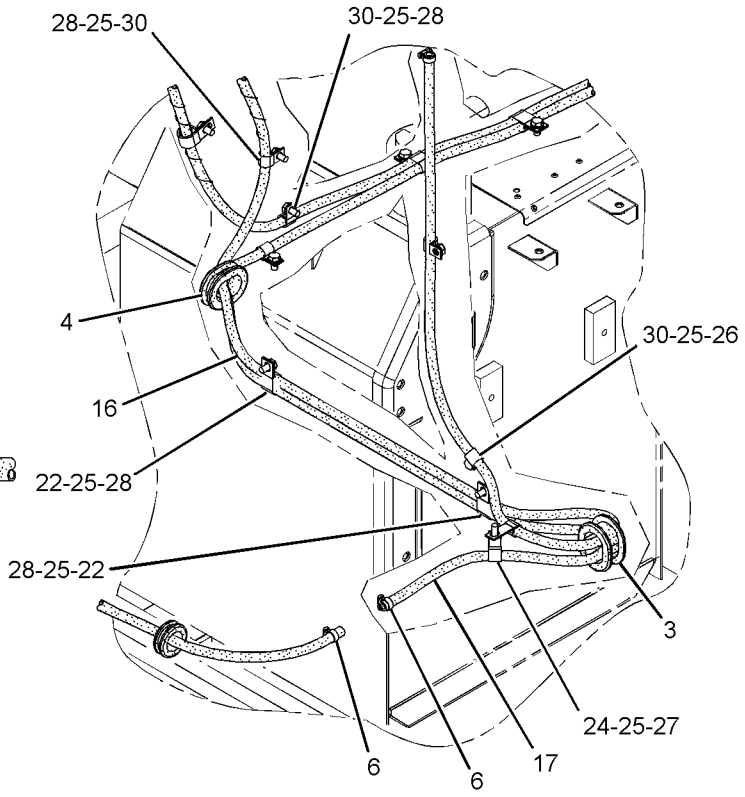

VIEW OF AREA D

GRAPHIC #2 **<END>** g01409670

FUEL SYSTEM

296-4793 LINES GP-FUEL INJECTION

S/N: JKH1-UP
PART OF 272-4817 ENGINE AR
ALSO AN ATTACHMENT

SMCS-1252, 1254 **i02944413**

NOTE	REF NO	GRAPHIC REF	PART NUMBER	QTY	PART NAME 1 2 3 4 5 6 (PRODUCT LEVEL)	SEE PAGE
	1	1	**294-1788**	4	SEAL	
	2	1	**096-9260**	4	BOLT AS	
	3	1	**296-4740**	1	PIPE	
	4	1	**311-6631**	1	RAIL AS-FUEL	
	5	1	**296-4741**	1	PIPE	
	6	1	**296-4742**	1	PIPE	
	7	1	**296-4743**	1	PIPE	
	8	1	**296-4744**	1	PIPE	
	10	1	**305-4772**	1	PIPE	
	11	1	**297-7657**	1	HOSE	
	12	1	**297-7658**	1	BLOCK	
	14	1	**294-1802**	2	CLAMP	
	16	1	**095-2039**	8	WASHER-SPECIAL	
	18	1	**296-4812**	4	BOLT	
	20	1	**195-8256**	5	BOLT (M8X1.25X45-MM)	
M	21	1	**5C-2890**	2	NUT (M6X1-THD)	
	22	1	**9X-8256**	2	WASHER (6.6X12X2-MM THK)	
	23	1	**099-4437**	4	GASKET	
	24	1	**099-5041**	3	BOLT (M14X1.5X27-MM)	
	25	1	**294-1808**	2	BOLT AS (M6X1X29-MM)	
	26	1	**294-1812**	2	WASHER	
	27	1	**310-9537**	1	VALVE AS	
	28	1	**296-4747**	1	PIPE	
	29	1	**296-4748**	1	BRACKET	

M-METRIC PART

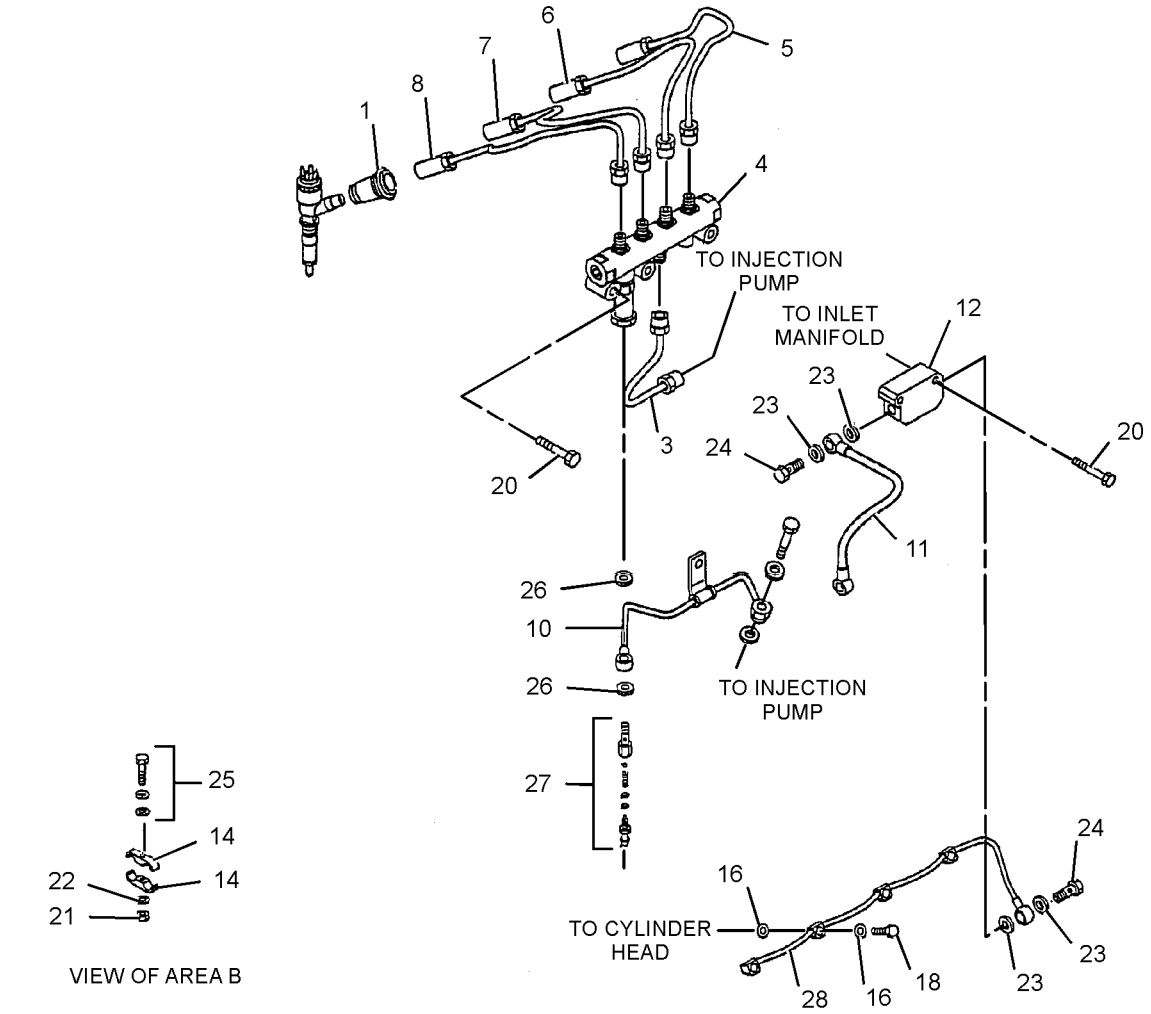

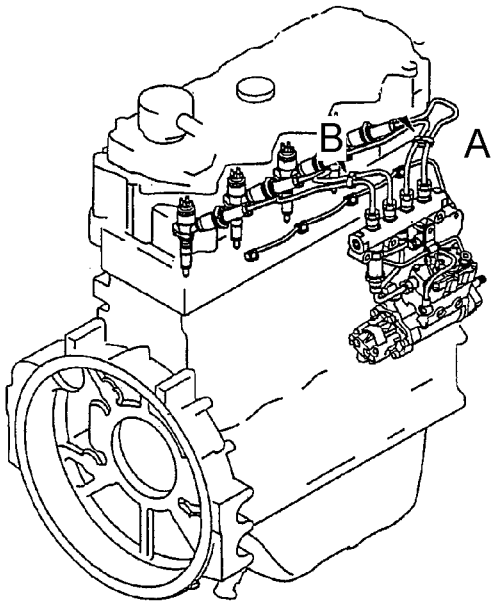

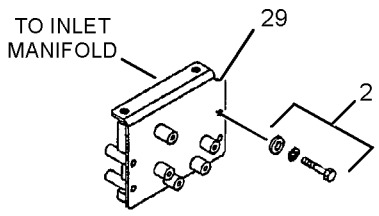

GRAPHIC #1 **<END>** g01414737

305-4680 PUMP & MTG GP-FUEL TRANSFER

S/N: JKH1-UP
PART OF 272-4817 ENGINE AR
ALSO AN ATTACHMENT

SMCS-1256 **i02879720**

NOTE	REF NO	GRAPHIC REF	PART NUMBER	QTY	PART NAME 1 2 3 4 5 6 (PRODUCT LEVEL)	SEE PAGE
R	1	1	**295-9127**	1	PUMP GP-FUEL INJECTION (INCLUDES TRANSFER PUMP)	
	1A	1	**238-0120**	1	SENSOR GP-SPEED (FUEL PUMP)	
	1B	1	**117-1385**	1	SEAL-O-RING	
M	1C	1	**5A-3604**	5	BOLT-SOCKET HEAD (M8X1.25X25-MM)	
	1D	1	**292-3751**	1	PUMP GP-FUEL TRANSFER	
M	1E	1	**8T-4200**	1	BOLT (M8X1.25X16-MM)	
	1F	1	**247-6019**	1	SEAL	
	2	1	**294-1834**	1	NUT	
	3	1	**294-1836**	1	KEY-WOODRUFF	
	4	1	**294-1839**	1	FLANGE	
	5	1	**294-1841**	1	GASKET	
	6	1	**294-1842**	1	SEAL-O-RING	
	7	1	**095-8799**	4	BOLT (M8X1.25X30.5-MM)	
	8	1	**294-1843**	1	BOLT (M10X1.5X47-MM)	
	9	1	**294-1846**	1	SEAL-O-RING	

M-METRIC PART
R-REMFG PART MAY BE AVAILABLE

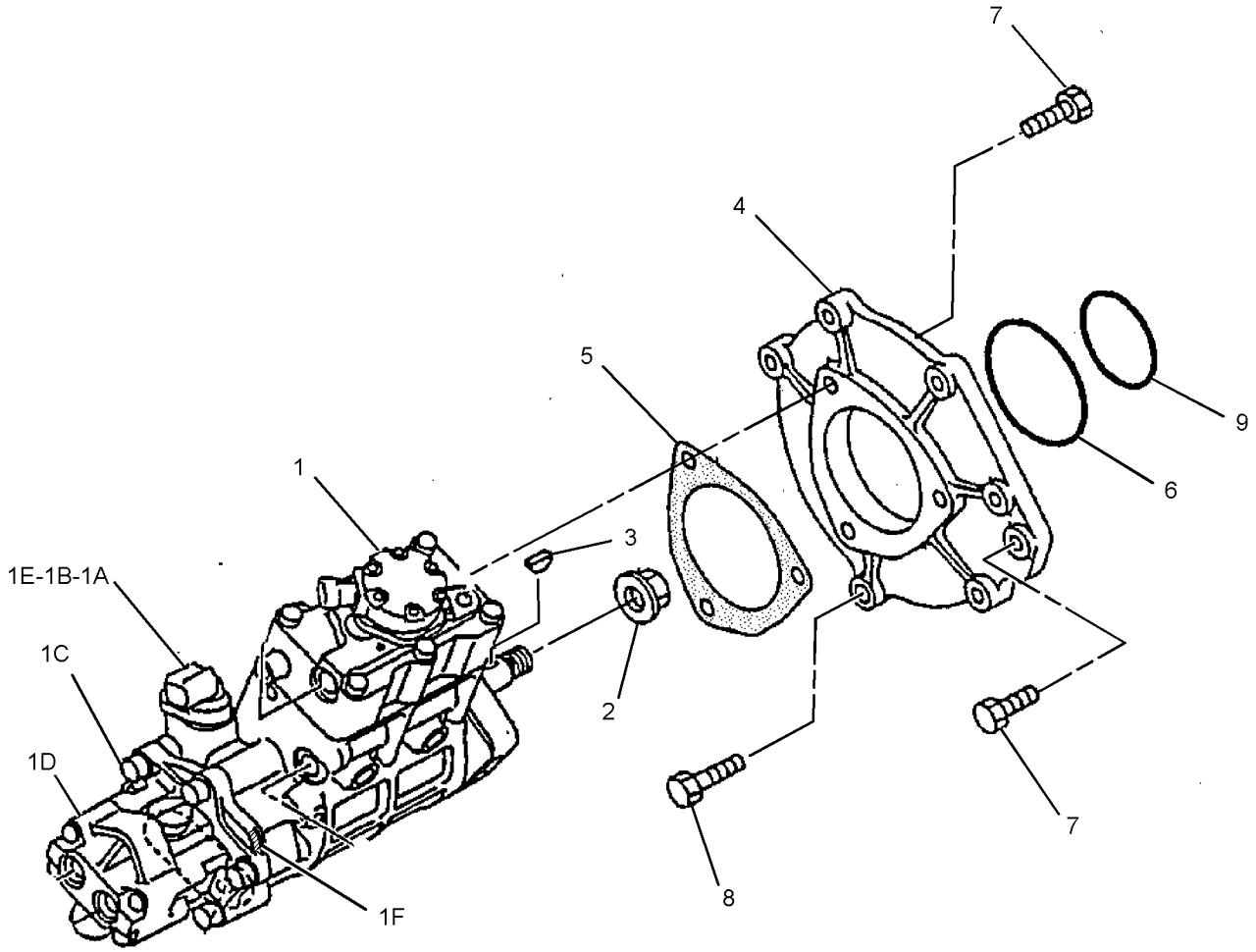

GRAPHIC #1 **<END>** g01433257

260-7007 PUMP AR-FUEL TRANSFER

S/N: CJN1-UP
AN ATTACHMENT

SMCS-1256 **i03134069**

NOTE	PART NUMBER	QTY	PART NAME 1 2 3 4 5 6 (PRODUCT LEVEL)	SEE PAGE
Y	*301-2573*	1	FILM GP (FUEL TRANSFER PUMP)	1090
Y	*260-7094*	1	PUMP GP-FUEL TRANSFER	94
Y	*262-2269*	1	TANK & MTG GP-FUEL	100
Y	*259-5175*	1	WIRING GP-FUEL PUMP	246

Y-SEPARATE ILLUSTRATION

<END>

330-8780 PUMP AR-FUEL TRANSFER

S/N: CJN1-UP
AN ATTACHMENT

SMCS-1256 **i03146756**

NOTE	PART NUMBER	QTY	PART NAME 1 2 3 4 5 6 (PRODUCT LEVEL)	SEE PAGE
Y	*330-1579*	1	COVER GP-SIDE (FUEL TANK, HYDRAULIC TANK)	292
Y	*301-2573*	1	FILM GP (FUEL TRANSFER PUMP)	1090
Y	*260-7094*	1	PUMP GP-FUEL TRANSFER	94
Y	*330-1562*	1	TANK & MTG GP-FUEL	101
Y	*259-5175*	1	WIRING GP-FUEL PUMP	246

Y-SEPARATE ILLUSTRATION

<END>

260-7094 PUMP GP-FUEL TRANSFER

S/N: CJN1-UP
PART OF 260-7007 PUMP AR-FUEL TRANSFER
AN ATTACHMENT
TYPE 1

SMCS-1256 **i02767950**

NOTE	REF NO	GRAPHIC REF	PART NUMBER	QTY	PART NAME 1 2 3 4 5 6 (PRODUCT LEVEL)	SEE PAGE
	1	1	**2S-3440**	4	CLAMP-HOSE	
Y	2	1	**5C-6108**	1	SWITCH GP-REFUELING (FUEL TANK SHUTOFF)	204
	3	1	**7K-1181**	1	STRAP-CABLE	
	4	1	**105-6701**	1	CONNECTOR-HOSE	
	5	1	**122-4021**	1	COVER	
M	6	1	**135-8572**	2	BOLT AS (M12X1.75X20-MM)	
	7	1	**190-5283**	1	VALVE AS (FOOT)	
	8	1	**283-8927**	1	SUPPORT AS	
	9	1	**283-8931**	1	PLATE	
Y	10	1	**271-2158**	1	PUMP GP-FUEL TRANSFER	98
	11	1	**5P-1076**	2	WASHER-HARD (13.5X30X4-MM THK)	
	12	1	**8T-4121**	2	WASHER-HARD (11X21X2.5-MM THK)	
M	13	1	**8T-4184**	2	BOLT (M12X1.75X45-MM)	
M	14	1	**8T-4195**	2	BOLT (M10X1.5X30-MM)	
E	15	1	**234-3344**		HOSE (75-CM)	
E	15A	1	**234-3344**		HOSE (312-CM)	

E-ORDER BY THE CENTIMETER
M-METRIC PART
Y-SEPARATE ILLUSTRATION

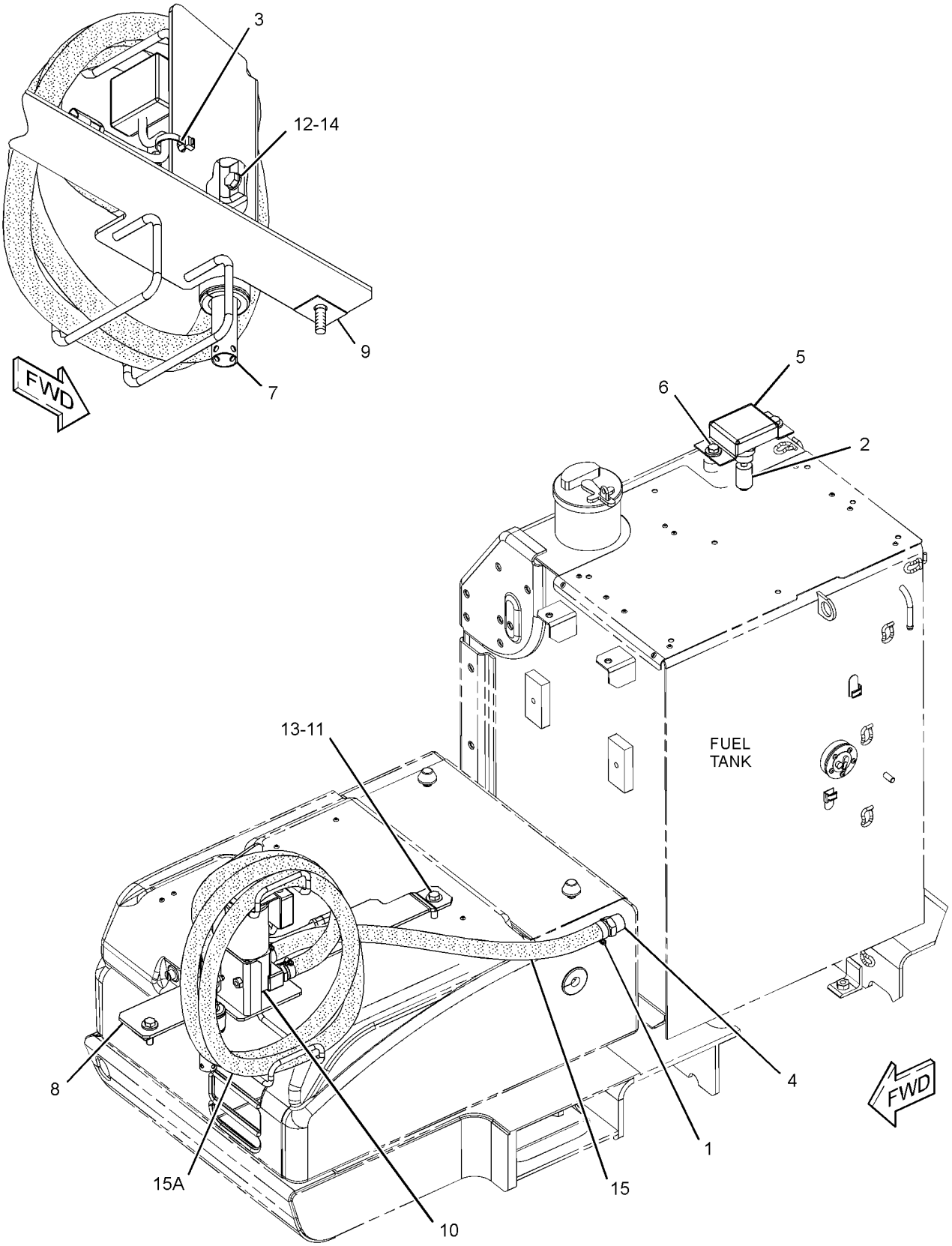

GRAPHIC #1 **<END>** g01387889

260-7094 PUMP GP-FUEL TRANSFER

S/N: CJN1-UP
PART OF 260-7007, 330-8780 PUMP AR-FUEL TRANSFER
AN ATTACHMENT
TYPE 2

SMCS-1256 **i03134144**

NOTE	REF NO	GRAPHIC REF	PART NUMBER	QTY	PART NAME 1 2 3 4 5 6 (PRODUCT LEVEL)	SEE PAGE
	1	1	**2S-3440**	4	CLAMP-HOSE	
C	2	1	**312-2645**	1	SWITCH AS-LIQUID LEVEL (FUEL TANK SHUTOFF)	
		1	**2S-4078**	1	SEAL-O-RING	
		1	**186-3735**	2	PIN-CONNECTOR (16-GA TO 18-GA)	
		1	**243-4505**	1	RECEPTACLE AS-CONNECTOR (2-PIN)	
	3	1	**7K-1181**	1	STRAP-CABLE	
	4	1	**105-6701**	1	CONNECTOR-HOSE	
C	5	1	**324-5761**	1	COVER AS	
M	6	1	**135-8572**	2	BOLT AS (M12X1.75X20-MM)	
	7	1	**190-5283**	1	VALVE AS (FOOT)	
	8	1	**283-8927**	1	SUPPORT AS	
	9	1	**283-8931**	1	PLATE	
Y	10	1	**271-2158**	1	PUMP GP-FUEL TRANSFER	98
	11	1	**5P-1076**	2	WASHER-HARD (13.5X30X4-MM THK)	
	12	1	**8T-4121**	2	WASHER-HARD (11X21X2.5-MM THK)	
M	13	1	**8T-4184**	2	BOLT (M12X1.75X45-MM)	
M	14	1	**8T-4195**	2	BOLT (M10X1.5X30-MM)	
E	15	1	**234-3344**		HOSE (75-CM)	
E	15A	1	**234-3344**		HOSE (312-CM)	

C-CHANGE FROM PREVIOUS TYPE
E-ORDER BY THE CENTIMETER
M-METRIC PART
Y-SEPARATE ILLUSTRATION

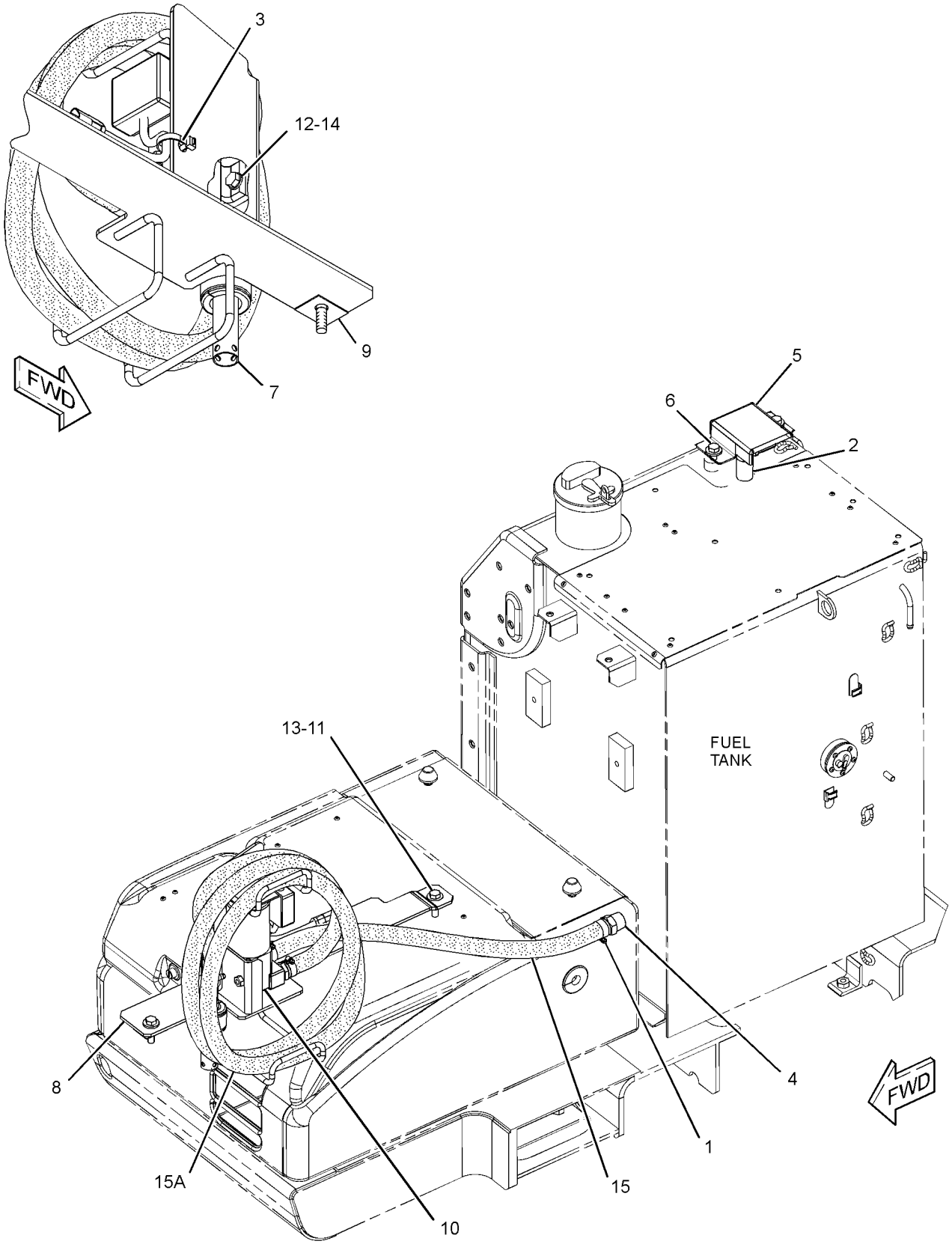

GRAPHIC #1 **<END>** g01620072

271-2158 PUMP GP-FUEL TRANSFER

S/N: CJN1-UP
PART OF 260-7094 PUMP GP-FUEL TRANSFER
AN ATTACHMENT

SMCS-1256 **i02767955**

NOTE	REF NO	GRAPHIC REF	PART NUMBER	QTY	PART NAME 1 2 3 4 5 6 (PRODUCT LEVEL)	SEE PAGE
	1	1	**9W-0852**	3	PIN-CONNECTOR (14-GA)	
	2	1	**243-4506**	1	RECEPTACLE AS-CONNECTOR (3-PIN)	
	3	1	**272-0709**	1	PUMP GP-FUEL	
	4	1	**272-0710**	1	CONTROL-REFUELING PUMP	
	5	1	**7Y-3963**	2	TERMINAL (RECEPTACLE)	
	6	1	**7Y-3962**	2	TERMINAL (CONNECTOR)	
	7	1	**7Y-3964**	2	TUBE (CONNECTOR TERMINAL)	
	8	1	**7Y-3965**	2	TUBE (RECEPTACLE TERMINAL)	
E	9	1	**125-7876**		TUBE-HEAT SHRINK (17.78-MM DIA) (7-CM)	

E-ORDER BY THE CENTIMETER

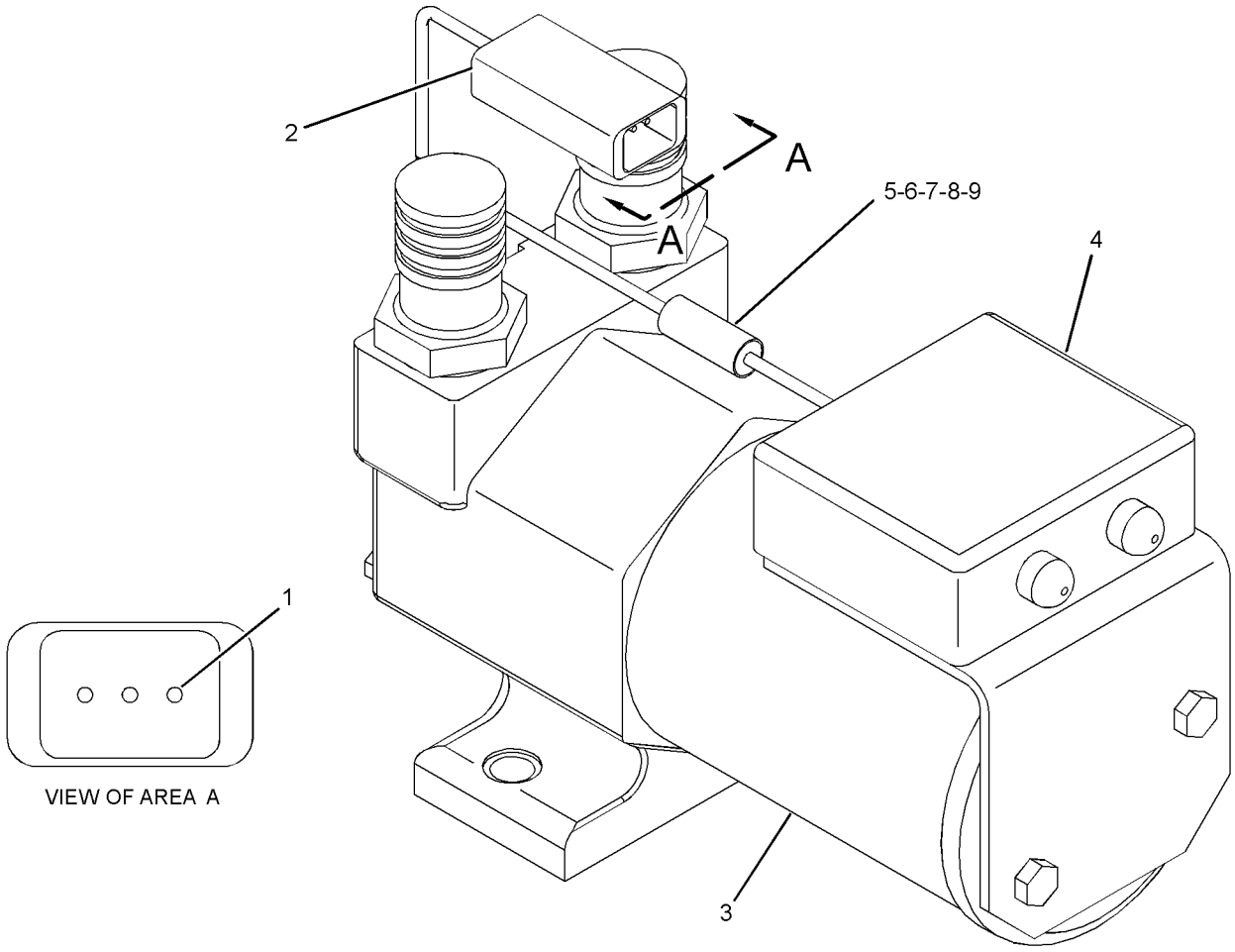

GRAPHIC #1 **<END>** g01364000

262-2259 TANK & MTG GP-FUEL

S/N: CJN1-UP

PART OF 260-6960 CHASSIS AR

SMCS-1273 **i02599546**

NOTE	REF NO	GRAPHIC REF	PART NUMBER	QTY	PART NAME 1 2 3 4 5 6 (PRODUCT LEVEL)	SEE PAGE
	1	1	**246-2641**	1	PADLOCK GP	
		1	**5P-8500**	1	KEY	
Y	2	1	*262-2260*	1	TANK GP-FUEL	103
	3	1	**085-9310**	4	SPACER (16.6X32X26-MM THK)	
M	4	1	**8T-4140**	4	BOLT (M16X2X60-MM)	

M-METRIC PART
Y-SEPARATE ILLUSTRATION

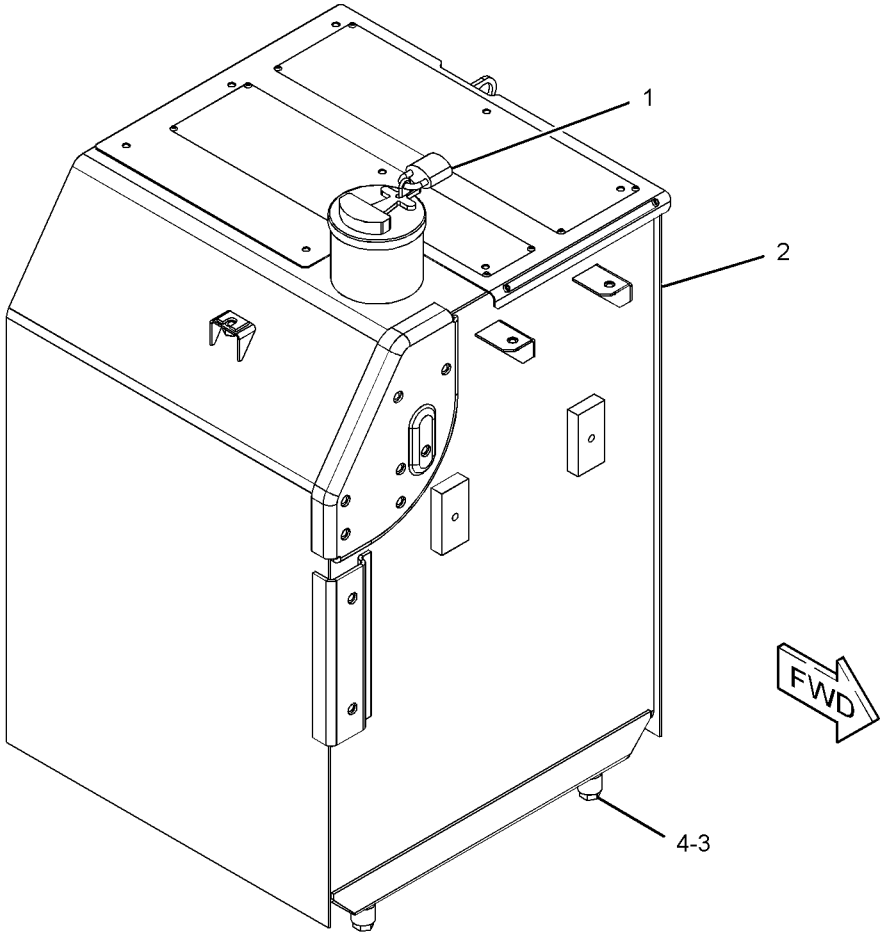

GRAPHIC #1 **<END>** g01312105

FUEL SYSTEM

262-2269 TANK & MTG GP-FUEL

S/N: CJN1-UP
PART OF 260-7007 PUMP AR-FUEL TRANSFER
AN ATTACHMENT

SMCS-1273 **i02767963**

NOTE	REF NO	GRAPHIC REF	PART NUMBER	QTY	PART NAME 1 2 3 4 5 6 (PRODUCT LEVEL)	SEE PAGE
Y	1	1	**262-2270**	1	TANK GP-FUEL	103

Y-SEPARATE ILLUSTRATION

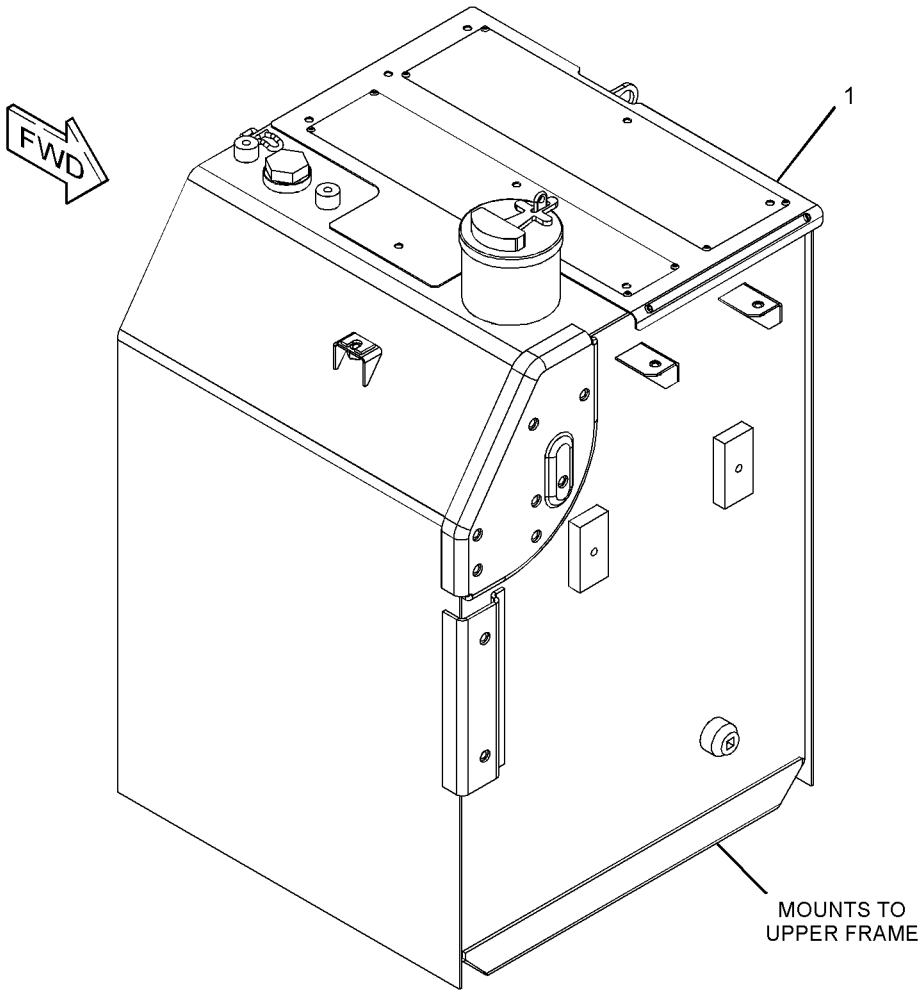

GRAPHIC #1 **<END>** g01408976

FUEL SYSTEM

330-1562 TANK & MTG GP-FUEL

S/N: CJN1-UP
PART OF 330-8780 PUMP AR-FUEL TRANSFER
AN ATTACHMENT

SMCS-1273 **i03146889**

NOTE	REF NO	GRAPHIC REF	PART NUMBER	QTY	PART NAME 1 2 3 4 5 6 (PRODUCT LEVEL)	SEE PAGE
Y	1	1	**330-1568**	1	TANK GP-FUEL	117

Y-SEPARATE ILLUSTRATION

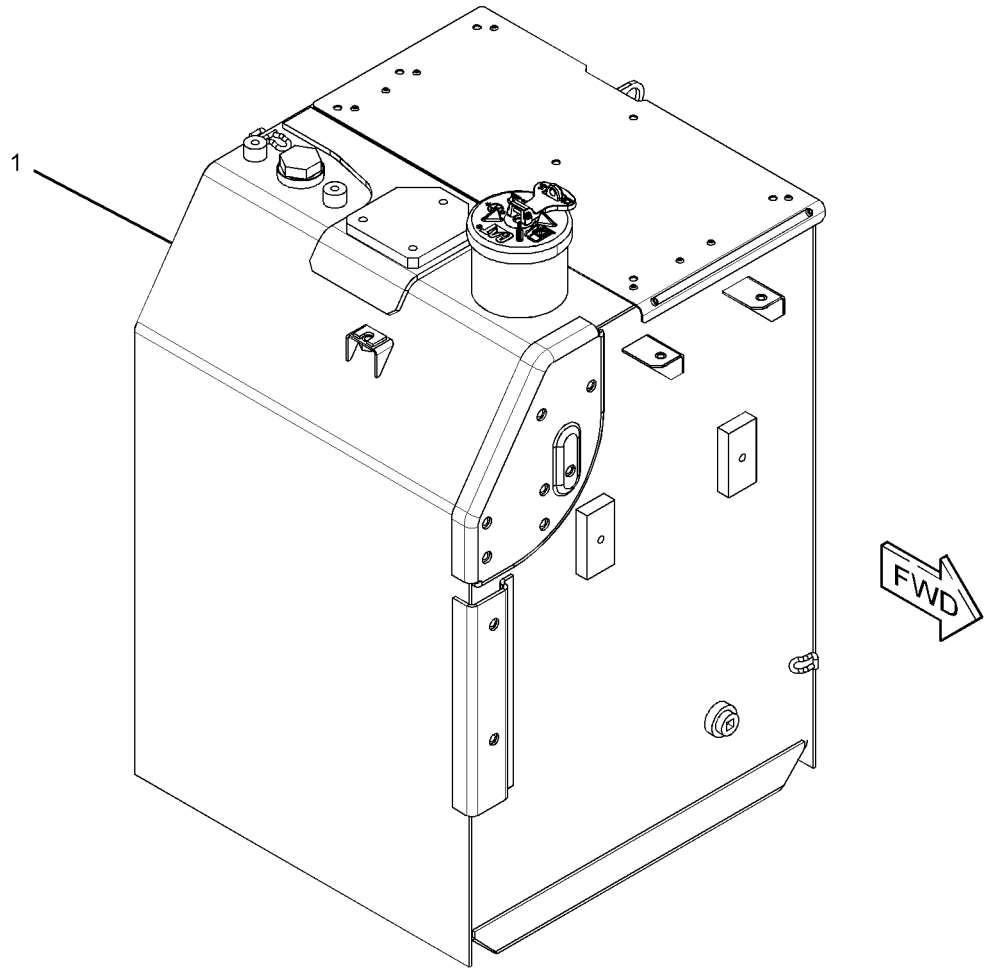

GRAPHIC #1 **<END>** g01620194

333-5084 TANK & MTG GP-FUEL

S/N: CJN1-UP
PART OF 330-1324 MIRROR GP
AN ATTACHMENT

SMCS-1273 **i03148160**

NOTE	REF NO	GRAPHIC REF	PART NUMBER	QTY	PART NAME 1 2 3 4 5 6 (PRODUCT LEVEL)	SEE PAGE
	1	1	**246-2641**	1	PADLOCK GP	
		1	**5P-8500**	1	KEY	
Y	2	1	**330-1563**	1	TANK GP-FUEL	112
	3	1	**085-9310**	4	SPACER (16.6X32X26-MM THK)	
M	4	1	**8T-4140**	4	BOLT (M16X2X60-MM)	

M-METRIC PART
Y-SEPARATE ILLUSTRATION

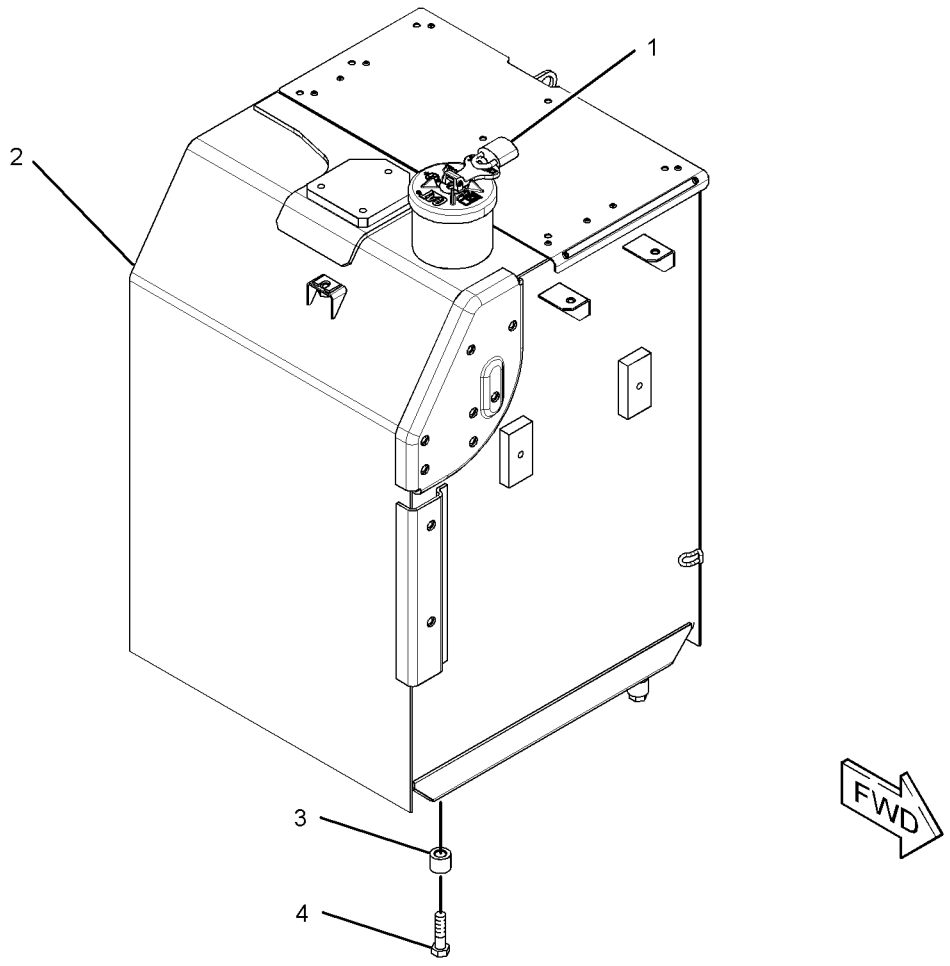

GRAPHIC #1 **<END>** g01620645

262-2260 TANK GP-FUEL

S/N: CJN1-UP
300-L (79.3-US GAL)
PART OF 262-2259 TANK & MTG GP-FUEL

SMCS-1273 **i02599548**

NOTE	PART NUMBER	QTY	PART NAME 1 2 3 4 5 6 (PRODUCT LEVEL)	SEE PAGE
Y	*278-3711*	1	TANK GP-FUEL	104
			—OR—	
Y	*278-3712*	1	TANK GP-FUEL	106

Y-SEPARATE ILLUSTRATION

<END>

262-2270 TANK GP-FUEL

S/N: CJN1-UP
300-L (79.3-US GAL)
PART OF 262-2269 TANK & MTG GP-FUEL
AN ATTACHMENT

SMCS-1273 **i02767977**

NOTE	PART NUMBER	QTY	PART NAME 1 2 3 4 5 6 (PRODUCT LEVEL)	SEE PAGE
Y	*278-3715*	1	TANK GP-FUEL	108
			—OR—	
Y	*278-3720*	1	TANK GP-FUEL	110

Y-SEPARATE ILLUSTRATION

<END>

278-3711 TANK GP-FUEL

S/N: CJN1-UP
300-L (79.3-US GAL)
PART OF 262-2260 TANK GP-FUEL

SMCS-1273 **i02868803**

NOTE	REF NO	GRAPHIC REF	PART NUMBER	QTY	PART NAME 1 2 3 4 5 6 (PRODUCT LEVEL)	SEE PAGE
	1	1	**4I-0378**	1	GASKET-RUBBER	
	2	1	**5P-4924**	1	ELBOW	
	3	1	**164-4858**	1	CAP GP-FUEL FILLER (EXTREME SERVICE, LOCKABLE)	
		1	**9X-8600**	1	SEAL-O-RING	
		1	**190-9775**	1	COVER AS-FILTER	
	4	1	**003-7764**	1	END-HOSE	
	5	1	**128-4411**	1	VALVE AS (FUEL SHUTOFF)	
	6	1	**163-6700**	1	SENSOR GP-FUEL LEVEL	
		1	**186-3735**	2	PIN-CONNECTOR (16-GA TO 18-GA)	
		1	**102-8802**	1	KIT-RECEPTACLE (2-PIN)	
					(INCLUDES RECEPTACLE AS & WEDGE)	
J	7	1	**303-9933**	1	STRAINER AS-FUEL (FLOAT GAUGE)	
	8	1	**8T-0328**	5	WASHER-HARD (5.5X10X1-MM THK)	
M	9	1	**095-0736**	5	SCREW-MACHINE (M5X0.8X10-MM)	
	10	1	**3J-1907**	1	SEAL-O-RING	
					AVAILABLE REPAIR KIT(S):	
J			**303-9937**	1	KIT-GAUGE (FUEL STRAINER)	
					(INCLUDES STOPPER & GAUGE)	

J-KIT MARKED J SERVICES PART MARKED J
M-METRIC PART

278-3711 **TANK GP-FUEL** *(contd.)* **i02868803**

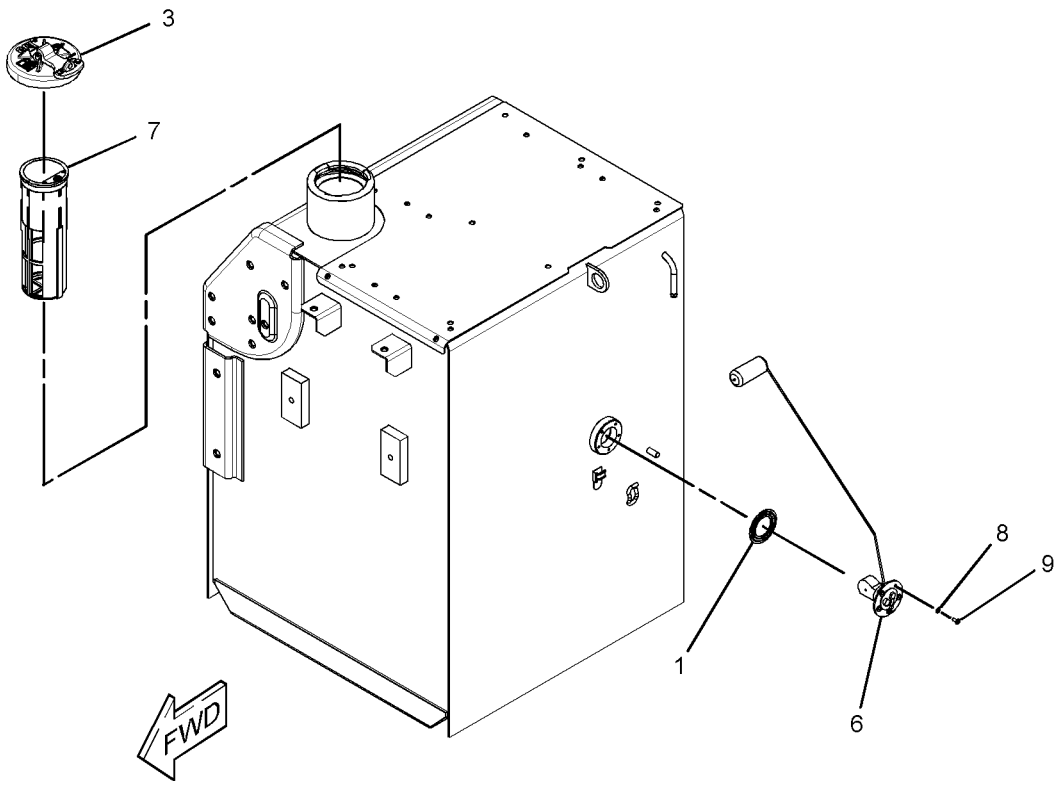

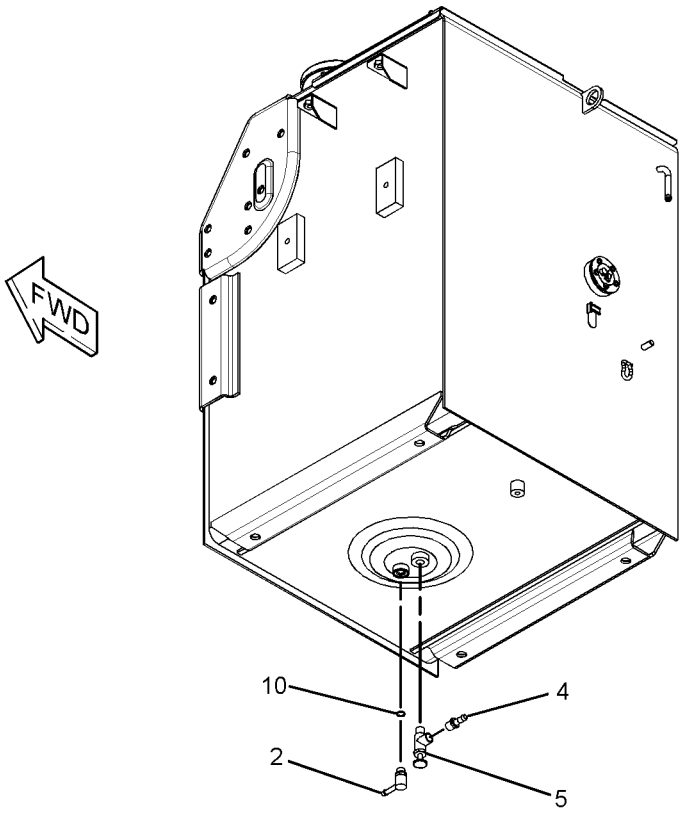

GRAPHIC #1 **<END>** g01447134

FUEL SYSTEM

278-3712 TANK GP-FUEL

S/N: CJN1-UP
300-L (79.3-US GAL)
PART OF 262-2260 TANK GP-FUEL

SMCS-1273 **i02868832**

NOTE	REF NO	GRAPHIC REF	PART NUMBER	QTY	PART NAME 1 2 3 4 5 6 (PRODUCT LEVEL)	SEE PAGE
	1	1	**4I-0378**	1	GASKET-RUBBER	
	2	1	**5P-4924**	1	ELBOW	
	3	1	**164-4858**	1	CAP GP-FUEL FILLER (EXTREME SERVICE, LOCKABLE)	
		1	**190-9775**	1	COVER AS-FILTER	
		1	**9X-8600**	1	SEAL-O-RING	
	4	1	**003-7764**	1	END-HOSE	
	5	1	**128-4411**	1	VALVE AS (FUEL SHUTOFF)	
	6	1	**163-6700**	1	SENSOR GP-FUEL LEVEL	
		1	**186-3735**	2	PIN-CONNECTOR (16-GA TO 18-GA)	
		1	**102-8802**	1	KIT-RECEPTACLE (2-PIN)	
					(INCLUDES RECEPTACLE AS & WEGDE)	
J	7	1	**303-9933**	1	STRAINER AS-FUEL (FLOAT GAUGE)	
M	9	1	**095-0736**	5	SCREW-MACHINE (M5X0.8X10-MM)	
	10	1	**3J-1907**	1	SEAL-O-RING	
	11	1	**8T-0328**	5	WASHER-HARD (5.5X10X1-MM THK)	
					PARTS SHOWN IN GRAPHIC(S) WITHOUT A REFERENCE NUMBER ARE NOT SERVICED SEPARATELY	
					AVAILABLE REPAIR KIT(S):	
J			**303-9937**	1	KIT-GAUGE (FUEL STRAINER)	
					(INCLUDES STOPPER & GAUGE)	

J-KIT MARKED J SERVICES PART(S) MARKED J
M-METRIC PART

278-3712 **TANK GP-FUEL** *(contd.)* **i02868832**

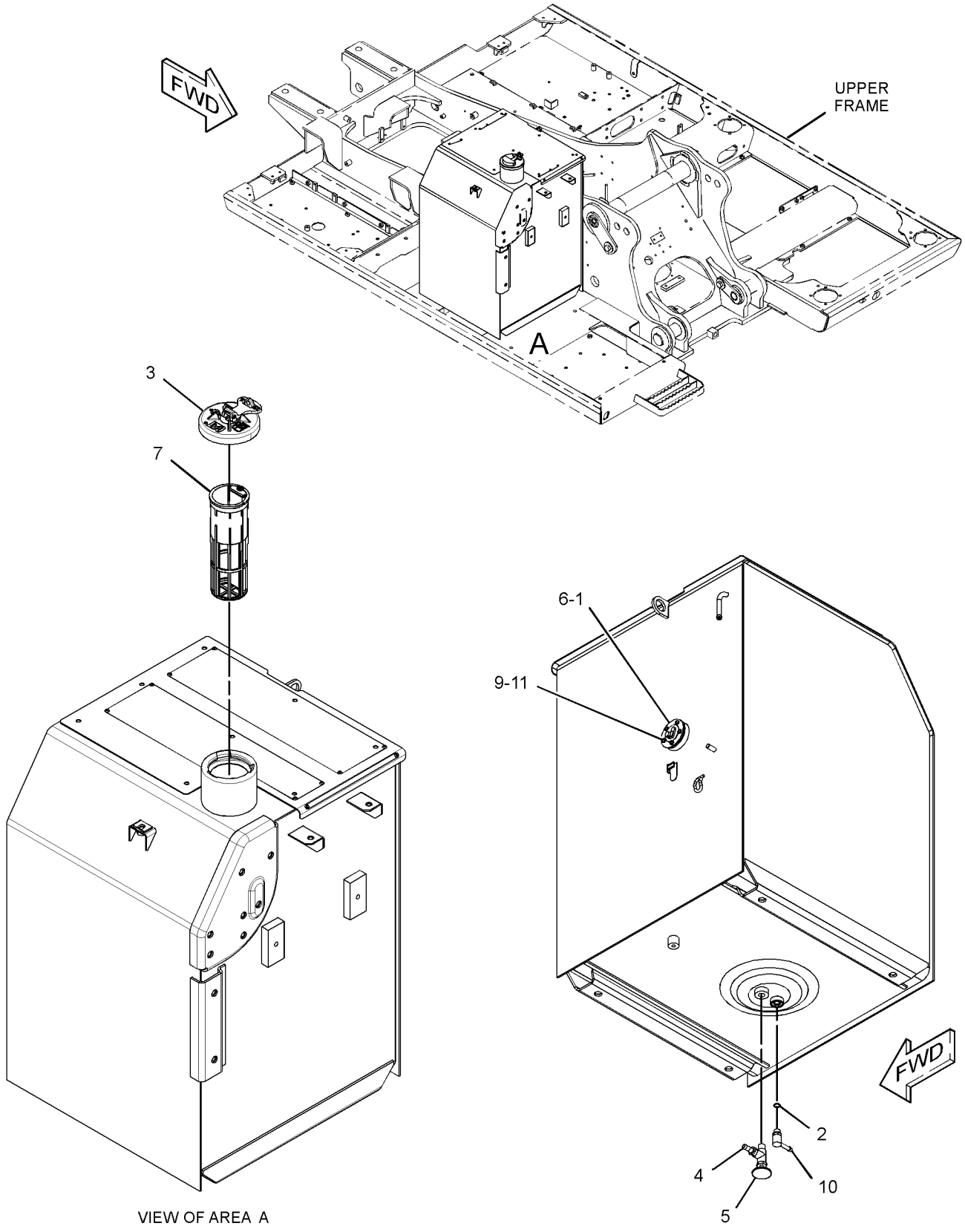

VIEW OF AREA A

GRAPHIC #1 **<END>** g01447136

FUEL SYSTEM

278-3715 TANK GP-FUEL

S/N: CJN1-UP
300-L (79.3-US GAL)
PART OF 262-2270 TANK GP-FUEL
AN ATTACHMENT

SMCS-1273 **i02862846**

NOTE	REF NO	GRAPHIC REF	PART NUMBER	QTY	PART NAME 1 2 3 4 5 6 (PRODUCT LEVEL)	SEE PAGE
	1	1	**4I-0378**	1	GASKET-RUBBER	
	2	1	**5P-4924**	1	ELBOW	
	3	1	**164-4858**	1	CAP GP-FUEL FILLER (EXTREME SERVICE, LOCKABLE)	
		1	**9X-8600**	1	SEAL-O-RING	
		1	**190-9775**	1	COVER AS-FILTER	
	4	1	**003-7764**	1	END-HOSE	
	5	1	**128-4411**	1	VALVE AS (FUEL SHUTOFF)	
	6	1	**163-6700**	1	SENSOR GP-FUEL LEVEL	
		1	**186-3735**	2	PIN-CONNECTOR (16-GA TO 18-GA)	
		1	**102-8802**	1	KIT-RECEPTACLE (2-PIN)	
					(INCLUDES RECEPTACLE AS & WEDGE)	
J	7	1	**303-9933**	1	STRAINER AS-FUEL (FLOAT GAUGE)	
	8	1	**9S-6130**	1	PLUG	
M	9	1	**095-0736**	5	SCREW-MACHINE (M5X0.8X10-MM)	
	10	1	**2S-4078**	1	SEAL-O-RING	
	11	1	**3B-0551**	1	PLUG-PIPE	
	12	1	**3J-1907**	1	SEAL-O-RING	
	13	1	**8T-0328**	5	WASHER-HARD (5.5X10X1-MM THK)	
					AVAILABLE REPAIR KIT(S):	
J			**303-9937**	1	KIT-GAUGE (FLOAT)	
					(INCLUDES STOPPER & GAUGE)	

J-KIT MARKED J SERVICES PART (S) MARKED J
M-METRIC PART

278-3715 **TANK GP-FUEL** *(contd.)* **i02862846**

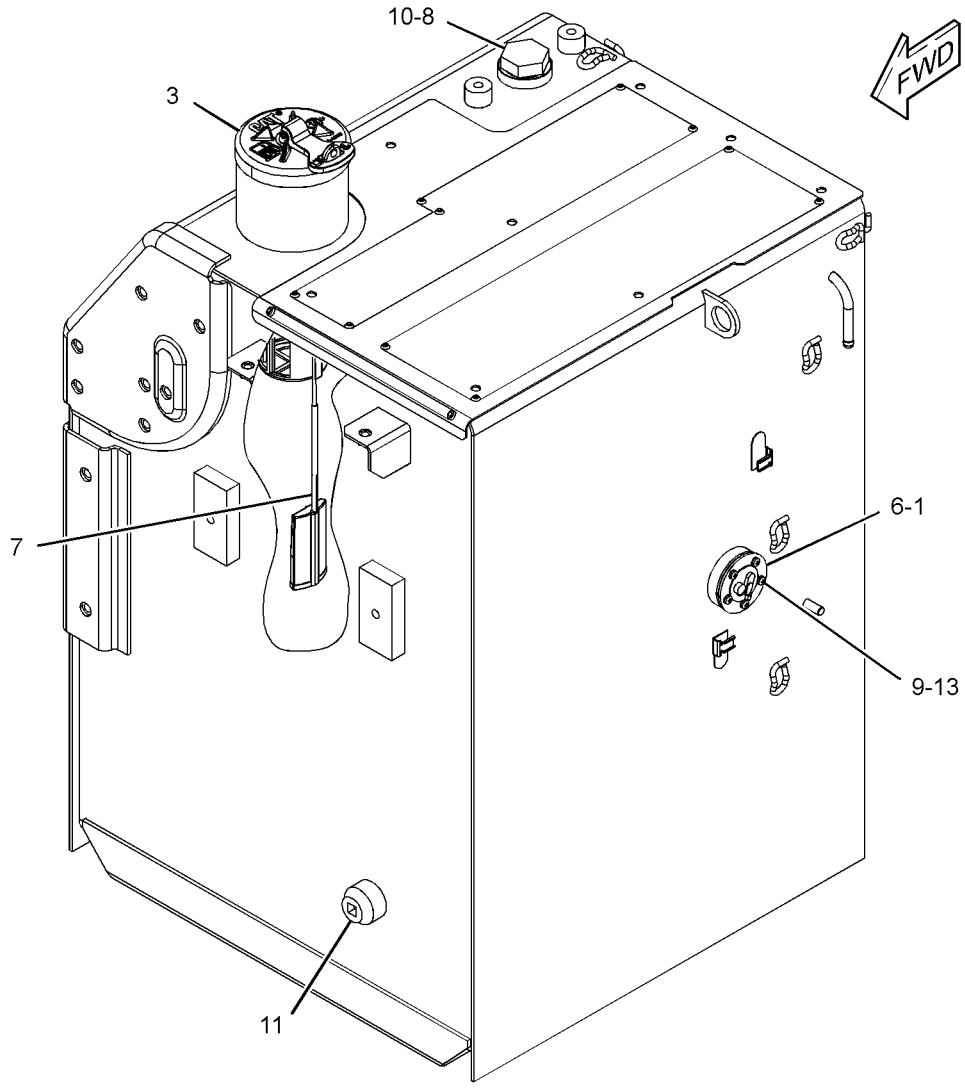

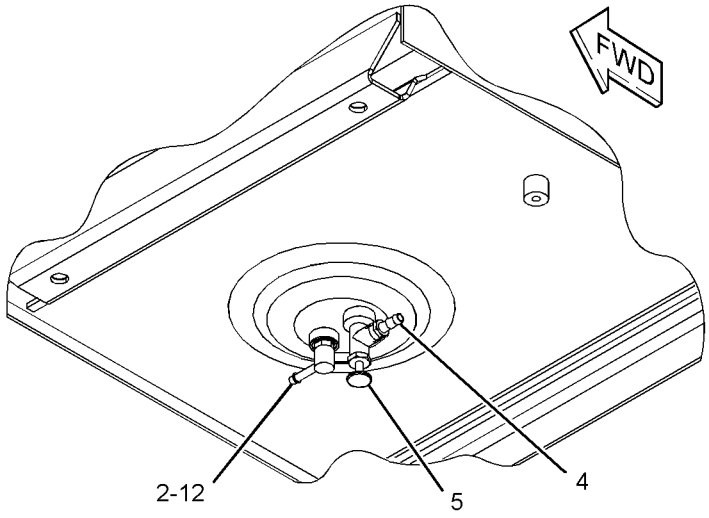

GRAPHIC #1 **<END>** g01426805

FUEL SYSTEM

278-3720 TANK GP-FUEL

S/N: CJN1-UP
300-L (79.3-US GAL)
PART OF 262-2270 TANK GP-FUEL
AN ATTACHMENT

SMCS-1273 **i02864403**

NOTE	REF NO	GRAPHIC REF	PART NUMBER	QTY	PART NAME 1 2 3 4 5 6 (PRODUCT LEVEL)	SEE PAGE
	1	1	**4I-0378**	1	GASKET-RUBBER	
	2	1	**5P-4924**	1	ELBOW	
	3	1	**164-4858**	1	CAP GP-FUEL FILLER (EXTREME SERVICE, LOCKABLE)	
		1	**190-9775**	1	COVER AS-FILTER	
		1	**9X-8600**	1	SEAL-O-RING	
	4	1	**003-7764**	1	END-HOSE	
	5	1	**128-4411**	1	VALVE AS (FUEL SHUTOFF)	
	6	1	**163-6700**	1	SENSOR GP-FUEL LEVEL	
		1	**186-3735**	2	PIN-CONNECTOR (16-GA TO 18-GA)	
		1	**102-8802**	1	KIT-RECEPTACLE (2-PIN)	
					(INCLUDES RECEPTACLE AS & WEDGE)	
J	7	1	**303-9933**	1	STRAINER AS-FUEL (FLOAT GAUGE)	
	8	1	**9S-6130**	1	PLUG	
M	9	1	**095-0736**	5	SCREW-MACHINE (M5X0.8X10-MM)	
	10	1	**2S-4078**	1	SEAL-O-RING	
	11	1	**3B-0551**	1	PLUG-PIPE	
	12	1	**3J-1907**	1	SEAL-O-RING	
	13	1	**8T-0328**	5	WASHER-HARD (5.5X10X1-MM THK)	
					AVAILABLE REPAIR KIT(S):	
J			**303-9937**	1	KIT-GAUGE (FLOAT)	

J-KIT MARKED J SERVICES PART(S) MARKED J
M-METRIC PART

278-3720 **TANK GP-FUEL** *(contd.)* **i02864403**

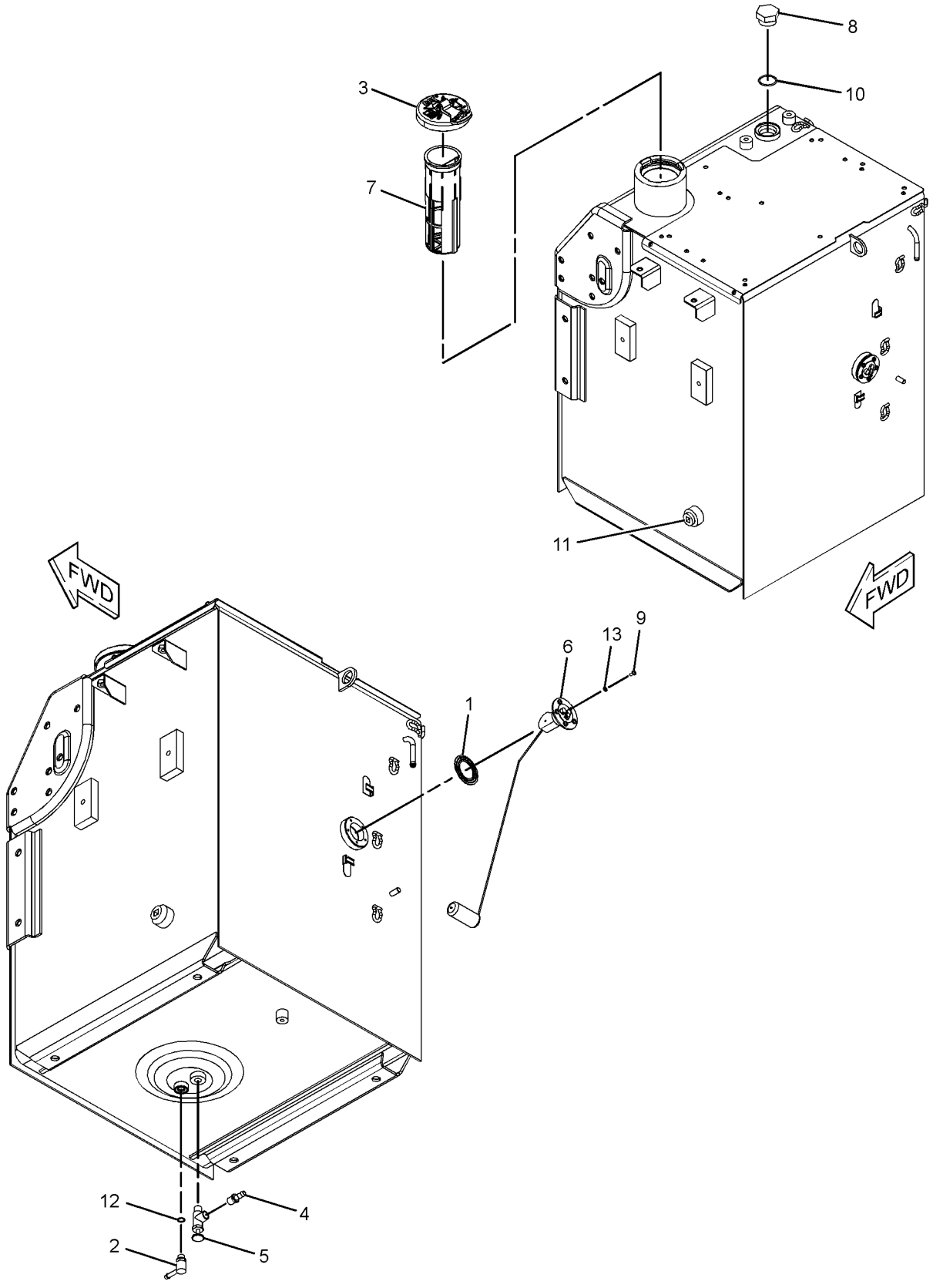

GRAPHIC #1 **<END>** g01426706

FUEL SYSTEM

330-1563 TANK GP-FUEL

S/N: CJN1-UP
300-L (79.3-US GAL)
PART OF 333-5084 TANK & MTG GP-FUEL
AN ATTACHMENT

SMCS-1273 **i03148240**

NOTE	PART NUMBER	QTY	PART NAME 1 2 3 4 5 6 (PRODUCT LEVEL)	SEE PAGE
Y	*330-1564*	1	TANK GP-FUEL	113
			—OR—	
Y	*330-1566*	1	TANK GP-FUEL	115

Y-SEPARATE ILLUSTRATION

<END>

330-1564 TANK GP-FUEL

S/N: CJN1-UP
300-L (79.3-US GAL)
PART OF 330-1563 TANK GP-FUEL
AN ATTACHMENT

SMCS-1273 **i03243260**

NOTE	REF NO	GRAPHIC REF	PART NUMBER	QTY	PART NAME 1 2 3 4 5 6 (PRODUCT LEVEL)	SEE PAGE
	1	1	**4I-0378**	1	GASKET-RUBBER	
	2	1	**5P-4924**	1	ELBOW	
	3	1	**003-7764**	1	END-HOSE	
	4	1	**128-4411**	1	VALVE AS (FUEL SHUTOFF)	
	5	1	**163-6700**	1	SENSOR GP-FUEL LEVEL	
		1	**186-3735**	2	PIN-CONNECTOR (16-GA TO 18-GA)	
		1	**102-8802**	1	KIT-RECEPTACLE (2-PIN)	
					(INCLUDES RECEPTACLE AS & WEDGE)	
Y	6	1	**164-4858**	1	CAP GP-FUEL FILLER (EXTREME SERVICE, LOCKABLE)	80
J	7	1	**303-9933**	1	STRAINER AS-FUEL (FLOAT GAUGE)	
M	9	1	**095-0736**	5	SCREW-MACHINE (M5X0.8X10-MM)	
	10	1	**3J-1907**	1	SEAL-O-RING	
	11	1	**8T-0328**	5	WASHER-HARD (5.5X10X1-MM THK)	
					AVAILABLE REPAIR KIT(S):	
J			**303-9937**	1	KIT-GAUGE (FUEL)	
					(INCLUDES STOPPER & FLOAT GAUGE)	

J-KIT MARKED J SERVICES PART(S) MARKED J
M-METRIC PART
Y-SEPARATE ILLUSTRATION

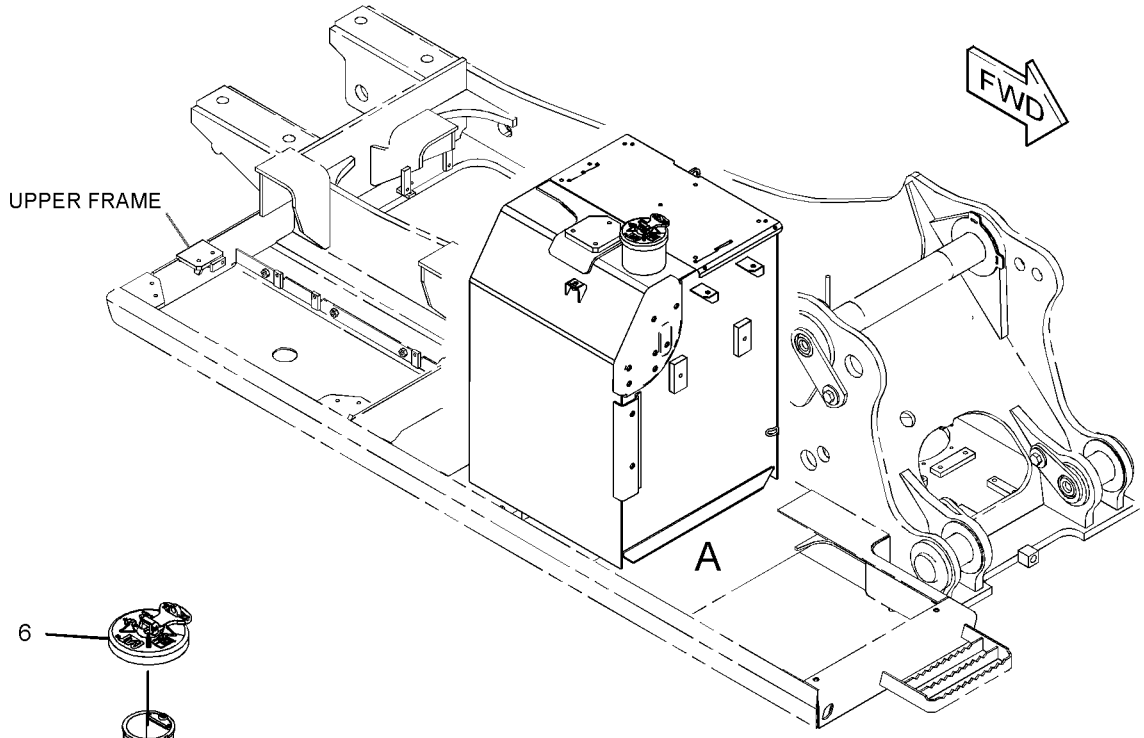

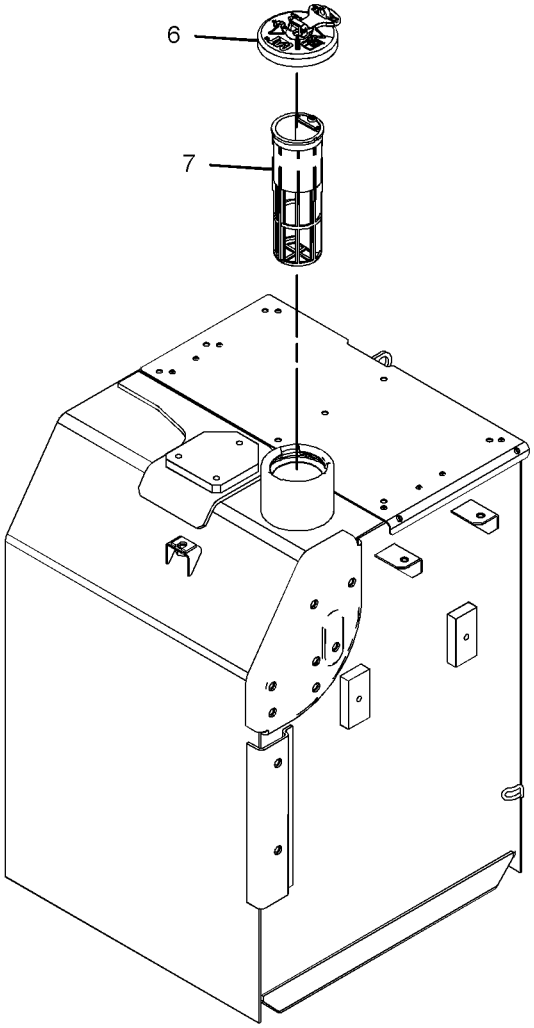

VIEW OF AREA A

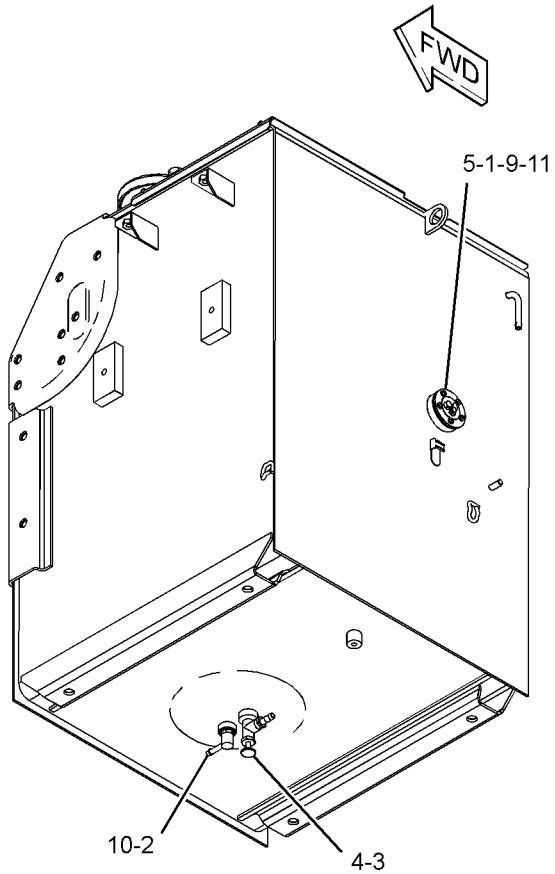

GRAPHIC #1 **<END>** g01622025

FUEL SYSTEM

330-1566 TANK GP-FUEL

S/N: CJN1-UP
300-L (79.3-US GAL)
PART OF 330-1563 TANK GP-FUEL
AN ATTACHMENT

SMCS-1273 **i03243257**

NOTE	REF NO	GRAPHIC REF	PART NUMBER	QTY	PART NAME 1 2 3 4 5 6 (PRODUCT LEVEL)	SEE PAGE
	1	1	**4I-0378**	1	GASKET-RUBBER	
	2	1	**5P-4924**	1	ELBOW	
	3	1	**003-7764**	1	END-HOSE	
	4	1	**128-4411**	1	VALVE AS (FUEL SHUTOFF)	
	5	1	**163-6700**	1	SENSOR GP-FUEL LEVEL	
		1	**186-3735**	2	PIN-CONNECTOR (16-GA TO 18-GA)	
		1	**102-8802**	1	KIT-RECEPTACLE (2-PIN)	
					(INCLUDES RECEPTACLE AS & WEDGE)	
Y	6	1	**164-4858**	1	CAP GP-FUEL FILLER (EXTREME SERVICE, LOCKABLE)	80
J	7	1	**303-9933**	1	STRAINER AS-FUEL (FLOAT GAUGE)	
M	9	1	**095-0736**	5	SCREW-MACHINE (M5X0.8X10-MM)	
	10	1	**3J-1907**	1	SEAL-O-RING	
	11	1	**8T-0328**	5	WASHER-HARD (5.5X10X1-MM THK)	
					AVAILABLE REPAIR KIT(S):	
J			**303-9937**	1	KIT-GAUGE (FUEL)	
					(INCLUDES FLOAT GAUGE & STOPPER)	

J-KIT MARKED J SERVICES PART(S) MARKED J
M-METRIC PART
Y-SEPARATE ILLUSTRATION

330-1566 **TANK GP-FUEL** *(contd.)* **i03243257**

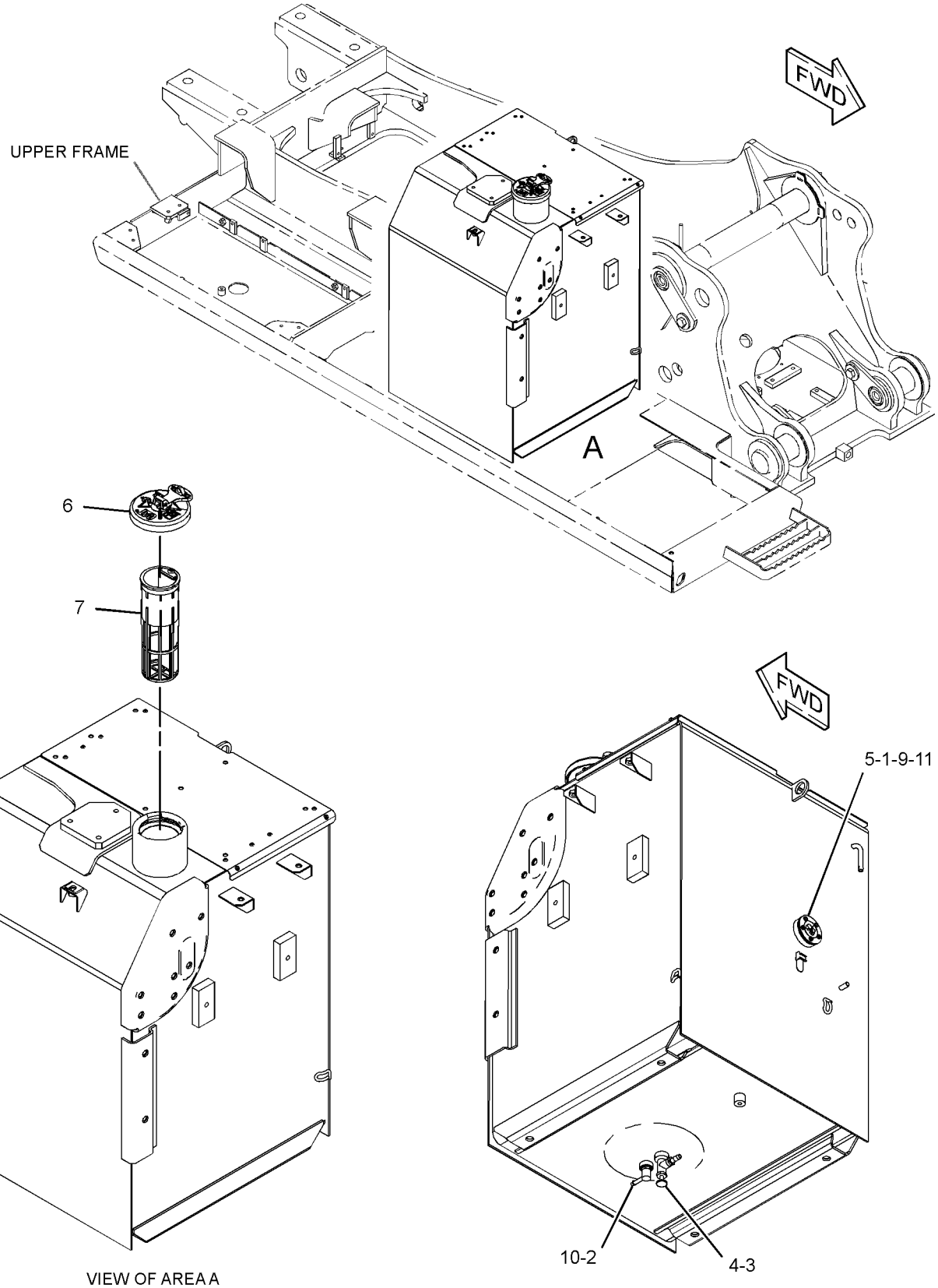

GRAPHIC #1 **<END>** g01622034

330-1568 TANK GP-FUEL

S/N: CJN1-UP
300-L (79.3-US GAL)
PART OF 330-1562 TANK & MTG GP-FUEL
AN ATTACHMENT

SMCS-1273 **i03146915**

NOTE	PART NUMBER	QTY	PART NAME 1 2 3 4 5 6 (PRODUCT LEVEL)	SEE PAGE
Y	*330-1569*	1	TANK GP-FUEL	118
			–OR–	
Y	*330-1571*	1	TANK GP-FUEL	120
Y-SEPARATE ILLUSTRATION				

<END>

FUEL SYSTEM

330-1569 TANK GP-FUEL

S/N: CJN1-UP
300-L (79.3-US GAL)
PART OF 330-1568 TANK GP-FUEL
AN ATTACHMENT

SMCS-1273 **i03243255**

NOTE	REF NO	GRAPHIC REF	PART NUMBER	QTY	PART NAME 1 2 3 4 5 6 (PRODUCT LEVEL)	SEE PAGE
	1	1	**4I-0378**	1	GASKET-RUBBER	
	2	1	**5P-4924**	1	ELBOW	
	3	1	**003-7764**	1	END-HOSE	
	4	1	**128-4411**	1	VALVE AS (FUEL SHUTOFF)	
	5	1	**163-6700**	1	SENSOR GP-FUEL LEVEL	
		1	**102-8802**	1	KIT-RECEPTACLE (2-PIN)	
					(INCLUDES RECEPTACLE AS & WEDGE)	
		1	**186-3735**	2	PIN-CONNECTOR (16-GA TO 18-GA)	
Y	6	1	**164-4858**	1	CAP GP-FUEL FILLER (EXTREME SERVICE, LOCKABLE)	80
J	7	1	**303-9933**	1	STRAINER AS-FUEL (FLOAT GAUGE)	
M	9	1	**095-0736**	5	SCREW-MACHINE (M5X0.8X10-MM)	
	10	1	**2S-4078**	1	SEAL-O-RING	
	11	1	**3B-0551**	1	PLUG-PIPE	
	12	1	**3J-1907**	1	SEAL-O-RING	
	13	1	**8T-0328**	5	WASHER-HARD (5.5X10X1-MM THK)	
	14	1	**9S-6130**	1	PLUG	
					AVAILABLE REPAIR KIT(S):	
J			**303-9937**	1	KIT-GAUGE (FUEL)	
					(INCLUDES FLOAT GAUGE AND STOPPER)	

J-(KIT MARKED J SERVICES PART(S) MARKED J
M-METRIC PART
Y-SEPARATE ILLUSTRATION

330 - 1569 **TANK GP - FUEL** *(contd.)* **i03243255**

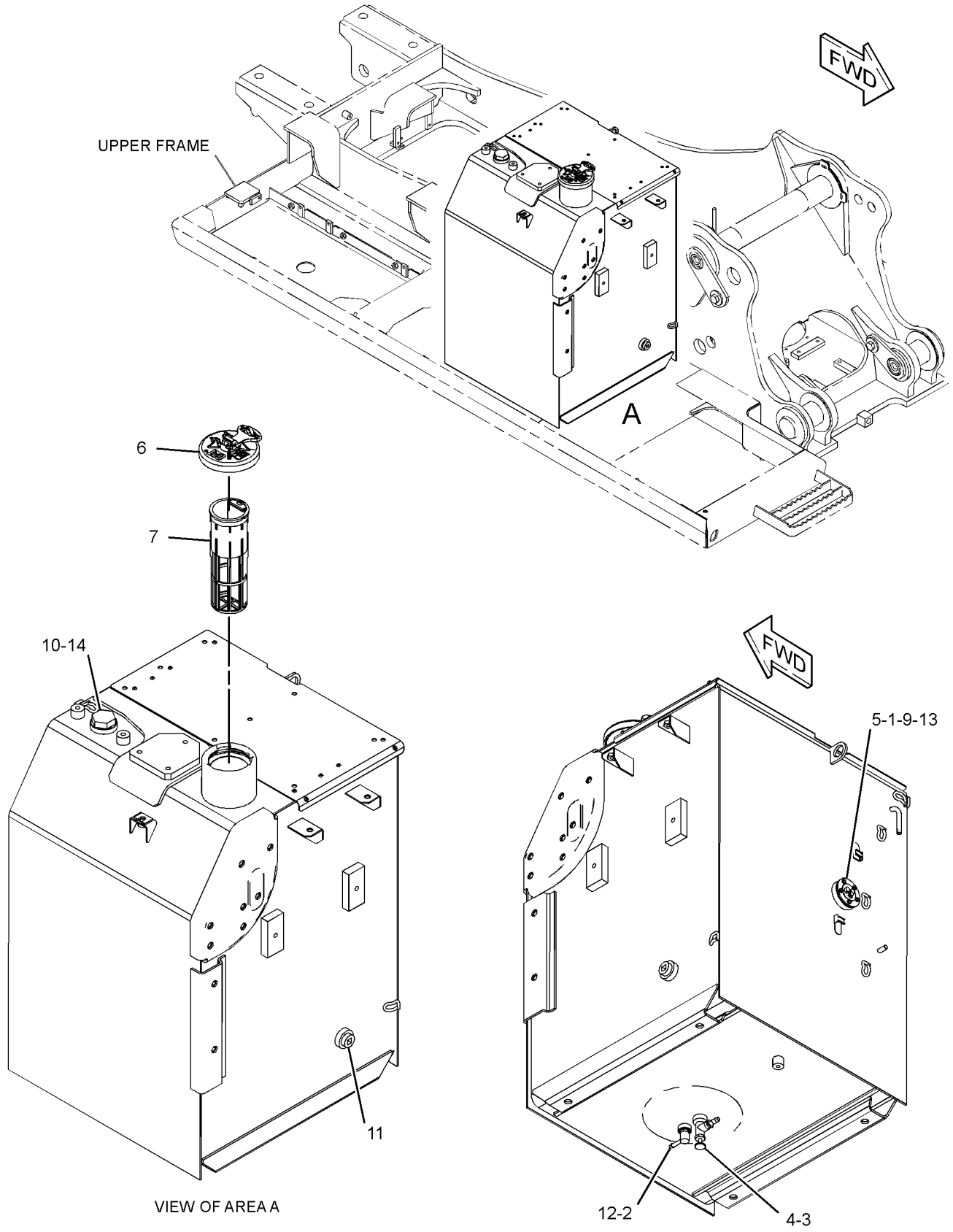

GRAPHIC #1 **<END>** g01622038

FUEL SYSTEM

330-1571 TANK GP-FUEL

S/N: CJN1-UP
300-L (79.3-US GAL)
PART OF 330-1568 TANK GP-FUEL
AN ATTACHMENT

SMCS-1273 **i03243253**

NOTE	REF NO	GRAPHIC REF	PART NUMBER	QTY	PART NAME 1 2 3 4 5 6 (PRODUCT LEVEL)	SEE PAGE
	1	1	**4I-0378**	1	GASKET-RUBBER	
	2	1	**5P-4924**	1	ELBOW	
	3	1	**003-7764**	1	END-HOSE	
	4	1	**128-4411**	1	VALVE AS (FUEL SHUTOFF)	
	5	1	**163-6700**	1	SENSOR GP-FUEL LEVEL	
		1	**186-3735**	2	PIN-CONNECTOR (16-GA TO 18-GA)	
		1	**102-8802**	1	KIT-RECEPTACLE (2-PIN)	
					(INCLUDES RECEPTACLE AS & WEDGE)	
Y	6	1	**164-4858**	1	CAP GP-FUEL FILLER (EXTREME SERVICE, LOCKABLE)	80
J	7	1	**303-9933**	1	STRAINER AS-FUEL (FLOAT GAUGE)	
M	9	1	**095-0736**	5	SCREW-MACHINE (M5X0.8X10-MM)	
	10	1	**2S-4078**	1	SEAL-O-RING	
	11	1	**3B-0551**	1	PLUG-PIPE	
	12	1	**3J-1907**	1	SEAL-O-RING	
	13	1	**8T-0328**	5	WASHER-HARD (5.5X10X1-MM THK)	
	14	1	**9S-6130**	1	PLUG	
					AVAILABLE REPAIR KIT(S):	
J			**303-9937**	1	KIT-GAUGE (FUEL)	
					(INCLUDES STOPPER & FLOAT GAUGE)	

J-(KIT MARKED J SERVICES PART(S) MARKED J
M-METRIC PART
Y-SEPARATE ILLUSTRATION

330-1571 **TANK GP-FUEL** *(contd.)* **i03243253**

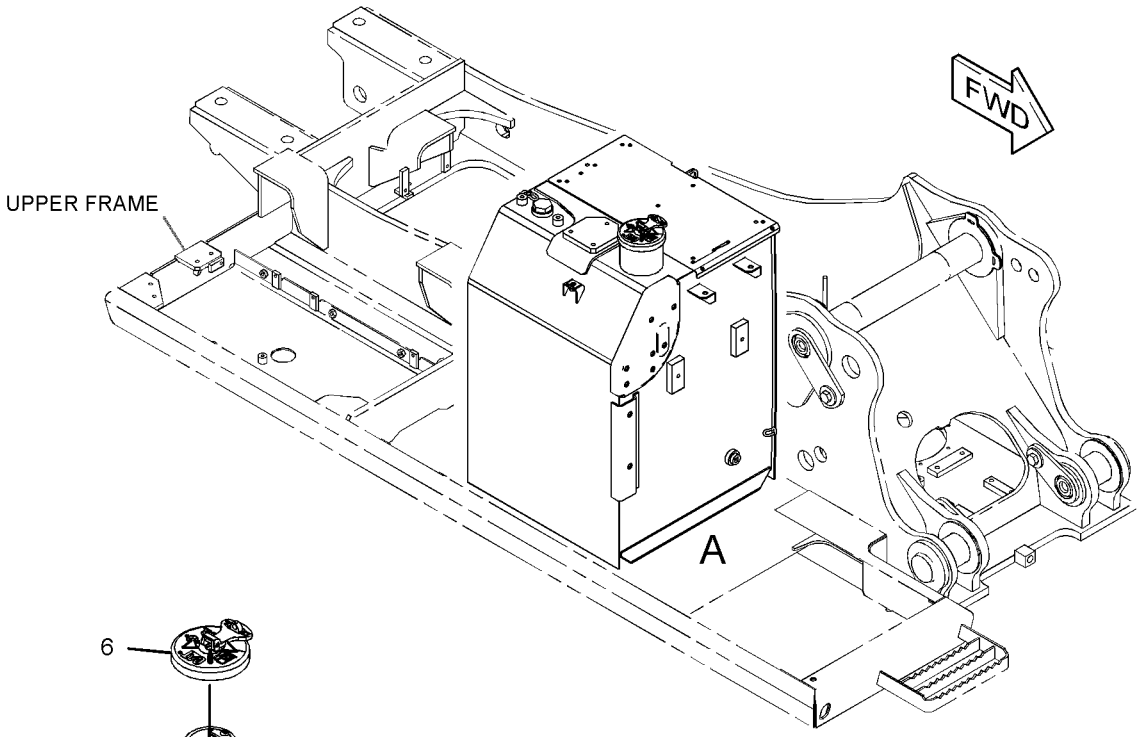

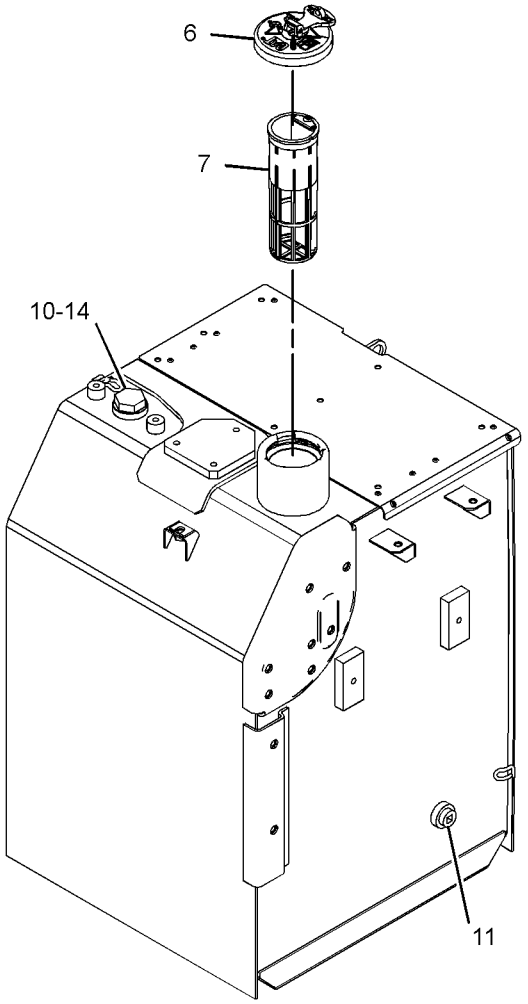

VIEW OF AREA A

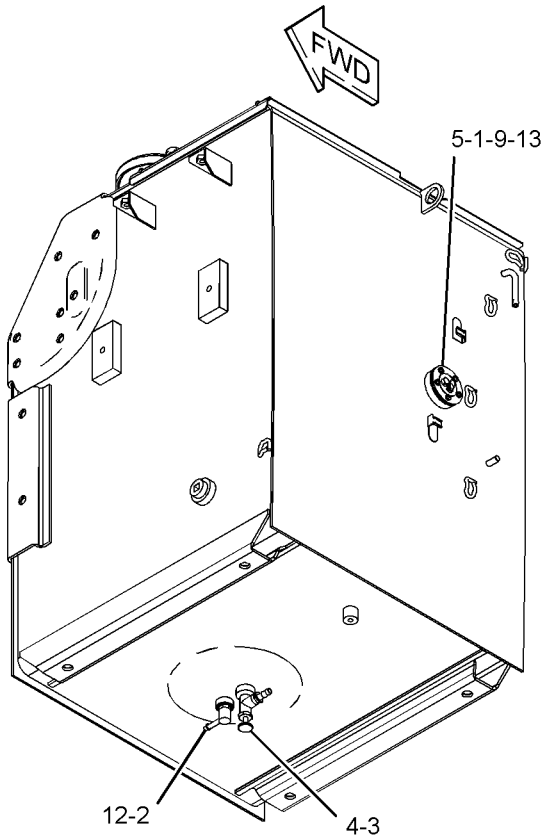

GRAPHIC #1 **<END>** g01622037

FUEL SYSTEM

298-3147 VALVE GP-FUEL SHUTOFF

S/N: CJN1-UP

PART OF 262-2261 LINES GP-FUEL

SMCS-1273 **i02750485**

NOTE	REF NO	GRAPHIC REF	PART NUMBER	QTY	PART NAME 1 2 3 4 5 6 (PRODUCT LEVEL)	SEE PAGE
	1	1	**298-3257**	1	STOP	
	2	1	**298-3258**	1	LEVER	
M	3	1	**260-6692**	1	NUT (M5X0.8-THD)	
	4	1	**3J-1907**	1	SEAL-O-RING	
	5	1	**8T-0328**	1	WASHER-HARD (5.5X10X1-MM THK)	
					PARTS SHOWN IN GRAPHIC(S) WITHOUT A REFERENCE NUMBER ARE NOT SERVICED SEPARATELY	

M-METRIC PART

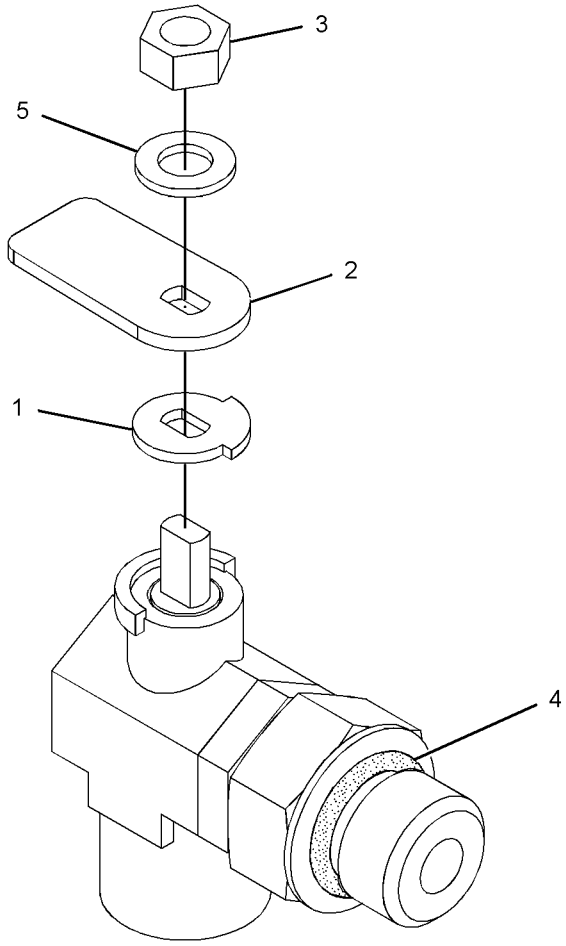

GRAPHIC #1 **<END>** g01377343

132-1829 ALARM GP

S/N: CJN1-UP
24-VOLT
PART OF 259-5161 WIRING GP-CAB

SMCS-7400, 7402, 7407 **i03254766**

NOTE	REF NO	GRAPHIC REF	PART NUMBER	QTY	PART NAME 1 2 3 4 5 6 (PRODUCT LEVEL)	SEE PAGE
	1	1	**102-8802**	1	KIT-RECEPTACLE (2-PIN)	
					(INCLUDES RECEPTACLE AS & WEDGE)	
	2	1	**186-3735**	2	PIN-CONNECTOR (16-GA TO 18-GA)	

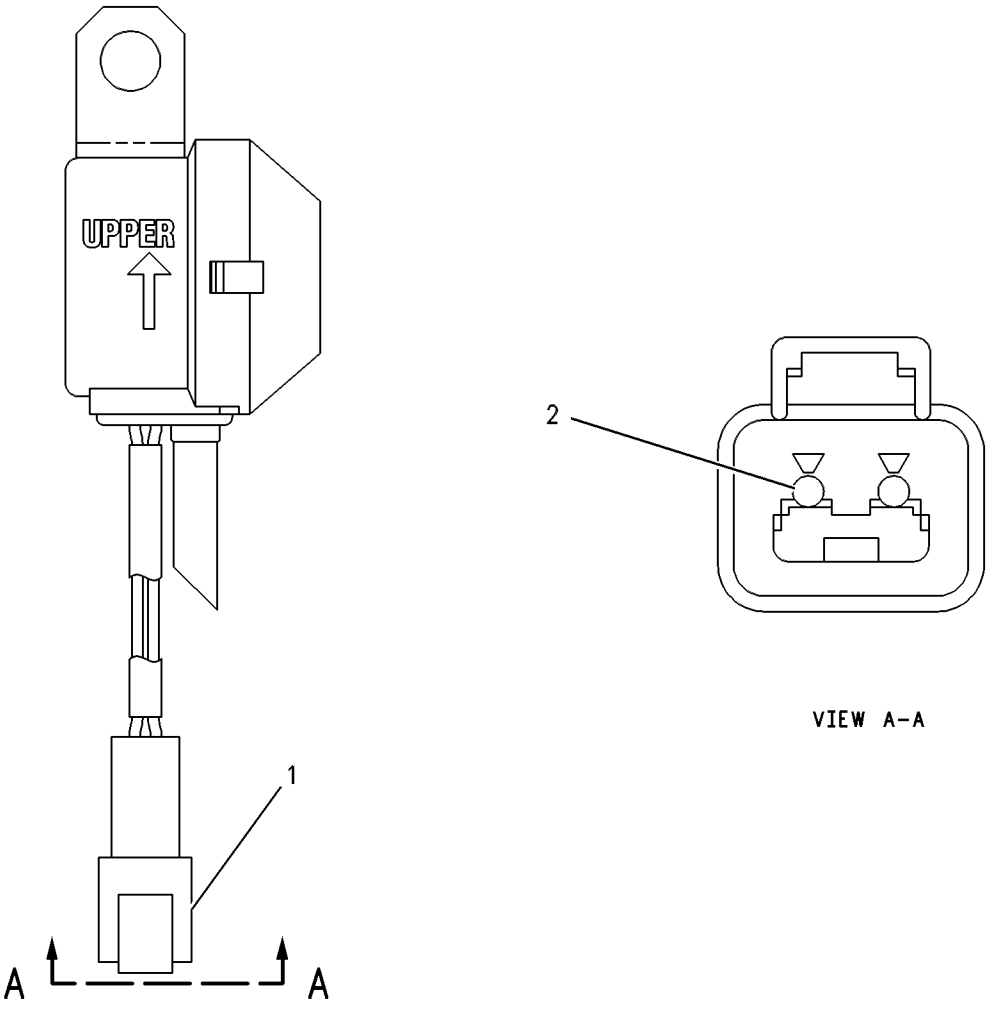

GRAPHIC #1 **<END>** g00272185

231-1771 ALARM GP-TRAVEL

S/N: CJN1-UP
AN ATTACHMENT

SMCS-7429 **i02693231**

NOTE	REF NO	GRAPHIC REF	PART NUMBER	QTY	PART NAME 1 2 3 4 5 6 (PRODUCT LEVEL)	SEE PAGE
	1	1	**213-9100**	1	ALARM GP	
BD		1	**5P-5623**		WIRE-ELECTRICAL (16-GA, BLACK)	
		1	**102-8802**	1	KIT-RECEPTACLE (2-PIN)	
					(INCLUDES RECEPTACLE AS & WEDGE)	
		1	**186-3735**	2	PIN-CONNECTOR (16-GA TO 18-GA)	
BE		1	**9X-1813**		SLEEVE	
M	2	1	**8T-4189**	2	BOLT (M8X1.25X20-MM)	
	3	1	**5P-4116**	2	WASHER-HARD (8.8X20.5X2-MM THK)	

B-USE AS REQUIRED
D-ORDER BY THE METER
E-ORDER BY THE CENTIMETER
M-METRIC PART

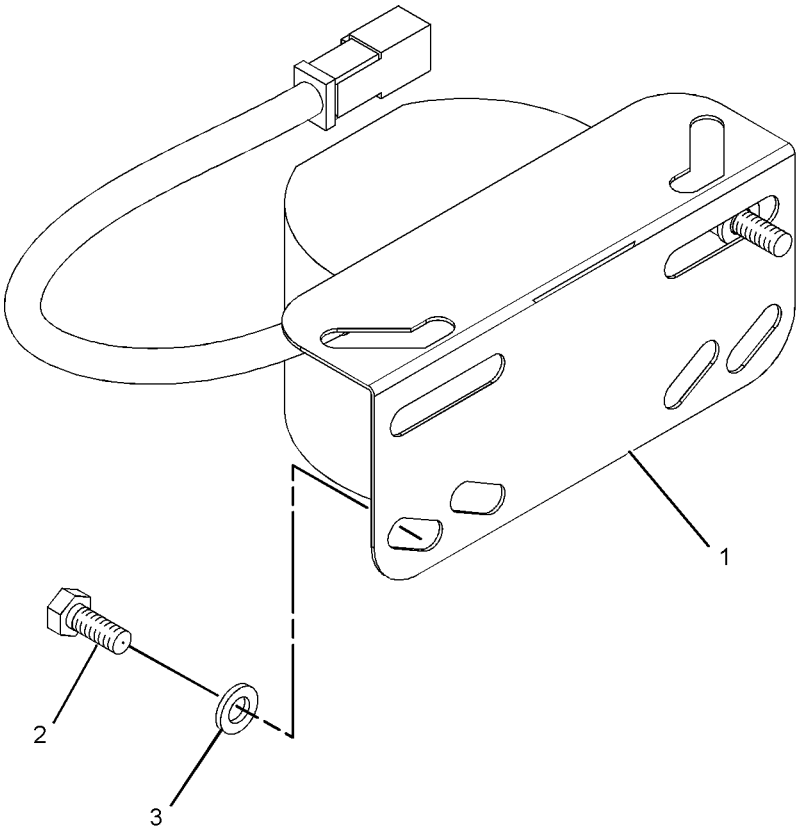

GRAPHIC #1 **<END>** g01071794

125-2994 ALTERNATOR GP-CHARGING

S/N: JKH1-UP

PART OF 296-4798 MOUNTING GP-ALTERNATOR

ALSO AN ATTACHMENT

SMCS-1405 **i02182383**

NOTE	REF NO	GRAPHIC REF	PART NUMBER	QTY	PART NAME 1 2 3 4 5 6 (PRODUCT LEVEL)	SEE PAGE
	1	1	**135-2382**	1	NUT SET	
	2	1	**125-2995**	1	PULLEY AS	
	3	1	**5I-7985**	1	SETSCREW	
	4	1	**5I-8086**	1	BRACKET AS	
	5	1	**5I-7987**	1	SETSCREW	
	6	1	**5I-8087**	1	BEARING	
	7	1	**5I-8097**	1	SETSCREW	
	8	1	**5I-8088**	1	ROTOR AS	
	9	1	**5I-8089**	1	BEARING	
	10	1	**5I-8098**	1	COIL AS	
	11	1	**5I-8090**	1	STATOR	
	12	1	**5I-8091**	1	BRACKET AS	
		1	**212-8521**	1	BRACKET	
	13	1	**239-6681**	1	REGULATOR AS-VOLTAGE	
	14	1	**5I-8095**	1	RECTIFIER AS	
	15	1	**085-9429**	1	NUT SET	
	16	1	**135-2381**	1	PLATE	
	17	1	**5I-8080**	1	CONNECTOR AS	
	18	1	**5I-8094**	1	BOLT	
	19	1	**5I-7997**	1	SETSCREW	

125-2994 ALTERNATOR GP-CHARGING *(contd.)* **i02182383**

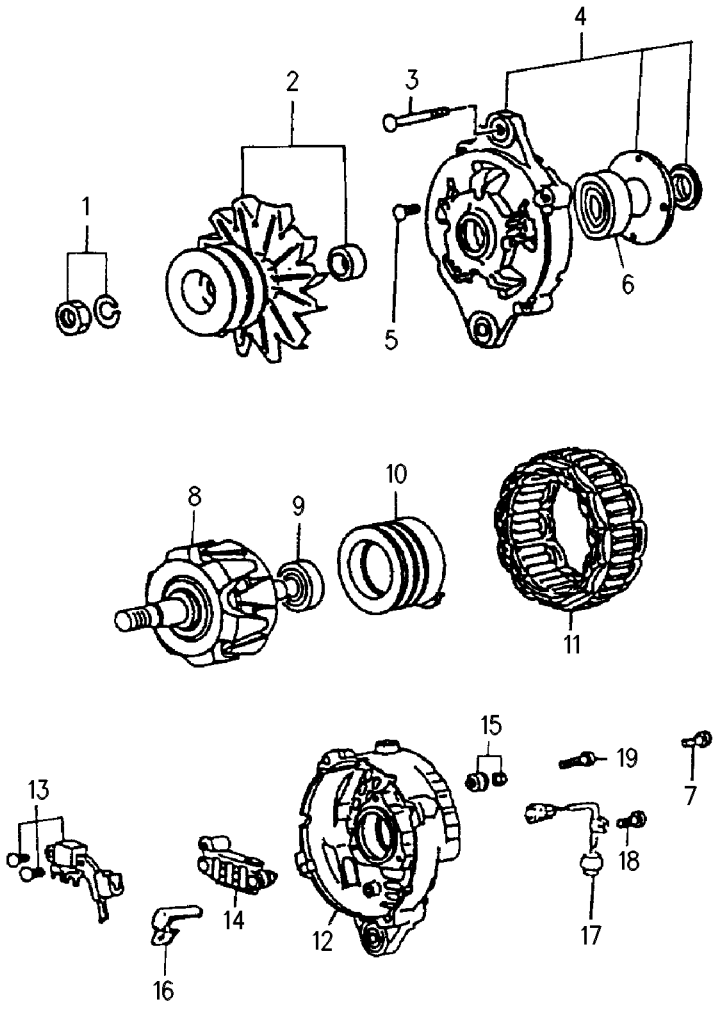

GRAPHIC #1 **<END>** g00287948

ELECTRICAL AND STARTING SYSTEM

259-5159 BATTERY & WIRING GP

S/N: CJN1-161

PART OF 260-6960 CHASSIS AR

SMCS-1401, 1402, 1408 **i02599528**

NOTE	REF NO	GRAPHIC REF	PART NUMBER	QTY	PART NAME 1 2 3 4 5 6 (PRODUCT LEVEL)	SEE PAGE
	1	1,2,3,4	**3S-2093**	44	STRAP-CABLE	
	2	2	**3T-5760**	2	BATTERY (12-VOLT, MAINTENANCE FREE, WET)	
	3	3	**4I-5479**	2	CLAMP	
	4	3	**4I-5480**	3	WASHER (11X72X3-MM THK)	
	5	2	**5I-8270**	1	COVER-BATTERY	
	6	3	**5I-9368**	1	SPACER (9.24X13.72X20.5-MM THK)	
	7	2	**6W-6005**	1	HOLD-DOWN-BATTERY	
	8	2,3,4	**7K-1181**	21	STRAP-CABLE	
	9	1,2	**7Y-5456**	2	GROMMET	
	10	2	**087-4587**	1	GROMMET	
	11	4	**091-9035**	2	SPACER (11X25X20-MM THK)	
	12	1,4	**111-4836**	17	CLIP	
	13	1,2,3	**111-4837**	6	CLIP	
	14	2,3	**111-4838**	11	CLIP	
	15	2,3	**111-4839**	11	STRAP	
	16	1,2,3,4	**116-0118**	10	CLIP	
	17	2,4	**132-1805**	2	STRAP AS-GROUND	
	18	1,2	**134-3299**	2	GROMMET	
	19	4	**141-6526**	1	GROMMET	
	20	3	**145-0603**	1	GROMMET	
	21	2	**170-6929**	1	CABLE AS	
E		2	**5P-0761**		CABLE (00-GA, RED) (31-CM)	
		2	**9G-0002**	1	COVER-TERMINAL (RED)	
		2	**9G-0005**	1	COVER-TERMINAL (BLACK)	
		2	**8C-5918**	1	TERMINAL AS (NEGATIVE)	
		2	**8T-9756**	1	TERMINAL AS (POSITIVE)	
					(EACH TERMINAL AS INCLUDES)	
		2	**1M-6119**	1	BOLT (5/16-18X1.375-IN)	
		2	**1M-6120**	1	NUT (5/16-18-THD)	
	22	2	**238-2501**	1	KNOB	
	23	2	**238-2528**	1	ROD	
	24	2	**259-5300**	1	CABLE AS	
		2	**1S-7252**	1	TERMINAL-CABLE (00-GA, 3/8-IN BOLT)	
E		2	**5P-0747**		CABLE (00-GA, BLACK) (114-CM)	
		2	**7N-5274**	1	COVER-TERMINAL (BLACK)	
		2	**9G-8909**	1	COVER-TERMINAL (BLACK)	
		2	**3S-6050**	1	TERMINAL AS-BATTERY (NEGATIVE)	
		2	**1M-6119**	1	BOLT (5/16-18X1.375-IN)	
		2	**1M-6120**	1	NUT (5/16-18-THD)	
	25	2	**259-5301**	1	BRACKET AS	
	26	3	**259-5303**	1	BRACKET AS	
	27	3	**267-7683**	1	BRACKET AS	
	28	3	**267-7689**	1	BRACKET AS	
	29	4	**275-7216**	1	BRACKET AS	
	30	3	**283-2662**	1	BRACKET AS	
	31	2	**299-2786**	1	HARNESS AS-CHASSIS	
	32	2	**299-2810**	1	CABLE AS	
		2	**1S-7252**	1	TERMINAL-CABLE (00-GA, 3/8-IN BOLT)	
E		2	**5P-0761**		CABLE (00-GA, RED) (299-CM)	
		2	**8N-0869**	1	COVER-TERMINAL (RED)	
		2	**8N-1725**	1	COVER-TERMINAL (RED)	
		2	**3S-6049**	1	TERMINAL AS-BATTERY (POSITIVE)	
		2	**1M-6119**	1	BOLT (5/16-18X1.375-IN)	
		2	**1M-6120**	1	NUT (5/16-18-THD)	
	33	1	**1R-6072**	1	GROMMET	
	34	2	**4K-8864**	4	CLIP	

259-5159 **BATTERY & WIRING GP** *(contd.)* **i02599528**

NOTE	REF NO	GRAPHIC REF	PART NUMBER	QTY	PART NAME 1 2 3 4 5 6 (PRODUCT LEVEL)	SEE PAGE
	35	2,3,4	**4P-7581**	11	CLIP	
M	36	2,3	**5C-7261**	2	NUT (M8X1.25-THD)	
M	37	2	**5C-7883**	4	BOLT-SOCKET HEAD (M6X1X16-MM)	
	38	2,3	**6D-4246**	5	CLIP	
	39	2,3	**6G-2263**	3	SPACER (10.5X19X28.5-MM THK)	
M	40	3	**7X-2619**	1	BOLT (M6X1X10-MM)	
M	41	1,2,3,4	**7X-2621**	11	BOLT (M10X1.5X12-MM)	
M	42	3	**7Y-5226**	1	NUT (M5X0.8-THD)	
M	43	3	**8C-8451**	1	BOLT (M6X1X40-MM)	
	44	3	**8J-1256**	1	CLIP	
M	45	3	**8T-0286**	1	BOLT (M5X0.8X8-MM)	
	46	3	**8T-0328**	2	WASHER-HARD (5.5X10X1-MM THK)	
	47	1,2,3,4	**8T-4121**	71	WASHER-HARD (11X21X2.5-MM THK)	
M	48	2	**8T-4133**	1	NUT (M10X1.5-THD)	
M	49	2,3	**8T-4136**	6	BOLT (M10X1.5X25-MM)	
M	50	1,2,3,4	**8T-4137**	48	BOLT (M10X1.5X20-MM)	
M	51	4	**8T-4179**	2	BOLT (M12X1.75X20-MM)	
M	52	2,3	**8T-4185**	3	BOLT (M10X1.5X50-MM)	
M	53	4	**8T-4186**	2	BOLT (M10X1.5X40-MM)	
M	54	3,4	**8T-4191**	3	BOLT (M10X1.5X16-MM)	
	55	4	**8T-4223**	2	WASHER-HARD (13.5X25.5X3-MM THK)	
	56	3	**8T-4224**	1	WASHER-HARD (8.8X16X2-MM THK)	
	57	2	**8T-4226**	1	WASHER-PLATED (10.5X45X3-MM THK)	
	58	2,3	**9X-8256**	6	WASHER (6.6X12X2-MM THK)	
J	59	4	**3S-2093**	2	STRAP-CABLE	
L	60	3	**3S-2093**	1	STRAP-CABLE	
L	61	3	**4P-7581**	1	CLIP	
L	62	3	**7K-1181**	2	STRAP-CABLE	
L	63	3	**8T-4121**	2	WASHER-HARD (11X21X2.5-MM THK)	
LM	64	3	**8T-4191**	2	BOLT (M10X1.5X16-MM)	
L	65	3	**116-0118**	1	CLIP	
	66	4	**306-8539**	1	HARNESS AS-PUMP	
	67	4	**299-2901**	1	GROMMET	
	68	4	**4P-8134**	1	CLIP	

E-ORDER BY THE CENTIMETER
J-USE FOR MACHINE MODEL 319D
L-USE FOR MACHINE MODEL 315D
M-METRIC PART

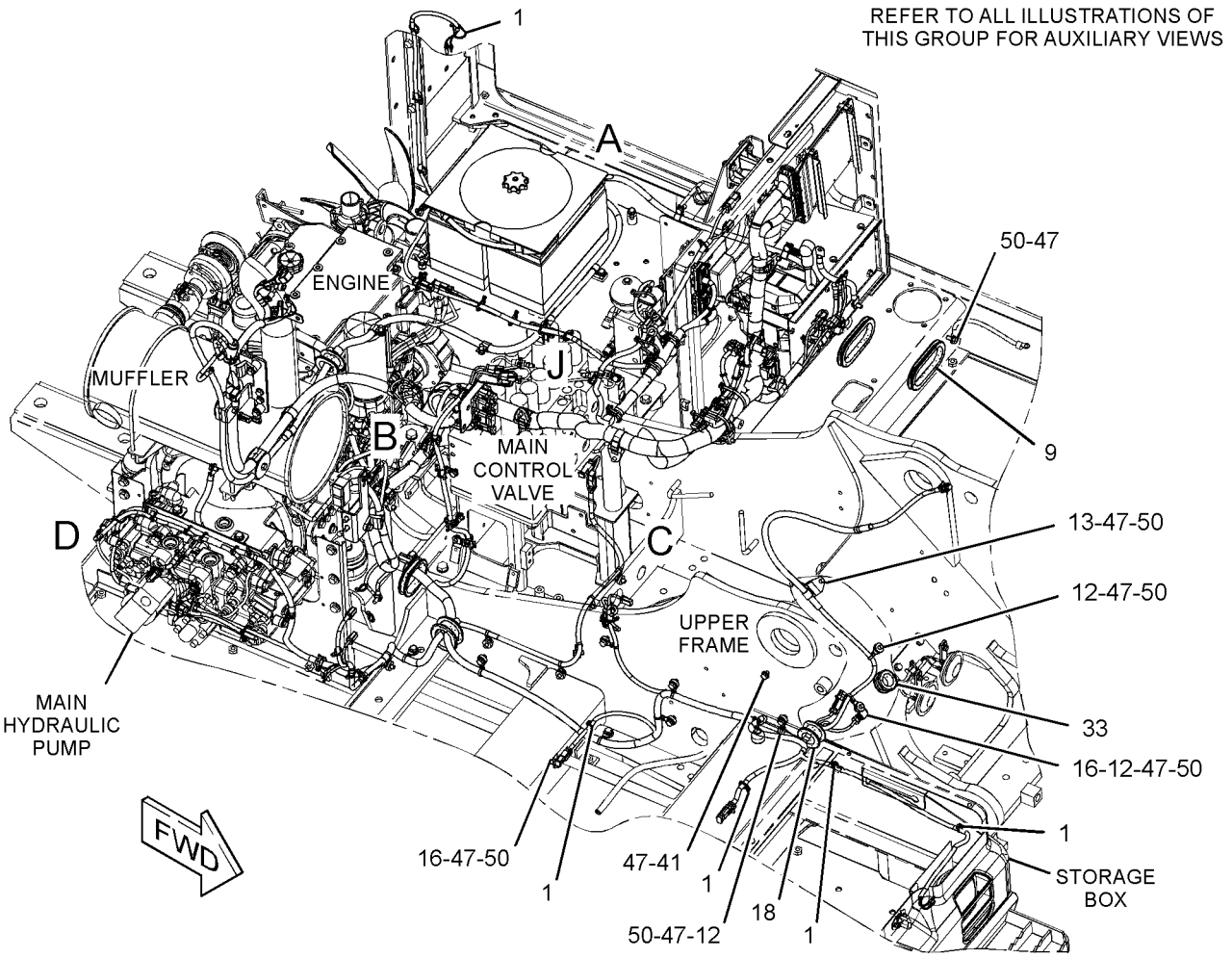

GRAPHIC #1 g01387325

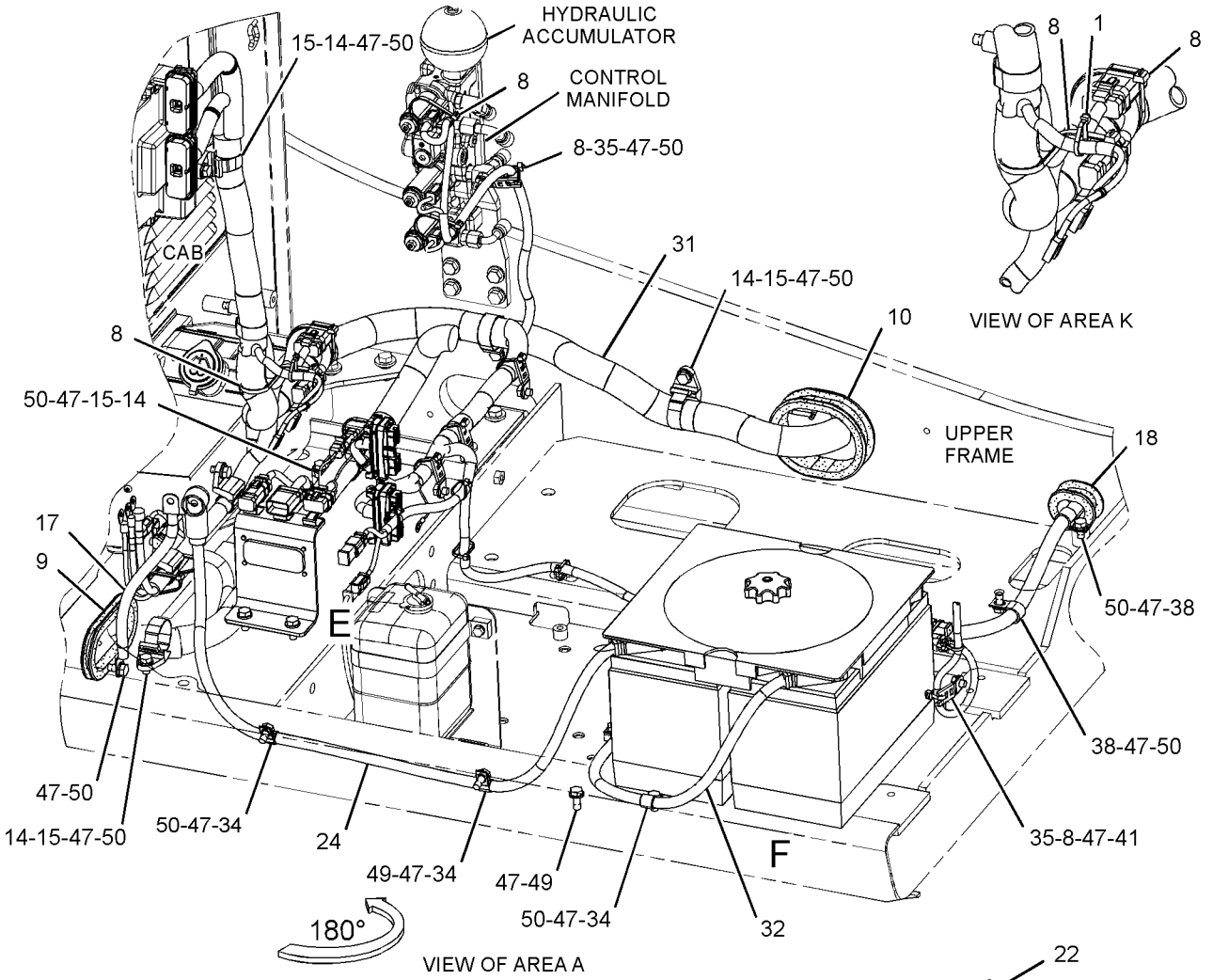

VIEW OF AREA A

VIEW OF AREA K

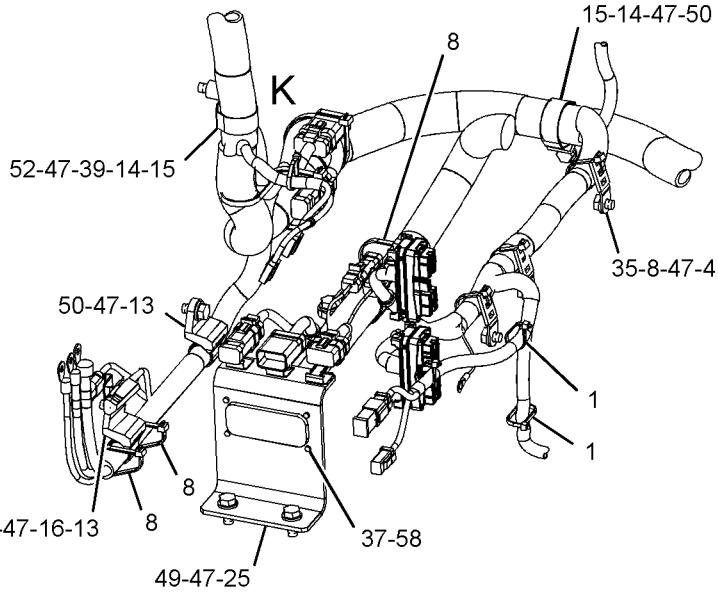

VIEW OF AREA E

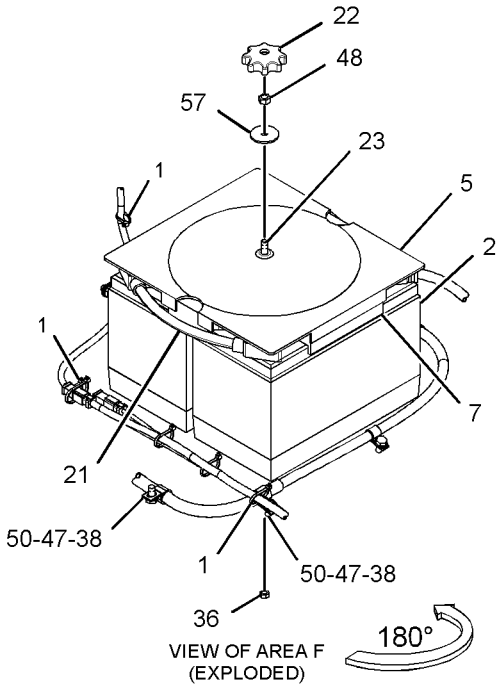

VIEW OF AREA F (EXPLODED)

GRAPHIC #2

g01387326

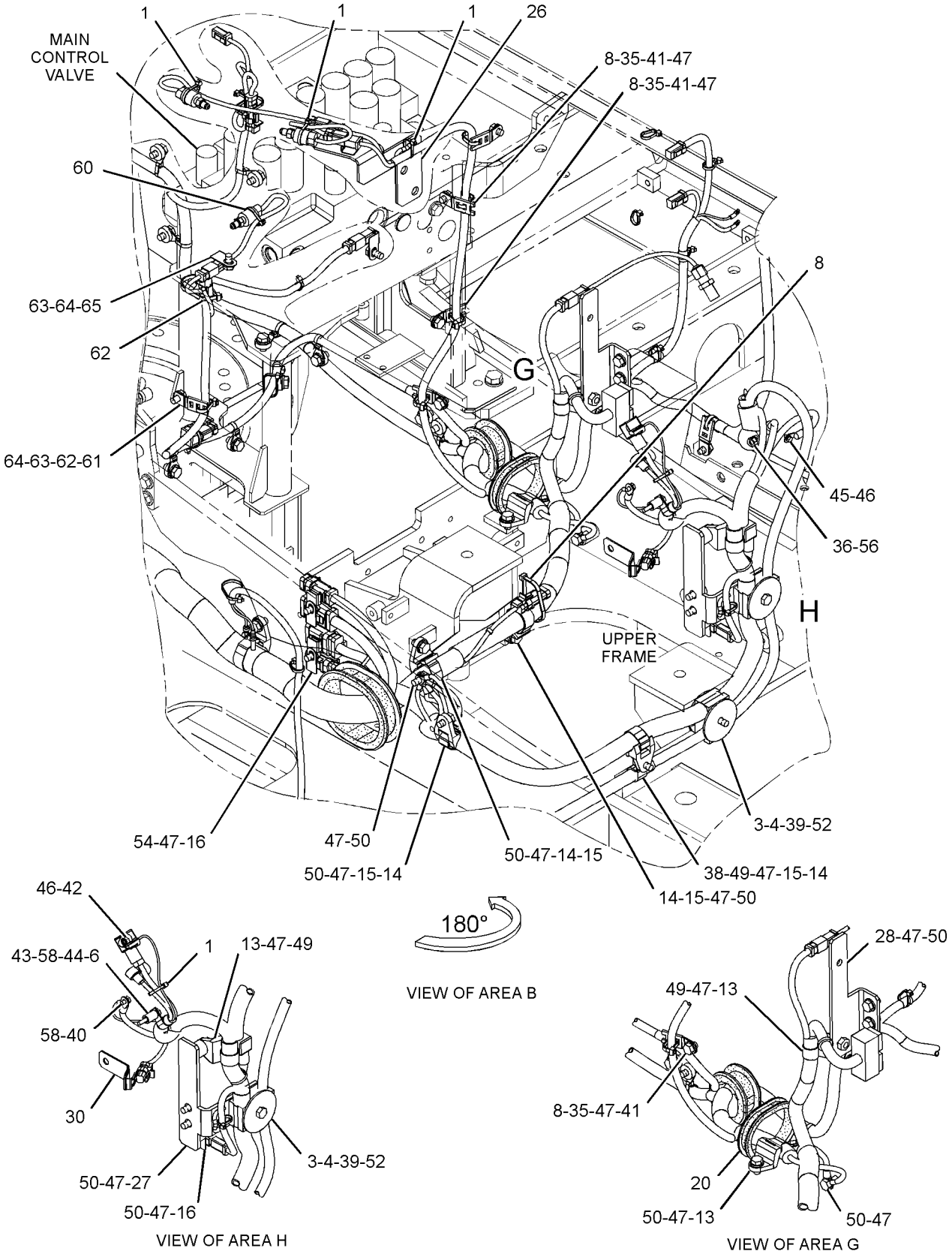

GRAPHIC #3

g01387327

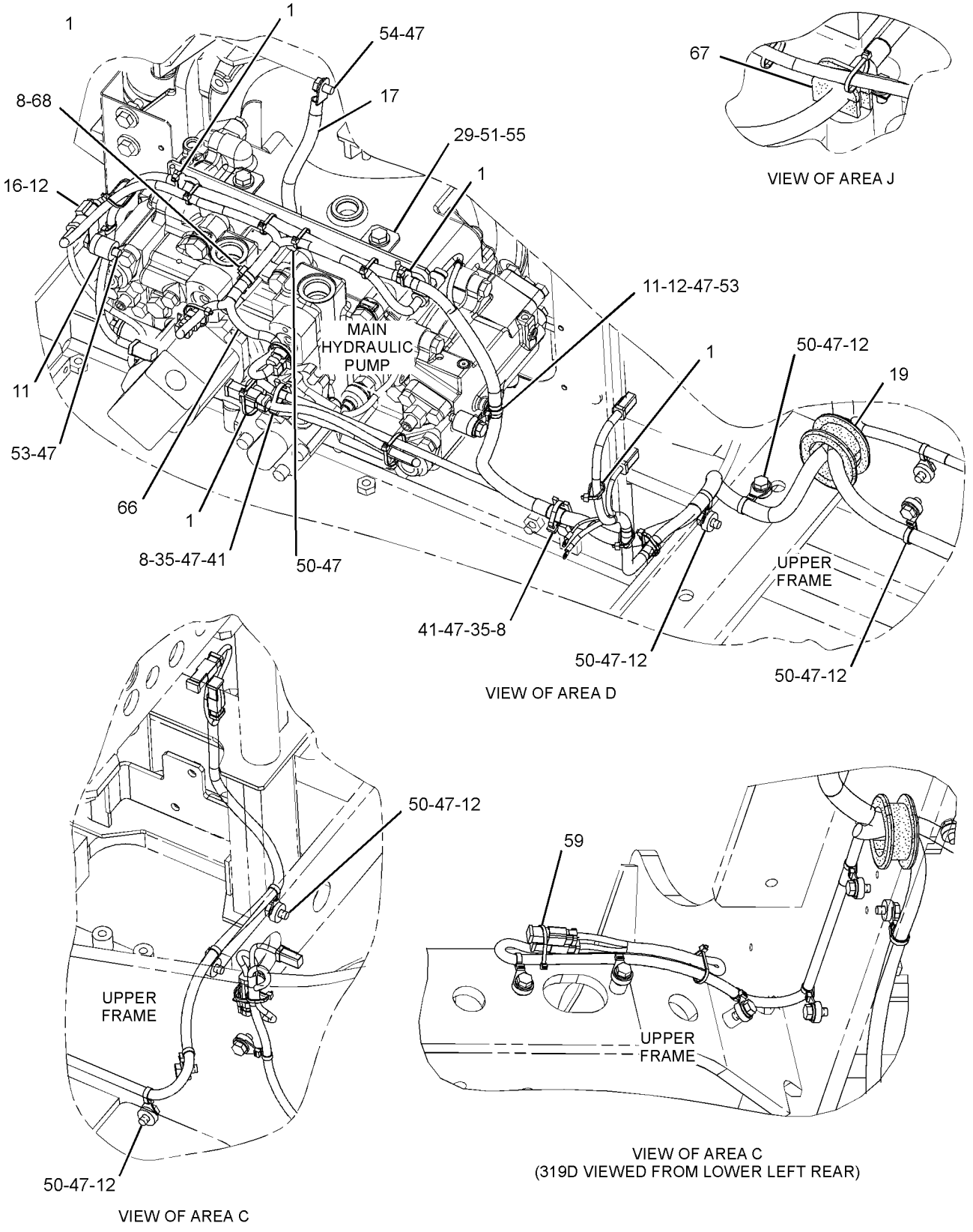

GRAPHIC #4 **<END>** g01391535

ELECTRICAL AND STARTING SYSTEM

259-5159 BATTERY & WIRING GP

S/N: CJN162-UP

PART OF 260-6960 CHASSIS AR

SMCS-1401, 1402, 1408 **i03022065**

NOTE	REF NO	GRAPHIC REF	PART NUMBER	QTY	PART NAME 1 2 3 4 5 6 (PRODUCT LEVEL)	SEE PAGE
C	1	1,2,3,4	**3S-2093**	40	STRAP-CABLE	
	2	2	**3T-5760**	2	BATTERY (12-VOLT, MAINTENANCE FREE, WET)	
	3	3	**4I-5479**	2	CLAMP	
	4	3	**4I-5480**	3	WASHER (11X72X3-MM THK)	
	5	2	**5I-8270**	1	COVER-BATTERY	
	6	3	**5I-9368**	1	SPACER (9.24X13.72X20.5-MM THK)	
	7	2	**6W-6005**	1	HOLD-DOWN-BATTERY	
	8	2,3,4	**7K-1181**	21	STRAP-CABLE	
	9	1,2	**7Y-5456**	2	GROMMET	
	10	2	**087-4587**	1	GROMMET	
	11	4	**091-9035**	2	SPACER (11X25X20-MM THK)	
	12	1,4	**111-4836**	17	CLIP	
	13	1,2,3	**111-4837**	6	CLIP	
	14	2,3	**111-4838**	11	CLIP	
	15	2,3	**111-4839**	11	STRAP	
C	16	1,2,3	**116-0118**	9	CLIP	
	17	2,4	**132-1805**	2	STRAP AS-GROUND	
	18	1,2	**134-3299**	2	GROMMET	
	19	4	**141-6526**	1	GROMMET	
	20	3	**145-0603**	1	GROMMET	
	21	2	**170-6929**	1	CABLE AS	
E		2	**5P-0761**		CABLE (00-GA, RED) (31-CM)	
		2	**9G-0002**	1	COVER-TERMINAL (RED)	
		2	**9G-0005**	1	COVER-TERMINAL (BLACK)	
		2	**8C-5918**	1	TERMINAL AS (NEGATIVE)	
		2	**8T-9756**	1	TERMINAL AS (POSITIVE)	
					(EACH TERMINAL AS INCLUDES)	
		2	**1M-6119**	1	BOLT (5/16-18X1.375-IN)	
		2	**1M-6120**	1	NUT (5/16-18-THD)	
	22	2	**238-2501**	1	KNOB	
	23	2	**238-2528**	1	ROD	
	24	2	**259-5300**	1	CABLE AS	
		2	**1S-7252**	1	TERMINAL-CABLE (00-GA, 3/8-IN BOLT)	
E		2	**5P-0747**		CABLE (00-GA, BLACK) (114-CM)	
		2	**7N-5274**	1	COVER-TERMINAL (BLACK)	
		2	**9G-8909**	1	COVER-TERMINAL (BLACK)	
		2	**3S-6050**	1	TERMINAL AS-BATTERY (NEGATIVE)	
		2	**1M-6119**	1	BOLT (5/16-18X1.375-IN)	
		2	**1M-6120**	1	NUT (5/16-18-THD)	
	25	2	**259-5301**	1	BRACKET AS	
	26	3	**259-5303**	1	BRACKET AS	
	27	3	**267-7683**	1	BRACKET AS	
	28	3	**267-7689**	1	BRACKET AS	
C	29	4	**306-8531**	1	BRACKET AS	
	30	3	**283-2662**	1	BRACKET AS	
C	31	2	**306-8718**	1	HARNESS AS-CHASSIS	
	32	2	**299-2810**	1	CABLE AS	
		2	**1S-7252**	1	TERMINAL-CABLE (00-GA, 3/8-IN BOLT)	
E		2	**5P-0761**		CABLE (00-GA, RED) (299-CM)	
		2	**8N-0869**	1	COVER-TERMINAL (RED)	
		2	**8N-1725**	1	COVER-TERMINAL (RED)	
		2	**3S-6049**	1	TERMINAL AS-BATTERY (POSITIVE)	
		2	**1M-6119**	1	BOLT (5/16-18X1.375-IN)	
		2	**1M-6120**	1	NUT (5/16-18-THD)	
	33	1	**1R-6072**	1	GROMMET	
	34	2	**4K-8864**	4	CLIP	

259-5159 **BATTERY & WIRING GP** *(contd.)* **i03022065**

NOTE	REF NO	GRAPHIC REF	PART NUMBER	QTY	PART NAME 1 2 3 4 5 6 (PRODUCT LEVEL)	SEE PAGE
	35	2,3,4	**4P-7581**	11	CLIP	
CM	36	2	**5C-7261**	1	NUT (M8X1.25-THD)	
M	37	2	**5C-7883**	4	BOLT-SOCKET HEAD (M6X1X16-MM)	
	38	2,3	**6D-4246**	5	CLIP	
	39	2,3	**6G-2263**	3	SPACER (10.5X19X28.5-MM THK)	
M	40	3	**7X-2619**	1	BOLT (M6X1X10-MM)	
M	41	1,2,3,4	**7X-2621**	11	BOLT (M10X1.5X12-MM)	
M	42	3	**7Y-5226**	1	NUT (M5X0.8-THD)	
M	43	3	**8C-8451**	1	BOLT (M6X1X40-MM)	
	44	3	**8J-1256**	1	CLIP	
C	46	3	**8T-0328**	1	WASHER-HARD (5.5X10X1-MM THK)	
	47	1,2,3,4	**8T-4121**	71	WASHER-HARD (11X21X2.5-MM THK)	
M	48	2	**8T-4133**	1	NUT (M10X1.5-THD)	
M	49	2,3	**8T-4136**	6	BOLT (M10X1.5X25-MM)	
M	50	1,2,3,4	**8T-4137**	48	BOLT (M10X1.5X20-MM)	
M	51	4	**8T-4179**	2	BOLT (M12X1.75X20-MM)	
M	52	2,3	**8T-4185**	3	BOLT (M10X1.5X50-MM)	
M	53	4	**8T-4186**	2	BOLT (M10X1.5X40-MM)	
M	54	3,4	**8T-4191**	3	BOLT (M10X1.5X16-MM)	
	55	4	**8T-4223**	2	WASHER-HARD (13.5X25.5X3-MM THK)	
	57	2	**8T-4226**	1	WASHER-PLATED (10.5X45X3-MM THK)	
	58	2,3	**9X-8256**	6	WASHER (6.6X12X2-MM THK)	
J	59	4	**3S-2093**	2	STRAP-CABLE	
L	60	3	**3S-2093**	1	STRAP-CABLE	
L	61	3	**4P-7581**	1	CLIP	
L	62	3	**7K-1181**	2	STRAP-CABLE	
L	63	3	**8T-4121**	2	WASHER-HARD (11X21X2.5-MM THK)	
LM	64	3	**8T-4191**	2	BOLT (M10X1.5X16-MM)	
L	65	3	**116-0118**	1	CLIP	
	67	4	**299-2901**	1	GROMMET	
	68	4	**4P-8134**	1	CLIP	

C-CHANGE FROM PREVIOUS TYPE
E-ORDER BY THE CENTIMETER
J-USE FOR MACHINE MODEL 319D
L-USE FOR MACHINE MODEL 315D
M-METRIC PART

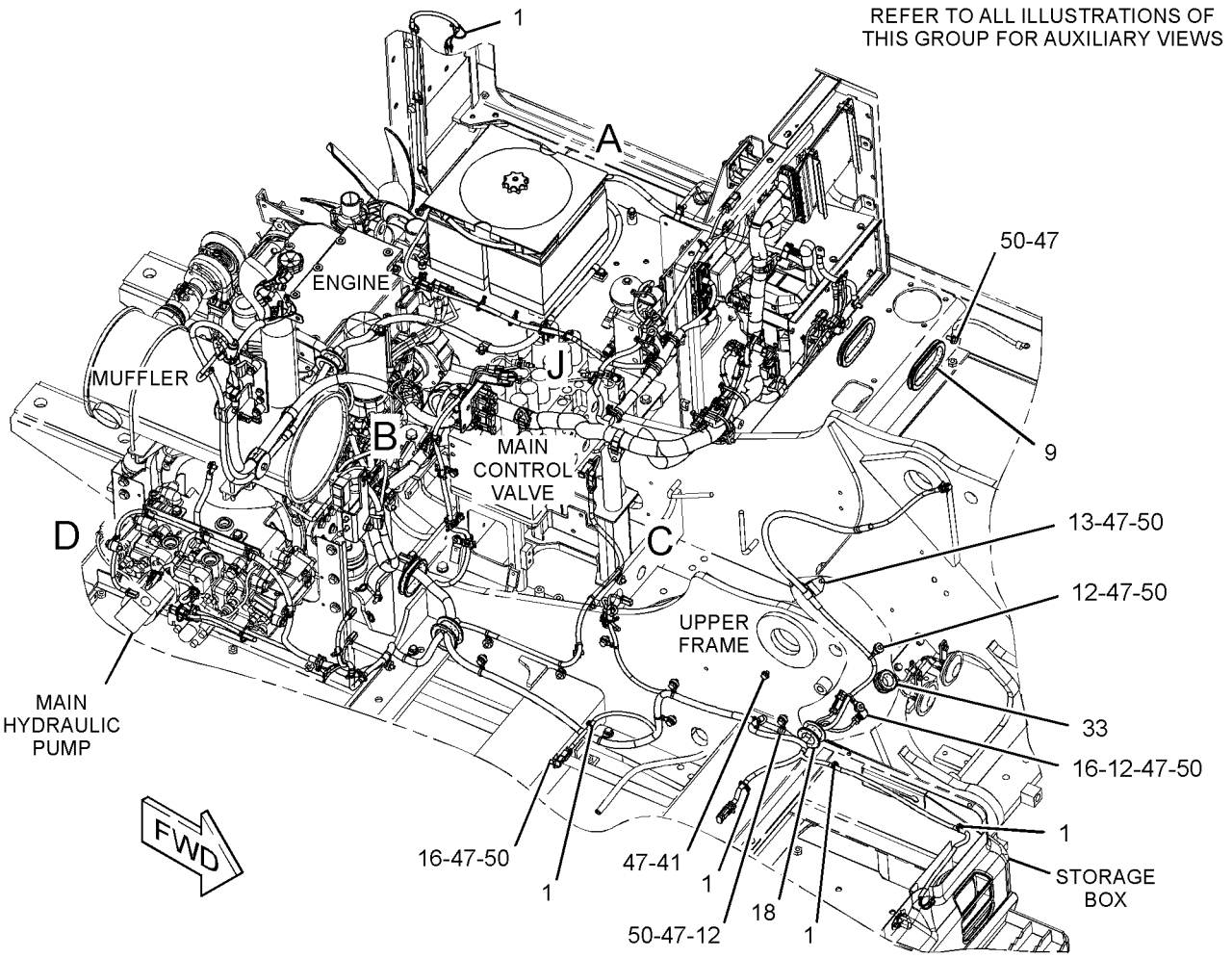

GRAPHIC #1 g01494413

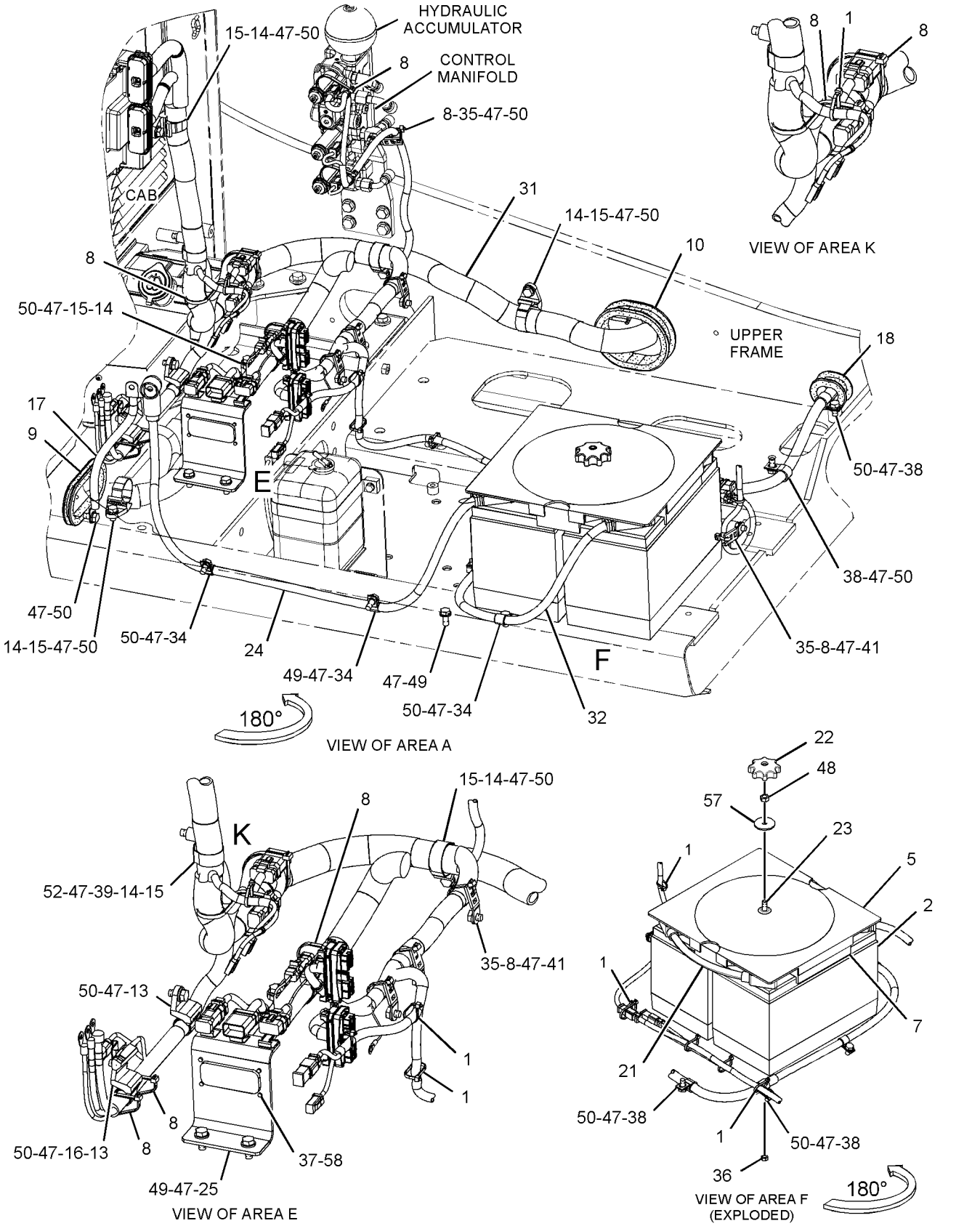

GRAPHIC #2

g01387326

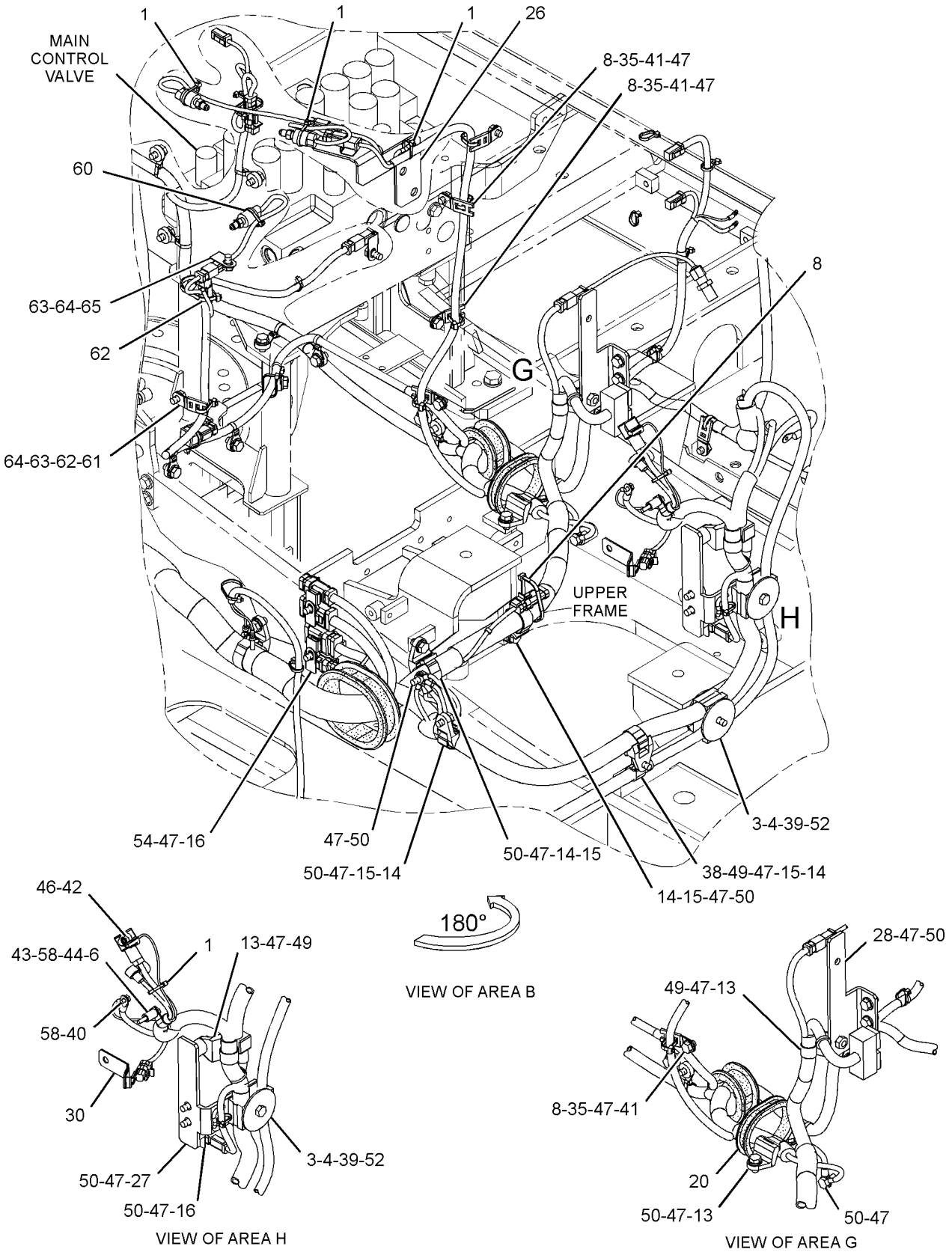

GRAPHIC #3

g01494433

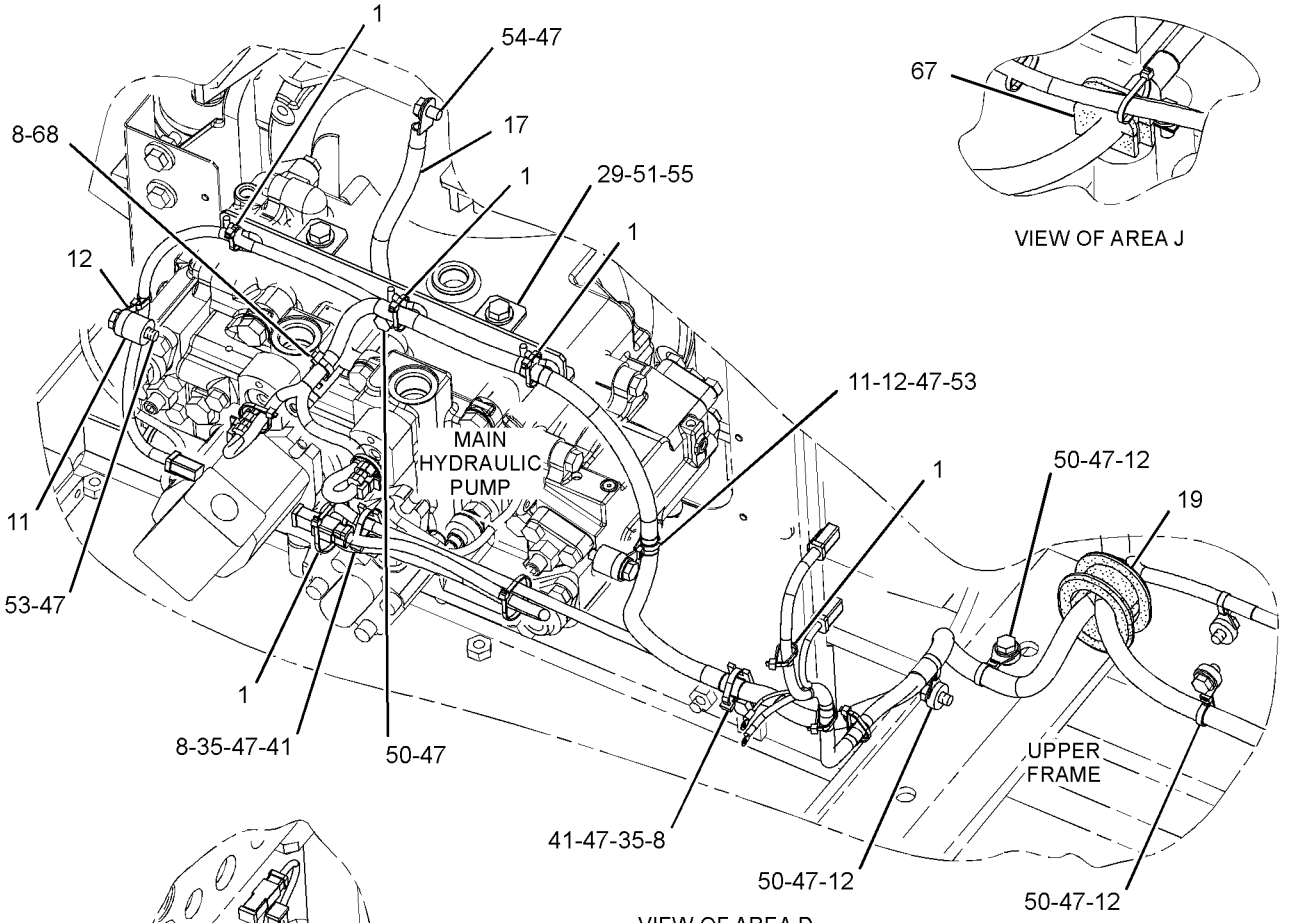

VIEW OF AREA J

VIEW OF AREA D

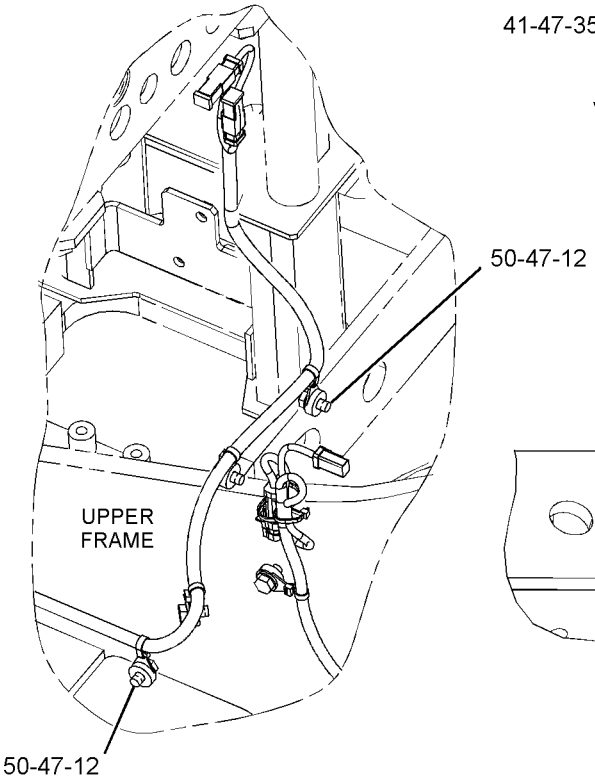

VIEW OF AREA C

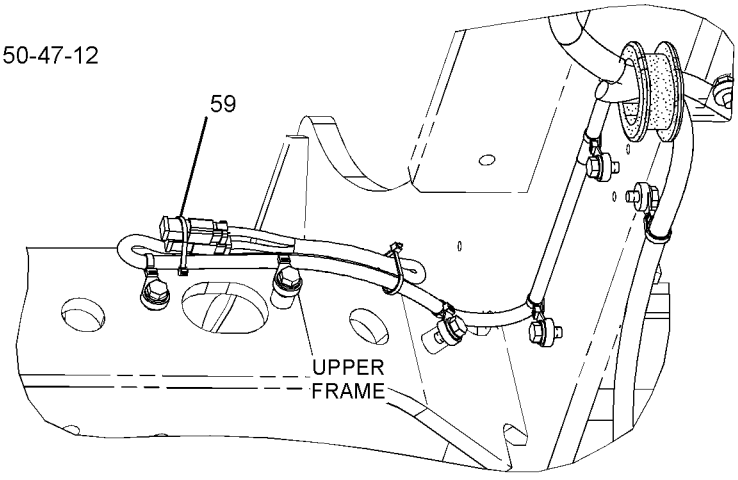

VIEW OF AREA C
(319D VIEWED FROM LOWER LEFT REAR)

GRAPHIC #4 **<END>** g01494453

259-5050 BATTERY GP–COLD WEATHER

S/N: CJN1-UP

AN ATTACHMENT

SMCS-1401 **i02419977**

NOTE	REF NO	GRAPHIC REF	PART NUMBER	QTY	PART NAME 1 2 3 4 5 6 (PRODUCT LEVEL)	SEE PAGE
	1	1	**102-5420**	1	FILM-INSTRUCTION (COLD WEATHER)	
	2	1	**9X-3404**	2	BATTERY (12-VOLT, MAINTENANCE FREE, WET)	

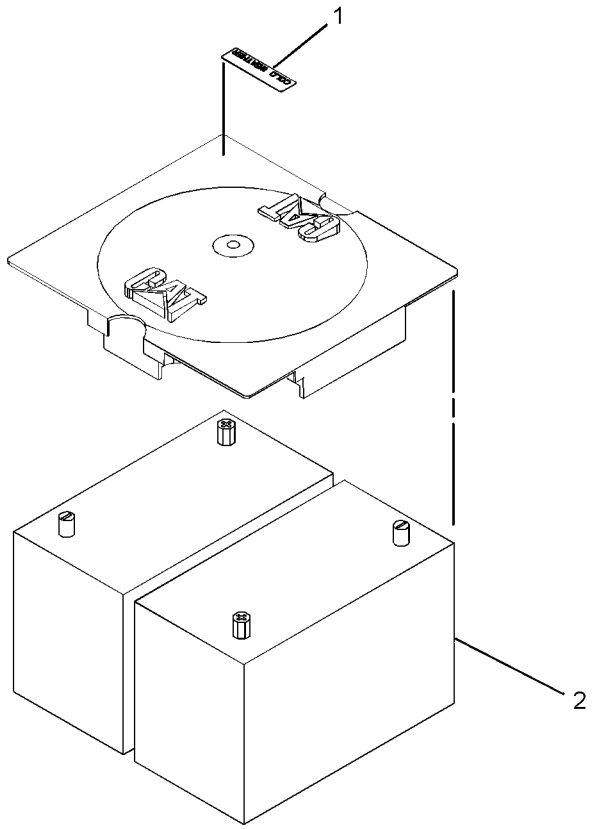

GRAPHIC #1 **<END>** g01226775

124-5814 BLOCK GP-JUNCTION

S/N: CJN1-UP

PART OF 259-5166 WIRING GP-AUX START RECEPTACLE

AN ATTACHMENT

SMCS-7426 **i02760068**

NOTE	REF NO	GRAPHIC REF	PART NUMBER	QTY	PART NAME 1 2 3 4 5 6 (PRODUCT LEVEL)	SEE PAGE
	1	1	**8C-6358**	1	BLOCK GP-JUNCTION (BATTERY)	
		1	**1D-5117**	3	NUT-JAM (1/2-13-THD)	
	2	1	**7F-0560**	6	WASHER (0.516X0.938X0.101-IN THK)	
D	3	1	**6V-2722**		TUBE-HEAT SHRINK (25.4-MM DIA) (0.1-M)	
	4	1	**8T-3518**	6	NUT-FULL (1/2-13-THD)	

D-ORDER BY THE METER

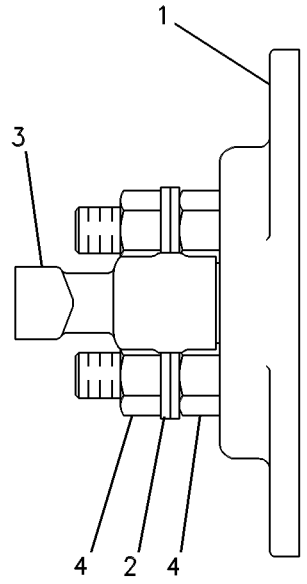

GRAPHIC #1 **<END>** g00108983

327-3329 CAMERA & MOUNTING GP

S/N: CJN1-UP
PART OF 330-8753 INSTALLATION AR
AN ATTACHMENT

SMCS-7348 **i03114041**

NOTE	REF NO	GRAPHIC REF	PART NUMBER	QTY	PART NAME 1 2 3 4 5 6 (PRODUCT LEVEL)	SEE PAGE
Y	1	1	*313-7833*	1	CAMERA GP (WITH MOUNTING)	143
	2	1	**320-5396**	1	COVER	
	3	1	**8T-4121**	4	WASHER-HARD (11X21X2.5-MM THK)	
M	4	1	**8T-4137**	4	BOLT (M10X1.5X20-MM)	

M-METRIC PART
Y-SEPARATE ILLUSTRATION

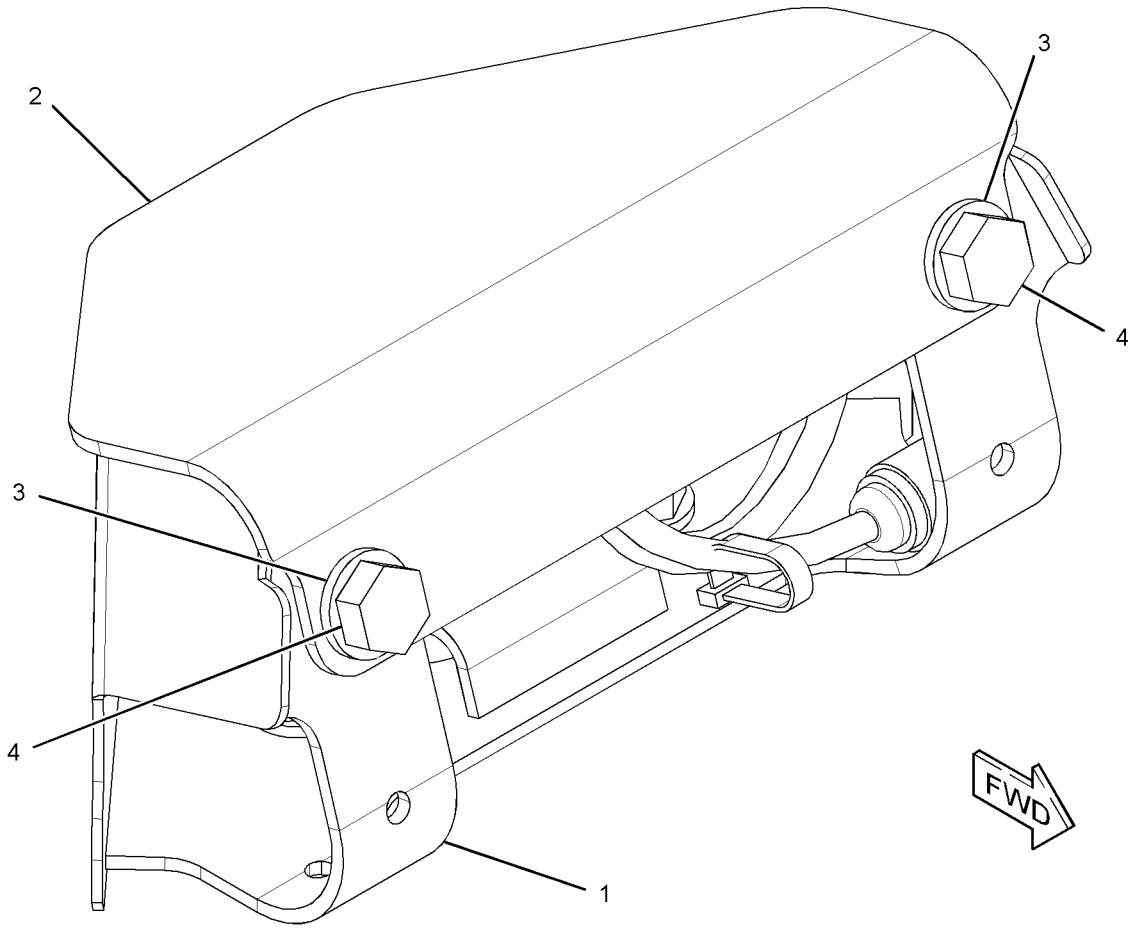

GRAPHIC #1 **<END>** g01609019

286-4271 CAMERA GP

S/N: CJN1-UP
PART OF 313-7833 CAMERA GP
AN ATTACHMENT

SMCS-7348 **i02957535**

NOTE	REF NO	GRAPHIC REF	PART NUMBER	QTY	PART NAME 1 2 3 4 5 6 (PRODUCT LEVEL)	SEE PAGE
					AVAILABLE REPAIR KIT(S):	
			251-4162	1	KIT-BRACKET (CAMERA)	
					(KIT INCLUDES BRACKET, BOLTS, LOCKNUTS, SOCKET BOLTS, GASKET, & ALLEN KEY)	

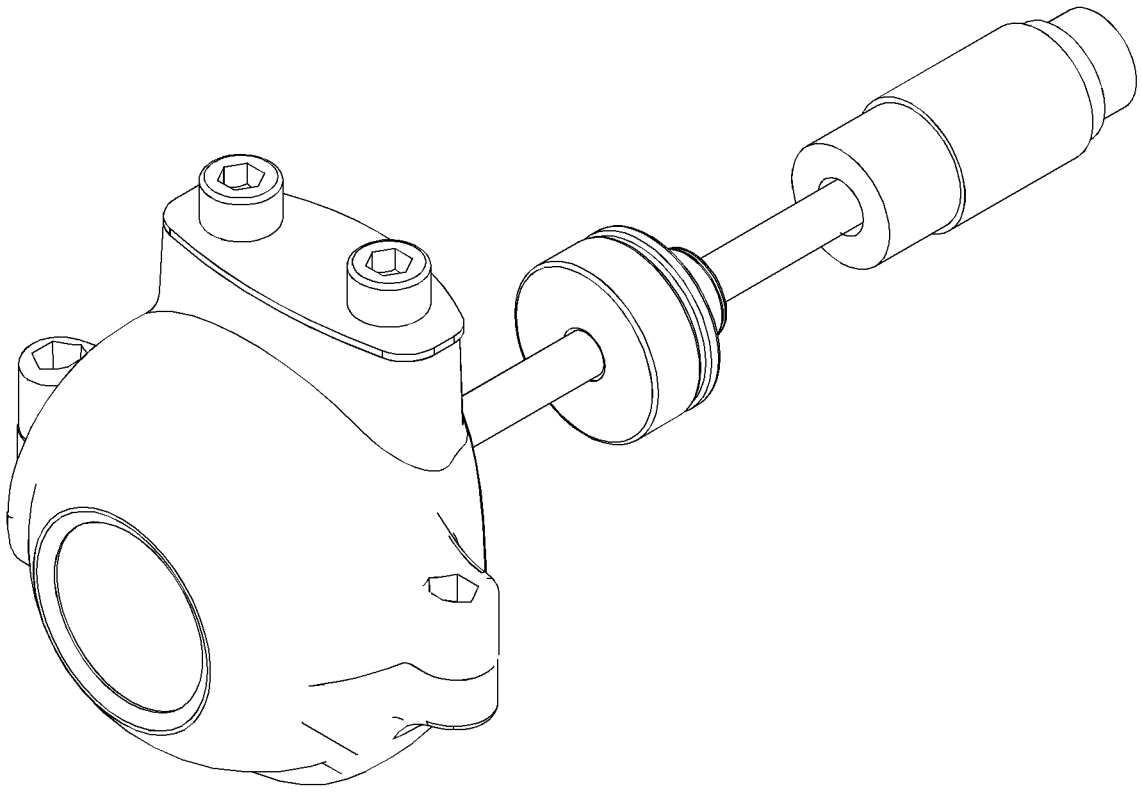

GRAPHIC #1 **<END>** g01356476

313-7833 CAMERA GP

S/N: CJN1-UP
PART OF 327-3329 CAMERA & MOUNTING GP
AN ATTACHMENT

SMCS-7348 **i03045209**

NOTE	REF NO	GRAPHIC REF	PART NUMBER	QTY	PART NAME 1 2 3 4 5 6 (PRODUCT LEVEL)	SEE PAGE
	1	1	**096-0061**	1	STRAP-CABLE	
Y	2	1	**286-4271**	1	CAMERA GP	142
	3	1	**320-5392**	1	BRACKET AS	
M	4	1	**8T-4970**	2	BOLT (M6X1X14-MM)	
	5	1	**9X-8256**	2	WASHER (6.6X12X2-MM THK)	

M-METRIC PART
Y-SEPARATE ILLUSTRATION

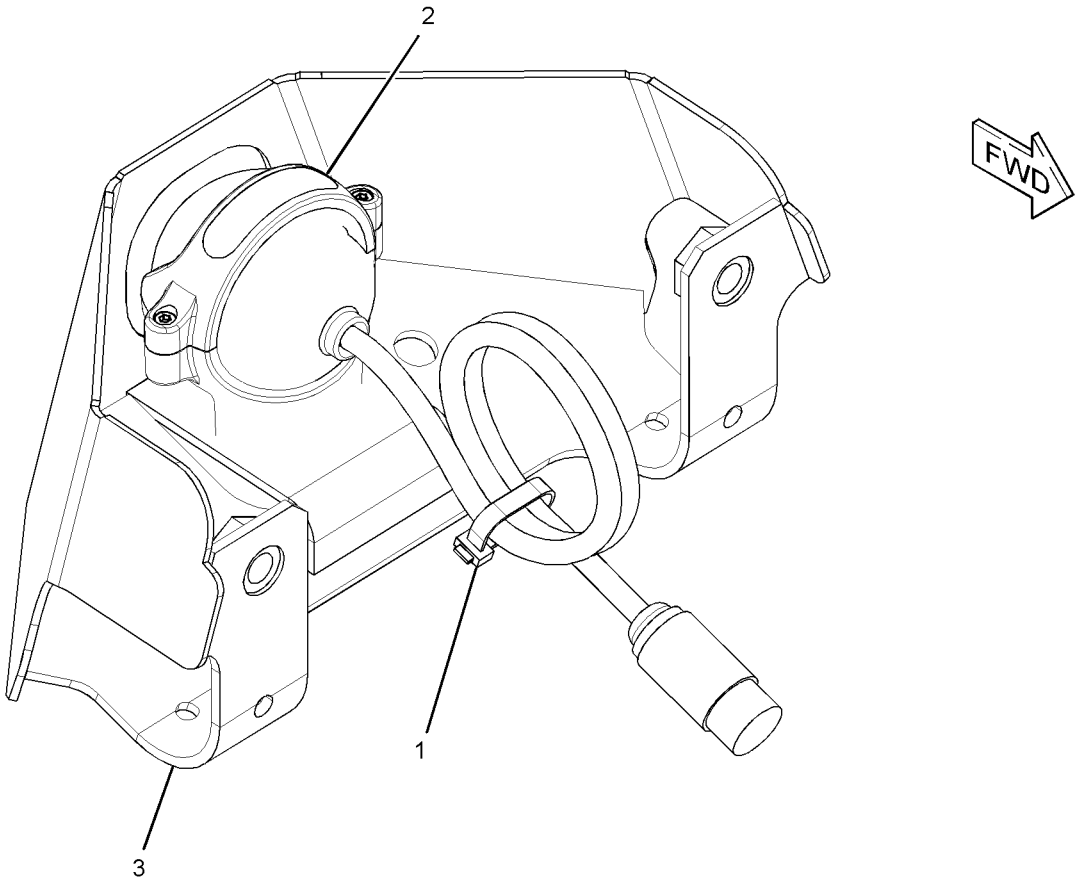

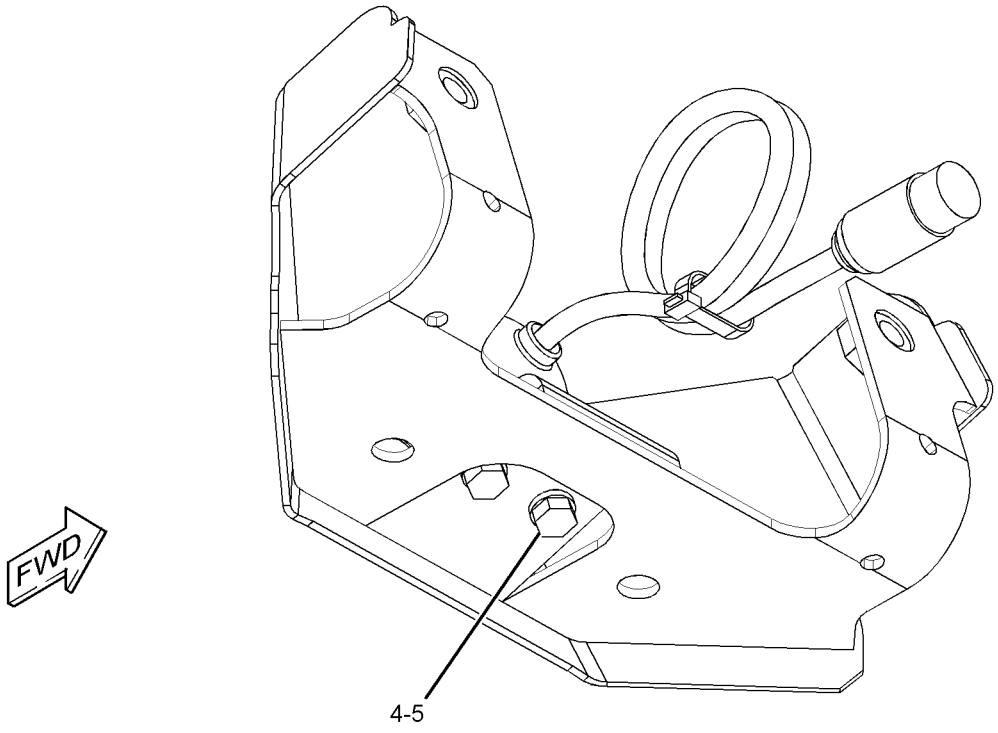

GRAPHIC #1 **<END>** g01515863

247-5284 CONTROL & MTG GP-COMMUNICATION–PRODUCT LINK

S/N: CJN1-UP

PART OF 260-7072 INSTALLATION AR-COMMUNICATION

AN ATTACHMENT

SMCS-7606 **i02518472**

NOTE	REF NO	GRAPHIC REF	PART NUMBER	QTY	PART NAME 1 2 3 4 5 6 (PRODUCT LEVEL)	SEE PAGE
	1	1	**8C-5608**	4	SPACER (6.5X9.5X25.4-MM THK)	
	2	1	**9X-9896**	8	MOUNT (ISOLATION)	
Y	3	1	**239-9954**	1	CONTROL GP-UNPROGRAMMED (PRODUCT LINK 300) (PRODUCT LINK 300)	152
	4	1	**260-2042**	1	BRACKET AS	
M	5	1	**8C-8451**	4	BOLT (M6X1X40-MM)	
	6	1	**9X-6165**	4	WASHER (6.5X22X2.5-MM THK)	

M-METRIC PART
Y-SEPARATE ILLUSTRATION

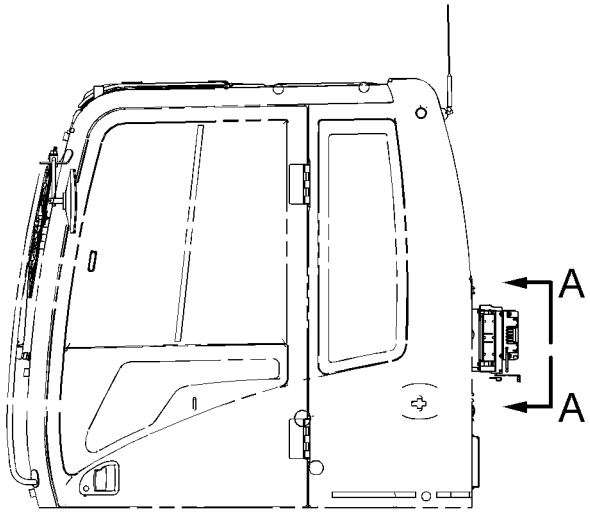

LEFT SIDE VIEW

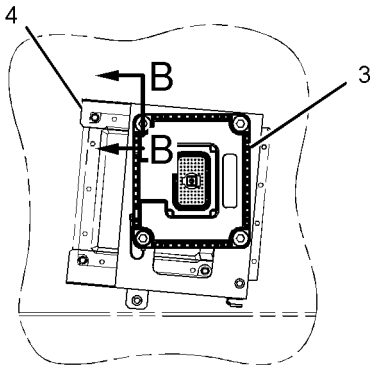

VIEW A-A

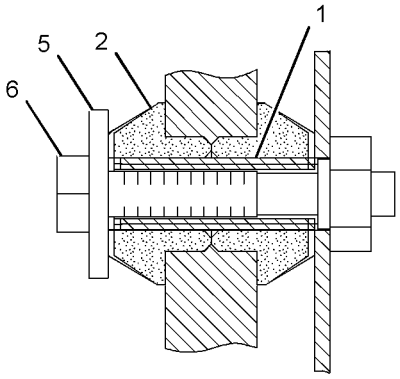

SECTION B-B

GRAPHIC #1 **<END>** g01126708

309-5842 CONTROL & MTG GP-COMMUNICATION–

PRODUCT LINK 321SR

S/N: CJN1-UP

PART OF 301-2590 INSTALLATION AR-COMMUNICATION

AN ATTACHMENT

SMCS-7606 **i02898031**

NOTE	REF NO	GRAPHIC REF	PART NUMBER	QTY	PART NAME 1 2 3 4 5 6 (PRODUCT LEVEL)	SEE PAGE
	1	1	**8C-5608**	4	SPACER (6.5X9.5X25.4-MM THK)	
	2	1	**9X-9896**	8	MOUNT (ISOLATION)	
	3	1	**260-2042**	1	BRACKET AS	
Y	4	1	*262-1421*	1	ELECTRONICS GP-COMMUNICATION (PRODUCT LINK 300)	153
M	5	1	**8C-8451**	4	BOLT (M6X1X40-MM)	
	6	1	**9X-6165**	4	WASHER (6.5X22X2.5-MM THK)	

M-METRIC PART
Y-SEPARATE ILLUSTRATION

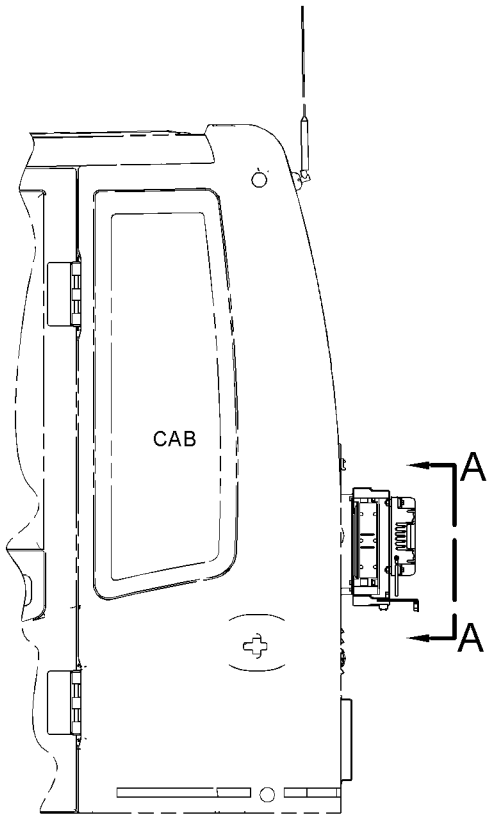

LEFT SIDE VIEW

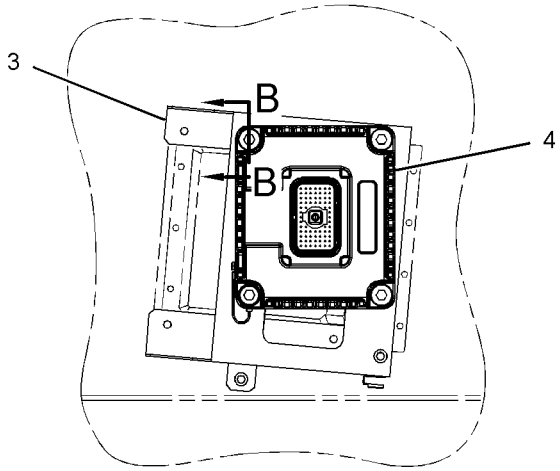

VIEW A-A

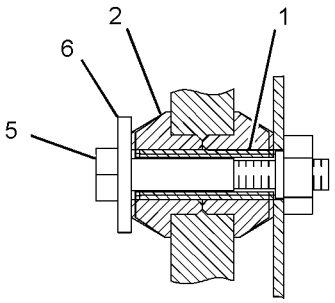

SECTION B-B

GRAPHIC #1 **<END>** g01447041

319-4258 CONTROL & MTG GP-COMMUNICATION–

PRODUCT LINK 121SR

S/N: CJN1-UP

PART OF 301-2586, 301-2590 INSTALLATION AR-COMMUNICATION

AN ATTACHMENT

SMCS-7606 **i02942604**

NOTE	REF NO	GRAPHIC REF	PART NUMBER	QTY	PART NAME 1 2 3 4 5 6 (PRODUCT LEVEL)	SEE PAGE
	1	1	**3S-2093**	4	STRAP-CABLE	
	2	1	**7K-1181**	4	STRAP-CABLE	
Y	3	1	**263-9088**	1	CONTROL GP-COMMUNICATION (PRODUCT LINK 121SR)	151
M	4	1	**8T-4138**	4	BOLT (M6X1X20-MM)	
	5	1	**9X-8256**	4	WASHER (6.6X12X2-MM THK)	
	6	1	**230-1340**	1	FILM-WARNING (PRODUCT LINK RADIO, U.S.)	
					–OR–	
F			**230-1341**	1	FILM-WARNING (PRODUCT LINK RADIO, INTL)	

F-NOT SHOWN
M-METRIC PART
Y-SEPARATE ILLUSTRATION

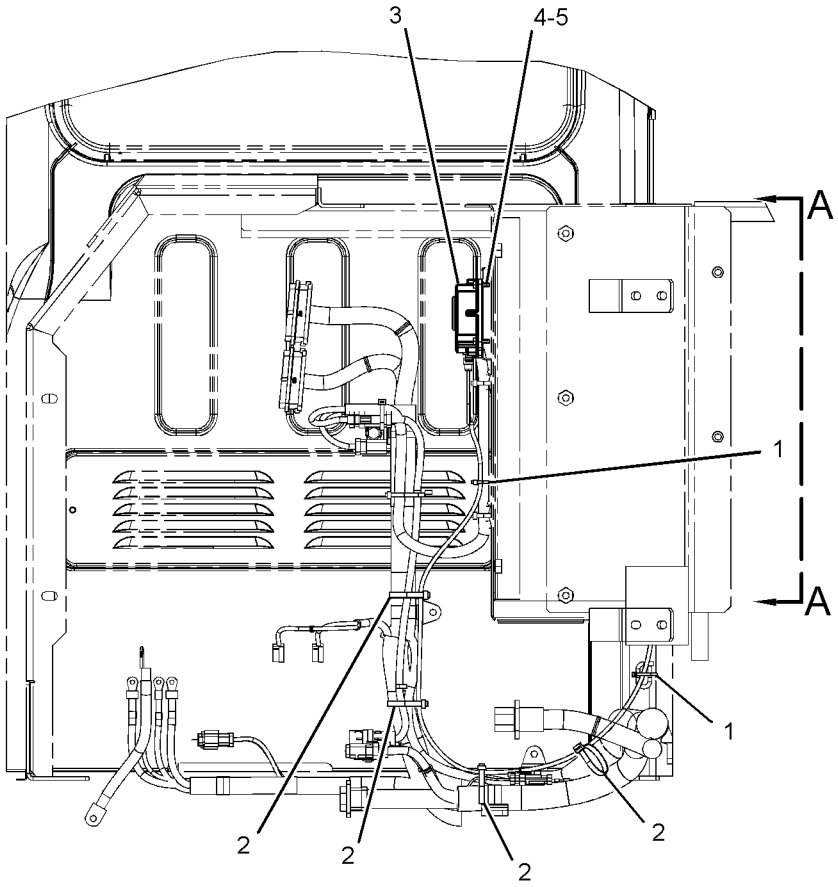

REAR VIEW
(CAB)

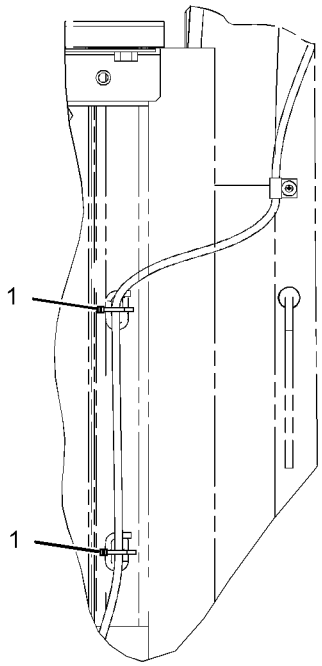

VIEW A-A

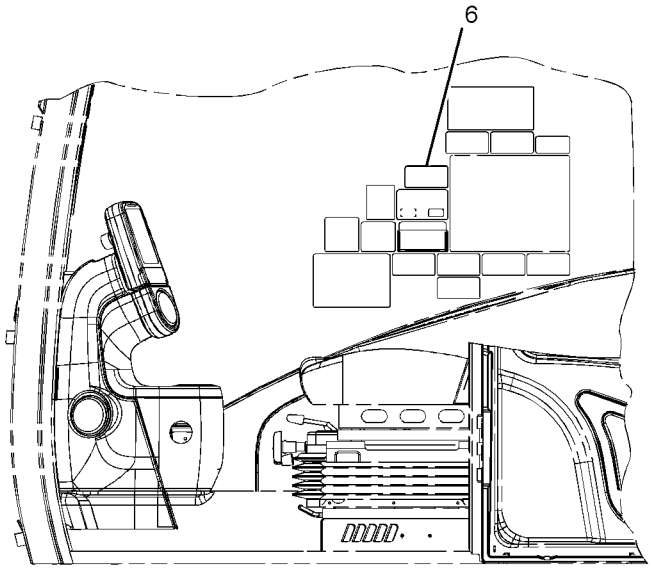

LEFT SIDE VIEW
(CAB)

GRAPHIC #1 **<END>** g01457050

296-4800 CONTROL & MTG GP-ENGINE ELEK

S/N: JKH1-UP
PART OF 272-4817 ENGINE AR
ALSO AN ATTACHMENT

SMCS-1901 **i02710566**

NOTE	REF NO	GRAPHIC REF	PART NUMBER	QTY	PART NAME 1 2 3 4 5 6 (PRODUCT LEVEL)	SEE PAGE
	1	1	**296-4761**	1	BRACKET	
	2	1	**296-4762**	3	BOLT	
	3	1	**294-1775**	2	BOLT (M10X1.5X23-MM)	
	4	1	**286-3683**	1	CONTROL GP-UNPROGRAMMED	
	5	1	**270-6259**	4	BOLT (M8X1.25X40-MM)	
	6	1	**8T-4224**	4	WASHER-HARD (8.8X16X2-MM THK)	
	7	1	**155-0576**	8	MOUNT-ISOLATION	
	8	1	**6I-1418**	4	SPACER (8.2X12.7X28.7-MM THK)	

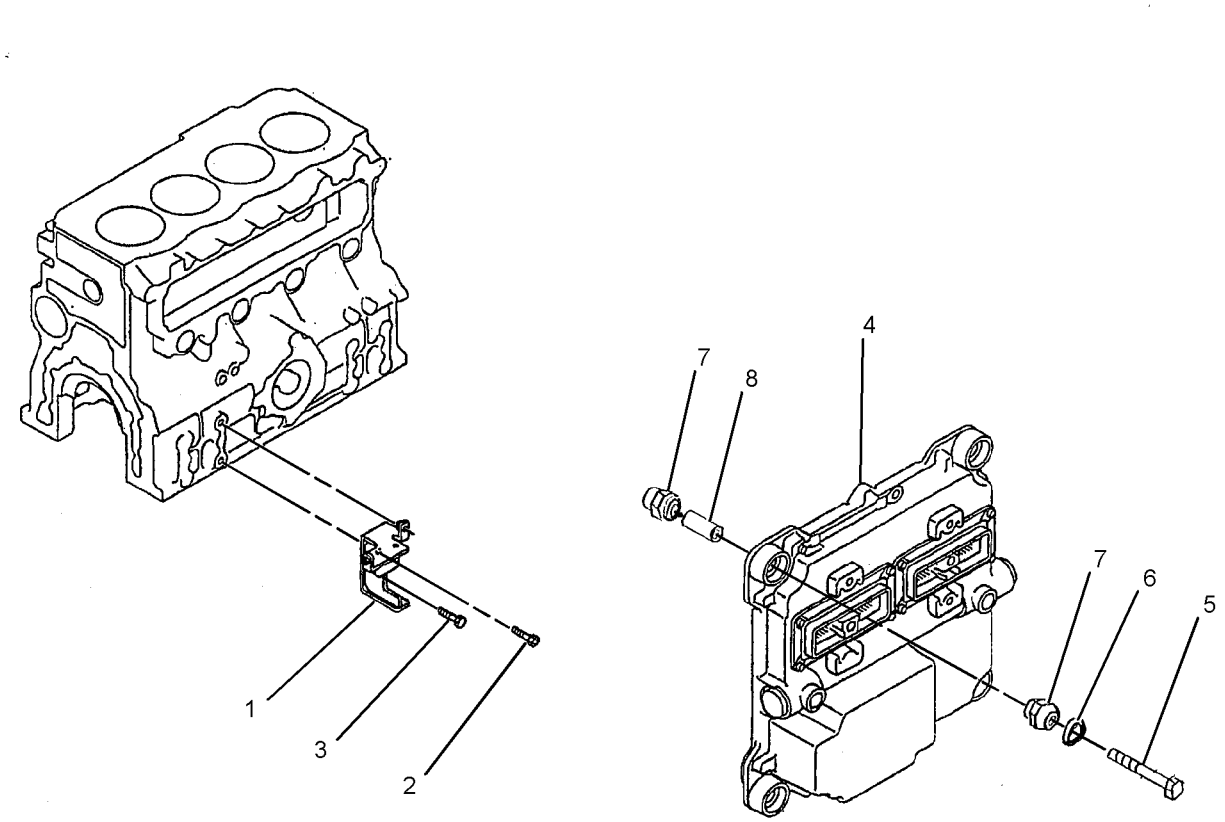

GRAPHIC #1 **<END>** g01402501

221-8872 CONTROL & MTG GP-MACHINE

S/N: CJN1-UP

PART OF 259-7193 OPERATOR AR

SMCS-1931, 7600 **i02348301**

NOTE	REF NO	GRAPHIC REF	PART NUMBER	QTY	PART NAME 1 2 3 4 5 6 (PRODUCT LEVEL)	SEE PAGE
	1	1	**221-8874**	1	CONTROL GP-UNPROGRAMMED	
M	2	1	**9X-2480**	4	BOLT (M6X1X45-MM)	
	3	1	**9X-8256**	4	WASHER (6.6X12X2-MM THK)	

M-METRIC PART

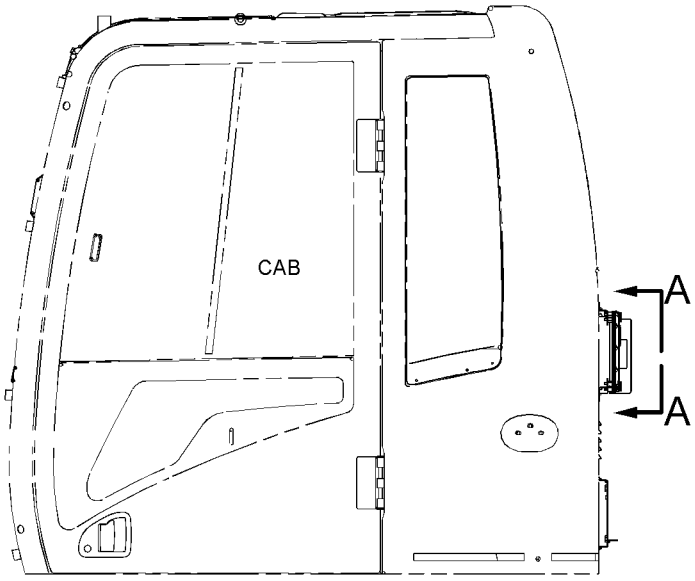

LEFT SIDE VIEW

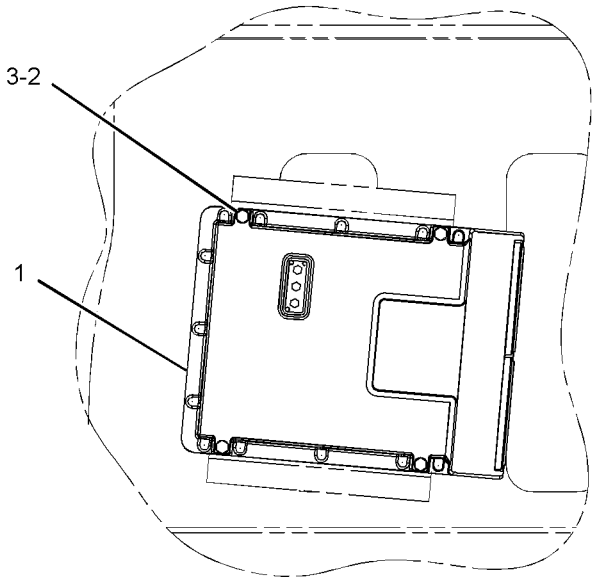

VIEW A-A

GRAPHIC #1 **<END>** g01150750

263-9088 CONTROL GP-COMMUNICATION—PRODUCT LINK 121SR

S/N: CJN1-UP

PART OF 319-4258 CONTROL & MTG GP-COMMUNICATION, 270-5604 MOUNTING GP-CONTROL AN ATTACHMENT

SMCS-7606, 7610, 7620 **i03135906**

NOTE	PART NUMBER	QTY	PART NAME 1 2 3 4 5 6 (PRODUCT LEVEL)	SEE PAGE
	330-3408	1	SOFTWARE GP-COMMUNICATION (PRODUCT LINK 121SR)	

<END>

239-9954 CONTROL GP-UNPROGRAMMED

S/N: CJN1-UP
COMMUNICATION
PART OF 247-5284 CONTROL & MTG GP-COMMUNICATION
AN ATTACHMENT

SMCS-7610 **i02418848**

NOTE	REF NO	GRAPHIC REF	PART NUMBER	QTY	PART NAME 1 2 3 4 5 6 (PRODUCT LEVEL)	SEE PAGE
	1	1	**7X-6315**	1	STRAP AS-GROUND	
	2	1	**126-7574**	1	SCREW-PAN HEAD (8-32X9.52-MM)	
	3	1	**134-4126**	1	WASHER (4.52X8.28X0.76-MM THK)	

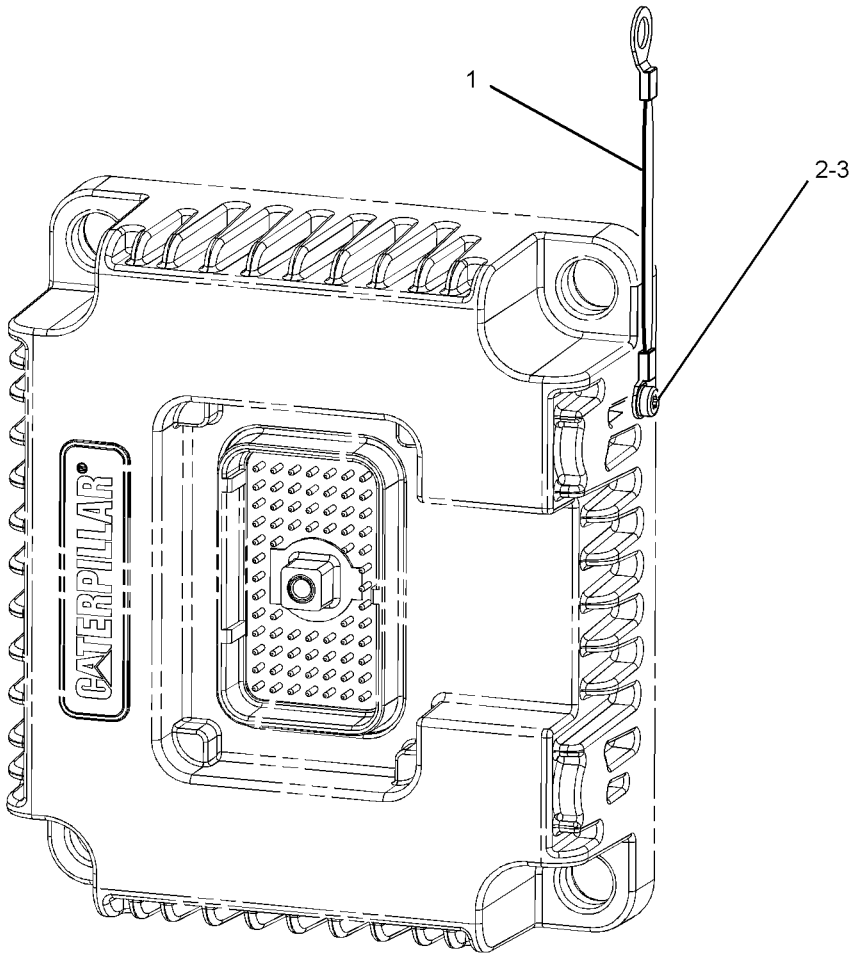

GRAPHIC #1 **<END>** g01213660

262-1421 ELECTRONICS GP-COMMUNICATION–
PRODUCT LINK 300
S/N: CJN1-UP
PART OF 309-5842 CONTROL & MTG GP-COMMUNICATION
AN ATTACHMENT

SMCS-7606, 7610, 7620 **i03136107**

NOTE	PART NUMBER	QTY	PART NAME 1 2 3 4 5 6 (PRODUCT LEVEL)	SEE PAGE
	330-3409	1	SOFTWARE GP-COMMUNICATION (PRODUCT LINK 300)	
			–OR–	
	330-3410	1	SERVICE GP-COMMUNICATION (PRODUCT LINK 300)	
			(OPTIONAL SERVICE REPLACEMENT)(INCLUDES CONTROL GP & SOFTWARE)	
	7X-6315	1	STRAP AS-GROUND	
	126-7574	1	SCREW-PAN HEAD (8-32X9.52-MM)	
	134-4126	1	WASHER (4.52X8.28X0.76-MM THK)	

<END>

262-2043 ELECTRONICS GP-COMMUNICATION–
PRODUCT LINK 300
S/N: CJN1-UP
PART OF 260-7072 INSTALLATION AR-COMMUNICATION
AN ATTACHMENT

SMCS-7606, 7610, 7620 **i02485254**

NOTE	PART NUMBER	QTY	PART NAME 1 2 3 4 5 6 (PRODUCT LEVEL)	SEE PAGE
	265-9642	1	SOFTWARE GP-COMMUNICATION (PRODUCT LINK 300)	
			(SOFTWARE ONLY)	
			–OR–	
	265-9643	1	SERVICE GP-COMMUNICATION (PRODUCT LINK 300)	
			(INCLUDES SOFTWARE)	
			(OPTIONAL SERVICE REPLACEMENT)	
	134-3379	1	FILM-IDENTIFICATION (ELECTRONIC CONTROL MODULE)	

<END>

290-9441 ELECTRONICS GP-MACHINE–HIGH AMBIENT
S/N: CJN1-UP
PART OF 260-7009 COOLING AR-HIGH AMBIENT TEMP
AN ATTACHMENT

SMCS-7610, 7620 **i02942692**

NOTE	PART NUMBER	QTY	PART NAME 1 2 3 4 5 6 (PRODUCT LEVEL)	SEE PAGE
	319-4304	1	SOFTWARE GP-MACHINE	
			–OR–	
	319-4305	1	CONTROL GP-MACHINE	
			(OPTIONAL SERVICE RELPLACEMENT)(INCLUDES CONTROL GP & SOFTWARE)	

<END>

ELECTRICAL AND STARTING SYSTEM

290-9444 ELECTRONICS GP-MACHINE

S/N: CJN1-UP

PART OF 260-6952 GENERAL AR

SMCS-7610, 7620 **i02942677**

NOTE	PART NUMBER	QTY	PART NAME 1 2 3 4 5 6 (PRODUCT LEVEL)	SEE PAGE
	319-4306	1	SOFTWARE GP-MACHINE	
			—OR—	
	319-4307	1	SERVICE GP-MACHINE	
			(OPTIONAL SERVICE REPLACEMENT) (INCLUDES CONTROL GROUP & SOFTWARE)	

<END>

221-8861 ELECTRONICS GP-MONITOR

S/N: CJN1-UP

PART OF 260-6952 GENERAL AR

SMCS-7490, 7601, 7610, 7620 **i03250673**

NOTE	PART NUMBER	QTY	PART NAME 1 2 3 4 5 6 (PRODUCT LEVEL)	SEE PAGE
	327-7486	1	SOFTWARE GP-MONITOR	
			—OR—	
	327-7483	1	MONITOR GP-OPERATOR	
			(OPTIONAL SERVICE REPLACEMENT)(PREPROGRAMMED CONTROL GP)	

<END>

259-5173 FASTENER GP-WIRING HARNESS–

CONTROL PATTERN CHANGE, 2-WAY

S/N: CJN1-UP

PART OF 259-7577 VALVE AR-ALT PATTERN CONTROL

AN ATTACHMENT

SMCS-1408, 7553 **i02724691**

NOTE	REF NO	GRAPHIC REF	PART NUMBER	QTY	PART NAME 1 2 3 4 5 6 (PRODUCT LEVEL)	SEE PAGE
	1	1	**3S-2093**	2	STRAP-CABLE	
	2	1	**7K-1181**	1	STRAP-CABLE	
	3	1	**116-0118**	1	CLIP	
	4	1	**132-5789**	1	CLIP	
	5	1	**8T-4121**	1	WASHER-HARD (11X21X2.5-MM THK)	
M	6	1	**8T-4191**	1	BOLT (M10X1.5X16-MM)	

M-METRIC PART

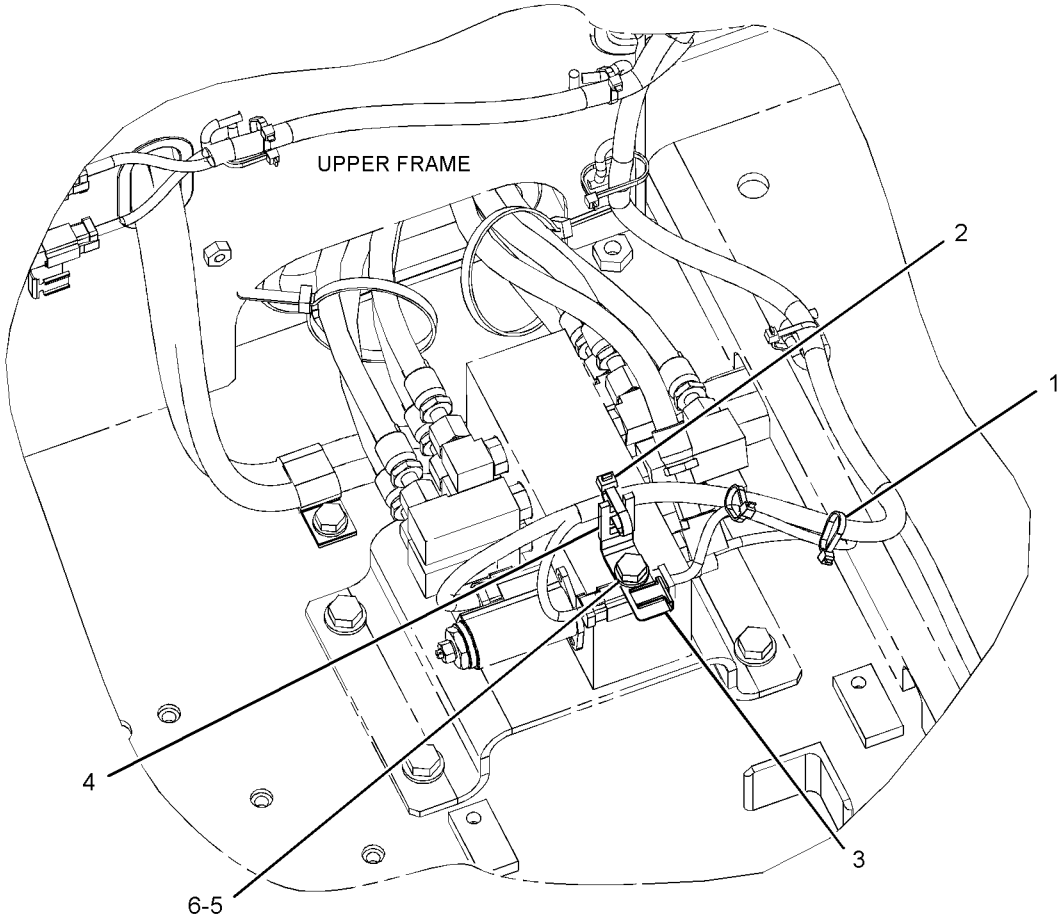

REAR VIEW
(UPPER LEFT)

GRAPHIC #1 **<END>** g01367614

259-5293 FASTENER GP-WIRING HARNESS–PEDAL CONTROL

S/N: CJN1-UP
PART OF 255-5845 PEDAL AR-AUXILIARY
AN ATTACHMENT

SMCS-1408, 7553 **i02527277**

NOTE	REF NO	GRAPHIC REF	PART NUMBER	QTY	PART NAME 1 2 3 4 5 6 (PRODUCT LEVEL)	SEE PAGE
	1	1	**116-0118**	1	CLIP	
M	2	1	**7X-2621**	1	BOLT (M10X1.5X12-MM)	
	3	1	**8T-4121**	1	WASHER-HARD (11X21X2.5-MM THK)	

M-METRIC PART

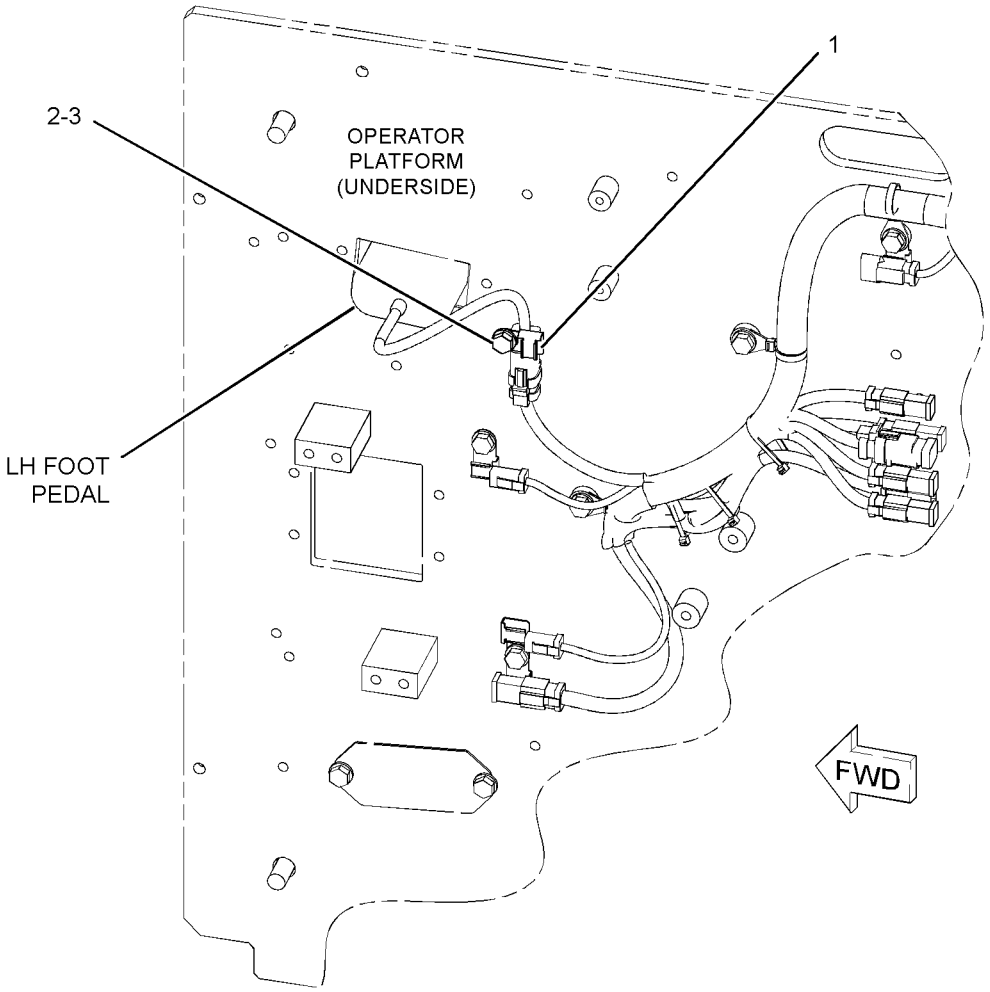

GRAPHIC #1 **<END>** g01264273

259-5294 FASTENER GP-WIRING HARNESS–FOOT SWITCH

S/N: CJN1-UP

PART OF 270-6106 CONTROL AR-AUXILIARY

AN ATTACHMENT

SMCS-1408, 7553 **i02430270**

NOTE	REF NO	GRAPHIC REF	PART NUMBER	QTY	PART NAME 1 2 3 4 5 6 (PRODUCT LEVEL)	SEE PAGE
	1	1	**116-0118**	1	CLIP	
M	2	1	**7X-2621**	1	BOLT (M10X1.5X12-MM)	
	3	1	**8T-4121**	1	WASHER-HARD (11X21X2.5-MM THK)	

M-METRIC PART

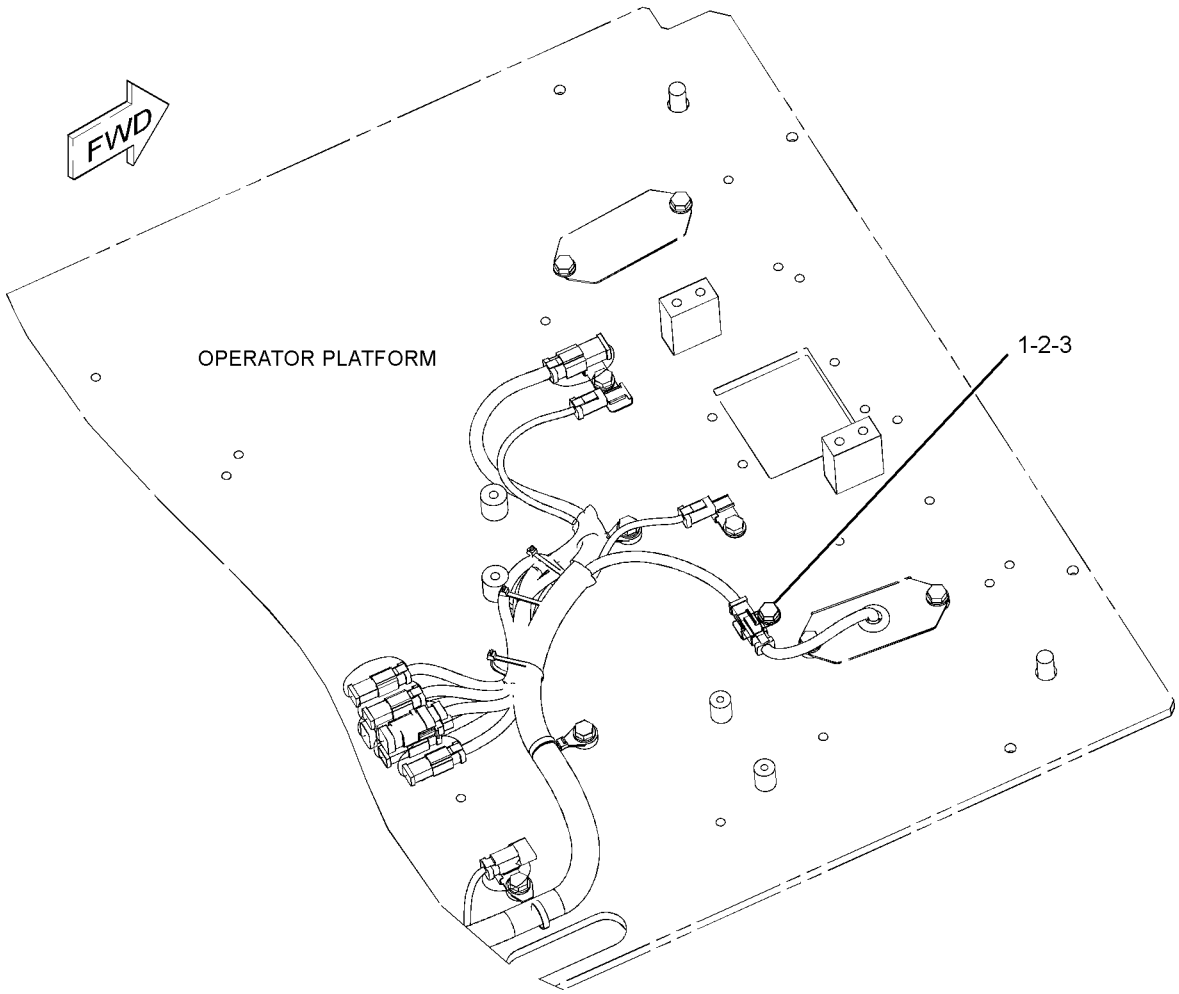

GRAPHIC #1 **<END>** g01156526

259-5295 FASTENER GP-WIRING HARNESS–JOYSTICK

S/N: CJN1-UP

PART OF 255-5843, 255-5844 CONTROL AR-AUXILIARY

AN ATTACHMENT

SMCS-1408, 7553 **i02425705**

NOTE	REF NO	GRAPHIC REF	PART NUMBER	QTY	PART NAME 1 2 3 4 5 6 (PRODUCT LEVEL)	SEE PAGE
	1	1	**3S-2093**	2	STRAP-CABLE	

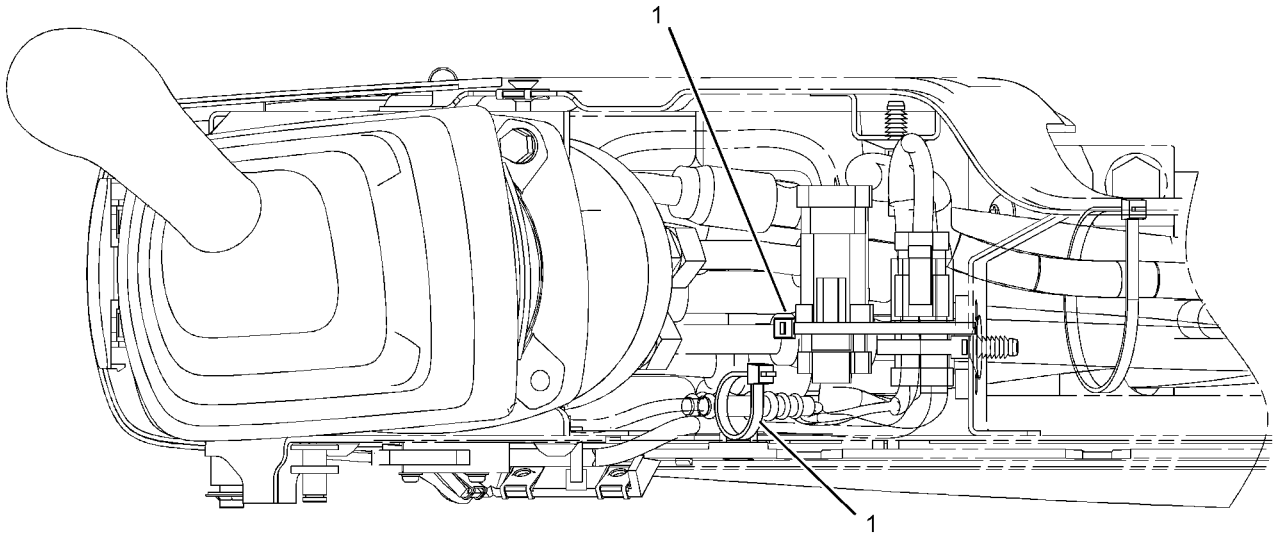

GRAPHIC #1 **<END>** g01160306

328-0078 FASTENER GP-WIRING HARNESS–

WORK AREA VISUAL SYSTEM, REAR

S/N: CJN1-UP

PART OF 330-8753 INSTALLATION AR

AN ATTACHMENT

SMCS-1408, 7553 **i03146562**

NOTE	REF NO	GRAPHIC REF	PART NUMBER	QTY	PART NAME 1 2 3 4 5 6 (PRODUCT LEVEL)	SEE PAGE
	1	1	**3S-2093**	16	STRAP-CABLE	
	2	1	**7K-1181**	8	STRAP-CABLE	
	3	1	**111-4836**	1	CLIP	
	4	1	**251-8248**	1	CABLE AS-COMMUNICATION (CAMERA)	
	5	1	**093-2064**	1	GROMMET	
	6	1	**132-5789**	1	CLIP	
	7	1	**8T-4121**	1	WASHER-HARD (11X21X2.5-MM THK)	
M	8	1	**8T-4137**	1	BOLT (M10X1.5X20-MM)	

M-METRIC PART

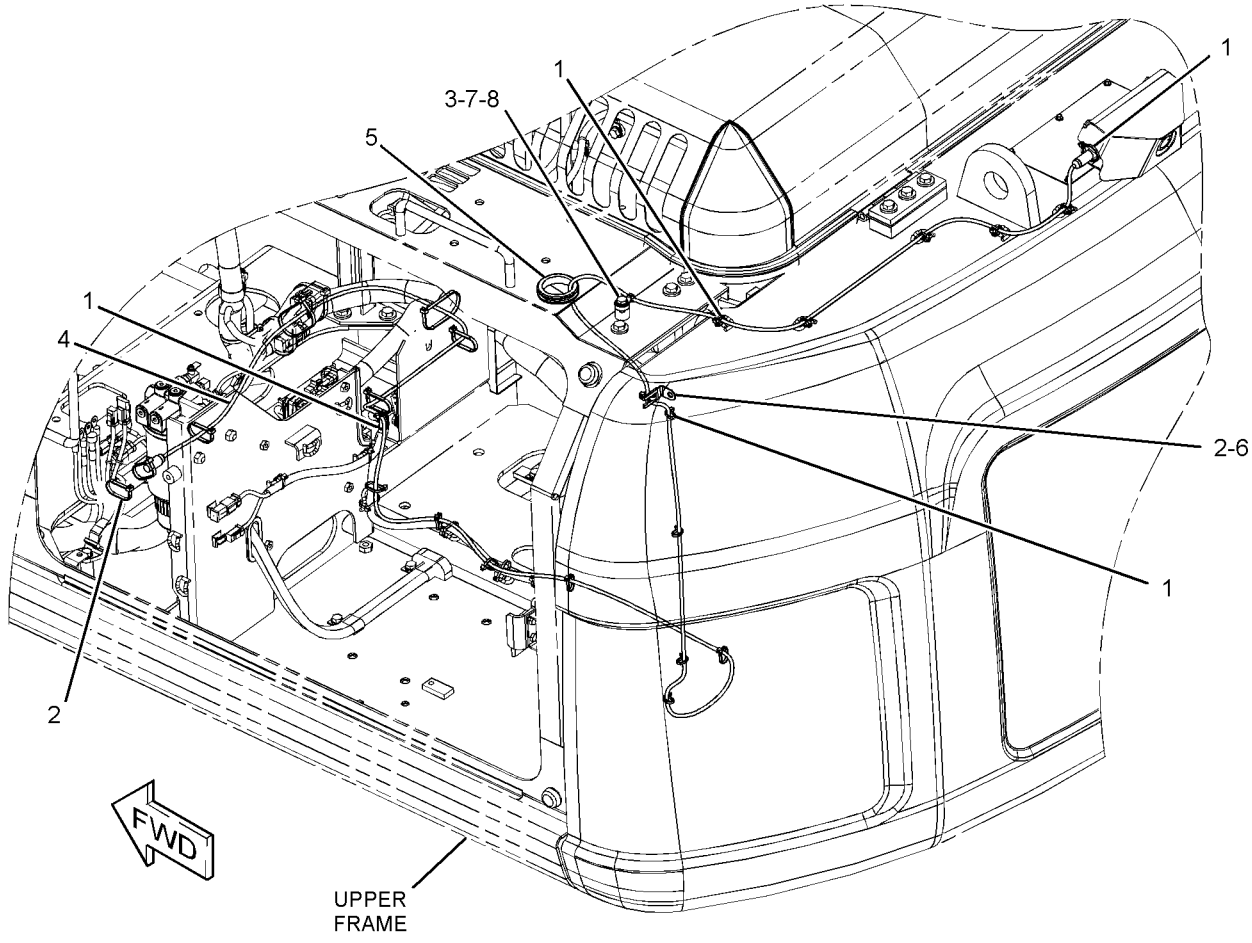

GRAPHIC #1 **<END>** g01619490

260-7072 INSTALLATION AR-COMMUNICATION–
PRODUCT LINK 321SR
S/N: CJN1-UP
AN ATTACHMENT

SMCS-7606 **i02753028**

NOTE	PART NUMBER	QTY	PART NAME 1 2 3 4 5 6 (PRODUCT LEVEL)	SEE PAGE
Y	*247-5284*	1	CONTROL & MTG GP-COMMUNICATION (PRODUCT LINK 300)	145
Y	*262-2043*	1	ELECTRONICS GP-COMMUNICATION (PRODUCT LINK 300)	153
Y	*290-9464*	1	MOUNTING GP-ANTENNA (PRODUCT LINK 300)	1006
Y	*270-5604*	1	MOUNTING GP-CONTROL (PRODUCT LINK 121SR)	177
Y	*275-6880*	1	WIRING GP-COMMUNICATION (PRODUCT LINK 321SR)	230
Y-SEPARATE ILLUSTRATION				

<END>

301-2586 INSTALLATION AR-COMMUNICATION–
PRODUCT LINK 121SR
S/N: CJN1-UP
AN ATTACHMENT

SMCS-7606 **i02942603**

NOTE	PART NUMBER	QTY	PART NAME 1 2 3 4 5 6 (PRODUCT LEVEL)	SEE PAGE
Y	*319-4258*	1	CONTROL & MTG GP-COMMUNICATION (PRODUCT LINK 121SR)	147
Y	*319-4255*	1	MOUNTING GP-ANTENNA (PRODUCT LINK)	1007
Y	*275-6881*	1	WIRING GP-COMMUNICATION (PRODUCT LINK 121SR)	232
Y-SEPARATE ILLUSTRATION				

<END>

301-2590 INSTALLATION AR-COMMUNICATION–
PRODUCT LINK 321SR
S/N: CJN1-UP
AN ATTACHMENT

SMCS-7606 **i03001025**

NOTE	PART NUMBER	QTY	PART NAME 1 2 3 4 5 6 (PRODUCT LEVEL)	SEE PAGE
Y	*309-5842*	1	CONTROL & MTG GP-COMMUNICATION (PRODUCT LINK 321SR)	146
Y	*319-4258*	1	CONTROL & MTG GP-COMMUNICATION (PRODUCT LINK 121SR)	147
Y	*319-4255*	1	MOUNTING GP-ANTENNA (PRODUCT LINK)	1007
Y	*275-6880*	1	WIRING GP-COMMUNICATION (PRODUCT LINK 321SR)	230
Y-SEPARATE ILLUSTRATION				

<END>

227-7581 INSTALLATION GP-SECURITY

S/N: CJN1-UP
AN ATTACHMENT

SMCS-7631 **i02397785**

NOTE	REF NO	GRAPHIC REF	PART NUMBER	QTY	PART NAME 1 2 3 4 5 6 (PRODUCT LEVEL)	SEE PAGE
	1	1	**8C-5607**	4	MOUNT-ISOLATION	
	2	1	**8C-5608**	2	SPACER (6.5X9.5X25.4-MM THK)	
	3	1	**206-5162**	2	KEY AS-ELECTRONIC (SECURITY)	
	4	1	**218-0404**	1	MODULE GP-INTERFACE (KEY)	
	5	1	**219-6314**	2	KEY RING (IDENTIFICATION)	
Y	6	1	*251-0544*	1	PANEL GP-SWITCH (ENGINE SPEED, START)	187
M	7	1	**7X-2533**	2	BOLT (M6X1X35-MM)	
	8	1	**9X-6165**	2	WASHER (6.5X22X2.5-MM THK)	

M-METRIC PART
Y-SEPARATE ILLUSTRATION

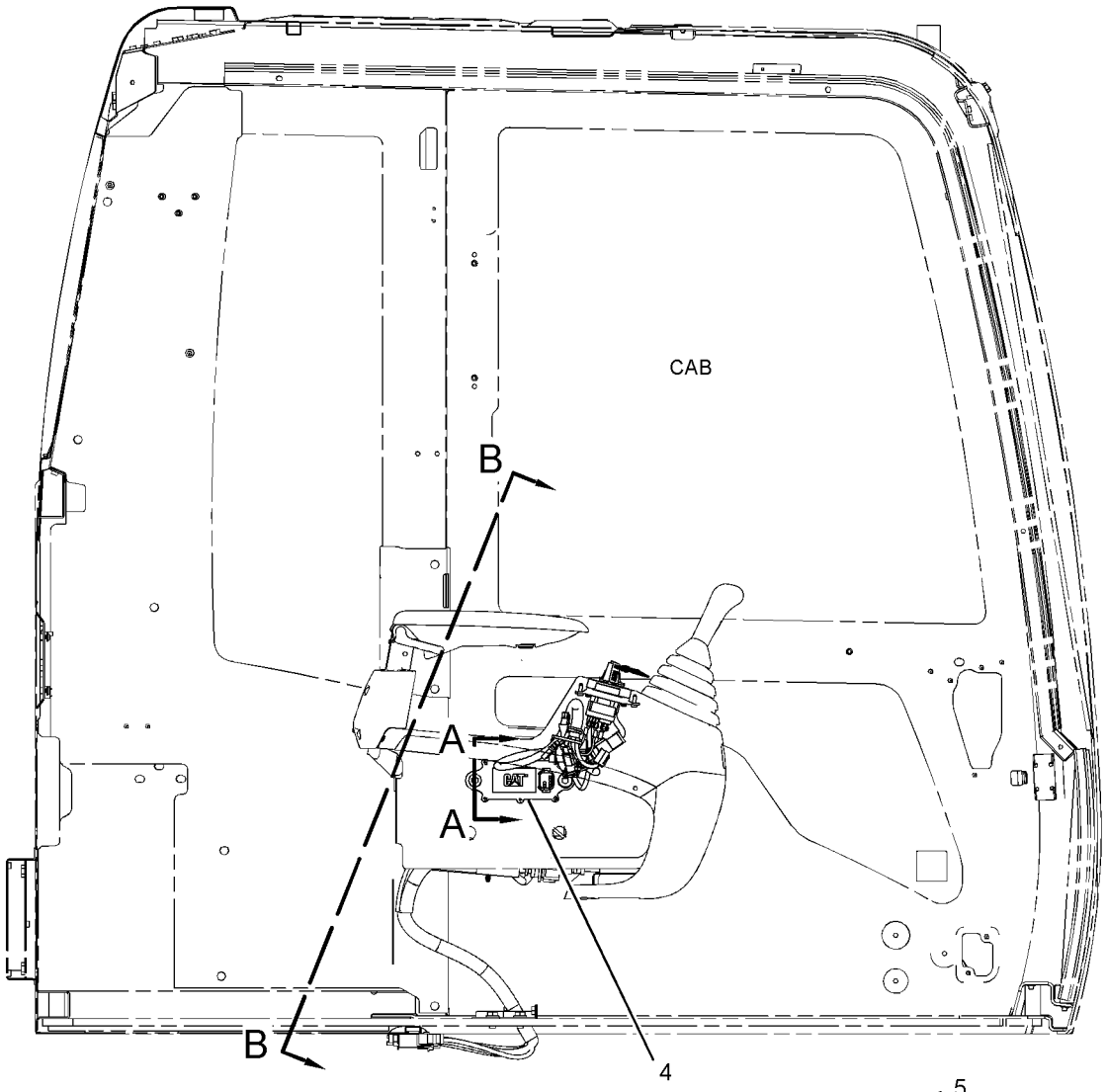

RIGHT SIDE VIEW

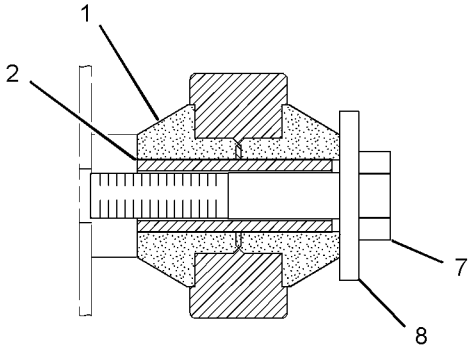

SECTION A-A

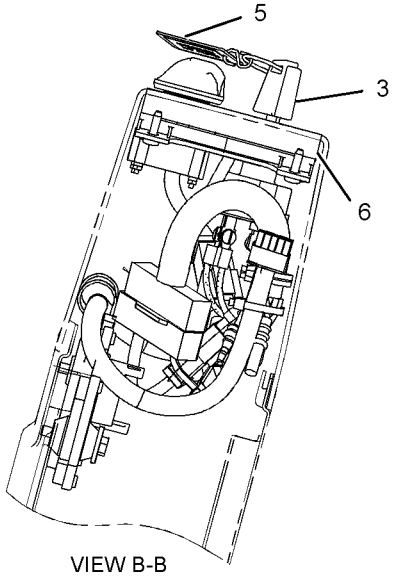

VIEW B-B

GRAPHIC #1 **<END>** g01196691

291-7701 KIT-BRACKET—PRODUCT LINK 121SR, 321SR

S/N: CJN1-UP

PROVIDES MOUNTING PARTS FOR PRODUCT LINK SYSTEM

FIELD INSTALLATION

SMCS-0635, 7606 **i02595811**

NOTE	PART NUMBER	QTY	PART NAME 1 2 3 4 5 6 (PRODUCT LEVEL)	SEE PAGE
M	**8T-4171**	1	BOLT (M6X1X12-MM)	
M	**8T-4190**	1	BOLT (M16X2X25-MM)	
	270-5433	1	BRACKET	
	260-2042	1	BRACKET AS	
	096-3872	1	GROMMET	
	291-7700	1	HARNESS AS-WIRING	
	155-2274	1	KIT-CONNECTING PLUG (6-PIN)	
			(INCLUDES PLUG AS, WEDGE & INTERFACE SEAL)	
	243-4508	1	RECEPTACLE AS-CONNECTOR (6-PIN)	
	9X-8256	1	WASHER (6.6X12X2-MM THK)	
	9X-8257	1	WASHER (17.5X30X3.5-MM THK)	

M-METRIC PART

<END>

153-2521 LAMP GP-FLOOD

S/N: CJN1-UP
24-VOLT
PART OF 259-5163, 291-7730 LIGHTING GP-FLOOD
AN ATTACHMENT

SMCS-1434 **i02743410**

NOTE	REF NO	GRAPHIC REF	PART NUMBER	QTY	PART NAME 1 2 3 4 5 6 (PRODUCT LEVEL)	SEE PAGE
M	1	1	**6V-5210**	2	SCREW-MACHINE (M4X0.7X10-MM)	
	2	1	**3B-4501**	2	LOCKWASHER	
	3	1	**9X-3463**	1	LAMP-HALOGEN (24-VOLT, 65-WATT)	
	4	1	**8T-4223**	1	WASHER-HARD (13.5X25.5X3-MM THK)	
M	5	1	**8T-4244**	1	NUT (M12X1.75-THD)	
M	6	1	**174-7791**	1	SCREW-TAPPING	
	7	1	**5C-2889**	1	LOCKWASHER	
	8	1	**170-6993**	1	COVER	
M	9	1	**180-3861**	4	SCREW-TAPPING	
	10	1	**170-9417**	1	LENS AS (FLOODLIGHT)	
	11	1	**170-9418**	1	BAND	

M-METRIC PART

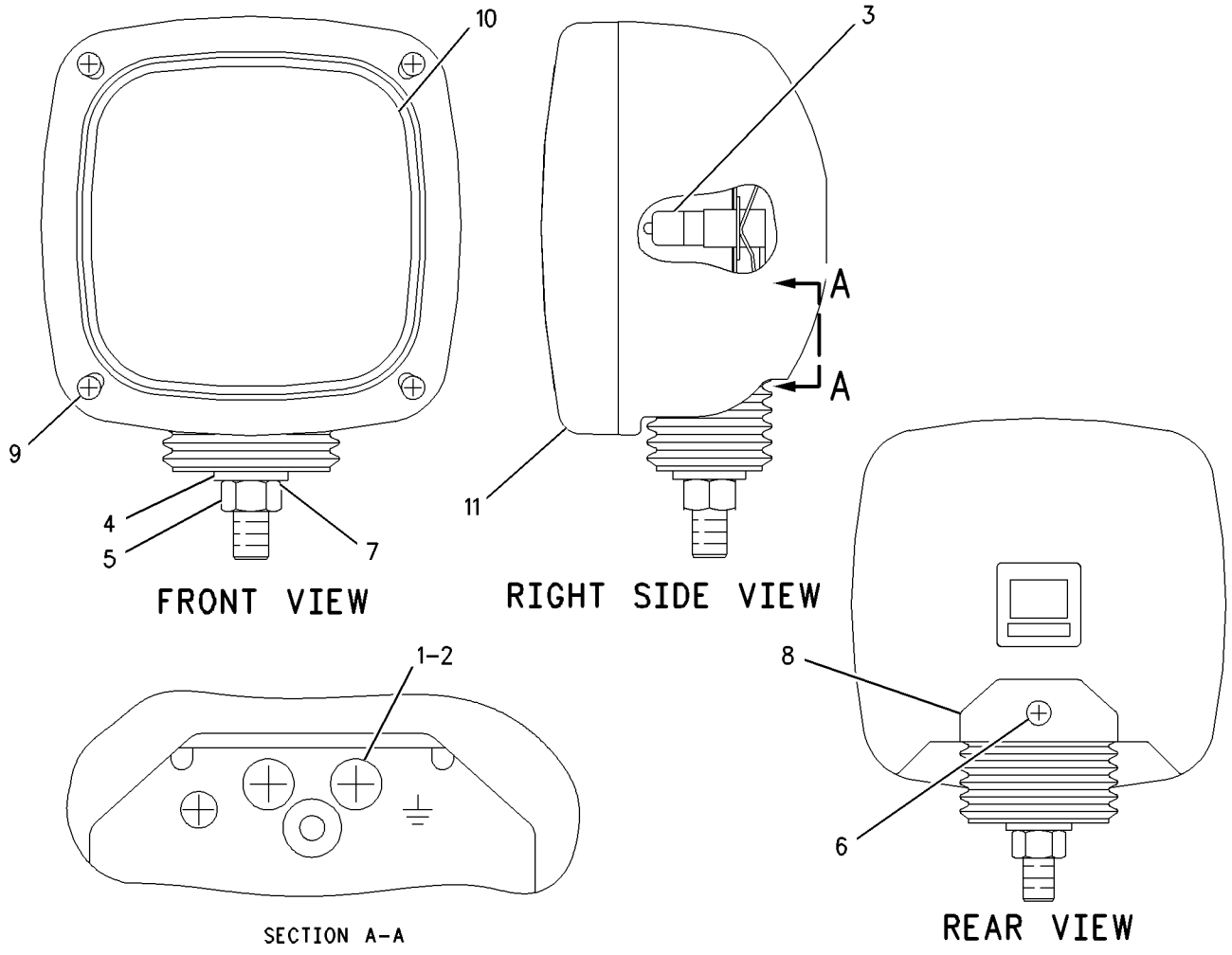

GRAPHIC #1 **<END>** g00645948

153-2523 LAMP GP-FLOOD

S/N: CJN1-UP
24-VOLT
PART OF 4I-5409 LIGHTING GP-CHASSIS

SMCS-1434 **i02724687**

NOTE	REF NO	GRAPHIC REF	PART NUMBER	QTY	PART NAME 1 2 3 4 5 6 (PRODUCT LEVEL)	SEE PAGE
M	1	1	**6V-5210**	2	SCREW-MACHINE (M4X0.7X10-MM)	
	2	1	**3B-4501**	2	LOCKWASHER	
	3	1	**9X-3463**	1	LAMP-HALOGEN (24-VOLT, 65-WATT)	
	4	1	**8T-4223**	1	WASHER-HARD (13.5X25.5X3-MM THK)	
M	5	1	**8T-4244**	1	NUT (M12X1.75-THD)	
M	6	1	**174-7791**	1	SCREW-TAPPING	
	7	1	**5C-2889**	1	LOCKWASHER	
	8	1	**170-6993**	1	COVER	
M	9	1	**180-3861**	4	SCREW-TAPPING	
	10	1	**170-9417**	1	LENS AS	
	11	1	**170-9418**	1	BAND	

M-METRIC PART

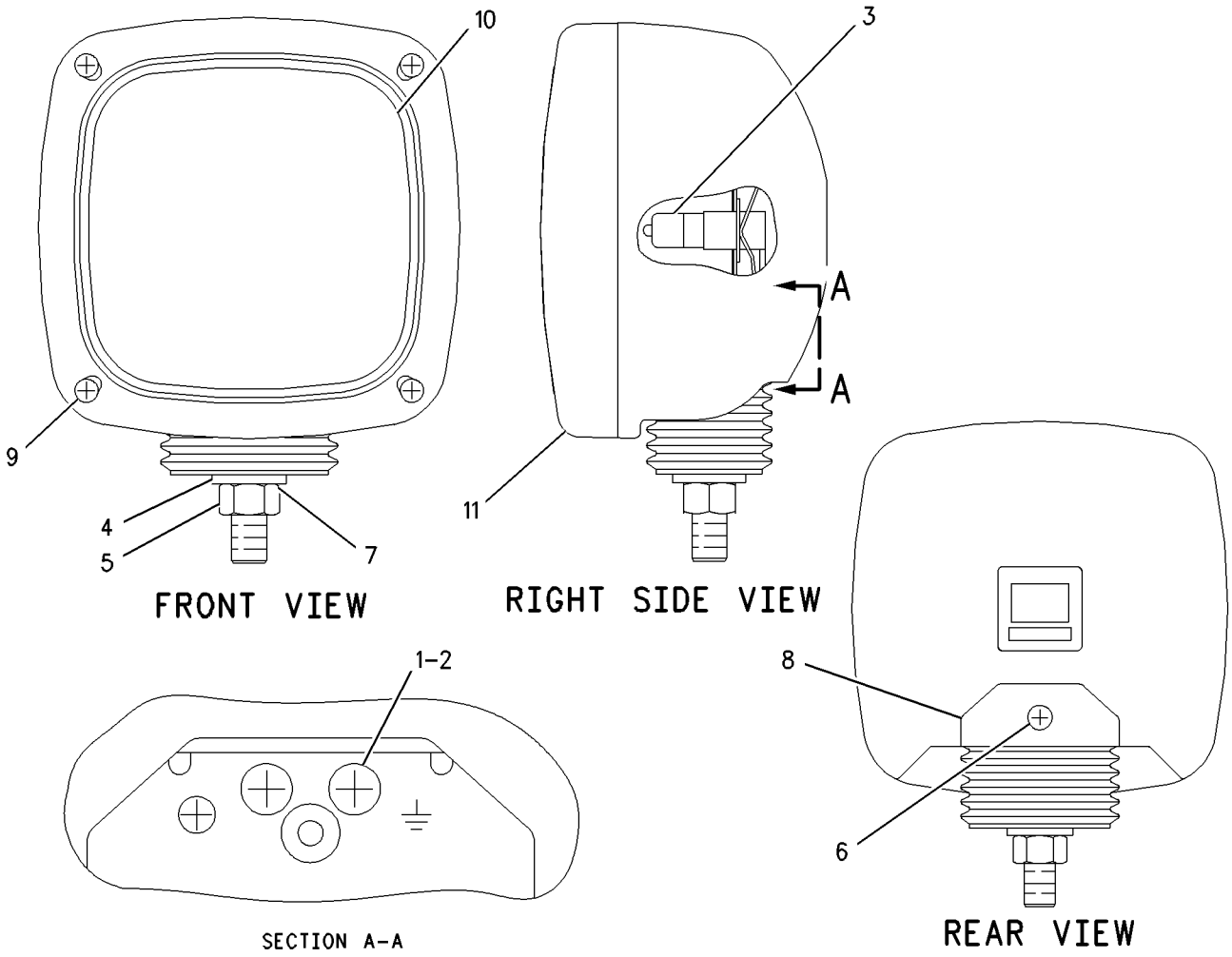

GRAPHIC #1 **<END>** g00645948

167-3441 LAMP GP-FLOOD

S/N: CJN1-UP

PART OF 163-6772, 238-1627 LIGHTING GP-FLOOD

AN ATTACHMENT

SMCS-1434 **i01823005**

NOTE	REF NO	GRAPHIC REF	PART NUMBER	QTY	PART NAME 1 2 3 4 5 6 (PRODUCT LEVEL)	SEE PAGE
	1	1	**9X-3463**	1	LAMP-HALOGEN (24-VOLT, 65-WATT)	

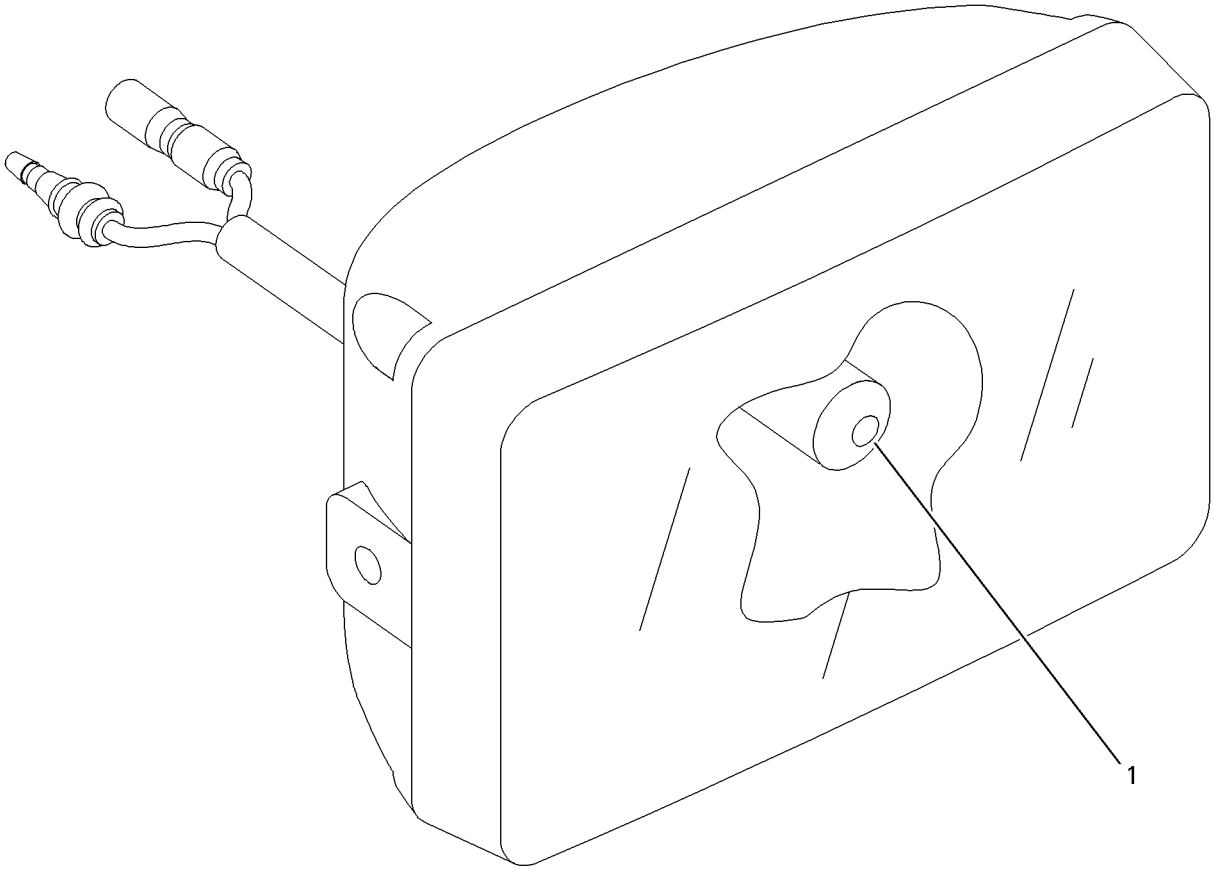

GRAPHIC #1 **<END>** g00692317

4I-5409 LIGHTING GP-CHASSIS–FRONT, RH

S/N: CJN1-UP

PART OF 260-6960 CHASSIS AR

SMCS-1429 **i01097714**

NOTE	REF NO	GRAPHIC REF	PART NUMBER	QTY	PART NAME 1 2 3 4 5 6 (PRODUCT LEVEL)	SEE PAGE
Y	1	1	**153-2523**	1	LAMP GP-FLOOD	165

Y-SEPARATE ILLUSTRATION

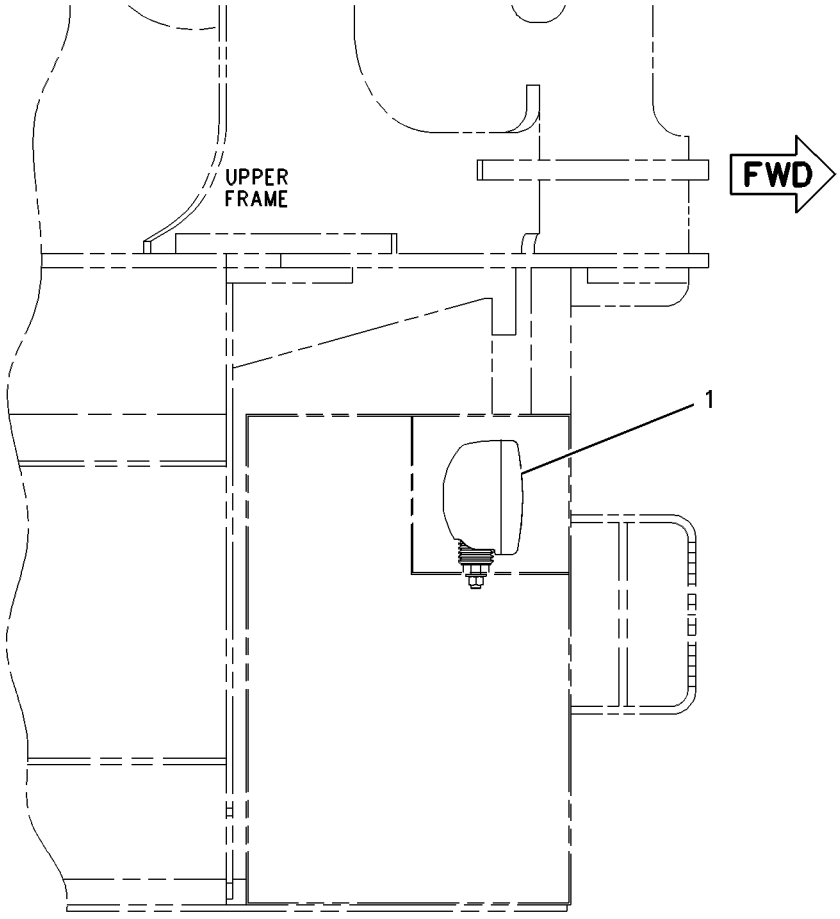

TOP VIEW

GRAPHIC #1 **<END>** g00588573

163-6772 LIGHTING GP-FLOOD—CAB

S/N: CJN1-UP
AN ATTACHMENT

SMCS-1434 **i02075362**

NOTE	REF NO	GRAPHIC REF	PART NUMBER	QTY	PART NAME 1 2 3 4 5 6 (PRODUCT LEVEL)	SEE PAGE
	1	1	**163-6814**	1	COVER (RH)	
	2	1	**163-6813**	1	COVER (LH)	
M	3	1	**8T-4970**	4	BOLT (M6X1X14-MM)	
	4	1	**9X-8256**	12	WASHER (6.6X12X2-MM THK)	
Y	5	1	**167-3441**	2	LAMP GP-FLOOD	166
	6	1	**163-6795**	2	STRAP-CABLE	
B	7	1	**9X-8256**	4	WASHER (6.6X12X2-MM THK)	
	8	1	**167-3437**	1	BRACKET AS (LH)	
M	9	1	**8T-6411**	6	SCREW-MACHINE (M6X1X12-MM)	
M	10	1	**8T-4200**	2	BOLT (M8X1.25X16-MM)	
	11	1	**8T-4224**	2	WASHER-HARD (8.8X16X2-MM THK)	
	12	1	**167-3456**	2	HARNESS AS-LIGHTING (CAB FLOODLIGHT)	
		1	**7Y-3962**	1	TERMINAL (CONNECTOR)	
		1	**7Y-3964**	1	TUBE (CONNECTOR TERMINAL)	
		1	**7Y-3963**	1	TERMINAL (RECEPTACLE)	
		1	**7Y-3965**	1	TUBE (RECEPTACLE TERMINAL)	
	13	1	**167-3438**	1	BRACKET AS (RH)	
M	14	1	**8T-6412**	2	SCREW-MACHINE (M6X1X20-MM)	

B-USE AS REQUIRED
M-METRIC PART
Y-SEPARATE ILLUSTRATION

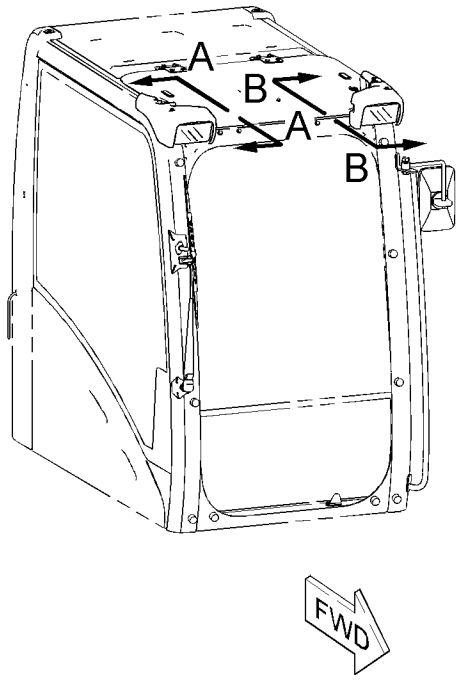

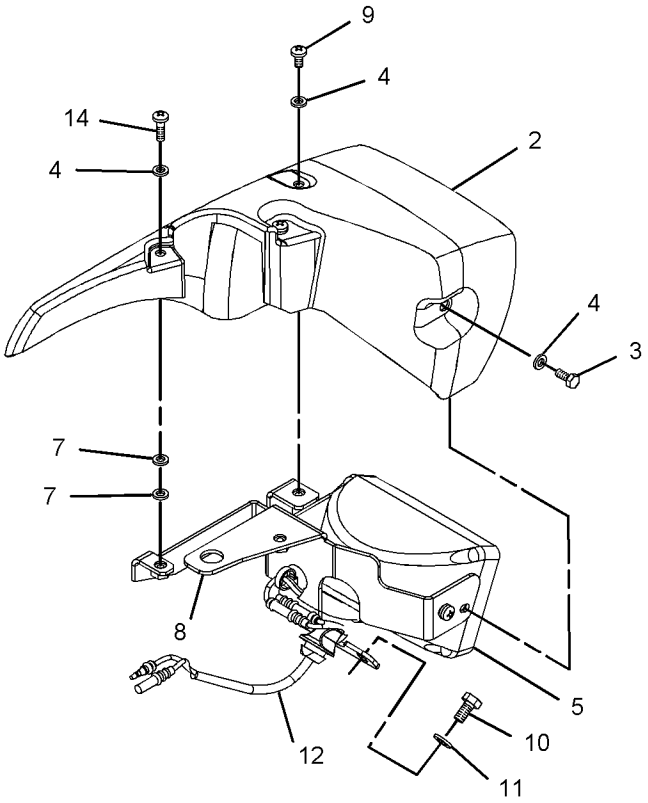

VIEW B-B
(EXPLODED)

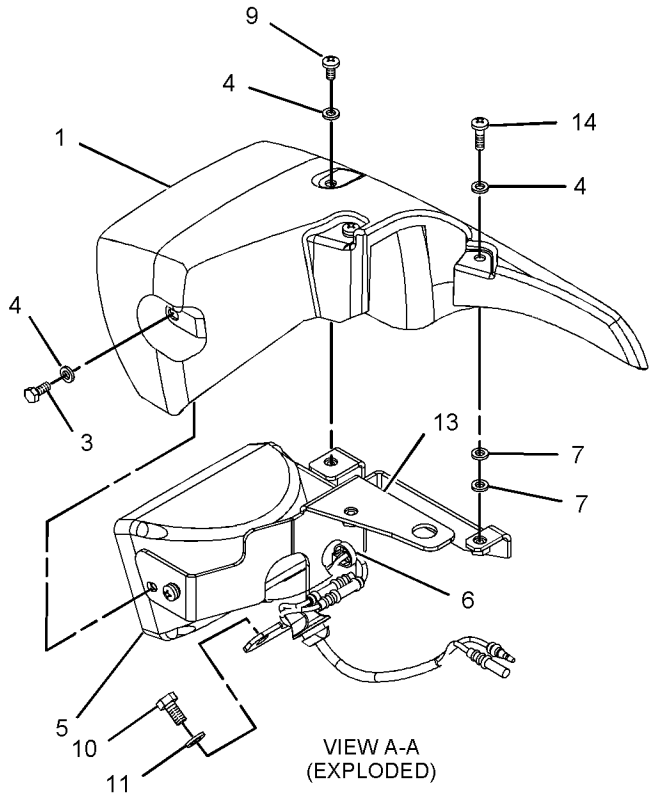

VIEW A-A
(EXPLODED)

GRAPHIC #1 **<END>** g01062205

ELECTRICAL AND STARTING SYSTEM

170-9294 LIGHTING GP-FLOOD—CAB GUARD

S/N: CJN1-UP
AN ATTACHMENT

SMCS-1434 **i02259861**

NOTE	REF NO	GRAPHIC REF	PART NUMBER	QTY	PART NAME 1 2 3 4 5 6 (PRODUCT LEVEL)	SEE PAGE
	1	1	**183-1035**	2	LAMP GP-FLOOD	
					(EACH INCLUDES)	
		1	**9X-3463**	1	LAMP-HALOGEN (24-VOLT, 65-WATT)	
	2	1	**163-6795**	2	STRAP-CABLE	
M	3	1	**8T-4133**	2	NUT (M10X1.5-THD)	
	4	1	**8T-4121**	4	WASHER-HARD (11X21X2.5-MM THK)	
M	5	1	**8T-4137**	2	BOLT (M10X1.5X20-MM)	
	6	1	**170-9295**	2	HARNESS AS-LIGHTING (CAB FLOODLIGHTS, FRONT)	
					(EACH INCLUDES)	
		1	**7Y-3962**	2	TERMINAL (CONNECTOR)	
		1	**7Y-3964**	2	TUBE (CONNECTOR TERMINAL)	
		1	**7Y-3963**	2	TERMINAL (RECEPTACLE)	
		1	**7Y-3965**	2	TUBE (RECEPTACLE TERMINAL)	

M-METRIC PART

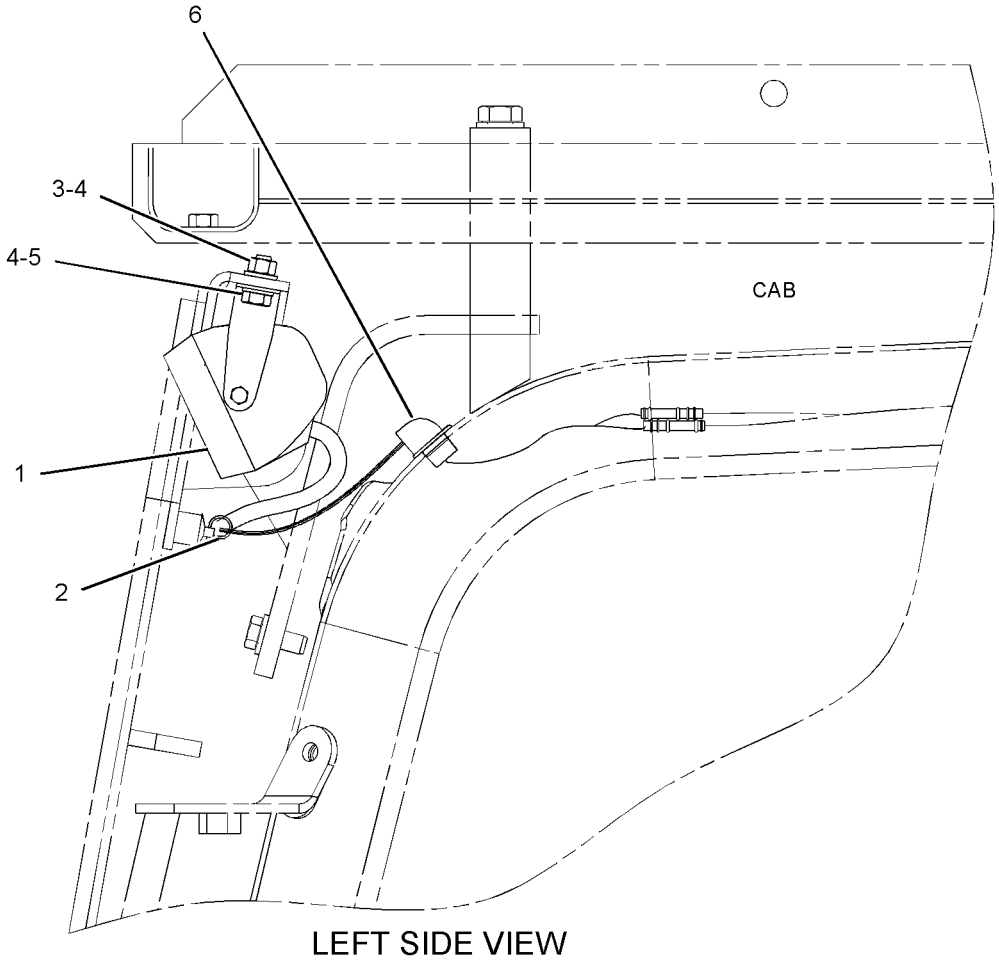

LEFT SIDE VIEW

GRAPHIC #1 **<END>** g01134805

238-1627 LIGHTING GP-FLOOD—CAB

S/N: CJN1-UP
AN ATTACHMENT

SMCS-1434 **i02602026**

NOTE	REF NO	GRAPHIC REF	PART NUMBER	QTY	PART NAME 1 2 3 4 5 6 (PRODUCT LEVEL)	SEE PAGE
	1	1	**3S-2093**	1	STRAP-CABLE	
	2	1	**163-6704**	1	TIMER AS (TIME DELAY LIGHTING)	
		1	**102-8802**	1	KIT-RECEPTACLE (2-PIN)	
		1	**102-8803**	1	KIT-RECEPTACLE (3-PIN)	
					(EACH RECEPTACLE KIT INCLUDES RECEPTACLE AS & WEDGE)	
		1	**186-3735**	5	PIN-CONNECTOR (16-GA TO 18-GA)	
	3	1	**163-6795**	2	STRAP-CABLE	
	4	1	**163-6813**	1	COVER (LH)	
	5	1	**163-6814**	1	COVER (RH)	
	6	1	**167-3437**	1	BRACKET AS (LH)	
	7	1	**167-3438**	1	BRACKET AS (RH)	
Y	8	1	**167-3441**	2	LAMP GP-FLOOD (CAB)	166
	9	1	**167-3456**	2	HARNESS AS-LIGHTING (CAB FLOODLIGHT)	
	10	1	**238-2326**	1	PLATE AS	
M	11	1	**8T-4200**	2	BOLT (M8X1.25X16-MM)	
	12	1	**8T-4224**	2	WASHER-HARD (8.8X16X2-MM THK)	
M	13	1	**8T-4970**	4	BOLT (M6X1X14-MM)	
M	14	1	**8T-6411**	3	SCREW-MACHINE (M6X1X12-MM)	
M	15	1	**8T-6412**	1	SCREW-MACHINE (M6X1X20-MM)	
M	16	1	**9X-2042**	2	SCREW-TRUSS HEAD (M6X1X12-MM)	
M	17	1	**9X-2043**	2	SCREW-TRUSS HEAD (M6X1X14-MM)	
	18	1	**9X-8256**	8	WASHER (6.6X12X2-MM THK)	
B	19	1	**9X-8256**	4	WASHER (6.6X12X2-MM THK)	

B-USE AS REQUIRED
M-METRIC PART
Y-SEPARATE ILLUSTRATION

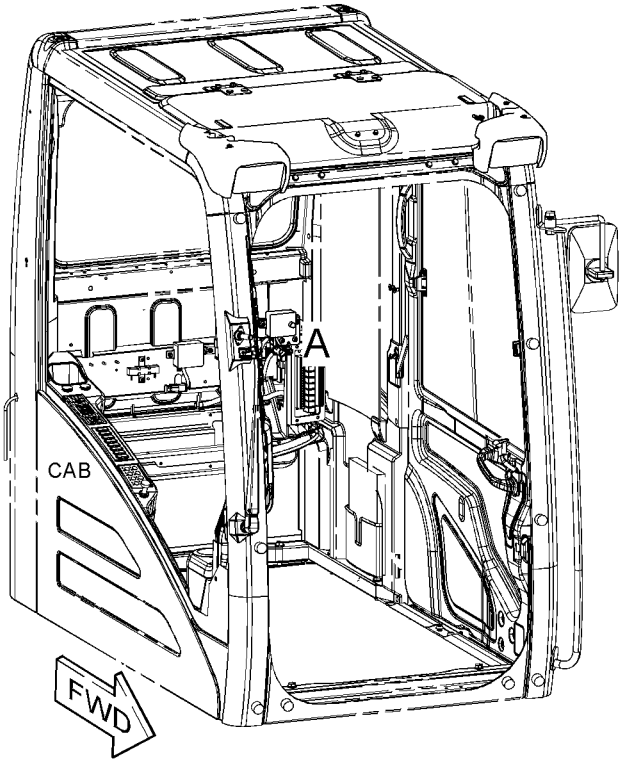

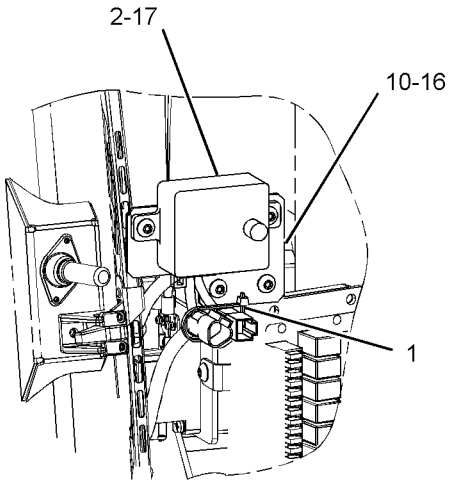

VIEW OF AREA A

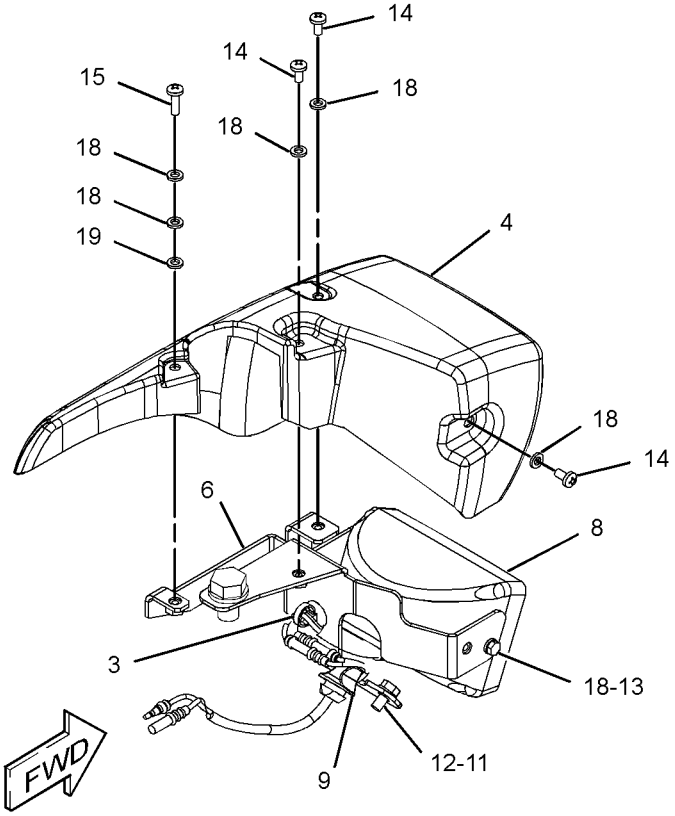

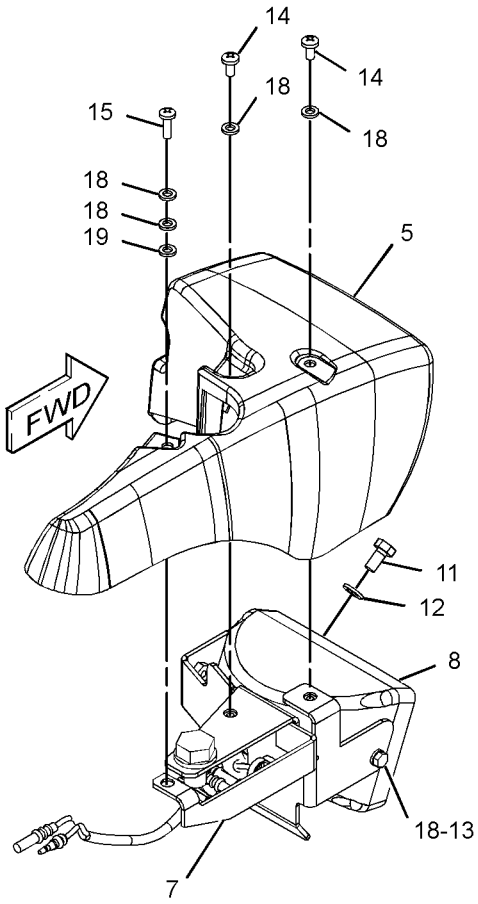

GRAPHIC #1 **<END>** g01310977

238-1628 LIGHTING GP-FLOOD—CAB GUARD

S/N: CJN1-UP

AN ATTACHMENT

SMCS-1434 **i03130082**

NOTE	REF NO	GRAPHIC REF	PART NUMBER	QTY	PART NAME 1 2 3 4 5 6 (PRODUCT LEVEL)	SEE PAGE
	1	1	**3S-2093**	1	STRAP-CABLE	
	2	1	**163-6704**	1	TIMER AS (TIME DELAY LIGHTING)	
		1	**186-3735**	5	PIN-CONNECTOR (16-GA TO 18-GA)	
		1	**102-8802**	1	KIT-RECEPTACLE (2-PIN)	
		1	**102-8803**	1	KIT-RECEPTACLE (3-PIN)	
					(EACH RECEPTACLE KIT INCLUDES RECEPTACLE AS & WEDGE)	
	3	1	**163-6795**	2	STRAP-CABLE	
	4	1	**170-9295**	2	HARNESS AS-LIGHTING (CAB FLOODLIGHTS, FRONT)	
					(EACH INCLUDES)	
		1	**7Y-3962**	1	TERMINAL (CONNECTOR)	
		1	**7Y-3964**	1	TUBE (CONNECTOR TERMINAL)	
		1	**7Y-3963**	1	TERMINAL (RECEPTACLE)	
		1	**7Y-3965**	1	TUBE (RECEPTACLE TERMINAL)	
	5	1	**183-1035**	2	LAMP GP-FLOOD (CANOPY)	
		1	**9X-3463**	1	LAMP-HALOGEN (24-VOLT, 65-WATT) (CANOPY)	
	6	1	**238-2326**	1	PLATE AS	
	7	1	**8T-4121**	4	WASHER-HARD (11X21X2.5-MM THK)	
M	8	1	**8T-4133**	2	NUT (M10X1.5-THD)	
M	9	1	**8T-4137**	2	BOLT (M10X1.5X20-MM)	
M	10	1	**9X-2042**	2	SCREW-TRUSS HEAD (M6X1X12-MM)	
M	11	1	**9X-2043**	2	SCREW-TRUSS HEAD (M6X1X14-MM)	

M-METRIC PART

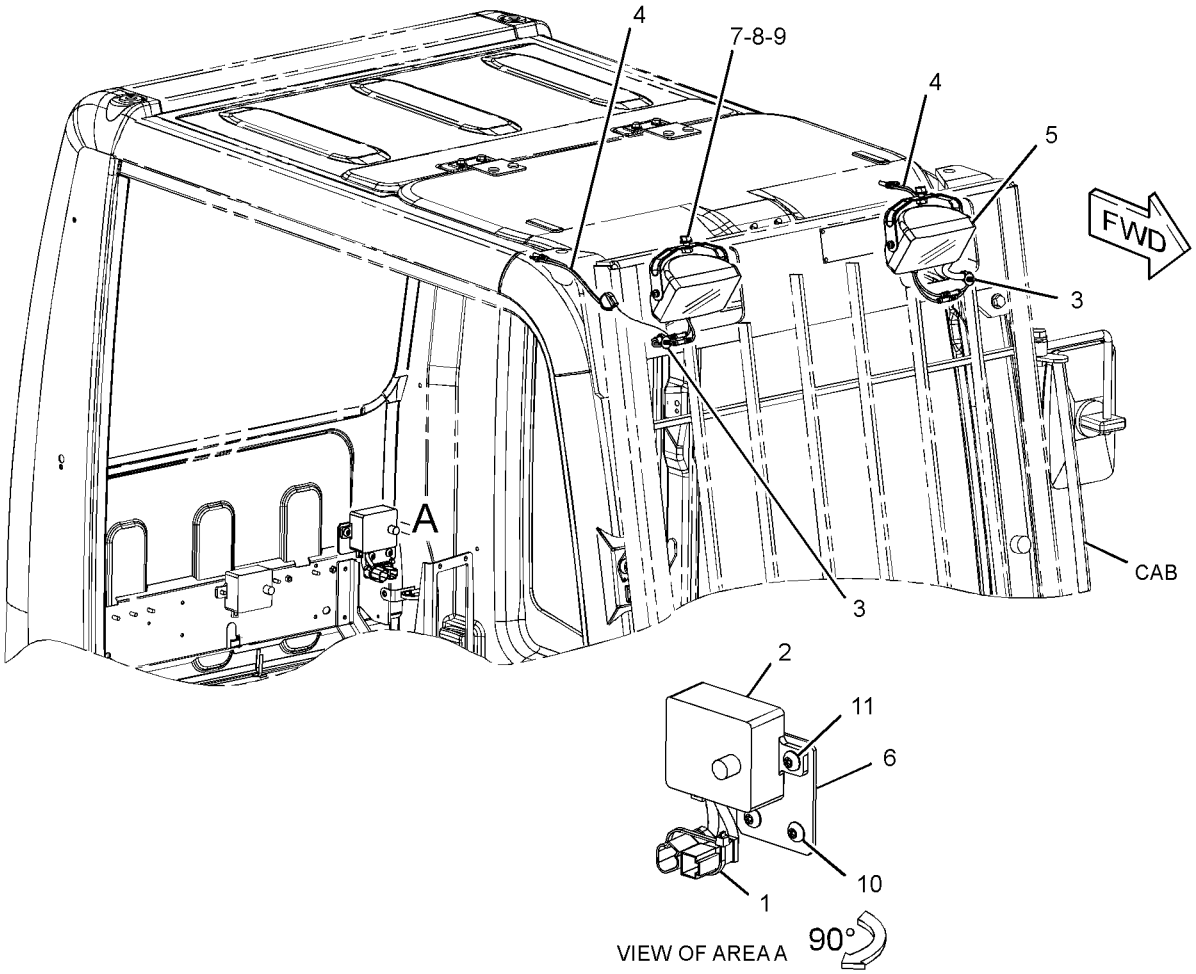

GRAPHIC #1 **<END>** g01620741

259-5163 LIGHTING GP-FLOOD–BOOM, LH

S/N: CJN1-UP

PART OF 330-8777 BOOM AR, 260-6979, 283-9001, 301-2575 BOOM AR-1 PIECE LONG, 301-2479, 301-2517 SPECIAL AR

AN ATTACHMENT

SMCS-1434 **i02855090**

NOTE	REF NO	GRAPHIC REF	PART NUMBER	QTY	PART NAME 1 2 3 4 5 6 (PRODUCT LEVEL)	SEE PAGE
	1	1	**7I-2673**	3	STRAP-CABLE	
	2	1	**111-4836**	4	CLIP	
	3	1	**116-0118**	1	CLIP	
	4	1	**134-3284**	1	BRACKET	
Y	5	1	**153-2521**	1	LAMP GP-FLOOD (24-VOLT)	164
	6	1	**291-7746**	1	HARNESS AS-LIGHTING (BOOM, LH)	
	7	1	**111-4837**	1	CLIP	
	8	1	**7N-3718**	2	CLIP	
	9	1	**8T-4121**	5	WASHER-HARD (11X21X2.5-MM THK)	
M	10	1	**8T-4133**	5	NUT (M10X1.5-THD)	
M	11	1	**8T-4190**	1	BOLT (M16X2X25-MM)	
	12	1	**9X-8257**	1	WASHER (17.5X30X3.5-MM THK)	

M-METRIC PART
Y-SEPARATE ILLUSTRATION

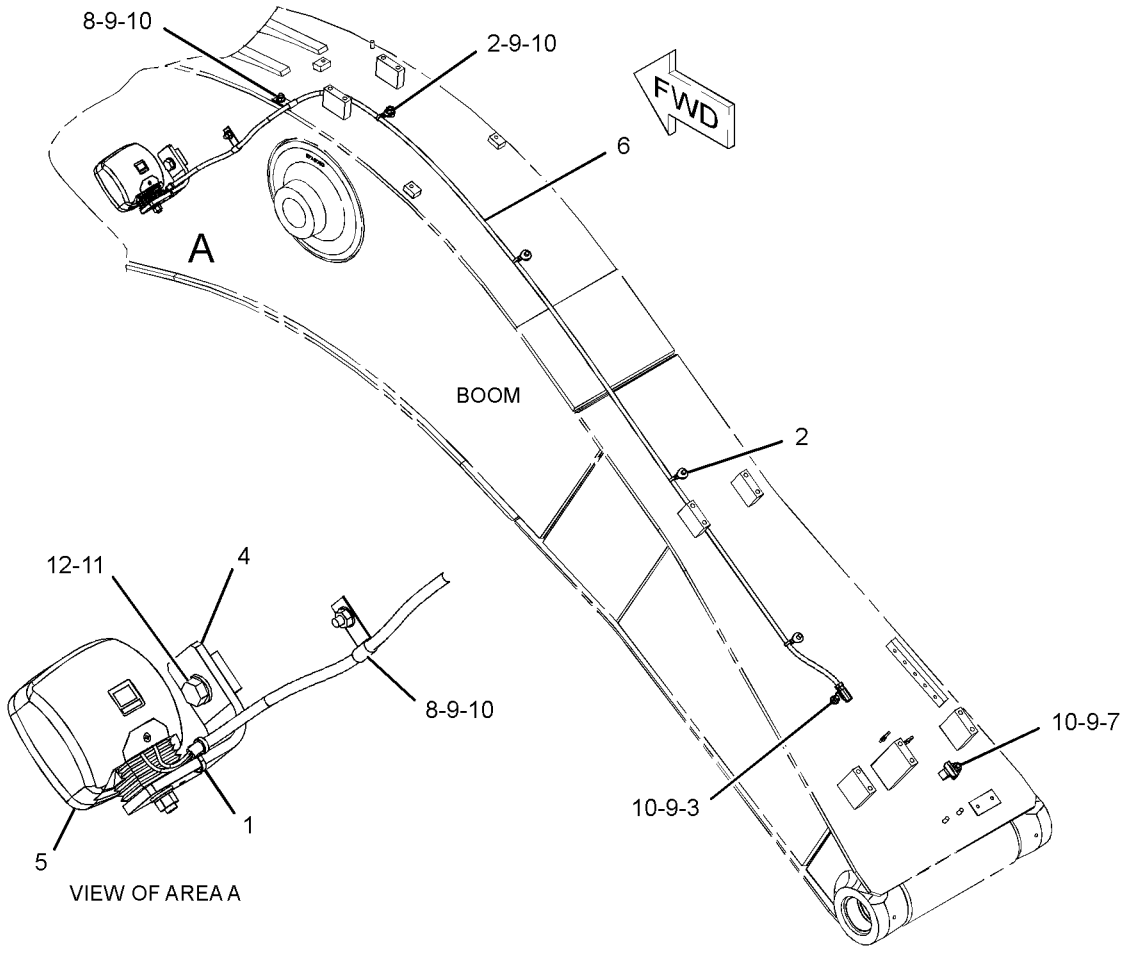

GRAPHIC #1 **<END>** g01378409

291-7730 LIGHTING GP-FLOOD–BOOM, RH

S/N: CJN1-UP
AN ATTACHMENT

SMCS-1434 **i02855091**

NOTE	REF NO	GRAPHIC REF	PART NUMBER	QTY	PART NAME 1 2 3 4 5 6 (PRODUCT LEVEL)	SEE PAGE
	1	1	**7I-2673**	2	STRAP-CABLE	
	2	1	**111-4836**	2	CLIP	
	3	1	**134-3284**	1	BRACKET	
Y	4	1	**153-2521**	1	LAMP GP-FLOOD (24-VOLT)	164
	5	1	**291-7731**	1	HARNESS AS-LIGHTING (BOOM, RH)	
	6	1	**5P-9297**	2	CLIP	
	7	1	**8T-4121**	2	WASHER-HARD (11X21X2.5-MM THK)	
M	8	1	**8T-4133**	2	NUT (M10X1.5-THD)	
M	9	1	**8T-4190**	1	BOLT (M16X2X25-MM)	
	10	1	**9X-8257**	1	WASHER (17.5X30X3.5-MM THK)	

M-METRIC PART
Y-SEPARATE ILLUSTRATION

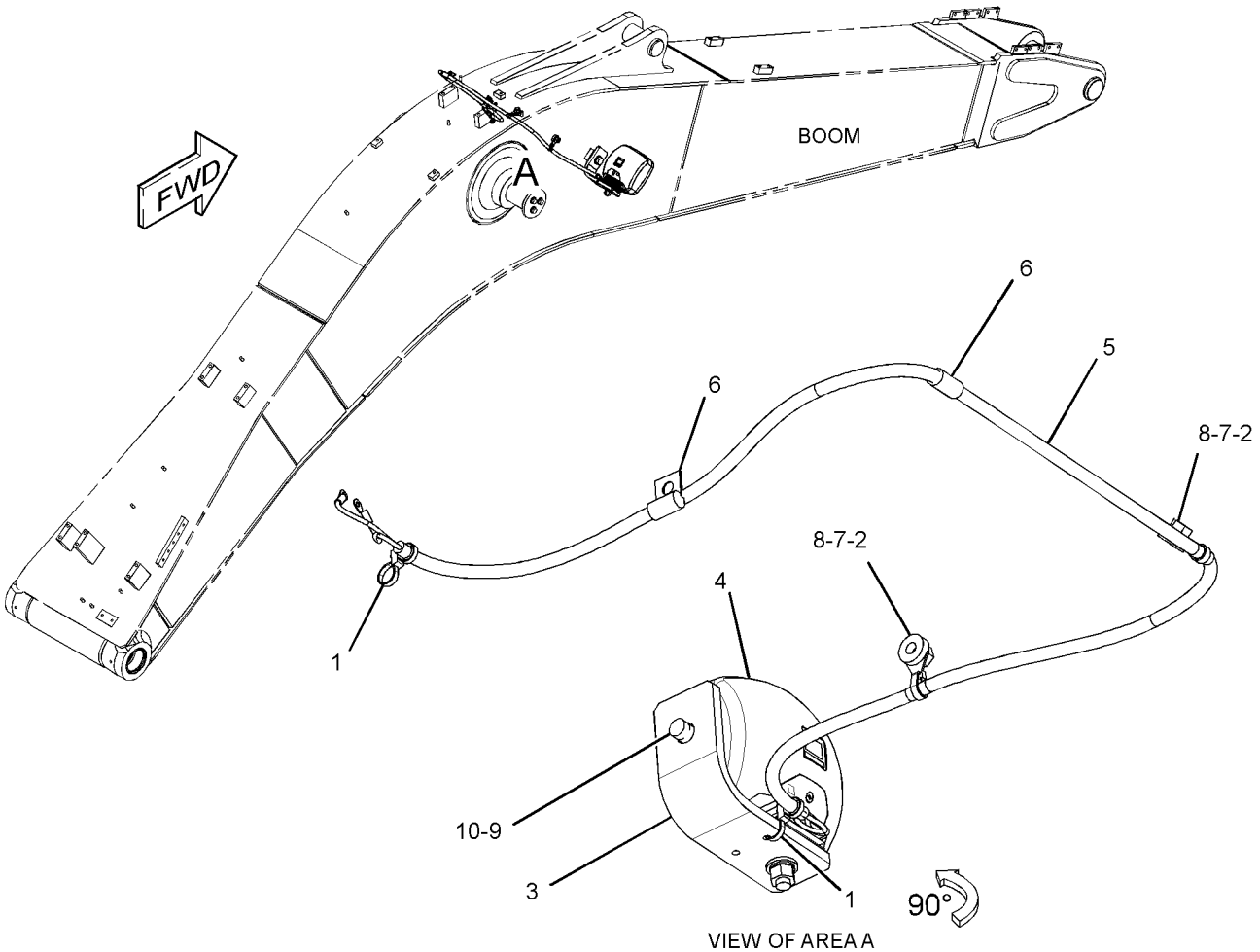

VIEW OF AREA A

GRAPHIC #1 **<END>** g01379758

270-5604 MOUNTING GP-CONTROL–PRODUCT LINK 121SR

S/N: CJN1-UP
PART OF 260-7072 INSTALLATION AR-COMMUNICATION
AN ATTACHMENT

SMCS-1901 **i02753053**

NOTE	REF NO	GRAPHIC REF	PART NUMBER	QTY	PART NAME 1 2 3 4 5 6 (PRODUCT LEVEL)	SEE PAGE
	1	1	**3S-2093**	4	STRAP-CABLE	
	2	1	**7K-1181**	4	STRAP-CABLE	
Y	3	1	**263-9088**	1	CONTROL GP-COMMUNICATION (PRODUCT LINK 121SR)	151
M	4	1	**8T-4138**	4	BOLT (M6X1X20-MM)	
	5	1	**9X-8256**	4	WASHER (6.6X12X2-MM THK)	
	6	1	**230-1340**	1	FILM-WARNING (PRODUCT LINK RADIO, U.S.)	
					–OR–	
		1	**230-1341**	1	FILM-WARNING (PRODUCT LINK RADIO, INTL)	

M-METRIC PART
Y-SEPARATE ILLUSTRATION

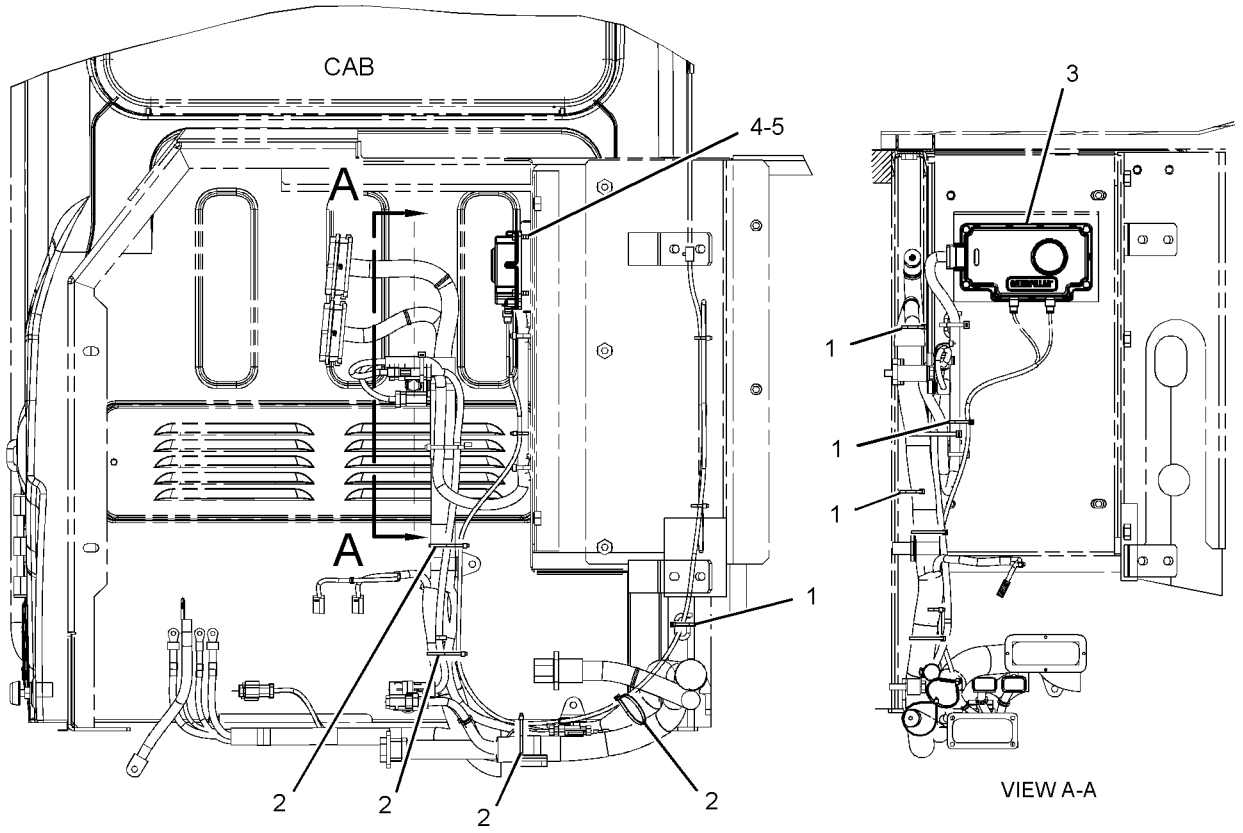

REAR VIEW

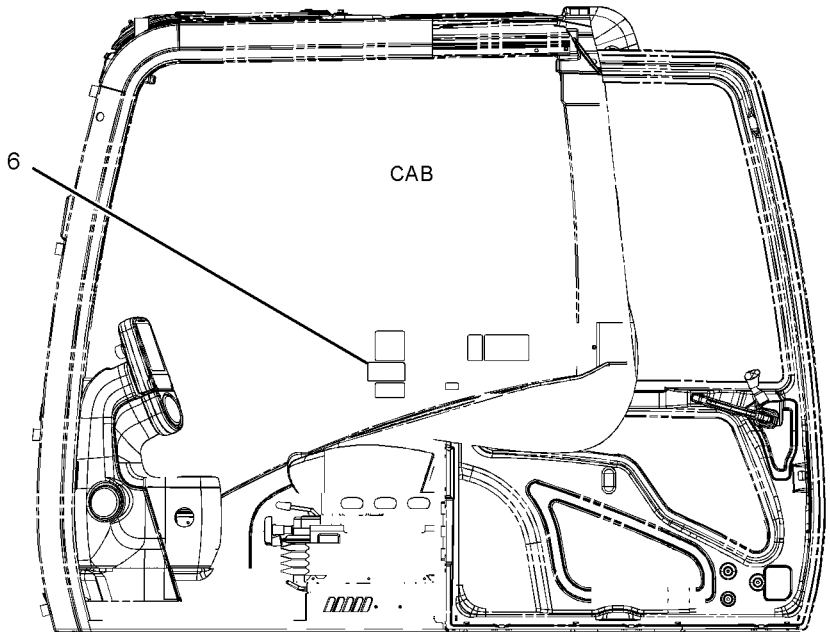

LEFT SIDE VIEW

GRAPHIC #1 **<END>** g01386479

297-4468 MOUNTING GP-SENSOR–
BODY TILT SENSOR, GPS RECEIVER
S/N: CJN1-UP
PART OF 301-2479, 330-8775 SPECIAL AR
AN ATTACHMENT

SMCS-1439, 1923, 1924 **i02840333**

NOTE	REF NO	GRAPHIC REF	PART NUMBER	QTY	PART NAME 1 2 3 4 5 6 (PRODUCT LEVEL)	SEE PAGE
	1	1	**297-4478**	1	PLATE	
M	2	1	**8T-4139**	4	BOLT (M12X1.75X30-MM)	
	3	1	**8T-4223**	4	WASHER-HARD (13.5X25.5X3-MM THK)	

M-METRIC PART

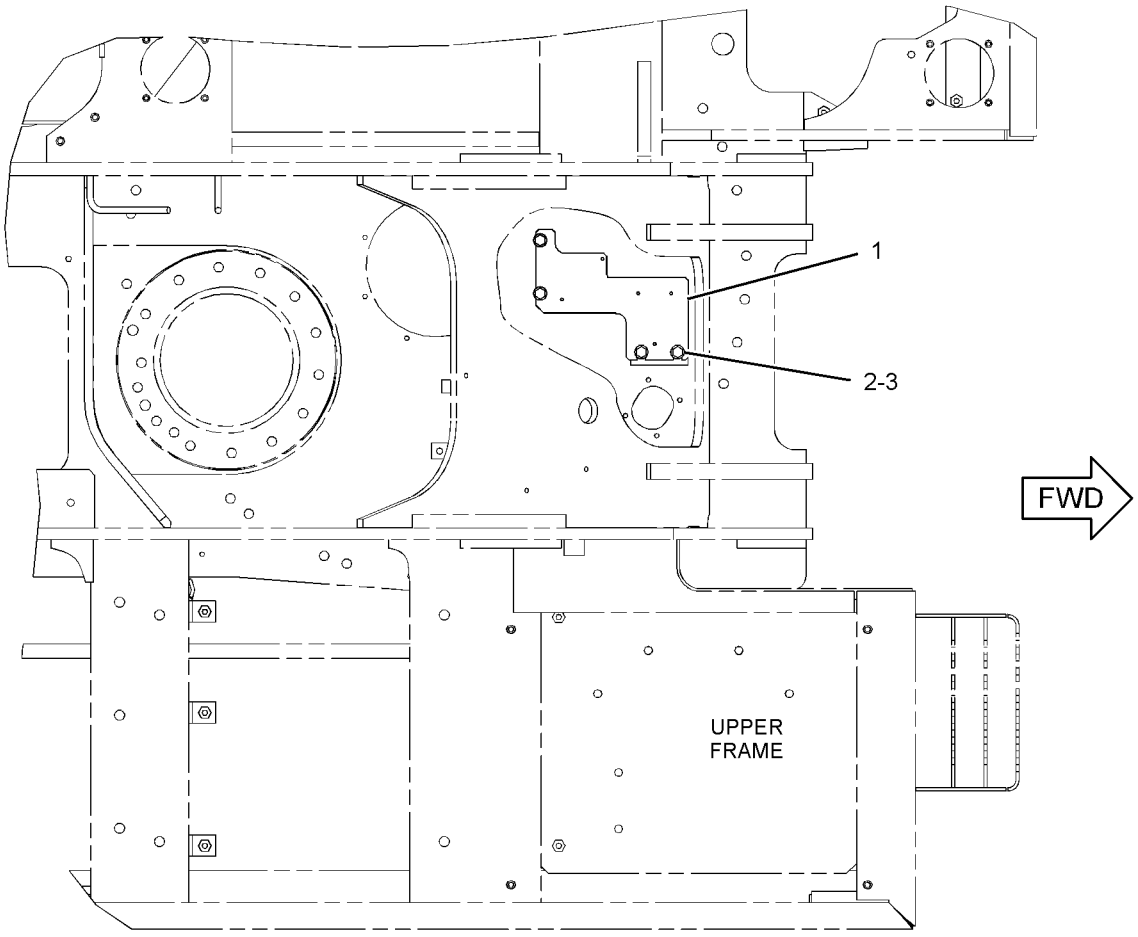

TOP VIEW

GRAPHIC #1 **<END>** g01418338

275-6926 PANEL & MTG GP-CIRCUIT BREAKER

S/N: CJN1-307

PART OF 259-7193 OPERATOR AR

SMCS-1417, 1420 **i02599644**

NOTE	REF NO	GRAPHIC REF	PART NUMBER	QTY	PART NAME 1 2 3 4 5 6 (PRODUCT LEVEL)	SEE PAGE
Y	1	1	**275-6927**	1	PANEL GP-CIRCUIT BREAKER	181
	2	1	**8T-4121**	4	WASHER-HARD (11X21X2.5-MM THK)	
M	3	1	**8T-4137**	4	BOLT (M10X1.5X20-MM)	

M-METRIC PART
Y-SEPARATE ILLUSTRATION

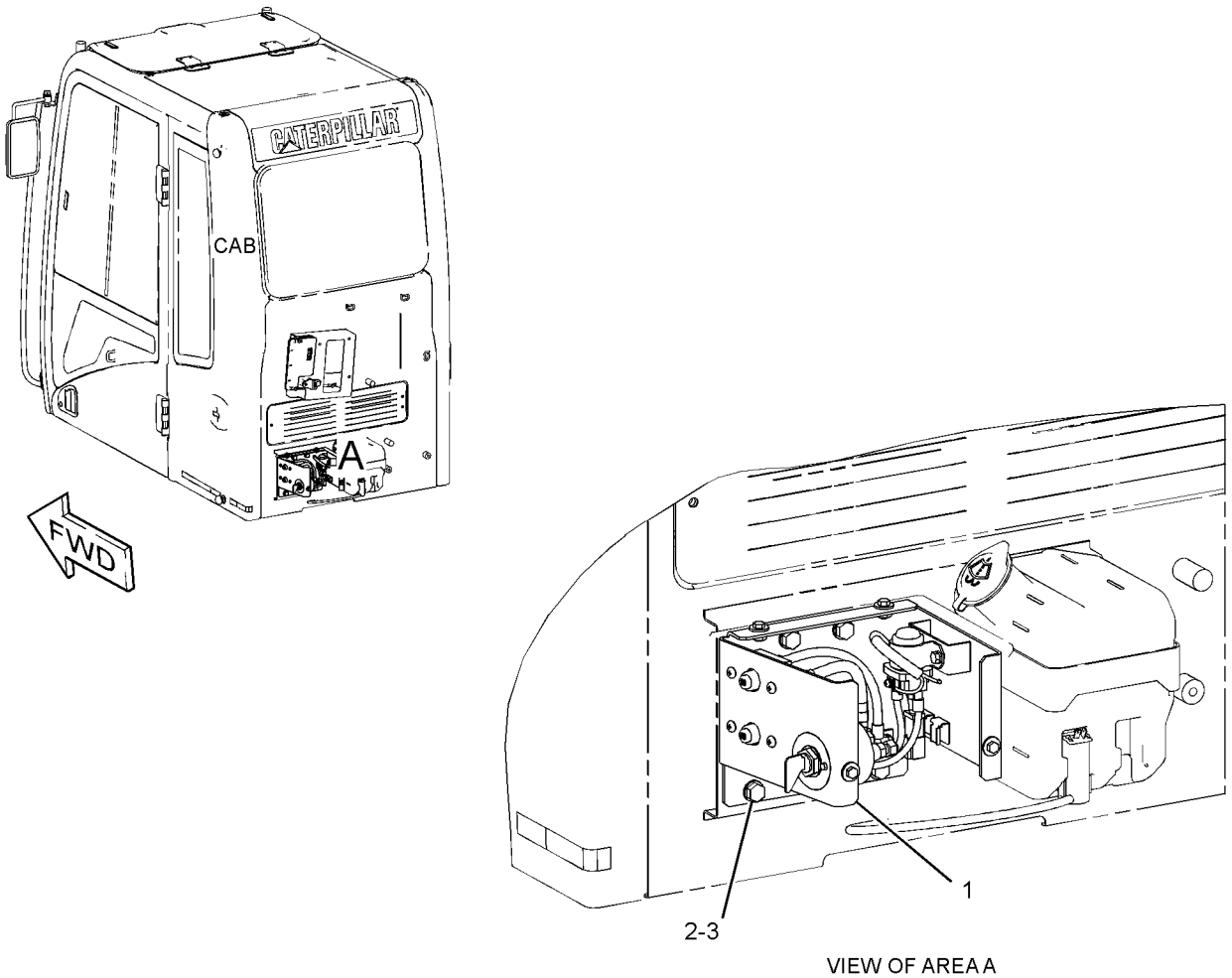

VIEW OF AREA A

GRAPHIC #1 **<END>** g01312382

275-6927 PANEL GP-CIRCUIT BREAKER

S/N: CJN1-307

PART OF 275-6926 PANEL & MTG GP-CIRCUIT BREAKER

SMCS-1417 **i02854822**

NOTE	REF NO	GRAPHIC REF	PART NUMBER	QTY	PART NAME 1 2 3 4 5 6 (PRODUCT LEVEL)	SEE PAGE
	1	1	**3E-8320**	1	PLATE-INSTRUCTION (BATTERY)	
Y	2	1	**7N-0718**	1	SWITCH GP-DISCONNECT	200
	3	1	**121-1023**	1	BLOCK-TERMINAL	
	4	1	**171-2208**	1	CIRCUIT BREAKER AS (60-AMPERE) (ALTERNATOR)	
		1	**6V-8187**	2	NUT (1/4-28-THD)	
		1	**8T-4205**	2	WASHER-HARD (7.2X14.5X2-MM THK)	
		1	**253-2111**	2	LOCKWASHER	
	5	1	**224-2908**	1	BRACKET AS	
	6	1	**234-1034**	1	CABLE AS	
		1	**9G-4343**	1	TERMINAL (4-GA)	
E		1	**125-7876**		TUBE-HEAT SHRINK (17.78-MM DIA) (4-CM)	
	7	1	**234-1036**	1	CABLE AS	
		1	**9G-4343**	1	TERMINAL (4-GA)	
E		1	**125-7876**		TUBE-HEAT SHRINK (17.78-MM DIA) (4-CM)	
	8	1	**234-1037**	1	WIRE AS	
	9	1	**234-1038**	1	WIRE AS	
	10	1	**238-1506**	1	COVER	
	11	1	**238-2280**	1	WIRE AS	
	12	1	**238-2392**	1	BAR-BUS	
Y	13	1	**259-5274**	1	SWITCH GP-MAGNETIC (24-VOLT) (START RELAY)	202
	14	1	**171-2210**	1	CIRCUIT BREAKER AS (80-AMPERE) (MAIN)	
		1	**6V-8187**	2	NUT (1/4-28-THD)	
		1	**8T-4205**	2	WASHER-HARD (7.2X14.5X2-MM THK)	
		1	**253-2111**	2	LOCKWASHER	
M	15	1	**5C-9553**	4	BOLT (M6X1X16-MM)	
	16	1	**5P-4115**	4	WASHER-HARD (7.2X19X2-MM THK)	
	17	1	**6V-5645**	4	SCREW-MACHINE (10-32X0.87-IN)	
	18	1	**8T-0328**	4	WASHER-HARD (5.5X10X1-MM THK)	
M	19	1	**8T-4171**	4	BOLT (M6X1X12-MM)	
M	20	1	**8T-4970**	4	BOLT (M6X1X14-MM)	
	21	1	**9X-8256**	8	WASHER (6.6X12X2-MM THK)	

E-ORDER BY THE CENTIMETER
M-METRIC PART
Y-SEPARATE ILLUSTRATION

275-6927 PANEL GP-CIRCUIT BREAKER *(contd.)* i02854822

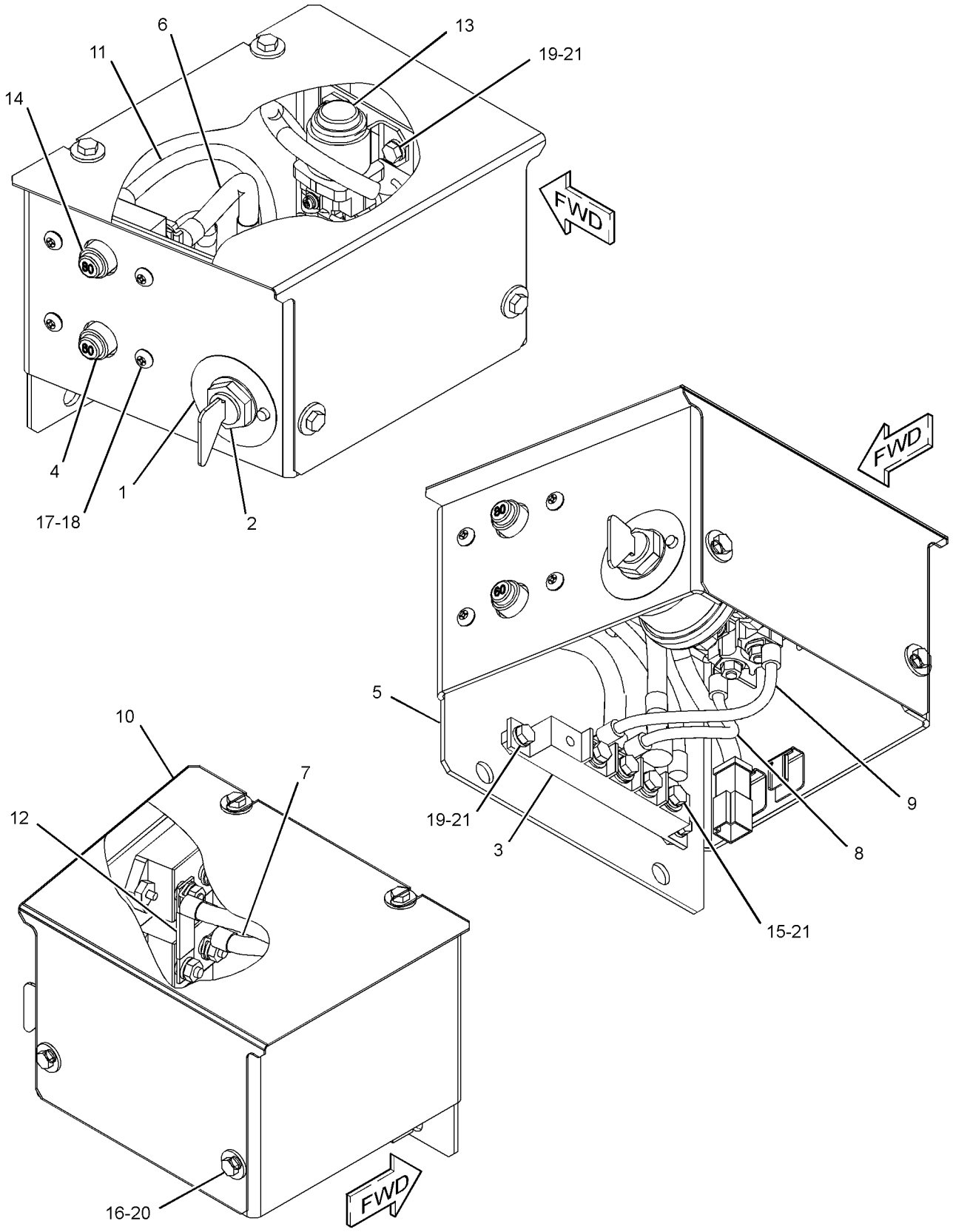

GRAPHIC #1 **<END>** g01312077

251-0542 PANEL GP-SWITCH—ENGINE SPEED, START

S/N: CJN1-UP
CONSOLE
CANNOT BE USED WITH 251-0544—PAGE 187
AN ATTACHMENT
TYPE 1

SMCS-1408, 1429, 7332, 7451 **i02742287**

NOTE	REF NO	GRAPHIC REF	PART NUMBER	QTY	PART NAME 1 2 3 4 5 6 (PRODUCT LEVEL)	SEE PAGE
	1	1	**3S-2093**	4	STRAP-CABLE	
Y	2	1	**9G-7641**	1	SWITCH GP-START (ENGINE, KEY)	207
Y	3	1	**106-0107**	1	SWITCH GP-ROTARY (THROTTLE POSITION)	205
	4	1	**170-9324**	1	LAMP AS (24-VOLT, 3-WATT)	
	5	1	**185-9208**	1	KNOB AS (THROTTLE POSITION)	
	6	1	**234-1156**	1	COVER	
	7	1	**234-1158**	1	COVER	
	8	1	**267-7976**	1	PANEL	
	9	1	**251-0543**	1	HARNESS AS-CONSOLE (RH)	
		1	**102-8802**	1	KIT-RECEPTACLE (2-PIN)	
					(INCLUDES RECEPTACLE AS & WEDGE)	
		1	**155-2270**	1	KIT-CONNECTING PLUG (2-PIN)	
		1	**155-2274**	1	KIT-CONNECTING PLUG (6-PIN)	
					(EACH CONNECTING PLUG KIT INCLUDES PLUG AS, WEDGE & INTERFACE SEAL)	
	10	1	**096-6166**	4	WASHER-HARD (4.5X9X1-MM THK)	
	11	1	**119-5026**	4	SCREW-PAN HEAD (10-16X0.63-IN)	
M	12	1	**6V-9491**	4	SCREW-MACHINE (M4X0.7X20-MM)	

M-METRIC PART
Y-SEPARATE ILLUSTRATION

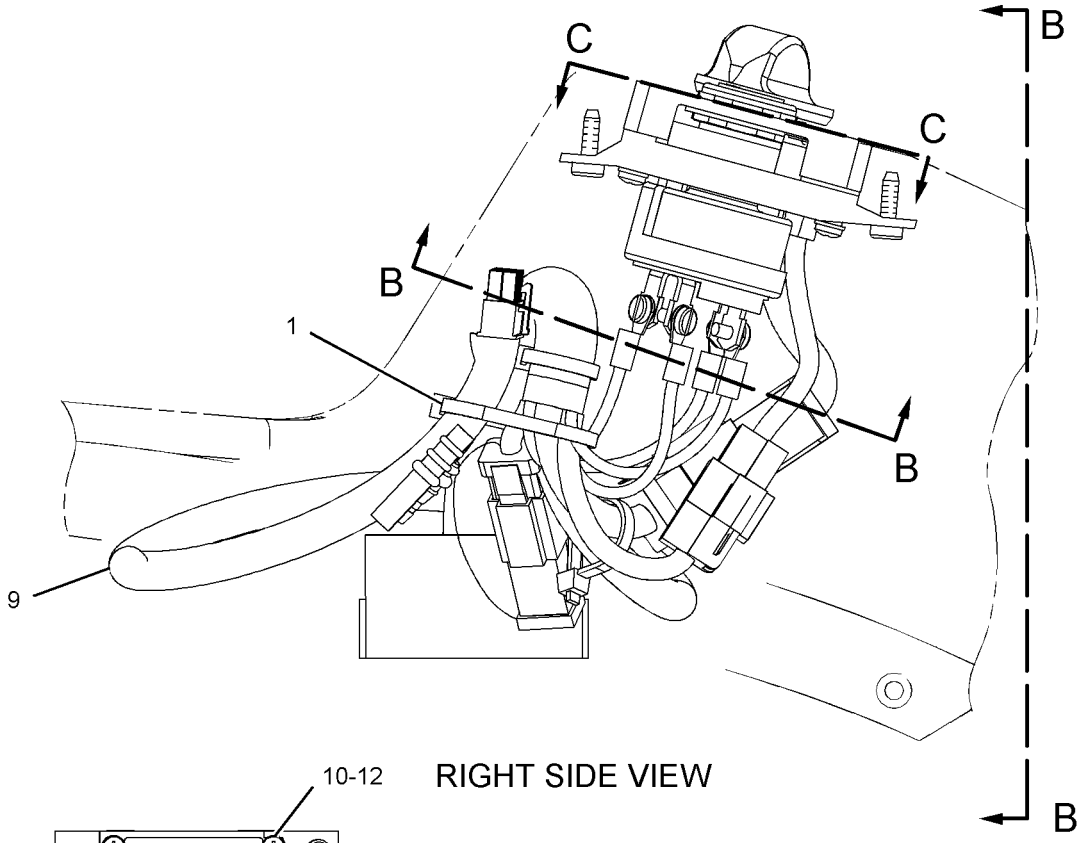

RIGHT SIDE VIEW

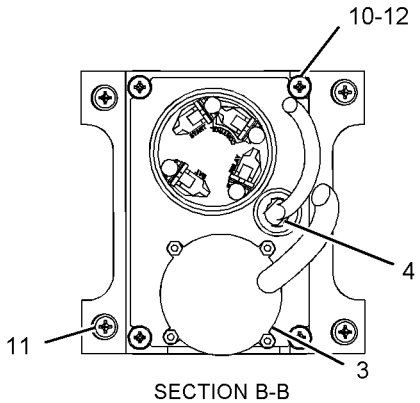

SECTION B-B

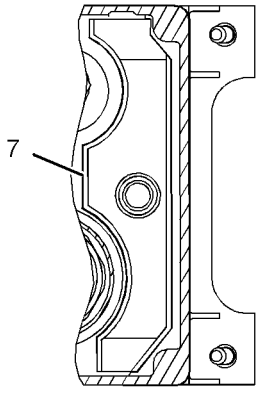

VIEW C-C

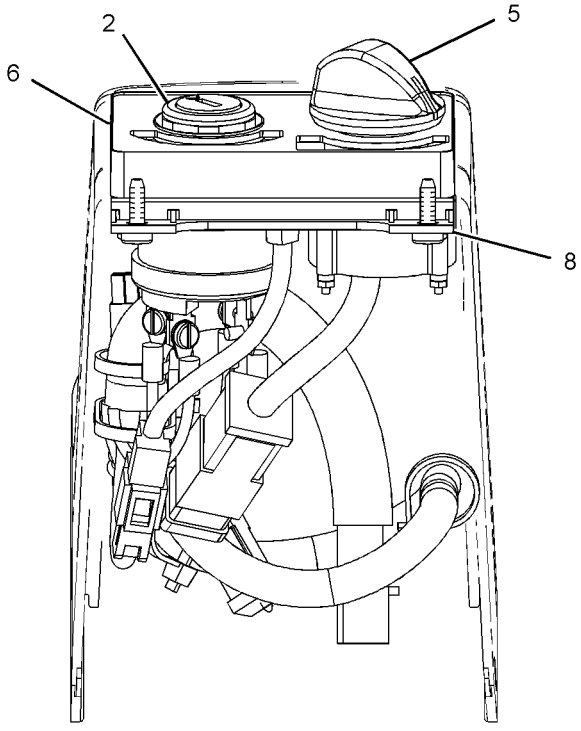

VIEW B-B

GRAPHIC #1 **<END>** g01112022

251-0542 PANEL GP-SWITCH–ENGINE SPEED, START

S/N: CJN1-UP
CONSOLE
CANNOT BE USED WITH 251-0544–PAGE 187
AN ATTACHMENT
TYPE 2

SMCS-1408, 1429, 7332, 7451 **i03098161**

NOTE	REF NO	GRAPHIC REF	PART NUMBER	QTY	PART NAME 1 2 3 4 5 6 (PRODUCT LEVEL)	SEE PAGE
	1	1	**3S-2093**	4	STRAP-CABLE	
Y	2	1	**9G-7641**	1	SWITCH GP-START (ENGINE, KEY)	207
CY	3	1	**319-4420**	1	SWITCH GP-ROTARY (THROTTLE POSITION)	206
	4	1	**170-9324**	1	LAMP AS (24-VOLT, 3-WATT)	
	5	1	**185-9208**	1	KNOB AS (THROTTLE POSITION)	
	6	1	**234-1156**	1	COVER	
	7	1	**234-1158**	1	COVER	
	8	1	**267-7976**	1	PANEL	
C	9	1	**328-0021**	1	HARNESS AS-CONSOLE (RH)	
	10	1	**096-6166**	4	WASHER-HARD (4.5X9X1-MM THK)	
	11	1	**119-5026**	4	SCREW-PAN HEAD (10-16X0.63-IN)	
M	12	1	**6V-9491**	4	SCREW-MACHINE (M4X0.7X20-MM)	

C-CHANGE FROM PREVIOUS TYPE
M-METRIC PART
Y-SEPARATE ILLUSTRATION

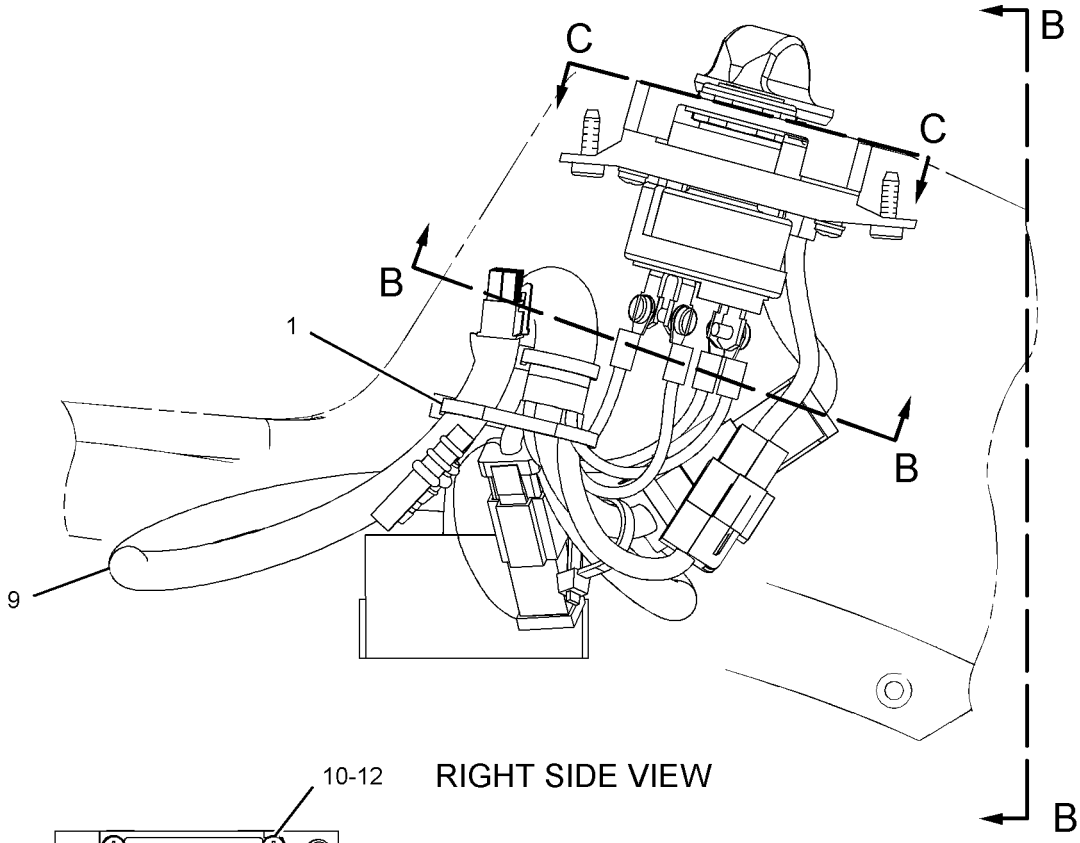

RIGHT SIDE VIEW

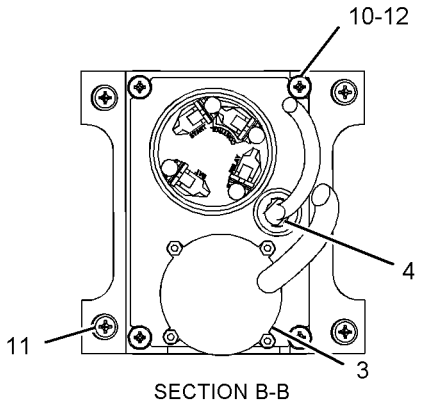

SECTION B-B

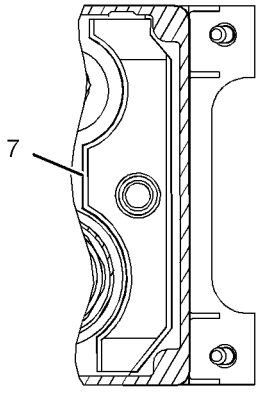

VIEW C-C

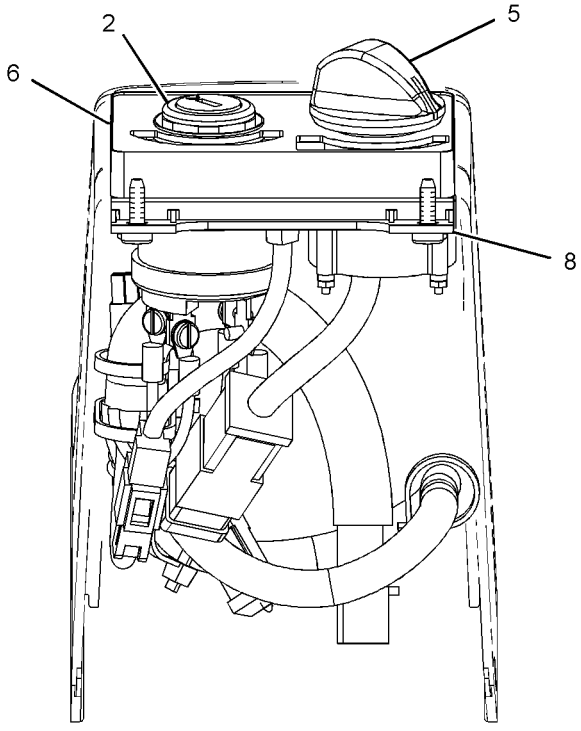

VIEW B-B

GRAPHIC #1 **<END>** g01112022

251-0544 PANEL GP-SWITCH–ENGINE SPEED, START

S/N: CJN1-UP
PART OF 227-7581 INSTALLATION GP-SECURITY
AN ATTACHMENT
TYPE 1

SMCS-1408, 1429, 7332, 7451 **i02742288**

NOTE	REF NO	GRAPHIC REF	PART NUMBER	QTY	PART NAME 1 2 3 4 5 6 (PRODUCT LEVEL)	SEE PAGE
	1	1	**3S-2093**	5	STRAP-CABLE	
Y	2	1	**9G-7641**	1	SWITCH GP-START (ENGINE, KEY)	207
Y	3	1	**106-0107**	1	SWITCH GP-ROTARY (THROTTLE POSITION)	205
	4	1	**185-9208**	1	KNOB AS	
	5	1	**205-0826**	1	FILM-INSTRUCTION (MACHINE SECURITY, CONSOLE)	
	6	1	**205-8257**	1	COIL AS (EXCITER)	
		1	**186-3735**	2	PIN-CONNECTOR (16-GA TO 18-GA)	
	7	1	**234-1156**	1	COVER	
	8	1	**267-7977**	1	PANEL	
	9	1	**251-0543**	1	HARNESS AS-CONSOLE (RH)	
		1	**102-8802**	1	KIT-RECEPTACLE (2-PIN)	
					(INCLUDES RECEPTACLE AS & WEDGE)	
		1	**155-2270**	1	KIT-CONNECTING PLUG (2-PIN)	
		1	**155-2274**	1	KIT-CONNECTING PLUG (6-PIN)	
					(EACH PLUG KIT INCLUDES PLUG AS, WEDGE & INTERFACE SEAL)	
	10	1	**096-6166**	4	WASHER-HARD (4.5X9X1-MM THK)	
	11	1	**119-5026**	4	SCREW-PAN HEAD (10-16X0.63-IN)	
M	12	1	**6V-9491**	4	SCREW-MACHINE (M4X0.7X20-MM)	

M-METRIC PART
Y-SEPARATE ILLUSTRATION

251-0544 **PANEL GP-SWITCH** *(contd.)* **i02742288**

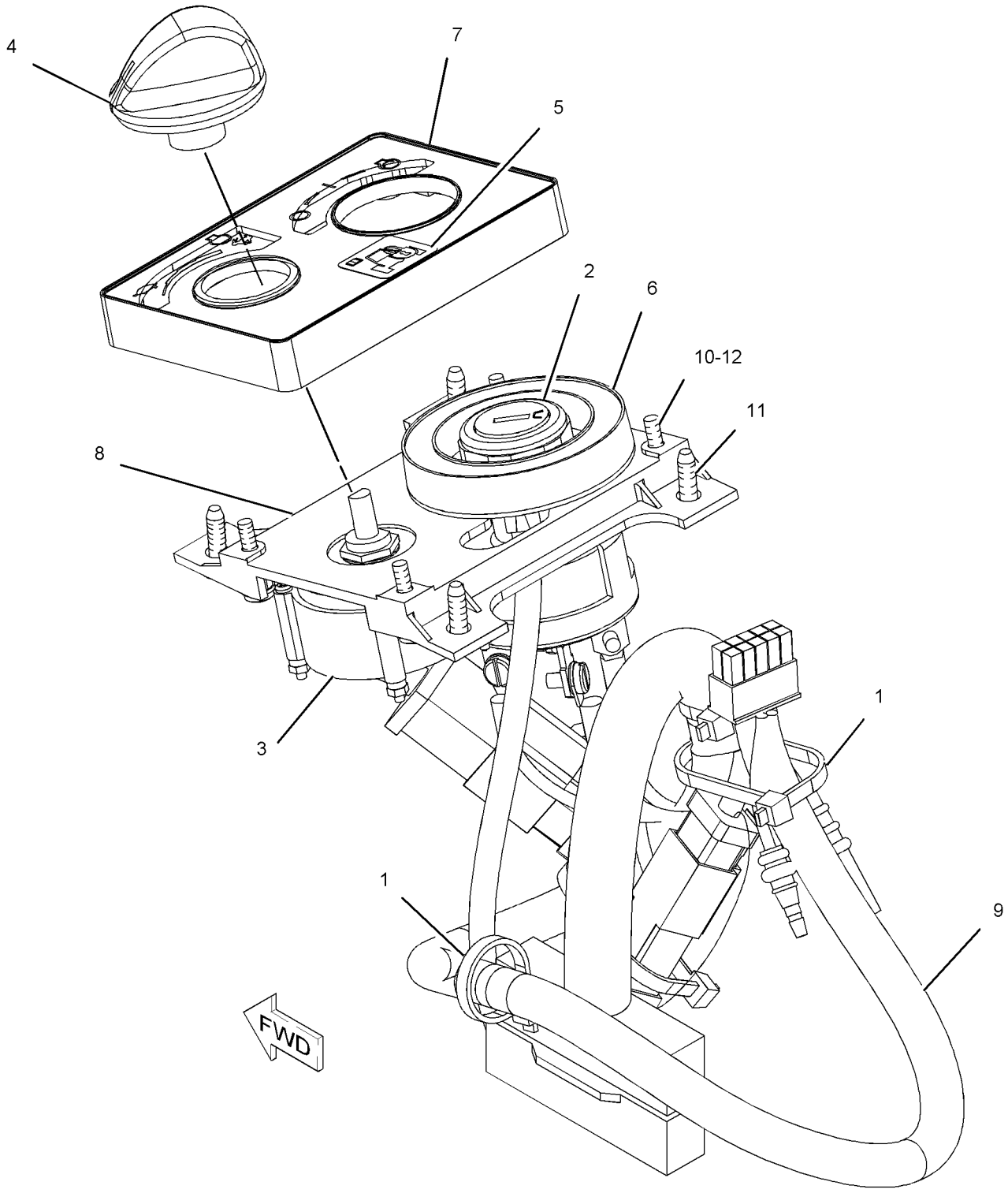

GRAPHIC #1 **<END>** g01123869

251-0544 PANEL GP-SWITCH–ENGINE SPEED, START

S/N: CJN1-UP
PART OF 227-7581 INSTALLATION GP-SECURITY
AN ATTACHMENT
TYPE 2

SMCS-1408, 1429, 7332, 7451 **i03115847**

NOTE	REF NO	GRAPHIC REF	PART NUMBER	QTY	PART NAME 1 2 3 4 5 6 (PRODUCT LEVEL)	SEE PAGE
	1	1	**3S-2093**	5	STRAP-CABLE	
Y	2	1	**9G-7641**	1	SWITCH GP-START (ENGINE, KEY)	207
CY	3	1	**319-4420**	1	SWITCH GP-ROTARY (THROTTLE POSITION)	206
	4	1	**185-9208**	1	KNOB AS	
	5	1	**205-0826**	1	FILM-INSTRUCTION (MACHINE SECURITY, CONSOLE)	
	6	1	**206-5208**	1	COIL AS (EXCITER)	
	7	1	**234-1156**	1	COVER	
	8	1	**267-7977**	1	PANEL	
C	9	1	**328-0021**	1	HARNESS AS-CONSOLE	
	10	1	**096-6166**	4	WASHER-HARD (4.5X9X1-MM THK)	
	11	1	**119-5026**	4	SCREW-PAN HEAD (10-16X0.63-IN)	
M	12	1	**6V-9491**	4	SCREW-MACHINE (M4X0.7X20-MM)	

C-CHANGE FROM PREVIOUS TYPE
M-METRIC PART
Y-SEPARATE ILLUSTRATION

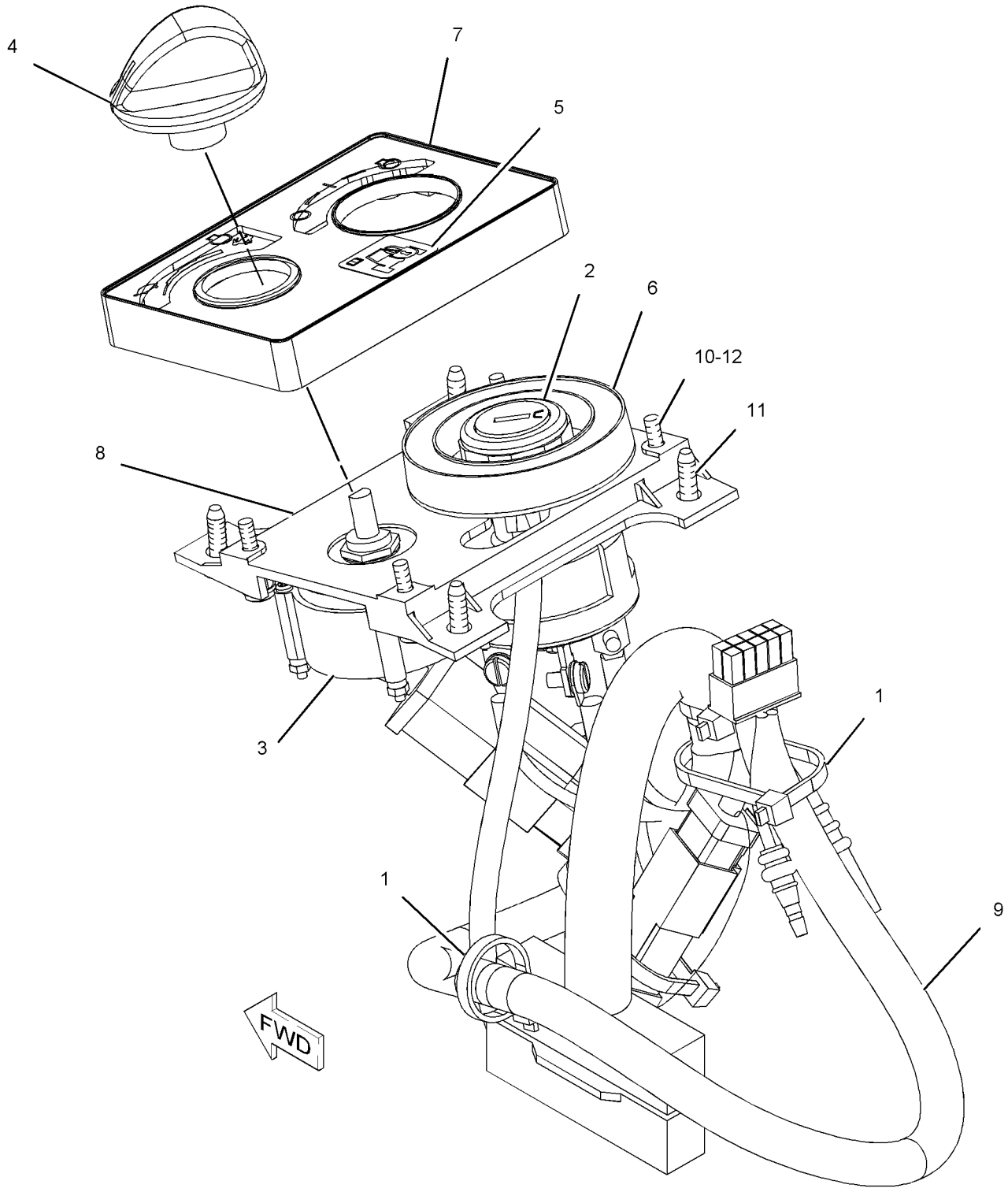

GRAPHIC #1 **<END>** g01123869

297-4469 SENSOR & MTG GP-POSITION–BOOM

S/N: CJN1-UP
PART OF 301-2479, 301-2517, 330-8775 SPECIAL AR
AN ATTACHMENT

SMCS-5736 **i02840334**

NOTE	REF NO	GRAPHIC REF	PART NUMBER	QTY	PART NAME 1 2 3 4 5 6 (PRODUCT LEVEL)	SEE PAGE
Y	1	1	**169-0417**	1	SENSOR GP-POSITION (BOOM)	197
	2	1	**196-3273**	1	SPACER	
	3	1	**297-4479**	1	LEVER AS	
	4	1	**309-5694**	1	PLATE	
M	5	1	**131-3983**	4	BOLT-SOCKET HEAD (M8X1.25X35-MM)	
M	6	1	**7X-2543**	1	BOLT (M10X1.5X120-MM)	
M	7	1	**8C-8451**	2	BOLT (M6X1X40-MM)	
	8	1	**8T-4121**	1	WASHER-HARD (11X21X2.5-MM THK)	
	9	1	**8T-4224**	4	WASHER-HARD (8.8X16X2-MM THK)	
	10	1	**9X-8256**	2	WASHER (6.6X12X2-MM THK)	

M-METRIC PART
Y-SEPARATE ILLUSTRATION

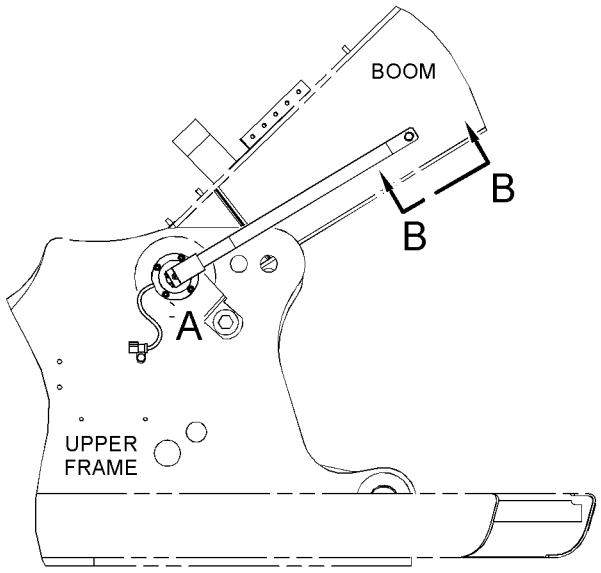

RIGHT SIDE VIEW

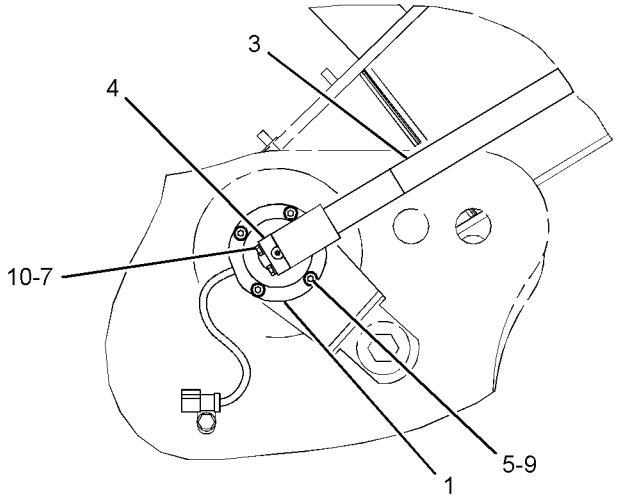

VIEW OF AREA A

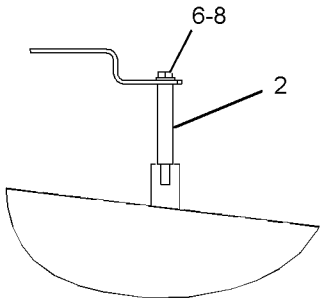

VIEW B-B

GRAPHIC #1 **<END>** g01419414

297-4470 SENSOR & MTG GP-POSITION–STICK

S/N: CJN1-UP

PART OF 330-8777 BOOM AR, 301-2479, 301-2517 SPECIAL AR

AN ATTACHMENT

SMCS-5736 **i02840336**

NOTE	REF NO	GRAPHIC REF	PART NUMBER	QTY	PART NAME 1 2 3 4 5 6 (PRODUCT LEVEL)	SEE PAGE
Y	1	1	**169-0417**	1	SENSOR GP-POSITION (STICK)	197
	2	1	**309-5693**	1	LEVER AS	
	3	1	**309-5694**	1	PLATE	
	4	1	**309-5695**	1	ROD AS	
M		1	**8T-4133**	1	NUT (M10X1.5-THD)	
M		1	**9X-2065**	1	NUT (M10X1.15-THD)	
	5	1	**309-5733**	1	ROLLER	
	6	1	**309-5734**	1	SPACER (10.8X17.3X12-MM THK)	
M	7	1	**131-3983**	4	BOLT-SOCKET HEAD (M8X1.25X35-MM)	
M	8	1	**8T-1160**	1	BOLT-SOCKET HEAD (M10X1.5X50-MM)	
	9	1	**8T-4121**	3	WASHER-HARD (11X21X2.5-MM THK)	
M	10	1	**8T-4195**	1	BOLT (M10X1.5X30-MM)	
	11	1	**8T-4224**	4	WASHER-HARD (8.8X16X2-MM THK)	
M	12	1	**8T-4971**	2	BOLT (M6X1X30-MM)	
	13	1	**9X-8256**	2	WASHER (6.6X12X2-MM THK)	

M-METRIC PART
Y-SEPARATE ILLUSTRATION

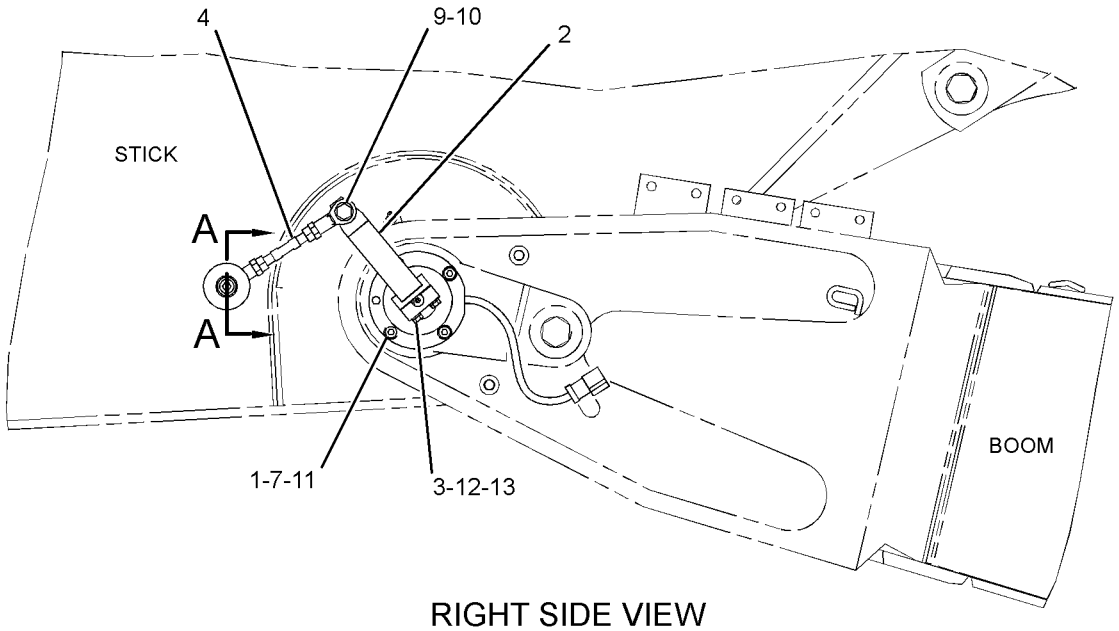

RIGHT SIDE VIEW

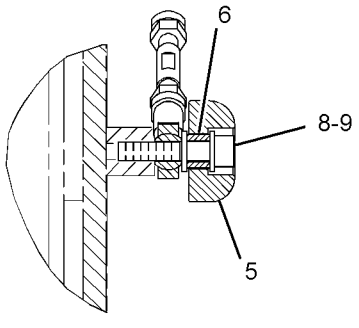

SECTION A-A

GRAPHIC #1 **<END>** g01418908

296-4802 SENSOR GP-ENGINE

S/N: JKH1-UP
PART OF 272-4817 ENGINE AR
ALSO AN ATTACHMENT

SMCS-1000, 1906, 1907, 1924, 7422 **i02710546**

NOTE	REF NO	GRAPHIC REF	PART NUMBER	QTY	PART NAME 1 2 3 4 5 6 (PRODUCT LEVEL)	SEE PAGE
	1	1	**238-0112**	1	SENSOR GP-TEMPERATURE (AIR INLET)	
	1A	1	**238-0112**	1	SENSOR GP-TEMPERATURE (ENGINE COOLANT)	
	1B	1	**238-0112**	1	SENSOR GP-TEMPERATURE (FUEL)	
	2	1	**238-0118**	1	SENSOR GP-PRESSURE (FUEL MANIFOLD)	
	3	1	**296-4631**	1	WASHER	
	4	1	**274-6720**	1	SENSOR GP-PRESSURE (AIR INLET MANIFOLD)	
	5	1	**274-6721**	1	SENSOR GP-PRESSURE (FUEL)	
	5A	1	**274-6721**	1	SENSOR GP-PRESSURE (ENGINE OIL)	
	6	1	**238-0120**	1	SENSOR GP-SPEED (ENGINE)	
	7	1	**196-7973**	1	SENSOR GP-SPEED (ENGINE)	
	8	1	**294-1804**	5	SEAL-O-RING	
	9	1	**296-4633**	1	SEAL-O-RING	
	10	1	**266-0136**	1	SENSOR GP-PRESSURE (FUEL)	
	11	1	**296-4621**	2	BOLT (M6X1.25X23.5-MM)	

296-4802 **SENSOR GP-ENGINE** *(contd.)* **i02710546**

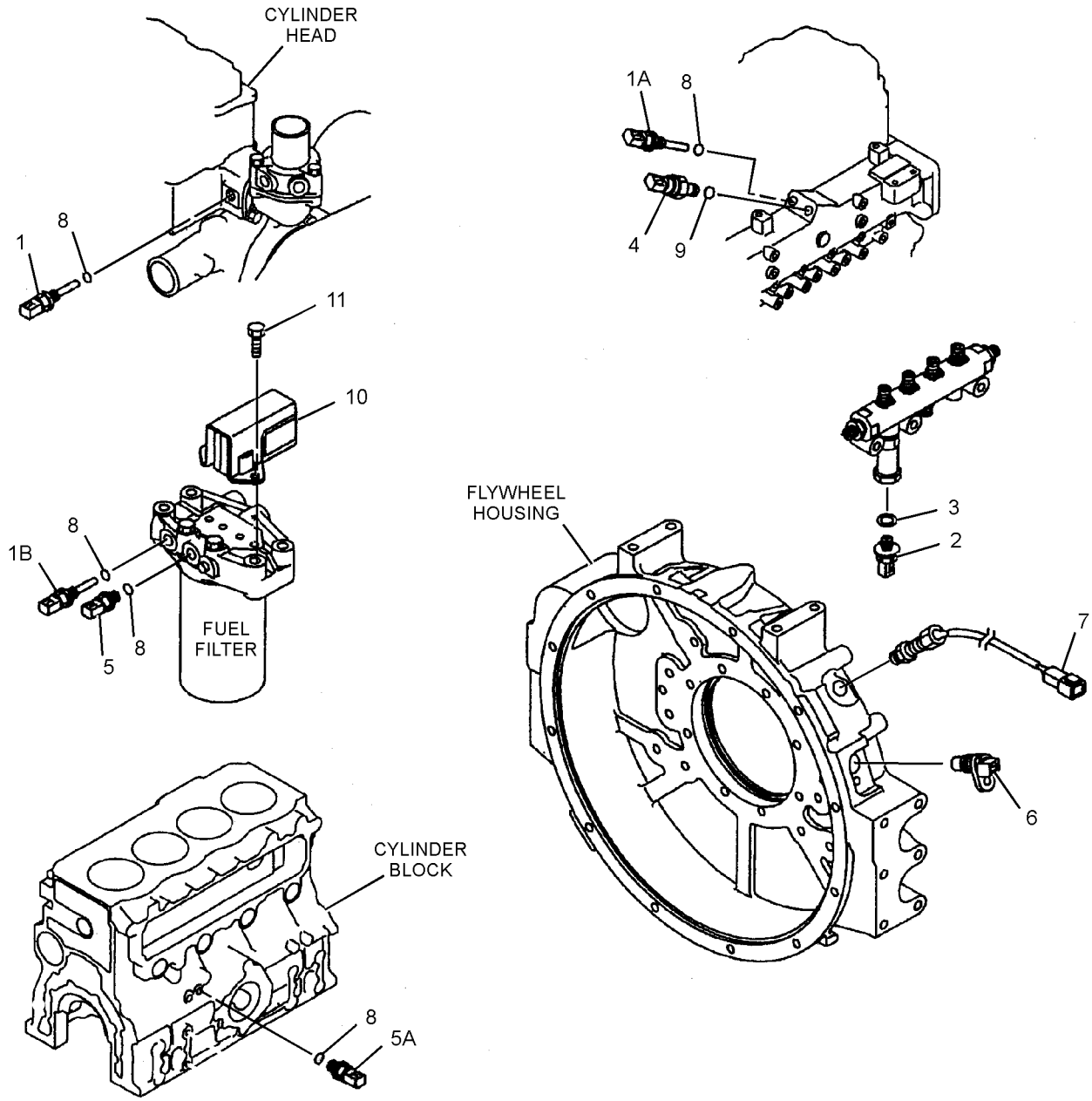

GRAPHIC #1 **<END>** g01403837

178-2345 SENSOR GP-LIQUID LEVEL–WATER IN FUEL

S/N: CJN1-UP

PART OF 255-3050 SENSOR GP-LIQUID LEVEL

AN ATTACHMENT

SMCS-7422 **i03195620**

NOTE	REF NO	GRAPHIC REF	PART NUMBER	QTY	PART NAME 1 2 3 4 5 6 (PRODUCT LEVEL)	SEE PAGE
	1	1	**178-2334**	1	PROBE AS-LIQUID LEVEL (WATER SEPARATOR)	
	2	1	**178-2335**	1	SENSOR AS-LIQUID LEVEL (WATER SEPARATOR)	
		1	**102-8804**	1	KIT-RECEPTACLE (4-PIN)	
					(INCLUDES RECEPTACLE AS & WEDGE)	
		1	**155-2270**	1	KIT-CONNECTING PLUG (2-PIN)	
					(INCLUDES PLUG AS,WEDGE & INTERFACE SEAL)	
		1	**186-3735**	4	PIN-CONNECTOR (16-GA TO 18-GA)	
		1	**186-3736**	2	SOCKET-CONNECTOR (16-GA TO 18-GA)	

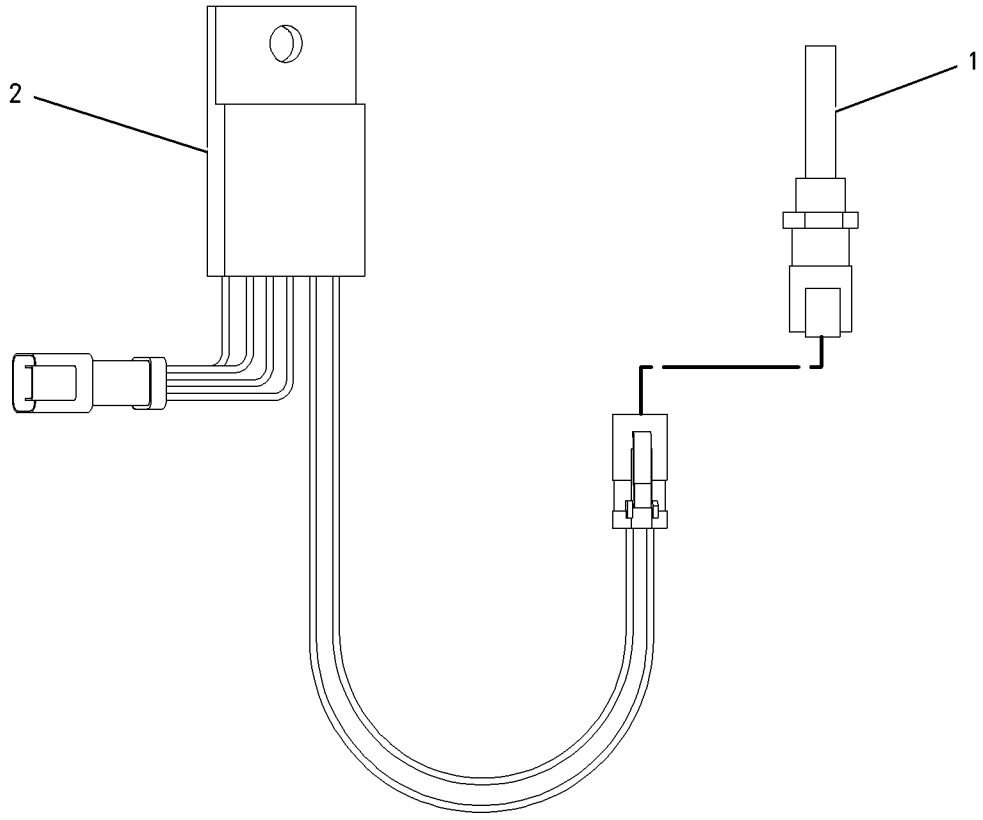

GRAPHIC #1 **<END>** g00816289

255-3050 SENSOR GP-LIQUID LEVEL–WATER SEPARATOR

S/N: CJN1-UP
AN ATTACHMENT

SMCS-7422 **i02855094**

NOTE	REF NO	GRAPHIC REF	PART NUMBER	QTY	PART NAME 1 2 3 4 5 6 (PRODUCT LEVEL)	SEE PAGE
	1	1	**3S-2093**	2	STRAP-CABLE	
Y	2	1	**178-2345**	1	SENSOR GP-LIQUID LEVEL (WATER IN FUEL)	195
	3	1	**6V-5049**	1	SEAL-O-RING	
	4	1	**8T-4121**	1	WASHER-HARD (11X21X2.5-MM THK)	
M	5	1	**8T-4137**	1	BOLT (M10X1.5X20-MM)	

M-METRIC PART
Y-SEPARATE ILLUSTRATION

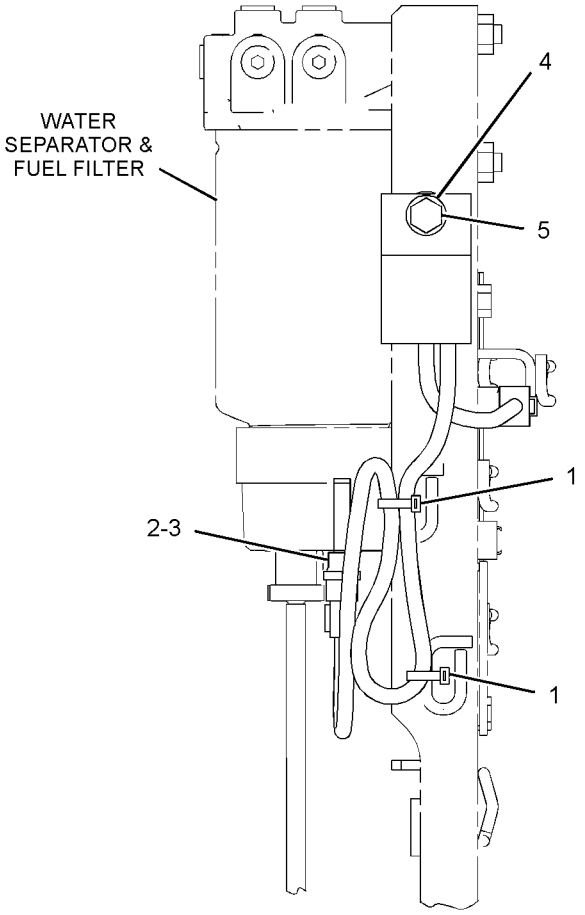

LEFT SIDE VIEW

GRAPHIC #1 **<END>** g01379156

169-0417 SENSOR GP-POSITION

S/N: CJN1-UP

PART OF 297-4469, 297-4470 SENSOR & MTG GP-POSITION

AN ATTACHMENT

SMCS-5737 **i02846101**

NOTE	REF NO	GRAPHIC REF	PART NUMBER	QTY	PART NAME 1 2 3 4 5 6 (PRODUCT LEVEL)	SEE PAGE
	2	1	**102-8803**	1	KIT-RECEPTACLE (3-PIN)	
					(INCLUDES RECEPTACLE AS AND WEDGE)	
	3	1	**9X-3401**	3	PIN-CONNECTOR (16-GA TO 18-GA)	
	4	1	**3E-3371**	1	WEDGE-RECEPTACLE LOCK (3-PIN)	
E	5	1	**119-3662**		TUBE-HEAT SHRINK (10.85-MM DIA) (5-CM)	
E	6	1	**9X-1813**		SLEEVE (17-CM)	
	7	1	**172-1482**	1	CLAMP	
M	8	1	**3E-8048**	2	SCREW-MACHINE (M3X0.5X6-MM)	

E-ORDER BY THE CENTIMETER
M-METRIC PART

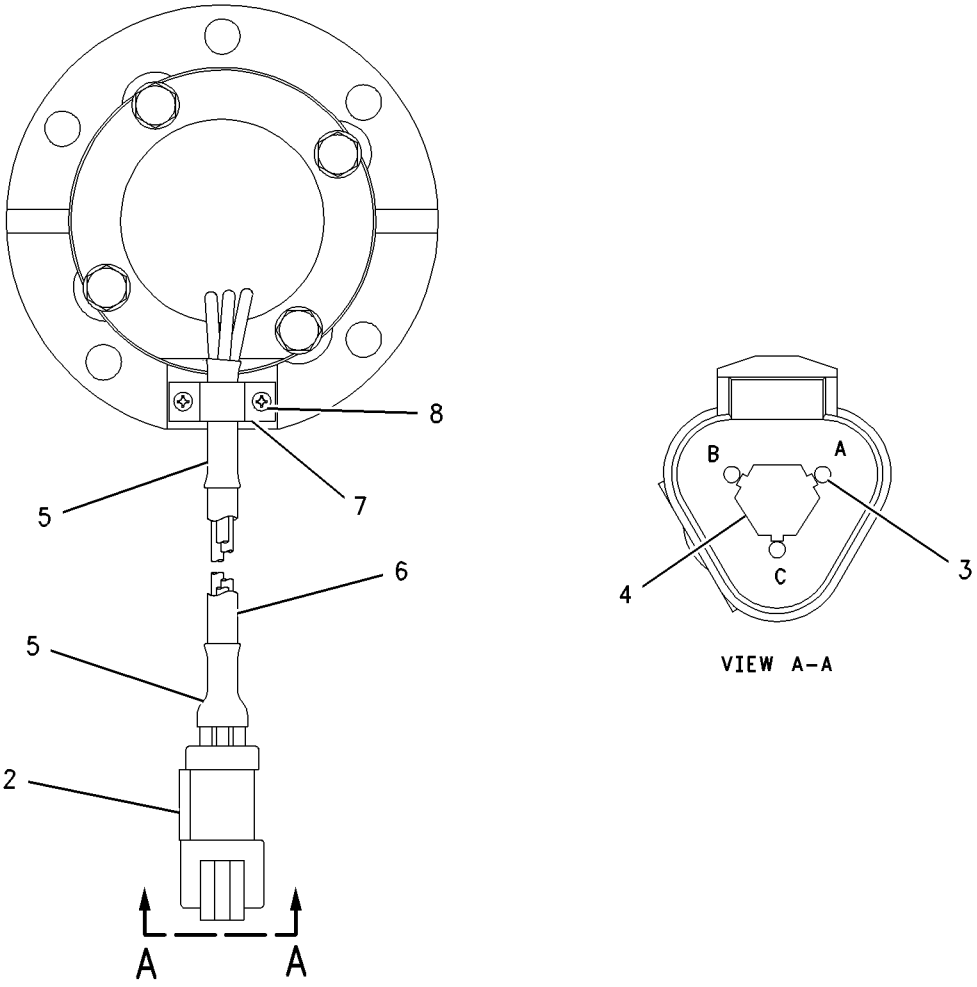

GRAPHIC #1 **<END>** g00934905

ELECTRICAL AND STARTING SYSTEM

272-4774 STARTING MOTOR GP-ELECTRIC

S/N: JKH1-UP

PART OF 296-4637 MOUNTING GP-STARTING MOTOR

ALSO AN ATTACHMENT

SMCS-1453 **i02646437**

NOTE	REF NO	GRAPHIC REF	PART NUMBER	QTY	PART NAME 1 2 3 4 5 6 (PRODUCT LEVEL)	SEE PAGE
	1	1	**127-5947**	1	SETSCREW	
C	2	1	**294-1855**	1	BRACKET AS	
		1	**127-5937**	1	BEARING AS	
	3	1	**127-5944**	1	LEVER AS	
C	4	1	**294-1857**	1	SOLENOID AS-STARTING MOTOR (STARTING MOTOR)	
	5	1	**127-5948**	1	BALL	
	6	1	**127-5949**	1	PACKING AS	
	7	1	**127-5950**	1	ARMATURE AS	
		1	**095-0410**	1	BEARING	
	8	1	**095-0085**	1	BOLT SET	
	9	1	**279-7750**	1	PINION SET	
		1	**094-9950**	1	STOP SET	
	10	1	**233-1279**	1	SHAFT GP-MOTOR	
		1	**127-5939**	1	SHAFT AS-GEAR	
		1	**127-5940**	1	WASHER AS	
		1	**127-5941**	1	GEAR AS-INTERNAL	
		1	**127-5943**	4	GEAR AS (55/138-TEETH)	
		1	**233-1280**	1	CLUTCH	
	11	1	**094-9980**	2	GASKET	
	12	1	**127-5952**	1	YOKE AS	
		1	**127-5953**	2	BRUSH	
C	13	1	**294-1858**	1	HOLDER AS	
	14	1	**135-2366**	1	BRACKET	

C-CHANGE FROM PREVIOUS TYPE

272-4774 **STARTING MOTOR GP-ELECTRIC** *(contd.)* **i02646437**

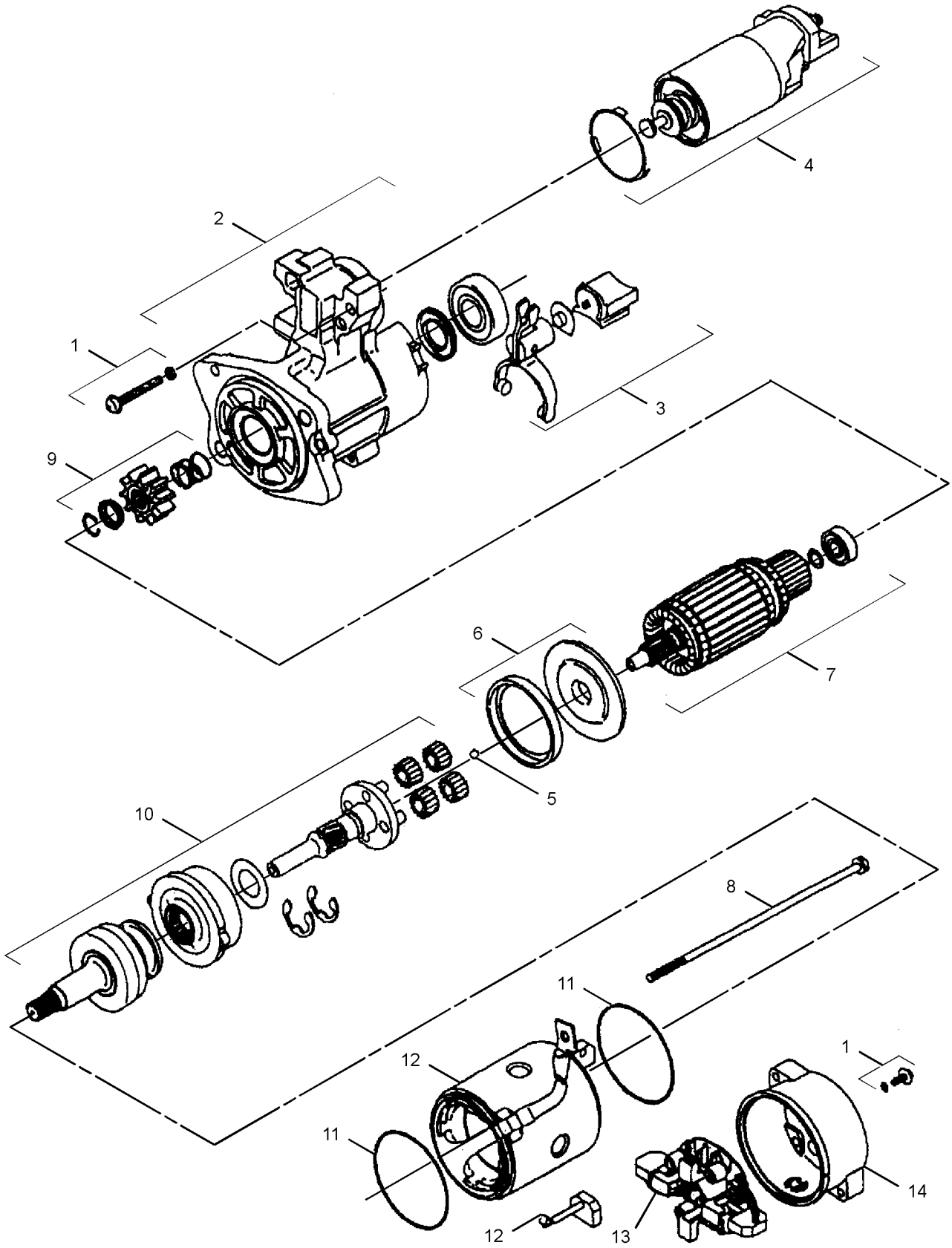

GRAPHIC #1 **<END>** g01219448

7N-0718 SWITCH GP-DISCONNECT–BATTERY

S/N: CJN1-307

PART OF 275-6927 PANEL GP-CIRCUIT BREAKER

SMCS-1411 **i01213345**

NOTE	REF NO	GRAPHIC REF	PART NUMBER	QTY	PART NAME 1 2 3 4 5 6 (PRODUCT LEVEL)	SEE PAGE
	1	1	**2H-3922**	2	LOCKWASHER	
	2	1	**8H-5303**	1	NUT (3/4-16-THD)	
	3	1	**9F-5644**	2	LOCKWASHER	
	4	1	**6F-7045**	2	NUT-FULL (3/8-24-THD)	
	5	1	**8H-5306**	1	KEY (BATTERY DISCONNECT)	

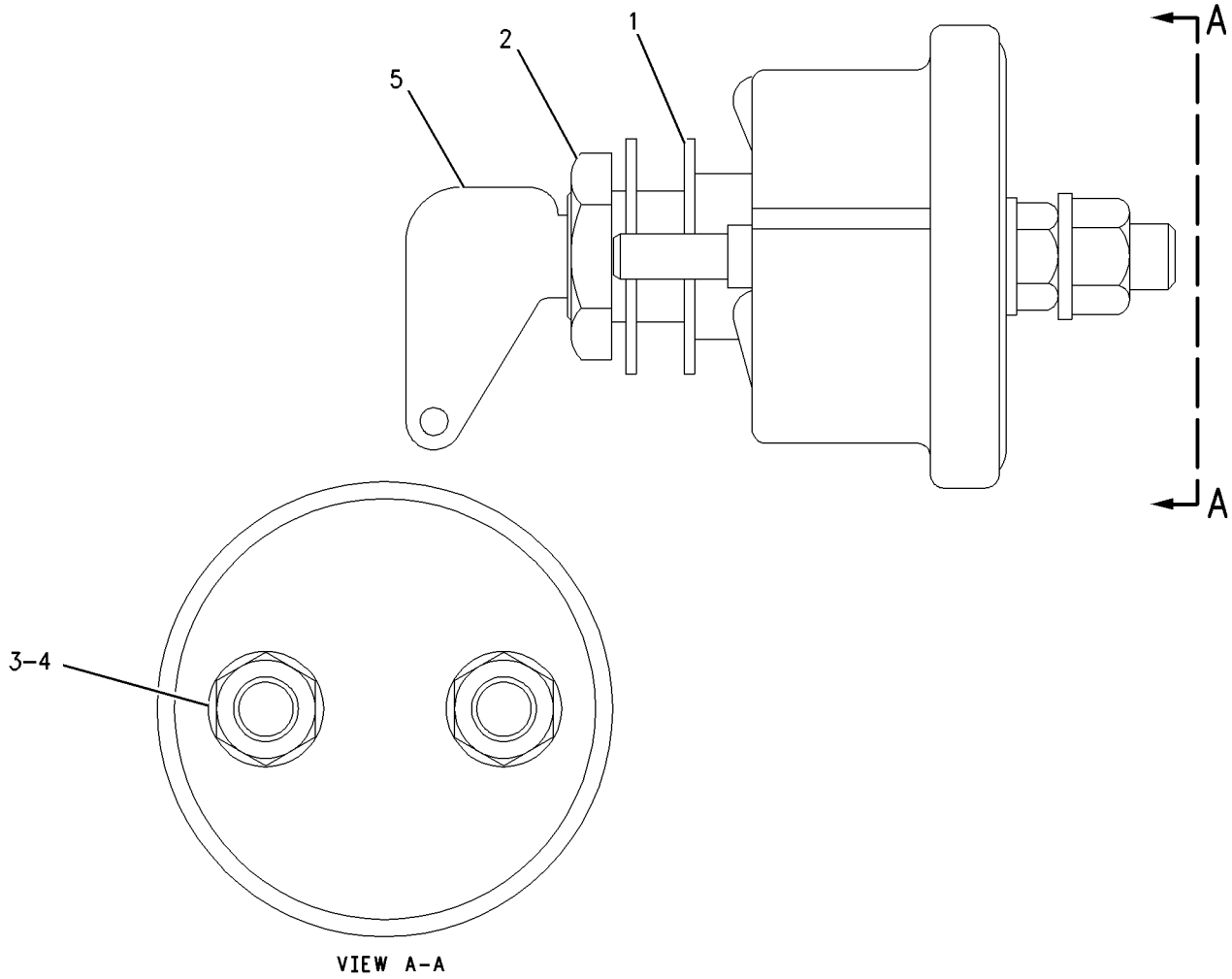

GRAPHIC #1 **<END>** g00664195

223-7577 SWITCH GP-MAGNETIC—AIR INLET HEATER RELAY

S/N: JKH1-UP
24 VOLT
PART OF 296-4801 WIRING GP-ELECTRONIC CONTROL
ALSO AN ATTACHMENT

SMCS-7499 **i02953207**

NOTE	REF NO	GRAPHIC REF	PART NUMBER	QTY	PART NAME 1 2 3 4 5 6 (PRODUCT LEVEL)	SEE PAGE
	1	1	**209-5582**	1	SWITCH GP-MAGNETIC (24-VOLT) (AIR INLET HEATER RELAY)	
	1A	1	**102-8802**	1	KIT-RECEPTACLE (2-PIN)	
					(INCLUDES RECEPTACLE AS & WEDGE)	
	1B	1	**186-3735**	2	PIN-CONNECTOR (16-GA TO 18-GA)	
	1C	1	**3F-9556**	2	LOCKWASHER	
	1D	1	**6V-8186**	2	NUT-FULL (5/16-24-THD)	
	1E	1	**6V-8378**	2	NUT (10-32-THD)	
	1F	1	**8F-1434**	2	LOCKWASHER	
	2	1	**283-1224**	1	BRACKET AS	
	3	1	**208-9277**	2	BOLT-FLANGE HEAD (M8X1X25-MM)	

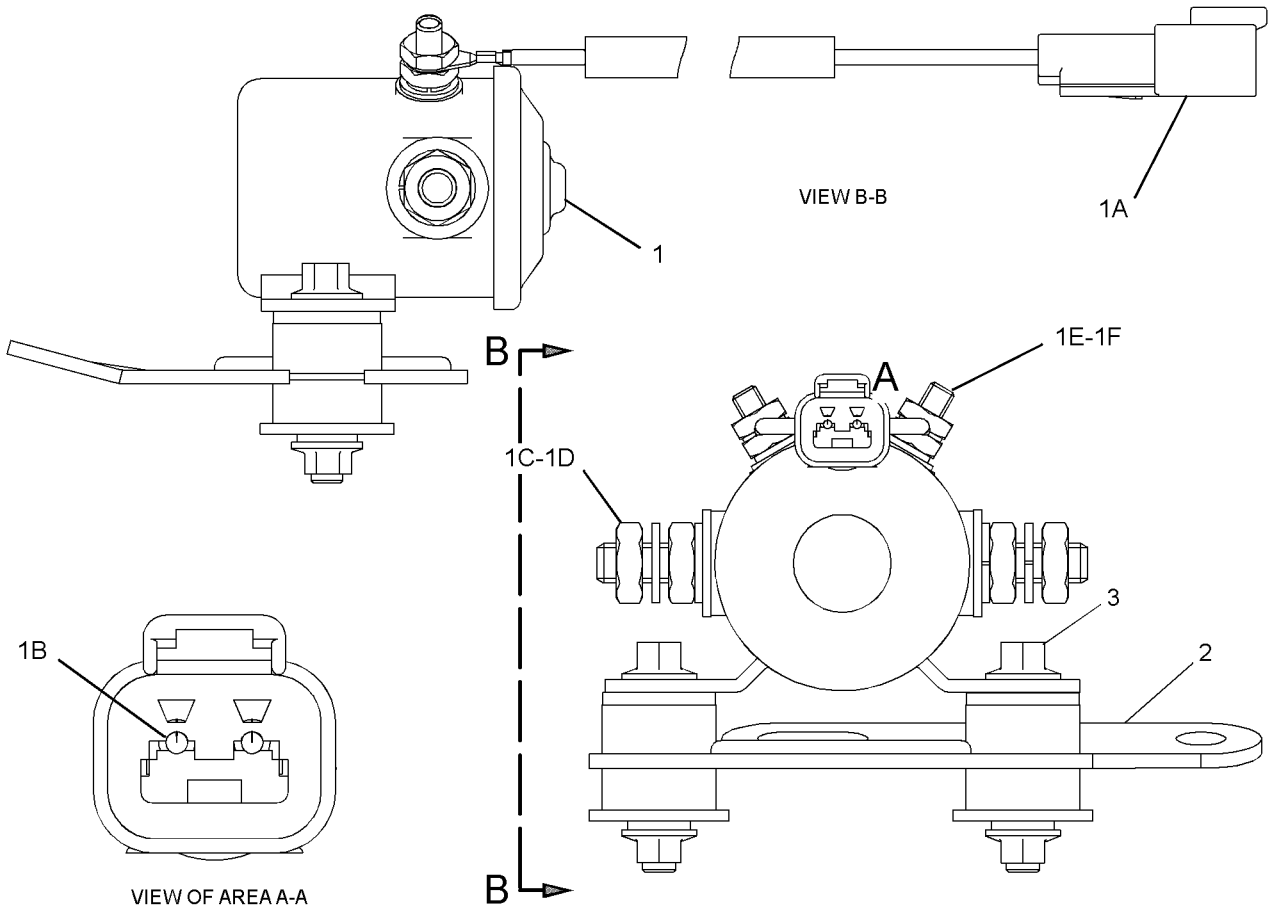

GRAPHIC #1 **<END>** g01269556

259-5274 SWITCH GP-MAGNETIC–START RELAY

S/N: CJN1-307

PART OF 275-6927 PANEL GP-CIRCUIT BREAKER

SMCS-7499 **i02420131**

NOTE	REF NO	GRAPHIC REF	PART NUMBER	QTY	PART NAME 1 2 3 4 5 6 (PRODUCT LEVEL)	SEE PAGE
	1	1	**102-8802**	1	KIT-RECEPTACLE (2-PIN)	
					(INCLUDES RECEPTACLE AS & WEDGE)	
	2	1	**186-3735**	2	PIN-CONNECTOR (16-GA TO 18-GA)	
	3	1	**1H-3338**	2	LOCKWASHER (TOOTH)	
	4	1	**012-0380**	2	LOCKWASHER (SPLIT)	
M	5	1	**5C-2890**	2	NUT (M6X1-THD)	

M-METRIC PART

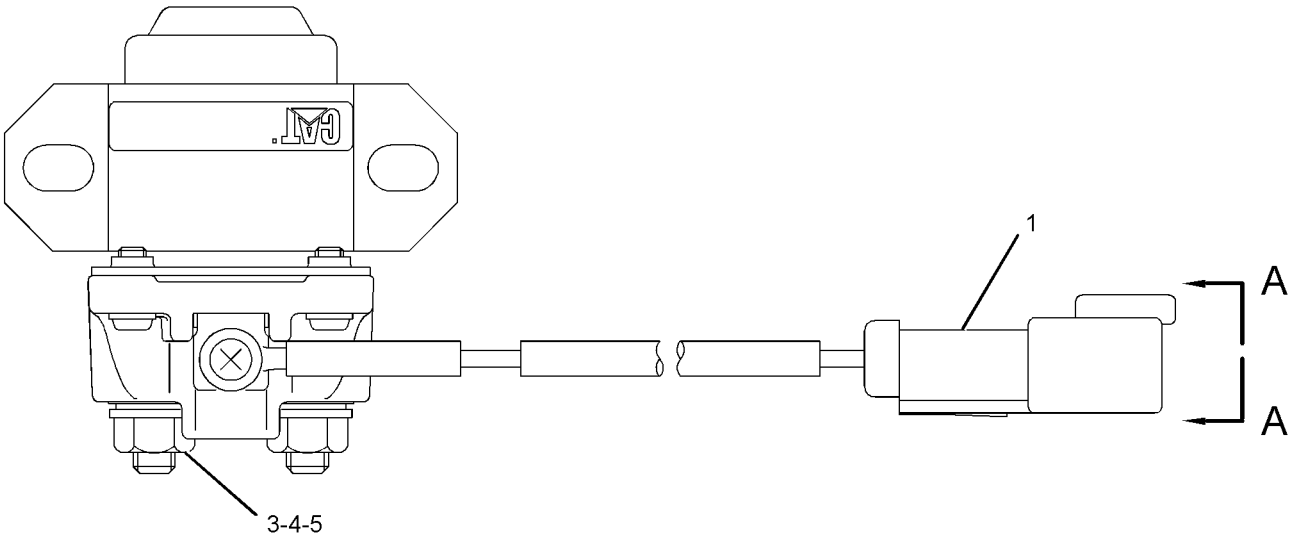

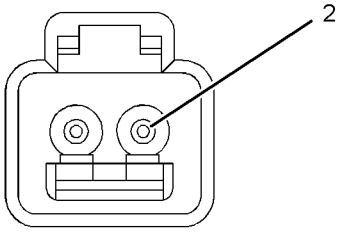

VIEW A-A

GRAPHIC #1 **<END>** g01196733

234-6613 SWITCH GP-POSITION–HYDRAULIC LOCKOUT

S/N: CJN1-UP

PART OF 259-7349 CONSOLE GP-OPERATOR

SMCS-1408, 1435 **i02175053**

NOTE	REF NO	GRAPHIC REF	PART NUMBER	QTY	PART NAME 1 2 3 4 5 6 (PRODUCT LEVEL)	SEE PAGE
	1	1	**3S-2093**	1	STRAP-CABLE	
	2	1	**4I-3038**	2	WASHER (3.3X8X0.5-MM THK)	
	3	1	**111-4799**	1	SWITCH AS-LIMIT (HYDRAULIC LOCKOUT)	
		1	**102-8803**	1	KIT-RECEPTACLE (3-PIN)	
					(INCLUDES RECEPTACLE AS & WEDGE)	
		1	**186-3735**		PIN-CONNECTOR (16-GA TO 18-GA)	
BD		1	**5P-5998**		TUBE	
M	4	1	**185-8286**	2	SCREW-MACHINE (M4X0.7X8-MM)	
	5	1	**234-6615**	1	KNOB	
	6	1	**087-4683**	2	LOCKWASHER	
M	7	1	**120-9027**	2	SCREW-PAN HEAD (M3X0.5X16-MM)	

B-USE AS REQUIRED
D-ORDER BY THE METER
M-METRIC PART

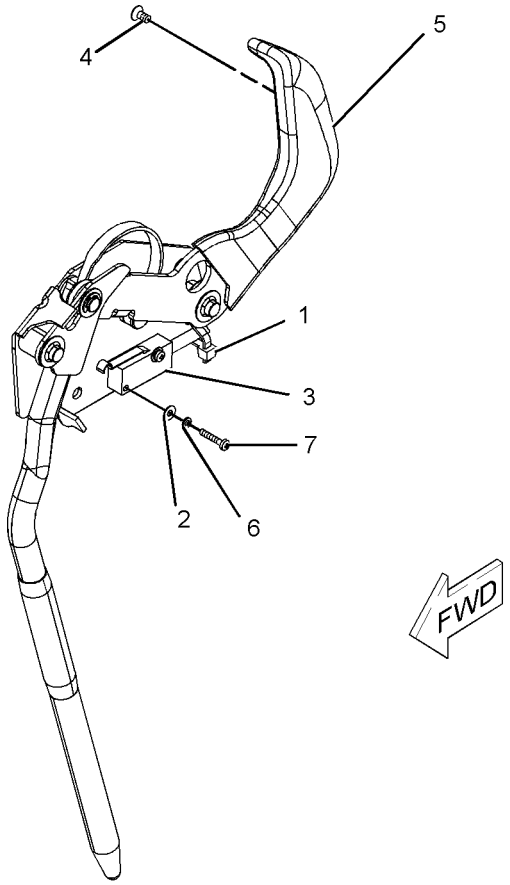

GRAPHIC #1 **<END>** g01096293

5C-6108 SWITCH GP-REFUELING–FUEL TANK SHUTOFF

S/N: CJN1-UP

PART OF 260-7094 PUMP GP-FUEL TRANSFER

AN ATTACHMENT

SMCS-1295 **i02742303**

NOTE	REF NO	GRAPHIC REF	PART NUMBER	QTY	PART NAME 1 2 3 4 5 6 (PRODUCT LEVEL)	SEE PAGE
	1	1	**8J-9236**	1	SWITCH (LIQUID LEVEL) (FUEL)	
	2	1	**5C-6074**	1	FITTING	
	3	1	**2S-4078**	1	SEAL-O-RING	
	4	1	**3D-2824**	1	SEAL-O-RING	
	5	1	**8S-1815**	1	PLUG	
	6	1	**8S-1814**	2	INSULATOR	
	7	1	**4B-2049**	2	NUT (10-32-THD)	
	8	1	**8S-1812**	1	TERMINAL	
	9	1	**9B-4499**	1	SCREW-MACHINE (8-36X0.375-IN)	
	10	1	**2L-8076**	1	TERMINAL (14-GA TO 16-GA, NO. 10 SCREW)	

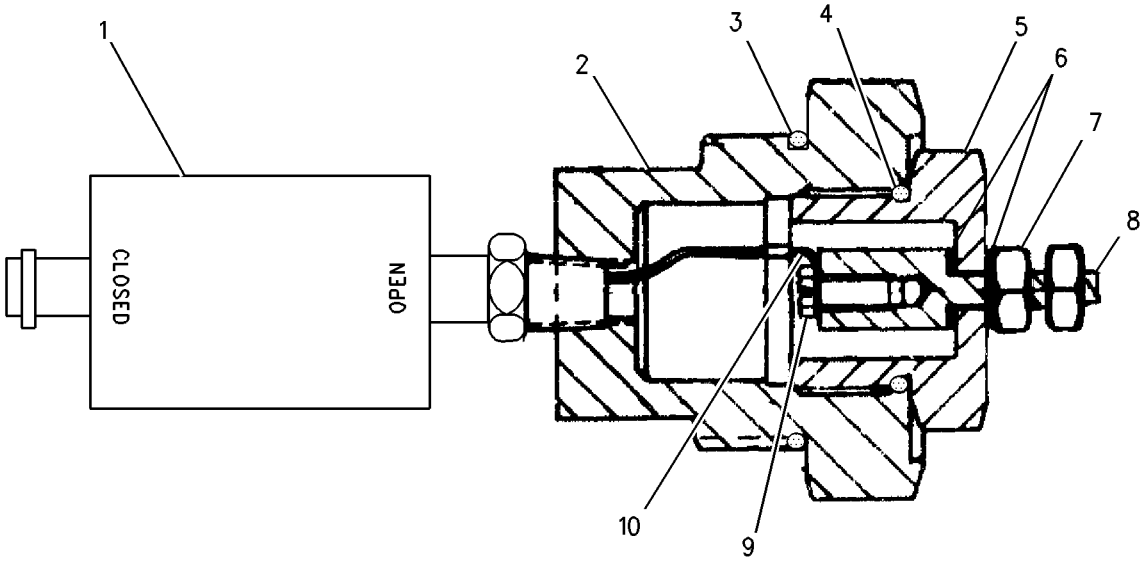

GRAPHIC #1 **<END>** g00687581

106-0107 SWITCH GP-ROTARY–THROTTLE POSITION

S/N: CJN1-UP

PART OF 251-0542, 251-0544 PANEL GP-SWITCH

AN ATTACHMENT

SMCS-7332 **i02164374**

NOTE	REF NO	GRAPHIC REF	PART NUMBER	QTY	PART NAME 1 2 3 4 5 6 (PRODUCT LEVEL)	SEE PAGE
	1	1	**102-8805**	1	KIT-RECEPTACLE (6-PIN)	
					(INCLUDES RECEPTACLE AS & WEDGE)	
	2	1	**3E-3383**	1	WEDGE-RECEPTACLE LOCK (6-PIN)	
	3	1	**8T-8737**	1	PLUG-SEAL	
	4	1	**144-1636**	5	PIN-CONNECTOR (14-GA TO 18-GA)	
M	5	1	**7Y-5458**	1	NUT (M12X1-THD)	
	6	1	**7Y-5464**	1	WASHER (M12.2X15.4X0.5-MM THK)	
	7	1	**106-0210**	1	SEAL	

M-METRIC PART

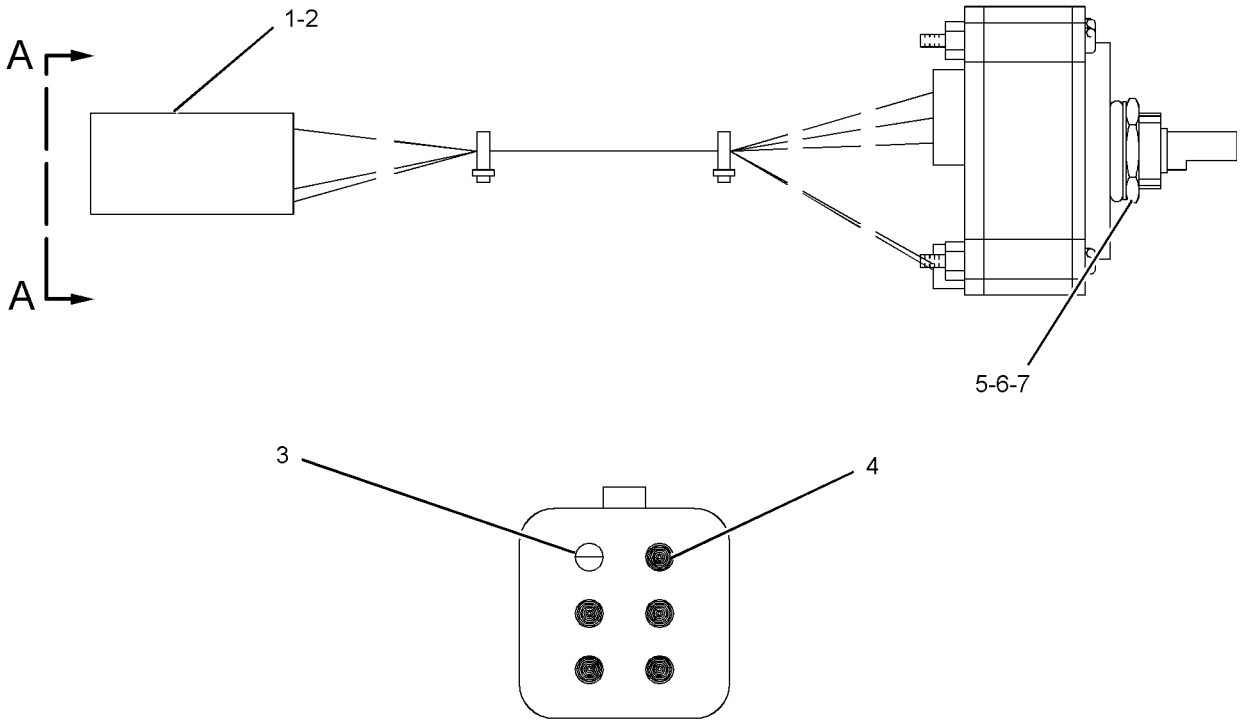

VIEW A-A

GRAPHIC #1 **<END>** g01098706

319-4420 SWITCH GP-ROTARY–THROTTLE POSITION

S/N: CJN1-UP

PART OF 251-0542, 251-0544 PANEL GP-SWITCH

AN ATTACHMENT

SMCS-7332 **i03105700**

NOTE	REF NO	GRAPHIC REF	PART NUMBER	QTY	PART NAME 1 2 3 4 5 6 (PRODUCT LEVEL)	SEE PAGE
	1	1	**243-4508**	1	RECEPTACLE AS-CONNECTOR (6-PIN)	
	2	1	**9X-3401**	5	PIN-CONNECTOR (16-GA TO 18-GA)	
					–OR–	
		1	**126-1767**	5	PIN-CONNECTOR (14-GA)	
	3	1	**8T-8737**	1	PLUG-SEAL	
M	4	1	**7Y-5458**	1	NUT (M12X1-THD)	
	5	1	**7Y-5464**	1	WASHER (M12.2X15.4X0.5-MM THK)	
	6	1	**106-0210**	1	SEAL	

M-METRIC PART

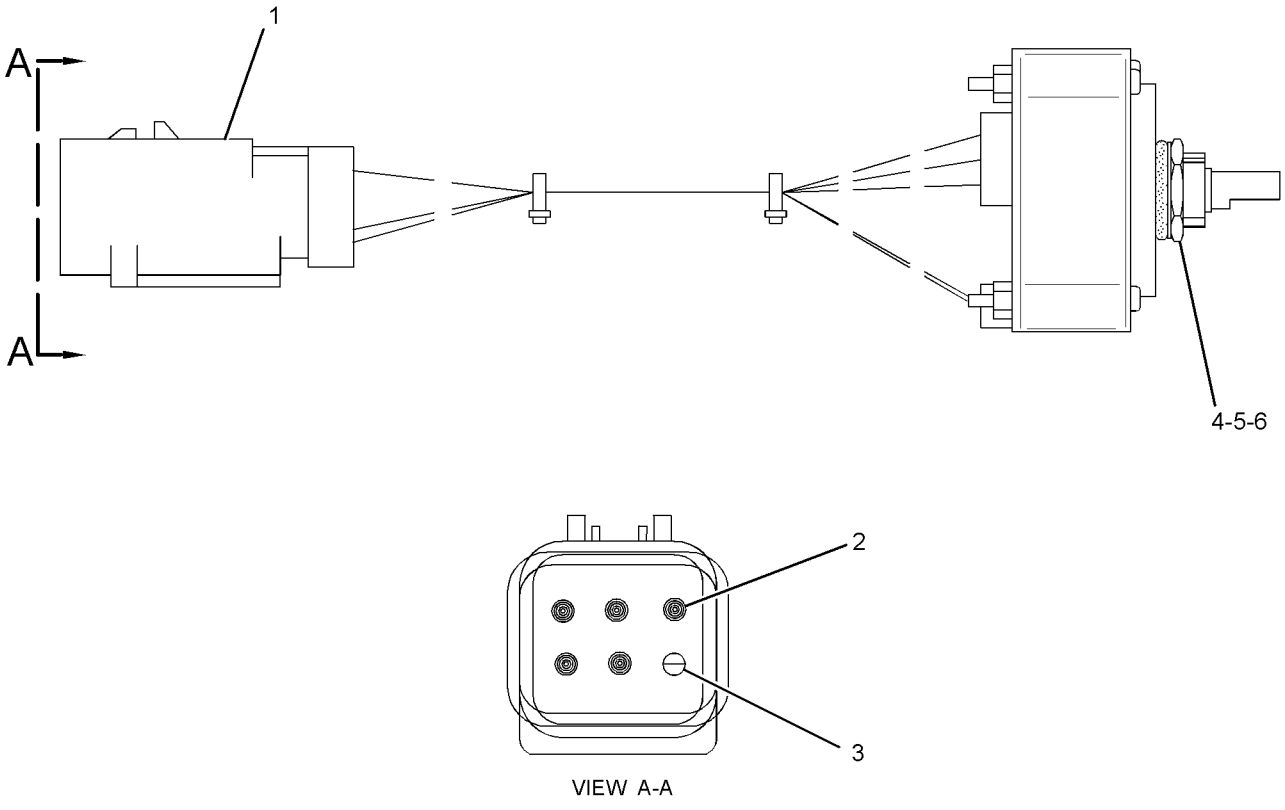

GRAPHIC #1 **<END>** g01588034

9G-7641 SWITCH GP-START–ENGINE, KEY

S/N: CJN1-UP

PART OF 251-0542, 251-0544 PANEL GP-SWITCH

AN ATTACHMENT

SMCS-1416 **i01101254**

NOTE	REF NO	GRAPHIC REF	PART NUMBER	QTY	PART NAME 1 2 3 4 5 6 (PRODUCT LEVEL)	SEE PAGE
	1	1	**6V-8362**	4	SCREW-MACHINE (8-32X0.31-IN)	
	2	1	**9B-7233**	4	LOCKWASHER	
	3	1	**7T-6799**	1	NUT-MOUNTING (1-32-THD)	

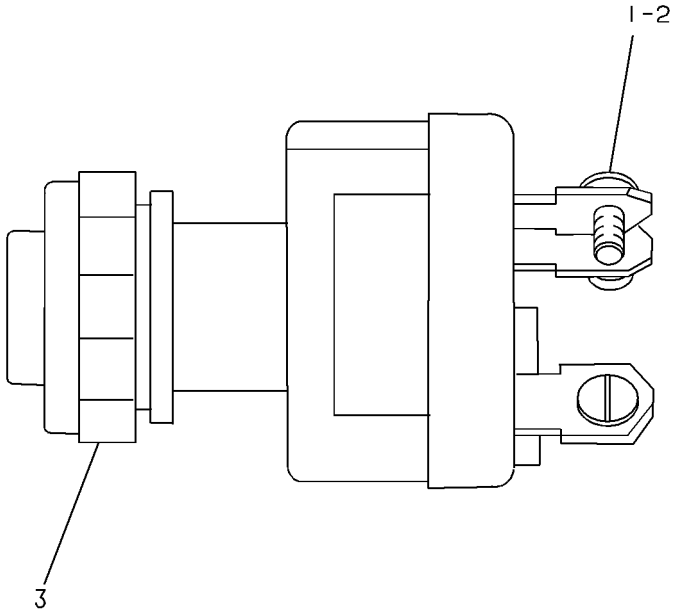

GRAPHIC #1 **<END>** g00081868

238-2478 SWITCH GP-TOGGLE–QUICK COUPLER

S/N: CJN1-UP

PART OF 238-2485 WIRING GP-QUICK COUPLER

AN ATTACHMENT

SMCS-7332 **i02518014**

NOTE	REF NO	GRAPHIC REF	PART NUMBER	QTY	PART NAME 1 2 3 4 5 6 (PRODUCT LEVEL)	SEE PAGE
	1	1	**7N-2353**	1	SWITCH AS-TOGGLE (QUICK COUPLER)	
	2	1	**238-2479**	1	HARNESS AS-WIRING (QUICK COUPLER SWITCH)	
		1	**7Y-3950**	2	TERMINAL (MALE)	
		1	**7Y-3953**	1	CONNECTOR-RECEPTACLE	
		1	**3S-2093**	1	STRAP-CABLE	

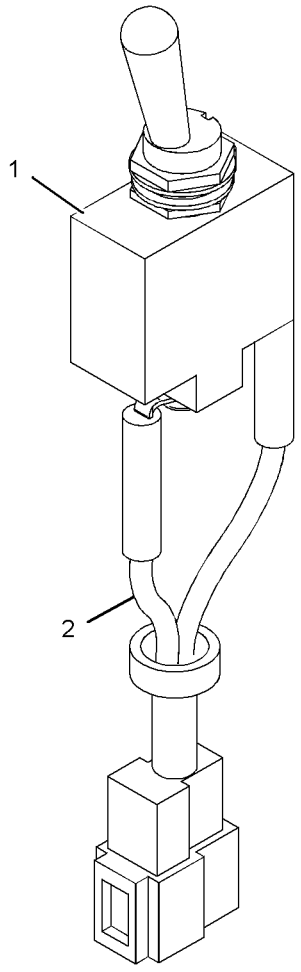

GRAPHIC #1

<END>

g01125914

238-2208 SWITCH GP-WIPER–LOWER

S/N: CJN1-UP

PART OF 273-5388 WIPER AR-WINDOW

AN ATTACHMENT

SMCS-7305 **i02971621**

NOTE	REF NO	GRAPHIC REF	PART NUMBER	QTY	PART NAME 1 2 3 4 5 6 (PRODUCT LEVEL)	SEE PAGE
	1	1	**238-2209**	1	SWITCH AS-ROCKER (WIPER, LOWER)	
		1	**167-3542**	1	CONNECTOR-RECEPTACLE	
		1	**167-3543**	5	TERMINAL (MALE)	
	2	1	**238-2210**	1	SWITCH AS-ROCKER (LOWER WASHER)	
		1	**167-3542**	1	CONNECTOR-RECEPTACLE	
		1	**167-3543**	4	TERMINAL (MALE)	

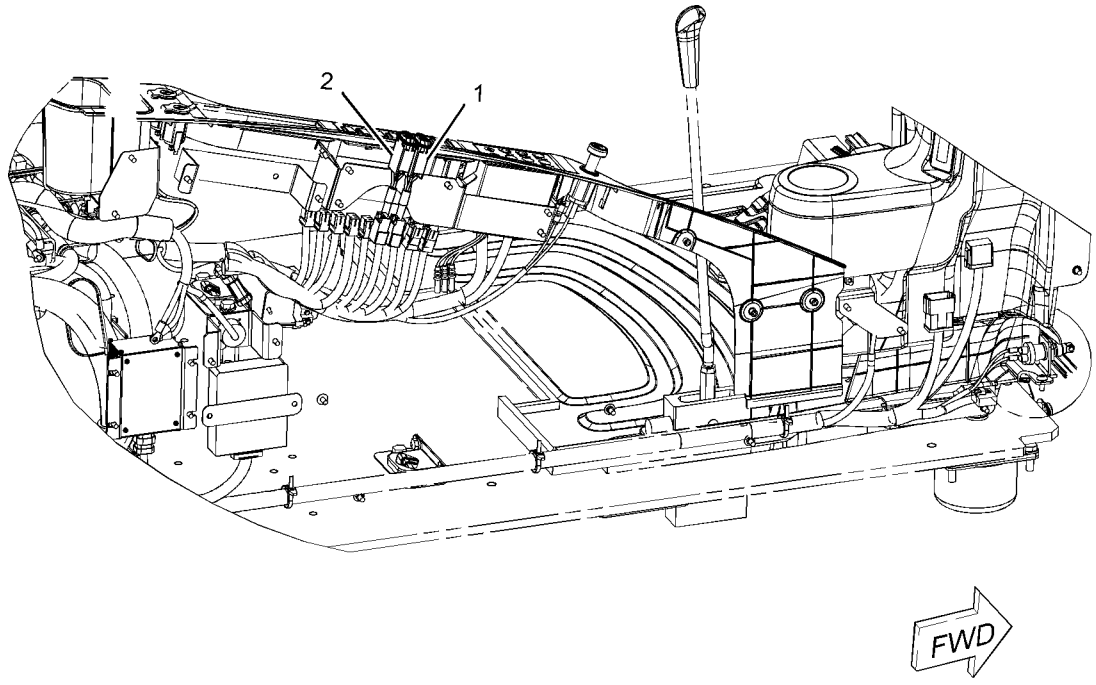

GRAPHIC #1 **<END>** g01098895

259-5166 WIRING GP-AUX START RECEPTACLE–JUMP START

S/N: CJN1-UP

AN ATTACHMENT

SMCS-1408, 1463 **i02752944**

NOTE	REF NO	GRAPHIC REF	PART NUMBER	QTY	PART NAME 1 2 3 4 5 6 (PRODUCT LEVEL)	SEE PAGE
	1	1	**8N-0869**	1	COVER-TERMINAL (RED)	
	2	1	**8S-2634**	1	COVER AS	
	3	1	**9S-9015**	1	RECEPTACLE AS	
		1	**1S-7251**	2	TERMINAL-CABLE (00-GA, 1/2-IN BOLT)	
E		1	**5P-0747**		CABLE (00-GA, BLACK) (41-CM)	
E		1	**5P-0761**		CABLE (00-GA, RED) (38-CM)	
D			**6V-2722**	1	TUBE-HEAT SHRINK (25.4-MM DIA) (1-M)	
	4	1	**204-1673**	1	STRAP-CABLE	
	5	1	**267-7583**	1	CABLE AS	
		1	**1S-7251**	1	TERMINAL-CABLE (00-GA, 1/2-IN BOLT)	
E		1	**5P-0761**		CABLE (00-GA, RED) (69-CM)	
		1	**8N-0869**	1	COVER-TERMINAL (RED)	
		1	**8N-1725**	1	COVER-TERMINAL (RED)	
		1	*3S-6049*	1	TERMINAL AS-BATTERY (POSITIVE)	
		1	**1M-6119**	1	BOLT (5/16-18X1.375-IN)	
		1	**1M-6120**	1	NUT (5/16-18-THD)	
	6	1	**267-7584**	1	CABLE AS	
		1	**1S-7251**	1	TERMINAL-CABLE (00-GA, 1/2-IN BOLT)	
		1	**1S-7252**	1	TERMINAL-CABLE (00-GA, 3/8-IN BOLT)	
E		1	**5P-0761**		CABLE (00-GA, RED) (259-CM)	
E		1	**6V-2722**		TUBE-HEAT SHRINK (25.4-MM DIA) (1-M)	
		1	**8N-0869**	1	COVER-TERMINAL (RED)	
	7	1	**267-7585**	1	BRACKET	
	8	1	**267-7586**	1	BRACKET AS	
Y	9	1	*124-5814*	1	BLOCK GP-JUNCTION	140
	10	1	**5P-4115**	4	WASHER-HARD (7.2X19X2-MM THK)	
	11	1	**8T-4121**	6	WASHER-HARD (11X21X2.5-MM THK)	
M	12	1	**8T-4136**	6	BOLT (M10X1.5X25-MM)	
M	13	1	**8T-4970**	4	BOLT (M6X1X14-MM)	

D-ORDER BY THE METER
E-ORDER BY THE CENTIMETER
M-METRIC PART
Y-SEPARATE ILLUSTRATION

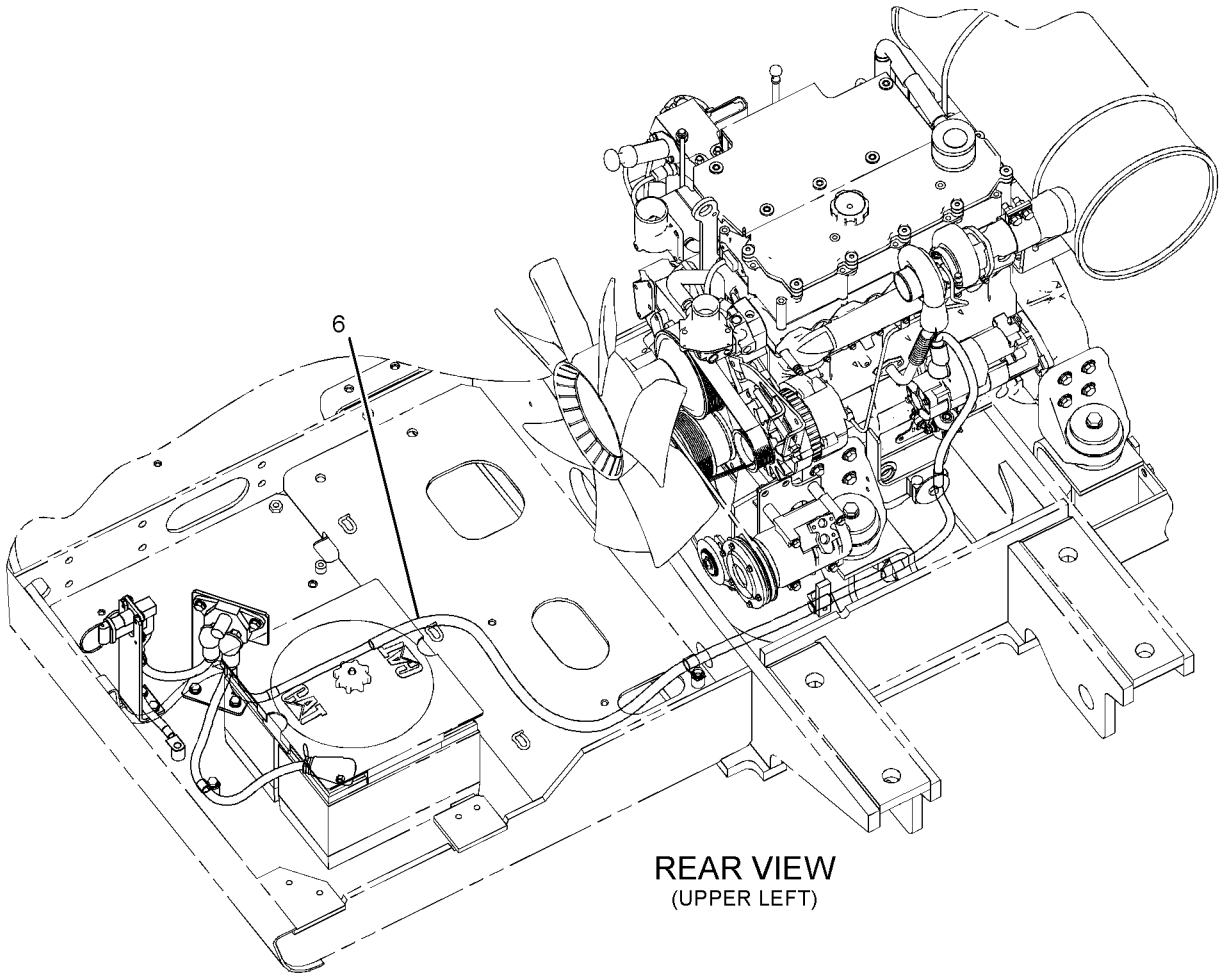

REAR VIEW
(UPPER LEFT)

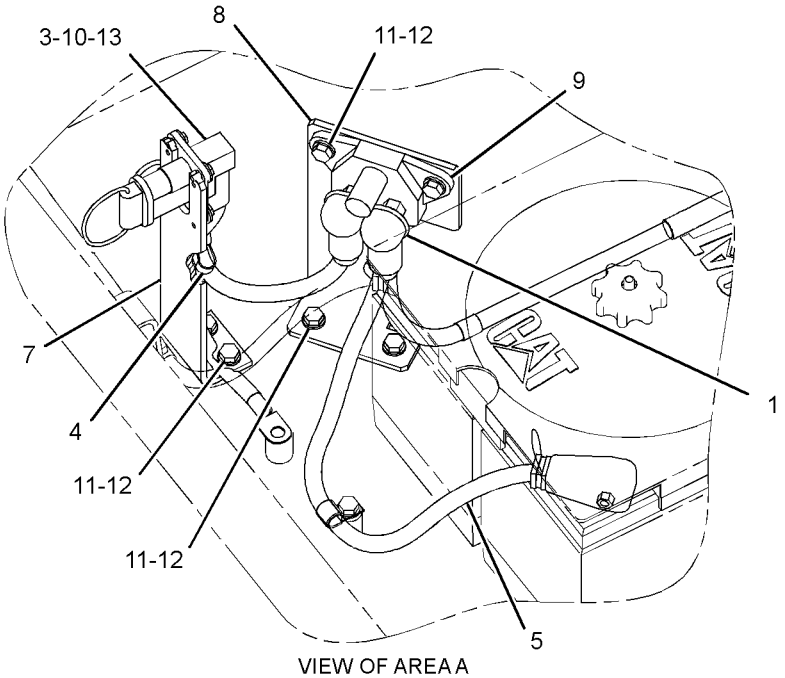

VIEW OF AREA A

GRAPHIC #1 **<END>** g01381918

259-5168 WIRING GP-AUXILIARY CONTROL–

SYSTEM 23, COMBINED FUNCTION

S/N: CJN1-UP

PART OF 270-5751 CONTROL AR-AUXILIARY

AN ATTACHMENT

SMCS-1408 **i02995331**

NOTE	REF NO	GRAPHIC REF	PART NUMBER	QTY	PART NAME 1 2 3 4 5 6 (PRODUCT LEVEL)	SEE PAGE
	1	1	**3S-2093**	18	STRAP-CABLE	
M	2	1	**7T-2673**	1	SCREW-GUIDE	
	3	1	**7K-1181**	14	STRAP-CABLE	
	4	1	**111-4836**	4	CLIP	
	5	1	**116-0118**	2	CLIP	
	6	1	**299-2838**	1	HARNESS AS-VALVE	
		1	**102-8803**	1	KIT-RECEPTACLE (3-PIN)	
					(INCLUDES RECEPTACLE AS & WEDGE)	
		1	**3S-2093**	5	STRAP-CABLE	
		1	**155-2260**	1	KIT-CONNECTING PLUG (3-PIN)	
		1	**155-2270**	4	KIT-CONNECTING PLUG (2-PIN)	
					(EACH PLUG KIT INCLUDES PLUG AS, WEDGE, & INTERFACE SEAL)	
		1	**230-4011**	2	PLUG AS-CONNECTOR (2-PIN)	
					(EACH INCLUDES)	
		1	**264-7029**	1	SEAL-CONNECTOR	
		1	**243-4505**	2	RECEPTACLE AS-CONNECTOR (2-PIN)	
		1	**243-4508**	1	RECEPTACLE AS-CONNECTOR (6-PIN)	
		1	**243-4510**	1	RECEPTACLE AS-CONNECTOR (12-PIN)	
	7	1	**132-5789**	2	CLIP	
	8	1	**4P-7428**	1	CLIP	
	9	1	**4P-7581**	5	CLIP	
M	10	1	**7X-2621**	4	BOLT (M10X1.5X12-MM)	
	11	1	**8T-4121**	11	WASHER-HARD (11X21X2.5-MM THK)	
M	12	1	**8T-4137**	4	BOLT (M10X1.5X20-MM)	
M	13	1	**8T-4191**	3	BOLT (M10X1.5X16-MM)	

M-METRIC PART

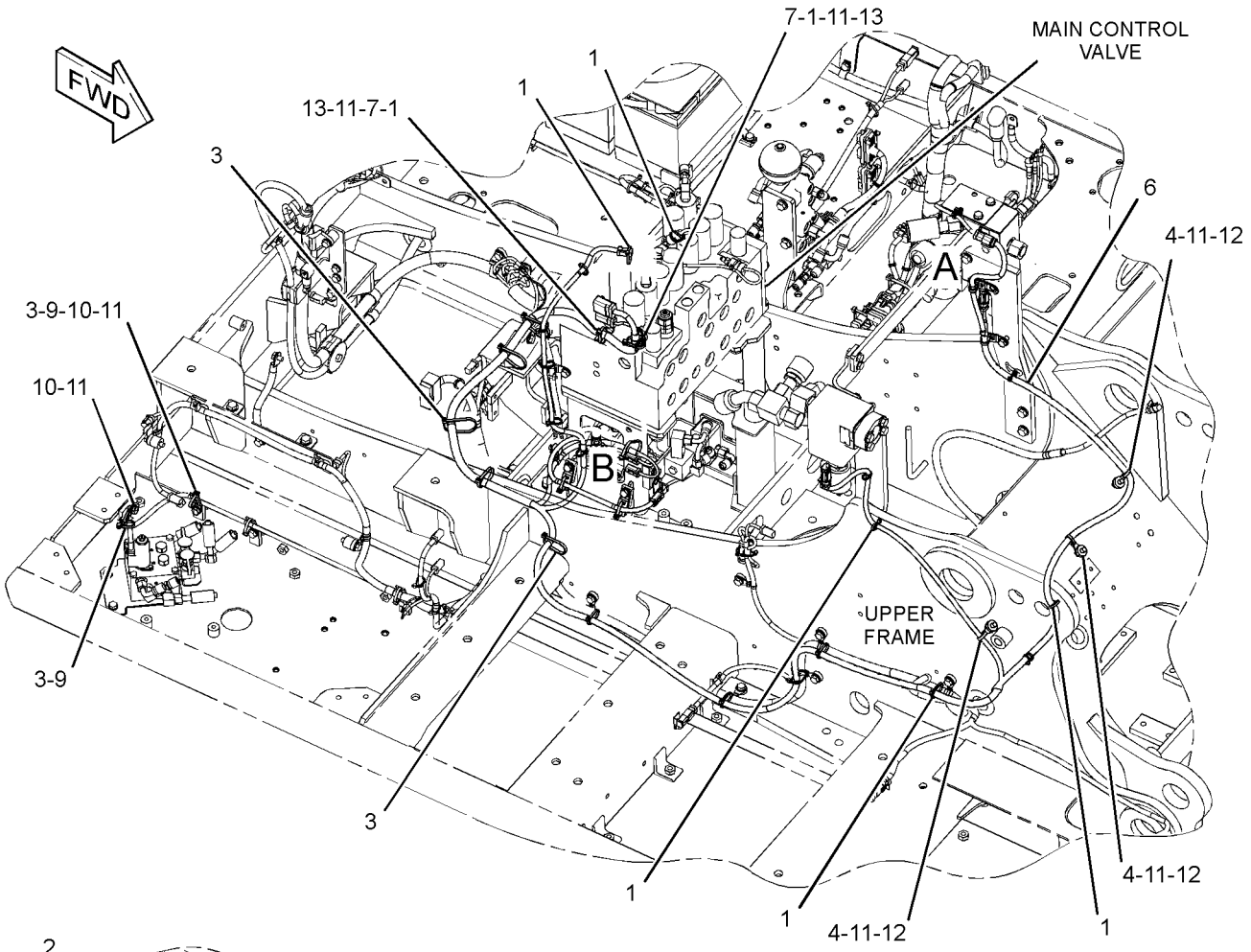

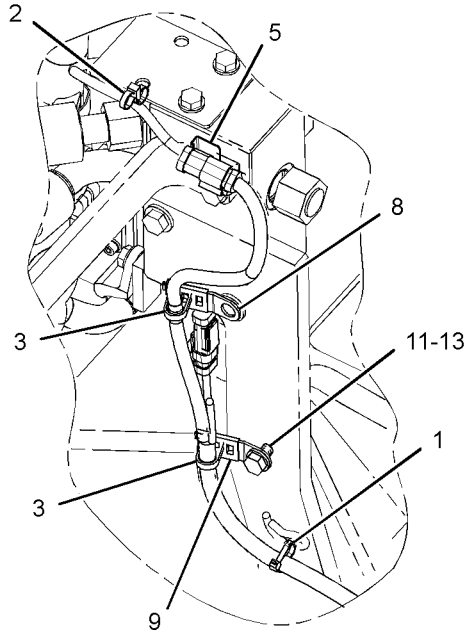

VIEW OF AREA A

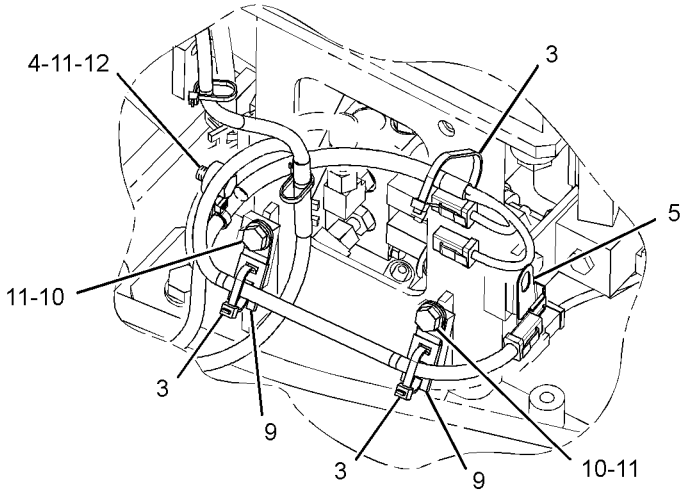

VIEW OF AREA B

GRAPHIC #1 **<END>** g01560047

259-5169 WIRING GP-AUXILIARY CONTROL–

SYSTEM 20, WORK TOOL PRIORITY

S/N: CJN1-UP

PART OF 259-7557 CONTROL AR-AUXILIARY

AN ATTACHMENT

SMCS-1408 **i02995333**

NOTE	REF NO	GRAPHIC REF	PART NUMBER	QTY	PART NAME 1 2 3 4 5 6 (PRODUCT LEVEL)	SEE PAGE
	1	1	**3S-2093**	27	STRAP-CABLE	
	2	1	**7I-2673**	1	STRAP-CABLE	
	3	1	**7K-1181**	21	STRAP-CABLE	
	4	1	**111-4836**	3	CLIP	
	5	1	**116-0118**	2	CLIP	
	6	1	**299-2837**	1	HARNESS AS-VALVE	
		1	**3S-2093**	5	STRAP-CABLE	
E		1	**119-3662**		TUBE-HEAT SHRINK (10.85-MM DIA) (7-CM)	
E		1	**125-7874**		TUBE-HEAT SHRINK (5.72-MM DIA) (10-CM)	
E		1	**125-7875**		TUBE-HEAT SHRINK (7.44-MM DIA) (10-CM)	
		1	**155-2260**	1	KIT-CONNECTING PLUG (3-PIN)	
		1	**155-2270**	9	KIT-CONNECTING PLUG (2-PIN)	
					(EACH PLUG KIT INCLUDES PLUG AS, WEDGE & INTERFACE SEAL)	
		1	**230-4011**	2	PLUG AS-CONNECTOR (2-PIN)	
		1	**243-4506**	1	RECEPTACLE AS-CONNECTOR (3-PIN)	
		1	**243-4510**	1	RECEPTACLE AS-CONNECTOR (12-PIN)	
	7	1	**132-5789**	5	CLIP	
	8	1	**4P-7428**	1	CLIP	
	9	1	**4P-7581**	6	CLIP	
M	10	1	**7X-2621**	4	BOLT (M10X1.5X12-MM)	
	11	1	**8T-4121**	13	WASHER-HARD (11X21X2.5-MM THK)	
M	12	1	**8T-4137**	4	BOLT (M10X1.5X20-MM)	
M	13	1	**8T-4191**	5	BOLT (M10X1.5X16-MM)	

E-ORDER BY THE CENTIMETER
M-METRIC PART

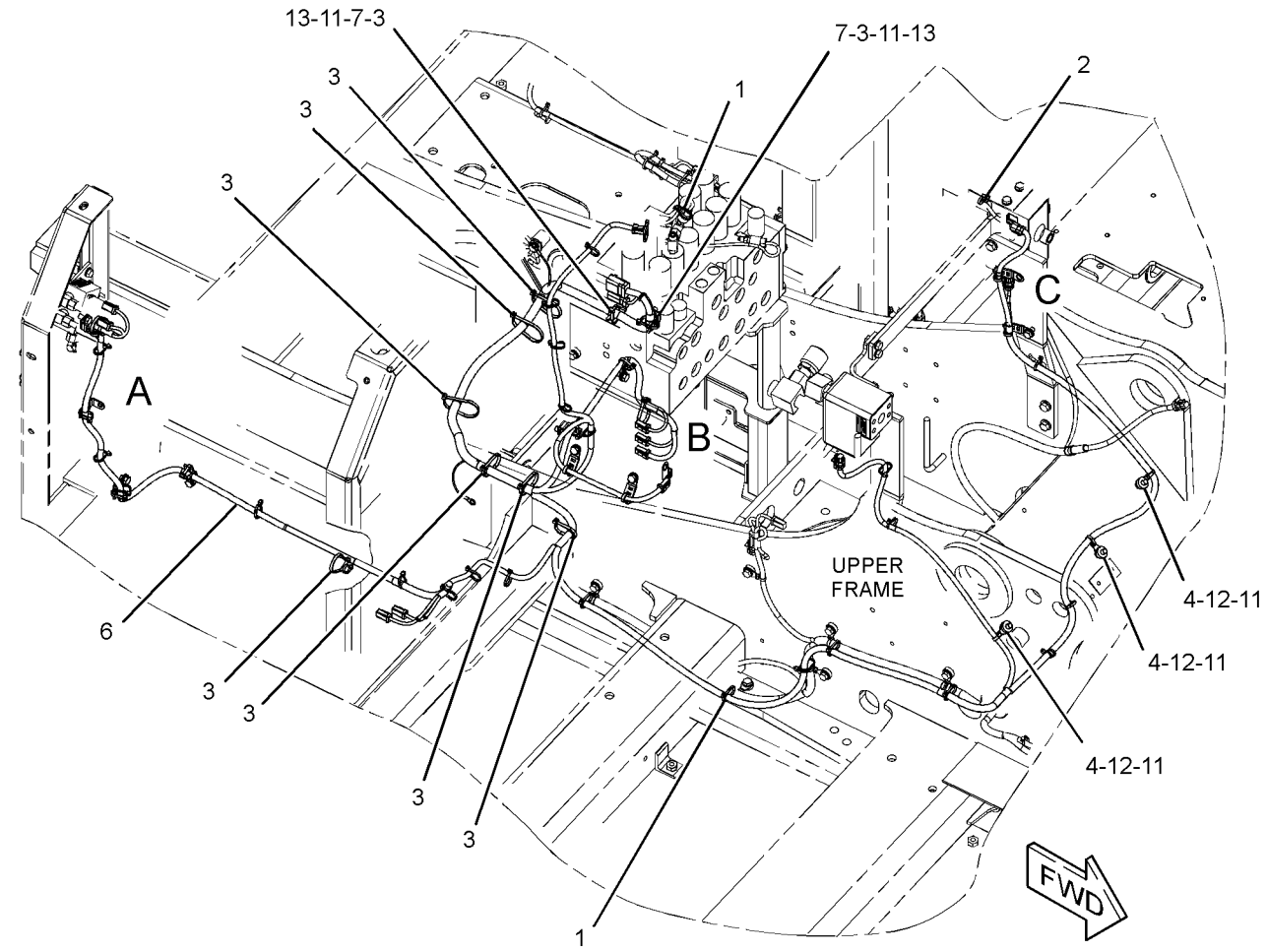

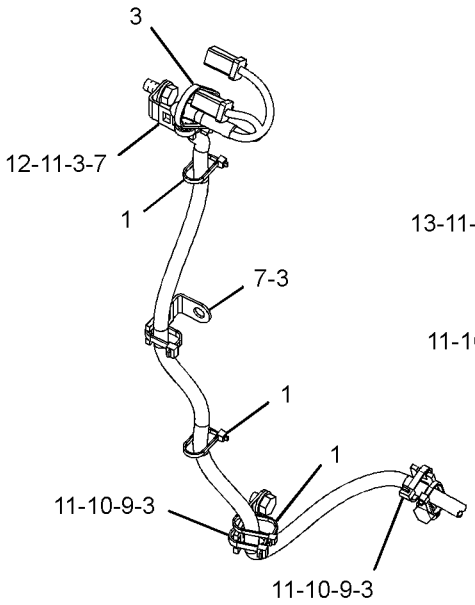

VIEW OF AREA A

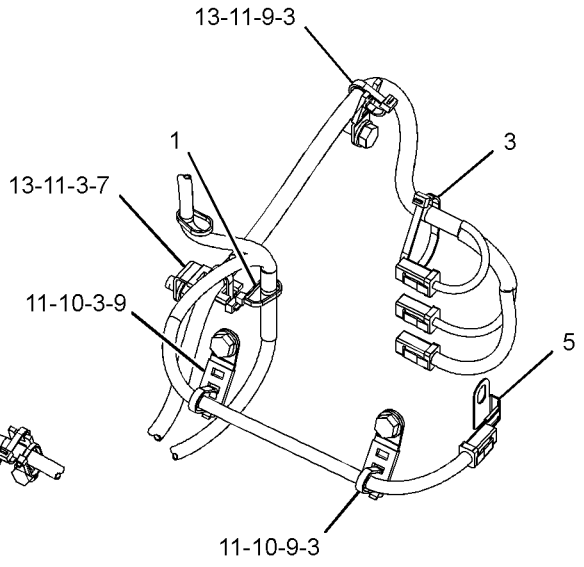

VIEW OF AREA B

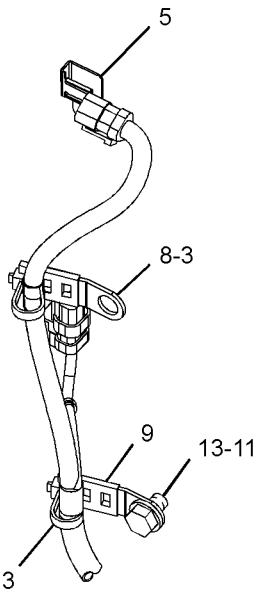

VIEW OF AREA C

GRAPHIC #1 **<END>** g01582195

ELECTRICAL AND STARTING SYSTEM

259-5161 WIRING GP-CAB

S/N: CJN1-UP

PART OF 259-7193 OPERATOR AR

SMCS-1408, 7301 **i02853579**

NOTE	REF NO	GRAPHIC REF	PART NUMBER	QTY	PART NAME 1 2 3 4 5 6 (PRODUCT LEVEL)	SEE PAGE
	1	3,4	**3S-2093**	10	STRAP-CABLE	
	2	4	**7Y-5505**	2	SPEAKER AS	
					(EACH INCLUDES)	
		4	**7Y-3951**	2	TERMINAL (FEMALE)	
		4	**7Y-3954**	1	CONNECTOR-PLUG	
	3	3	**9W-0335**	1	LIGHTER AS-CIGAR (24-VOLT)	
					—OR—	
F			**238-2318**	1	LIGHTER AS-CIGAR (24-VOLT)	
	4	3	**094-2080**	1	SWITCH-MAGNETIC (24-VOLT) (START RELAY)	
M	5	4	**099-7127**	8	SCREW-MACHINE (M4X0.7X12-MM)	
	6	1	**102-8016**	1	RESISTOR AS	
	7	3	**113-8490**	20	FUSE (10-AMPERE)	
	8	3	**113-8491**	5	FUSE (15-AMPERE)	
	9	3	**113-8492**	3	FUSE (20-AMPERE)	
	10	3	**113-8493**	3	FUSE (25-AMPERE)	
	11	4	**116-0210**	4	BRACKET AS	
	12	3	**124-3548**	2	FUSE (30-AMPERE)	
Y	13	4	**132-1829**	1	ALARM GP (24-VOLT)	123
	14	3	**141-2759**	7	FUSE (5-AMPERE)	
	15	3	**161-3128**	1	RELAY (24-VOLT) (BOOM FLOODLIGHT)	
	15A	3	**161-3128**	1	RELAY (24-VOLT) (CHASSIS LIGHT)	
	15B	3	**161-3128**	1	RELAY (24-VOLT) (CAB FLOODLIGHT)	
	15C	3	**161-3128**	1	RELAY (24-VOLT) (HORN)	
	15D	3	**161-3128**	1	RELAY (24-VOLT) (NEUTRAL START)	
	15E	3	**161-3128**	1	RELAY (24-VOLT) (TRAVEL ALARM)	
	16	4	**268-1964**	1	KIT-SERVICE METER	
					(INCLUDES FILM & METER)	
	17	4	**163-6758**	1	WIRE AS	
	18	2,3,4	**163-6795**	15	STRAP-CABLE	
	19	3	**167-3593**	1	STRAP	
	20	3	**170-6888**	1	PULLER-FUSE	
	21	4	**213-0772**	1	SWITCH AS-MAGNETIC (24-VOLT) (MAIN RELAY)	
	22	3	**227-7575**	1	PANEL-CONTROL (SWITCH)	
	23	3	**234-1097**	1	BRACKET	
	24	3	**238-2212**	1	SWITCH AS-ROCKER (FINE SWING)	
		3	**167-3542**	1	CONNECTOR-RECEPTACLE	
		3	**167-3543**	5	TERMINAL (MALE)	
	26	4	**238-2390**	1	CABLE AS	
		4	**3T-4004**	1	TERMINAL-SOLDER	
E		4	**125-7876**		TUBE-HEAT SHRINK (17.78-MM DIA) (4-CM)	
	27	4	**238-2391**	1	CABLE AS	
		4	**9G-4343**	1	TERMINAL (4-GA)	
E		4	**125-7876**		TUBE-HEAT SHRINK (17.78-MM DIA) (4-CM)	
	28	2	**245-7760**	8	INSULATION	
	29	2	**251-0637**	1	INSULATION	
	30	2	**259-4883**	1	ANTENNA AS	
	31	3	**259-5290**	1	BRACKET AS	
	32	1	**259-5296**	1	HARNESS AS-CAB	
		1	**7Y-3952**	4	CONNECTOR-PLUG	
		1	**7Y-3958**	2	CONNECTOR-PLUG	
		1	**102-7964**	2	CONNECTOR-PLUG	
		1	**111-4816**	1	CONNECTOR-PLUG	
		1	**163-6659**	1	CONNECTOR-PLUG	
		1	**163-6699**	1	CONNECTOR-PLUG	
		1	**163-6803**	9	CONNECTOR-PLUG	
		1	**7Y-3955**	2	CONNECTOR-RECEPTACLE	

259-5161 **WIRING GP-CAB** ***(contd.)*** **i02853579**

NOTE	REF NO	GRAPHIC REF	PART NUMBER	QTY	PART NAME 1 2 3 4 5 6 (PRODUCT LEVEL)	SEE PAGE
		1	**121-1168**	1	CONNECTOR-RECEPTACLE	
		1	**153-2602**	5	CONNECTOR-RECEPTACLE	
		1	**9W-1951**	1	RECEPTACLE-CONNECTOR (9-PIN)	
		1	**8C-6354**	1	CAP-RECEPTACLE	
		1	**5P-6271**	1	CONNECTOR AS	
		1	**134-3296**	1	HOUSING-PLUG	
		1	**134-3297**	1	SEAL	
		1	**3S-2093**	111	STRAP-CABLE	
		1	**121-1022**	3	DIODE	
		1	**238-2319**	1	BASE AS	
		1	**9X-8256**	2	WASHER (6.6X12X2-MM THK)	
M		1	**095-0742**	2	SCREW-MACHINE (M6X1X16-MM)	
		1	**170-9394**	40	TERMINAL	
		1	**102-8803**	3	KIT-RECEPTACLE (3-PIN)	
					(INCLUDES RECEPTACLE AS & WEDGE)	
		1	**155-2260**	1	KIT-CONNECTING PLUG (3-PIN)	
		1	**155-2270**	2	KIT-CONNECTING PLUG (2-PIN)	
					(EACH PLUG KIT INCLUDES PLUG AS, WEDGE & INTERFACE SEAL)	
		1	**230-4011**	1	PLUG AS-CONNECTOR (2-PIN)	
		1	**264-7029**	1	SEAL-CONNECTOR	
		1	**230-4013**	1	PLUG AS-CONNECTOR (3-PIN)	
		1	**264-7030**	1	SEAL-CONNECTOR	
		1	**239-7356**	1	PLUG AS-CONNECTOR (12-PIN)	
		1	**230-4009**	1	PLUG AS-CONNECTOR (12-PIN)	
					(EACH PLUG AS INCLUDES)	
		1	**264-7034**	1	SEAL-CONNECTOR	
		1	**174-3016**	2	PLUG AS-CONNECTOR (3-PIN)	
		1	**243-4505**	2	RECEPTACLE AS-CONNECTOR (2-PIN)	
		1	**243-4506**	1	RECEPTACLE AS-CONNECTOR (3-PIN)	
	33	3	**267-7639**	1	SWITCH AS-ROCKER (LEVELING)	
		3	**167-3542**	1	CONNECTOR-RECEPTACLE	
		3	**167-3543**	5	TERMINAL (MALE)	
M	34	3	**095-0723**	3	SCREW (M3X0.5X10-MM)	
	35	3	**096-5962**	3	WASHER-HARD (3.4X7X0.8-MM THK)	
	36	4	**096-6166**	2	WASHER-HARD (4.5X9X1-MM THK)	
	37	3,4	**132-5789**	7	CLIP	
	38	4	**4P-7581**	1	CLIP	
M	39	3	**5C-2890**	5	NUT (M6X1-THD)	
M	40	4	**6V-5210**	8	SCREW-MACHINE (M4X0.7X10-MM)	
M	41	4	**6V-9672**	2	SCREW-MACHINE (M4X0.7X16-MM)	
	42	4	**8T-0328**	3	WASHER-HARD (5.5X10X1-MM THK)	
M	43	4	**8T-4127**	2	SCREW-MACHINE (M5X0.8X20-MM)	
M	44	4	**8T-6693**	1	SCREW-MACHINE (M5X0.8X16-MM)	
M	45	1,3,4	**9X-2042**	13	SCREW-TRUSS HEAD (M6X1X12-MM)	
M	46	3	**9X-2044**	5	SCREW-TRUSS HEAD (M6X1X16-MM)	
	47	3	**9X-8256**	5	WASHER (6.6X12X2-MM THK)	
E	48	2	**101-2846**		GUARD (9.5-CM)	
E	48A	4	**101-2846**		GUARD (9-CM EACH)	

E-ORDER BY THE CENTIMETER
F-NOT SHOWN
M-METRIC PART
Y-SEPARATE ILLUSTRATION

REFER TO ALL ILLUSTRATIONS OF
THIS GROUP FOR AUXILIARY VIEWS

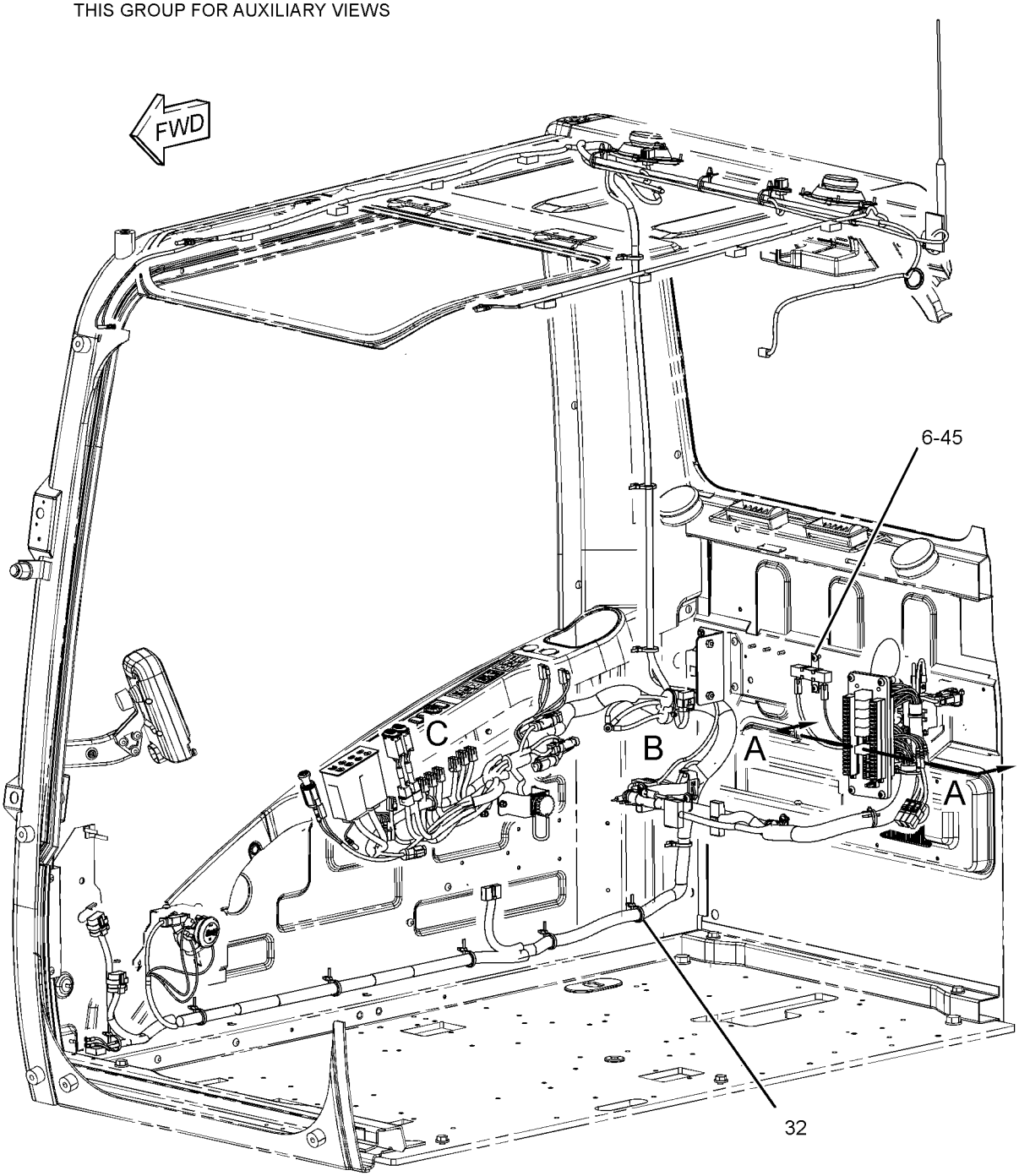

GRAPHIC #1 g01398279

259-5161 **WIRING GP-CAB** *(contd.)* **i02853579**

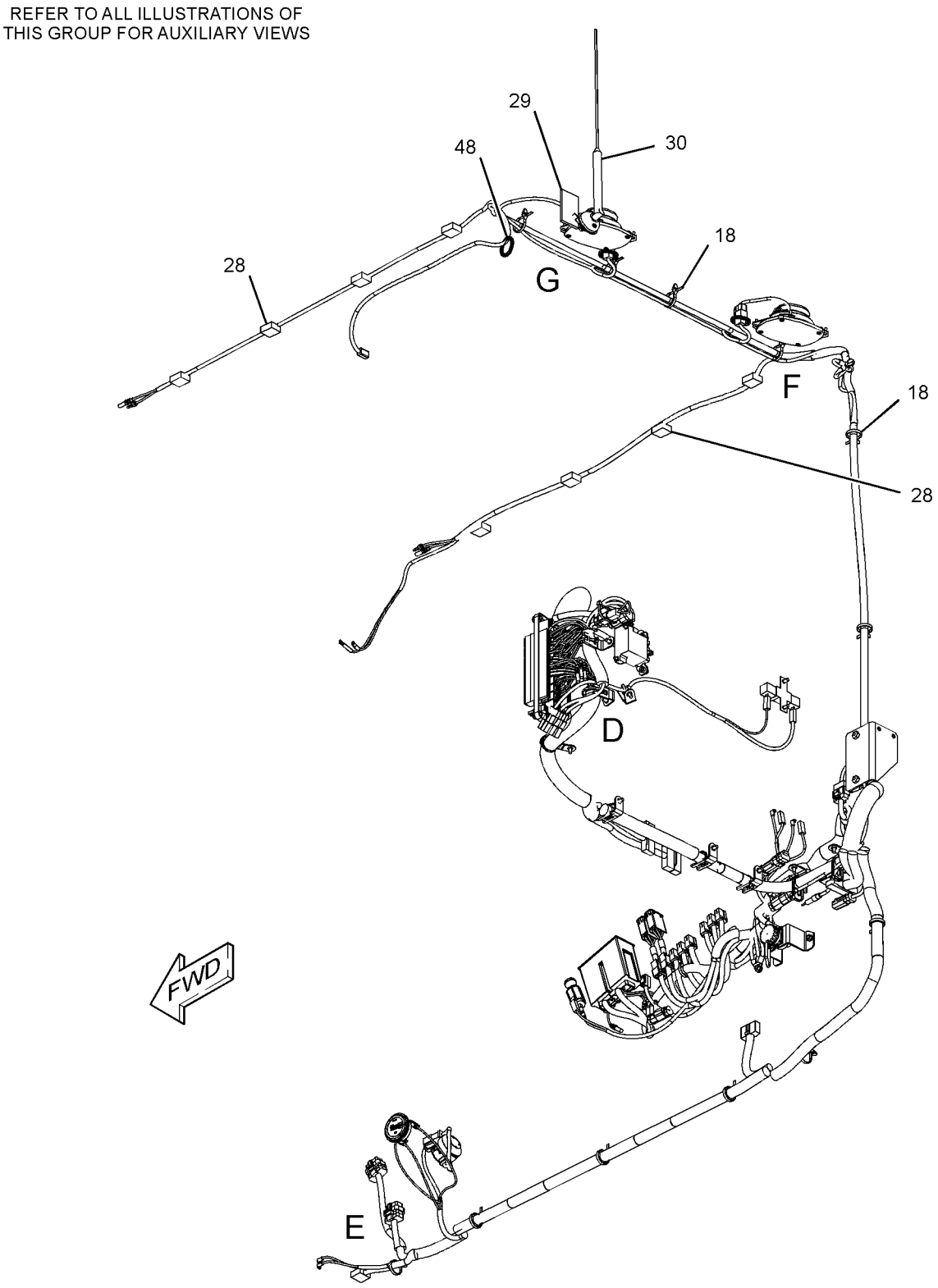

GRAPHIC #2 g01398365

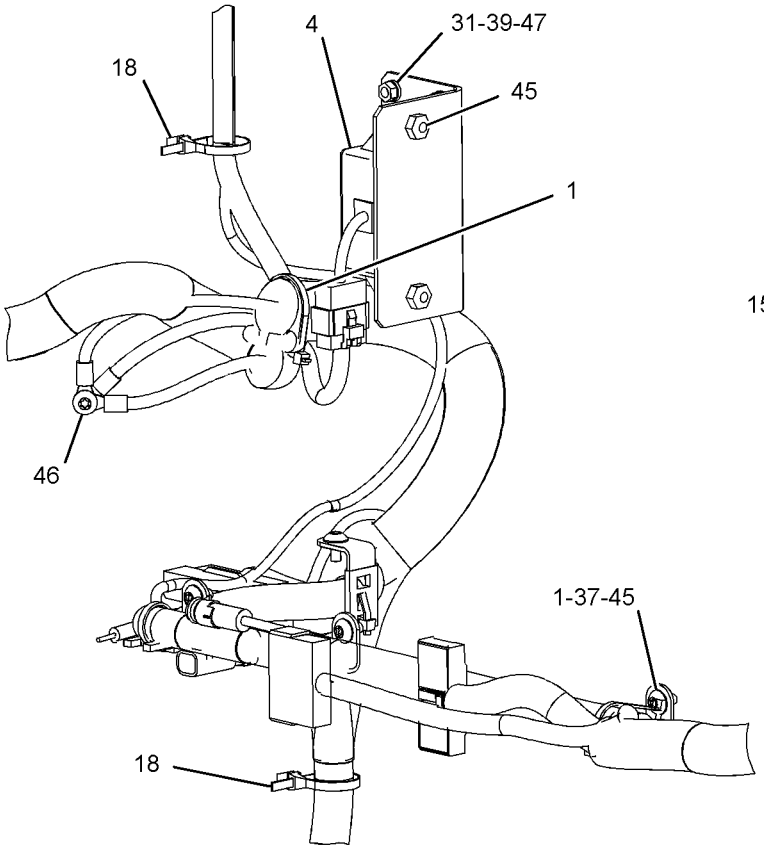

VIEW OF AREA B

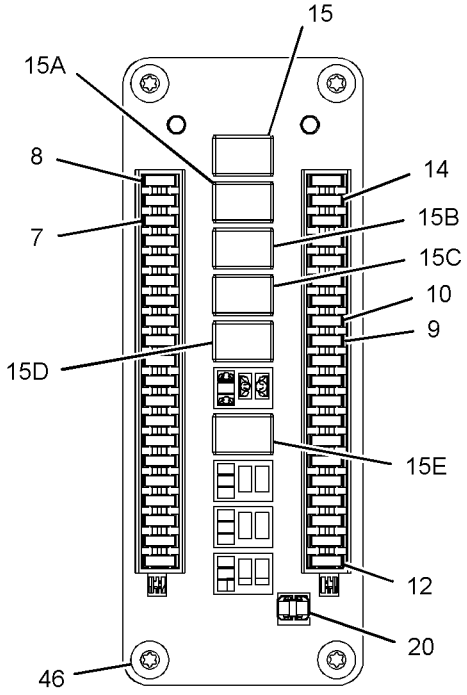

VIEW A-A

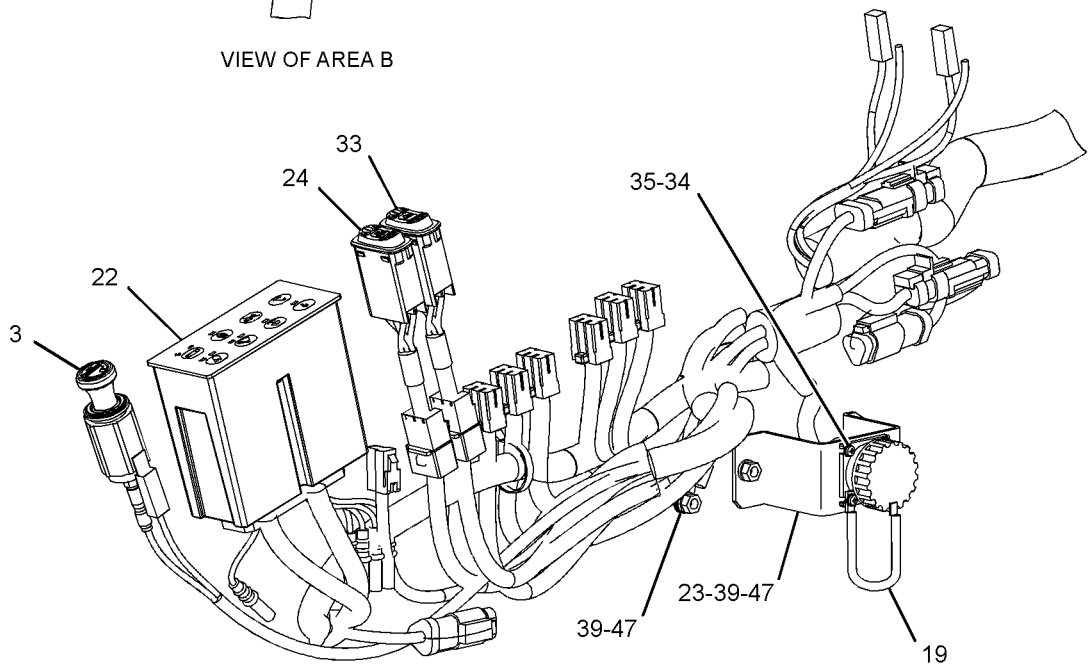

VIEW OF AREA C

GRAPHIC #3 g01398416

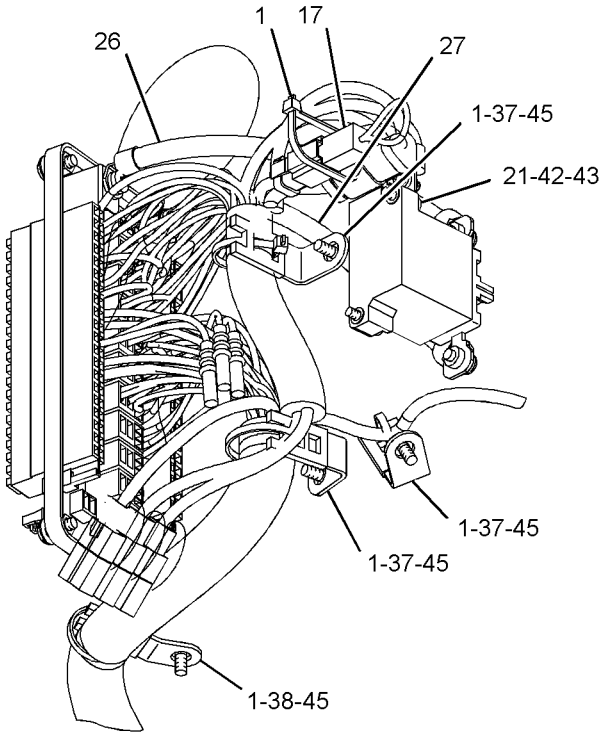

VIEW OF AREA D

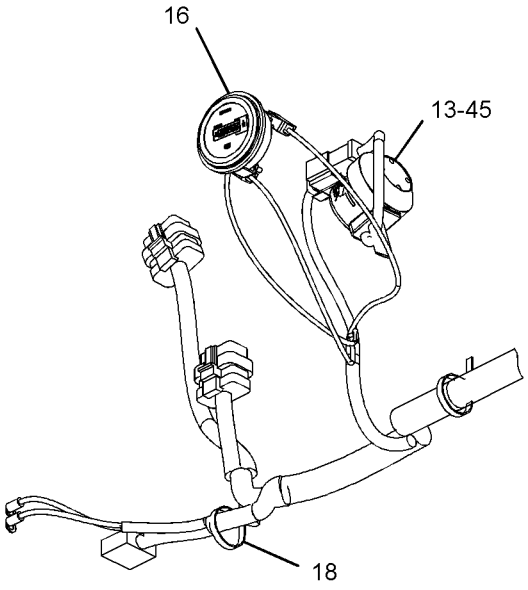

VIEW OF AREA E

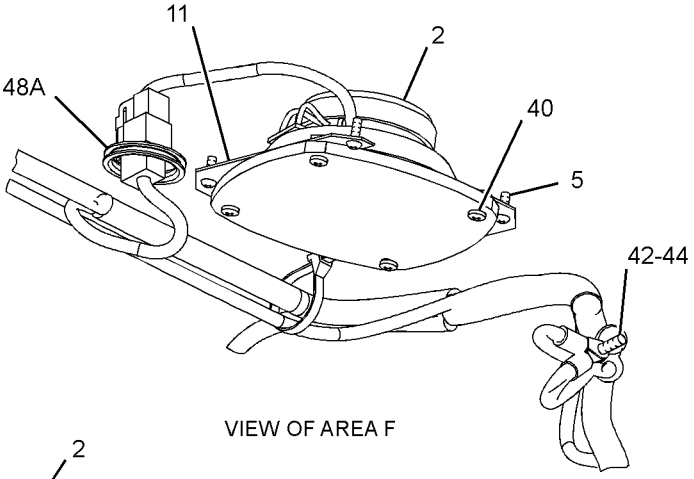

VIEW OF AREA F

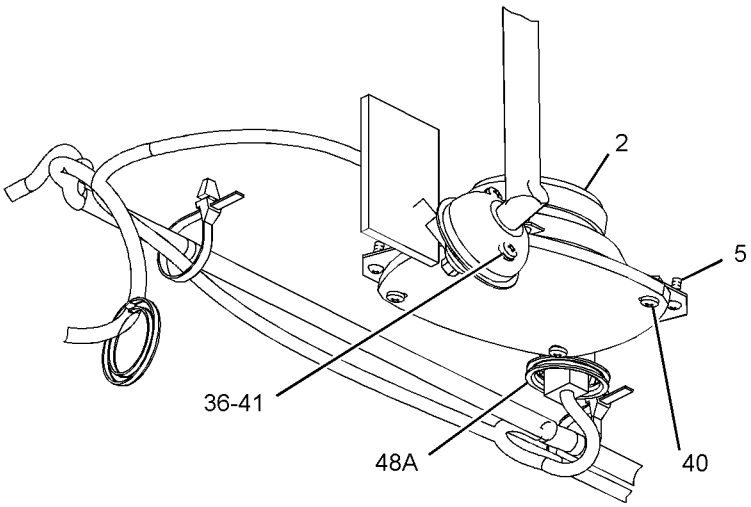

VIEW OF AREA G

GRAPHIC #4 **<END>** g01302137

259-5165 WIRING GP-CAB–SYSTEM 20, WORK TOOL PRIORITY

S/N: CJN1-UP

PART OF 259-7557 CONTROL AR-AUXILIARY

AN ATTACHMENT

SMCS-1408, 7301 **i02747389**

NOTE	REF NO	GRAPHIC REF	PART NUMBER	QTY	PART NAME 1 2 3 4 5 6 (PRODUCT LEVEL)	SEE PAGE
	1	1	**3S-2093**	7	STRAP-CABLE	
	2	1	**7K-1181**	10	STRAP-CABLE	
	3	1	**149-5050**	1	RELAY (24-VOLT) (WORK TOOL)	
	4	1	**259-7219**	1	COVER	
	5	1	**267-7692**	1	HARNESS AS-PUMP	
		1	**3S-2093**	14	STRAP-CABLE	
E		1	**125-7874**		TUBE-HEAT SHRINK (5.72-MM DIA) (5-CM)	
		1	**243-4508**	1	RECEPTACLE AS-CONNECTOR (6-PIN)	
	6	1	*267-7693*	1	SWITCH GP-TOGGLE (WORK TOOL PRIORITY)	
		1	**7N-2353**	1	SWITCH AS-TOGGLE (WORK TOOL PRIORITY)	
		1	**267-7694**	1	HARNESS AS-CONTROL	
		1	**3S-2093**	1	STRAP-CABLE	
	7	1	**267-7695**	1	BRACKET AS	
M	8	1	**5C-2890**	1	NUT (M6X1-THD)	
M	9	1	**9X-2042**	3	SCREW-TRUSS HEAD (M6X1X12-MM)	
	10	1	**9X-8256**	1	WASHER (6.6X12X2-MM THK)	

E-ORDER BY THE CENTIMETER
M-METRIC PART

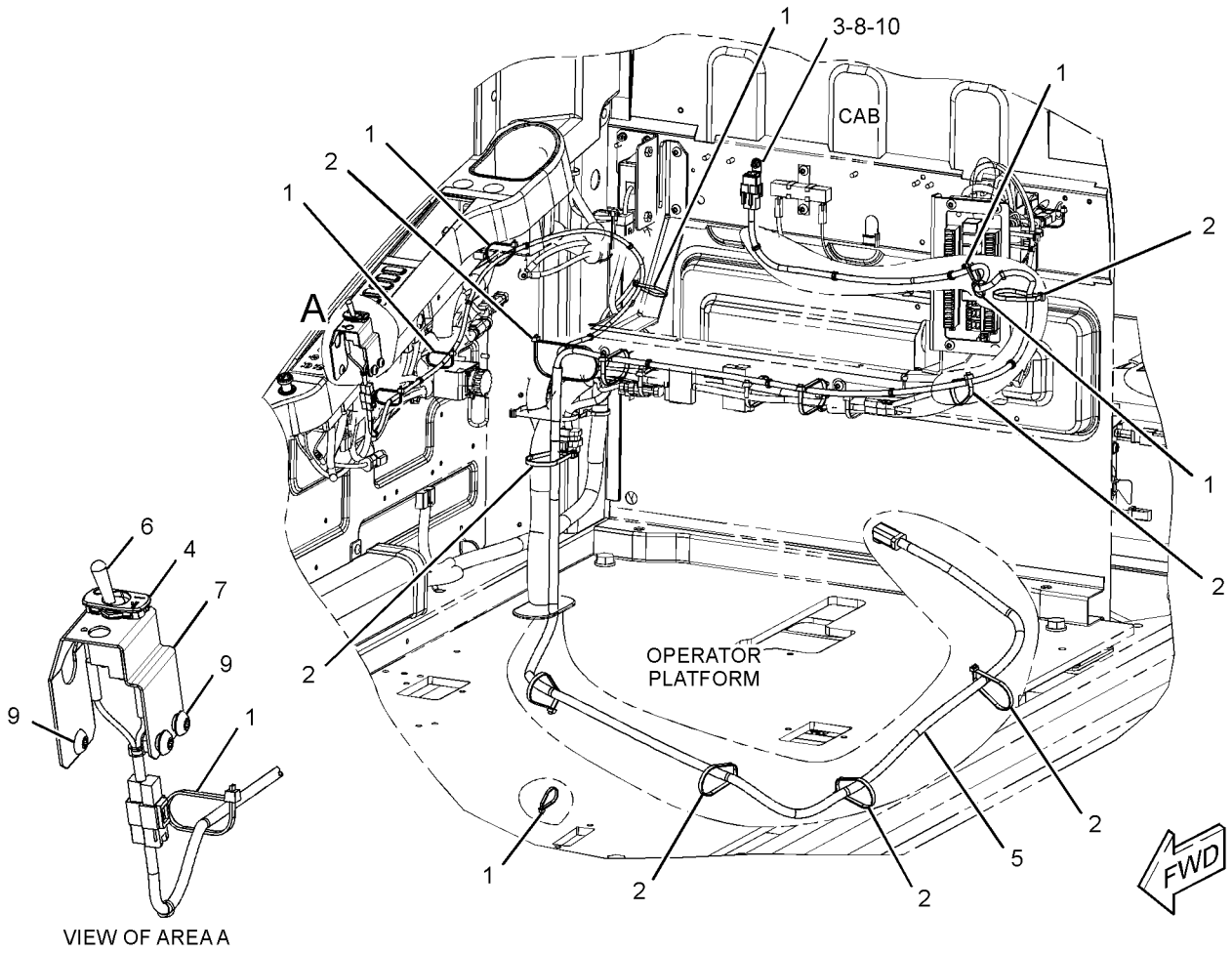

VIEW OF AREA A

GRAPHIC #1 **<END>** g01386511

267-7642 WIRING GP-CAB–COUPLER

S/N: CJN1-UP
PART OF 268-7253 CONTROL AR-COUPLER
AN ATTACHMENT

SMCS-1408, 7301 **i02706844**

NOTE	REF NO	GRAPHIC REF	PART NUMBER	QTY	PART NAME 1 2 3 4 5 6 (PRODUCT LEVEL)	SEE PAGE
	1	1	**7K-1181**	13	STRAP-CABLE	
	2	1	**149-5050**	1	RELAY (24-VOLT) (QUICK COUPLER LOCK PRIORITY)	
	2A	1	**149-5050**	1	RELAY (24-VOLT) (QUICK COUPLER LOCK ON)	
	2B	1	**149-5050**	1	RELAY (24-VOLT) (QUICK COUPLER LOCK)	
	2C	1	**149-5050**	1	RELAY (24-VOLT) (QUICK COUPLER LOCK)	
	3	1	**259-4884**	1	BRACKET AS	
	4	1	**259-7220**	1	COVER	
	5	1	**267-7644**	1	HARNESS AS-QUICK COUPLER	
		1	**102-7965**	3	TERMINAL (FEMALE)	
E		1	**125-7874**		TUBE-HEAT SHRINK (5.72-MM DIA) (10-CM)	
E		1	**125-7875**		TUBE-HEAT SHRINK (7.44-MM DIA) (15-CM)	
		1	**149-5070**	9	TERMINAL (FEMALE)	
		1	**163-6803**	1	CONNECTOR-PLUG	
		1	**230-5008**	1	PLUG AS-CONNECTOR (4-PIN)	
		1	**7Y-3950**	2	TERMINAL (MALE)	
		1	**7Y-3953**	1	CONNECTOR-RECEPTACLE	
		1	**149-5069**	7	TERMINAL (FEMALE)	
		1	**3S-2093**	15	STRAP-CABLE	
		1	**230-5008**	1	PLUG AS-CONNECTOR (4-PIN)	
	6	1	*267-7671*	1	SWITCH GP-TOGGLE (QUICK COUPLER)	
		1	**105-5175**	1	SWITCH AS-TOGGLE (QUICK COUPLER)	
		1	**3L-8187**	6	LOCKWASHER	
		1	**6T-3631**	2	NUT-HEX (15/32-32-THD)	
		1	**6T-3632**	1	LOCKWASHER	
		1	**6T-3633**	1	RING-LOCKING	
		1	**6V-8374**	6	SCREW-MACHINE (6-32X0.25-IN)	
		1	**267-7672**	1	HARNESS AS-WIRING (CAB)	
		1	**3S-2093**	1	STRAP-CABLE	
		1	**121-1173**	3	TERMINAL	
		1	**167-3542**	1	CONNECTOR-RECEPTACLE	
	7	1	**267-7676**	1	BRACKET AS	
M	8	1	**9X-2042**	7	SCREW-TRUSS HEAD (M6X1X12-MM)	

E-ORDER BY THE CENTIMETER
M-METRIC PART

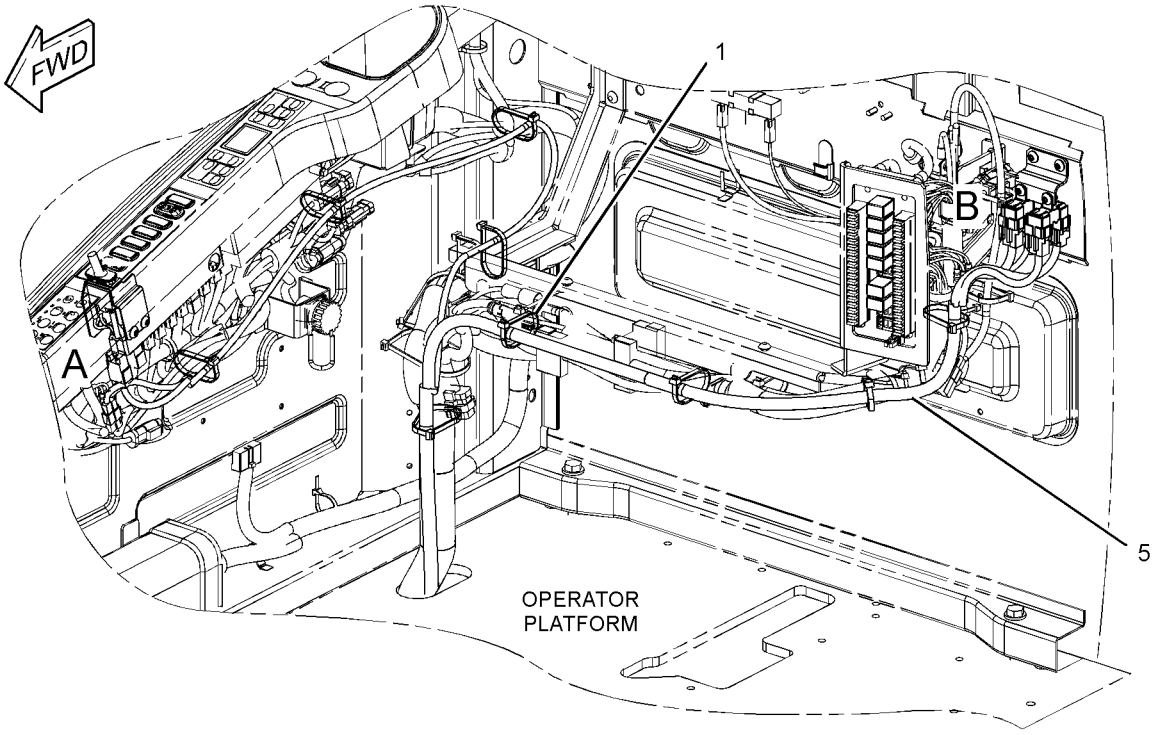

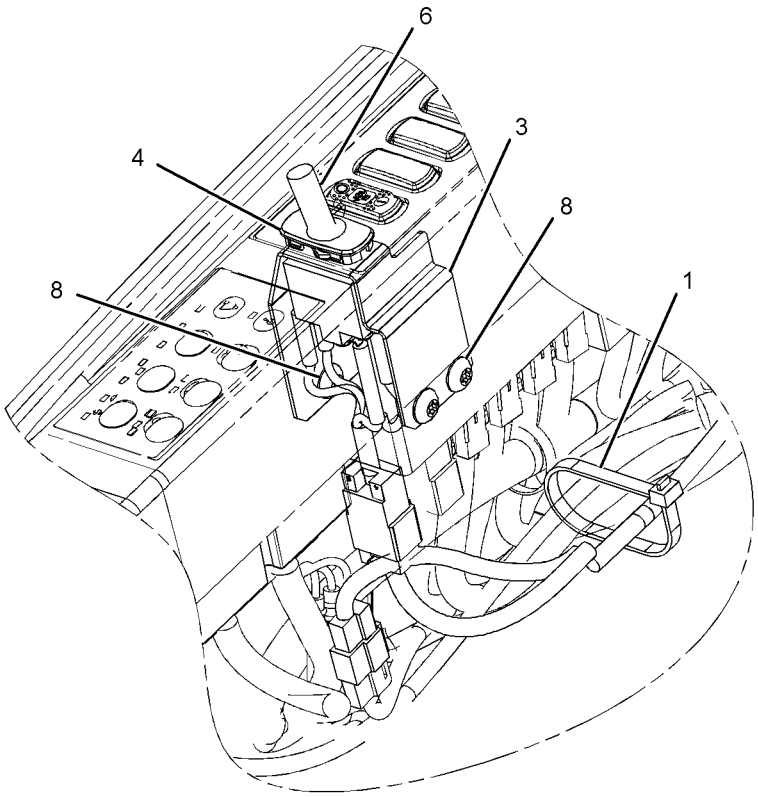

VIEW OF AREA A

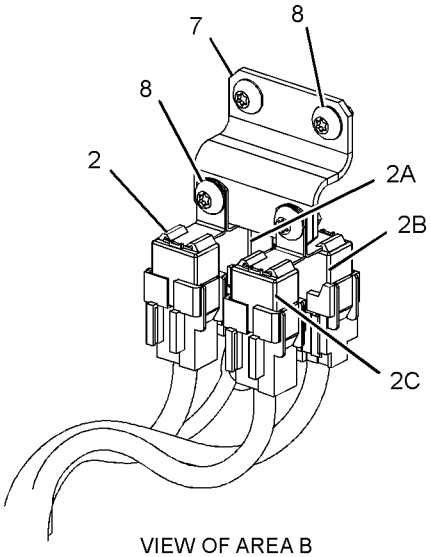

VIEW OF AREA B

GRAPHIC #1 **<END>** g01235651

299-2697 WIRING GP-CAB–ACCUGRADE READY

S/N: CJN1-UP

PART OF 301-2479, 301-2517, 330-8775 SPECIAL AR

AN ATTACHMENT

SMCS-1408, 7301 **i02840817**

NOTE	REF NO	GRAPHIC REF	PART NUMBER	QTY	PART NAME 1 2 3 4 5 6 (PRODUCT LEVEL)	SEE PAGE
	1	2	**3S-2093**	9	STRAP-CABLE	
	2	2	**7K-1181**	22	STRAP-CABLE	
	3	2	**113-8491**	1	FUSE (15-AMPERE) (ACCUGRADE, SOLENOID RESISTOR)	
	4	2	**204-1790**	3	RESISTOR AS	
	5	2	**283-3074**	1	SWITCH AS-TOGGLE (ACCUGRADE BACKUP)	
	6	2	**299-2701**	1	HARNESS AS-CAB	
	7	2	**299-2841**	1	HARNESS AS-SOLENOID	
	8	2	**299-2952**	1	SHEET AS	
M	9	2	**5C-2890**	3	NUT (M6X1-THD)	
M	10	2	**7X-2619**	6	BOLT (M6X1X10-MM)	
	11	2	**9X-8256**	9	WASHER (6.6X12X2-MM THK)	

M-METRIC PART

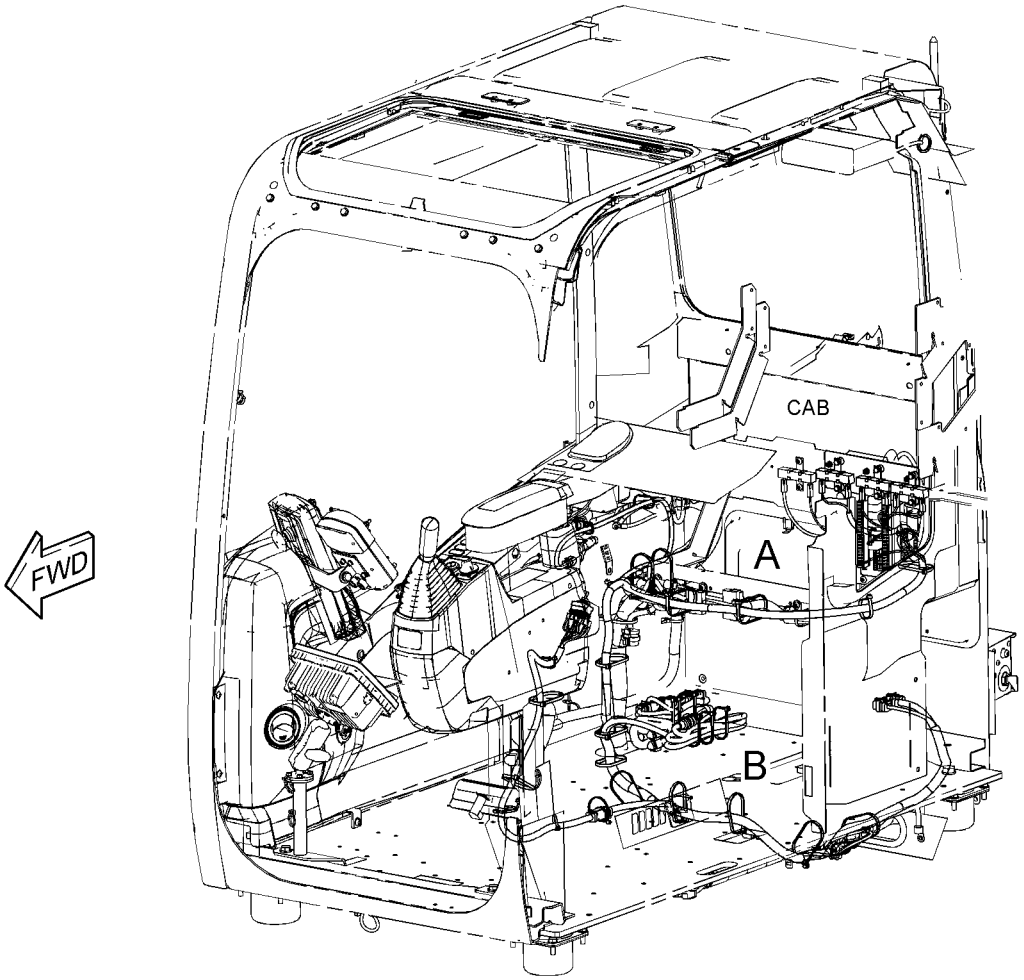

GRAPHIC #1 g01421082

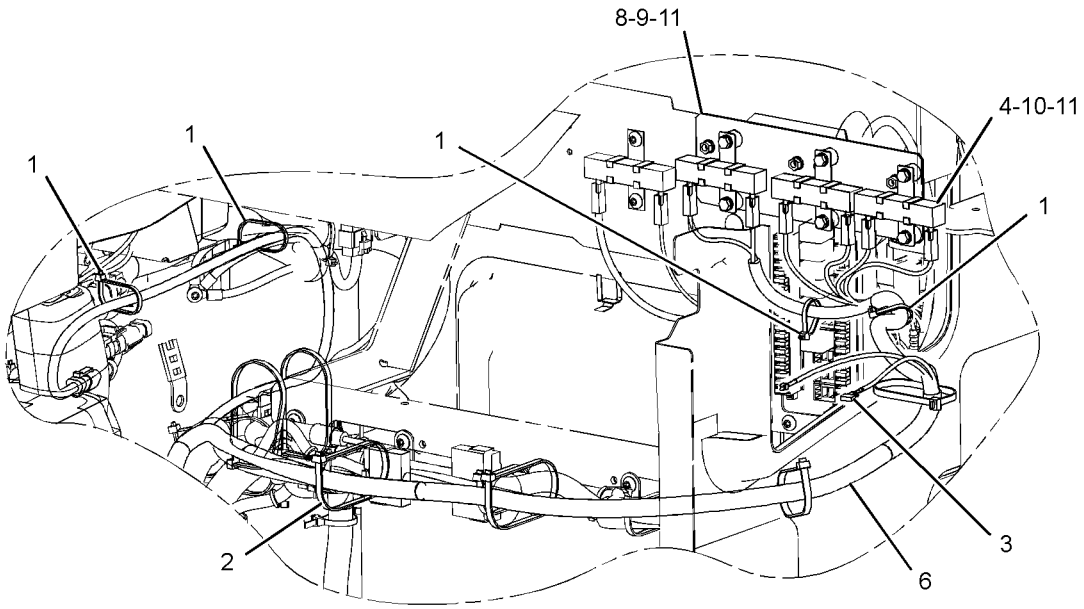

VIEW OF AREA A

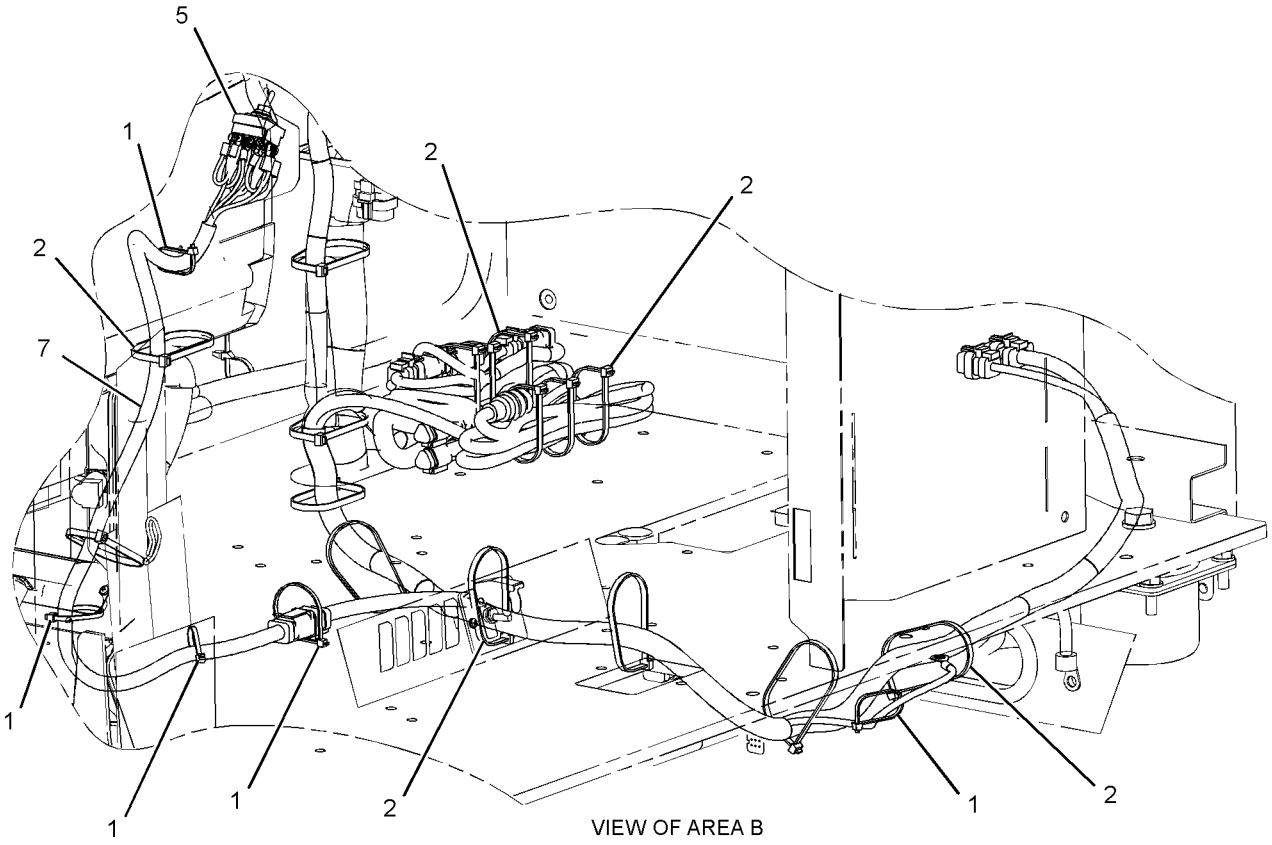

VIEW OF AREA B

GRAPHIC #2 **<END>** g01421083

328-0048 WIRING GP-CAB–REAR VISION CAMERA

S/N: CJN1-UP
PART OF 330-8753 INSTALLATION AR
AN ATTACHMENT

SMCS-1408, 7301 **i03114038**

NOTE	REF NO	GRAPHIC REF	PART NUMBER	QTY	PART NAME 1 2 3 4 5 6 (PRODUCT LEVEL)	SEE PAGE
	1	1	**3S-2093**	13	STRAP-CABLE	
	2	1	**7K-1181**	16	STRAP-CABLE	
	3	1	**306-8590**	1	HARNESS AS-WIRING	
	4	1	**327-9998**	1	HARNESS AS-AUXILIARY	

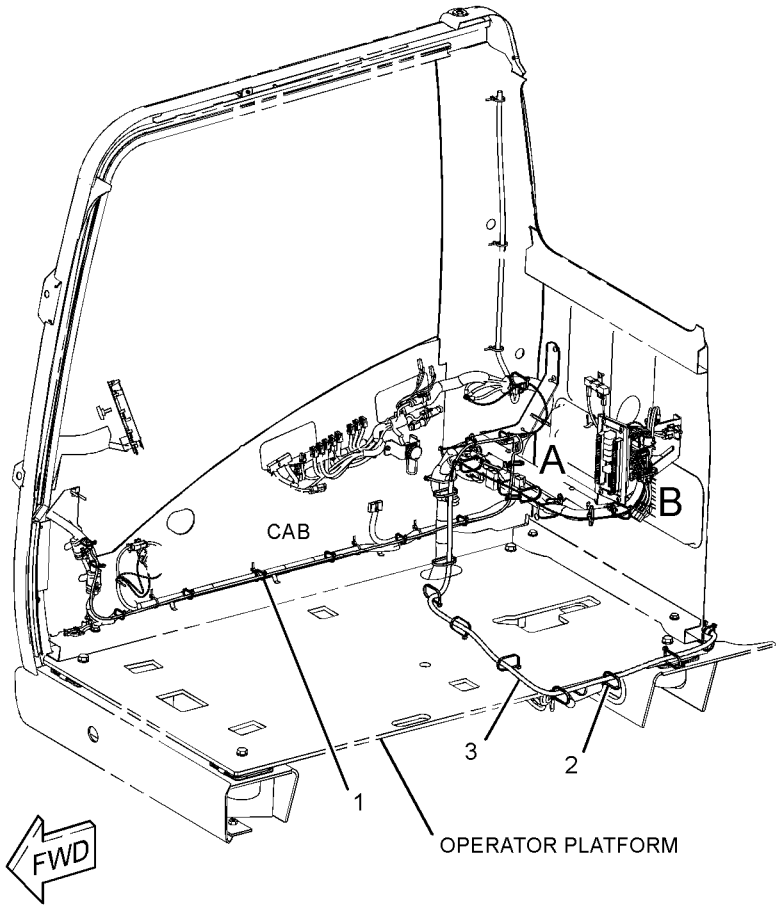

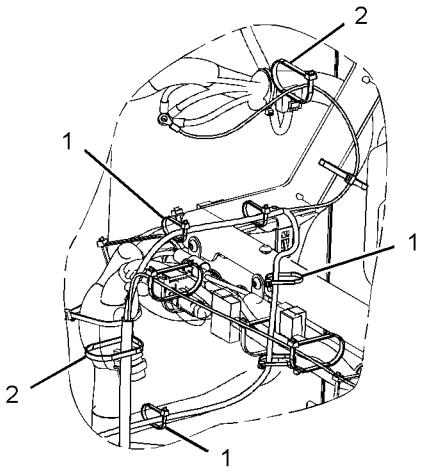

VIEW OF AREA A

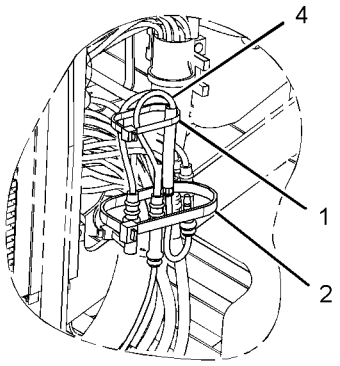

VIEW OF AREA B

GRAPHIC #1 **<END>** g01609106

299-2696 WIRING GP-CHASSIS–ACCUGRADE READY

S/N: CJN1-UP

PART OF 301-2479, 301-2517, 330-8775 SPECIAL AR

AN ATTACHMENT

SMCS-1408 **i03036045**

NOTE	REF NO	GRAPHIC REF	PART NUMBER	QTY	PART NAME 1 2 3 4 5 6 (PRODUCT LEVEL)	SEE PAGE
	1	2	**3S-2093**	28	STRAP-CABLE	
	2	2	**7K-1181**	41	STRAP-CABLE	
	3	2	**093-2064**	2	GROMMET	
	4	2	**111-4836**	1	CLIP	
	5	2	**111-4837**	1	CLIP	
	6	2	**116-0118**	2	CLIP	
	7	2	**204-1611**	5	STRAP-CABLE	
	8	2	**299-2700**	1	HARNESS AS-CHASSIS	
	9	2	**132-5789**	3	CLIP	
	10	2	**4P-7581**	4	CLIP	
	11	2	**5P-4116**	1	WASHER-HARD (8.8X20.5X2-MM THK)	
M	12	2	**7X-2621**	4	BOLT (M10X1.5X12-MM)	
	13	2	**8T-4121**	6	WASHER-HARD (11X21X2.5-MM THK)	
M	14	2	**8T-4191**	2	BOLT (M10X1.5X16-MM)	

M-METRIC PART

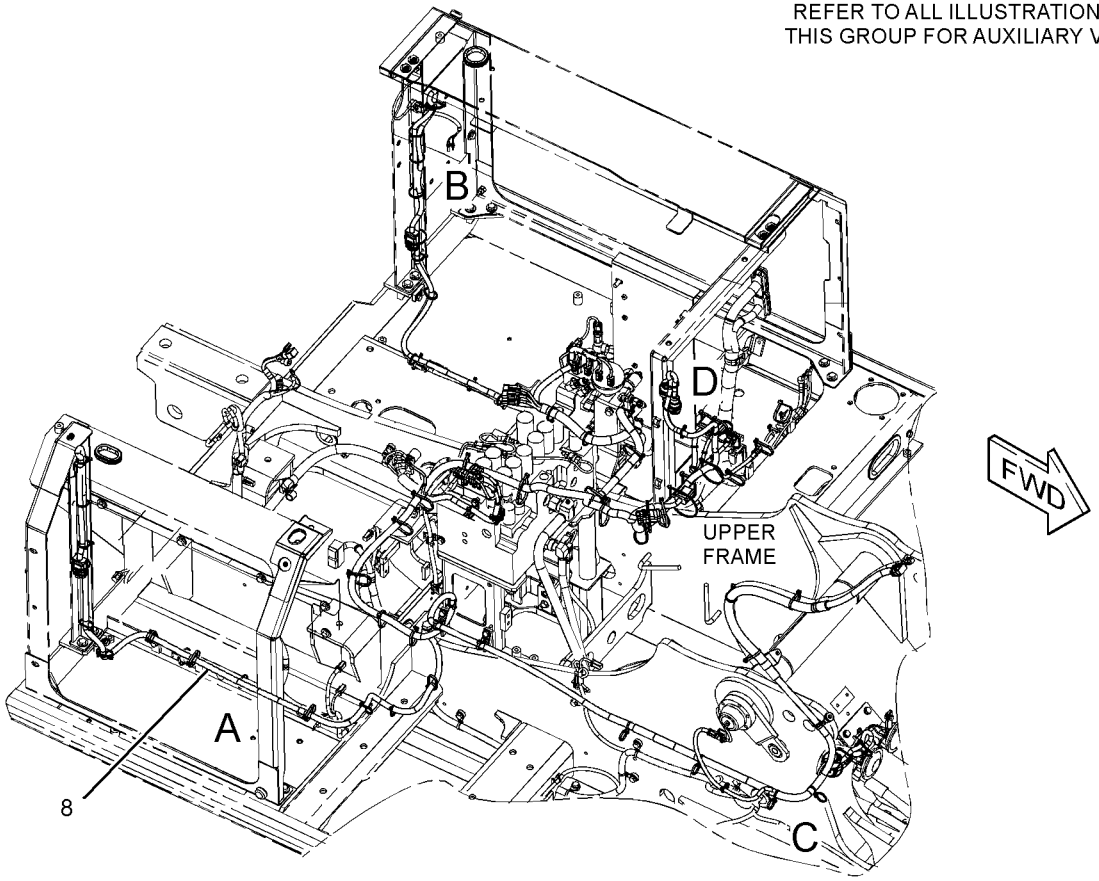

GRAPHIC #1 g01622257

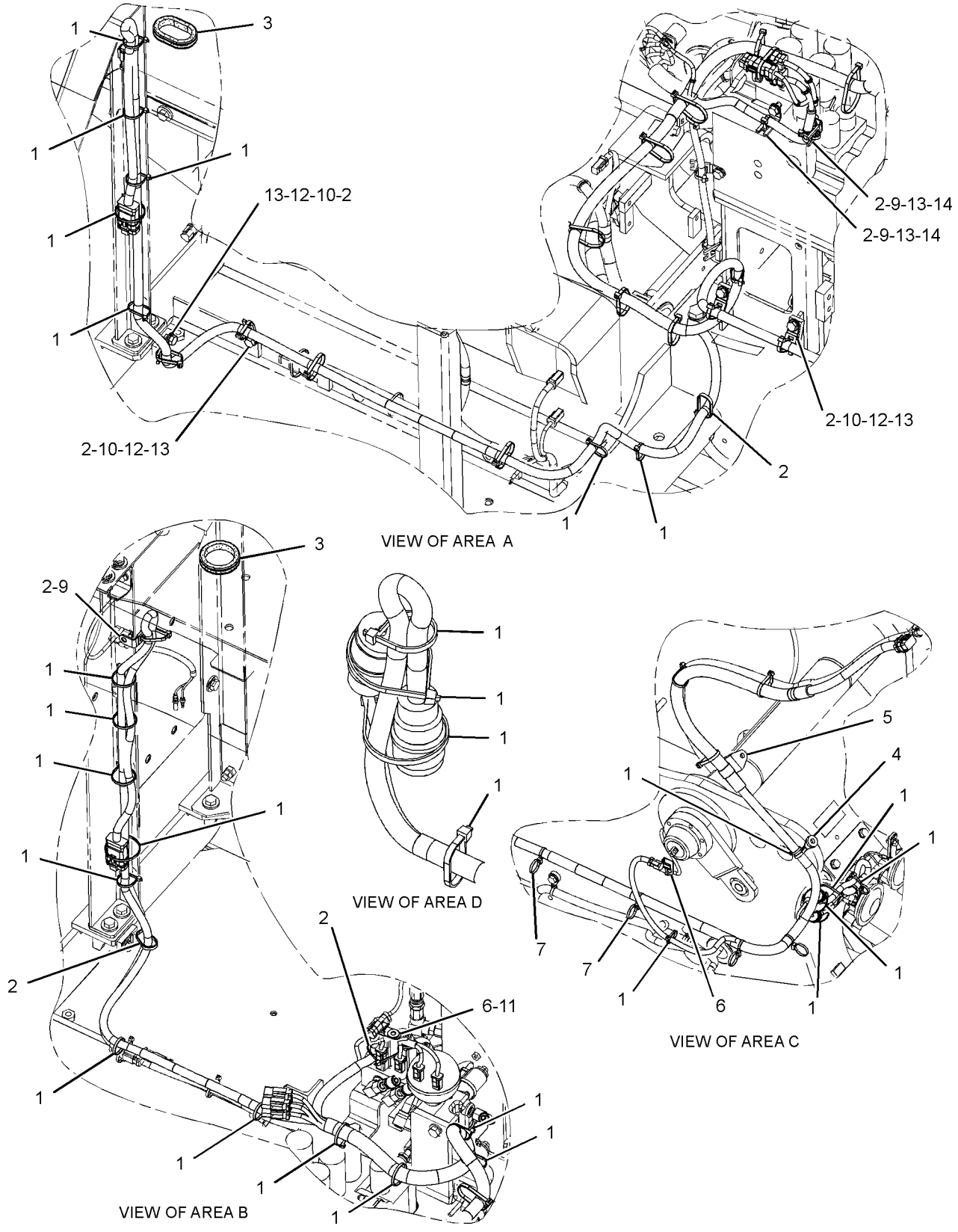

GRAPHIC #2 **<END>** g01622258

275-6880 WIRING GP-COMMUNICATION–PRODUCT LINK 321SR

S/N: CJN1-UP

PART OF 260-7072, 301-2590 INSTALLATION AR-COMMUNICATION

AN ATTACHMENT

SMCS-1408 **i02753051**

NOTE	REF NO	GRAPHIC REF	PART NUMBER	QTY	PART NAME 1 2 3 4 5 6 (PRODUCT LEVEL)	SEE PAGE
	1	1	**4I-7889**	1	SPACER (11X25X45-MM THK)	
	2	1	**7K-1181**	5	STRAP-CABLE	
	3	1	**9X-3495**	1	CLIP AS	
		1	**8C-3334**	2	RIVET-TUBULAR	
	4	1	**116-0118**	3	CLIP	
	5	1	**259-4887**	1	HARNESS AS-CONTROL (PRODUCT LINK)	
		1	**3S-2093**	2	STRAP-CABLE	
E		1	**125-7874**		TUBE-HEAT SHRINK (5.72-MM DIA) (15-CM)	
E		1	**125-7875**		TUBE-HEAT SHRINK (7.44-MM DIA) (5-CM)	
		1	**126-1774**	1	COVER-CONNECTOR	
		1	**160-7690**	1	PLUG AS-CONNECTOR (70-PIN)	
		1	**159-9322**	1	SEAL-O-RING	
		1	**230-5010**	2	PLUG AS-CONNECTOR (6-PIN)	
		1	**243-4508**	2	RECEPTACLE AS-CONNECTOR (6-PIN)	
	6	1	**259-4940**	1	HARNESS AS-WIRING (SERVICE CONNECTOR)	
		1	**243-4508**	1	RECEPTACLE AS-CONNECTOR (6-PIN)	
	7	1	**275-7047**	1	HARNESS AS-CONTROL (SERVICE CONNECTOR)	
		1	**155-2255**	1	KIT-CONNECTING PLUG (12-PIN)	
					(INCLUDES PLUG AS, WEDGE & INTERFACE SEAL)	
		1	**230-5010**	1	PLUG AS-CONNECTOR (6-PIN)	
		1	**243-4508**	1	RECEPTACLE AS-CONNECTOR (6-PIN)	
	8	1	**091-9035**	1	SPACER (11X25X20-MM THK)	
	9	1	**111-4837**	1	CLIP	
	10	1	**132-5789**	1	CLIP	
	11	1	**8T-4121**	2	WASHER-HARD (11X21X2.5-MM THK)	
M	12	1	**8T-4136**	1	BOLT (M10X1.5X25-MM)	
M	13	1	**8T-4185**	1	BOLT (M10X1.5X50-MM)	
M	14	1	**8T-4191**	1	BOLT (M10X1.5X16-MM)	
M	15	1	**8T-5005**	1	BOLT (M10X1.5X70-MM)	

E-ORDER BY THE CENTIMETER
M-METRIC PART

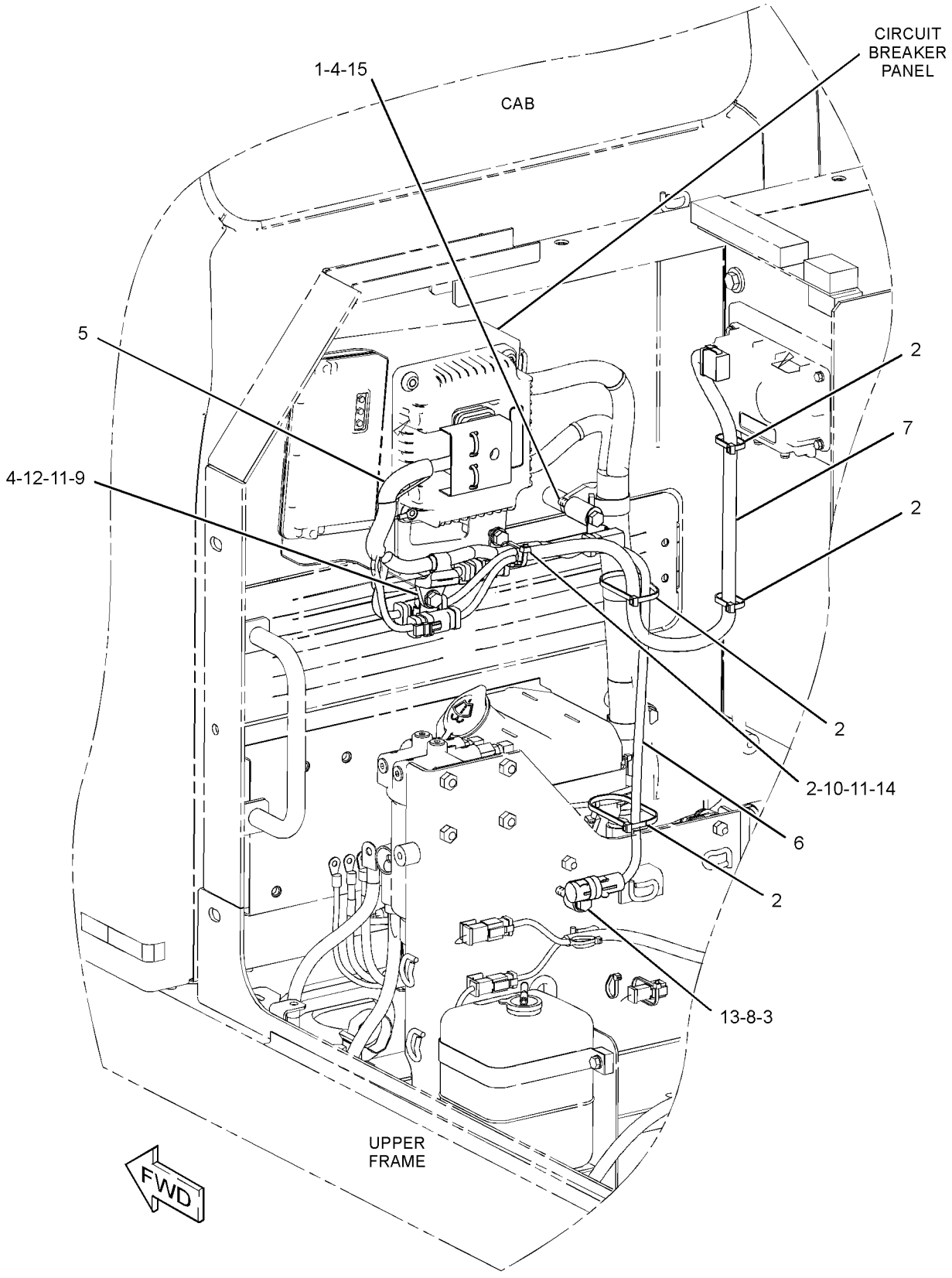

GRAPHIC #1 **<END>** g01384150

275-6881 WIRING GP-COMMUNICATION–PRODUCT LINK 121SR

S/N: CJN1-UP

PART OF 301-2586 INSTALLATION AR-COMMUNICATION

AN ATTACHMENT

SMCS-1408 **i02765577**

NOTE	REF NO	GRAPHIC REF	PART NUMBER	QTY	PART NAME 1 2 3 4 5 6 (PRODUCT LEVEL)	SEE PAGE
	1	1	**4I-7889**	1	SPACER (11X25X45-MM THK)	
	2	1	**7K-1181**	5	STRAP-CABLE	
	3	1	**9X-3495**	1	CLIP AS	
		1	**8C-3334**	2	RIVET-TUBULAR	
	4	1	**116-0118**	2	CLIP	
	5	1	**259-4940**	1	HARNESS AS-WIRING (SERVICE CONNECTOR)	
		1	**243-4508**	1	RECEPTACLE AS-CONNECTOR (6-PIN)	
	6	1	**275-7047**	1	HARNESS AS-CONTROL (SERVICE CONNECTOR)	
		1	**155-2255**	1	KIT-CONNECTING PLUG (12-PIN)	
					(INCLUDES PLUG AS, WEDGE & INTERFACE SEAL)	
		1	**230-5010**	1	PLUG AS-CONNECTOR (6-PIN)	
		1	**264-7032**	1	SEAL-CONNECTOR	
		1	**243-4508**	1	RECEPTACLE AS-CONNECTOR (6-PIN)	
	7	1	**091-9035**	1	SPACER (11X25X20-MM THK)	
	8	1	**8T-4121**	1	WASHER-HARD (11X21X2.5-MM THK)	
M	9	1	**8T-4185**	1	BOLT (M10X1.5X50-MM)	
M	10	1	**8T-5005**	1	BOLT (M10X1.5X70-MM)	

M-METRIC PART

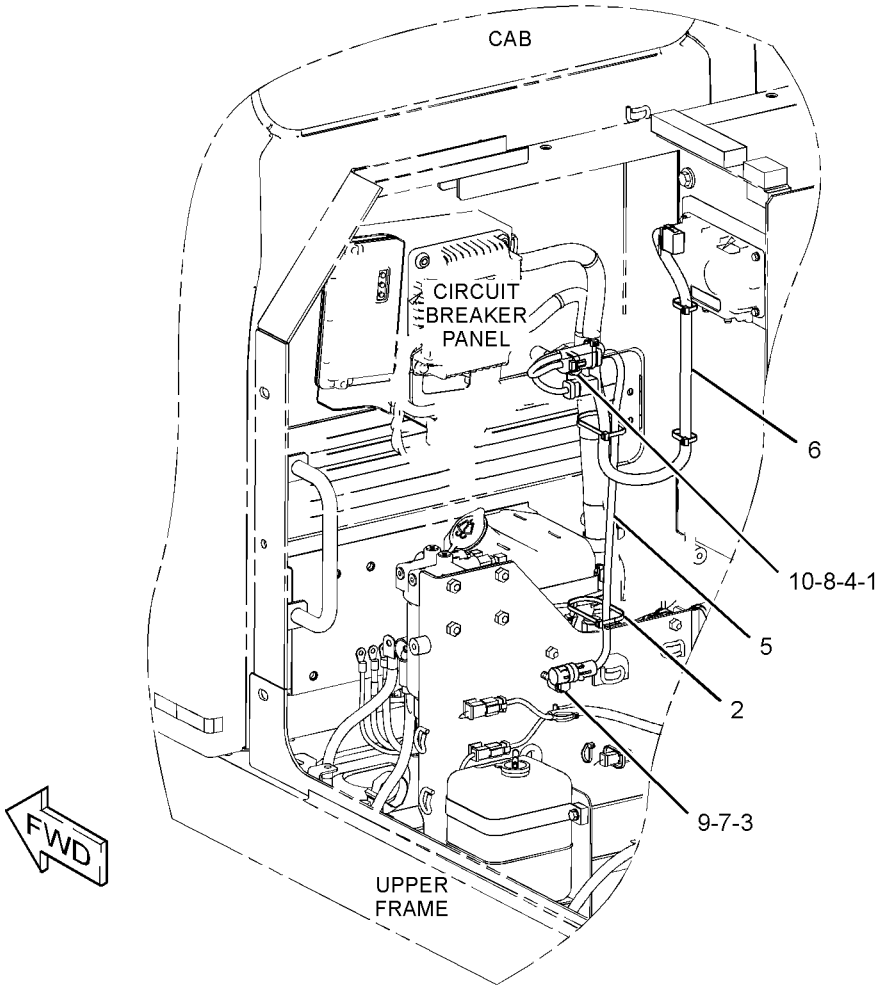

GRAPHIC #1

<END>

g01384949

283-2761 WIRING GP-COMMUNICATION

S/N: CJN1-UP
AN ATTACHMENT

SMCS-1408 **i03084913**

NOTE	REF NO	GRAPHIC REF	PART NUMBER	QTY	PART NAME 1 2 3 4 5 6 (PRODUCT LEVEL)	SEE PAGE
	1	1	**3S-2093**	3	STRAP-CABLE	
	2	1	**4I-7889**	1	SPACER (11X25X45-MM THK)	
	3	1	**7K-1181**	10	STRAP-CABLE	
	4	1	**116-0118**	1	CLIP	
	5	1	**149-5050**	1	RELAY (24-VOLT) (START CONTROL)	
	6	1	**283-2762**	1	HARNESS AS-CONTROL	
M	7	1	**5C-2890**	1	NUT (M6X1-THD)	
M	8	1	**8T-5005**	1	BOLT (M10X1.5X70-MM)	
	9	1	**9X-8256**	1	WASHER (6.6X12X2-MM THK)	

M-METRIC PART

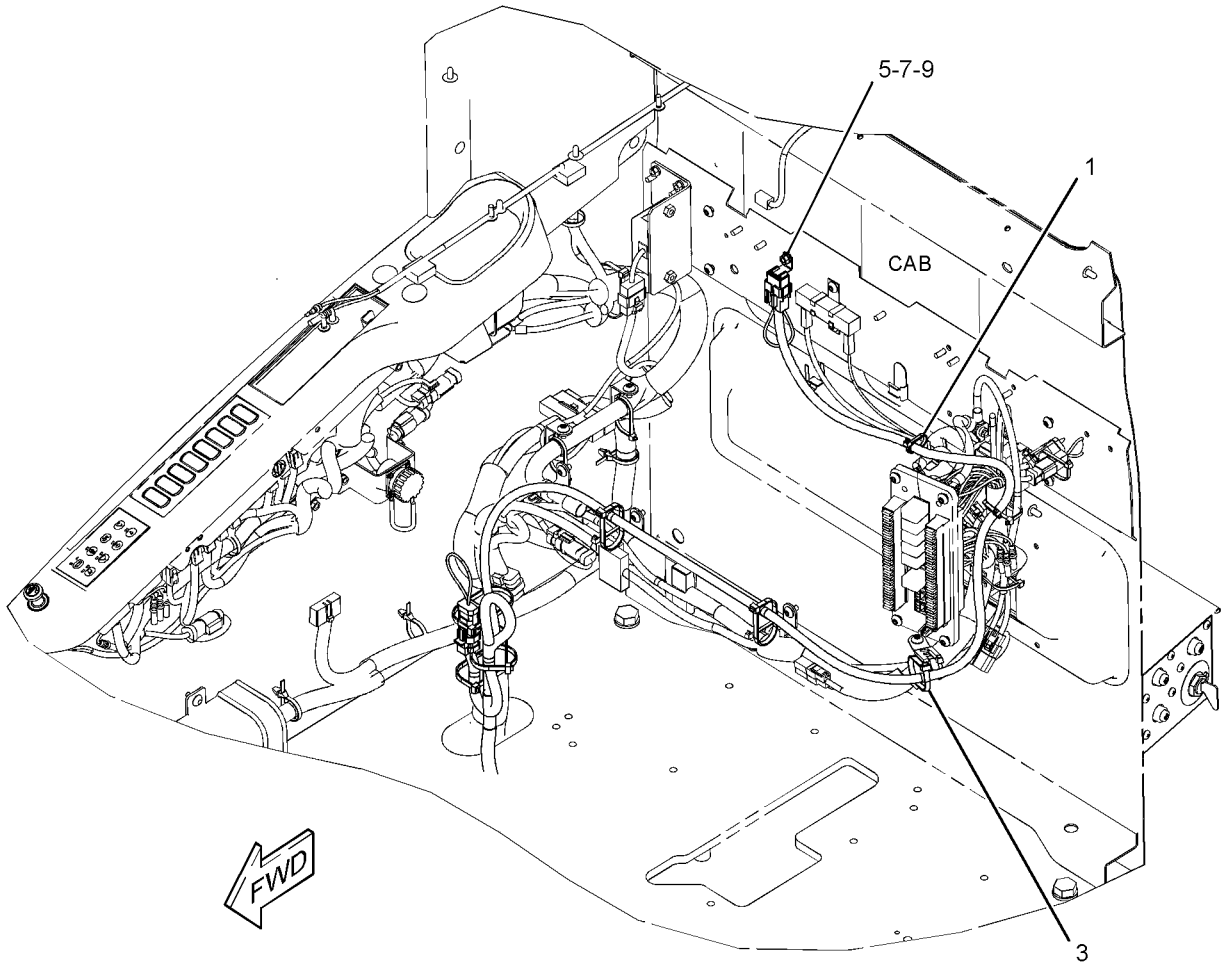

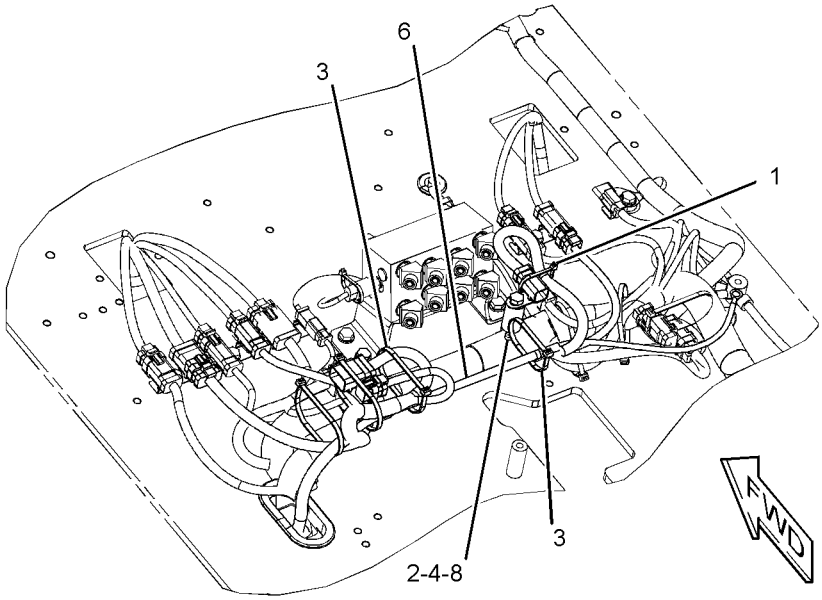

GRAPHIC #1 **<END>** g01571474

231-1836 WIRING GP-CONSOLE–LH

S/N: CJN1-UP

PART OF 251-0433 WIRING GP-CONSOLE

SMCS-1408 **i02348297**

NOTE	REF NO	GRAPHIC REF	PART NUMBER	QTY	PART NAME 1 2 3 4 5 6 (PRODUCT LEVEL)	SEE PAGE
	1	1	**3S-2093**	2	STRAP-CABLE	
	2	1	**7K-1181**	1	STRAP-CABLE	
	3	1	**163-6795**	2	STRAP-CABLE	
	4	1	**251-0580**	1	HARNESS AS-CONSOLE (LH)	
		1	**155-2260**	1	KIT-CONNECTING PLUG (3-PIN)	
					(INCLUDES PLUG AS, WEDGE & INTERFACE SEAL)	
		1	**230-4011**	1	PLUG AS-CONNECTOR (2-PIN)	
		1	**230-5010**	1	PLUG AS-CONNECTOR (6-PIN)	
		1	**239-7352**	1	PLUG AS-CONNECTOR (6-PIN)	
		1	**243-4505**	1	RECEPTACLE AS-CONNECTOR (2-PIN)	
		1	**243-4508**	1	RECEPTACLE AS-CONNECTOR (6-PIN)	
		1	**247-2693**	1	RECEPTACLE AS-CONNECTOR (6-PIN)	

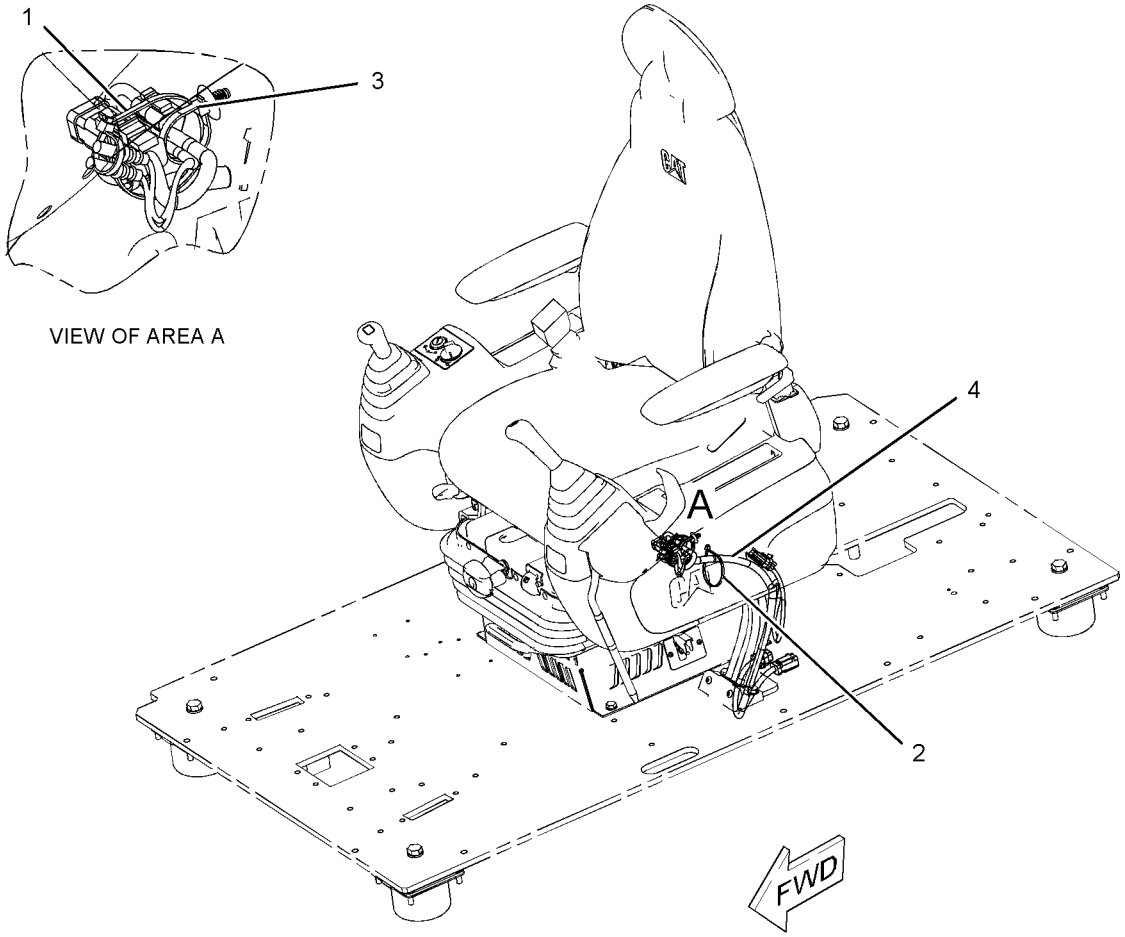

GRAPHIC #1 **<END>** g01150799

ELECTRICAL AND STARTING SYSTEM

251-0433 WIRING GP-CONSOLE

S/N: CJN1-UP

PART OF 259-7193 OPERATOR AR

SMCS-1408 **i02706845**

NOTE	PART NUMBER	QTY	PART NAME 1 2 3 4 5 6 (PRODUCT LEVEL)	SEE PAGE
Y	*231-1836*	1	WIRING GP-CONSOLE (LH)	235
Y	*251-0435*	1	WIRING GP-CONSOLE (RH)	237

Y-SEPARATE ILLUSTRATION

<END>

251-0435 WIRING GP-CONSOLE—RH

S/N: CJN1-UP

PART OF 251-0433 WIRING GP-CONSOLE

SMCS-1408 **i02553916**

NOTE	REF NO	GRAPHIC REF	PART NUMBER	QTY	PART NAME 1 2 3 4 5 6 (PRODUCT LEVEL)	SEE PAGE
	1	1	**3S-2093**	3	STRAP-CABLE	
	2	1	**7K-1181**	1	STRAP-CABLE	
	3	1	**283-3074**	1	SWITCH AS-TOGGLE (AUTO/MANUAL ENG SPEED CONTROL)	
	4	1	**163-6711**	1	SWITCH AS-TOGGLE (MANUAL ENGINE SPEED CONTROL)	
	5	1	**163-6795**	3	STRAP-CABLE	
	6	1	**251-0602**	1	BRACKET	
	7	1	**259-4877**	1	HARNESS AS-CONSOLE (RH)	
		1	**102-8806**	1	KIT-RECEPTACLE (8-PIN)	
					(INCLUDES RECEPTACLE AS & WEDGE)	
		1	**3S-2093**	10	STRAP-CABLE	
		1	**7Y-3967**	2	TERMINAL AS	
		1	**7Y-3963**	1	TERMINAL (RECEPTACLE)	
		1	**7Y-3965**	1	TUBE (RECEPTACLE TERMINAL)	
		1	**102-7964**	1	CONNECTOR-PLUG	
		1	**102-7965**	14	TERMINAL (FEMALE)	
E		1	**125-7874**		TUBE-HEAT SHRINK (5.72-MM DIA) (10-CM)	
E		1	**125-7875**		TUBE-HEAT SHRINK (7.44-MM DIA) (10-CM)	
		1	**155-2265**	1	KIT-CONNECTING PLUG (8-PIN)	
					(INCLUDES PLUG AS, WEDGE & INTERFACE SEAL)	
		1	**9X-3401**	2	PIN-CONNECTOR (16-GA TO 18-GA)	
					—OR—	
		1	**126-1767**	2	PIN-CONNECTOR (14-GA)	
		1	**230-4009**	1	PLUG AS-CONNECTOR (12-PIN)	
		1	**230-4011**	1	PLUG AS-CONNECTOR (2-PIN)	
		1	**230-5008**	1	PLUG AS-CONNECTOR (4-PIN)	
		1	**230-5010**	1	PLUG AS-CONNECTOR (6-PIN)	
		1	**231-2295**	1	PLUG AS-CONNECTOR (8-PIN)	
		1	**239-7352**	1	PLUG AS-CONNECTOR (6-PIN)	
		1	**243-4505**	1	RECEPTACLE AS-CONNECTOR (2-PIN)	
		1	**243-4510**	1	RECEPTACLE AS-CONNECTOR (12-PIN)	
		1	**247-2693**	1	RECEPTACLE AS-CONNECTOR (6-PIN)	
M	8	1	**9X-2042**	3	SCREW-TRUSS HEAD (M6X1X12-MM)	

E-ORDER BY THE CENTIMETER
M-METRIC PART

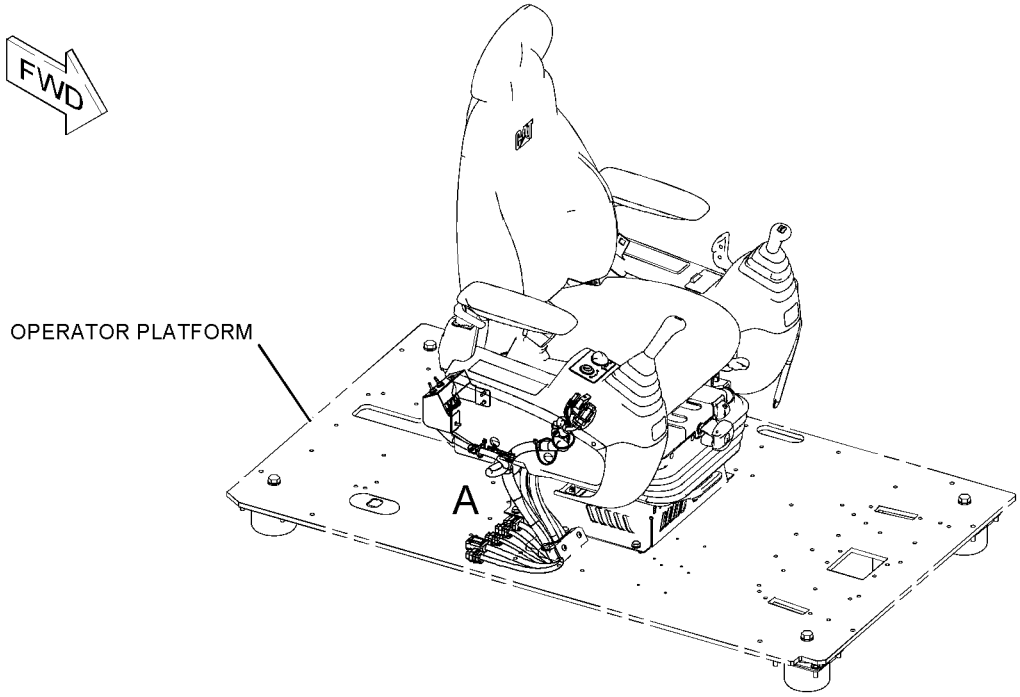

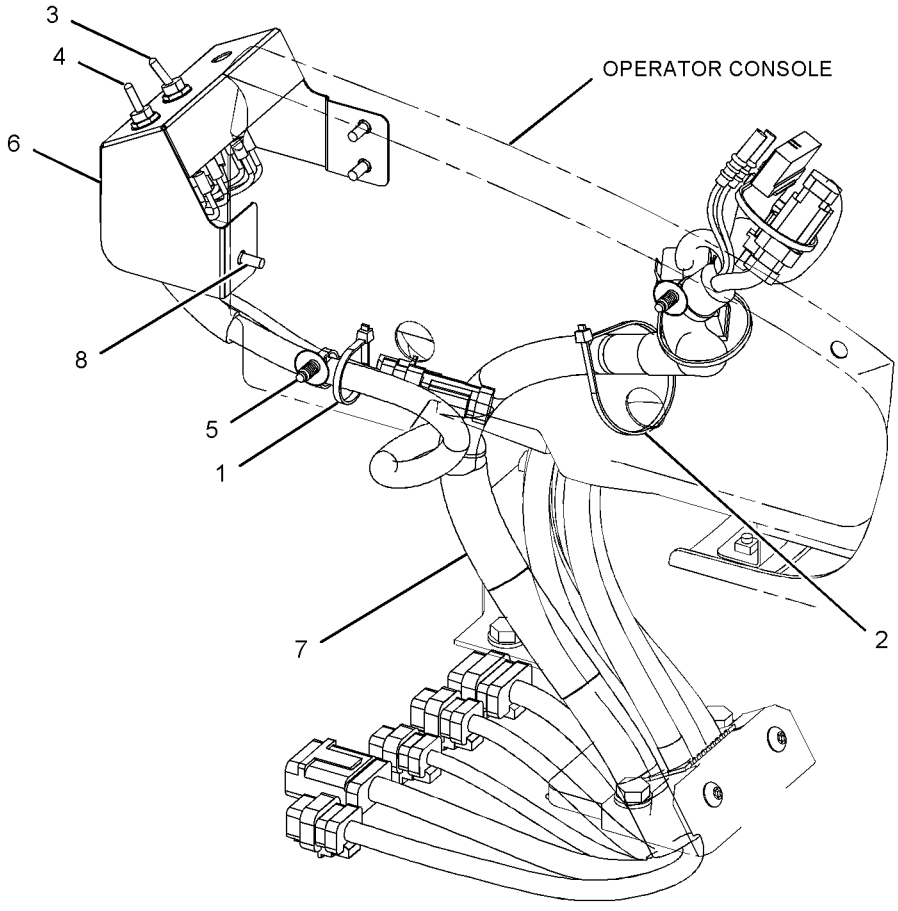

VIEW OF AREA A

GRAPHIC #1 **<END>** g01231684

275-6883 WIRING GP-CONVERTER

S/N: CJN1-UP
12-VOLT, 7-AMPERE
CANNOT BE USED WITH 275-6884—PAGE 241
AN ATTACHMENT

SMCS-1421 **i02636485**

NOTE	REF NO	GRAPHIC REF	PART NUMBER	QTY	PART NAME 1 2 3 4 5 6 (PRODUCT LEVEL)	SEE PAGE
	1	1	**7K-1181**	2	STRAP-CABLE	
	2	1	**121-0987**	1	SOCKET (12-VOLT, 7-AMPERE)	
	3	1	**275-7048**	1	BRACKET	
	4	1	**283-2783**	1	CONVERTER-POWER (24-VOLT TO 12-VOLT)	
	5	1	**8T-4121**	2	WASHER-HARD (11X21X2.5-MM THK)	
M	6	1	**8T-4136**	2	BOLT (M10X1.5X25-MM)	
M	7	1	**8T-4171**	4	BOLT (M6X1X12-MM)	
	8	1	**9X-8256**	4	WASHER (6.6X12X2-MM THK)	

M-METRIC PART

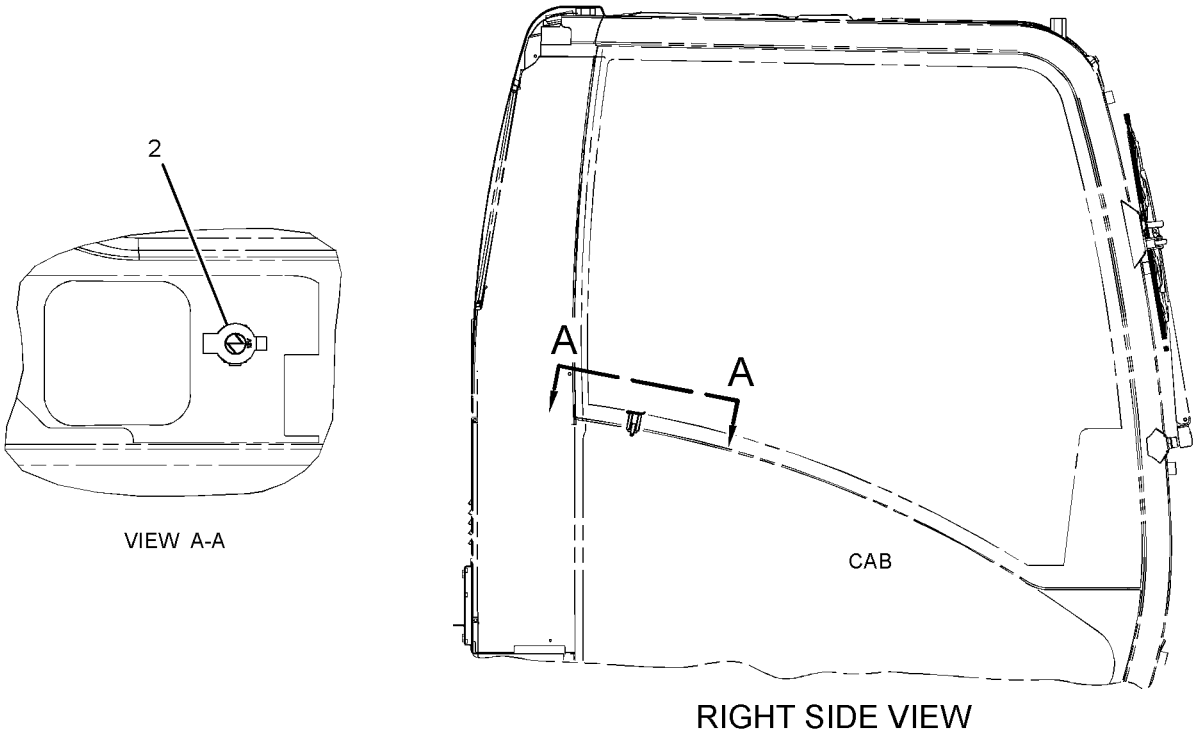

VIEW A-A

RIGHT SIDE VIEW

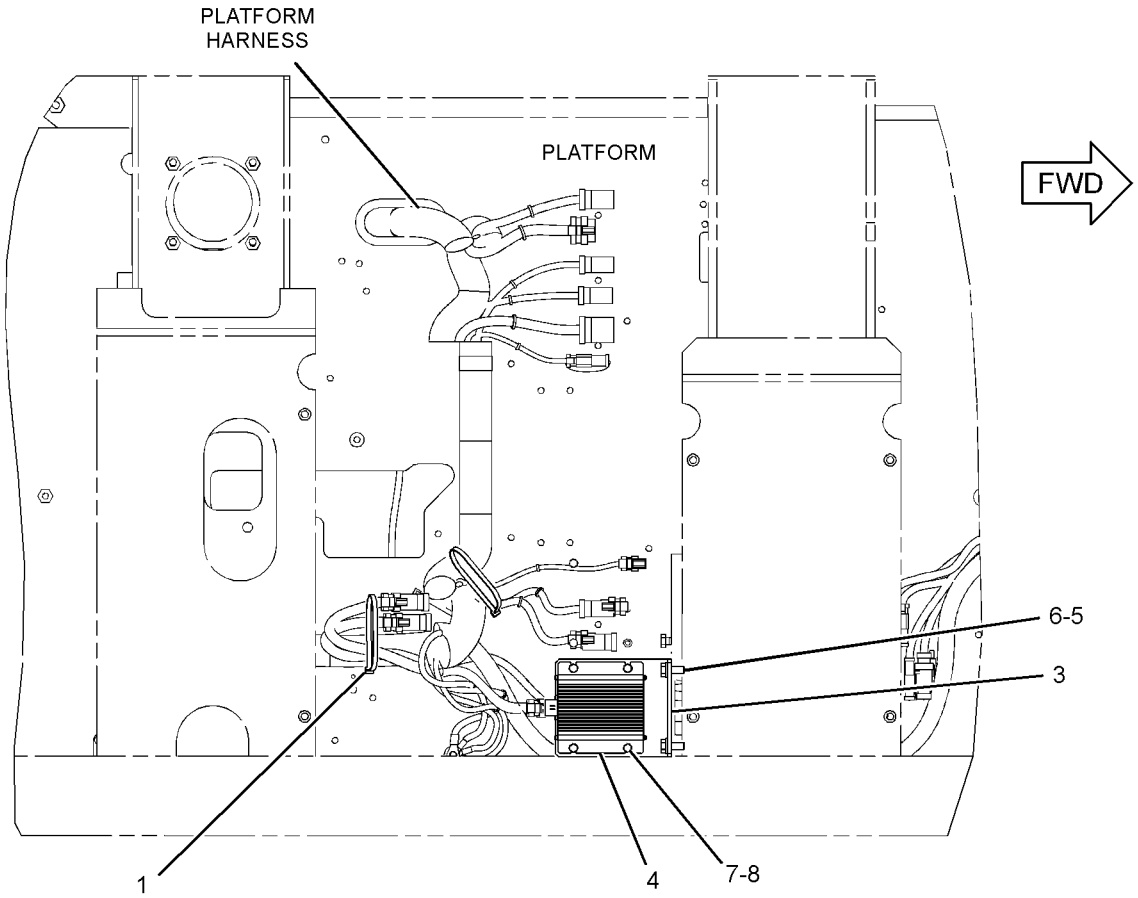

BOTTOM VIEW

GRAPHIC #1

<END>

g01313257

275-6884 WIRING GP-CONVERTER

S/N: CJN1-UP
12-VOLT, 7-AMPERE (2X)
CANNOT BE USED WITH 275-6883—PAGE 239
AN ATTACHMENT

SMCS-1421 **i02598627**

NOTE	REF NO	GRAPHIC REF	PART NUMBER	QTY	PART NAME 1 2 3 4 5 6 (PRODUCT LEVEL)	SEE PAGE
	1	1	**121-0987**	2	SOCKET (12-VOLT, 7-AMPERE)	
	2	1	**275-7048**	2	BRACKET	
	3	1	**283-2783**	2	CONVERTER-POWER (24-VOLT TO 12-VOLT)	
	4	1	**8T-4121**	4	WASHER-HARD (11X21X2.5-MM THK)	
M	5	1	**8T-4136**	4	BOLT (M10X1.5X25-MM)	
M	6	1	**8T-4171**	8	BOLT (M6X1X12-MM)	
	7	1	**9X-8256**	8	WASHER (6.6X12X2-MM THK)	

M-METRIC PART

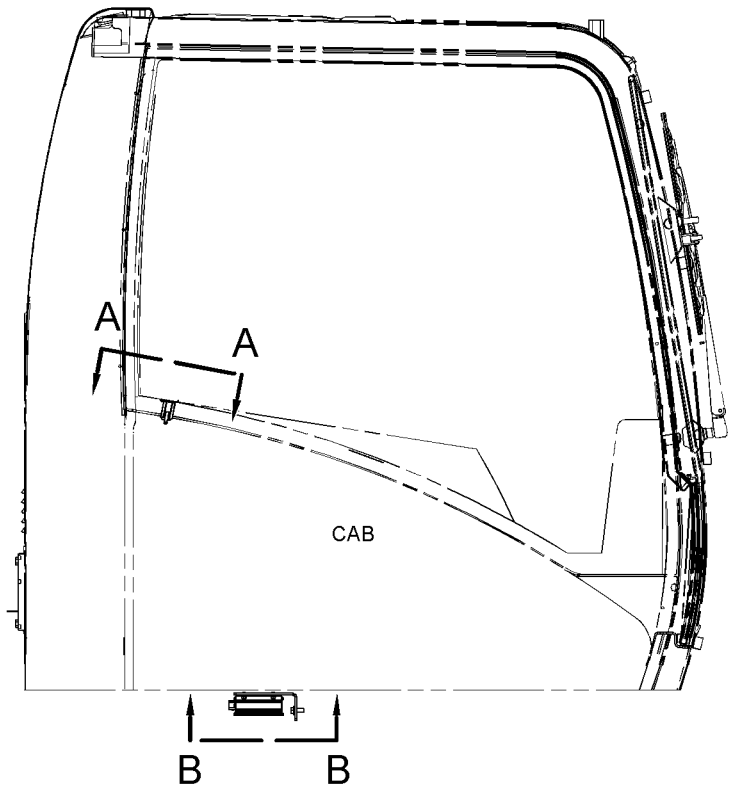

RIGHT SIDE VIEW

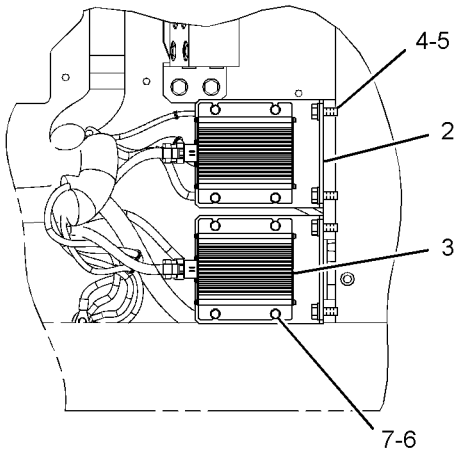

VIEW B-B

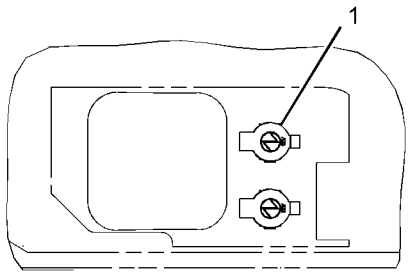

VIEW A-A

GRAPHIC #1 **<END>** g01311851

ELECTRICAL AND STARTING SYSTEM

296-4801 WIRING GP-ELECTRONIC CONTROL

S/N: JKH1-UP
PART OF 272-4817 ENGINE AR
ALSO AN ATTACHMENT

SMCS-1408 **i03021485**

NOTE	REF NO	GRAPHIC REF	PART NUMBER	QTY	PART NAME 1 2 3 4 5 6 (PRODUCT LEVEL)	SEE PAGE
	1	1	**310-9688**	1	HARNESS AS-ENGINE	
	2	1	**296-4618**	1	SPACER	
	3	1	**296-4619**	1	CLIP	
	4	1	**099-4460**	1	BOLT	
	5	1	**096-2501**	1	LOCKWASHER	
	6	1	**8T-4223**	1	WASHER-HARD (13.5X25.5X3-MM THK)	
	7	1	**305-4891**	1	HARNESS AS-ENGINE (FUEL INJECTORS)	
	8	1,2	**305-4895**	15	STRAP-CABLE	
	9	1,2	**282-8567**	2	BOLT	
	10	1	**305-4898**	1	CLIP	
	11	1,2	**305-4896**	11	CLIP	
	12	1	**305-4897**	3	CLIP	
	13	1,2	**294-1768**	6	BOLT	
	14	1	**296-4766**	1	BRACKET	
Y	15	2	**223-7577**	1	SWITCH GP-MAGNETIC (AIR INLET HEATER RELAY)	201
	16	2	**296-4755**	1	CABLE	
	17	2	**296-4621**	2	BOLT (M6X1.25X23.5-MM)	

Y-SEPARATE ILLUSTRATION

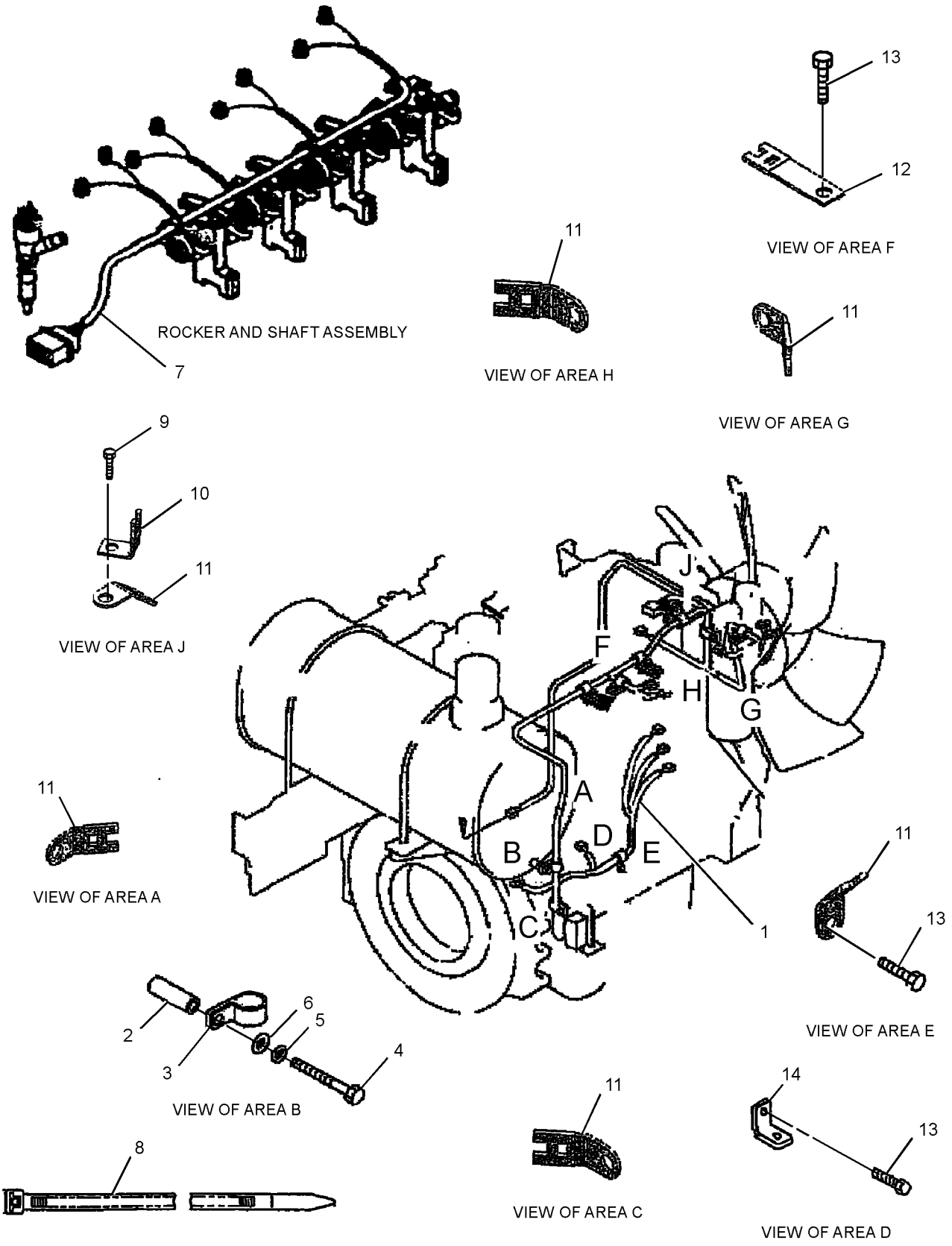

GRAPHIC #1 g01414753

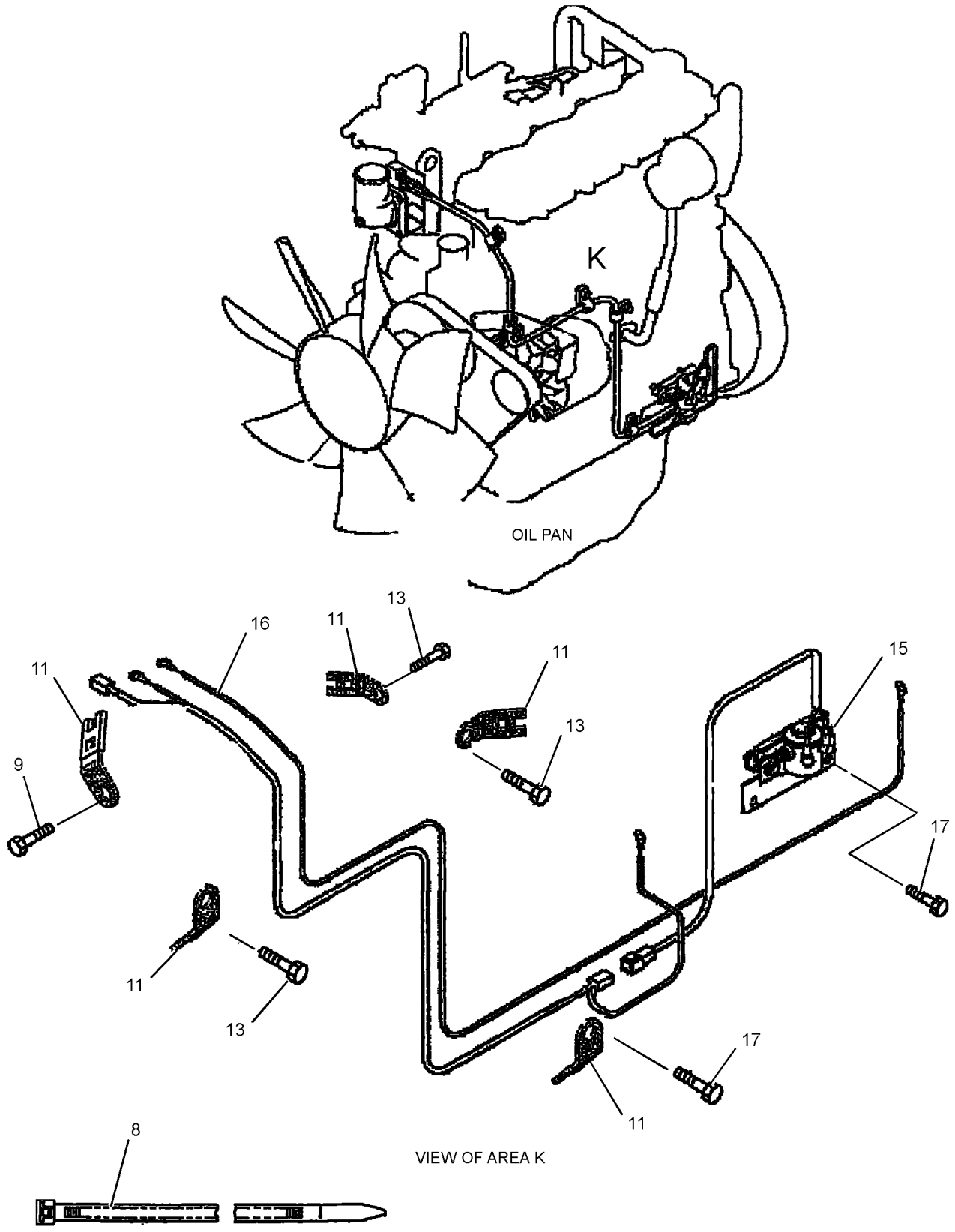

GRAPHIC #2 **<END>** g01414579

267-7849 WIRING GP-FINE SWING

S/N: CJN1-UP
PART OF 260-7075 VALVE AR-SWING
AN ATTACHMENT

SMCS-1408 **i02752928**

NOTE	REF NO	GRAPHIC REF	PART NUMBER	QTY	PART NAME 1 2 3 4 5 6 (PRODUCT LEVEL)	SEE PAGE
	1	1	**3S-2093**	1	STRAP-CABLE	
	2	1	**111-4836**	3	CLIP	
	3	1	**116-0118**	1	CLIP	
	4	1	**238-2212**	1	SWITCH AS-ROCKER (FINE SWING)	
		1	**167-3542**	1	CONNECTOR-RECEPTACLE	
		1	**167-3543**	5	TERMINAL (MALE)	
	5	1	**267-7704**	1	BRACKET	
	6	1	**267-7850**	1	HARNESS AS-VALVE	
		1	**155-2270**	1	KIT-CONNECTING PLUG (2-PIN)	
					(INCLUDES PLUG AS, WEDGE & INTERFACE SEAL)	
		1	**230-4011**	1	PLUG AS-CONNECTOR (2-PIN)	
	7	1	**132-5789**	1	CLIP	
	8	1	**6G-2263**	2	SPACER (10.5X19X28.5-MM THK)	
M	9	1	**7X-2621**	1	BOLT (M10X1.5X12-MM)	
	10	1	**8T-4121**	6	WASHER-HARD (11X21X2.5-MM THK)	
M	11	1	**8T-4133**	1	NUT (M10X1.5-THD)	
M	12	1	**8T-4182**	2	BOLT (M10X1.5X45-MM)	
M	13	1	**8T-4191**	1	BOLT (M10X1.5X16-MM)	
M	14	1	**8T-4195**	1	BOLT (M10X1.5X30-MM)	

M-METRIC PART

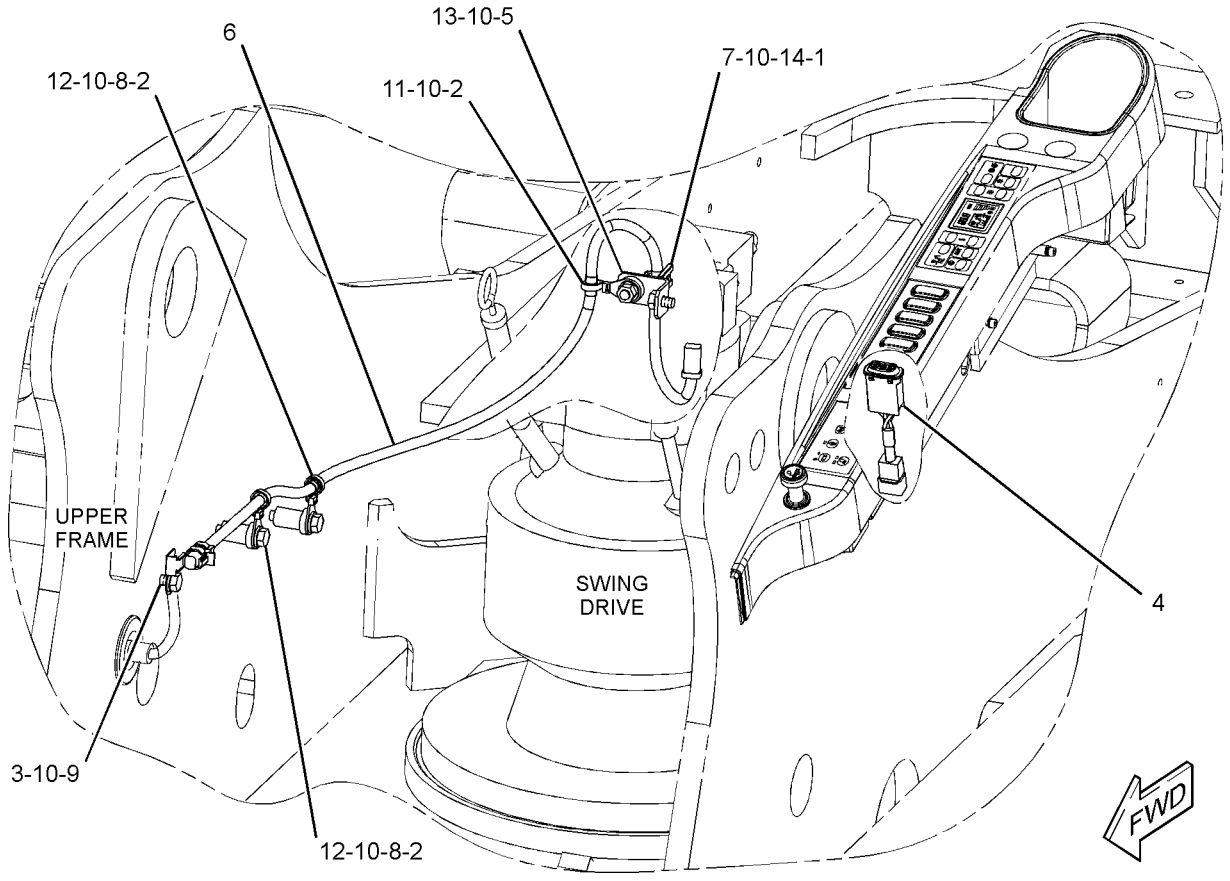

GRAPHIC #1 **<END>** g01382011

259-5175 WIRING GP-FUEL PUMP–REFUELING PUMP

S/N: CJN1-UP
PART OF 260-7007 PUMP AR-FUEL TRANSFER
AN ATTACHMENT
TYPE 1

SMCS-1256, 1258, 1408 **i02767942**

NOTE	REF NO	GRAPHIC REF	PART NUMBER	QTY	PART NAME 1 2 3 4 5 6 (PRODUCT LEVEL)	SEE PAGE
	1	1	**3S-2093**	9	STRAP-CABLE	
	2	1	**7K-1181**	1	STRAP-CABLE	
	3	1	**267-7707**	1	HARNESS AS-PUMP	
	4	1	**267-7708**	1	WIRE AS	
	5	1	**4P-7428**	1	CLIP	
	6	1	**8T-0328**	1	WASHER-HARD (5.5X10X1-MM THK)	

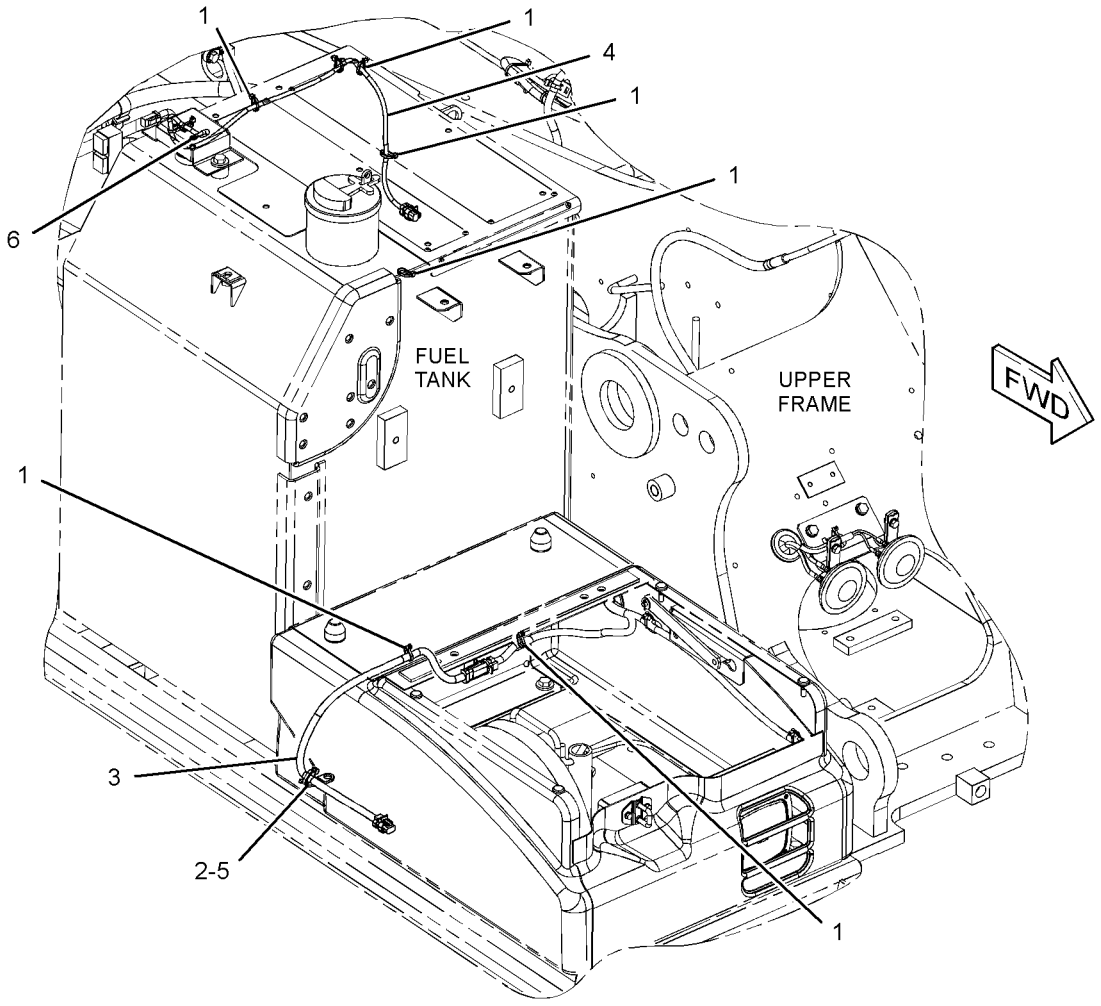

GRAPHIC #1 **<END>** g01380130

259-5175 WIRING GP-FUEL PUMP–REFUELING PUMP

S/N: CJN1-UP
PART OF 260-7007, 330-8780 PUMP AR-FUEL TRANSFER
AN ATTACHMENT
TYPE 2

SMCS-1256, 1258, 1408 **i03088422**

NOTE	REF NO	GRAPHIC REF	PART NUMBER	QTY	PART NAME 1 2 3 4 5 6 (PRODUCT LEVEL)	SEE PAGE
	1	1	**3S-2093**	9	STRAP-CABLE	
C	2	1	**7K-1181**	14	STRAP-CABLE	
	3	1	**267-7707**	1	HARNESS AS-PUMP	
C	4	1	**319-1334**	1	HARNESS AS-WIRING	
	5	1	**4P-7428**	1	CLIP	

C-CHANGE FROM PREVIOUS TYPE

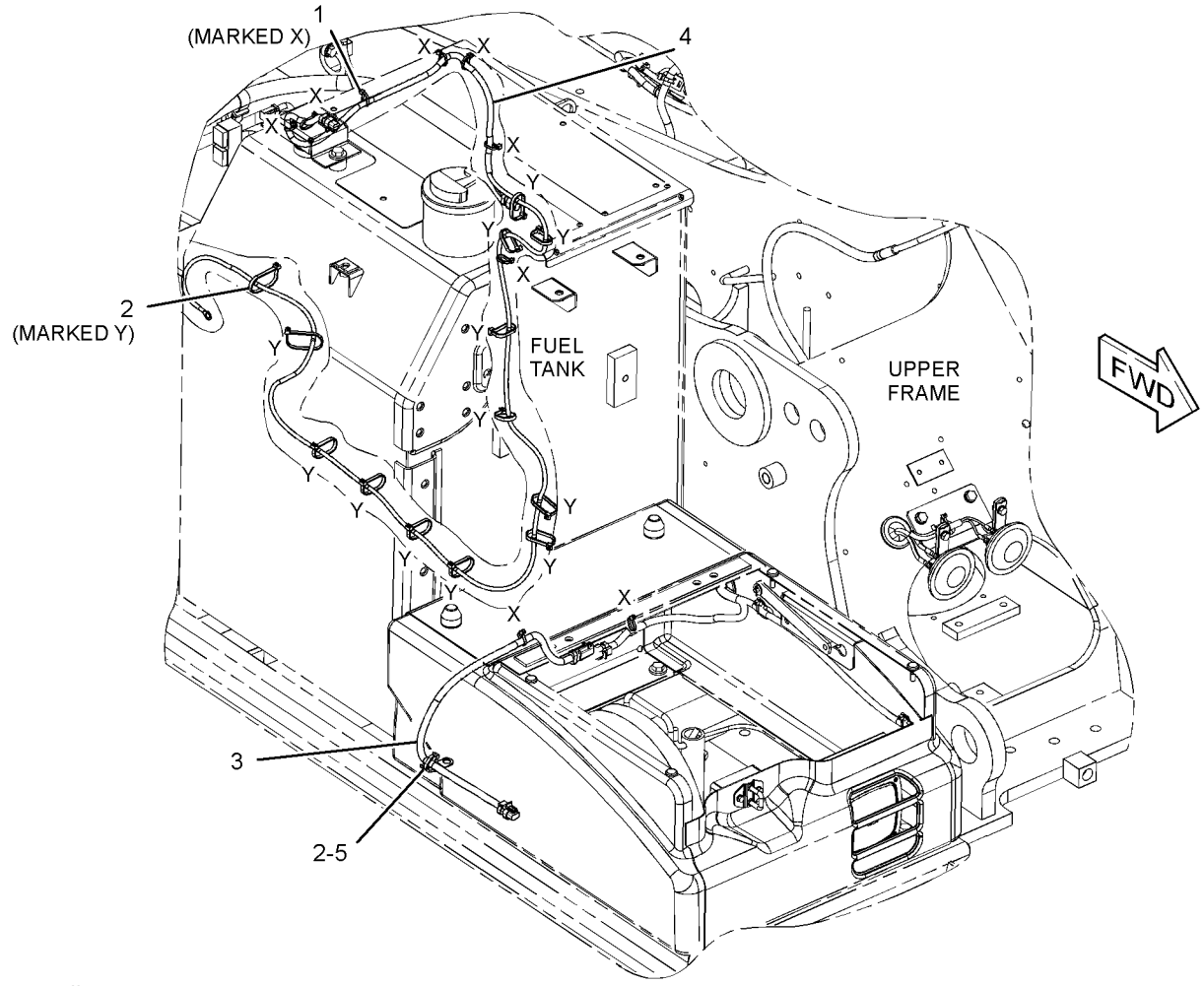

GRAPHIC #1 **<END>** g01621848

299-2698 WIRING GP-GRADE CONTROL–ACCUGRADE, BOOM

S/N: CJN1-UP

PART OF 301-2479, 301-2517, 330-8775 SPECIAL AR

AN ATTACHMENT

SMCS-1408, 7220 **i02840819**

NOTE	REF NO	GRAPHIC REF	PART NUMBER	QTY	PART NAME 1 2 3 4 5 6 (PRODUCT LEVEL)	SEE PAGE
	1	1	**3S-2093**	17	STRAP-CABLE	
	2	1	**7I-2673**	2	STRAP-CABLE	
	3	1	**095-1392**	2	CLAMP-HOSE	
	4	1	**111-4836**	5	CLIP	
	5	1	**111-4837**	1	CLIP	
	6	1	**111-4838**	2	CLIP	
	7	1	**116-0118**	1	CLIP	
	8	1	**204-1611**	5	STRAP-CABLE	
	9	1	**299-2694**	1	HARNESS AS-CONTROL (GRADE CONTROL)	
	10	1	**4S-1962**	2	CLIP	
	11	1	**5P-9297**	1	CLIP	
	12	1	**8T-4121**	3	WASHER-HARD (11X21X2.5-MM THK)	
M	13	1	**8T-4133**	2	NUT (M10X1.5-THD)	
M	14	1	**8T-4137**	1	BOLT (M10X1.5X20-MM)	
M	15	1	**8T-4195**	2	BOLT (M10X1.5X30-MM)	

M-METRIC PART

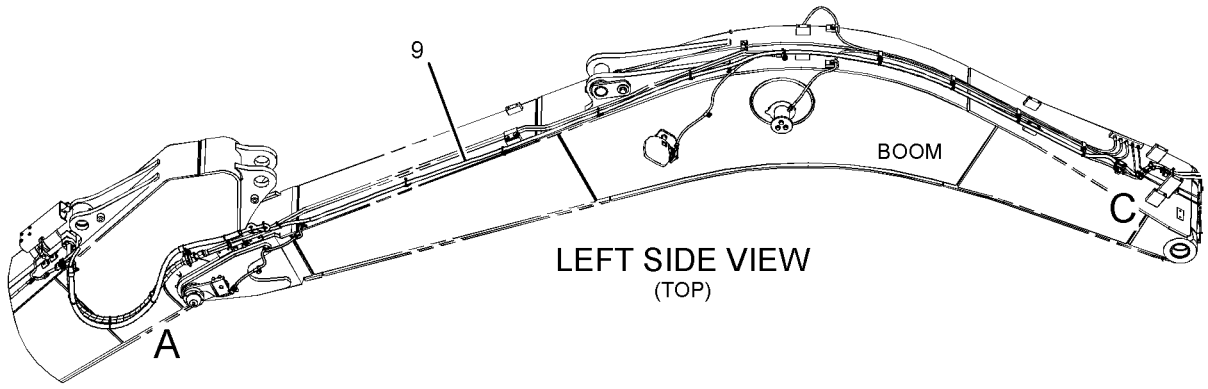

LEFT SIDE VIEW
(TOP)

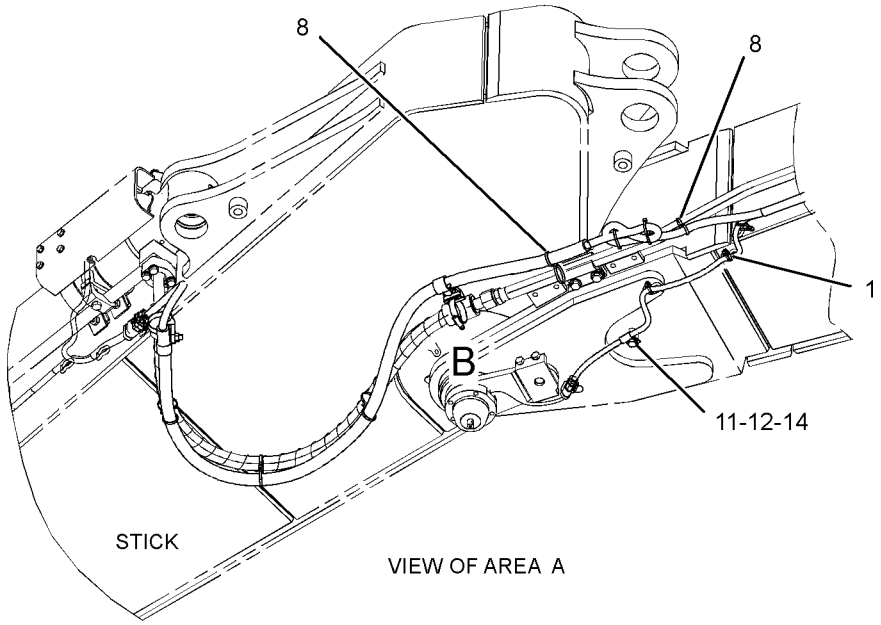

VIEW OF AREA A

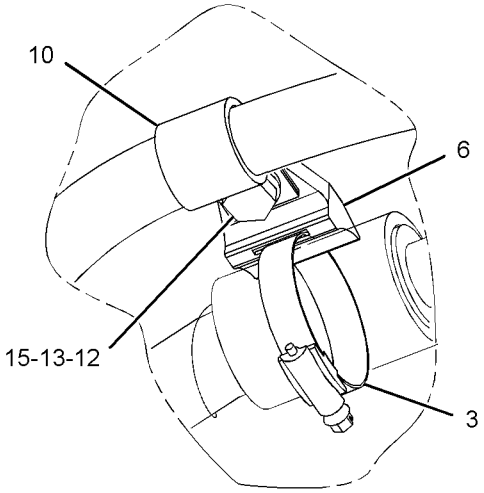

VIEW OF AREA B

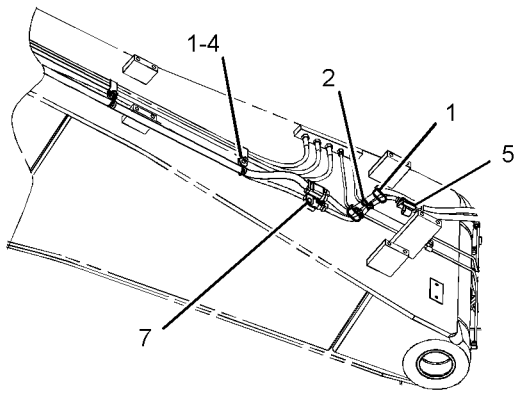

VIEW OF AREA C

GRAPHIC #1 **<END>** g01419765

299-2699 WIRING GP-GRADE CONTROL–ACCUGRADE, STICK

S/N: CJN1-UP

PART OF 301-2479, 301-2517, 330-8775 SPECIAL AR

AN ATTACHMENT

SMCS-1408, 7220 **i02840821**

NOTE	REF NO	GRAPHIC REF	PART NUMBER	QTY	PART NAME 1 2 3 4 5 6 (PRODUCT LEVEL)	SEE PAGE
	1	1	**3S-2093**	8	STRAP-CABLE	
	2	1	**7K-1181**	1	STRAP-CABLE	
	3	1	**204-1611**	1	STRAP-CABLE	
	4	1	**299-2695**	1	HARNESS AS-CONTROL (GRADE CONTROL)	
	5	1	**4P-7428**	1	CLIP	
	6	1	**5P-8522**	1	GROMMET	

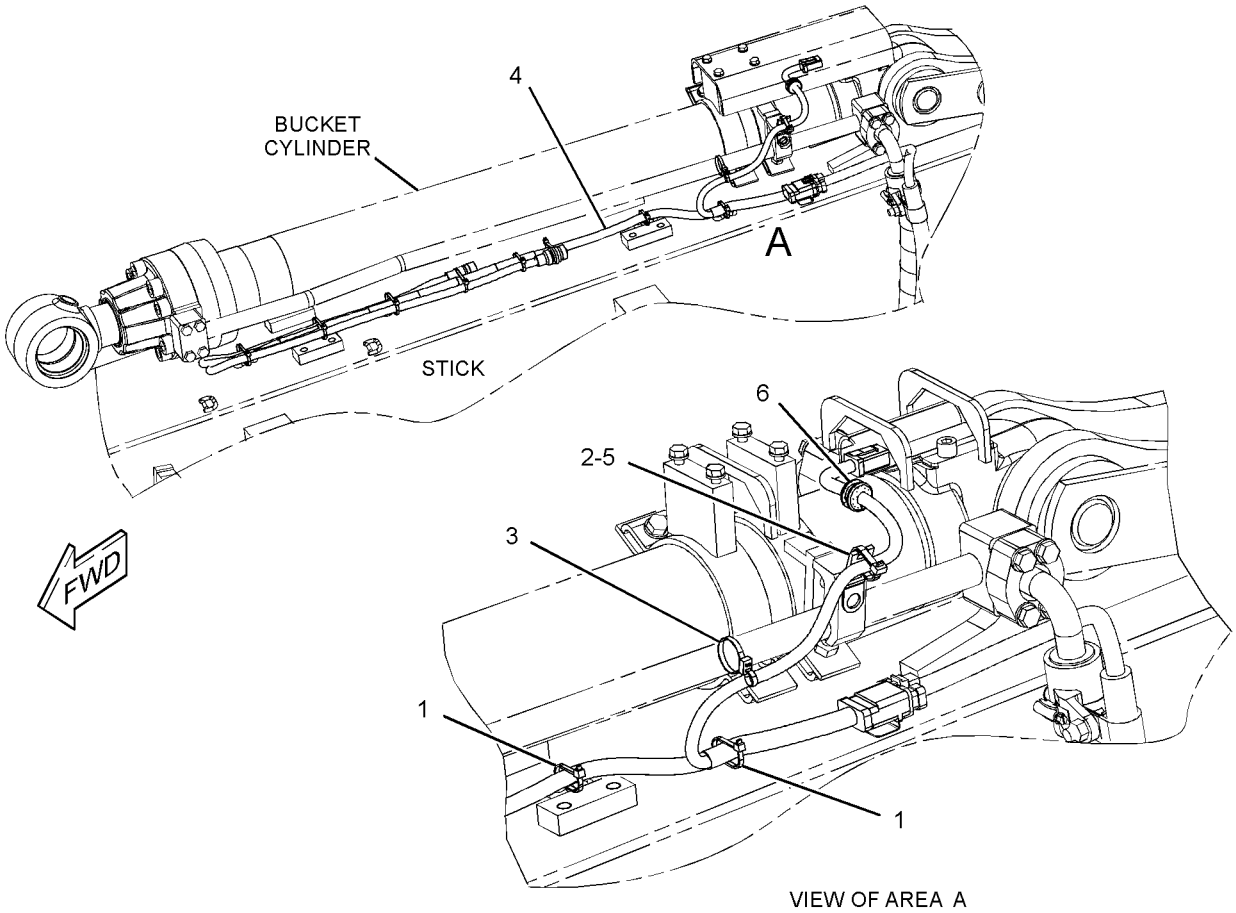

GRAPHIC #1 **<END>** g01419835

319-1364 WIRING GP-HEATER

S/N: CJN1-UP
AN ATTACHMENT

SMCS-7304 **i03146333**

NOTE	REF NO	GRAPHIC REF	PART NUMBER	QTY	PART NAME 1 2 3 4 5 6 (PRODUCT LEVEL)	SEE PAGE
	1	1	**3S-2093**	8	STRAP-CABLE	
	2	1	**7K-1181**	18	STRAP-CABLE	
	3	1	**116-0114**	1	SWITCH AS-MAGNETIC (24-VOLT) (AIR INLET HEATER RELAY)	
		1	**186-3735**	2	PIN-CONNECTOR (16-GA TO 18-GA)	
		1	**102-8802**	1	KIT-RECEPTACLE (2-PIN)	
					(INCLUDES RECEPTACLE AS & WEDGE)	
	4	1	**197-4330**	1	CONTROLLER-AIR (HEATER)	
	5	1	**319-1344**	1	BRACKET AS	
	6	1	**319-1346**	1	COVER AS	
	7	1	**319-1348**	1	HARNESS AS-CONTROL (ENGINE START, PUMP CONTROL)	
	8	1	**319-1349**	1	CABLE AS	
D		1	**6V-2369**		WIRE (4-GA, BLACK) (2.9-M)	
		1	**8T-8799**	1	BOOT	
		1	**9G-4343**	1	TERMINAL (4-GA)	
		1	**5P-3454**	1	TERMINAL (4-GA)	
	9	1	**319-1354**	1	CABLE AS	
D		1	**6V-2369**		WIRE (4-GA, BLACK) (0.2-M)	
		1	**9G-4343**	2	TERMINAL (4-GA)	
	10	1	**319-1355**	1	CABLE AS	
D		1	**6V-2369**		WIRE (4-GA, BLACK) (0.2-M)	
		1	**9G-4343**	2	TERMINAL (4-GA)	
M	11	1	**5C-2890**	2	NUT (M6X1-THD)	
M	12	1	**5C-9553**	1	BOLT (M6X1X16-MM)	
M	13	1	**7X-2619**	2	BOLT (M6X1X10-MM)	
M	14	1	**8T-4171**	2	BOLT (M6X1X12-MM)	
M	15	1	**8T-4970**	2	BOLT (M6X1X14-MM)	
	16	1	**9X-8256**	7	WASHER (6.6X12X2-MM THK)	

D-ORDER BY THE METER
M-METRIC PART

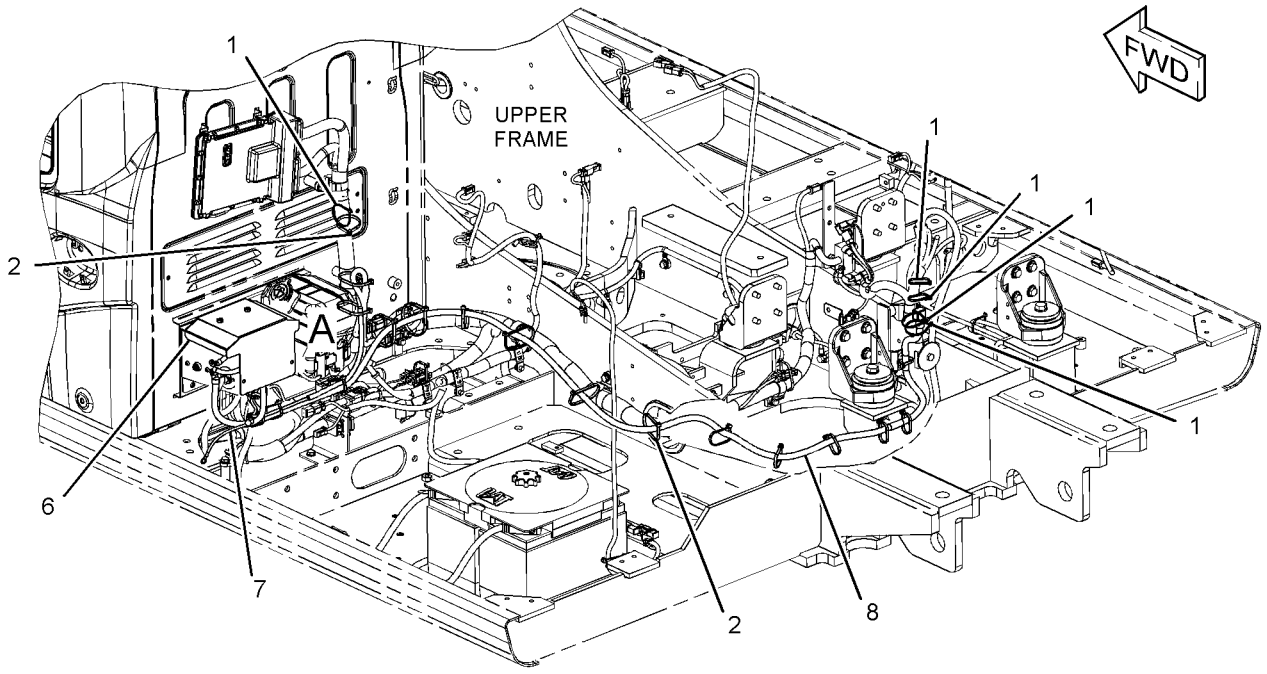

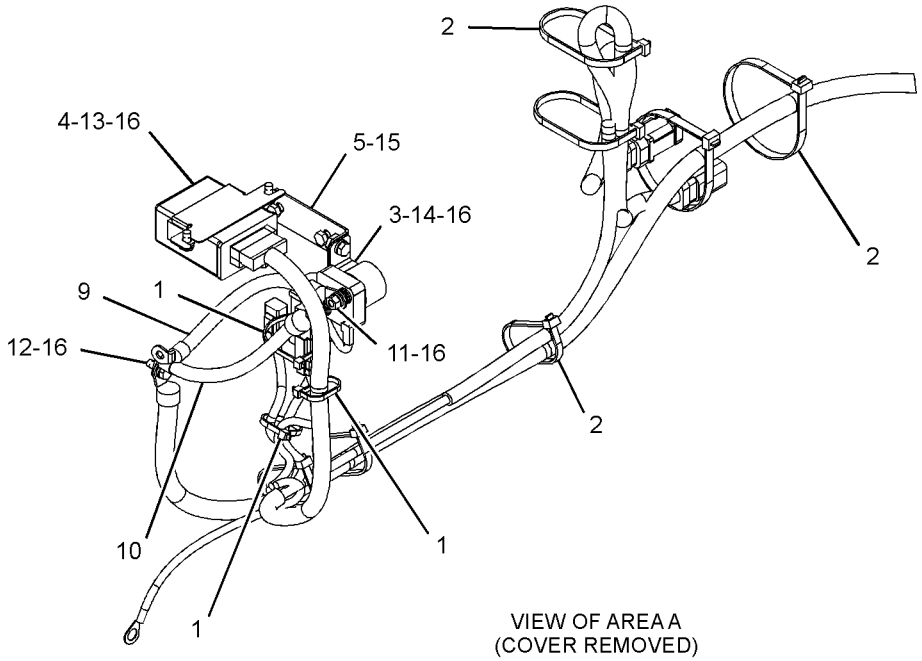

GRAPHIC #1 **<END>** g01621527

319-1398 WIRING GP-HEATER

S/N: CJN308-UP

PART OF 260-6960 CHASSIS AR

SMCS-7304 **i02988385**

NOTE	REF NO	GRAPHIC REF	PART NUMBER	QTY	PART NAME 1 2 3 4 5 6 (PRODUCT LEVEL)	SEE PAGE
	1	1	**3S-2093**	4	STRAP-CABLE	
	2	1	**7K-1181**	20	STRAP-CABLE	
	3	1	**319-1348**	1	HARNESS AS-CONTROL (ENGINE START, PUMP CONTROL)	
	4	1	**319-1349**	1	CABLE AS	
D		1	**6V-2369**		WIRE (4-GA, BLACK) (2.9-M)	
		1	**8T-8799**	1	BOOT	
		1	**9G-4343**	1	TERMINAL (4-GA)	
		1	**5P-3454**	1	TERMINAL (4-GA)	

D-ORDER BY THE METER

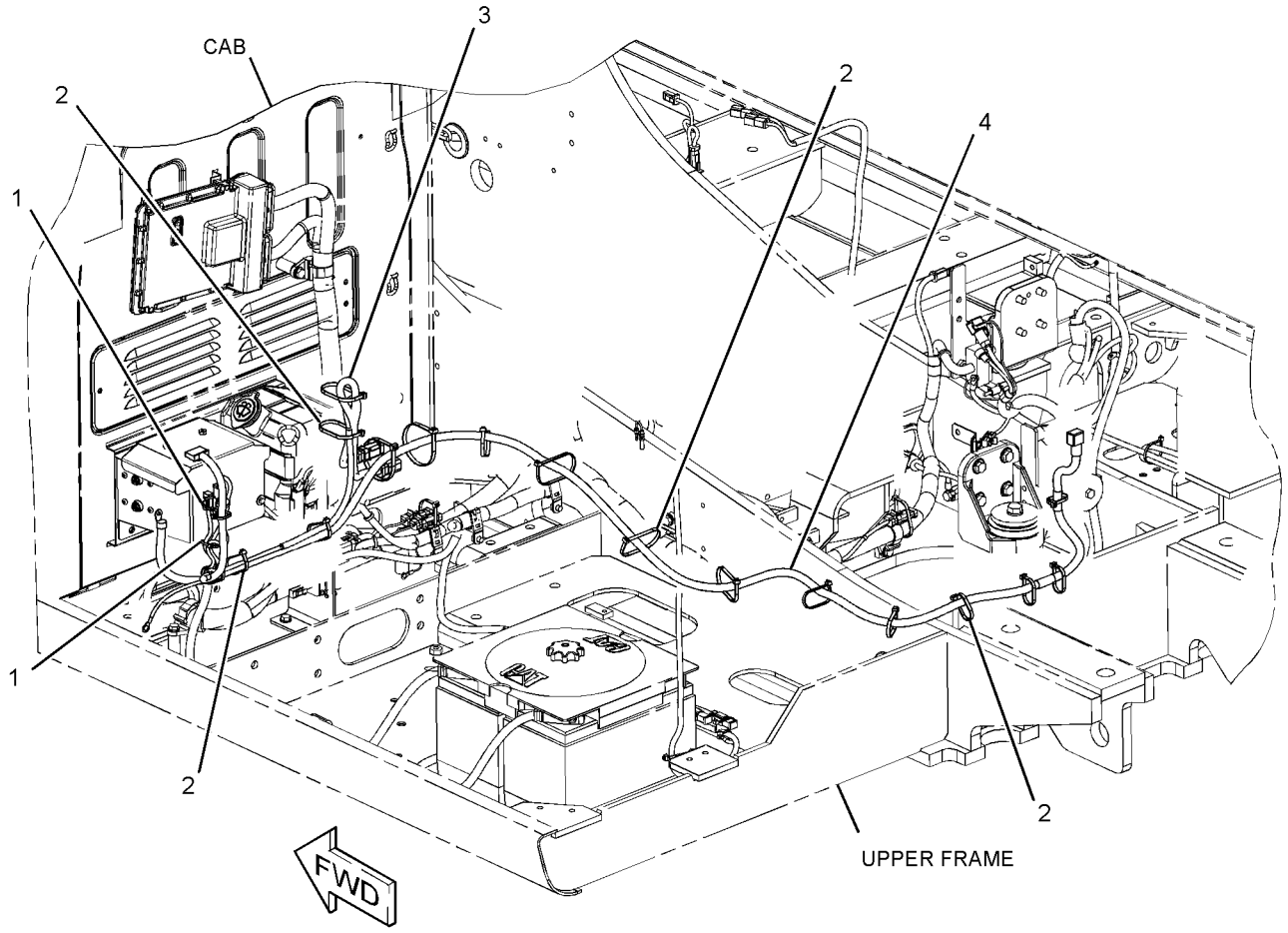

GRAPHIC #1 **<END>** g01560214

259-5271 WIRING GP-HYDRAULIC CONTROL–RETURN FILTER

S/N: CJN1-UP
PART OF 260-7018 FILTER AR-HYDRAULIC
AN ATTACHMENT

SMCS-1408 **i02719501**

NOTE	REF NO	GRAPHIC REF	PART NUMBER	QTY	PART NAME 1 2 3 4 5 6 (PRODUCT LEVEL)	SEE PAGE
	1	1	**3S-2093**	4	STRAP-CABLE	
	2	1	**7K-1181**	6	STRAP-CABLE	
	3	1	**267-7706**	1	HARNESS AS-PUMP	
		1	**155-2270**	1	KIT-CONNECTING PLUG (2-PIN)	
					(INCLUDES PLUG AS, WEDGE & INTERFACE SEAL)	
		1	**243-4505**	1	RECEPTACLE AS-CONNECTOR (2-PIN)	

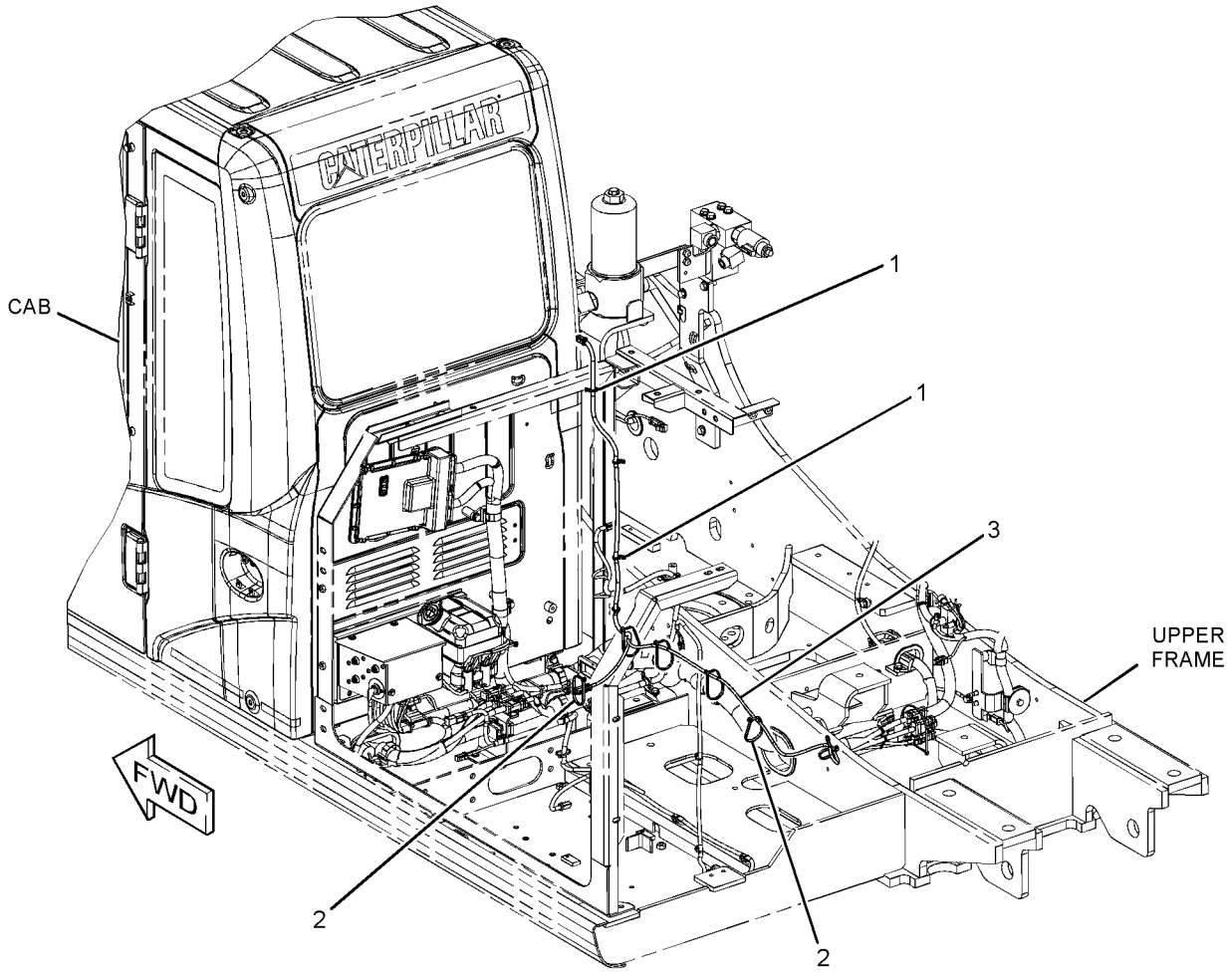

GRAPHIC #1 **<END>** g01367398

259-5171 WIRING GP-MEDIUM PRESSURE

S/N: CJN1-UP

PART OF 259-7565, 270-5954 CONTROL AR-AUXILIARY AN ATTACHMENT

SMCS-1408 **i02749973**

NOTE	REF NO	GRAPHIC REF	PART NUMBER	QTY	PART NAME 1 2 3 4 5 6 (PRODUCT LEVEL)	SEE PAGE
	1	1	**3S-2093**	5	STRAP-CABLE	
	2	1	**7K-1181**	8	STRAP-CABLE	
	3	1	**116-0118**	2	CLIP	
	4	1	**267-7705**	1	HARNESS AS-VALVE	
		1	**3S-2093**	2	STRAP-CABLE	
E		1	**125-7874**		TUBE-HEAT SHRINK (5.72-MM DIA) (5-CM)	
		1	**155-2270**	2	KIT-CONNECTING PLUG (2-PIN)	
					(EACH INCLUDES PLUG AS, WEDGE & INTERFACE SEAL)	
		1	**243-4506**	1	RECEPTACLE AS-CONNECTOR (3-PIN)	
	5	1	**132-5789**	2	CLIP	
	6	1	**6G-2263**	2	SPACER (10.5X19X28.5-MM THK)	
M	7	1	**7X-2621**	1	BOLT (M10X1.5X12-MM)	
	8	1	**8T-4121**	3	WASHER-HARD (11X21X2.5-MM THK)	
M	9	1	**8T-4182**	1	BOLT (M10X1.5X45-MM)	
M	10	1	**8T-4186**	1	BOLT (M10X1.5X40-MM)	

E-ORDER BY THE CENTIMETER
M-METRIC PART

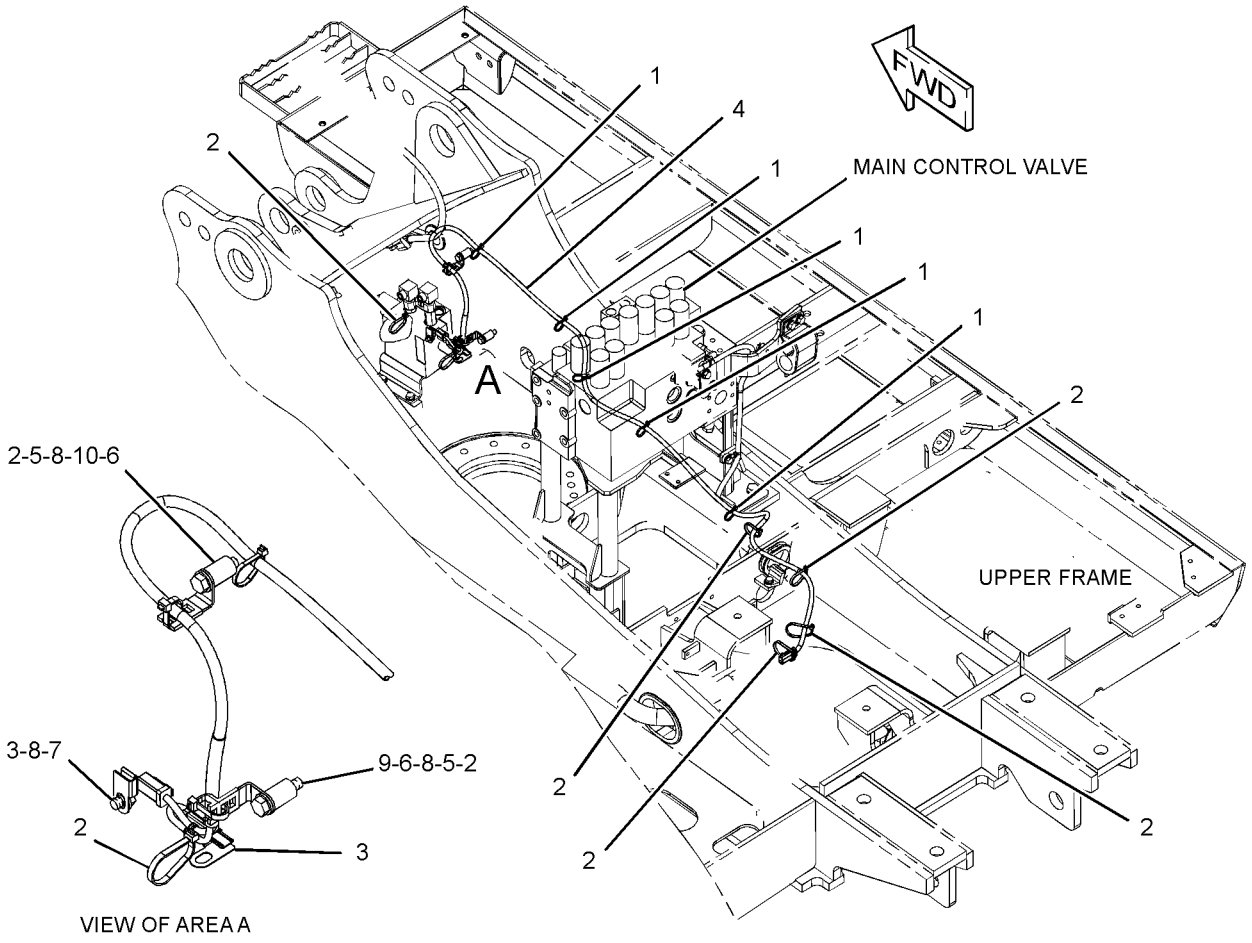

GRAPHIC #1 **<END>** g01379761

259-5172 WIRING GP-MEDIUM PRESSURE

S/N: CJN1-UP
PART OF 259-7569 CONTROL AR-AUXILIARY
AN ATTACHMENT

SMCS-1408 **i02750060**

NOTE	REF NO	GRAPHIC REF	PART NUMBER	QTY	PART NAME 1 2 3 4 5 6 (PRODUCT LEVEL)	SEE PAGE
	1	1	**3S-2093**	1	STRAP-CABLE	
	2	1	**7I-2673**	1	STRAP-CABLE	
	3	1	**7K-1181**	6	STRAP-CABLE	
	4	1	**267-7703**	1	HARNESS AS-VALVE	
E		1	**125-7874**		TUBE-HEAT SHRINK (5.72-MM DIA) (5-CM)	
		1	**155-2270**	2	KIT-CONNECTING PLUG (2-PIN)	
					(EACH INCLUDES PLUG AS, WEDGE & INTERFACE SEAL)	
		1	**243-4506**	1	RECEPTACLE AS-CONNECTOR (3-PIN)	
	5	1	**4P-7581**	2	CLIP	
M	6	1	**7X-2621**	2	BOLT (M10X1.5X12-MM)	
	7	1	**8T-4121**	2	WASHER-HARD (11X21X2.5-MM THK)	

E-ORDER BY THE CENTIMETER
M-METRIC PART

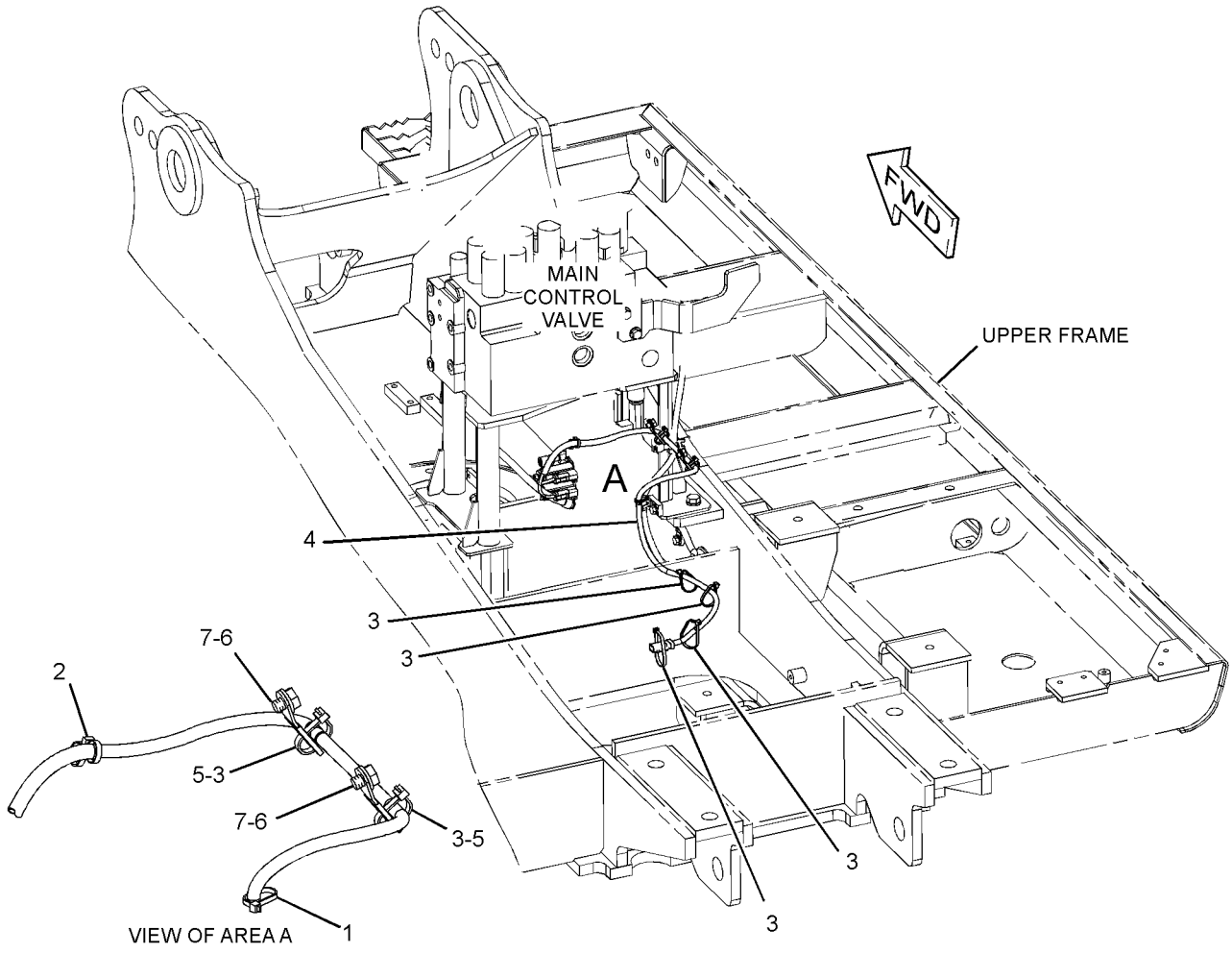

GRAPHIC #1 **<END>** g01379865

291-7908 WIRING GP-OVERLOAD WARNING

S/N: CJN1-UP
PART OF 259-7578 VALVE AR-CHECK & RELIEF
AN ATTACHMENT

SMCS-1408 **i03093894**

NOTE	REF NO	GRAPHIC REF	PART NUMBER	QTY	PART NAME 1 2 3 4 5 6 (PRODUCT LEVEL)	SEE PAGE
	1	1	**3S-2093**	7	STRAP-CABLE	
	2	1	**7K-1181**	7	STRAP-CABLE	
	3	1	**111-4836**	1	CLIP	
	4	1	**111-4837**	2	CLIP	
	5	1	**204-1611**	6	STRAP-CABLE	
	6	1	**238-2215**	1	SWITCH AS-ROCKER (OVERLOAD WARNING)	
		1	**167-3542**	1	CONNECTOR-RECEPTACLE	
		1	**167-3543**	4	TERMINAL (MALE)	
	7	1	**283-3060**	1	BRACKET AS	
	8	1	**291-7909**	1	HARNESS AS-VALVE	
	9	1	**8T-4121**	5	WASHER-HARD (11X21X2.5-MM THK)	
M	10	1	**8T-4137**	3	BOLT (M10X1.5X20-MM)	
	11	1	**132-5789**	2	CLIP	
M	12	1	**8T-4191**	2	BOLT (M10X1.5X16-MM)	

M-METRIC PART

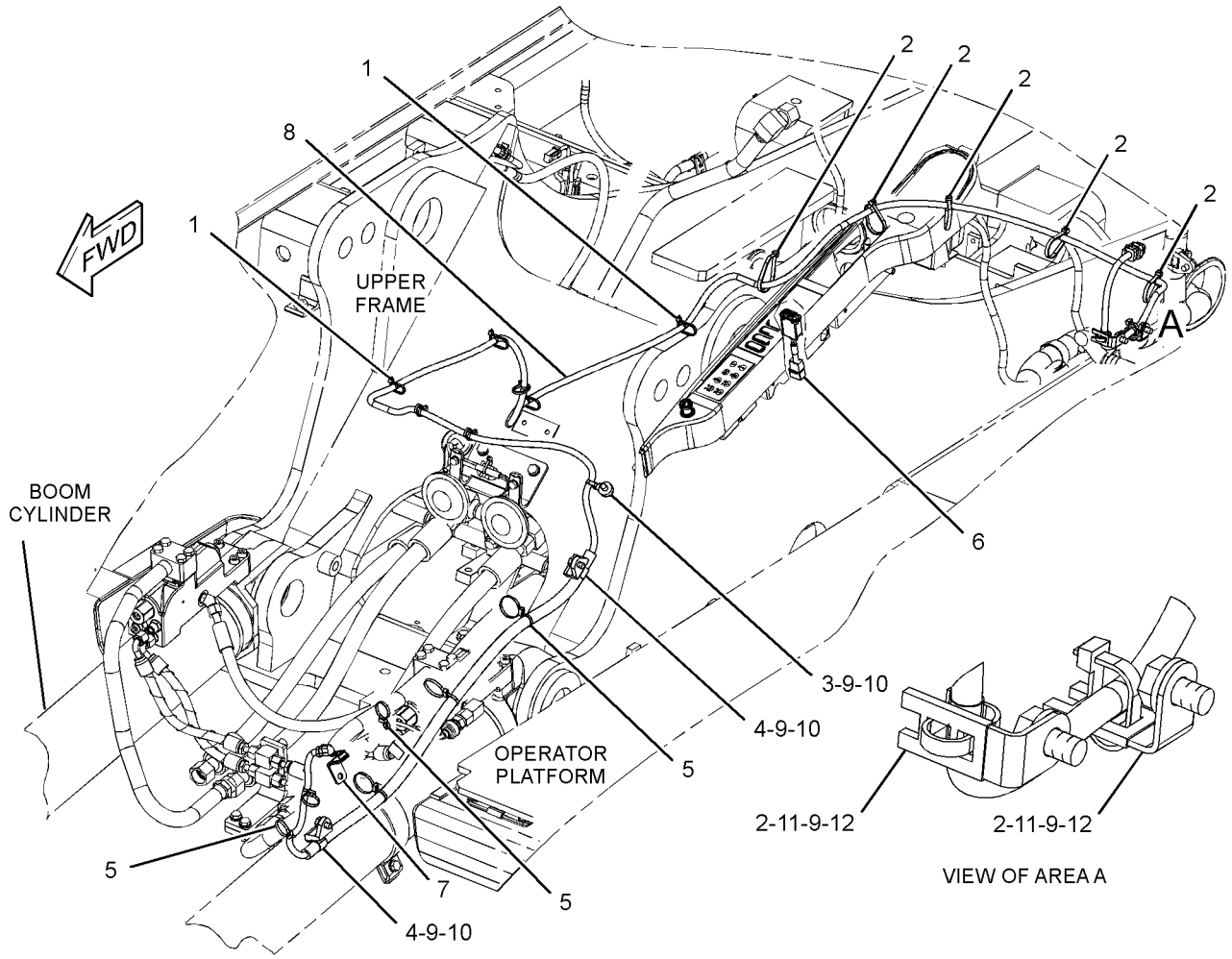

GRAPHIC #1 **<END>** g01614714

328-0092 WIRING GP-OVERLOAD WARNING

S/N: CJN1-UP
PART OF 323-7798 VALVE AR-CHECK & RELIEF
AN ATTACHMENT

SMCS-1408 **i03246443**

NOTE	REF NO	GRAPHIC REF	PART NUMBER	QTY	PART NAME 1 2 3 4 5 6 (PRODUCT LEVEL)	SEE PAGE
	1	1	**3S-2093**	7	STRAP-CABLE	
	2	1	**7K-1181**	7	STRAP-CABLE	
	3	1	**111-4836**	1	CLIP	
	4	1	**111-4837**	2	CLIP	
	5	1	**204-1611**	6	STRAP-CABLE	
	6	1	**324-5753**	1	BRACKET AS	
	7	1	**327-9936**	1	HARNESS AS (OVERLOAD WARNING)	
	8	1	**328-0028**	1	SWITCH AS-ROCKER (OVERLOAD WARNING)	
		1	**167-3542**	1	CONNECTOR-RECEPTACLE	
		1	**167-3543**	4	TERMINAL (MALE)	
	9	1	**132-5789**	2	CLIP	
	10	1	**8T-4121**	5	WASHER-HARD (11X21X2.5-MM THK)	
M	11	1	**8T-4137**	3	BOLT (M10X1.5X20-MM)	
M	12	1	**8T-4191**	2	BOLT (M10X1.5X16-MM)	

M-METRIC PART

328-0092 **WIRING GP-OVERLOAD WARNING** *(contd.)* **i03246443**

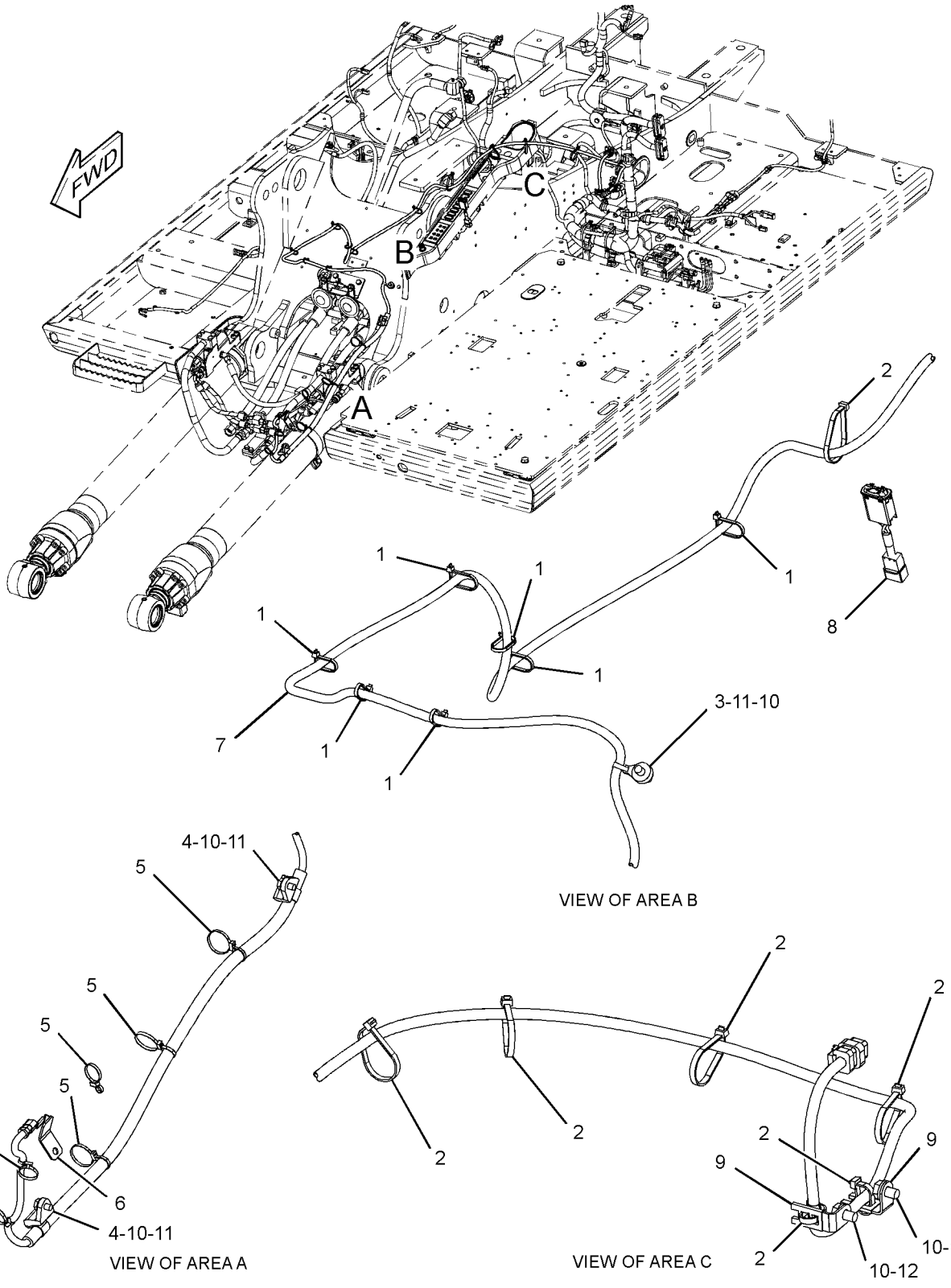

GRAPHIC #1 **<END>** g01623752

ELECTRICAL AND STARTING SYSTEM

259-5160 WIRING GP-PLATFORM

S/N: CJN1-UP

PART OF 259-7193 OPERATOR AR

SMCS-1408 **i02599637**

NOTE	REF NO	GRAPHIC REF	PART NUMBER	QTY	PART NAME 1 2 3 4 5 6 (PRODUCT LEVEL)	SEE PAGE
	1	2	**3E-5169**	1	GUARD-SWITCH	
	2	1	**3S-2093**	3	STRAP-CABLE	
	3	1	**7G-1060**	1	STRAP AS-GROUND	
	4	1,2	**7K-1181**	14	STRAP-CABLE	
	5	1	**111-4836**	4	CLIP	
	6	1	**111-4838**	2	CLIP	
	7	1	**111-4839**	2	STRAP	
	8	1	**116-0118**	12	CLIP	
	9	2	**234-1122**	1	COVER	
	10	1	**251-0299**	1	HARNESS AS-SWITCH (SECONDARY SHUTDOWN)	
		1	**243-4505**	1	RECEPTACLE AS-CONNECTOR (2-PIN)	
	11	1	**259-5297**	1	HARNESS AS-PLATFORM	
		1	**102-8802**	6	KIT-RECEPTACLE (2-PIN)	
		1	**102-8804**	1	KIT-RECEPTACLE (4-PIN)	
					(EACH RECEPTACLE KIT INCLUDES RECEPTACLE AS & WEDGE)	
		1	**3S-2093**	19	STRAP-CABLE	
E		1	**119-3662**		TUBE-HEAT SHRINK (10.85-MM DIA) (7-CM)	
E		1	**125-7874**		TUBE-HEAT SHRINK (5.72-MM DIA) (20-CM)	
E		1	**125-7875**		TUBE-HEAT SHRINK (7.44-MM DIA) (45-CM)	
		1	**153-2620**	1	PLUG AS-CONNECTOR (54-PIN, BLACK)	
		1	**163-6759**	1	SEAL	
		1	**155-2270**	10	KIT-CONNECTING PLUG (2-PIN)	
		1	**155-2271**	1	KIT-CONNECTING PLUG (4-PIN)	
					(EACH PLUG KIT INCLUDES PLUG AS, WEDGE & INTERFACE SEAL)	
		1	**197-4385**	3	DIODE	
		1	**230-4009**	3	PLUG AS-CONNECTOR (12-PIN)	
		1	**230-4011**	3	PLUG AS-CONNECTOR (2-PIN)	
		1	**230-5010**	3	PLUG AS-CONNECTOR (6-PIN)	
		1	**239-7352**	1	PLUG AS-CONNECTOR (6-PIN)	
		1	**243-4505**	1	RECEPTACLE AS-CONNECTOR (2-PIN)	
		1	**243-4507**	1	RECEPTACLE AS-CONNECTOR (4-PIN)	
		1	**243-4508**	4	RECEPTACLE AS-CONNECTOR (6-PIN)	
		1	**243-4509**	1	RECEPTACLE AS-CONNECTOR (8-PIN)	
		1	**243-4510**	2	RECEPTACLE AS-CONNECTOR (12-PIN)	
		1	**247-2693**	1	RECEPTACLE AS-CONNECTOR (6-PIN)	
	12	2	**275-6810**	1	RECEPTACLE AS	
		2	**134-3297**	1	SEAL	
		2	**163-6773**	1	PLUG-SEAL	
M	13	2	**095-0728**	2	SCREW-MACHINE (M4X0.7X12-MM)	
	14	2	**096-6166**	2	WASHER-HARD (4.5X9X1-MM THK)	
	15	2	**4D-1836**	1	SWITCH AS-TOGGLE (SECONDARY SHUTDOWN)	
M	16	1	**7X-2621**	6	BOLT (M10X1.5X12-MM)	
	17	1	**8T-4121**	13	WASHER-HARD (11X21X2.5-MM THK)	
M	18	1	**8T-4137**	7	BOLT (M10X1.5X20-MM)	

E-ORDER BY THE CENTIMETER
M-METRIC PART

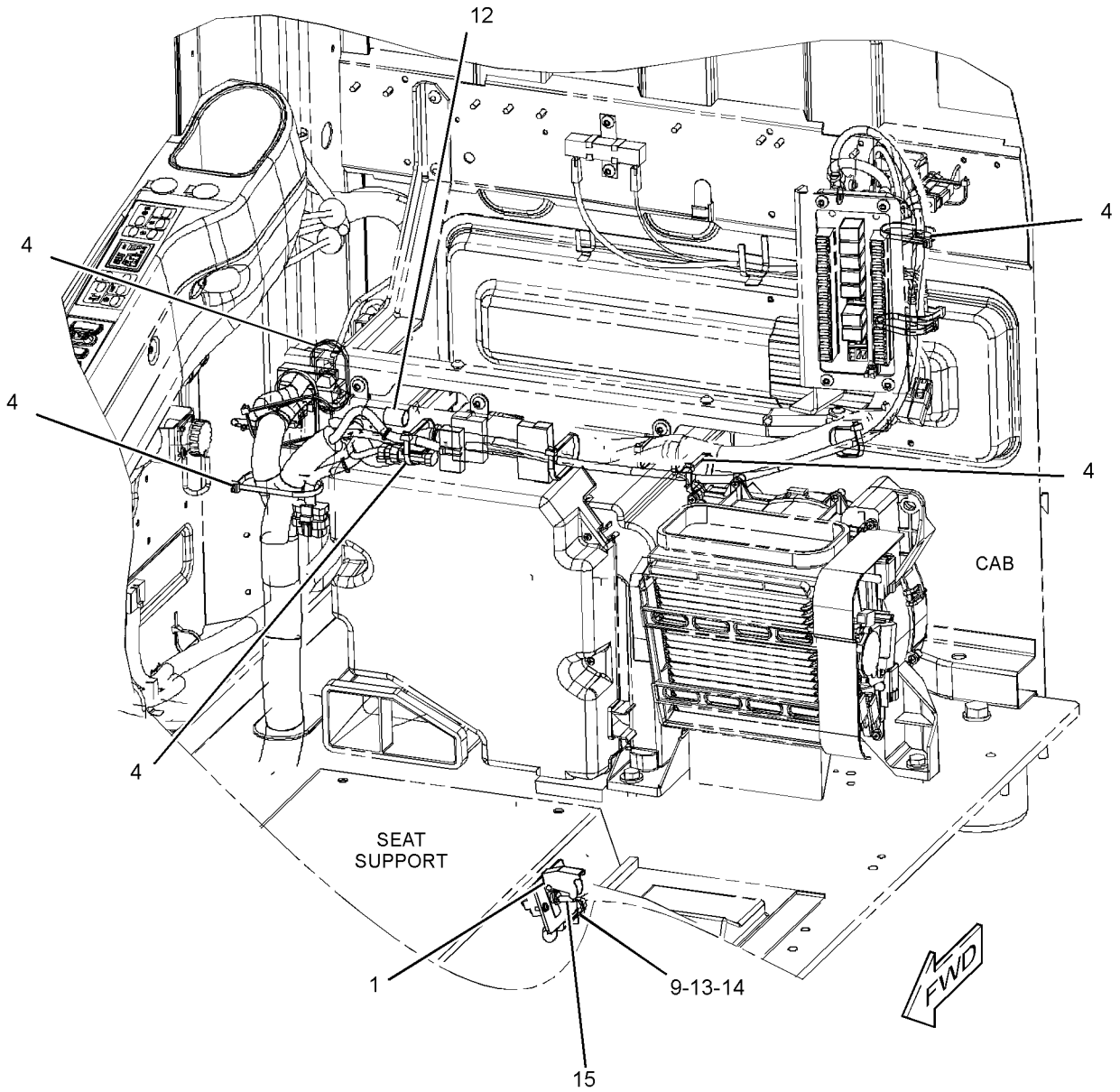

GRAPHIC #1 g01311055

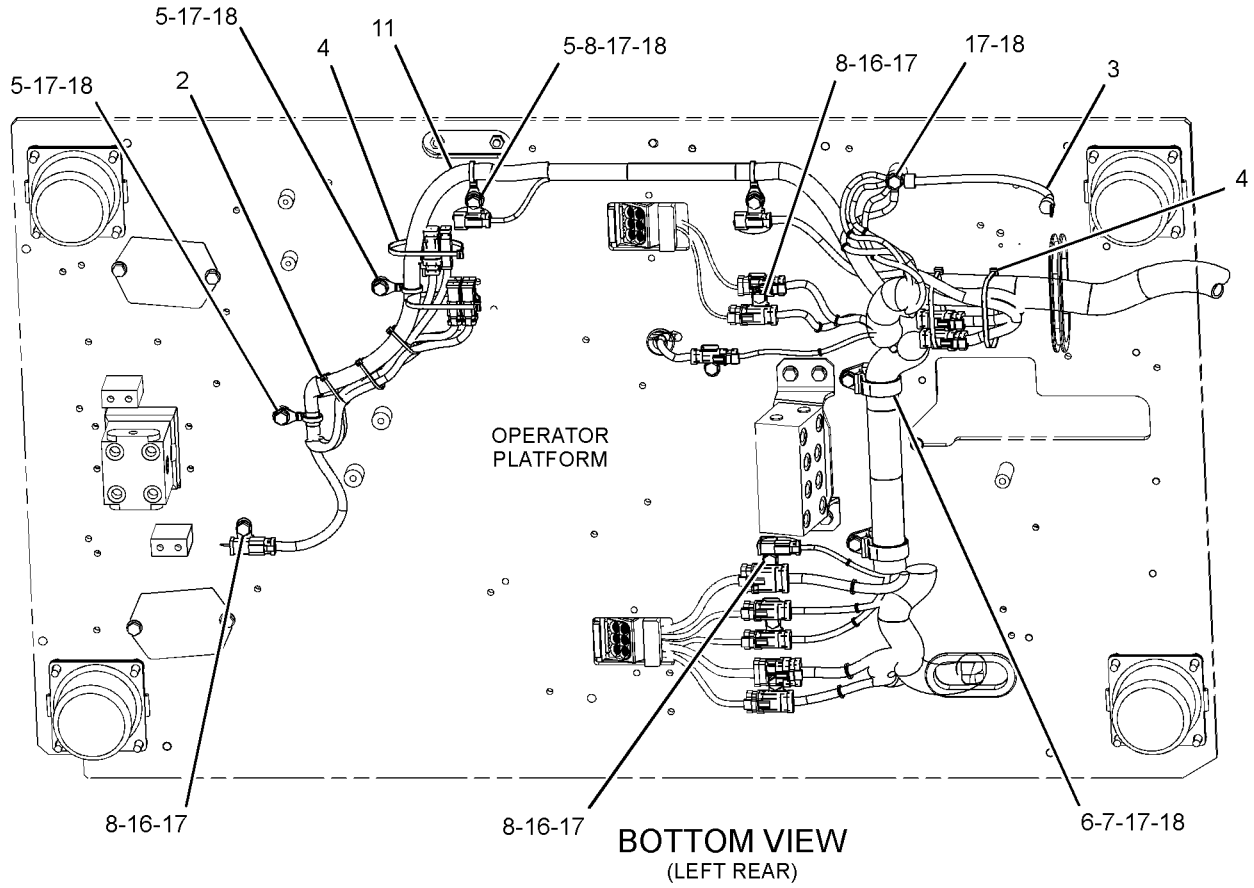

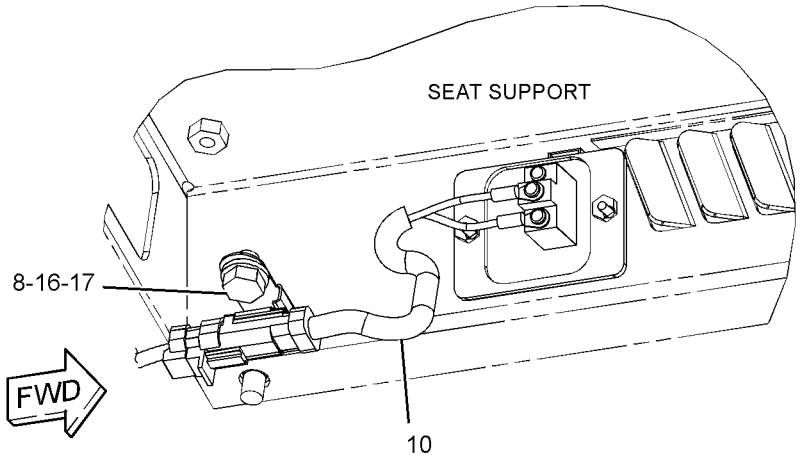

GRAPHIC #2 **<END>** g01309691

306-8398 WIRING GP-PLATFORM–ACCUGRADE READY

S/N: CJN1-UP

PART OF 301-2479, 301-2517, 330-8775 SPECIAL AR

AN ATTACHMENT

SMCS-1408 **i02840809**

NOTE	REF NO	GRAPHIC REF	PART NUMBER	QTY	PART NAME 1 2 3 4 5 6 (PRODUCT LEVEL)	SEE PAGE
	1	1	**3S-2093**	5	STRAP-CABLE	
	2	1	**7K-1181**	3	STRAP-CABLE	
	3	1	**204-1611**	1	STRAP-CABLE	
	4	1	**299-2702**	1	HARNESS AS-SOLENOID	

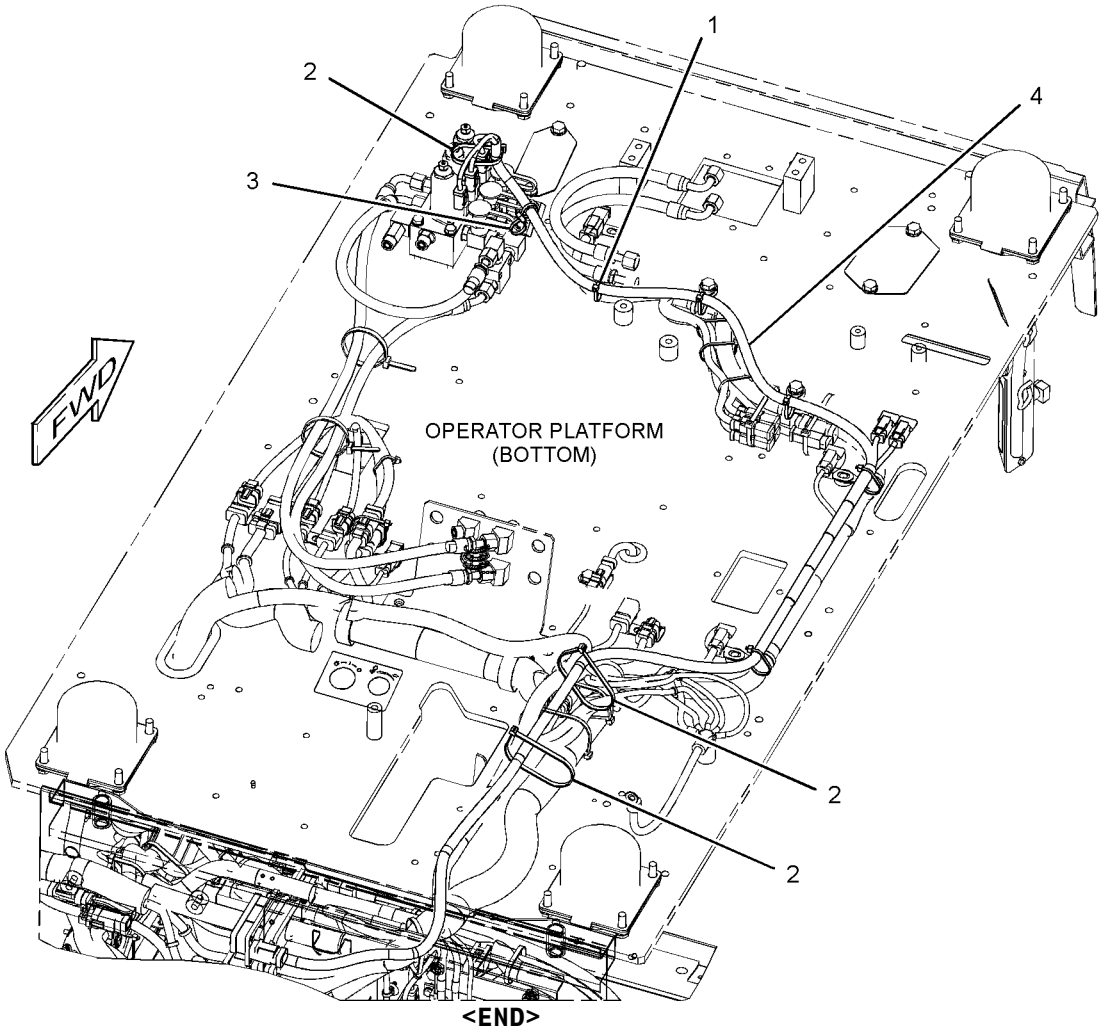

GRAPHIC #1 **<END>** g01418138

238-2485 WIRING GP-COUPLER

S/N: CJN1-UP
PART OF 262-3249 CONTROL AR-COUPLER
AN ATTACHMENT

SMCS-1408, 6129 **i02517794**

NOTE	REF NO	GRAPHIC REF	PART NUMBER	QTY	PART NAME 1 2 3 4 5 6 (PRODUCT LEVEL)	SEE PAGE
Y	1	1	*238-2478*	1	SWITCH GP-TOGGLE (QUICK COUPLER)	208
	2	1	**259-4884**	1	BRACKET AS	
	3	1	**259-7180**	1	COVER	
M	4	1	**9X-2042**	3	SCREW-TRUSS HEAD (M6X1X12-MM)	

M-METRIC PART
Y-SEPARATE ILLUSTRATION

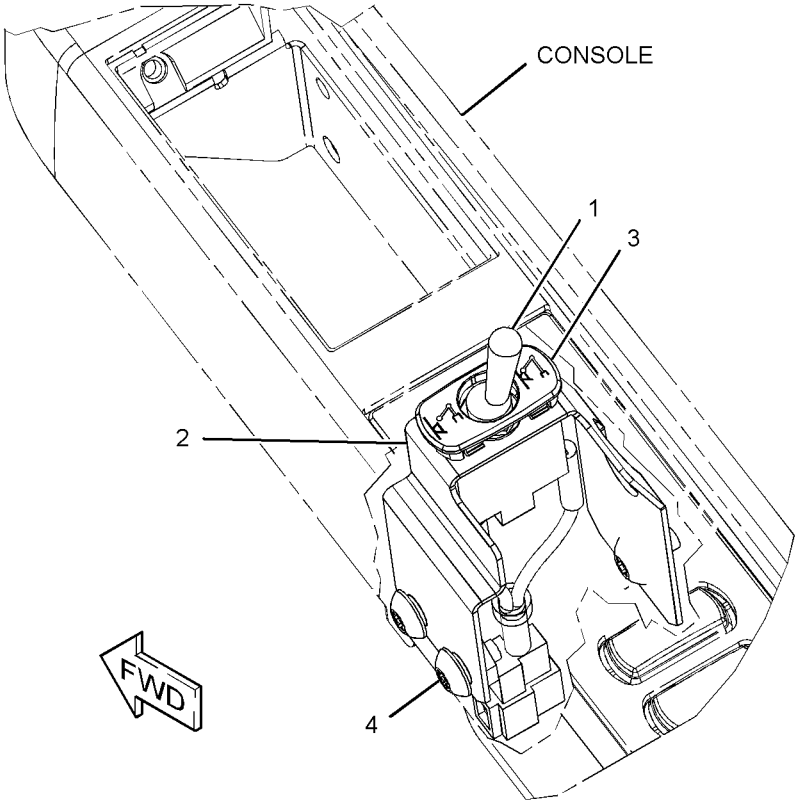

GRAPHIC #1 **<END>** g01259744

259-5167 WIRING GP-QUICK COUPLER

S/N: CJN1-UP
PART OF 262-3249 CONTROL AR-COUPLER
AN ATTACHMENT

SMCS-1408, 6129 **i02995326**

NOTE	REF NO	GRAPHIC REF	PART NUMBER	QTY	PART NAME 1 2 3 4 5 6 (PRODUCT LEVEL)	SEE PAGE
	1	1	**267-7697**	1	HARNESS AS-SOLENOID	
		1	**230-4011**	1	PLUG AS-CONNECTOR (2-PIN)	
		1	**264-7029**	1	SEAL-CONNECTOR	
		1	**243-4505**	1	RECEPTACLE AS-CONNECTOR (2-PIN)	
	2	1	**3S-2093**	8	STRAP-CABLE	
	3	1	**7K-1181**	9	STRAP-CABLE	

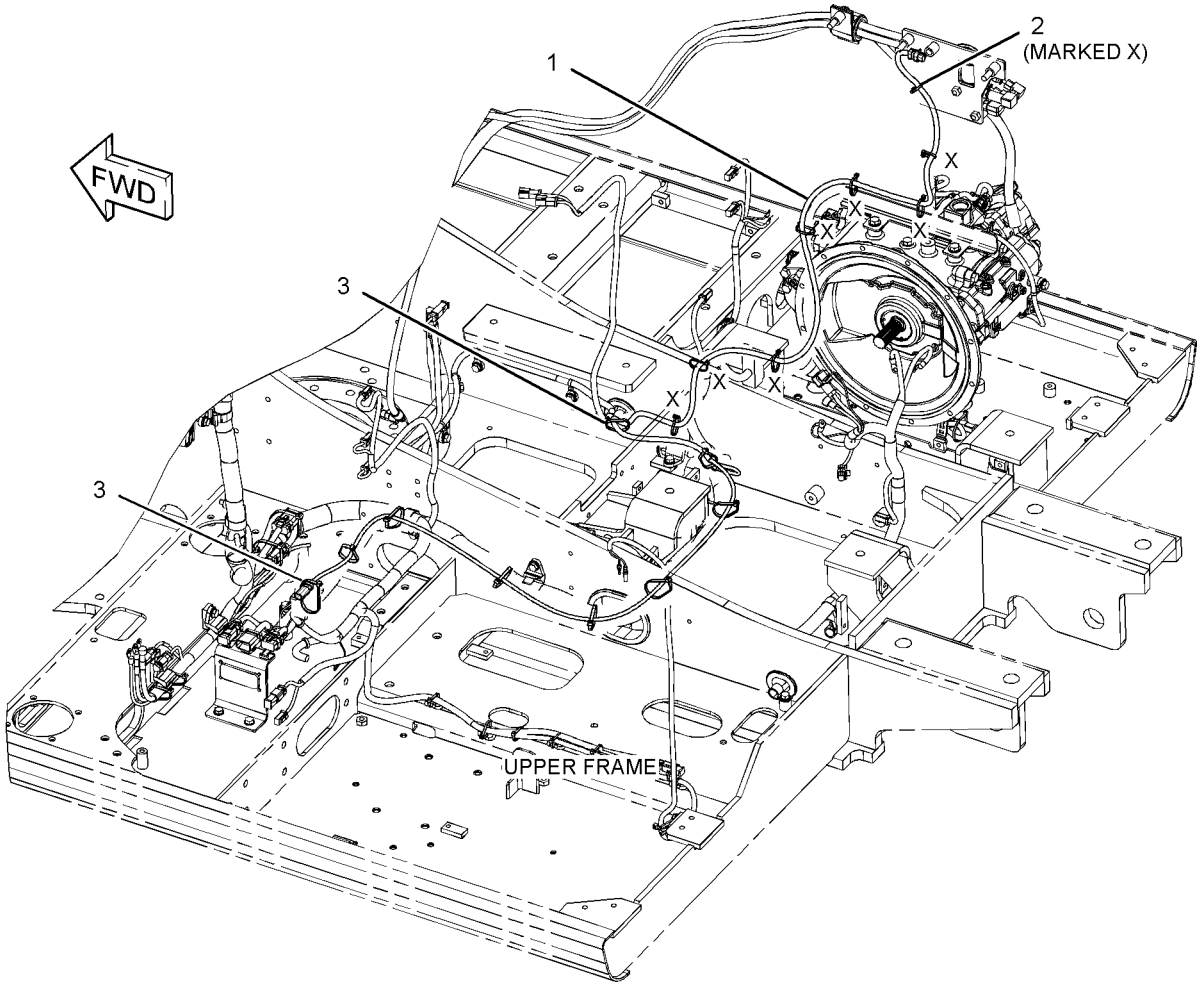

GRAPHIC #1 **<END>** g01560882

275-6877 WIRING GP-QUICK COUPLER

S/N: CJN1-UP
PART OF 268-7253 CONTROL AR-COUPLER
AN ATTACHMENT

SMCS-1408, 6129 **i02790503**

NOTE	REF NO	GRAPHIC REF	PART NUMBER	QTY	PART NAME 1 2 3 4 5 6 (PRODUCT LEVEL)	SEE PAGE
	1	1	**3S-2093**	11	STRAP-CABLE	
	2	1	**7I-2673**	3	STRAP-CABLE	
	3	1	**7K-1181**	14	STRAP-CABLE	
	4	1	**116-0118**	1	CLIP	
	5	1	**299-2932**	1	HARNESS AS-SOLENOID	
		1	**243-4507**	1	RECEPTACLE AS-CONNECTOR (4-PIN)	
		1	**102-8802**	1	KIT-RECEPTACLE (2-PIN)	
					(INCLUDES RECEPTACLE AS & WEDGE)	
		1	**155-2270**	3	KIT-CONNECTING PLUG (2-PIN)	
					(EACH INCLUDES PLUG AS, WEDGE & INTERFACE SEAL)	
	6	1	**4P-7428**	1	CLIP	
	7	1	**4P-7581**	2	CLIP	
M	8	1	**7X-2621**	2	BOLT (M10X1.5X12-MM)	
	9	1	**8T-4121**	2	WASHER-HARD (11X21X2.5-MM THK)	

M-METRIC PART

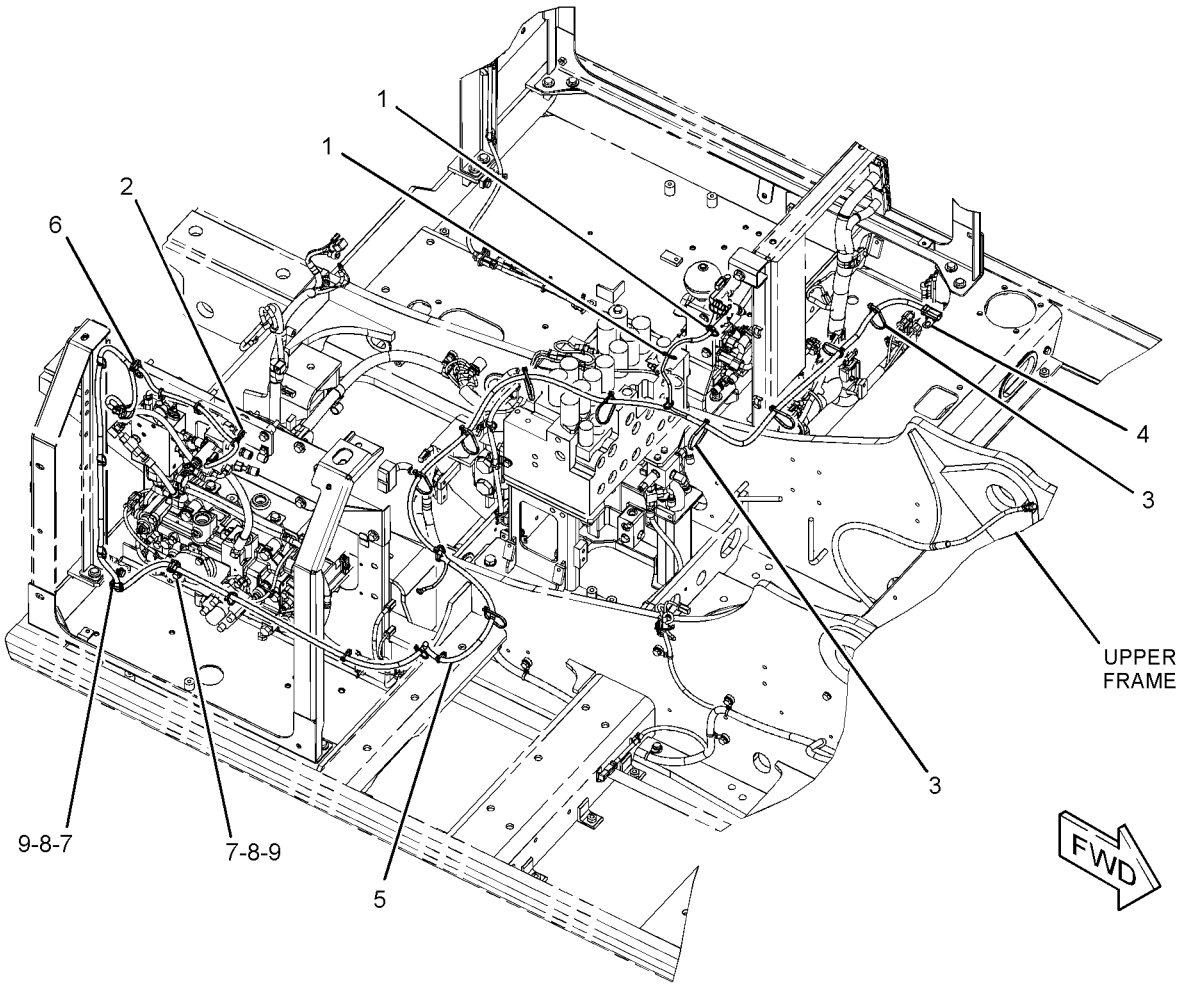

GRAPHIC #1 **<END>** g01390283

165-5777 FINAL DRIVE GP

S/N: CJN1-UP

PART OF 267-6738 POWER TRAIN AR

SMCS-4050 **i02917916**

NOTE	REF NO	GRAPHIC REF	PART NUMBER	QTY	PART NAME 1 2 3 4 5 6 (PRODUCT LEVEL)	SEE PAGE
Y	1	1	*185-6952*	1	MOTOR & MTG GP-TRAVEL	638
Y	2	1	**210-3529**	1	FINAL DRIVE GP	270

Y-SEPARATE ILLUSTRATION

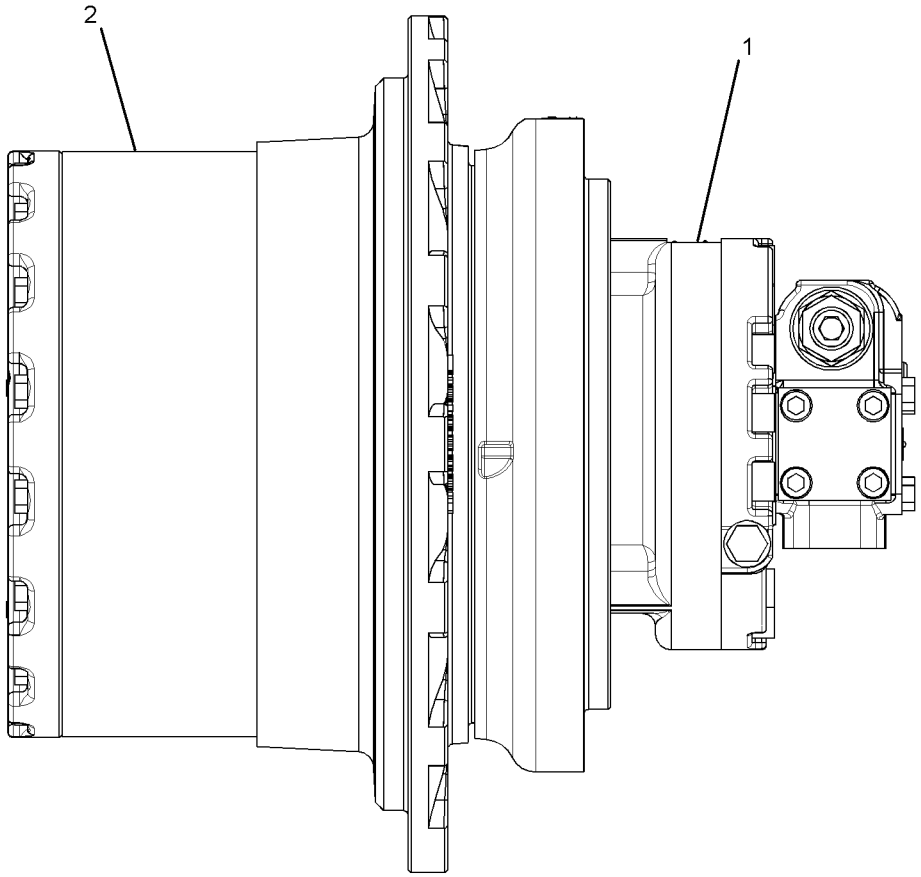

GRAPHIC #1 **<END>** g01452683

197-7178 FINAL DRIVE GP—WITH MOTOR

S/N: CJN1-UP
PART OF 199-4505 DRIVE GP-FINAL
AN ATTACHMENT

SMCS-4050 **i01879852**

NOTE	REF NO	GRAPHIC REF	PART NUMBER	QTY	PART NAME 1 2 3 4 5 6 (PRODUCT LEVEL)	SEE PAGE
Y	1	1	**210-3529**	1	FINAL DRIVE GP	270
Y	2	1	*197-7179*	1	MOTOR & MTG GP-TRAVEL	639

Y-SEPARATE ILLUSTRATION

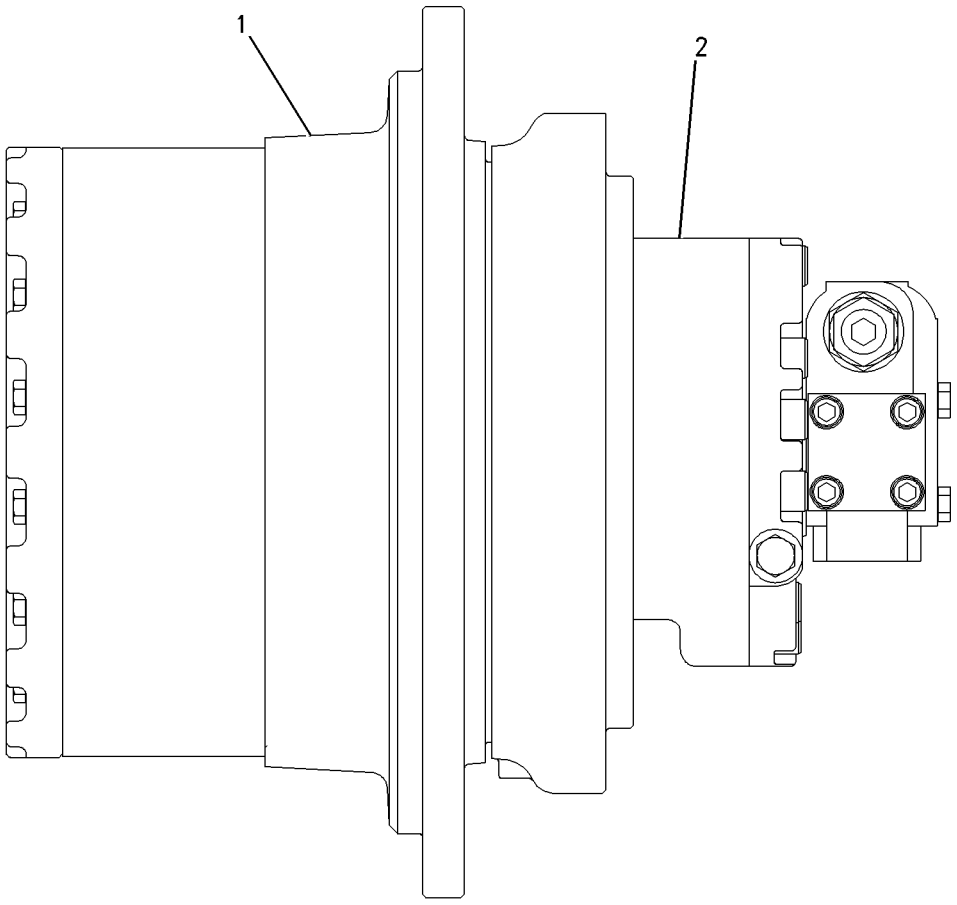

RIGHT SIDE VIEW

GRAPHIC #1 **<END>** g00932607

199-4505 FINAL DRIVE GP—WITH MOTOR

S/N: CJN1-UP

PART OF 283-8896 DRIVE GP-FINAL

AN ATTACHMENT

SMCS-4050 **i02736229**

NOTE	PART NUMBER	QTY	PART NAME 1 2 3 4 5 6 (PRODUCT LEVEL)	SEE PAGE
Y	*197-7178*	2	FINAL DRIVE GP	268

Y-SEPARATE ILLUSTRATION

<END>

POWER TRAIN

210-3529 DRIVE GP-FINAL

S/N: CJN1-UP

PART OF 165-5777, 197-7178 DRIVE GP-FINAL

ALSO AN ATTACHMENT

SMCS-4050 **i02194733**

NOTE	REF NO	GRAPHIC REF	PART NUMBER	QTY	PART NAME 1 2 3 4 5 6 (PRODUCT LEVEL)	SEE PAGE
	1	1	**165-5785**	1	SPACER	
B	2	1	**096-1773**	1	SHIM (0.15-MM THK)	
B		1	**096-1774**	1	SHIM (0.3-MM THK)	
B		1	**096-1775**	1	SHIM (0.4-MM THK)	
B		1	**096-1776**	1	SHIM (0.5-MM THK)	
B		1	**096-1777**	1	SHIM (0.6-MM THK)	
B		1	**096-1778**	1	SHIM (0.7-MM THK)	
B		1	**096-1779**	1	SHIM (0.8-MM THK)	
B		1	**096-1780**	1	SHIM (1-MM THK)	
B		1	**096-1781**	1	SHIM (1.6-MM THK)	
	11	1	**227-6034**	16	BOLT-FLANGE HEAD (M16X2X60-MM)	
	12	1	**165-5786**	3	SHAFT	
	13	1	**094-1542**	6	BEARING-ROLLER	
	14	1	**165-5787**	3	GEAR-PLANETARY	
M	15	1	**094-1528**	6	WASHER (53X84X1-MM THK)	
	16	1	**095-0891**	6	PIN-SPRING	
	17	1	**165-5788**	3	GEAR-PLANETARY	
	18	1	**094-0616**	3	BEARING AS-ROLLER	
	19	1	**3E-2338**	2	PLUG-PIPE	
	20	1	**7M-8485**	2	SEAL-O-RING	
	21	1	**165-5790**	1	COVER	
	22	1	**7Y-0225**	3	SHAFT-PLANETARY	
	23	1	**094-0611**	6	WASHER (47.3X76X1-MM THK)	
	24	1	**094-0580**	1	PLATE (10-MM THK)	
	25	1	**165-5792**	1	GEAR-SUN	
	26	1	**165-5793**	1	GEAR-SUN	
	27	1	**165-5794**	1	SPACER	
	28	1	**165-5795**	1	CARRIER	
M	29	1	**8T-7929**	16	BOLT (M12X1.75X180-MM)	
	30	1	**8T-4223**	16	WASHER-HARD (13.5X25.5X3-MM THK)	
	31	1	**095-1299**	3	DOWEL	
	32	1	**165-3892**	1	GEAR-RING	
	33	1	**165-5796**	1	CARRIER	
	34	1	**165-5797**	1	GEAR	
	35	1	**165-5800**	1	WASHER	
	36	1	**210-3530**	1	HOUSING	
	37	1	**114-1539**	4	PIN-DOWEL	
	38	1	**168-8451**	2	BALL BEARING	
	39	1	**210-3531**	1	HOUSING-MOTOR	
	40	1	**114-1497**	1	SEAL GP-DUO-CONE	
B	41	1	**1U-8846**		SEALANT-GASKET	

B-USE AS REQUIRED
M-METRIC PART

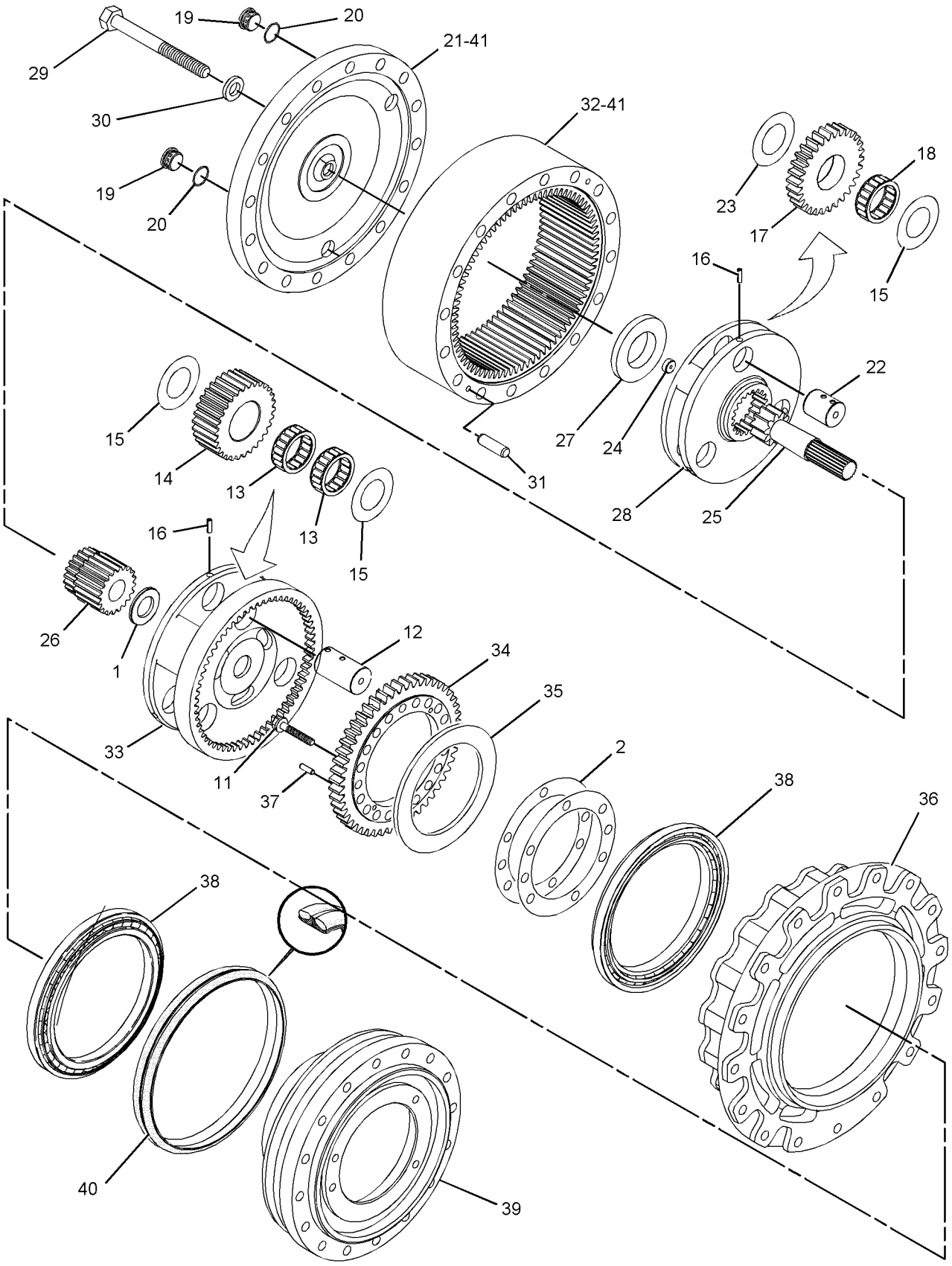

GRAPHIC #1 **<END>** g01115670

283-8896 DRIVE GP-FINAL—WITH MOTOR, BIODEGRADABLE OIL

S/N: CJN1-UP
AN ATTACHMENT

SMCS-4050 **i02598655**

NOTE	PART NUMBER	QTY	PART NAME 1 2 3 4 5 6 (PRODUCT LEVEL)	SEE PAGE
Y	*199-4505*	1	DRIVE GP-FINAL	269
	283-8897	1	PLATE & FILM GP	
	169-3530	1	FILM-IDENTIFICATION (BIODEGRADABLE HYDRAULIC OIL)	

Y-SEPARATE ILLUSTRATION

<END>

267-6738 POWER TRAIN AR

S/N: CJN1-UP
PART OF 260-6952 GENERAL AR

SMCS-3000, 4000 **i02599518**

NOTE	PART NUMBER	QTY	PART NAME 1 2 3 4 5 6 (PRODUCT LEVEL)	SEE PAGE
Y	*199-4615*	1	DRIVE GP-SWING	432
Y	*227-6229*	1	FASTENER GP-SWING & FINAL DR	436
Y	*165-5777*	2	FINAL DRIVE GP	267
Y	*145-3042*	2	SPROCKET GP	273

Y-SEPARATE ILLUSTRATION

<END>

145-3042 SPROCKET GP

S/N: CJN1-UP
NON-SEGMENTED
PART OF 267-6738 POWER TRAIN AR

SMCS-4164 **i01831999**

NOTE	REF NO	GRAPHIC REF	PART NUMBER	QTY	PART NAME 1 2 3 4 5 6 (PRODUCT LEVEL)	SEE PAGE
	1	1	**8E-9805**	1	SPROCKET-TRACK	
M	2	1	**7X-2562**	16	BOLT (M20X2.5X45MM)	

M-METRIC PART

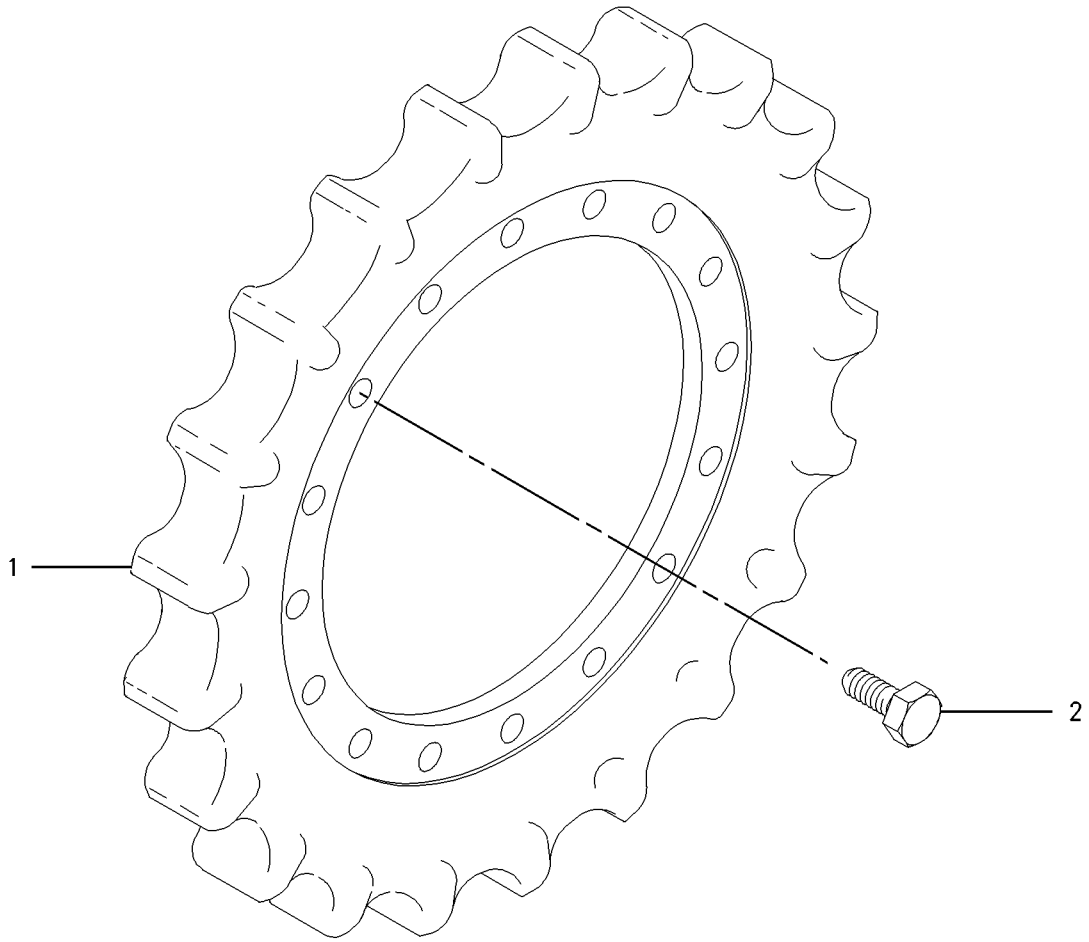

GRAPHIC #1 **<END>** g00935714

FRAME AND BODY

244-8039 BOX & MOUNTING GP

S/N: CJN1-UP

PART OF 260-6960 CHASSIS AR

SMCS-7268 **i02599496**

NOTE	REF NO	GRAPHIC REF	PART NUMBER	QTY	PART NAME 1 2 3 4 5 6 (PRODUCT LEVEL)	SEE PAGE
Y	1	1	*244-8040*	1	BOX GP-STORAGE	275
M	2	1	**135-8577**	4	BOLT AS (M12X1.75X35-MM)	

M-METRIC PART
Y-SEPARATE ILLUSTRATION

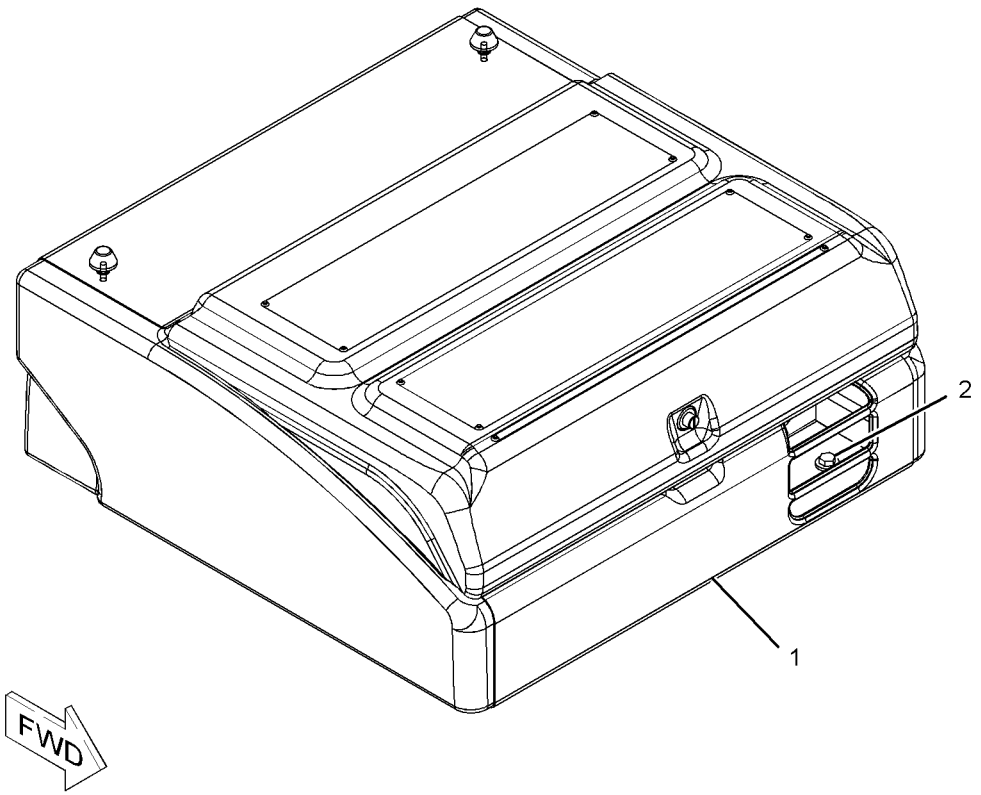

GRAPHIC #1 **<END>** g01150412

244-8040 BOX GP-STORAGE

S/N: CJN1-UP

PART OF 244-8039 BOX & MOUNTING GP

SMCS-7268 **i02855131**

NOTE	REF NO	GRAPHIC REF	PART NUMBER	QTY	PART NAME 1 2 3 4 5 6 (PRODUCT LEVEL)	SEE PAGE
	1	1	**4I-2187**	1	SUPPORT AS	
J	2	1	**236-3669**	1	LOCK AS	
	3	1	**236-3670**	1	STRIKER AS	
	4	1	**236-3671**	1	SEAL	
	5	1	**236-9438**	1	PLUNGER AS	
	6	1	**236-9440**	1	SHEET	
	7	1	**259-3891**	1	BOX AS-STORAGE	
	8	1	**259-3893**	1	COVER AS	
	9	1	**273-7964**	2	MOUNT	
	10	1	**278-3581**	4	CUSHION	
	11	1	**095-0843**	1	PIN-COTTER	
	12	1	**096-3780**	1	PIN-CLEVIS	
M	13	1	**105-3487**	4	BOLT-SOCKET HEAD (M6X1X20-MM)	
	14	1	**170-9360**	1	GROMMET	
M	15	1	**5C-9553**	3	BOLT (M6X1X16-MM)	
	16	1	**5P-1075**	4	WASHER-HARD (10.2X22.5X3-MM THK)	
	17	1	**5P-4116**	1	WASHER-HARD (8.8X20.5X2-MM THK)	
M	18	1	**8T-4133**	4	NUT (M10X1.5-THD)	
M	19	1	**8T-4200**	2	BOLT (M8X1.25X16-MM)	
B	20	1	**8T-4223**	2	WASHER-HARD (13.5X25.5X3-MM THK)	
	21	1	**8T-4224**	2	WASHER-HARD (8.8X16X2-MM THK)	
	22	1	**9X-8256**	7	WASHER (6.6X12X2-MM THK)	

B-USE AS REQUIRED
J-REQUIRES CORPORATE KEY
M-METRIC PART

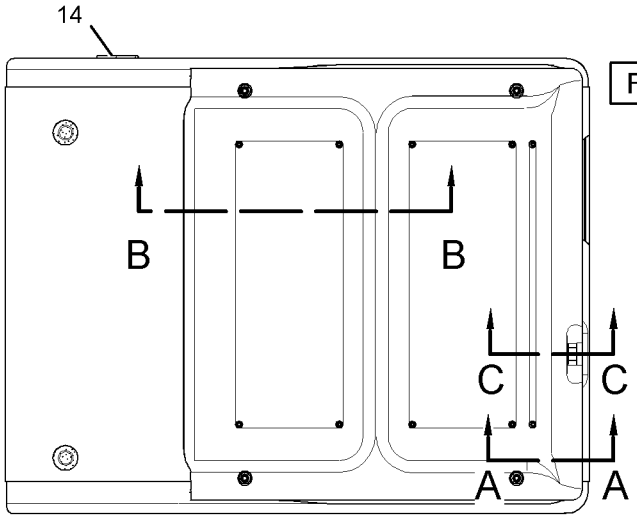

TOP VIEW

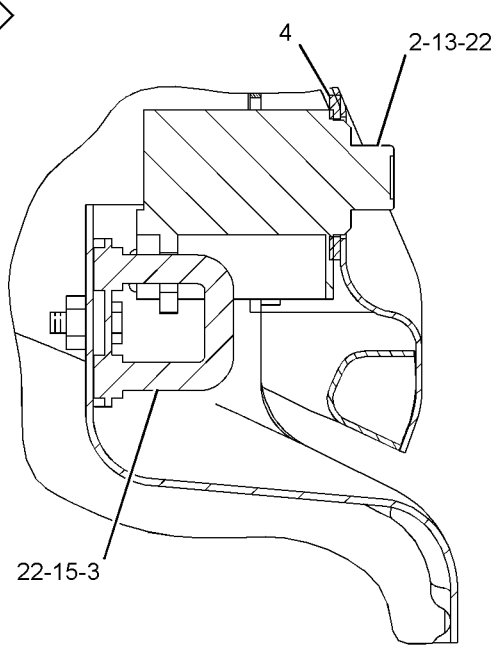

SECTION C-C

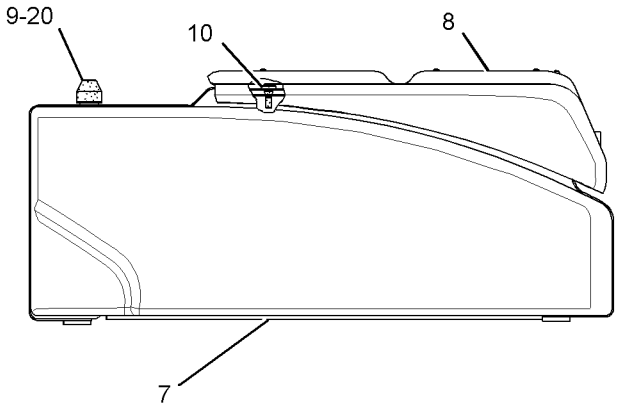

RIGHT SIDE VIEW

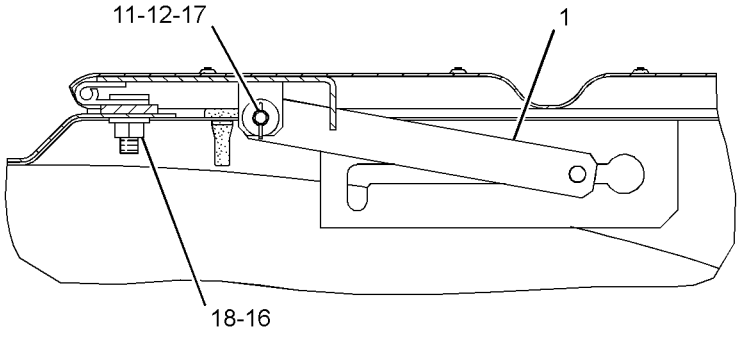

SECTION B-B

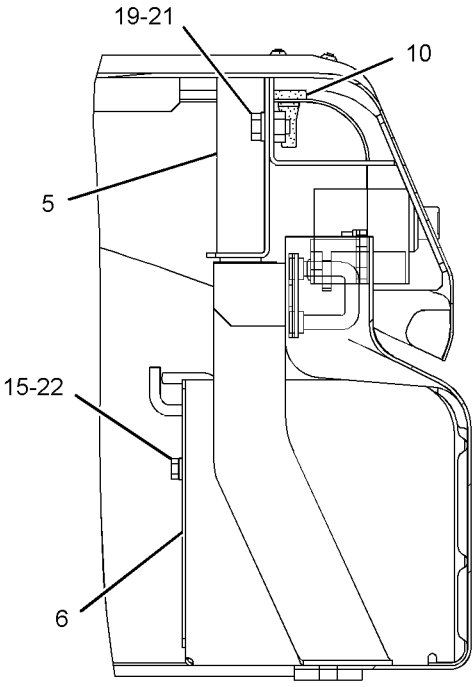

SECTION A-A

GRAPHIC #1 **<END>** g01304721

260-2555 BUMPER GP–SIDE

S/N: CJN1-UP
AN ATTACHMENT

SMCS-7156 **i02656789**

NOTE	REF NO	GRAPHIC REF	PART NUMBER	QTY	PART NAME 1 2 3 4 5 6 (PRODUCT LEVEL)	SEE PAGE
	1	1	**284-7077**	1	BUMPER AS	
	2	1	**284-7081**	1	BUMPER AS	

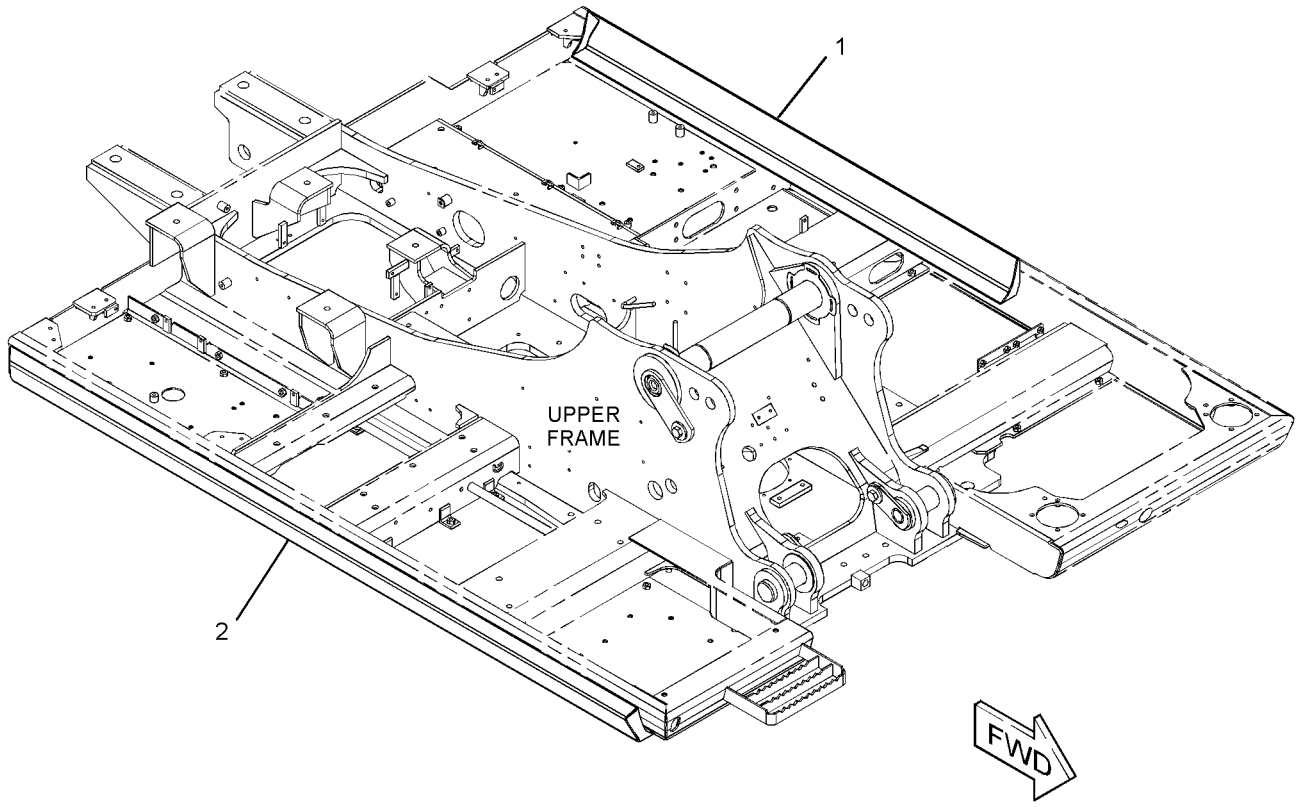

GRAPHIC #1 **<END>** g01345134

FRAME AND BODY

262-2256 COUNTERWEIGHT GP

S/N: CJN1-UP
3179-KG (7008-LB)
PART OF 260-6960 CHASSIS AR

SMCS-7056 **i02599576**

NOTE	REF NO	GRAPHIC REF	PART NUMBER	QTY	PART NAME 1 2 3 4 5 6 (PRODUCT LEVEL)	SEE PAGE
	1	1	**244-8194**	4	SPACER (32X65X30-MM THK)	
Y	2	1	*262-2257*	1	COUNTERWEIGHT GP	279
M	3	1	**7X-2583**	4	BOLT (M30X3.5X120-MM)	

M-METRIC PART
Y-SEPARATE ILLUSTRATION

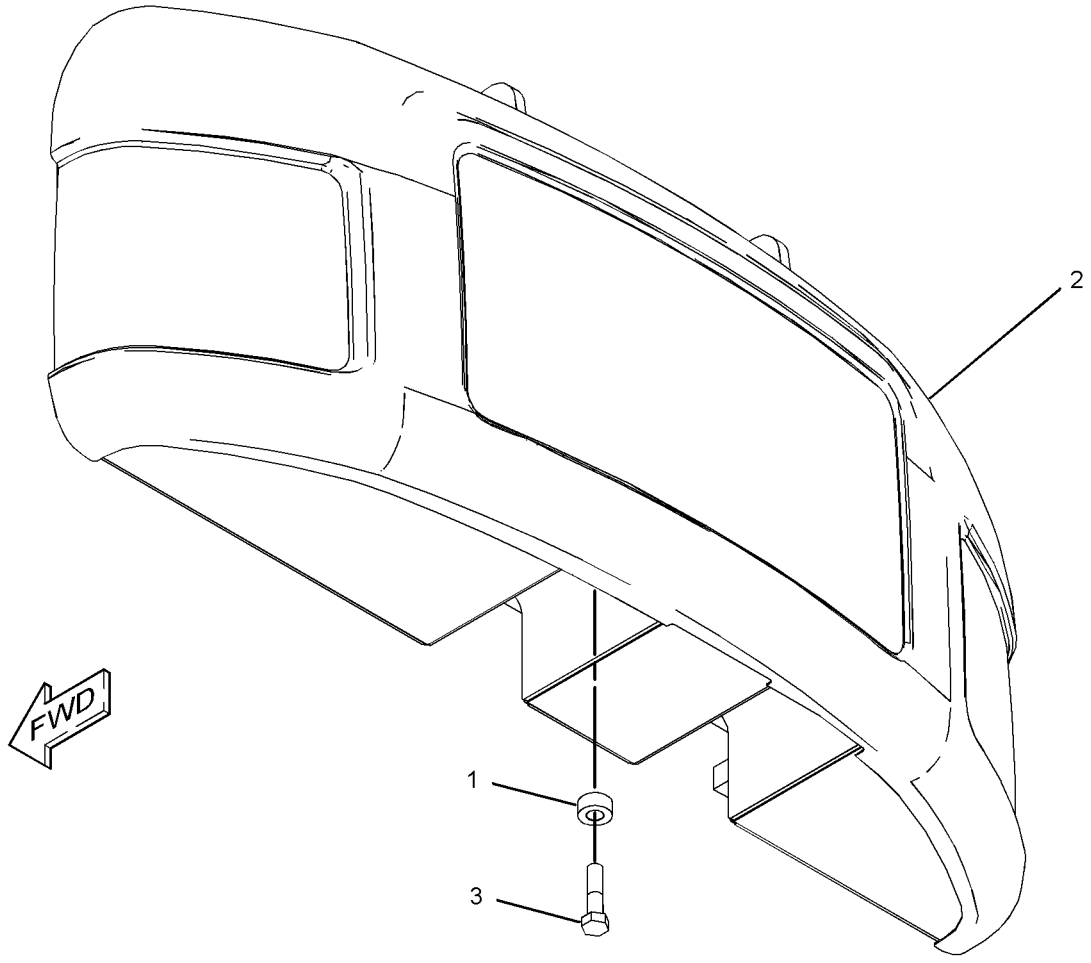

GRAPHIC #1 **<END>** g01311712

262-2257 COUNTERWEIGHT GP

S/N: CJN1-161

PART OF 262-2256 COUNTERWEIGHT GP

SMCS-7056 **i02599578**

NOTE	REF NO	GRAPHIC REF	PART NUMBER	QTY	PART NAME 1 2 3 4 5 6 (PRODUCT LEVEL)	SEE PAGE
	1	1	**270-9762**	1	COUNTERWEIGHT AS	
		1	**192-3039**	6	SCREW-HEX FLANGE (6.3X1.8X19-MM)	
	2	1	**270-9827**	1	INSULATION	
	3	1	**270-9829**	1	INSULATION	
	4	1	**270-9830**	1	LINER	
	5	1	**270-9831**	1	LINER	
	6	1	**270-9832**	1	LINER	
	7	1	**270-9833**	1	LINER	
	8	1	**270-9834**	1	LINER	
	9	1	**270-9836**	1	LINER	
	10	1	**270-9837**	1	LINER	
	11	1	**270-9838**	1	LINER	
	12	1	**278-4014**	1	LINER	
	13	1	**7Y-2292**	7	WASHER (13X50X2-MM THK)	
M	14	1	**8T-4179**	7	BOLT (M12X1.75X20-MM)	
	15	1	**8T-4223**	7	WASHER-HARD (13.5X25.5X3-MM THK)	

M-METRIC PART

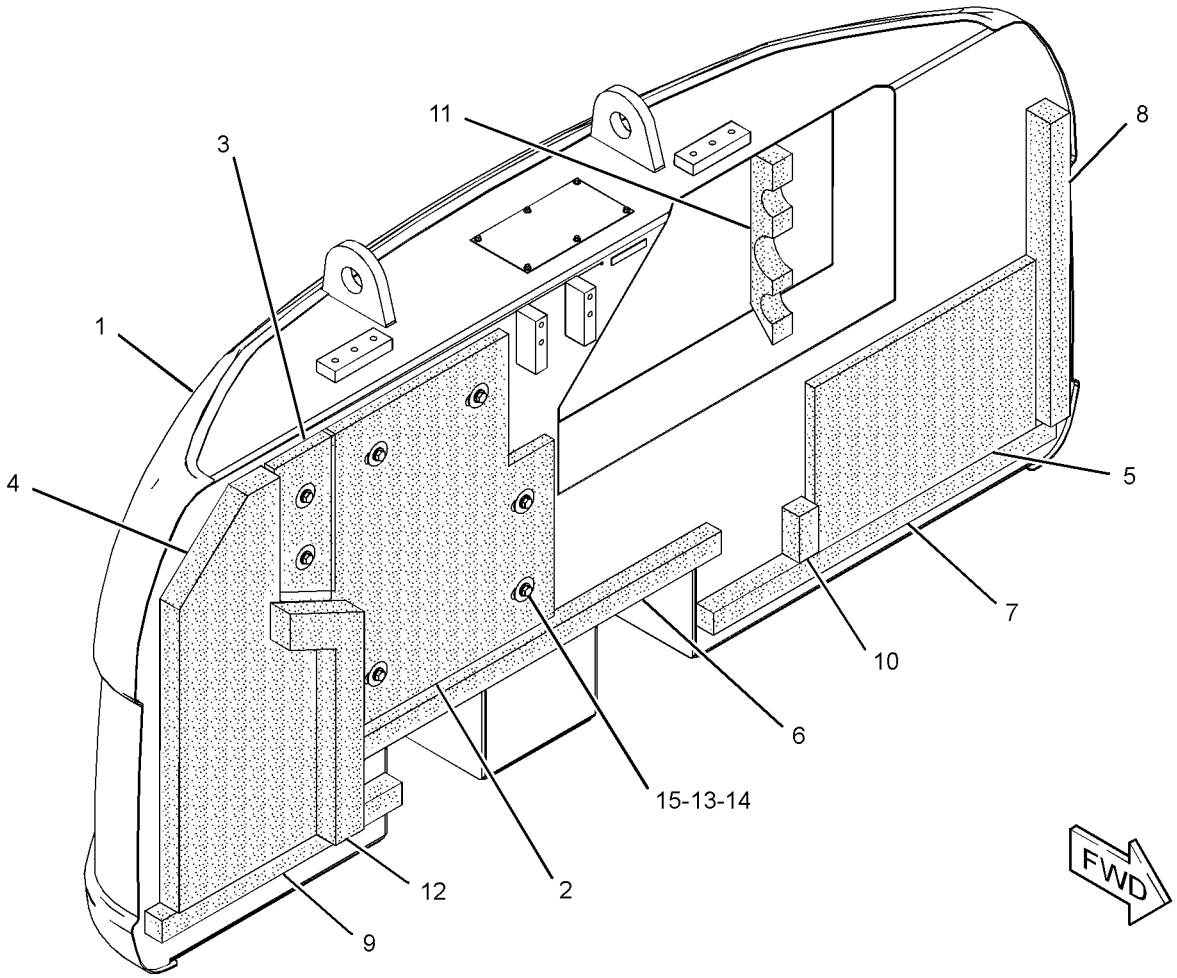

GRAPHIC #1 **<END>** g01311855

262-2257 COUNTERWEIGHT GP

S/N: CJN162-UP

PART OF 262-2256 COUNTERWEIGHT GP

SMCS-7056 **i02942231**

NOTE	REF NO	GRAPHIC REF	PART NUMBER	QTY	PART NAME 1 2 3 4 5 6 (PRODUCT LEVEL)	SEE PAGE
C	1	1	**313-8252**	1	COUNTERWEIGHT AS	
M		1	**192-3039**	6	SCREW-HEX FLANGE (6.3X1.8X19-MM)	
		1	**165-3120**	1	SHEET	
C	2	1	**313-8251**	1	INSULATION	
	3	1	**270-9829**	1	INSULATION	
	4	1	**270-9830**	1	LINER	
	5	1	**270-9831**	1	LINER	
	6	1	**270-9832**	1	LINER	
	7	1	**270-9833**	1	LINER	
	8	1	**270-9834**	1	LINER	
	9	1	**270-9836**	1	LINER	
	10	1	**270-9837**	1	LINER	
	11	1	**270-9838**	1	LINER	
	12	1	**278-4014**	1	LINER	
	13	1	**7Y-2292**	7	WASHER (13X50X2-MM THK)	
M	14	1	**8T-4179**	7	BOLT (M12X1.75X20-MM)	
	15	1	**8T-4223**	7	WASHER-HARD (13.5X25.5X3-MM THK)	

C-CHANGE FROM PREVIOUS TYPE
M-METRIC PART

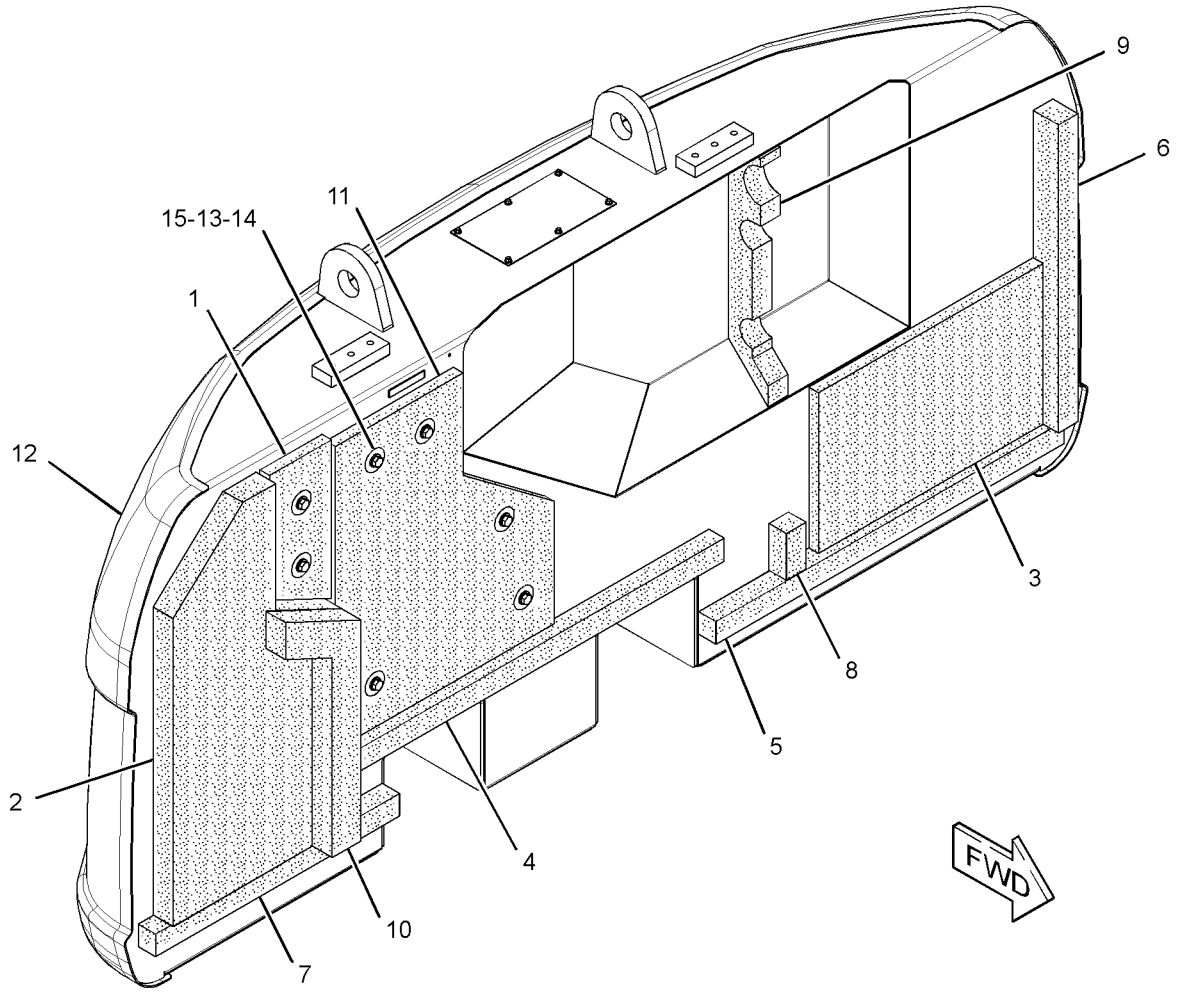

GRAPHIC #1 **<END>** g01456009

FRAME AND BODY

298-2991 COUNTERWEIGHT GP

S/N: CJN1-UP
PART OF 301-2479, 330-8775 SPECIAL AR
AN ATTACHMENT
TYPE 1

SMCS-7056 **i02840347**

NOTE	REF NO	GRAPHIC REF	PART NUMBER	QTY	PART NAME 1 2 3 4 5 6 (PRODUCT LEVEL)	SEE PAGE
	1	1	**244-8194**	4	SPACER (32X65X30-MM THK)	
Y	2	1	*298-2992*	1	COUNTERWEIGHT GP	283
M	3	1	**7X-2583**	4	BOLT (M30X3.5X120-MM)	

M-METRIC PART
Y-SEPARATE ILLUSTRATION

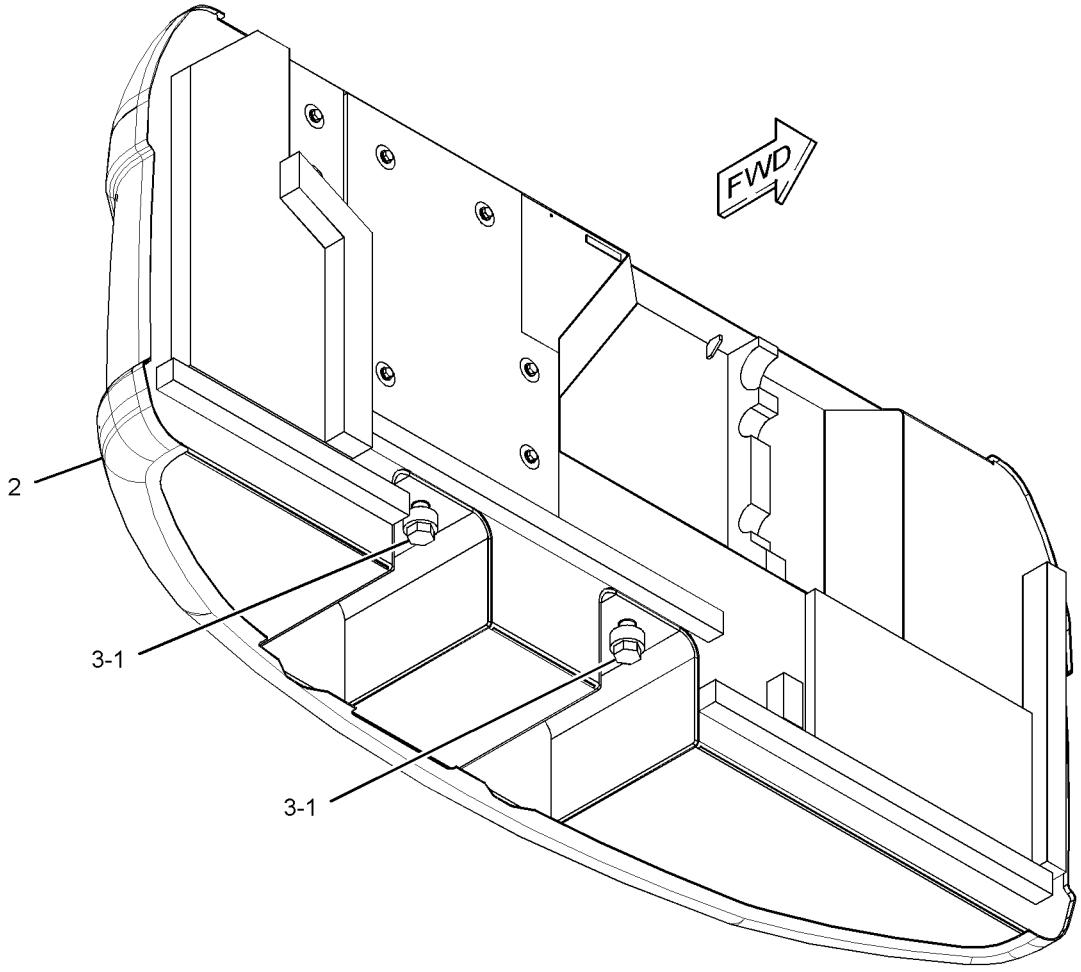

GRAPHIC #1 **<END>** g01418011

298-2991 COUNTERWEIGHT GP

S/N: CJN1-UP
PART OF 330-8775 SPECIAL AR
AN ATTACHMENT
TYPE 2

SMCS-7056 **i03151047**

NOTE	REF NO	GRAPHIC REF	PART NUMBER	QTY	PART NAME 1 2 3 4 5 6 (PRODUCT LEVEL)	SEE PAGE
	1	1	**244-8194**	4	SPACER (32X65X30-MM THK)	
CY	2	1	*330-1335*	1	COUNTERWEIGHT GP	286
M	3	1	**7X-2583**	4	BOLT (M30X3.5X120-MM)	

C-CHANGE FROM PREVIOUS TYPE
M-METRIC PART
Y-SEPARATE ILLUSTRATION

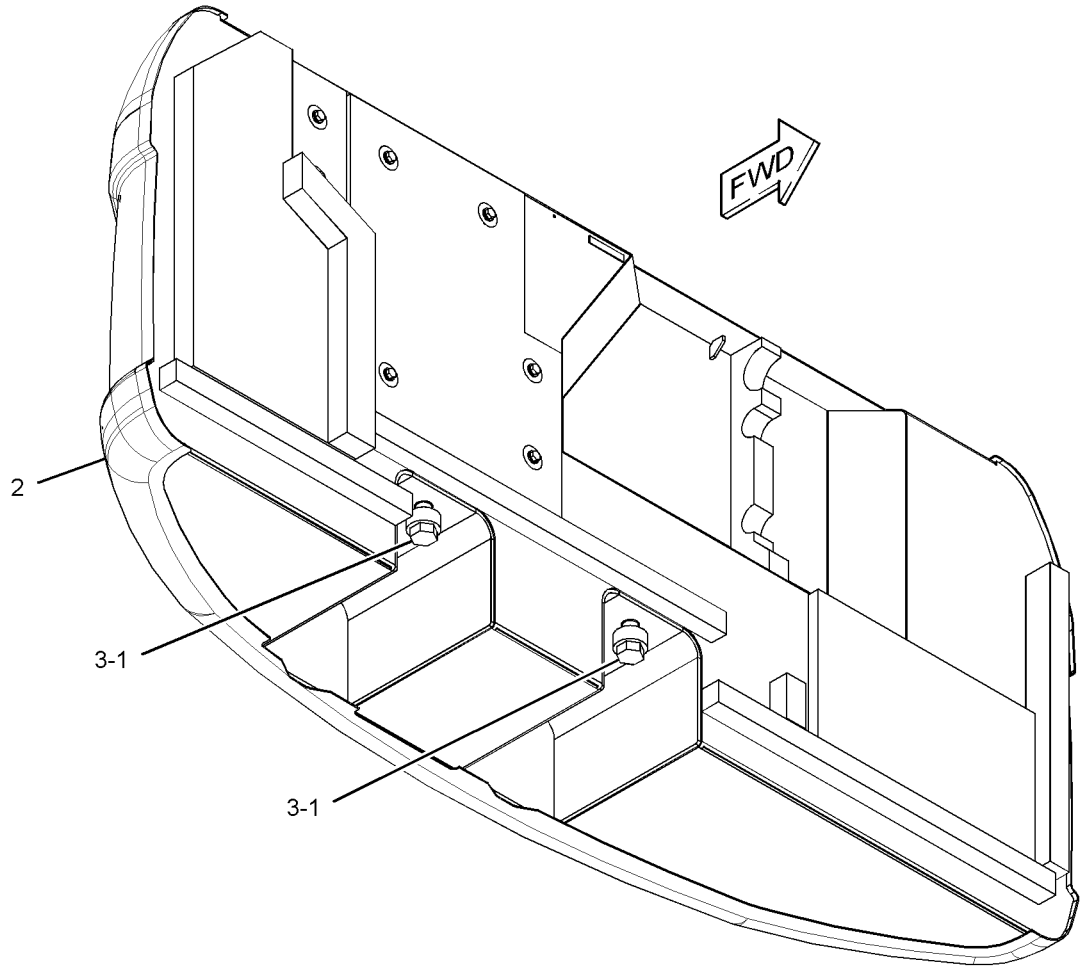

GRAPHIC #1 **<END>** g01418011

298-2992 COUNTERWEIGHT GP

S/N: CJN1-UP
3173-KG (6981-LBS)
PART OF 298-2991 COUNTERWEIGHT GP
AN ATTACHMENT
TYPE 1

SMCS-7056 **i02840348**

NOTE	REF NO	GRAPHIC REF	PART NUMBER	QTY	PART NAME 1 2 3 4 5 6 (PRODUCT LEVEL)	SEE PAGE
	1	1	**270-9827**	1	INSULATION	
	2	1	**270-9829**	1	INSULATION	
	3	1	**270-9830**	1	LINER	
	4	1	**270-9831**	1	LINER	
	5	1	**270-9832**	1	LINER	
	6	1	**270-9833**	1	LINER	
	7	1	**270-9834**	1	LINER	
	8	1	**270-9836**	1	LINER	
	9	1	**270-9837**	1	LINER	
	10	1	**270-9838**	1	LINER	
	11	1	**278-4014**	1	LINER	
	12	1	**303-9792**	1	COUNTERWEIGHT AS	
		1	**192-3039**	6	SCREW-HEX FLANGE (6.3X1.8X19-MM)	
	13	1	**7Y-2292**	7	WASHER (13X50X2-MM THK)	
M	14	1	**8T-4179**	7	BOLT (M12X1.75X20-MM)	
	15	1	**8T-4223**	7	WASHER-HARD (13.5X25.5X3-MM THK)	

M-METRIC PART

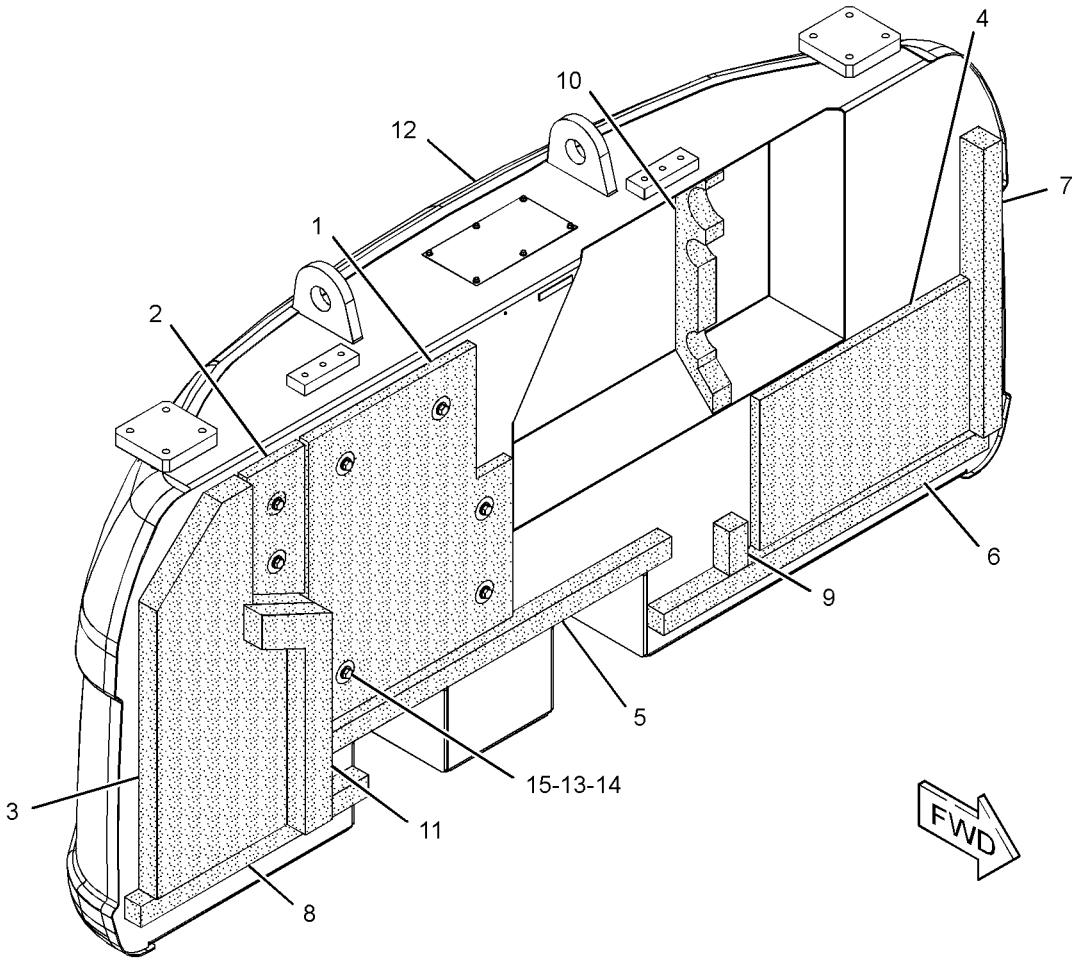

GRAPHIC #1 **<END>** g01418062

298-2992 COUNTERWEIGHT GP

S/N: CJN1-UP
3173-KG (6981-LBS)
PART OF 298-2991 COUNTERWEIGHT GP
AN ATTACHMENT
TYPE 2

SMCS-7056 **i02988368**

NOTE	REF NO	GRAPHIC REF	PART NUMBER	QTY	PART NAME 1 2 3 4 5 6 (PRODUCT LEVEL)	SEE PAGE
C	1	1	**313-8251**	1	INSULATION	
	2	1	**270-9829**	1	INSULATION	
	3	1	**270-9830**	1	LINER	
	4	1	**270-9831**	1	LINER	
	5	1	**270-9832**	1	LINER	
	6	1	**270-9833**	1	LINER	
	7	1	**270-9834**	1	LINER	
	8	1	**270-9836**	1	LINER	
	9	1	**270-9837**	1	LINER	
	10	1	**270-9838**	1	LINER	
	11	1	**278-4014**	1	LINER	
C	12	1	**313-8258**	1	COUNTERWEIGHT AS	
		1	**165-3120**	1	SHEET	
M		1	**192-3039**	6	SCREW-HEX FLANGE (6.3X1.8X19-MM)	
	13	1	**7Y-2292**	7	WASHER (13X50X2-MM THK)	
M	14	1	**8T-4179**	7	BOLT (M12X1.75X20-MM)	
	15	1	**8T-4223**	7	WASHER-HARD (13.5X25.5X3-MM THK)	

C-CHANGE FROM PREVIOUS TYPE
M-METRIC PART

298 - 2992 **COUNTERWEIGHT GP** *(contd.)* **i02988368**

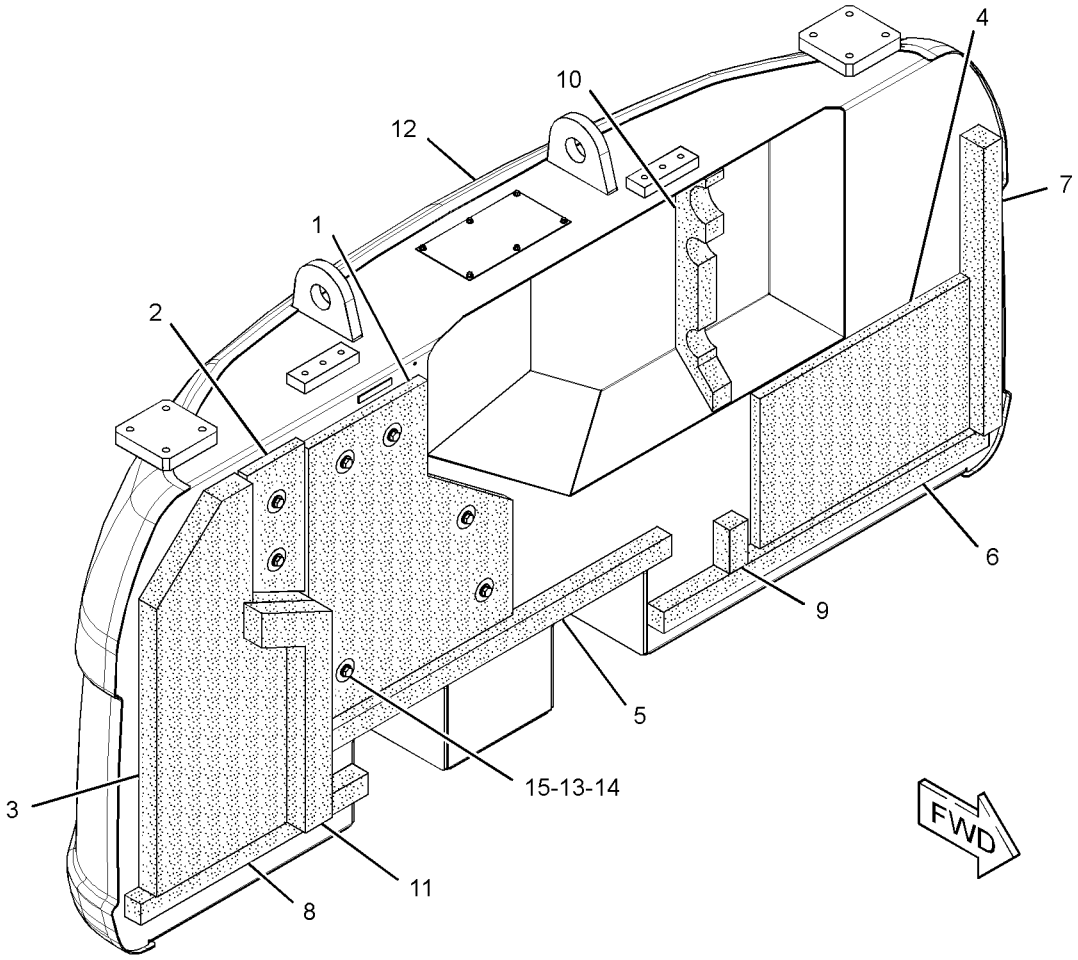

GRAPHIC #1 **<END>** g01559873

330-1335 COUNTERWEIGHT GP

S/N: CJN1-UP
3173-KG (6981-LBS)
PART OF 298-2991 COUNTERWEIGHT GP
AN ATTACHMENT

SMCS-7056 **i03151062**

NOTE	REF NO	GRAPHIC REF	PART NUMBER	QTY	PART NAME 1 2 3 4 5 6 (PRODUCT LEVEL)	SEE PAGE
	1	1	**270-9829**	1	INSULATION	
	2	1	**270-9830**	1	LINER	
	3	1	**270-9831**	1	LINER	
	4	1	**270-9832**	1	LINER	
	5	1	**270-9833**	1	LINER	
	6	1	**270-9834**	1	LINER	
	7	1	**270-9836**	1	LINER	
	8	1	**270-9837**	1	LINER	
	9	1	**270-9838**	1	LINER	
	10	1	**278-4014**	1	LINER	
	11	1	**313-8251**	1	INSULATION	
	12	1	**330-1336**	1	COUNTERWEIGHT AS	
	13	1	**7Y-2292**	7	WASHER (13X50X2-MM THK)	
M	14	1	**8T-4179**	7	BOLT (M12X1.75X20-MM)	
	15	1	**8T-4223**	7	WASHER-HARD (13.5X25.5X3-MM THK)	

M-METRIC PART

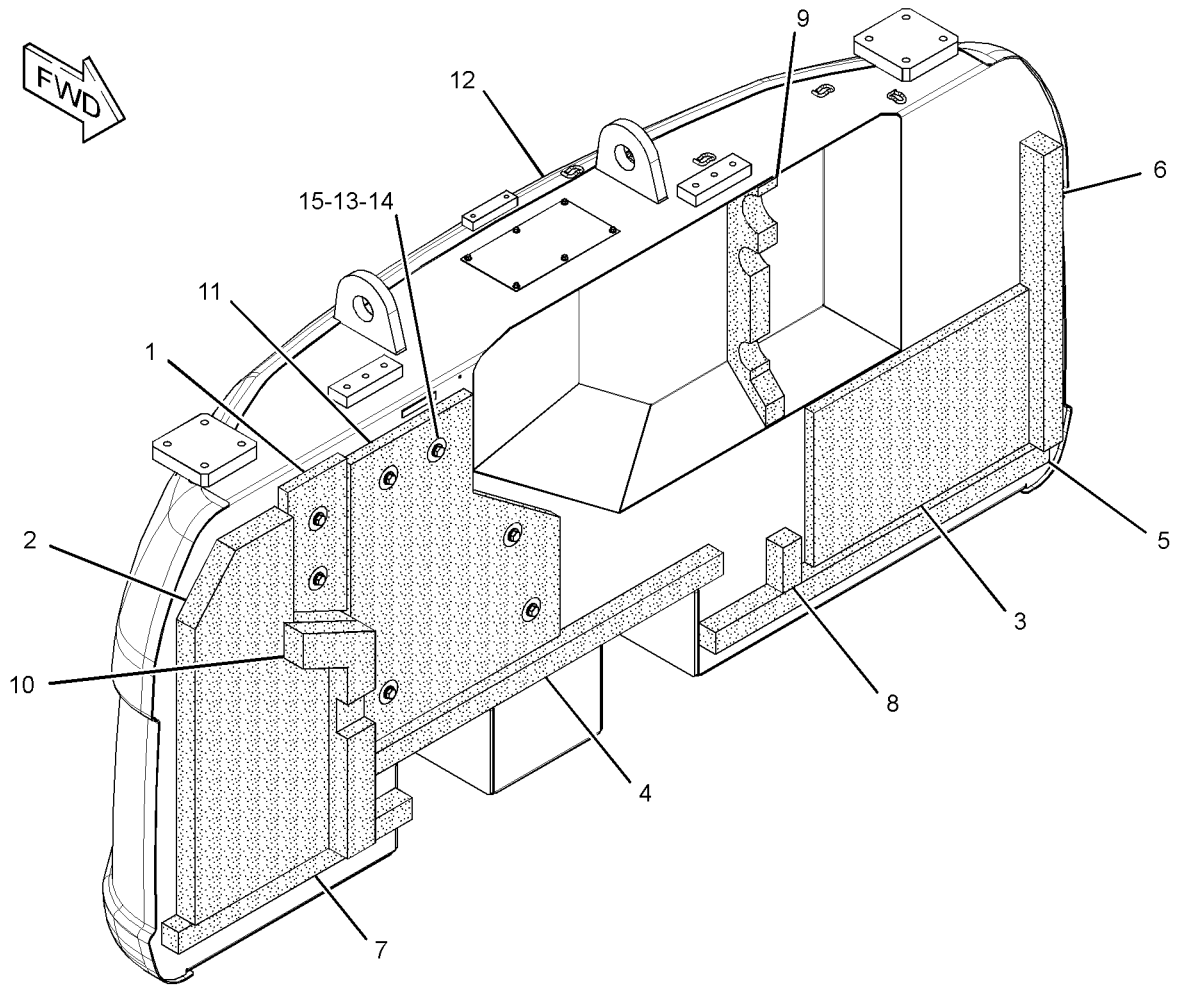

GRAPHIC #1 **<END>** g01626778

268-0660 COVER AS-SOUND SUPPRESSION—AIR CLEANER

S/N: CJN1-UP

PART OF 268-0645 COVER GP-ACCESS

SMCS-7253, 7263, 7276, 795C **i02598784**

NOTE	REF NO	GRAPHIC REF	PART NUMBER	QTY	PART NAME 1 2 3 4 5 6 (PRODUCT LEVEL)	SEE PAGE
Z	1	1		1	SHEET AS	
	2	1	**268-0717**	1	LINER	
	3	1	**268-0737**	1	LINER	
D	4	1	**101-9848**		SEAL (0.04-M)	

D-ORDER BY THE METER
Z-NOT SERVICED SEPARATELY

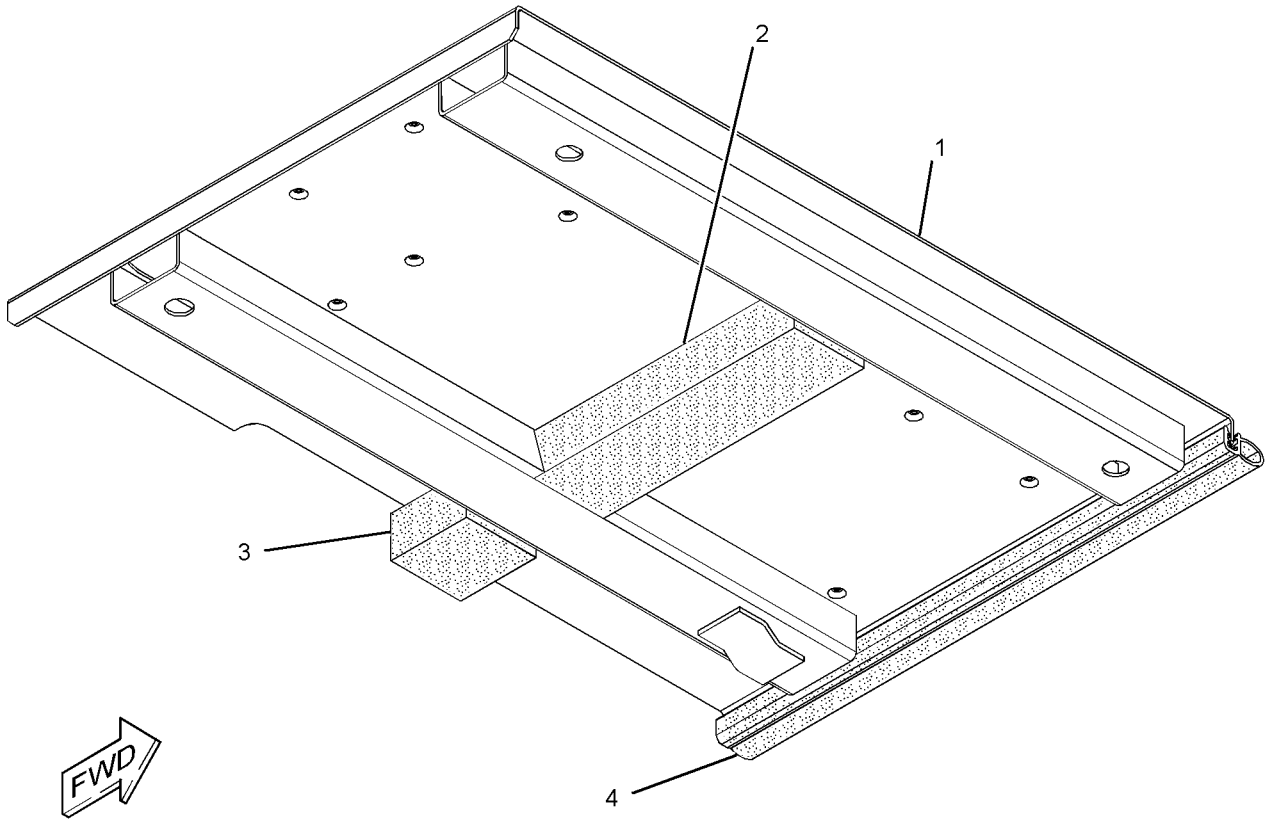

GRAPHIC #1 **<END>** g01304660

268-0663 COVER AS-SOUND SUPPRESSION—HYDRAULIC TANK

S/N: CJN1-UP

PART OF 268-0644 COVER GP-SIDE

SMCS-7253, 7263, 7276, 795C **i02598779**

NOTE	REF NO	GRAPHIC REF	PART NUMBER	QTY	PART NAME 1 2 3 4 5 6 (PRODUCT LEVEL)	SEE PAGE
	1	1	**236-9567**	2	SHEET-RUBBER	
Z	2	1		1	SHEET AS	
	3	1	**268-0693**	2	LINER	
	4	1	**268-0694**	1	LINER	
	5	1	**268-0695**	1	LINER	
	6	1	**268-0696**	1	LINER	

Z-NOT SERVICED SEPARATELY

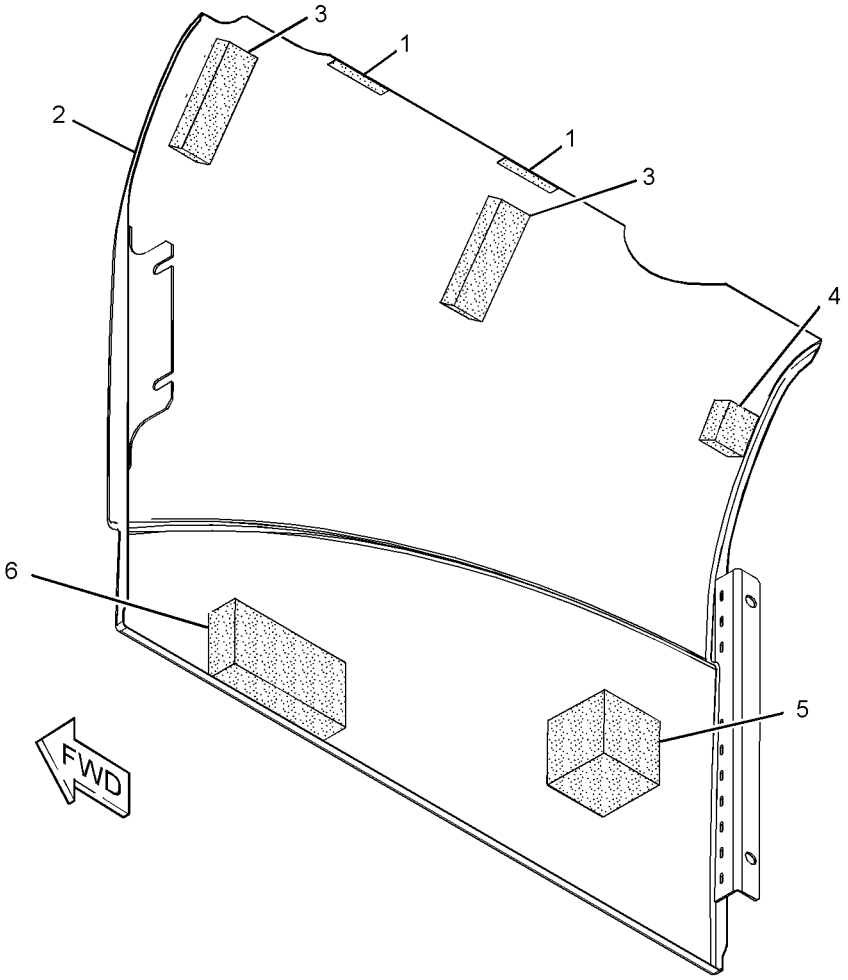

GRAPHIC #1 **<END>** g01304556

330-1576 COVER AS-SOUND SUPPRESSION

S/N: CJN1-UP
PART OF 330-1579 COVER GP-SIDE
AN ATTACHMENT

SMCS-7253, 7263, 7276, 795C **i03147982**

NOTE	REF NO	GRAPHIC REF	PART NUMBER	QTY	PART NAME 1 2 3 4 5 6 (PRODUCT LEVEL)	SEE PAGE
	1	1	**236-9567**	2	SHEET-RUBBER	
	2	1	**268-0693**	2	LINER	
	3	1	**268-0694**	1	LINER	
	4	1	**268-0695**	1	LINER	
	5	1	**268-0696**	1	LINER	

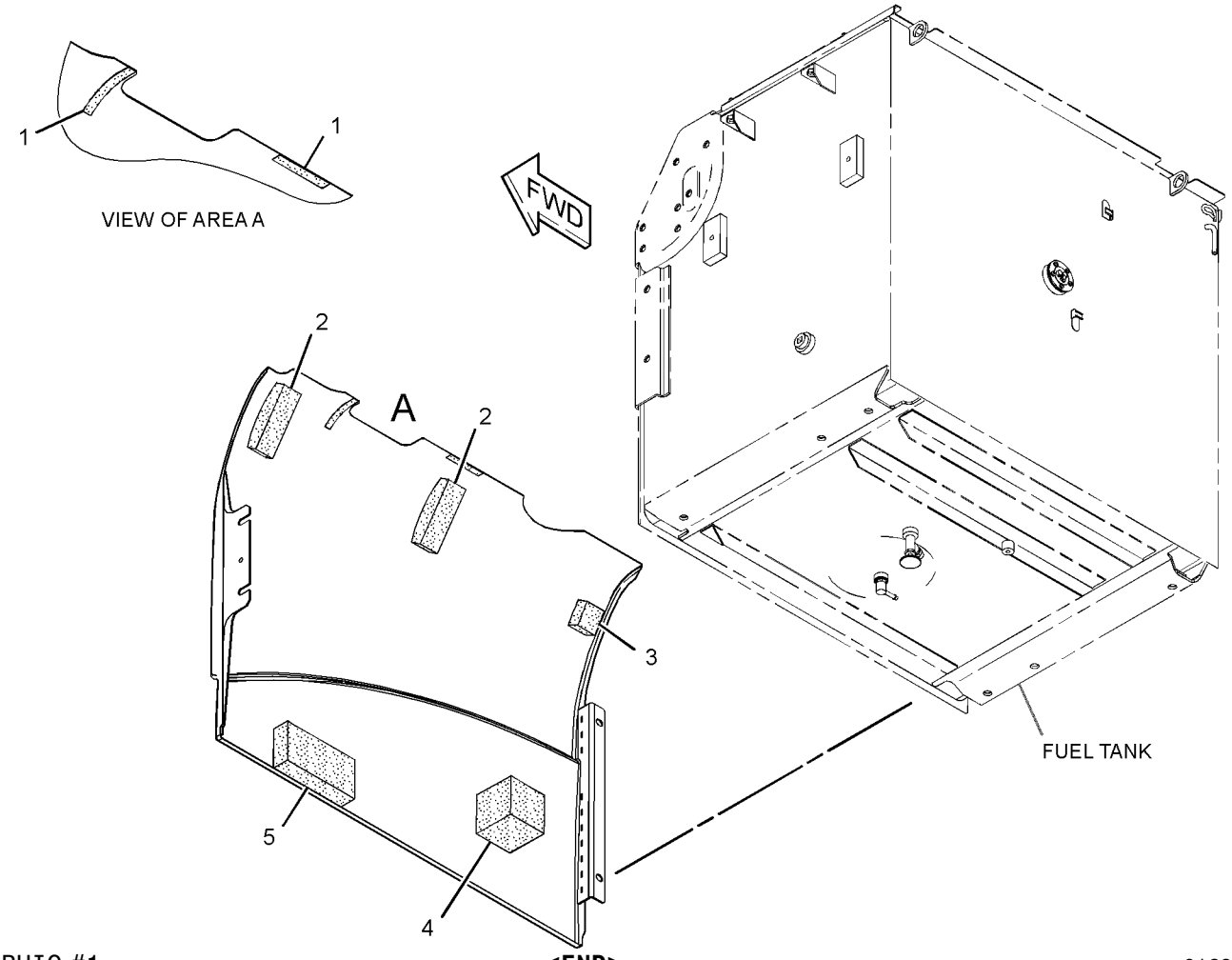

GRAPHIC #1 **<END>** g01620622

268-0645 COVER GP-ACCESS—UPPER

S/N: CJN1-UP

PART OF 262-2265 HOOD & GUARD GP

SMCS-726A **i02696850**

NOTE	REF NO	GRAPHIC REF	PART NUMBER	QTY	PART NAME 1 2 3 4 5 6 (PRODUCT LEVEL)	SEE PAGE
M	1	1	**135-8575**	11	BOLT AS-LOCKING (M12X1.75X30-MM)	
Y	2	1	**268-0660**	1	COVER AS-SOUND SUPPRESSION (AIR CLEANER)	287
	3	1	**268-0661**	1	COVER AS (MAIN CONTROL VALVE)	
D		1	**101-9848**		SEAL (0.9-M)	
		1	**268-0689**	1	SHEET AS	
	4	1	**268-0662**	1	COVER AS-SOUND SUPPRESSION (HYDRAULIC TANK)	
D		1	**5P-8309**		SEAL (0.8-M)	
D		1	**101-9848**		SEAL (0.2-M)	
		1	**268-0739**	1	LINER	

D-ORDER BY THE METER
M-METRIC PART
Y-SEPARATE ILLUSTRATION

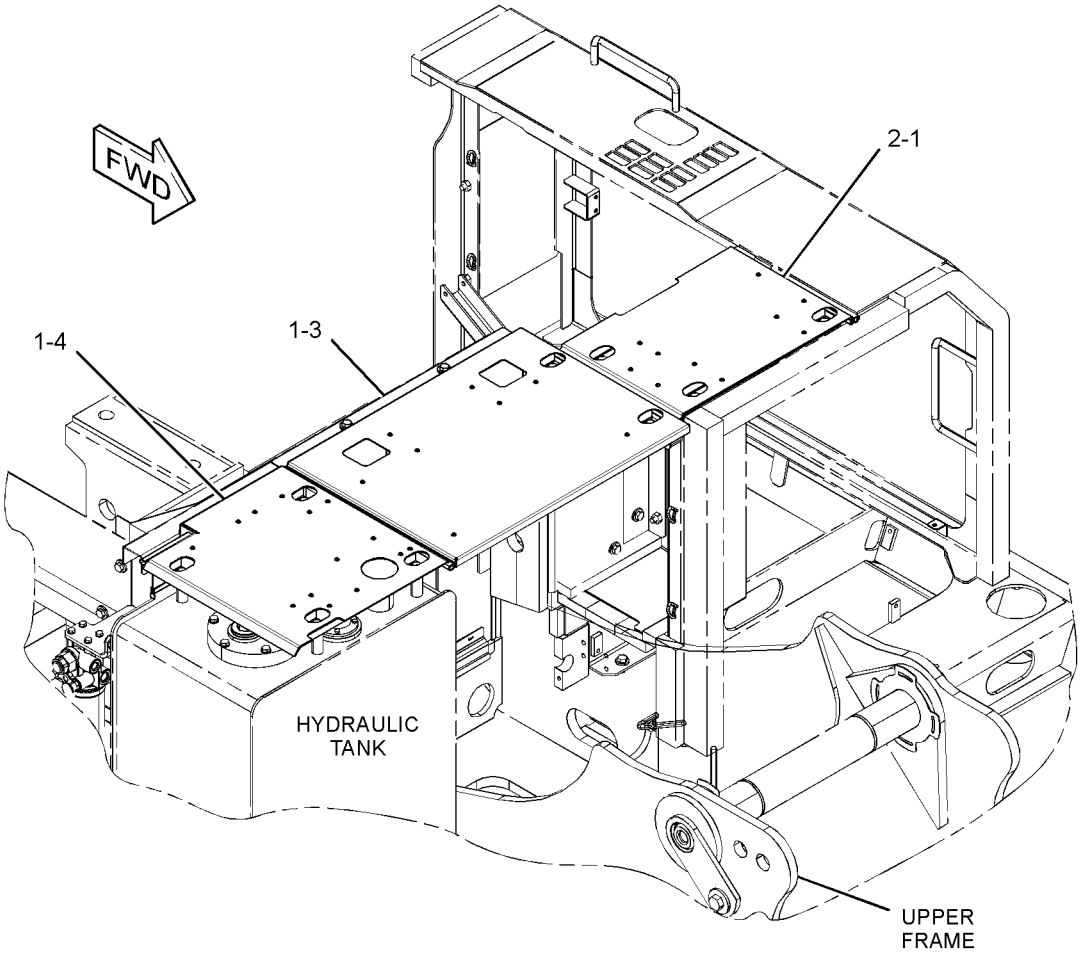

GRAPHIC #1 **<END>** g01370988

268-0644 COVER GP-SIDE—HYDRAULIC TANK

S/N: CJN1-UP

PART OF 262-2265 HOOD & GUARD GP

SMCS-7263, 7267 **i02598785**

NOTE	REF NO	GRAPHIC REF	PART NUMBER	QTY	PART NAME 1 2 3 4 5 6 (PRODUCT LEVEL)	SEE PAGE
M	1	1	**135-8573**	4	BOLT AS	
Y	2	1	**268-0663**	1	COVER AS-SOUND SUPPRESSION (HYDRAULIC TANK)	288

M-METRIC PART
Y-SEPARATE ILLUSTRATION

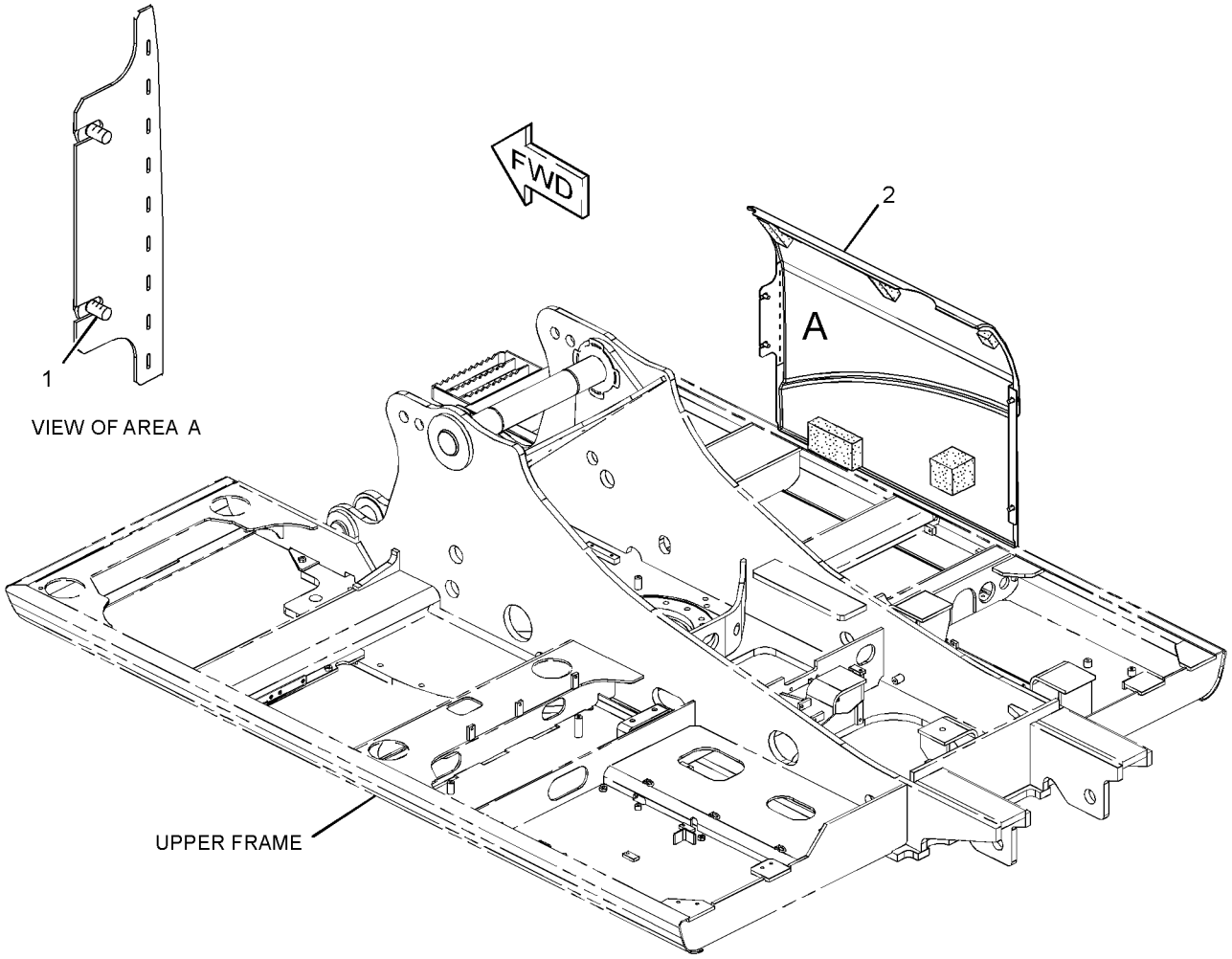

GRAPHIC #1 **<END>** g01304633

330-1579 COVER GP-SIDE–FUEL TANK, HYDRAULIC TANK

S/N: CJN1-UP

PART OF 330-1324 MIRROR GP, 330-8780 PUMP AR-FUEL TRANSFER

AN ATTACHMENT

SMCS-7263, 7267 **i03147002**

NOTE	REF NO	GRAPHIC REF	PART NUMBER	QTY	PART NAME 1 2 3 4 5 6 (PRODUCT LEVEL)	SEE PAGE
Y	1	1	**330-1576**	1	COVER AS-SOUND SUPPRESSION (FUEL TANK, HYDRAULIC TANK)	289

Y-SEPARATE ILLUSTRATION

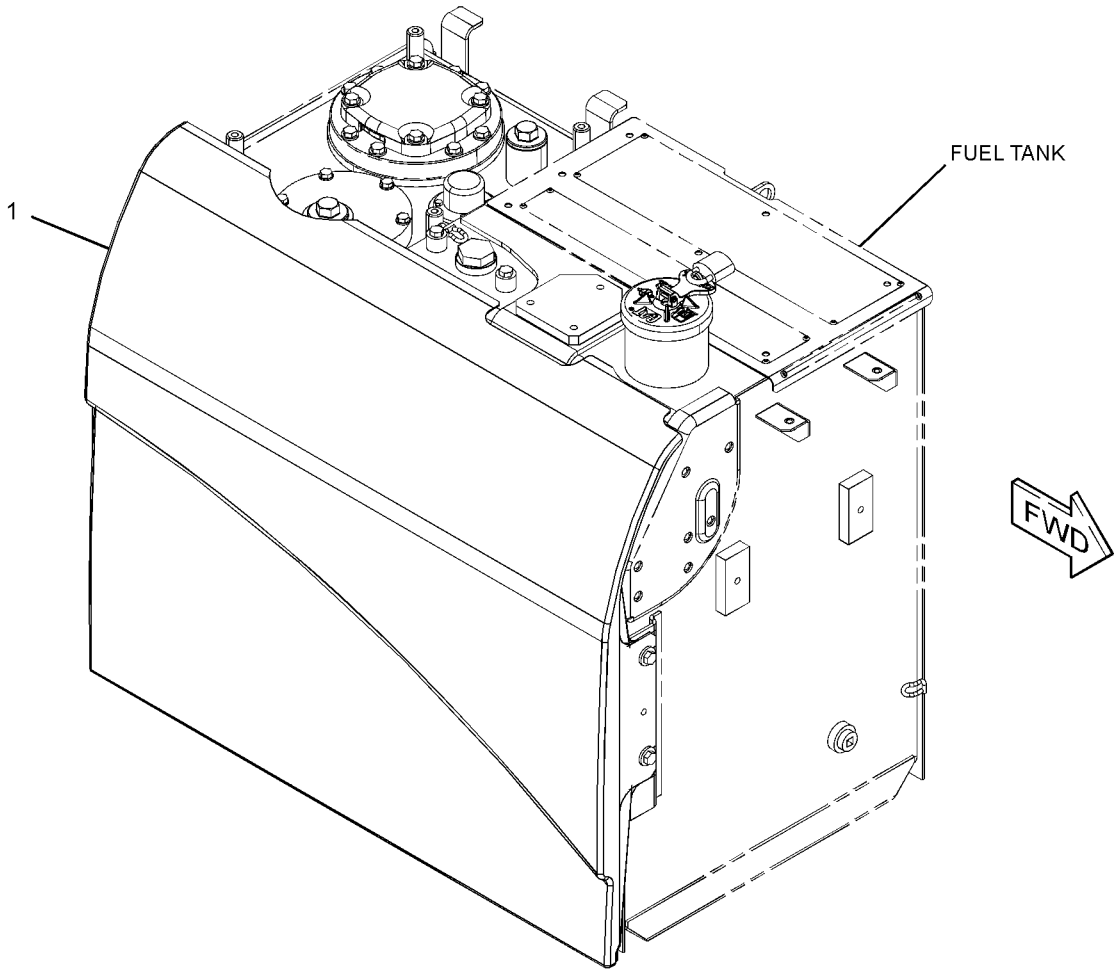

GRAPHIC #1 **<END>** g01620390

268-0642 DOOR GP-ACCESS—RADIATOR, LH

S/N: CJN1-UP

PART OF 262-2265 HOOD & GUARD GP

SMCS-7273 **i03001061**

NOTE	REF NO	GRAPHIC REF	PART NUMBER	QTY	PART NAME 1 2 3 4 5 6 (PRODUCT LEVEL)	SEE PAGE
M	1	1	**135-8573**	4	BOLT AS (M12X1.75X25-MM)	
M	2	1	**135-8575**	8	BOLT AS-LOCKING (M12X1.75X30-MM)	
Y	3	1	*268-0670*	1	DOOR GP-ACCESS (RADIATOR, LH)	298

M-METRIC PART
Y-SEPARATE ILLUSTRATION

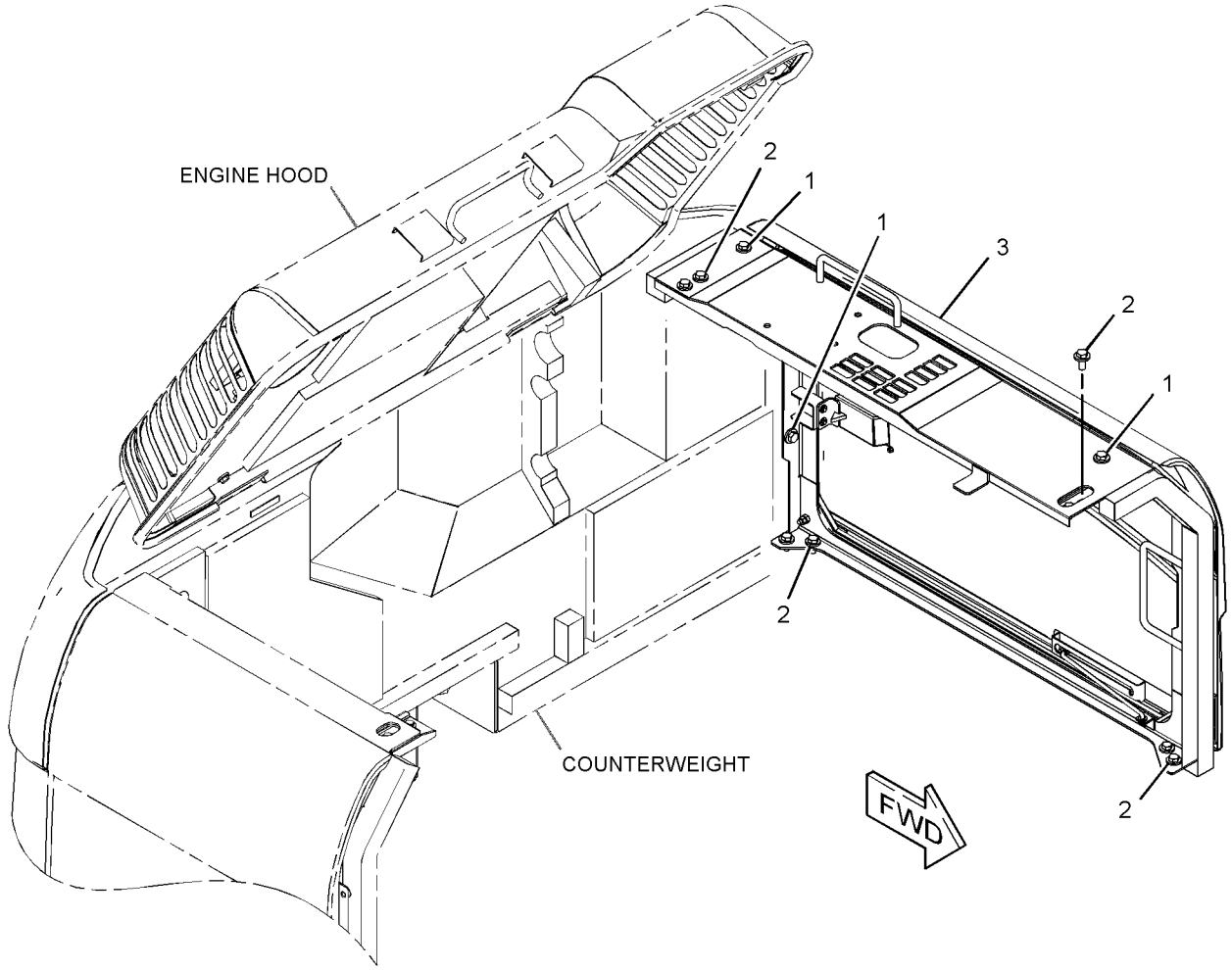

GRAPHIC #1 **<END>** g01621292

268-0643 DOOR GP-ACCESS—PUMP

S/N: CJN1-UP

PART OF 262-2265 HOOD & GUARD GP

SMCS-7273 **i02988373**

NOTE	REF NO	GRAPHIC REF	PART NUMBER	QTY	PART NAME 1 2 3 4 5 6 (PRODUCT LEVEL)	SEE PAGE
M	1	1	**135-8575**	12	BOLT AS-LOCKING (M12X1.75X30-MM)	
Y	2	1	*268-0669*	1	DOOR GP-ACCESS (RADIATOR, RH)	297
M	3	1	**135-8573**	2	BOLT AS (M12X1.75X25-MM)	

M-METRIC PART
Y-SEPARATE ILLUSTRATION

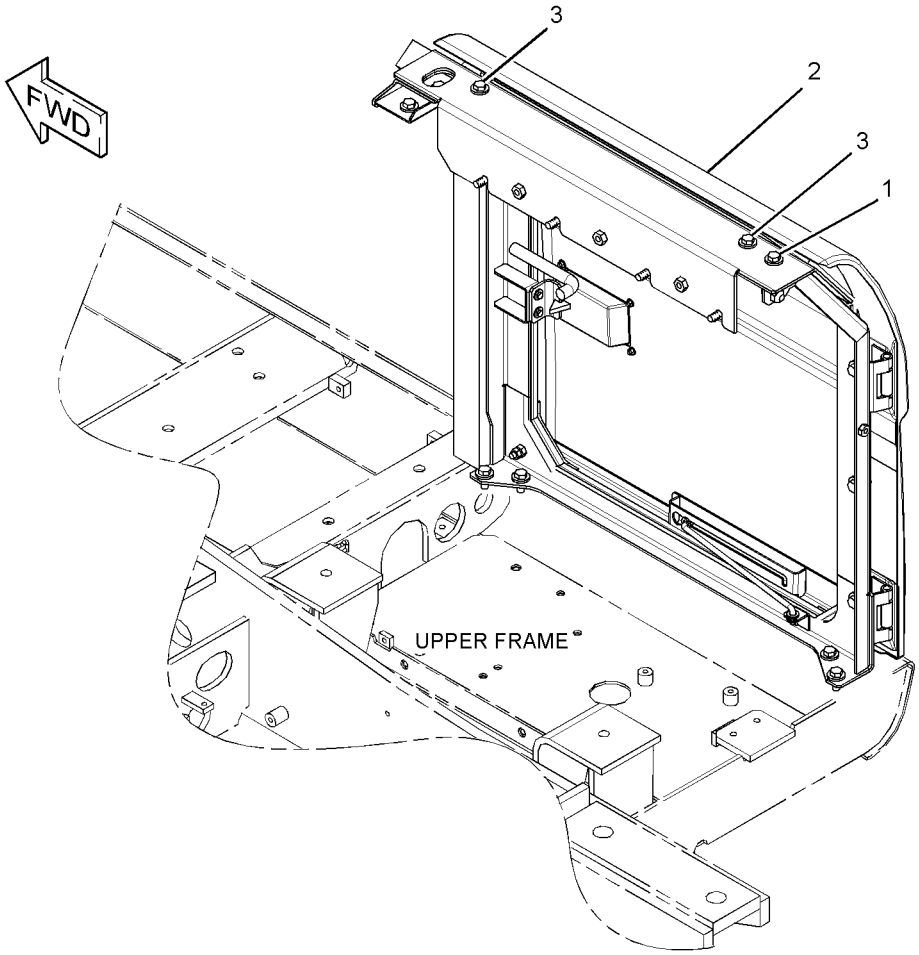

GRAPHIC #1 **<END>** g01561275

268-0665 DOOR GP-ACCESS

S/N: CJN1-UP
PART OF 268-0669, 303-9888 DOOR GP-ACCESS
ALSO AN ATTACHMENT

SMCS-7273 **i02725922**

NOTE	REF NO	GRAPHIC REF	PART NUMBER	QTY	PART NAME 1 2 3 4 5 6 (PRODUCT LEVEL)	SEE PAGE
M	1	1	**099-6418**	4	NUT (M6X1-THD)	
	2	1	**184-8862**	1	COVER	
	3	1	*268-0699*	1	DOOR AS	
	3A	1	**184-8898**	2	HINGE	
J	4	1	**298-2942**	1	LOCK AS	
D	5	1	**5P-8309**		SEAL (3.2-M)	

D-ORDER BY THE METER
J-LOCK REQUIRES CORPORATE KEY
M-METRIC PART

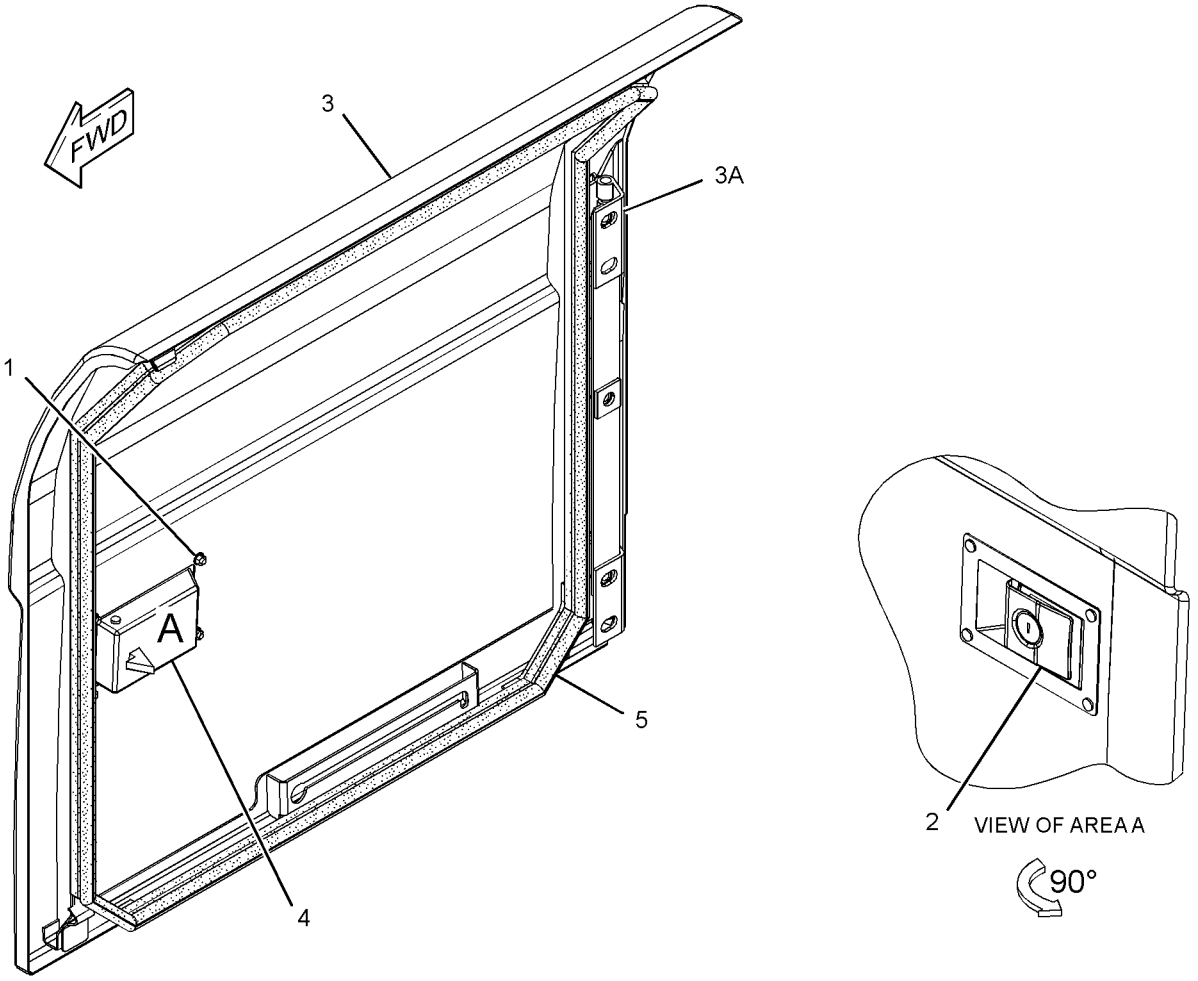

GRAPHIC #1 **<END>** g01368904

268-0667 DOOR GP-ACCESS—RADIATOR, LH

S/N: CJN1-UP
PART OF 268-0670, 273-8041 DOOR GP-ACCESS
ALSO AN ATTACHMENT

SMCS-7273 **i03148205**

NOTE	REF NO	GRAPHIC REF	PART NUMBER	QTY	PART NAME 1 2 3 4 5 6 (PRODUCT LEVEL)	SEE PAGE
M	1	1	**099-6418**	4	NUT (M6X1-THD)	
	2	1	*268-0698*	1	DOOR AS-ACCESS (LH)	
	2A	1	**184-8898**	2	HINGE	
J	3	1	**298-2942**	1	LOCK AS	
D	4	1	**5P-8309**		SEAL (4.1-M)	

D-ORDER BY THE METER
J-REQUIRES CORPORATE KEY
M-METRIC PART

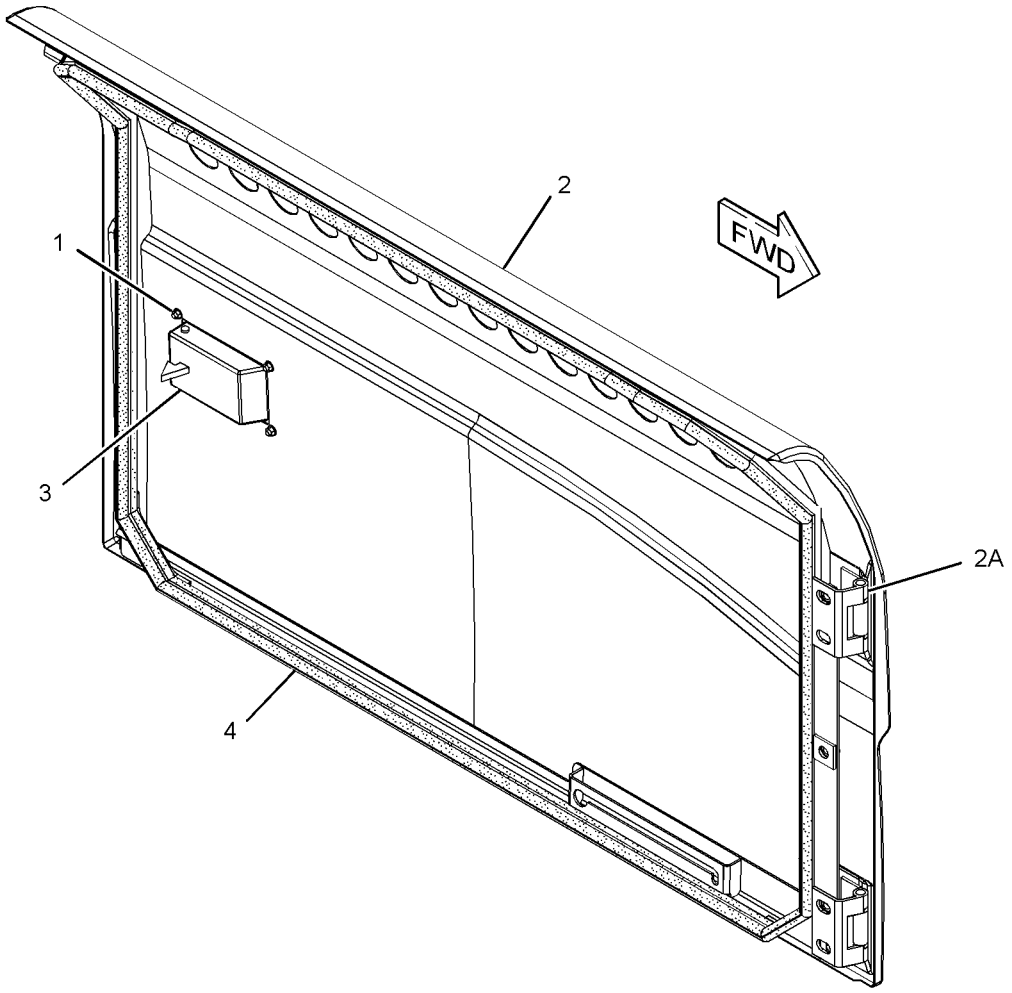

GRAPHIC #1 **<END>** g01381485

268-0669 DOOR GP-ACCESS—RADIATOR, RH

S/N: CJN1-UP

PART OF 268-0643 DOOR GP-ACCESS

SMCS-7273 **i03148207**

NOTE	REF NO	GRAPHIC REF	PART NUMBER	QTY	PART NAME 1 2 3 4 5 6 (PRODUCT LEVEL)	SEE PAGE
	1	1	**4I-0232**	1	STRIKER	
B	2	1	**087-3908**	2	SHIM (1-MM THK)	
B	3	1	**087-3909**	2	SHIM (2-MM THK)	
M	4	1	**135-8575**	3	BOLT AS-LOCKING (M12X1.75X30-MM)	
Y	5	1	**268-0665**	1	DOOR GP-ACCESS	295
	6	1	**268-0666**	1	SUPPORT AS	
		1	**268-0734**	1	INSULATION	
	7	1	**268-0700**	1	TUBE AS	
	8	1	**3B-4615**	1	PIN-COTTER	
	9	1	**4I-1205**	2	BUMPER	
	10	1	**5P-4115**	2	WASHER-HARD (7.2X19X2-MM THK)	
	11	1	**8T-4121**	1	WASHER-HARD (11X21X2.5-MM THK)	
M	12	1	**8T-4133**	2	NUT (M10X1.5-THD)	
M	13	1	**8T-4138**	2	BOLT (M6X1X20-MM)	

B-USE AS REQUIRED
M-METRIC PART
Y-SEPARATE ILLUSTRATION

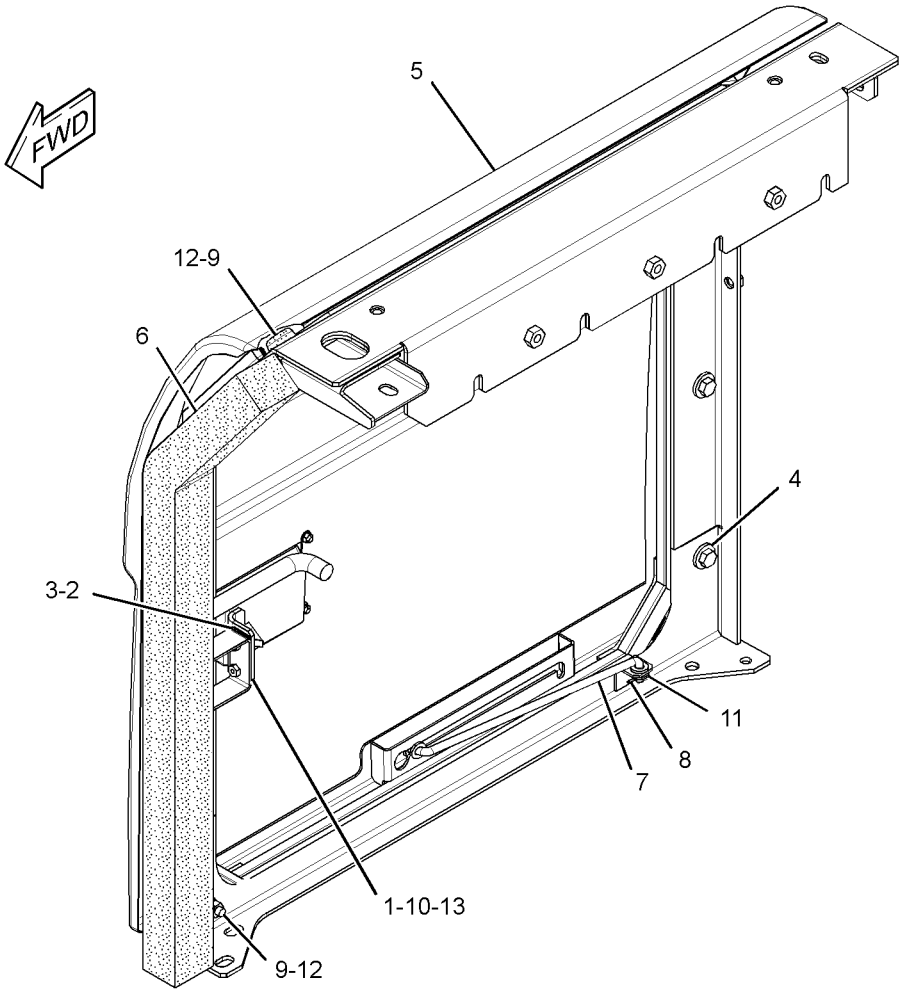

GRAPHIC #1 **<END>** g01623113

268-0670 DOOR GP-ACCESS—RADIATOR, LH

S/N: CJN1-UP

PART OF 268-0642 DOOR GP-ACCESS

SMCS-7273 **i03148208**

NOTE	REF NO	GRAPHIC REF	PART NUMBER	QTY	PART NAME 1 2 3 4 5 6 (PRODUCT LEVEL)	SEE PAGE
	1	1	**4I-0232**	1	STRIKER	
B	2	1	**087-3908**	2	SHIM (1-MM THK)	
B	3	1	**087-3909**	2	SHIM (2-MM THK)	
M	4	1	**135-8575**	3	BOLT AS-LOCKING (M12X1.75X30-MM)	
Y	5	1	**268-0667**	1	DOOR GP-ACCESS (RADIATOR, LH)	296
Y	6	1	**268-0668**	1	SUPPORT AS-ENCLOSURE	348
	7	1	**268-0700**	1	TUBE AS	
	8	1	**3B-4615**	1	PIN-COTTER	
	9	1	**4I-1205**	2	BUMPER	
	10	1	**5P-4115**	2	WASHER-HARD (7.2X19X2-MM THK)	
	11	1	**8T-4121**	1	WASHER-HARD (11X21X2.5-MM THK)	
M	12	1	**8T-4133**	2	NUT (M10X1.5-THD)	
M	13	1	**8T-4138**	2	BOLT (M6X1X20-MM)	

B-USE AS REQUIRED
M-METRIC PART
Y-SEPARATE ILLUSTRATION

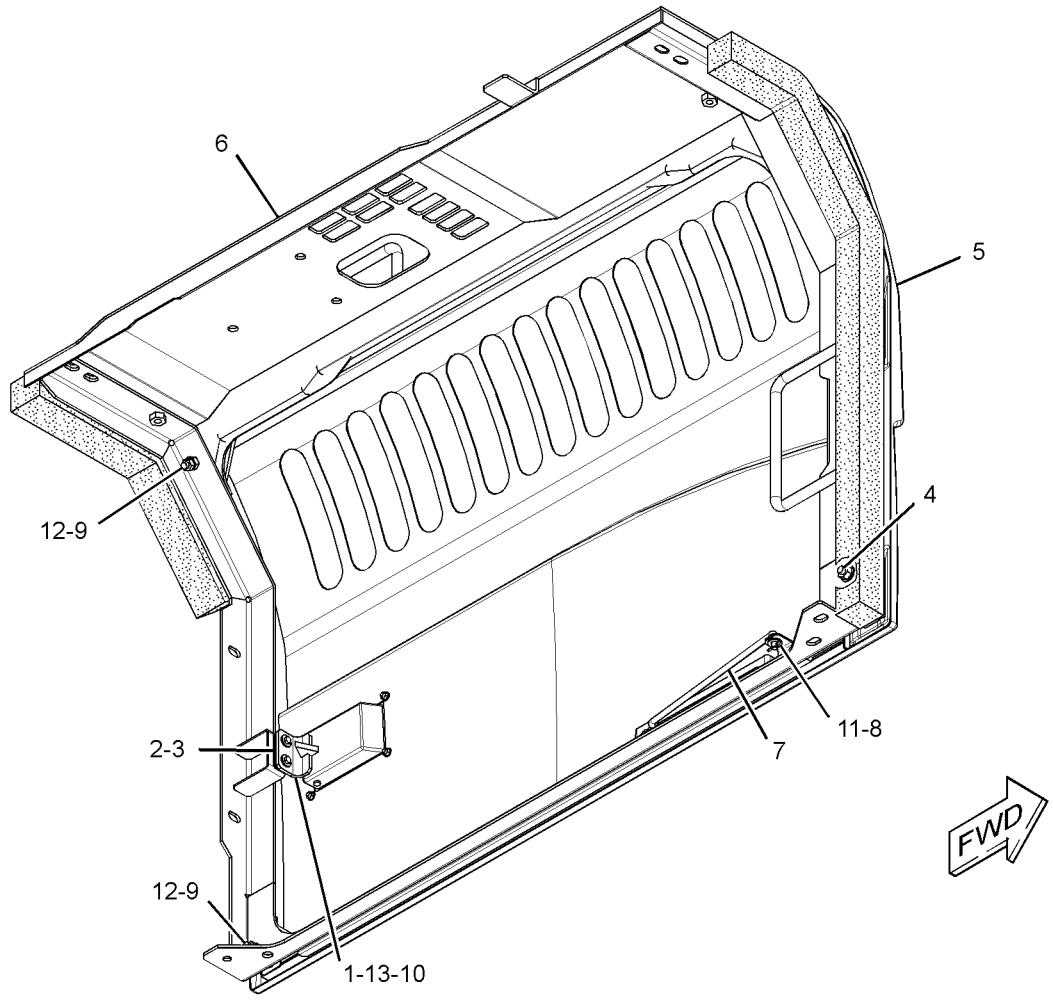

GRAPHIC #1 **<END>** g01621870

268-0677 DOOR GP-ACCESS–PRECLEANER

S/N: CJN1-UP
PART OF 260-7076 HOOD AR
AN ATTACHMENT

SMCS-7273 **i02752982**

NOTE	REF NO	GRAPHIC REF	PART NUMBER	QTY	PART NAME 1 2 3 4 5 6 (PRODUCT LEVEL)	SEE PAGE
Y	1	1	*273-8040*	1	DOOR GP-ACCESS (PRECLEANER)	302

Y-SEPARATE ILLUSTRATION

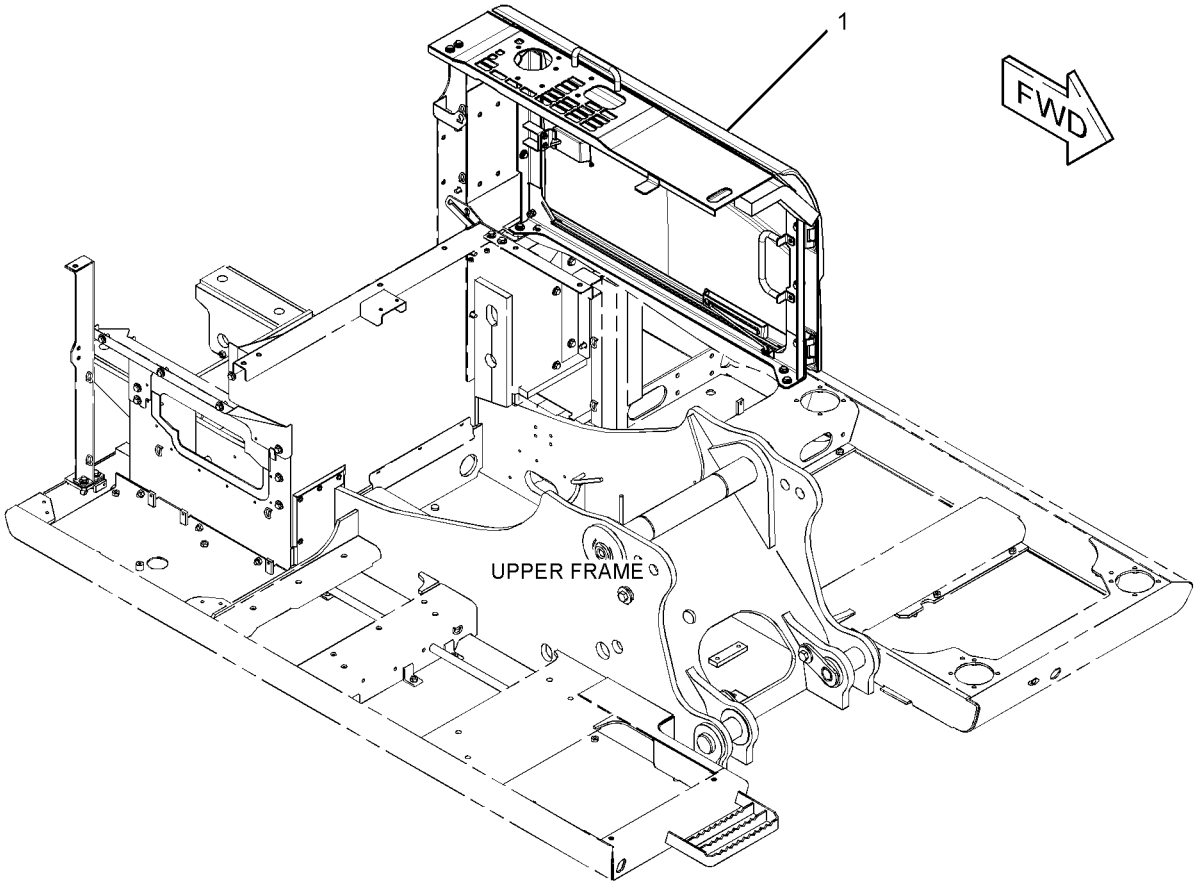

GRAPHIC #1 **<END>** g01381728

FRAME AND BODY

268-0679 DOOR GP-ACCESS–PRECLEANER

S/N: CJN1-UP
AN ATTACHMENT
TYPE 1

SMCS-7273 **i02988369**

NOTE	REF NO	GRAPHIC REF	PART NUMBER	QTY	PART NAME 1 2 3 4 5 6 (PRODUCT LEVEL)	SEE PAGE
M	1	1	**135-8575**	8	BOLT AS-LOCKING (M12X1.75X30-MM)	
Y	2	1	*289-6447*	1	DOOR GP-ACCESS	306
M	3	1	**135-8573**	4	BOLT AS (M12X1.75X25-MM)	

M-METRIC PART
Y-SEPARATE ILLUSTRATION

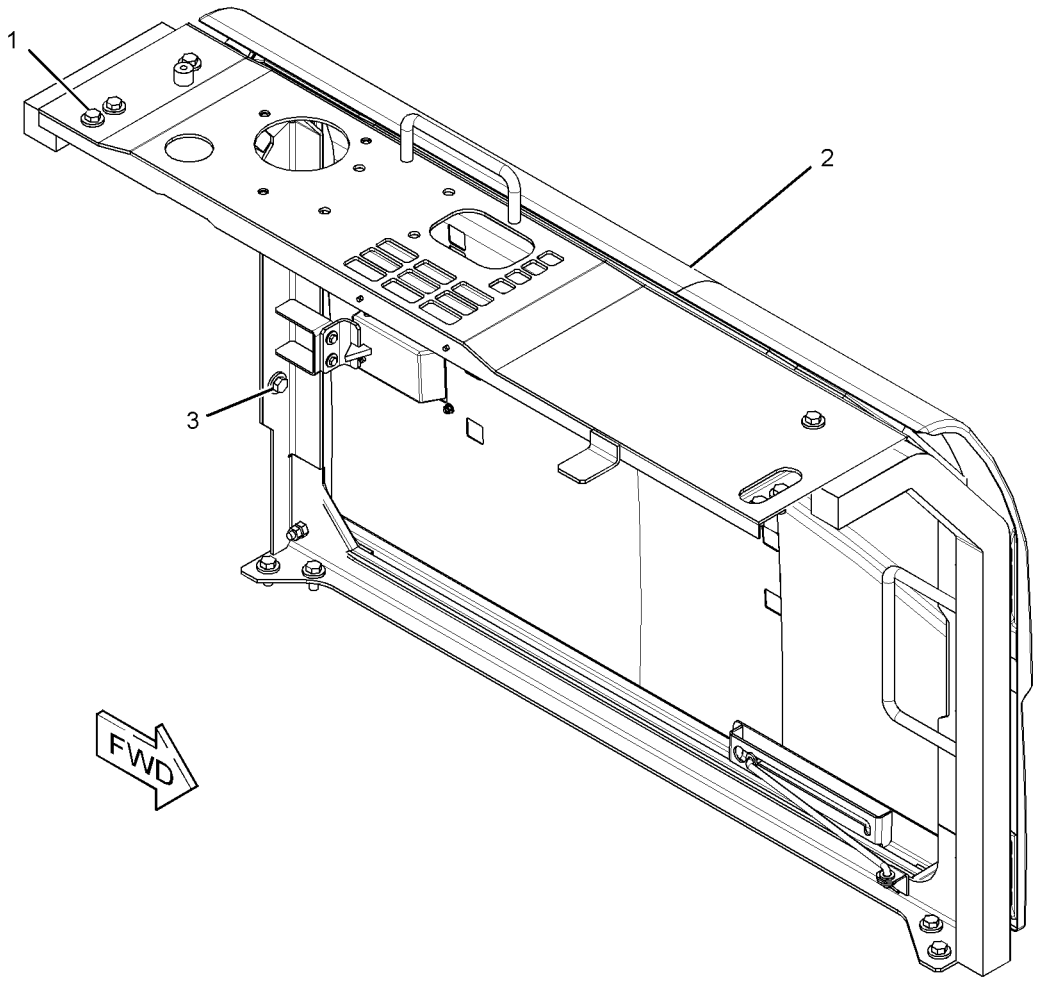

GRAPHIC #1 **<END>** g01561280

268-0679 DOOR GP-ACCESS–PRECLEANER

S/N: CJN1-UP
AN ATTACHMENT
TYPE 2

SMCS-7273 **i03146161**

NOTE	REF NO	GRAPHIC REF	PART NUMBER	QTY	PART NAME 1 2 3 4 5 6 (PRODUCT LEVEL)	SEE PAGE
Y	1	1	*289-6447*	1	DOOR GP-ACCESS	306

Y-SEPARATE ILLUSTRATION

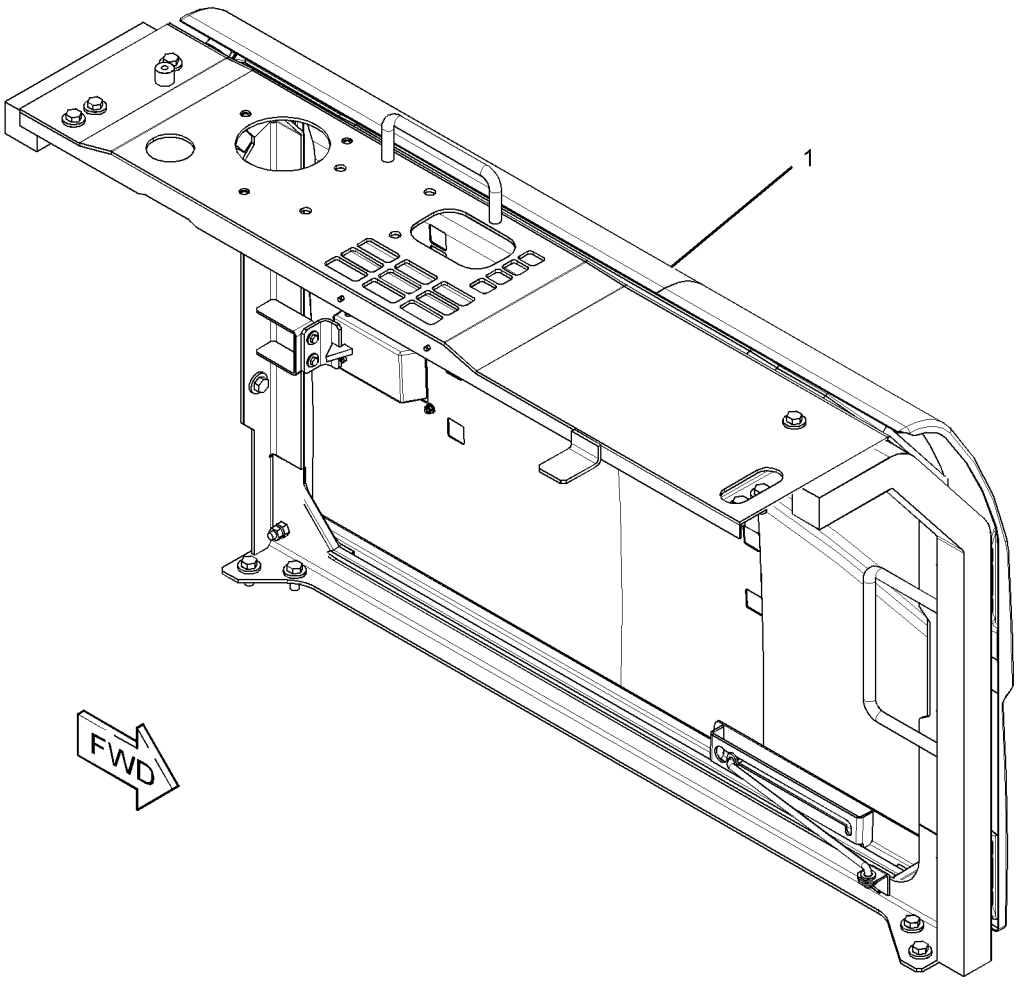

GRAPHIC #1 **<END>** g01620159

273-8040 DOOR GP-ACCESS–PRECLEANER

S/N: CJN1-UP
PART OF 268-0677 DOOR GP-ACCESS
AN ATTACHMENT

SMCS-7273 **i03036022**

NOTE	REF NO	GRAPHIC REF	PART NUMBER	QTY	PART NAME 1 2 3 4 5 6 (PRODUCT LEVEL)	SEE PAGE
M	1	1	**135-8575**	8	BOLT AS-LOCKING (M12X1.75X30-MM)	
Y	2	1	**273-8041**	1	DOOR GP-ACCESS (PRECLEANER)	303
M	3	1	**135-8573**	4	BOLT AS (M12X1.75X25-MM)	

M-METRIC PART
Y-SEPARATE ILLUSTRATION

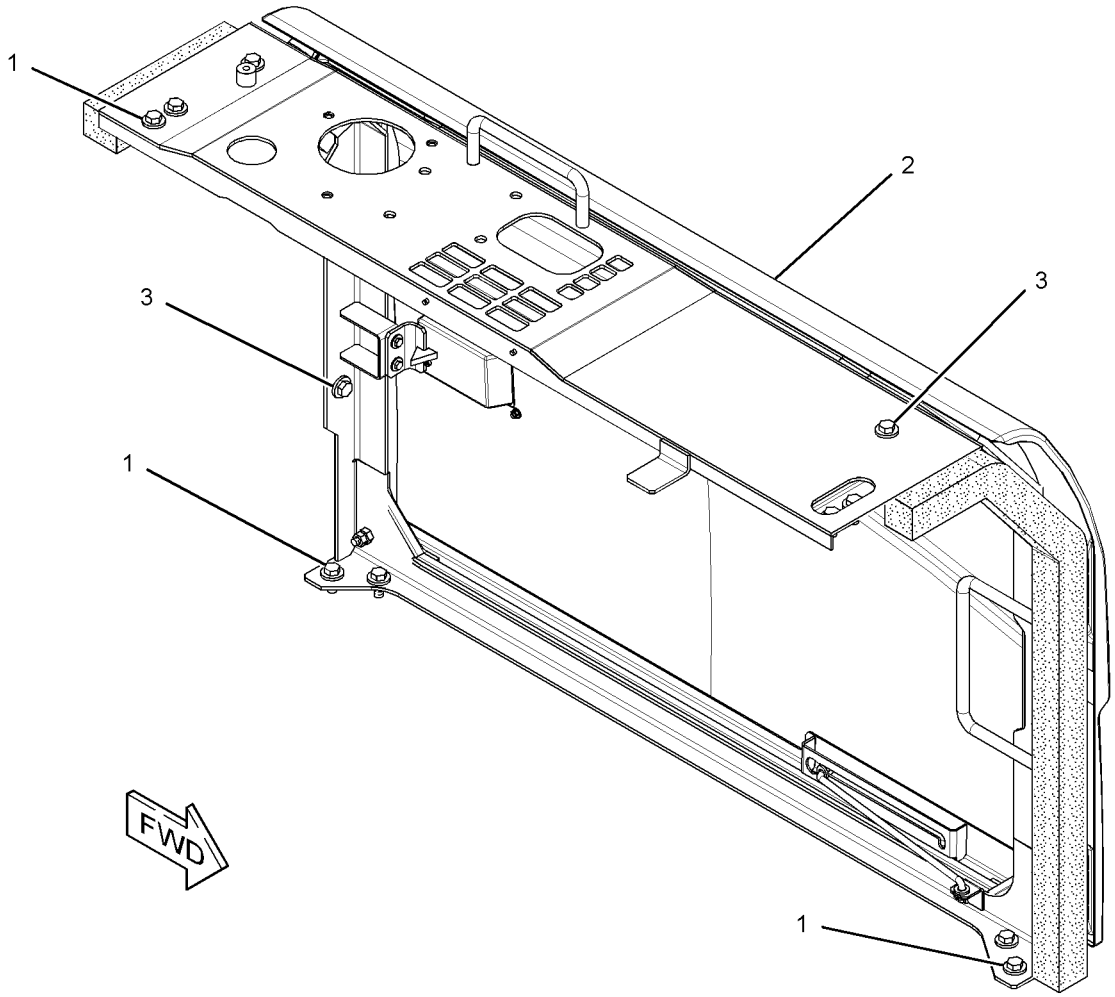

GRAPHIC #1 **<END>** g01621095

273-8041 DOOR GP-ACCESS—PRECLEANER

S/N: CJN1-UP
PART OF 273-8040 DOOR GP-ACCESS
AN ATTACHMENT

SMCS-7273 **i03160723**

NOTE	REF NO	GRAPHIC REF	PART NUMBER	QTY	PART NAME 1 2 3 4 5 6 (PRODUCT LEVEL)	SEE PAGE
	1	1	**4I-0232**	1	STRIKER	
	2	1	**087-3908**	2	SHIM (1-MM THK)	
	3	1	**087-3909**	2	SHIM (2-MM THK)	
M	4	1	**135-8575**	3	BOLT AS-LOCKING (M12X1.75X30-MM)	
Y	5	1	**268-0667**	1	DOOR GP-ACCESS (RADIATOR, LH)	296
	6	1	**268-0700**	1	TUBE AS	
Y	7	1	**273-8042**	1	SUPPORT AS-ENCLOSURE	350
	8	1	**3B-4615**	1	PIN-COTTER	
	9	1	**4I-1205**	2	BUMPER	
	10	1	**5P-4115**	2	WASHER-HARD (7.2X19X2-MM THK)	
	11	1	**8T-4121**	1	WASHER-HARD (11X21X2.5-MM THK)	
M	12	1	**8T-4133**	2	NUT (M10X1.5-THD)	
M	13	1	**8T-4138**	2	BOLT (M6X1X20-MM)	

M-METRIC PART
Y-SEPARATE ILLUSTRATION

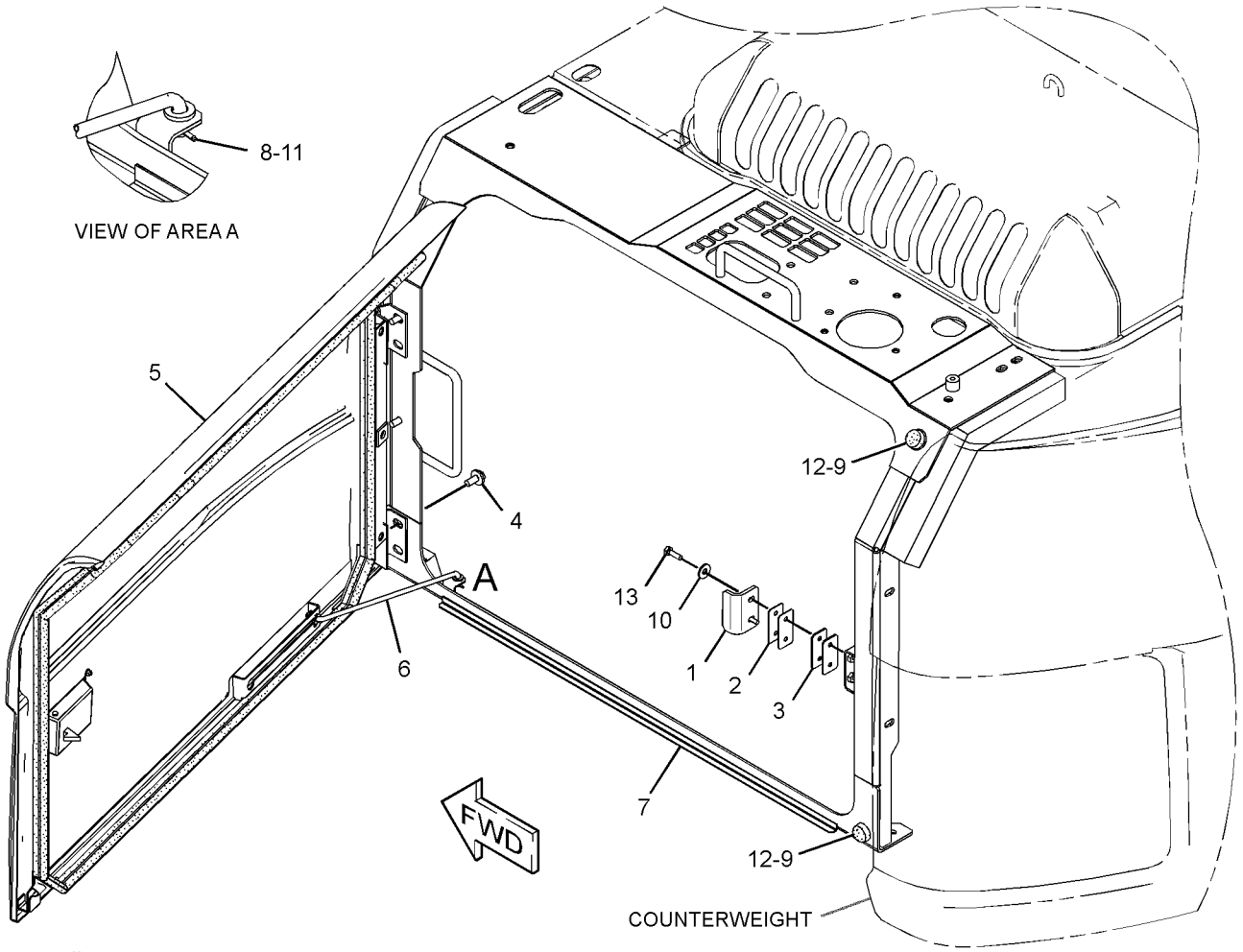

GRAPHIC #1 **<END>** g01623378

273-8048 DOOR GP-ACCESS—HIGH AMBIENT

S/N: CJN1-UP
PART OF 273-8085 HOOD & GUARD GP
AN ATTACHMENT

SMCS-7273 **i03148210**

NOTE	REF NO	GRAPHIC REF	PART NUMBER	QTY	PART NAME 1 2 3 4 5 6 (PRODUCT LEVEL)	SEE PAGE
	1	1	**4I-0232**	1	STRIKER	
M	2	1	**135-8575**	3	BOLT AS-LOCKING (M12X1.75X30-MM)	
Y	3	1	**268-0668**	1	SUPPORT AS-ENCLOSURE	348
	4	1	**268-0700**	1	TUBE AS	
	5	1	**273-8049**	1	DOOR GP-ACCESS	
		1	*273-8057*	1	DOOR AS	
M		1	**8T-3597**	3	NUT-WELD (M12X1.75-THD)	
		1	**184-8898**	2	HINGE	
D		1	**5P-8309**		SEAL (4.1-M)	
J		1	**298-2942**	1	LOCK AS	
M		1	**099-6418**	4	NUT (M6X1-THD)	
	6	1	**3B-4618**	1	PIN-COTTER	
	7	1	**4I-1205**	2	BUMPER	
	8	1	**5P-4115**	2	WASHER-HARD (7.2X19X2-MM THK)	
M	9	1	**8T-4133**	2	NUT (M10X1.5-THD)	
M	10	1	**8T-4138**	2	BOLT (M6X1X20-MM)	
	11	1	**8T-4121**	1	WASHER-HARD (11X21X2.5-MM THK)	
B	12	1	**087-3908**	2	SHIM (1-MM THK)	
B	13	1	**087-3909**	2	SHIM (2-MM THK)	

B-USE AS REQUIRED
D-ORDER BY THE METER
J-REQUIRES CORPORATE KEY
M-METRIC PART
Y-SEPARATE ILLUSTRATION

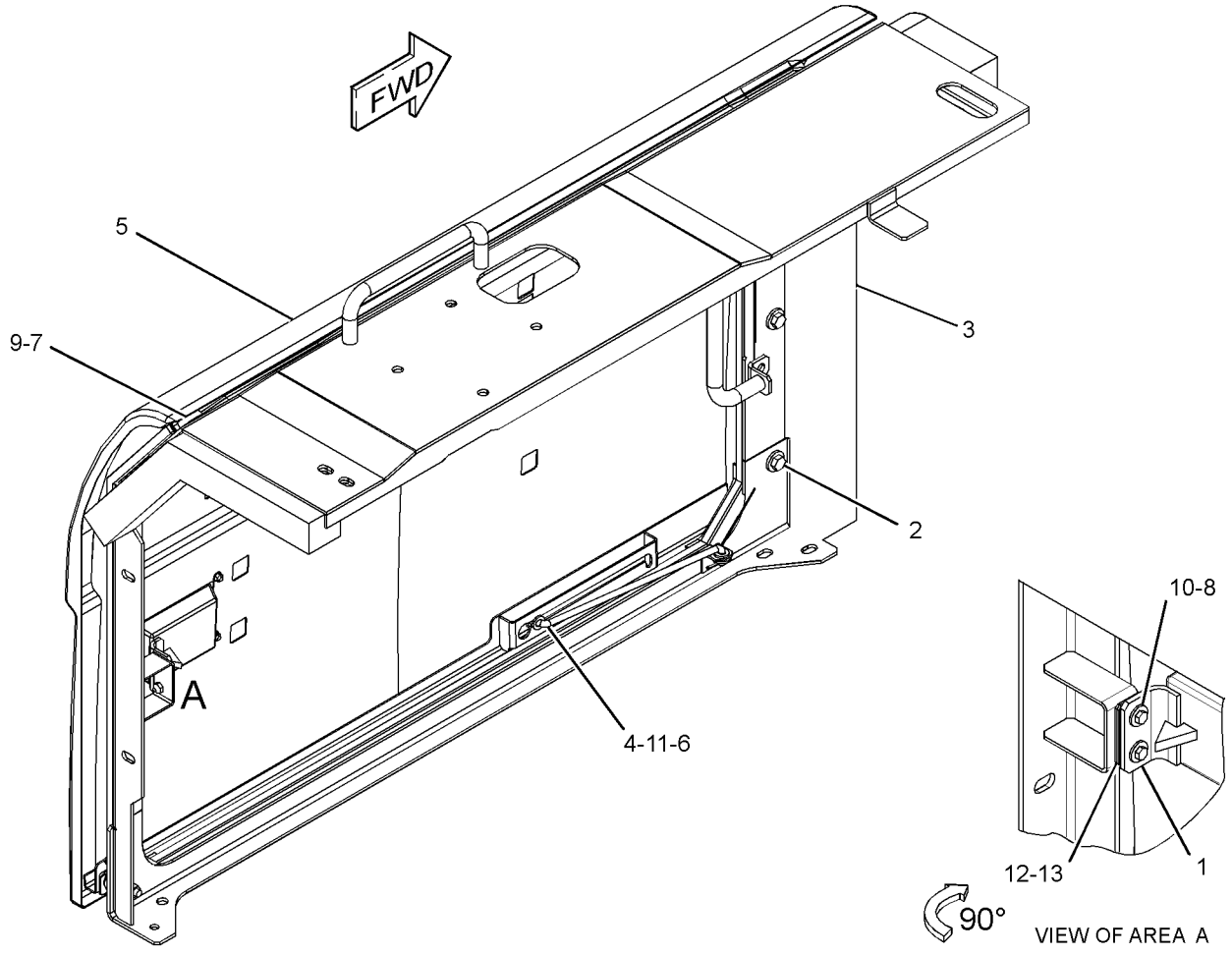

GRAPHIC #1 **<END>** g01623241

289-6447 DOOR GP-ACCESS—LH

S/N: CJN1-UP
PART OF 268-0679 DOOR GP-ACCESS
AN ATTACHMENT

SMCS-7273 **i03148785**

NOTE	REF NO	GRAPHIC REF	PART NUMBER	QTY	PART NAME 1 2 3 4 5 6 (PRODUCT LEVEL)	SEE PAGE
	1	1	**4I-0232**	1	STRIKER	
M	2	1	**135-8575**	3	BOLT AS-LOCKING (M12X1.75X30-MM)	
	3	1	**268-0700**	1	TUBE AS	
Y	4	1	**273-8042**	1	SUPPORT AS-ENCLOSURE	350
	5	1	**273-8049**	1	DOOR GP-ACCESS	
	5A	1	**268-0457**	1	LOCK AS	
M	5B	1	**099-6418**	4	NUT (M6X1-THD)	
D		1	**5P-8309**		SEAL (0.41-M)	
	6	1	**3B-4618**	1	PIN-COTTER	
	7	1	**4I-1205**	2	BUMPER	
	8	1	**5P-4115**	2	WASHER-HARD (7.2X19X2-MM THK)	
M	9	1	**8T-4133**	2	NUT (M10X1.5-THD)	
M	10	1	**8T-4138**	2	BOLT (M6X1X20-MM)	
	11	1	**8T-4223**	1	WASHER-HARD (13.5X25.5X3-MM THK)	
	12	1	**087-3908**	2	SHIM (1-MM THK)	
	13	1	**087-3909**	2	SHIM (2-MM THK)	

D-ORDER BY THE METER
M-METRIC PART
Y-SEPARATE ILLUSTRATION

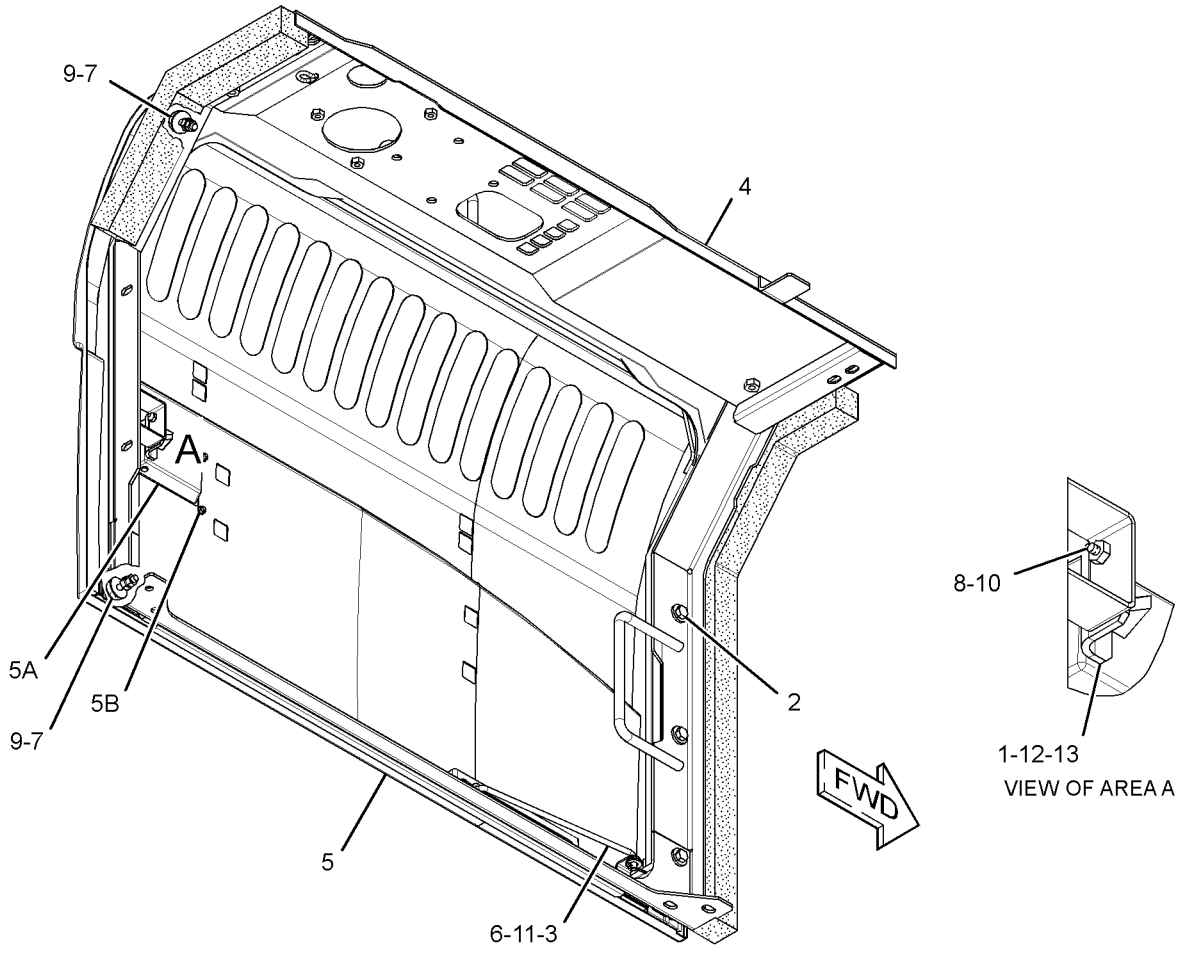

GRAPHIC #1 **<END>** g01623227

303-9888 DOOR GP-ACCESS—MAIN PUMP

S/N: CJN1-UP
PART OF 303-9791 HOOD GP
AN ATTACHMENT

SMCS-7273 **i03149801**

NOTE	REF NO	GRAPHIC REF	PART NUMBER	QTY	PART NAME 1 2 3 4 5 6 (PRODUCT LEVEL)	SEE PAGE
	1	1	**4I-0232**	1	STRIKER	
M	2	1	**135-8575**	3	BOLT AS-LOCKING (M12X1.75X30-MM)	
Y	3	1	**268-0665**	1	DOOR GP-ACCESS	295
	4	1	**268-0700**	1	TUBE AS	
	5	1	**303-9889**	1	SUPPORT AS	
		1	**268-0734**	1	INSULATION	
	6	1	**3B-4615**	1	PIN-COTTER	
	7	1	**4I-1205**	2	BUMPER	
	8	1	**5P-4115**	2	WASHER-HARD (7.2X19X2-MM THK)	
M	9	1	**8T-4133**	2	NUT (M10X1.5-THD)	
M	10	1	**8T-4138**	2	BOLT (M6X1X20-MM)	
	11	1	**8T-4121**	1	WASHER-HARD (11X21X2.5-MM THK)	
	12	1	**087-3908**	2	SHIM (1-MM THK)	
	13	1	**087-3909**	2	SHIM (2-MM THK)	

M-METRIC PART
Y-SEPARATE ILLUSTRATION

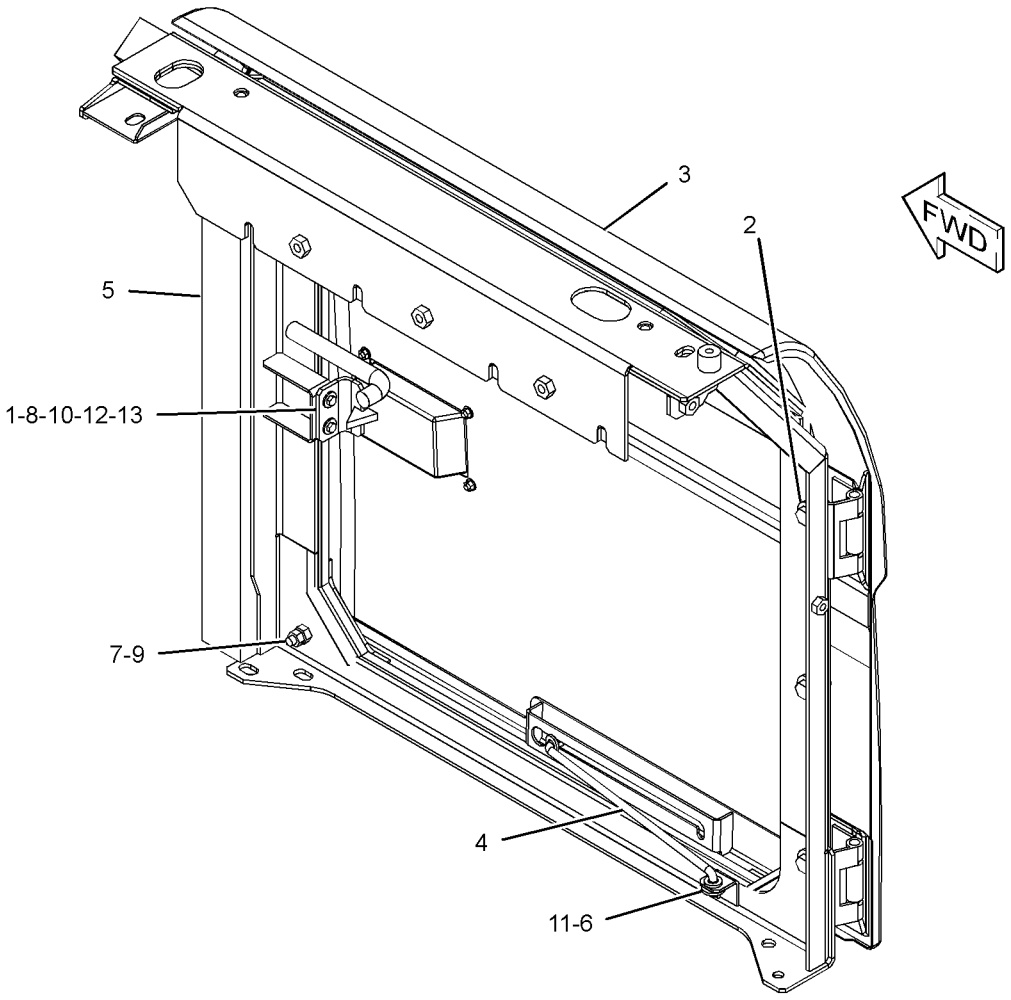

GRAPHIC #1 **<END>** g01620212

303-9964 DOOR GP-ACCESS—RADIATOR

S/N: CJN1-UP

PART OF 273-8085 HOOD & GUARD GP, 303-9791 HOOD GP

AN ATTACHMENT

SMCS-7273 **i03149800**

NOTE	REF NO	GRAPHIC REF	PART NUMBER	QTY	PART NAME 1 2 3 4 5 6 (PRODUCT LEVEL)	SEE PAGE
	1	1	**4I-0232**	1	STRIKER	
M	2	1	**135-8575**	3	BOLT AS-LOCKING (M12X1.75X30-MM)	
	3	1	**268-0700**	1	TUBE AS	
	4	1	**273-8049**	1	DOOR GP-ACCESS	
		1	**184-8898**	2	HINGE	
D		1	**5P-8309**		SEAL (4.1-M)	
M		1	**099-6418**	4	NUT (M6X1-THD)	
J		1	**298-2942**	1	LOCK AS	
Y	5	1	**303-9886**	1	SUPPORT AS-ENCLOSURE (DOOR, LH)	351
	6	1	**3B-4618**	1	PIN-COTTER	
	7	1	**4I-1205**	2	BUMPER	
	8	1	**5P-4115**	2	WASHER-HARD (7.2X19X2-MM THK)	
M	9	1	**8T-4133**	2	NUT (M10X1.5-THD)	
M	10	1	**8T-4138**	2	BOLT (M6X1X20-MM)	
	11	1	**8T-4121**	1	WASHER-HARD (11X21X2.5-MM THK)	
	12	1	**087-3908**	2	SHIM (1-MM THK)	
	13	1	**087-3909**	2	SHIM (2-MM THK)	

D-ORDER BY THE METER
J-REQUIRES CORPORATE KEY
M-METRIC PART
Y-SEPARATE ILLUSTRATION

303-9964 DOOR GP-ACCESS *(contd.)* **i03149800**

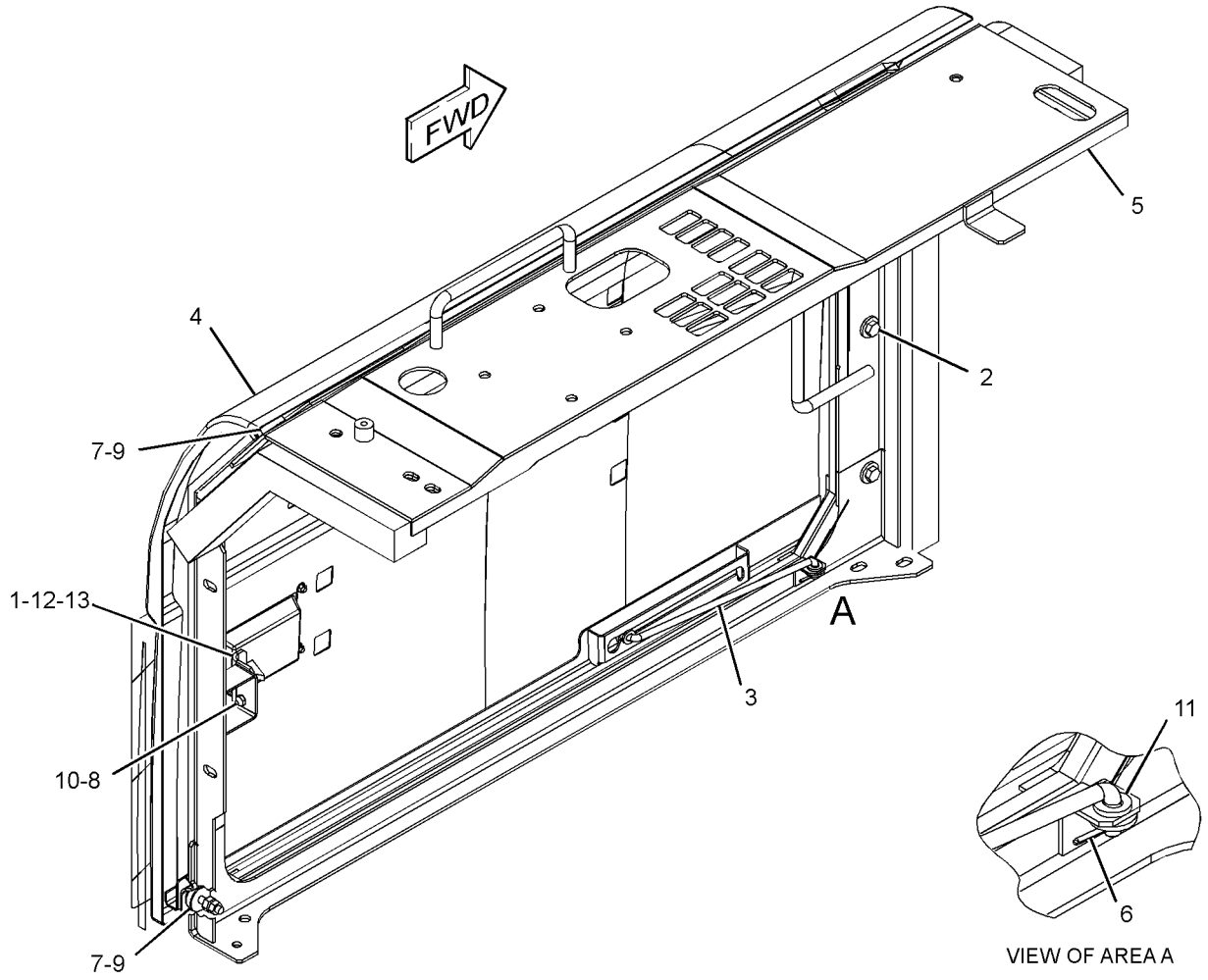

GRAPHIC #1 **<END>** g01620213

FRAME AND BODY

244-8041 FENDER & COVER GP

S/N: CJN1-UP

PART OF 260-6960 CHASSIS AR

SMCS-7252 **i02902074**

NOTE	REF NO	GRAPHIC REF	PART NUMBER	QTY	PART NAME 1 2 3 4 5 6 (PRODUCT LEVEL)	SEE PAGE
M	1	1	**135-8573**	2	BOLT AS (M12X1.75X25-MM)	
	2	1	**236-3698**	1	STEP AS	
	3	1	**236-3702**	2	SPACER (15X35X11-MM THK)	
	4	1	**236-3703**	2	WASHER (25X35X4-MM THK)	
	5	1	**259-3903**	1	COVER AS	
		1	**278-3818**	8	LINER	
	6	1	**5P-1075**	2	WASHER-HARD (10.2X22.5X3-MM THK)	
M	7	1	**8T-4195**	2	BOLT (M10X1.5X30-MM)	

M-METRIC PART

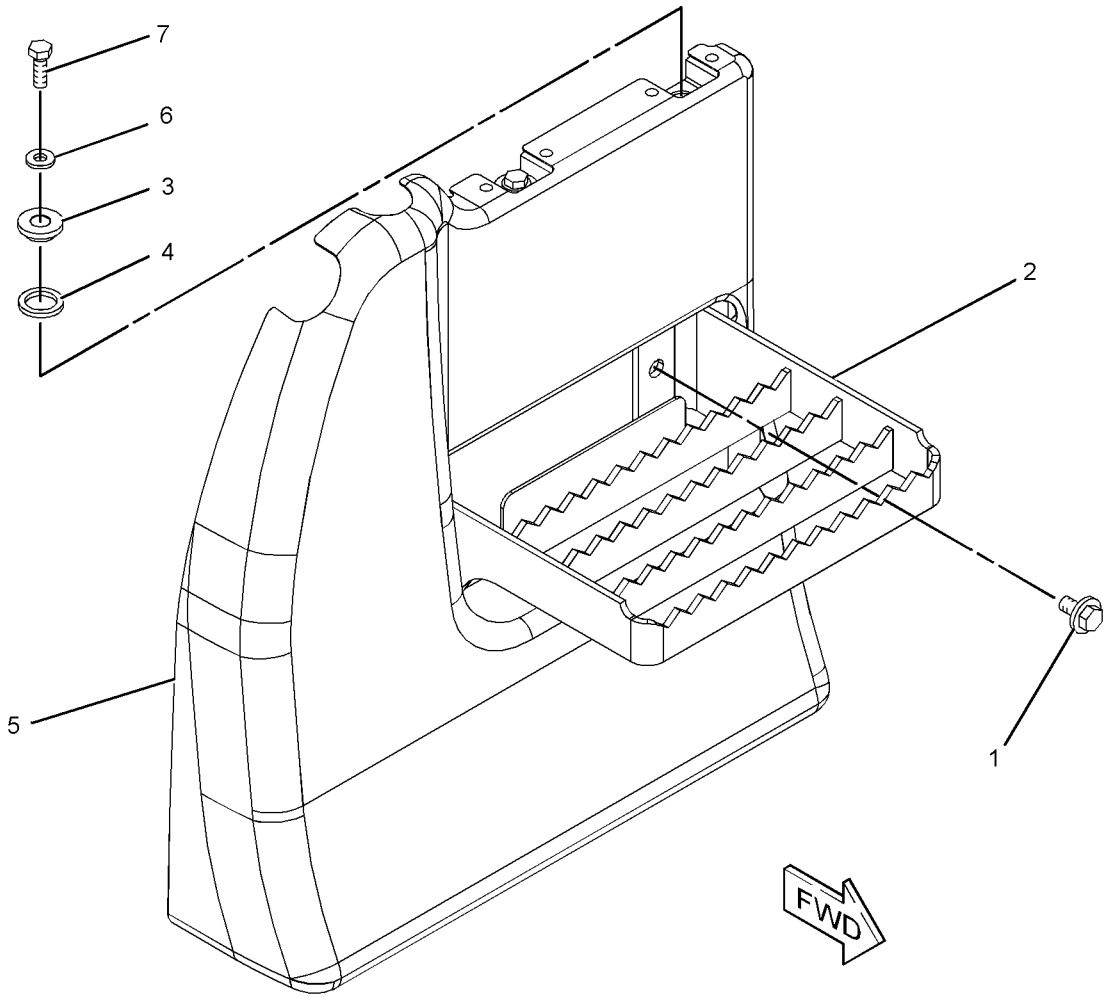

GRAPHIC #1 **<END>** g01223345

330-1163 FENDER & COVER GP

S/N: CJN1-UP
PART OF 330-1324 MIRROR GP
AN ATTACHMENT

SMCS-7252 **i03132131**

NOTE	REF NO	GRAPHIC REF	PART NUMBER	QTY	PART NAME 1 2 3 4 5 6 (PRODUCT LEVEL)	SEE PAGE
	1	1	**330-1164**	1	COVER AS	
		1	**6C-3679**	8	RIVET-POP	
		1	**278-3818**	1	LINER	

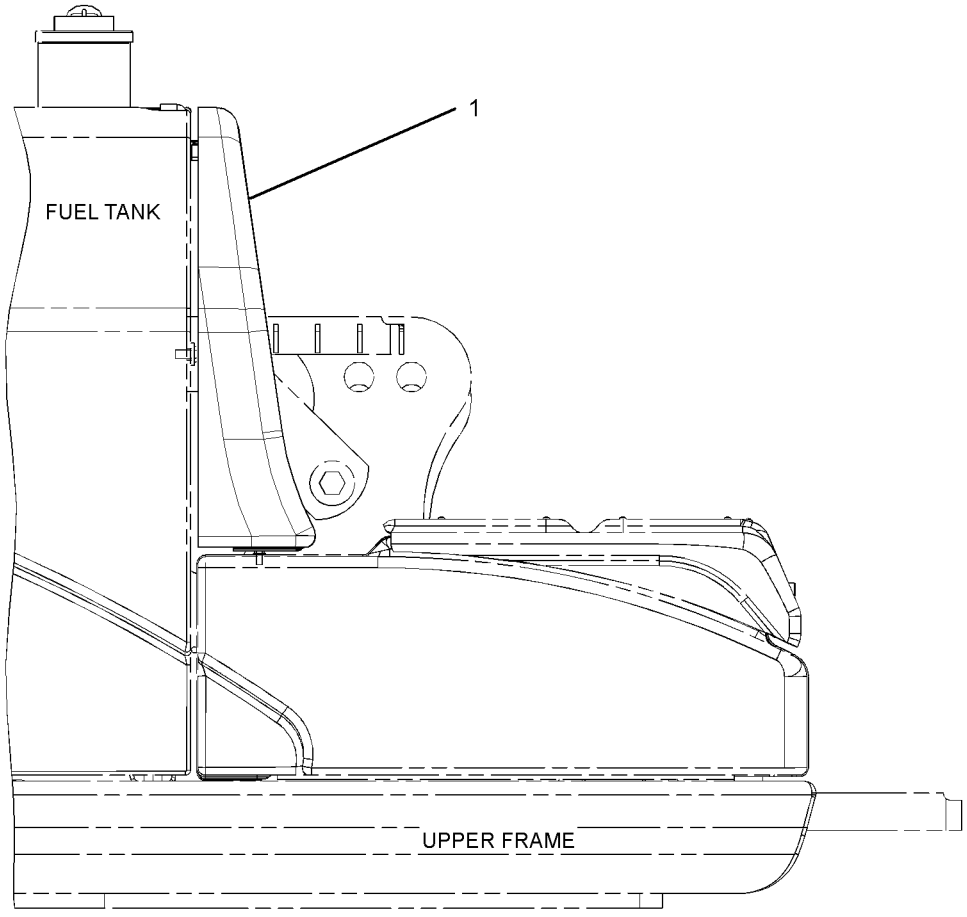

RIGHT SIDE VIEW

GRAPHIC #1

<END>

g01621025

FRAME AND BODY

260-2458 FRAME GP-UPPER

S/N: CJN1-UP

PART OF 260-6960 CHASSIS AR

SMCS-7051 **i02910650**

NOTE	REF NO	GRAPHIC REF	PART NUMBER	QTY	PART NAME 1 2 3 4 5 6 (PRODUCT LEVEL)	SEE PAGE
B	1	1	**308-8776**	2	SHIM (1-MM THK)	
B	2	1	**093-0086**	4	SHIM (1-MM THK)	
B	3	1	**308-8777**	1	SHIM (2-MM THK)	
B	4	1	**093-0118**	2	SHIM (2-MM THK)	
	5	1	**093-0349**	3	WASHER (22X60X6-MM THK)	
	6	1	**107-9739**	2	PIN AS	
B	7	1	**308-8775**	1	SHIM (0.5-MM THK)	
	8	1	**118-5982**	2	SPACER (73X105X14-MM THK)	
B	9	1	**133-2424**	2	SHIM (0.5-MM THK)	
	10	1	**212-2838**	2	SHIM (2-MM THK)	
J	11	1	**245-7900**	1	CAP	
J	12	1	**245-7901**	1	CAP	
	13	1	**260-2459**	1	FRAME AS-UPPER	
	14	1	**267-0061**	1	PIN AS	
M	15	1	**8T-4780**	3	BOLT (M20X2.5X30-MM)	

B-USE AS REQUIRED
J-REQUIRED ON MACHINE WITHOUT LOWER WIPER
M-METRIC PART

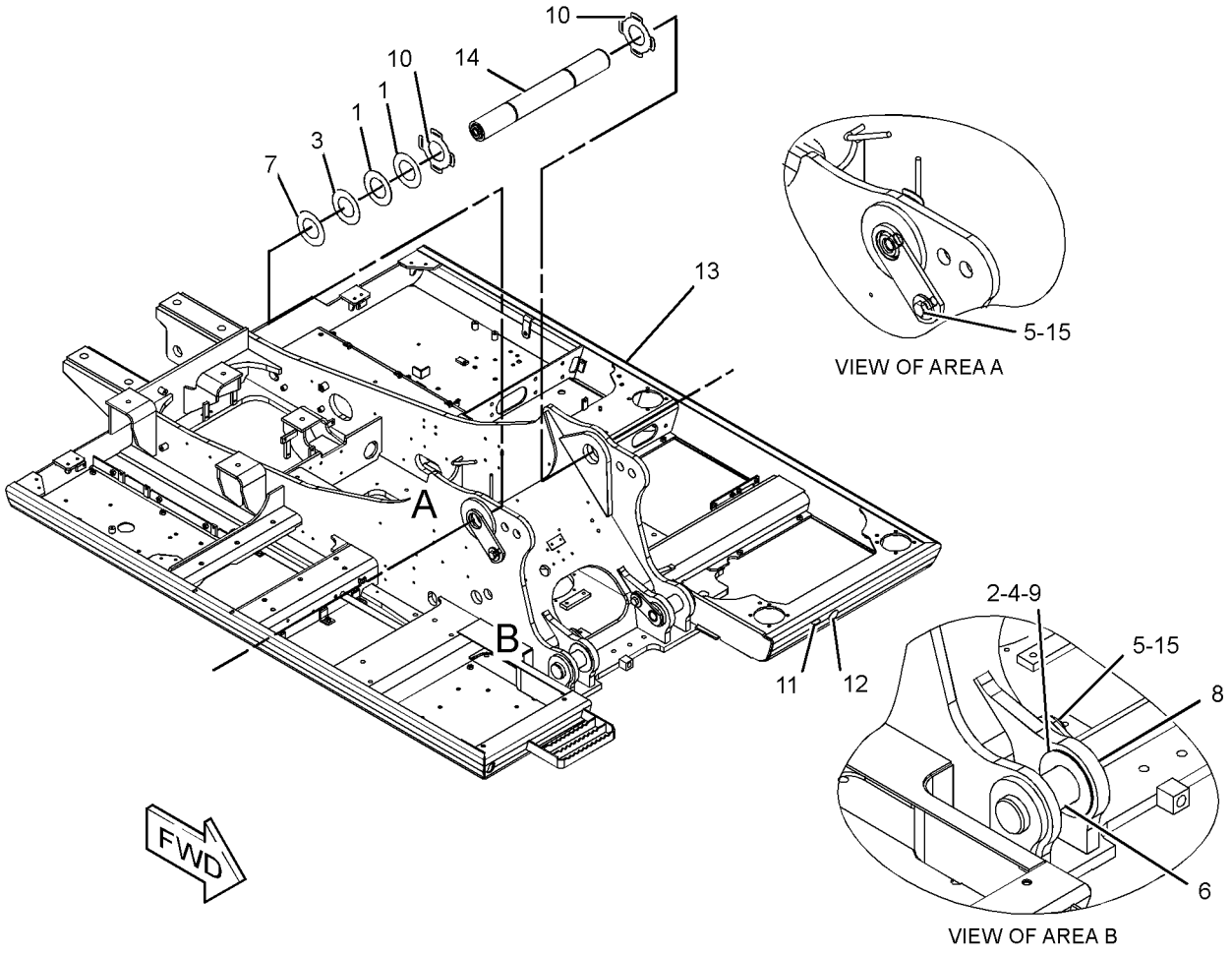

GRAPHIC #1 **<END>** g01317162

297-7558 FRAME GP-UPPER–ACCUGRADE

S/N: CJN1-UP
PART OF 301-2479, 301-2517, 330-8775 SPECIAL AR
AN ATTACHMENT

SMCS-7051 **i02840342**

NOTE	REF NO	GRAPHIC REF	PART NUMBER	QTY	PART NAME 1 2 3 4 5 6 (PRODUCT LEVEL)	SEE PAGE
B	1	1	**093-0086**	4	SHIM (1-MM THK)	
B	2	1	**093-0118**	2	SHIM (2-MM THK)	
	3	1	**093-0349**	3	WASHER (22X60X6-MM THK)	
	4	1	**107-9739**	2	PIN AS	
	5	1	**118-5982**	2	SPACER (73X105X14-MM THK)	
B	6	1	**133-2424**	2	SHIM (0.5-MM THK)	
	7	1	**212-2838**	2	SHIM (2-MM THK)	
J	8	1	**245-7900**	1	CAP	
J	9	1	**245-7901**	1	CAP	
	10	1	**260-2459**	1	FRAME AS-UPPER	
	11	1	**303-8860**	1	PIN AS	
B	12	1	**308-8775**	1	SHIM (0.5-MM THK)	
B	13	1	**308-8776**	2	SHIM (1-MM THK)	
B	14	1	**308-8777**	1	SHIM (2-MM THK)	
	15	1	**308-8914**	1	PLATE	
M	16	1	**096-4883**	2	LOCKNUT (M10X1.15-THD)	
M	17	1	**7X-2561**	1	BOLT (M20X2.5X35-MM)	
	18	1	**8T-4121**	2	WASHER-HARD (11X21X2.5-MM THK)	
M	19	1	**8T-4186**	2	BOLT (M10X1.5X40-MM)	
M	20	1	**8T-4780**	2	BOLT (M20X2.5X30-MM)	

B-USE AS REQUIRED
J-USED ONLY ON MACHINES WITHOUT LOWER WIPER
M-METRIC PART

297-7558 **FRAME GP-UPPER** *(contd.)* **i02840342**

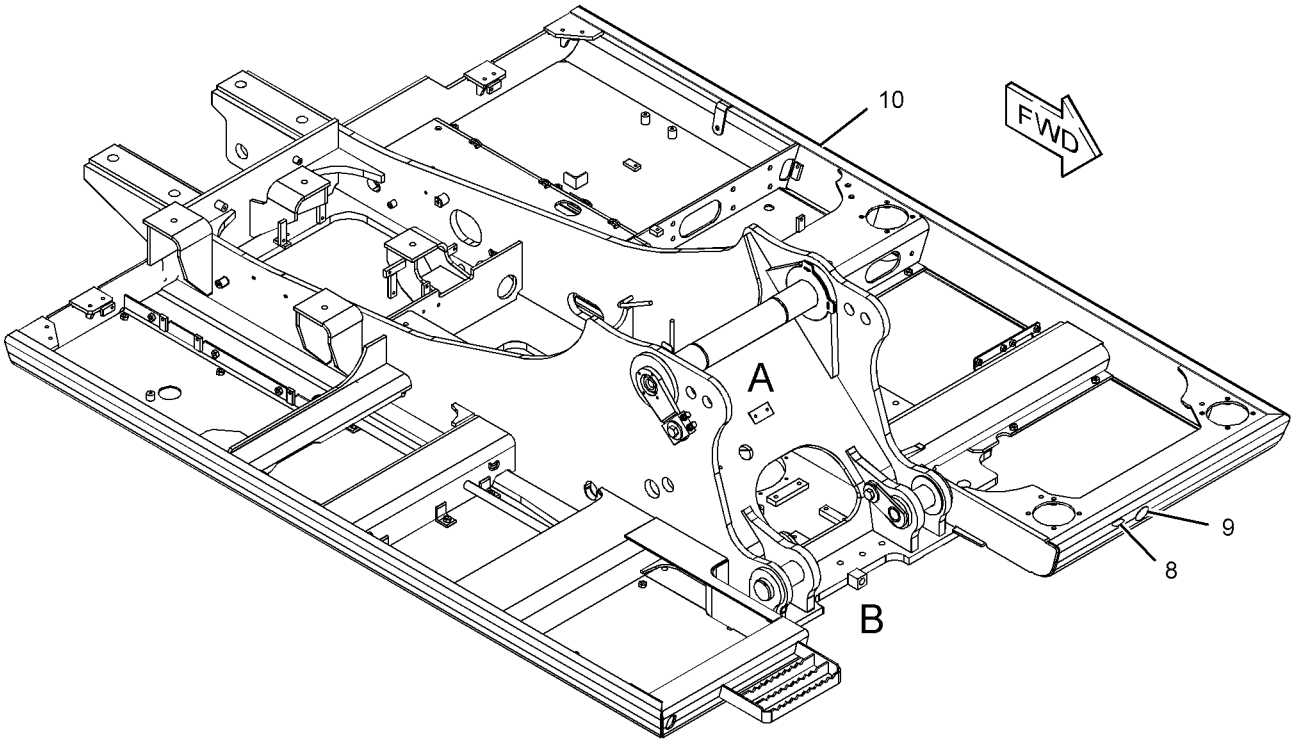

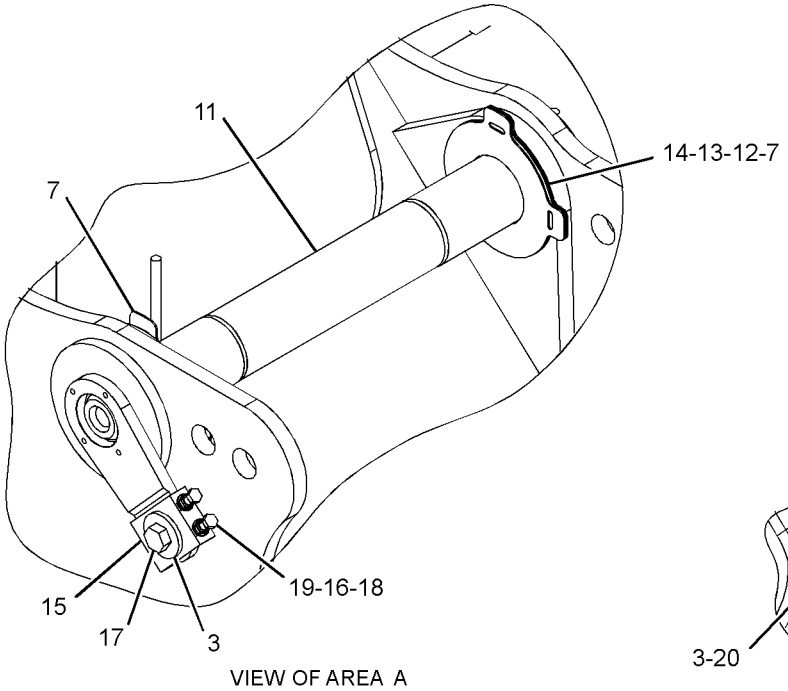

VIEW OF AREA A

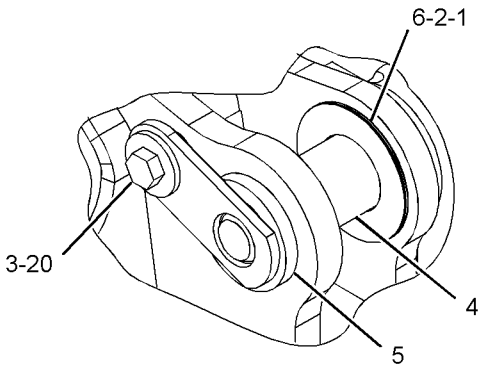

VIEW OF AREA B

GRAPHIC #1 **<END>** g01418786

267-6832 GEAR & BEARING GP-SWING

S/N: CJN1-UP

PART OF 260-6975 FRAME AR-UNDERCARRIAGE

SMCS-7063 **i02814406**

NOTE	REF NO	GRAPHIC REF	PART NUMBER	QTY	PART NAME 1 2 3 4 5 6 (PRODUCT LEVEL)	SEE PAGE
	1	1	**2Y-5503**	1	CORK	
	2	1	**4I-7444**	1	BOOT	
	3	1	**4I-7446**	1	GASKET	
	4	1	**4I-7511**	1	RETAINER	
	5	1	**4I-7512**	1	CLAMP-HOSE	
	6	1	**5K-9243**	2	ELBOW-FLARED	
	7	1	**102-6449**	1	TUBE AS	
	8	1	**171-9464**	68	SPACER (20.6X38X6-MM THK)	
	9	1	**267-6831**	1	GEAR & BEARING GP-SWING	
		1	**3B-8489**	1	FITTING-GREASE	
E		1	**148-4685**		SEAL (335-CM)	
		1	**229-1081**	2	SEAL-DUST	
	10	1	**095-7993**	1	DOWEL	
	11	1	**148-4703**	1	COVER	
	12	1	**148-4704**	1	GASKET	
	13	1	**3B-8489**	1	FITTING-GREASE	
	14	1	**4I-7326**	1	STRIP	
	15	1	**4N-9170**	2	CLIP	
M	16	1	**6V-3532**	36	BOLT (M20X2.5X60-MM)	
M	17	1	**8T-0362**	32	BOLT (M20X2.5X110-MM)	
	18	1	**8T-4121**	14	WASHER-HARD (11X21X2.5-MM THK)	
M	19	1	**8T-4136**	12	BOLT (M10X1.5X25-MM)	
M	20	1	**8T-4137**	2	BOLT (M10X1.5X20-MM)	
M	21	1	**8T-4199**	2	BOLT (M8X1.25X12-MM)	
B	22	1	**1U-8846**		SEALANT-GASKET	

B-USE AS REQUIRED
E-ORDER BY THE CENTIMETER
M-METRIC PART

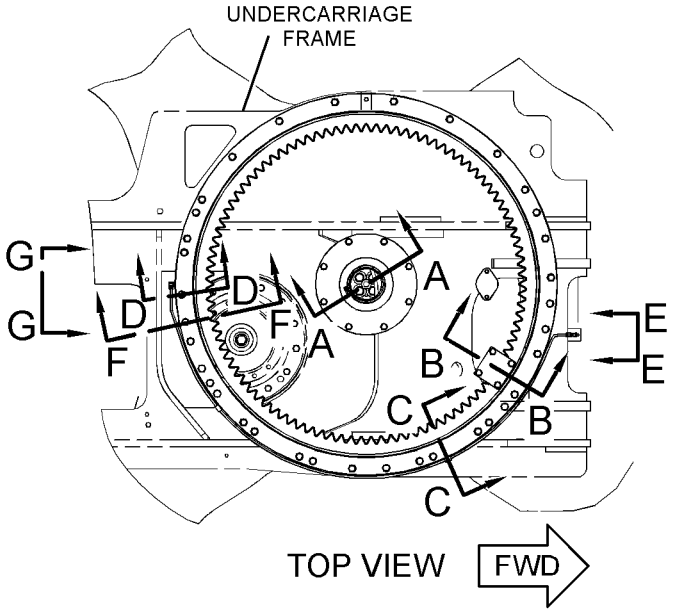

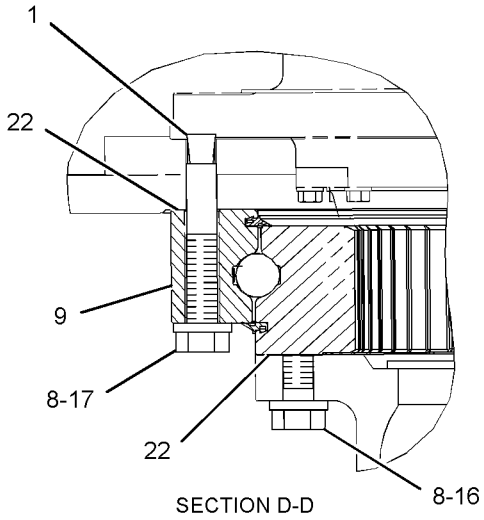

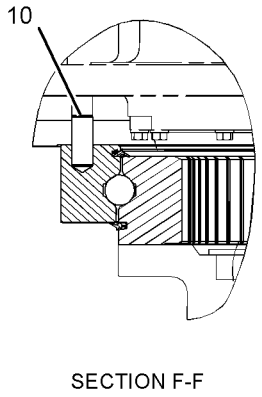

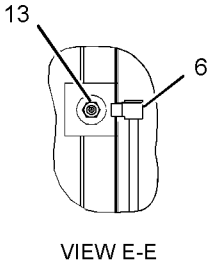

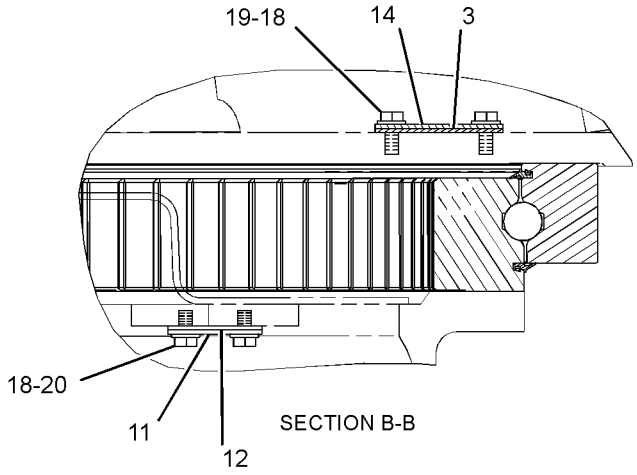

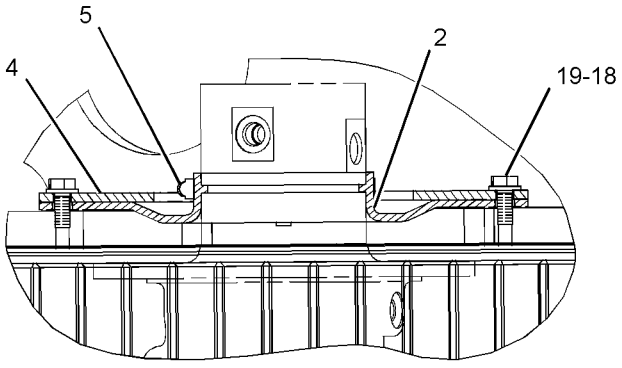

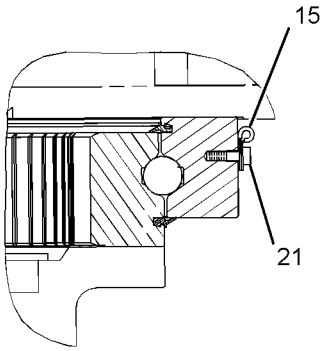

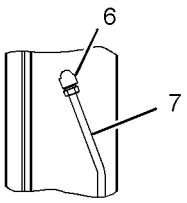

GRAPHIC #1 **<END>** g01404675

FRAME AND BODY

262-2258 GUARD GP-BOTTOM

S/N: CJN1-UP

PART OF 260-6960 CHASSIS AR

SMCS-7153 **i02862830**

NOTE	REF NO	GRAPHIC REF	PART NUMBER	QTY	PART NAME 1 2 3 4 5 6 (PRODUCT LEVEL)	SEE PAGE
M	1	1	**135-8576**	28	BOLT AS-LOCKING (M12X1.75X30-MM)	
	2	1	**268-0581**	1	SHEET	
	3	1	**268-0582**	1	SHEET	
	4	1	**268-0583**	1	SHEET	
	5	1	**268-0584**	1	SHEET	
	6	1	**313-8080**	1	SHEET	
	7	1	**273-7766**	1	SHEET AS	

M-METRIC PART

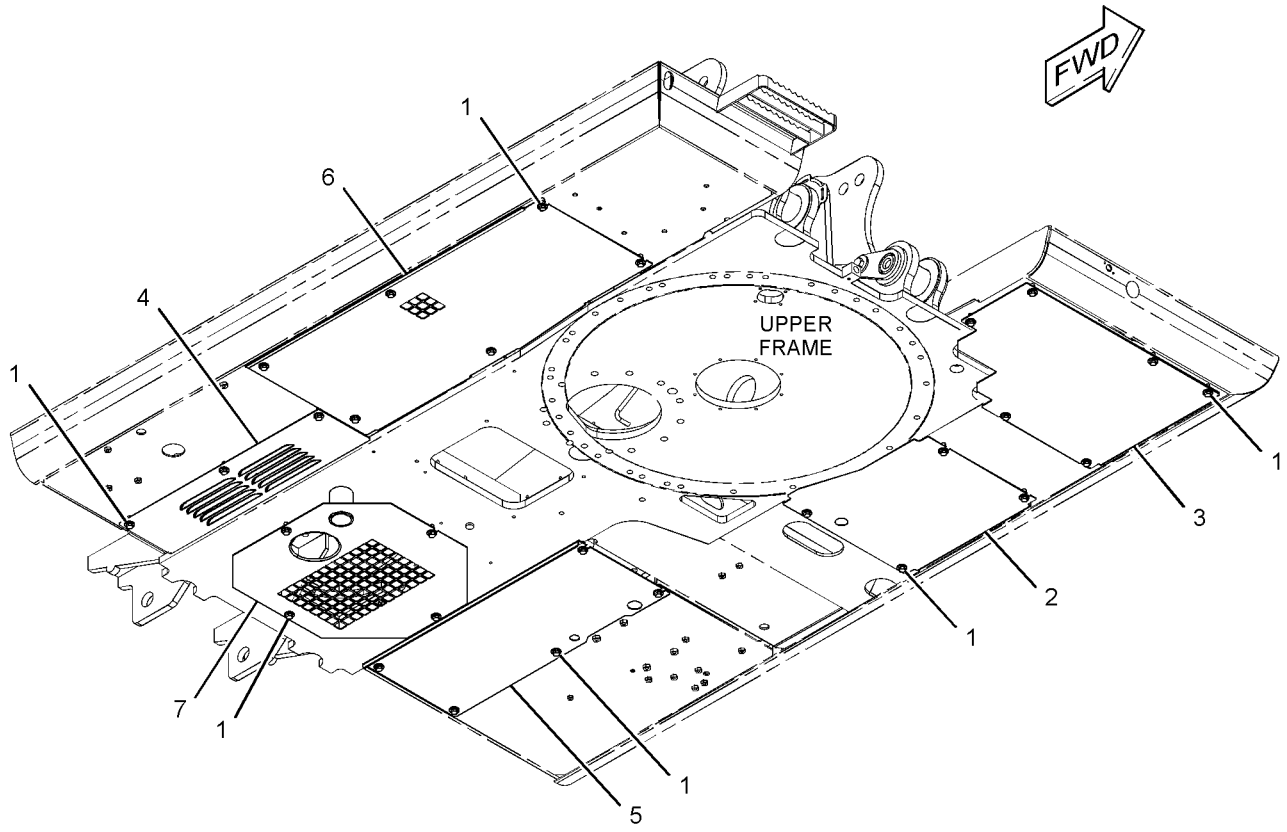

GRAPHIC #1 **<END>** g01427015

273-7694 GUARD GP-BOTTOM–HEAVY-DUTY

S/N: CJN1-UP
AN ATTACHMENT

SMCS-7153 **i02750409**

NOTE	REF NO	GRAPHIC REF	PART NUMBER	QTY	PART NAME 1 2 3 4 5 6 (PRODUCT LEVEL)	SEE PAGE
M	1	1	**135-8576**	4	BOLT AS-LOCKING (M12X1.75X30-MM)	
	2	1	**193-9710**	1	PLATE AS	
	3	1	**273-7689**	1	PLATE AS	
	4	1	**273-7691**	1	PLATE AS	
	5	1	**273-7698**	1	PLATE AS	
	6	1	**273-7700**	1	PLATE AS	
	7	1	**273-7702**	1	PLATE AS	
	8	1	**273-7768**	1	PLATE AS	
	9	1	**5P-1076**	3	WASHER-HARD (13.5X30X4-MM THK)	
M	10	1	**7X-7478**	3	BOLT-LOCKING (M12X1.75X35-MM)	

M-METRIC PART

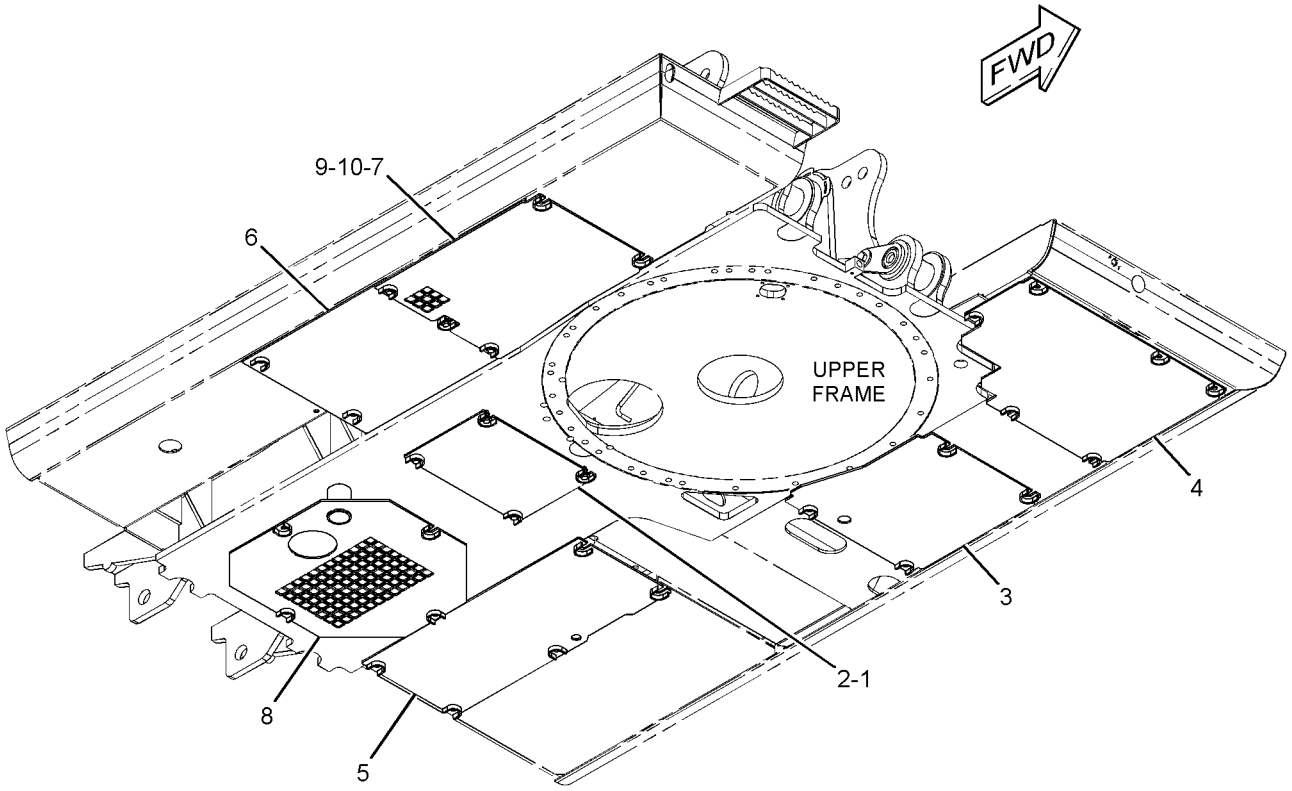

GRAPHIC #1 **<END>** g01379162

210-3821 GUARD GP-FRONT

S/N: CJN1-UP
PART OF 330-8777 BOOM AR, 301-2479, 301-2517 SPECIAL AR
AN ATTACHMENT

SMCS-7167, 7182 **i02841156**

NOTE	REF NO	GRAPHIC REF	PART NUMBER	QTY	PART NAME 1 2 3 4 5 6 (PRODUCT LEVEL)	SEE PAGE
	1	1	**210-3823**	1	GUARD AS	
	2	1	**5P-1076**	2	WASHER-HARD (13.5X30X4-MM THK)	
M	3	1	**8T-4179**	2	BOLT (M12X1.75X20-MM)	

M-METRIC PART

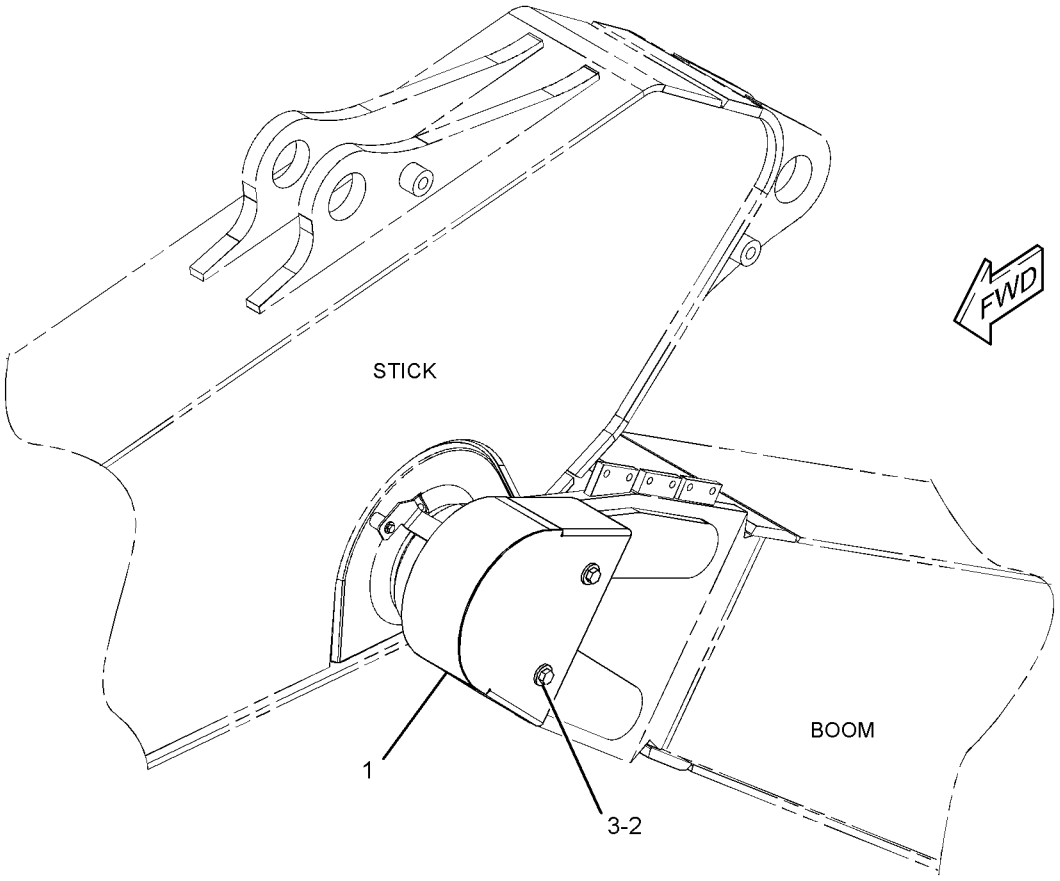

GRAPHIC #1 **<END>** g01418381

134-8875 GUARD GP-SWIVEL

S/N: CJN1-UP
AN ATTACHMENT

SMCS-7183 **i01721530**

NOTE	REF NO	GRAPHIC REF	PART NUMBER	QTY	PART NAME 1 2 3 4 5 6 (PRODUCT LEVEL)	SEE PAGE
	1	1	**134-8876**	1	PLATE AS	
	2	1	**134-8878**	1	PLATE AS	
M	3	1	**8C-8992**	5	BOLT-LOCKING (M12X1.75X30MM)	
	4	1	**5P-1076**	5	WASHER-HARD (13.5X30X4MM THK)	

M-METRIC PART

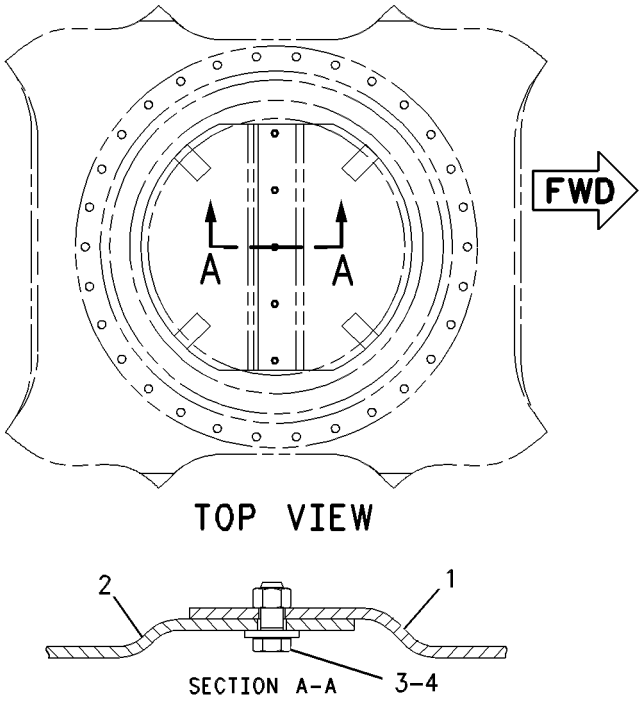

GRAPHIC #1 **<END>** g00390432

170-2602 HANDRAIL GP–FRONT, RH

S/N: CJN1-UP

PART OF 260-6960 CHASSIS AR

SMCS-7256 **i02902073**

NOTE	REF NO	GRAPHIC REF	PART NUMBER	QTY	PART NAME 1 2 3 4 5 6 (PRODUCT LEVEL)	SEE PAGE
	1	1	**8T-4223**	2	WASHER-HARD (13.5X25.5X3-MM THK)	
M	2	1	**8T-4192**	2	BOLT (M12X1.75X25-MM)	
	3	1	**193-9712**	1	HANDRAIL AS	
	4	1	**177-5880**	2	SLEEVE	
	5	1	**177-5879**	1	CLAMP	
M	6	1	**135-8578**	3	BOLT AS (M12X1.75X40-MM)	

M-METRIC PART

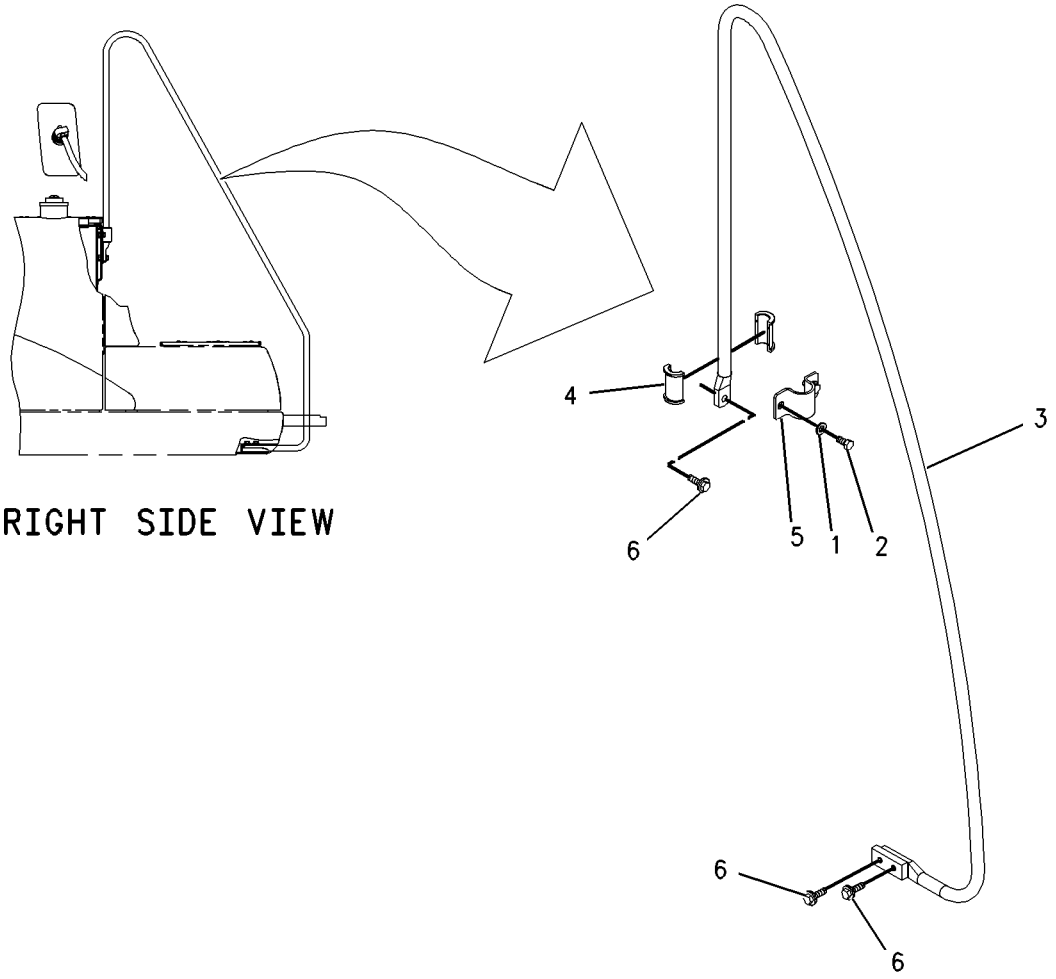

GRAPHIC #1 **<END>** g00747864

262-2265 HOOD & GUARD GP

S/N: CJN1-UP

PART OF 260-6960 CHASSIS AR

SMCS-7251, 7276 **i03152223**

NOTE	REF NO	GRAPHIC REF	PART NUMBER	QTY	PART NAME 1 2 3 4 5 6 (PRODUCT LEVEL)	SEE PAGE
Y	1	1	*268-0641*	1	HOOD & GUARD GP	323
Y	2	1	*268-0642*	1	DOOR GP-ACCESS (RADIATOR, LH)	293
Y	3	1	*268-0643*	1	DOOR GP-ACCESS (PUMP)	294
Y	4	1	*268-0644*	1	COVER GP-SIDE (HYDRAULIC TANK)	291
Y	5	1	*268-0645*	1	COVER GP-ACCESS (UPPER)	290
Y	6	1	*268-0646*	1	HOOD & GUARD GP	324

Y-SEPARATE ILLUSTRATION

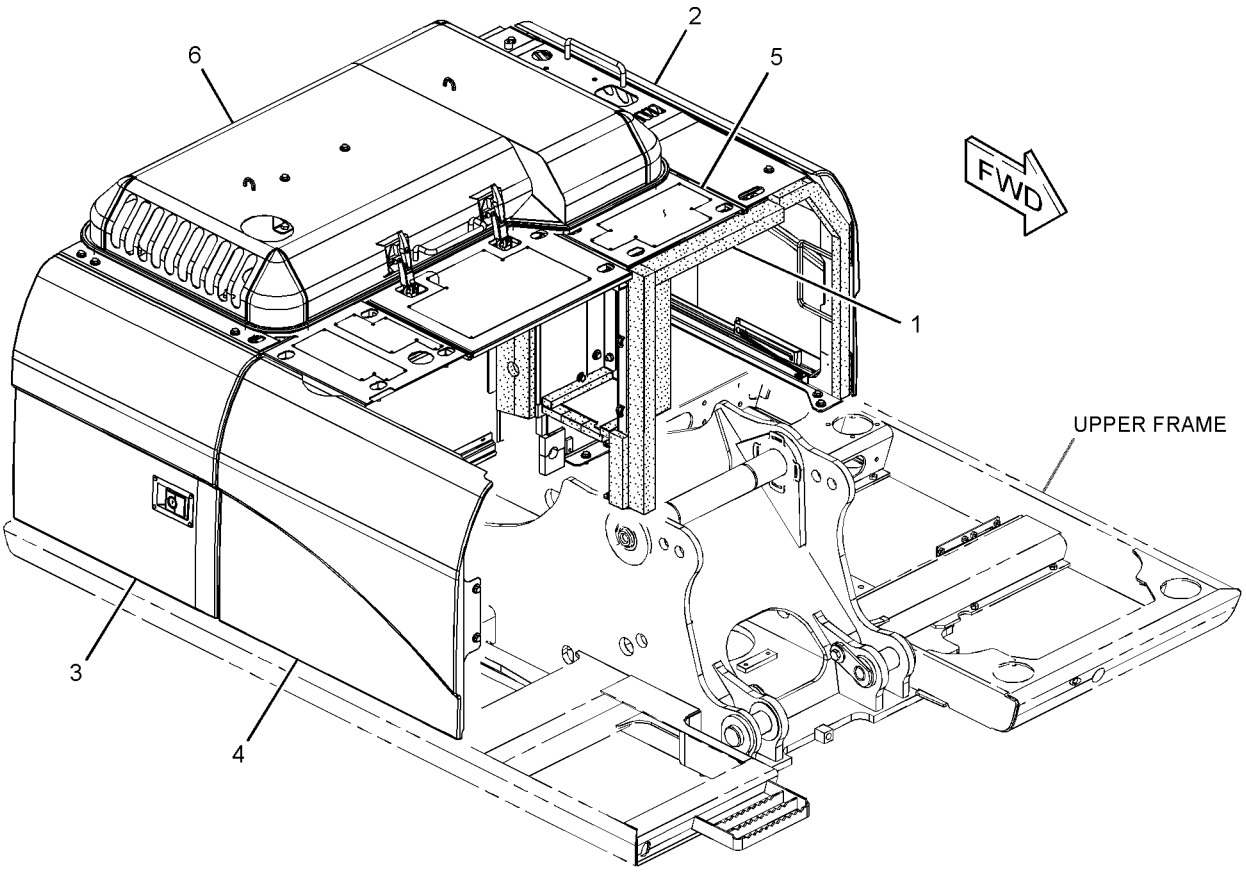

GRAPHIC #1 **<END>** g01620436

268-0641 HOOD & GUARD GP

S/N: CJN1-UP

PART OF 262-2265 HOOD & GUARD GP

SMCS-7251, 7276 **i02753500**

NOTE	REF NO	GRAPHIC REF	PART NUMBER	QTY	PART NAME 1 2 3 4 5 6 (PRODUCT LEVEL)	SEE PAGE
M	1	1	**135-8575**	4	BOLT AS-LOCKING (M12X1.75X30-MM)	
Y	2	1	**268-0654**	1	SHEET AS-SOUND SUPPRESSION	339
Y	3	1	*273-8044*	1	HOOD & GUARD GP	325

M-METRIC PART
Y-SEPARATE ILLUSTRATION

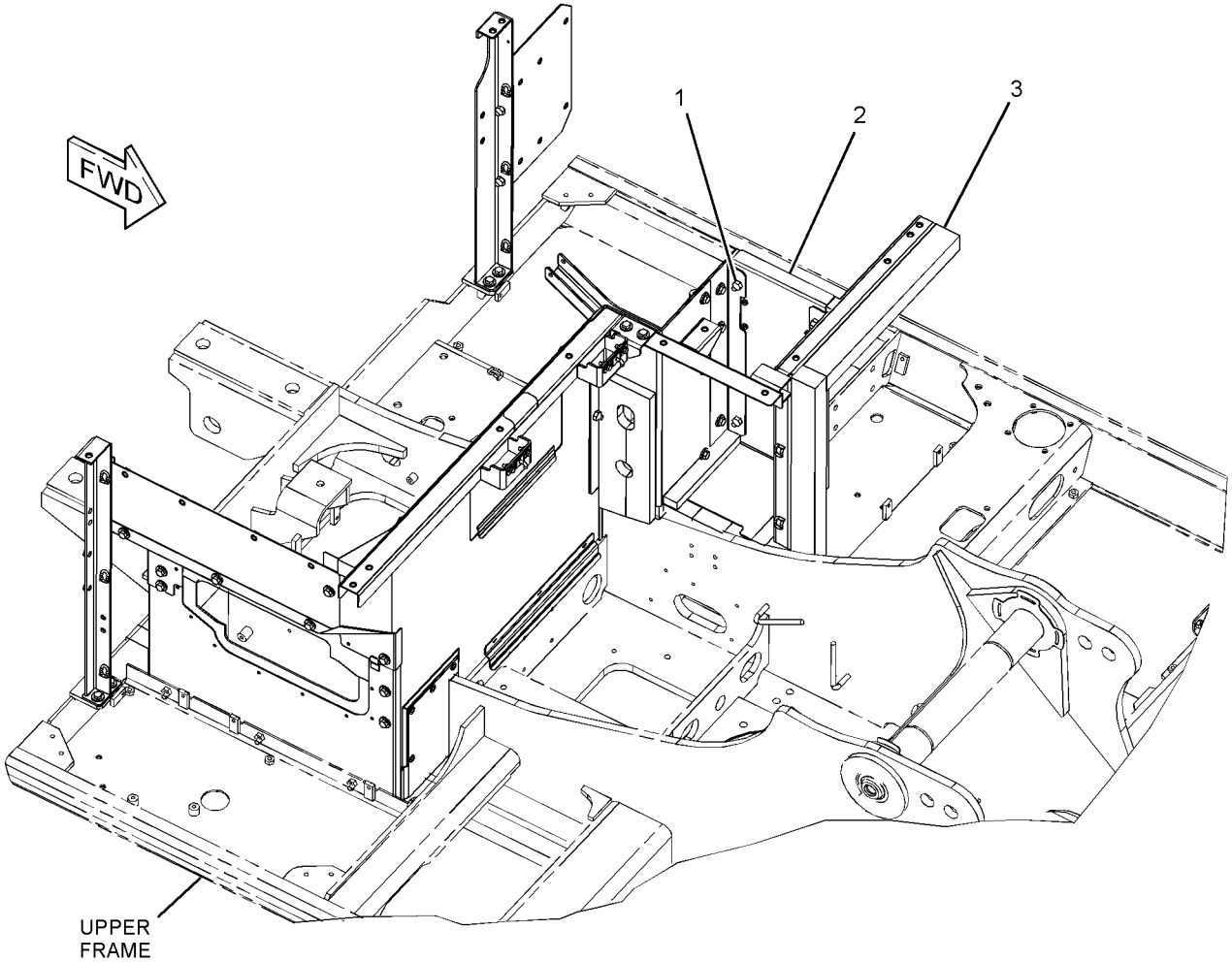

GRAPHIC #1 **<END>** g01380705

FRAME AND BODY

268-0646 HOOD & GUARD GP

S/N: CJN1-UP

PART OF 262-2265 HOOD & GUARD GP

SMCS-7251, 7276 **i02988372**

NOTE	REF NO	GRAPHIC REF	PART NUMBER	QTY	PART NAME 1 2 3 4 5 6 (PRODUCT LEVEL)	SEE PAGE
M	1	1	**135-8578**	6	BOLT AS (M12X1.75X40-MM)	
Y	2	1	**268-0664**	1	HOOD GP-ENGINE	332
	3	1	**1R-9958**	1	FASTENER	
	4	1	**8T-4224**	5	WASHER-HARD (8.8X16X2-MM THK)	
	5	1	**4I-0117**	1	FASTENER	
	6	1	**273-8035**	1	SPRING AS-GAS	
	7	1	**114-6285**	2	BAR	
	8	1	**3B-4618**	1	PIN-COTTER	
M	9	1	**5C-7261**	1	NUT (M8X1.25-THD)	
	10	1	**7F-3708**	1	PIN	
	11	1	**8T-4121**	2	WASHER-HARD (11X21X2.5-MM THK)	
M	12	1	**8T-4908**	4	BOLT (M8X1.25X25-MM)	

M-METRIC PART
Y-SEPARATE ILLUSTRATION

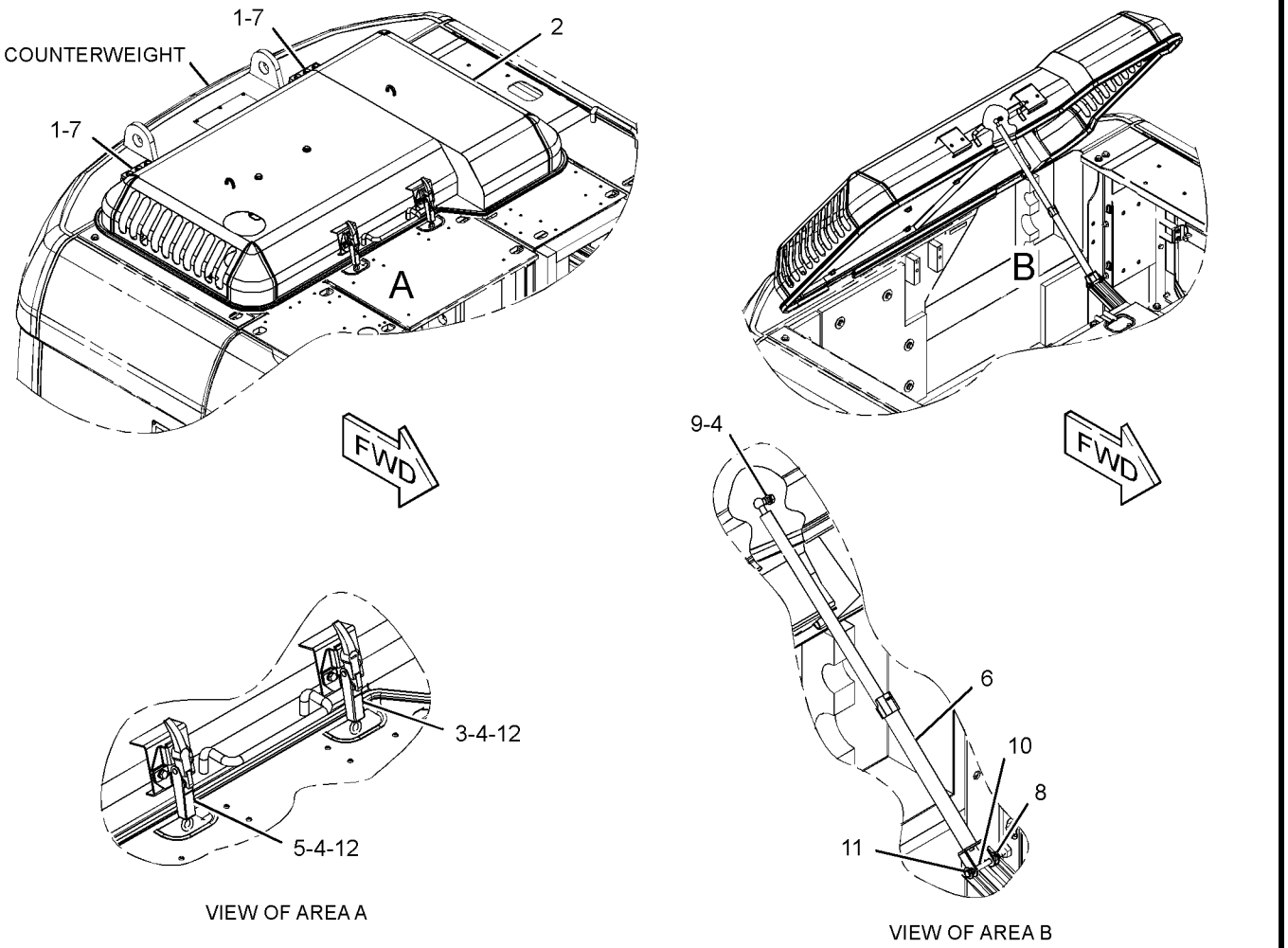

VIEW OF AREA A

VIEW OF AREA B

GRAPHIC #1 **<END>** g01370513

273-8044 HOOD & GUARD GP

S/N: CJN1-UP

PART OF 268-0641 HOOD & GUARD GP

SMCS-7251, 7276 **i02785155**

NOTE	REF NO	GRAPHIC REF	PART NUMBER	QTY	PART NAME 1 2 3 4 5 6 (PRODUCT LEVEL)	SEE PAGE
M	1	1	**135-8575**	31	BOLT AS-LOCKING (M12X1.75X30-MM)	
	2	1	**303-9986**	1	SUPPORT AS	
		1	**303-9987**	1	LINER	
Y	3	1	**268-0648**	1	SUPPORT AS-ENCLOSURE	347
	4	1	**268-0649**	1	SUPPORT AS	
	5	1	**268-0650**	1	SUPPORT AS	
	6	1	**268-0653**	1	SHEET AS	
Y	7	1	**268-0655**	1	SHEET AS-SOUND SUPPRESSION	340
Y	8	1	**268-0658**	1	SHEET AS-SOUND SUPPRESSION	342
	9	1	**268-0659**	1	SHEET AS	
		1	**9M-2307**	6	WASHER (5.2X19X2-MM THK)	
		1	**9M-5732**	6	RIVET-POP	
		1	**268-0493**	1	SHEET-RUBBER	
	10	1	**268-0673**	1	SHEET AS	
Y	11	1	**268-0684**	1	SUPPORT AS-ENCLOSURE	349

M-METRIC PART
Y-SEPARATE ILLUSTRATION

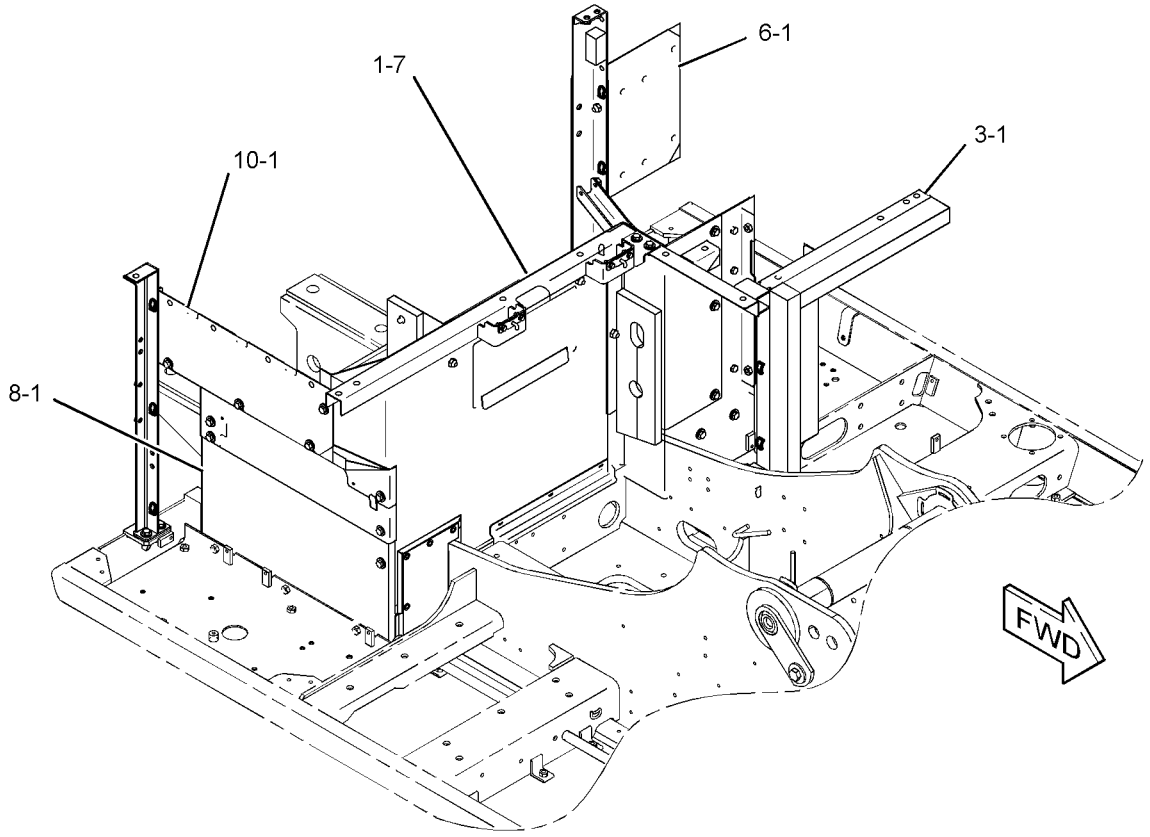

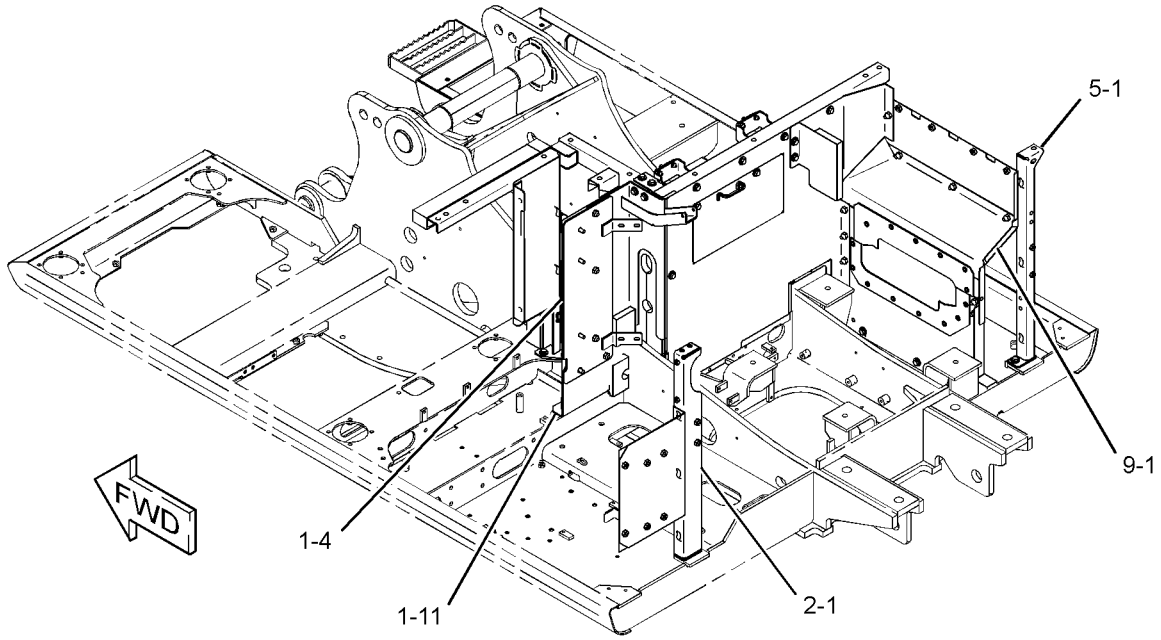

GRAPHIC #1 **<END>** g01415905

273-8085 HOOD & GUARD GP–HIGH AMBIENT

S/N: CJN1-UP
PART OF 260-7009 COOLING AR-HIGH AMBIENT TEMP
AN ATTACHMENT
TYPE 1

SMCS-7251, 7276 **i03001037**

NOTE	REF NO	GRAPHIC REF	PART NUMBER	QTY	PART NAME 1 2 3 4 5 6 (PRODUCT LEVEL)	SEE PAGE
Y	1	1	*273-8048*	1	DOOR GP-ACCESS	304
Y	2	1	**313-8128**	1	HOOD GP-ENGINE	335

Y-SEPARATE ILLUSTRATION

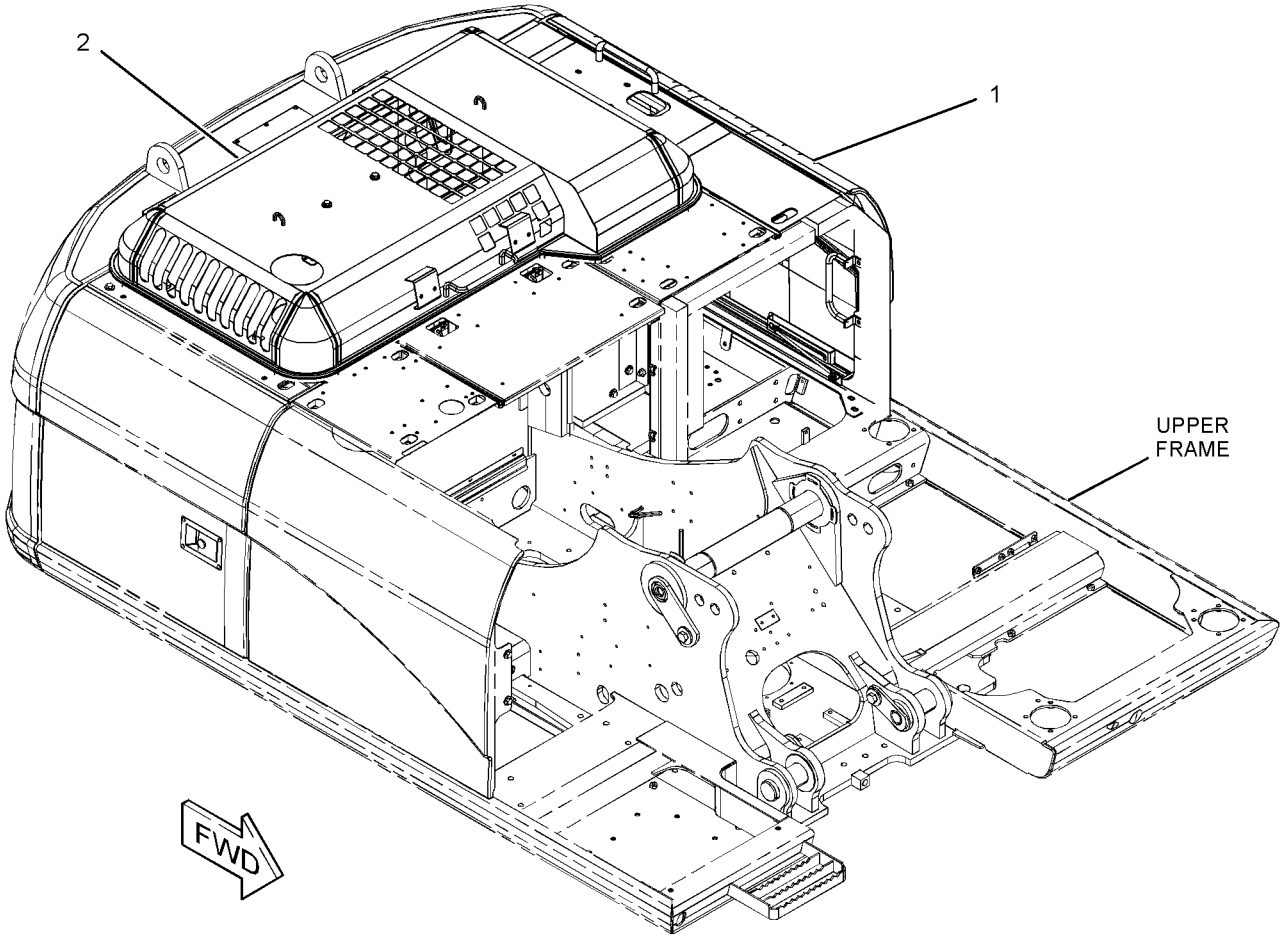

GRAPHIC #1 **<END>** g01367543

273-8085 HOOD & GUARD GP–HIGH AMBIENT

S/N: CJN1-UP
PART OF 260-7009 COOLING AR-HIGH AMBIENT TEMP
AN ATTACHMENT
TYPE 2

SMCS-7251, 7276 **i03161020**

NOTE	REF NO	GRAPHIC REF	PART NUMBER	QTY	PART NAME 1 2 3 4 5 6 (PRODUCT LEVEL)	SEE PAGE
CY	1	1	**303-9964**	1	DOOR GP-ACCESS (RADIATOR)	308
Y	2	1	**313-8128**	1	HOOD GP-ENGINE	335

C-CHANGE FROM PREVIOUS TYPE
Y-SEPARATE ILLUSTRATION

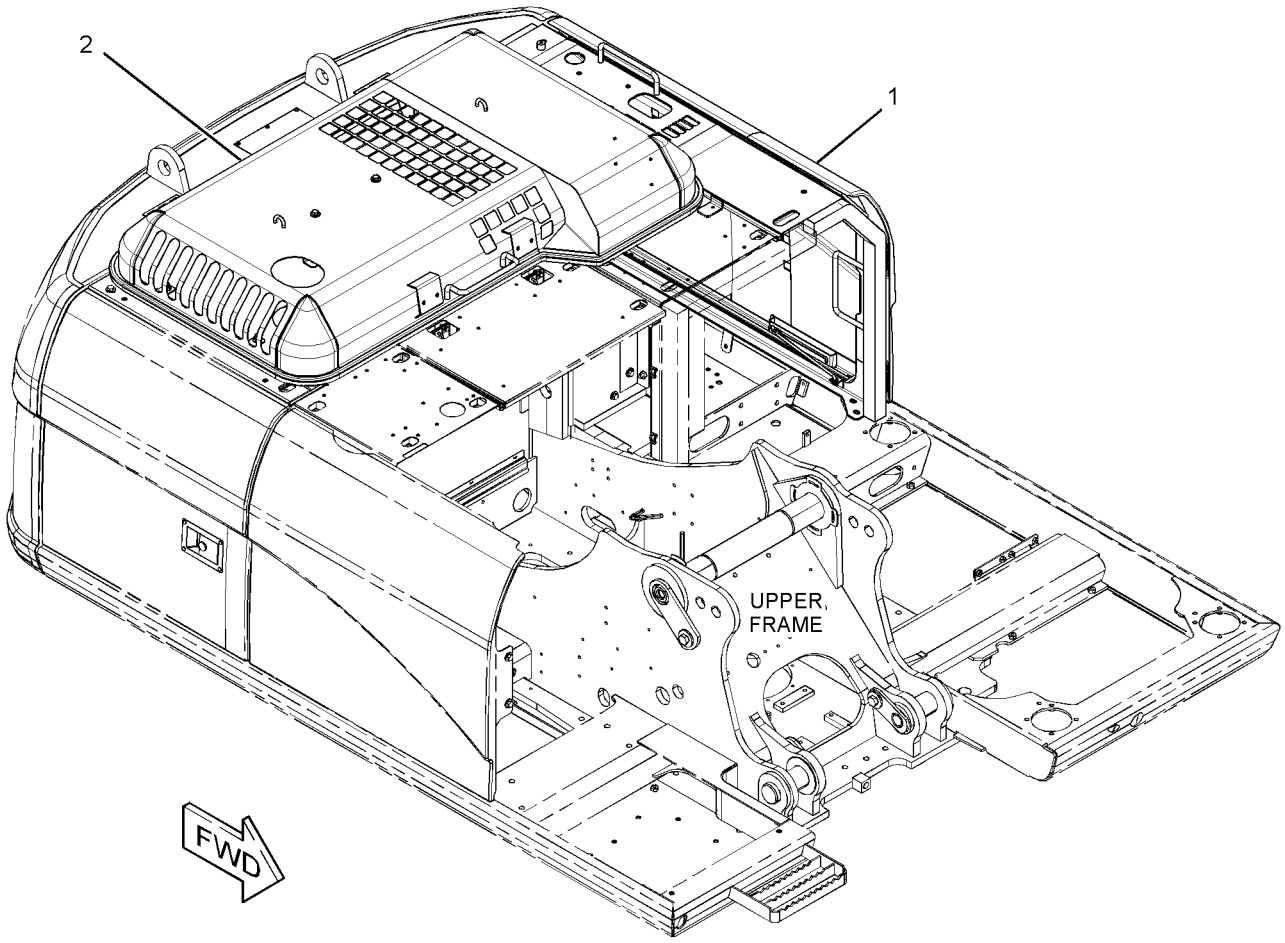

GRAPHIC #1 **<END>** g01622345

260-7076 HOOD AR–PRECLEANER

S/N: CJN1-UP

AN ATTACHMENT

SMCS-7251 **i02752974**

NOTE	PART NUMBER	QTY	PART NAME 1 2 3 4 5 6 (PRODUCT LEVEL)	SEE PAGE
Y	*272-4665*	1	AIR CLEANER GP	65
Y	*268-0677*	1	DOOR GP-ACCESS (PRECLEANER)	299

Y-SEPARATE ILLUSTRATION

<END>

303-9791 HOOD GP–ACCUGRADE READY

S/N: CJN1-UP
PART OF 301-2479, 330-8775 SPECIAL AR
AN ATTACHMENT

SMCS-7251 **i03148606**

NOTE	REF NO	GRAPHIC REF	PART NUMBER	QTY	PART NAME 1 2 3 4 5 6 (PRODUCT LEVEL)	SEE PAGE
Y	1	1	**303-9888**	1	DOOR GP-ACCESS (MAIN PUMP)	307
	2	1	**303-9952**	1	COVER AS	
		1	**278-3818**	1	LINER	
Y	3	1	**303-9964**	1	DOOR GP-ACCESS (RADIATOR)	308
Y	4	1	**303-9965**	1	HOOD GP-ENGINE	334
Y	5	1	**303-9983**	1	SHEET AS-SOUND SUPPRESSION	343

Y-SEPARATE ILLUSTRATION

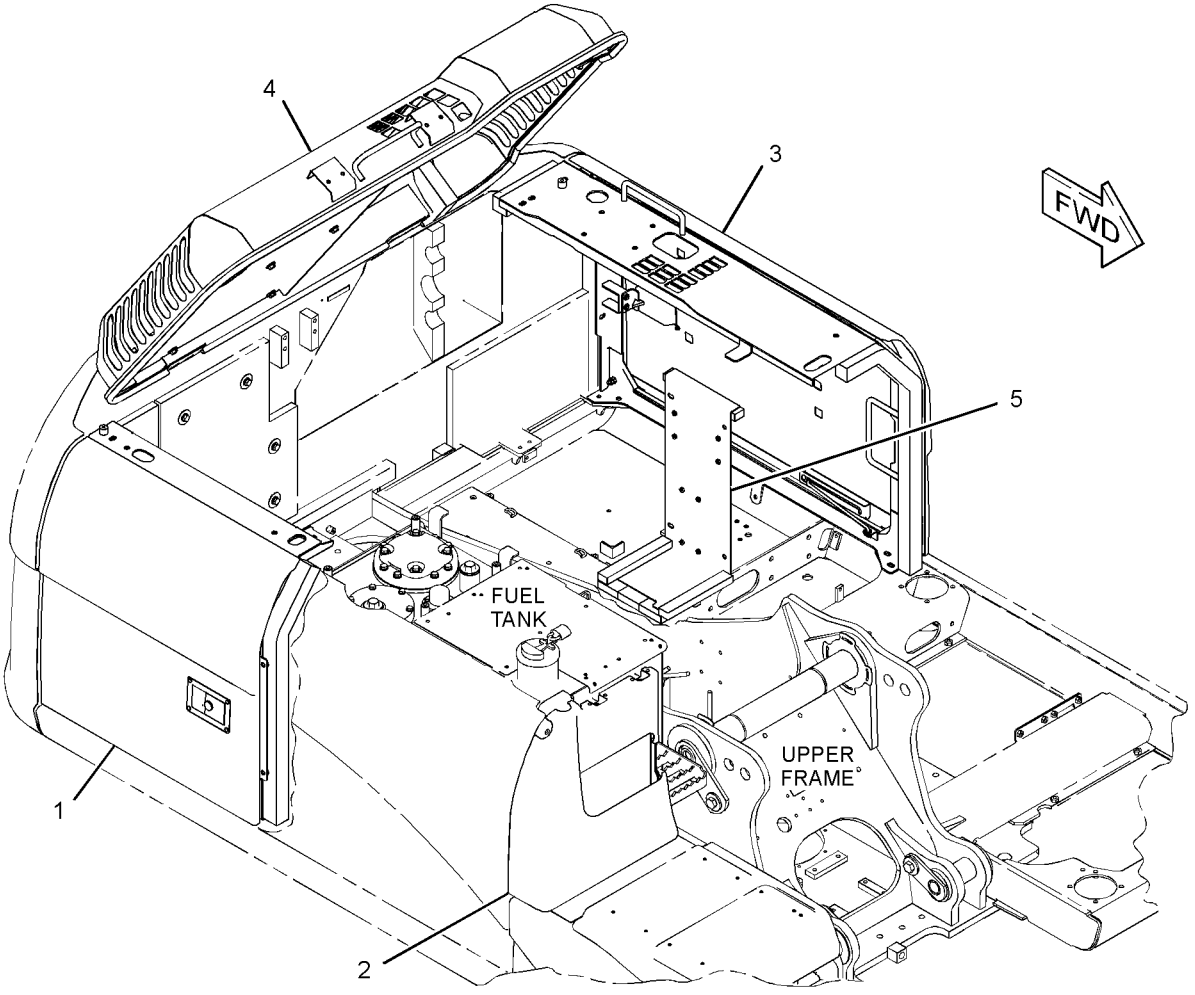

GRAPHIC #1 **<END>** g01418420

303-9985 HOOD GP–ACCUGRADE READY

S/N: CJN1-UP
PART OF 301-2517 SPECIAL AR
AN ATTACHMENT

SMCS-7251 **i02840807**

NOTE	REF NO	GRAPHIC REF	PART NUMBER	QTY	PART NAME 1 2 3 4 5 6 (PRODUCT LEVEL)	SEE PAGE
	1	1	**303-9952**	1	COVER AS	
		1	**278-3818**	1	LINER	
Y	2	1	**303-9983**	1	SHEET AS-SOUND SUPPRESSION	343

Y-SEPARATE ILLUSTRATION

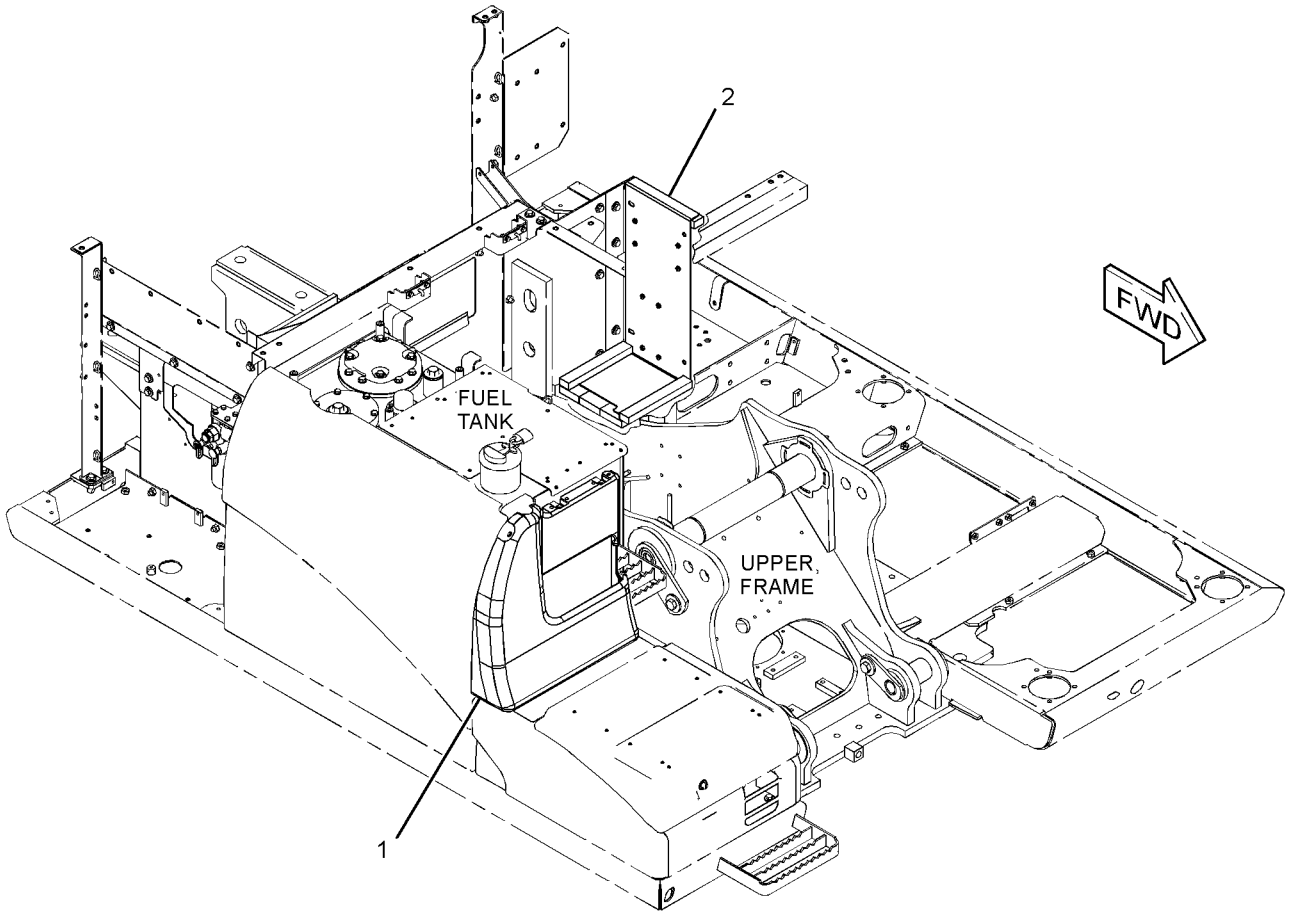

GRAPHIC #1 **<END>** g01418079

268-0664 HOOD GP-ENGINE

S/N: CJN1-UP

PART OF 268-0646 HOOD & GUARD GP

SMCS-7251 **i02696677**

NOTE	REF NO	GRAPHIC REF	PART NUMBER	QTY	PART NAME 1 2 3 4 5 6 (PRODUCT LEVEL)	SEE PAGE
	1	1	**096-4129**	3	CUSHION	
M	2	1	**135-8575**	10	BOLT AS-LOCKING (M12X1.75X30-MM)	
	3	1	**268-0697**	1	SHEET AS	
	4	1	**268-0703**	1	INSULATION	
	5	1	**268-0704**	1	INSULATION	
	6	1	*268-0709*	1	HOOD AS	
	6A	1	**114-6289**	2	HINGE	
	7	1	**268-0721**	1	PLATE	
	8	1	**8T-0328**	6	WASHER-HARD (5.5X10X1-MM THK)	
M	9	1	**8T-6693**	6	SCREW-MACHINE (M5X0.8X16-MM)	
D	10	1	**101-9848**		SEAL (3.9-M)	
D	10A	1	**101-9848**		SEAL (0.08-M)	

D-ORDER BY THE METER
M-METRIC PART

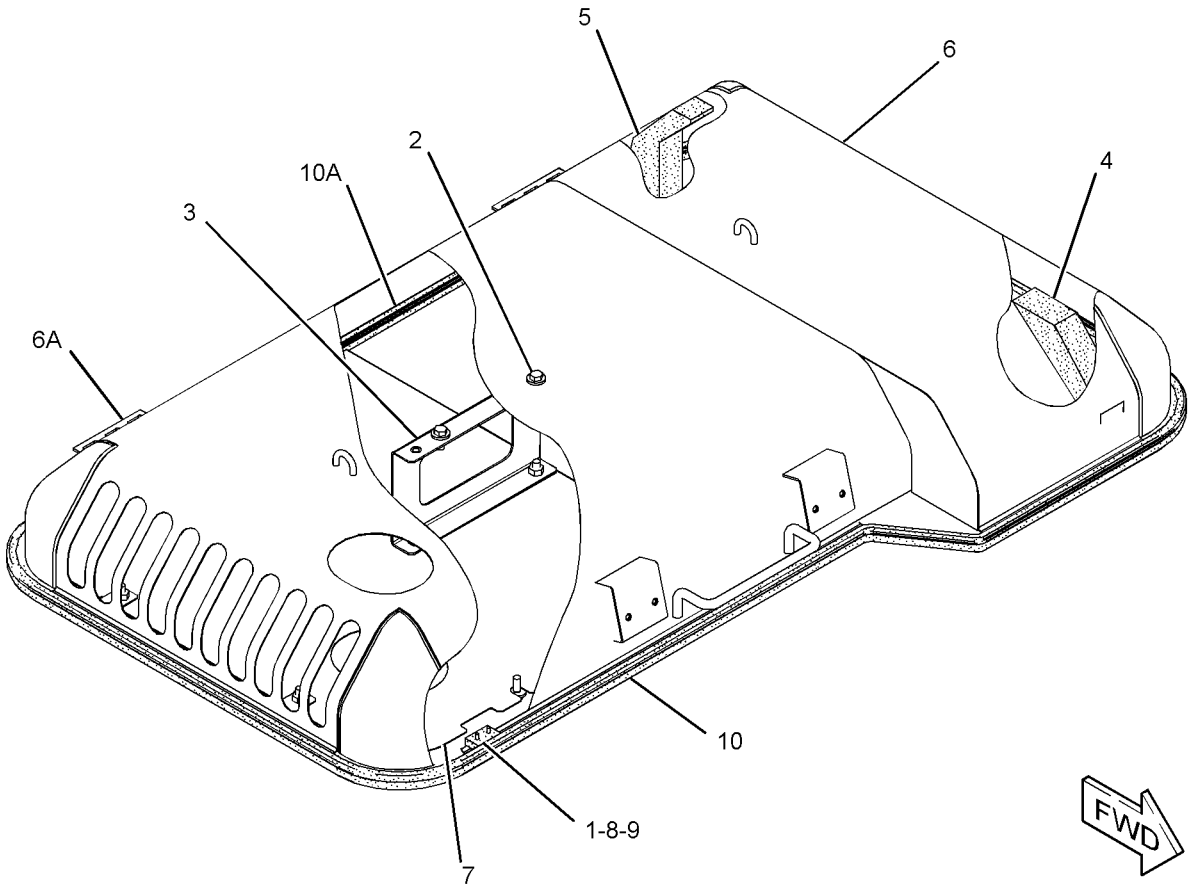

GRAPHIC #1 **<END>** g01305312

273-8086 HOOD GP-ENGINE—HIGH AMBIENT

S/N: CJN1-UP
PART OF 313-8128 HOOD GP-ENGINE
AN ATTACHMENT

SMCS-7251 **i02788203**

NOTE	REF NO	GRAPHIC REF	PART NUMBER	QTY	PART NAME 1 2 3 4 5 6 (PRODUCT LEVEL)	SEE PAGE
	1	1	**096-4129**	3	CUSHION	
M	2	1	**135-8575**	10	BOLT AS-LOCKING (M12X1.75X30-MM)	
	3	1	**268-0697**	1	SHEET AS	
	4	1	**268-0703**	1	INSULATION	
	5	1	**268-0704**	1	INSULATION	
	6	1	**268-0721**	1	PLATE	
	7	1	*273-8087*	1	HOOD AS	
	7A	1	**114-6289**	2	HINGE	
	7B	1	**268-0720**	1	HANDLE	
	8	1	**8T-0328**	6	WASHER-HARD (5.5X10X1-MM THK)	
M	9	1	**8T-6693**	6	SCREW-MACHINE (M5X0.8X16-MM)	
D	10	1	**101-9848**		SEAL (3.9-M)	
	10A	1	**101-9848**		SEAL (0.8-M)	

D-ORDER BY THE METER
M-METRIC PART

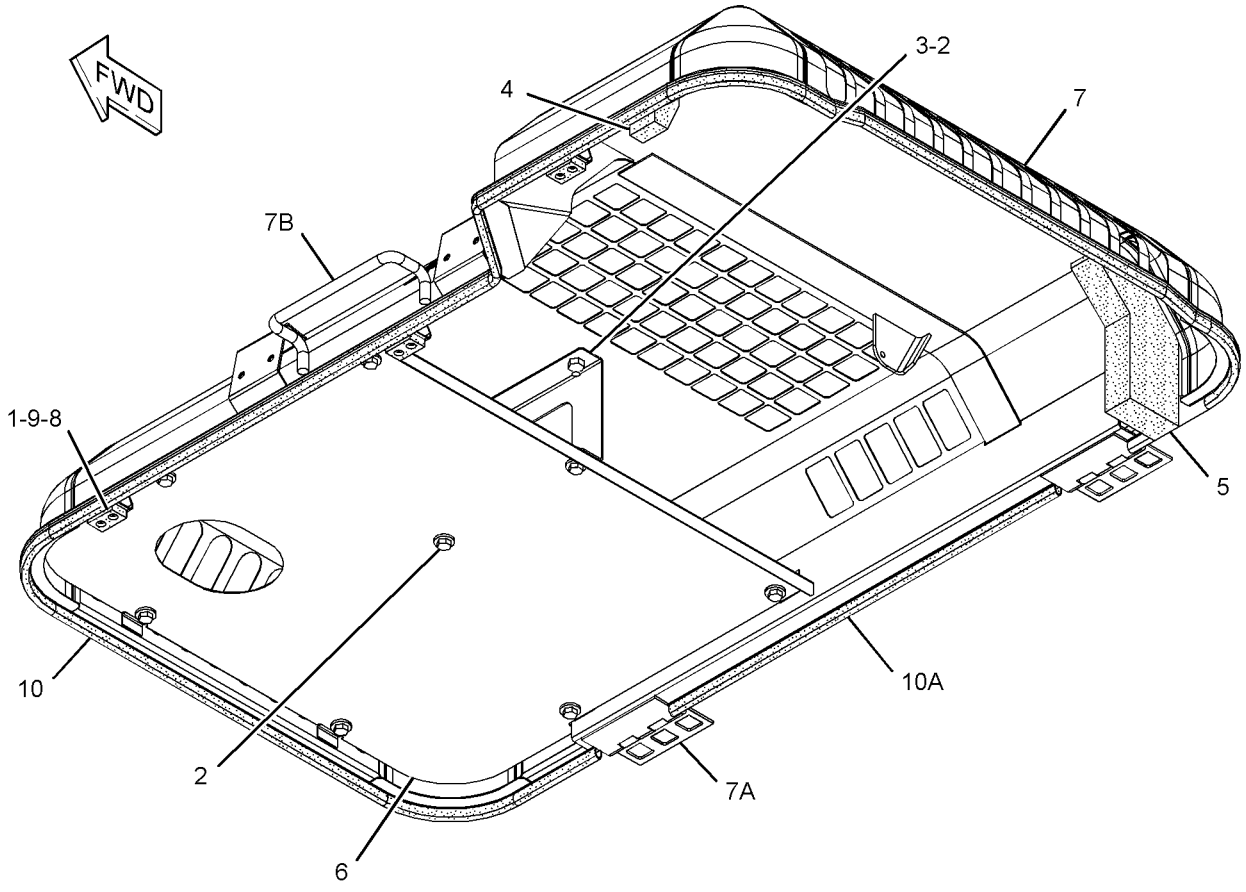

GRAPHIC #1 **<END>** g01393684

303-9965 HOOD GP-ENGINE—HIGH AMBIENT

S/N: CJN1-UP
PART OF 303-9791 HOOD GP
AN ATTACHMENT

SMCS-7251 **i02841095**

NOTE	REF NO	GRAPHIC REF	PART NUMBER	QTY	PART NAME 1 2 3 4 5 6 (PRODUCT LEVEL)	SEE PAGE
	1	1	**096-4129**	3	CUSHION	
M	2	1	**135-8575**	10	BOLT AS-LOCKING (M12X1.75X30-MM)	
	3	1	**268-0697**	1	SHEET AS	
	4	1	**268-0703**	1	INSULATION	
	5	1	**268-0704**	1	INSULATION	
	6	1	**268-0721**	1	PLATE	
	7	1	*303-9966*	1	HOOD AS	
	7A	1	**114-6289**	2	HINGE	
	7B	1	**268-0720**	1	HANDLE	
	8	1	**8T-0328**	6	WASHER-HARD (5.5X10X1-MM THK)	
M	9	1	**8T-6693**	6	SCREW-MACHINE (M5X0.8X16-MM)	
D	10A	1	**101-9848**		SEAL (0.8-M)	
D	10B	1	**101-9848**		SEAL (3.9-M)	

D-ORDER BY THE METER
M-METRIC PART

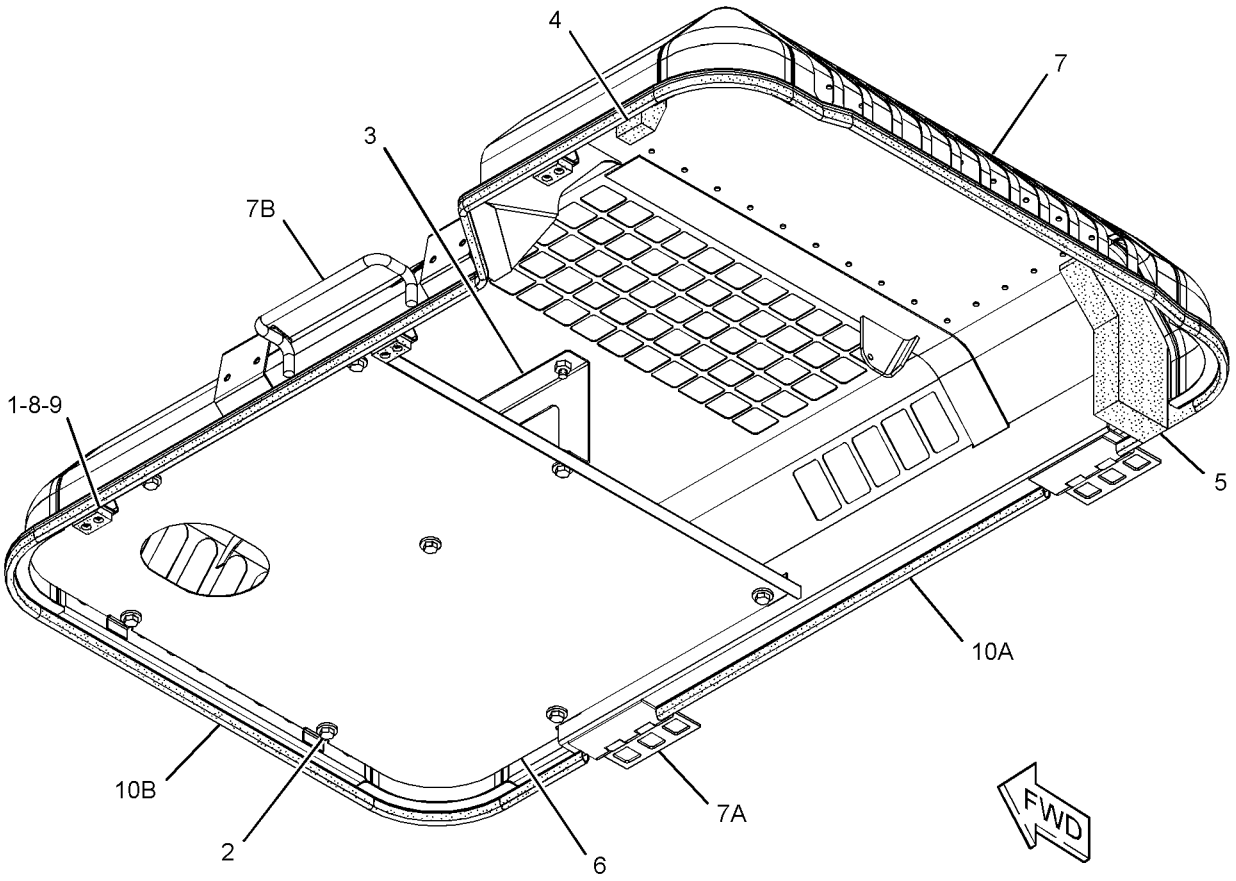

GRAPHIC #1 **<END>** g01418413

313-8128 HOOD GP-ENGINE

S/N: CJN1-UP
PART OF 273-8085 HOOD & GUARD GP
AN ATTACHMENT

SMCS-7251 **i03001035**

NOTE	PART NUMBER	QTY	PART NAME 1 2 3 4 5 6 (PRODUCT LEVEL)	SEE PAGE
Y	*273-8086*	1	HOOD GP-ENGINE (HIGH AMBIENT)	333
			-OR-	
Y	*313-8129*	1	HOOD GP-ENGINE	336

Y-SEPARATE ILLUSTRATION

<END>

313-8129 HOOD GP-ENGINE

S/N: CJN1-UP
PART OF 313-8128 HOOD GP-ENGINE
AN ATTACHMENT

SMCS-7251 **i03001036**

NOTE	REF NO	GRAPHIC REF	PART NUMBER	QTY	PART NAME 1 2 3 4 5 6 (PRODUCT LEVEL)	SEE PAGE
	1	1	**096-4129**	3	CUSHION	
M	2	1	**135-8575**	10	BOLT AS-LOCKING (M12X1.75X30-MM)	
	3	1	**268-0697**	1	SHEET AS	
	4	1	**273-8054**	1	INSULATION	
	5	1	**273-8055**	1	INSULATION	
	6	1	*313-8130*	1	HOOD AS-ENGINE	
	6A	1	**114-6289**	2	HINGE	
	6B	1	**268-0720**	1	HANDLE	
	7	1	**313-8131**	1	PLATE	
	8	1	**8T-0328**	6	WASHER-HARD (5.5X10X1-MM THK)	
M	9	1	**8T-6693**	6	SCREW-MACHINE (M5X0.8X16-MM)	
D	10	1	**101-9848**		SEAL (4.7-M)	

D-ORDER BY THE METER
M-METRIC PART

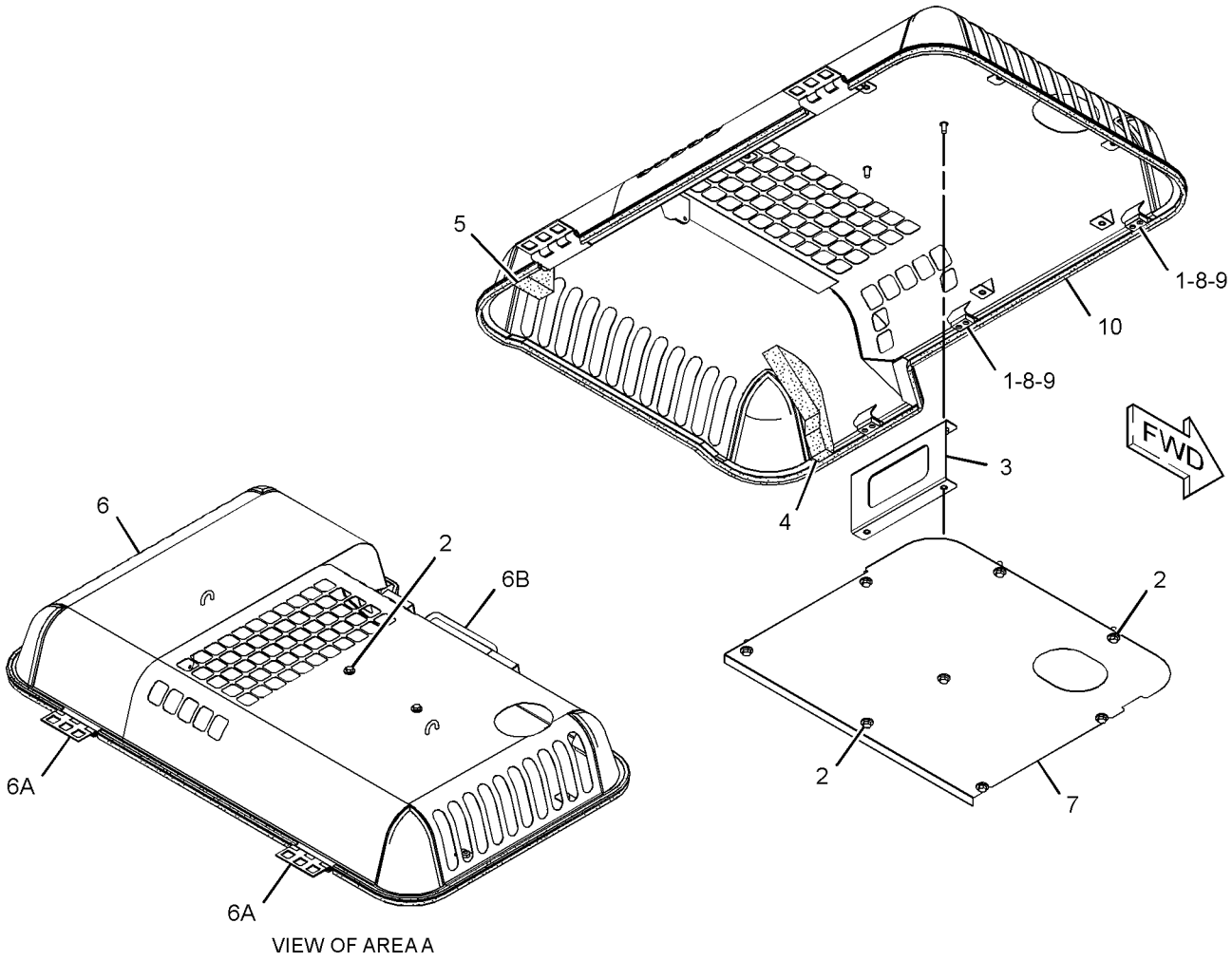

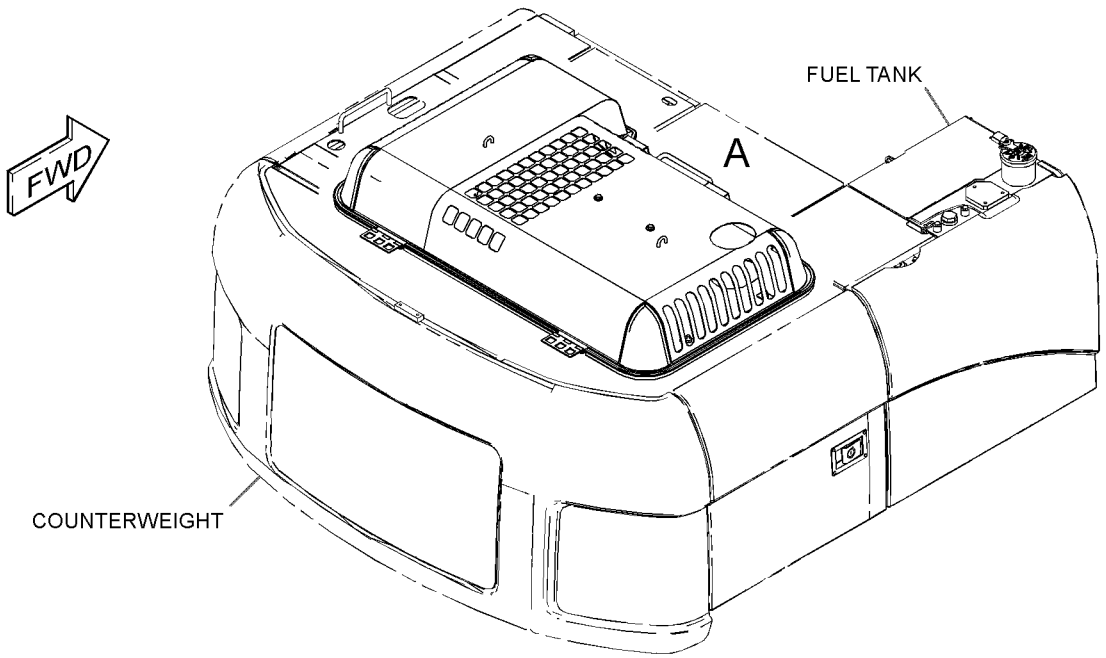

GRAPHIC #1 **<END>** g01621245

301-2545 INSULATION GP-SOUND SUPPR

S/N: CJN1-UP

PART OF 260-6960 CHASSIS AR

SMCS-1801, 7076, 7261 **i02862849**

NOTE	REF NO	GRAPHIC REF	PART NUMBER	QTY	PART NAME 1 2 3 4 5 6 (PRODUCT LEVEL)	SEE PAGE
	1	1	**301-2546**	1	LINER	
	2	1	**301-2570**	1	GROMMET	

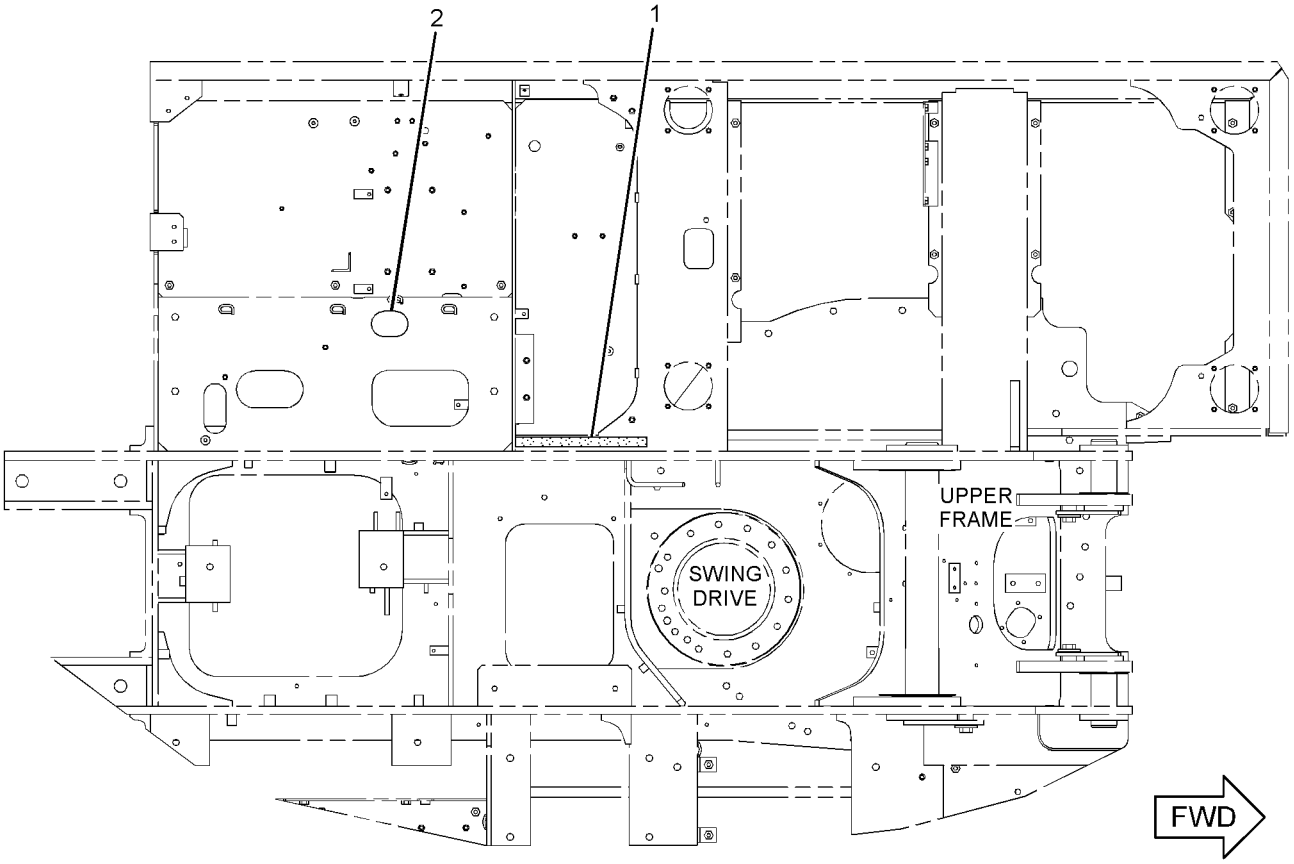

TOP VIEW

GRAPHIC #1 **<END>** g01427494

268-0654 SHEET AS-SOUND SUPPRESSION

S/N: CJN1-UP

PART OF 268-0641 HOOD & GUARD GP

SMCS-1801, 7076, 7251, 7267 **i02598776**

NOTE	REF NO	GRAPHIC REF	PART NUMBER	QTY	PART NAME 1 2 3 4 5 6 (PRODUCT LEVEL)	SEE PAGE
Z	1	1		1	SHEET AS	
	2	1	**268-0714**	1	LINER	
	3	1	**268-0715**	2	LINER	
	4	1	**268-0716**	2	LINER	

Z-NOT SERVICED SEPARATELY

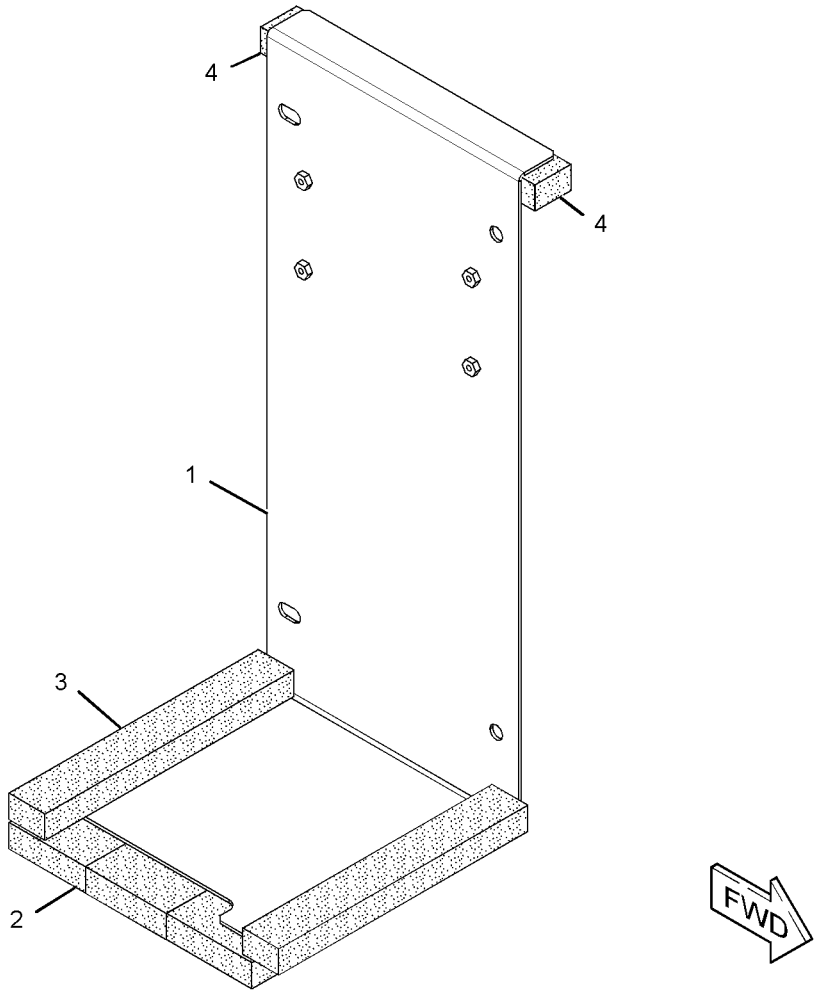

GRAPHIC #1 **<END>** g01304865

FRAME AND BODY

268-0655 SHEET AS-SOUND SUPPRESSION

S/N: CJN1-UP

PART OF 273-8044 HOOD & GUARD GP

SMCS-1801, 7076, 7251, 7267 **i03001045**

NOTE	REF NO	GRAPHIC REF	PART NUMBER	QTY	PART NAME 1 2 3 4 5 6 (PRODUCT LEVEL)	SEE PAGE
	1	1	**4I-0118**	2	HOOK AS	
M	2	1	**135-8573**	4	BOLT AS (M12X1.75X25-MM)	
M	3	1	**135-8575**	10	BOLT AS-LOCKING (M12X1.75X30-MM)	
	4	1	**268-0651**	1	SUPPORT AS	
Y	5	1	**268-0656**	1	SHEET AS-SOUND SUPPRESSION	341
	6	1	**273-8091**	1	SHEET AS	
	6A	1	**268-0495**	1	LINER	
	6B	1	**268-0496**	1	SHEET-RUBBER	
D	6C	1	**5P-8309**		SEAL (0.3-M)	
		1	**9M-2307**	4	WASHER (5.2X19X2-MM THK)	
		1	**9M-5732**	4	RIVET-POP	
	7	1	**320-5777**	1	SUPPORT AS	
	8	1	**303-9858**	1	SHEET AS	
	9	1	**8T-4224**	4	WASHER-HARD (8.8X16X2-MM THK)	
M	10	1	**8T-4908**	4	BOLT (M8X1.25X25-MM)	
	11	1	**307-7971**	1	SHEET AS	
		1	**6P-2216**	2	CAP	
		1	**307-7974**	1	INSULATION	

D-ORDER BY THE METER
M-METRIC PART
Y-SEPARATE ILLUSTRATION

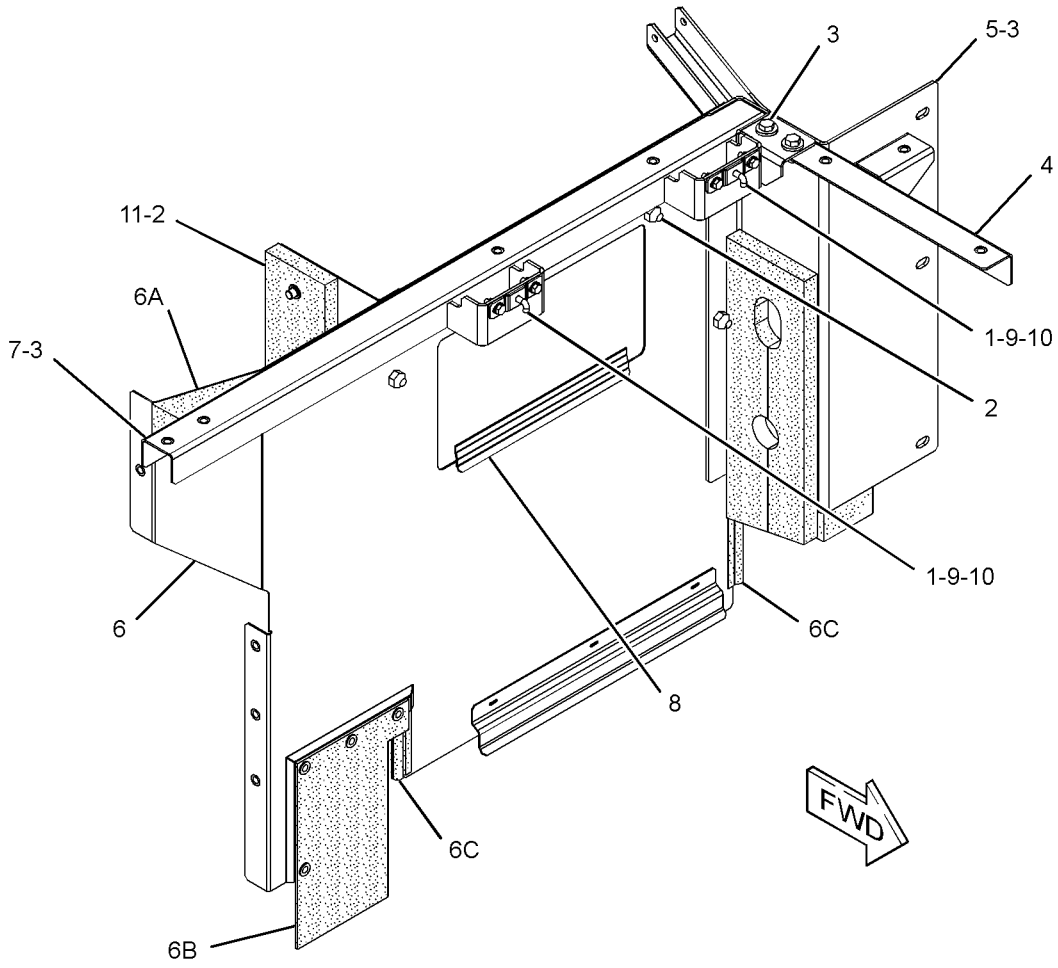

GRAPHIC #1 **<END>** g01393698

268-0656 SHEET AS-SOUND SUPPRESSION

S/N: CJN1-UP

PART OF 268-0655 SHEET AS-SOUND SUPPRESSION

SMCS-1801, 7076, 7251, 7267 **i02753501**

NOTE	REF NO	GRAPHIC REF	PART NUMBER	QTY	PART NAME 1 2 3 4 5 6 (PRODUCT LEVEL)	SEE PAGE
	1	1	**268-0497**	1	LINER	
	3	1	**271-0016**	1	LINER	

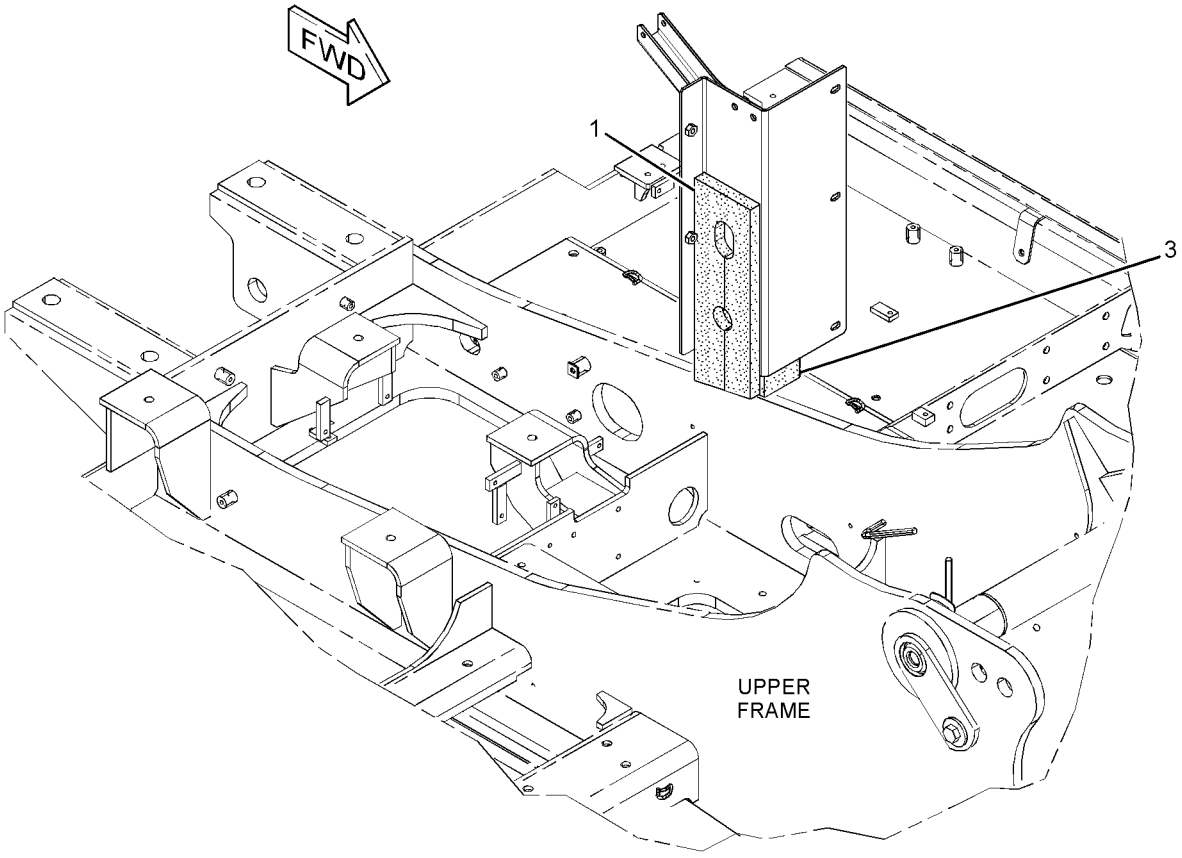

GRAPHIC #1 **<END>** g01378514

268-0658 SHEET AS-SOUND SUPPRESSION

S/N: CJN1-UP

PART OF 273-8044 HOOD & GUARD GP

SMCS-1801, 7076, 7251, 7267 **i02784334**

NOTE	REF NO	GRAPHIC REF	PART NUMBER	QTY	PART NAME 1 2 3 4 5 6 (PRODUCT LEVEL)	SEE PAGE
	1	1	**9M-5732**	8	RIVET-POP	
	2	1	**268-0494**	1	SHEET-RUBBER	
	3	1	**268-0731**	1	LINER	
	4	1	**9M-2307**	8	WASHER (5.2X19X2-MM THK)	
D	5	1	**5P-8309**		SEAL (0.2-M)	

D-ORDER BY THE METER

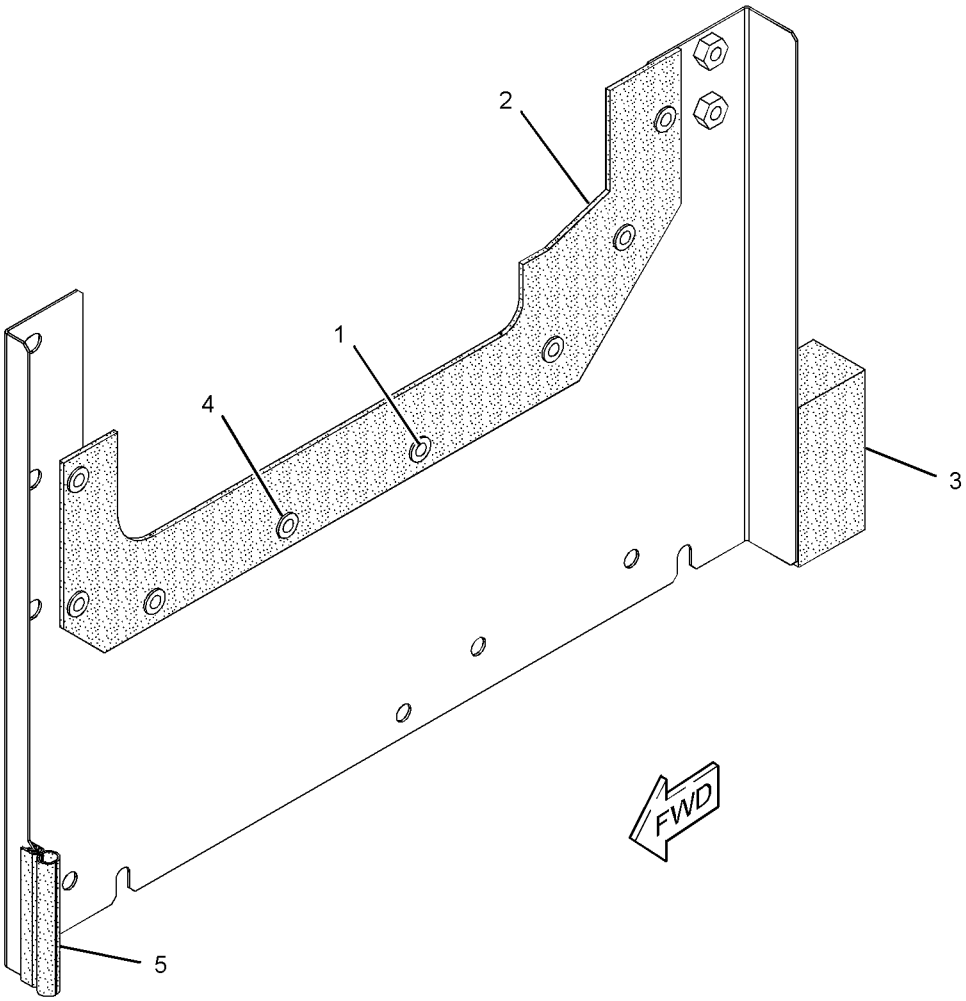

GRAPHIC #1 **<END>** g01380299

303-9983 SHEET AS-SOUND SUPPRESSION

S/N: CJN1-UP
PART OF 303-9791, 303-9985 HOOD GP
AN ATTACHMENT

SMCS-1801, 7076, 7251, 7267 **i02840808**

NOTE	REF NO	GRAPHIC REF	PART NUMBER	QTY	PART NAME 1 2 3 4 5 6 (PRODUCT LEVEL)	SEE PAGE
	1	1	**268-0714**	1	LINER	
	2	1	**268-0715**	2	LINER	
	3	1	**268-0716**	2	LINER	

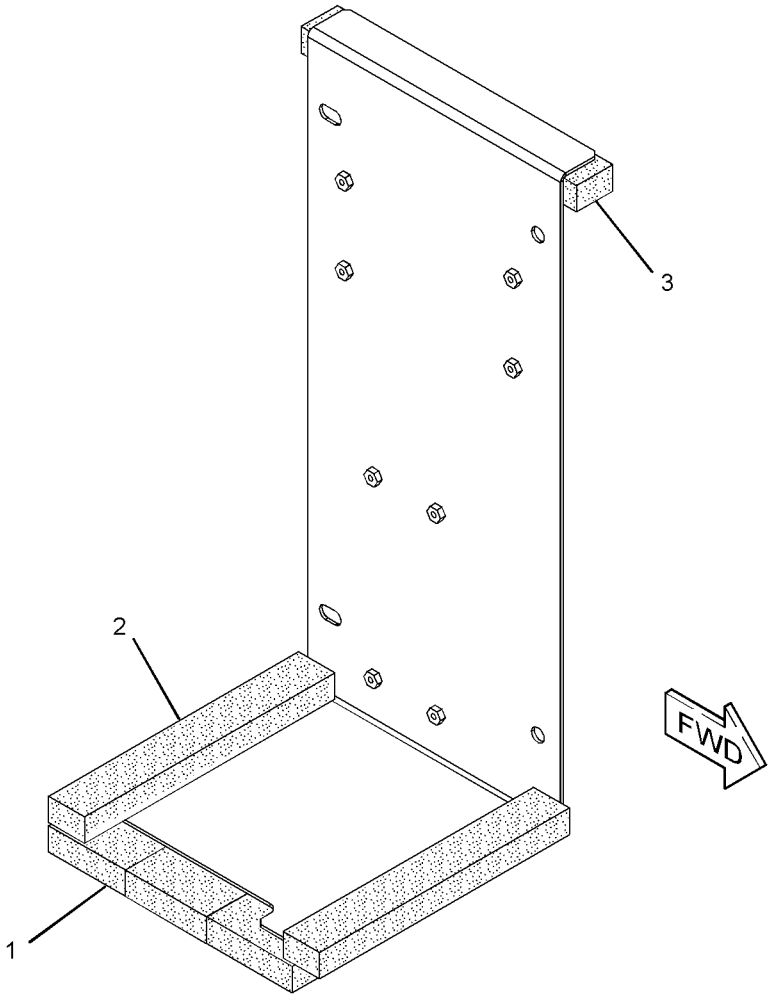

GRAPHIC #1

<END>

g01418397

235-7764 STEP GP

S/N: CJN1-UP
PART OF 301-2566, 330-8810 SPECIAL AR, 260-6990 TRACK GP
FOR USE WITH TRACK SHOES UPT TO 800-MM (31.5-IN) WIDE
AN ATTACHMENT

SMCS-7254 **i03255291**

NOTE	REF NO	GRAPHIC REF	PART NUMBER	QTY	PART NAME 1 2 3 4 5 6 (PRODUCT LEVEL)	SEE PAGE
	1	1	**235-7765**	2	STEP	
M	2	1	**8T-7338**	4	BOLT (M16X2X45-MM)	
	3	1	**9X-8257**	4	WASHER (17.5X30X3.5-MM THK)	

M-METRIC PART

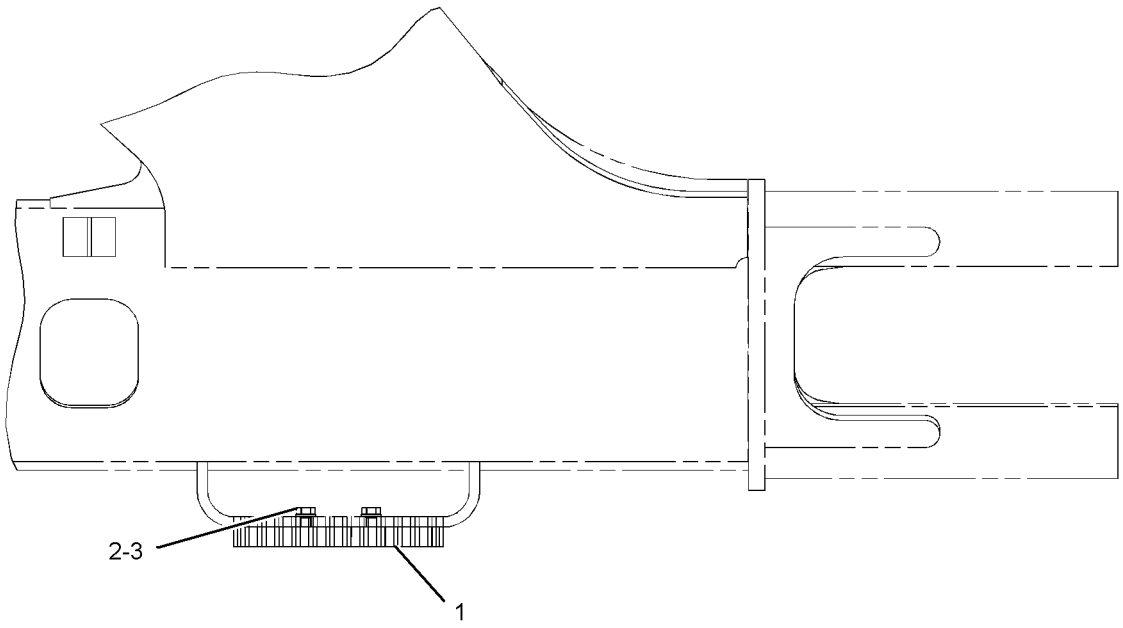

TOP VIEW

GRAPHIC #1 **<END>** g01150668

308-8881 STEP GP

S/N: CJN1-UP
PART OF 301-2567 SPECIAL AR
AN ATTACHMENT

SMCS-7254 **i02843488**

NOTE	REF NO	GRAPHIC REF	PART NUMBER	QTY	PART NAME 1 2 3 4 5 6 (PRODUCT LEVEL)	SEE PAGE
	1	1	**308-8882**	2	STEP AS	
M	2	1	**7X-2553**	4	BOLT (M16X2X40-MM)	
	3	1	**9X-8257**	4	WASHER (17.5X30X3.5-MM THK)	

M-METRIC PART

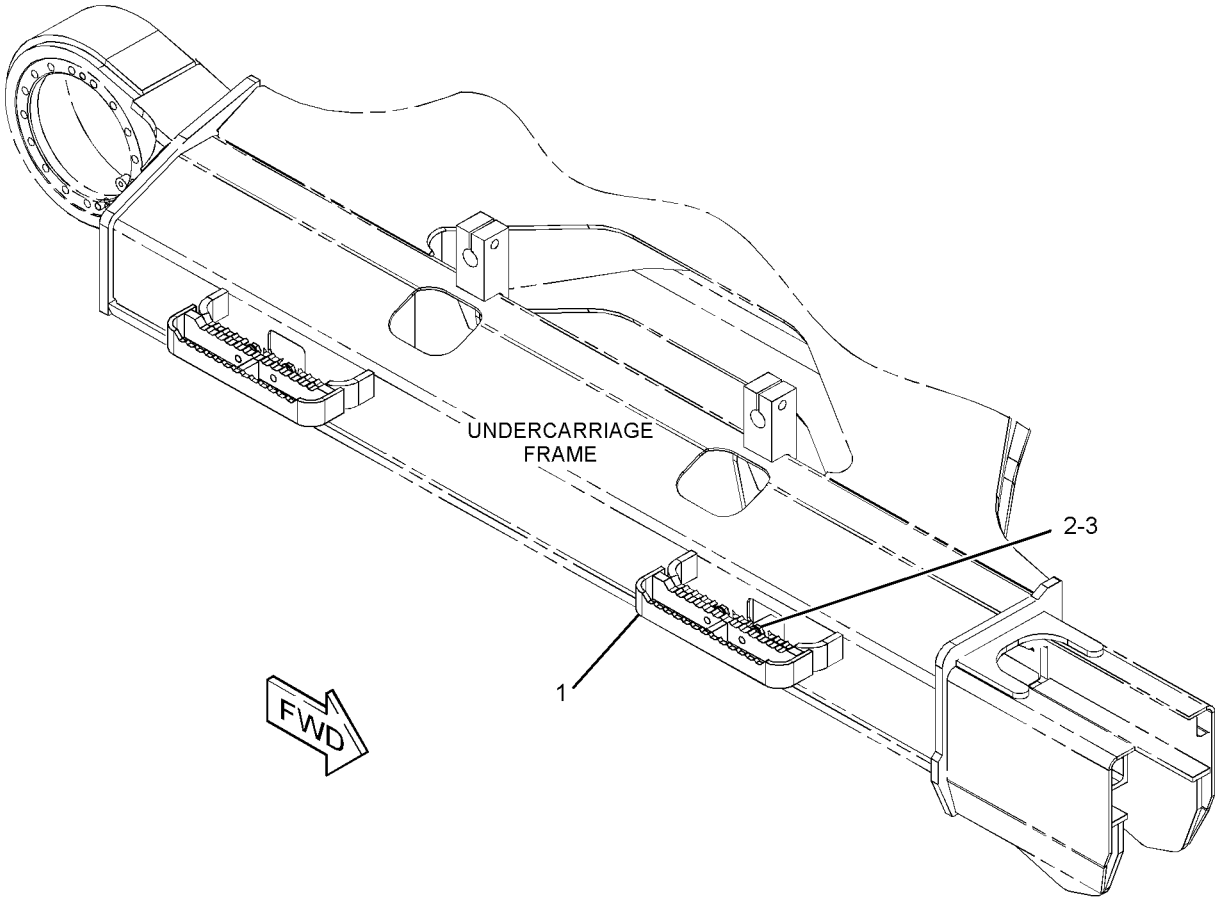

GRAPHIC #1 **<END>** g01421202

268-0674 STORAGE GP-VANDALISM GUARD

S/N: CJN1-UP
PART OF 260-7017, 260-7071 GUARD AR-VANDALISM
AN ATTACHMENT

SMCS-7315 **i02954236**

NOTE	REF NO	GRAPHIC REF	PART NUMBER	QTY	PART NAME 1 2 3 4 5 6 (PRODUCT LEVEL)	SEE PAGE
M	1	1	**135-8573**	4	BOLT AS (M12X1.75X25-MM)	
	2	1	**241-2311**	1	CABLE	
	3	1	**268-0675**	1	SHEET AS	
E		1	**237-5586**		SEAL (72-CM)	
	4	1	**268-0727**	1	BOLT AS-SPECIAL	
	5	1	**5P-7958**	2	SLEEVE-CABLE SPLICE	

E-ORDER BY THE CENTIMETER
M-METRIC PART

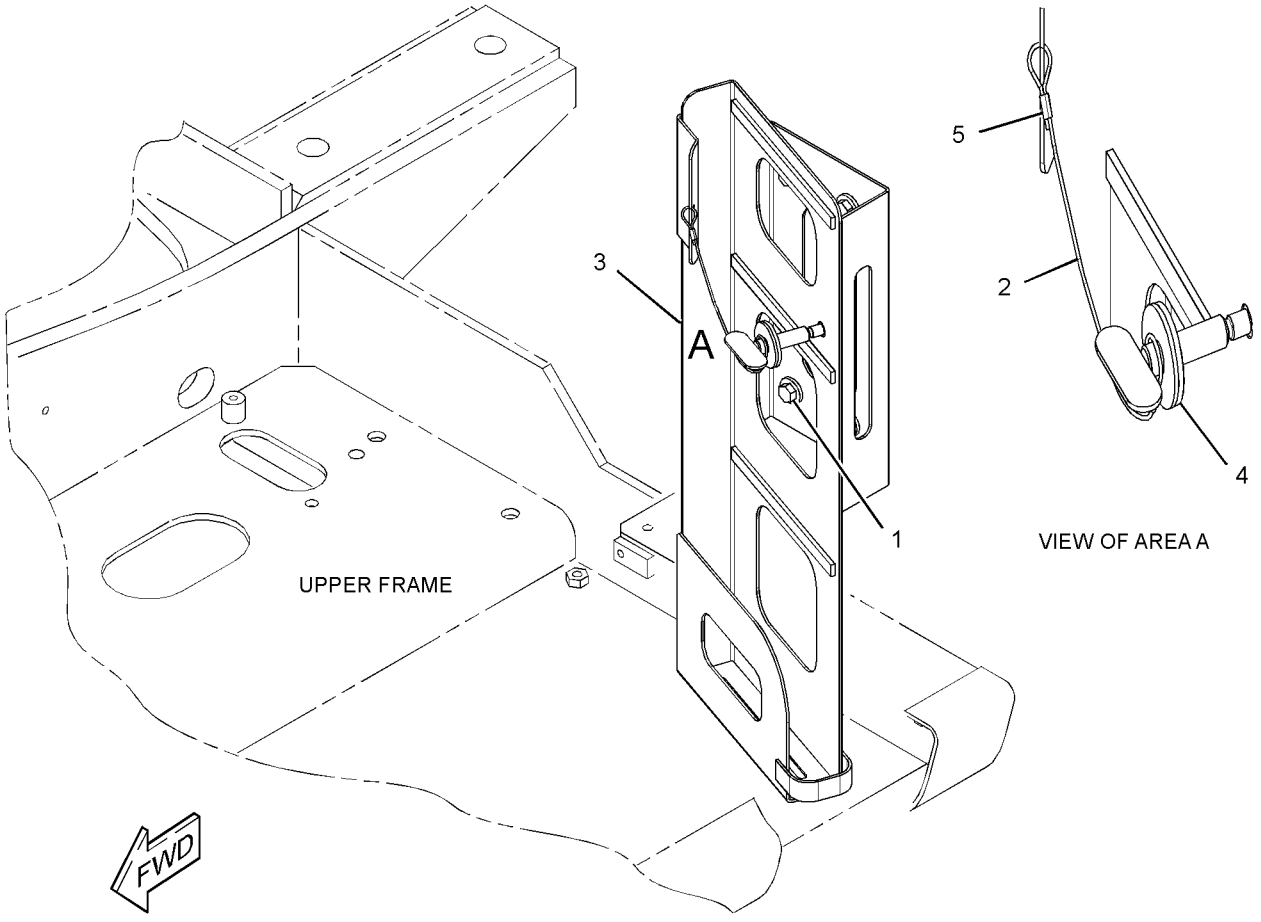

GRAPHIC #1 **<END>** g01379490

268-0648 SUPPORT AS-ENCLOSURE

S/N: CJN1-UP

PART OF 273-8044 HOOD & GUARD GP

SMCS-0635, 1801, 7076, 7251, 7263, 7267, 7272, 7276 **i02598777**

NOTE	REF NO	GRAPHIC REF	PART NUMBER	QTY	PART NAME 1 2 3 4 5 6 (PRODUCT LEVEL)	SEE PAGE
	1	1	**268-0705**	1	LINER	
	2	1	**268-0706**	1	LINER	
Z	3	1		1	SUPPORT AS	
	4	1	**268-0719**	1	LINER	

Z-NOT SERVICED SEPARATELY

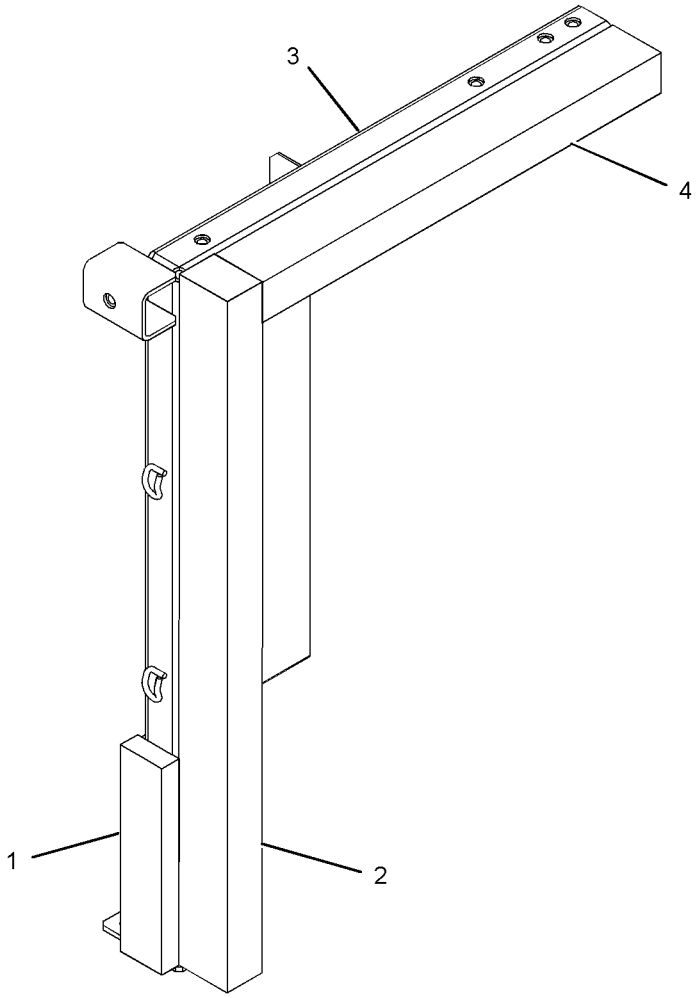

GRAPHIC #1 **<END>** g01304654

268-0668 SUPPORT AS-ENCLOSURE

S/N: CJN1-UP

PART OF 268-0670, 273-8048 DOOR GP-ACCESS

ALSO AN ATTACHMENT

SMCS-0635, 1801, 7076, 7251, 7263, 7267, 7272, 7276 **i02781268**

NOTE	REF NO	GRAPHIC REF	PART NUMBER	QTY	PART NAME 1 2 3 4 5 6 (PRODUCT LEVEL)	SEE PAGE
	1	1	**268-0733**	1	INSULATION	
	2	1	*268-0736*	1	SUPPORT AS	
	2A	1	**273-8084**	1	HANDLE	
M	2B	1	**6V-9632**	2	NUT-WELD (M6X1-THD)	
M	2C	1	**8T-3597**	2	NUT-WELD (M12X1.75-THD)	
M		1	**8T-3490**	2	NUT-WELD (M10X1.5-THD)	
	3	1	**273-8075**	1	LINER	

M-METRIC PART

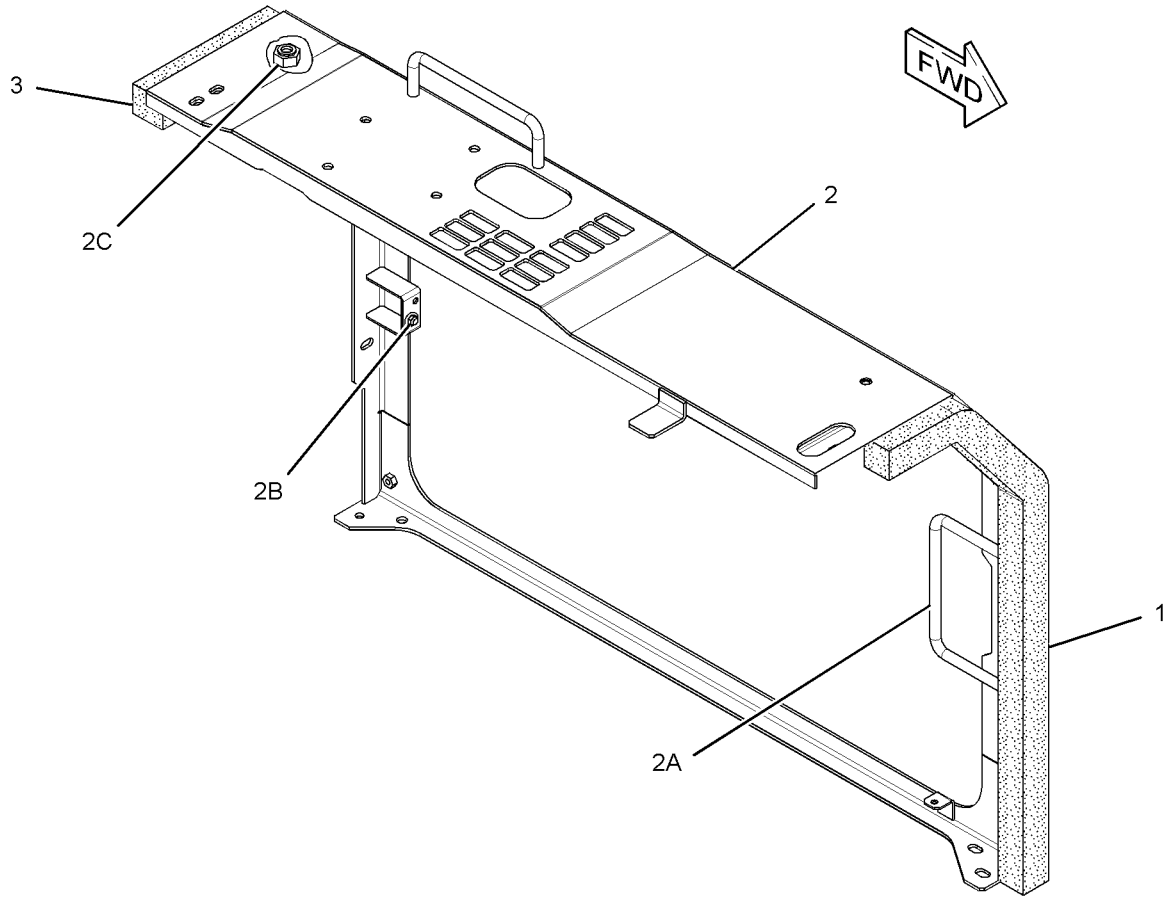

GRAPHIC #1 **<END>** g01405076

268-0684 SUPPORT AS-ENCLOSURE

S/N: CJN1-UP

PART OF 273-8044 HOOD & GUARD GP

SMCS-0635, 1801, 7076, 7251, 7263, 7267, 7272, 7276 **i02598763**

NOTE	REF NO	GRAPHIC REF	PART NUMBER	QTY	PART NAME 1 2 3 4 5 6 (PRODUCT LEVEL)	SEE PAGE
Z	1	1		1	SUPPORT AS	
	2	1	**268-0732**	1	LINER	
	3	1	**271-0017**	1	LINER	

Z-NOT SERVICED SEPARATELY

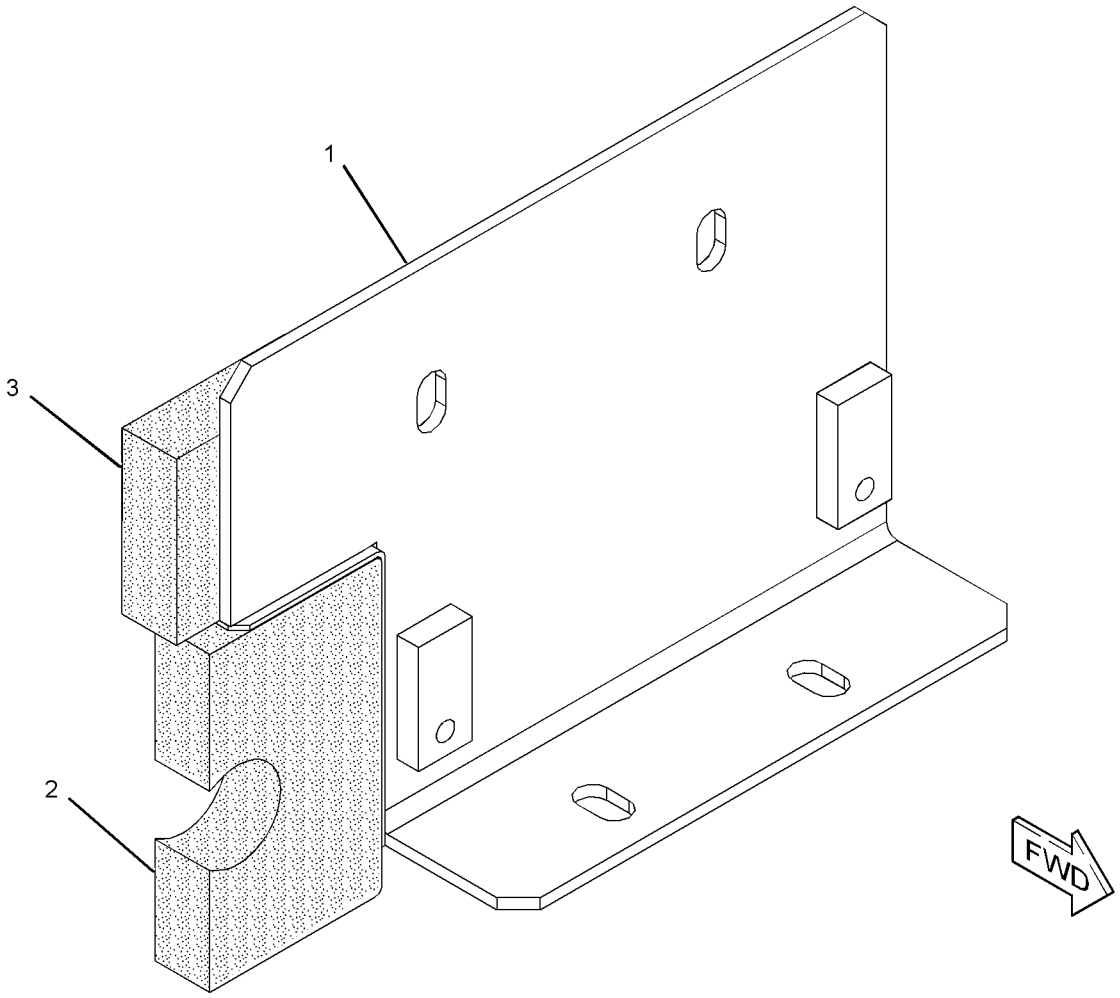

GRAPHIC #1 **<END>** g01311836

273-8042 SUPPORT AS-ENCLOSURE

S/N: CJN1-UP

PART OF 273-8041, 289-6447 DOOR GP-ACCESS

AN ATTACHMENT

SMCS-0635, 1801, 7076, 7251, 7263, 7267, 7272, 7276 **i02886128**

NOTE	REF NO	GRAPHIC REF	PART NUMBER	QTY	PART NAME 1 2 3 4 5 6 (PRODUCT LEVEL)	SEE PAGE
	1	1	**268-0733**	1	INSULATION	
	2	1	*273-8043*	1	SUPPORT AS	
	2A	1	**273-8084**	1	HANDLE	
	3	1	**273-8075**	1	LINER	

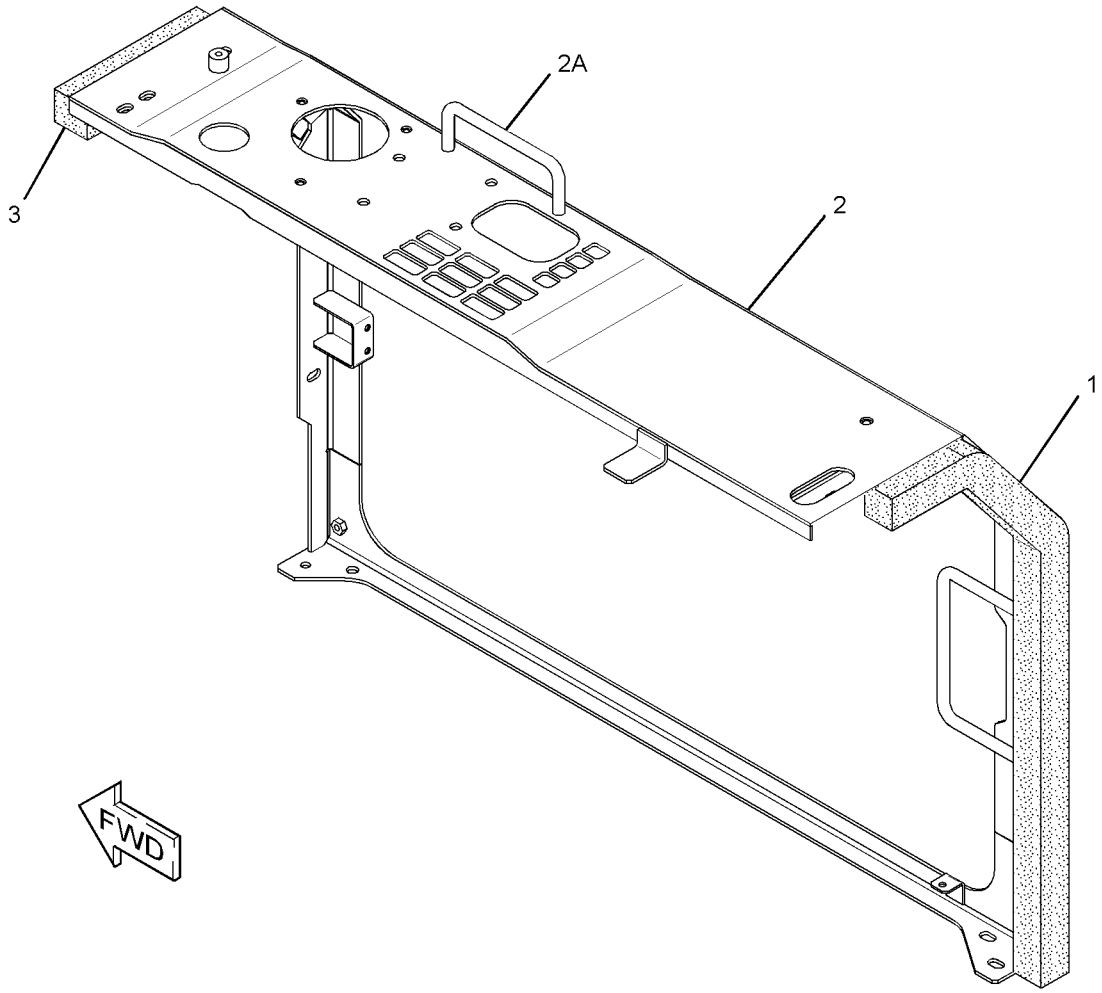

GRAPHIC #1 **<END>** g01622083

303-9886 SUPPORT AS-ENCLOSURE

S/N: CJN1-UP
PART OF 303-9964 DOOR GP-ACCESS
AN ATTACHMENT

SMCS-0635, 1801, 7076, 7251, 7263, 7267, 7272, 7276 **i02841094**

NOTE	REF NO	GRAPHIC REF	PART NUMBER	QTY	PART NAME 1 2 3 4 5 6 (PRODUCT LEVEL)	SEE PAGE
	1	1	**268-0733**	1	INSULATION	
	2	1	**273-8075**	1	LINER	
	3	1	*303-9887*	1	SUPPORT AS	
	3A	1	**273-8084**	1	HANDLE	

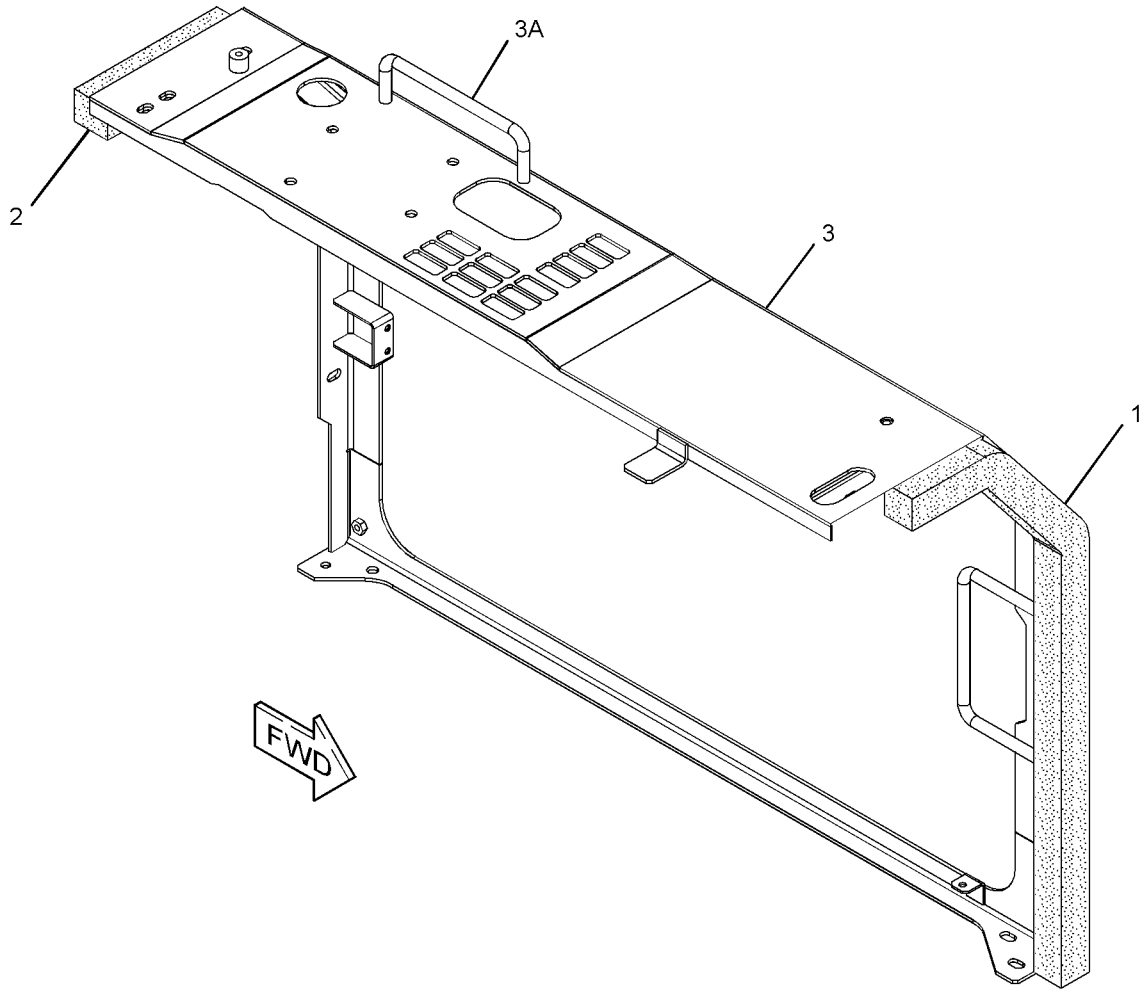

GRAPHIC #1 **<END>** g01418347

260-6975 FRAME AR-UNDERCARRIAGE

S/N: CJN1-UP

PART OF 260-6952 GENERAL AR

SMCS-4151 **i02818500**

NOTE	PART NUMBER	QTY	PART NAME 1 2 3 4 5 6 (PRODUCT LEVEL)	SEE PAGE
Y	**254-2979**	1	FRAME AS-UNDERCARRIAGE	353
Y	*267-6832*	1	GEAR & BEARING GP-SWING	315
Y	*087-5908*	2	GUARD GP-TRACK GUIDE	354
Y	*163-3754*	1	GUARD GP-TRAVEL MOTOR	357
Y	*248-7132*	1	IDLER GP-FRONT	358
Y	**102-8120**	1	ROLLER AR-TRACK & CARRIER	366

Y-SEPARATE ILLUSTRATION

<END>

UNDERCARRIAGE

254-2979 FRAME AS-UNDERCARRIAGE

S/N: CJN1-UP

PART OF 260-6975 FRAME AR-UNDERCARRIAGE

SMCS-4150, 7062 **i02818842**

NOTE	REF NO	GRAPHIC REF	PART NUMBER	QTY	PART NAME 1 2 3 4 5 6 (PRODUCT LEVEL)	SEE PAGE
	1	1	*254-2981*	1	FRAME AS-TRACK ROLLER (RH)	
	1A	1	**117-5540**	2	BRACKET	
	1B	1	**264-1581**	2	STEP	
	2	1	*254-2982*	1	FRAME AS-TRACK ROLLER (LH)	
	2A	1	**117-5540**	2	BRACKET	
	2B	1	**264-1581**	2	STEP	

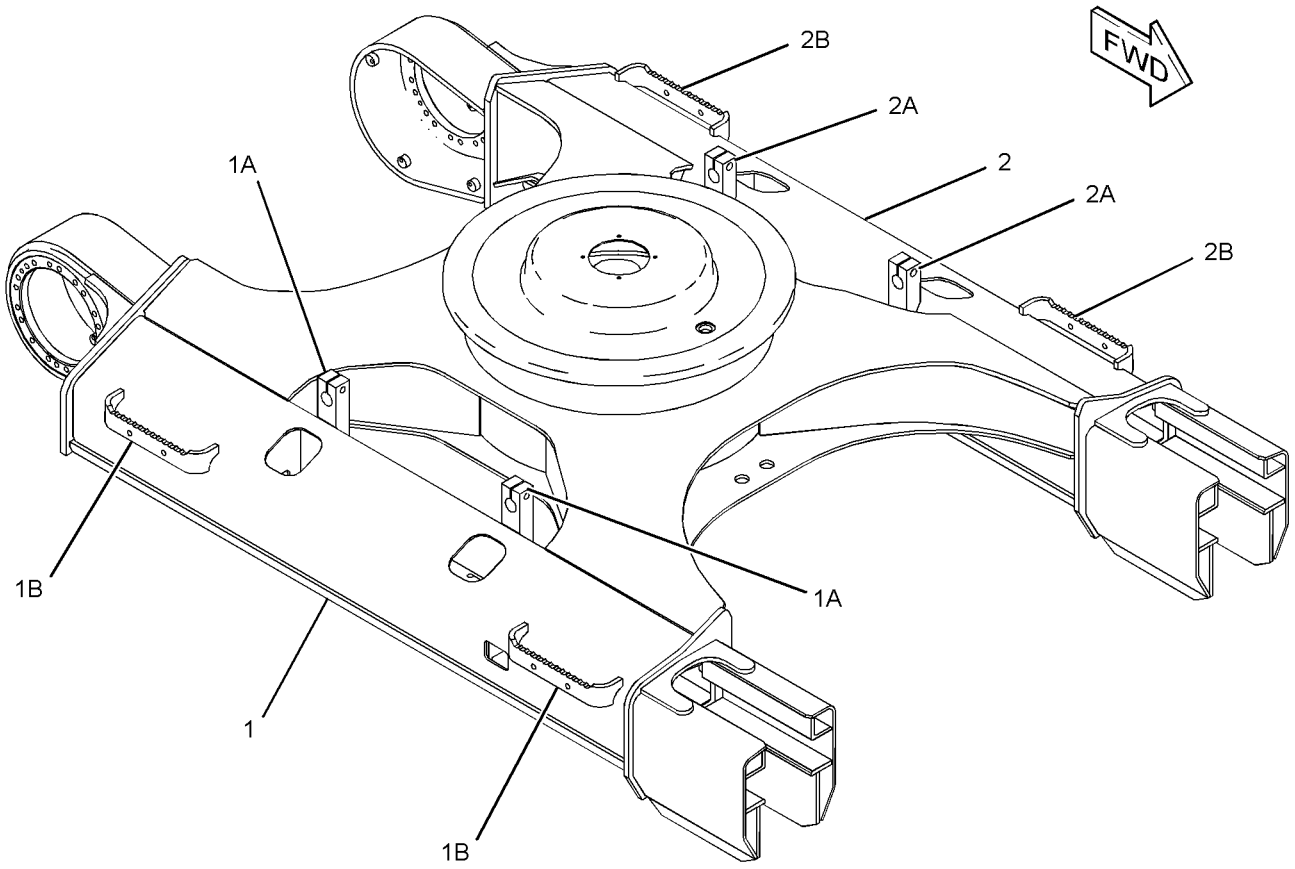

GRAPHIC #1 **<END>** g01408175

087-5908 GUARD GP-TRACK GUIDE

S/N: CJN1-UP

PART OF 260-6975 FRAME AR-UNDERCARRIAGE

SMCS-4177 **i02271129**

NOTE	REF NO	GRAPHIC REF	PART NUMBER	QTY	PART NAME 1 2 3 4 5 6 (PRODUCT LEVEL)	SEE PAGE
	1	1	**240-2988**	1	GUARD AS-TRACK GUIDE	
M	2	1	**8T-5460**	4	BOLT (M20X2.5X40-MM)	
	3	1	**8T-4123**	4	WASHER (22X35X3.5-MM THK)	

M-METRIC PART

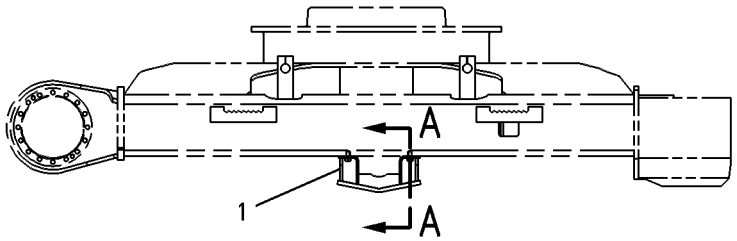

RIGHT SIDE VIEW

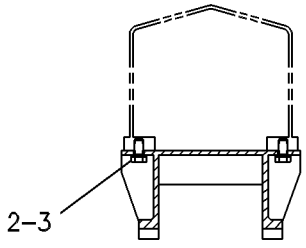

SECTION A–A

GRAPHIC #1 **<END>** g00257014

106-6773 GUARD GP-TRACK GUIDE–SPROCKET

S/N: CJN1-UP
AN ATTACHMENT

SMCS-4177 **i02857961**

NOTE	REF NO	GRAPHIC REF	PART NUMBER	QTY	PART NAME 1 2 3 4 5 6 (PRODUCT LEVEL)	SEE PAGE
	1	1	**111-0106**	2	GUARD AS-TRACK GUIDE	
M	2	1	**8T-5460**	12	BOLT (M20X2.5X40-MM)	
	3	1	**8T-4123**	12	WASHER (22X35X3.5-MM THK)	

QUANTITIES SHOWN ARE THOSE REQUIRED FOR BOTH LH AND RH SIDES
M-METRIC PART

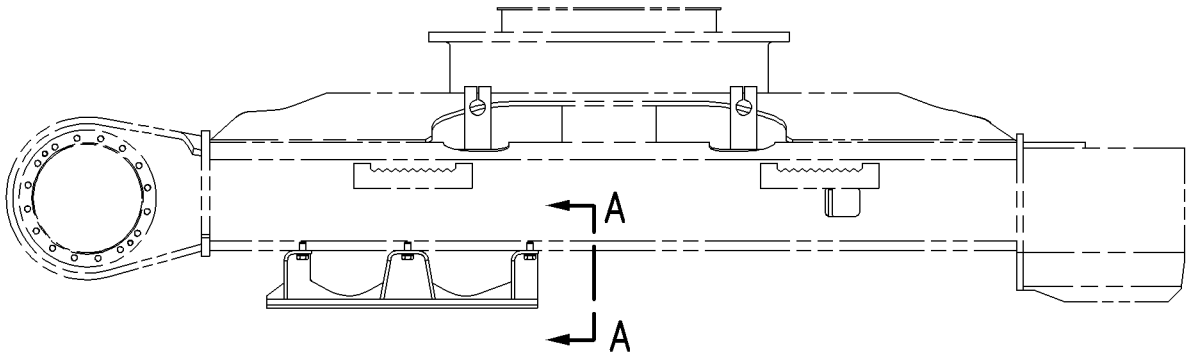

RIGHT SIDE VIEW

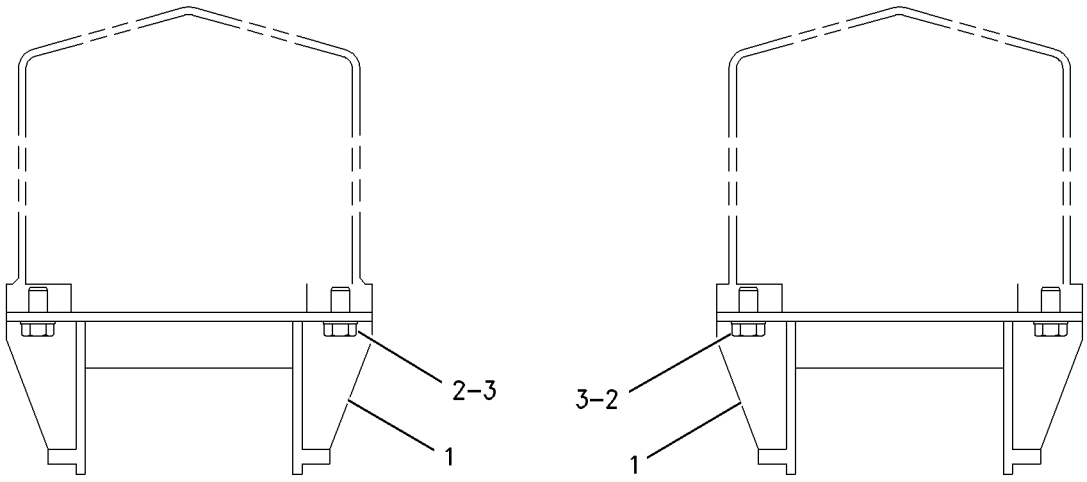

VIEW A-A

GRAPHIC #1 **<END>** g00765109

106-6775 GUARD GP-TRACK GUIDE–FRONT

S/N: CJN1-UP
2-PIECE
AN ATTACHMENT

SMCS-4177 **i02857507**

NOTE	REF NO	GRAPHIC REF	PART NUMBER	QTY	PART NAME 1 2 3 4 5 6 (PRODUCT LEVEL)	SEE PAGE
	1	1	**111-0106**	2	GUARD AS-TRACK GUIDE	
M	2	1	**8T-5460**	12	BOLT (M20X2.5X40-MM)	
	3	1	**8T-4123**	12	WASHER (22X35X3.5-MM THK)	

QUANTITIES SHOWN ARE THOSE REQUIRED FOR BOTH LH AND RH SIDES
M-METRIC PART

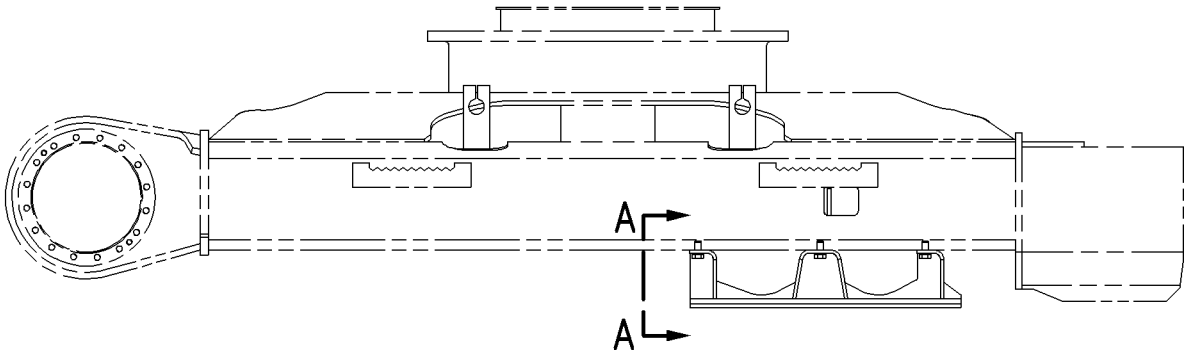

RIGHT SIDE VIEW

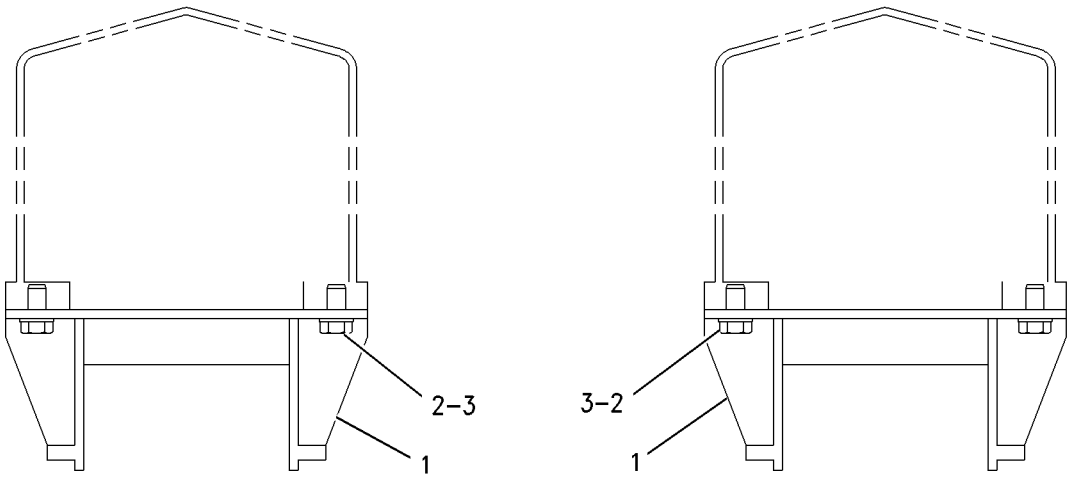

VIEW A–A

GRAPHIC #1 **<END>** g00765105

163-3754 GUARD GP-TRAVEL MOTOR

S/N: CJN1-UP

PART OF 260-6975 FRAME AR-UNDERCARRIAGE

SMCS-7163 **i03040366**

NOTE	REF NO	GRAPHIC REF	PART NUMBER	QTY	PART NAME 1 2 3 4 5 6 (PRODUCT LEVEL)	SEE PAGE
M	1	1	**135-8576**	8	BOLT AS-LOCKING (M12X1.75X30-MM)	
					(EACH INCLUDES)	
		1	**5P-1076**	1	WASHER-HARD (13.5X30X4-MM THK)	
M		1	**8C-8992**	1	BOLT-LOCKING (M12X1.75X30-MM)	
	2	1	**163-3755**	2	COVER	

QUANTITIES SHOWN ARE THOSE REQUIRED FOR BOTH LH AND RH SIDES
M-METRIC PART

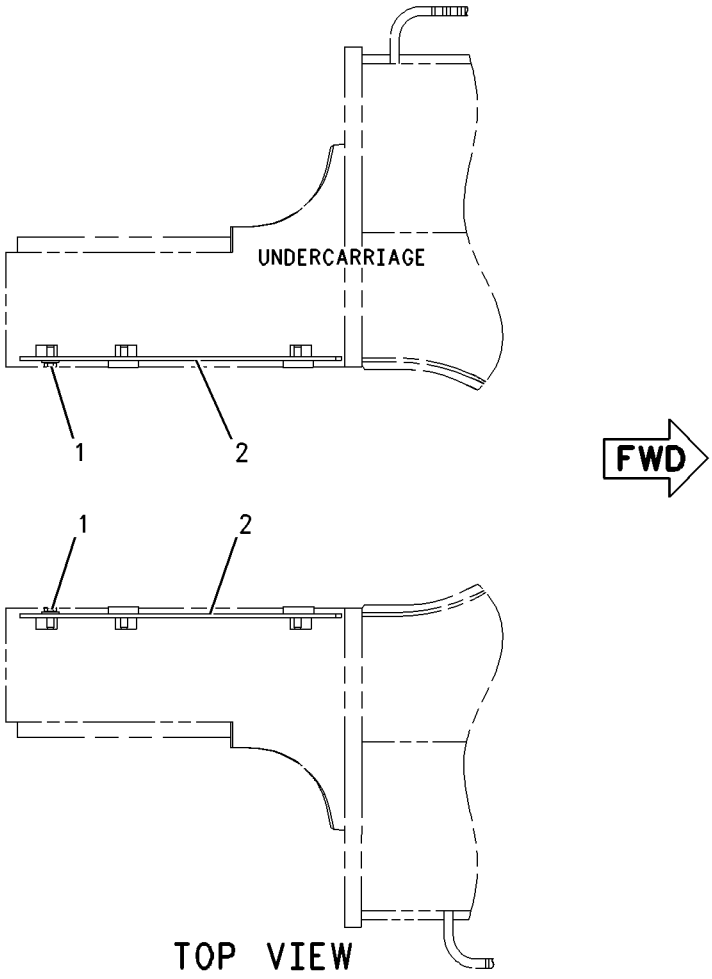

GRAPHIC #1 **<END>** g00678898

UNDERCARRIAGE

248-7132 IDLER GP-FRONT

S/N: CJN1-161

PART OF 260-6975 FRAME AR-UNDERCARRIAGE

SMCS-4159 **i02600452**

NOTE	REF NO	GRAPHIC REF	PART NUMBER	QTY	PART NAME 1 2 3 4 5 6 (PRODUCT LEVEL)	SEE PAGE
Y	1	1	**248-7133**	1	IDLER GP-FRONT (RH)	360
Y	2	1	**248-7134**	1	IDLER GP-FRONT (LH)	361

Y-SEPARATE ILLUSTRATION

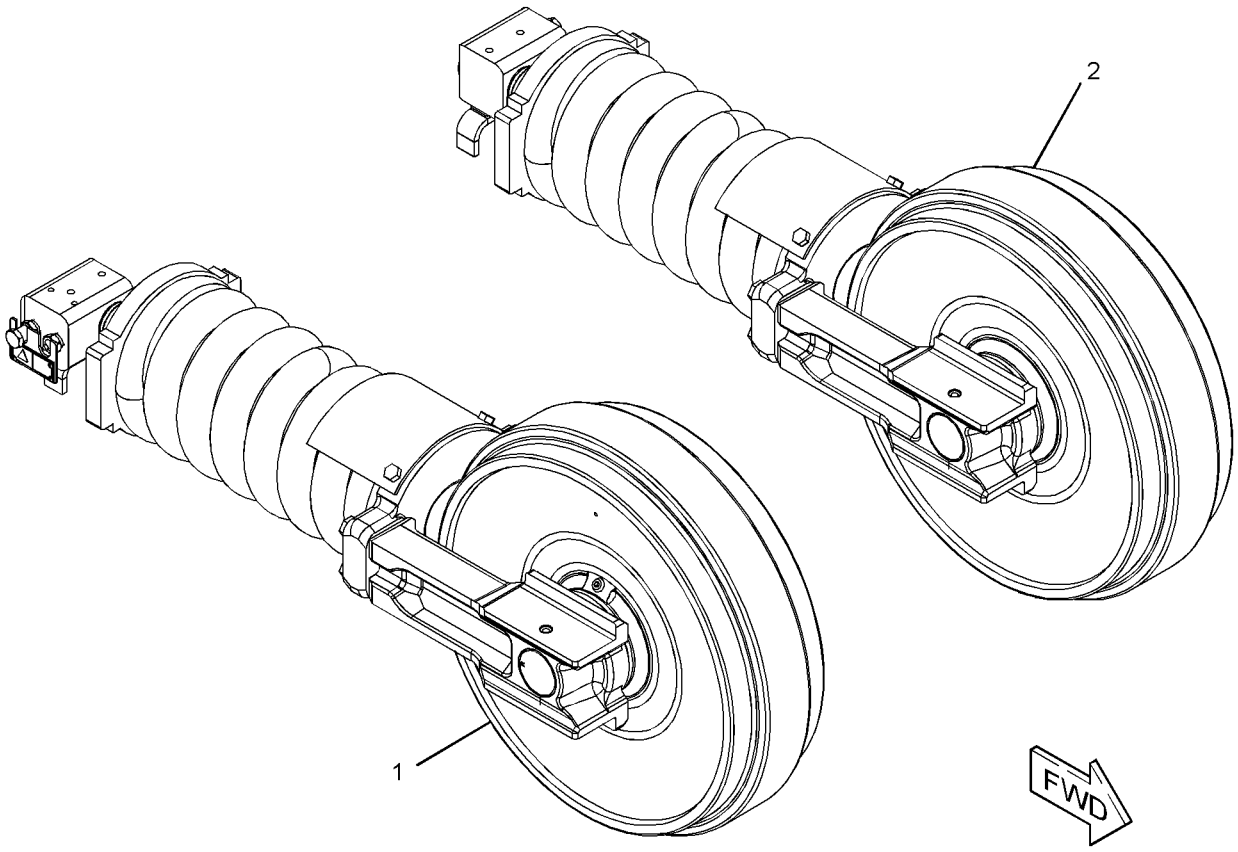

GRAPHIC #1 **<END>** g01312197

UNDERCARRIAGE

248-7132 IDLER GP-FRONT

S/N: CJN162-UP

PART OF 260-6975 FRAME AR-UNDERCARRIAGE

SMCS-4159 **i02942318**

NOTE	REF NO	GRAPHIC REF	PART NUMBER	QTY	PART NAME 1 2 3 4 5 6 (PRODUCT LEVEL)	SEE PAGE
Y	1	1	*297-9185*	1	IDLER GP-FRONT (RH)	363
Y	2	1	*297-9186*	1	IDLER GP-FRONT (LH)	364

Y-SEPARATE ILLUSTRATION

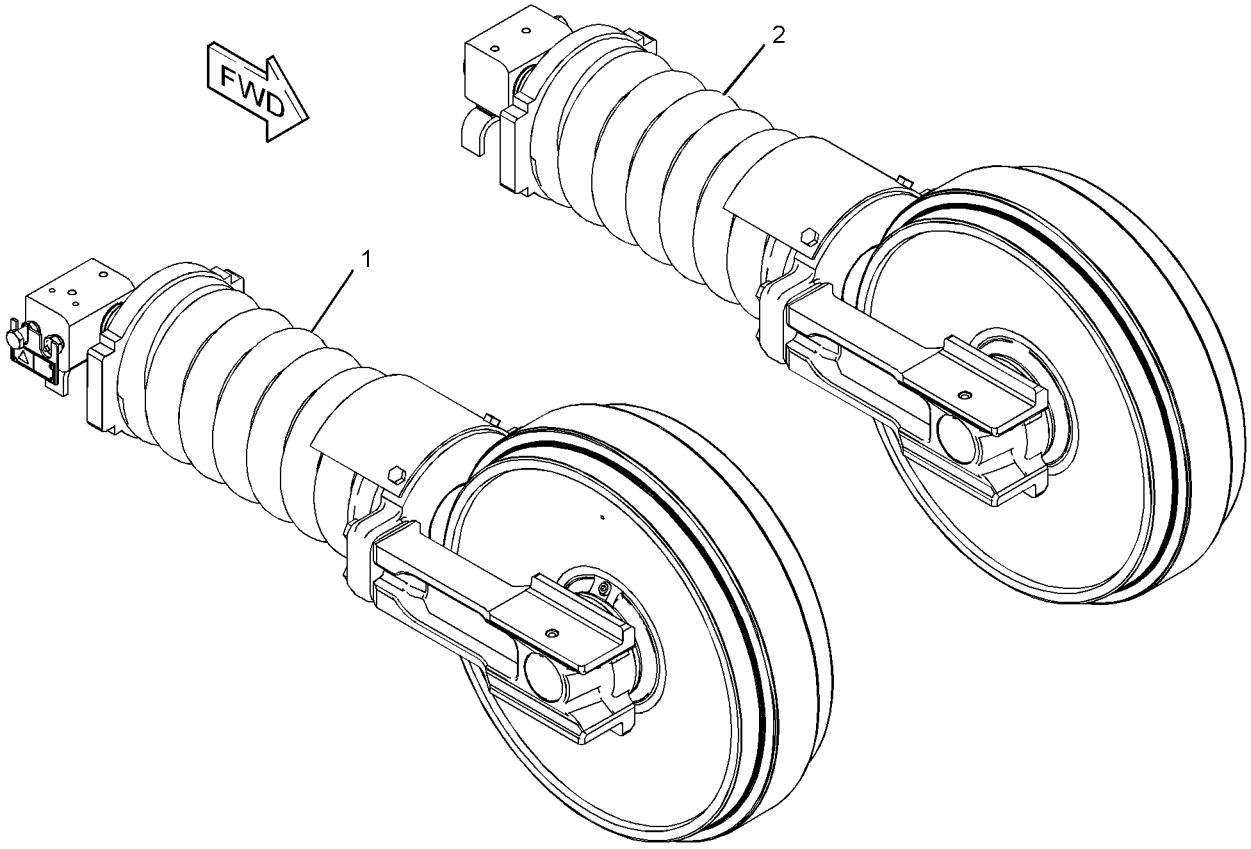

GRAPHIC #1 **<END>** g01455992

248-7133 IDLER GP-FRONT–RH

S/N: CJN1-161

PART OF 248-7132 IDLER GP-FRONT

SMCS-4159 **i02600453**

NOTE	REF NO	GRAPHIC REF	PART NUMBER	QTY	PART NAME 1 2 3 4 5 6 (PRODUCT LEVEL)	SEE PAGE
Y	1	1	*248-7135*	1	TRACK ADJUSTER & RECOIL GP (RH)	369
Y	2	1	**248-7143**	1	IDLER GP-FRONT	362
M	3	1	**8T-4140**	4	BOLT (M16X2X60-MM)	

M-METRIC PART
Y-SEPARATE ILLUSTRATION

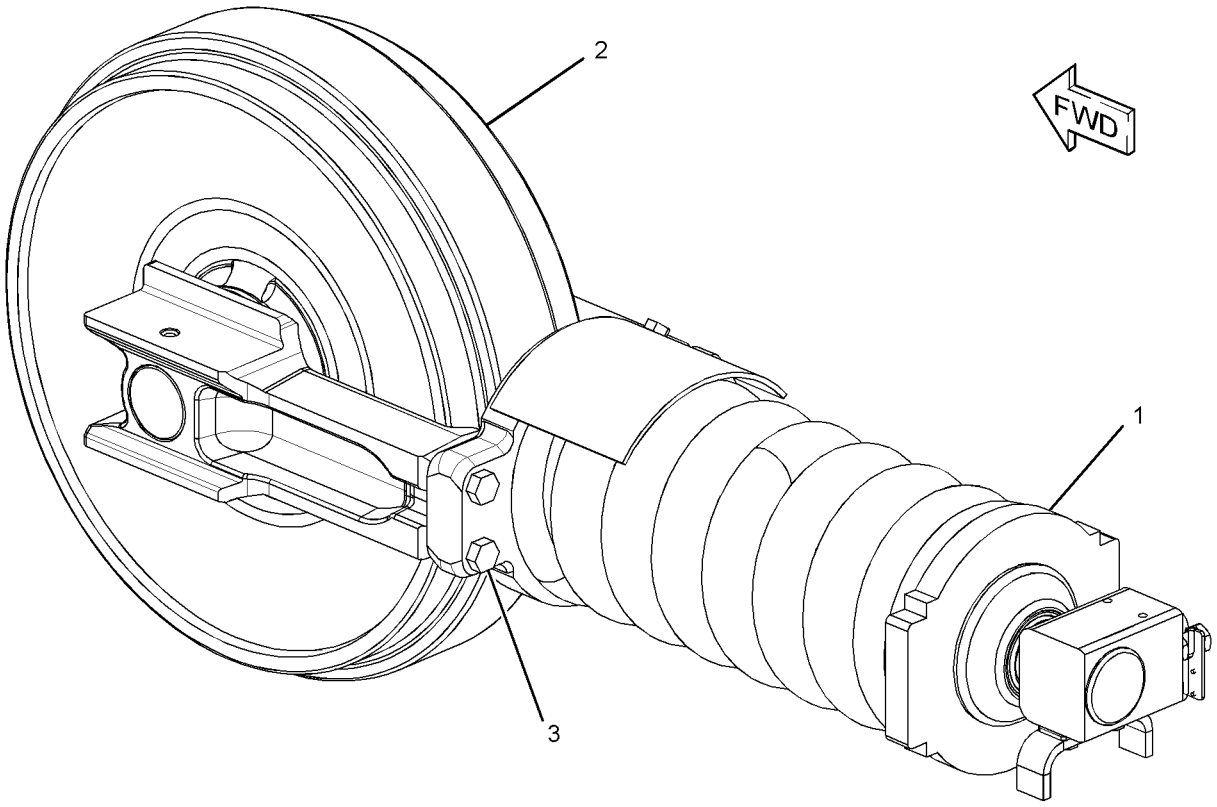

GRAPHIC #1 **<END>** g01312161

248-7134 IDLER GP-FRONT–LH

S/N: CJN1-161

PART OF 248-7132 IDLER GP-FRONT

SMCS-4159 **i02600455**

NOTE	REF NO	GRAPHIC REF	PART NUMBER	QTY	PART NAME 1 2 3 4 5 6 (PRODUCT LEVEL)	SEE PAGE
Y	1	1	*248-7136*	1	TRACK ADJUSTER & RECOIL GP (LH)	370
Y	2	1	**248-7143**	1	IDLER GP-FRONT	362
M	3	1	**8T-4140**	4	BOLT (M16X2X60-MM)	

M-METRIC PART
Y-SEPARATE ILLUSTRATION

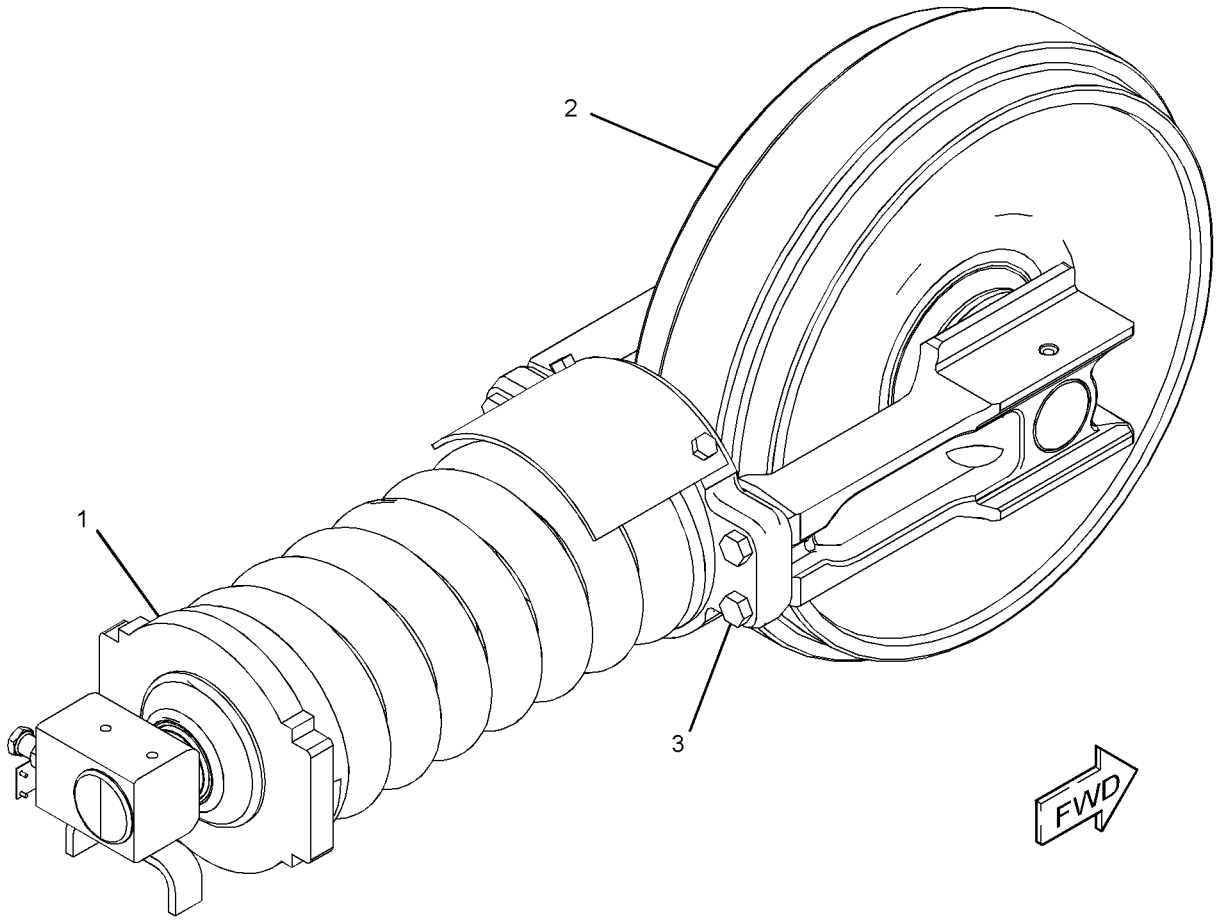

GRAPHIC #1 **<END>** g01312170

248-7143 IDLER GP-FRONT

S/N: CJN1-UP

PART OF 248-7133, 248-7134, 297-9185, 297-9186 IDLER GP-FRONT

SMCS-4159 **i02408880**

NOTE	REF NO	GRAPHIC REF	PART NUMBER	QTY	PART NAME 1 2 3 4 5 6 (PRODUCT LEVEL)	SEE PAGE
	1	1	**9W-2201**	2	SEAL GP-DUO-CONE	
					(EACH INCLUDES)	
		1	**096-4255**	2	RING	
	2	1	**239-4362**	2	BEARING (FRONT IDLER)	
	3	1	**246-5425**	1	SHAFT	
	4	1	**262-4781**	1	IDLER & BEARING AS	
		1	**8E-4359**	2	BEARING	
	5	1	**6V-7658**	2	SEAL-O-RING	
	6	1	**7H-3171**	1	PLUG-PIPE	
	7	1	**9W-9455**	2	PIN	

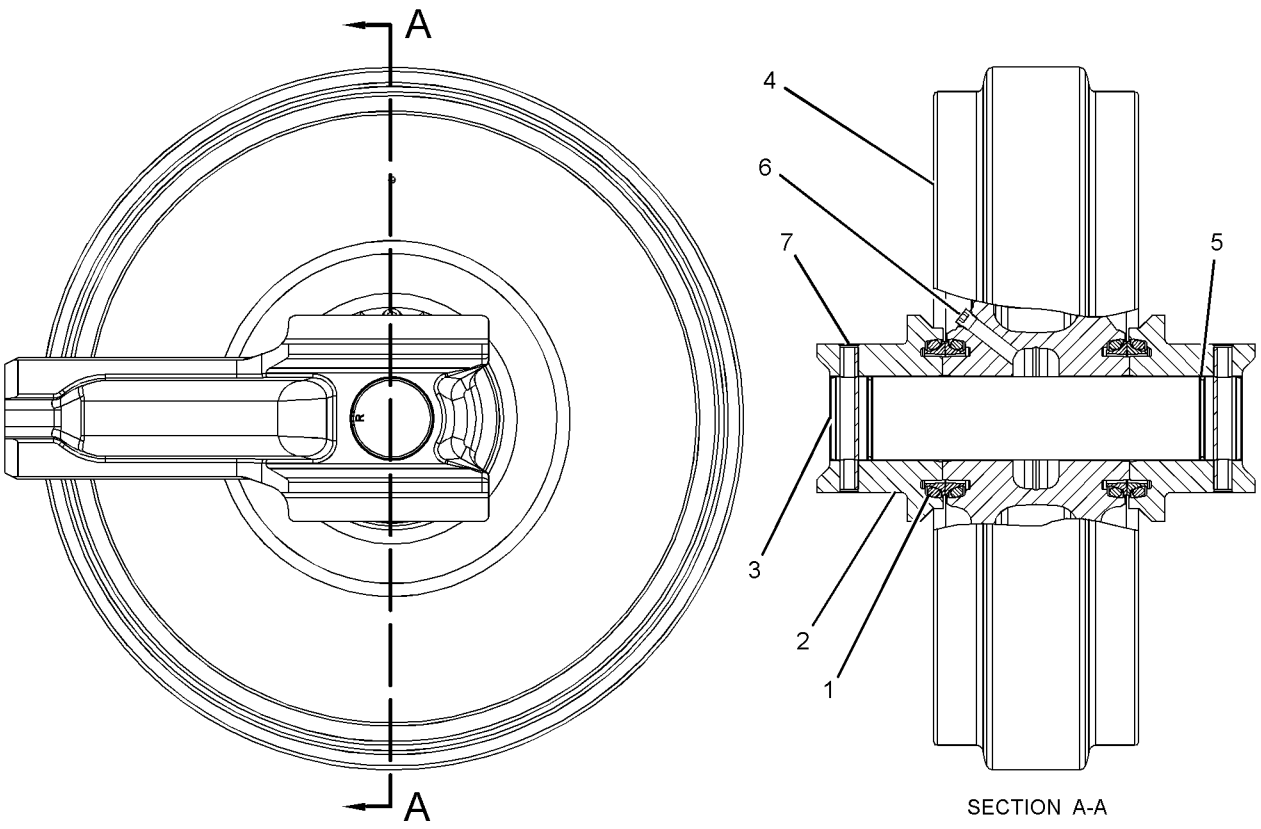

SECTION A-A

GRAPHIC #1 **<END>** g01206925

297-9185 IDLER GP-FRONT–RH

S/N: CJN162-UP

PART OF 248-7132 IDLER GP-FRONT

SMCS-4159 **i02942323**

NOTE	REF NO	GRAPHIC REF	PART NUMBER	QTY	PART NAME 1 2 3 4 5 6 (PRODUCT LEVEL)	SEE PAGE
Y	1	1	**248-7143**	1	IDLER GP-FRONT	362
Y	2	1	*297-9187*	1	TRACK ADJUSTER & RECOIL GP	373
M	3	1	**8T-4140**	4	BOLT (M16X2X60-MM)	

M-METRIC PART
Y-SEPARATE ILLUSTRATION

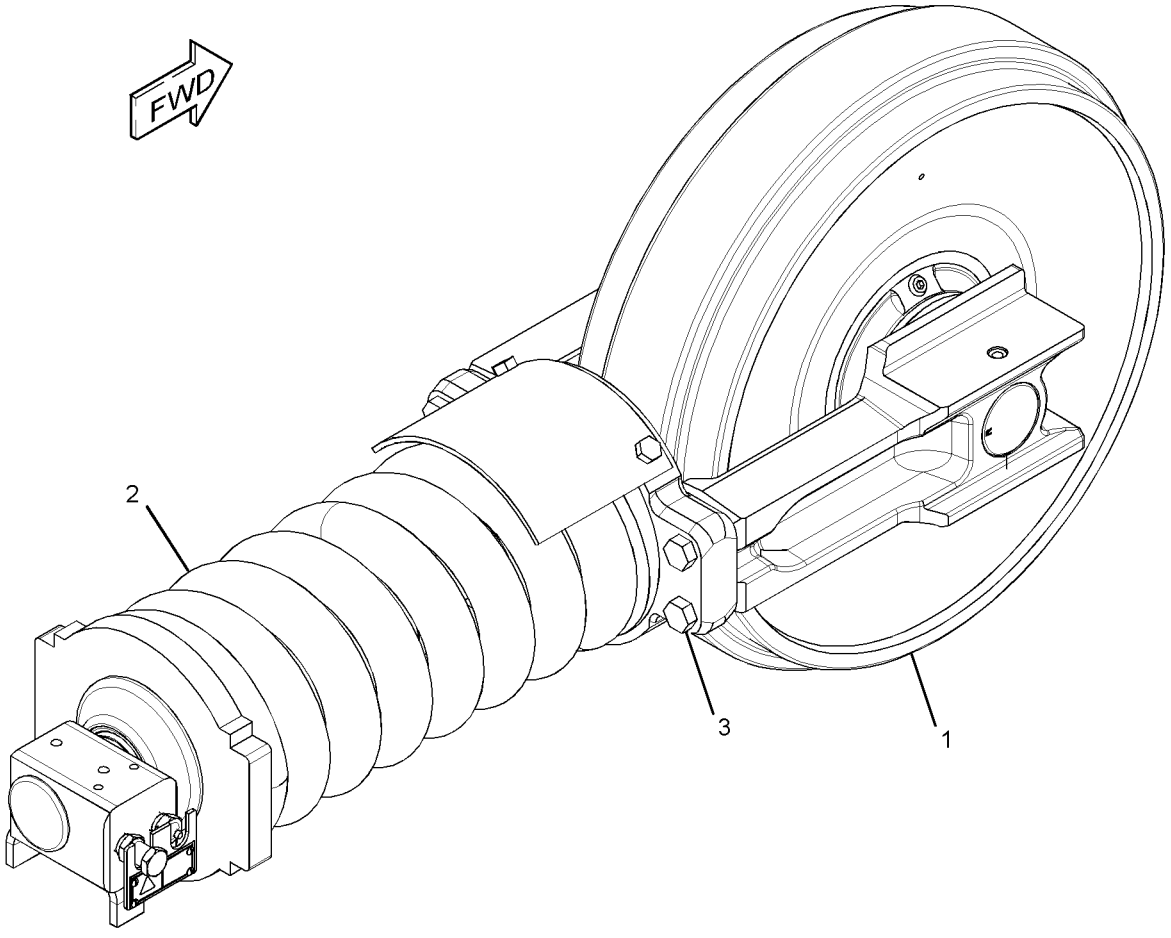

GRAPHIC #1 **<END>** g01456197

UNDERCARRIAGE

297-9186 IDLER GP-FRONT–LH

S/N: CJN162-UP

PART OF 248-7132 IDLER GP-FRONT

SMCS-4159 **i02942327**

NOTE	REF NO	GRAPHIC REF	PART NUMBER	QTY	PART NAME 1 2 3 4 5 6 (PRODUCT LEVEL)	SEE PAGE
Y	1	1	**248-7143**	1	IDLER GP-FRONT	362
Y	2	1	*297-9188*	1	TRACK ADJUSTER & RECOIL GP	374
M	3	1	**8T-4140**	4	BOLT (M16X2X60-MM)	

M-METRIC PART
Y-SEPARATE ILLUSTRATION

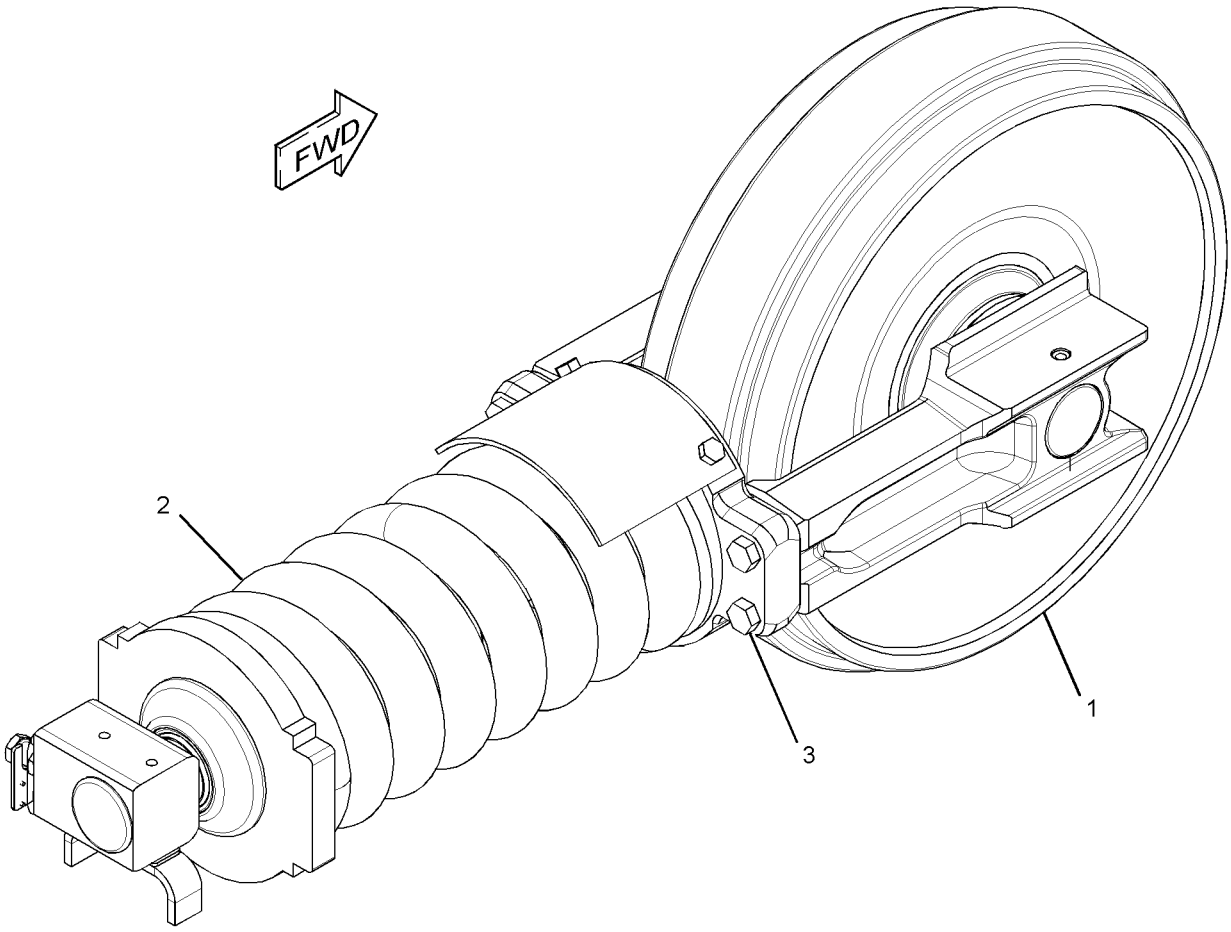

GRAPHIC #1 **<END>** g01456169

194-1134 LINK AS-TRACK

S/N: CJN1-UP

PART OF 176-4852, 179-3027, 179-3028 TRACK GP

AN ATTACHMENT

SMCS-4169, 4171 **i01476355**

NOTE	REF NO	GRAPHIC REF	PART NUMBER	QTY	PART NAME 1 2 3 4 5 6 (PRODUCT LEVEL)	SEE PAGE
	1	1	**9W-3138**	43	LINK-TRACK-LH	
	2	1	**095-0863**	1	COTTER	
	3	1	**8E-8586**	1	LINK-MASTER-LH	
	4	1	**190-3523**	43	BUSHING-TRACK	
	5	1	**8E-8585**	1	LINK-MASTER-RH	
	6	1	**188-3064**	1	PIN-TRACK MASTER	
	7	1	**158-4381**	2	SEAL-TRACK MASTER	
	8	1	**9W-3137**	43	LINK-TRACK-RH	
	9	1	**6Y-8186**	43	PIN-TRACK	
	10	1	**158-4380**	86	SEAL-TRACK	
	11	1	**190-3524**	1	BUSHING-MASTER	

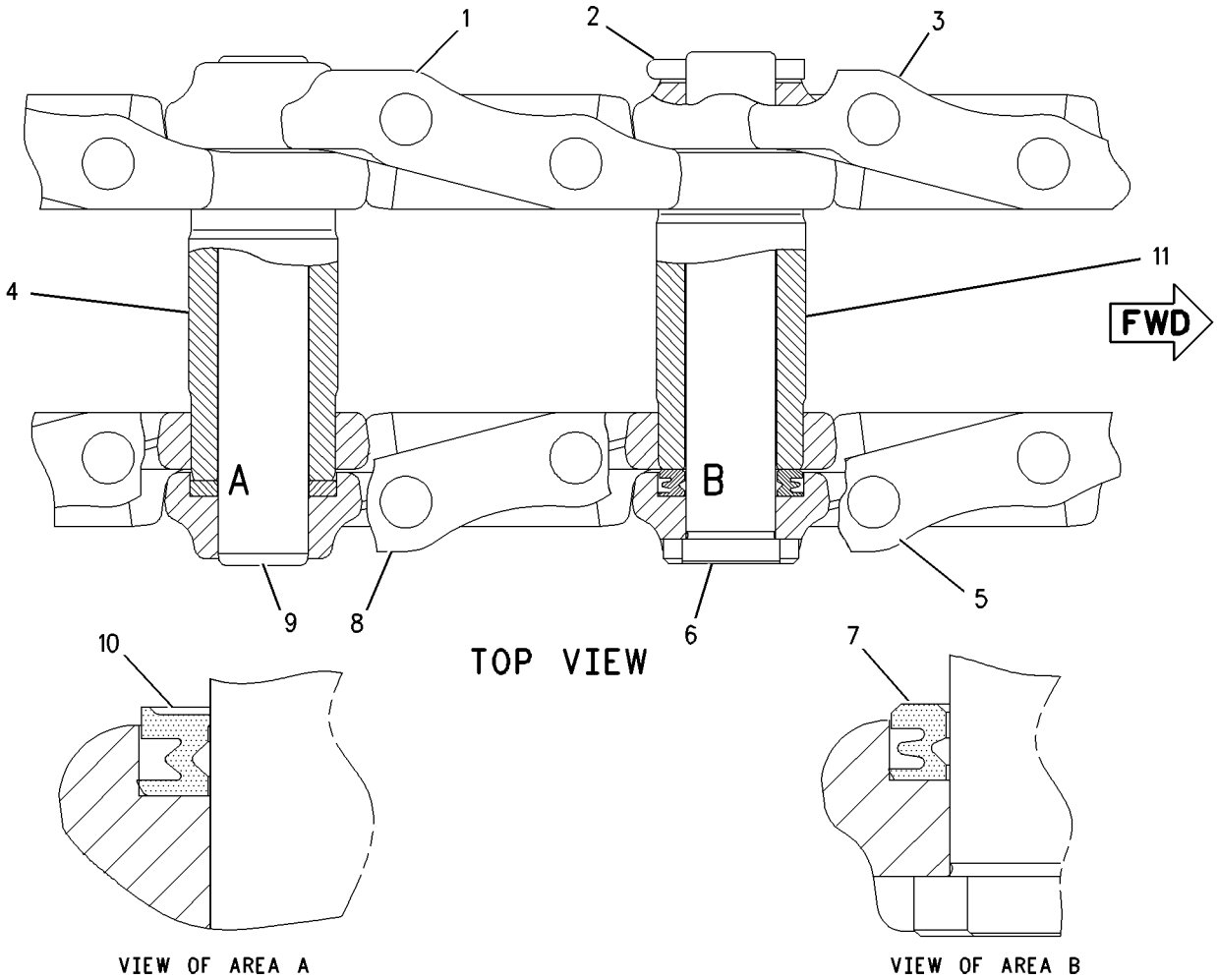

GRAPHIC #1 **<END>** g00770657

102-8120 ROLLER AR-TRACK & CARRIER

S/N: CJN1-UP

PART OF 260-6975 FRAME AR-UNDERCARRIAGE

SMCS-4154, 4180 **i01435775**

NOTE	REF NO	GRAPHIC REF	PART NUMBER	QTY	PART NAME 1 2 3 4 5 6 (PRODUCT LEVEL)	SEE PAGE
M	1	1	**8T-5878**	4	BOLT (M24X3X80-MM)	
Y	2	1	**8E-5600**	4	ROLLER GP-TRACK CARRIER	367
YR	3	1	**163-4143**	14	ROLLER GP-TRACK-SINGLE FLANGE	368
M	4	1	**7X-2565**	56	BOLT (M20X2.5X100-MM)	
	5	1	**8T-4123**	56	WASHER (22X35X3.5-MM THK)	

M-METRIC PART
R-REMFG PART MAY BE AVAILABLE
Y-SEPARATE ILLUSTRATION

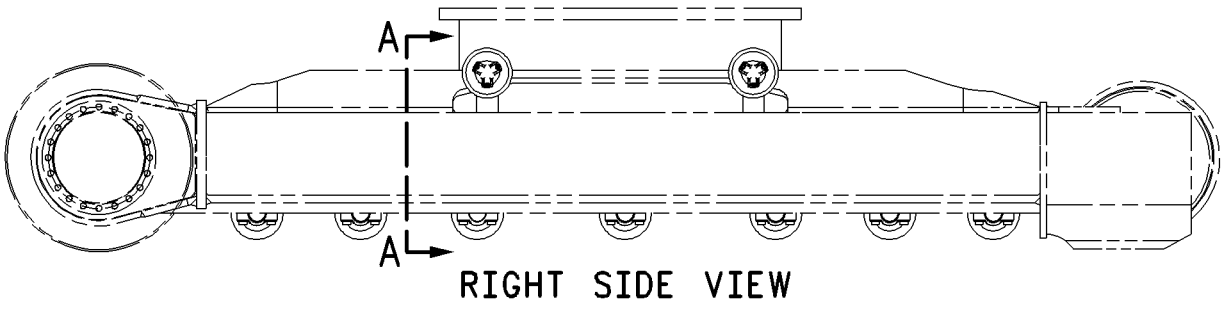

RIGHT SIDE VIEW

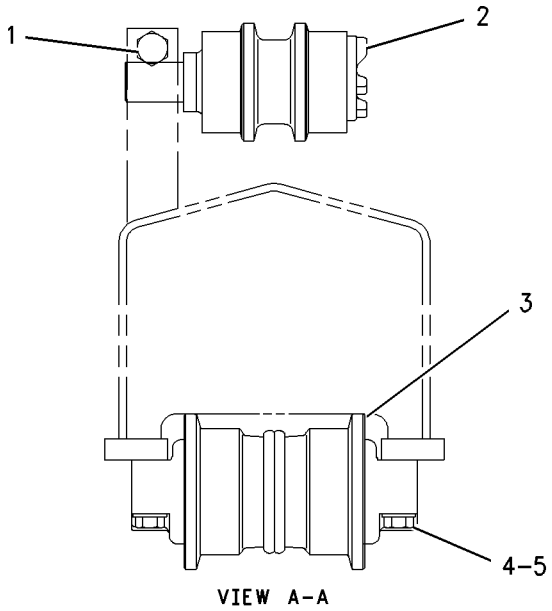

VIEW A-A

GRAPHIC #1 **<END>** g00756800

UNDERCARRIAGE

8E-5600 ROLLER GP-TRACK CARRIER

S/N: CJN1-UP

PART OF 102-8120 ROLLER AR-TRACK & CARRIER

SMCS-4154 **i02752192**

NOTE	REF NO	GRAPHIC REF	PART NUMBER	QTY	PART NAME 1 2 3 4 5 6 (PRODUCT LEVEL)	SEE PAGE
	1	1	**8E-5601**	1	SHAFT AS-TRACK ROLLER	
		1	**8E-5604**	1	COLLAR-ROLLER END	
		1	**8E-5607**	1	SHAFT-TRACK ROLLER	
	2	1	**8E-5608**	1	SEAL GP-DUO-CONE	
	3	1	**8E-5602**	1	ROLLER & BEARING AS	
	3A	1	**8E-6792**	1	BEARING-TRACK ROLLER	
	3B	1	**8E-6793**	1	BEARING-TRACK ROLLER	
	4	1	**8E-5606**	1	RETAINER	
	5	1	**6V-7661**	1	SEAL-O-RING	
M	6	1	**8T-1159**	5	BOLT-SOCKET HEAD (M10X1.5X25-MM)	
	7	1	**8E-5605**	1	COVER-CARRIER ROLLER	
	8	1	**7H-3171**	1	PLUG-PIPE	

M-METRIC PART

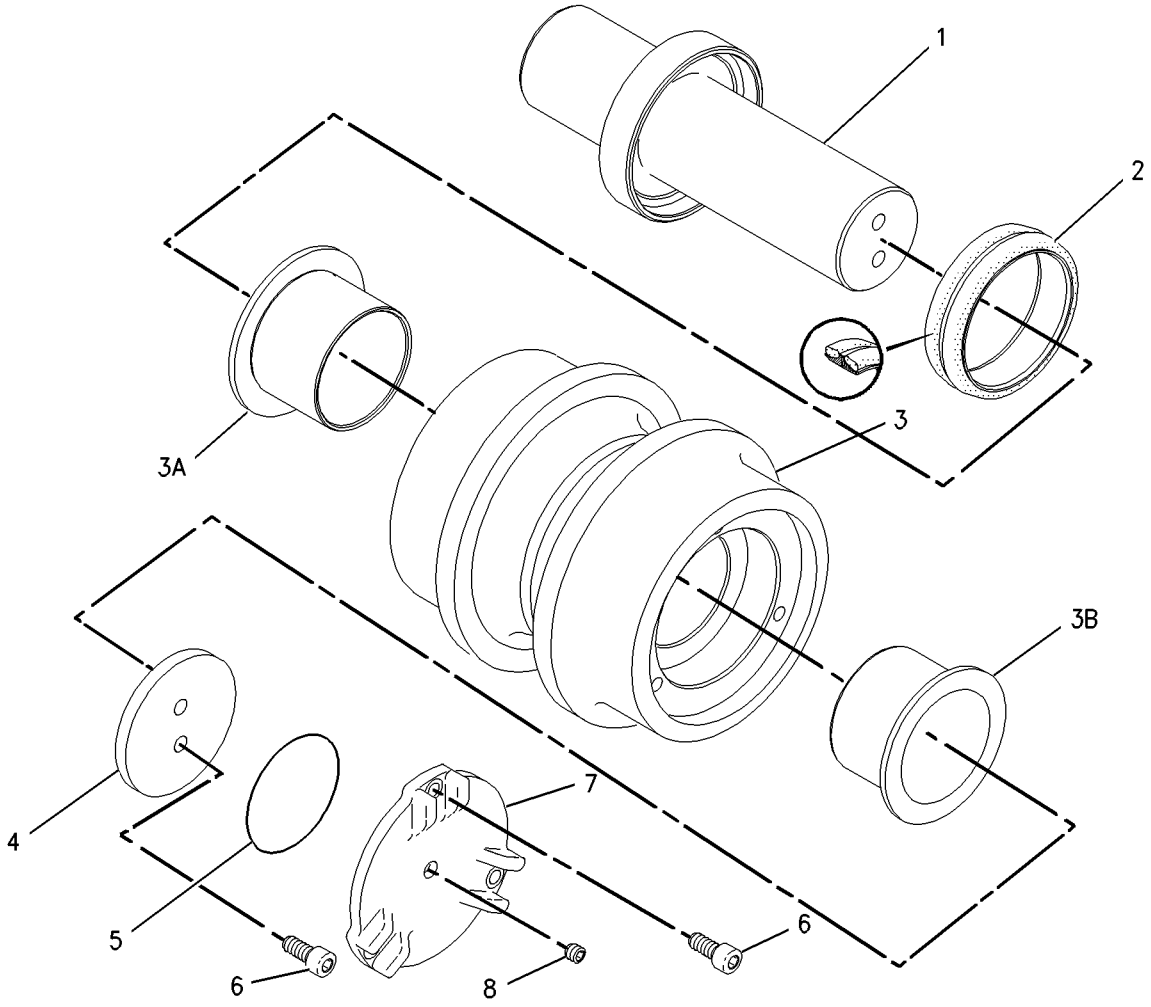

GRAPHIC #1 **<END>** g00715793

163-4143 ROLLER GP-TRACK-SINGLE FLANGE*R

S/N: CJN1-UP

PART OF 102-8120 ROLLER AR-TRACK & CARRIER

SMCS-4180 **i01319077**

NOTE	REF NO	GRAPHIC REF	PART NUMBER	QTY	PART NAME 1 2 3 4 5 6 (PRODUCT LEVEL)	SEE PAGE
	1	1	**8E-5031**	2	RING-RETAINING	
	2	1	**7F-8268**	2	SEAL-O-RING	
	3	1	**5G-2247**	1	STOPPER-RUBBER	
	4	1	**6Y-0473**	1	PLUG-CLEAR	
	5	1	**8E-5032**	1	ROLLER & BEARING AS	
		1	**8E-5599**	2	BEARING-TRACK ROLLER	
	6	1	**8E-5035**	1	SHAFT-TRACK ROLLER	
	7	1	**8E-5037**	2	COLLAR-TRACK ROLLER	
	8	1	**9W-2142**	2	SEAL GP-DUO-CONE	
	9	1	**3E-3217**	1	DOWEL	

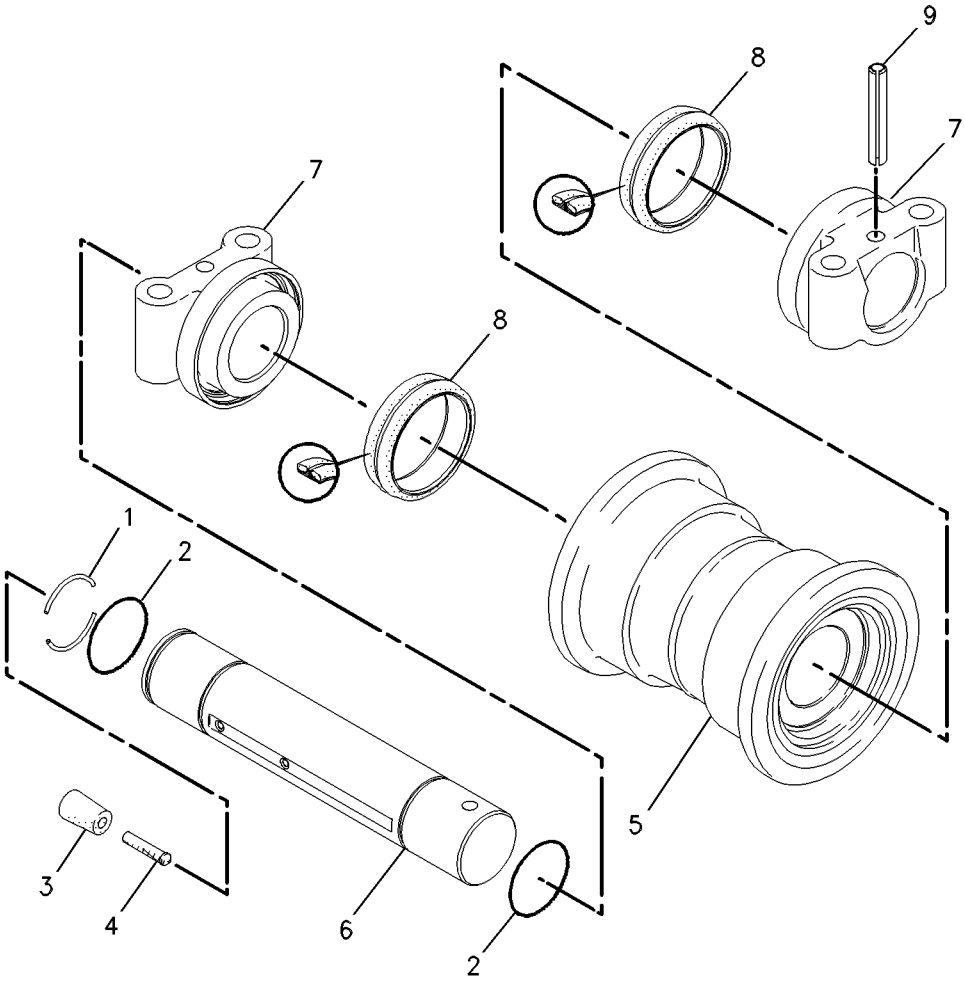

GRAPHIC #1 **<END>** g00593567

248-7135 TRACK ADJUSTER & RECOIL GP–RH

S/N: CJN1-161

PART OF 248-7133 IDLER GP-FRONT

SMCS-4157, 4158 **i02600457**

NOTE	REF NO	GRAPHIC REF	PART NUMBER	QTY	PART NAME 1 2 3 4 5 6 (PRODUCT LEVEL)	SEE PAGE
	1	1	**7Y-1746**	1	PLATE	
	2	1	**168-6761**	1	PLATE AS	
		1	**4B-4158**	4	SCREW-DRIVE (3/16X0.25-IN)	
		1	**253-1346**	1	PLATE-WARNING (HIGH PRESSURE CYLINDER)	
Y	3	1	*248-7137*	1	TRACK ADJUSTER & RECOIL GP	371
M	4	1	**8T-4137**	2	BOLT (M10X1.5X20-MM)	

M-METRIC PART
Y-SEPARATE ILLUSTRATION

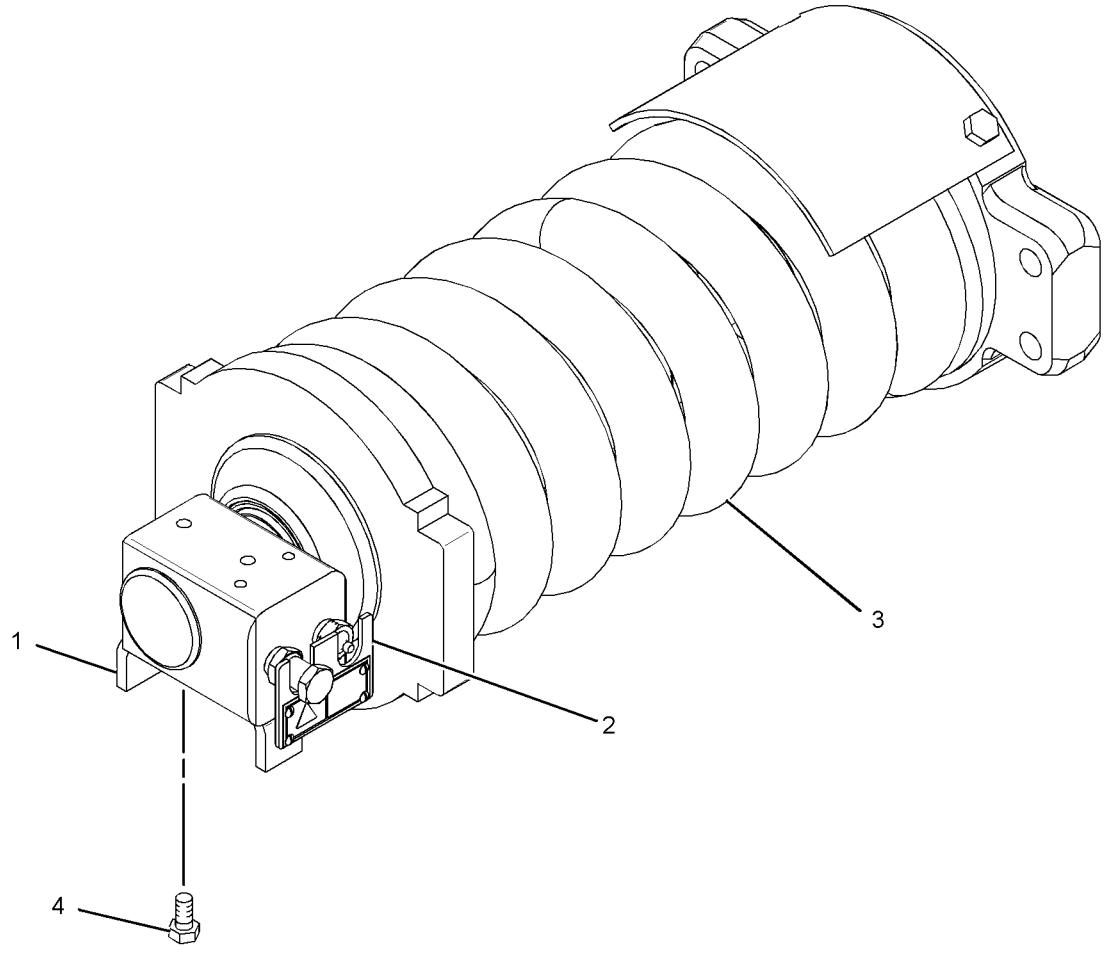

GRAPHIC #1 **<END>** g01305420

248-7136 TRACK ADJUSTER & RECOIL GP–LH

S/N: CJN1-161

PART OF 248-7134 IDLER GP-FRONT

SMCS-4157, 4158 **i02600460**

NOTE	REF NO	GRAPHIC REF	PART NUMBER	QTY	PART NAME 1 2 3 4 5 6 (PRODUCT LEVEL)	SEE PAGE
	1	1	**7Y-1746**	1	PLATE	
	2	1	**168-6761**	1	PLATE AS	
		1	**4B-4158**	4	SCREW-DRIVE (3/16X0.25-IN)	
		1	**253-1346**	1	PLATE-WARNING (HIGH PRESSURE CYLINDER)	
Y	3	1	**248-7137**	1	TRACK ADJUSTER & RECOIL GP	371
M	4	1	**8T-4137**	2	BOLT (M10X1.5X20-MM)	

M-METRIC PART
Y-SEPARATE ILLUSTRATION

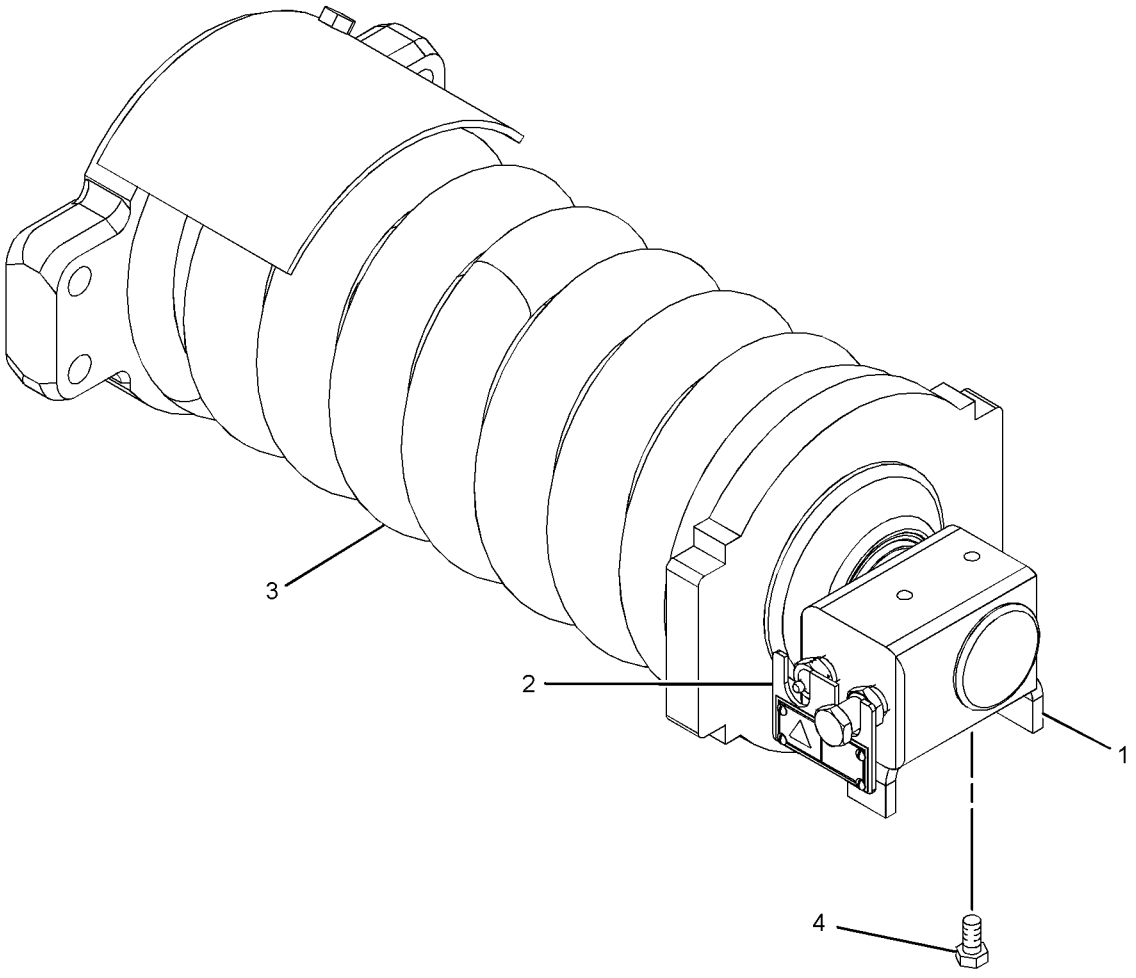

GRAPHIC #1 **<END>** g01305452

248-7137 TRACK ADJUSTER & RECOIL GP

S/N: CJN1-161

PART OF 248-7135, 248-7136 TRACK ADJUSTER & RECOIL GP

SMCS-4157, 4158 **i02600458**

NOTE	REF NO	GRAPHIC REF	PART NUMBER	QTY	PART NAME 1 2 3 4 5 6 (PRODUCT LEVEL)	SEE PAGE
	1	1	**7Y-1686**	1	STRIP	
	2	1	**7Y-1781**	1	COVER	
	3	1	**7Y-1883**	1	PLATE	
	4	1	**115-3678**	1	SUPPORT	
	5	1	**248-7138**	1	SPRING	
Y	6	1	*248-7139*	1	TRACK ADJUSTER & RECOIL GP	372
	7	1	**248-7141**	1	SPACER	
M	8	1	**096-4879**	1	NUT (M36X4-THD)	
M	9	1	**8T-4171**	2	BOLT (M6X1X12-MM)	
M	10	1	**8T-4179**	2	BOLT (M12X1.75X20-MM)	
	11	1	**9X-8259**	1	WASHER (39X66X6-MM THK)	

M-METRIC PART
Y-SEPARATE ILLUSTRATION

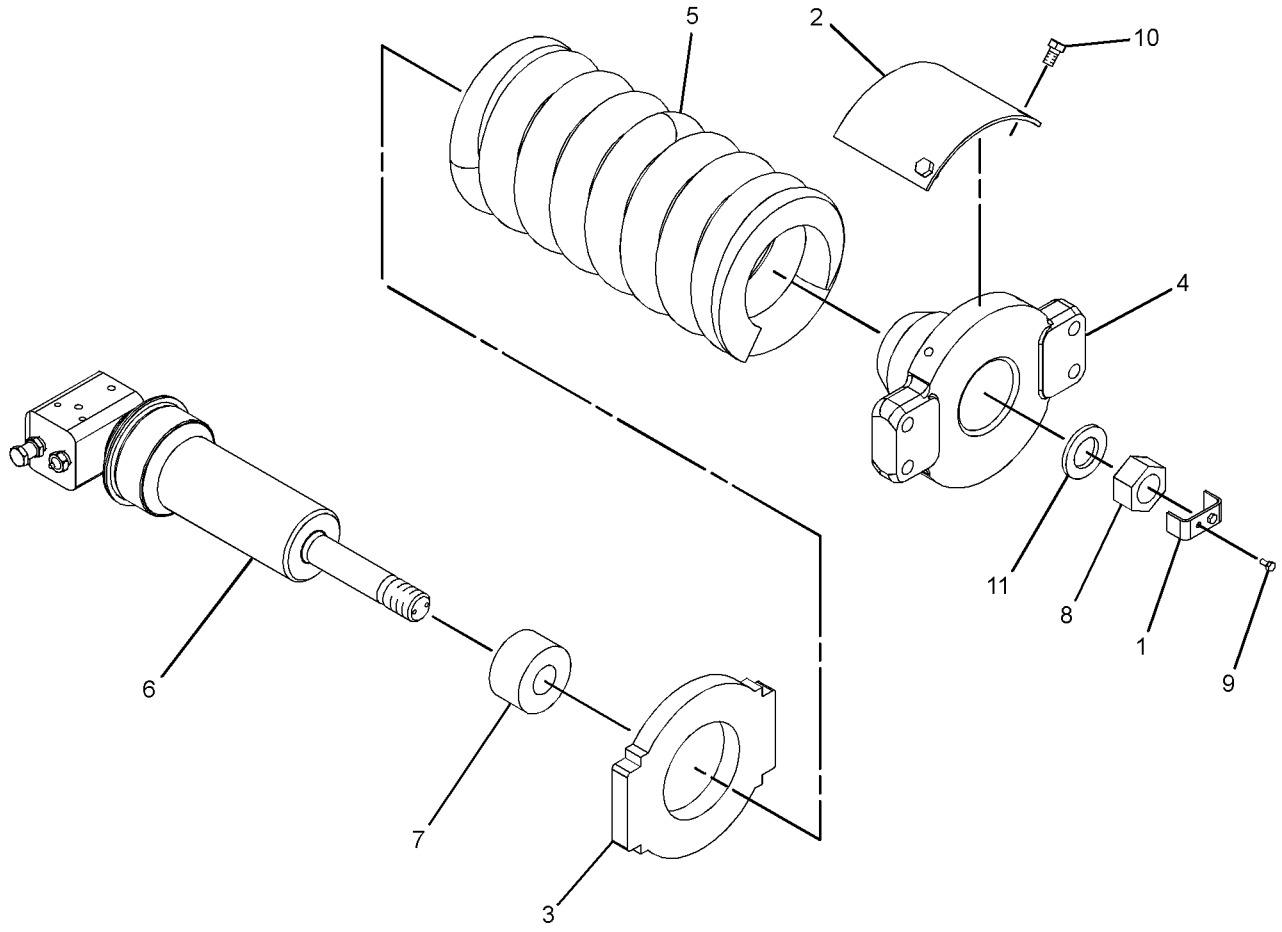

GRAPHIC #1 **<END>** g01305116

248-7139 TRACK ADJUSTER & RECOIL GP

S/N: CJN1-161

PART OF 248-7137 TRACK ADJUSTER & RECOIL GP

SMCS-4157, 4158 **i02758277**

NOTE	REF NO	GRAPHIC REF	PART NUMBER	QTY	PART NAME 1 2 3 4 5 6 (PRODUCT LEVEL)	SEE PAGE
	1	1	**2S-5926**	1	VALVE-RELIEF	
	2	1	**7Y-1780**	1	CYLINDER	
	3	1	**093-1435**	1	SEAL-LIP TYPE	
	4	1	**095-2927**	1	VALVE-FILL	
	5	1	**248-7140**	1	ROD	
	6	1	**093-1515**	2	RING	
	7	1	**248-7173**	2	SEAL-O-RING	
	8	1	**095-1701**	1	SEAL-O-RING	
	9	1	**096-4275**	2	RING	
	10	1	**096-4276**	1	RING	
	11	1	**136-2369**	1	PISTON AS	

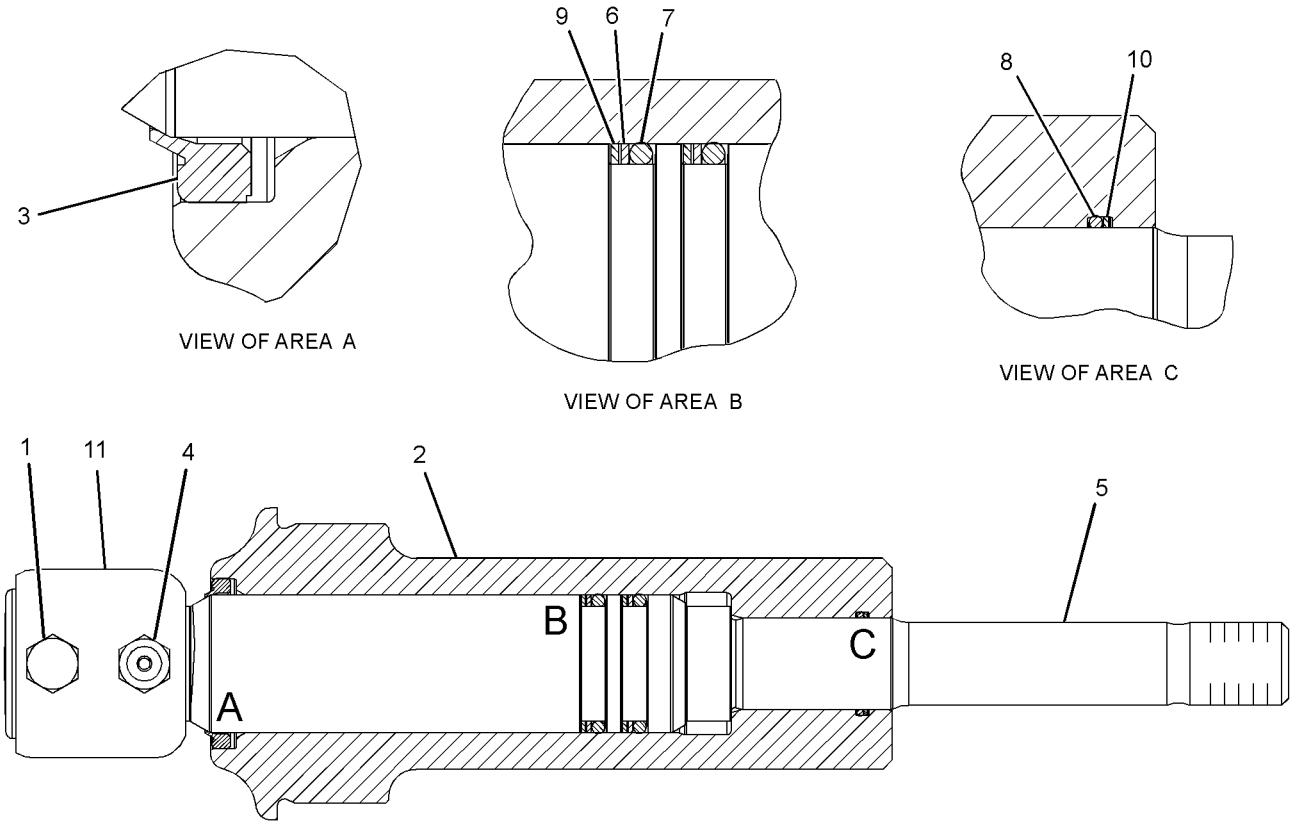

GRAPHIC #1 **<END>** g01305231

297-9187 TRACK ADJUSTER & RECOIL GP–RH

S/N: CJN162-UP

PART OF 297-9185 IDLER GP-FRONT

SMCS-4157, 4158 **i02942332**

NOTE	REF NO	GRAPHIC REF	PART NUMBER	QTY	PART NAME 1 2 3 4 5 6 (PRODUCT LEVEL)	SEE PAGE
	1	1	**7Y-1746**	1	PLATE	
	2	1	**168-6761**	1	PLATE AS	
		1	**4B-4158**	4	SCREW-DRIVE (3/16X0.25-IN)	
		1	**253-1346**	1	PLATE-WARNING (HIGH PRESSURE CYLINDER)	
Y	3	1	*297-9189*	1	TRACK ADJUSTER & RECOIL GP	375
M	4	1	**8T-4137**	2	BOLT (M10X1.5X20-MM)	

M-METRIC PART
Y-SEPARATE ILLUSTRATION

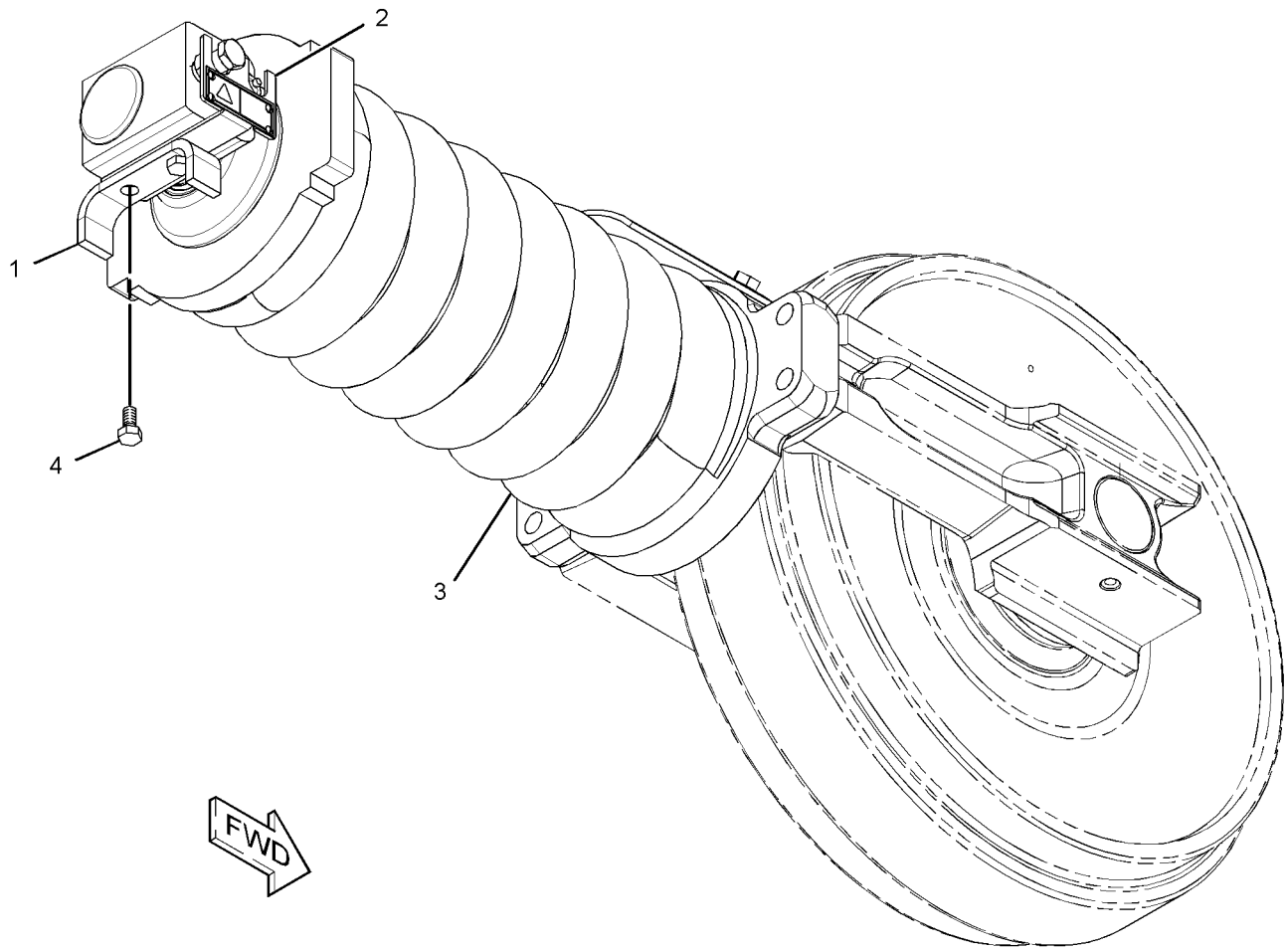

GRAPHIC #1 **<END>** g01456182

297-9188 TRACK ADJUSTER & RECOIL GP–LH

S/N: CJN162-UP

PART OF 297-9186 IDLER GP-FRONT

SMCS-4157, 4158 **i02942333**

NOTE	REF NO	GRAPHIC REF	PART NUMBER	QTY	PART NAME 1 2 3 4 5 6 (PRODUCT LEVEL)	SEE PAGE
	1	1	**7Y-1746**	1	PLATE	
	2	1	**168-6761**	1	PLATE AS	
		1	**4B-4158**	4	SCREW-DRIVE (3/16X0.25-IN)	
		1	**253-1346**	1	PLATE-WARNING (HIGH PRESSURE CYLINDER)	
Y	3	1	*297-9189*	1	TRACK ADJUSTER & RECOIL GP	375
M	4	1	**8T-4137**	2	BOLT (M10X1.5X20-MM)	

M-METRIC PART
Y-SEPARATE ILLUSTRATION

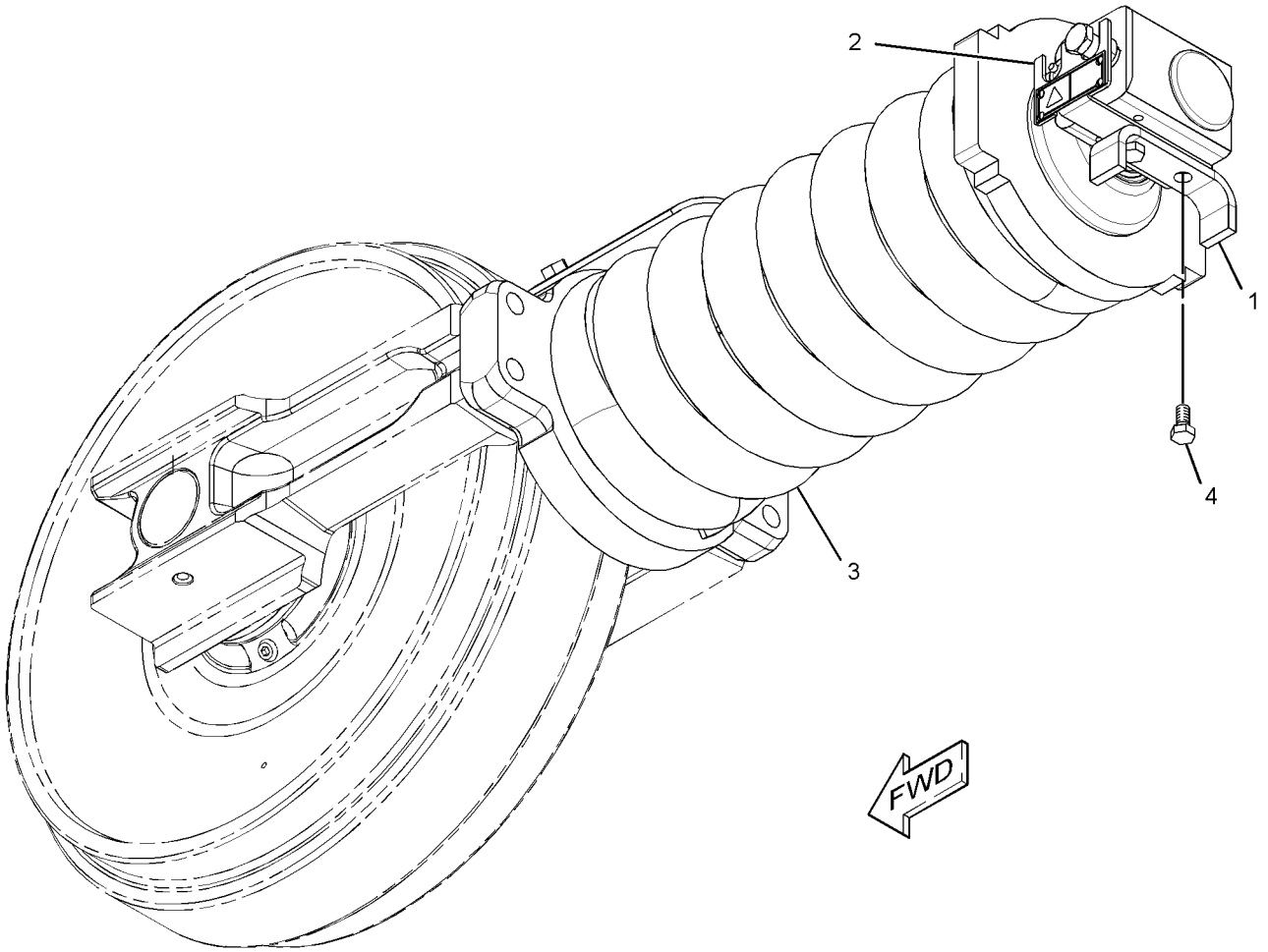

GRAPHIC #1 **<END>** g01456190

297-9189 TRACK ADJUSTER & RECOIL GP

S/N: CJN162-UP

PART OF 297-9187, 297-9188 TRACK ADJUSTER & RECOIL GP

SMCS-4157, 4158 **i02942335**

NOTE	REF NO	GRAPHIC REF	PART NUMBER	QTY	PART NAME 1 2 3 4 5 6 (PRODUCT LEVEL)	SEE PAGE
	1	1	**7I-7733**	1	WASHER (44X68X8-MM THK)	
	2	1	**7Y-1781**	1	COVER	
	3	1	**7Y-1883**	1	PLATE	
	4	1	**122-5253**	1	STRIP	
	5	1	**248-7138**	1	SPRING	
	6	1	**297-9190**	1	SUPPORT	
Y	7	1	*297-9191*	1	TRACK ADJUSTER & RECOIL GP	376
	8	1	**297-9192**	1	SPACER	
M	9	1	**3E-8024**	1	NUT-HEX (M42X4.5-THD)	
M	10	1	**7X-2536**	2	BOLT (M8X1.25X14-MM)	
M	11	1	**8T-4179**	2	BOLT (M12X1.75X20-MM)	

M-METRIC PART
Y-SEPARATE ILLUSTRATION

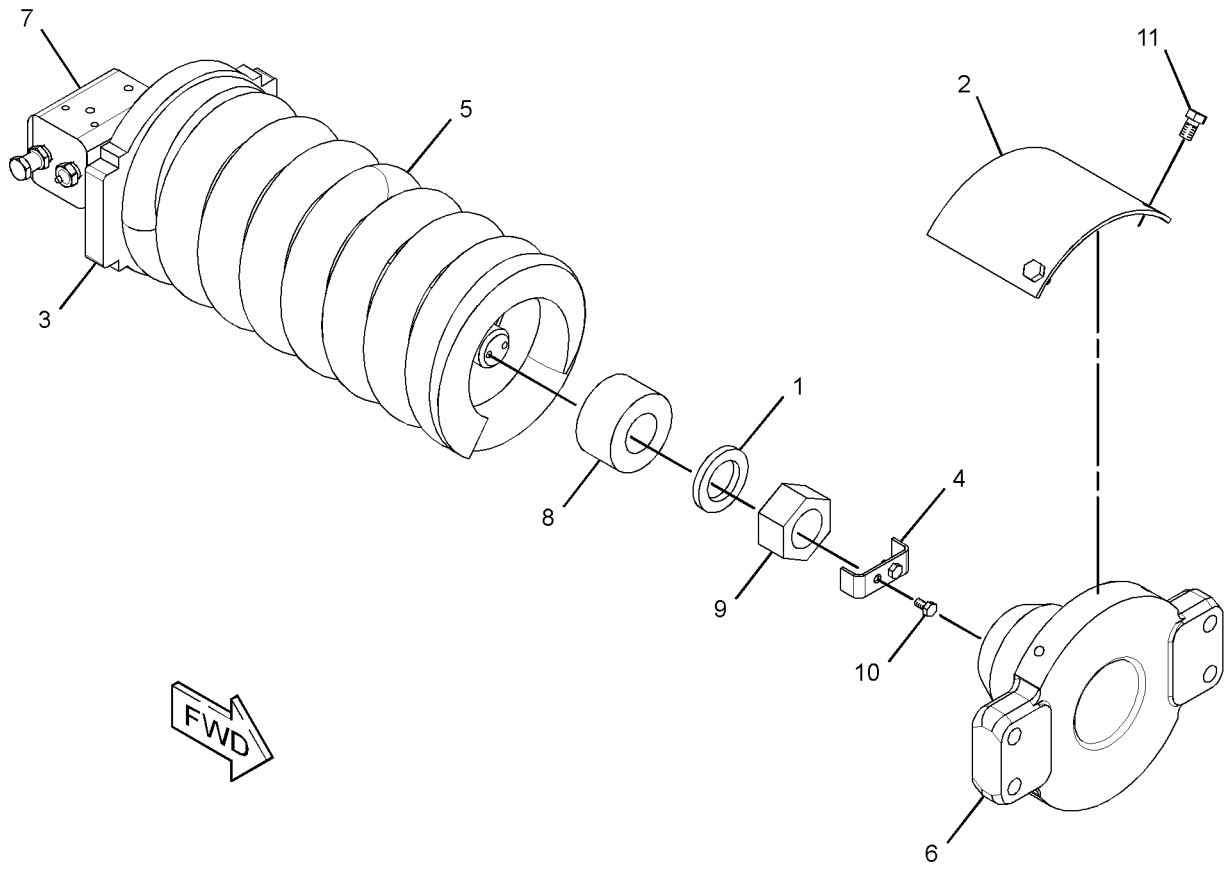

GRAPHIC #1 **<END>** g01456208

297-9191 TRACK ADJUSTER & RECOIL GP

S/N: CJN162-UP

PART OF 297-9189 TRACK ADJUSTER & RECOIL GP

SMCS-4157, 4158 **i02942337**

NOTE	REF NO	GRAPHIC REF	PART NUMBER	QTY	PART NAME 1 2 3 4 5 6 (PRODUCT LEVEL)	SEE PAGE
	1	1	**2S-5926**	1	VALVE-RELIEF	
	2	1	**7I-7734**	1	RING-BACKUP	
	3	1	**093-1435**	1	SEAL-LIP TYPE	
	4	1	**095-2927**	1	VALVE-FILL	
	5	1	**248-7173**	2	SEAL-O-RING	
	6	1	**297-9184**	1	ROD	
	7	1	**297-9193**	1	CYLINDER	
	8	1	**093-1515**	2	RING	
	9	1	**095-1703**	1	SEAL-O-RING	
	10	1	**096-4275**	2	RING	
	11	1	**136-2369**	1	PISTON AS	

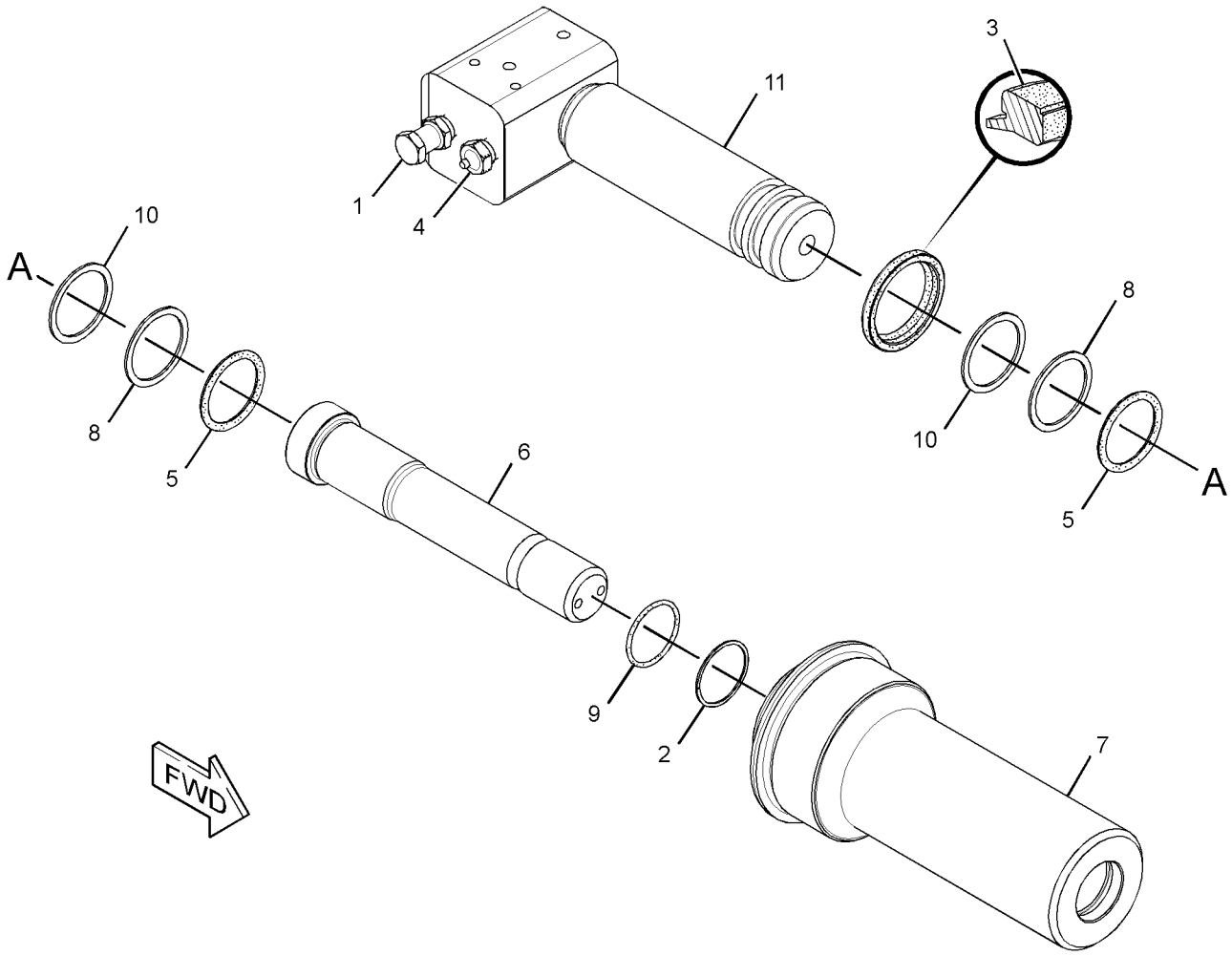

GRAPHIC #1 **<END>** g01456253

176-4852 TRACK GP–2-REQUIRED

S/N: CJN1-UP
600-MM (23.6-IN) TRIPLE GROUSER SHOE
AN ATTACHMENT

SMCS-4170 **i01476499**

NOTE	REF NO	GRAPHIC REF	PART NUMBER	QTY	PART NAME 1 2 3 4 5 6 (PRODUCT LEVEL)	SEE PAGE
Y	1	1	**194-1134**	1	LINK AS-TRACK	365
	2	1	**126-5062**	44	SHOE-TRACK	
M	3	1	**9W-3619**	176	BOLT-TRACK (M20X1.5X55MM)	
M	4	1	**9W-3361**	176	NUT-TRACK (M20X1.5 THD)	

M-METRIC PART
Y-SEPARATE ILLUSTRATION

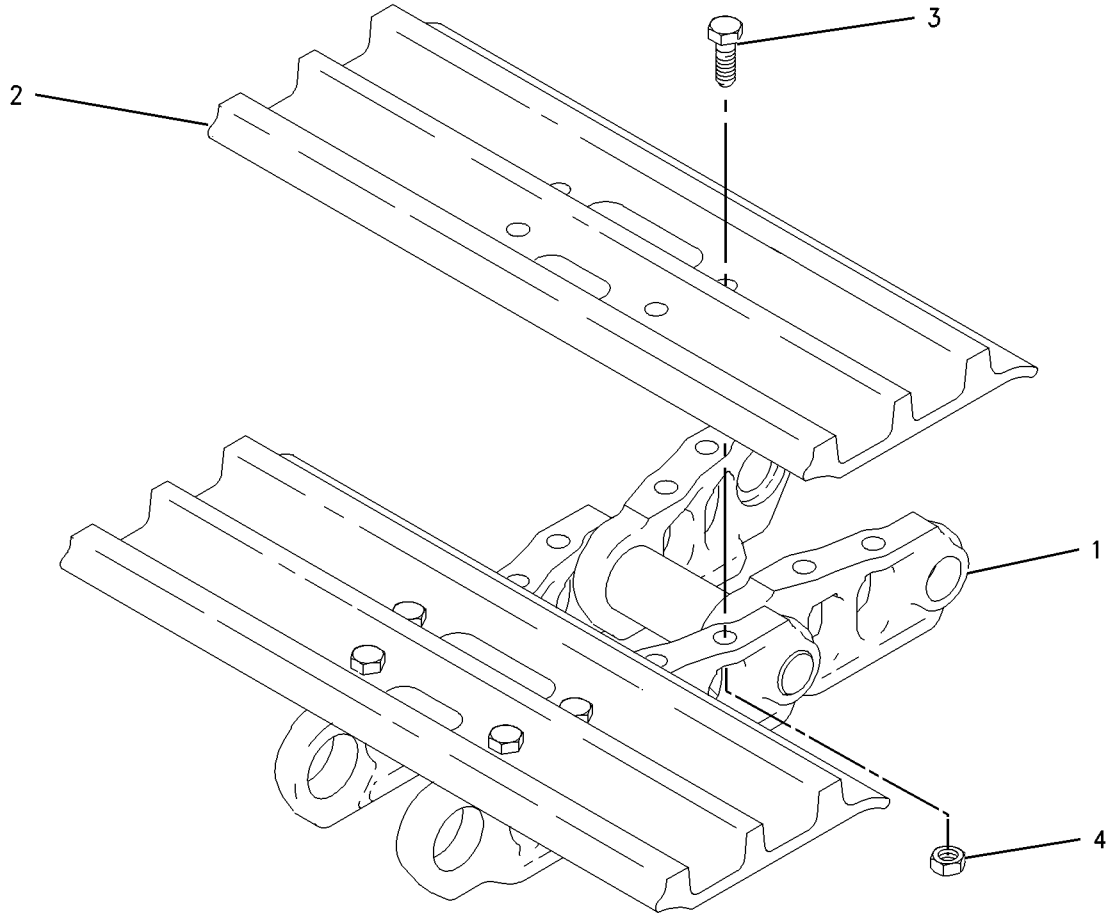

GRAPHIC #1 **<END>** g00731630

UNDERCARRIAGE

179-3027 TRACK GP–2-REQUIRED

S/N: CJN1-UP
500-MM (19.7-IN) TRIPLE GROUSER SHOE
AN ATTACHMENT

SMCS-4170 **i01476488**

NOTE	REF NO	GRAPHIC REF	PART NUMBER	QTY	PART NAME 1 2 3 4 5 6 (PRODUCT LEVEL)	SEE PAGE
Y	1	1	**194-1134**	1	LINK AS-TRACK	365
	2	1	**126-5061**	44	SHOE-TRACK (500MM WIDE)	
M	3	1	**9W-3619**	176	BOLT-TRACK (M20X1.5X55MM)	
M	4	1	**9W-3361**	176	NUT-TRACK (M20X1.5 THD)	

M-METRIC PART
Y-SEPARATE ILLUSTRATION

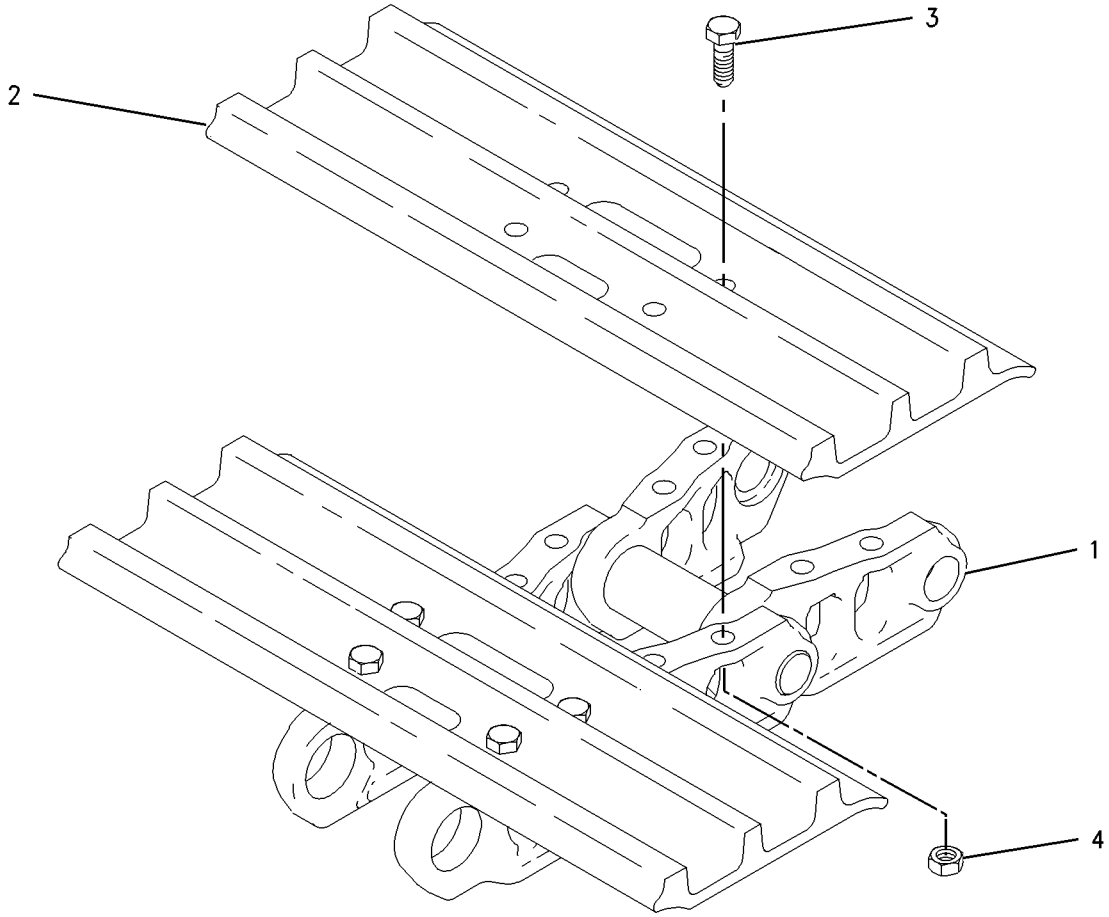

GRAPHIC #1 **<END>** g00731630

179-3028 TRACK GP–2-REQUIRED

S/N: CJN1-UP
700-MM (27.6-IN) TRIPLE GROUSER SHOE
PART OF 260-6990 TRACK GP
AN ATTACHMENT

SMCS-4170 **i01476494**

NOTE	REF NO	GRAPHIC REF	PART NUMBER	QTY	PART NAME 1 2 3 4 5 6 (PRODUCT LEVEL)	SEE PAGE
Y	1	1	**194-1134**	1	LINK AS-TRACK	365
	2	1	**126-5063**	44	SHOE-TRACK	
M	3	1	**9W-3619**	176	BOLT-TRACK (M20X1.5X55MM)	
M	4	1	**9W-3361**	176	NUT-TRACK (M20X1.5 THD)	

M-METRIC PART
Y-SEPARATE ILLUSTRATION

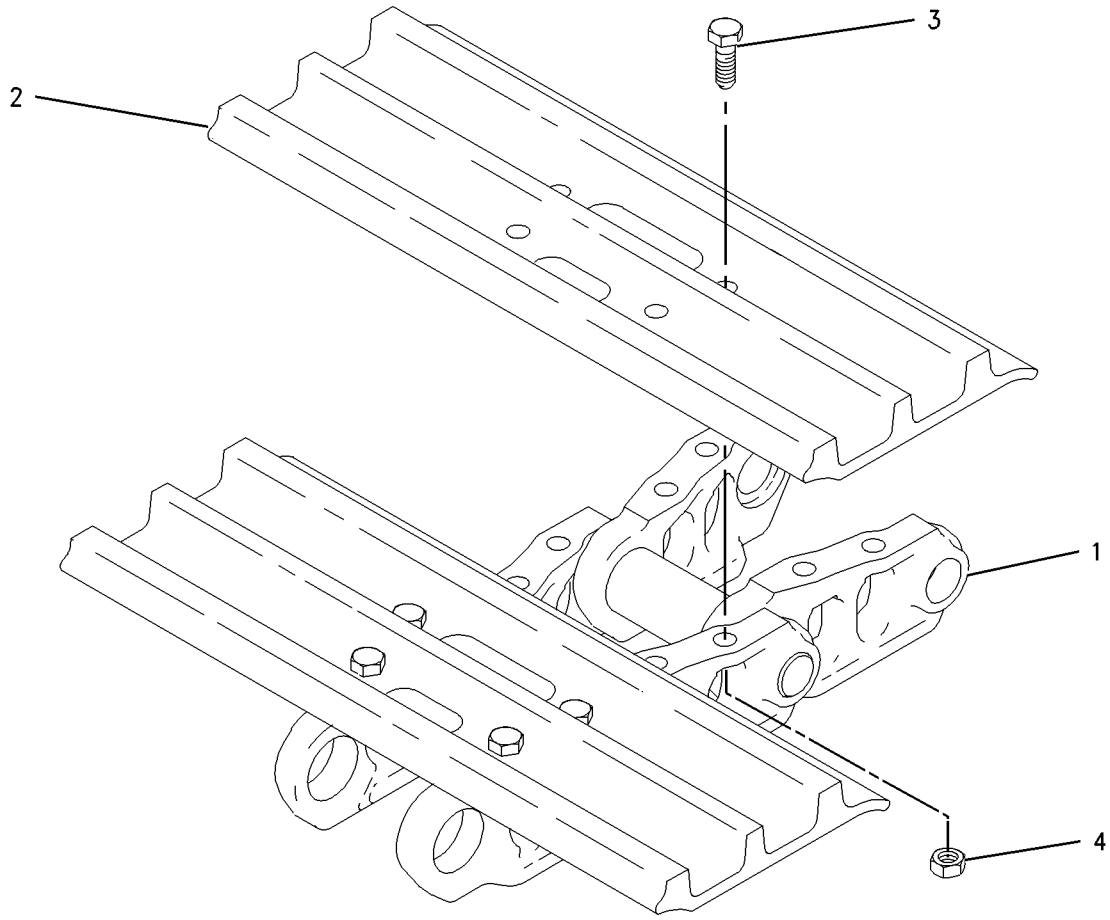

GRAPHIC #1 **<END>** g00731630

UNDERCARRIAGE

260-6990 TRACK GP—WITH STEP

S/N: CJN1-UP
700-MM (27.6-IN) TRIPLE GROUSER SHOE
AN ATTACHMENT

SMCS-4170 **i02602016**

NOTE	PART NUMBER	QTY	PART NAME 1 2 3 4 5 6 (PRODUCT LEVEL)	SEE PAGE
Y	*235-7764*	1	STEP GP	344
Y	*179-3028*	1	TRACK GP	379

Y-SEPARATE ILLUSTRATION

<END>

4I-1536 ACCUMULATOR GP-HYDRAULIC—CHARGED

S/N: CJN1-UP

PART OF 087-4456 ACCUMULATOR GP-HYDRAULIC

SMCS-5077 **i01107876**

NOTE	REF NO	GRAPHIC REF	PART NUMBER	QTY	PART NAME 1 2 3 4 5 6 (PRODUCT LEVEL)	SEE PAGE
	1	1	**4I-5862**	1	CAP	
	2	1	**4I-1539**	1	CORE	
	3	1	**5P-3779**	1	TAG-NOTICE (SHIPPING INSTRUCTIONS)	

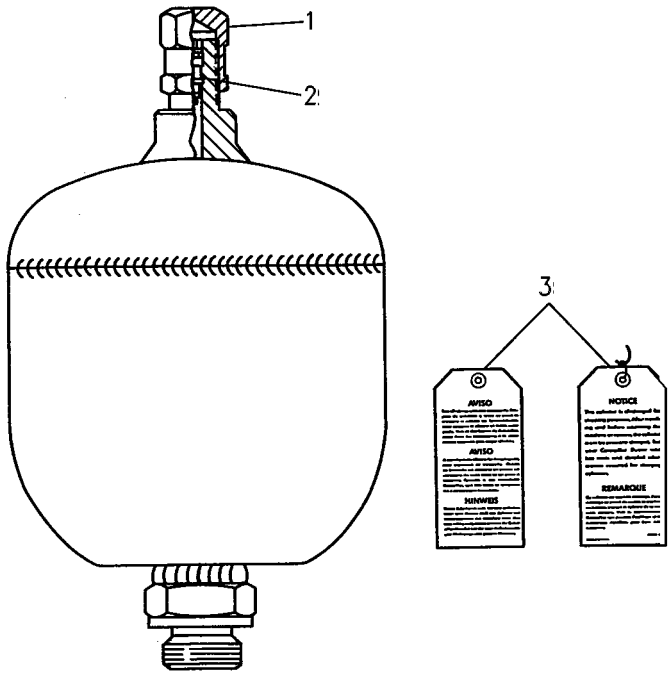

GRAPHIC #1 **<END>** g00237221

5I-8416 ACCUMULATOR GP-HYDRAULIC–CHARGED

S/N: CJN1-UP

PART OF 087-4456 ACCUMULATOR GP-HYDRAULIC

SMCS-5077 **i01548084**

NOTE	REF NO	GRAPHIC REF	PART NUMBER	QTY	PART NAME 1 2 3 4 5 6 (PRODUCT LEVEL)	SEE PAGE
	1	1	**4I-8267**	1	CAP-ACCUMULATOR	
Y	2	1	*087-4454*	1	ACCUMULATOR GP-HYDRAULIC (CHARGED)	383

Y-SEPARATE ILLUSTRATION

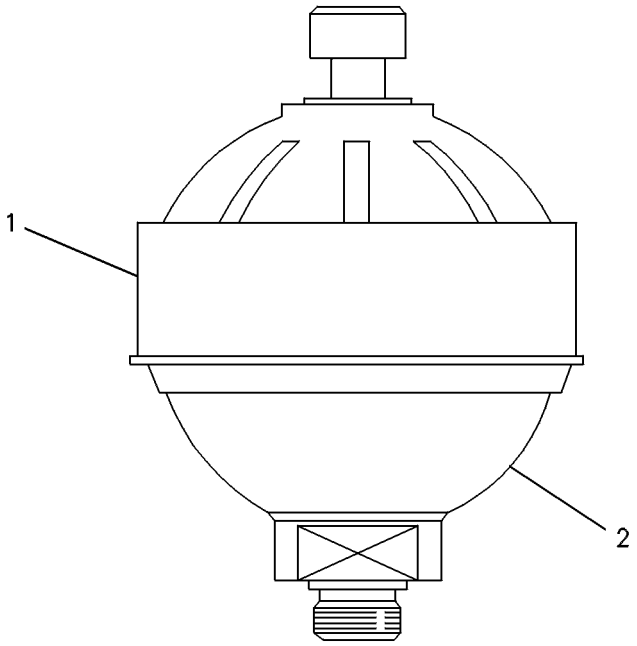

GRAPHIC #1 **<END>** g00237219

087-4454 ACCUMULATOR GP-HYDRAULIC—CHARGED

S/N: CJN1-UP

PART OF 5I-8416 ACCUMULATOR GP-HYDRAULIC

SMCS-5077 **i01611978**

NOTE	REF NO	GRAPHIC REF	PART NUMBER	QTY	PART NAME 1 2 3 4 5 6 (PRODUCT LEVEL)	SEE PAGE
	1	1	**087-4577**	1	SEAL	
	2	1	**087-4576**	1	CAP	
	3	1	**087-4575**	1	CORE	
	4	1	**5P-3779**	1	TAG-NOTICE (SHIPPING INSTRUCTIONS)	

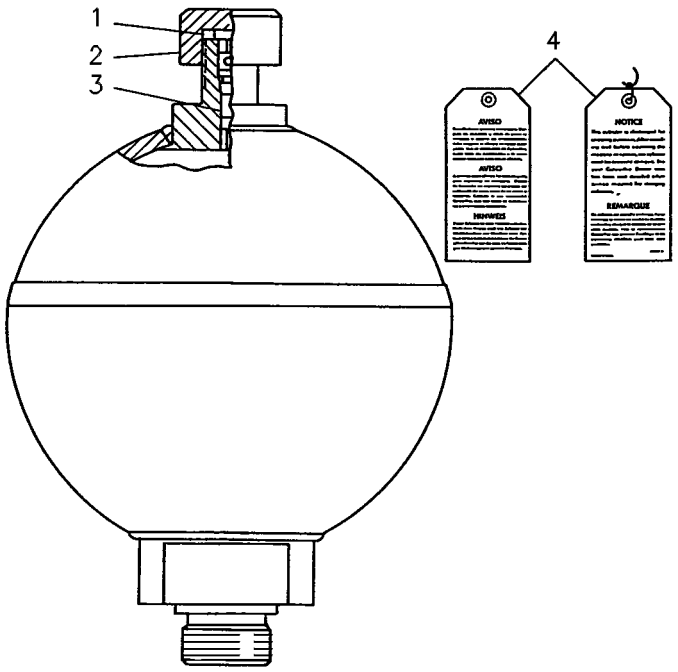

GRAPHIC #1 **<END>** g00237220

HYDRAULIC SYSTEM

087-4456 ACCUMULATOR GP-HYDRAULIC—CHARGED

S/N: CJN1-UP

PART OF 164-6981 ACCUMULATOR GP-HYDRAULIC

FIELD REPLACEMENT ORDER 227-8807—PAGE 388, 199-7447—PAGE 387

SMCS-5077 **i02290967**

NOTE	PART NUMBER	QTY	PART NAME 1 2 3 4 5 6 (PRODUCT LEVEL)	SEE PAGE
Y	*4I-1536*	1	ACCUMULATOR GP-HYDRAULIC (CHARGED)	381
			-OR-	
Y	*5I-8416*	1	ACCUMULATOR GP-HYDRAULIC (CHARGED)	382
			-OR-	
Y	*145-5106*	1	ACCUMULATOR GP-HYDRAULIC (CHARGED)	385
Y-SEPARATE ILLUSTRATION				

<END>

145-5106 ACCUMULATOR GP-HYDRAULIC—CHARGED

S/N: CJN1-UP

PART OF 087-4456 ACCUMULATOR GP-HYDRAULIC

FIELD REPLACEMENT ORDER 227-8807—PAGE 388

SMCS-5077 **i02464714**

NOTE	REF NO	GRAPHIC REF	PART NUMBER	QTY	PART NAME 1 2 3 4 5 6 (PRODUCT LEVEL)	SEE PAGE
	1	1	**159-4700**	1	FILM-WARNING (HIGH PRESSURE CYLINDER)	

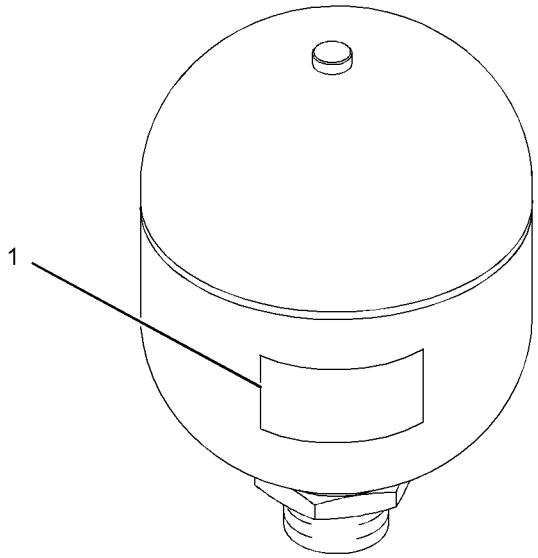

GRAPHIC #1 **<END>** g01229518

HYDRAULIC SYSTEM

164-6981 ACCUMULATOR GP-HYDRAULIC—CHARGED

S/N: CJN1-UP

PART OF 302-3195 LINES GP-PILOT

SMCS-5077 **i01284579**

NOTE	PART NUMBER	QTY	PART NAME 1 2 3 4 5 6 (PRODUCT LEVEL)	SEE PAGE
Y	**087-4456**	1	ACCUMULATOR GP-HYDRAULIC (CHARGED)	384
	3K-0360	1	SEAL-O-RING	

Y-SEPARATE ILLUSTRATION

<END>

199-7447 ACCUMULATOR GP-HYDRAULIC—UNCHARGED

S/N: CJN1-UP

FIELD REPLACEMENT FOR 087-4456—PAGE 384

SMCS-5077 **i01592197**

NOTE	REF NO	GRAPHIC REF	PART NUMBER	QTY	PART NAME 1 2 3 4 5 6 (PRODUCT LEVEL)	SEE PAGE
	1	1	**4I-5862**	1	CAP	
	2	1	**4I-1539**	1	CORE	

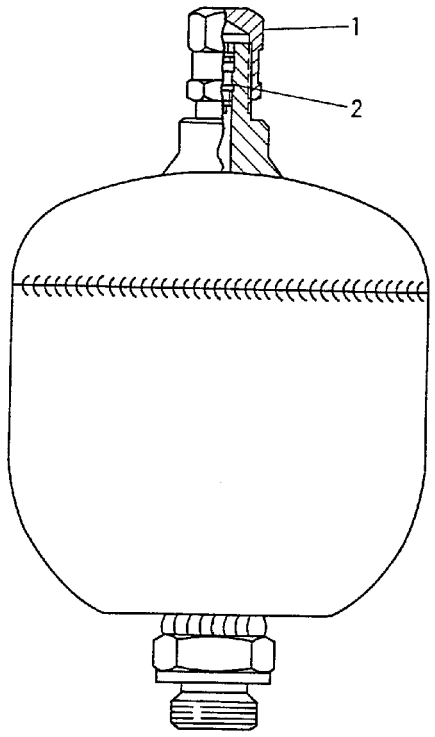

GRAPHIC #1 **<END>** g00222004

HYDRAULIC SYSTEM

227-8807 ACCUMULATOR GP-HYDRAULIC—UNCHARGED

S/N: CJN1-UP

FIELD REPLACEMENT FOR 087-4456—PAGE 384, 145-5106—PAGE 385

SMCS-5077 **i02847478**

NOTE	REF NO	GRAPHIC REF	PART NUMBER	QTY	PART NAME 1 2 3 4 5 6 (PRODUCT LEVEL)	SEE PAGE
					(NO SERVICED PARTS)	

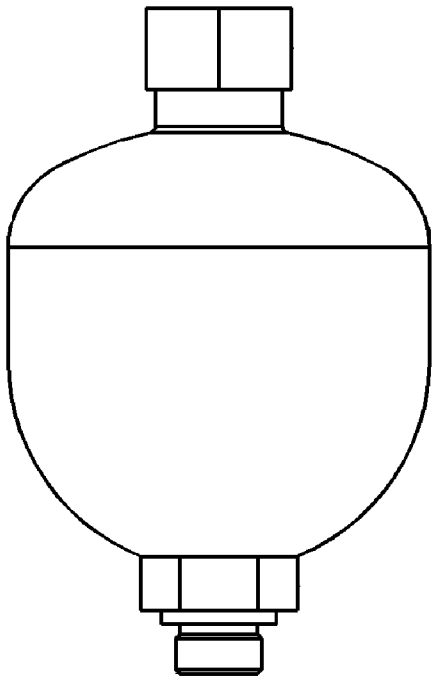

GRAPHIC #1 **<END>** g01423820

255-5843 CONTROL AR-AUXILIARY–
JOYSTICK WITH SLIDE CONTROL
S/N: CJN1-UP
AN ATTACHMENT

SMCS-5051 **i02431300**

NOTE	PART NUMBER	QTY	PART NAME 1 2 3 4 5 6 (PRODUCT LEVEL)	SEE PAGE
Y	*259-7598*	1	CONTROL & MTG GP-JOYSTICK (WITH SLIDE CONTROL)	898
Y	*259-5295*	1	FASTENER GP-WIRING HARNESS (JOYSTICK)	158
Y	*247-7410*	1	FILM GP (OPERATOR CONTROLS, NOTICE)	1079

Y-SEPARATE ILLUSTRATION

<END>

255-5844 CONTROL AR-AUXILIARY–
JOYSTICK, 3-BUTTON, TRIGGER SW
S/N: CJN1-UP
AN ATTACHMENT

SMCS-5051 **i02430669**

NOTE	PART NUMBER	QTY	PART NAME 1 2 3 4 5 6 (PRODUCT LEVEL)	SEE PAGE
Y	*259-7599*	1	CONTROL & MTG GP-JOYSTICK	900
Y	*259-5295*	1	FASTENER GP-WIRING HARNESS (JOYSTICK)	158
Y	*247-7411*	1	FILM GP (OPERATOR CONTROLS, NOTICE)	1081

Y-SEPARATE ILLUSTRATION

<END>

259-7557 CONTROL AR-AUXILIARY–COMBINED FUNCTION
S/N: CJN1-UP
AN ATTACHMENT

SMCS-5051 **i02784096**

NOTE	PART NUMBER	QTY	PART NAME 1 2 3 4 5 6 (PRODUCT LEVEL)	SEE PAGE
Y	*260-8226*	1	LINES GP-FRONT	505
Y	*260-7891*	1	LINES GP-PILOT (PUMP CONTROL, SHUTTLE VALVE)	547
Y	**302-3258**	1	LINES GP-PILOT (CONTROL VALVE, PUMP)	597
Y	*278-6438*	1	LINES GP-PUMP	617
Y	*285-1738*	1	VALVE & MTG GP-CONTROL	673
Y	*259-5169*	1	WIRING GP-AUXILIARY CONTROL	214
Y	*259-5165*	1	WIRING GP-CAB (WORK TOOL PRIORITY)	222

Y-SEPARATE ILLUSTRATION

<END>

HYDRAULIC SYSTEM

259-7565 CONTROL AR-AUXILIARY–
AUX PUMP, MEDIUM PRESS VALVE
S/N: CJN1-UP
AN ATTACHMENT

SMCS-5051 **i02750103**

NOTE	PART NUMBER	QTY	PART NAME 1 2 3 4 5 6 (PRODUCT LEVEL)	SEE PAGE
Y	*260-8233*	1	LINES GP-FRONT	516
Y	*260-8234*	1	LINES GP-PILOT (MEDIUM PRESSURE)	567
Y	*260-8235*	1	LINES GP-PUMP	615
Y	*259-0917*	1	PUMP & MTG GP-AUXILIARY (MEDIUM PRESSURE)	652
Y	*259-5171*	1	WIRING GP-MEDIUM PRESSURE	255

Y-SEPARATE ILLUSTRATION

<END>

259-7569 CONTROL AR-AUXILIARY–MEDIUM PRESSURE
S/N: CJN1-UP
AN ATTACHMENT

SMCS-5051 **i02750100**

NOTE	PART NUMBER	QTY	PART NAME 1 2 3 4 5 6 (PRODUCT LEVEL)	SEE PAGE
Y	*260-8236*	1	LINES GP-FRONT (MEDIUM PRESSURE)	518
Y	*260-8238*	1	LINES GP-PILOT (MEDIUM PRESSURE)	569
Y	*285-1736*	1	VALVE & MTG GP (MEDIUM PRESSURE)	671
Y	*259-5172*	1	WIRING GP-MEDIUM PRESSURE	256

Y-SEPARATE ILLUSTRATION

<END>

270-5750 CONTROL AR-AUXILIARY–
SYSTEM 23, COMBINED FUNCTION
S/N: CJN1-UP
FOR USE WITH 255-5843–PAGE 389, 255-5844–PAGE 389, 255-5845–PAGE 1010, 266-1085–PAGE 578, 240-5071–PAGE 948, 240-5073–PAGE 949, 245-7794–PAGE 950, 245-7796–PAGE 951
AN ATTACHMENT

SMCS-5051 **i02750329**

NOTE	PART NUMBER	QTY	PART NAME 1 2 3 4 5 6 (PRODUCT LEVEL)	SEE PAGE
Y	*275-1701*	1	LINES GP-FRONT (SYSTEM 23, COMBINED FUNCTION)	541

Y-SEPARATE ILLUSTRATION

<END>

270-5751 CONTROL AR-AUXILIARY

S/N: CJN1-UP

FOR USE WITH 255-5843—PAGE 389, 255-5844—PAGE 389, 255-5845—PAGE 1010, 266-1085—PAGE 578

AN ATTACHMENT

SMCS-5051 **i02728825**

NOTE	PART NUMBER	QTY	PART NAME 1 2 3 4 5 6 (PRODUCT LEVEL)	SEE PAGE
Y	*275-1699*	1	LINES GP-FRONT (SYSTEM 23, COMBINED FUNCTION)	530
Y	*260-8225*	1	LINES GP-PILOT	561
Y	*260-7891*	1	LINES GP-PILOT (PUMP CONTROL, SHUTTLE VALVE)	547
Y	*259-5168*	1	WIRING GP-AUXILIARY CONTROL	212

Y-SEPARATE ILLUSTRATION

<END>

270-5954 CONTROL AR-AUXILIARY—AUX PUMP, MEDIUM PRESS VALVE

S/N: CJN1-UP

AN ATTACHMENT

SMCS-5051 **i03245494**

NOTE	PART NUMBER	QTY	PART NAME 1 2 3 4 5 6 (PRODUCT LEVEL)	SEE PAGE
Y	*260-8233*	1	LINES GP-FRONT (MEDIUM PRESSURE)	516
Y	*260-8234*	1	LINES GP-PILOT (MEDIUM PRESSURE)	567
Y	*282-7080*	1	LINES GP-PUMP	619
Y	*259-0917*	1	PUMP & MTG GP-AUXILIARY (MEDIUM PRESSURE)	652
Y	*259-5171*	1	WIRING GP-MEDIUM PRESSURE	255

Y-SEPARATE ILLUSTRATION

<END>

270-6106 CONTROL AR-AUXILIARY—FOOT SWITCH

S/N: CJN1-UP

AN ATTACHMENT

SMCS-5051 **i03245496**

NOTE	PART NUMBER	QTY	PART NAME 1 2 3 4 5 6 (PRODUCT LEVEL)	SEE PAGE
Y	*270-6107*	1	CONTROL GP-FOOT (LEFT ON/OFF SWITCH)	904
Y	*259-5294*	1	FASTENER GP-WIRING HARNESS (FOOT SWITCH)	157
Y	*247-7465*	1	FILM GP (HAMMER CONTROL, FOOT SWITCH)	1083

Y-SEPARATE ILLUSTRATION

<END>

HYDRAULIC SYSTEM

262-3249 CONTROL AR-COUPLER

S/N: CJN1-UP

AN ATTACHMENT

SMCS-6129 **i02776621**

NOTE	PART NUMBER	QTY	PART NAME 1 2 3 4 5 6 (PRODUCT LEVEL)	SEE PAGE
Y	*282-5705*	1	FILM GP (QUICK COUPLER)	1088
Y	*260-8222*	1	LINES GP-FRONT (QUICK COUPLER)	493
Y	*238-2485*	1	WIRING GP-QUICK COUPLER	264
Y	*259-5167*	1	WIRING GP-QUICK COUPLER	265

Y-SEPARATE ILLUSTRATION

<END>

268-7253 CONTROL AR-COUPLER—UNIVERSAL QUICK COUPLER

S/N: CJN1-UP

AN ATTACHMENT

SMCS-6129 **i02790445**

NOTE	PART NUMBER	QTY	PART NAME 1 2 3 4 5 6 (PRODUCT LEVEL)	SEE PAGE
Y	*268-6816*	1	FILM GP (QUICK COUPLER)	1087
Y	*275-1696*	1	LINES GP-FRONT (UNIVERSAL QUICK COUPLER)	522
Y	*267-7642*	1	WIRING GP-CAB (COUPLER)	223
Y	*275-6877*	1	WIRING GP-QUICK COUPLER	266

Y-SEPARATE ILLUSTRATION

<END>

266-6280 COUPLING GP-FLEXIBLE

S/N: CJN1-UP

PART OF 255-3027 COUPLING GP-PUMP

SMCS-3252 **i02747795**

NOTE	REF NO	GRAPHIC REF	PART NUMBER	QTY	PART NAME 1 2 3 4 5 6 (PRODUCT LEVEL)	SEE PAGE
	1	1	**7Y-1900**	4	INSERT-COUPLING	
	2	1	**7Y-1901**	1	ELEMENT-COUPLING	
	3	1	**7Y-1902**	4	INSERT-COUPLING	
M	4	1	**7Y-1904**	4	BOLT-SOCKET HEAD (M16X2X50-MM)	
	5	1	**248-7284**	1	HUB	
M	6	1	**7Y-0466**	2	SETSCREW-SOCKET (M16X2X22-MM)	
	7	1	**7Y-0468**	12	PIN-SPRING	

M-METRIC PART

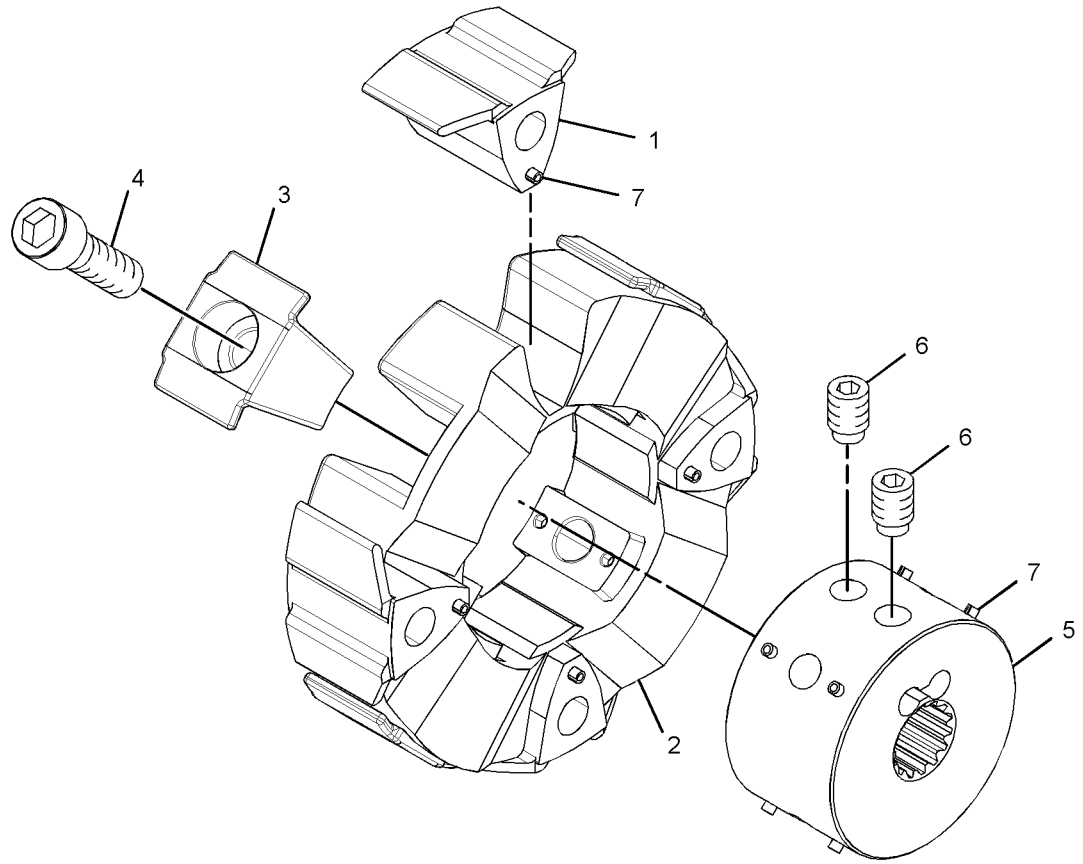

GRAPHIC #1 **<END>** g01379448

HYDRAULIC SYSTEM

255-3027 COUPLING GP-PUMP

S/N: CJN1-UP

PART OF 255-3025 PUMP & MTG GP-MAIN HYDRAULIC

SMCS-5062 **i02724264**

NOTE	REF NO	GRAPHIC REF	PART NUMBER	QTY	PART NAME 1 2 3 4 5 6 (PRODUCT LEVEL)	SEE PAGE
M	1	1	**8T-6429**	4	BOLT-SOCKET HEAD (M16X2X55-MM)	
Y	2	1	**266-6280**	1	COUPLING GP-FLEXIBLE	393
	3	1	**7Y-0468**	4	PIN-SPRING	

M-METRIC PART
Y-SEPARATE ILLUSTRATION

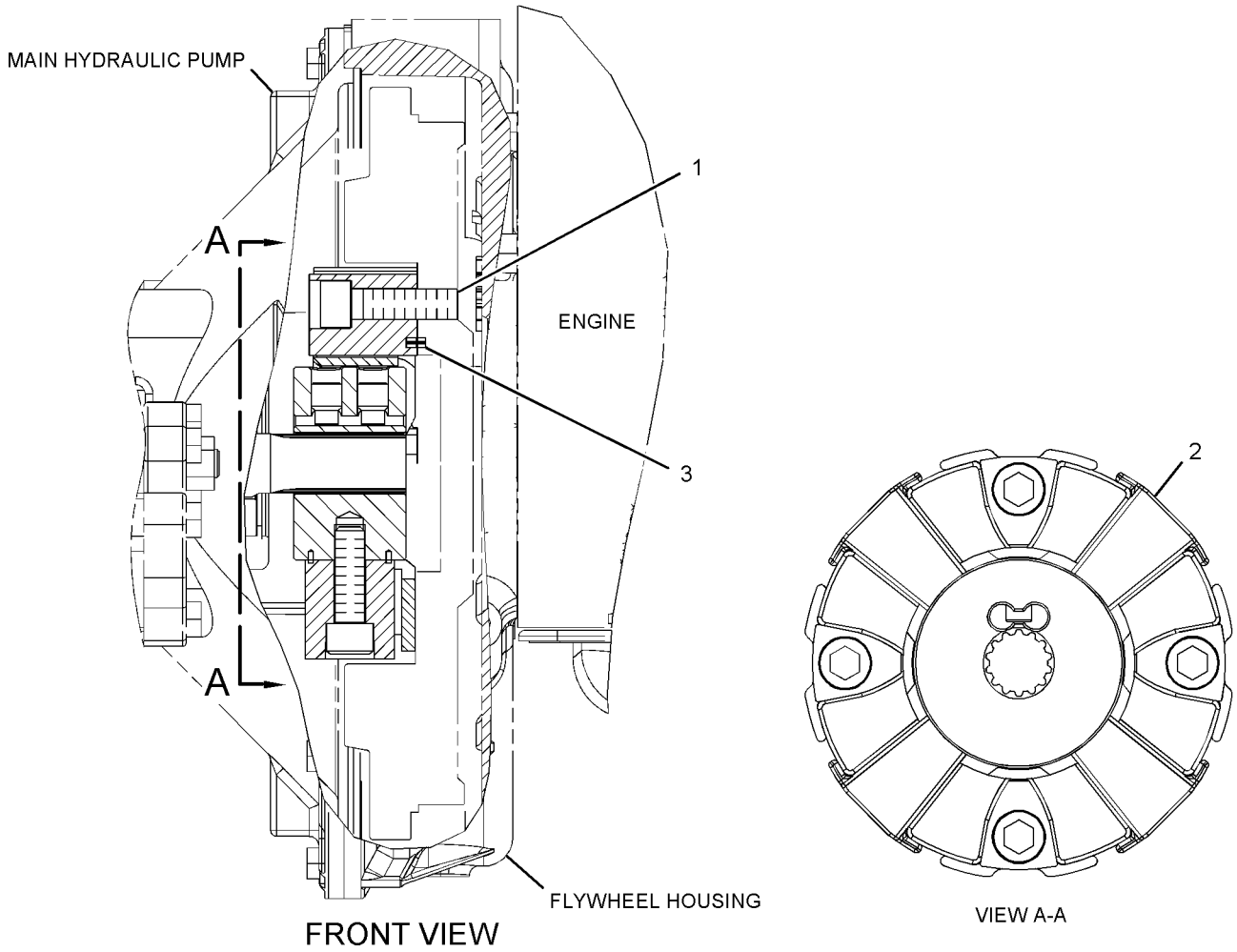

GRAPHIC #1 **<END>** g01325820

259-0837 CYLINDER & LINES GP-BOOM–LH

S/N: CJN1-UP
PART OF 330-8777 BOOM AR, 260-6979, 301-2575 BOOM AR-1 PIECE LONG, 301-2479, 301-2517 SPECIAL AR
AN ATTACHMENT

SMCS-5456, 7562 **i03195680**

NOTE	PART NUMBER	QTY	PART NAME 1 2 3 4 5 6 (PRODUCT LEVEL)	SEE PAGE
Y	*259-0839*	1	CYLINDER & SEAL GP-BOOM	398
Y	*179-7644*	1	LINES GP-BOOM CYLINDER (LH)	472
Y-SEPARATE ILLUSTRATION				

<END>

259-0838 CYLINDER & LINES GP-BOOM–RH

S/N: CJN1-UP
PART OF 330-8777 BOOM AR, 260-6979, 301-2575 BOOM AR-1 PIECE LONG, 301-2479, 301-2517 SPECIAL AR
AN ATTACHMENT

SMCS-5456, 7562 **i03195682**

NOTE	PART NUMBER	QTY	PART NAME 1 2 3 4 5 6 (PRODUCT LEVEL)	SEE PAGE
Y	*259-0839*	1	CYLINDER & SEAL GP-BOOM	398
Y	*179-7645*	1	LINES GP-BOOM CYLINDER (RH)	473
Y-SEPARATE ILLUSTRATION				

<END>

289-8090 CYLINDER & LINES GP–LH

S/N: CJN1-UP
PART OF 283-9001 BOOM AR-1 PIECE LONG
AN ATTACHMENT

SMCS-5456, 7562 **i02793516**

NOTE	PART NUMBER	QTY	PART NAME 1 2 3 4 5 6 (PRODUCT LEVEL)	SEE PAGE
Y	*289-8092*	1	CYLINDER & SEAL GP	399
Y	*179-7644*	1	LINES GP-BOOM CYLINDER	472
Y-SEPARATE ILLUSTRATION				

<END>

289-8091 CYLINDER & LINES GP–RH

S/N: CJN1-UP
PART OF 283-9001 BOOM AR-1 PIECE LONG
AN ATTACHMENT

SMCS-5456, 7562 **i02793519**

NOTE	PART NUMBER	QTY	PART NAME 1 2 3 4 5 6 (PRODUCT LEVEL)	SEE PAGE
Y	*289-8092*	1	CYLINDER & SEAL GP	399
Y	*179-7645*	1	LINES GP-BOOM CYLINDER	473
Y-SEPARATE ILLUSTRATION				

<END>

HYDRAULIC SYSTEM

259-0844 CYLINDER & LINES GP-BUCKET

S/N: CJN1-UP

PART OF 268-7258, 268-7259 COUPLER AR-QUICK, 260-7020 LINKAGE AR-BUCKET

AN ATTACHMENT

SMCS-5457 **i02719480**

NOTE	PART NUMBER	QTY	PART NAME 1 2 3 4 5 6 (PRODUCT LEVEL)	SEE PAGE
Y	*259-0845*	1	CYLINDER & SEAL GP-BUCKET	400
Y	*131-9878*	1	LINES GP-BUCKET CYLINDER	478

Y-SEPARATE ILLUSTRATION

<END>

259-0914 CYLINDER & LINES GP-BUCKET

S/N: CJN1-UP

PART OF 306-1336, 306-1337 COUPLER AR-QUICK, 260-7021 LINKAGE AR-BUCKET

AN ATTACHMENT

SMCS-5457 **i02719447**

NOTE	PART NUMBER	QTY	PART NAME 1 2 3 4 5 6 (PRODUCT LEVEL)	SEE PAGE
Y	*259-0915*	1	CYLINDER & SEAL GP-BUCKET	401
Y	*131-9879*	1	LINES GP-BUCKET CYLINDER	479

Y-SEPARATE ILLUSTRATION

<END>

289-8111 CYLINDER & LINES GP

S/N: CJN1-UP

PART OF 283-9011 LINKAGE AR-BUCKET

AN ATTACHMENT

SMCS-5457 **i02765405**

NOTE	PART NUMBER	QTY	PART NAME 1 2 3 4 5 6 (PRODUCT LEVEL)	SEE PAGE
Y	*289-8112*	1	CYLINDER & SEAL GP	402
Y	*131-9878*	1	LINES GP-BUCKET CYLINDER	478

Y-SEPARATE ILLUSTRATION

<END>

289-8119 CYLINDER & LINES GP

S/N: CJN1-UP

PART OF 283-9012 LINKAGE AR-BUCKET

AN ATTACHMENT

SMCS-5457 **i02776597**

NOTE	PART NUMBER	QTY	PART NAME 1 2 3 4 5 6 (PRODUCT LEVEL)	SEE PAGE
Y	*289-8120*	1	CYLINDER & SEAL GP	403
Y	*131-9879*	1	LINES GP-BUCKET CYLINDER	479

Y-SEPARATE ILLUSTRATION

<END>

310-1782 CYLINDER & LINES GP-BUCKET

S/N: CJN1-UP
PART OF 330-8778 LINKAGE AR-BUCKET, 301-2479, 301-2517 SPECIAL AR
AN ATTACHMENT

SMCS-5457 **i02842093**

NOTE	PART NUMBER	QTY	PART NAME 1 2 3 4 5 6 (PRODUCT LEVEL)	SEE PAGE
Y	*302-1730*	1	CYLINDER & SEAL GP-BUCKET	404
Y	*131-9878*	1	LINES GP-BUCKET CYLINDER	478
Y-SEPARATE ILLUSTRATION				

<END>

259-0841 CYLINDER & LINES GP-STICK

S/N: CJN1-UP
PART OF 330-8777 BOOM AR, 260-6979, 301-2575 BOOM AR-1 PIECE LONG, 301-2479, 301-2517 SPECIAL AR
AN ATTACHMENT

SMCS-5458 **i02748090**

NOTE	PART NUMBER	QTY	PART NAME 1 2 3 4 5 6 (PRODUCT LEVEL)	SEE PAGE
Y	*259-0842*	1	CYLINDER & SEAL GP-STICK	405
Y	*266-1187*	1	LINES GP-STICK CYLINDER	626
Y-SEPARATE ILLUSTRATION				

<END>

289-8101 CYLINDER & LINES GP-STICK

S/N: CJN1-UP
PART OF 283-9001 BOOM AR-1 PIECE LONG
AN ATTACHMENT

SMCS-5458 **i03087026**

NOTE	PART NUMBER	QTY	PART NAME 1 2 3 4 5 6 (PRODUCT LEVEL)	SEE PAGE
Y	*289-8102*	1	CYLINDER & SEAL GP-STICK	406
			—OR—	
Y	*322-8745*	1	CYLINDER & SEAL GP-STICK	407
Y	*266-1187*	1	LINES GP-STICK CYLINDER	626
			—OR—	
Y	*320-0199*	1	LINES GP-STICK CYLINDER	629
Y-SEPARATE ILLUSTRATION				

<END>

259-0839 CYLINDER & SEAL GP-BOOM

S/N: CJN1-UP

PART OF 259-0837, 259-0838 CYLINDER & LINES GP-BOOM

AN ATTACHMENT

SMCS-5456 **i02748074**

NOTE	REF NO	GRAPHIC REF	PART NUMBER	QTY	PART NAME 1 2 3 4 5 6 (PRODUCT LEVEL)	SEE PAGE
	1	1	**3B-8489**	1	FITTING-GREASE	
	2	1	**235-7679**	2	SEAL-LIP TYPE	
Y	3	1	**259-0840**	1	CYLINDER GP-BOOM	408
	4	1	**166-1494**	2	SEAL-LIP TYPE	

Y-SEPARATE ILLUSTRATION

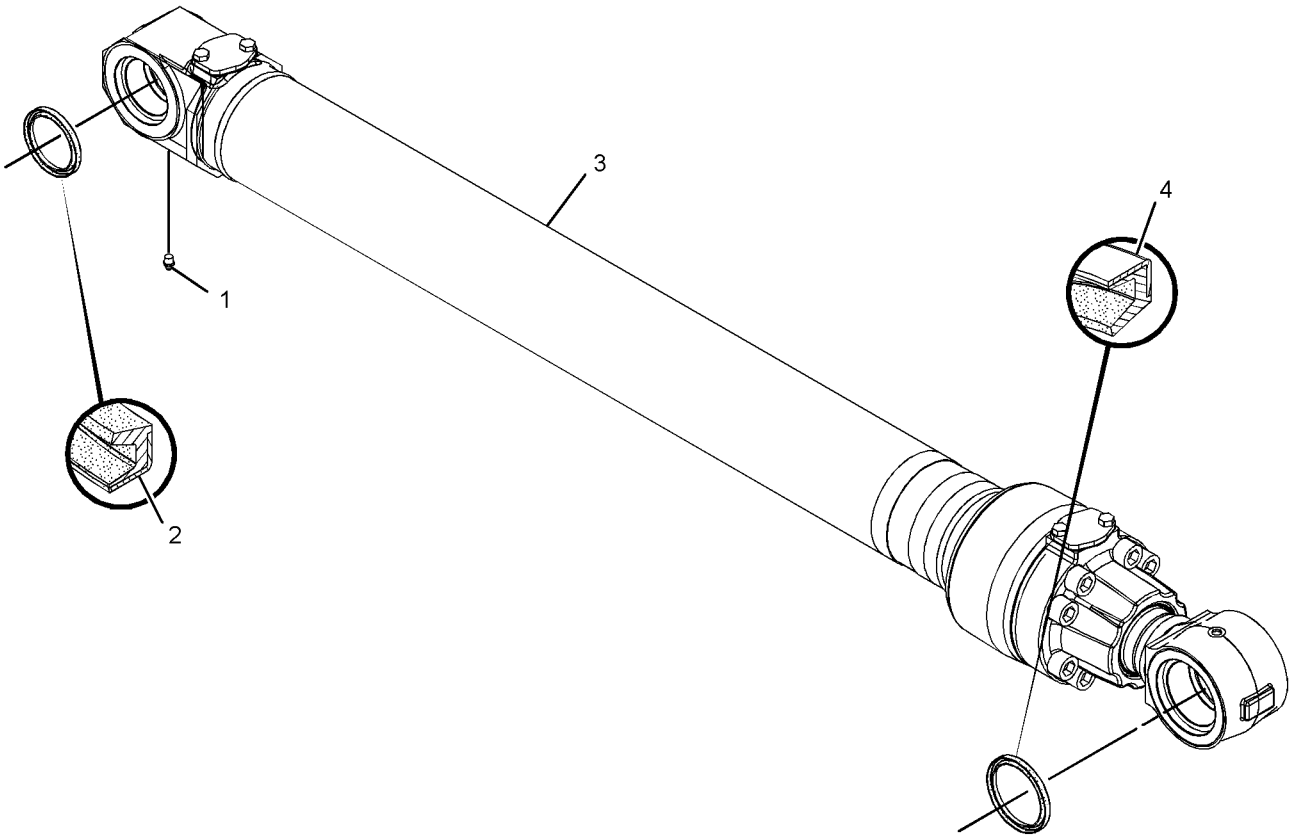

GRAPHIC #1 **<END>** g01378020

HYDRAULIC SYSTEM

289-8092 CYLINDER & SEAL GP-BOOM

S/N: CJN1-UP

PART OF 289-8090, 289-8091 CYLINDER & LINES GP-BOOM

AN ATTACHMENT

SMCS-5456 **i02793517**

NOTE	REF NO	GRAPHIC REF	PART NUMBER	QTY	PART NAME 1 2 3 4 5 6 (PRODUCT LEVEL)	SEE PAGE
	1	1	**3B-8489**	1	FITTING-GREASE	
	2	1	**235-7679**	2	SEAL-LIP TYPE	
Y	3	1	**289-8093**	1	CYLINDER GP-BOOM	410
	4	1	**166-1494**	2	SEAL-LIP TYPE	

Y-SEPARATE ILLUSTRATION

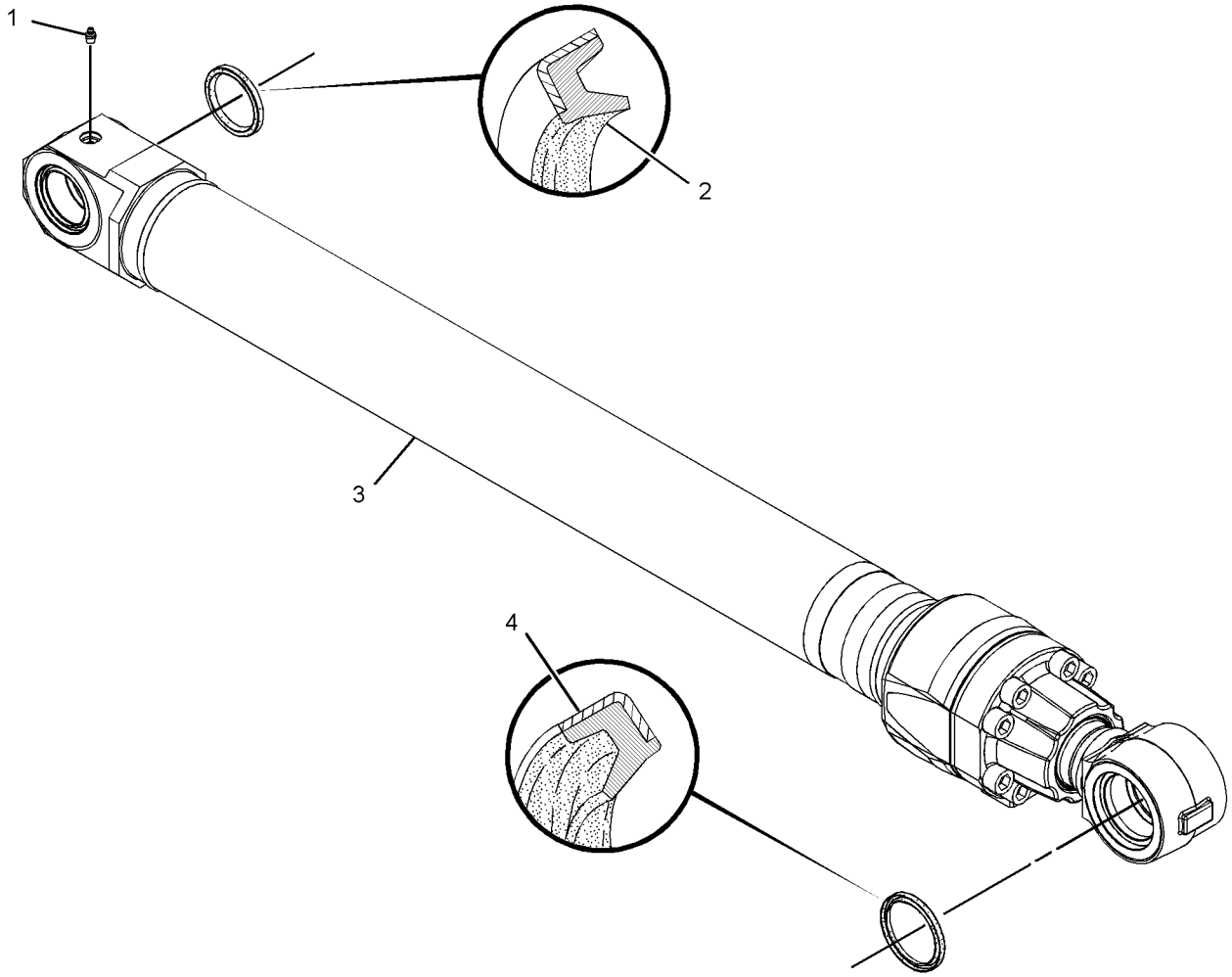

GRAPHIC #1 **<END>** g01395830

259-0845 CYLINDER & SEAL GP-BUCKET

S/N: CJN1-UP

PART OF 259-0844 CYLINDER & LINES GP-BUCKET

AN ATTACHMENT

SMCS-5457 **i02719482**

NOTE	REF NO	GRAPHIC REF	PART NUMBER	QTY	PART NAME 1 2 3 4 5 6 (PRODUCT LEVEL)	SEE PAGE
	1	1	**3B-8489**	2	FITTING-GREASE	
	2	1	**235-7679**	2	SEAL-LIP TYPE	
Y	3	1	**259-0846**	1	CYLINDER GP-BUCKET	412
	4	1	**166-1494**	2	SEAL-LIP TYPE	

Y-SEPARATE ILLUSTRATION

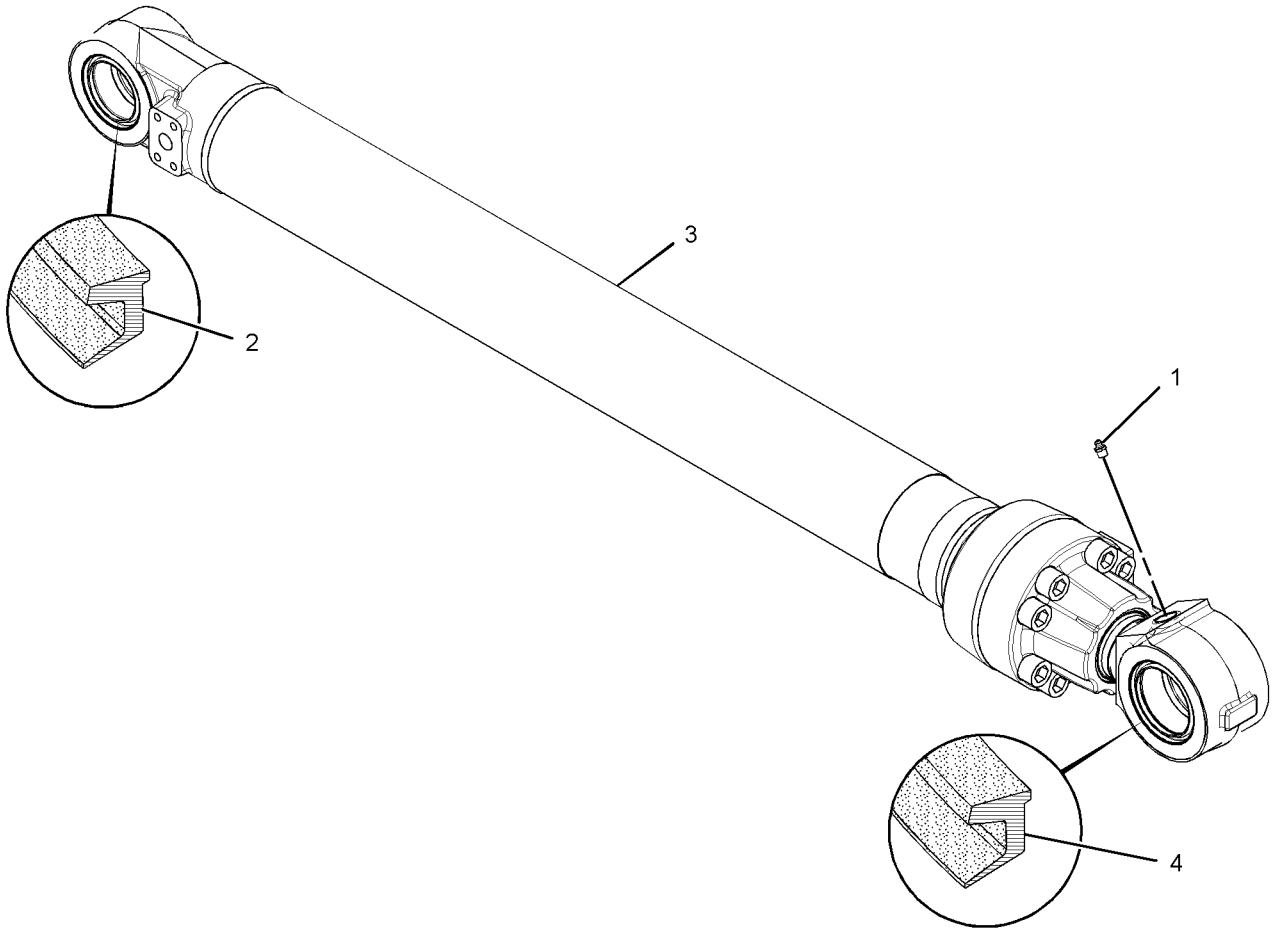

GRAPHIC #1 **<END>** g01367665

259-0915 CYLINDER & SEAL GP-BUCKET

S/N: CJN1-UP
PART OF 259-0914 CYLINDER & LINES GP-BUCKET
AN ATTACHMENT

SMCS-5457 **i02719449**

NOTE	REF NO	GRAPHIC REF	PART NUMBER	QTY	PART NAME 1 2 3 4 5 6 (PRODUCT LEVEL)	SEE PAGE
	1	1	**3B-8489**	2	FITTING-GREASE	
	2	1	**093-1434**	2	SEAL-LIP TYPE	
	3	1	**096-0854**	2	SEAL-LIP TYPE	
Y	4	1	*259-0916*	1	CYLINDER GP-BUCKET	414
Y-SEPARATE ILLUSTRATION						

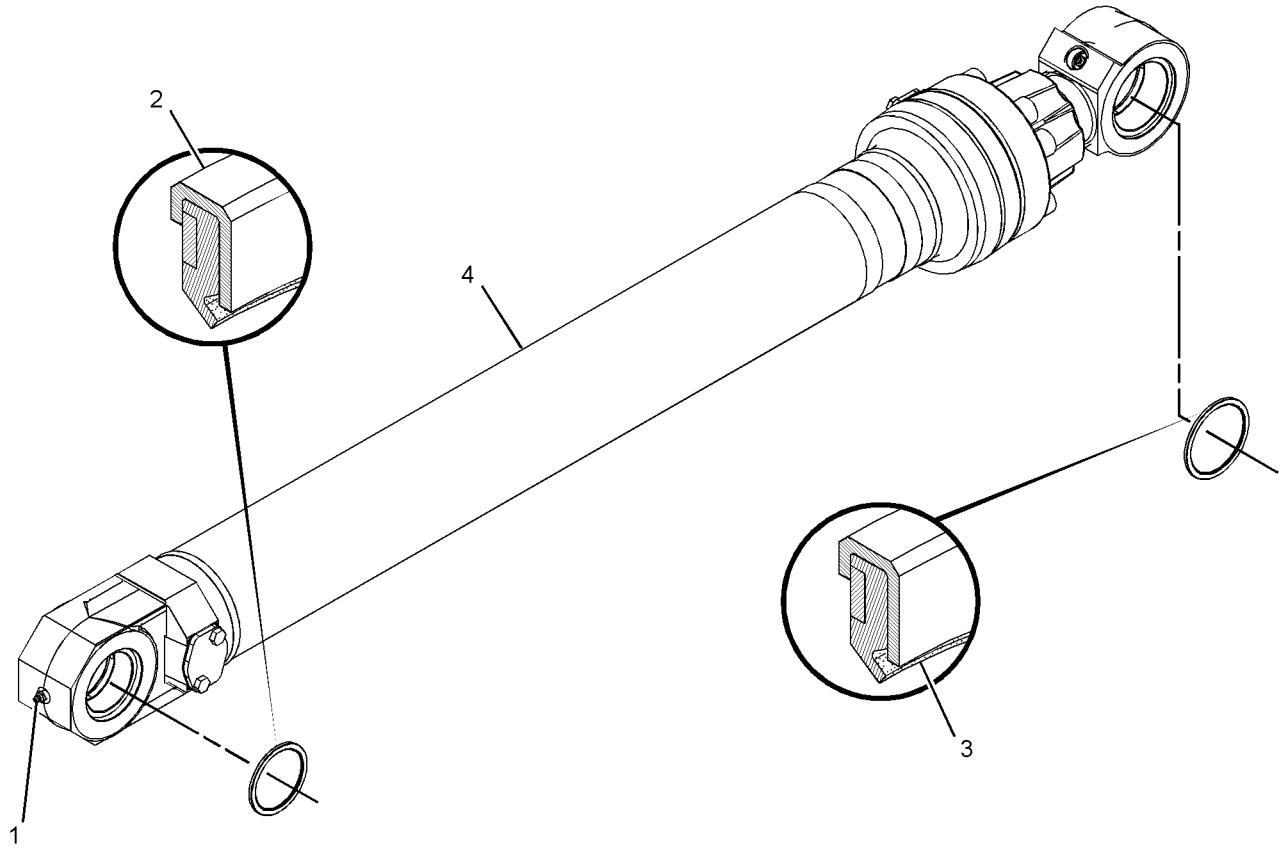

GRAPHIC #1 **<END>** g01366400

289-8112 CYLINDER & SEAL GP-BUCKET

S/N: CJN1-UP

PART OF 289-8111 CYLINDER & LINES GP-BUCKET

AN ATTACHMENT

SMCS-5457 **i02765410**

NOTE	REF NO	GRAPHIC REF	PART NUMBER	QTY	PART NAME 1 2 3 4 5 6 (PRODUCT LEVEL)	SEE PAGE
	1	1	**3B-8489**	2	FITTING-GREASE	
	2	1	**235-7679**	2	SEAL-LIP TYPE	
Y	3	1	**289-8113**	1	CYLINDER GP-BUCKET	418
	4	1	**166-1494**	2	SEAL-LIP TYPE	

Y-SEPARATE ILLUSTRATION

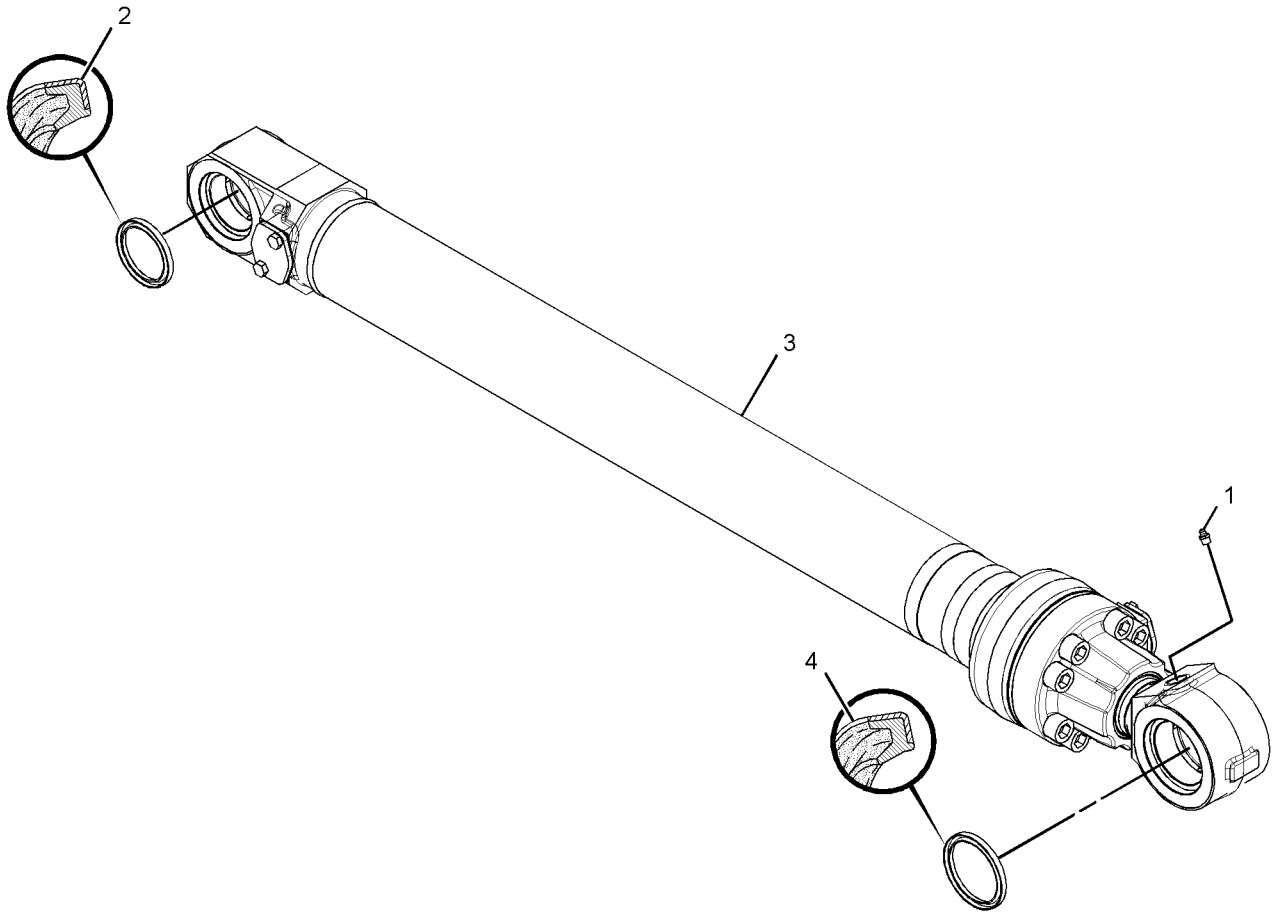

GRAPHIC #1 **<END>** g01387374

HYDRAULIC SYSTEM

289-8120 CYLINDER & SEAL GP-BUCKET

S/N: CJN1-UP

PART OF 289-8119 CYLINDER & LINES GP-BUCKET

AN ATTACHMENT

SMCS-5457 **i02776598**

NOTE	REF NO	GRAPHIC REF	PART NUMBER	QTY	PART NAME 1 2 3 4 5 6 (PRODUCT LEVEL)	SEE PAGE
	1	1	**3B-8489**	2	FITTING-GREASE	
	2	1	**093-1434**	2	SEAL-LIP TYPE	
	3	1	**096-0854**	2	SEAL-LIP TYPE	
Y	4	1	**289-8121**	1	CYLINDER GP-BUCKET	420
Y-SEPARATE ILLUSTRATION						

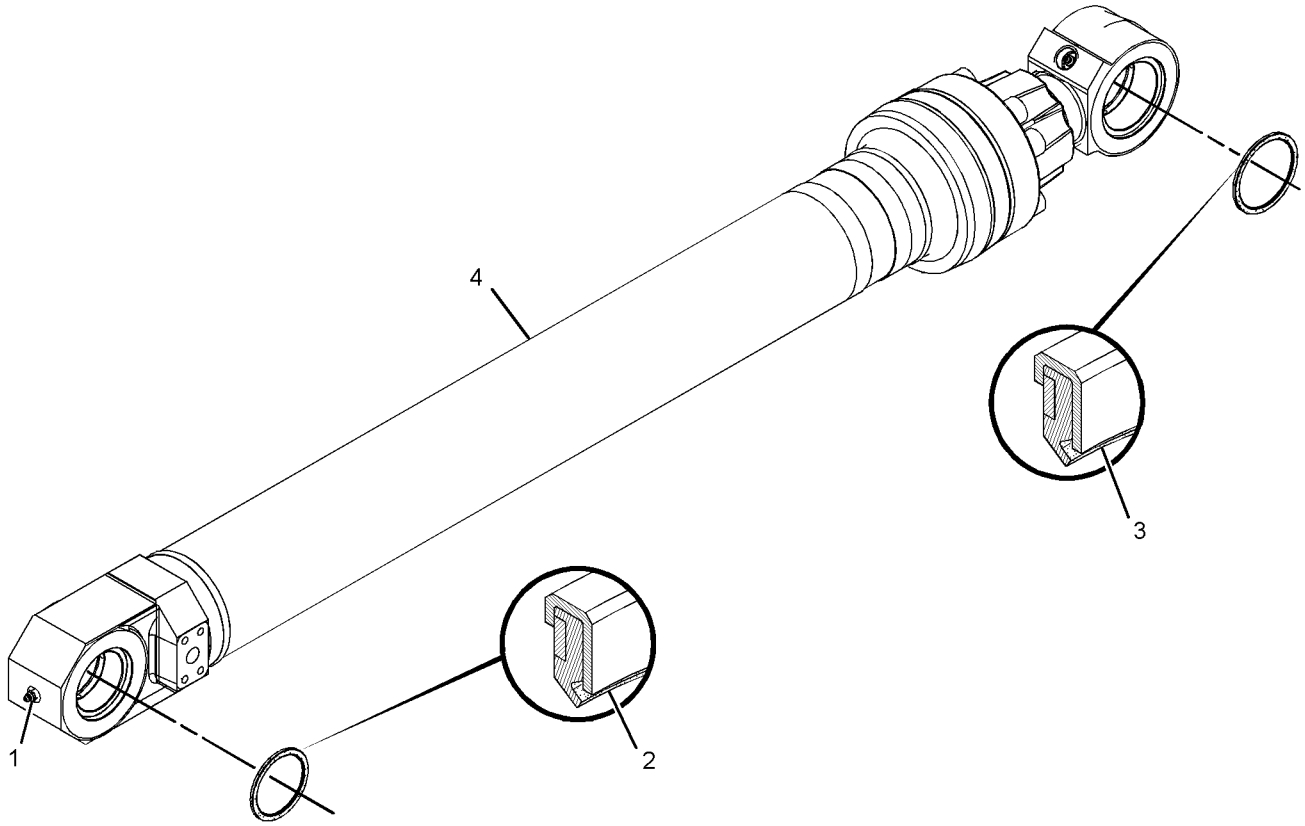

GRAPHIC #1 **<END>** g01388827

302-1730 CYLINDER & SEAL GP-BUCKET

S/N: CJN1-UP
PART OF 310-1782 CYLINDER & LINES GP-BUCKET
AN ATTACHMENT

SMCS-5457 **i02842155**

NOTE	REF NO	GRAPHIC REF	PART NUMBER	QTY	PART NAME 1 2 3 4 5 6 (PRODUCT LEVEL)	SEE PAGE
	1	1	**3B-8489**	2	FITTING-GREASE	
	2	1	**235-7679**	2	SEAL-LIP TYPE	
Y	3	1	**281-8979**	1	CYLINDER GP-BUCKET	416
	4	1	**166-1494**	2	SEAL-LIP TYPE	

Y-SEPARATE ILLUSTRATION

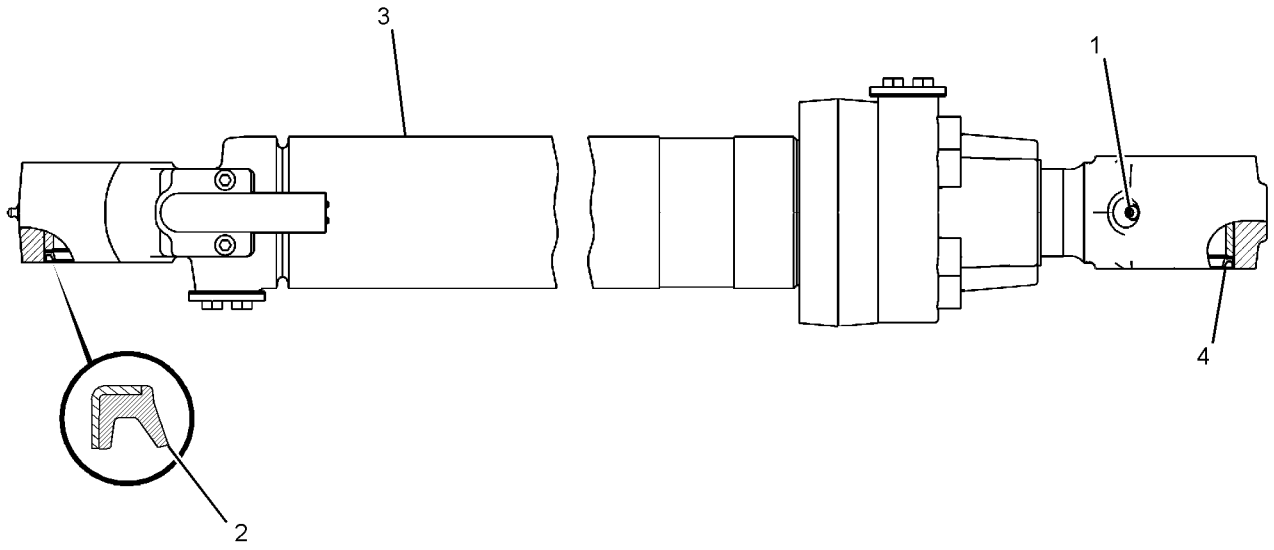

GRAPHIC #1 **<END>** g01418959

259-0842 CYLINDER & SEAL GP-STICK

S/N: CJN1-UP
PART OF 259-0841 CYLINDER & LINES GP-STICK
AN ATTACHMENT

SMCS-5458 **i02748092**

NOTE	REF NO	GRAPHIC REF	PART NUMBER	QTY	PART NAME 1 2 3 4 5 6 (PRODUCT LEVEL)	SEE PAGE
	1	1	**3B-8489**	1	FITTING-GREASE	
	2	1	**235-7679**	4	SEAL-LIP TYPE	
Y	3	1	**259-0843**	1	CYLINDER GP-STICK	423
	4	1	**8T-6763**	1	PLUG-PIPE	

Y-SEPARATE ILLUSTRATION

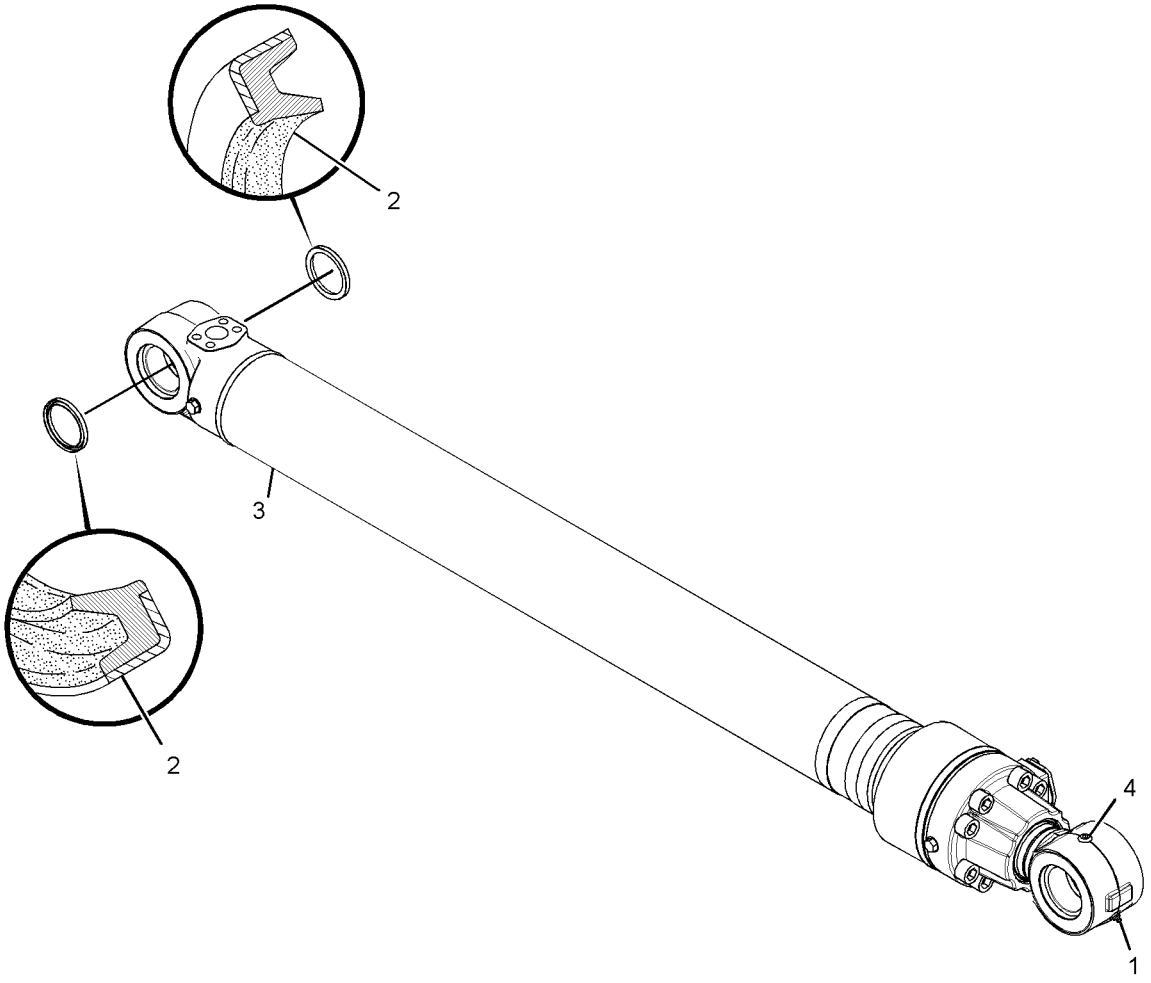

GRAPHIC #1 **<END>** g01379584

289-8102 CYLINDER & SEAL GP-STICK

S/N: CJN1-UP
PART OF 289-8101 CYLINDER & LINES GP-STICK
AN ATTACHMENT

SMCS-5458 **i02793521**

NOTE	REF NO	GRAPHIC REF	PART NUMBER	QTY	PART NAME 1 2 3 4 5 6 (PRODUCT LEVEL)	SEE PAGE
	1	1	**3B-8489**	1	FITTING-GREASE	
	2	1	**235-7679**	4	SEAL-LIP TYPE	
Y	3	1	**289-8103**	1	CYLINDER GP-STICK	425
	4	1	**8T-6763**	1	PLUG-PIPE	

Y-SEPARATE ILLUSTRATION

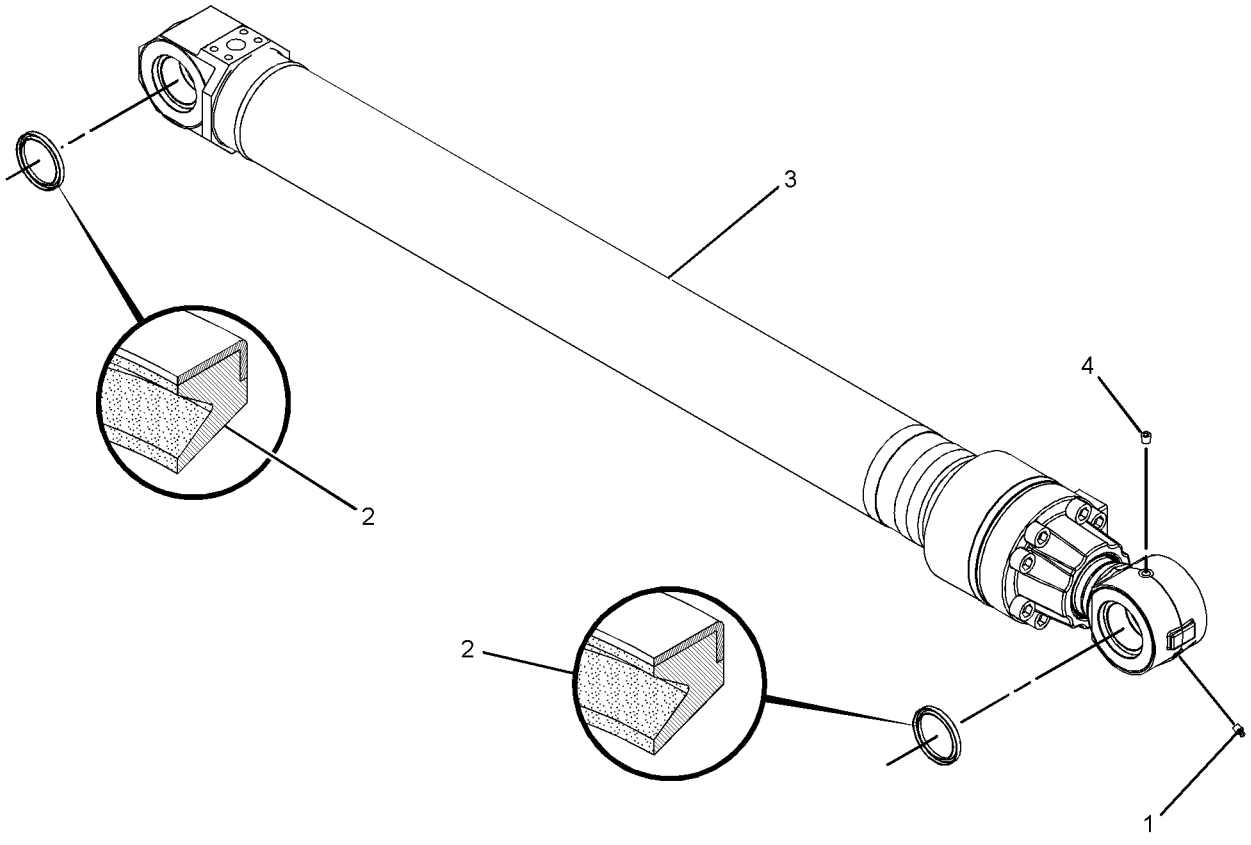

GRAPHIC #1 **<END>** g01398573

322-8745 CYLINDER & SEAL GP-STICK

S/N: CJN1-UP
PART OF 289-8101 CYLINDER & LINES GP-STICK
AN ATTACHMENT

SMCS-5458 **i03087028**

NOTE	REF NO	GRAPHIC REF	PART NUMBER	QTY	PART NAME 1 2 3 4 5 6 (PRODUCT LEVEL)	SEE PAGE
	1	1	**3B-8489**	1	FITTING-GREASE	
	2	1	**235-7679**	4	SEAL-LIP TYPE	
Y	3	1	**322-8746**	1	CYLINDER GP-STICK	427
	4	1	**8T-6763**	1	PLUG-PIPE	

Y-SEPARATE ILLUSTRATION

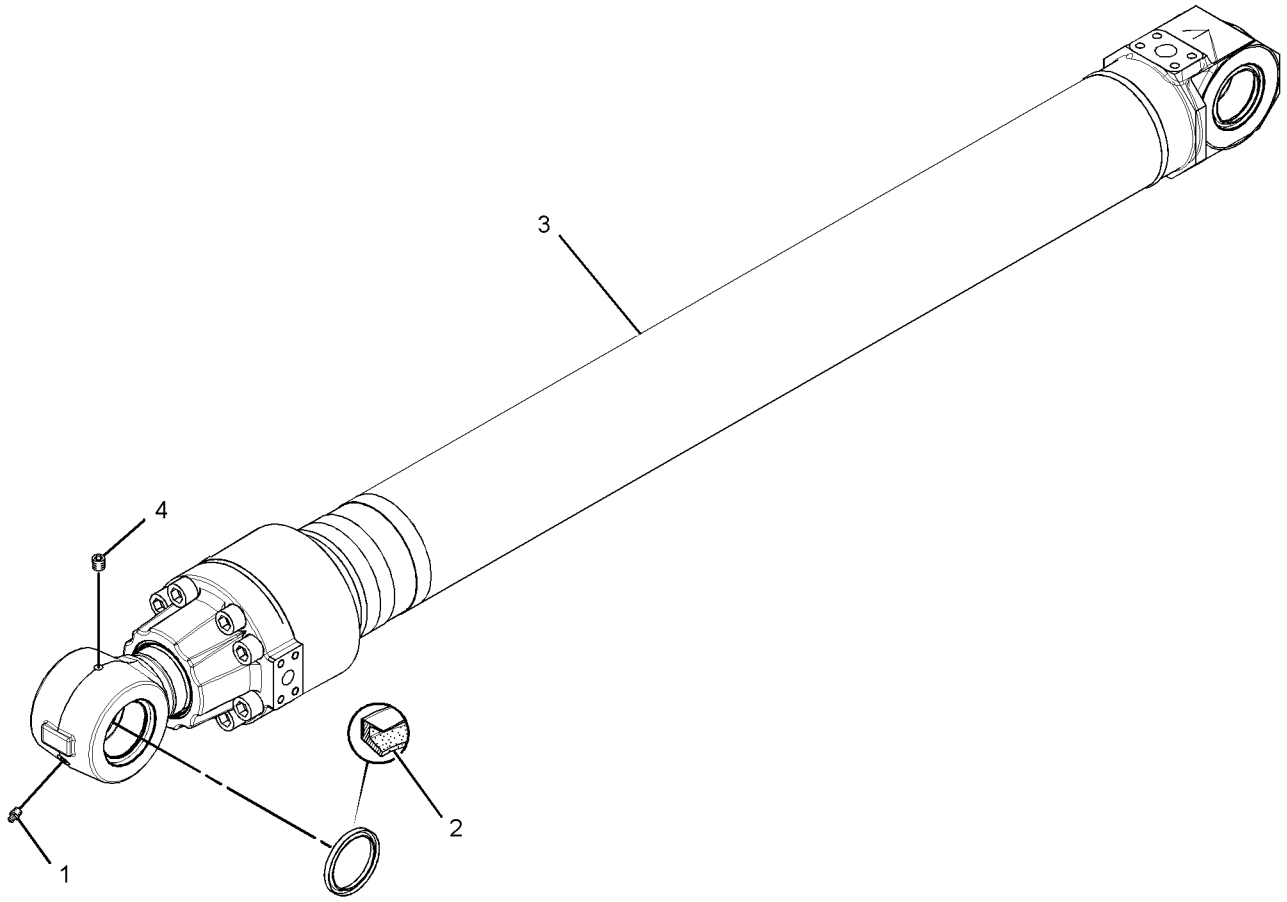

GRAPHIC #1 **<END>** g01626420

259-0840 CYLINDER GP-BOOM

S/N: CJN1-UP
110-MM (4.3-IN) BORE X 1193-MM (47-IN) STROKE
PART OF 259-0839 CYLINDER & SEAL GP-BOOM
AN ATTACHMENT

SMCS-5456 **i02748079**

NOTE	REF NO	GRAPHIC REF	PART NUMBER	QTY	PART NAME 1 2 3 4 5 6 (PRODUCT LEVEL)	SEE PAGE
J	1	1	**9X-7301**	1	SEAL AS	
J	2	1	**143-8031**	1	RING	
	3	1	**143-8150**	1	LOCKNUT-SPECIAL	
	4	1	**147-5818**	1	PISTON	
	5	1	**150-5814**	1	STOP	
	6	1	**266-7849**	1	CYLINDER AS	
	6A	1	**260-2526**	1	BEARING-SLEEVE	
	7	1	**289-8099**	1	ROD AS	
	7A	1	**241-7380**	1	BEARING-SLEEVE	
J	8	1	**266-7859**	1	RING-SEAL	
	9	1	**096-8139**	1	RING-RETAINING	
	10	1	**129-8068**	1	HEAD	
J	11	1	**143-8034**	1	RING	
J	12	1	**147-5819**	1	RING	
J	13	1	**165-9285**	1	SEAL-LIP TYPE	
J	14	1	**170-9843**	1	SEAL-BUFFER	
J	15	1	**170-9859**	1	SEAL-U-CUP	
J	16	1	**095-1716**	1	SEAL-O-RING	
J	17	1	**096-1054**	1	RING-BACKUP	
J	18	1	**105-7360**	1	RING-BACKUP	
	19	1	**114-0755**	1	BEARING-SLEEVE	
M	20	1	**7Y-5216**	8	BOLT-SOCKET HEAD (M20X2.5X80-MM)	
					AVAILABLE REPAIR KIT(S):	
J			**266-7861**	1	KIT-SEAL (HYDRAULIC CYLINDER) (BOOM)	

J-KIT MARKED J SERVICES PART(S) MARKED J
M-METRIC PART

259-0840 CYLINDER GP-BOOM *(contd.)* **i02748079**

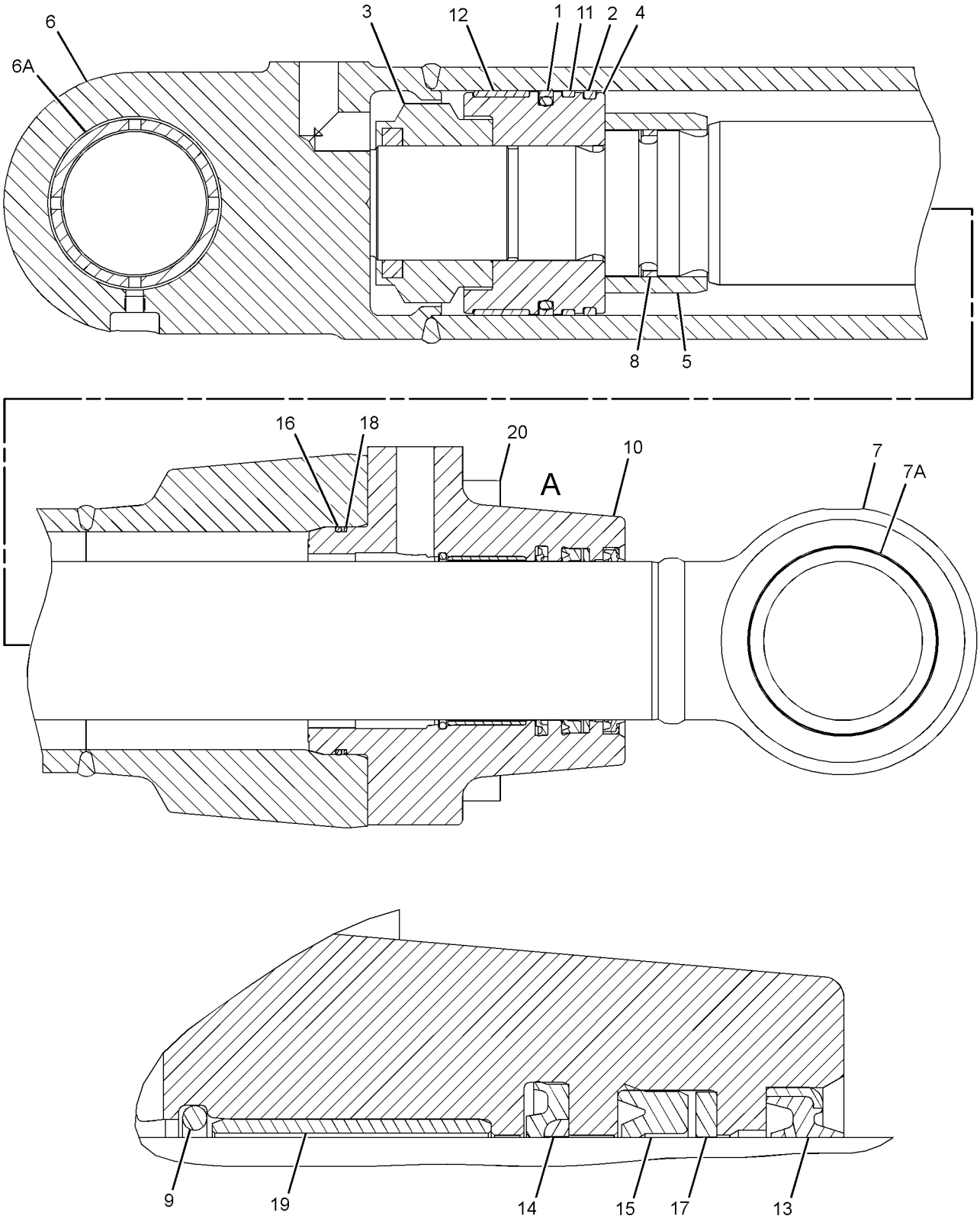

VIEW OF AREA A

GRAPHIC #1 **<END>** g01379184

HYDRAULIC SYSTEM

289-8093 CYLINDER GP-BOOM

S/N: CJN1-UP
110-MM (4.3-IN) BORE X 1193-MM (46.9-IN) STROKE
PART OF 289-8092 CYLINDER & SEAL GP-BOOM
AN ATTACHMENT

SMCS-5456 **i03245500**

NOTE	REF NO	GRAPHIC REF	PART NUMBER	QTY	PART NAME 1 2 3 4 5 6 (PRODUCT LEVEL)	SEE PAGE
J	1	1	**9X-7301**	1	SEAL AS	
J	2	1	**143-8031**	1	RING	
M	3	1	**143-8150**	1	LOCKNUT-SPECIAL	
	4	1	**147-5818**	1	PISTON	
	5	1	**150-5814**	1	STOP	
J	6	1	**266-7859**	1	RING-SEAL	
	7	1	**289-8094**	1	CYLINDER AS	
	7A	1	**260-2526**	1	BEARING-SLEEVE	
	8	1	**289-8099**	1	ROD AS	
	8A	1	**241-7380**	1	BEARING-SLEEVE	
	9	1	**096-8139**	1	RING-RETAINING	
	10	1	**129-8068**	1	HEAD	
J	11	1	**143-8034**	1	RING	
J	12	1	**147-5819**	1	RING	
J	13	1	**165-9285**	1	SEAL-LIP TYPE	
J	14	1	**170-9843**	1	SEAL-BUFFER	
J	15	1	**170-9859**	1	SEAL-U-CUP	
J	16	1	**095-1716**	1	SEAL-O-RING	
J	17	1	**096-1054**	1	RING-BACKUP	
J	18	1	**105-7360**	1	RING-BACKUP	
	19	1	**114-0755**	1	BEARING-SLEEVE	
M	20	1	**7Y-5216**	8	BOLT-SOCKET HEAD (M20X2.5X80-MM)	
					AVAILABLE REPAIR KIT(S):	
J			**266-7861**	1	KIT-SEAL (BOOM CYLINDER)	

J-KIT MARKED J SERVICES PART(S) MARKED J
M-METRIC PART

289-8093 CYLINDER GP-BOOM *(contd.)* **i03245500**

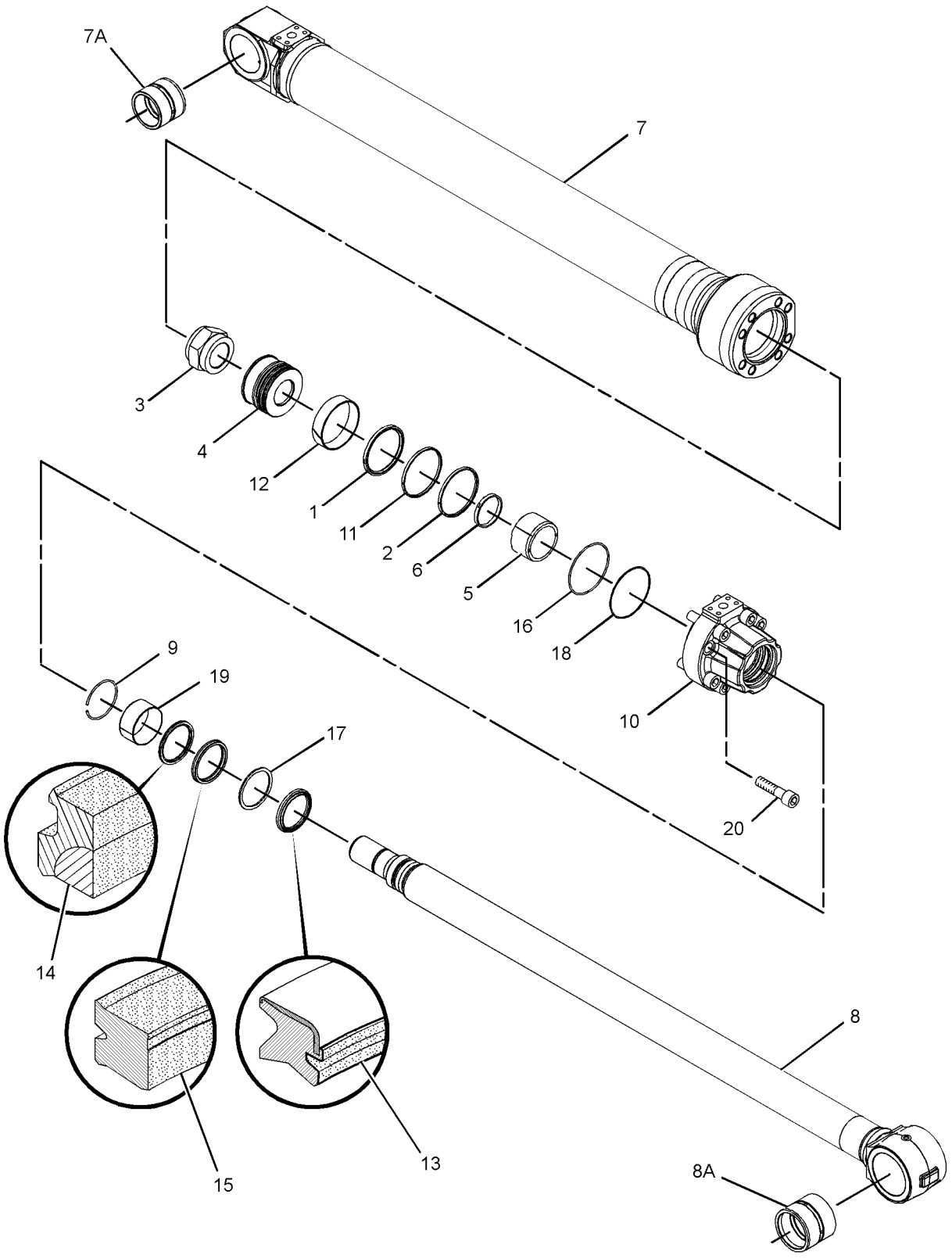

GRAPHIC #1 **<END>** g01397514

HYDRAULIC SYSTEM

259-0846 CYLINDER GP-BUCKET

S/N: CJN1-UP
100-MM (3.9-IN) BORE X 1048-MM (41.3-IN) STROKE
PART OF 259-0845 CYLINDER & SEAL GP-BUCKET
AN ATTACHMENT

SMCS-5457 **i02719490**

NOTE	REF NO	GRAPHIC REF	PART NUMBER	QTY	PART NAME 1 2 3 4 5 6 (PRODUCT LEVEL)	SEE PAGE
J	1	1	**9X-7298**	1	SEAL AS	
J	2	1	**093-1519**	1	RING-BACKUP	
	3	1	**099-5400**	1	RING-RETAINING	
	4	1	**133-6677**	1	HEAD	
	5	1	**133-6686**	1	LOCKNUT-SPECIAL	
J	6	1	**133-6716**	1	RING-BACKUP	
J	7	1	**143-8024**	1	RING	
J	8	1	**143-8025**	1	RING	
J	9	1	**143-8033**	1	RING	
	10	1	**158-8924**	1	PISTON	
J	11	1	**165-9283**	1	SEAL-LIP TYPE	
J	12	1	**170-9841**	1	SEAL-BUFFER	
J	13	1	**170-9857**	1	SEAL-U-CUP	
	14	1	**266-7875**	1	CYLINDER AS	
	14A	1	**260-2528**	1	BEARING-SLEEVE	
	15	1	**266-7879**	1	ROD AS	
	15A	1	**240-2912**	1	BEARING-SLEEVE	
J	16	1	**095-1714**	1	SEAL-O-RING	
	17	1	**114-0753**	1	BEARING-SLEEVE	
M	18	1	**7Y-5216**	8	BOLT-SOCKET HEAD (M20X2.5X80-MM)	
					AVAILABLE REPAIR KIT(S):	
J			**179-9638**	1	KIT-SEAL (BUCKET CYLINDER)	

J-KIT MARKED J SERVICES PART(S) MARKED J
M-METRIC PART

259-0846 CYLINDER GP-BUCKET *(contd.)* **i02719490**

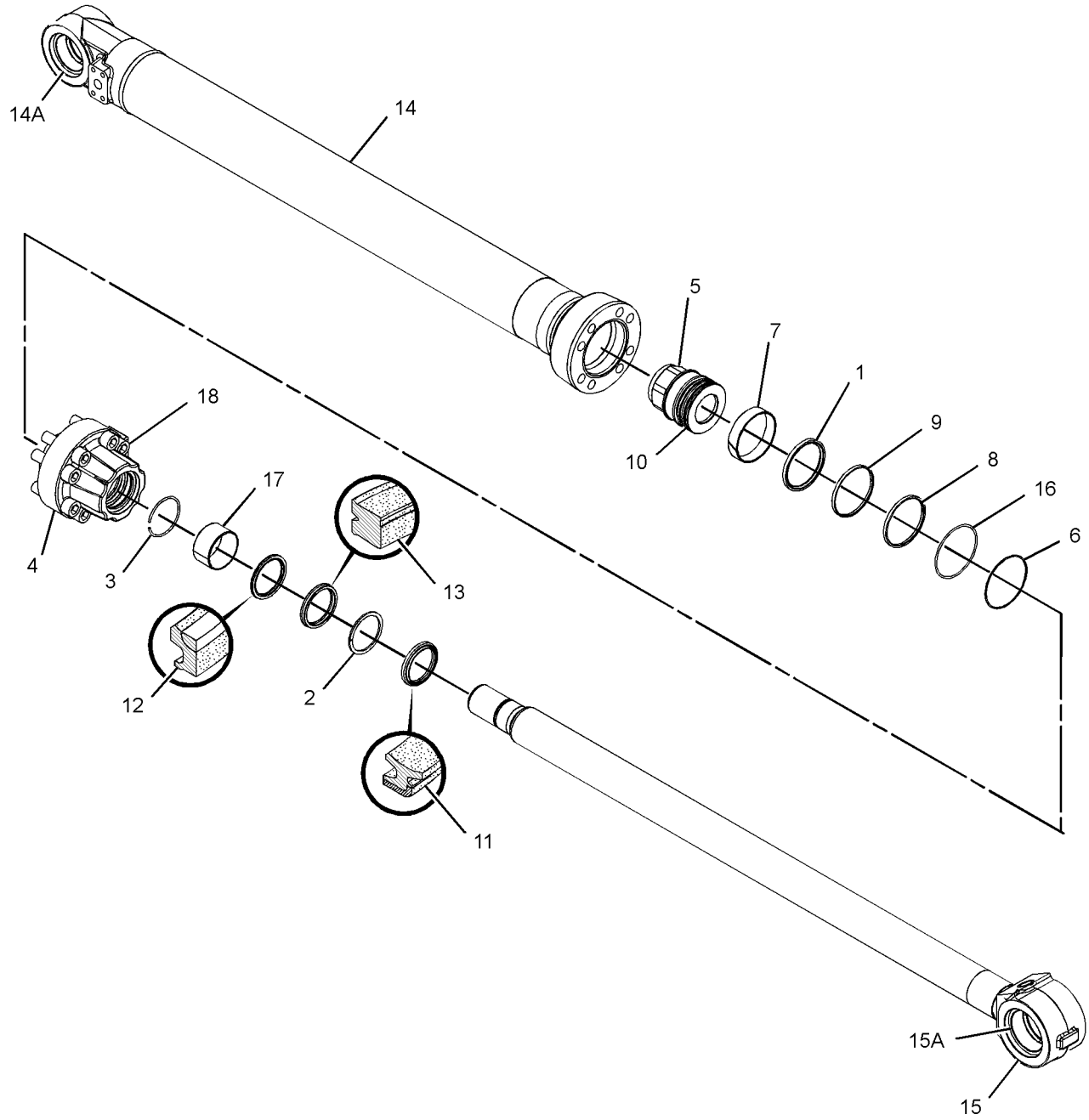

GRAPHIC #1 **<END>** g01372389

HYDRAULIC SYSTEM

259-0916 CYLINDER GP-BUCKET

S/N: CJN1-UP
110-MM (4.3-IN) BORE X 1048-MM (41.3-IN) STROKE
PART OF 259-0915 CYLINDER & SEAL GP-BUCKET
AN ATTACHMENT

SMCS-5457 **i02719453**

NOTE	REF NO	GRAPHIC REF	PART NUMBER	QTY	PART NAME 1 2 3 4 5 6 (PRODUCT LEVEL)	SEE PAGE
J	1	1	**9X-7301**	1	SEAL AS	
J	2	1	**143-8031**	1	RING	
	3	1	**143-8150**	1	LOCKNUT-SPECIAL	
	4	1	**147-5818**	1	PISTON	
	5	1	**266-7813**	1	CYLINDER AS	
	5A	1	**260-2530**	1	BEARING-SLEEVE	
	6	1	**266-7885**	1	ROD & BEARING AS	
	6A	1	**240-2913**	1	BEARING-SLEEVE	
	7	1	**096-8139**	1	RING-RETAINING	
	8	1	**129-8068**	1	HEAD	
J	9	1	**143-8034**	1	RING	
J	10	1	**147-5819**	1	RING	
J	11	1	**165-9285**	1	SEAL-LIP TYPE	
J	12	1	**170-9843**	1	SEAL-BUFFER	
J	13	1	**170-9859**	1	SEAL-U-CUP	
J	14	1	**095-1716**	1	SEAL-O-RING	
J	15	1	**096-1054**	1	RING-BACKUP	
J	16	1	**105-7360**	1	RING-BACKUP	
	17	1	**114-0755**	1	BEARING-SLEEVE	
M	18	1	**7Y-5216**	8	BOLT-SOCKET HEAD (M20X2.5X80-MM)	
					AVAILABLE REPAIR KIT(S):	
J			**179-9625**	1	KIT-SEAL (BUCKET CYLINDER)	

J-KIT MARKED J SERVICES PART(S) MARKED J
M-METRIC PART

259-0916 **CYLINDER GP-BUCKET** *(contd.)* **i02719453**

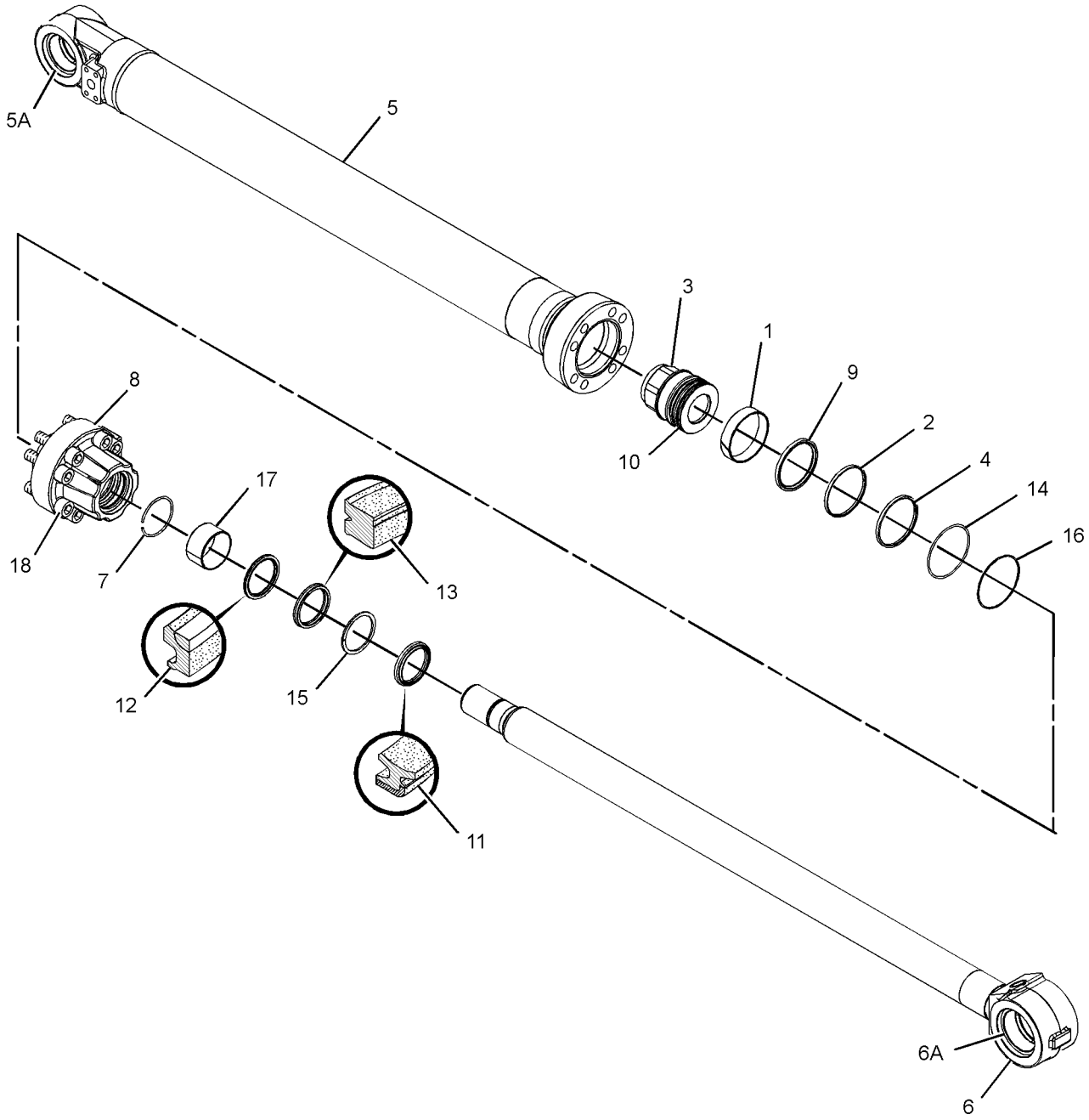

GRAPHIC #1 **<END>** g01372430

HYDRAULIC SYSTEM

281-8979 CYLINDER GP-BUCKET

S/N: CJN1-UP
100-MM (3.9-IN) BORE X 1048-MM (41.2-IN) STROKE
PART OF 302-1730 CYLINDER & SEAL GP-BUCKET
AN ATTACHMENT

SMCS-5457 **i02842163**

NOTE	REF NO	GRAPHIC REF	PART NUMBER	QTY	PART NAME 1 2 3 4 5 6 (PRODUCT LEVEL)	SEE PAGE
	1	1	**3E-3377**	1	WEDGE-RECEPTACLE LOCK (4-PIN)	
J	2	1	**9X-7298**	1	SEAL AS	
	3	1	**099-5400**	1	RING-RETAINING	
	4	1	**102-2244**	1	GROMMET	
	5	1	**133-6677**	1	HEAD	
J	6	1	**133-6716**	1	RING-BACKUP	
J	7	1	**170-9857**	1	SEAL-U-CUP	
	8	1	**212-0907**	1	PLATE-CONNECTOR	
	9	1	**217-3312**	1	MAGNET	
	10	1	**217-8763**	1	COVER-PROTECTION	
	11	1	**246-9113**	1	RETAINER	
	12	1	**281-8980**	1	CYLINDER AS	
	12A	1	**260-2528**	1	BEARING-SLEEVE	
	13	1	**281-8984**	1	ROD AS	
	13A	1	**240-2912**	1	BEARING-SLEEVE	
	14	1	**281-8986**	1	PISTON	
	15	1	**281-8989**	1	SENSOR GP-POSITION (BUCKET)	
		1	**9X-3401**	3	PIN-CONNECTOR (16-GA TO 18-GA)	
J	16	1	**093-1519**	1	RING-BACKUP	
M	17	1	**095-1267**	2	SETSCREW-SOCKET (M110X1.5-THD)	
J	18	1	**095-1714**	1	SEAL-O-RING	
	19	1	**114-0753**	1	BEARING-SLEEVE	
J	20	1	**143-8024**	1	RING	
J	21	1	**143-8025**	1	RING	
J	22	1	**143-8033**	1	RING	
J	23	1	**165-9283**	1	SEAL-LIP TYPE	
J	24	1	**170-9841**	1	SEAL-BUFFER	
	25	1	**188-2199**	1	SEAL-O-RING	
	26	1	**215-1942**	1	RING-BACKUP	
	27	1	**102-8804**	1	KIT-RECEPTACLE (4-PIN)	
					(INCLUDES RECEPTACLE AS & WEDGE)	
	28	1	**3V-2431**	2	WASHER (10.2X16X2-MM THK)	
M	29	1	**6V-8223**	1	SETSCREW-SOCKET (M10X1.5X16-MM)	
M	30	1	**7Y-5216**	8	BOLT-SOCKET HEAD (M20X2.5X80-MM)	
	31	1	**8T-8737**	1	PLUG-SEAL	
M	32	1	**8T-8894**	2	BOLT-SOCKET HEAD (M10X1.5X20-MM)	
E	33	1	**9X-1386**		SLEEVE (10-CM EACH)	
					AVAILABLE REPAIR KIT(S):	
J			**179-9638**	1	KIT-SEAL (BUCKET CYLINDER)	

E-ORDER BY THE CENTIMETER
J-KIT MARKED J SERVICES PART(S) MARKED J
M-METRIC PART

281-8979 CYLINDER GP-BUCKET *(contd.)* **i02842163**

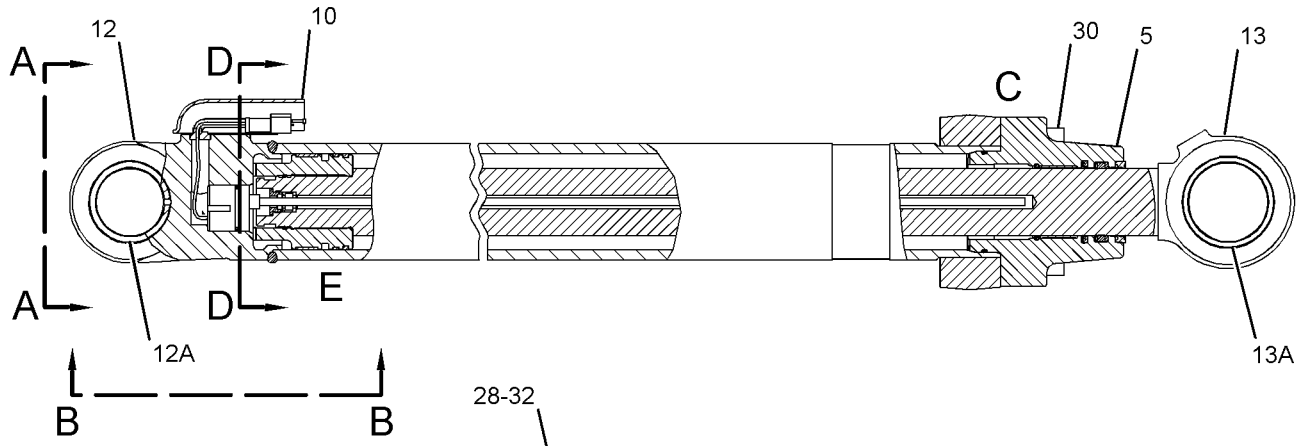

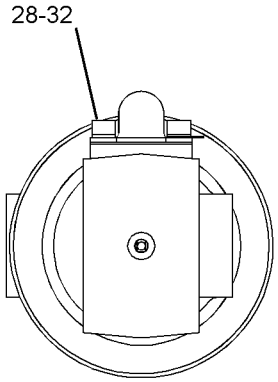

VIEW A-A

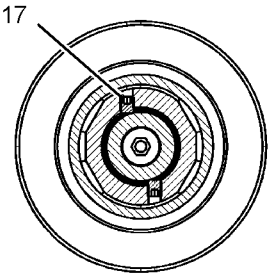

VIEW D-D

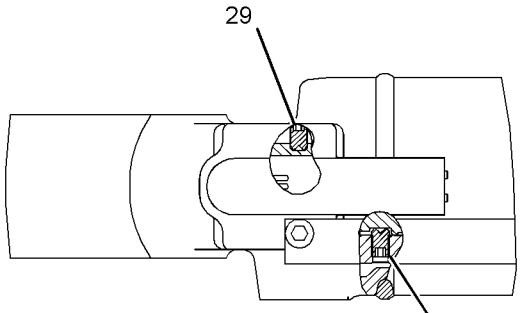

VIEW B-B

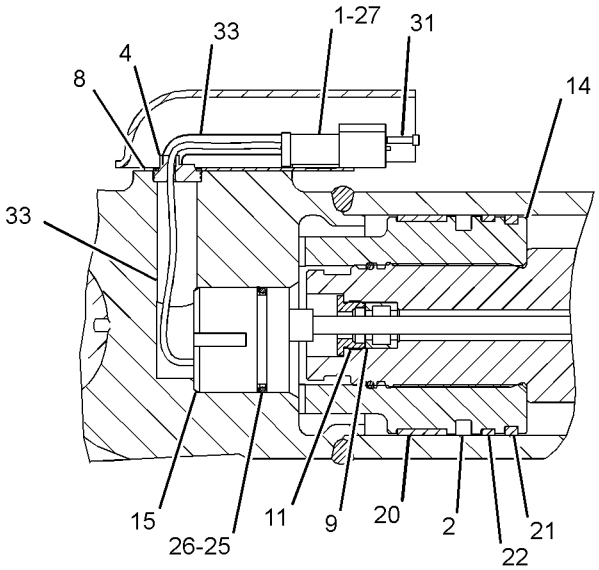

VIEW OF AREA E

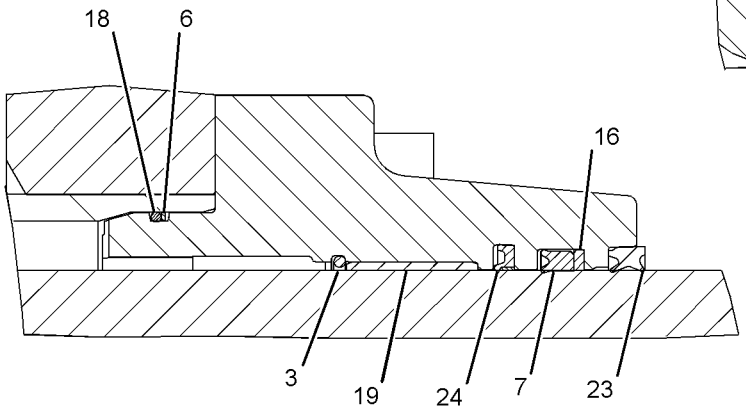

VIEW OF AREA C

GRAPHIC #1 **<END>** g01420053

289-8113 CYLINDER GP-BUCKET

S/N: CJN1-UP
100-MM (3.9-IN) BORE X 1048-MM (41.3-IN) STROKE
PART OF 289-8112 CYLINDER & SEAL GP-BUCKET
AN ATTACHMENT

SMCS-5457 **i02765418**

NOTE	REF NO	GRAPHIC REF	PART NUMBER	QTY	PART NAME 1 2 3 4 5 6 (PRODUCT LEVEL)	SEE PAGE
J	1	1	**9X-7298**	1	SEAL AS	
J	2	1	**093-1519**	1	RING-BACKUP	
	3	1	**099-5400**	1	RING-RETAINING	
	4	1	**133-6677**	1	HEAD	
M	5	1	**133-6686**	1	LOCKNUT-SPECIAL	
J	6	1	**133-6716**	1	RING-BACKUP	
J	7	1	**143-8024**	1	RING	
J	8	1	**143-8025**	1	RING	
J	9	1	**143-8033**	1	RING	
	10	1	**158-8924**	1	PISTON	
J	11	1	**165-9283**	1	SEAL-LIP TYPE	
J	12	1	**170-9841**	1	SEAL-BUFFER	
J	13	1	**170-9857**	1	SEAL-U-CUP	
	14	1	**266-7879**	1	ROD AS	
	14A	1	**240-2912**	1	BEARING-SLEEVE	
	15	1	**289-8114**	1	CYLINDER AS	
	15A	1	**260-2528**	1	BEARING-SLEEVE	
J	16	1	**095-1714**	1	SEAL-O-RING	
	17	1	**114-0753**	1	BEARING-SLEEVE	
M	18	1	**7Y-5216**	8	BOLT-SOCKET HEAD (M20X2.5X80-MM)	
					AVAILABLE REPAIR KIT(S):	
J			**179-9638**	1	KIT-SEAL (BUCKET CYLINDER)	

J-(KIT MARKED J SERVICES PART(S) MARKED J)
M-METRIC PART

289-8113 CYLINDER GP-BUCKET *(contd.)* **i02765418**

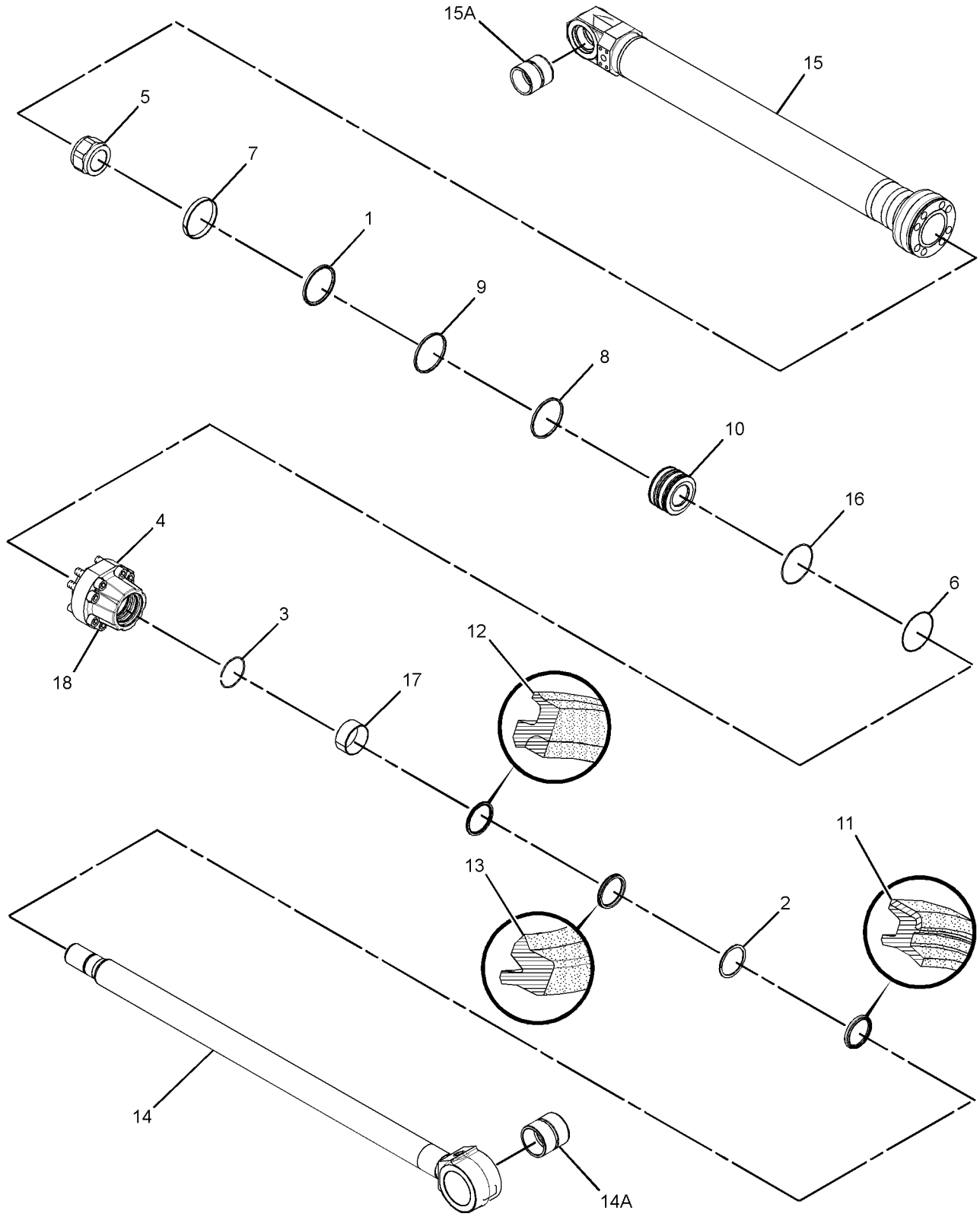

GRAPHIC #1 **<END>** g01388393

HYDRAULIC SYSTEM

289-8121 CYLINDER GP-BUCKET

S/N: CJN1-UP
110-MM (4.3-IN) BORE X 1048-MM (41.3-IN) STROKE
PART OF 289-8120 CYLINDER & SEAL GP-BUCKET
AN ATTACHMENT

SMCS-5457 **i02776599**

NOTE	REF NO	GRAPHIC REF	PART NUMBER	QTY	PART NAME 1 2 3 4 5 6 (PRODUCT LEVEL)	SEE PAGE
J	1	1	**9X-7301**	1	SEAL AS	
J	2	1	**143-8031**	1	RING	
	3	1	**143-8150**	1	LOCKNUT-SPECIAL	
	4	1	**147-5818**	1	PISTON	
	5	1	**266-7885**	1	ROD & BEARING AS	
	5A	1	**240-2913**	1	BEARING-SLEEVE	
	6	1	**289-8122**	1	CYLINDER AS	
	6A	1	**284-7311**	2	BEARING-SLEEVE	
	7	1	**096-8139**	1	RING-RETAINING	
	8	1	**129-8068**	1	HEAD	
J	9	1	**143-8034**	1	RING	
J	10	1	**147-5819**	1	RING	
J	11	1	**165-9285**	1	SEAL-LIP TYPE	
J	12	1	**170-9843**	1	SEAL-BUFFER	
J	13	1	**170-9859**	1	SEAL-U-CUP	
J	14	1	**095-1716**	1	SEAL-O-RING	
J	15	1	**096-1054**	1	RING-BACKUP	
J	16	1	**105-7360**	1	RING-BACKUP	
	17	1	**114-0755**	1	BEARING-SLEEVE	
M	18	1	**7Y-5216**	8	BOLT-SOCKET HEAD (M20X2.5X80-MM)	
					AVAILABLE REPAIR KIT(S):	
J			**179-9625**	1	KIT-SEAL (BUCKET CYLINDER)	

J-KIT MARKED J SERVICES PART(S) MARKED J
M-METRIC PART

289-8121 **CYLINDER GP-BUCKET** *(contd.)* **i02776599**

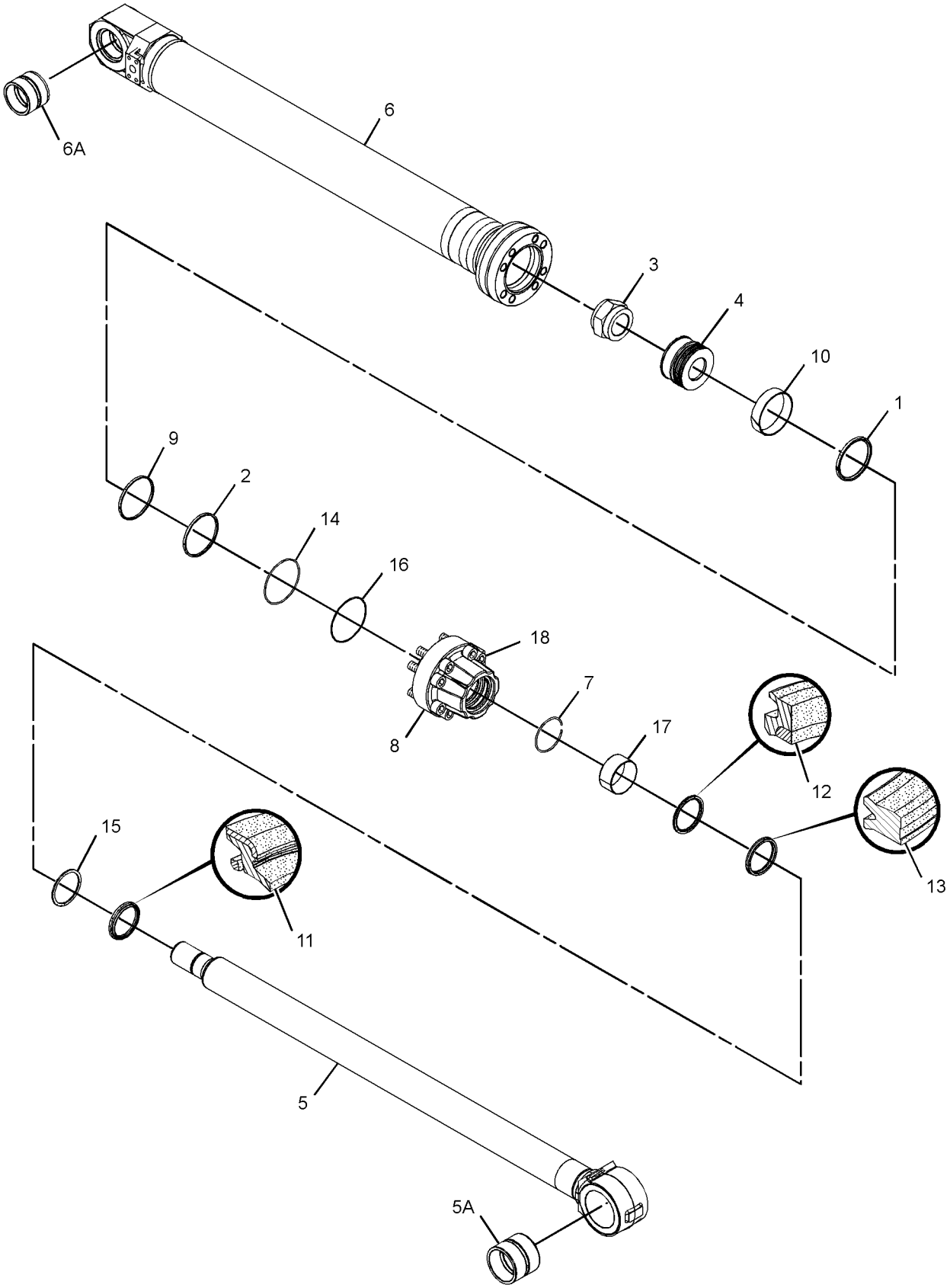

GRAPHIC #1 **<END>** g01388981

256-9795 CYLINDER GP-COUPLER

S/N: CJN1-UP
70-MM (2.7-IN) BORE X 125-MM (4.9-IN) STROKE
PART OF 236-4154 COUPLER GP-QUICK
AN ATTACHMENT

SMCS-5133 **i02528891**

NOTE	REF NO	GRAPHIC REF	PART NUMBER	QTY	PART NAME 1 2 3 4 5 6 (PRODUCT LEVEL)	SEE PAGE
	1	1	**3B-8489**	2	FITTING-GREASE	
	2	1	**172-8406**	1	VALVE GP-CHECK (HYD CYLINDER, QUICK COUPLER)	
		1	**2U-5338**	1	SEAL-O-RING	
		1	**107-7640**	1	SEAL-O-RING	
		1	**9W-3340**	1	SEAL-O-RING	
F			**172-8488**	1	KIT-SEAL (COUPLER CYLINDER)	

F-NOT SHOWN

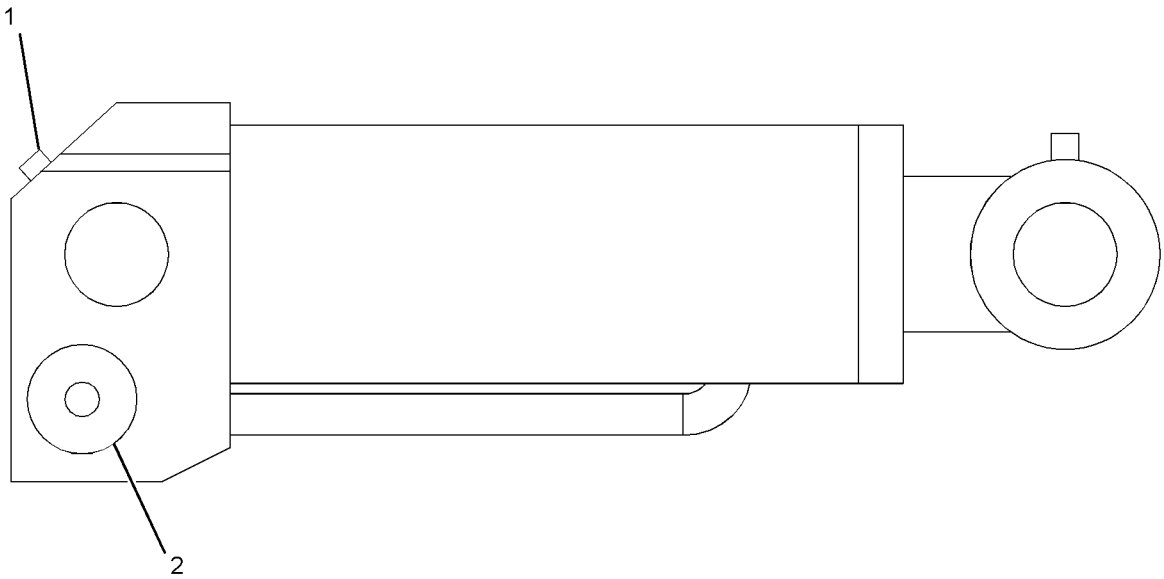

GRAPHIC #1 **<END>** g01203166

259-0843 CYLINDER GP-STICK

S/N: CJN1-UP
120-MM (4.7-IN) BORE X 1331-MM (52.4-IN) STROKE
PART OF 259-0842 CYLINDER & SEAL GP-STICK
AN ATTACHMENT

SMCS-5458 **i02748097**

NOTE	REF NO	GRAPHIC REF	PART NUMBER	QTY	PART NAME 1 2 3 4 5 6 (PRODUCT LEVEL)	SEE PAGE
J	1	1	**7Y-5116**	1	RING	
	2	1	**7Y-5119**	1	RING-RETAINING	
J	3	1	**9X-3592**	1	SEAL AS	
	4	1	**103-8441**	1	RING-RETAINING	
	5	1	**103-8442**	1	RING	
	6	1	**103-8443**	1	STOP	
	7	1	**105-7374**	1	STOP	
J	8	1	**143-8027**	1	RING	
M	9	1	**147-5835**	1	LOCKNUT-SPECIAL	
J	10	1	**165-9286**	1	SEAL-LIP TYPE	
	11	1	**179-9633**	1	HEAD	
	12	1	**229-1132**	1	PISTON	
J	13	1	**247-8789**	1	RING-SEAL	
	14	1	**266-7862**	1	CYLINDER AS	
	14A	1	**260-2527**	1	BEARING-SLEEVE	
	15	1	**266-7867**	1	ROD AS	
	15A	1	**260-2527**	1	BEARING-SLEEVE	
J	16	1	**143-8035**	1	RING	
J	17	1	**147-5837**	1	RING	
J	18	1	**170-9844**	1	SEAL-BUFFER	
J	19	1	**087-5510**	1	RING	
J	20	1	**095-1717**	1	SEAL-O-RING	
	21	1	**114-0756**	1	BEARING-SLEEVE	
J	22	1	**170-9860**	1	SEAL-U-CUP	
M	23	1	**7Y-5216**	8	BOLT-SOCKET HEAD (M20X2.5X80-MM)	
	24	1	**8T-4241**	2	RING-RETAINING	
					AVAILABLE REPAIR KIT(S):	
J			**266-7874**	1	KIT-SEAL (STICK CYLINDER) (STICK)	

J-KIT MARKED J SERVICES PART(S) MARKED J
M-METRIC PART

259-0843 CYLINDER GP-STICK *(contd.)* **i02748097**

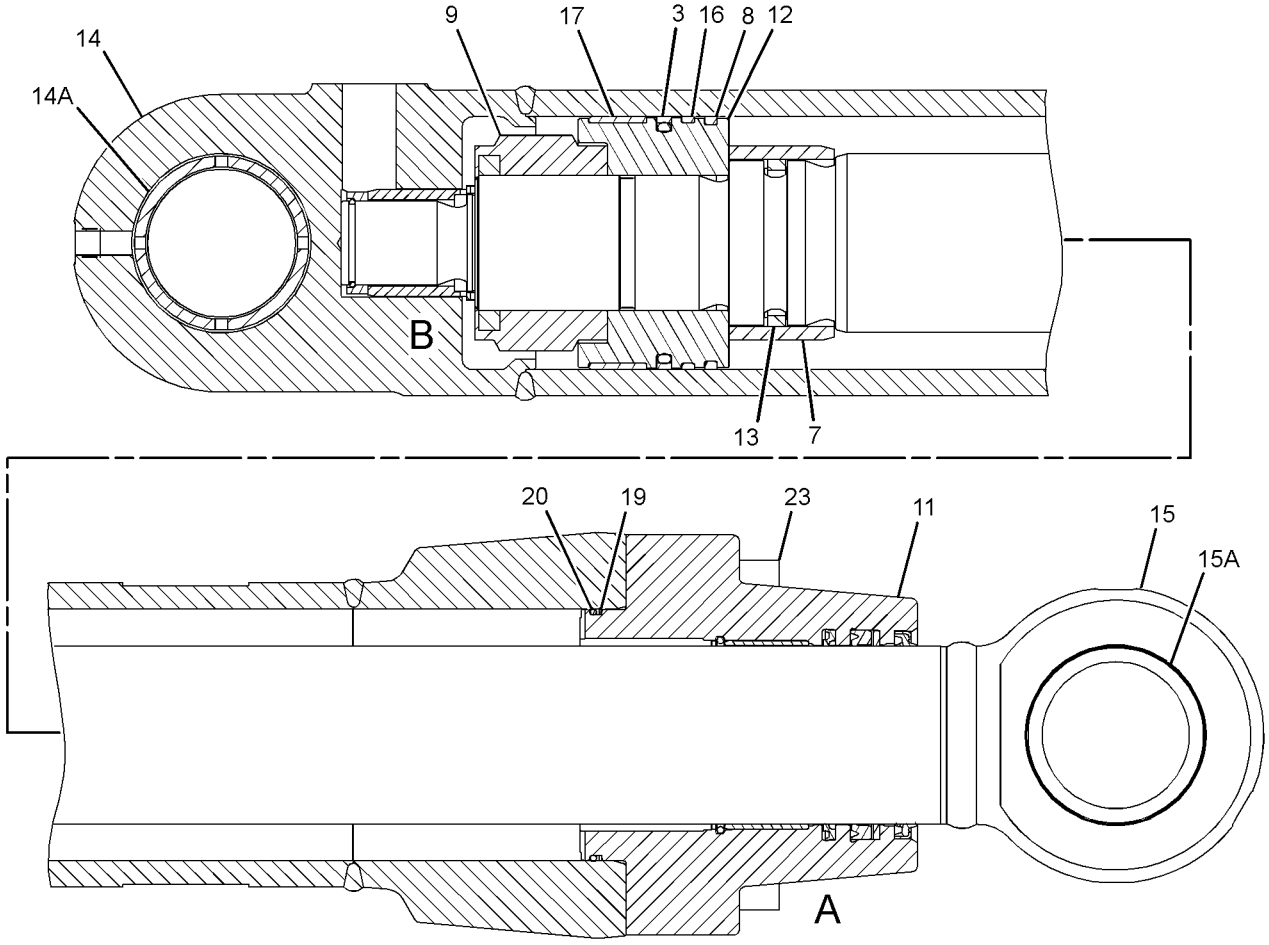

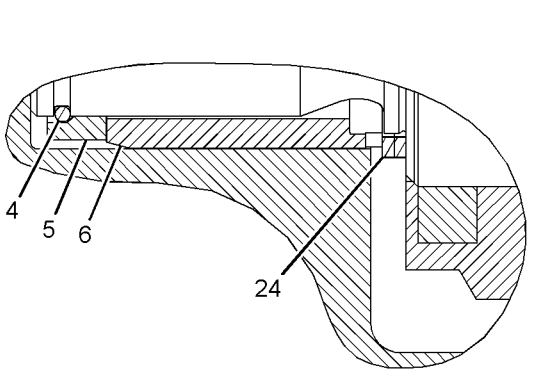

VIEW OF AREA B

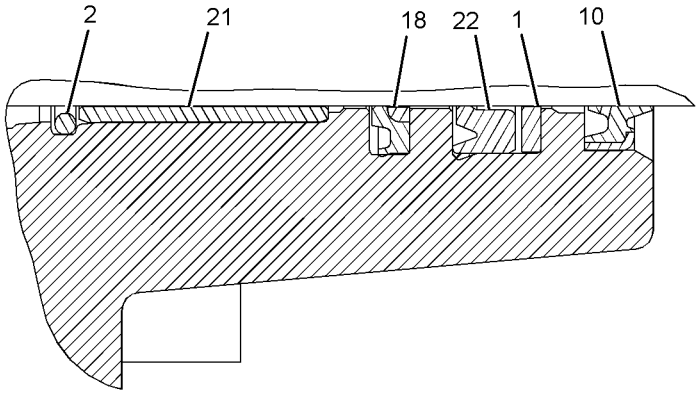

VIEW OF AREA A

GRAPHIC #1 **<END>** g01379842

289-8103 CYLINDER GP-STICK

S/N: CJN1-UP
120-MM (4.7-IN) BORE X 1331-MM (52.4-IN) STROKE
PART OF 289-8102 CYLINDER & SEAL GP-STICK
AN ATTACHMENT

SMCS-5458 **i03245624**

NOTE	REF NO	GRAPHIC REF	PART NUMBER	QTY	PART NAME 1 2 3 4 5 6 (PRODUCT LEVEL)	SEE PAGE
J	1	1	**7Y-5116**	1	RING	
	2	1	**7Y-5119**	1	RING-RETAINING	
J	3	1	**9X-3592**	1	SEAL AS	
	4	1	**103-8441**	1	RING-RETAINING	
	5	1	**103-8442**	1	RING	
	6	1	**103-8443**	1	STOP	
	7	1	**105-7374**	1	STOP	
J	8	1	**143-8027**	1	RING	
M	9	1	**147-5835**	1	LOCKNUT-SPECIAL	
J	10	1	**165-9286**	1	SEAL-LIP TYPE	
	11	1	**179-9633**	1	HEAD	
	12	1	**229-1132**	1	PISTON	
J	13	1	**247-8789**	1	RING-SEAL	
	14	1	**289-8104**	1	CYLINDER AS	
	14A	1	**260-2527**	1	BEARING-SLEEVE	
	15	1	**289-8109**	1	ROD AS	
	15A	1	**260-2527**	1	BEARING-SLEEVE	
J	16	1	**143-8035**	1	RING	
J	17	1	**147-5837**	1	RING	
J	18	1	**170-9844**	1	SEAL-BUFFER	
J	19	1	**087-5510**	1	RING	
J	20	1	**095-1717**	1	SEAL-O-RING	
	21	1	**114-0756**	1	BEARING-SLEEVE	
J	22	1	**170-9860**	1	SEAL-U-CUP	
M	23	1	**7Y-5216**	8	BOLT-SOCKET HEAD (M20X2.5X80-MM)	
	24	1	**8T-4241**	2	RING-RETAINING	
					AVAILABLE REPAIR KIT(S):	
J			**266-7874**	1	KIT-SEAL (STICK CYLINDER)	

J-KIT MARKED J SERVICES PART(S) MARKED J
M-METRIC PART

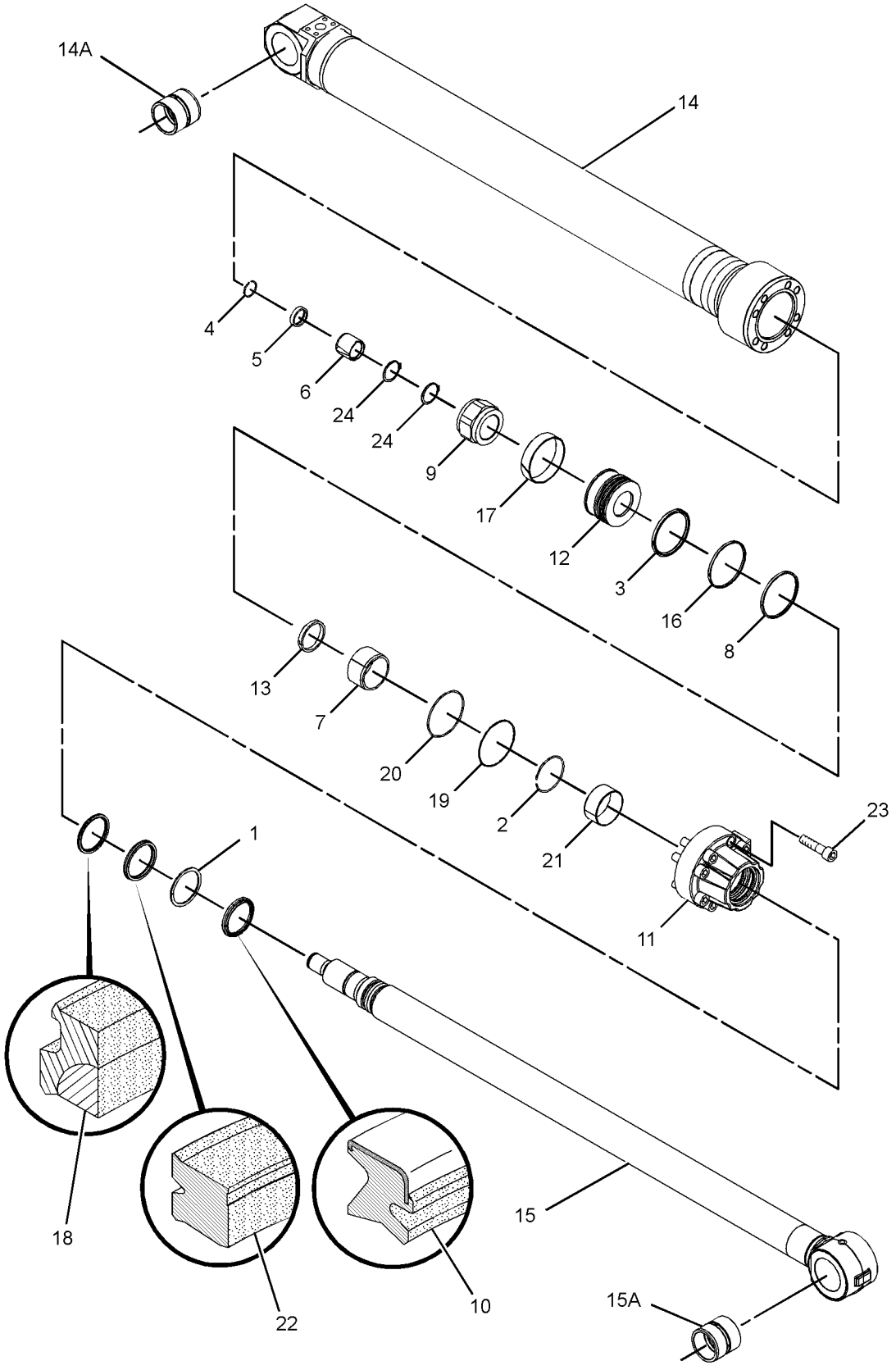

GRAPHIC #1 **<END>** g01398688

322-8746 CYLINDER GP-STICK

S/N: CJN1-UP
120-MM (4.7-IN) BORE X 1331-MM (52.4-IN) STROKE
PART OF 322-8745 CYLINDER & SEAL GP-STICK
AN ATTACHMENT

SMCS-5458 **i03245630**

NOTE	REF NO	GRAPHIC REF	PART NUMBER	QTY	PART NAME 1 2 3 4 5 6 (PRODUCT LEVEL)	SEE PAGE
J	1	1	**7Y-5116**	1	RING	
	2	1	**7Y-5119**	1	RING-RETAINING	
J	3	1	**9X-3592**	1	SEAL AS	
	4	1	**103-8441**	1	RING-RETAINING	
	5	1	**103-8442**	1	RING	
	6	1	**103-8443**	1	STOP	
	7	1	**105-7374**	1	STOP	
	8	1	**133-6670**	1	HEAD	
J	9	1	**143-8027**	1	RING	
M	10	1	**147-5835**	1	LOCKNUT-SPECIAL	
J	11	1	**165-9286**	1	SEAL-LIP TYPE	
	12	1	**229-1132**	1	PISTON	
J	13	1	**247-8789**	1	RING-SEAL	
	14	1	**289-8104**	1	CYLINDER AS	
	14A	1	**260-2527**	1	BEARING-SLEEVE	
	15	1	**289-8109**	1	ROD AS	
	15A	1	**260-2527**	1	BEARING-SLEEVE	
J	16	1	**143-8035**	1	RING	
J	17	1	**147-5837**	1	RING	
J	18	1	**170-9844**	1	SEAL-BUFFER	
J	19	1	**087-5510**	1	RING	
J	20	1	**095-1717**	1	SEAL-O-RING	
	21	1	**114-0756**	1	BEARING-SLEEVE	
J	22	1	**170-9860**	1	SEAL-U-CUP	
M	23	1	**7Y-5216**	8	BOLT-SOCKET HEAD (M20X2.5X80-MM)	
	24	1	**8T-4241**	2	RING-RETAINING	
					AVAILABLE REPAIR KIT(S):	
J			**266-7874**	1	KIT-SEAL (STICK CYLINDER)	

J-KIT MARKED J SERVICES PART(S) MARKED J
M-METRIC PART

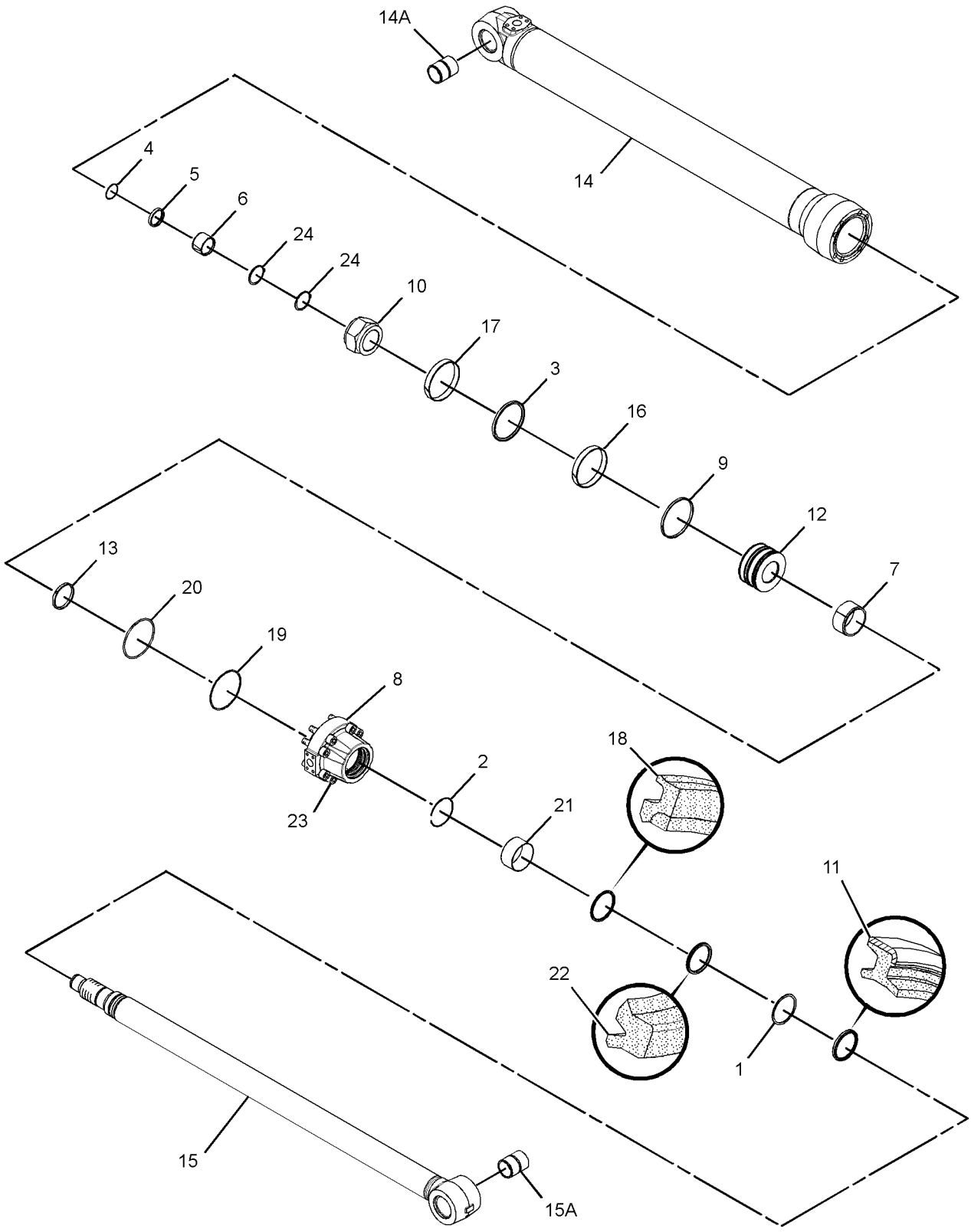

GRAPHIC #1 **<END>** g01626413

199-4600 DRIVE GP-SWING—WITH MOTOR

S/N: CJN1-UP

PART OF 199-4615 DRIVE GP-SWING

SMCS-5459 **i01823300**

NOTE	REF NO	GRAPHIC REF	PART NUMBER	QTY	PART NAME 1 2 3 4 5 6 (PRODUCT LEVEL)	SEE PAGE
Y	1	1	**204-2814**	1	MOTOR GP-SWING	640
Y	2	1	*199-4602*	1	DRIVE GP-SWING	430
M	3	1	**8T-5041**	12	BOLT (M12X1.75X120-MM)	
	4	1	**8T-4223**	12	WASHER-HARD (13.5X25.5X3-MM THK)	

M-METRIC PART
Y-SEPARATE ILLUSTRATION

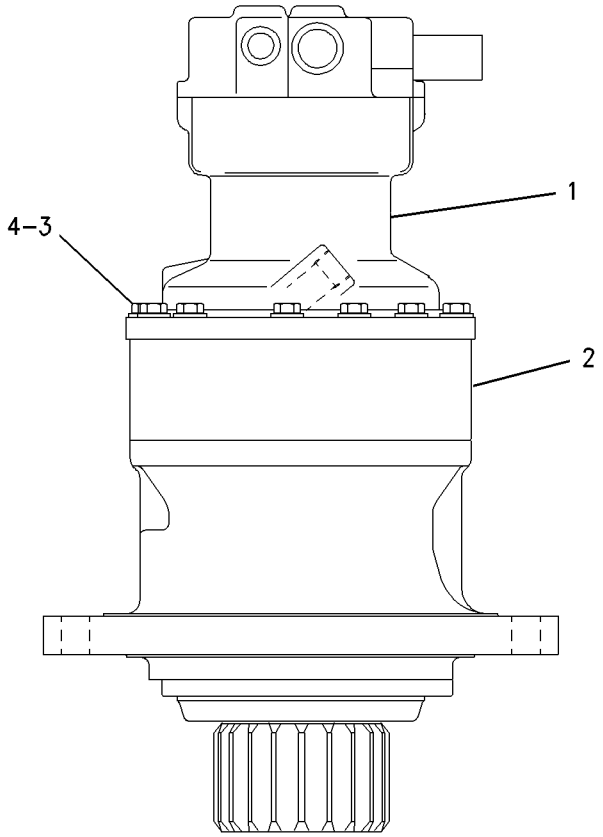

GRAPHIC #1 **<END>** g00934784

HYDRAULIC SYSTEM

199-4602 DRIVE GP-SWING—WITHOUT MOTOR

S/N: CJN1-UP
PART OF 199-4600, 267-6779 DRIVE GP-SWING
ALSO AN ATTACHMENT

SMCS-5459 **i01823301**

NOTE	REF NO	GRAPHIC REF	PART NUMBER	QTY	PART NAME 1 2 3 4 5 6 (PRODUCT LEVEL)	SEE PAGE
	1	1	**191-2600**	3	GEAR-PLANETARY	
	2	1	**191-2599**	1	CARRIER-PLANETARY	
	3	1	**191-2604**	3	PIN-SPRING	
	4	1	**191-2603**	3	SHAFT-PLANETARY	
	5	1	**199-4628**	3	SHAFT-PLANETARY	
	6	1	**191-2605**	1	WASHER (30X75X3-MM THK)	
	7	1	**199-4629**	1	GEAR-SUN	
	8	1	**199-4630**	1	GEAR-SUN	
M	9	1	**114-8224**	1	BOLT (M20X1.5-THD)	
	10	1	**199-4631**	1	GEAR-RING	
	11	1	**093-6089**	2	DOWEL	
	12	1	**095-0893**	1	PIN-SPRING	
	13	1	**7I-7625**	1	BEARING AS-ROLLER	
	14	1	**199-4638**	1	HOUSING	
	15	1	**199-4632**	1	SHAFT-PINION	
	16	1	**199-4636**	1	SPACER	
	17	1	**199-4627**	6	WASHER	
	18	1	**199-4634**	1	SPACER	
	19	1	**199-4635**	1	SPACER	
	20	1	**199-4637**	1	SPACER	
	21	1	**148-4744**	1	BEARING AS	
M	22	1	**8T-4195**	9	BOLT (M10X1.5X30-MM)	
	23	1	**8T-4121**	9	WASHER-HARD (11X21X2.5-MM THK)	
	24	1	**102-6495**	1	SEAL	
	25	1	**148-4748**	1	CAGE	
	26	1	**148-4747**	1	SPACER (29.5-MM THK)	
B	27	1	**1U-8846**	1	SEALANT-GASKET	
	28	1	**148-4751**	1	SPACER (8.3-MM THK)	
B		1	**148-4752**	1	SPACER (8.275-MM THK)	
B		1	**148-4754**	1	SPACER (8.25-MM THK)	
B		1	**148-4755**	1	SPACER (8.225-MM THK)	
B		1	**148-4756**	1	SPACER (8.2-MM THK)	
B		1	**148-4757**	1	SPACER (8.175-MM THK)	
B		1	**148-4758**	1	SPACER (8.15-MM THK)	
B		1	**148-4759**	1	SPACER (8.125-MM THK)	
B		1	**148-4760**	1	SPACER (8.1-MM THK)	
B		1	**148-4761**	1	SPACER (8.075MM THK)	
B		1	**148-4762**	1	SPACER (8.05-MM THK)	
B		1	**148-4763**	1	SPACER (8.025-MM THK)	
B		1	**148-4764**	1	SPACER (8-MM THK)	
B		1	**169-5520**	1	SPACER (7.95-MM THK)	
B		1	**169-5521**	1	SPACER (7.9-MM THK)	
B		1	**169-5522**	1	SPACER (7.85-MM THK)	
B		1	**169-5523**	1	SPACER (7.8-MM THK)	
	29	1	**199-4624**	1	CARRIER-PLANETARY	
	30	1	**114-8223**	1	RETAINER	
	31	1	**8C-3347**	3	PIN-ROLL	
	32	1	**191-2602**	6	WASHER (32X56X1.2-MM THK)	
	33	1	**191-2601**	3	BEARING	
	34	1	**199-4625**	3	GEAR-PLANETARY	
	35	1	**199-4626**	3	BEARING	

B-USE AS REQUIRED
M-METRIC PART

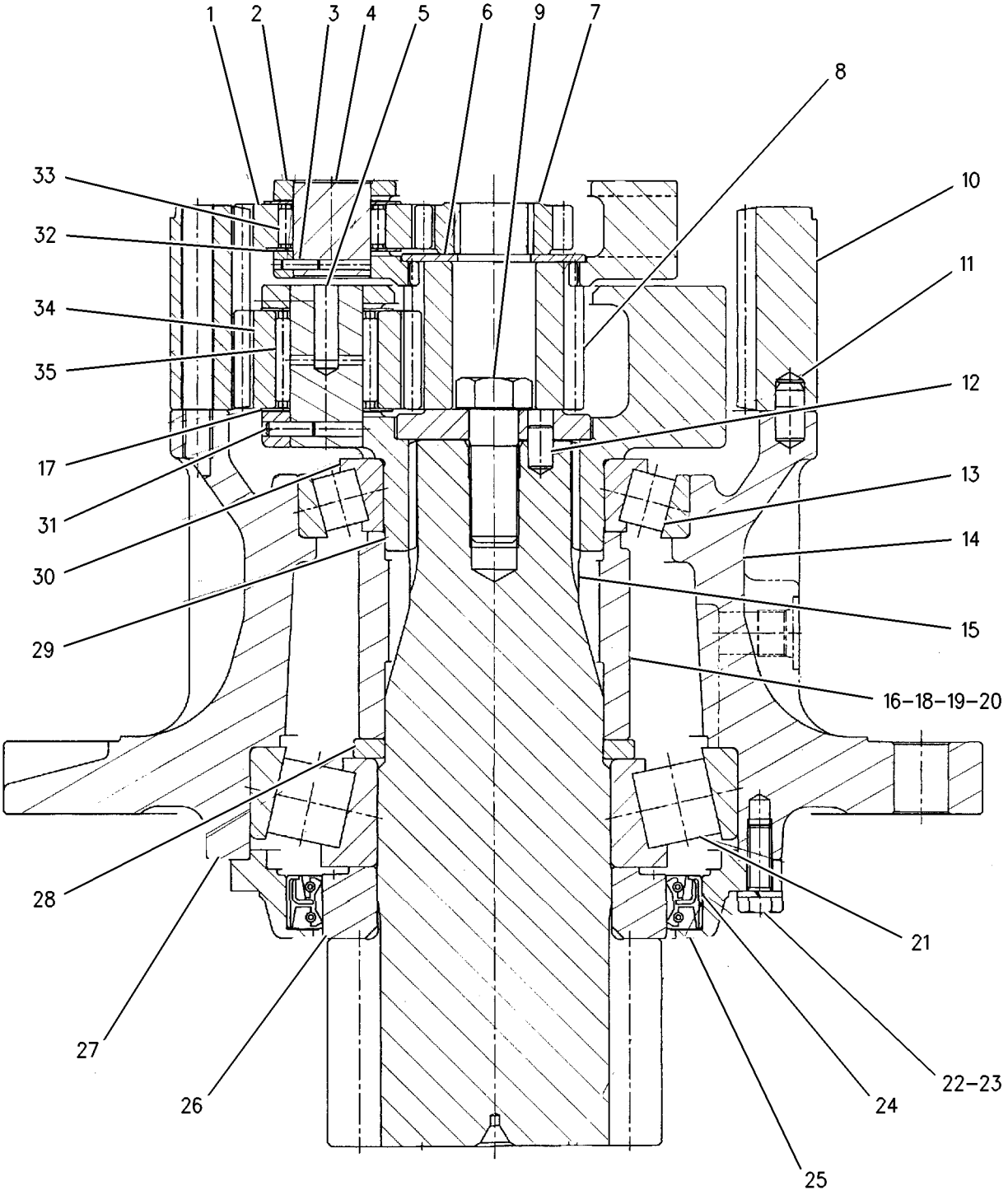

GRAPHIC #1 **<END>** g00938931

199-4615 DRIVE GP-SWING—WITH MOTOR

S/N: CJN1-UP

PART OF 267-6738 POWER TRAIN AR

SMCS-5459 **i02855151**

NOTE	REF NO	GRAPHIC REF	PART NUMBER	QTY	PART NAME 1 2 3 4 5 6 (PRODUCT LEVEL)	SEE PAGE
	1	1	**191-2656**	1	TUBE-GAUGE	
	2	1	**191-2657**	1	GAUGE-OIL LEVEL (DIPSTICK, SWING DRIVE) (POWER TRAIN OIL)	
Y	3	1	*199-4600*	1	DRIVE GP-SWING	429
	4	1	**3K-0360**	1	SEAL-O-RING	
	5	1	**6V-7238**	1	VALVE-SHUTOFF (SWING DRIVE MOTOR)	
C	6	1	**267-6744**	1	BREATHER AS	
		1	**4H-6112**	1	BREATHER (SWING DRIVE)	
		1	**227-6227**	1	BOSS	
		1	**267-6786**	1	FITTING	

C-CHANGE FROM PREVIOUS TYPE
Y-SEPARATE ILLUSTRATION

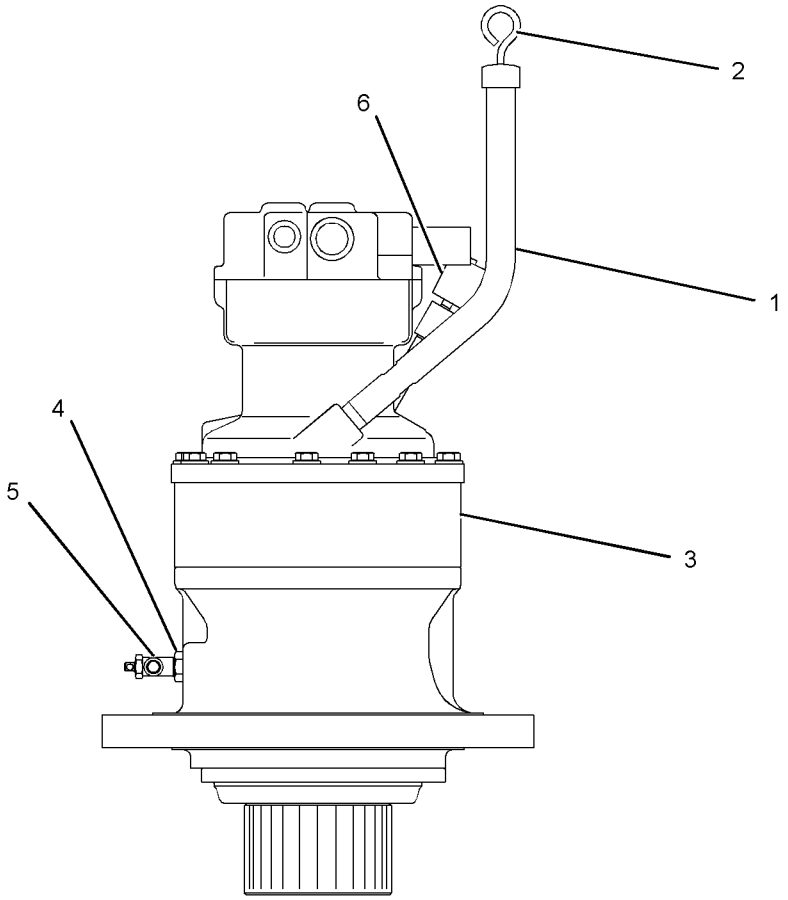

RIGHT SIDE VIEW

GRAPHIC #1 **<END>** g01240420

267-6778 DRIVE GP-SWING—WITH MOTOR

S/N: CJN1-UP
PART OF 260-7075 VALVE AR-SWING
AN ATTACHMENT
TYPE 1

SMCS-5459 **i02752932**

NOTE	REF NO	GRAPHIC REF	PART NUMBER	QTY	PART NAME 1 2 3 4 5 6 (PRODUCT LEVEL)	SEE PAGE
	1	1	**6V-7238**	1	VALVE-SHUTOFF	
	2	1	**191-2656**	1	TUBE-GAUGE	
	3	1	**191-2657**	1	GAUGE-OIL LEVEL (DIPSTICK, SWING DRIVE)	
Y	4	1	**266-7932**	1	VALVE GP-SOLENOID (FINE SWING)	742
	5	1	**267-6744**	1	BREATHER AS	
		1	**4H-6112**	1	BREATHER (SWING DRIVE)	
		1	**227-6227**	1	BOSS	
		1	**267-6786**	1	FITTING	
Y	6	1	*267-6779*	1	DRIVE GP-SWING	435
	7	1	**095-1581**	1	SEAL-O-RING	
	8	1	**095-1698**	2	SEAL-O-RING	
	9	1	**3K-0360**	1	SEAL-O-RING	
M	10	1	**6V-8213**	6	BOLT-SOCKET HEAD (M8X1.25X70-MM)	

M-METRIC PART
Y-SEPARATE ILLUSTRATION

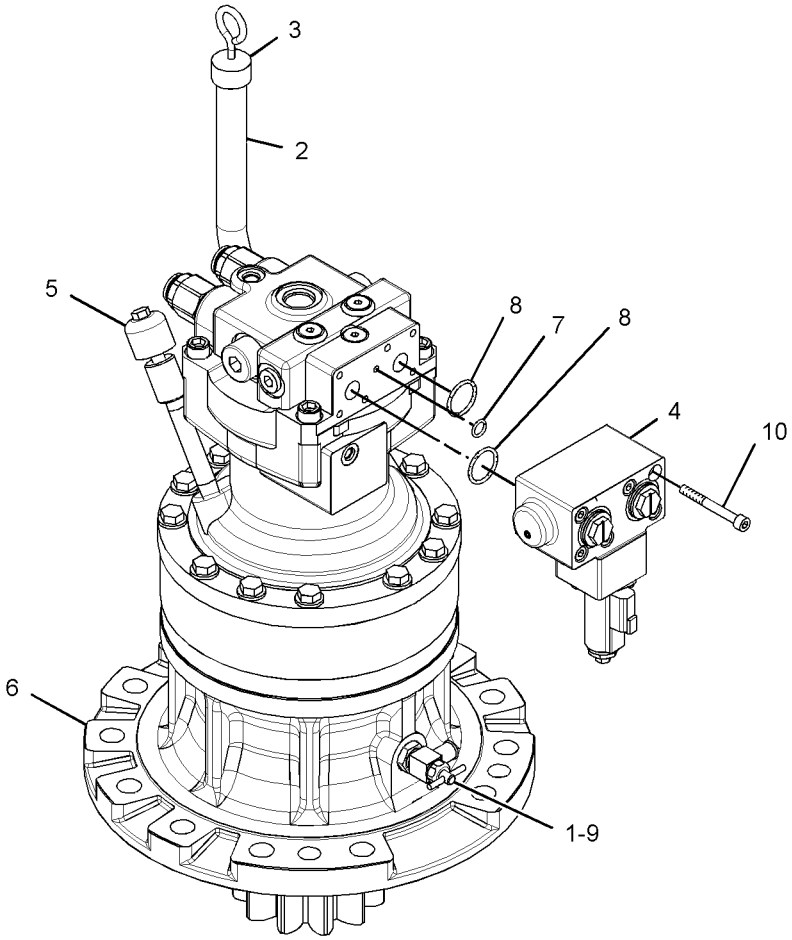

GRAPHIC #1 **<END>** g01380561

267-6778 DRIVE GP-SWING—WITH MOTOR

S/N: CJN1-UP
PART OF 260-7075 VALVE AR-SWING
AN ATTACHMENT
TYPE 2

SMCS-5459 **i03154502**

NOTE	REF NO	GRAPHIC REF	PART NUMBER	QTY	PART NAME 1 2 3 4 5 6 (PRODUCT LEVEL)	SEE PAGE
	1	1	**6V-7238**	1	VALVE-SHUTOFF	
	2	1	**191-2656**	1	TUBE-GAUGE	
	3	1	**191-2657**	1	GAUGE-OIL LEVEL (DIPSTICK, SWING DRIVE)	
CY	4	1	**322-8717**	1	VALVE GP-SOLENOID (FINE SWING)	744
	5	1	**267-6744**	1	BREATHER AS	
		1	**4H-6112**	1	BREATHER (SWING DRIVE)	
		1	**227-6227**	1	BOSS	
		1	**267-6786**	1	FITTING	
Y	6	1	*267-6779*	1	DRIVE GP-SWING	435
	7	1	**095-1581**	1	SEAL-O-RING	
	8	1	**095-1698**	2	SEAL-O-RING	
	9	1	**3K-0360**	1	SEAL-O-RING	
M	10	1	**6V-8213**	6	BOLT-SOCKET HEAD (M8X1.25X70-MM)	

C-CHANGE FROM PREVIOUS TYPE
M-METRIC PART
Y-SEPARATE ILLUSTRATION

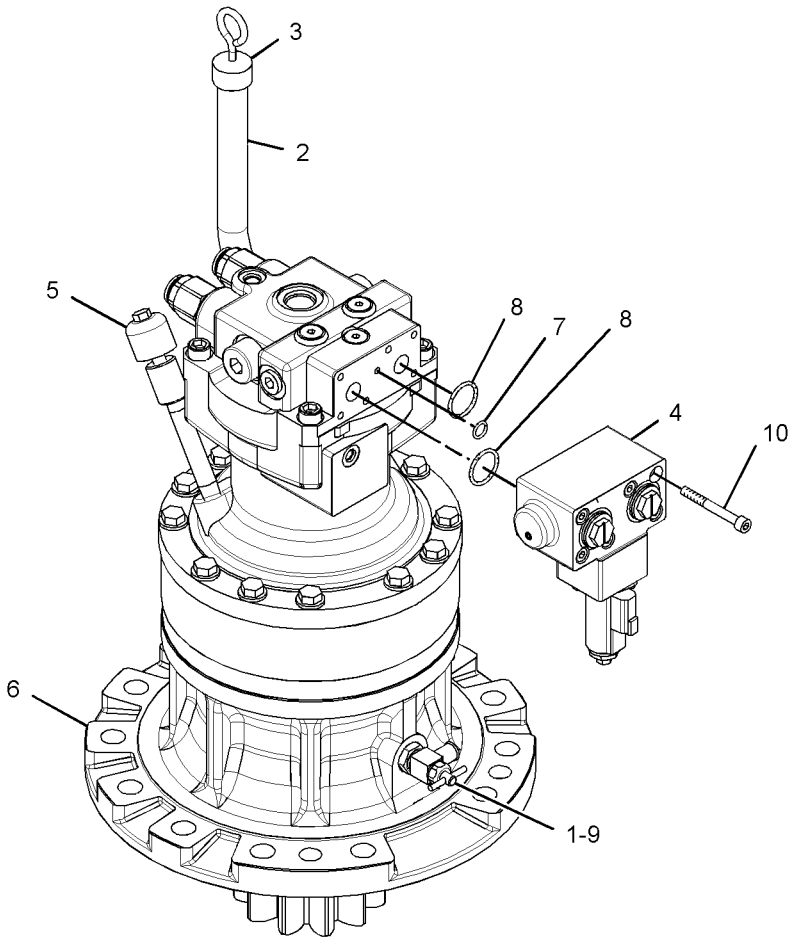

GRAPHIC #1 **<END>** g01380561

267-6779 DRIVE GP-SWING—WITH MOTOR

S/N: CJN1-UP
PART OF 267-6778 DRIVE GP-SWING
AN ATTACHMENT

SMCS-5459 **i02752934**

NOTE	REF NO	GRAPHIC REF	PART NUMBER	QTY	PART NAME 1 2 3 4 5 6 (PRODUCT LEVEL)	SEE PAGE
Y	1	1	**266-8046**	1	MOTOR GP-SWING	642
Y	2	1	*199-4602*	1	DRIVE GP-SWING	430
	3	1	**8T-4223**	12	WASHER-HARD (13.5X25.5X3-MM THK)	
M	4	1	**8T-5041**	12	BOLT (M12X1.75X120-MM)	

M-METRIC PART
Y-SEPARATE ILLUSTRATION

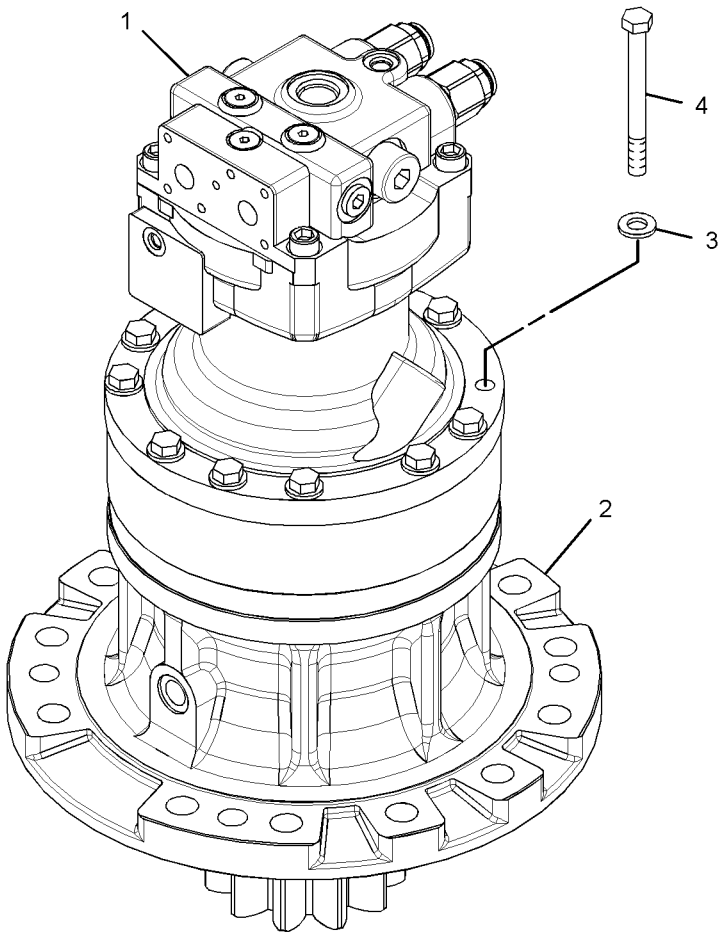

GRAPHIC #1 **<END>** g01380562

227-6229 FASTENER GP-SWING & FINAL DR

S/N: CJN1-UP

PART OF 267-6738 POWER TRAIN AR

SMCS-4050, 5459 **i02687963**

NOTE	REF NO	GRAPHIC REF	PART NUMBER	QTY	PART NAME 1 2 3 4 5 6 (PRODUCT LEVEL)	SEE PAGE
	1	1	**2Y-5503**	2	CORK	
	2	1	**5D-1026**	1	CLAMP-HOSE	
	3	1	**191-2580**	1	PIN	
M	4	1	**7X-2563**	13	BOLT (M20X2.5X60-MM)	
	5	1	**8T-4123**	13	WASHER (22X35X3.5-MM THK)	
M	6	1	**8T-4140**	40	BOLT (M16X2X60-MM)	
	7	1	**9X-8257**	40	WASHER (17.5X30X3.5-MM THK)	
E	8	1	**5P-0767**		HOSE (90-CM)	
B	9	1	**1U-8846**		SEALANT-GASKET	

B-USE AS REQUIRED
E-ORDER BY THE CENTIMETER
M-METRIC PART

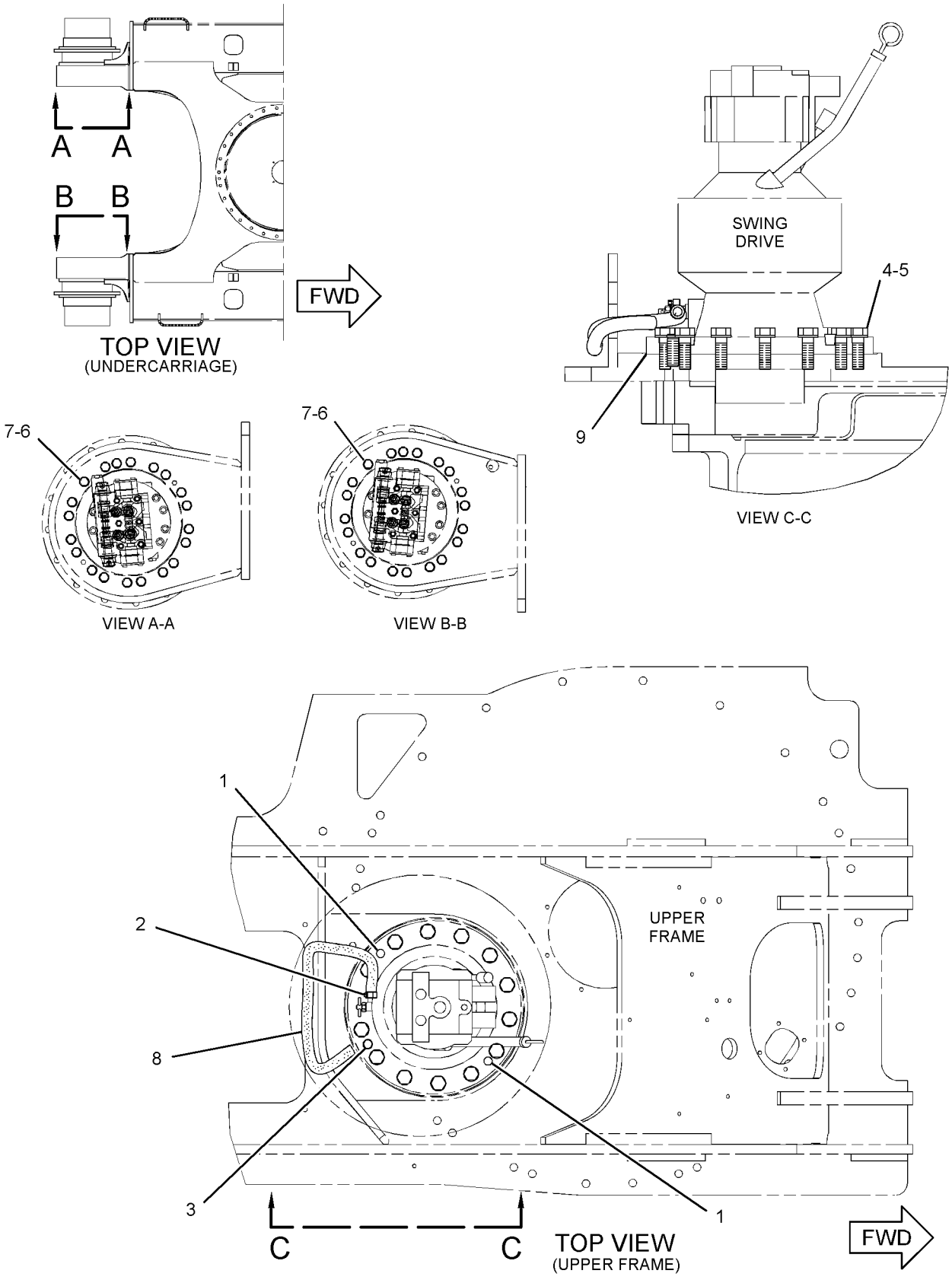

GRAPHIC #1 **<END>** g01304902

158-8987 FILTER & VALVE GP-PILOT—HYDRAULIC OIL

S/N: CJN1-UP

PART OF 260-8205 TANK & FILTER GP-HYDRAULIC

TYPE 1

SMCS-5072, 5092 **i02699181**

NOTE	PART NUMBER	QTY	PART NAME 1 2 3 4 5 6 (PRODUCT LEVEL)	SEE PAGE
Y	*188-2084*	1	FILTER & VALVE GP-PILOT (HYDRAULIC OIL)	440
			(REQUIRES FILTER AS WITH 2-12-THD)	
			—OR—	
Y	*289-7836*	1	FILTER & VALVE GP-PILOT (HYDRAULIC OIL)	441
			(REQUIRES FILTER AS WITH M45X2-THD)	

Y-SEPARATE ILLUSTRATION

<END>

158-8987 FILTER & VALVE GP-PILOT–HYDRAULIC OIL

S/N: CJN1-UP

PART OF 260-8205 TANK & FILTER GP-HYDRAULIC

TYPE 2

SMCS-5072, 5092 **i03215762**

NOTE	REF NO	GRAPHIC REF	PART NUMBER	QTY	PART NAME 1 2 3 4 5 6 (PRODUCT LEVEL)	SEE PAGE
C	1	1	**5I-8670**	1	FILTER-OIL (ADVANCED EFFICIENCY) (HYDRAULIC)	
C	2	1	**215-4909**	1	VALVE GP-PILOT RELIEF (HYDRAULIC FILTER)	
	2A	1	**095-1584**	1	SEAL-O-RING	
	2B	1	**095-1590**	1	SEAL-O-RING	
	2C	1	**095-1596**	1	SEAL-O-RING	

C-CHANGE FROM PREVIOUS TYPE

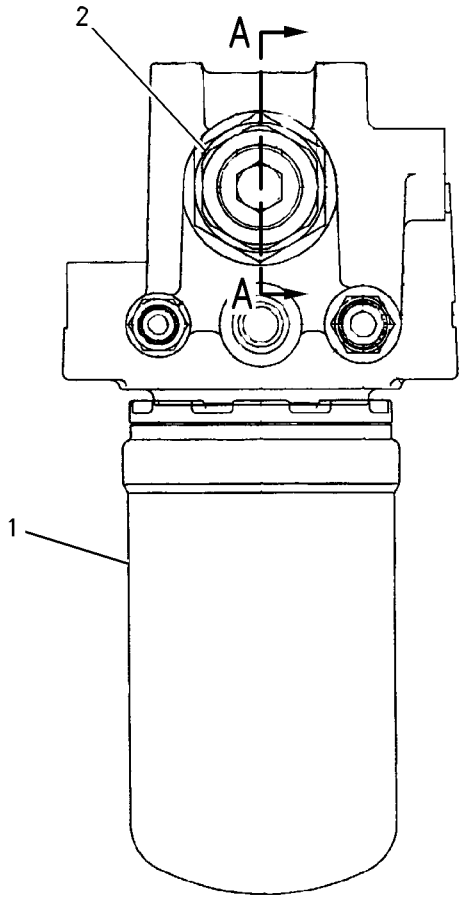

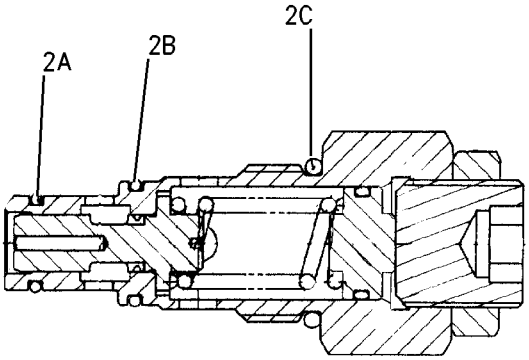

SECTION A–A

GRAPHIC #1 **<END>** g00842119

188-2084 FILTER & VALVE GP-PILOT–HYDRAULIC OIL

S/N: CJN1-UP

PART OF 158-8987 FILTER & VALVE GP-PILOT

SMCS-5072, 5092 **i02997212**

NOTE	REF NO	GRAPHIC REF	PART NUMBER	QTY	PART NAME 1 2 3 4 5 6 (PRODUCT LEVEL)	SEE PAGE
	1	1	**103-8236**	1	RING	
	2	1	**126-1813**	1	FILTER-OIL (ULTRA HIGH EFFICIENCY) (HYDRAULIC, PILOT)	
	3	1	**215-4909**	1	VALVE GP-PILOT RELIEF (HYDRAULIC FILTER)	
	3A	1	**095-1584**	1	SEAL-O-RING	
	3B	1	**095-1590**	1	SEAL-O-RING	
	3C	1	**095-1596**	1	SEAL-O-RING	
					PARTS SHOWN IN GRAPHIC(S) WITHOUT A REFERENCE NUMBER ARE NOT SERVICED SEPARATELY	

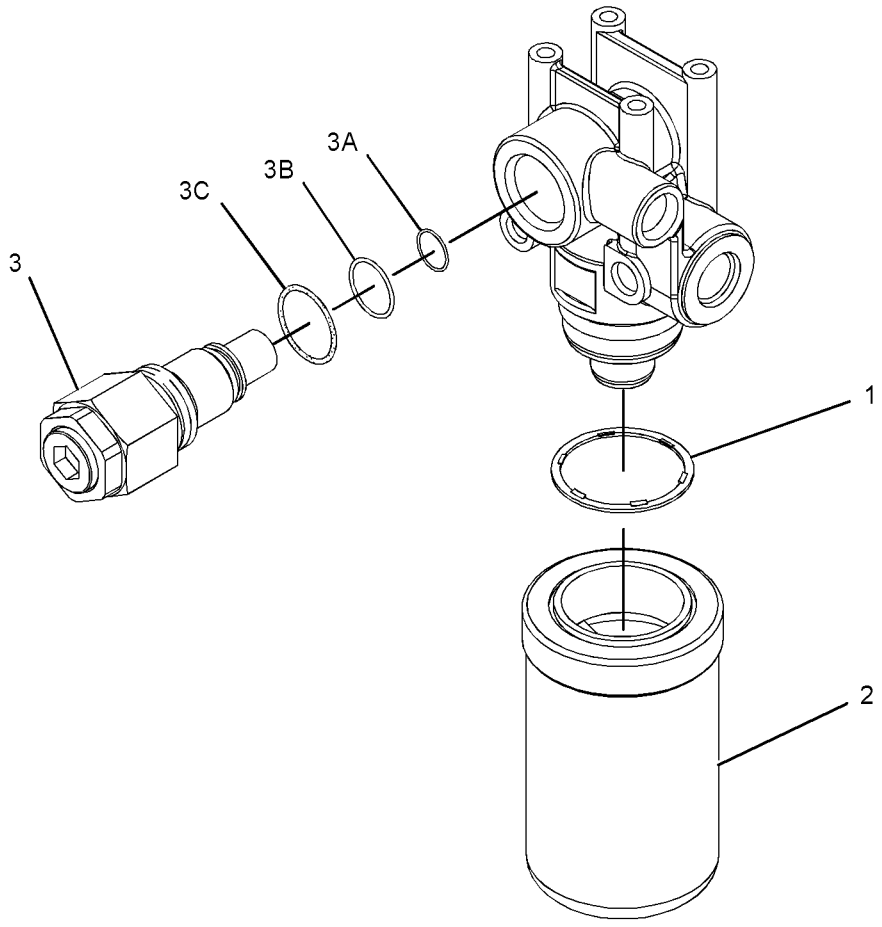

GRAPHIC #1 **<END>** g01330160

289-7836 FILTER & VALVE GP-PILOT–HYDRAULIC OIL

S/N: CJN1-UP

PART OF 158-8987 FILTER & VALVE GP-PILOT

SMCS-5072, 5092 **i02997229**

NOTE	REF NO	GRAPHIC REF	PART NUMBER	QTY	PART NAME 1 2 3 4 5 6 (PRODUCT LEVEL)	SEE PAGE
	1	1	**5I-8670**	1	FILTER-OIL (ADVANCED EFFICIENCY) (HYDRAULIC, PILOT)	
	2	1	**215-4909**	1	VALVE GP-PILOT RELIEF (HYDRAULIC FILTER)	
	2A	1	**095-1584**	1	SEAL-O-RING	
	2B	1	**095-1590**	1	SEAL-O-RING	
	2C	1	**095-1596**	1	SEAL-O-RING	

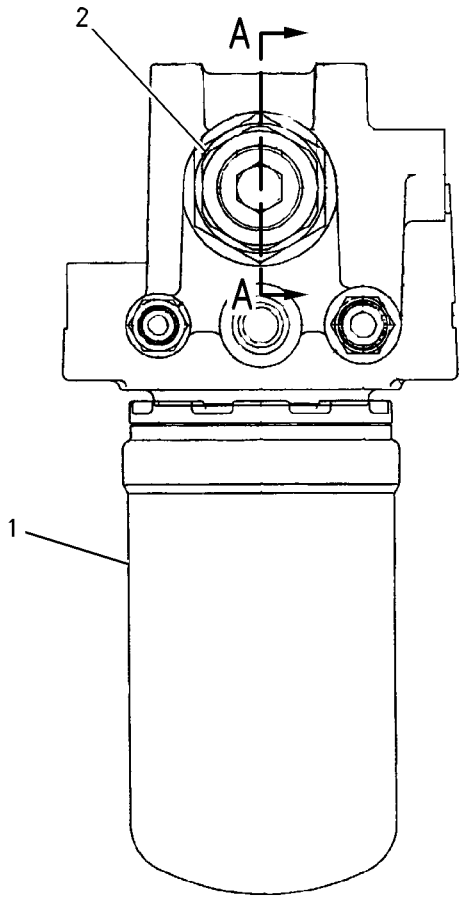

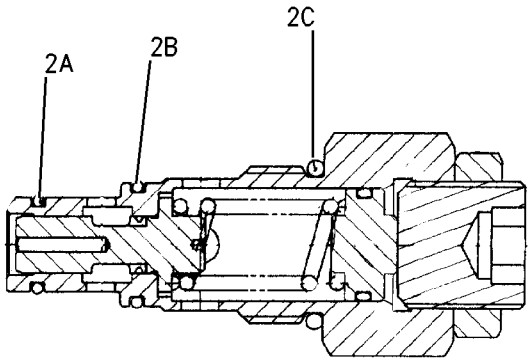

SECTION A–A

GRAPHIC #1 **<END>** g00842119

HYDRAULIC SYSTEM

260-7018 FILTER AR-HYDRAULIC

S/N: CJN1-UP
CANNOT BE USED WITH SYSTEM 22 AND 24
AN ATTACHMENT

SMCS-5068 **i02719497**

NOTE	PART NUMBER	QTY	PART NAME 1 2 3 4 5 6 (PRODUCT LEVEL)	SEE PAGE
Y	*260-8325*	1	LINES GP-FRONT (HAMMER, RETURN)	520
Y	*259-5271*	1	WIRING GP-HYDRAULIC CONTROL (RETURN FILTER)	254

Y-SEPARATE ILLUSTRATION

<END>

224-1687 FILTER GP-OIL–HYDRAULIC

S/N: CJN1-UP
PART OF 260-8325 LINES GP-FRONT
AN ATTACHMENT

SMCS-3004, 4295, 431F, 5068, 5091, 5092 **i02855340**

NOTE	REF NO	GRAPHIC REF	PART NUMBER	QTY	PART NAME 1 2 3 4 5 6 (PRODUCT LEVEL)	SEE PAGE
	1	1	**224-1685**	1	SWITCH AS (FILTER BYPASS)	
	2	1	**096-6073**	1	PLUG	
	3	1	**095-1582**	1	SEAL-O-RING	
	4	1	**216-6678**	1	CASE	
	5	1	**216-6676**	1	FILTER ELEMENT AS-OIL (HYDRAULIC)	
	6	1	**216-6677**	1	HEAD AS	
	7	1	**095-1717**	1	SEAL-O-RING	

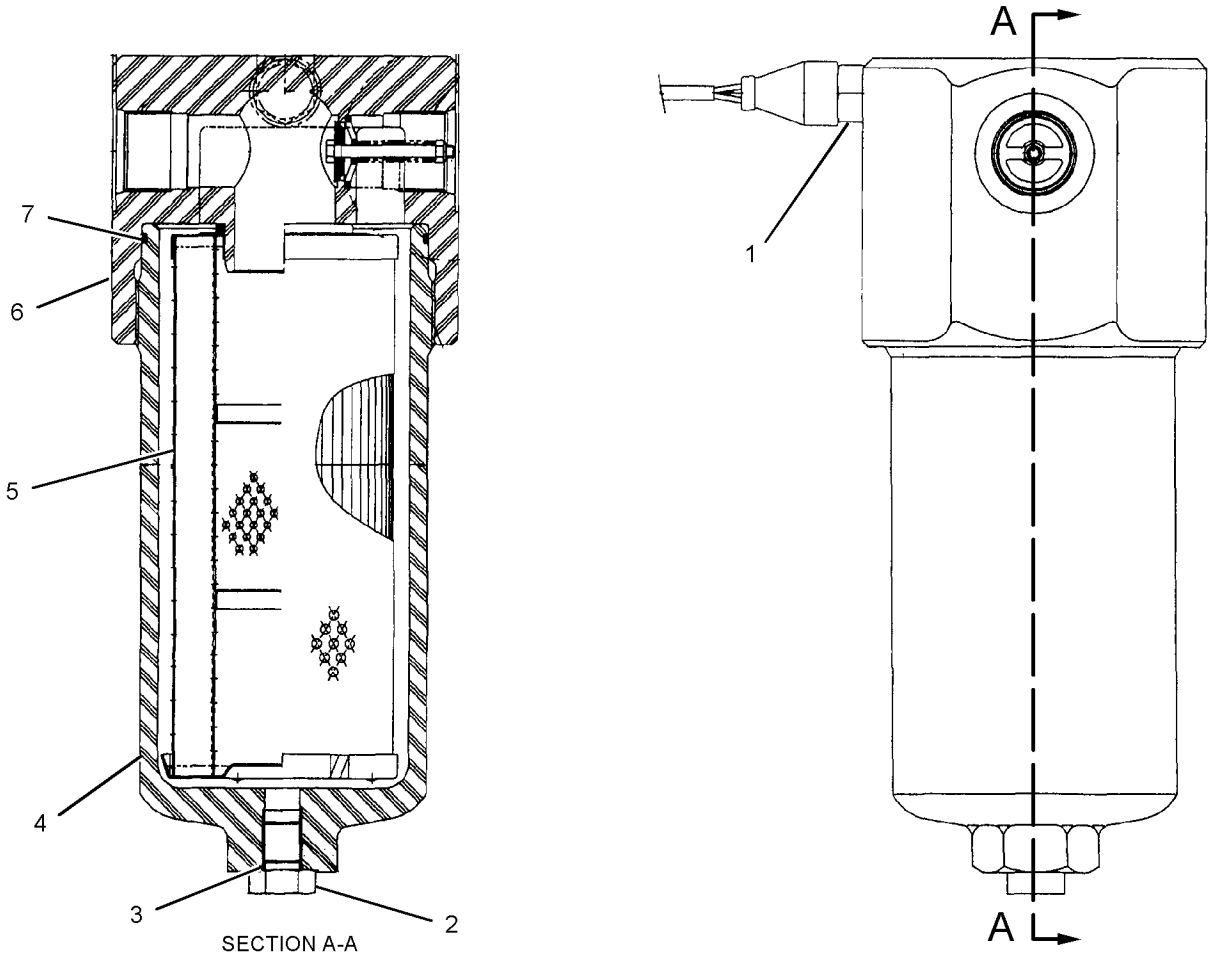

GRAPHIC #1 **<END>** g01029603

259-0869 FILTER GP-OIL–HYDRAULIC, MAIN RETURN

S/N: CJN1-UP

PART OF 260-8205 TANK & FILTER GP-HYDRAULIC

SMCS-3004, 4295, 431F, 5068, 5091, 5092 **i02854827**

NOTE	REF NO	GRAPHIC REF	PART NUMBER	QTY	PART NAME 1 2 3 4 5 6 (PRODUCT LEVEL)	SEE PAGE
	1	1	**283-6089**	1	SEAL-O-RING	
	2	1	**9S-5282**	4	WASHER-HARD (8.8X14.5X2-MM THK)	
M	3	1	**8T-4200**	4	BOLT (M8X1.25X16-MM)	
	4	1	**2S-8439**	1	SEAL-O-RING	
	5	1	**266-7800**	1	HOUSING GP-FILTER	
M		1	**095-0757**	2	SCREW-MACHINE (M6X1X8.6-MM)	
		1	**274-2709**	1	FLANGE AS	
		1	**283-6090**	1	SEAL-O-RING	
	6	1	**266-7799**	1	BLOCK AS	
	7	1	**283-6090**	1	SEAL-O-RING	
	8	1	**266-7791**	1	COVER	
Y	9	1	**266-7792**	1	FILTER GP-OIL (HYDRAULIC, MAIN RETURN)	445
M	10	1	**8T-4184**	4	BOLT (M12X1.75X45-MM)	
	11	1	**8T-4223**	4	WASHER-HARD (13.5X25.5X3-MM THK)	

M-METRIC PART
Y-SEPARATE ILLUSTRATION

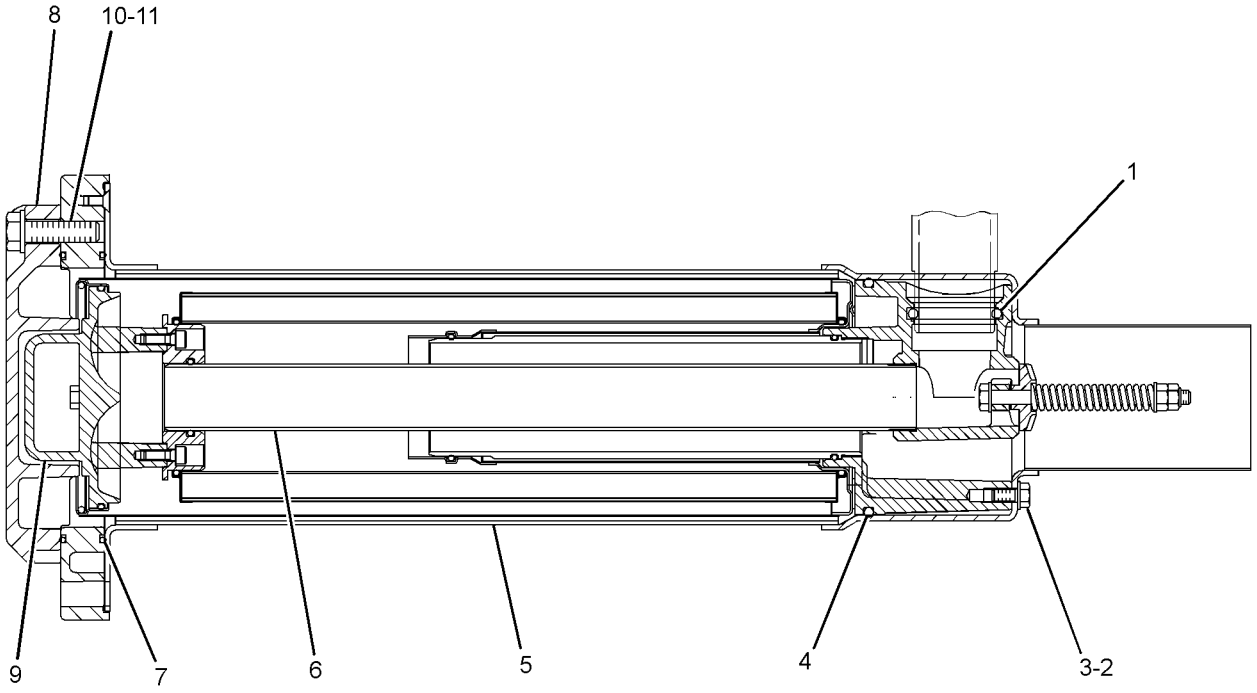

GRAPHIC #1 **<END>** g01305252

266-7792 FILTER GP-OIL–HYDRAULIC, MAIN RETURN

S/N: CJN1-UP

PART OF 259-0869 FILTER GP-OIL

SMCS-3004, 4295, 431F, 5068, 5091, 5092 **i02855379**

NOTE	REF NO	GRAPHIC REF	PART NUMBER	QTY	PART NAME 1 2 3 4 5 6 (PRODUCT LEVEL)	SEE PAGE
	1	1	**266-7797**	1	SHELL AS	
	2	1	**266-7796**	1	FILTER ELEMENT AS-OIL (HYDRAULIC)	
J	3	1	**8F-8882**	1	SEAL-O-RING	
J	4	1	**8C-3095**	1	SEAL-O-RING	
	5	1	**295-9573**	1	HANDLE AS	
	6	1	**266-7793**	1	RING-RETAINING	
J	7	1	**5F-3144**	1	SEAL-O-RING	
	8	1	**295-9618**	1	FILM-INSTRUCTION (OIL FILTER REMOVAL, HYD TANK)	
J	9	1	**095-1537**	1	SEAL-O-RING	
	10	1	**295-9617**	1	PLUG	
J	11	1	**4J-7533**	1	SEAL-O-RING	
					AVAILABLE REPAIR KIT(S):	
J			**295-9619**	1	KIT-SERVICE (OIL FILTER)	

J-KIT MARKED J SERVICES PART(S) MARKED J

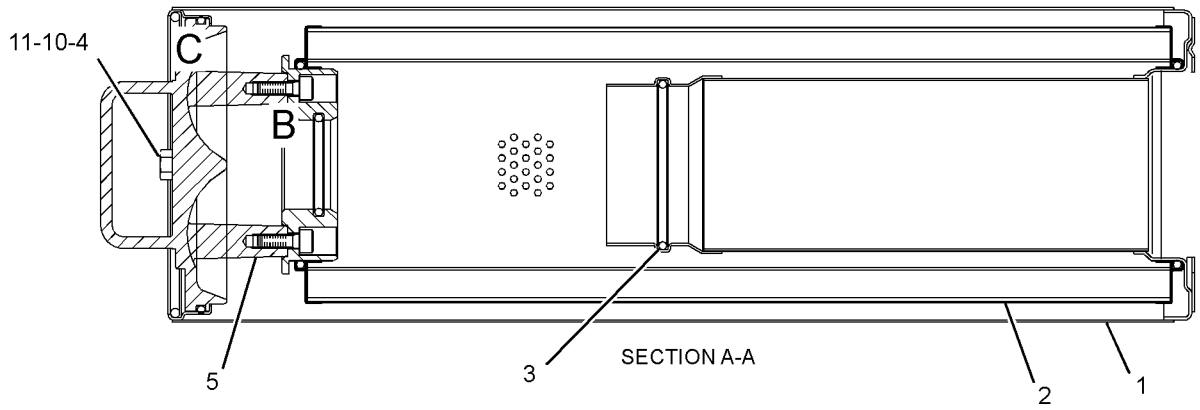

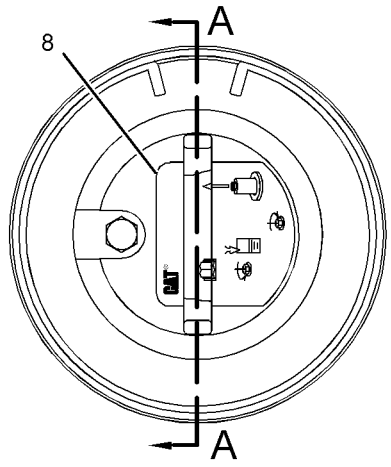

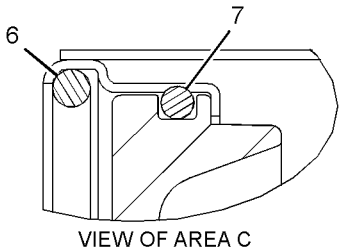

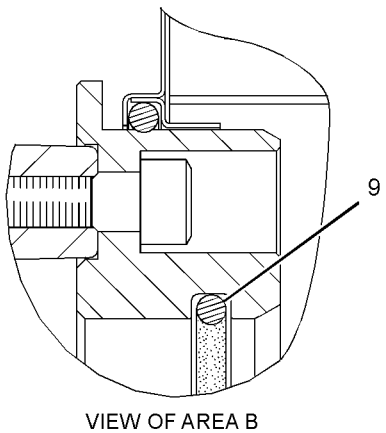

GRAPHIC #1 **<END>** g01419534

289-8194 FILTER GP-OIL–HYDRAULIC, CASE DRAIN

S/N: CJN1-UP

PART OF 260-8205 TANK & FILTER GP-HYDRAULIC

SMCS-3004, 4295, 431F, 5068, 5091, 5092 **i02997232**

NOTE	REF NO	GRAPHIC REF	PART NUMBER	QTY	PART NAME 1 2 3 4 5 6 (PRODUCT LEVEL)	SEE PAGE
	1	1	**093-7521**	1	FILTER-OIL (ADVANCED EFFICIENCY) (HYDRAULIC, CASE DRAIN)	
	2	1	**289-8195**	1	HEAD AS-FILTER	

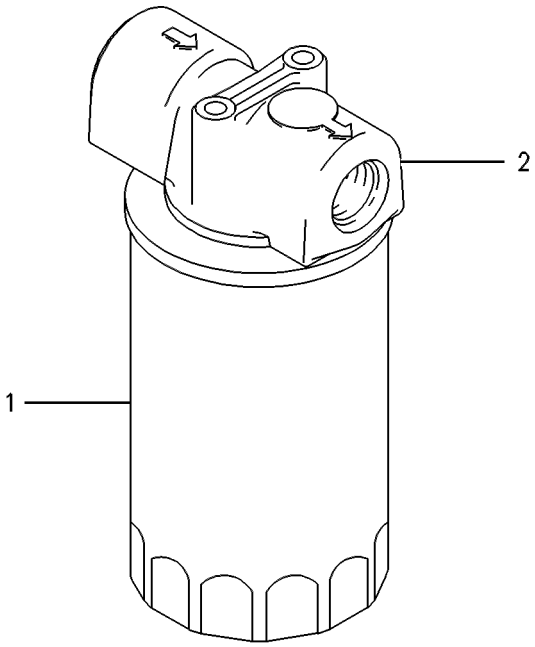

GRAPHIC #1 **<END>** g00258224

221-5069 FITTING GP-HYDRAULIC

S/N: CJN1-UP

PART OF 260-8204 LINES GP-HYDRAULIC

SMCS-5057, 7553 **i03016751**

NOTE	PART NUMBER	QTY	PART NAME 1 2 3 4 5 6 (PRODUCT LEVEL)	SEE PAGE
	221-5070	1	TEE AS (TEE,REDUCER & NUT)	
	6V-8556	1	NUT (1-3/16-12-THD)	
	6V-8398	1	SEAL-O-RING	
	6V-8942	1	REDUCER-O-RING	
	3D-2824	1	SEAL-O-RING	
	6V-8784	1	TEE-FACE SEAL	
	6V-9746	2	SEAL-O-RING	
			-OR-	
	221-5071	1	TEE AS (FABRICATED TEE)	
	3D-2824	1	SEAL-O-RING	
	6V-8398	1	SEAL-O-RING	
	6V-9746	1	SEAL-O-RING	

<END>

227-0620 GAUGE GP-SIGHT–HYDRAULIC OIL LEVEL

S/N: CJN1-UP

PART OF 260-8205 TANK & FILTER GP-HYDRAULIC

SMCS-7479 **i02220641**

NOTE	REF NO	GRAPHIC REF	PART NUMBER	QTY	PART NAME 1 2 3 4 5 6 (PRODUCT LEVEL)	SEE PAGE
	1	1	**236-3258**	2	BLOCK	
M	2	1	**236-3259**	2	BOLT-SPECIAL	
	3	1	**236-3257**	1	PIPE	
	4	1	**095-1519**	4	SEAL-O-RING	
	5	1	**6F-4855**	4	SEAL-O-RING	

M-METRIC PART

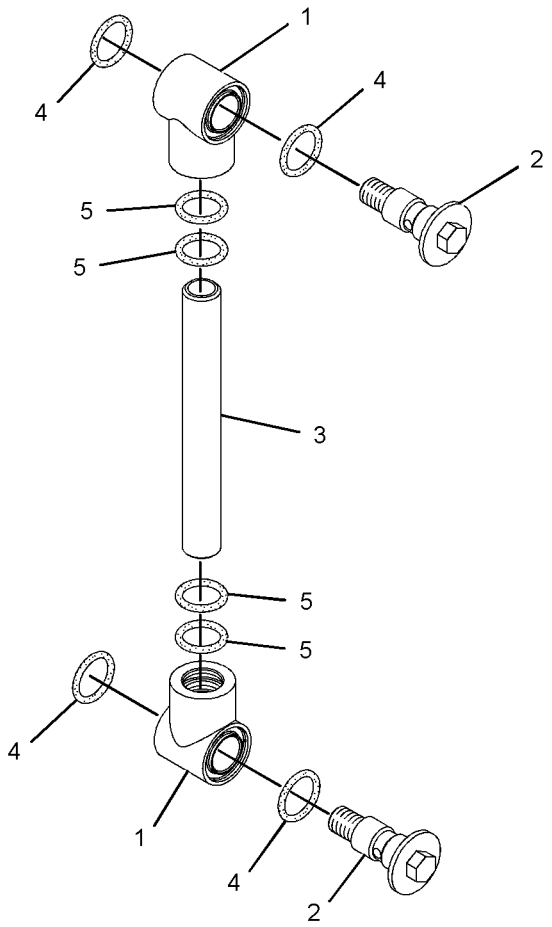

GRAPHIC #1 **<END>** g01091508

295-9562 GUARD GP-CYLINDER

S/N: CJN1-UP

PART OF 330-8778 LINKAGE AR-BUCKET, 301-2479, 301-2517 SPECIAL AR AN ATTACHMENT

SMCS-7164 **i02793525**

NOTE	REF NO	GRAPHIC REF	PART NUMBER	QTY	PART NAME 1 2 3 4 5 6 (PRODUCT LEVEL)	SEE PAGE
	1	1	**131-9940**	2	SUPPORT AS	
	2	1	**295-9563**	1	GUARD AS	
	3	1	**295-9566**	1	SUPPORT AS	
	4	1	**295-9567**	1	SUPPORT AS	
	5	1	**093-1292**	1	CLAMP	
	6	1	**8T-4121**	4	WASHER-HARD (11X21X2.5-MM THK)	
M	7	1	**8T-4196**	4	BOLT (M10X1.5X35-MM)	
	8	1	**8T-4223**	1	WASHER-HARD (13.5X25.5X3-MM THK)	
	9	1	**8T-4224**	4	WASHER-HARD (8.8X16X2-MM THK)	
M	10	1	**8T-4908**	4	BOLT (M8X1.25X25-MM)	
M	11	1	**8T-4910**	1	BOLT (M12X1.75X60-MM)	

M-METRIC PART

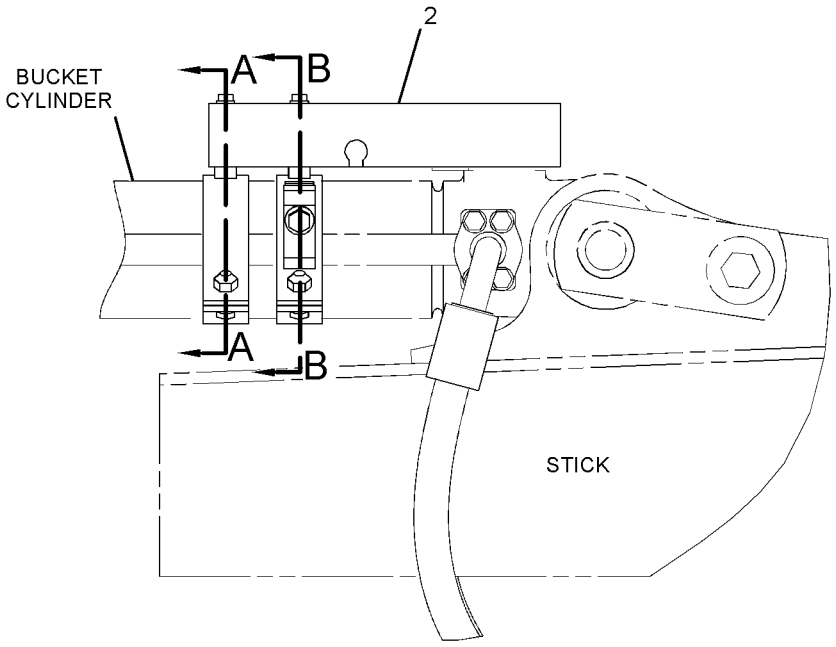

RIGHT SIDE VIEW

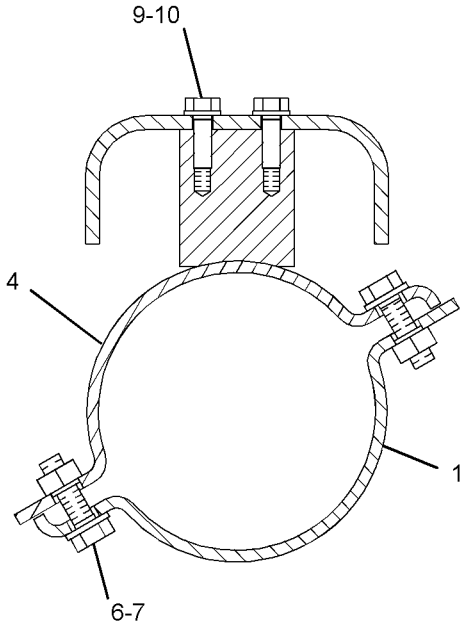

SECTION A-A

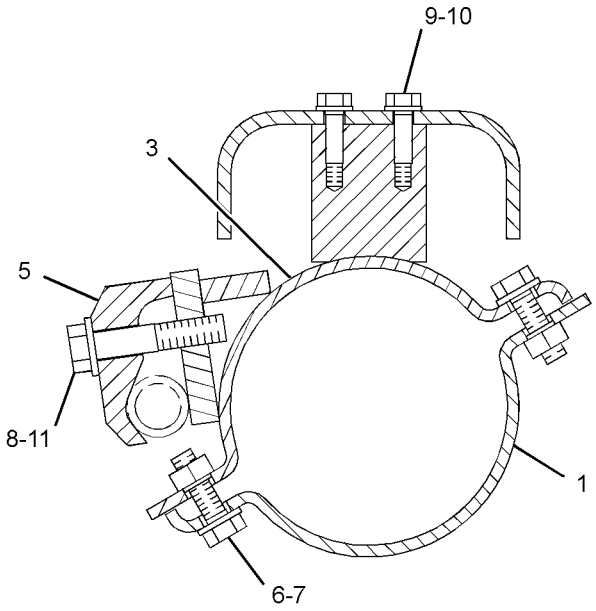

SECTION B-B

GRAPHIC #1 **<END>** g01398384

267-8088 HEAD GP-PUMP

S/N: CJN1-UP

PART OF 311-7405 PUMP GP-PISTON

SMCS-3222, 5070, 5086 **i02791360**

NOTE	REF NO	GRAPHIC REF	PART NUMBER	QTY	PART NAME 1 2 3 4 5 6 (PRODUCT LEVEL)	SEE PAGE
B	1	1	**099-3669**	2	SHIM (1-MM THK)	
B		1	**099-6109**	2	SHIM (1.05-MM THK)	
B		1	**099-6110**	2	SHIM (1.1-MM THK)	
B		1	**099-6111**	2	SHIM (1.15-MM THK)	
B		1	**099-6112**	2	SHIM (1.2-MM THK)	
B		1	**099-6113**	2	SHIM (1.25-MM THK)	
B		1	**099-6115**	2	SHIM (1.3-MM THK)	
	2	1	**4J-7533**	9	SEAL-O-RING	
	3	1	**6V-5391**	1	SEAL-O-RING	
M	4	1	**8T-4132**	2	NUT (M16X2-THD)	
M	5	1	**8T-4183**	8	BOLT (M12X1.75X40-MM)	
M	6	1	**8T-4192**	2	BOLT (M12X1.75X25-MM)	
	7	1	**9S-8001**	9	PLUG-O-RING	
	8	1	**173-1170**	1	SPRING	
	9	1	**301-8294**	1	ADJUSTER	
	10	1	**215-9962**	2	STOPPER	
	11	1	**174-7220**	2	COVER	
	12	1	**174-7221**	1	COVER	
	13	1	**174-7222**	1	COVER	
	14	1	**301-6874**	1	RETAINER	
	16	1	**192-2376**	1	PIN AS	
		1	**192-0573**	1	PIN-DOWEL	
	17	1	**200-3247**	1	SPRING	
M	18	1	**225-0224**	1	SETSCREW (M16X2X55-MM)	
M	19	1	**225-0225**	1	SETSCREW (M16X2X45-MM)	
	21	1	**267-1626**	1	SPOOL AS	
	22	1	**268-3550**	1	SPRING	
	23	1	**268-4201**	1	LEVER AS	
		1	**094-1875**	1	DOWEL	
	24	1	**268-4203**	1	PIN	
	25	1	**281-6847**	1	PISTON	
	27	1	**094-1881**	1	PLATE-SLIDE	
	28	1	**273-8316**	1	SEAL-O-RING	
	29	1	**273-8317**	1	SEAL-O-RING	
	30	1	**273-8318**	1	SEAL-O-RING	
	31	1	**095-1788**	2	RING-BACKUP	
	32	1	**099-3671**	1	SPRING	
	33	1	**185-0169**	1	GUIDE	
	34	1	**189-9763**	3	SEAL-O-RING	
	35	1	**190-7674**	2	SEAL-O-RING	
M	36	1	**8T-4133**	1	NUT (M10X1.5-THD)	
M	37	1	**200-3255**	1	NUT (M20X1.5-THD)	
	38	1	**2H-9247**	1	SEAL-O-RING	
	39	1	**3D-2891**	1	BALL	
	40	1	**3J-1907**	1	SEAL-O-RING	

B-USE AS REQUIRED
M-METRIC PART

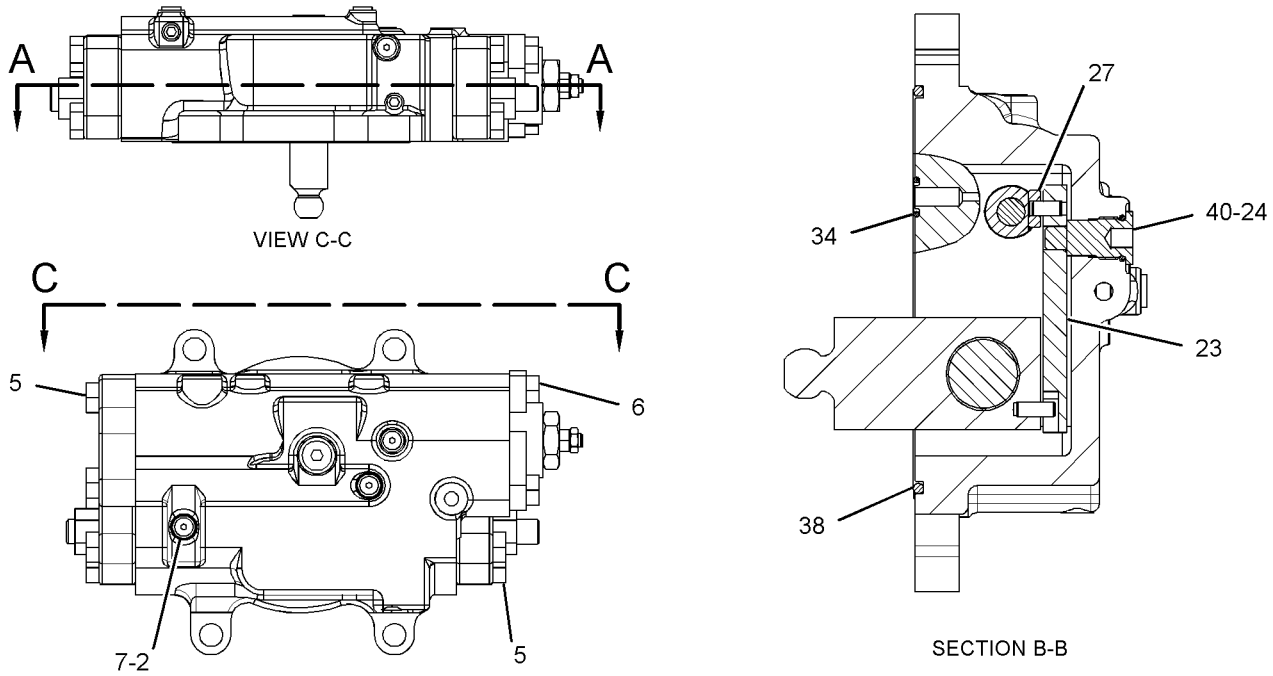

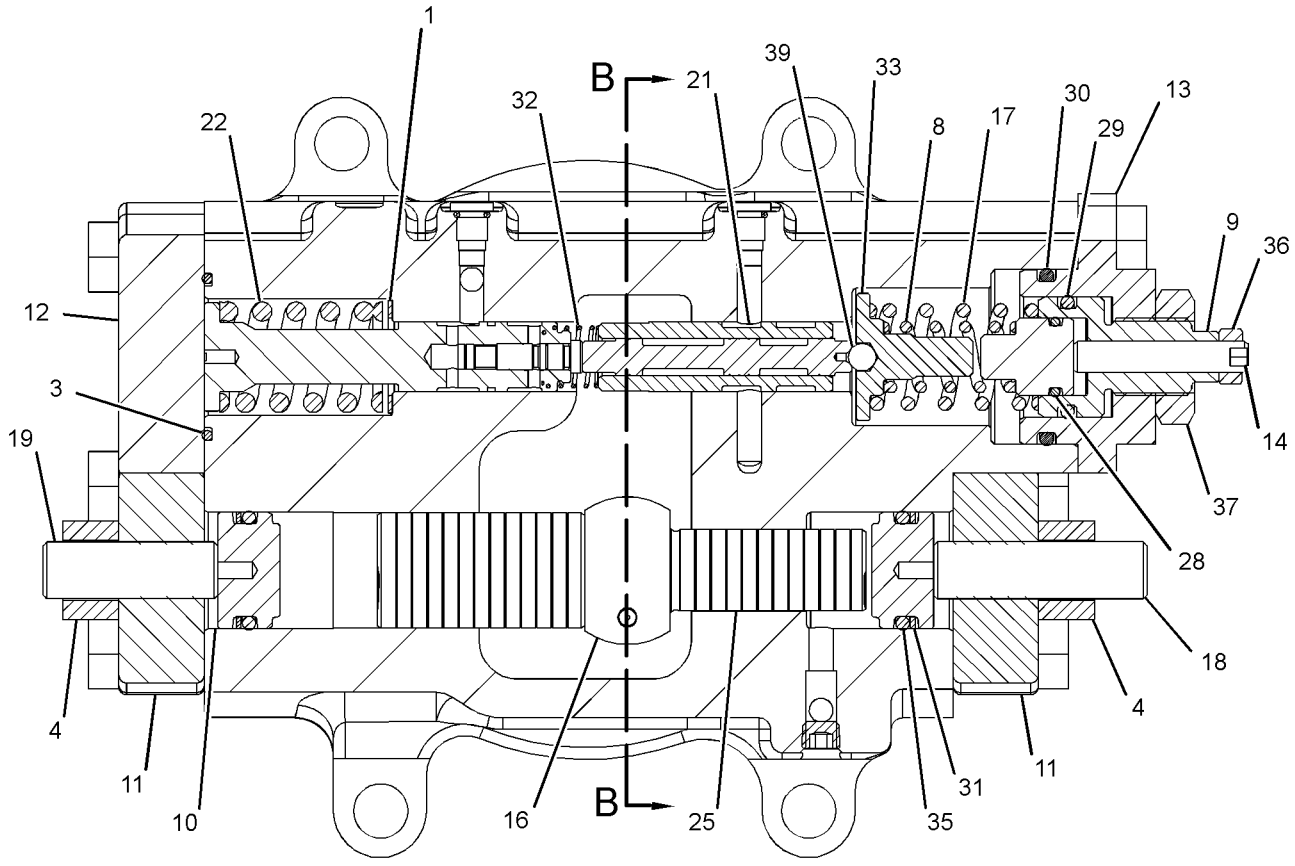

GRAPHIC #1

<END>

g01387711

HYDRAULIC SYSTEM

259-7547 HYDRAULIC AR

S/N: CJN1-UP

PART OF 260-6952 GENERAL AR

SMCS-5050 **i02753358**

NOTE	PART NUMBER	QTY	PART NAME 1 2 3 4 5 6 (PRODUCT LEVEL)	SEE PAGE
Y	*260-8209*	1	LINES GP-BOOM CYLINDER	474
Y	*260-8208*	1	LINES GP-FRONT	489
Y	*260-8215*	1	LINES GP-HYDRAULIC OIL COOLER	546
Y	*260-8210*	1	LINES GP-PUMP (OUTPUT, HYD OIL CLR BYPASS)	611
Y	*260-8216*	1	LINES GP-PUMP (SUPPLY, MAIN PUMP)	613
Y	*260-8217*	1	LINES GP-PILOT (MAIN CONTROL VALVE)	551
Y	*302-3195*	1	LINES GP-PILOT (MAIN CONTROL VALVE, MANIFOLD)	590
Y	*260-8219*	1	LINES GP-PILOT (FILTER, PILOT PUMP)	559
Y	*275-1715*	1	LINES GP-PILOT (PILOT CONTROL)	580
Y	*260-8212*	1	LINES GP-TRAVEL MOTOR	631
Y	*302-3225*	1	MOUNTING GP-MAIN CONTROL VALVE	651
Y	*255-3025*	1	PUMP & MTG GP-MAIN HYDRAULIC	653
Y	*260-8203*	1	TANK & MTG GP-HYDRAULIC	669
Y	**259-7550**	1	VALVE GP-MAIN CONTROL	699

Y-SEPARATE ILLUSTRATION

<END>

262-3234 LINES GP-AUXILIARY HYDRAULIC–
HIGH PRESSURE, REACH BOOM
S/N: CJN1-UP
AN ATTACHMENT

SMCS-5057 **i02784896**

NOTE	REF NO	GRAPHIC REF	PART NUMBER	QTY	PART NAME 1 2 3 4 5 6 (PRODUCT LEVEL)	SEE PAGE
	1	1	**7Y-3732**	8	CLIP	
	2	1	**7Y-4868**	8	CLIP	
I	3	1	**197-2299**	1	HOSE AS	
	4	1	**253-6276**	2	PLATE	
I	5	1	**262-3538**	1	HOSE AS	
	6	1	**268-6940**	1	LINES GP-BOOM (LH, HIGH FLOW)	
	7	1	**268-6943**	1	LINES GP-BOOM (RH, HIGH FLOW)	
	8	1	**1P-3703**	2	SEAL-RECTANGULAR	
	9	1	**6V-0400**	4	FLANGE-HALF	
	10	1	**6V-9746**	2	SEAL-O-RING	
M	11	1	**7X-2549**	4	BOLT (M12X1.75X100-MM)	
M	12	1	**8T-4139**	4	BOLT (M12X1.75X30-MM)	
M	13	1	**8T-4183**	4	BOLT (M12X1.75X40-MM)	
M	14	1	**8T-4184**	12	BOLT (M12X1.75X45-MM)	
	15	1	**8T-4223**	24	WASHER-HARD (13.5X25.5X3-MM THK)	

I-REFER TO HYDRAULIC INFORMATION SYSTEM
M-METRIC PART

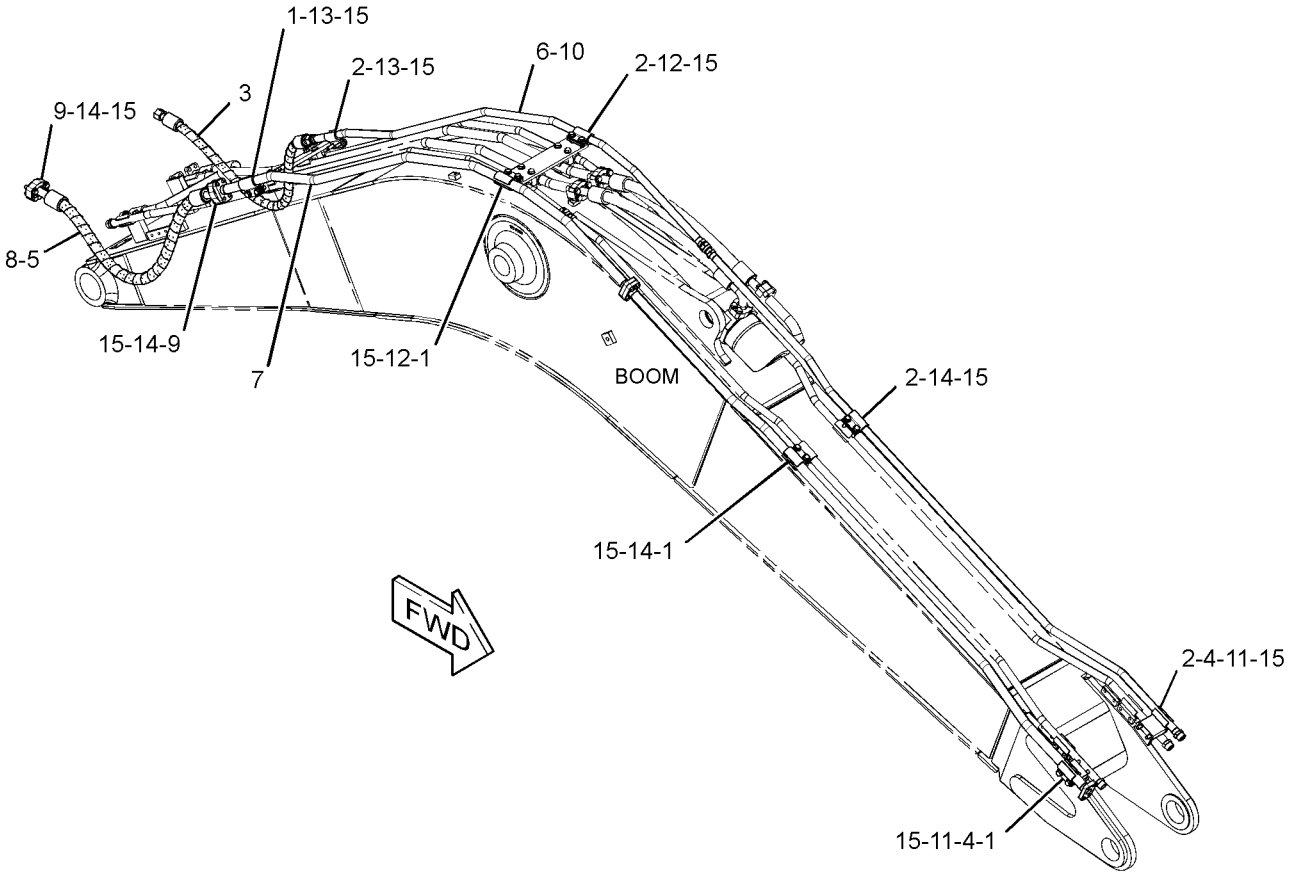

GRAPHIC #1 **<END>** g01380911

262-3235 LINES GP-AUXILIARY HYDRAULIC–REACH BOOM

S/N: CJN1-UP
MEDIUM FLOW
AN ATTACHMENT

SMCS-5057 **i02736216**

NOTE	REF NO	GRAPHIC REF	PART NUMBER	QTY	PART NAME 1 2 3 4 5 6 (PRODUCT LEVEL)	SEE PAGE
	1	1	**149-1738**	4	CLIP	
	2	1	**153-8867**	6	CLIP	
	3	1	**193-6606**	2	PLATE	
	4	1	**262-3520**	2	SUPPORT AS	
	5	1	**268-6886**	2	CLIP AS	
					(EACH INCLUDES)	
M		1	**8T-4244**	2	NUT (M12X1.75-THD)	
	6	1	**268-6888**	1	TUBE AS	
	7	1	**268-6889**	1	TUBE AS	
	8	1	**268-6890**	1	TUBE AS	
	9	1	**268-6891**	1	TUBE AS	
	10	1	**093-1291**	2	CLAMP	
	11	1	**6V-8398**	4	SEAL-O-RING	
	12	1	**7J-9108**	2	SEAL-O-RING	
M	13	1	**7X-2549**	4	BOLT (M12X1.75X100-MM)	
	14	1	**7Y-4868**	2	CLIP	
	15	1	**8T-4121**	2	WASHER-HARD (11X21X2.5-MM THK)	
M	16	1	**8T-4133**	2	NUT (M10X1.5-THD)	
M	17	1	**8T-4139**	10	BOLT (M12X1.75X30-MM)	
M	18	1	**8T-4185**	2	BOLT (M10X1.5X50-MM)	
	19	1	**8T-4223**	18	WASHER-HARD (13.5X25.5X3-MM THK)	
M	20	1	**8T-4648**	4	BOLT (M12X1.75X70-MM)	

M-METRIC PART

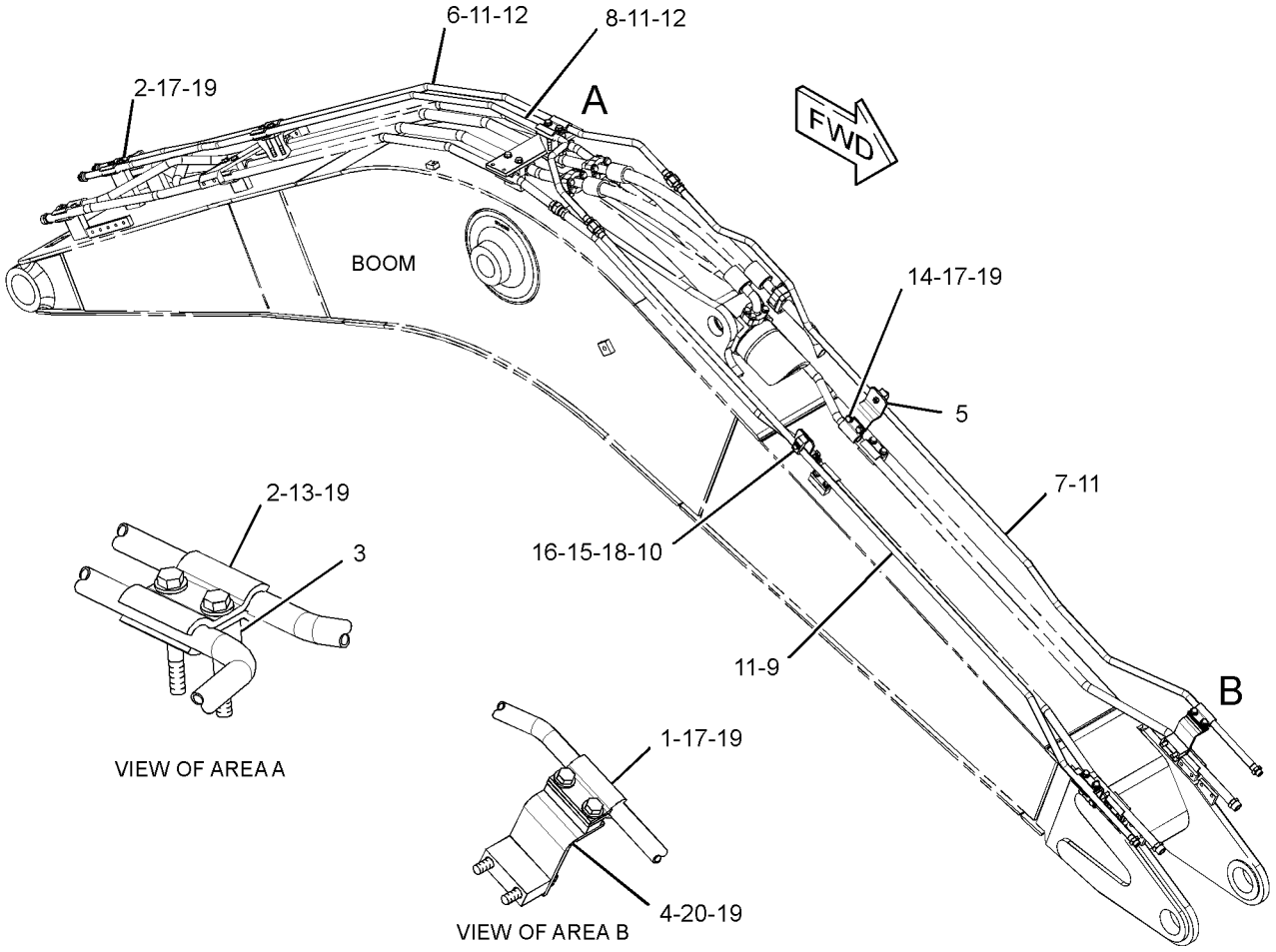

GRAPHIC #1

<END>

g01374111

262-3237 LINES GP-AUXILIARY HYDRAULIC—HIGH PRESSURE

S/N: CJN1-UP

3.1-M TO 3.2-M (10.2-FT TO 10.5-FT) STICK

AN ATTACHMENT

SMCS-5057 **i02855347**

NOTE	REF NO	GRAPHIC REF	PART NUMBER	QTY	PART NAME 1 2 3 4 5 6 (PRODUCT LEVEL)	SEE PAGE
I	1	1	**087-6643**	1	HOSE AS	
M	2	1	**101-7403**	4	BOLT-SOCKET HEAD (M10X1.5X80-MM)	
I	3	1	**277-0917**	1	HOSE AS	
Y	4	1	**282-5894**	2	VALVE AS-MANUAL (AUXILIARY, SHUTOFF)	677
	5	1	**282-5895**	2	TUBE AS	
	6	1	**282-5896**	1	TUBE AS	
	7	1	**8T-4896**	4	WASHER-HARD (10.2X18.5X2.5-MM THK)	
	8	1	**1P-3703**	4	SEAL-RECTANGULAR	
	9	1	**6V-0400**	4	FLANGE-HALF	
	10	1	**6V-9746**	1	SEAL-O-RING	
	11	1	**7Y-3732**	4	CLIP	
	12	1	**7Y-4868**	4	CLIP	
M	13	1	**8T-4139**	8	BOLT (M12X1.75X30-MM)	
M	14	1	**8T-4184**	8	BOLT (M12X1.75X45-MM)	
M	15	1	**8T-4196**	4	BOLT (M10X1.5X35-MM)	
	16	1	**8T-4223**	16	WASHER-HARD (13.5X25.5X3-MM THK)	
M	17	1	**8T-4956**	4	BOLT (M12X1.75X35-MM)	

I-REFER TO HYDRAULIC INFORMATION SYSTEM
M-METRIC PART
Y-SEPARATE ILLUSTRATION

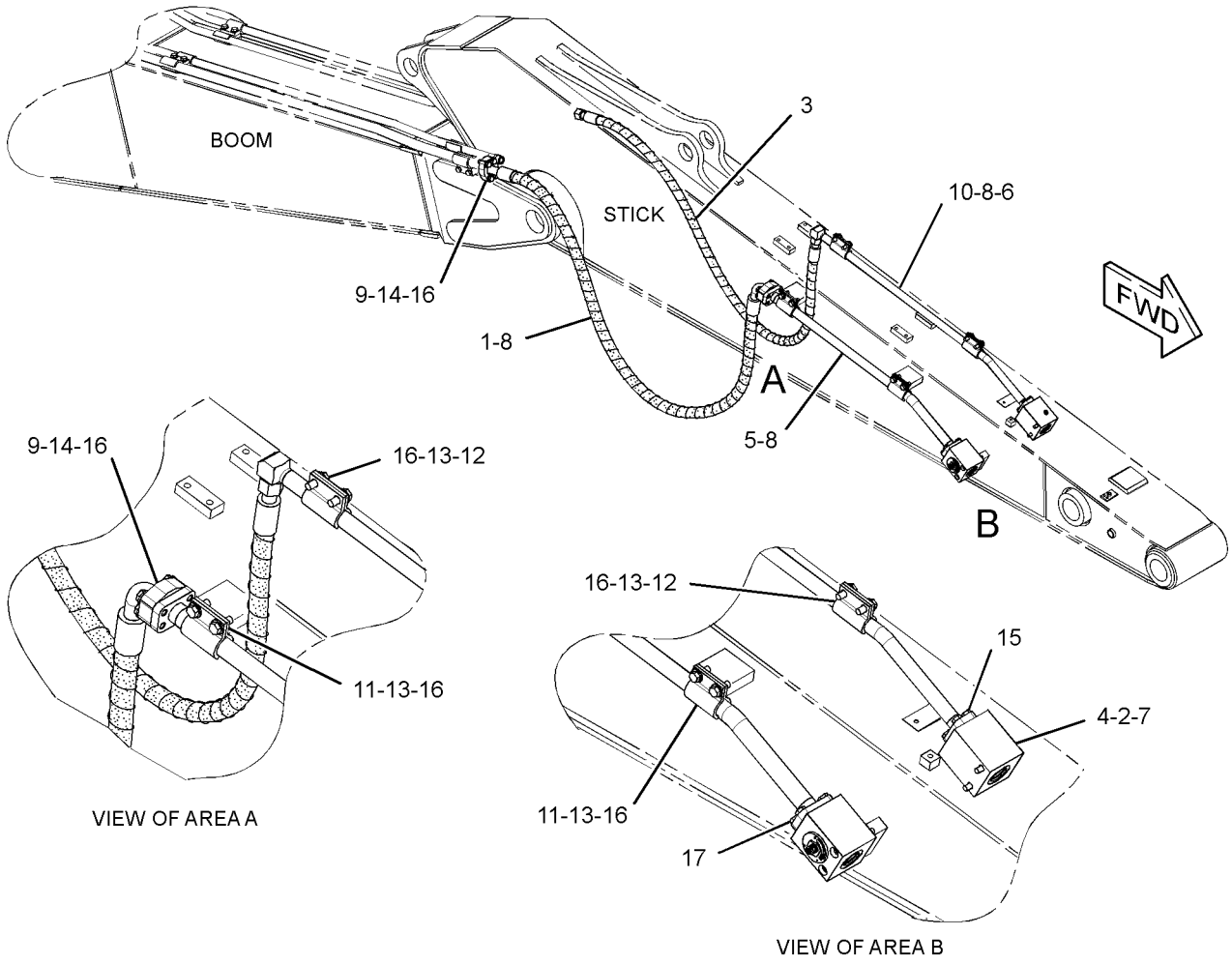

GRAPHIC #1 **<END>** g01324557

HYDRAULIC SYSTEM

262-3238 LINES GP-AUXILIARY HYDRAULIC–MEDIUM PRESSURE

S/N: CJN1-UP

3.1-M TO 3.2-M (10.2-FT TO 10.5-FT) STICK

AN ATTACHMENT

SMCS-5057 **i02603427**

NOTE	REF NO	GRAPHIC REF	PART NUMBER	QTY	PART NAME 1 2 3 4 5 6 (PRODUCT LEVEL)	SEE PAGE
	1	1	**6C-6760**	2	MANIFOLD	
	2	1	**149-1738**	8	CLIP	
I	3	1	**173-7864**	2	HOSE AS	
	4	1	**187-9978**	1	SUPPORT AS	
	5	1	**187-9981**	1	SUPPORT AS	
	6	1	*250-1440*	2	ADAPTER AS	
					(EACH INCLUDES)	
		1	**3K-0360**	1	SEAL-O-RING	
		1	**7X-3164**	1	ADAPTER-SWIVEL	
	7	1	**282-5887**	2	PLATE	
	8	1	**282-5897**	2	TUBE AS	
	9	1	**6V-8398**	4	SEAL-O-RING	
	10	1	**8T-4121**	4	WASHER-HARD (11X21X2.5-MM THK)	
M	11	1	**8T-4136**	4	BOLT (M10X1.5X25-MM)	
M	12	1	**8T-4139**	16	BOLT (M12X1.75X30-MM)	
M	13	1	**8T-4185**	4	BOLT (M10X1.5X50-MM)	
	14	1	**8T-4223**	16	WASHER-HARD (13.5X25.5X3-MM THK)	
M	15	1	**105-3479**	4	BOLT-SOCKET HEAD (M10X1.5X90-MM)	
M	16	1	**8T-4183**	8	BOLT (M12X1.75X40-MM)	

I-REFER TO HYDRAULIC INFORMATION SYSTEM
M-METRIC PART

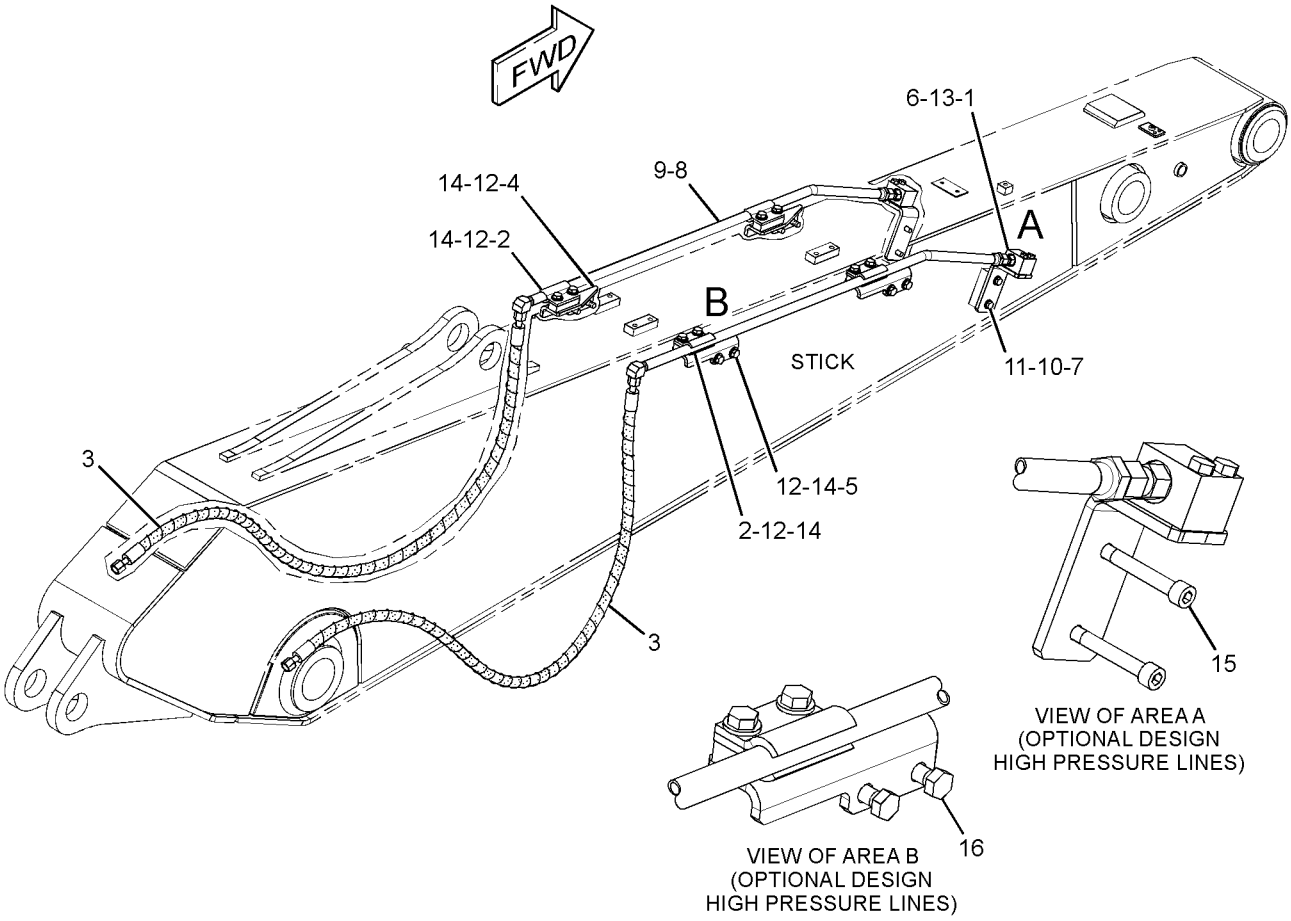

GRAPHIC #1 **<END>** g01375090

HYDRAULIC SYSTEM

262-3240 LINES GP-AUXILIARY HYDRAULIC–HIGH PRESSURE

S/N: CJN1-UP
2.6-M TO 2.7-M (8.5-FT TO 8.9-FT) STICK
AN ATTACHMENT

SMCS-5057 **i02752997**

NOTE	REF NO	GRAPHIC REF	PART NUMBER	QTY	PART NAME 1 2 3 4 5 6 (PRODUCT LEVEL)	SEE PAGE
M	1	1	**101-7403**	4	BOLT-SOCKET HEAD (M10X1.5X80-MM)	
I	2	1	**212-5326**	1	HOSE AS	
I	3	1	**277-1089**	1	HOSE AS	
	4	1	**282-5881**	1	TUBE AS	
	5	1	**282-5882**	1	TUBE AS	
Y	6	1	**282-5894**	2	VALVE AS-MANUAL (AUXILIARY, SHUTOFF)	677
	7	1	**1P-3703**	4	SEAL-RECTANGULAR	
	8	1	**6V-0400**	4	FLANGE-HALF	
	9	1	**6V-9746**	1	SEAL-O-RING	
	10	1	**7Y-3732**	4	CLIP	
	11	1	**7Y-4868**	4	CLIP	
M	12	1	**8T-4139**	8	BOLT (M12X1.75X30-MM)	
M	13	1	**8T-4184**	8	BOLT (M12X1.75X45-MM)	
M	14	1	**8T-4196**	4	BOLT (M10X1.5X35-MM)	
	15	1	**8T-4223**	16	WASHER-HARD (13.5X25.5X3-MM THK)	
	16	1	**8T-4896**	4	WASHER-HARD (10.2X18.5X2.5-MM THK)	
M	17	1	**8T-4956**	4	BOLT (M12X1.75X35-MM)	

I-REFER TO HYDRAULIC INFORMATION SYSTEM
M-METRIC PART
Y-SEPARATE ILLUSTRATION

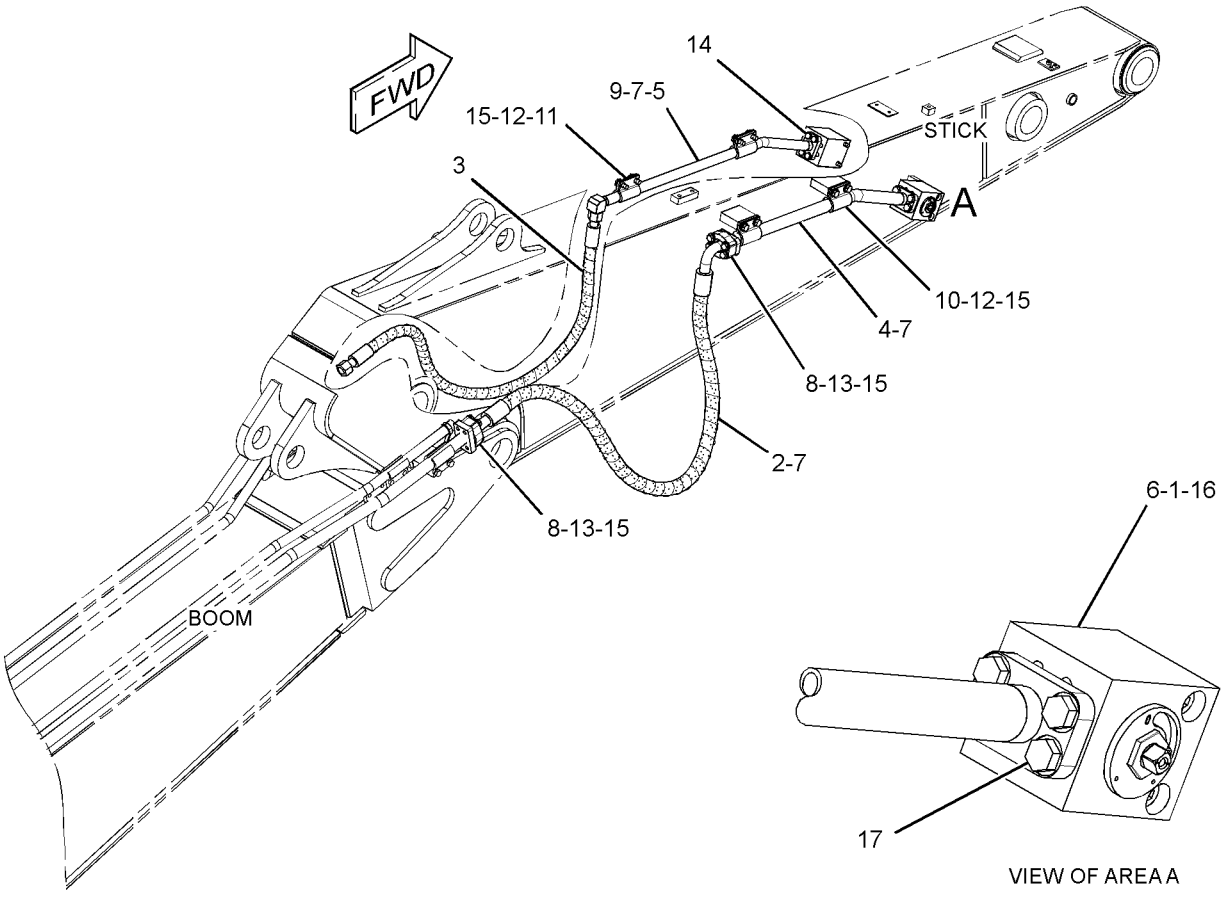

GRAPHIC #1 **<END>** g01381268

262-3241 LINES GP-AUXILIARY HYDRAULIC–MEDIUM PRESSURE

S/N: CJN1-UP
2.6-M TO 2.7-M (8.5-FT TO 8.9-FT) STICK
AN ATTACHMENT

SMCS-5057 **i02765776**

NOTE	REF NO	GRAPHIC REF	PART NUMBER	QTY	PART NAME 1 2 3 4 5 6 (PRODUCT LEVEL)	SEE PAGE
	1	1	**6C-6760**	2	MANIFOLD	
	2	1	**149-1738**	8	CLIP	
I	3	1	**173-7865**	2	HOSE AS	
	4	1	**187-9978**	2	SUPPORT AS	
	5	1	**187-9981**	2	SUPPORT AS	
	6	1	*250-1440*	2	ADAPTER AS	
					(EACH INCLUDES)	
		1	**3K-0360**	1	SEAL-O-RING	
		1	**7X-3164**	1	ADAPTER-SWIVEL	
	7	1	**282-5883**	2	TUBE AS	
	8	1	**282-5887**	2	PLATE	
	9	1	**6V-8398**	4	SEAL-O-RING	
	10	1	**8T-4121**	4	WASHER-HARD (11X21X2.5-MM THK)	
M	11	1	**8T-4136**	4	BOLT (M10X1.5X25-MM)	
M	12	1	**8T-4139**	16	BOLT (M12X1.75X30-MM)	
M	13	1	**8T-4185**	4	BOLT (M10X1.5X50-MM)	
	14	1	**8T-4223**	16	WASHER-HARD (13.5X25.5X3-MM THK)	
M	15	1	**105-3479**	4	BOLT-SOCKET HEAD (M10X1.5X90-MM)	
M	16	1	**8T-4183**	8	BOLT (M12X1.75X40-MM)	

I-REFER TO HYDRAULIC INFORMATION SYSTEM
M-METRIC PART

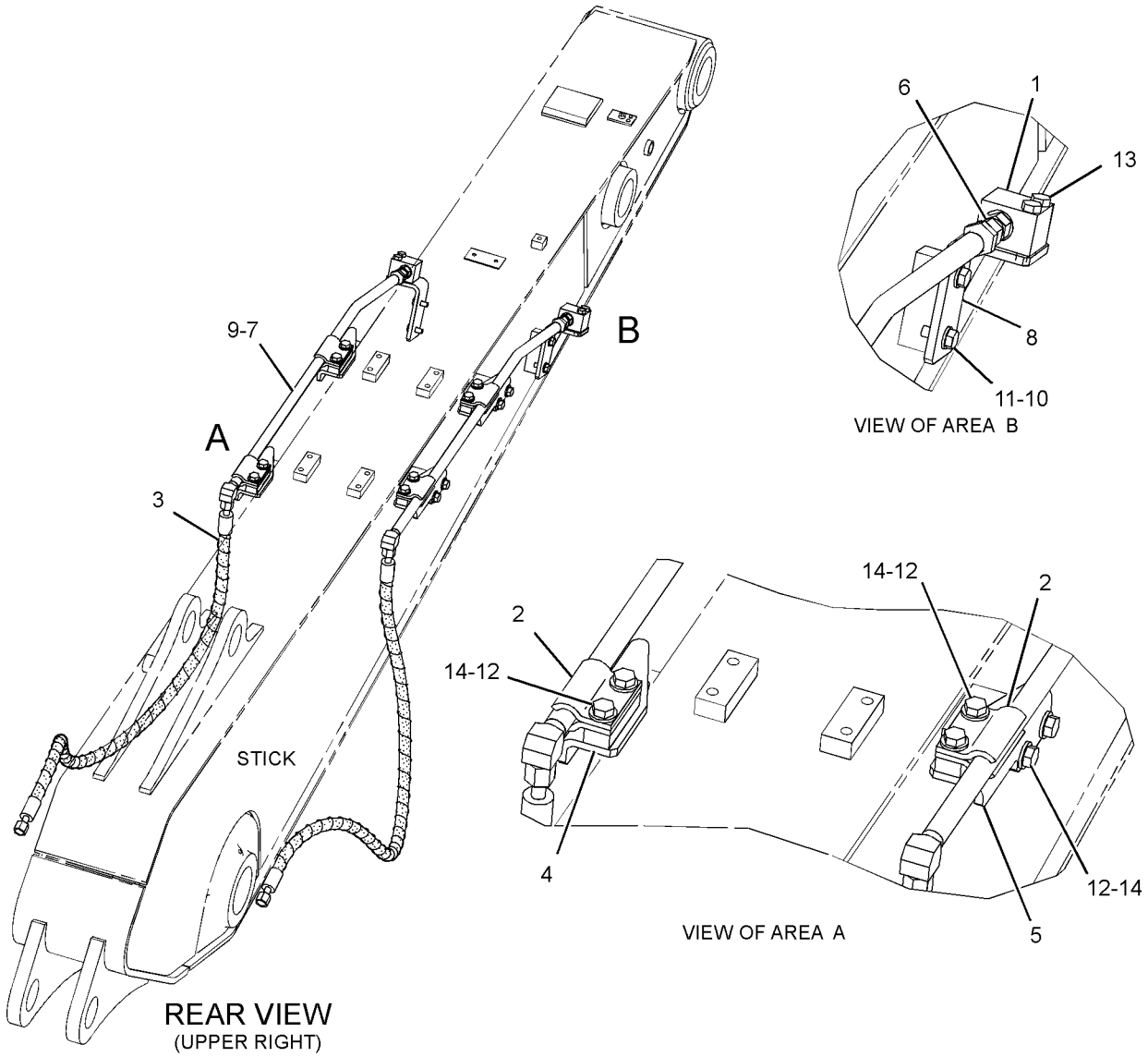

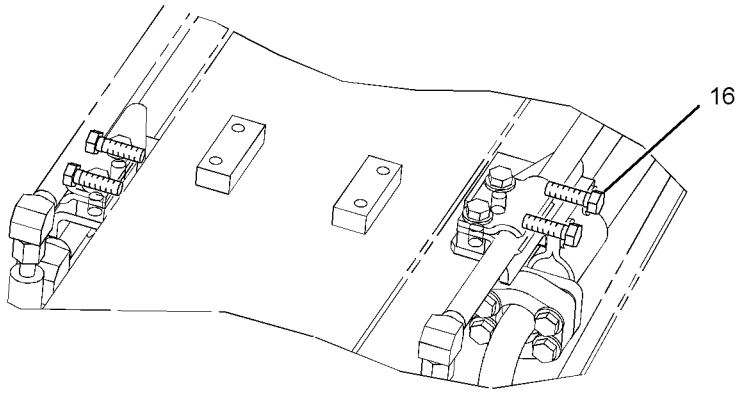

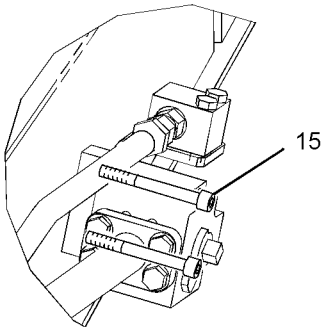

GRAPHIC #1 **<END>** g01388323

HYDRAULIC SYSTEM

262-3243 LINES GP-AUXILIARY HYDRAULIC—HIGH PRESSURE

S/N: CJN1-UP
2.25-M (7.4-FT) STICK
AN ATTACHMENT

SMCS-5057 **i02752995**

NOTE	REF NO	GRAPHIC REF	PART NUMBER	QTY	PART NAME 1 2 3 4 5 6 (PRODUCT LEVEL)	SEE PAGE
M	1	1	**101-7403**	4	BOLT-SOCKET HEAD (M10X1.5X80-MM)	
I	2	1	**237-3227**	1	HOSE AS	
I	3	1	**253-6694**	1	HOSE AS	
	4	1	**282-5875**	1	TUBE AS	
	5	1	**282-5876**	1	TUBE AS	
Y	6	1	**282-5894**	2	VALVE AS-MANUAL (AUXILIARY, SHUTOFF)	677
	7	1	**1P-3703**	4	SEAL-RECTANGULAR	
	8	1	**6V-0400**	4	FLANGE-HALF	
	9	1	**6V-9746**	1	SEAL-O-RING	
	10	1	**7Y-3732**	2	CLIP	
	11	1	**7Y-4868**	2	CLIP	
M	12	1	**8T-4139**	4	BOLT (M12X1.75X30-MM)	
M	13	1	**8T-4184**	8	BOLT (M12X1.75X45-MM)	
M	14	1	**8T-4196**	4	BOLT (M10X1.5X35-MM)	
	15	1	**8T-4223**	12	WASHER-HARD (13.5X25.5X3-MM THK)	
	16	1	**8T-4896**	4	WASHER-HARD (10.2X18.5X2.5-MM THK)	
M	17	1	**8T-4956**	4	BOLT (M12X1.75X35-MM)	

I-REFER TO HYDRAULIC INFORMATION SYSTEM
M-METRIC PART
Y-SEPARATE ILLUSTRATION

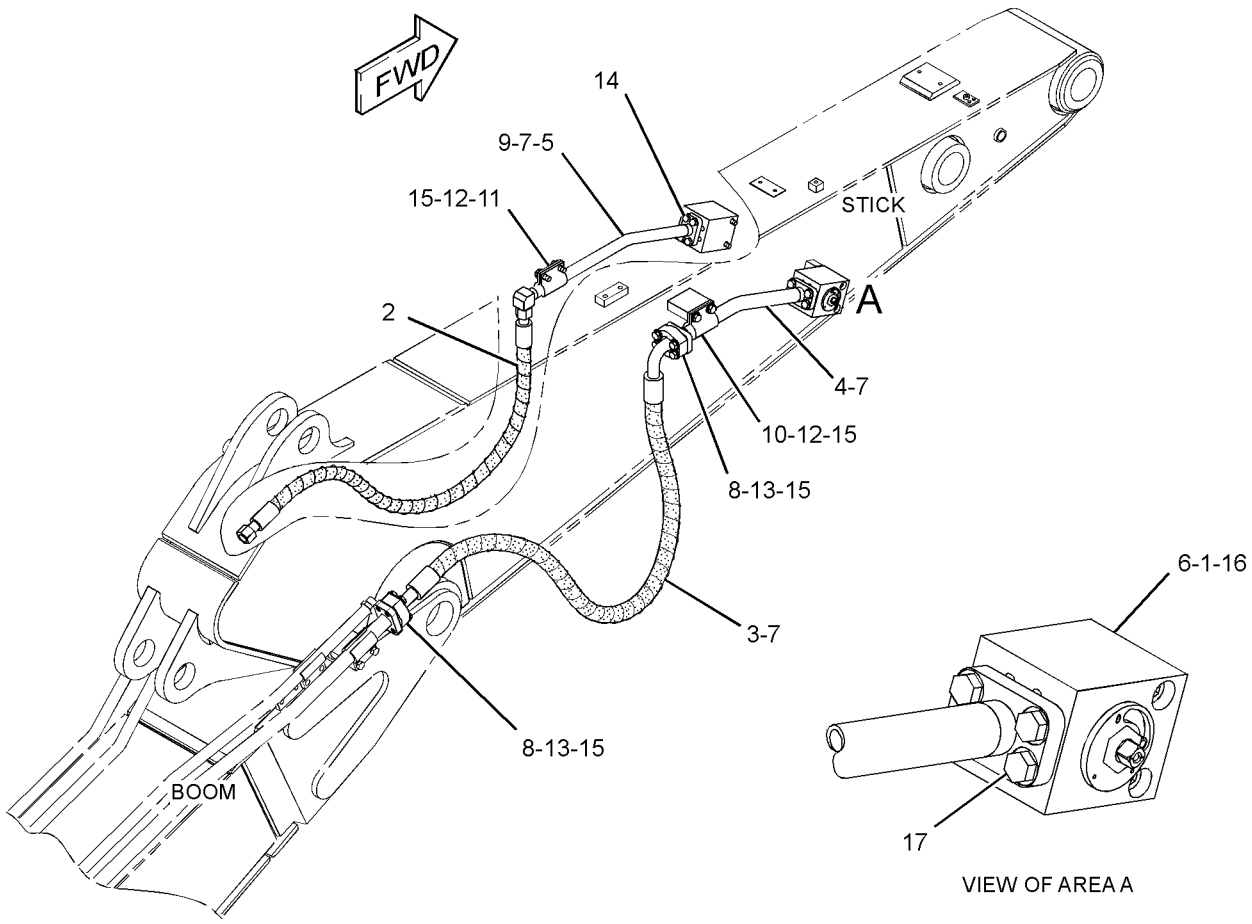

GRAPHIC #1 **<END>** g01381266

HYDRAULIC SYSTEM

262-3244 LINES GP-AUXILIARY HYDRAULIC—MEDIUM PRESSURE

S/N: CJN1-UP
2.3-M (7.4-FT) STICK
AN ATTACHMENT

SMCS-5057 **i02765828**

NOTE	REF NO	GRAPHIC REF	PART NUMBER	QTY	PART NAME 1 2 3 4 5 6 (PRODUCT LEVEL)	SEE PAGE
	1	1	**6C-6760**	2	MANIFOLD	
	2	1	**149-1738**	4	CLIP	
	3	1	**187-9978**	1	SUPPORT AS	
	4	1	**187-9981**	1	SUPPORT AS	
	5	1	*250-1440*	2	ADAPTER AS	
					(EACH INCLUDES)	
		1	**3K-0360**	1	SEAL-O-RING	
		1	**7X-3164**	1	ADAPTER-SWIVEL	
	6	1	**282-5877**	2	TUBE AS	
I	7	1	**282-5884**	2	HOSE AS	
	8	1	**282-5887**	2	PLATE	
	9	1	**6V-8398**	4	SEAL-O-RING	
	10	1	**8T-4121**	4	WASHER-HARD (11X21X2.5-MM THK)	
M	11	1	**8T-4136**	4	BOLT (M10X1.5X25-MM)	
M	12	1	**8T-4139**	8	BOLT (M12X1.75X30-MM)	
M	13	1	**8T-4185**	4	BOLT (M10X1.5X50-MM)	
	14	1	**8T-4223**	8	WASHER-HARD (13.5X25.5X3-MM THK)	
JM	15	1	**105-3479**	4	BOLT-SOCKET HEAD (M10X1.5X90-MM)	
JM	16	1	**8T-4183**	4	BOLT (M12X1.75X40-MM)	

I-REFER TO HYDRAULIC INFORMATION SYSTEM
J-USE WITH LINES GP-AUX HYD (HIGH PRESSURE)
M-METRIC PART

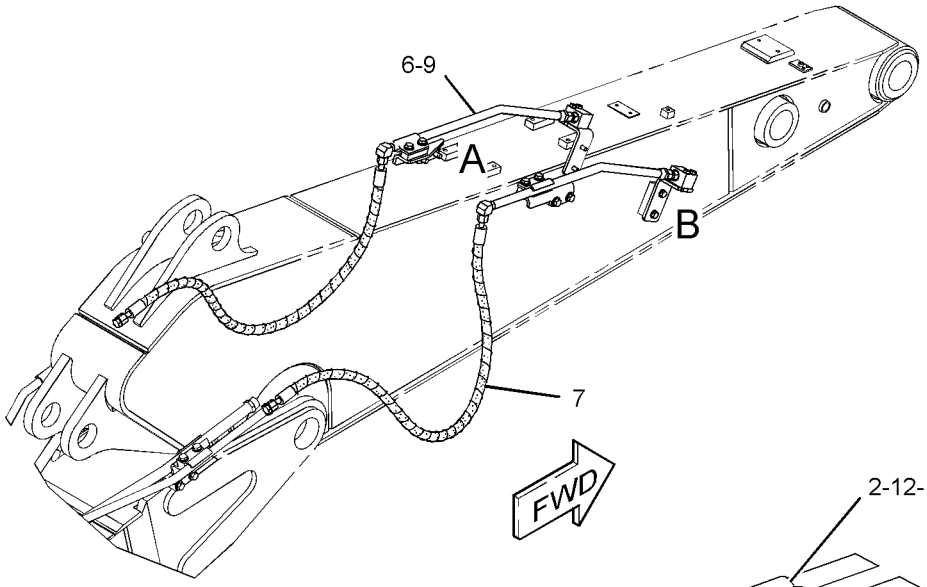

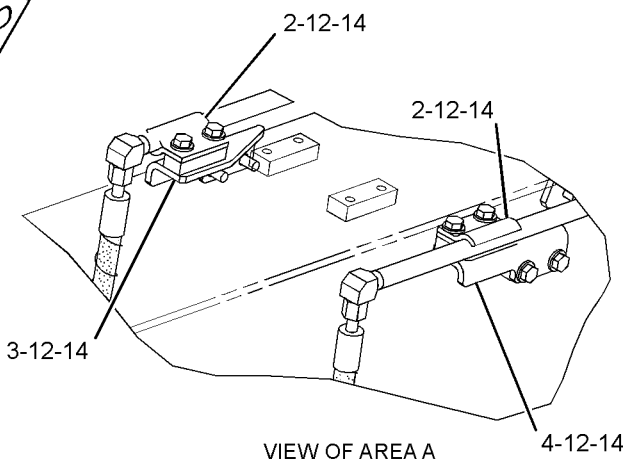

VIEW OF AREA A

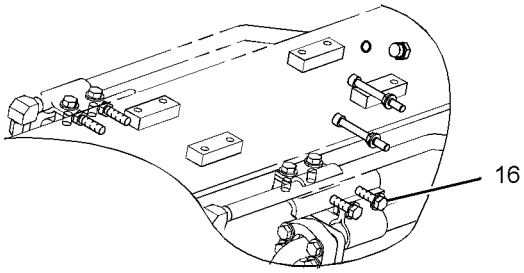

VIEW OF AREA A
OPTIONAL DESIGN

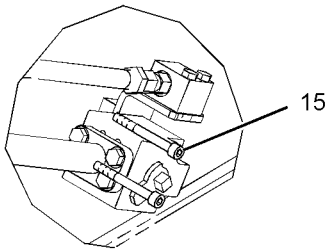

VIEW OF AREA B
OPTIONAL DESIGN

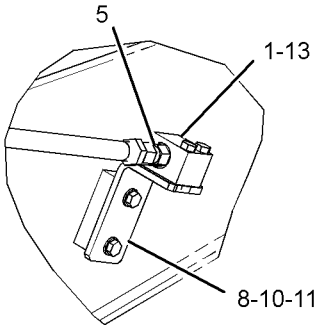

VIEW OF AREA B

GRAPHIC #1 **<END>** g01400998

HYDRAULIC SYSTEM

268-7245 LINES GP-AUXILIARY HYDRAULIC

S/N: CJN1-UP
2.9-M (9.5-FT) STICK
AN ATTACHMENT

SMCS-5057 **i02636484**

NOTE	REF NO	GRAPHIC REF	PART NUMBER	QTY	PART NAME 1 2 3 4 5 6 (PRODUCT LEVEL)	SEE PAGE
I	1	1	**4I-5556**	1	HOSE AS	
M	2	1	**101-7403**	4	BOLT-SOCKET HEAD (M10X1.5X80-MM)	
Y	3	1	**282-5894**	2	VALVE AS-MANUAL (AUXILIARY, SHUTOFF)	677
I	4	1	**207-6282**	1	HOSE AS	
	5	1	**282-5895**	1	TUBE AS	
	6	1	**282-5896**	1	TUBE AS	
	7	1	**8T-4896**	4	WASHER-HARD (10.2X18.5X2.5-MM THK)	
	8	1	**1P-3703**	4	SEAL-RECTANGULAR	
	9	1	**6V-0400**	4	FLANGE-HALF	
	10	1	**6V-9746**	1	SEAL-O-RING	
	11	1	**7Y-3732**	4	CLIP	
	12	1	**7Y-4868**	4	CLIP	
M	13	1	**8T-4139**	8	BOLT (M12X1.75X30-MM)	
M	14	1	**8T-4184**	8	BOLT (M12X1.75X45-MM)	
M	15	1	**8T-4196**	4	BOLT (M10X1.5X35-MM)	
	16	1	**8T-4223**	16	WASHER-HARD (13.5X25.5X3-MM THK)	
M	17	1	**8T-4956**	4	BOLT (M12X1.75X35-MM)	

I-REFER TO HYDRAULIC INFORMATION SYSTEM
M-METRIC PART
Y-SEPARATE ILLUSTRATION

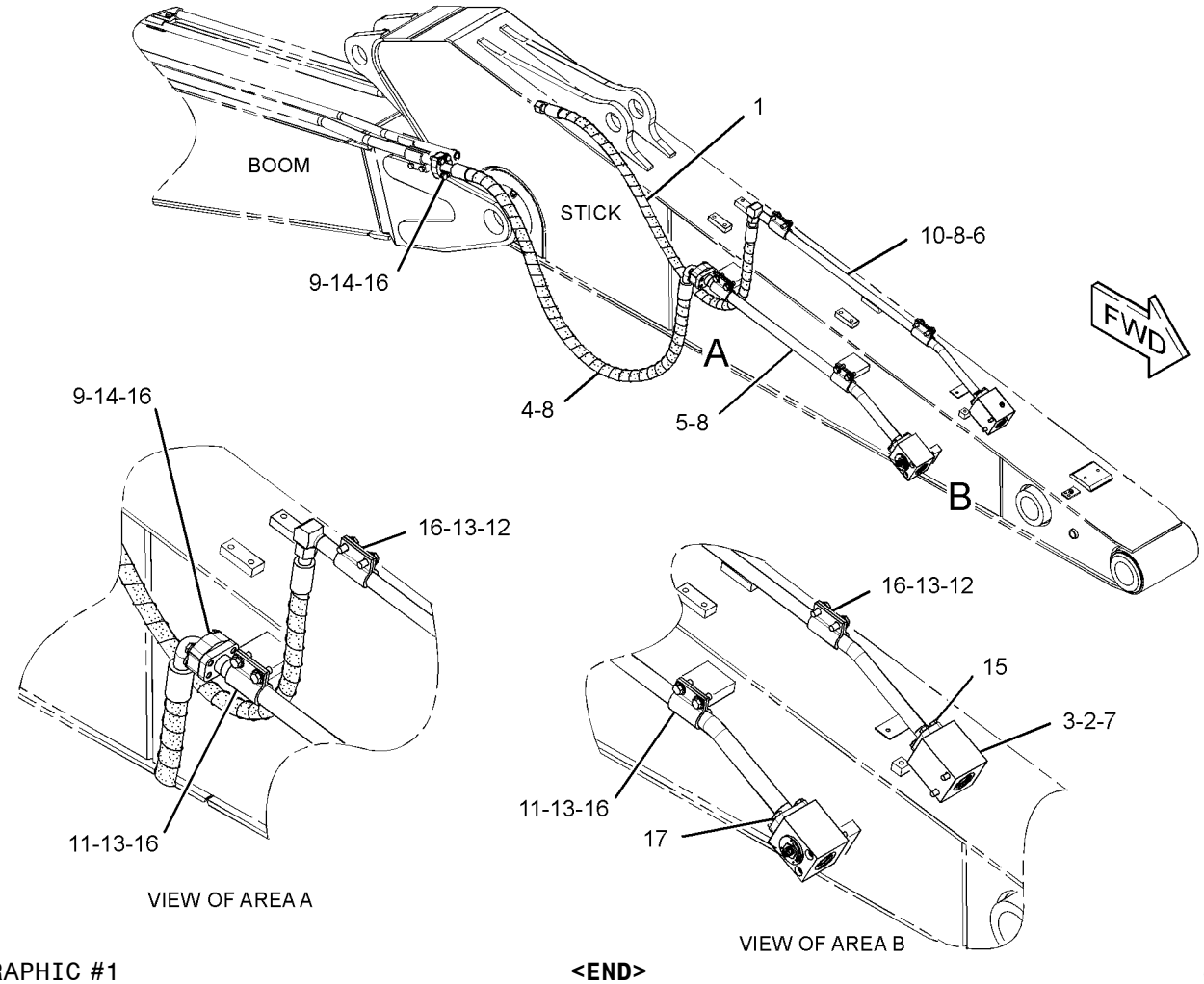

GRAPHIC #1 **<END>** g01324666

268-7246 LINES GP-AUXILIARY HYDRAULIC–MEDIUM PRESSURE

S/N: CJN1-UP
2.9-M (9.5-FT) STICK
AN ATTACHMENT

SMCS-5057 **i02791351**

NOTE	REF NO	GRAPHIC REF	PART NUMBER	QTY	PART NAME 1 2 3 4 5 6 (PRODUCT LEVEL)	SEE PAGE
	1	1	**6C-6760**	2	MANIFOLD	
	2	1	**149-1738**	8	CLIP	
I	3	1	**173-7865**	2	HOSE AS	
	4	1	**187-9978**	2	SUPPORT AS	
	5	1	**187-9981**	2	SUPPORT AS	
	6	1	*250-1440*	2	ADAPTER AS	
					(EACH INCLUDES)	
		1	**3K-0360**	1	SEAL-O-RING	
		1	**7X-3164**	1	ADAPTER-SWIVEL	
	7	1	**282-5887**	2	PLATE	
	8	1	**282-5897**	2	TUBE AS	
	9	1	**6V-8398**	4	SEAL-O-RING	
	10	1	**8T-4121**	4	WASHER-HARD (11X21X2.5-MM THK)	
M	11	1	**8T-4136**	4	BOLT (M10X1.5X25-MM)	
M	12	1	**8T-4139**	16	BOLT (M12X1.75X30-MM)	
M	13	1	**8T-4185**	4	BOLT (M10X1.5X50-MM)	
	14	1	**8T-4223**	16	WASHER-HARD (13.5X25.5X3-MM THK)	
M	15	1	**105-3479**	4	BOLT-SOCKET HEAD (M10X1.5X90-MM)	
					USE WITH LINES GP AUX HYD (HIGH PRESS.)	
M	16	1	**8T-4183**	8	BOLT (M12X1.75X40-MM)	
					USE WITH LINES GP AUX HYD (HIGH PRESS.)	

I-REFER TO HYDRAULIC INFORMATION SYSTEM
M-METRIC PART

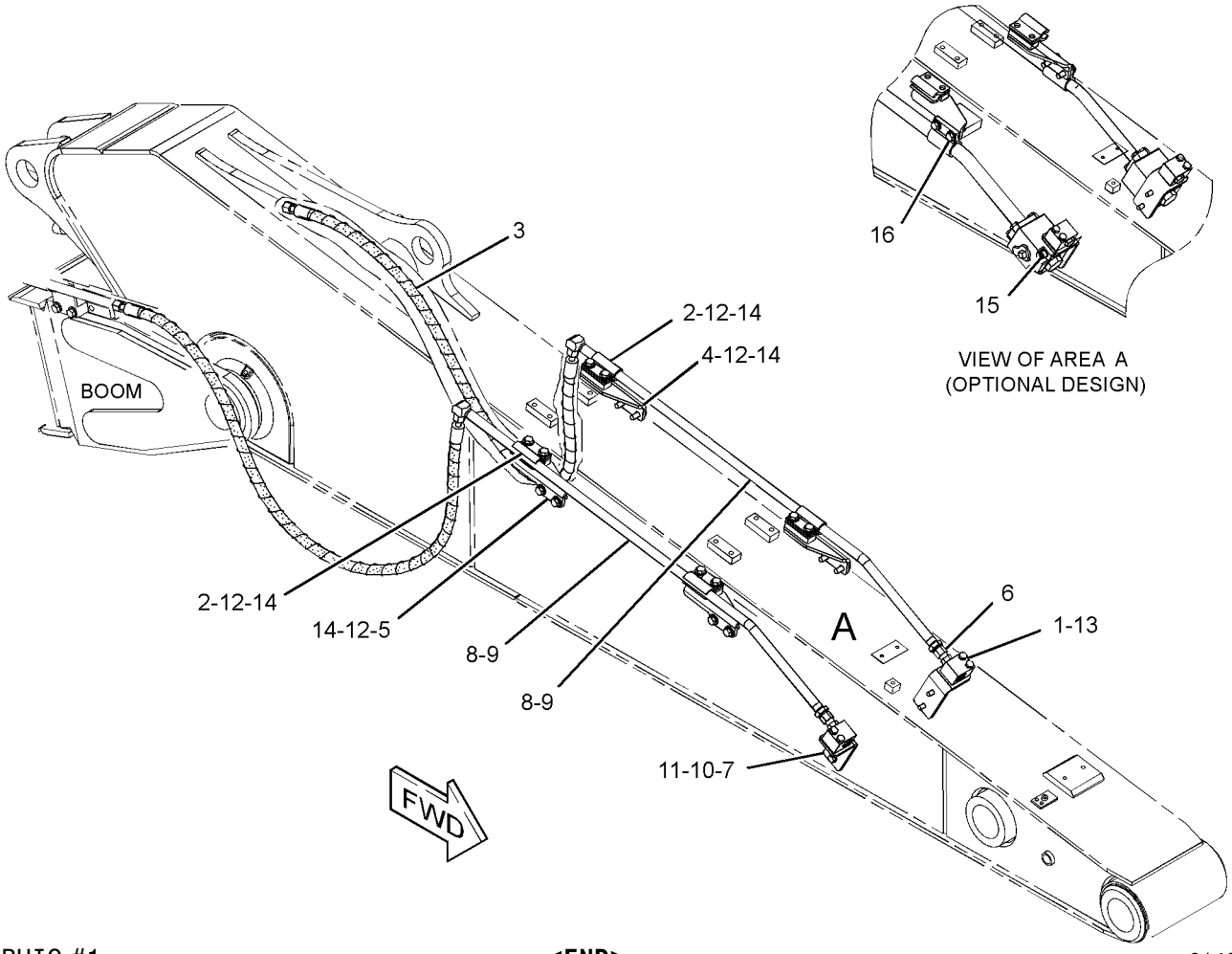

GRAPHIC #1 **<END>** g01400223

HYDRAULIC SYSTEM

260-8220 LINES GP-BOOM

S/N: CJN1-UP

PART OF 330-8777 BOOM AR, 260-6979, 283-9001, 301-2575 BOOM AR-1 PIECE LONG, 301-2479, 301-2517 SPECIAL AR

AN ATTACHMENT

SMCS-5057 **i02748106**

NOTE	REF NO	GRAPHIC REF	PART NUMBER	QTY	PART NAME 1 2 3 4 5 6 (PRODUCT LEVEL)	SEE PAGE
	1	1	**4I-1674**	2	CLIP	
	2	1	**4I-1676**	8	CLIP	
	3	1	**7Y-4868**	8	CLIP	
	4	1	**108-7550**	2	CLIP	
	5	1	**153-8800**	4	PLATE	
I	6	1	**260-8316**	1	HOSE AS	
	7	1	**262-3592**	1	SUPPORT AS	
	8	1	**262-3596**	1	PLATE	
	9	1	**266-1188**	1	TUBE AS	
	10	1	**266-1189**	1	TUBE AS	
	11	1	**266-1190**	1	TUBE AS	
	12	1	**266-1191**	1	TUBE AS	
	13	1	**266-1192**	1	TUBE AS	
	14	1	**266-1193**	1	TUBE AS	
I	15	1	**266-1210**	1	HOSE AS	
	16	1	**1P-3703**	4	SEAL-RECTANGULAR	
	17	1	**6V-0400**	8	FLANGE-HALF	
	18	1	**6V-9746**	6	SEAL-O-RING	
M	19	1	**8C-8992**	12	BOLT-LOCKING (M12X1.75X30-MM)	
M	20	1	**8T-4184**	16	BOLT (M12X1.75X45-MM)	
	21	1	**8T-4223**	36	WASHER-HARD (13.5X25.5X3-MM THK)	
M	22	1	**8T-4648**	8	BOLT (M12X1.75X70-MM)	

I-REFER TO HYDRAULIC INFORMATION SYSTEM
M-METRIC PART

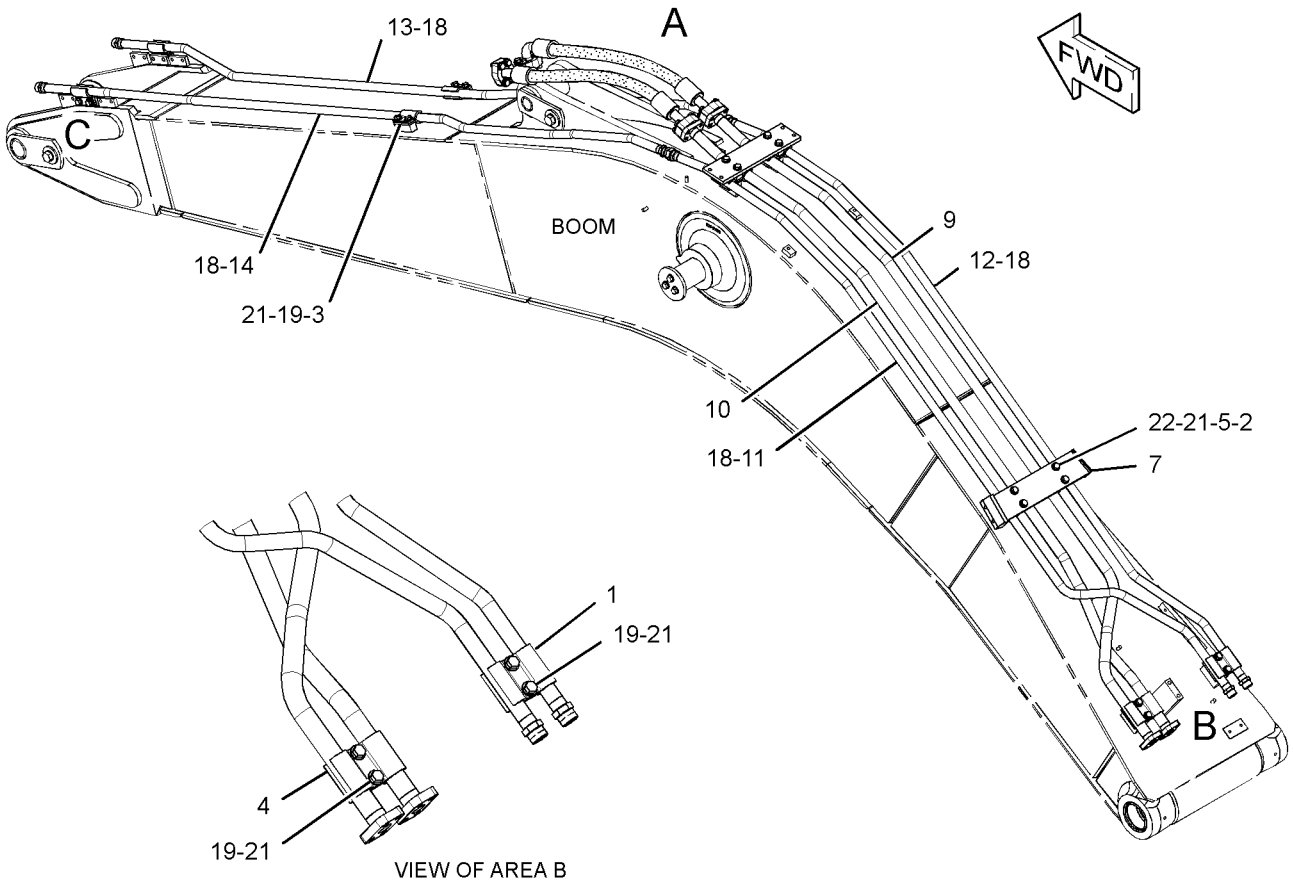

VIEW OF AREA B

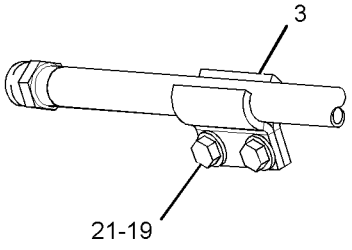

VIEW OF AREA C

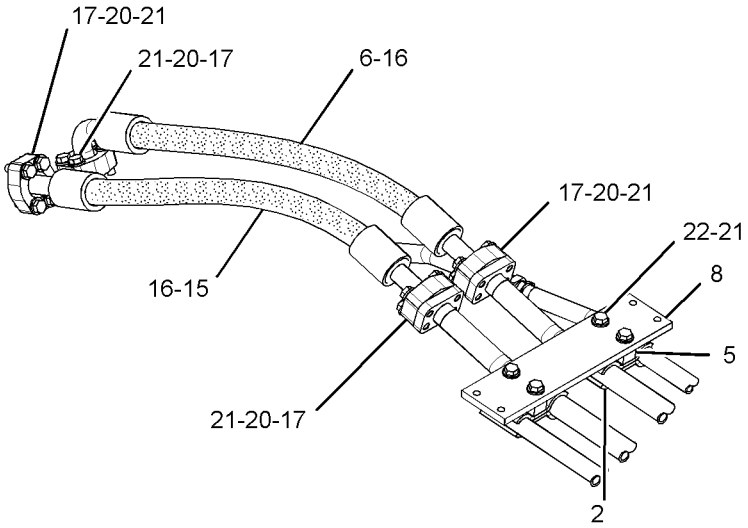

VIEW OF AREA A

GRAPHIC #1 **<END>** g01379835

262-3251 LINES GP-BOOM–STICK LOWERING CONTROL VALVE

S/N: CJN1-UP

PART OF 259-7585 VALVE AR-CHECK & RELIEF

AN ATTACHMENT

SMCS-5057 **i02776584**

NOTE	REF NO	GRAPHIC REF	PART NUMBER	QTY	PART NAME 1 2 3 4 5 6 (PRODUCT LEVEL)	SEE PAGE
	1	1	**7K-1181**	12	STRAP-CABLE	
I	2	1	**212-5149**	2	HOSE AS	
	3	1	*164-5570*	2	UNION AS	
					(EACH INCLUDES)	
		1	**6V-8397**	2	SEAL-O-RING	
		1	**6V-8730**	1	UNION (FACE SEAL)	

I-REFER TO HYDRAULIC INFORMATION SYSTEM

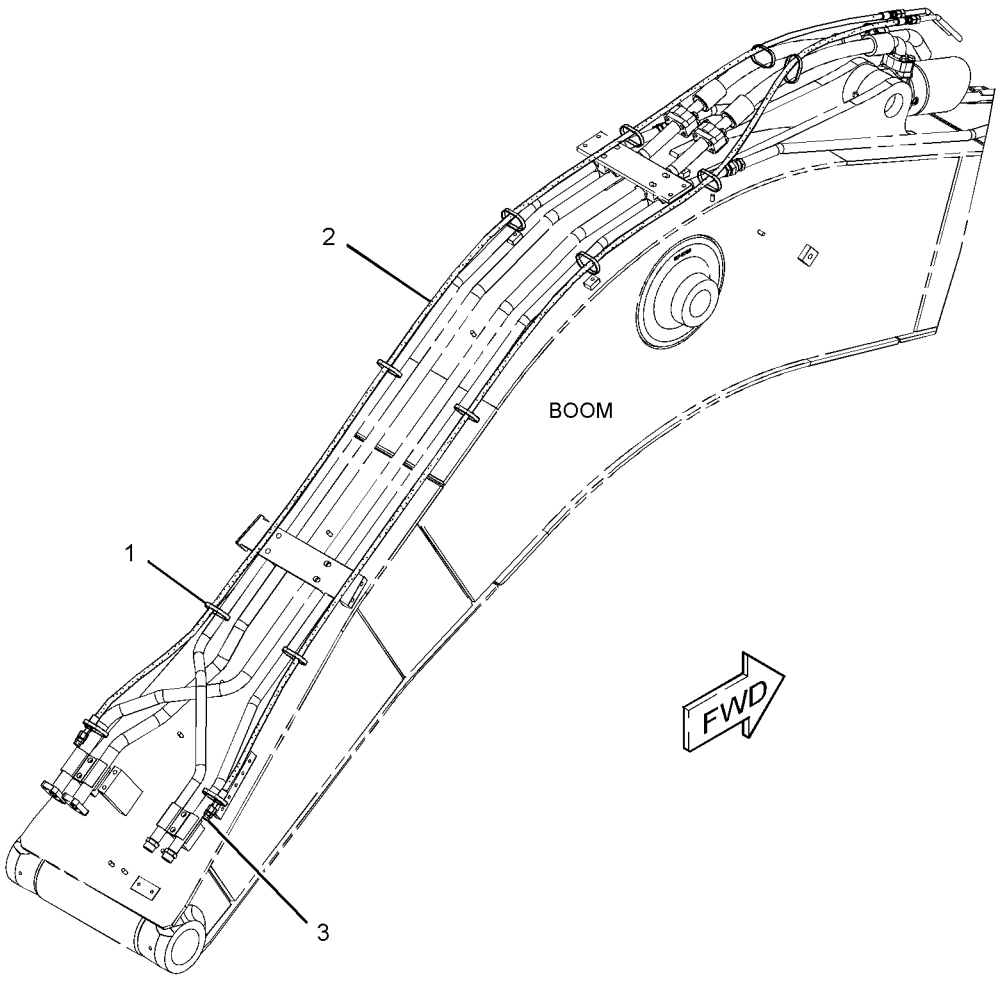

GRAPHIC #1 **<END>** g01390029

HYDRAULIC SYSTEM

179-7644 LINES GP-BOOM CYLINDER–LH

S/N: CJN1-UP

PART OF 259-0837, 289-8090 CYLINDER & LINES GP-BOOM AN ATTACHMENT

SMCS-5057, 5456 **i02528564**

NOTE	REF NO	GRAPHIC REF	PART NUMBER	QTY	PART NAME 1 2 3 4 5 6 (PRODUCT LEVEL)	SEE PAGE
C	1	1	**278-6611**	1	TUBE AS	
C	2	1	**199-1859**	1	TUBE AS	
	3	1	**1P-3703**	2	SEAL-RECTANGULAR	
CM	4	1	**8T-4185**	9	BOLT (M10X1.5X50-MM)	
	5	1	**132-0002**	1	SUPPORT AS	
C	6	1	**8T-4121**	3	WASHER-HARD (11X21X2.5-MM THK)	
M	7	1	**8T-4196**	2	BOLT (M10X1.5X35-MM)	
C	8	1	**135-1179**	1	SUPPORT AS	
C	9	1	**096-5766**	1	CLAMP	

C-CHANGE FROM PREVIOUS TYPE
M-METRIC PART

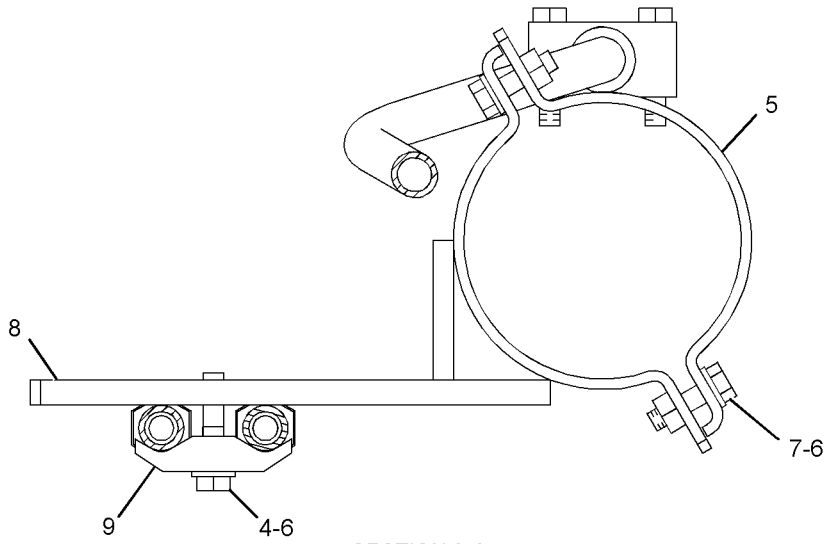

SECTION A-A

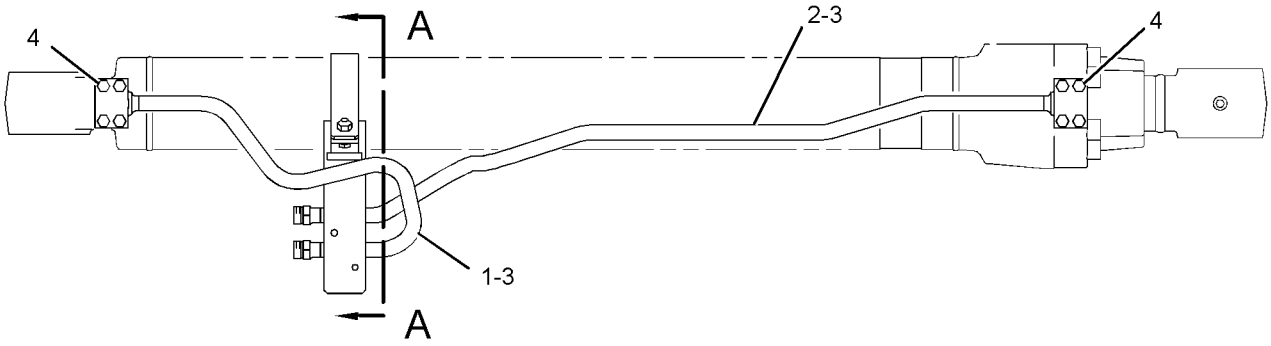

GRAPHIC #1 **<END>** g01287307

179-7645 LINES GP-BOOM CYLINDER–RH

S/N: CJN1-UP

PART OF 259-0838, 289-8091 CYLINDER & LINES GP-BOOM

AN ATTACHMENT

SMCS-5057, 5456 **i02600482**

NOTE	REF NO	GRAPHIC REF	PART NUMBER	QTY	PART NAME 1 2 3 4 5 6 (PRODUCT LEVEL)	SEE PAGE
	1	1	**132-0002**	1	SUPPORT AS	
C	2	1	**135-1179**	1	SUPPORT AS	
C	3	1	**199-1860**	1	TUBE AS	
C	4	1	**278-6612**	1	TUBE AS	
C	5	1	**096-5766**	1	CLAMP	
	6	1	**1P-3703**	2	SEAL-RECTANGULAR	
C	7	1	**8T-4121**	3	WASHER-HARD (11X21X2.5-MM THK)	
CM	8	1	**8T-4185**	9	BOLT (M10X1.5X50-MM)	
M	9	1	**8T-4196**	2	BOLT (M10X1.5X35-MM)	

C-CHANGE FROM PREVIOUS TYPE
M-METRIC PART

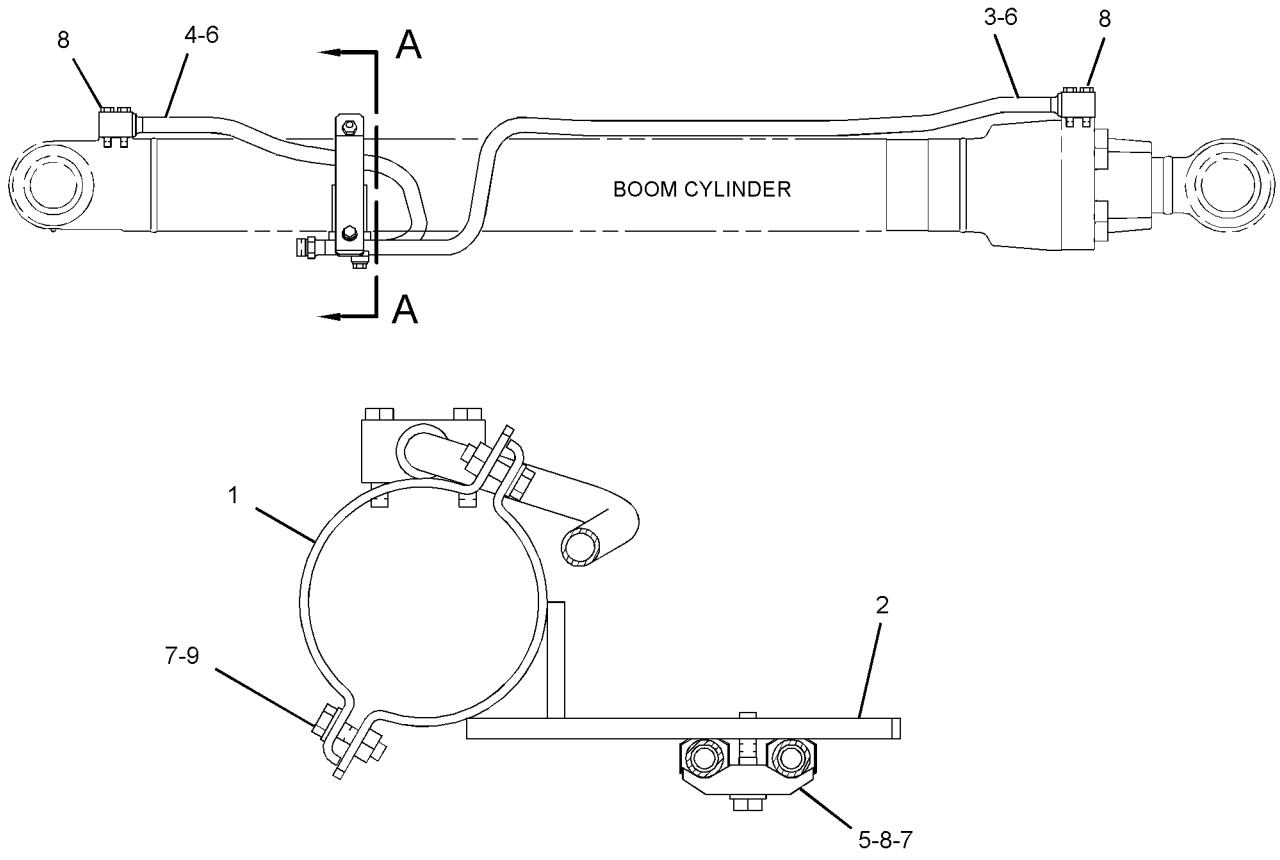

SECTION A-A

GRAPHIC #1 **<END>** g01322243

HYDRAULIC SYSTEM

260-8209 LINES GP-BOOM CYLINDER

S/N: CJN1-UP

PART OF 259-7547 HYDRAULIC AR

SMCS-5057, 5456 **i02844917**

NOTE	REF NO	GRAPHIC REF	PART NUMBER	QTY	PART NAME 1 2 3 4 5 6 (PRODUCT LEVEL)	SEE PAGE
	1	1	**093-1296**	1	CLAMP	
	2	1	**099-5408**	1	CLAMP	
	3	1	*106-8715*	2	ELBOW AS	
					(EACH INCLUDES)	
		1	**3D-2824**	1	SEAL-O-RING	
		1	**6V-9746**	1	SEAL-O-RING	
		1	**8C-8400**	1	ELBOW	
I	4	1	**184-9543**	4	HOSE AS	
	5	1	**187-5873**	1	TUBE AS	
	6	1	**187-5874**	1	TUBE AS	
	7	1	**266-7940**	1	ROD AS	
		1	**225-4539**	1	WASHER-SPECIAL	
	8	1	**266-7941**	1	BRACKET AS	
	9	1	*268-5145*	1	ELBOW AS	
		1	**3D-2824**	1	SEAL-O-RING	
		1	**6V-9746**	1	SEAL-O-RING	
		1	**194-9041**	1	ELBOW	
	10	1	**269-9799**	1	SUPPORT AS	
	11	1	**278-6495**	1	HOSE AS	
	12	1	*148-8336*	1	CONNECTOR AS	
		1	**3J-1907**	1	SEAL-O-RING	
		1	**6V-8397**	1	SEAL-O-RING	
		1	**6V-8639**	1	CONNECTOR (SEAL)	
	13	1	*148-8340*	1	CONNECTOR AS	
		1	**3K-0360**	1	SEAL-O-RING	
		1	**6V-8398**	1	SEAL-O-RING	
		1	**6V-8639**	1	CONNECTOR	
	14	1	*148-8341*	2	CONNECTOR AS	
					(EACH INCLUDES)	
		1	**3D-2824**	1	SEAL-O-RING	
		1	**6V-8713**	1	CONNECTOR	
		1	**7J-9108**	1	SEAL-O-RING	
	15	1	*148-8347*	2	ELBOW AS	
					(EACH INCLUDES)	
		1	**3D-2824**	1	SEAL-O-RING	
		1	**6V-9007**	1	ELBOW	
		1	**6V-9746**	1	SEAL-O-RING	
	16	1	*148-8361*	1	ELBOW AS	
		1	**3J-7354**	1	SEAL-O-RING	
		1	**6V-8397**	1	SEAL-O-RING	
		1	**6V-9200**	1	ELBOW	
	17	1	*148-8365*	1	ELBOW AS	
		1	**3J-1907**	1	SEAL-O-RING	
		1	**6V-8398**	1	SEAL-O-RING	
		1	**8T-6876**	1	ELBOW (90-DEG)	
	18	1	*148-8444*	1	TEE AS-SWIVEL	
		1	**6V-8398**	2	SEAL-O-RING	
		1	**6V-9837**	1	TEE-SWIVEL	
	19	1	**7J-9108**	8	SEAL-O-RING	
M	20	1	**8T-4192**	4	BOLT (M12X1.75X25-MM)	
	21	1	**8T-4223**	6	WASHER-HARD (13.5X25.5X3-MM THK)	
M	22	1	**8T-4648**	1	BOLT (M12X1.75X70-MM)	
M	23	1	**8T-4910**	1	BOLT (M12X1.75X60-MM)	
	24	1	**9F-2167**	1	SCREW-PURGE (3/8-24X1.164-IN)	

I-REFER TO HYDRAULIC INFORMATION SYSTEM
M-METRIC PART

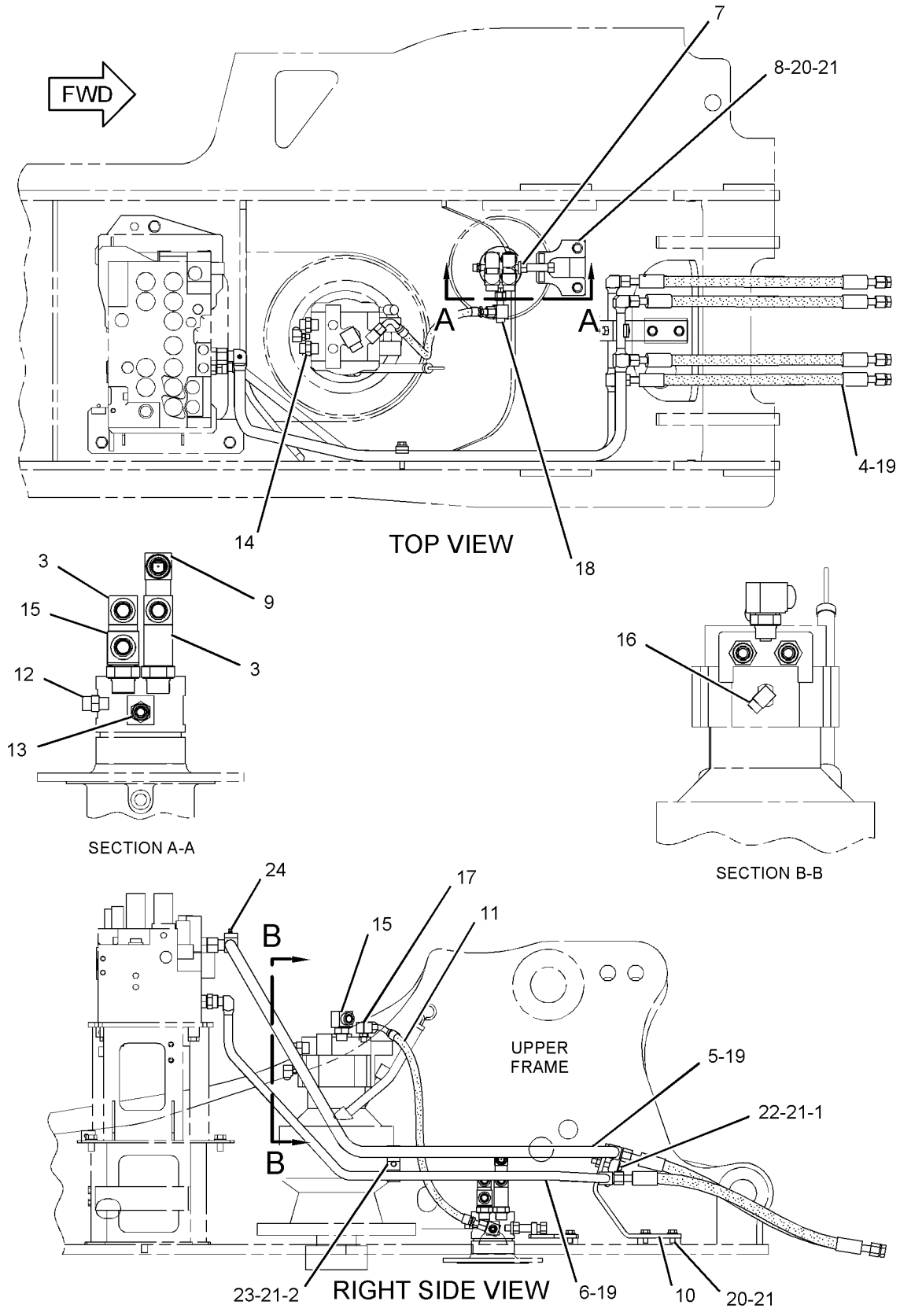

GRAPHIC #1

<END>

g01418555

HYDRAULIC SYSTEM

260-8243 LINES GP-BOOM CYLINDER—BOOM LOWERING CONTROL

S/N: CJN1-UP

PART OF 259-7578, 323-7798 VALVE AR-CHECK & RELIEF

AN ATTACHMENT

SMCS-5057, 5456 **i03180328**

NOTE	REF NO	GRAPHIC REF	PART NUMBER	QTY	PART NAME 1 2 3 4 5 6 (PRODUCT LEVEL)	SEE PAGE
	1	1	**7K-1181**	3	STRAP-CABLE	
I	2	1	**196-3369**	1	HOSE AS	
	3	1	**199-1861**	1	TUBE AS	
	4	1	**199-1862**	1	TUBE AS	
I	5	1	**199-2013**	1	HOSE AS	
	6	1	**210-2768**	1	FITTING	
	7	1	**221-8859**	1	SENSOR AS-PRESSURE (BOOM CYLINDER)	
		1	**3E-3371**	1	WEDGE-RECEPTACLE LOCK (3-PIN)	
		1	**3K-0360**	1	SEAL-O-RING	
		1	**9X-3401**	3	PIN-CONNECTOR (16-GA TO 18-GA)	
					—OR—	
		1	**126-1767**	3	PIN-CONNECTOR (14-GA)	
		1	**171-0596**	1	RECEPTACLE AS	
Y	8	1	**285-1685**	1	VALVE GP-LOAD CONTROL (BOOM LOWERING CONTROL, LH)	693
Y	9	1	**285-1686**	1	VALVE GP-LOAD CONTROL (BOOM LOWERING CONTROL, RH)	695
	10	1	**296-7057**	1	HOSE AS	
E		1	**7I-7439**		GUARD (95-CM)	
	11	1	**302-2988**	2	SUPPORT AS	
	12	1	*148-8336*	3	CONNECTOR AS	
					(EACH INCLUDES)	
		1	**3J-1907**	1	SEAL-O-RING	
		1	**6V-8397**	1	SEAL-O-RING	
		1	**6V-8636**	1	CONNECTOR	
	13	1	*148-8341*	2	CONNECTOR AS	
					(EACH INCLUDES)	
		1	**3D-2824**	1	SEAL-O-RING	
		1	**6V-8713**	1	CONNECTOR	
		1	**7J-9108**	1	SEAL-O-RING	
	14	1	*148-8371*	2	ELBOW AS	
					(EACH INCLUDES)	
		1	**6V-8397**	1	SEAL-O-RING	
		1	**8C-8988**	1	ELBOW	
	15	1	*148-8378*	3	ELBOW AS	
					(EACH INCLUDES)	
		1	**3J-1907**	1	SEAL-O-RING	
		1	**6V-8397**	1	SEAL-O-RING	
		1	**6V-8724**	1	ELBOW	
	16	1	*148-8433*	2	TEE AS	
					(EACH INCLUDES)	
		1	**6V-8397**	2	SEAL-O-RING	
		1	**6V-9836**	1	TEE-SWIVEL	
	17	1	*164-5567*	2	COUPLER AS-QUICK DISCONNECT	
					(EACH INCLUDES)	
		1	**3J-1907**	1	SEAL-O-RING	
		1	**6V-3965**	1	FITTING (QUICK DISCONNECT)	
	18	1	**1P-3703**	2	SEAL-RECTANGULAR	
	19	1	**3J-1907**	1	SEAL-O-RING	
	20	1	**6V-0852**	2	CAP-DUST	
	21	1	**7J-9108**	2	SEAL-O-RING	
M	22	1	**280-2747**	8	BOLT-SOCKET HEAD (M10X1.5X60-MM)	

E-ORDER BY THE CENTIMETER
I-REFER TO HYDRAULIC INFORMATION SYSTEM
M-METRIC PART
Y-SEPARATE ILLUSTRATION

260-8243 **LINES GP-BOOM CYLINDER** *(contd.)* **i03180328**

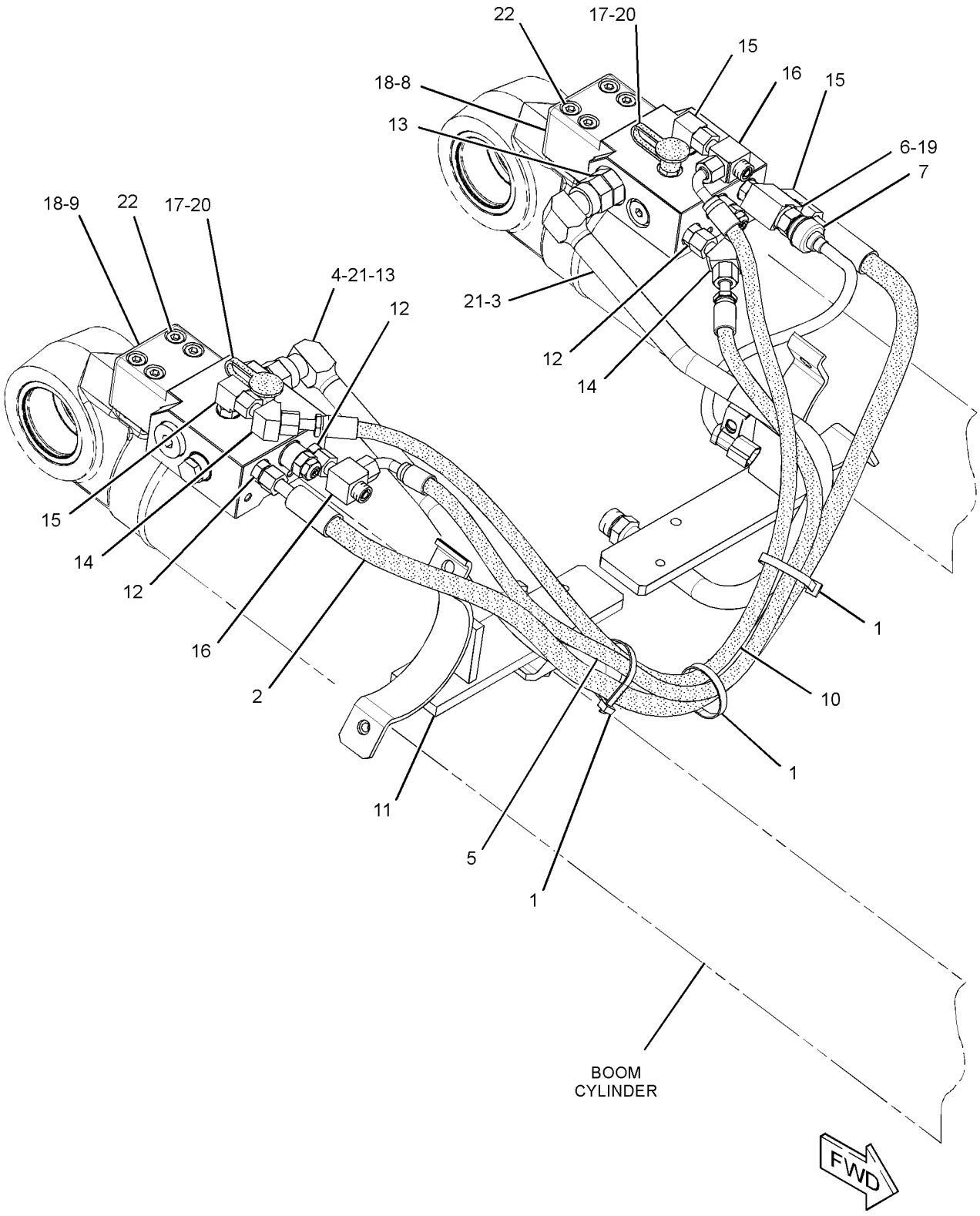

GRAPHIC #1 **<END>** g01621862

HYDRAULIC SYSTEM

131-9878 LINES GP-BUCKET CYLINDER

S/N: CJN1-UP

PART OF 259-0844, 289-8111, 310-1782 CYLINDER & LINES GP-BUCKET

AN ATTACHMENT

SMCS-5457 **i03195684**

NOTE	REF NO	GRAPHIC REF	PART NUMBER	QTY	PART NAME 1 2 3 4 5 6 (PRODUCT LEVEL)	SEE PAGE
	1	1	**131-9938**	1	TUBE AS	
	2	1	**1P-3703**	1	SEAL-RECTANGULAR	
M	3	1	**8T-4185**	4	BOLT (M10X1.5X50-MM)	
	4	1	**131-9939**	1	SUPPORT AS	
	5	1	**093-1292**	1	CLAMP	
	6	1	**8T-4223**	1	WASHER-HARD (13.5X25.5X3-MM THK)	
M	7	1	**8T-4910**	1	BOLT (M12X1.75X60-MM)	
M	8	1	**8T-4196**	2	BOLT (M10X1.5X35-MM)	
	9	1	**8T-4121**	2	WASHER-HARD (11X21X2.5-MM THK)	
	10	1	**131-9940**	1	SUPPORT AS	

M-METRIC PART

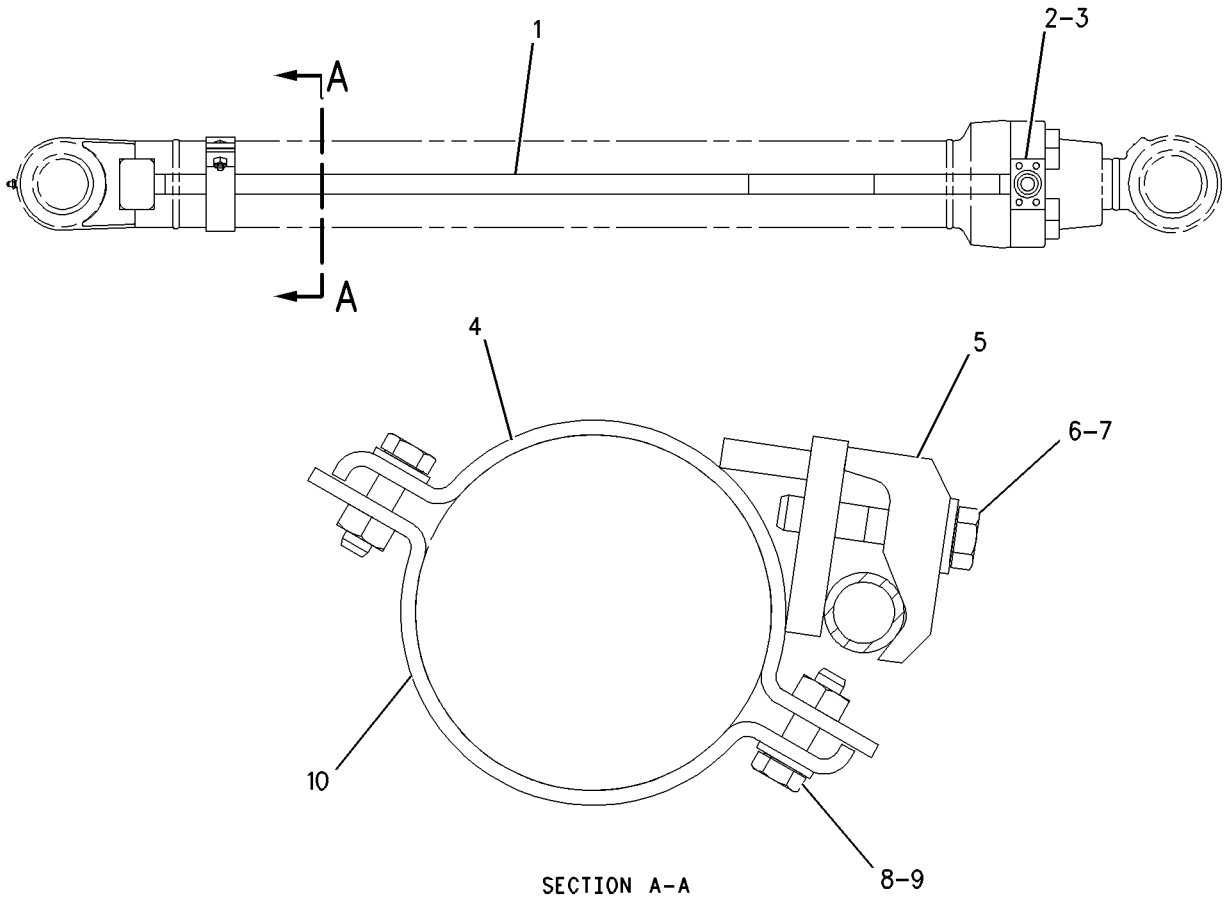

GRAPHIC #1 **<END>** g00755986

131-9879 LINES GP-BUCKET CYLINDER

S/N: CJN1-UP

PART OF 259-0914, 289-8119 CYLINDER & LINES GP-BUCKET

AN ATTACHMENT

SMCS-5457 **i01471719**

NOTE	REF NO	GRAPHIC REF	PART NUMBER	QTY	PART NAME 1 2 3 4 5 6 (PRODUCT LEVEL)	SEE PAGE
	1	1	**131-9938**	1	TUBE AS	
	2	1	**1P-3703**	1	SEAL-RECTANGULAR	
M	3	1	**8T-4185**	4	BOLT (M10X1.5X50-MM)	
	4	1	**131-9942**	1	SUPPORT AS	
M		1	**8T-3490**	1	NUT-WELD (M10X1.5-THD)	
	5	1	**093-1292**	1	CLAMP	
	6	1	**8T-4223**	1	WASHER-HARD (13.5X25.5X3-MM THK)	
M	7	1	**8T-4910**	1	BOLT (M12X1.75X60-MM)	
M	8	1	**8T-4196**	2	BOLT (M10X1.5X35-MM)	
	9	1	**8T-4121**	2	WASHER-HARD (11X21X2.5-MM THK)	
	10	1	**132-0002**	1	SUPPORT AS	
M		1	**8T-3490**	1	NUT-WELD (M10X1.5-THD)	

M-METRIC PART

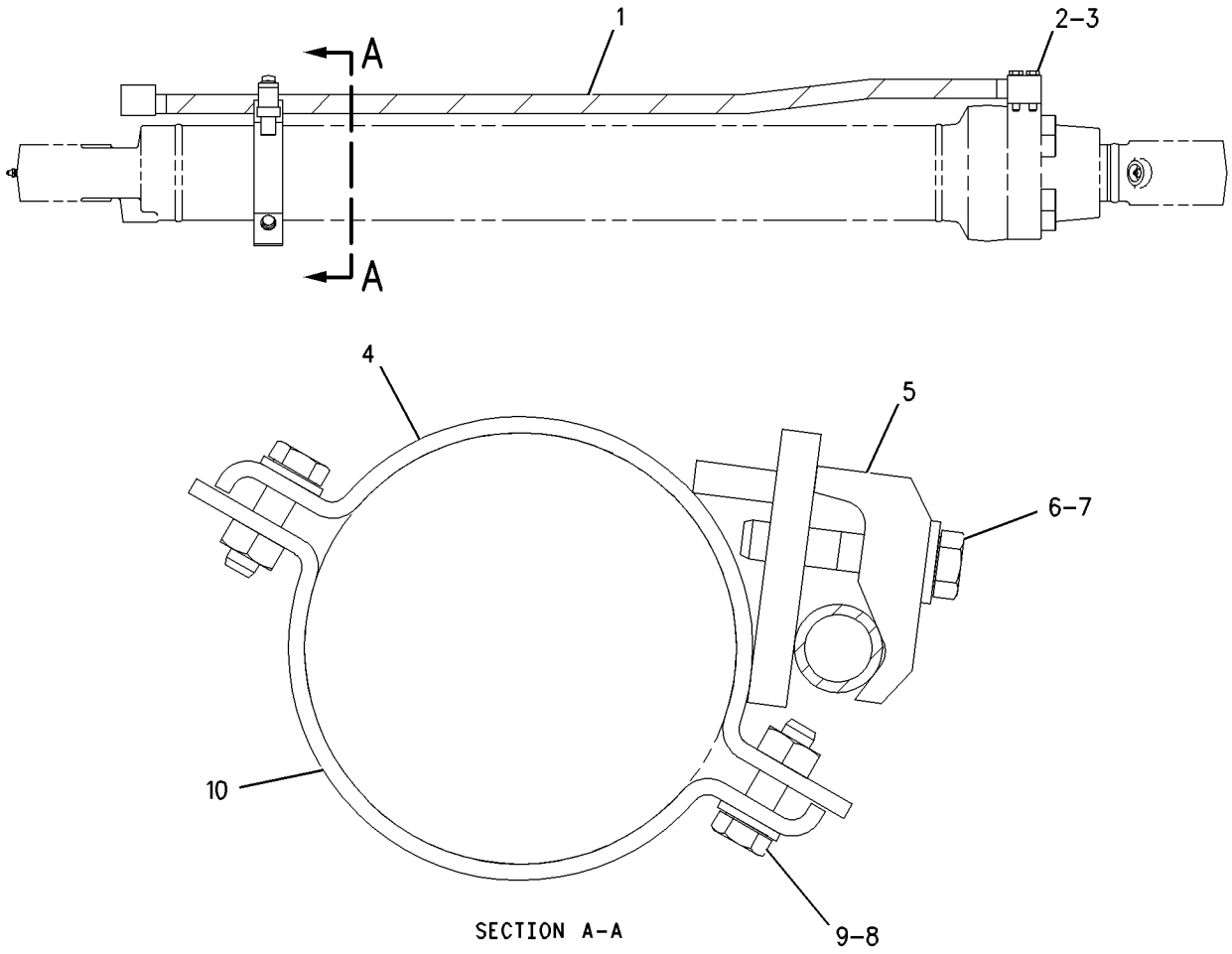

GRAPHIC #1 **<END>** g00768323

HYDRAULIC SYSTEM

262-3236 LINES GP-COUPLER—REACH BOOM

S/N: CJN1-UP
AN ATTACHMENT

SMCS-5057, 5133 **i02736212**

NOTE	REF NO	GRAPHIC REF	PART NUMBER	QTY	PART NAME 1 2 3 4 5 6 (PRODUCT LEVEL)	SEE PAGE
	1	1	**5Q-4213**	4	CLIP	
	2	1	**193-6606**	2	PLATE	
	3	1	**230-0496**	1	PLATE	
	4	1	**277-1194**	2	SUPPORT AS	
	5	1	**277-1195**	1	TUBE AS	
	6	1	**277-1198**	1	TUBE AS	
	7	1	**277-1201**	1	TUBE AS	
	8	1	**277-1204**	1	TUBE AS	
	9	1	**135-3980**	6	CLIP	
	10	1	**5Q-4212**	4	CLIP	
	11	1	**6V-8398**	6	SEAL-O-RING	
M	12	1	**7X-2549**	6	BOLT (M12X1.75X100-MM)	
M	13	1	**8T-4139**	8	BOLT (M12X1.75X30-MM)	
	14	1	**8T-4223**	18	WASHER-HARD (13.5X25.5X3-MM THK)	
M	15	1	**8T-4244**	4	NUT (M12X1.75-THD)	
M	16	1	**8T-4648**	4	BOLT (M12X1.75X70-MM)	

M-METRIC PART

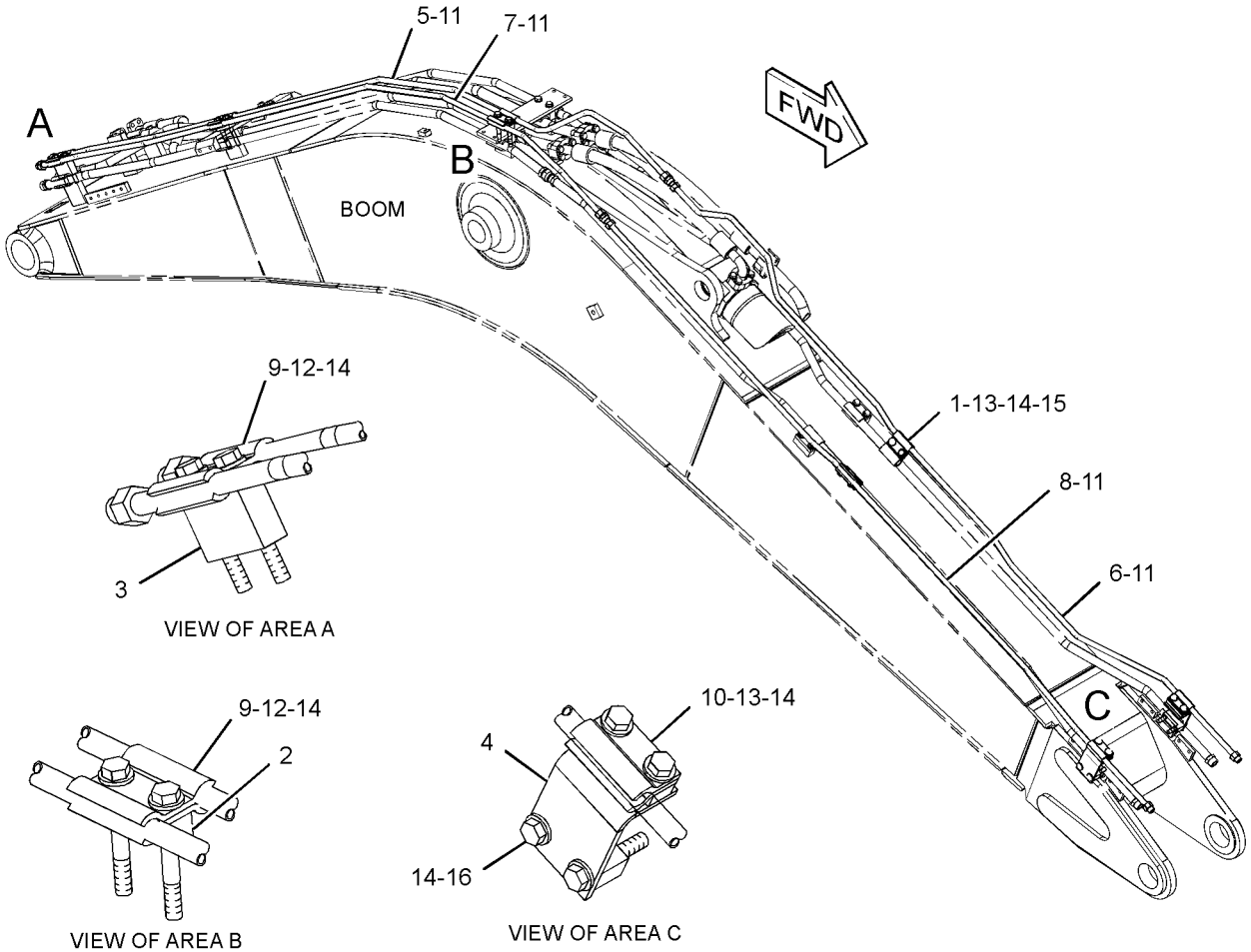

GRAPHIC #1

<END>

g01374161

HYDRAULIC SYSTEM

262-3239 LINES GP-COUPLER

S/N: CJN1-UP
3.1-M TO 3.2-M (10.2-FT TO 10.5-FT) STICK
AN ATTACHMENT

SMCS-5057, 5133 **i02765743**

NOTE	REF NO	GRAPHIC REF	PART NUMBER	QTY	PART NAME 1 2 3 4 5 6 (PRODUCT LEVEL)	SEE PAGE
I	1	1	**177-8506**	2	HOSE AS	
	2	1	**198-0370**	2	CLIP	
	3	1	**277-0921**	1	TUBE AS	
	4	1	**277-0924**	1	TUBE AS	
	5	1	*148-8415*	1	REDUCER AS	
		1	**6V-8397**	1	SEAL-O-RING	
		1	**6V-8936**	1	REDUCER	
	6	1	*148-8419*	1	REDUCER AS	
		1	**4J-5477**	1	SEAL-O-RING	
		1	**6V-8935**	1	REDUCER-O-RING	
	7	1	**5Q-4212**	8	CLIP	
	8	1	**6V-8398**	4	SEAL-O-RING	
	9	1	**8T-4121**	1	WASHER-HARD (11X21X2.5-MM THK)	
M	10	1	**8T-4139**	8	BOLT (M12X1.75X30-MM)	
M	11	1	**8T-4195**	1	BOLT (M10X1.5X30-MM)	
	12	1	**8T-4223**	8	WASHER-HARD (13.5X25.5X3-MM THK)	
	13	1	**9X-6582**	1	NUT (13/16-16-THD)	

I-REFER TO HYDRAULIC INFORMATION SYSTEM
M-METRIC PART

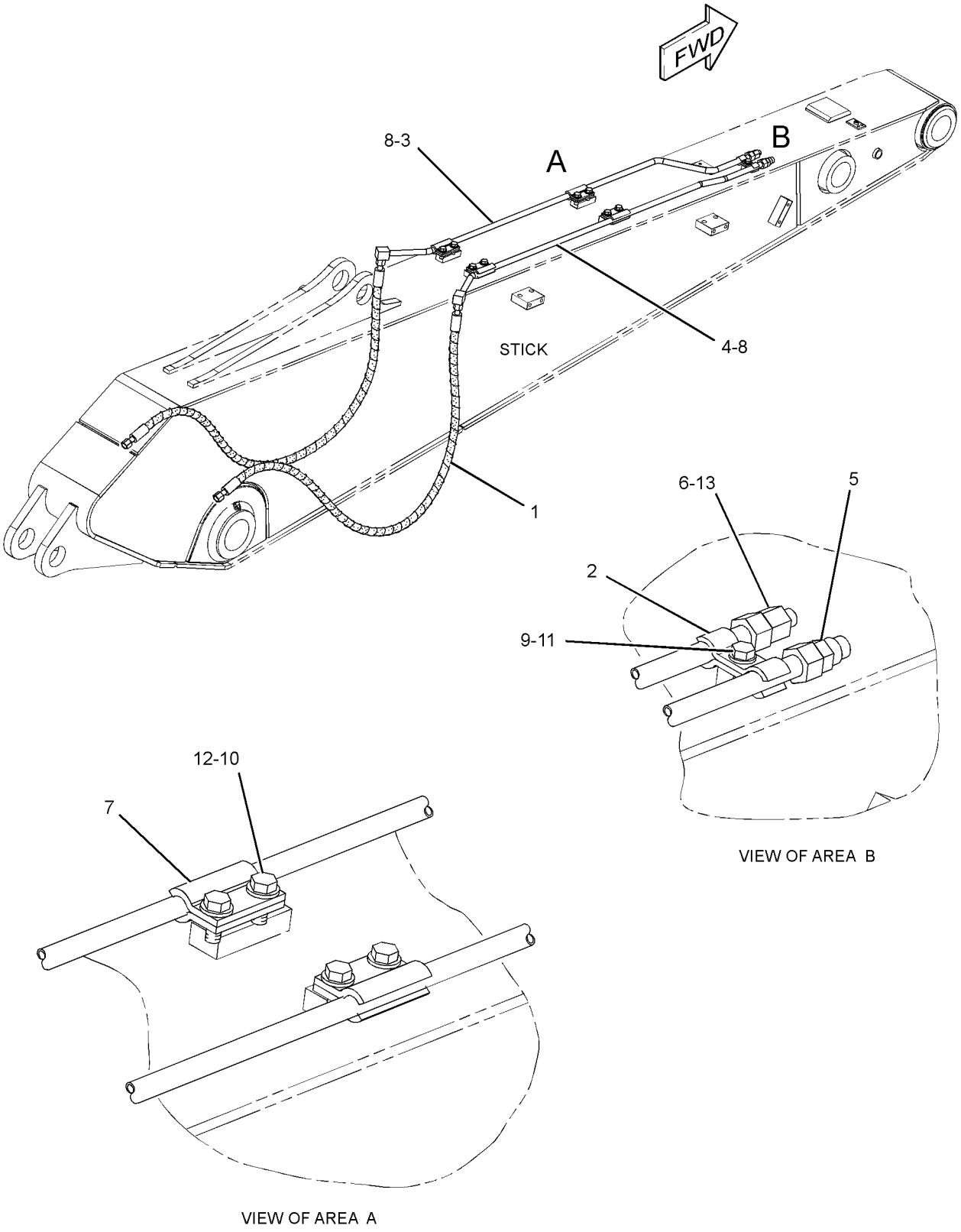

GRAPHIC #1 **<END>** g01388318

HYDRAULIC SYSTEM

262-3242 LINES GP-COUPLER

S/N: CJN1-UP
2.6-M TO 2.7-M (8.5-FT TO 8.9-FT) STICK
AN ATTACHMENT

SMCS-5057, 5133 **i02765818**

NOTE	REF NO	GRAPHIC REF	PART NUMBER	QTY	PART NAME 1 2 3 4 5 6 (PRODUCT LEVEL)	SEE PAGE
I	1	1	**177-8407**	2	HOSE AS	
	2	1	**198-0370**	2	CLIP	
	3	1	**277-1059**	1	TUBE AS	
	4	1	**277-1062**	1	TUBE AS	
	5	1	*148-8415*	1	REDUCER AS	
		1	**6V-8397**	1	SEAL-O-RING	
		1	**6V-8936**	1	REDUCER	
	6	1	*148-8419*	1	REDUCER AS	
		1	**4J-5477**	1	SEAL-O-RING	
		1	**6V-8935**	1	REDUCER-O-RING	
	7	1	**5Q-4212**	8	CLIP	
	8	1	**6V-8398**	4	SEAL-O-RING	
	9	1	**8T-4121**	1	WASHER-HARD (11X21X2.5-MM THK)	
M	10	1	**8T-4139**	8	BOLT (M12X1.75X30-MM)	
M	11	1	**8T-4195**	1	BOLT (M10X1.5X30-MM)	
	12	1	**8T-4223**	8	WASHER-HARD (13.5X25.5X3-MM THK)	
	13	1	**9X-6582**	1	NUT (13/16-16-THD)	

I-REFER TO HYDRAULIC INFORMATION SYSTEM
M-METRIC PART

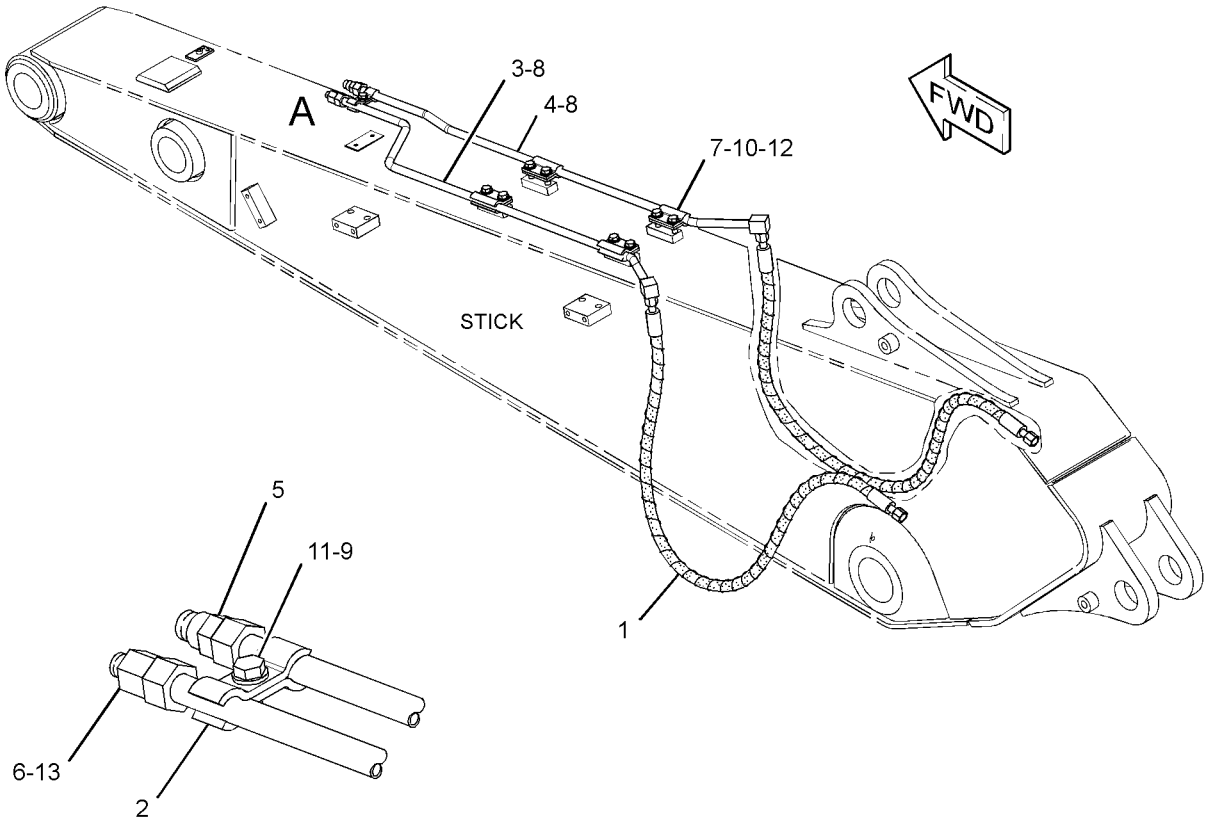

VIEW OF AREA A

GRAPHIC #1 **<END>** g01390123

HYDRAULIC SYSTEM

262-3245 LINES GP-COUPLER

S/N: CJN1-UP
2.3-M (7.4-FT) STICK
AN ATTACHMENT

SMCS-5057, 5133 **i02765847**

NOTE	REF NO	GRAPHIC REF	PART NUMBER	QTY	PART NAME 1 2 3 4 5 6 (PRODUCT LEVEL)	SEE PAGE
	1	1	**198-0370**	2	CLIP	
	2	1	**210-9888**	1	TUBE AS	
	3	1	**210-9892**	1	TUBE AS	
I	4	1	**277-1251**	2	HOSE AS	
	5	1	*148-8415*	1	REDUCER AS	
		1	**6V-8397**	1	SEAL-O-RING	
		1	**6V-8936**	1	REDUCER	
	6	1	*148-8419*	1	REDUCER AS	
		1	**4J-5477**	1	SEAL-O-RING	
		1	**6V-8935**	1	REDUCER-O-RING	
	7	1	**5Q-4212**	8	CLIP	
	8	1	**6V-8398**	4	SEAL-O-RING	
	9	1	**8T-4121**	1	WASHER-HARD (11X21X2.5-MM THK)	
M	10	1	**8T-4139**	8	BOLT (M12X1.75X30-MM)	
M	11	1	**8T-4195**	1	BOLT (M10X1.5X30-MM)	
	12	1	**8T-4223**	8	WASHER-HARD (13.5X25.5X3-MM THK)	
	13	1	**9X-6582**	1	NUT (13/16-16-THD)	

I-REFER TO HYDRAULIC INFORMATION SYSTEM
M-METRIC PART

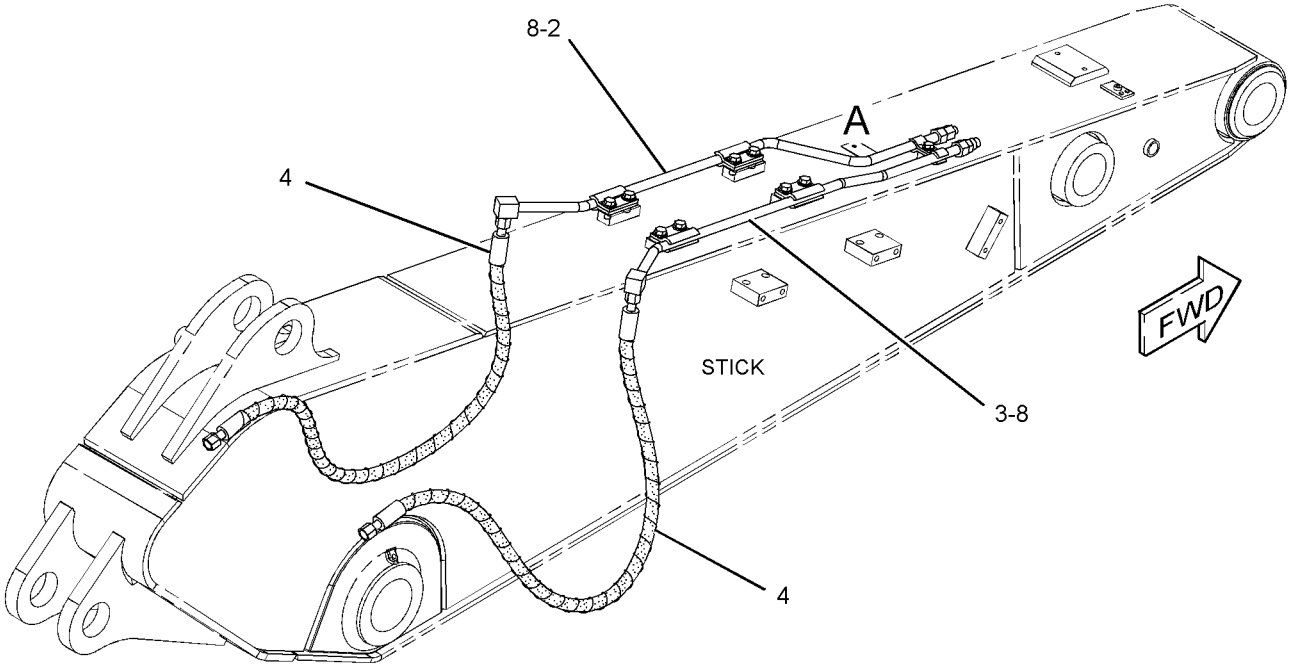

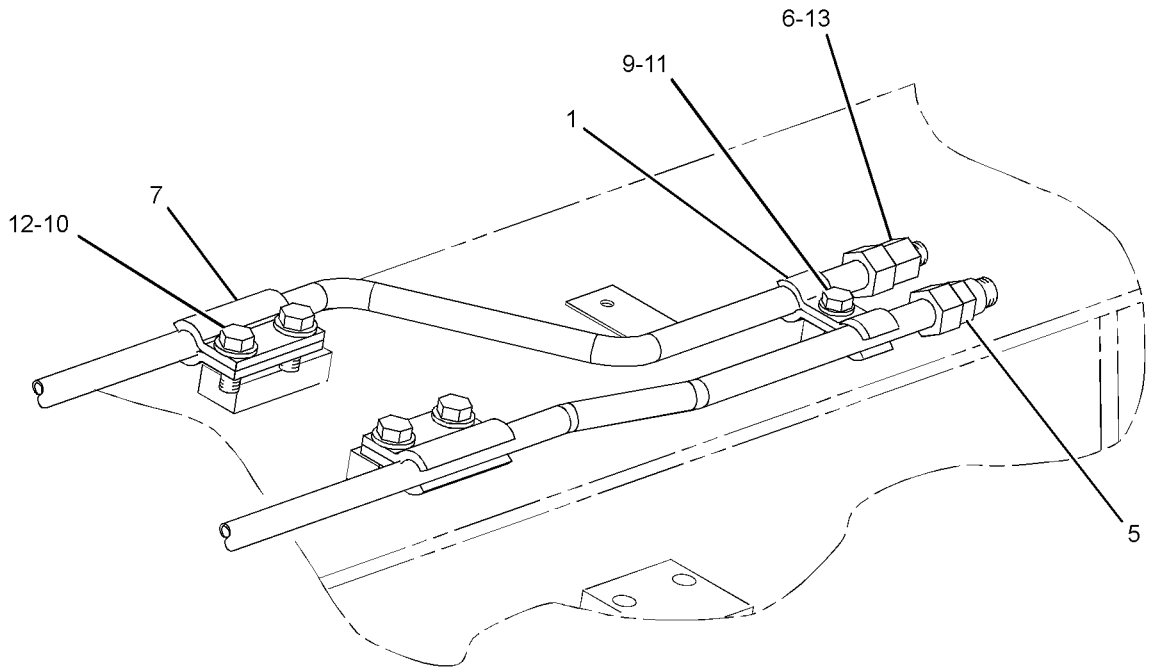

VIEW OF AREA A

GRAPHIC #1 **<END>** g01388625

HYDRAULIC SYSTEM

268-7247 LINES GP-COUPLER

S/N: CJN1-UP
2.9-M (9.5-FT) STICK
AN ATTACHMENT

SMCS-5057, 5133 **i02736246**

NOTE	REF NO	GRAPHIC REF	PART NUMBER	QTY	PART NAME 1 2 3 4 5 6 (PRODUCT LEVEL)	SEE PAGE
	1	1	**198-0370**	2	CLIP	
I	2	1	**210-9966**	2	HOSE AS	
	3	1	**277-0921**	1	TUBE AS	
	4	1	**277-0924**	1	TUBE AS	
	5	1	*148-8415*	1	REDUCER AS	
		1	**6V-8397**	1	SEAL-O-RING	
		1	**6V-8936**	1	REDUCER	
	6	1	*148-8419*	1	REDUCER AS	
		1	**4J-5477**	1	SEAL-O-RING	
		1	**6V-8935**	1	REDUCER-O-RING	
	7	1	**5Q-4212**	8	CLIP	
	8	1	**6V-8398**	4	SEAL-O-RING	
	9	1	**8T-4121**	1	WASHER-HARD (11X21X2.5-MM THK)	
M	10	1	**8T-4139**	8	BOLT (M12X1.75X30-MM)	
M	11	1	**8T-4195**	1	BOLT (M10X1.5X30-MM)	
	12	1	**8T-4223**	8	WASHER-HARD (13.5X25.5X3-MM THK)	
	13	1	**9X-6582**	1	NUT (13/16-16-THD)	

I-REFER TO HYDRAULIC INFORMATION SYSTEM
M-METRIC PART

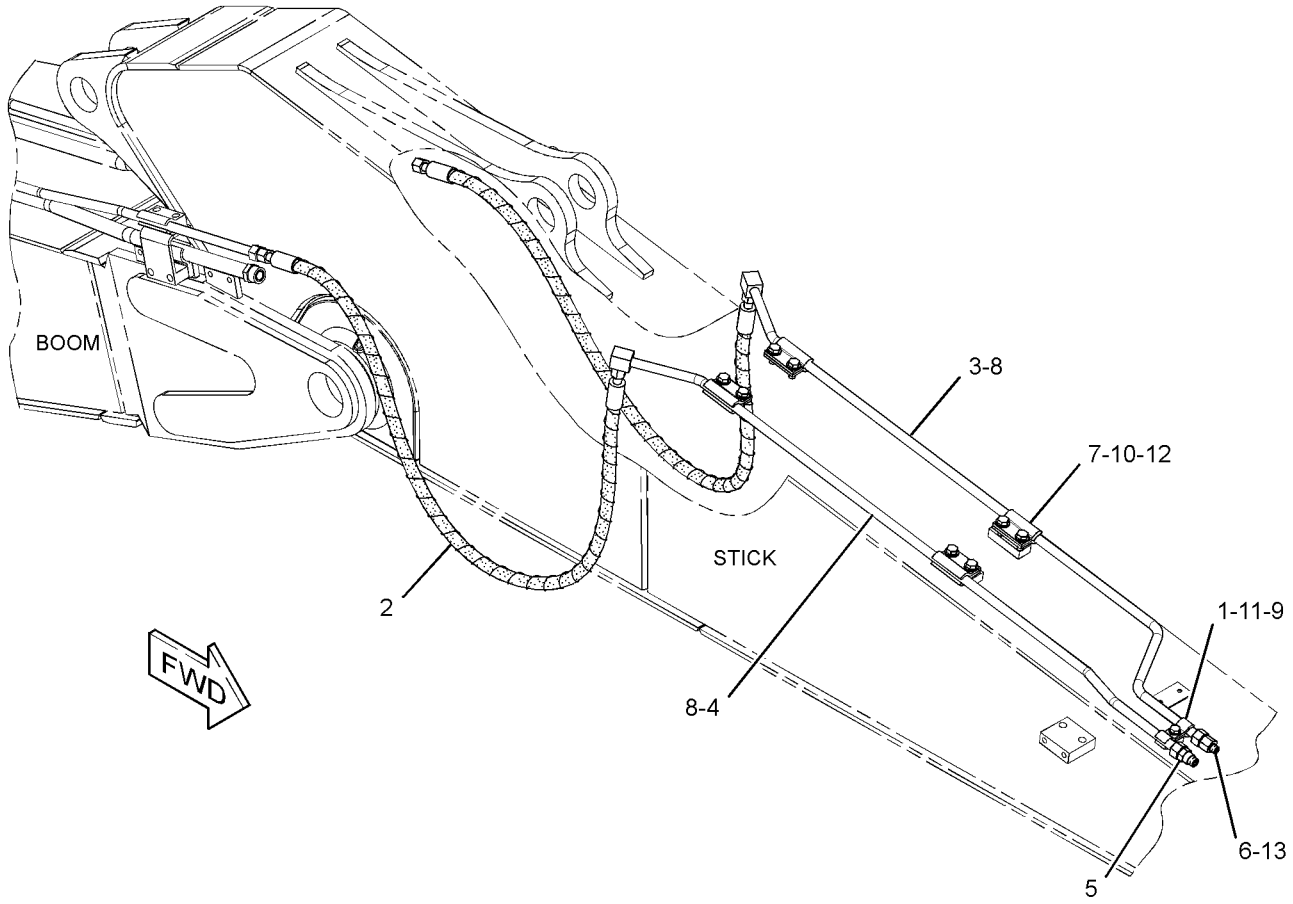

GRAPHIC #1 **<END>** g01375888

HYDRAULIC SYSTEM

277-1212 LINES GP-COUPLER

S/N: CJN1-UP

PART OF 268-7258, 268-7259, 306-1336, 306-1337 COUPLER AR-QUICK

AN ATTACHMENT

TYPE 1

SMCS-5057, 5133 **i02727884**

NOTE	REF NO	GRAPHIC REF	PART NUMBER	QTY	PART NAME 1 2 3 4 5 6 (PRODUCT LEVEL)	SEE PAGE
	1	1	**8C-6561**	1	BOLT (5/16-18X1.375-IN)	
	2	1	**6W-2464**	2	CLAMP	
Y	3	1	*236-4154*	1	COUPLER GP-QUICK	822
I	4	1	**277-1215**	1	HOSE AS	
I	5	1	**277-1216**	1	HOSE AS	
	6	1	**3V-0046**	1	PLATE	
	7	1	**3J-1907**	1	SEAL-O-RING	
	8	1	**3J-7354**	1	SEAL-O-RING	

I-REFER TO HYDRAULIC INFORMATION SYSTEM
Y-SEPARATE ILLUSTRATION

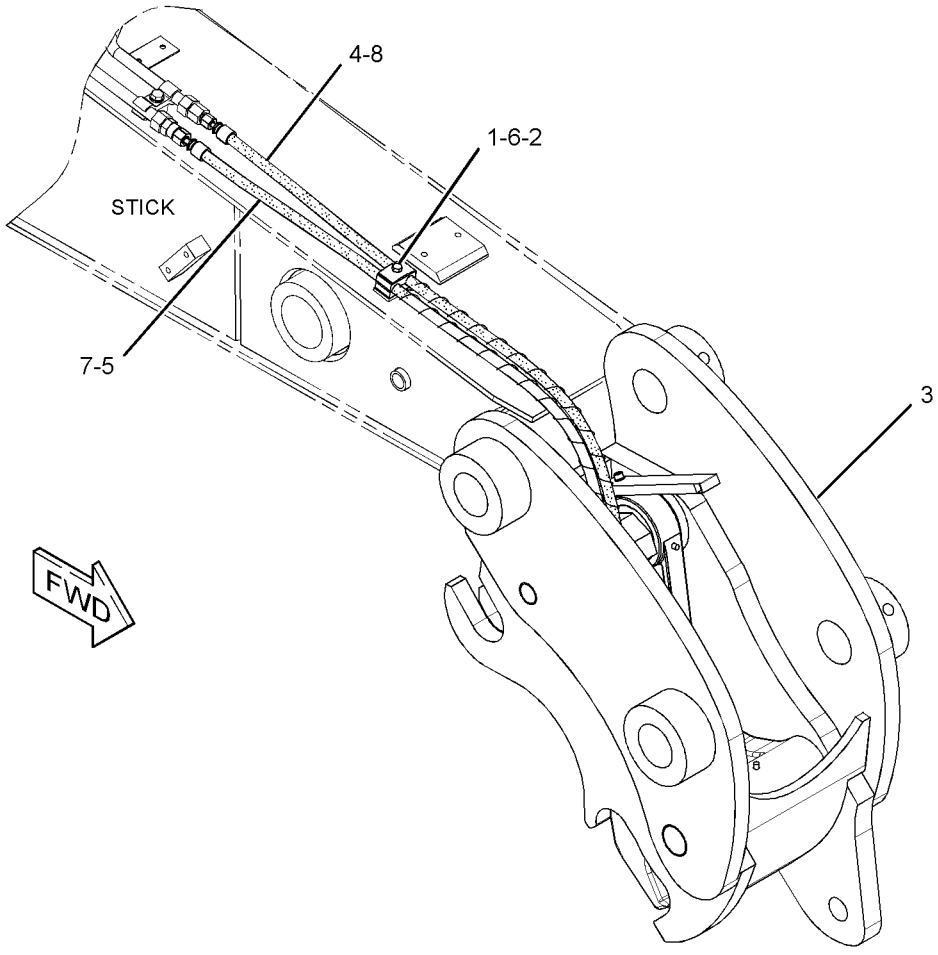

GRAPHIC #1 **<END>** g01375465

HYDRAULIC SYSTEM

277-1212 LINES GP-COUPLER

S/N: CJN1-UP

PART OF 268-7258, 268-7259, 306-1336, 306-1337 COUPLER AR-QUICK

AN ATTACHMENT

TYPE 2

SMCS-5057, 5133 **i03001032**

NOTE	REF NO	GRAPHIC REF	PART NUMBER	QTY	PART NAME 1 2 3 4 5 6 (PRODUCT LEVEL)	SEE PAGE
	1	1	**8C-6561**	1	BOLT (5/16-18X1.375-IN)	
	2	1	**6W-2464**	2	CLAMP	
Y	3	1	*236-4154*	1	COUPLER GP-QUICK	822
CI	4	1	**316-4078**	1	HOSE AS	
CI	5	1	**316-4079**	1	HOSE AS	
	6	1	**3V-0046**	1	PLATE	
	7	1	**3J-1907**	1	SEAL-O-RING	
	8	1	**3J-7354**	1	SEAL-O-RING	

C-CHANGE FROM PREVIOUS TYPE
I-REFER TO HYDRAULIC INFORMATION SYSTEM
Y-SEPARATE ILLUSTRATION

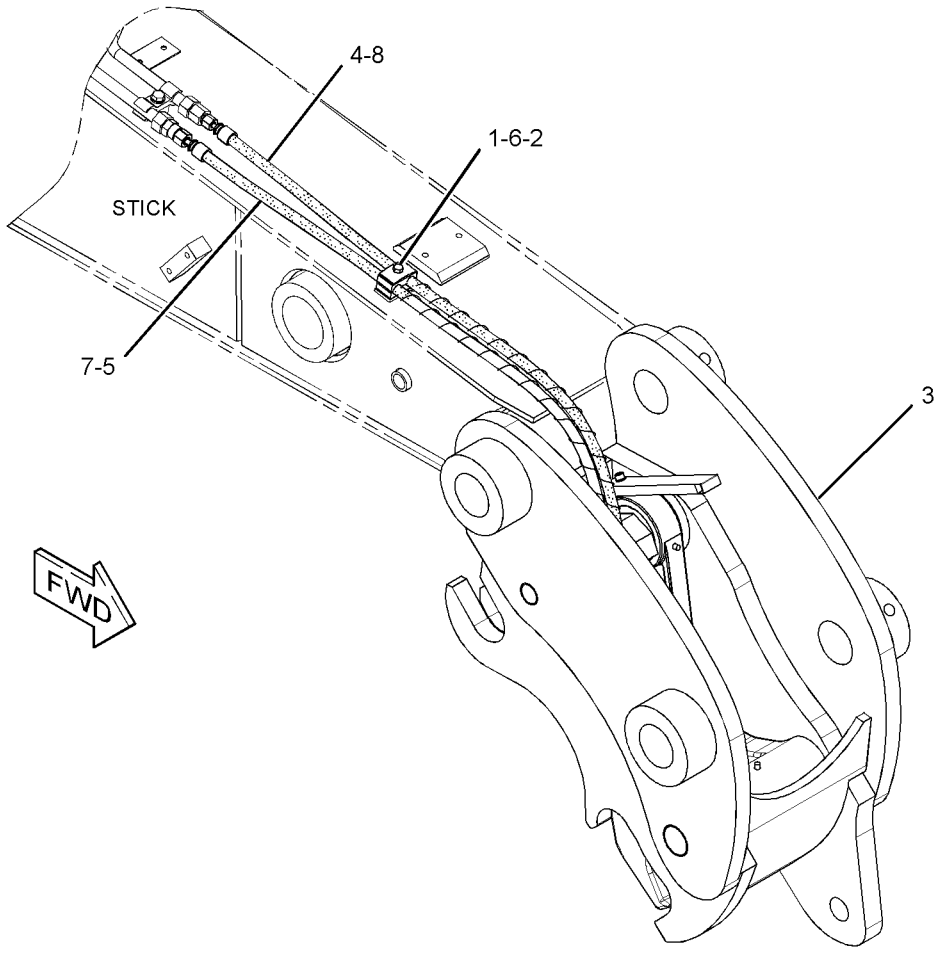

GRAPHIC #1 **<END>** g01375465

HYDRAULIC SYSTEM

260-8208 LINES GP-FRONT

S/N: CJN1-945

PART OF 259-7547 HYDRAULIC AR

SMCS-5057 **i02599667**

NOTE	REF NO	GRAPHIC REF	PART NUMBER	QTY	PART NAME 1 2 3 4 5 6 (PRODUCT LEVEL)	SEE PAGE
I	1	1	**108-7547**	1	HOSE AS	
I	2	1	**184-9228**	1	HOSE AS	
I	3	1	**184-9508**	1	HOSE AS	
I	4	1	**184-9512**	1	HOSE AS	
I	5	1	**184-9516**	1	HOSE AS	
	6	1	*260-9174*	1	CONNECTOR AS	
		1	**3D-2824**	1	SEAL-O-RING	
		1	**7J-9108**	1	SEAL-O-RING	
		1	**109-5815**	1	CONNECTOR	
I	7	1	**269-9573**	1	HOSE AS	
I	8	1	**269-9577**	1	HOSE AS	
I	9	1	**270-0016**	2	HOSE AS	
I	10	1	**278-6517**	1	HOSE AS	
I	11	1	**278-6520**	1	HOSE AS	
	12	1	*148-8327*	1	CONNECTOR AS	
		1	**3D-2824**	1	SEAL-O-RING	
		1	**6V-8637**	1	CONNECTOR	
		1	**6V-9746**	1	SEAL-O-RING	
	13	1	*148-8335*	2	CONNECTOR AS	
					(EACH INCLUDES)	
		1	**5K-9090**	1	SEAL-O-RING	
		1	**6V-8635**	1	CONNECTOR	
		1	**7M-8485**	1	SEAL-O-RING	
	14	1	*148-8339*	3	CONNECTOR AS	
					(EACH INCLUDES)	
		1	**6V-8716**	1	CONNECTOR	
		1	**6V-9746**	1	SEAL-O-RING	
		1	**7M-8485**	1	SEAL-O-RING	
	15	1	*148-8341*	2	CONNECTOR AS	
					(EACH INCLUDES)	
		1	**3D-2824**	1	SEAL-O-RING	
		1	**6V-8713**	1	CONNECTOR	
		1	**7J-9108**	1	SEAL-O-RING	
	16	1	*148-8347*	1	ELBOW AS	
		1	**3D-2824**	1	SEAL-O-RING	
		1	**6V-9007**	1	ELBOW	
		1	**6V-9746**	1	SEAL-O-RING	
	17	1	*153-6237*	1	ELBOW AS	
		1	**3D-2824**	1	SEAL-O-RING	
		1	**6V-9004**	1	ELBOW	
		1	**6V-9746**	1	SEAL-O-RING	
	18	1	*153-6242*	2	CONNECTOR AS	
					(EACH INCLUDES)	
		1	**6V-9746**	1	SEAL-O-RING	
		1	**7M-8485**	1	SEAL-O-RING	
		1	**8T-0197**	1	CONNECTOR	
	19	1	*164-4180*	2	PLUG AS	
					(EACH INCLUDES)	
		1	**7M-8485**	1	SEAL-O-RING	
		1	**9S-4181**	1	PLUG-O-RING	
	20	1	**1P-3703**	2	SEAL-RECTANGULAR	
	21	1	**6V-0400**	4	FLANGE-HALF	
	22	1	**7K-1181**	4	STRAP-CABLE	
M	23	1	**8T-4194**	8	BOLT (M12X1.75X50-MM)	
	24	1	**8T-4223**	8	WASHER-HARD (13.5X25.5X3-MM THK)	

I-REFER TO HYDRAULIC INFORMATION SYSTEM
M-METRIC PART

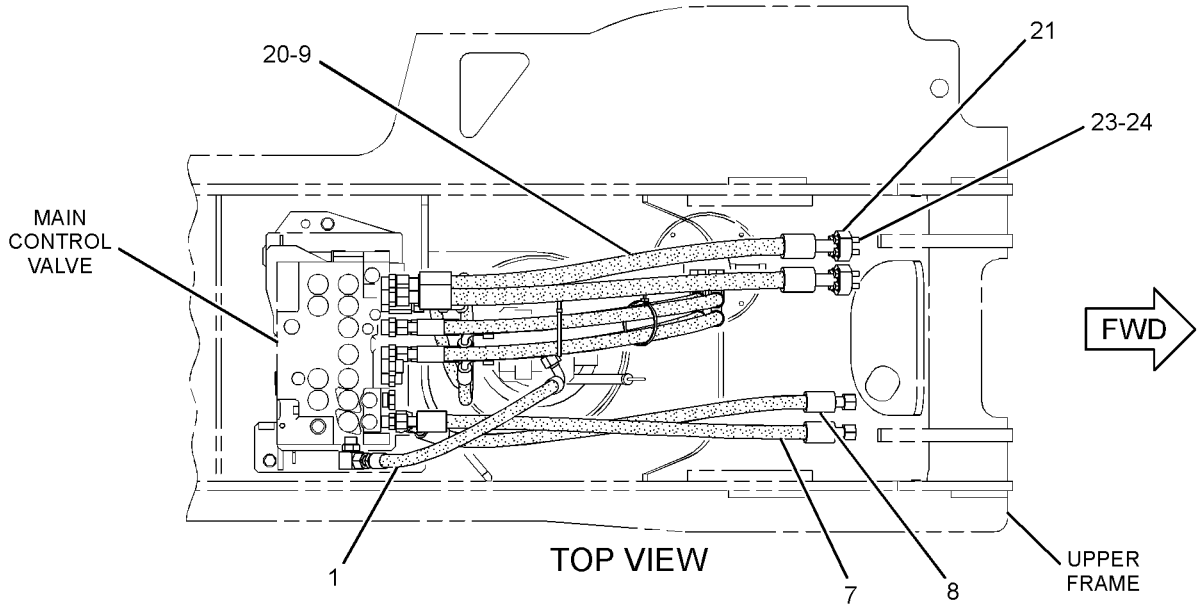

TOP VIEW

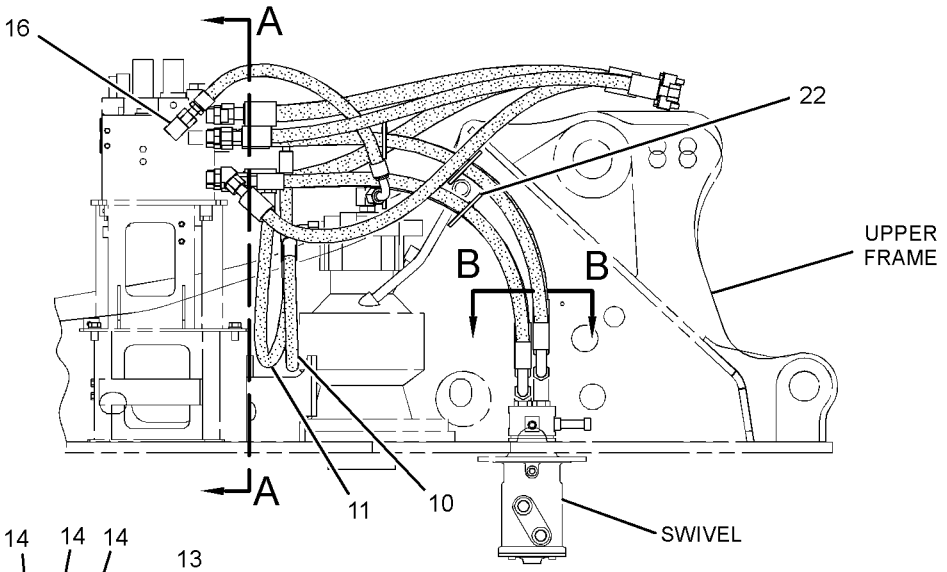

RIGHT SIDE VIEW

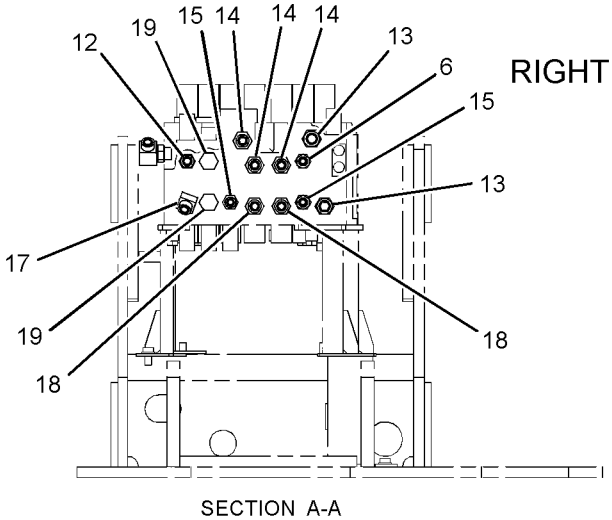

SECTION A-A

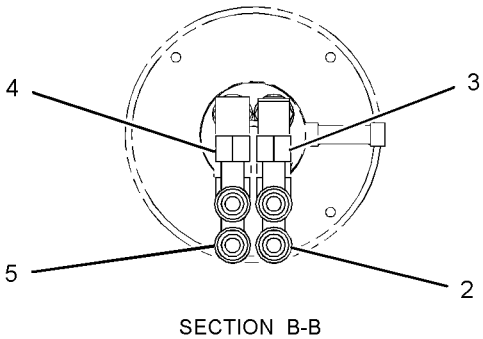

SECTION B-B

GRAPHIC #1 **<END>** g01313348

HYDRAULIC SYSTEM

260-8208 LINES GP-FRONT

S/N: CJN946-UP

PART OF 259-7547 HYDRAULIC AR

SMCS-5057 **i03249111**

NOTE	REF NO	GRAPHIC REF	PART NUMBER	QTY	PART NAME 1 2 3 4 5 6 (PRODUCT LEVEL)	SEE PAGE
I	1	1	**108-7547**	1	HOSE AS	
I	3	1	**184-9508**	1	HOSE AS	
I	4	1	**184-9512**	1	HOSE AS	
CI	5	1	**184-9516**	2	HOSE AS	
	6	1	*260-9174*	1	CONNECTOR AS	
		1	**3D-2824**	1	SEAL-O-RING	
		1	**7J-9108**	1	SEAL-O-RING	
		1	**109-5815**	1	CONNECTOR	
I	7	1	**269-9573**	1	HOSE AS	
I	8	1	**269-9577**	1	HOSE AS	
I	9	1	**270-0016**	2	HOSE AS	
I	10	1	**278-6517**	1	HOSE AS	
I	11	1	**278-6520**	1	HOSE AS	
	12	1	*148-8327*	1	CONNECTOR AS	
		1	**3D-2824**	1	SEAL-O-RING	
		1	**6V-8637**	1	CONNECTOR	
		1	**6V-9746**	1	SEAL-O-RING	
	13	1	*148-8335*	2	CONNECTOR AS	
					(EACH INCLUDES)	
		1	**5K-9090**	1	SEAL-O-RING	
		1	**6V-8635**	1	CONNECTOR	
		1	**7M-8485**	1	SEAL-O-RING	
	14	1	*148-8339*	3	CONNECTOR AS	
					(EACH INCLUDES)	
		1	**6V-8716**	1	CONNECTOR	
		1	**6V-9746**	1	SEAL-O-RING	
		1	**7M-8485**	1	SEAL-O-RING	
	15	1	*148-8341*	2	CONNECTOR AS	
					(EACH INCLUDES)	
		1	**3D-2824**	1	SEAL-O-RING	
		1	**6V-8713**	1	CONNECTOR	
		1	**7J-9108**	1	SEAL-O-RING	
	16	1	*148-8347*	1	ELBOW AS	
		1	**3D-2824**	1	SEAL-O-RING	
		1	**6V-9007**	1	ELBOW	
		1	**6V-9746**	1	SEAL-O-RING	
	17	1	*153-6237*	1	ELBOW AS	
		1	**3D-2824**	1	SEAL-O-RING	
		1	**6V-9004**	1	ELBOW	
		1	**6V-9746**	1	SEAL-O-RING	
	18	1	*153-6242*	2	CONNECTOR AS	
					(EACH INCLUDES)	
		1	**6V-9746**	1	SEAL-O-RING	
		1	**7M-8485**	1	SEAL-O-RING	
		1	**8T-0197**	1	CONNECTOR	
	19	1	*164-4180*	2	PLUG AS	
					(EACH INCLUDES)	
		1	**7M-8485**	1	SEAL-O-RING	
		1	**9S-4181**	1	PLUG-O-RING	
	20	1	**1P-3703**	2	SEAL-RECTANGULAR	
	21	1	**6V-0400**	4	FLANGE-HALF	
C	22	1	**7K-1181**	3	STRAP-CABLE	
M	23	1	**8T-4194**	8	BOLT (M12X1.75X50-MM)	
	24	1	**8T-4223**	8	WASHER-HARD (13.5X25.5X3-MM THK)	

260-8208 **LINES GP-FRONT** *(contd.)* **i03249111**

C-CHANGE FROM PREVIOUS TYPE
I-REFER TO HYDRAULIC INFORMATION SYSTEM
M-METRIC PART

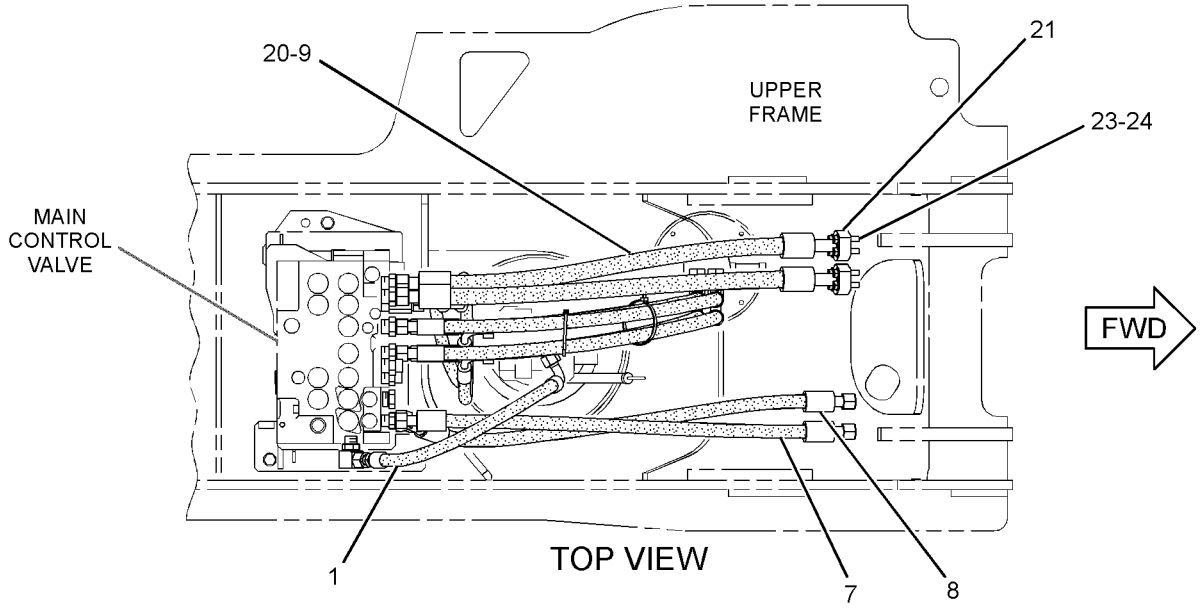

TOP VIEW

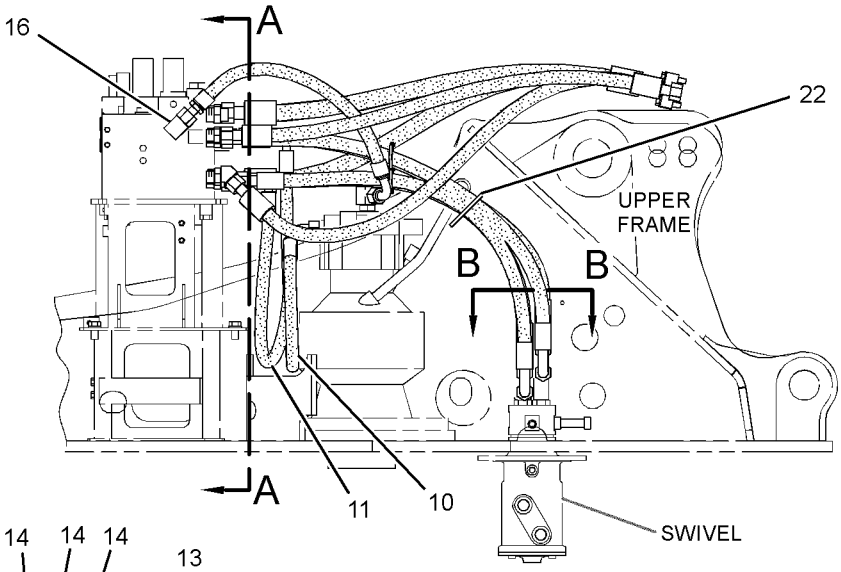

RIGHT SIDE VIEW

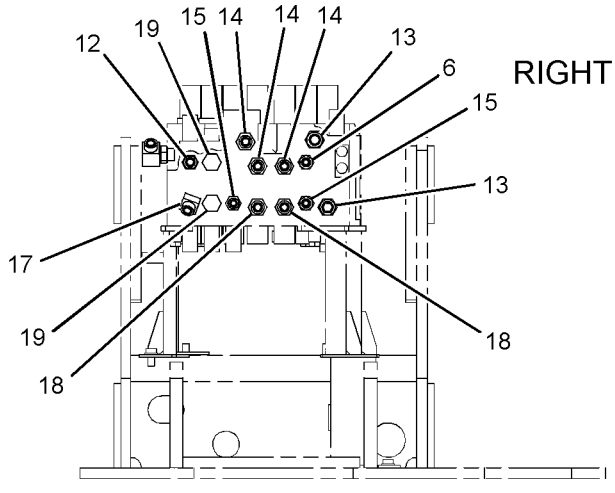

SECTION A-A

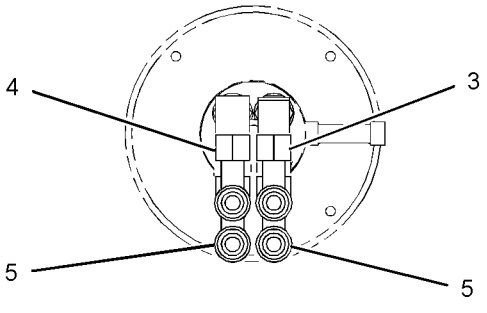

SECTION B-B

GRAPHIC #1 **<END>** g01656693

HYDRAULIC SYSTEM

260-8222 LINES GP-FRONT—QUICK COUPLER

S/N: CJN1-UP
PART OF 262-3249 CONTROL AR-COUPLER
AN ATTACHMENT
TYPE 1

SMCS-5057 **i02862856**

NOTE	REF NO	GRAPHIC REF	PART NUMBER	QTY	PART NAME 1 2 3 4 5 6 (PRODUCT LEVEL)	SEE PAGE
	1	1	*148-8336*	1	CONNECTOR AS	
		1	**3J-1907**	1	SEAL-O-RING	
		1	**6V-8397**	1	SEAL-O-RING	
		1	**6V-8636**	1	CONNECTOR	
	2	2	**3S-2093**	1	STRAP-CABLE	
	3	1	**4I-9521**	4	BAND-MARKER (RED, L1)	
	4	1	**4I-9522**	4	BAND-MARKER (YELLOW, L2)	
	5	1	**9X-6582**	2	NUT (13/16-16-THD)	
	6	1	**081-6344**	1	SPACER (13.3X21.3X25-MM THK)	
I	7	2	**123-2790**	1	HOSE AS	
M	8	1,2	**8T-4910**	3	BOLT (M12X1.75X60-MM)	
	9	1	**227-0384**	1	SPACER (12.52X17.14X65-MM THK)	
	10	2	**236-3200**	1	SUPPORT AS	
Y	11	2	**260-3877**	1	VALVE GP-SOLENOID & MANIFOLD (QUICK COUPLER)	745
	12	1	**266-0982**	1	GUARD	
I	13	1	**307-5212**	2	HOSE AS	
I	14	2	**285-2906**	1	HOSE AS	
	15	2	*148-8368*	2	ELBOW AS	
					(EACH INCLUDES)	
		2	**3J-1907**	1	SEAL-O-RING	
		2	**4J-5477**	1	SEAL-O-RING	
		2	**6V-8627**	1	ELBOW	
	16	2	*285-2663*	2	FITTING AS (QUICK DISCONNECT, MALE)	
					(EACH INCLUDES)	
		2	**3J-1907**	1	SEAL-O-RING	
		2	**285-2664**	1	FITTING	
	17	2	*148-8378*	2	ELBOW AS	
					(EACH INCLUDES)	
		2	**3J-1907**	1	SEAL-O-RING	
		2	**6V-8397**	1	SEAL-O-RING	
		2	**6V-8724**	1	ELBOW	
	18	2	*164-6874*	3	FITTING AS-ELBOW (QUICK DISCONNECT, MALE)	
					(EACH INCLUDES)	
		2	**3J-1907**	1	SEAL-O-RING	
		2	**085-7356**	1	FITTING	
	19	1	*148-8419*	2	REDUCER AS	
					(EACH INCLUDES)	
		1	**4J-5477**	1	SEAL-O-RING	
		1	**6V-8935**	1	REDUCER-O-RING	
	20	2	*150-4027*	1	TEE AS	
		2	**3J-1907**	1	SEAL-O-RING	
		2	**3E-2310**	1	TEE	
		2	**6V-8397**	1	SEAL-O-RING	
	21	2	*164-5567*	1	COUPLER AS-QUICK DISCONNECT	
		2	**3J-1907**	1	SEAL-O-RING	
		2	**6V-3965**	1	FITTING (QUICK DISCONNECT)	
	22	1,2	**8T-4223**	3	WASHER-HARD (13.5X25.5X3-MM THK)	
	23	1	**5K-5338**	1	CLIP	
	24	1	**5P-7468**	1	CLIP (SLOT)	
	25	1	**5P-7469**	1	CLIP (TAB)	
	26	2	**6V-0852**	1	CAP-DUST	
M	27	2	**8T-4185**	2	BOLT (M10X1.5X50-MM)	
	28	1	**7K-1181**	10	STRAP-CABLE	
	29	1	**8T-2525**	1	GROMMET	

260-8222 **LINES GP-FRONT** *(contd.)* **i02862856**

NOTE	REF NO	GRAPHIC REF	PART NUMBER	QTY	PART NAME 1 2 3 4 5 6 (PRODUCT LEVEL)	SEE PAGE
	30	1,2	**8T-4121**	3	WASHER-HARD (11X21X2.5-MM THK)	
M	31	1	**8T-4178**	1	BOLT (M10X1.5X90-MM)	

I-REFER TO HYDRAULIC INFORMATION SYSTEM
M-METRIC PART
Y-SEPARATE ILLUSTRATION

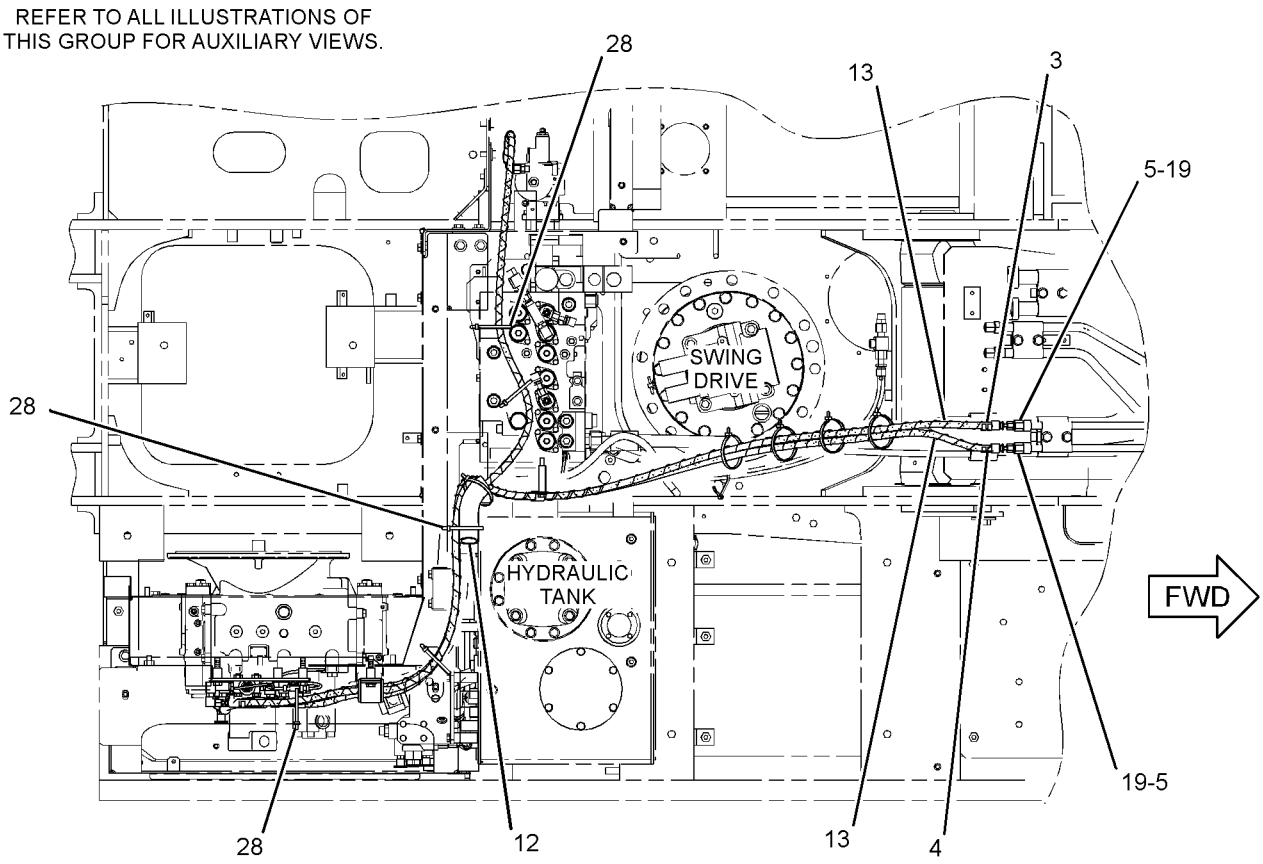

TOP VIEW

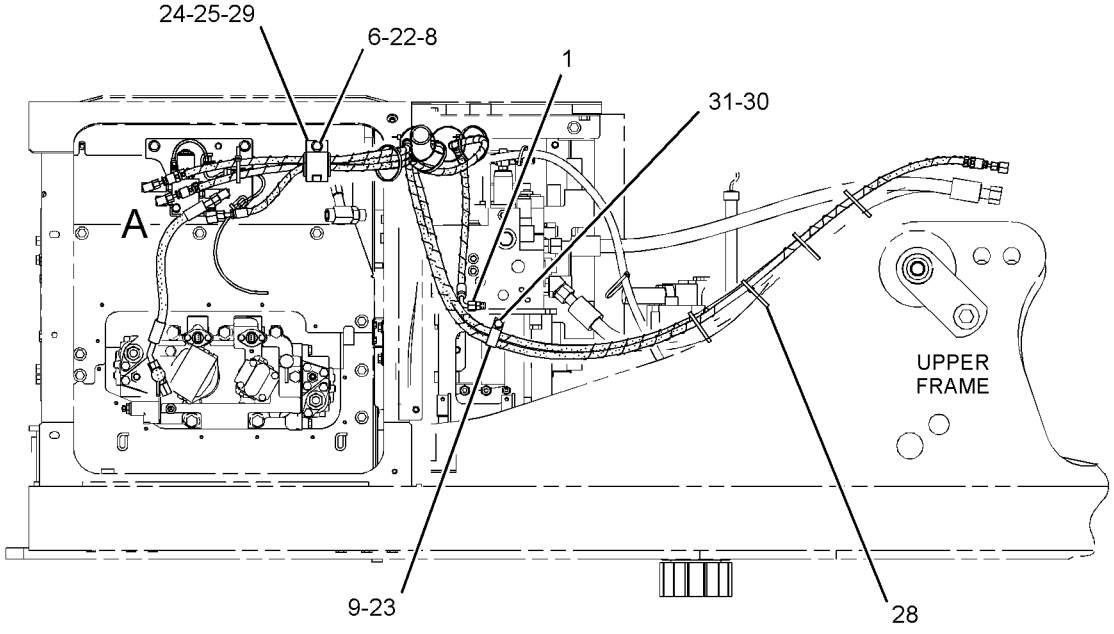

RIGHT SIDE VIEW

GRAPHIC #1 g01427095

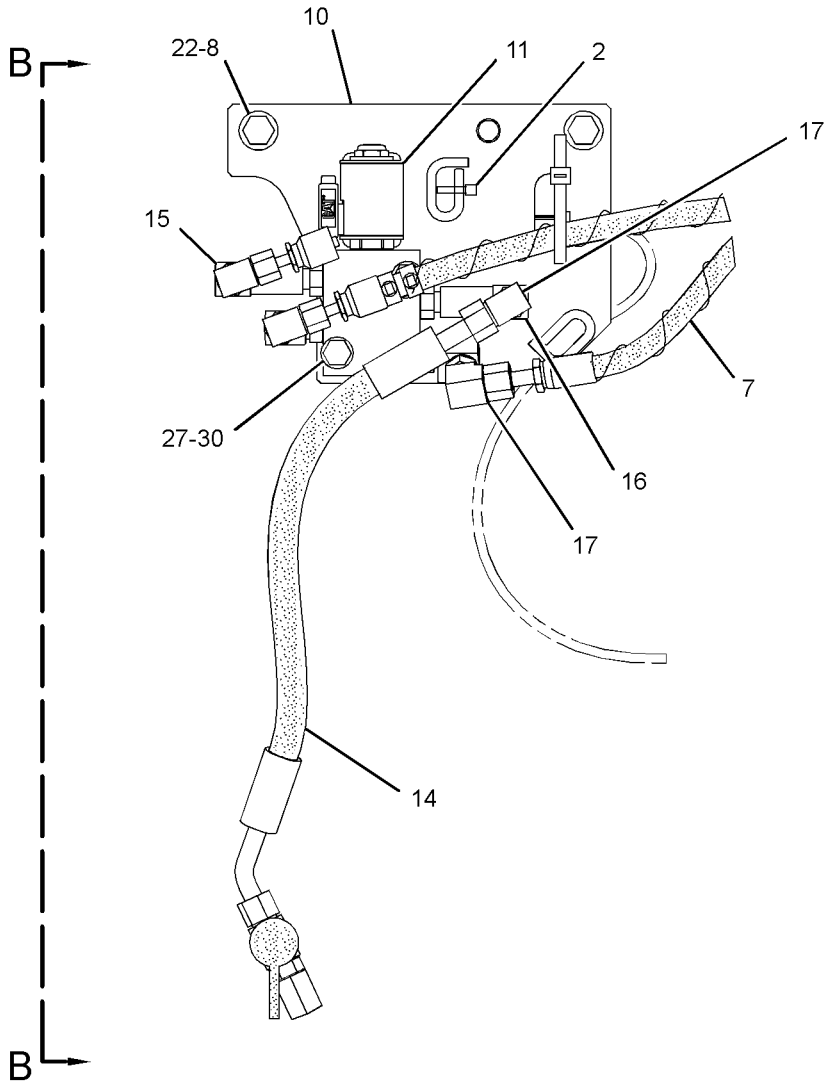

VIEW OF AREA A

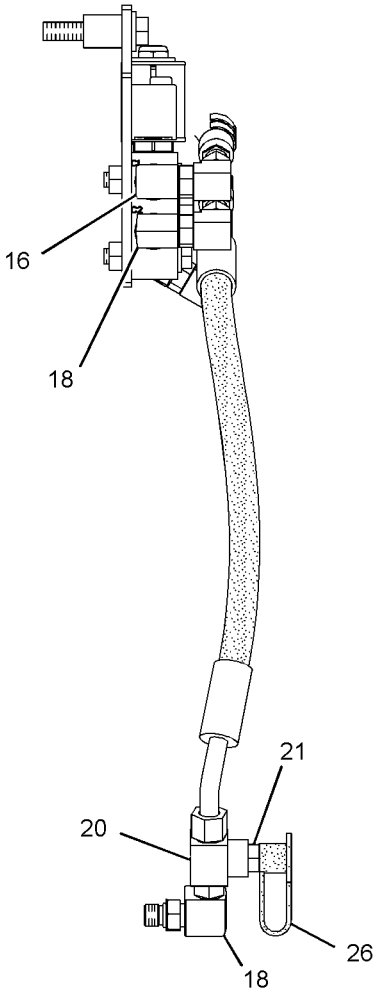

VIEW B-B

GRAPHIC #2 **<END>** g01427096

HYDRAULIC SYSTEM

260-8222 LINES GP-FRONT—QUICK COUPLER

S/N: CJN1-UP
PART OF 262-3249 CONTROL AR-COUPLER
AN ATTACHMENT
TYPE 2

SMCS-5057 **i03001048**

NOTE	REF NO	GRAPHIC REF	PART NUMBER	QTY	PART NAME 1 2 3 4 5 6 (PRODUCT LEVEL)	SEE PAGE
	1	1	*148-8336*	1	CONNECTOR AS	
		1	**3J-1907**	1	SEAL-O-RING	
		1	**6V-8397**	1	SEAL-O-RING	
		1	**6V-8636**	1	CONNECTOR	
	2	2	**3S-2093**	1	STRAP-CABLE	
	3	1	**4I-9521**	4	BAND-MARKER (RED, L1)	
	4	1	**4I-9522**	4	BAND-MARKER (YELLOW, L2)	
	5	1	**9X-6582**	2	NUT (13/16-16-THD)	
	6	1	**292-7635**	1	BOSS	
I	7	2	**123-2790**	1	HOSE AS	
M	8	2	**8T-4910**	2	BOLT (M12X1.75X60-MM)	
	10	2	**236-3200**	1	SUPPORT AS	
Y	11	2	**260-3877**	1	VALVE GP-SOLENOID & MANIFOLD (QUICK COUPLER)	745
	12	1	**266-0982**	1	GUARD	
CI	13	1	**307-4943**	2	HOSE AS	
I	14	2	**285-2906**	1	HOSE AS	
	15	2	*148-8368*	2	ELBOW AS	
					(EACH INCLUDES)	
		2	**3J-1907**	1	SEAL-O-RING	
		2	**4J-5477**	1	SEAL-O-RING	
		2	**6V-8627**	1	ELBOW	
	16	2	*285-2663*	2	FITTING AS (QUICK DISCONNECT, MALE)	
					(EACH INCLUDES)	
		2	**3J-1907**	1	SEAL-O-RING	
		2	**285-2664**	1	FITTING	
	17	2	*148-8378*	2	ELBOW AS	
					(EACH INCLUDES)	
		2	**3J-1907**	1	SEAL-O-RING	
		2	**6V-8397**	1	SEAL-O-RING	
		2	**6V-8724**	1	ELBOW	
	18	2	*164-6874*	3	FITTING AS-ELBOW (QUICK DISCONNECT, MALE)	
					(EACH INCLUDES)	
		2	**3J-1907**	1	SEAL-O-RING	
		2	**085-7356**	1	FITTING	
	19	1	*148-8419*	2	REDUCER AS	
					(EACH INCLUDES)	
		1	**4J-5477**	1	SEAL-O-RING	
		1	**6V-8935**	1	REDUCER-O-RING	
	20	2	*150-4027*	1	TEE AS	
		2	**3J-1907**	1	SEAL-O-RING	
		2	**3E-2310**	1	TEE	
		2	**6V-8397**	1	SEAL-O-RING	
	21	2	*164-5567*	1	COUPLER AS-QUICK DISCONNECT	
		2	**3J-1907**	1	SEAL-O-RING	
		2	**6V-3965**	1	FITTING (QUICK DISCONNECT)	
	22	1,2	**8T-4223**	3	WASHER-HARD (13.5X25.5X3-MM THK)	
M	23	1	**8T-4648**	1	BOLT (M12X1.75X70-MM)	
	24	1	**5P-7468**	1	CLIP (SLOT)	
	25	1	**5P-7469**	1	CLIP (TAB)	
	26	2	**6V-0852**	1	CAP-DUST	
M	27	2	**8T-4185**	2	BOLT (M10X1.5X50-MM)	
C	28	1	**7K-1181**	12	STRAP-CABLE	
	29	1	**8T-2525**	1	GROMMET	
C	30	2	**8T-4121**	2	WASHER-HARD (11X21X2.5-MM THK)	

C-CHANGE FROM PREVIOUS TYPE
I-REFER TO HYDRAULIC INFORMATION SYSTEM
M-METRIC PART
Y-SEPARATE ILLUSTRATION

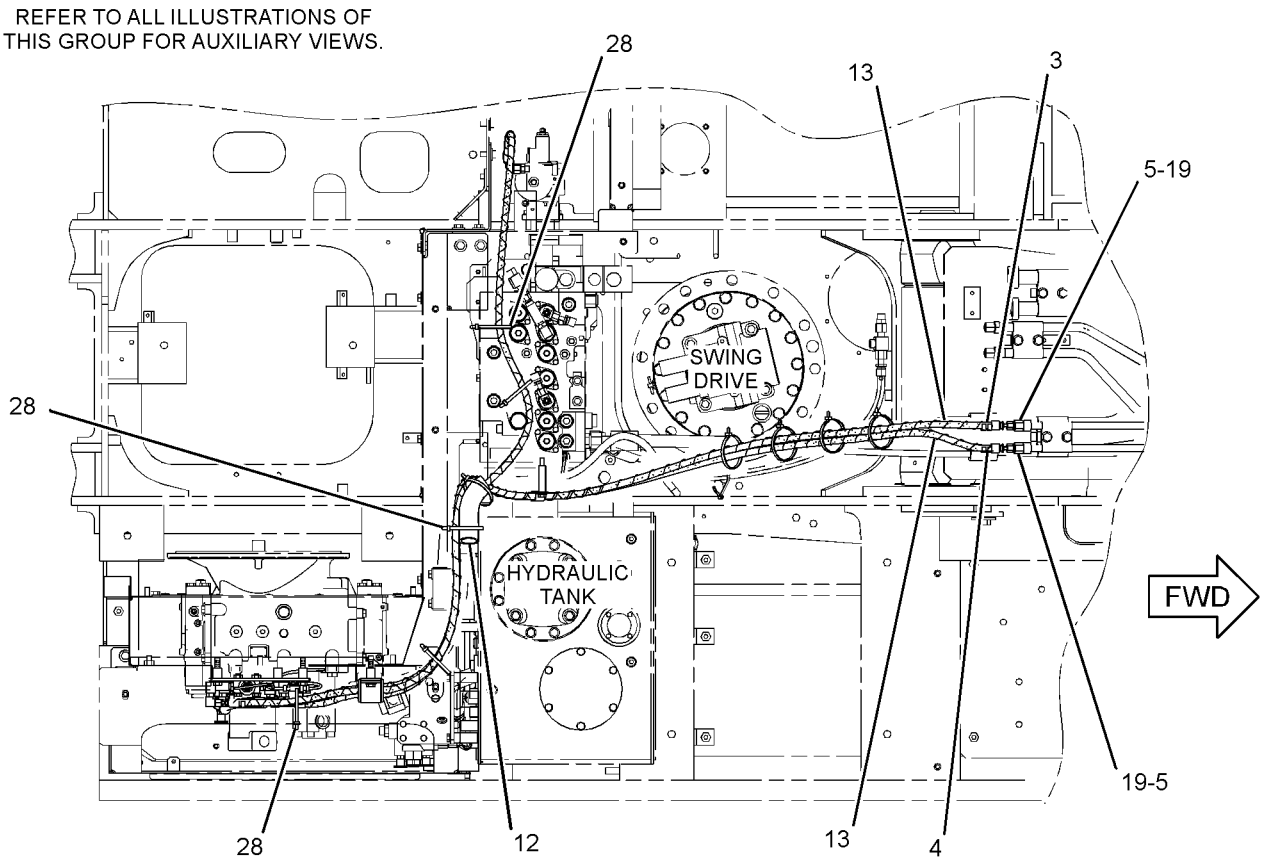

TOP VIEW

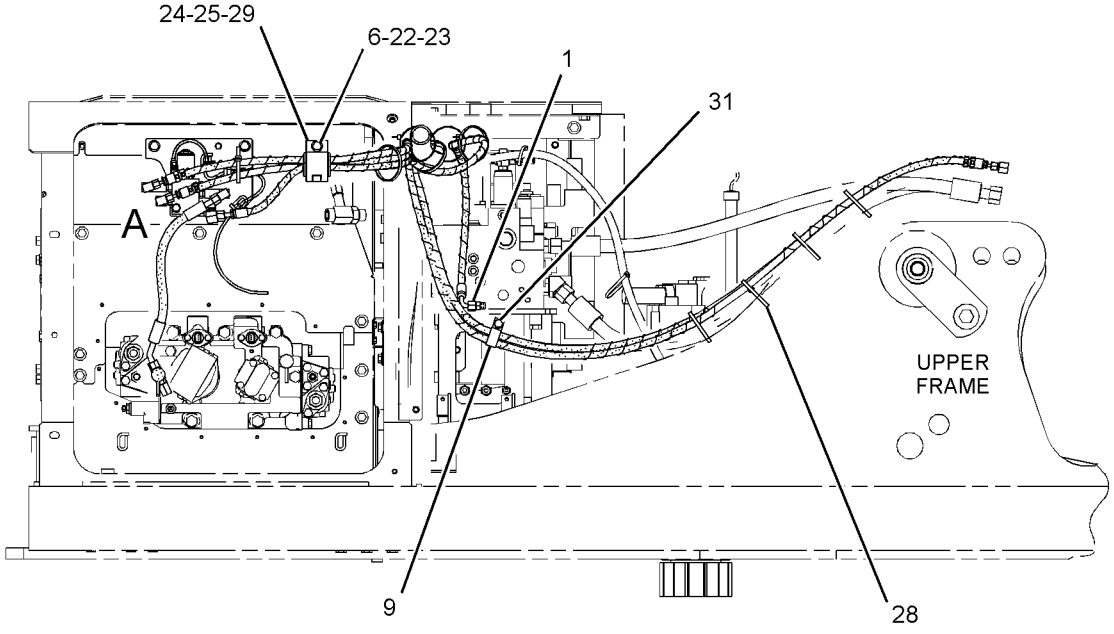

RIGHT SIDE VIEW

GRAPHIC #1 g01528634

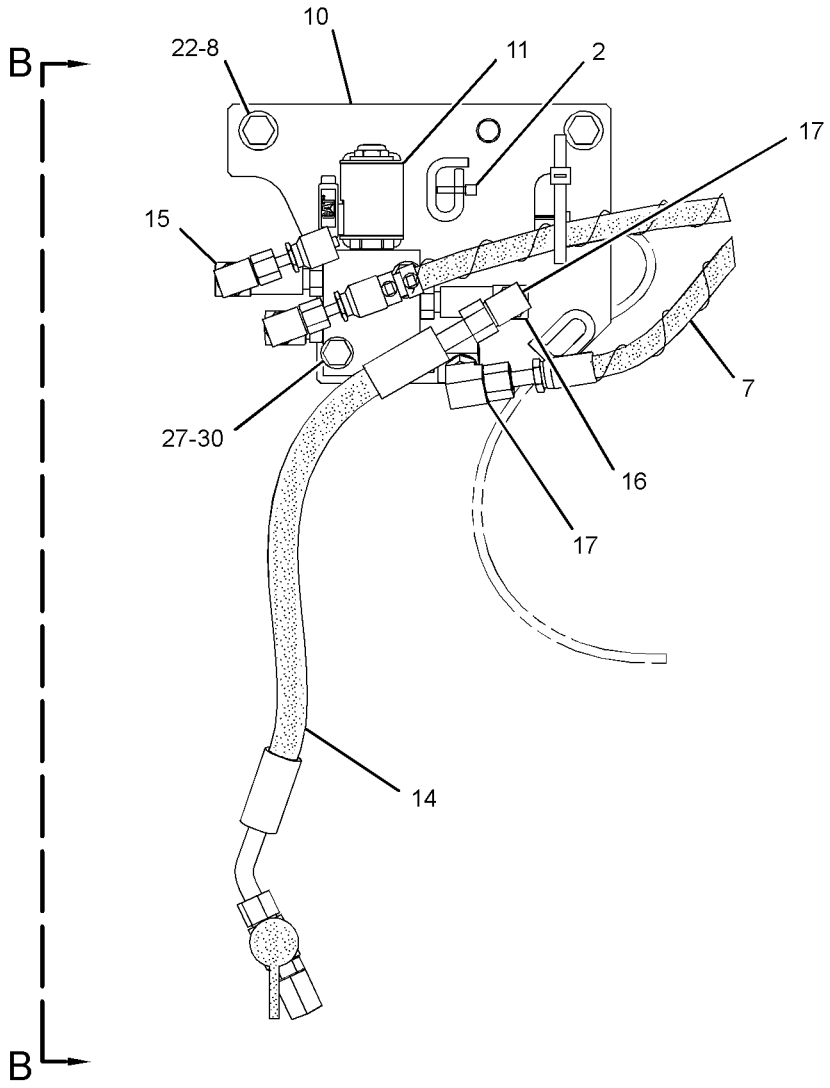

VIEW OF AREA A

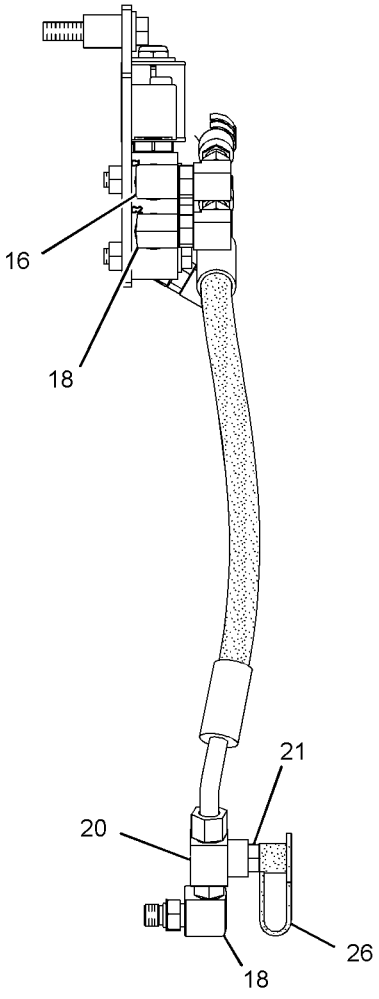

VIEW B-B

GRAPHIC #2 **<END>** g01427096

HYDRAULIC SYSTEM

260-8222 LINES GP-FRONT—QUICK COUPLER

S/N: CJN1-UP
PART OF 262-3249 CONTROL AR-COUPLER
AN ATTACHMENT
TYPE 3

SMCS-5057 **i03026101**

NOTE	REF NO	GRAPHIC REF	PART NUMBER	QTY	PART NAME 1 2 3 4 5 6 (PRODUCT LEVEL)	SEE PAGE
	1	1	*148-8336*	1	CONNECTOR AS	
		1	**3J-1907**	1	SEAL-O-RING	
		1	**6V-8397**	1	SEAL-O-RING	
		1	**6V-8636**	1	CONNECTOR	
	2	2	**3S-2093**	1	STRAP-CABLE	
	3	1	**4I-9521**	4	BAND-MARKER (RED, L1)	
	4	1	**4I-9522**	4	BAND-MARKER (YELLOW, L2)	
	5	1	**9X-6582**	2	NUT (13/16-16-THD)	
	6	1	**292-7635**	1	BOSS	
I	7	2	**123-2790**	1	HOSE AS	
M	8	2	**8T-4910**	2	BOLT (M12X1.75X60-MM)	
	10	2	**236-3200**	1	SUPPORT AS	
C	11	2	**328-2035**	1	VALVE GP-SOLENOID & MANIFOLD (QUICK COUPLER)	
		2	**260-3883**	1	COIL AS-SOLENOID	
		2	**1S-9593**	2	STRAP-CABLE	
		2	**186-3735**	2	PIN-CONNECTOR (16-GA TO 18-GA)	
		2	**230-4012**	1	RECEPTACLE AS-CONNECTOR (2-PIN)	
	12	1	**266-0982**	1	GUARD	
I	13	1	**307-4943**	2	HOSE AS	
I	14	2	**285-2906**	1	HOSE AS	
	15	2	*148-8368*	2	ELBOW AS	
					(EACH INCLUDES)	
		2	**3J-1907**	1	SEAL-O-RING	
		2	**4J-5477**	1	SEAL-O-RING	
		2	**6V-8627**	1	ELBOW	
	16	2	*285-2663*	2	FITTING AS (QUICK DISCONNECT, MALE)	
					(EACH INCLUDES)	
		2	**3J-1907**	1	SEAL-O-RING	
		2	**285-2664**	1	FITTING	
	17	2	*148-8378*	2	ELBOW AS	
					(EACH INCLUDES)	
		2	**3J-1907**	1	SEAL-O-RING	
		2	**6V-8397**	1	SEAL-O-RING	
		2	**6V-8724**	1	ELBOW	
	18	2	*164-6874*	3	FITTING AS-ELBOW (QUICK DISCONNECT, MALE)	
					(EACH INCLUDES)	
		2	**3J-1907**	1	SEAL-O-RING	
		2	**085-7356**	1	FITTING	
	19	1	*148-8419*	2	REDUCER AS	
					(EACH INCLUDES)	
		1	**4J-5477**	1	SEAL-O-RING	
		1	**6V-8935**	1	REDUCER-O-RING	
	20	2	*150-4027*	1	TEE AS	
		2	**3J-1907**	1	SEAL-O-RING	
		2	**3E-2310**	1	TEE	
		2	**6V-8397**	1	SEAL-O-RING	
	21	2	*164-5567*	1	COUPLER AS-QUICK DISCONNECT	
		2	**3J-1907**	1	SEAL-O-RING	
		2	**6V-3965**	1	FITTING (QUICK DISCONNECT)	
	22	1,2	**8T-4223**	3	WASHER-HARD (13.5X25.5X3-MM THK)	
M	23	1	**8T-4648**	1	BOLT (M12X1.75X70-MM)	
	24	1	**5P-7468**	1	CLIP (SLOT)	
	25	1	**5P-7469**	1	CLIP (TAB)	
	26	2	**6V-0852**	1	CAP-DUST	

260-8222 **LINES GP-FRONT** *(contd.)* **i03026101**

NOTE	REF NO	GRAPHIC REF	PART NUMBER	QTY	PART NAME 1 2 3 4 5 6 (PRODUCT LEVEL)	SEE PAGE
M	27	2	**8T-4185**	2	BOLT (M10X1.5X50-MM)	
	28	1	**7K-1181**	12	STRAP-CABLE	
	29	1	**8T-2525**	1	GROMMET	
	30	2	**8T-4121**	2	WASHER-HARD (11X21X2.5-MM THK)	

C-CHANGE FROM PREVIOUS TYPE
I-REFER TO HYDRAULIC INFORMATION SYSTEM
M-METRIC PART

REFER TO ALL ILLUSTRATIONS OF THIS GROUP FOR AUXILIARY VIEWS.

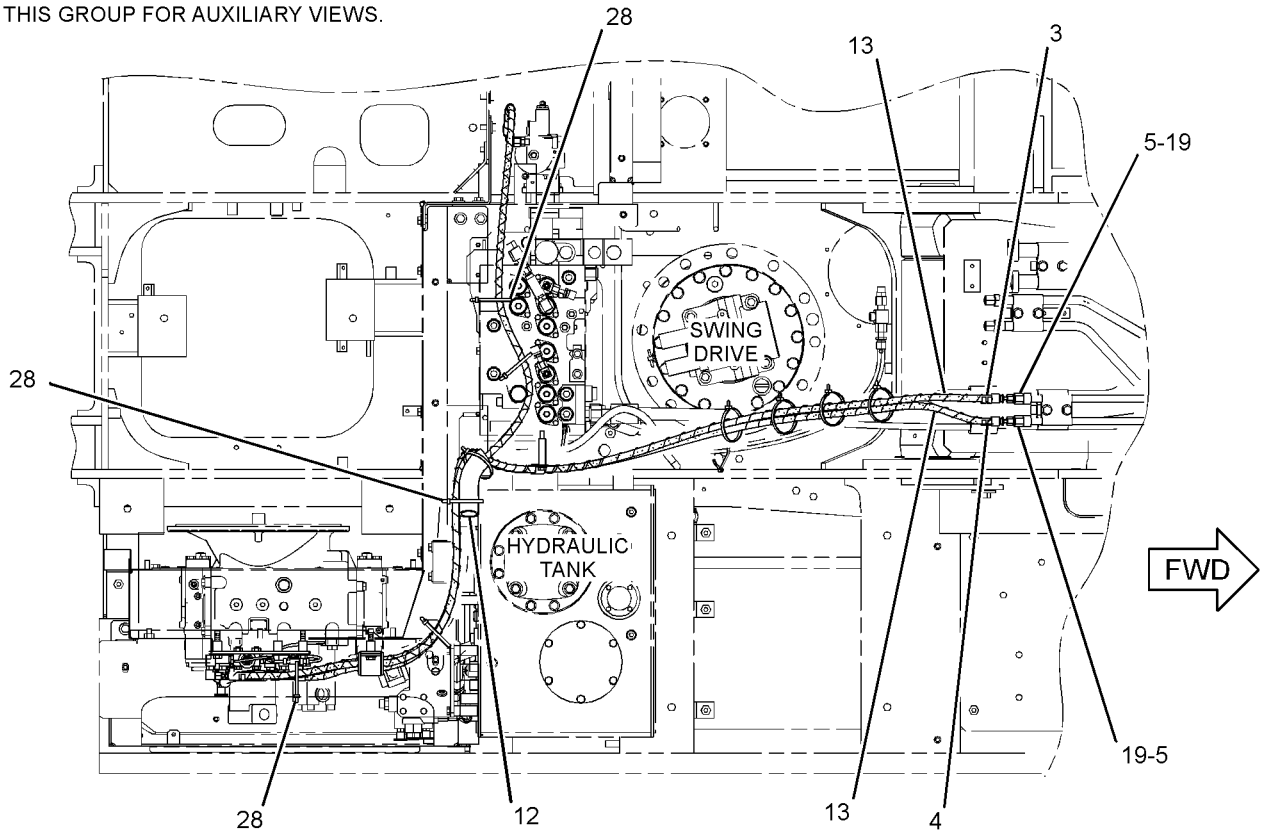

TOP VIEW

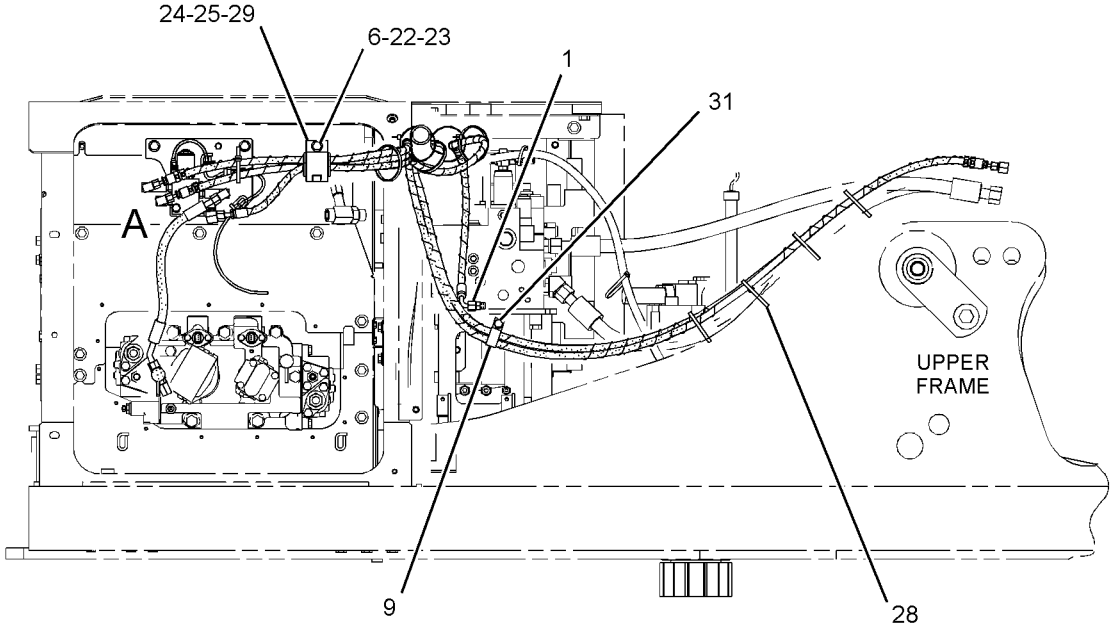

RIGHT SIDE VIEW

GRAPHIC #1

g01528634

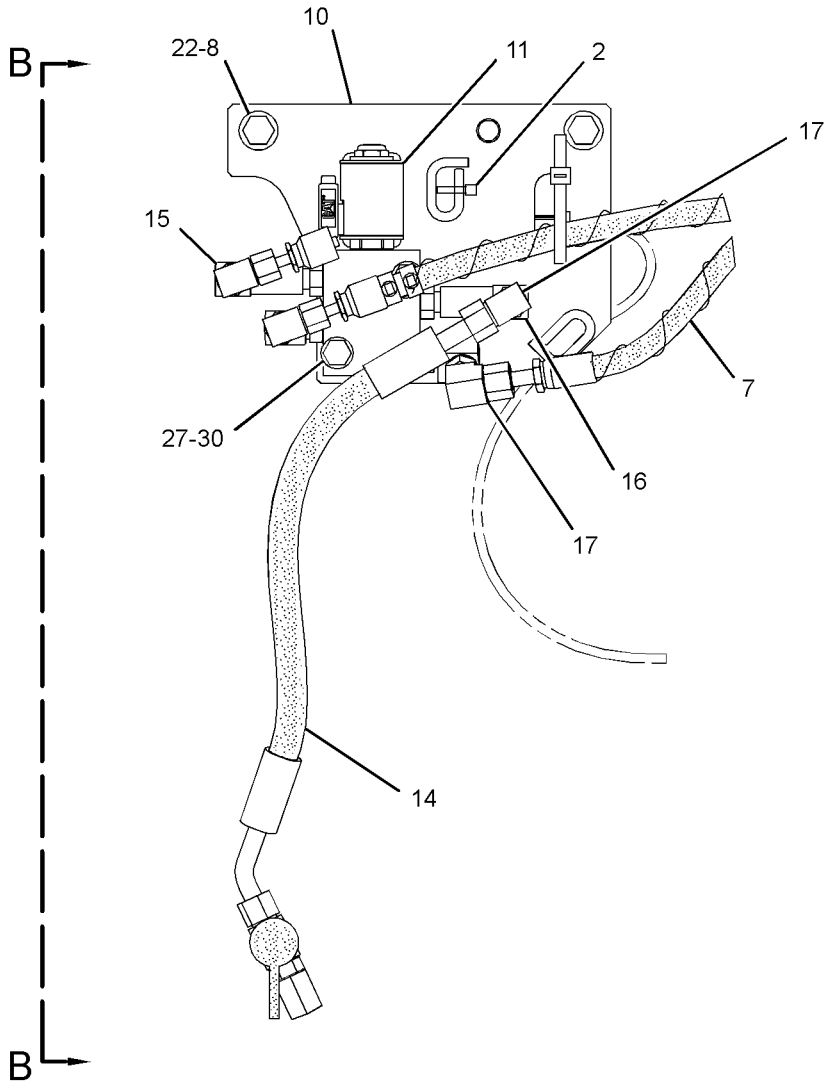

VIEW OF AREA A

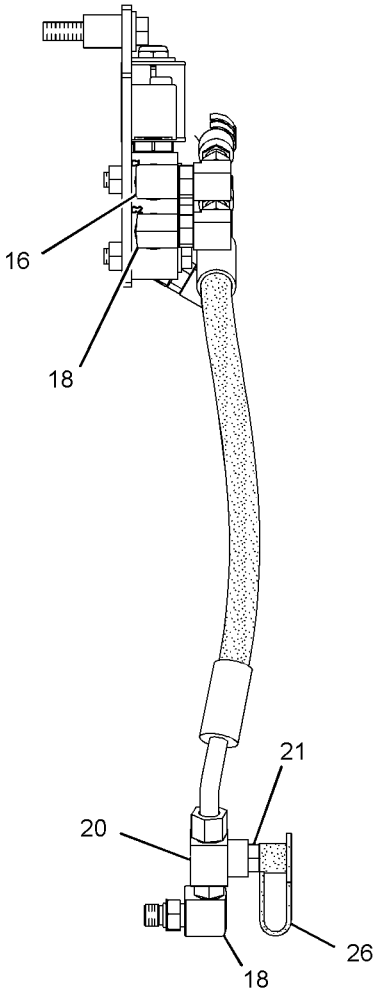

VIEW B-B

GRAPHIC #2 **<END>** g01427096

HYDRAULIC SYSTEM

260-8226 LINES GP-FRONT—SYSTEM 20, WORK TOOL PRIORITY

S/N: CJN1-UP
PART OF 259-7557 CONTROL AR-AUXILIARY
AN ATTACHMENT
TYPE 1

SMCS-5057 **i02747395**

NOTE	REF NO	GRAPHIC REF	PART NUMBER	QTY	PART NAME 1 2 3 4 5 6 (PRODUCT LEVEL)	SEE PAGE
	1	1	*106-8715*	1	ELBOW AS	
		1	**3D-2824**	1	SEAL-O-RING	
		1	**6V-9746**	1	SEAL-O-RING	
		1	**8C-8400**	1	ELBOW	
I	2	1	**128-7471**	1	HOSE AS	
I	3	2	**204-8393**	1	HOSE AS	
	4	2	**221-8859**	1	SENSOR AS-PRESSURE (1-PUMP/2-PUMP, 1-WAY FLOW)	
		2	**3E-3371**	1	WEDGE-RECEPTACLE LOCK (3-PIN)	
		2	**3K-0360**	1	SEAL-O-RING	
		2	**9X-3401**	3	PIN-CONNECTOR (16-GA TO 18-GA)	
					—OR—	
		2	**126-1767**	3	PIN-CONNECTOR (14-GA)	
		2	**171-0596**	1	RECEPTACLE AS	
I	5	2	**266-0939**	1	HOSE AS	
	6	2	**270-5672**	1	VALVE GP-SOLENOID & RELIEF (AUXILIARY, COMBINED FN, LH)	
	7	2	**270-5757**	1	VALVE GP-SOLENOID & RELIEF (AUXILIARY, COMBINED FN, RH)	
Y	8	2	**270-5985**	2	VALVE GP-RELIEF	721
	9	2	**270-6110**	1	CONNECTOR AS	
		2	**6V-9746**	1	SEAL-O-RING	
		2	**095-1592**	1	SEAL-O-RING	
I	10	1	**272-4153**	1	HOSE AS	
	11	2	**272-4157**	1	SUPPORT AS	
	12	2	**272-4159**	1	SUPPORT AS	
	13	1	**272-4164**	1	PLATE	
	14	2	**272-4165**	1	SUPPORT AS	
	15	2	**275-1749**	1	PLATE	
I	16	2	**275-1750**	1	HOSE AS	
	17	1	**278-6738**	1	SUPPORT AS	
I	18	2	**292-7327**	1	HOSE AS	
	19	1	*148-8327*	1	CONNECTOR AS	
		1	**3D-2824**	1	SEAL-O-RING	
		1	**6V-8637**	1	CONNECTOR	
		1	**6V-9746**	1	SEAL-O-RING	
	20	1	*148-8330*	1	CONNECTOR AS	
		1	**5K-9090**	1	SEAL-O-RING	
		1	**7M-8485**	1	SEAL-O-RING	
		1	**8T-0198**	1	CONNECTOR	
	21	2	*148-8335*	1	CONNECTOR AS	
		2	**5K-9090**	1	SEAL-O-RING	
		2	**6V-8635**	1	CONNECTOR	
		2	**7M-8485**	1	SEAL-O-RING	
	22	1	*148-8339*	1	CONNECTOR AS	
		1	**6V-8716**	1	CONNECTOR	
		1	**6V-9746**	1	SEAL-O-RING	
		1	**7M-8485**	1	SEAL-O-RING	
	23	2	*148-8347*	1	ELBOW AS	
		2	**3D-2824**	1	SEAL-O-RING	
		2	**6V-9007**	1	ELBOW	
		2	**6V-9746**	1	SEAL-O-RING	
J	24	1	*148-8352*	2	ELBOW AS	
					(EACH INCLUDES)	
		1	**5K-9090**	1	SEAL-O-RING	

260-8226 **LINES GP-FRONT** *(contd.)* **i02747395**

NOTE	REF NO	GRAPHIC REF	PART NUMBER	QTY	PART NAME 1 2 3 4 5 6 (PRODUCT LEVEL)	SEE PAGE
		1	**6V-9854**	1	ELBOW	
L	25	1	*148-8357*	1	ELBOW AS	
		1	**5K-9090**	1	SEAL-O-RING	
		1	**6V-9008**	1	ELBOW	
		1	**7M-8485**	1	SEAL-O-RING	
	26	2	*148-8392*	1	ELBOW AS	
		2	**6V-9746**	1	SEAL-O-RING	
		2	**6V-9853**	1	ELBOW	
	27	2	*148-8429*	1	TEE AS	
		2	**5K-9090**	2	SEAL-O-RING	
		2	**6V-9840**	1	TEE-SWIVEL	
L	28	1	*153-6236*	1	REDUCER AS	
		1	**6V-8946**	1	REDUCER	
		1	**6V-9746**	1	SEAL-O-RING	
	29	2	*153-6242*	2	CONNECTOR AS	
					(EACH INCLUDES)	
		2	**6V-9746**	1	SEAL-O-RING	
		2	**7M-8485**	1	SEAL-O-RING	
		2	**8T-0197**	1	CONNECTOR	
	30	2	*164-4180*	1	PLUG AS	
		2	**7M-8485**	1	SEAL-O-RING	
		2	**9S-4181**	1	PLUG-O-RING	
	31	2	*164-5574*	1	TEE AS	
		2	**3D-2824**	1	SEAL-O-RING	
		2	**6V-8784**	1	TEE-FACE SEAL	
		2	**6V-9746**	2	SEAL-O-RING	
L	32	1	*164-6858*	1	TEE AS	
		1	**5K-9090**	2	SEAL-O-RING	
		1	**6V-8778**	1	TEE-FACE SEAL	
		1	**7M-8485**	1	SEAL-O-RING	
	33	1	*171-6723*	1	ELBOW AS	
		1	**6V-9746**	1	SEAL-O-RING	
		1	**8T-8899**	1	ELBOW	
	34	1	**5P-7468**	2	CLIP (SLOT)	
	35	1	**5P-7469**	2	CLIP (TAB)	
	36	1	**6V-1874**	1	GROMMET	
	37	1,2	**8T-4121**	8	WASHER-HARD (11X21X2.5-MM THK)	
M	38	2	**8T-4136**	4	BOLT (M10X1.5X25-MM)	
M	39	1	**8T-4137**	2	BOLT (M10X1.5X20-MM)	
M	40	1	**8T-4139**	2	BOLT (M12X1.75X30-MM)	
M	41	2	**8T-4183**	4	BOLT (M12X1.75X40-MM)	
M	42	1	**8T-4195**	2	BOLT (M10X1.5X30-MM)	
	43	1,2	**8T-4223**	12	WASHER-HARD (13.5X25.5X3-MM THK)	
M	44	1,2	**8T-4956**	6	BOLT (M12X1.75X35-MM)	
	45	1	**8T-7087**	1	GROMMET	

I-REFER TO HYDRAULIC INFORMATION SYSTEM
J-FOR USE WITH MEDIUM PRESSURE & COMBINED FUNCTION
L-FOR USE WITH COMBINED FUNCTION ONLY
M-METRIC PART
Y-SEPARATE ILLUSTRATION

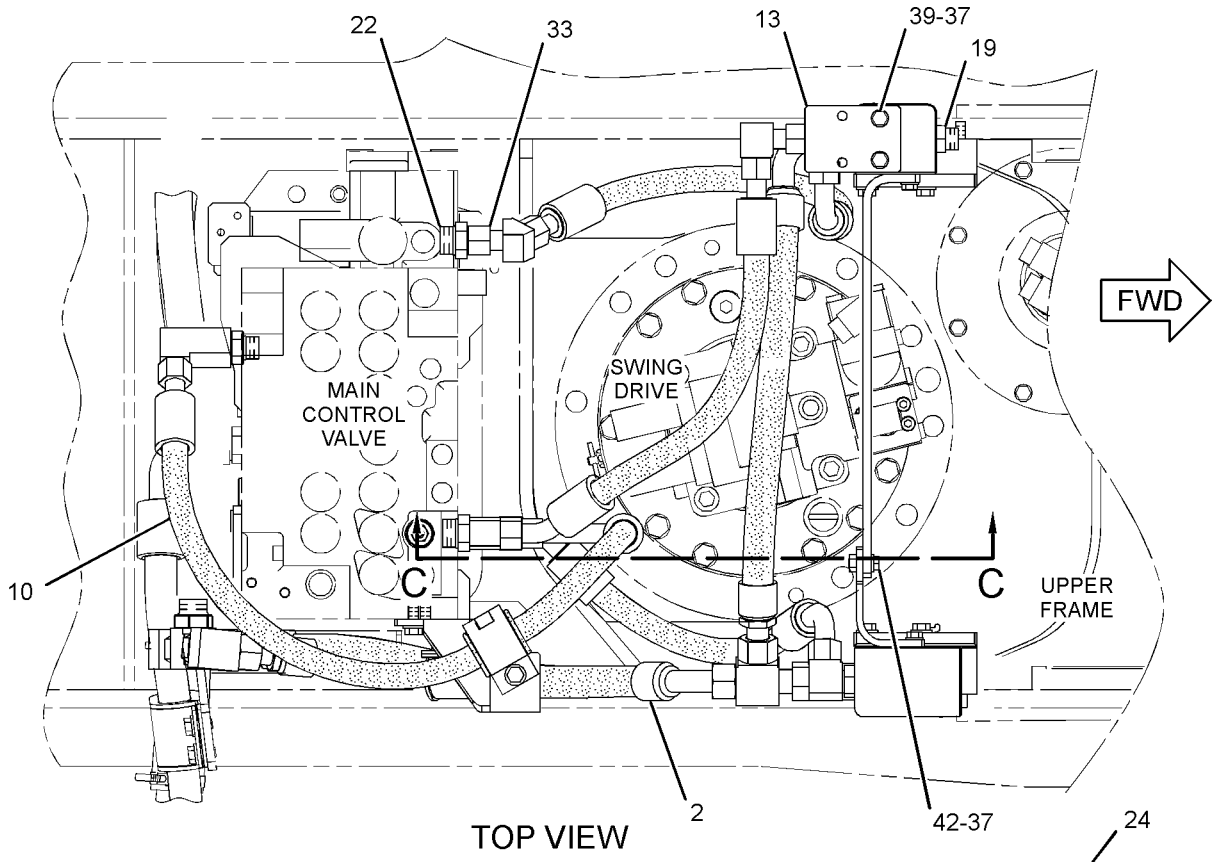

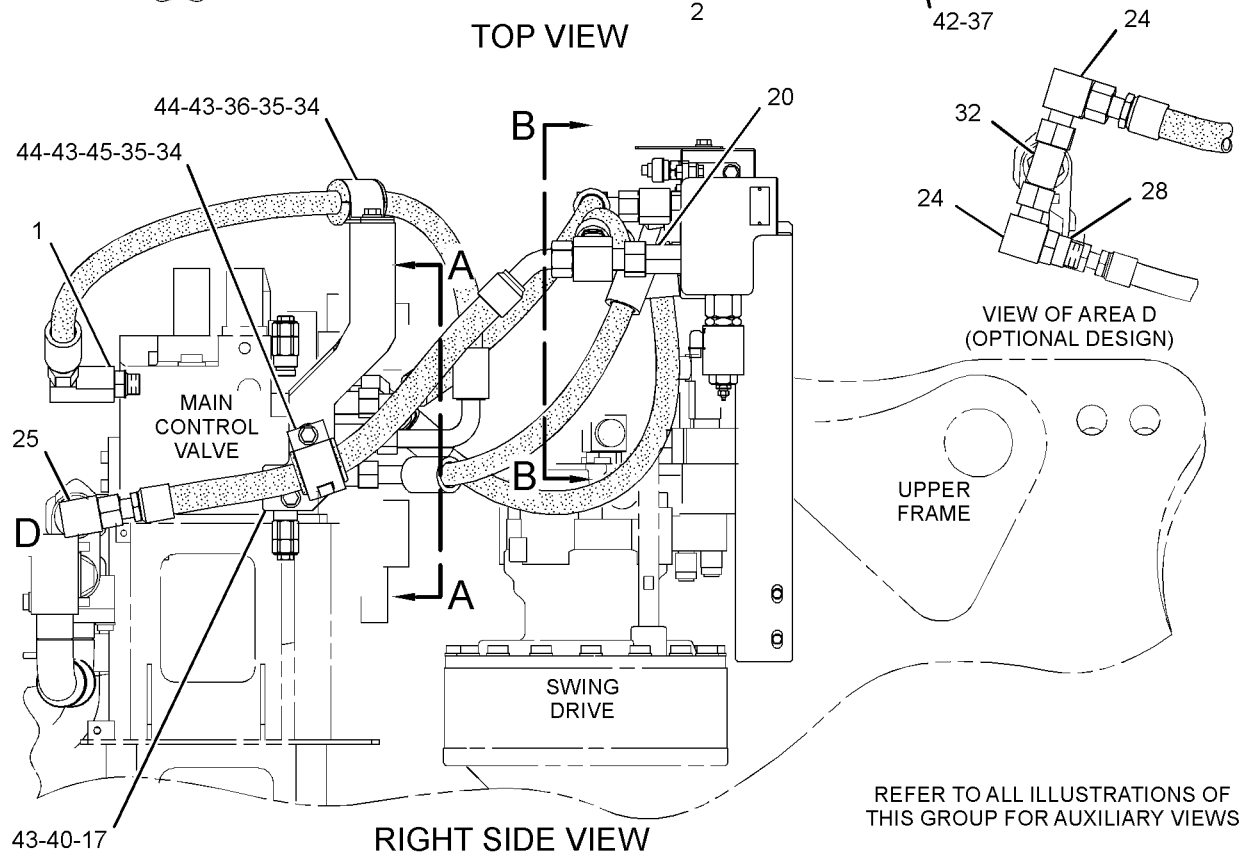

GRAPHIC #1 g01383659

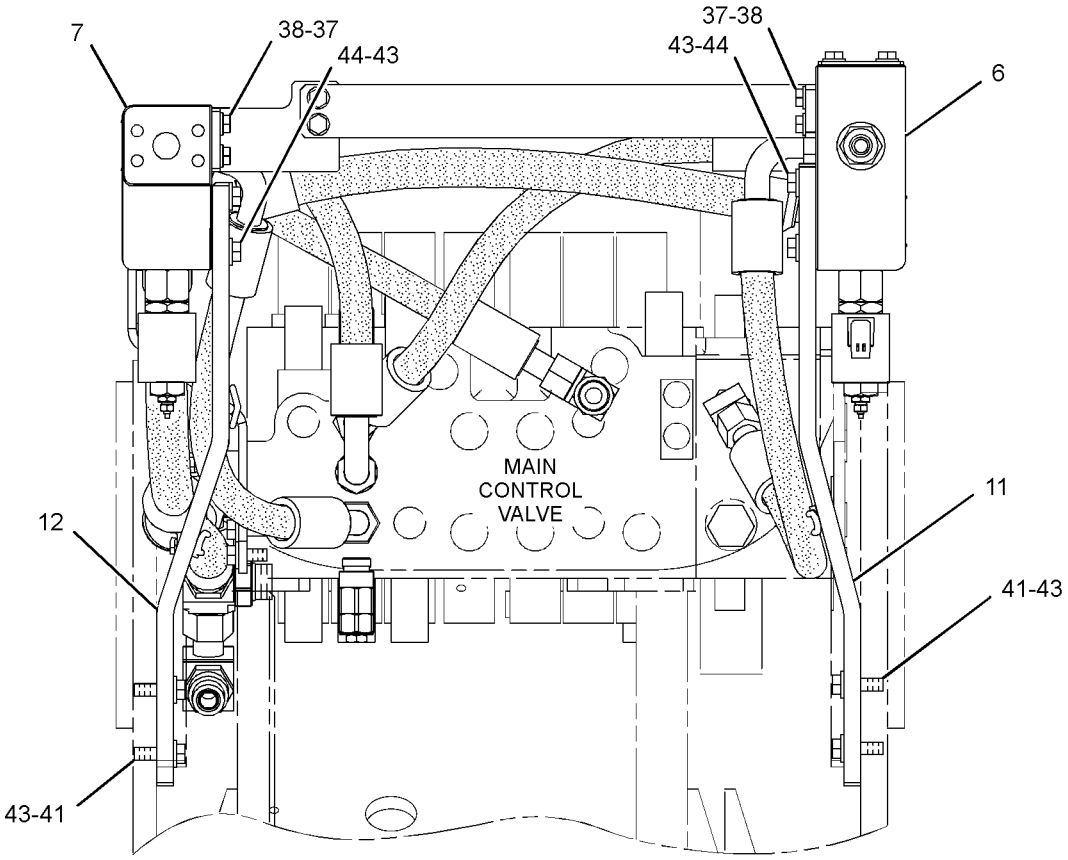

FRONT VIEW

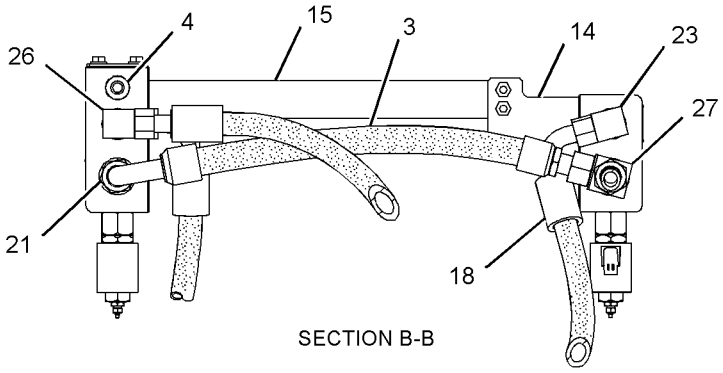

SECTION B-B

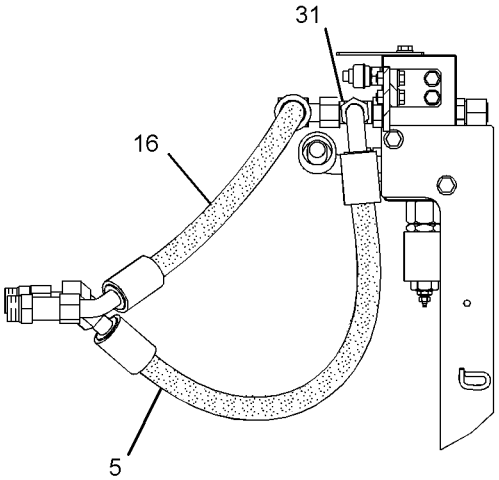

SECTION C-C

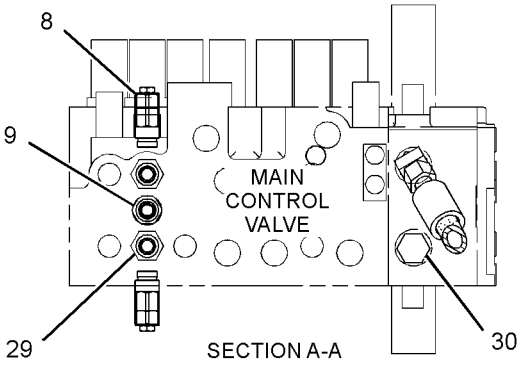

SECTION A-A

GRAPHIC #2 **<END>** g01383306

HYDRAULIC SYSTEM

260-8226 LINES GP-FRONT—SYSTEM 20, WORK TOOL PRIORITY

S/N: CJN1-UP
PART OF 259-7557 CONTROL AR-AUXILIARY
AN ATTACHMENT
TYPE 2

SMCS-5057 **i03001049**

NOTE	REF NO	GRAPHIC REF	PART NUMBER	QTY	PART NAME 1 2 3 4 5 6 (PRODUCT LEVEL)	SEE PAGE
	1	1	*106-8715*	1	ELBOW AS	
		1	**3D-2824**	1	SEAL-O-RING	
		1	**6V-9746**	1	SEAL-O-RING	
		1	**8C-8400**	1	ELBOW	
I	2	1	**128-7471**	1	HOSE AS	
I	3	2	**204-8393**	1	HOSE AS	
	4	2	**221-8859**	1	SENSOR AS-PRESSURE (1-PUMP/2-PUMP, 1-WAY FLOW)	
		2	**3E-3371**	1	WEDGE-RECEPTACLE LOCK (3-PIN)	
		2	**3K-0360**	1	SEAL-O-RING	
		2	**9X-3401**	3	PIN-CONNECTOR (16-GA TO 18-GA)	
					—OR—	
		2	**126-1767**	3	PIN-CONNECTOR (14-GA)	
		2	**171-0596**	1	RECEPTACLE AS	
I	5	2	**266-0939**	1	HOSE AS	
	6	2	**270-5672**	1	VALVE GP-SOLENOID & RELIEF (AUXILIARY, COMBINED FN, LH)	
	7	2	**270-5757**	1	VALVE GP-SOLENOID & RELIEF (AUXILIARY, COMBINED FN, RH)	
CY	8	2	**309-9977**	2	VALVE GP-PILOT RELIEF (LINE)	717
	9	2	**270-6110**	1	CONNECTOR AS	
		2	**6V-9746**	1	SEAL-O-RING	
		2	**095-1592**	1	SEAL-O-RING	
I	10	1	**272-4153**	1	HOSE AS	
	11	2	**272-4157**	1	SUPPORT AS	
	12	2	**272-4159**	1	SUPPORT AS	
	13	1	**272-4164**	1	PLATE	
	14	2	**272-4165**	1	SUPPORT AS	
	15	2	**275-1749**	1	PLATE	
I	16	2	**275-1750**	1	HOSE AS	
	17	1	**278-6738**	1	SUPPORT AS	
I	18	2	**292-7327**	1	HOSE AS	
	19	1	*148-8327*	1	CONNECTOR AS	
		1	**3D-2824**	1	SEAL-O-RING	
		1	**6V-8637**	1	CONNECTOR	
		1	**6V-9746**	1	SEAL-O-RING	
	20	1	*148-8330*	1	CONNECTOR AS	
		1	**5K-9090**	1	SEAL-O-RING	
		1	**7M-8485**	1	SEAL-O-RING	
		1	**8T-0198**	1	CONNECTOR	
	21	2	*148-8335*	1	CONNECTOR AS	
		2	**5K-9090**	1	SEAL-O-RING	
		2	**6V-8635**	1	CONNECTOR	
		2	**7M-8485**	1	SEAL-O-RING	
	22	1	*148-8339*	1	CONNECTOR AS	
		1	**6V-8716**	1	CONNECTOR	
		1	**6V-9746**	1	SEAL-O-RING	
		1	**7M-8485**	1	SEAL-O-RING	
	23	2	*148-8347*	1	ELBOW AS	
		2	**3D-2824**	1	SEAL-O-RING	
		2	**6V-9007**	1	ELBOW	
		2	**6V-9746**	1	SEAL-O-RING	
J	24	1	*148-8352*	2	ELBOW AS	
					(EACH INCLUDES)	
		1	**5K-9090**	1	SEAL-O-RING	

260-8226 **LINES GP-FRONT** *(contd.)* **i03001049**

NOTE	REF NO	GRAPHIC REF	PART NUMBER	QTY	PART NAME 1 2 3 4 5 6 (PRODUCT LEVEL)	SEE PAGE
		1	**6V-9854**	1	ELBOW	
L	25	1	*148-8357*	1	ELBOW AS	
		1	**5K-9090**	1	SEAL-O-RING	
		1	**6V-9008**	1	ELBOW	
		1	**7M-8485**	1	SEAL-O-RING	
	26	2	*148-8392*	1	ELBOW AS	
		2	**6V-9746**	1	SEAL-O-RING	
		2	**6V-9853**	1	ELBOW	
	27	2	*148-8429*	1	TEE AS	
		2	**5K-9090**	2	SEAL-O-RING	
		2	**6V-9840**	1	TEE-SWIVEL	
L	28	1	*153-6236*	1	REDUCER AS	
		1	**6V-8946**	1	REDUCER	
		1	**6V-9746**	1	SEAL-O-RING	
	29	2	*153-6242*	2	CONNECTOR AS	
					(EACH INCLUDES)	
		2	**6V-9746**	1	SEAL-O-RING	
		2	**7M-8485**	1	SEAL-O-RING	
		2	**8T-0197**	1	CONNECTOR	
	30	2	*164-4180*	1	PLUG AS	
		2	**7M-8485**	1	SEAL-O-RING	
		2	**9S-4181**	1	PLUG-O-RING	
	31	2	*164-5574*	1	TEE AS	
		2	**3D-2824**	1	SEAL-O-RING	
		2	**6V-8784**	1	TEE-FACE SEAL	
		2	**6V-9746**	2	SEAL-O-RING	
L	32	1	*164-6858*	1	TEE AS	
		1	**5K-9090**	2	SEAL-O-RING	
		1	**6V-8778**	1	TEE-FACE SEAL	
		1	**7M-8485**	1	SEAL-O-RING	
	33	1	*171-6723*	1	ELBOW AS	
		1	**6V-9746**	1	SEAL-O-RING	
		1	**8T-8899**	1	ELBOW	
	34	1	**5P-7468**	2	CLIP (SLOT)	
	35	1	**5P-7469**	2	CLIP (TAB)	
	36	1	**6V-1874**	1	GROMMET	
	37	1,2	**8T-4121**	8	WASHER-HARD (11X21X2.5-MM THK)	
M	38	2	**8T-4136**	4	BOLT (M10X1.5X25-MM)	
M	39	1	**8T-4137**	2	BOLT (M10X1.5X20-MM)	
M	40	1	**8T-4139**	2	BOLT (M12X1.75X30-MM)	
M	41	2	**8T-4183**	4	BOLT (M12X1.75X40-MM)	
M	42	1	**8T-4195**	2	BOLT (M10X1.5X30-MM)	
	43	1,2	**8T-4223**	12	WASHER-HARD (13.5X25.5X3-MM THK)	
M	44	1,2	**8T-4956**	6	BOLT (M12X1.75X35-MM)	
	45	1	**8T-7087**	1	GROMMET	
	46	1	**7K-1181**	2	STRAP-CABLE	
	47	1	**282-7106**	1	GROMMET	

C-CHANGE FROM PREVIOUS TYPE
I-REFER TO HYDRAULIC INFORMATION SYSTEM
J-FOR USE WITH MEDIUM PRESSURE & COMBINED FUNCTION
L-FOR USE WITH COMBINED FUNCTION ONLY
M-METRIC PART
Y-SEPARATE ILLUSTRATION

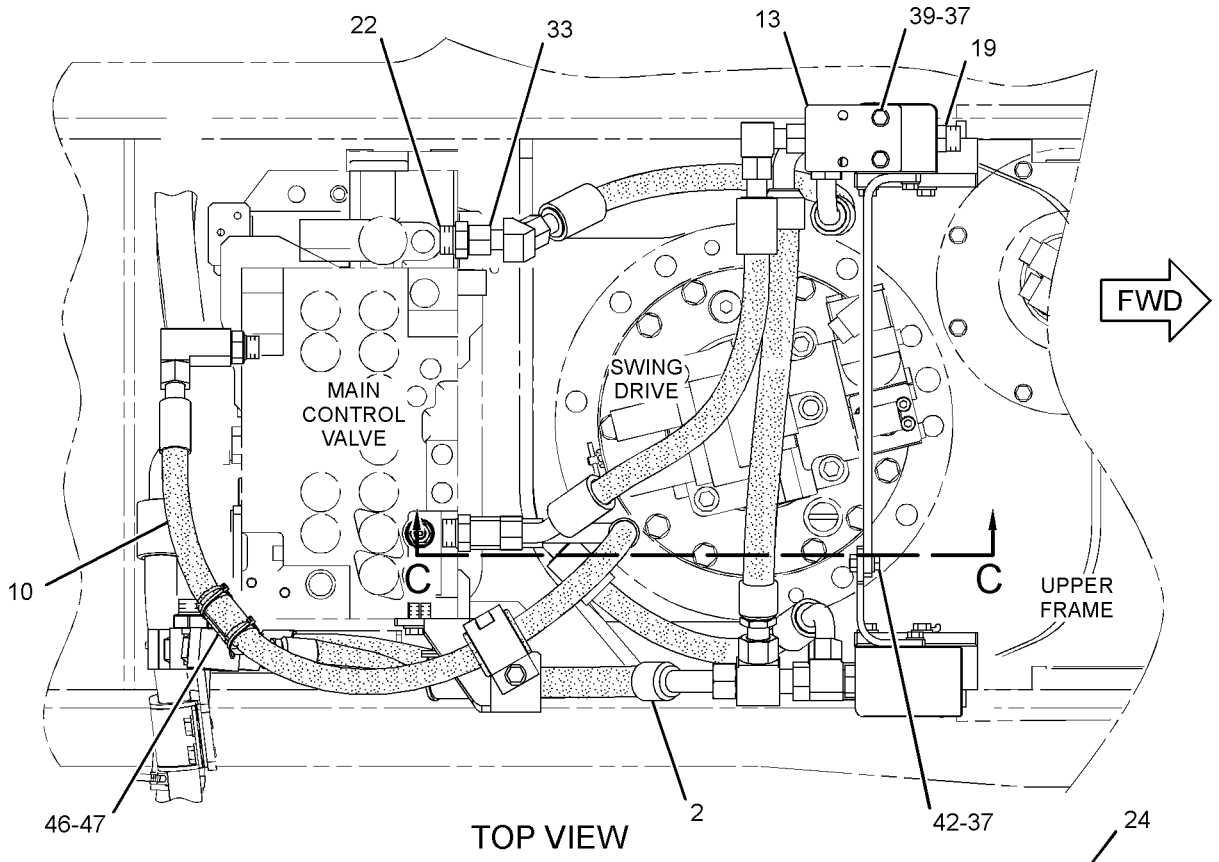

TOP VIEW

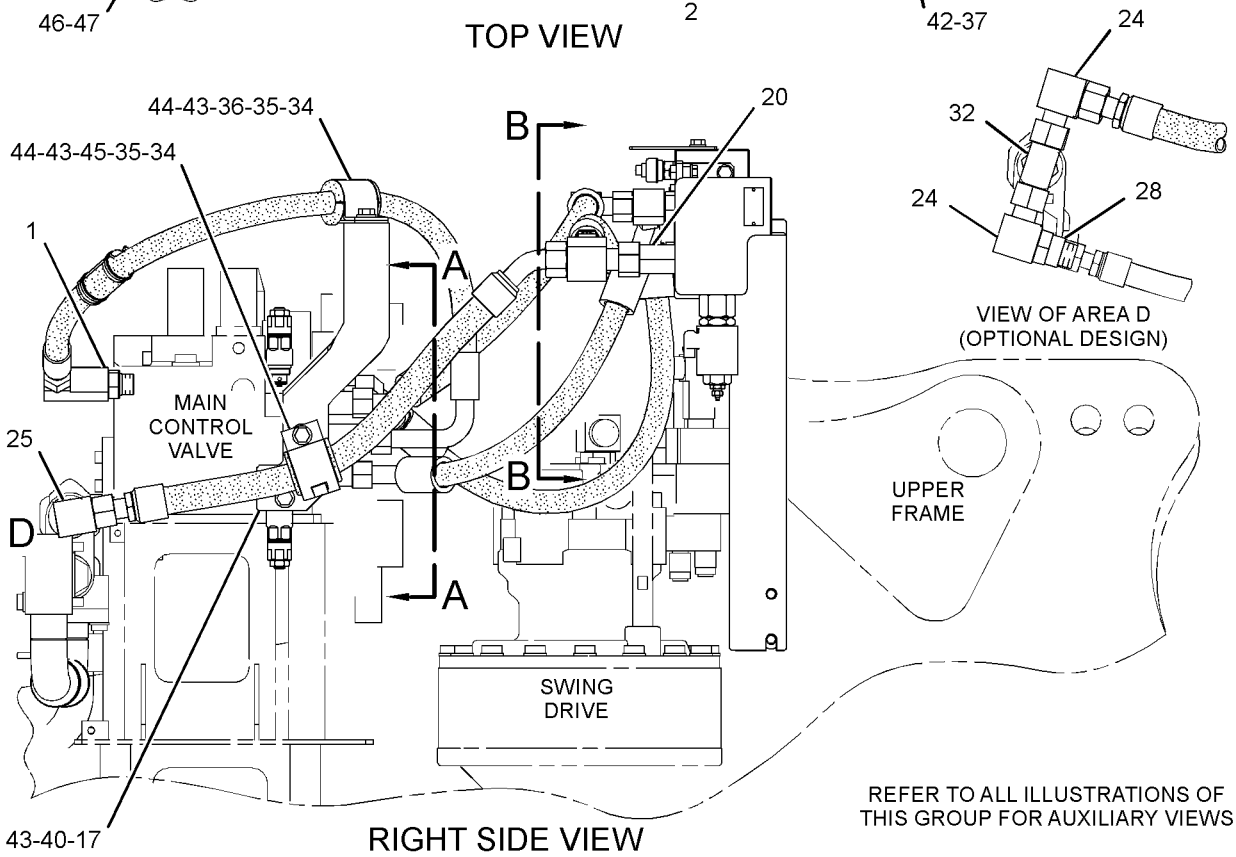

RIGHT SIDE VIEW

GRAPHIC #1 g01622298

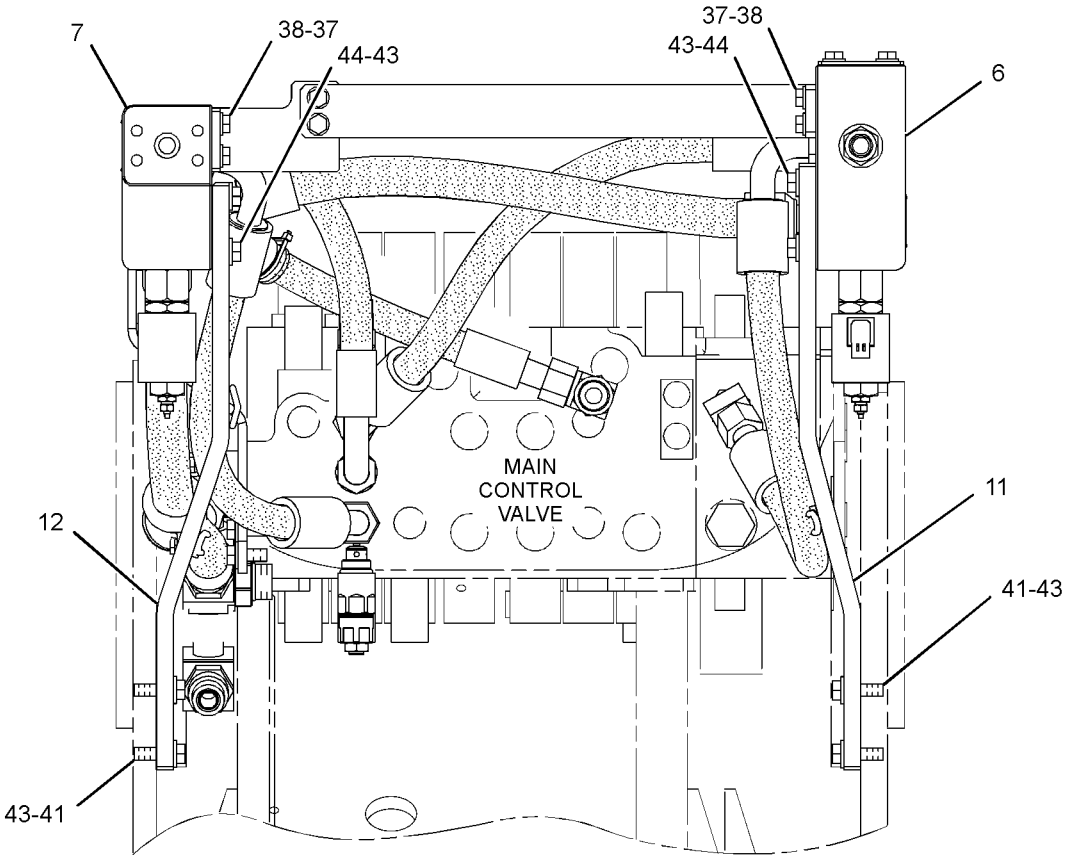

FRONT VIEW

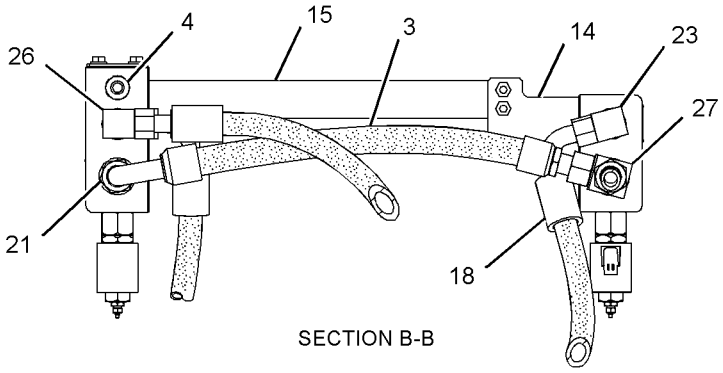

SECTION B-B

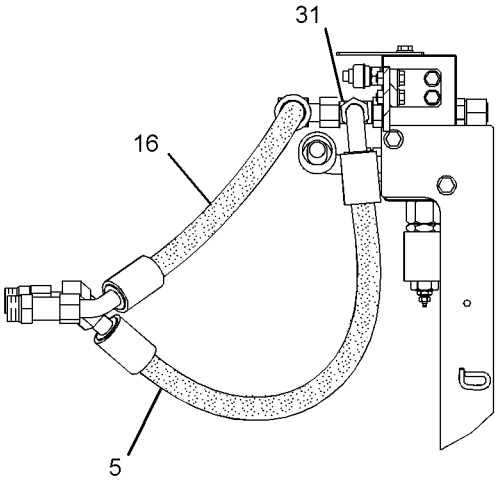

SECTION C-C

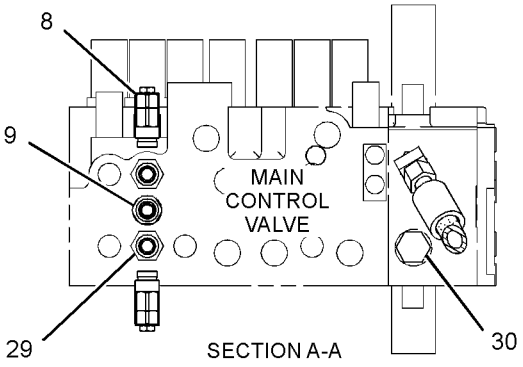

SECTION A-A

GRAPHIC #2 **<END>** g01622300

HYDRAULIC SYSTEM

260-8226 LINES GP-FRONT—SYSTEM 20, WORK TOOL PRIORITY

S/N: CJN1-UP
PART OF 259-7557 CONTROL AR-AUXILIARY
AN ATTACHMENT
TYPE 3

SMCS-5057 **i03001231**

NOTE	REF NO	GRAPHIC REF	PART NUMBER	QTY	PART NAME 1 2 3 4 5 6 (PRODUCT LEVEL)	SEE PAGE
	1	1	*106-8715*	1	ELBOW AS	
		1	**3D-2824**	1	SEAL-O-RING	
		1	**6V-9746**	1	SEAL-O-RING	
		1	**8C-8400**	1	ELBOW	
I	2	1	**128-7471**	1	HOSE AS	
I	3	1	**204-8393**	1	HOSE AS	
	4	1	**221-8859**	1	SENSOR AS-PRESSURE (1-PUMP/2-PUMP, 1-WAY FLOW)	
		1	**3E-3371**	1	WEDGE-RECEPTACLE LOCK (3-PIN)	
		1	**3K-0360**	1	SEAL-O-RING	
		1	**9X-3401**	3	PIN-CONNECTOR (16-GA TO 18-GA)	
					—OR—	
		1	**126-1767**	3	PIN-CONNECTOR (14-GA)	
		1	**171-0596**	1	RECEPTACLE AS	
I	5	1	**266-0939**	1	HOSE AS	
	6	1	**270-5672**	1	VALVE GP-SOLENOID & RELIEF (AUXILIARY, COMBINED FN, LH)	
	7	1	**270-5757**	1	VALVE GP-SOLENOID & RELIEF (AUXILIARY, COMBINED FN, RH)	
Y	8	1	**309-9977**	2	VALVE GP-PILOT RELIEF (LINE)	717
	9	1	**270-6110**	1	CONNECTOR AS	
		1	**6V-9746**	1	SEAL-O-RING	
		1	**095-1592**	1	SEAL-O-RING	
CI	10	1	**320-0000**	1	HOSE AS	
	11	1	**272-4157**	1	SUPPORT AS	
	12	1	**272-4159**	1	SUPPORT AS	
	13	1	**272-4164**	1	PLATE	
	14	1	**272-4165**	1	SUPPORT AS	
	15	1	**275-1749**	1	PLATE	
I	16	1	**275-1750**	1	HOSE AS	
	17	1	**278-6738**	1	SUPPORT AS	
I	18	1	**292-7327**	1	HOSE AS	
	19	1	*148-8327*	1	CONNECTOR AS	
		1	**3D-2824**	1	SEAL-O-RING	
		1	**6V-8637**	1	CONNECTOR	
		1	**6V-9746**	1	SEAL-O-RING	
	20	1	*148-8330*	1	CONNECTOR AS	
		1	**5K-9090**	1	SEAL-O-RING	
		1	**7M-8485**	1	SEAL-O-RING	
		1	**8T-0198**	1	CONNECTOR	
	21	1	*148-8335*	1	CONNECTOR AS	
		1	**5K-9090**	1	SEAL-O-RING	
		1	**6V-8635**	1	CONNECTOR	
		1	**7M-8485**	1	SEAL-O-RING	
	22	1	*148-8339*	1	CONNECTOR AS	
		1	**6V-8716**	1	CONNECTOR	
		1	**6V-9746**	1	SEAL-O-RING	
		1	**7M-8485**	1	SEAL-O-RING	
	23	1	*148-8347*	1	ELBOW AS	
		1	**3D-2824**	1	SEAL-O-RING	
		1	**6V-9007**	1	ELBOW	
		1	**6V-9746**	1	SEAL-O-RING	
J	24	1	*148-8352*	2	ELBOW AS	
					(EACH INCLUDES)	
		1	**5K-9090**	1	SEAL-O-RING	

260-8226 **LINES GP-FRONT** *(contd.)* **i03001231**

NOTE	REF NO	GRAPHIC REF	PART NUMBER	QTY	PART NAME 1 2 3 4 5 6 (PRODUCT LEVEL)	SEE PAGE
		1	**6V-9854**	1	ELBOW	
L	25	1	*148-8357*	1	ELBOW AS	
		1	**5K-9090**	1	SEAL-O-RING	
		1	**6V-9008**	1	ELBOW	
		1	**7M-8485**	1	SEAL-O-RING	
	26	1	*148-8392*	1	ELBOW AS	
		1	**6V-9746**	1	SEAL-O-RING	
		1	**6V-9853**	1	ELBOW	
	27	1	*148-8429*	1	TEE AS	
		1	**5K-9090**	2	SEAL-O-RING	
		1	**6V-9840**	1	TEE-SWIVEL	
L	28	1	*153-6236*	1	REDUCER AS	
		1	**6V-8946**	1	REDUCER	
		1	**6V-9746**	1	SEAL-O-RING	
	29	1	*153-6242*	2	CONNECTOR AS	
					(EACH INCLUDES)	
		1	**6V-9746**	1	SEAL-O-RING	
		1	**7M-8485**	1	SEAL-O-RING	
		1	**8T-0197**	1	CONNECTOR	
	30	1	*164-4180*	1	PLUG AS	
		1	**7M-8485**	1	SEAL-O-RING	
		1	**9S-4181**	1	PLUG-O-RING	
	31	1	*164-5574*	1	TEE AS	
		1	**3D-2824**	1	SEAL-O-RING	
		1	**6V-8784**	1	TEE-FACE SEAL	
		1	**6V-9746**	2	SEAL-O-RING	
L	32	1	*164-6858*	1	TEE AS	
		1	**5K-9090**	2	SEAL-O-RING	
		1	**6V-8778**	1	TEE-FACE SEAL	
		1	**7M-8485**	1	SEAL-O-RING	
	33	1	*171-6723*	1	ELBOW AS	
		1	**6V-9746**	1	SEAL-O-RING	
		1	**8T-8899**	1	ELBOW	
	34	1	**5P-7468**	2	CLIP (SLOT)	
	35	1	**5P-7469**	2	CLIP (TAB)	
	36	1	**6V-1874**	1	GROMMET	
	37	1	**8T-4121**	8	WASHER-HARD (11X21X2.5-MM THK)	
M	38	1	**8T-4136**	4	BOLT (M10X1.5X25-MM)	
M	39	1	**8T-4137**	2	BOLT (M10X1.5X20-MM)	
M	40	1	**8T-4139**	2	BOLT (M12X1.75X30-MM)	
M	41	1	**8T-4183**	4	BOLT (M12X1.75X40-MM)	
M	42	1	**8T-4195**	2	BOLT (M10X1.5X30-MM)	
	43	1	**8T-4223**	12	WASHER-HARD (13.5X25.5X3-MM THK)	
M	44	1	**8T-4956**	6	BOLT (M12X1.75X35-MM)	
	45	1	**8T-7087**	1	GROMMET	

C-CHANGE FROM PREVIOUS TYPE
I-REFER TO HYDRAULIC INFORMATION SYSTEM
J-FOR USE WITH MEDIUM PRESSURE & COMBINED FUNCTION
L-FOR USE WITH COMBINED FUNCTION ONLY
M-METRIC PART
Y-SEPARATE ILLUSTRATION

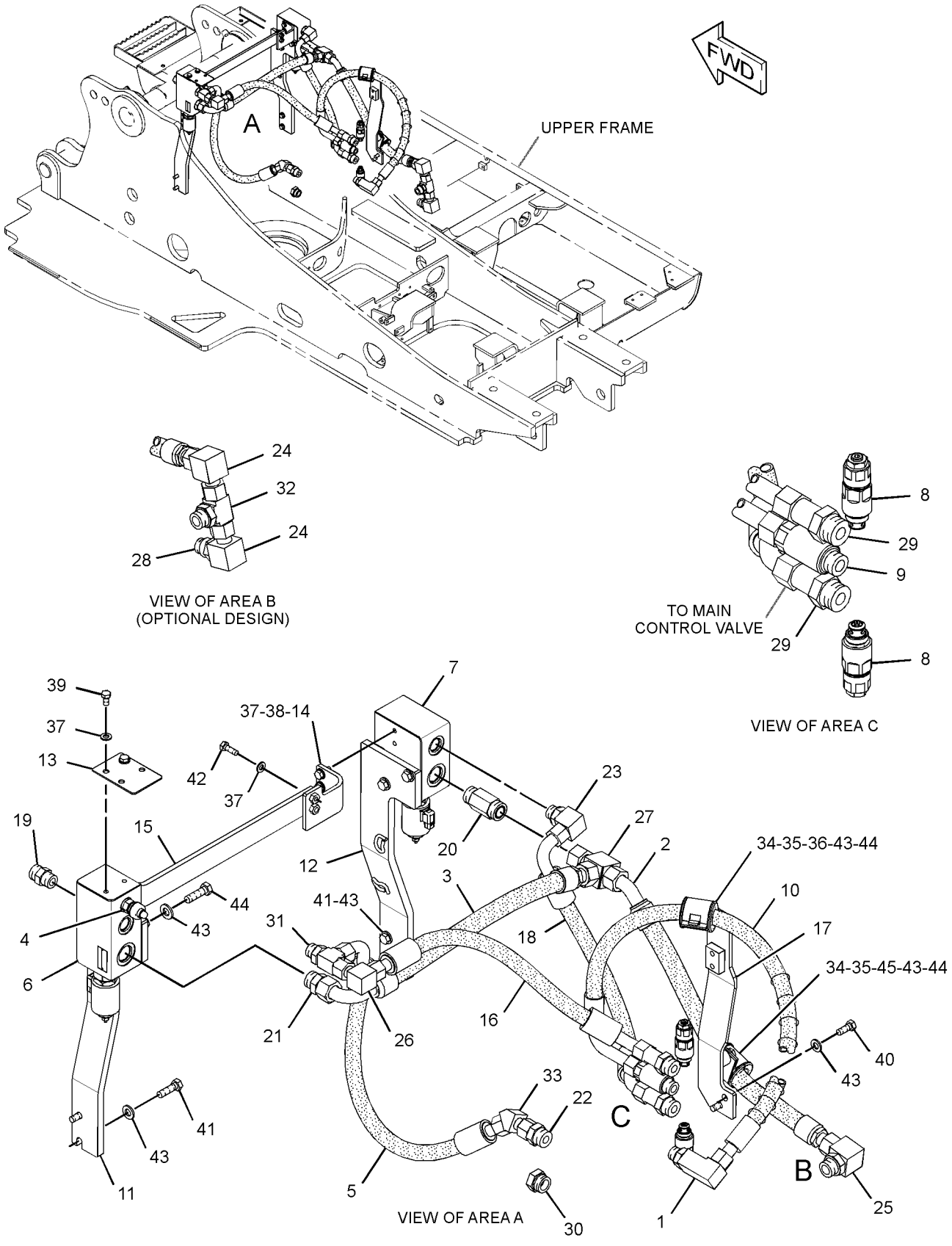

GRAPHIC #1 **<END>** g01625278

HYDRAULIC SYSTEM

260-8233 LINES GP-FRONT—MEDIUM PRESSURE

S/N: CJN1-UP

PART OF 259-7565, 270-5954 CONTROL AR-AUXILIARY

AN ATTACHMENT

SMCS-5057 **i02910788**

NOTE	REF NO	GRAPHIC REF	PART NUMBER	QTY	PART NAME 1 2 3 4 5 6 (PRODUCT LEVEL)	SEE PAGE
	1	1	**282-7123**	1	SUPPORT AS	
Y	2	1	**259-7545**	1	VALVE GP-BANK (MEDIUM PRESSURE)	678
	3	1	**275-1806**	1	SUPPORT	
	4	1	**153-8867**	2	CLIP	
	5	1	**196-0843**	1	TUBE AS	
	6	1	**196-0842**	1	TUBE AS	
	7	1	**8T-4223**	4	WASHER-HARD (13.5X25.5X3-MM THK)	
M	8	1	**8T-4956**	2	BOLT (M12X1.75X35-MM)	
M	9	1	**8T-4184**	2	BOLT (M12X1.75X45-MM)	
	10	1	**8T-4121**	4	WASHER-HARD (11X21X2.5-MM THK)	
M	11	1	**8T-4136**	4	BOLT (M10X1.5X25-MM)	
	12	1	*148-8340*	1	CONNECTOR AS	
		1	**3K-0360**	1	SEAL-O-RING	
		1	**6V-8398**	1	SEAL-O-RING	
		1	**6V-8639**	1	CONNECTOR	
	13	1	*148-8370*	2	ELBOW AS	
					(EACH INCLUDES)	
		1	**6V-8398**	1	SEAL-O-RING	
		1	**6V-9851**	1	ELBOW	
	14	1	*164-8908*	1	CONNECTOR AS	
		1	**3K-0360**	1	SEAL-O-RING	
		1	**6V-8398**	1	SEAL-O-RING	
		1	**8T-0077**	1	CONNECTOR	
	15	1	*153-6241*	2	ELBOW AS	
					(EACH INCLUDES)	
		1	**6V-8398**	1	SEAL-O-RING	
		1	**8C-8989**	1	ELBOW	
I	16	1	**196-0737**	1	HOSE AS	
I	17	1	**107-1482**	1	HOSE AS	
I	18	1	**275-1586**	1	HOSE AS	
I	19	1	**278-6619**	1	HOSE AS	
	20	1	**6V-8398**	4	SEAL-O-RING	
	21	1	**7X-7729**	4	WASHER (11X25X3-MM THK)	
M	22	1	**5I-4936**	4	BOLT (M10X1.25X20-MM)	

I-REFER TO HYDRAULIC INFORMATION SYSTEM
M-METRIC PART
Y-SEPARATE ILLUSTRATION

260-8233 **LINES GP-FRONT** *(contd.)* **i02910788**

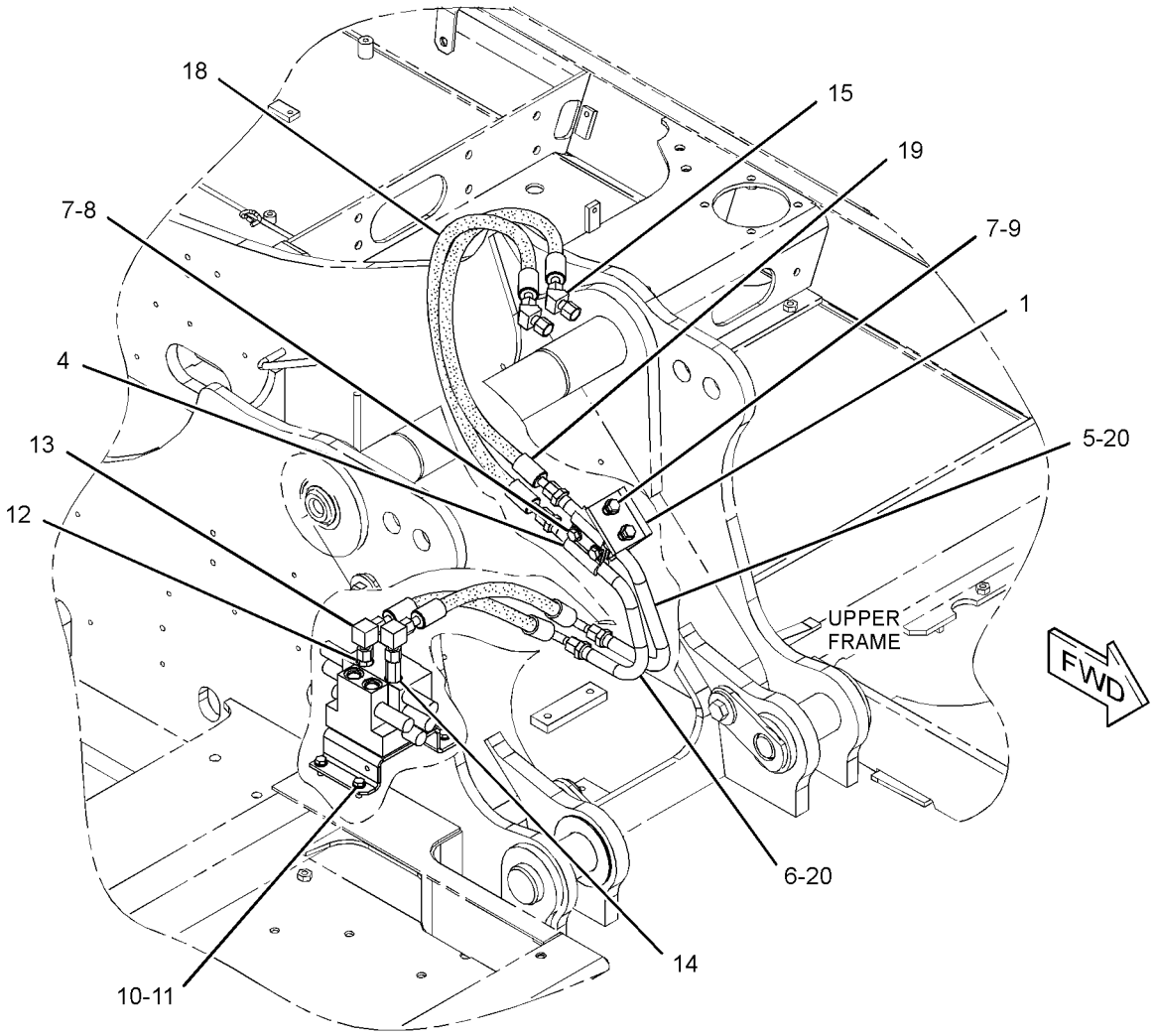

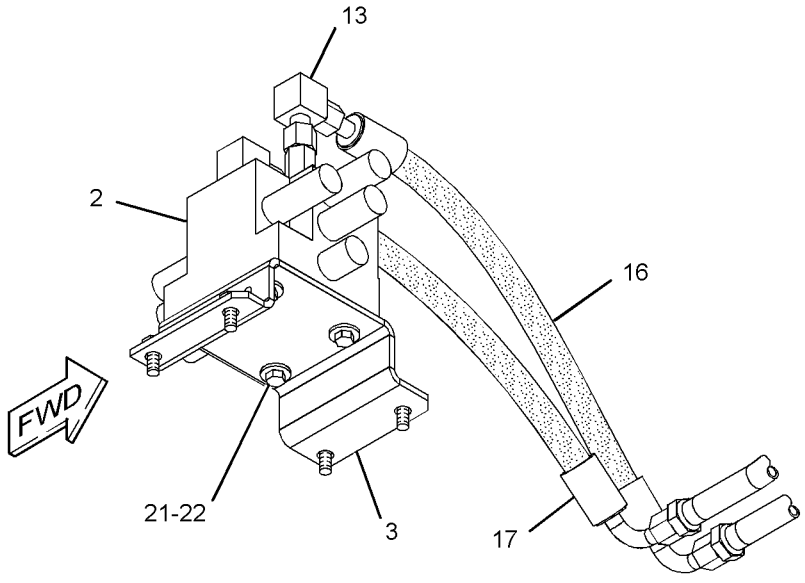

GRAPHIC #1 **<END>** g01379342

HYDRAULIC SYSTEM

260-8236 LINES GP-FRONT

S/N: CJN1-UP
PART OF 259-7569 CONTROL AR-AUXILIARY
AN ATTACHMENT

SMCS-5057 **i02911216**

NOTE	REF NO	GRAPHIC REF	PART NUMBER	QTY	PART NAME 1 2 3 4 5 6 (PRODUCT LEVEL)	SEE PAGE
	1	1	**7K-1181**	1	STRAP-CABLE	
I	2	1	**115-3796**	1	HOSE AS	
	3	1	**153-8867**	2	CLIP	
	4	1	**178-5883**	1	FITTING	
I	5	1	**183-1756**	1	HOSE AS	
I	6	1	**196-0590**	1	HOSE AS	
	7	1	**196-0842**	1	TUBE AS	
	8	1	**196-0843**	1	TUBE AS	
I	9	1	**275-1586**	1	HOSE AS	
I	10	1	**278-6619**	1	HOSE AS	
	11	1	**282-7123**	1	SUPPORT AS	
I	12	1	**296-6986**	1	HOSE AS	
	13	1	*148-8328*	1	CONNECTOR AS	
		1	**3D-2824**	1	SEAL-O-RING	
		1	**6V-8398**	1	SEAL-O-RING	
		1	**6V-8633**	1	CONNECTOR	
	14	1	*148-8339*	1	CONNECTOR AS	
		1	**6V-8716**	1	CONNECTOR	
		1	**6V-9746**	1	SEAL-O-RING	
		1	**7M-8485**	1	SEAL-O-RING	
	15	1	*148-8364*	2	ELBOW AS	
					(EACH INCLUDES)	
		1	**3K-0360**	1	SEAL-O-RING	
		1	**6V-8398**	1	SEAL-O-RING	
		1	**6V-8625**	1	ELBOW	
	16	1	*148-8418*	2	REDUCER AS	
					(EACH INCLUDES)	
		1	**6V-8398**	1	SEAL-O-RING	
		1	**6V-8942**	1	REDUCER-O-RING	
	17	1	*148-8444*	1	TEE AS-SWIVEL	
		1	**6V-8398**	2	SEAL-O-RING	
		1	**6V-9837**	1	TEE-SWIVEL	
	18	1	*153-6241*	2	ELBOW AS	
					(EACH INCLUDES)	
		1	**6V-8398**	1	SEAL-O-RING	
		1	**8C-8989**	1	ELBOW	
	19	1	*153-6242*	1	CONNECTOR AS	
		1	**6V-9746**	1	SEAL-O-RING	
		1	**7M-8485**	1	SEAL-O-RING	
		1	**8T-0197**	1	CONNECTOR	
	20	1	**3K-0360**	1	SEAL-O-RING	
	21	1	**6V-8398**	4	SEAL-O-RING	
M	22	1	**8T-4184**	2	BOLT (M12X1.75X45-MM)	
	23	1	**8T-4223**	4	WASHER-HARD (13.5X25.5X3-MM THK)	
M	24	1	**8T-4956**	2	BOLT (M12X1.75X35-MM)	
	25	1	**9X-6580**	2	NUT (1-3/16-12-THD)	

I-REFER TO HYDRAULIC INFORMATION SYSTEM
M-METRIC PART

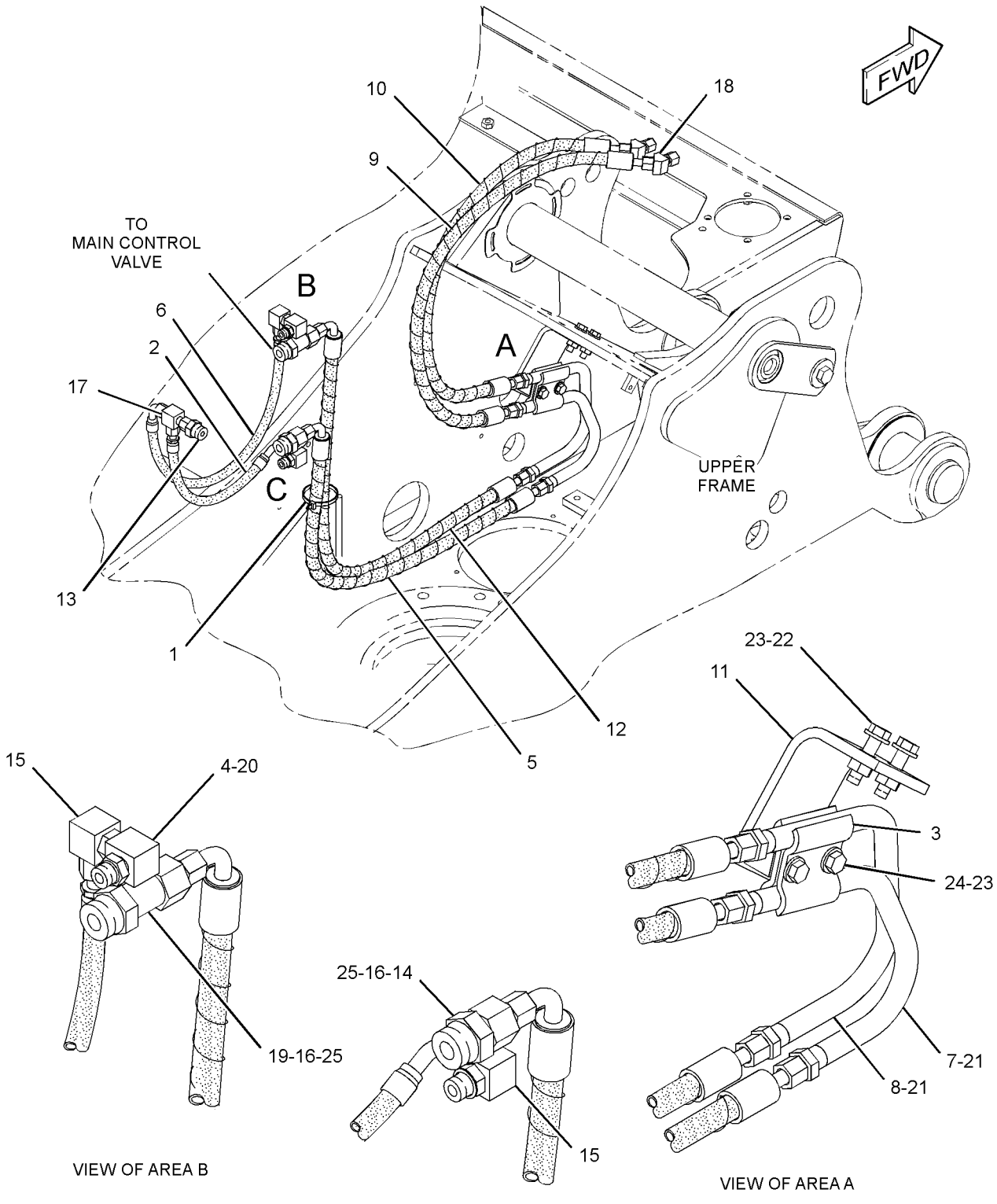

GRAPHIC #1 **<END>** g01380964

HYDRAULIC SYSTEM

260-8325 LINES GP-FRONT–HAMMER, RETURN

S/N: CJN1-UP

PART OF 260-7018 FILTER AR-HYDRAULIC

AN ATTACHMENT

SMCS-5057 **i02719518**

NOTE	REF NO	GRAPHIC REF	PART NUMBER	QTY	PART NAME 1 2 3 4 5 6 (PRODUCT LEVEL)	SEE PAGE
I	1	1	**168-9602**	1	HOSE AS	
	2	1	**272-4228**	1	SUPPORT AS	
	3	1	**272-4231**	1	SUPPORT AS	
I	4	1	**278-6801**	1	HOSE AS	
	5	1	*148-8335*	1	CONNECTOR AS	
		1	**5K-9090**	1	SEAL-O-RING	
		1	**6V-8635**	1	CONNECTOR	
		1	**7M-8485**	1	SEAL-O-RING	
	6	1	*148-8357*	1	ELBOW AS	
		1	**5K-9090**	1	SEAL-O-RING	
		1	**6V-9008**	1	ELBOW	
		1	**7M-8485**	1	SEAL-O-RING	
Y	7	1	**224-1687**	1	FILTER GP-OIL (HYDRAULIC)	443
	8	1	**5P-7468**	1	CLIP (SLOT)	
	9	1	**5P-7469**	1	CLIP (TAB)	
	10	1	**8T-4121**	2	WASHER-HARD (11X21X2.5-MM THK)	
M	11	1	**8T-4137**	2	BOLT (M10X1.5X20-MM)	
M	12	1	**8T-4183**	4	BOLT (M12X1.75X40-MM)	
	13	1	**8T-4223**	9	WASHER-HARD (13.5X25.5X3-MM THK)	
M	14	1	**8T-4956**	5	BOLT (M12X1.75X35-MM)	
	15	1	**8T-7087**	1	GROMMET	

I-REFER TO HYDRAULIC INFORMATION SYSTEM
M-METRIC PART
Y-SEPARATE ILLUSTRATION

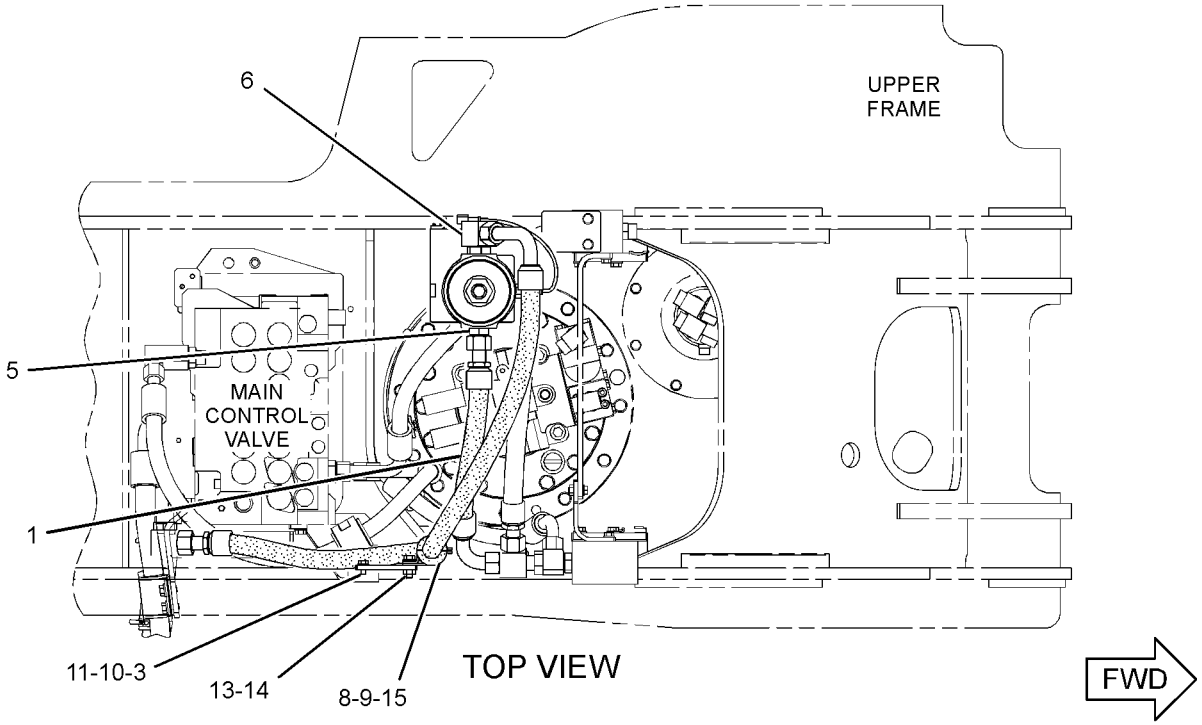

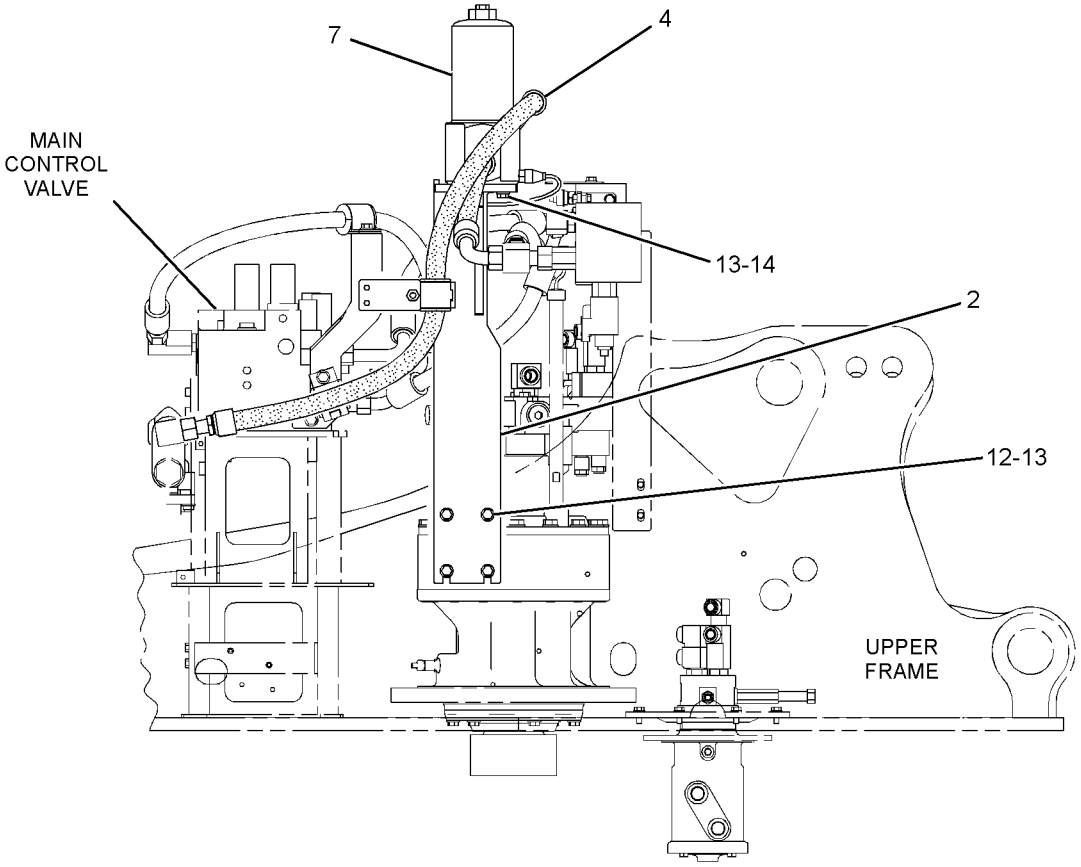

GRAPHIC #1 **<END>** g01367446

HYDRAULIC SYSTEM

275-1696 LINES GP-FRONT—UNIVERSAL QUICK COUPLER

S/N: CJN1-UP
PART OF 268-7253 CONTROL AR-COUPLER
AN ATTACHMENT
TYPE 1

SMCS-5057 **i02862834**

NOTE	REF NO	GRAPHIC REF	PART NUMBER	QTY	PART NAME 1 2 3 4 5 6 (PRODUCT LEVEL)	SEE PAGE
	1	1	**4I-9521**	6	BAND-MARKER (RED, L1)	
	2	1,2	**4I-9522**	6	BAND-MARKER (YELLOW, L2)	
	3	2	**4I-9523**	2	BAND-MARKER (BLUE, L3)	
	4	1	**4I-9527**	2	BAND-MARKER (GREEN, R3)	
	5	2	**6V-0852**	3	CAP-DUST	
	6	1,2	**7K-1181**	13	STRAP-CABLE	
	7	2	**123-4750**	1	VALVE-CHECK	
	8	1	*148-8420*	1	TEE AS	
		1	**3K-0360**	1	SEAL-O-RING	
		1	**6V-8398**	1	SEAL-O-RING	
		1	**8T-6338**	1	TEE-O-RING PORT	
	9	2	*164-5546*	1	TEE AS	
		2	**3E-7410**	1	TEE-O-RING	
		2	**3J-1907**	1	SEAL-O-RING	
	10	2	*164-6874*	1	FITTING AS-ELBOW	
		2	**3J-1907**	1	SEAL-O-RING	
		2	**085-7356**	1	FITTING	
	11	2	*164-9640*	1	CONNECTOR AS	
		2	**3J-1907**	1	SEAL-O-RING	
		2	**4J-5477**	1	SEAL-O-RING	
		2	**145-2237**	1	CONNECTOR	
	12	2	*202-3937*	1	ELBOW AS	
		2	**3J-1907**	1	SEAL-O-RING	
		2	**8T-0164**	1	ELBOW	
		2	**4J-5477**	1	SEAL-O-RING	
	13	2	**213-3745**	2	ELBOW	
	14	2	**227-0384**	1	SPACER (12.52X17.14X65-MM THK)	
	15	2	**238-6189**	1	HOSE AS	
Y	16	2	**254-3080**	1	VALVE GP-COUPLER (QUICK COUPLER)	691
Y	17	2	**258-6749**	1	VALVE GP-SOLENOID (QUICK COUPLER)	740
	18	1,2	**266-0982**	2	GUARD	
I	19	2	**272-4180**	1	HOSE AS	
	20	2	**282-7615**	1	HOSE AS	
	21	2	**286-6723**	1	TUBE AS	
	22	2	**317-4728**	1	SUPPORT AS	
I	23	2	**307-4923**	2	HOSE AS	
					(EACH INCLUDES)	
E		2	**7I-7439**		GUARD (210-CM)	
	24	2	**307-4924**	1	HOSE AS	
I	25	1	**307-4928**	1	HOSE AS	
E		1	**7I-7439**		GUARD (214-CM)	
I	26	1	**307-4929**	1	HOSE AS	
E		1	**7I-7439**		GUARD (133-CM)	
I	27	1	**307-4933**	2	HOSE AS	
I	28	2	**307-4939**	1	HOSE AS	
E		2	**7I-7439**		GUARD (108-CM)	
	29	2	*148-8321*	1	CONNECTOR AS	
		2	**3J-1907**	1	SEAL-O-RING	
		2	**6V-8397**	1	SEAL-O-RING	
		2	**8C-0564**	1	CONNECTOR	
	30	2	*148-8325*	2	CONNECTOR AS	
					(EACH INCLUDES)	
		2	**3J-1907**	1	SEAL-O-RING	
		2	**4J-5477**	1	SEAL-O-RING	

275-1696 **LINES GP-FRONT** ***(contd.)*** **i02862834**

NOTE	REF NO	GRAPHIC REF	PART NUMBER	QTY	PART NAME 1 2 3 4 5 6 (PRODUCT LEVEL)	SEE PAGE
		2	**6V-8641**	1	CONNECTOR	
	31	1,2	*148-8336*	2	CONNECTOR AS	
					(EACH INCLUDES)	
		1,2	**3J-1907**	1	SEAL-O-RING	
		1,2	**6V-8397**	1	SEAL-O-RING	
		1,2	**6V-8636**	1	CONNECTOR	
	32	2	*148-8353*	2	ELBOW AS	
					(EACH INCLUDES)	
		2	**3J-1907**	1	SEAL-O-RING	
		2	**6V-8397**	1	SEAL-O-RING	
		2	**6V-9001**	1	ELBOW	
	33	2	*148-8367*	1	ELBOW AS	
		2	**6V-8397**	1	SEAL-O-RING	
		2	**6V-9850**	1	ELBOW	
	34	2	*148-8378*	1	ELBOW AS	
		2	**3J-1907**	1	SEAL-O-RING	
		2	**6V-8397**	1	SEAL-O-RING	
		2	**6V-8724**	1	ELBOW	
	35	1	*148-8419*	2	REDUCER AS	
					(EACH INCLUDES)	
		1	**4J-5477**	1	SEAL-O-RING	
		1	**6V-8935**	1	REDUCER-O-RING	
	36	2	*148-8435*	1	TEE AS	
		2	**3J-1907**	1	SEAL-O-RING	
		2	**6V-8397**	2	SEAL-O-RING	
		2	**6V-8781**	1	TEE-FACE SEAL	
	37	2	*148-8439*	2	TEE AS	
					(EACH INCLUDES)	
		2	**3J-1907**	1	SEAL-O-RING	
		2	**6V-8397**	2	SEAL-O-RING	
		2	**6V-8774**	1	TEE	
	38	2	*150-3036*	1	ELBOW AS	
		2	**3J-1907**	1	SEAL-O-RING	
		2	**6V-8397**	1	SEAL-O-RING	
		2	**8T-1905**	1	ELBOW	
	39	2	*153-6249*	1	CONNECTOR AS	
		2	**3J-1907**	1	SEAL-O-RING	
		2	**6V-8397**	1	SEAL-O-RING	
		2	**8T-8887**	1	CONNECTOR	
	40	2	*164-5567*	3	COUPLER AS-QUICK DISCONNECT	
					(EACH INCLUDES)	
		2	**3J-1907**	1	SEAL-O-RING	
		2	**6V-3965**	1	FITTING (QUICK DISCONNECT)	
	41	2	*164-9869*	1	CONNECTOR AS	
		2	**3J-1907**	1	SEAL-O-RING	
		2	**6V-8397**	1	SEAL-O-RING	
		2	**9X-2297**	1	CONNECTOR	
	42	2	**3J-1907**	1	SEAL-O-RING	
	43	2	**5K-5338**	1	CLIP	
	44	2	**6V-8397**	1	SEAL-O-RING	
	45	2	**8T-4121**	6	WASHER-HARD (11X21X2.5-MM THK)	
M	46	2	**8T-4136**	2	BOLT (M10X1.5X25-MM)	
M	47	2	**8T-4137**	3	BOLT (M10X1.5X20-MM)	
M	48	2	**8T-4178**	1	BOLT (M10X1.5X90-MM)	
	49	2	**8T-4223**	3	WASHER-HARD (13.5X25.5X3-MM THK)	
M	50	2	**8T-4910**	3	BOLT (M12X1.75X60-MM)	
	51	2	**9M-8406**	1	CLIP	
	52	1	**9X-6582**	2	NUT (13/16-16-THD)	
J	53	2	*148-8367*	1	ELBOW AS	

275-1696 **LINES GP-FRONT** *(contd.)* **i02862834**

NOTE	REF NO	GRAPHIC REF	PART NUMBER	QTY	PART NAME 1 2 3 4 5 6 (PRODUCT LEVEL)	SEE PAGE
		2	**6V-8397**	1	SEAL-O-RING	
		2	**6V-9850**	1	ELBOW	
JY	54	2	*164-6980*	1	VALVE GP-SHUTTLE	731

E-ORDER BY THE CENTIMETER
I-REFER TO HYDRAULIC INFORMATION SYSTEM
J-REQUIRED ONLY WHEN USE WITH LINES GP-PILOT SYSTEM 22/24
M-METRIC PART
Y-SEPARATE ILLUSTRATION

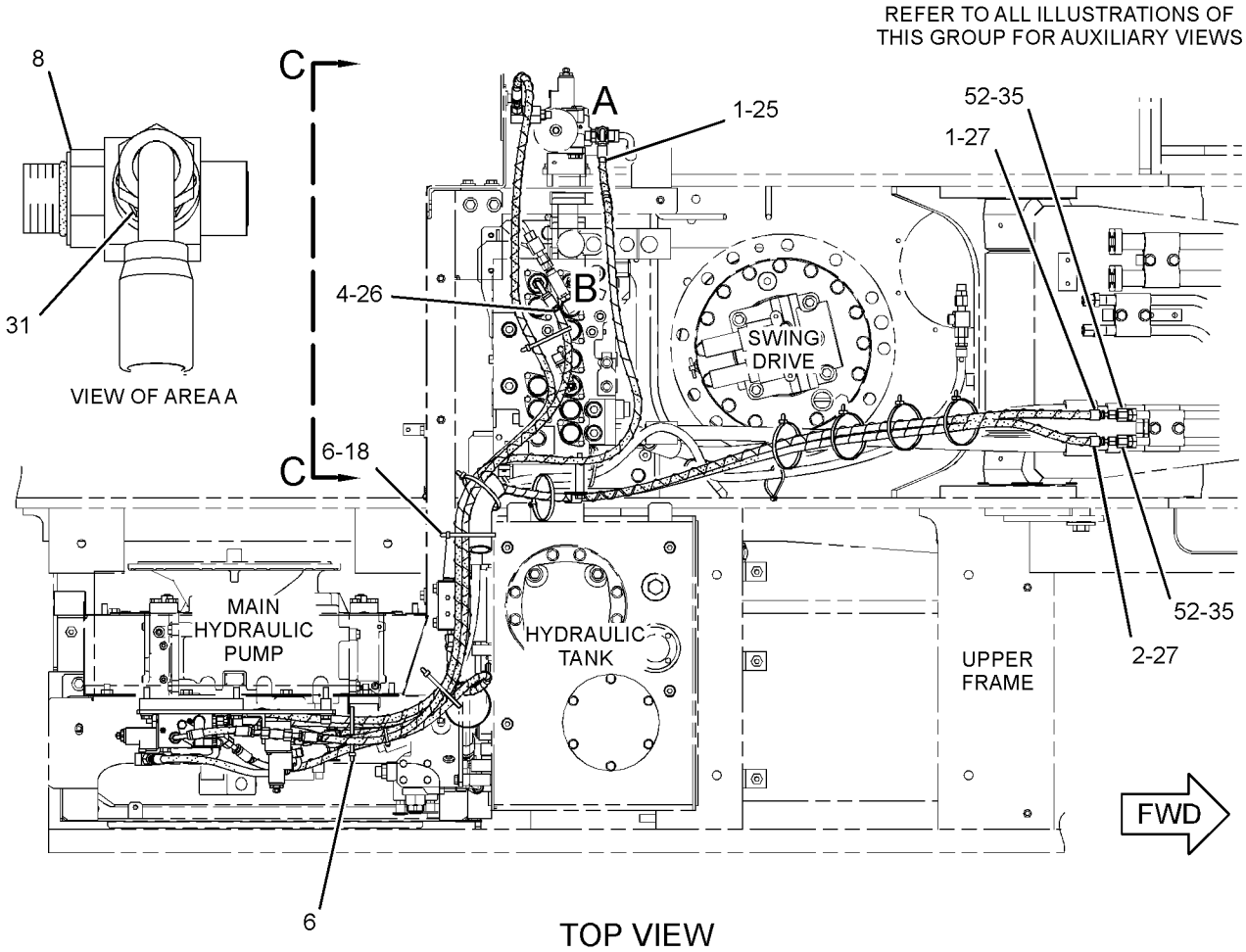

TOP VIEW

GRAPHIC #1 g01401331

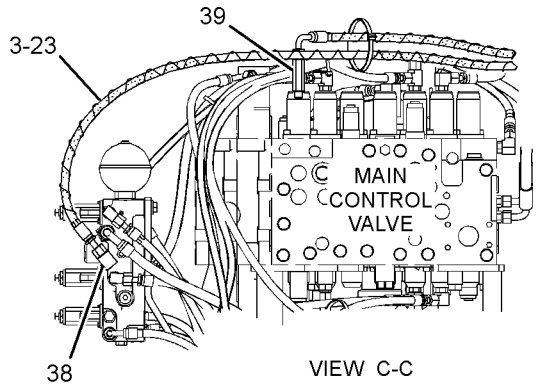

VIEW C-C

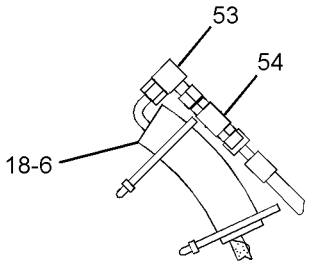

VIEW OF AREA B
(WHEN EQUIPPED WITH SYSTEM 22/24)

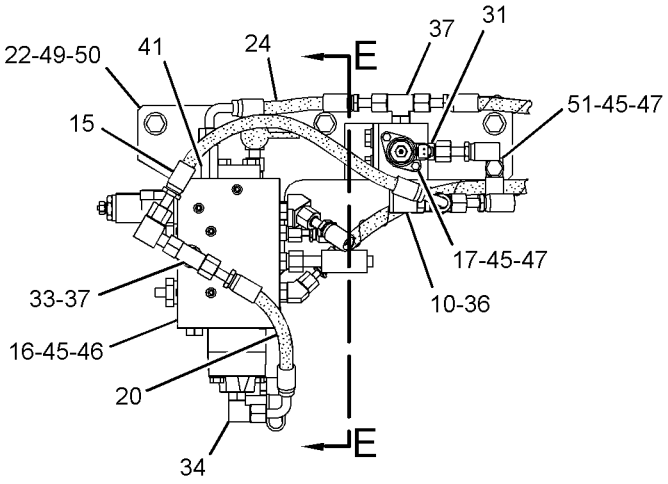

VIEW OF AREA D

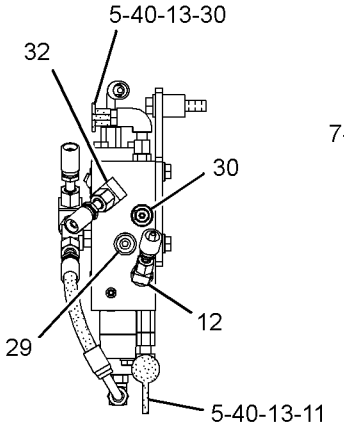

SECTION E-E

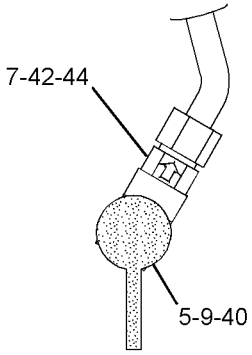

VIEW OF AREA F

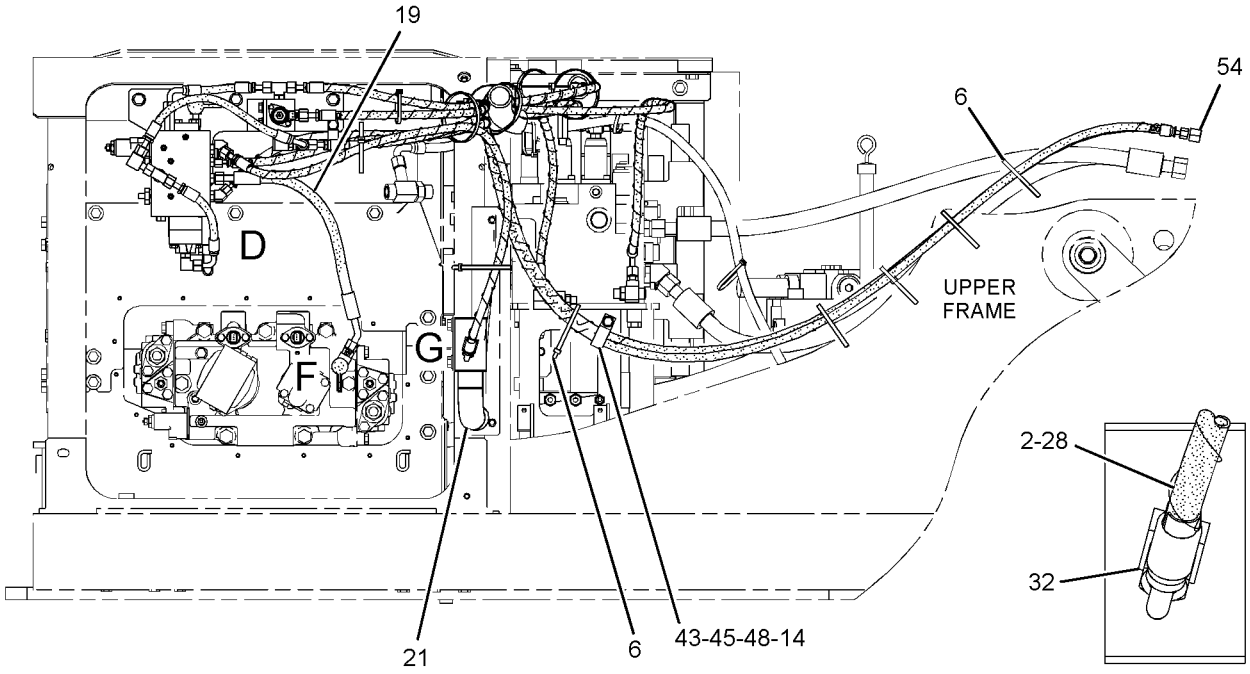

RIGHT SIDE VIEW

VIEW OF AREA G

GRAPHIC #2

<END>

g01427380

HYDRAULIC SYSTEM

275-1696 LINES GP-FRONT—UNIVERSAL QUICK COUPLER

S/N: CJN1-UP
PART OF 268-7253 CONTROL AR-COUPLER
AN ATTACHMENT
TYPE 2

SMCS-5057 **i03001047**

NOTE	REF NO	GRAPHIC REF	PART NUMBER	QTY	PART NAME 1 2 3 4 5 6 (PRODUCT LEVEL)	SEE PAGE
	1	1	**4I-9521**	6	BAND-MARKER (RED, L1)	
	2	1,2	**4I-9522**	6	BAND-MARKER (YELLOW, L2)	
	3	2	**4I-9523**	2	BAND-MARKER (BLUE, L3)	
	4	1	**4I-9527**	2	BAND-MARKER (GREEN, R3)	
	5	2	**6V-0852**	3	CAP-DUST	
	6	1,2	**7K-1181**	13	STRAP-CABLE	
	7	2	**123-4750**	1	VALVE-CHECK	
C	8	1	*196-2036*	1	TEE AS	
		1	**3K-0360**	1	SEAL-O-RING	
		1	**6V-8398**	1	SEAL-O-RING	
		1	**9X-2492**	1	TEE-O-RING	
	9	2	*164-5546*	1	TEE AS	
		2	**3E-7410**	1	TEE-O-RING	
		2	**3J-1907**	1	SEAL-O-RING	
	10	2	*164-6874*	1	FITTING AS-ELBOW	
		2	**3J-1907**	1	SEAL-O-RING	
		2	**085-7356**	1	FITTING	
	11	2	*164-9640*	1	CONNECTOR AS	
		2	**3J-1907**	1	SEAL-O-RING	
		2	**4J-5477**	1	SEAL-O-RING	
		2	**145-2237**	1	CONNECTOR	
	12	2	*202-3937*	1	ELBOW AS	
		2	**3J-1907**	1	SEAL-O-RING	
		2	**8T-0164**	1	ELBOW	
		2	**4J-5477**	1	SEAL-O-RING	
	13	2	**213-3745**	2	ELBOW	
	14	2	**227-0384**	1	SPACER (12.52X17.14X65-MM THK)	
	15	2	**238-6189**	1	HOSE AS	
Y	16	2	**254-3080**	1	VALVE GP-COUPLER (QUICK COUPLER)	691
Y	17	2	**258-6749**	1	VALVE GP-SOLENOID (QUICK COUPLER)	740
	18	1,2	**266-0982**	2	GUARD	
CI	19	2	**278-6470**	1	HOSE AS	
	20	2	**282-7615**	1	HOSE AS	
	21	2	**286-6723**	1	TUBE AS	
	22	2	**317-4728**	1	SUPPORT AS	
I	23	2	**307-4923**	2	HOSE AS	
					(EACH INCLUDES)	
E		2	**7I-7439**		GUARD (210-CM)	
	24	2	**307-4924**	1	HOSE AS	
I	25	1	**307-4928**	1	HOSE AS	
E		1	**7I-7439**		GUARD (214-CM)	
I	26	1	**307-4929**	1	HOSE AS	
E		1	**7I-7439**		GUARD (133-CM)	
I	27	1	**307-4933**	2	HOSE AS	
I	28	2	**307-4939**	1	HOSE AS	
E		2	**7I-7439**		GUARD (108-CM)	
	29	2	*148-8321*	1	CONNECTOR AS	
		2	**3J-1907**	1	SEAL-O-RING	
		2	**6V-8397**	1	SEAL-O-RING	
		2	**8C-0564**	1	CONNECTOR	
	30	2	*148-8325*	2	CONNECTOR AS	
					(EACH INCLUDES)	
		2	**3J-1907**	1	SEAL-O-RING	
		2	**4J-5477**	1	SEAL-O-RING	

275-1696 **LINES GP-FRONT** ***(contd.)*** **i03001047**

NOTE	REF NO	GRAPHIC REF	PART NUMBER	QTY	PART NAME 1 2 3 4 5 6 (PRODUCT LEVEL)	SEE PAGE
		2	**6V-8641**	1	CONNECTOR	
C	31	2	*148-8336*	1	CONNECTOR AS	
		2	**3J-1907**	1	SEAL-O-RING	
		2	**6V-8397**	1	SEAL-O-RING	
		2	**6V-8636**	1	CONNECTOR	
	32	2	*148-8353*	2	ELBOW AS	
					(EACH INCLUDES)	
		2	**3J-1907**	1	SEAL-O-RING	
		2	**6V-8397**	1	SEAL-O-RING	
		2	**6V-9001**	1	ELBOW	
	33	2	*148-8367*	1	ELBOW AS	
		2	**6V-8397**	1	SEAL-O-RING	
		2	**6V-9850**	1	ELBOW	
C	34	1,2	*148-8378*	2	ELBOW AS	
					(EACH INCLUDES)	
		1,2	**3J-1907**	1	SEAL-O-RING	
		1,2	**6V-8397**	1	SEAL-O-RING	
		1,2	**6V-8724**	1	ELBOW	
	35	1	*148-8419*	2	REDUCER AS	
					(EACH INCLUDES)	
		1	**4J-5477**	1	SEAL-O-RING	
		1	**6V-8935**	1	REDUCER-O-RING	
	36	2	*148-8435*	1	TEE AS	
		2	**3J-1907**	1	SEAL-O-RING	
		2	**6V-8397**	2	SEAL-O-RING	
		2	**6V-8781**	1	TEE-FACE SEAL	
	37	2	*148-8439*	2	TEE AS	
					(EACH INCLUDES)	
		2	**3J-1907**	1	SEAL-O-RING	
		2	**6V-8397**	2	SEAL-O-RING	
		2	**6V-8774**	1	TEE	
	38	2	*150-3036*	1	ELBOW AS	
		2	**3J-1907**	1	SEAL-O-RING	
		2	**6V-8397**	1	SEAL-O-RING	
		2	**8T-1905**	1	ELBOW	
	39	2	*153-6249*	1	CONNECTOR AS	
		2	**3J-1907**	1	SEAL-O-RING	
		2	**6V-8397**	1	SEAL-O-RING	
		2	**8T-8887**	1	CONNECTOR	
	40	2	*164-5567*	3	COUPLER AS-QUICK DISCONNECT	
					(EACH INCLUDES)	
		2	**3J-1907**	1	SEAL-O-RING	
		2	**6V-3965**	1	FITTING (QUICK DISCONNECT)	
	41	2	*164-9869*	1	CONNECTOR AS	
		2	**3J-1907**	1	SEAL-O-RING	
		2	**6V-8397**	1	SEAL-O-RING	
		2	**9X-2297**	1	CONNECTOR	
	42	2	**3J-1907**	1	SEAL-O-RING	
	43	2	**5K-5338**	1	CLIP	
	44	2	**6V-8397**	1	SEAL-O-RING	
	45	2	**8T-4121**	6	WASHER-HARD (11X21X2.5-MM THK)	
M	46	2	**8T-4136**	2	BOLT (M10X1.5X25-MM)	
M	47	2	**8T-4137**	3	BOLT (M10X1.5X20-MM)	
M	48	2	**8T-4178**	1	BOLT (M10X1.5X90-MM)	
	49	2	**8T-4223**	3	WASHER-HARD (13.5X25.5X3-MM THK)	
M	50	2	**8T-4910**	3	BOLT (M12X1.75X60-MM)	
	51	2	**9M-8406**	1	CLIP	
	52	1	**9X-6582**	2	NUT (13/16-16-THD)	
J	53	2	*148-8367*	1	ELBOW AS	

275-1696 **LINES GP-FRONT** *(contd.)* **i03001047**

NOTE	REF NO	GRAPHIC REF	PART NUMBER	QTY	PART NAME 1 2 3 4 5 6 (PRODUCT LEVEL)	SEE PAGE
		2	**6V-8397**	1	SEAL-O-RING	
		2	**6V-9850**	1	ELBOW	
JY	54	2	*164-6980*	1	VALVE GP-SHUTTLE	731

C-CHANGE FROM PREVIOUS TYPE
E-ORDER BY THE CENTIMETER
I-REFER TO HYDRAULIC INFORMATION SYSTEM
J-REQUIRED ONLY WHEN USE WITH LINES GP-PILOT SYSTEM 22/24
M-METRIC PART
Y-SEPARATE ILLUSTRATION

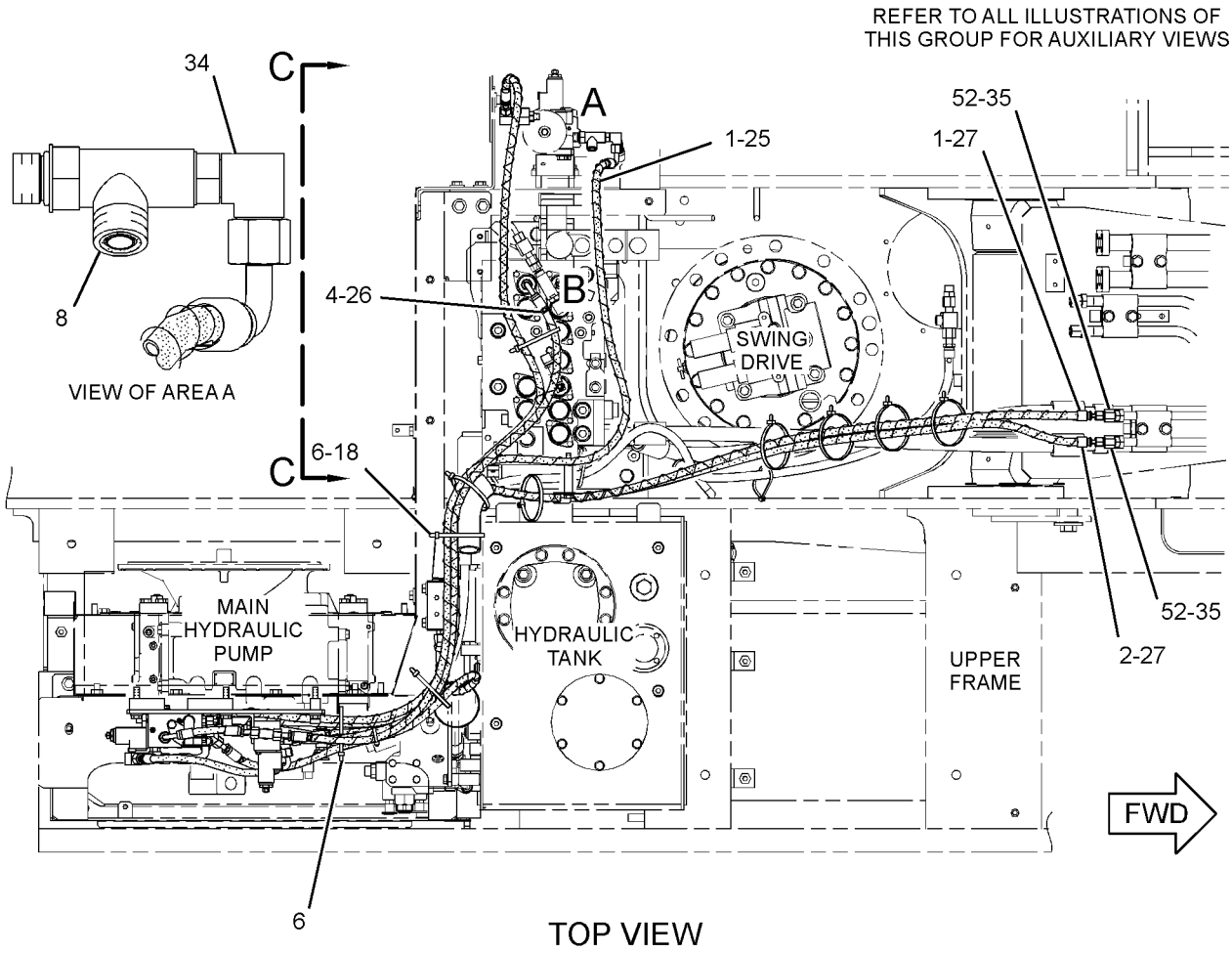

GRAPHIC #1 g01619259

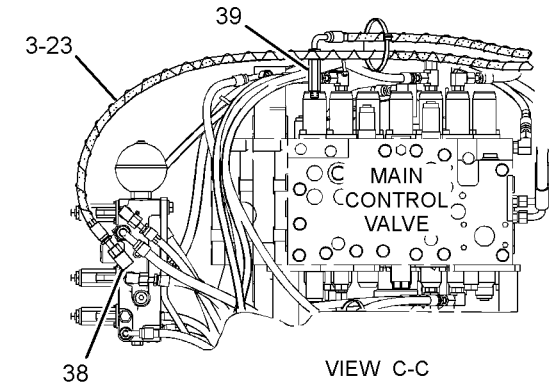

VIEW C-C

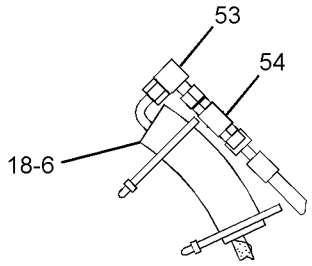

VIEW OF AREA B
(WHEN EQUIPPED WITH SYSTEM 22/24)

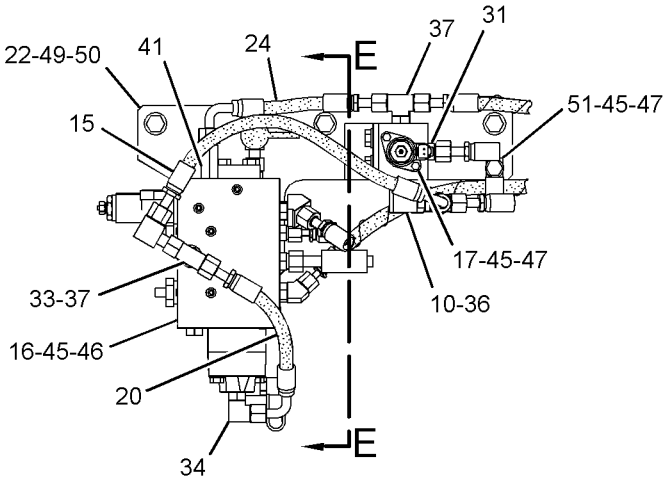

VIEW OF AREA D

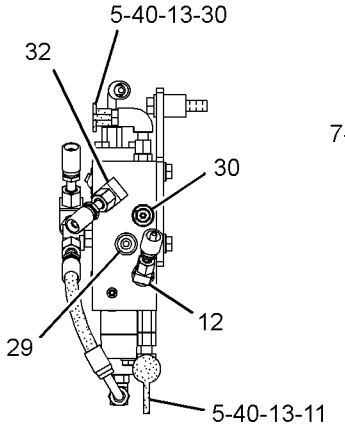

SECTION E-E

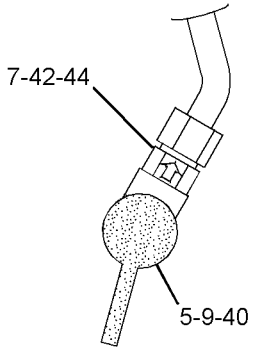

VIEW OF AREA F

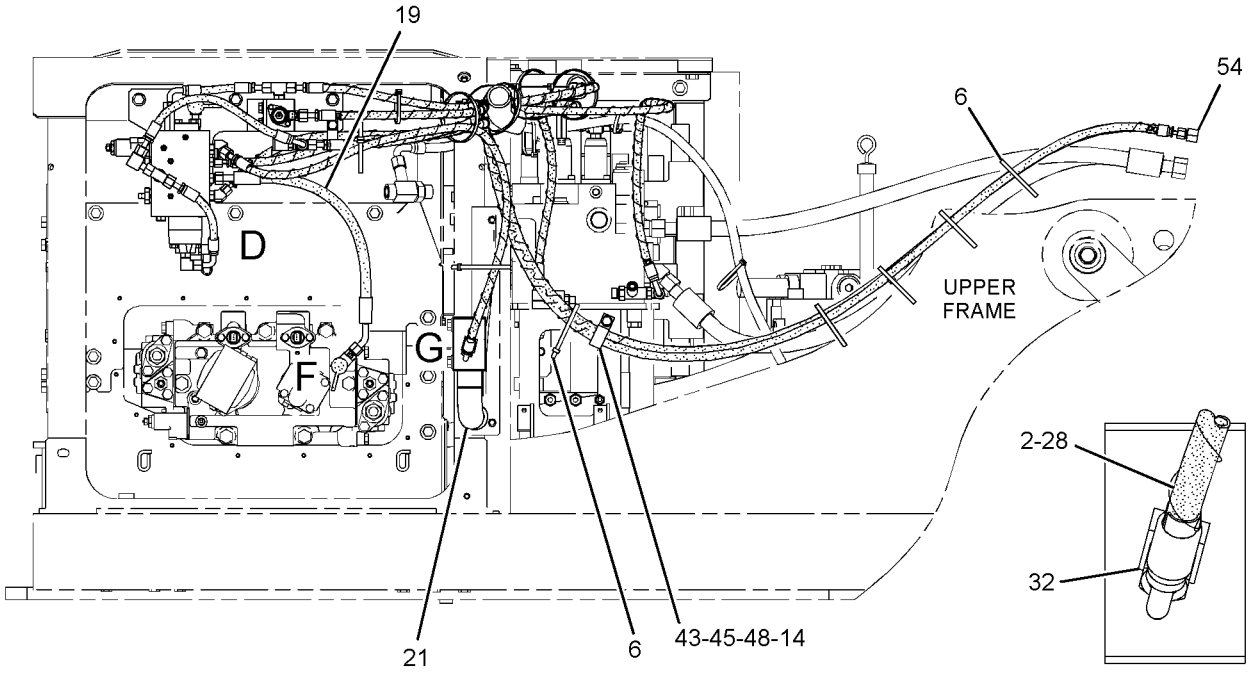

RIGHT SIDE VIEW

VIEW OF AREA G

GRAPHIC #2

<END>

g01619257

HYDRAULIC SYSTEM

275-1699 LINES GP-FRONT—SYSTEM 23, COMBINED FUNCTION

S/N: CJN1-UP
PART OF 270-5751 CONTROL AR-AUXILIARY
AN ATTACHMENT
TYPE 1

SMCS-5057 **i02598678**

NOTE	REF NO	GRAPHIC REF	PART NUMBER	QTY	PART NAME 1 2 3 4 5 6 (PRODUCT LEVEL)	SEE PAGE
	1	1	*106-8715*	1	ELBOW AS	
		1	**3D-2824**	1	SEAL-O-RING	
		1	**6V-9746**	1	SEAL-O-RING	
		1	**8C-8400**	1	ELBOW	
I	2	1	**128-7471**	1	HOSE AS	
I	3	2	**204-8393**	1	HOSE AS	
Y	4	2	**270-5985**	2	VALVE GP-RELIEF	721
	5	2	**270-6110**	1	CONNECTOR AS	
		1	**6V-9746**	1	SEAL-O-RING	
		1	**095-1592**	1	SEAL-O-RING	
I	6	1	**272-4149**	1	HOSE AS	
I	7	1	**272-4153**	1	HOSE AS	
	8	2	**272-4157**	1	SUPPORT AS	
	9	2	**272-4159**	1	SUPPORT AS	
	10	2	**272-4165**	1	SUPPORT AS	
	11	2	**275-1749**	1	PLATE	
	12	1	**278-6738**	1	SUPPORT AS	
	13	2	**278-6752**	1	BLOCK	
	14	2	**278-6753**	1	BLOCK	
I	15	2	**292-7327**	1	HOSE AS	
	16	1	*148-8330*	1	CONNECTOR AS	
		1	**5K-9090**	1	SEAL-O-RING	
		1	**7M-8485**	1	SEAL-O-RING	
		1	**8T-0198**	1	CONNECTOR	
	17	2	*148-8335*	1	CONNECTOR AS	
		2	**5K-9090**	1	SEAL-O-RING	
		2	**6V-8635**	1	CONNECTOR	
		2	**7M-8485**	1	SEAL-O-RING	
	18	2	*148-8339*	1	CONNECTOR AS	
		2	**6V-8716**	1	CONNECTOR	
		2	**6V-9746**	1	SEAL-O-RING	
		2	**7M-8485**	1	SEAL-O-RING	
	19	2	*148-8347*	1	ELBOW AS	
		2	**3D-2824**	1	SEAL-O-RING	
		2	**6V-9007**	1	ELBOW	
		2	**6V-9746**	1	SEAL-O-RING	
	20	1	*148-8357*	1	ELBOW AS	
		1	**5K-9090**	1	SEAL-O-RING	
		1	**6V-9008**	1	ELBOW	
		1	**7M-8485**	1	SEAL-O-RING	
	21	1	*148-8429*	1	TEE AS	
		1	**5K-9090**	2	SEAL-O-RING	
		1	**6V-9840**	1	TEE-SWIVEL	
	22	2	*153-6237*	1	ELBOW AS	
		2	**3D-2824**	1	SEAL-O-RING	
		2	**6V-9004**	1	ELBOW	
		2	**6V-9746**	1	SEAL-O-RING	
	23	2	*153-6242*	1	CONNECTOR AS	
		2	**6V-9746**	1	SEAL-O-RING	
		2	**7M-8485**	1	SEAL-O-RING	
		2	**8T-0197**	1	CONNECTOR	
	24	1	**5P-7468**	2	CLIP (SLOT)	
	25	1	**5P-7469**	2	CLIP (TAB)	
	26	1	**6V-1874**	1	GROMMET	

275-1699 **LINES GP-FRONT** ***(contd.)*** **i02598678**

NOTE	REF NO	GRAPHIC REF	PART NUMBER	QTY	PART NAME 1 2 3 4 5 6 (PRODUCT LEVEL)	SEE PAGE
	27	1,2	**8T-4121**	6	WASHER-HARD (11X21X2.5-MM THK)	
M	28	2	**8T-4136**	4	BOLT (M10X1.5X25-MM)	
M	29	1	**8T-4139**	2	BOLT (M12X1.75X30-MM)	
M	30	2	**8T-4183**	4	BOLT (M12X1.75X40-MM)	
M	31	1	**8T-4195**	2	BOLT (M10X1.5X30-MM)	
	32	1,2	**8T-4223**	12	WASHER-HARD (13.5X25.5X3-MM THK)	
M	33	1,2	**8T-4956**	6	BOLT (M12X1.75X35-MM)	
	34	1	**8T-7087**	1	GROMMET	

I-REFER TO HYDRAULIC INFORMATION SYSTEM
M-METRIC PART
Y-SEPARATE ILLUSTRATION

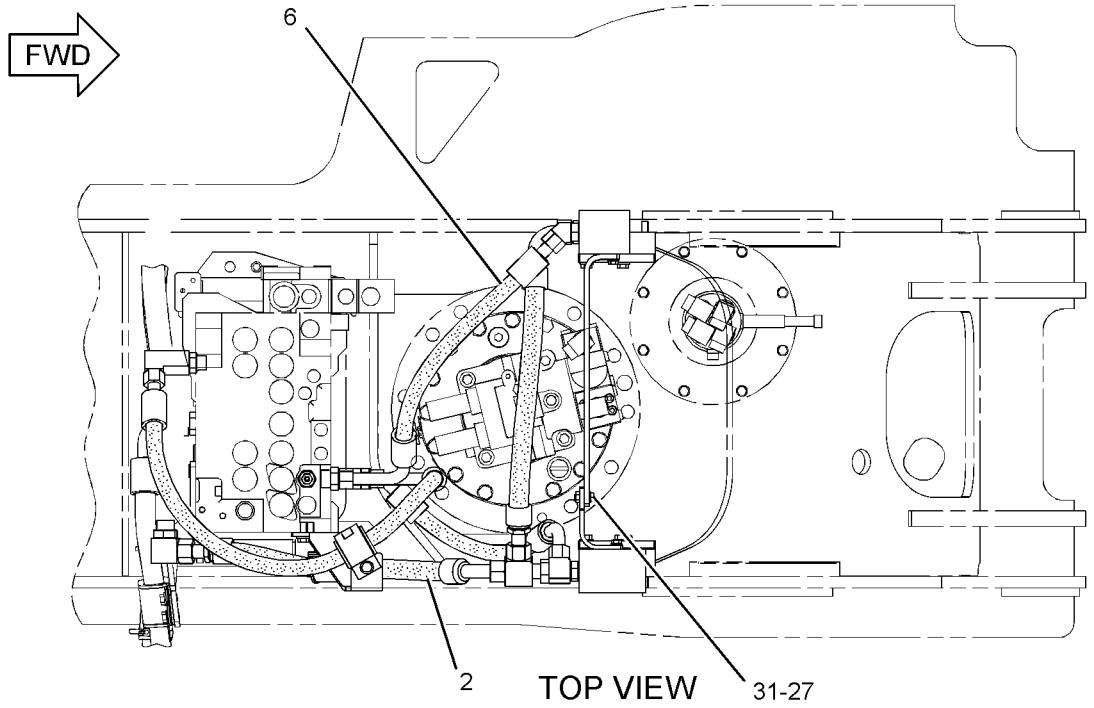

TOP VIEW

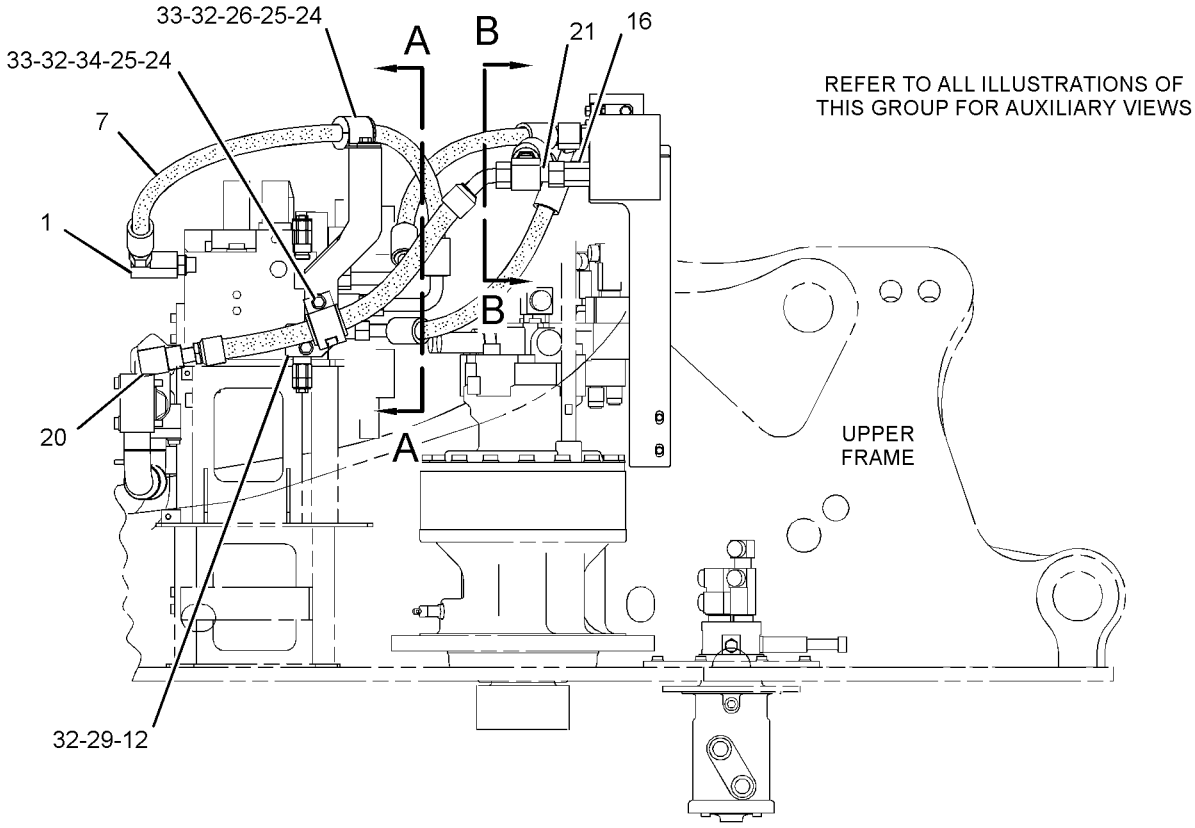

RIGHT SIDE VIEW

GRAPHIC #1

g01310534

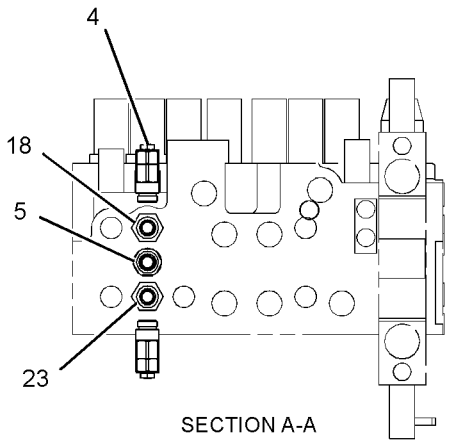

SECTION A-A

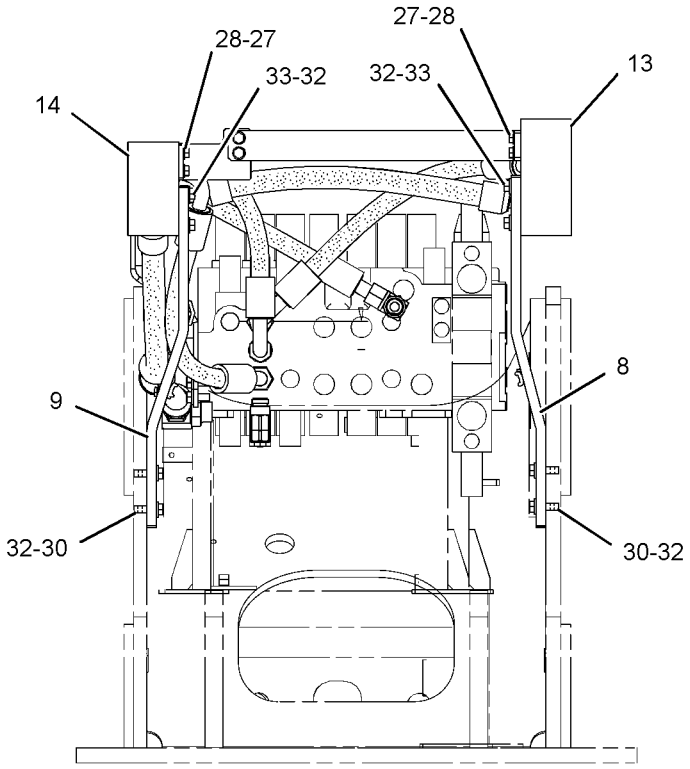

FRONT VIEW

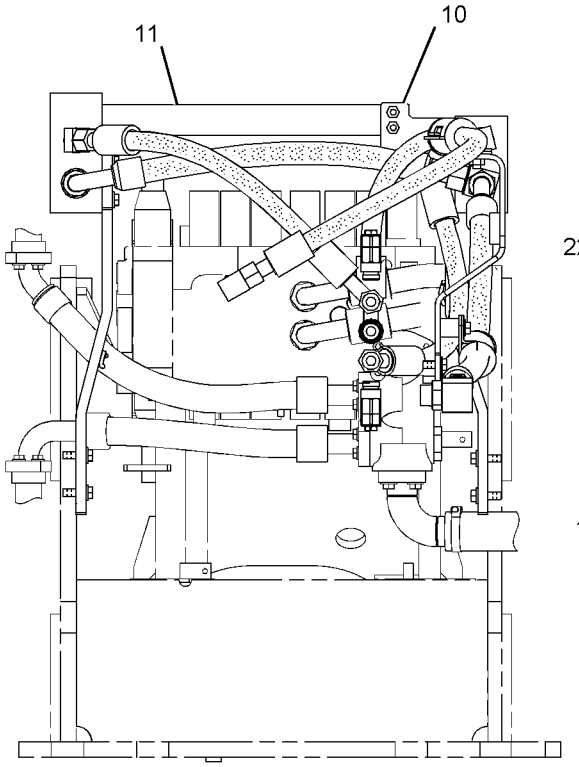

REAR VIEW

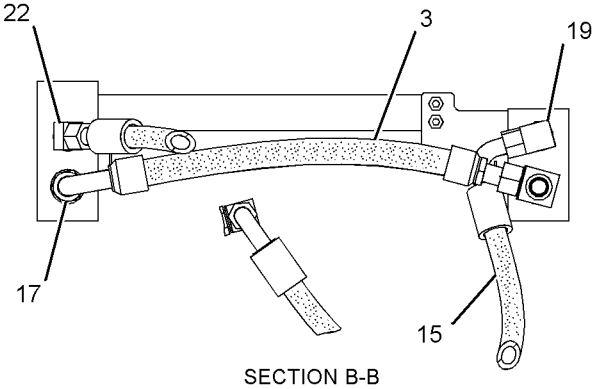

SECTION B-B

GRAPHIC #2 **<END>** g01310673

HYDRAULIC SYSTEM

275-1699 LINES GP-FRONT—SYSTEM 23, COMBINED FUNCTION

S/N: CJN1-UP
PART OF 270-5751 CONTROL AR-AUXILIARY
AN ATTACHMENT
TYPE 2

SMCS-5057 **i03001033**

NOTE	REF NO	GRAPHIC REF	PART NUMBER	QTY	PART NAME 1 2 3 4 5 6 (PRODUCT LEVEL)	SEE PAGE
	1	1	*106-8715*	1	ELBOW AS	
		1	**3D-2824**	1	SEAL-O-RING	
		1	**6V-9746**	1	SEAL-O-RING	
		1	**8C-8400**	1	ELBOW	
I	2	1	**128-7471**	1	HOSE AS	
I	3	2	**204-8393**	1	HOSE AS	
CY	4	2	**309-9977**	2	VALVE GP-PILOT RELIEF (LINE)	717
	5	2	**270-6110**	1	CONNECTOR AS	
		2	**6V-9746**	1	SEAL-O-RING	
		2	**095-1592**	1	SEAL-O-RING	
I	6	1	**272-4149**	1	HOSE AS	
I	7	1	**272-4153**	1	HOSE AS	
	8	2	**272-4157**	1	SUPPORT AS	
	9	2	**272-4159**	1	SUPPORT AS	
	10	2	**272-4165**	1	SUPPORT AS	
	11	2	**275-1749**	1	PLATE	
	12	1	**278-6738**	1	SUPPORT AS	
	13	2	**278-6752**	1	BLOCK	
	14	2	**278-6753**	1	BLOCK	
I	15	2	**292-7327**	1	HOSE AS	
	16	1	*148-8330*	1	CONNECTOR AS	
		1	**5K-9090**	1	SEAL-O-RING	
		1	**7M-8485**	1	SEAL-O-RING	
		1	**8T-0198**	1	CONNECTOR	
	17	2	*148-8335*	1	CONNECTOR AS	
		2	**5K-9090**	1	SEAL-O-RING	
		2	**6V-8635**	1	CONNECTOR	
		2	**7M-8485**	1	SEAL-O-RING	
	18	2	*148-8339*	1	CONNECTOR AS	
		2	**6V-8716**	1	CONNECTOR	
		2	**6V-9746**	1	SEAL-O-RING	
		2	**7M-8485**	1	SEAL-O-RING	
	19	2	*148-8347*	1	ELBOW AS	
		2	**3D-2824**	1	SEAL-O-RING	
		2	**6V-9007**	1	ELBOW	
		2	**6V-9746**	1	SEAL-O-RING	
	20	1	*148-8357*	1	ELBOW AS	
		1	**5K-9090**	1	SEAL-O-RING	
		1	**6V-9008**	1	ELBOW	
		1	**7M-8485**	1	SEAL-O-RING	
	21	1	*148-8429*	1	TEE AS	
		1	**5K-9090**	2	SEAL-O-RING	
		1	**6V-9840**	1	TEE-SWIVEL	
	22	2	*153-6237*	1	ELBOW AS	
		2	**3D-2824**	1	SEAL-O-RING	
		2	**6V-9004**	1	ELBOW	
		2	**6V-9746**	1	SEAL-O-RING	
	23	2	*153-6242*	1	CONNECTOR AS	
		2	**6V-9746**	1	SEAL-O-RING	
		2	**7M-8485**	1	SEAL-O-RING	
		2	**8T-0197**	1	CONNECTOR	
	24	1	**5P-7468**	2	CLIP (SLOT)	
	25	1	**5P-7469**	2	CLIP (TAB)	
	26	1	**6V-1874**	1	GROMMET	

275-1699 **LINES GP-FRONT** *(contd.)* **i03001033**

NOTE	REF NO	GRAPHIC REF	PART NUMBER	QTY	PART NAME 1 2 3 4 5 6 (PRODUCT LEVEL)	SEE PAGE
	27	1,2	**8T-4121**	6	WASHER-HARD (11X21X2.5-MM THK)	
M	28	2	**8T-4136**	4	BOLT (M10X1.5X25-MM)	
M	29	1	**8T-4139**	2	BOLT (M12X1.75X30-MM)	
M	30	2	**8T-4183**	4	BOLT (M12X1.75X40-MM)	
M	31	1	**8T-4195**	2	BOLT (M10X1.5X30-MM)	
	32	1,2	**8T-4223**	12	WASHER-HARD (13.5X25.5X3-MM THK)	
M	33	1,2	**8T-4956**	6	BOLT (M12X1.75X35-MM)	
	34	1	**8T-7087**	1	GROMMET	
	35	1	**7K-1181**	2	STRAP-CABLE	
	36	1	**282-7106**	1	GROMMET	

C-CHANGE FROM PREVIOUS TYPE
I-REFER TO HYDRAULIC INFORMATION SYSTEM
M-METRIC PART
Y-SEPARATE ILLUSTRATION

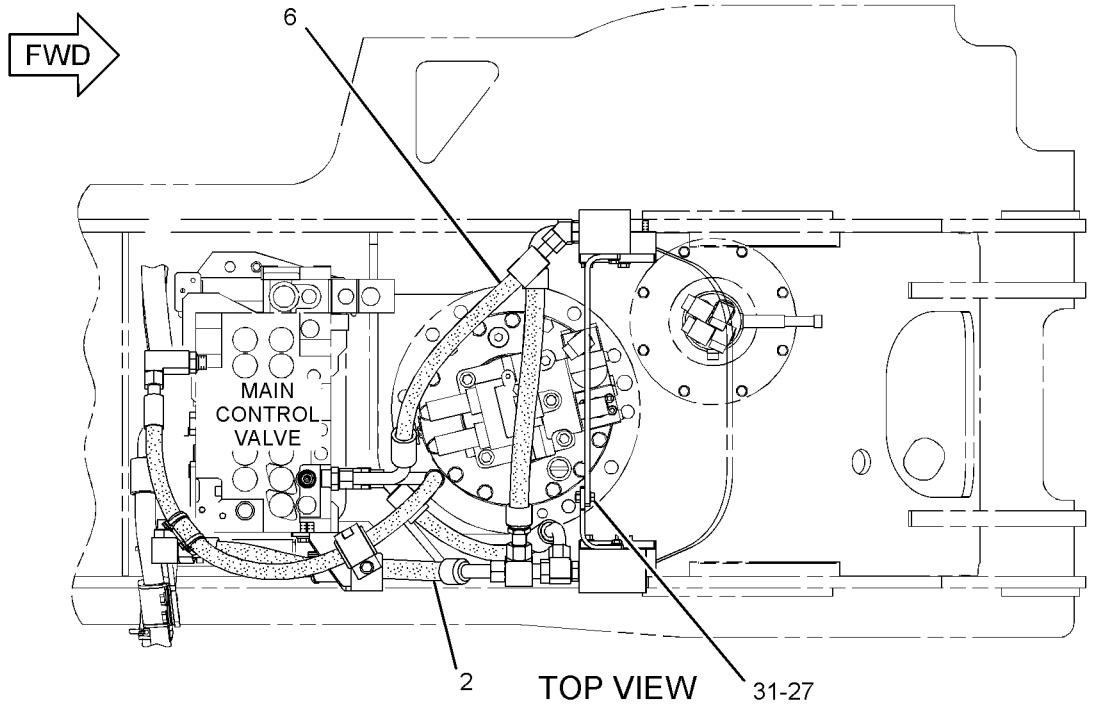

TOP VIEW

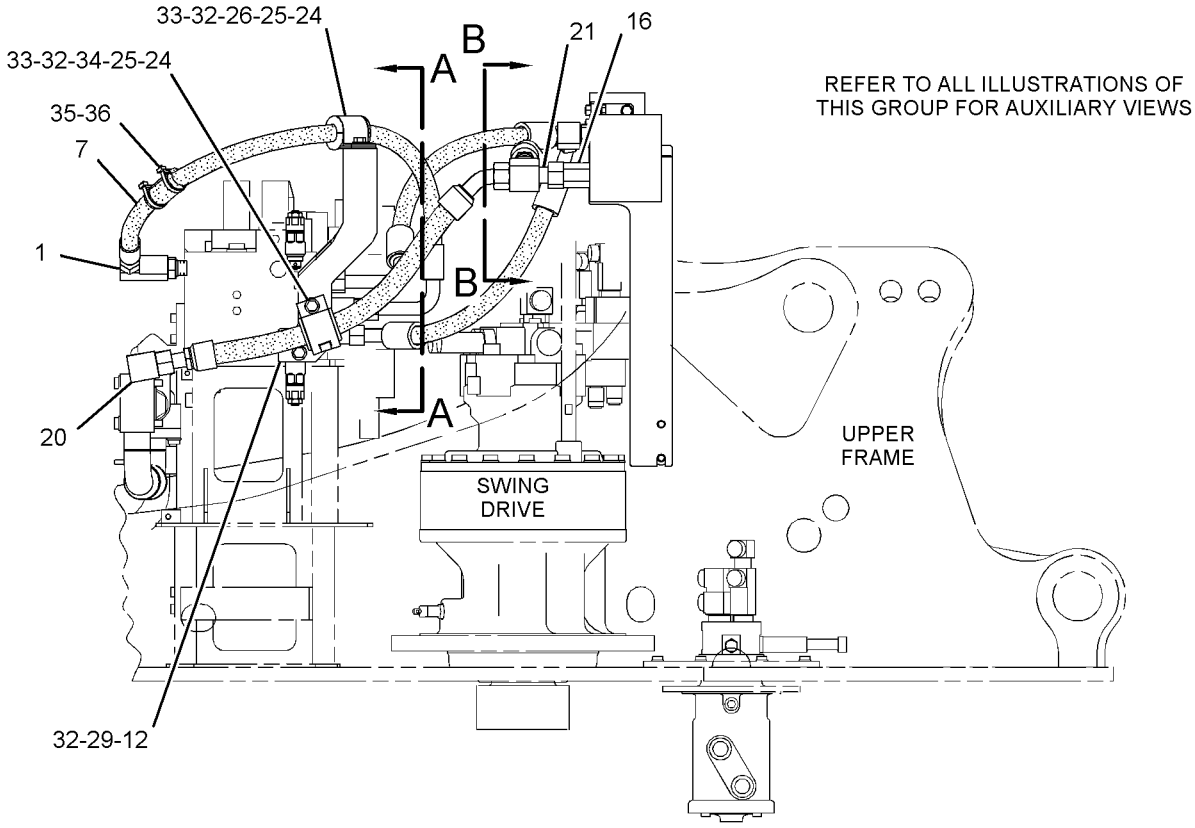

RIGHT SIDE VIEW

GRAPHIC #1

g01618857

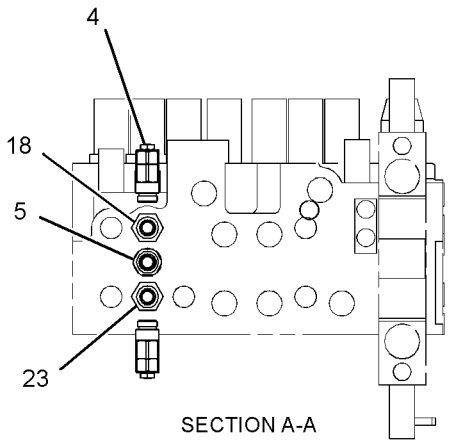

SECTION A-A

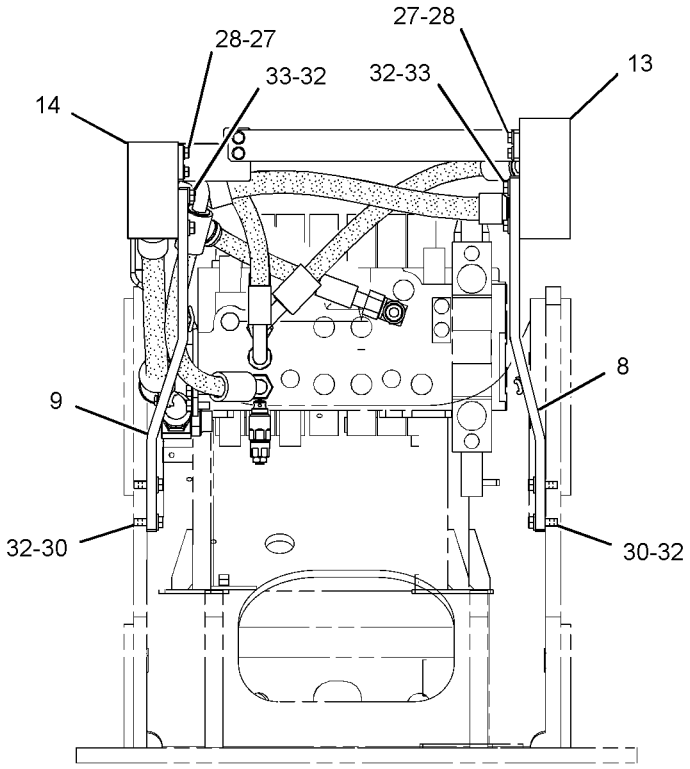

FRONT VIEW

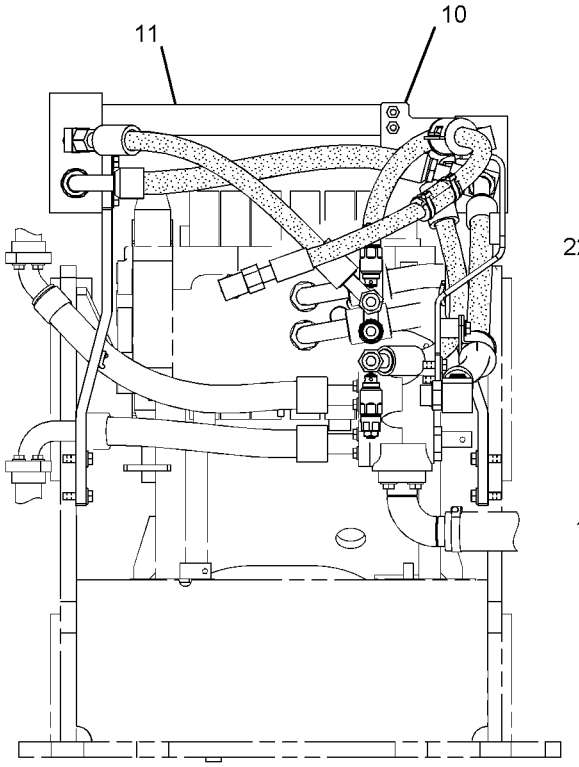

REAR VIEW

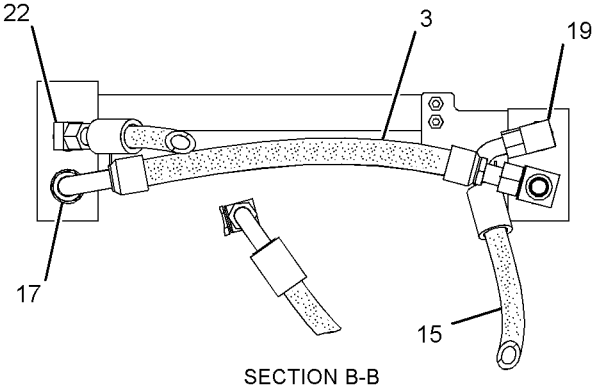

SECTION B-B

GRAPHIC #2 **<END>** g01618861

HYDRAULIC SYSTEM

275-1699 LINES GP-FRONT—SYSTEM 23, COMBINED FUNCTION

S/N: CJN1-UP
PART OF 270-5751 CONTROL AR-AUXILIARY
AN ATTACHMENT
TYPE 3

SMCS-5057 **i03168880**

NOTE	REF NO	GRAPHIC REF	PART NUMBER	QTY	PART NAME 1 2 3 4 5 6 (PRODUCT LEVEL)	SEE PAGE
	1	1	*106-8715*	1	ELBOW AS	
		1	**3D-2824**	1	SEAL-O-RING	
		1	**6V-9746**	1	SEAL-O-RING	
		1	**8C-8400**	1	ELBOW	
I	2	1	**128-7471**	1	HOSE AS	
I	3	1	**204-8393**	1	HOSE AS	
Y	4	1	**309-9977**	2	VALVE GP-PILOT RELIEF (LINE)	717
	5	1	**270-6110**	1	CONNECTOR AS	
		1	**6V-9746**	1	SEAL-O-RING	
		1	**095-1592**	1	SEAL-O-RING	
I	6	1	**272-4149**	1	HOSE AS	
CI	7	1	**320-0000**	1	HOSE AS	
	8	1	**272-4157**	1	SUPPORT AS	
	9	1	**272-4159**	1	SUPPORT AS	
	10	1	**272-4165**	1	SUPPORT AS	
	11	1	**275-1749**	1	PLATE	
	12	1	**278-6738**	1	SUPPORT AS	
	13	1	**278-6752**	1	BLOCK	
	14	1	**278-6753**	1	BLOCK	
I	15	1	**292-7327**	1	HOSE AS	
	16	1	*148-8330*	1	CONNECTOR AS	
		1	**5K-9090**	1	SEAL-O-RING	
		1	**7M-8485**	1	SEAL-O-RING	
		1	**8T-0198**	1	CONNECTOR	
	17	1	*148-8335*	1	CONNECTOR AS	
		1	**5K-9090**	1	SEAL-O-RING	
		1	**6V-8635**	1	CONNECTOR	
		1	**7M-8485**	1	SEAL-O-RING	
	18	1	*148-8339*	1	CONNECTOR AS	
		1	**6V-8716**	1	CONNECTOR	
		1	**6V-9746**	1	SEAL-O-RING	
		1	**7M-8485**	1	SEAL-O-RING	
	19	1	*148-8347*	1	ELBOW AS	
		1	**3D-2824**	1	SEAL-O-RING	
		1	**6V-9007**	1	ELBOW	
		1	**6V-9746**	1	SEAL-O-RING	
	20	1	*148-8357*	1	ELBOW AS	
		1	**5K-9090**	1	SEAL-O-RING	
		1	**6V-9008**	1	ELBOW	
		1	**7M-8485**	1	SEAL-O-RING	
	21	1	*148-8429*	1	TEE AS	
		1	**5K-9090**	2	SEAL-O-RING	
		1	**6V-9840**	1	TEE-SWIVEL	
	22	1	*153-6237*	1	ELBOW AS	
		1	**3D-2824**	1	SEAL-O-RING	
		1	**6V-9004**	1	ELBOW	
		1	**6V-9746**	1	SEAL-O-RING	
	23	1	*153-6242*	1	CONNECTOR AS	
		1	**6V-9746**	1	SEAL-O-RING	
		1	**7M-8485**	1	SEAL-O-RING	
		1	**8T-0197**	1	CONNECTOR	
	24	1	**5P-7468**	2	CLIP (SLOT)	
	25	1	**5P-7469**	2	CLIP (TAB)	
	26	1	**6V-1874**	1	GROMMET	

275-1699 **LINES GP-FRONT** ***(contd.)*** **i03168880**

NOTE	REF NO	GRAPHIC REF	PART NUMBER	QTY	PART NAME 1 2 3 4 5 6 (PRODUCT LEVEL)	SEE PAGE
	27	1	**8T-4121**	6	WASHER-HARD (11X21X2.5-MM THK)	
M	28	1	**8T-4136**	4	BOLT (M10X1.5X25-MM)	
M	29	1	**8T-4139**	2	BOLT (M12X1.75X30-MM)	
M	30	1	**8T-4183**	4	BOLT (M12X1.75X40-MM)	
M	31	1	**8T-4195**	2	BOLT (M10X1.5X30-MM)	
	32	1	**8T-4223**	12	WASHER-HARD (13.5X25.5X3-MM THK)	
M	33	1	**8T-4956**	6	BOLT (M12X1.75X35-MM)	
	34	1	**8T-7087**	1	GROMMET	

C-CHANGE FROM PREVIOUS TYPE
I-REFER TO HYDRAULIC INFORMATION SYSTEM
M-METRIC PART
Y-SEPARATE ILLUSTRATION

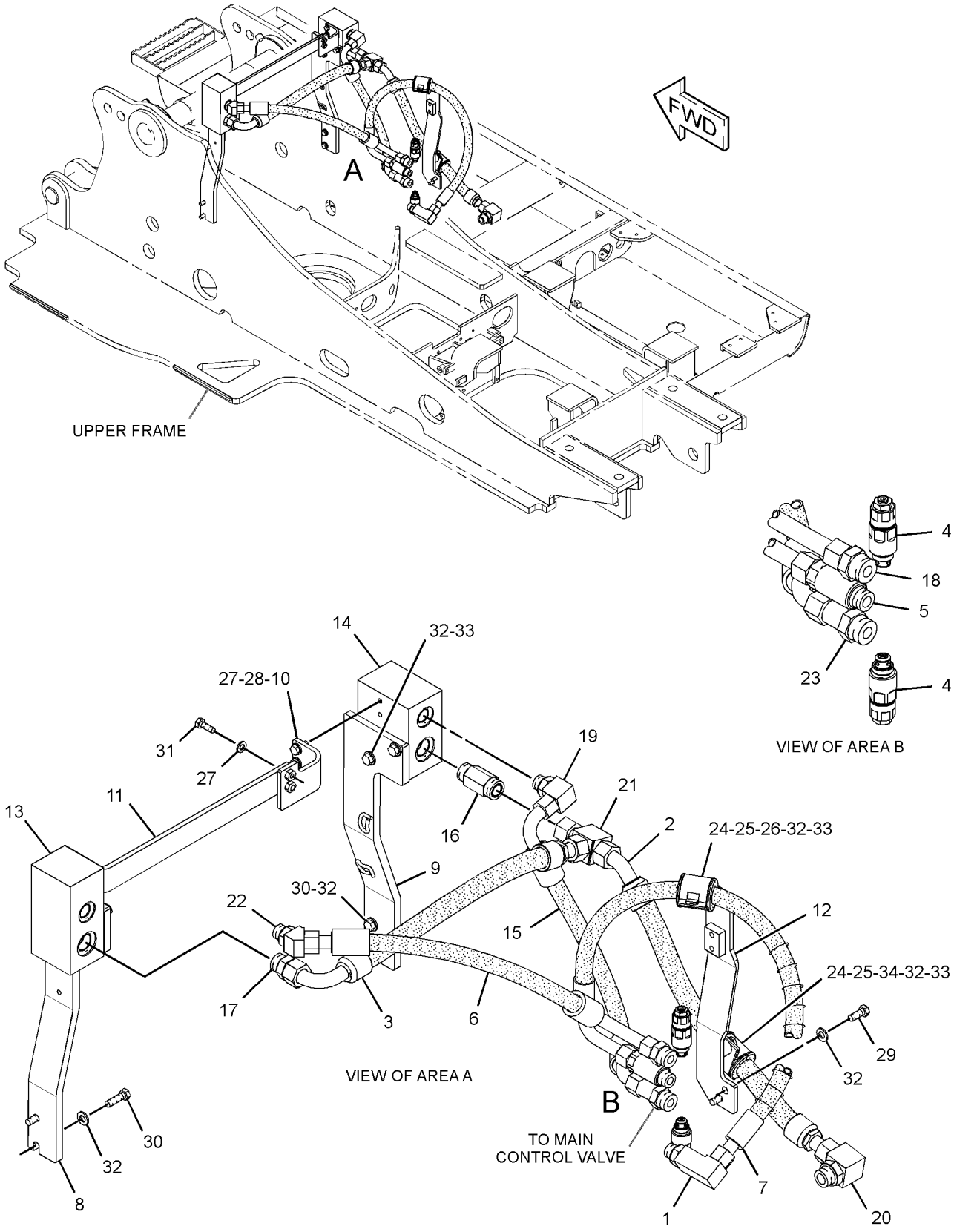

GRAPHIC #1 **<END>** g01623700

275-1701 LINES GP-FRONT–SYSTEM 23, COMBINED FUNCTION

S/N: CJN1-UP

PART OF 270-5750 CONTROL AR-AUXILIARY

AN ATTACHMENT

SMCS-5057 **i02598676**

NOTE	REF NO	GRAPHIC REF	PART NUMBER	QTY	PART NAME 1 2 3 4 5 6 (PRODUCT LEVEL)	SEE PAGE
	1	1	**221-8859**	1	SENSOR AS-PRESSURE (WORK TOOL)	
		1	**3E-3371**	1	WEDGE-RECEPTACLE LOCK (3-PIN)	
		1	**3K-0360**	1	SEAL-O-RING	
		1	**9X-3401**	3	PIN-CONNECTOR (16-GA TO 18-GA)	
					–OR–	
		1	**126-1767**	3	PIN-CONNECTOR (14-GA)	
		1	**171-0596**	1	RECEPTACLE AS	
	2	1	**270-5672**	1	VALVE GP-SOLENOID & RELIEF (AUXILIARY, COMBINED FN, LH)	
	3	1	**270-5757**	1	VALVE GP-SOLENOID & RELIEF (AUXILIARY, COMBINED FN, RH)	
	4	1	**272-4164**	1	PLATE	
	5	1	*148-8327*	1	CONNECTOR AS	
		1	**3D-2824**	1	SEAL-O-RING	
		1	**6V-8637**	1	CONNECTOR	
		1	**6V-9746**	1	SEAL-O-RING	
	6	1	**8T-4121**	2	WASHER-HARD (11X21X2.5-MM THK)	
M	7	1	**8T-4137**	2	BOLT (M10X1.5X20-MM)	

M-METRIC PART

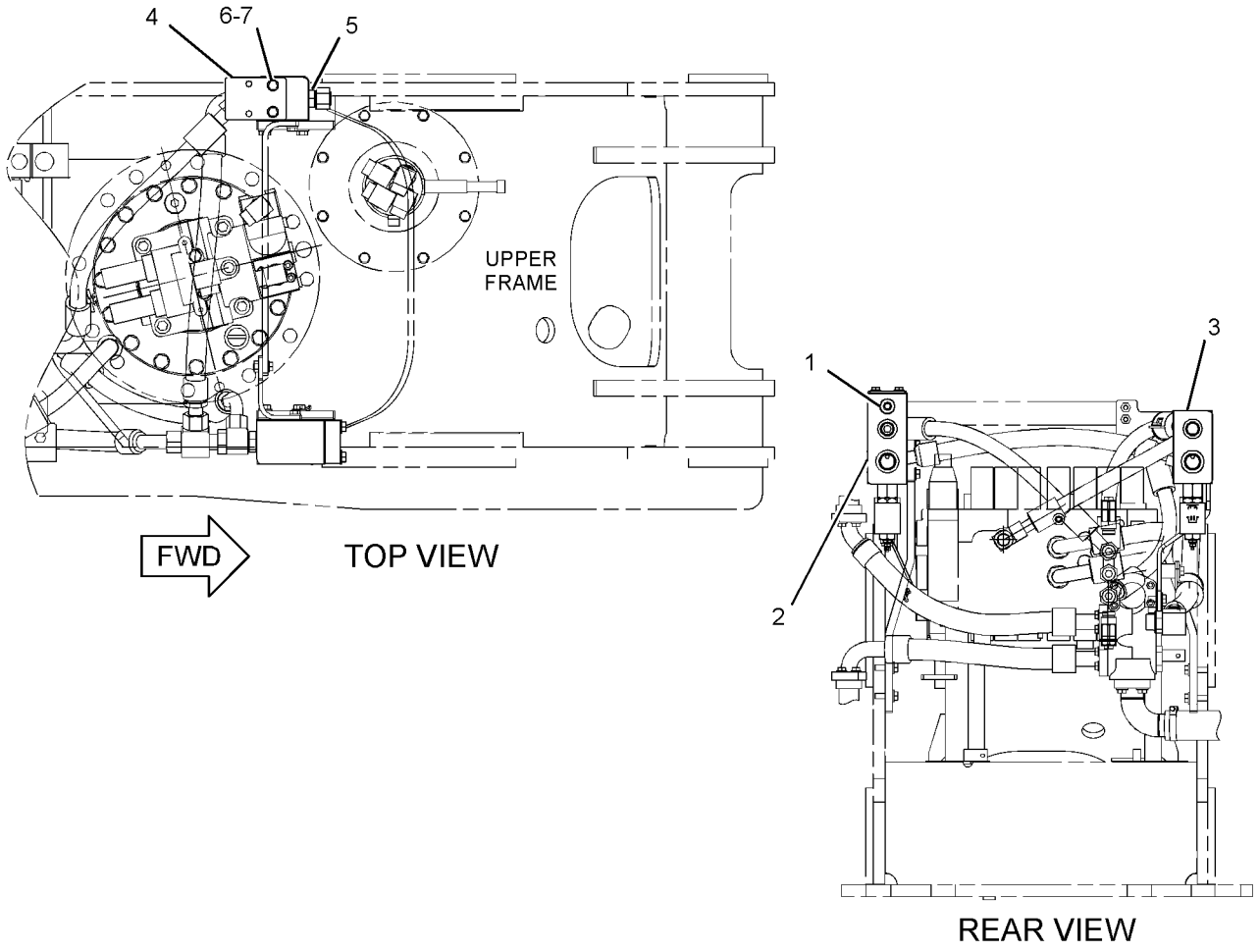

GRAPHIC #1 **<END>** g01310312

HYDRAULIC SYSTEM

260-8204 LINES GP-HYDRAULIC

S/N: CJN1-945

PART OF 260-8203 TANK & MTG GP-HYDRAULIC

SMCS-5057 **i02877611**

NOTE	REF NO	GRAPHIC REF	PART NUMBER	QTY	PART NAME 1 2 3 4 5 6 (PRODUCT LEVEL)	SEE PAGE
	1	1	**4I-9527**	2	BAND-MARKER (GREEN, R3)	
	2	1	**7K-1181**	4	STRAP-CABLE	
	3	1	*164-6874*	1	FITTING AS-ELBOW	
		1	**3J-1907**	1	SEAL-O-RING	
		1	**085-7356**	1	FITTING	
Y	4	1	**221-5069**	1	FITTING GP-HYDRAULIC (TEE)	447
I	5	1	**269-9714**	1	HOSE AS	
	6	1	**269-9721**	1	TUBE AS	
	7	1	**317-4746**	1	HOSE AS	
I	8	1	**115-8631**	1	HOSE AS	
	9	1	*148-8340*	2	CONNECTOR AS	
					(EACH INCLUDES)	
		1	**3K-0360**	1	SEAL-O-RING	
		1	**6V-8398**	1	SEAL-O-RING	
		1	**6V-8639**	1	CONNECTOR	
	10	1	*148-8345*	1	CONNECTOR AS	
		1	**2M-9780**	1	SEAL-O-RING	
		1	**6V-8398**	1	SEAL-O-RING	
		1	**6V-8638**	1	CONNECTOR	
	11	1	*148-8347*	1	ELBOW AS	
		1	**3D-2824**	1	SEAL-O-RING	
		1	**6V-9007**	1	ELBOW	
		1	**6V-9746**	1	SEAL-O-RING	
	12	1	*148-8359*	1	ELBOW AS	
		1	**3K-0360**	1	SEAL-O-RING	
		1	**6V-9746**	1	SEAL-O-RING	
		1	**6V-9877**	1	ELBOW	
	13	1	*148-8372*	1	ELBOW AS	
		1	**2M-9780**	1	SEAL-O-RING	
		1	**6V-8398**	1	SEAL-O-RING	
		1	**6V-8721**	1	ELBOW	
	14	1	*148-8407*	1	PLUG AS	
		1	**3J-1907**	1	SEAL-O-RING	
		1	**9S-4191**	1	PLUG-O-RING	
	15	1	*150-4043*	1	CONNECTOR AS	
		1	**3J-1907**	1	SEAL-O-RING	
		1	**6V-8398**	1	SEAL-O-RING	
		1	**6V-9873**	1	CONNECTOR	
	16	1	*164-5608*	1	CONNECTOR AS	
		1	**3K-0360**	1	SEAL-O-RING	
		1	**6V-8398**	1	SEAL-O-RING	
		1	**8T-1687**	1	CONNECTOR	
	17	1	**4J-0527**	1	SEAL-O-RING	
	18	1	**6D-1641**	1	CLIP	
	19	1	**8T-4121**	1	WASHER-HARD (11X21X2.5-MM THK)	
M	20	1	**8T-4137**	1	BOLT (M10X1.5X20-MM)	
	21	1	**8T-4223**	4	WASHER-HARD (13.5X25.5X3-MM THK)	
M	22	1	**8T-6868**	4	BOLT (M12X1.75X80-MM)	

I-REFER TO HYDRAULIC INFORMATION SYSTEM
M-METRIC PART
Y-SEPARATE ILLUSTRATION

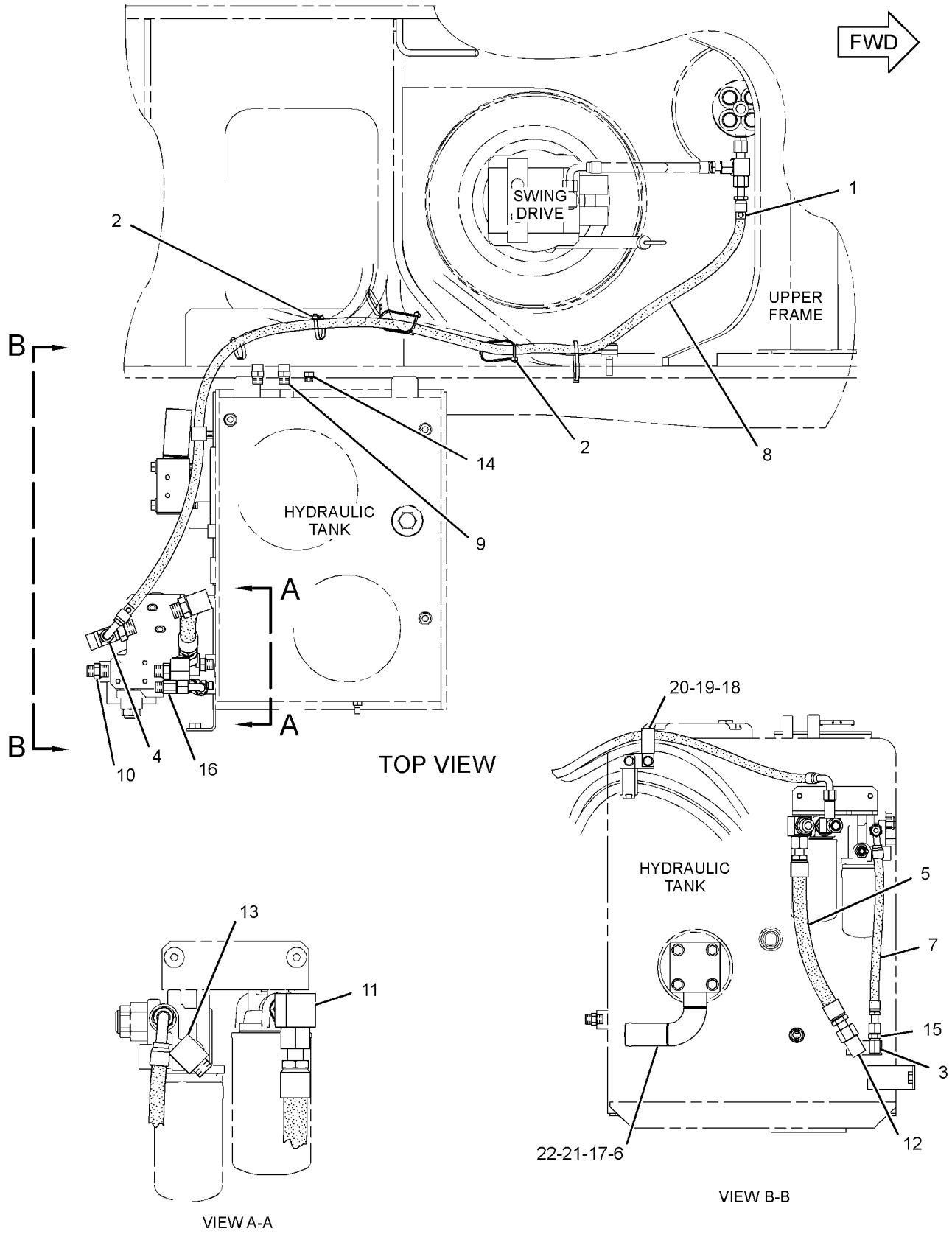

GRAPHIC #1 **<END>** g01426360

HYDRAULIC SYSTEM

260-8204 LINES GP-HYDRAULIC

S/N: CJN945-UP

PART OF 260-8203 TANK & MTG GP-HYDRAULIC

SMCS-5057 **i03127420**

NOTE	REF NO	GRAPHIC REF	PART NUMBER	QTY	PART NAME 1 2 3 4 5 6 (PRODUCT LEVEL)	SEE PAGE
	1	1	**4I-9527**	2	BAND-MARKER (GREEN, R3)	
	2	1	**7K-1181**	4	STRAP-CABLE	
	3	1	*164-6874*	1	FITTING AS-ELBOW	
		1	**3J-1907**	1	SEAL-O-RING	
		1	**085-7356**	1	FITTING	
Y	4	1	**221-5069**	1	FITTING GP-HYDRAULIC (TEE)	447
I	5	1	**269-9714**	1	HOSE AS	
	6	1	**269-9721**	1	TUBE AS	
C	7	1	**255-1929**	1	HOSE AS	
I	8	1	**115-8631**	1	HOSE AS	
	9	1	*148-8340*	2	CONNECTOR AS	
					(EACH INCLUDES)	
		1	**3K-0360**	1	SEAL-O-RING	
		1	**6V-8398**	1	SEAL-O-RING	
		1	**6V-8639**	1	CONNECTOR	
	10	1	*148-8345*	1	CONNECTOR AS	
		1	**2M-9780**	1	SEAL-O-RING	
		1	**6V-8398**	1	SEAL-O-RING	
		1	**6V-8638**	1	CONNECTOR	
	11	1	*148-8347*	1	ELBOW AS	
		1	**3D-2824**	1	SEAL-O-RING	
		1	**6V-9007**	1	ELBOW	
		1	**6V-9746**	1	SEAL-O-RING	
	12	1	*148-8359*	1	ELBOW AS	
		1	**3K-0360**	1	SEAL-O-RING	
		1	**6V-9746**	1	SEAL-O-RING	
		1	**6V-9877**	1	ELBOW	
	13	1	*148-8372*	1	ELBOW AS	
		1	**2M-9780**	1	SEAL-O-RING	
		1	**6V-8398**	1	SEAL-O-RING	
		1	**6V-8721**	1	ELBOW	
	14	1	*148-8407*	1	PLUG AS	
		1	**3J-1907**	1	SEAL-O-RING	
		1	**9S-4191**	1	PLUG-O-RING	
	15	1	*150-4043*	1	CONNECTOR AS	
		1	**3J-1907**	1	SEAL-O-RING	
		1	**6V-8398**	1	SEAL-O-RING	
		1	**6V-9873**	1	CONNECTOR	
C	16	1	*148-8354*	1	ELBOW AS	
		1	**3K-0360**	1	SEAL-O-RING	
		1	**6V-8398**	1	SEAL-O-RING	
		1	**6V-9002**	1	ELBOW	
	17	1	**4J-0527**	1	SEAL-O-RING	
	18	1	**6D-1641**	1	CLIP	
	19	1	**8T-4121**	1	WASHER-HARD (11X21X2.5-MM THK)	
M	20	1	**8T-4137**	1	BOLT (M10X1.5X20-MM)	
	21	1	**8T-4223**	4	WASHER-HARD (13.5X25.5X3-MM THK)	
M	22	1	**8T-6868**	4	BOLT (M12X1.75X80-MM)	

C-CHANGE FROM PREVIOUS TYPE
I-REFER TO HYDRAULIC INFORMATION SYSTEM
M-METRIC PART
Y-SEPARATE ILLUSTRATION

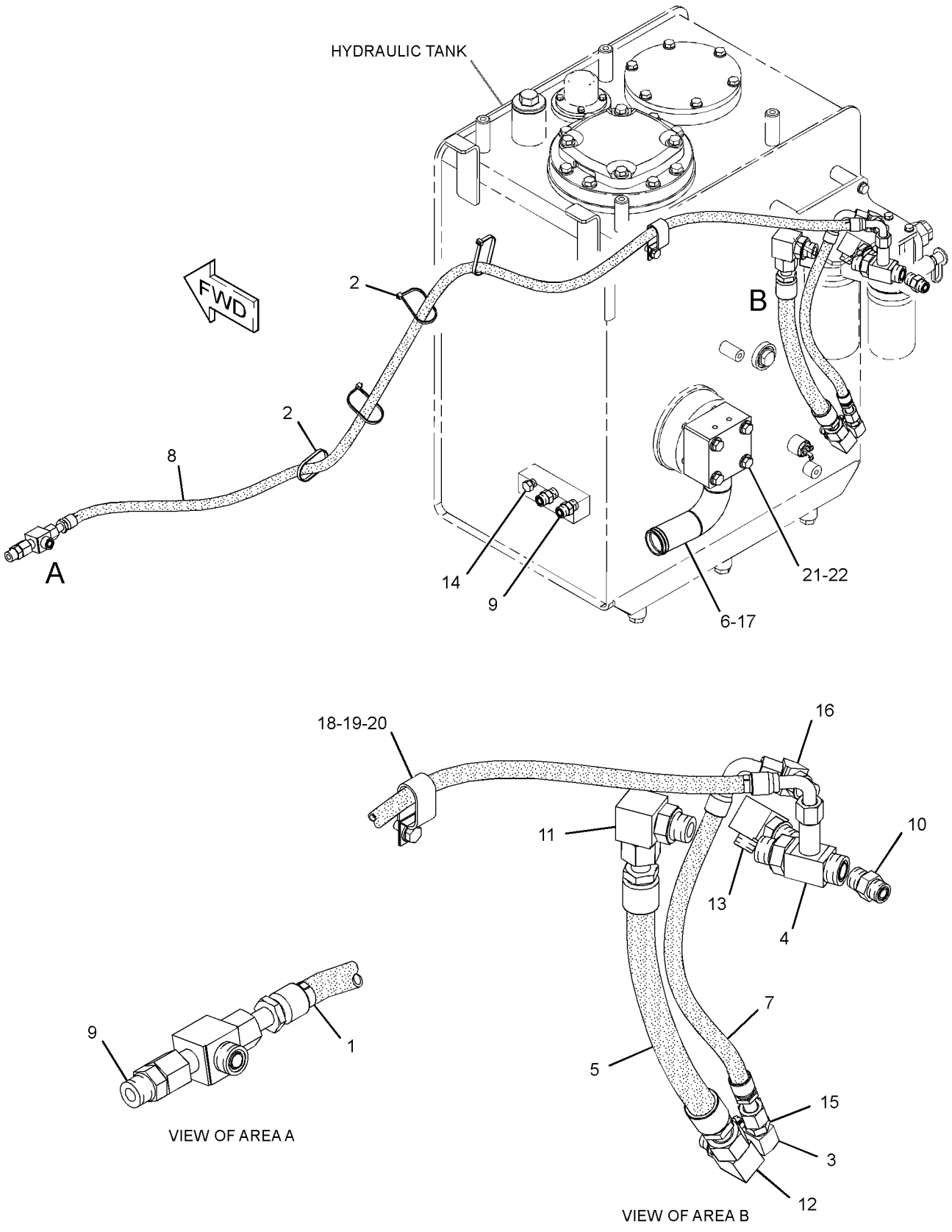

GRAPHIC #1 **<END>** g01620517

HYDRAULIC SYSTEM

260-8215 LINES GP-HYDRAULIC OIL COOLER

S/N: CJN1-UP

PART OF 259-7547 HYDRAULIC AR

SMCS-1374 **i03093825**

NOTE	REF NO	GRAPHIC REF	PART NUMBER	QTY	PART NAME 1 2 3 4 5 6 (PRODUCT LEVEL)	SEE PAGE
	1	1	**269-9883**	1	TUBE AS	
	2	1	**269-9886**	1	TUBE AS	
M	3	1	**096-4883**	4	LOCKNUT (M10X1.15-THD)	
	4	1	**4J-0523**	2	SEAL-O-RING	
M	5	1	**7Y-5237**	2	U-BOLT	
	6	1	**8T-4121**	4	WASHER-HARD (11X21X2.5-MM THK)	
	7	1	**8T-4223**	4	WASHER-HARD (13.5X25.5X3-MM THK)	
M	8	1	**8T-4956**	4	BOLT (M12X1.75X35-MM)	

M-METRIC PART

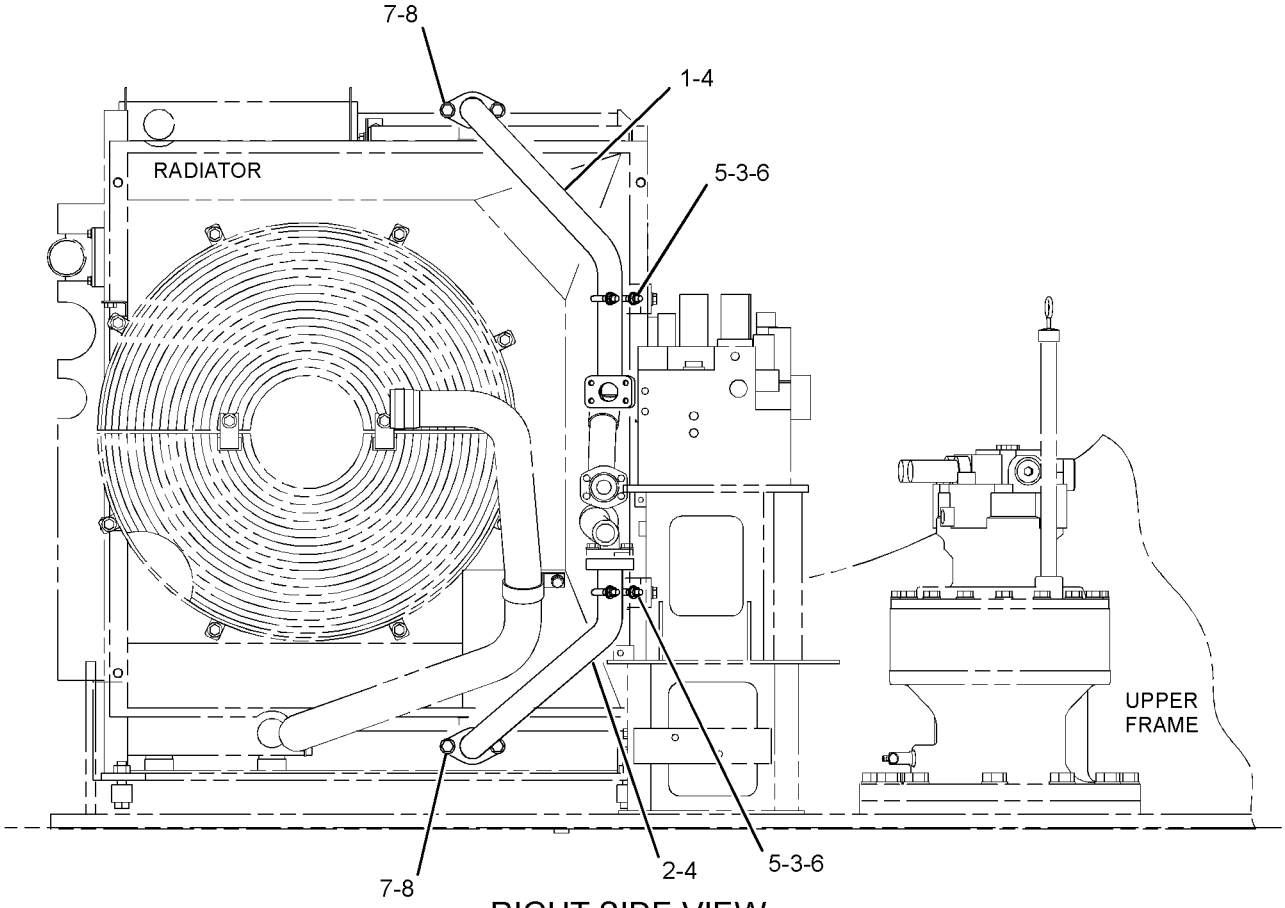

RIGHT SIDE VIEW

GRAPHIC #1 **<END>** g01621853

260-7891 LINES GP-PILOT–PUMP CONTROL, SHUTTLE VALVE

S/N: CJN1-UP

PART OF 259-7557, 270-5751 CONTROL AR-AUXILIARY

AN ATTACHMENT

SMCS-5057, 5059 **i02855390**

NOTE	REF NO	GRAPHIC REF	PART NUMBER	QTY	PART NAME 1 2 3 4 5 6 (PRODUCT LEVEL)	SEE PAGE
	1	1	**309-5769**	1	SWITCH AS-PRESSURE (IMPLEMENT, SWING)	
		1	**102-8802**	1	KIT-RECEPTACLE (2-PIN)	
					(INCLUDES RECEPTACLE AS & WEDGE)	
		1	**9X-3401**	2	PIN-CONNECTOR (16-GA TO 18-GA)	
					–OR–	
		1	**126-1767**	2	PIN-CONNECTOR (14-GA)	
	2	1	**185-0383**	1	BRACKET	
Y	3	1	**185-0462**	1	VALVE GP-SHUTTLE (PILOT)	732
	4	1	*148-8336*	8	CONNECTOR AS	
					(EACH INCLUDES)	
		1	**3J-1907**	1	SEAL-O-RING	
		1	**6V-8397**	1	SEAL-O-RING	
		1	**6V-8636**	1	CONNECTOR	
	5	1	*148-8353*	8	ELBOW AS	
					(EACH INCLUDES)	
		1	**3J-1907**	1	SEAL-O-RING	
		1	**6V-8397**	1	SEAL-O-RING	
		1	**6V-9001**	1	ELBOW	
	6	1	**8T-4121**	7	WASHER-HARD (11X21X2.5-MM THK)	
M	7	1	**8T-4136**	3	BOLT (M10X1.5X25-MM)	
M	8	1	**8T-4137**	4	BOLT (M10X1.5X20-MM)	

M-METRIC PART
Y-SEPARATE ILLUSTRATION

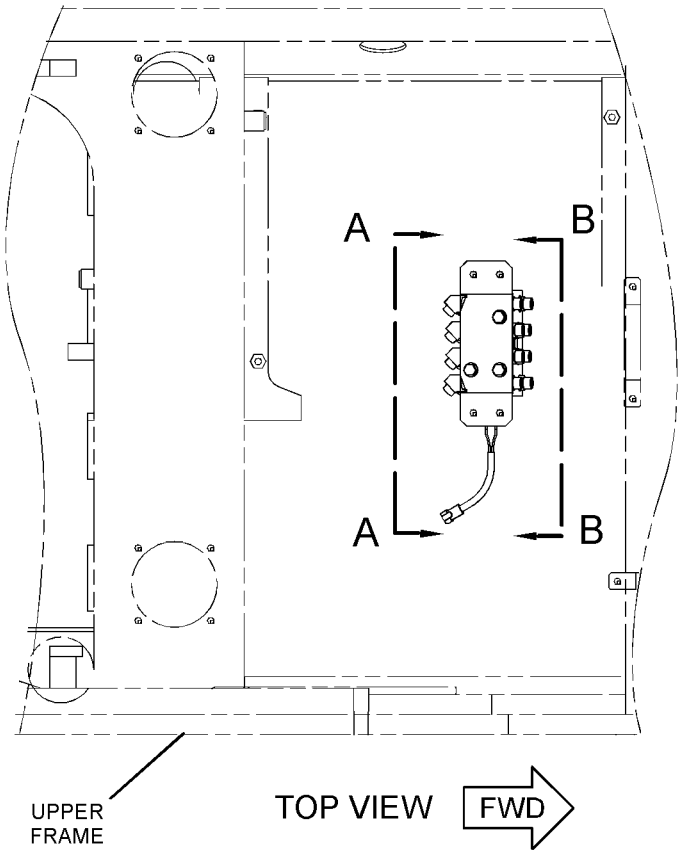

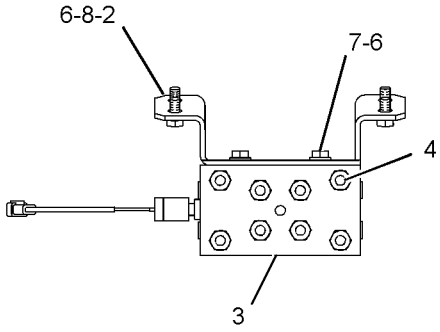

VIEW B-B

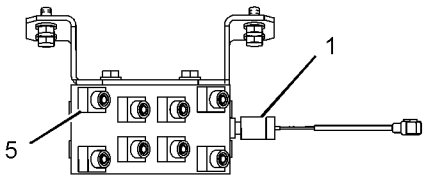

VIEW A-A

GRAPHIC #1 **<END>** g01151832

260-8047 LINES GP-PILOT—THIRD PEDAL, STRAIGHT TRAVEL

S/N: CJN1-UP
PART OF 259-7196 PEDAL AR-THIRD
AN ATTACHMENT

SMCS-5057, 5059 **i03134843**

NOTE	REF NO	GRAPHIC REF	PART NUMBER	QTY	PART NAME 1 2 3 4 5 6 (PRODUCT LEVEL)	SEE PAGE
I	1	1	**4I-1704**	1	HOSE AS	
I	2	1	**087-4402**	1	HOSE AS	
I	3	1	**087-5762**	1	HOSE AS	
I	4	1	**087-5765**	2	HOSE AS	
I	5	1	**087-5766**	1	HOSE AS	
I	6	1	**179-7456**	2	HOSE AS	
Y	7	1	**112-0083**	1	VALVE GP-SHUTTLE (THIRD PEDAL, STRAIGHT TRAVEL)	728
	8	1	*148-8336*	3	CONNECTOR AS	
					(EACH INCLUDES)	
		1	**3J-1907**	1	SEAL-O-RING	
		1	**6V-8397**	1	SEAL-O-RING	
		1	**6V-8636**	1	CONNECTOR	
	9	1	*148-8353*	6	ELBOW AS	
					(EACH INCLUDES)	
		1	**3J-1907**	1	SEAL-O-RING	
		1	**6V-8397**	1	SEAL-O-RING	
		1	**6V-9001**	1	ELBOW	
	10	1	*148-8378*	4	ELBOW AS	
					(EACH INCLUDES)	
		1	**3J-1907**	1	SEAL-O-RING	
		1	**6V-8397**	1	SEAL-O-RING	
		1	**6V-8724**	1	ELBOW	
	11	1	*150-3036*	1	ELBOW AS	
		1	**3J-1907**	1	SEAL-O-RING	
		1	**6V-8397**	1	SEAL-O-RING	
		1	**8T-1905**	1	ELBOW	
	12	1	*150-4044*	1	CONNECTOR AS	
		1	**3J-1907**	1	SEAL-O-RING	
		1	**6V-8397**	1	SEAL-O-RING	
		1	**8T-1779**	1	CONNECTOR	
	13	1	*164-5628*	1	CONNECTOR AS	
		1	**3J-1907**	1	SEAL-O-RING	
		1	**6V-8397**	1	SEAL-O-RING	
		1	**107-6631**	1	CONNECTOR-FILTER	
	14	1	**4I-7889**	2	SPACER (11X25X45-MM THK)	
M	15	1	**8T-4178**	2	BOLT (M10X1.5X90-MM)	

I-REFER TO HYDRAULIC INFORMATION SYSTEM
M-METRIC PART
Y-SEPARATE ILLUSTRATION

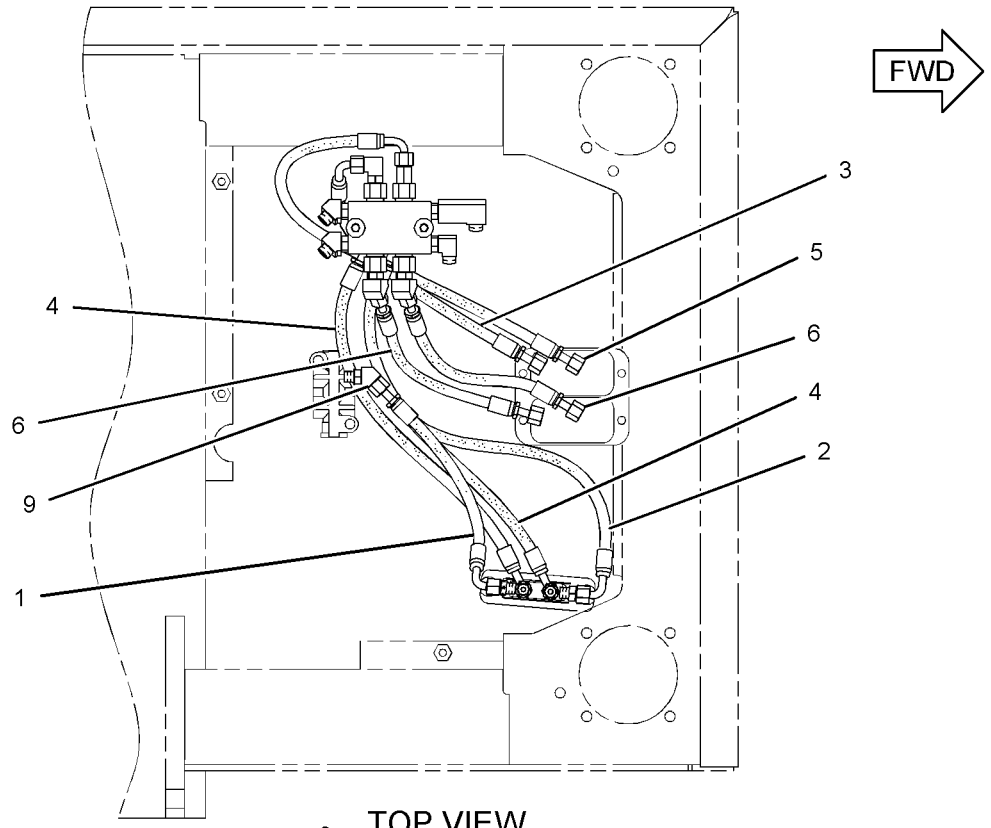

TOP VIEW

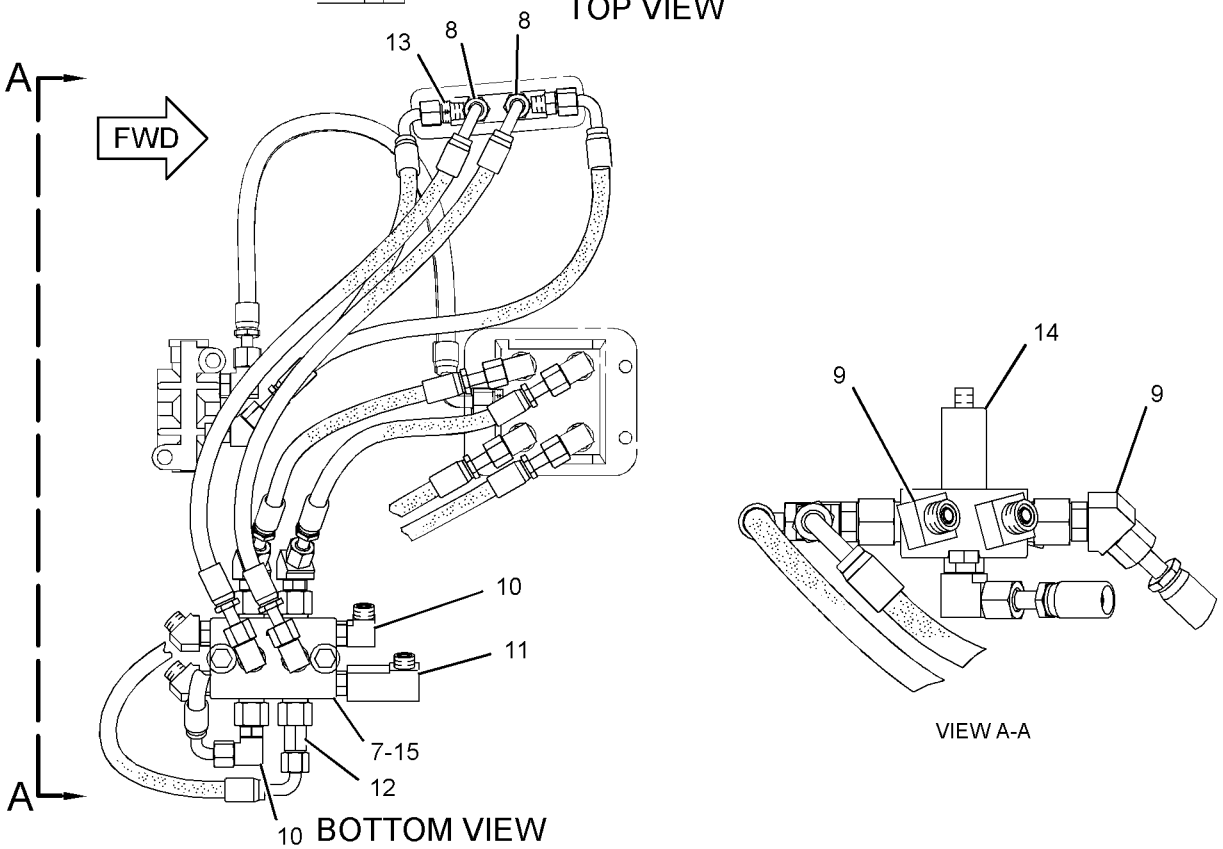

VIEW A-A

BOTTOM VIEW

GRAPHIC #1 **<END>** g01436139

HYDRAULIC SYSTEM

260-8217 LINES GP-PILOT—MAIN CONTROL VALVE

S/N: CJN1-527

PART OF 259-7547 HYDRAULIC AR

SMCS-5057, 5059 **i03153880**

NOTE	REF NO	GRAPHIC REF	PART NUMBER	QTY	PART NAME 1 2 3 4 5 6 (PRODUCT LEVEL)	SEE PAGE
I	1	2	**4I-0836**	1	HOSE AS	
	2	2	**4I-3941**	2	FITTING AS	
	3	1	**4I-3953**	2	GROMMET	
I	4	2	**4I-3988**	1	HOSE AS	
I	5	2	**4I-3994**	1	HOSE AS	
	6	2	**4I-9521**	6	BAND-MARKER (RED, L1)	
	7	2	**4I-9522**	6	BAND-MARKER (YELLOW, L2)	
	8	2	**4I-9523**	2	BAND-MARKER (BLUE, L3)	
	9	2	**4I-9524**	2	BAND-MARKER (BROWN, L4)	
	10	2	**4I-9525**	6	BAND-MARKER (ORANGE, R1)	
	11	2	**4I-9526**	6	BAND-MARKER (WHITE, R2)	
	12	2	**4I-9527**	2	BAND-MARKER (GREEN, R3)	
	13	2	**4I-9528**	2	BAND-MARKER (PURPLE, R4)	
I	14	2	**7I-8252**	2	HOSE AS	
	15	1,2	**7K-1181**	14	STRAP-CABLE	
I	16	2	**7Y-4199**	1	HOSE AS	
	17	1	**087-4587**	2	GROMMET	
I	18	2	**104-8771**	2	HOSE AS	
I	19	2	**104-8774**	1	HOSE AS	
I	20	2	**104-8973**	1	HOSE AS	
I	21	2	**104-8976**	1	HOSE AS	
I	22	2	**111-6752**	1	HOSE AS	
	23	2	**133-5813**	2	BAND-MARKER (GRAY, P)	
	24	2	**309-5768**	2	SWITCH AS-PRESSURE (IMPLEMENT)	
					(EACH INCLUDES)	
		2	**126-1768**	2	SOCKET-CONNECTOR (14-GA)	
					—OR—	
		2	**9X-3402**	2	SOCKET-CONNECTOR (16-GA TO 18-GA)	
		2	**155-2270**	1	KIT-CONNECTING PLUG (2-PIN)	
					(INCLUDES PLUG AS & WEDGE)	
	25	2	**221-4807**	1	HOSE AS	
	26	1,2	**115-8645**	5	GUARD	
	27	2	*148-8336*	2	CONNECTOR AS	
					(EACH INCLUDES)	
		2	**3J-1907**	1	SEAL-O-RING	
		2	**6V-8397**	1	SEAL-O-RING	
		2	**6V-8636**	1	CONNECTOR	
	28	2	*148-8353*	2	ELBOW AS	
					(EACH INCLUDES)	
		2	**3J-1907**	1	SEAL-O-RING	
		2	**6V-8397**	1	SEAL-O-RING	
		2	**6V-9001**	1	ELBOW	
	29	2	*148-8378*	2	ELBOW AS	
					(EACH INCLUDES)	
		2	**3J-1907**	1	SEAL-O-RING	
		2	**6V-8397**	1	SEAL-O-RING	
		2	**6V-8724**	1	ELBOW	
	30	2	*148-8407*	2	PLUG AS	
					(EACH INCLUDES)	
		2	**3J-1907**	1	SEAL-O-RING	
		2	**9S-4191**	1	PLUG-O-RING	
	31	2	*148-8435*	6	TEE AS	
					(EACH INCLUDES)	
		2	**3J-1907**	1	SEAL-O-RING	
		2	**6V-8397**	2	SEAL-O-RING	
		2	**6V-8781**	1	TEE-FACE SEAL	

260-8217 **LINES GP-PILOT** *(contd.)* **i03153880**

NOTE	REF NO	GRAPHIC REF	PART NUMBER	QTY	PART NAME 1 2 3 4 5 6 (PRODUCT LEVEL)	SEE PAGE
	32	2	*150-3036*	3	ELBOW AS	
					(EACH INCLUDES)	
		2	**3J-1907**	1	SEAL-O-RING	
		2	**6V-8397**	1	SEAL-O-RING	
		2	**8T-1905**	1	ELBOW	
	33	2	*148-8338*	1	CONNECTOR AS	
		2	**3J-1907**	1	SEAL-O-RING	
		2	**6V-8397**	1	SEAL-O-RING	
		2	**8T-0075**	1	CONNECTOR	
I-REFER TO HYDRAULIC INFORMATION SYSTEM						

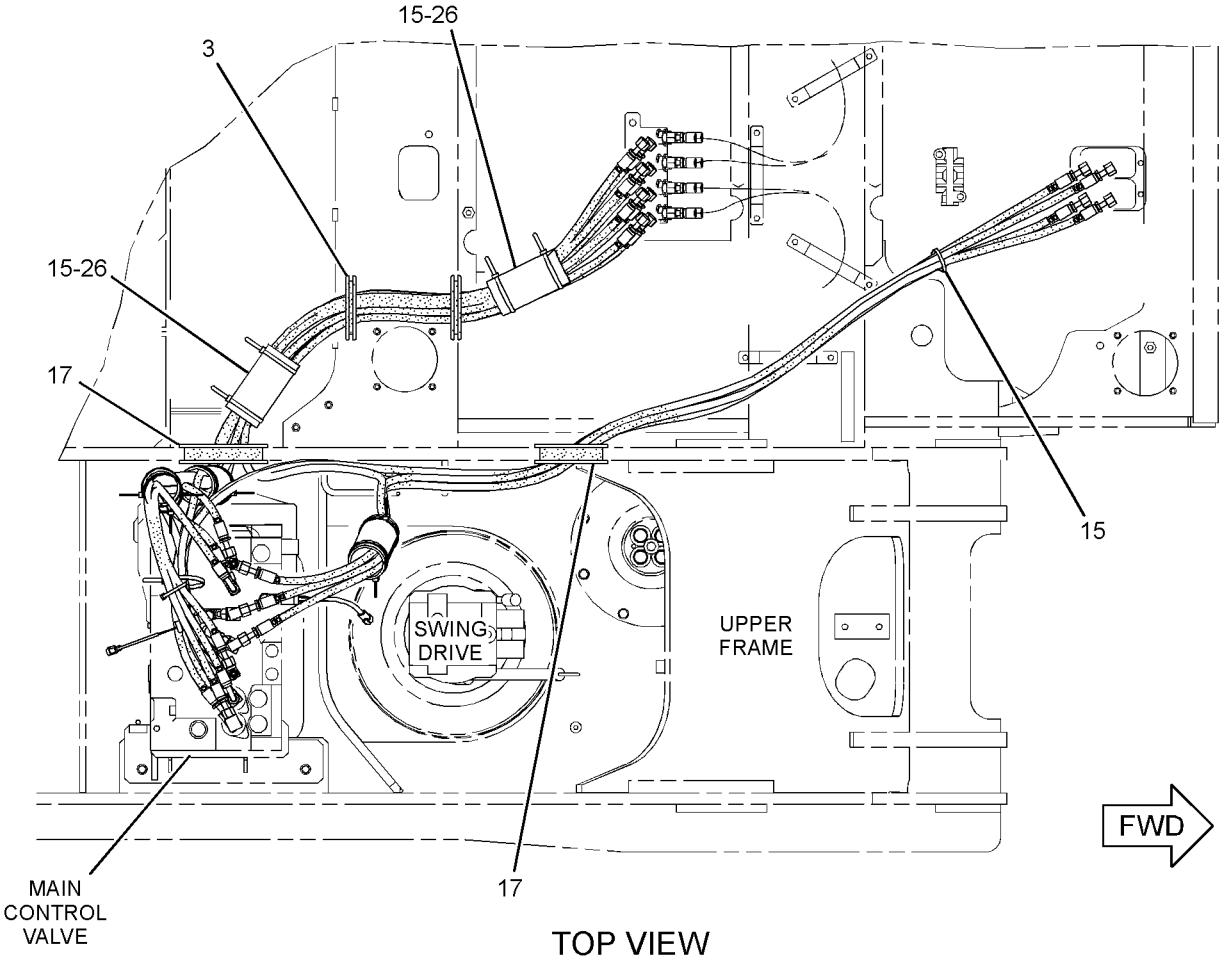

TOP VIEW

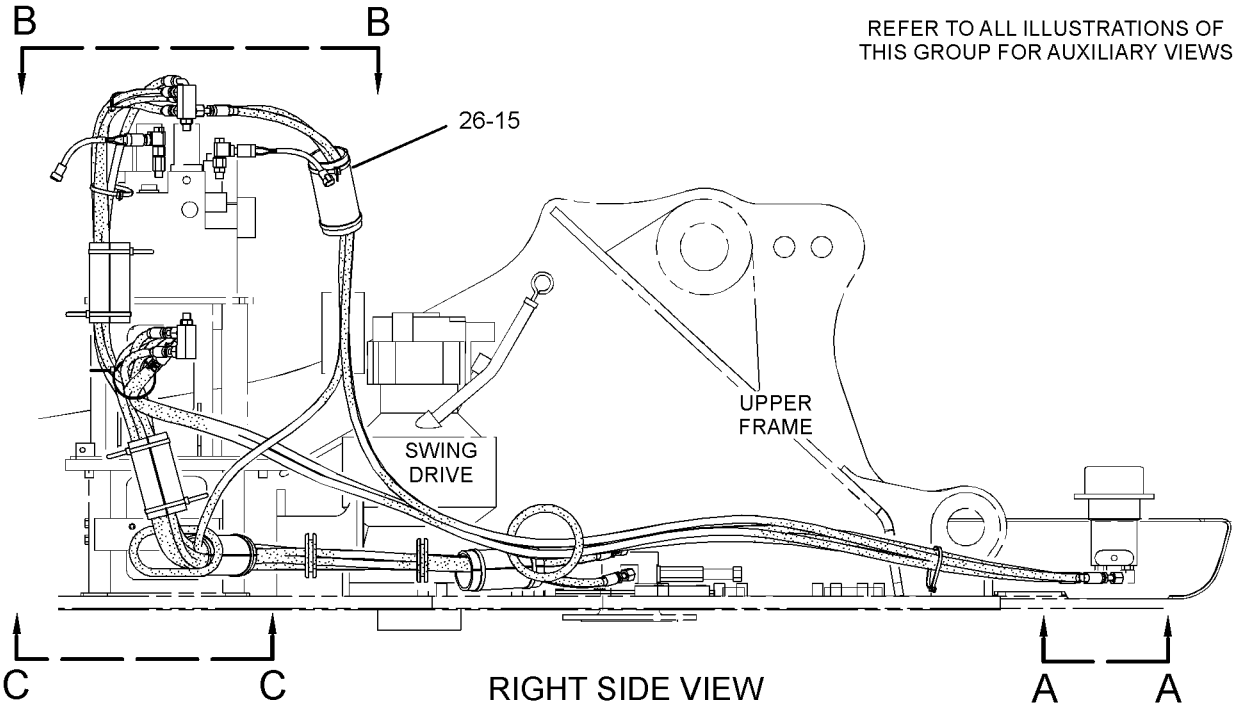

REFER TO ALL ILLUSTRATIONS OF THIS GROUP FOR AUXILIARY VIEWS

RIGHT SIDE VIEW

GRAPHIC #1

g01620918

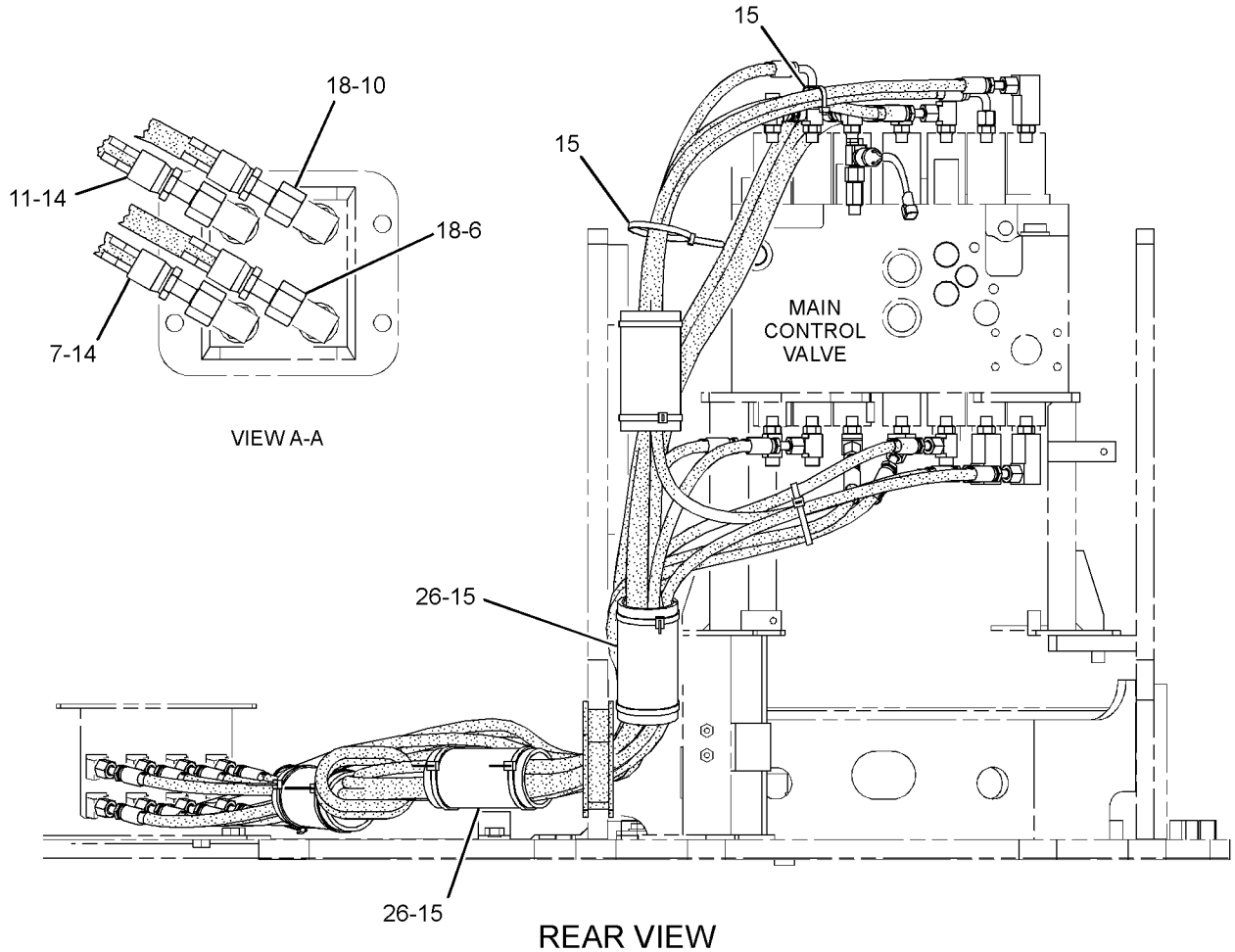

REAR VIEW

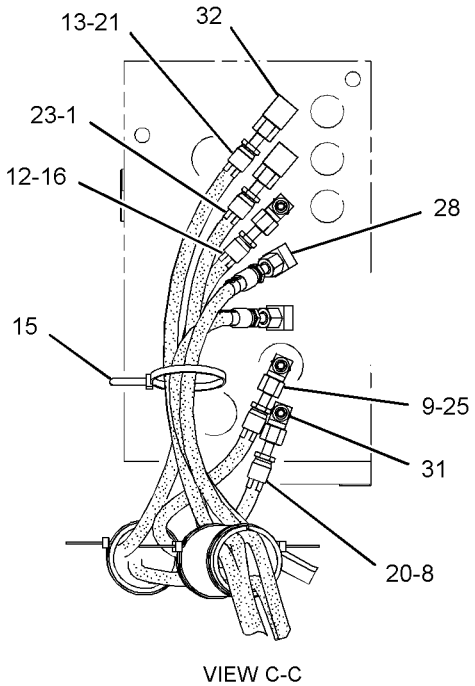

VIEW C-C

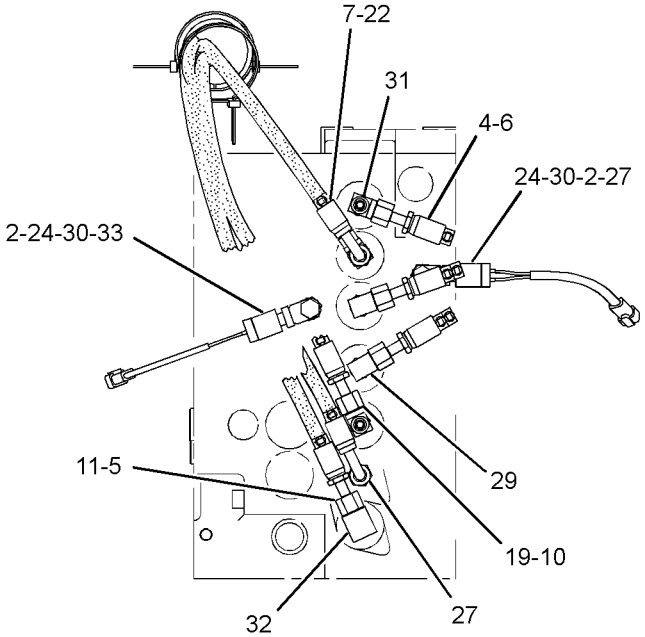

VIEW B-B

GRAPHIC #2 **<END>** g01620919

260-8217 LINES GP-PILOT—MAIN CONTROL VALVE

S/N: CJN528-UP

PART OF 259-7547 HYDRAULIC AR

SMCS-5057, 5059 **i03183296**

NOTE	REF NO	GRAPHIC REF	PART NUMBER	QTY	PART NAME 1 2 3 4 5 6 (PRODUCT LEVEL)	SEE PAGE
I	1	2	**4I-0836**	1	HOSE AS	
	2	2	**4I-3941**	2	FITTING AS	
	3	1	**4I-3953**	2	GROMMET	
I	4	2	**4I-3988**	1	HOSE AS	
I	5	2	**4I-3994**	1	HOSE AS	
	6	2	**4I-9521**	6	BAND-MARKER (RED, L1)	
	7	2	**4I-9522**	6	BAND-MARKER (YELLOW, L2)	
	8	2	**4I-9523**	2	BAND-MARKER (BLUE, L3)	
	9	2	**4I-9524**	2	BAND-MARKER (BROWN, L4)	
	10	2	**4I-9525**	6	BAND-MARKER (ORANGE, R1)	
	11	2	**4I-9526**	6	BAND-MARKER (WHITE, R2)	
	12	2	**4I-9527**	2	BAND-MARKER (GREEN, R3)	
	13	2	**4I-9528**	2	BAND-MARKER (PURPLE, R4)	
C	14	2	**320-0150**	2	HOSE AS	
	15	1,2	**7K-1181**	14	STRAP-CABLE	
I	16	2	**7Y-4199**	1	HOSE AS	
	17	1	**087-4587**	2	GROMMET	
I	18	2	**104-8771**	2	HOSE AS	
I	19	2	**104-8774**	1	HOSE AS	
I	20	2	**104-8973**	1	HOSE AS	
I	21	2	**104-8976**	1	HOSE AS	
I	22	2	**111-6752**	1	HOSE AS	
	23	2	**133-5813**	2	BAND-MARKER (GRAY, P)	
	24	2	**309-5768**	2	SWITCH AS-PRESSURE (IMPLEMENT)	
					(EACH INCLUDES)	
		2	**9X-3402**	2	SOCKET-CONNECTOR (16-GA TO 18-GA)	
					—OR—	
		2	**126-1768**	2	SOCKET-CONNECTOR (14-GA)	
		2	**155-2270**	1	KIT-CONNECTING PLUG (2-PIN)	
					(INCLUDES PLUG AS, WEDGE & INTERFACE SEAL)	
	25	2	**221-4807**	1	HOSE AS	
	26	1,2	**115-8645**	5	GUARD	
C	27	2	*148-8336*	4	CONNECTOR AS	
					(EACH INCLUDES)	
		2	**3J-1907**	1	SEAL-O-RING	
		2	**6V-8397**	1	SEAL-O-RING	
		2	**6V-8636**	1	CONNECTOR	
	29	2	*148-8378*	2	ELBOW AS	
					(EACH INCLUDES)	
		2	**3J-1907**	1	SEAL-O-RING	
		2	**6V-8397**	1	SEAL-O-RING	
		2	**6V-8724**	1	ELBOW	
	30	2	*148-8407*	2	PLUG AS	
					(EACH INCLUDES)	
		2	**3J-1907**	1	SEAL-O-RING	
		2	**9S-4191**	1	PLUG-O-RING	
	31	2	*148-8435*	4	TEE AS	
					(EACH INCLUDES)	
		2	**3J-1907**	1	SEAL-O-RING	
		2	**6V-8397**	2	SEAL-O-RING	
		2	**6V-8781**	1	TEE-FACE SEAL	
	32	2	*150-3036*	3	ELBOW AS	
					(EACH INCLUDES)	
		2	**3J-1907**	1	SEAL-O-RING	
		2	**6V-8397**	1	SEAL-O-RING	
		2	**8T-1905**	1	ELBOW	

260-8217 **LINES GP-PILOT** *(contd.)* **i03183296**

NOTE	REF NO	GRAPHIC REF	PART NUMBER	QTY	PART NAME 1 2 3 4 5 6 (PRODUCT LEVEL)	SEE PAGE
	33	2	*148-8338*	1	CONNECTOR AS	
		2	**3J-1907**	1	SEAL-O-RING	
		2	**6V-8397**	1	SEAL-O-RING	
		2	**8T-0075**	1	CONNECTOR	

C-CHANGE FROM PREVIOUS TYPE
I-REFER TO HYDRAULIC INFORMATION SYSTEM

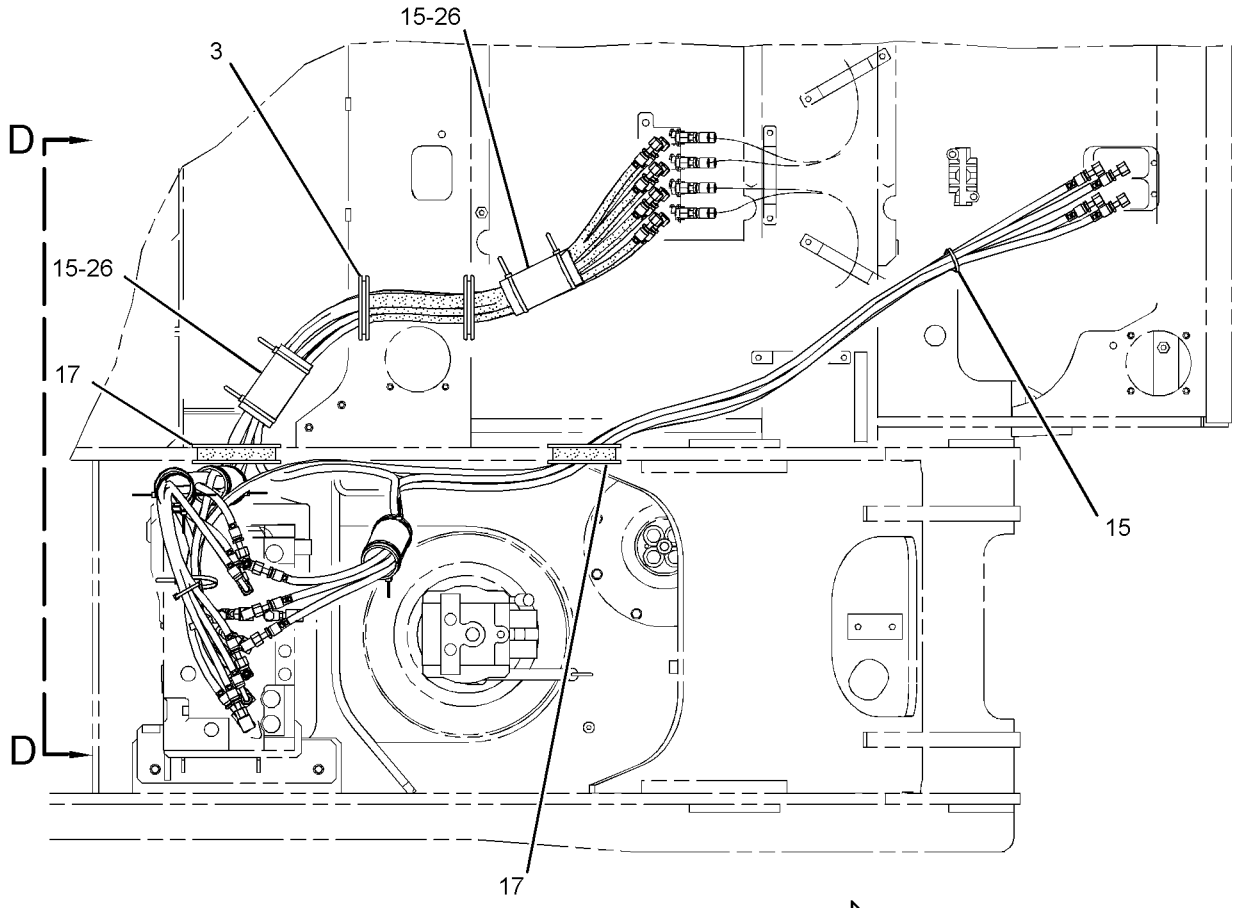

TOP VIEW FWD

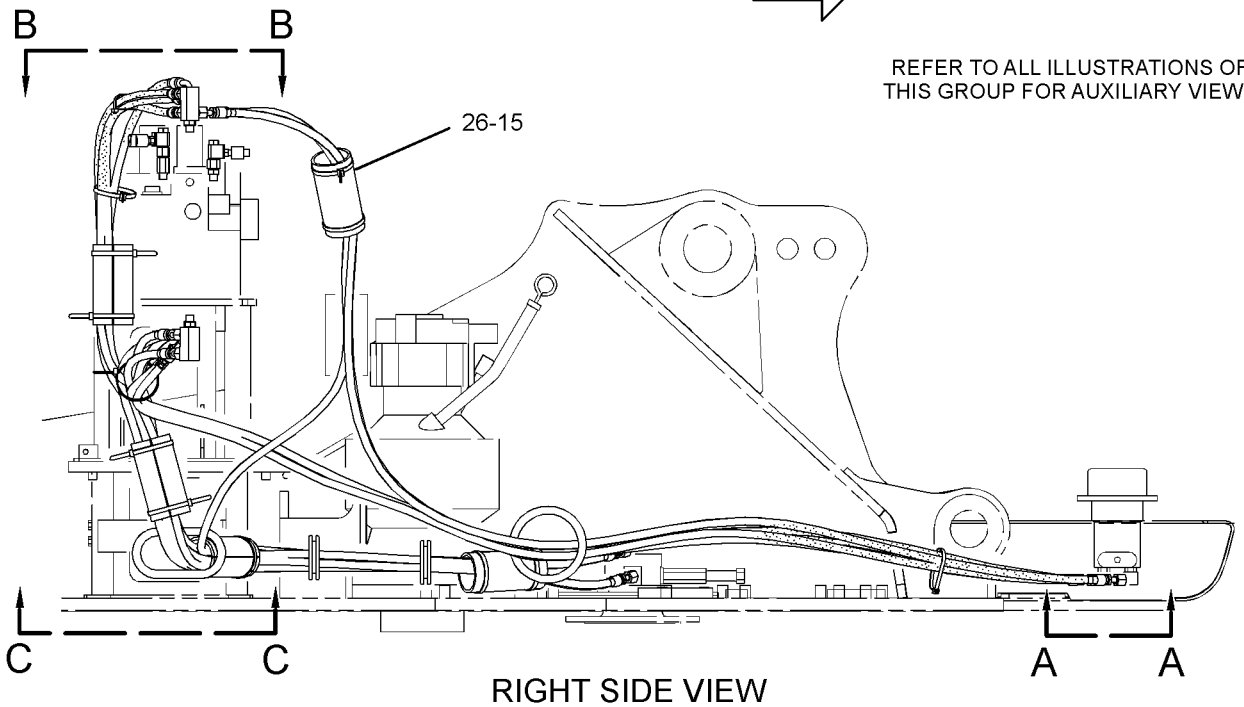

REFER TO ALL ILLUSTRATIONS OF THIS GROUP FOR AUXILIARY VIEWS

RIGHT SIDE VIEW

GRAPHIC #1 g01578693

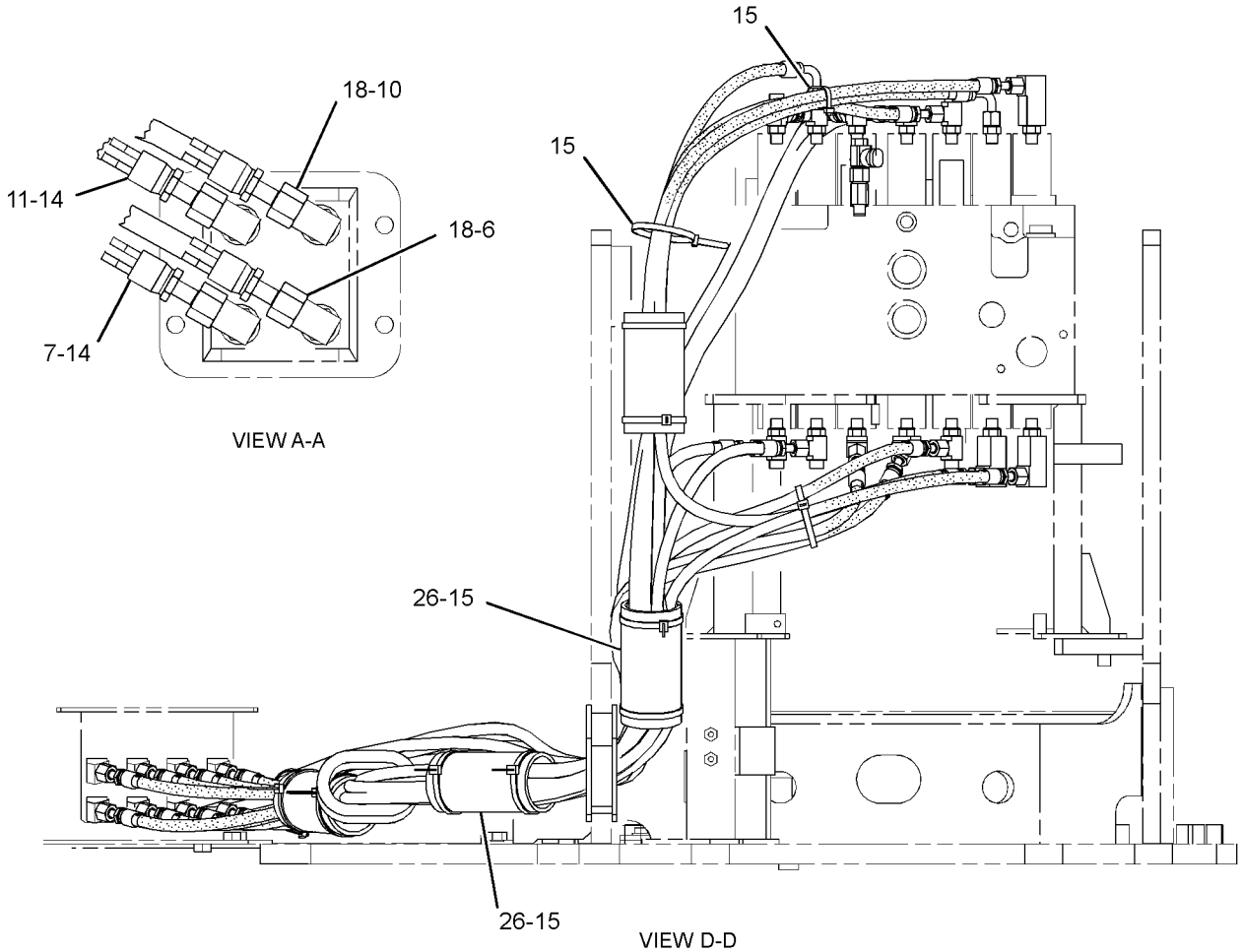

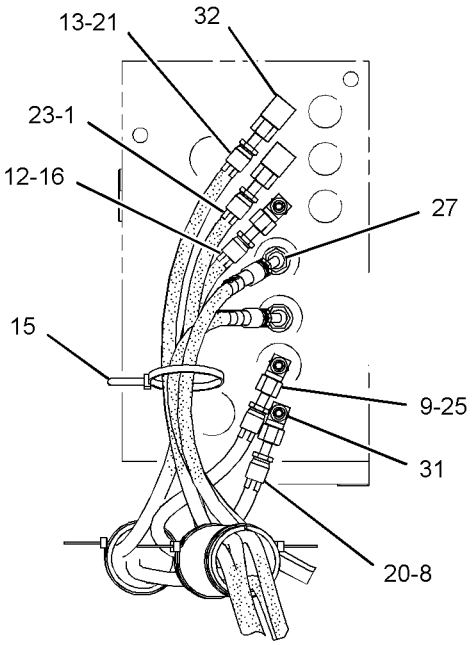

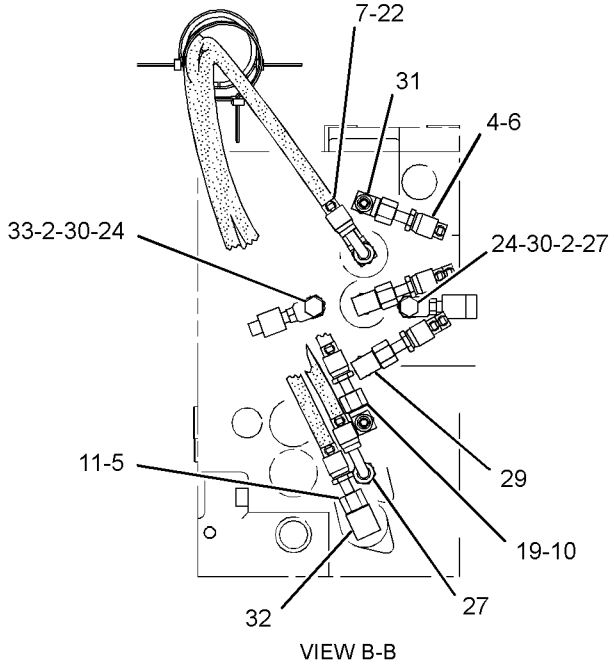

GRAPHIC #2 **<END>** g01588013

260-8219 LINES GP-PILOT–FILTER, PILOT PUMP

S/N: CJN1-UP

PART OF 259-7547 HYDRAULIC AR

SMCS-5057, 5059 **i02855401**

NOTE	REF NO	GRAPHIC REF	PART NUMBER	QTY	PART NAME 1 2 3 4 5 6 (PRODUCT LEVEL)	SEE PAGE
	1	1	**6V-0852**	4	CAP-DUST	
I	2	1	**7I-1377**	1	HOSE AS	
	3	1	**7K-1181**	4	STRAP-CABLE	
I	4	1	**131-9869**	1	HOSE AS	
	5	1	*164-6874*	1	FITTING AS-ELBOW	
		1	**3J-1907**	1	SEAL-O-RING	
		1	**085-7356**	1	FITTING	
	6	1	*168-1968*	1	TEE AS	
		1	**126-6872**	1	TEE	
		1	**3J-1907**	1	SEAL-O-RING	
		1	**6V-8397**	1	SEAL-O-RING	
	7	1	**221-8912**	2	FLANGE	
	8	1	**260-2180**	2	SENSOR AS-PRESSURE (MAIN HYDRAULIC PUMP)	
					(EACH INCLUDES)	
		1	**095-1777**	1	RING-BACKUP	
		1	**260-2191**	1	SEAL-O-RING	
	9	1	**269-9890**	1	HOSE AS	
	10	1	**292-7176**	1	HOSE AS	
I	11	1	**292-7482**	1	HOSE AS	
	12	1	*148-8327*	2	CONNECTOR AS	
					(EACH INCLUDES)	
		1	**3D-2824**	1	SEAL-O-RING	
		1	**6V-8637**	1	CONNECTOR	
		1	**6V-9746**	1	SEAL-O-RING	
	13	1	*148-8346*	1	ELBOW AS	
		1	**3K-0360**	1	SEAL-O-RING	
		1	**6V-8398**	1	SEAL-O-RING	
		1	**8T-1686**	1	ELBOW	
	14	1	*148-8347*	1	ELBOW AS	
		1	**3D-2824**	1	SEAL-O-RING	
		1	**6V-9007**	1	ELBOW	
		1	**6V-9746**	1	SEAL-O-RING	
	15	1	*148-8367*	1	ELBOW AS	
		1	**6V-8397**	1	SEAL-O-RING	
		1	**6V-9850**	1	ELBOW	
	16	1	*148-8444*	1	TEE AS-SWIVEL	
		1	**6V-8398**	2	SEAL-O-RING	
		1	**6V-9837**	1	TEE-SWIVEL	
	17	1	*150-3036*	3	ELBOW AS	
					(EACH INCLUDES)	
		1	**3J-1907**	1	SEAL-O-RING	
		1	**6V-8397**	1	SEAL-O-RING	
		1	**8T-1905**	1	ELBOW	
	18	1	*150-4043*	1	CONNECTOR AS	
		1	**3J-1907**	1	SEAL-O-RING	
		1	**6V-8398**	1	SEAL-O-RING	
		1	**6V-9873**	1	CONNECTOR	
	19	1	*164-5567*	4	COUPLER AS-QUICK DISCONNECT	
					(EACH INCLUDES)	
		1	**3J-1907**	1	SEAL-O-RING	
		1	**6V-3965**	1	FITTING (QUICK DISCONNECT)	
M	20	1	**8T-4189**	4	BOLT (M8X1.25X20-MM)	
	21	1	**8T-4224**	4	WASHER-HARD (8.8X16X2-MM THK)	

I-REFER TO HYDRAULIC INFORMATION SYSTEM
M-METRIC PART

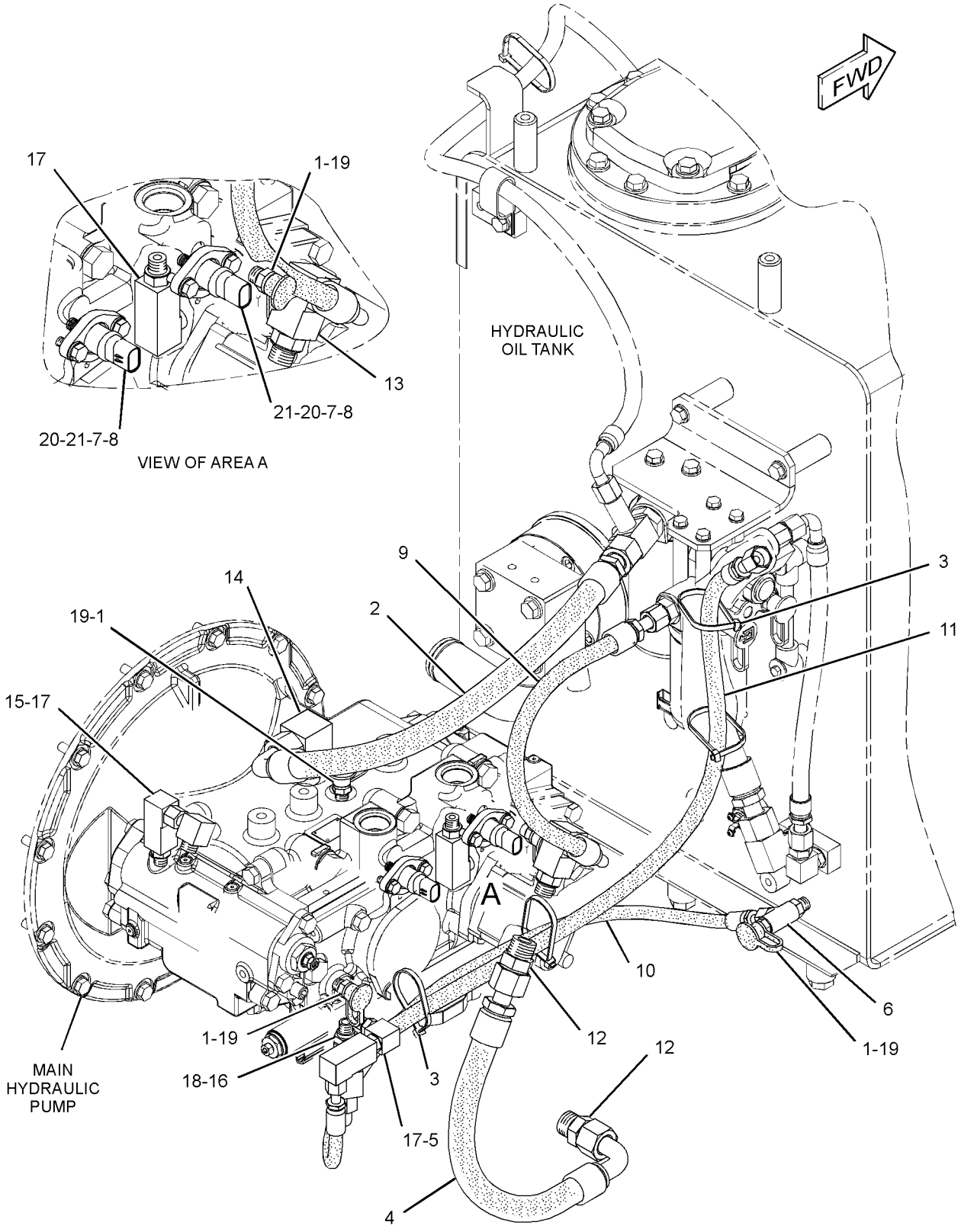

GRAPHIC #1 **<END>** g01389082

HYDRAULIC SYSTEM

260-8225 LINES GP-PILOT—SYSTEM 23, COMBINED FUNCTION

S/N: CJN1-UP
PART OF 270-5751 CONTROL AR-AUXILIARY
AN ATTACHMENT
TYPE 1

SMCS-5057, 5059 **i02866153**

NOTE	REF NO	GRAPHIC REF	PART NUMBER	QTY	PART NAME 1 2 3 4 5 6 (PRODUCT LEVEL)	SEE PAGE
I	1	1	**192-6775**	1	HOSE AS	
	2	1	**4I-3941**	1	FITTING AS	
	3	1	**4I-9521**	2	BAND-MARKER (RED, L1)	
	4	1	**4I-9522**	2	BAND-MARKER (YELLOW, L2)	
	5	1	**4I-9523**	4	BAND-MARKER (BLUE, L3)	
	6	1	**4I-9524**	4	BAND-MARKER (BROWN, L4)	
	7	1	**4I-9527**	4	BAND-MARKER (GREEN, R3)	
I	8	1	**5I-4396**	1	HOSE AS	
	9	1	**7K-1181**	11	STRAP-CABLE	
I	10	1	**087-5762**	1	HOSE AS	
I	11	1	**108-7393**	1	HOSE AS	
Y	12	1	**121-6303**	1	VALVE GP-SOLENOID (SYSTEM 24, COMBINED FUNCTION)	737
Y	13	1	**123-2430**	1	VALVE GP-SHUTTLE	729
	14	1	*164-6874*	2	FITTING AS-ELBOW	
					(EACH INCLUDES)	
		1	**3J-1907**	1	SEAL-O-RING	
		1	**085-7356**	1	FITTING	
I	15	1	**302-3188**	1	HOSE AS	
C	16	1	**317-4755**	1	SUPPORT AS	
	17	1	**207-6350**	1	BRACKET AS	
Y	18	1	**259-7430**	1	VALVE GP-SOLENOID (PRESSURE REDUCING)	741
I	19	1	**266-1389**	1	HOSE AS	
	20	1	**269-9717**	1	PLATE	
I	21	1	**272-4180**	1	HOSE AS	
I	22	1	**272-4183**	1	HOSE AS	
I	23	1	**111-0985**	1	HOSE AS	
	24	1	**275-1442**	1	CLIP (TAB)	
	25	1	**275-1443**	1	CLIP (SLOT)	
	26	1	**275-1444**	1	GROMMET	
I	27	1	**275-1487**	1	HOSE AS	
I	28	1	**104-8838**	1	HOSE AS	
	29	1	**278-6905**	1	HOSE AS	
I	30	1	**4I-0836**	1	HOSE AS	
	31	1	*148-8336*	4	CONNECTOR AS	
					(EACH INCLUDES)	
		1	**3J-1907**	1	SEAL-O-RING	
		1	**6V-8397**	1	SEAL-O-RING	
		1	**6V-8636**	1	CONNECTOR	
	32	1	*148-8338*	1	CONNECTOR AS	
		1	**3J-1907**	1	SEAL-O-RING	
		1	**6V-8397**	1	SEAL-O-RING	
		1	**8T-0075**	1	CONNECTOR	
	33	1	*148-8367*	2	ELBOW AS	
					(EACH INCLUDES)	
		1	**6V-8397**	1	SEAL-O-RING	
		1	**6V-9850**	1	ELBOW	
	34	1	*148-8374*	1	ELBOW AS	
		1	**3K-0360**	1	SEAL-O-RING	
		1	**6V-8397**	1	SEAL-O-RING	
		1	**6V-8723**	1	ELBOW	
	35	1	*148-8378*	10	ELBOW AS	
					(EACH INCLUDES)	
		1	**3J-1907**	1	SEAL-O-RING	

260-8225 **LINES GP-PILOT** ***(contd.)*** **i02866153**

NOTE	REF NO	GRAPHIC REF	PART NUMBER	QTY	PART NAME 1 2 3 4 5 6 (PRODUCT LEVEL)	SEE PAGE
		1	**6V-8397**	1	SEAL-O-RING	
		1	**6V-8724**	1	ELBOW	
	36	1	*148-8433*	2	TEE AS	
					(EACH INCLUDES)	
		1	**6V-8397**	2	SEAL-O-RING	
		1	**6V-9836**	1	TEE-SWIVEL	
	37	1	*150-3036*	4	ELBOW AS	
					(EACH INCLUDES)	
		1	**3J-1907**	1	SEAL-O-RING	
		1	**6V-8397**	1	SEAL-O-RING	
		1	**8T-1905**	1	ELBOW	
	38	1	*150-4027*	2	TEE AS	
					(EACH INCLUDES)	
		1	**3E-2310**	1	TEE	
		1	**3J-1907**	1	SEAL-O-RING	
		1	**6V-8397**	1	SEAL-O-RING	
	39	1	*164-5549*	1	COUPLING AS	
		1	**3J-1907**	1	SEAL-O-RING	
		1	**4I-6287**	1	COUPLING	
	40	1	*164-5567*	4	COUPLER AS-QUICK DISCONNECT	
					(EACH INCLUDES)	
		1	**3J-1907**	1	SEAL-O-RING	
		1	**6V-3965**	1	FITTING (QUICK DISCONNECT)	
C	41	1	**309-5769**	1	SWITCH AS-PRESSURE (PILOT, BOOM UP)	
		1	**102-8802**	1	KIT-RECEPTACLE (2-PIN)	
					(INCLUDES RECEPTACLE AS & WEDGE)	
		1	**9X-3401**	2	PIN-CONNECTOR (16-GA TO 18-GA)	
					—OR—	
		1	**126-1767**	2	PIN-CONNECTOR (14-GA)	
Y	42	1	**171-0188**	1	VALVE GP-SOLENOID (NEG FLOW CONT, PROPN RED VALVE)	738
	43	1	**282-7198**	1	HOSE AS	
M	44	1	**5C-9553**	2	BOLT (M6X1X16-MM)	
	45	1	**6V-0852**	4	CAP-DUST	
	46	1	**6V-8397**	2	SEAL-O-RING	
	47	1	**5P-2369**	1	CLIP	
	48	1	**8T-4121**	8	WASHER-HARD (11X21X2.5-MM THK)	
M	49	1	**8T-4136**	4	BOLT (M10X1.5X25-MM)	
M	50	1	**8T-4137**	4	BOLT (M10X1.5X20-MM)	
M	51	1	**8T-4177**	4	BOLT (M8X1.25X90-MM)	
M	52	1	**8T-4194**	3	BOLT (M12X1.75X50-MM)	
	53	1	**8T-4223**	3	WASHER-HARD (13.5X25.5X3-MM THK)	
	54	1	**8T-4224**	2	WASHER-HARD (8.8X16X2-MM THK)	
M	55	1	**8T-6870**	2	BOLT (M8X1.25X70-MM)	
	56	1	**9X-8256**	2	WASHER (6.6X12X2-MM THK)	
	57	1	**282-7106**	1	GROMMET	
	58	1	**5P-4325**	1	CLIP	

C-CHANGE FROM PREVIOUS TYPE
I-REFER TO HYDRAULIC INFORMATION SYSTEM
M-METRIC PART
Y-SEPARATE ILLUSTRATION

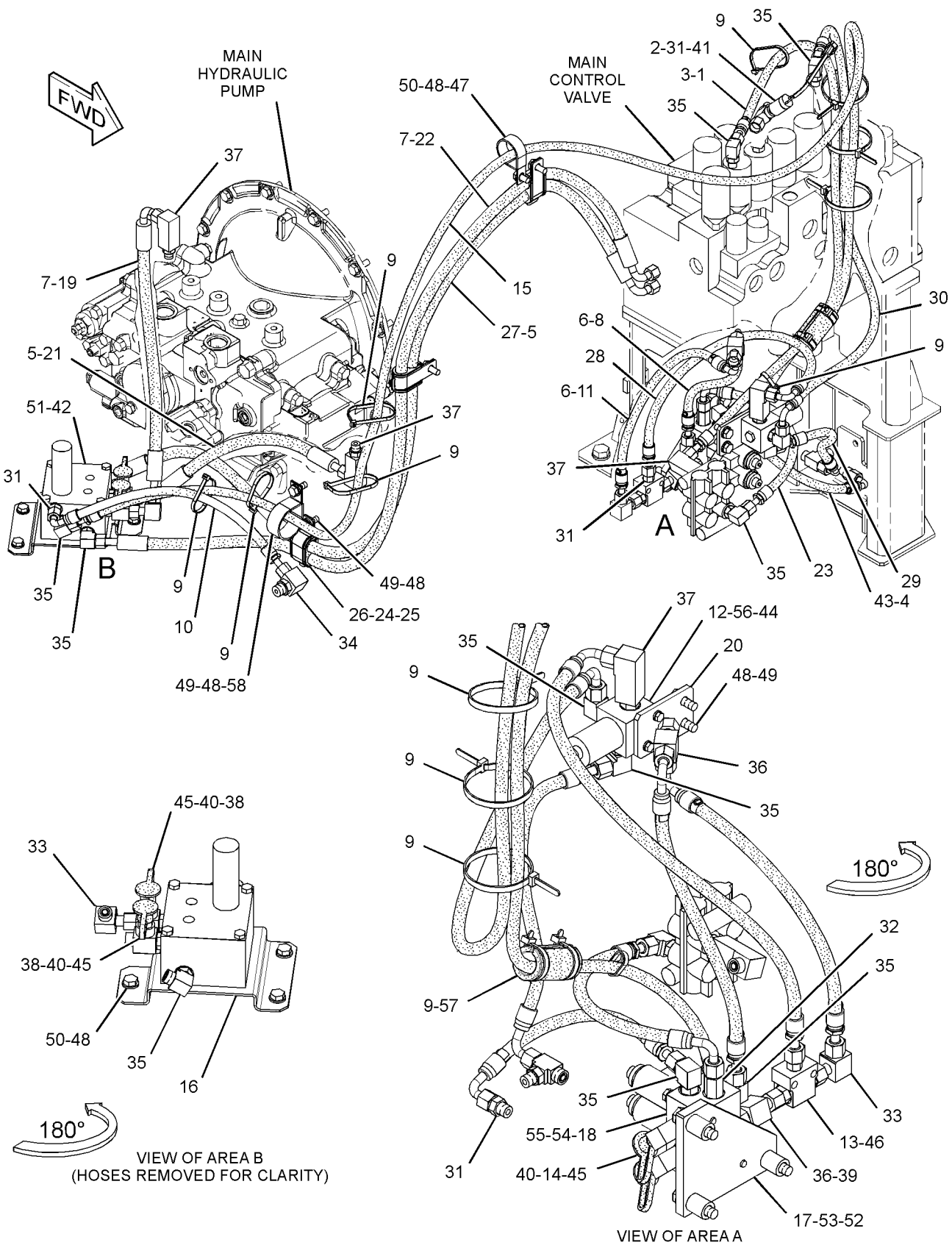

GRAPHIC #1 **<END>** g01376776

HYDRAULIC SYSTEM

260-8225 LINES GP-PILOT—SYSTEM 23, COMBINED FUNCTION

S/N: CJN1-UP
PART OF 270-5751 CONTROL AR-AUXILIARY
AN ATTACHMENT
TYPE 2

SMCS-5057, 5059 **i03063022**

NOTE	REF NO	GRAPHIC REF	PART NUMBER	QTY	PART NAME 1 2 3 4 5 6 (PRODUCT LEVEL)	SEE PAGE
CI	1	1	**4I-1037**	1	HOSE AS	
	2	1	**4I-3941**	1	FITTING AS	
		1	**6V-8553**	1	NUT (11/16-16-THD)	
CI	3	1	**4I-5906**	1	HOSE AS	
	4	1	**4I-9521**	2	BAND-MARKER (RED, L1)	
	5	1	**4I-9522**	2	BAND-MARKER (YELLOW, L2)	
	6	1	**4I-9523**	4	BAND-MARKER (BLUE, L3)	
	7	1	**4I-9524**	4	BAND-MARKER (BROWN, L4)	
	8	1	**4I-9527**	4	BAND-MARKER (GREEN, R3)	
	9	1	**6V-0852**	4	CAP-DUST	
	10	1	**7K-1181**	11	STRAP-CABLE	
I	11	1	**087-5762**	1	HOSE AS	
Y	12	1	**121-6303**	1	VALVE GP-SOLENOID (SYSTEM 24, COMBINED FUNCTION)	737
Y	13	1	**123-2430**	1	VALVE GP-SHUTTLE	729
	14	1	*148-8433*	2	TEE AS	
					(EACH INCLUDES)	
		1	**6V-8397**	2	SEAL-O-RING	
		1	**6V-9836**	1	TEE-SWIVEL	
	15	1	*164-6874*	2	FITTING AS-ELBOW	
					(EACH INCLUDES)	
		1	**3J-1907**	1	SEAL-O-RING	
		1	**085-7356**	1	FITTING	
CI	16	1	**164-8988**	1	HOSE AS	
Y	17	1	**171-0188**	1	VALVE GP-SOLENOID (NEG FLOW CONT, PROPN RED VALVE)	738
C	18	1	**212-5402**	1	HOSE AS	
Y	19	1	**259-7430**	1	VALVE GP-SOLENOID (PRESSURE REDUCING)	741
CI	20	1	**269-9700**	1	HOSE AS	
	21	1	**269-9717**	1	PLATE	
I	22	1	**272-4180**	1	HOSE AS	
I	23	1	**272-4183**	1	HOSE AS	
	24	1	**275-1442**	1	CLIP (TAB)	
	25	1	**275-1443**	1	CLIP (SLOT)	
	26	1	**275-1444**	1	GROMMET	
I	27	1	**275-1487**	1	HOSE AS	
	28	1	**278-6905**	1	HOSE AS	
	29	1	**282-7106**	1	GROMMET	
	30	1	**282-7198**	1	HOSE AS	
I	31	1	**302-3188**	1	HOSE AS	
CI	32	1	**307-5000**	1	HOSE AS	
	33	1	**309-5769**	1	SWITCH AS-PRESSURE (PILOT, BOOM UP)	
		1	**102-8802**	1	KIT-RECEPTACLE (2-PIN)	
					(INCLUDES RECEPTACLE AS & WEDGE)	
		1	**9X-3401**	2	PIN-CONNECTOR (16-GA TO 18-GA)	
					—OR—	
		1	**126-1767**	2	PIN-CONNECTOR (14-GA)	
	34	1	**317-4755**	1	SUPPORT AS	
C	35	1	**325-9013**	1	SUPPORT AS	
C	36	1	**325-9177**	1	HOSE AS	
	37	1	*148-8336*	4	CONNECTOR AS	
					(EACH INCLUDES)	
		1	**3J-1907**	1	SEAL-O-RING	
		1	**6V-8397**	1	SEAL-O-RING	

260-8225 **LINES GP-PILOT** *(contd.)* **i03063022**

NOTE	REF NO	GRAPHIC REF	PART NUMBER	QTY	PART NAME 1 2 3 4 5 6 (PRODUCT LEVEL)	SEE PAGE
		1	**6V-8636**	1	CONNECTOR	
	38	1	*148-8367*	2	ELBOW AS	
					(EACH INCLUDES)	
		1	**6V-8397**	1	SEAL-O-RING	
		1	**6V-9850**	1	ELBOW	
	39	1	*148-8374*	1	ELBOW AS	
		1	**3K-0360**	1	SEAL-O-RING	
		1	**6V-8397**	1	SEAL-O-RING	
		1	**6V-8723**	1	ELBOW	
C	40	1	*148-8378*	12	ELBOW AS	
					(EACH INCLUDES)	
		1	**3J-1907**	1	SEAL-O-RING	
		1	**6V-8397**	1	SEAL-O-RING	
		1	**6V-8724**	1	ELBOW	
C	41	1	*150-3036*	3	ELBOW AS	
					(EACH INCLUDES)	
		1	**3J-1907**	1	SEAL-O-RING	
		1	**6V-8397**	1	SEAL-O-RING	
		1	**8T-1905**	1	ELBOW	
	42	1	*150-4027*	2	TEE AS	
					(EACH INCLUDES)	
		1	**3E-2310**	1	TEE	
		1	**3J-1907**	1	SEAL-O-RING	
		1	**6V-8397**	1	SEAL-O-RING	
	43	1	*164-5549*	1	COUPLING AS	
		1	**3J-1907**	1	SEAL-O-RING	
		1	**4I-6287**	1	COUPLING	
	44	1	*164-5567*	4	COUPLER AS-QUICK DISCONNECT	
					(EACH INCLUDES)	
		1	**3J-1907**	1	SEAL-O-RING	
		1	**6V-3965**	1	FITTING (QUICK DISCONNECT)	
M	45	1	**5C-9553**	2	BOLT (M6X1X16-MM)	
	46	1	**5P-2369**	1	CLIP	
	47	1	**5P-4325**	1	CLIP	
	48	1	**6V-8397**	2	SEAL-O-RING	
	49	1	**8T-4121**	8	WASHER-HARD (11X21X2.5-MM THK)	
M	50	1	**8T-4136**	4	BOLT (M10X1.5X25-MM)	
M	51	1	**8T-4137**	4	BOLT (M10X1.5X20-MM)	
M	52	1	**8T-4177**	4	BOLT (M8X1.25X90-MM)	
M	53	1	**8T-4194**	3	BOLT (M12X1.75X50-MM)	
	54	1	**8T-4223**	3	WASHER-HARD (13.5X25.5X3-MM THK)	
	55	1	**8T-4224**	2	WASHER-HARD (8.8X16X2-MM THK)	
M	56	1	**8T-6870**	2	BOLT (M8X1.25X70-MM)	
	57	1	**9X-8256**	2	WASHER (6.6X12X2-MM THK)	

C-CHANGE FROM PREVIOUS TYPE
I-REFER TO HYDRAULIC INFORMATION SYSTEM
M-METRIC PART
Y-SEPARATE ILLUSTRATION

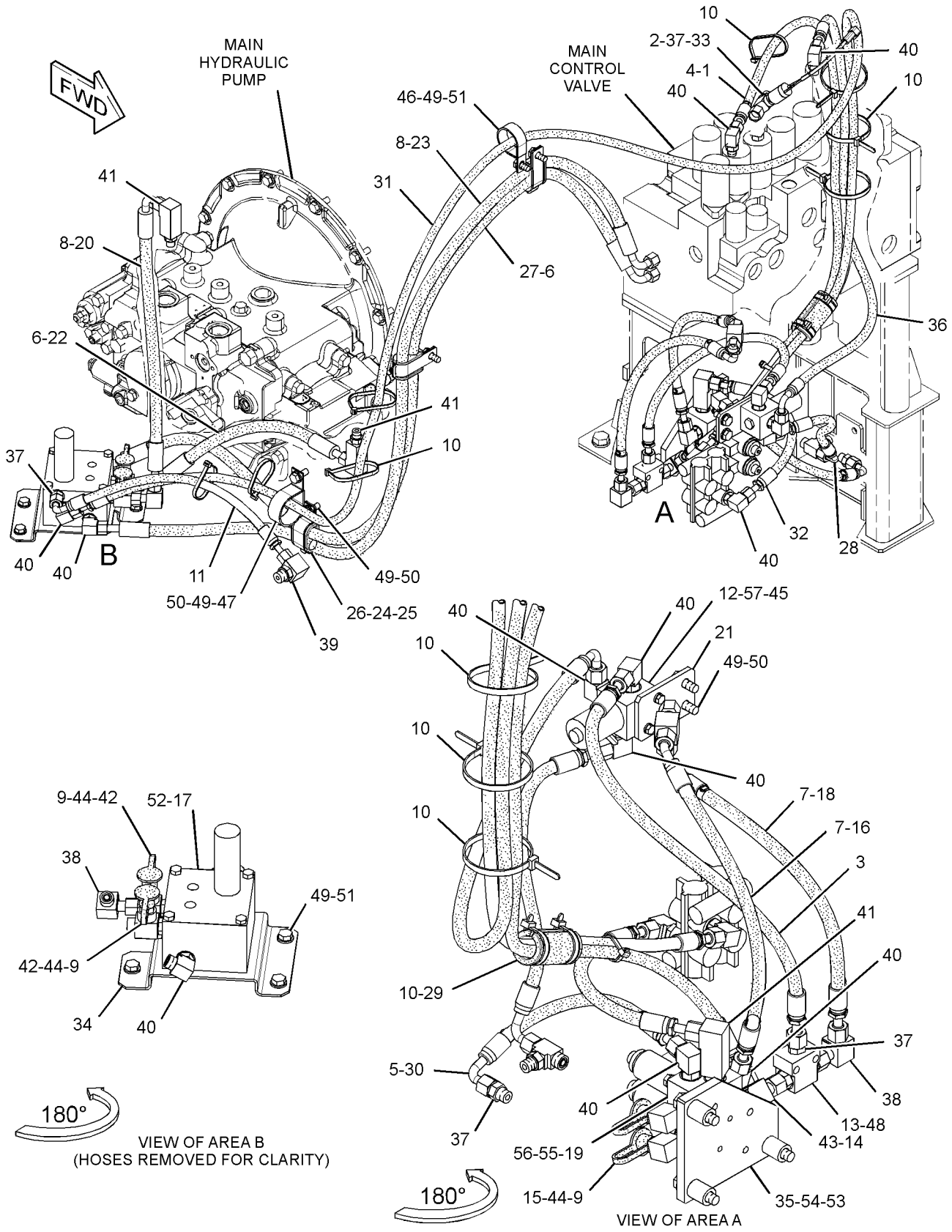

GRAPHIC #1

<END>

g01623771

HYDRAULIC SYSTEM

260-8234 LINES GP-PILOT

S/N: CJN1-UP

PART OF 259-7565, 270-5954 CONTROL AR-AUXILIARY AN ATTACHMENT

SMCS-5057, 5059 **i02750020**

NOTE	REF NO	GRAPHIC REF	PART NUMBER	QTY	PART NAME 1 2 3 4 5 6 (PRODUCT LEVEL)	SEE PAGE
	1	1	**4I-9526**	2	BAND-MARKER (WHITE, R2)	
	2	1	**4I-9527**	2	BAND-MARKER (GREEN, R3)	
	3	1	**7K-1181**	2	STRAP-CABLE	
I	4	1	**087-5759**	1	HOSE AS	
I	5	1	**087-5773**	1	HOSE AS	
	6	1	*164-6874*	1	FITTING AS-ELBOW	
		1	**3J-1907**	1	SEAL-O-RING	
		1	**085-7356**	1	FITTING	
	7	1	*202-3631*	1	CONNECTOR AS	
		1	**3J-1907**	1	SEAL-O-RING	
		1	**8T-8887**	1	CONNECTOR	
		1	**6V-8397**	1	SEAL-O-RING	
	8	1	*148-8338*	2	CONNECTOR AS	
					(EACH INCLUDES)	
		1	**3J-1907**	1	SEAL-O-RING	
		1	**6V-8397**	1	SEAL-O-RING	
		1	**8T-0075**	1	CONNECTOR	
	9	1	*148-8371*	1	ELBOW AS	
		1	**6V-8397**	1	SEAL-O-RING	
		1	**8C-8988**	1	ELBOW	
	10	1	*148-8435*	1	TEE AS	
		1	**3J-1907**	1	SEAL-O-RING	
		1	**6V-8397**	2	SEAL-O-RING	
		1	**6V-8781**	1	TEE-FACE SEAL	

I-REFER TO HYDRAULIC INFORMATION SYSTEM

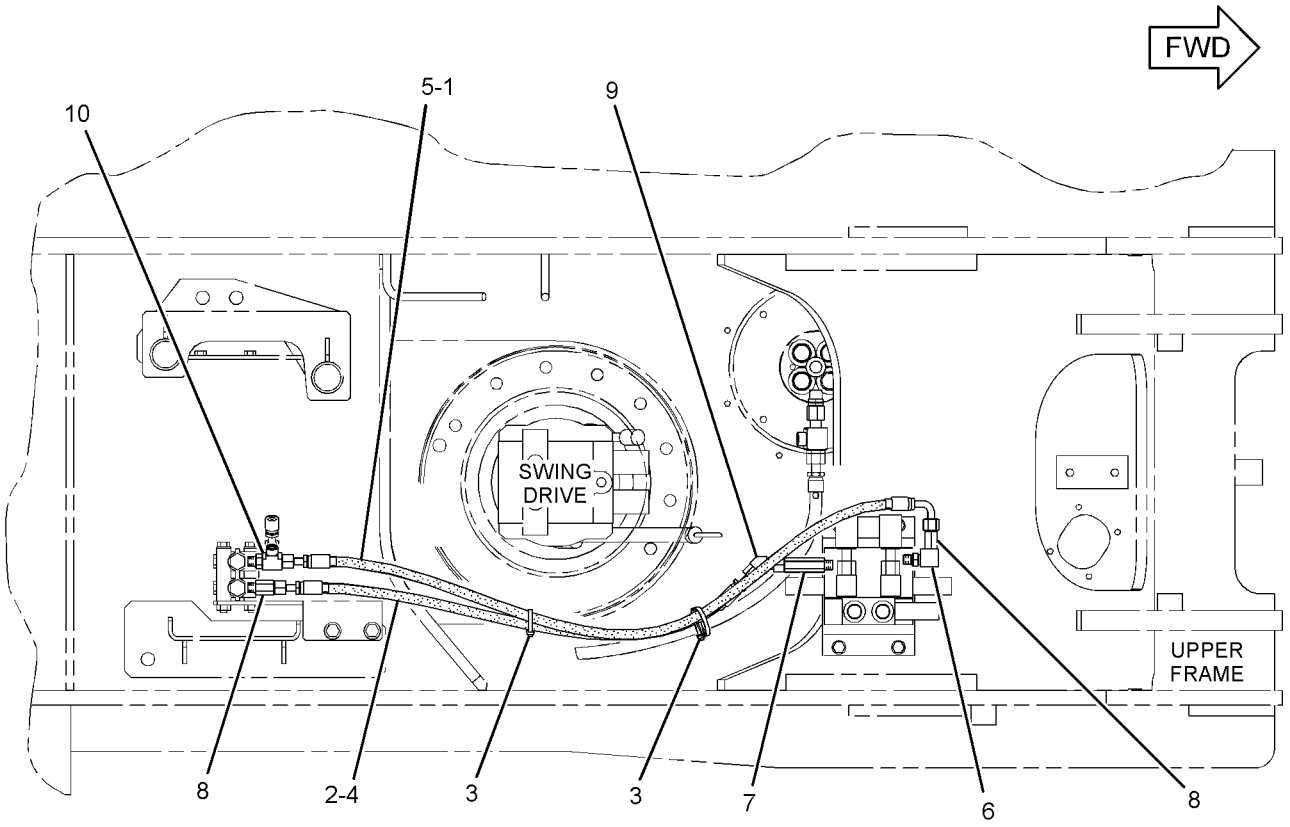

TOP VIEW

GRAPHIC #1 **<END>** g01382436

260-8238 LINES GP-PILOT—MEDIUM PRESSURE

S/N: CJN1-UP
PART OF 259-7569 CONTROL AR-AUXILIARY
AN ATTACHMENT

SMCS-5057, 5059 **i02750094**

NOTE	REF NO	GRAPHIC REF	PART NUMBER	QTY	PART NAME 1 2 3 4 5 6 (PRODUCT LEVEL)	SEE PAGE
	1	1	**4I-9523**	2	BAND-MARKER (BLUE, L3)	
	2	1	**4I-9526**	2	BAND-MARKER (WHITE, R2)	
	3	1	**7K-1181**	9	STRAP-CABLE	
I	4	1	**7Y-4366**	1	HOSE AS	
I	5	1	**087-4411**	1	HOSE AS	
I	6	1	**087-5761**	1	HOSE AS	
I	7	1	**087-6585**	1	HOSE AS	
	8	1	**104-8903**	1	GUARD	
	9	1	*164-6874*	2	FITTING AS-ELBOW	
					(EACH INCLUDES)	
		1	**3J-1907**	1	SEAL-O-RING	
		1	**085-7356**	1	FITTING	
Y	10	1	**259-7430**	1	VALVE GP-SOLENOID (PRESSURE REDUCING)	741
	11	1	*148-8336*	1	CONNECTOR AS	
		1	**3J-1907**	1	SEAL-O-RING	
		1	**6V-8397**	1	SEAL-O-RING	
		1	**6V-8636**	1	CONNECTOR	
	12	1	*148-8338*	1	CONNECTOR AS	
		1	**3J-1907**	1	SEAL-O-RING	
		1	**6V-8397**	1	SEAL-O-RING	
		1	**8T-0075**	1	CONNECTOR	
	13	1	*148-8353*	1	ELBOW AS	
		1	**3J-1907**	1	SEAL-O-RING	
		1	**6V-8397**	1	SEAL-O-RING	
		1	**6V-9001**	1	ELBOW	
	14	1	*148-8378*	4	ELBOW AS	
					(EACH INCLUDES)	
		1	**3J-1907**	1	SEAL-O-RING	
		1	**6V-8397**	1	SEAL-O-RING	
		1	**6V-8724**	1	ELBOW	
	15	1	*150-3036*	1	ELBOW AS	
		1	**3J-1907**	1	SEAL-O-RING	
		1	**6V-8397**	1	SEAL-O-RING	
		1	**8T-1905**	1	ELBOW	
	16	1	*164-5567*	2	COUPLER AS-QUICK DISCONNECT	
					(EACH INCLUDES)	
		1	**3J-1907**	1	SEAL-O-RING	
		1	**6V-3965**	1	FITTING (QUICK DISCONNECT)	
	17	1	**6V-0852**	2	CAP-DUST	
M	18	1	**8T-6870**	2	BOLT (M8X1.25X70-MM)	

I-REFER TO HYDRAULIC INFORMATION SYSTEM
M-METRIC PART
Y-SEPARATE ILLUSTRATION

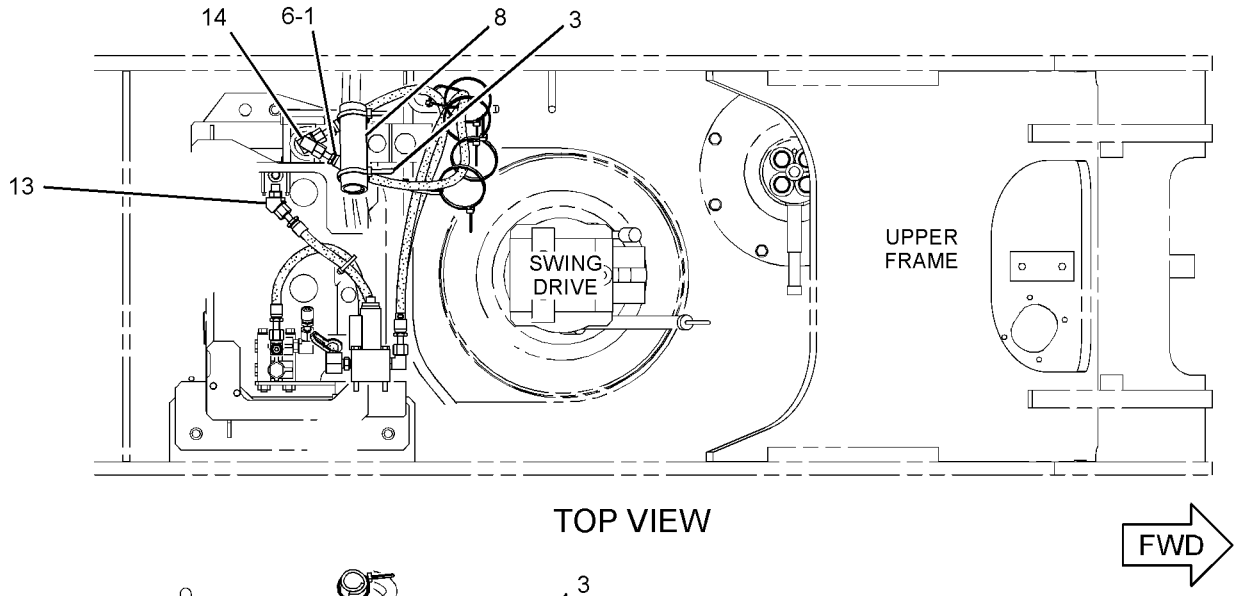

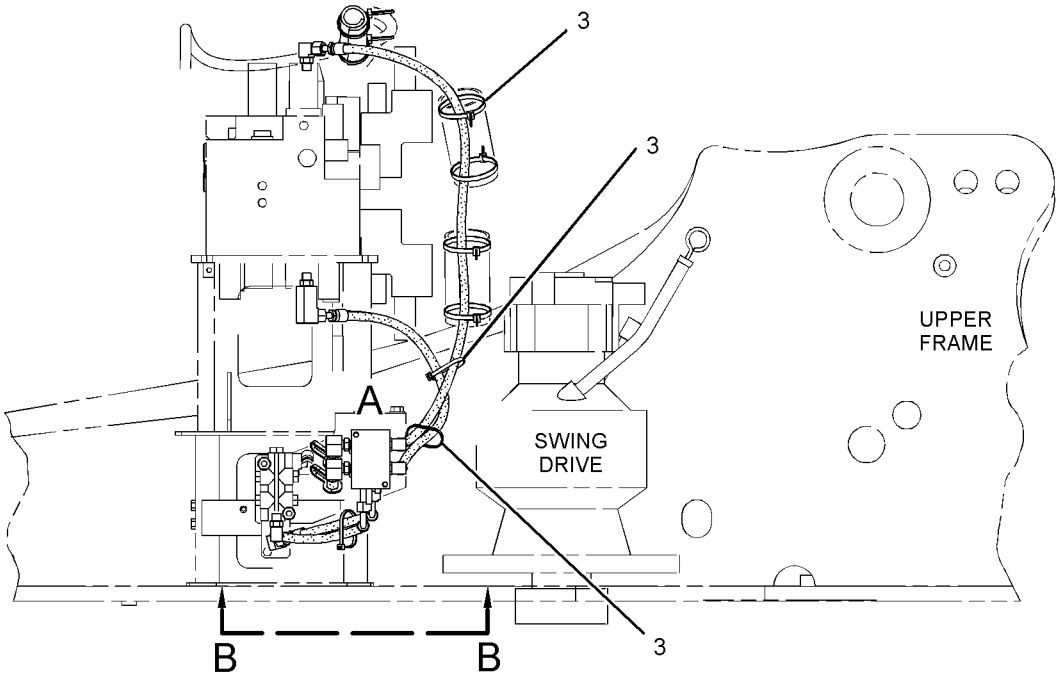

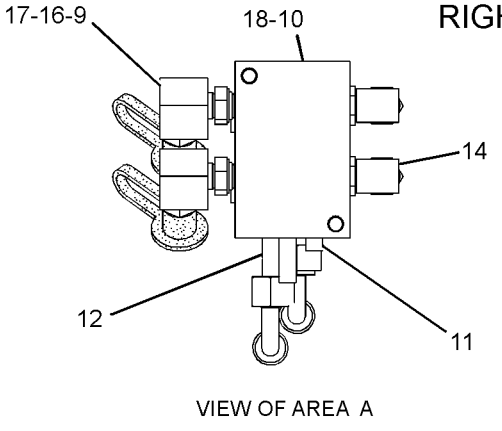

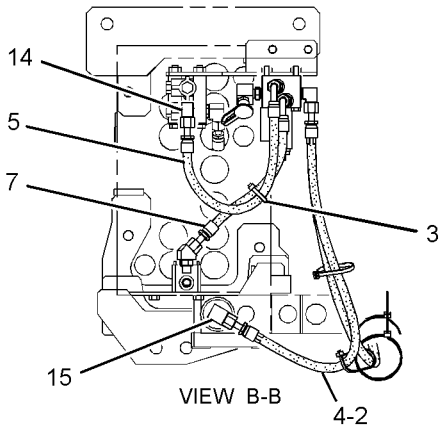

GRAPHIC #1 **<END>** g01381741

260-8240 LINES GP-PILOT–THIRD PEDAL, MAIN CTL VALVE

S/N: CJN1-UP

PART OF 259-7196 PEDAL AR-THIRD

AN ATTACHMENT

SMCS-5057, 5059 **i02748205**

NOTE	REF NO	GRAPHIC REF	PART NUMBER	QTY	PART NAME 1 2 3 4 5 6 (PRODUCT LEVEL)	SEE PAGE
	1	1	**4I-9521**	4	BAND-MARKER (RED, L1)	
	2	1	**4I-9522**	4	BAND-MARKER (YELLOW, L2)	
	3	1	**4I-9525**	4	BAND-MARKER (ORANGE, R1)	
	4	1	**4I-9526**	4	BAND-MARKER (WHITE, R2)	
I	5	1	**7I-8252**	2	HOSE AS	
	6	1	**7K-1181**	4	STRAP-CABLE	
I	7	1	**104-8771**	2	HOSE AS	

I-REFER TO HYDRAULIC INFORMATION SYSTEM

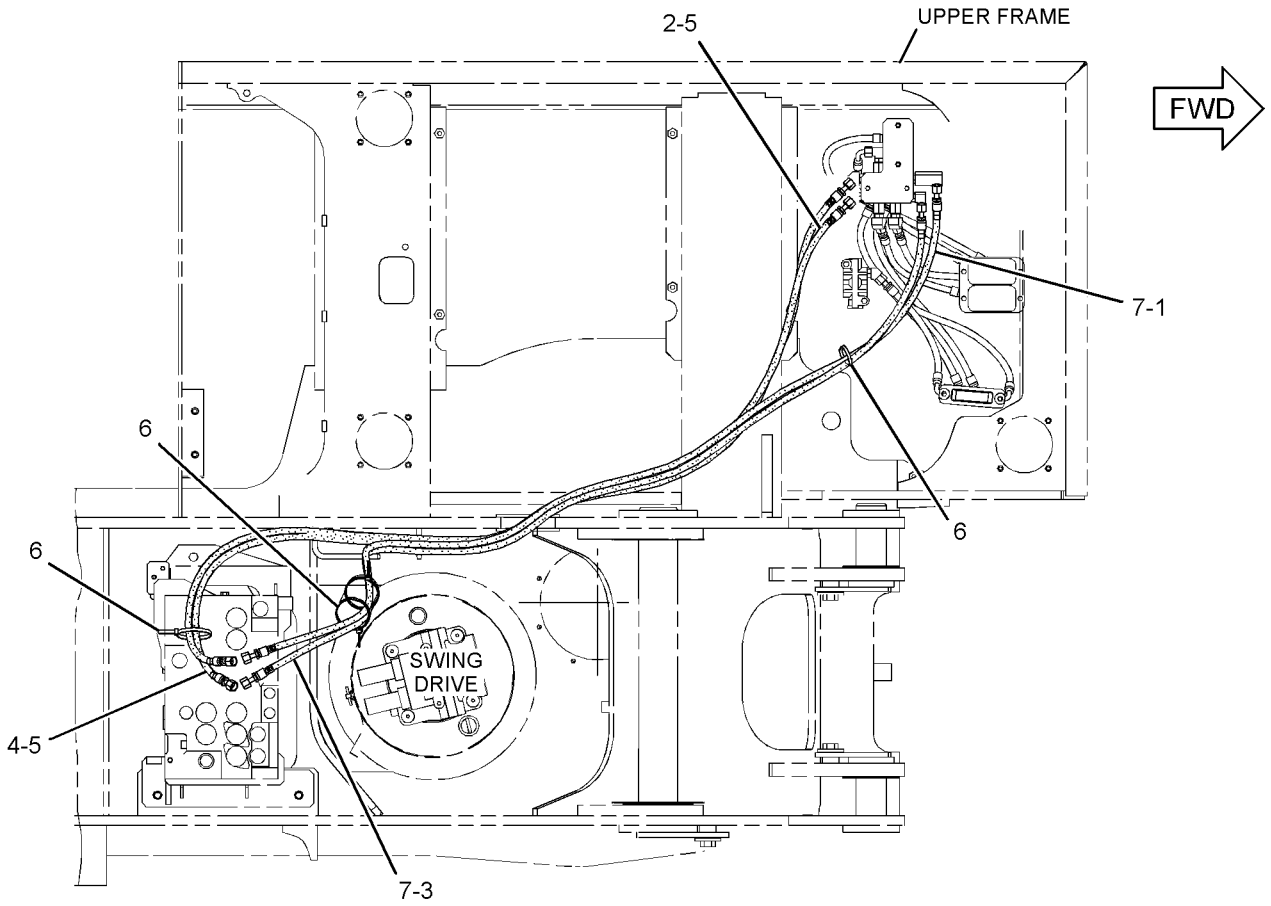

TOP VIEW

GRAPHIC #1 **<END>** g01379039

HYDRAULIC SYSTEM

260-8241 LINES GP-PILOT–4-WAY

S/N: CJN1-UP

PART OF 259-7575 VALVE & LINES GP-PILOT

AN ATTACHMENT

SMCS-5057, 5059 **i02765489**

NOTE	REF NO	GRAPHIC REF	PART NUMBER	QTY	PART NAME 1 2 3 4 5 6 (PRODUCT LEVEL)	SEE PAGE
I	1	1	**4I-1037**	2	HOSE AS	
I	2	1	**4I-6136**	1	HOSE AS	
	3	1	**4I-9521**	4	BAND-MARKER (RED, L1)	
	4	1	**4I-9522**	4	BAND-MARKER (YELLOW, L2)	
	5	1	**4I-9523**	4	BAND-MARKER (BLUE, L3)	
	6	1	**4I-9524**	4	BAND-MARKER (BROWN, L4)	
	7	1	**4I-9525**	4	BAND-MARKER (ORANGE, R1)	
	8	1	**4I-9526**	4	BAND-MARKER (WHITE, R2)	
	9	1	**4I-9527**	4	BAND-MARKER (GREEN, R3)	
	10	1	**4I-9528**	4	BAND-MARKER (PURPLE, R4)	
I	11	1	**5I-4076**	1	HOSE AS	
	12	1	**7K-1181**	13	STRAP-CABLE	
I	13	1	**7Y-4199**	1	HOSE AS	
I	14	1	**7Y-8478**	1	HOSE AS	
I	15	1	**104-8774**	1	HOSE AS	
I	16	1	**104-8777**	1	HOSE AS	
I	17	1	**108-7357**	1	HOSE AS	
I	18	1	**110-5499**	1	HOSE AS	
	19	1	**221-4807**	1	HOSE AS	
	20	1	**272-4144**	1	GROMMET	
I	21	1	**272-4227**	5	HOSE AS	
	22	1	*148-8336*	1	CONNECTOR AS	
		1	**3J-1907**	1	SEAL-O-RING	
		1	**6V-8397**	1	SEAL-O-RING	
		1	**6V-8636**	1	CONNECTOR	
	23	1	*148-8353*	5	ELBOW AS	
					(EACH INCLUDES)	
		1	**3J-1907**	1	SEAL-O-RING	
		1	**6V-8397**	1	SEAL-O-RING	
		1	**6V-9001**	1	ELBOW	
	24	1	*148-8378*	9	ELBOW AS	
					(EACH INCLUDES)	
		1	**3J-1907**	1	SEAL-O-RING	
		1	**6V-8397**	1	SEAL-O-RING	
		1	**6V-8724**	1	ELBOW	
	25	1	*150-3036*	1	ELBOW AS	
		1	**3J-1907**	1	SEAL-O-RING	
		1	**6V-8397**	1	SEAL-O-RING	
		1	**8T-1905**	1	ELBOW	
Y	26	1	**165-9470**	1	VALVE GP-SELECTOR (ALT PATTERN CONTROL, 4-WAY)	726
	27	1	**176-4684**	1	SUPPORT	
	28	1	**8T-4121**	4	WASHER-HARD (11X21X2.5-MM THK)	
M	29	1	**8T-4191**	4	BOLT (M10X1.5X16-MM)	
M	30	1	**8T-4192**	4	BOLT (M12X1.75X25-MM)	
	31	1	**8T-4223**	4	WASHER-HARD (13.5X25.5X3-MM THK)	

I-REFER TO HYDRAULIC INFORMATION SYSTEM
M-METRIC PART
Y-SEPARATE ILLUSTRATION

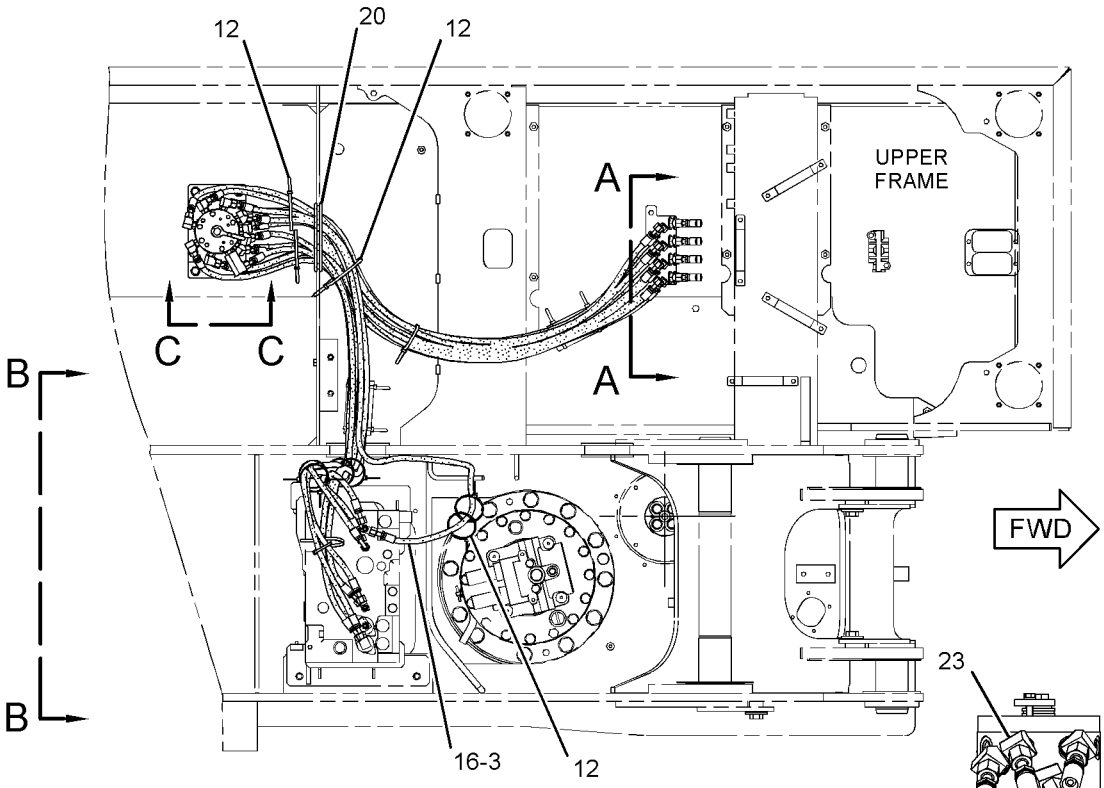

TOP VIEW

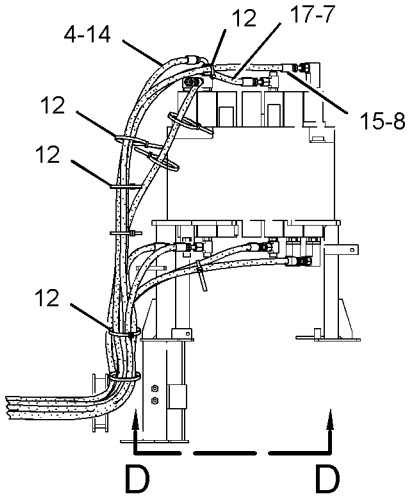

VIEW B-B

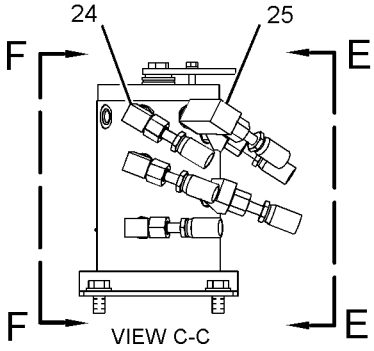

VIEW C-C

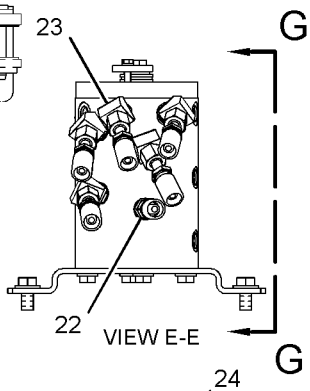

VIEW E-E

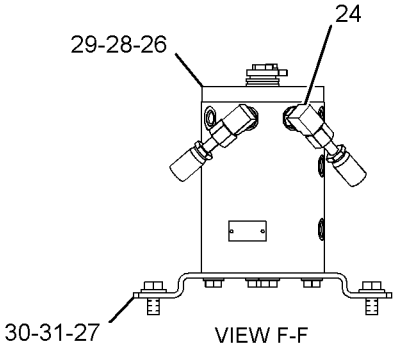

VIEW F-F

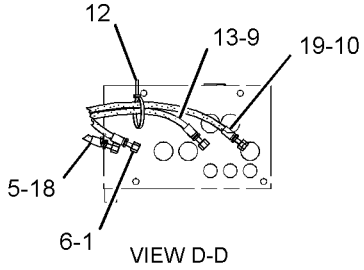

VIEW D-D

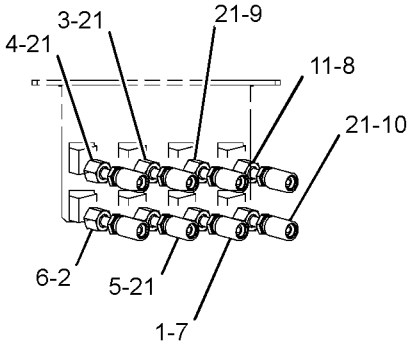

SECTION A-A

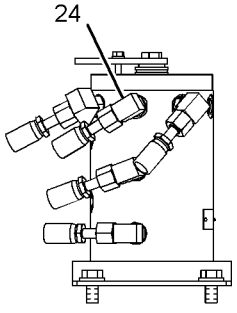

VIEW G-G

GRAPHIC #1

<END>

g01388547

260-8242 LINES GP-PILOT—CONTROL PATTERN CHANGE, 2-WAY

S/N: CJN1-UP

PART OF 259-7577 VALVE AR-ALT PATTERN CONTROL

AN ATTACHMENT

SMCS-5057, 5059 **i02911118**

NOTE	REF NO	GRAPHIC REF	PART NUMBER	QTY	PART NAME 1 2 3 4 5 6 (PRODUCT LEVEL)	SEE PAGE
I	1	1	**4I-1037**	4	HOSE AS	
I	2	1	**4I-6136**	1	HOSE AS	
	3	1	**4I-9521**	4	BAND-MARKER (RED, L1)	
	4	1,2	**4I-9523**	4	BAND-MARKER (BLUE, L3)	
	5	1,2	**4I-9525**	4	BAND-MARKER (ORANGE, R1)	
	6	1,2	**4I-9527**	4	BAND-MARKER (GREEN, R3)	
I	7	2	**5I-4076**	2	HOSE AS	
	8	1,2	**7K-1181**	15	STRAP-CABLE	
I	9	1	**104-8777**	1	HOSE AS	
I	10	2	**110-5499**	1	HOSE AS	
	11	1	*148-8420*	1	TEE AS	
		1	**3K-0360**	1	SEAL-O-RING	
		1	**6V-8398**	1	SEAL-O-RING	
		1	**8T-6338**	1	TEE-O-RING PORT	
	12	2	**309-5769**	1	SWITCH AS-PRESSURE (SWING)	
		2	**102-8802**	1	KIT-RECEPTACLE (2-PIN)	
					(INCLUDES RECEPTACLE AS & WEDGE)	
		2	**9X-3401**	2	PIN-CONNECTOR (16-GA TO 18-GA)	
					—OR—	
		2	**126-1767**	2	PIN-CONNECTOR (14-GA)	
	13	2	**270-5664**	1	VALVE GP-PILOT (ALT PATTERN CONTROL, 2-WAY)	
	14	1	**272-4144**	1	GROMMET	
	15	2	**272-4214**	1	SUPPORT	
I	16	2	**108-7357**	1	HOSE AS	
	17	1	*148-8336*	1	CONNECTOR AS	
		1	**3J-1907**	1	SEAL-O-RING	
		1	**6V-8397**	1	SEAL-O-RING	
		1	**6V-8636**	1	CONNECTOR	
	18	2	*148-8378*	7	ELBOW AS	
					(EACH INCLUDES)	
		2	**3J-1907**	1	SEAL-O-RING	
		2	**6V-8397**	1	SEAL-O-RING	
		2	**6V-8724**	1	ELBOW	
	19	2	*150-3036*	4	ELBOW AS	
					(EACH INCLUDES)	
		2	**3J-1907**	1	SEAL-O-RING	
		2	**6V-8397**	1	SEAL-O-RING	
		2	**8T-1905**	1	ELBOW	
	20	2	**8T-4121**	3	WASHER-HARD (11X21X2.5-MM THK)	
M	21	2	**8T-4137**	3	BOLT (M10X1.5X20-MM)	
M	22	2	**8T-4192**	3	BOLT (M12X1.75X25-MM)	
	23	2	**8T-4223**	3	WASHER-HARD (13.5X25.5X3-MM THK)	

I-REFER TO HYDRAULIC INFORMATION SYSTEM
M-METRIC PART

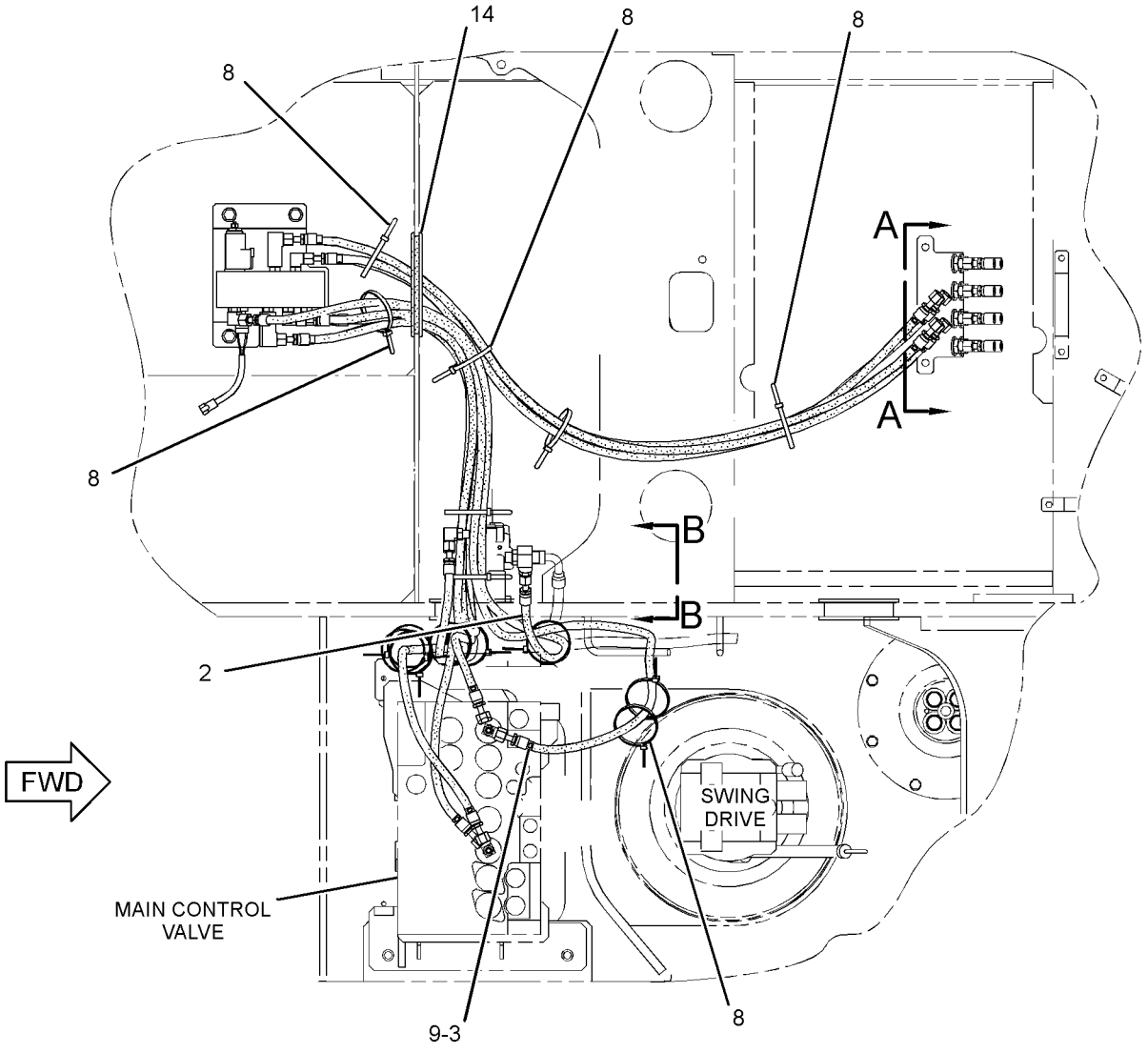

TOP VIEW

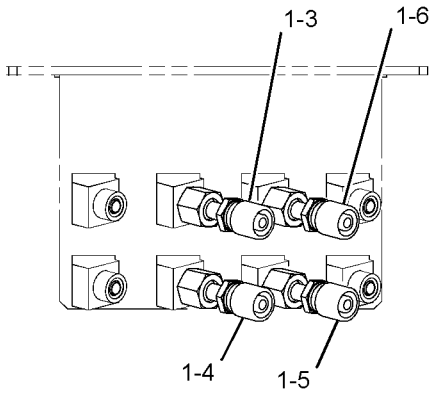

SECTION A-A

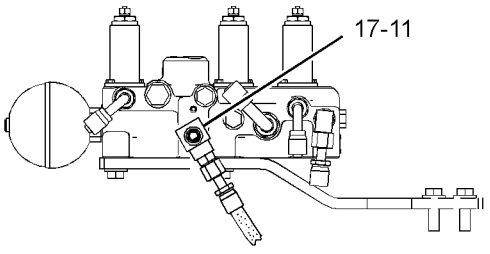

VIEW B-B

GRAPHIC #1 g01377042

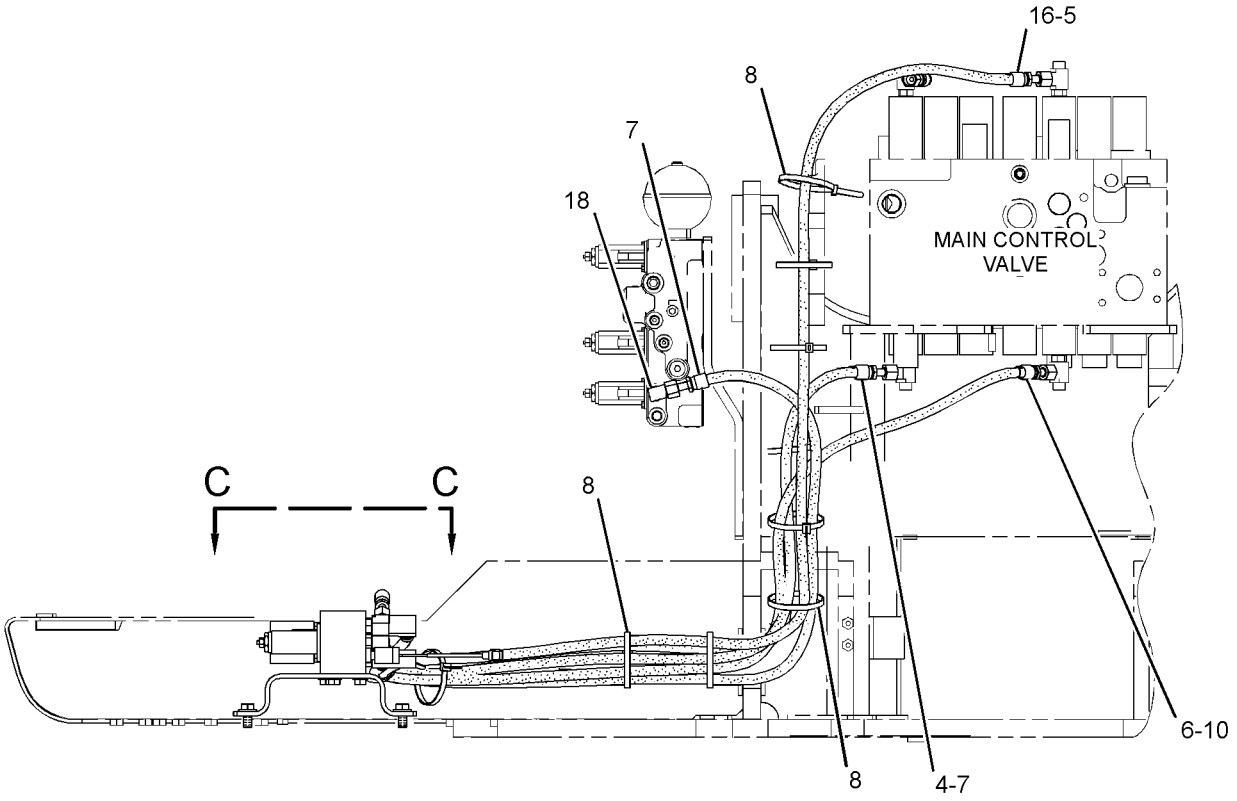

REAR VIEW

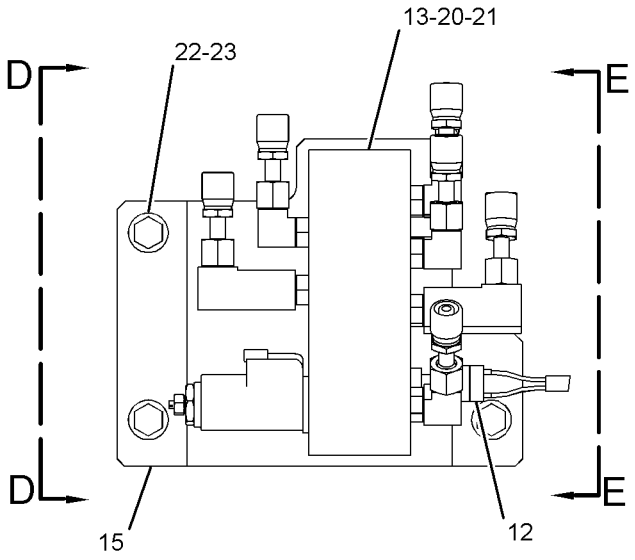

VIEW C-C

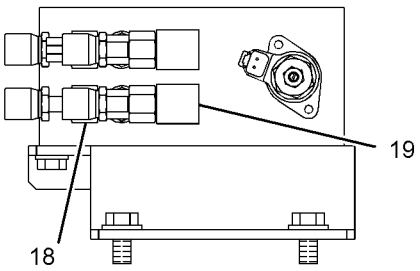

VIEW D-D

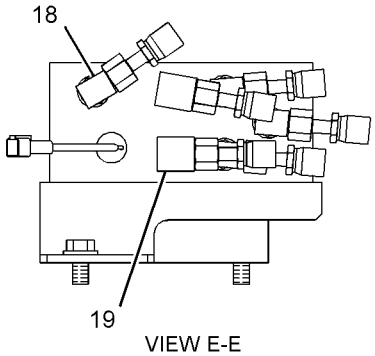

VIEW E-E

GRAPHIC #2 **<END>** g01377072

260-8246 LINES GP-PILOT—STICK LOWERING CONTROL

S/N: CJN1-UP

PART OF 259-7585 VALVE AR-CHECK & RELIEF

AN ATTACHMENT

SMCS-5057, 5059 **i02954233**

NOTE	REF NO	GRAPHIC REF	PART NUMBER	QTY	PART NAME 1 2 3 4 5 6 (PRODUCT LEVEL)	SEE PAGE
	1	1	**7K-1181**	6	STRAP-CABLE	
I	2	1	**113-6452**	1	HOSE AS	
	3	1	*148-8338*	1	CONNECTOR AS	
		1	**3J-1907**	1	SEAL-O-RING	
		1	**6V-8397**	1	SEAL-O-RING	
		1	**8T-0075**	1	CONNECTOR	
	4	1	*148-8353*	1	ELBOW AS	
		1	**3J-1907**	1	SEAL-O-RING	
		1	**6V-8397**	1	SEAL-O-RING	
		1	**6V-9001**	1	ELBOW	
	5	1	*148-8433*	1	TEE AS	
		1	**6V-8397**	2	SEAL-O-RING	
		1	**6V-9836**	1	TEE-SWIVEL	
I	6	1	**202-3772**	1	HOSE AS	
	7	1	**4I-9523**	4	BAND-MARKER (BLUE, L3)	
	8	1	**133-5813**	2	BAND-MARKER (GRAY, P)	

I-REFER TO HYDRAULIC INFORMATION SYSTEM

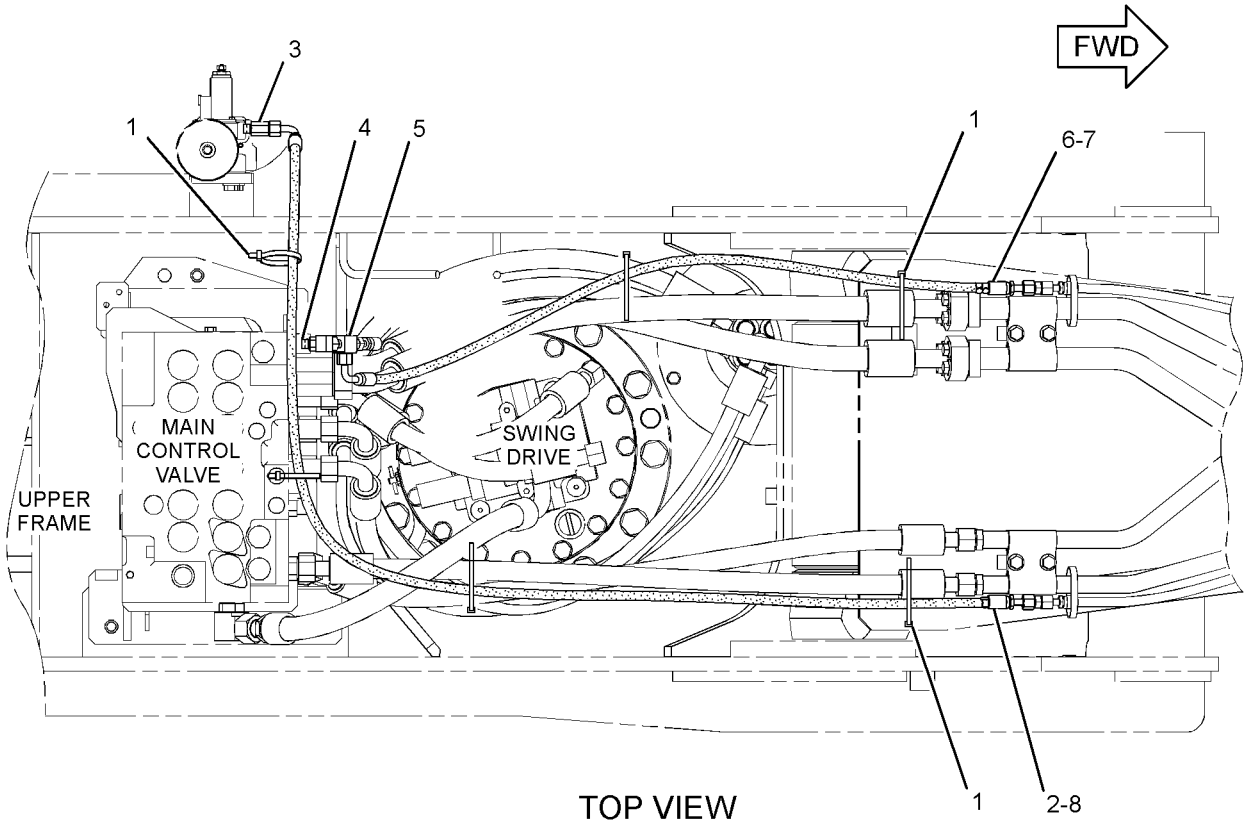

TOP VIEW

GRAPHIC #1 **<END>** g01514998

HYDRAULIC SYSTEM

266-1085 LINES GP-PILOT—PRESSURE SUPPLY

S/N: CJN1-UP

AN ATTACHMENT

SMCS-5057, 5059 **i02778740**

NOTE	REF NO	GRAPHIC REF	PART NUMBER	QTY	PART NAME 1 2 3 4 5 6 (PRODUCT LEVEL)	SEE PAGE
	1	1	**7K-1181**	1	STRAP-CABLE	
I	2	1	**087-5766**	1	HOSE AS	
	3	1	**168-9759**	1	BLOCK	
	4	1	**272-4172**	1	SUPPORT AS	
	5	1	*148-8336*	1	CONNECTOR AS	
		1	**3J-1907**	1	SEAL-O-RING	
		1	**6V-8397**	1	SEAL-O-RING	
		1	**6V-8636**	1	CONNECTOR	
	6	1	*148-8378*	2	ELBOW AS	
					(EACH INCLUDES)	
		1	**3J-1907**	1	SEAL-O-RING	
		1	**6V-8397**	1	SEAL-O-RING	
		1	**6V-8724**	1	ELBOW	
B	7	1	*148-8407*	8	PLUG AS	
					(EACH INCLUDES)	
		1	**3J-1907**	1	SEAL-O-RING	
		1	**9S-4191**	1	PLUG-O-RING	
	8	1	*148-8411*	2	PLUG AS	
					(EACH INCLUDES)	
		1	**3K-0360**	1	SEAL-O-RING	
		1	**9S-4185**	1	PLUG-O-RING	
	9	1	*150-3036*	1	ELBOW AS	
		1	**3J-1907**	1	SEAL-O-RING	
		1	**6V-8397**	1	SEAL-O-RING	
		1	**8T-1905**	1	ELBOW	
I	10	1	**194-0328**	1	HOSE AS	
	11	1	**8T-4121**	2	WASHER-HARD (11X21X2.5-MM THK)	
M	12	1	**8T-4139**	2	BOLT (M12X1.75X30-MM)	
M	13	1	**8T-4198**	2	BOLT (M10X1.5X100-MM)	
	14	1	**8T-4223**	2	WASHER-HARD (13.5X25.5X3-MM THK)	

B-USE AS REQUIRED
I-REFER TO HYDRAULIC INFORMATION SYSTEM
M-METRIC PART

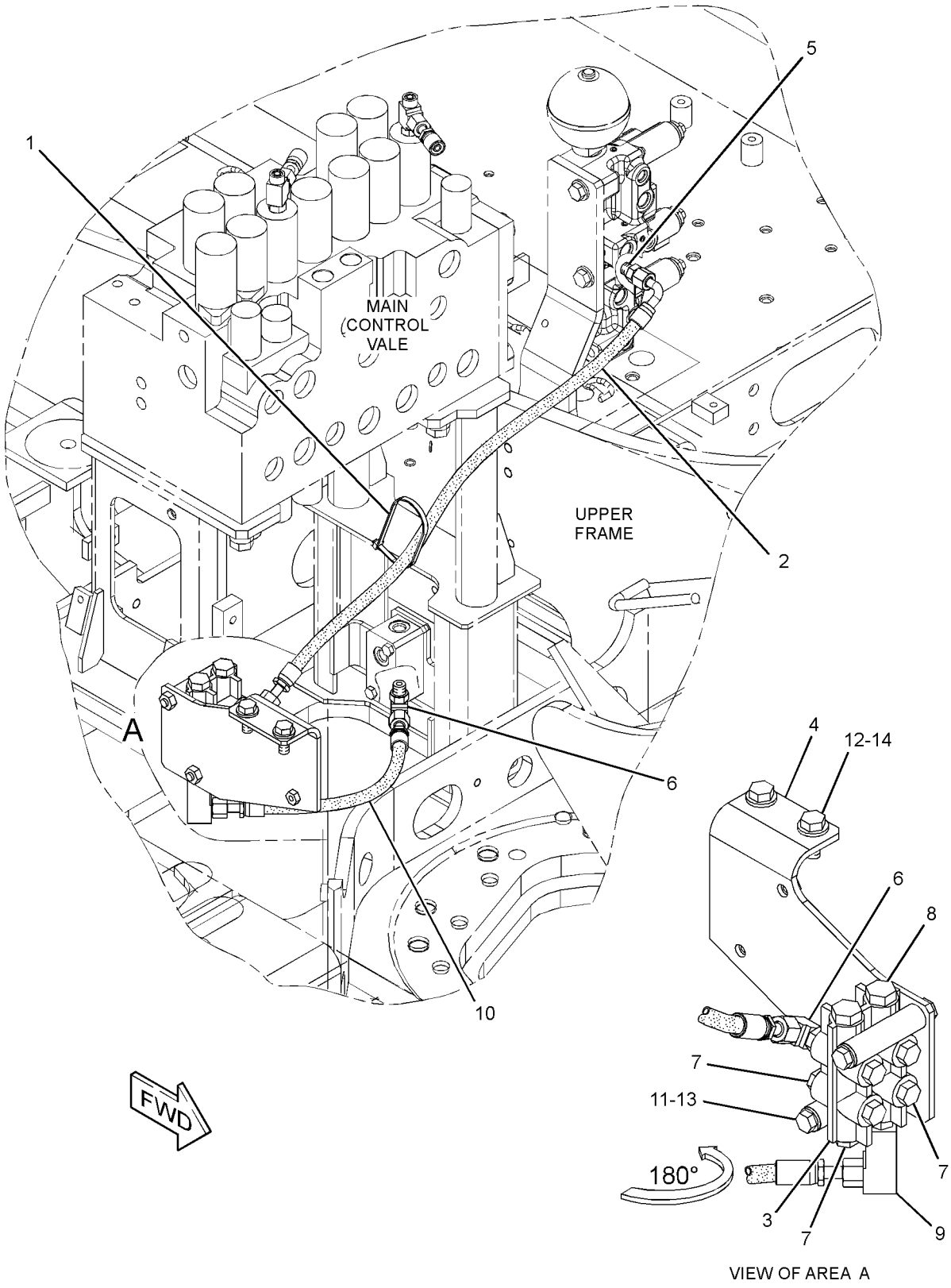

GRAPHIC #1 **<END>** g01407994

HYDRAULIC SYSTEM

275-1715 LINES GP-PILOT—PILOT CONTROL

S/N: CJN1-992

PART OF 259-7547 HYDRAULIC AR

SMCS-5057, 5059 **i02696669**

NOTE	REF NO	GRAPHIC REF	PART NUMBER	QTY	PART NAME 1 2 3 4 5 6 (PRODUCT LEVEL)	SEE PAGE
	1	1	**4I-9521**	2	BAND-MARKER (RED, L1)	
	2	1	**4I-9522**	2	BAND-MARKER (YELLOW, L2)	
	3	1	**4I-9523**	2	BAND-MARKER (BLUE, L3)	
	4	1	**4I-9524**	2	BAND-MARKER (BROWN, L4)	
	5	1	**4I-9525**	2	BAND-MARKER (ORANGE, R1)	
	6	1	**4I-9526**	2	BAND-MARKER (WHITE, R2)	
	7	1	**4I-9527**	2	BAND-MARKER (GREEN, R3)	
	8	1	**4I-9528**	2	BAND-MARKER (PURPLE, R4)	
	9	1	**7K-1181**	2	STRAP-CABLE	
I	10	1	**087-4402**	2	HOSE AS	
	11	1	**133-5813**	4	BAND-MARKER (GRAY, P)	
Y	12	1	**270-5948**	1	VALVE GP-PILOT (TRAVEL)	709
	13	1	**168-9759**	1	BLOCK	
	14	1	**184-9336**	4	SUPPORT	
	15	1	**236-2838**	1	PLATE	
	16	1	**236-2843**	4	HOSE AS	
	17	1	**236-2844**	4	HOSE AS	
	18	1	**236-2848**	1	HOSE AS	
	19	1	**245-5079**	1	HOSE AS	
	20	1	**255-1665**	1	HOSE AS	
	21	1	**255-1666**	1	HOSE AS	
	22	1	**099-7241**	8	WASHER-HARD (19X34X3-MM THK)	
	23	1	*148-8336*	15	CONNECTOR AS	
					(EACH INCLUDES)	
		1	**3J-1907**	1	SEAL-O-RING	
		1	**6V-8397**	1	SEAL-O-RING	
		1	**6V-8636**	1	CONNECTOR	
	24	1	*148-8354*	2	ELBOW AS	
					(EACH INCLUDES)	
		1	**3K-0360**	1	SEAL-O-RING	
		1	**6V-8398**	1	SEAL-O-RING	
		1	**6V-9002**	1	ELBOW	
	25	1	*148-8366*	8	ELBOW AS	
					(EACH INCLUDES)	
		1	**6V-8397**	2	SEAL-O-RING	
		1	**6V-8987**	1	ELBOW	
	26	1	*148-8378*	6	ELBOW AS	
					(EACH INCLUDES)	
		1	**3J-1907**	1	SEAL-O-RING	
		1	**6V-8397**	1	SEAL-O-RING	
		1	**6V-8724**	1	ELBOW	
	27	1	*148-8407*	4	PLUG AS	
					(EACH INCLUDES)	
		1	**3J-1907**	1	SEAL-O-RING	
		1	**9S-4191**	1	PLUG-O-RING	
	28	1	*164-5628*	3	CONNECTOR AS	
					(EACH INCLUDES)	
		1	**3J-1907**	1	SEAL-O-RING	
		1	**6V-8397**	1	SEAL-O-RING	
		1	**107-6631**	1	CONNECTOR-FILTER	
	29	1	**6V-9168**	8	NUT (11/16-16-THD)	
	30	1	**8T-4121**	16	WASHER-HARD (11X21X2.5-MM THK)	
M	31	1	**8T-4136**	4	BOLT (M10X1.5X25-MM)	
M	32	1	**8T-4137**	8	BOLT (M10X1.5X20-MM)	
M	33	1	**8T-4191**	2	BOLT (M10X1.5X16-MM)	
M	34	1	**8T-4198**	2	BOLT (M10X1.5X100-MM)	

275-1715 **LINES GP-PILOT** *(contd.)* **i02696669**

I-REFER TO HYDRAULIC INFORMATION SYSTEM
M-METRIC PART
Y-SEPARATE ILLUSTRATION

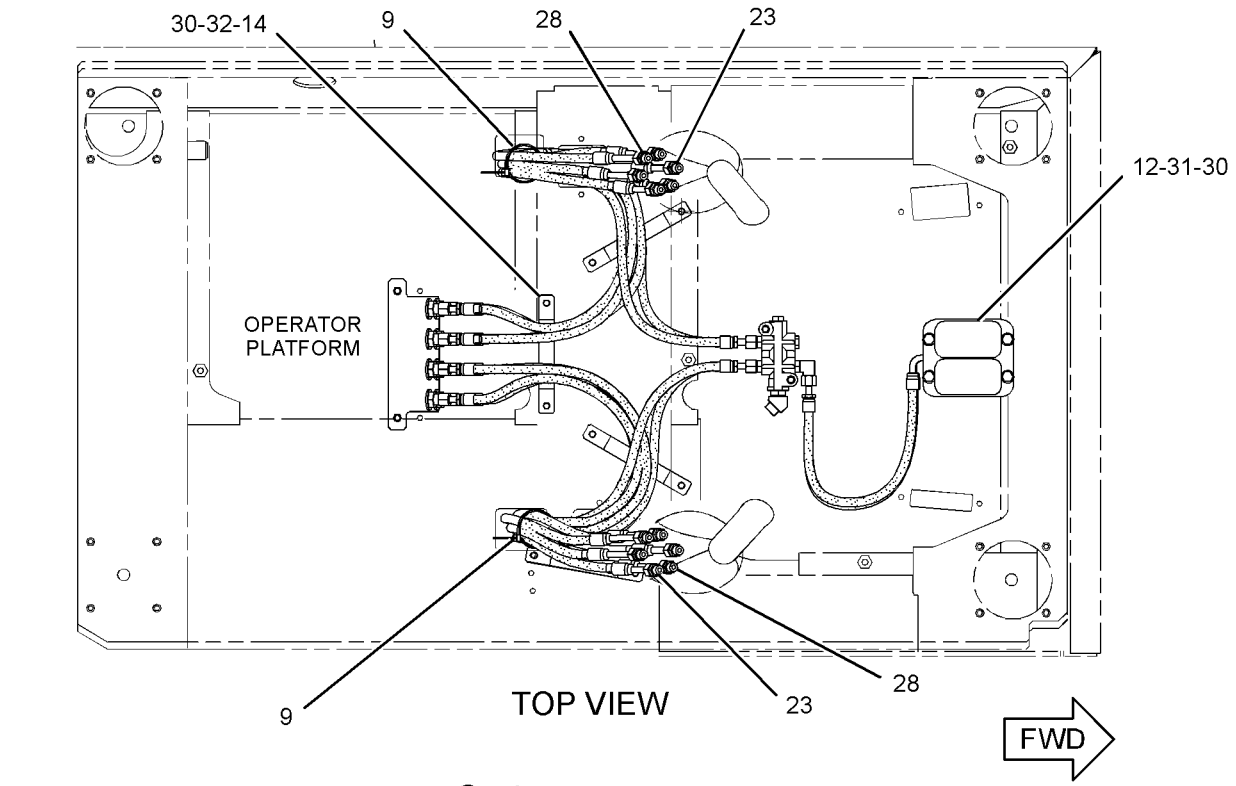

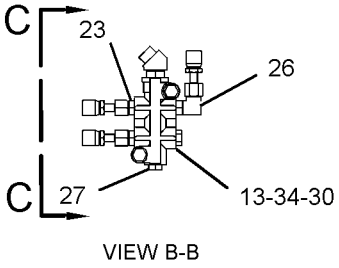

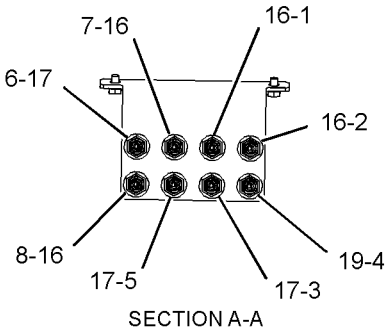

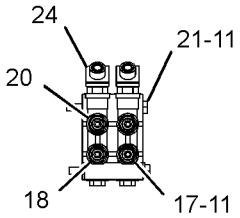

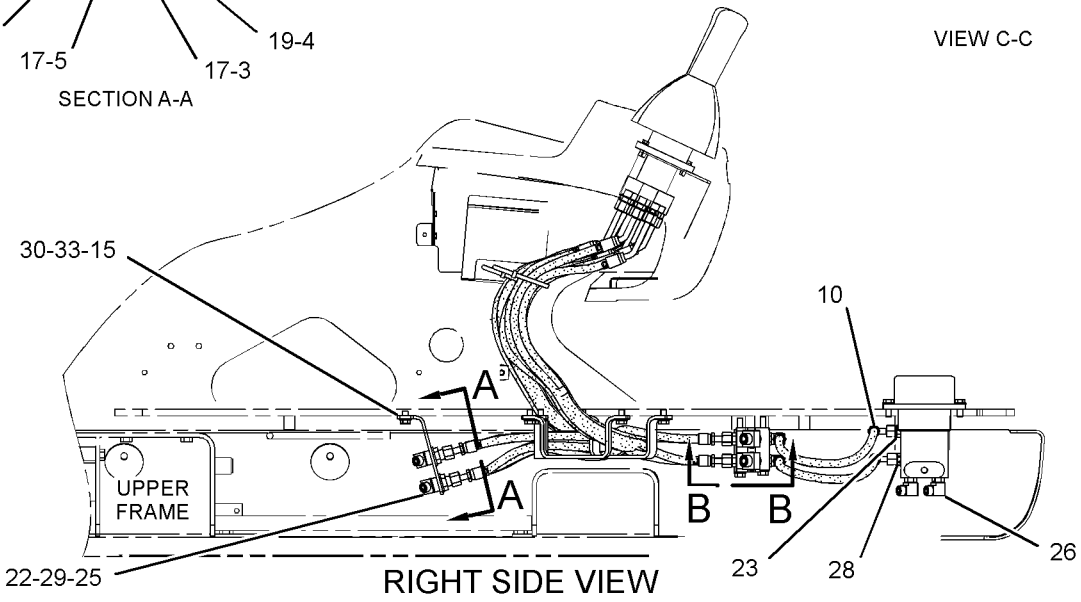

GRAPHIC #1 **<END>** g01307912

HYDRAULIC SYSTEM

275-1715 LINES GP-PILOT—PILOT CONTROL

S/N: CJN993-UP

PART OF 259-7547 HYDRAULIC AR

SMCS-5057, 5059 **i03127804**

NOTE	REF NO	GRAPHIC REF	PART NUMBER	QTY	PART NAME 1 2 3 4 5 6 (PRODUCT LEVEL)	SEE PAGE
	1	1	**4I-9521**	2	BAND-MARKER (RED, L1)	
	2	1	**4I-9522**	2	BAND-MARKER (YELLOW, L2)	
	3	1	**4I-9523**	2	BAND-MARKER (BLUE, L3)	
	4	1	**4I-9524**	2	BAND-MARKER (BROWN, L4)	
	5	1	**4I-9525**	2	BAND-MARKER (ORANGE, R1)	
	6	1	**4I-9526**	2	BAND-MARKER (WHITE, R2)	
	7	1	**4I-9527**	2	BAND-MARKER (GREEN, R3)	
	8	1	**4I-9528**	2	BAND-MARKER (PURPLE, R4)	
	9	1	**7K-1181**	2	STRAP-CABLE	
I	10	1	**087-4402**	2	HOSE AS	
	11	1	**133-5813**	4	BAND-MARKER (GRAY, P)	
CY	12	1	**310-0415**	1	VALVE GP-PILOT	715
	13	1	**168-9759**	1	BLOCK	
	14	1	**184-9336**	4	SUPPORT	
	15	1	**236-2838**	1	PLATE	
	16	1	**236-2843**	4	HOSE AS	
	17	1	**236-2844**	4	HOSE AS	
	18	1	**236-2848**	1	HOSE AS	
	19	1	**245-5079**	1	HOSE AS	
	20	1	**255-1665**	1	HOSE AS	
	21	1	**255-1666**	1	HOSE AS	
	22	1	**099-7241**	8	WASHER-HARD (19X34X3-MM THK)	
	23	1	*148-8336*	15	CONNECTOR AS	
					(EACH INCLUDES)	
		1	**3J-1907**	1	SEAL-O-RING	
		1	**6V-8397**	1	SEAL-O-RING	
		1	**6V-8636**	1	CONNECTOR	
	24	1	*148-8354*	2	ELBOW AS	
					(EACH INCLUDES)	
		1	**3K-0360**	1	SEAL-O-RING	
		1	**6V-8398**	1	SEAL-O-RING	
		1	**6V-9002**	1	ELBOW	
	25	1	*148-8366*	8	ELBOW AS	
					(EACH INCLUDES)	
		1	**6V-8397**	2	SEAL-O-RING	
		1	**6V-8987**	1	ELBOW	
	26	1	*148-8378*	6	ELBOW AS	
					(EACH INCLUDES)	
		1	**3J-1907**	1	SEAL-O-RING	
		1	**6V-8397**	1	SEAL-O-RING	
		1	**6V-8724**	1	ELBOW	
	27	1	*148-8407*	4	PLUG AS	
					(EACH INCLUDES)	
		1	**3J-1907**	1	SEAL-O-RING	
		1	**9S-4191**	1	PLUG-O-RING	
	28	1	*164-5628*	3	CONNECTOR AS	
					(EACH INCLUDES)	
		1	**3J-1907**	1	SEAL-O-RING	
		1	**6V-8397**	1	SEAL-O-RING	
		1	**107-6631**	1	CONNECTOR-FILTER	
	29	1	**6V-9168**	8	NUT (11/16-16-THD)	
	30	1	**8T-4121**	16	WASHER-HARD (11X21X2.5-MM THK)	
M	31	1	**8T-4136**	4	BOLT (M10X1.5X25-MM)	
M	32	1	**8T-4137**	8	BOLT (M10X1.5X20-MM)	
M	33	1	**8T-4191**	2	BOLT (M10X1.5X16-MM)	
M	34	1	**8T-4198**	2	BOLT (M10X1.5X100-MM)	

C-CHANGE FROM PREVIOUS TYPE
I-REFER TO HYDRAULIC INFORMATION SYSTEM
M-METRIC PART
Y-SEPARATE ILLUSTRATION

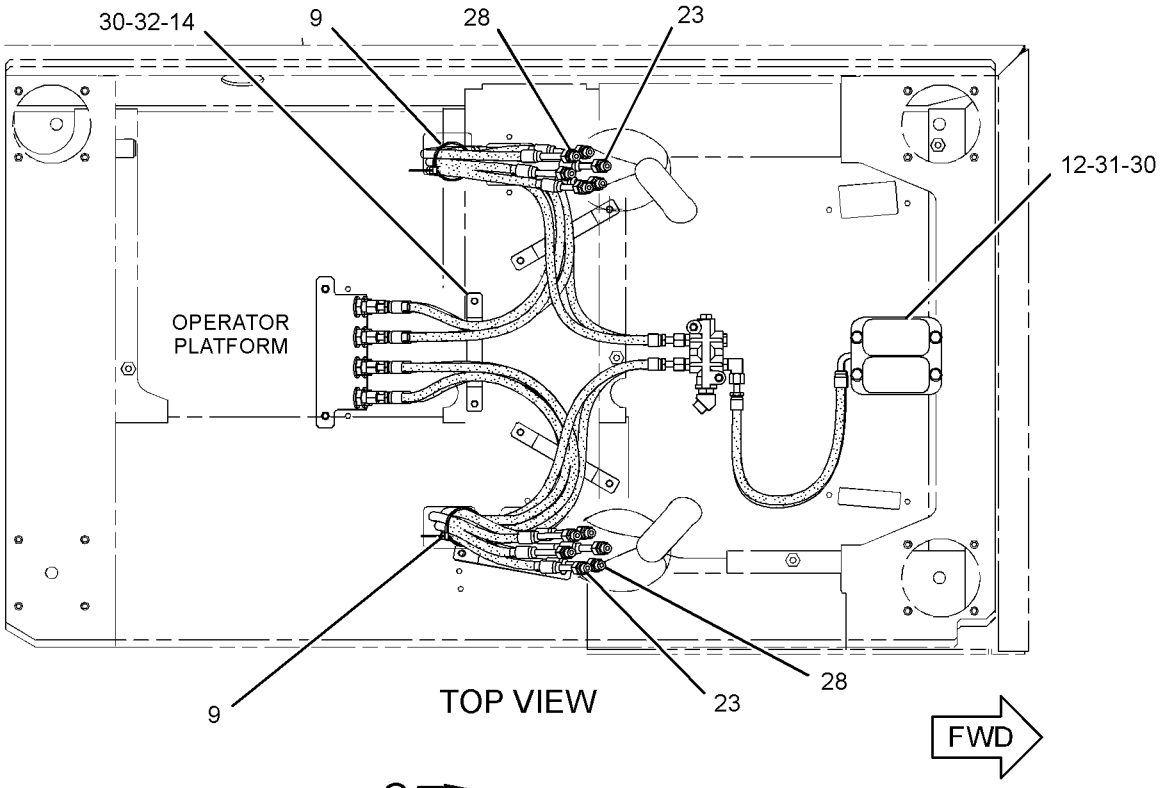

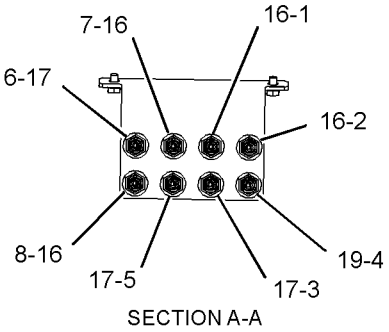

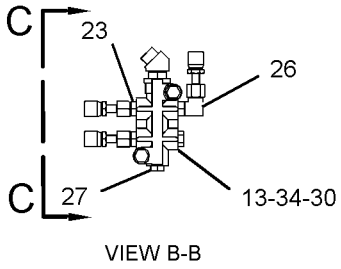

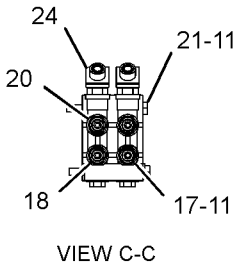

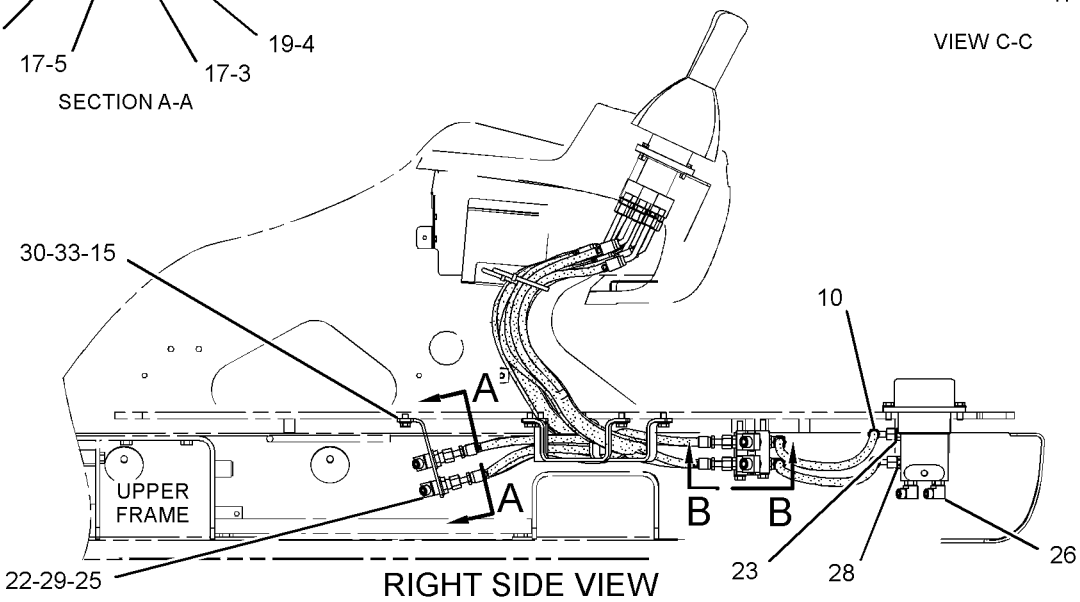

GRAPHIC #1

<END>

g01307912

HYDRAULIC SYSTEM

289-5749 LINES GP-PILOT—ACCUGRADE, CAB

S/N: CJN1-UP

PART OF 301-2479, 301-2517, 330-8775 SPECIAL AR

AN ATTACHMENT

SMCS-5057, 5059 **i02843759**

NOTE	REF NO	GRAPHIC REF	PART NUMBER	QTY	PART NAME 1 2 3 4 5 6 (PRODUCT LEVEL)	SEE PAGE
I	1	1	**4I-0836**	1	HOSE AS	
	2	1	**4I-9521**	6	BAND-MARKER (RED, L1)	
	3	1	**4I-9523**	2	BAND-MARKER (BLUE, L3)	
	4	1	**6V-0852**	3	CAP-DUST	
	5	1	**7K-1181**	2	STRAP-CABLE	
Y	6	1	**123-2430**	1	VALVE GP-SHUTTLE	729
	7	1	*164-6874*	1	FITTING AS-ELBOW	
		1	**3J-1907**	1	SEAL-O-RING	
		1	**085-7356**	1	FITTING	
I	8	1	**207-6418**	1	HOSE AS	
	9	1	**238-6189**	2	HOSE AS	
I	10	1	**292-7198**	1	HOSE AS	
Y	11	1	*297-0684*	1	VALVE GP-SOLENOID & PRESS REDC	749
	12	1	*148-8336*	2	CONNECTOR AS	
					(EACH INCLUDES)	
		1	**3J-1907**	1	SEAL-O-RING	
		1	**6V-8397**	1	SEAL-O-RING	
		1	**6V-8636**	1	CONNECTOR	
	13	1	*148-8338*	2	CONNECTOR AS	
					(EACH INCLUDES)	
		1	**3J-1907**	1	SEAL-O-RING	
		1	**6V-8397**	1	SEAL-O-RING	
		1	**8T-0075**	1	CONNECTOR	
	14	1	*148-8378*	3	ELBOW AS	
					(EACH INCLUDES)	
		1	**3J-1907**	1	SEAL-O-RING	
		1	**6V-8397**	1	SEAL-O-RING	
		1	**6V-8724**	1	ELBOW	
	15	1	*148-8407*	1	PLUG AS	
		1	**3J-1907**	1	SEAL-O-RING	
		1	**9S-4191**	1	PLUG-O-RING	
	16	1	*150-4050*	1	ELBOW AS	
		1	**3J-1907**	1	SEAL-O-RING	
		1	**8T-0788**	1	ELBOW	
	17	1	*164-5567*	3	COUPLER AS-QUICK DISCONNECT	
					(EACH INCLUDES)	
		1	**3J-1907**	1	SEAL-O-RING	
		1	**6V-3965**	1	FITTING (QUICK DISCONNECT)	
	18	1	**6V-8397**	2	SEAL-O-RING	
M	19	1	**8T-6870**	4	BOLT (M8X1.25X70-MM)	

I-REFER TO HYDRAULIC INFORMATION SYSTEM
M-METRIC PART
Y-SEPARATE ILLUSTRATION

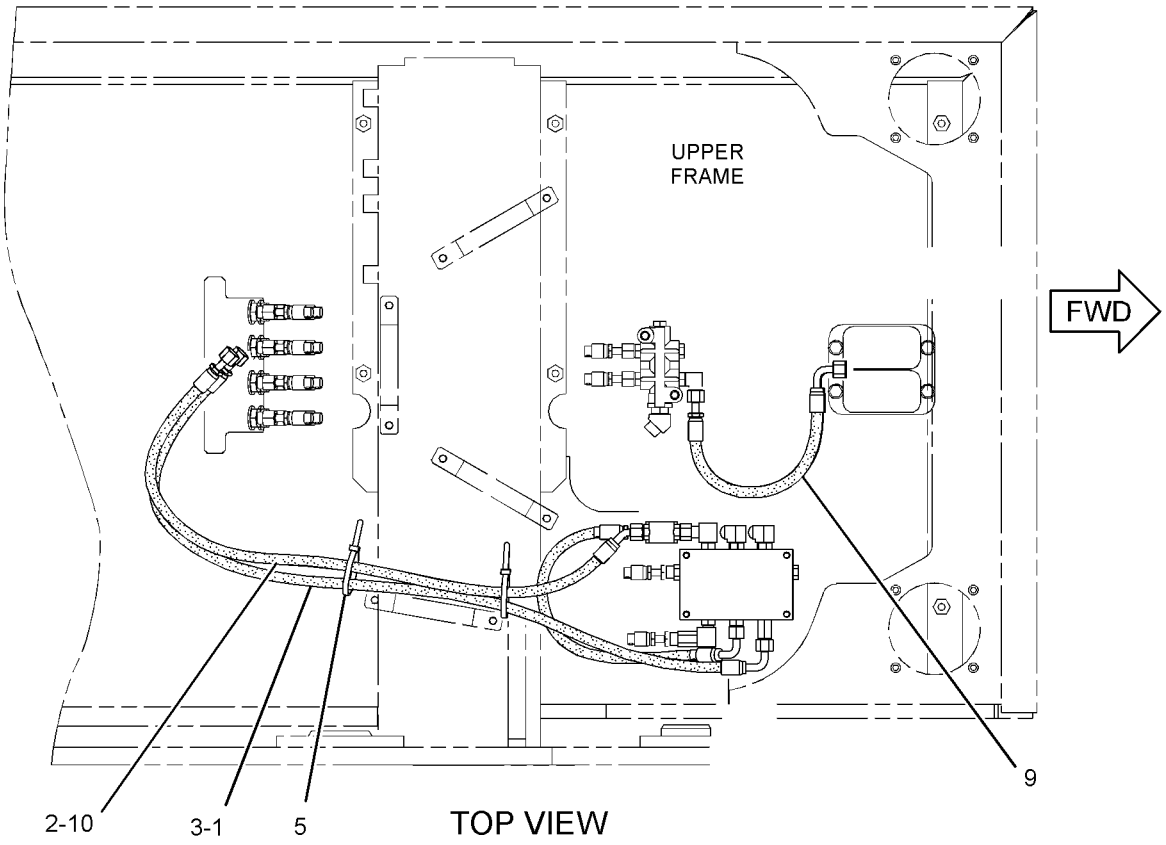

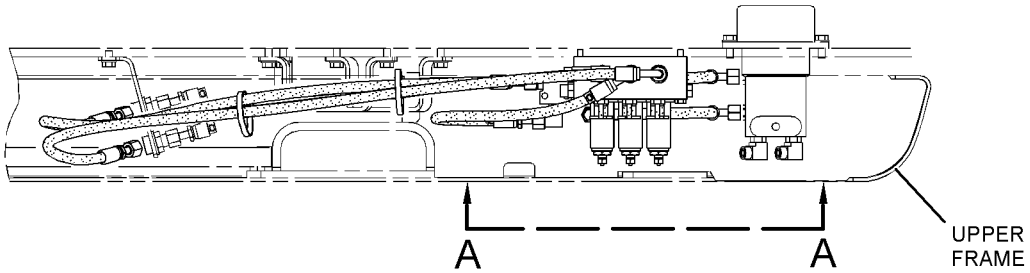

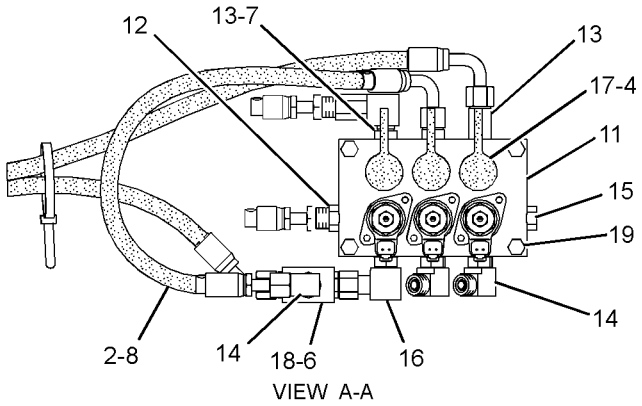

GRAPHIC #1

<END>

g01419435

HYDRAULIC SYSTEM

289-5750 LINES GP-PILOT—ACCUGRADE, CONTROL VALVE

S/N: CJN1-UP

PART OF 301-2479, 301-2517, 330-8775 SPECIAL AR

AN ATTACHMENT

SMCS-5057, 5059 **i02843750**

NOTE	REF NO	GRAPHIC REF	PART NUMBER	QTY	PART NAME 1 2 3 4 5 6 (PRODUCT LEVEL)	SEE PAGE
I	1	2	**4I-1783**	1	HOSE AS	
I	2	2	**4I-3991**	2	HOSE AS	
I	3	2	**4I-5933**	1	HOSE AS	
I	4	2	**4I-6136**	1	HOSE AS	
	5	1	**4I-9521**	2	BAND-MARKER (RED, L1)	
	6	2	**4I-9523**	2	BAND-MARKER (BLUE, L3)	
	7	2	**4I-9525**	8	BAND-MARKER (ORANGE, R1)	
	8	2	**4I-9526**	4	BAND-MARKER (WHITE, R2)	
	9	2	**4I-9527**	4	BAND-MARKER (GREEN, R3)	
	10	2	**4I-9528**	4	BAND-MARKER (PURPLE, R4)	
I	11	2	**5I-4076**	1	HOSE AS	
	12	1,2	**7K-1181**	5	STRAP-CABLE	
I	13	2	**7Y-4190**	1	HOSE AS	
I	14	2	**7Y-4193**	1	HOSE AS	
I	15	1	**102-7685**	1	HOSE AS	
I	16	2	**104-8783**	1	HOSE AS	
	17	2	*150-4027*	1	TEE AS	
		2	**3E-2310**	1	TEE	
		2	**3J-1907**	1	SEAL-O-RING	
		2	**6V-8397**	1	SEAL-O-RING	
	18	2	**157-3180**	1	SENSOR AS-PRESSURE	
		2	**9X-3401**	3	PIN-CONNECTOR (16-GA TO 18-GA)	
					—OR—	
		2	**126-1767**	3	PIN-CONNECTOR (14-GA)	
		2	**171-0596**	1	RECEPTACLE AS	
		2	**185-2478**	1	SEAL	
	19	2	*164-5546*	1	TEE AS	
		2	**3E-7410**	1	TEE-O-RING	
		2	**3J-1907**	1	SEAL-O-RING	
I	20	2	**192-6775**	1	HOSE AS	
	21	2	**202-1771**	1	CONNECTOR	
	22	1	**272-4144**	1	GROMMET	
I	23	2	**272-4227**	1	HOSE AS	
I	24	1	**292-7147**	1	HOSE AS	
	25	2	**292-7151**	1	SUPPORT AS	
Y	26	2	*297-0685*	1	VALVE GP-SOLENOID & PRESS REDC	750
	27	1	**302-3112**	1	SUPPORT AS	
	28	2	*148-8336*	1	CONNECTOR AS	
		2	**3J-1907**	1	SEAL-O-RING	
		2	**6V-8397**	1	SEAL-O-RING	
		2	**6V-8636**	1	CONNECTOR	
	29	2	*148-8378*	7	ELBOW AS	
					(EACH INCLUDES)	
		2	**3J-1907**	1	SEAL-O-RING	
		2	**6V-8397**	1	SEAL-O-RING	
		2	**6V-8724**	1	ELBOW	
	30	2	*148-8407*	1	PLUG AS	
		2	**3J-1907**	1	SEAL-O-RING	
		2	**9S-4191**	1	PLUG-O-RING	
	31	2	*148-8435*	1	TEE AS	
		2	**3J-1907**	1	SEAL-O-RING	
		2	**6V-8397**	2	SEAL-O-RING	
		2	**6V-8781**	1	TEE-FACE SEAL	
	32	2	*150-3036*	1	ELBOW AS	
		2	**3J-1907**	1	SEAL-O-RING	

289-5750 **LINES GP-PILOT** *(contd.)* **i02843750**

NOTE	REF NO	GRAPHIC REF	PART NUMBER	QTY	PART NAME 1 2 3 4 5 6 (PRODUCT LEVEL)	SEE PAGE
		2	**6V-8397**	1	SEAL-O-RING	
		2	**8T-1905**	1	ELBOW	
	33	2	*164-5567*	4	COUPLER AS-QUICK DISCONNECT	
					(EACH INCLUDES)	
		2	**3J-1907**	1	SEAL-O-RING	
		2	**6V-3965**	1	FITTING (QUICK DISCONNECT)	
	34	2	**3J-1907**	1	SEAL-O-RING	
	35	2	**6V-0852**	4	CAP-DUST	
M	36	2	**8T-3647**	4	BOLT (M8X1.25X80-MM)	
M	37	1,2	**8T-4192**	5	BOLT (M12X1.75X25-MM)	
	38	1,2	**8T-4223**	5	WASHER-HARD (13.5X25.5X3-MM THK)	

I-REFER TO HYDRAULIC INFORMATION SYSTEM
M-METRIC PART
Y-SEPARATE ILLUSTRATION

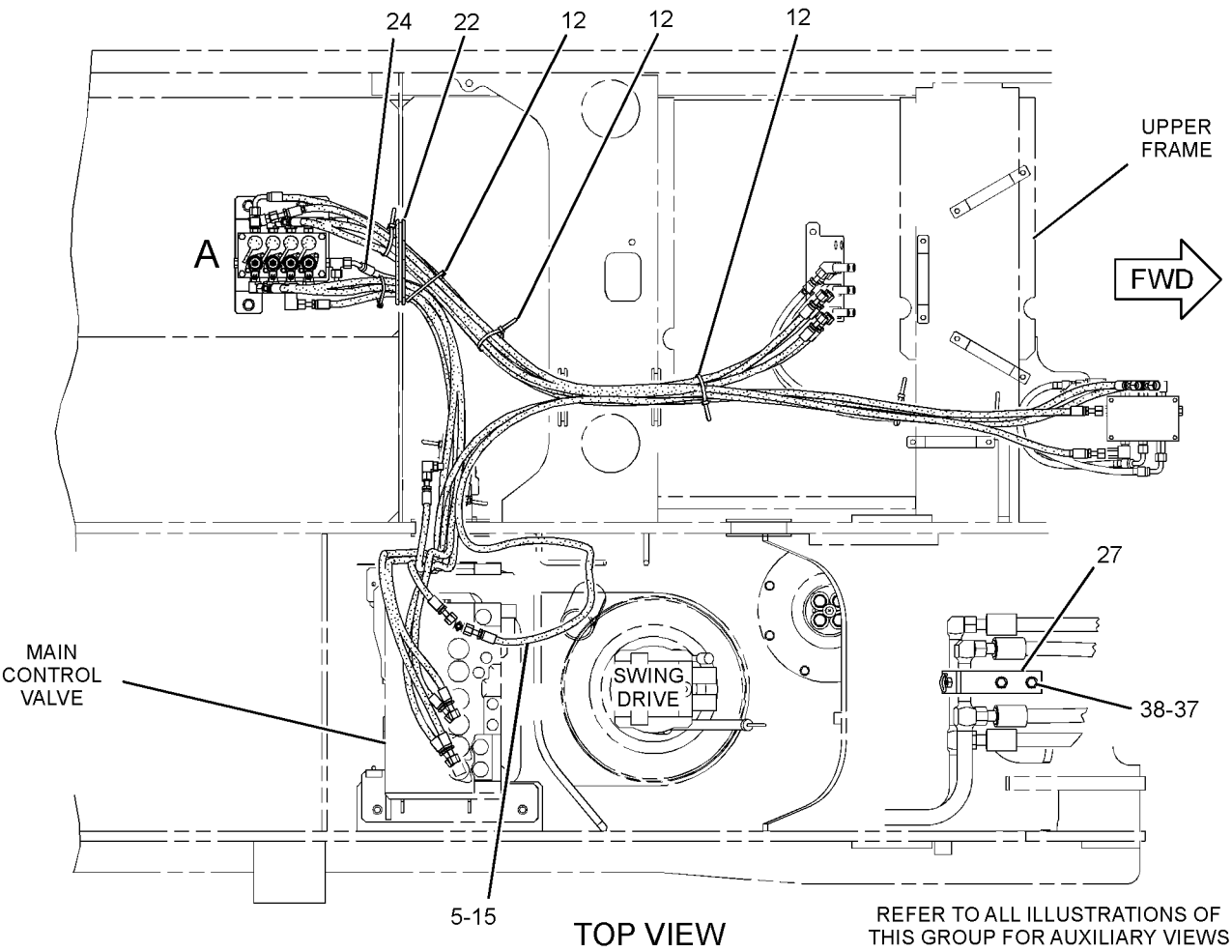

GRAPHIC #1 g01419484

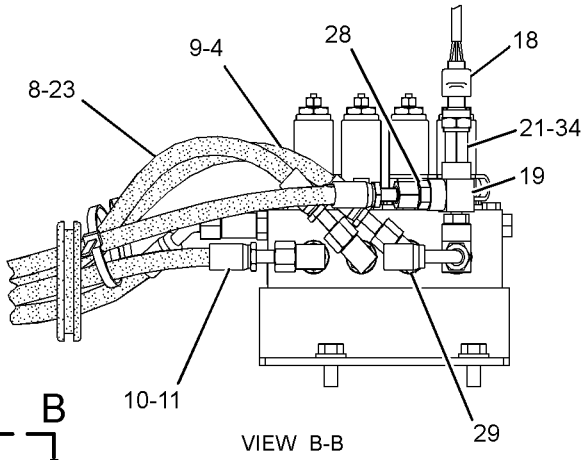

VIEW B-B

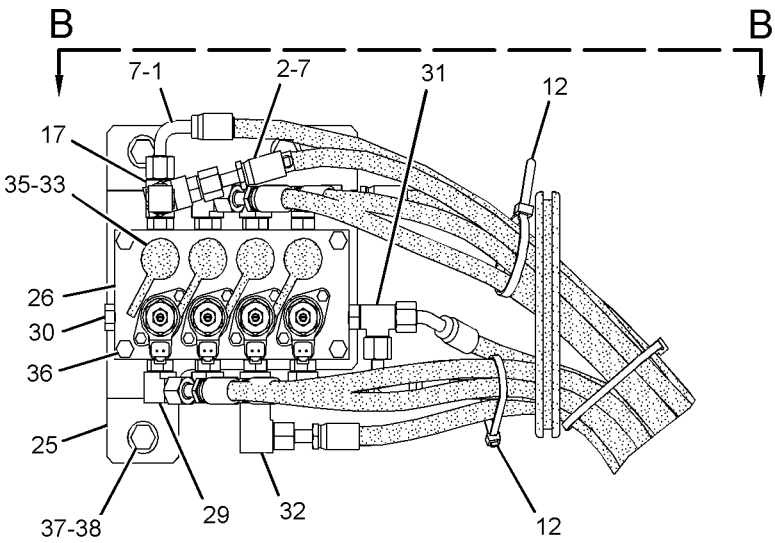

VIEW OF AREA A

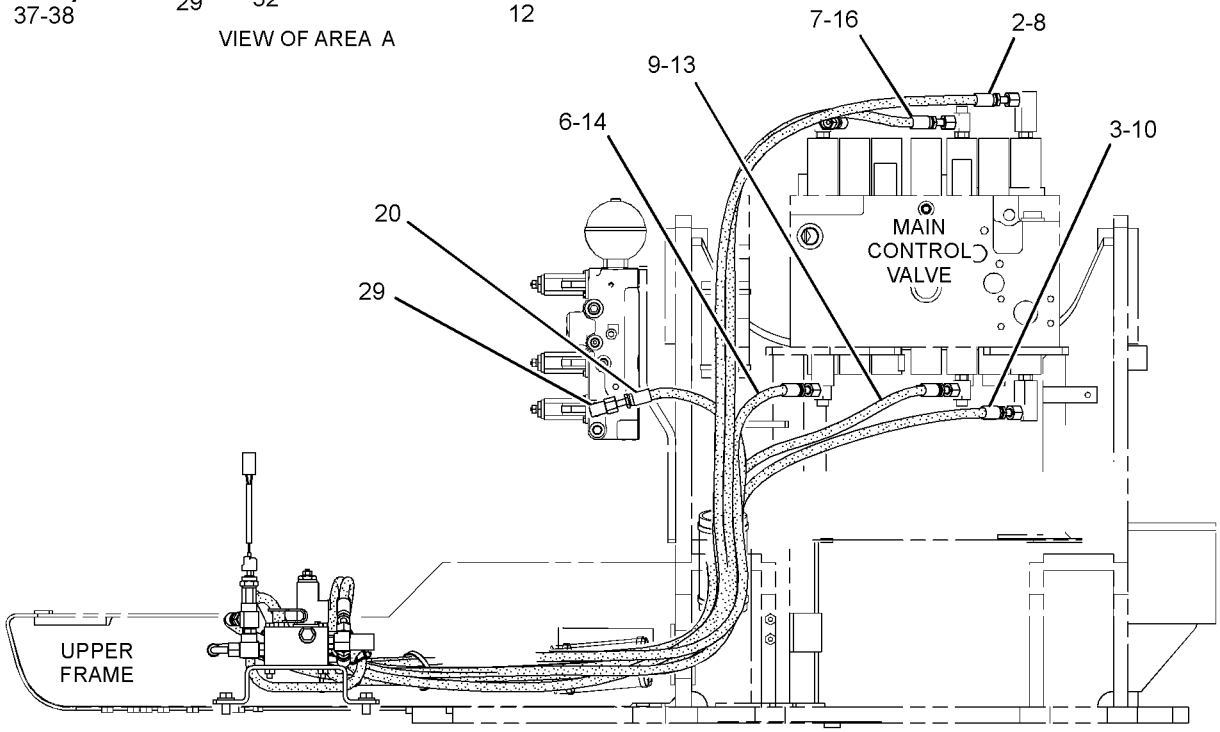

REAR VIEW

GRAPHIC #2

<END>

g01419487

HYDRAULIC SYSTEM

302-3195 LINES GP-PILOT—MAIN CONTROL VALVE, MANIFOLD

S/N: CJN1-UP

PART OF 259-7547 HYDRAULIC AR

SMCS-5057, 5059 **i03148224**

NOTE	REF NO	GRAPHIC REF	PART NUMBER	QTY	PART NAME 1 2 3 4 5 6 (PRODUCT LEVEL)	SEE PAGE
I	1	2	**4I-0797**	1	HOSE AS	
I	2	2	**4I-0800**	1	HOSE AS	
I	3	3	**4I-0821**	2	HOSE AS	
I	4	2	**4I-1760**	1	HOSE AS	
I	5	2	**4I-1783**	1	HOSE AS	
I	6	2	**4I-5795**	1	HOSE AS	
I	7	1	**4I-6248**	1	HOSE AS	
I	8	1	**4I-6391**	1	HOSE AS	
	9	1,2	**4I-9521**	6	BAND-MARKER (RED, L1)	
	10	1,2	**4I-9522**	4	BAND-MARKER (YELLOW, L2)	
	11	1,2	**4I-9523**	12	BAND-MARKER (BLUE, L3)	
	12	1,2	**4I-9524**	4	BAND-MARKER (BROWN, L4)	
	13	2	**4I-9525**	2	BAND-MARKER (ORANGE, R1)	
	14	1,2,3	**4I-9527**	6	BAND-MARKER (GREEN, R3)	
	15	2,3	**4I-9528**	4	BAND-MARKER (PURPLE, R4)	
I	16	2	**325-8876**	1	HOSE AS	
	17	1,2,3	**7K-1181**	15	STRAP-CABLE	
	18	3	**224-1914**	1	HOSE AS	
I	19	1	**7Y-8379**	1	HOSE AS	
I	20	2	**087-4411**	1	HOSE AS	
I	21	2	**087-5771**	1	HOSE AS	
I	22	2	**087-5772**	1	HOSE AS	
I	23	1	**087-5773**	1	HOSE AS	
I	24	2	**087-5783**	1	HOSE AS	
I	25	3	**087-6582**	1	HOSE AS	
I	26	3	**087-6585**	1	HOSE AS	
I	27	2	**108-7402**	1	HOSE AS	
Y	28	3	**123-2430**	1	VALVE GP-SHUTTLE	729
	29	1	**133-5813**	2	BAND-MARKER (GRAY, P)	
	30	4	*164-5628*	1	CONNECTOR AS	
		4	**3J-1907**	1	SEAL-O-RING	
		4	**6V-8397**	1	SEAL-O-RING	
		4	**107-6631**	1	CONNECTOR-FILTER	
Y	31	2	*164-6981*	1	ACCUMULATOR GP-HYDRAULIC (CHARGED)	386
	32	3	**309-5769**	1	SWITCH AS-PRESSURE (PILOT, BOOM UP)	
		3	**102-8802**	1	KIT-RECEPTACLE (2-PIN)	
					(INCLUDES RECEPTACLE AS & WEDGE)	
		3	**9X-3401**	2	PIN-CONNECTOR (16-GA TO 18-GA)	
					—OR—	
		3	**126-1767**	2	PIN-CONNECTOR (14-GA)	
	33	3	*168-1968*	1	TEE AS	
		3	**3J-1907**	1	SEAL-O-RING	
		3	**6V-8397**	1	SEAL-O-RING	
		3	**126-6872**	1	TEE	
	34	3	**176-4791**	1	BLOCK	
I	35	3	**199-1914**	1	HOSE AS	
I	36	1	**199-1965**	1	HOSE AS	
I	37	2	**207-6418**	1	HOSE AS	
Y	38	2	**215-5037**	1	MANIFOLD GP-CONTROL (PILOT OIL SUPPLY)	635
Y	39	3	**238-0751**	1	VALVE GP-SOLENOID & PRESS REDC (BOOM LOWERING CONTROL)	747
	40	3	**317-4751**	1	HOSE AS	
E		3	**7I-7439**		GUARD (59-CM)	
	41	2	**269-9553**	1	PLATE	
	42	2	**275-1442**	2	CLIP (TAB)	
	43	2	**275-1443**	2	CLIP (SLOT)	

302-3195 **LINES GP-PILOT** *(contd.)* **i03148224**

NOTE	REF NO	GRAPHIC REF	PART NUMBER	QTY	PART NAME 1 2 3 4 5 6 (PRODUCT LEVEL)	SEE PAGE
	44	2	**275-1444**	2	GROMMET	
I	45	1	**275-1624**	1	HOSE AS	
	46	1	**278-6613**	1	SUPPORT AS	
I	47	1	**278-6623**	1	HOSE AS	
	48	3	*281-5898*	1	TEE AS	
		3	**3J-1907**	1	SEAL-O-RING	
		3	**6V-8398**	2	SEAL-O-RING	
		3	**153-6270**	1	TEE	
Y	49	3	**285-1613**	1	VALVE GP-PRESSURE REDUCING (BOOM PRIORITY)	718
	50	1	**286-6560**	1	HOSE AS	
E		1	**7I-7439**		GUARD (390-CM)	
I	51	1	**292-7446**	1	HOSE AS	
M	52	3	**099-3649**	2	BOLT (M8X1.25X40-MM)	
	53	2	**115-8645**	1	GUARD	
	54	2,3,4	*148-8336*	10	CONNECTOR AS	
					(EACH INCLUDES)	
		2,3,4	**3J-1907**	1	SEAL-O-RING	
		2,3,4	**6V-8397**	1	SEAL-O-RING	
		2,3,4	**6V-8636**	1	CONNECTOR	
	55	2	*148-8340*	2	CONNECTOR AS	
					(EACH INCLUDES)	
		2	**3K-0360**	1	SEAL-O-RING	
		2	**6V-8398**	1	SEAL-O-RING	
		2	**6V-8639**	1	CONNECTOR	
	56	3,4	*148-8353*	3	ELBOW AS	
					(EACH INCLUDES)	
		3,4	**3J-1907**	1	SEAL-O-RING	
		3,4	**6V-8397**	1	SEAL-O-RING	
		3,4	**6V-9001**	1	ELBOW	
	57	3	*148-8367*	1	ELBOW AS	
		3	**6V-8397**	1	SEAL-O-RING	
		3	**6V-9850**	1	ELBOW	
	58	2,3,4	*148-8378*	10	ELBOW AS	
					(EACH INCLUDES)	
		2,3,4	**3J-1907**	1	SEAL-O-RING	
		2,3,4	**6V-8397**	1	SEAL-O-RING	
		2,3,4	**6V-8724**	1	ELBOW	
	59	2,3,4	*148-8407*	10	PLUG AS	
					(EACH INCLUDES)	
		2,3,4	**3J-1907**	1	SEAL-O-RING	
		2,3,4	**9S-4191**	1	PLUG-O-RING	
	60	2	*148-8411*	1	PLUG AS	
		2	**3K-0360**	1	SEAL-O-RING	
		2	**9S-4185**	1	PLUG-O-RING	
	61	4	*148-8433*	2	TEE AS	
					(EACH INCLUDES)	
		4	**6V-8397**	2	SEAL-O-RING	
		4	**6V-9836**	1	TEE-SWIVEL	
	62	3,4	*148-8435*	3	TEE AS	
					(EACH INCLUDES)	
		3,4	**3J-1907**	1	SEAL-O-RING	
		3,4	**6V-8397**	2	SEAL-O-RING	
		3,4	**6V-8781**	1	TEE-FACE SEAL	
	63	3	*148-8439*	1	TEE AS	
		3	**3J-1907**	1	SEAL-O-RING	
		3	**6V-8397**	2	SEAL-O-RING	
		3	**6V-8774**	1	TEE	
	64	2	*150-3036*	1	ELBOW AS	
		2	**3J-1907**	1	SEAL-O-RING	

302-3195 **LINES GP-PILOT** *(contd.)* **i03148224**

NOTE	REF NO	GRAPHIC REF	PART NUMBER	QTY	PART NAME 1 2 3 4 5 6 (PRODUCT LEVEL)	SEE PAGE
		2	**6V-8397**	1	SEAL-O-RING	
		2	**8T-1905**	1	ELBOW	
	65	2	*164-8908*	1	CONNECTOR AS	
		2	**3K-0360**	1	SEAL-O-RING	
		2	**6V-8398**	1	SEAL-O-RING	
		2	**8T-0077**	1	CONNECTOR	
	66	3	*164-5629*	1	FITTING AS	
		3	**3J-1907**	1	SEAL-O-RING	
		3	**108-7516**	1	FITTING	
	67	1	**5P-2369**	1	CLIP	
	68	1	**5P-7462**	1	CLIP (SLOT)	
	69	1	**5P-7463**	1	CLIP (TAB)	
	70	3	*164-6874*	1	FITTING AS-ELBOW	
		3	**3J-1907**	1	SEAL-O-RING	
		3	**085-7356**	1	FITTING	
	71	1	**6V-0683**	1	GROMMET	
	72	3	**6V-8397**	2	SEAL-O-RING	
	73	3	**6V-9829**	1	CAP AS	
	74	3	**7X-0613**	2	WASHER-HARD (8.8X25.5X5-MM THK)	
	75	1,2	**8T-4121**	6	WASHER-HARD (11X21X2.5-MM THK)	
M	76	1,2	**8T-4136**	5	BOLT (M10X1.5X25-MM)	
M	77	2	**8T-4137**	1	BOLT (M10X1.5X20-MM)	
M	78	2	**8T-4183**	4	BOLT (M12X1.75X40-MM)	
M	79	3	**8T-4189**	2	BOLT (M8X1.25X20-MM)	
	80	2	**8T-4223**	6	WASHER-HARD (13.5X25.5X3-MM THK)	
	81	3	**8T-4224**	2	WASHER-HARD (8.8X16X2-MM THK)	
M	82	3	**8T-4908**	2	BOLT (M8X1.25X25-MM)	
M	83	2	**8T-4956**	2	BOLT (M12X1.75X35-MM)	
M	84	3	**8T-6869**	2	BOLT (M8X1.25X60-MM)	
	85	3	*164-5567*	1	COUPLER AS-QUICK DISCONNECT	
		3	**3J-1907**	1	SEAL-O-RING	
		3	**6V-3965**	1	FITTING (QUICK DISCONNECT)	
	86	3	*148-8443*	1	TEE AS	
		3	**3J-1907**	1	SEAL-O-RING	
		3	**6V-8397**	1	SEAL-O-RING	
		3	**7X-2459**	1	TEE-O-RING	
I	87	2	**087-4532**	1	HOSE AS	
	88	3	**6V-0852**	1	CAP-DUST	

E-ORDER BY THE CENTIMETER
I-REFER TO HYDRAULIC INFORMATION SYSTEM
M-METRIC PART
Y-SEPARATE ILLUSTRATION

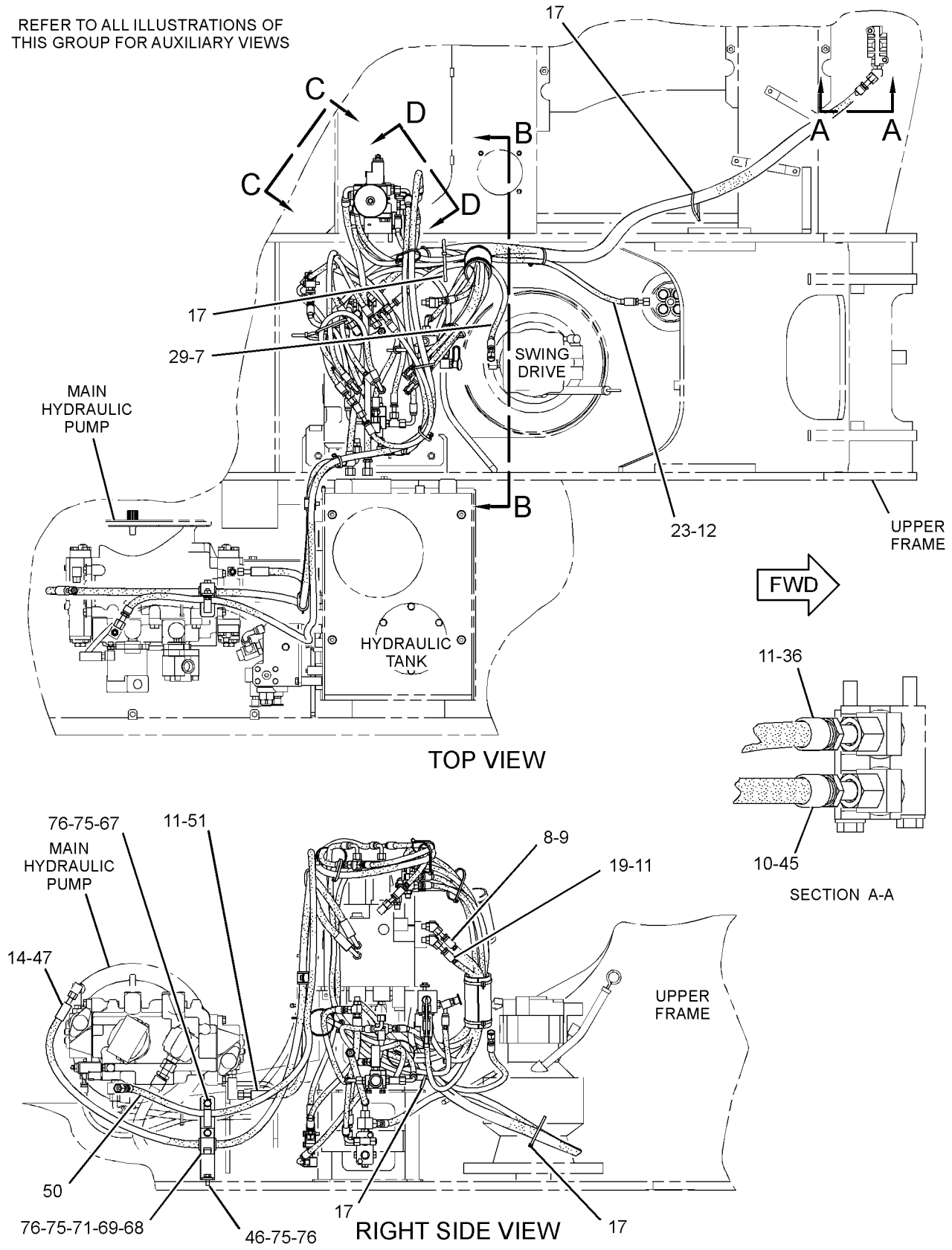

GRAPHIC #1 g01419830

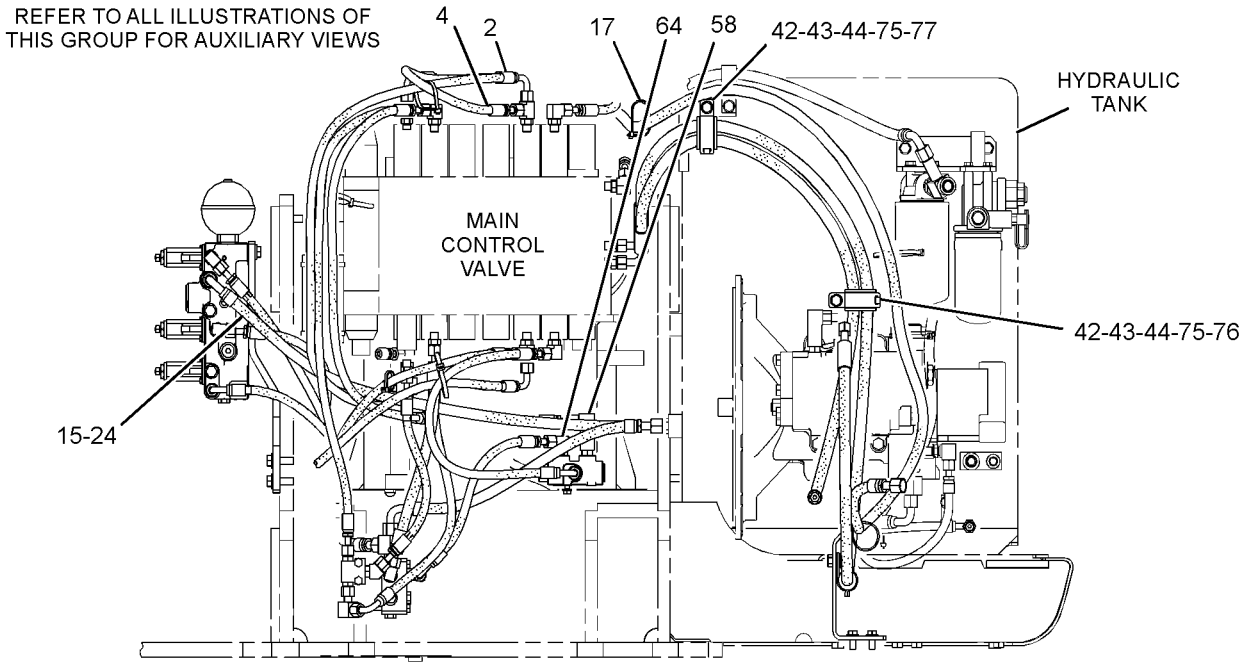

REAR VIEW

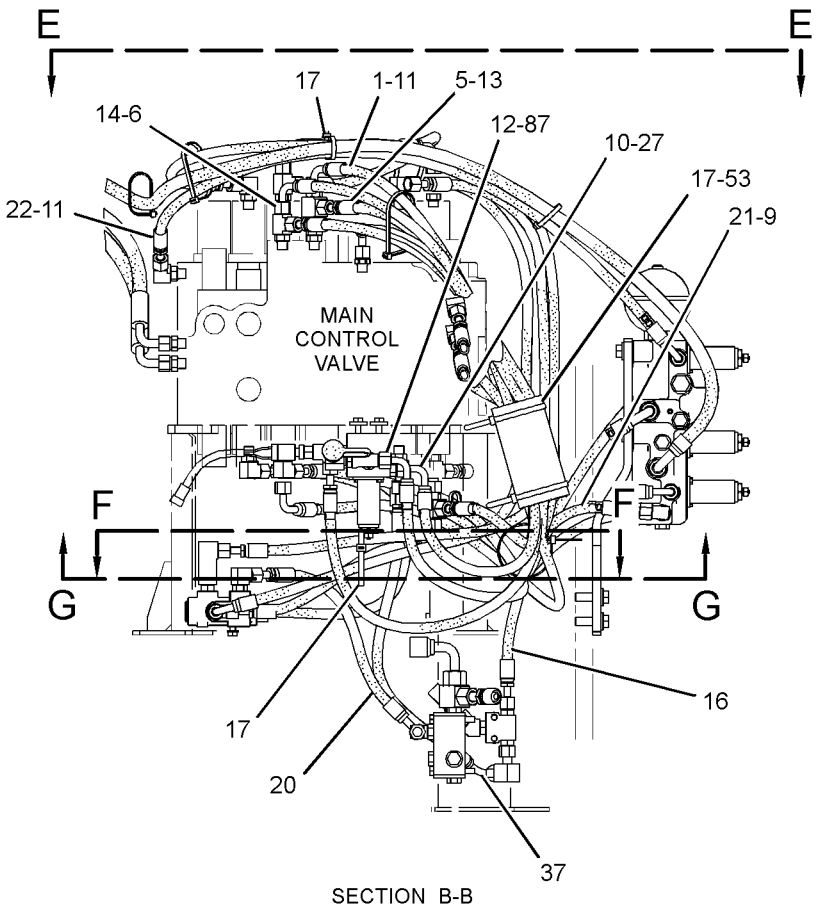

SECTION B-B

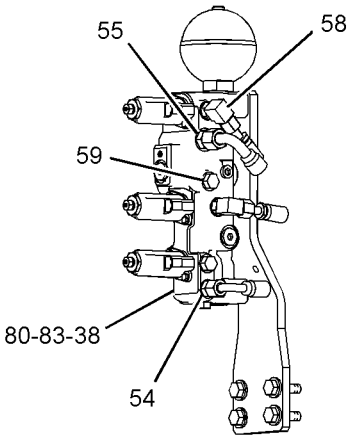

VIEW C-C

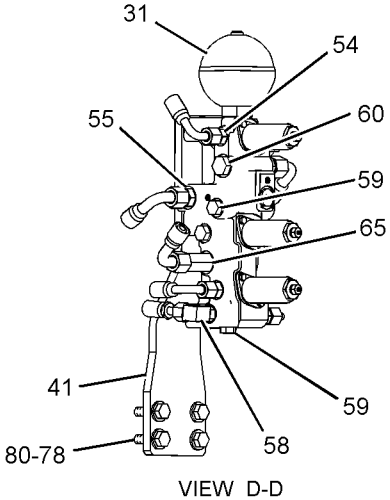

VIEW D-D

GRAPHIC #2

g01435608

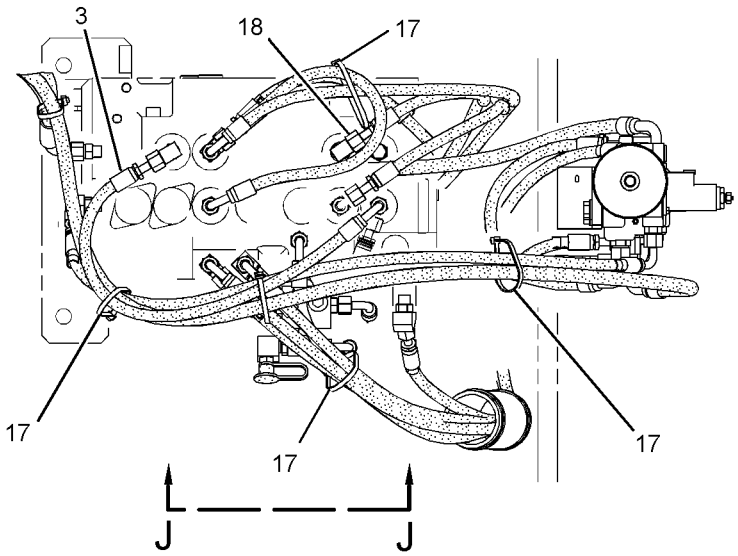

VIEW E-E

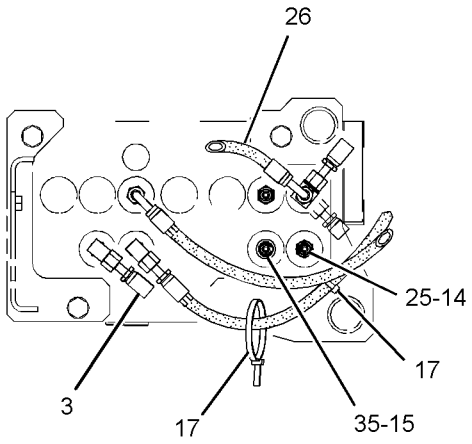

SECTION G-G

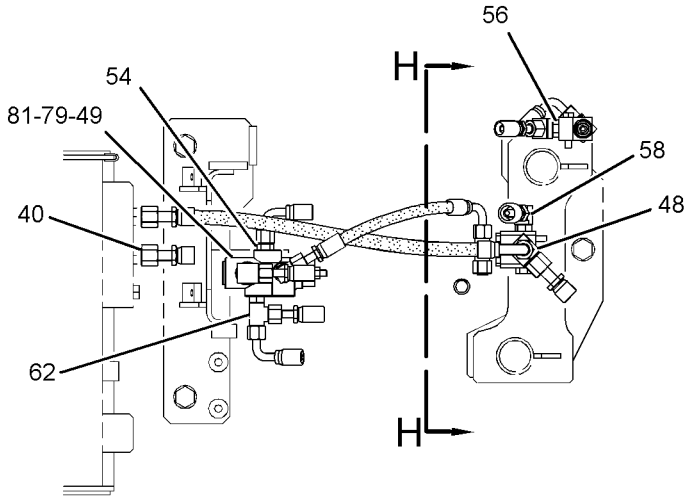

SECTION F-F

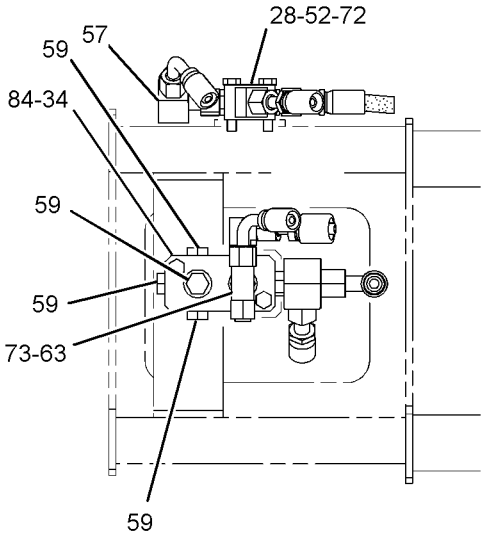

SECTION H-H

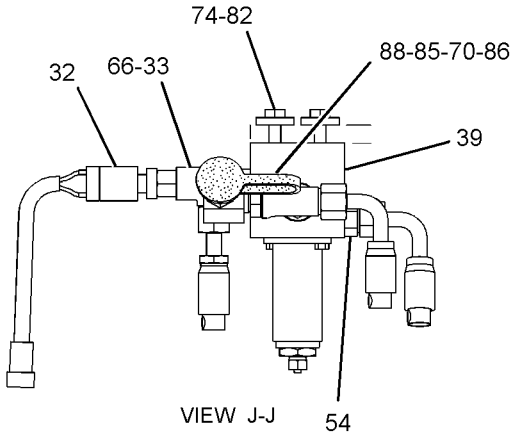

VIEW J-J

GRAPHIC #3 g01435609

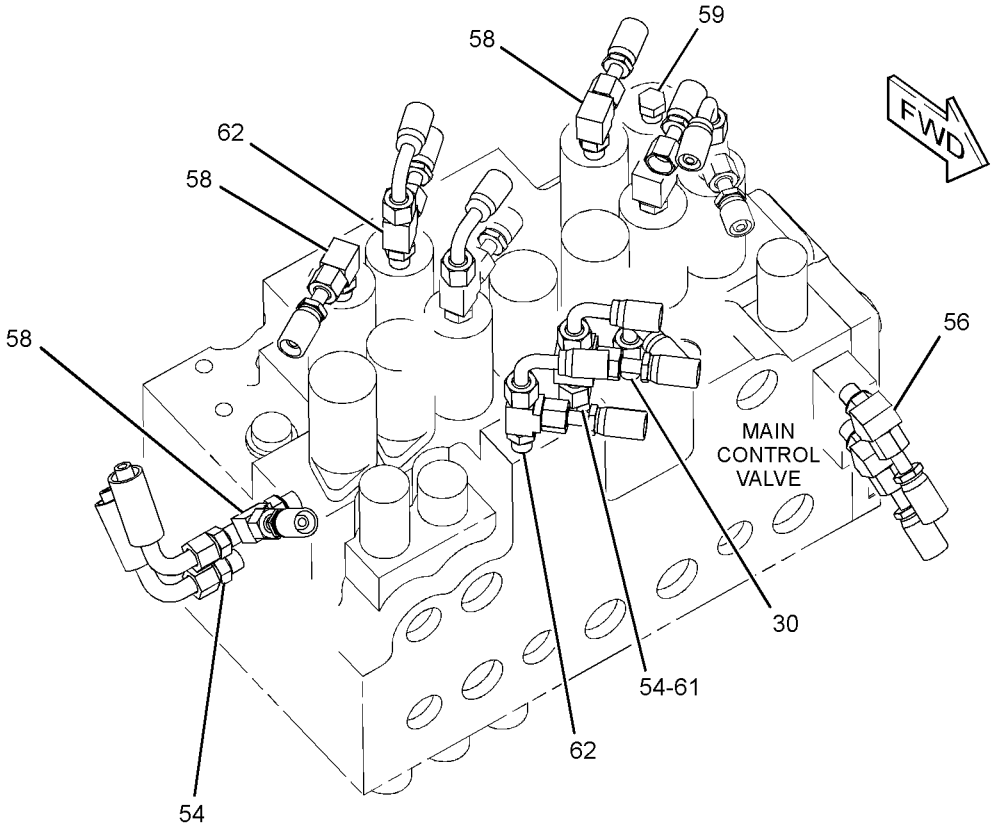

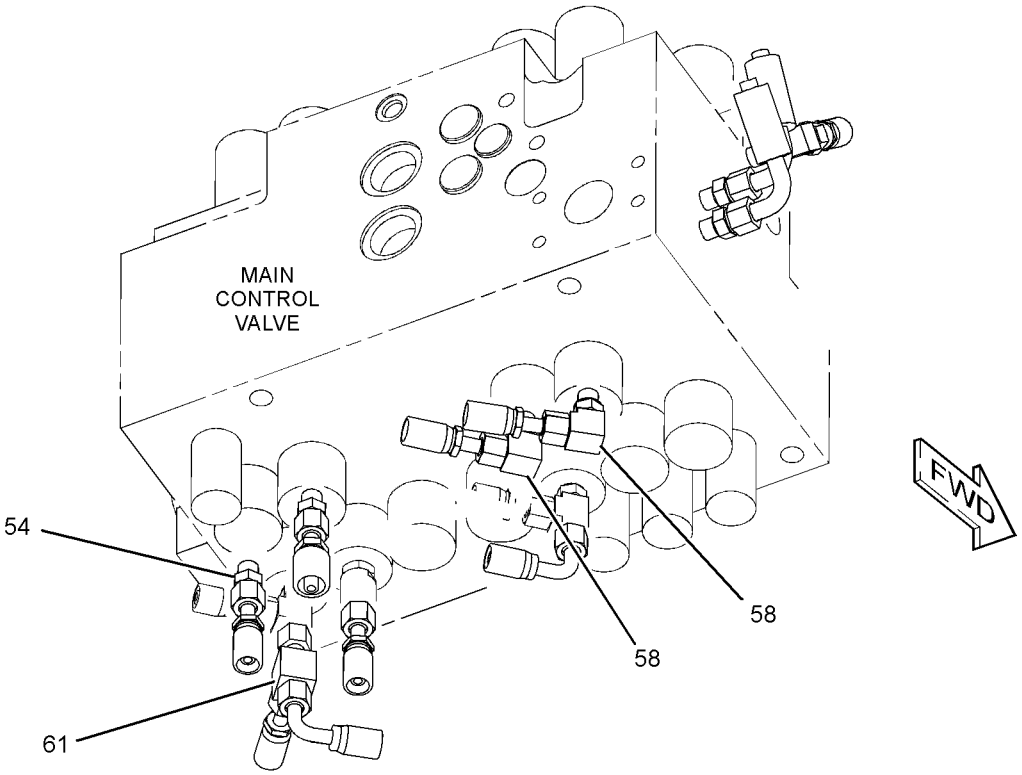

GRAPHIC #4 **<END>** g01419834

302-3258 LINES GP-PILOT—SYSTEM 20, WORK TOOL PRIORITY

S/N: CJN1-UP
PART OF 259-7557 CONTROL AR-AUXILIARY
AN ATTACHMENT
TYPE 1

SMCS-5057, 5059 **i02866151**

NOTE	REF NO	GRAPHIC REF	PART NUMBER	QTY	PART NAME 1 2 3 4 5 6 (PRODUCT LEVEL)	SEE PAGE
I	1	3	**4I-0836**	1	HOSE AS	
I	2	3	**4I-1780**	1	HOSE AS	
I	3	3	**4I-1783**	1	HOSE AS	
	4	1	**4I-3941**	1	FITTING AS	
I	5	3	**4I-5906**	1	HOSE AS	
	6	3	**4I-9521**	2	BAND-MARKER (RED, L1)	
	7	3	**4I-9522**	4	BAND-MARKER (YELLOW, L2)	
	8	1	**4I-9523**	6	BAND-MARKER (BLUE, L3)	
	9	2,3	**4I-9524**	4	BAND-MARKER (BROWN, L4)	
	10	3	**4I-9525**	2	BAND-MARKER (ORANGE, R1)	
	11	1,2	**4I-9527**	6	BAND-MARKER (GREEN, R3)	
I	12	1,2	**5I-4396**	2	HOSE AS	
	13	3	**5P-5148**	1	STRAP-TIE	
	14	1,2,3	**7K-1181**	13	STRAP-CABLE	
I	15	3	**087-5303**	1	HOSE AS	
I	16	1	**087-5762**	1	HOSE AS	
I	17	1	**087-5766**	1	HOSE AS	
I	18	3	**104-8771**	1	HOSE AS	
I	19	3	**104-8838**	1	HOSE AS	
	20	3	**104-8903**	1	GUARD	
I	21	3	**108-7393**	1	HOSE AS	
I	22	3	**115-3667**	1	HOSE AS	
Y	23	2	**121-6303**	1	VALVE GP-SOLENOID (WORK TOOL PRIORITY)	737
Y	24	2	**123-2430**	1	VALVE GP-SHUTTLE	729
	25	2	*150-4027*	2	TEE AS	
					(EACH INCLUDES)	
		2	**3E-2310**	1	TEE	
		2	**3J-1907**	1	SEAL-O-RING	
		2	**6V-8397**	1	SEAL-O-RING	
	26	2,3	*164-6874*	4	FITTING AS-ELBOW	
					(EACH INCLUDES)	
		2,3	**3J-1907**	1	SEAL-O-RING	
		2,3	**085-7356**	1	FITTING	
C	27	1	**309-5769**	1	SWITCH AS-PRESSURE (PILOT, BOOM UP)	
		1	**102-8802**	1	KIT-RECEPTACLE (2-PIN)	
					(INCLUDES RECEPTACLE AS & WEDGE)	
		1	**9X-3401**	2	PIN-CONNECTOR (16-GA TO 18-GA)	
					—OR—	
		1	**126-1767**	2	PIN-CONNECTOR (14-GA)	
Y	28	2	**171-0188**	1	VALVE GP-SOLENOID (NEG FLOW CONT, PROPN RED VALVE)	738
C	29	2	**317-4755**	1	SUPPORT AS	
I	30	3	**199-2013**	1	HOSE AS	
E		3	**7I-7439**		GUARD (98-CM)	
Y	31	3	**226-3109**	1	VALVE GP-SOLENOID (NEGATIVE FLOW CONTROL)	739
	32	1	**260-8071**	1	HOSE AS	
I	33	1	**266-1293**	2	HOSE AS	
I	34	1	**266-1389**	1	HOSE AS	
	35	2	**269-9717**	1	PLATE	
I	36	1	**269-9754**	1	HOSE AS	
Y	37	2	**270-5766**	1	VALVE GP-SOLENOID & PRESS REDC (WORK TOOL CONTROL)	748
I	38	1	**272-4180**	1	HOSE AS	
	39	1	**272-4186**	1	HOSE AS	

302-3258 **LINES GP-PILOT** *(contd.)* **i02866151**

NOTE	REF NO	GRAPHIC REF	PART NUMBER	QTY	PART NAME 1 2 3 4 5 6 (PRODUCT LEVEL)	SEE PAGE
	40	2,3	**275-1442**	2	CLIP (TAB)	
	41	2,3	**275-1443**	2	CLIP (SLOT)	
	42	2,3	**275-1444**	2	GROMMET	
	43	2	**278-6418**	1	SUPPORT AS	
	44	3	**278-6419**	1	PLATE	
	45	3	**278-6905**	1	HOSE AS	
	46	2	**282-7106**	1	GROMMET	
	47	3	**282-7113**	1	SUPPORT AS	
	48	3	**282-7198**	1	HOSE AS	
	49	2	**285-2663**	1	FITTING AS	
		2	**3J-1907**	1	SEAL-O-RING	
	50	3	**286-6560**	1	HOSE AS	
E		3	**7I-7439**		GUARD (390-CM)	
	51	1	**286-6663**	1	HOSE AS	
E		1	**145-8495**		GUARD (74-CM)	
I	52	2	**286-6717**	1	HOSE AS	
	53	2	**302-3325**	1	SUPPORT AS	
	54	3	**307-4847**	1	BRACKET	
I	55	1	**307-5238**	1	HOSE AS	
	56	2	*148-8318*	1	CONNECTOR AS	
		2	**3K-0360**	1	SEAL-O-RING	
		2	**6V-8397**	1	SEAL-O-RING	
		2	**6V-8634**	1	CONNECTOR	
	57	1,2,3	*148-8336*	6	CONNECTOR AS	
					(EACH INCLUDES)	
		1,2,3	**3J-1907**	1	SEAL-O-RING	
		1,2,3	**6V-8397**	1	SEAL-O-RING	
		1,2,3	**6V-8636**	1	CONNECTOR	
	58	2	*148-8338*	2	CONNECTOR AS	
					(EACH INCLUDES)	
		2	**3J-1907**	1	SEAL-O-RING	
		2	**6V-8397**	1	SEAL-O-RING	
		2	**8T-0075**	1	CONNECTOR	
	59	3	*148-8353*	2	ELBOW AS	
					(EACH INCLUDES)	
		3	**3J-1907**	1	SEAL-O-RING	
		3	**6V-8397**	1	SEAL-O-RING	
		3	**6V-9001**	1	ELBOW	
	60	2	*148-8367*	2	ELBOW AS	
					(EACH INCLUDES)	
		2	**6V-8397**	1	SEAL-O-RING	
		2	**6V-9850**	1	ELBOW	
	61	1	*148-8372*	1	ELBOW AS	
		1	**2M-9780**	1	SEAL-O-RING	
		1	**6V-8398**	1	SEAL-O-RING	
		1	**6V-8721**	1	ELBOW	
	62	2	*148-8374*	1	ELBOW AS	
		2	**3K-0360**	1	SEAL-O-RING	
		2	**6V-8397**	1	SEAL-O-RING	
		2	**6V-8723**	1	ELBOW	
	63	1,2,3	*148-8378*	10	ELBOW AS	
					(EACH INCLUDES)	
		1,2,3	**3J-1907**	1	SEAL-O-RING	
		1,2,3	**6V-8397**	1	SEAL-O-RING	
		1,2,3	**6V-8724**	1	ELBOW	
	64	2	*148-8407*	2	PLUG AS	
					(EACH INCLUDES)	
		2	**3J-1907**	1	SEAL-O-RING	
		2	**9S-4191**	1	PLUG-O-RING	

302-3258 **LINES GP-PILOT** *(contd.)* **i02866151**

NOTE	REF NO	GRAPHIC REF	PART NUMBER	QTY	PART NAME 1 2 3 4 5 6 (PRODUCT LEVEL)	SEE PAGE
	65	1,2	*148-8433*	2	TEE AS	
					(EACH INCLUDES)	
		1,2	**6V-8397**	2	SEAL-O-RING	
		1,2	**6V-9836**	1	TEE-SWIVEL	
	66	2,3	*148-8435*	2	TEE AS	
					(EACH INCLUDES)	
		2,3	**3J-1907**	1	SEAL-O-RING	
		2,3	**6V-8397**	2	SEAL-O-RING	
		2,3	**6V-8781**	1	TEE-FACE SEAL	
	67	1,2,3	*150-3036*	7	ELBOW AS	
					(EACH INCLUDES)	
		1,2,3	**3J-1907**	1	SEAL-O-RING	
		1,2,3	**6V-8397**	1	SEAL-O-RING	
		1,2,3	**8T-1905**	1	ELBOW	
	68	3	*153-6248*	1	ADAPTER AS	
		3	**6V-8397**	1	SEAL-O-RING	
		3	**8T-6663**	1	ADAPTER-PORT	
	69	2	*153-6249*	1	CONNECTOR AS	
		2	**3J-1907**	1	SEAL-O-RING	
		2	**6V-8397**	1	SEAL-O-RING	
		2	**8T-8887**	1	CONNECTOR	
	70	2	*164-5549*	1	COUPLING AS	
		2	**3J-1907**	1	SEAL-O-RING	
		2	**4I-6287**	1	COUPLING	
	71	2,3	*164-5567*	6	COUPLER AS-QUICK DISCONNECT	
					(EACH INCLUDES)	
		2,3	**3J-1907**	1	SEAL-O-RING	
		2,3	**6V-3965**	1	FITTING (QUICK DISCONNECT)	
M	72	2	**5C-9553**	2	BOLT (M6X1X16-MM)	
	73	3	**5P-2369**	1	CLIP	
	74	3	**6K-8178**	1	CLIP	
	75	2,3	**6V-0852**	6	CAP-DUST	
	76	2	**6V-8397**	2	SEAL-O-RING	
	77	2,3	**8T-4121**	16	WASHER-HARD (11X21X2.5-MM THK)	
M	78	3	**8T-4133**	2	NUT (M10X1.5-THD)	
M	79	2,3	**8T-4136**	12	BOLT (M10X1.5X25-MM)	
M	80	2,3	**8T-4137**	4	BOLT (M10X1.5X20-MM)	
M	81	2	**8T-4177**	4	BOLT (M8X1.25X90-MM)	
M	82	3	**8T-4192**	2	BOLT (M12X1.75X25-MM)	
M	83	2	**8T-4194**	3	BOLT (M12X1.75X50-MM)	
	84	2,3	**8T-4223**	5	WASHER-HARD (13.5X25.5X3-MM THK)	
	85	2,3	**8T-4224**	6	WASHER-HARD (8.8X16X2-MM THK)	
M	86	2	**8T-6870**	4	BOLT (M8X1.25X70-MM)	
M	87	3	**8T-7547**	2	BOLT (M8X1.25X30-MM)	
	88	2	**9M-8406**	1	CLIP	
	89	2	**9X-8256**	2	WASHER (6.6X12X2-MM THK)	

C-CHANGE FROM PREVIOUS TYPE
E-ORDER BY THE CENTIMETER
I-REFER TO HYDRAULIC INFORMATION SYSTEM
M-METRIC PART
Y-SEPARATE ILLUSTRATION

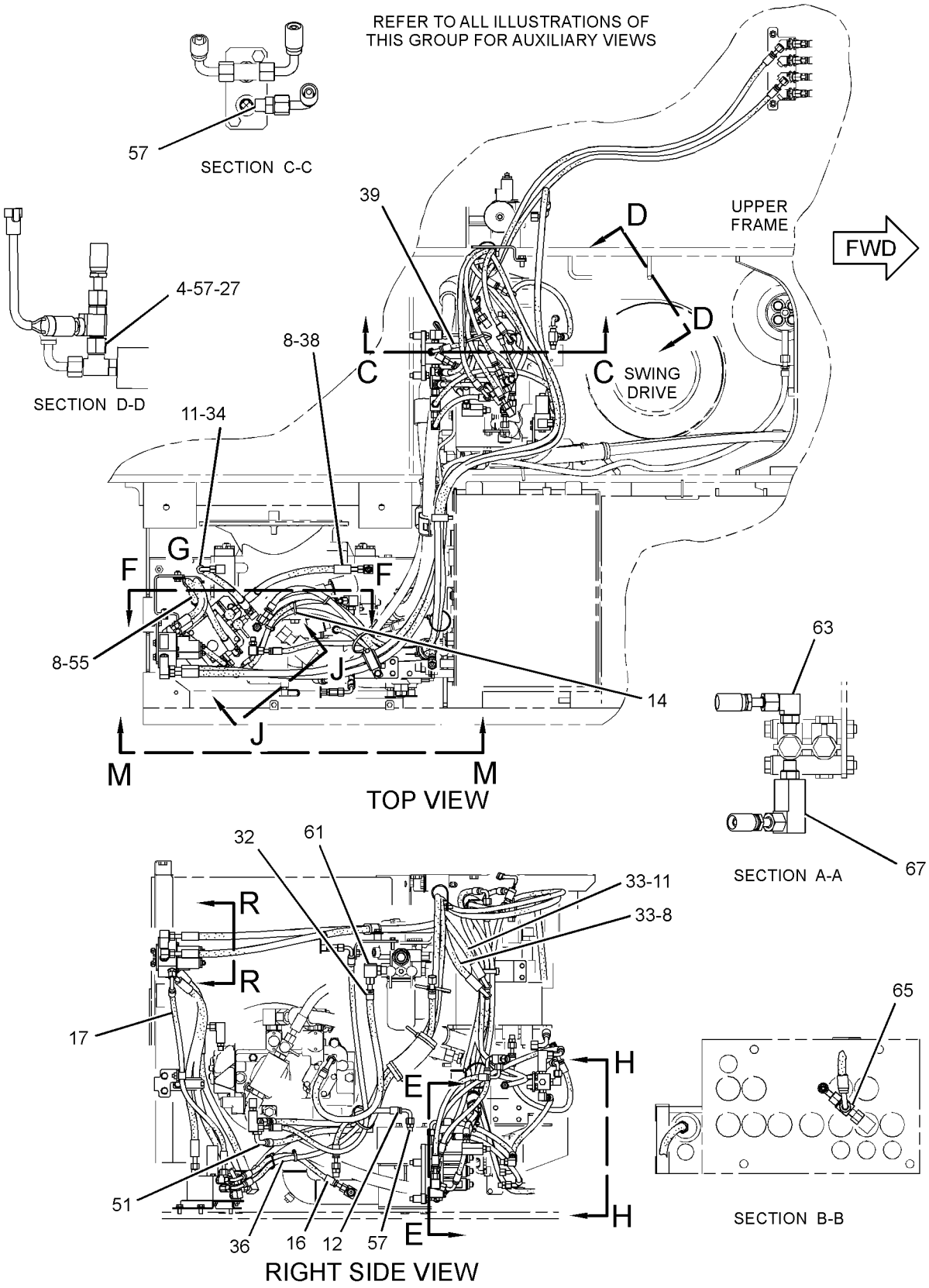

GRAPHIC #1

g01392937

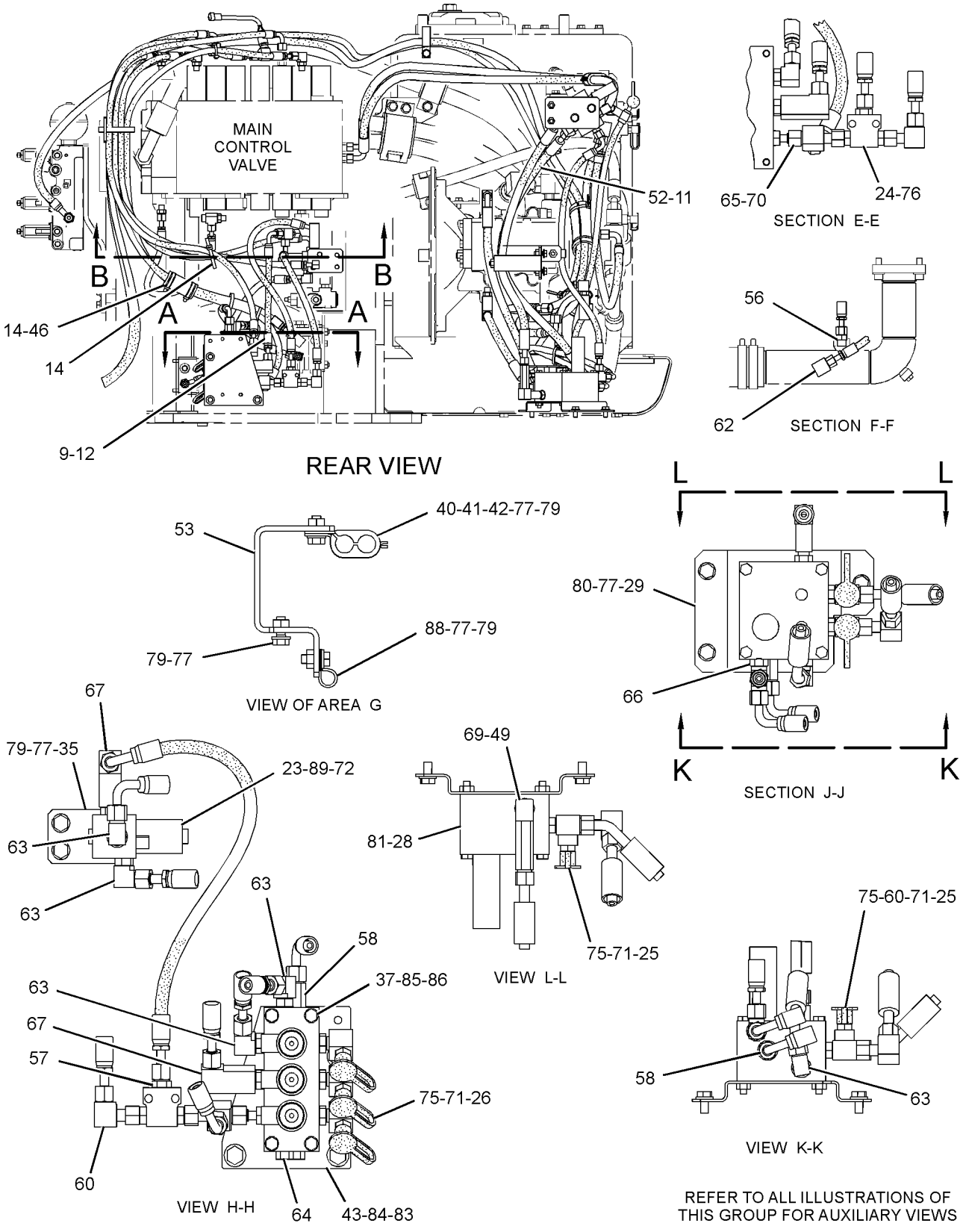

GRAPHIC #2

g01392938

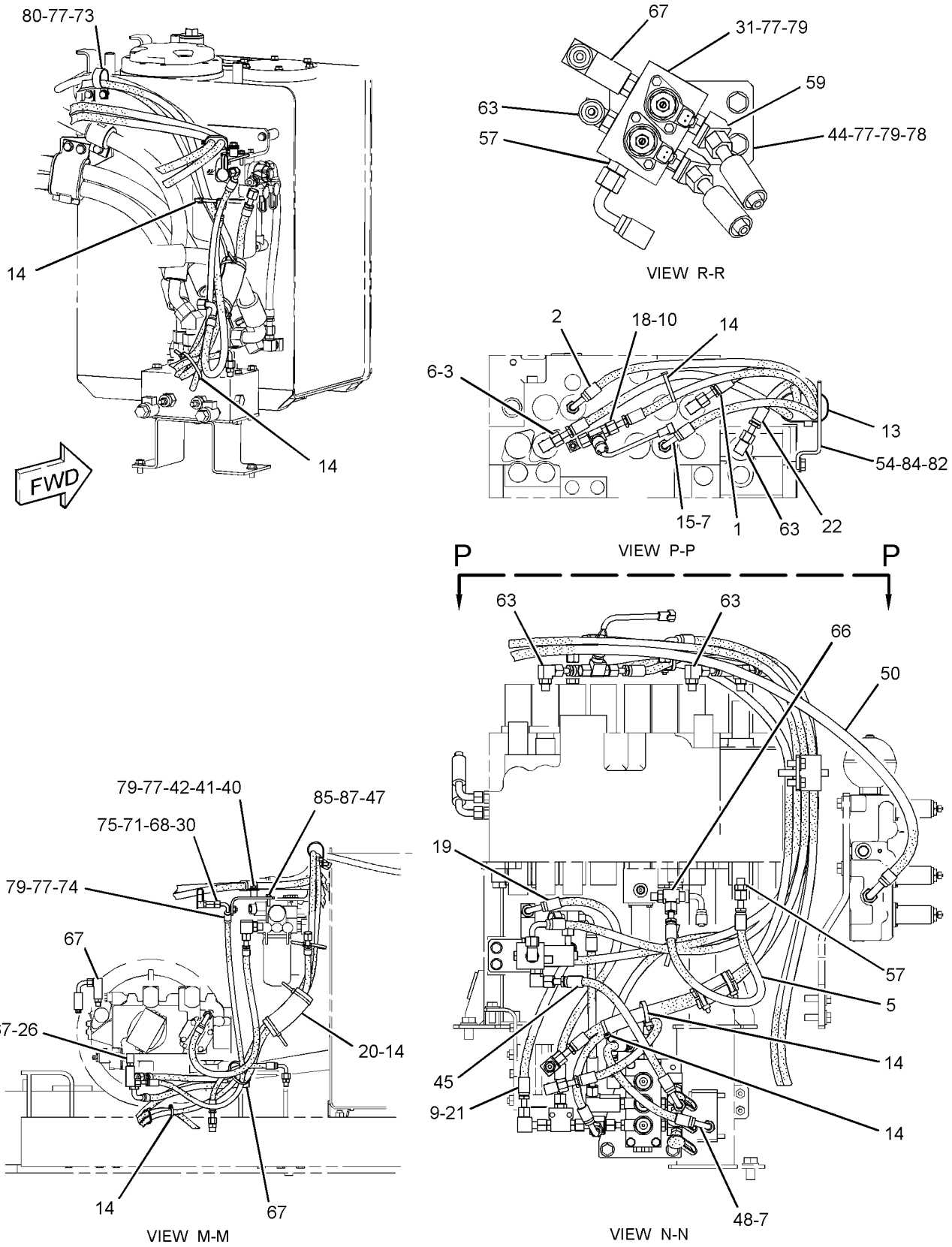

GRAPHIC #3 **<END>** g01392941

HYDRAULIC SYSTEM

302-3258 LINES GP-PILOT—SYSTEM 20, WORK TOOL PRIORITY

S/N: CJN1-UP
PART OF 259-7557 CONTROL AR-AUXILIARY
AN ATTACHMENT
TYPE 2

SMCS-5057, 5059 **i03146252**

NOTE	REF NO	GRAPHIC REF	PART NUMBER	QTY	PART NAME 1 2 3 4 5 6 (PRODUCT LEVEL)	SEE PAGE
I	1	3	**4I-1780**	1	HOSE AS	
I	2	3	**4I-1783**	1	HOSE AS	
	3	2	**4I-3941**	1	FITTING AS	
CI	4	2,3	**4I-5906**	2	HOSE AS	
	5	3	**4I-9521**	2	BAND-MARKER (RED, L1)	
	6	3	**4I-9522**	4	BAND-MARKER (YELLOW, L2)	
	7	1,2	**4I-9523**	6	BAND-MARKER (BLUE, L3)	
	8	3	**4I-9524**	4	BAND-MARKER (BROWN, L4)	
	9	3	**4I-9525**	2	BAND-MARKER (ORANGE, R1)	
	10	1,2,3	**4I-9527**	6	BAND-MARKER (GREEN, R3)	
CI	11	2	**5I-4396**	1	HOSE AS	
	12	3	**5P-5148**	1	STRAP-TIE	
C	13	1,2,3	**7K-1181**	12	STRAP-CABLE	
I	14	3	**087-5303**	1	HOSE AS	
I	15	2	**087-5762**	1	HOSE AS	
I	16	2	**087-5766**	1	HOSE AS	
I	17	3	**104-8771**	1	HOSE AS	
	18	2	**104-8903**	1	GUARD	
Y	19	2	**121-6303**	1	VALVE GP-SOLENOID (WORK TOOL PRIORITY)	737
Y	20	2	**123-2430**	1	VALVE GP-SHUTTLE	729
	21	1	*150-4027*	2	TEE AS	
					(EACH INCLUDES)	
		1	**3E-2310**	1	TEE	
		1	**3J-1907**	1	SEAL-O-RING	
		1	**6V-8397**	1	SEAL-O-RING	
	22	2	*164-6874*	4	FITTING AS-ELBOW	
					(EACH INCLUDES)	
		2	**3J-1907**	1	SEAL-O-RING	
		2	**085-7356**	1	FITTING	
Y	23	1	**171-0188**	1	VALVE GP-SOLENOID (NEG FLOW CONT, PROPN RED VALVE)	738
I	24	2	**199-2013**	1	HOSE AS	
C	25	3	**212-5402**	1	HOSE AS	
Y	26	2	**226-3109**	1	VALVE GP-SOLENOID (NEGATIVE FLOW CONTROL)	739
	27	2	**260-8071**	1	HOSE AS	
I	28	2	**266-1293**	2	HOSE AS	
I	29	1	**266-1389**	1	HOSE AS	
	30	2	**269-9717**	1	PLATE	
I	31	2	**269-9754**	1	HOSE AS	
Y	32	2	**270-5766**	1	VALVE GP-SOLENOID & PRESS REDC (WORK TOOL CONTROL)	748
I	33	1	**272-4180**	1	HOSE AS	
	34	1,3	**275-1442**	2	CLIP (TAB)	
	35	1,3	**275-1443**	2	CLIP (SLOT)	
	36	1,3	**275-1444**	2	GROMMET	
	37	2	**278-6419**	1	PLATE	
	38	3	**278-6905**	1	HOSE AS	
	39	3	**282-7106**	1	GROMMET	
	40	3	**282-7113**	1	SUPPORT AS	
	41	3	**282-7198**	1	HOSE AS	
	42	1	**285-2663**	1	FITTING AS	
		1	**3J-1907**	1	SEAL-O-RING	
	43	3	**286-6560**	1	HOSE AS	
E		3	**7I-7439**		GUARD (390-CM)	

302-3258 **LINES GP-PILOT** *(contd.)* **i03146252**

NOTE	REF NO	GRAPHIC REF	PART NUMBER	QTY	PART NAME 1 2 3 4 5 6 (PRODUCT LEVEL)	SEE PAGE
	44	2	**286-6663**	1	HOSE AS	
E		2	**145-8495**		GUARD (74-CM)	
I	45	3	**286-6717**	1	HOSE AS	
	46	1	**302-3325**	1	SUPPORT AS	
	47	3	**307-4847**	1	BRACKET	
CI	48	2	**307-5000**	1	HOSE AS	
I	49	1	**307-5238**	1	HOSE AS	
CI	50	3	**307-5289**	1	HOSE AS	
	51	2	**309-5769**	1	SWITCH AS-PRESSURE (PILOT, BOOM UP)	
		2	**102-8802**	1	KIT-RECEPTACLE (2-PIN)	
					(INCLUDES RECEPTACLE AS & WEDGE)	
		2	**9X-3401**	2	PIN-CONNECTOR (16-GA TO 18-GA)	
					—OR—	
		2	**126-1767**	2	PIN-CONNECTOR (14-GA)	
	52	1	**317-4755**	1	SUPPORT AS	
C	53	2	**325-8984**	1	SUPPORT AS	
C	54	3	**325-9177**	1	HOSE AS	
C	55	3	**325-9213**	1	HOSE AS	
	56	2	*148-8318*	1	CONNECTOR AS	
		2	**3K-0360**	1	SEAL-O-RING	
		2	**6V-8397**	1	SEAL-O-RING	
		2	**6V-8634**	1	CONNECTOR	
	57	2,3	*148-8336*	6	CONNECTOR AS	
					(EACH INCLUDES)	
		2,3	**3J-1907**	1	SEAL-O-RING	
		2,3	**6V-8397**	1	SEAL-O-RING	
		2,3	**6V-8636**	1	CONNECTOR	
C	58	1	*148-8338*	1	CONNECTOR AS	
		1	**3J-1907**	1	SEAL-O-RING	
		1	**6V-8397**	1	SEAL-O-RING	
		1	**8T-0075**	1	CONNECTOR	
	59	2	*148-8353*	2	ELBOW AS	
					(EACH INCLUDES)	
		2	**3J-1907**	1	SEAL-O-RING	
		2	**6V-8397**	1	SEAL-O-RING	
		2	**6V-9001**	1	ELBOW	
	60	1,2	*148-8367*	2	ELBOW AS	
					(EACH INCLUDES)	
		1,2	**6V-8397**	1	SEAL-O-RING	
		1,2	**6V-9850**	1	ELBOW	
	61	2	*148-8372*	1	ELBOW AS	
		2	**2M-9780**	1	SEAL-O-RING	
		2	**6V-8398**	1	SEAL-O-RING	
		2	**6V-8721**	1	ELBOW	
	62	2	*148-8374*	1	ELBOW AS	
		2	**3K-0360**	1	SEAL-O-RING	
		2	**6V-8397**	1	SEAL-O-RING	
		2	**6V-8723**	1	ELBOW	
C	63	1,2,3	*148-8378*	12	ELBOW AS	
					(EACH INCLUDES)	
		1,2,3	**3J-1907**	1	SEAL-O-RING	
		1,2,3	**6V-8397**	1	SEAL-O-RING	
		1,2,3	**6V-8724**	1	ELBOW	
	64	2	*148-8407*	2	PLUG AS	
					(EACH INCLUDES)	
		2	**3J-1907**	1	SEAL-O-RING	
		2	**9S-4191**	1	PLUG-O-RING	
	65	2,3	*148-8433*	2	TEE AS	
					(EACH INCLUDES)	

302-3258 **LINES GP-PILOT** ***(contd.)*** **i03146252**

NOTE	REF NO	GRAPHIC REF	PART NUMBER	QTY	PART NAME 1 2 3 4 5 6 (PRODUCT LEVEL)	SEE PAGE
		2,3	**6V-8397**	2	SEAL-O-RING	
		2,3	**6V-9836**	1	TEE-SWIVEL	
	66	1,3	*148-8435*	2	TEE AS	
					(EACH INCLUDES)	
		1,3	**3J-1907**	1	SEAL-O-RING	
		1,3	**6V-8397**	2	SEAL-O-RING	
		1,3	**6V-8781**	1	TEE-FACE SEAL	
C	67	2	*150-3036*	6	ELBOW AS	
					(EACH INCLUDES)	
		2	**3J-1907**	1	SEAL-O-RING	
		2	**6V-8397**	1	SEAL-O-RING	
		2	**8T-1905**	1	ELBOW	
	68	2	*153-6248*	1	ADAPTER AS	
		2	**6V-8397**	1	SEAL-O-RING	
		2	**8T-6663**	1	ADAPTER-PORT	
	69	1	*153-6249*	1	CONNECTOR AS	
		1	**3J-1907**	1	SEAL-O-RING	
		1	**6V-8397**	1	SEAL-O-RING	
		1	**8T-8887**	1	CONNECTOR	
	70	2	*164-5549*	1	COUPLING AS	
		2	**3J-1907**	1	SEAL-O-RING	
		2	**4I-6287**	1	COUPLING	
	71	1,2	*164-5567*	6	COUPLER AS-QUICK DISCONNECT	
					(EACH INCLUDES)	
		1,2	**3J-1907**	1	SEAL-O-RING	
		1,2	**6V-3965**	1	FITTING (QUICK DISCONNECT)	
M	72	2	**5C-9553**	2	BOLT (M6X1X16-MM)	
	73	3	**5P-2369**	1	CLIP	
	74	3	**6K-8178**	1	CLIP	
	75	1,2	**6V-0852**	6	CAP-DUST	
	76	2	**6V-8397**	2	SEAL-O-RING	
	77	1,2,3	**8T-4121**	16	WASHER-HARD (11X21X2.5-MM THK)	
M	78	2	**8T-4133**	2	NUT (M10X1.5-THD)	
M	79	1,2,3	**8T-4136**	12	BOLT (M10X1.5X25-MM)	
M	80	1,3	**8T-4137**	4	BOLT (M10X1.5X20-MM)	
M	81	1	**8T-4177**	4	BOLT (M8X1.25X90-MM)	
M	82	3	**8T-4192**	2	BOLT (M12X1.75X25-MM)	
M	83	2	**8T-4194**	3	BOLT (M12X1.75X50-MM)	
	84	2,3	**8T-4223**	5	WASHER-HARD (13.5X25.5X3-MM THK)	
	85	2,3	**8T-4224**	6	WASHER-HARD (8.8X16X2-MM THK)	
M	86	2	**8T-6870**	4	BOLT (M8X1.25X70-MM)	
M	87	3	**8T-7547**	2	BOLT (M8X1.25X30-MM)	
	88	1	**9M-8406**	1	CLIP	
	89	2	**9X-8256**	2	WASHER (6.6X12X2-MM THK)	

C-CHANGE FROM PREVIOUS TYPE
E-ORDER BY THE CENTIMETER
I-REFER TO HYDRAULIC INFORMATION SYSTEM
M-METRIC PART
Y-SEPARATE ILLUSTRATION

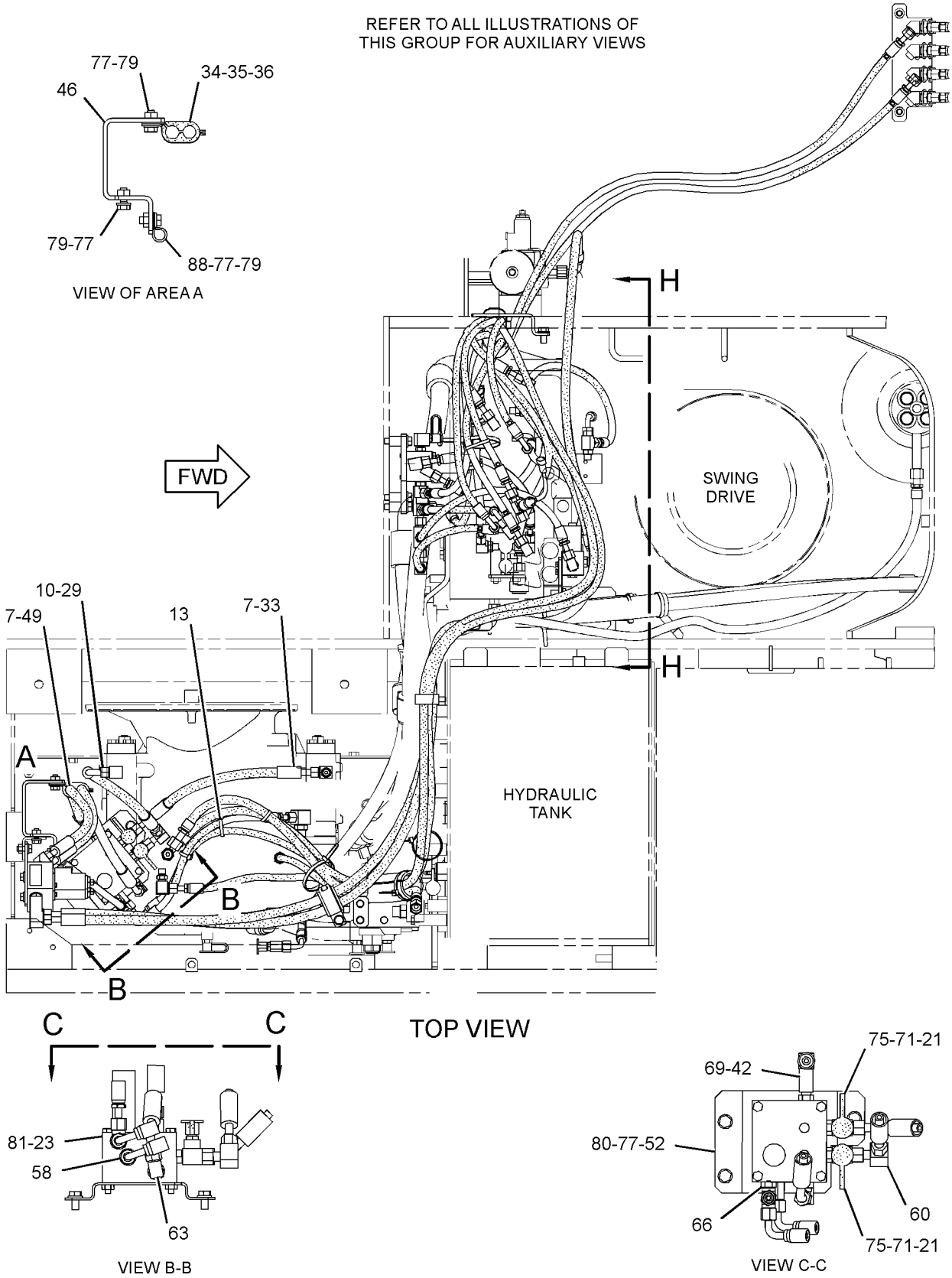

GRAPHIC #1

g01628475

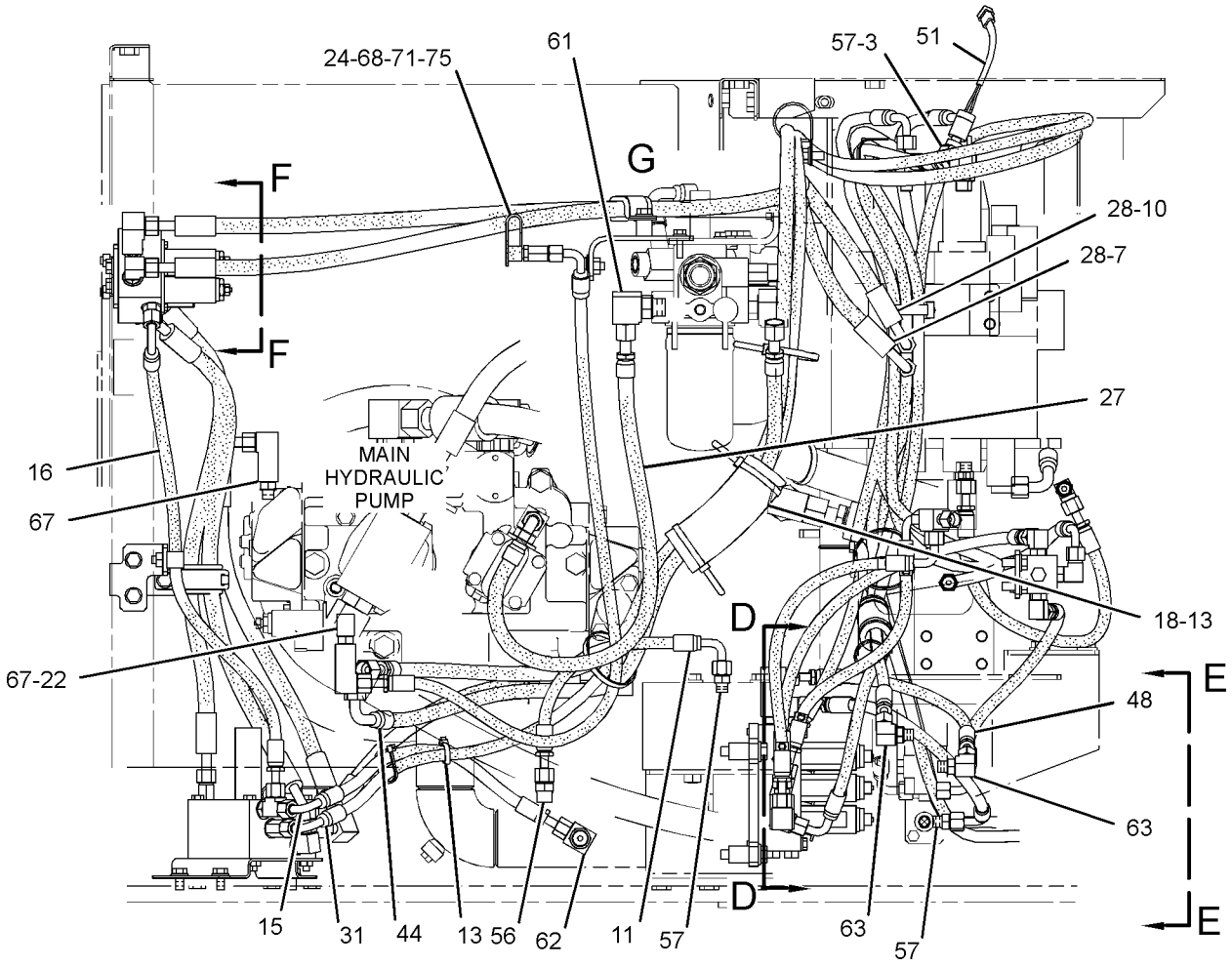

RIGHT SIDE VIEW

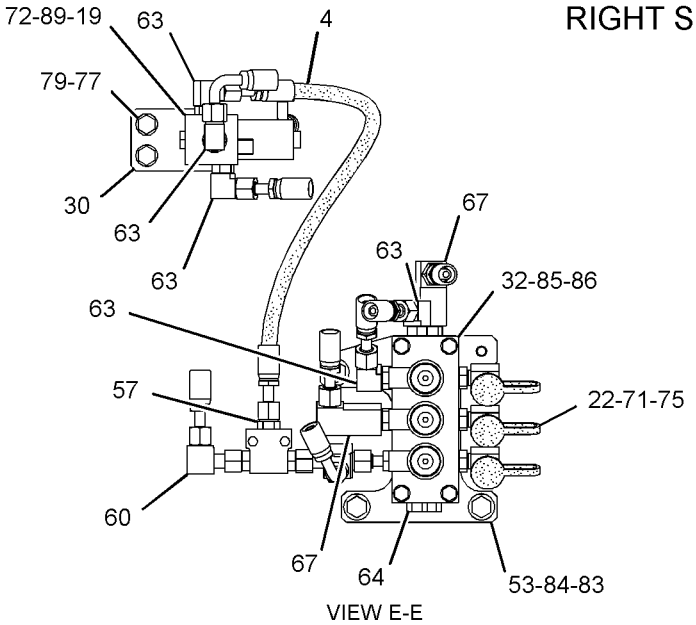

VIEW E-E

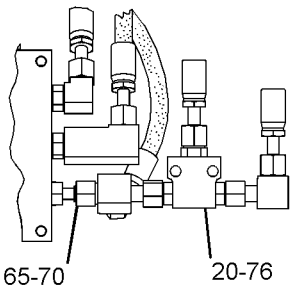

VIEW D-D

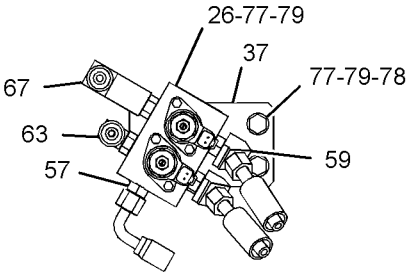

SECTION F-F

REFER TO ALL ILLUSTRATIONS OF
THIS GROUP FOR AUXILIARY VIEWS

GRAPHIC #2

g01628476

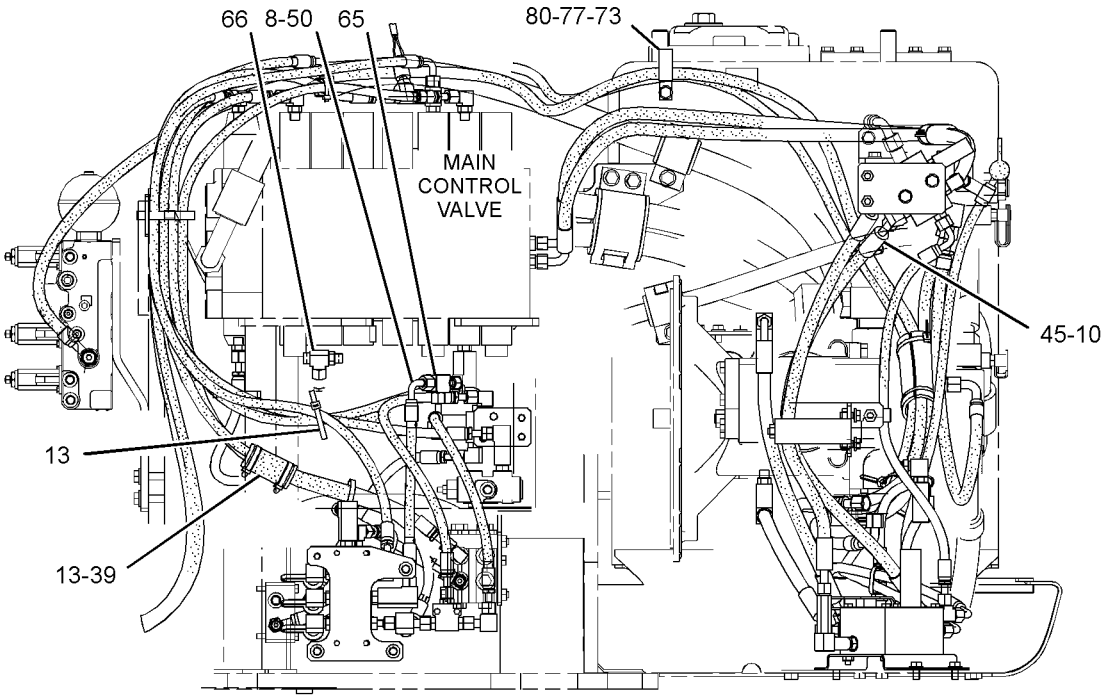

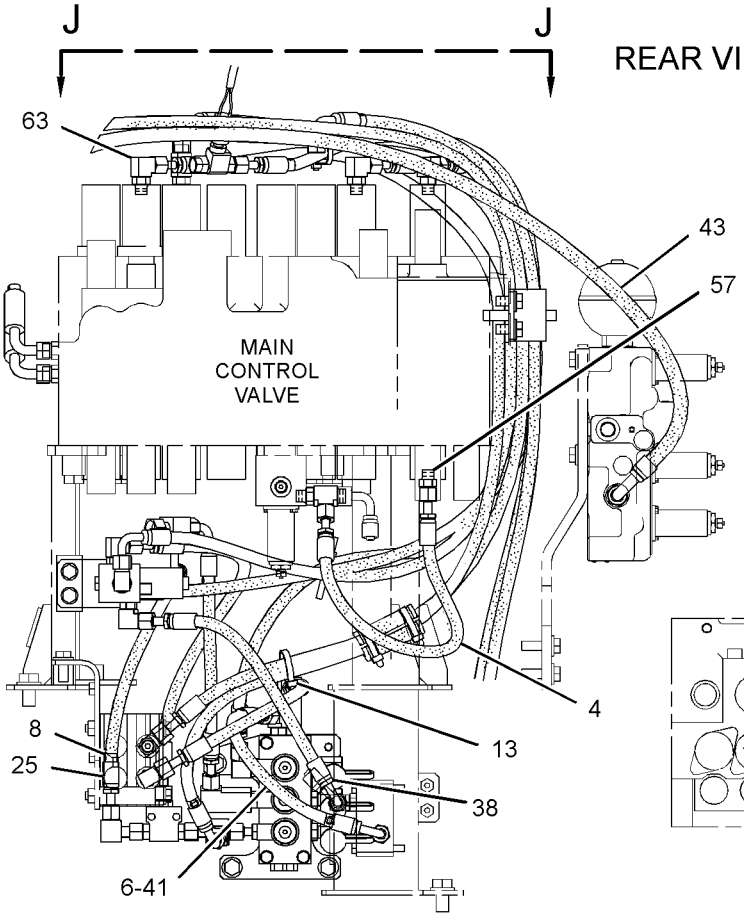

VIEW H-H

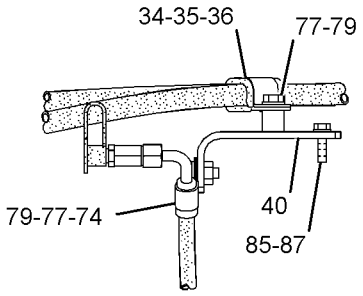

VIEW OF AREA G

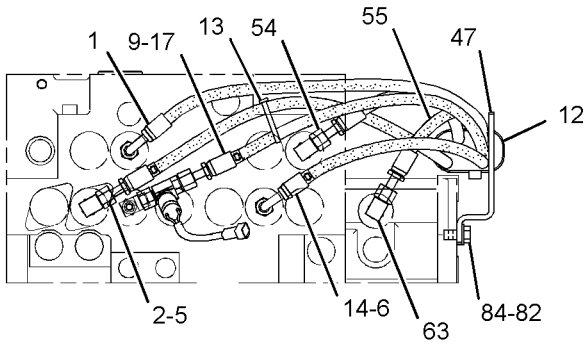

VIEW J-J

GRAPHIC #3 **<END>** g01628478

307-4836 LINES GP-PILOT—BOOM LOWERING CONTROL VALVE

S/N: CJN1-UP

PART OF 259-7578, 323-7798 VALVE AR-CHECK & RELIEF

AN ATTACHMENT

SMCS-5057, 5059 **i02961340**

NOTE	REF NO	GRAPHIC REF	PART NUMBER	QTY	PART NAME 1 2 3 4 5 6 (PRODUCT LEVEL)	SEE PAGE
	1	1	**7K-1181**	14	STRAP-CABLE	
	2	1	**296-7204**	1	HOSE AS	
E		1	**145-8494**		GUARD (368-CM)	
I	3	1	**307-5087**	1	HOSE AS	
E		1	**7I-7439**		GUARD (277-CM)	
	4	1	*148-8371*	2	ELBOW AS	
					(EACH INCLUDES)	
		1	**6V-8397**	1	SEAL-O-RING	
		1	**8C-8988**	1	ELBOW	
	5	1	*148-8433*	1	TEE AS	
		1	**6V-8397**	2	SEAL-O-RING	
		1	**6V-9836**	1	TEE-SWIVEL	
	6	1	*148-8435*	1	TEE AS	
		1	**3J-1907**	1	SEAL-O-RING	
		1	**6V-8397**	2	SEAL-O-RING	
		1	**6V-8781**	1	TEE-FACE SEAL	
	7	1	**5K-5338**	1	CLIP	
	8	1	**8T-4121**	1	WASHER-HARD (11X21X2.5-MM THK)	
M	9	1	**8T-4136**	1	BOLT (M10X1.5X25-MM)	

E-ORDER BY THE CENTIMETER
I-REFER TO HYDRAULIC INFORMATION SYSTEM
M-METRIC PART

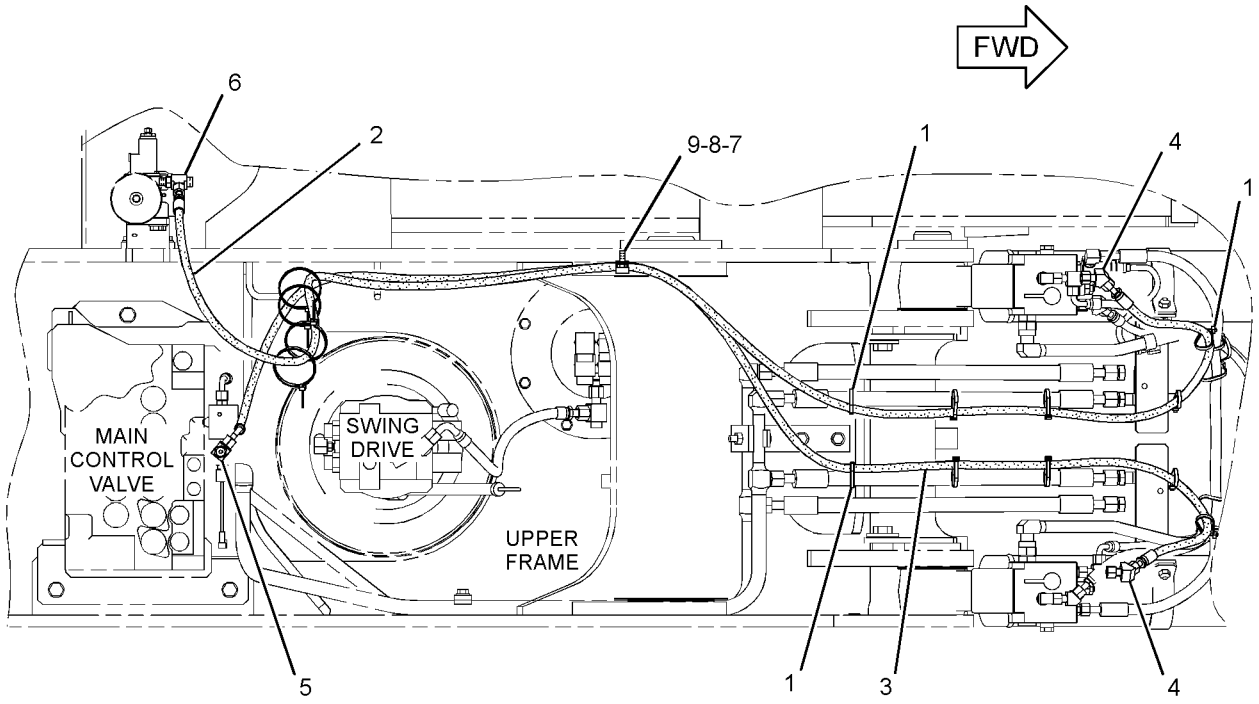

TOP VIEW

GRAPHIC #1 **<END>** g01514953

260-8210 LINES GP-PUMP—OUTPUT, HYD OIL CLR BYPASS

S/N: CJN1-UP

PART OF 259-7547 HYDRAULIC AR

SMCS-5057 **i02599675**

NOTE	REF NO	GRAPHIC REF	PART NUMBER	QTY	PART NAME 1 2 3 4 5 6 (PRODUCT LEVEL)	SEE PAGE
	1	1	**8T-6703**	2	CLAMP-HOSE	
Y	2	1	**171-0002**	1	VALVE GP-CHECK (COOLER BYPASS)	679
	3	1	**229-1023**	1	HOSE	
I	4	1	**269-9901**	1	HOSE AS	
I	5	1	**269-9904**	1	HOSE AS	
I	6	1	**269-9907**	1	HOSE AS	
I	7	1	**269-9911**	1	HOSE AS	
	8	1	**269-9915**	1	SUPPORT	
	9	1	**269-9916**	1	TUBE AS	
M	10	1	**101-7404**	4	BOLT-SOCKET HEAD (M10X1.5X30-MM)	
	11	1	*148-8335*	2	CONNECTOR AS	
					(EACH INCLUDES)	
		1	**5K-9090**	1	SEAL-O-RING	
		1	**6V-8635**	1	CONNECTOR	
		1	**7M-8485**	1	SEAL-O-RING	
	12	1	**164-4180**	2	PLUG AS	
					(EACH INCLUDES)	
		1	**7M-8485**	1	SEAL-O-RING	
		1	**9S-4181**	1	PLUG-O-RING	
	13	1	**1P-4578**	8	FLANGE-HALF	
	14	1	**4J-0522**	4	SEAL-O-RING	
	15	1	**4J-0527**	2	SEAL-O-RING	
	16	1	**7G-5984**	1	CLIP (TAB)	
	17	1	**7G-5985**	1	CLIP (SLOT)	
	18	1	**8T-3440**	1	GROMMET	
	19	1	**8T-4121**	16	WASHER-HARD (11X21X2.5-MM THK)	
M	20	1	**8T-4139**	4	BOLT (M12X1.75X30-MM)	
M	21	1	**8T-4183**	4	BOLT (M12X1.75X40-MM)	
M	22	1	**8T-4196**	16	BOLT (M10X1.5X35-MM)	
	23	1	**8T-4223**	8	WASHER-HARD (13.5X25.5X3-MM THK)	

I-REFER TO HYDRAULIC INFORMATION SYSTEM
M-METRIC PART
Y-SEPARATE ILLUSTRATION

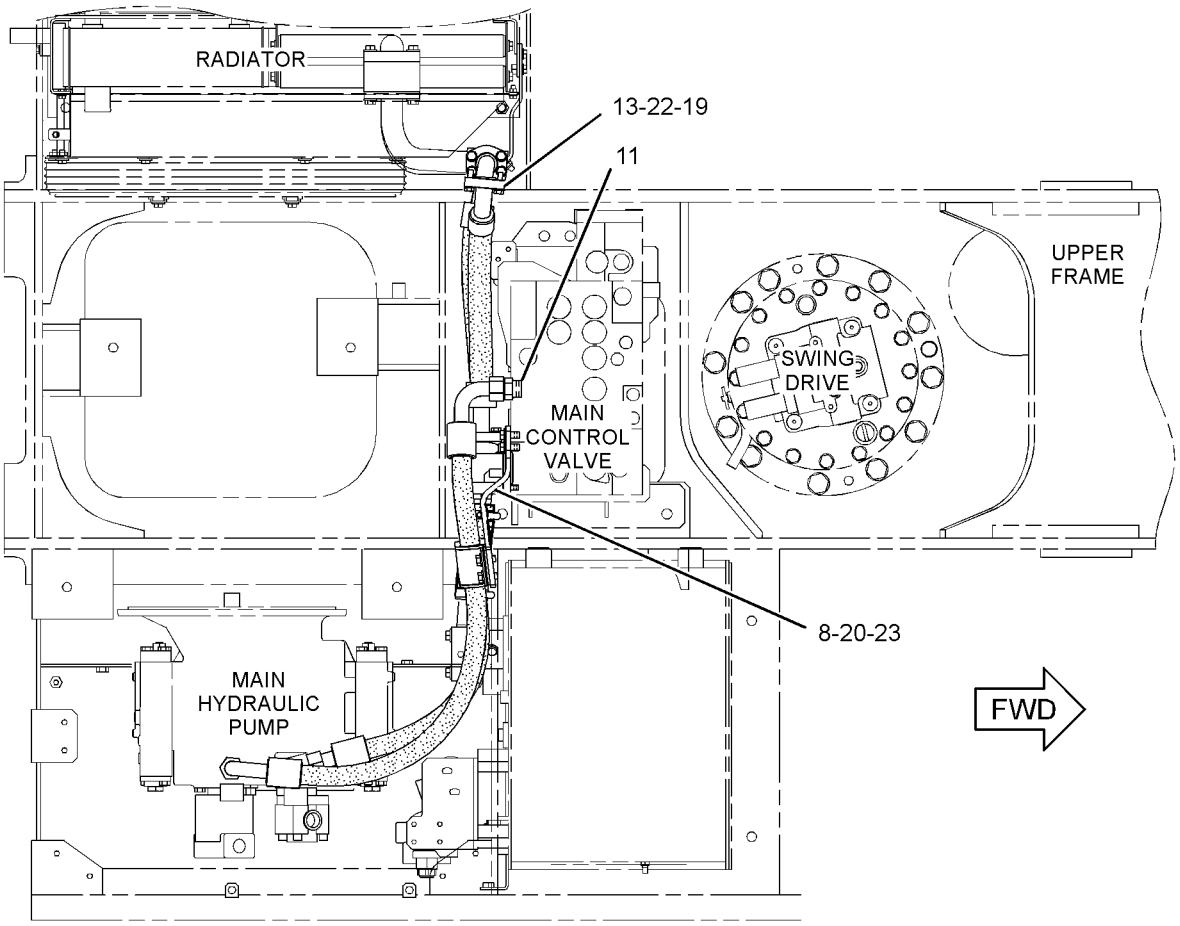

TOP VIEW

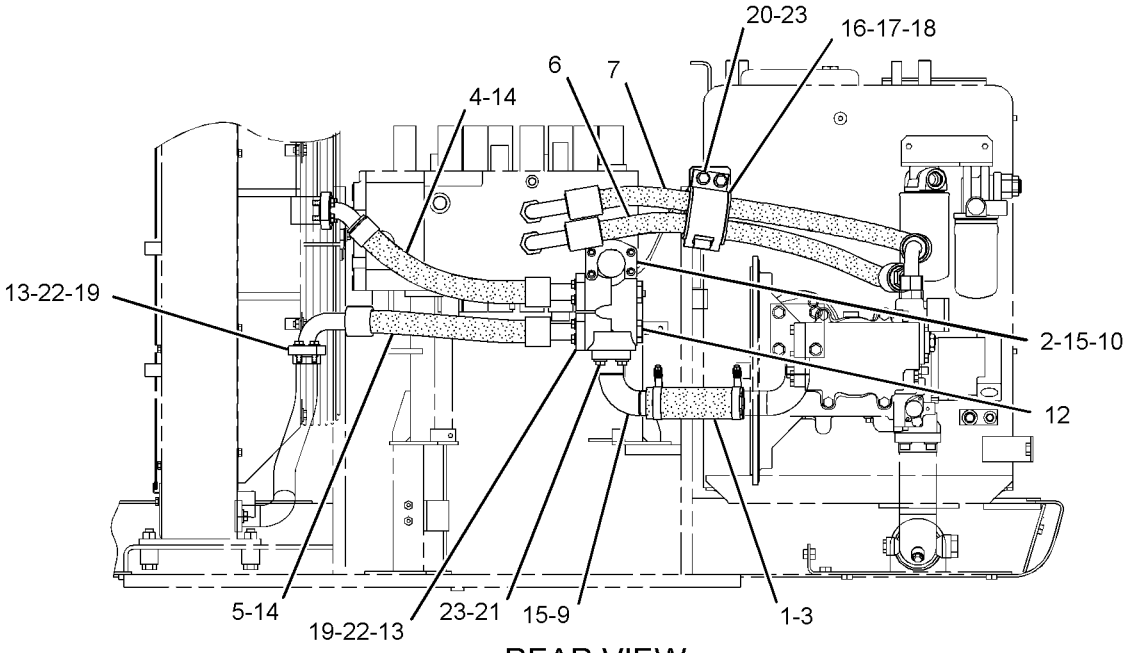

REAR VIEW

GRAPHIC #1

<END>

g01325931

260-8216 LINES GP-PUMP—SUPPLY, MAIN PUMP

S/N: CJN1-UP

PART OF 259-7547 HYDRAULIC AR

SMCS-5057 **i02599684**

NOTE	REF NO	GRAPHIC REF	PART NUMBER	QTY	PART NAME 1 2 3 4 5 6 (PRODUCT LEVEL)	SEE PAGE
	1	1	**144-0367**	4	CLAMP-HOSE	
	2	1	**269-9728**	1	TUBE AS	
	3	1	**269-9730**	1	TUBE AS	
	4	1	**269-9732**	1	HOSE	
M	5	1	**108-1781**	4	BOLT-SOCKET HEAD (M12X1.75X35-MM)	
	6	1	*148-8335*	1	CONNECTOR AS	
		1	**5K-9090**	1	SEAL-O-RING	
		1	**6V-8635**	1	CONNECTOR	
		1	**7M-8485**	1	SEAL-O-RING	
	7	1	*148-8357*	1	ELBOW AS	
		1	**5K-9090**	1	SEAL-O-RING	
		1	**6V-9008**	1	ELBOW	
		1	**7M-8485**	1	SEAL-O-RING	
	8	1	*148-8411*	2	PLUG AS	
					(EACH INCLUDES)	
		1	**3K-0360**	1	SEAL-O-RING	
		1	**9S-4185**	1	PLUG-O-RING	
	9	1	*155-3624*	1	PLUG AS	
		1	**3J-7354**	1	SEAL-O-RING	
		1	**9S-4182**	1	PLUG-O-RING	
	10	1	*164-4180*	1	PLUG AS	
		1	**7M-8485**	1	SEAL-O-RING	
		1	**9S-4181**	1	PLUG-O-RING	
	11	1	**5H-8624**	1	SEAL-O-RING	
	12	1	**6J-2680**	1	SEAL-O-RING	
M	13	1	**8T-4193**	4	BOLT (M16X2X50-MM)	
	14	1	**9X-8257**	4	WASHER (17.5X30X3.5-MM THK)	

M-METRIC PART

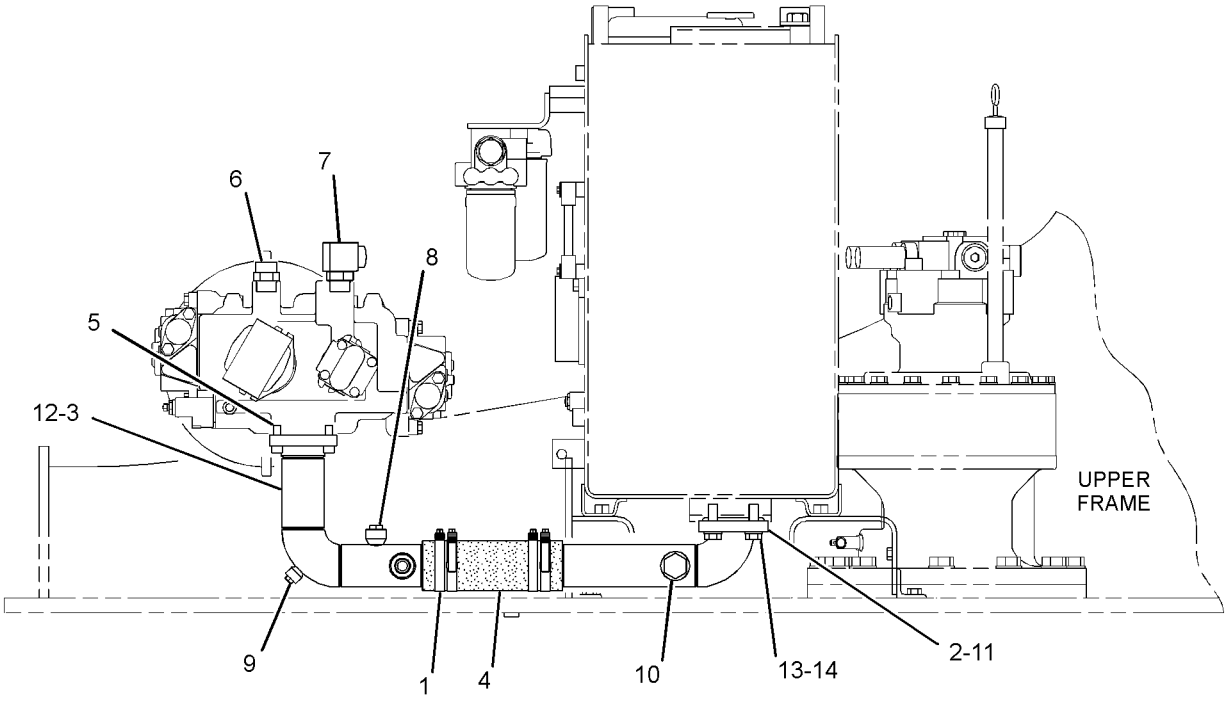

RIGHT SIDE VIEW

GRAPHIC #1 **<END>** g01318032

HYDRAULIC SYSTEM

260-8235 LINES GP-PUMP

S/N: CJN1-UP
PART OF 259-7565 CONTROL AR-AUXILIARY
AN ATTACHMENT

SMCS-5057 **i02864301**

NOTE	REF NO	GRAPHIC REF	PART NUMBER	QTY	PART NAME 1 2 3 4 5 6 (PRODUCT LEVEL)	SEE PAGE
	1	1	**7K-1181**	7	STRAP-CABLE	
	2	1	**134-6838**	1	GUARD	
I	3	1	**193-9994**	1	HOSE AS	
	4	1	**199-2046**	1	GUARD	
	5	1	**317-4747**	1	SUPPORT AS	
	6	1	**272-4215**	1	GROMMET	
I	7	1	**272-4265**	1	HOSE AS	
	8	1	*278-6424*	1	TEE AS	
		1	**3D-2824**	1	SEAL-O-RING	
		1	**7J-9108**	1	SEAL-O-RING	
		1	**278-6425**	1	TEE-ORP TO ORFS	
I	9	1	**278-6466**	1	HOSE AS	
	10	1	*148-8315*	1	CONNECTOR AS	
		1	**2M-9780**	1	SEAL-O-RING	
		1	**6V-8642**	1	CONNECTOR	
		1	**7J-9108**	1	SEAL-O-RING	
	11	1	*148-8322*	1	CONNECTOR AS	
		1	**2M-9780**	1	SEAL-O-RING	
		1	**6V-8640**	1	CONNECTOR	
		1	**6V-9746**	1	SEAL-O-RING	
	12	1	*148-8335*	1	CONNECTOR AS	
		1	**5K-9090**	1	SEAL-O-RING	
		1	**6V-8635**	1	CONNECTOR	
		1	**7M-8485**	1	SEAL-O-RING	
	13	1	*148-8357*	1	ELBOW AS	
		1	**5K-9090**	1	SEAL-O-RING	
		1	**6V-9008**	1	ELBOW	
		1	**7M-8485**	1	SEAL-O-RING	
	14	1	*148-8360*	1	ELBOW AS	
		1	**6V-9182**	1	ELBOW	
		1	**6V-9746**	1	SEAL-O-RING	
		1	**7M-8485**	1	SEAL-O-RING	
	15	1	*164-5567*	1	COUPLER AS-QUICK DISCONNECT	
		1	**3J-1907**	1	SEAL-O-RING	
		1	**6V-3965**	1	FITTING (QUICK DISCONNECT)	
	16	1	**5P-7466**	1	CLIP (SLOT)	
	17	1	**5P-7467**	1	CLIP (TAB)	
	18	1	**5P-8112**	1	GROMMET	
	19	1	**6V-0852**	1	CAP-DUST	
	20	1	**8T-4121**	2	WASHER-HARD (11X21X2.5-MM THK)	
M	21	1	**8T-4137**	2	BOLT (M10X1.5X20-MM)	
	22	1	**8T-4223**	1	WASHER-HARD (13.5X25.5X3-MM THK)	
M	23	1	**8T-4956**	1	BOLT (M12X1.75X35-MM)	

I-REFER TO HYDRAULIC INFORMATION SYSTEM
M-METRIC PART

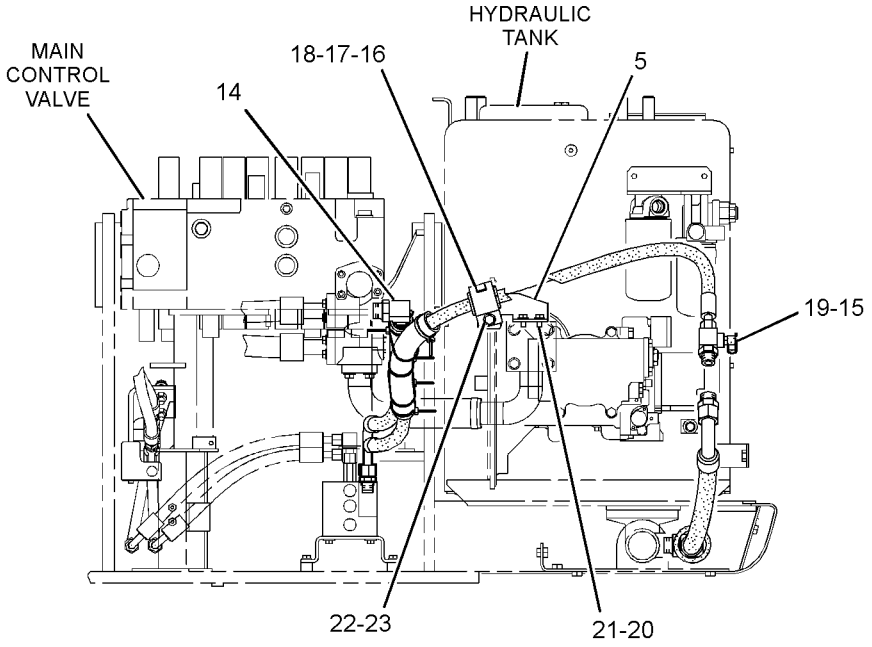

REAR VIEW

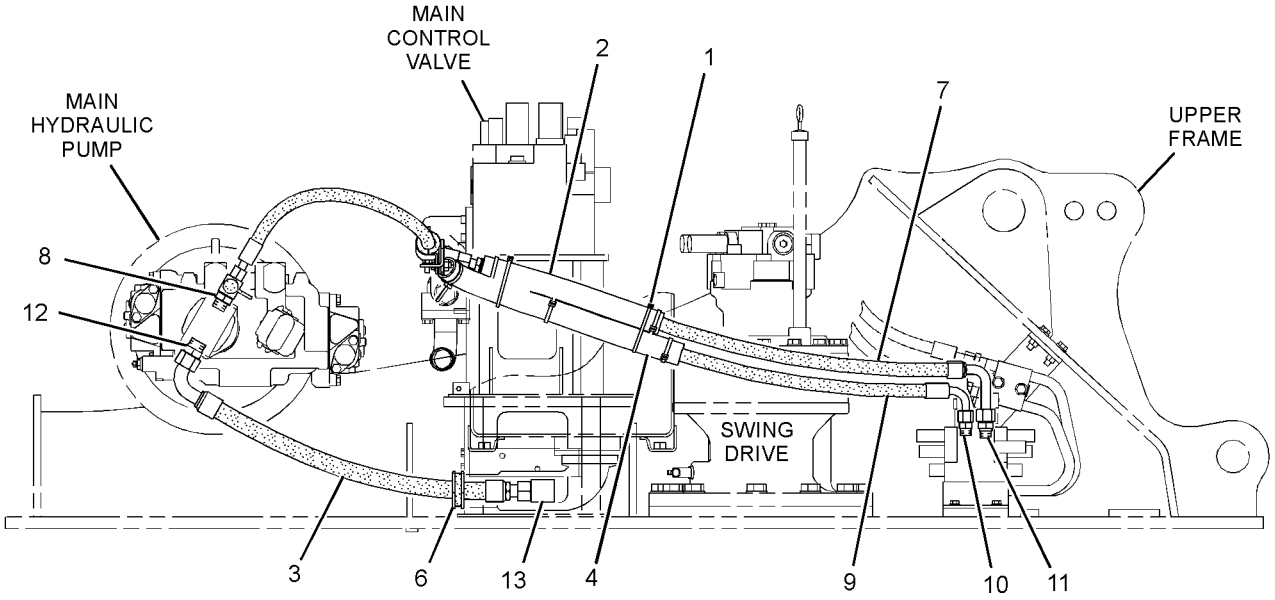

RIGHT SIDE VIEW

GRAPHIC #1 **<END>** g01382448

278-6438 LINES GP-PUMP—SYSTEM 20, WORK TOOL PRIORITY

S/N: CJN1-UP

PART OF 259-7557 CONTROL AR-AUXILIARY

AN ATTACHMENT

SMCS-5057 **i02791350**

NOTE	REF NO	GRAPHIC REF	PART NUMBER	QTY	PART NAME 1 2 3 4 5 6 (PRODUCT LEVEL)	SEE PAGE
I	1	1	**193-9933**	1	HOSE AS	
	2	1	**297-0647**	1	VALVE GP-PRIORITY	
	3	1	**278-6473**	1	SUPPORT AS	
I	4	1	**278-6476**	1	HOSE AS	
I	5	1	**278-6480**	1	HOSE AS	
I	6	1	**278-6484**	1	HOSE AS	
I	7	1	**278-6488**	1	HOSE AS	
	8	1	**278-6492**	1	SUPPORT	
	9	1	*278-6782*	1	CONNECTOR AS	
		1	**5K-9090**	1	SEAL-O-RING	
		1	**7M-8485**	1	SEAL-O-RING	
		1	**272-4264**	1	CONNECTOR	
	10	1	**087-3591**	1	SPACER (15.5X30X12-MM THK)	
	11	1	*148-8335*	3	CONNECTOR AS	
					(EACH INCLUDES)	
		1	**5K-9090**	1	SEAL-O-RING	
		1	**6V-8635**	1	CONNECTOR	
		1	**7M-8485**	1	SEAL-O-RING	
	12	1	*148-8336*	1	CONNECTOR AS	
		1	**3J-1907**	1	SEAL-O-RING	
		1	**6V-8397**	1	SEAL-O-RING	
		1	**6V-8636**	1	CONNECTOR	
	13	1	*148-8352*	1	ELBOW AS	
		1	**5K-9090**	1	SEAL-O-RING	
		1	**6V-9854**	1	ELBOW	
	14	1	*148-8355*	1	ELBOW AS	
		1	**5K-9090**	1	SEAL-O-RING	
		1	**6V-9005**	1	ELBOW	
		1	**7M-8485**	1	SEAL-O-RING	
	15	1	*148-8357*	2	ELBOW AS	
					(EACH INCLUDES)	
		1	**5K-9090**	1	SEAL-O-RING	
		1	**6V-9008**	1	ELBOW	
		1	**7M-8485**	1	SEAL-O-RING	
	16	1	*155-2027*	3	CONNECTOR AS	
					(EACH INCLUDES)	
		1	**5K-9090**	1	SEAL-O-RING	
		1	**7M-8485**	1	SEAL-O-RING	
		1	**8T-8898**	1	CONNECTOR	
	17	1	*177-1061*	1	ELBOW AS	
		1	**5K-9090**	1	SEAL-O-RING	
		1	**142-0038**	1	ELBOW	
	18	1	**5P-7468**	1	CLIP (SLOT)	
	19	1	**5P-7469**	1	CLIP (TAB)	
	20	1	**7G-5984**	1	CLIP (TAB)	
	21	1	**7G-5985**	1	CLIP (SLOT)	
	22	1	**8T-2525**	1	GROMMET	
	23	1	**278-6469**	1	GROMMET	
M	24	1	**8T-4139**	4	BOLT (M12X1.75X30-MM)	
M	25	1	**8T-4183**	1	BOLT (M12X1.75X40-MM)	
M	26	1	**8T-4192**	3	BOLT (M12X1.75X25-MM)	
	27	1	**8T-4223**	12	WASHER-HARD (13.5X25.5X3-MM THK)	
M	28	1	**8T-5001**	4	BOLT (M12X1.75X130-MM)	

I-REFER TO HYDRAULIC INFORMATION SYSTEM
M-METRIC PART

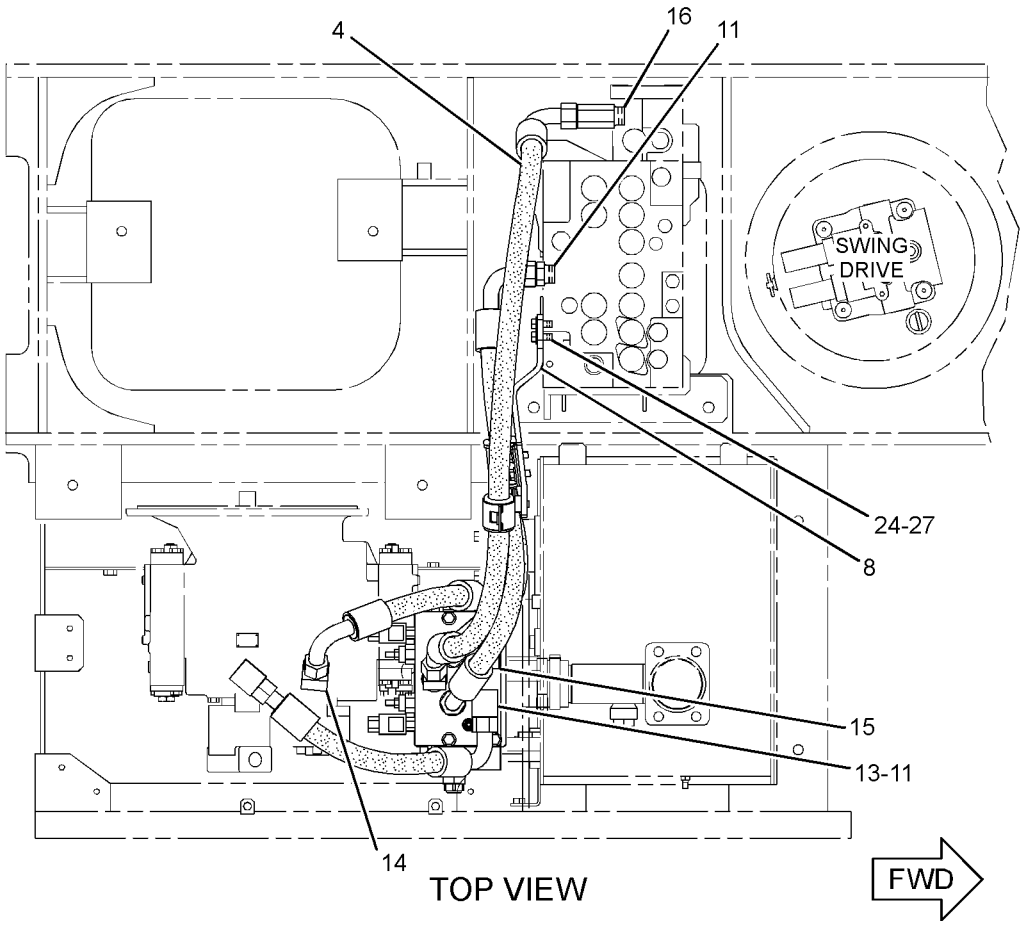

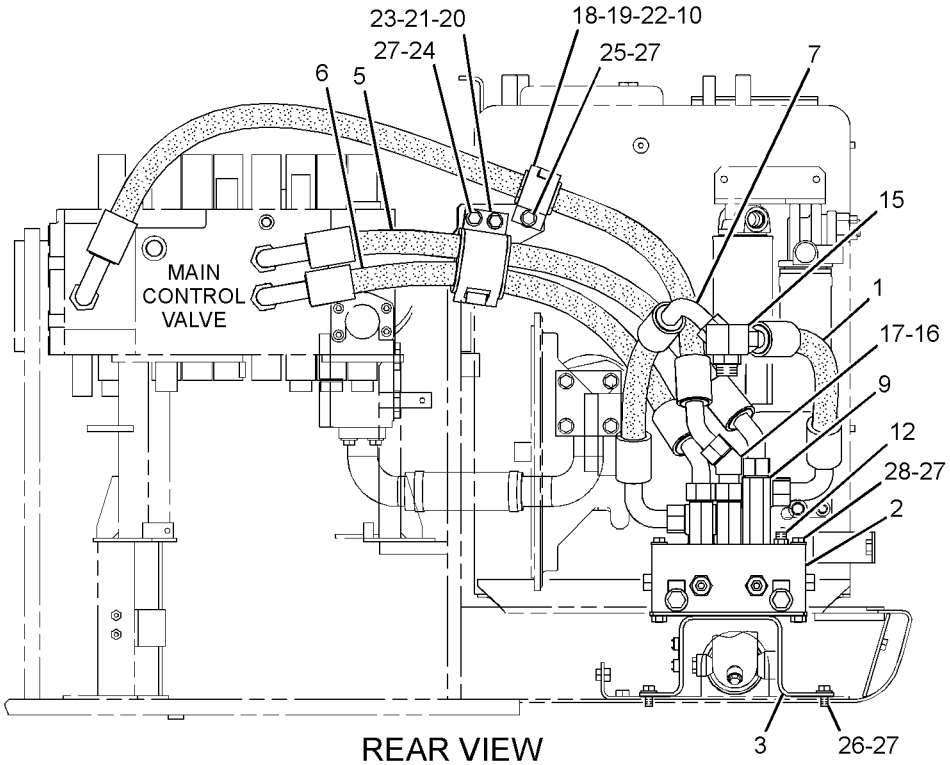

GRAPHIC #1

<END>

g01383237

HYDRAULIC SYSTEM

282-7080 LINES GP-PUMP

S/N: CJN1-UP
PART OF 270-5954 CONTROL AR-AUXILIARY
AN ATTACHMENT

SMCS-5057 **i02854826**

NOTE	REF NO	GRAPHIC REF	PART NUMBER	QTY	PART NAME 1 2 3 4 5 6 (PRODUCT LEVEL)	SEE PAGE
	1	1	**7K-1181**	7	STRAP-CABLE	
	2	1	**134-6838**	1	GUARD	
I	3	1	**193-9994**	1	HOSE AS	
	4	1	**199-2046**	1	GUARD	
	5	1	**317-4747**	1	SUPPORT AS	
	6	1	**272-4215**	1	GROMMET	
I	7	1	**272-4265**	1	HOSE AS	
I	8	1	**278-6466**	1	HOSE AS	
	9	1	*278-6592*	1	TEE AS	
		1	**3D-2824**	1	SEAL-O-RING	
		1	**7J-9108**	1	SEAL-O-RING	
		1	**278-6493**	1	TEE-ORP TO ORFS	
	10	1	*148-8315*	1	CONNECTOR AS	
		1	**2M-9780**	1	SEAL-O-RING	
		1	**6V-8642**	1	CONNECTOR	
		1	**7J-9108**	1	SEAL-O-RING	
	11	1	*148-8322*	1	CONNECTOR AS	
		1	**2M-9780**	1	SEAL-O-RING	
		1	**6V-8640**	1	CONNECTOR	
		1	**6V-9746**	1	SEAL-O-RING	
	12	1	*148-8335*	1	CONNECTOR AS	
		1	**5K-9090**	1	SEAL-O-RING	
		1	**6V-8635**	1	CONNECTOR	
		1	**7M-8485**	1	SEAL-O-RING	
	13	1	*148-8357*	1	ELBOW AS	
		1	**5K-9090**	1	SEAL-O-RING	
		1	**6V-9008**	1	ELBOW	
		1	**7M-8485**	1	SEAL-O-RING	
	14	1	*148-8360*	1	ELBOW AS	
		1	**6V-9182**	1	ELBOW	
		1	**6V-9746**	1	SEAL-O-RING	
		1	**7M-8485**	1	SEAL-O-RING	
	15	1	*164-5567*	1	COUPLER AS-QUICK DISCONNECT	
		1	**3J-1907**	1	SEAL-O-RING	
		1	**6V-3965**	1	FITTING (QUICK DISCONNECT)	
	16	1	**5P-7466**	1	CLIP (SLOT)	
	17	1	**5P-7467**	1	CLIP (TAB)	
	18	1	**5P-8112**	1	GROMMET	
	19	1	**6V-0852**	1	CAP-DUST	
	20	1	**8T-4121**	2	WASHER-HARD (11X21X2.5-MM THK)	
M	21	1	**8T-4137**	2	BOLT (M10X1.5X20-MM)	
	22	1	**8T-4223**	1	WASHER-HARD (13.5X25.5X3-MM THK)	
M	23	1	**8T-4956**	1	BOLT (M12X1.75X35-MM)	

I-REFER TO HYDRAULIC INFORMATION SYSTEM
M-METRIC PART

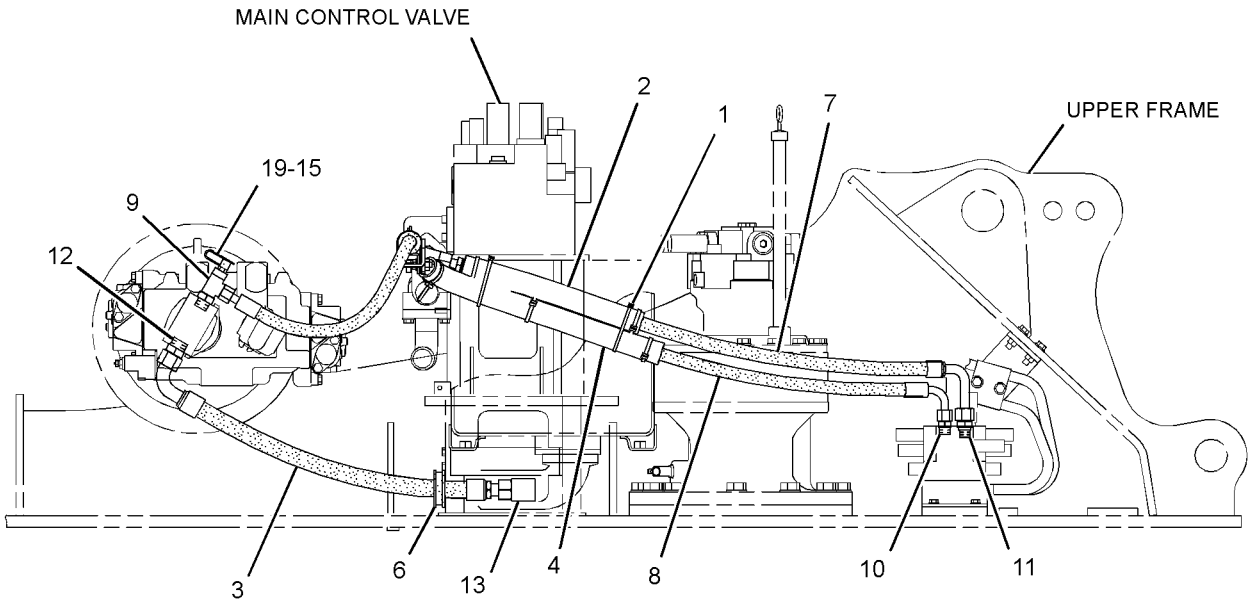

RIGHT SIDE VIEW

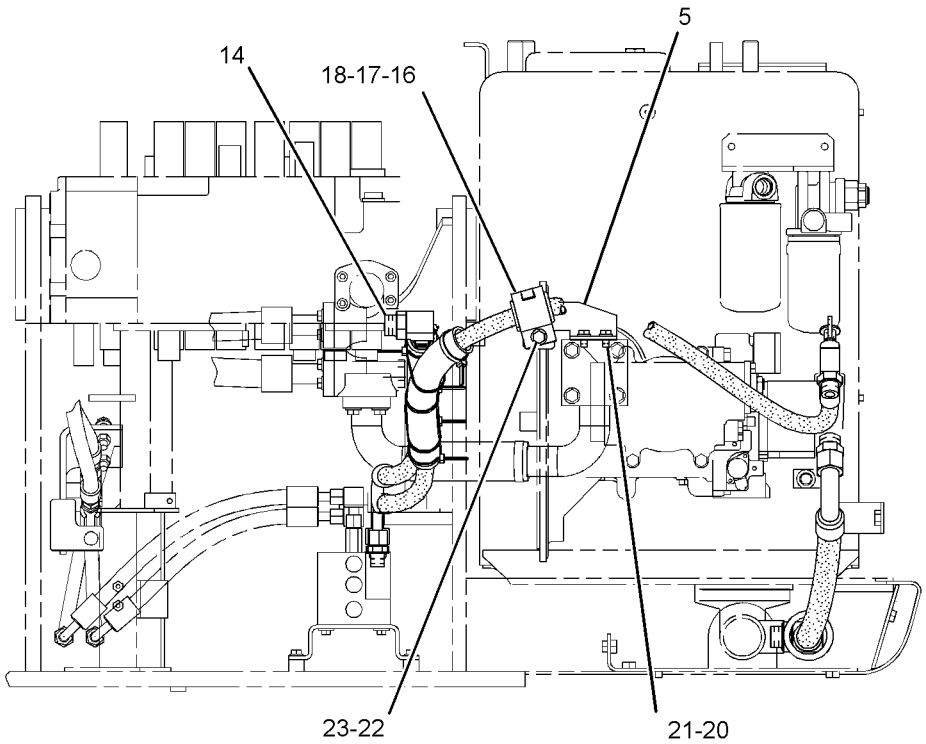

REAR VIEW

GRAPHIC #1 **<END>** g01379093

HYDRAULIC SYSTEM

131-9961 LINES GP-STICK

S/N: CJN1-UP
PART OF 260-6981, 283-9002, 301-2461 STICK AR-HOE
AN ATTACHMENT

SMCS-5057, 5458 **i01435784**

NOTE	REF NO	GRAPHIC REF	PART NUMBER	QTY	PART NAME 1 2 3 4 5 6 (PRODUCT LEVEL)	SEE PAGE
I	1	1	**5I-4494**	2	HOSE AS	
	2	1	**1P-3702**	3	SEAL-RECTANGULAR	
M	3	1	**8T-4182**	4	BOLT (M10X1.5X45-MM)	
	4	1	**8T-9403**	4	FLANGE-HALF	
	5	1	**131-9943**	1	BLOCK	
	6	1	**8T-4121**	8	WASHER-HARD (11X21X2.5-MM THK)	
M	7	1	**8T-4198**	4	BOLT (M10X1.5X100-MM)	

I-REFER TO HYDRAULIC INFORMATION SYSTEM
M-METRIC PART

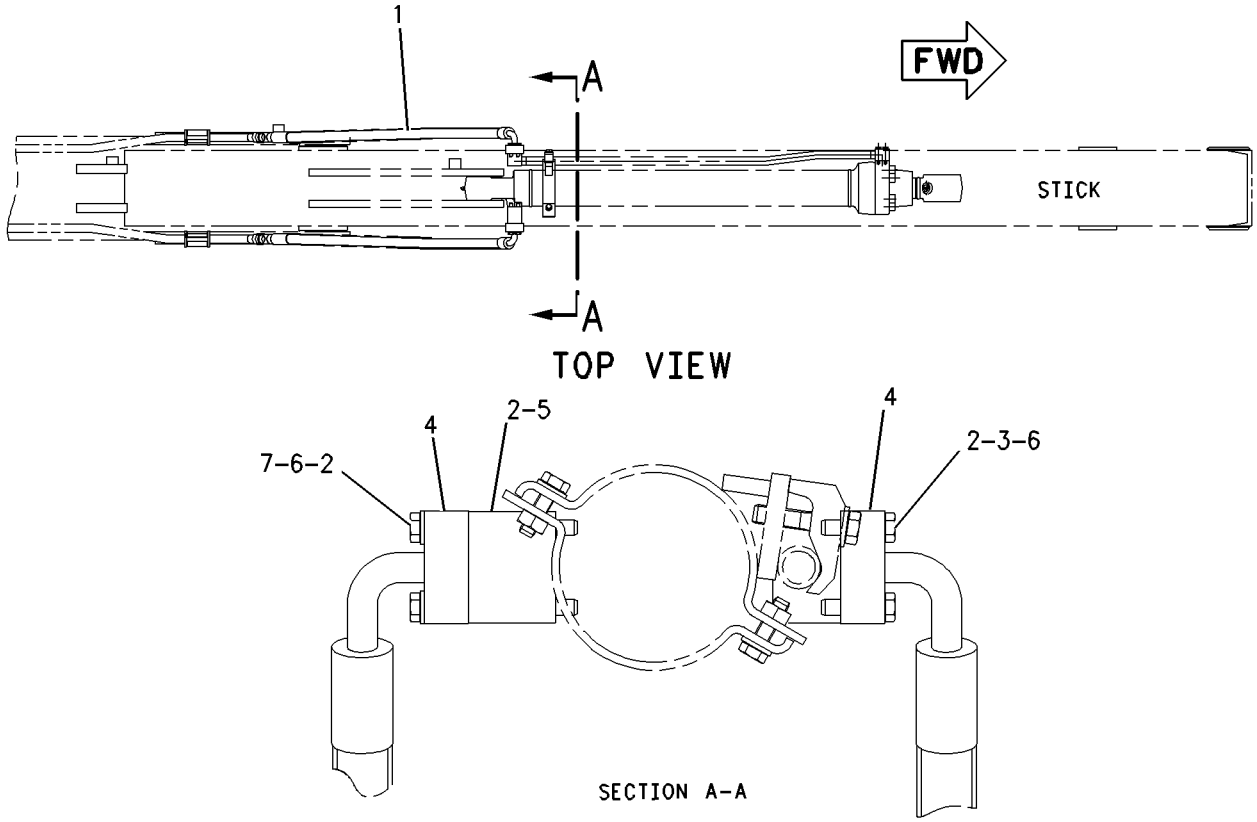

GRAPHIC #1 **<END>** g00755997

HYDRAULIC SYSTEM

131-9962 LINES GP-STICK

S/N: CJN1-UP

PART OF 260-6982, 283-9004, 301-2463, 301-2576 STICK AR-HOE

AN ATTACHMENT

SMCS-5057, 5458 **i01435785**

NOTE	REF NO	GRAPHIC REF	PART NUMBER	QTY	PART NAME 1 2 3 4 5 6 (PRODUCT LEVEL)	SEE PAGE
I	1	1	**4I-8785**	2	HOSE AS	
	2	1	**1P-3702**	3	SEAL-RECTANGULAR	
M	3	1	**8T-4182**	4	BOLT (M10X1.5X45-MM)	
	4	1	**8T-9403**	4	FLANGE-HALF	
	5	1	**131-9943**	1	BLOCK	
	6	1	**8T-4121**	8	WASHER-HARD (11X21X2.5-MM THK)	
M	7	1	**8T-4198**	4	BOLT (M10X1.5X100-MM)	

I-REFER TO HYDRAULIC INFORMATION SYSTEM
M-METRIC PART

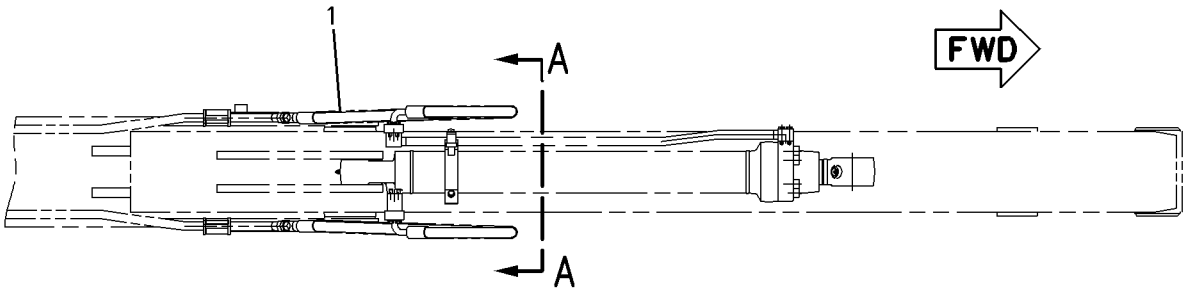

TOP VIEW

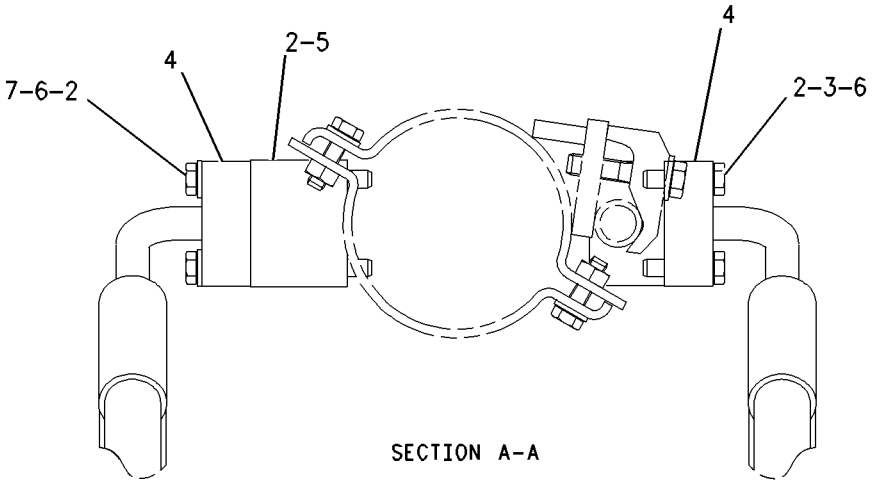

SECTION A-A

GRAPHIC #1 **<END>** g00756004

HYDRAULIC SYSTEM

131-9963 LINES GP-STICK

S/N: CJN1-UP
PART OF 260-6983, 283-9005 STICK AR-HOE
AN ATTACHMENT

SMCS-5057, 5458 **i01471602**

NOTE	REF NO	GRAPHIC REF	PART NUMBER	QTY	PART NAME 1 2 3 4 5 6 (PRODUCT LEVEL)	SEE PAGE
I	1	1	**4I-8785**	2	HOSE AS	
	2	1	**8T-4121**	8	WASHER-HARD (11X21X2.5-MM THK)	
M	3	1	**8T-4182**	4	BOLT (M10X1.5X45-MM)	
	4	1	**1P-3702**	3	SEAL-RECTANGULAR	
	5	1	**8T-9403**	4	FLANGE-HALF	
M	6	1	**8T-4198**	4	BOLT (M10X1.5X100-MM)	
	7	1	**131-9943**	1	BLOCK	

I-REFER TO HYDRAULIC INFORMATION SYSTEM
M-METRIC PART

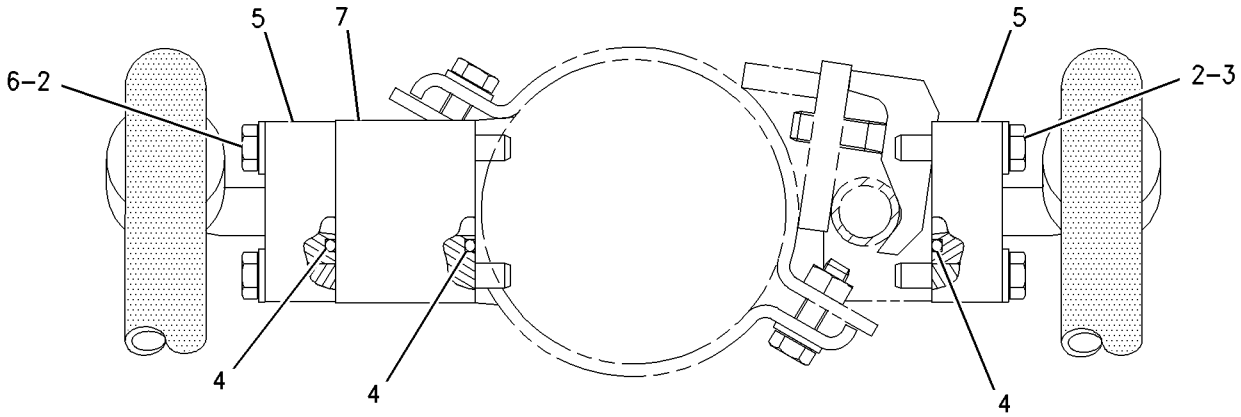

SECTION A-A

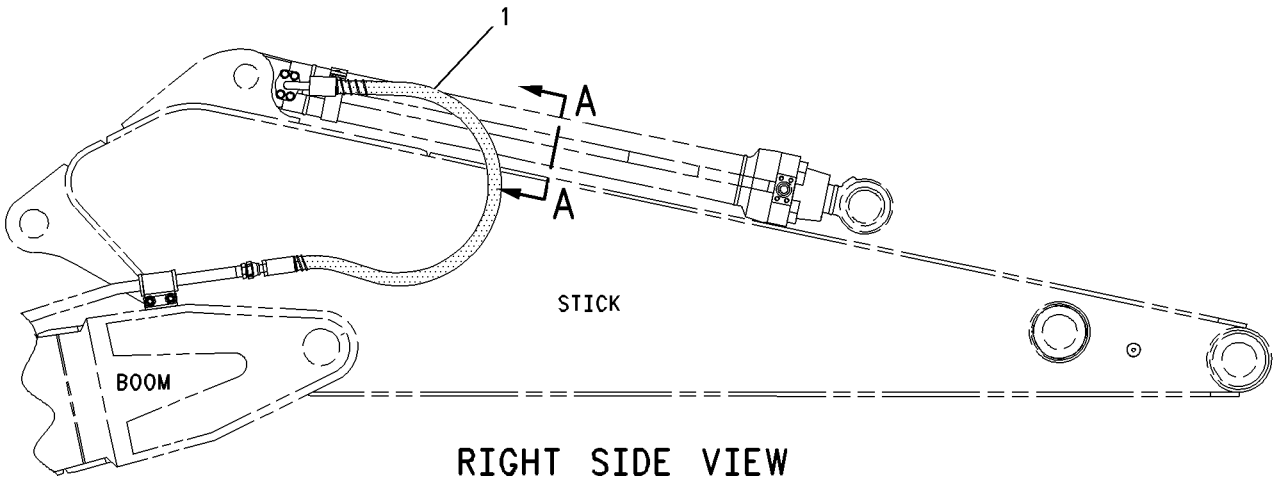

RIGHT SIDE VIEW

GRAPHIC #1 **<END>** g00768324

HYDRAULIC SYSTEM

131-9964 LINES GP-STICK

S/N: CJN1-UP
PART OF 260-6984, 283-9006 STICK AR-HOE
AN ATTACHMENT

SMCS-5057, 5458 **i01829413**

NOTE	REF NO	GRAPHIC REF	PART NUMBER	QTY	PART NAME 1 2 3 4 5 6 (PRODUCT LEVEL)	SEE PAGE
I	1	1	**4I-8785**	2	HOSE AS	
	2	1	**8T-4121**	8	WASHER-HARD (11X21X2.5-MM THK)	
M	3	1	**8T-4182**	4	BOLT (M10X1.5X45-MM)	
	4	1	**1P-3702**	3	SEAL-RECTANGULAR	
	5	1	**8T-9403**	4	FLANGE-HALF	
M	6	1	**8T-4198**	4	BOLT (M10X1.5X100-MM)	
	7	1	**131-9943**	1	BLOCK	

I-REFER TO HYDRAULIC INFORMATION SYSTEM
M-METRIC PART

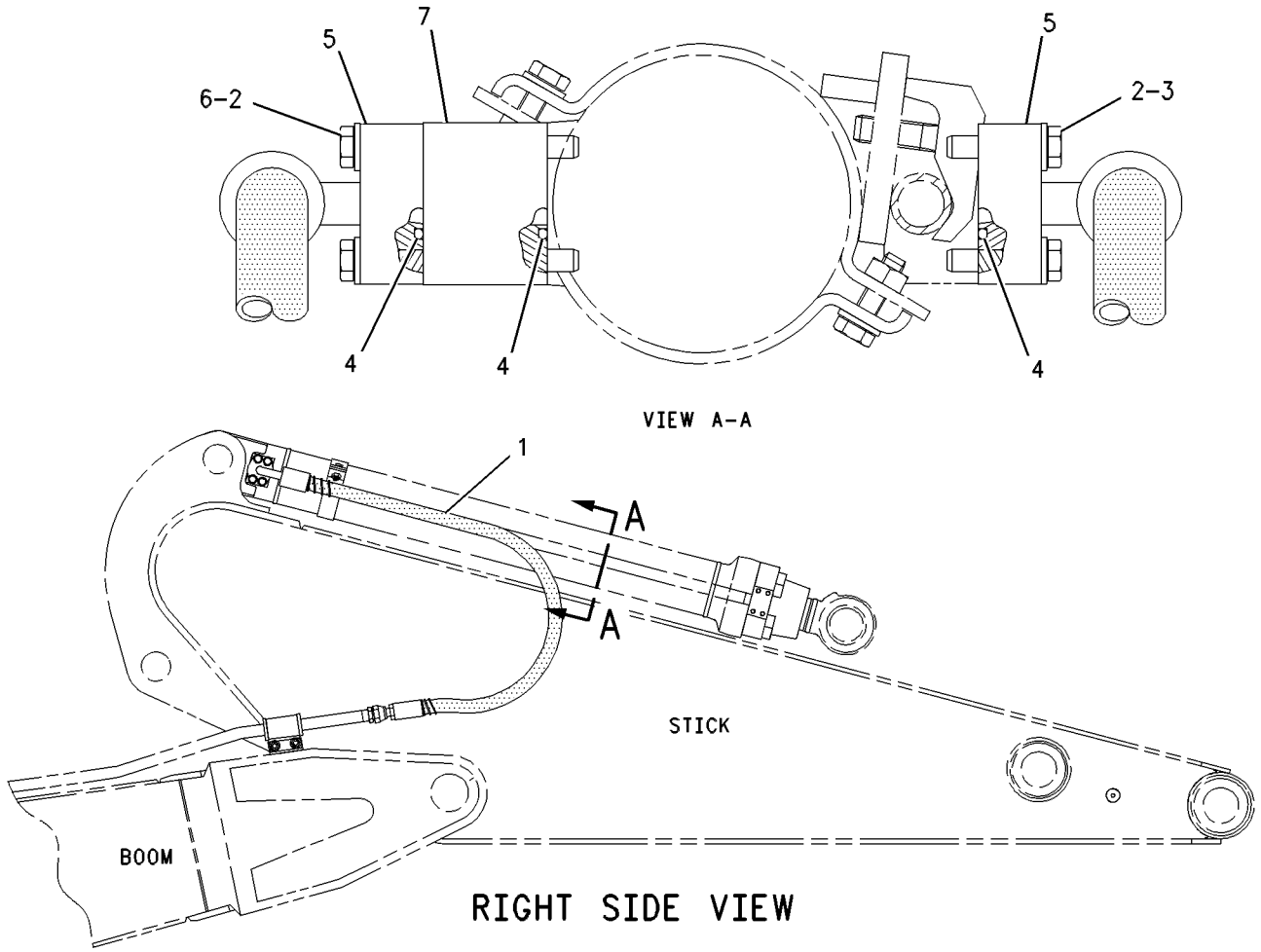

RIGHT SIDE VIEW

GRAPHIC #1 **<END>** g00337128

HYDRAULIC SYSTEM

275-1695 LINES GP-STICK

S/N: CJN1-UP
PART OF 283-9003 STICK AR-HOE, 260-7070 STICK AR-REACH
AN ATTACHMENT

SMCS-5057, 5458 **i02750444**

NOTE	REF NO	GRAPHIC REF	PART NUMBER	QTY	PART NAME 1 2 3 4 5 6 (PRODUCT LEVEL)	SEE PAGE
I	1	1	**5I-4494**	2	HOSE AS	
	2	1	**131-9943**	1	BLOCK	
	3	1	**1P-3702**	3	SEAL-RECTANGULAR	
	4	1	**8T-4121**	8	WASHER-HARD (11X21X2.5-MM THK)	
M	5	1	**8T-4182**	4	BOLT (M10X1.5X45-MM)	
M	6	1	**8T-4198**	4	BOLT (M10X1.5X100-MM)	
	7	1	**8T-9403**	4	FLANGE-HALF	

I-REFER TO HYDRAULIC INFORMATION SYSTEM
M-METRIC PART

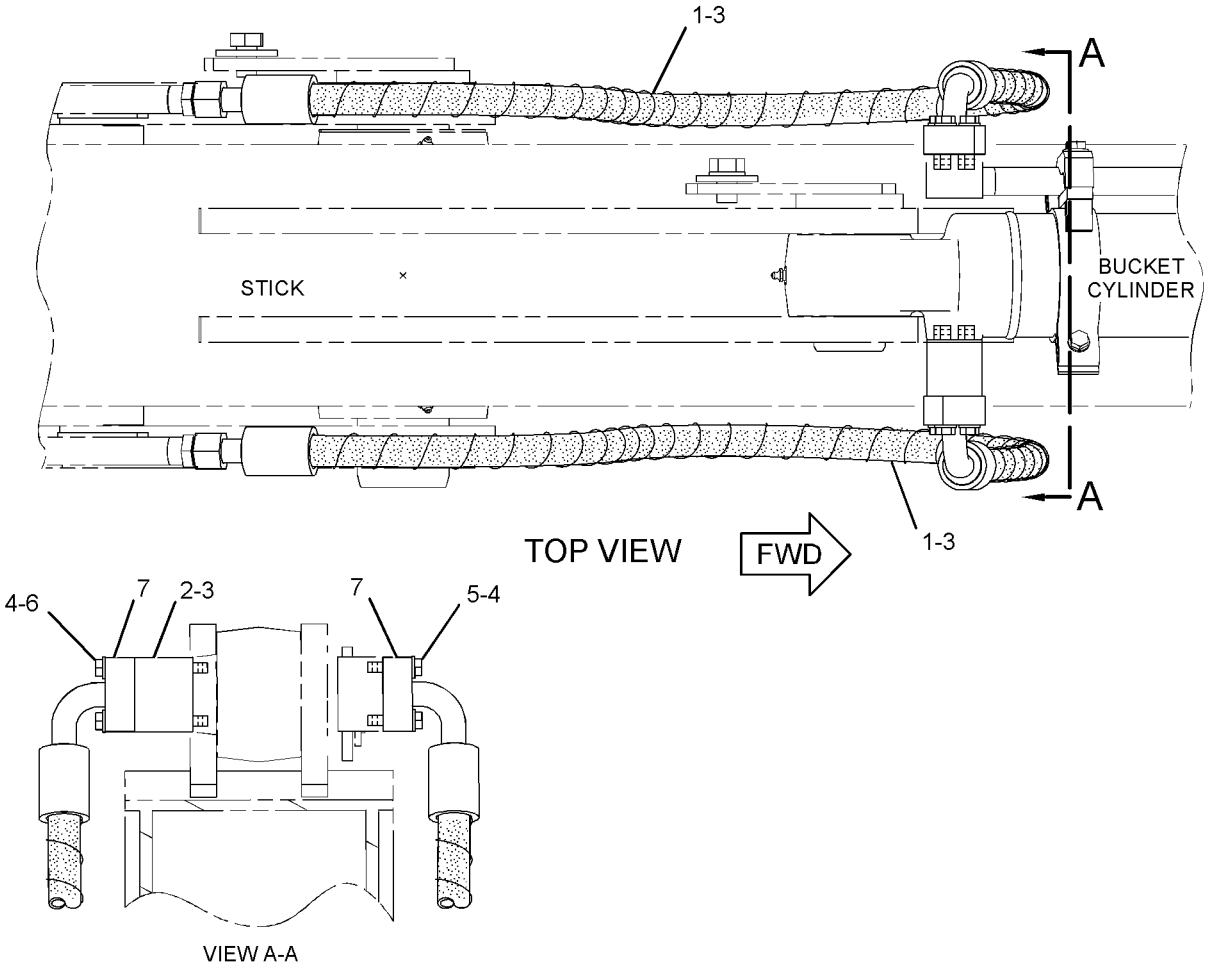

GRAPHIC #1 **<END>** g01382013

HYDRAULIC SYSTEM

266-1187 LINES GP-STICK CYLINDER

S/N: CJN1-UP

PART OF 259-0841, 289-8101 CYLINDER & LINES GP-STICK

AN ATTACHMENT

SMCS-5458 **i02748091**

NOTE	REF NO	GRAPHIC REF	PART NUMBER	QTY	PART NAME 1 2 3 4 5 6 (PRODUCT LEVEL)	SEE PAGE
	1	1	**093-1293**	1	CLAMP	
	2	1	**131-9935**	1	SUPPORT AS	
	3	1	**179-7855**	1	SUPPORT AS	
	4	1	**266-1198**	1	TUBE AS	
	5	1	**1P-3704**	1	SEAL-RECTANGULAR	
	6	1	**8T-4121**	2	WASHER-HARD (11X21X2.5-MM THK)	
M	7	1	**8T-4196**	2	BOLT (M10X1.5X35-MM)	
	8	1	**8T-4223**	5	WASHER-HARD (13.5X25.5X3-MM THK)	
M	9	1	**8T-4648**	5	BOLT (M12X1.75X70-MM)	

M-METRIC PART

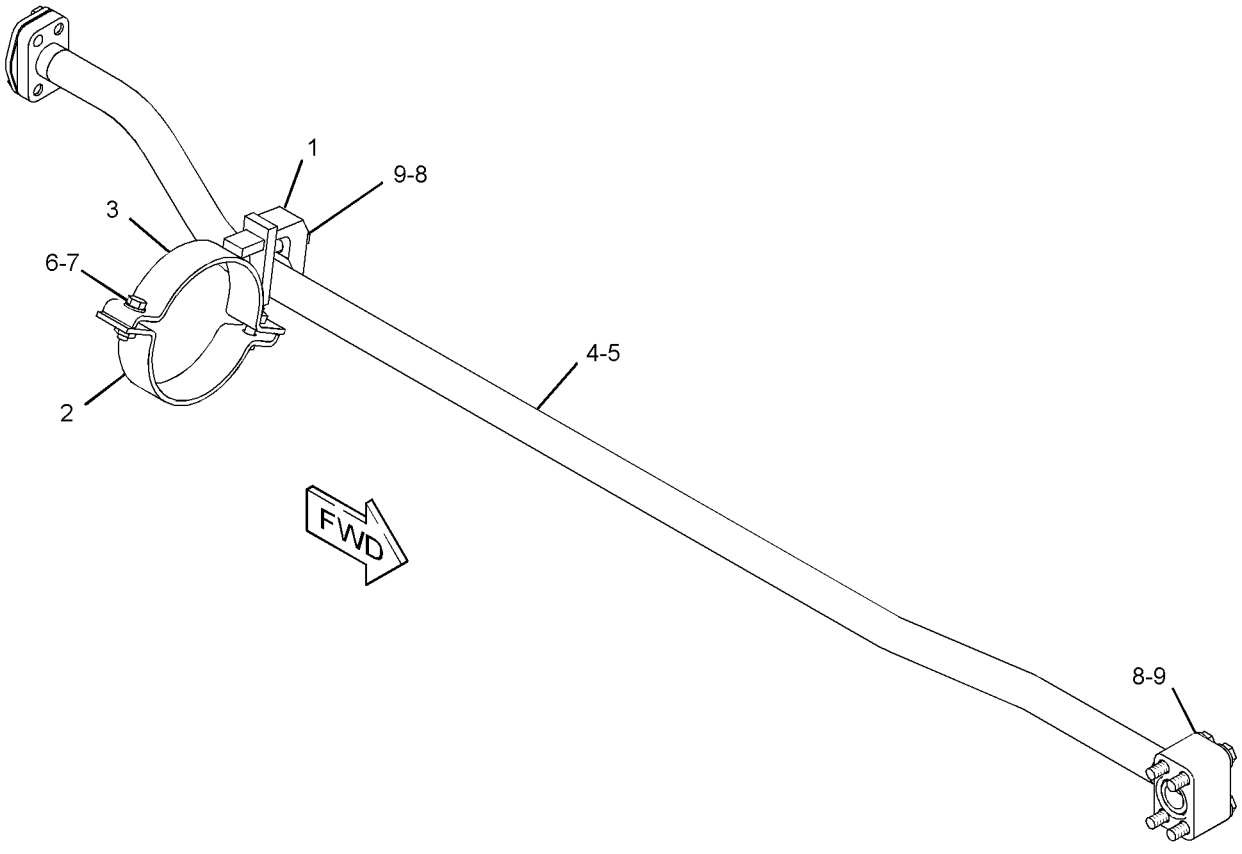

GRAPHIC #1 **<END>** g01386671

294-6486 LINES GP-STICK CYLINDER–
STICK LOWERING CONTROL VALVE
S/N: CJN1-UP
PART OF 259-7585 VALVE AR-CHECK & RELIEF
AN ATTACHMENT

SMCS-5458 **i03195701**

NOTE	REF NO	GRAPHIC REF	PART NUMBER	QTY	PART NAME 1 2 3 4 5 6 (PRODUCT LEVEL)	SEE PAGE
	1	1	**093-1293**	1	CLAMP	
	2	1	**093-1294**	1	CLAMP	
	3	1	**119-2321**	1	SUPPORT AS	
	4	1	**131-9935**	1	SUPPORT AS	
	5	1	**193-6534**	1	SUPPORT AS	
	6	1	**268-6930**	1	SUPPORT AS	
Y	7	1	**285-1687**	1	VALVE GP-LOAD CONTROL (STICK CYLINDER)	697
	8	1	**294-6521**	1	TUBE AS	
	9	1	**294-6522**	1	TUBE AS	
	10	1	**294-6524**	1	TUBE AS	
M	11	1	**095-0673**	4	BOLT-SOCKET HEAD (M12X1.75X60-MM)	
	12	1	*148-8325*	1	CONNECTOR AS	
		1	**3J-1907**	1	SEAL-O-RING	
		1	**4J-5477**	1	SEAL-O-RING	
		1	**6V-8641**	1	CONNECTOR	
	13	1	*148-8362*	1	ELBOW AS	
		1	**3D-2824**	1	SEAL-O-RING	
		1	**5K-9090**	1	SEAL-O-RING	
		1	**8T-6684**	1	ELBOW	
	14	1	*148-8368*	1	ELBOW AS	
		1	**3J-1907**	1	SEAL-O-RING	
		1	**4J-5477**	1	SEAL-O-RING	
		1	**6V-8627**	1	ELBOW	
	15	1	**1P-3704**	1	SEAL-RECTANGULAR	
	16	1	**3J-1907**	2	SEAL-O-RING	
	17	1	**6V-8397**	2	SEAL-O-RING	
	18	1	**8T-4121**	7	WASHER-HARD (11X21X2.5-MM THK)	
M	19	1	**8T-4186**	1	BOLT (M10X1.5X40-MM)	
M	20	1	**8T-4189**	2	BOLT (M8X1.25X20-MM)	
M	21	1	**8T-4196**	6	BOLT (M10X1.5X35-MM)	
	22	1	**8T-4223**	1	WASHER-HARD (13.5X25.5X3-MM THK)	
	23	1	**8T-4224**	2	WASHER-HARD (8.8X16X2-MM THK)	
M	24	1	**8T-4648**	1	BOLT (M12X1.75X70-MM)	
	25	1	**9S-4191**	2	PLUG-O-RING	

M-METRIC PART
Y-SEPARATE ILLUSTRATION

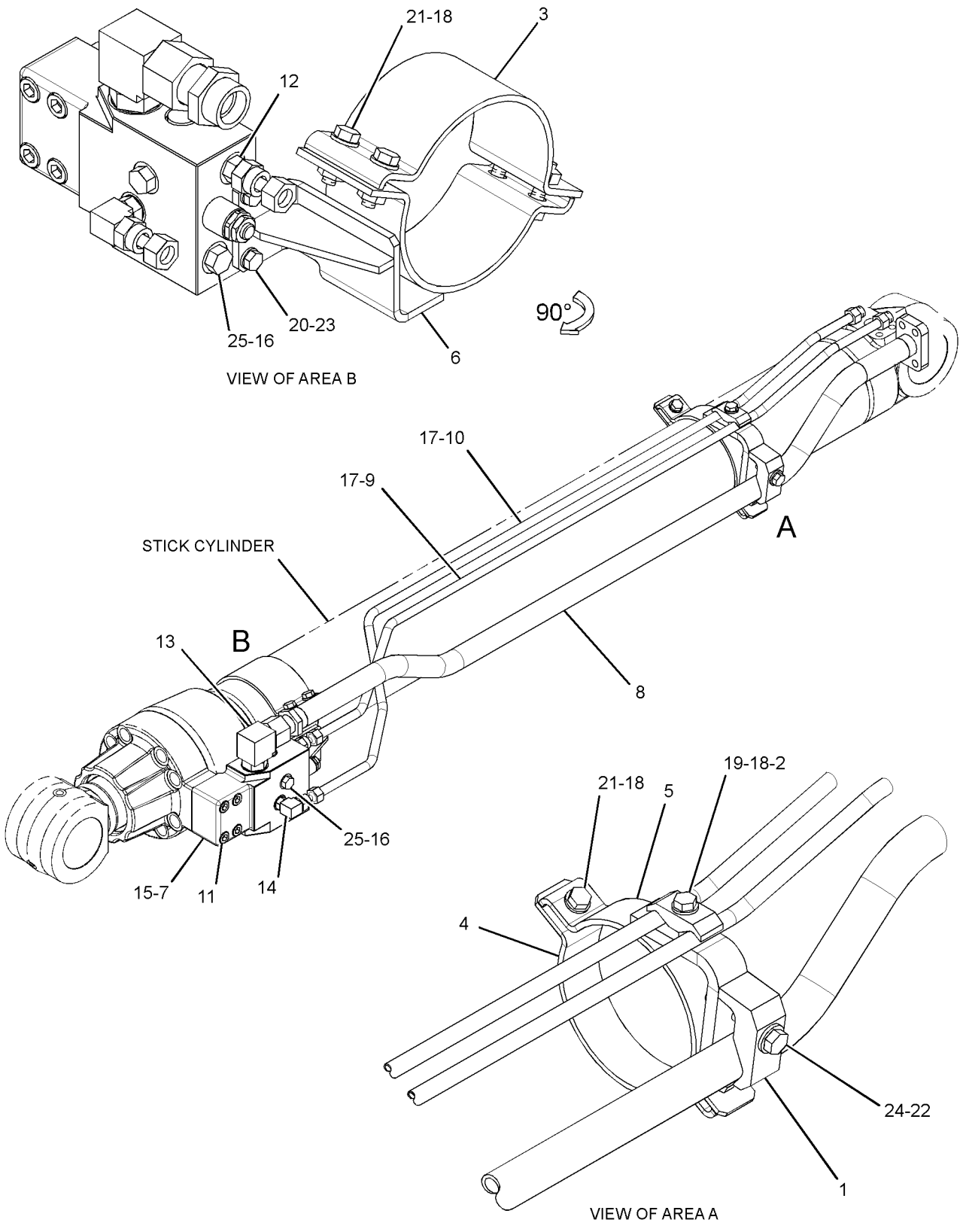

GRAPHIC #1 **<END>** g01392327

320-0199 LINES GP-STICK CYLINDER

S/N: CJN1-UP

PART OF 289-8101 CYLINDER & LINES GP-STICK

AN ATTACHMENT

SMCS-5458 **i03087027**

NOTE	REF NO	GRAPHIC REF	PART NUMBER	QTY	PART NAME 1 2 3 4 5 6 (PRODUCT LEVEL)	SEE PAGE
	1	1	**093-1293**	1	CLAMP	
	2	1	**131-9935**	1	SUPPORT AS	
	3	1	**179-7855**	1	SUPPORT AS	
	4	1	**320-0200**	1	TUBE AS	
	5	1	**1P-3702**	1	SEAL-RECTANGULAR	
	6	1	**8T-4121**	6	WASHER-HARD (11X21X2.5-MM THK)	
M	7	1	**8T-4196**	2	BOLT (M10X1.5X35-MM)	
	8	1	**8T-4223**	1	WASHER-HARD (13.5X25.5X3-MM THK)	
M	9	1	**8T-4648**	1	BOLT (M12X1.75X70-MM)	
M	10	1	**8T-6466**	4	BOLT (M10X1.5X60-MM)	

M-METRIC PART

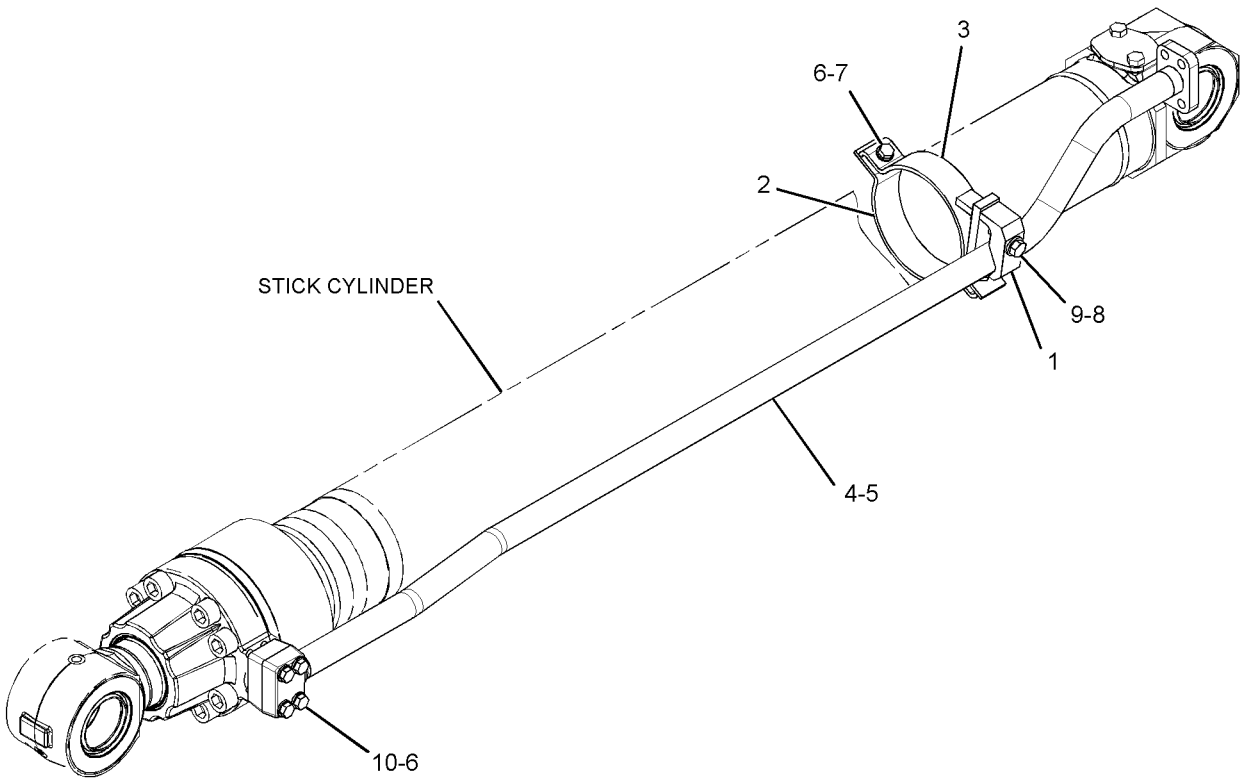

GRAPHIC #1 **<END>** g01626418

HYDRAULIC SYSTEM

278-6465 LINES GP-SWING MOTOR

S/N: CJN1-UP
PART OF 260-7075 VALVE AR-SWING
AN ATTACHMENT

SMCS-5057 **i02752930**

NOTE	REF NO	GRAPHIC REF	PART NUMBER	QTY	PART NAME 1 2 3 4 5 6 (PRODUCT LEVEL)	SEE PAGE
I	1	1	**278-6557**	1	HOSE AS	
I	2	1	**278-6560**	1	HOSE AS	

I-REFER TO HYDRAULIC INFORMATION SYSTEM

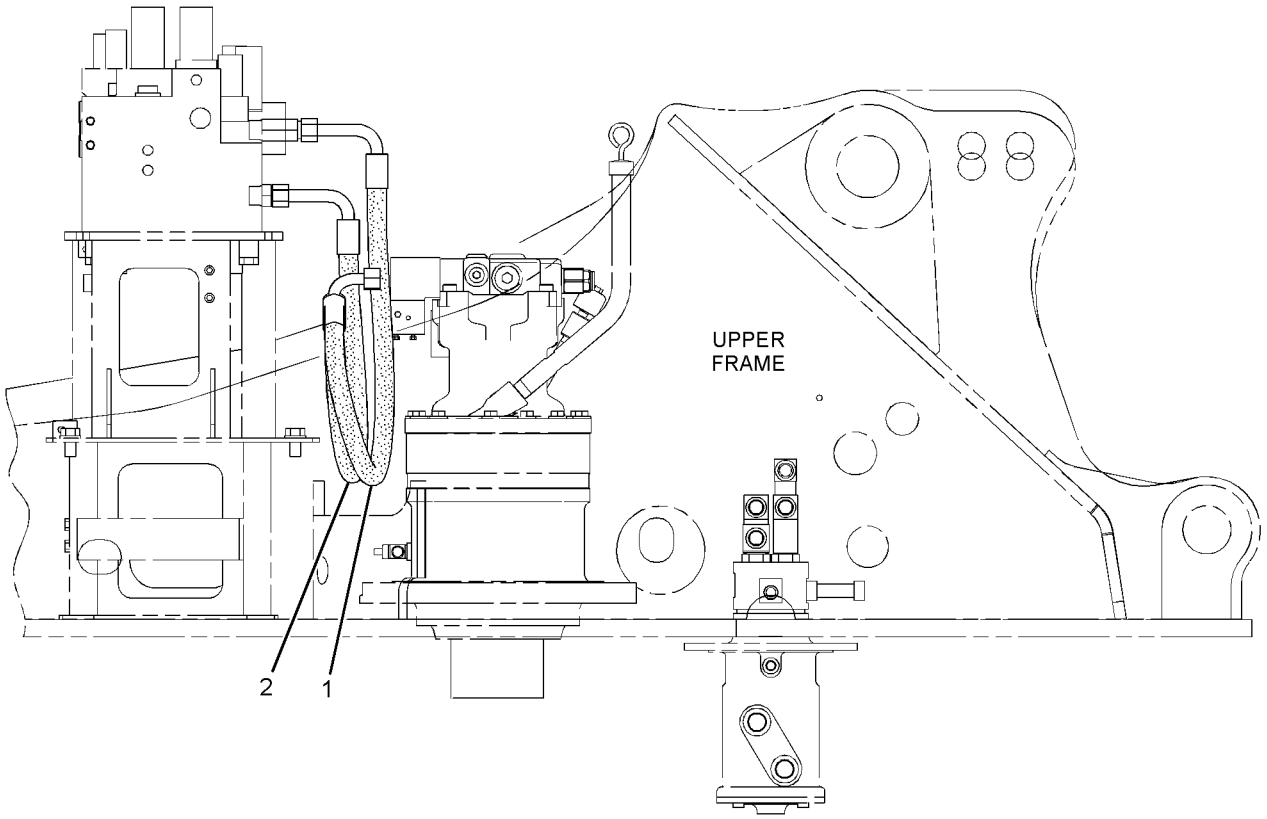

RIGHT SIDE VIEW

GRAPHIC #1 **<END>** g01380666

260-8212 LINES GP-TRAVEL MOTOR—LONG CARRIAGE

S/N: CJN1-484

PART OF 259-7547 HYDRAULIC AR

SMCS-5057, 5058 **i02599677**

NOTE	REF NO	GRAPHIC REF	PART NUMBER	QTY	PART NAME 1 2 3 4 5 6 (PRODUCT LEVEL)	SEE PAGE
	1	1	**108-7304**	2	GROMMET	
	2	1	**124-0986**	2	GROMMET	
Y	3	1	**162-4696**	1	SWIVEL GP	664
	4	1	**187-5915**	2	HOSE AS	
	5	1	**187-5916**	2	HOSE AS	
I	6	1	**196-0800**	4	HOSE AS	
	7	1	*148-8325*	2	CONNECTOR AS	
					(EACH INCLUDES)	
		1	**3J-1907**	1	SEAL-O-RING	
		1	**4J-5477**	1	SEAL-O-RING	
		1	**6V-8641**	1	CONNECTOR	
	8	1	*148-8327*	4	CONNECTOR AS	
					(EACH INCLUDES)	
		1	**3D-2824**	1	SEAL-O-RING	
		1	**6V-8637**	1	CONNECTOR	
		1	**6V-9746**	1	SEAL-O-RING	
	9	1	*148-8340*	2	CONNECTOR AS	
					(EACH INCLUDES)	
		1	**3K-0360**	1	SEAL-O-RING	
		1	**6V-8398**	1	SEAL-O-RING	
		1	**6V-8639**	1	CONNECTOR	
	10	1	*148-8368*	2	ELBOW AS	
					(EACH INCLUDES)	
		1	**3J-1907**	1	SEAL-O-RING	
		1	**4J-5477**	1	SEAL-O-RING	
		1	**6V-8627**	1	ELBOW	
	11	1	*148-8436*	1	TEE AS	
		1	**3K-0360**	1	SEAL-O-RING	
		1	**6V-8398**	2	SEAL-O-RING	
		1	**6V-8775**	1	TEE-FACE SEAL	
	12	1	**1P-3703**	4	SEAL-RECTANGULAR	
	13	1	**6V-0400**	8	FLANGE-HALF	
	14	1	**7K-1181**	4	STRAP-CABLE	
	15	1	**8T-4121**	4	WASHER-HARD (11X21X2.5-MM THK)	
M	16	1	**8T-4137**	4	BOLT (M10X1.5X20-MM)	
M	17	1	**8T-4184**	16	BOLT (M12X1.75X45-MM)	
	18	1	**8T-4223**	16	WASHER-HARD (13.5X25.5X3-MM THK)	
B	19	1	**1U-8846**		SEALANT-GASKET	

B-USE AS REQUIRED
I-REFER TO HYDRAULIC INFORMATION SYSTEM
M-METRIC PART
Y-SEPARATE ILLUSTRATION

260-8212 **LINES GP-TRAVEL MOTOR** *(contd.)* **i02599677**

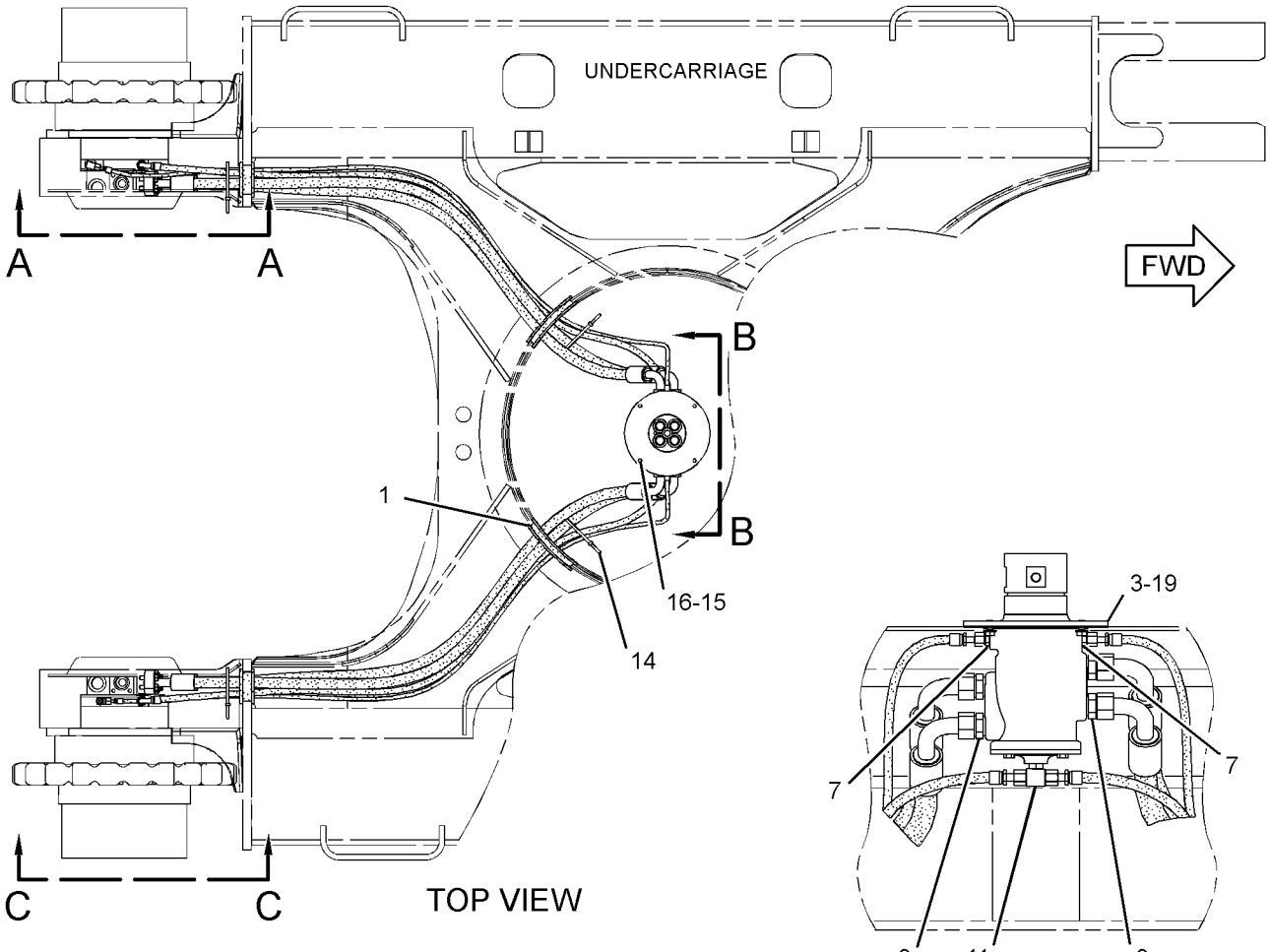

VIEW B-B

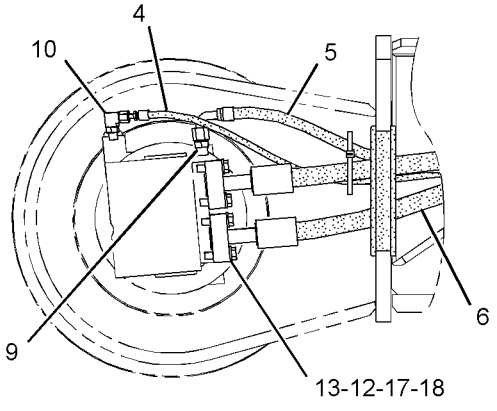

VIEW A-A

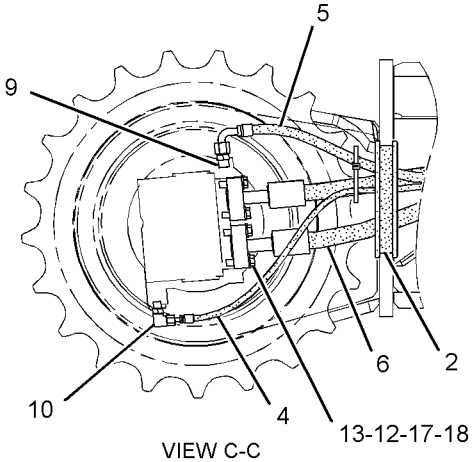

VIEW C-C

GRAPHIC #1 **<END>** g01326775

HYDRAULIC SYSTEM

260-8212 LINES GP-TRAVEL MOTOR—LONG CARRIAGE

S/N: CJN485-UP

PART OF 259-7547 HYDRAULIC AR

SMCS-5057, 5058 **i03248906**

NOTE	REF NO	GRAPHIC REF	PART NUMBER	QTY	PART NAME 1 2 3 4 5 6 (PRODUCT LEVEL)	SEE PAGE
	1	1	**108-7304**	2	GROMMET	
	2	1	**124-0986**	2	GROMMET	
Y	3	1	**162-4696**	1	SWIVEL GP	664
	4	1	**187-5915**	2	HOSE AS	
CI	5	1	**7I-8249**	2	HOSE AS	
I	6	1	**196-0800**	4	HOSE AS	
	7	1	*148-8325*	2	CONNECTOR AS	
					(EACH INCLUDES)	
		1	**3J-1907**	1	SEAL-O-RING	
		1	**4J-5477**	1	SEAL-O-RING	
		1	**6V-8641**	1	CONNECTOR	
	8	1	*148-8327*	4	CONNECTOR AS	
					(EACH INCLUDES)	
		1	**3D-2824**	1	SEAL-O-RING	
		1	**6V-8637**	1	CONNECTOR	
		1	**6V-9746**	1	SEAL-O-RING	
C	9	1	*148-8364*	2	ELBOW AS	
					(EACH INCLUDES)	
		1	**3K-0360**	1	SEAL-O-RING	
		1	**6V-8398**	1	SEAL-O-RING	
		1	**6V-8625**	1	ELBOW	
	10	1	*148-8368*	2	ELBOW AS	
					(EACH INCLUDES)	
		1	**3J-1907**	1	SEAL-O-RING	
		1	**4J-5477**	1	SEAL-O-RING	
		1	**6V-8627**	1	ELBOW	
	11	1	*148-8436*	1	TEE AS	
		1	**3K-0360**	1	SEAL-O-RING	
		1	**6V-8398**	2	SEAL-O-RING	
		1	**6V-8775**	1	TEE-FACE SEAL	
	12	1	**1P-3703**	4	SEAL-RECTANGULAR	
	13	1	**6V-0400**	8	FLANGE-HALF	
	14	1	**7K-1181**	4	STRAP-CABLE	
	15	1	**8T-4121**	4	WASHER-HARD (11X21X2.5-MM THK)	
M	16	1	**8T-4137**	4	BOLT (M10X1.5X20-MM)	
M	17	1	**8T-4184**	16	BOLT (M12X1.75X45-MM)	
	18	1	**8T-4223**	16	WASHER-HARD (13.5X25.5X3-MM THK)	
B	19	1	**1U-8846**		SEALANT-GASKET	

B-USE AS REQUIRED
C-CHANGE FROM PREVIOUS TYPE
I-REFER TO HYDRAULIC INFORMATION SYSTEM
M-METRIC PART
Y-SEPARATE ILLUSTRATION

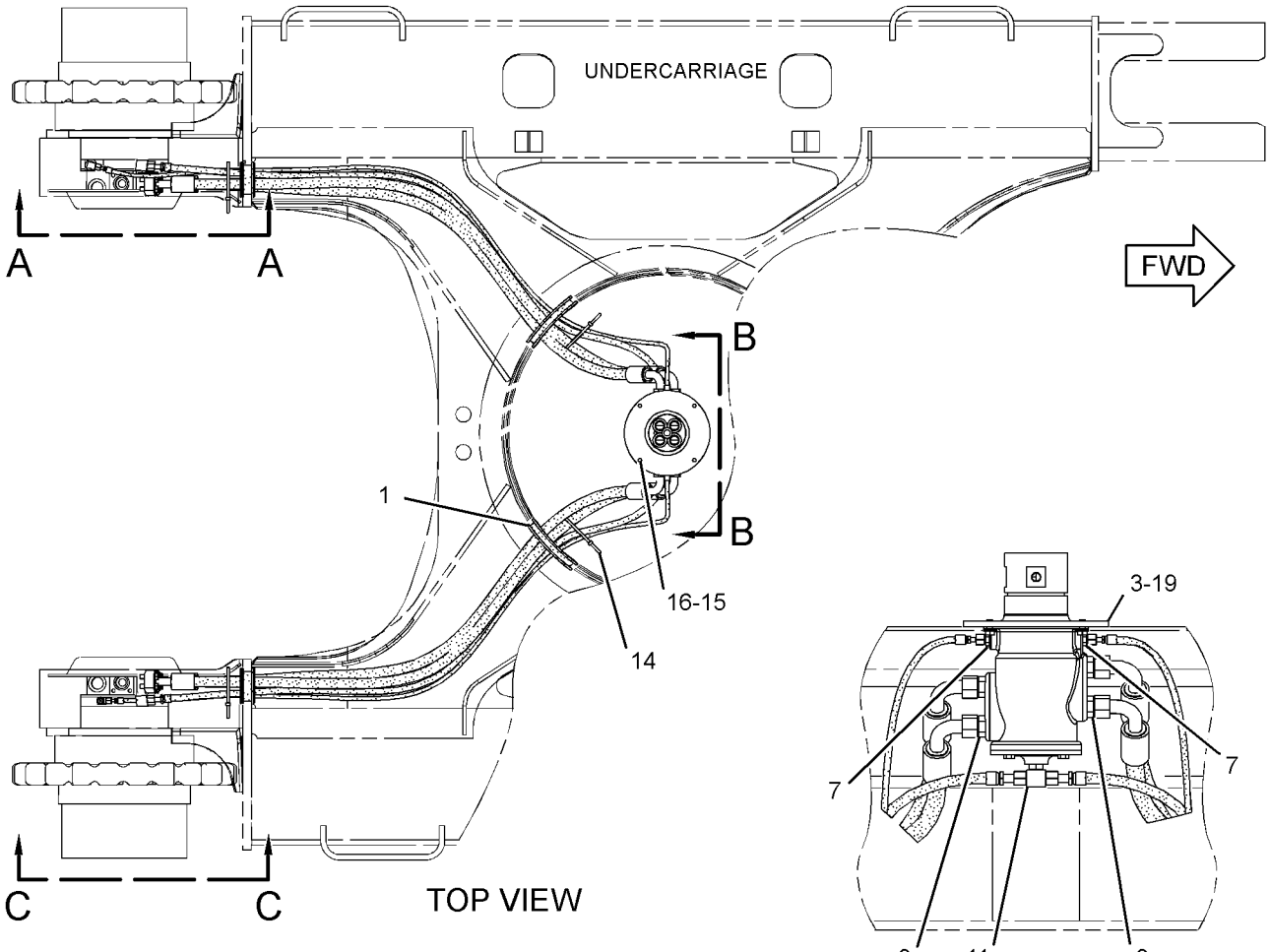

VIEW B-B

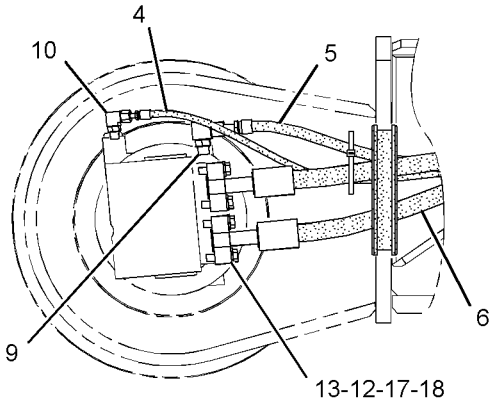

VIEW A-A

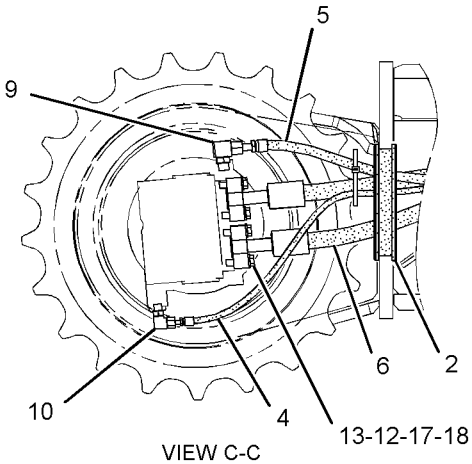

VIEW C-C

GRAPHIC #1 **<END>** g01617114

215-5037 MANIFOLD GP-CONTROL—PILOT OIL SUPPLY

S/N: CJN1-UP

PART OF 302-3195 LINES GP-PILOT

SMCS-5264 **i02092079**

NOTE	PART NUMBER	QTY	PART NAME 1 2 3 4 5 6 (PRODUCT LEVEL)	SEE PAGE
Y	*239-8998*	1	MANIFOLD GP-CONTROL (PILOT OIL SUPPLY) (STEEL BODY)	637
			-OR-	
Y	*239-8697*	1	MANIFOLD GP-CONTROL (PILOT OIL SUPPLY) (ALUMINUM BODY)	636

Y-SEPARATE ILLUSTRATION

<END>

HYDRAULIC SYSTEM

239-8697 MANIFOLD GP-CONTROL—PILOT OIL SUPPLY

S/N: CJN1-UP
ALUMINUM BODY
PART OF 215-5037 MANIFOLD GP-CONTROL

SMCS-5264 **i02092727**

NOTE	REF NO	GRAPHIC REF	PART NUMBER	QTY	PART NAME 1 2 3 4 5 6 (PRODUCT LEVEL)	SEE PAGE
Y	1	1	**121-1491**	1	VALVE GP-SOLENOID (SWING BRAKE RELEASE)	736
Y	2	1	**121-1491**	1	VALVE GP-SOLENOID (HYDRAULIC LOCKOUT)	736
Y	3	1	**121-1491**	1	VALVE GP-SOLENOID (TRAVEL SPEED)	736
	4	1	**197-0196**	1	VALVE-CHECK	
	5	1	**197-0199**	1	SPRING	
	6	1	**197-0273**	1	SPRING	
Z	7	1		1	MANIFOLD GP-CONTROL	
	8	1	**3J-1907**	1	SEAL-O-RING	
	9	1	**3K-0360**	4	SEAL-O-RING	
	10	1	**4J-7533**	6	SEAL-O-RING	
M	11	1	**7I-2272**	6	BOLT (M5X0.8X12-MM)	
	12	1	**9S-8001**	6	PLUG-O-RING	
	13	1	**9S-8004**	1	PLUG-O-RING	
	14	1	**9S-8005**	4	PLUG-O-RING	

M-METRIC PART
Y-SEPARATE ILLUSTRATION
Z-NOT SERVICED SEPARATELY

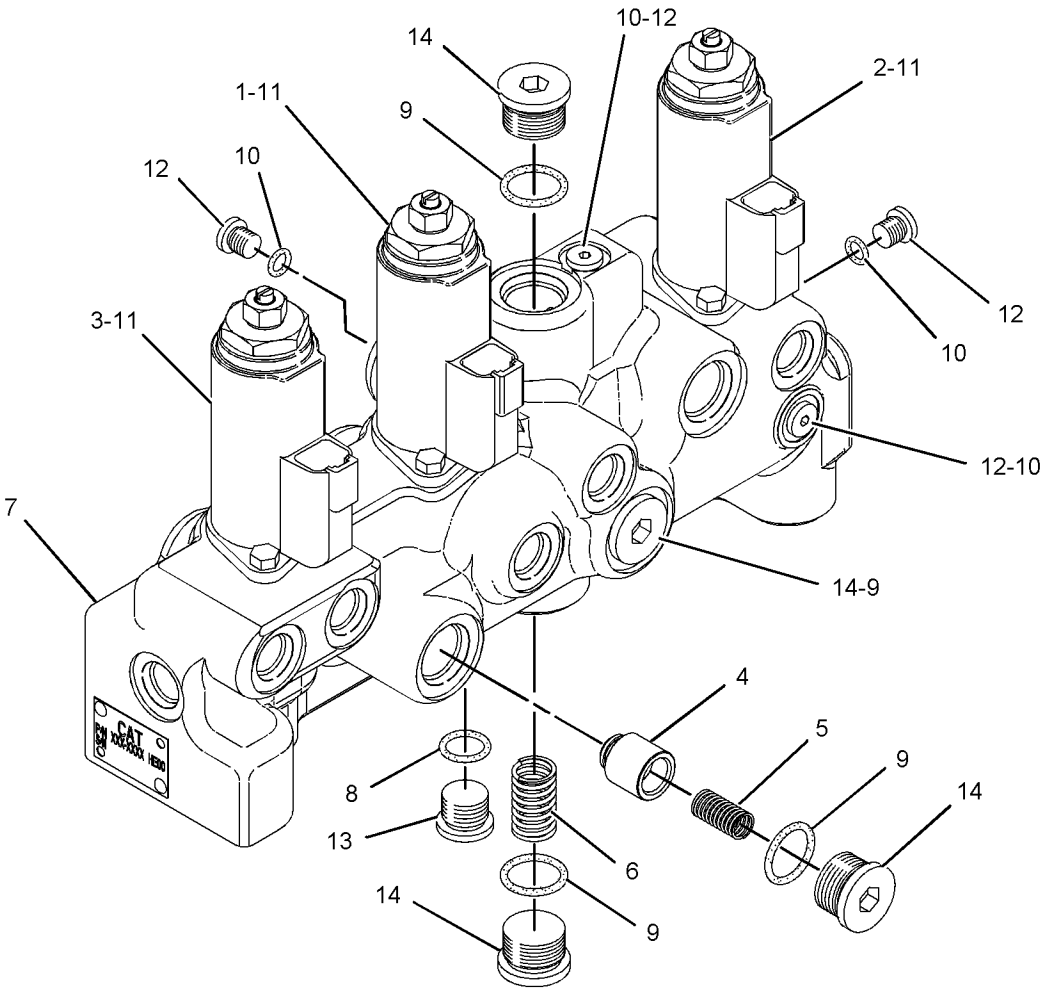

GRAPHIC #1 **<END>** g01084474

239-8998 MANIFOLD GP-CONTROL—PILOT OIL SUPPLY

S/N: CJN1-UP
STEEL BODY
PART OF 215-5037 MANIFOLD GP-CONTROL

SMCS-5264 **i02092174**

NOTE	REF NO	GRAPHIC REF	PART NUMBER	QTY	PART NAME 1 2 3 4 5 6 (PRODUCT LEVEL)	SEE PAGE
Y	1	1	**121-1491**	1	VALVE GP-SOLENOID (SWING BRAKE RELEASE)	736
Y	2	1	**121-1491**	1	VALVE GP-SOLENOID (HYDRAULIC LOCKOUT)	736
Y	3	1	**121-1491**	1	VALVE GP-SOLENOID (TRAVEL SPEED)	736
	4	1	**197-0196**	1	VALVE-CHECK	
Z	5	1		1	MANIFOLD GP-CONTROL	
	6	1	**197-0199**	1	SPRING	
	7	1	**197-0273**	1	SPRING	
	8	1	**3K-0360**	3	SEAL-O-RING	
M	9	1	**7I-2272**	6	BOLT (M5X0.8X12-MM)	
	10	1	**7M-7410**	2	PLUG-PIPE	
	11	1	**8T-6759**	6	PLUG-PIPE	
	12	1	**9S-8005**	3	PLUG-O-RING	

M-METRIC PART
Y-SEPARATE ILLUSTRATION
Z-NOT SERVICED SEPARATELY

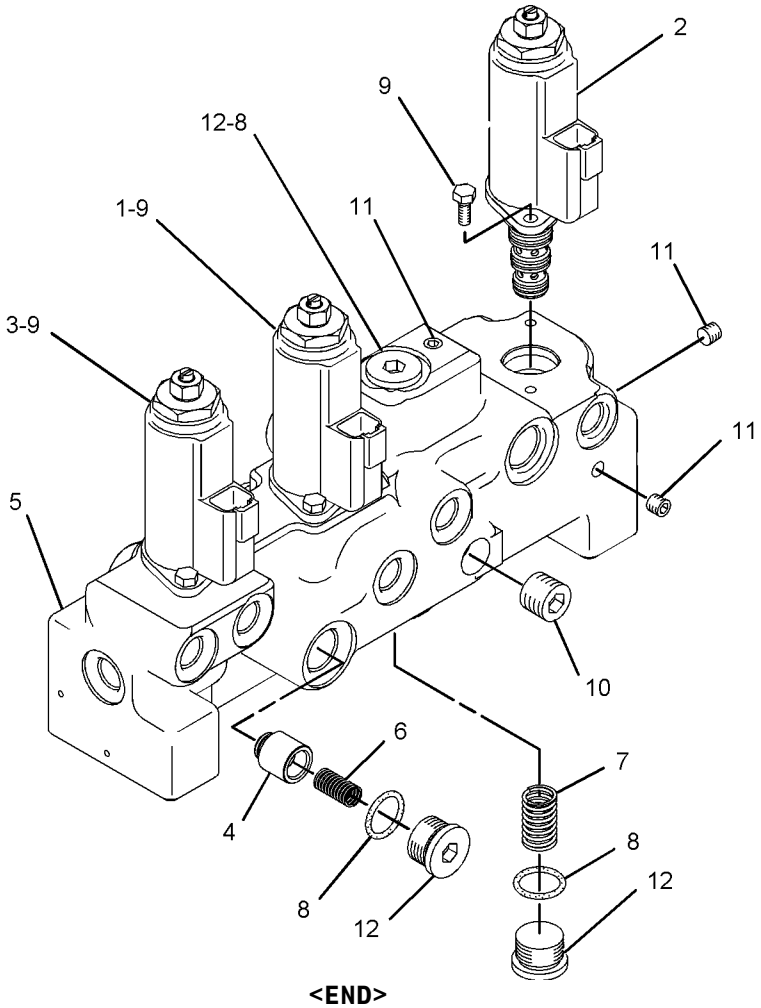

GRAPHIC #1 **<END>** g01083316

HYDRAULIC SYSTEM

185-6952 MOTOR & MTG GP-TRAVEL

S/N: CJN1-UP

PART OF 165-5777 DRIVE GP-FINAL

SMCS-4351 **i01884173**

NOTE	REF NO	GRAPHIC REF	PART NUMBER	QTY	PART NAME 1 2 3 4 5 6 (PRODUCT LEVEL)	SEE PAGE
Y	1	1	**185-6953**	1	MOTOR GP-TRAVEL	644
Y	2	1	**199-0504**	1	VALVE GP-TRAVEL COUNTERBALANCE	751
M	3	1	**8T-4176**	6	BOLT (M12X1.75X90MM)	
M	4	1	**095-0707**	3	BOLT (M16X2X120MM)	

M-METRIC PART
Y-SEPARATE ILLUSTRATION

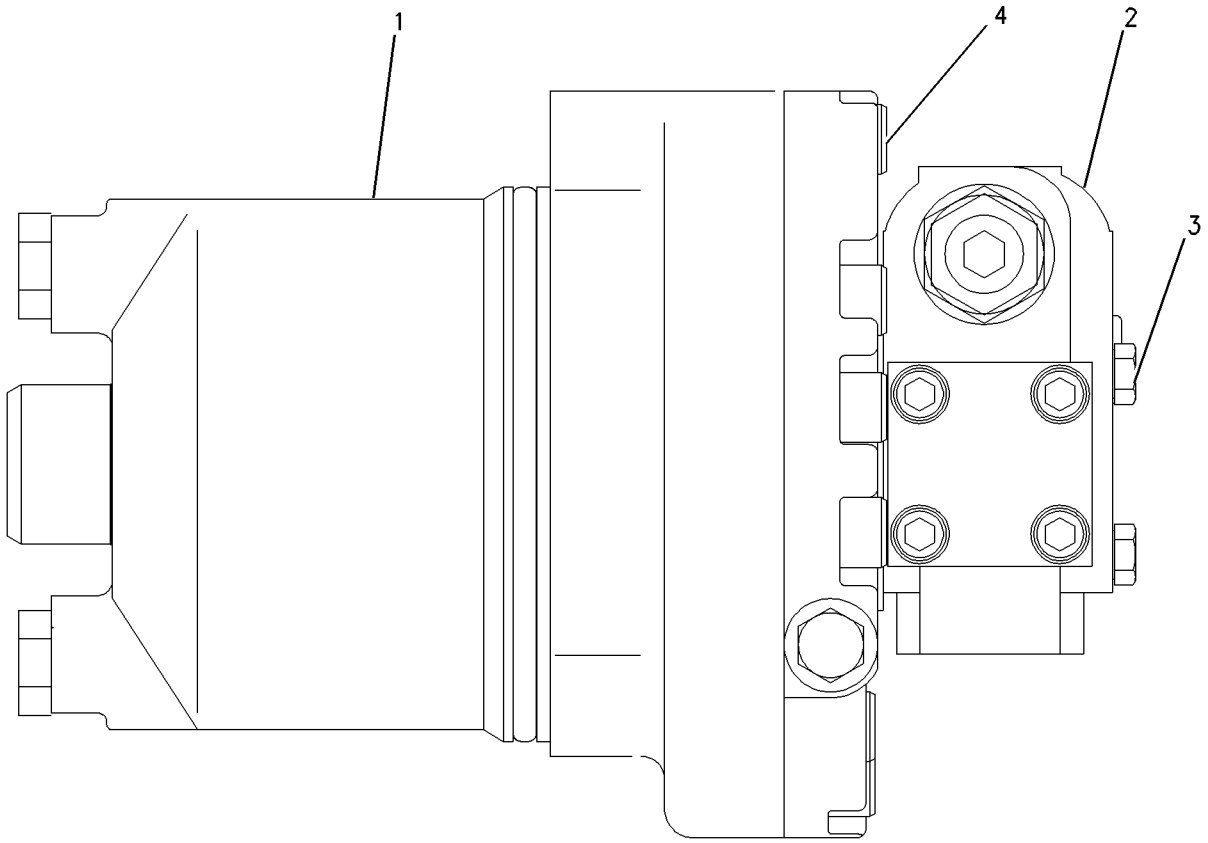

GRAPHIC #1 **<END>** g00755709

197-7179 MOTOR & MTG GP-TRAVEL

S/N: CJN1-UP
PART OF 197-7178 DRIVE GP-FINAL
AN ATTACHMENT

SMCS-4351 **i02525343**

NOTE	REF NO	GRAPHIC REF	PART NUMBER	QTY	PART NAME 1 2 3 4 5 6 (PRODUCT LEVEL)	SEE PAGE
Y	1	1	**197-7180**	1	MOTOR GP-TRAVEL	647
Y	2	1	**199-0504**	1	VALVE GP-TRAVEL COUNTERBALANCE	751
M	3	1	**8T-4176**	6	BOLT (M12X1.75X90-MM)	
M	4	1	**095-0707**	3	BOLT (M16X2X120-MM)	

M-METRIC PART
Y-SEPARATE ILLUSTRATION

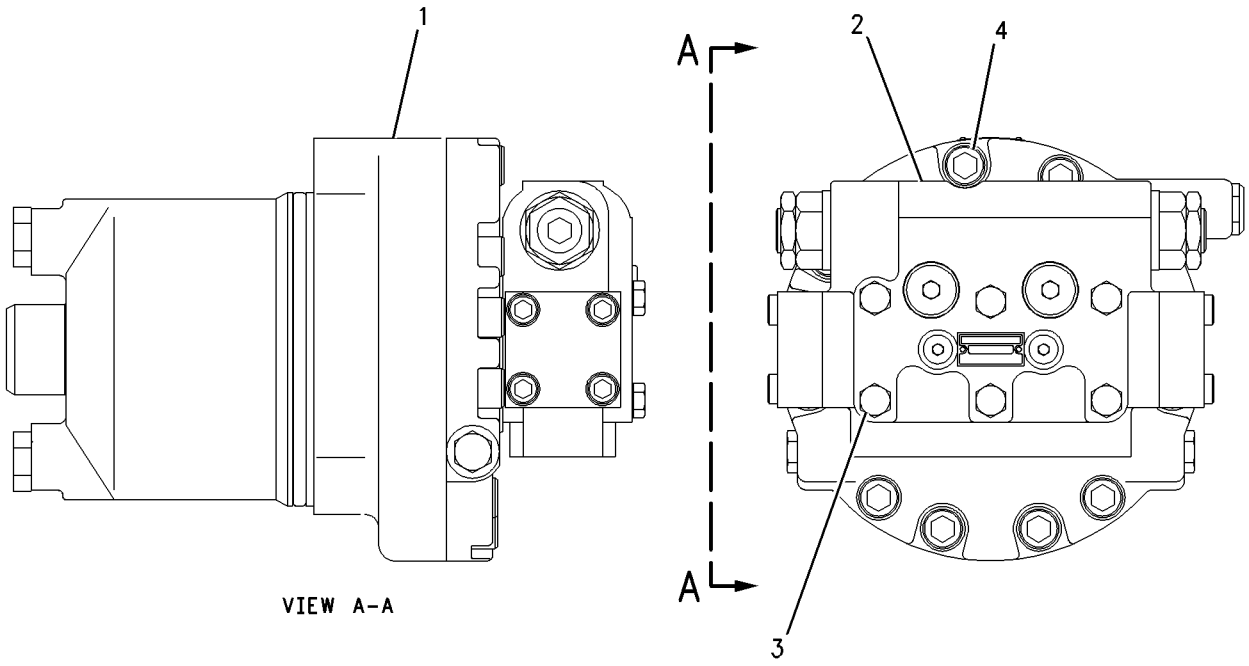

GRAPHIC #1 **<END>** g00933227

HYDRAULIC SYSTEM

204-2814 MOTOR GP-SWING

S/N: CJN1-UP

PART OF 199-4600 DRIVE GP-SWING

SMCS-5058 **i03245874**

NOTE	REF NO	GRAPHIC REF	PART NUMBER	QTY	PART NAME 1 2 3 4 5 6 (PRODUCT LEVEL)	SEE PAGE
	1	1	**099-0320**	1	BUSHING	
J	2	1	**099-0321**	1	SEAL-LIP TYPE	
	3	1	**099-0322**	1	BEARING-ROLLER	
	4	1	**7I-0057**	1	SPRING	
	5	1	**099-4749**	1	PLATE-CAM	
	6	1	**7I-0058**	1	PLATE-RETAINER	
	7	1	**200-3335**	1	PISTON AS	
	8	1	**099-6530**	3	PLATE-FRICTION	
	9	1	**099-6531**	3	PLATE-SEPARATOR	
J	10	1	**099-6532**	1	SEAL-O-RING	
	11	1	**099-6535**	1	PISTON-BRAKE	
J	12	1	**6F-4718**	2	SEAL-O-RING	
	13	1	**099-0328**	16	SPRING	
	14	1	**099-0329**	2	PIN	
	15	1	**099-0330**	4	SPRING	
	16	1	**099-0331**	4	RING	
	17	1	**099-0332**	4	BUSHING	
	18	1	**099-0333**	1	PLATE-VALVE	
	19	1	**099-0334**	1	BEARING AS-NEEDLE	
	20	1	**099-0335**	1	RING-RETAINING	
	21	1	**123-2143**	1	BARREL AS	
	22	1	**209-6012**	1	HOUSING	
	23	1	**200-3338**	1	BUSHING	
	24	1	**7I-0060**	2	PLUG	
J	25	1	**095-1784**	2	RING-BACKUP	
J	26	1	**095-1585**	2	SEAL-O-RING	
J	27	1	**095-1580**	2	SEAL-O-RING	
	28	1	**7I-0061**	2	VALVE (CROSSOVER RELIEF)	
	29	1	**7I-0062**	2	SPRING	
	30	1	**7I-0063**	2	SLEEVE AS	
	31	1	**194-8400**	1	HEAD	
J	32	1	**095-1594**	4	SEAL-O-RING	
J	33	1	**3J-1907**	3	SEAL-O-RING	
	34	1	**9S-4191**	3	PLUG-O-RING	
	35	1	**229-0993**	2	VALVE GP-RELIEF (PISTON MOTOR)	
					(EACH INCLUDES)	
		1	**095-1594**	1	SEAL-O-RING	
M	36	1	**8T-0347**	4	BOLT-SOCKET HEAD (M14X1.5X45-MM)	
	37	1	**096-5933**	2	VALVE-CHECK (MAKEUP)	
J	38	1	**095-1789**	2	RING	
	39	1	**096-5934**	2	SPRING	
	40	1	**096-5932**	2	PLUG	
					AVAILABLE REPAIR KIT(S):	
J			**123-2145**	1	KIT-SEAL (SWING MOTOR)	

J-KIT MARKED J SERVICES PARTS MARKED J
M-METRIC PART

204-2814 MOTOR GP-SWING *(contd.)* **i03245874**

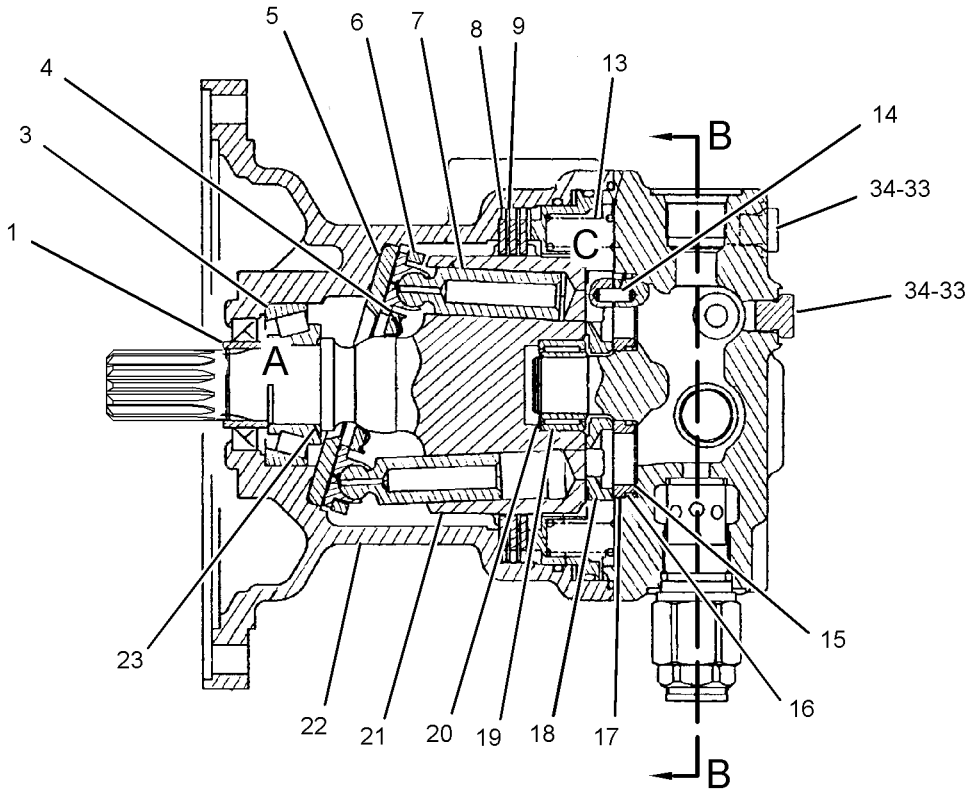

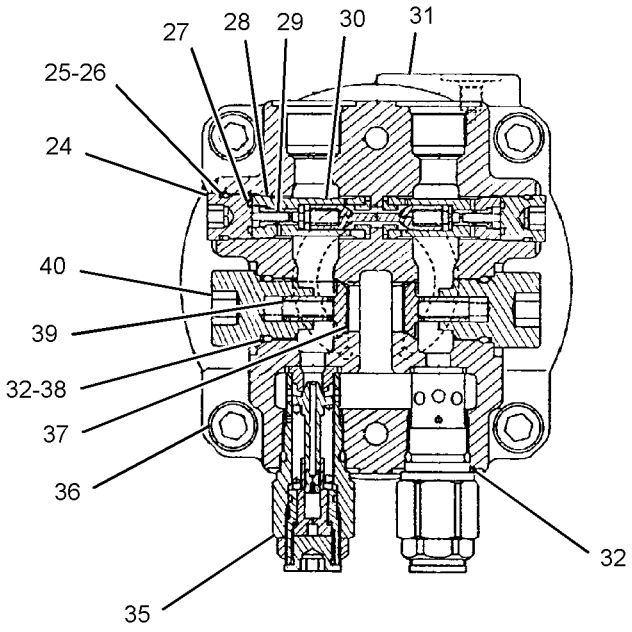

SECTION B-B

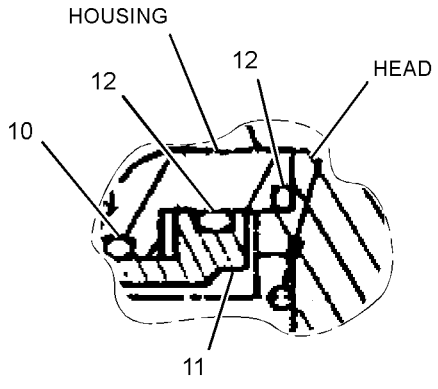

VIEW OF AREA C

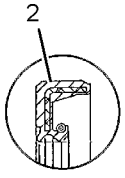

VIEW OF AREA A

GRAPHIC #1 **<END>** g01223330

HYDRAULIC SYSTEM

266-8046 MOTOR GP-SWING

S/N: CJN1-UP
PART OF 267-6779 DRIVE GP-SWING
AN ATTACHMENT

SMCS-5058 **i03245932**

NOTE	REF NO	GRAPHIC REF	PART NUMBER	QTY	PART NAME 1 2 3 4 5 6 (PRODUCT LEVEL)	SEE PAGE
	1	1	**099-0320**	1	BUSHING	
J	2	1	**099-0321**	1	SEAL-LIP TYPE	
	3	1	**099-0322**	1	BEARING-ROLLER	
	4	1	**7I-0057**	1	SPRING	
	5	1	**099-4749**	1	PLATE-CAM	
	6	1	**7I-0058**	1	PLATE-RETAINER	
	7	1	**200-3335**	1	PISTON AS	
	8	1	**099-6530**	3	PLATE-FRICTION	
	9	1	**099-6531**	3	PLATE-SEPARATOR	
J	10	1	**099-6532**	1	SEAL-O-RING	
	11	1	**099-6535**	1	PISTON-BRAKE	
J	12	1	**6F-4718**	2	SEAL-O-RING	
	13	1	**099-0328**	16	SPRING	
	14	1	**099-0329**	2	PIN	
	15	1	**099-0330**	4	SPRING	
	16	1	**099-0331**	4	RING	
	17	1	**099-0332**	4	BUSHING	
	18	1	**099-0333**	1	PLATE-VALVE	
	19	1	**099-0334**	1	BEARING AS-NEEDLE	
	20	1	**099-0335**	1	RING-RETAINING	
	21	1	**123-2143**	1	BARREL AS	
	22	1	**209-6012**	1	HOUSING	
	23	1	**200-3338**	1	BUSHING	
	24	1	**7I-0060**	2	PLUG	
J	25	1	**095-1784**	2	RING-BACKUP	
J	26	1	**095-1585**	2	SEAL-O-RING	
J	27	1	**095-1580**	2	SEAL-O-RING	
	28	1	**7I-0061**	2	VALVE (CROSSOVER RELIEF)	
	29	1	**7I-0062**	2	SPRING	
	30	1	**7I-0063**	2	SLEEVE AS	
	31	1	**274-2565**	1	HEAD	
J	32	1	**095-1594**	4	SEAL-O-RING	
J	33	1	**3J-1907**	3	SEAL-O-RING	
	34	1	**9S-4191**	3	PLUG-O-RING	
	35	1	**229-0993**	2	VALVE GP-RELIEF (SWING)	
					(EACH INCLUDES)	
		1	**095-1594**	1	SEAL-O-RING	
M	36	1	**8T-0347**	4	BOLT-SOCKET HEAD (M14X1.5X45-MM)	
	37	1	**096-5933**	2	VALVE-CHECK (MAKEUP)	
J	38	1	**095-1789**	2	RING	
	39	1	**096-5934**	2	SPRING	
	40	1	**096-5932**	2	PLUG	
					AVAILABLE REPAIR KIT(S):	
J			**123-2145**	1	KIT-SEAL (SWING MOTOR)	

J-KIT MARKED J SERVICES PART(S) MARKED J
M-METRIC PART

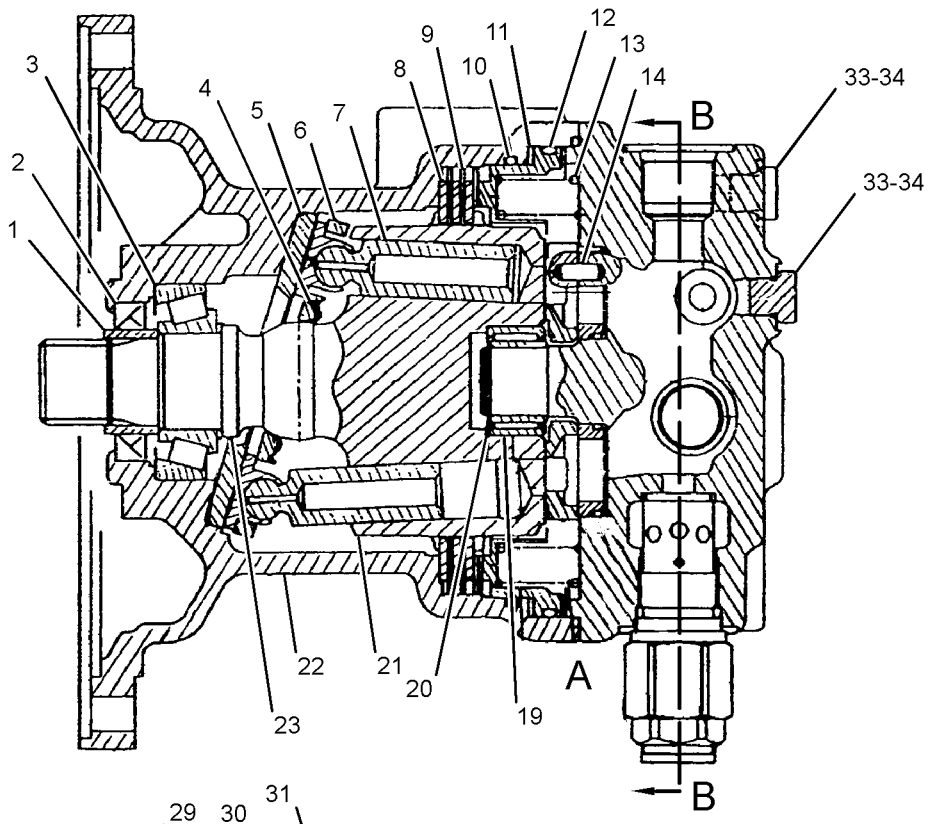

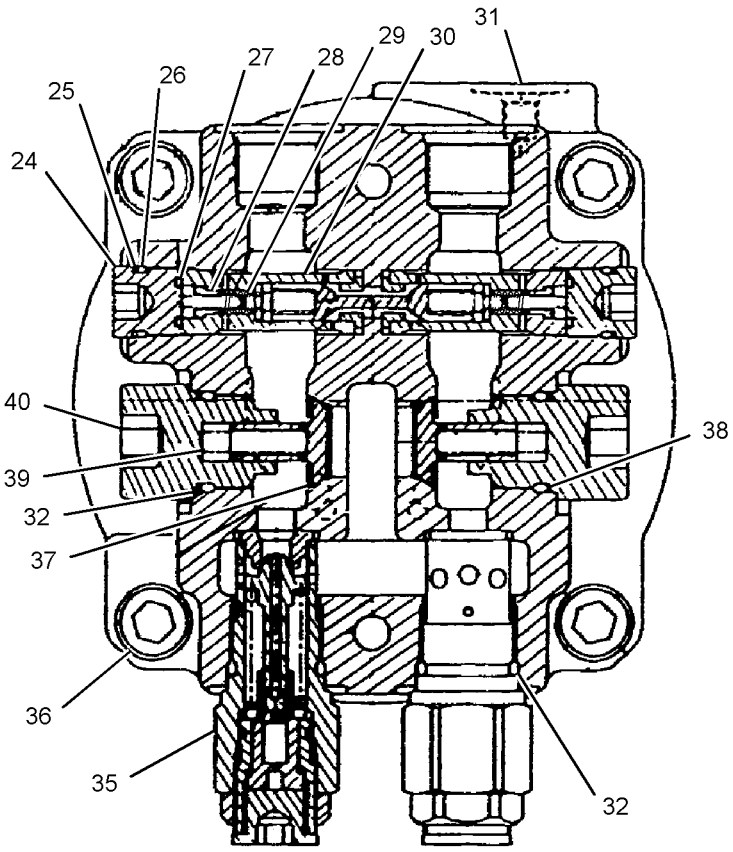

SECTION B-B

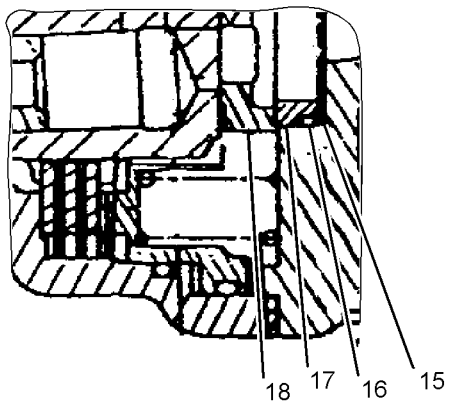

VIEW OF AREA A

GRAPHIC #1 **<END>** g01382003

HYDRAULIC SYSTEM

185-6953 MOTOR GP-TRAVEL

S/N: CJN1-UP

PART OF 185-6952 MOTOR & MTG GP-TRAVEL

SMCS-4351, 5058 **i01832068**

NOTE	REF NO	GRAPHIC REF	PART NUMBER	QTY	PART NAME 1 2 3 4 5 6 (PRODUCT LEVEL)	SEE PAGE
	1	1	**209-5894**	1	SHAFT	
	2	1	**087-4743**	2	STOP	
	3	1	**094-1399**	1	RING-RETAINING	
	4	1	**7Y-4212**	1	BEARING	
	5	1	**087-4757**	2	PISTON	
	6	1	**107-6969**	1	BODY	
	7	1	**122-5114**	1	GUIDE-BALL	
	8	1	**184-4535**	1	PLATE-CAM	
	9	1	**147-5860**	1	PISTON AS	
	10	1	**133-6777**	1	BARREL AS	
	11	1	**107-6954**	4	PLATE-FRICTION	
	12	1	**107-6955**	5	PLATE-SEPARATOR	
	13	1	**096-1523**	1	GUIDE-PISTON	
	14	1	**7Y-4213**	1	PISTON-BRAKE	
	15	1	**7Y-4202**	1	HEAD	
M	16	1	**8T-4944**	10	BOLT-SOCKET HEAD (M16X2X40-MM)	
B	17	1	**096-1521**	1	SHIM (1-MM THK)	
B	18	1	**096-3785**	1	SHIM (1.2-MM THK)	
B	19	1	**096-3787**	1	SHIM (1.6-MM THK)	
B	20	1	**096-3786**	1	SHIM (1.4-MM THK)	
B	21	1	**096-1522**	1	SHIM (2-MM THK)	
B	22	1	**096-3788**	1	SHIM (1.8-MM THK)	
	23	1	**096-5916**	2	SEAT	
	24	1	**2D-6642**	2	BALL	
J	25	1	**095-1572**	2	SEAL-O-RING	
J	26	1	**096-5919**	2	RING-BACKUP	
	27	1	**096-5915**	2	RETAINER	
	28	1	**096-4003**	1	SET-BEARING	
J	29	1	**095-1585**	1	SEAL-O-RING	
	30	1	**087-4742**	1	VALVE	
	31	1	**096-1519**	1	SEAT	
	32	1	**095-7380**	1	SPRING	
	33	1	**095-7382**	1	RETAINER	
	34	1	**094-1875**	1	DOWEL	
	35	1	**095-7378**	1	WASHER SET	
	36	1	**094-1882**	11	PLUG	
J	37	1	**095-1575**	3	SEAL-O-RING	
J	38	1	**096-4378**	1	RING-BACKUP	
J	39	1	**096-4377**	2	SEAL-O-RING	
J	40	1	**095-7384**	1	SEAL-O-RING	
J	41	1	**095-7383**	1	SEAL-O-RING	
J	42	1	**095-7386**	1	RING-BACKUP	
J	43	1	**095-7387**	1	RING	
J	44	1	**095-1685**	1	SEAL-O-RING	
	45	1	**118-4057**	9	SPRING	
	46	1	**7Y-4215**	1	SPACER	
J	47	1	**095-1586**	2	SEAL-O-RING	
J	48	1	**7Y-4217**	2	RING-BACKUP	
J	49	1	**096-4376**	1	SEAL-LIP TYPE	
	50	1	**123-2008**	2	KEY	
	52	1	**121-1558**	2	PIN	
J	53	1	**3K-0360**	1	SEAL-O-RING	
	54	1	**9S-4185**	1	PLUG-O-RING	
J	55	1	**095-1700**	2	SEAL-O-RING	
	56	1	**7Y-4224**	2	ORIFICE	
	57	1	**096-3978**	1	SPRING	

185-6953 MOTOR GP-TRAVEL *(contd.)* i01832068

NOTE	REF NO	GRAPHIC REF	PART NUMBER	QTY	PART NAME 1 2 3 4 5 6 (PRODUCT LEVEL)	SEE PAGE
	58	1	**7Y-4216**	1	SPOOL	
J	59	1	**2M-9780**	1	SEAL-O-RING	
	60	1	**087-4786**	1	ADAPTER	
					AVAILABLE REPAIR KIT(S):	
J			**7Y-4222**	1	KIT-SEAL (TRAVEL MOTOR)	

B-USE AS REQUIRED
J-KIT MARKED J SERVICES PARTS MARKED J
M-METRIC PART

185-6953 MOTOR GP-TRAVEL *(contd.)* i01832068

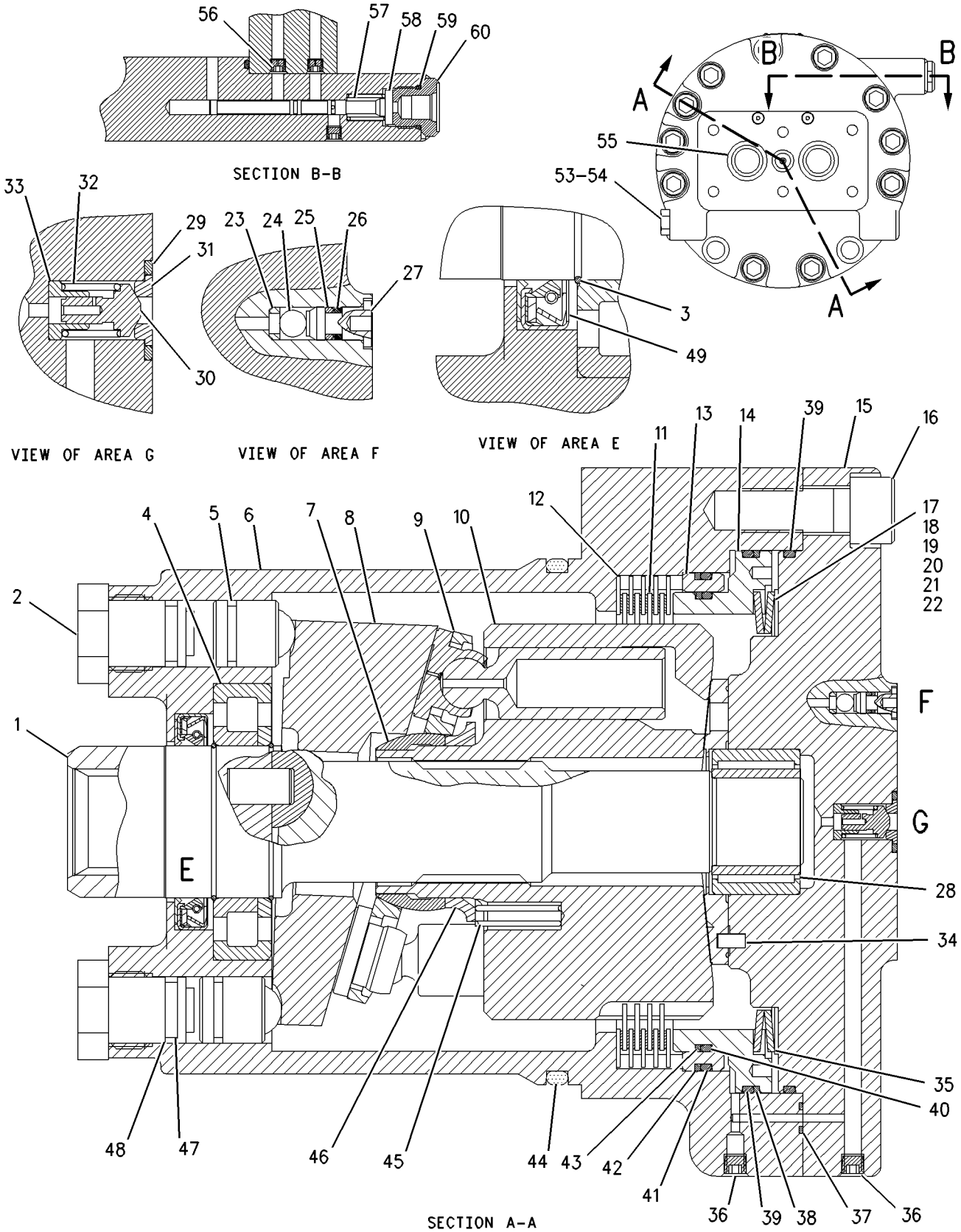

GRAPHIC #1 **<END>** g00935725

HYDRAULIC SYSTEM

197-7180 MOTOR GP-TRAVEL

S/N: CJN1-UP

PART OF 197-7179 MOTOR & MTG GP-TRAVEL

AN ATTACHMENT

SMCS-4351, 5058 **i02194734**

NOTE	REF NO	GRAPHIC REF	PART NUMBER	QTY	PART NAME 1 2 3 4 5 6 (PRODUCT LEVEL)	SEE PAGE
	1	1	**209-5894**	1	SHAFT	
	2	1	**087-4743**	2	STOP	
	3	1	**094-1399**	1	RING-RETAINING	
	4	1	**7Y-4212**	1	BEARING	
	5	1	**087-4757**	2	PISTON	
	6	1	**107-6969**	1	BODY	
	7	1	**122-5114**	1	GUIDE-BALL	
	8	1	**184-4535**	1	PLATE-CAM	
	9	1	**147-5860**	1	PISTON AS	
	10	1	**133-6777**	1	BARREL AS	
	11	1	**107-6954**	4	PLATE-FRICTION	
	12	1	**107-6955**	5	PLATE-SEPARATOR	
B	13	1	**107-6976**	1	SHIM (1.2-MM THK)	
B	14	1	**107-6977**	1	SHIM (1.4-MM THK)	
	15	1	**107-6970**	1	HEAD	
M	16	1	**8T-4944**	10	BOLT-SOCKET HEAD (M16X2X40-MM)	
B	17	1	**107-6978**	1	SHIM (1.6-MM THK)	
B	18	1	**107-6979**	1	SHIM (1.8-MM THK)	
B	19	1	**107-6980**	1	SHIM (1-MM THK)	
B	20	1	**107-6981**	1	SHIM (0.8-MM THK)	
	21	1	**107-6974**	1	WASHER-SPRING	
	22	1	**107-6972**	1	GUIDE-PISTON	
	23	2	**096-5916**	2	SEAT	
	24	2	**2D-6642**	2	BALL	
J	25	2	**095-1572**	2	SEAL-O-RING	
J	26	2	**096-5919**	2	RING-BACKUP	
	27	2	**096-5915**	2	RETAINER	
	28	1	**096-4003**	1	SET-BEARING	
J	29	1	**095-1585**	1	SEAL-O-RING	
	30	1	**137-3723**	1	VALVE	
	31	1	**096-1519**	1	SEAT	
	32	1	**095-7380**	1	SPRING	
	33	1	**137-3708**	1	RETAINER	
	34	1	**094-1875**	1	DOWEL	
	35	1	**107-6971**	1	PISTON-BRAKE	
	36	1	**094-1882**	11	PLUG	
J	37	1	**095-1575**	3	SEAL-O-RING	
J	38	2	**096-4378**	1	RING-BACKUP	
J	39	1,2	**096-4377**	2	SEAL-O-RING	
J	40	2	**107-6986**	1	SEAL-O-RING	
J	41	2	**095-7383**	1	SEAL-O-RING	
J	42	2	**095-7386**	1	RING-BACKUP	
J	43	2	**107-6987**	1	RING-BACKUP	
J	44	1	**095-1685**	1	SEAL-O-RING	
	45	1	**118-4057**	9	SPRING	
	46	1	**7Y-4215**	1	SPACER	
J	47	2	**095-1586**	2	SEAL-O-RING	
J	48	2	**7Y-4217**	2	RING-BACKUP	
J	49	1	**096-4376**	1	SEAL-LIP TYPE	
	50	1	**123-2008**	2	KEY	
	51	2	**087-4786**	1	ADAPTER	
	52	1	**121-1558**	2	PIN	
J	53	1	**3K-0360**	1	SEAL-O-RING	
	54	1	**9S-4185**	1	PLUG-O-RING	
J	55	1	**095-1700**	2	SEAL-O-RING	

197-7180 **MOTOR GP-TRAVEL** ***(contd.)*** **i02194734**

NOTE	REF NO	GRAPHIC REF	PART NUMBER	QTY	PART NAME 1 2 3 4 5 6 (PRODUCT LEVEL)	SEE PAGE
	56	2	**7Y-4224**	2	ORIFICE	
	57	2	**096-3978**	1	SPRING	
	58	2	**7Y-4216**	1	SPOOL	
J	59	2	**2M-9780**	1	SEAL-O-RING	
					AVAILABLE REPAIR KIT(S):	
J			**107-6988**	1	KIT-SEAL (TRAVEL MOTOR)	

B-USE AS REQUIRED
J-KIT MARKED J SERVICES PARTS MARKED J
M-METRIC PART

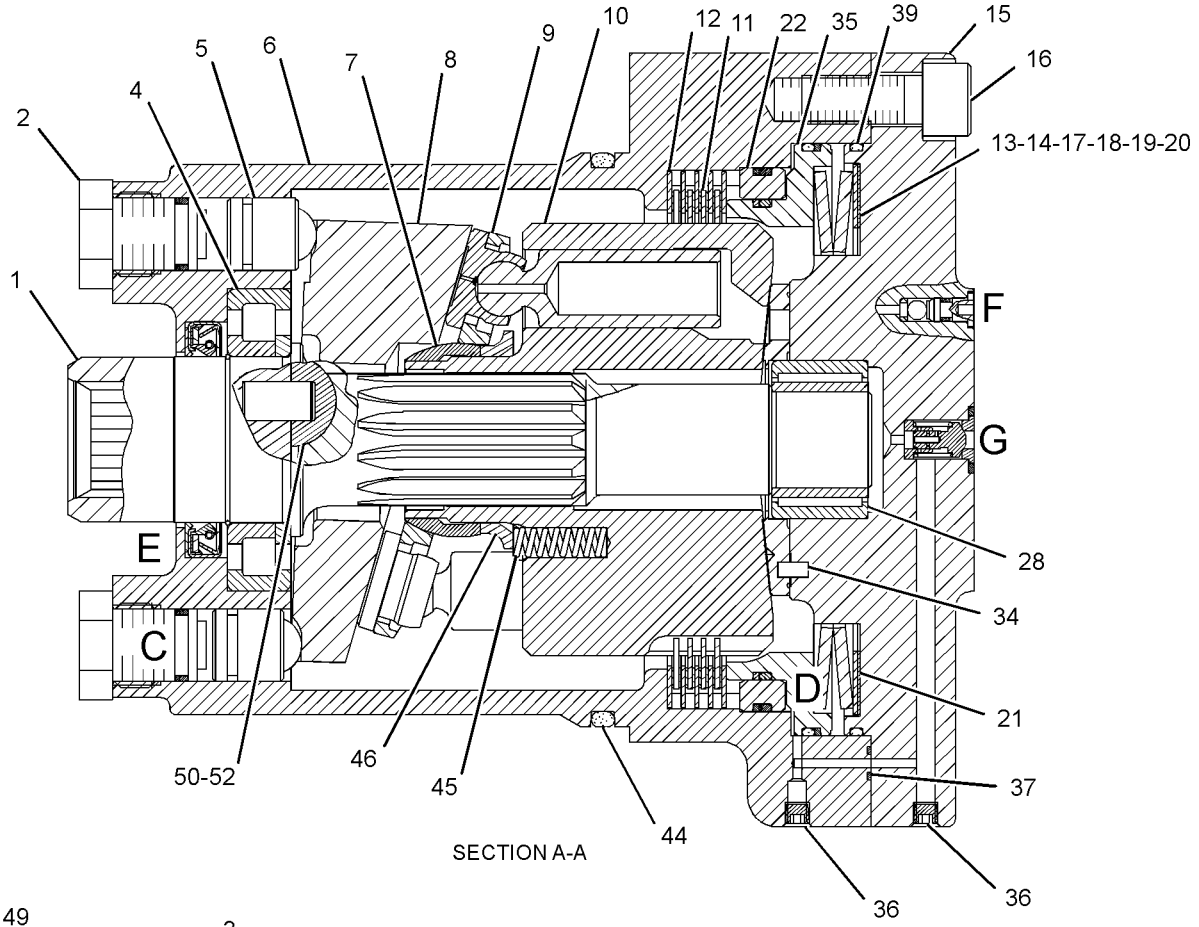

SECTION A-A

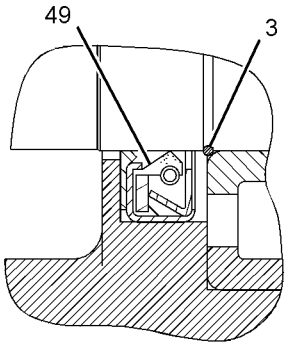

VIEW OF AREA E

REFER TO ALL ILLUSTRATIONS OF
THIS GROUP FOR AUXILIARY VIEWS

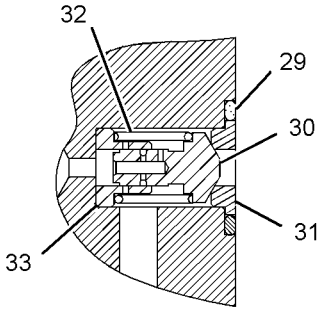

VIEW OF AREA G

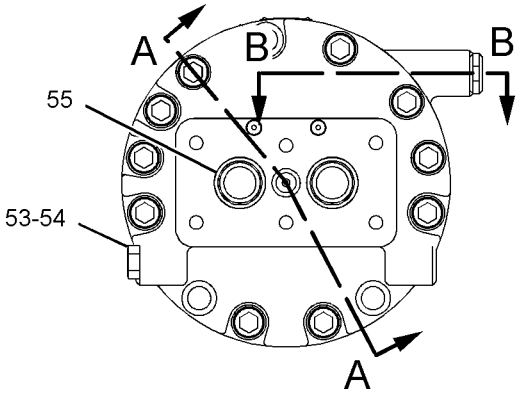

GRAPHIC #1

g01160497

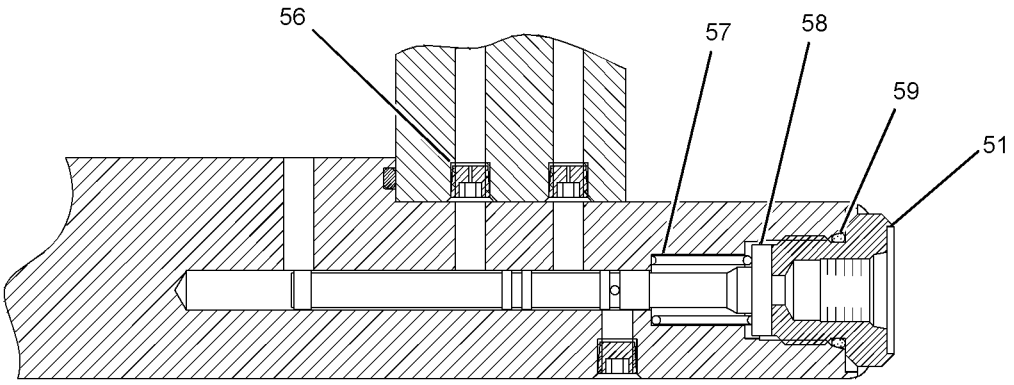

SECTION B-B

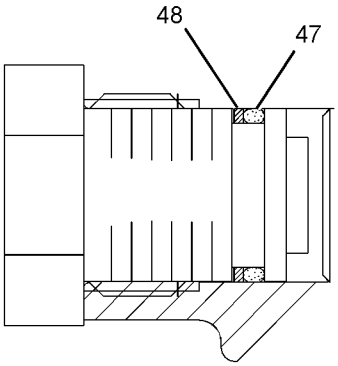

VIEW OF AREA C

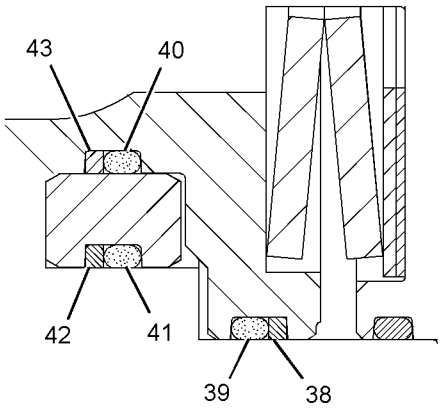

VIEW OF AREA D

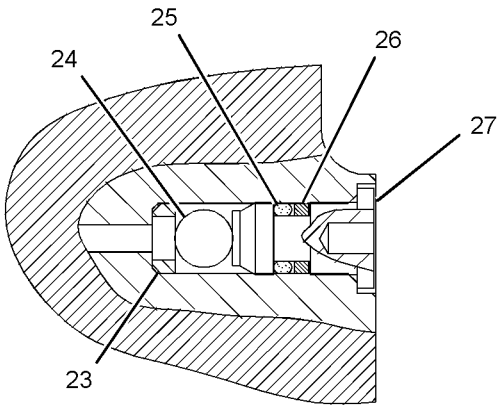

VIEW OF AREA F

GRAPHIC #2 **<END>** g01160498

302-3225 MOUNTING GP-MAIN CONTROL VALVE

S/N: CJN1-UP

PART OF 259-7547 HYDRAULIC AR

SMCS-5051 **i02753359**

NOTE	REF NO	GRAPHIC REF	PART NUMBER	QTY	PART NAME 1 2 3 4 5 6 (PRODUCT LEVEL)	SEE PAGE
	1	1	**178-6450**	4	SPACER (17X35X30-MM THK)	
	2	1	**269-9773**	1	SUPPORT AS	
	3	1	**302-3226**	1	SUPPORT AS	
M	4	1	**7X-2552**	3	BOLT (M16X2X30-MM)	
M	5	1	**8T-4140**	4	BOLT (M16X2X60-MM)	
	6	1	**9X-8257**	3	WASHER (17.5X30X3.5-MM THK)	

M-METRIC PART

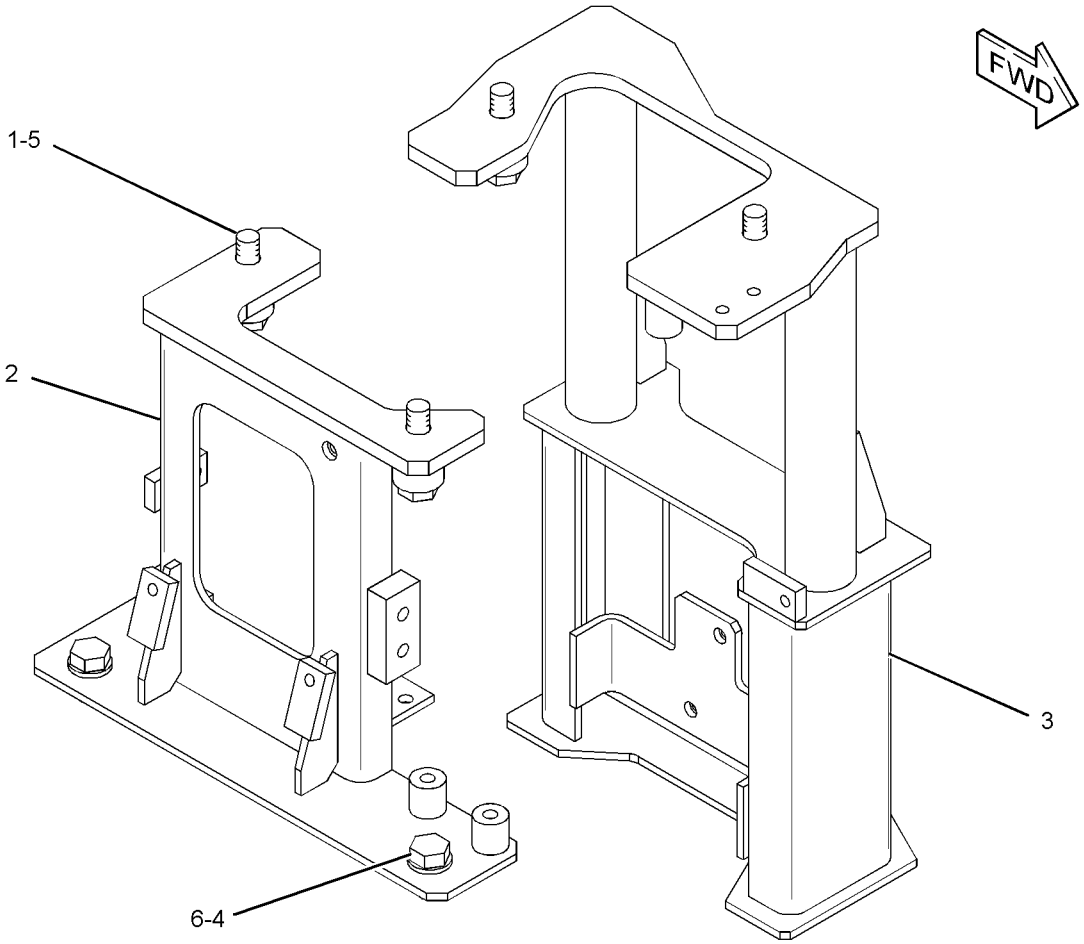

GRAPHIC #1 **<END>** g01380754

HYDRAULIC SYSTEM

259-0917 PUMP & MTG GP-AUXILIARY—MEDIUM PRESSURE

S/N: CJN1-UP

PART OF 259-7565, 270-5954 CONTROL AR-AUXILIARY

AN ATTACHMENT

SMCS-5070, 5073 **i02749965**

NOTE	REF NO	GRAPHIC REF	PART NUMBER	QTY	PART NAME 1 2 3 4 5 6 (PRODUCT LEVEL)	SEE PAGE
	1	1	**170-6738**	1	SPACER	
	2	1	**218-0557**	1	PUMP GP-GEAR	
	3	1	**222-2062**	1	COUPLING	
	4	1	**273-8315**	2	SEAL-O-RING	
	5	1	**8T-4121**	2	WASHER-HARD (11X21X2.5-MM THK)	
M	6	1	**8T-6466**	2	BOLT (M10X1.5X60-MM)	

M-METRIC PART

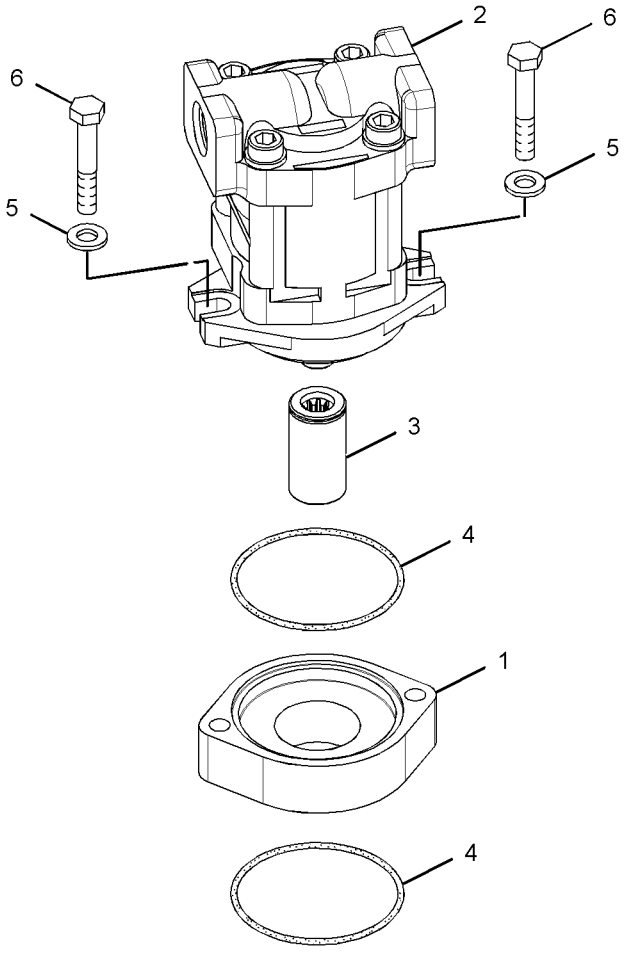

GRAPHIC #1 **<END>** g01379452

HYDRAULIC SYSTEM

255-3025 PUMP & MTG GP-MAIN HYDRAULIC

S/N: CJN1-UP

PART OF 259-7547 HYDRAULIC AR

SMCS-5070 **i02791366**

NOTE	REF NO	GRAPHIC REF	PART NUMBER	QTY	PART NAME 1 2 3 4 5 6 (PRODUCT LEVEL)	SEE PAGE
Y	1	1	*255-3027*	1	COUPLING GP-PUMP	394
Y	2	1	**311-7405**	1	PUMP GP-PISTON	654
	3	1	**8T-4121**	12	WASHER-HARD (11X21X2.5-MM THK)	
M	4	1	**8T-4195**	12	BOLT (M10X1.5X30-MM)	

M-METRIC PART
Y-SEPARATE ILLUSTRATION

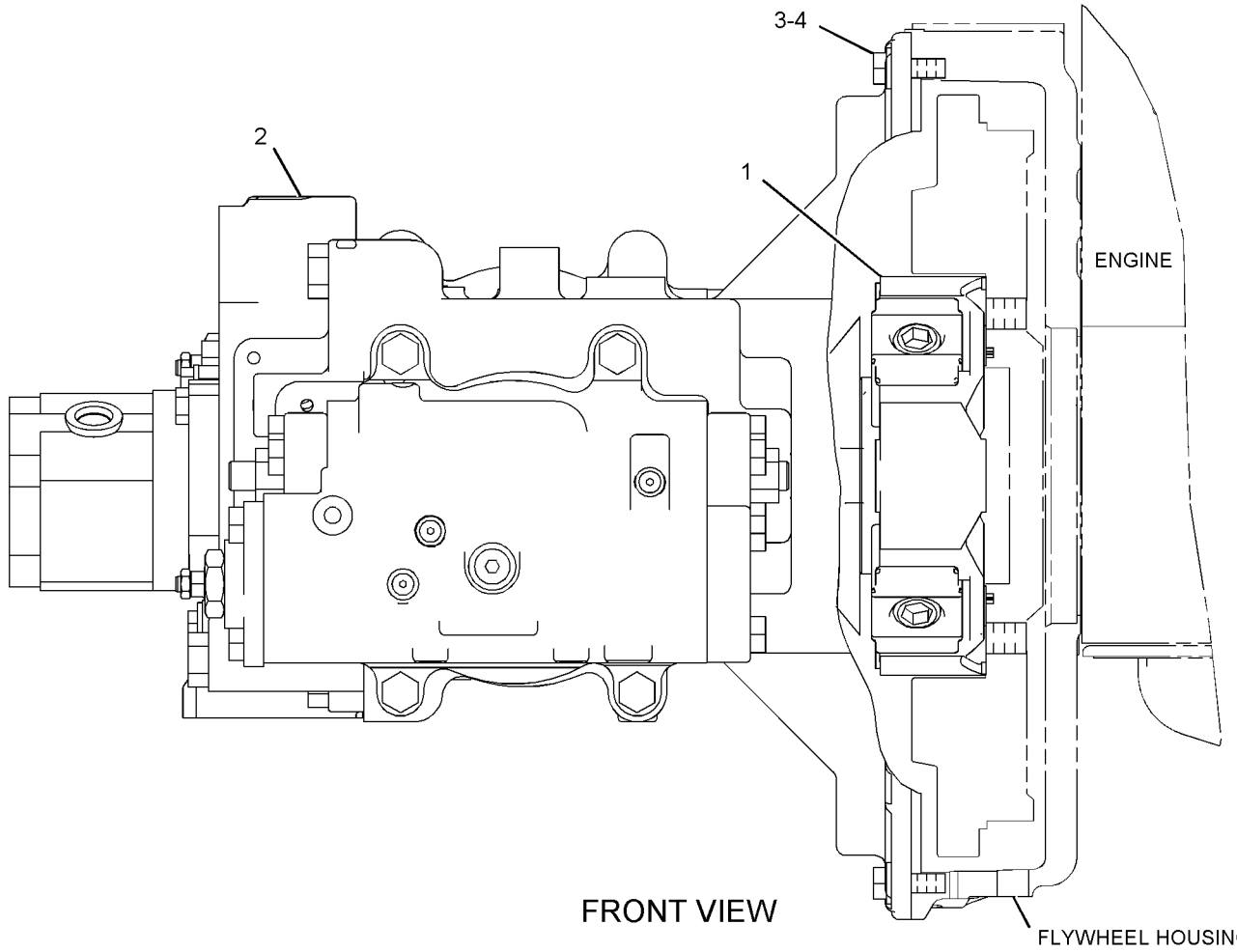

GRAPHIC #1 **<END>** g01325843

HYDRAULIC SYSTEM

311-7405 PUMP GP-PISTON

S/N: CJN1-UP

PART OF 255-3025 PUMP & MTG GP-MAIN HYDRAULIC

SMCS-5070 **i02790433**

NOTE	REF NO	GRAPHIC REF	PART NUMBER	QTY	PART NAME 1 2 3 4 5 6 (PRODUCT LEVEL)	SEE PAGE
Y	1	1	**111-9916**	1	VALVE GP-SOLENOID (PRESSURE REDUCING)	733
	2	2	**165-2793**	2	RETAINER	
	3	2	**165-2801**	2	BEARING-ROLLER	
	4	2	**165-2802**	1	SEAL-LIP TYPE	
	5	1	**165-2804**	1	FLANGE	
	6	2	**165-2805**	2	BLOCK	
	7	2	**165-3838**	1	BARREL AS	
	8	2	**165-3839**	1	BARREL AS	
	9	2	**165-3847**	18	PISTON AS	
	10	2	**165-3853**	1	COVER	
	11	1	**173-1203**	1	PUMP GP-GEAR	
	12	2	**176-8131**	2	SPACER-SPECIAL	
	13	2	**176-8132**	2	BEARING	
	14	2	**190-4896**	2	PLUG	
	15	2	**192-0573**	4	PIN-DOWEL	
	16	2	**199-0518**	2	SEAL-O-RING	
	17	2	**207-2985**	2	ORIFICE	
	18	1	**225-6216**	1	GASKET	
	19	2	**267-1628**	1	SHAFT-DRIVE	
	20	2	**267-1629**	1	SHAFT-DRIVEN	
	21	2	**267-8084**	2	BEARING-NEEDLE	
Y	22	1	**267-8088**	2	HEAD GP-PUMP	451
	23	2	**268-6263**	2	CAM	
	24	2	**268-6265**	1	PLATE	
	25	2	**269-2433**	4	BEARING-CRADLE	
	26	1	**282-9192**	1	CASE-FLANGE	
	27	2	**298-5732**	2	RETAINER-BALL	
	28	1	**311-7407**	1	BLOCK-PORT	
	29	1,2	**9S-4191**	3	PLUG-O-RING	
	30	1,2	**094-1875**	6	DOWEL	
	31	1	**094-1882**	12	PLUG	
	32	2	**095-1663**	1	SEAL-O-RING	
	34	2	**165-2799**	12	SPRING	
	35	2	**189-9763**	4	SEAL-O-RING	
	36	2	**1H-7339**	1	SEAL-O-RING	
	37	2	**1J-6472**	2	RING-RETAINING	
	38	2	**273-8320**	1	SEAL-O-RING	
	39	1,2	**3J-1907**	3	SEAL-O-RING	
	40	2	**6V-8144**	2	RING-RETAINING	
M	41	1	**7I-2272**	2	BOLT (M5X0.8X12-MM)	
M	42	1	**7X-2553**	5	BOLT (M16X2X40-MM)	
M	43	1	**7X-2556**	1	BOLT (M16X2X100-MM)	
	44	2	**8C-3338**	4	DOWEL	
	45	1	**8T-4121**	2	WASHER-HARD (11X21X2.5-MM THK)	
M	46	1	**8T-4136**	2	BOLT (M10X1.5X25-MM)	
M	47	2	**8T-4137**	2	BOLT (M10X1.5X20-MM)	
M	48	1	**8T-4139**	8	BOLT (M12X1.75X30-MM)	
M	49	1	**8T-4140**	2	BOLT (M16X2X60-MM)	
M	50	2	**8T-4185**	4	BOLT (M10X1.5X50-MM)	
M	51	2	**8T-7547**	4	BOLT (M8X1.25X30-MM)	
	52	2	**8T-9599**	1	RING-RETAINING	

M-METRIC PART
Y-SEPARATE ILLUSTRATION

311-7405 PUMP GP-PISTON *(contd.)* **i02790433**

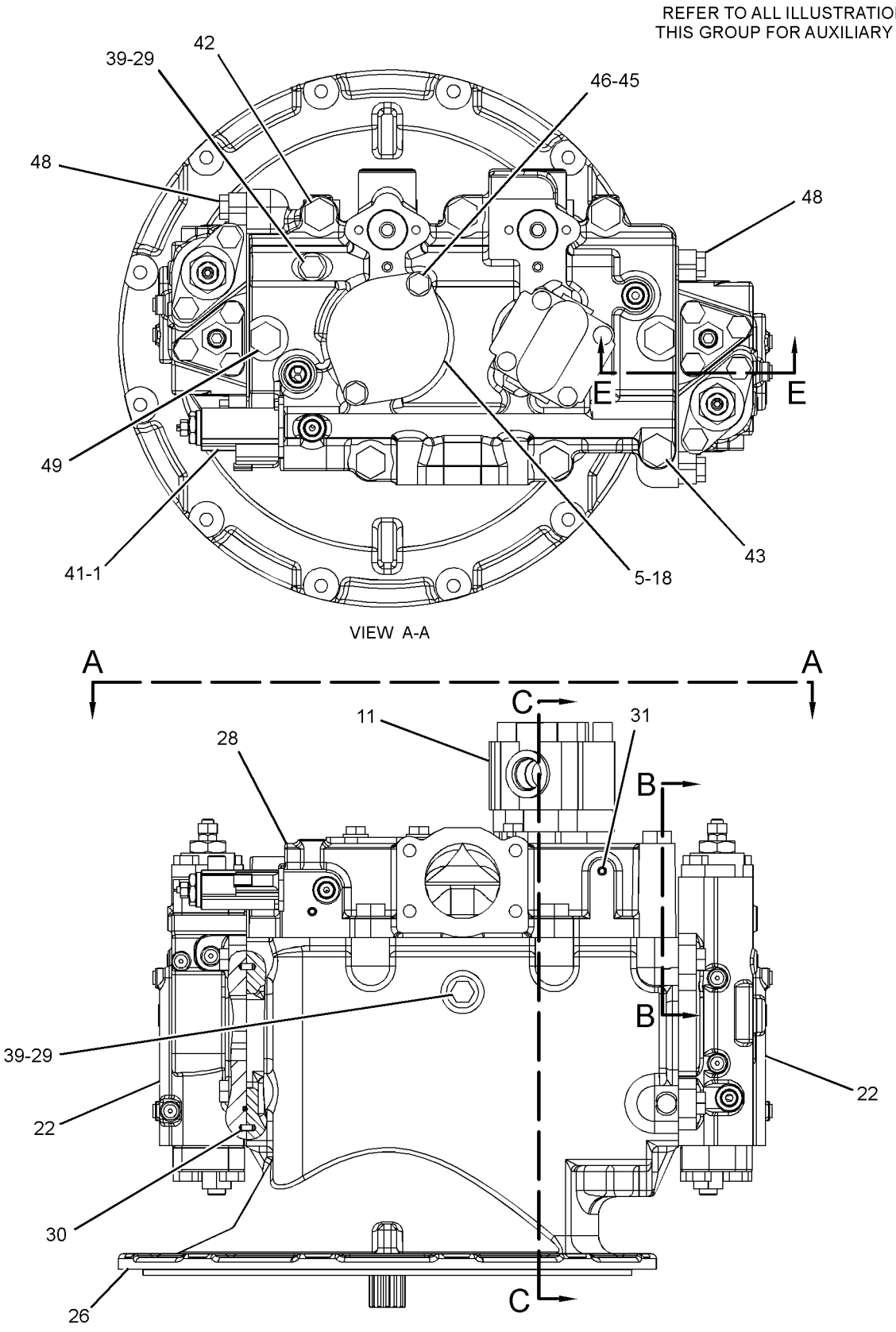

GRAPHIC #1 g01402429

311-7405 PUMP GP-PISTON *(contd.)* i02790433

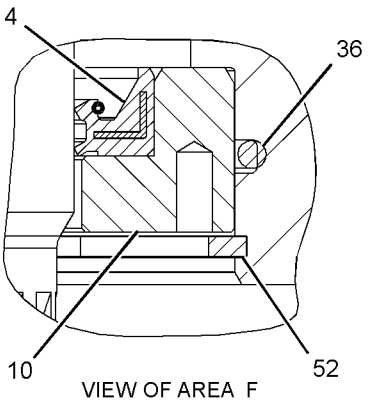

VIEW OF AREA F

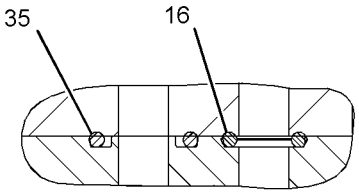

SECTION B-B

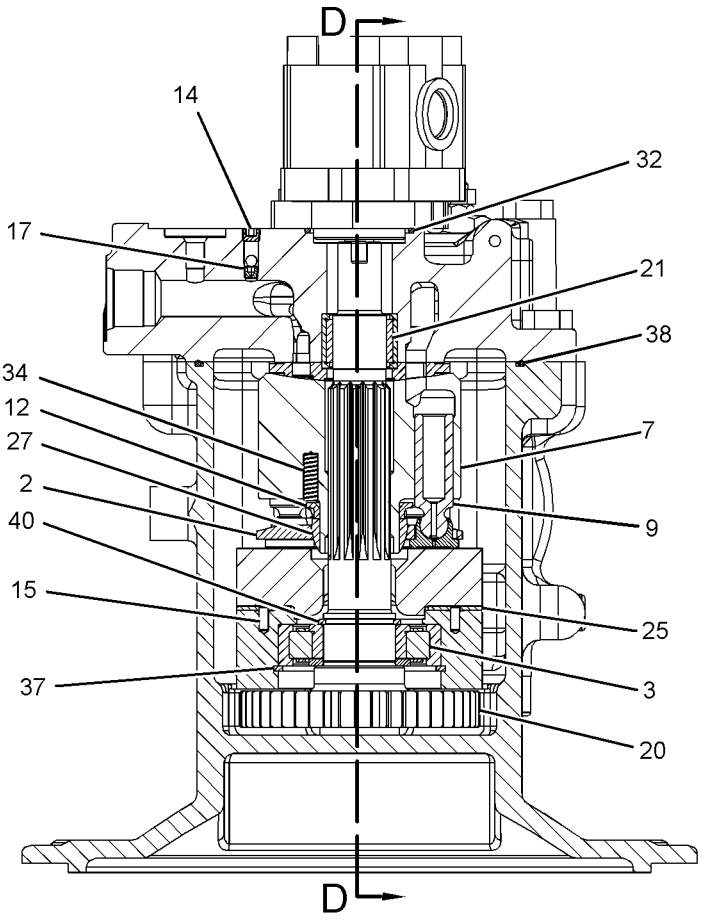

SECTION C-C

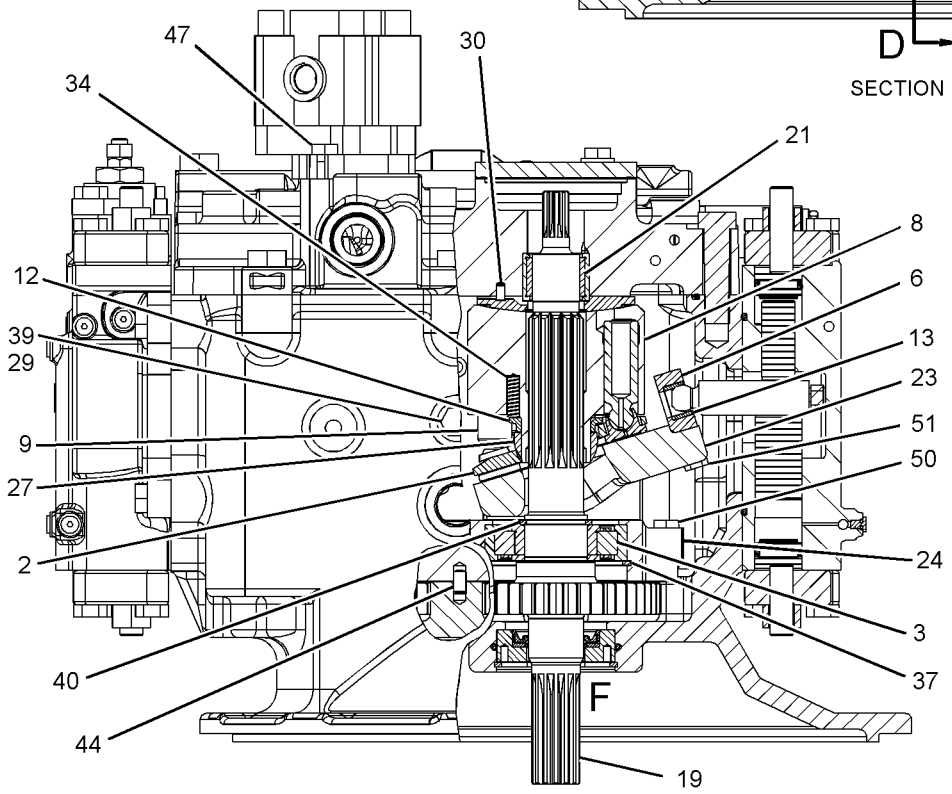

SECTION D-D

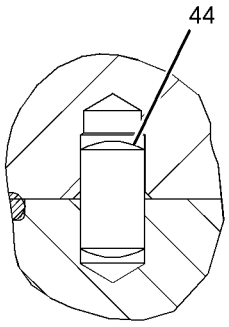

SECTION E-E

GRAPHIC #2

<END>

g01402430

259-0920 SCREEN GP-HYDRAULIC–OIL

S/N: CJN1-UP

PART OF 260-8205 TANK & FILTER GP-HYDRAULIC

SMCS-5068 **i02600421**

NOTE	REF NO	GRAPHIC REF	PART NUMBER	QTY	PART NAME 1 2 3 4 5 6 (PRODUCT LEVEL)	SEE PAGE
	1	1	**087-5317**	1	ROD	
	2	1	**209-6002**	1	SCREEN AS (HYDRAULIC TANK)	
	3	1	**259-0918**	1	GUIDE	
	4	1	**095-1552**	1	SEAL-O-RING	
	5	1	**095-6639**	1	SPRING	
M	6	1	**8T-4133**	2	NUT (M10X1.5-THD)	

M-METRIC PART

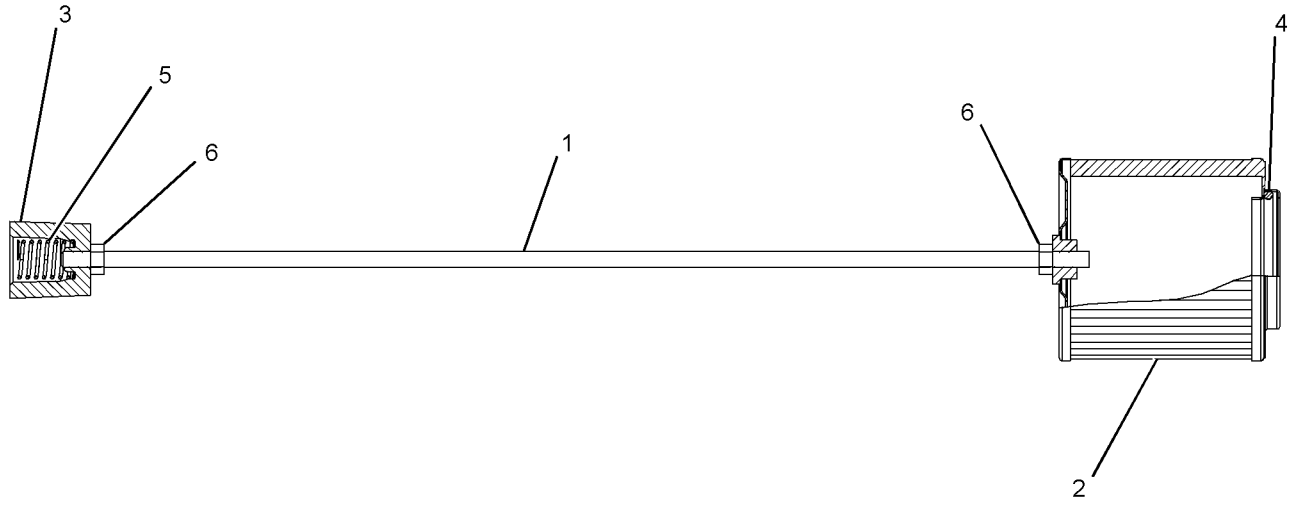

GRAPHIC #1 **<END>** g01311910

197-0173 SPOOL GP-CONTROL VALVE–WORK TOOL

S/N: CJN1-UP

PART OF 259-7798, 259-7804, 297-0374, 310-0157 VALVE GP-CONTROL, 259-7550 VALVE GP-MAIN CONTROL

ALSO AN ATTACHMENT

SMCS-5051, 5464 **i01463920**

NOTE	REF NO	GRAPHIC REF	PART NUMBER	QTY	PART NAME 1 2 3 4 5 6 (PRODUCT LEVEL)	SEE PAGE
M	1	1	**197-0148**	1	BOLT-SHOULDER (M8X1.25X56.1-MM)	
	2	1	**7I-7203**	2	SEAT	
	3	1	**197-0151**	1	SPRING	
	4	1	**197-0150**	1	SPRING	
	5	1	**197-0149**	1	STOP	
	6	1	**197-0156**	1	SPOOL	

M-METRIC PART

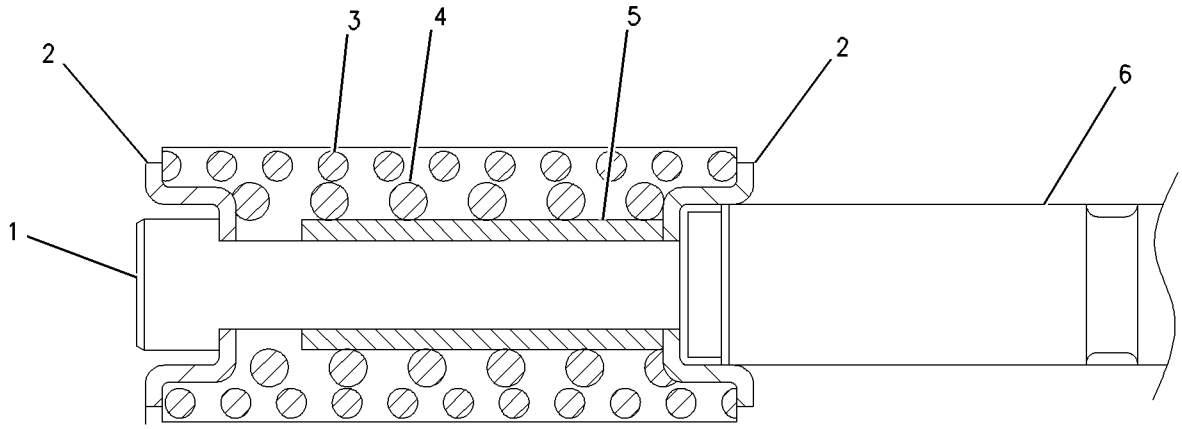

GRAPHIC #1 **<END>** g00766597

197-0219 SPOOL GP-CONTROL VALVE

S/N: CJN1-UP

PART OF 259-7550 VALVE GP-MAIN CONTROL

ALSO AN ATTACHMENT

SMCS-5051, 5464 **i01884898**

NOTE	REF NO	GRAPHIC REF	PART NUMBER	QTY	PART NAME 1 2 3 4 5 6 (PRODUCT LEVEL)	SEE PAGE
M	1	1	**197-0148**	1	BOLT-SHOULDER (M8X1.25X56.1-MM)	
	2	1	**7I-7203**	2	SEAT	
	3	1	**197-0151**	1	SPRING	
	4	1	**197-0150**	1	SPRING	
	5	1	**197-0149**	1	STOP	
	6	1	**197-0220**	1	SPOOL	

M-METRIC PART

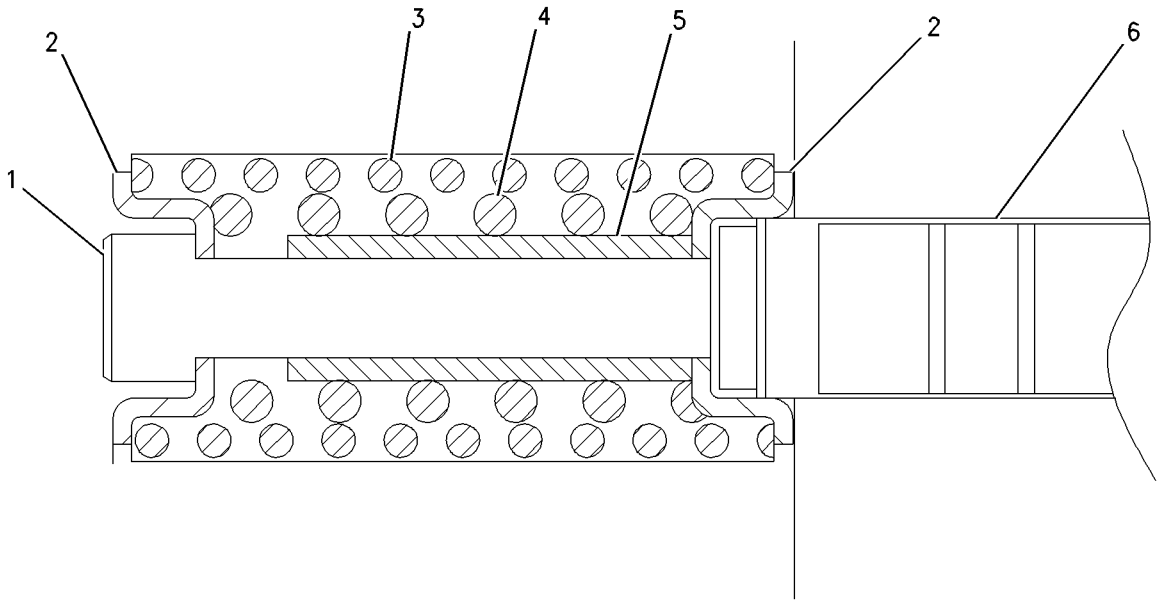

GRAPHIC #1 **<END>** g00766482

HYDRAULIC SYSTEM

229-1085 SPOOL GP-CONTROL VALVE—SWING

S/N: CJN1-UP

PART OF 259-7550 VALVE GP-MAIN CONTROL

ALSO AN ATTACHMENT

SMCS-5051, 5464 **i02148149**

NOTE	REF NO	GRAPHIC REF	PART NUMBER	QTY	PART NAME 1 2 3 4 5 6 (PRODUCT LEVEL)	SEE PAGE
M	1	1	**197-0148**	1	BOLT-SHOULDER (M8X1.25X56.1-MM)	
	2	1	**7I-7203**	2	SEAT	
	3	1	**197-0151**	1	SPRING	
	4	1	**197-0150**	1	SPRING	
	5	1	**197-0149**	1	STOP	
	6	1	**229-1086**	1	SPOOL	

M-METRIC PART

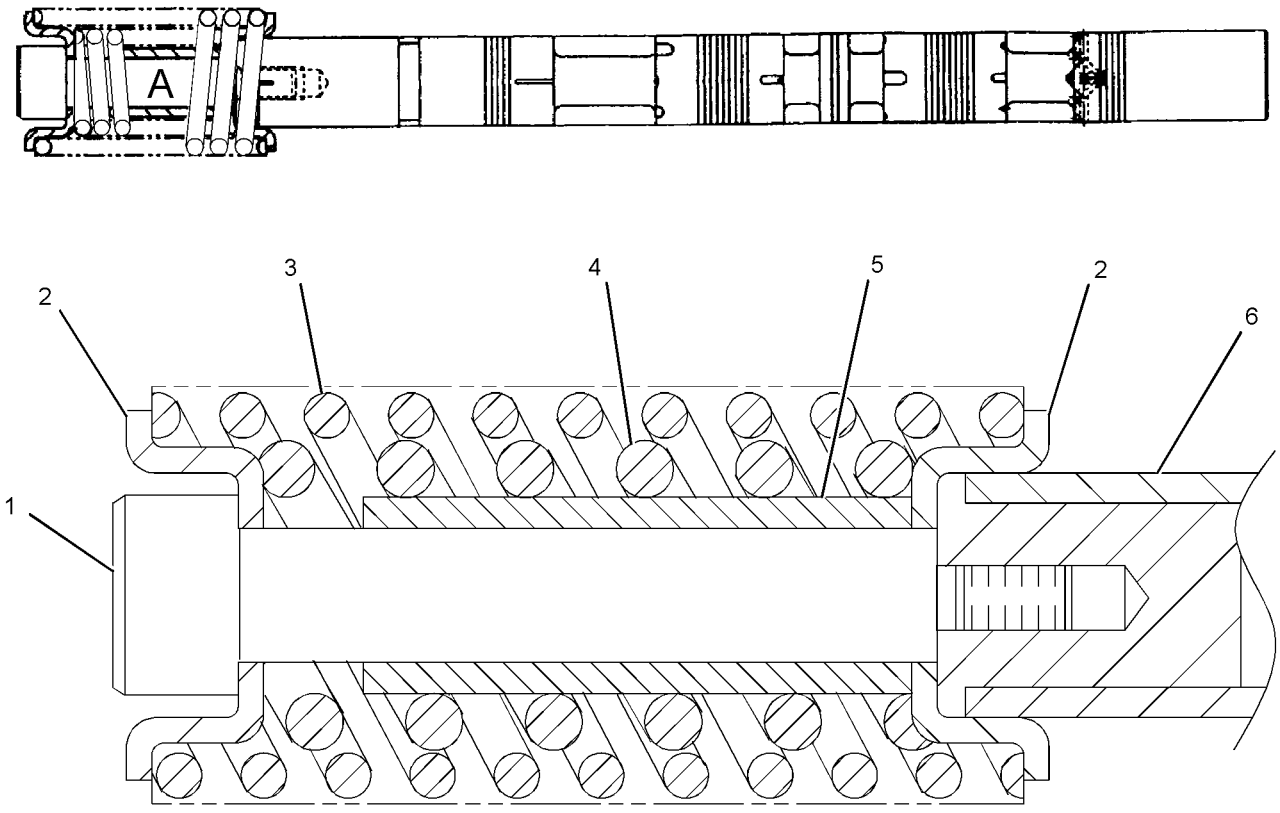

VIEW OF AREA A

GRAPHIC #1 **<END>** g01098051

259-7868 SPOOL GP-CONTROL VALVE—BUCKET CYLINDER

S/N: CJN1-UP

PART OF 259-7550 VALVE GP-MAIN CONTROL

ALSO AN ATTACHMENT

SMCS-5051, 5464 **i02496832**

NOTE	REF NO	GRAPHIC REF	PART NUMBER	QTY	PART NAME 1 2 3 4 5 6 (PRODUCT LEVEL)	SEE PAGE
M	1	1	**197-0148**	1	BOLT-SHOULDER (M8X1.25X56.1-MM)	
	2	1	**7I-7203**	2	SEAT	
	3	1	**197-0152**	1	SPRING	
	4	1	**197-0150**	1	SPRING	
	5	1	**197-0149**	1	STOP	
	6	1	**259-7867**	1	SPOOL	

M-METRIC PART

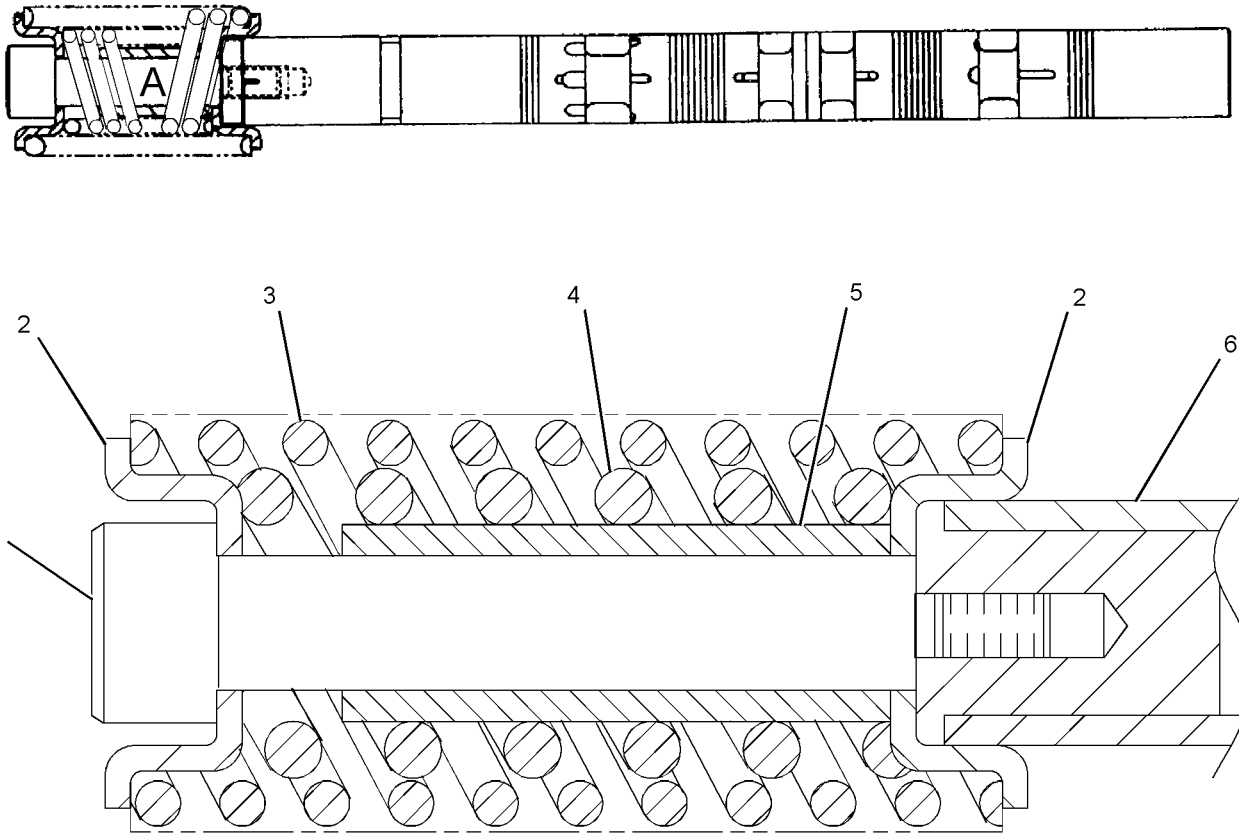

VIEW OF AREA A

GRAPHIC #1 **<END>** g01098156

HYDRAULIC SYSTEM

285-1505 SPOOL GP-CONTROL VALVE—SWING PRIORITY

S/N: CJN1-UP

PART OF 259-7550 VALVE GP-MAIN CONTROL

ALSO AN ATTACHMENT

SMCS-5051, 5464 **i02776159**

NOTE	REF NO	GRAPHIC REF	PART NUMBER	QTY	PART NAME 1 2 3 4 5 6 (PRODUCT LEVEL)	SEE PAGE
	1	1	**285-1641**	1	SPOOL	
M	2	1	**197-0148**	1	BOLT-SHOULDER (M8X1.25X56.1-MM)	
	3	1	**7I-7203**	2	SEAT	
	4	1	**197-0151**	1	SPRING	
	5	1	**197-0150**	1	SPRING	
	6	1	**197-0149**	1	STOP	

M-METRIC PART

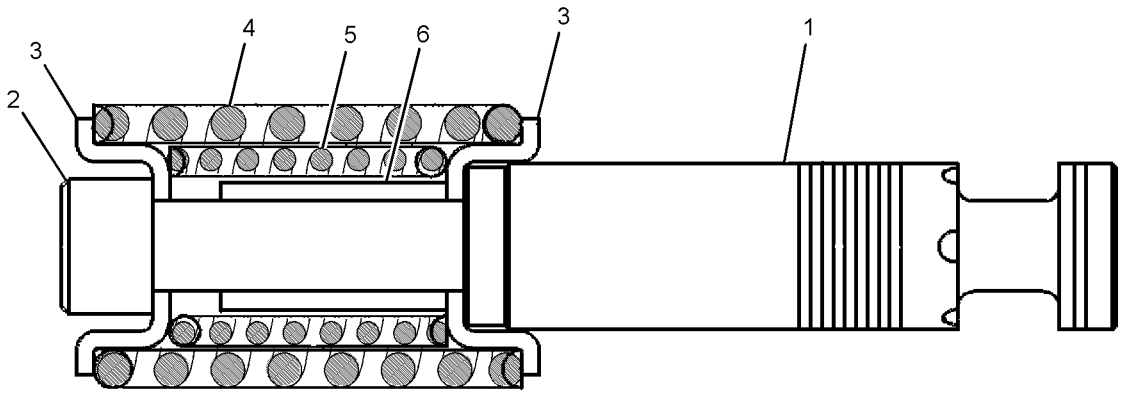

GRAPHIC #1 **<END>** g01390001

285-1669 SPOOL GP-CONTROL VALVE–STICK REGENERATION

S/N: CJN1-UP

PART OF 259-7550 VALVE GP-MAIN CONTROL

ALSO AN ATTACHMENT

SMCS-5051, 5464 **i02866441**

NOTE	REF NO	GRAPHIC REF	PART NUMBER	QTY	PART NAME 1 2 3 4 5 6 (PRODUCT LEVEL)	SEE PAGE
	1	1	**197-0149**	1	STOP	
M	2	1	**197-0148**	1	BOLT-SHOULDER (M8X1.25X56.1-MM)	
	3	1	**7I-7203**	2	SEAT	
	4	1	**197-0151**	1	SPRING	
	5	1	**197-0150**	1	SPRING	

M-METRIC PART

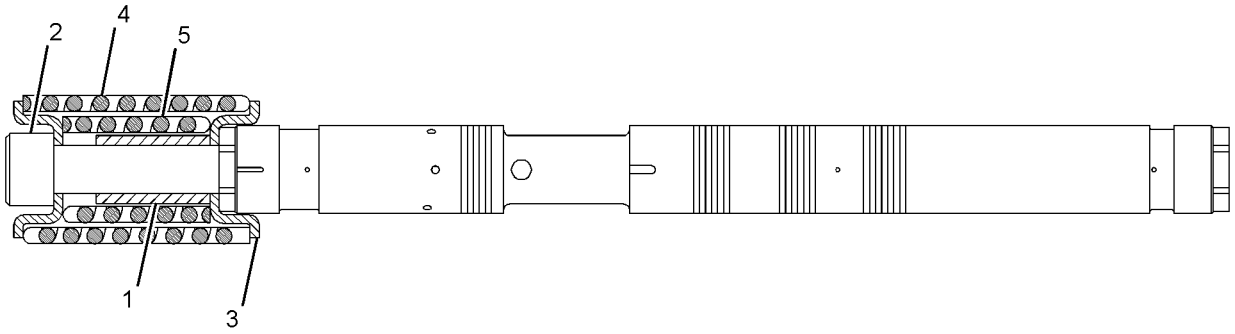

GRAPHIC #1 **<END>** g01439293

HYDRAULIC SYSTEM

162-4696 SWIVEL GP

S/N: CJN1-UP

PART OF 260-8212 LINES GP-TRAVEL MOTOR

SMCS-5060 **i01108789**

NOTE	REF NO	GRAPHIC REF	PART NUMBER	QTY	PART NAME 1 2 3 4 5 6 (PRODUCT LEVEL)	SEE PAGE
M	1	1	**8T-4136**	6	BOLT (M10X1.5X25-MM)	
	2	1	**8T-4121**	2	WASHER-HARD (11X21X2.5-MM THK)	
	3	1	**5I-4363**	1	COVER	
	4	1	**095-1716**	1	SEAL-O-RING	
	5	1	**7I-7321**	1	RETAINER	
	6	1	**4I-7604**	1	HOUSING	
	7	1	**159-7782**	5	SEAL	
	8	1	**095-1625**	3	SEAL-O-RING	
	9	1	**4I-7605**	1	ROTOR	
	10	1	**8T-6759**	1	PLUG-PIPE	
	11	1	**3K-0360**	1	SEAL-O-RING	
	12	1	**9S-8005**	1	PLUG-O RING	

M-METRIC PART

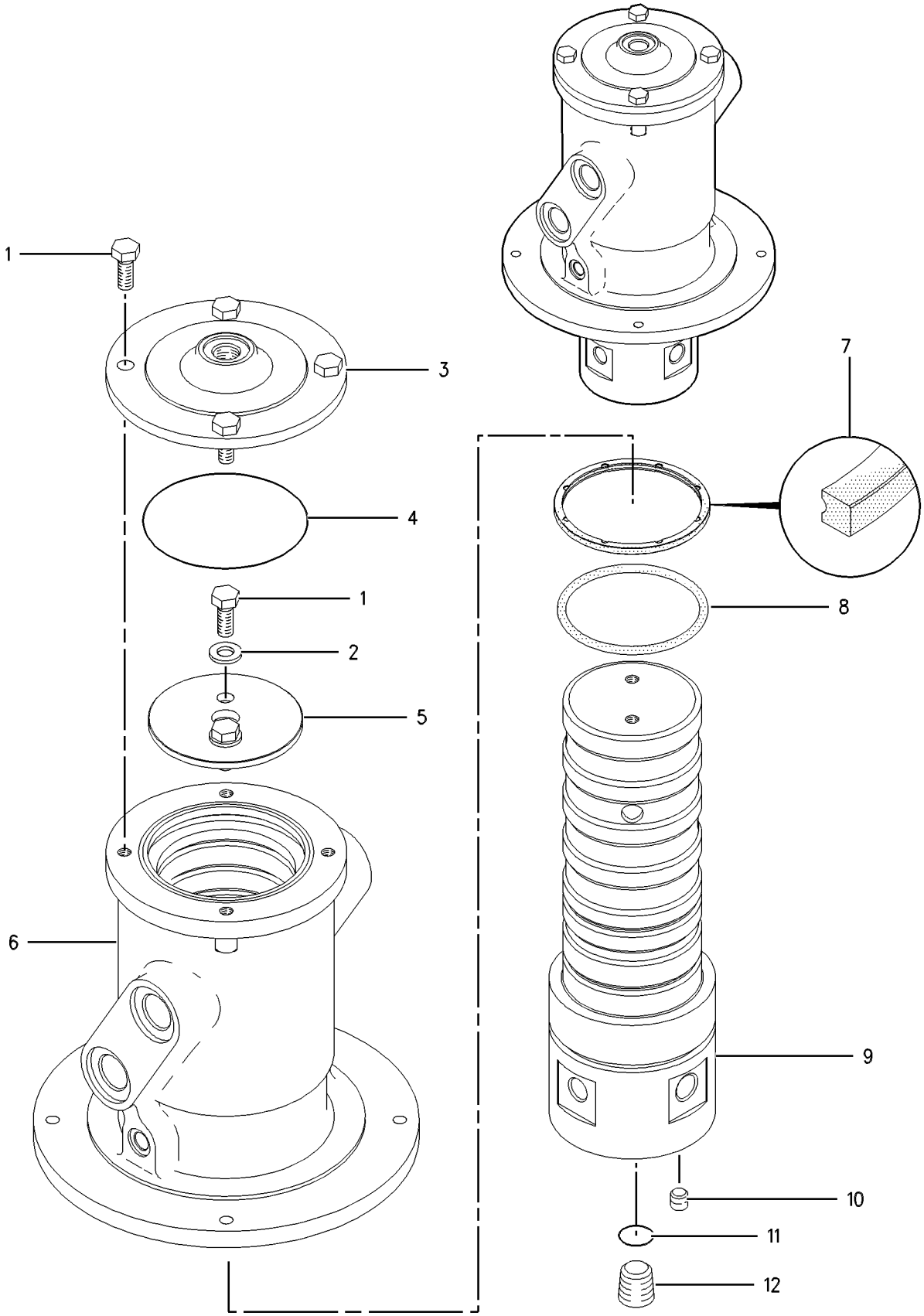

GRAPHIC #1 **<END>** g00590219

HYDRAULIC SYSTEM

260-8205 TANK & FILTER GP-HYDRAULIC

S/N: CJN1-UP

185-L (48.9-US GAL)

PART OF 260-8203 TANK & MTG GP-HYDRAULIC

SMCS-5056, 5068 **i03093849**

NOTE	REF NO	GRAPHIC REF	PART NUMBER	QTY	PART NAME 1 2 3 4 5 6 (PRODUCT LEVEL)	SEE PAGE
	1	1	**4B-7739**	2	PLUG-DRAIN (HYDRAULIC TANK)	
	2	1	**4I-5394**	1	SENDER AS-TEMPERATURE (HYDRAULIC OIL)	
M		1	**4I-5490**	2	SCREW-MACHINE (M4X0.7X6-MM)	
		1	**095-0826**	2	LOCKWASHER	
	3	1	**8H-9819**	1	ADAPTER-PLUG	
	4	1	**170-9419**	1	SWITCH AS-PRESSURE (HYDRAULIC OIL)	
		1	**2M-9780**	1	SEAL-O-RING	
		1	**4I-0754**	1	SEAL-O-RING	
		1	**8T-8729**	2	PIN-CONNECTOR (16-GA TO 18-GA)	
		1	**102-8802**	1	KIT-RECEPTACLE (2-PIN)	
					(INCLUDES RECEPTACLE AS & WEDGE)	
	5	1	**179-7541**	1	PIPE AS	
	6	1	**213-0677**	1	SWITCH AS-LIQUID LEVEL (HYDRAULIC TANK)	
		1	**102-8802**	1	KIT-RECEPTACLE (2-PIN)	
					(INCLUDES RECEPTACLE AS & WEDGE)	
		1	**144-1636**	2	PIN-CONNECTOR (14-GA TO 18-GA)	
	7	1	**227-0590**	1	BREATHER GP (HYDRAULIC TANK)	
Y	8	1	**227-0620**	1	GAUGE GP-SIGHT (HYDRAULIC OIL LEVEL)	448
Y	9	1	**259-0869**	1	FILTER GP-OIL (HYDRAULIC, MAIN RETURN)	444
Y	10	1	*259-0920*	1	SCREEN GP-HYDRAULIC (TANK)	657
	12	1	**269-9853**	1	COVER AS	
	13	1	**269-9855**	1	FLANGE AS	
		1	**270-0034**	1	SEAL-O-RING	
	14	1	**269-9858**	1	PIPE	
Y	15	1	**289-8194**	1	FILTER GP-OIL (HYDRAULIC, CASE DRAIN)	446
	16	1	**292-7461**	1	SUPPORT	
	17	1	**207-6403**	1	PLUG	
	18	1	**207-6404**	1	WASHER (49.5X60.5X1.5-MM THK)	
	19	1	**095-1608**	1	SEAL-O-RING	
	20	1	**095-1725**	1	SEAL-O-RING	
	21	1	**129-3400**	1	GUARD	
Y	22	1	**158-8987**	1	FILTER & VALVE GP-PILOT (HYDRAULIC OIL)	438
	23	1	*164-5567*	1	COUPLER AS-QUICK DISCONNECT	
		1	**3J-1907**	1	SEAL-O-RING	
		1	**6V-3965**	1	FITTING (QUICK DISCONNECT)	
	24	1	*164-5590*	1	VALVE AS-FLUID SAMPLING (HYDRAULIC OIL)	
		1	**3J-7354**	1	SEAL-O-RING	
		1	**8C-3446**	1	VALVE-FLUID SAMPLING	
	25	1	**1J-2859**	1	SEAL-O-RING	
	26	1	**2B-0858**	1	PLUG-PIPE	
	27	1	**2H-3934**	1	SEAL-O-RING	
	28	1	**3D-2824**	1	SEAL-O-RING	
	29	1	**3K-0360**	1	SEAL-O-RING	
	30	1	**4J-0527**	1	SEAL-O-RING	
	31	1	**4J-5267**	1	SEAL-O-RING	
M	32	1	**5C-9553**	4	BOLT (M6X1X16-MM)	
	33	1	**6V-0852**	1	CAP-DUST	
	34	1	**8C-3451**	1	CAP-DUST	
M	35	1	**191-8920**	2	BOLT-SOCKET HEAD (M6X1X12-MM)	
M	36	1	**170-8553**	4	BOLT-SOCKET HEAD (M12X1.75X40-MM)	
	37	1	**8T-4121**	13	WASHER-HARD (11X21X2.5-MM THK)	
M	38	1	**8T-4136**	7	BOLT (M10X1.5X25-MM)	
M	39	1	**8T-4137**	1	BOLT (M10X1.5X20-MM)	
M	40	1	**8T-4184**	8	BOLT (M12X1.75X45-MM)	
	41	1	**8T-4223**	8	WASHER-HARD (13.5X25.5X3-MM THK)	

260-8205 TANK & FILTER GP-HYDRAULIC *(contd.)* i03093849

NOTE	REF NO	GRAPHIC REF	PART NUMBER	QTY	PART NAME 1 2 3 4 5 6 (PRODUCT LEVEL)	SEE PAGE
	42	1	**8T-4224**	4	WASHER-HARD (8.8X16X2-MM THK)	
M	43	1	**8T-4908**	4	BOLT (M8X1.25X25-MM)	
	44	1	**9F-1399**	1	SEAL-O-RING	
	45	1	**9X-8256**	4	WASHER (6.6X12X2-MM THK)	

M-METRIC PART
Y-SEPARATE ILLUSTRATION

260-8205 TANK & FILTER GP-HYDRAULIC *(contd.)* i03093849

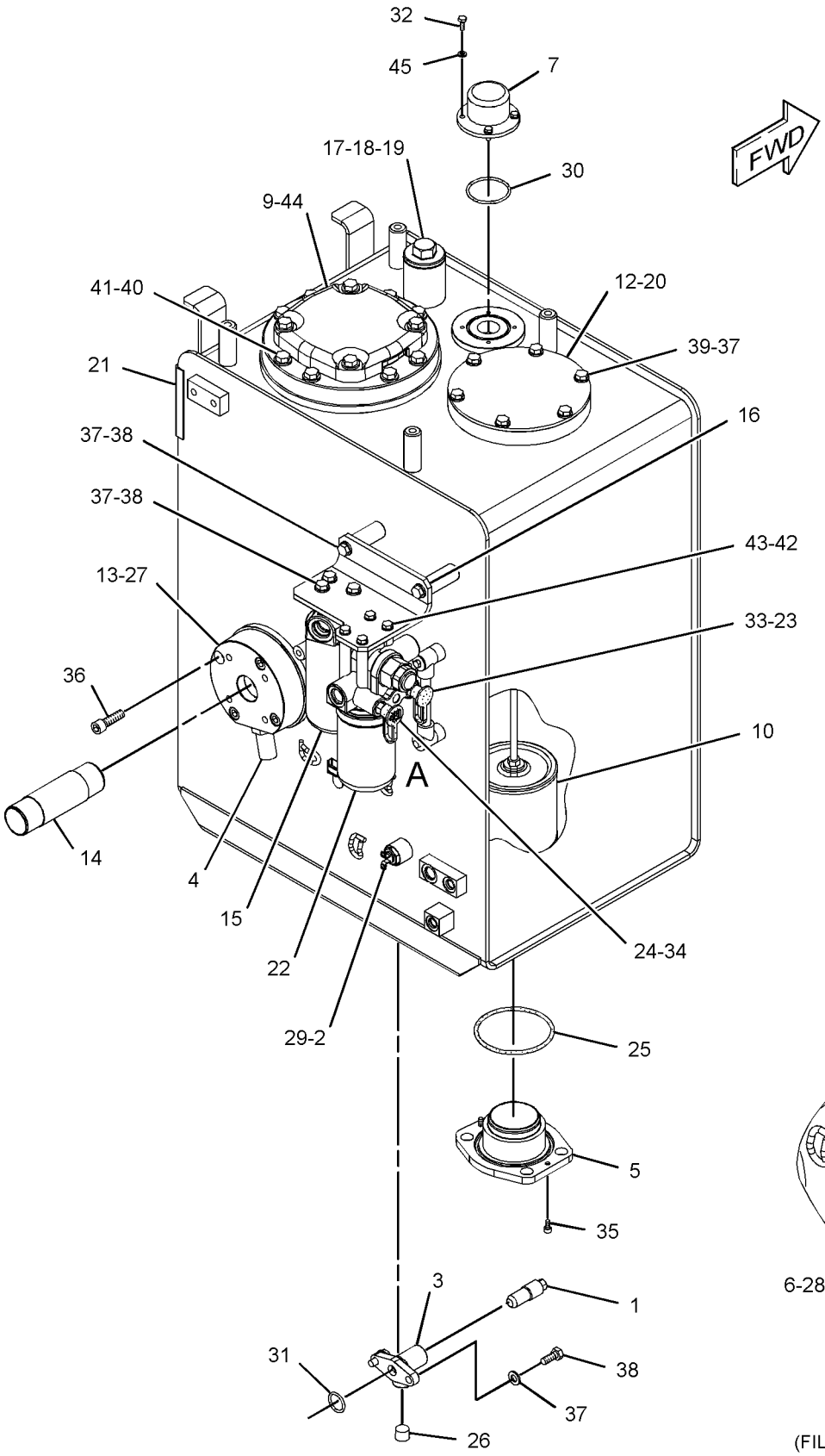

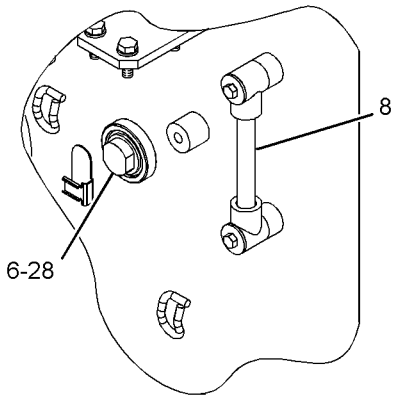

VIEW OF AREA A
(FILTERS REMOVED FOR CLARITY)

GRAPHIC #1

<END>

g01375338

260-8203 TANK & MTG GP-HYDRAULIC

S/N: CJN1-UP

PART OF 259-7547 HYDRAULIC AR

SMCS-5056 **i02599656**

NOTE	REF NO	GRAPHIC REF	PART NUMBER	QTY	PART NAME 1 2 3 4 5 6 (PRODUCT LEVEL)	SEE PAGE
Y	1	1	*260-8204*	1	LINES GP-HYDRAULIC (HYDRAULIC TANK, FILTER)	542
Y	2	1	**260-8205**	1	TANK & FILTER GP-HYDRAULIC	666
	3	1	**085-9310**	6	SPACER (16.6X32X26-MM THK)	
M	4	1	**8T-4140**	6	BOLT (M16X2X60-MM)	

M-METRIC PART
Y-SEPARATE ILLUSTRATION

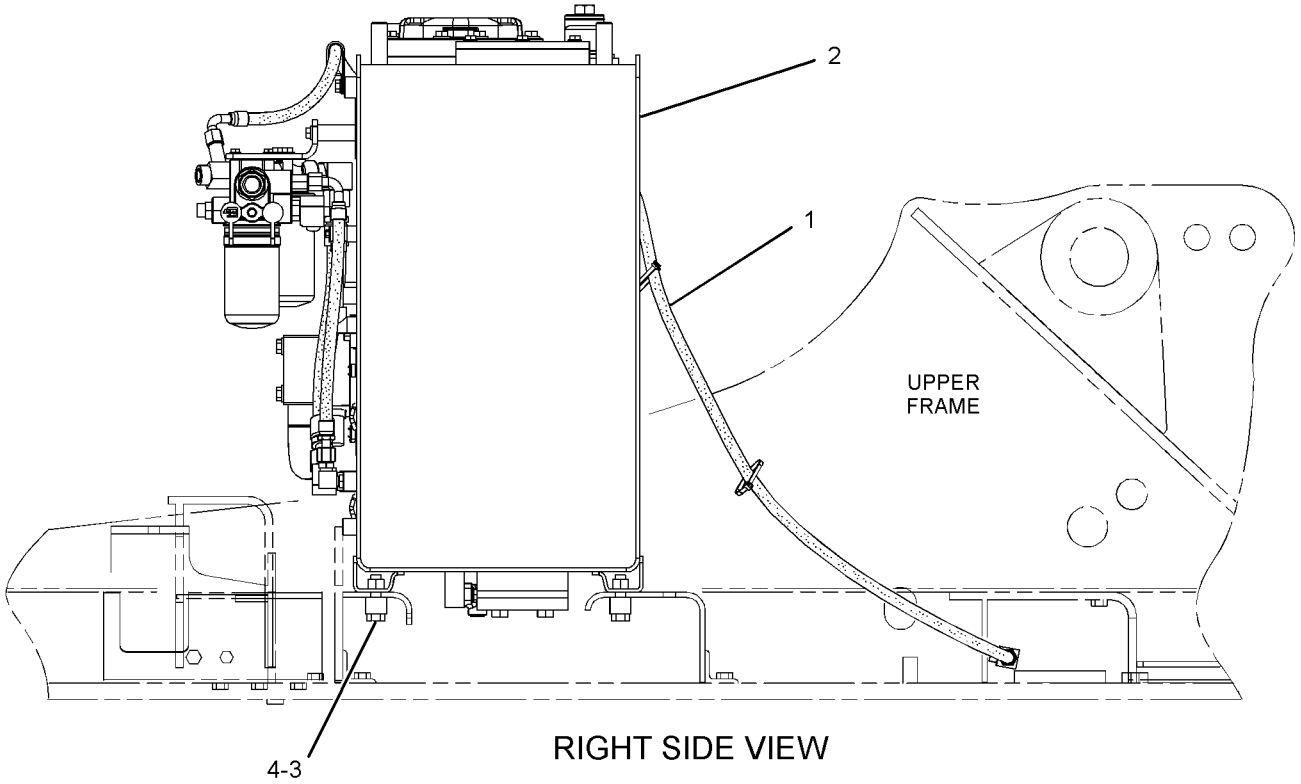

RIGHT SIDE VIEW

GRAPHIC #1 **<END>** g01327450

HYDRAULIC SYSTEM

259-7575 VALVE & LINES GP-PILOT—4-WAY PATTERN

S/N: CJN1-UP
AN ATTACHMENT

SMCS-5057, 5059 **i02765485**

NOTE	PART NUMBER	QTY	PART NAME 1 2 3 4 5 6 (PRODUCT LEVEL)	SEE PAGE
Y	*247-7492*	1	FILM GP (ALT PATTERN CONTROL, WARNING)	1084
Y	*260-8241*	1	LINES GP-PILOT	572

Y-SEPARATE ILLUSTRATION

<END>

285-1736 VALVE & MTG GP-CONTROL—MEDIUM PRESSURE

S/N: CJN1-UP
PART OF 259-7569 CONTROL AR-AUXILIARY
AN ATTACHMENT
TYPE 1

SMCS-5051 **i02765540**

NOTE	REF NO	GRAPHIC REF	PART NUMBER	QTY	PART NAME 1 2 3 4 5 6 (PRODUCT LEVEL)	SEE PAGE
Y	1	1	**259-7550**	1	VALVE GP-MAIN CONTROL	699
Y	2	1	**259-7798**	1	VALVE GP-CONTROL (MEDIUM PRESSURE)	680
M	3	1	**177-2768**	5	BOLT (M14X2X105-MM)	

M-METRIC PART
Y-SEPARATE ILLUSTRATION

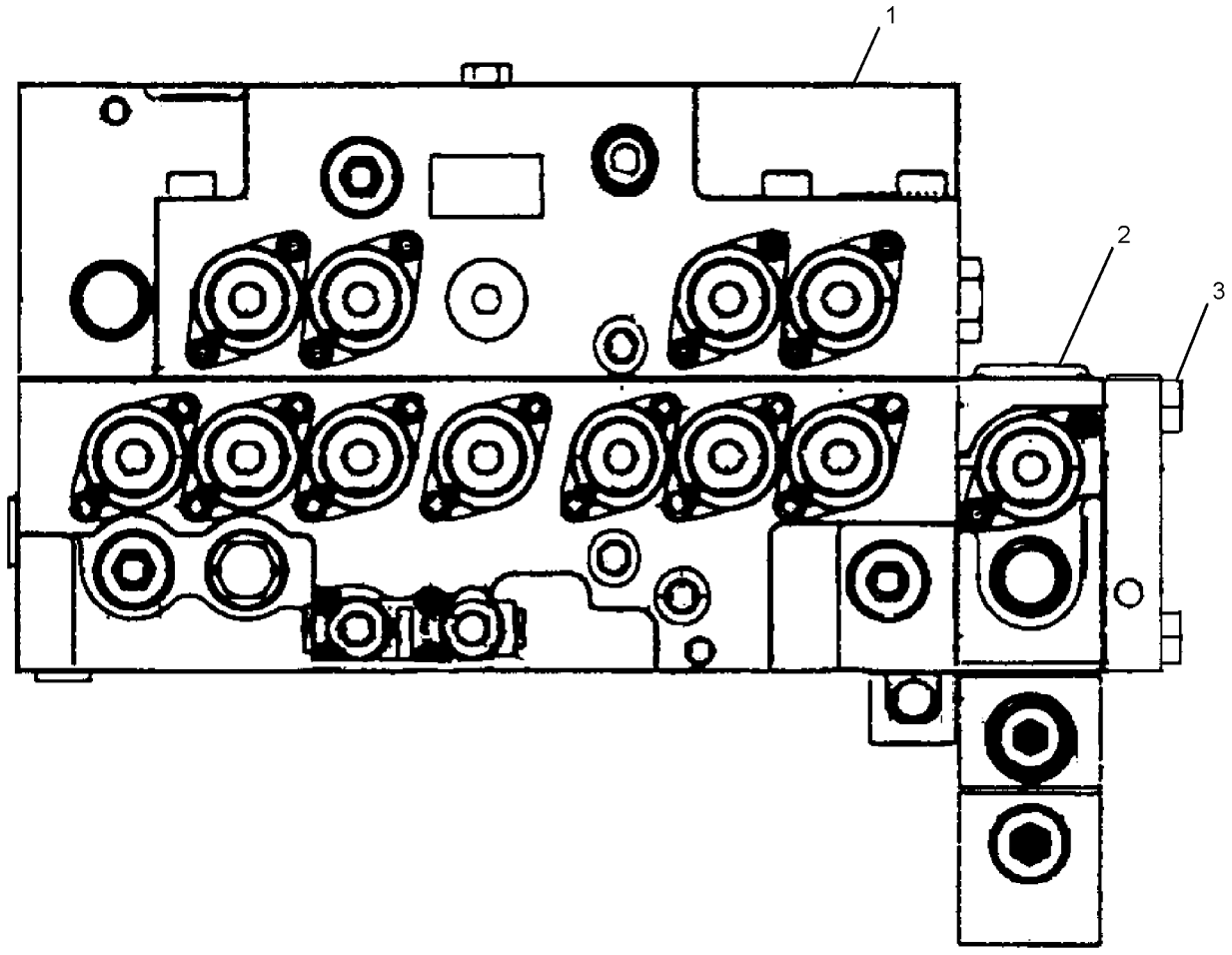

GRAPHIC #1 **<END>** g01386501

HYDRAULIC SYSTEM

285-1736 VALVE & MTG GP-CONTROL—MEDIUM PRESSURE

S/N: CJN1-UP
PART OF 259-7569 CONTROL AR-AUXILIARY
AN ATTACHMENT
TYPE 2

SMCS-5051 **i03084638**

NOTE	REF NO	GRAPHIC REF	PART NUMBER	QTY	PART NAME 1 2 3 4 5 6 (PRODUCT LEVEL)	SEE PAGE
Y	1	1	**259-7550**	1	VALVE GP-MAIN CONTROL	699
CY	2	1	**297-0374**	1	VALVE GP-CONTROL	685
M	3	1	**177-2768**	5	BOLT (M14X2X105-MM)	

C-CHANGE FROM PREVIOUS TYPE
M-METRIC PART
Y-SEPARATE ILLUSTRATION

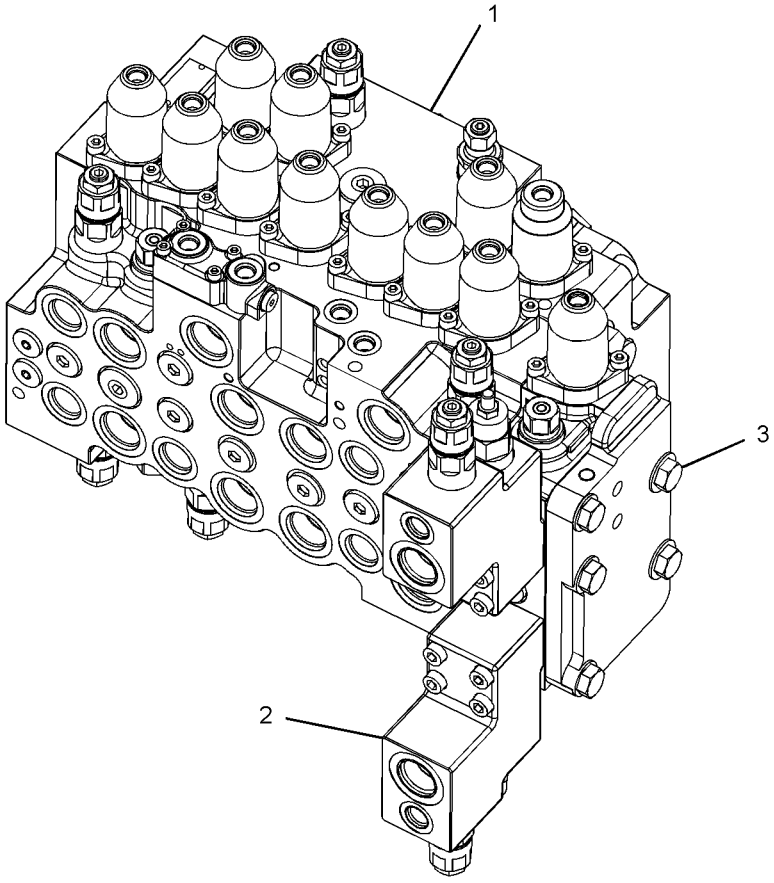

GRAPHIC #1 **<END>** g01621886

285-1738 VALVE & MTG GP-CONTROL

S/N: CJN1-UP
PART OF 259-7557 CONTROL AR-AUXILIARY
AN ATTACHMENT
TYPE 1

SMCS-5051 **i02747400**

NOTE	REF NO	GRAPHIC REF	PART NUMBER	QTY	PART NAME 1 2 3 4 5 6 (PRODUCT LEVEL)	SEE PAGE
Y	1	1	**259-7550**	1	VALVE GP-MAIN CONTROL	699
Y	2	1	**259-7804**	1	VALVE GP-CONTROL (2-PUMP, 1-WAY)	682
	3	1	**185-0508**	5	BOLT (M14X2X155-MM)	

Y-SEPARATE ILLUSTRATION

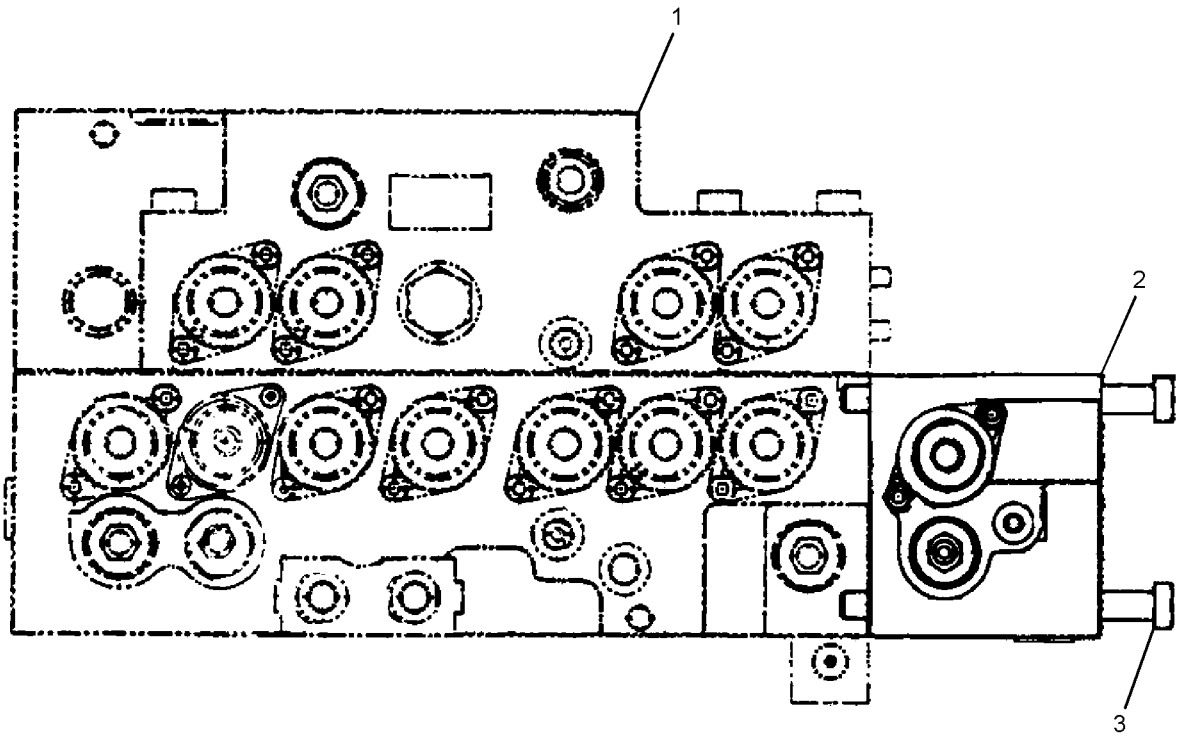

GRAPHIC #1 **<END>** g01379454

HYDRAULIC SYSTEM

285-1738 VALVE & MTG GP-CONTROL

S/N: CJN1-UP
PART OF 259-7557 CONTROL AR-AUXILIARY
AN ATTACHMENT
TYPE 2

SMCS-5051 **i03035180**

NOTE	REF NO	GRAPHIC REF	PART NUMBER	QTY	PART NAME 1 2 3 4 5 6 (PRODUCT LEVEL)	SEE PAGE
Y	1	1	**259-7550**	1	VALVE GP-MAIN CONTROL	699
CY	2	1	**310-0157**	1	VALVE GP-CONTROL (2-PUMP, 1-WAY)	690
	3	1	**185-0508**	5	BOLT (M14X2X155-MM)	

C-CHANGE FROM PREVIOUS TYPE
Y-SEPARATE ILLUSTRATION

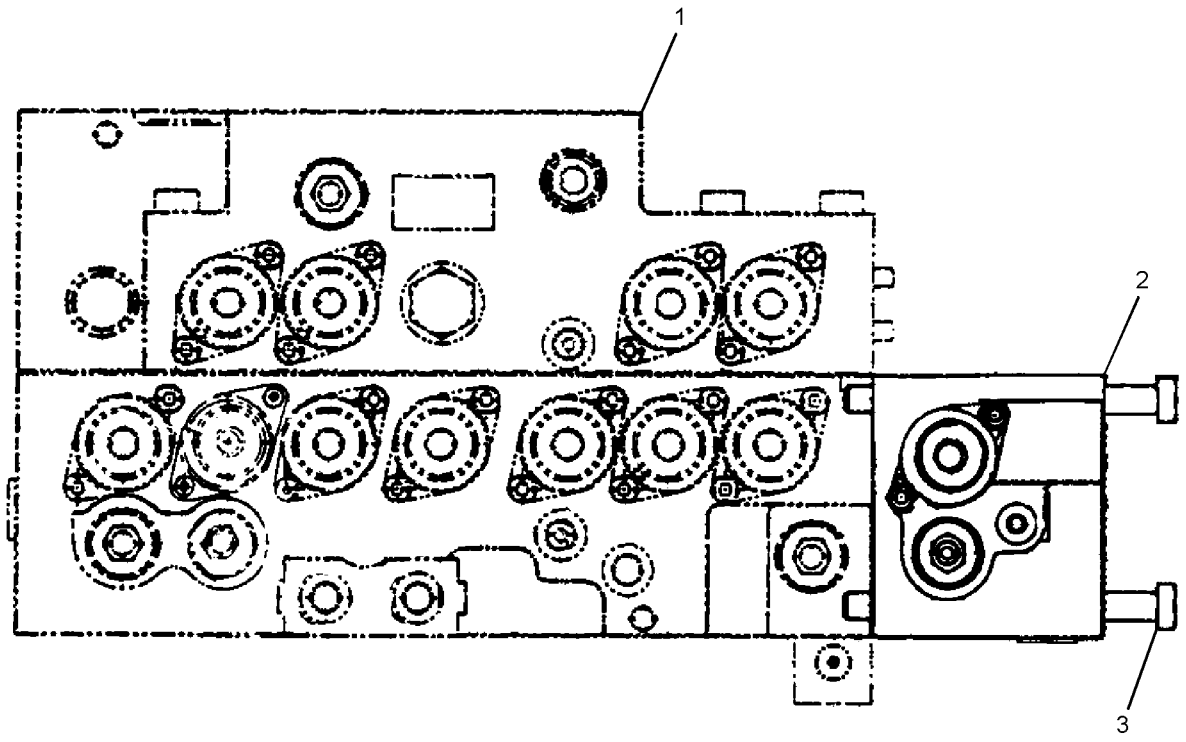

GRAPHIC #1 **<END>** g01379454

259-7577 VALVE AR-ALT PATTERN CONTROL–
CONTROL PATTERN CHANGE, 2-WAY
S/N: CJN1-UP
AN ATTACHMENT

SMCS-5065 **i02724645**

NOTE	PART NUMBER	QTY	PART NAME 1 2 3 4 5 6 (PRODUCT LEVEL)	SEE PAGE
Y	*259-5173*	1	FASTENER GP-WIRING HARNESS	155
Y	*260-7006*	1	FILM GP	1086
Y	*260-8242*	1	LINES GP-PILOT	574
Y-SEPARATE ILLUSTRATION				

<END>

259-7578 VALVE AR-CHECK & RELIEF–BOOM LOWERING CONTROL
S/N: CJN1-UP
AN ATTACHMENT

SMCS-5117, 5453 **i02788621**

NOTE	PART NUMBER	QTY	PART NAME 1 2 3 4 5 6 (PRODUCT LEVEL)	SEE PAGE
Y	*260-8243*	1	LINES GP-BOOM CYLINDER (BOOM LOWERING CONTROL)	476
Y	*307-4836*	1	LINES GP-PILOT (BOOM LOWERING CONTROL VALVE)	609
Y	*291-7908*	1	WIRING GP-OVERLOAD WARNING	257
Y-SEPARATE ILLUSTRATION				

<END>

259-7585 VALVE AR-CHECK & RELIEF–STICK LOWERING CONTROL
S/N: CJN1-UP
AN ATTACHMENT

SMCS-5117, 5453 **i03195702**

NOTE	PART NUMBER	QTY	PART NAME 1 2 3 4 5 6 (PRODUCT LEVEL)	SEE PAGE
Y	*262-3251*	1	LINES GP-BOOM (STICK LOWERING CONTROL VALVE)	471
Y	*260-8246*	1	LINES GP-PILOT (STICK LOWERING CONTROL)	577
Y	*294-6486*	1	LINES GP-STICK CYLINDER (STICK LOWERING CONTROL VALVE)	627
Y-SEPARATE ILLUSTRATION				

<END>

323-7798 VALVE AR-CHECK & RELIEF–
BOOM LOWERING CONTROL VALVE
S/N: CJN1-UP
FOR USE WITH 260-6979–PAGE 752, 283-9001–PAGE 752
AN ATTACHMENT

SMCS-5117, 5453 **i03195703**

NOTE	PART NUMBER	QTY	PART NAME 1 2 3 4 5 6 (PRODUCT LEVEL)	SEE PAGE
Y	*314-3768*	1	FILM GP (OVERLOAD WARNING DEVICE)	1093
Y	*260-8243*	1	LINES GP-BOOM CYLINDER (BOOM LOWERING CONTROL)	476
Y	*307-4836*	1	LINES GP-PILOT (BOOM LOWERING CONTROL VALVE)	609
Y	*328-0092*	1	WIRING GP-OVERLOAD WARNING	258
Y-SEPARATE ILLUSTRATION				

<END>

260-7075 VALVE AR-SWING—FINE SWING

S/N: CJN1-UP

AN ATTACHMENT

SMCS-5480 **i02752927**

NOTE	PART NUMBER	QTY	PART NAME 1 2 3 4 5 6 (PRODUCT LEVEL)	SEE PAGE
Y	*267-6778*	1	DRIVE GP-SWING (WITH MOTOR)	433
Y	*278-6465*	1	LINES GP-SWING MOTOR	630
Y	*267-7849*	1	WIRING GP-FINE SWING	245

Y-SEPARATE ILLUSTRATION

<END>

HYDRAULIC SYSTEM

282-5894 VALVE AS-MANUAL–AUXILIARY, SHUTOFF

S/N: CJN1-UP

PART OF 262-3237, 262-3240, 262-3243, 268-7245 LINES GP-AUXILIARY HYDRAULIC AN ATTACHMENT

SMCS-1329 **i03079367**

NOTE	REF NO	GRAPHIC REF	PART NUMBER	QTY	PART NAME 1 2 3 4 5 6 (PRODUCT LEVEL)	SEE PAGE
	1	1	**302-9466**	1	HANDLE	

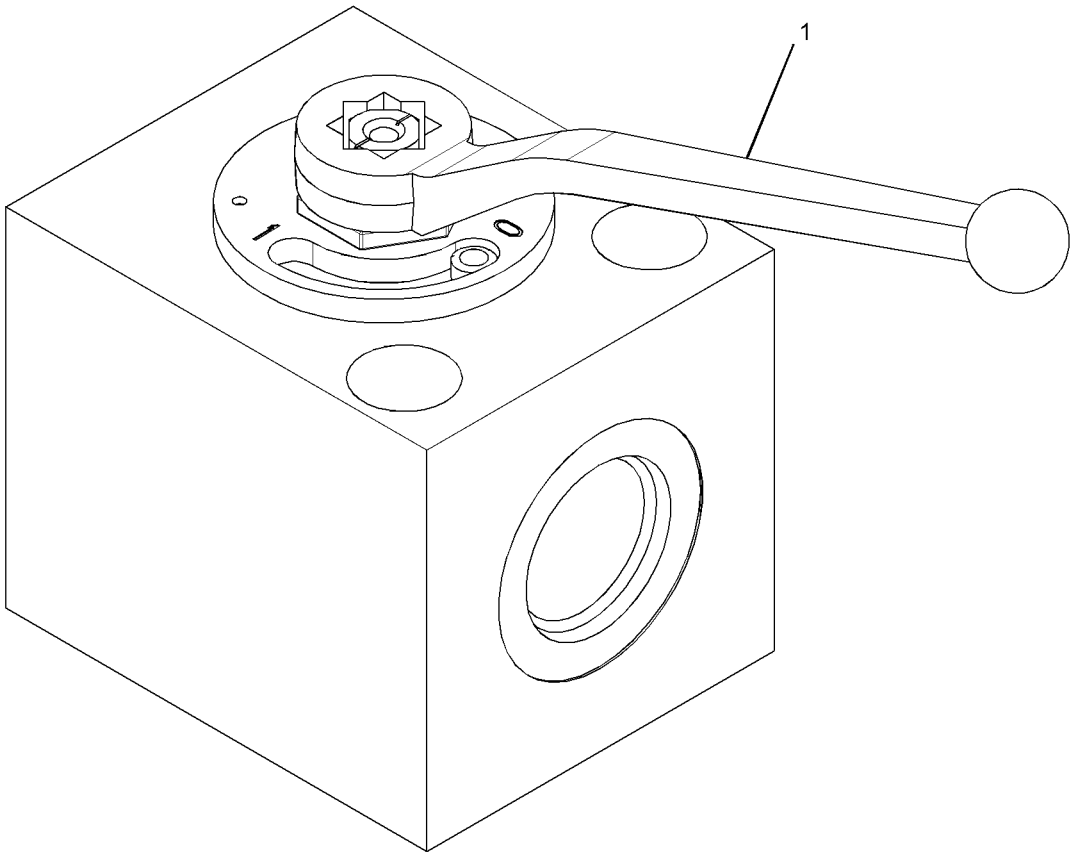

GRAPHIC #1 **<END>** g01562673

HYDRAULIC SYSTEM

259-7545 VALVE GP-BANK–MEDIUM PRESSURE

S/N: CJN1-UP

PART OF 260-8233 LINES GP-FRONT

AN ATTACHMENT

SMCS-5051 **i02749998**

NOTE	REF NO	GRAPHIC REF	PART NUMBER	QTY	PART NAME 1 2 3 4 5 6 (PRODUCT LEVEL)	SEE PAGE
	1	1	**102-8802**	2	KIT-RECEPTACLE (2-PIN)	
					(EACH INCLUDES RECEPTACLE AS & WEDGE)	
	2	1	**186-3735**	4	PIN-CONNECTOR (16-GA TO 18-GA)	
	3	1	**252-6601**	1	BLOCK AS	
	4	1	**252-6602**	1	BLOCK AS	
	5	1	**252-6603**	1	BLOCK AS	
	6	1	**102-7024**	1	VALVE GP-RELIEF (AUXILIARY PUMP)	
	7	1	**150-6351**	2	VALVE AS-RELIEF (LINE, MEDIUM PRESSURE)	
	8	1	**200-4856**	4	NUT	
	9	1	**093-3094**	2	ROD	
	10	1	**150-6348**	2	NUT	
	11	1	**093-3093**	1	ROD	

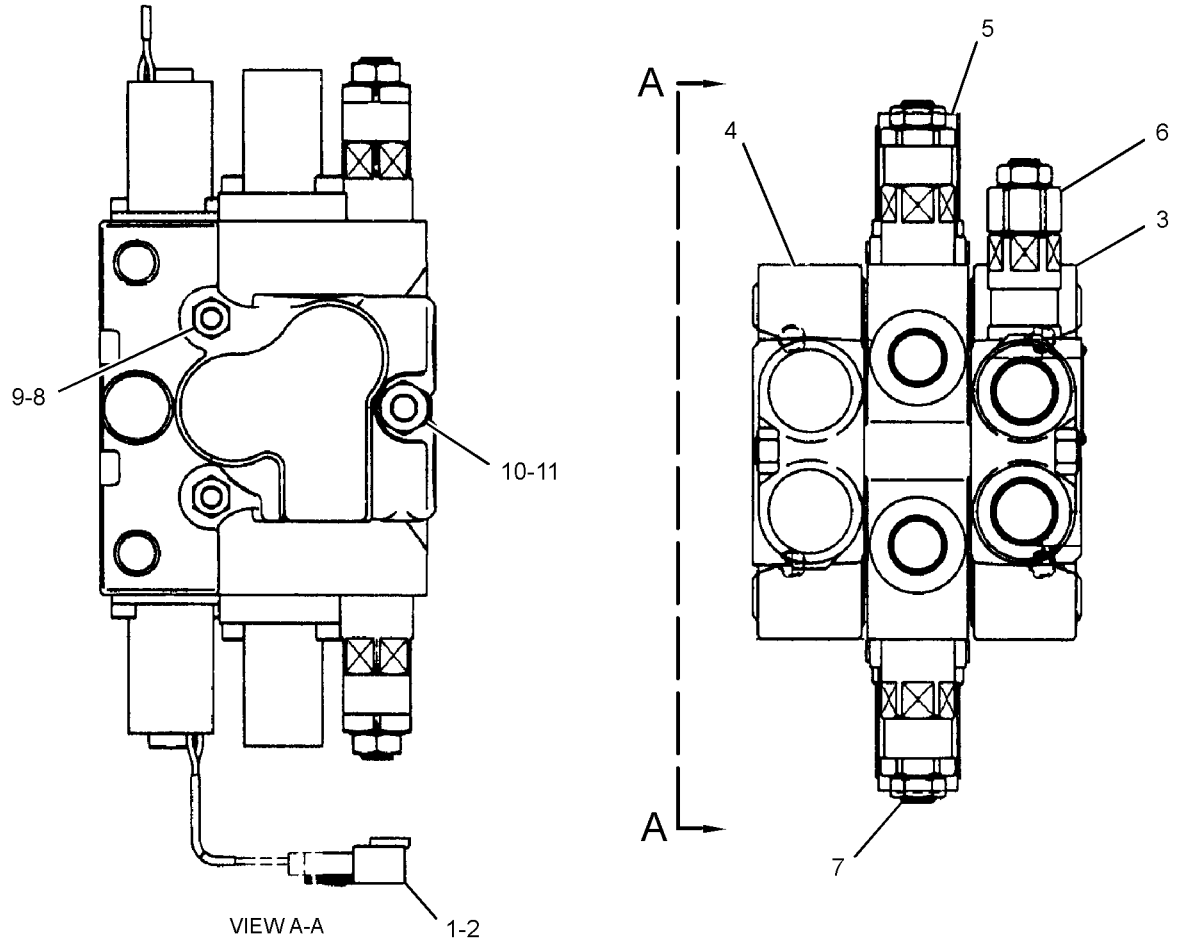

GRAPHIC #1 **<END>** g01381960

171-0002 VALVE GP-CHECK–COOLER BYPASS

S/N: CJN1-UP

PART OF 260-8210 LINES GP-PUMP

SMCS-5067 **i01884897**

NOTE	REF NO	GRAPHIC REF	PART NUMBER	QTY	PART NAME 1 2 3 4 5 6 (PRODUCT LEVEL)	SEE PAGE
Z	1	1		1	BODY	
	2	1	**177-2706**	1	VALVE AS	
	3	1	**190-7875**	1	VALVE AS	
	4	1	**184-3841**	1	RING	

Z-NOT SERVICED SEPARATELY

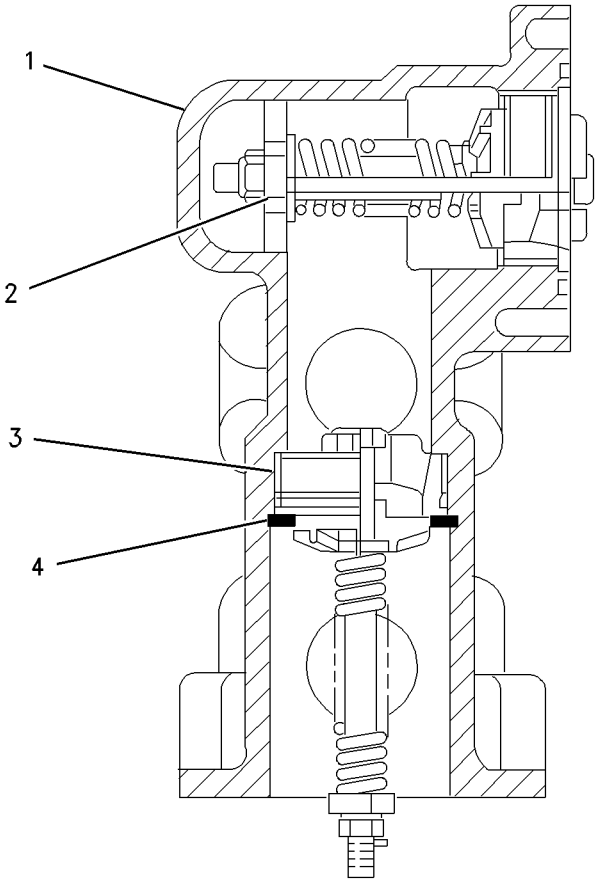

GRAPHIC #1 **<END>** g00754553

HYDRAULIC SYSTEM

259-7798 VALVE GP-CONTROL—MEDIUM PRESSURE

S/N: CJN1-UP

PART OF 285-1736 VALVE & MTG GP-CONTROL

AN ATTACHMENT

SMCS-5051 **i02750086**

NOTE	REF NO	GRAPHIC REF	PART NUMBER	QTY	PART NAME 1 2 3 4 5 6 (PRODUCT LEVEL)	SEE PAGE
	1	1	**7I-7208**	1	VALVE-LOAD CHECK	
	2	1	**095-1700**	1	SEAL-O-RING	
	3	1	**197-0168**	1	COVER	
M	4	1	**197-0165**	2	BOLT (M8X1.25X20-MM)	
Y	5	1	**197-0173**	1	SPOOL GP-CONTROL VALVE (WORK TOOL)	658
Y	6	1	**270-5987**	2	VALVE GP-RELIEF (LINE RELIEF, MEDIUM PRESSURE)	722
J	7	1	**165-9497**	2	VALVE GP-FLOW CONTROL (MEDIUM PRESSURE)	
	8	1	**197-0225**	2	PLUG AS	
M	9	1	**5A-3604**	2	BOLT-SOCKET HEAD (M8X1.25X25-MM)	
	10	1	**197-0170**	1	COVER	
	11	1	**7I-7207**	1	SPRING	
	12	1	**7I-7206**	1	PLUG	
	13	1	**095-1586**	1	SEAL-O-RING	
M	14	1	**197-0226**	8	BOLT-SOCKET HEAD (M10X1.5X75-MM)	
	15	1,1	**095-1698**	5	SEAL-O-RING	
	16	1	**7I-7204**	1	SEAL	
	17	1	**095-1578**	3	SEAL-O-RING	
	18	1	**095-1696**	2	SEAL-O-RING	
					AVAILABLE REPAIR KIT(S):	
J			**185-0400**	1	KIT-SEAL (CONTROL VALVE)	
					(INCLUDES 2 O-RING SEALS & 3 BACKUP RINGS)	

J-KIT MARKED J AVAILABLE FOR PART(S) MARKED J
M-METRIC PART
Y-SEPARATE ILLUSTRATION

259-7798 VALVE GP-CONTROL *(contd.)* **i02750086**

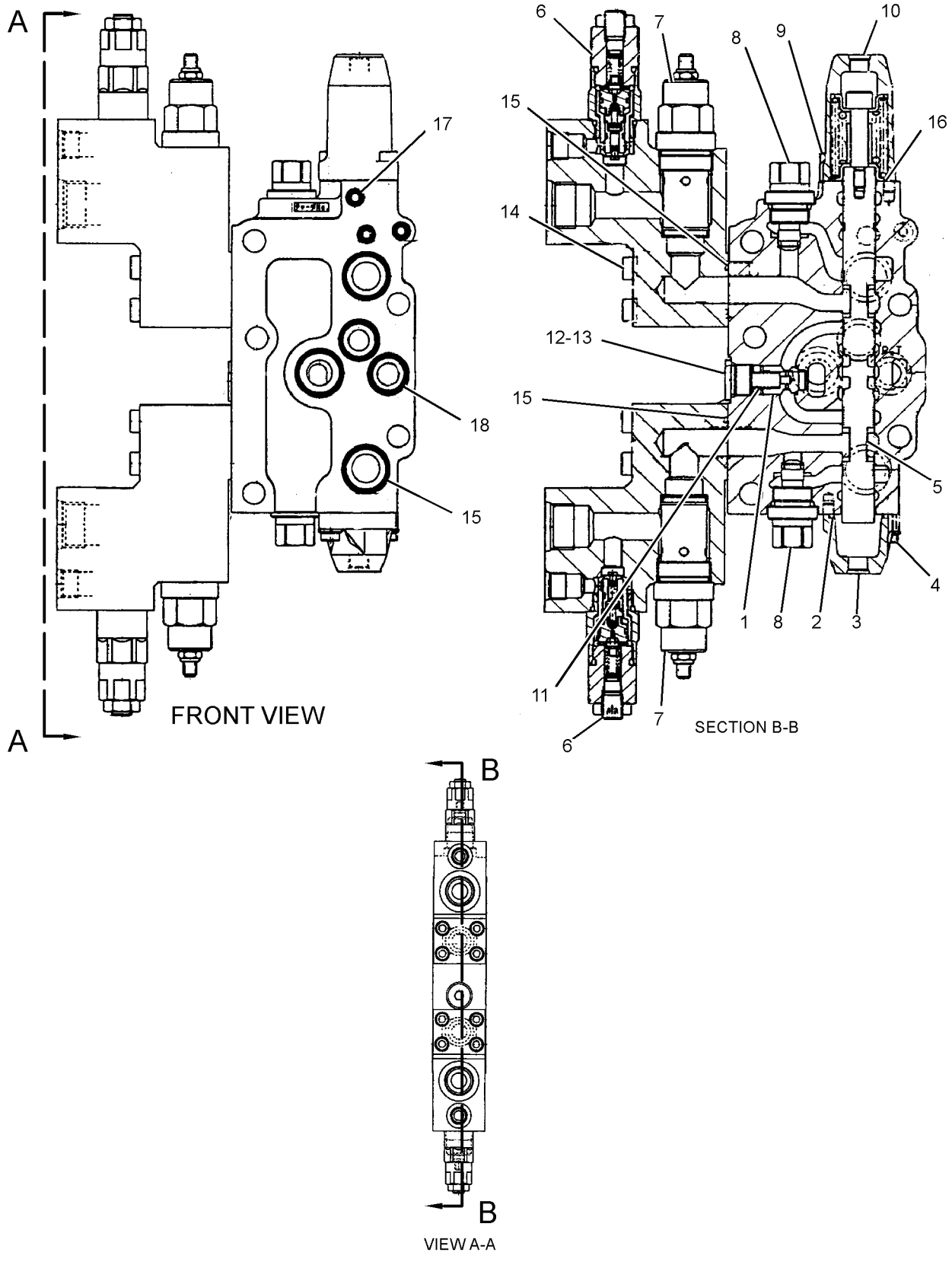

GRAPHIC #1 **<END>** g01384449

HYDRAULIC SYSTEM

259-7804 VALVE GP-CONTROL–2-PUMP, 1-WAY

S/N: CJN1-UP

PART OF 285-1738 VALVE & MTG GP-CONTROL

AN ATTACHMENT

SMCS-5051 **i02747405**

NOTE	REF NO	GRAPHIC REF	PART NUMBER	QTY	PART NAME 1 2 3 4 5 6 (PRODUCT LEVEL)	SEE PAGE
M	1	1	**5A-3604**	2	BOLT-SOCKET HEAD (M8X1.25X25-MM)	
	2	1	**7I-7204**	1	SEAL	
	3	1	**7I-7206**	1	PLUG	
	4	1	**7I-7207**	1	SPRING	
	5	1	**7I-7208**	1	VALVE-LOAD CHECK	
	6	1	**170-9997**	1	PLUG	
M	7	1	**197-0165**	2	BOLT (M8X1.25X20-MM)	
	8	1	**197-0168**	1	COVER	
	9	1	**197-0170**	1	COVER	
Y	10	1	**197-0173**	1	SPOOL GP-CONTROL VALVE (WORK TOOL)	658
Y	11	1	**309-9976**	2	VALVE GP-RELIEF	723
Y	12	1	**310-0062**	1	VALVE GP-RELIEF	724
	13	1	**095-1578**	3	SEAL-O-RING	
	14	1	**095-1579**	1	SEAL-O-RING	
	15	1	**095-1586**	1	SEAL-O-RING	
	16	1	**095-1698**	2	SEAL-O-RING	
	17	1	**095-1700**	1	SEAL-O-RING	

M-METRIC PART
Y-SEPARATE ILLUSTRATION

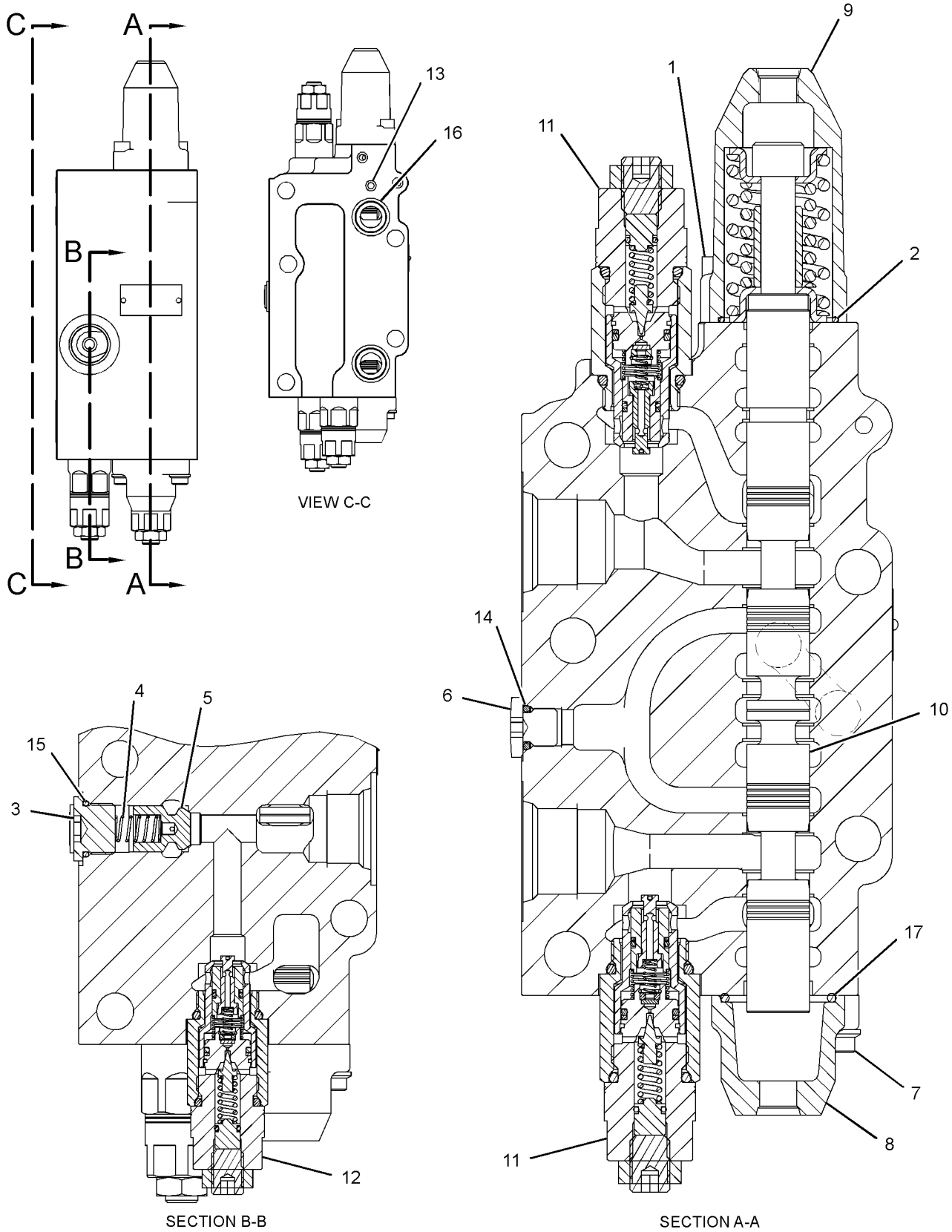

GRAPHIC #1 **<END>** g01419189

285-1667 VALVE GP-CONTROL–STICK II

S/N: CJN1-UP
PART OF 259-7550 VALVE GP-MAIN CONTROL
ALSO AN ATTACHMENT

SMCS-5051 **i03013699**

NOTE	REF NO	GRAPHIC REF	PART NUMBER	QTY	PART NAME 1 2 3 4 5 6 (PRODUCT LEVEL)	SEE PAGE
	1	1	**197-0149**	1	STOP	
M	2	1	**197-0148**	1	BOLT-SHOULDER (M8X1.25X56.1-MM)	
	3	1	**7I-7203**	2	SEAT	
	4	1	**197-0153**	1	SPRING	
	5	1	**197-0150**	1	SPRING	

M-METRIC PART

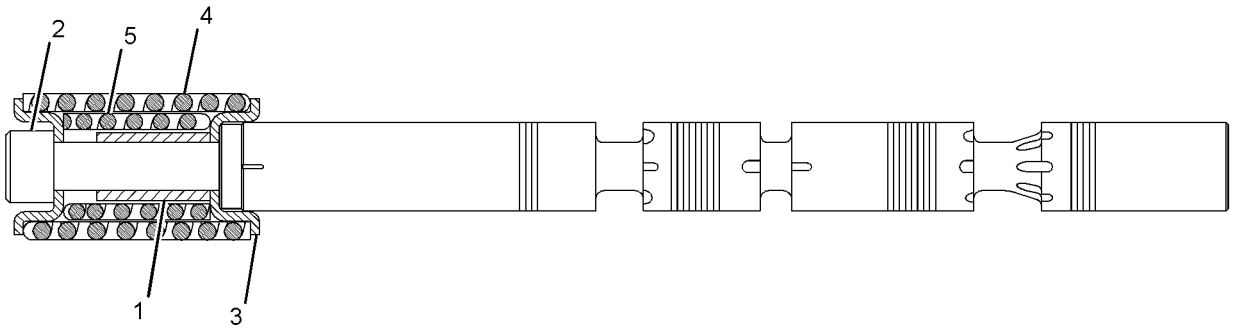

GRAPHIC #1 **<END>** g01439292

HYDRAULIC SYSTEM

297-0374 VALVE GP-CONTROL

S/N: CJN1-UP

PART OF 285-1736 VALVE & MTG GP-CONTROL

AN ATTACHMENT

SMCS-5051 **i03246024**

NOTE	REF NO	GRAPHIC REF	PART NUMBER	QTY	PART NAME 1 2 3 4 5 6 (PRODUCT LEVEL)	SEE PAGE
M	1	1	**5A-3604**	2	BOLT-SOCKET HEAD (M8X1.25X25-MM)	
	2	1	**7I-7204**	1	SEAL	
	3	1	**7I-7206**	1	PLUG	
	4	1	**7I-7207**	1	SPRING	
	5	1	**7I-7208**	1	VALVE-LOAD CHECK	
J	6	1	**165-9497**	2	VALVE GP-FLOW CONTROL (MEDIUM PRESSURE)	
M	7	1	**197-0165**	2	BOLT (M8X1.25X20-MM)	
	8	1	**197-0168**	1	COVER	
	9	1	**197-0170**	1	COVER	
Y	10	1	**197-0173**	1	SPOOL GP-CONTROL VALVE (WORK TOOL)	658
	11	1	**197-0225**	2	PLUG AS	
Y	12	1	**310-0063**	2	VALVE GP-RELIEF (LINE)	725
	13	1	**095-1578**	3	SEAL-O-RING	
	14	1	**095-1586**	1	SEAL-O-RING	
	15	1	**095-1696**	2	SEAL-O-RING	
	16	1	**095-1698**	5	SEAL-O-RING	
	17	1	**095-1700**	1	SEAL-O-RING	
M	18	1	**197-0226**	8	BOLT-SOCKET HEAD (M10X1.5X75-MM)	
					AVAILABLE REPAIR KIT(S):	
J			**185-0400**	1	KIT-SEAL (CONTROL VALVE)	
					(INCLUDES O-RING SEALS & BACKUP RINGS)	

J-KIT MARKED J SERVICES PART MARKED J
M-METRIC PART
Y-SEPARATE ILLUSTRATION

297-0374 VALVE GP-CONTROL *(contd.)* i03246024

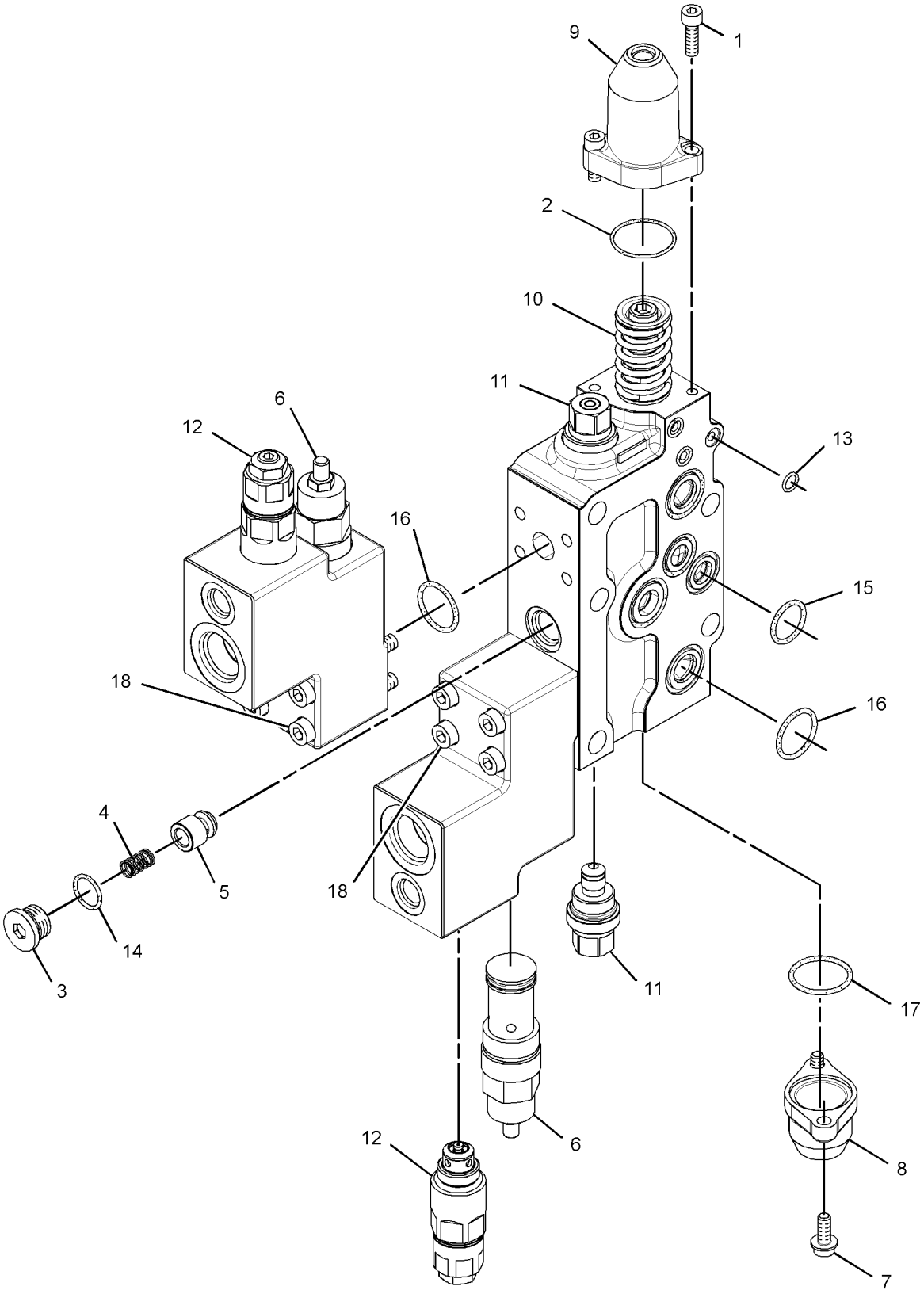

GRAPHIC #1 **<END>** g01439086

310-0072 VALVE GP-CONTROL–BOOM I

S/N: CJN1-UP
PART OF 259-7550 VALVE GP-MAIN CONTROL
ALSO AN ATTACHMENT

SMCS-5051 **i02866439**

NOTE	REF NO	GRAPHIC REF	PART NUMBER	QTY	PART NAME 1 2 3 4 5 6 (PRODUCT LEVEL)	SEE PAGE
	1	1	**197-0149**	1	STOP	
M	2	1	**197-0148**	1	BOLT-SHOULDER (M8X1.25X56.1-MM)	
	3	1	**7I-7203**	2	SEAT	
	4	1	**197-0151**	1	SPRING	
	5	1	**197-0150**	1	SPRING	

M-METRIC PART

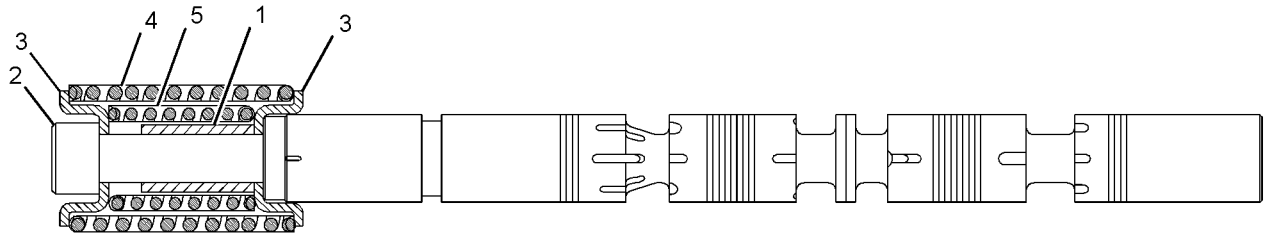

GRAPHIC #1 **<END>** g01430634

310-0074 VALVE GP-CONTROL–BOOM II

S/N: CJN1-UP
PART OF 259-7550 VALVE GP-MAIN CONTROL
ALSO AN ATTACHMENT

SMCS-5051 **i02866436**

NOTE	REF NO	GRAPHIC REF	PART NUMBER	QTY	PART NAME 1 2 3 4 5 6 (PRODUCT LEVEL)	SEE PAGE
	1	1	**197-0149**	1	STOP	
M	2	1	**197-0148**	1	BOLT-SHOULDER (M8X1.25X56.1-MM)	
	3	1	**7I-7203**	2	SEAT	
	4	1	**197-0153**	1	SPRING	
	5	1	**197-0150**	1	SPRING	

M-METRIC PART

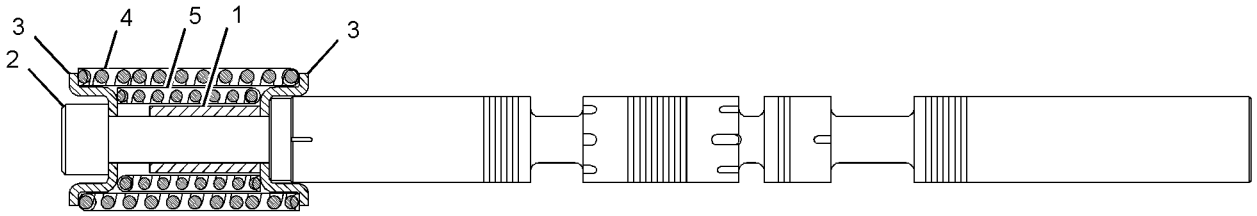

GRAPHIC #1 **<END>** g01431008

310-0076 VALVE GP-CONTROL–STICK I

S/N: CJN1-UP
PART OF 259-7550 VALVE GP-MAIN CONTROL
ALSO AN ATTACHMENT

SMCS-5051 **i02866433**

NOTE	REF NO	GRAPHIC REF	PART NUMBER	QTY	PART NAME 1 2 3 4 5 6 (PRODUCT LEVEL)	SEE PAGE
	1	1	**197-0149**	1	STOP	
M	2	1	**197-0148**	1	BOLT-SHOULDER (M8X1.25X56.1-MM)	
	3	1	**7I-7203**	2	SEAT	
	4	1	**197-0151**	1	SPRING	
	5	1	**197-0150**	1	SPRING	

M-METRIC PART

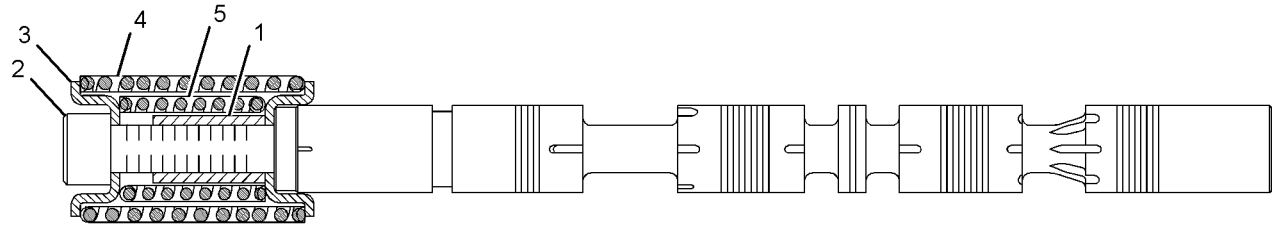

GRAPHIC #1 **<END>** g01431009

HYDRAULIC SYSTEM

310-0157 VALVE GP-CONTROL–2-PUMP, 1-WAY

S/N: CJN1-UP

PART OF 285-1738 VALVE & MTG GP-CONTROL

AN ATTACHMENT

SMCS-5051 **i03022387**

NOTE	REF NO	GRAPHIC REF	PART NUMBER	QTY	PART NAME 1 2 3 4 5 6 (PRODUCT LEVEL)	SEE PAGE
M	1	1	**5A-3604**	2	BOLT-SOCKET HEAD (M8X1.25X25-MM)	
	2	1	**7I-7204**	1	SEAL	
	3	1	**7I-7206**	1	PLUG	
	4	1	**7I-7207**	1	SPRING	
	5	1	**7I-7208**	1	VALVE-LOAD CHECK	
	6	1	**170-9997**	1	PLUG	
M	7	1	**197-0165**	2	BOLT (M8X1.25X20-MM)	
	8	1	**197-0168**	1	COVER	
	9	1	**197-0170**	1	COVER	
Y	10	1	**197-0173**	1	SPOOL GP-CONTROL VALVE (WORK TOOL)	658
	11	1	**197-0225**	2	PLUG AS	
Y	12	1	**310-0062**	1	VALVE GP-RELIEF	724
	13	1	**095-1578**	3	SEAL-O-RING	
	14	1	**095-1579**	1	SEAL-O-RING	
	15	1	**095-1586**	1	SEAL-O-RING	
	16	1	**095-1698**	2	SEAL-O-RING	
	17	1	**095-1700**	1	SEAL-O-RING	

M-METRIC PART
Y-SEPARATE ILLUSTRATION

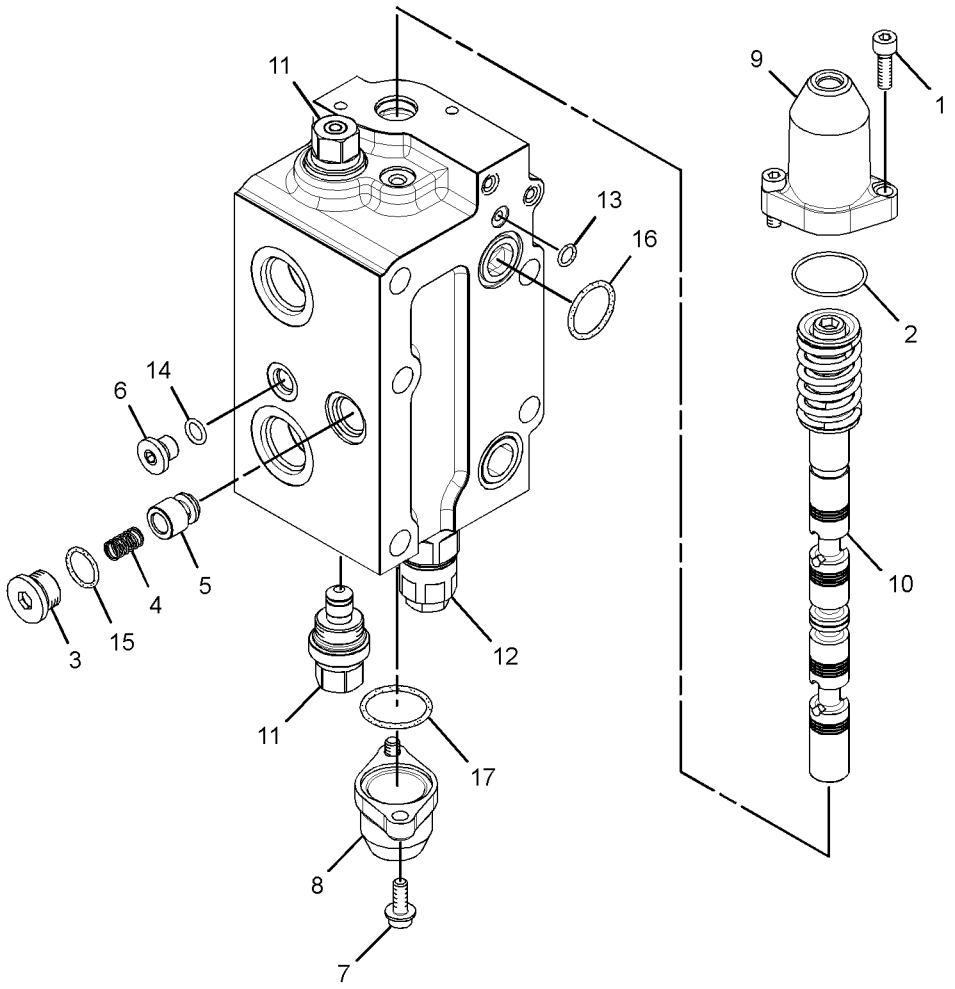

GRAPHIC #1 **<END>** g01622720

254-3080 VALVE GP-COUPLER—QUICK COUPLER

S/N: CJN1-UP
PART OF 275-1696 LINES GP-FRONT
AN ATTACHMENT

SMCS-5491 **i02997486**

NOTE	REF NO	GRAPHIC REF	PART NUMBER	QTY	PART NAME 1 2 3 4 5 6 (PRODUCT LEVEL)	SEE PAGE
	1	1	**287-2352**	1	RETAINER-SPRING	
	2	1	**6E-5438**	1	SPRING	
	3	1	**6E-5439**	1	SPRING	
Y	4	1	**121-1491**	1	VALVE GP-SOLENOID (QUICK COUPLER)	736
J	5	1	**247-7587**	2	VALVE GP-PRESSURE REDUCING (QUICK COUPLER)	
Z	6	1		1	BODY-VALVE	
Z	7	1		1	STEM	
	8	1	*148-8407*	2	PLUG AS	
					(EACH INCLUDES)	
		1	**3J-1907**	1	SEAL-O-RING	
		1	**9S-4191**	1	PLUG-O-RING	
	9	1	**4J-5267**	1	SEAL-O-RING	
	10	1	**6E-2313**	1	COVER	
	11	1	**6E-5431**	5	SHIM (0.5-MM THK)	
	12	1	**6E-5434**	1	HOUSING-PILOT	
M	13	1	**7I-2272**	2	BOLT (M5X0.8X12-MM)	
	14	1	**8F-0212**	1	SEAL-O-RING	
M	15	1	**8T-4195**	2	BOLT (M10X1.5X30-MM)	
	16	1	**8T-4224**	2	WASHER-HARD (8.8X16X2-MM THK)	
	17	1	**8T-6759**	12	PLUG-PIPE	
M	18	1	**8T-6870**	2	BOLT (M8X1.25X70-MM)	
					AVAILABLE REPAIR KIT(S):	
J			**172-4432**	1	KIT-SEAL (QUICK COUPLER VALVE)	

J-KIT MARKED J AVAILABLE FOR PART MARKED J
M-METRIC PART
Y-SEPARATE ILLUSTRATION
Z-NOT SERVICED SEPARATELY

254-3080 VALVE GP-COUPLER *(contd.)* **i02997486**

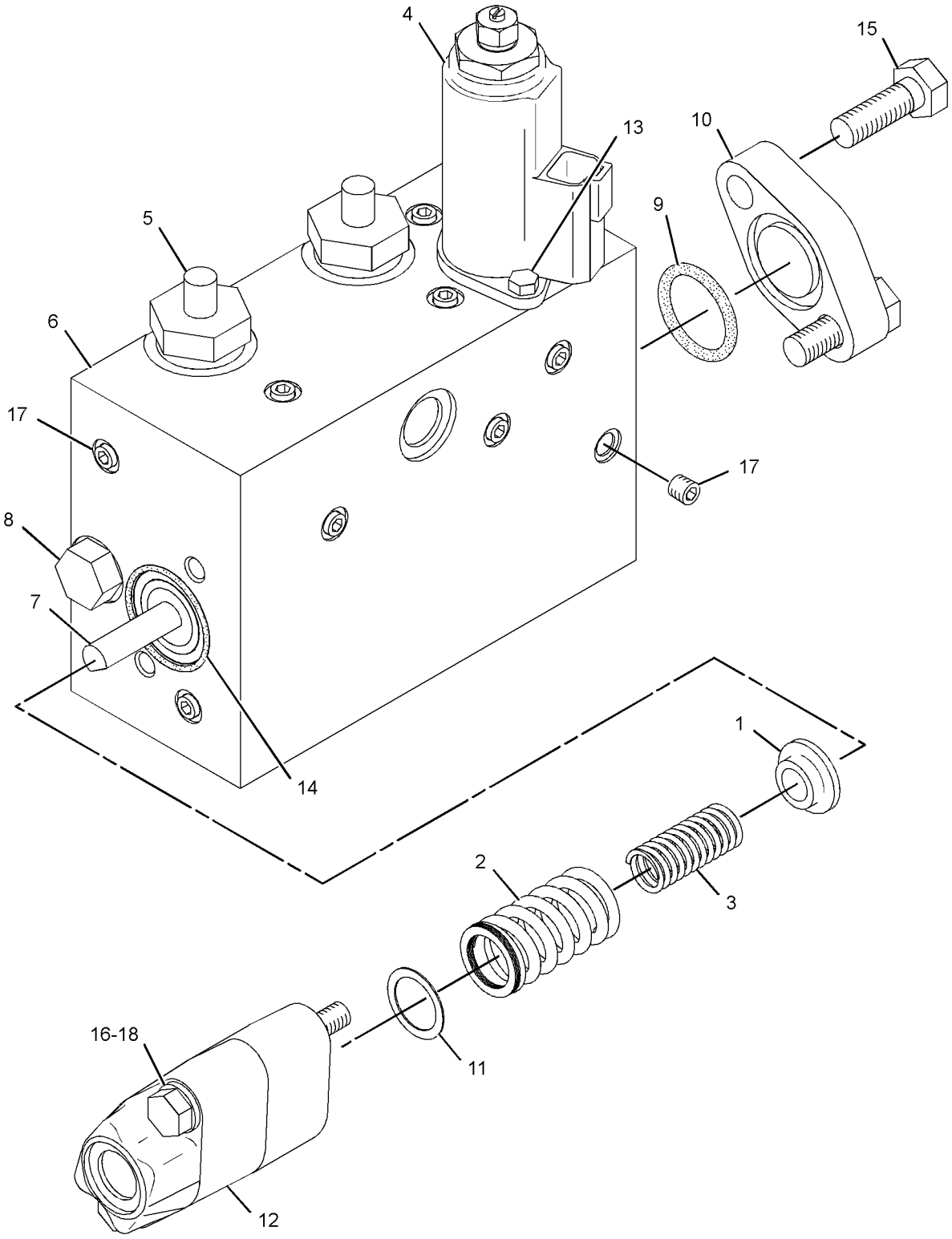

GRAPHIC #1 **<END>** g01245214

285-1685 VALVE GP-LOAD CONTROL—BOOM LOWERING CONTROL, LH

S/N: CJN1-UP

PART OF 260-8243 LINES GP-BOOM CYLINDER

AN ATTACHMENT

SMCS-5067, 5117, 5147, 5811 **i02841147**

NOTE	REF NO	GRAPHIC REF	PART NUMBER	QTY	PART NAME 1 2 3 4 5 6 (PRODUCT LEVEL)	SEE PAGE
	1	1	**7I-8084**	3	PLUG	
	2	1	**215-5023**	1	PISTON	
	3	1	**095-1584**	1	SEAL-O-RING	
	4	1	**197-0145**	1	PLUG	
	5	1	**201-9283**	1	SEAT AS	
	6	1	**095-1590**	1	SEAL-O-RING	
	7	1	**201-9291**	1	VALVE	
	8	1	**201-9287**	1	SPRING	
	9	1	**095-1573**	1	SEAL-O-RING	
	10	1	**201-9285**	1	SEAT	
M	11	1	**201-9331**	1	SETSCREW (M12X1.75X19.5-MM)	
M	12	1	**201-9330**	1	NUT (M12X1.75-THD)	
	13	1	**201-9295**	1	PLUG	
	14	1	**297-0686**	1	SPOOL AS	
	15	1	**095-1589**	1	SEAL-O-RING	
	16	1	**310-0094**	1	SPRING	
M	17	1	**201-9296**	1	PLUG	
M	18	1	**201-9294**	1	PLUG	
	19	1	**095-1592**	1	SEAL-O-RING	
	20	1	**201-9288**	1	SPRING	
	21	1	**310-0093**	1	VALVE AS	
	22	1	**095-1582**	1	SEAL-O-RING	
	23	1	**7J-9108**	1	SEAL-O-RING	

M-METRIC PART

285-1685 VALVE GP-LOAD CONTROL *(contd.)* i02841147

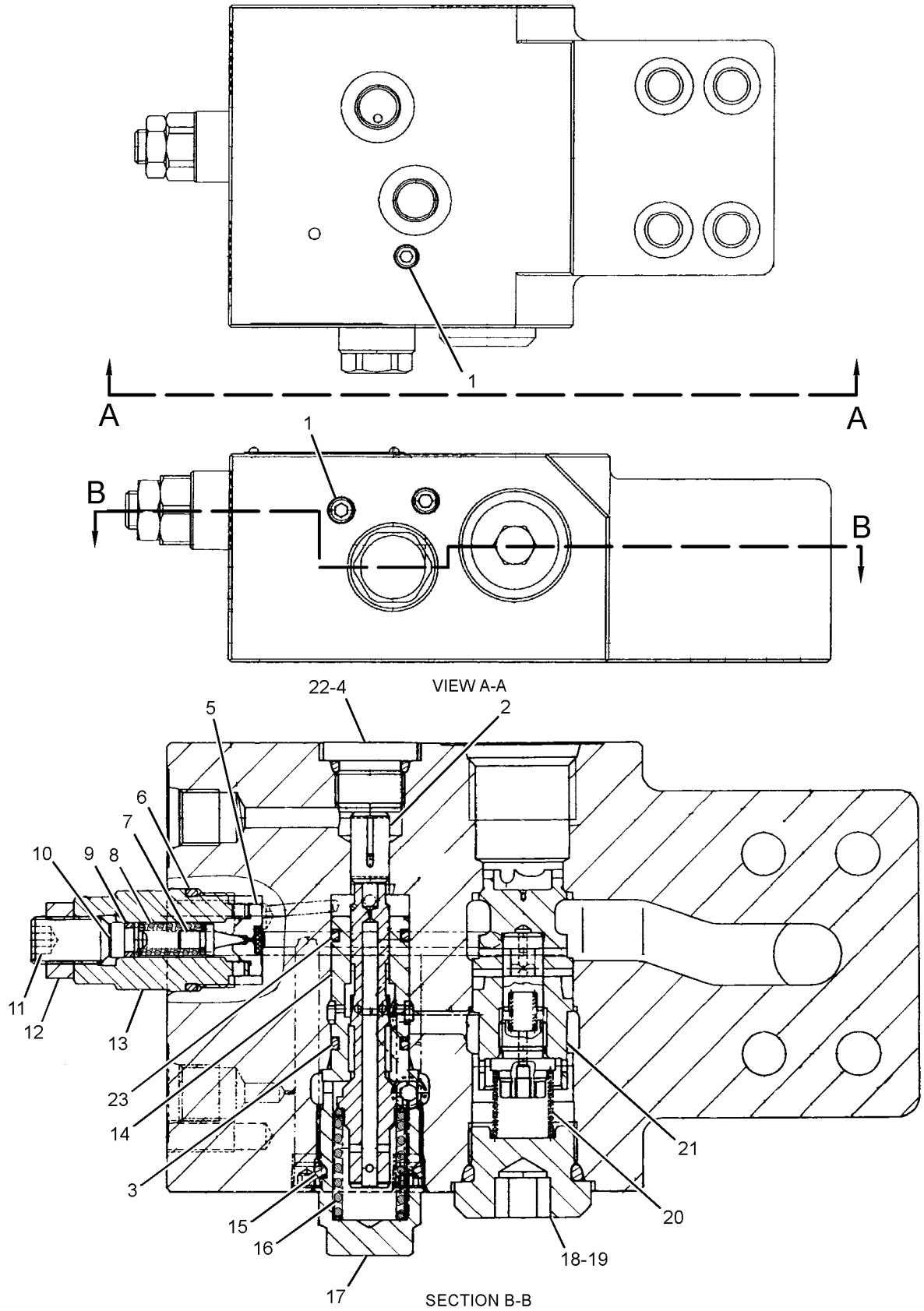

GRAPHIC #1

<END>

g01390064

285-1686 VALVE GP-LOAD CONTROL—BOOM LOWERING CONTROL, RH

S/N: CJN1-UP

PART OF 260-8243 LINES GP-BOOM CYLINDER

AN ATTACHMENT

SMCS-5067, 5117, 5147, 5811 **i02841149**

NOTE	REF NO	GRAPHIC REF	PART NUMBER	QTY	PART NAME 1 2 3 4 5 6 (PRODUCT LEVEL)	SEE PAGE
	1	1	**7I-8084**	3	PLUG	
	2	1	**215-5023**	1	PISTON	
	3	1	**095-1584**	3	SEAL-O-RING	
	4	1	**197-0145**	1	PLUG	
	5	1	**201-9283**	1	SEAT AS	
	6	1	**095-1590**	1	SEAL-O-RING	
	7	1	**201-9291**	1	VALVE	
	8	1	**201-9287**	1	SPRING	
	9	1	**095-1573**	1	SEAL-O-RING	
	10	1	**201-9285**	1	SEAT	
M	11	1	**201-9331**	1	SETSCREW (M12X1.75X19.5-MM)	
M	12	1	**201-9330**	1	NUT (M12X1.75-THD)	
	13	1	**201-9295**	1	PLUG	
	14	1	**297-0686**	1	SPOOL AS	
	15	1	**095-1589**	1	SEAL-O-RING	
	16	1	**310-0094**	1	SPRING	
M	17	1	**201-9296**	1	PLUG	
M	18	1	**201-9294**	1	PLUG	
	19	1	**095-1592**	1	SEAL-O-RING	
	20	1	**201-9288**	1	SPRING	
	21	1	**310-0093**	1	VALVE AS	
	22	1	**7J-9108**	1	SEAL-O-RING	
	23	1	**095-1582**	1	SEAL-O-RING	

M-METRIC PART

285-1686 VALVE GP-LOAD CONTROL *(contd.)* i02841149

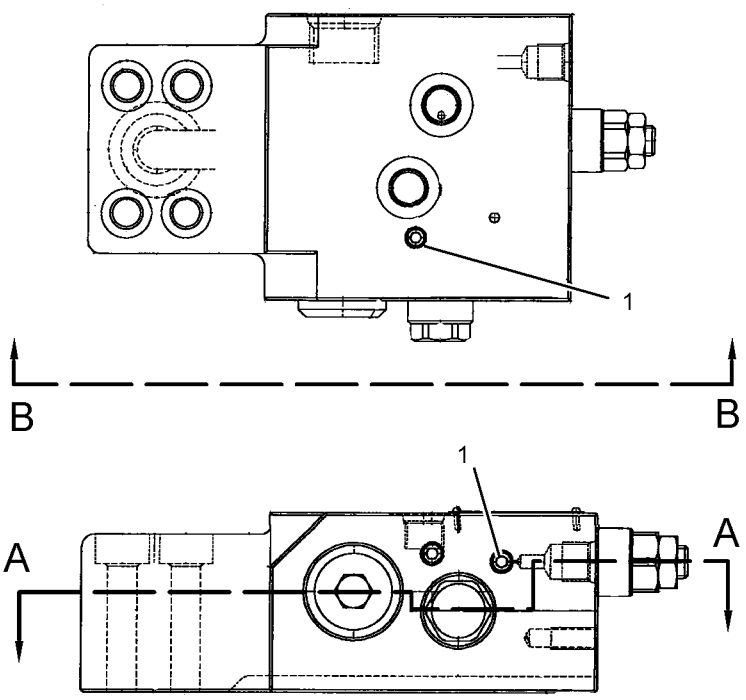

VIEW B-B

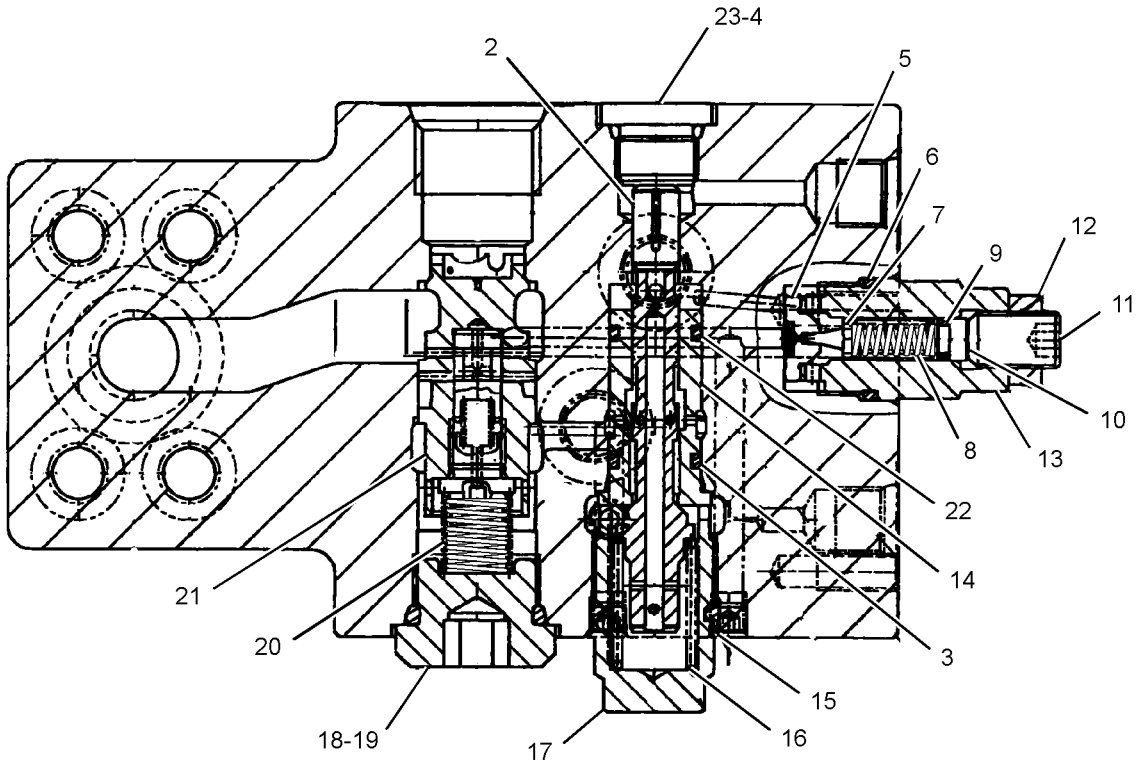

SECTION A-A

GRAPHIC #1 **<END>** g01390504

285-1687 VALVE GP-LOAD CONTROL—STICK CYLINDER

S/N: CJN1-UP

PART OF 294-6486 LINES GP-STICK CYLINDER

AN ATTACHMENT

SMCS-5067, 5117, 5147, 5811 **i02776588**

NOTE	REF NO	GRAPHIC REF	PART NUMBER	QTY	PART NAME 1 2 3 4 5 6 (PRODUCT LEVEL)	SEE PAGE
	1	1	**7J-9108**	1	SEAL-O-RING	
	2	1	**7I-8084**	3	PLUG	
	3	1	**215-5023**	1	PISTON	
	4	1	**095-1584**	1	SEAL-O-RING	
	5	1	**197-0145**	1	PLUG	
	6	1	**201-9283**	1	SEAT AS	
	7	1	**095-1590**	1	SEAL-O-RING	
	8	1	**201-9291**	1	VALVE	
	9	1	**201-9287**	1	SPRING	
	10	1	**095-1573**	1	SEAL-O-RING	
	11	1	**201-9285**	1	SEAT	
M	12	1	**201-9331**	1	SETSCREW (M12X1.75X19.5-MM)	
M	13	1	**201-9330**	1	NUT (M12X1.75-THD)	
	14	1	**201-9295**	1	PLUG	
	15	1	**297-0686**	1	SPOOL AS	
	16	1	**095-1589**	1	SEAL-O-RING	
	17	1	**201-9290**	1	SPRING	
M	18	1	**201-9296**	1	PLUG	
M	19	1	**201-9294**	1	PLUG	
	20	1	**095-1592**	1	SEAL-O-RING	
	21	1	**201-9288**	1	SPRING	
	22	1	**209-5931**	1	VALVE AS	
	23	1	**095-1582**	1	SEAL-O-RING	

M-METRIC PART

285-1687 VALVE GP-LOAD CONTROL *(contd.)* i02776588

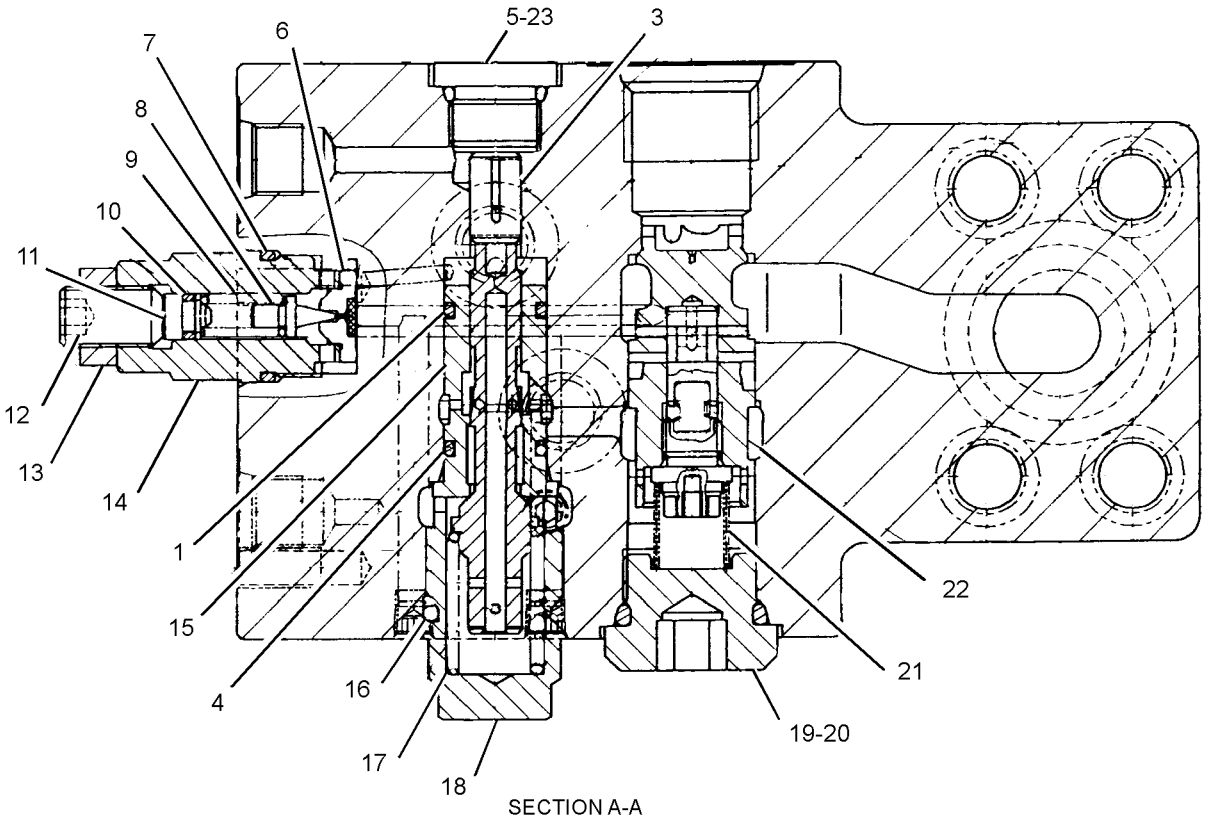

SECTION A-A

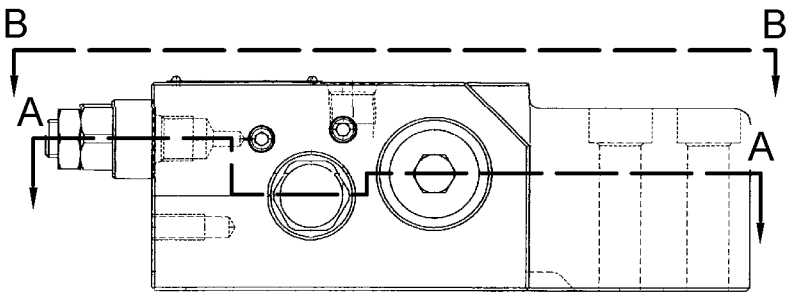

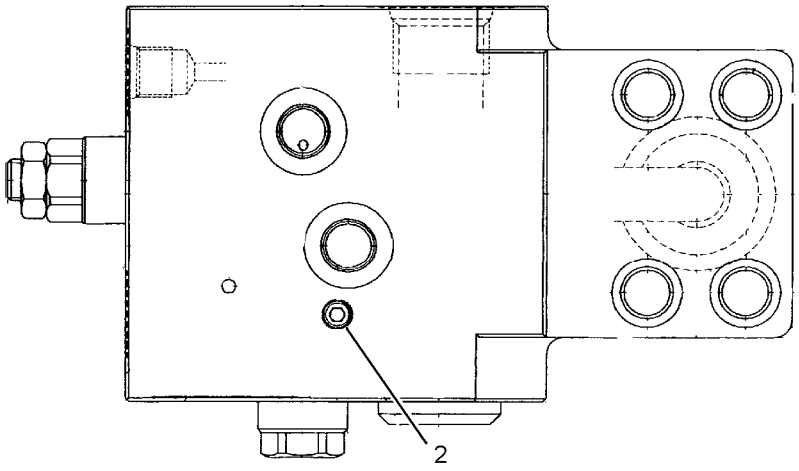

VIEW B-B

GRAPHIC #1 **<END>** g01390876

HYDRAULIC SYSTEM

259-7550 VALVE GP-MAIN CONTROL

S/N: CJN1-UP

PART OF 259-7547 HYDRAULIC AR, 285-1736, 285-1738 VALVE & MTG GP-CONTROL

ALSO AN ATTACHMENT

SMCS-5051 **i02866456**

NOTE	REF NO	GRAPHIC REF	PART NUMBER	QTY	PART NAME 1 2 3 4 5 6 (PRODUCT LEVEL)	SEE PAGE
	1	3	**285-1507**	1	SPRING	
	2	3	**285-1506**	1	VALVE	
I	3	5	**275-1504**	1	HOSE AS	
	4	5	**285-1503**	2	COVER	
	5	4	**095-1579**	1	SEAL-O-RING	
M	6	1	**5A-3604**	24	BOLT-SOCKET HEAD (M8X1.25X25-MM)	
M	7	1	**197-0165**	20	BOLT (M8X1.25X20-MM)	
	8	2	**197-0167**	1	PLATE	
	9	2,3,4,5	**095-1578**	12	SEAL-O-RING	
	10	2,3,4,5	**095-1696**	8	SEAL-O-RING	
M	11	2	**104-8107**	5	BOLT-SOCKET HEAD (M14X2X55-MM)	
	12	2,3,4,5	**095-1698**	18	SEAL-O-RING	
	13	2,3,4,5	**197-0145**	14	PLUG	
	14	2,3,4,5	**095-1582**	14	SEAL-O-RING	
	15	2,3,4	**095-1585**	11	SEAL-O-RING	
	16	2,3,4	**197-0272**	8	PLUG	
M	17	3	**197-0143**	3	BOLT (M14X2X95-MM)	
	18	2,3	**3D-2824**	2	SEAL-O-RING	
	19	2,3	**9S-4183**	2	PLUG-O-RING	
M	20	3	**197-0144**	13	BOLT (M14X2X130-MM)	
	21	2	**7I-7192**	2	PLUG	
	22	2	**215-4855**	2	VALVE AS-CHECK (MAKEUP)	
	23	2,3,4,5	**095-1700**	10	SEAL-O-RING	
	24	2,3,4,5	**197-0168**	10	COVER	
Y	25	1,2,4,5	**309-9977**	6	VALVE GP-PILOT RELIEF (LINE)	717
	26	1,2,3, 4,5	**7I-7208**	10	VALVE-LOAD CHECK	
	27	1,2,3, 4,5	**7I-0207**	13	PLATE	
	28	1,2,3, 4,5	**095-1586**	15	SEAL-O-RING	
	29	1,2,3, 4,5	**7I-7206**	13	PLUG	
Y	30	2	**259-7868**	1	SPOOL GP-CONTROL VALVE (BUCKET CYLINDER)	661
	31	2,3,4,5	**7I-7204**	12	SEAL	
	32	2,3,4,5	**197-0170**	10	COVER	
Y	33	3	**285-1667**	1	VALVE GP-CONTROL (STICK II)	684
	34	3	**197-0225**	2	PLUG AS	
Y	35	3	**197-0173**	1	SPOOL GP-CONTROL VALVE (WORK TOOL)	658
Y	36	4	**310-0074**	1	VALVE GP-CONTROL (BOOM II)	688
	37	4,5	**131-5767**	2	PLUG	
	38	4,5	**105-7405**	2	SPRING	
	39	4,5	**131-5768**	2	VALVE-LOAD CHECK	
	40	1,5	**197-0169**	2	VALVE AS	
Y	41	4	**310-0072**	1	VALVE GP-CONTROL (BOOM I)	687
	42	3	**7I-7235**	2	PLUG	
	43	3	**3J-1907**	1	SEAL-O-RING	
	44	3	**9S-4191**	1	PLUG-O-RING	
	45	3	**309-9960**	1	SPOOL AS (STRAIGHT TRAVEL)	
	46	3	**103-8413**	1	ROD	
	47	3	**103-8412**	1	SPRING	
	48	3	**103-8411**	1	SPRING	
	49	3	**197-0166**	1	PLUG	
	50	3,5	**7I-8084**	6	PLUG	
Y	51	3,4	**197-0219**	2	SPOOL GP-CONTROL VALVE	659
Y	52	4	**270-5979**	1	VALVE GP-RELIEF (MAIN)	720

259-7550 VALVE GP-MAIN CONTROL *(contd.)* i02866456

NOTE	REF NO	GRAPHIC REF	PART NUMBER	QTY	PART NAME 1 2 3 4 5 6 (PRODUCT LEVEL)	SEE PAGE
	53	4	**095-0965**	2	PLUG	
	54	4	**7I-7241**	2	ORIFICE	
Y	55	5	**285-1669**	1	SPOOL GP-CONTROL VALVE (STICK REGENERATION)	663
Y	56	5	**229-1085**	1	SPOOL GP-CONTROL VALVE (SWING)	660
Y	57	5	**285-1505**	1	SPOOL GP-CONTROL VALVE (SWING PRIORITY)	662
	58	5	**7I-7250**	1	VALVE-LOAD CHECK	
Y	59	5	**310-0076**	1	VALVE GP-CONTROL (STICK I)	689
	60	4	**197-0146**	1	SPRING	
	61	4	**197-0147**	1	VALVE	
	63	3	**095-1592**	2	SEAL-O-RING	
	64	4	**215-4872**	2	VALVE	
	65	4	**170-9997**	1	PLUG	

I-REFER TO HYDRAULIC INFORMATION SYSTEM
M-METRIC PART
Y-SEPARATE ILLUSTRATION

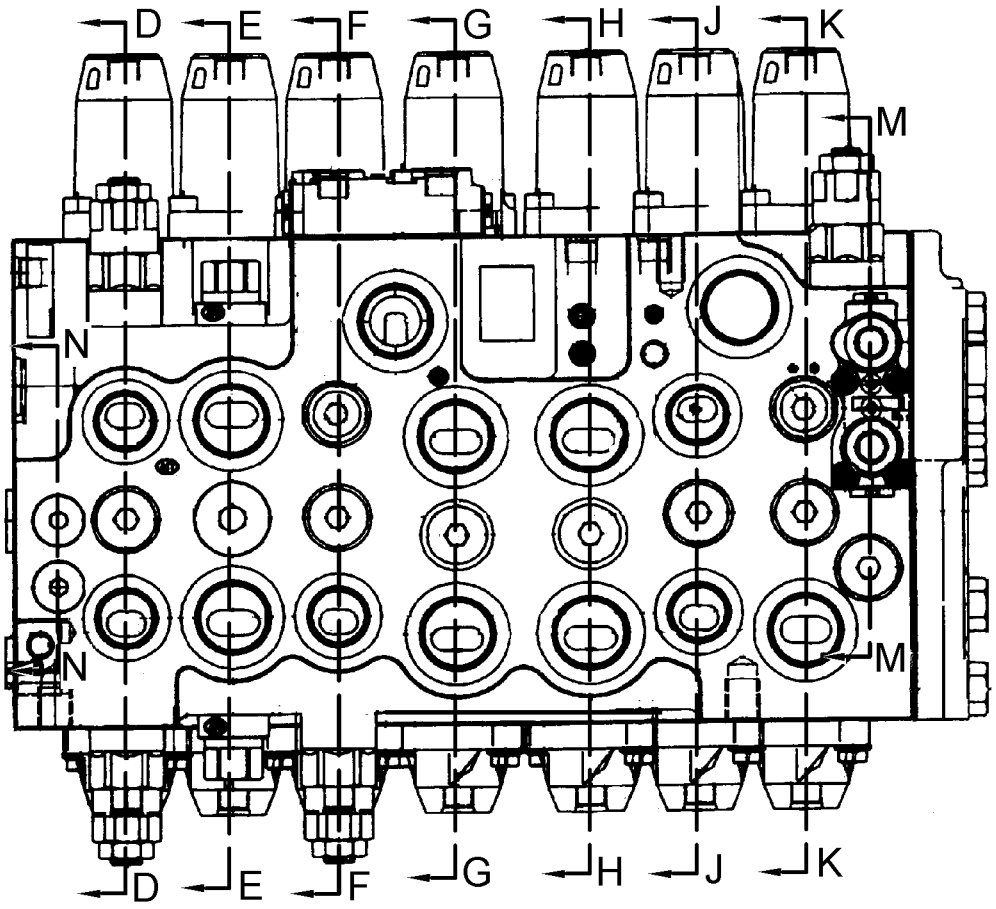

FRONT VIEW

REFER TO ALL ILLUSTRATIONS OF THIS GROUP FOR AUXILIARY VIEWS

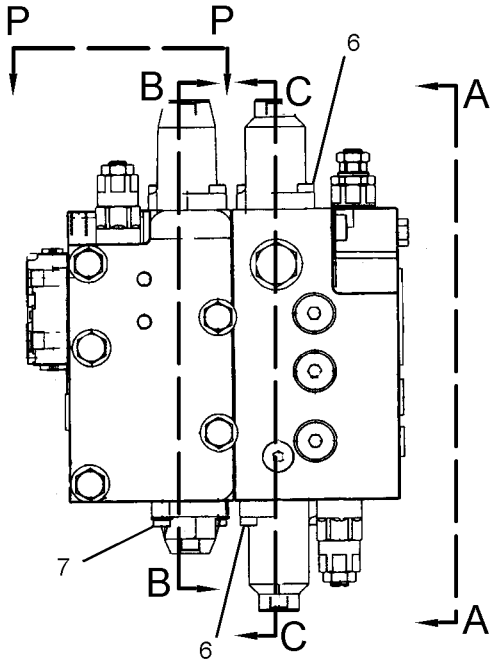

RIGHT SIDE VIEW

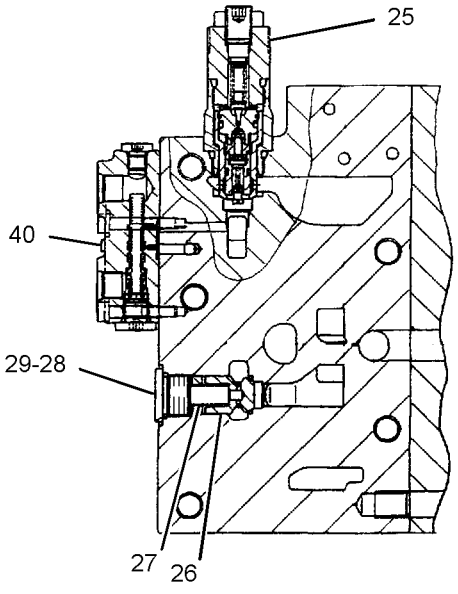

SECTION M-M

GRAPHIC #1

g01420728

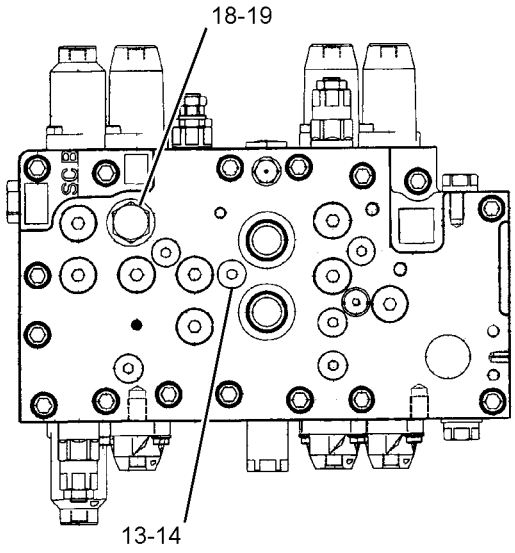

VIEW A-A

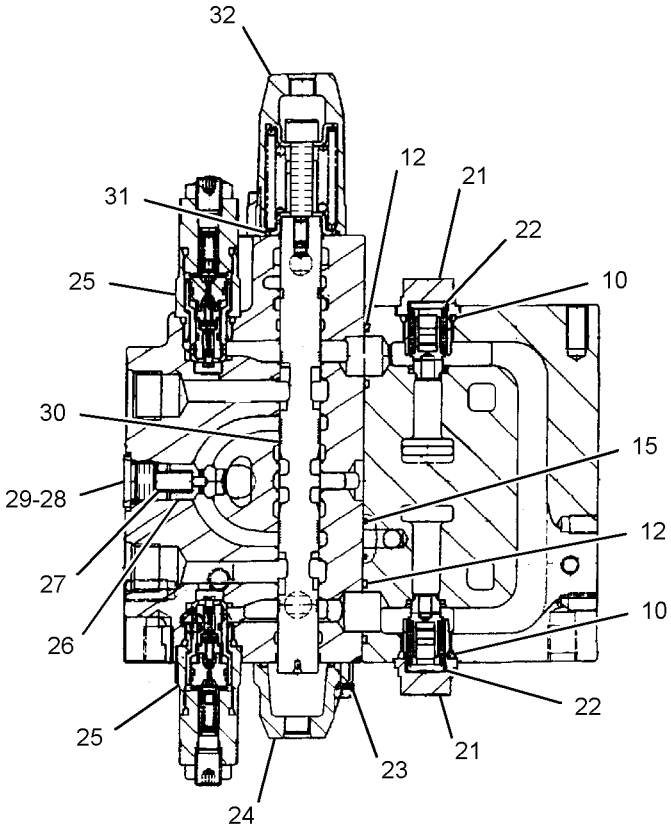

SECTION D-D

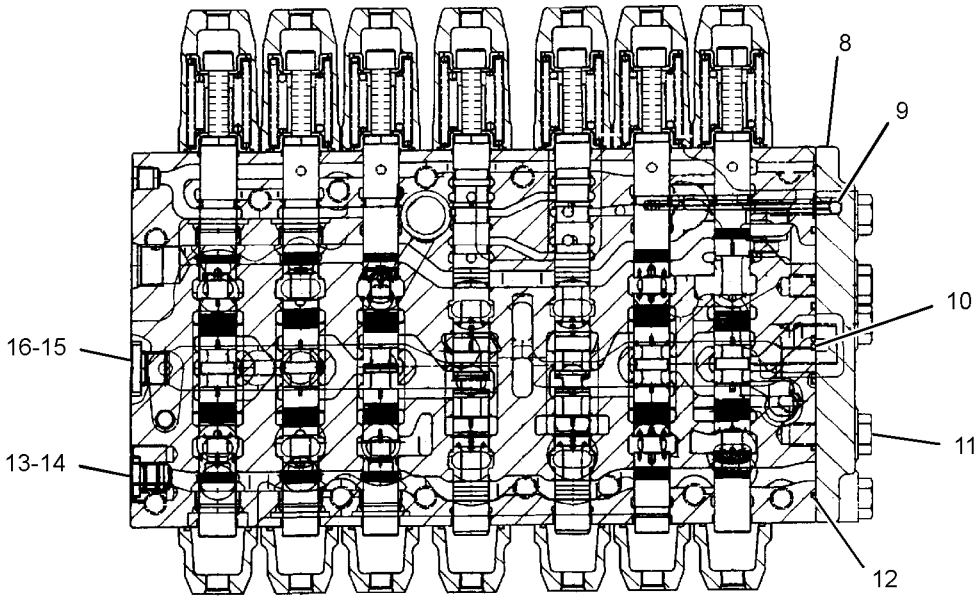

SECTION B-B

GRAPHIC #2

g01420729

259-7550 VALVE GP-MAIN CONTROL *(contd.)* i02866456

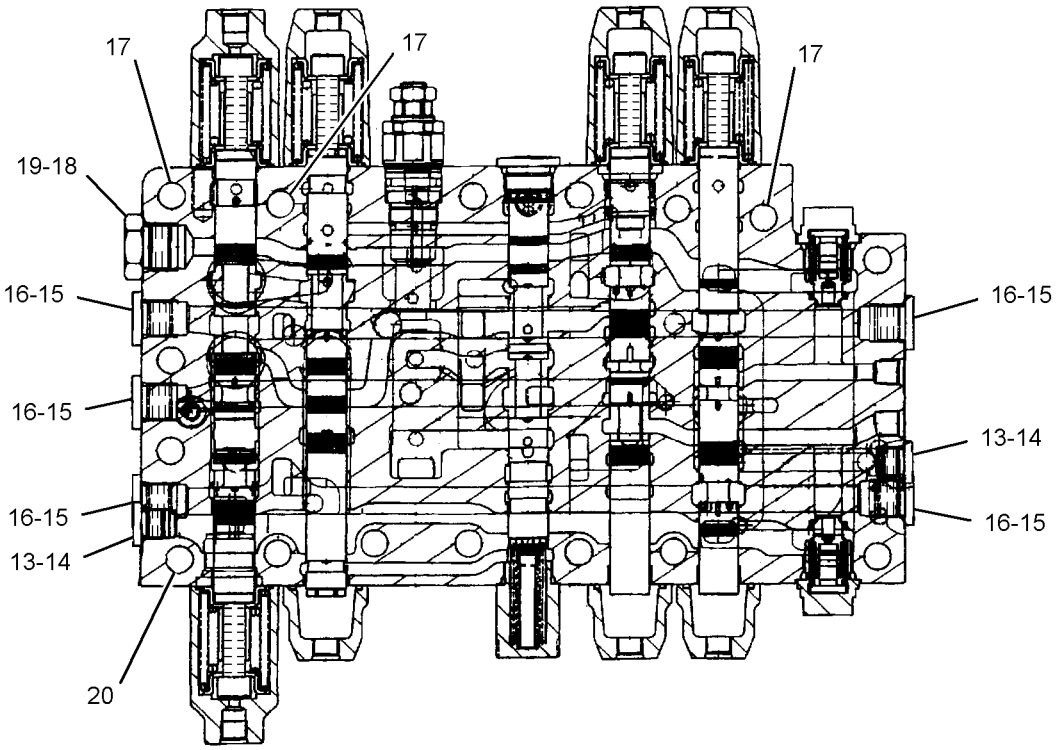

SECTION C-C

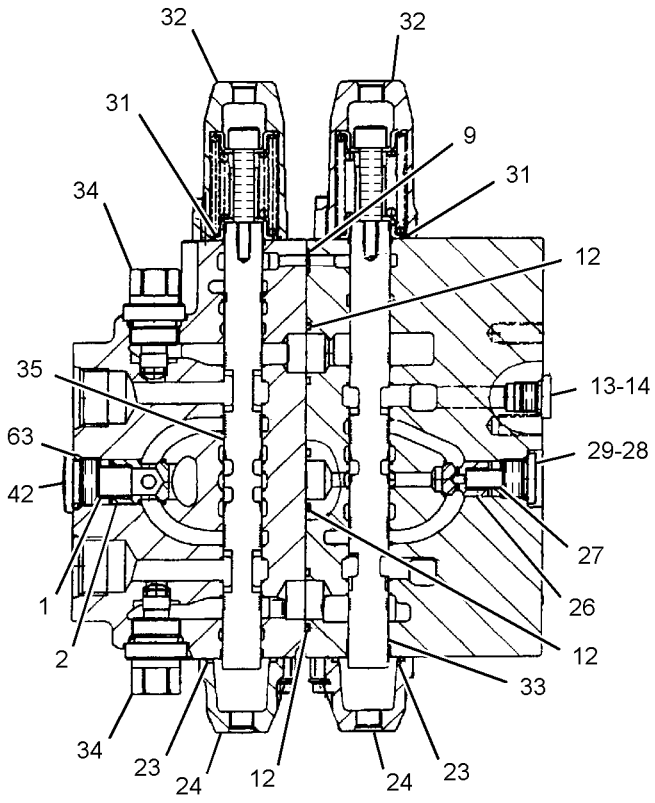

SECTION E-E

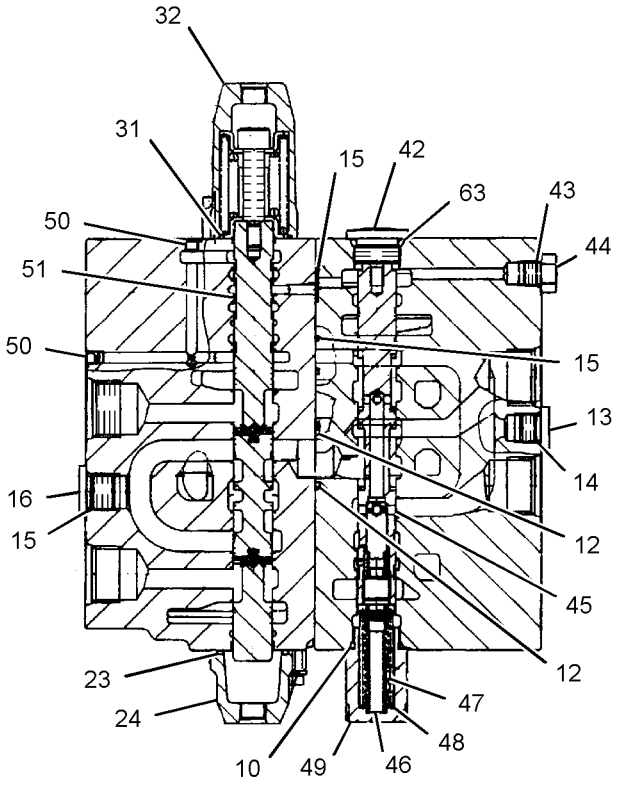

SECTION G-G

GRAPHIC #3 g01420730

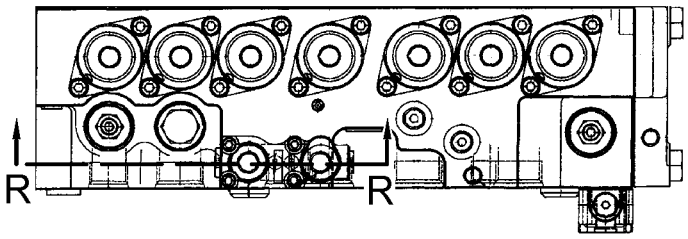

SECTION P-P

REFER TO ALL ILLUSTRATIONS OF THIS GROUP FOR AUXILIARY VIEWS

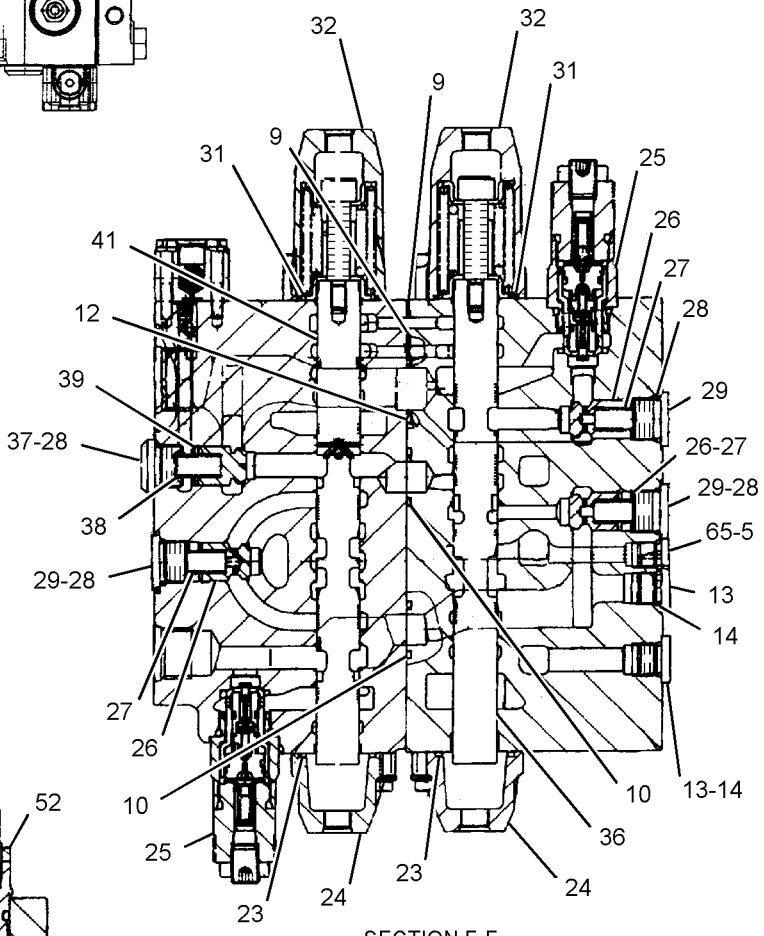

SECTION F-F

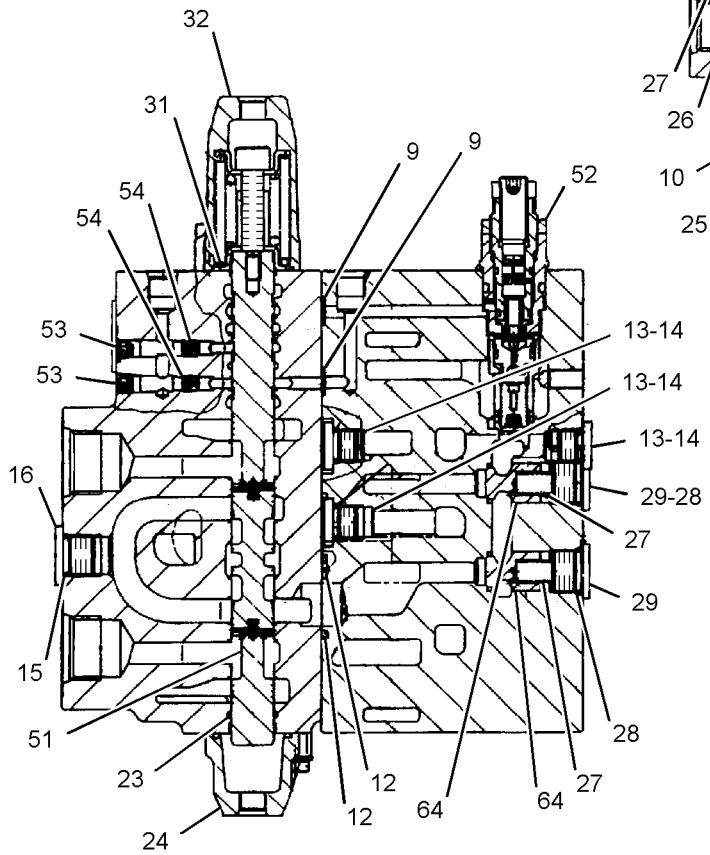

SECTION H-H

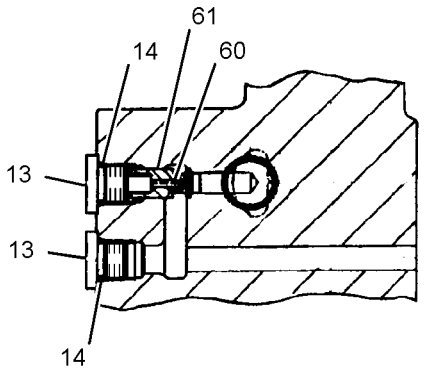

SECTION M-M

GRAPHIC #4

g01421005

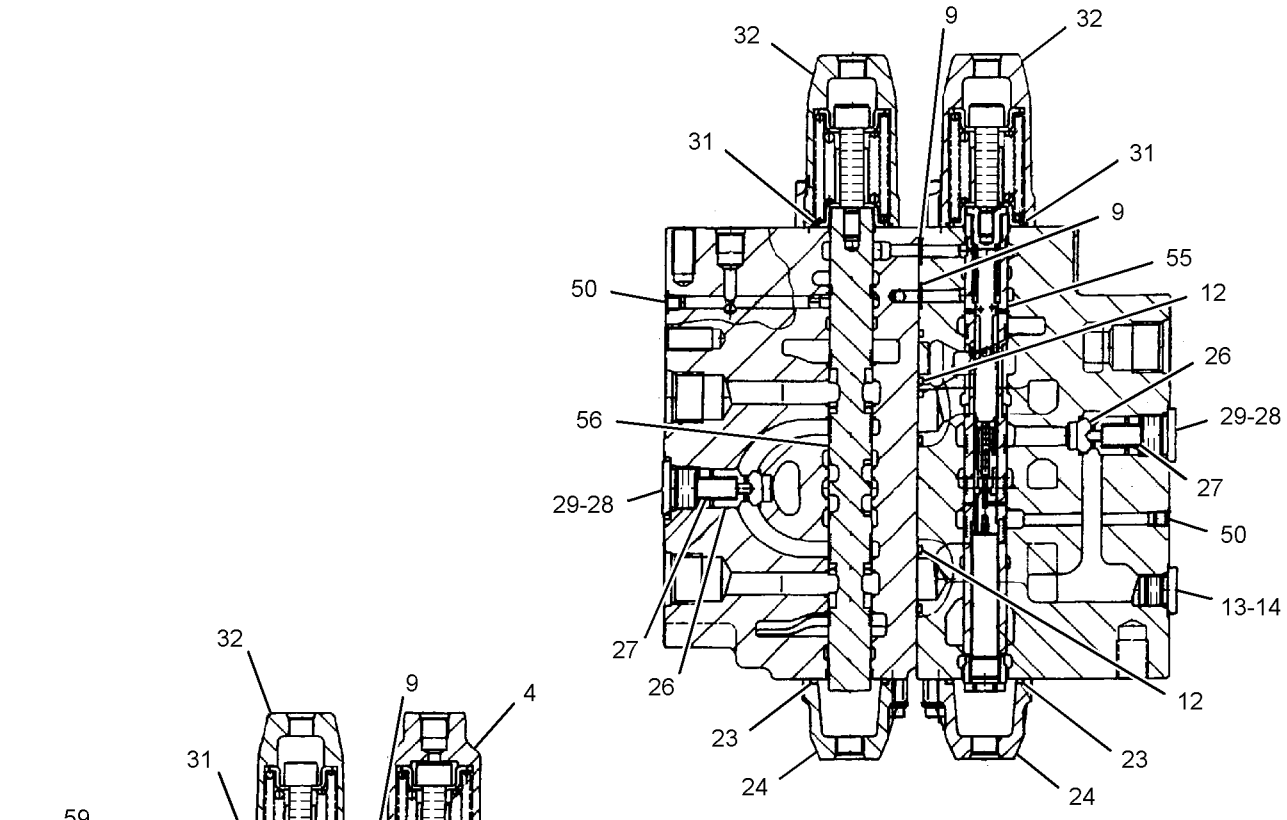

GRAPHIC #5 **<END>** g01421080

HYDRAULIC SYSTEM

206-3305 VALVE GP-PILOT–JOYSTICK

S/N: CJN1-UP

PART OF 259-7762, 259-7763, 259-7764, 259-7765 CONTROL GP-JOYSTICK

FIELD REPLACEMENT ORDER 297-0589–PAGE 713

AN ATTACHMENT

SMCS-5059 **i02174618**

NOTE	REF NO	GRAPHIC REF	PART NUMBER	QTY	PART NAME 1 2 3 4 5 6 (PRODUCT LEVEL)	SEE PAGE
	1	1	**165-9431**	1	PLATE	
	2	1	**4I-6365**	1	JOINT	
	3	1	**118-4087**	4	SPRING	
	4	1	**165-9444**	2	SEAT-SPRING	
					(USED WITH REF NO 7 OR 7A SPRINGS)	
					–OR–	
J		1	**244-8496**	2	SEAT-SPRING	
					(USED WITH REF NO 7B SPRINGS)	
					–OR–	
L		1	**244-8500**	2	SEAT-SPRING	
					(USED WITH REF NO 7C SPRINGS)	
	5	1	**096-1628**	4	PLUG	
	6	1	**165-9436**	2	SEAT	
	7	1	**165-9460**	2	SPRING (STANDARD)	
					–OR–	
	7A	1	**225-4815**	2	SPRING (OPTIONAL)	
					(REDUCES OPERATING FORCE FOR IMPROVED INCHING CONTROL)	
					–OR–	
J	7B	1	**244-8494**	2	SPRING (OPTIONAL)	
					(PROVIDES CONTROLLABILITY EQUAL TO A-SERIES MACHINES)	
					–OR–	
L	7C	1	**244-8498**	2	SPRING (OPTIONAL)	
					(PROVIDES CONTROLLABILITY COMPARABLE TO A AND B-SERIES MACHINES)	
	8	1	**165-9461**	4	SPRING (STANDARD)	
					–OR–	
		1	**190-7750**	4	SPRING (OPTIONAL)	
					(REDUCES OPERATING FORCE BY 30%)	
					–OR–	
		1	**190-7751**	4	SPRING (OPTIONAL)	
					(REDUCES OPERATING FORCE BY 20%)	
	9	1	**165-9439**	1	BUSHING	
	10	1	**165-9448**	1	SEAL-O-RING	
	11	1	**168-0794**	1	PLATE	
	12	1	**096-4498**	2	WASHER	
M	13	1	**6V-8337**	2	BOLT-SOCKET HEAD (M8X1.25X35-MM)	
	14	1	**171-0087**	1	BELLOWS	
M	15	1	**131-5915**	1	NUT-SPECIAL	
	16	1	**7Y-0468**	1	PIN-SPRING	
	17	1	**094-0876**	4	SEAL	
B	18	1	**099-6137**	4	WASHER (6.1X9X0.2-MM THK)	
	19	1	**165-9442**	2	SPRING (STANDARD)	
					–OR–	
	19A	1	**225-4816**	2	SPRING (OPTIONAL)	
					(REDUCES OPERATING FORCE FOR IMPROVED INCHING CONTROL)	
					–OR–	
J	19B	1	**244-8495**	2	SPRING (OPTIONAL)	
					(PROVIDES CONTROLLABILITY EQUAL TO A-SERIES MACHINES)	
					–OR–	

206-3305 VALVE GP-PILOT *(contd.)* i02174618

NOTE	REF NO	GRAPHIC REF	PART NUMBER	QTY	PART NAME 1 2 3 4 5 6 (PRODUCT LEVEL)	SEE PAGE
L	19C	1	**244-8499**	2	SPRING (OPTIONAL)	
					(PROVIDES CONTROLLABILITY COMPARABLE TO A AND B-SERIES MACHINES)	
	20	1	**165-9435**	2	SEAT	
	21	1	**095-1586**	4	SEAL-O-RING	
	22	1	**165-9443**	2	SEAT-SPRING	
					(USED WITH REF NO 19 OR 19A SPRINGS)	
					—OR—	
J		1	**244-8497**	2	SEAT-SPRING	
					(USED WITH REF NO 19B SPRINGS)	
					—OR—	
L		1	**244-8501**	2	SEAT-SPRING	
					(USED WITH REF NO 19C SPRINGS)	
	23	1	**165-9438**	1	PLATE	
	24	1	**118-4086**	4	ROD	

B-USE AS REQUIRED
J-PARTS MARKED J MUST BE USED TOGETHER AS A SET
L-PARTS MARKED L MUST BE USED TOGETHER AS A SET
M-METRIC PART

206-3305 VALVE GP-PILOT *(contd.)* **i02174618**

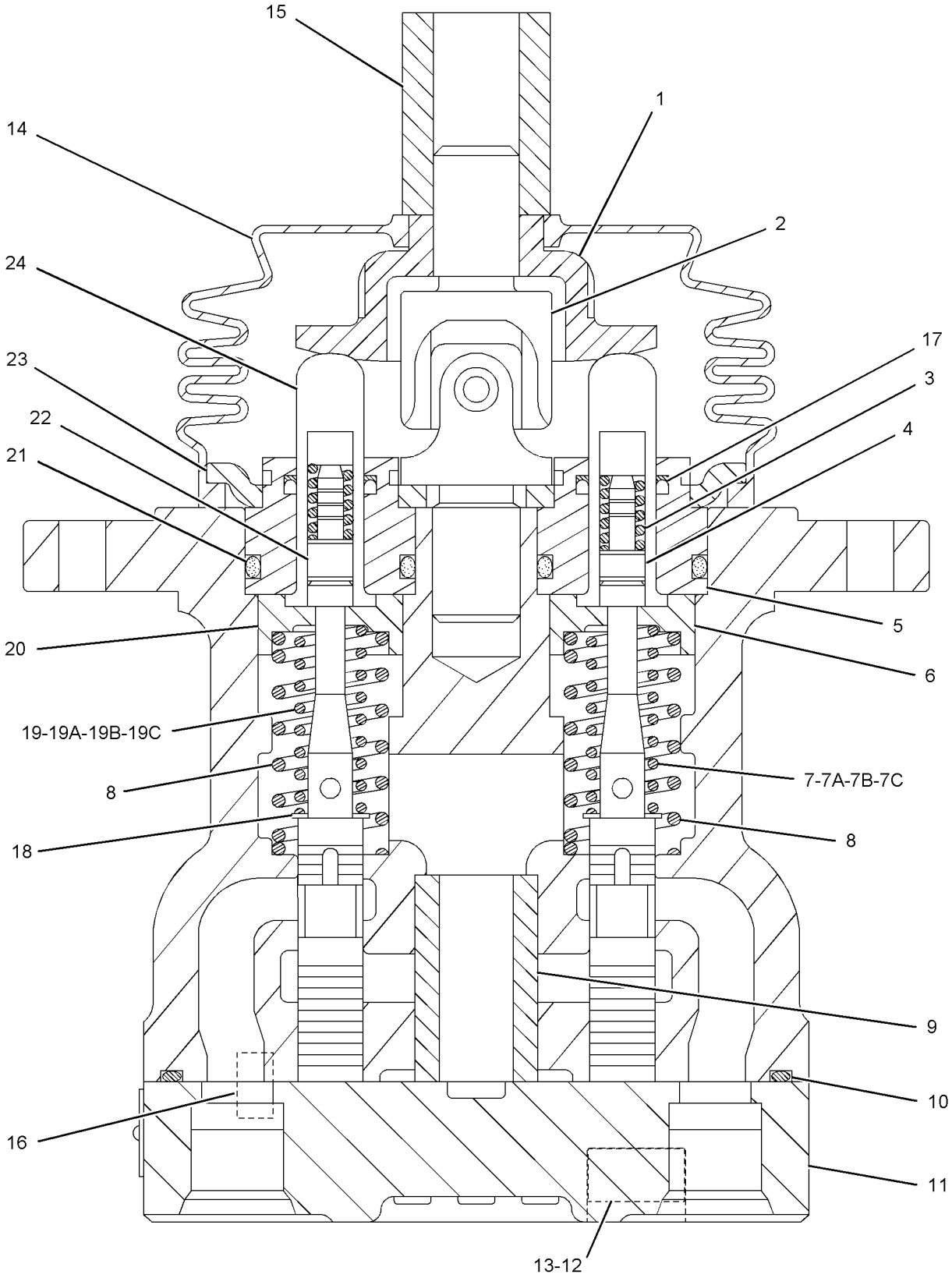

GRAPHIC #1 **<END>** g01102305

270-5948 VALVE GP-PILOT–TRAVEL

S/N: CJN1-992

PART OF 275-1715 LINES GP-PILOT

SMCS-5059 **i02696671**

NOTE	REF NO	GRAPHIC REF	PART NUMBER	QTY	PART NAME 1 2 3 4 5 6 (PRODUCT LEVEL)	SEE PAGE
	1	1	**270-5950**	4	SPRING	
	2	1	**131-5818**	4	SPRING	
	3	1	**095-0936**	4	RING-RETAINING	
	4	1	**126-1865**	4	SPRING	
	5	1	**126-1866**	4	SPRING	
	6	1	**270-5949**	4	PISTON	
	7	1	**6V-8400**	4	SEAL-O-RING	
	8	1	**165-9463**	2	COVER	
	9	1	**165-9554**	4	PLUG	
	10	1	**119-5389**	4	PACKING	
	11	1	**165-9552**	4	PUSHROD	
M	12	1	**8T-4133**	4	NUT (M10X1.5-THD)	
M	13	1	**087-4710**	4	SETSCREW	
	14	1	**147-4131**	2	BOOT-PROTECTION	
	15	1	**087-5708**	2	PEDAL	
M	16	1	**8T-0343**	2	BOLT-SOCKET HEAD (M12X1.75X55-MM)	
	17	1	**119-5388**	4	CAP	
	18	1	**165-9553**	1	COVER	
	19	1	**119-5391**	4	SEAT	
	20	1	**153-5223**	12	BALL	
	21	1	**119-5392**	4	BUSHING	
	22	1	**165-9551**	4	SEAT	
	24	1	**099-6137**	4	WASHER	
	25	1	**099-6141**	4	WASHER (6.1X11X1.5-MM THK)	
	26	1	**099-6145**	2	CAMSHAFT	
	27	1	**099-6144**	4	BUSHING-TERMINAL	
M	28	1	**095-1260**	2	SETSCREW-SOCKET (M6X1X6-MM)	
M	29	1	**8T-1158**	2	BOLT-SOCKET HEAD (M8X1.25X20-MM)	
	30	1	**8T-6759**	2	PLUG-PIPE	

M-METRIC PART

270-5948 VALVE GP-PILOT *(contd.)* i02696671

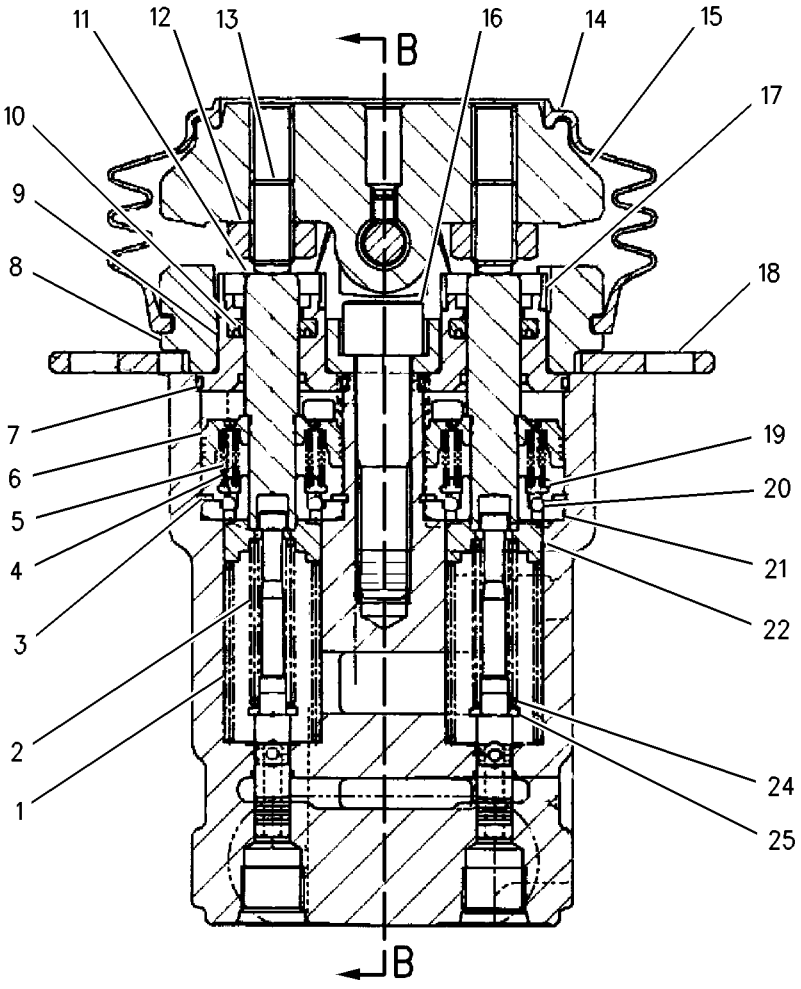

SECTION A-A

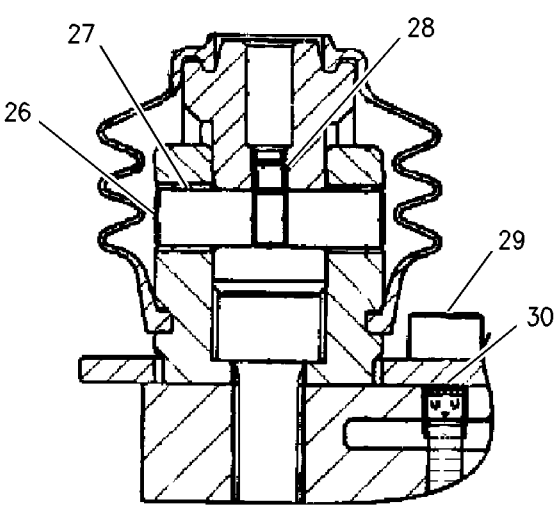

SECTION B-B

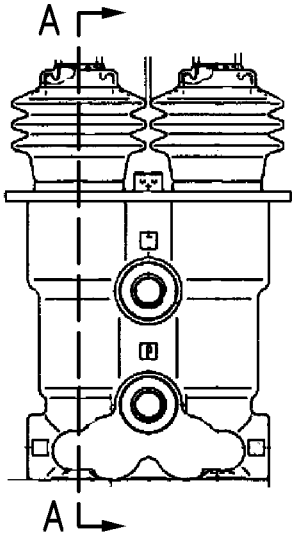

GRAPHIC #1 **<END>** g00857024

HYDRAULIC SYSTEM

297-0529 VALVE GP-PILOT–JOYSTICK

S/N: CJN1-UP

PART OF 297-0532, 297-0533 CONTROL GP-JOYSTICK

AN ATTACHMENT

SMCS-5059 **i03017531**

NOTE	REF NO	GRAPHIC REF	PART NUMBER	QTY	PART NAME 1 2 3 4 5 6 (PRODUCT LEVEL)	SEE PAGE
	1	1	**270-5953**	4	SPRING	
	2	1	**095-1586**	4	SEAL-O-RING	
	3	1	**4I-6365**	1	JOINT	
	4	1	**094-0876**	4	SEAL	
	5	1	**096-1628**	4	PLUG	
B	6	1	**099-6137**	4	WASHER (6.1X9X0.2-MM THK)	
	7	1	**118-4086**	4	ROD	
	8	1	**118-4087**	4	SPRING	
M	9	1	**131-5915**	1	NUT-SPECIAL	
	10	1	**165-9431**	1	PLATE	
	11	1	**165-9435**	2	SEAT	
	12	1	**165-9436**	2	SEAT	
	13	1	**165-9438**	1	PLATE	
	14	1	**165-9442**	2	SPRING	
	15	1	**165-9443**	2	SEAT-SPRING	
	16	1	**165-9444**	2	SEAT-SPRING	
	17	1	**165-9460**	2	SPRING	
	18	1	**171-0087**	1	BELLOWS	

PARTS SHOWN IN GRAPHIC(S) WITHOUT A REFERENCE NUMBER ARE NOT SERVICED SEPARATELY

B-USE AS REQUIRED
M-METRIC PART

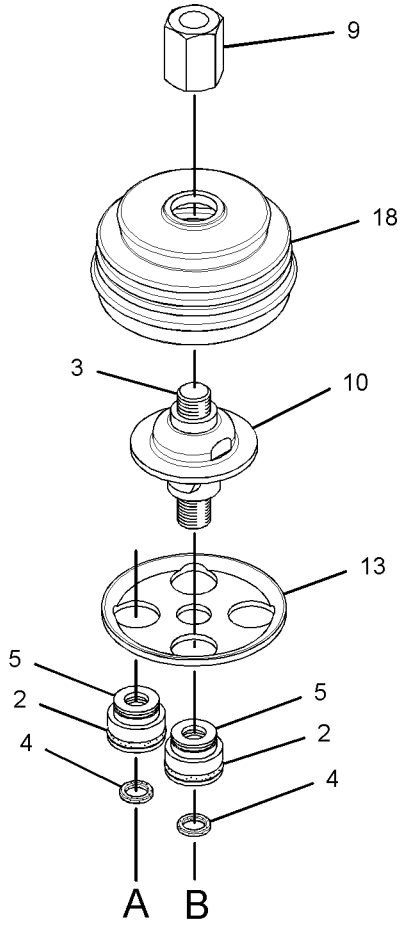

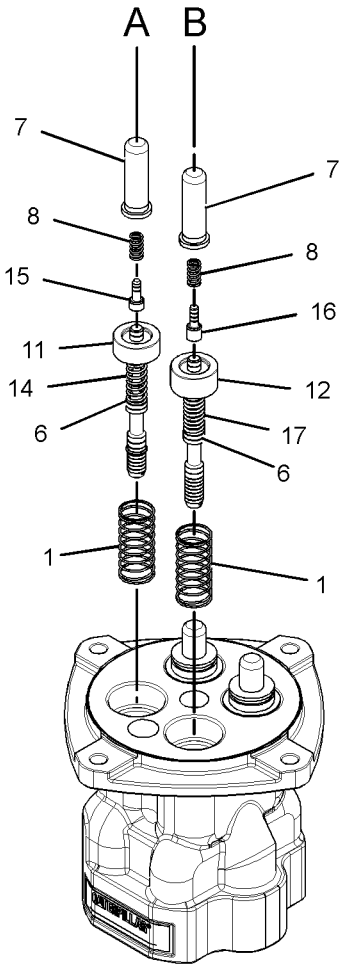

GRAPHIC #1 **<END>** g01528724

297-0589 VALVE GP-PILOT—JOYSTICK

S/N: CJN1-UP

PART OF 297-0534, 297-0535, 297-0536, 297-0537 CONTROL GP-JOYSTICK

FIELD REPLACEMENT FOR 206-3305—PAGE 706

AN ATTACHMENT

SMCS-5059 **i03135570**

NOTE	REF NO	GRAPHIC REF	PART NUMBER	QTY	PART NAME 1 2 3 4 5 6 (PRODUCT LEVEL)	SEE PAGE
	1	1	**095-1586**	4	SEAL-O-RING	
	2	1	**4I-6365**	1	JOINT	
	3	1	**094-0876**	4	SEAL	
	4	1	**096-1628**	4	PLUG	
B	5	1	**099-6137**	4	WASHER (6.1X9X0.2-MM THK)	
	6	1	**118-4086**	4	ROD	
	7	1	**118-4087**	4	SPRING	
M	8	1	**131-5915**	1	NUT-SPECIAL	
	9	1	**165-9431**	1	PLATE	
	10	1	**165-9435**	2	SEAT	
	11	1	**165-9436**	2	SEAT	
	12	1	**165-9438**	1	PLATE	
	13	1	**165-9442**	2	SPRING	
	14	1	**165-9443**	2	SEAT-SPRING	
	15	1	**165-9444**	2	SEAT-SPRING	
	16	1	**165-9460**	2	SPRING	
	17	1	**165-9461**	4	SPRING	
	18	1	**171-0087**	1	BELLOWS	

B-USE AS REQUIRED
M-METRIC PART

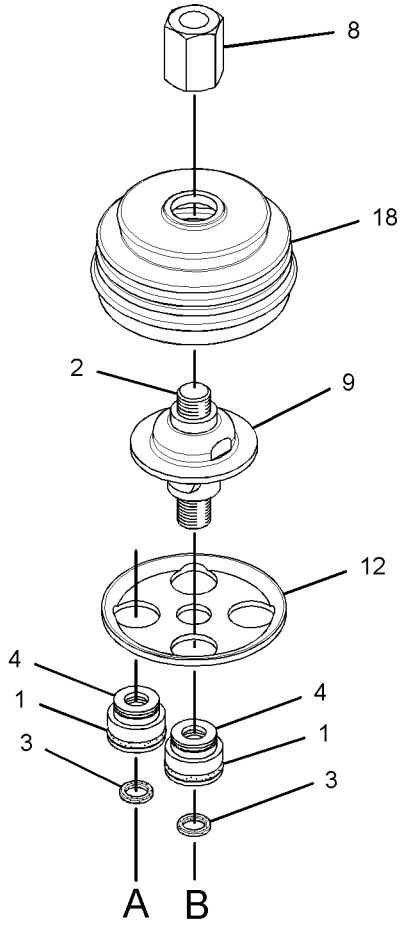

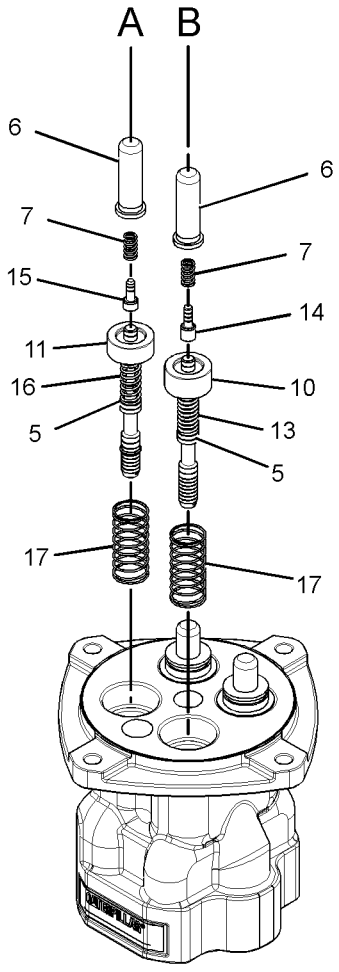

GRAPHIC #1 **<END>** g01528741

310-0415 VALVE GP-PILOT—WITHOUT SHUTTLE

S/N: CJN993-UP

PART OF 275-1715 LINES GP-PILOT

SMCS-5059 **i03127888**

NOTE	REF NO	GRAPHIC REF	PART NUMBER	QTY	PART NAME 1 2 3 4 5 6 (PRODUCT LEVEL)	SEE PAGE
	1	1	**087-5708**	2	PEDAL	
M	2	1	**095-0673**	2	BOLT-SOCKET HEAD (M12X1.75X60-MM)	
	3	1	**099-6137**	4	WASHER (6.1X9X0.2-MM THK)	
	4	1	**099-6141**	4	WASHER (6.1X11X1.5-MM THK)	
	5	1	**099-6144**	4	BUSHING-TERMINAL	
	6	1	**099-6145**	2	CAMSHAFT	
	7	1	**119-5388**	4	CAP	
	8	1	**119-5389**	4	PACKING	
	9	1	**119-5391**	4	SEAT	
	10	1	**126-1865**	4	SPRING	
	11	1	**126-1866**	4	SPRING	
	12	1	**131-5818**	4	SPRING	
	13	1	**147-4131**	2	BOOT-PROTECTION	
	14	1	**153-5223**	12	BALL	
	15	1	**165-9463**	2	COVER	
	16	1	**165-9552**	4	PUSHROD	
	17	1	**165-9553**	1	COVER	
	18	1	**165-9554**	4	PLUG	
	19	1	**270-5949**	4	PISTON	
	20	1	**270-5950**	4	SPRING	
	21	1	**310-0419**	4	SEAT	
	22	1	**310-0420**	4	SEAL-O-RING	
M	23	1	**087-4710**	4	SETSCREW	
M	24	1	**095-1260**	2	SETSCREW-SOCKET (M6X1X6-MM)	
	25	1	**095-1575**	2	SEAL-O-RING	
	26	1	**6V-8400**	4	SEAL-O-RING	
M	27	1	**8C-6965**	2	BOLT-SOCKET HEAD (M6X1X45-MM)	
M	28	1	**8T-1158**	2	BOLT-SOCKET HEAD (M8X1.25X20-MM)	
M	29	1	**8T-4133**	4	NUT (M10X1.5-THD)	

M-METRIC PART

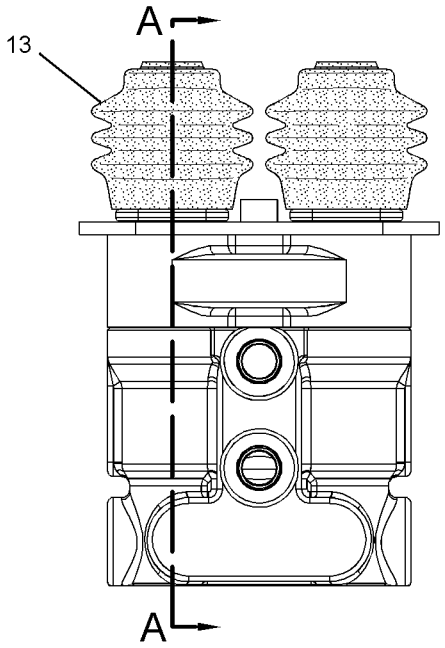

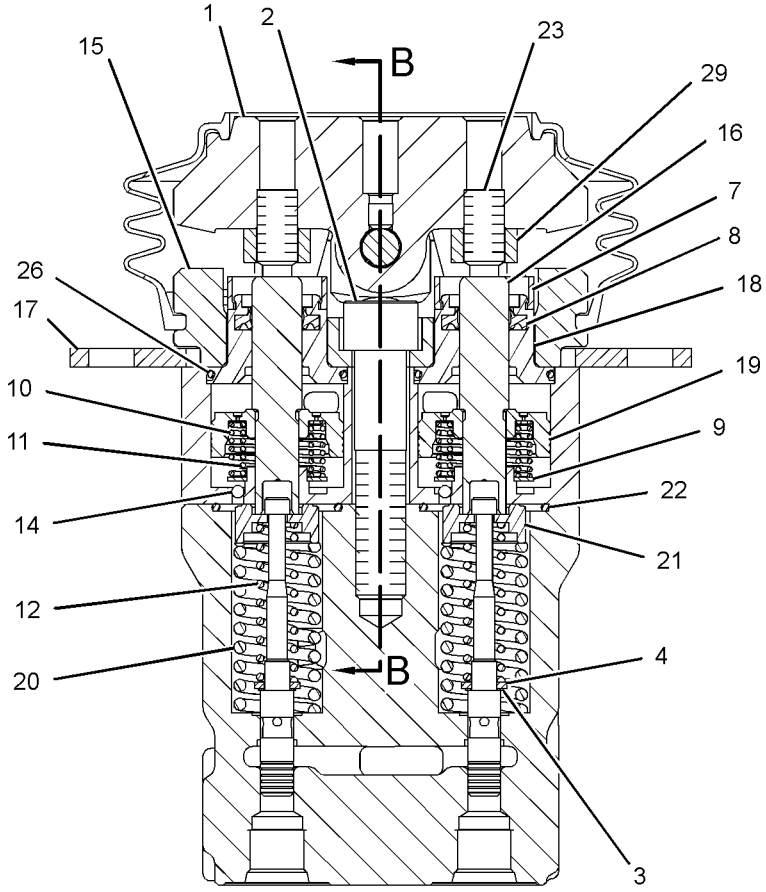

SECTION A-A

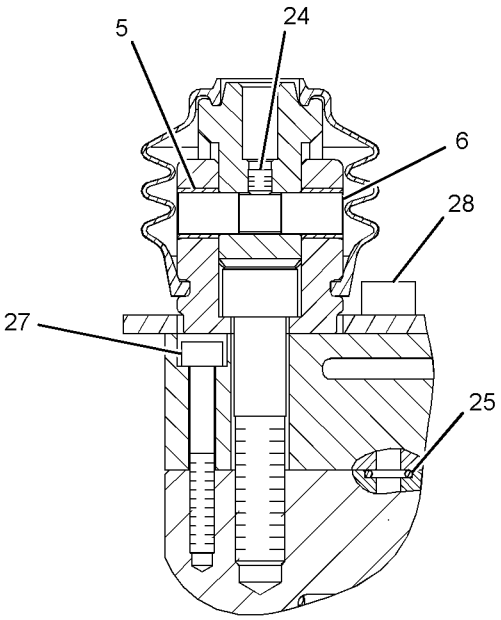

SECTION B-B

GRAPHIC #1 **<END>** g01620929

309-9977 VALVE GP-PILOT RELIEF–LINE

S/N: CJN1-UP

PART OF 260-8226, 275-1699 LINES GP-FRONT, 259-7550 VALVE GP-MAIN CONTROL

ALSO AN ATTACHMENT

SMCS-5072 **i02866443**

NOTE	REF NO	GRAPHIC REF	PART NUMBER	QTY	PART NAME 1 2 3 4 5 6 (PRODUCT LEVEL)	SEE PAGE
	1	1	**095-1514**	1	SEAL-O-RING	
	2	1	**095-1519**	1	SEAL-O-RING	
	3	1	**095-1575**	1	SEAL-O-RING	
	4	1	**095-1591**	1	SEAL-O-RING	
	5	1	**095-1592**	1	SEAL-O-RING	
	6	1	**095-1783**	1	RING-BACKUP	
	7	1	**095-8024**	1	RING-BACKUP	

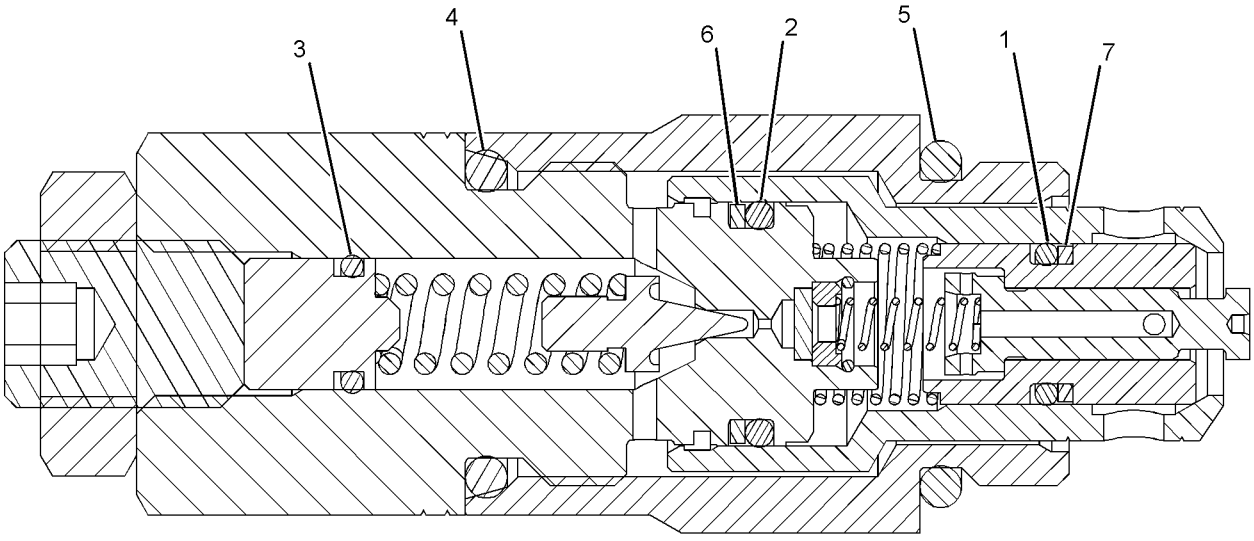

GRAPHIC #1 **<END>** g01426401

HYDRAULIC SYSTEM

285-1613 VALVE GP-PRESSURE REDUCING–BOOM PRIORITY

S/N: CJN1-UP

PART OF 302-3195 LINES GP-PILOT

SMCS-5117 **i02711164**

NOTE	REF NO	GRAPHIC REF	PART NUMBER	QTY	PART NAME 1 2 3 4 5 6 (PRODUCT LEVEL)	SEE PAGE
	1	1	**171-0123**	1	PLUG	
M	2	1	**171-0124**	1	SETSCREW (M8X1.25X18-MM)	
	3	1	**185-0423**	1	STOP	
	4	1	**095-1582**	1	SEAL-O-RING	
	5	1	**111-9998**	1	PLUG	
	6	1	**171-0127**	1	SEAT-SPRING	
	7	1	**171-0128**	1	SPRING	
	8	1	**171-0126**	1	SEAT-SPRING	
	9	1	**095-1590**	1	SEAL-O-RING	
	10	1	**095-1580**	1	SEAL-O-RING	
M	11	1	**5C-7261**	1	NUT (M8X1.25-THD)	

M-METRIC PART

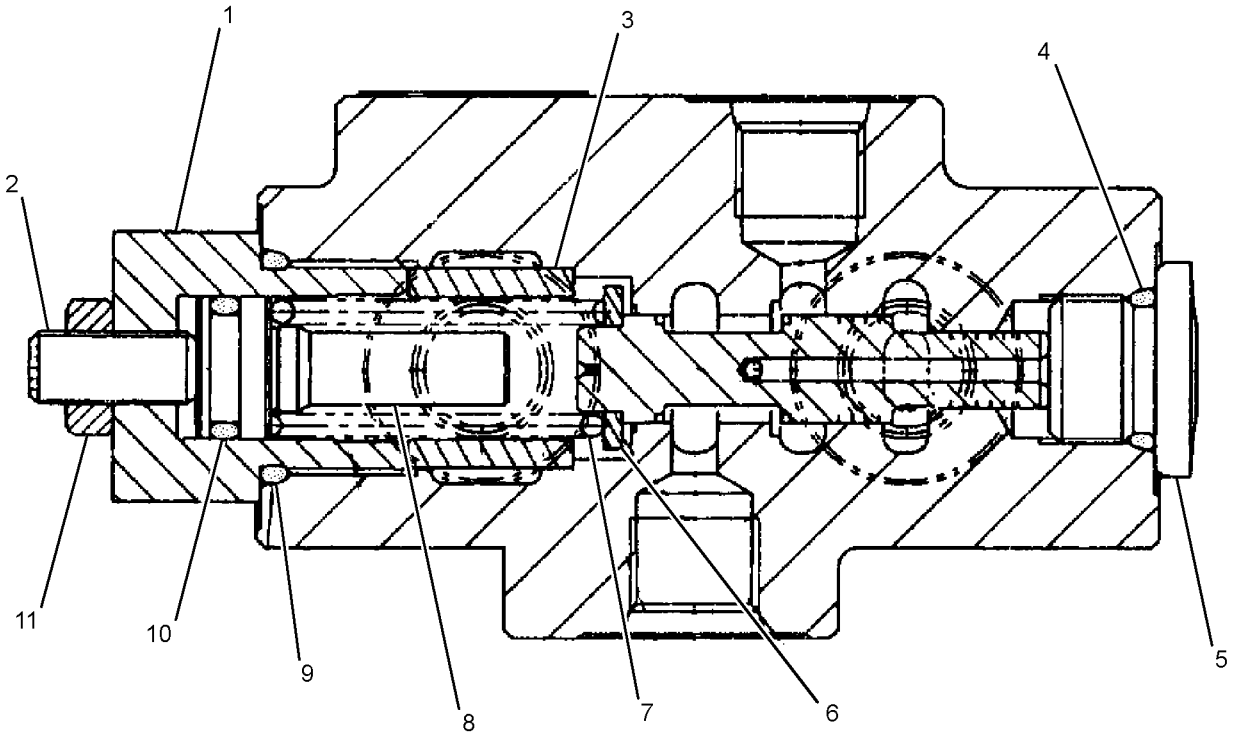

GRAPHIC #1 **<END>** g01363363

129-8030 VALVE GP-RELIEF–CROSSOVER

S/N: CJN1-UP

PART OF 199-0504 VALVE GP-TRAVEL COUNTERBALANCE

ALSO AN ATTACHMENT

SMCS-5069, 5117 **i01109874**

NOTE	REF NO	GRAPHIC REF	PART NUMBER	QTY	PART NAME 1 2 3 4 5 6 (PRODUCT LEVEL)	SEE PAGE
	1	1	**114-0515**	1	SEAT	
	2	1	**095-1785**	3	RING-BACKUP	
	3	1	**095-1586**	3	SEAL-O-RING	
	4	1	**114-0516**	1	SPRING	
	5	1	**114-0519**	1	STOP	
M	6	1	**7Y-8436**	1	SETSCREW (M27X2X27-MM)	
M	7	1	**7Y-8437**	1	NUT (M27X2-THD)	
	8	1	**114-0518**	1	BODY	
	9	1	**095-1601**	1	SEAL-O-RING	
	10	1	**121-1459**	2	RING-BACKUP	
	11	1	**114-0517**	1	PISTON	
	12	1	**114-0514**	1	SPRING	
	13	1	**129-8031**	1	VALVE GP	

M-METRIC PART

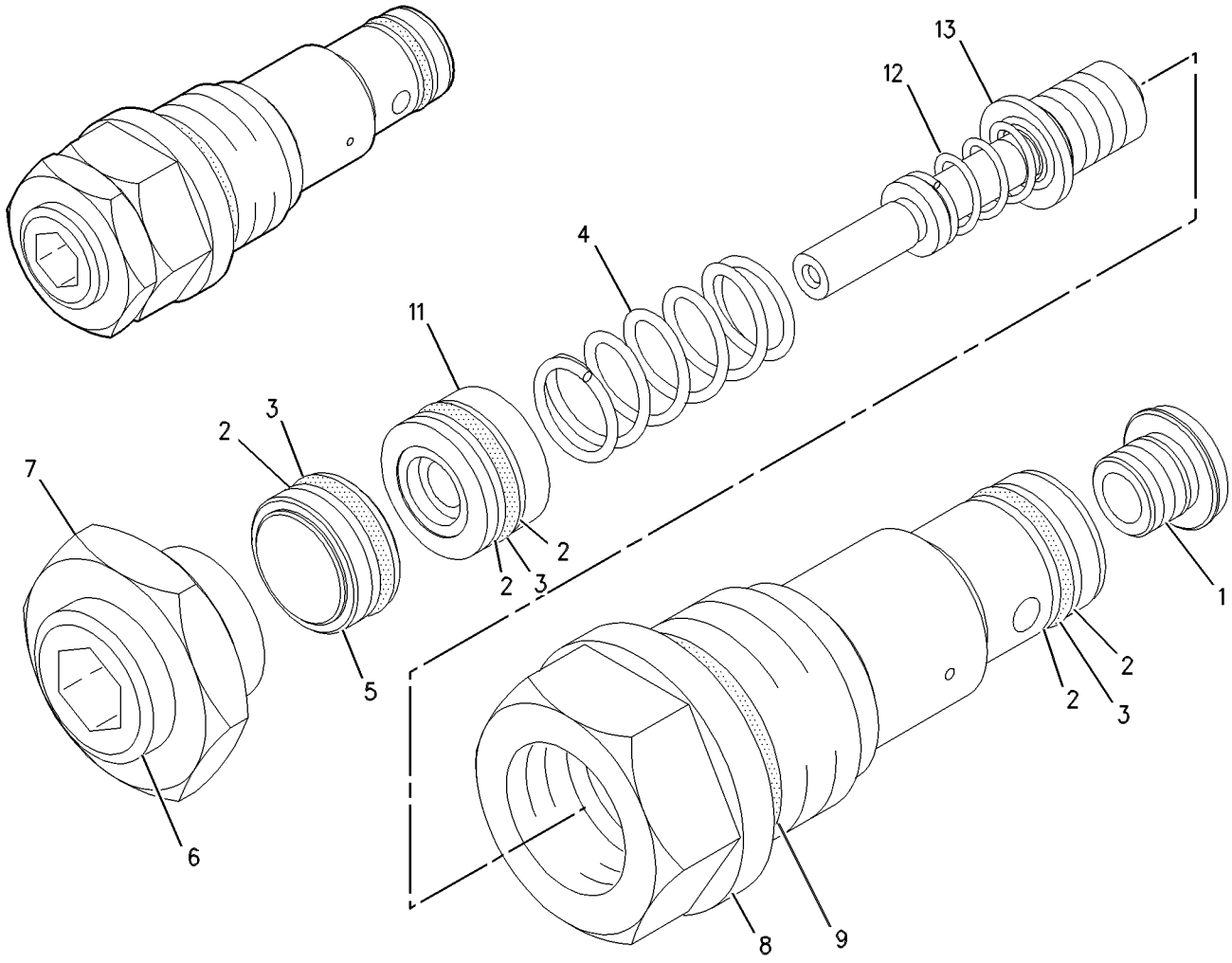

GRAPHIC #1 **<END>** g00591424

HYDRAULIC SYSTEM

270-5979 VALVE GP-RELIEF–MAIN

S/N: CJN1-UP
PART OF 259-7550 VALVE GP-MAIN CONTROL
ALSO AN ATTACHMENT

SMCS-5069, 5117 **i02858309**

NOTE	REF NO	GRAPHIC REF	PART NUMBER	QTY	PART NAME 1 2 3 4 5 6 (PRODUCT LEVEL)	SEE PAGE
	1	1	**095-1575**	1	SEAL-O-RING	
	2	1	**7I-8096**	1	STOP	
M	3	1	**7I-8098**	1	SETSCREW (M14X1.5X34-MM)	
M	4	1	**6V-8821**	1	NUT (M14X1.5-THD)	
M	5	1	**7I-8100**	1	NUT (M24X1.3-THD)	
	6	1	**095-1584**	1	SEAL-O-RING	
	7	1	**7I-8087**	1	SPRING	
	8	1	**7I-8095**	1	RING	
	9	1	**7I-8081**	1	SPRING	
	10	1	**095-1593**	1	SEAL-O-RING	
	11	1	**095-1519**	1	SEAL-O-RING	
	12	1	**095-1783**	1	RING-BACKUP	
	13	1	**095-1582**	1	SEAL-O-RING	

M-METRIC PART

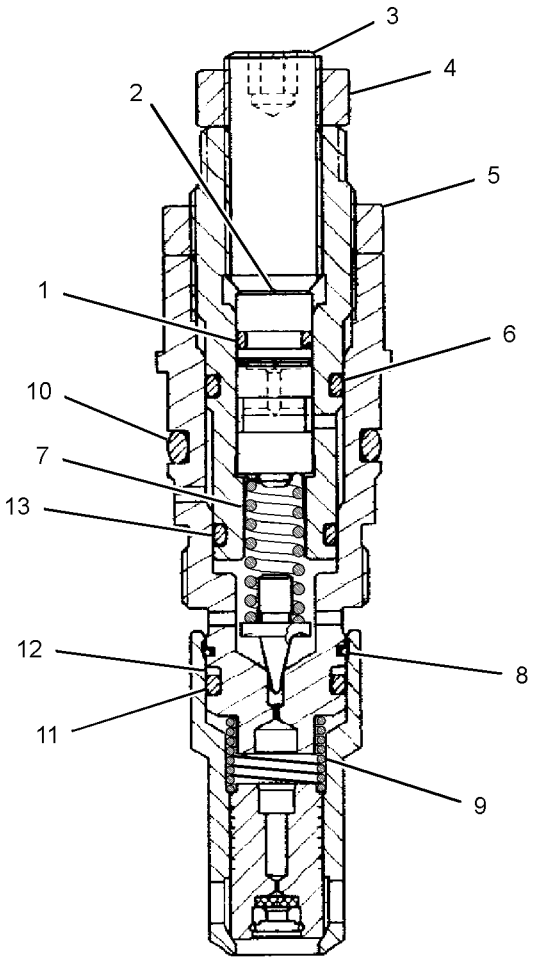

GRAPHIC #1 **<END>** g01426438

270-5985 VALVE GP-RELIEF

S/N: CJN1-UP

PART OF 260-8226, 275-1699 LINES GP-FRONT

AN ATTACHMENT

SMCS-5069, 5117 **i02598679**

NOTE	REF NO	GRAPHIC REF	PART NUMBER	QTY	PART NAME 1 2 3 4 5 6 (PRODUCT LEVEL)	SEE PAGE
	1	1	**095-1591**	1	SEAL-O-RING	
	2	1	**095-1592**	1	SEAL-O-RING	
	3	1	**095-1519**	1	SEAL-O-RING	
	4	1	**095-1783**	1	RING-BACKUP	
	5	1	**095-1575**	1	SEAL-O-RING	
	6	1	**095-8024**	1	RING-BACKUP	
	7	1	**095-1514**	1	SEAL-O-RING	

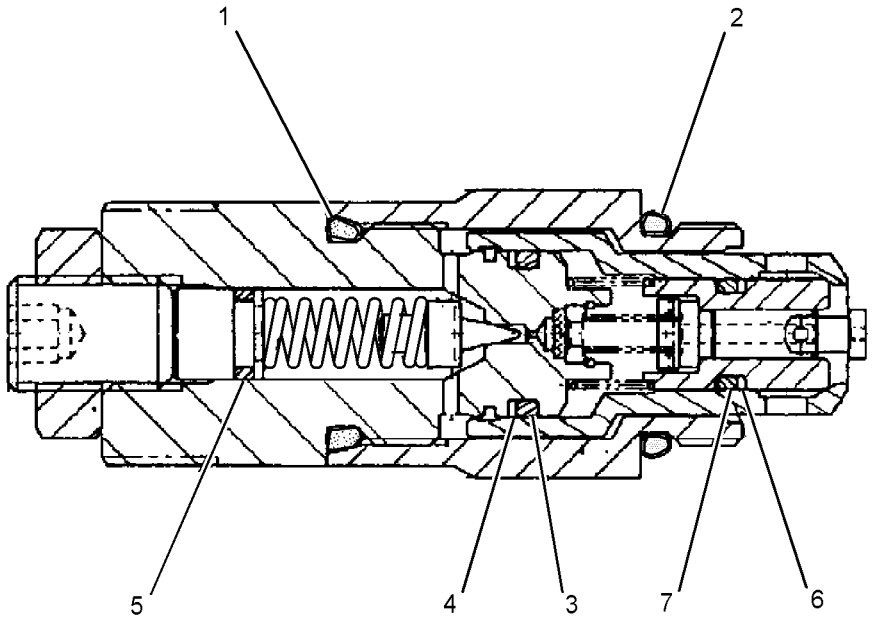

GRAPHIC #1 **<END>** g01311693

HYDRAULIC SYSTEM

270-5987 VALVE GP-RELIEF

S/N: CJN1-UP

PART OF 259-7798 VALVE GP-CONTROL

AN ATTACHMENT

SMCS-5069, 5117 **i02765523**

NOTE	PART NUMBER	QTY	PART NAME 1 2 3 4 5 6 (PRODUCT LEVEL)	SEE PAGE
			NO SERVICEABLE BREAKDOWN OF PARTS AVAILABLE AT TIME OF PUBLICATION	

<END>

309-9976 VALVE GP-RELIEF

S/N: CJN1-UP
PART OF 259-7804 VALVE GP-CONTROL
AN ATTACHMENT

SMCS-5069, 5117 **i02845984**

NOTE	REF NO	GRAPHIC REF	PART NUMBER	QTY	PART NAME 1 2 3 4 5 6 (PRODUCT LEVEL)	SEE PAGE
	1	1	**095-1514**	1	SEAL-O-RING	
	2	1	**095-1519**	1	SEAL-O-RING	
	3	1	**095-1575**	1	SEAL-O-RING	
	4	1	**095-1591**	1	SEAL-O-RING	
	5	1	**095-1592**	1	SEAL-O-RING	
	6	1	**095-1783**	1	RING-BACKUP	
	7	1	**095-8024**	1	RING-BACKUP	

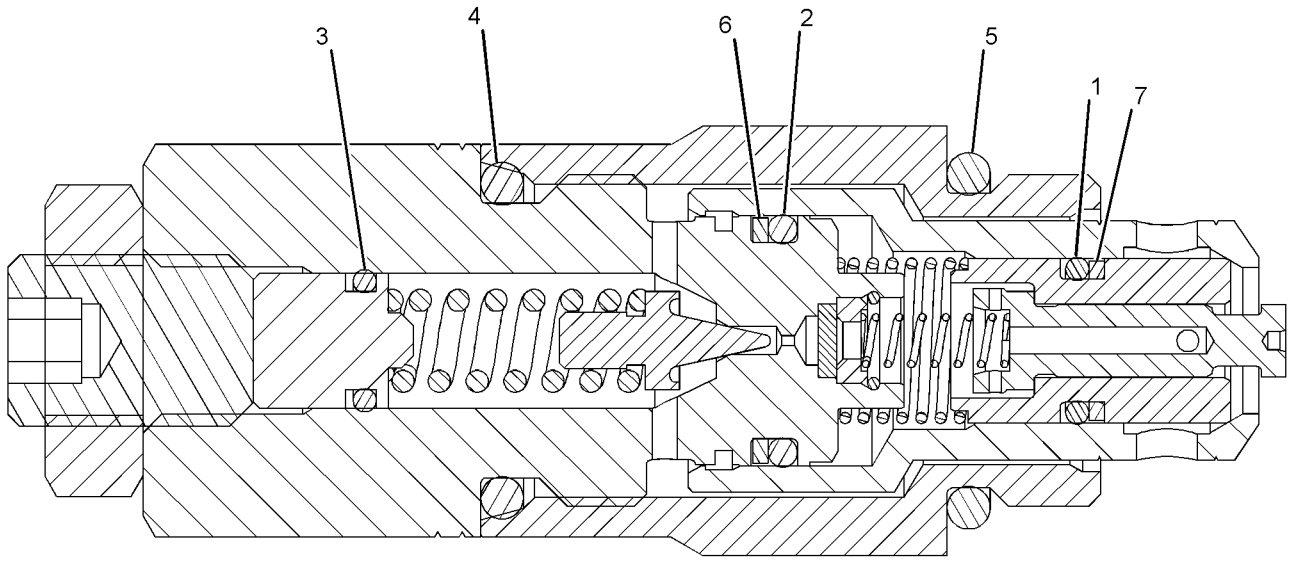

GRAPHIC #1 **<END>** g01419177

HYDRAULIC SYSTEM

310-0062 VALVE GP-RELIEF

S/N: CJN1-UP

PART OF 259-7804, 310-0157 VALVE GP-CONTROL

AN ATTACHMENT

SMCS-5069, 5117 **i02845986**

NOTE	REF NO	GRAPHIC REF	PART NUMBER	QTY	PART NAME 1 2 3 4 5 6 (PRODUCT LEVEL)	SEE PAGE
	1	1	**095-1514**	1	SEAL-O-RING	
	2	1	**095-1519**	1	SEAL-O-RING	
	3	1	**095-1575**	1	SEAL-O-RING	
	4	1	**095-1591**	1	SEAL-O-RING	
	5	1	**095-1592**	1	SEAL-O-RING	
	6	1	**095-1783**	1	RING-BACKUP	
	7	1	**095-8024**	1	RING-BACKUP	

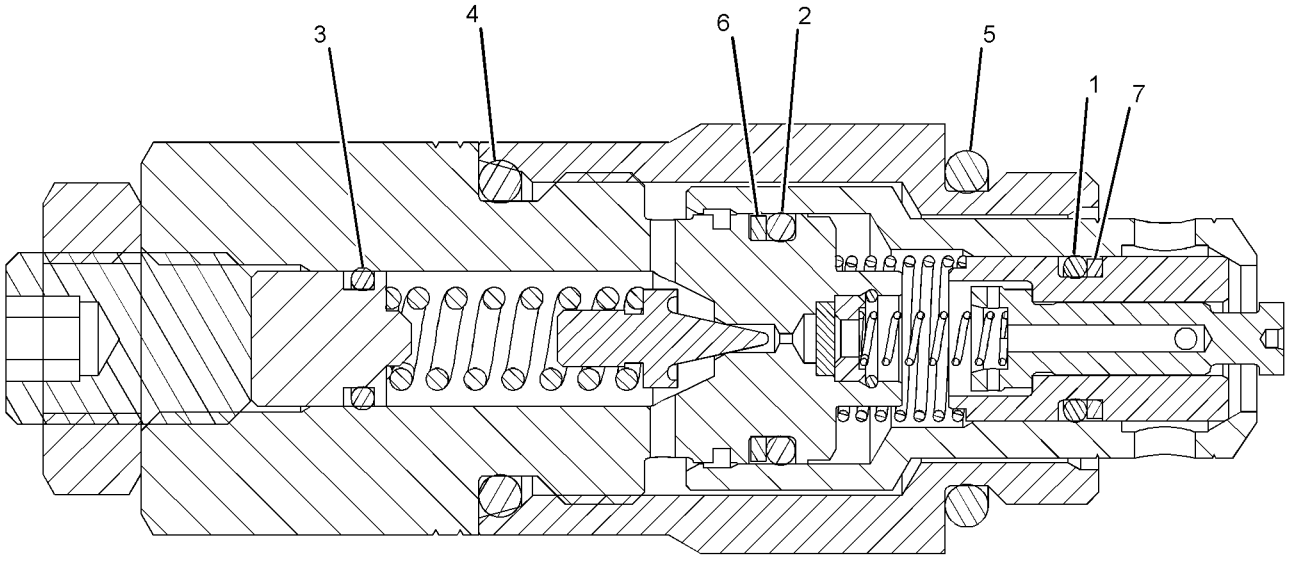

GRAPHIC #1 **<END>** g01419177

310-0063 VALVE GP-RELIEF

S/N: CJN1-UP
PART OF 297-0374 VALVE GP-CONTROL
AN ATTACHMENT

SMCS-5069, 5117 **i02862897**

NOTE	REF NO	GRAPHIC REF	PART NUMBER	QTY	PART NAME 1 2 3 4 5 6 (PRODUCT LEVEL)	SEE PAGE
	1	1	**095-1514**	1	SEAL-O-RING	
	2	1	**095-1519**	1	SEAL-O-RING	
	3	1	**095-1575**	1	SEAL-O-RING	
	4	1	**095-1591**	1	SEAL-O-RING	
	5	1	**095-1592**	1	SEAL-O-RING	
	6	1	**095-1783**	1	RING-BACKUP	
	7	1	**095-8024**	1	RING-BACKUP	

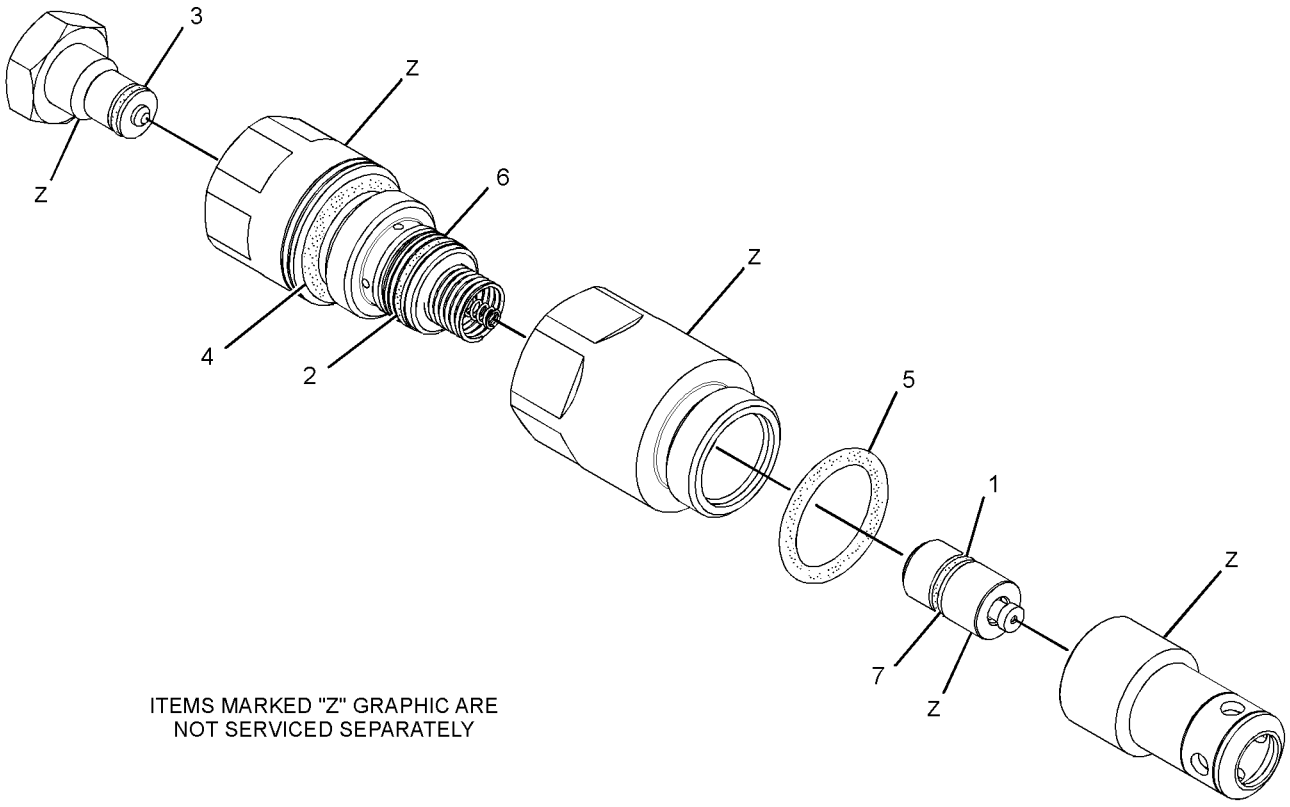

ITEMS MARKED "Z" GRAPHIC ARE
NOT SERVICED SEPARATELY

GRAPHIC #1 **<END>** g01439985

HYDRAULIC SYSTEM

165-9470 VALVE GP-SELECTOR—ALT PATTERN CONTROL, 4-WAY

S/N: CJN1-UP

PART OF 260-8241 LINES GP-PILOT

AN ATTACHMENT

SMCS-5065 **i01298655**

NOTE	REF NO	GRAPHIC REF	PART NUMBER	QTY	PART NAME 1 2 3 4 5 6 (PRODUCT LEVEL)	SEE PAGE
M	1	1	**6V-8202**	6	BOLT-SOCKET HEAD (M8X1.25X16-MM)	
	2	1	**085-7083**	1	PIN-SPRING	
	3	1	**085-7084**	1	BOLT (M8X1.25X35-MM)	
	4	1	**085-7080**	1	LEVER	
	5	1	**085-7079**	1	GRIP	
M	6	1	**6V-3938**	4	BOLT (M10X1.5X20-MM)	
	7	1	**171-0185**	1	COVER	
	8	1	**085-7081**	4	NEEDLE	
	9	1	**171-0184**	1	SPRING	
M	10	1	**8T-9533**	1	SETSCREW (M12X1.75-THD)	
	11	1	**006-6803**	1	BALL	
	12	1	**171-0183**	1	COVER	
	13	1	**095-1710**	2	SEAL-O-RING	
	14	1	**6I-6923**	1	SEAL	
	15	1	**095-1590**	1	SEAL-O-RING	
	16	1	**095-0965**	7	PLUG	
	17	1	**1F-0425**	1	BALL	
	18	1	**126-9993**	2	SCREW-RIVET	

M-METRIC PART

165-9470 VALVE GP-SELECTOR *(contd.)* **i01298655**

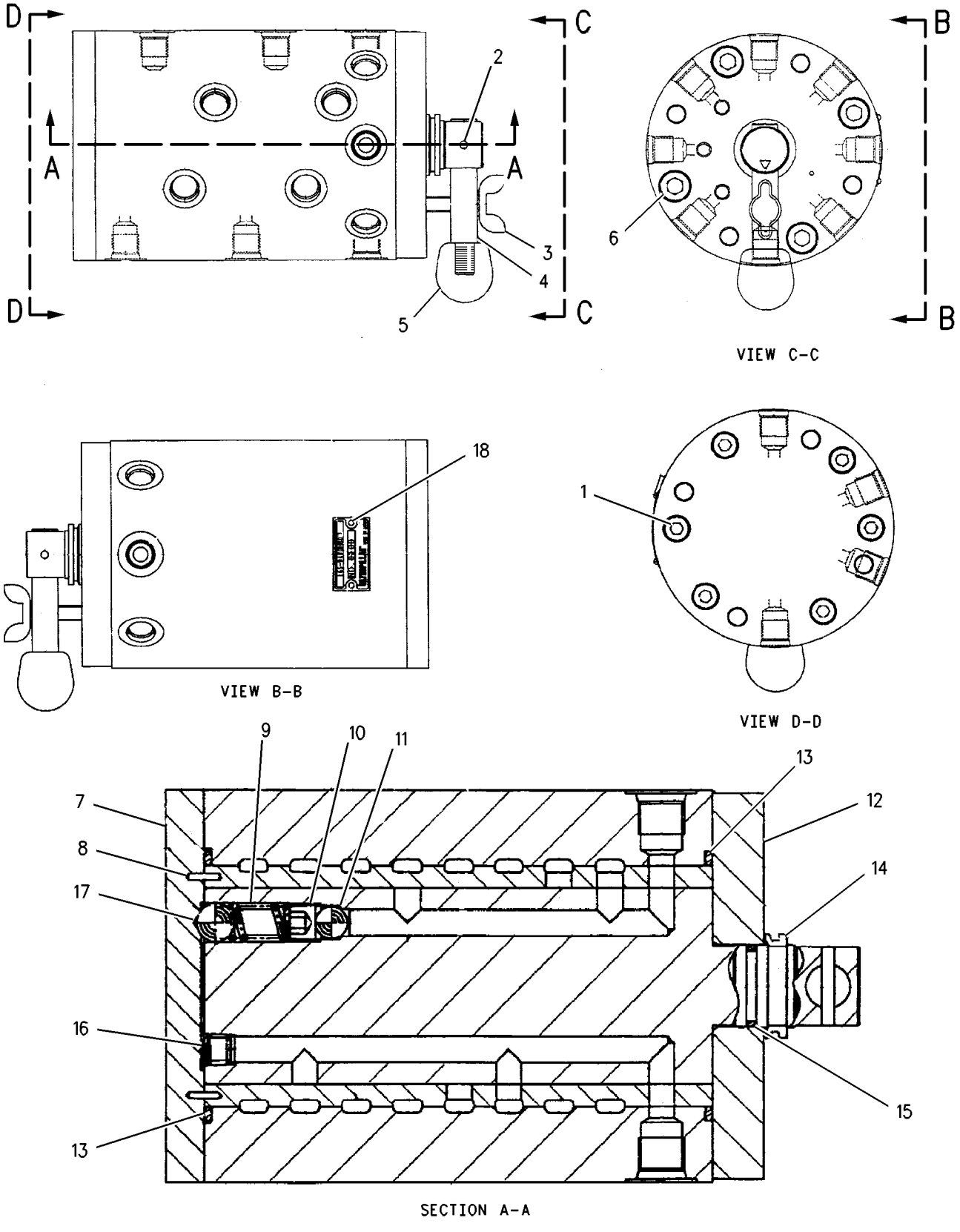

GRAPHIC #1 **<END>** g00690417

HYDRAULIC SYSTEM

112-0083 VALVE GP-SHUTTLE

S/N: CJN1-UP
PART OF 260-8047 LINES GP-PILOT
AN ATTACHMENT

SMCS-5079 **i03093680**

NOTE	REF NO	GRAPHIC REF	PART NUMBER	QTY	PART NAME 1 2 3 4 5 6 (PRODUCT LEVEL)	SEE PAGE
Z	1	1		1	BODY	
	2	1	**2D-6642**	4	BALL	
	3	1	**112-0085**	4	PLUG	
	4	1	**3J-1907**	4	SEAL-O-RING	

Z-NOT SERVICED SEPARATELY

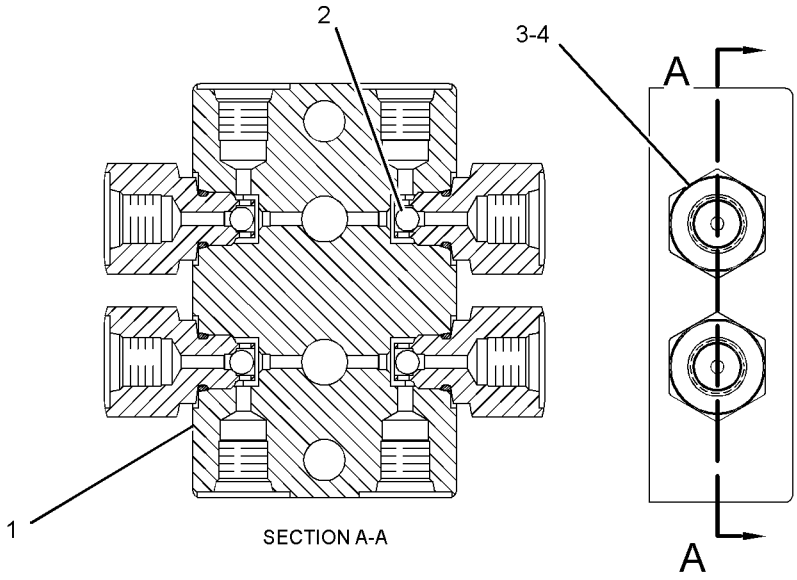

GRAPHIC #1 **<END>** g01206121

HYDRAULIC SYSTEM

123-2430 VALVE GP-SHUTTLE

S/N: CJN1-UP

PART OF 260-8225, 289-5749, 302-3195, 302-3258 LINES GP-PILOT

ALSO AN ATTACHMENT

SMCS-5079 **i01884911**

NOTE	REF NO	GRAPHIC REF	PART NUMBER	QTY	PART NAME 1 2 3 4 5 6 (PRODUCT LEVEL)	SEE PAGE
Z	1	1		1	BODY-VALVE	
	2	1	**4B-9783**	1	BALL	
	3	1	**3J-1907**	2	SEAL-O-RING	
	4	1	**123-2552**	2	CONNECTOR	

Z-NOT SERVICED SEPARATELY

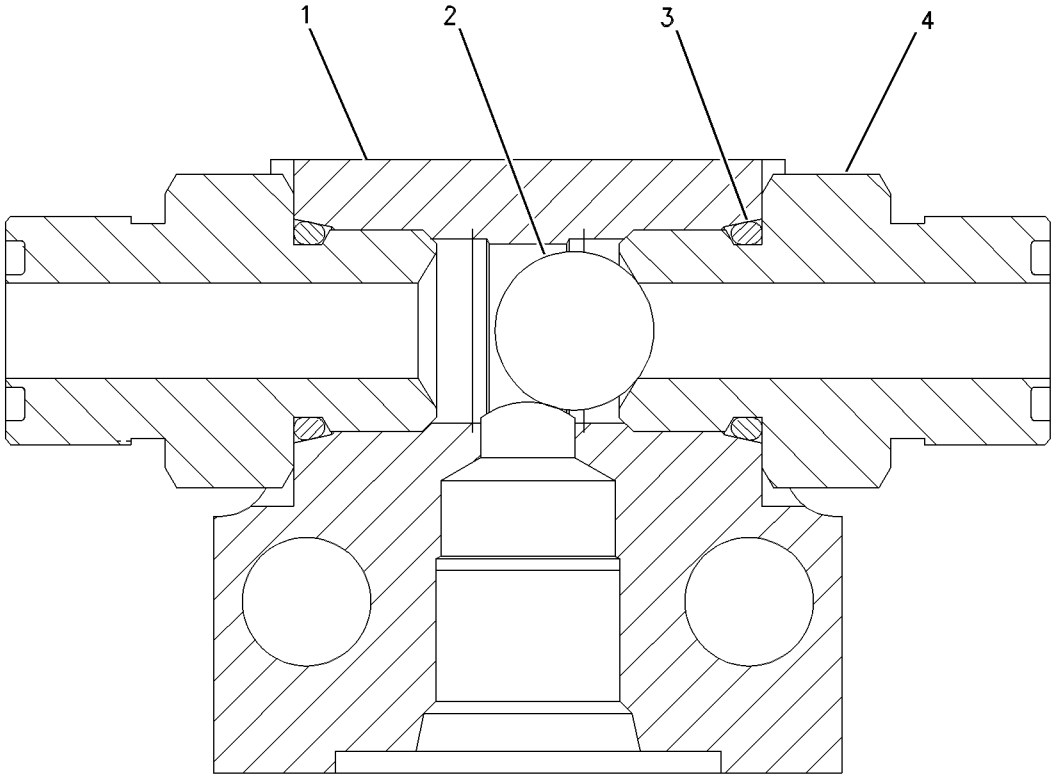

GRAPHIC #1 **<END>** g00652899

HYDRAULIC SYSTEM

123-2549 VALVE GP-SHUTTLE–1-PUMP/2-PUMP

S/N: CJN1-UP

PART OF 164-6980 VALVE GP-SHUTTLE

AN ATTACHMENT

SMCS-5079 **i02210148**

NOTE	REF NO	GRAPHIC REF	PART NUMBER	QTY	PART NAME 1 2 3 4 5 6 (PRODUCT LEVEL)	SEE PAGE
	1	1	**123-2511**	1	TEE	
	2	1	**4B-9783**	1	BALL	
	3	1	**123-2552**	2	CONNECTOR	
	4	1	**3J-1907**	2	SEAL-O-RING	

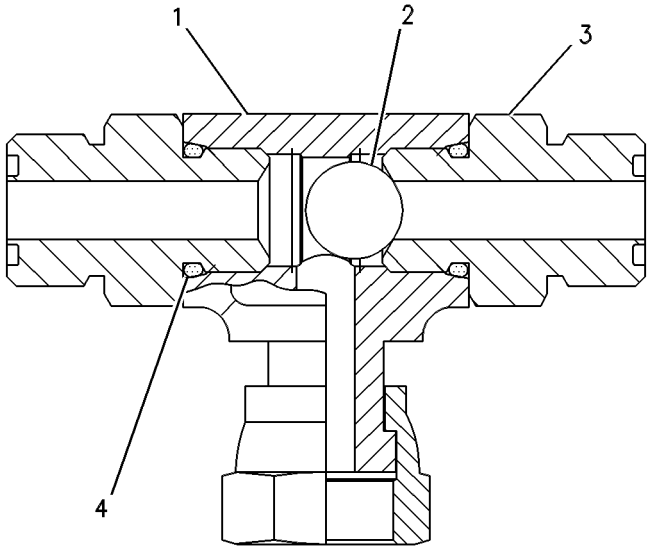

GRAPHIC #1 **<END>** g00274258

164-6980 VALVE GP-SHUTTLE

S/N: CJN1-UP
PART OF 275-1696 LINES GP-FRONT
AN ATTACHMENT

SMCS-5079 **i03254262**

NOTE	PART NUMBER	QTY	PART NAME 1 2 3 4 5 6 (PRODUCT LEVEL)	SEE PAGE
Y	**123-2549**	1	VALVE GP-SHUTTLE (1-PUMP/2-PUMP)	730
	6V-8397	2	SEAL-O-RING	

Y-SEPARATE ILLUSTRATION

<END>

171-0198 VALVE GP-SHUTTLE

S/N: CJN1-UP
PART OF 171-0188 VALVE GP-SOLENOID
AN ATTACHMENT

SMCS-5079 **i01269960**

NOTE	PART NUMBER	QTY	PART NAME 1 2 3 4 5 6 (PRODUCT LEVEL)	SEE PAGE
	185-0407	1	KIT-SEAL (SHUTTLE VALVE)	

<END>

HYDRAULIC SYSTEM

185-0462 VALVE GP-SHUTTLE–PILOT

S/N: CJN1-UP
PART OF 260-7891 LINES GP-PILOT
AN ATTACHMENT

SMCS-5079 **i01612080**

NOTE	REF NO	GRAPHIC REF	PART NUMBER	QTY	PART NAME 1 2 3 4 5 6 (PRODUCT LEVEL)	SEE PAGE
	1	1	**7I-8084**	4	PLUG	
	2	1	**185-0463**	1	SEAT	
	3	1	**4B-9880**	7	BALL	
	4	1	**165-9464**	6	SEAT	
	5	1	**095-1578**	7	SEAL-O-RING	
	6	1	**107-6479**	7	PLUG	

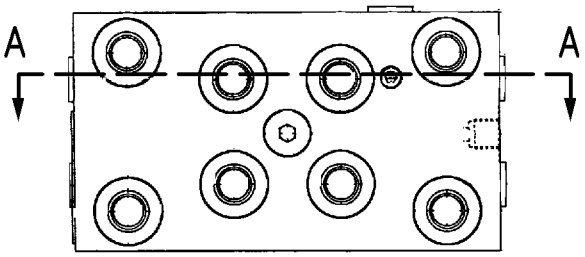

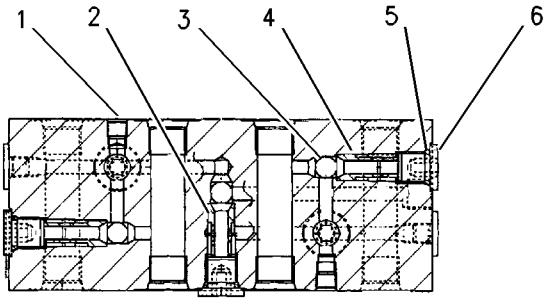

SECTION A-A

GRAPHIC #1 **<END>** g00699270

111-9916 VALVE GP-SOLENOID–PRESSURE REDUCING

S/N: CJN1-UP

PART OF 311-7405 PUMP GP-PISTON, 171-0188, 259-7430 VALVE GP-SOLENOID, 238-0751, 270-5766, 297-0684, 297-0685 VALVE GP-SOLENOID & PRESS REDC

ALSO AN ATTACHMENT

SMCS-5479 **i02649387**

NOTE	REF NO	GRAPHIC REF	PART NUMBER	QTY	PART NAME 1 2 3 4 5 6 (PRODUCT LEVEL)	SEE PAGE
	1	1	**095-1750**	1	SEAL-O-RING	
	2	1	**6V-8398**	1	SEAL-O-RING	
	3	1	**095-1751**	1	SEAL-O-RING	
	4	1	**095-1586**	1	SEAL-O-RING	
M	5	1	**114-0623**	1	NUT AS (M6X1-THD)	

M-METRIC PART

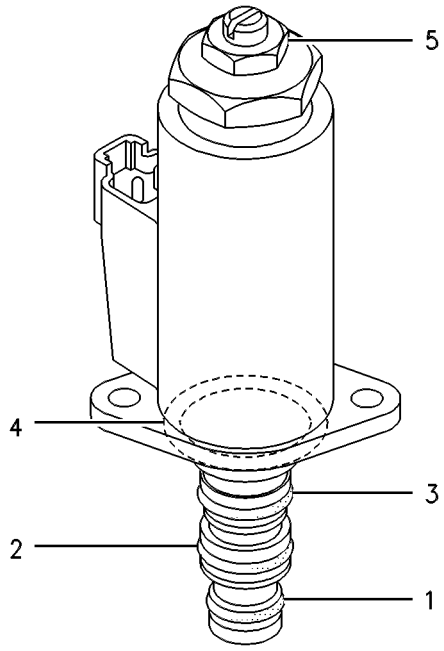

GRAPHIC #1 **<END>** g00258219

HYDRAULIC SYSTEM

116-3526 VALVE GP-SOLENOID

S/N: CJN1-UP
24-VOLT
PART OF 266-7932 VALVE GP-SOLENOID
AN ATTACHMENT

SMCS-5479 **i01229341**

NOTE	REF NO	GRAPHIC REF	PART NUMBER	QTY	PART NAME 1 2 3 4 5 6 (PRODUCT LEVEL)	SEE PAGE
	1	1	**126-6514**	1	SEAL-O-RING	
	2	1	**126-6515**	1	SEAL-O-RING	
	3	1	**126-6516**	1	SEAL-O-RING	
	4	1	**095-1586**	1	SEAL-O-RING	

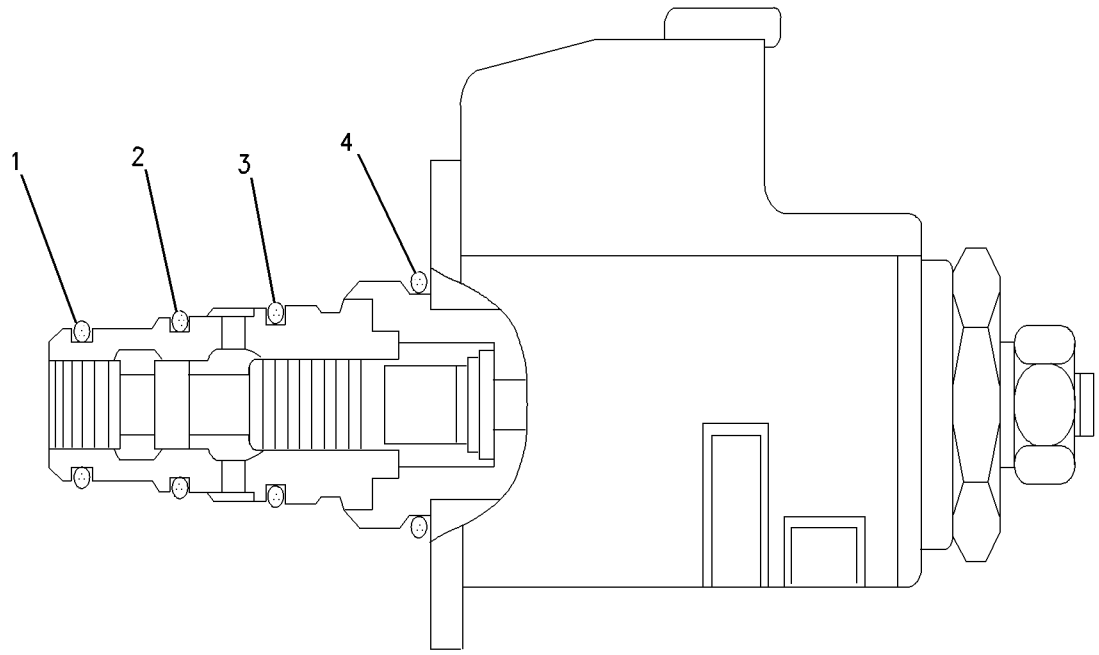

GRAPHIC #1 **<END>** g00669557

121-1490 VALVE GP-SOLENOID

S/N: CJN1-UP
PART OF 226-3109 VALVE GP-SOLENOID
AN ATTACHMENT

SMCS-5479 **i01897979**

NOTE	REF NO	GRAPHIC REF	PART NUMBER	QTY	PART NAME 1 2 3 4 5 6 (PRODUCT LEVEL)	SEE PAGE
	1	1	**095-1750**	1	SEAL-O-RING	
	2	1	**6V-8398**	1	SEAL-O-RING	
	3	1	**095-1751**	1	SEAL-O-RING	
	4	1	**095-1586**	1	SEAL-O-RING	
M	5	1	**114-0623**	1	NUT AS (M6X1-THD)	

M-METRIC PART

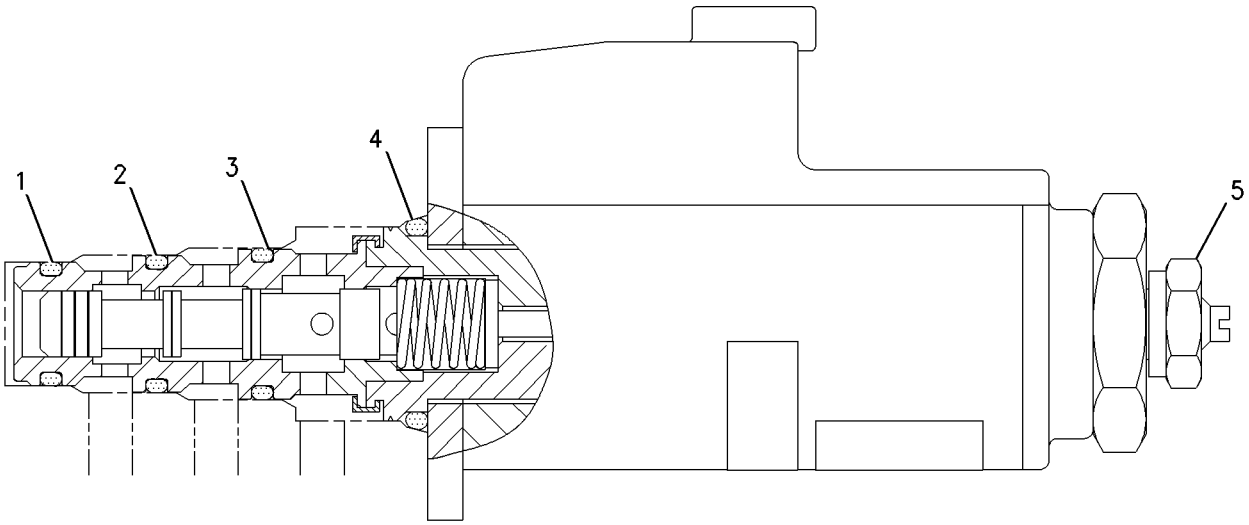

GRAPHIC #1 **<END>** g00989646

121-1491 VALVE GP-SOLENOID

S/N: CJN1-UP

PART OF 239-8697, 239-8998 MANIFOLD GP-CONTROL, 254-3080 VALVE GP-COUPLER, 258-6749 VALVE GP-SOLENOID

ALSO AN ATTACHMENT

SMCS-5479 **i02196717**

NOTE	REF NO	GRAPHIC REF	PART NUMBER	QTY	PART NAME 1 2 3 4 5 6 (PRODUCT LEVEL)	SEE PAGE
	1	1	**095-1750**	1	SEAL-O-RING	
	2	1	**6V-8398**	1	SEAL-O-RING	
	3	1	**095-1751**	1	SEAL-O-RING	
	4	1	**095-1586**	1	SEAL-O-RING	
M	5	1	**114-0623**	1	NUT AS (M6X1-THD)	

M-METRIC PART

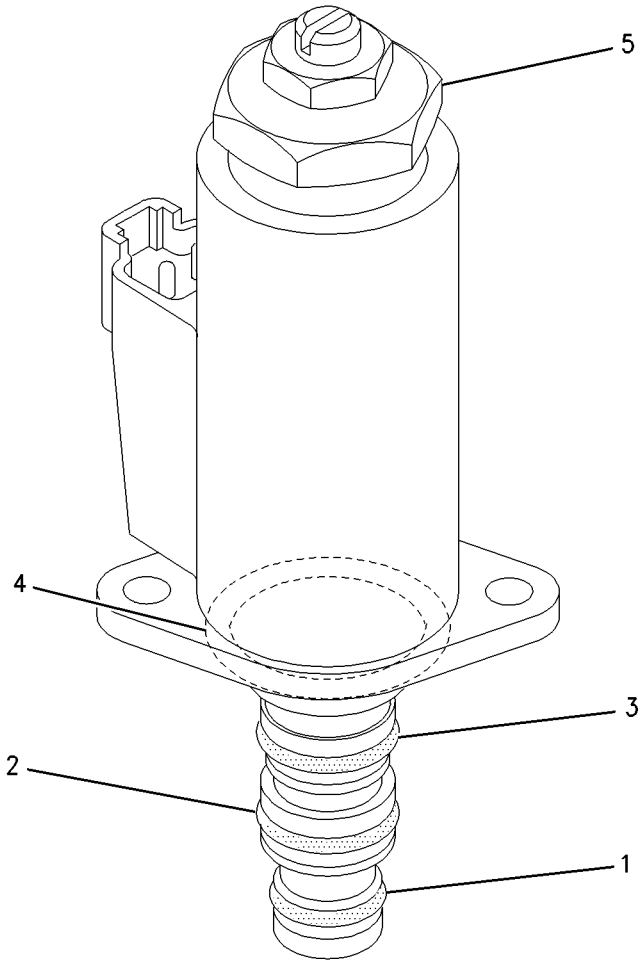

GRAPHIC #1 **<END>** g00928680

HYDRAULIC SYSTEM

121-6303 VALVE GP-SOLENOID

S/N: CJN1-UP

PART OF 260-8225, 302-3258 LINES GP-PILOT

AN ATTACHMENT

SMCS-5479 **i01272110**

NOTE	REF NO	GRAPHIC REF	PART NUMBER	QTY	PART NAME 1 2 3 4 5 6 (PRODUCT LEVEL)	SEE PAGE
	1	1	**7I-8102**	1	VALVE AS	
	2	1	**121-6304**	1	COIL GP	
M	3	1	**099-0822**	2	BOLT-SOCKET HEAD (M5X0.8X10-MM)	
	4	1	**095-1519**	1	SEAL-O-RING	
	5	1	**7I-0986**	1	PLUG	
	6	1	**7I-7403**	1	SPRING	
	7	1	**095-1578**	1	SEAL-O-RING	

M-METRIC PART

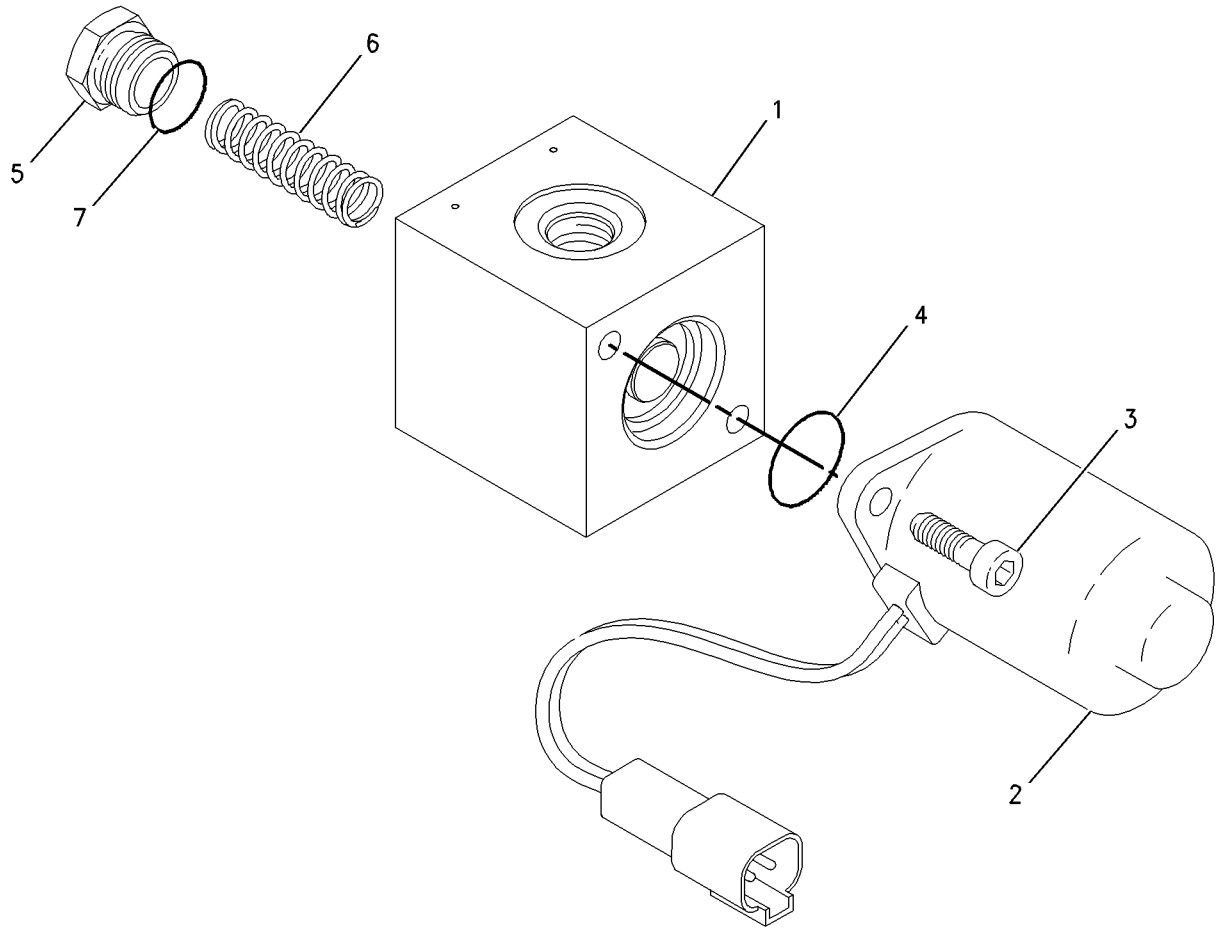

GRAPHIC #1 **<END>** g00685554

HYDRAULIC SYSTEM

171-0188 VALVE GP-SOLENOID

S/N: CJN1-UP

PART OF 260-8225, 302-3258 LINES GP-PILOT

AN ATTACHMENT

SMCS-5479 **i03255367**

NOTE	REF NO	GRAPHIC REF	PART NUMBER	QTY	PART NAME 1 2 3 4 5 6 (PRODUCT LEVEL)	SEE PAGE
Y	1	1	**111-9916**	1	VALVE GP-SOLENOID (PRESSURE REDUCING)	733
M	2	1	**8T-0288**	2	BOLT (M5X0.8X12-MM)	
Y	3	1	**171-0198**	2	VALVE GP-SHUTTLE	731
	4	1	**7I-8084**	6	PLUG	

M-METRIC PART
Y-SEPARATE ILLUSTRATION

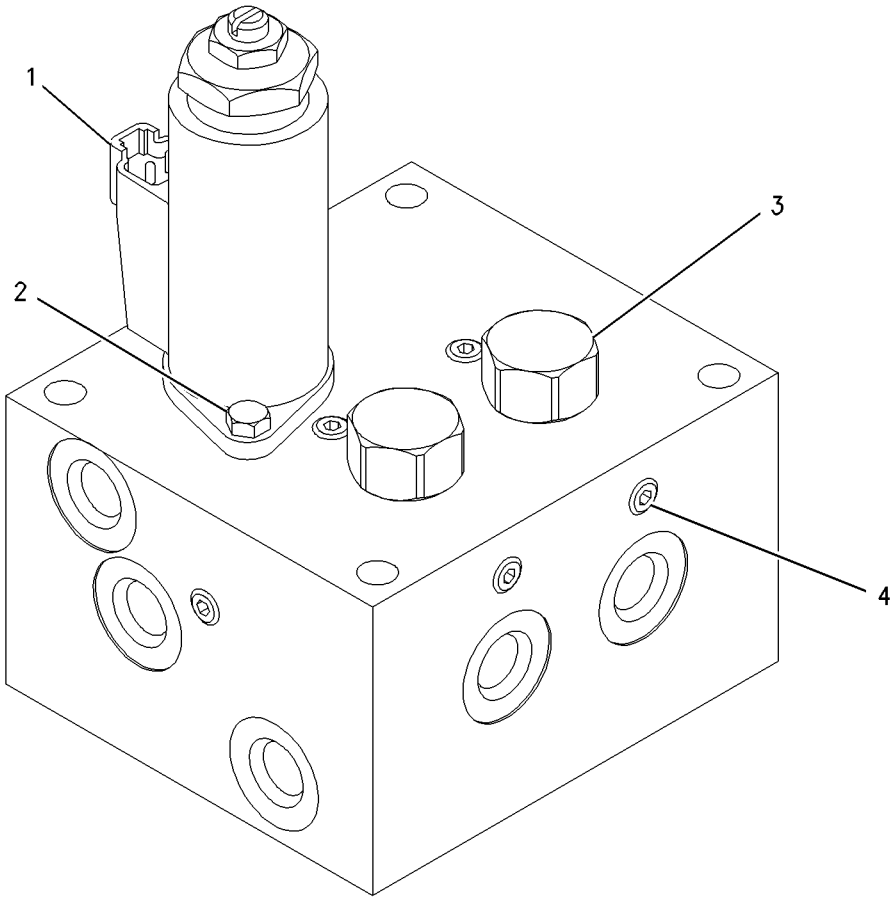

GRAPHIC #1 **<END>** g00681111

226-3109 VALVE GP-SOLENOID—NEGATIVE FLOW CONTROL

S/N: CJN1-UP
PART OF 302-3258 LINES GP-PILOT
AN ATTACHMENT

SMCS-5479 **i02747443**

NOTE	REF NO	GRAPHIC REF	PART NUMBER	QTY	PART NAME 1 2 3 4 5 6 (PRODUCT LEVEL)	SEE PAGE
Y	1	1	**121-1490**	2	VALVE GP-SOLENOID (NEGATIVE FLOW CONTROL)	735
M	2	1	**8T-0288**	4	BOLT (M5X0.8X12-MM)	

M-METRIC PART
Y-SEPARATE ILLUSTRATION

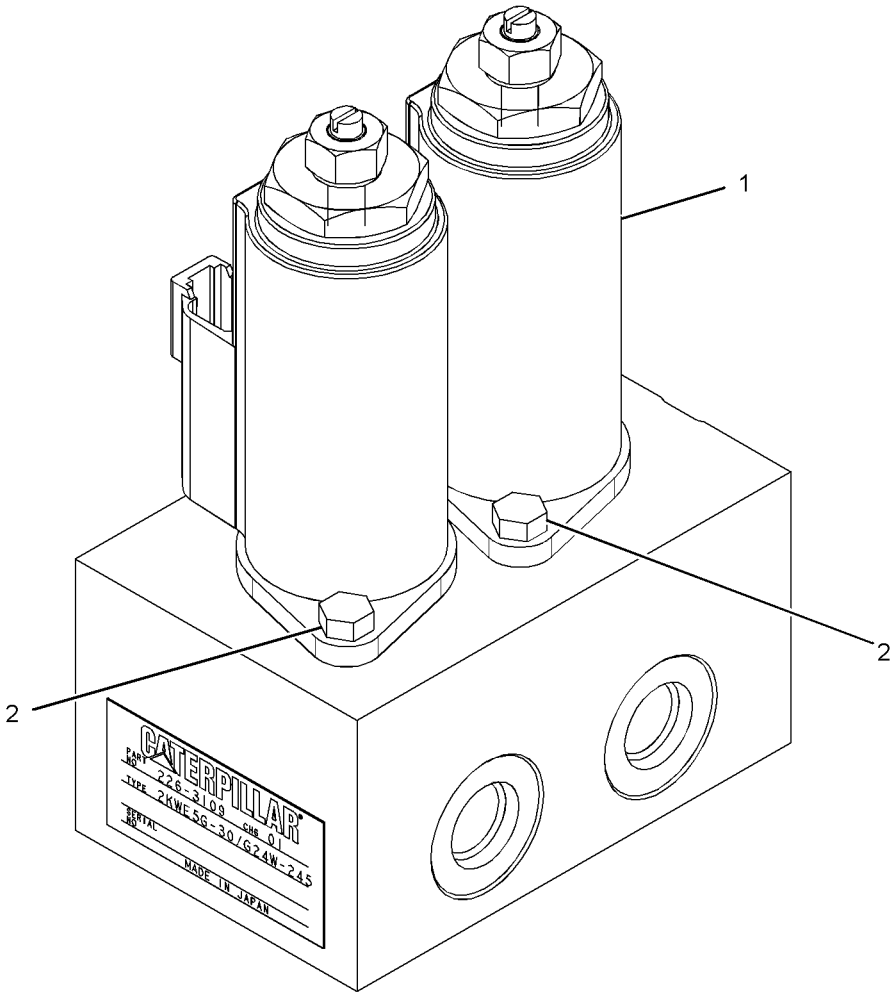

GRAPHIC #1 **<END>** g01381829

HYDRAULIC SYSTEM

258-6749 VALVE GP-SOLENOID—QUICK COUPLER

S/N: CJN1-UP
PART OF 275-1696 LINES GP-FRONT
AN ATTACHMENT

SMCS-5479 **i02490783**

NOTE	REF NO	GRAPHIC REF	PART NUMBER	QTY	PART NAME 1 2 3 4 5 6 (PRODUCT LEVEL)	SEE PAGE
Y	1	1	**121-1491**	1	VALVE GP-SOLENOID (QUICK COUPLER PIN)	736
Z	2	1		1	BODY-VALVE	
M	3	1	**8T-0288**	2	BOLT (M5X0.8X12-MM)	

M-METRIC PART
Y-SEPARATE ILLUSTRATION
Z-NOT SERVICED SEPARATELY

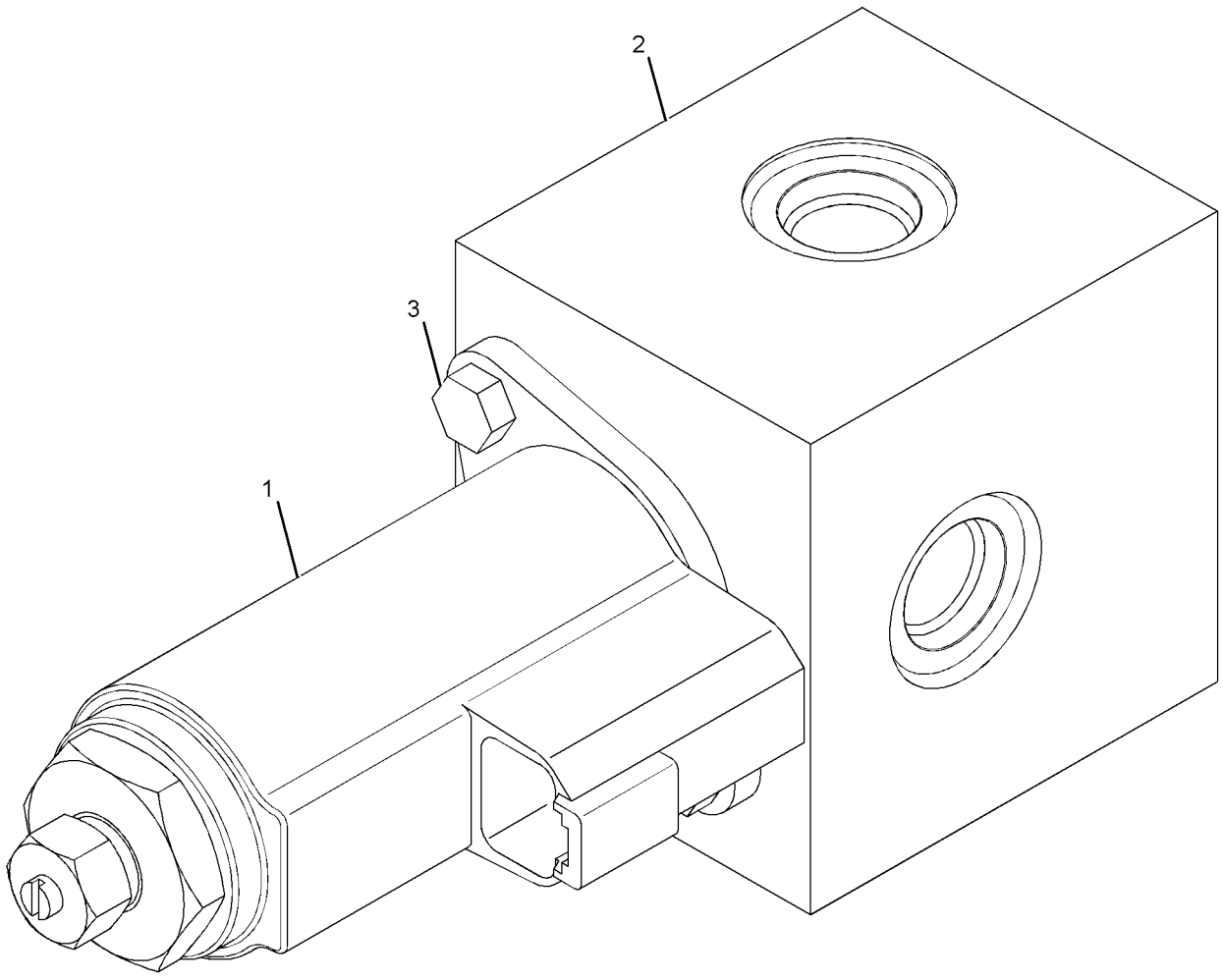

GRAPHIC #1 **<END>** g01137453

259-7430 VALVE GP-SOLENOID—PRESSURE REDUCING

S/N: CJN1-UP
PART OF 260-8225, 260-8238 LINES GP-PILOT
AN ATTACHMENT

SMCS-5479 **i03196381**

NOTE	REF NO	GRAPHIC REF	PART NUMBER	QTY	PART NAME 1 2 3 4 5 6 (PRODUCT LEVEL)	SEE PAGE
M	1	1	**8T-0288**	4	BOLT (M5X0.8X12-MM)	
Y	2	1	**111-9916**	2	VALVE GP-SOLENOID (PRESSURE REDUCING)	733

M-METRIC PART
Y-SEPARATE ILLUSTRATION

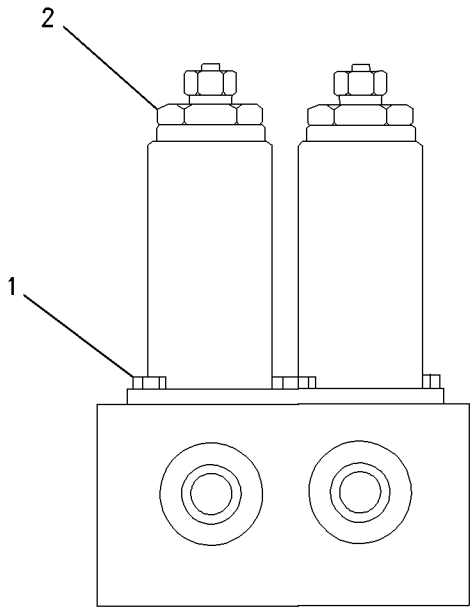

GRAPHIC #1 **<END>** g00785417

266-7932 VALVE GP-SOLENOID—FINE SWING

S/N: CJN1-UP
PART OF 267-6778 DRIVE GP-SWING
AN ATTACHMENT

SMCS-5479 **i02752937**

NOTE	REF NO	GRAPHIC REF	PART NUMBER	QTY	PART NAME 1 2 3 4 5 6 (PRODUCT LEVEL)	SEE PAGE
	1	1	**8T-6759**	3	PLUG-PIPE	
Y	2	1	**116-3526**	1	VALVE GP-SOLENOID (24-VOLT) (FINE SWING)	734
	3	1	**190-4896**	2	PLUG	
	4	1	**266-8070**	1	BLOCK	
	5	1	**283-6099**	2	ORIFICE	
M	6	1	**7I-2272**	2	BOLT (M5X0.8X12-MM)	

M-METRIC PART
Y-SEPARATE ILLUSTRATION

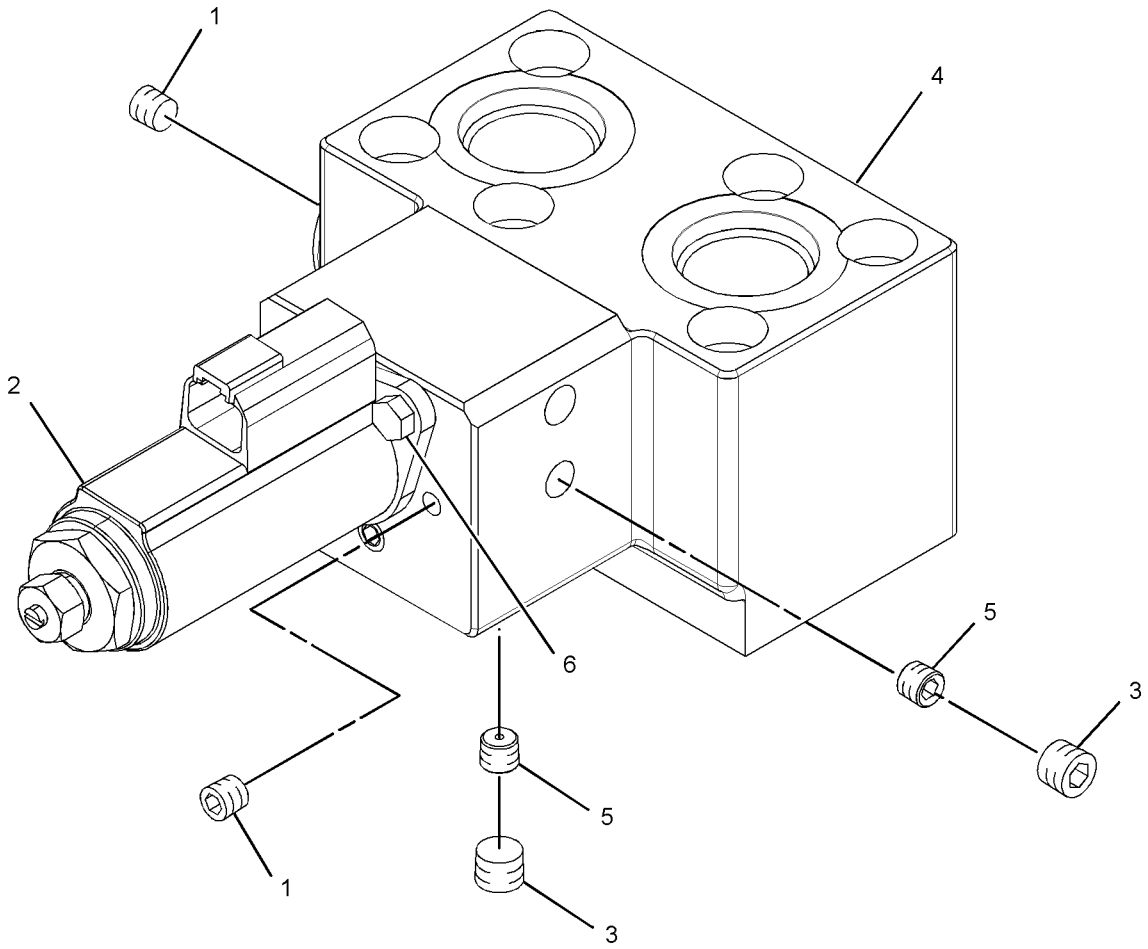

GRAPHIC #1 **<END>** g01382010

315-4412 VALVE GP-SOLENOID

S/N: CJN1-UP

PART OF 322-8717 VALVE GP-SOLENOID

AN ATTACHMENT

SMCS-5479 **i02954227**

NOTE	REF NO	GRAPHIC REF	PART NUMBER	QTY	PART NAME 1 2 3 4 5 6 (PRODUCT LEVEL)	SEE PAGE
	1	1	**126-6514**	1	SEAL-O-RING	
	2	1	**126-6515**	1	SEAL-O-RING	
	3	1	**126-6516**	1	SEAL-O-RING	
	4	1	**095-1586**	1	SEAL-O-RING	

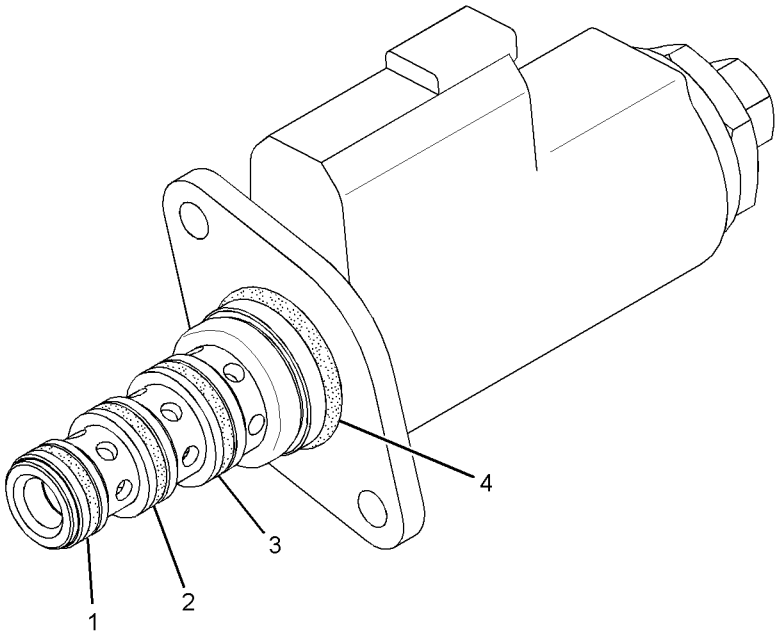

GRAPHIC #1 **<END>** g01456627

322-8717 VALVE GP-SOLENOID—FINE SWING

S/N: CJN1-UP
PART OF 267-6778 DRIVE GP-SWING
AN ATTACHMENT

SMCS-5479 **i03153990**

NOTE	REF NO	GRAPHIC REF	PART NUMBER	QTY	PART NAME 1 2 3 4 5 6 (PRODUCT LEVEL)	SEE PAGE
	1	1	**8T-6759**	3	PLUG-PIPE	
	2	1	**190-4896**	2	PLUG	
	3	1	**266-8070**	1	BLOCK	
	4	1	**283-6099**	2	ORIFICE	
Y	5	1	**315-4412**	1	VALVE GP-SOLENOID (24-VOLT) (FINE SWING)	743
M	6	1	**7I-2272**	2	BOLT (M5X0.8X12-MM)	

M-METRIC PART
Y-SEPARATE ILLUSTRATION

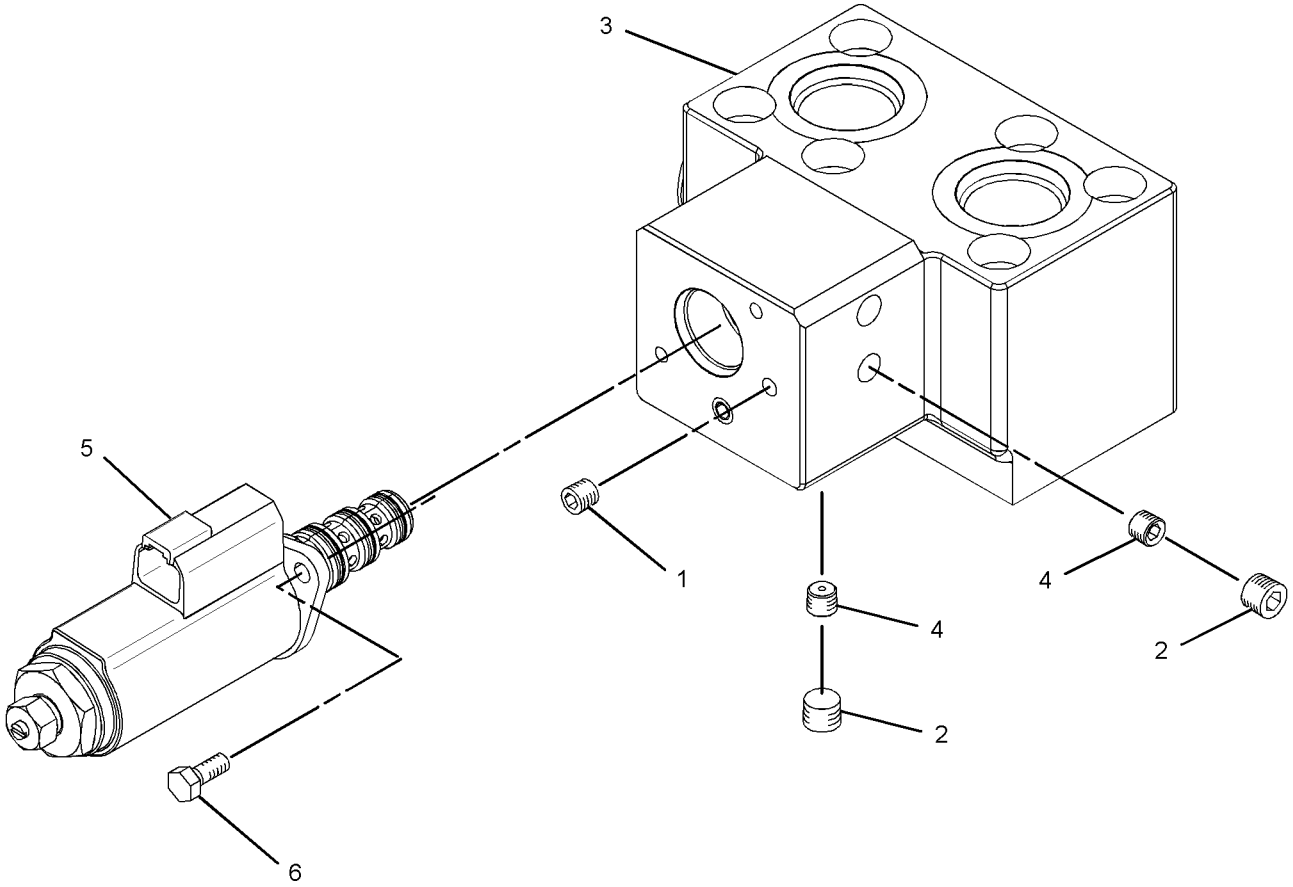

GRAPHIC #1 **<END>** g01622516

HYDRAULIC SYSTEM

260-3877 VALVE GP-SOLENOID & MANIFOLD

S/N: CJN1-UP
24-VOLT
PART OF 260-8222 LINES GP-FRONT
FIELD REPLACEMENT ORDER 328-2035—PAGE 746
AN ATTACHMENT

SMCS-5264, 5479 **i03091731**

NOTE	REF NO	GRAPHIC REF	PART NUMBER	QTY	PART NAME 1 2 3 4 5 6 (PRODUCT LEVEL)	SEE PAGE
	1	1	**156-5970**	1	NUT (1/2-20-THD)	
	2	1	**260-3883**	1	COIL AS-SOLENOID	
		1	**1S-9593**	2	STRAP-CABLE	
		1	**186-3735**	2	PIN-CONNECTOR (16-GA TO 18-GA)	
		1	**230-4012**	1	RECEPTACLE AS-CONNECTOR (2-PIN)	

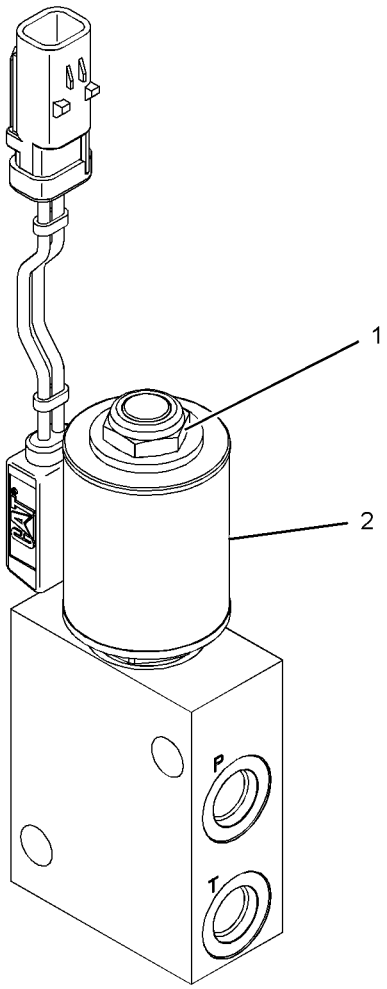

GRAPHIC #1 **<END>** g01573003

328-2035 VALVE GP-SOLENOID & MANIFOLD—QUICK COUPLER

S/N: CJN1-UP

FIELD REPLACEMENT FOR 260-3877—PAGE 745

SMCS-5264, 5479 **i03091800**

NOTE	REF NO	GRAPHIC REF	PART NUMBER	QTY	PART NAME 1 2 3 4 5 6 (PRODUCT LEVEL)	SEE PAGE
	1	1	**156-5970**	1	NUT (1/2-20-THD)	
	2	1	**260-3883**	1	COIL AS-SOLENOID	
		1	**1S-9593**	2	STRAP-CABLE	
		1	**186-3735**	2	PIN-CONNECTOR (16-GA TO 18-GA)	
		1	**230-4012**	1	RECEPTACLE AS-CONNECTOR (2-PIN)	

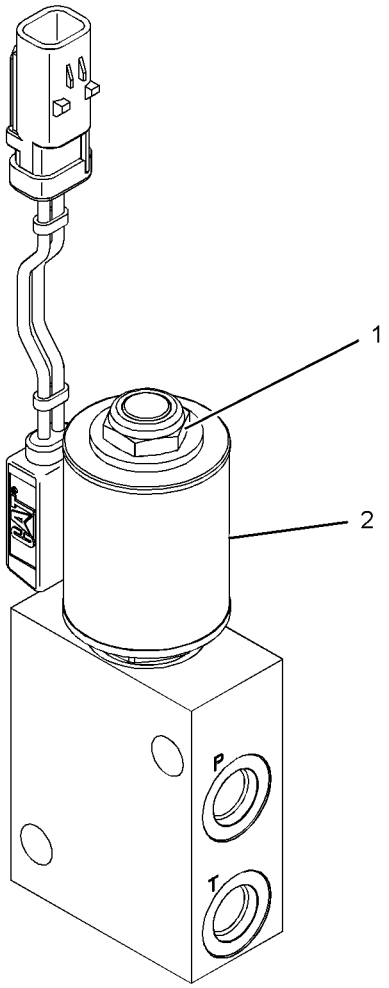

GRAPHIC #1 **<END>** g01573003

HYDRAULIC SYSTEM

238-0751 VALVE GP-SOLENOID & PRESS REDC–

BOOM LOWERING CONTROL

S/N: CJN1-UP

PART OF 302-3195 LINES GP-PILOT

SMCS-5467, 5479 **i02753368**

NOTE	REF NO	GRAPHIC REF	PART NUMBER	QTY	PART NAME 1 2 3 4 5 6 (PRODUCT LEVEL)	SEE PAGE
Y	1	1	**111-9916**	1	VALVE GP-SOLENOID (AUXILIARY, 1-WAY/2-WAY FLOW)	733
M	2	1	**8T-0288**	2	BOLT (M5X0.8X12-MM)	

M-METRIC PART
Y-SEPARATE ILLUSTRATION

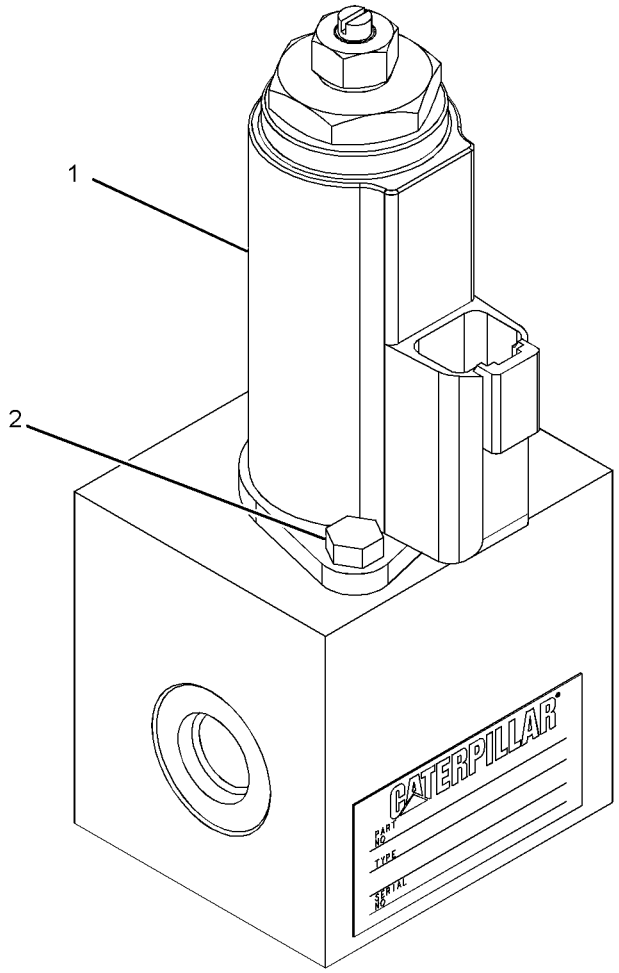

GRAPHIC #1 **<END>** g01380974

270-5766 VALVE GP-SOLENOID & PRESS REDC–

WORK TOOL CONTROL

S/N: CJN1-UP

PART OF 302-3258 LINES GP-PILOT

AN ATTACHMENT

SMCS-5467, 5479 **i02747429**

NOTE	REF NO	GRAPHIC REF	PART NUMBER	QTY	PART NAME 1 2 3 4 5 6 (PRODUCT LEVEL)	SEE PAGE
M	1	1	**8T-0288**	6	BOLT (M5X0.8X12-MM)	
Y	2	1	**111-9916**	3	VALVE GP-SOLENOID (AUXILIARY, COMBINED FUNCTION)	733

M-METRIC PART
Y-SEPARATE ILLUSTRATION

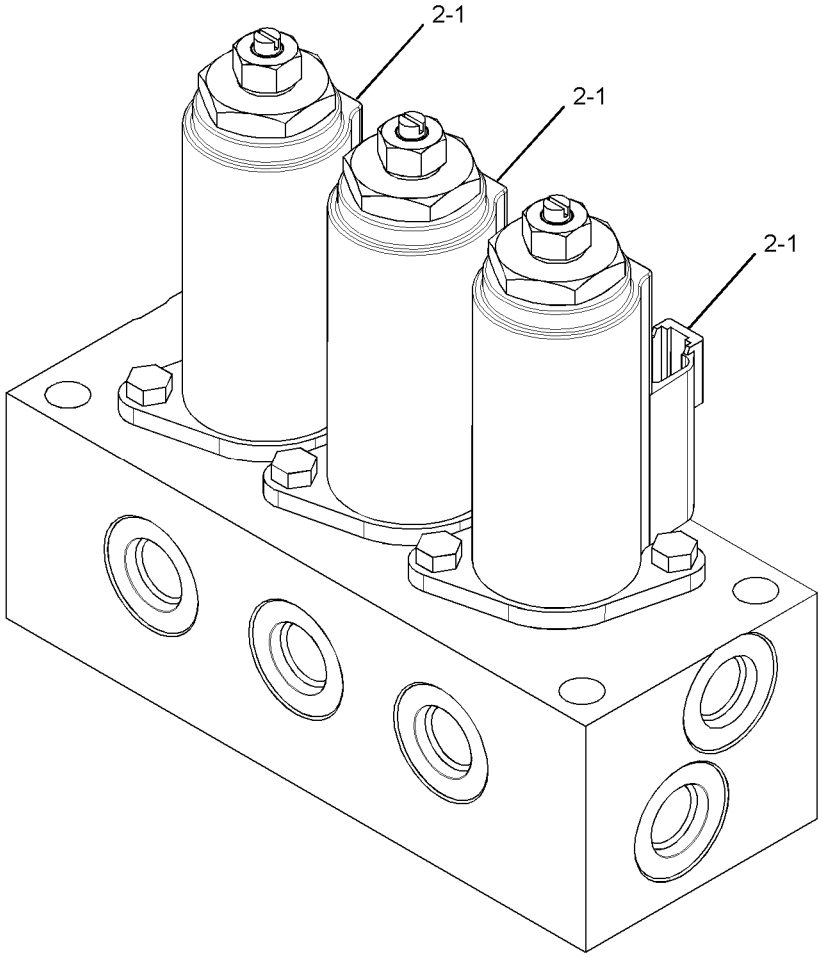

GRAPHIC #1 **<END>** g01382803

297-0684 VALVE GP-SOLENOID & PRESS REDC

S/N: CJN1-UP
PART OF 289-5749 LINES GP-PILOT
AN ATTACHMENT

SMCS-5467, 5479 **i02843761**

NOTE	REF NO	GRAPHIC REF	PART NUMBER	QTY	PART NAME 1 2 3 4 5 6 (PRODUCT LEVEL)	SEE PAGE
M	1	1	**8T-0288**	6	BOLT (M5X0.8X12-MM)	
Y	2	1	**111-9916**	3	VALVE GP-SOLENOID	733
	3	1	**215-5032**	3	PLUG	
	4	1	**215-5033**	3	SPRING	
	5	1	**215-5034**	3	SEAT	
	6	1	**215-5035**	3	VALVE	
	7	1	**095-1579**	3	SEAL-O-RING	
	8	1	**4J-5477**	3	SEAL-O-RING	

M-METRIC PART
Y-SEPARATE ILLUSTRATION

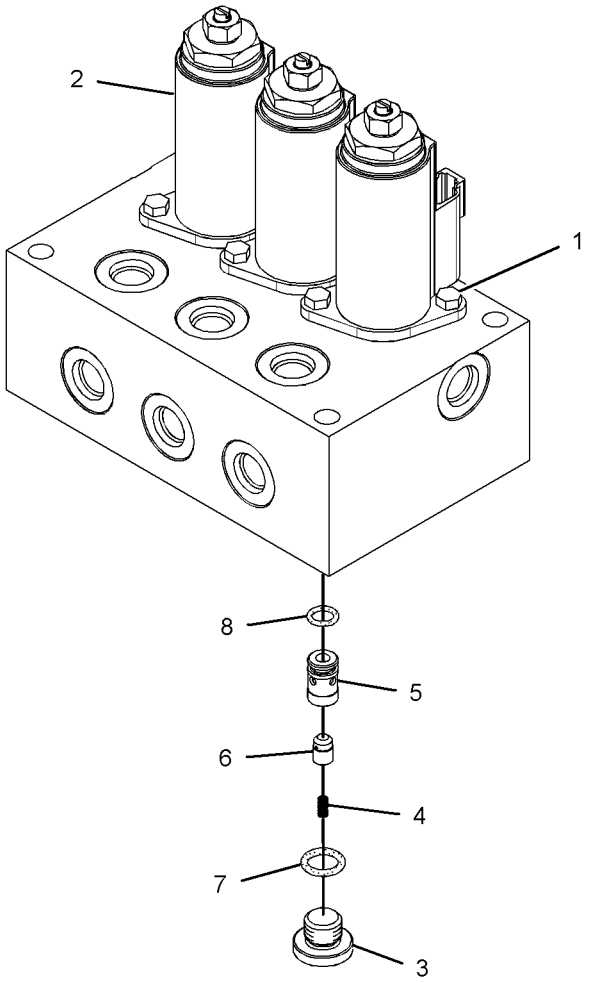

GRAPHIC #1 **<END>** g01418539

297-0685 VALVE GP-SOLENOID & PRESS REDC

S/N: CJN1-UP
PART OF 289-5750 LINES GP-PILOT
AN ATTACHMENT

SMCS-5467, 5479 **i02843757**

NOTE	REF NO	GRAPHIC REF	PART NUMBER	QTY	PART NAME 1 2 3 4 5 6 (PRODUCT LEVEL)	SEE PAGE
M	1	1	**8T-0288**	8	BOLT (M5X0.8X12-MM)	
Y	2	1	**111-9916**	4	VALVE GP-SOLENOID	733
	3	1	**215-5032**	4	PLUG	
	4	1	**215-5033**	4	SPRING	
	5	1	**215-5034**	4	SEAT	
	6	1	**215-5035**	4	VALVE	
	7	1	**095-1579**	4	SEAL-O-RING	
	8	1	**4J-5477**	4	SEAL-O-RING	

M-METRIC PART
Y-SEPARATE ILLUSTRATION

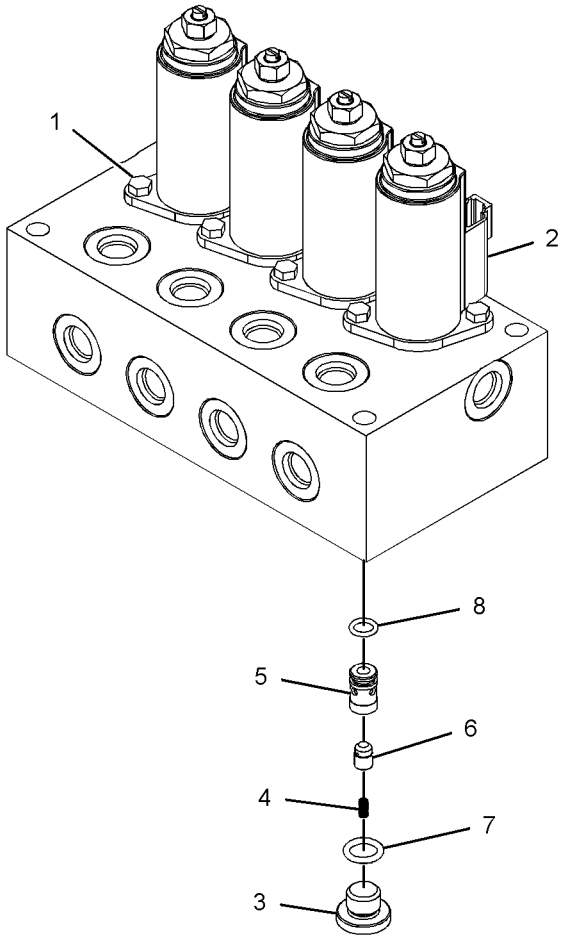

GRAPHIC #1 **<END>** g01418520

HYDRAULIC SYSTEM

199-0504 VALVE GP-TRAVEL COUNTERBALANCE

S/N: CJN1-UP

PART OF 185-6952, 197-7179 MOTOR & MTG GP-TRAVEL

ALSO AN ATTACHMENT

SMCS-5811 **i01884912**

NOTE	REF NO	GRAPHIC REF	PART NUMBER	QTY	PART NAME 1 2 3 4 5 6 (PRODUCT LEVEL)	SEE PAGE
Z	1	1		1	VALVE GP-CONTROL	
M	2	1	**6V-8200**	8	BOLT-SOCKET HEAD (M12X1.75X35-MM)	
	3	1	**9S-8004**	2	PLUG-O-RING	
	4	1	**3J-1907**	2	SEAL-O-RING	
	5	1	**129-7932**	2	GUIDE	
	6	1	**199-0508**	2	SPRING	
	7	1	**095-1701**	2	SEAL-O-RING	
	8	1	**119-5360**	2	COVER	
Y	9	1	**129-8030**	2	VALVE GP-RELIEF	719
	10	1	**2M-9780**	2	SEAL-O-RING	
	11	1	**119-5364**	2	PLUG	
	12	1	**119-5362**	2	SPRING	
	13	1	**119-5365**	2	VALVE	

M-METRIC PART
Y-SEPARATE ILLUSTRATION
Z-NOT SERVICED SEPARATELY

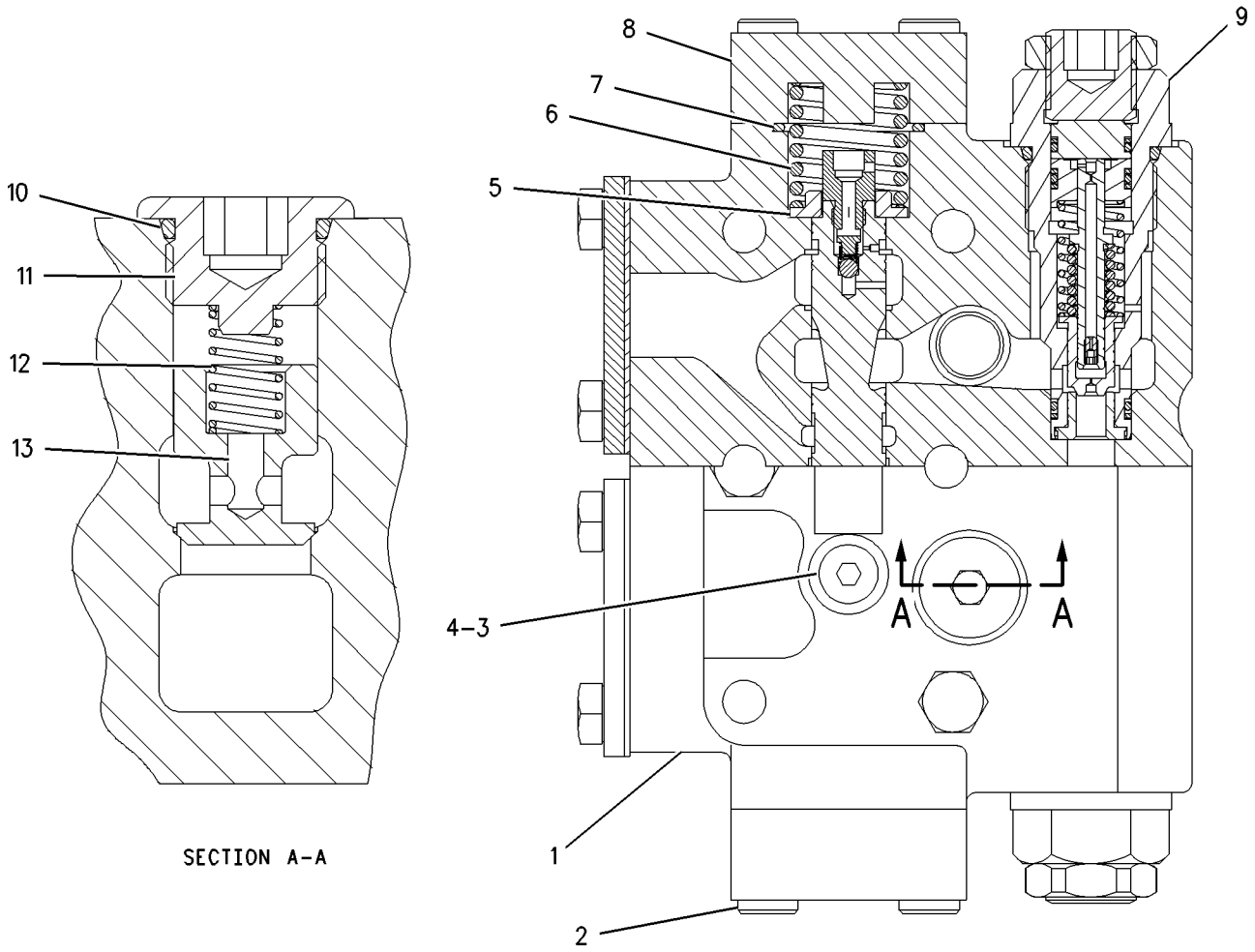

GRAPHIC #1 **<END>** g00754563

IMPLEMENTS

330-8777 BOOM AR—ACCUGRADE

S/N: CJN1-UP
FOR USE WITH 330-8775—PAGE 4
AN ATTACHMENT

SMCS-6000 **i03146526**

NOTE	PART NUMBER	QTY	PART NAME 1 2 3 4 5 6 (PRODUCT LEVEL)	SEE PAGE
Y	*303-8845*	1	BOOM GP	758
Y	*259-0837*	1	CYLINDER & LINES GP-BOOM (LH)	395
Y	*259-0838*	1	CYLINDER & LINES GP-BOOM (RH)	395
Y	*259-0841*	1	CYLINDER & LINES GP-STICK	397
Y	*210-3821*	1	GUARD GP-FRONT	319
Y	*259-5163*	1	LIGHTING GP-FLOOD (BOOM, LH)	175
Y	*260-8220*	1	LINES GP-BOOM	469
Y	*174-8529*	1	LINES GP-GREASE	762
Y	*297-4470*	1	SENSOR & MTG GP-POSITION	192

Y-SEPARATE ILLUSTRATION

<END>

260-6979 BOOM AR-1 PIECE LONG

S/N: CJN1-UP
AN ATTACHMENT

SMCS-6501 **i02748062**

NOTE	PART NUMBER	QTY	PART NAME 1 2 3 4 5 6 (PRODUCT LEVEL)	SEE PAGE
Y	*264-1593*	1	BOOM GP	754
Y	*259-0837*	1	CYLINDER & LINES GP-BOOM (LH)	395
Y	*259-0838*	1	CYLINDER & LINES GP-BOOM (RH)	395
Y	*259-0841*	1	CYLINDER & LINES GP-STICK	397
Y	*259-5163*	1	LIGHTING GP-FLOOD (BOOM, LH)	175
Y	*260-8220*	1	LINES GP-BOOM	469
Y	*174-8529*	1	LINES GP-GREASE	762

Y-SEPARATE ILLUSTRATION

<END>

283-9001 BOOM AR-1 PIECE LONG

S/N: CJN1-UP
AN ATTACHMENT

SMCS-6501 **i02793515**

NOTE	PART NUMBER	QTY	PART NAME 1 2 3 4 5 6 (PRODUCT LEVEL)	SEE PAGE
Y	*290-9321*	1	BOOM GP-1 PIECE	756
Y	*289-8090*	1	CYLINDER & LINES GP-BOOM (LH)	395
Y	*289-8091*	1	CYLINDER & LINES GP-BOOM (RH)	395
Y	*289-8101*	1	CYLINDER & LINES GP-STICK	397
Y	*259-5163*	1	LIGHTING GP-FLOOD (BOOM, LH)	175
Y	*260-8220*	1	LINES GP-BOOM	469
Y	*174-8529*	1	LINES GP-GREASE	762

Y-SEPARATE ILLUSTRATION

<END>

301-2575 BOOM AR-1 PIECE LONG—HEAVY-DUTY

S/N: CJN1-UP

AN ATTACHMENT

SMCS-6501 **i02988355**

NOTE	PART NUMBER	QTY	PART NAME 1 2 3 4 5 6 (PRODUCT LEVEL)	SEE PAGE
Y	*315-0943*	1	BOOM GP	760
Y	*259-0837*	1	CYLINDER & LINES GP-BOOM (LH)	395
Y	*259-0838*	1	CYLINDER & LINES GP-BOOM (RH)	395
Y	*259-0841*	1	CYLINDER & LINES GP-STICK	397
Y	*259-5163*	1	LIGHTING GP-FLOOD (BOOM, LH)	175
Y	*260-8220*	1	LINES GP-BOOM	469
Y	*174-8529*	1	LINES GP-GREASE	762

Y-SEPARATE ILLUSTRATION

<END>

IMPLEMENTS

264-1593 BOOM GP

S/N: CJN1-UP
5.1-M (16.7-FT)
PART OF 260-6979 BOOM AR-1 PIECE LONG
AN ATTACHMENT

SMCS-6301, 6302, 6460, 6501, 6516, 6521, 6535, 6536 **i02748141**

NOTE	REF NO	GRAPHIC REF	PART NUMBER	QTY	PART NAME 1 2 3 4 5 6 (PRODUCT LEVEL)	SEE PAGE
	1	1	**4I-3308**	2	PLATE	
	2	1	**4I-3309**	2	SPACER (82X110X3-MM THK)	
	3	1	**4I-4811**	1	PIN AS	
B	4	1	**093-0084**	1	SHIM (1-MM THK)	
	5	1	**093-0349**	2	WASHER (22X60X6-MM THK)	
B	6	1	**113-2127**	2	SHIM (0.5-MM THK)	
	7	1	**118-5982**	1	SPACER (73X105X14-MM THK)	
	8	1	**166-1486**	2	SHIM (2-MM THK)	
	9	1	**166-1495**	2	SEAL-LIP TYPE	
	10	1	**180-7755**	1	PIN	
	11	1	**264-1594**	1	BOOM & BEARING AS	
	11A	1	**244-4277**	2	BEARING-SLEEVE	
	12	1	**267-0060**	1	PIN AS	
	13	1	**093-0366**	1	SPACER (93X130X12-MM THK)	
	14	1	**166-1487**	2	SHIM (2-MM THK)	
	15	1	**8T-4123**	2	WASHER (22X35X3.5-MM THK)	
	16	1	**8T-4223**	6	WASHER-HARD (13.5X25.5X3-MM THK)	
M	17	1	**8T-4780**	2	BOLT (M20X2.5X30-MM)	
M	18	1	**8T-4956**	6	BOLT (M12X1.75X35-MM)	

B-USE AS REQUIRED
M-METRIC PART

264-1593 **BOOM GP** *(contd.)* **i02748141**

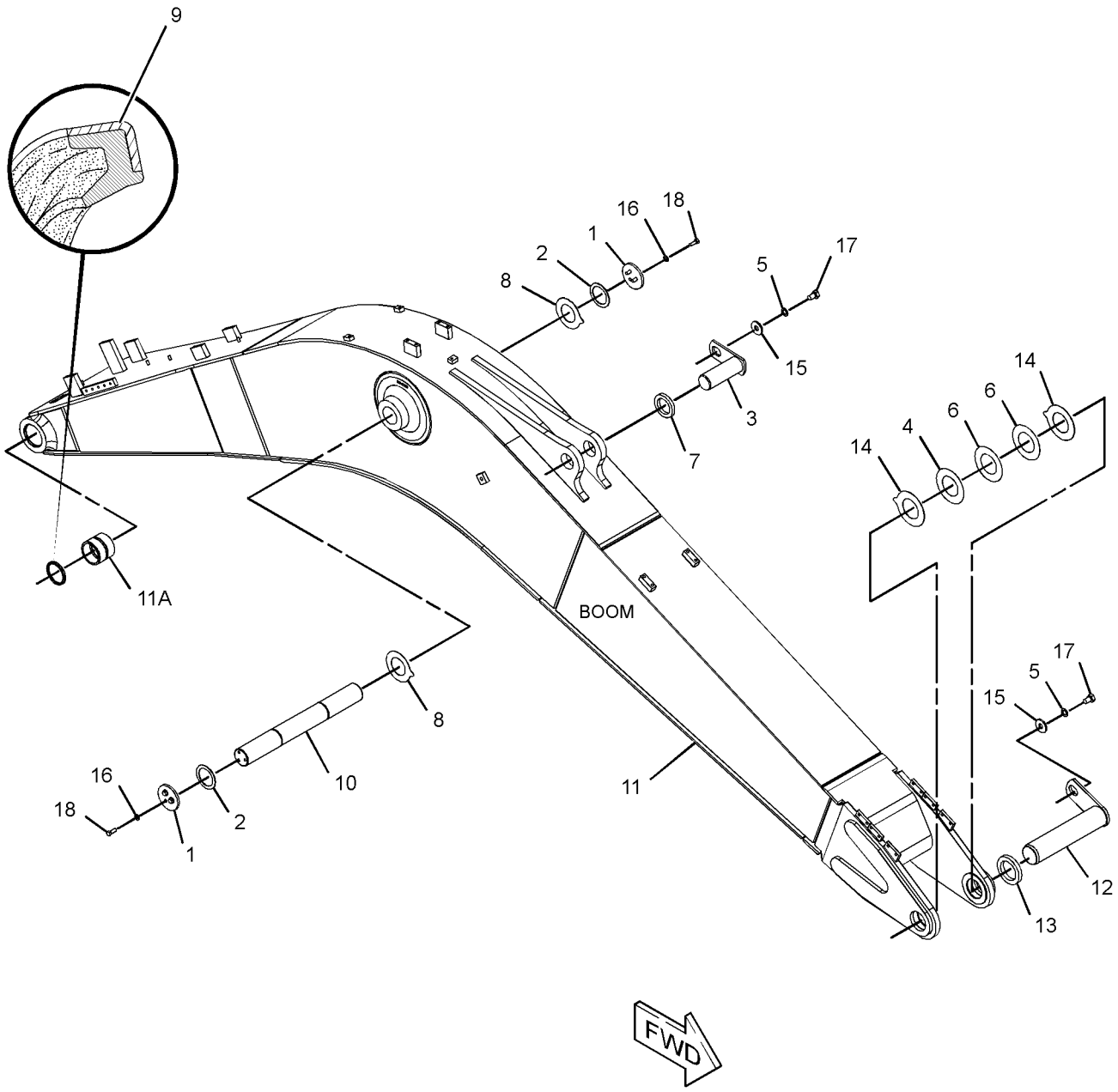

GRAPHIC #1 **<END>** g01377916

290-9321 BOOM GP-1 PIECE

S/N: CJN1-UP

PART OF 283-9001 BOOM AR-1 PIECE LONG

AN ATTACHMENT

SMCS-6301, 6302, 6460, 6501, 6516, 6521, 6535, 6536 **i02793523**

NOTE	REF NO	GRAPHIC REF	PART NUMBER	QTY	PART NAME 1 2 3 4 5 6 (PRODUCT LEVEL)	SEE PAGE
	1	1	**4I-3308**	2	PLATE	
	2	1	**4I-3309**	2	SPACER (82X110X3-MM THK)	
	3	1	**4I-4811**	1	PIN AS	
B	4	1	**093-0084**	1	SHIM (1-MM THK)	
	5	1	**093-0349**	2	WASHER (22X60X6-MM THK)	
B	6	1	**113-2127**	2	SHIM (0.5-MM THK)	
	7	1	**118-5982**	1	SPACER (73X105X14-MM THK)	
	8	1	**166-1486**	2	SHIM (2-MM THK)	
	9	1	**166-1495**	2	SEAL-LIP TYPE	
	10	1	**180-7755**	1	PIN	
	11	1	**267-0060**	1	PIN AS	
	12	1	**290-9322**	1	BOOM & BEARING AS	
	12A	1	**228-5615**	2	BEARING-SLEEVE	
	12B	1	**244-4277**	2	BEARING-SLEEVE	
	13	1	**093-0366**	1	SPACER (93X130X12-MM THK)	
	14	1	**166-1487**	2	SHIM (2-MM THK)	
	15	1	**8T-4123**	2	WASHER (22X35X3.5-MM THK)	
	16	1	**8T-4223**	6	WASHER-HARD (13.5X25.5X3-MM THK)	
M	17	1	**8T-4780**	2	BOLT (M20X2.5X30-MM)	
M	18	1	**8T-4956**	6	BOLT (M12X1.75X35-MM)	

B-USE AS REQUIRED
M-METRIC PART

290-9321 **BOOM GP-1 PIECE** *(contd.)* **i02793523**

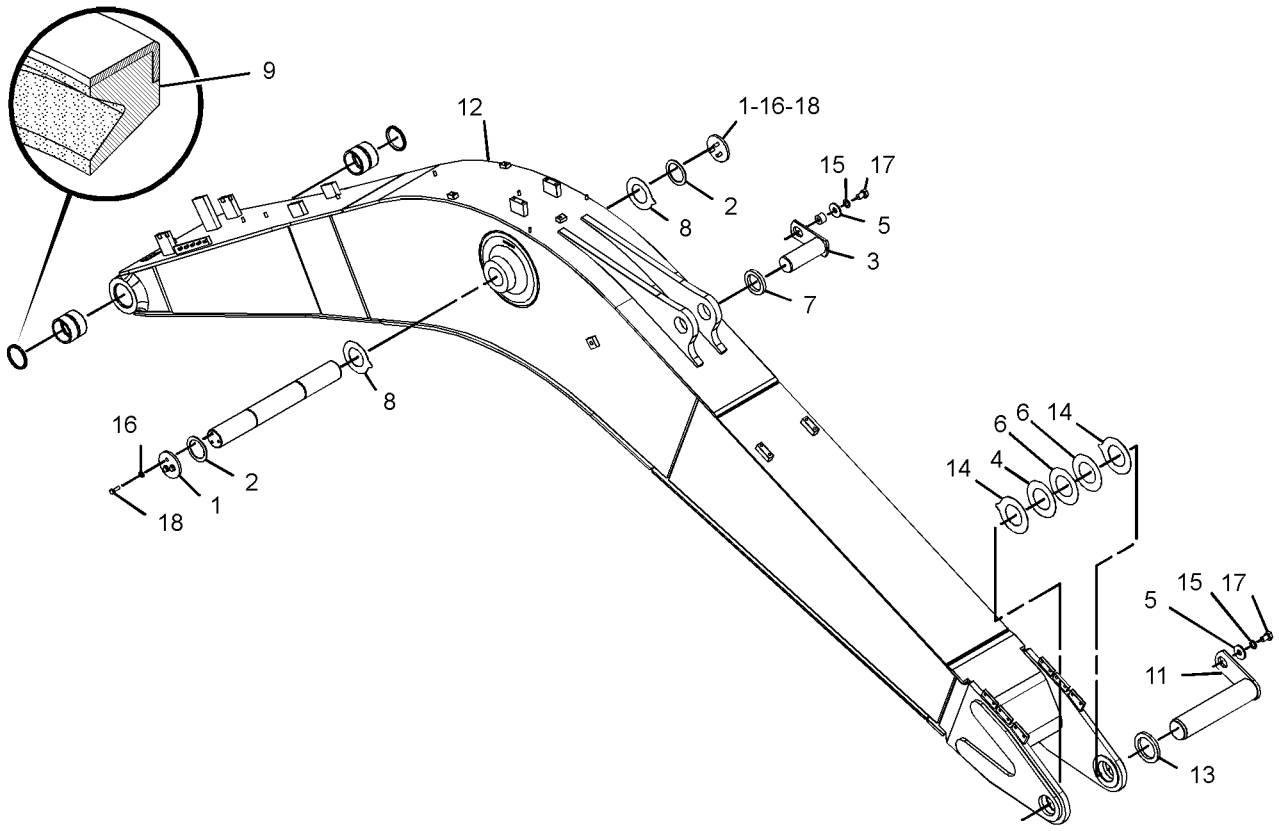

GRAPHIC #1 **<END>** g01398610

303-8845 BOOM GP–ACCUGRADE READY

S/N: CJN1-UP
5.1-M (16.7-FT)
PART OF 330-8777 BOOM AR, 301-2479, 301-2517 SPECIAL AR
AN ATTACHMENT

SMCS-6301, 6302, 6460, 6501, 6516, 6521, 6535, 6536 **i02840810**

NOTE	REF NO	GRAPHIC REF	PART NUMBER	QTY	PART NAME 1 2 3 4 5 6 (PRODUCT LEVEL)	SEE PAGE
	1	1	**4I-3308**	2	PLATE	
	2	1	**4I-3309**	2	SPACER (82X110X3-MM THK)	
	3	1	**4I-4811**	1	PIN AS	
B	4	1	**093-0084**	1	SHIM (1-MM THK)	
	5	1	**093-0349**	1	WASHER (22X60X6-MM THK)	
B	6	1	**113-2127**	2	SHIM (0.5-MM THK)	
	7	1	**118-5982**	1	SPACER (73X105X14-MM THK)	
	8	1	**166-1486**	2	SHIM (2-MM THK)	
	9	1	**166-1495**	2	SEAL-LIP TYPE	
	10	1	**180-7755**	1	PIN	
	11	1	**303-8846**	1	BOOM & BEARING AS	
	11A	1	**244-4277**	2	BEARING-SLEEVE	
	12	1	**303-8863**	1	PIN AS	
	13	1	**308-8914**	1	PLATE	
	14	1	**093-0366**	1	SPACER (93X130X12-MM THK)	
M	15	1	**096-4883**	2	LOCKNUT (M10X1.15-THD)	
	16	1	**166-1487**	2	SHIM (2-MM THK)	
	17	1	**8T-4121**	2	WASHER-HARD (11X21X2.5-MM THK)	
	18	1	**8T-4123**	2	WASHER (22X35X3.5-MM THK)	
M	19	1	**8T-4186**	2	BOLT (M10X1.5X40-MM)	
	20	1	**8T-4223**	6	WASHER-HARD (13.5X25.5X3-MM THK)	
M	21	1	**8T-4780**	2	BOLT (M20X2.5X30-MM)	
M	22	1	**8T-4956**	6	BOLT (M12X1.75X35-MM)	

B-USE AS REQUIRED
M-METRIC PART

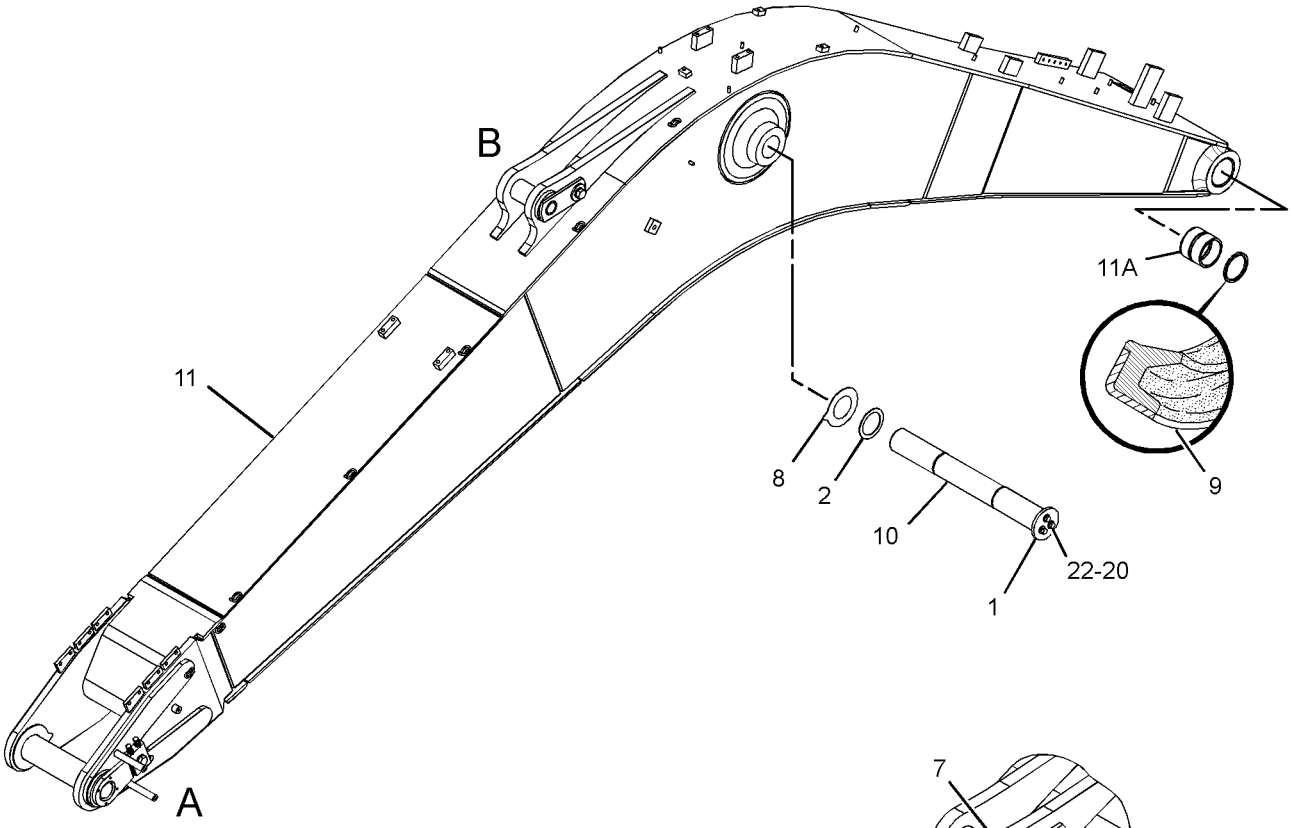

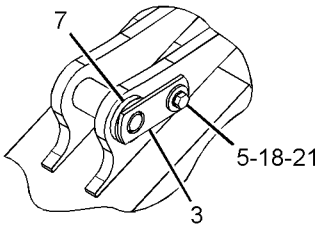

VIEW OF AREA B

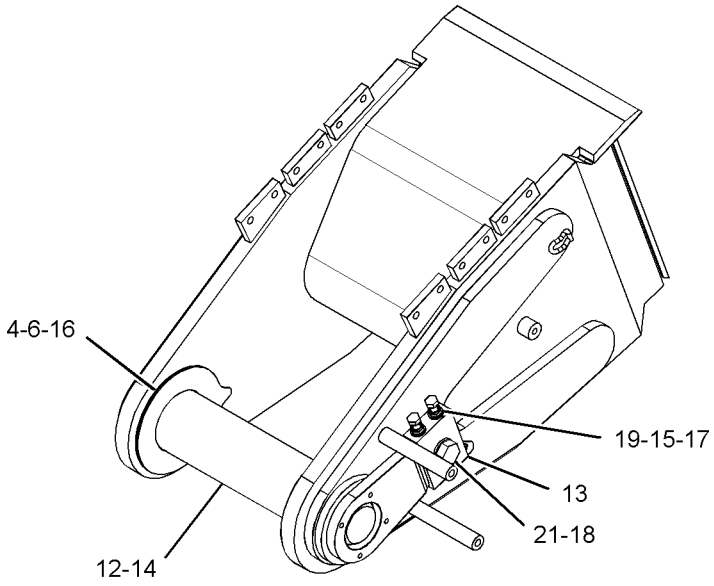

VIEW OF AREA A

GRAPHIC #1 **<END>** g01419154

IMPLEMENTS

315-0943 BOOM GP

S/N: CJN1-UP
5.1-M (16.7-FT)
PART OF 301-2575 BOOM AR-1 PIECE LONG
AN ATTACHMENT

SMCS-6301, 6302, 6460, 6501, 6516, 6521, 6535, 6536 **i02988356**

NOTE	REF NO	GRAPHIC REF	PART NUMBER	QTY	PART NAME 1 2 3 4 5 6 (PRODUCT LEVEL)	SEE PAGE
	1	1	**4I-3308**	2	PLATE	
	2	1	**4I-3309**	2	SPACER (82X110X3-MM THK)	
	3	1	**4I-4811**	1	PIN AS	
B	4	1	**093-0084**	1	SHIM (1-MM THK)	
	5	1	**093-0349**	2	WASHER (22X60X6-MM THK)	
B	6	1	**113-2127**	2	SHIM (0.5-MM THK)	
	7	1	**118-5982**	1	SPACER (73X105X14-MM THK)	
	8	1	**166-1486**	2	SHIM (2-MM THK)	
	9	1	**166-1495**	2	SEAL-LIP TYPE	
	10	1	**180-7755**	1	PIN	
	11	1	**267-0060**	1	PIN AS	
	12	1	**315-0944**	1	BOOM & BEARING AS	
	12A	1	**244-4277**	2	BEARING-SLEEVE	
	13	1	**093-0366**	1	SPACER (93X130X12-MM THK)	
	14	1	**166-1487**	2	SHIM (2-MM THK)	
	15	1	**8T-4123**	2	WASHER (22X35X3.5-MM THK)	
	16	1	**8T-4223**	6	WASHER-HARD (13.5X25.5X3-MM THK)	
M	17	1	**8T-4780**	2	BOLT (M20X2.5X30-MM)	
M	18	1	**8T-4956**	6	BOLT (M12X1.75X35-MM)	

B-USE AS REQUIRED
M-METRIC PART

315-0943 **BOOM GP** *(contd.)* **i02988356**

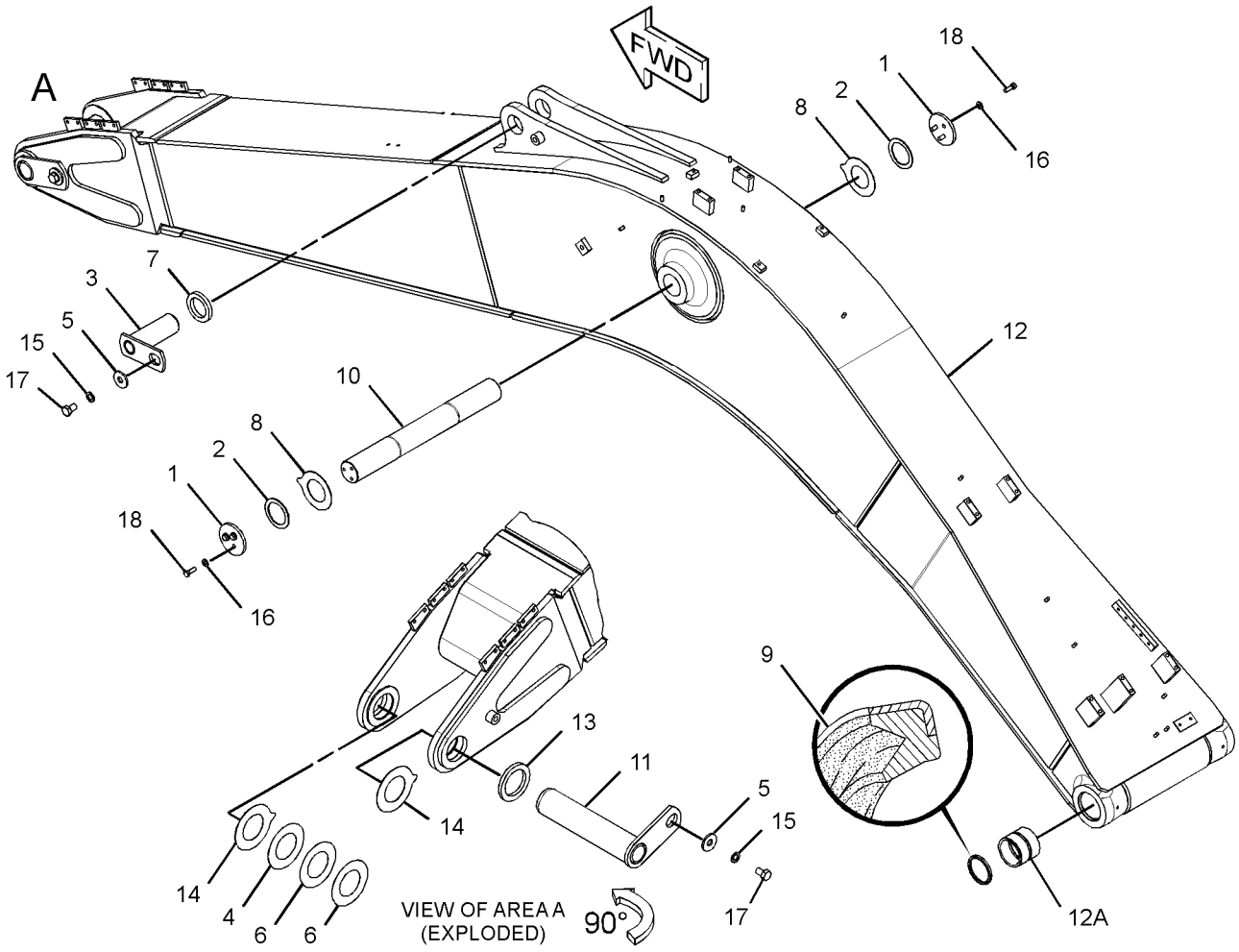

GRAPHIC #1

<END>

g01570853

174-8529 LINES GP-GREASE

S/N: CJN1-UP

PART OF 330-8777 BOOM AR, 260-6979, 283-9001, 301-2575 BOOM AR-1 PIECE LONG, 301-2479, 301-2517 SPECIAL AR

AN ATTACHMENT

SMCS-7510 **i01432048**

NOTE	REF NO	GRAPHIC REF	PART NUMBER	QTY	PART NAME 1 2 3 4 5 6 (PRODUCT LEVEL)	SEE PAGE
	1	1	**8M-2772**	2	CLIP	
M	2	1	**8T-4133**	5	NUT (M10X1.5-THD)	
	3	1	**8T-4121**	8	WASHER-HARD (11X21X2.5-MM THK)	
	4	1	**166-1579**	3	CLIP	
	5	1	**033-8248**	3	CLIP	
M	6	1	**8T-4191**	3	BOLT (M10X1.5X16-MM)	
	7	1	**123-5349**	1	HOSE AS	
	8	1	**134-9137**	1	HOSE AS	
	9	1	**3B-8489**	5	FITTING-GREASE	
	10	1	**6L-3616**	2	CONNECTOR	
	11	1	**5K-9243**	2	ELBOW-FLARED	
	12	1	**107-9742**	1	TUBE AS	
	13	1	**107-9743**	1	TUBE AS	
	14	1	**120-7225**	1	HOSE AS	

M-METRIC PART

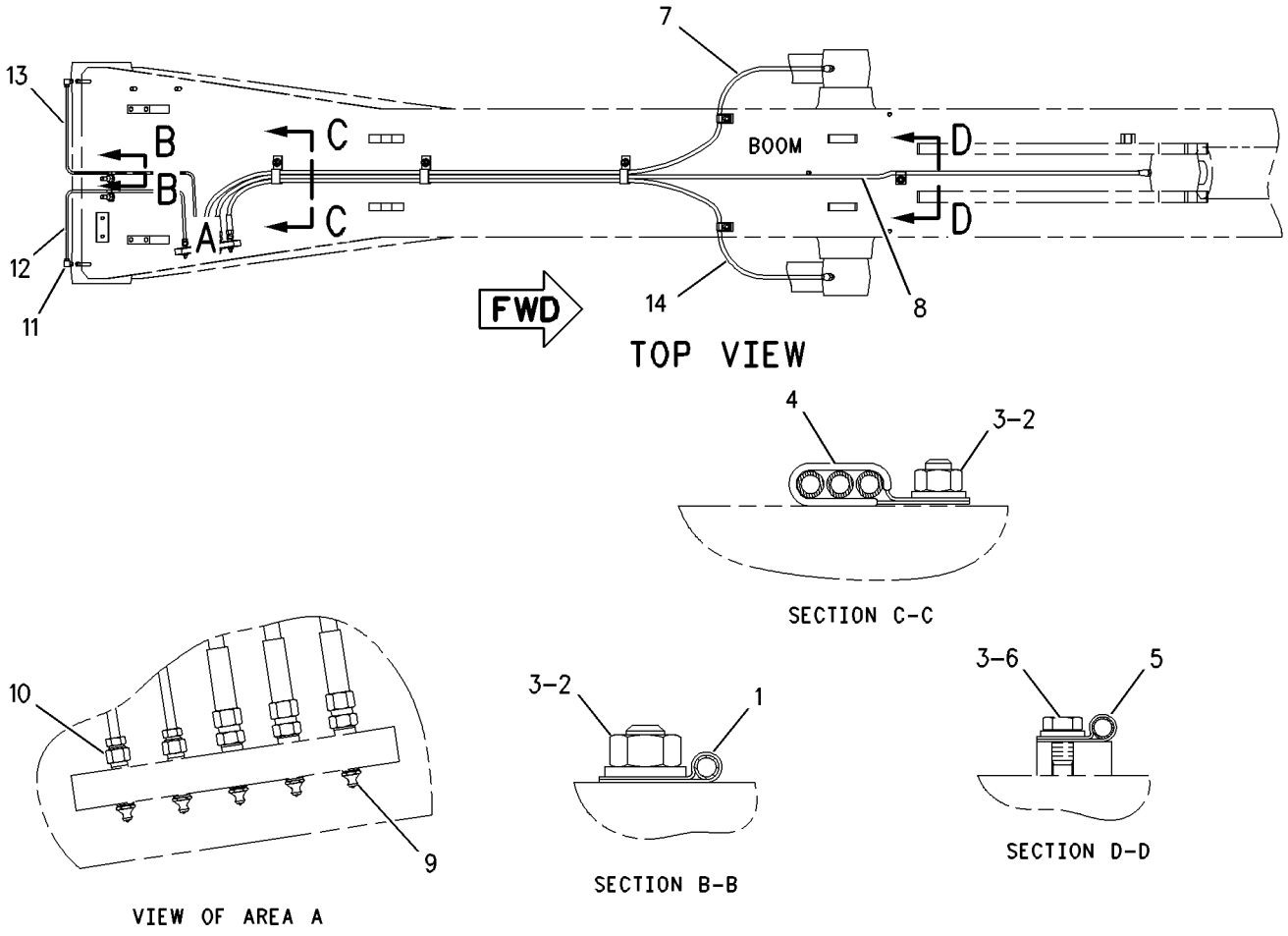

GRAPHIC #1 **<END>** g00751475

260-7020 LINKAGE AR-BUCKET—WITH LIFTING EYE

S/N: CJN1-UP
AN ATTACHMENT

SMCS-6513 **i02719478**

NOTE	PART NUMBER	QTY	PART NAME 1 2 3 4 5 6 (PRODUCT LEVEL)	SEE PAGE
Y	*259-0844*	1	CYLINDER & LINES GP-BUCKET	396
Y	*264-1603*	1	LINKAGE GP-BUCKET (WITH LIFTING EYE)	765
Y-SEPARATE ILLUSTRATION				

<END>

260-7021 LINKAGE AR-BUCKET—WITH LIFTING EYE

S/N: CJN1-UP
1.9-M (6.1-FT) REACH
AN ATTACHMENT

SMCS-6513 **i02719412**

NOTE	PART NUMBER	QTY	PART NAME 1 2 3 4 5 6 (PRODUCT LEVEL)	SEE PAGE
Y	*259-0914*	1	CYLINDER & LINES GP-BUCKET	396
Y	*264-1603*	1	LINKAGE GP-BUCKET (WITH LIFTING EYE)	765
Y-SEPARATE ILLUSTRATION				

<END>

283-9011 LINKAGE AR-BUCKET—WITH LIFTING EYE

S/N: CJN1-UP
AN ATTACHMENT

SMCS-6513 **i02765404**

NOTE	PART NUMBER	QTY	PART NAME 1 2 3 4 5 6 (PRODUCT LEVEL)	SEE PAGE
Y	*289-8111*	1	CYLINDER & LINES GP	396
Y	*264-1603*	1	LINKAGE GP-BUCKET (WITH LIFTING EYE)	765
Y-SEPARATE ILLUSTRATION				

<END>

283-9012 LINKAGE AR-BUCKET—WITH LIFTING EYE

S/N: CJN1-UP
1.9-M (6.1-FT) REACH
AN ATTACHMENT

SMCS-6513 **i02776605**

NOTE	PART NUMBER	QTY	PART NAME 1 2 3 4 5 6 (PRODUCT LEVEL)	SEE PAGE
Y	*289-8119*	1	CYLINDER & LINES GP-BUCKET	396
Y	*264-1603*	1	LINKAGE GP-BUCKET (WITH LIFTING EYE)	765
Y-SEPARATE ILLUSTRATION				

<END>

330-8778 LINKAGE AR-BUCKET—ACCUGRADE

S/N: CJN1-UP

FOR USE WITH 330-8775—PAGE 4

AN ATTACHMENT

SMCS-6513 **i03146515**

NOTE	PART NUMBER	QTY	PART NAME 1 2 3 4 5 6 (PRODUCT LEVEL)	SEE PAGE
Y	*310-1782*	1	CYLINDER & LINES GP-BUCKET	397
Y	*295-9562*	1	GUARD GP-CYLINDER	449
Y	*264-1603*	1	LINKAGE GP-BUCKET (WITH LIFTING EYE)	765

Y-SEPARATE ILLUSTRATION

<END>

264-1603 LINKAGE GP-BUCKET—WITH LIFTING EYE

S/N: CJN1-UP

PART OF 260-7020, 260-7021, 283-9011, 283-9012, 330-8778 LINKAGE AR-BUCKET, 301-2479, 301-2517 SPECIAL AR AN ATTACHMENT

SMCS-6513 **i02719413**

NOTE	REF NO	GRAPHIC REF	PART NUMBER	QTY	PART NAME 1 2 3 4 5 6 (PRODUCT LEVEL)	SEE PAGE
	1	1	**3B-8489**	5	FITTING-GREASE	
	2	1	**087-5802**	1	LINK (RH)	
	3	1	**087-5803**	1	LINK AS	
	4	1	**106-6876**	1	PIN	
	5	1	**106-6877**	1	PIN	
	6	1	**106-6878**	2	PIN	
	7	1	**107-9976**	4	SEAL-O-RING	
	8	1	**166-1486**	2	SHIM (2-MM THK)	
M	9	1	**236-6365**	2	BOLT (M16X2X150-MM)	
	10	1	**235-7679**	2	SEAL-LIP TYPE	
	11	1	**267-0055**	1	LINK & BEARING AS	
	11A	1	**244-4360**	2	BEARING-SLEEVE	
	12	1	**166-1494**	4	SEAL-LIP TYPE	
M	13	1	**8T-4132**	8	NUT (M16X2-THD)	
M	14	1	**8T-6385**	2	BOLT (M16X2X180-MM)	

M-METRIC PART

264-1603 **LINKAGE GP-BUCKET** *(contd.)* **i02719413**

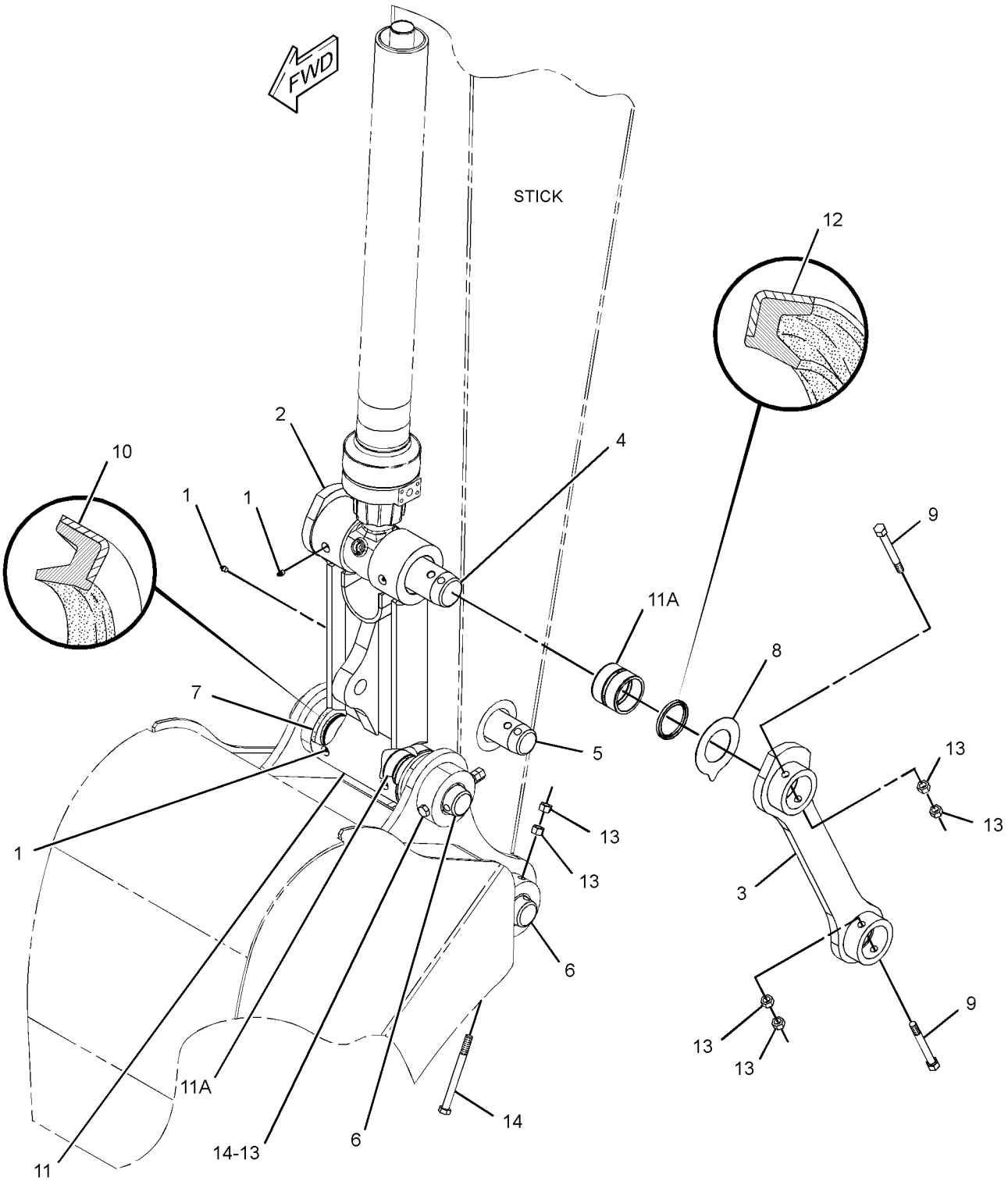

GRAPHIC #1 **<END>** g01367416

277-1213 LINKAGE GP-BUCKET–COUPLER

S/N: CJN1-UP

PART OF 268-7258, 268-7259, 306-1336, 306-1337 COUPLER AR-QUICK

AN ATTACHMENT

SMCS-6513 **i02727899**

NOTE	REF NO	GRAPHIC REF	PART NUMBER	QTY	PART NAME 1 2 3 4 5 6 (PRODUCT LEVEL)	SEE PAGE
M	1	1	**236-6365**	2	BOLT (M16X2X150-MM)	
M	2	1	**6C-8647**	2	BOLT (M16X2X170-MM)	
	3	1	**3B-8489**	5	FITTING-GREASE	
	4	1	**087-5803**	1	LINK AS	
	5	1	**267-0055**	1	LINK & BEARING AS	
	5A	1	**244-4360**	2	BEARING-SLEEVE	
	6	1	**087-5802**	1	LINK (RH)	
M	7	1	**8T-4132**	8	NUT (M16X2-THD)	
	8	1	**106-6876**	1	PIN	
	9	1	**106-6877**	1	PIN	
	10	1	**106-6878**	2	PIN	
	11	1	**166-1494**	4	SEAL-LIP TYPE	
	12	1	**235-7679**	2	SEAL-LIP TYPE	
	13	1	**166-1486**	2	SHIM (2-MM THK)	

M-METRIC PART

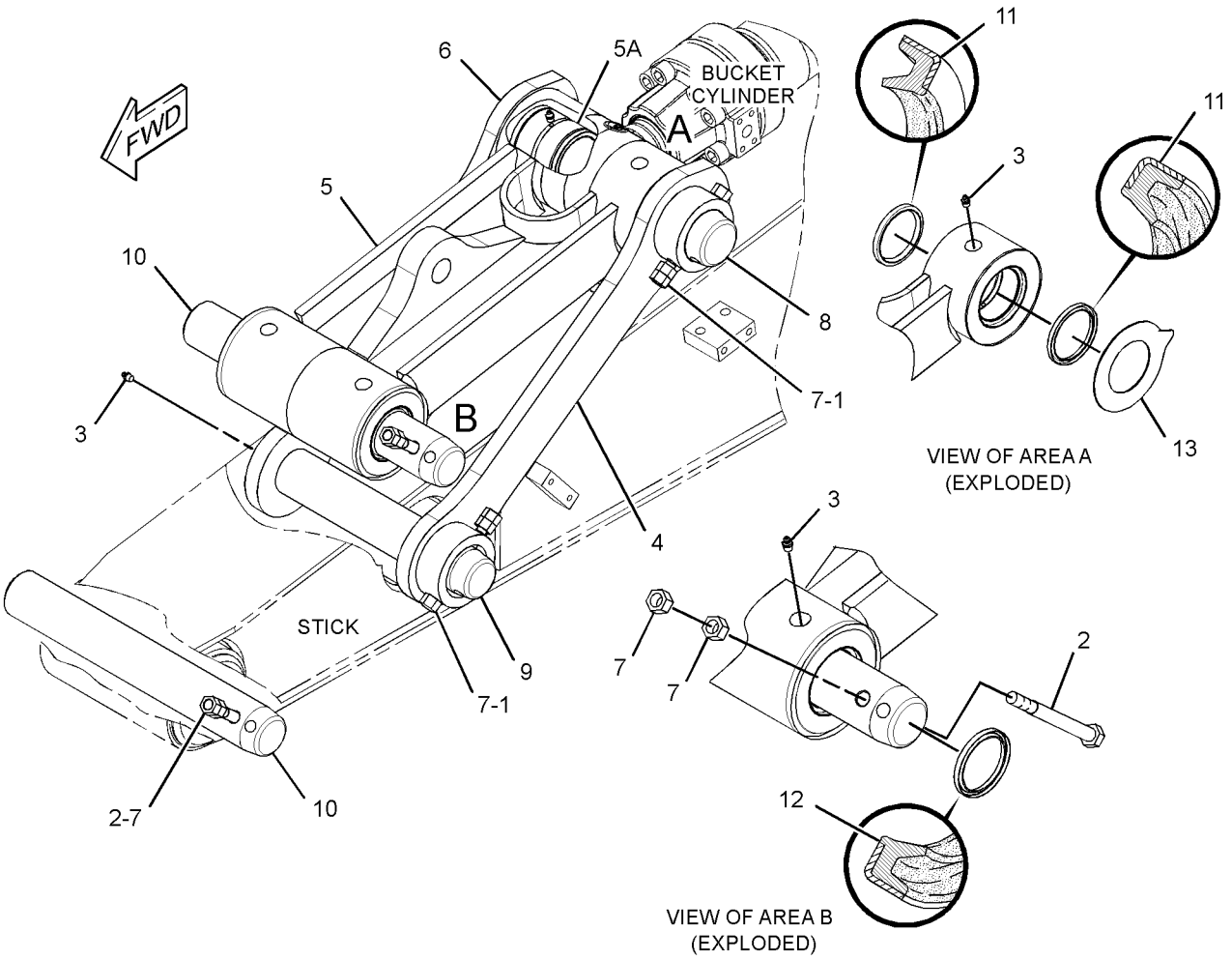

GRAPHIC #1 **<END>** g01375459

IMPLEMENTS

260-6981 STICK AR-HOE

S/N: CJN1-UP
3.1-M (10.2-FT) REACH
AN ATTACHMENT

SMCS-6502 **i02840189**

NOTE	PART NUMBER	QTY	PART NAME 1 2 3 4 5 6 (PRODUCT LEVEL)	SEE PAGE
Y	*131-9961*	1	LINES GP-STICK	621
Y	*308-8867*	1	STICK GP-HOE	783

Y-SEPARATE ILLUSTRATION

<END>

260-6982 STICK AR-HOE

S/N: CJN1-UP
2.6-M (8.5-FT) REACH
AN ATTACHMENT

SMCS-6502 **i02747909**

NOTE	PART NUMBER	QTY	PART NAME 1 2 3 4 5 6 (PRODUCT LEVEL)	SEE PAGE
Y	*131-9962*	1	LINES GP-STICK	622
Y	*264-1600*	1	STICK GP-HOE	772

Y-SEPARATE ILLUSTRATION

<END>

260-6983 STICK AR-HOE

S/N: CJN1-UP
2.3-M (7.4-FT) REACH
AN ATTACHMENT

SMCS-6502 **i02747944**

NOTE	PART NUMBER	QTY	PART NAME 1 2 3 4 5 6 (PRODUCT LEVEL)	SEE PAGE
Y	*131-9963*	1	LINES GP-STICK	623
Y	*264-1604*	1	STICK GP-HOE	773

Y-SEPARATE ILLUSTRATION

<END>

260-6984 STICK AR-HOE

S/N: CJN1-UP
1.9-M (6.1-FT) REACH
AN ATTACHMENT

SMCS-6502 **i02747974**

NOTE	PART NUMBER	QTY	PART NAME 1 2 3 4 5 6 (PRODUCT LEVEL)	SEE PAGE
Y	*131-9964*	1	LINES GP-STICK	624
Y	*264-1605*	1	STICK GP-HOE	774

Y-SEPARATE ILLUSTRATION

<END>

IMPLEMENTS

283-9002 STICK AR-HOE—REACH

S/N: CJN1-UP
3.1-M (10.2-FT)
AN ATTACHMENT

SMCS-6502 **i02840281**

NOTE	PART NUMBER	QTY	PART NAME 1 2 3 4 5 6 (PRODUCT LEVEL)	SEE PAGE
Y	*131-9961*	1	LINES GP-STICK	621
Y	*308-8895*	1	STICK GP-HOE	784
Y-SEPARATE ILLUSTRATION				

<END>

283-9003 STICK AR-HOE—REACH

S/N: CJN1-UP
2.9-M (9.5-FT)
AN ATTACHMENT

SMCS-6502 **i02765397**

NOTE	PART NUMBER	QTY	PART NAME 1 2 3 4 5 6 (PRODUCT LEVEL)	SEE PAGE
Y	*275-1695*	1	LINES GP-STICK	625
Y	*290-9333*	1	STICK GP-HOE (AUXILIARY, QUICK CPLR, REACH)	778
Y-SEPARATE ILLUSTRATION				

<END>

283-9004 STICK AR-HOE

S/N: CJN1-UP
2.6-M (8.5-FT) REACH
AN ATTACHMENT

SMCS-6502 **i02761915**

NOTE	PART NUMBER	QTY	PART NAME 1 2 3 4 5 6 (PRODUCT LEVEL)	SEE PAGE
Y	*131-9962*	1	LINES GP-STICK	622
Y	*290-9327*	1	STICK GP-HOE	776
Y-SEPARATE ILLUSTRATION				

<END>

283-9005 STICK AR-HOE

S/N: CJN1-UP
2.3-M (7.4-FT) REACH
AN ATTACHMENT

SMCS-6502 **i02761917**

NOTE	PART NUMBER	QTY	PART NAME 1 2 3 4 5 6 (PRODUCT LEVEL)	SEE PAGE
Y	*131-9963*	1	LINES GP-STICK	623
Y	*290-9330*	1	STICK GP-HOE	777
Y-SEPARATE ILLUSTRATION				

<END>

IMPLEMENTS

283-9006 STICK AR-HOE

S/N: CJN1-UP
1.9-M (6.1-FT)
AN ATTACHMENT

SMCS-6502 **i02761919**

NOTE	PART NUMBER	QTY	PART NAME 1 2 3 4 5 6 (PRODUCT LEVEL)	SEE PAGE
Y	*131-9964*	1	LINES GP-STICK	624
Y	*294-1360*	1	STICK GP-HOE	779

Y-SEPARATE ILLUSTRATION

<END>

301-2461 STICK AR-HOE—REACH, ACCUGRADE READY

S/N: CJN1-UP
3.1-M (10.2-FT)
AN ATTACHMENT

SMCS-6502 **i02765898**

NOTE	PART NUMBER	QTY	PART NAME 1 2 3 4 5 6 (PRODUCT LEVEL)	SEE PAGE
Y	*131-9961*	1	LINES GP-STICK	621
Y	*303-8851*	1	STICK GP-HOE (ACCUGRADE READY)	781

Y-SEPARATE ILLUSTRATION

<END>

301-2463 STICK AR-HOE—REACH, ACCUGRADE READY

S/N: CJN1-UP
2.6-M (8.5-FT)
AN ATTACHMENT

SMCS-6502 **i02761985**

NOTE	PART NUMBER	QTY	PART NAME 1 2 3 4 5 6 (PRODUCT LEVEL)	SEE PAGE
Y	*131-9962*	1	LINES GP-STICK	622
Y	*303-8848*	1	STICK GP-HOE (ACCUGRADE READY)	780

Y-SEPARATE ILLUSTRATION

<END>

301-2576 STICK AR-HOE—HEAVY-DUTY

S/N: CJN1-UP
2.6-M (8.5-FT)
AN ATTACHMENT

SMCS-6502 **i03001027**

NOTE	PART NUMBER	QTY	PART NAME 1 2 3 4 5 6 (PRODUCT LEVEL)	SEE PAGE
Y	*131-9962*	1	LINES GP-STICK	622
Y	*315-0925*	1	STICK GP-HOE	785

Y-SEPARATE ILLUSTRATION

<END>

IMPLEMENTS

260-7070 STICK AR-REACH

S/N: CJN1-UP
2.9-M (9.5-FT) REACH
AN ATTACHMENT

SMCS-6502 **i02750443**

NOTE	PART NUMBER	QTY	PART NAME 1 2 3 4 5 6 (PRODUCT LEVEL)	SEE PAGE
Y	*275-1695*	1	LINES GP-STICK	625
Y	*269-1609*	1	STICK GP-HOE	775

Y-SEPARATE ILLUSTRATION

<END>

IMPLEMENTS

264-1600 STICK GP-HOE

S/N: CJN1-UP
2.6-M (8.5-FT)
PART OF 260-6982 STICK AR-HOE
AN ATTACHMENT

SMCS-6502 **i02747932**

NOTE	REF NO	GRAPHIC REF	PART NUMBER	QTY	PART NAME 1 2 3 4 5 6 (PRODUCT LEVEL)	SEE PAGE
	1	1	**3B-8489**	3	FITTING-GREASE	
	2	1	**4I-4811**	1	PIN AS	
	3	1	**093-0349**	2	WASHER (22X60X6-MM THK)	
	4	1	**107-9852**	1	PIN AS	
	5	1	**118-5982**	2	SPACER (73X105X14-MM THK)	
	6	1	**166-1482**	2	SHIM (2-MM THK)	
	7	1	**166-1495**	2	SEAL-LIP TYPE	
	8	1	**235-7679**	4	SEAL-LIP TYPE	
	9	1	**264-1601**	1	STICK & BEARING AS	
	9A	1	**228-5614**	2	BEARING-SLEEVE	
	9B	1	**229-1096**	2	BEARING-SLEEVE	
	9C	1	**244-4277**	2	BEARING-SLEEVE	
	10	1	**8T-4123**	2	WASHER (22X35X3.5-MM THK)	
M	11	1	**8T-4780**	2	BOLT (M20X2.5X30-MM)	

M-METRIC PART

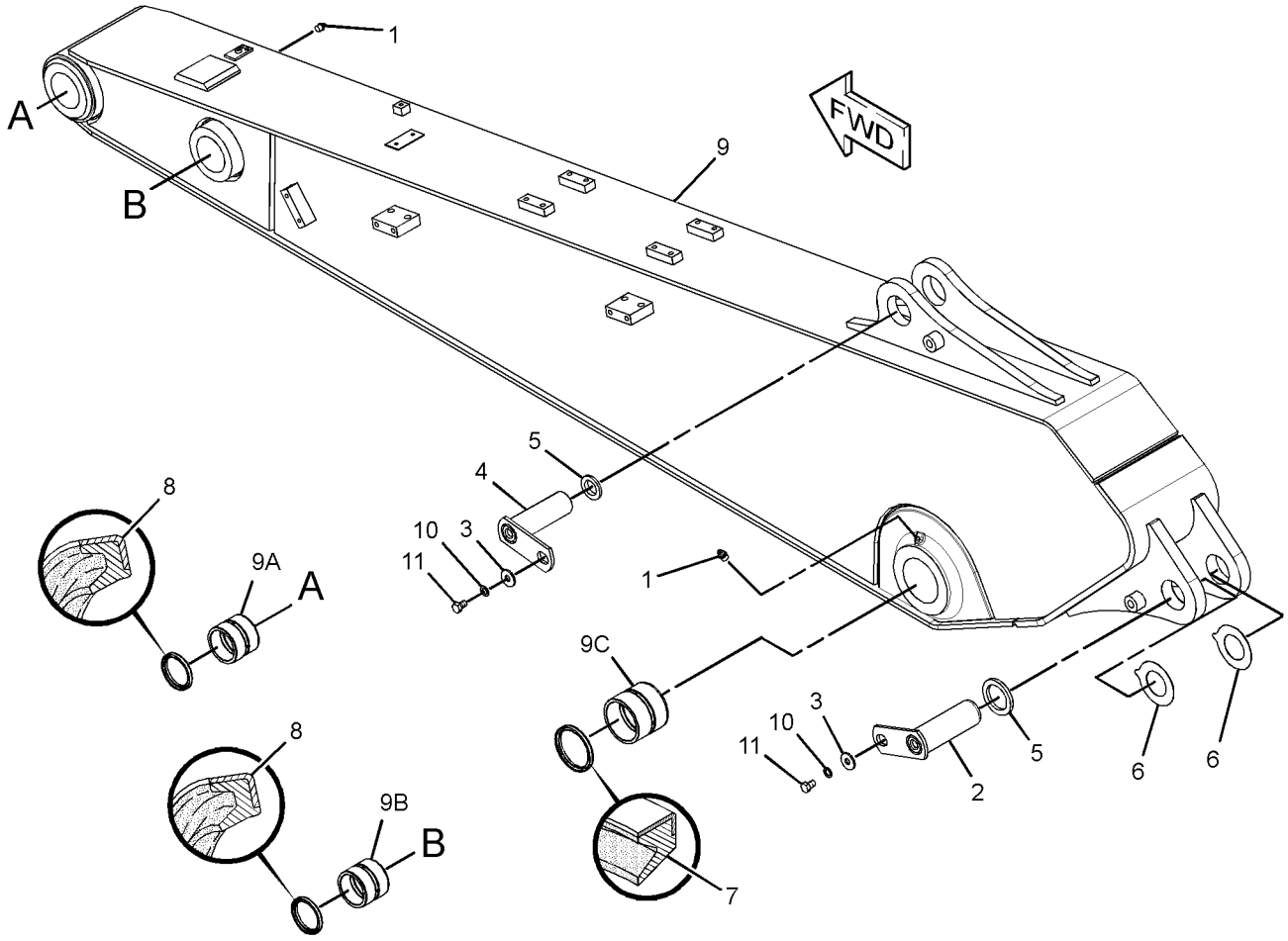

GRAPHIC #1 **<END>** g01379567

264-1604 STICK GP-HOE

S/N: CJN1-UP
2.3-M (7.4-FT)
PART OF 260-6983 STICK AR-HOE
AN ATTACHMENT

SMCS-6502 **i02747957**

NOTE	REF NO	GRAPHIC REF	PART NUMBER	QTY	PART NAME 1 2 3 4 5 6 (PRODUCT LEVEL)	SEE PAGE
	1	1	**3B-8489**	3	FITTING-GREASE	
	2	1	**4I-4811**	1	PIN AS	
	3	1	**093-0349**	2	WASHER (22X60X6-MM THK)	
	4	1	**107-9852**	1	PIN AS	
	5	1	**118-5982**	2	SPACER (73X105X14-MM THK)	
	6	1	**166-1482**	2	SHIM (2-MM THK)	
	7	1	**166-1495**	2	SEAL-LIP TYPE	
	8	1	**235-7679**	4	SEAL-LIP TYPE	
	9	1	**278-9246**	1	STICK & BEARING AS	
	9A	1	**228-5614**	2	BEARING-SLEEVE	
	9B	1	**229-1096**	2	BEARING-SLEEVE	
	9C	1	**244-4277**	2	BEARING-SLEEVE	
	10	1	**8T-4123**	2	WASHER (22X35X3.5-MM THK)	
M	11	1	**8T-4780**	2	BOLT (M20X2.5X30-MM)	

M-METRIC PART

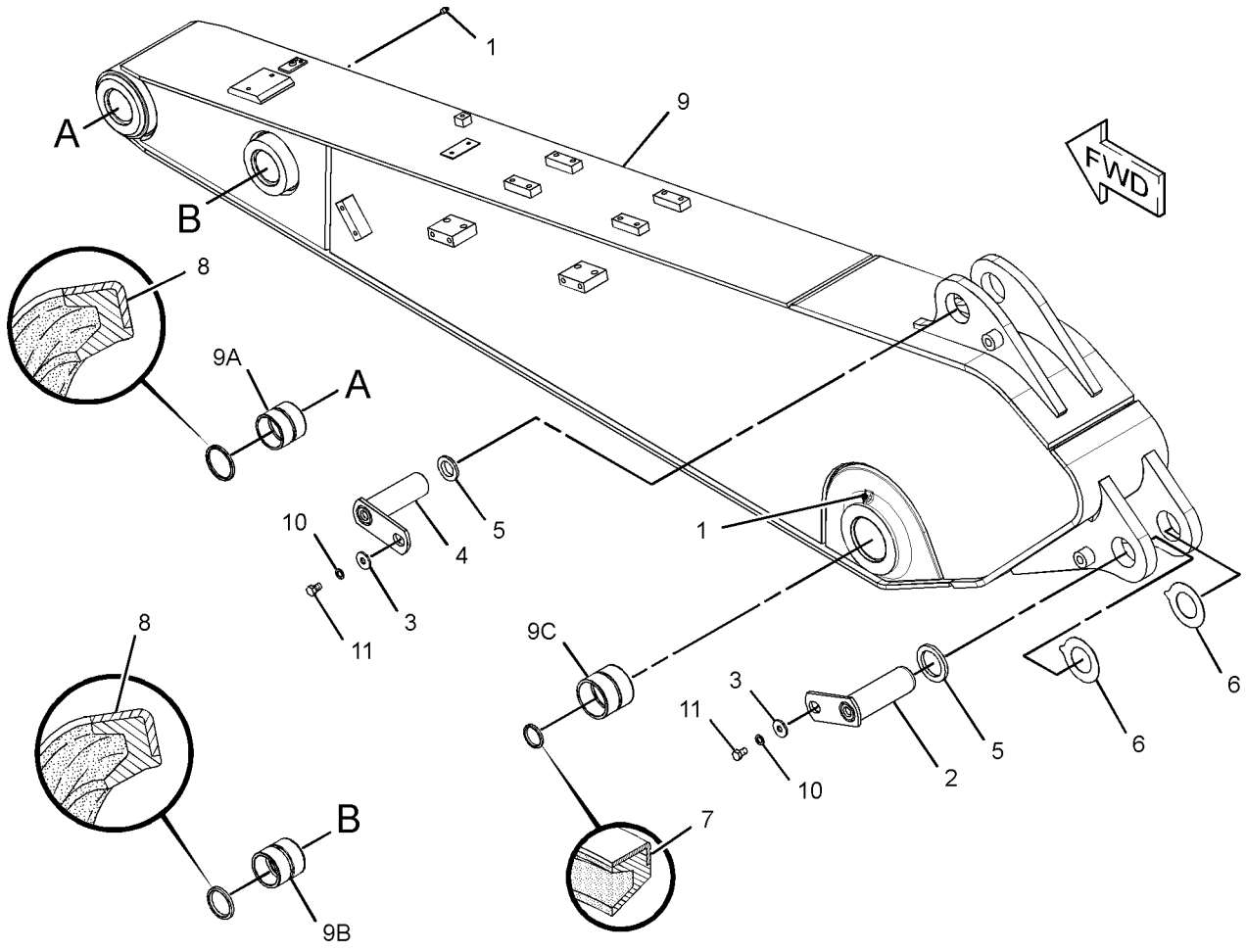

GRAPHIC #1 **<END>** g01379838

IMPLEMENTS

264-1605 STICK GP-HOE

S/N: CJN1-UP
1.9-M (6.1-FT)
PART OF 260-6984 STICK AR-HOE
AN ATTACHMENT

SMCS-6502 **i02747976**

NOTE	REF NO	GRAPHIC REF	PART NUMBER	QTY	PART NAME 1 2 3 4 5 6 (PRODUCT LEVEL)	SEE PAGE
	1	1	**3B-8489**	3	FITTING-GREASE	
	2	1	**4I-4811**	2	PIN AS	
	3	1	**093-0349**	2	WASHER (22X60X6-MM THK)	
	4	1	**118-5982**	2	SPACER (73X105X14-MM THK)	
	5	1	**166-1482**	2	SHIM (2-MM THK)	
	6	1	**166-1495**	2	SEAL-LIP TYPE	
	7	1	**235-7679**	4	SEAL-LIP TYPE	
	8	1	**273-6938**	1	STICK & BEARING AS	
	8A	1	**228-5614**	2	BEARING-SLEEVE	
	8B	1	**229-1096**	2	BEARING-SLEEVE	
	8C	1	**244-4277**	2	BEARING-SLEEVE	
	9	1	**8T-4123**	2	WASHER (22X35X3.5-MM THK)	
M	10	1	**8T-4780**	2	BOLT (M20X2.5X30-MM)	

M-METRIC PART

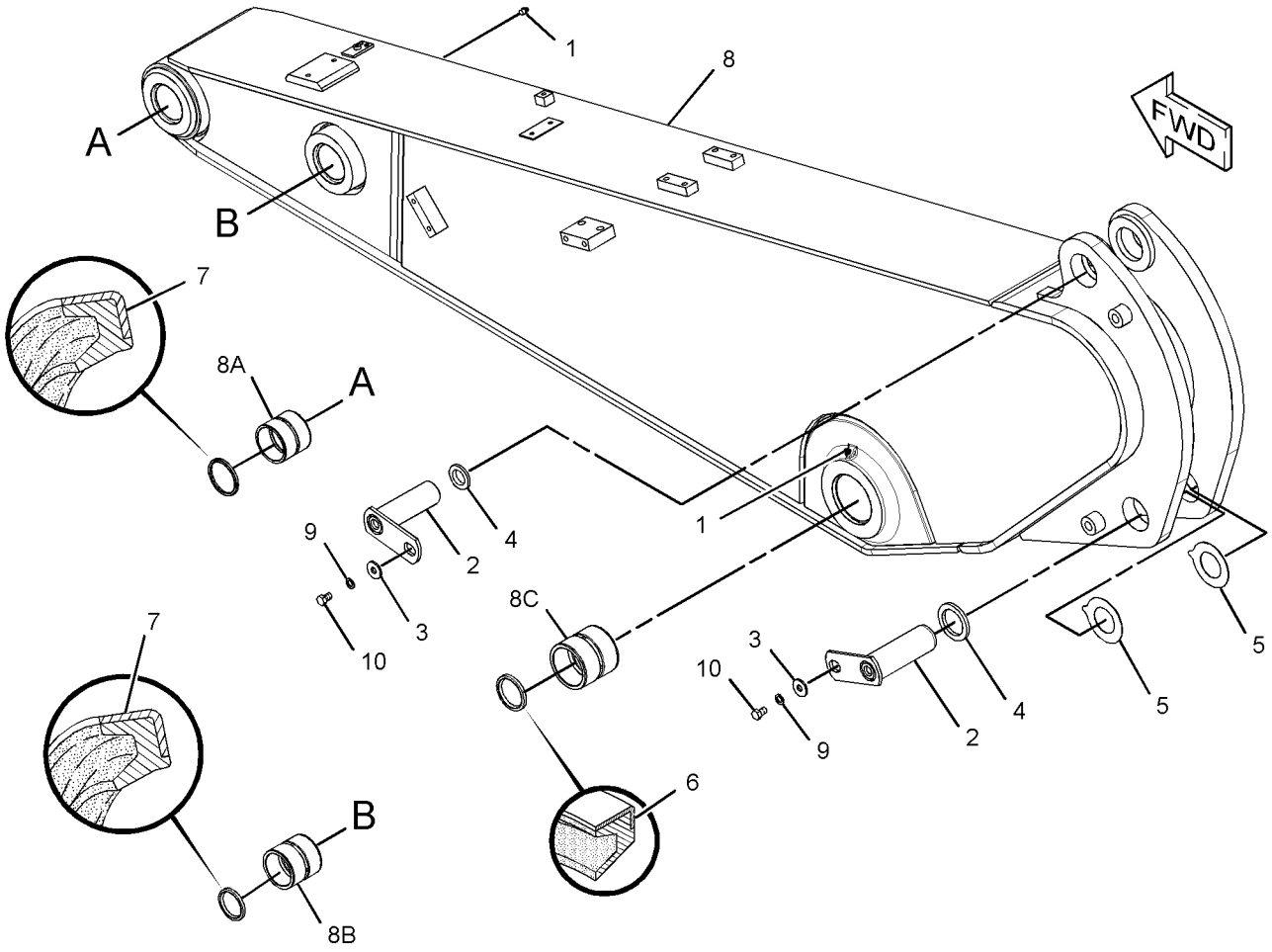

GRAPHIC #1 **<END>** g01379839

269-1609 STICK GP-HOE

S/N: CJN1-UP
2.9-M (9.5-FT)
PART OF 260-7070 STICK AR-REACH
AN ATTACHMENT

SMCS-6502 **i02750446**

NOTE	REF NO	GRAPHIC REF	PART NUMBER	QTY	PART NAME 1 2 3 4 5 6 (PRODUCT LEVEL)	SEE PAGE
	1	1	**3B-8489**	3	FITTING-GREASE	
	2	1	**4I-4811**	1	PIN AS	
	3	1	**093-0349**	2	WASHER (22X60X6-MM THK)	
	4	1	**107-9852**	1	PIN AS	
	5	1	**118-5982**	2	SPACER (73X105X14-MM THK)	
	6	1	**166-1482**	2	SHIM (2-MM THK)	
	7	1	**166-1495**	2	SEAL-LIP TYPE	
	8	1	**235-7679**	4	SEAL-LIP TYPE	
	9	1	**290-9334**	1	STICK & BEARING AS	
	9A	1	**228-5614**	2	BEARING-SLEEVE	
	9B	1	**229-1096**	2	BEARING-SLEEVE	
	9C	1	**244-4277**	2	BEARING-SLEEVE	
	10	1	**8T-4123**	2	WASHER (22X35X3.5-MM THK)	
M	11	1	**8T-4780**	2	BOLT (M20X2.5X30-MM)	

M-METRIC PART

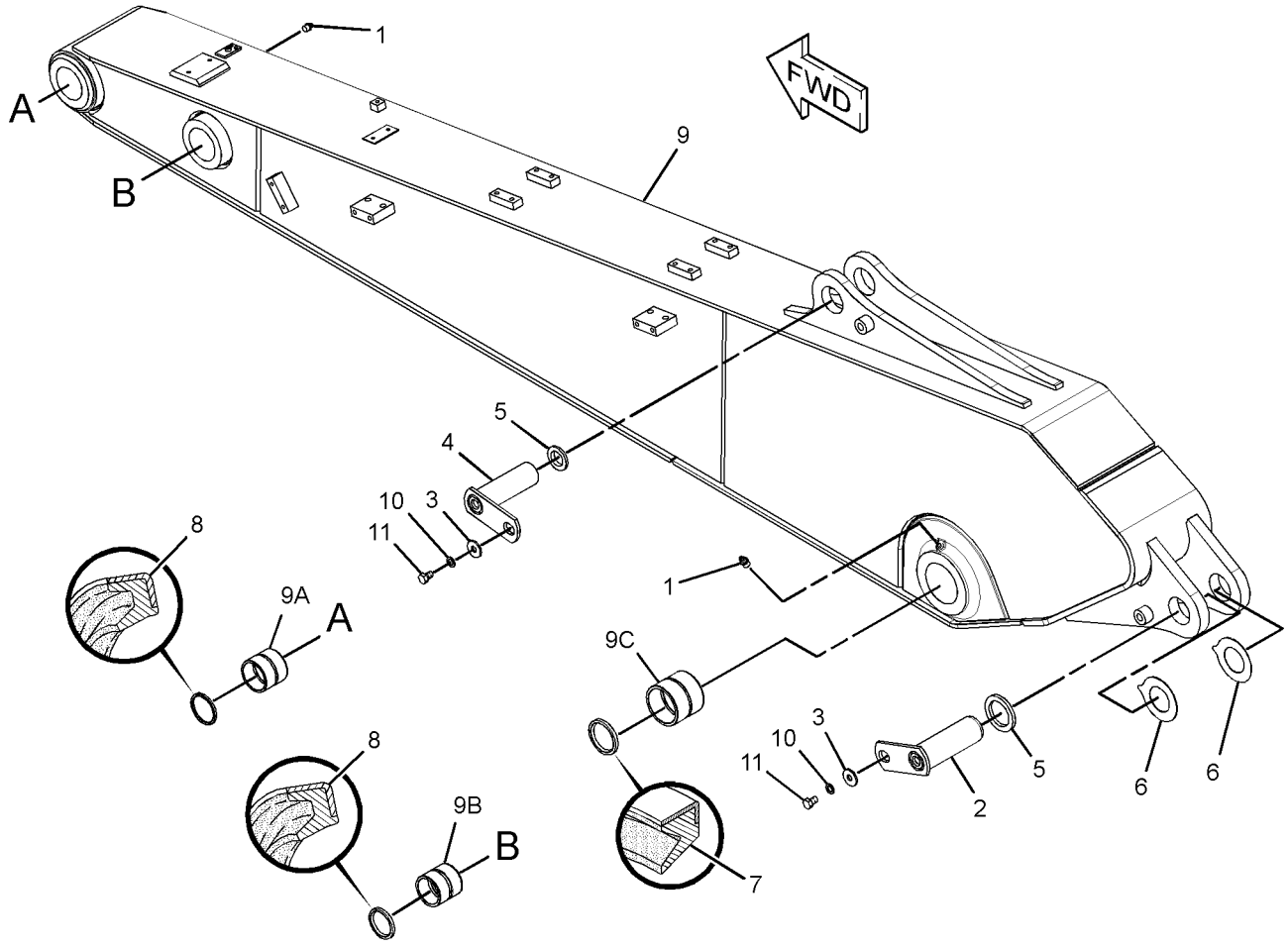

GRAPHIC #1 **<END>** g01380667

IMPLEMENTS

290-9327 STICK GP-HOE

S/N: CJN1-UP
2.6-M (8.5-FT)
PART OF 283-9004 STICK AR-HOE
AN ATTACHMENT

SMCS-6502 **i02761916**

NOTE	REF NO	GRAPHIC REF	PART NUMBER	QTY	PART NAME 1 2 3 4 5 6 (PRODUCT LEVEL)	SEE PAGE
	1	1	**3B-8489**	3	FITTING-GREASE	
	2	1	**4I-4811**	1	PIN AS	
	3	1	**093-0349**	2	WASHER (22X60X6-MM THK)	
	4	1	**107-9852**	1	PIN AS	
	5	1	**118-5982**	2	SPACER (73X105X14-MM THK)	
	6	1	**166-1482**	2	SHIM (2-MM THK)	
	7	1	**166-1495**	2	SEAL-LIP TYPE	
	8	1	**235-7679**	4	SEAL-LIP TYPE	
	9	1	**290-9328**	1	STICK & BEARING AS	
	9A	1	**228-5614**	2	BEARING-SLEEVE	
	9B	1	**229-1096**	2	BEARING-SLEEVE	
	9C	1	**244-4277**	2	BEARING-SLEEVE	
	10	1	**8T-4123**	2	WASHER (22X35X3.5-MM THK)	
M	11	1	**8T-4780**	2	BOLT (M20X2.5X30-MM)	

M-METRIC PART

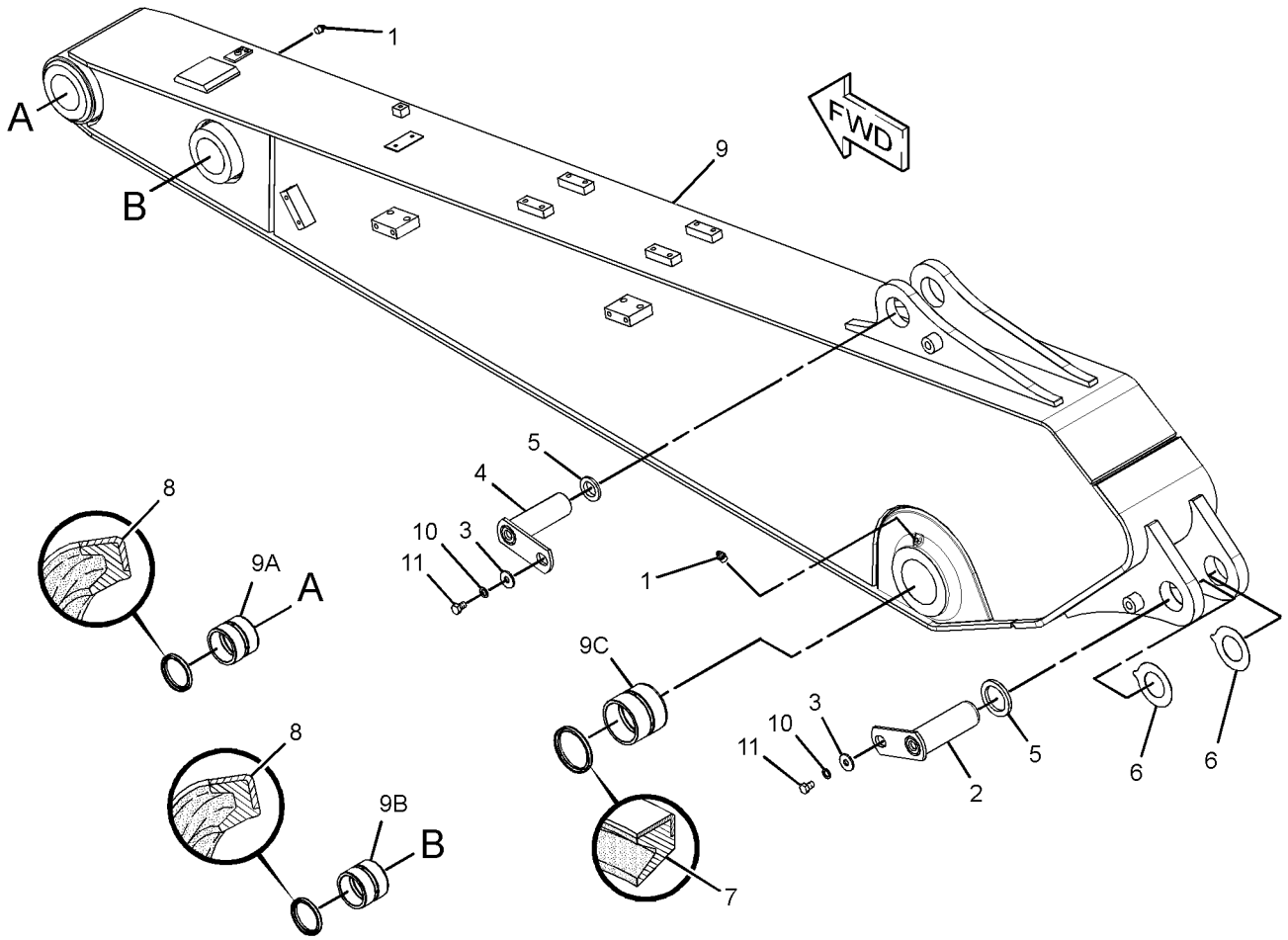

GRAPHIC #1 **<END>** g01379567

290-9330 STICK GP-HOE

S/N: CJN1-UP
2.3-M (7.4-FT)
PART OF 283-9005 STICK AR-HOE
AN ATTACHMENT

SMCS-6502 **i02761918**

NOTE	REF NO	GRAPHIC REF	PART NUMBER	QTY	PART NAME 1 2 3 4 5 6 (PRODUCT LEVEL)	SEE PAGE
	1	1	**3B-8489**	3	FITTING-GREASE	
	2	1	**4I-4811**	1	PIN AS	
	3	1	**093-0349**	2	WASHER (22X60X6-MM THK)	
	4	1	**107-9852**	1	PIN AS	
	5	1	**118-5982**	2	SPACER (73X105X14-MM THK)	
	6	1	**166-1482**	2	SHIM (2-MM THK)	
	7	1	**166-1495**	2	SEAL-LIP TYPE	
	8	1	**235-7679**	4	SEAL-LIP TYPE	
	9	1	**290-9331**	1	STICK & BEARING AS	
	9A	1	**228-5614**	2	BEARING-SLEEVE	
	9B	1	**229-1096**	2	BEARING-SLEEVE	
	9C	1	**244-4277**	2	BEARING-SLEEVE	
	10	1	**8T-4123**	2	WASHER (22X35X3.5-MM THK)	
M	11	1	**8T-4780**	2	BOLT (M20X2.5X30-MM)	

M-METRIC PART

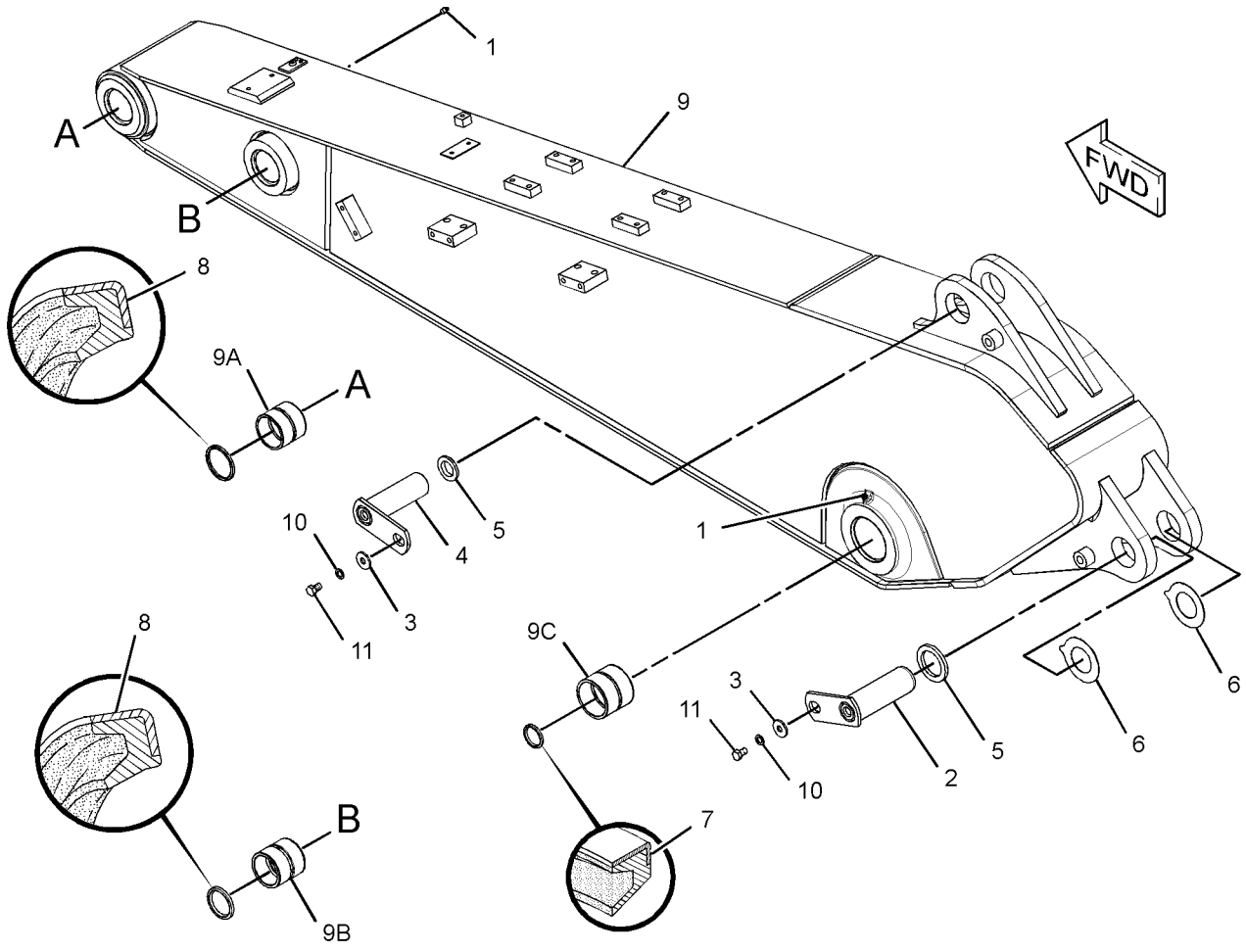

GRAPHIC #1 **<END>** g01379838

290-9333 STICK GP-HOE

S/N: CJN1-UP
2.9-M (9.5-FT)
PART OF 283-9003 STICK AR-HOE
AN ATTACHMENT

SMCS-6502 **i02765398**

NOTE	REF NO	GRAPHIC REF	PART NUMBER	QTY	PART NAME 1 2 3 4 5 6 (PRODUCT LEVEL)	SEE PAGE
	1	1	**3B-8489**	3	FITTING-GREASE	
	2	1	**4I-4811**	1	PIN AS	
	3	1	**093-0349**	2	WASHER (22X60X6-MM THK)	
	4	1	**107-9852**	1	PIN AS	
	5	1	**118-5982**	2	SPACER (73X105X14-MM THK)	
	6	1	**166-1482**	2	SHIM (2-MM THK)	
	7	1	**166-1495**	2	SEAL-LIP TYPE	
	8	1	**235-7679**	4	SEAL-LIP TYPE	
	9	1	**290-9334**	1	STICK & BEARING AS	
	9A	1	**228-5614**	2	BEARING-SLEEVE	
	9B	1	**229-1096**	2	BEARING-SLEEVE	
	9C	1	**244-4277**	2	BEARING-SLEEVE	
	10	1	**8T-4123**	2	WASHER (22X35X3.5-MM THK)	
M	11	1	**8T-4780**	2	BOLT (M20X2.5X30-MM)	

M-METRIC PART

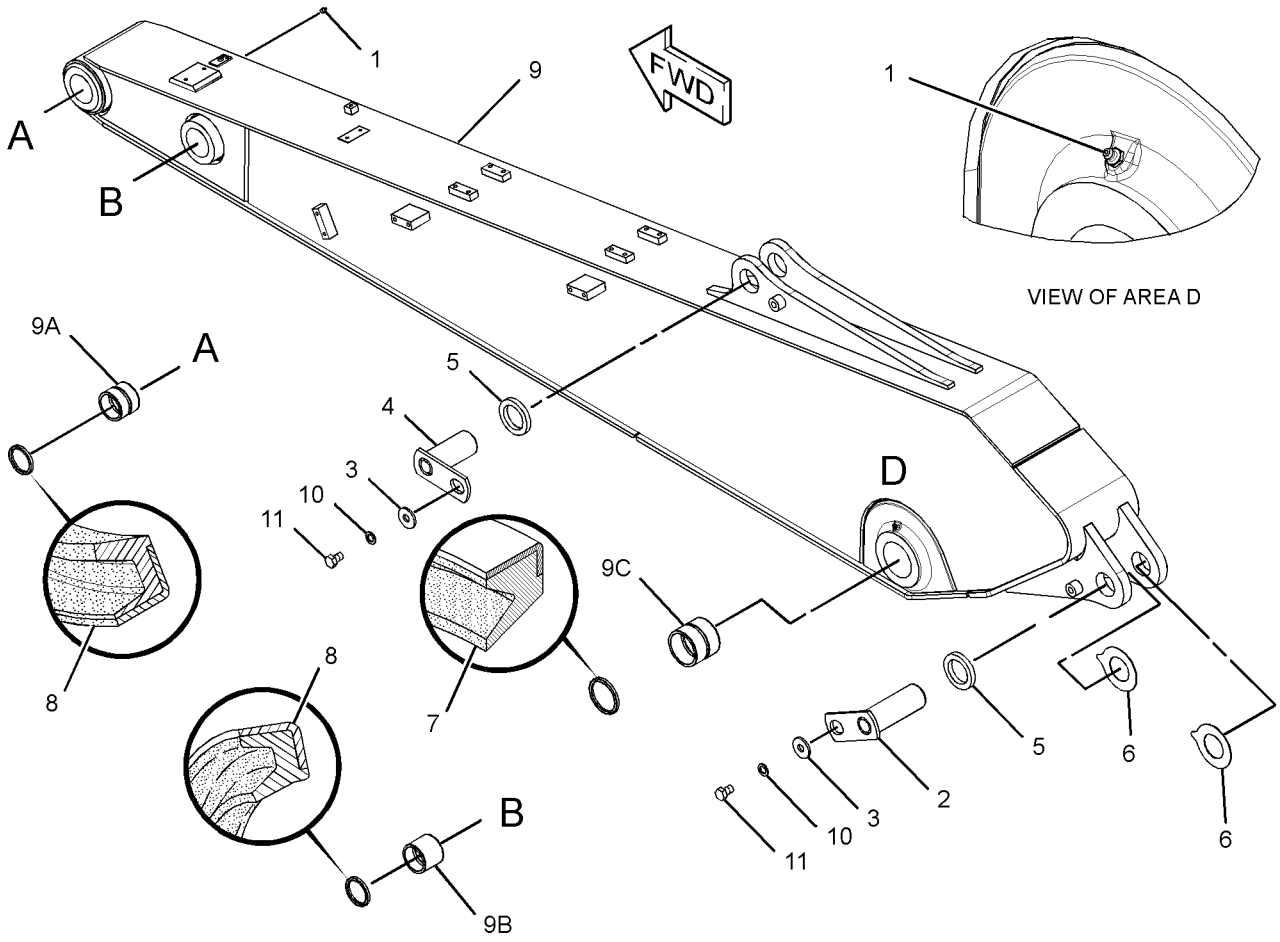

GRAPHIC #1 **<END>** g01387316

294-1360 STICK GP-HOE

S/N: CJN1-UP
1.9-M (6.1-FT)
PART OF 283-9006 STICK AR-HOE
AN ATTACHMENT

SMCS-6502 **i02761922**

NOTE	REF NO	GRAPHIC REF	PART NUMBER	QTY	PART NAME 1 2 3 4 5 6 (PRODUCT LEVEL)	SEE PAGE
	1	1	**3B-8489**	3	FITTING-GREASE	
	2	1	**4I-4811**	2	PIN AS	
	3	1	**093-0349**	2	WASHER (22X60X6-MM THK)	
	4	1	**118-5982**	2	SPACER (73X105X14-MM THK)	
	5	1	**166-1482**	2	SHIM (2-MM THK)	
	6	1	**166-1495**	2	SEAL-LIP TYPE	
	7	1	**235-7679**	4	SEAL-LIP TYPE	
	8	1	**294-1361**	1	STICK & BEARING AS	
	8A	1	**228-5614**	2	BEARING-SLEEVE	
	8B	1	**229-1096**	2	BEARING-SLEEVE	
	8C	1	**244-4277**	2	BEARING-SLEEVE	
	9	1	**8T-4123**	2	WASHER (22X35X3.5-MM THK)	
M	10	1	**8T-4780**	2	BOLT (M20X2.5X30-MM)	

M-METRIC PART

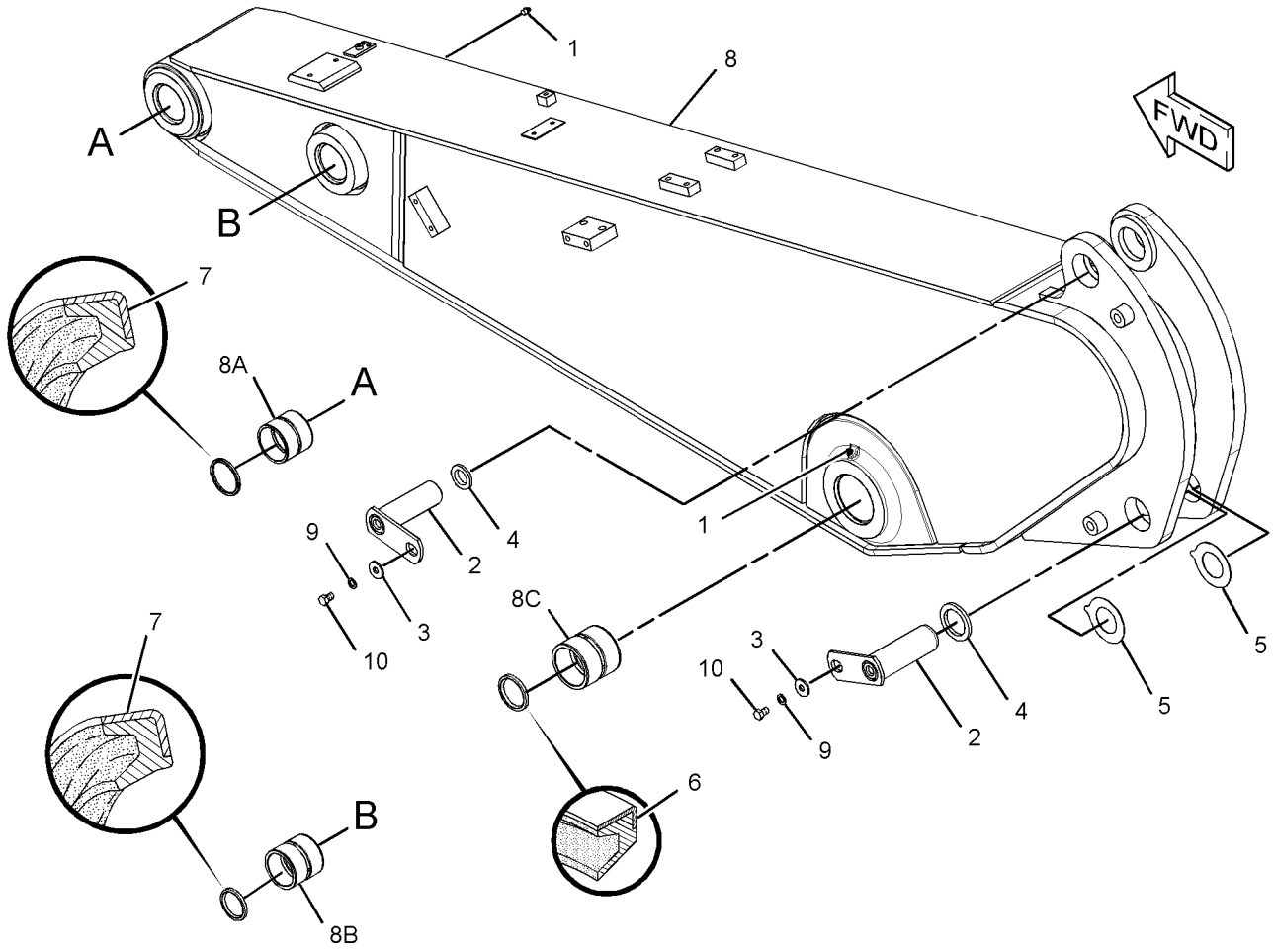

GRAPHIC #1 **<END>** g01379839

303-8848 STICK GP-HOE–ACCUGRADE READY

S/N: CJN1-UP
2.6-M (8.5-FT)
PART OF 301-2463 STICK AR-HOE
AN ATTACHMENT

SMCS-6502 **i02808300**

NOTE	REF NO	GRAPHIC REF	PART NUMBER	QTY	PART NAME 1 2 3 4 5 6 (PRODUCT LEVEL)	SEE PAGE
	1	1	**3B-8489**	3	FITTING-GREASE	
	2	1	**4I-4811**	1	PIN AS	
	3	1	**093-0349**	2	WASHER (22X60X6-MM THK)	
	4	1	**107-9852**	1	PIN AS	
	5	1	**118-5982**	2	SPACER (73X105X14-MM THK)	
	6	1	**166-1482**	2	SHIM (2-MM THK)	
	7	1	**166-1495**	2	SEAL-LIP TYPE	
	8	1	**235-7679**	4	SEAL-LIP TYPE	
	9	1	**303-8849**	1	STICK & BEARING AS	
	9A	1	**228-5614**	2	BEARING-SLEEVE	
	9B	1	**229-1096**	2	BEARING-SLEEVE	
	9C	1	**244-4277**	2	BEARING-SLEEVE	
	10	1	**8T-4123**	2	WASHER (22X35X3.5-MM THK)	
M	11	1	**8T-4780**	2	BOLT (M20X2.5X30-MM)	

M-METRIC PART

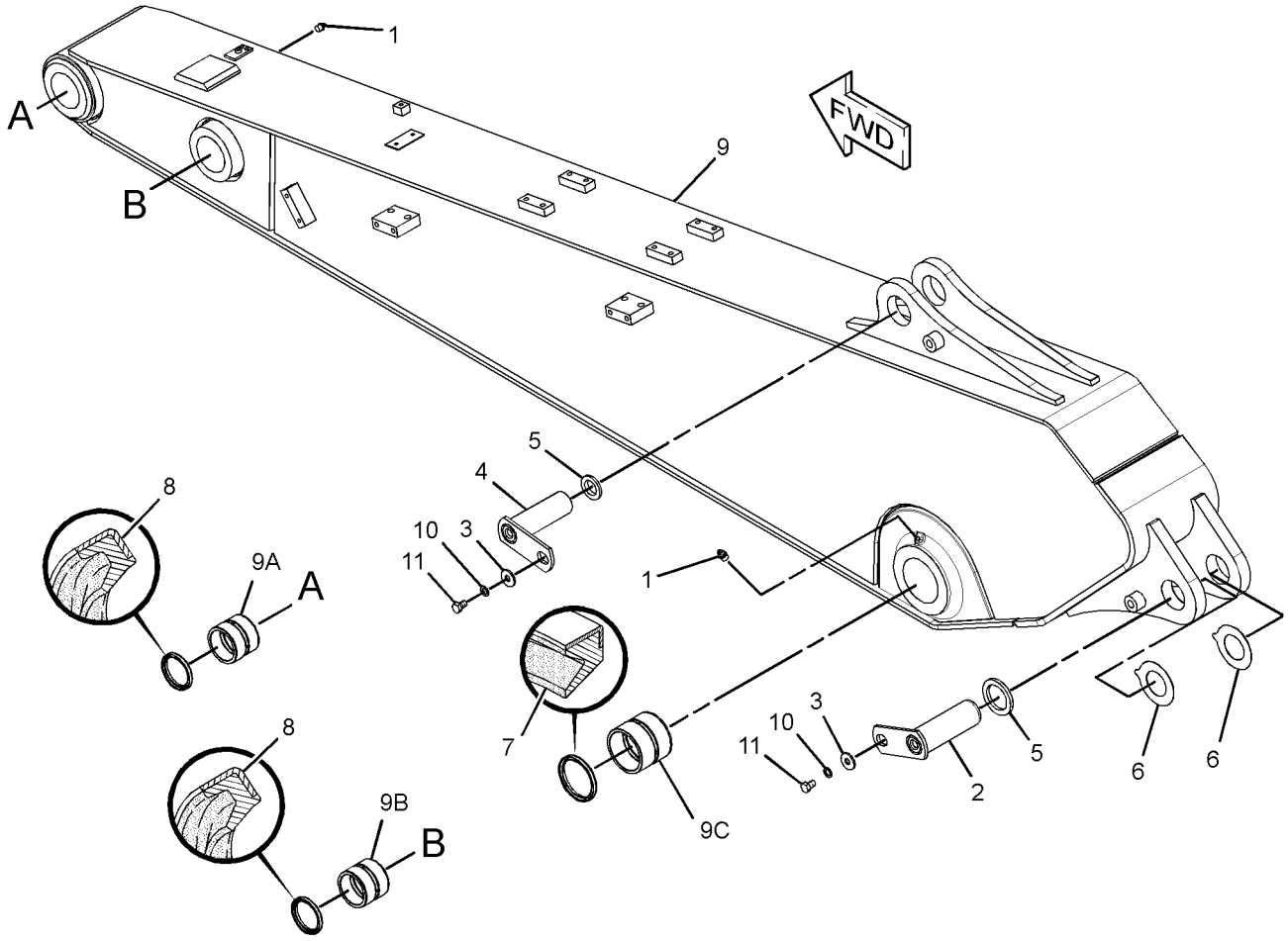

GRAPHIC #1 **<END>** g01400941

303-8851 STICK GP-HOE—ACCUGRADE READY

S/N: CJN1-UP
3.1-M (10.2-FT)
PART OF 301-2461 STICK AR-HOE
AN ATTACHMENT

SMCS-6502 **i02765902**

NOTE	REF NO	GRAPHIC REF	PART NUMBER	QTY	PART NAME 1 2 3 4 5 6 (PRODUCT LEVEL)	SEE PAGE
	1	1	**3B-8489**	3	FITTING-GREASE	
	2	1	**4I-4811**	1	PIN AS	
	3	1	**093-0349**	2	WASHER (22X60X6-MM THK)	
	4	1	**107-9852**	1	PIN AS	
	5	1	**118-5982**	2	SPACER (73X105X14-MM THK)	
	6	1	**166-1482**	2	SHIM (2-MM THK)	
	7	1	**166-1495**	2	SEAL-LIP TYPE	
	8	1	**235-7679**	4	SEAL-LIP TYPE	
	9	1	**303-8852**	1	STICK & BEARING AS	
	9A	1	**228-5614**	2	BEARING-SLEEVE	
	9B	1	**229-1096**	2	BEARING-SLEEVE	
	9C	1	**244-4277**	2	BEARING-SLEEVE	
	10	1	**8T-4123**	2	WASHER (22X35X3.5-MM THK)	
M	11	1	**8T-4780**	2	BOLT (M20X2.5X30-MM)	

M-METRIC PART

303-8851 **STICK GP-HOE** *(contd.)* **i02765902**

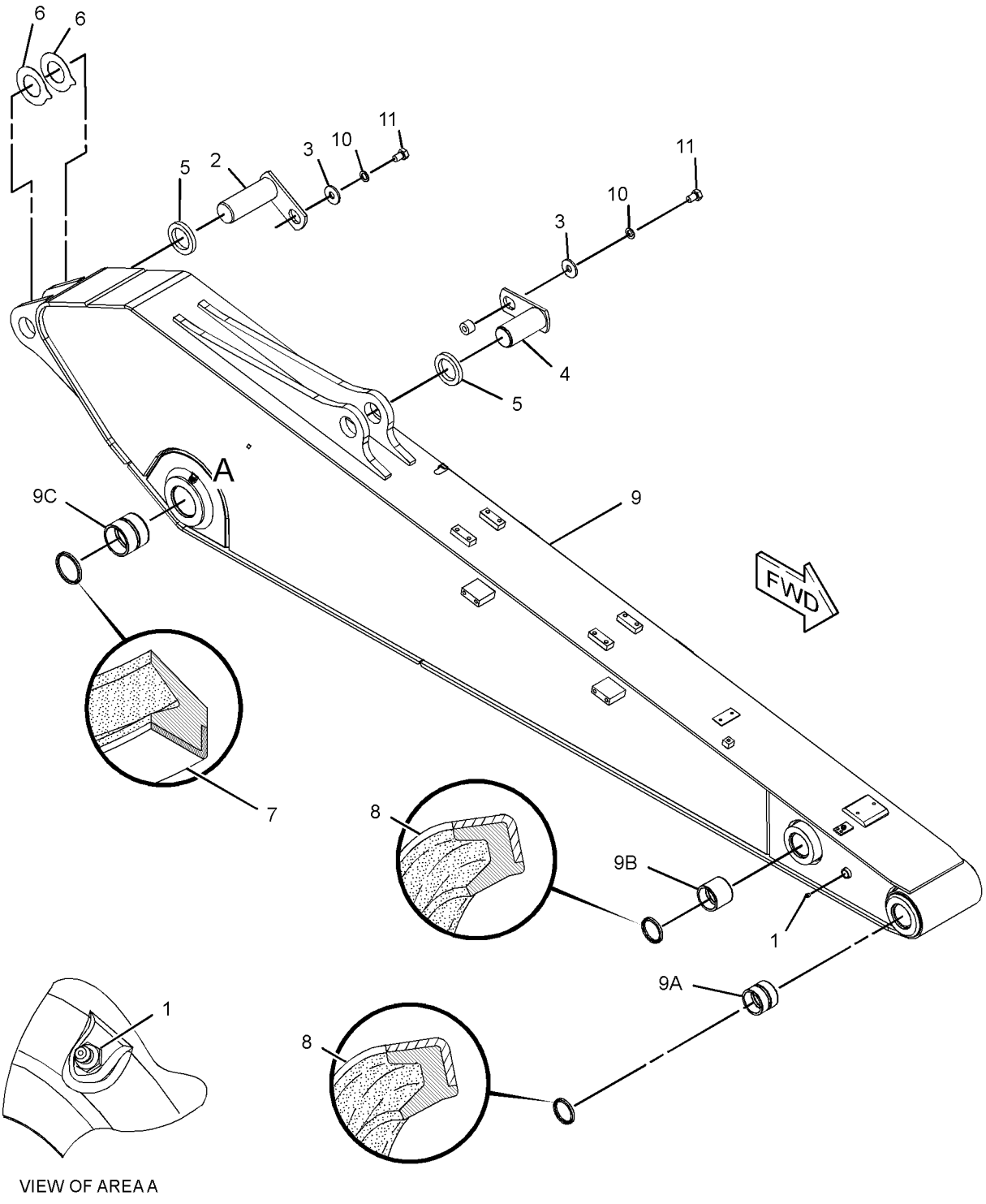

GRAPHIC #1 **<END>** g01388241

308-8867 STICK GP-HOE

S/N: CJN1-UP
3.1-M (10.2-FT)
PART OF 260-6981 STICK AR-HOE
AN ATTACHMENT

SMCS-6502 **i02840180**

NOTE	REF NO	GRAPHIC REF	PART NUMBER	QTY	PART NAME 1 2 3 4 5 6 (PRODUCT LEVEL)	SEE PAGE
	1	1	**3B-8489**	3	FITTING-GREASE	
	2	1	**4I-4811**	1	PIN AS	
	3	1	**093-0349**	2	WASHER (22X60X6-MM THK)	
	4	1	**107-9852**	1	PIN AS	
	5	1	**118-5982**	2	SPACER (73X105X14-MM THK)	
	6	1	**166-1482**	2	SHIM (2-MM THK)	
	7	1	**166-1495**	2	SEAL-LIP TYPE	
	8	1	**235-7679**	4	SEAL-LIP TYPE	
	9	1	*308-8868*	1	STICK & BEARING AS	
	9A	1	**228-5614**	2	BEARING-SLEEVE	
	9B	1	**229-1096**	2	BEARING-SLEEVE	
	9C	1	**244-4277**	2	BEARING-SLEEVE	
	10	1	**8T-4123**	2	WASHER (22X35X3.5-MM THK)	
M	11	1	**8T-4780**	2	BOLT (M20X2.5X30-MM)	

M-METRIC PART

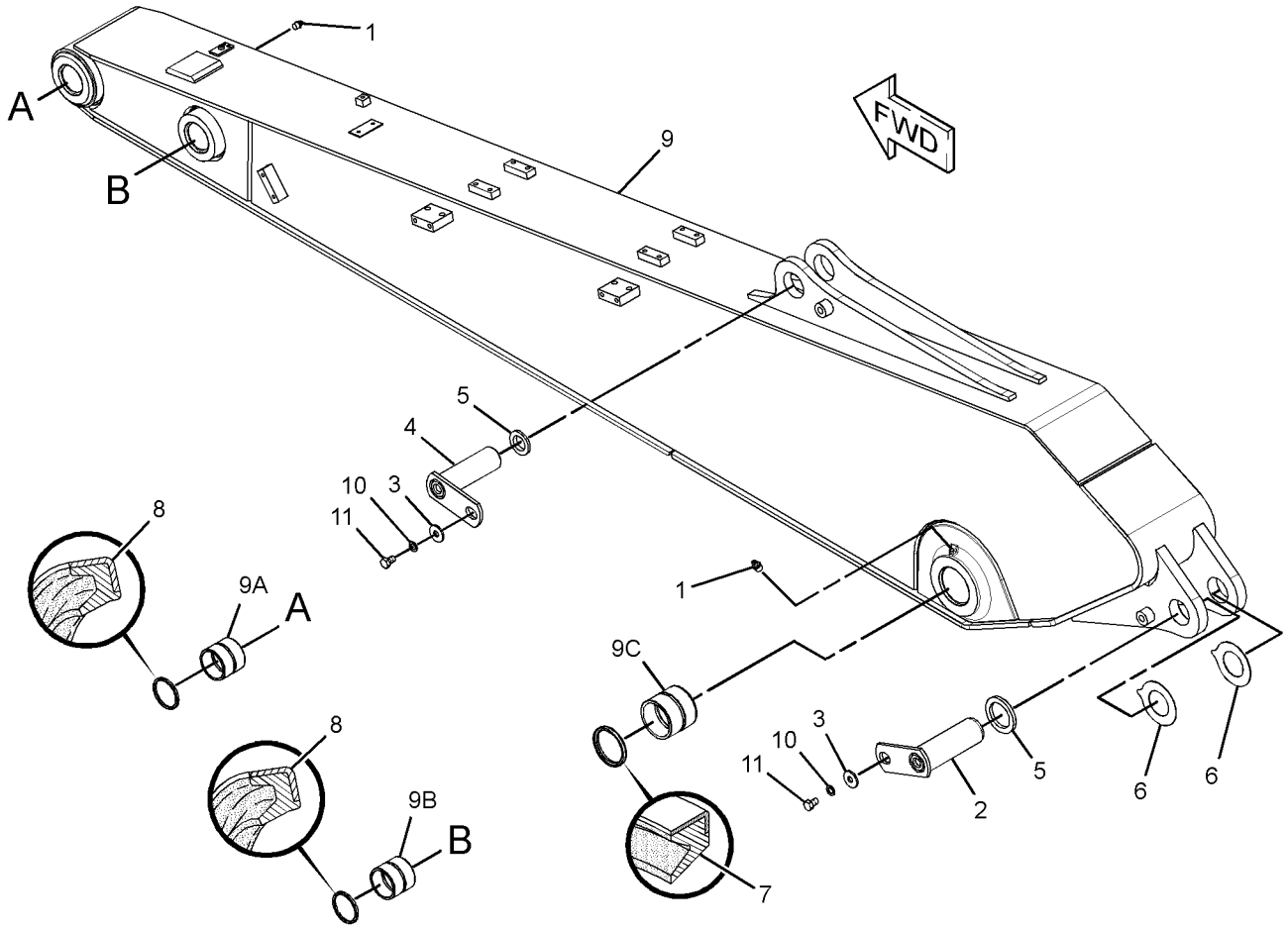

GRAPHIC #1 **<END>** g01418410

308-8895 STICK GP-HOE—AUXILIARY, QUICK CPLR, REACH

S/N: CJN1-UP
3.1-M (10.2-FT)
PART OF 283-9002 STICK AR-HOE
AN ATTACHMENT

SMCS-6502 **i02840284**

NOTE	REF NO	GRAPHIC REF	PART NUMBER	QTY	PART NAME 1 2 3 4 5 6 (PRODUCT LEVEL)	SEE PAGE
	1	1	**3B-8489**	3	FITTING-GREASE	
	2	1	**4I-4811**	1	PIN AS	
	3	1	**093-0349**	2	WASHER (22X60X6-MM THK)	
	4	1	**107-9852**	1	PIN AS	
	5	1	**118-5982**	2	SPACER (73X105X14-MM THK)	
	6	1	**166-1482**	2	SHIM (2-MM THK)	
	7	1	**166-1495**	2	SEAL-LIP TYPE	
	8	1	**235-7679**	4	SEAL-LIP TYPE	
	9	1	**308-8896**	1	STICK & BEARING AS	
	9A	1	**228-5614**	2	BEARING-SLEEVE	
	9B	1	**229-1096**	2	BEARING-SLEEVE	
	9C	1	**244-4277**	2	BEARING-SLEEVE	
	10	1	**8T-4123**	2	WASHER (22X35X3.5-MM THK)	
M	11	1	**8T-4780**	2	BOLT (M20X2.5X30-MM)	

M-METRIC PART

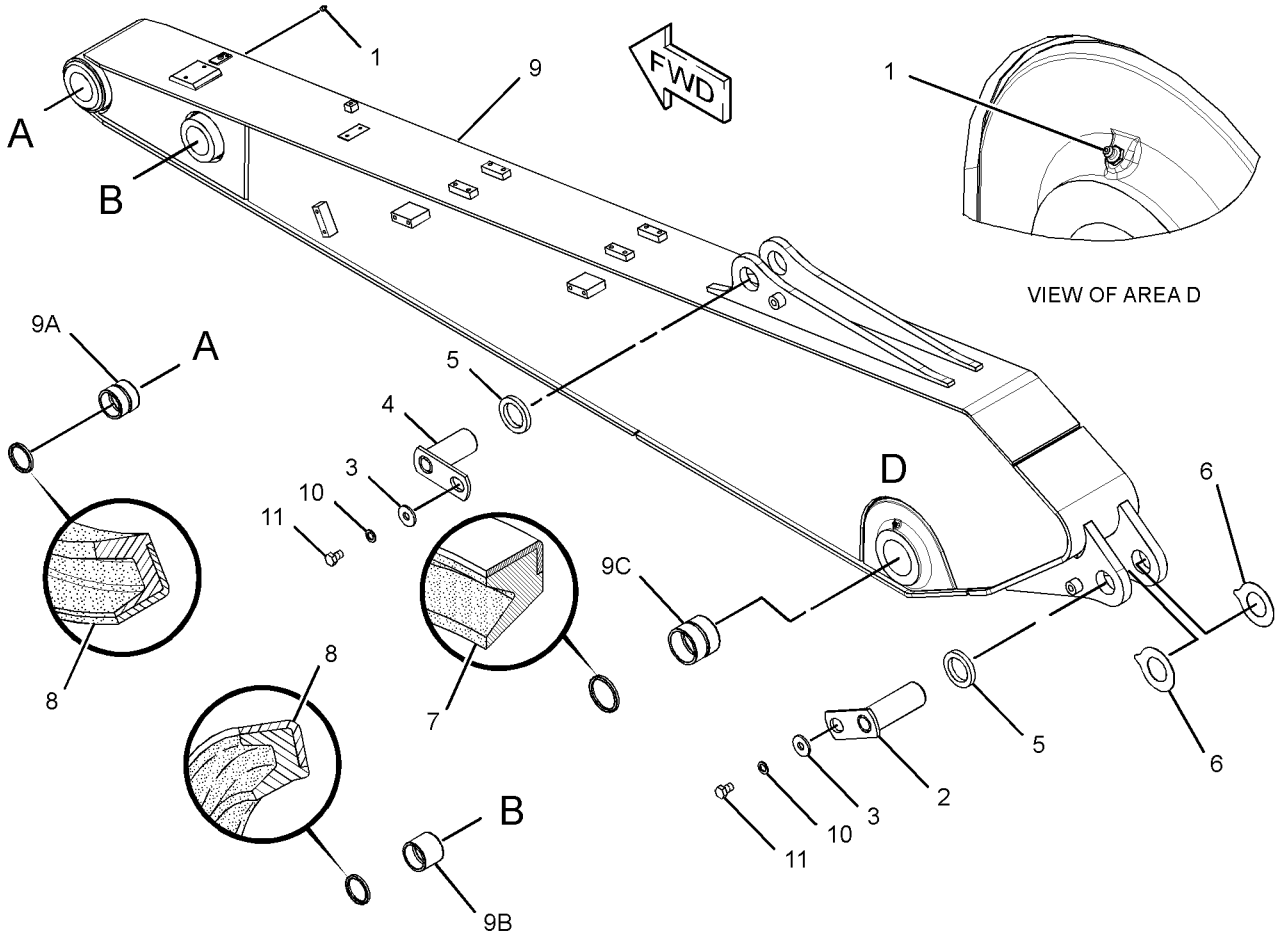

GRAPHIC #1 **<END>** g01386504

315-0925 STICK GP-HOE

S/N: CJN1-UP
2.6-M (8.5-FT)
PART OF 301-2576 STICK AR-HOE
AN ATTACHMENT

SMCS-6502 **i03001026**

NOTE	REF NO	GRAPHIC REF	PART NUMBER	QTY	PART NAME 1 2 3 4 5 6 (PRODUCT LEVEL)	SEE PAGE
	1	1	**3B-8489**	3	FITTING-GREASE	
	2	1	**4I-4811**	1	PIN AS	
	3	1	**093-0349**	2	WASHER (22X60X6-MM THK)	
	4	1	**107-9852**	1	PIN AS	
	5	1	**118-5982**	2	SPACER (73X105X14-MM THK)	
	6	1	**166-1482**	2	SHIM (2-MM THK)	
	7	1	**166-1495**	2	SEAL-LIP TYPE	
	8	1	**235-7679**	4	SEAL-LIP TYPE	
	9	1	**315-0926**	1	STICK & BEARING AS	
	9A	1	**228-5614**	2	BEARING-SLEEVE	
	9B	1	**229-1096**	2	BEARING-SLEEVE	
	9C	1	**244-4277**	2	BEARING-SLEEVE	
	10	1	**8T-4123**	2	WASHER (22X35X3.5-MM THK)	
M	11	1	**8T-4780**	2	BOLT (M20X2.5X30-MM)	

M-METRIC PART

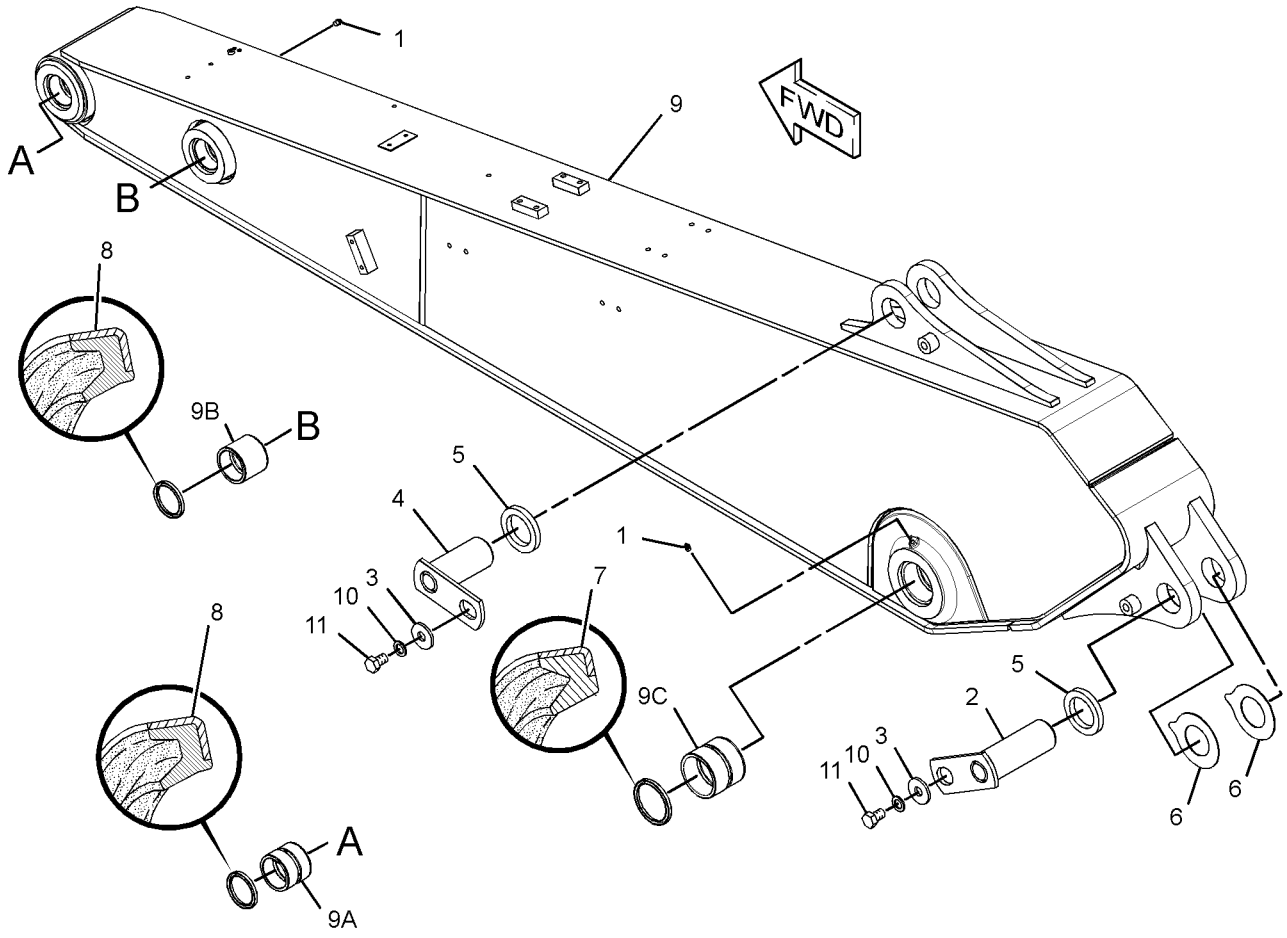

GRAPHIC #1 **<END>** g01622710

106-6757 ADJUSTER GP-BUCKET

S/N: CJN1-UP

PART OF 239-2509, 239-2510, 239-2511, 239-2512, 239-2513, 239-2514, 239-2515, 239-2516, 239-2517, 239-2518, 305-1667, 305-1671 BUCKET & ADJUSTER GP AN ATTACHMENT

SMCS-6513, 6700 **i02210037**

NOTE	REF NO	GRAPHIC REF	PART NUMBER	QTY	PART NAME 1 2 3 4 5 6 (PRODUCT LEVEL)	SEE PAGE
B	1	1	**107-9965**	6	SHIM (1-MM THK)	
B	2	1	**107-9966**	4	SHIM (0.5-MM THK)	
	3	1	**193-5014**	1	PIN	
	4	1	**107-9967**	1	PLATE	
M	5	1	**8T-4193**	4	BOLT (M16X2X50-MM)	
	6	1	**9X-8257**	4	WASHER (17.5X30X3.5-MM THK)	
	7	1	**193-5013**	1	FLANGE	

B-USE AS REQUIRED
M-METRIC PART

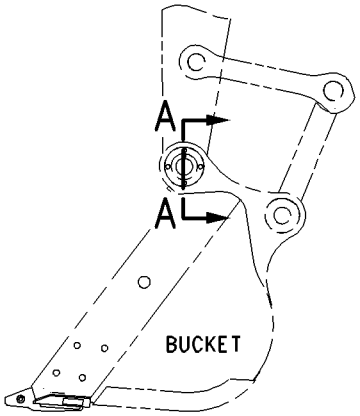

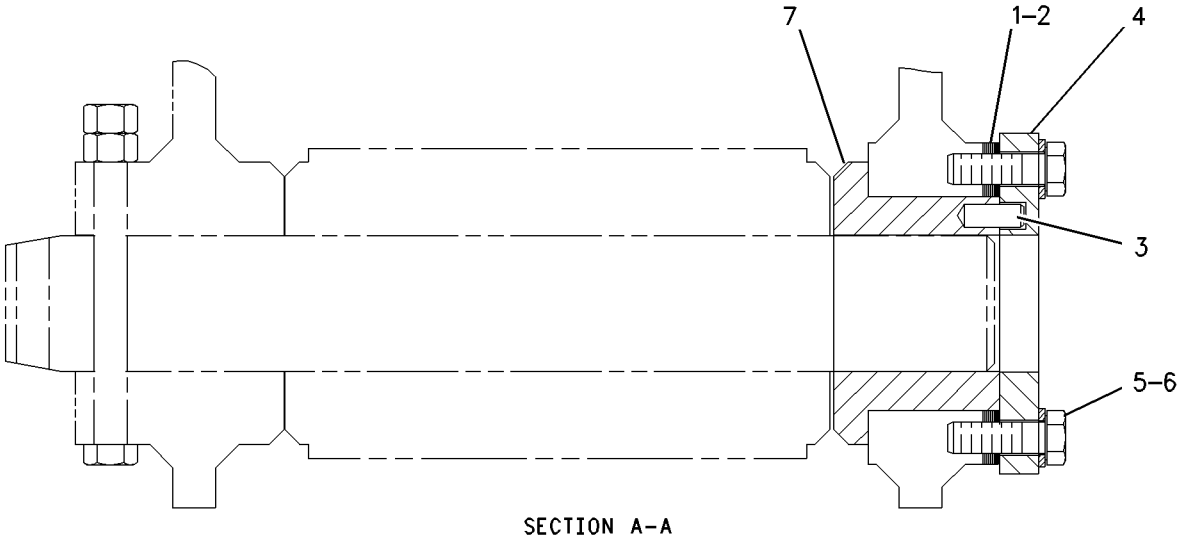

SECTION A-A

GRAPHIC #1 **<END>** g00767965

239-2509 BUCKET & ADJUSTER GP—GENERAL PURPOSE

S/N: CJN1-UP

617-MM (24-IN) WIDE X 0.35-CU M (0.45-CU YD) CAPACITY. K-80 ADAPTERS, (3X)

AN ATTACHMENT

TYPE 1

SMCS-6503, 6513 **i02586880**

NOTE	REF NO	GRAPHIC REF	PART NUMBER	QTY	PART NAME 1 2 3 4 5 6 (PRODUCT LEVEL)	SEE PAGE
	1	1	**239-2810**	1	EDGE AS	
	1A	1	**220-9086**	1	ADAPTER-TIP (K-80, 2-STRAP, LH)	
	1B	1	**220-9084**	1	ADAPTER-TIP (K-80, 2-STRAP, CENTER)	
	1C	1	**220-9085**	1	ADAPTER-TIP (K-80, 2-STRAP, RH)	
	1D	1	**8P-9770**	1	PLATE	
	2	1	**216-5858**	2	PLATE-WEAR	
	3	1	**239-2814**	1	PLATE-WEAR	
	4	1	**239-2813**	1	PLATE-WEAR	
	5	1	**239-2812**	1	PLATE-REINFORCEMENT	
	6	1	**2C-9259**	1	PLATE-IDENTIFICATION (CAT)	
Y	7	1	**106-6757**	1	ADJUSTER GP-BUCKET	786

Y-SEPARATE ILLUSTRATION

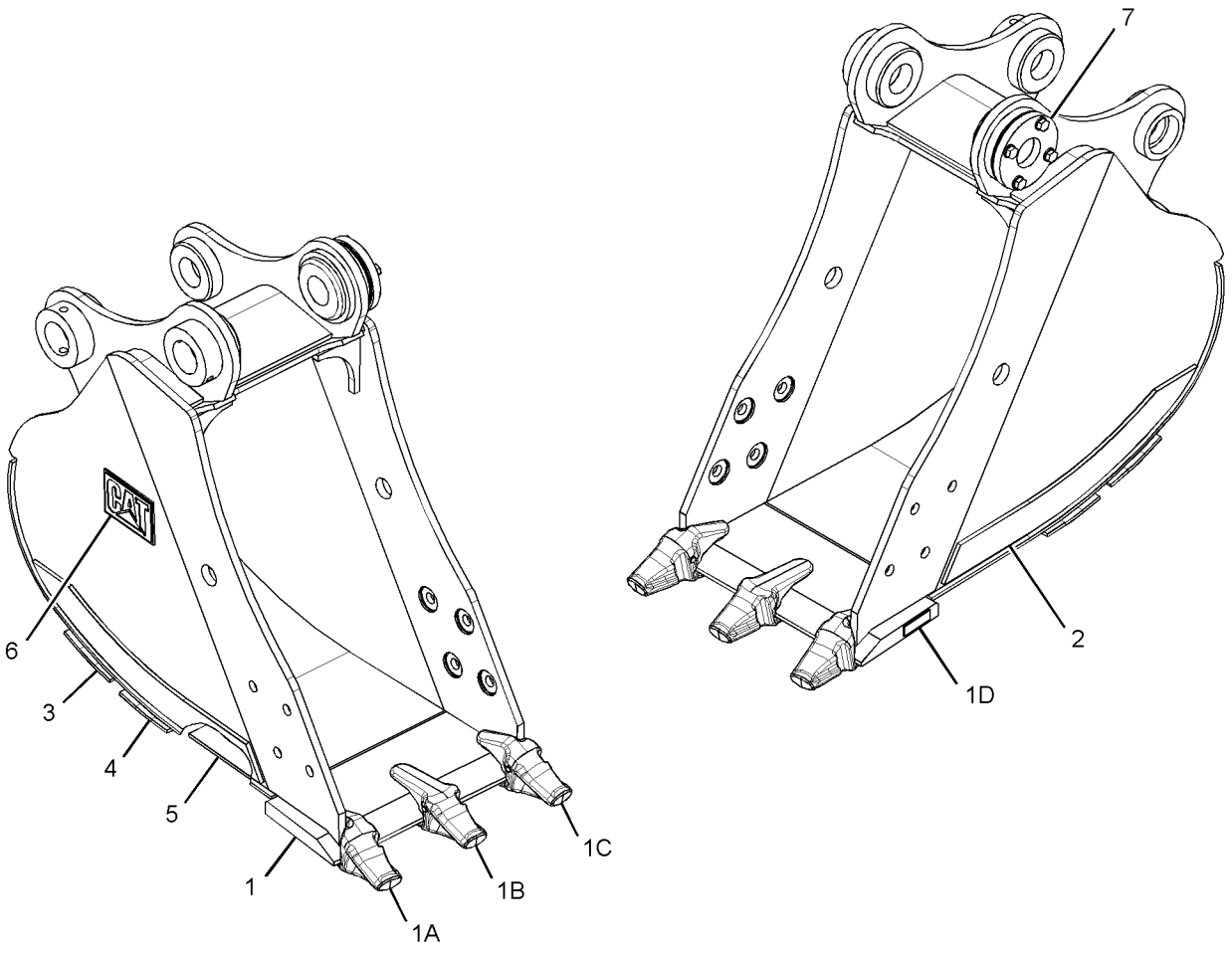

GRAPHIC #1 **<END>** g01329367

239-2509 BUCKET & ADJUSTER GP—GENERAL PURPOSE

S/N: CJN1-UP
617-MM (24-IN) WIDE X 0.35-CU M (0.45-CU YD) CAPACITY. K-80 ADAPTERS, (3X)
AN ATTACHMENT
TYPE 2

SMCS-6503, 6513 **i02895018**

NOTE	PART NUMBER	QTY	PART NAME 1 2 3 4 5 6 (PRODUCT LEVEL)	SEE PAGE
Y	*106-6757*	1	ADJUSTER GP-BUCKET	786
CY	**305-1689**	1	BUCKET AS-GENERAL PURPOSE	797

C-CHANGE FROM PREVIOUS TYPE
Y-SEPARATE ILLUSTRATION

<END>

239-2510 BUCKET & ADJUSTER GP—EXCAVATION

S/N: CJN1-UP
770-MM (30-IN) WIDE X 0.5-CU M (0.6-CU YD) CAPACITY. K-80 ADAPTERS, (4X)
AN ATTACHMENT

SMCS-6503, 6513 **i02895026**

NOTE	PART NUMBER	QTY	PART NAME 1 2 3 4 5 6 (PRODUCT LEVEL)	SEE PAGE
Y	**106-6757**	1	ADJUSTER GP-BUCKET	786
Y	**239-2520**	1	BUCKET AS-EXCAVATION (GENERAL PURPOSE)	794
			—OR—	
Y	**305-1690**	1	BUCKET AS-GENERAL PURPOSE	798

Y-SEPARATE ILLUSTRATION

<END>

239-2511 BUCKET & ADJUSTER GP—EXCAVATION

S/N: CJN1-UP
922-MM (36-IN) WIDE X 0.6-CU M (0.8-CU YD) CAPACITY. K-80 ADAPTERS, (5X)
AN ATTACHMENT

SMCS-6503, 6513 **i02895032**

NOTE	PART NUMBER	QTY	PART NAME 1 2 3 4 5 6 (PRODUCT LEVEL)	SEE PAGE
Y	**106-6757**	1	ADJUSTER GP-BUCKET	786
Y	**239-2521**	1	BUCKET AS-EXCAVATION (GENERAL PURPOSE)	795
			—OR—	
Y	**305-1691**	1	BUCKET AS-GENERAL PURPOSE	799

Y-SEPARATE ILLUSTRATION

<END>

239-2512 BUCKET & ADJUSTER GP—EXCAVATION

S/N: CJN1-UP
1074-MM (42-IN) WIDE X 0.7-CU M (1-CU YD) CAPACITY. K-80 ADAPTERS, (5X)
AN ATTACHMENT
TYPE 1

SMCS-6503, 6513 **i02598653**

NOTE	REF NO	GRAPHIC REF	PART NUMBER	QTY	PART NAME 1 2 3 4 5 6 (PRODUCT LEVEL)	SEE PAGE
	1	1	**239-2764**	1	EDGE AS	
	1A	1	**220-9086**	1	ADAPTER-TIP (K-80, 2-STRAP, LH)	
	1B	1	**220-9084**	3	ADAPTER-TIP (K-80, 2-STRAP, CENTER)	
	1C	1	**220-9085**	1	ADAPTER-TIP (K-80, 2-STRAP, RH)	
	1D	1	**8P-9770**	1	PLATE	
	2	1	**239-2760**	1	PLATE AS-BOX	
	3	1	**216-5858**	2	PLATE-WEAR	
	4	1	**239-2769**	1	PLATE-WEAR	
	5	1	**239-2768**	1	PLATE-WEAR	
	6	1	**239-2767**	1	PLATE-REINFORCEMENT	
	7	1	**2C-9259**	1	PLATE-IDENTIFICATION (CAT)	
Y	8	1	**106-6757**	1	ADJUSTER GP-BUCKET	786

Y-SEPARATE ILLUSTRATION

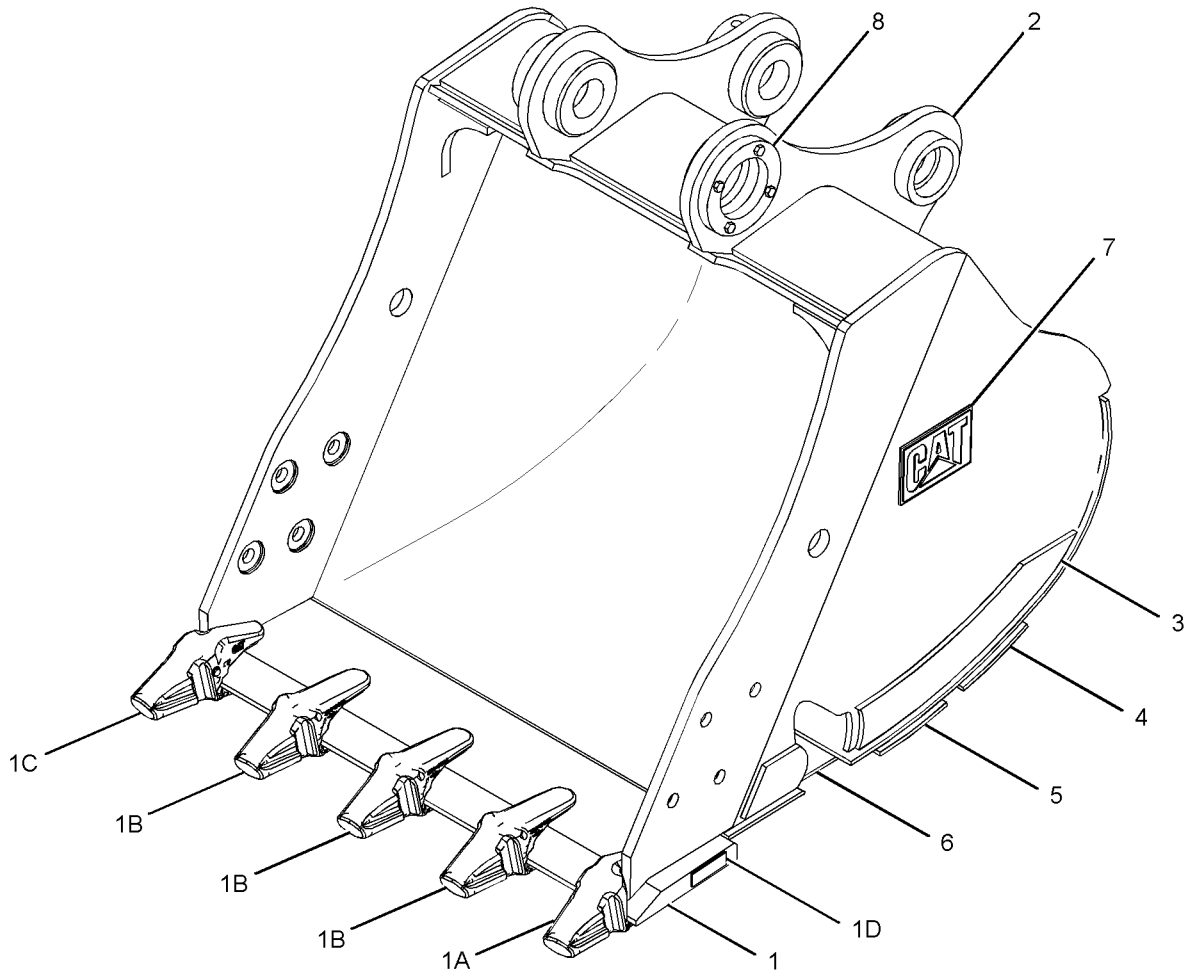

GRAPHIC #1 **<END>** g01307454

239-2512 BUCKET & ADJUSTER GP—EXCAVATION

S/N: CJN1-UP
1074-MM (42-IN) WIDE X 0.7-CU M (1-CU YD) CAPACITY. K-80 ADAPTERS, (5X)
AN ATTACHMENT
TYPE 2

SMCS-6503, 6513 **i02895034**

NOTE	PART NUMBER	QTY	PART NAME 1 2 3 4 5 6 (PRODUCT LEVEL)	SEE PAGE
Y	**106-6757**	1	ADJUSTER GP-BUCKET	786
CY	**305-1692**	1	BUCKET AS-GENERAL PURPOSE	800

C-CHANGE FROM PREVIOUS TYPE
Y-SEPARATE ILLUSTRATION

<END>

239-2513 BUCKET & ADJUSTER GP—EXCAVATION

S/N: CJN1-UP
1226-M (48-IN) WIDE X 0.9-CU M (1.2-CU YD) CAPACITY. K-80 ADAPTERS, (6X)
AN ATTACHMENT

SMCS-6503, 6513 **i02895049**

NOTE	PART NUMBER	QTY	PART NAME 1 2 3 4 5 6 (PRODUCT LEVEL)	SEE PAGE
Y	**106-6757**	1	ADJUSTER GP-BUCKET	786
Y	**239-2523**	1	BUCKET AS-EXCAVATION (GENERAL PURPOSE)	796
			—OR—	
Y	**305-1693**	1	BUCKET AS-GENERAL PURPOSE	801

Y-SEPARATE ILLUSTRATION

<END>

239-2514 BUCKET & ADJUSTER GP–HEAVY-DUTY ROCK

S/N: CJN1-UP
619-MM (24-IN) WIDE X 0.4-CU M (0.5-CU YD) CAPACITY. K-90 ADAPTERS, (3X)
AN ATTACHMENT
TYPE 1

SMCS-6503, 6513 **i02672931**

NOTE	REF NO	GRAPHIC REF	PART NUMBER	QTY	PART NAME 1 2 3 4 5 6 (PRODUCT LEVEL)	SEE PAGE
	1	1	**239-2819**	1	EDGE AS	
	1A	1	**220-9095**	1	ADAPTER-TIP (K-90, 2-STRAP, RH)	
	1B	1	**220-9094**	1	ADAPTER-TIP (K-90, 2-STRAP, CENTER)	
	1C	1	**220-9096**	1	ADAPTER-TIP (K-90, 2-STRAP, LH)	
	1D	1	**8P-9770**	1	PLATE	
	2	1	**229-7646**	2	PLATE-WEAR	
	3	1	**239-2823**	2	PLATE-WEAR	
	4	1	**239-2822**	1	PLATE-WEAR	
	5	1	**239-2821**	1	PLATE-WEAR	
	6	1	**239-2820**	1	PLATE-WEAR	
	7	1	**2C-9259**	2	PLATE-IDENTIFICATION (CAT)	
Y	8	1	**106-6757**	1	ADJUSTER GP-BUCKET	786

Y-SEPARATE ILLUSTRATION

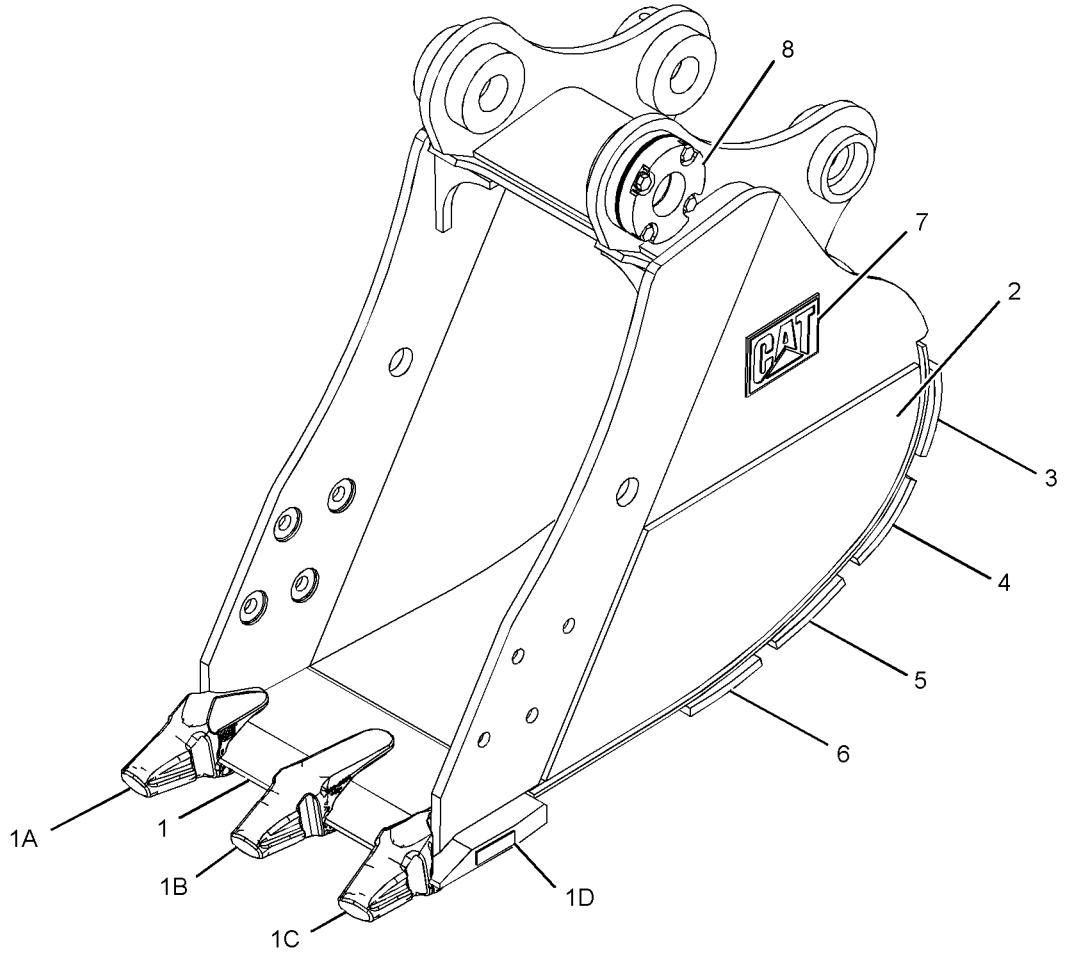

GRAPHIC #1 **<END>** g01342552

239-2514 BUCKET & ADJUSTER GP—HEAVY-DUTY ROCK

S/N: CJN1-UP
619-MM (24-IN) WIDE X 0.4-CU M (0.5-CU YD) CAPACITY. K-90 ADAPTERS, (3X)
AN ATTACHMENT
TYPE 2

SMCS-6503, 6513 **i02895053**

NOTE	PART NUMBER	QTY	PART NAME 1 2 3 4 5 6 (PRODUCT LEVEL)	SEE PAGE
Y	**106-6757**	1	ADJUSTER GP-BUCKET	786
CY	**305-1694**	1	BUCKET AS-HEAVY DUTY ROCK	813

C-CHANGE FROM PREVIOUS TYPE
Y-SEPARATE ILLUSTRATION

<END>

239-2515 BUCKET & ADJUSTER GP—HEAVY-DUTY ROCK

S/N: CJN1-UP
770-MM (30-IN) WIDE X 0.5-CU M (0.6-CU YD) CAPACITY. K-90 ADAPTERS, (4X)
AN ATTACHMENT

SMCS-6503, 6513 **i02895057**

NOTE	PART NUMBER	QTY	PART NAME 1 2 3 4 5 6 (PRODUCT LEVEL)	SEE PAGE
Y	**106-6757**	1	ADJUSTER GP-BUCKET	786
Y	**239-2525**	1	BUCKET AS-HEAVY DUTY ROCK	807
			—OR—	
Y	**305-1695**	1	BUCKET AS-HEAVY DUTY ROCK	814

Y-SEPARATE ILLUSTRATION

<END>

239-2516 BUCKET & ADJUSTER GP—HEAVY-DUTY ROCK

S/N: CJN1-UP
924-MM (36-IN) WIDE X 0.6-CU M (0.8-CU YD) CAPACITY. K-90 ADAPTERS, (5X)
AN ATTACHMENT

SMCS-6503, 6513 **i02895062**

NOTE	PART NUMBER	QTY	PART NAME 1 2 3 4 5 6 (PRODUCT LEVEL)	SEE PAGE
Y	**106-6757**	1	ADJUSTER GP-BUCKET	786
Y	**239-2526**	1	BUCKET AS-HEAVY DUTY ROCK	808
			—OR—	
Y	**305-1696**	1	BUCKET AS-HEAVY DUTY ROCK	815

Y-SEPARATE ILLUSTRATION

<END>

WORK TOOLS

239-2517 BUCKET & ADJUSTER GP—HEAVY-DUTY ROCK

S/N: CJN1-UP

1076-MM (42-IN) WIDE X 0.7-CU M (1-CU YD) CAPACITY. K-90 ADAPTERS, (5X)

AN ATTACHMENT

SMCS-6503, 6513 **i02895089**

NOTE	PART NUMBER	QTY	PART NAME 1 2 3 4 5 6 (PRODUCT LEVEL)	SEE PAGE
Y	**106-6757**	1	ADJUSTER GP-BUCKET	786
Y	**239-2527**	1	BUCKET AS-HEAVY DUTY ROCK	809
			—OR—	
Y	**305-1697**	1	BUCKET AS-HEAVY DUTY ROCK	816

Y-SEPARATE ILLUSTRATION

<END>

239-2518 BUCKET & ADJUSTER GP—HEAVY-DUTY ROCK

S/N: CJN1-UP

1228-MM (48-IN) WIDE X 0.9-CU M (1.2-CU YD) CAPACITY. K-90 ADAPTERS, (6X)

AN ATTACHMENT

SMCS-6503, 6513 **i03034901**

NOTE	PART NUMBER	QTY	PART NAME 1 2 3 4 5 6 (PRODUCT LEVEL)	SEE PAGE
Y	**106-6757**	1	ADJUSTER GP-BUCKET	786
Y	**239-2528**	1	BUCKET AS-HEAVY DUTY ROCK	810
			—OR—	
Y	**305-1698**	1	BUCKET AS-HEAVY DUTY ROCK	817

Y-SEPARATE ILLUSTRATION

<END>

305-1667 BUCKET & ADJUSTER GP—HEAVY-DUTY ROCK

S/N: CJN1-UP

927-MM (36-IN) WIDE X 0.6-CU M (0.8-CU YD) CAPACITY. J-350 ADAPTERS, (5X)

AN ATTACHMENT

SMCS-6503, 6513 **i02788578**

NOTE	PART NUMBER	QTY	PART NAME 1 2 3 4 5 6 (PRODUCT LEVEL)	SEE PAGE
Y	**106-6757**	1	ADJUSTER GP-BUCKET	786
Y	**305-1668**	1	BUCKET AS-HEAVY DUTY ROCK	811

Y-SEPARATE ILLUSTRATION

<END>

305-1671 BUCKET & ADJUSTER GP—HEAVY-DUTY ROCK

S/N: CJN1-UP

1079-MM (42-IN) WIDE X 0.7-CU M (0.9-CU YD) CAPASITY. J-350 ADAPTERS, (5X)

AN ATTACHMENT

SMCS-6503, 6513 **i03153788**

NOTE	PART NUMBER	QTY	PART NAME 1 2 3 4 5 6 (PRODUCT LEVEL)	SEE PAGE
Y	**106-6757**	1	ADJUSTER GP-BUCKET	786
Y	**305-1672**	1	BUCKET AS-HEAVY DUTY ROCK	812

Y-SEPARATE ILLUSTRATION

<END>

WORK TOOLS

239-2520 BUCKET AS-EXCAVATION

S/N: CJN1-UP
770-MM (30-IN) WIDE X 0.5-CU M (0.6-CU YD) CAPACITY. K-80 ADAPTERS, (4X)
PART OF 239-2510 BUCKET & ADJUSTER GP
AN ATTACHMENT

SMCS-6523 **i02209995**

NOTE	REF NO	GRAPHIC REF	PART NUMBER	QTY	PART NAME 1 2 3 4 5 6 (PRODUCT LEVEL)	SEE PAGE
	1	1	**239-2771**	1	PLATE-REINFORCEMENT	
	2	1	**239-2772**	1	PLATE-WEAR	
	3	1	**239-2773**	1	PLATE-WEAR	
	4	1	**239-2774**	1	EDGE AS	
	4A	1	**8P-9770**	1	PLATE	
	4B	1	**220-9084**	2	ADAPTER-TIP (K-80, 2-STRAP, CENTER)	
	4C	1	**220-9085**	1	ADAPTER-TIP (K-80, 2-STRAP, RH)	
	4D	1	**220-9086**	1	ADAPTER-TIP (K-80, 2-STRAP, LH)	

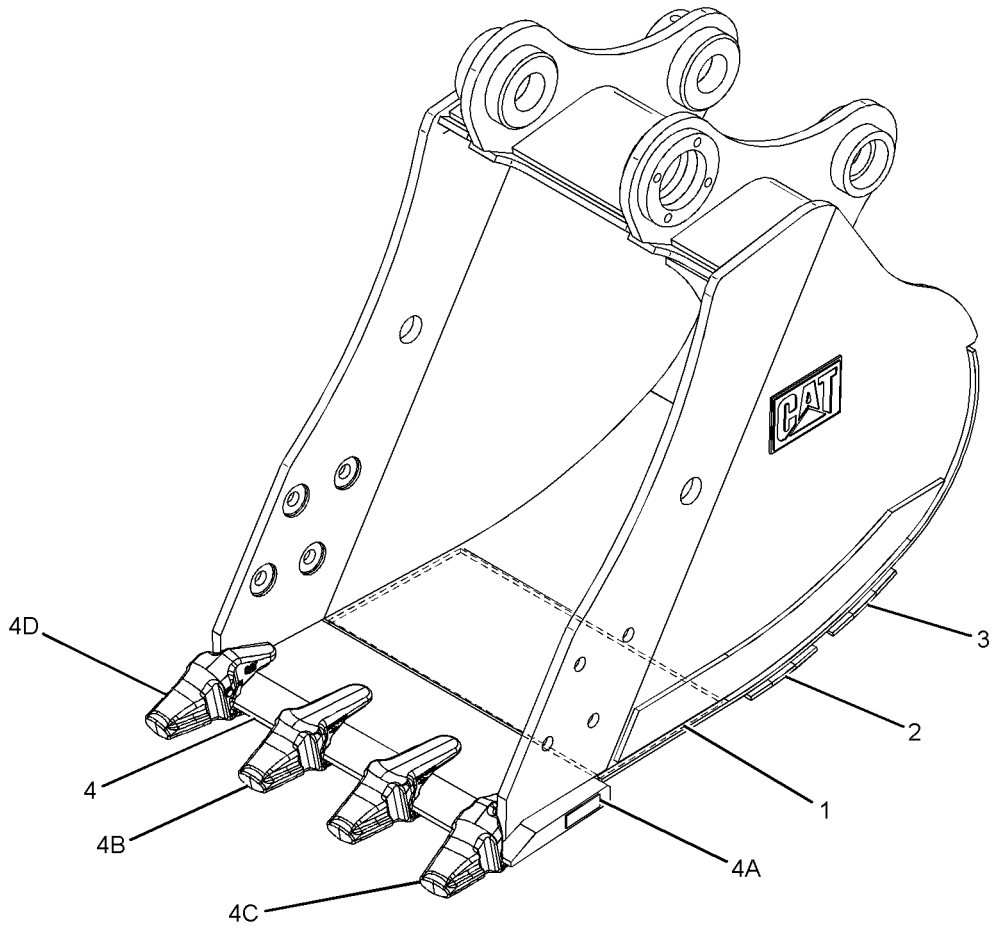

GRAPHIC #1 **<END>** g01145764

239-2521 BUCKET AS-EXCAVATION

S/N: CJN1-UP
922-MM (36-IN) WIDE X 0.6-CU M (0.8-CU YD) CAPACITY. K-80 ADAPTERS, (5X)
PART OF 239-2511 BUCKET & ADJUSTER GP
AN ATTACHMENT

SMCS-6523 **i02210000**

NOTE	REF NO	GRAPHIC REF	PART NUMBER	QTY	PART NAME 1 2 3 4 5 6 (PRODUCT LEVEL)	SEE PAGE
	1	1	**239-2619**	1	EDGE AS	
	1A	1	**8P-9770**	1	PLATE	
	1B	1	**220-9086**	1	ADAPTER-TIP (K-80, 2-STRAP, LH)	
	1C	1	**220-9084**	3	ADAPTER-TIP (K-80, 2-STRAP, CENTER)	
	1D	1	**220-9085**	1	ADAPTER-TIP (K-80, 2-STRAP, RH)	
	2	1	**239-2626**	1	PLATE-REINFORCEMENT	
	3	1	**239-2627**	1	PLATE-WEAR	
	4	1	**239-2628**	1	PLATE-WEAR	

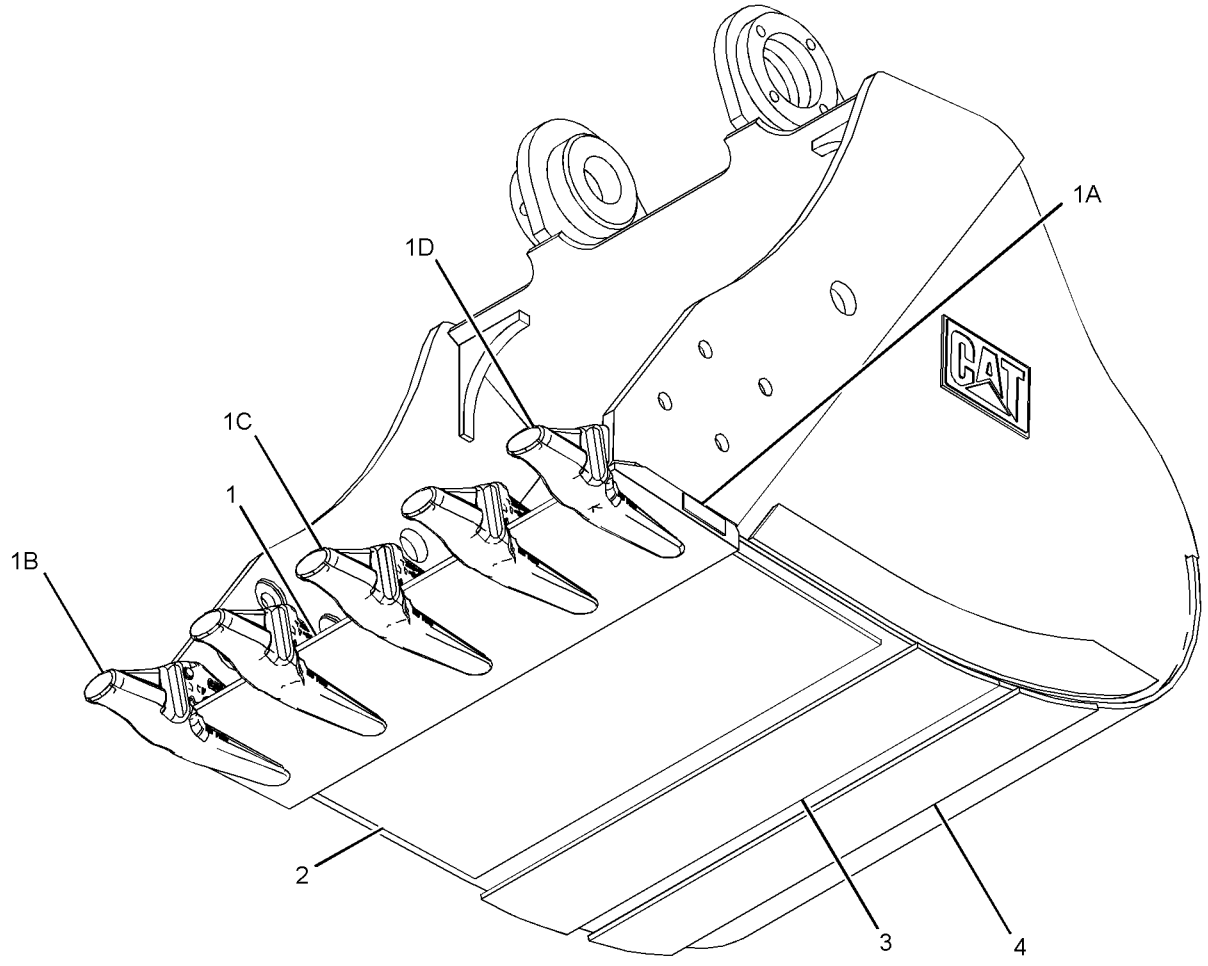

GRAPHIC #1 **<END>** g01217793

239-2523 BUCKET AS-EXCAVATION

S/N: CJN1-UP
1226-MM (48-IN) WIDE X 0.9-CU M (1.2-CU YD) CAPACITY. K-80 ADAPTERS, (6X)
PART OF 239-2513 BUCKET & ADJUSTER GP
AN ATTACHMENT

SMCS-6523 **i02210005**

NOTE	REF NO	GRAPHIC REF	PART NUMBER	QTY	PART NAME 1 2 3 4 5 6 (PRODUCT LEVEL)	SEE PAGE
	1	1	**239-2784**	1	EDGE AS	
	1A	1	**8P-9770**	1	PLATE	
	1B	1	**220-9084**	4	ADAPTER-TIP (K-80, 2-STRAP, CENTER)	
	1C	1	**220-9085**	1	ADAPTER-TIP (K-80, 2-STRAP, RH)	
	1D	1	**220-9086**	1	ADAPTER-TIP (K-80, 2-STRAP, LH)	
	2	1	**239-2786**	1	PLATE	
	3	1	**239-2787**	1	PLATE-REINFORCEMENT	
	4	1	**239-2788**	1	PLATE-WEAR	
	5	1	**239-2789**	1	PLATE-WEAR	

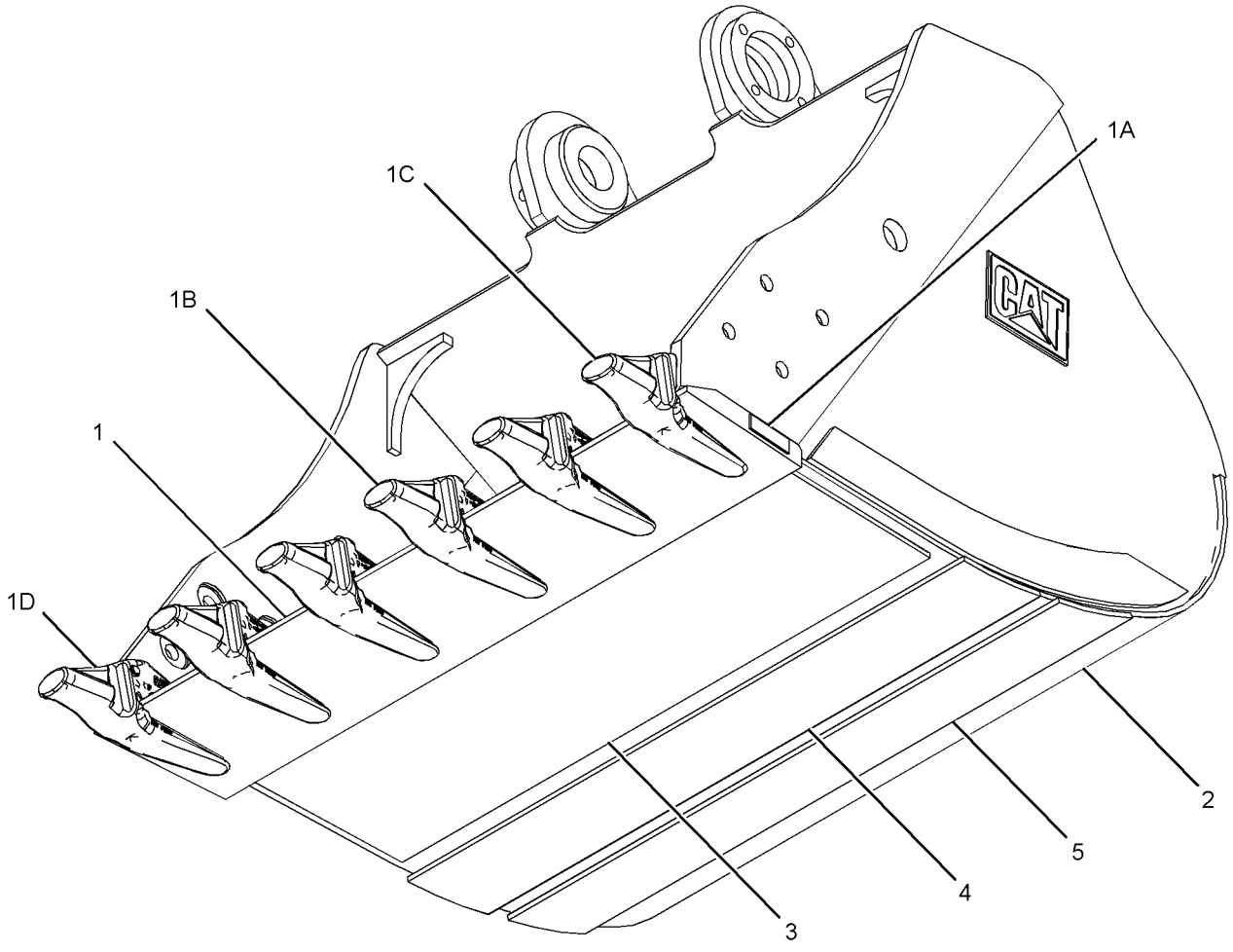

GRAPHIC #1 **<END>** g01281414

WORK TOOLS

305-1689 BUCKET AS-GENERAL PURPOSE

S/N: CJN1-UP
617-MM (24-IN) WIDE X 0.4-CU M (0.5-CU YD) CAPACITY. K-80 ADAPTERS, (3X)
PART OF 239-2509 BUCKET & ADJUSTER GP
AN ATTACHMENT

SMCS-6101 **i02895021**

NOTE	REF NO	GRAPHIC REF	PART NUMBER	QTY	PART NAME 1 2 3 4 5 6 (PRODUCT LEVEL)	SEE PAGE
	1	1	**239-2810**	1	EDGE AS	
	1A	1	**220-9086**	1	ADAPTER-TIP (K-80, 2-STRAP, LH)	
	1B	1	**220-9084**	1	ADAPTER-TIP (K-80, 2-STRAP, CENTER)	
	1C	1	**220-9085**	1	ADAPTER-TIP (K-80, 2-STRAP, RH)	
	1D	1	**8P-9770**	1	PLATE	
	2	1	**239-2813**	1	PLATE-WEAR	
	3	1	**239-2814**	1	PLATE-WEAR	
	4	1	**239-2812**	1	PLATE-REINFORCEMENT	
	5	1	**2C-9259**	1	PLATE-IDENTIFICATION (CAT)	
	6	1	**216-5858**	2	PLATE-WEAR	

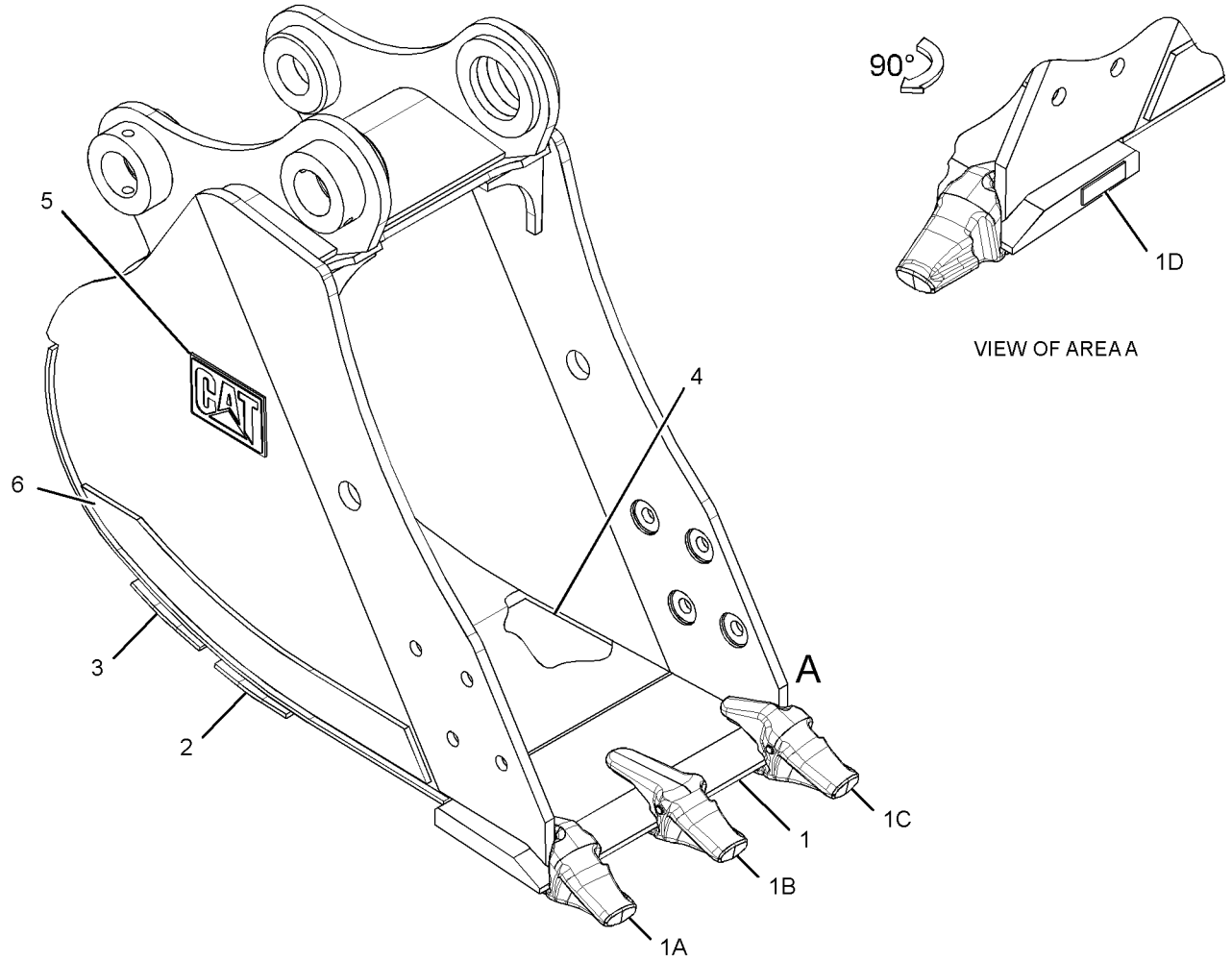

GRAPHIC #1 **<END>** g01444672

WORK TOOLS

305-1690 BUCKET AS-GENERAL PURPOSE

S/N: CJN1-UP
770-MM (30-IN) WIDE X 0.5-CU M (0.6-CU YD) CAPACITY. K-80 ADAPTERS, (4X)
PART OF 239-2510 BUCKET & ADJUSTER GP
AN ATTACHMENT

SMCS-6101 **i02895029**

NOTE	REF NO	GRAPHIC REF	PART NUMBER	QTY	PART NAME 1 2 3 4 5 6 (PRODUCT LEVEL)	SEE PAGE
	1	1	**239-2774**	1	EDGE AS	
	1A	1	**220-9086**	1	ADAPTER-TIP (K-80, 2-STRAP, LH)	
	1B	1	**220-9084**	2	ADAPTER-TIP (K-80, 2-STRAP, CENTER)	
	1C	1	**220-9085**	1	ADAPTER-TIP (K-80, 2-STRAP, RH)	
	1D	1	**8P-9770**	1	PLATE	
	2	1	**239-2772**	1	PLATE-WEAR	
	3	1	**239-2773**	1	PLATE-WEAR	
	4	1	**239-2771**	1	PLATE-REINFORCEMENT	
	5	1	**2C-9259**	1	PLATE-IDENTIFICATION (CAT)	
	6	1	**216-5858**	2	PLATE-WEAR	

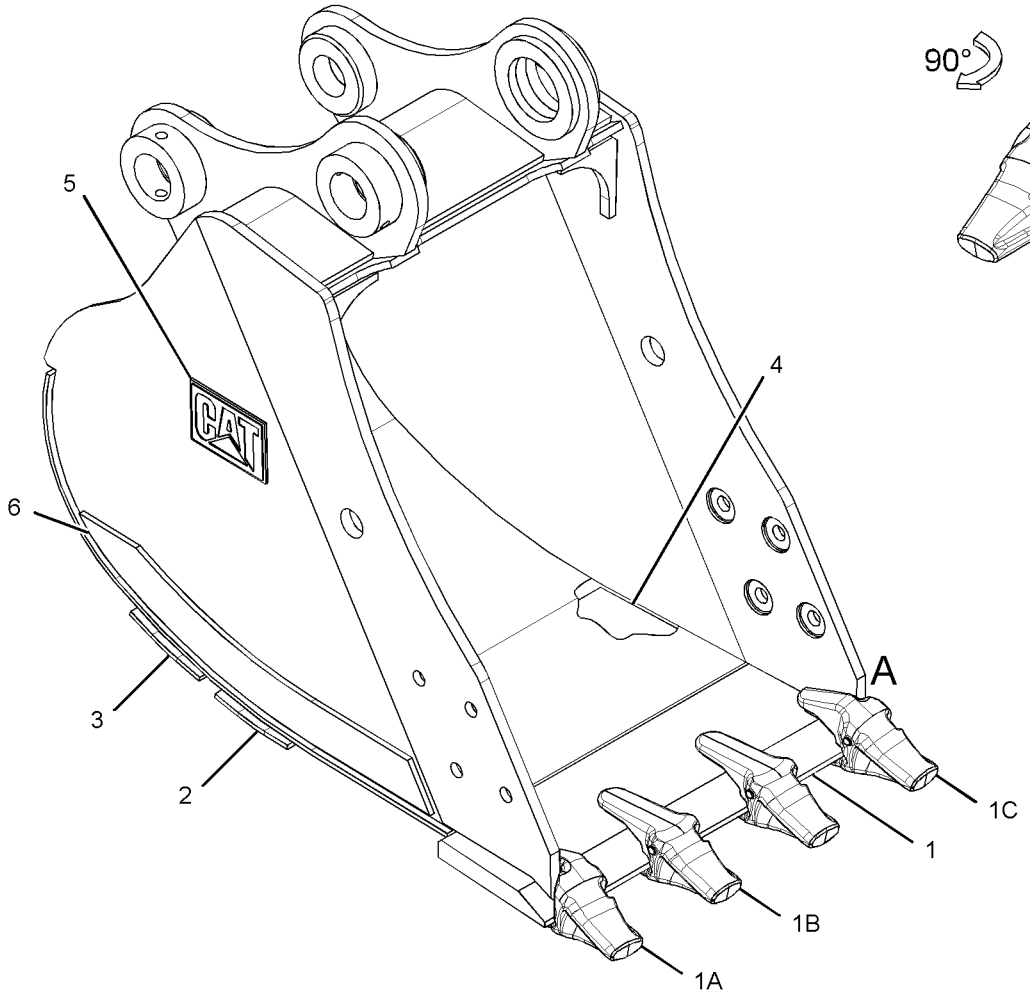

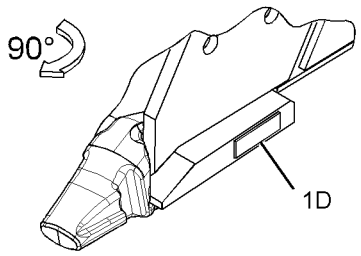

VIEW OF AREA A

GRAPHIC #1 **<END>** g01444681

305-1691 BUCKET AS-GENERAL PURPOSE

S/N: CJN1-UP
922-MM (36-IN) WIDE X 0.6-CU M (0.8-CU YD) CAPACITY. K-80 ADAPTERS, (5X)
PART OF 239-2511 BUCKET & ADJUSTER GP
AN ATTACHMENT

SMCS-6101 **i02895033**

NOTE	REF NO	GRAPHIC REF	PART NUMBER	QTY	PART NAME 1 2 3 4 5 6 (PRODUCT LEVEL)	SEE PAGE
	1	1	**239-2619**	1	EDGE AS	
	1A	1	**220-9086**	1	ADAPTER-TIP (K-80, 2-STRAP, LH)	
	1B	1	**220-9084**	3	ADAPTER-TIP (K-80, 2-STRAP, CENTER)	
	1C	1	**220-9085**	1	ADAPTER-TIP (K-80, 2-STRAP, RH)	
	1D	1	**8P-9770**	1	PLATE	
	2	1	**239-2627**	1	PLATE-WEAR	
	3	1	**239-2628**	1	PLATE-WEAR	
	4	1	**239-2626**	1	PLATE-REINFORCEMENT	
	5	1	**2C-9259**	1	PLATE-IDENTIFICATION (CAT)	
	6	1	**216-5858**	2	PLATE-WEAR	

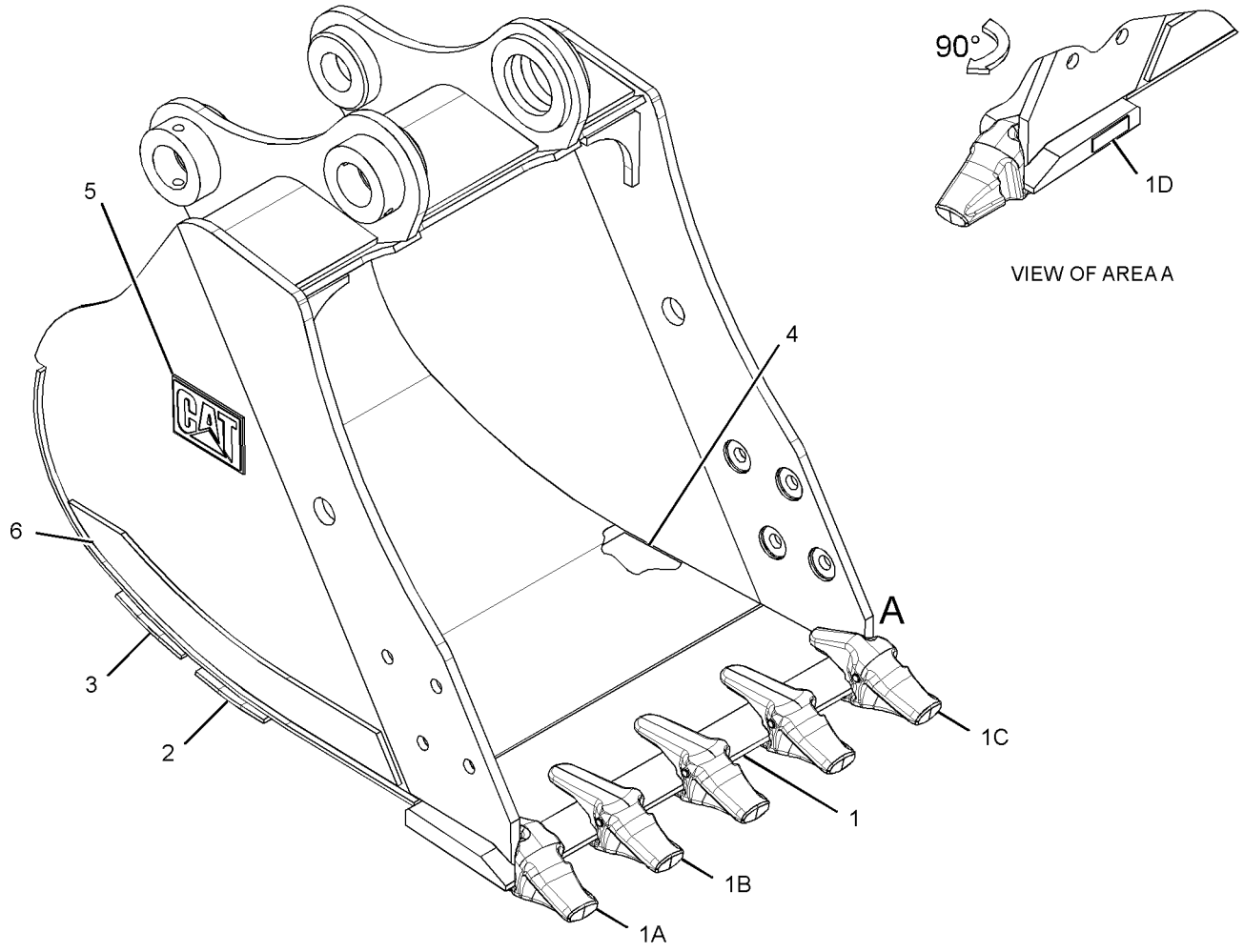

GRAPHIC #1 **<END>** g01444687

305-1692 BUCKET AS-GENERAL PURPOSE

S/N: CJN1-UP
1074-MM (42-IN) WIDE X 0.7-CU M (1-CU YD) CAPACITY. K-80 ADAPTERS, (5X)
PART OF 239-2512 BUCKET & ADJUSTER GP
AN ATTACHMENT

SMCS-6101 **i02895047**

NOTE	REF NO	GRAPHIC REF	PART NUMBER	QTY	PART NAME 1 2 3 4 5 6 (PRODUCT LEVEL)	SEE PAGE
	1	1	**239-2764**	1	EDGE AS	
	1A	1	**220-9086**	1	ADAPTER-TIP (K-80, 2-STRAP, LH)	
	1B	1	**220-9084**	3	ADAPTER-TIP (K-80, 2-STRAP, CENTER)	
	1C	1	**220-9085**	1	ADAPTER-TIP (K-80, 2-STRAP, RH)	
	1D	1	**8P-9770**	1	PLATE	
	2	1	**239-2768**	1	PLATE-WEAR	
	3	1	**239-2769**	1	PLATE-WEAR	
	4	1	**239-2767**	1	PLATE-REINFORCEMENT	
	5	1	**2C-9259**	1	PLATE-IDENTIFICATION (CAT)	
	6	1	**216-5858**	2	PLATE-WEAR	

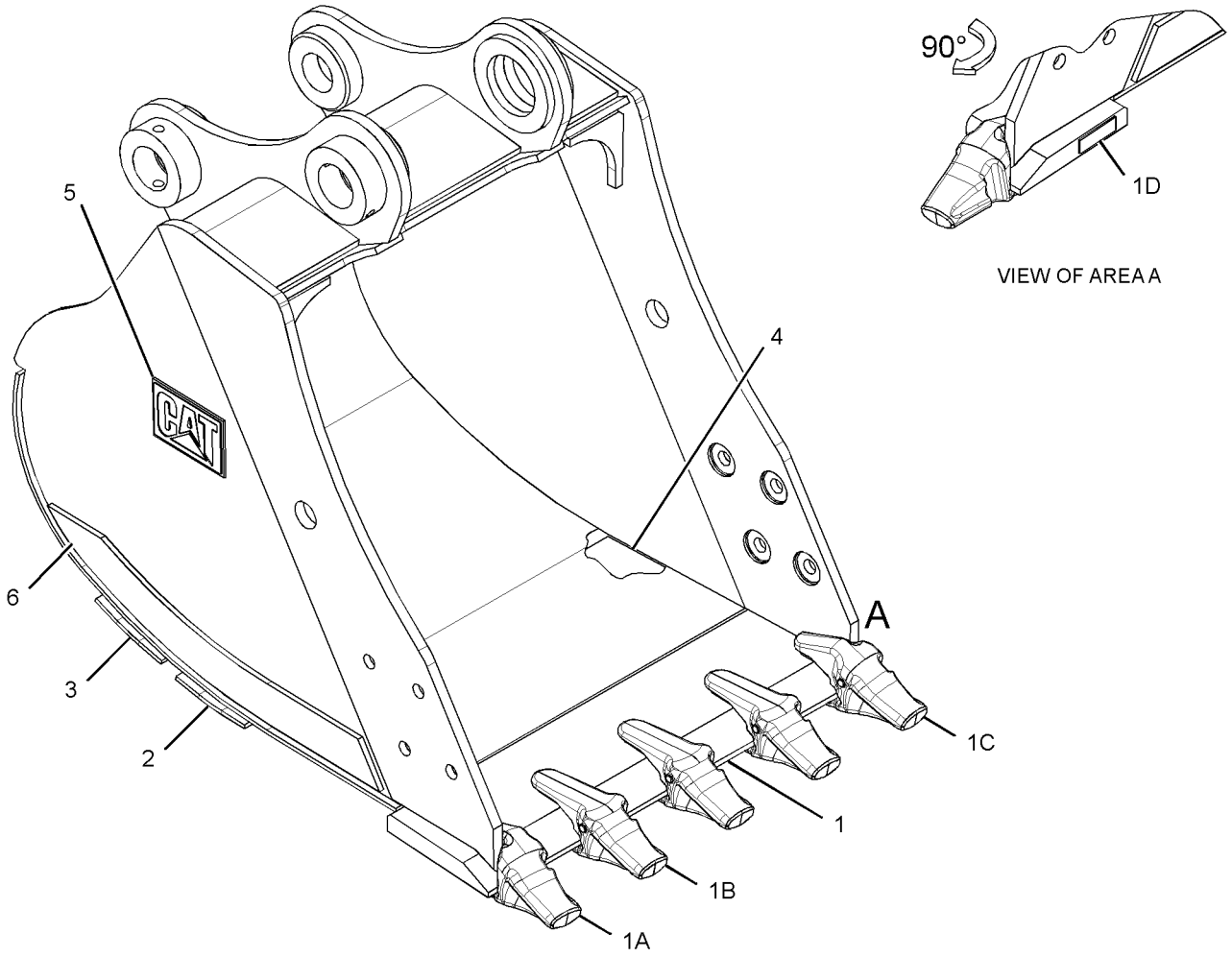

GRAPHIC #1

<END>

g01444690

305-1693 BUCKET AS-GENERAL PURPOSE

S/N: CJN1-UP
1226-MM (48-IN) WIDE X 0.9-CU M (1.2-CU YD) CAPACITY. K-80 ADAPTERS, (6X)
PART OF 239-2513 BUCKET & ADJUSTER GP
AN ATTACHMENT

SMCS-6101 **i02895050**

NOTE	REF NO	GRAPHIC REF	PART NUMBER	QTY	PART NAME 1 2 3 4 5 6 (PRODUCT LEVEL)	SEE PAGE
	1	1	**239-2784**	1	EDGE AS	
	1A	1	**220-9086**	1	ADAPTER-TIP (K-80, 2-STRAP, LH)	
	1B	1	**220-9084**	4	ADAPTER-TIP (K-80, 2-STRAP, CENTER)	
	1C	1	**220-9085**	1	ADAPTER-TIP (K-80, 2-STRAP, RH)	
	1D	1	**8P-9770**	1	PLATE	
	2	1	**239-2788**	1	PLATE-WEAR	
	3	1	**239-2789**	1	PLATE-WEAR	
	4	1	**239-2787**	1	PLATE-REINFORCEMENT	
	5	1	**2C-9259**	1	PLATE-IDENTIFICATION (CAT)	
	6	1	**216-5858**	2	PLATE-WEAR	

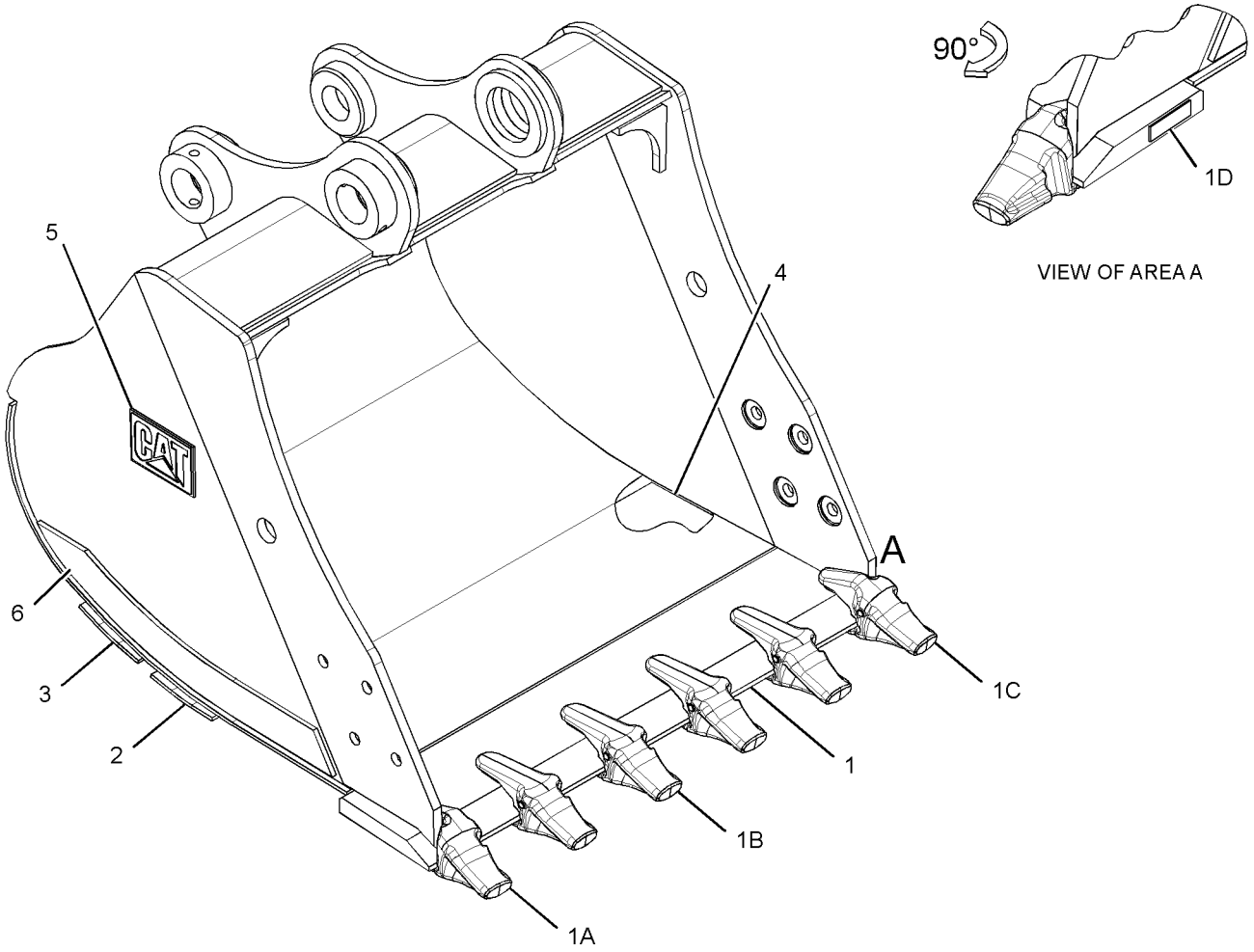

GRAPHIC #1 **<END>** g01444693

327-3615 BUCKET AS-GENERAL PURPOSE

S/N: CJN1-UP
617-MM (24-IN) WIDE X 0.4-CU M (0.5-CU YD) CAPACITY. K-80 ADAPTERS, (3X)
PART OF 327-3614 BUCKET GP-GENERAL PURPOSE
AN ATTACHMENT

SMCS-6101 **i03093734**

NOTE	REF NO	GRAPHIC REF	PART NUMBER	QTY	PART NAME 1 2 3 4 5 6 (PRODUCT LEVEL)	SEE PAGE
	1	1	**239-2810**	1	EDGE AS	
	1A	1	**220-9086**	1	ADAPTER-TIP (K-80, 2-STRAP, LH)	
	1B	1	**220-9084**	1	ADAPTER-TIP (K-80, 2-STRAP, CENTER)	
	1C	1	**220-9085**	1	ADAPTER-TIP (K-80, 2-STRAP, RH)	
	1D	1	**8P-9770**	1	PLATE	
	2	1	**239-2812**	1	PLATE-REINFORCEMENT	
	3	1	**239-2813**	1	PLATE-WEAR	
	4	1	**239-2814**	1	PLATE-WEAR	
	5	1	**216-5858**	2	PLATE-WEAR	
	6	1	**2C-9259**	1	PLATE-IDENTIFICATION (CAT)	

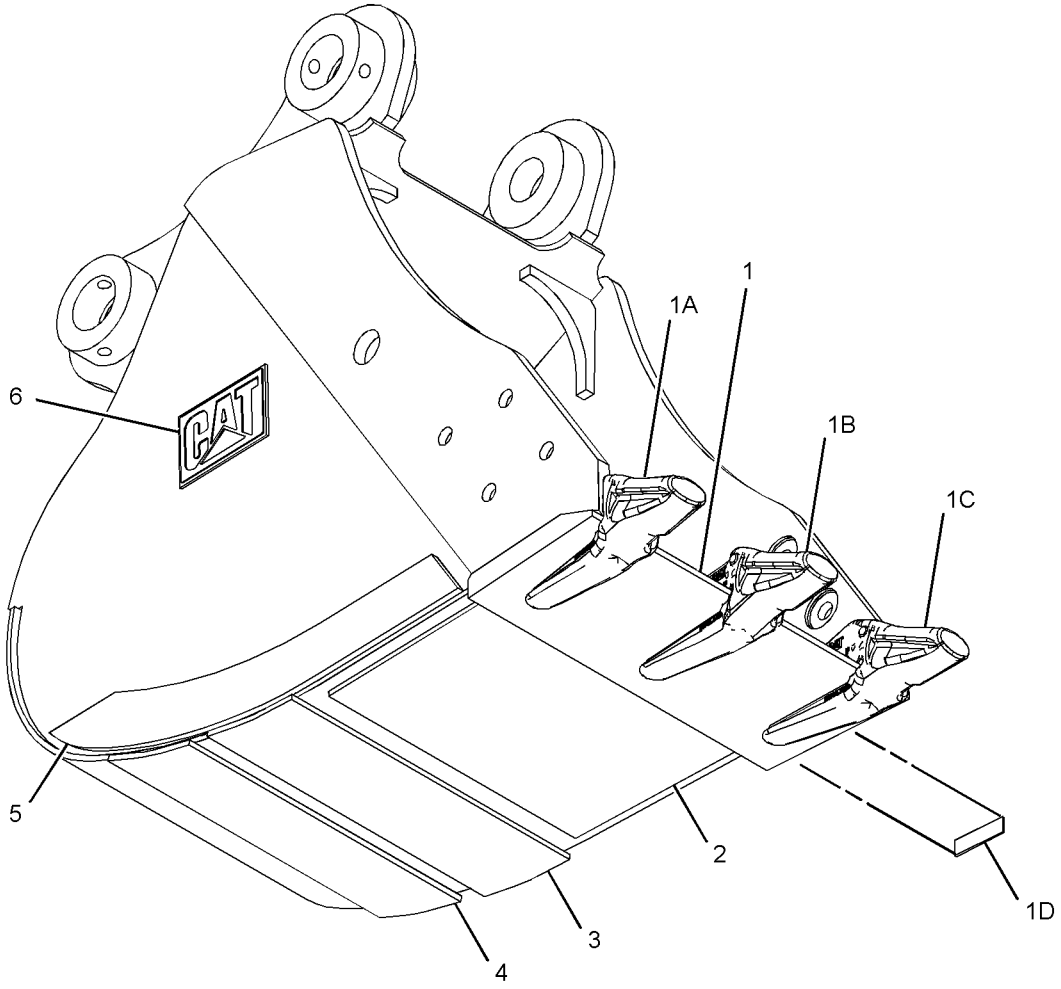

GRAPHIC #1 **<END>** g01621379

327-3618 BUCKET AS-GENERAL PURPOSE

S/N: CJN1-UP

770-MM (30-IN) WIDE X 0.5-CU M (0.6-CU YD) CAPACITY. K-80 ADAPTERS, (4X)

PART OF 327-3617 BUCKET GP-GENERAL PURPOSE

AN ATTACHMENT

SMCS-6101 **i03164868**

NOTE	REF NO	GRAPHIC REF	PART NUMBER	QTY	PART NAME 1 2 3 4 5 6 (PRODUCT LEVEL)	SEE PAGE
	1	1	**239-2774**	1	EDGE AS	
	1A	1	**220-9086**	1	ADAPTER-TIP (K-80, 2-STRAP, LH)	
	1B	1	**220-9084**	2	ADAPTER-TIP (K-80, 2-STRAP, CENTER)	
	1C	1	**220-9085**	1	ADAPTER-TIP (K-80, 2-STRAP, RH)	
	1D	1	**8P-9770**	1	PLATE	
	2	1	**239-2771**	1	PLATE-REINFORCEMENT	
	3	1	**239-2772**	1	PLATE-WEAR	
	4	1	**239-2773**	1	PLATE-WEAR	
	5	1	**216-5858**	2	PLATE-WEAR	
	6	1	**2C-9259**	1	PLATE-IDENTIFICATION (CAT)	

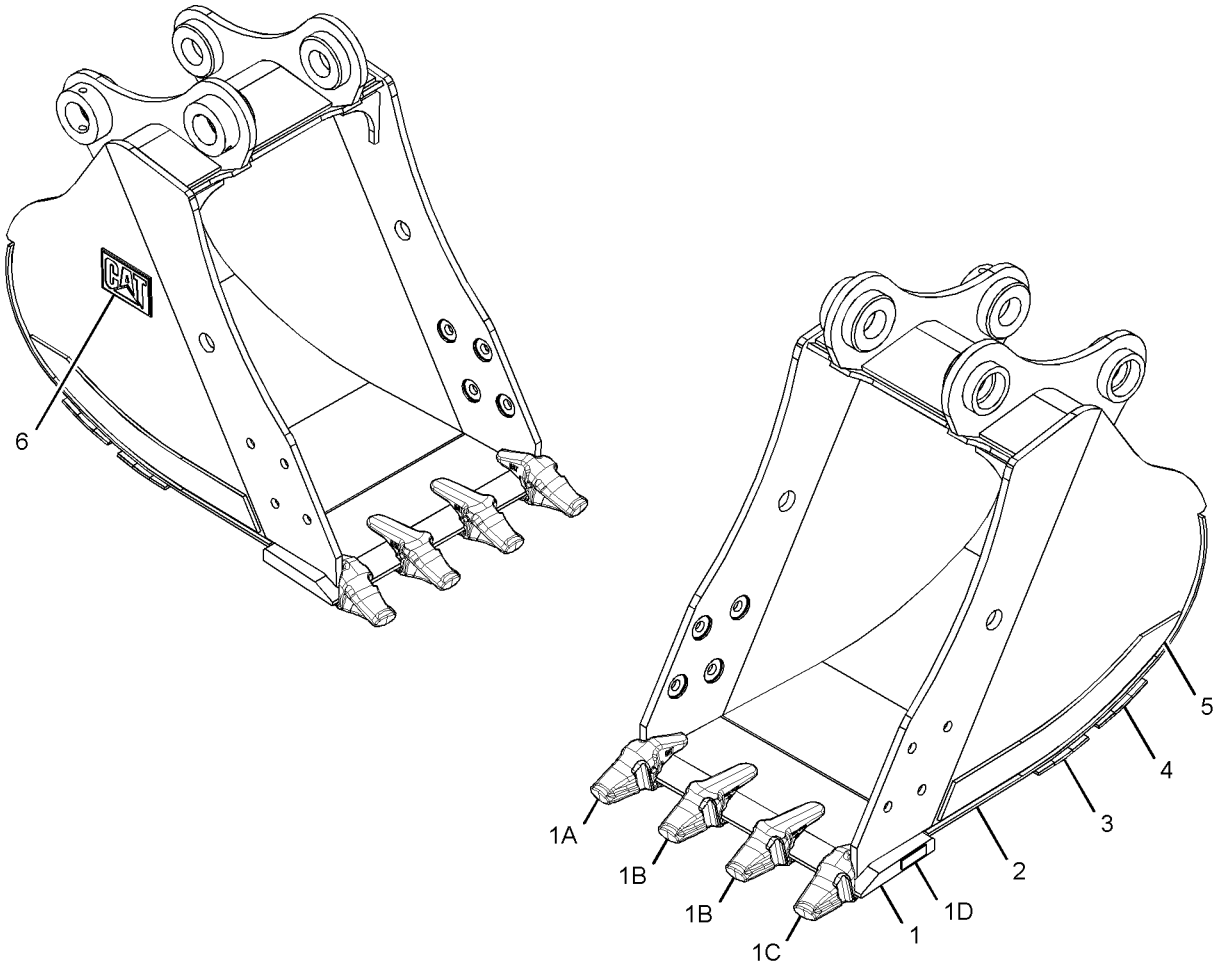

GRAPHIC #1 **<END>** g01621408

WORK TOOLS

327-3621 BUCKET AS-GENERAL PURPOSE

S/N: CJN1-UP
922-MM (36-IN) WIDE X 0.6-CU M (0.8-CU YD) CAPACITY. K-80 ADAPTERS, (5X)
PART OF 327-3620 BUCKET GP-GENERAL PURPOSE
AN ATTACHMENT

SMCS-6101 **i03095190**

NOTE	REF NO	GRAPHIC REF	PART NUMBER	QTY	PART NAME 1 2 3 4 5 6 (PRODUCT LEVEL)	SEE PAGE
	1	1	**239-2619**	1	EDGE AS	
	1A	1	**220-9086**	1	ADAPTER-TIP (K-80, 2-STRAP, LH)	
	1B	1	**220-9084**	3	ADAPTER-TIP (K-80, 2-STRAP, CENTER)	
	1C	1	**220-9085**	1	ADAPTER-TIP (K-80, 2-STRAP, RH)	
	1D	1	**8P-9770**	1	PLATE	
	2	1	**239-2626**	1	PLATE-REINFORCEMENT	
	3	1	**239-2627**	1	PLATE-WEAR	
	4	1	**239-2628**	1	PLATE-WEAR	
	5	1	**216-5858**	2	PLATE-WEAR	
	6	1	**2C-9259**	1	PLATE-IDENTIFICATION (CAT)	

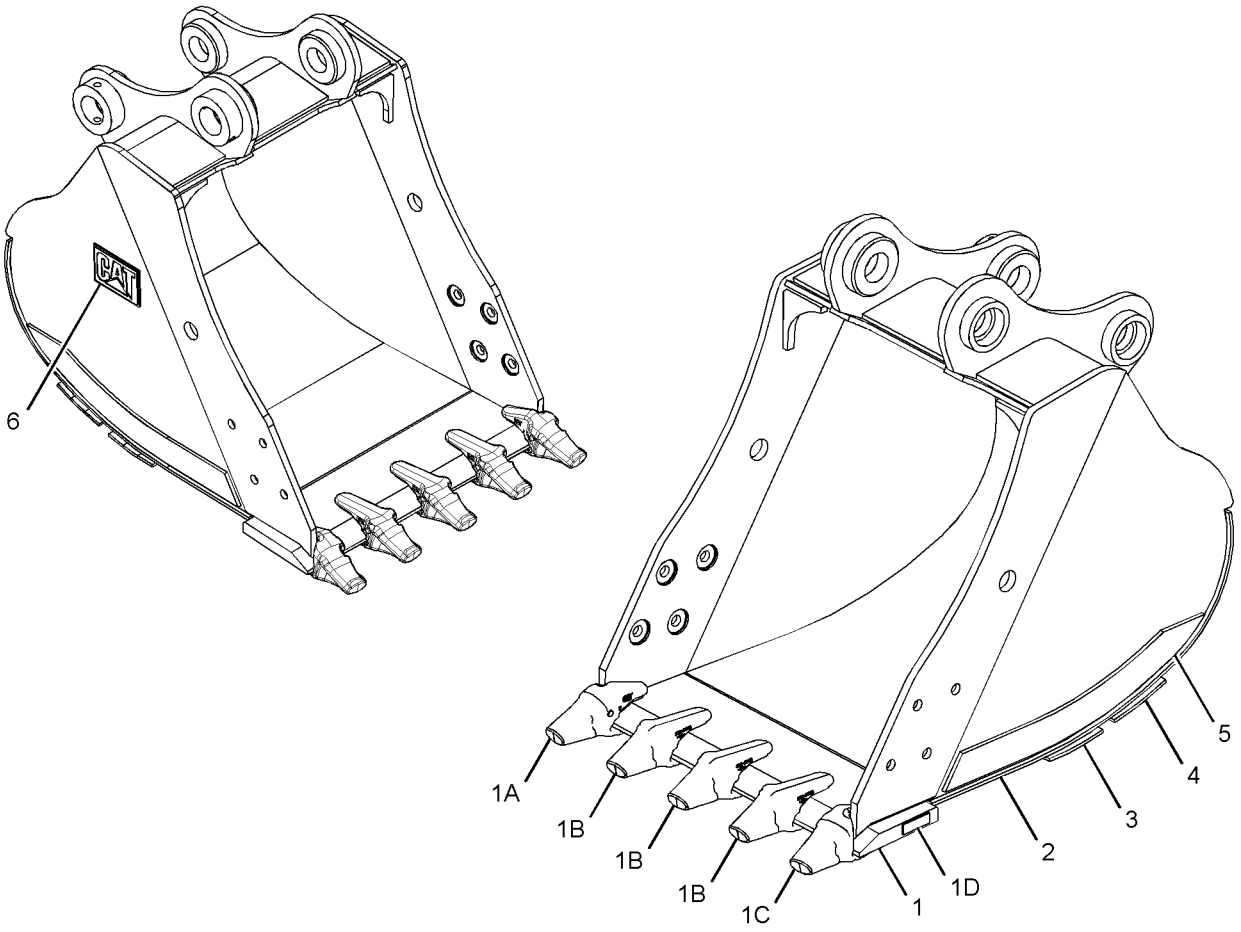

GRAPHIC #1 **<END>** g01621343

327-3624 BUCKET AS-GENERAL PURPOSE

S/N: CJN1-UP
1074-MM (42-IN) WIDE X 0.7-CU M (1-CU YD) CAPACITY. K-80 ADAPTERS, (5X)
PART OF 327-3623 BUCKET GP-GENERAL PURPOSE
AN ATTACHMENT

SMCS-6101 **i03095206**

NOTE	REF NO	GRAPHIC REF	PART NUMBER	QTY	PART NAME 1 2 3 4 5 6 (PRODUCT LEVEL)	SEE PAGE
	1	1	**239-2764**	1	EDGE AS	
	1A	1	**220-9086**	1	ADAPTER-TIP (K-80, 2-STRAP, LH)	
	1B	1	**220-9084**	3	ADAPTER-TIP (K-80, 2-STRAP, CENTER)	
	1C	1	**220-9085**	1	ADAPTER-TIP (K-80, 2-STRAP, RH)	
	1D	1	**8P-9770**	1	PLATE	
	2	1	**239-2767**	1	PLATE-REINFORCEMENT	
	3	1	**239-2768**	1	PLATE-WEAR	
	4	1	**239-2769**	1	PLATE-WEAR	
	5	1	**216-5858**	2	PLATE-WEAR	
	6	1	**2C-9259**	1	PLATE-IDENTIFICATION (CAT)	

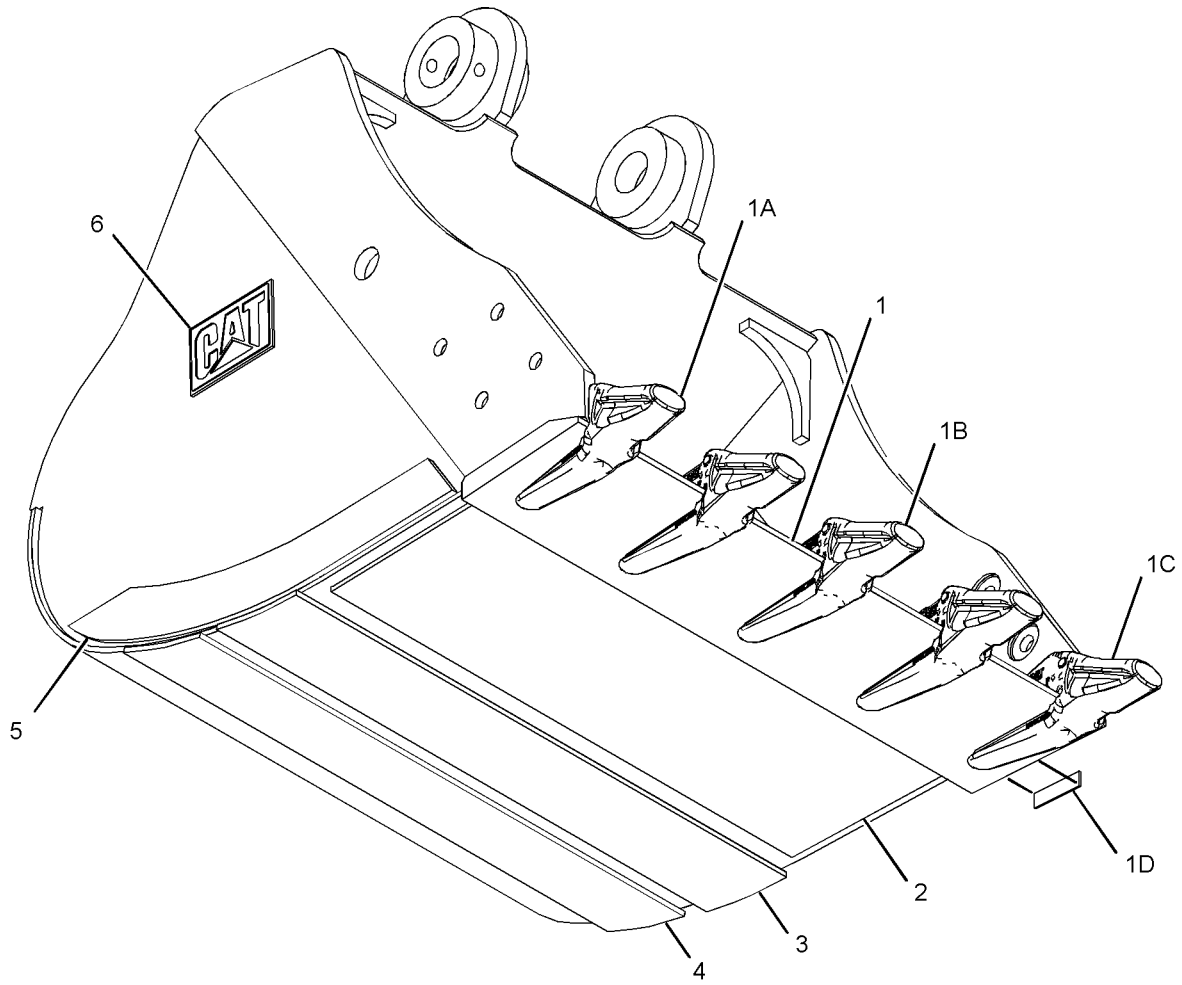

GRAPHIC #1 **<END>** g01621350

WORK TOOLS

327-3627 BUCKET AS-GENERAL PURPOSE

S/N: CJN1-UP
1219-MM (48-IN) WIDE X 0.9-CU M (1.2-CU YD) CAPACITY. K-80 ADAPTERS, (6X)
PART OF 327-3626 BUCKET GP-GENERAL PURPOSE
AN ATTACHMENT

SMCS-6101 **i03095218**

NOTE	REF NO	GRAPHIC REF	PART NUMBER	QTY	PART NAME 1 2 3 4 5 6 (PRODUCT LEVEL)	SEE PAGE
	1	1	**239-2784**	1	EDGE AS	
	1A	1	**220-9086**	1	ADAPTER-TIP (K-80, 2-STRAP, LH)	
	1B	1	**220-9084**	4	ADAPTER-TIP (K-80, 2-STRAP, CENTER)	
	1C	1	**220-9085**	1	ADAPTER-TIP (K-80, 2-STRAP, RH)	
	1D	1	**8P-9770**	1	PLATE	
	2	1	**239-2787**	1	PLATE-REINFORCEMENT	
	3	1	**239-2788**	1	PLATE-WEAR	
	4	1	**239-2789**	1	PLATE-WEAR	
	5	1	**216-5858**	2	PLATE-WEAR	
	6	1	**2C-9259**	1	PLATE-IDENTIFICATION (CAT)	

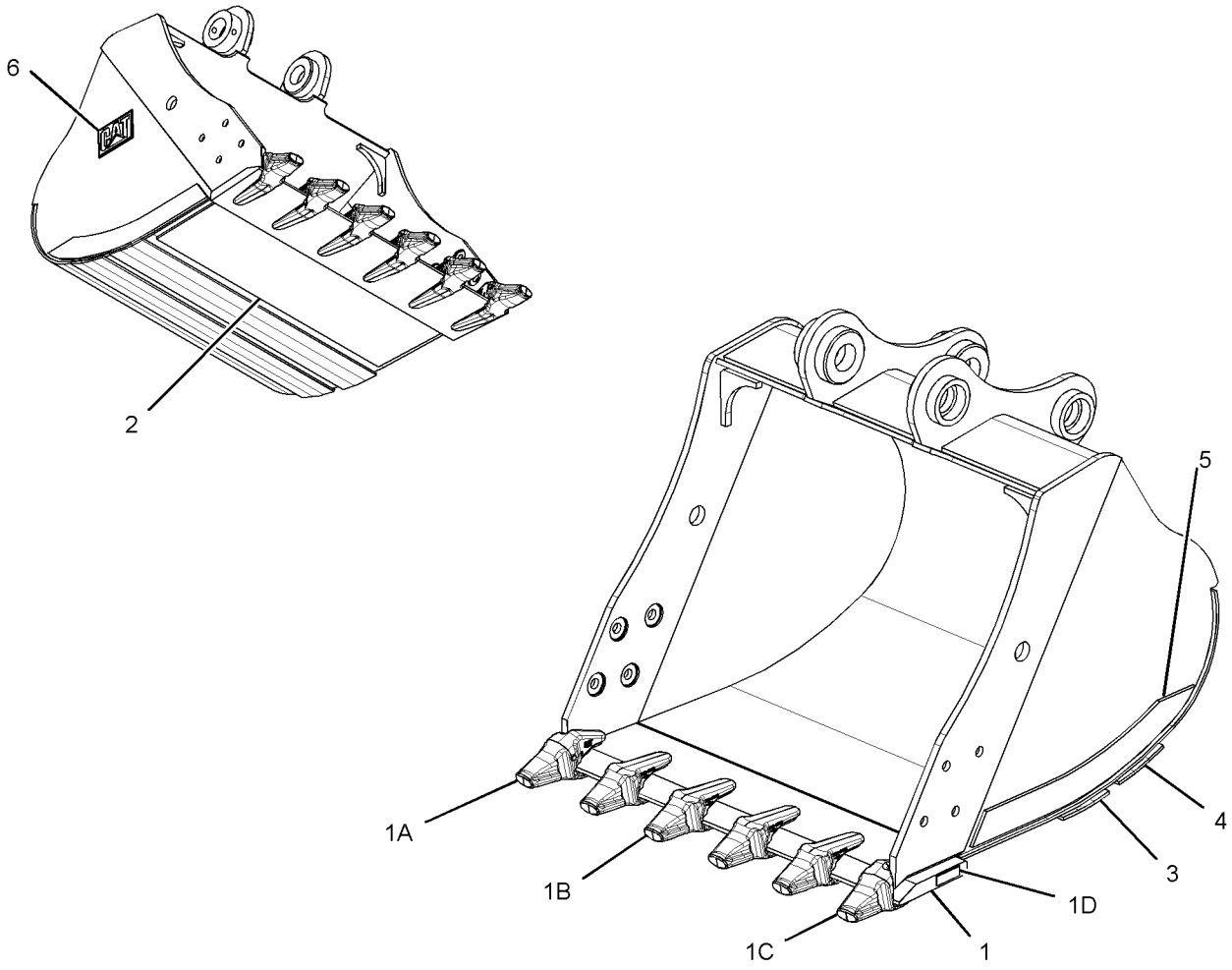

GRAPHIC #1 **<END>** g01621221

239-2525 BUCKET AS-HEAVY DUTY ROCK

S/N: CJN1-UP
770-MM (30-IN) WIDE X 0.5-CU M (0.6-CU YD) CAPACITY. K-80 ADAPTERS, (4X)
PART OF 239-2515 BUCKET & ADJUSTER GP
AN ATTACHMENT

SMCS-6102 **i02210009**

NOTE	REF NO	GRAPHIC REF	PART NUMBER	QTY	PART NAME 1 2 3 4 5 6 (PRODUCT LEVEL)	SEE PAGE
	1	1	**239-2748**	1	PLATE-REINFORCEMENT	
	2	1	**239-2815**	1	PLATE-WEAR	
	3	1	**239-2816**	1	PLATE-WEAR	
	4	1	**239-2817**	2	PLATE-WEAR	
	5	1	**239-2818**	1	EDGE AS	
	5A	1	**8P-9770**	1	PLATE	
	5B	1	**220-9094**	2	ADAPTER-TIP (K-90, 2-STRAP, CENTER)	
	5C	1	**220-9095**	1	ADAPTER-TIP (K-90, 2-STRAP, RH)	
	5D	1	**220-9096**	1	ADAPTER-TIP (K-90, 2-STRAP, LH)	

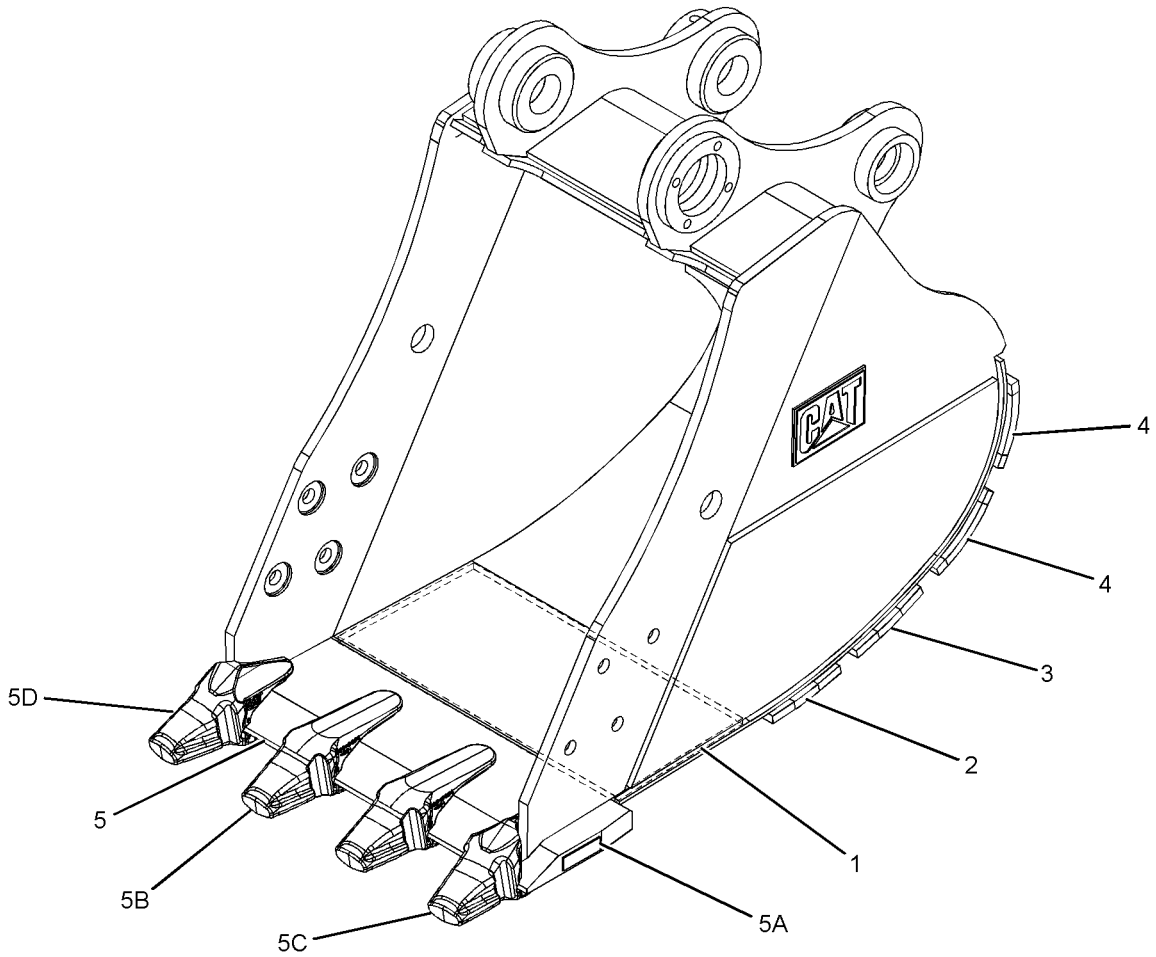

GRAPHIC #1 **<END>** g01145826

WORK TOOLS

239-2526 BUCKET AS-HEAVY DUTY ROCK

S/N: CJN1-UP
924-MM (36-IN) WIDE X 0.6-CU M (0.8-CU YD) CAPACITY. K-90 ADAPTERS, (5X)
PART OF 239-2516 BUCKET & ADJUSTER GP
AN ATTACHMENT

SMCS-6102 **i02210013**

NOTE	REF NO	GRAPHIC REF	PART NUMBER	QTY	PART NAME 1 2 3 4 5 6 (PRODUCT LEVEL)	SEE PAGE
	1	1	**239-2716**	1	EDGE AS	
	1A	1	**8P-9770**	1	PLATE	
	1B	1	**220-9094**	3	ADAPTER-TIP (K-90, 2-STRAP, CENTER)	
	1C	1	**220-9095**	1	ADAPTER-TIP (K-90, 2-STRAP, RH)	
	1D	1	**220-9096**	1	ADAPTER-TIP (K-90, 2-STRAP, LH)	
	2	1	**239-2722**	1	PLATE-REINFORCEMENT	
	3	1	**239-2723**	1	PLATE-WEAR	
	4	1	**239-2724**	1	PLATE-WEAR	
	5	1	**239-2725**	2	PLATE-WEAR	

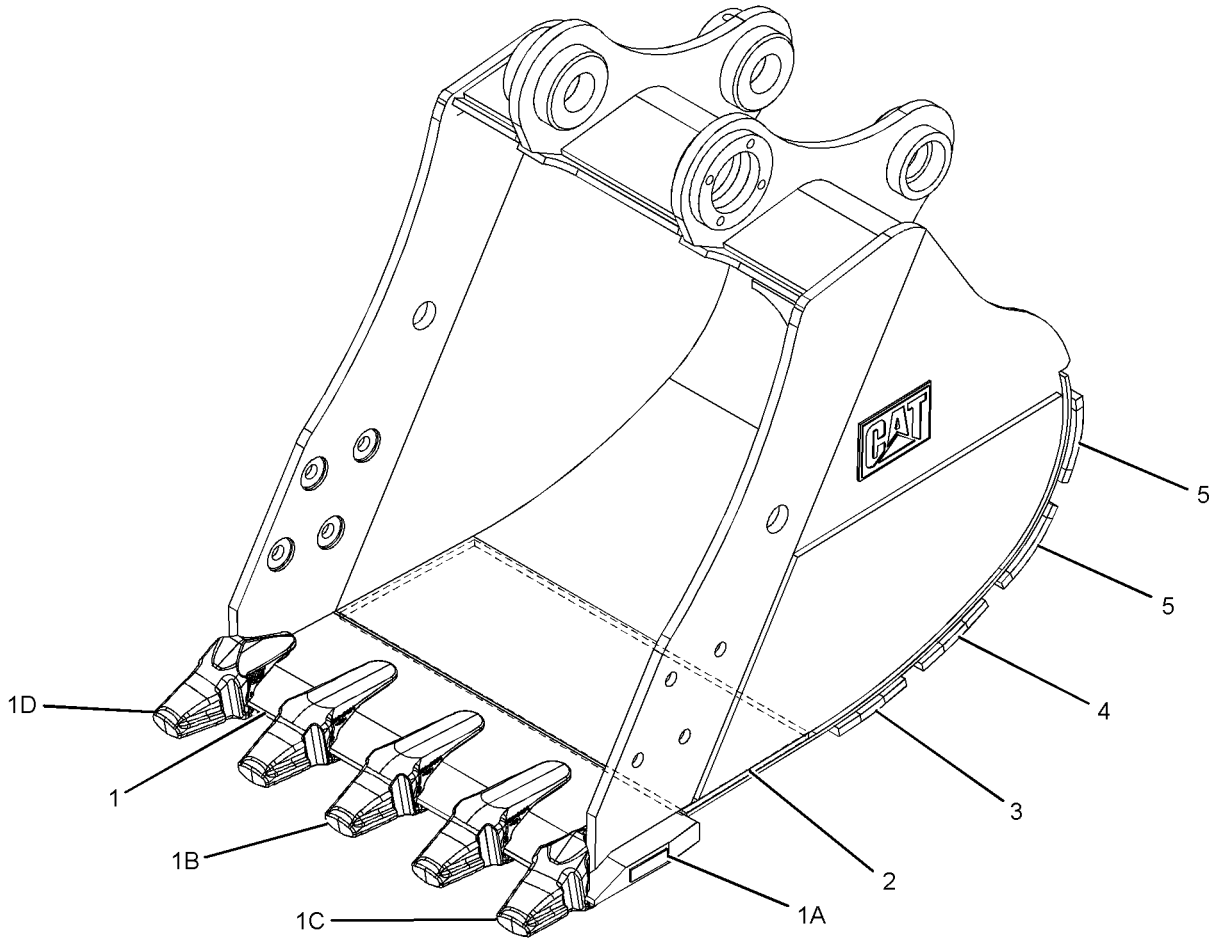

GRAPHIC #1 **<END>** g01145941

239-2527 BUCKET AS-HEAVY DUTY ROCK

S/N: CJN1-UP
1076-MM (42-IN) WIDE X 0.7-CU M (1-CU YD) CAPACITY. K-90 ADAPTERS, (5X)
PART OF 239-2517 BUCKET & ADJUSTER GP
AN ATTACHMENT

SMCS-6102 **i02210015**

NOTE	REF NO	GRAPHIC REF	PART NUMBER	QTY	PART NAME 1 2 3 4 5 6 (PRODUCT LEVEL)	SEE PAGE
	1	1	**239-2792**	1	EDGE AS	
	1A	1	**220-9094**	3	ADAPTER-TIP (K-90, 2-STRAP, CENTER)	
	1B	1	**220-9095**	1	ADAPTER-TIP (K-90, 2-STRAP, RH)	
	1C	1	**220-9096**	1	ADAPTER-TIP (K-90, 2-STRAP, LH)	
	1D	1	**8P-9770**	1	PLATE	
	2	1	**239-2793**	1	PLATE-REINFORCEMENT	
	3	1	**239-2794**	1	PLATE-WEAR	
	4	1	**239-2795**	1	PLATE-WEAR	
	5	1	**239-2796**	2	PLATE-WEAR	

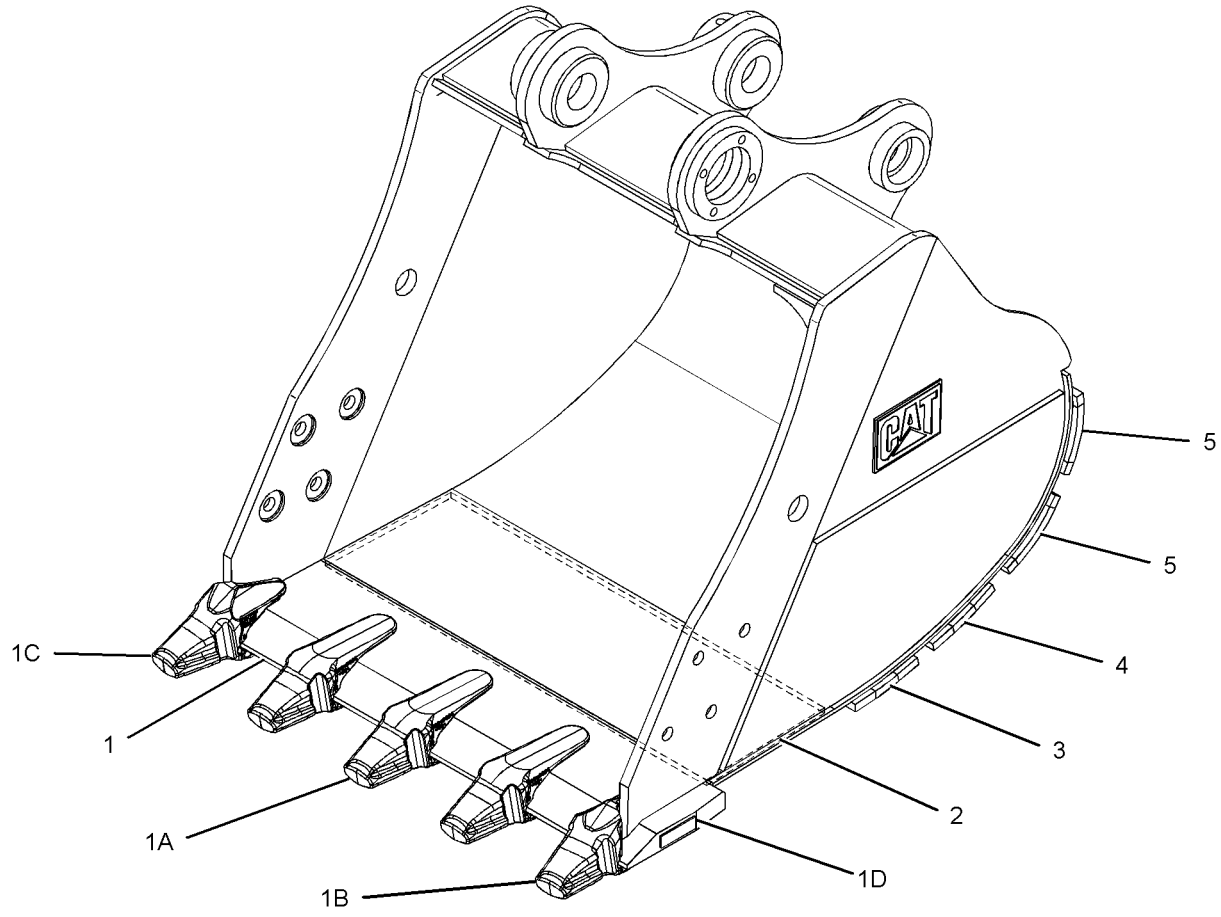

GRAPHIC #1 **<END>** g01145637

WORK TOOLS

239-2528 BUCKET AS-HEAVY DUTY ROCK

S/N: CJN1-UP
1228-MM (48-IN) WIDE X 0.9-CU M (1.2-CU YD) CAPACITY. K-90 ADAPTERS, (6X)
PART OF 239-2518 BUCKET & ADJUSTER GP
AN ATTACHMENT

SMCS-6102 **i02210017**

NOTE	REF NO	GRAPHIC REF	PART NUMBER	QTY	PART NAME 1 2 3 4 5 6 (PRODUCT LEVEL)	SEE PAGE
	1	1	**239-2801**	1	EDGE AS	
	1A	1	**8P-9770**	1	PLATE	
	1B	1	**220-9094**	4	ADAPTER-TIP (K-90, 2-STRAP, CENTER)	
	1C	1	**220-9095**	1	ADAPTER-TIP (K-90, 2-STRAP, RH)	
	1D	1	**220-9096**	1	ADAPTER-TIP (K-90, 2-STRAP, LH)	
	2	1	**239-2802**	1	PLATE-REINFORCEMENT	
	3	1	**239-2803**	1	PLATE-WEAR	
	4	1	**239-2804**	1	PLATE-WEAR	
	5	1	**239-2805**	2	PLATE-WEAR	

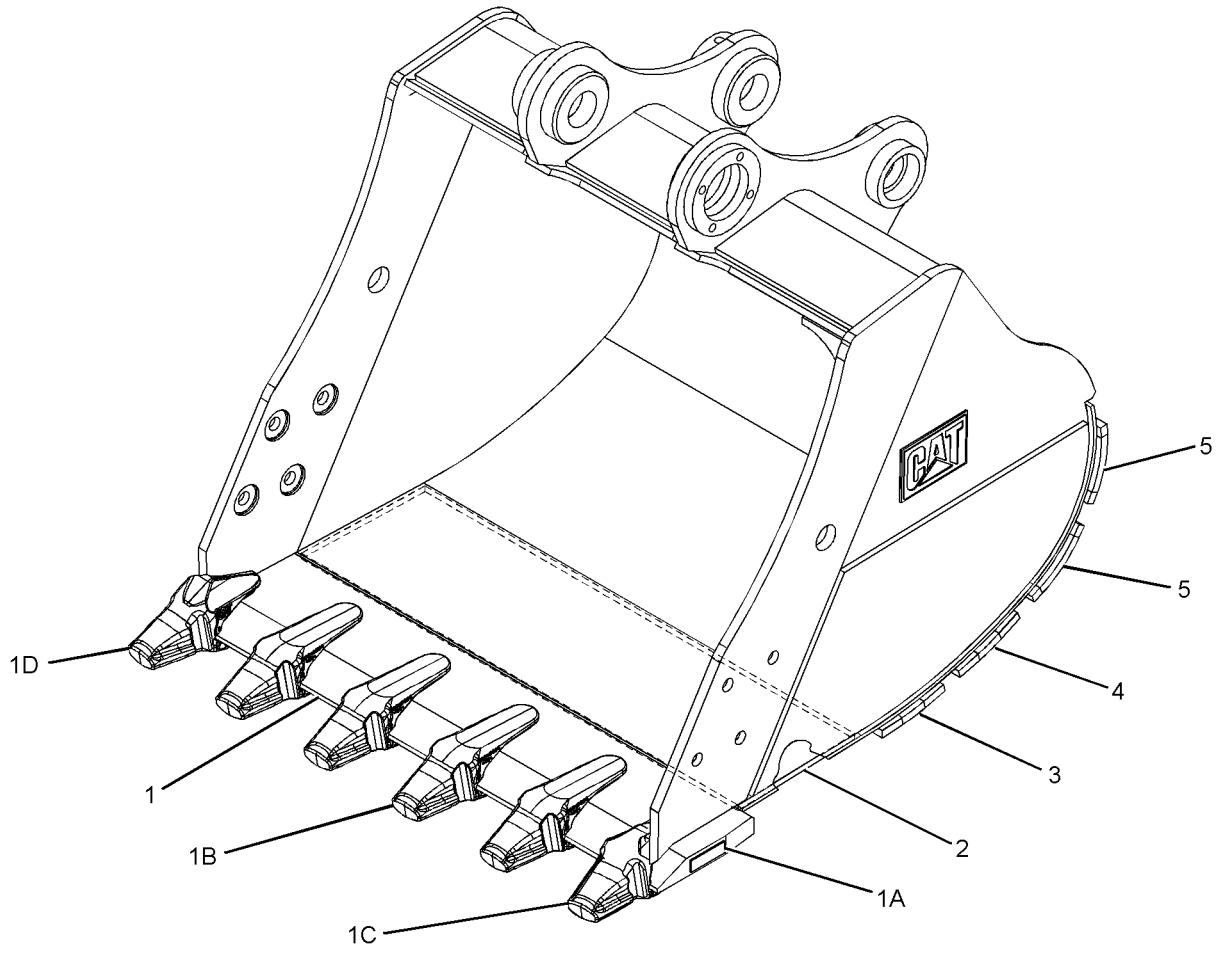

GRAPHIC #1 **<END>** g01146016

305-1668 BUCKET AS-HEAVY DUTY ROCK

S/N: CJN1-UP
927-MM (36-IN) WIDE X 0.6-CU M (0.8-CU YD) CAPACITY. J-350 ADAPTERS, (5X)
PART OF 305-1667 BUCKET & ADJUSTER GP
AN ATTACHMENT

SMCS-6102 **i02788581**

NOTE	REF NO	GRAPHIC REF	PART NUMBER	QTY	PART NAME 1 2 3 4 5 6 (PRODUCT LEVEL)	SEE PAGE
	1	1	**177-8236**	1	EDGE AS	
	1A	1	**6I-6356**	1	ADAPTER-TIP (J-350, 2-STRAP, LH)	
	1B	1	**6I-6354**	3	ADAPTER-TIP (J-350, 2-STRAP, CENTER)	
	1C	1	**6I-6355**	1	ADAPTER-TIP (J-350, 2-STRAP, RH)	
	1D	1	**8P-9770**	1	PLATE	
	2	1	**229-7639**	1	PLATE-REINFORCEMENT	
	3	1	**229-7640**	1	PLATE-WEAR	
	4	1	**229-7641**	1	PLATE-WEAR	
	5	1	**229-7642**	2	PLATE-WEAR	
	6	1	**305-1676**	3	PLATE-WEAR	
	7	1	**305-1677**	9	PLATE-WEAR	
	8	1	**2C-9259**	1	PLATE-IDENTIFICATION (CAT)	

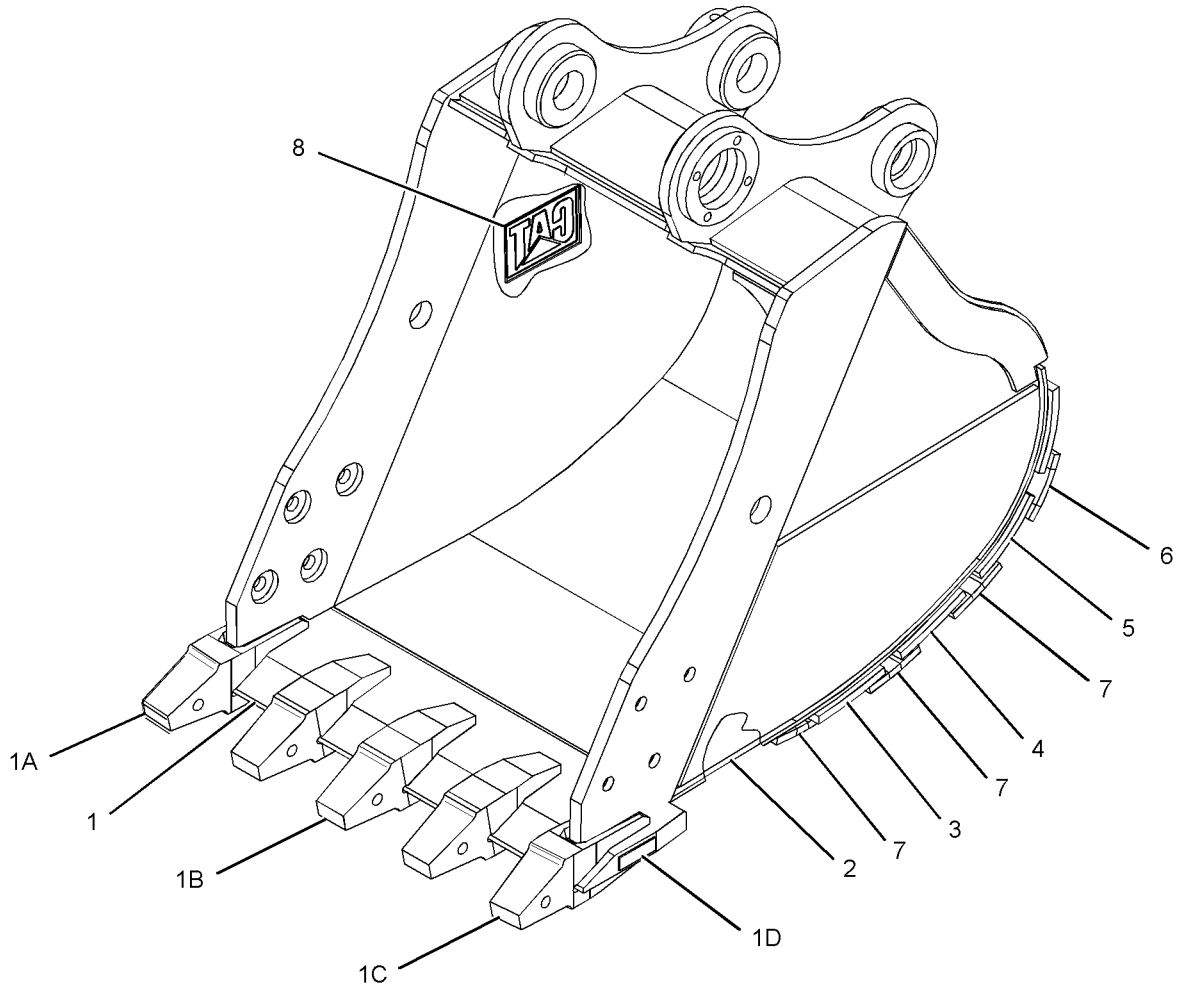

GRAPHIC #1 **<END>** g01416479

305-1672 BUCKET AS-HEAVY DUTY ROCK

S/N: CJN1-UP
1079-MM (42-IN) WIDE X 0.7-CU M (0.9-CU YD) CAPASITY. J-350 ADAPTERS, (5X)
PART OF 305-1671 BUCKET & ADJUSTER GP
AN ATTACHMENT

SMCS-6102 **i03153806**

NOTE	REF NO	GRAPHIC REF	PART NUMBER	QTY	PART NAME 1 2 3 4 5 6 (PRODUCT LEVEL)	SEE PAGE
	1	1	**177-8197**	1	EDGE AS	
	1A	1	**6I-6356**	1	ADAPTER-TIP (J-350, 2-STRAP, LH)	
	1B	1	**6I-6354**	3	ADAPTER-TIP (J-350, 2-STRAP, CENTER)	
	1C	1	**6I-6355**	1	ADAPTER-TIP (J-350, 2-STRAP, RH)	
	1D	1	**8P-9770**	1	PLATE	
	2	1	**2C-9259**	1	PLATE-IDENTIFICATION (CAT)	
	3	1	**229-7646**	2	PLATE-WEAR	
	4	1	**305-1679**	9	PLATE	
	5	1	**229-7777**	2	PLATE	
	6	1	**229-7775**	1	PLATE	
	7	1	**229-7776**	1	PLATE	
	8	1	**229-7774**	1	PLATE	
	9	1	**305-1678**	3	PLATE	

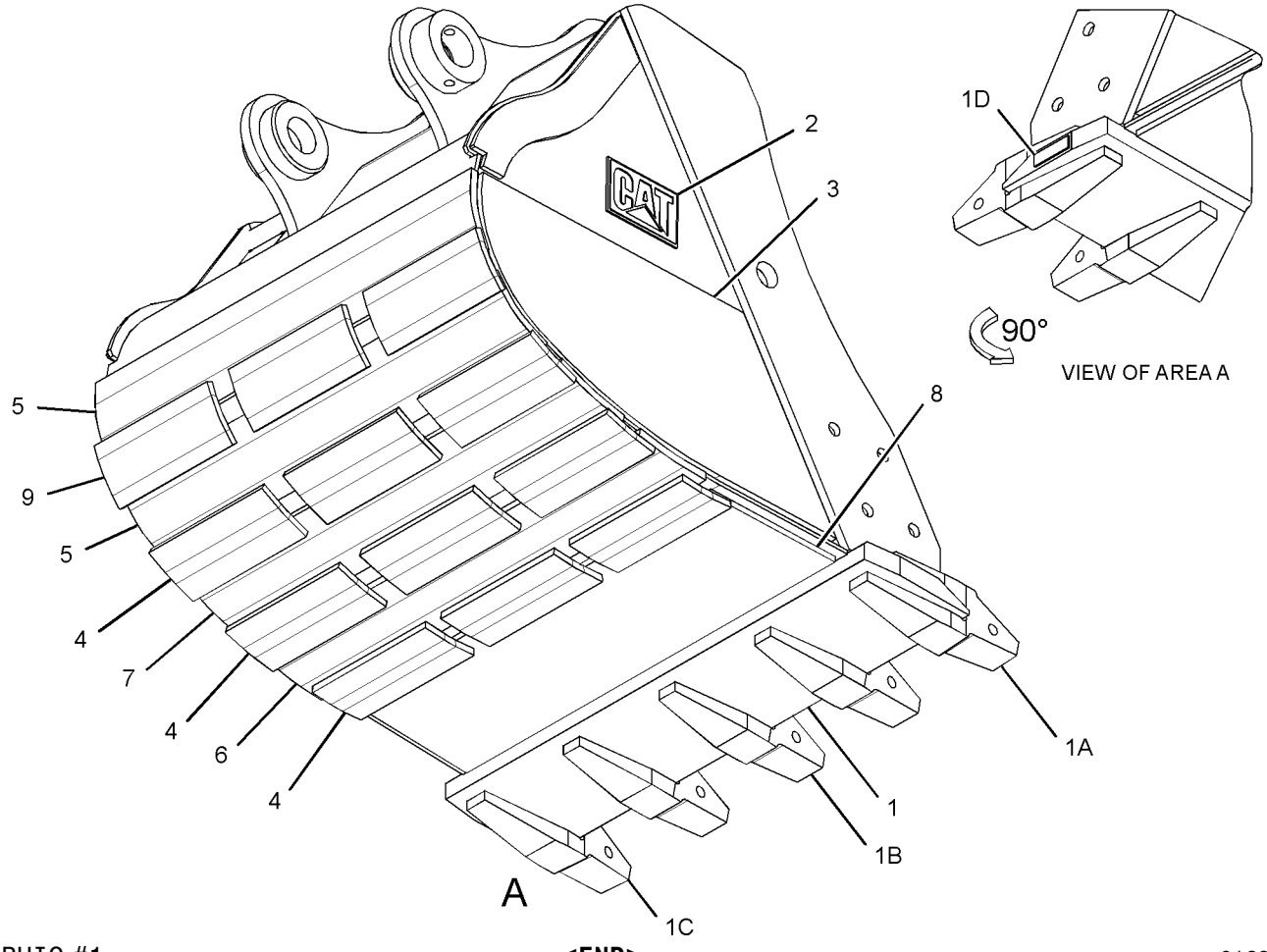

GRAPHIC #1 **<END>** g01626406

305-1694 BUCKET AS-HEAVY DUTY ROCK

S/N: CJN1-UP
619-MM (24-IN) WIDE X (0.4-CU M (0.5-CU YD) CAPACITY. K-90 ADAPTERS, (3X)
PART OF 239-2514 BUCKET & ADJUSTER GP
AN ATTACHMENT

SMCS-6102 **i02895055**

NOTE	REF NO	GRAPHIC REF	PART NUMBER	QTY	PART NAME 1 2 3 4 5 6 (PRODUCT LEVEL)	SEE PAGE
	1	1	**239-2819**	1	EDGE AS	
	1A	1	**220-9096**	1	ADAPTER-TIP (K-90, 2-STRAP, LH)	
	1B	1	**220-9094**	1	ADAPTER-TIP (K-90, 2-STRAP, CENTER)	
	1C	1	**220-9095**	1	ADAPTER-TIP (K-90, 2-STRAP, RH)	
	1D	1	**8P-9770**	1	PLATE	
	2	1	**239-2821**	1	PLATE-WEAR	
	3	1	**239-2822**	1	PLATE-WEAR	
	4	1	**239-2823**	2	PLATE-WEAR	
	5	1	**239-2820**	1	PLATE-WEAR	
	6	1	**2C-9259**	1	PLATE-IDENTIFICATION (CAT)	
	7	1	**229-7646**	2	PLATE-WEAR	

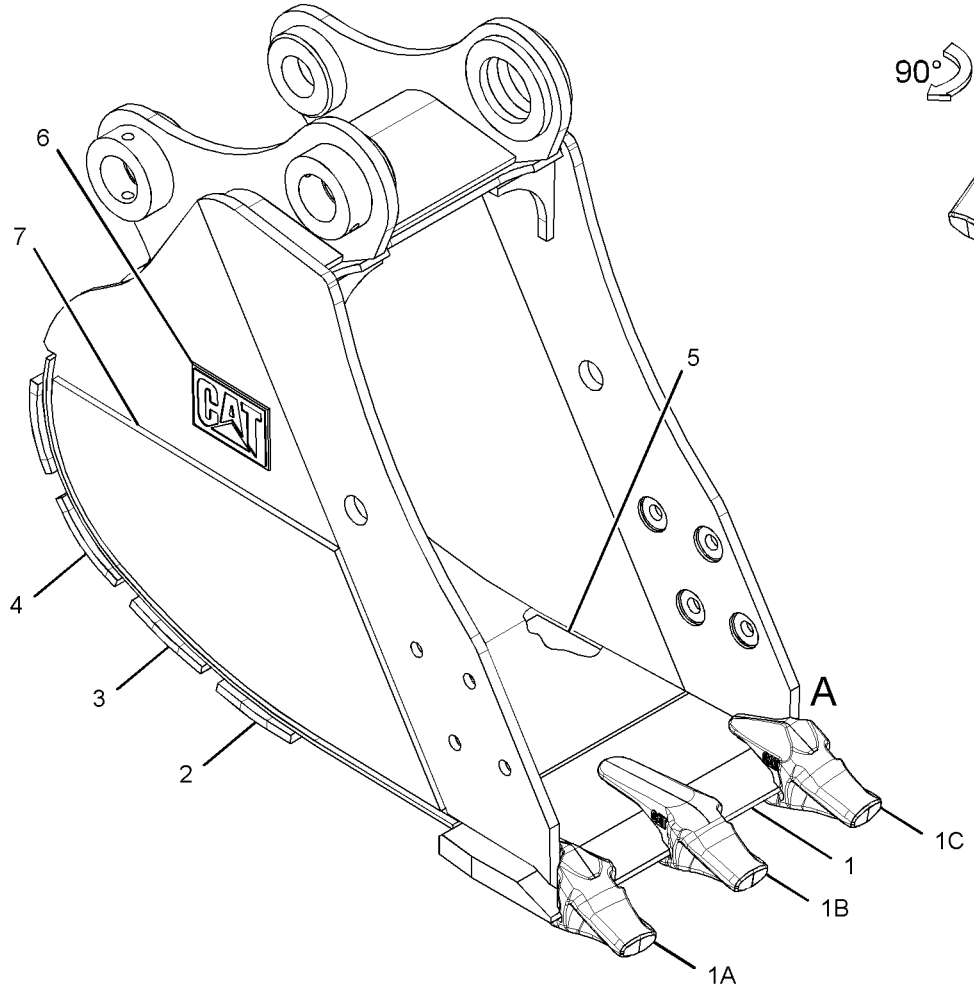

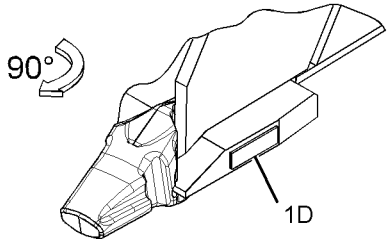

VIEW OF AREA A

GRAPHIC #1 **<END>** g01444715

WORK TOOLS

305-1695 BUCKET AS-HEAVY DUTY ROCK–D-FAMILY

S/N: CJN1-UP
770-MM (30-IN) WIDE X (0.5-CU M (0.6-CU YD) CAPACITY. K-90 ADAPTERS, (4X)
PART OF 239-2515 BUCKET & ADJUSTER GP
AN ATTACHMENT

SMCS-6102 **i02895058**

NOTE	REF NO	GRAPHIC REF	PART NUMBER	QTY	PART NAME 1 2 3 4 5 6 (PRODUCT LEVEL)	SEE PAGE
	1	1	**239-2818**	1	EDGE AS	
	1A	1	**220-9096**	1	ADAPTER-TIP (K-90, 2-STRAP, LH)	
	1B	1	**220-9094**	2	ADAPTER-TIP (K-90, 2-STRAP, CENTER)	
	1C	1	**220-9095**	1	ADAPTER-TIP (K-90, 2-STRAP, RH)	
	1D	1	**8P-9770**	1	PLATE	
	2	1	**239-2815**	1	PLATE-WEAR	
	3	1	**239-2816**	1	PLATE-WEAR	
	4	1	**239-2817**	2	PLATE-WEAR	
	5	1	**239-2748**	1	PLATE-REINFORCEMENT	
	6	1	**2C-9259**	1	PLATE-IDENTIFICATION (CAT)	
	7	1	**229-7646**	2	PLATE-WEAR	

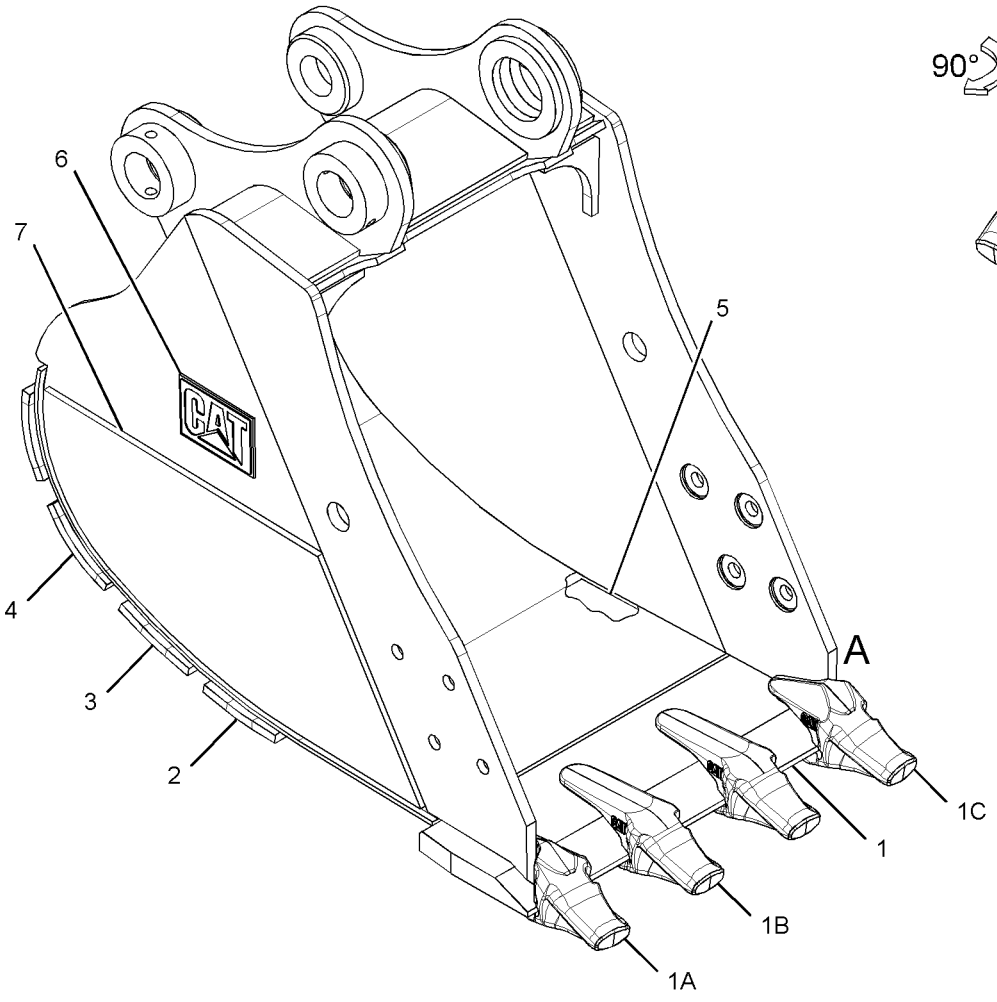

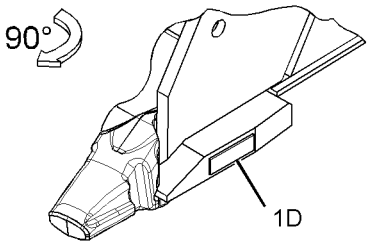

VIEW OF AREA A

GRAPHIC #1 **<END>** g01444707

305-1696 BUCKET AS-HEAVY DUTY ROCK

S/N: CJN1-UP
924-MM (36-IN) WIDE X 0.6-CU M (0.8-CU YD) CAPACITY. K-90 ADAPTERS, (5X)
PART OF 239-2516 BUCKET & ADJUSTER GP
AN ATTACHMENT

SMCS-6102 **i02895064**

NOTE	REF NO	GRAPHIC REF	PART NUMBER	QTY	PART NAME 1 2 3 4 5 6 (PRODUCT LEVEL)	SEE PAGE
	1	1	**239-2716**	1	EDGE AS	
	1A	1	**220-9096**	1	ADAPTER-TIP (K-90, 2-STRAP, LH)	
	1B	1	**220-9094**	3	ADAPTER-TIP (K-90, 2-STRAP, CENTER)	
	1C	1	**220-9095**	1	ADAPTER-TIP (K-90, 2-STRAP, RH)	
	1D	1	**8P-9770**	1	PLATE	
	2	1	**239-2723**	1	PLATE-WEAR	
	3	1	**239-2724**	1	PLATE-WEAR	
	4	1	**239-2725**	2	PLATE-WEAR	
	5	1	**239-2722**	1	PLATE-REINFORCEMENT	
	6	1	**2C-9259**	1	PLATE-IDENTIFICATION (CAT)	
	7	1	**229-7646**	2	PLATE-WEAR	

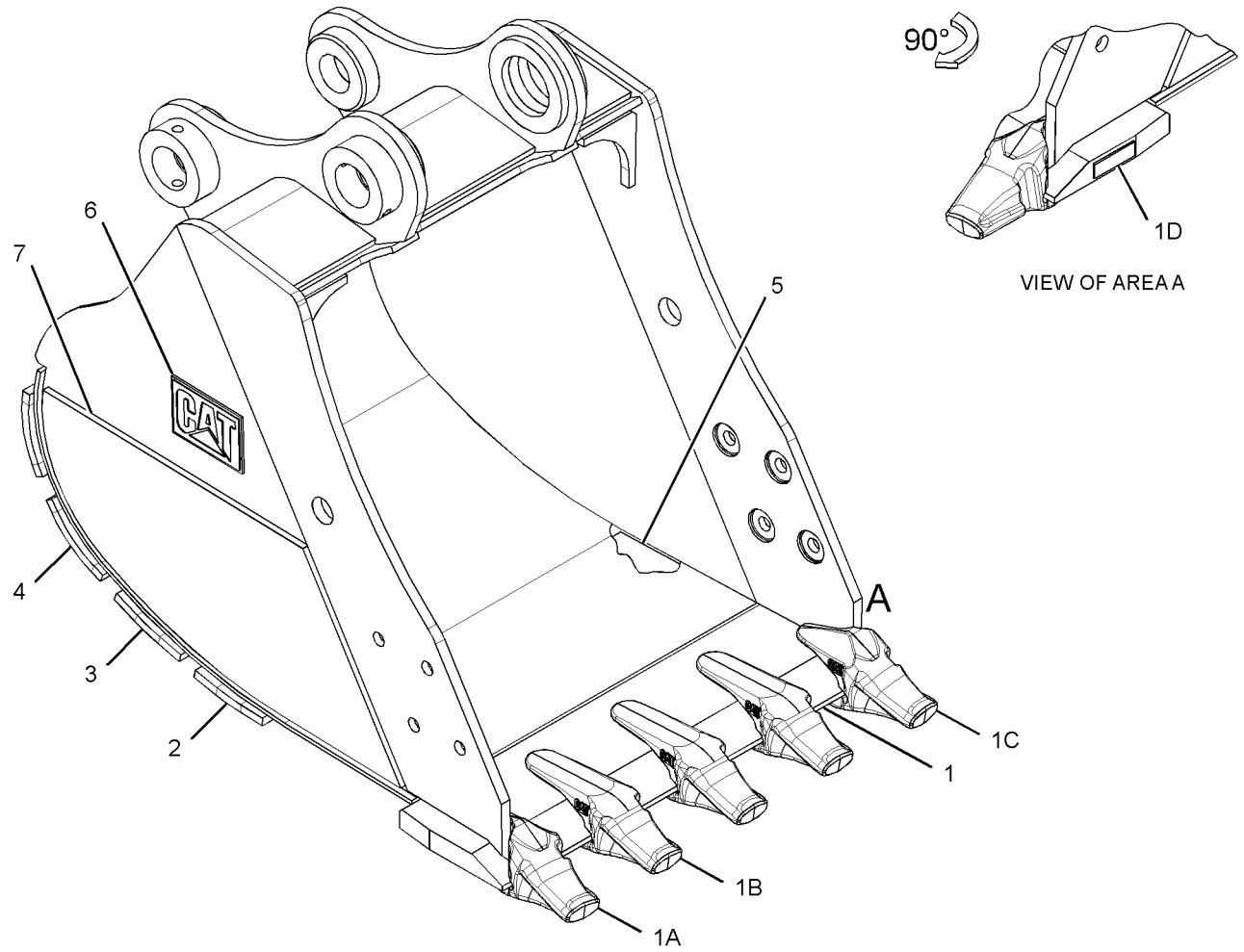

GRAPHIC #1 **<END>** g01444713

305-1697 BUCKET AS-HEAVY DUTY ROCK

S/N: CJN1-UP
1076-MM (42-IN) WIDE X 0.7-CU M (1-CU YD) CAPACITY. K-90 ADAPTERS, (5X)
PART OF 239-2517 BUCKET & ADJUSTER GP
AN ATTACHMENT

SMCS-6102 **i02895090**

NOTE	REF NO	GRAPHIC REF	PART NUMBER	QTY	PART NAME 1 2 3 4 5 6 (PRODUCT LEVEL)	SEE PAGE
	1	1	**239-2792**	1	EDGE AS	
	1A	1	**220-9096**	1	ADAPTER-TIP (K-90, 2-STRAP, LH)	
	1B	1	**220-9094**	3	ADAPTER-TIP (K-90, 2-STRAP, CENTER)	
	1C	1	**220-9095**	1	ADAPTER-TIP (K-90, 2-STRAP, RH)	
	1D	1	**8P-9770**	1	PLATE	
	2	1	**239-2794**	1	PLATE-WEAR	
	3	1	**239-2795**	1	PLATE-WEAR	
	4	1	**239-2796**	2	PLATE-WEAR	
	5	1	**239-2793**	1	PLATE-REINFORCEMENT	
	6	1	**2C-9259**	1	PLATE-IDENTIFICATION (CAT)	
	7	1	**229-7646**	2	PLATE-WEAR	

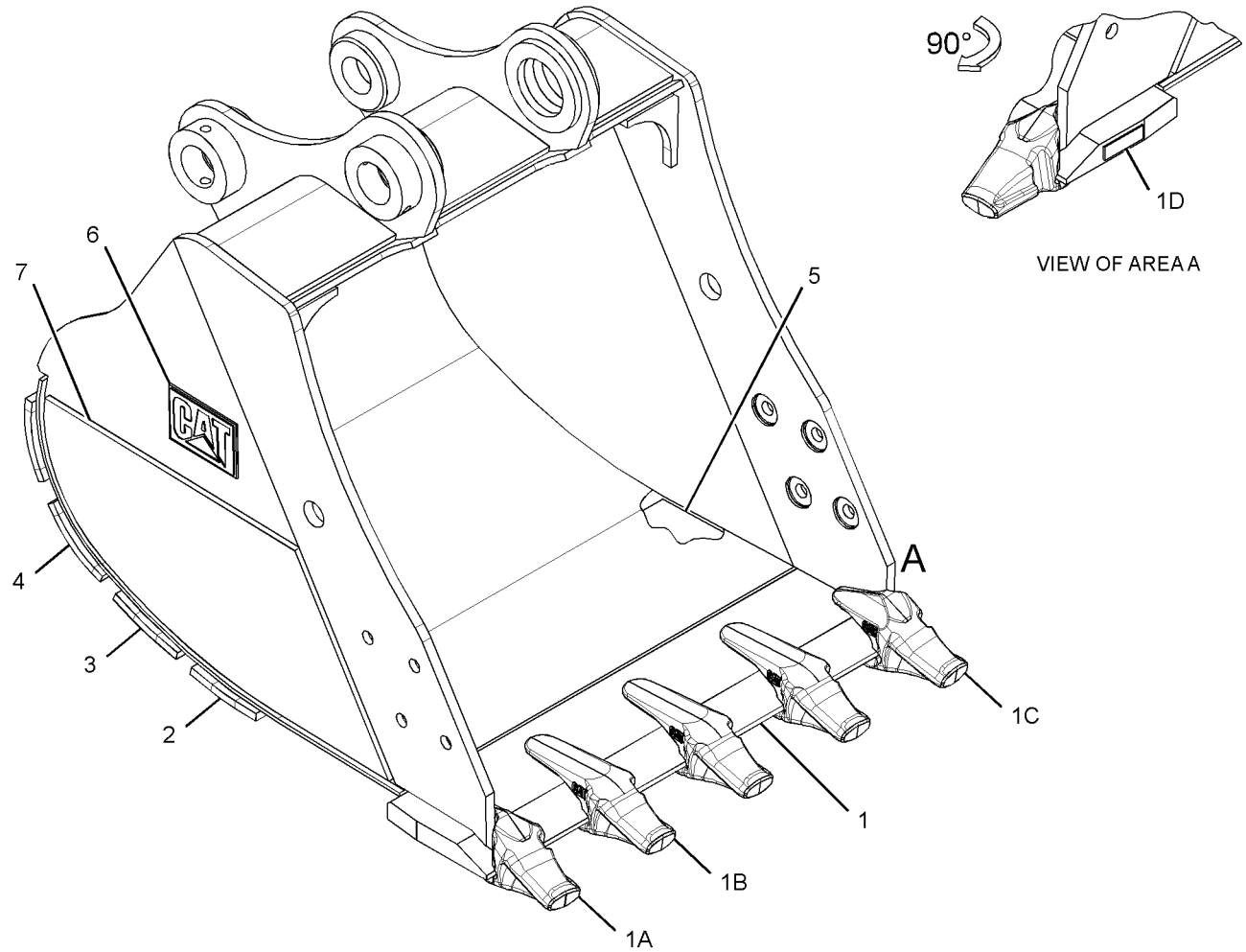

GRAPHIC #1 **<END>** g01444700

WORK TOOLS

305-1698 BUCKET AS-HEAVY DUTY ROCK

S/N: CJN1-UP
1228-MM (48-IN) WIDE X 0.8-CU M (1.2-CU YD) CAPACITY. K-90 ADAPTER, (6X)
PART OF 239-2518 BUCKET & ADJUSTER GP
AN ATTACHMENT

SMCS-6102 **i03034921**

NOTE	REF NO	GRAPHIC REF	PART NUMBER	QTY	PART NAME 1 2 3 4 5 6 (PRODUCT LEVEL)	SEE PAGE
	1	1	**239-2801**	1	EDGE AS	
	1A	1	**220-9094**	4	ADAPTER-TIP (K-90, 2-STRAP, CENTER)	
	1B	1	**220-9095**	1	ADAPTER-TIP (K-90, 2-STRAP, RH)	
	1C	1	**220-9096**	1	ADAPTER-TIP (K-90, 2-STRAP, LH)	
	1D	1	**8P-9770**	1	PLATE	
	2	1	**239-2802**	1	PLATE-REINFORCEMENT	
	3	1	**239-2803**	1	PLATE-WEAR	
	4	1	**239-2804**	1	PLATE-WEAR	
	5	1	**239-2805**	2	PLATE-WEAR	
	6	1	**229-7646**	2	PLATE-WEAR	
	7	1	**2C-9259**	1	PLATE-IDENTIFICATION (CAT)	

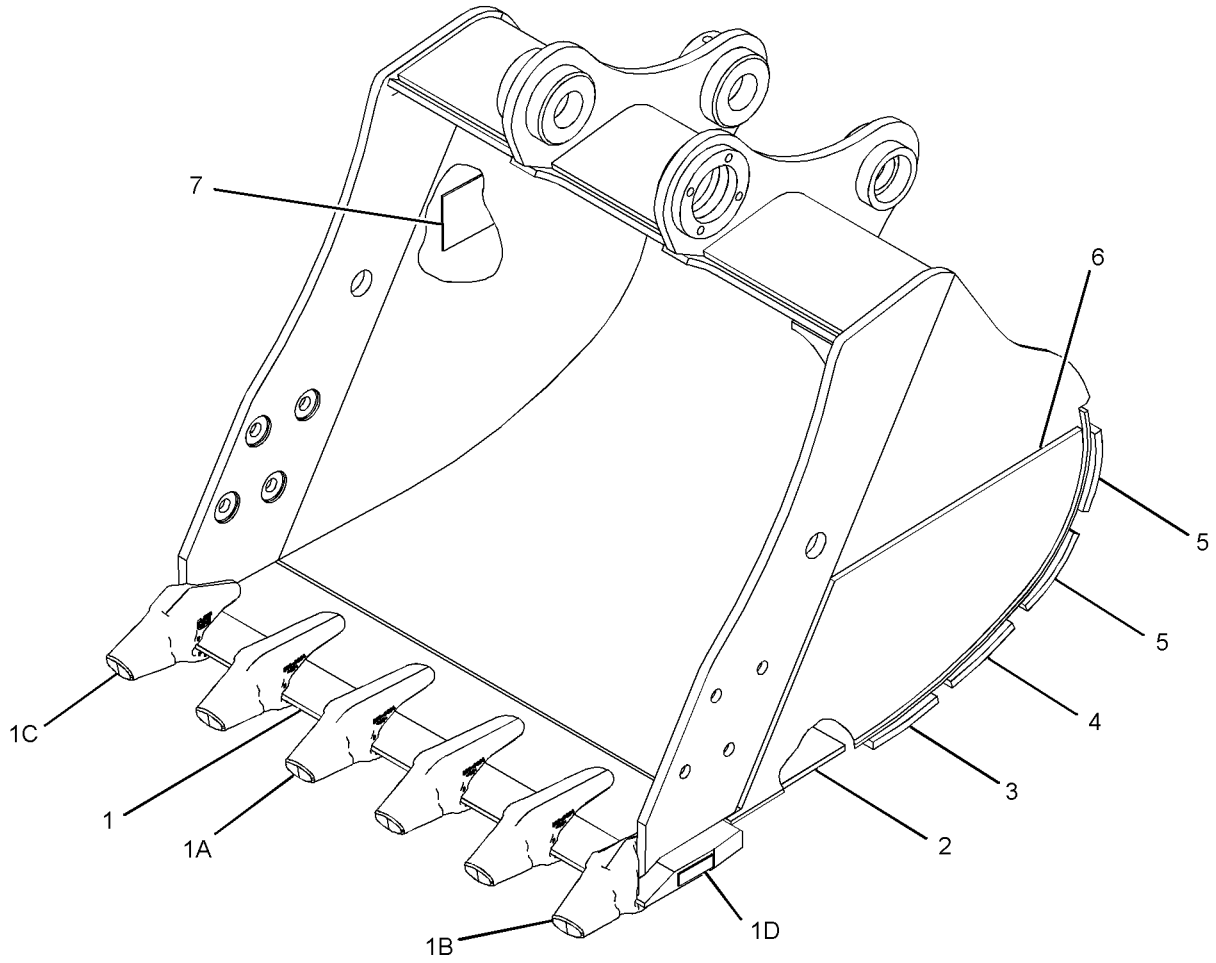

GRAPHIC #1 **<END>** g01550313

167-0278 BUCKET AS-UTILITY—DITCH CLEANING

S/N: CJN1-UP
1500-MM (59-IN) WIDE X 0.9-CU M (1.2-CU YD) CAPACITY
PART OF 327-3650 BUCKET GP-UTILITY
AN ATTACHMENT

SMCS-6101 **i03095382**

NOTE	REF NO	GRAPHIC REF	PART NUMBER	QTY	PART NAME 1 2 3 4 5 6 (PRODUCT LEVEL)	SEE PAGE
	1	1	**167-0286**	1	EDGE	
	2	1	**2C-9259**	2	PLATE-IDENTIFICATION (CAT)	

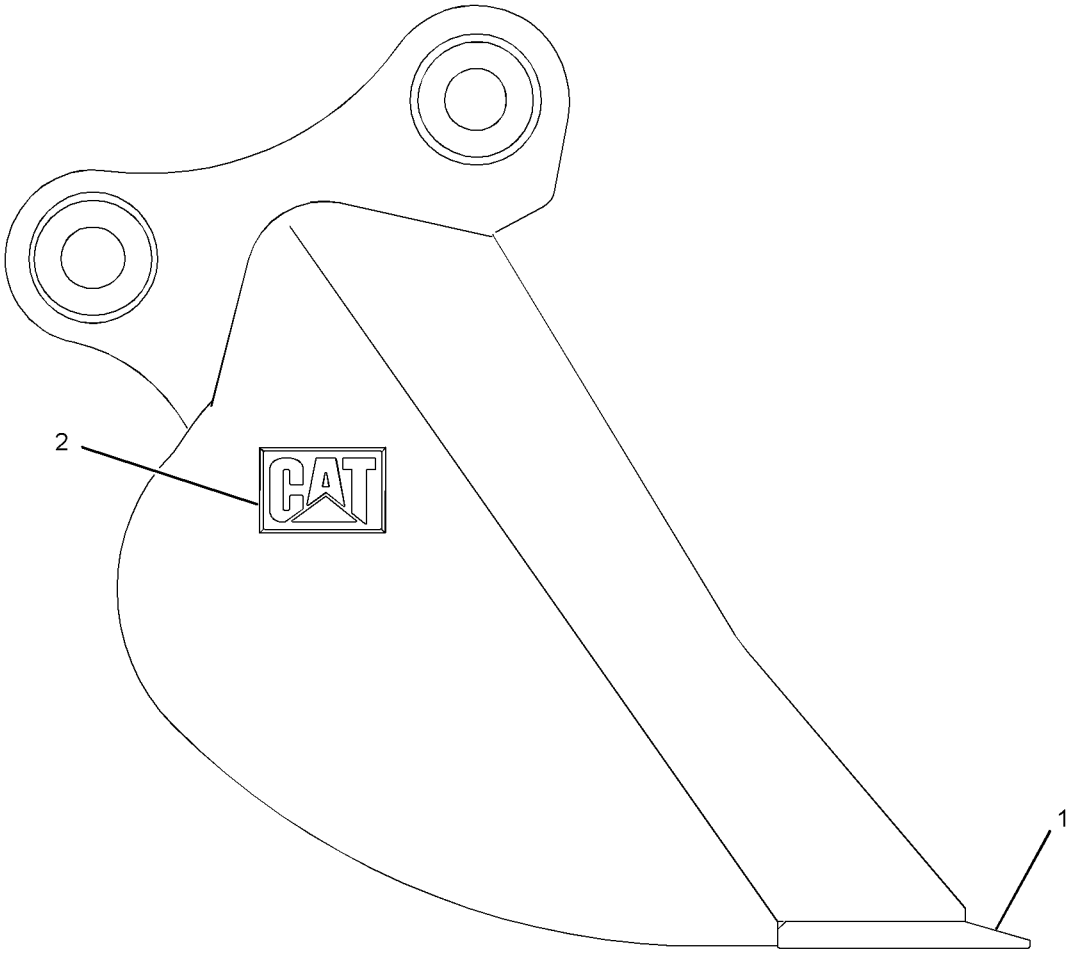

GRAPHIC #1 **<END>** g01627836

327-3614 BUCKET GP-GENERAL PURPOSE

S/N: CJN1-UP
617-MM (24-IN) WIDE X 0.4-CU M (0.5-CU YD) CAPACITY. K-80 ADAPTERS, (3X)
AN ATTACHMENT

SMCS-6101 **i03093721**

NOTE	PART NUMBER	QTY	PART NAME 1 2 3 4 5 6 (PRODUCT LEVEL)	SEE PAGE
Y	**327-3615**	1	BUCKET AS-GENERAL PURPOSE	802
Y	**2C-9589**	1	PIN GP-BUCKET	823
Y	*7Y-0729*	1	SIDECUTTER GP	825
Y	*229-6966*	3	TIP GP-PENETRATION PLUS (K-80)	834

Y-SEPARATE ILLUSTRATION

<END>

327-3617 BUCKET GP-GENERAL PURPOSE

S/N: CJN1-UP
770-MM (30-IN) WIDE X 0.5-CU M (0.6-CU YD) CAPACITY. K-80 ADAPTERS, (4X)
AN ATTACHMENT

SMCS-6101 **i03095132**

NOTE	PART NUMBER	QTY	PART NAME 1 2 3 4 5 6 (PRODUCT LEVEL)	SEE PAGE
Y	**327-3618**	1	BUCKET AS-GENERAL PURPOSE	803
Y	**2C-9589**	1	PIN GP-BUCKET	823
Y	*7Y-0729*	1	SIDECUTTER GP	825
Y	*229-6966*	4	TIP GP-PENETRATION PLUS (K-80)	834

Y-SEPARATE ILLUSTRATION

<END>

327-3620 BUCKET GP-GENERAL PURPOSE

S/N: CJN1-UP
922-MM (36-IN) WIDE X 0.6-CU M (0.8-CU YD) CAPACITY. K-80 ADAPTERS, (5X)
AN ATTACHMENT

SMCS-6101 **i03095186**

NOTE	PART NUMBER	QTY	PART NAME 1 2 3 4 5 6 (PRODUCT LEVEL)	SEE PAGE
Y	**327-3621**	1	BUCKET AS-GENERAL PURPOSE	804
Y	**2C-9589**	1	PIN GP-BUCKET	823
Y	*7Y-0729*	1	SIDECUTTER GP	825
Y	*229-6966*	5	TIP GP-PENETRATION PLUS (K-80)	834

Y-SEPARATE ILLUSTRATION

<END>

327-3623 BUCKET GP-GENERAL PURPOSE

S/N: CJN1-UP

1074-MM (42-IN) WIDE X 0.7-CU M (1-CU YD) CAPACITY. K-80 ADAPTERS, (5X)

AN ATTACHMENT

SMCS-6101 **i03095205**

NOTE	PART NUMBER	QTY	PART NAME 1 2 3 4 5 6 (PRODUCT LEVEL)	SEE PAGE
Y	**327-3624**	1	BUCKET AS-GENERAL PURPOSE	805
Y	**2C-9589**	1	PIN GP-BUCKET	823
Y	*7Y-0729*	1	SIDECUTTER GP	825
Y	*229-6966*	5	TIP GP-PENETRATION PLUS (K-80)	834

Y-SEPARATE ILLUSTRATION

<END>

327-3626 BUCKET GP-GENERAL PURPOSE

S/N: CJN1-UP

1219-MM (48-IN) WIDE X 0.9-CU M (1.2-CU YD) CAPACITY. K-80 ADAPTERS, (6X)

AN ATTACHMENT

SMCS-6101 **i03095214**

NOTE	PART NUMBER	QTY	PART NAME 1 2 3 4 5 6 (PRODUCT LEVEL)	SEE PAGE
Y	**327-3627**	1	BUCKET AS-GENERAL PURPOSE	806
Y	**2C-9589**	1	PIN GP-BUCKET	823
Y	*7Y-0729*	1	SIDECUTTER GP	825
Y	*229-6966*	6	TIP GP-PENETRATION PLUS (K-80)	834

Y-SEPARATE ILLUSTRATION

<END>

327-3650 BUCKET GP-UTILITY—DITCH CLEANING

S/N: CJN1-UP

1500-MM (59-IN) WIDE X 0.9-CU M (1.2-CU YD) CAPACITY

AN ATTACHMENT

SMCS-6101 **i03095365**

NOTE	PART NUMBER	QTY	PART NAME 1 2 3 4 5 6 (PRODUCT LEVEL)	SEE PAGE
Y	**167-0278**	1	BUCKET AS-UTILITY	818
Y	*167-0316*	1	EDGE GP-CUTTING	823
Y	**2C-9589**	1	PIN GP-BUCKET	823

Y-SEPARATE ILLUSTRATION

<END>

WORK TOOLS

268-7258 COUPLER AR-QUICK—WITH COUPLER PIN

S/N: CJN1-UP
CANNOT BE USED WITH SHORT STICK
AN ATTACHMENT

SMCS-1408, 5057, 6129 **i02889023**

NOTE	PART NUMBER	QTY	PART NAME 1 2 3 4 5 6 (PRODUCT LEVEL)	SEE PAGE
Y	*259-0844*	1	CYLINDER & LINES GP-BUCKET	396
Y	*277-1212*	1	LINES GP-COUPLER	487
Y	*277-1213*	1	LINKAGE GP-BUCKET	767
Y	*253-6407*	1	PIN GP-COUPLER	824
Y-SEPARATE ILLUSTRATION				

<END>

268-7259 COUPLER AR-QUICK—WITHOUT COUPLER PIN

S/N: CJN1-UP
AN ATTACHMENT

SMCS-1408, 5057, 6129 **i03196445**

NOTE	PART NUMBER	QTY	PART NAME 1 2 3 4 5 6 (PRODUCT LEVEL)	SEE PAGE
Y	*259-0844*	1	CYLINDER & LINES GP-BUCKET	396
Y	*277-1212*	1	LINES GP-COUPLER	487
Y	*277-1213*	1	LINKAGE GP-BUCKET (COUPLER)	767
Y-SEPARATE ILLUSTRATION				

<END>

306-1336 COUPLER AR—WITH COUPLER PIN

S/N: CJN1-UP
AN ATTACHMENT

SMCS-1408, 5057, 6129 **i02841181**

NOTE	PART NUMBER	QTY	PART NAME 1 2 3 4 5 6 (PRODUCT LEVEL)	SEE PAGE
Y	*259-0914*	1	CYLINDER & LINES GP-BUCKET	396
Y	*277-1212*	1	LINES GP-COUPLER	487
Y	*277-1213*	1	LINKAGE GP-BUCKET	767
Y	*253-6407*	1	PIN GP-COUPLER	824
Y-SEPARATE ILLUSTRATION				

<END>

306-1337 COUPLER AR—WITHOUT COUPLER PIN

S/N: CJN1-UP
AN ATTACHMENT

SMCS-1408, 5057, 6129 **i02841185**

NOTE	PART NUMBER	QTY	PART NAME 1 2 3 4 5 6 (PRODUCT LEVEL)	SEE PAGE
Y	*259-0914*	1	CYLINDER & LINES GP-BUCKET	396
Y	*277-1212*	1	LINES GP-COUPLER	487
Y	*277-1213*	1	LINKAGE GP-BUCKET	767
Y-SEPARATE ILLUSTRATION				

<END>

WORK TOOLS

236-4154 COUPLER GP-QUICK

S/N: CJN1-UP
PART OF 277-1212 LINES GP-COUPLER
AN ATTACHMENT

SMCS-1408, 5057, 6129 **i02528888**

NOTE	REF NO	GRAPHIC REF	PART NUMBER	QTY	PART NAME 1 2 3 4 5 6 (PRODUCT LEVEL)	SEE PAGE
Y	1	1	**256-9795**	1	CYLINDER GP-COUPLER	422
	2	1	**256-9794**	1	HOOK	
	3	1	**256-9797**	1	PIN	
	4	1	**256-9798**	1	PIN	
	5	1	**273-4160**	1	PIN	
	6	1	**3B-8489**	4	FITTING-GREASE	
	7	1	**201-3664**	1	SPRING	
	8	1	**184-7496**	1	BEARING	
	9	1	**273-4166**	1	BAR	
	10	1	**273-4164**	1	BAR	
	11	1	**256-9808**	2	CLIP	
	12	1	**256-9807**	4	CLIP	
	13	1	**273-4159**	1	PLATE-RETAINING	
M	14	1	**8C-6364**	2	BOLT-SOCKET HEAD (M5X0.8X14-MM)	
Z	15	1		1	COUPLER AS-QUICK	

M-METRIC PART
Y-SEPARATE ILLUSTRATION
Z-NOT SERVICED SEPARATELY

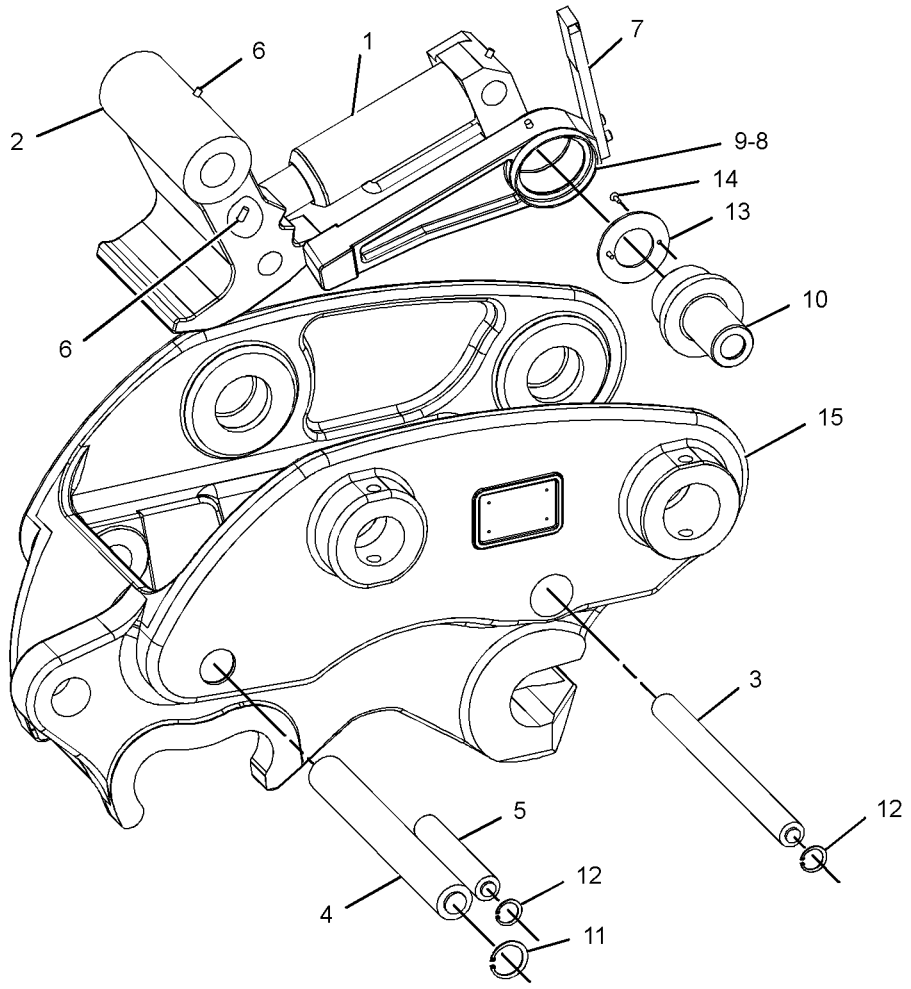

GRAPHIC #1 **<END>** g01203214

WORK TOOLS

167-0316 EDGE GP-CUTTING

S/N: CJN1-UP
PART OF 327-3650 BUCKET GP-UTILITY
AN ATTACHMENT

SMCS-6801 **i03095383**

NOTE	PART NUMBER	QTY	PART NAME 1 2 3 4 5 6 (PRODUCT LEVEL)	SEE PAGE
	5J-4771	6	BOLT-PLOW (3/4-10X2.75-IN)	
	4T-3009	1	EDGE-CUTTING	
	2J-3506	6	NUT-FULL (3/4-10-THD)	

<END>

2C-9589 PIN GP-BUCKET

S/N: CJN1-UP
PART OF 327-3614, 327-3617, 327-3620, 327-3623, 327-3626 BUCKET GP-GENERAL PURPOSE, 327-3650 BUCKET GP-UTILITY
AN ATTACHMENT

SMCS-6108 **i03093782**

NOTE	PART NUMBER	QTY	PART NAME 1 2 3 4 5 6 (PRODUCT LEVEL)	SEE PAGE
M	**8T-6385**	2	BOLT (M16X2X180-MM)	
M	**8T-4132**	4	NUT (M16X2-THD)	
	123-7083	2	PIN	

M-METRIC PART

<END>

WORK TOOLS

253-6407 PIN GP-COUPLER

S/N: CJN1-UP
PART OF 268-7258, 306-1336 COUPLER AR-QUICK
AN ATTACHMENT

SMCS-6129 **i02211016**

NOTE	REF NO	GRAPHIC REF	PART NUMBER	QTY	PART NAME 1 2 3 4 5 6 (PRODUCT LEVEL)	SEE PAGE
	1	1	**106-6878**	2	PIN	
M	2	1	**8T-4132**	4	NUT (M16X2-THD)	
M	3	1	**8T-6385**	2	BOLT (M16X2X180-MM)	

M-METRIC PART

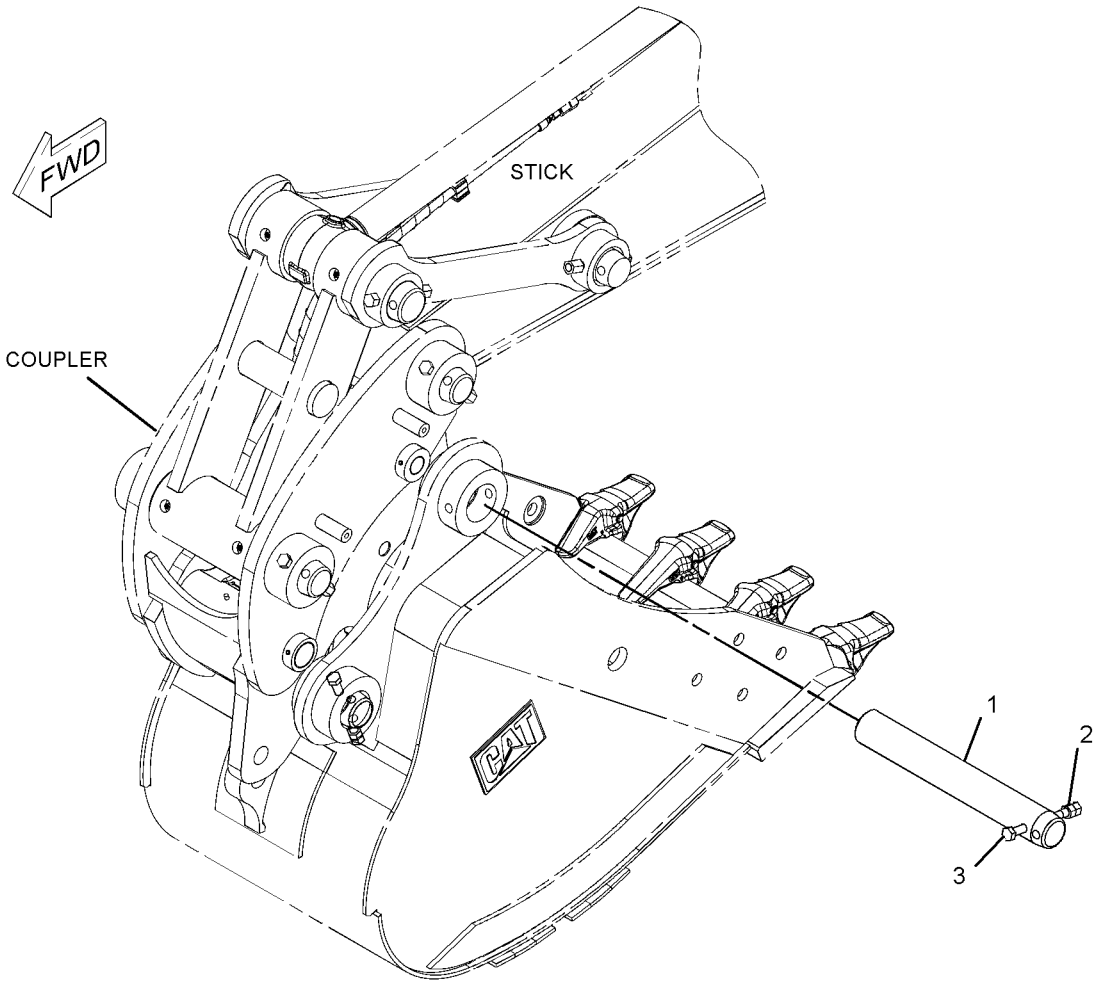

GRAPHIC #1 **<END>** g01116892

7Y-0729 SIDECUTTER GP

S/N: CJN1-UP
B FAMILY
PART OF 327-3614, 327-3617, 327-3620, 327-3623, 327-3626 BUCKET GP-GENERAL PURPOSE
AN ATTACHMENT

SMCS-6813 **i01471591**

NOTE	REF NO	GRAPHIC REF	PART NUMBER	QTY	PART NAME 1 2 3 4 5 6 (PRODUCT LEVEL)	SEE PAGE
	1	1	**096-4748**	1	SIDECUTTER-RH	
	2	1	**096-4747**	1	SIDECUTTER-LH	
M	3	1	**8T-0380**	8	BOLT (M24X3X60MM)	
M	4	1	**7X-0851**	8	NUT (M24X3.00 THD)	

M-METRIC PART

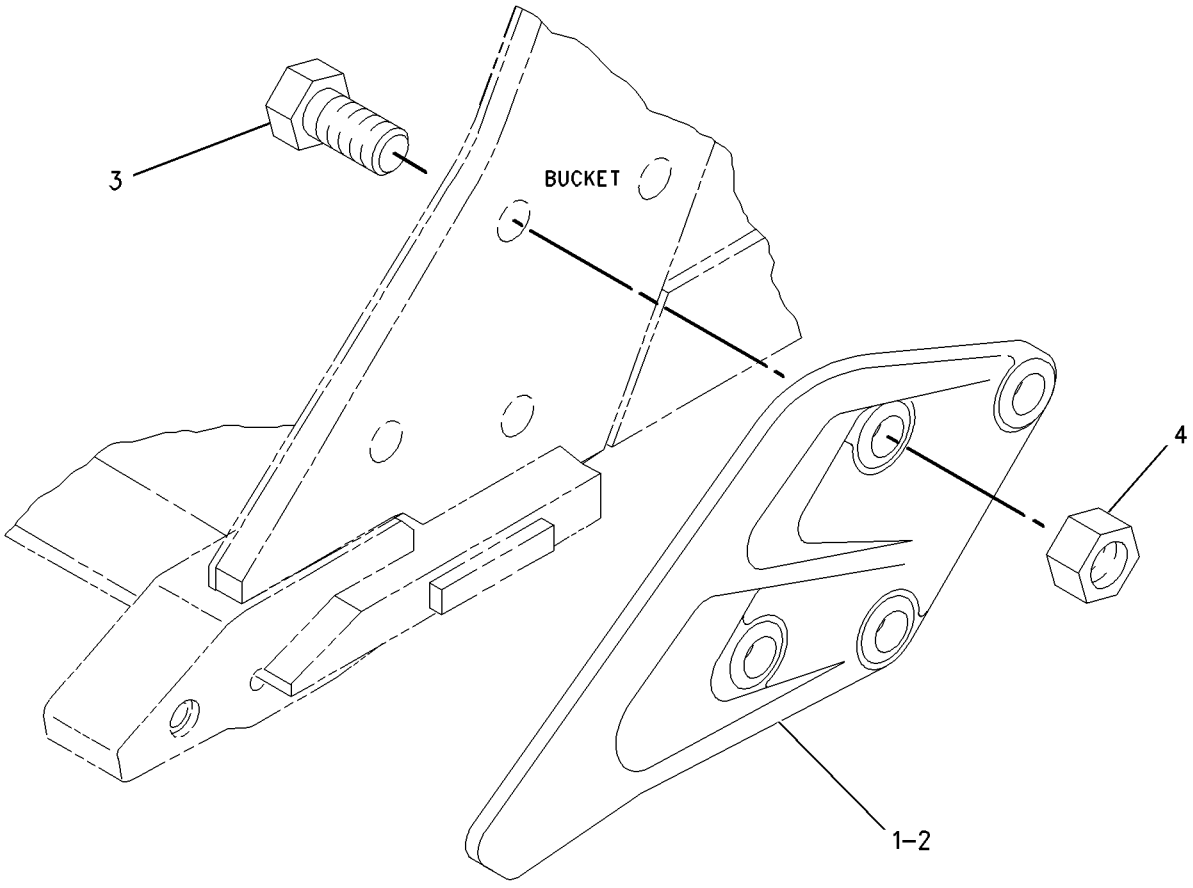

GRAPHIC #1 **<END>** g00767961

WORK TOOLS

217-4895 TIP GP-DOUBLE SPIKE–K-90

S/N: CJN1-UP

AN ATTACHMENT

SMCS-6805 **i03013718**

NOTE	REF NO	GRAPHIC REF	PART NUMBER	QTY	PART NAME 1 2 3 4 5 6 (PRODUCT LEVEL)	SEE PAGE
	1	1	**220-9090**	1	RETAINER-G.E.T.	
	2	1	**309-1098**	1	TIP-DOUBLE SPIKE (K-90)	

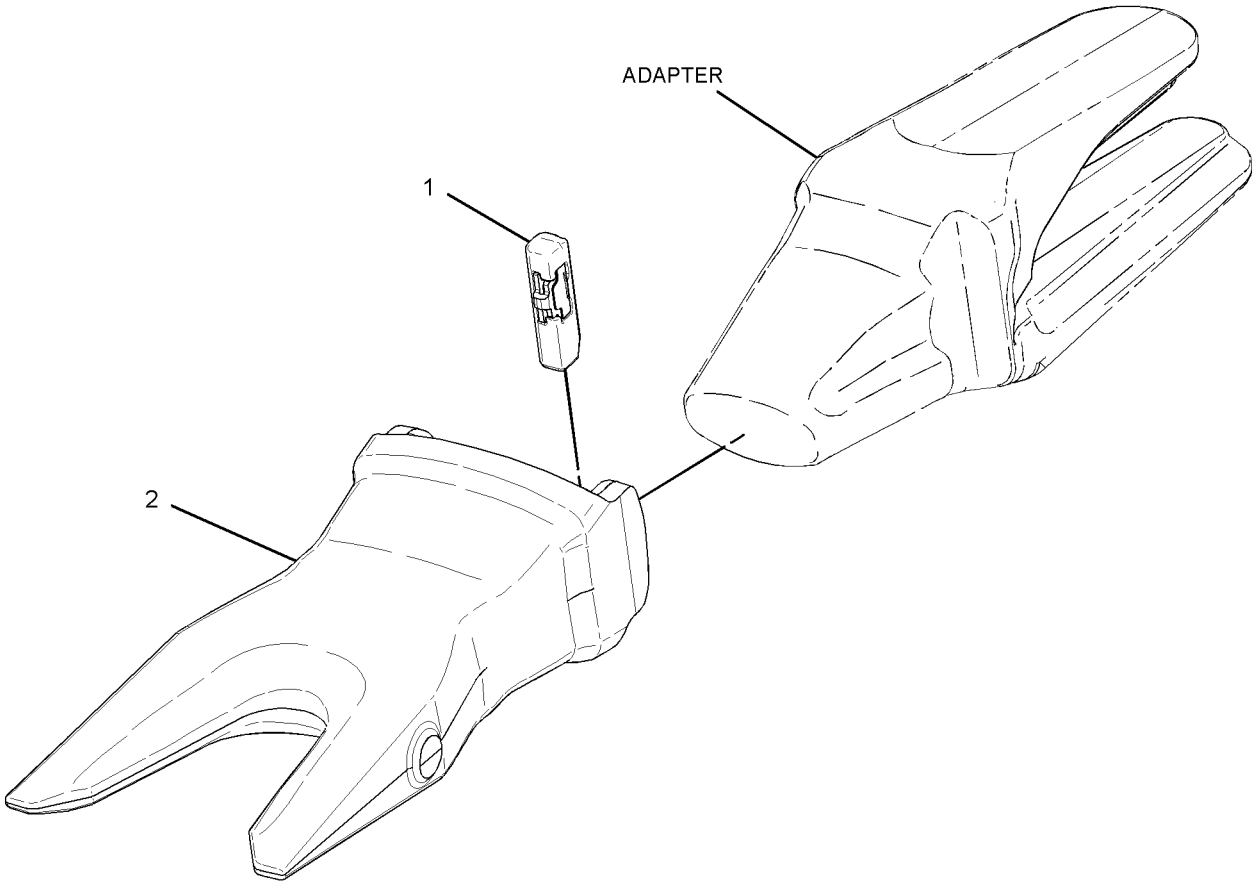

GRAPHIC #1 **<END>** g01506153

WORK TOOLS

217-4891 TIP GP-EXTRA-DUTY–K-90

S/N: CJN1-UP
AN ATTACHMENT

SMCS-6805 **i02153726**

NOTE	REF NO	GRAPHIC REF	PART NUMBER	QTY	PART NAME 1 2 3 4 5 6 (PRODUCT LEVEL)	SEE PAGE
	1	1	**220-9090**	1	RETAINER-G.E.T.	
	2	1	**220-9091**	1	TIP-EXTRA-DUTY (K-90)	

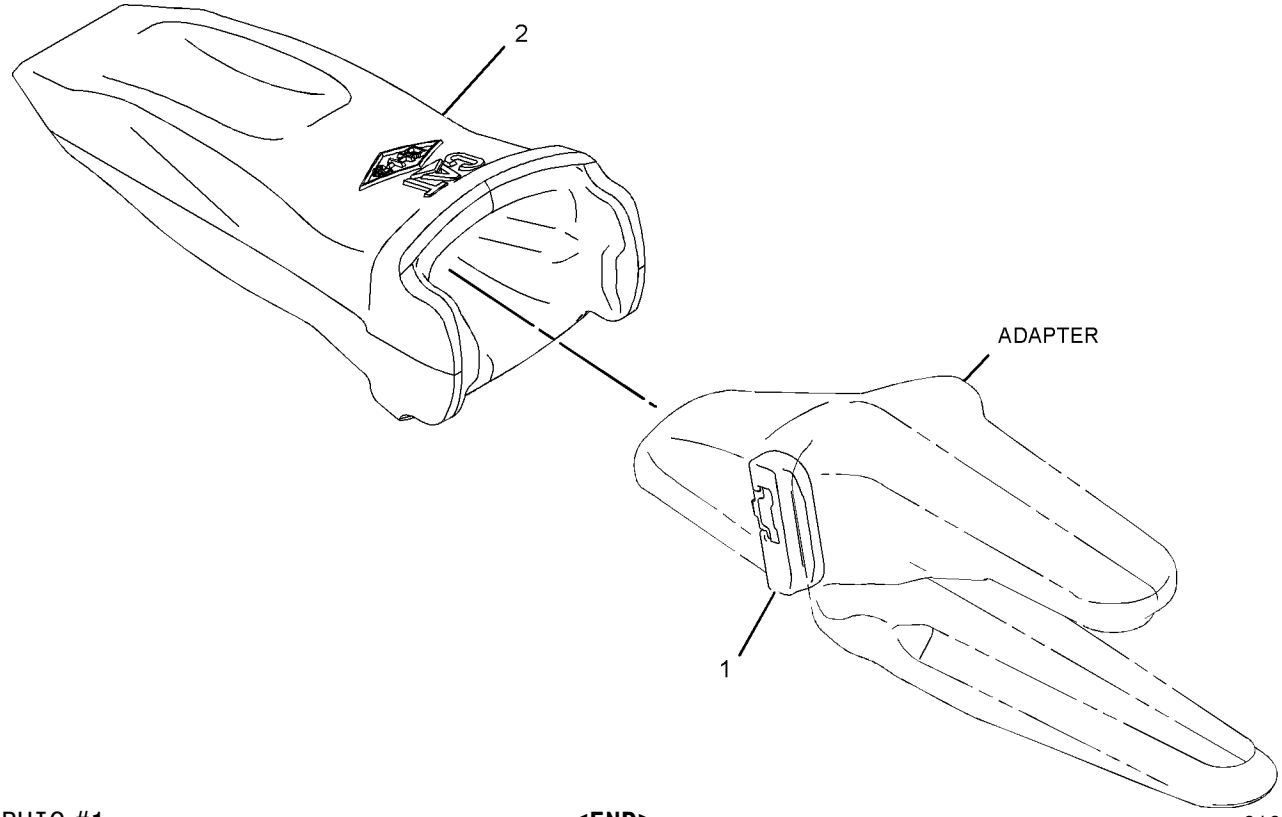

GRAPHIC #1 **<END>** g01074500

WORK TOOLS

229-6964 TIP GP-EXTRA-DUTY–K-80

S/N: CJN1-UP

AN ATTACHMENT

SMCS-6805 **i02496230**

NOTE	REF NO	GRAPHIC REF	PART NUMBER	QTY	PART NAME 1 2 3 4 5 6 (PRODUCT LEVEL)	SEE PAGE
	1	1	**220-9081**	1	TIP-EXTRA-DUTY (K-80)	
	2	1	**220-9090**	1	RETAINER-G.E.T.	

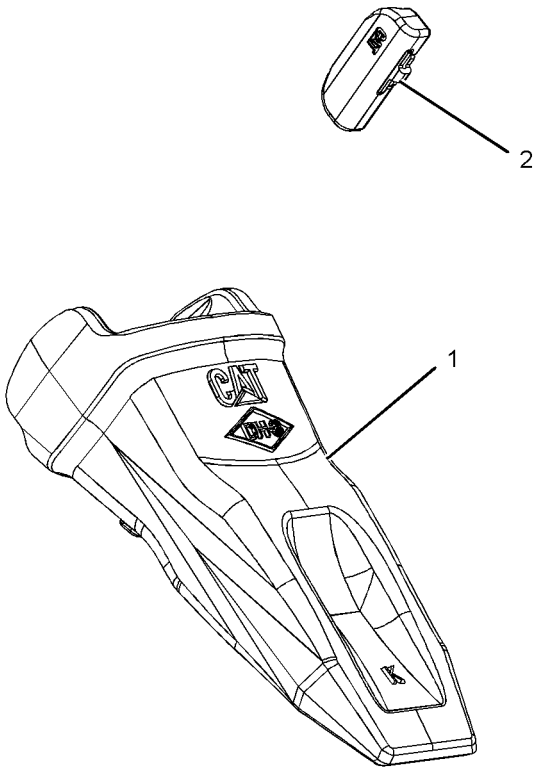

GRAPHIC #1 **<END>** g01136160

WORK TOOLS

217-4896 TIP GP-GENERAL PURPOSE–K-90

S/N: CJN1-UP
AN ATTACHMENT

SMCS-6805 **i02467714**

NOTE	REF NO	GRAPHIC REF	PART NUMBER	QTY	PART NAME 1 2 3 4 5 6 (PRODUCT LEVEL)	SEE PAGE
	1	1	**220-9090**	1	RETAINER-G.E.T.	
	2	1	**220-9099**	1	TIP-GENERAL PURPOSE (K-90)	

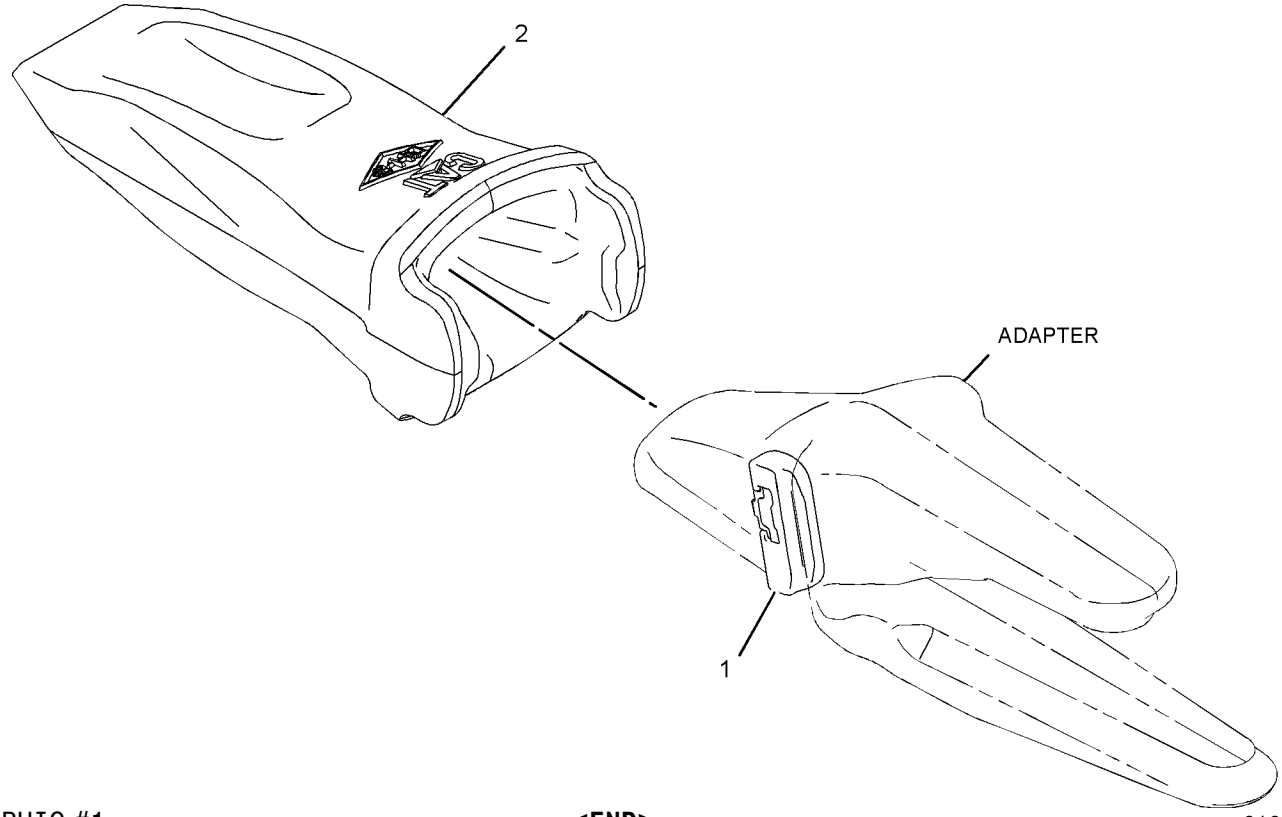

GRAPHIC #1 **<END>** g01074500

WORK TOOLS

229-6969 TIP GP-GENERAL PURPOSE–K-80

S/N: CJN1-UP

AN ATTACHMENT

SMCS-6805 **i02496237**

NOTE	REF NO	GRAPHIC REF	PART NUMBER	QTY	PART NAME 1 2 3 4 5 6 (PRODUCT LEVEL)	SEE PAGE
	1	1	**220-9089**	1	TIP-GENERAL PURPOSE (K-80)	
	2	1	**220-9090**	1	RETAINER-G.E.T.	

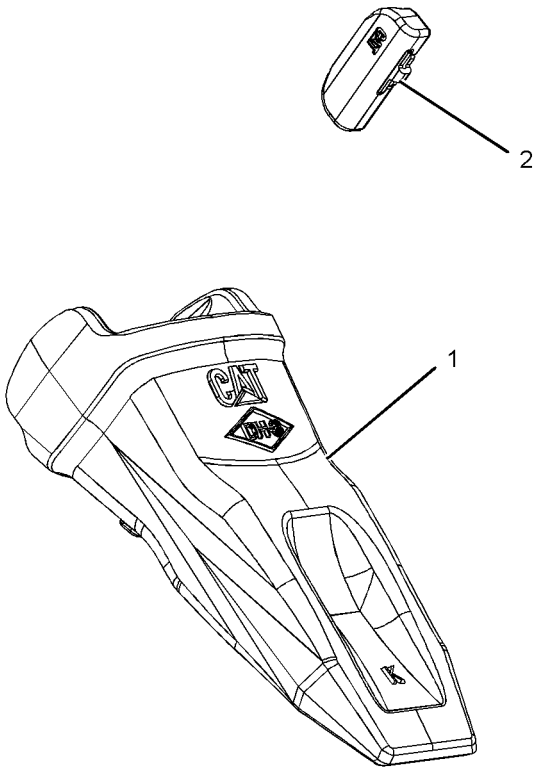

GRAPHIC #1 **<END>** g01136148

217-4892 TIP GP-PENETRATION–K-90

S/N: CJN1-UP
AN ATTACHMENT

SMCS-6805 **i02100092**

NOTE	REF NO	GRAPHIC REF	PART NUMBER	QTY	PART NAME 1 2 3 4 5 6 (PRODUCT LEVEL)	SEE PAGE
	1	1	**220-9090**	1	RETAINER-G.E.T.	
	2	1	**220-9092**	1	TIP-PENETRATION (K-90)	

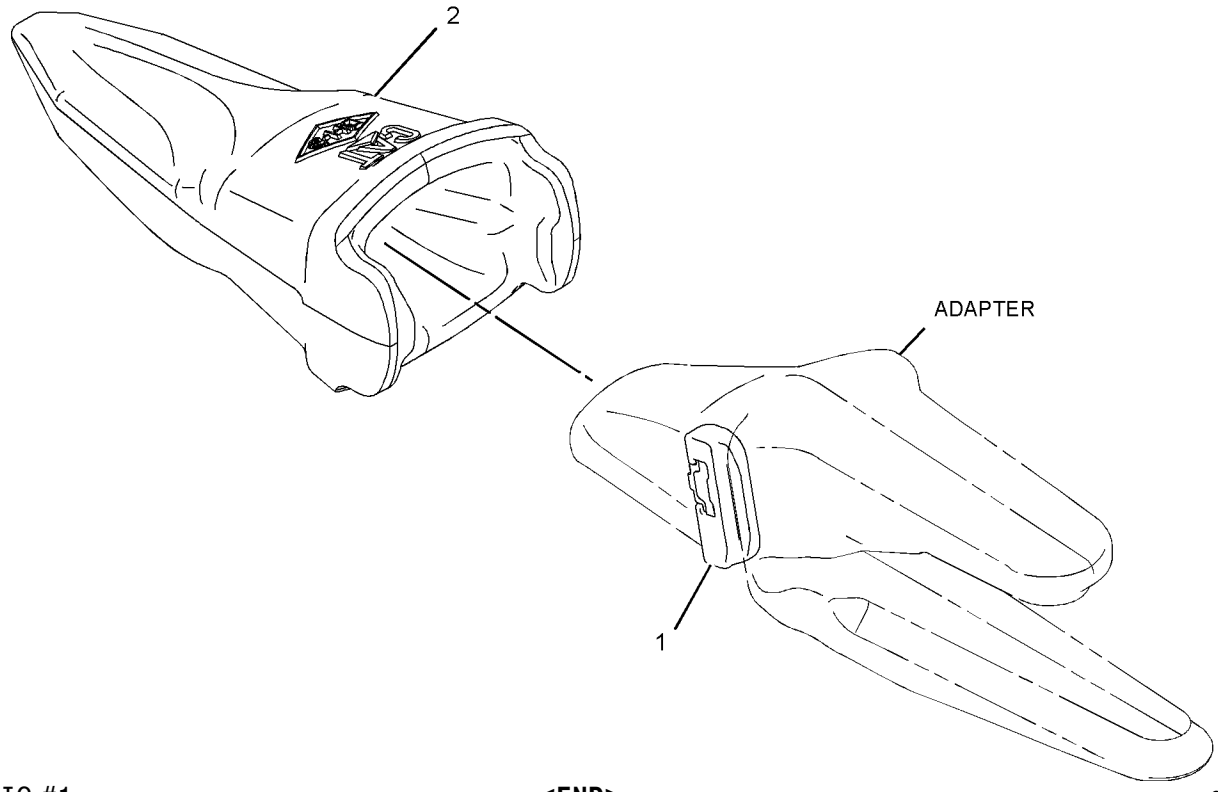

GRAPHIC #1 **<END>** g01074482

WORK TOOLS

229-6965 TIP GP-PENETRATION

S/N: CJN1-UP

AN ATTACHMENT

SMCS-6805 **i02496231**

NOTE	REF NO	GRAPHIC REF	PART NUMBER	QTY	PART NAME 1 2 3 4 5 6 (PRODUCT LEVEL)	SEE PAGE
	1	1	**220-9090**	1	RETAINER-G.E.T.	
	2	1	**220-9082**	1	TIP-PENETRATION (K-80)	

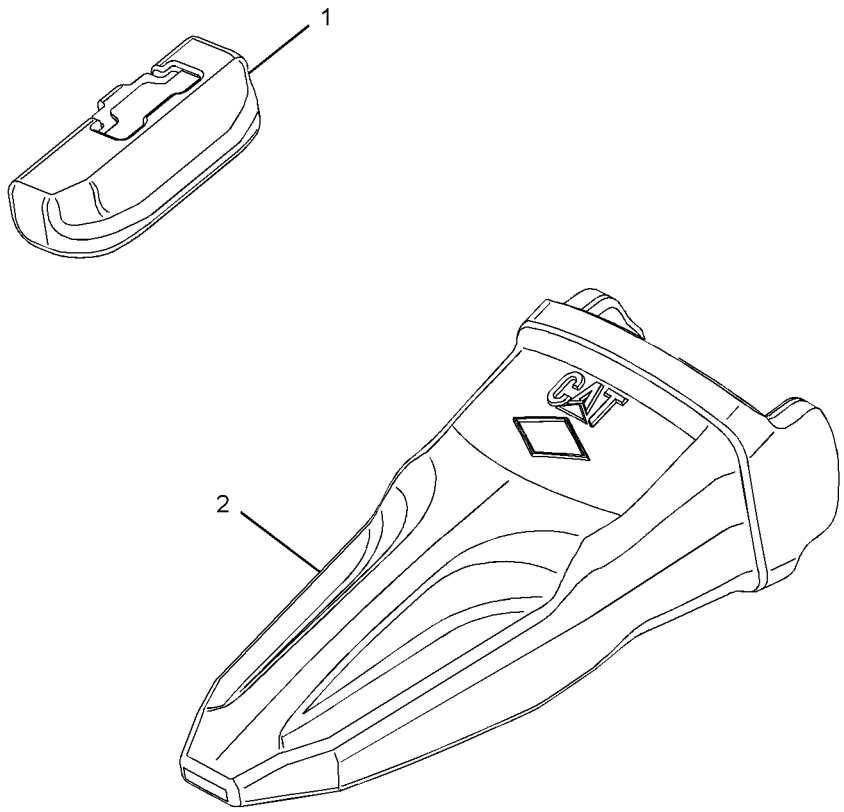

GRAPHIC #1 **<END>** g01221373

WORK TOOLS

217-4893 TIP GP-PENETRATION PLUS

S/N: CJN1-UP
K-90
AN ATTACHMENT

SMCS-6805 **i02100266**

NOTE	REF NO	GRAPHIC REF	PART NUMBER	QTY	PART NAME 1 2 3 4 5 6 (PRODUCT LEVEL)	SEE PAGE
	1	1	**220-9090**	1	RETAINER-G.E.T.	
	2	1	**220-9093**	1	TIP-PENETRATION PLUS (K-90)	

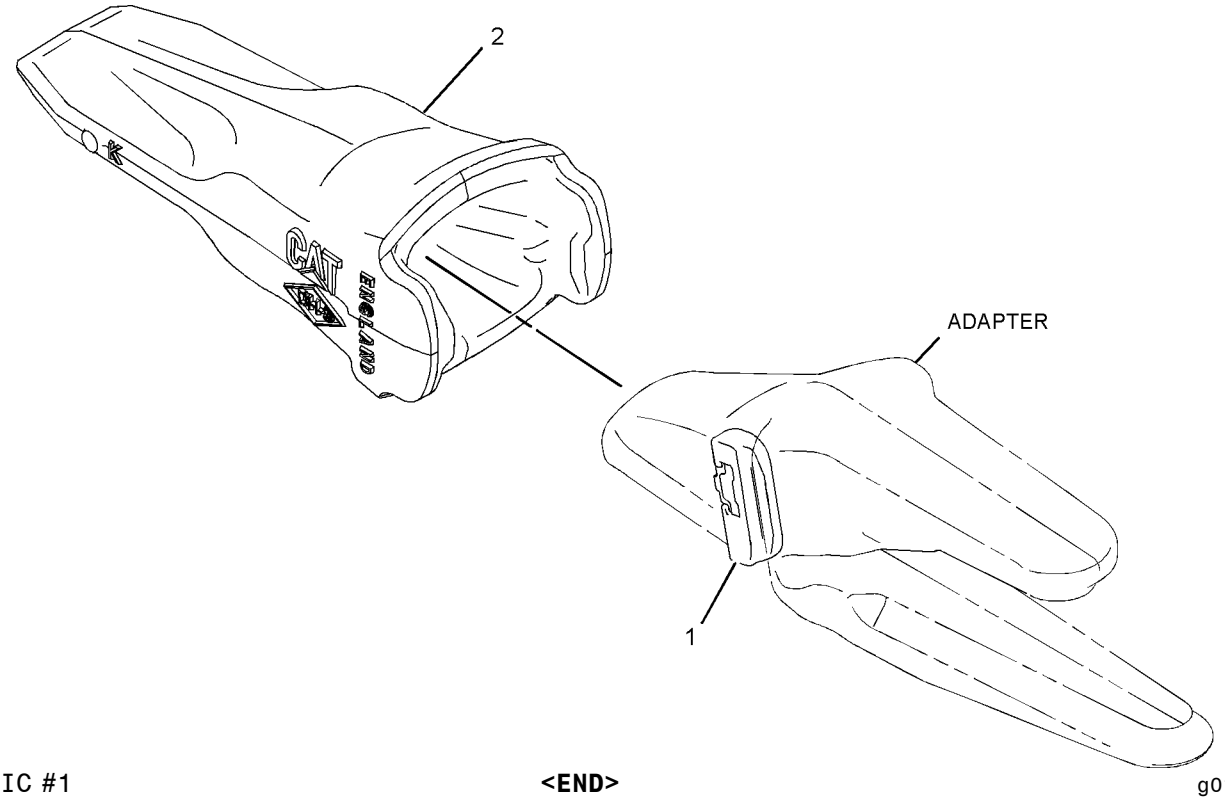

GRAPHIC #1 **<END>** g01074401

WORK TOOLS

229-6966 TIP GP-PENETRATION PLUS

S/N: CJN1-UP

PART OF 327-3614, 327-3617, 327-3620, 327-3623, 327-3626 BUCKET GP-GENERAL PURPOSE

AN ATTACHMENT

SMCS-6805 **i02438228**

NOTE	PART NUMBER	QTY	PART NAME 1 2 3 4 5 6 (PRODUCT LEVEL)	SEE PAGE
	220-9090	1	RETAINER-G.E.T.	
	220-9083	1	TIP-BUCKET (K-80)	

<END>

WORK TOOLS

229-6967 TIP GP-SHARP

S/N: CJN1-UP
AN ATTACHMENT

SMCS-6805 **i02496232**

NOTE	REF NO	GRAPHIC REF	PART NUMBER	QTY	PART NAME 1 2 3 4 5 6 (PRODUCT LEVEL)	SEE PAGE
	1	1	**220-9090**	1	RETAINER-G.E.T.	
	2	1	**220-9087**	1	TIP-SPIKE	

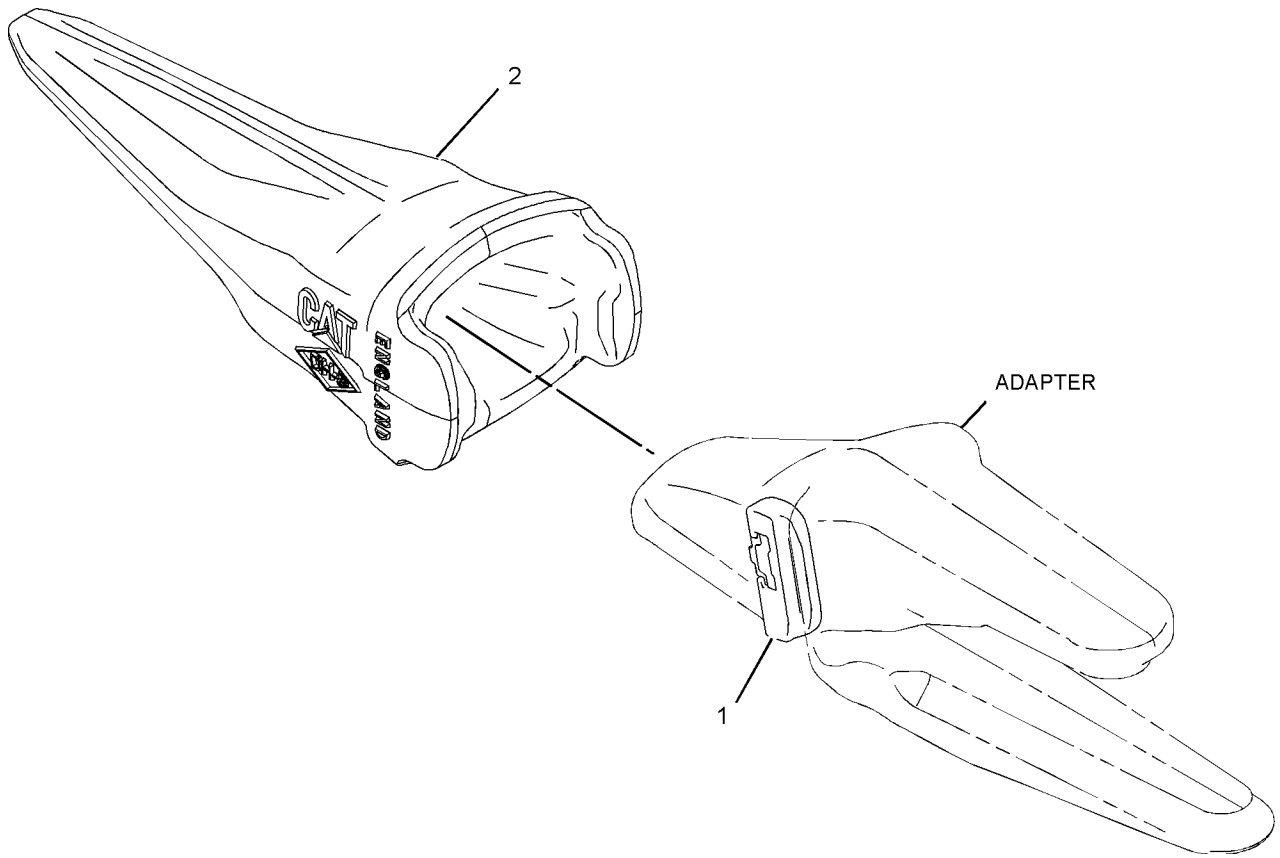

GRAPHIC #1 **<END>** g01074300

WORK TOOLS

217-4894 TIP GP-SPIKE–K-90

S/N: CJN1-UP

AN ATTACHMENT

SMCS-6805 **i03246464**

NOTE	REF NO	GRAPHIC REF	PART NUMBER	QTY	PART NAME 1 2 3 4 5 6 (PRODUCT LEVEL)	SEE PAGE
	1	1	**220-9090**	1	RETAINER-G.E.T.	
	2	1	**220-9097**	1	TIP-SPIKE	

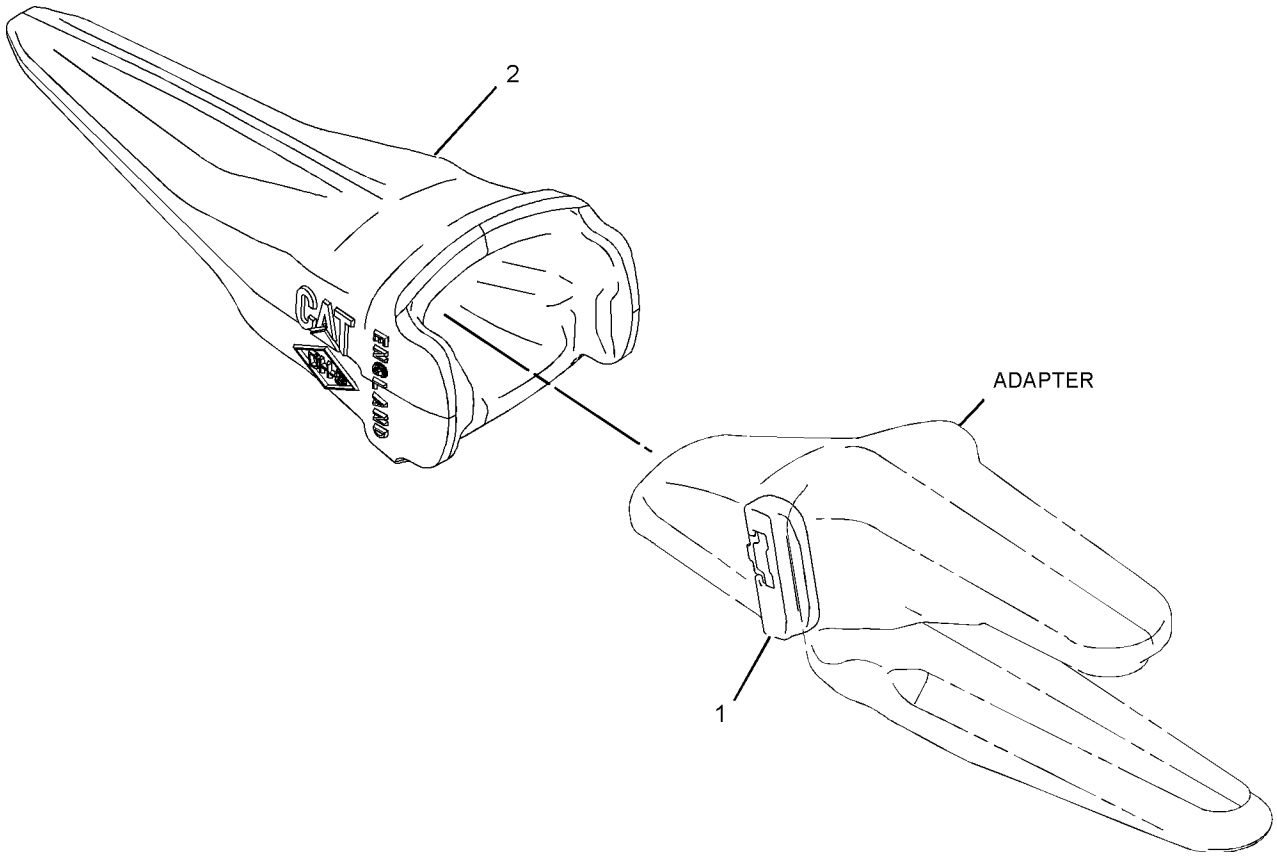

GRAPHIC #1 **<END>** g01074300

WORK TOOLS

229-6968 TIP GP-TWIN SHARP

S/N: CJN1-UP
AN ATTACHMENT

SMCS-6805 **i02496233**

NOTE	REF NO	GRAPHIC REF	PART NUMBER	QTY	PART NAME 1 2 3 4 5 6 (PRODUCT LEVEL)	SEE PAGE
	1	1	**220-9090**	1	RETAINER-G.E.T.	
	2	1	**220-9088**	1	TIP-DOUBLE SPIKE	

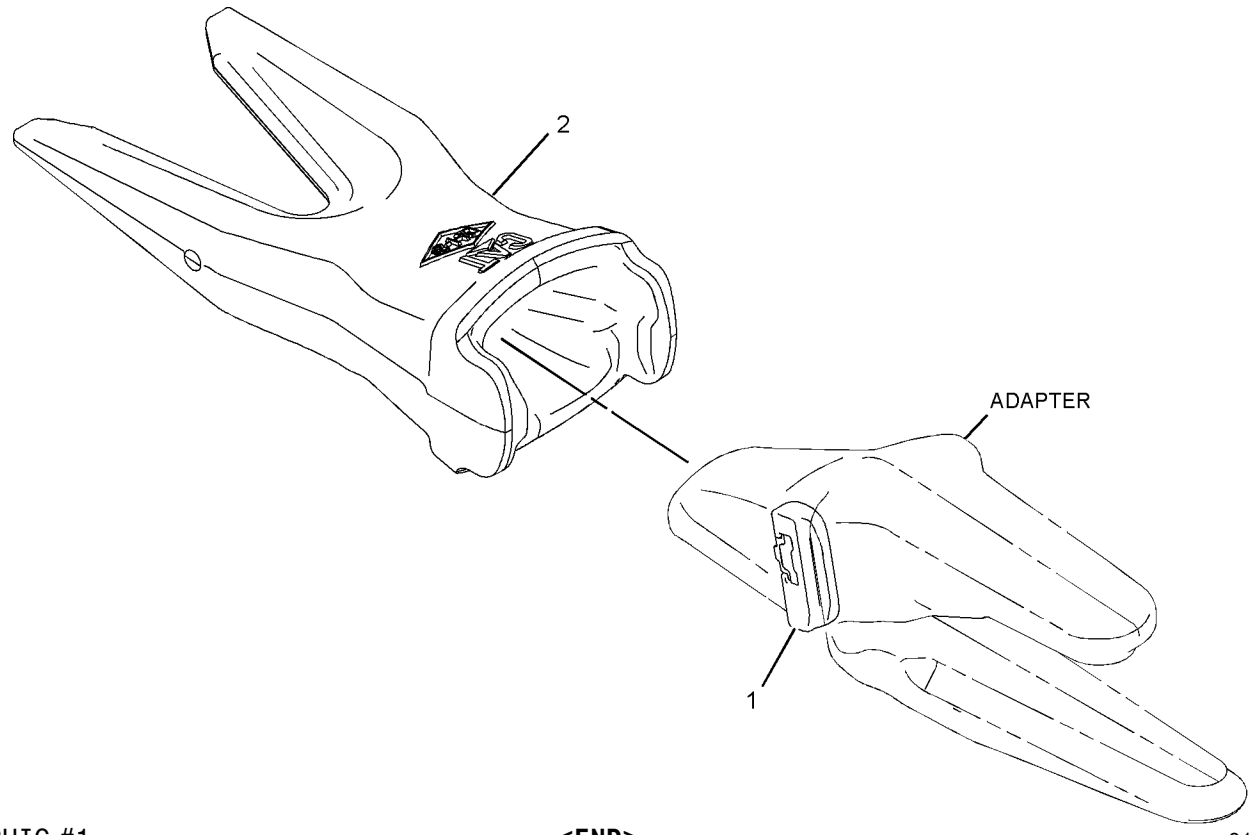

GRAPHIC #1 **<END>** g01074222

WORK TOOLS

217-4890 TIP GP-WIDE–K-90

S/N: CJN1-UP

AN ATTACHMENT

SMCS-6805 **i02098260**

NOTE	REF NO	GRAPHIC REF	PART NUMBER	QTY	PART NAME 1 2 3 4 5 6 (PRODUCT LEVEL)	SEE PAGE
	1	1	**220-9090**	1	RETAINER-G.E.T.	
	2	1	**222-1090**	1	TIP-BUCKET (WIDE)	

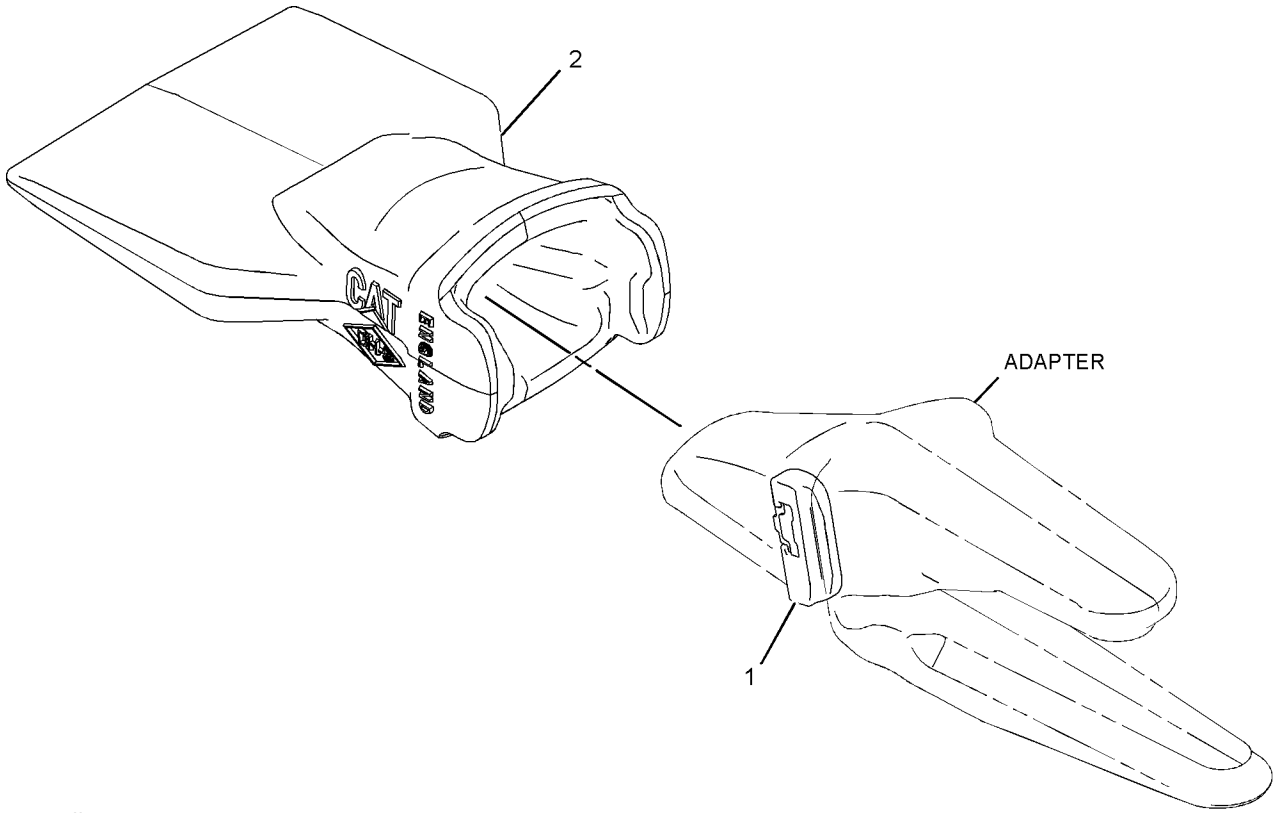

GRAPHIC #1 **<END>** g01074257

WORK TOOLS

229-6963 TIP GP-WIDE

S/N: CJN1-UP
K-80
AN ATTACHMENT

SMCS-6805 **i02342645**

NOTE	PART NUMBER	QTY	PART NAME 1 2 3 4 5 6 (PRODUCT LEVEL)	SEE PAGE
	220-9090	1	RETAINER-G.E.T.	
	222-1080	1	TIP-WIDE	

<END>

WORK TOOLS

232-0082 TIP-LEVELING EDGE–K-80

S/N: CJN1-UP

FIELD INSTALLATION

SMCS-6805 **i03215485**

NOTE	REF NO	GRAPHIC REF	PART NUMBER	QTY	PART NAME 1 2 3 4 5 6 (PRODUCT LEVEL)	SEE PAGE
					(NO SERVICED PARTS)	

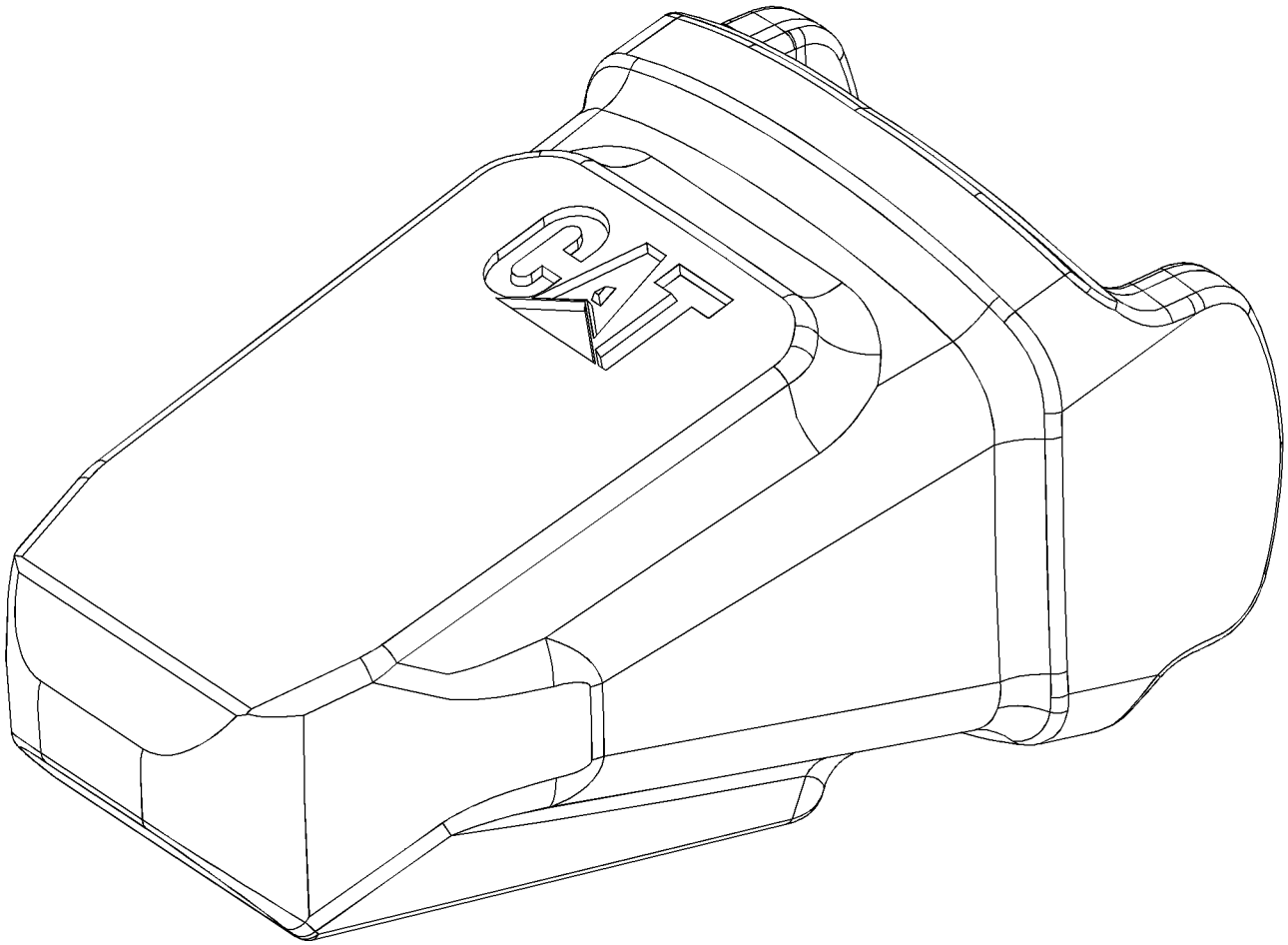

GRAPHIC #1 **<END>** g01230675

OPERATOR STATION

245-7889 ADJUSTER GP-SEAT—UPPER SLIDE

S/N: CJN1-UP

PART OF 240-5063 SUSPENSION GP-SEAT

AN ATTACHMENT

SMCS-7321 **i02407038**

NOTE	REF NO	GRAPHIC REF	PART NUMBER	QTY	PART NAME 1 2 3 4 5 6 (PRODUCT LEVEL)	SEE PAGE
	1	1	**245-7897**	4	PLATE	
M	2	1	**245-7899**	4	SCREW-BUTTON HEAD (M8X1.25X30-MM)	
M	3	1	**5C-7261**	8	NUT (M8X1.25-THD)	
	4	1	**8T-4224**	8	WASHER-HARD (8.8X16X2-MM THK)	

M-METRIC PART

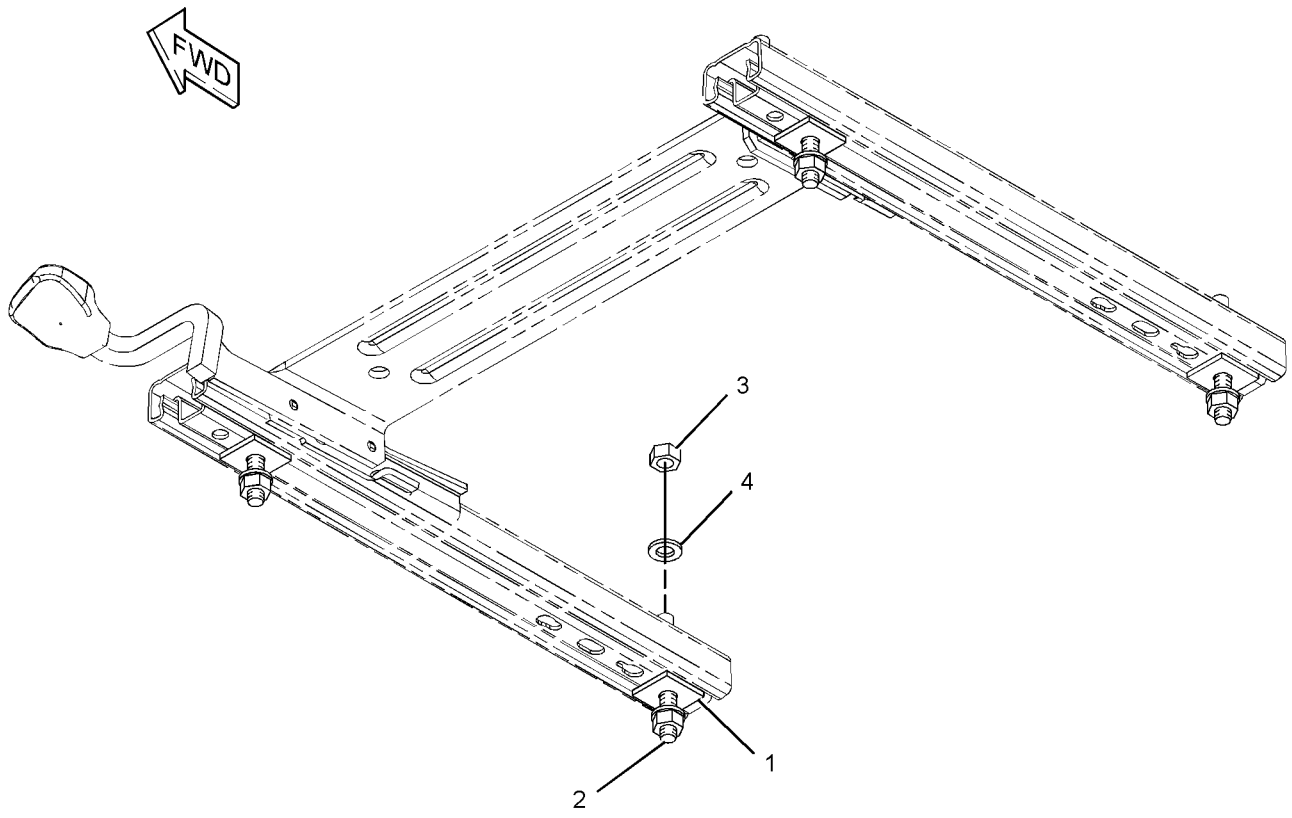

GRAPHIC #1 **<END>** g01203316

245-7896 ADJUSTER GP-SEAT—LOWER SLIDE

S/N: CJN1-UP

PART OF 229-9077, 240-5063 SUSPENSION GP-SEAT

AN ATTACHMENT

SMCS-7321 **i02178063**

NOTE	REF NO	GRAPHIC REF	PART NUMBER	QTY	PART NAME 1 2 3 4 5 6 (PRODUCT LEVEL)	SEE PAGE
M	1	1	**198-3899**	2	SCREW-BUTTON HEAD (M8X1.25X20-MM)	
	2	1	**245-7886**	2	PLATE	
	3	1	**245-7897**	4	PLATE	
M	4	1	**245-7898**	2	SCREW-BUTTON HEAD (M8X1.25X25-MM)	
M	5	1	**5C-7261**	4	NUT (M8X1.25-THD)	
	6	1	**8T-4224**	4	WASHER-HARD (8.8X16X2-MM THK)	

M-METRIC PART

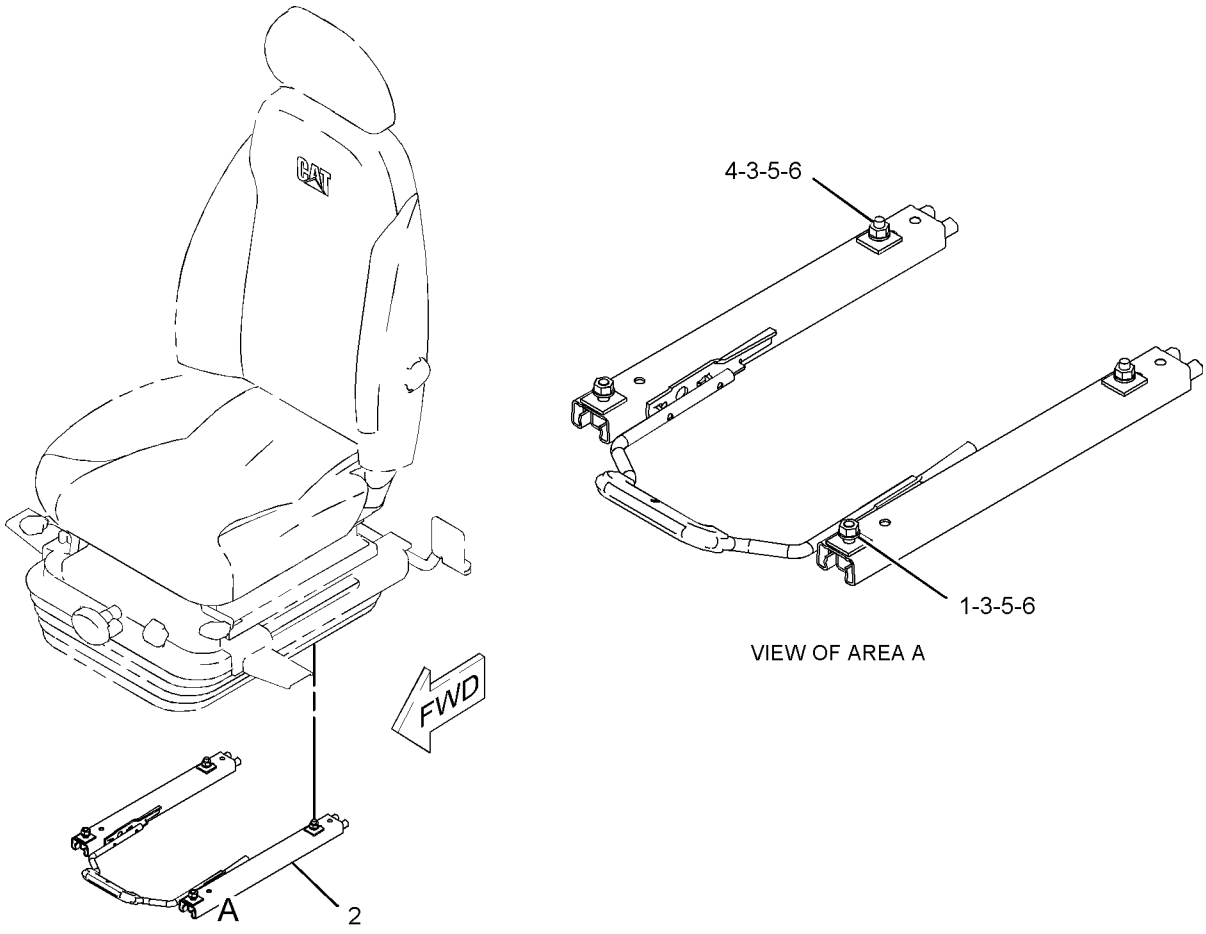

GRAPHIC #1 **<END>** g01103189

235-9004 AIR CONDITIONER & MOUNTING GP

S/N: CJN1-UP
PART OF 235-9003 AIR CONDITIONER AR
AN ATTACHMENT
TYPE 1

SMCS-7320 **i02864313**

NOTE	REF NO	GRAPHIC REF	PART NUMBER	QTY	PART NAME 1 2 3 4 5 6 (PRODUCT LEVEL)	SEE PAGE
	1	1	**293-1136**	1	PANEL AS-CONTROL	
	2	1	**235-8873**	1	HARNESS AS-HEATER & AIR COND (CONTROL PANEL SWITCHES)	
	3	1	**235-8874**	1	SENSOR-TEMPERATURE (AMBIENT AIR)	
	4	1	**235-8875**	1	BRACKET	
	5	1	**235-9005**	1	HARNESS AS-HEATER & AIR COND (AIR CONDITIONER, LOW SIDE)	
Y	6	1	**240-5036**	1	AIR CONDITIONER GP	848
	7	1	**9X-8256**	1	WASHER (6.6X12X2-MM THK)	
M	8	1	**099-2374**	2	BOLT-SOCKET HEAD (M5X0.8X12-MM)	
	9	1	**111-4836**	3	CLIP	
	10	1	**3S-2093**	2	STRAP-CABLE	
M	11	1	**5C-9553**	1	BOLT (M6X1X16-MM)	
	12	1	**7X-7729**	7	WASHER (11X25X3-MM THK)	
	13	1	**8T-0328**	2	WASHER-HARD (5.5X10X1-MM THK)	
	14	1	**8T-4121**	3	WASHER-HARD (11X21X2.5-MM THK)	
M	15	1	**8T-4136**	7	BOLT (M10X1.5X25-MM)	
M	16	1	**8T-4137**	3	BOLT (M10X1.5X20-MM)	

M-METRIC PART
Y-SEPARATE ILLUSTRATION

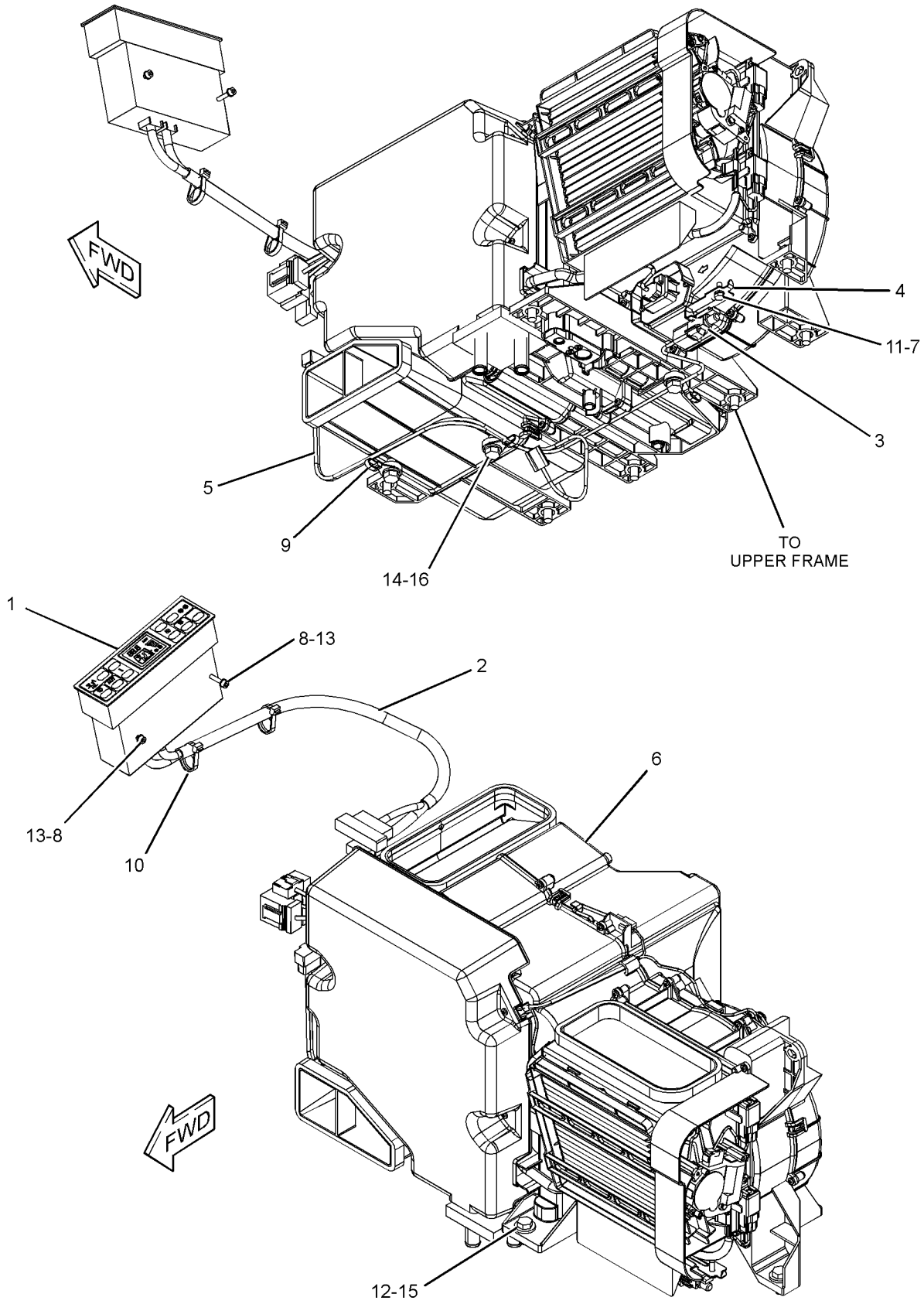

GRAPHIC #1

<END>

g01397723

OPERATOR STATION

235-9004 AIR CONDITIONER & MOUNTING GP

S/N: CJN1-UP
PART OF 235-9003 AIR CONDITIONER AR
AN ATTACHMENT
TYPE 2

SMCS-7320 **i03033088**

NOTE	REF NO	GRAPHIC REF	PART NUMBER	QTY	PART NAME 1 2 3 4 5 6 (PRODUCT LEVEL)	SEE PAGE
	1	1	**293-1136**	1	PANEL AS-CONTROL	
	2	1	**235-8873**	1	HARNESS AS-HEATER & AIR COND (CONTROL PANEL SWITCHES)	
	3	1	**235-8874**	1	SENSOR-TEMPERATURE (AMBIENT AIR)	
	4	1	**235-8875**	1	BRACKET	
	5	1	**235-9005**	1	HARNESS AS-HEATER & AIR COND (AIR CONDITIONER, LOW SIDE)	
CY	6	1	**316-8811**	1	AIR CONDITIONER GP	851
	7	1	**9X-8256**	1	WASHER (6.6X12X2-MM THK)	
M	8	1	**099-2374**	2	BOLT-SOCKET HEAD (M5X0.8X12-MM)	
	9	1	**111-4836**	3	CLIP	
	10	1	**3S-2093**	2	STRAP-CABLE	
M	11	1	**5C-9553**	1	BOLT (M6X1X16-MM)	
	12	1	**7X-7729**	7	WASHER (11X25X3-MM THK)	
	13	1	**8T-0328**	2	WASHER-HARD (5.5X10X1-MM THK)	
	14	1	**8T-4121**	3	WASHER-HARD (11X21X2.5-MM THK)	
M	15	1	**8T-4136**	7	BOLT (M10X1.5X25-MM)	
M	16	1	**8T-4137**	3	BOLT (M10X1.5X20-MM)	

C-CHANGE FROM PREVIOUS TYPE
M-METRIC PART
Y-SEPARATE ILLUSTRATION

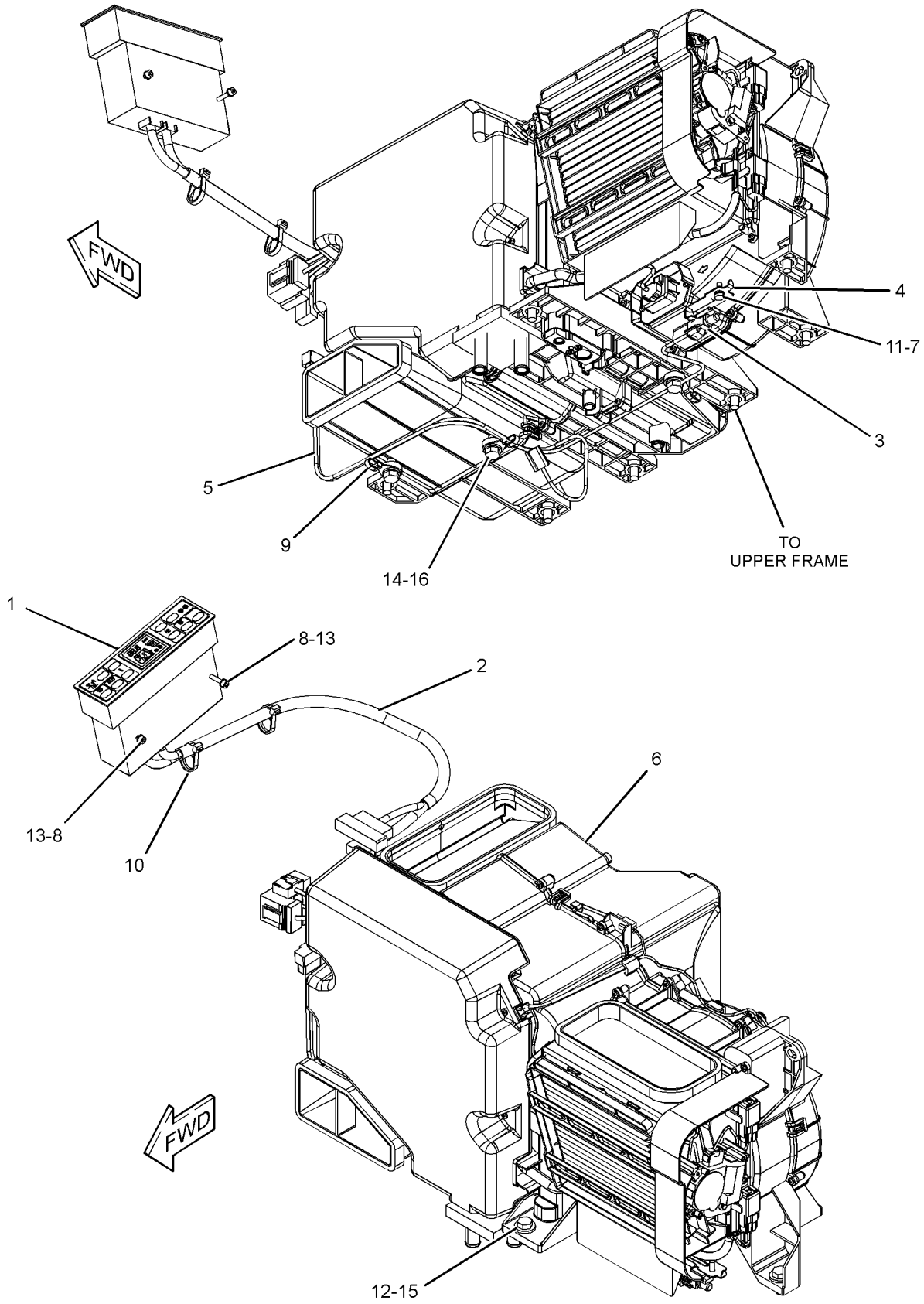

GRAPHIC #1

<END>

g01397723

OPERATOR STATION

235-9003 AIR CONDITIONER AR

S/N: CJN1-UP

AN ATTACHMENT

SMCS-7320 **i02420514**

NOTE	PART NUMBER	QTY	PART NAME 1 2 3 4 5 6 (PRODUCT LEVEL)	SEE PAGE
Y	*235-9004*	1	AIR CONDITIONER & MOUNTING GP	843
Y	*229-9082*	1	DUCT GP-CAB AIR	939

Y-SEPARATE ILLUSTRATION

<END>

OPERATOR STATION

240-5036 AIR CONDITIONER GP

S/N: CJN1-UP

PART OF 235-9004 AIR CONDITIONER & MOUNTING GP, 229-9084 HEATER & MTG GP-CAB

AN ATTACHMENT

SMCS-7320 **i03017477**

NOTE	REF NO	GRAPHIC REF	PART NUMBER	QTY	PART NAME 1 2 3 4 5 6 (PRODUCT LEVEL)	SEE PAGE
	1	1	**185-8300**	35	SCREW-TAPPING	
	2	2	**185-8302**	3	SCREW AS-TAPPING	
	3	1	**245-7817**	2	MOTOR AS	
	4	1	**245-7818**	3	CLIP	
	5	2	**245-7819**	2	CLIP	
	6	1	**245-7820**	1	COVER-FRONT	
	7	1	**293-1137**	1	FILTER GP-AIR (AIR CONDITIONER)	
		1	**245-7823**	1	FILTER ELEMENT-CAB AIR (AIR CONDITIONER)	
		1	**245-7824**	1	PACKING	
	8	1	**245-7825**	1	INSULATOR	
	9	2	**245-7826**	1	INSULATOR	
	10	2	**245-7827**	1	INSULATOR	
	11	2	**245-7828**	1	INSULATOR	
	12	1	**245-7829**	1	PACKING	
	13	1	**245-7830**	1	CLIP	
	14	1	**245-7831**	1	SENSOR AS-TEMPERATURE (COOLANT)	
	15	1	**245-7832**	1	CONTROL AS	
	16	1	**245-7833**	1	CORE AS-HEATER	
	17	1	**245-7834**	1	DAMPER AS	
	18	2	**245-7835**	1	SENSOR AS (AMBIENT AIR TEMP)	
Y	19	2	**245-7836**	1	COIL GP-EVAPORATOR	886
	20	2	**245-7838**	1	PACKING	
	21	2	**245-7839**	1	MOTOR AS (WITH FAN)	
Y	22	1	**245-7846**	1	CONTROL GP-HEAT & AIR COND (AIR INLET)	911
	23	1	**245-7847**	1	HARNESS AS-HEATER & AIR COND	
	24	2	**245-7856**	3	SCREW AS-TAPPING	
	25	2	**316-8845**	1	PLATE	
	26	2	**316-8846**	1	PLATE	
	27	2	**316-8847**	2	ROD	
	28	2	**316-8848**	1	ROD	
	29	1	**316-8849**	1	ROD	
	30	2	**316-8850**	1	ROD	

Y-SEPARATE ILLUSTRATION

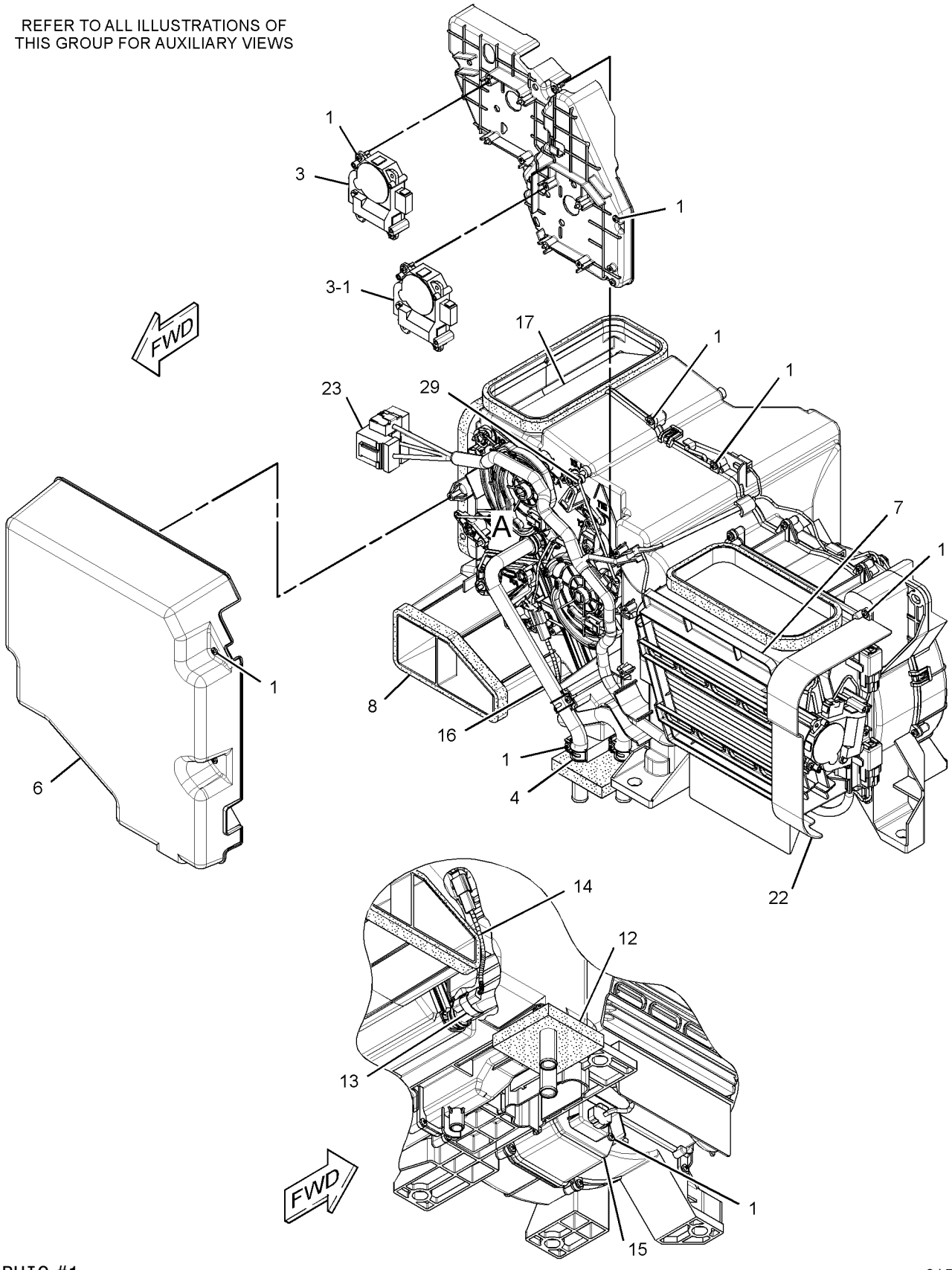

GRAPHIC #1 g01530013

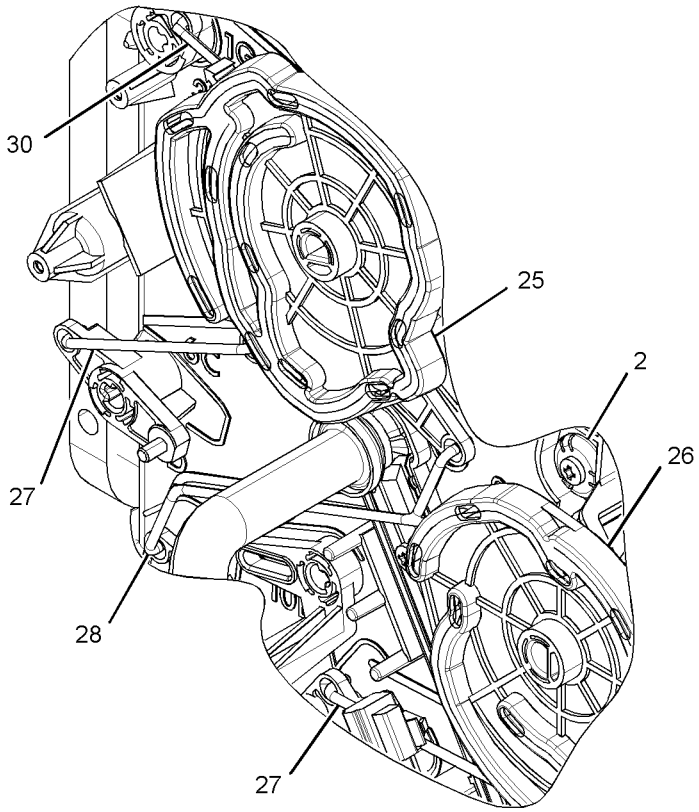

VIEW OF AREA A

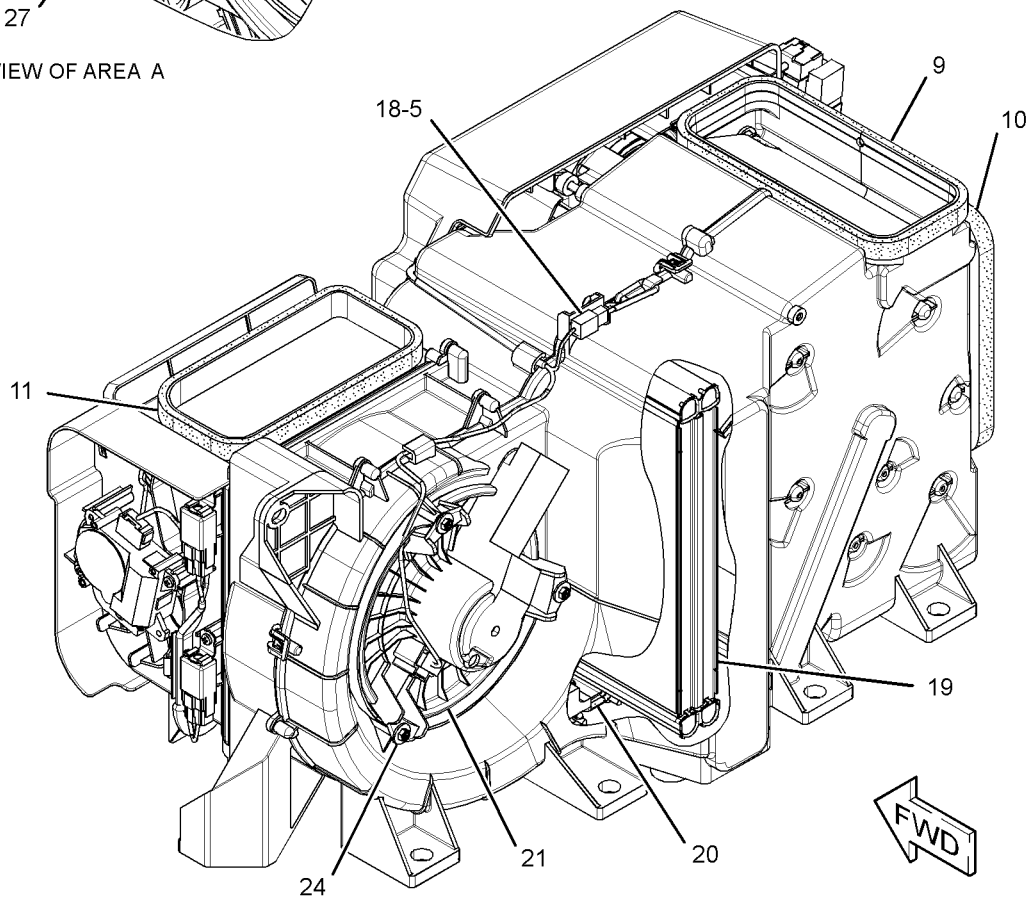

GRAPHIC #2

<END>

g01530054

OPERATOR STATION

316-8811 AIR CONDITIONER GP

S/N: CJN1-UP

PART OF 235-9004 AIR CONDITIONER & MOUNTING GP, 229-9084 HEATER & MTG GP-CAB

AN ATTACHMENT

SMCS-7320 **i03012140**

NOTE	REF NO	GRAPHIC REF	PART NUMBER	QTY	PART NAME 1 2 3 4 5 6 (PRODUCT LEVEL)	SEE PAGE
	1	1	**185-8300**	35	SCREW-TAPPING	
	2	2	**185-8302**	3	SCREW AS-TAPPING	
	3	1	**245-7817**	2	MOTOR AS	
	4	1	**245-7818**	3	CLIP	
	5	2	**245-7819**	2	CLIP	
	6	1	**245-7820**	1	COVER-FRONT	
	7	1	**245-7825**	1	INSULATOR	
	8	2	**245-7826**	1	INSULATOR	
	9	2	**245-7827**	1	INSULATOR	
	10	2	**245-7828**	1	INSULATOR	
	11	1	**245-7829**	1	PACKING	
	12	1	**245-7830**	1	CLIP	
	13	1	**245-7831**	1	SENSOR AS-TEMPERATURE (COOLANT)	
	14	1	**245-7832**	1	CONTROL AS	
	15	1	**245-7833**	1	CORE AS-HEATER	
	16	1	**245-7834**	1	DAMPER AS	
	17	2	**245-7835**	1	SENSOR AS (AMBIENT AIR TEMP)	
Y	18	2	**245-7836**	1	COIL GP-EVAPORATOR	886
	19	2	**245-7838**	1	PACKING	
	20	2	**245-7839**	1	MOTOR AS (WITH FAN)	
Y	21	1	**245-7846**	1	CONTROL GP-HEAT & AIR COND (AIR INLET)	911
	22	1	**245-7847**	1	HARNESS AS-HEATER & AIR COND	
	23	2	**245-7856**	3	SCREW AS-TAPPING	
	24	1	**293-1137**	1	FILTER GP-AIR (AIR CONDITIONER)	
		1	**245-7823**	1	FILTER ELEMENT-CAB AIR (AIR CONDITIONER)	
		1	**245-7824**	1	PACKING	
	25	2	**316-8845**	1	PLATE	
	26	2	**316-8846**	1	PLATE	
	27	2	**316-8847**	2	ROD	
	28	2	**316-8848**	1	ROD	
	29	1	**316-8849**	1	ROD	
	30	2	**316-8850**	1	ROD	

Y-SEPARATE ILLUSTRATION

REFER TO ALL ILLUSTRATIONS OF
THIS GROUP FOR AUXILIARY VIEWS

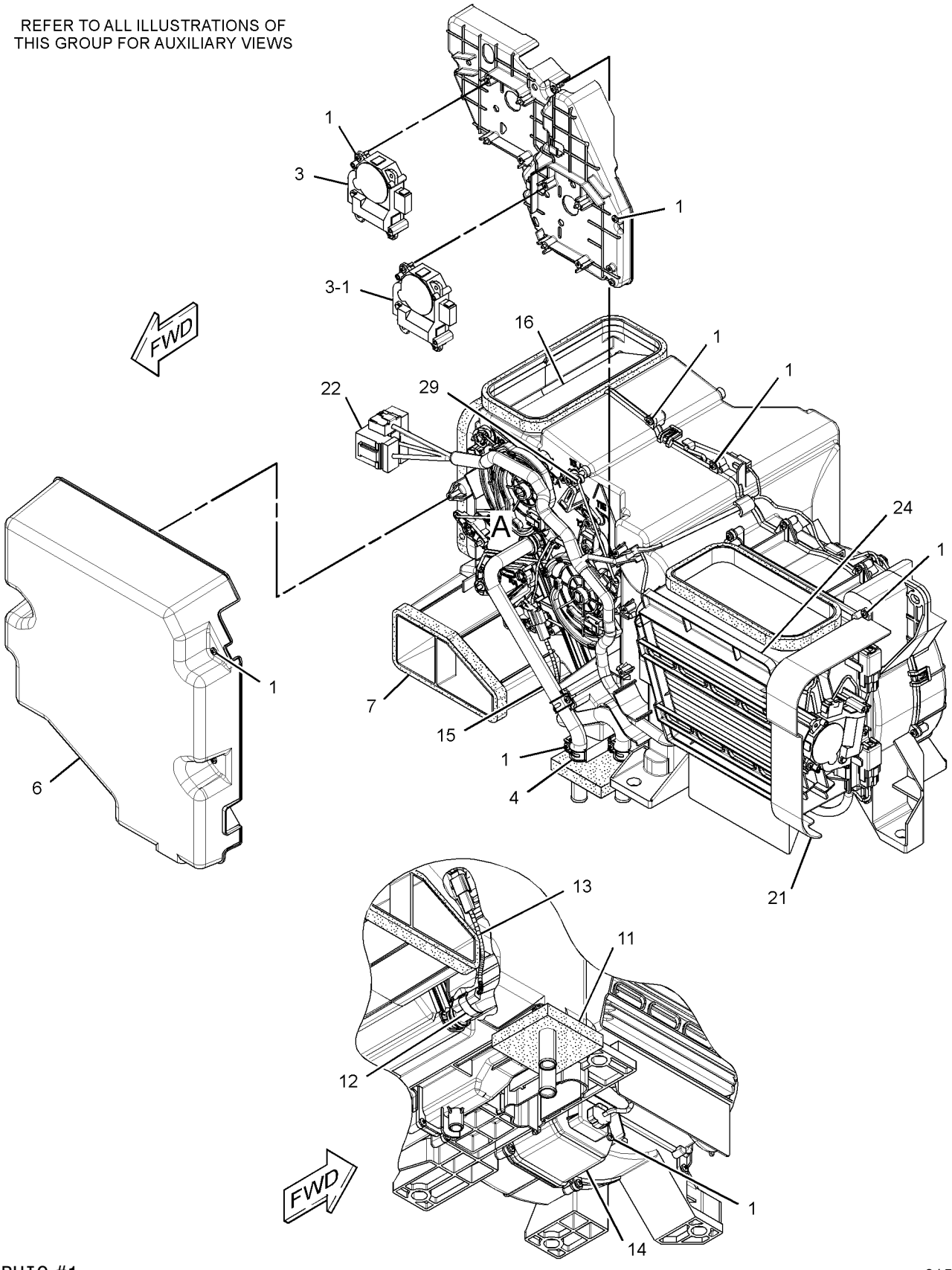

GRAPHIC #1

g01525866

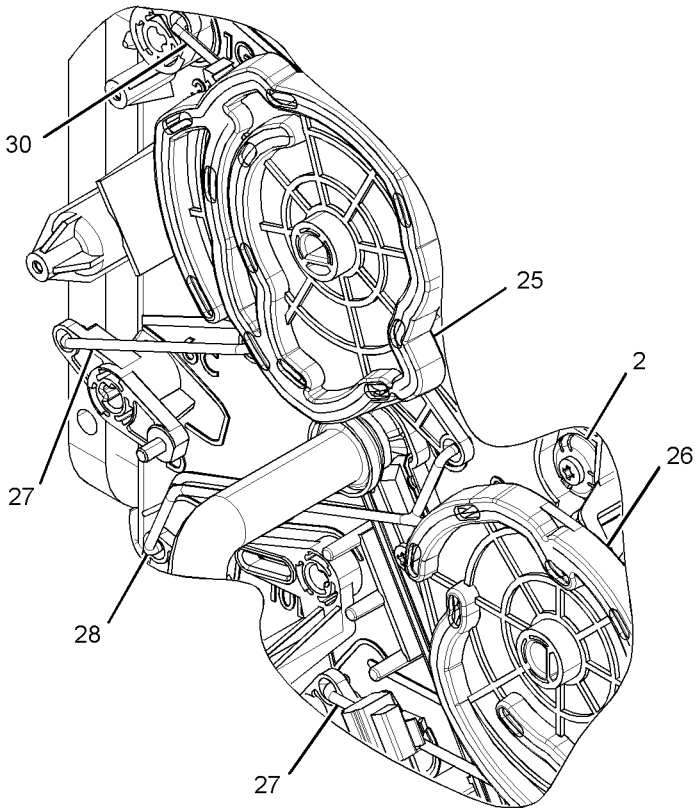

VIEW OF AREA A

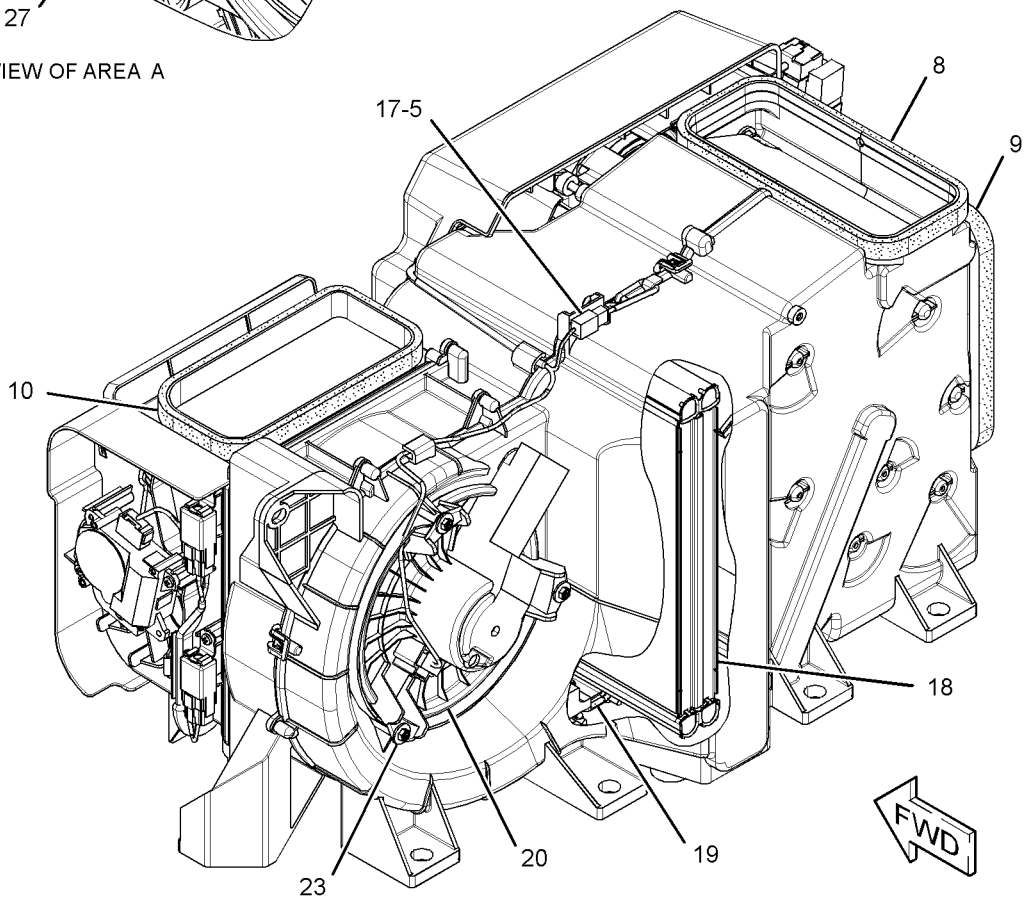

GRAPHIC #2 **<END>** g01526086

OPERATOR STATION

259-7346 ARMREST GP–RH

S/N: CJN1-UP

PART OF 259-7348 CONSOLE GP-OPERATOR

SMCS-7307 **i02488350**

NOTE	REF NO	GRAPHIC REF	PART NUMBER	QTY	PART NAME 1 2 3 4 5 6 (PRODUCT LEVEL)	SEE PAGE
	1	1	**171-7325**	3	SCREW-TAPPING	
M	2	1	**185-8286**	2	SCREW-MACHINE (M4X0.7X8-MM)	
	3	1	**235-8951**	1	SUPPORT AS	
	4	1	**235-8996**	1	COVER	
	5	1	**235-8997**	1	KNOB	
	6	1	**279-3161**	1	CUSHION	

M-METRIC PART

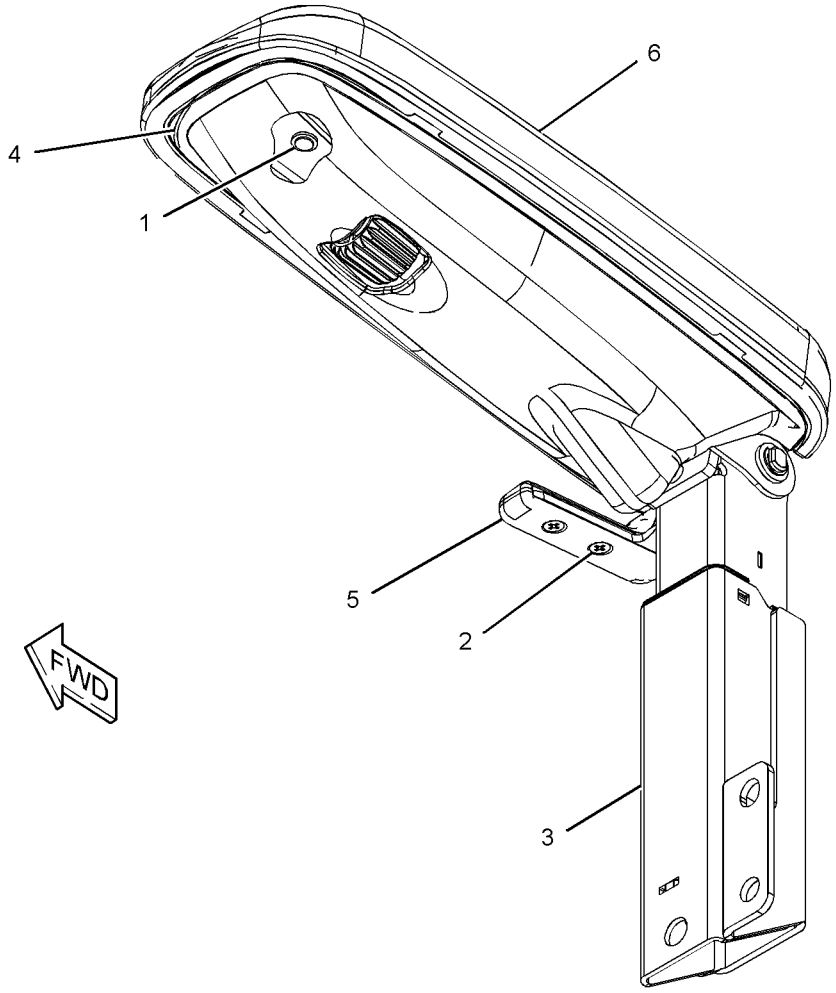

GRAPHIC #1 **<END>** g01217218

OPERATOR STATION

259-7347 ARMREST GP–LH

S/N: CJN1-UP

PART OF 259-7349 CONSOLE GP-OPERATOR

SMCS-7307 **i02488397**

NOTE	REF NO	GRAPHIC REF	PART NUMBER	QTY	PART NAME 1 2 3 4 5 6 (PRODUCT LEVEL)	SEE PAGE
	1	1	**171-7325**	3	SCREW-TAPPING	
M	2	1	**185-8286**	2	SCREW-MACHINE (M4X0.7X8-MM)	
	3	1	**235-8952**	1	SUPPORT AS	
	4	1	**235-8996**	1	COVER	
	5	1	**235-8998**	1	KNOB	
	6	1	**259-7345**	1	CUSHION	

M-METRIC PART

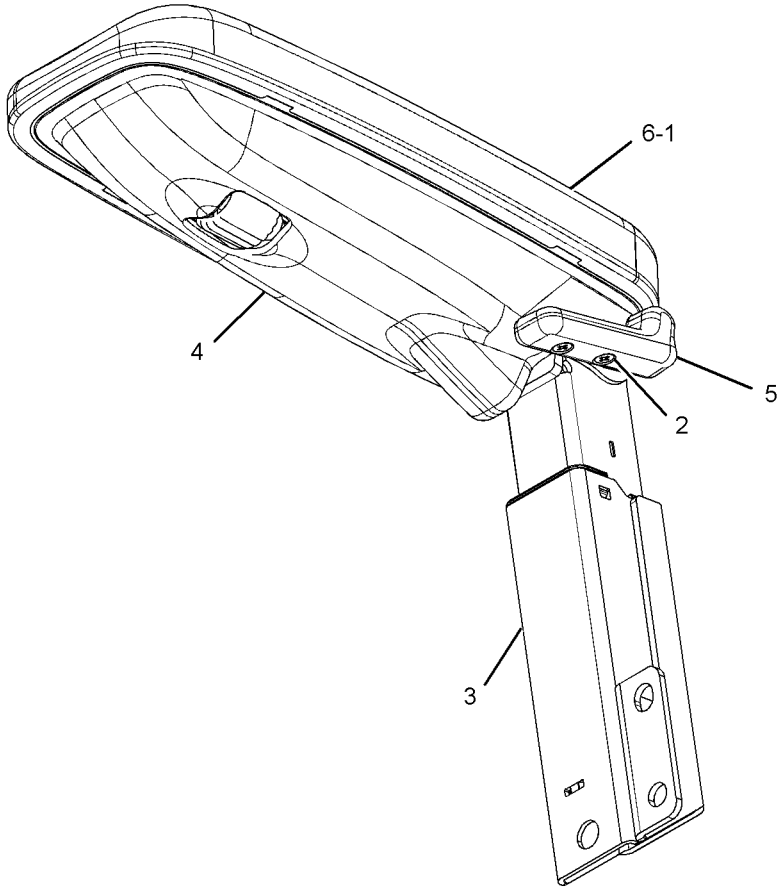

GRAPHIC #1 **<END>** g01210886

OPERATOR STATION

259-7295 BRACKET GP-MIRROR

S/N: CJN1-UP
PART OF 235-8910 CAB GP
AN ATTACHMENT

SMCS-7319 **i02612533**

NOTE	REF NO	GRAPHIC REF	PART NUMBER	QTY	PART NAME 1 2 3 4 5 6 (PRODUCT LEVEL)	SEE PAGE
	1	1	**2U-2552**	5	LOCKWASHER	
M	2	1	**6V-5683**	3	BOLT (M6X1X16-MM)	
M	3	1	**9X-6153**	2	BOLT (M6X1X10-MM)	
Z	4	1		1	BRACKET-MIRROR	

M-METRIC PART
Z-NOT SERVICED SEPARATELY

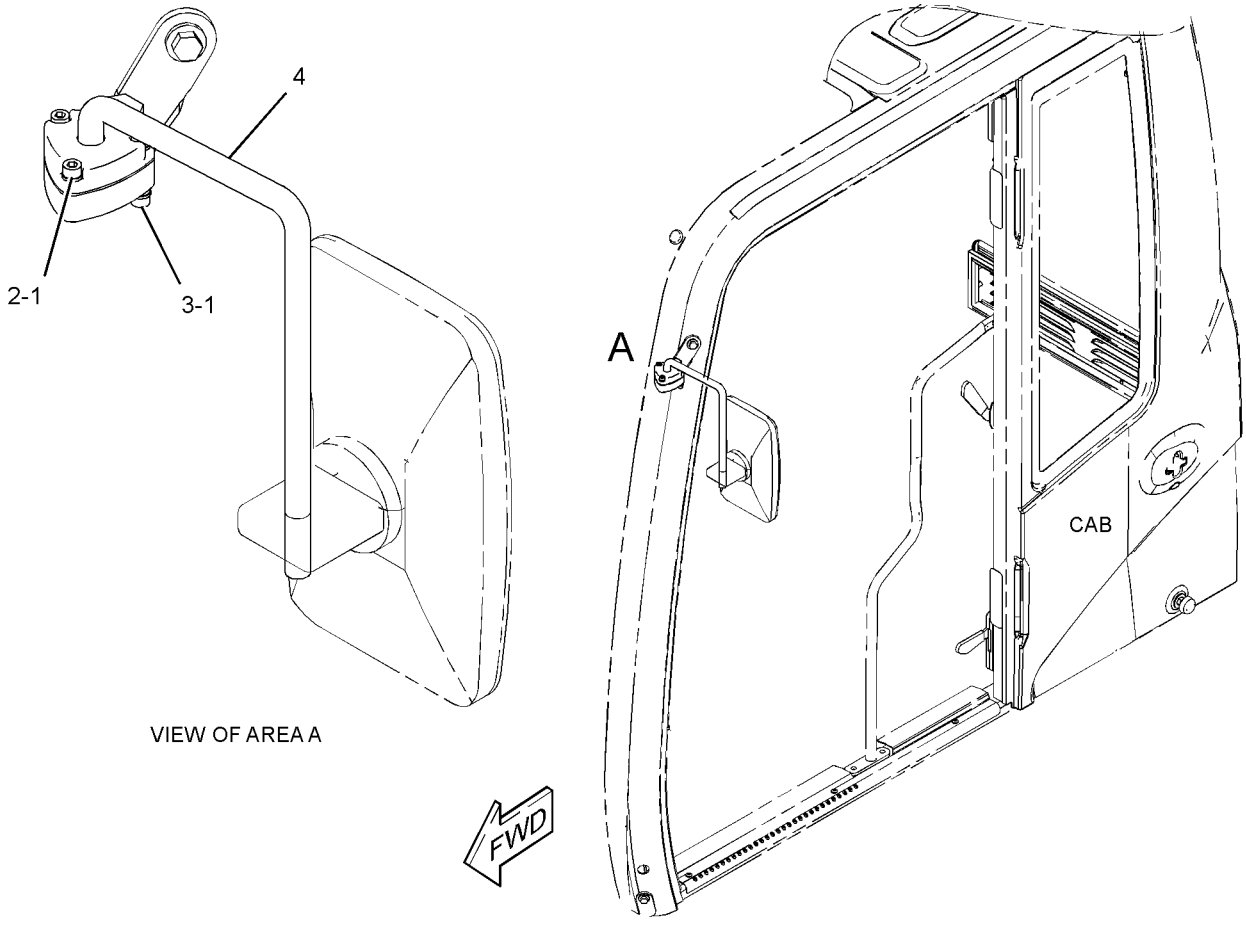

VIEW OF AREA A

GRAPHIC #1 **<END>** g01307553

245-7890 BRACKET GP-MOUNTING—SUSPENSION SEAT

S/N: CJN1-UP

PART OF 240-5063 SUSPENSION GP-SEAT

AN ATTACHMENT

SMCS-0635 **i02407041**

NOTE	REF NO	GRAPHIC REF	PART NUMBER	QTY	PART NAME 1 2 3 4 5 6 (PRODUCT LEVEL)	SEE PAGE
	1	1	**245-7897**	4	PLATE	
M	2	1	**245-7899**	4	SCREW-BUTTON HEAD (M8X1.25X30-MM)	
M	3	1	**5C-7261**	4	NUT (M8X1.25-THD)	
	4	1	**8T-4224**	4	WASHER-HARD (8.8X16X2-MM THK)	

M-METRIC PART

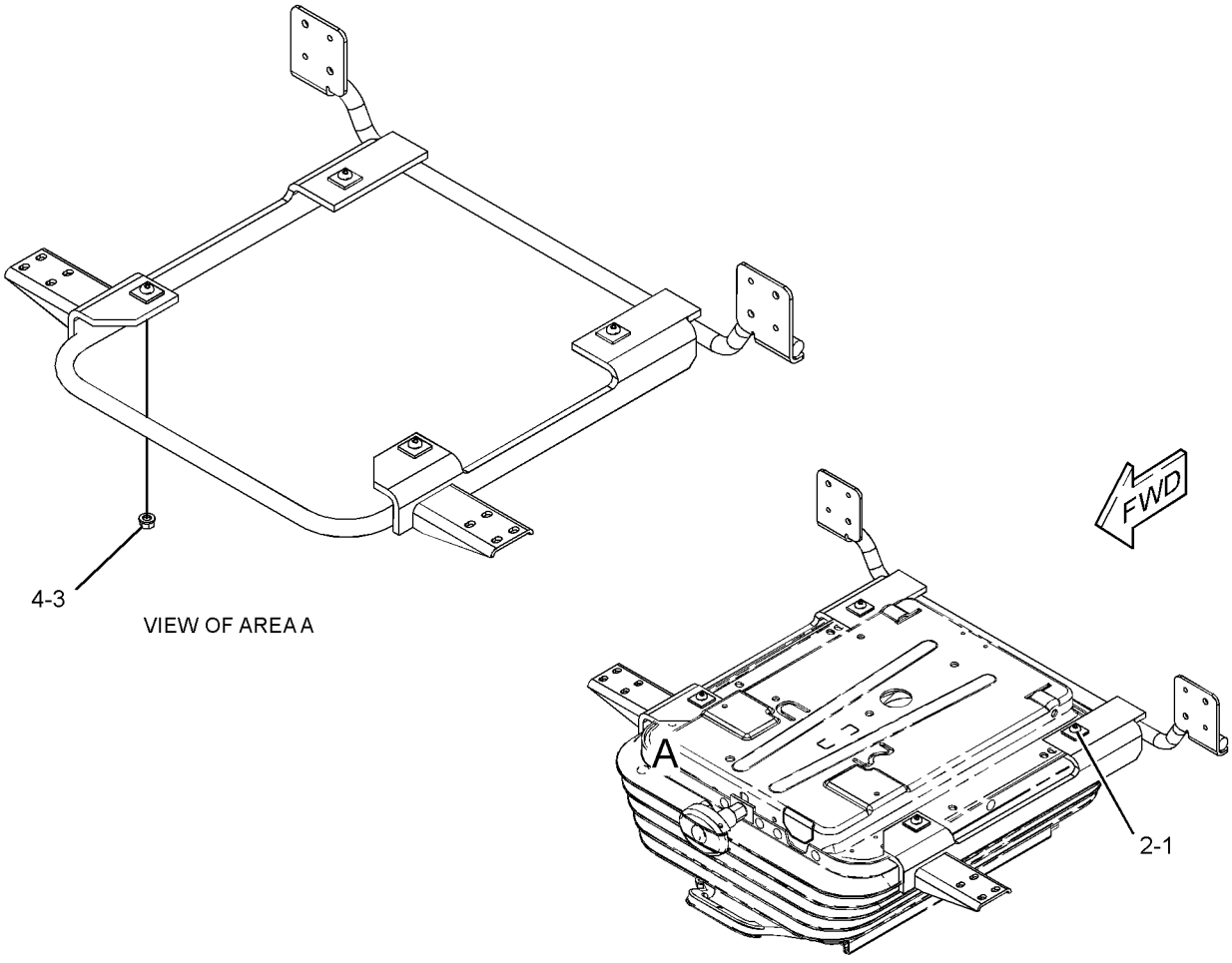

GRAPHIC #1 **<END>** g01231528

OPERATOR STATION

229-9096 CAB GP

S/N: CJN1-UP

AN ATTACHMENT

SMCS-7301, 7325 **i02485097**

NOTE	REF NO	GRAPHIC REF	PART NUMBER	QTY	PART NAME 1 2 3 4 5 6 (PRODUCT LEVEL)	SEE PAGE
M	1	1	**128-2135**	5	SCREW-TRUSS HEAD (M6X1X13-MM)	
	2	1	**164-8474**	2	LOUVER AS-VENT	
Y	3	1	**229-9097**	1	CAB GP	860
Y	4	1	*234-6501*	1	COVER GP-CAB (REAR)	925
	5	1	**235-9001**	1	SUPPORT	
M	6	1	**8T-4179**	5	BOLT (M12X1.75X20-MM)	
M	7	1	**8T-4190**	4	BOLT (M16X2X25-MM)	
	8	1	**8T-4223**	13	WASHER-HARD (13.5X25.5X3-MM THK)	
M	9	1	**8T-4910**	6	BOLT (M12X1.75X60-MM)	
M	10	1	**8T-6868**	2	BOLT (M12X1.75X80-MM)	
	11	1	**8Y-6967**	2	LOUVER AS	
	12	1	**9X-8257**	6	WASHER (17.5X30X3.5-MM THK)	

M-METRIC PART
Y-SEPARATE ILLUSTRATION

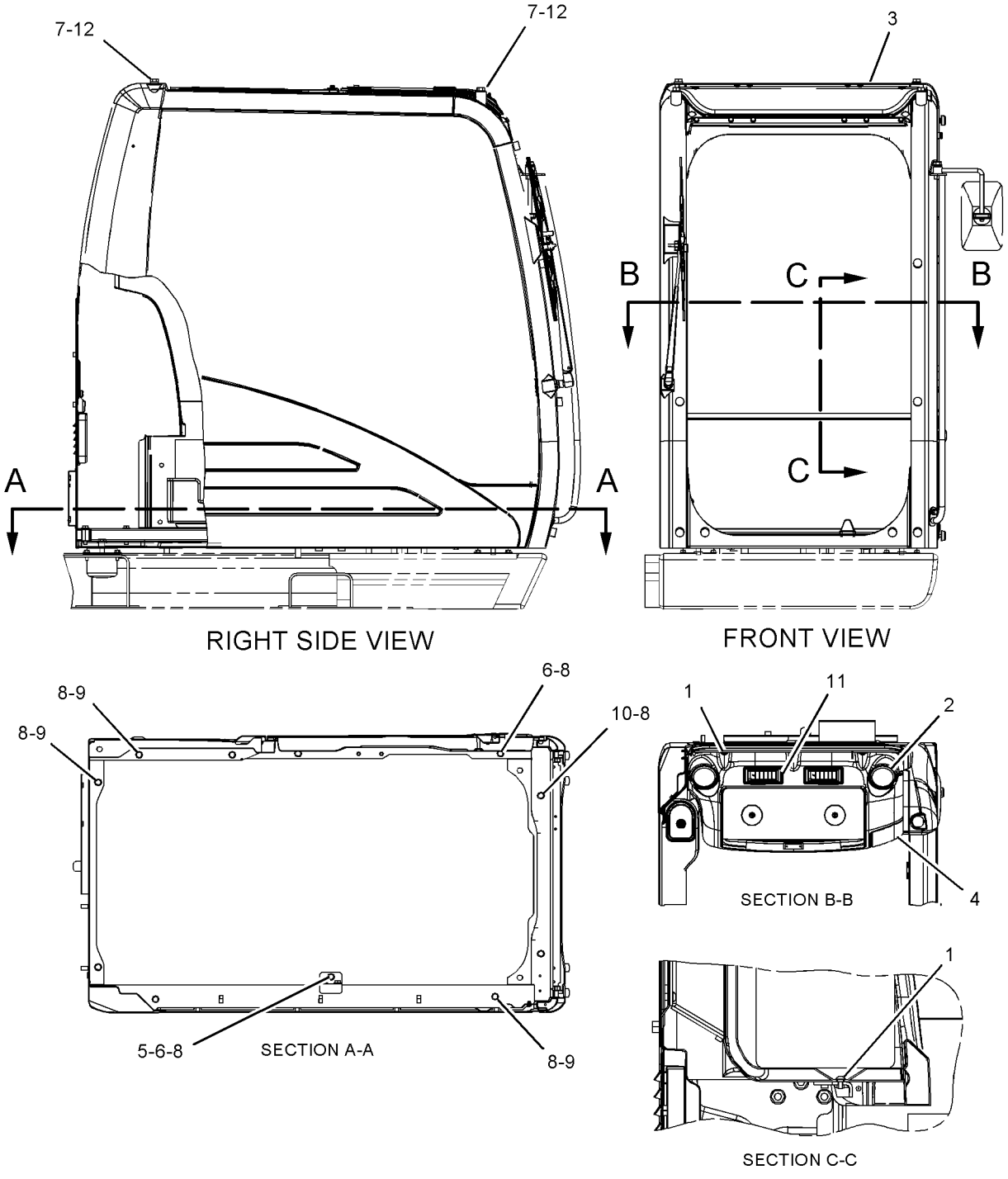

GRAPHIC #1 **<END>** g01125071

OPERATOR STATION

229-9097 CAB GP

S/N: CJN1-UP
PART OF 229-9096 CAB GP
AN ATTACHMENT

SMCS-7301, 7325 **i02857422**

NOTE	REF NO	GRAPHIC REF	PART NUMBER	QTY	PART NAME 1 2 3 4 5 6 (PRODUCT LEVEL)	SEE PAGE
	1	1	*234-6467*	1	CAB AS	
Y	2	1	*235-8910*	1	CAB GP (EXTERIOR)	872
Y	3	1	*235-8908*	1	CAB GP (INTERIOR)	870
Y	4	1	*235-8909*	1	WINDOW GP-CAB (SIDE, REAR)	1066
Y	5	1	*234-6594*	1	WIPER GP-WINDOW (FRONT, UPPER)	1076
Y	6	1	**189-2768**	1	DOOR & MTG GP-CAB	927
JY	7	1	*139-7101*	1	WINDOW GP-CAB (FRONT, UPPER)	1059
Y	8	1	*176-1958*	1	WINDOW GP-CAB (LOWER)	1063
Y	9	1	*139-7099*	1	HATCH GP-ROOF	968
FJY		1	*171-7503*	1	FRAME GP-UPPER FRONT WINDOW	954
FJY		1	*207-0144*	1	WINDOW AS-FRONT (UPPER)	1058

F-NOT SHOWN
J-ITEMS MARKED J AVAILABLE FOR SERVICE REPAIR OF WINDOW GP MARKED J
Y-SEPARATE ILLUSTRATION

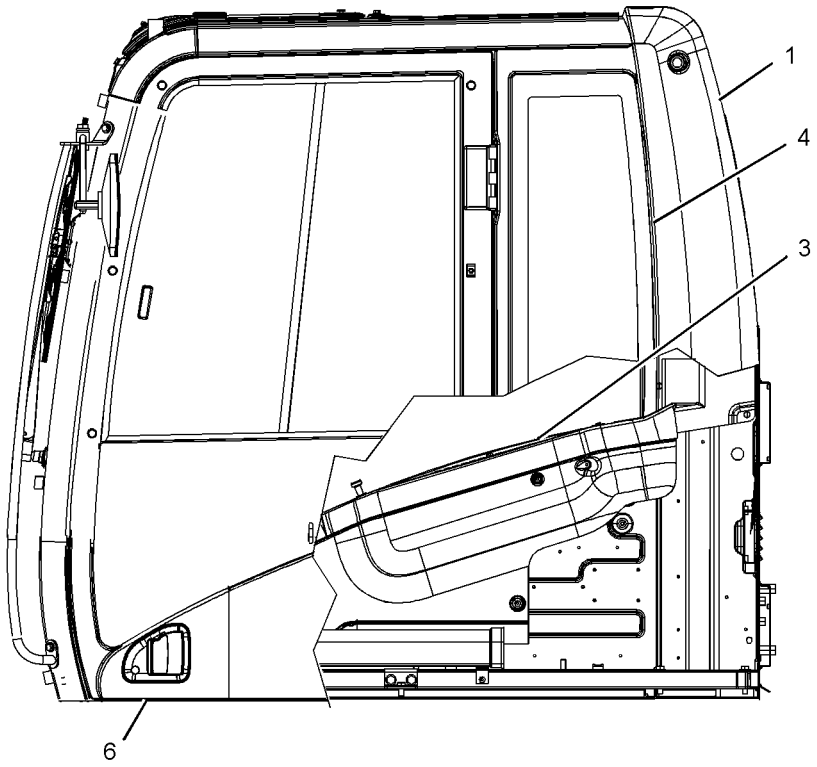

LEFT SIDE VIEW

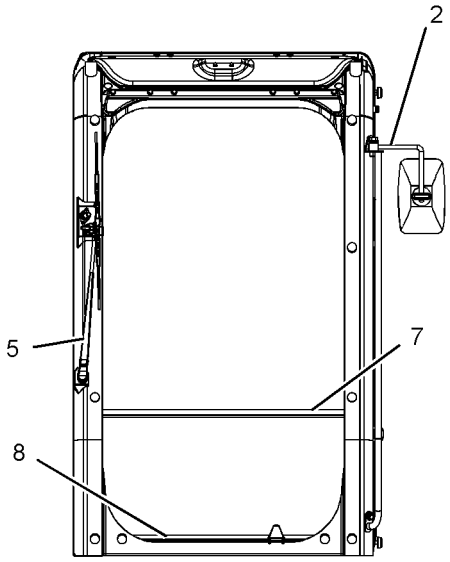

FRONT VIEW

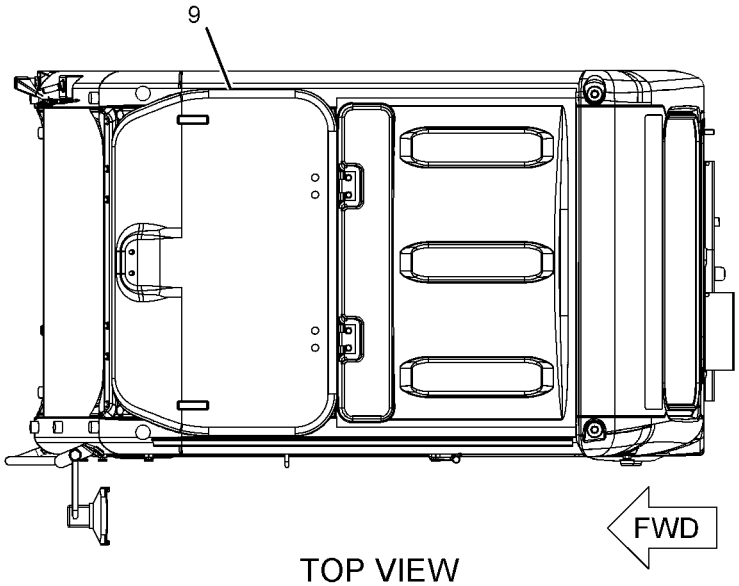

TOP VIEW

GRAPHIC #1 **<END>** g01125083

OPERATOR STATION

229-9098 CAB GP

S/N: CJN1-UP
AN ATTACHMENT

SMCS-7301, 7325 **i02401091**

NOTE	REF NO	GRAPHIC REF	PART NUMBER	QTY	PART NAME 1 2 3 4 5 6 (PRODUCT LEVEL)	SEE PAGE
M	1	1	**128-2135**	5	SCREW-TRUSS HEAD (M6X1X13-MM)	
	2	1	**164-8474**	2	LOUVER AS-VENT	
Y	3	1	**229-9099**	1	CAB GP	864
Y	4	1	*234-6501*	1	COVER GP-CAB (REAR)	925
	5	1	**235-9001**	1	SUPPORT	
M	6	1	**8T-4179**	5	BOLT (M12X1.75X20-MM)	
M	7	1	**8T-4190**	4	BOLT (M16X2X25-MM)	
	8	1	**8T-4223**	13	WASHER-HARD (13.5X25.5X3-MM THK)	
M	9	1	**8T-4910**	6	BOLT (M12X1.75X60-MM)	
M	10	1	**8T-6868**	2	BOLT (M12X1.75X80-MM)	
	11	1	**8Y-6967**	2	LOUVER AS	
	12	1	**9X-8257**	6	WASHER (17.5X30X3.5-MM THK)	

M-METRIC PART
Y-SEPARATE ILLUSTRATION

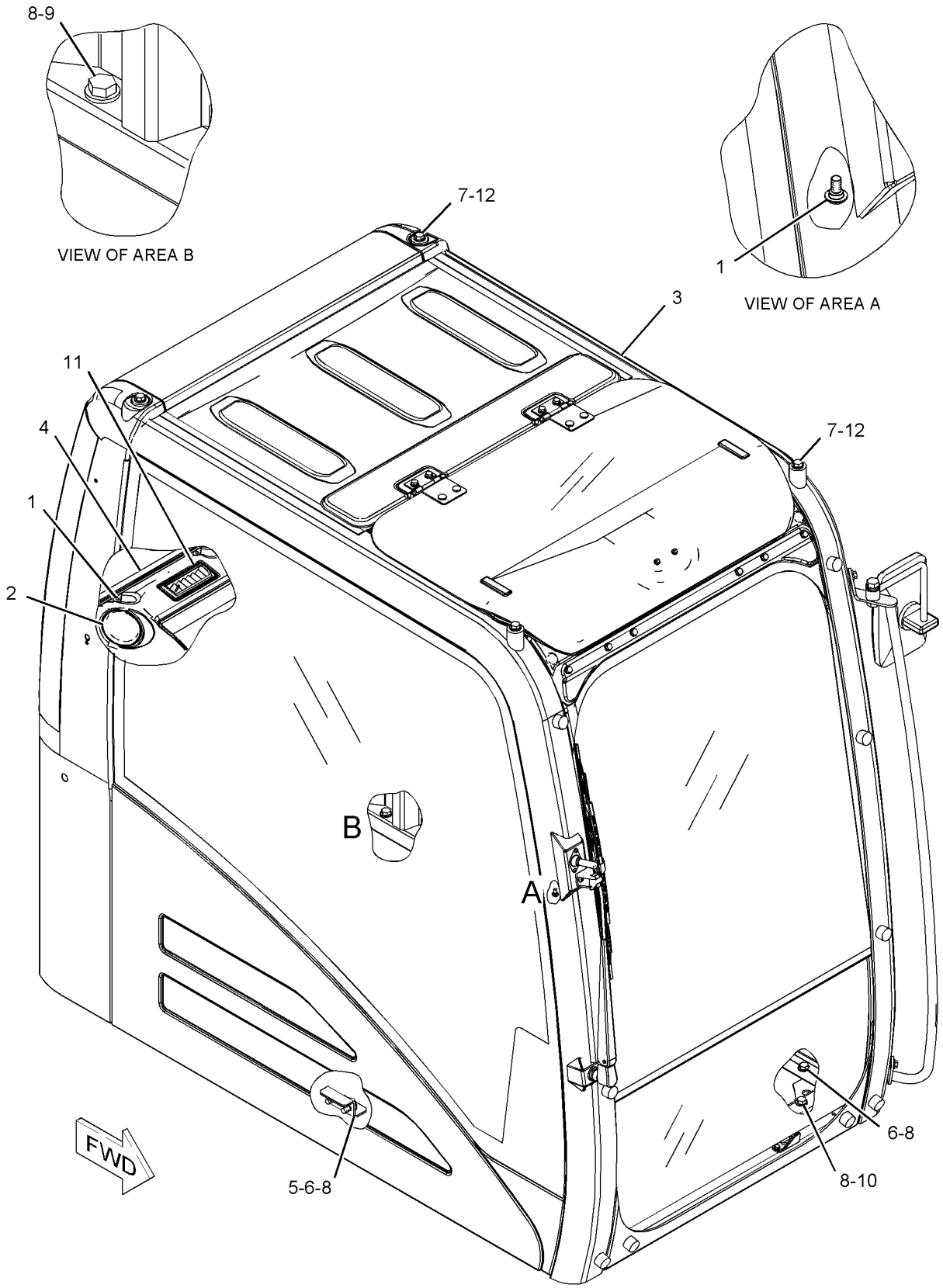

GRAPHIC #1 **<END>** g01119695

OPERATOR STATION

229-9099 CAB GP

S/N: CJN1-UP
PART OF 229-9098 CAB GP
AN ATTACHMENT

SMCS-7301, 7325 **i02888830**

NOTE	REF NO	GRAPHIC REF	PART NUMBER	QTY	PART NAME 1 2 3 4 5 6 (PRODUCT LEVEL)	SEE PAGE
	1	1	*235-8916*	1	CAB AS	
Y	2	1	*235-8910*	1	CAB GP (EXTERIOR)	872
Y	3	1	*235-8908*	1	CAB GP (INTERIOR)	870
Y	4	1	*235-8909*	1	WINDOW GP-CAB (SIDE, REAR)	1066
Y	5	1	*234-6594*	1	WIPER GP-WINDOW (FRONT, UPPER)	1076
Y	6	1	**189-2768**	1	DOOR & MTG GP-CAB	927
JY	7	1	*139-7101*	1	WINDOW GP-CAB (FRONT, UPPER)	1059
Y	8	1	*176-1958*	1	WINDOW GP-CAB (LOWER)	1063
Y	9	1	*139-7099*	1	HATCH GP-ROOF	968
FJY		1	*171-7503*	1	FRAME GP-UPPER FRONT WINDOW	954
FJY		1	*207-0144*	1	WINDOW AS-FRONT (UPPER)	1058

F-NOT SHOWN
J-ITEMS MARKED J AVAILABLE FOR SERVICE REPAIR OF WINDOW GP MARKED J
Y-SEPARATE ILLUSTRATION

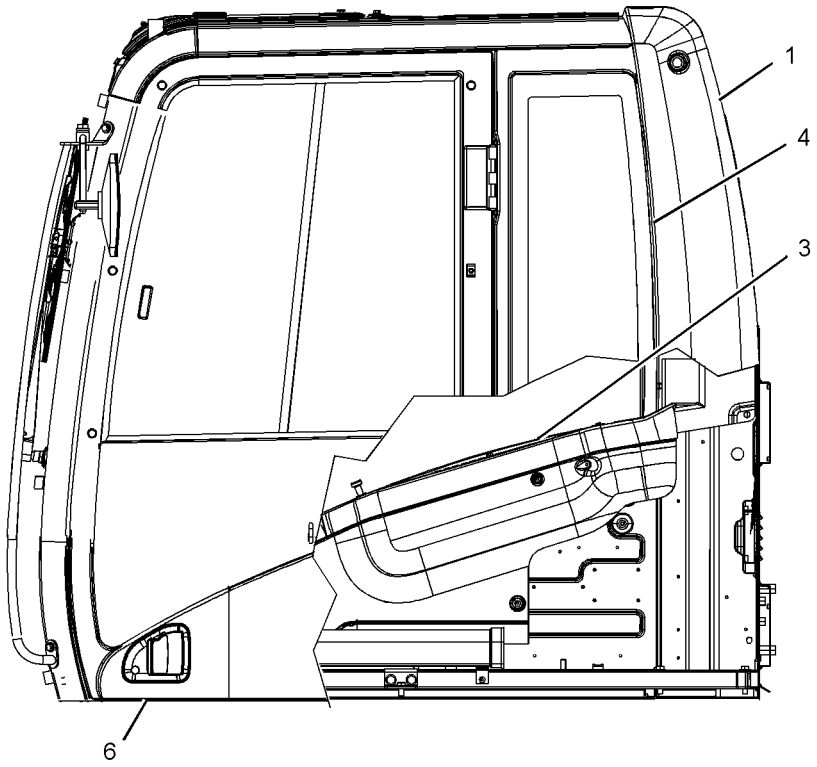

LEFT SIDE VIEW

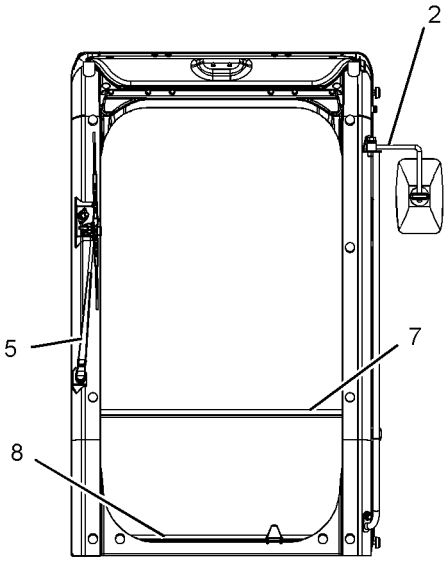

FRONT VIEW

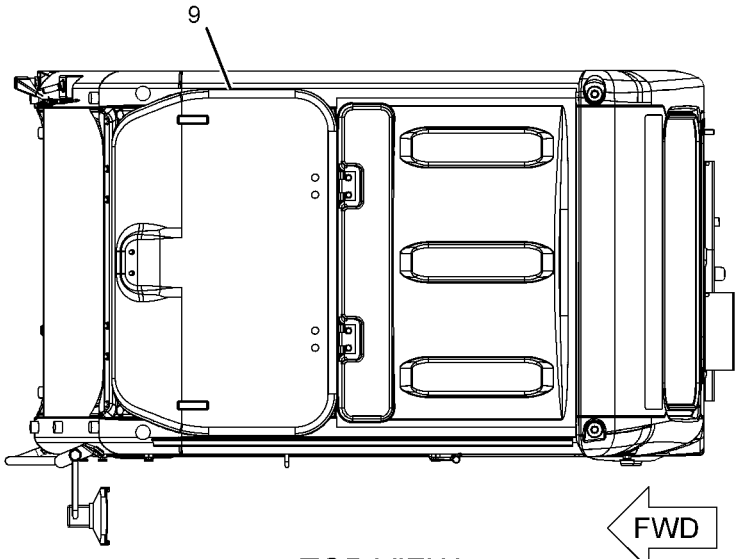

TOP VIEW

GRAPHIC #1 **<END>** g01125083

OPERATOR STATION

229-9100 CAB GP

S/N: CJN1-UP
AN ATTACHMENT

SMCS-7301, 7325 **i02401123**

NOTE	REF NO	GRAPHIC REF	PART NUMBER	QTY	PART NAME 1 2 3 4 5 6 (PRODUCT LEVEL)	SEE PAGE
M	1	1	**128-2135**	5	SCREW-TRUSS HEAD (M6X1X13-MM)	
	2	1	**164-8474**	2	LOUVER AS-VENT	
Y	3	1	**229-9101**	1	CAB GP	868
Y	4	1	*234-6501*	1	COVER GP-CAB (REAR)	925
	5	1	**235-9001**	1	SUPPORT	
M	6	1	**8T-4179**	5	BOLT (M12X1.75X20-MM)	
M	7	1	**8T-4190**	4	BOLT (M16X2X25-MM)	
	8	1	**8T-4223**	13	WASHER-HARD (13.5X25.5X3-MM THK)	
M	9	1	**8T-4910**	6	BOLT (M12X1.75X60-MM)	
M	10	1	**8T-6868**	2	BOLT (M12X1.75X80-MM)	
	11	1	**8Y-6967**	2	LOUVER AS	
	12	1	**9X-8257**	6	WASHER (17.5X30X3.5-MM THK)	

M-METRIC PART
Y-SEPARATE ILLUSTRATION

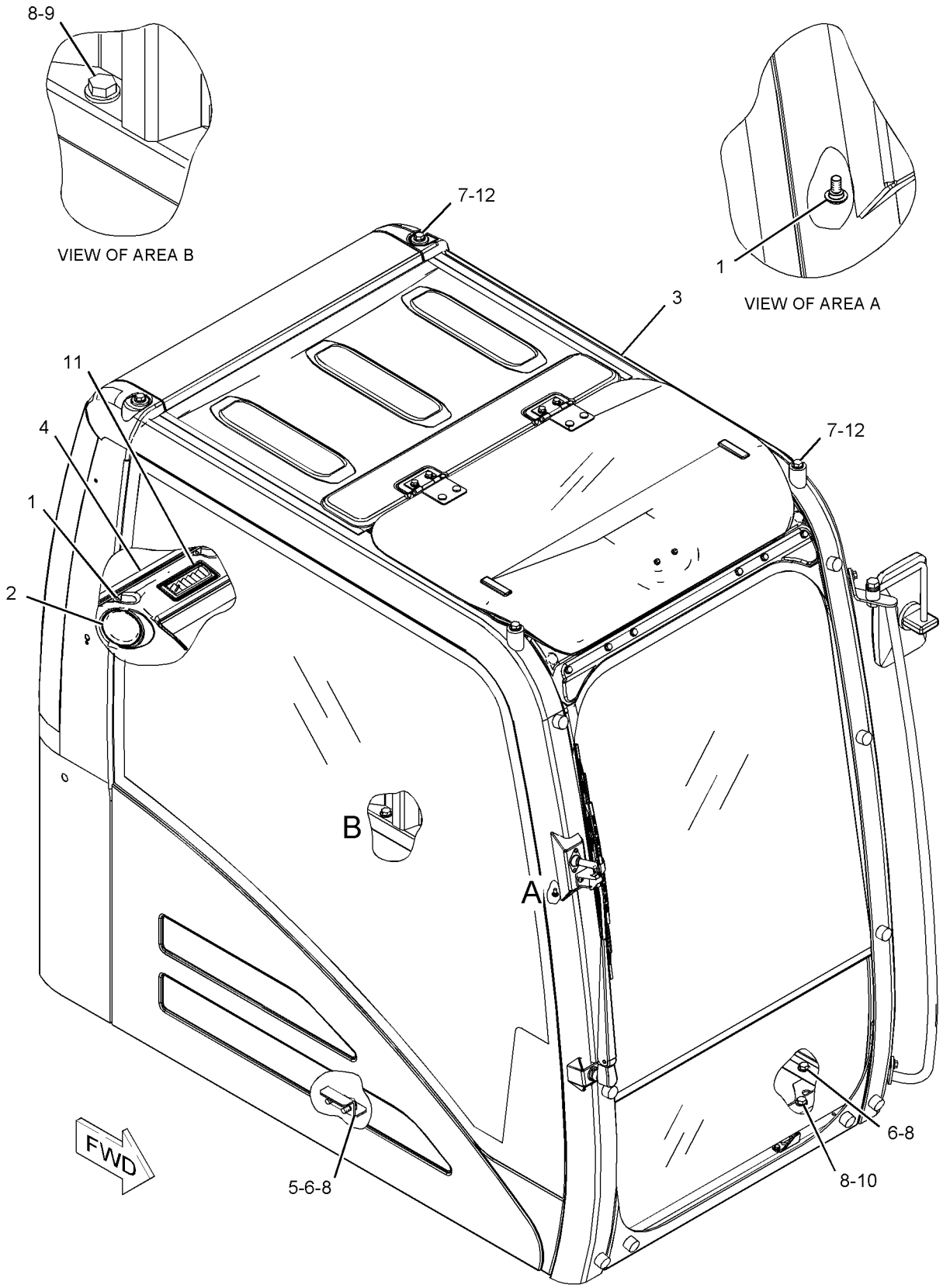

GRAPHIC #1 **<END>** g01119695

OPERATOR STATION

229-9101 CAB GP

S/N: CJN1-UP
PART OF 229-9100 CAB GP
AN ATTACHMENT

SMCS-7301, 7325 **i02857421**

NOTE	REF NO	GRAPHIC REF	PART NUMBER	QTY	PART NAME 1 2 3 4 5 6 (PRODUCT LEVEL)	SEE PAGE
	1		**234-6493**	1	CAB AS	
Y	2	1	*235-8910*	1	CAB GP (EXTERIOR)	872
Y	3	1	*235-8908*	1	CAB GP (INTERIOR)	870
Y	4	1	*235-8915*	1	WINDOW GP-CAB (SIDE, REAR)	1067
Y	5	1	*234-6594*	1	WIPER GP-WINDOW (FRONT, UPPER)	1076
Y	6	1	*176-1964*	1	DOOR GP-CAB	932
JY	7	1	*139-7101*	1	WINDOW GP-CAB (FRONT, UPPER)	1059
Y	8	1	*176-1958*	1	WINDOW GP-CAB (LOWER)	1063
Y	9	1	*139-7099*	1	HATCH GP-ROOF	968
FJY		1	*189-2793*	1	DOOR GP-CAB	938
FJY		1	*171-7503*	1	FRAME GP-UPPER FRONT WINDOW	954
FJY		1	*207-0144*	1	WINDOW AS-FRONT (UPPER)	1058

F-NOT SHOWN
J-ITEMS MARKED J AVAILABLE FOR SERVICE REPAIR OF WINDOW GP MARKED J
Y-SEPARATE ILLUSTRATION

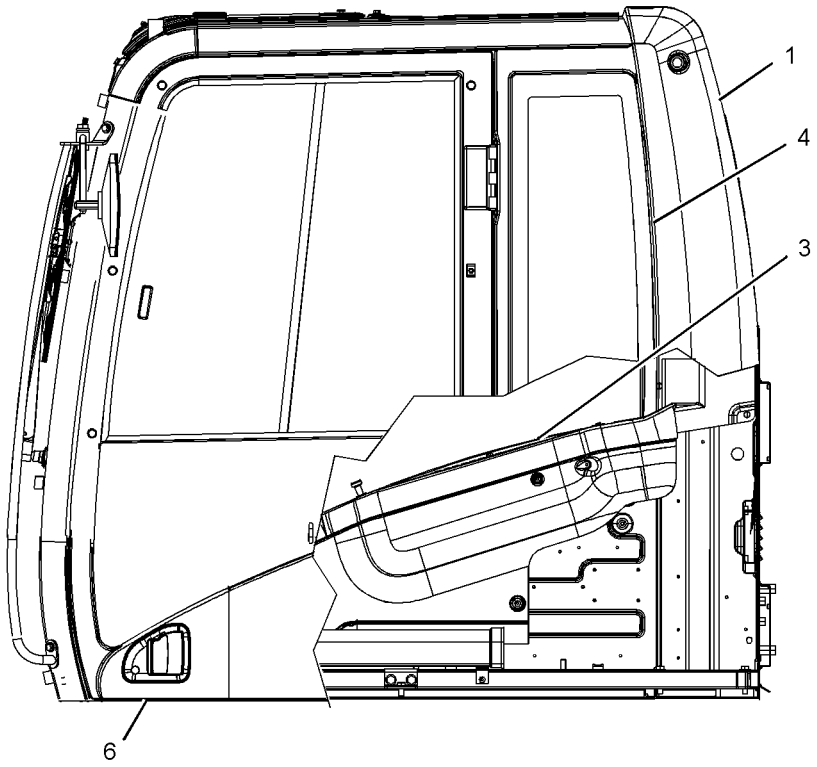

LEFT SIDE VIEW

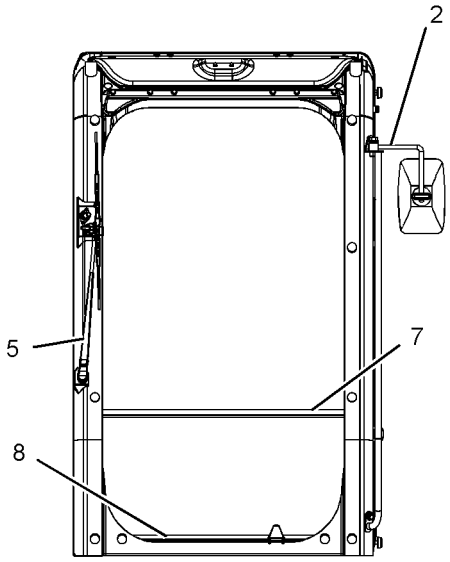

FRONT VIEW

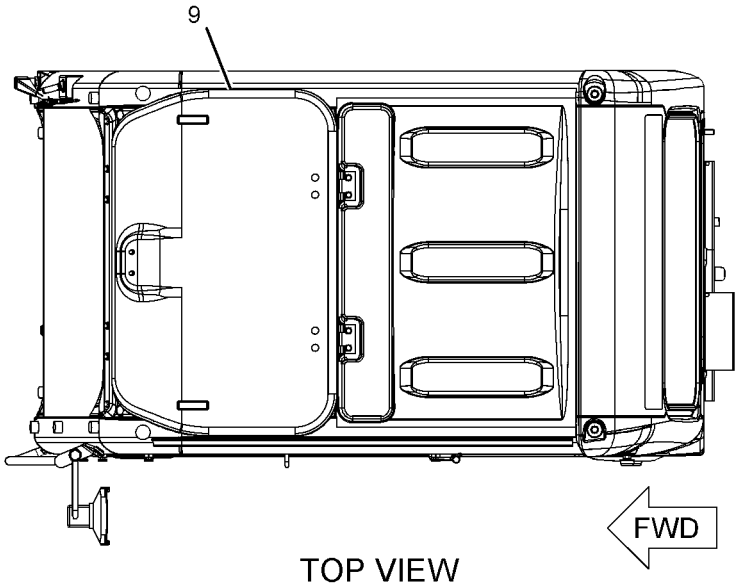

TOP VIEW

GRAPHIC #1 **<END>** g01125083

OPERATOR STATION

235-8908 CAB GP—INTERIOR

S/N: CJN1-UP

PART OF 229-9097, 229-9099, 229-9101 CAB GP

AN ATTACHMENT

SMCS-7301, 7325 **i03087701**

NOTE	REF NO	GRAPHIC REF	PART NUMBER	QTY	PART NAME 1 2 3 4 5 6 (PRODUCT LEVEL)	SEE PAGE
	1	1	**8Y-6352**	1	LOUVER AS	
	2	1	**156-6656**	1	RAIL	
	3	1	**156-6657**	1	RAIL	
	4	1	**164-0646**	1	CUP	
	5	1	**164-0655**	1	PANEL-SWITCH (OPERATOR CONSOLE)	
	6	1	**164-8474**	2	LOUVER AS-VENT	
	7	1	**170-9724**	5	CLIP	
	8	1	**171-7420**	6	CLIP	
	9	1	**176-1946**	1	PLATE	
	10	1	**176-1947**	1	PLATE	
	11	1	**176-1972**	1	COVER	
	12	1	**185-8214**	1	BRACKET AS	
	13	1	**189-2678**	3	SPACER	
	14	1	**234-6468**	1	COVER AS	
	15	1	**234-6470**	1	COVER-MONITOR	
	16	1	**234-6471**	1	COVER-DUCT	
	17	1	**234-6472**	1	COVER	
	18	1	**234-6473**	1	COVER-FRONT (UPPER, RH)	
	19	1	**234-6474**	1	COVER (UPPER, RH)	
	20	1	**305-0330**	1	COVER	
	21	1	**234-6476**	1	DUCT	
	22	1	**234-6477**	1	BRACKET AS	
	23	1	**305-0333**	1	BRACKET	
	24	1	**234-6480**	1	BRACKET AS	
	25	1	**234-6483**	1	BRACKET AS	
	26	1	**234-6485**	1	BRACKET AS	
	27	1	**234-6490**	1	CUP	
	28	1	**234-6491**	1	COVER	
	29	1	**234-6497**	1	COVER	
	30	1	**234-6498**	3	RIVET	
	31	1	**234-6521**	1	COVER	
	32	1	**234-6547**	1	COVER	
	33	1	**234-6548**	1	COVER	
	34	1	**234-6549**	1	COVER	
	35	1	**234-6550**	1	COVER	
	36	1	**234-6579**	2	NUT-SPEED	
	37	1	**235-8922**	1	COVER	
	38	1	**235-8923**	2	CAP	
	39	1	**235-8926**	1	VISOR	
	40	1	**235-8928**	1	LINER	
	41	1	**235-8929**	2	HANDLE	
	42	1	**185-8205**	5	CLIP	
	43	1	**235-8950**	10	CLIP	
	44	1	**245-7790**	2	SCREW-TAPPING	
M	45	1	**128-2135**	13	SCREW-TRUSS HEAD (M6X1X13-MM)	
M	46	1	**128-2136**	1	SCREW-TRUSS HEAD (M6X1X16-MM)	
	47	1	**189-2855**	1	COVER	
	48	1	**234-6469**	1	COVER	
M	49	1	**9X-2042**	23	SCREW-TRUSS HEAD (M6X1X12-MM)	
M	50	1	**9X-2044**	6	SCREW-TRUSS HEAD (M6X1X16-MM)	

M-METRIC PART

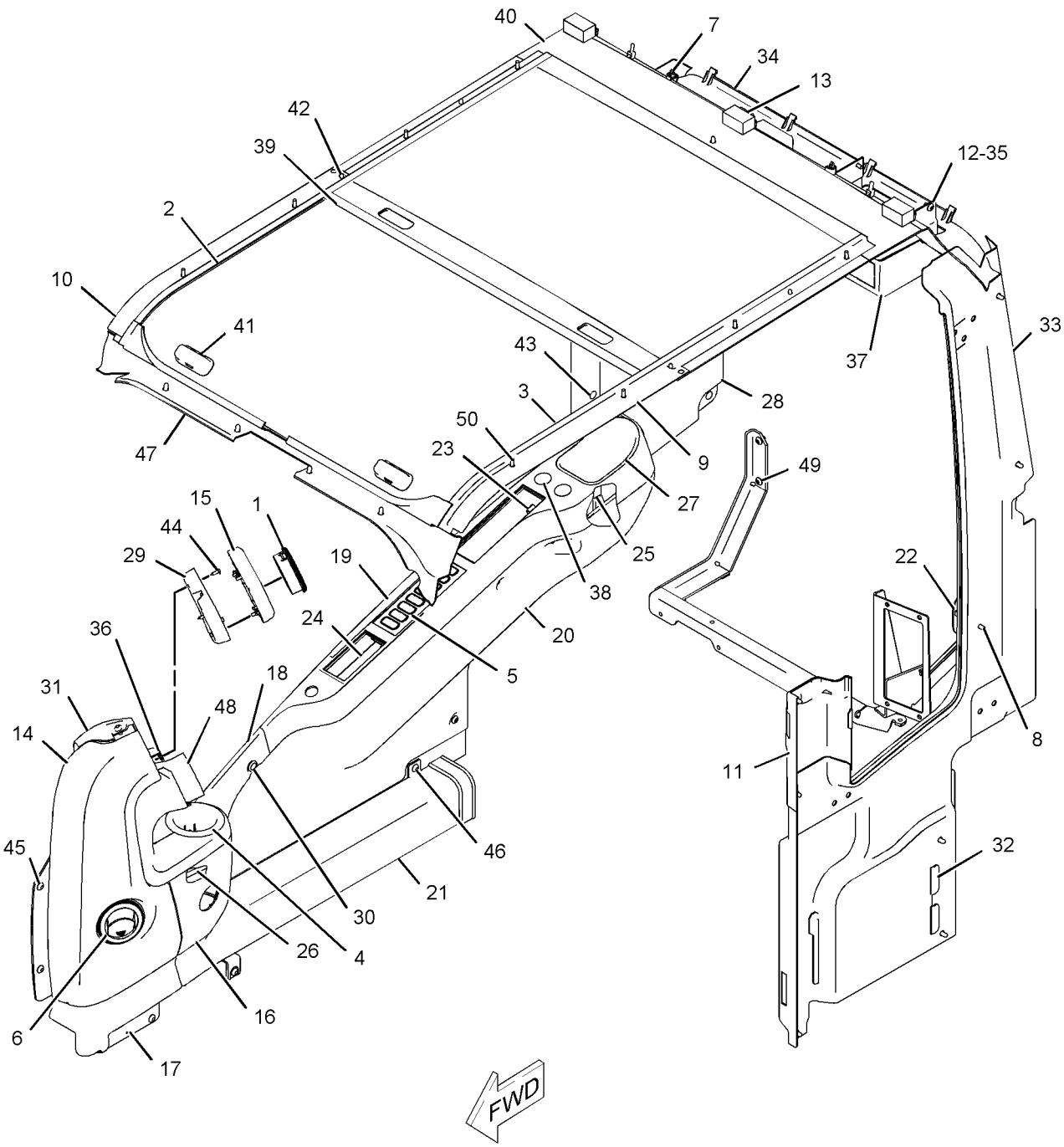

GRAPHIC #1

<END>

g01097914

OPERATOR STATION

235-8910 CAB GP–EXTERIOR

S/N: CJN1-UP
PART OF 229-9097, 229-9099, 229-9101, 316-8815 CAB GP
AN ATTACHMENT
TYPE 1

SMCS-7301, 7325 **i02909131**

NOTE	REF NO	GRAPHIC REF	PART NUMBER	QTY	PART NAME 1 2 3 4 5 6 (PRODUCT LEVEL)	SEE PAGE
	1	2	**139-7126**	1	HOLDER	
	2	2	**139-7127**	1	HOLDER	
	3	1	**156-6599**	1	STRIKER	
	4	2	**161-3685**	1	ROD	
	5	1	**235-8933**	1	HANDLE AS	
	6	1	**161-3697**	1	GUARD	
	7	2	**164-0523**	1	LEVER AS	
	8	2	**164-0527**	1	ROD	
Y	9	2	*164-0528*	1	LEVER GP-AIR & TEMP CONTROL	989
	10	1	**167-7018**	1	COVER AS	
	11	2	**167-7042**	2	SEAL	
	12	2	**171-7426**	1	CABLE AS	
	13	2	*176-1939*	1	LEVER AS	
M		2	**9X-2044**	1	SCREW-TRUSS HEAD (M6X1X16-MM)	
		2	**176-1937**	1	BRACKET AS	
		2	**176-1938**	1	LEVER	
	14	2	**176-1942**	1	COVER	
	15	1	**178-5570**	2	GROMMET	
	16	2	**185-8196**	1	GROMMET	
	17	2	**189-2704**	1	SEAL	
M	18	1,2	**189-3396**	5	NUT (M10X1.15-THD)	
	19	2	**189-3409**	3	WASHER	
	20	2	**201-4530**	1	BRACKET AS	
	21	2	**205-6295**	1	LATCH AS	
	22	1	**210-5808**	1	SEAL	
	23	1	**235-8912**	1	HANDLE AS	
M	24	1	**099-0823**	3	SCREW-MACHINE (M6X1X6-MM)	
M	25	1	**127-0580**	2	SCREW-FLAT HEAD (M8X1.25X20-MM)	
	26	2	**133-8016**	1	PACKING	
	27	1	**156-6617**	1	MIRROR	
CY	28	1	**259-7295**	1	BRACKET GP-MIRROR	856
	29	2	**176-1986**	1	LAMP AS-DOME	
		2	**201-4417**	1	LAMP (24-VOLT, 10-WATT) (DOME)	
	30	1	**1R-5998**	2	LOCKWASHER	
M	31	1	**284-4426**	1	BOLT-WING (M8X1.25X15-MM)	
M	32	2	**3E-8020**	6	SCREW-TRUSS HEAD (M6X1X25-MM)	
M	33	2	**3E-9874**	2	SCREW-OVAL HEAD	
	34	1	**4I-1205**	2	BUMPER	
	35	2	**4I-1206**	2	GUIDE	
	36	2	**4I-3063**	1	SPRING	
M	37	1	**4I-3123**	2	BOLT (M10X1.5X20-MM)	
	38	1	**4I-3144**	2	WASHER-HARD (10.2X22X3.2-MM THK)	
	39	2	**4I-4270**	1	HOLDER-GLASS	
	40	2	**4I-4392**	3	CLIP	
	41	2	**5C-7793**	1	HOOK-COAT	
	42	2	**6V-7636**	4	PIN AS-SPRING	
	43	1	**7X-0578**	2	WASHER-HARD (10.2X32X2.5-MM THK)	
					–OR–	
		1	**099-3607**	2	WASHER-HARD (10.2X30X3.2-MM THK)	
CM	44	1	**8T-4779**	1	BOLT (M16X2X35-MM)	
M	45	2	**9X-2041**	1	SCREW-TRUSS HEAD (M10X1.5X20-MM)	
M	46	2	**9X-2042**	5	SCREW-TRUSS HEAD (M6X1X12-MM)	
M	47	2	**9X-2044**	5	SCREW-TRUSS HEAD (M6X1X16-MM)	
M	48	2	**9X-2045**	2	SCREW-TRUSS HEAD (M6X1X20-MM)	

235-8910 **CAB GP** ***(contd.)*** **i02909131**

NOTE	REF NO	GRAPHIC REF	PART NUMBER	QTY	PART NAME 1 2 3 4 5 6 (PRODUCT LEVEL)	SEE PAGE
	49	1	**9X-8257**	1	WASHER (17.5X30X3.5-MM THK)	
E	50	2	**6I-5470**		SEAL (150-CM)	
	51	1	**085-6452**	2	WASHER	
M	52	1	**105-2169**	2	BOLT AS (M8X1.25X16-MM)	
M	53	1	**189-2864**	2	SCREW-FLAT HEAD (M8X1.25X30-MM)	
	54	1	**4I-3090**	4	SEAL	

C-CHANGE FROM PREVIOUS TYPE
E-ORDER BY THE CENTIMETER
M-METRIC PART
Y-SEPARATE ILLUSTRATION

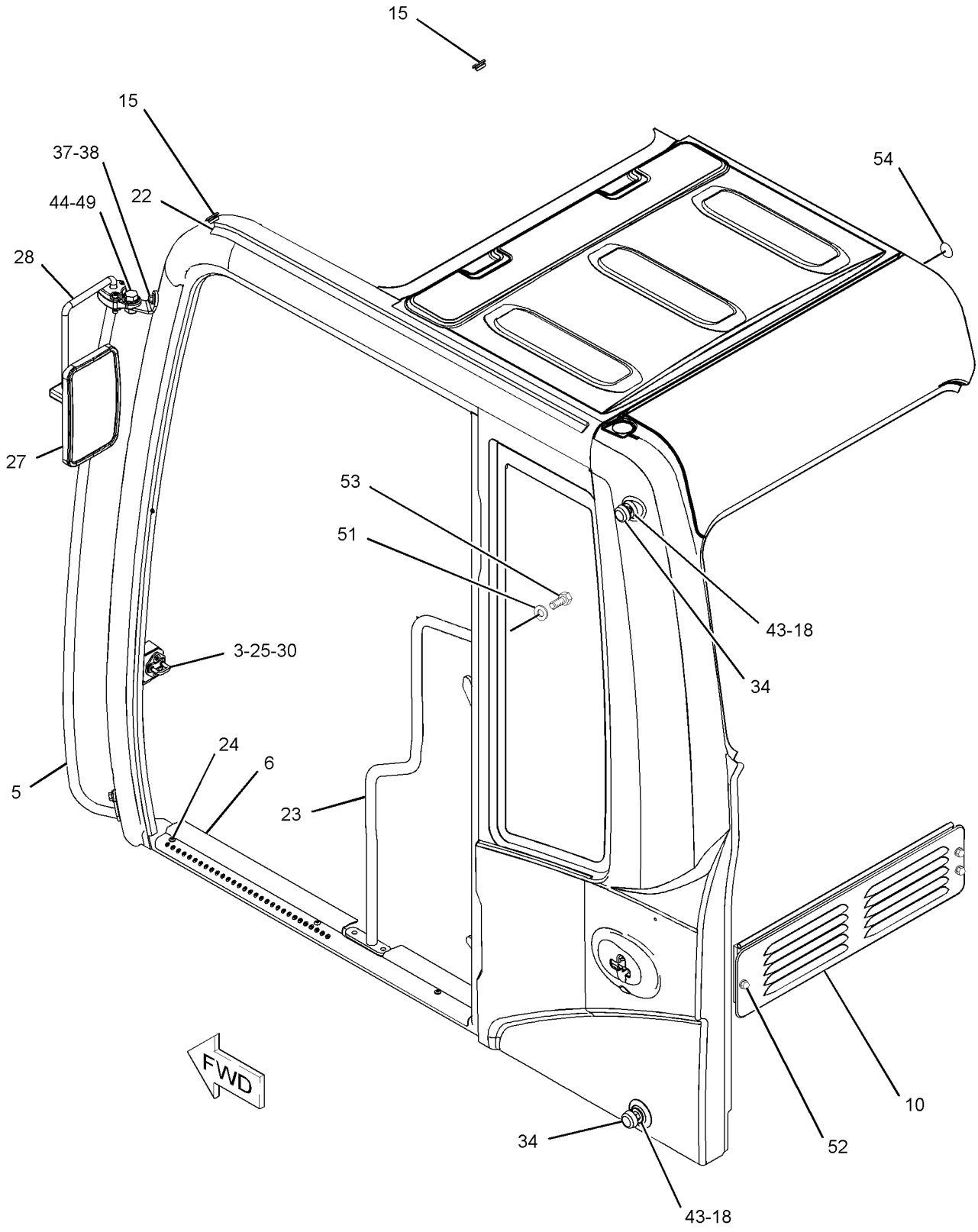

GRAPHIC #1 g01253581

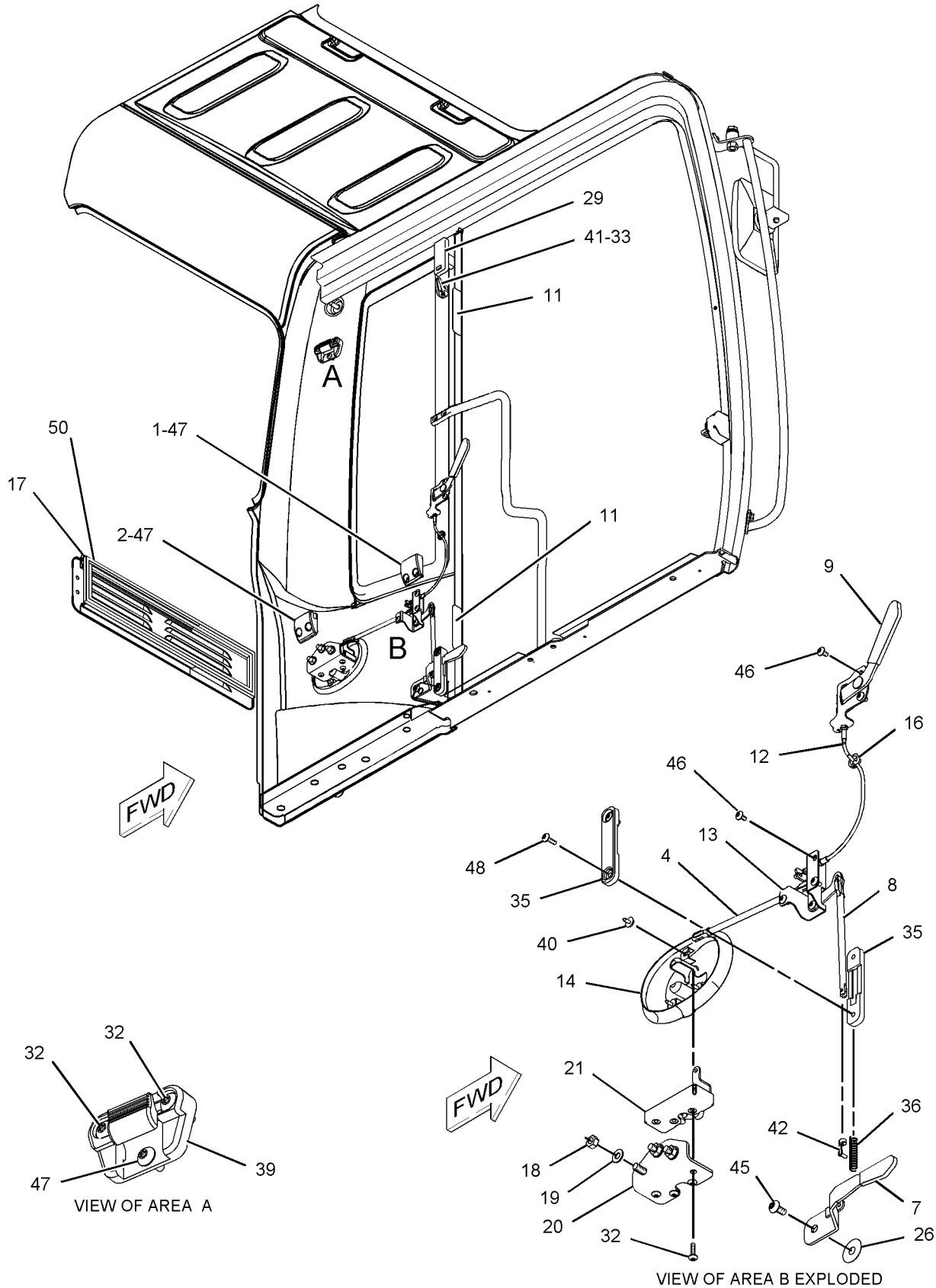

GRAPHIC #2 **<END>** g01098017

OPERATOR STATION

235-8910 CAB GP–EXTERIOR

S/N: CJN1-UP
PART OF 229-9097, 229-9099, 229-9101, 316-8815 CAB GP
AN ATTACHMENT
TYPE 2

SMCS-7301, 7325 **i03087760**

NOTE	REF NO	GRAPHIC REF	PART NUMBER	QTY	PART NAME 1 2 3 4 5 6 (PRODUCT LEVEL)	SEE PAGE
	1	2	**139-7126**	1	HOLDER	
	2	2	**139-7127**	1	HOLDER	
	3	1	**156-6599**	1	STRIKER	
	4	2	**161-3685**	1	ROD	
	5	1	**235-8933**	1	HANDLE AS	
	6	1	**161-3697**	1	GUARD	
	7	2	**164-0523**	1	LEVER AS	
	8	2	**164-0527**	1	ROD	
Y	9	2	*164-0528*	1	LEVER GP-AIR & TEMP CONTROL	989
	10	1	**167-7018**	1	COVER AS	
	11	2	**167-7042**	2	SEAL	
	12	2	**171-7426**	1	CABLE AS	
	13	2	*176-1939*	1	LEVER AS	
M		2	**9X-2044**	1	SCREW-TRUSS HEAD (M6X1X16-MM)	
		2	**176-1937**	1	BRACKET AS	
		2	**176-1938**	1	LEVER	
	14	2	**176-1942**	1	COVER	
	15	1	**178-5570**	2	GROMMET	
	16	2	**185-8196**	1	GROMMET	
	17	2	**189-2704**	1	SEAL	
M	18	1,2	**189-3396**	5	NUT (M10X1.15-THD)	
	19	2	**189-3409**	3	WASHER	
	20	2	**201-4530**	1	BRACKET AS	
	21	2	**205-6295**	1	LATCH AS	
	22	1	**210-5808**	1	SEAL	
	23	1	**235-8912**	1	HANDLE AS	
M	24	1	**099-0823**	3	SCREW-MACHINE (M6X1X6-MM)	
M	25	1	**127-0580**	2	SCREW-FLAT HEAD (M8X1.25X20-MM)	
	26	2	**133-8016**	1	PACKING	
CY	27	1	**327-6550**	1	MIRROR GP-REAR VIEW	999
Y	28	1	**259-7295**	1	BRACKET GP-MIRROR	856
	29	2	**176-1986**	1	LAMP AS-DOME	
		2	**201-4417**	1	LAMP (24-VOLT, 10-WATT) (DOME)	
	30	1	**1R-5998**	2	LOCKWASHER	
M	31	1	**284-4426**	1	BOLT-WING (M8X1.25X15-MM)	
M	32	2	**3E-8020**	6	SCREW-TRUSS HEAD (M6X1X25-MM)	
M	33	2	**3E-9874**	2	SCREW-OVAL HEAD	
	34	1	**4I-1205**	2	BUMPER	
	35	2	**4I-1206**	2	GUIDE	
	36	2	**4I-3063**	1	SPRING	
M	37	1	**4I-3123**	2	BOLT (M10X1.5X20-MM)	
	38	1	**4I-3144**	2	WASHER-HARD (10.2X22X3.2-MM THK)	
	39	2	**4I-4270**	1	HOLDER-GLASS	
	40	2	**4I-4392**	3	CLIP	
	41	2	**5C-7793**	1	HOOK-COAT	
	42	2	**6V-7636**	4	PIN AS-SPRING	
	43	1	**7X-0578**	2	WASHER-HARD (10.2X32X2.5-MM THK)	
					–OR–	
		1	**099-3607**	2	WASHER-HARD (10.2X30X3.2-MM THK)	
M	44	1	**8T-4779**	1	BOLT (M16X2X35-MM)	
M	45	2	**9X-2041**	1	SCREW-TRUSS HEAD (M10X1.5X20-MM)	
M	46	2	**9X-2042**	5	SCREW-TRUSS HEAD (M6X1X12-MM)	
M	47	2	**9X-2044**	5	SCREW-TRUSS HEAD (M6X1X16-MM)	
M	48	2	**9X-2045**	2	SCREW-TRUSS HEAD (M6X1X20-MM)	

235-8910 **CAB GP** ***(contd.)*** **i03087760**

NOTE	REF NO	GRAPHIC REF	PART NUMBER	QTY	PART NAME 1 2 3 4 5 6 (PRODUCT LEVEL)	SEE PAGE
	49	1	**9X-8257**	1	WASHER (17.5X30X3.5-MM THK)	
E	50	2	**6I-5470**		SEAL (150-CM)	
	51	1	**085-6452**	2	WASHER	
M	52	1	**105-2169**	2	BOLT AS (M8X1.25X16-MM)	
M	53	1	**189-2864**	2	SCREW-FLAT HEAD (M8X1.25X30-MM)	
	54	1	**4I-3090**	4	SEAL	

C-CHANGE FROM PREVIOUS TYPE
E-ORDER BY THE CENTIMETER
M-METRIC PART
Y-SEPARATE ILLUSTRATION

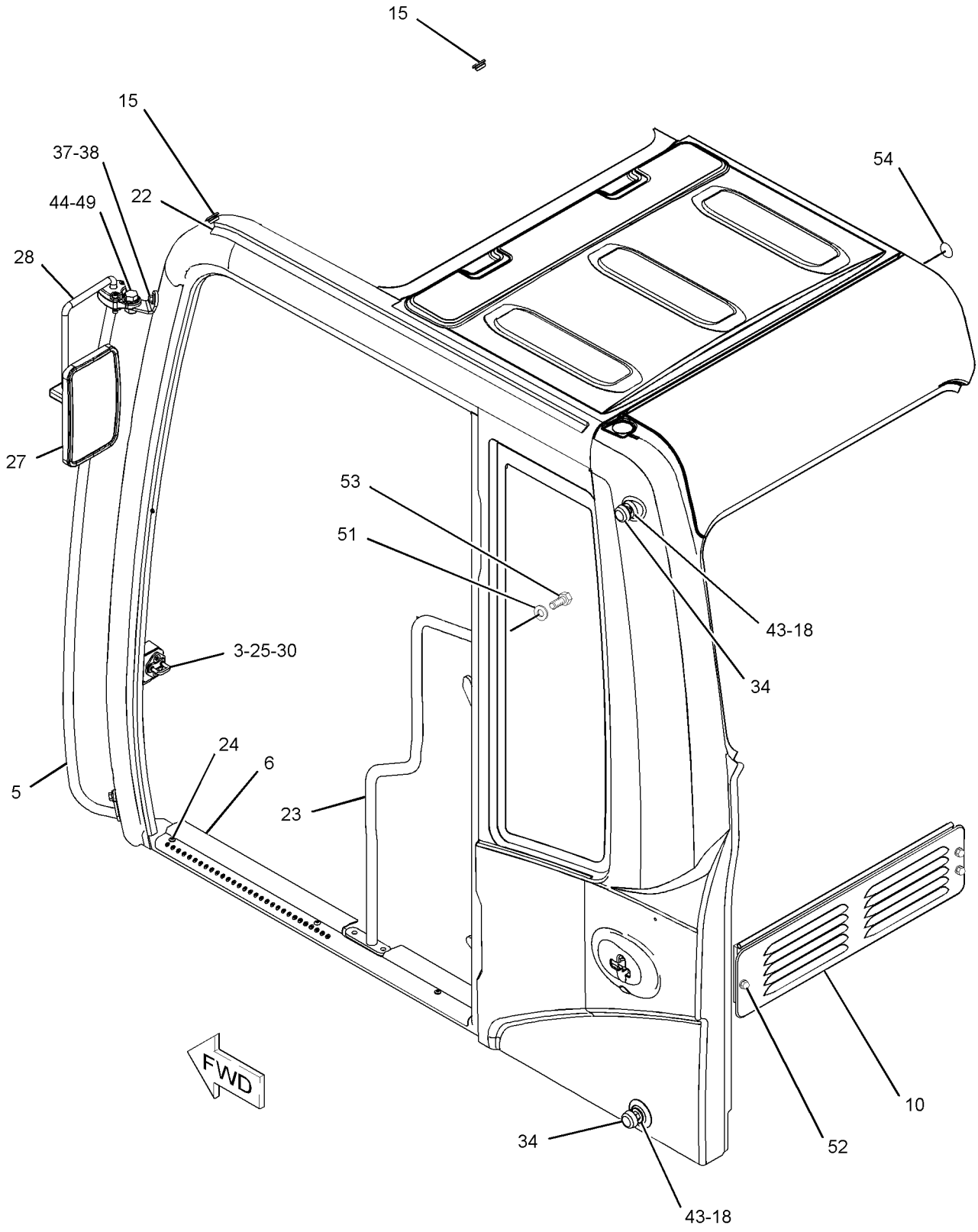

GRAPHIC #1

g01253581

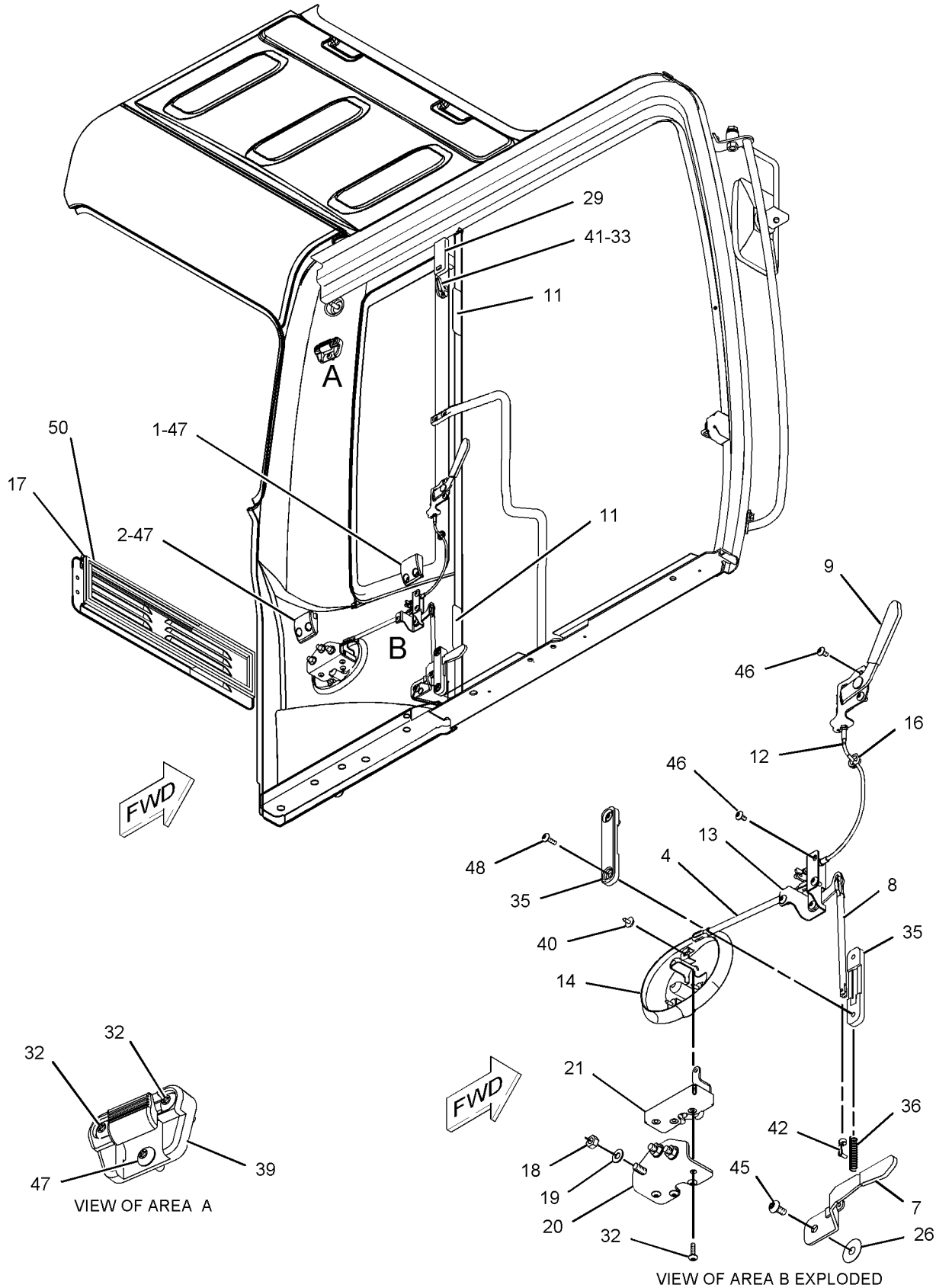

GRAPHIC #2 **<END>** g01098017

OPERATOR STATION

235-8917 CAB GP–INTERIOR

S/N: CJN1-UP
PART OF 316-8815 CAB GP
AN ATTACHMENT

SMCS-7301, 7325 **i02783571**

NOTE	REF NO	GRAPHIC REF	PART NUMBER	QTY	PART NAME 1 2 3 4 5 6 (PRODUCT LEVEL)	SEE PAGE
	1	1	**8Y-6352**	1	LOUVER AS	
	2	1	**164-0646**	1	CUP	
	3	1	**164-0655**	1	PANEL-SWITCH (OPERATOR CONSOLE)	
	4	1	**164-8474**	2	LOUVER AS-VENT	
	5	1	**170-9724**	5	CLIP	
	6	1	**171-7420**	10	CLIP	
	7	1	**176-1972**	1	COVER	
	8	1	**185-8205**	7	CLIP	
	9	1	**185-8214**	1	BRACKET AS	
	10	1	**189-2678**	3	SPACER	
	11	1	**189-2853**	1	COVER	
	12	1	**189-2854**	1	COVER	
	13	1	**234-6468**	1	COVER AS	
		1	**259-7353**	4	CLIP	
	14	1	**234-6470**	1	COVER-MONITOR	
	15	1	**234-6471**	1	COVER-DUCT	
	16	1	**234-6472**	1	COVER	
	17	1	**234-6473**	1	COVER-FRONT (UPPER, RH)	
	18	1	**234-6474**	1	COVER (UPPER, RH)	
	20	1	**234-6476**	1	DUCT	
	21	1	**234-6477**	1	BRACKET AS	
	23	1	**234-6480**	1	BRACKET AS	
	24	1	**234-6483**	1	BRACKET AS	
	25	1	**234-6485**	1	BRACKET AS	
	26	1	**234-6490**	1	CUP	
	27	1	**234-6491**	1	COVER	
	28	1	**234-6497**	1	COVER	
	29	1	**234-6498**	3	RIVET	
	30	1	**234-6521**	1	COVER	
	31	1	**234-6547**	1	COVER	
	32	1	**234-6548**	1	COVER	
	33	1	**234-6549**	1	COVER	
	34	1	**234-6550**	1	COVER	
	35	1	**234-6579**	2	NUT-SPEED	
	36	1	**235-8922**	1	COVER	
	37	1	**235-8923**	2	CAP	
	38	1	**235-8930**	1	LINER	
C	39	1	**235-8950**	10	CLIP	
	40	1	**245-7790**	2	SCREW-TAPPING	
M	41	1	**128-2135**	13	SCREW-TRUSS HEAD (M6X1X13-MM)	
M	42	1	**128-2136**	1	SCREW-TRUSS HEAD (M6X1X16-MM)	
	43	1	**189-2855**	1	COVER	
	44	1	**234-6469**	1	COVER	
M	45	1	**9X-2042**	23	SCREW-TRUSS HEAD (M6X1X12-MM)	
C	46	1	**305-0333**	1	BRACKET	
C	47	1	**305-0330**	1	COVER	

C-CHANGE FROM PREVIOUS TYPE
M-METRIC PART

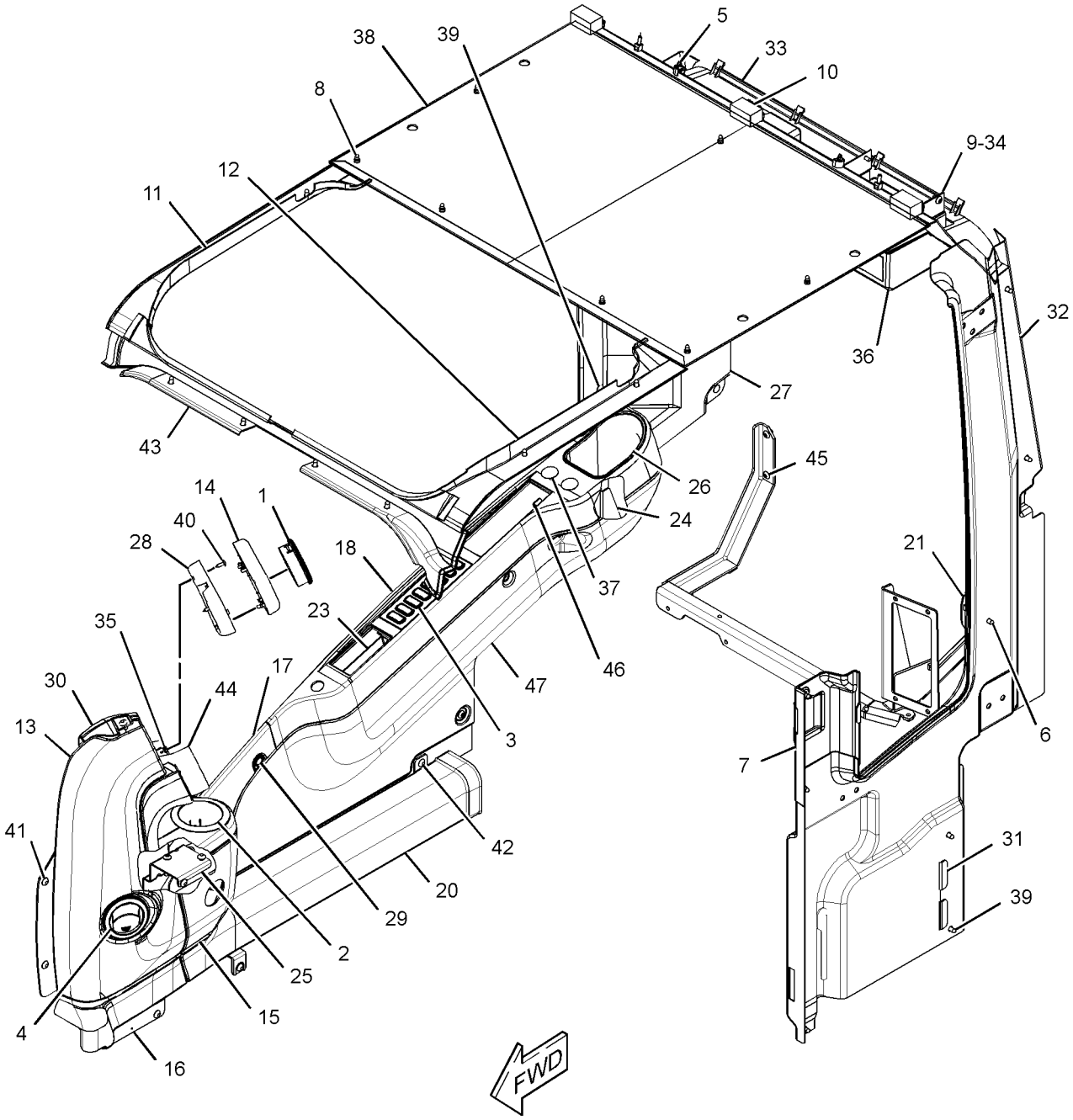

GRAPHIC #1 **<END>** g01421499

OPERATOR STATION

316-8814 CAB GP

S/N: CJN1-UP
AN ATTACHMENT

SMCS-7301, 7325 **i02884426**

NOTE	REF NO	GRAPHIC REF	PART NUMBER	QTY	PART NAME 1 2 3 4 5 6 (PRODUCT LEVEL)	SEE PAGE
M	1	1	**128-2135**	5	SCREW-TRUSS HEAD (M6X1X13-MM)	
	2	1	**164-8474**	2	LOUVER AS-VENT	
Y	3	1	**316-8815**	1	CAB GP	884
Y	4	1	*234-6501*	1	COVER GP-CAB (REAR)	925
	5	1	**235-9001**	1	SUPPORT	
M	6	1	**8T-4179**	5	BOLT (M12X1.75X20-MM)	
M	7	1	**8T-4190**	4	BOLT (M16X2X25-MM)	
	8	1	**8T-4223**	13	WASHER-HARD (13.5X25.5X3-MM THK)	
M	9	1	**8T-4910**	6	BOLT (M12X1.75X60-MM)	
M	10	1	**8T-6868**	2	BOLT (M12X1.75X80-MM)	
	11	1	**8Y-6967**	2	LOUVER AS	
	12	1	**9X-8257**	6	WASHER (17.5X30X3.5-MM THK)	

M-METRIC PART
Y-SEPARATE ILLUSTRATION

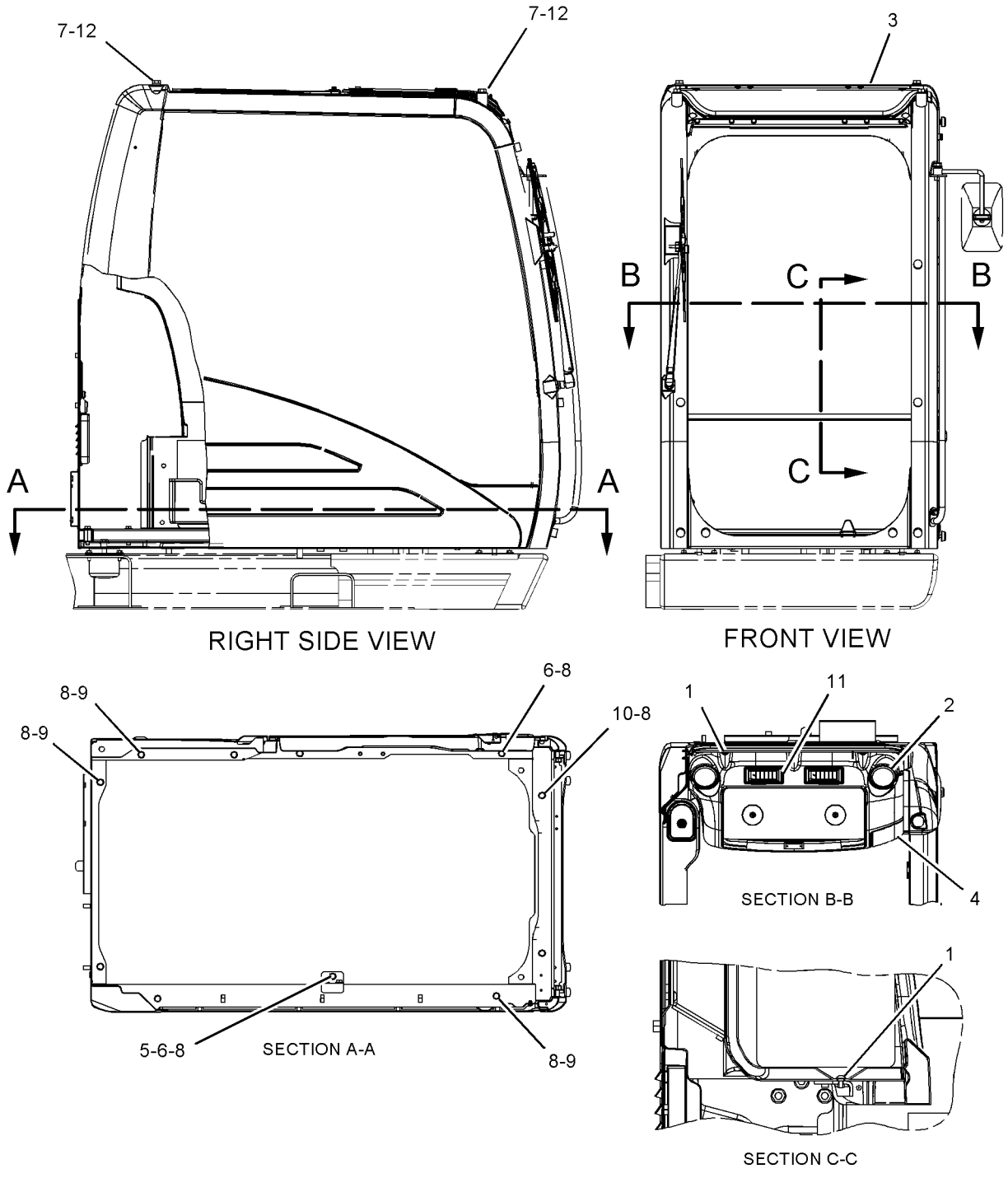

GRAPHIC #1 **<END>** g01125071

OPERATOR STATION

316-8815 CAB GP

S/N: CJN1-UP
PART OF 316-8814 CAB GP
AN ATTACHMENT

SMCS-7301, 7325 **i02884427**

NOTE	REF NO	GRAPHIC REF	PART NUMBER	QTY	PART NAME 1 2 3 4 5 6 (PRODUCT LEVEL)	SEE PAGE
	1	1	*235-8916*	1	CAB AS	
Y	2	1	*235-8910*	1	CAB GP (EXTERIOR)	872
Y	3	1	*235-8917*	1	CAB GP (INTERIOR)	880
Y	4	1	*235-8909*	1	WINDOW GP-CAB (SIDE, REAR)	1066
Y	5	1	*234-6594*	1	WIPER GP-WINDOW (FRONT, UPPER)	1076
Y	6	1	**189-2768**	1	DOOR & MTG GP-CAB	927
JY	7	1	*139-7101*	1	WINDOW GP-CAB (FRONT, UPPER)	1059
Y	8	1	*176-1958*	1	WINDOW GP-CAB (LOWER)	1063
Y	9	1	*139-7099*	1	HATCH GP-ROOF	968
FJY		1	*171-7503*	1	FRAME GP-UPPER FRONT WINDOW	954
FJY		1	*207-0144*	1	WINDOW AS-FRONT (UPPER)	1058

F-NOT SHOWN
J-ITEMS MARKED J AVAILABLE FOR SERVICE REPAIR OF WINDOW GP MARKED J
Y-SEPARATE ILLUSTRATION

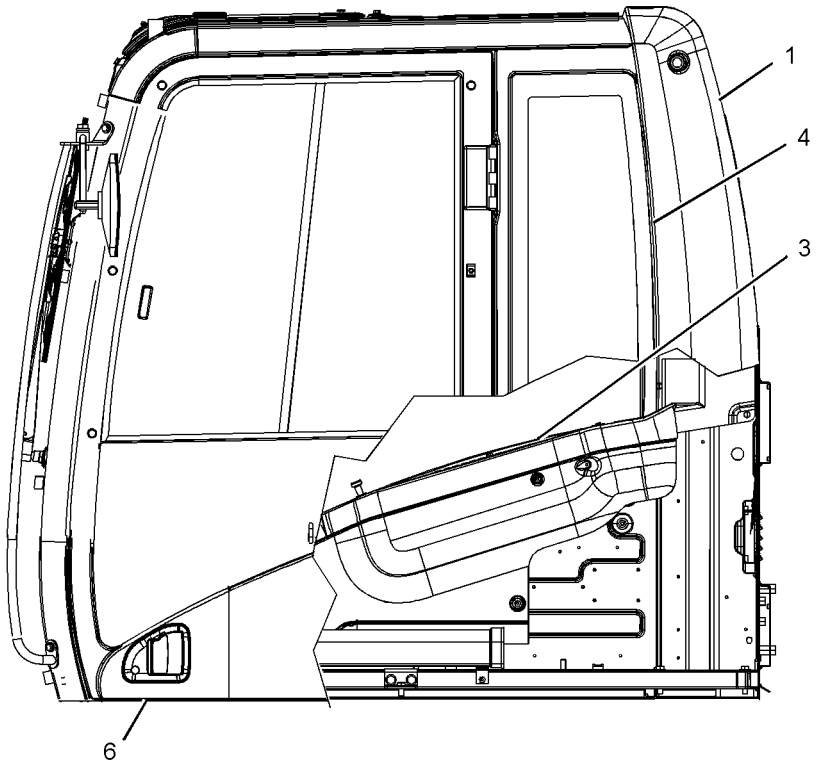

LEFT SIDE VIEW

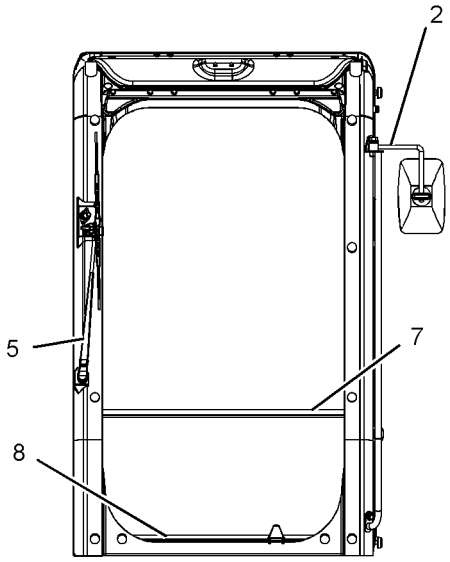

FRONT VIEW

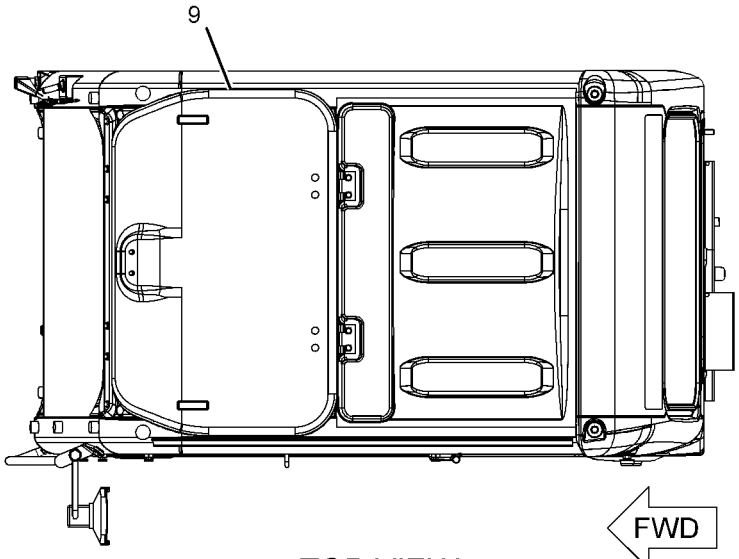

TOP VIEW

GRAPHIC #1 **<END>** g01125083

OPERATOR STATION

245-7836 COIL GP-EVAPORATOR

S/N: CJN1-UP

PART OF 240-5036, 316-8811 AIR CONDITIONER GP

AN ATTACHMENT

SMCS-7343 **i02218138**

NOTE	REF NO	GRAPHIC REF	PART NUMBER	QTY	PART NAME 1 2 3 4 5 6 (PRODUCT LEVEL)	SEE PAGE
	1	1	**245-7837**	1	VALVE AS-EXPANSION	
	2	1	**245-7905**	1	INSULATOR	
M	3	1	**8T-0266**	2	BOLT-SOCKET HEAD (M5X0.8X40-MM)	
	4	1	**121-7136**	1	SEAL-O-RING	
	5	1	**121-7138**	1	SEAL-O-RING	

M-METRIC PART

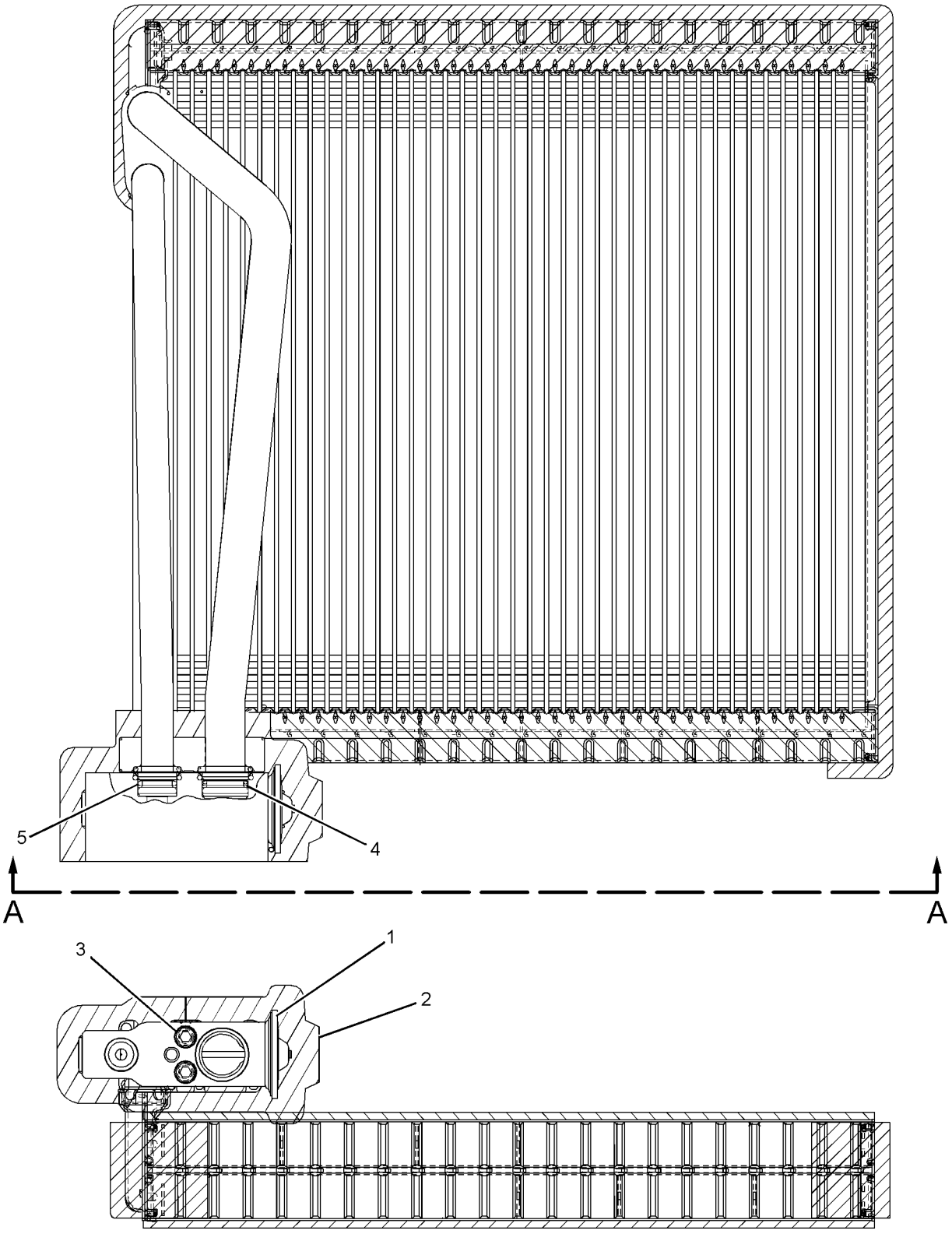

VIEW A-A

GRAPHIC #1 **<END>** g01134658

OPERATOR STATION

255-3032 COMPRESSOR GP-REFRIGERANT

S/N: CJN1-UP

PART OF 279-7748 INSTALLATION AR-ENGINE

SMCS-1802 **i02693365**

NOTE	REF NO	GRAPHIC REF	PART NUMBER	QTY	PART NAME 1 2 3 4 5 6 (PRODUCT LEVEL)	SEE PAGE
	1	1	**255-3016**	1	V-BELT (REFRIGERANT COMPRESSOR)	
Y	2	1	**255-3018**	1	PULLEY GP-IDLER	38
Y	3	1	**259-7244**	1	COMPRESSOR GP-REFRIGERANT	889
	4	1	**297-7667**	1	BRACKET AS	
	5	1	**5P-4116**	1	WASHER-HARD (8.8X20.5X2-MM THK)	
M	6	1	**8T-3647**	4	BOLT (M8X1.25X80-MM)	
	7	1	**8T-4121**	3	WASHER-HARD (11X21X2.5-MM THK)	
M	8	1	**8T-4172**	3	BOLT (M10X1.5X80-MM)	
	9	1	**8T-4223**	2	WASHER-HARD (13.5X25.5X3-MM THK)	
	10	1	**8T-4224**	4	WASHER-HARD (8.8X16X2-MM THK)	
M	11	1	**8T-4910**	2	BOLT (M12X1.75X60-MM)	

M-METRIC PART
Y-SEPARATE ILLUSTRATION

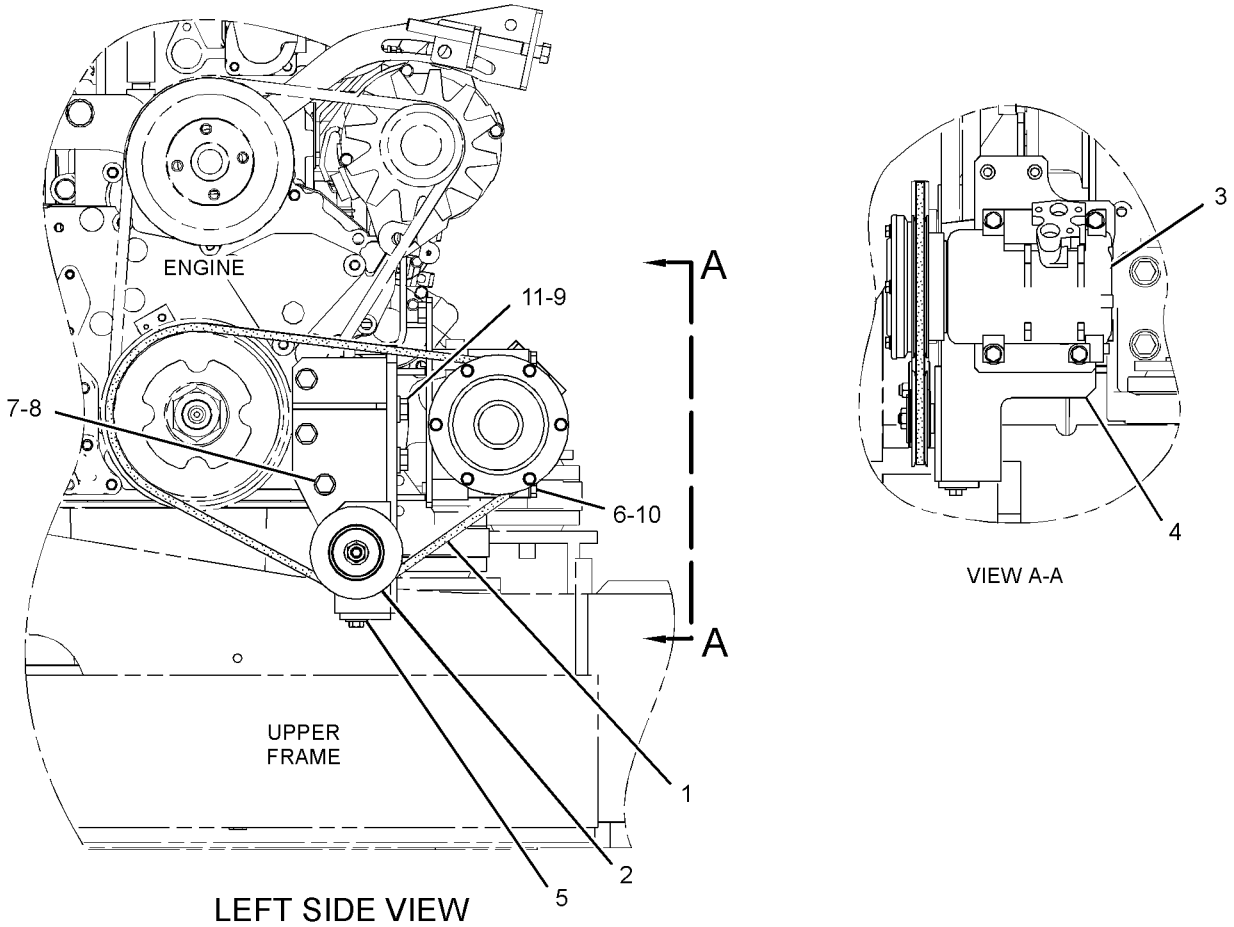

LEFT SIDE VIEW

GRAPHIC #1 **<END>** g01312011

OPERATOR STATION

259-7244 COMPRESSOR GP-REFRIGERANT

S/N: CJN1-UP

PART OF 255-3032 COMPRESSOR GP-REFRIGERANT

SMCS-1802 **i02974093**

NOTE	REF NO	GRAPHIC REF	PART NUMBER	QTY	PART NAME 1 2 3 4 5 6 (PRODUCT LEVEL)	SEE PAGE
	1	1	**259-7286**	1	COIL AS (24-VOLT)	
		1	**8T-8729**	2	PIN-CONNECTOR	
		1	**243-4505**	1	RECEPTACLE AS-CONNECTOR (2-PIN)	
B	2	1	**264-9982**	1	WASHER (6.2X12.2X0.1-MM THK)	
B	3	1	**264-9983**	1	WASHER (6.2X12.2X0.3-MM THK)	
B	4	1	**264-9984**	1	WASHER (6.2X12.2X0.5-MM THK)	

B-USE AS REQUIRED

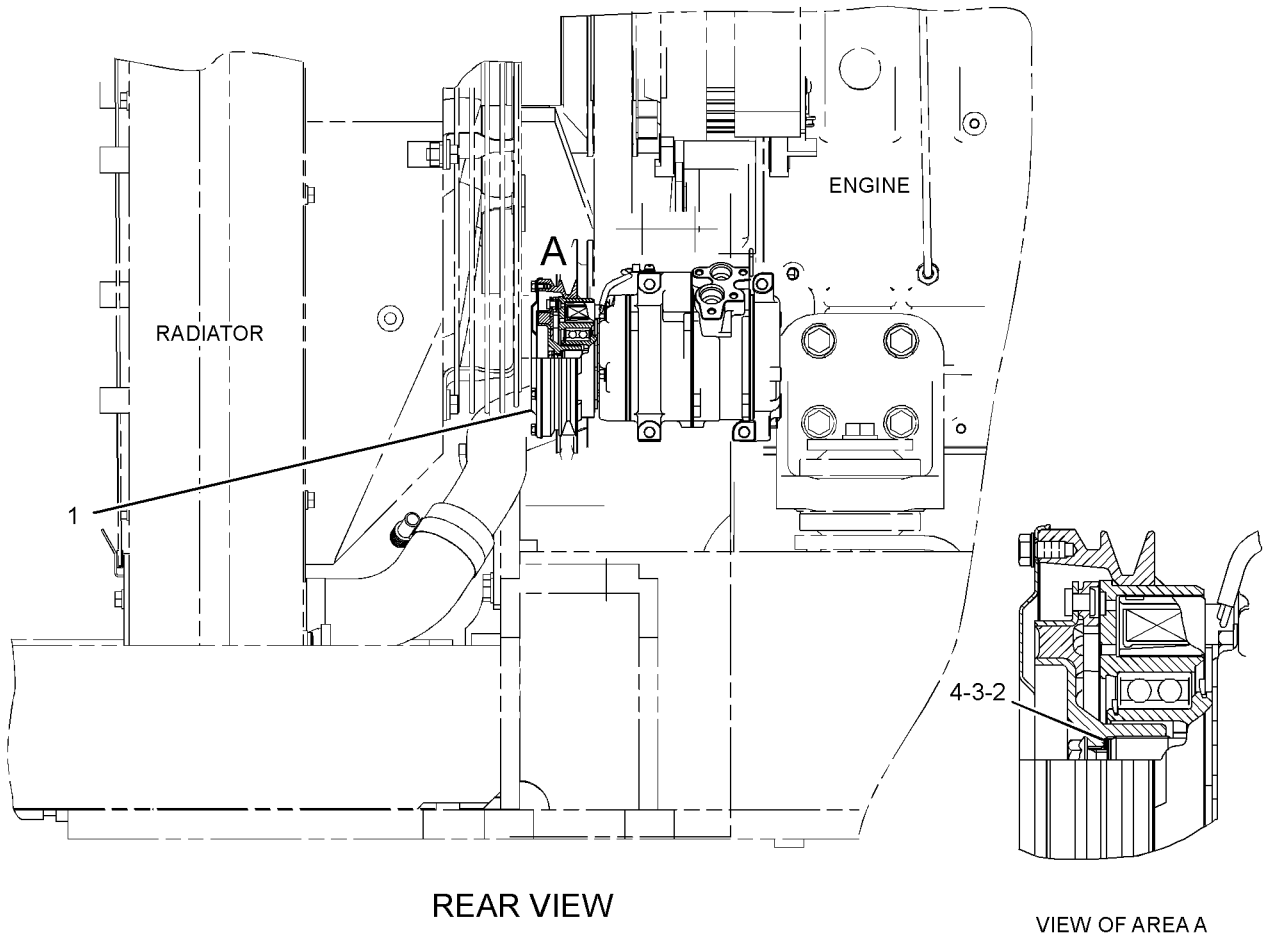

REAR VIEW

VIEW OF AREA A

GRAPHIC #1 **<END>** g01505958

OPERATOR STATION

259-7195 CONDENSER & MTG GP-REFRIGERANT

S/N: CJN1-UP

PART OF 279-7748 INSTALLATION AR-ENGINE

SMCS-1805 **i02910648**

NOTE	REF NO	GRAPHIC REF	PART NUMBER	QTY	PART NAME 1 2 3 4 5 6 (PRODUCT LEVEL)	SEE PAGE
	1	1	**7Y-8561**	1	BUMPER	
	2	1	**193-2764**	1	HANDLE AS	
Y	3	1	**245-7749**	1	CONDENSER GP-REFRIGERANT	891
	4	1	**305-0443**	1	BRACKET AS	
	5	1	**284-4507**	1	BRACKET AS	
	6	1	**284-4509**	1	SUPPORT AS	
		1	**099-7857**	2	HINGE	
	7	1	**193-2765**	2	SUPPORT AS	
	8	1	**5P-4116**	4	WASHER-HARD (8.8X20.5X2-MM THK)	
	9	1	**8T-4121**	7	WASHER-HARD (11X21X2.5-MM THK)	
M	10	1	**8T-4133**	1	NUT (M10X1.5-THD)	
M	11	1	**8T-4136**	2	BOLT (M10X1.5X25-MM)	
M	12	1	**8T-4137**	4	BOLT (M10X1.5X20-MM)	
M	13	1	**8T-4179**	4	BOLT (M12X1.75X20-MM)	
M	14	1	**8T-4189**	4	BOLT (M8X1.25X20-MM)	
	15	1	**8T-4223**	4	WASHER-HARD (13.5X25.5X3-MM THK)	
M	16	1	**8T-4971**	4	BOLT (M6X1X30-MM)	
	17	1	**9X-8256**	4	WASHER (6.6X12X2-MM THK)	

M-METRIC PART
Y-SEPARATE ILLUSTRATION

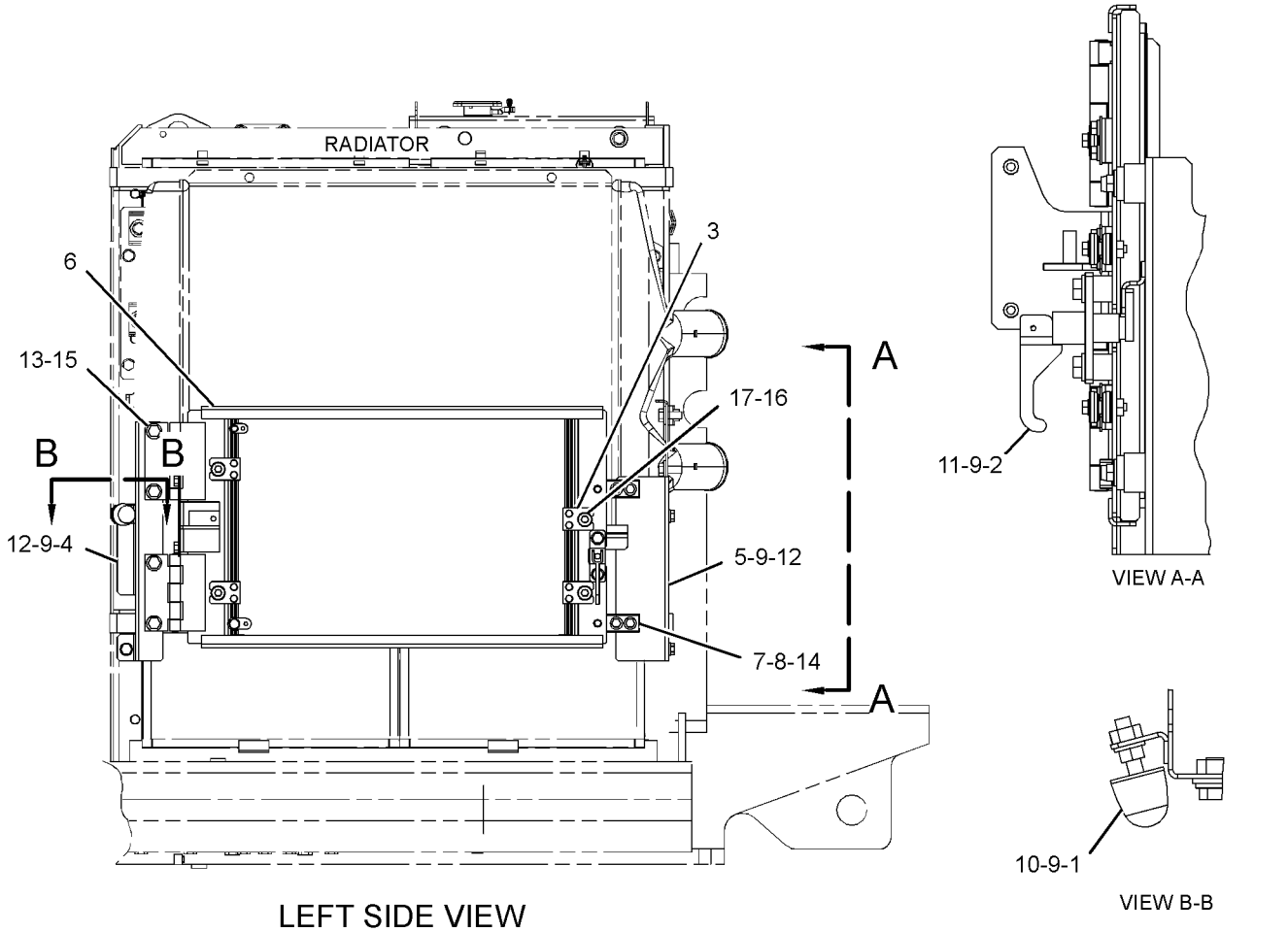

LEFT SIDE VIEW

GRAPHIC #1 **<END>** g01304667

OPERATOR STATION

245-7749 CONDENSER GP-REFRIGERANT

S/N: CJN1-UP

PART OF 259-7195 CONDENSER & MTG GP-REFRIGERANT

SMCS-1805 **i02416857**

NOTE	REF NO	GRAPHIC REF	PART NUMBER	QTY	PART NAME 1 2 3 4 5 6 (PRODUCT LEVEL)	SEE PAGE
	1	1	**235-8880**	1	CONDENSER AS	
	2	1	**245-7750**	4	BUSHING-RUBBER	
	3	1	**245-7751**	4	BRACKET	
	4	1	**095-0827**	8	LOCKWASHER	
M	5	1	**8T-4171**	8	BOLT (M6X1X12-MM)	
	6	1	**9X-8256**	8	WASHER (6.6X12X2-MM THK)	

M-METRIC PART

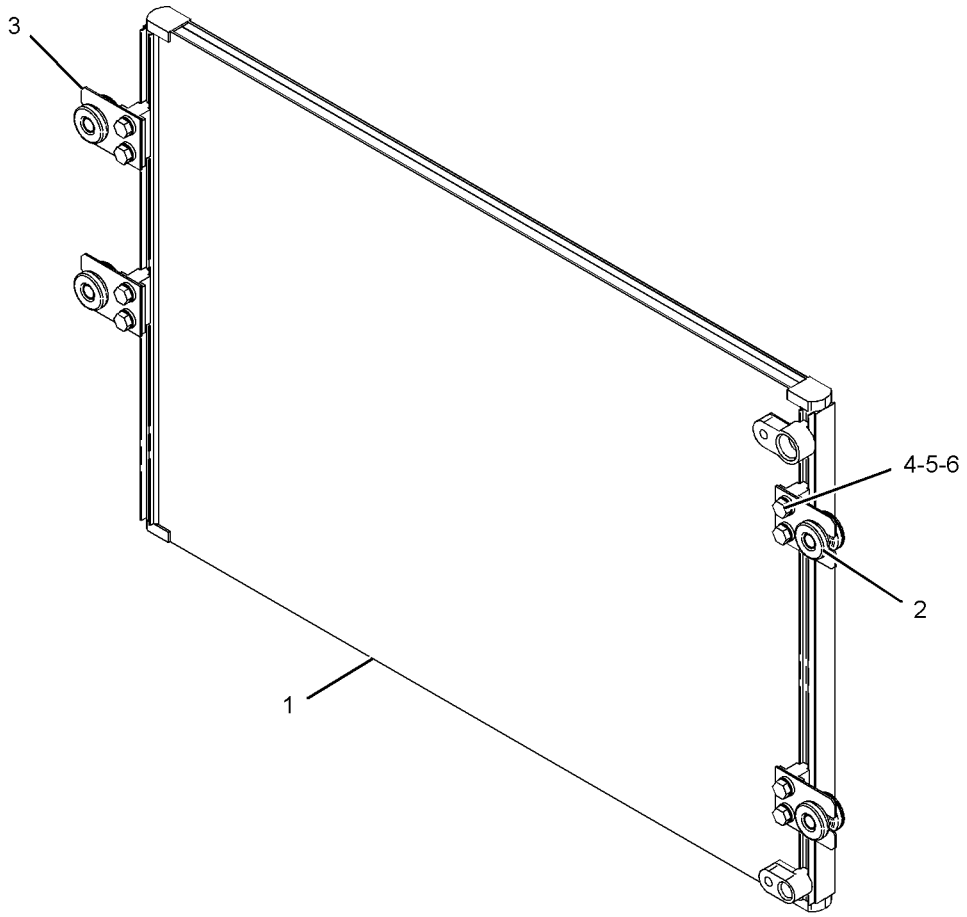

GRAPHIC #1 **<END>** g01086695

OPERATOR STATION

245-7922 CONSOLE GP-OPERATOR

S/N: CJN1-UP

PART OF 259-7193 OPERATOR AR

SMCS-5258 **i03088621**

NOTE	REF NO	GRAPHIC REF	PART NUMBER	QTY	PART NAME 1 2 3 4 5 6 (PRODUCT LEVEL)	SEE PAGE
	1	1	**176-1916**	2	GROMMET	
	2	1	**178-5422**	2	GROMMET	
	3	1	**178-5423**	2	GROMMET	
	4	1	**185-8161**	2	INSULATOR	
	5	1	**235-8893**	2	SUPPORT	
	6	1	**235-8894**	2	SUPPORT	
CY	7	1	*259-7349*	1	CONSOLE GP-OPERATOR (LH)	896
CY	8	1	*259-7348*	1	CONSOLE GP-OPERATOR (RH)	894
	9	1	**8T-4121**	4	WASHER-HARD (11X21X2.5-MM THK)	
M	10	1	**8T-4195**	4	BOLT (M10X1.5X30-MM)	
M	11	1	**9X-2046**	8	SCREW-TRUSS HEAD (M6X1X35-MM)	
M	12	1	**9X-2045**	12	SCREW-TRUSS HEAD (M6X1X20-MM)	
	13	1	**7K-1181**	4	STRAP-CABLE	
	14	1	**122-9617**	2	GUARD	
	15	1	**105-1766**	8	SPACER (6.6X11X6-MM THK)	

C-CHANGE FROM PREVIOUS TYPE
M-METRIC PART
Y-SEPARATE ILLUSTRATION

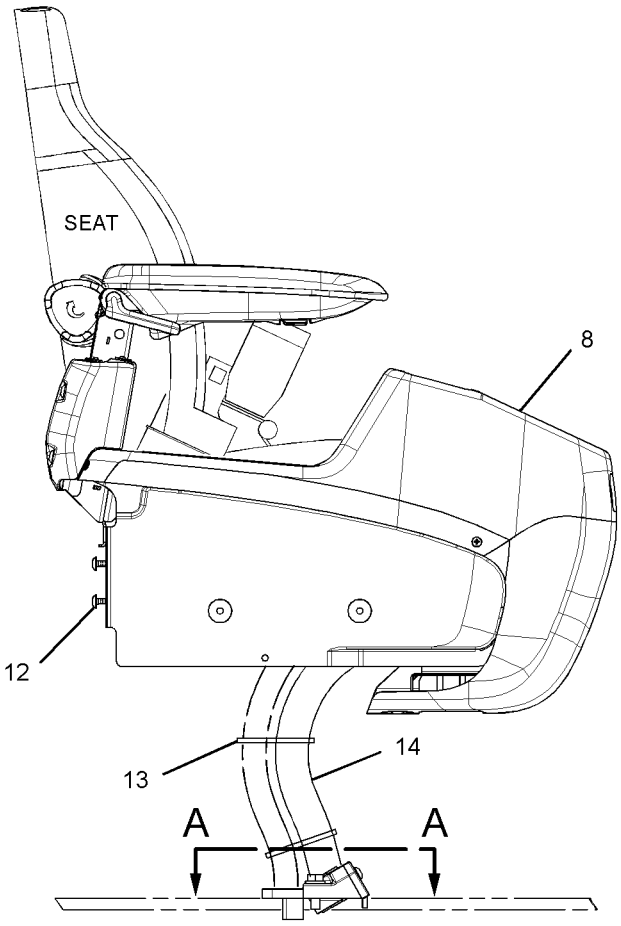

RIGHT SIDE VIEW

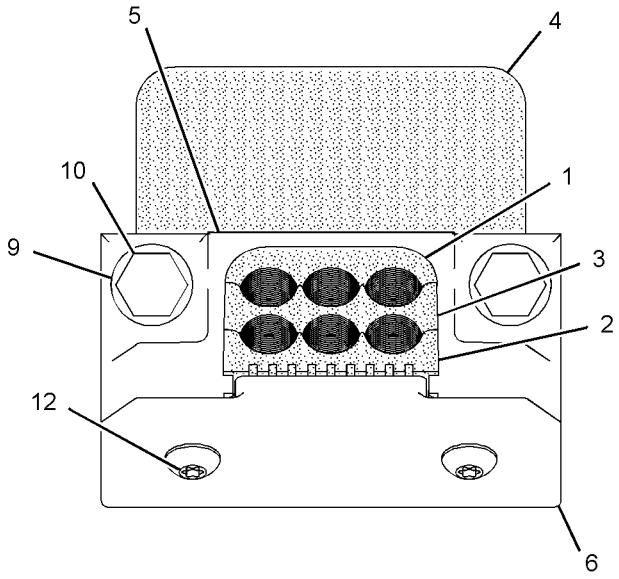

SECTION A-A

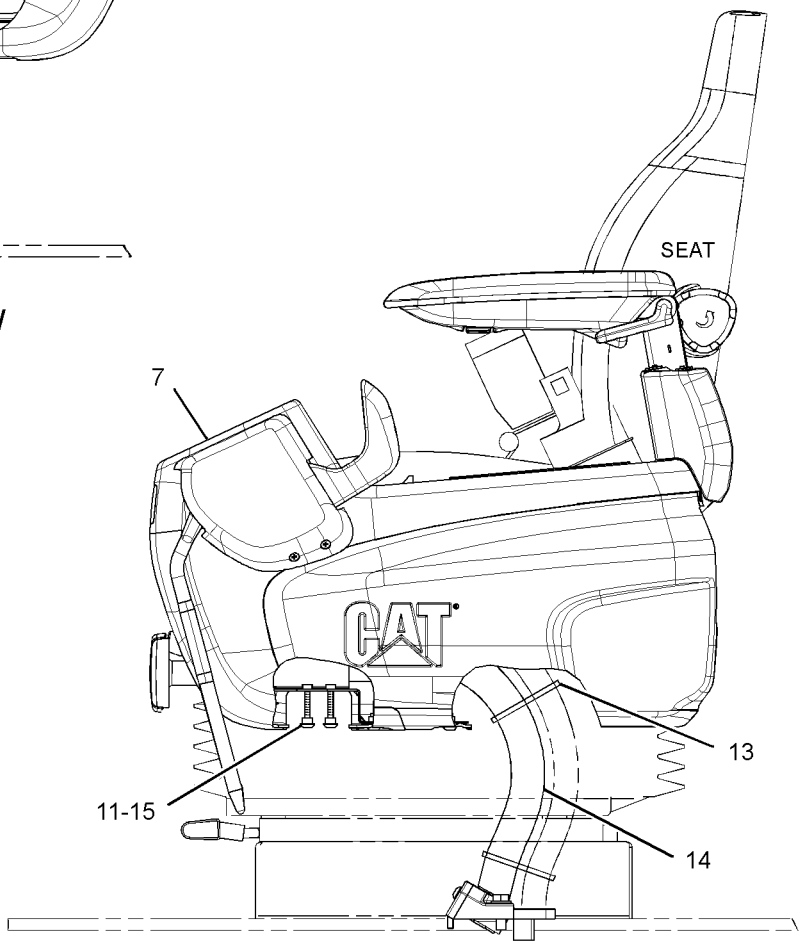

LEFT SIDE VIEW

GRAPHIC #1 **<END>** g01592535

OPERATOR STATION

259-7348 CONSOLE GP-OPERATOR—RH

S/N: CJN1-UP

PART OF 245-7922 CONSOLE GP-OPERATOR

SMCS-5258 **i02488237**

NOTE	REF NO	GRAPHIC REF	PART NUMBER	QTY	PART NAME 1 2 3 4 5 6 (PRODUCT LEVEL)	SEE PAGE
M	1	1	**128-2135**	4	SCREW-TRUSS HEAD (M6X1X13-MM)	
	2	1	**185-8284**	1	COVER	
	3	1	**234-6579**	2	NUT-SPEED	
	4	1	**234-6580**	2	CAP	
	5	1	**234-6602**	1	COVER	
	6	1	**234-6604**	1	COVER	
	7	1	**234-6608**	1	COVER	
	8	1	**234-6609**	1	COVER	
	9	1	**234-6610**	1	COVER	
	10	1	**235-8914**	4	NUT-SPEED	
	11	1	**235-8966**	2	BASE-MOUNTING	
	12	1	**245-7790**	2	SCREW-TAPPING	
	13	1	**245-7926**	1	SUPPORT AS	
	14	1	**245-7948**	4	SCREW-TAPPING	
Y	15	1	**259-7346**	1	ARMREST GP (RH)	854
M	16	1	**9X-2041**	3	SCREW-TRUSS HEAD (M10X1.5X20-MM)	

M-METRIC PART
Y-SEPARATE ILLUSTRATION

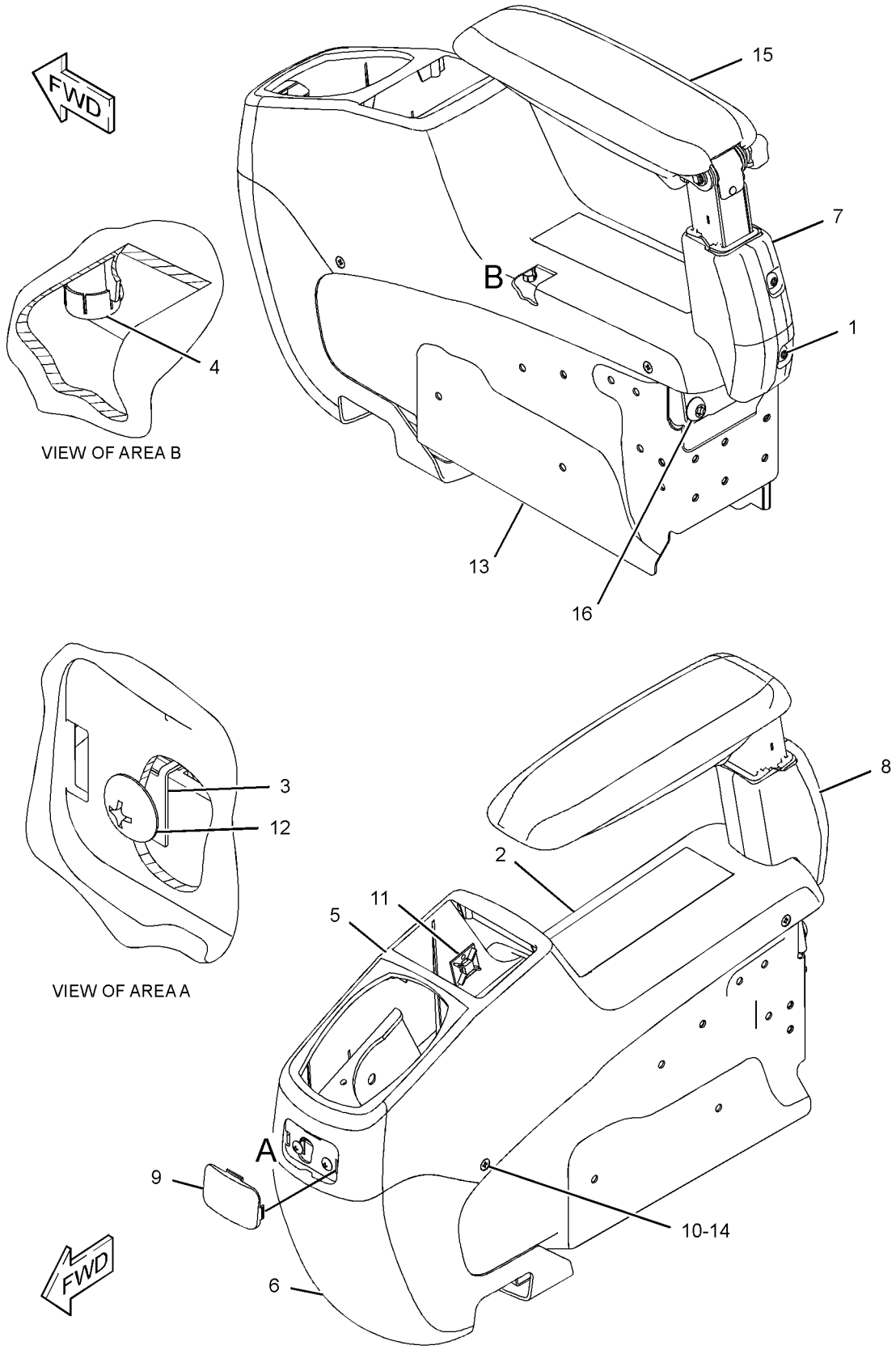

GRAPHIC #1 **<END>** g01217107

OPERATOR STATION

259-7349 CONSOLE GP-OPERATOR—LH

S/N: CJN1-UP

PART OF 245-7922 CONSOLE GP-OPERATOR

SMCS-5258 **i02488329**

NOTE	REF NO	GRAPHIC REF	PART NUMBER	QTY	PART NAME 1 2 3 4 5 6 (PRODUCT LEVEL)	SEE PAGE
M	1	1	**128-2135**	5	SCREW-TRUSS HEAD (M6X1X13-MM)	
	2	1	**171-7325**	3	SCREW-TAPPING	
	3	1	**234-6579**	6	NUT-SPEED	
	4	1	**234-6580**	4	CAP	
	5	1	**234-6603**	1	COVER	
	6	1	**234-6605**	1	COVER	
	7	1	**234-6608**	1	COVER	
	8	1	**234-6609**	1	COVER	
	9	1	**234-6610**	1	COVER	
	10	1	**234-6611**	1	CASE	
	11	1	**234-6612**	1	COVER	
Y	12	1	**234-6613**	1	SWITCH GP-POSITION (HYDRAULIC LOCKOUT)	203
	13	1	**234-6614**	1	COVER	
	14	1	**235-8914**	4	NUT-SPEED	
	15	1	**235-8965**	1	GUARD	
	16	1	**245-7790**	3	SCREW-TAPPING	
	17	1	**245-7925**	1	SUPPORT AS	
	18	1	**245-7948**	7	SCREW-TAPPING	
	19	1	**259-7202**	1	ASHTRAY	
Y	20	1	**259-7347**	1	ARMREST GP (LH)	855
M	21	1	**9X-2041**	3	SCREW-TRUSS HEAD (M10X1.5X20-MM)	
M	22	1	**9X-2042**	2	SCREW-TRUSS HEAD (M6X1X12-MM)	

M-METRIC PART
Y-SEPARATE ILLUSTRATION

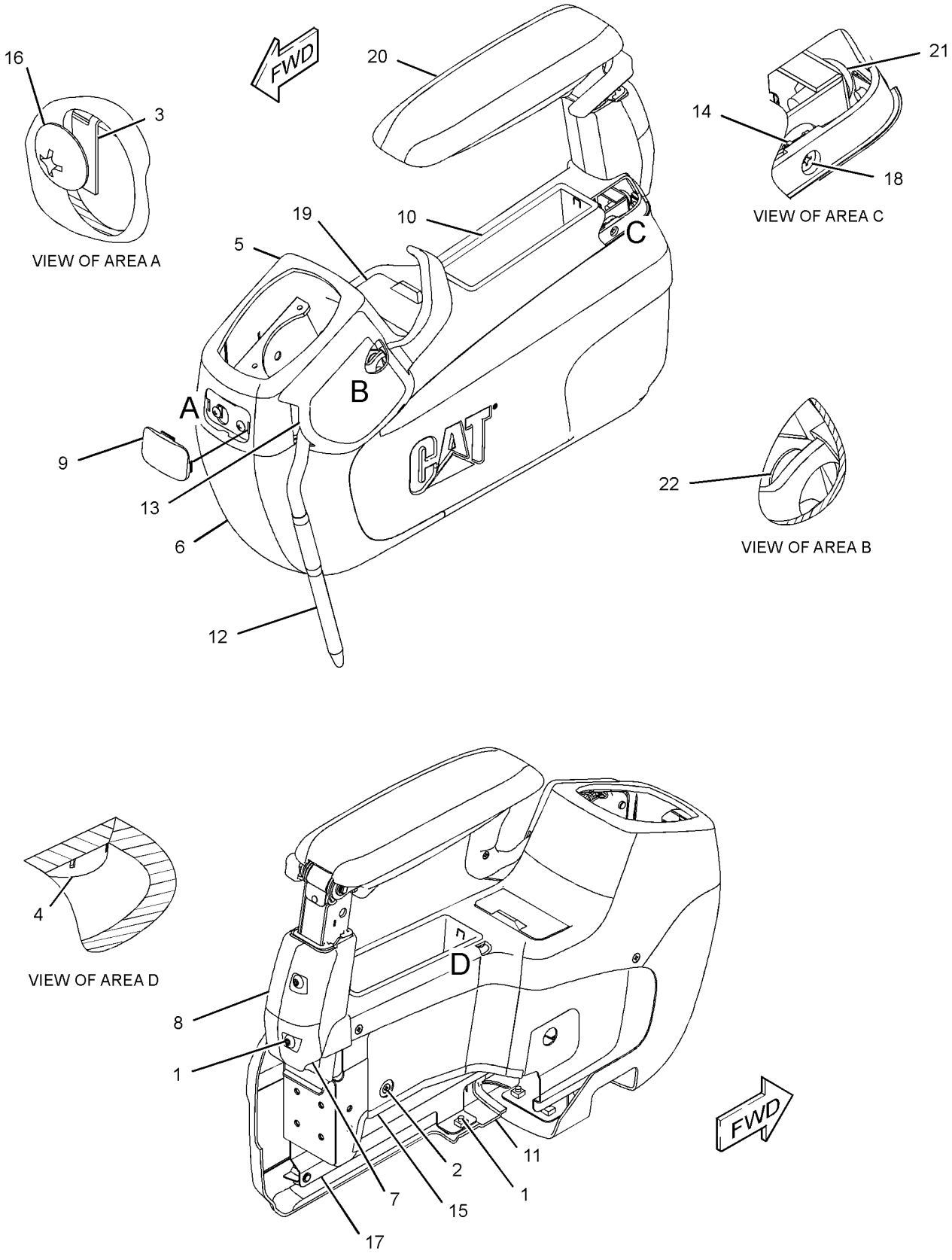

GRAPHIC #1 **<END>** g01217096

OPERATOR STATION

259-7598 CONTROL & MTG GP-JOYSTICK—WITH SLIDE CONTROL

S/N: CJN1-UP
PART OF 255-5843 CONTROL AR-AUXILIARY
AN ATTACHMENT
TYPE 1

SMCS-5063, 5705 **i02431334**

NOTE	REF NO	GRAPHIC REF	PART NUMBER	QTY	PART NAME 1 2 3 4 5 6 (PRODUCT LEVEL)	SEE PAGE
Y	1	1	**259-7763**	1	CONTROL GP-JOYSTICK (LH)	915
Y	2	1	**259-7762**	1	CONTROL GP-JOYSTICK (RH)	914
M	3	1	**6V-7357**	6	BOLT (M6X1X25-MM)	
	4	1	**9X-8256**	6	WASHER (6.6X12X2-MM THK)	

M-METRIC PART
Y-SEPARATE ILLUSTRATION

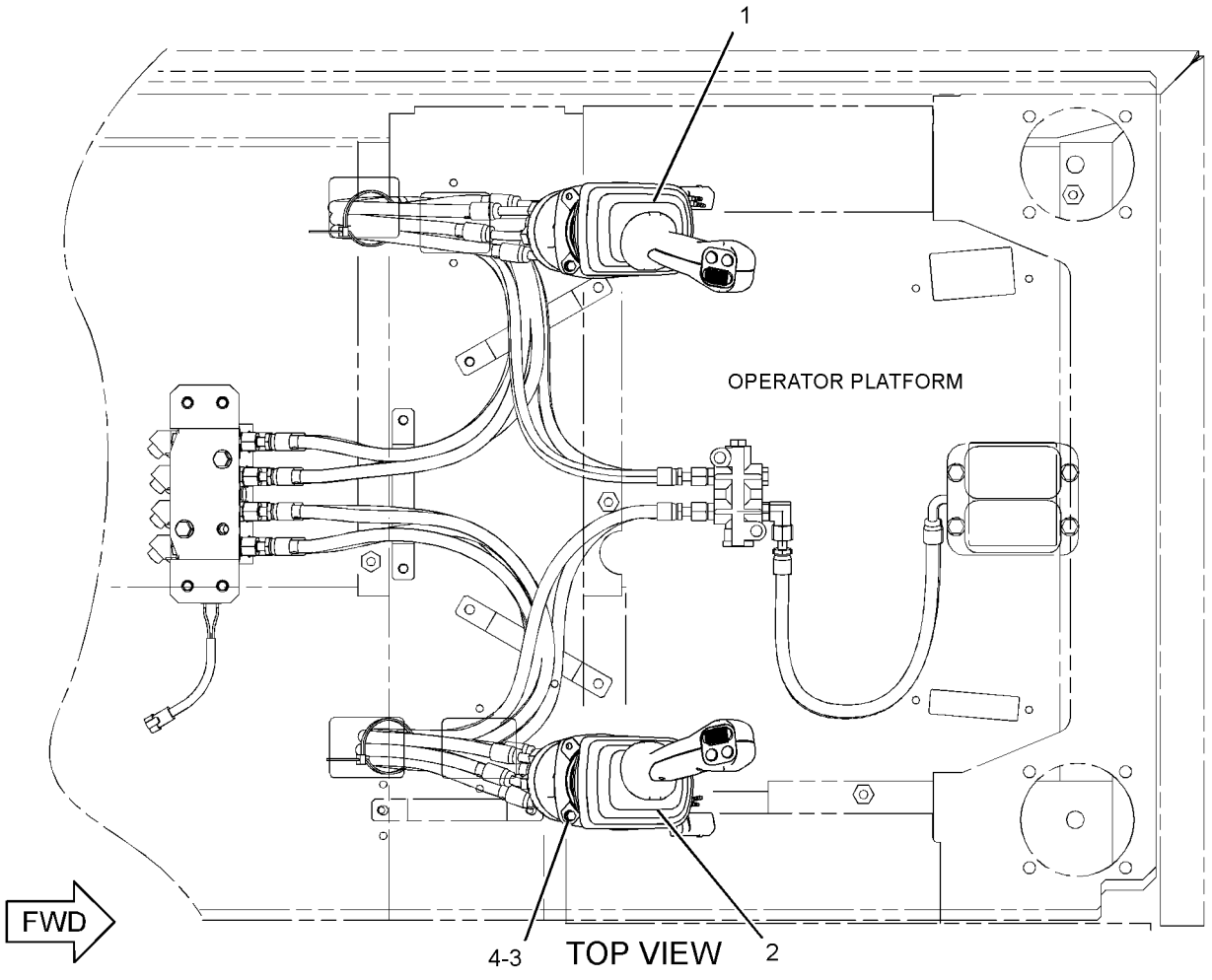

GRAPHIC #1

<END>

g01236540

OPERATOR STATION

259-7598 CONTROL & MTG GP-JOYSTICK—WITH SLIDE CONTROL

S/N: CJN1-UP
PART OF 255-5843 CONTROL AR-AUXILIARY
AN ATTACHMENT
TYPE 2

SMCS-5063, 5705 **i03105561**

NOTE	REF NO	GRAPHIC REF	PART NUMBER	QTY	PART NAME 1 2 3 4 5 6 (PRODUCT LEVEL)	SEE PAGE
CY	1	1	**297-0535**	1	CONTROL GP-JOYSTICK (LH)	921
CY	2	1	**297-0534**	1	CONTROL GP-JOYSTICK (RH)	920
M	3	1	**6V-7357**	6	BOLT (M6X1X25-MM)	
	4	1	**9X-8256**	6	WASHER (6.6X12X2-MM THK)	

C-CHANGE FROM PREVIOUS TYPE
M-METRIC PART
Y-SEPARATE ILLUSTRATION

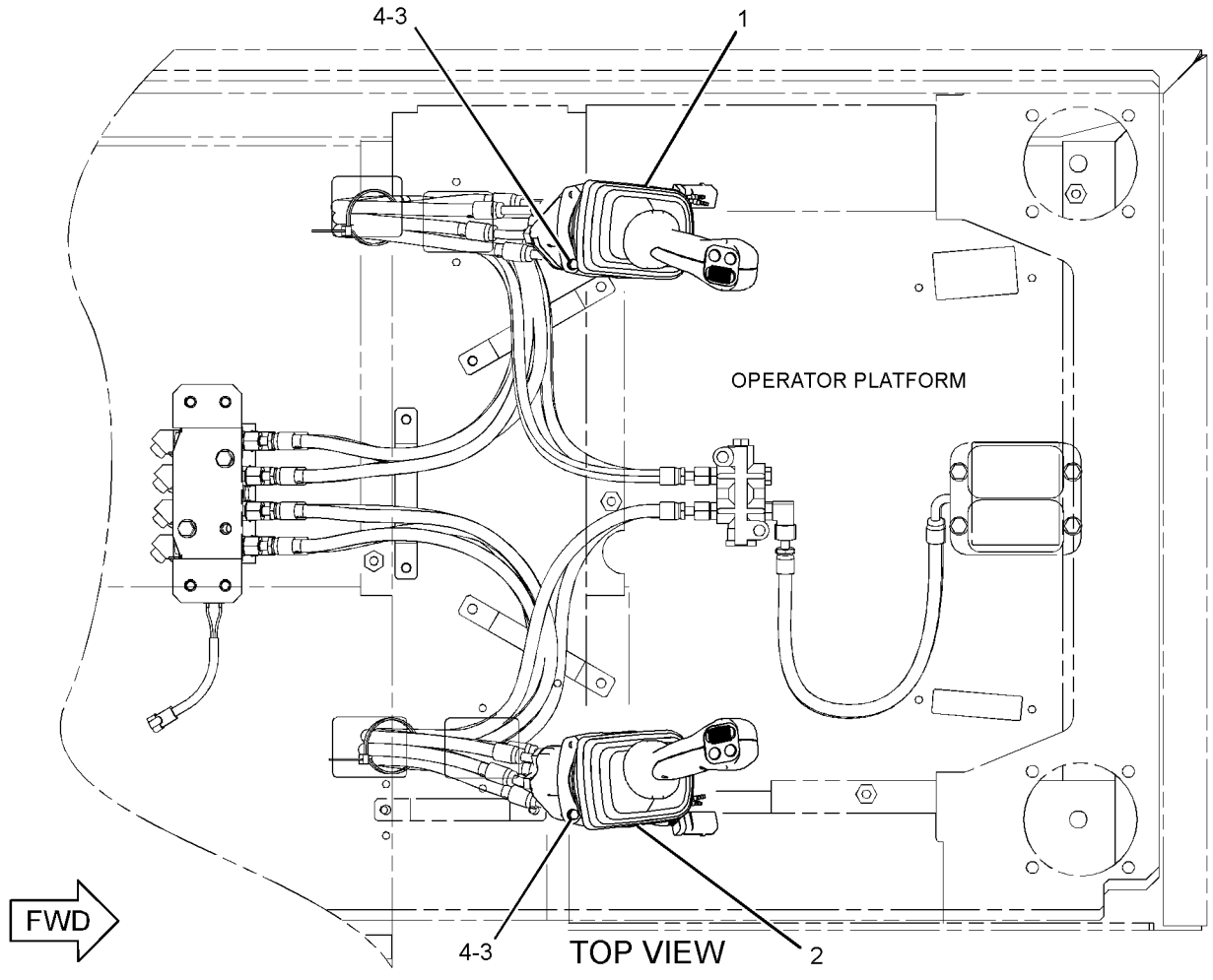

GRAPHIC #1

<END>

g01541355

259-7599 CONTROL & MTG GP-JOYSTICK–
3-BUTTON, TRIGGER SWITCH
S/N: CJN1-UP
PART OF 255-5844 CONTROL AR-AUXILIARY
AN ATTACHMENT
TYPE 1

SMCS-5063, 5705 **i03040444**

NOTE	REF NO	GRAPHIC REF	PART NUMBER	QTY	PART NAME 1 2 3 4 5 6 (PRODUCT LEVEL)	SEE PAGE
Y	1	1	**259-7765**	1	CONTROL GP-JOYSTICK (LH)	917
Y	2	1	**259-7764**	1	CONTROL GP-JOYSTICK (RH)	916
M	3	1	**6V-7357**	6	BOLT (M6X1X25-MM)	
	4	1	**9X-8256**	6	WASHER (6.6X12X2-MM THK)	

M-METRIC PART
Y-SEPARATE ILLUSTRATION

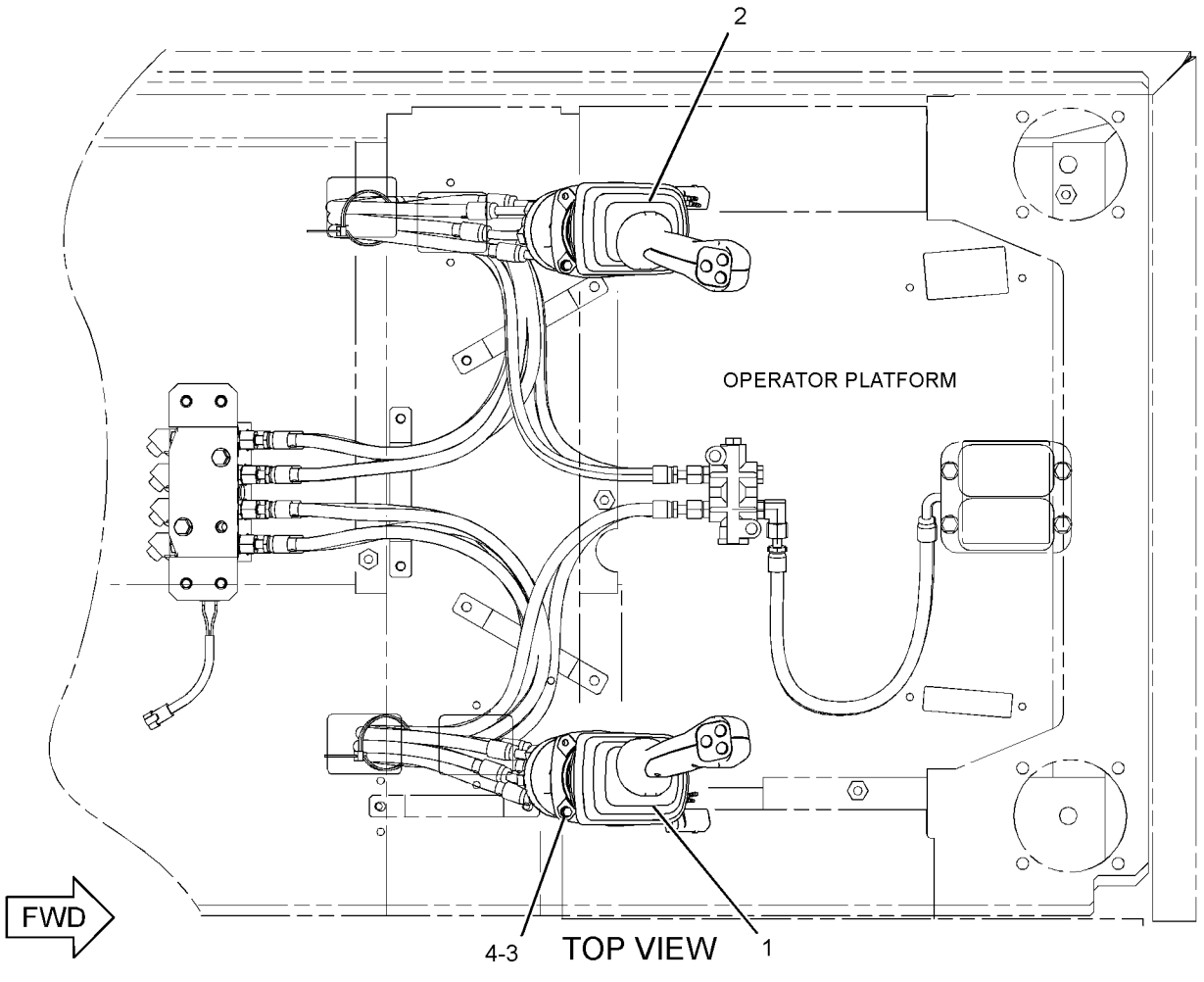

GRAPHIC #1 **<END>** g01263586

259-7599 CONTROL & MTG GP-JOYSTICK–
3-BUTTON, TRIGGER SWITCH
S/N: CJN1-UP
PART OF 255-5844 CONTROL AR-AUXILIARY
AN ATTACHMENT
TYPE 2

SMCS-5063, 5705 **i03017480**

NOTE	REF NO	GRAPHIC REF	PART NUMBER	QTY	PART NAME 1 2 3 4 5 6 (PRODUCT LEVEL)	SEE PAGE
CY	1	1	**297-0537**	1	CONTROL GP-JOYSTICK (LH)	923
CY	2	1	**297-0536**	1	CONTROL GP-JOYSTICK (RH)	922
M	3	1	**6V-7357**	6	BOLT (M6X1X25-MM)	
	4	1	**9X-8256**	6	WASHER (6.6X12X2-MM THK)	

C-CHANGE FROM PREVIOUS TYPE
M-METRIC PART
Y-SEPARATE ILLUSTRATION

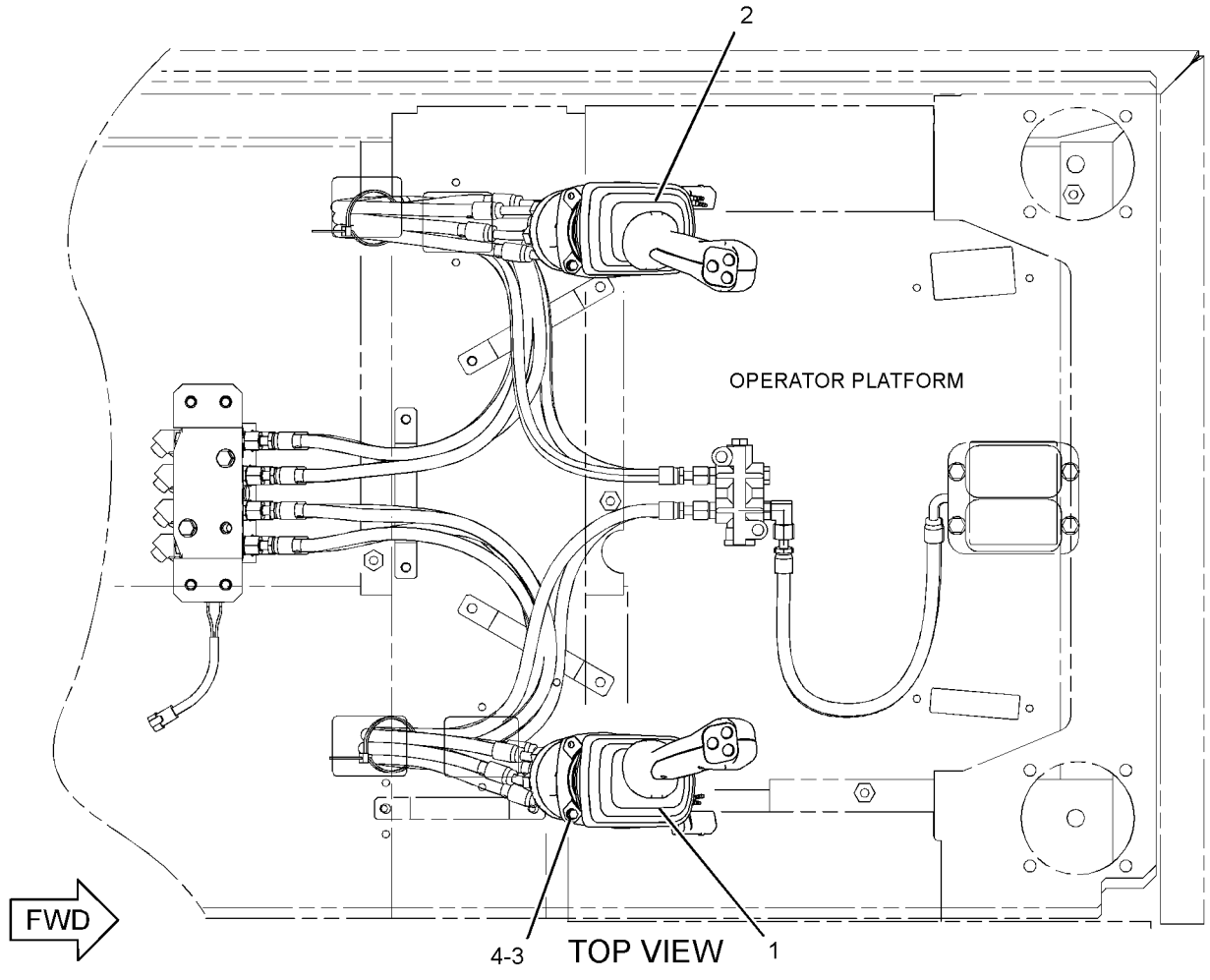

GRAPHIC #1 **<END>** g01263586

OPERATOR STATION

310-0078 CONTROL & MTG GP-JOYSTICK

S/N: CJN1-UP
AN ATTACHMENT

SMCS-5063, 5705 **i03031921**

NOTE	REF NO	GRAPHIC REF	PART NUMBER	QTY	PART NAME 1 2 3 4 5 6 (PRODUCT LEVEL)	SEE PAGE
Y	1	1	**297-0532**	1	CONTROL GP-JOYSTICK (RH)	918
Y	2	1	**297-0533**	1	CONTROL GP-JOYSTICK (LH)	919
M	3	1	**6V-7357**	6	BOLT (M6X1X25-MM)	
	4	1	**9X-8256**	6	WASHER (6.6X12X2-MM THK)	

M-METRIC PART
Y-SEPARATE ILLUSTRATION

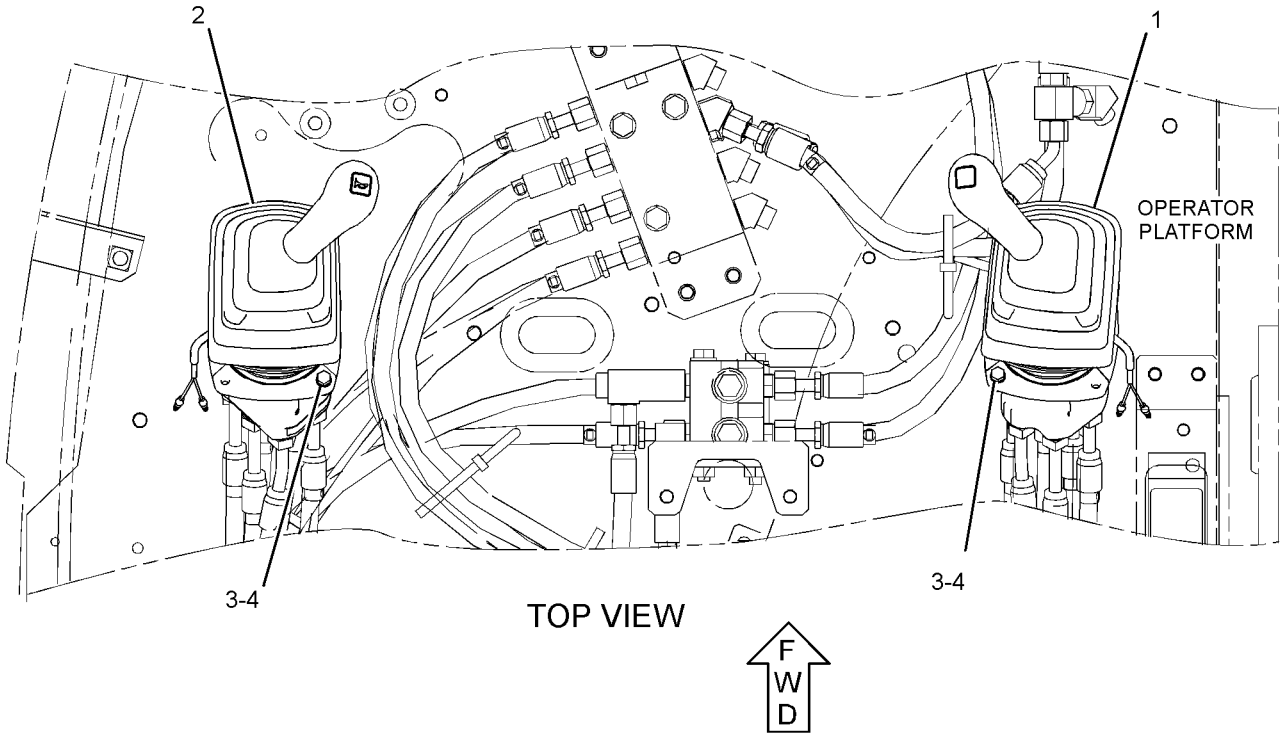

GRAPHIC #1 **<END>** g01442248

221-8884 CONTROL & MTG GP-PEDAL–LH

S/N: CJN1-UP

PART OF 255-5845 PEDAL AR-AUXILIARY

AN ATTACHMENT

SMCS-5462 **i02889901**

NOTE	REF NO	GRAPHIC REF	PART NUMBER	QTY	PART NAME 1 2 3 4 5 6 (PRODUCT LEVEL)	SEE PAGE
	1	1	**5I-7090**	1	CHAIN AS	
	2	1	**121-1865**	1	PEDAL-RUBBER (LH)	
	3	1	**128-2173**	1	PIN	
	4	1	**153-8723**	1	PEDAL AS	
CY	5	1	**309-5808**	1	CONTROL GP-PEDAL (ELECTRIC)	924
	6	1	**227-7625**	1	SUPPORT AS	
M	7	1	**095-0735**	2	SCREW-MACHINE (M5X0.8X8-MM)	
M	8	1	**7X-2536**	2	BOLT (M8X1.25X14-MM)	
	9	1	**8T-0114**	1	PIN-SPRING	
	10	1	**8T-4121**	3	WASHER-HARD (11X21X2.5-MM THK)	
M	11	1	**8T-4136**	2	BOLT (M10X1.5X25-MM)	
M	12	1	**8T-4191**	1	BOLT (M10X1.5X16-MM)	
	13	1	**8T-4224**	2	WASHER-HARD (8.8X16X2-MM THK)	

C-CHANGE FROM PREVIOUS TYPE
M-METRIC PART
Y-SEPARATE ILLUSTRATION

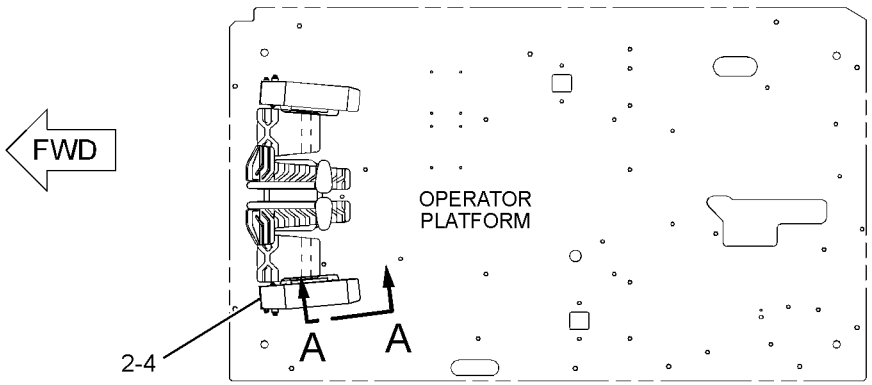

TOP VIEW

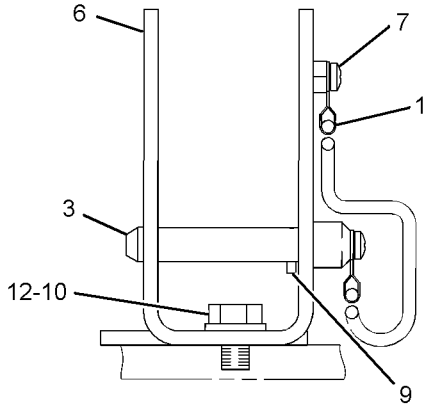

VIEW B-B

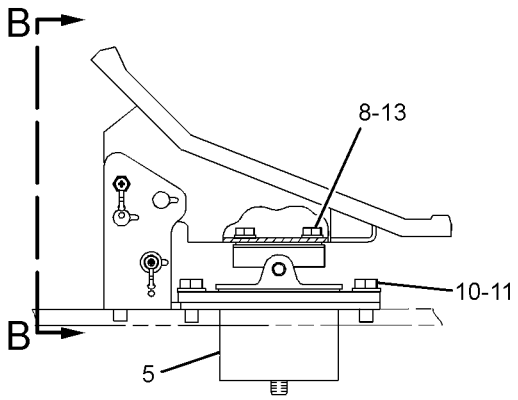

VIEW A-A

GRAPHIC #1 **<END>** g01439827

OPERATOR STATION

270-6107 CONTROL GP-FOOT–LH

S/N: CJN1-UP
PART OF 270-6106 CONTROL AR-AUXILIARY
AN ATTACHMENT

SMCS-1435 **i02490892**

NOTE	REF NO	GRAPHIC REF	PART NUMBER	QTY	PART NAME 1 2 3 4 5 6 (PRODUCT LEVEL)	SEE PAGE
	1	1	**093-2069**	1	GROMMET	
	2	1	**2Q-4703**	1	SWITCH AS-FOOT (WORK TOOL)	
		1	**205-1340**	1	HARNESS AS-OPERATOR CONTROLS	
		1	**155-2270**	1	KIT-CONNECTING PLUG (2-PIN)	
					(INCLUDES PLUG AS, WEDGE & INTERFACE SEAL)	
	3	1	**285-1332**	1	SUPPORT AS	
	4	1	**285-1333**	1	SUPPORT AS	
	5	1	**285-1337**	1	PLATE-STOP	
	6	1	**6V-7646**	1	WASHER-HARD (7.2X25X2-MM THK)	
M	7	1	**8C-8580**	2	BOLT-SOCKET HEAD (M5X0.8X16-MM)	
M	8	1	**8T-0269**	2	BOLT-SOCKET HEAD (M6X1X20-MM)	
	9	1	**8T-4121**	4	WASHER-HARD (11X21X2.5-MM THK)	
M	10	1	**8T-4137**	4	BOLT (M10X1.5X20-MM)	
	11	1	**9X-8256**	1	WASHER (6.6X12X2-MM THK)	

M-METRIC PART

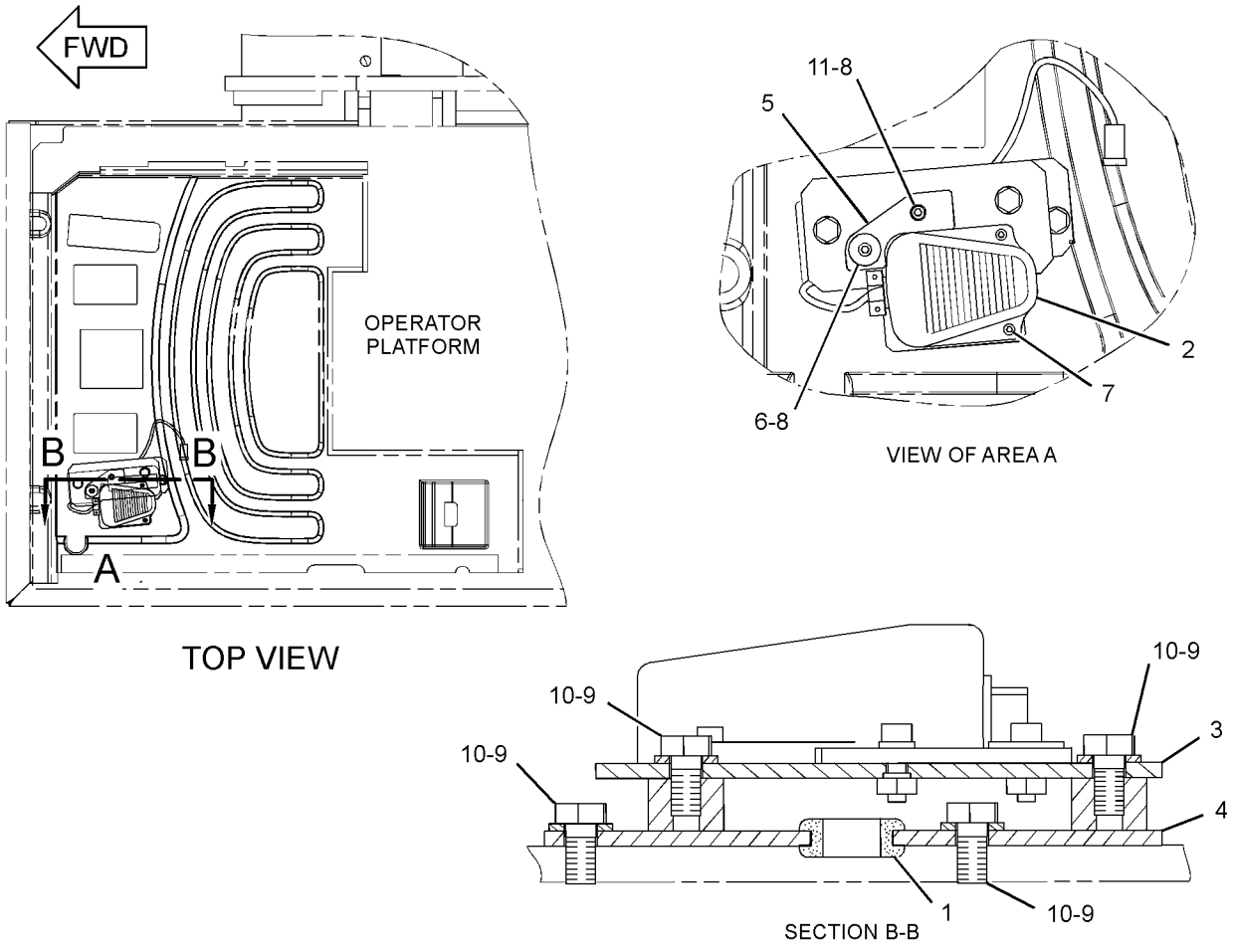

GRAPHIC #1 **<END>** g01252474

OPERATOR STATION

235-8969 CONTROL GP-HANDLE–JOYSTICK, LH

S/N: CJN1-UP

PART OF 297-0533 CONTROL GP-JOYSTICK

AN ATTACHMENT

SMCS-5705 **i02923993**

NOTE	REF NO	GRAPHIC REF	PART NUMBER	QTY	PART NAME 1 2 3 4 5 6 (PRODUCT LEVEL)	SEE PAGE
	1	1	**124-4010**	1	LEVER	
	2	1	**235-8971**	1	BOOT	
	3	1	**245-7842**	1	KNOB AS	
M		1	**6I-5298**	1	SCREW-TAPPING	
		1	**124-4009**	1	SHAFT	
		1	**222-0225**	1	SWITCH AS-PUSH BUTTON (HORN)	
M	4	1	**096-2617**	2	SCREW-MACHINE (M5X0.8X6-MM)	

M-METRIC PART

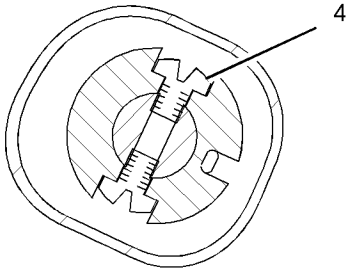

SECTION B-B

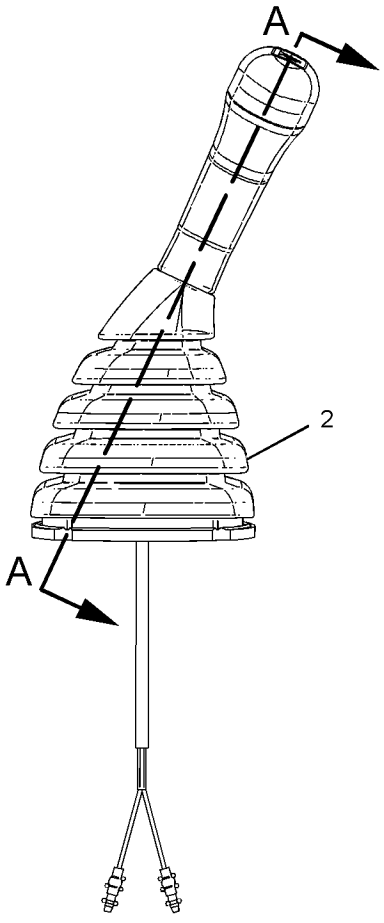

LEFT SIDE VIEW

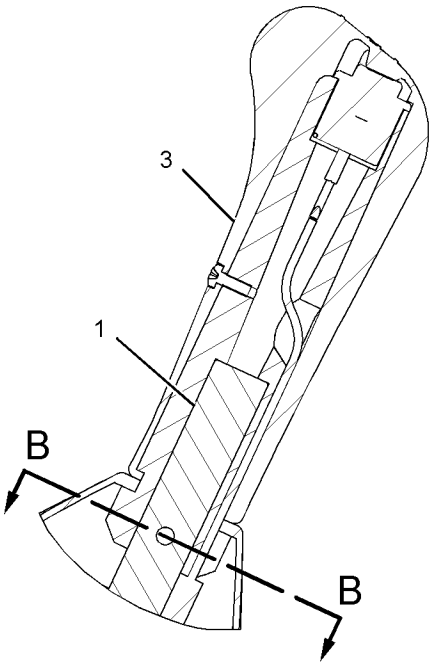

SECTION A-A

GRAPHIC #1 **<END>** g01082395

OPERATOR STATION

235-8970 CONTROL GP-HANDLE–JOYSTICK, RH

S/N: CJN1-UP

PART OF 297-0532 CONTROL GP-JOYSTICK

AN ATTACHMENT

SMCS-5705 **i02924011**

NOTE	REF NO	GRAPHIC REF	PART NUMBER	QTY	PART NAME 1 2 3 4 5 6 (PRODUCT LEVEL)	SEE PAGE
	1	1	**124-4010**	1	LEVER	
	2	1	**235-8972**	1	BOOT	
	3	1	**245-7844**	1	KNOB AS	
M		1	**6I-5298**	1	SCREW-TAPPING	
		1	**124-4009**	1	SHAFT	
		1	**222-0225**	1	SWITCH AS-PUSH BUTTON (MANUAL LOW IDLE)	
M	4	1	**096-2617**	2	SCREW-MACHINE (M5X0.8X6-MM)	

M-METRIC PART

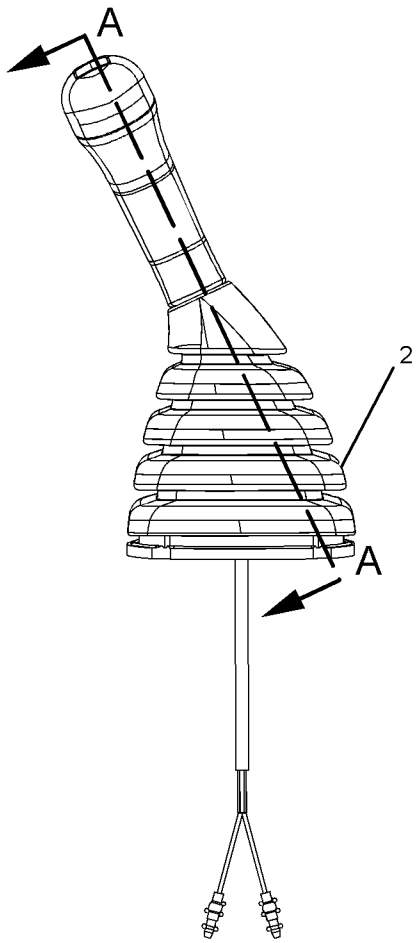

RIGHT SIDE VIEW

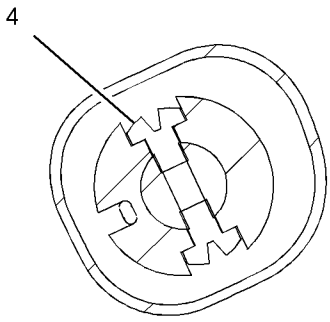

SECTION B-B

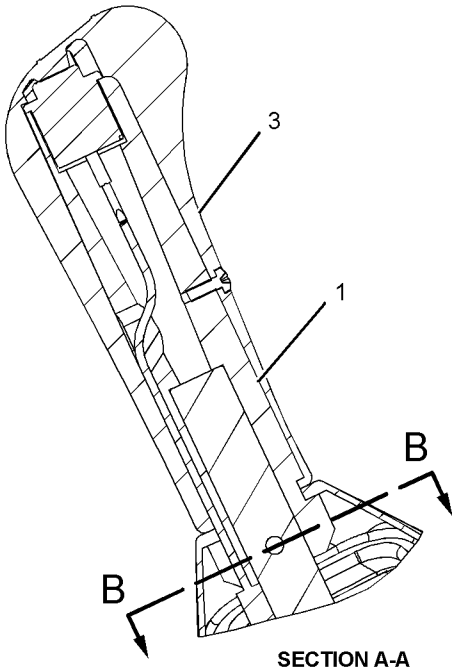

SECTION A-A

GRAPHIC #1 **<END>** g01082427

260-2109 CONTROL GP-HANDLE–JOYSTICK, RH

S/N: CJN1-UP
2-BUTTON, SLIDE, TRIGGER SW
PART OF 259-7762, 297-0534 CONTROL GP-JOYSTICK
AN ATTACHMENT

SMCS-5705 **i02865889**

NOTE	REF NO	GRAPHIC REF	PART NUMBER	QTY	PART NAME 1 2 3 4 5 6 (PRODUCT LEVEL)	SEE PAGE
M	1	1	**7Y-8463**	1	NUT (M14X2-THD)	
	2	1	**117-8683**	1	PIN-SPRING	
	3	1	**260-2111**	1	LEVER	
	4	1	**297-4589**	1	CONTROL GP-HANDLE (RH)	
		1	**247-2693**	1	RECEPTACLE AS-CONNECTOR (6-PIN)	
		1	**9X-3401**	6	PIN-CONNECTOR (16-GA TO 18-GA)	
					–OR–	
		1	**126-1767**	6	PIN-CONNECTOR (14-GA)	
	5	1	**305-0332**	1	BOOT	

M-METRIC PART

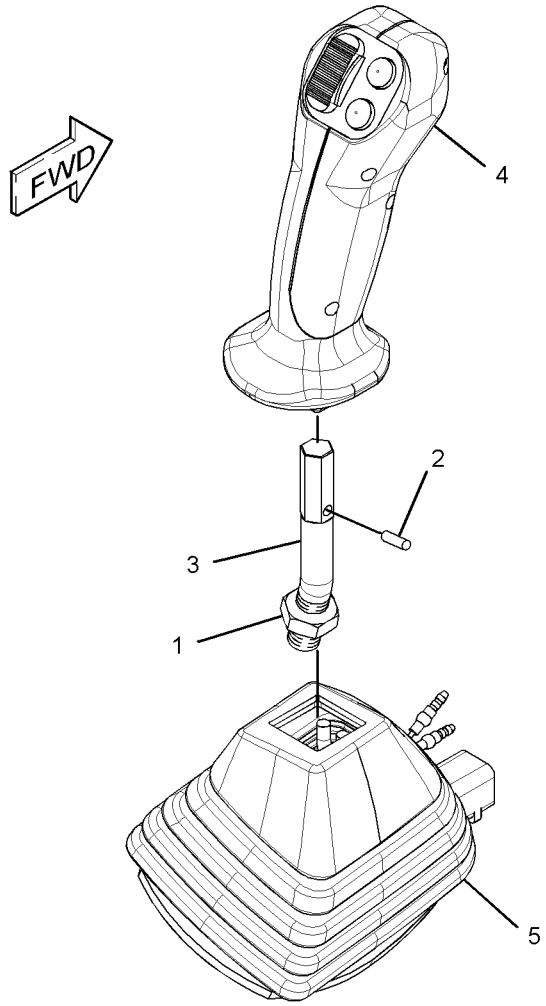

GRAPHIC #1

<END>

g01436256

OPERATOR STATION

260-2110 CONTROL GP-HANDLE—JOYSTICK, LH

S/N: CJN1-UP

PART OF 259-7763, 297-0535 CONTROL GP-JOYSTICK

AN ATTACHMENT

SMCS-5705 **i02865875**

NOTE	REF NO	GRAPHIC REF	PART NUMBER	QTY	PART NAME 1 2 3 4 5 6 (PRODUCT LEVEL)	SEE PAGE
M	1	1	**7Y-8463**	1	NUT (M14X2-THD)	
	2	1	**117-8683**	1	PIN-SPRING	
	3	1	**260-2111**	1	LEVER	
C	4	1	**297-4590**	1	CONTROL GP-HANDLE (LH)	
		1	**9X-3401**	6	PIN-CONNECTOR (16-GA TO 18-GA)	
					—OR—	
		1	**126-1767**	6	PIN-CONNECTOR (14-GA)	
		1	**247-2693**	1	RECEPTACLE AS-CONNECTOR (6-PIN)	
	5	1	**305-0331**	1	BOOT	

C-CHANGE FROM PREVIOUS TYPE
M-METRIC PART

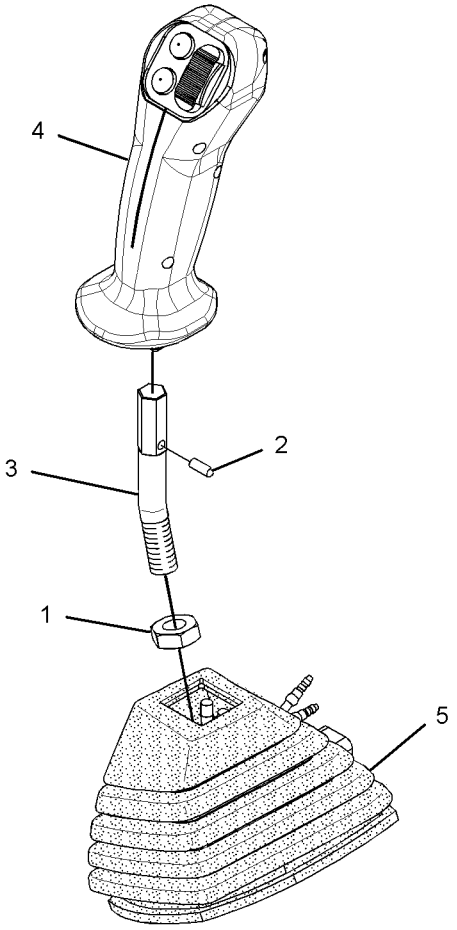

GRAPHIC #1 **<END>** g01428094

260-2127 CONTROL GP-HANDLE–JOYSTICK, RH

S/N: CJN1-UP

PART OF 259-7764, 297-0536 CONTROL GP-JOYSTICK

AN ATTACHMENT

SMCS-5705 **i02865870**

NOTE	REF NO	GRAPHIC REF	PART NUMBER	QTY	PART NAME 1 2 3 4 5 6 (PRODUCT LEVEL)	SEE PAGE
M	1	1	**7Y-8463**	1	NUT (M14X2-THD)	
	2	1	**117-8683**	1	PIN-SPRING	
	3	1	**260-2111**	1	LEVER	
	4	1	**297-4595**	1	CONTROL GP-HANDLE (RH)	
		1	**8T-8737**	2	PLUG-SEAL	
		1	**9X-3401**	4	PIN-CONNECTOR (16-GA TO 18-GA)	
					–OR–	
		1	**126-1767**	4	PIN-CONNECTOR (14-GA)	
		1	**247-2693**	1	RECEPTACLE AS-CONNECTOR (6-PIN)	
	5	1	**305-0332**	1	BOOT	

M-METRIC PART

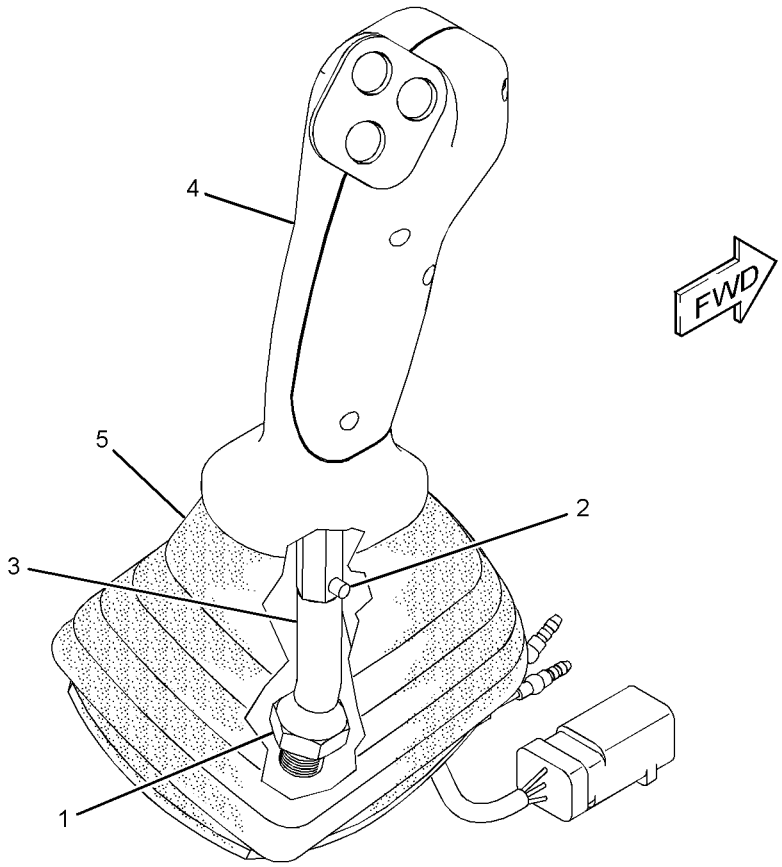

GRAPHIC #1 **<END>** g01430928

OPERATOR STATION

260-2128 CONTROL GP-HANDLE–JOYSTICK, LH

S/N: CJN1-UP

PART OF 259-7765, 297-0537 CONTROL GP-JOYSTICK

AN ATTACHMENT

SMCS-5705 **i02865871**

NOTE	REF NO	GRAPHIC REF	PART NUMBER	QTY	PART NAME 1 2 3 4 5 6 (PRODUCT LEVEL)	SEE PAGE
M	1	1	**7Y-8463**	1	NUT (M14X2-THD)	
	2	1	**117-8683**	1	PIN-SPRING	
	3	1	**305-0331**	1	BOOT	
	4	1	**297-4595**	1	CONTROL GP-HANDLE (LH)	
		1	**8T-8737**	2	PLUG-SEAL	
		1	**9X-3401**	4	PIN-CONNECTOR (16-GA TO 18-GA)	
					–OR–	
		1	**126-1767**	4	PIN-CONNECTOR (14-GA)	
		1	**247-2693**	1	RECEPTACLE AS-CONNECTOR (6-PIN)	
	5	1	**260-2111**	1	LEVER	

M-METRIC PART

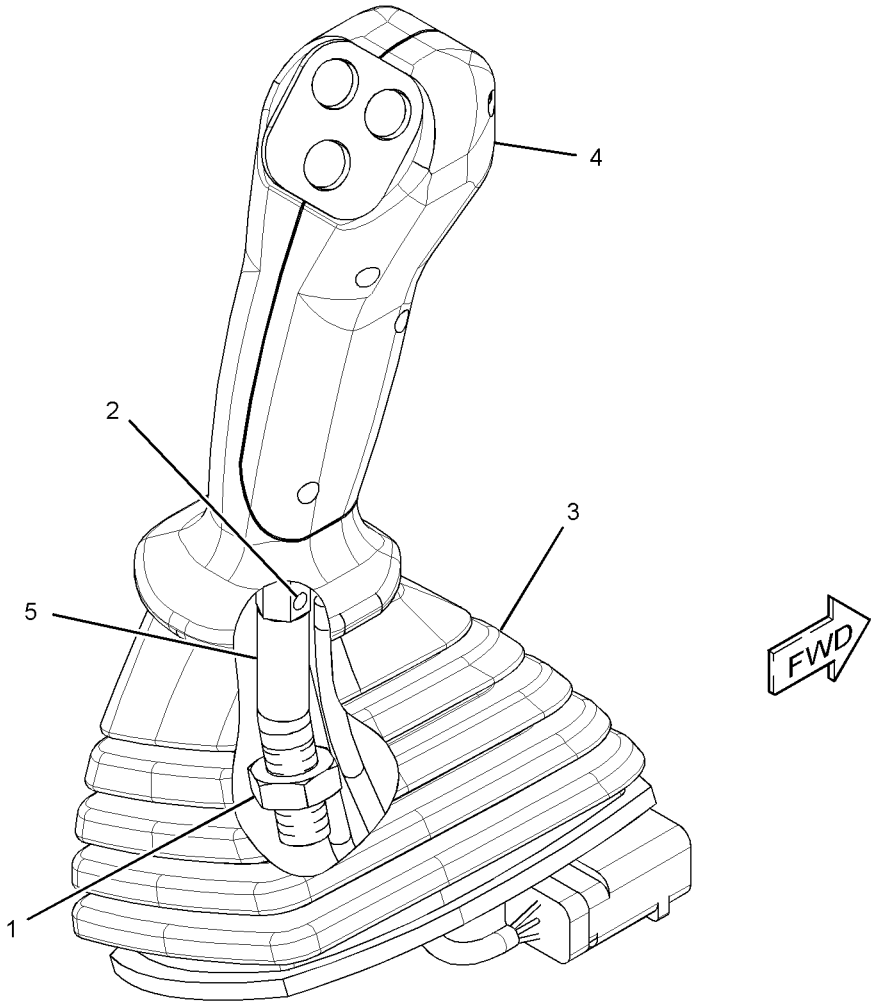

GRAPHIC #1

<END>

g01436267

OPERATOR STATION

245-7846 CONTROL GP-HEAT & AIR COND–AIR INLET

S/N: CJN1-UP

PART OF 240-5036, 316-8811 AIR CONDITIONER GP

AN ATTACHMENT

SMCS-7309 **i02547472**

NOTE	REF NO	GRAPHIC REF	PART NUMBER	QTY	PART NAME 1 2 3 4 5 6 (PRODUCT LEVEL)	SEE PAGE
	1	1	**185-8300**	4	SCREW-TAPPING	
	2	1	**196-1666**	1	RELAY (COMPRESSOR CLUTCH)	
	2A	1	**196-1666**	1	RELAY (BLOWER)	
	3	1	**245-7813**	1	MOTOR AS	
	4	1	**245-7814**	1	BRACKET	
	5	1	**245-7815**	1	SENSOR AS-TEMPERATURE (AIR)	
	6	1	**245-7816**	1	DAMPER AS	

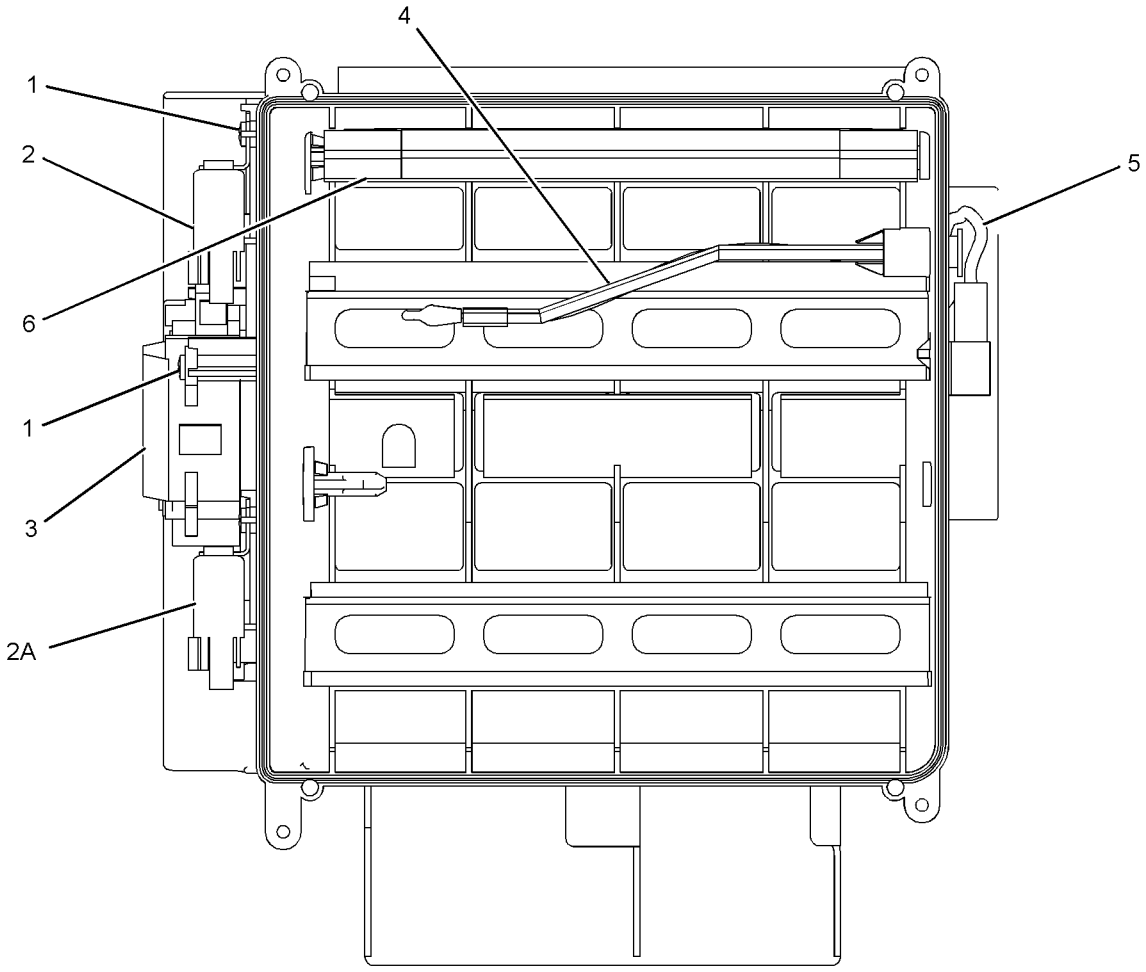

GRAPHIC #1 **<END>** g01245591

OPERATOR STATION

170-9497 CONTROL GP-HYDRAULIC PEDAL–TRAVEL

S/N: CJN1-UP

PART OF 259-7193 OPERATOR AR

SMCS-5059, 5063 **i02997569**

NOTE	REF NO	GRAPHIC REF	PART NUMBER	QTY	PART NAME 1 2 3 4 5 6 (PRODUCT LEVEL)	SEE PAGE
	1	1	**096-6166**	2	WASHER-HARD (4.5X9X1-MM THK)	
M	2	1	**095-0728**	2	SCREW-MACHINE (M4X0.7X12-MM)	
	3	1	**8T-4121**	12	WASHER-HARD (11X21X2.5-MM THK)	
M	4	1	**8T-4136**	4	BOLT (M10X1.5X25-MM)	
M	5	1	**8T-4191**	8	BOLT (M10X1.5X16-MM)	
	6	1	**142-5546**	2	KNOB	
	7	1	**117-6356**	2	STEP AS	
	8	1	**122-9610**	2	STEP	
	9	1	**170-9499**	1	LEVER AS (LH)	
	10	1	**170-9498**	1	LEVER AS (RH)	
	11	1	**122-9608**	1	PEDAL-RUBBER (RH)	
	12	1	**117-6350**	1	PEDAL AS (RH)	
	13	1	**122-9609**	1	PEDAL-RUBBER (LH)	
	14	1	**117-6349**	1	PEDAL AS (LH)	

M-METRIC PART

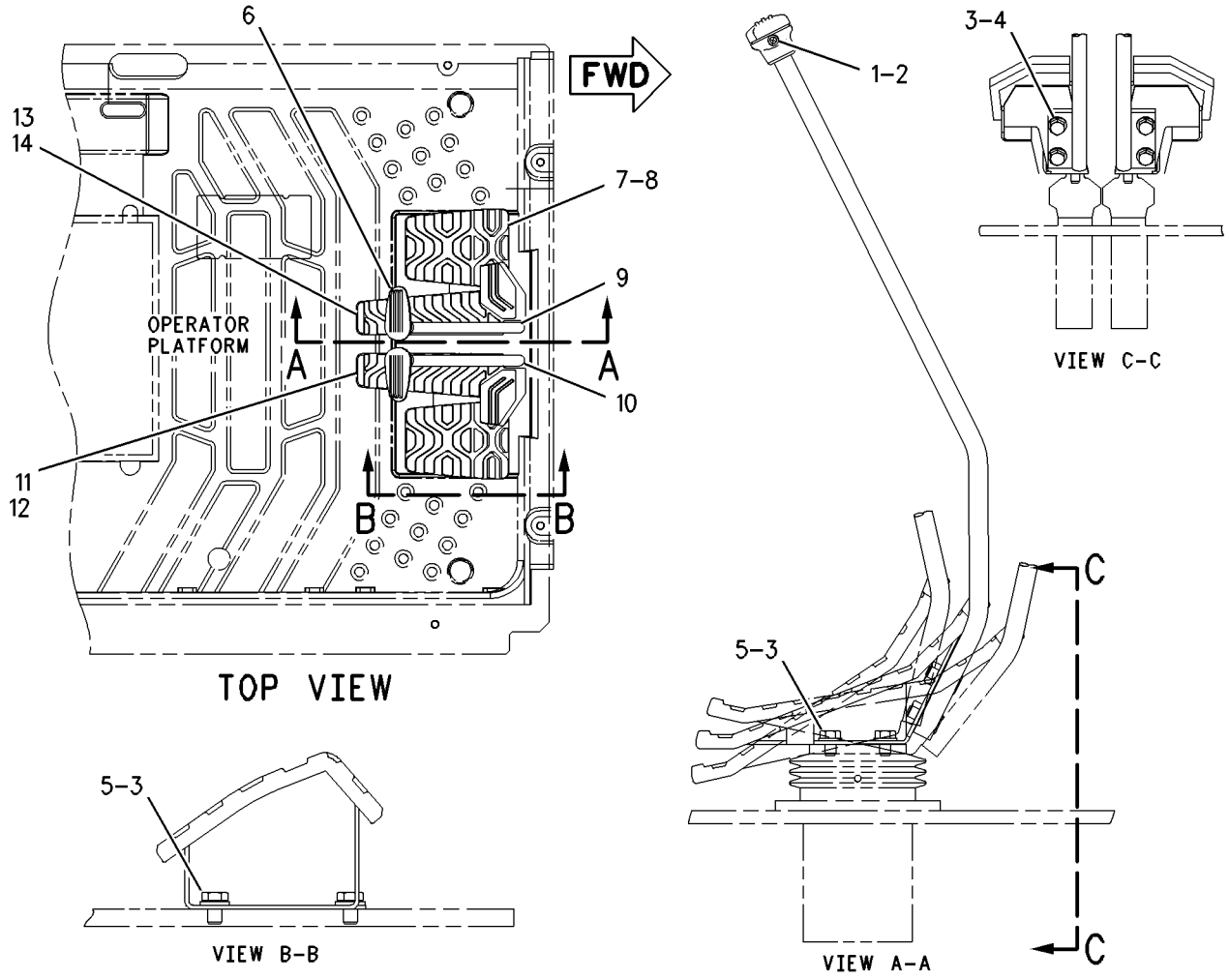

GRAPHIC #1 **<END>** g00672963

OPERATOR STATION

225-5730 CONTROL GP-HYDRAULIC PEDAL

S/N: CJN1-UP
PART OF 259-7196 PEDAL AR-THIRD
AN ATTACHMENT

SMCS-5059, 5063 **i02214468**

NOTE	REF NO	GRAPHIC REF	PART NUMBER	QTY	PART NAME 1 2 3 4 5 6 (PRODUCT LEVEL)	SEE PAGE
	1	1	**5I-7090**	1	CHAIN AS	
	2	1	**128-2173**	1	PIN	
	3	1	**135-2274**	1	PEDAL-RUBBER	
	4	1	**164-0614**	1	PEDAL AS	
	5	1	**164-0617**	1	SUPPORT AS	
	6	1	**165-9523**	1	VALVE GP-PILOT (THIRD PEDAL, STRAIGHT TRAVEL)	
	7	1	**8T-4224**	2	WASHER-HARD (8.8X16X2-MM THK)	
M	8	1	**095-0735**	2	SCREW-MACHINE (M5X0.8X8-MM)	
M	9	1	**7X-2536**	2	BOLT (M8X1.25X14-MM)	
	10	1	**8T-0114**	1	PIN-SPRING	
	11	1	**8T-4121**	3	WASHER-HARD (11X21X2.5-MM THK)	
M	12	1	**8T-4136**	2	BOLT (M10X1.5X25-MM)	
M	13	1	**8T-4191**	1	BOLT (M10X1.5X16-MM)	

M-METRIC PART

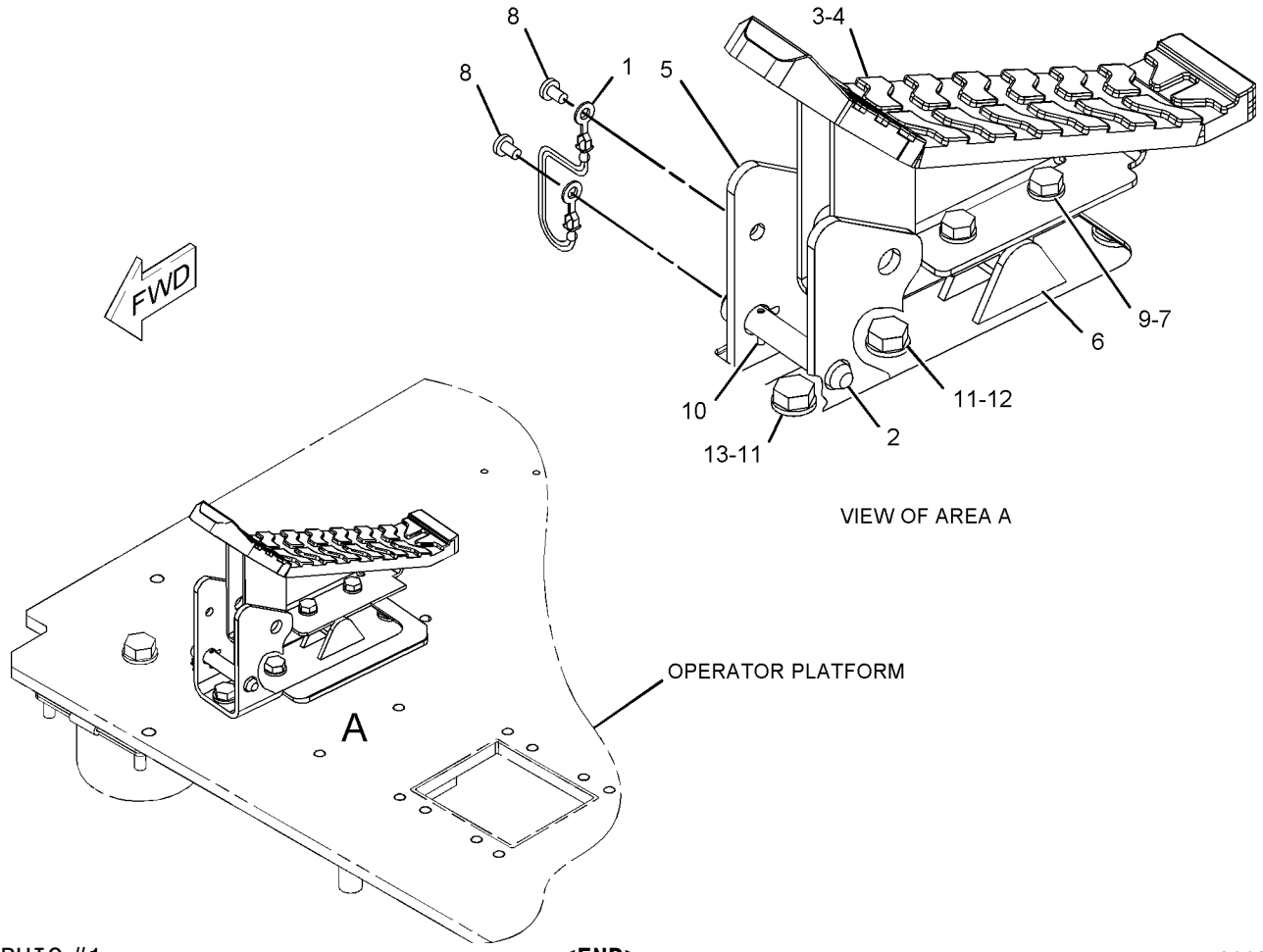

GRAPHIC #1 **<END>** g01130744

OPERATOR STATION

259-7762 CONTROL GP-JOYSTICK–RH

S/N: CJN1-UP
PART OF 259-7598 CONTROL & MTG GP-JOYSTICK
AN ATTACHMENT

SMCS-5705 **i02922535**

NOTE	REF NO	GRAPHIC REF	PART NUMBER	QTY	PART NAME 1 2 3 4 5 6 (PRODUCT LEVEL)	SEE PAGE
	1	1	**6K-0806**	1	STRAP-CABLE	
Y	2	1	**206-3305**	1	VALVE GP-PILOT (JOYSTICK)	706
Y	3	1	**260-2109**	1	CONTROL GP-HANDLE (JOYSTICK, RH)	907

Y-SEPARATE ILLUSTRATION

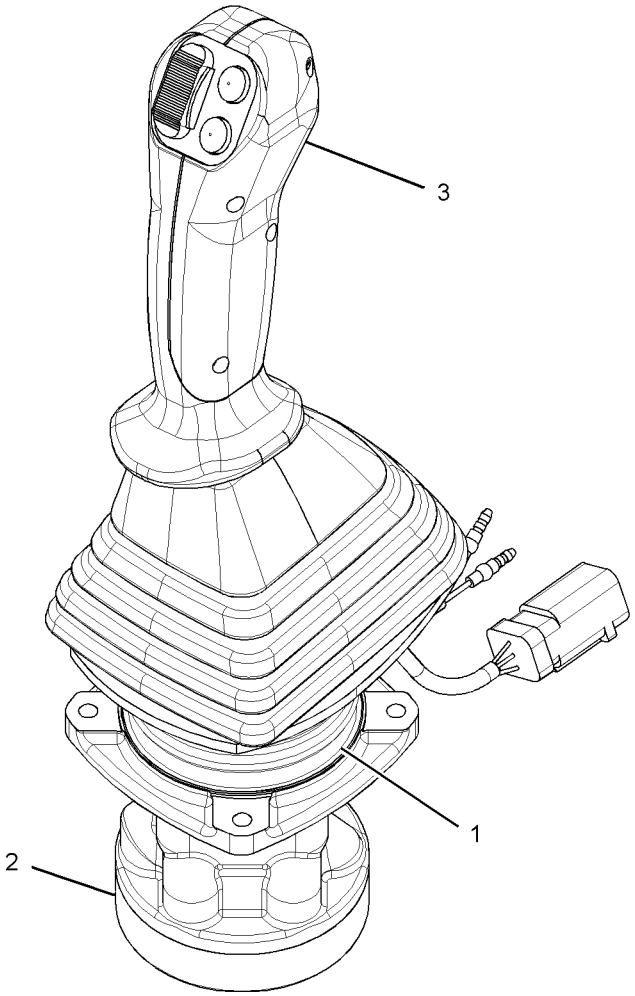

GRAPHIC #1

<END>

g01453642

OPERATOR STATION

259-7763 CONTROL GP-JOYSTICK–LH

S/N: CJN1-UP
PART OF 259-7598 CONTROL & MTG GP-JOYSTICK
AN ATTACHMENT

SMCS-5705 **i02922536**

NOTE	REF NO	GRAPHIC REF	PART NUMBER	QTY	PART NAME 1 2 3 4 5 6 (PRODUCT LEVEL)	SEE PAGE
	1	1	**6K-0806**	1	STRAP-CABLE	
Y	2	1	**206-3305**	1	VALVE GP-PILOT (JOYSTICK)	706
Y	3	1	**260-2110**	1	CONTROL GP-HANDLE (JOYSTICK, LH)	908

Y-SEPARATE ILLUSTRATION

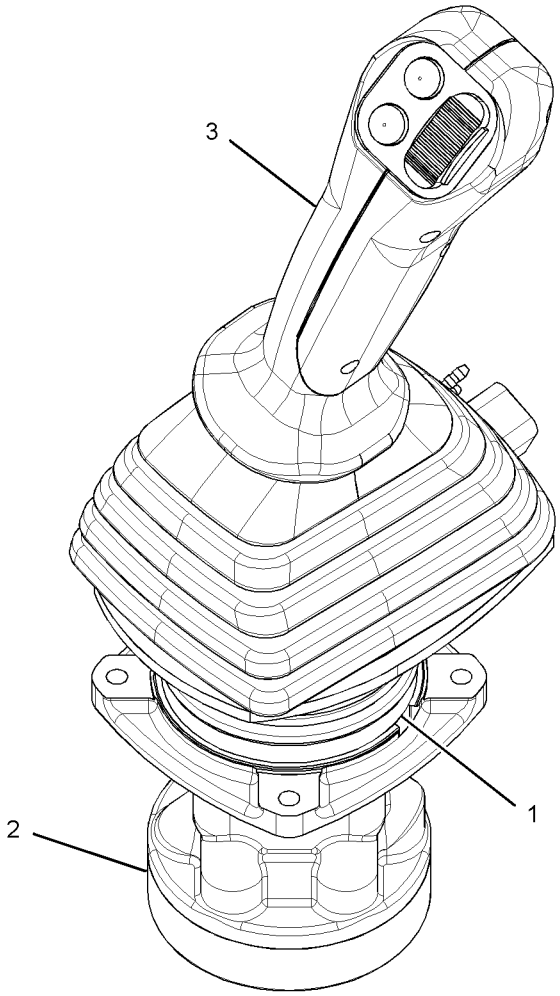

GRAPHIC #1

<END>

g01453715

OPERATOR STATION

259-7764 CONTROL GP-JOYSTICK–RH

S/N: CJN1-UP

PART OF 259-7599 CONTROL & MTG GP-JOYSTICK

AN ATTACHMENT

SMCS-5705 **i03016372**

NOTE	REF NO	GRAPHIC REF	PART NUMBER	QTY	PART NAME 1 2 3 4 5 6 (PRODUCT LEVEL)	SEE PAGE
Y	1	1	**206-3305**	1	VALVE GP-PILOT (JOYSTICK)	706
Y	2	1	**260-2127**	1	CONTROL GP-HANDLE (JOYSTICK, RH)	909
	3	1	**6K-0806**	1	STRAP-CABLE	

Y-SEPARATE ILLUSTRATION

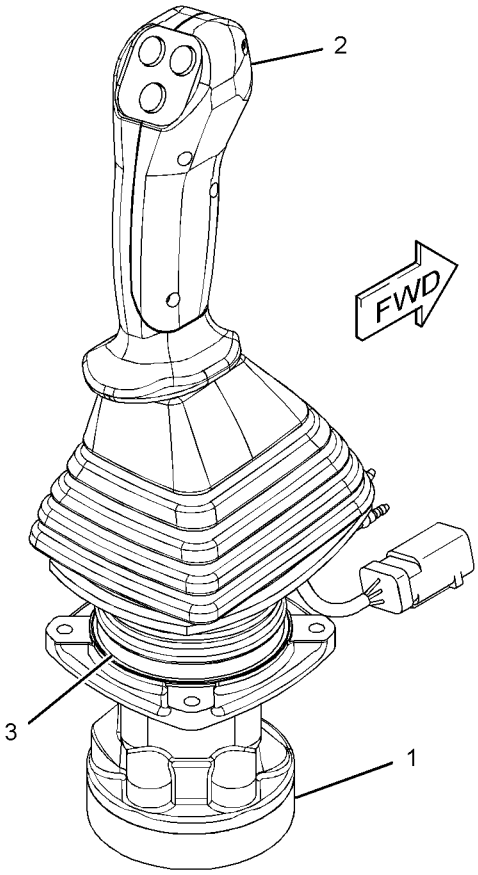

GRAPHIC #1 **<END>** g01525041

259-7765 CONTROL GP-JOYSTICK–LH

S/N: CJN1-UP
PART OF 259-7599 CONTROL & MTG GP-JOYSTICK
AN ATTACHMENT

SMCS-5705 **i03016371**

NOTE	REF NO	GRAPHIC REF	PART NUMBER	QTY	PART NAME 1 2 3 4 5 6 (PRODUCT LEVEL)	SEE PAGE
Y	1	1	**206-3305**	1	VALVE GP-PILOT (JOYSTICK)	706
Y	2	1	**260-2128**	1	CONTROL GP-HANDLE (JOYSTICK, LH)	910
	3	1	**6K-0806**	1	STRAP-CABLE	

Y-SEPARATE ILLUSTRATION

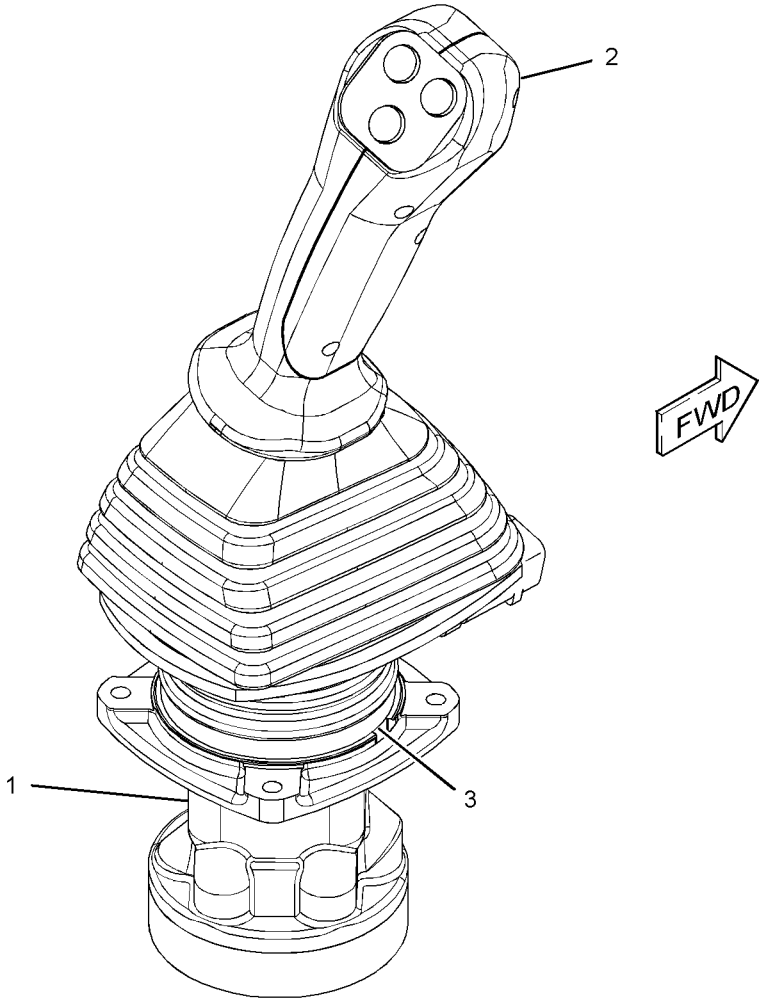

GRAPHIC #1 **<END>** g01525010

OPERATOR STATION

297-0532 CONTROL GP-JOYSTICK–RH

S/N: CJN1-UP

PART OF 310-0078 CONTROL & MTG GP-JOYSTICK

AN ATTACHMENT

SMCS-5705 **i03010035**

NOTE	REF NO	GRAPHIC REF	PART NUMBER	QTY	PART NAME 1 2 3 4 5 6 (PRODUCT LEVEL)	SEE PAGE
M	1	1	**7Y-8463**	1	NUT (M14X2-THD)	
Y	2	1	**235-8970**	1	CONTROL GP-HANDLE (JOYSTICK, RH)	906
Y	3	1	**297-0529**	1	VALVE GP-PILOT (JOYSTICK)	711
	4	1	**6K-0806**	1	STRAP-CABLE	

M-METRIC PART
Y-SEPARATE ILLUSTRATION

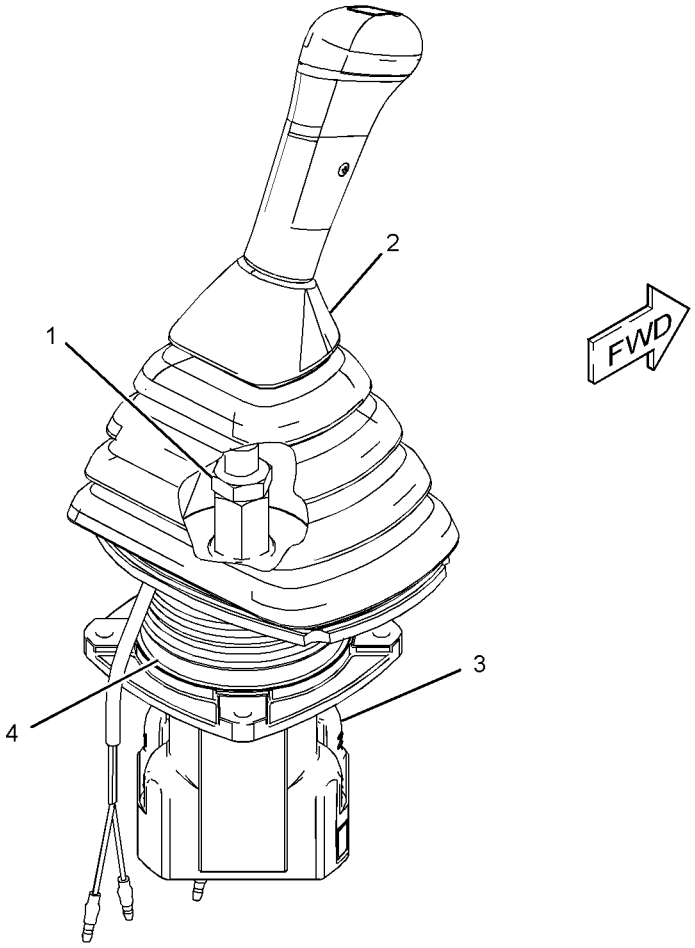

GRAPHIC #1 **<END>** g01452407

OPERATOR STATION

297-0533 CONTROL GP-JOYSTICK–LH

S/N: CJN1-UP
PART OF 310-0078 CONTROL & MTG GP-JOYSTICK
AN ATTACHMENT

SMCS-5705 **i03010036**

NOTE	REF NO	GRAPHIC REF	PART NUMBER	QTY	PART NAME 1 2 3 4 5 6 (PRODUCT LEVEL)	SEE PAGE
M	1	1	**7Y-8463**	1	NUT (M14X2-THD)	
Y	2	1	**235-8969**	1	CONTROL GP-HANDLE (JOYSTICK, LH)	905
Y	3	1	**297-0529**	1	VALVE GP-PILOT (JOYSTICK)	711
	4	1	**6K-0806**	1	STRAP-CABLE	

M-METRIC PART
Y-SEPARATE ILLUSTRATION

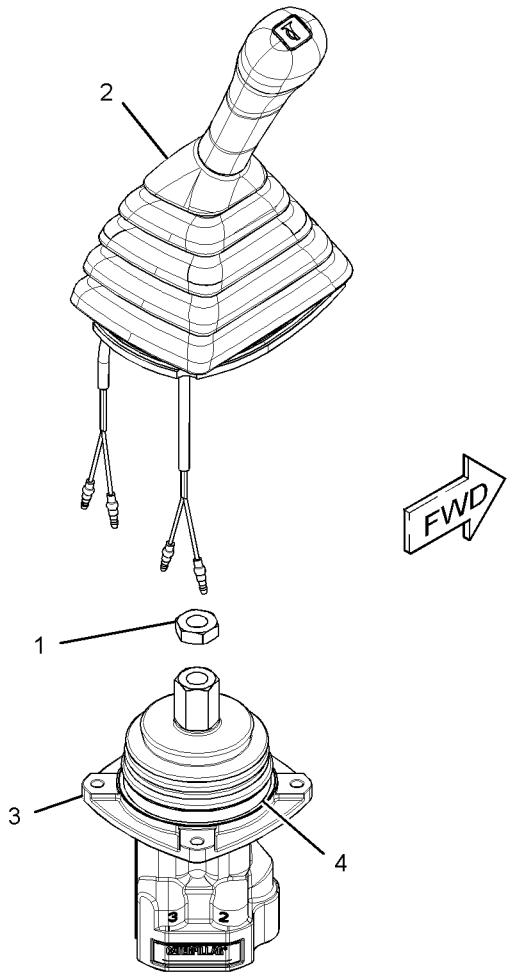

GRAPHIC #1 **<END>** g01452496

OPERATOR STATION

297-0534 CONTROL GP-JOYSTICK–RH

S/N: CJN1-UP

PART OF 259-7598 CONTROL & MTG GP-JOYSTICK

AN ATTACHMENT

SMCS-5705 **i03108272**

NOTE	REF NO	GRAPHIC REF	PART NUMBER	QTY	PART NAME 1 2 3 4 5 6 (PRODUCT LEVEL)	SEE PAGE
	1	1	**6K-0806**	1	STRAP-CABLE	
Y	2	1	**260-2109**	1	CONTROL GP-HANDLE (JOYSTICK, RH)	907
Y	3	1	**297-0589**	1	VALVE GP-PILOT	713

Y-SEPARATE ILLUSTRATION

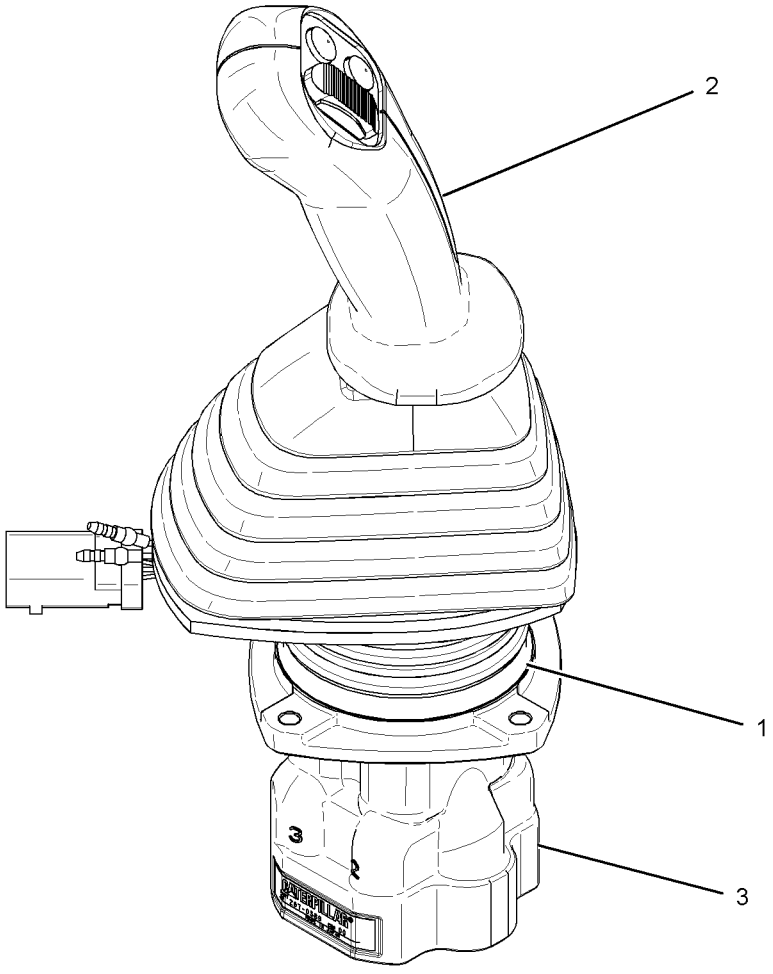

GRAPHIC #1 **<END>** g01539394

OPERATOR STATION

297-0535 CONTROL GP-JOYSTICK–LH

S/N: CJN1-UP
PART OF 259-7598 CONTROL & MTG GP-JOYSTICK
AN ATTACHMENT

SMCS-5705 **i03108292**

NOTE	REF NO	GRAPHIC REF	PART NUMBER	QTY	PART NAME 1 2 3 4 5 6 (PRODUCT LEVEL)	SEE PAGE
	1	1	**6K-0806**	1	STRAP-CABLE	
Y	2	1	**260-2110**	1	CONTROL GP-HANDLE (JOYSTICK, LH)	908
Y	3	1	**297-0589**	1	VALVE GP-PILOT	713

Y-SEPARATE ILLUSTRATION

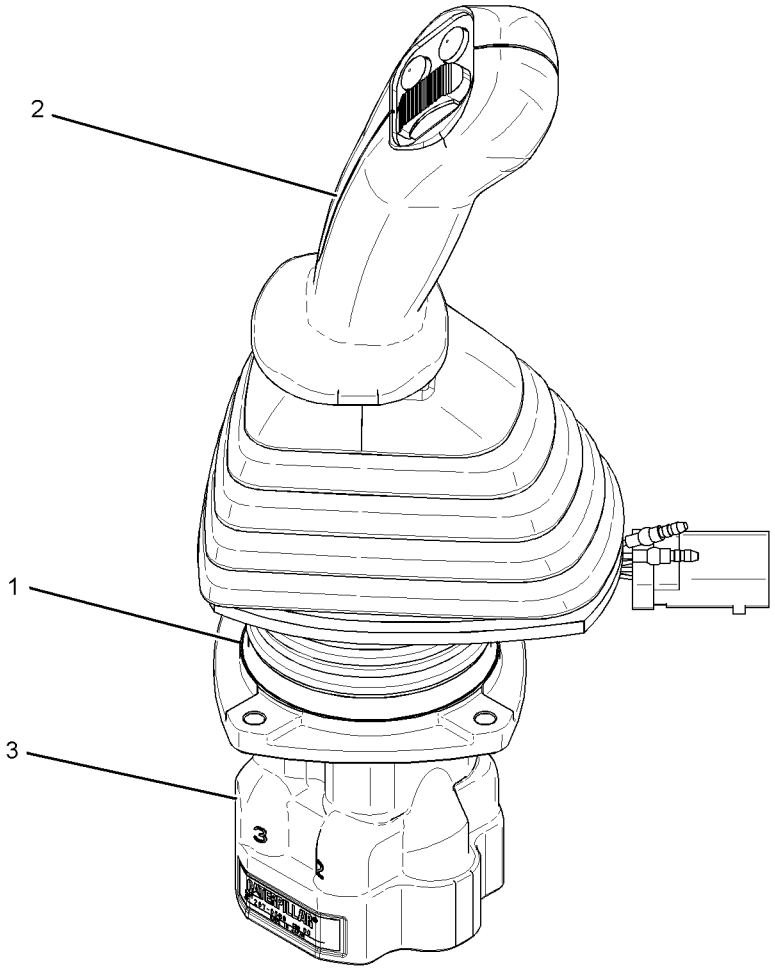

GRAPHIC #1 **<END>** g01541298

OPERATOR STATION

297-0536 CONTROL GP-JOYSTICK–RH

S/N: CJN1-UP

PART OF 259-7599 CONTROL & MTG GP-JOYSTICK

AN ATTACHMENT

SMCS-5705 **i03045060**

NOTE	REF NO	GRAPHIC REF	PART NUMBER	QTY	PART NAME 1 2 3 4 5 6 (PRODUCT LEVEL)	SEE PAGE
	1	1	**6K-0806**	1	STRAP-CABLE	
Y	2	1	**260-2127**	1	CONTROL GP-HANDLE (JOYSTICK, RH)	909
Y	3	1	**297-0589**	1	VALVE GP-PILOT (JOYSTICK)	713

Y-SEPARATE ILLUSTRATION

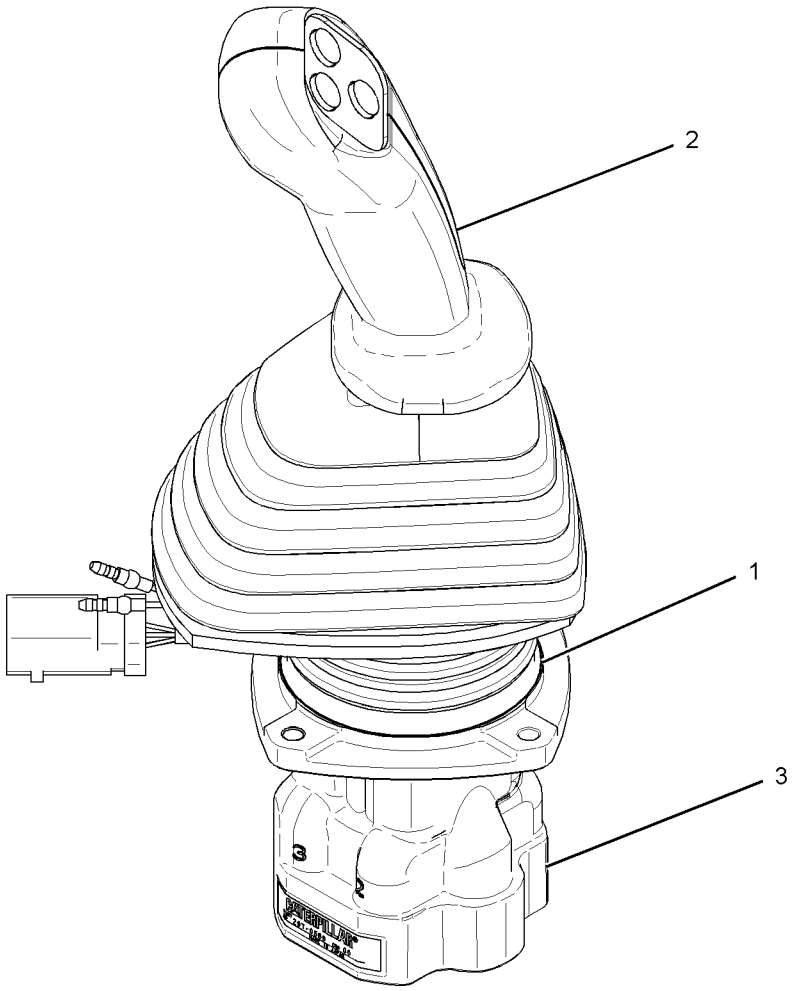

GRAPHIC #1 **<END>** g01529333

OPERATOR STATION

297-0537 CONTROL GP-JOYSTICK–LH

S/N: CJN1-UP
PART OF 259-7599 CONTROL & MTG GP-JOYSTICK
AN ATTACHMENT

SMCS-5705 **i03040580**

NOTE	REF NO	GRAPHIC REF	PART NUMBER	QTY	PART NAME 1 2 3 4 5 6 (PRODUCT LEVEL)	SEE PAGE
	1	1	**6K-0806**	1	STRAP-CABLE	
Y	2	1	**260-2128**	1	CONTROL GP-HANDLE (JOYSTICK, LH)	910
Y	3	1	**297-0589**	1	VALVE GP-PILOT	713

Y-SEPARATE ILLUSTRATION

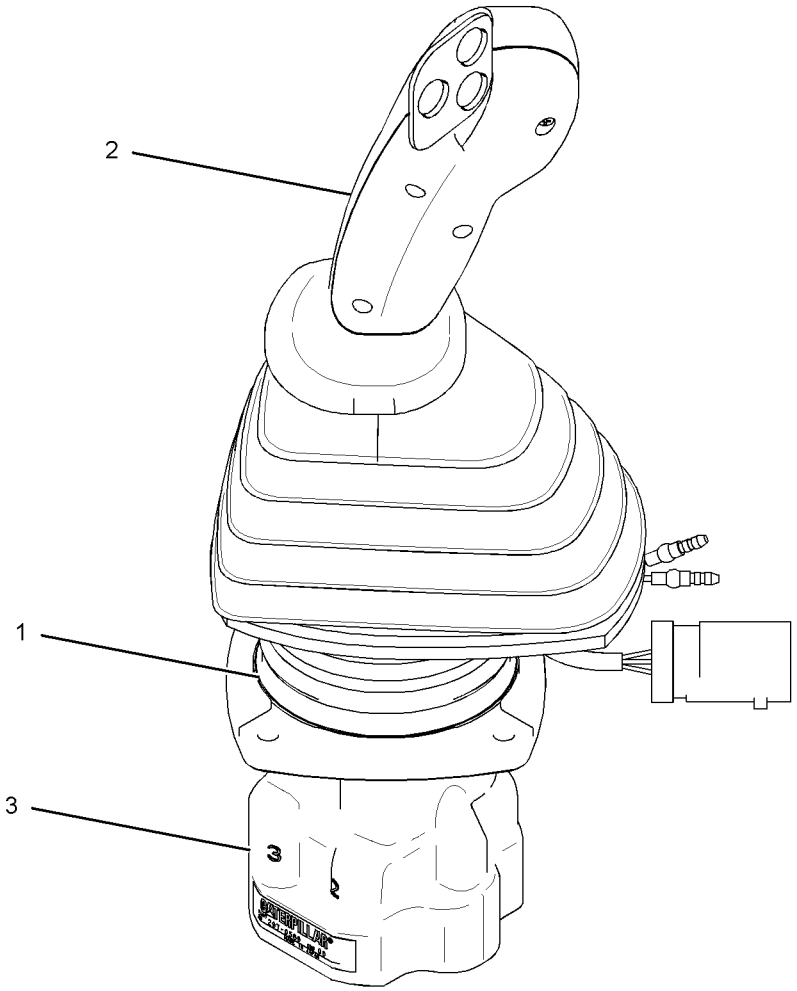

GRAPHIC #1 **<END>** g01528713

309-5808 CONTROL GP-PEDAL–ELECTRIC

S/N: CJN1-UP

PART OF 221-8884 CONTROL & MTG GP-PEDAL

AN ATTACHMENT

SMCS-1435, 5702 **i02840265**

NOTE	REF NO	GRAPHIC REF	PART NUMBER	QTY	PART NAME 1 2 3 4 5 6 (PRODUCT LEVEL)	SEE PAGE
	1	1	**8T-8737**	1	PLUG-SEAL	
	2	1	**9X-3401**	5	PIN-CONNECTOR (16-GA TO 18-GA)	
					–OR–	
		1	**126-1767**	5	PIN-CONNECTOR (14-GA)	
	3	1	**247-2693**	1	RECEPTACLE AS-CONNECTOR (6-PIN)	
	4	1	**247-5112**	1	BOOT	

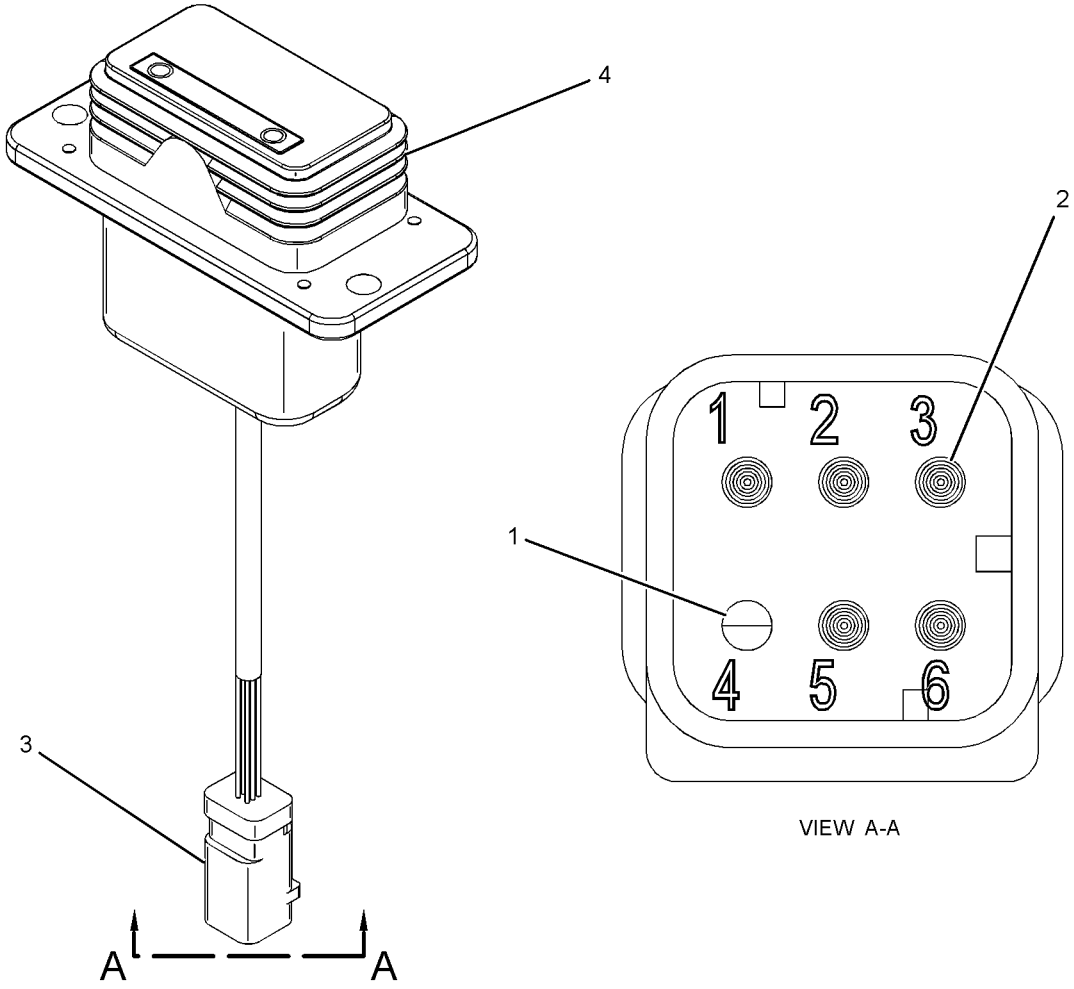

GRAPHIC #1 **<END>** g01219365

OPERATOR STATION

234-6501 COVER GP-CAB–REAR

S/N: CJN1-UP

PART OF 229-9096, 229-9098, 229-9100, 316-8814 CAB GP

AN ATTACHMENT

SMCS-7301, 7308 **i03159185**

NOTE	REF NO	GRAPHIC REF	PART NUMBER	QTY	PART NAME 1 2 3 4 5 6 (PRODUCT LEVEL)	SEE PAGE
	1	1	**234-6499**	1	COVER AS	
	2	1	**234-6502**	1	COVER-ACCESS (FUSE-REAR PANEL)	
	3	1	**234-6593**	2	FASTENER	
					USE WITH COVER WITH A 9-MM DIAMETER UPPER MOUNTING HOLE	
					–OR–	
		1	**245-7929**	2	CLIP	
					USE WITH COVER WITH A 7.6-MM DIAMETER UPPER MOUNTING HOLE	

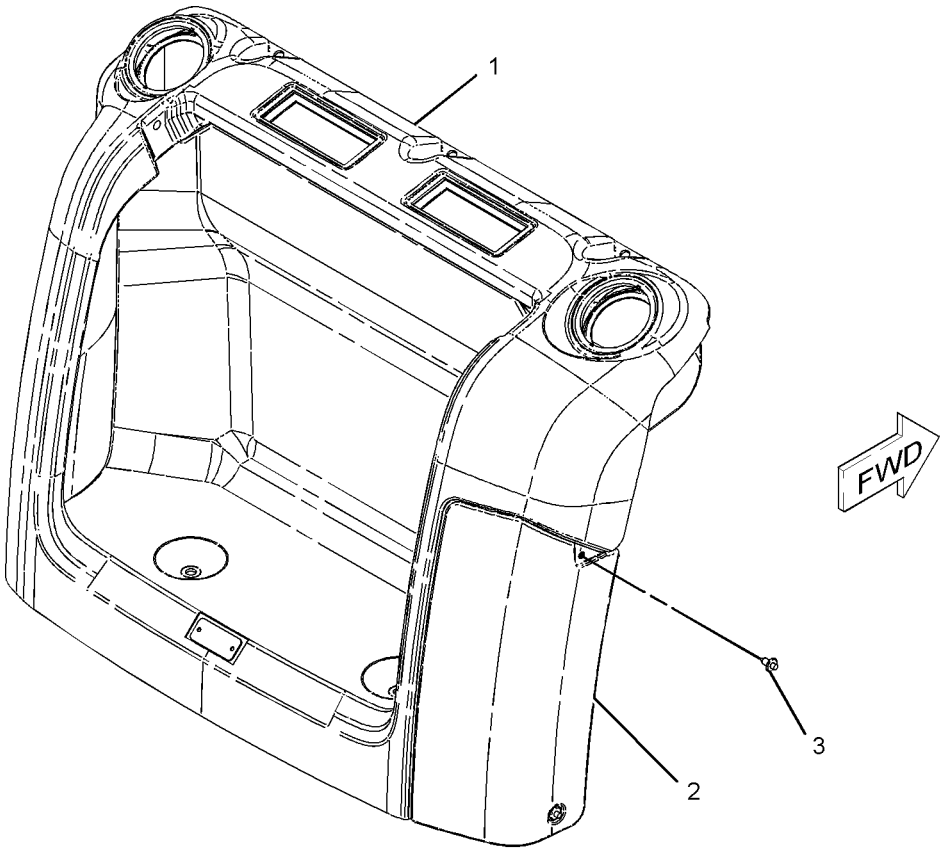

GRAPHIC #1 **<END>** g01101423

OPERATOR STATION

234-6500 COVER GP-STORAGE

S/N: CJN1-UP

USED ON STORAGE COMPARTMENT INSIDE CAB

AN ATTACHMENT

SMCS-7268 **i02232841**

NOTE	REF NO	GRAPHIC REF	PART NUMBER	QTY	PART NAME 1 2 3 4 5 6 (PRODUCT LEVEL)	SEE PAGE
					(NO SERVICED PARTS)	

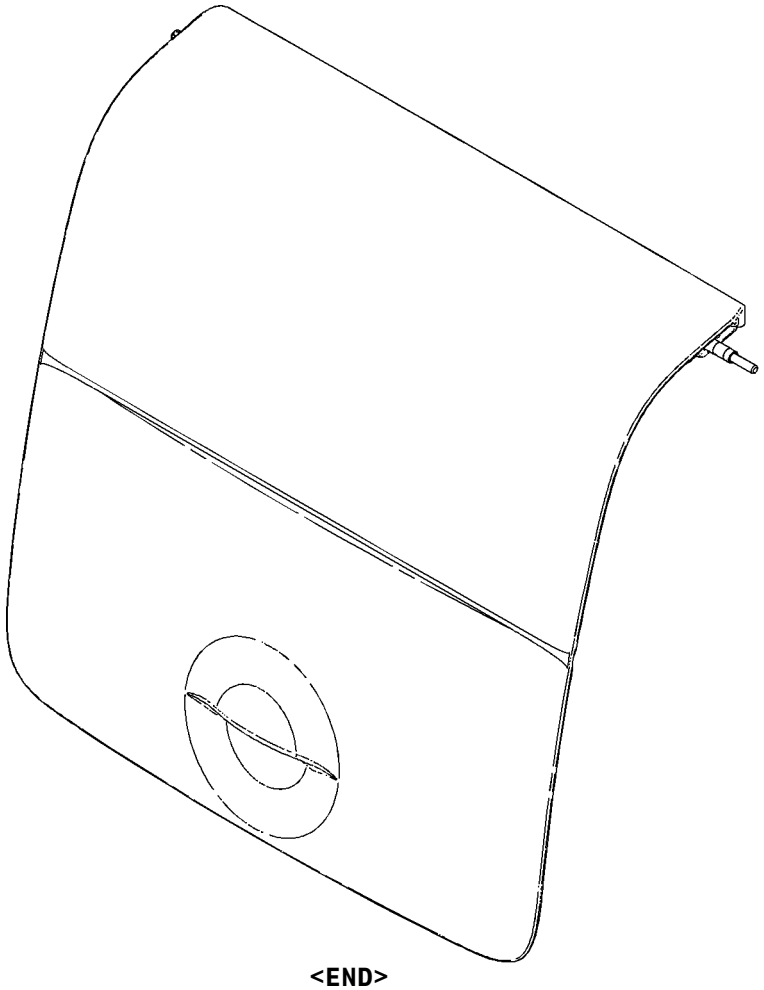

GRAPHIC #1

<END>

g01092876

OPERATOR STATION

189-2768 DOOR & MTG GP-CAB

S/N: CJN1-UP
PART OF 229-9097, 229-9099, 316-8815 CAB GP
AN ATTACHMENT

SMCS-7308 **i03013736**

NOTE	REF NO	GRAPHIC REF	PART NUMBER	QTY	PART NAME 1 2 3 4 5 6 (PRODUCT LEVEL)	SEE PAGE
Y	1	1	*139-7100*	1	DOOR GP-CAB	928
	2	1	*151-6767*	1	DOOR AS	
M		1	**9X-2041**	6	SCREW-TRUSS HEAD (M10X1.5X20-MM)	
		1	**151-6777**	2	HINGE	

M-METRIC PART
Y-SEPARATE ILLUSTRATION

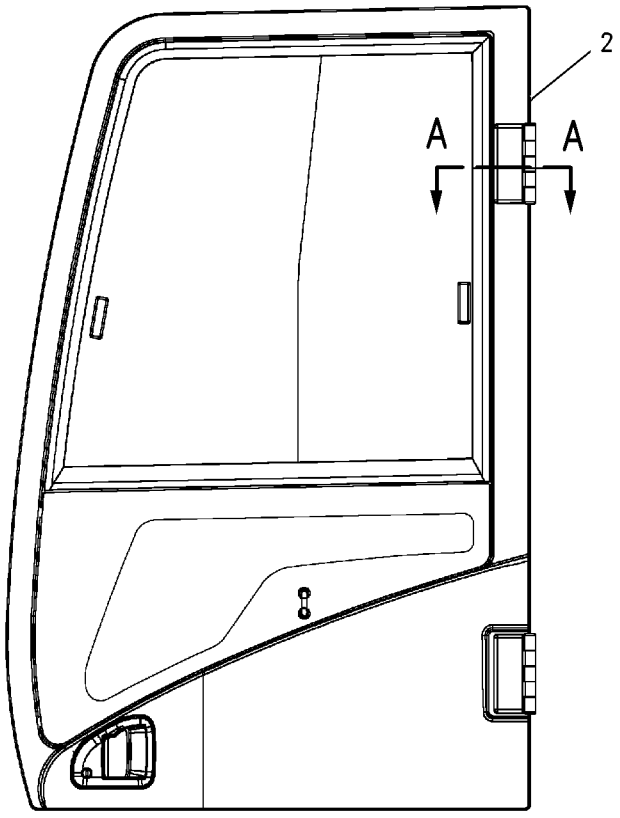

LEFT SIDE VIEW

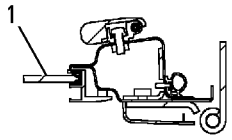

SECTION A-A

GRAPHIC #1 **<END>** g00840880

OPERATOR STATION

139-7100 DOOR GP-CAB

S/N: CJN1-UP
PART OF 189-2768 DOOR & MTG GP-CAB
AN ATTACHMENT
TYPE 1

SMCS-7308 **i02583462**

NOTE	REF NO	GRAPHIC REF	PART NUMBER	QTY	PART NAME 1 2 3 4 5 6 (PRODUCT LEVEL)	SEE PAGE
	1	1	**151-6703**	1	HANDLE-PULL	
	2	1	**151-6704**	2	CAP (HANDLE)	
Y	3	1	**151-6792**	1	WINDOW GP-DOOR	1068
	4	1	**156-6471**	1	GLASS	
	5	1	**156-6598**	1	HOOK	
	6	1	**156-6600**	1	LOCK AS	
	7	1	**156-6643**	1	COVER	
	8	1	**156-6645**	1	HANDLE AS	
	9	1	**161-3639**	1	HANDLE AS	
	10	1	**161-3650**	1	COVER AS	
	11	1	**161-3663**	1	SEAL AS	
		1	**151-9497**	45	CLIP	
	12	1	**161-3665**	1	SEAL	
	13	1	**259-7354**	1	COVER	
	14	1	**164-0515**	1	JOINT	
	15	1	**167-7039**	1	GROMMET	
M	16	1	**185-8180**	3	SCREW (M6X1X16-MM)	
	17	1	**189-2711**	2	WASHER (8.5X16X2.3-MM THK)	
M	18	1	**096-2622**	2	SCREW-MACHINE (M4X0.7X8-MM)	
	19	1	**3B-4505**	1	LOCKWASHER	
M	20	1	**101-8899**	2	SCREW AS (M6X1X16-MM)	
M	21	1	**101-8900**	2	SCREW AS (M6X1X20-MM)	
	22	1	**151-9461**	4	SPACER	
	23	1	**156-6644**	1	COVER	
	24	1	**178-5573**	4	SPACER	
	25	1	**178-5574**	2	SPACER	
	26	1	**189-2690**	1	HANDLE AS	
	27	1	**4I-4286**	1	KNOB	
M	28	1	**9X-2042**	8	SCREW-TRUSS HEAD (M6X1X12-MM)	

M-METRIC PART
Y-SEPARATE ILLUSTRATION

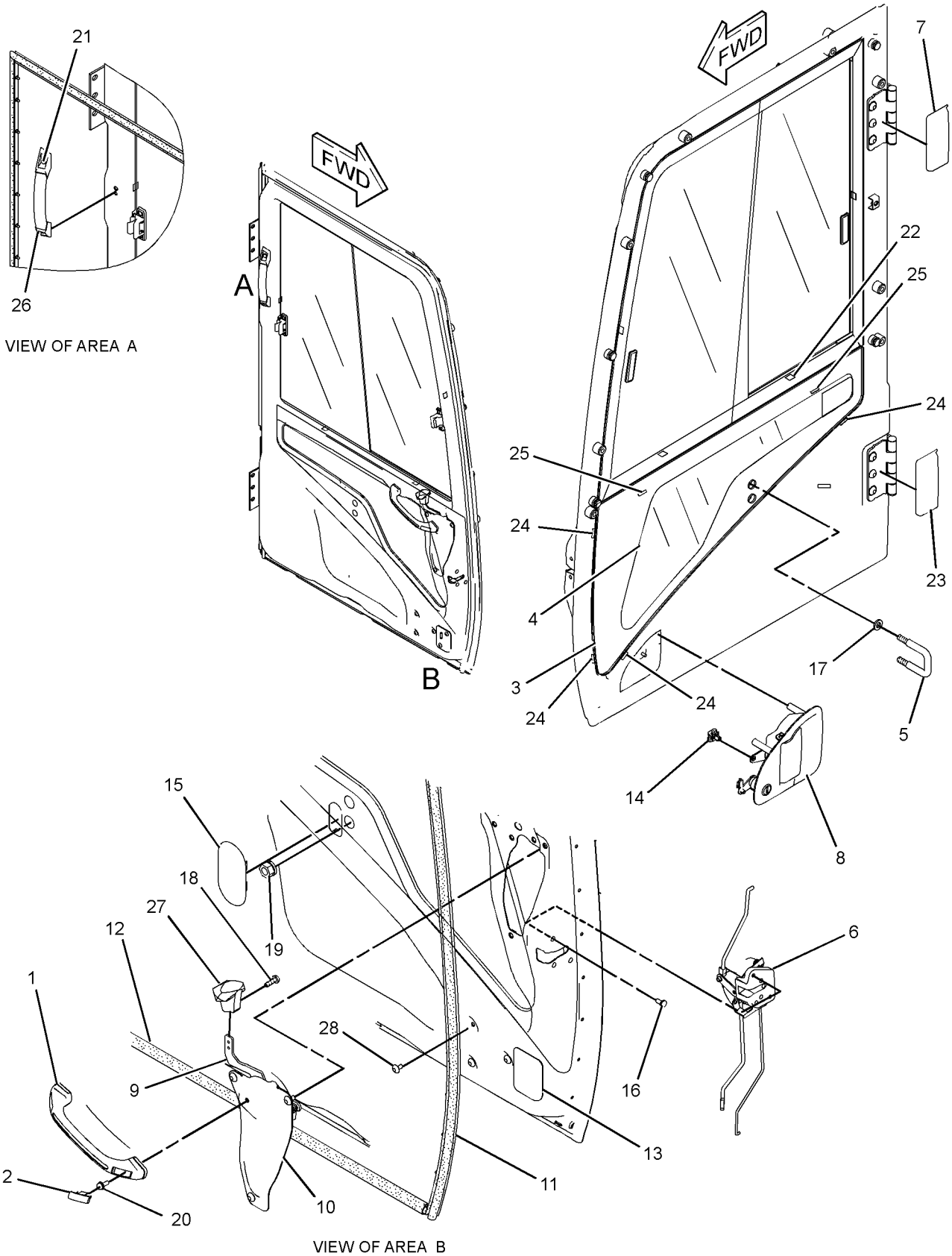

GRAPHIC #1 **<END>** g01304731

OPERATOR STATION

139-7100 DOOR GP-CAB

S/N: CJN1-UP
PART OF 189-2768 DOOR & MTG GP-CAB
AN ATTACHMENT
TYPE 2

SMCS-7308 **i03172907**

NOTE	REF NO	GRAPHIC REF	PART NUMBER	QTY	PART NAME 1 2 3 4 5 6 (PRODUCT LEVEL)	SEE PAGE
C	1	1	**327-6579**	1	HANDLE-PULL	
Y	3	1	**151-6792**	1	WINDOW GP-DOOR	1068
	4	1	**156-6471**	1	GLASS	
	5	1	**156-6598**	1	HOOK	
J	6	1	**156-6600**	1	LOCK AS	
		1	**164-0514**	1	CLIP	
		1	**164-0519**	1	CLIP	
	7	1	**156-6643**	1	COVER	
	8	1	**156-6645**	1	HANDLE AS	
		1	**201-4391**	1	CLIP	
	9	1	**161-3639**	1	HANDLE AS	
	10	1	**161-3650**	1	COVER AS	
	11	1	**161-3663**	1	SEAL AS	
		1	**151-9497**	45	CLIP	
	12	1	**161-3665**	1	SEAL	
	13	1	**259-7354**	1	COVER	
	14	1	**164-0515**	1	JOINT	
	15	1	**167-7039**	1	GROMMET	
M	16	1	**185-8180**	3	SCREW (M6X1X16-MM)	
	17	1	**189-2711**	2	WASHER (8.5X16X2.3-MM THK)	
M	18	1	**096-2622**	2	SCREW-MACHINE (M4X0.7X8-MM)	
M	19	1	**096-3884**	2	NUT-SPRING	
M	20	1	**101-8899**	2	SCREW AS (M6X1X16-MM)	
M	21	1	**101-8900**	2	SCREW AS (M6X1X20-MM)	
	22	1	**151-9461**	4	SPACER	
	23	1	**156-6644**	1	COVER	
	24	1	**178-5573**	4	SPACER	
	25	1	**178-5574**	2	SPACER	
	26	1	**189-2690**	1	HANDLE AS	
	27	1	**4I-4286**	1	KNOB	
M	28	1	**9X-2042**	8	SCREW-TRUSS HEAD (M6X1X12-MM)	

C-CHANGE FROM PREVIOUS TYPE
J-REQUIRES CORPORATE KEY
M-METRIC PART
Y-SEPARATE ILLUSTRATION

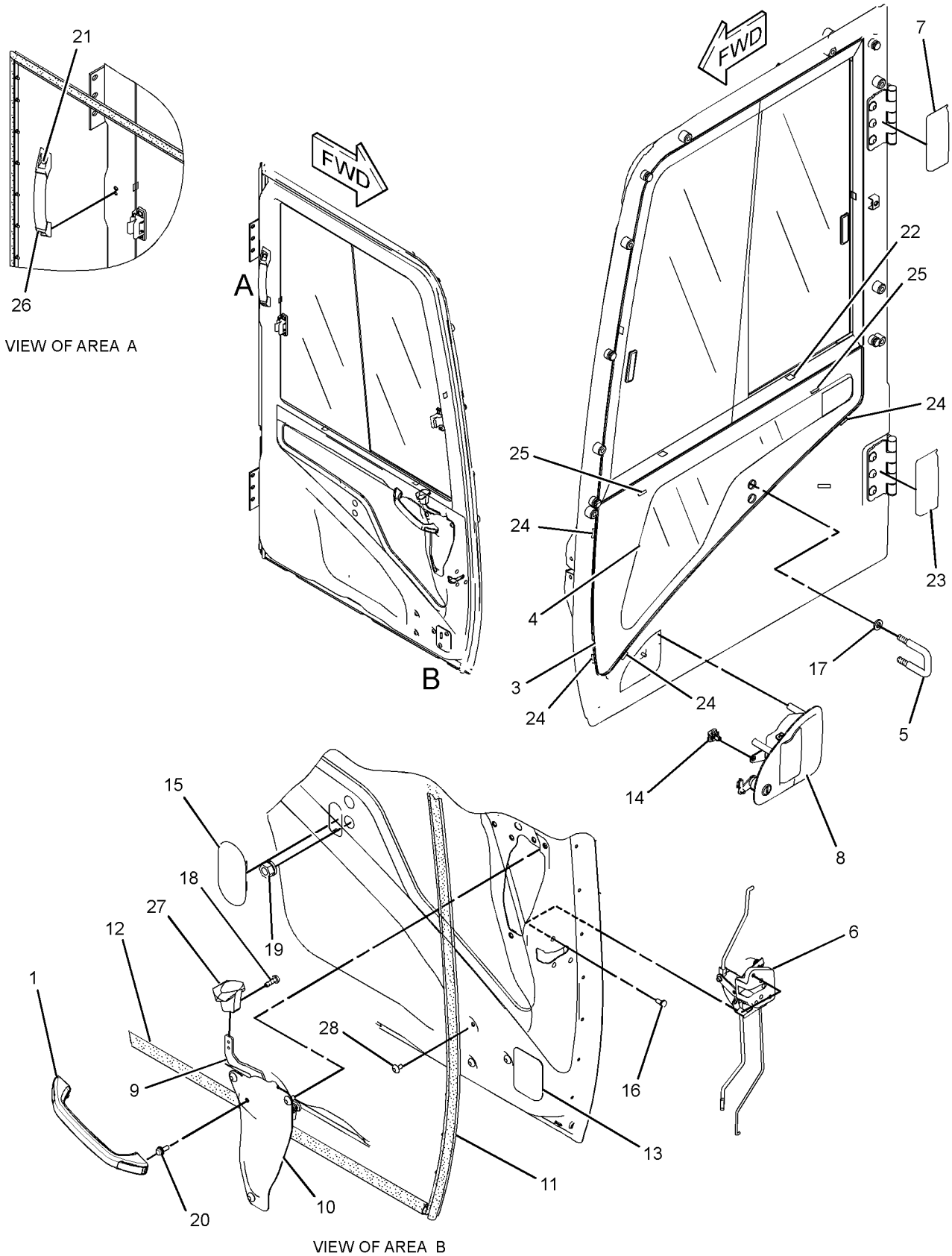

GRAPHIC #1 **<END>** g01625586

OPERATOR STATION

176-1964 D00R GP-CAB

S/N: CJN1-UP
PART OF 229-9101 CAB GP, 189-2793 D00R GP-CAB
AN ATTACHMENT
TYPE 1

SMCS-7308 **i02583463**

NOTE	REF NO	GRAPHIC REF	PART NUMBER	QTY	PART NAME 1 2 3 4 5 6 (PRODUCT LEVEL)	SEE PAGE
	1	1	**151-6703**	1	HANDLE-PULL	
	2	1	**151-6704**	2	CAP (HANDLE)	
Y	3	2	**151-6792**	1	WINDOW GP-DOOR	1068
	4	2	**156-6598**	1	HOOK	
	5	1	**156-6600**	1	LOCK AS	
		1	**164-0514**	1	CLIP	
	5A	1	**164-0519**	1	CLIP	
	6	2	**156-6643**	1	COVER	
	7	2	**156-6645**	1	HANDLE AS	
	7A	2	**201-4391**	1	CLIP	
	8	1	**161-3639**	1	HANDLE AS	
	9	1	**161-3650**	1	COVER AS	
	10	1	**161-3663**	1	SEAL AS	
		1	**151-9497**	45	CLIP	
	11	1	**161-3665**	1	SEAL	
	12	1	**259-7354**	1	COVER	
	13	2	**164-0515**	1	JOINT	
	14	2	**167-7038**	1	GLASS	
	15	1	**167-7039**	1	GROMMET	
M	16	1	**185-8180**	3	SCREW (M6X1X16-MM)	
	17	2	**8T-4224**	2	WASHER-HARD (8.8X16X2-MM THK)	
M	18	1	**096-2622**	2	SCREW-MACHINE (M4X0.7X8-MM)	
M	19	1	**095-0772**	2	NUT	
		1	**3B-4505**	2	LOCKWASHER	
M	20	1	**101-8899**	1	SCREW AS (M6X1X16-MM)	
M	21	1	**101-8900**	2	SCREW AS (M6X1X20-MM)	
	22	2	**151-9461**	4	SPACER	
	23	2	**156-6644**	1	COVER	
	24	2	**178-5573**	4	SPACER	
	25	2	**178-5574**	2	SPACER	
	26	1	**189-2690**	1	HANDLE AS	
	27	1	**4I-4286**	1	KNOB	
M	28	1	**9X-2042**	8	SCREW-TRUSS HEAD (M6X1X12-MM)	

M-METRIC PART
Y-SEPARATE ILLUSTRATION

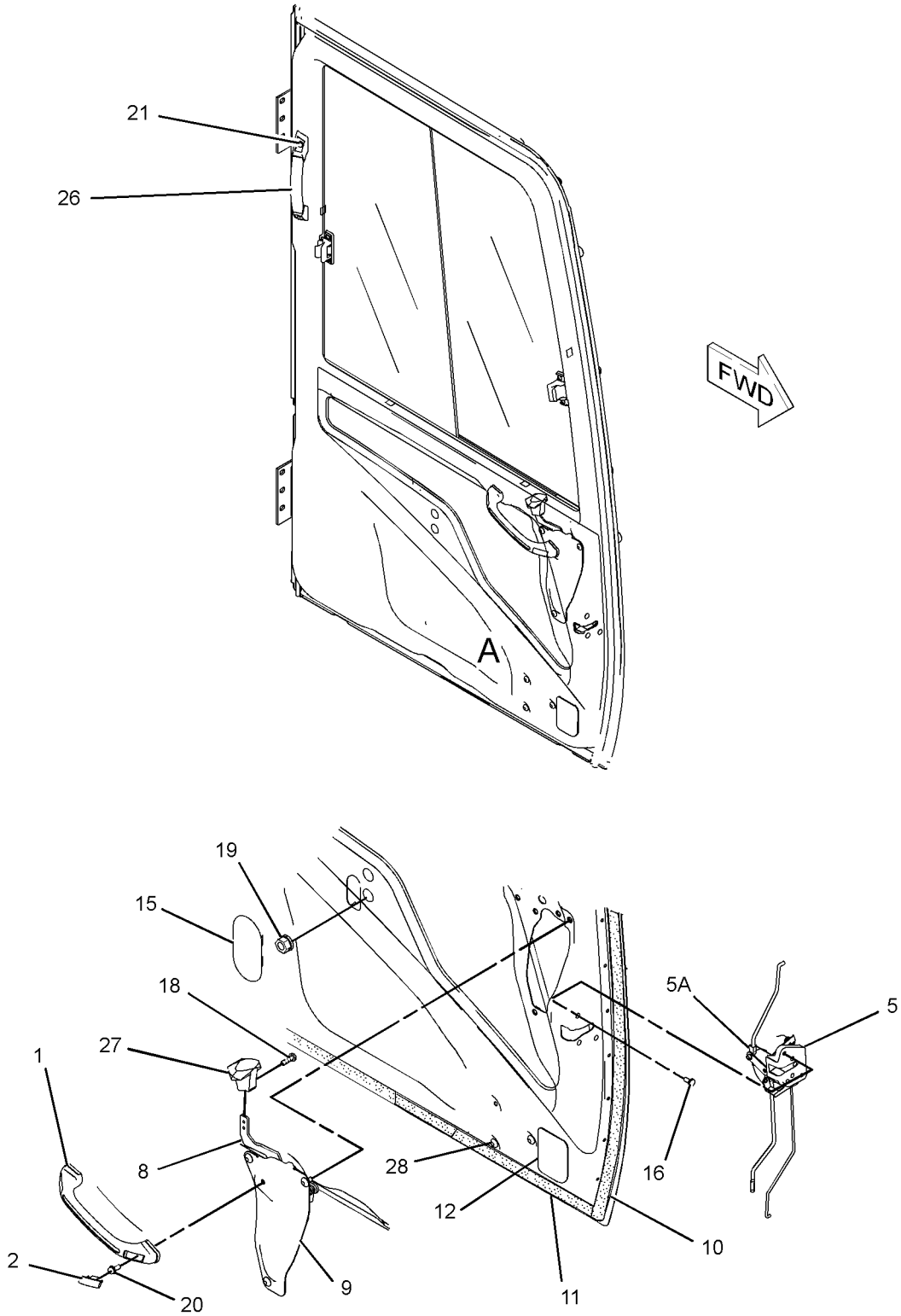

VIEW OF AREA A

GRAPHIC #1 g01294172

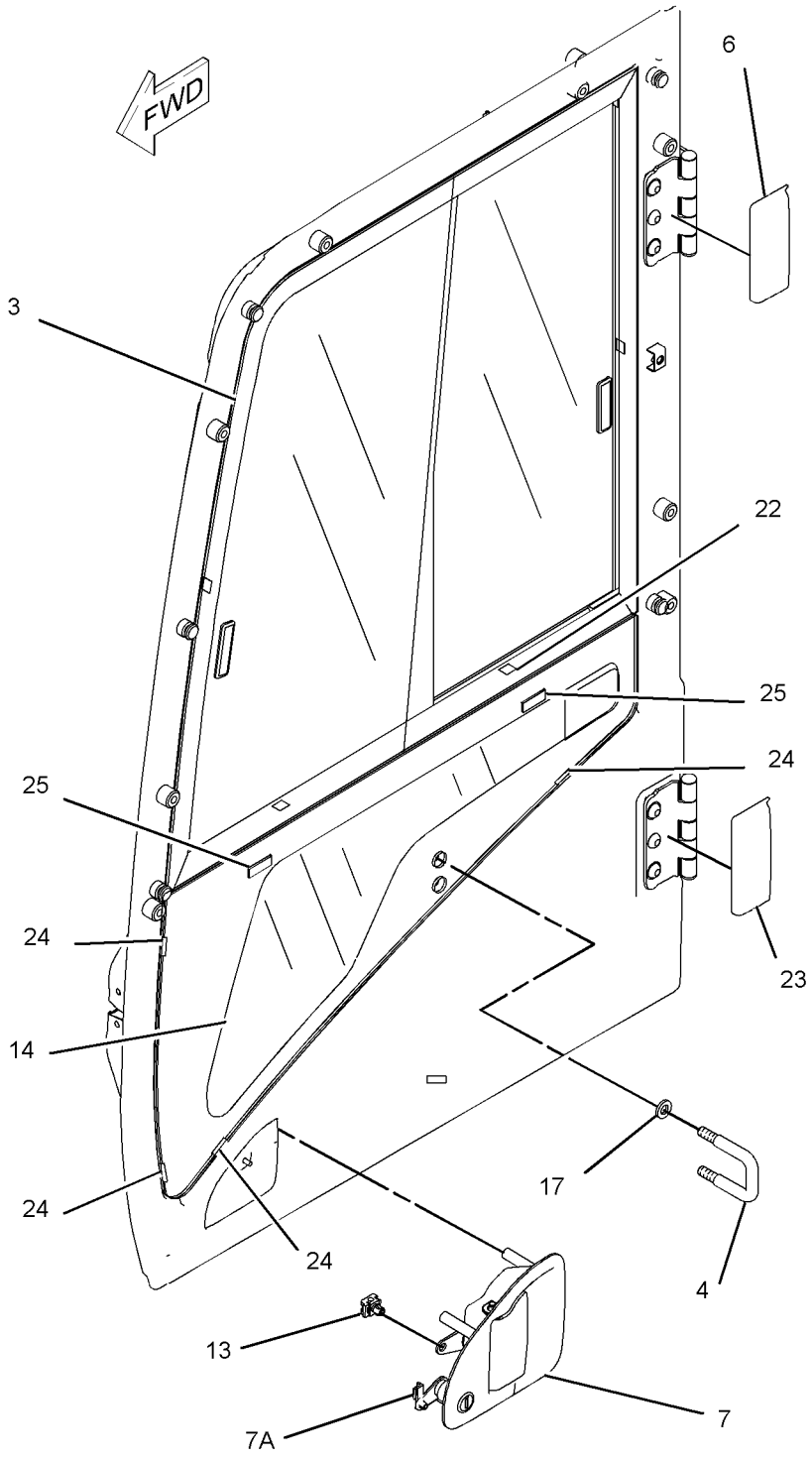

GRAPHIC #2 **<END>** g01120659

OPERATOR STATION

176-1964 DOOR GP-CAB

S/N: CJN1-UP
PART OF 229-9101 CAB GP, 189-2793 DOOR GP-CAB
AN ATTACHMENT
TYPE 2

SMCS-7308 **i03172900**

NOTE	REF NO	GRAPHIC REF	PART NUMBER	QTY	PART NAME 1 2 3 4 5 6 (PRODUCT LEVEL)	SEE PAGE
C	1	2	**327-6579**	1	HANDLE-PULL	
Y	3	1	**151-6792**	1	WINDOW GP-DOOR	1068
	4	1	**156-6598**	1	HOOK	
J	5	2	**156-6600**	1	LOCK AS	
		2	**164-0514**	1	CLIP	
	5A	2	**164-0519**	1	CLIP	
	6	1	**156-6643**	1	COVER	
	7	1	**156-6645**	1	HANDLE AS	
	7A	1	**201-4391**	1	CLIP	
	8	2	**161-3639**	1	HANDLE AS	
	9	2	**161-3650**	1	COVER AS	
	10	2	**161-3663**	1	SEAL AS	
		2	**151-9497**	45	CLIP	
	11	2	**161-3665**	1	SEAL	
	12	2	**259-7354**	1	COVER	
	13	1	**164-0515**	1	JOINT	
	14	1	**167-7038**	1	GLASS	
	15	2	**167-7039**	1	GROMMET	
M	16	2	**185-8180**	3	SCREW (M6X1X16-MM)	
	17	1	**8T-4224**	2	WASHER-HARD (8.8X16X2-MM THK)	
M	18	2	**096-2622**	2	SCREW-MACHINE (M4X0.7X8-MM)	
M	19	2	**096-3884**	2	NUT-SPRING	
M	20	2	**101-8899**	1	SCREW AS (M6X1X16-MM)	
M	21	2	**101-8900**	2	SCREW AS (M6X1X20-MM)	
	22	1	**151-9461**	4	SPACER	
	23	1	**156-6644**	1	COVER	
	24	1	**178-5573**	4	SPACER	
	25	1	**178-5574**	2	SPACER	
	26	2	**189-2690**	1	HANDLE AS	
	27	2	**4I-4286**	1	KNOB	
M	28	2	**9X-2042**	8	SCREW-TRUSS HEAD (M6X1X12-MM)	

C-CHANGE FROM PREVIOUS TYPE
J-REQUIRES CORPORATE KEY
M-METRIC PART
Y-SEPARATE ILLUSTRATION

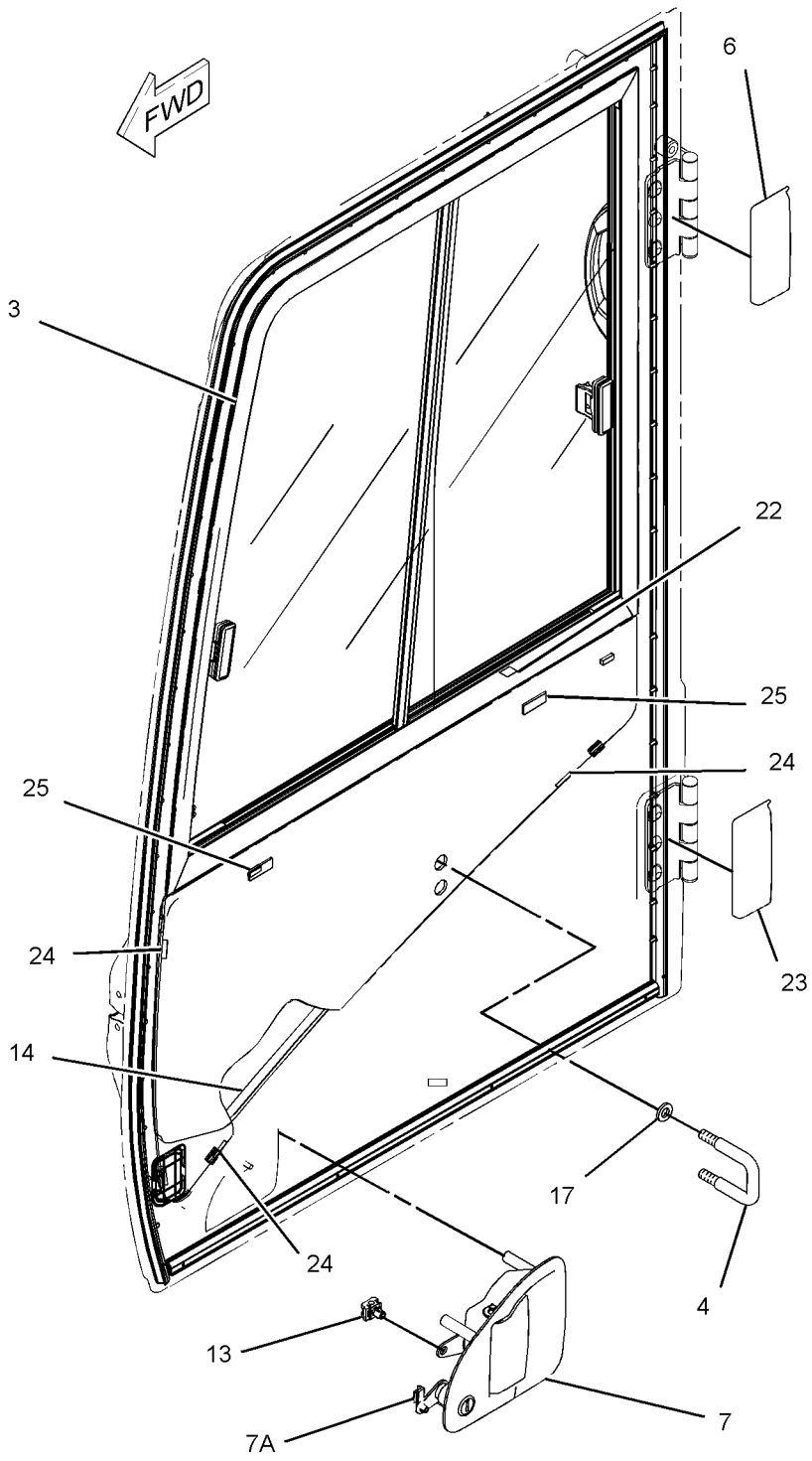

GRAPHIC #1 g01625289

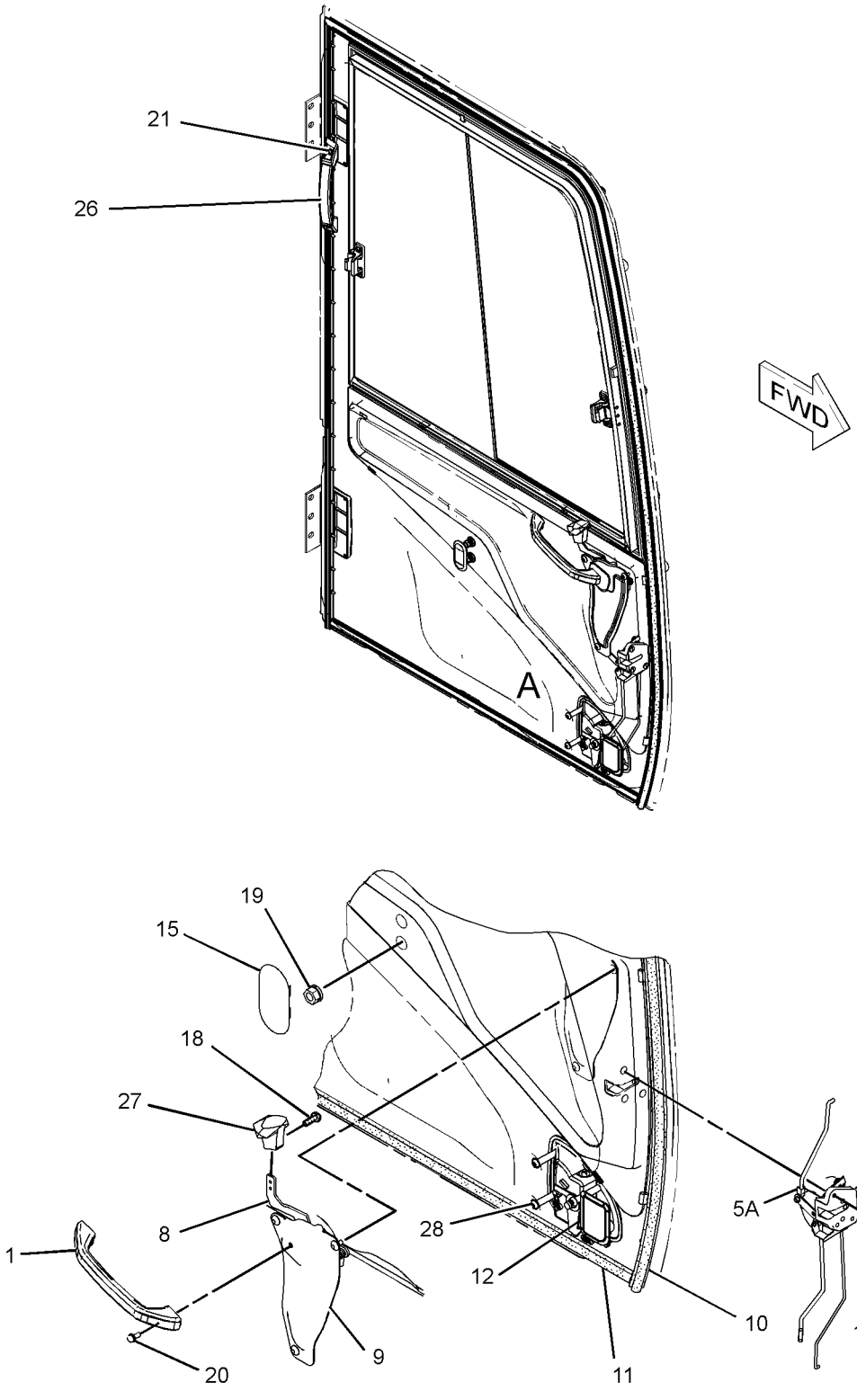

VIEW OF AREA A

GRAPHIC #2 **<END>** g01625166

OPERATOR STATION

189-2793 D00R GP-CAB

S/N: CJN1-UP
PART OF 229-9101 CAB GP
AN ATTACHMENT

SMCS-7308 **i02841129**

NOTE	REF NO	GRAPHIC REF	PART NUMBER	QTY	PART NAME 1 2 3 4 5 6 (PRODUCT LEVEL)	SEE PAGE
Y	1	1	**176-1964**	1	DOOR GP-CAB	932
	2	1	**189-2796**	1	DOOR AS	
	2A	1	**151-6777**	2	HINGE	
M	2B	1	**9X-2041**	6	SCREW-TRUSS HEAD (M10X1.5X20-MM)	

M-METRIC PART
Y-SEPARATE ILLUSTRATION

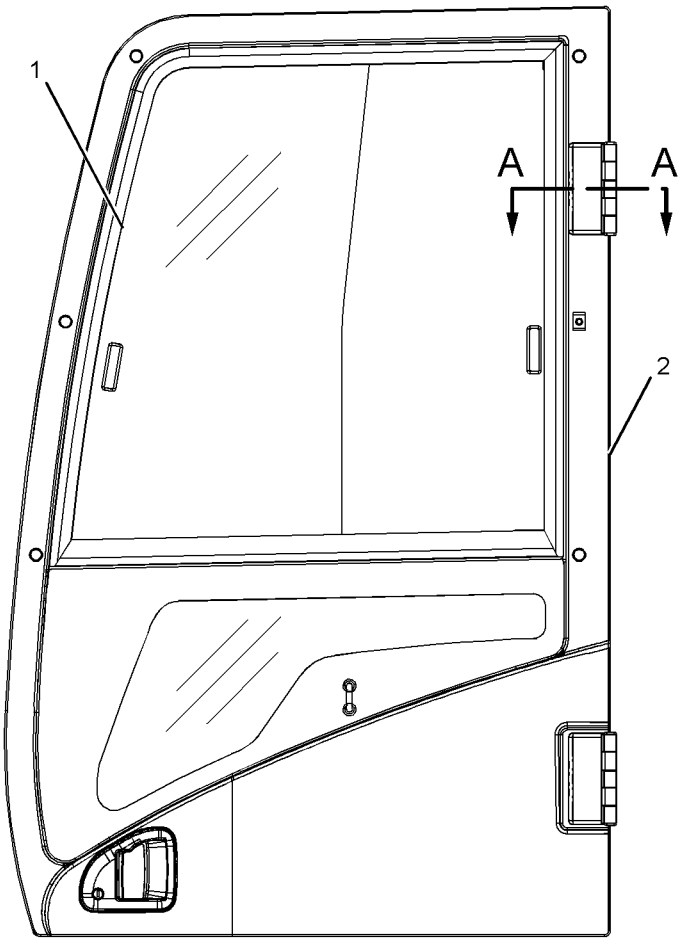

LEFT SIDE VIEW

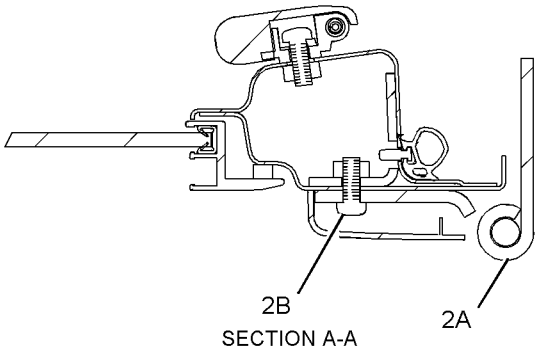

SECTION A-A

GRAPHIC #1 **<END>** g01121662

OPERATOR STATION

229-9082 DUCT GP-CAB AIR

S/N: CJN1-UP

PART OF 235-9003 AIR CONDITIONER AR, 259-7197 HEATER AR-CAB

AN ATTACHMENT

SMCS-734D **i03040445**

NOTE	REF NO	GRAPHIC REF	PART NUMBER	QTY	PART NAME 1 2 3 4 5 6 (PRODUCT LEVEL)	SEE PAGE
	1	1	**305-0329**	1	FILTER ELEMENT AS-CAB AIR	
		1	**293-1184**	1	FILTER ELEMENT-CAB AIR	
	2	1	**235-8876**	1	DUCT AS (FRESH AIR, UPPER)	
		1	**245-7872**	1	INSULATOR	
	3	1	**235-8877**	1	DUCT AS (VENT, REAR)	
		1	**245-7792**	1	INSULATOR	
	4	1	**235-8878**	1	DUCT AS (VENT, FRONT)	
		1	**245-7793**	1	INSULATOR	
	5	1	**235-8879**	1	DUCT AS (FLOOR)	
		1	**245-7873**	1	INSULATOR	
	6	1	**240-5074**	1	DUCT AS (FRESH AIR, LOWER)	
		1	**245-7791**	1	INSULATOR	
M	7	1	**101-8899**	2	SCREW AS (M6X1X16-MM)	
	8	1	**176-1996**	5	CLIP	

M-METRIC PART

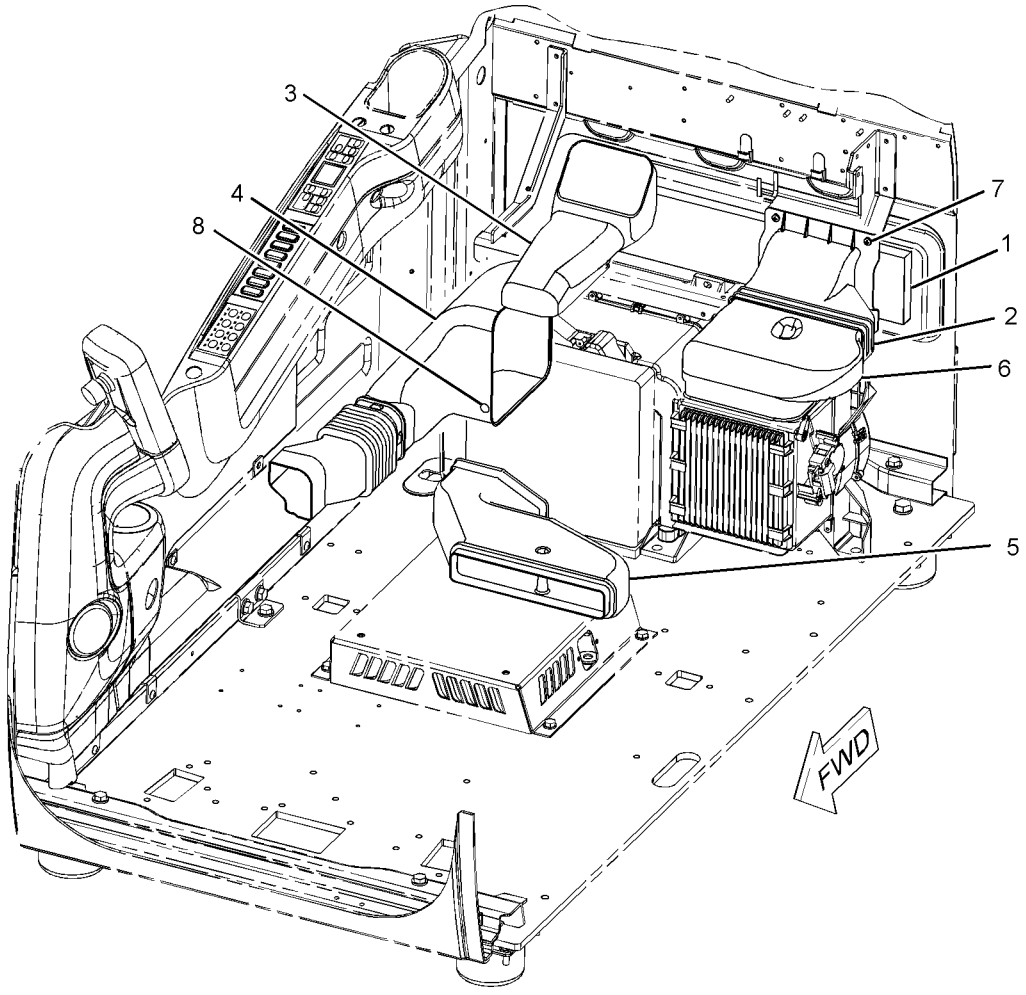

GRAPHIC #1 **<END>** g01126665

OPERATOR STATION

284-4376 FLOOR MAT

S/N: CJN1-UP

FIELD REPLACEMENT FOR 284-4380–PAGE 944: FOR 284-4379–PAGE 943: FOR 284-4378–PAGE 942: FOR 284-4377–PAGE 941: FOR 293-1222–PAGE 946

SMCS-726M **i02849540**

NOTE	REF NO	GRAPHIC REF	PART NUMBER	QTY	PART NAME 1 2 3 4 5 6 (PRODUCT LEVEL)	SEE PAGE
					(NO SERVICED PARTS)	

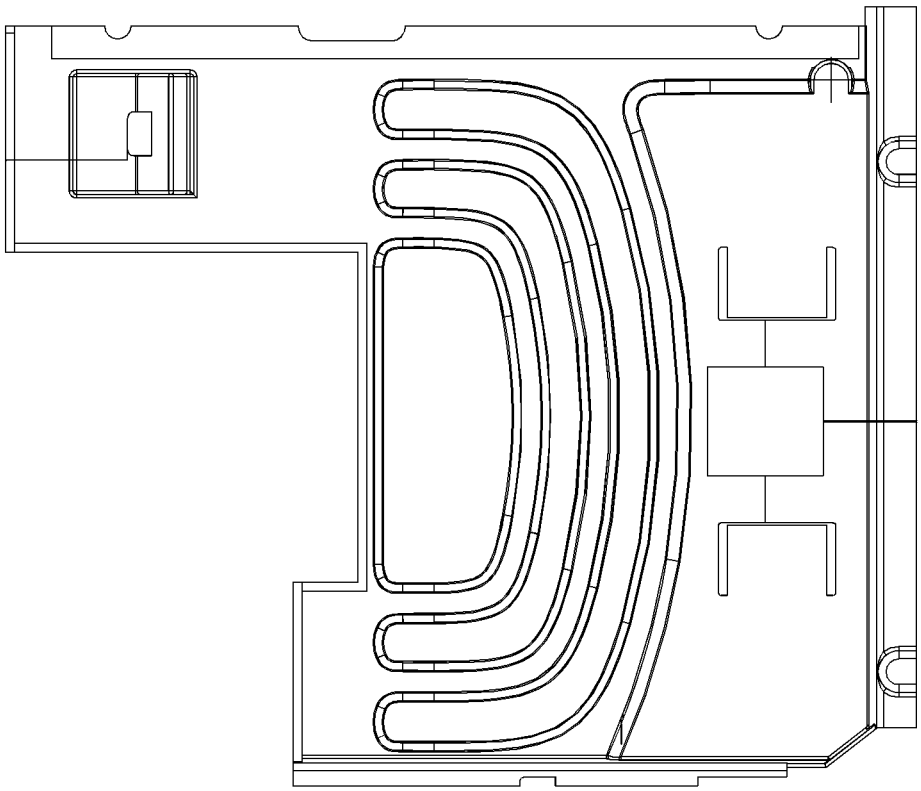

GRAPHIC #1 **<END>** g01420854

OPERATOR STATION

284-4377 FLOOR MAT

S/N: CJN1-UP

FIELD REPLACEMENT ORDER 284-4376—PAGE 940

AN ATTACHMENT

SMCS-726M **i02849538**

NOTE	REF NO	GRAPHIC REF	PART NUMBER	QTY	PART NAME 1 2 3 4 5 6 (PRODUCT LEVEL)	SEE PAGE
					(NO SERVICED PARTS)	

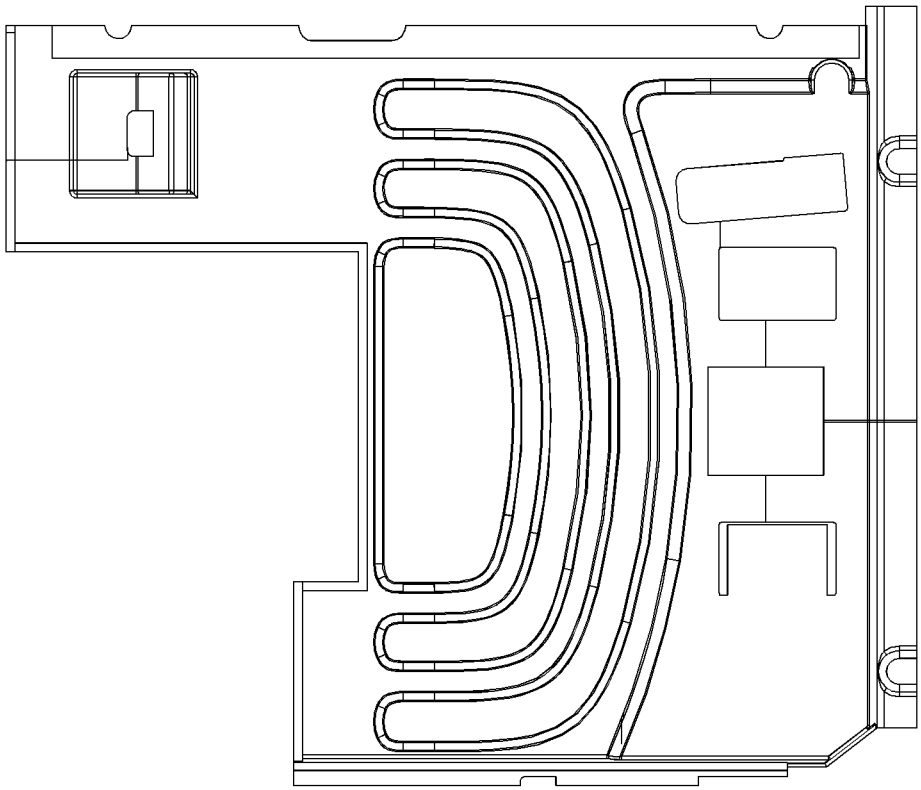

GRAPHIC #1 **<END>** g01420840

OPERATOR STATION

284-4378 FLOOR MAT

S/N: CJN1-UP

FIELD REPLACEMENT ORDER 284-4376—PAGE 940

AN ATTACHMENT

SMCS-726M **i02849239**

NOTE	REF NO	GRAPHIC REF	PART NUMBER	QTY	PART NAME 1 2 3 4 5 6 (PRODUCT LEVEL)	SEE PAGE
					(NO SERVICED PARTS)	

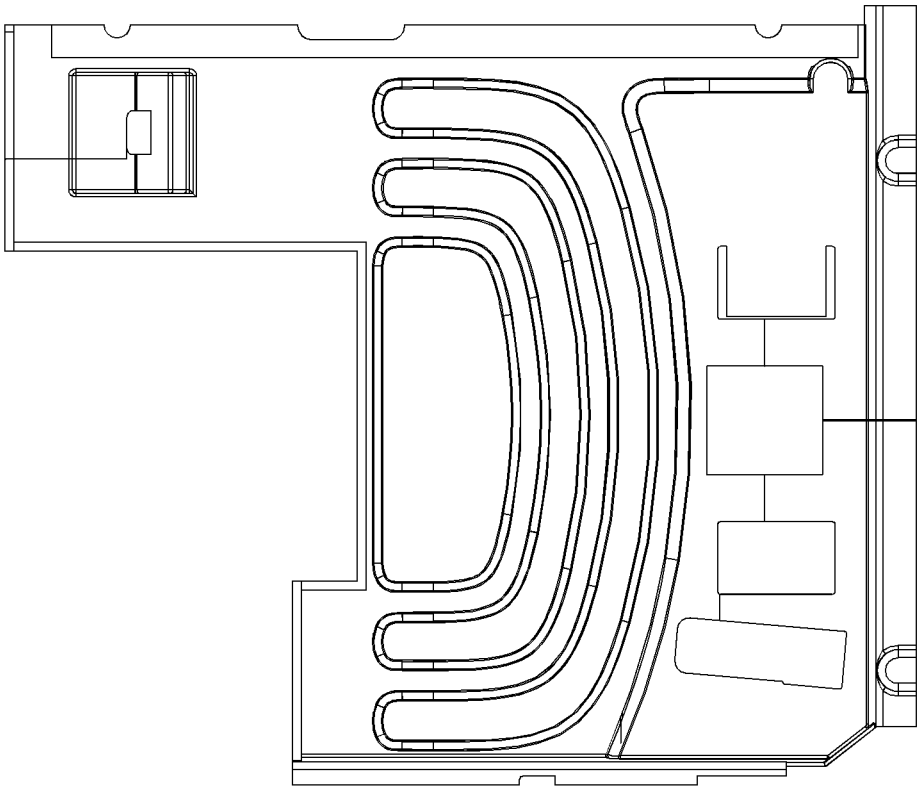

GRAPHIC #1 **<END>** g01420875

OPERATOR STATION

284-4379 FLOOR MAT

S/N: CJN1-UP

FIELD REPLACEMENT ORDER 284-4376—PAGE 940

AN ATTACHMENT

SMCS-726M **i02849223**

NOTE	REF NO	GRAPHIC REF	PART NUMBER	QTY	PART NAME 1 2 3 4 5 6 (PRODUCT LEVEL)	SEE PAGE
					(NO SERVICED PARTS)	

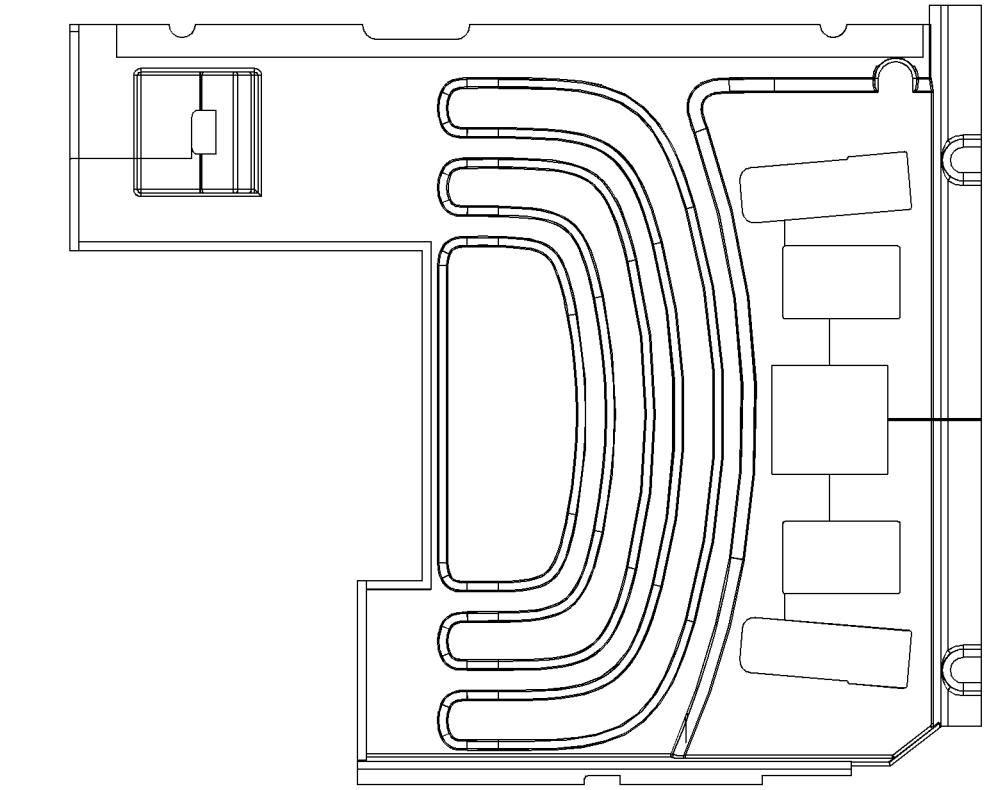

TOP VIEW

GRAPHIC #1

<END>

g01421222

OPERATOR STATION

284-4380 FLOOR MAT

S/N: CJN1-UP

FIELD REPLACEMENT ORDER 284-4376—PAGE 940

AN ATTACHMENT

SMCS-726M **i02849207**

NOTE	REF NO	GRAPHIC REF	PART NUMBER	QTY	PART NAME 1 2 3 4 5 6 (PRODUCT LEVEL)	SEE PAGE
					(NO SERVICED PARTS)	

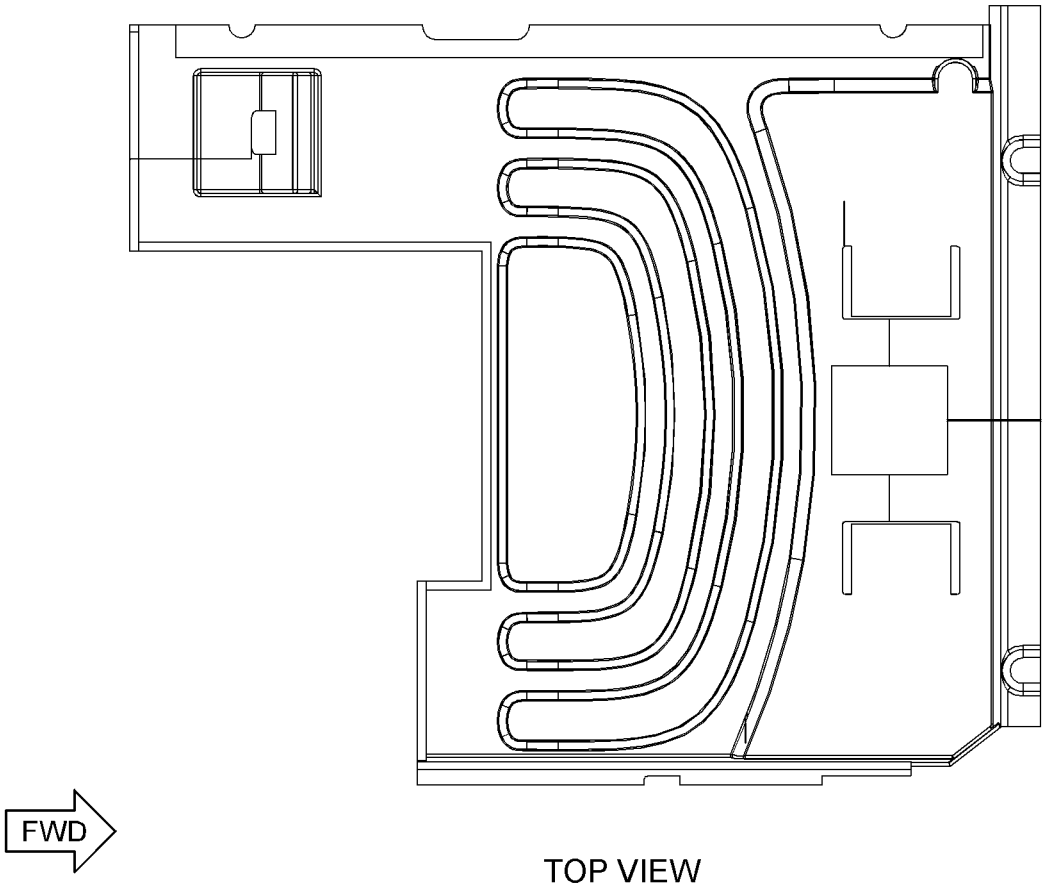

TOP VIEW

GRAPHIC #1 **<END>** g01421229

OPERATOR STATION

293-1168 FLOOR MAT

S/N: CJN1-UP

FIELD REPLACEMENT ORDER 240-5071—PAGE 948

AN ATTACHMENT

SMCS-726M **i02594540**

NOTE	REF NO	GRAPHIC REF	PART NUMBER	QTY	PART NAME 1 2 3 4 5 6 (PRODUCT LEVEL)	SEE PAGE
					(NO SERVICED PARTS)	

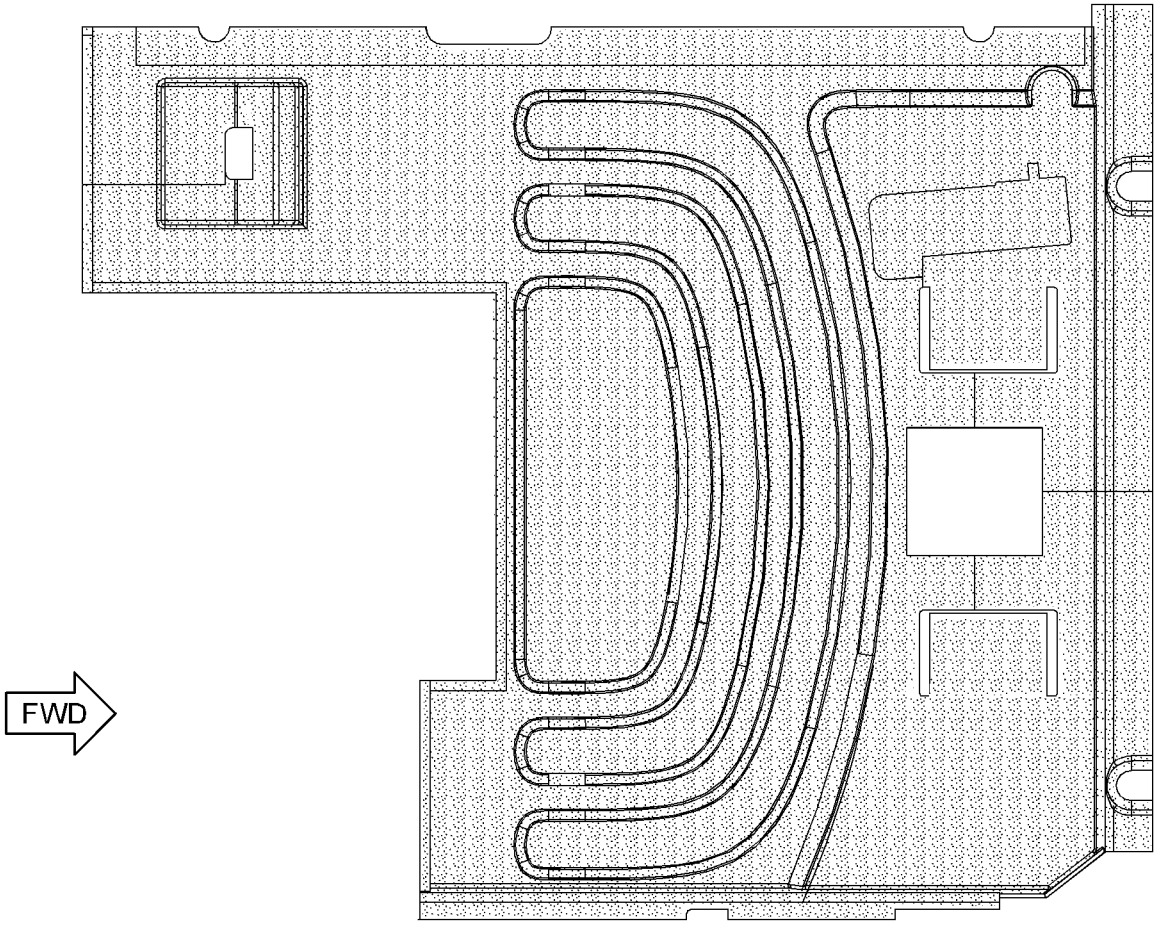

TOP VIEW

GRAPHIC #1 **<END>** g01305140

OPERATOR STATION

293-1222 FL00R MAT

S/N: CJN1-UP
FIELD REPLACEMENT ORDER 284-4376–PAGE 940
AN ATTACHMENT

SMCS-726M **i02849545**

NOTE	REF NO	GRAPHIC REF	PART NUMBER	QTY	PART NAME 1 2 3 4 5 6 (PRODUCT LEVEL)	SEE PAGE
					(NO SERVICED PARTS)	

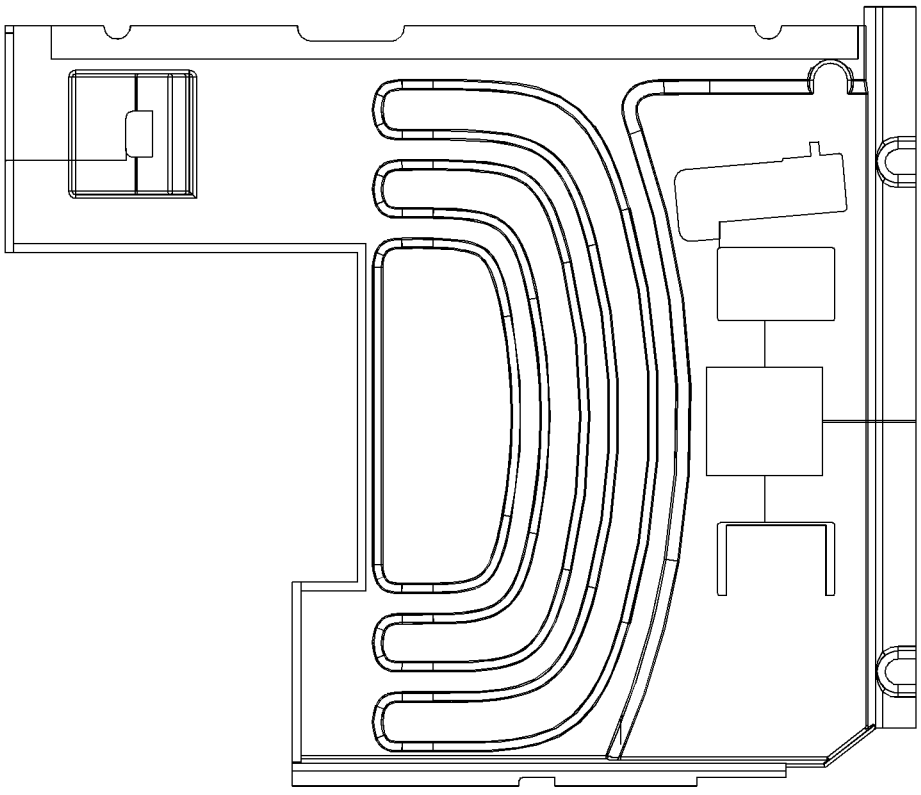

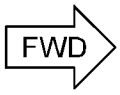

TOP VIEW

GRAPHIC #1

<END>

g01421278

OPERATOR STATION

305-0326 FLOOR MAT

S/N: CJN1-UP

FIELD REPLACEMENT ORDER 240-5071—PAGE 948

AN ATTACHMENT

SMCS-726M **i02737365**

NOTE	REF NO	GRAPHIC REF	PART NUMBER	QTY	PART NAME 1 2 3 4 5 6 (PRODUCT LEVEL)	SEE PAGE
					(NO SERVICED PARTS)	

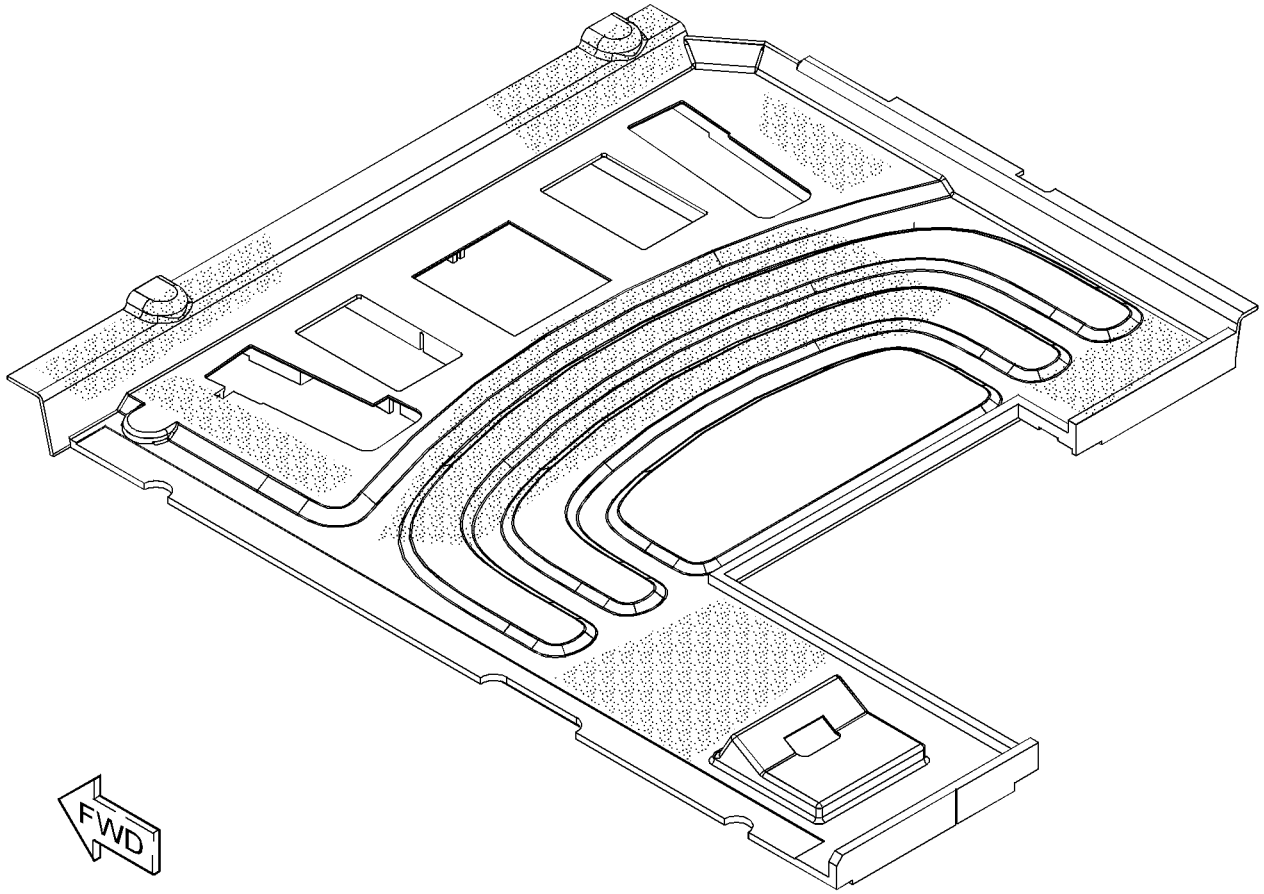

GRAPHIC #1 **<END>** g01374693

OPERATOR STATION

240-5071 FLOOR MAT GP

S/N: CJN1-UP

FIELD REPLACEMENT FOR 293-1168—PAGE 945: FOR 240-5073—PAGE 949: FOR 245-7796—PAGE 951: FOR 305-0326—PAGE 947: FOR 245-7794—PAGE 950 AN ATTACHMENT

SMCS-7265, 726M **i02605555**

NOTE	REF NO	GRAPHIC REF	PART NUMBER	QTY	PART NAME 1 2 3 4 5 6 (PRODUCT LEVEL)	SEE PAGE
					(NO SERVICED PARTS)	

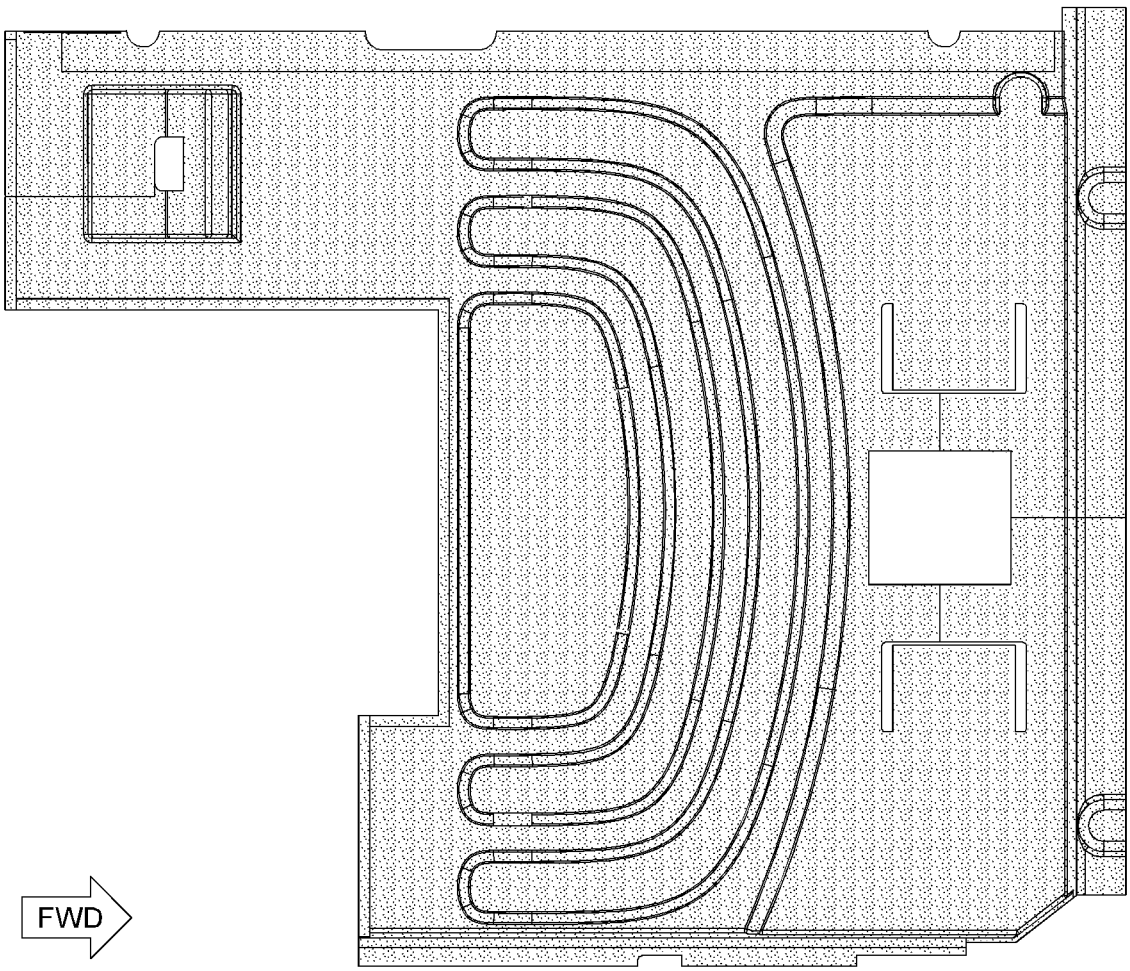

GRAPHIC #1 **<END>** g01305328

OPERATOR STATION

240-5073 FLOOR MAT GP

S/N: CJN1-UP

FIELD REPLACEMENT ORDER 240-5071—PAGE 948

AN ATTACHMENT

SMCS-7265, 726M **i02963424**

NOTE	REF NO	GRAPHIC REF	PART NUMBER	QTY	PART NAME 1 2 3 4 5 6 (PRODUCT LEVEL)	SEE PAGE
					(NO SERVICED PARTS)	

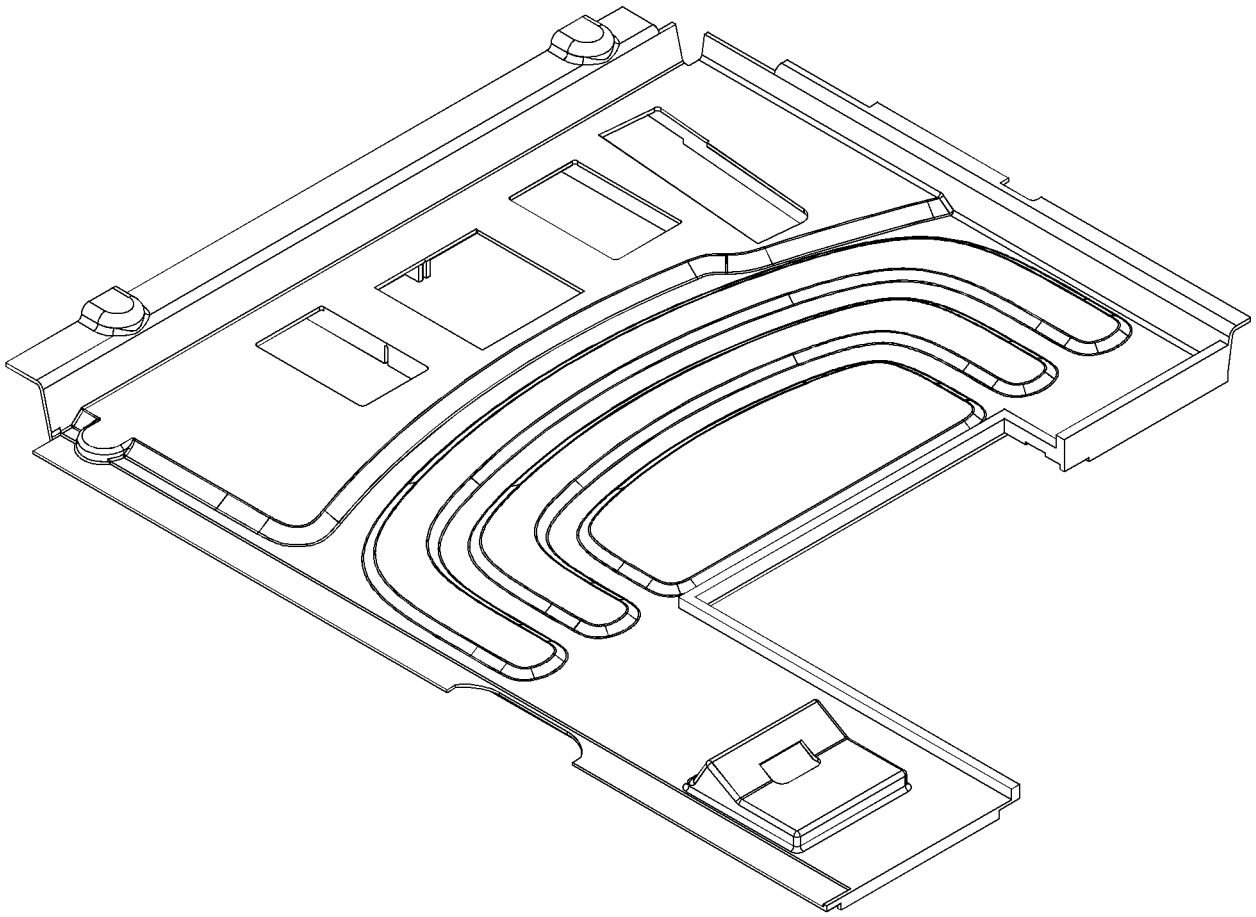

GRAPHIC #1 **<END>** g01124624

OPERATOR STATION

245-7794 FLOOR MAT GP

S/N: CJN1-UP

FIELD REPLACEMENT ORDER 240-5071—PAGE 948

AN ATTACHMENT

SMCS-7265, 726M **i02963460**

NOTE	REF NO	GRAPHIC REF	PART NUMBER	QTY	PART NAME 1 2 3 4 5 6 (PRODUCT LEVEL)	SEE PAGE
					(NO SERVICED PARTS)	

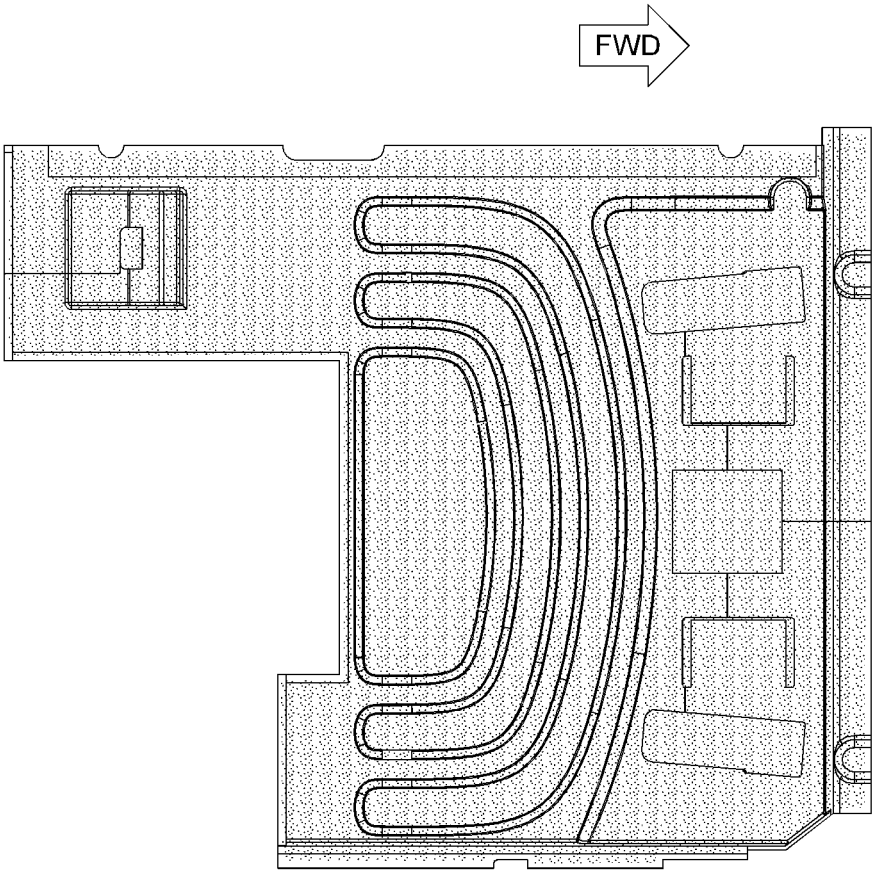

TOP VIEW

GRAPHIC #1 **<END>** g01125036

OPERATOR STATION

245-7796 FLOOR MAT GP

S/N: CJN1-UP

FIELD REPLACEMENT ORDER 240-5071—PAGE 948

AN ATTACHMENT

SMCS-7265, 726M **i02963491**

NOTE	REF NO	GRAPHIC REF	PART NUMBER	QTY	PART NAME 1 2 3 4 5 6 (PRODUCT LEVEL)	SEE PAGE
					(NO SERVICED PARTS)	

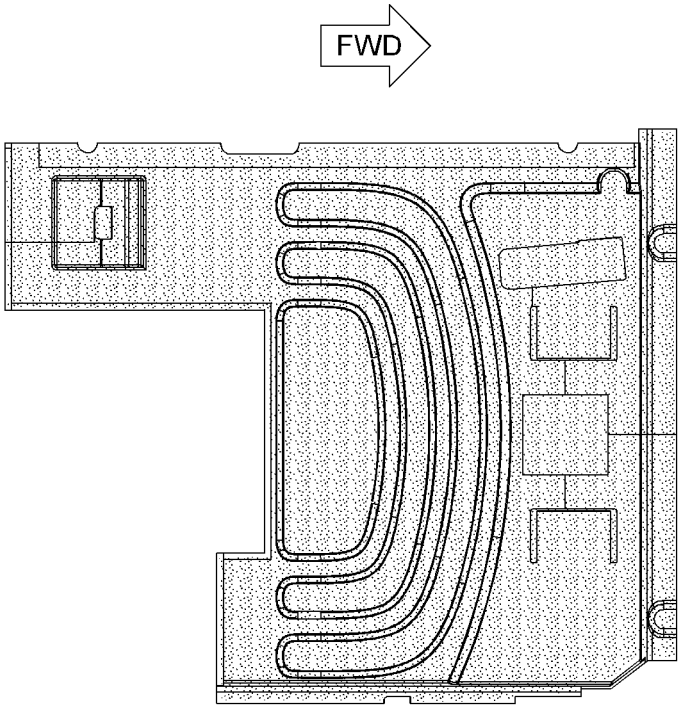

TOP VIEW

GRAPHIC #1 **<END>** g01123305

OPERATOR STATION

273-5358 FLOOR MAT GP

S/N: CJN1-UP
PART OF 330-8779 FLOOR MAT GP, 301-2479 SPECIAL AR
AN ATTACHMENT

SMCS-7265, 726M **i02851816**

NOTE	REF NO	GRAPHIC REF	PART NUMBER	QTY	PART NAME 1 2 3 4 5 6 (PRODUCT LEVEL)	SEE PAGE
	1	1	*273-5333*	1	FLOOR MAT	
	2	1	**273-5359**	1	PLATE-RUBBER	
	3	1	**273-5360**	1	PLATE-RUBBER	

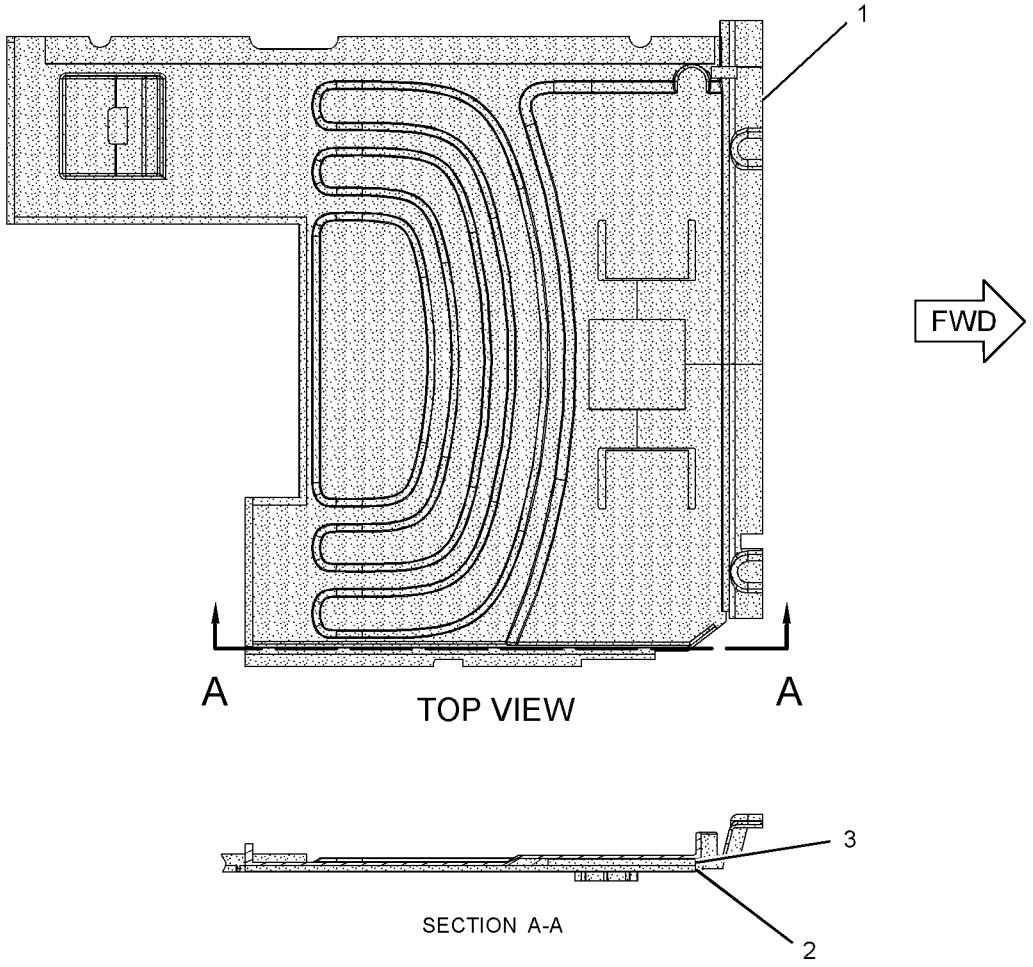

GRAPHIC #1 **<END>** g01235480

OPERATOR STATION

330-8779 FLOOR MAT GP—ACCUGRADE

S/N: CJN1-UP

FOR USE WITH 330-8775—PAGE 4

AN ATTACHMENT

SMCS-7265, 726M **i03146513**

NOTE	PART NUMBER	QTY	PART NAME 1 2 3 4 5 6 (PRODUCT LEVEL)	SEE PAGE
Y	*273-5358*	1	FLOOR MAT GP	952

Y-SEPARATE ILLUSTRATION

<END>

OPERATOR STATION

171-7503 FRAME GP-UPPER FRONT WINDOW

S/N: CJN1-UP
PART OF 229-9097, 229-9099, 229-9101, 316-8815 CAB GP
FIELD REPLACEMENT FOR 139-7101 WINDOW GP-CAB
AN ATTACHMENT

SMCS-7340 **i03013743**

NOTE	REF NO	GRAPHIC REF	PART NUMBER	QTY	PART NAME 1 2 3 4 5 6 (PRODUCT LEVEL)	SEE PAGE
	1	1	**161-3698**	1	SEAL	
M	2	1	**101-8900**	2	SCREW AS (M6X1X20-MM)	
	3	1	**151-6703**	1	HANDLE-PULL	
	4	1	**151-6704**	2	CAP (HANDLE)	
	5	1	**151-6778**	1	FRAME AS	
	6	1	**151-6813**	1	BRACKET AS	
	7	1	**151-6815**	1	BRACKET AS	
	8	1	**273-5345**	1	LINK AS	
	9	1	**273-5346**	1	LINK AS	
	10	1	**151-6831**	1	LOCK AS	
	11	1	**151-6832**	1	LEVER AS	
	12	1	**156-6472**	1	GLASS	
	13	1	**170-9722**	1	CUSHION	
	14	1	**151-9576**	4	ROLLER	
M	15	1	**9X-2042**	15	SCREW-TRUSS HEAD (M6X1X12-MM)	

M-METRIC PART

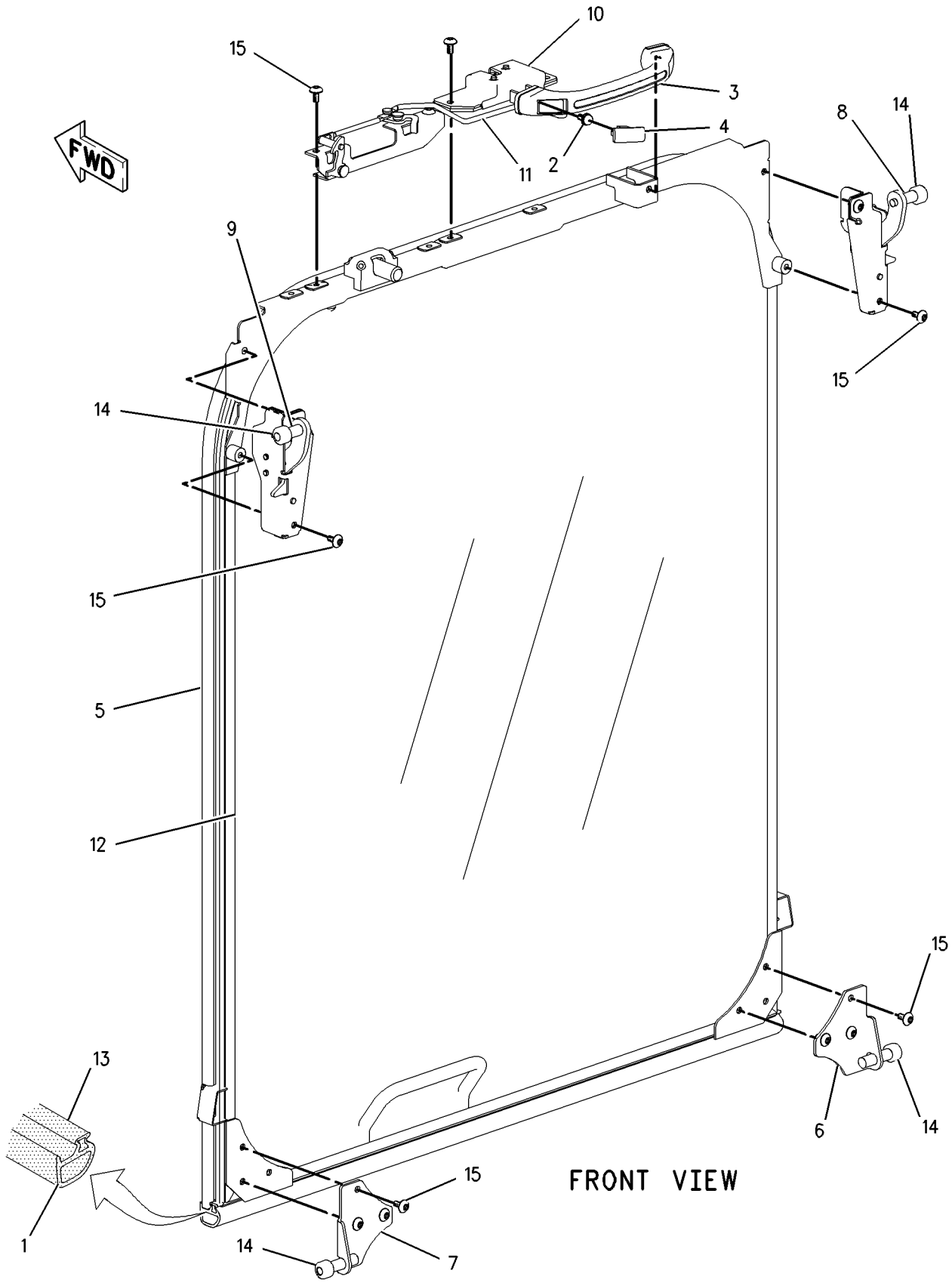

GRAPHIC #1 **<END>** g00852375

OPERATOR STATION

178-5549 GUARD AR-OVERHEAD—FOG

S/N: CJN1-UP
CANNOT BE USED WITH VANDALISM GUARD, WINDOW GUARD
AN ATTACHMENT

SMCS-7159 **i01485889**

NOTE	PART NUMBER	QTY	PART NAME 1 2 3 4 5 6 (PRODUCT LEVEL)	SEE PAGE
Y	*171-7485*	1	GUARD GP-FRONT WINDOW	962
Y	*164-0497*	1	GUARD GP-OVERHEAD	964
Y-SEPARATE ILLUSTRATION				

<END>

260-7017 GUARD AR-VANDALISM

S/N: CJN1-UP
AN ATTACHMENT

SMCS-7315 **i02762057**

NOTE	PART NUMBER	QTY	PART NAME 1 2 3 4 5 6 (PRODUCT LEVEL)	SEE PAGE
Y	*207-0159*	1	GUARD GP-VANDALISM (CAB)	966
Y	*268-0674*	1	STORAGE GP-VANDALISM GUARD	346
Y-SEPARATE ILLUSTRATION				

<END>

260-7071 GUARD AR-VANDALISM

S/N: CJN1-UP
AN ATTACHMENT

SMCS-7315 **i02750285**

NOTE	PART NUMBER	QTY	PART NAME 1 2 3 4 5 6 (PRODUCT LEVEL)	SEE PAGE
Y	*207-0160*	1	GUARD GP-VANDALISM	967
Y	*268-0674*	1	STORAGE GP-VANDALISM GUARD	346
Y-SEPARATE ILLUSTRATION				

<END>

164-0534 GUARD GP-FRONT WINDOW—FULL

S/N: CJN1-UP
CANNOT BE USED WITH 164-0535—PAGE 961, 171-7485—PAGE 962
AN ATTACHMENT
TYPE 1

SMCS-7182, 7315 **i02247106**

NOTE	REF NO	GRAPHIC REF	PART NUMBER	QTY	PART NAME 1 2 3 4 5 6 (PRODUCT LEVEL)	SEE PAGE
	1	1	**2Y-5685**	4	RING-RETAINING	
	2	1	**6C-8382**	2	SPRING-LATCH	
	3	1	**176-1928**	2	BRACKET AS	
	4	1	**196-1569**	1	SUPPORT AS	
	5	1	**196-1571**	1	SUPPORT AS	
	6	1	**196-1572**	2	LATCH AS	
	7	1	**258-0330**	2	BRACKET AS	
	8	1	**196-1599**	1	FRAME AS	
	9	1	**201-4534**	2	PIN	
	10	1	**201-4535**	2	PIN	
	11	1	**207-0216**	2	SPRING AS-GAS	
M	12	1	**096-4882**	2	LOCKNUT (M8X1.25-THD)	
M	13	1	**7X-2553**	2	BOLT (M16X2X40-MM)	
M	14	1	**7Y-0623**	2	LOCKNUT (M16X2-THD)	
M	15	1	**8T-4139**	6	BOLT (M12X1.75X30-MM)	
M	16	1	**8T-4192**	2	BOLT (M12X1.75X25-MM)	
	17	1	**8T-4223**	8	WASHER-HARD (13.5X25.5X3-MM THK)	
	18	1	**8T-4224**	4	WASHER-HARD (8.8X16X2-MM THK)	
	19	1	**9X-8257**	4	WASHER (17.5X30X3.5-MM THK)	
	20	1	**4I-6602**	8	BOSS (M12X1.75X20-MM)	

M-METRIC PART

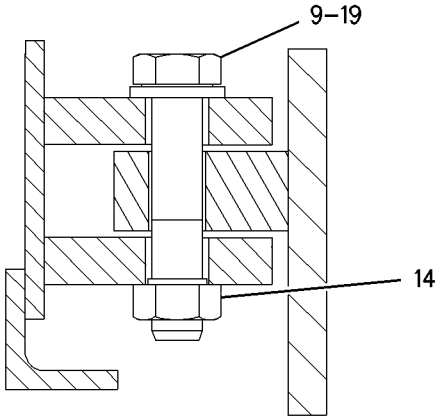

SECTION B-B

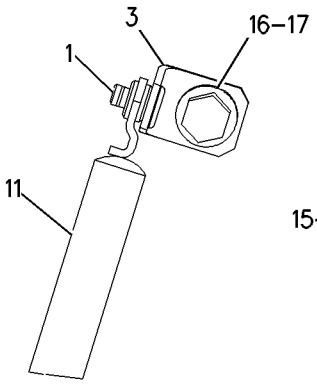

VIEW C-C

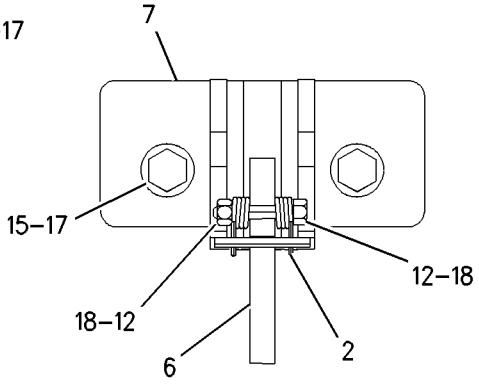

VIEW A-A

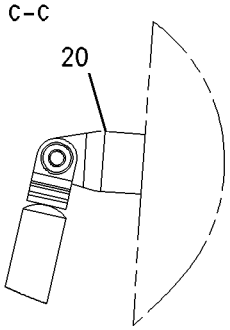

VIEW OF AREA D

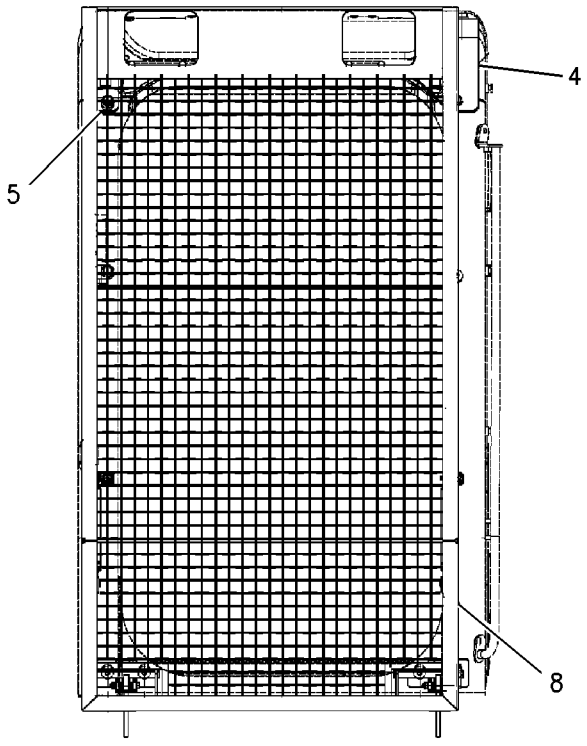

FRONT VIEW

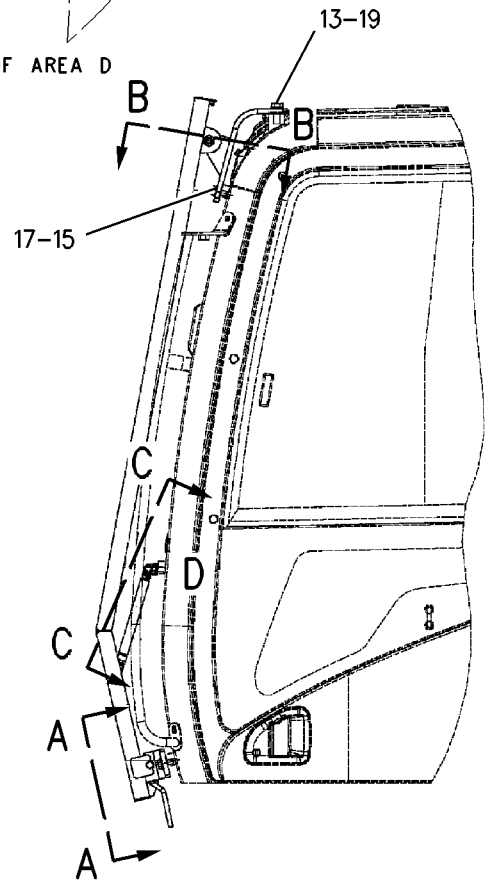

LEFT SIDE VIEW

GRAPHIC #1 **<END>** g00909397

164-0534 GUARD GP-FRONT WINDOW—FULL

S/N: CJN1-UP
CANNOT BE USED WITH 164-0535—PAGE 961, 171-7485—PAGE 962
AN ATTACHMENT
TYPE 2

SMCS-7182, 7315 **i03142180**

NOTE	REF NO	GRAPHIC REF	PART NUMBER	QTY	PART NAME 1 2 3 4 5 6 (PRODUCT LEVEL)	SEE PAGE
	1	1	**2Y-5685**	4	RING-RETAINING	
	2	1	**6C-8382**	2	SPRING-LATCH	
	3	1	**176-1928**	2	BRACKET AS	
	4	1	**196-1569**	1	SUPPORT AS	
	5	1	**196-1571**	1	SUPPORT AS	
	6	1	**196-1572**	2	LATCH AS	
	7	1	**201-4534**	2	PIN	
	8	1	**201-4535**	2	PIN	
	9	1	**207-0216**	2	SPRING AS-GAS	
	10	1	**258-0330**	2	BRACKET AS	
C	11	1	**327-6601**	1	FRAME AS	
M	12	1	**096-4882**	2	LOCKNUT (M8X1.25-THD)	
	13	1	**4I-6602**	8	BOSS (M12X1.75X20-MM)	
M	14	1	**7X-2553**	2	BOLT (M16X2X40-MM)	
M	15	1	**7Y-0623**	2	LOCKNUT (M16X2-THD)	
M	16	1	**8T-4139**	6	BOLT (M12X1.75X30-MM)	
M	17	1	**8T-4192**	2	BOLT (M12X1.75X25-MM)	
	18	1	**8T-4223**	8	WASHER-HARD (13.5X25.5X3-MM THK)	
	19	1	**8T-4224**	4	WASHER-HARD (8.8X16X2-MM THK)	
	20	1	**9X-8257**	4	WASHER (17.5X30X3.5-MM THK)	

C-CHANGE FROM PREVIOUS TYPE
M-METRIC PART

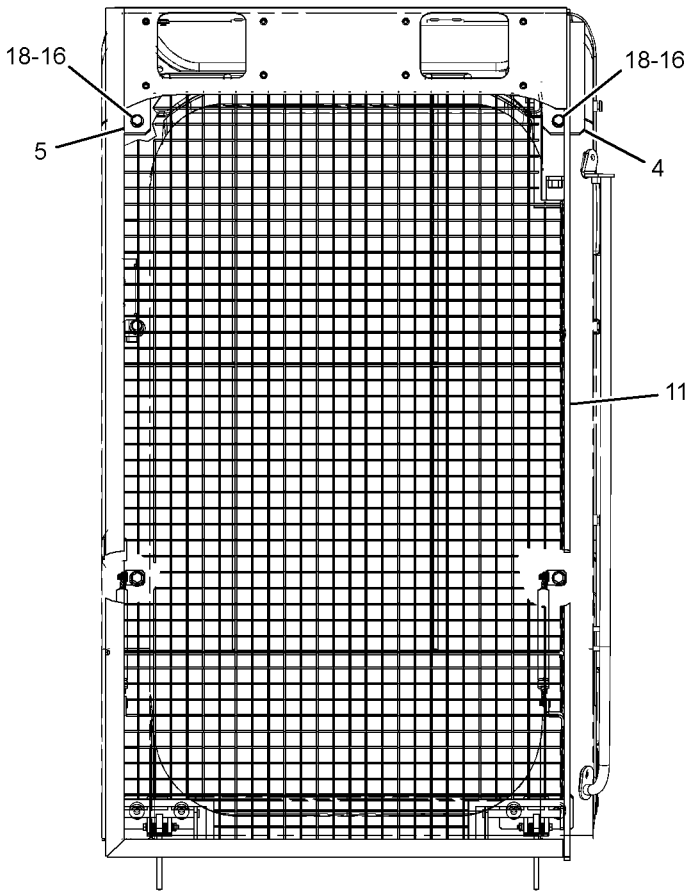

FRONT VIEW

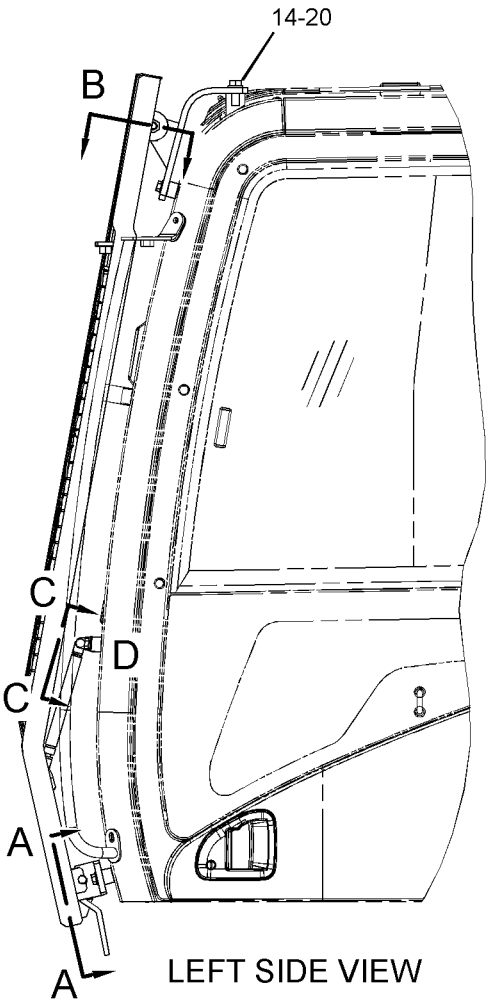

LEFT SIDE VIEW

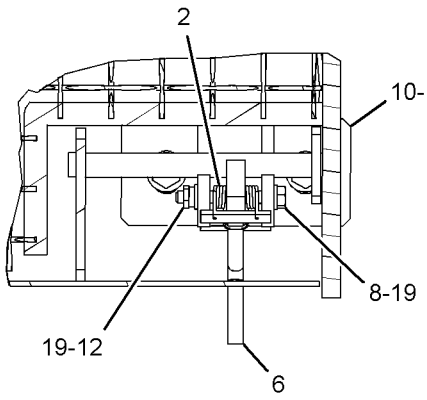

SECTION A-A

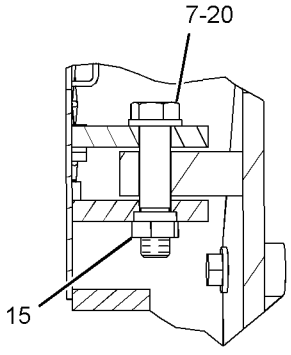

SECTION B

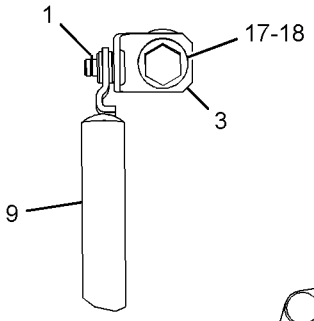

VIEW C-C

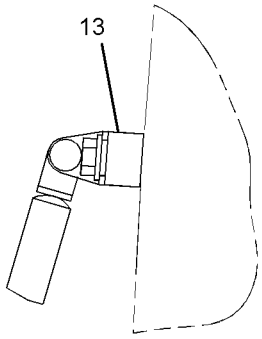

VIEW OF AREA D

GRAPHIC #1 **<END>** g01619617

164-0535 GUARD GP-FRONT WINDOW–LOWER

S/N: CJN1-UP
AN ATTACHMENT

SMCS-7182, 7315 **i02909135**

NOTE	REF NO	GRAPHIC REF	PART NUMBER	QTY	PART NAME 1 2 3 4 5 6 (PRODUCT LEVEL)	SEE PAGE
M	1	1	**8T-4192**	4	BOLT (M12X1.75X25-MM)	
	2	1	**8T-4223**	4	WASHER-HARD (13.5X25.5X3-MM THK)	
	3	1	**167-7055**	1	FRAME AS	
	4	1	**4I-6602**	4	BOSS (M12X1.75X20-MM)	

M-METRIC PART

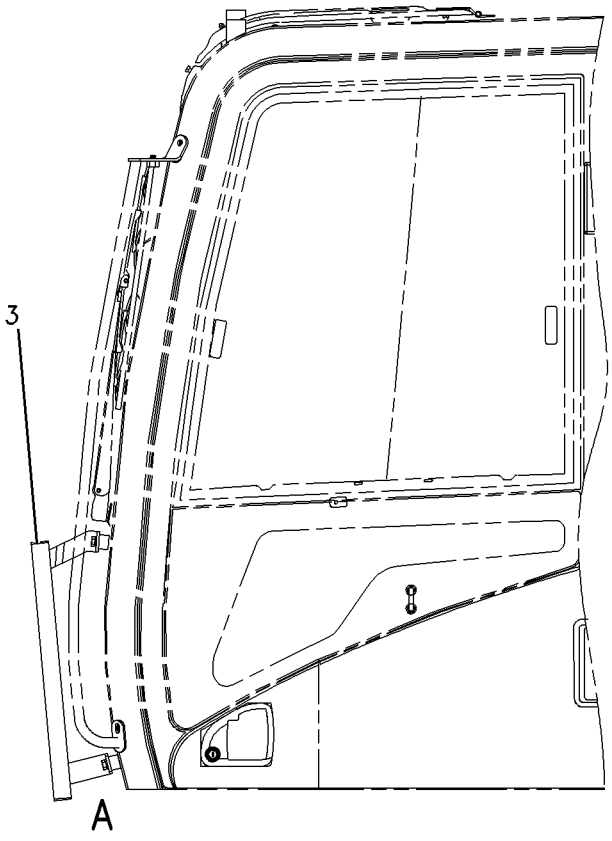

LEFT SIDE VIEW

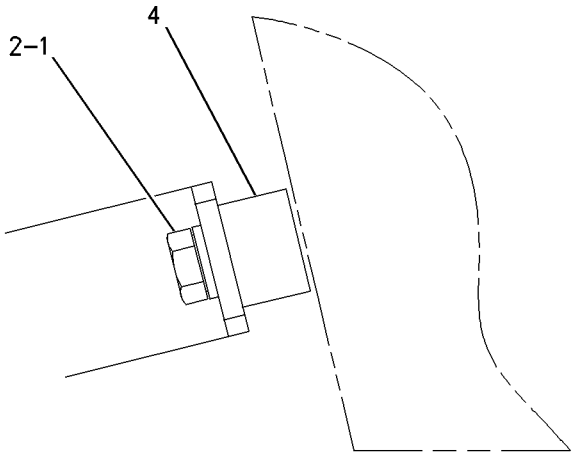

VIEW OF AREA A

GRAPHIC #1 **<END>** g00689592

OPERATOR STATION

171-7485 GUARD GP-FRONT WINDOW

S/N: CJN1-UP

PART OF 178-5549 GUARD AR-OVERHEAD

CANNOT BE USED WITH 164-0534—PAGE 957, 164-0535—PAGE 961, 161-3750—PAGE 1054 AN ATTACHMENT

SMCS-7182, 7315 **i03139021**

NOTE	REF NO	GRAPHIC REF	PART NUMBER	QTY	PART NAME 1 2 3 4 5 6 (PRODUCT LEVEL)	SEE PAGE
	1	1	**5D-4822**	4	RING-RETAINING	
	2	1	**6C-8382**	2	SPRING-LATCH	
	4	1	**316-8908**	1	GUARD AS-WINDOW	
	5	1	**176-1925**	2	SPRING AS-GAS	
	6	1	**176-1928**	2	BRACKET AS	
	7	1	**196-1569**	1	SUPPORT AS	
	8	1	**196-1571**	1	SUPPORT AS	
	9	1	**196-1572**	2	LATCH AS	
	10	1	**258-0330**	2	BRACKET AS	
	11	1	**201-4534**	2	PIN	
	12	1	**201-4535**	2	PIN	
M	13	1	**096-4882**	2	LOCKNUT (M8X1.25-THD)	
B	15	1	**4I-6602**	8	BOSS (M12X1.75X20-MM)	
M	16	1	**7X-2553**	2	BOLT (M16X2X40-MM)	
M	17	1	**7Y-0623**	2	LOCKNUT (M16X2-THD)	
M	18	1	**8T-4139**	6	BOLT (M12X1.75X30-MM)	
M	19	1	**8T-4192**	2	BOLT (M12X1.75X25-MM)	
	20	1	**8T-4223**	8	WASHER-HARD (13.5X25.5X3-MM THK)	
	21	1	**8T-4224**	4	WASHER-HARD (8.8X16X2-MM THK)	
	22	1	**9X-8257**	4	WASHER (17.5X30X3.5-MM THK)	
	23	1	**298-4195**	1	FILM-CERTIFICATION (OPS GUARD, READ OMM, ENGLISH)	
	25	1	**219-0305**	1	FILM-WARNING (NO WELD, NO DRILL, READ OMM)	

B-USE AS REQUIRED
M-METRIC PART

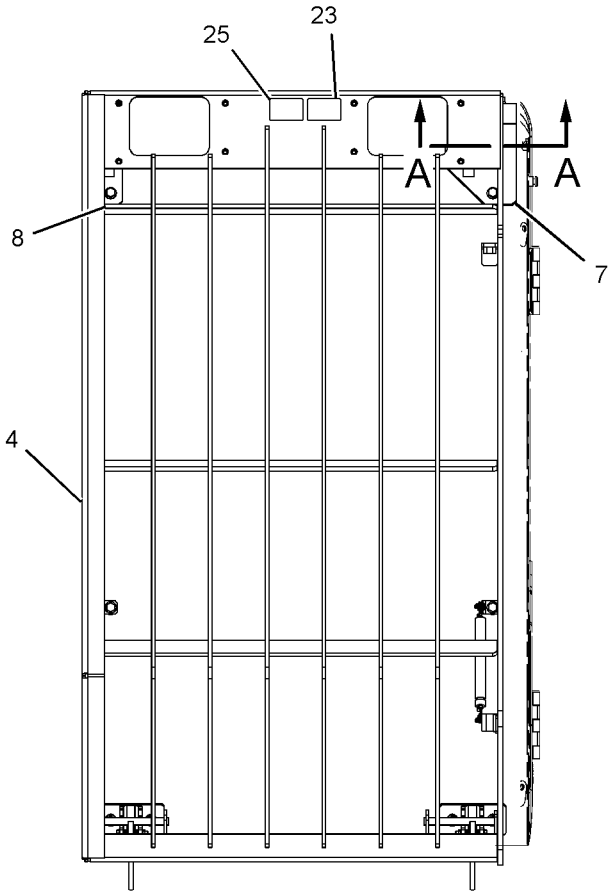

FRONT VIEW

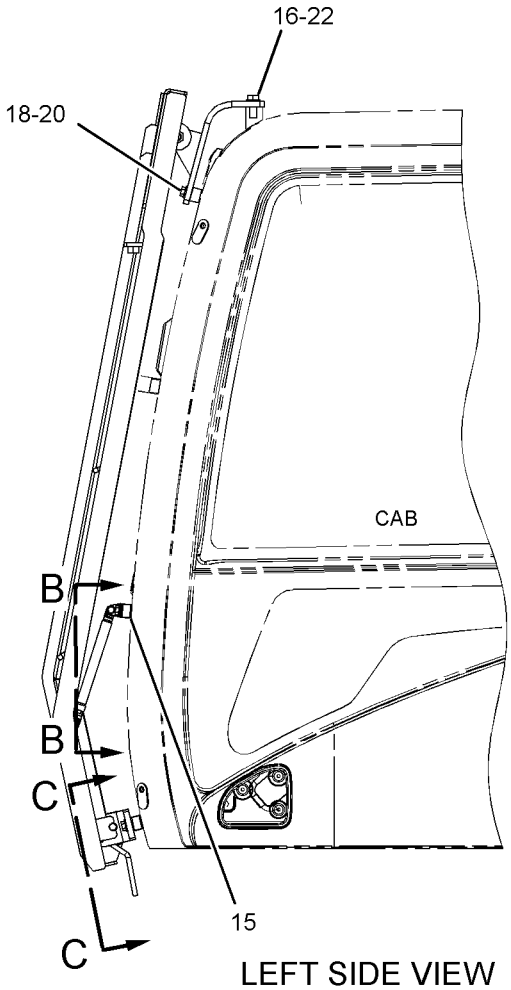

LEFT SIDE VIEW

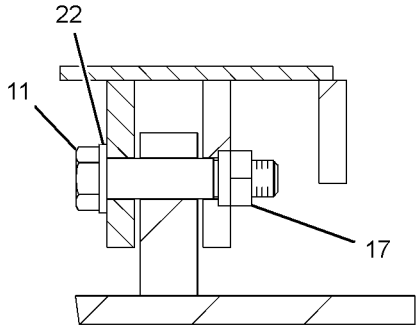

SECTION A-A

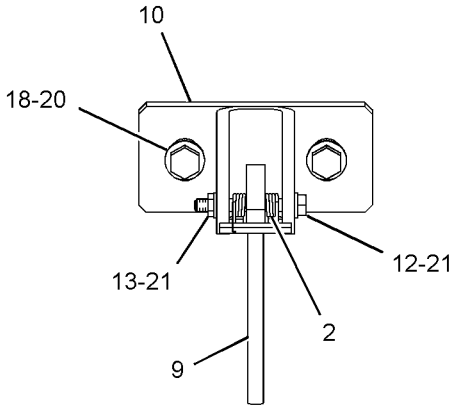

SECTION C-C

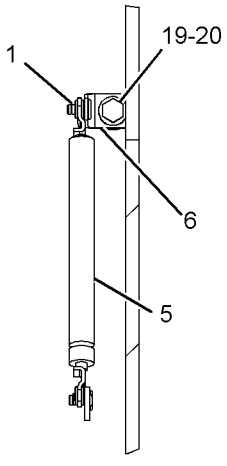

SECTION B-B

GRAPHIC #1 **<END>** g01620958

OPERATOR STATION

164-0497 GUARD GP-OVERHEAD

S/N: CJN1-UP
PART OF 178-5549 GUARD AR-OVERHEAD
AN ATTACHMENT

SMCS-7159 **i03253683**

NOTE	REF NO	GRAPHIC REF	PART NUMBER	QTY	PART NAME 1 2 3 4 5 6 (PRODUCT LEVEL)	SEE PAGE
	1	1	**8V-1715**	2	SPACER (20.5X35X12-MM THK)	
	2	1	**167-7141**	1	GUARD AS	
	3	1	**219-0305**	1	FILM-WARNING (NO WELD, NO DRILL, READ OMM)	
	4	1	**298-4196**	1	FILM-CERTIFICATION (OPS GUARD, READ OMM)	
	6	1	**090-8865**	2	SPACER (17X40X3-MM THK)	
					(WHEN EQUIPPED WITH CAB LIGHTS)	
					-OR-	
		1	**090-8865**	3	SPACER (17X40X3-MM THK)	
					(WHEN EQUIPPED WITH PRODUCT LINK)	
					-OR-	
		1	**090-8865**	1	SPACER (17X40X3-MM THK)	
					(WHEN EQUIPPED WITH CAB LIGHTS AND PRODUCT LINK)	
M	7	1	**7X-2559**	2	BOLT (M16X2X160-MM)	
M	8	1	**8T-4174**	2	BOLT (M16X2X120-MM)	
	9	1	**9X-8257**	4	WASHER (17.5X30X3.5-MM THK)	

M-METRIC PART

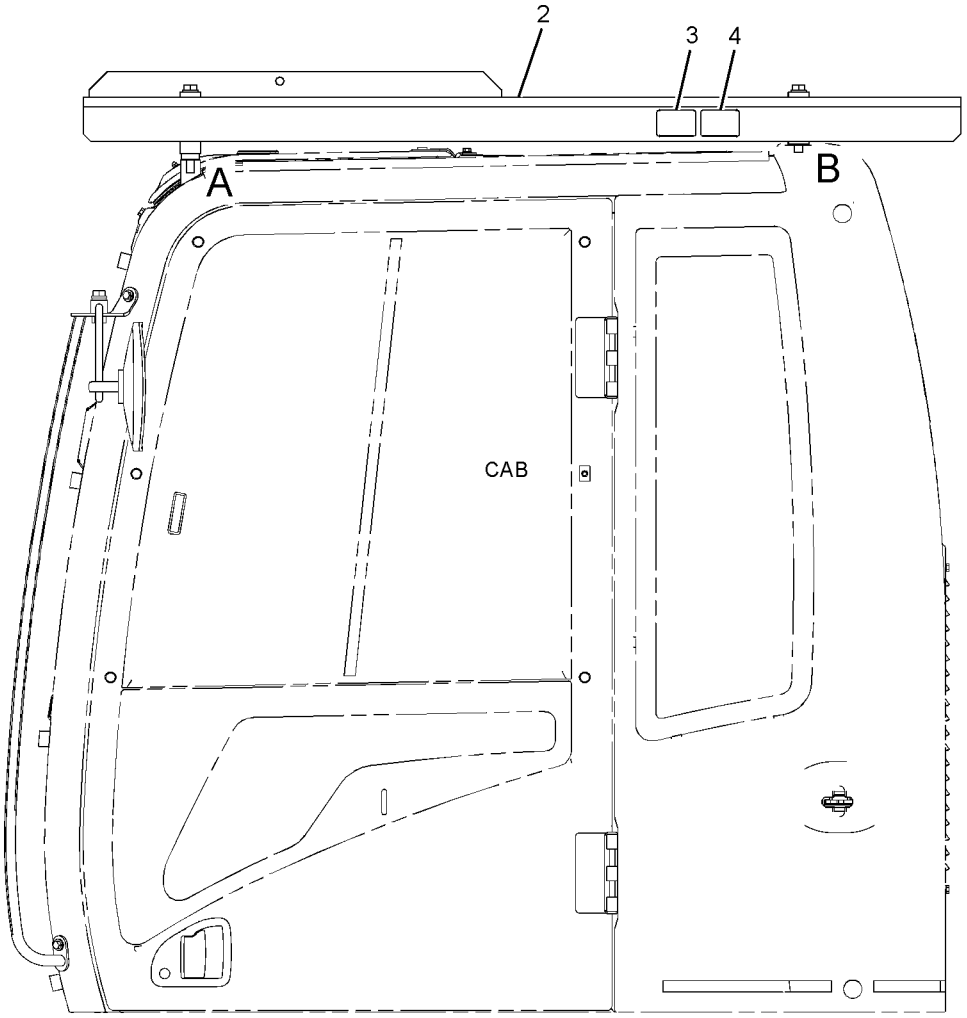

LEFT SIDE VIEW

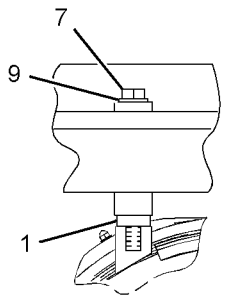

VIEW OF AREA A

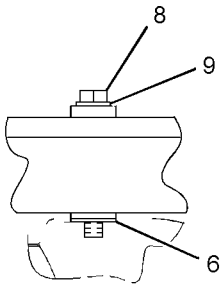

VIEW OF AREA B

GRAPHIC #1 **<END>** g01654213

OPERATOR STATION

207-0159 GUARD GP-VANDALISM—CAB

S/N: CJN1-UP
PART OF 260-7017 GUARD AR-VANDALISM
AN ATTACHMENT

SMCS-7315 **i02110739**

NOTE	REF NO	GRAPHIC REF	PART NUMBER	QTY	PART NAME 1 2 3 4 5 6 (PRODUCT LEVEL)	SEE PAGE
	1	1	**7Y-8621**	6	PIN	
	2	1	**7Y-8622**	1	PIN	
	3	1	**207-0161**	1	GUARD AS	
		1	**8H-2282**	2	HINGE	
	4	1	**207-0164**	1	GUARD AS	
		1	**8H-2282**	2	HINGE	
	5	1	**207-0167**	1	GUARD AS	
		1	**8H-2282**	2	HINGE	
	6	1	**207-0170**	1	GUARD AS	
		1	**8H-2282**	2	HINGE	
	7	1	**207-0173**	1	GUARD AS	
		1	**8H-2282**	2	HINGE	
M	8	1	**8T-4200**	2	BOLT (M8X1.25X16-MM)	
	9	1	**8T-4224**	2	WASHER-HARD (8.8X16X2-MM THK)	

M-METRIC PART

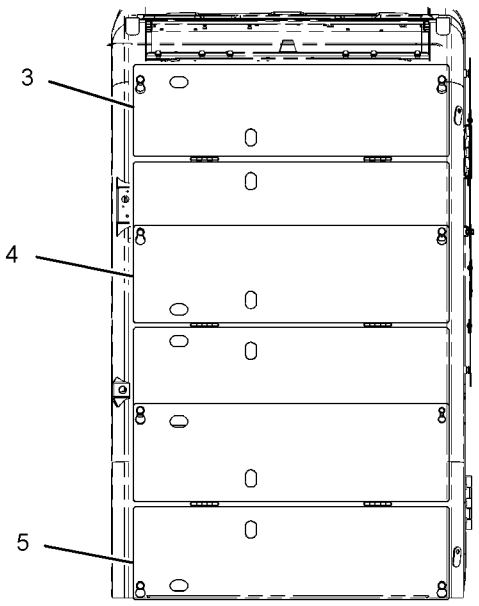

FRONT VIEW

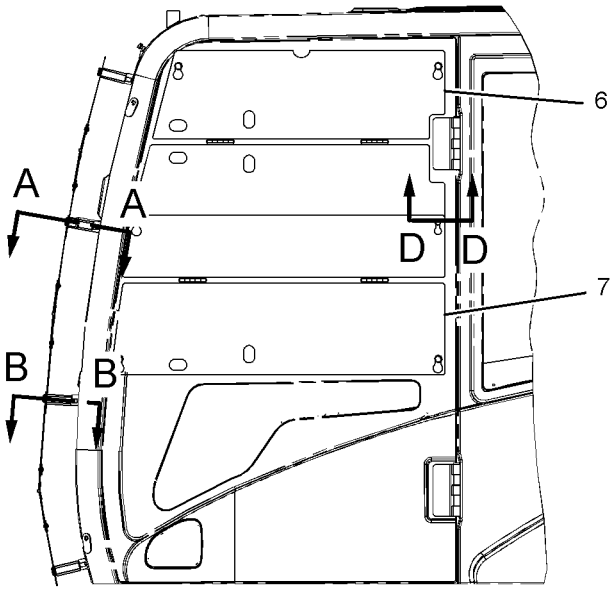

LEFT SIDE VIEW

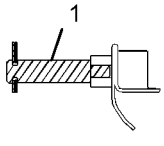

SECTION A-A

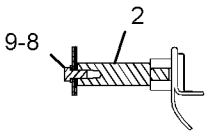

SECTION B-B

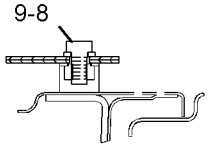

SECTION D-D

GRAPHIC #1

<END>

g01079377

OPERATOR STATION

207-0160 GUARD GP-VANDALISM–CAB

S/N: CJN1-UP
PART OF 260-7071 GUARD AR-VANDALISM
AN ATTACHMENT

SMCS-7315 **i01707116**

NOTE	REF NO	GRAPHIC REF	PART NUMBER	QTY	PART NAME 1 2 3 4 5 6 (PRODUCT LEVEL)	SEE PAGE
	1	1	**7Y-8621**	4	PIN	
	2	1	**7Y-8622**	1	PIN	
	3	1	**164-0643**	1	BRACKET AS	
	4	1	**207-0164**	1	GUARD AS	
		1	**8H-2282**	2	HINGE	
	5	1	**207-0167**	1	GUARD AS	
		1	**8H-2282**	2	HINGE	
	6	1	**207-0170**	1	GUARD AS	
		1	**8H-2282**	2	HINGE	
	7	1	**207-0173**	1	GUARD AS	
		1	**8H-2282**	2	HINGE	
	8	1	**207-0176**	1	GUARD AS	
		1	**8H-2282**	2	HINGE	
M	9	1	**8T-4138**	4	BOLT (M6X1X20MM)	
M	10	1	**8T-4200**	2	BOLT (M8X1.25X16MM)	
	11	1	**8T-4224**	2	WASHER-HARD (8.8X16X2MM THK)	

M-METRIC PART

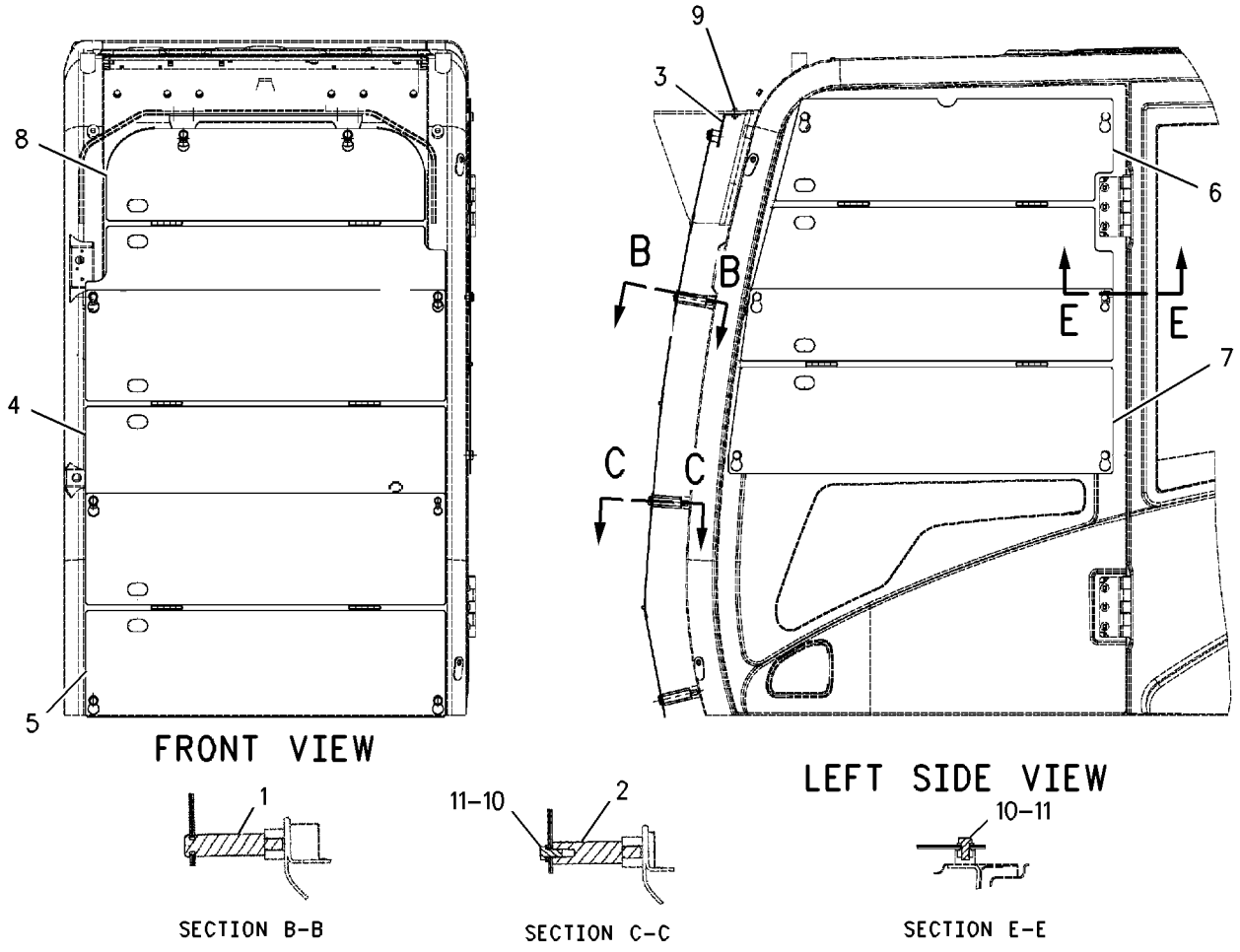

FRONT VIEW

LEFT SIDE VIEW

SECTION B-B

SECTION C-C

SECTION E-E

GRAPHIC #1 **<END>** g00880379

OPERATOR STATION

139-7099 HATCH GP-ROOF

S/N: CJN1-UP

PART OF 229-9097, 229-9099, 229-9101, 316-8815 CAB GP

AN ATTACHMENT

SMCS-7303 **i02757434**

NOTE	REF NO	GRAPHIC REF	PART NUMBER	QTY	PART NAME 1 2 3 4 5 6 (PRODUCT LEVEL)	SEE PAGE
	1	1	**2Y-5685**	4	RING-RETAINING	
	2	1	**099-3506**	2	SPRING AS-GAS	
M	3	1	**105-2169**	4	BOLT AS (M8X1.25X16-MM)	
Y	4	1	**189-2849**	1	HATCH GP-ROOF	969
	5	1	**189-2847**	1	SEAL	

M-METRIC PART
Y-SEPARATE ILLUSTRATION

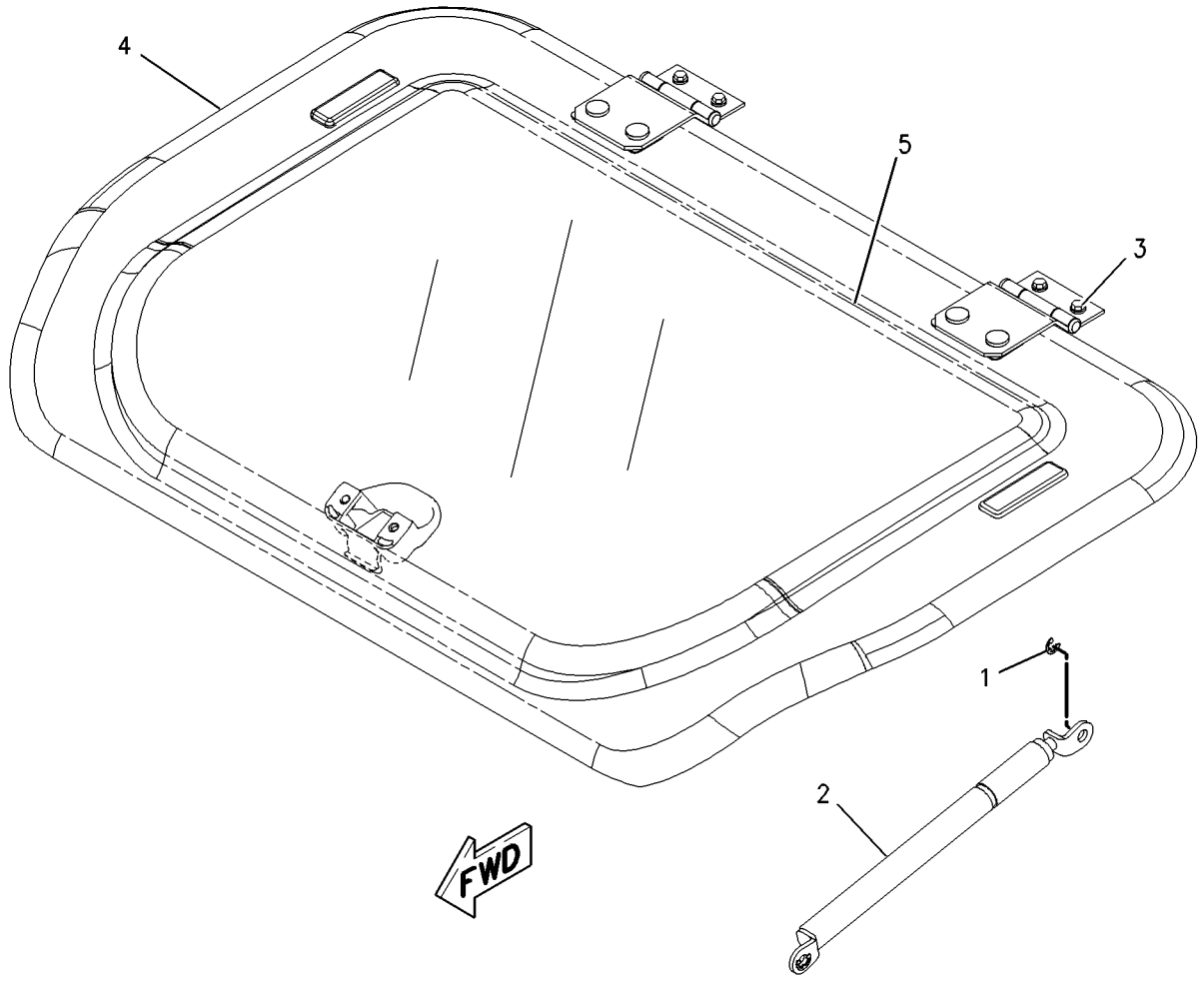

GRAPHIC #1 **<END>** g00737364

OPERATOR STATION

189-2849 HATCH GP-ROOF

S/N: CJN1-UP
PART OF 139-7099 HATCH GP-ROOF
AN ATTACHMENT

SMCS-7303 **i01895765**

NOTE	REF NO	GRAPHIC REF	PART NUMBER	QTY	PART NAME 1 2 3 4 5 6 (PRODUCT LEVEL)	SEE PAGE
	1	1	**161-3694**	1	CATCH	
	2	1	**189-2693**	1	BRACKET AS (RH)	
	3	1	**189-2694**	1	BRACKET AS (LH)	
	4	1	**189-2716**	2	HINGE AS	
Z	5	1		1	COVER	
	6	1	**085-6449**	2	PACKING	
M	7	1	**100-2881**	4	SCREW-TRUSS HEAD	
	8	1	**171-7477**	2	NUT	
	9	1	**4I-1260**	2	PACKING	
	10	1	**4I-4361**	2	RETAINER	
M	11	1	**6I-5342**	4	NUT (M8X1.25-THD)	
M	12	1	**9X-2045**	2	SCREW-TRUSS HEAD (M6X1X20-MM)	

M-METRIC PART
Z-NOT SERVICED SEPARATELY

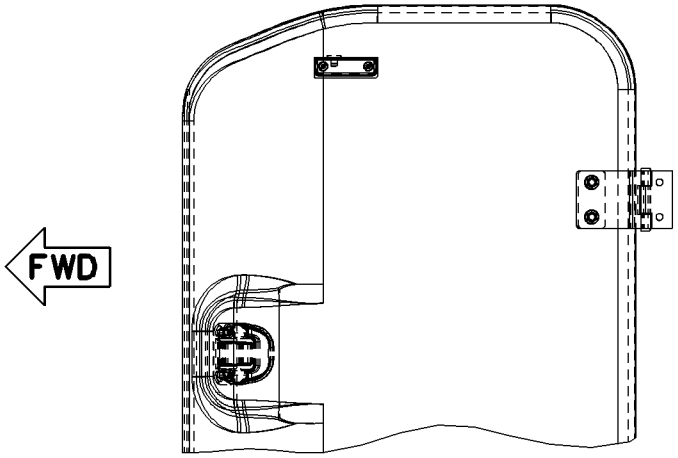

TOP VIEW

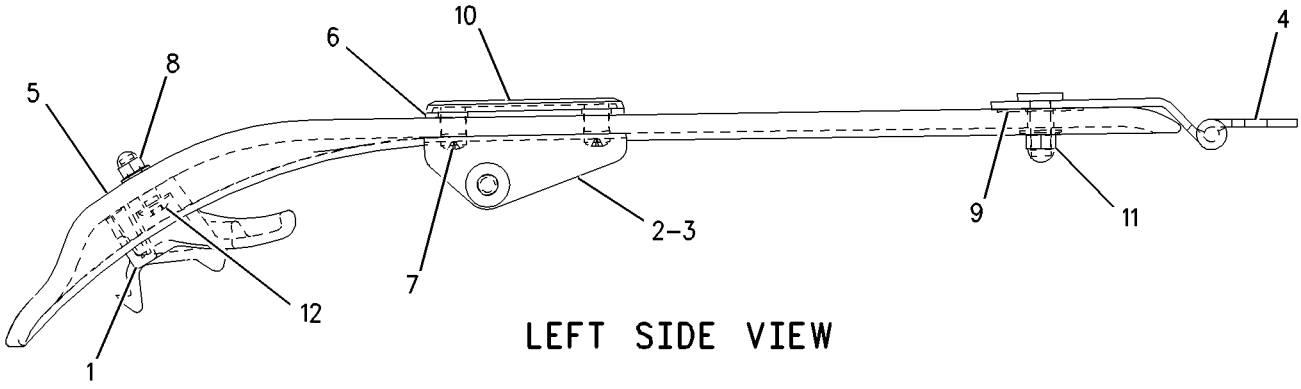

LEFT SIDE VIEW

GRAPHIC #1 **<END>** g00986370

OPERATOR STATION

229-9094 HEADREST AS-SEAT–CLOTH

S/N: CJN1-UP
AN ATTACHMENT

SMCS-7312 **i02232852**

NOTE	REF NO	GRAPHIC REF	PART NUMBER	QTY	PART NAME 1 2 3 4 5 6 (PRODUCT LEVEL)	SEE PAGE
					(NO SERVICED PARTS)	

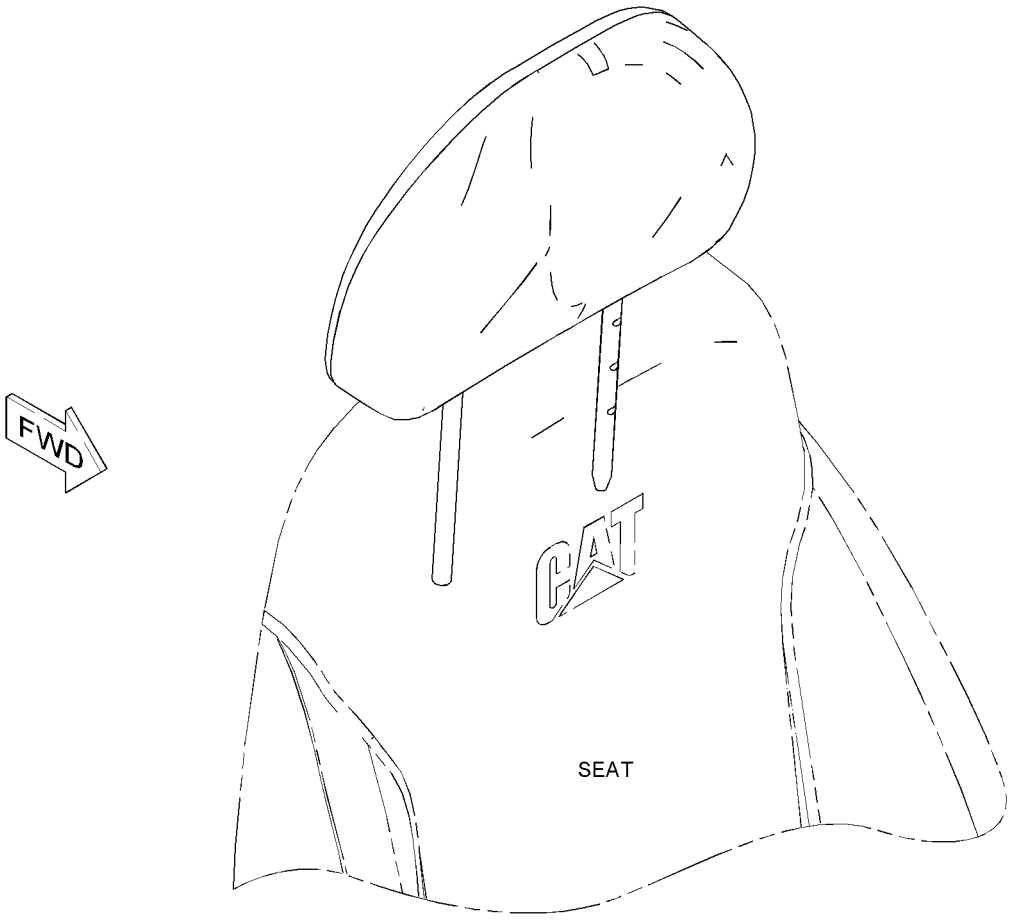

GRAPHIC #1 **<END>** g01126613

OPERATOR STATION

327-6514 HEADREST AS-SEAT

S/N: CJN1-UP

AN ATTACHMENT

SMCS-7312 **i03213631**

NOTE	REF NO	GRAPHIC REF	PART NUMBER	QTY	PART NAME 1 2 3 4 5 6 (PRODUCT LEVEL)	SEE PAGE
					(NO SERVICED PARTS)	

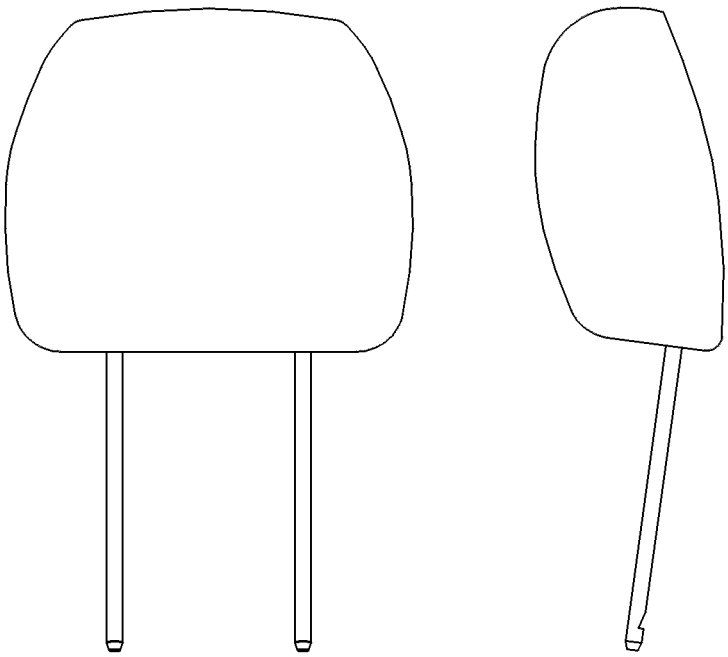

GRAPHIC #1 **<END>** g00242379

OPERATOR STATION

327-6515 HEADREST AS-SEAT

S/N: CJN1-UP

PART OF 327-6512, 327-6513 SEAT GP

AN ATTACHMENT

SMCS-7312 **i03090223**

NOTE	REF NO	GRAPHIC REF	PART NUMBER	QTY	PART NAME 1 2 3 4 5 6 (PRODUCT LEVEL)	SEE PAGE
					(NO SERVICED PARTS)	

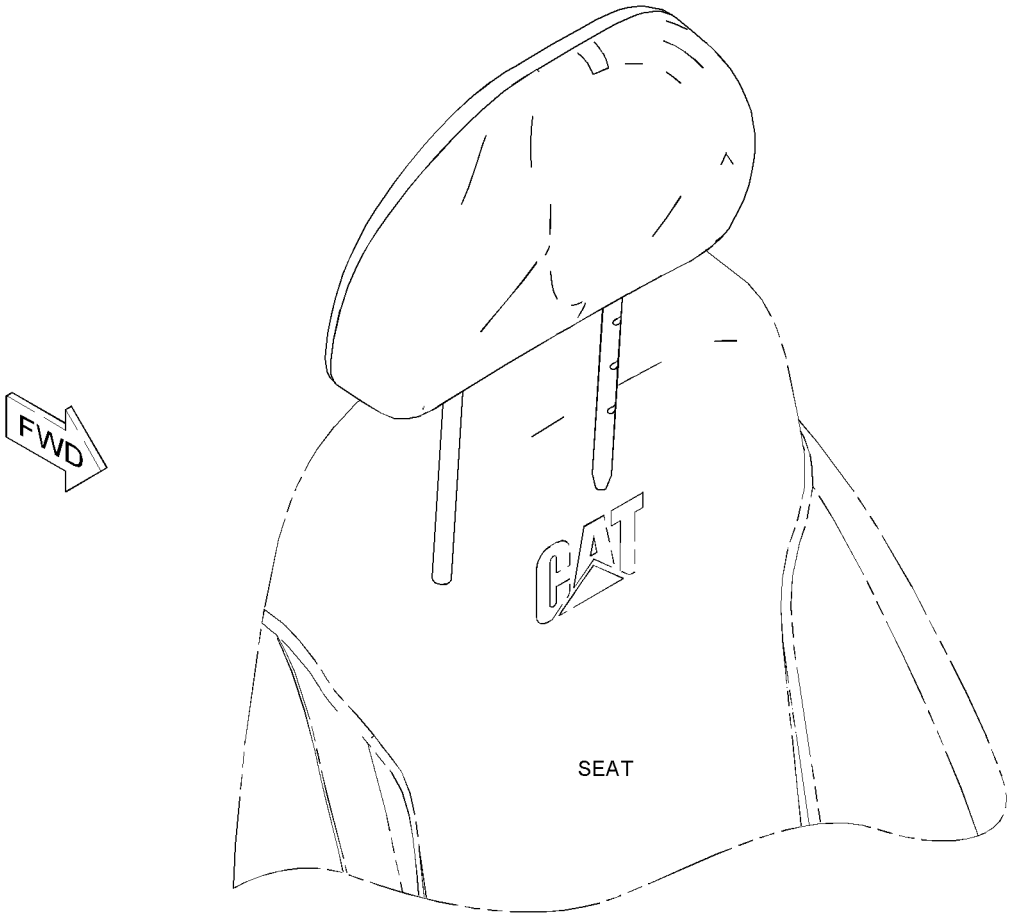

GRAPHIC #1

<END>

g01126613

OPERATOR STATION

229-9084 HEATER & MTG GP-CAB

S/N: CJN1-UP
PART OF 259-7197 HEATER AR-CAB
AN ATTACHMENT
TYPE 1

SMCS-7304 **i02780696**

NOTE	REF NO	GRAPHIC REF	PART NUMBER	QTY	PART NAME 1 2 3 4 5 6 (PRODUCT LEVEL)	SEE PAGE
	1	1	**235-8873**	1	HARNESS AS-HEATER & AIR COND (CONTROL PANEL SWITCHES)	
	2	1	**235-8874**	1	SENSOR-TEMPERATURE (AMBIENT AIR)	
	3	1	**235-8875**	1	BRACKET	
Y	4	1	**240-5036**	1	AIR CONDITIONER GP	848
	5	1	**293-1138**	1	PANEL AS-CONTROL	
	6	1	**245-7858**	1	HARNESS AS-HEATER	
M	8	1	**099-2374**	2	BOLT-SOCKET HEAD (M5X0.8X12-MM)	
	9	1	**111-4836**	3	CLIP	
	10	1	**3S-2093**	2	STRAP-CABLE	
M	11	1	**5C-9553**	1	BOLT (M6X1X16-MM)	
	12	1	**7X-7729**	7	WASHER (11X25X3-MM THK)	
	13	1	**8T-0328**	2	WASHER-HARD (5.5X10X1-MM THK)	
	14	1	**8T-4121**	3	WASHER-HARD (11X21X2.5-MM THK)	
M	15	1	**8T-4136**	7	BOLT (M10X1.5X25-MM)	
M	16	1	**8T-4137**	3	BOLT (M10X1.5X20-MM)	
	17	1	**9X-8256**	1	WASHER (6.6X12X2-MM THK)	

M-METRIC PART
Y-SEPARATE ILLUSTRATION

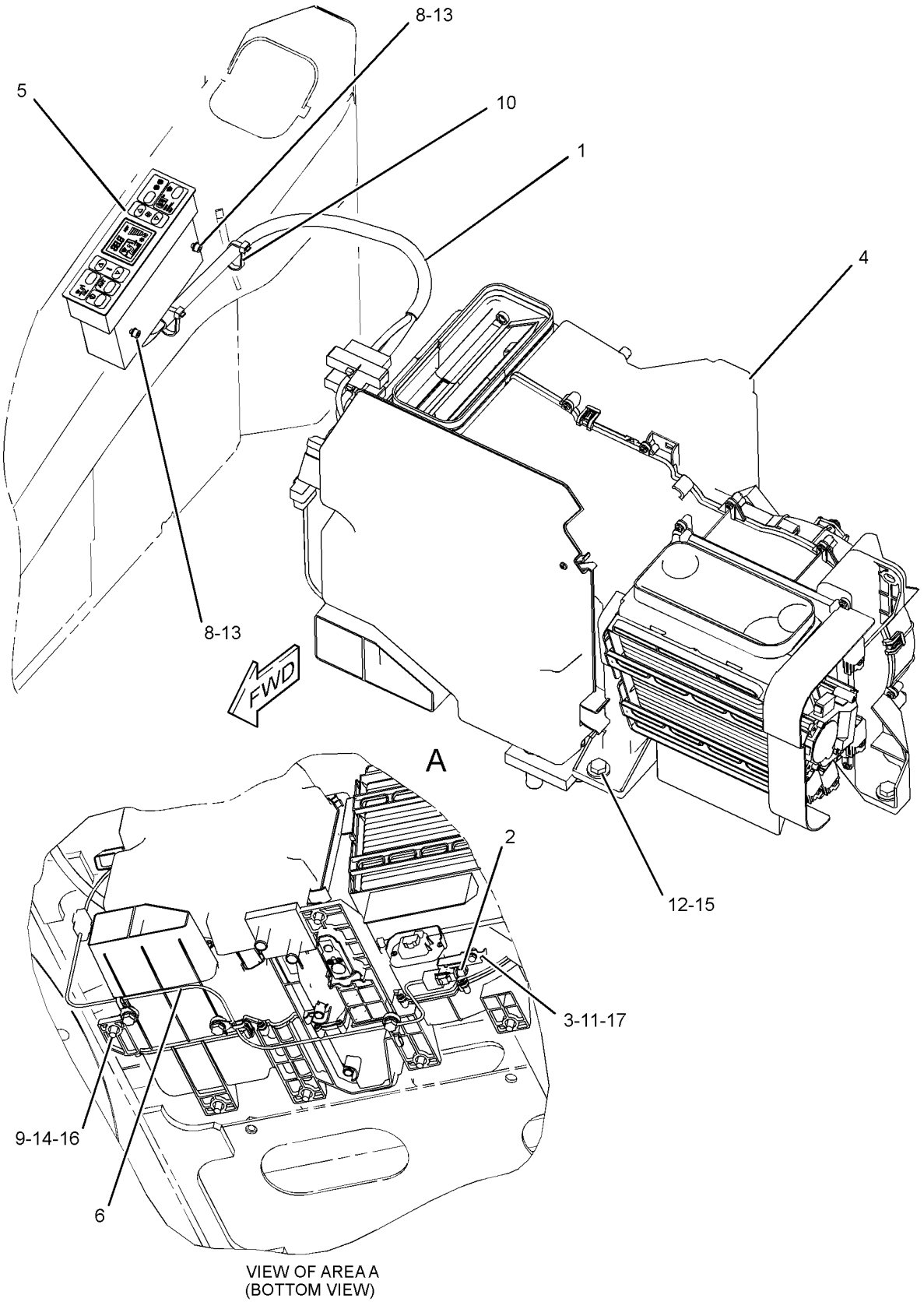

VIEW OF AREA A
(BOTTOM VIEW)

GRAPHIC #1 **<END>** g01405002

OPERATOR STATION

229-9084 HEATER & MTG GP-CAB

S/N: CJN1-UP
PART OF 259-7197 HEATER AR-CAB
AN ATTACHMENT
TYPE 2

SMCS-7304 **i02911100**

NOTE	REF NO	GRAPHIC REF	PART NUMBER	QTY	PART NAME 1 2 3 4 5 6 (PRODUCT LEVEL)	SEE PAGE
	1	1	**235-8873**	1	HARNESS AS-HEATER & AIR COND (CONTROL PANEL SWITCHES)	
	2	1	**235-8874**	1	SENSOR-TEMPERATURE (AMBIENT AIR)	
	3	1	**235-8875**	1	BRACKET	
CY	4	1	**316-8811**	1	AIR CONDITIONER GP	851
	5	1	**293-1138**	1	PANEL AS-CONTROL	
	6	1	**245-7858**	1	HARNESS AS-HEATER	
M	8	1	**099-2374**	2	BOLT-SOCKET HEAD (M5X0.8X12-MM)	
	9	1	**111-4836**	3	CLIP	
	10	1	**3S-2093**	2	STRAP-CABLE	
M	11	1	**5C-9553**	1	BOLT (M6X1X16-MM)	
	12	1	**7X-7729**	7	WASHER (11X25X3-MM THK)	
	13	1	**8T-0328**	2	WASHER-HARD (5.5X10X1-MM THK)	
	14	1	**8T-4121**	3	WASHER-HARD (11X21X2.5-MM THK)	
M	15	1	**8T-4136**	7	BOLT (M10X1.5X25-MM)	
M	16	1	**8T-4137**	3	BOLT (M10X1.5X20-MM)	
	17	1	**9X-8256**	1	WASHER (6.6X12X2-MM THK)	

C-CHANGE FROM PREVIOUS TYPE
M-METRIC PART
Y-SEPARATE ILLUSTRATION

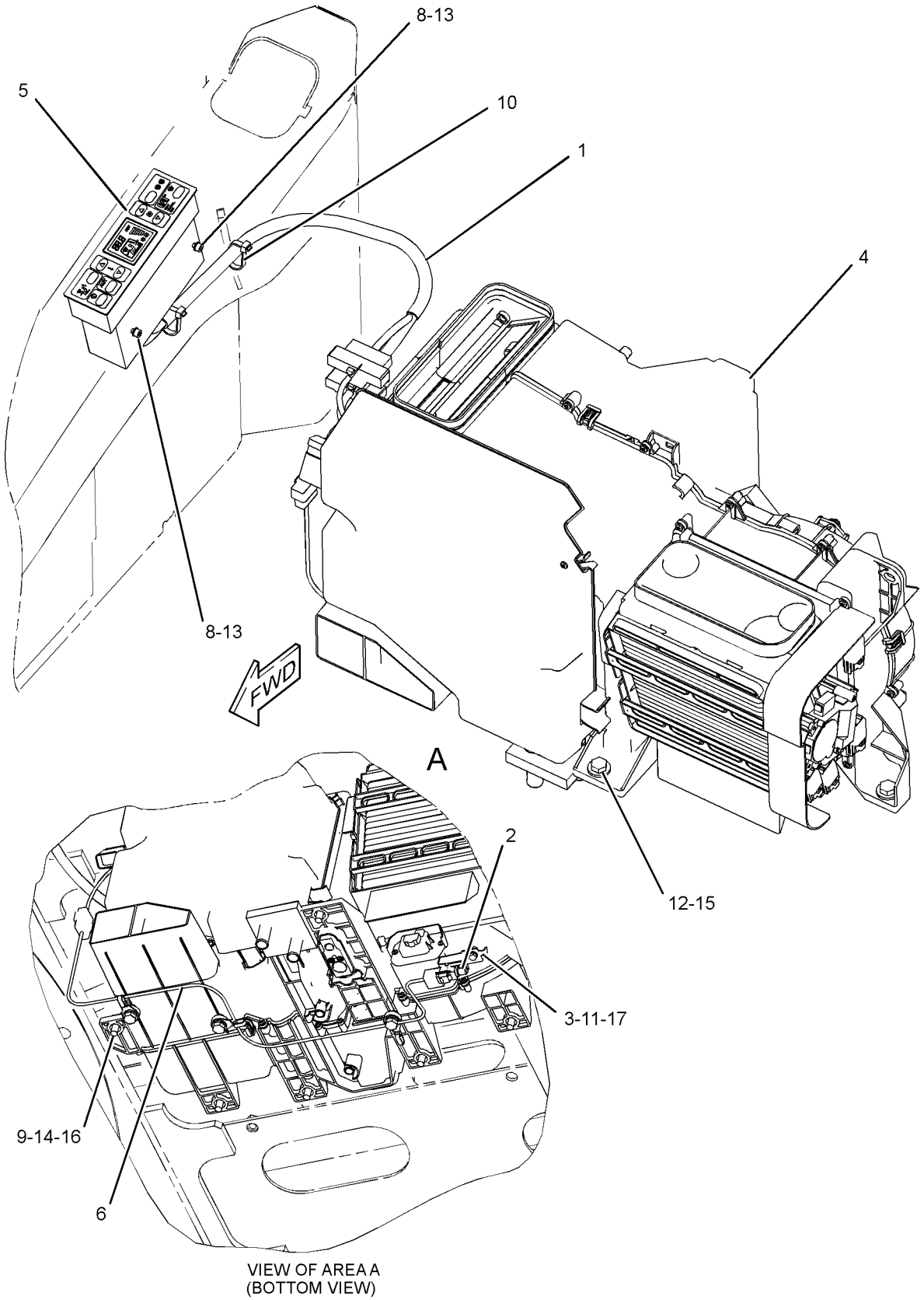

VIEW OF AREA A
(BOTTOM VIEW)

GRAPHIC #1 **<END>** g01405002

OPERATOR STATION

259-7197 HEATER AR-CAB

S/N: CJN1-UP
AN ATTACHMENT

SMCS-7304 **i02765440**

NOTE	PART NUMBER	QTY	PART NAME 1 2 3 4 5 6 (PRODUCT LEVEL)	SEE PAGE
Y	*229-9082*	1	DUCT GP-CAB AIR	939
Y	*229-9084*	1	HEATER & MTG GP-CAB	973
Y	*259-7198*	1	LINES GP-HEATER	993

Y-SEPARATE ILLUSTRATION

<END>

OPERATOR STATION

275-6874 HORN GP-ELECTRIC

S/N: CJN1-UP

PART OF 260-6960 CHASSIS AR

SMCS-7402 **i02599628**

NOTE	REF NO	GRAPHIC REF	PART NUMBER	QTY	PART NAME 1 2 3 4 5 6 (PRODUCT LEVEL)	SEE PAGE
Y	1	1	*275-6875*	1	HORN GP-ELECTRIC	979
	2	1	**8T-4121**	2	WASHER-HARD (11X21X2.5-MM THK)	
M	3	1	**8T-4137**	2	BOLT (M10X1.5X20-MM)	

M-METRIC PART
Y-SEPARATE ILLUSTRATION

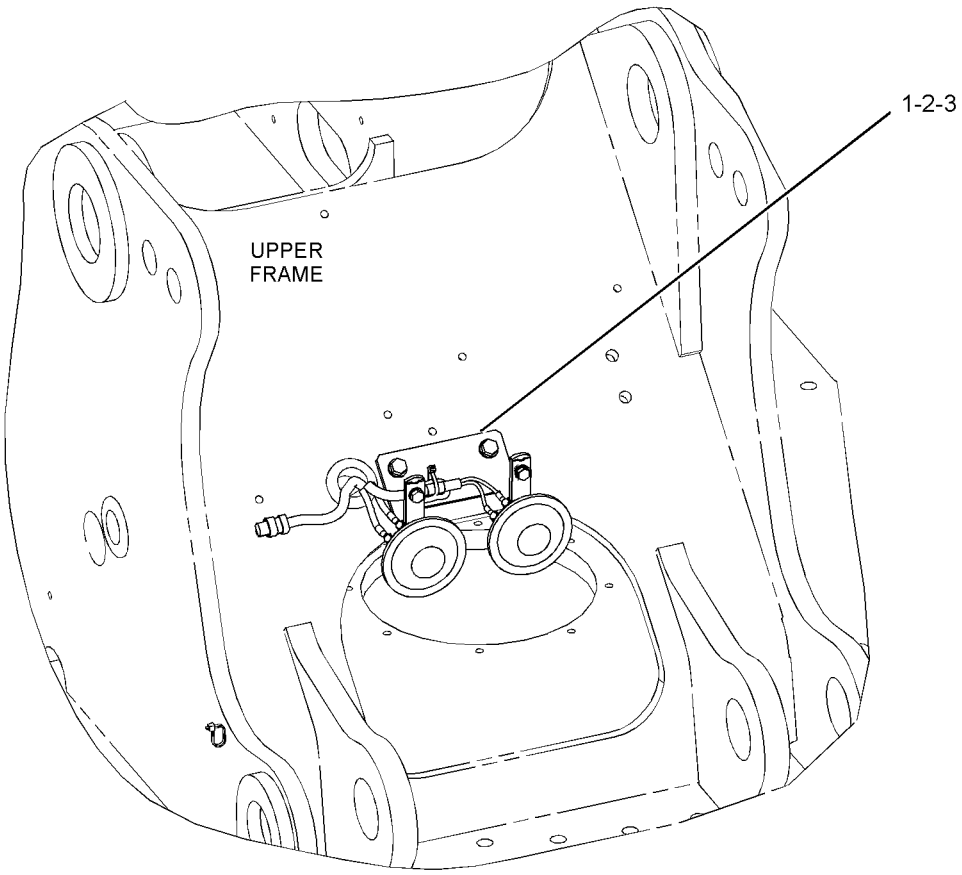

FRONT VIEW
(UPPER RIGHT)

GRAPHIC #1 **<END>** g01304388

OPERATOR STATION

275-6875 HORN GP-ELECTRIC

S/N: CJN1-UP

PART OF 275-6874 HORN GP-ELECTRIC

SMCS-7402 **i02856005**

NOTE	REF NO	GRAPHIC REF	PART NUMBER	QTY	PART NAME 1 2 3 4 5 6 (PRODUCT LEVEL)	SEE PAGE
	1	1	**3S-2093**	1	STRAP-CABLE	
	2	1	**7Y-3919**	1	HORN AS (24-VOLT)	
		1	**095-0826**	2	LOCKWASHER	
M		1	**095-7930**	2	SCREW-MACHINE (M4X0.07X6-MM)	
	3	1	**7Y-3920**	1	HORN AS (24-VOLT)	
		1	**095-0826**	2	LOCKWASHER	
M		1	**095-7930**	2	SCREW-MACHINE (M4X0.07X6-MM)	
	4	1	**170-6941**	1	BRACKET AS	
	5	1	**275-6876**	1	HARNESS AS-WIRING (HORN)	
		1	**3S-2093**	2	STRAP-CABLE	
		1	**230-4011**	1	PLUG AS-CONNECTOR (2-PIN)	
M	6	1	**8T-4200**	2	BOLT (M8X1.25X16-MM)	
	7	1	**8T-4224**	2	WASHER-HARD (8.8X16X2-MM THK)	

M-METRIC PART

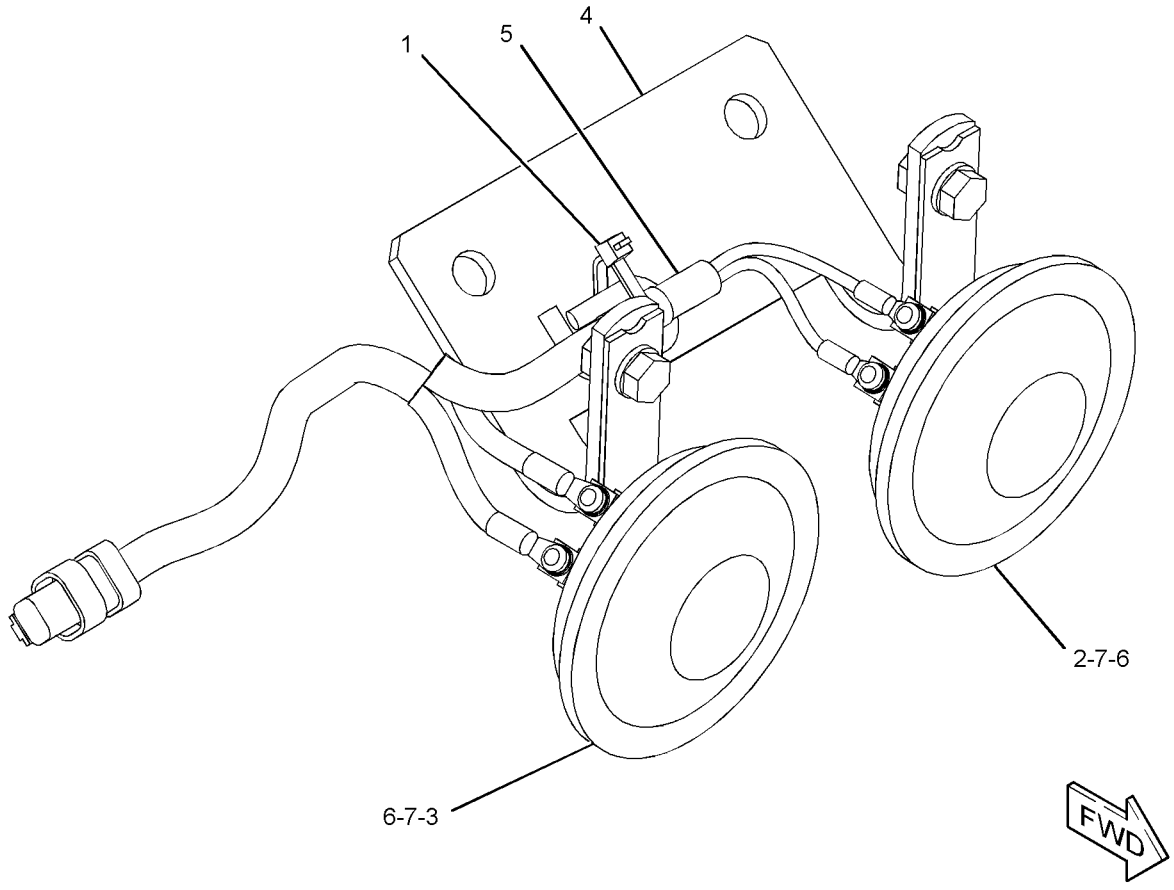

GRAPHIC #1 **<END>** g01304939

OPERATOR STATION

330-8752 INSTALLATION AR

S/N: CJN1-UP
FOR USE WITH 327-6552 MIRROR GP-REAR VIEW, 327-6553 MIRROR GP-REAR VIEW
AN ATTACHMENT

SMCS-1405, 1802, 1805, 1808, 7174, 7304, 7319, 7320, 7348, 734D **i03144660**

NOTE	PART NUMBER	QTY	PART NAME 1 2 3 4 5 6 (PRODUCT LEVEL)	SEE PAGE
Y	*330-8753*	1	INSTALLATION AR	980
Y	*330-1324*	1	MIRROR GP	997

Y-SEPARATE ILLUSTRATION

<END>

330-8753 INSTALLATION AR—CAMERA

S/N: CJN1-UP
PART OF 330-8752 INSTALLATION AR
AN ATTACHMENT

SMCS-1405, 1802, 1805, 1808, 7174, 7304, 7319, 7320, 7348, 734D **i03246429**

NOTE	PART NUMBER	QTY	PART NAME 1 2 3 4 5 6 (PRODUCT LEVEL)	SEE PAGE
Y	*327-3329*	1	CAMERA & MOUNTING GP	141
Y	*328-0078*	1	FASTENER GP-WIRING HARNESS (WORK AREA VISUAL SYSTEM, REAR)	159
Y	*303-2787*	1	FILM GP (REAR VIEW DISPLAY)	1092
Y	*328-0048*	1	WIRING GP-CAB	227

Y-SEPARATE ILLUSTRATION

<END>

OPERATOR STATION

251-0538 INSTALLATION GP-RADIO

S/N: CJN1-UP

PART OF 259-7193 OPERATOR AR

SMCS-7338 **i02996046**

NOTE	REF NO	GRAPHIC REF	PART NUMBER	QTY	PART NAME 1 2 3 4 5 6 (PRODUCT LEVEL)	SEE PAGE
	1	1	**3S-2093**	2	STRAP-CABLE	
	2	1	**7K-1181**	2	STRAP-CABLE	
M	3	1	**095-0736**	2	SCREW-MACHINE (M5X0.8X10-MM)	
	4	1	**238-2260**	1	CABLE	
	5	1	**306-8802**	1	RADIO-AM/FM	
	6	1	**259-4914**	1	BRACKET AS	
	7	1	**119-5026**	2	SCREW-PAN HEAD (10-16X0.63-IN)	

M-METRIC PART

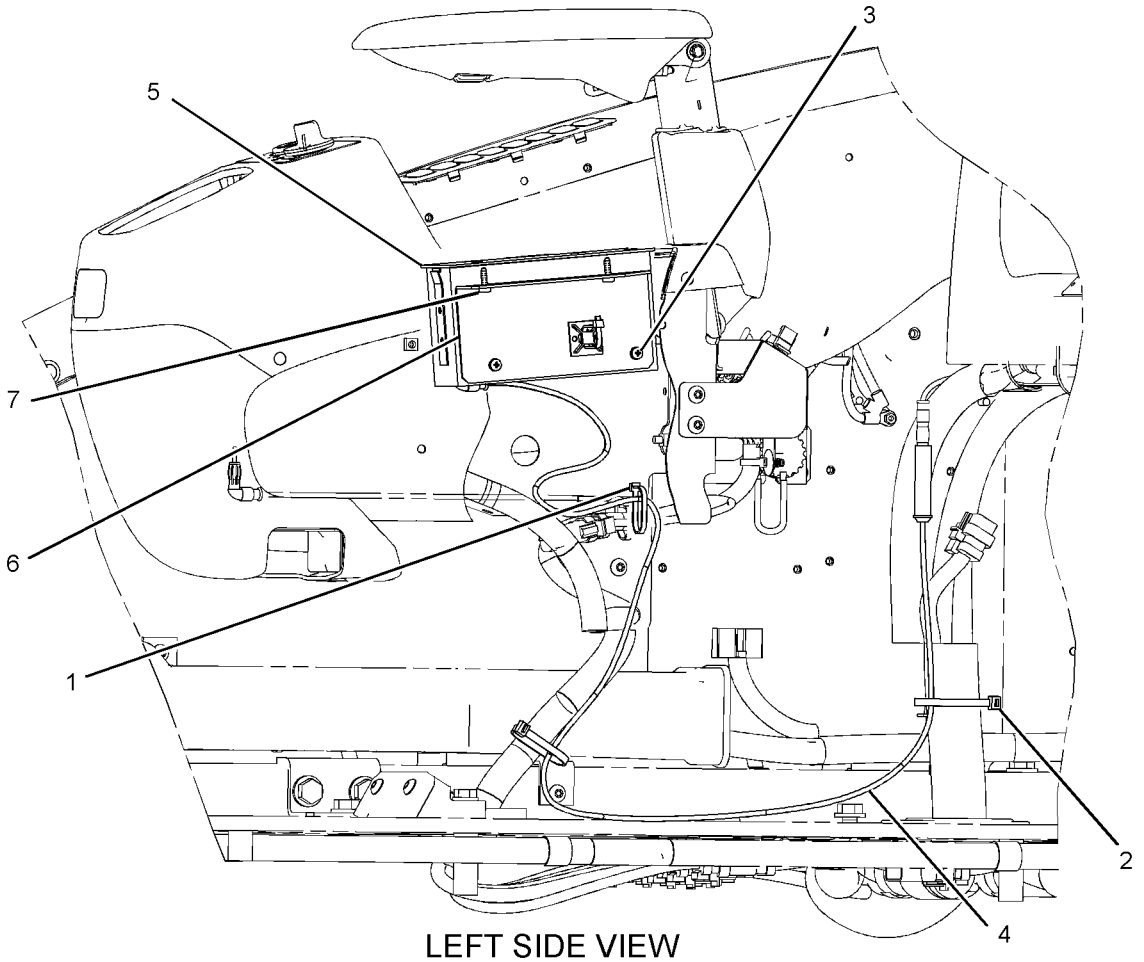

LEFT SIDE VIEW

GRAPHIC #1 **<END>** g01520813

OPERATOR STATION

259-5253 INSTALLATION GP-RADIO

S/N: CJN1-UP

AN ATTACHMENT

SMCS-7338 **i02742923**

NOTE	REF NO	GRAPHIC REF	PART NUMBER	QTY	PART NAME 1 2 3 4 5 6 (PRODUCT LEVEL)	SEE PAGE
	1	1	**3S-2093**	14	STRAP-CABLE	
	2	1	**7K-1181**	5	STRAP-CABLE	
	3	1	**141-2759**	1	FUSE (5-AMPERE) (RADIO)	
	4	1	**283-2783**	1	CONVERTER-POWER (24-VOLT TO 12-VOLT)	
	5	1	**238-2216**	1	SWITCH AS-ROCKER (RADIO MUTE)	
		1	**167-3542**	1	CONNECTOR-RECEPTACLE	
		1	**167-3543**	5	TERMINAL (MALE)	
	6	1	**259-5254**	1	HARNESS AS-POWER (RADIO)	
		1	**230-4013**	1	PLUG AS-CONNECTOR (3-PIN)	
		1	**230-5010**	1	PLUG AS-CONNECTOR (6-PIN)	
		1	**243-4505**	1	RECEPTACLE AS-CONNECTOR (2-PIN)	
		1	**243-4506**	1	RECEPTACLE AS-CONNECTOR (3-PIN)	
		1	**3S-2093**	20	STRAP-CABLE	
M	7	1	**8T-4171**	4	BOLT (M6X1X12-MM)	
	8	1	**9X-8256**	4	WASHER (6.6X12X2-MM THK)	

M-METRIC PART

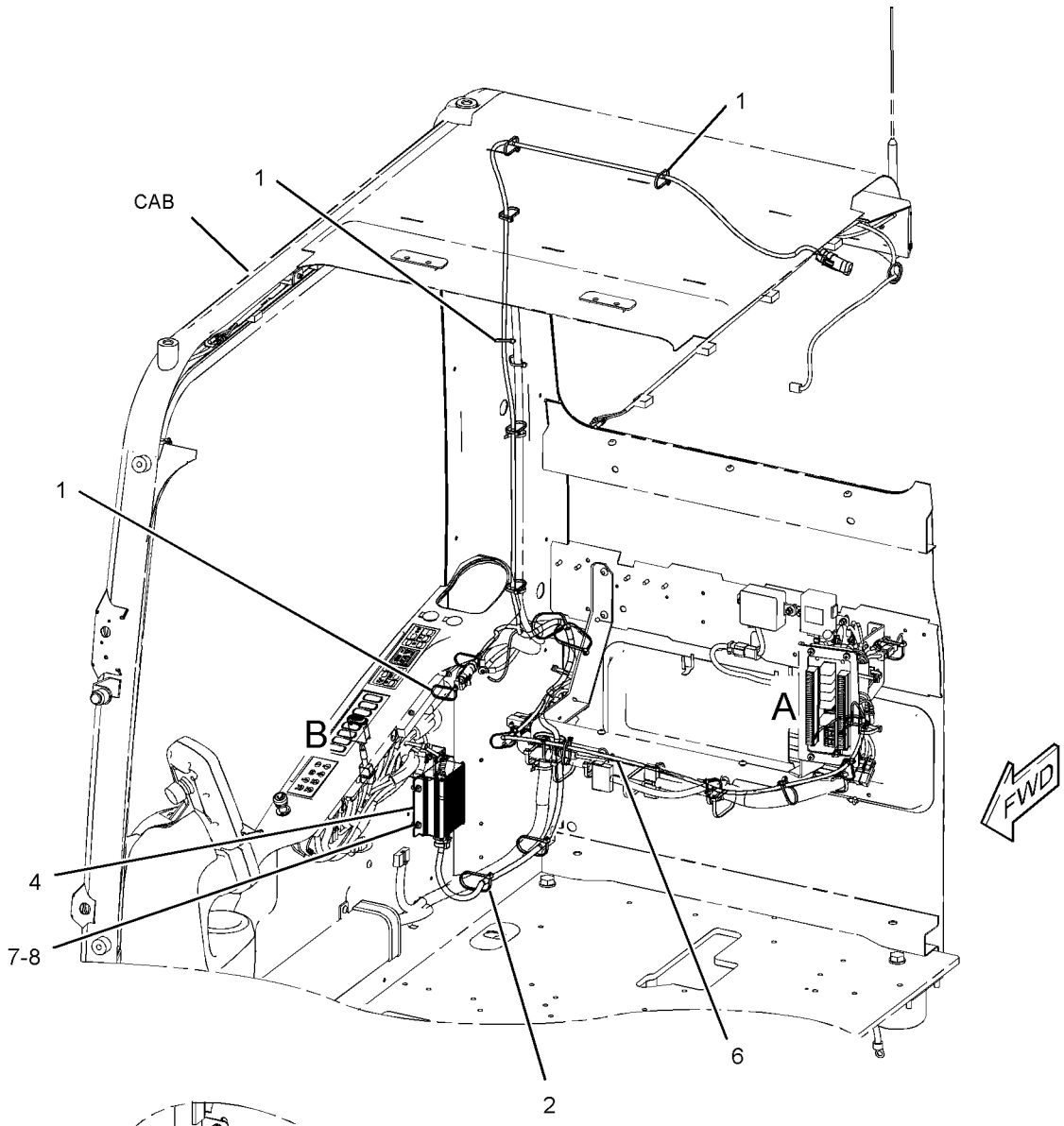

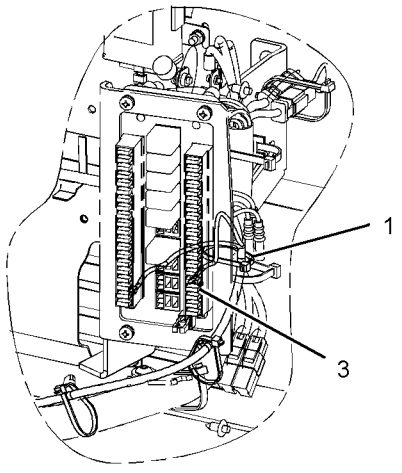

VIEW OF AREA A

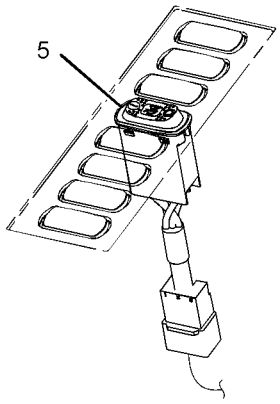

VIEW OF AREA B

GRAPHIC #1 **<END>** g01235540

OPERATOR STATION

275-6879 INSTALLATION GP-RADIO

S/N: CJN1-UP
FOR USE WITH CAB OUTSIDE JAPAN
AN ATTACHMENT

SMCS-7338 **i02598635**

NOTE	REF NO	GRAPHIC REF	PART NUMBER	QTY	PART NAME 1 2 3 4 5 6 (PRODUCT LEVEL)	SEE PAGE
	1	1	**3S-2093**	9	STRAP-CABLE	
	2	1	**7K-1181**	8	STRAP-CABLE	
	3	1	**185-8284**	1	COVER	
	4	1	**234-1124**	1	HARNESS AS-RADIO	
		1	**3S-2093**	15	STRAP-CABLE	
		1	**8T-8737**	10	PLUG-SEAL	
		1	**230-5010**	1	PLUG AS-CONNECTOR (6-PIN)	
		1	**231-2295**	2	PLUG AS-CONNECTOR (8-PIN)	
		1	**243-4505**	1	RECEPTACLE AS-CONNECTOR (2-PIN)	
		1	**243-4509**	1	RECEPTACLE AS-CONNECTOR (8-PIN)	
	5	1	**238-1463**	1	RECEPTACLE AS	
		1	**8T-8737**	8	PLUG-SEAL	
		1	**243-4509**	1	RECEPTACLE AS-CONNECTOR (8-PIN)	
	6	1	**238-2216**	1	SWITCH AS-ROCKER (RADIO MUTE)	
		1	**167-3542**	1	CONNECTOR-RECEPTACLE	
		1	**167-3543**	5	TERMINAL (MALE)	
	7	1	**283-2783**	1	CONVERTER-POWER (24-VOLT TO 12-VOLT)	
M	8	1	**8T-4171**	4	BOLT (M6X1X12-MM)	
	9	1	**9X-8256**	4	WASHER (6.6X12X2-MM THK)	

M-METRIC PART

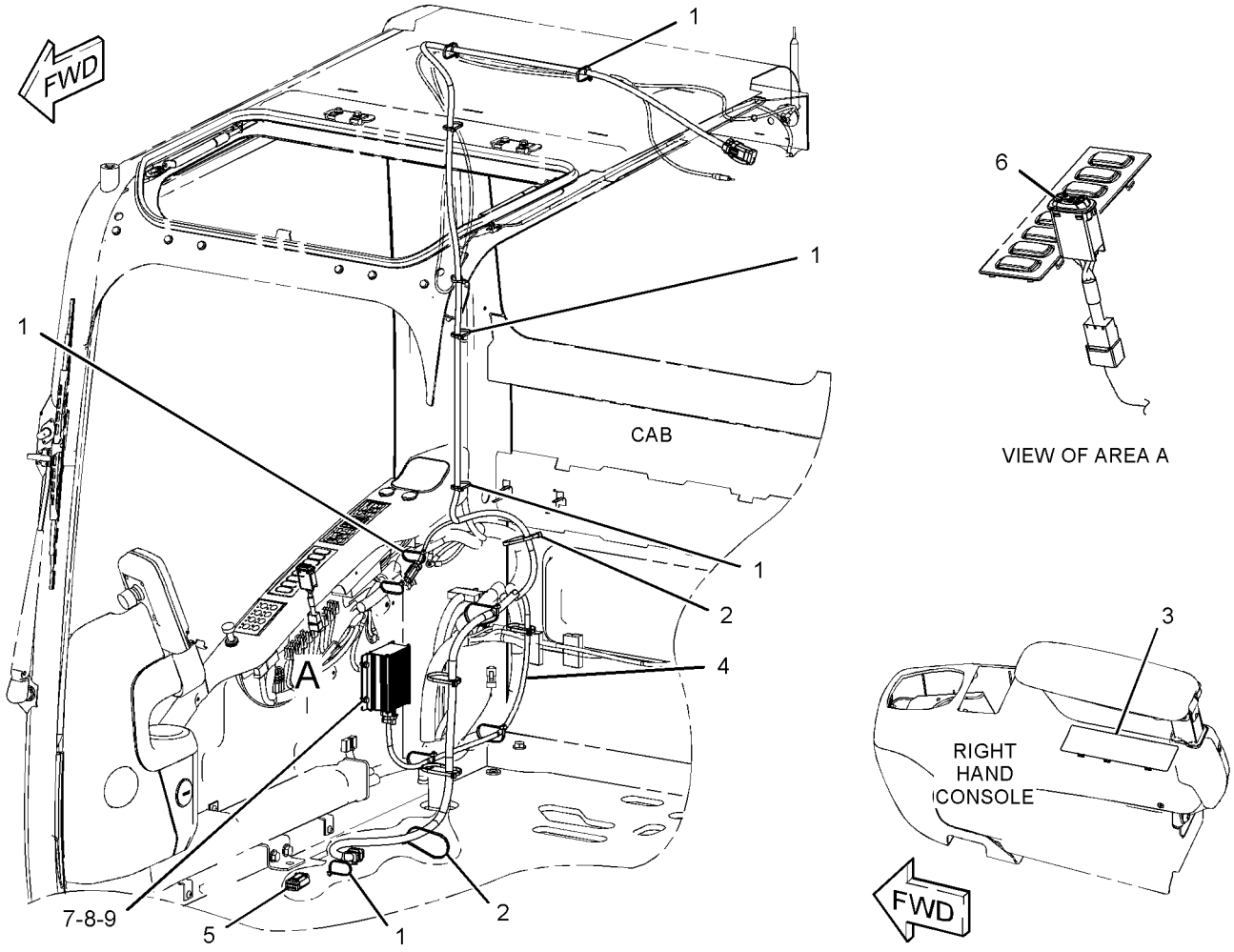

GRAPHIC #1 **<END>** g01325160

OPERATOR STATION

316-8872 KIT-CONSOLE ADJUSTMENT

S/N: CJN1-UP

FIELD INSTALLATION

SMCS-5258 **i02911066**

NOTE	REF NO	GRAPHIC REF	PART NUMBER	QTY	PART NAME 1 2 3 4 5 6 (PRODUCT LEVEL)	SEE PAGE
					INDIVIDUAL PARTS NOT SERVICED SEPARATELY	

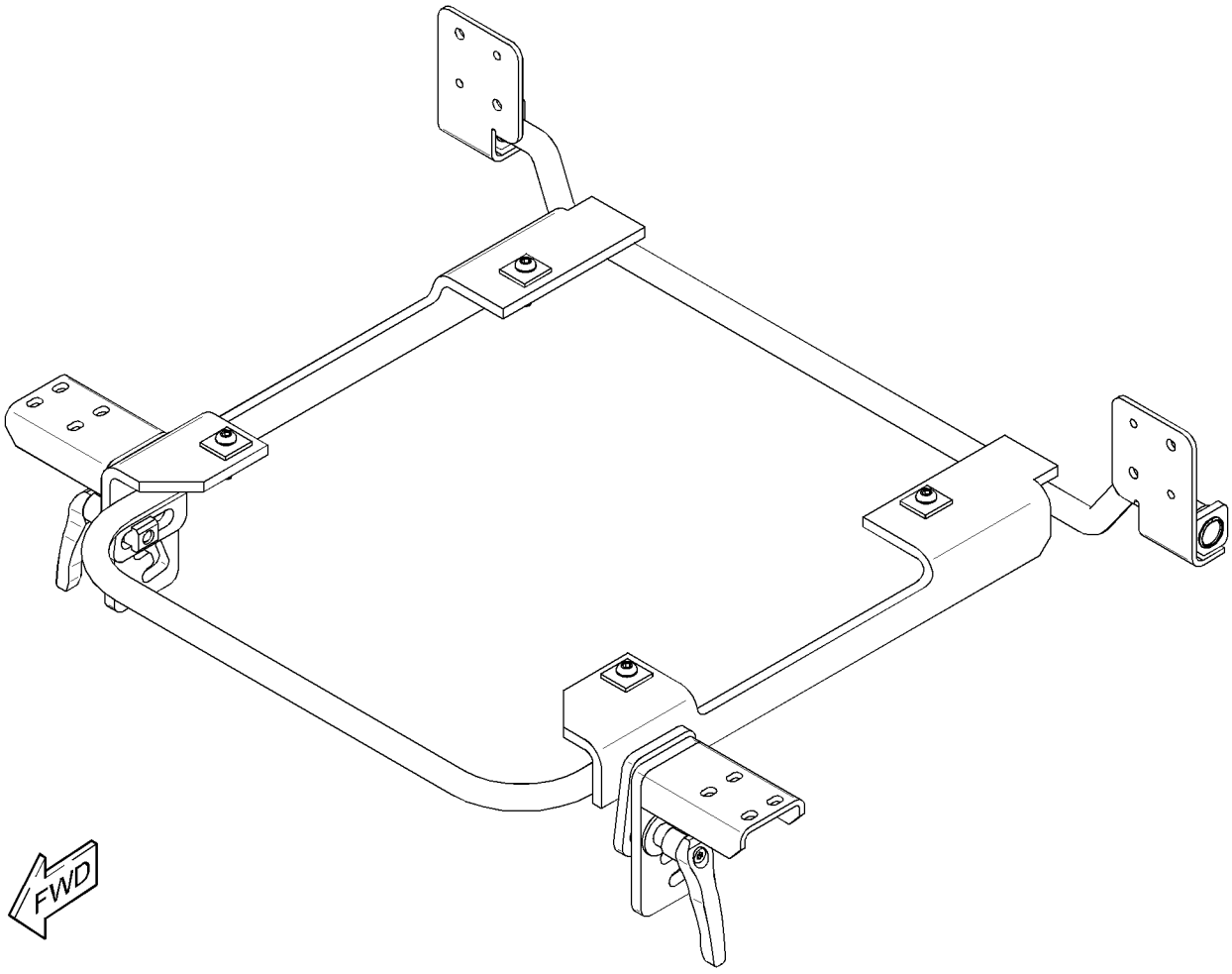

GRAPHIC #1 **<END>** g01451227

OPERATOR STATION

327-6645 KIT-SEAT SUSPENSION–SEAT HEIGHT

S/N: CJN1-UP

PART OF 327-6520 SUSPENSION GP-SEAT

AN ATTACHMENT

SMCS-7312 **i03207841**

NOTE	REF NO	GRAPHIC REF	PART NUMBER	QTY	PART NAME 1 2 3 4 5 6 (PRODUCT LEVEL)	SEE PAGE
	1	1	**327-6646**	1	KIT-CYLINDER (DAMPENER)	
J	2	1	**327-6647**	1	KIT-COVER (SUSPENSION SEAT)	
					(INCLUDES COVER & CLIP KIT)	
	3	1	**333-4180**	6	SCREW-BUTTON HEAD	
	4	1	**333-4181**	1	KIT-HANDLE (SEAT HEIGHT)	
M	5	1	**7Y-7394**	4	SCREW-BUTTON HEAD (M8X1.25X25-MM)	
					AVAILABLE REPAIR KIT(S):	
J			**245-7895**	1	KIT-CLIP (SUSPENSION SEAT)	
					(INCLUDES 28 CLIPS)	

J-KIT MARKED J SERVICES PART(S) MARKED J
M-METRIC PART

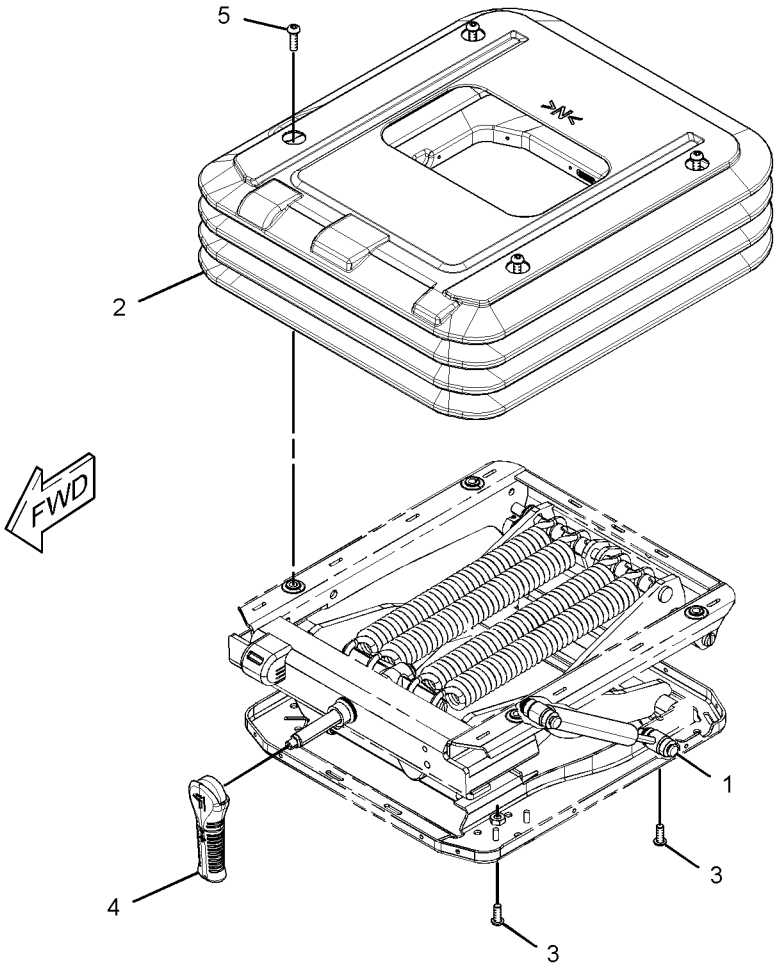

GRAPHIC #1 **<END>** g01637858

OPERATOR STATION

333-4157 KIT-SEAT SUSPENSION

S/N: CJN1-UP
PART OF 327-6521 SUSPENSION GP-SEAT
AN ATTACHMENT

SMCS-7312 **i03207839**

NOTE	REF NO	GRAPHIC REF	PART NUMBER	QTY	PART NAME 1 2 3 4 5 6 (PRODUCT LEVEL)	SEE PAGE
	1	1	**327-6646**	1	KIT-CYLINDER (DAMPENER)	
J	2	1	**333-4158**	1	KIT-COVER (AIR SEAT)	
					(INCLUDES COVER & CLIP KIT)	
	3	1	**333-4159**	1	KIT-VALVE (AIR SEAT)	
		1	**333-4178**	1	NUT	
	4	1	**333-4180**	6	SCREW-BUTTON HEAD	
M	5	1	**7Y-7394**	4	SCREW-BUTTON HEAD (M8X1.25X25-MM)	
					AVAILABLE REPAIR KIT(S):	
J			**245-7895**	1	KIT-CLIP (SUSPENSION SEAT)	
					(INCLUDES 28 CLIPS)	

J-KIT MARKED J SERVICES PART(S) MARKED J
M-METRIC PART

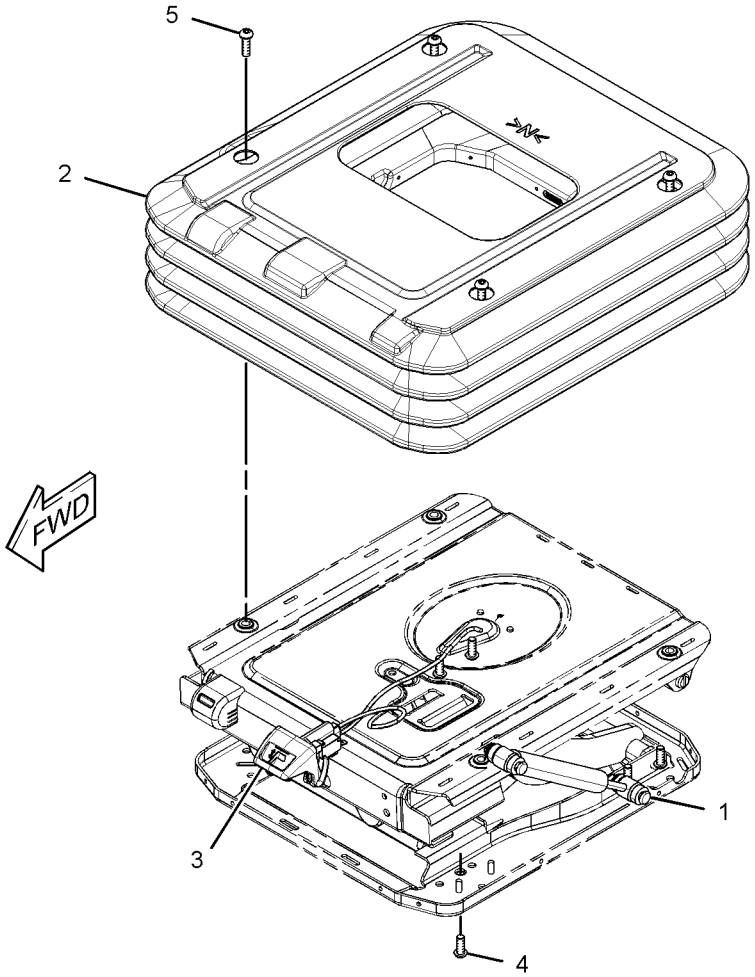

GRAPHIC #1 **<END>** g01637859

OPERATOR STATION

333-4173 KIT-SEAT SUSPENSION

S/N: CJN1-UP

PART OF 327-6517 SUSPENSION GP-SEAT

AN ATTACHMENT

SMCS-7312 **i03213417**

NOTE	REF NO	GRAPHIC REF	PART NUMBER	QTY	PART NAME 1 2 3 4 5 6 (PRODUCT LEVEL)	SEE PAGE
J	1	1	**333-4174**	1	KIT-COVER (SUSPENSION SEAT)	
	2	1	**333-4180**	6	SCREW-BUTTON HEAD	
	3	1	**333-4181**	1	KIT-HANDLE (SEAT HEIGHT)	
M	4	1	**7Y-7394**	4	SCREW-BUTTON HEAD (M8X1.25X25-MM)	
					AVAILABLE REPAIR KIT(S):	
J			**245-7895**	1	KIT-CLIP (SUSPENSION SEAT)	
					(KIT INCLUDES 28 CLIPS)	

J-KIT MARKED J SERVICES PART(S) MARKED J
M-METRIC PART

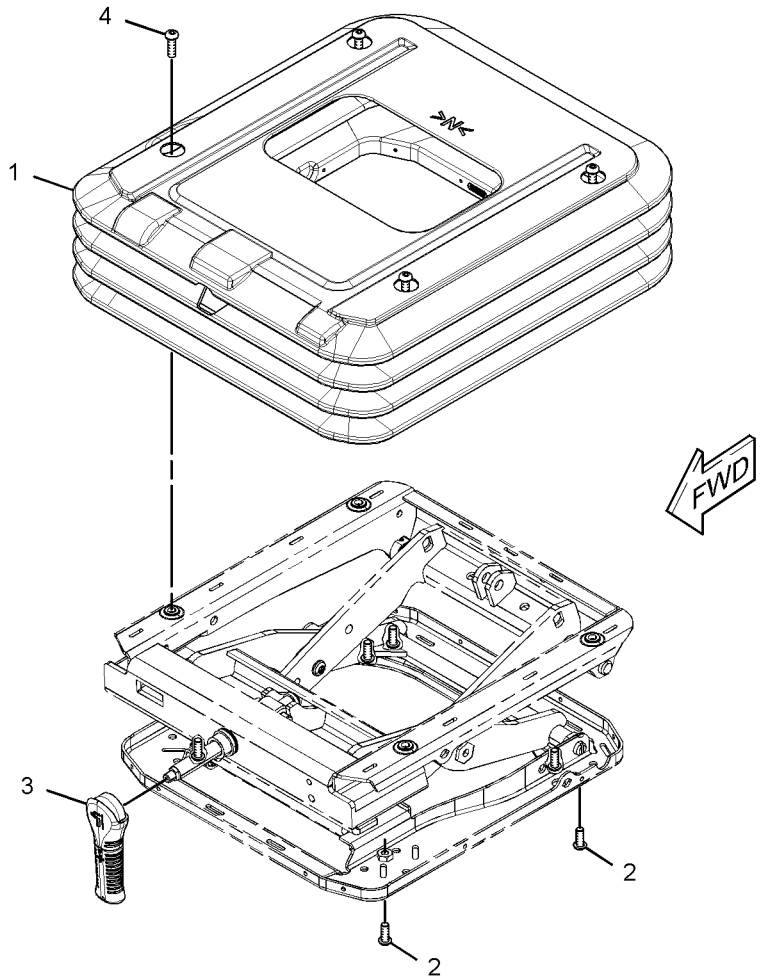

GRAPHIC #1 **<END>** g01641134

OPERATOR STATION

164-0528 LEVER GP-AIR & TEMP CONTROL

S/N: CJN1-UP
PART OF 235-8910 CAB GP
AN ATTACHMENT

SMCS-7309, 7337 **i02504626**

NOTE	REF NO	GRAPHIC REF	PART NUMBER	QTY	PART NAME 1 2 3 4 5 6 (PRODUCT LEVEL)	SEE PAGE
	1	1	**156-6642**	1	LEVER AS	
	2	1	**164-0664**	1	BRACKET	
	3	1	**176-1941**	1	PIN	
	4	1	**185-8280**	1	WASHER-WAVE (10.5X15X0.3-MM THK)	
	5	1	**185-8281**	1	SPRING	

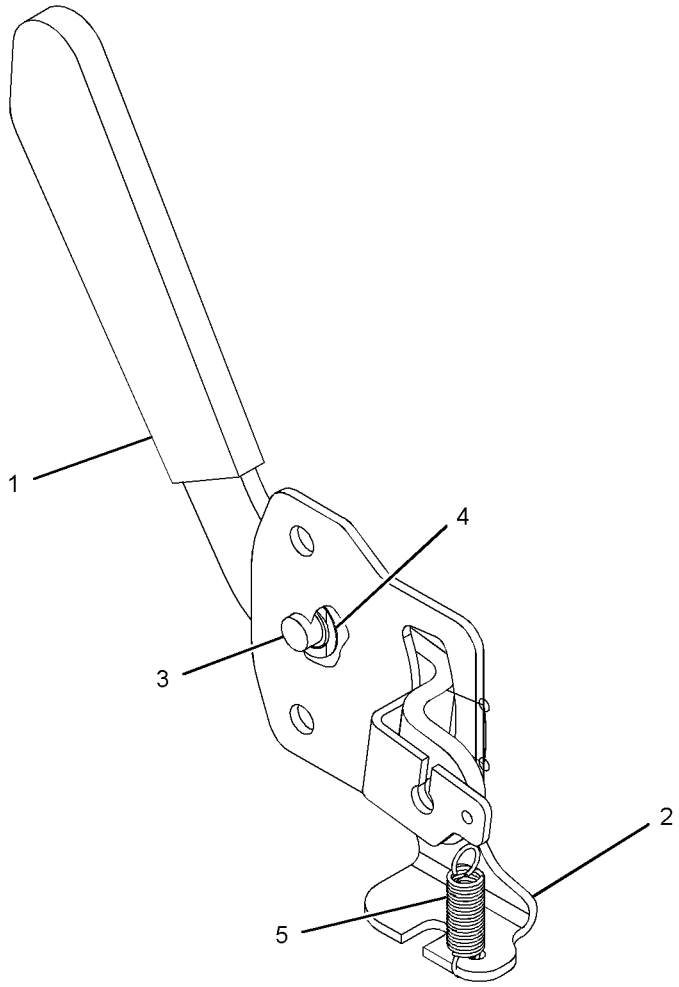

GRAPHIC #1 **<END>** g01217036

OPERATOR STATION

259-7194 LINES GP-AIR CONDITIONER

S/N: CJN1-UP

PART OF 260-6960 CHASSIS AR

SMCS-1808 **i02910647**

NOTE	REF NO	GRAPHIC REF	PART NUMBER	QTY	PART NAME 1 2 3 4 5 6 (PRODUCT LEVEL)	SEE PAGE
	1	2	**4I-4580**	1	FITTING	
	2	2	**122-9605**	2	TUBE	
					—OR—	
			6P-8855	2	TUBE	
					(OPTIONAL DESIGN)	
	3	1	**7I-0375**	1	ELBOW	
	4	1,2	**7K-1181**	3	STRAP-CABLE	
	5	2	**9X-8256**	7	WASHER (6.6X12X2-MM THK)	
	6	2	**122-9657**	2	CLAMP	
	7	2	**293-1238**	2	HOSE-DRAIN	
	8	2	**133-8011**	1	FITTING AS	
		2	**121-7138**	1	SEAL-O-RING	
	9	1,2	**155-7024**	2	SPACER-SPECIAL	
	10	2	**176-1902**	1	RECEIVER DRYER AS (REFRIGERANT)	
	11	2	**204-1611**	2	STRAP-CABLE	
	12	2	**235-8891**	1	PLATE	
	13	1,2	**235-9014**	8	CLAMP-HOSE	
					—OR—	
			5D-1026	8	CLAMP-HOSE	
					(OPTIONAL DESIGN)	
	14	2	**235-9015**	2	HOSE	
	15	2	**293-1279**	1	HOSE AS	
		2	**121-7137**	1	SEAL-O-RING	
		2	**245-7850**	1	PLUG	
	16	2	**284-4499**	1	HOSE AS	
		2	**121-7137**	2	SEAL-O-RING	
	17	2	**284-4500**	1	TUBE AS	
		2	**121-7137**	1	SEAL-O-RING	
	18	2	**284-4501**	1	TUBE AS	
		2	**121-7138**	2	SEAL-O-RING	
	19	2	**284-4502**	1	HOSE AS	
		2	**121-7138**	2	SEAL-O-RING	
		2	**130-0270**	1	SWITCH AS-PRESSURE (REFRIGERANT)	
		2	**185-8293**	1	SEAL-O-RING	
	20	2	**293-1281**	1	HOSE AS	
		2	**121-7136**	1	SEAL-O-RING	
		2	**245-7851**	1	PLUG	
	21	2	**293-1280**	1	HOSE AS	
		2	**121-7136**	2	SEAL-O-RING	
	22	1	**095-0913**	1	CLIP	
	23	2	**121-7098**	1	BRACKET AS	
	24	2	**132-5789**	1	CLIP	
	25	1,2	**4S-1962**	5	CLIP	
E	26	2	**5P-0767**		HOSE (350-CM)	
E	26A	1	**5P-0767**		HOSE (250-CM)	
	27	2	**5K-3294**	2	CLIP	
	28	1	**5P-4325**	1	CLIP	
	29	1,2	**6D-1641**	4	CLIP	
	30	2	**6D-3479**	2	CLIP	
	31	2	**6V-2235**	2	CLIP	
	32	2	**6V-3265**	1	CLIP	
M	33	2	**6V-7357**	7	BOLT (M6X1X25-MM)	
	34	1	**7Y-8168**	2	GROMMET	
M	35	1	**8T-3647**	1	BOLT (M8X1.25X80-MM)	
	36	1,2	**8T-4121**	18	WASHER-HARD (11X21X2.5-MM THK)	
M	37	2	**8T-4136**	1	BOLT (M10X1.5X25-MM)	

259-7194 **LINES GP-AIR CONDITIONER** *(contd.)* **i02910647**

NOTE	REF NO	GRAPHIC REF	PART NUMBER	QTY	PART NAME 1 2 3 4 5 6 (PRODUCT LEVEL)	SEE PAGE
M	38	1,2	**8T-4137**	14	BOLT (M10X1.5X20-MM)	
M	39	2	**8T-4191**	2	BOLT (M10X1.5X16-MM)	
M	40	2	**8T-4200**	2	BOLT (M8X1.25X16-MM)	
	41	1,2	**8T-4224**	3	WASHER-HARD (8.8X16X2-MM THK)	
	42	2	**293-1277**	1	BRACKET AS	
	43	2	**293-1230**	1	SUPPORT AS	
E	44	2	**225-5714**		GUARD (35-CM)	
	45	2	**173-8073**	1	SPACER (11X25X20-MM THK)	
M	46	2	**8T-4196**	1	BOLT (M10X1.5X35-MM)	
	47	1,2	**305-0442**	2	BAND-MARKER (HR)	
	48	2	**305-0441**	2	BAND-MARKER (HS)	
E	49	2	**225-5707**		GUARD (44-CM)	
	50	1	**115-8645**	1	GUARD	

E-ORDER BY THE CENTIMETER
M-METRIC PART

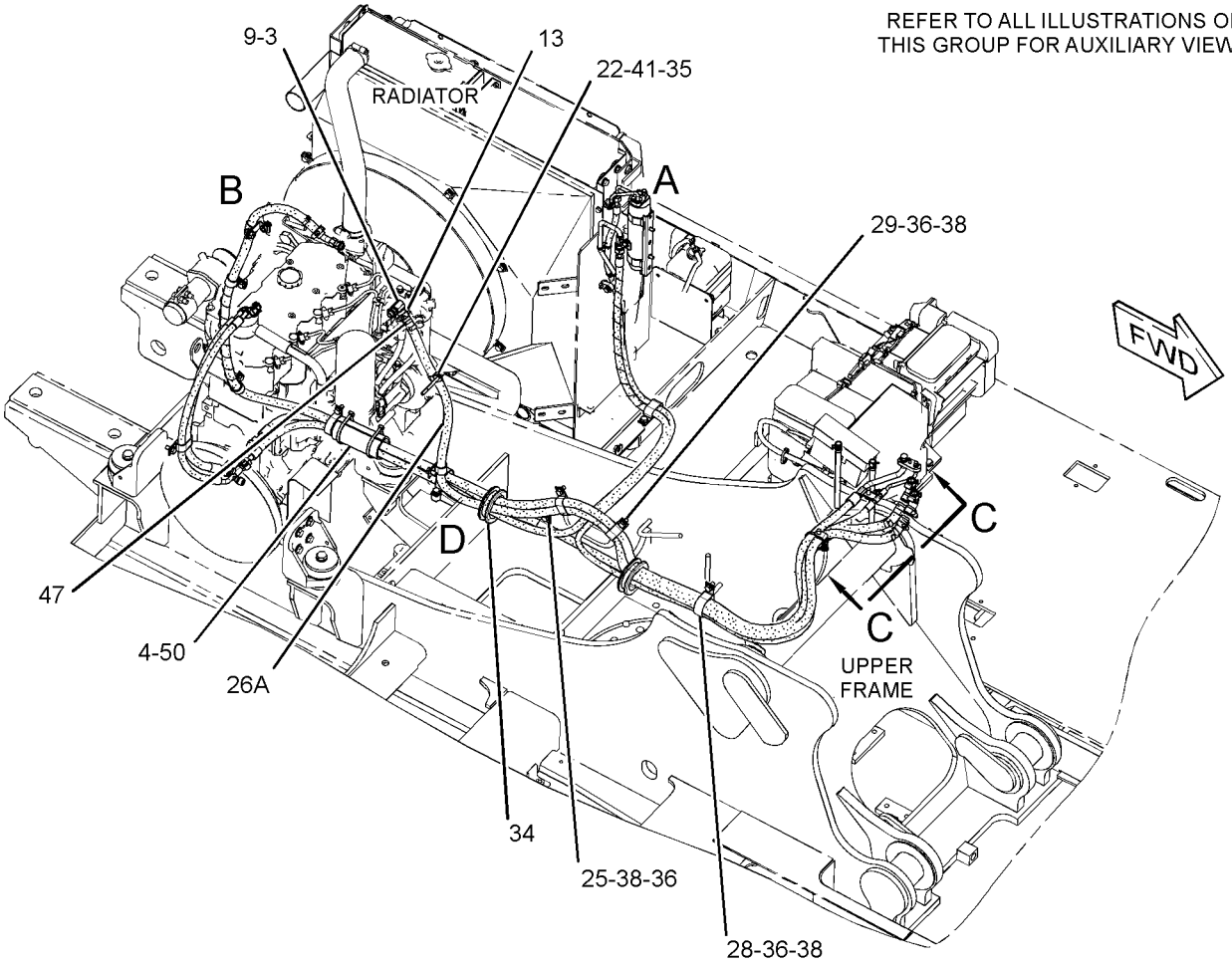

GRAPHIC #1 g01523901

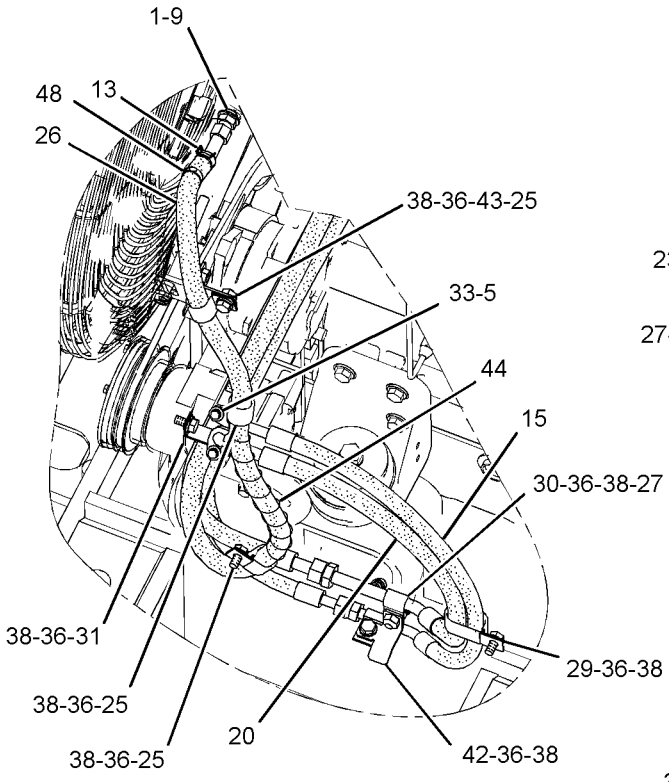

VIEW OF AREA B 90°

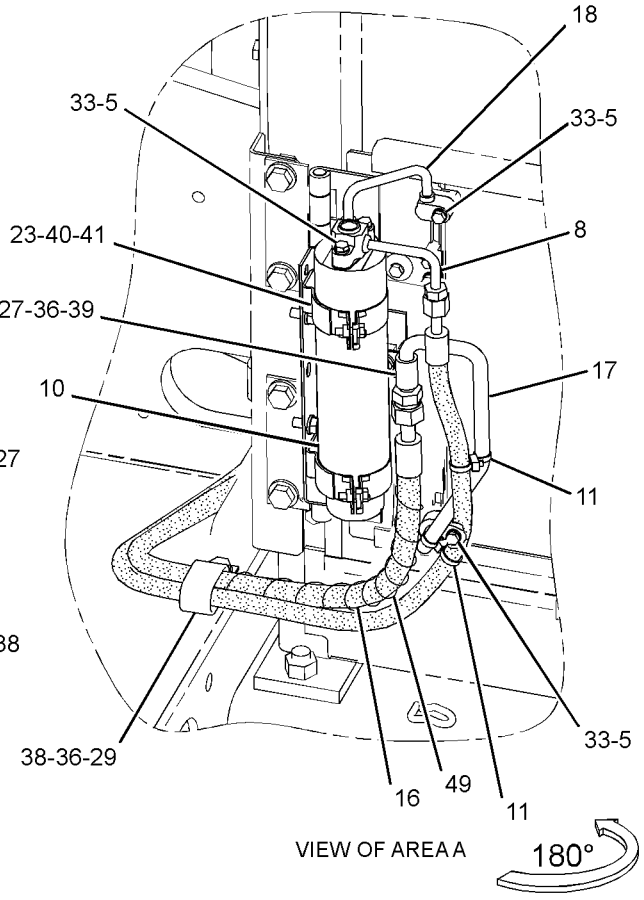

VIEW OF AREA A 180°

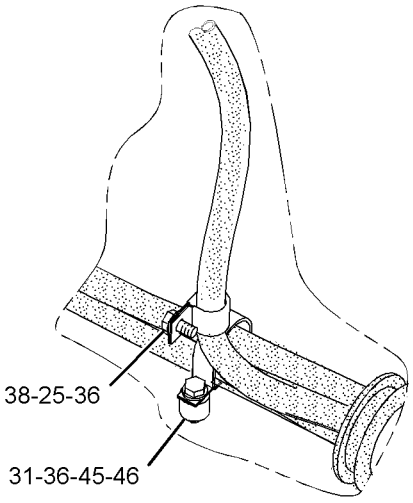

VIEW OF AREA D

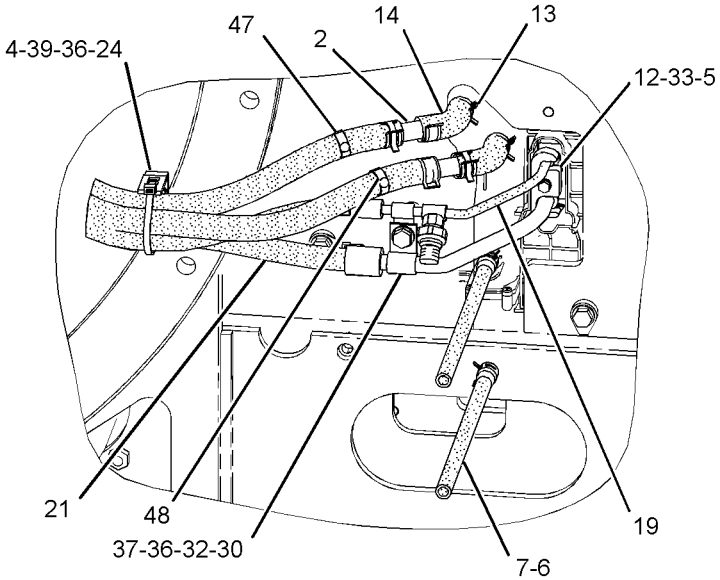

VIEW C-C

GRAPHIC #2 **<END>** g01523902

OPERATOR STATION

259-7198 LINES GP-HEATER

S/N: CJN1-UP
PART OF 259-7197 HEATER AR-CAB
AN ATTACHMENT

SMCS-1812, 7304 **i02910649**

NOTE	REF NO	GRAPHIC REF	PART NUMBER	QTY	PART NAME 1 2 3 4 5 6 (PRODUCT LEVEL)	SEE PAGE
	1	1	**4I-4580**	1	FITTING	
	2	1	**7I-0375**	1	ELBOW	
	3	1	**7K-1181**	1	STRAP-CABLE	
	4	1	**122-9605**	2	TUBE	
					—OR—	
		1	**6P-8855**	2	TUBE	
	5	1	**155-7024**	2	SPACER-SPECIAL	
	6	1	**173-8073**	1	SPACER (11X25X20-MM THK)	
	7	1	**235-9014**	8	CLAMP-HOSE	
					—OR—	
		1	**5D-1026**	8	CLAMP-HOSE	
	8	1	**235-9015**	2	HOSE	
	9	1	**266-6310**	1	BRACKET AS	
	10	1	**283-2893**	1	RECEPTACLE AS	
		1	**8T-8737**	2	PLUG-SEAL	
		1	**243-4505**	1	RECEPTACLE AS-CONNECTOR (2-PIN)	
	11	1	**293-1230**	1	SUPPORT AS	
	12	1	**095-0913**	1	CLIP	
	13	1	**132-5789**	1	CLIP	
	14	1	**4S-1962**	6	CLIP	
	15	1	**6D-1641**	3	CLIP	
	16	1	**7Y-8168**	2	GROMMET	
M	17	1	**8T-3647**	1	BOLT (M8X1.25X80-MM)	
	18	1	**8T-4121**	14	WASHER-HARD (11X21X2.5-MM THK)	
M	19	1	**8T-4137**	9	BOLT (M10X1.5X20-MM)	
M	20	1	**8T-4172**	3	BOLT (M10X1.5X80-MM)	
M	21	1	**8T-4191**	1	BOLT (M10X1.5X16-MM)	
M	22	1	**8T-4196**	1	BOLT (M10X1.5X35-MM)	
	23	1	**8T-4223**	2	WASHER-HARD (13.5X25.5X3-MM THK)	
	24	1	**8T-4224**	1	WASHER-HARD (8.8X16X2-MM THK)	
M	25	1	**8T-4910**	2	BOLT (M12X1.75X60-MM)	
E	26	1	**5P-0767**		HOSE (350-CM)	
E	26A	1	**5P-0767**		HOSE (250-CM)	
	27	1	**305-0441**	2	BAND-MARKER (HS)	
	28	1	**305-0442**	2	BAND-MARKER (HR)	

E-ORDER BY THE CENTIMETER
M-METRIC PART

259-7198 **LINES GP-HEATER** *(contd.)* **i02910649**

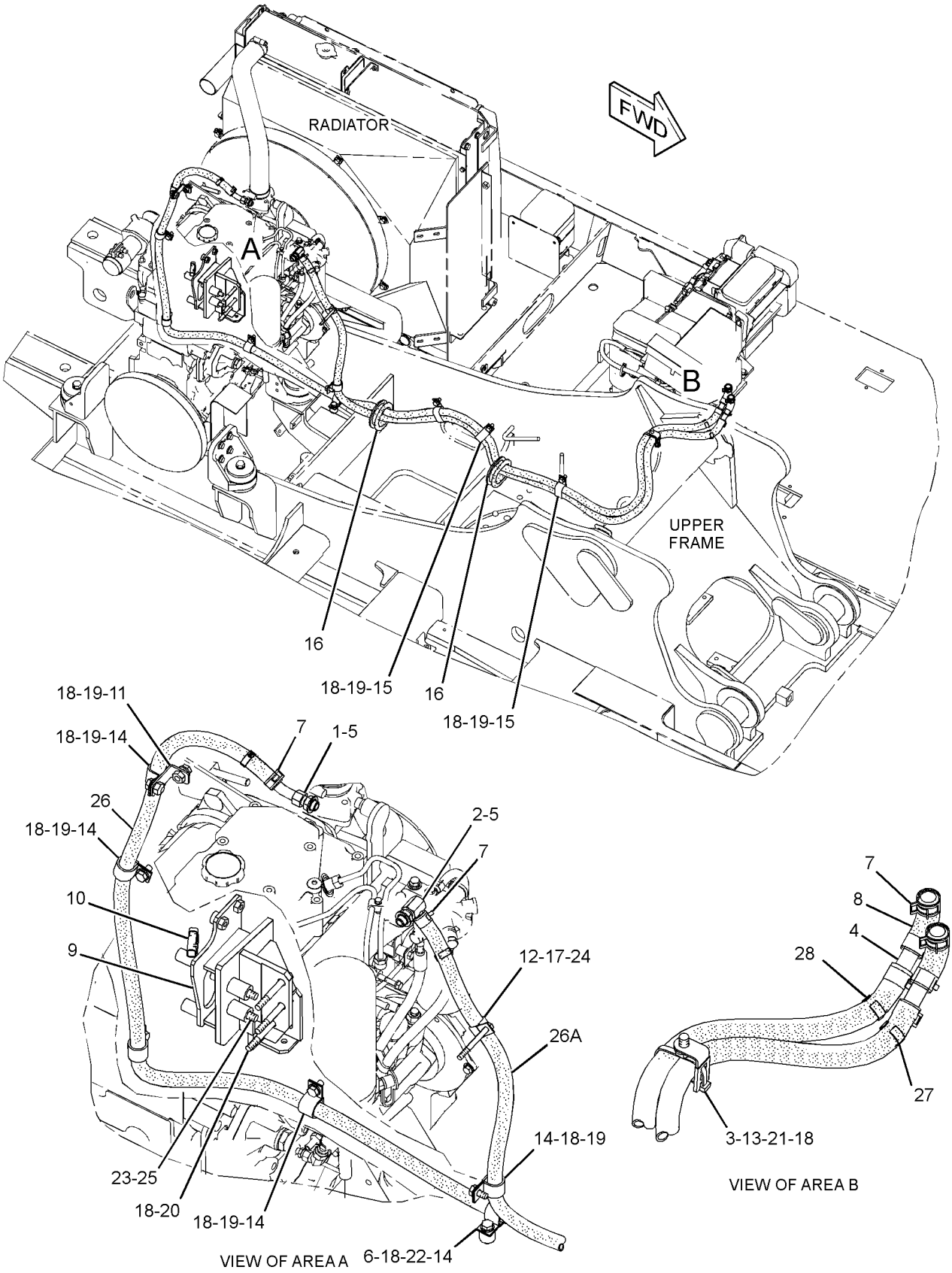

GRAPHIC #1

<END>

g01418101

OPERATOR STATION

7Y-0059 LITERATURE GP

S/N: CJN1-UP

PART OF 260-6960 CHASSIS AR

SMCS-7300 **i01809351**

NOTE	PART NUMBER	QTY	PART NAME 1 2 3 4 5 6 (PRODUCT LEVEL)	SEE PAGE
	099-3645	1	CABLE-LANYARD	
	5P-8500	2	KEY	
	5P-7958	2	SLEEVE-CABLE SPLICE	

<END>

OPERATOR STATION

330-1162 MIRROR GP

S/N: CJN1-UP
PART OF 330-1324 MIRROR GP
AN ATTACHMENT

SMCS-7319 **i03117525**

NOTE	REF NO	GRAPHIC REF	PART NUMBER	QTY	PART NAME 1 2 3 4 5 6 (PRODUCT LEVEL)	SEE PAGE
M	1	1	**135-8575**	3	BOLT AS-LOCKING (M12X1.75X30-MM)	
	2	1	**320-5525**	1	TUBE AS	
	3	1	**327-3062**	1	MIRROR GP-REAR VIEW	
M		1	**8T-0269**	2	BOLT-SOCKET HEAD (M6X1X20-MM)	
		1	**9X-8256**	2	WASHER (6.6X12X2-MM THK)	
	4	1	**327-3063**	1	MIRROR GP-REAR VIEW	
M		1	**8T-0269**	2	BOLT-SOCKET HEAD (M6X1X20-MM)	
		1	**9X-8256**	2	WASHER (6.6X12X2-MM THK)	

M-METRIC PART

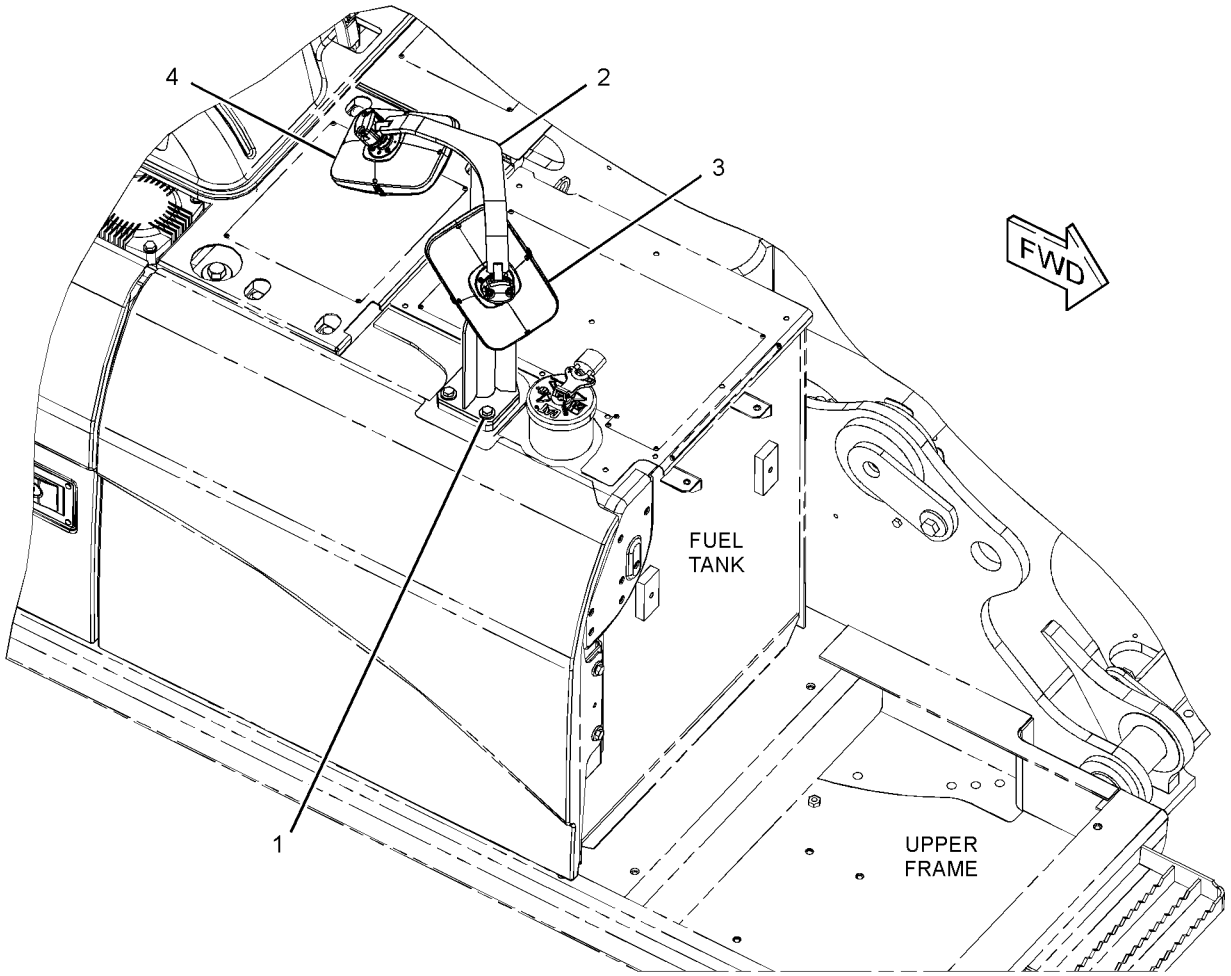

GRAPHIC #1 **<END>** g01619310

OPERATOR STATION

330-1324 MIRROR GP

S/N: CJN1-UP
PART OF 330-8752 INSTALLATION AR
AN ATTACHMENT

SMCS-7319 **i03148122**

NOTE	PART NUMBER	QTY	PART NAME 1 2 3 4 5 6 (PRODUCT LEVEL)	SEE PAGE
Y	*330-1579*	1	COVER GP-SIDE (FUEL TANK, HYDRAULIC TANK)	292
Y	*330-1163*	1	FENDER & COVER GP	311
Y	*330-1162*	1	MIRROR GP	996
Y	*333-5084*	1	TANK & MTG GP-FUEL	102

Y-SEPARATE ILLUSTRATION

<END>

OPERATOR STATION

142-3836 MIRROR GP-REAR VIEW—FRONT, RH

S/N: CJN1-UP

PART OF 260-6960 CHASSIS AR

SMCS-7319 **i01584884**

NOTE	REF NO	GRAPHIC REF	PART NUMBER	QTY	PART NAME 1 2 3 4 5 6 (PRODUCT LEVEL)	SEE PAGE
	1	1	**2M-0849**	4	WASHER-HARD (13.5X25.5X5-MM THK)	
	2	1	**137-2270**	1	MIRROR	
	3	1	**165-3065**	1	BRACKET-MIRROR	
	4	1	**177-6315**	4	PLUG	
M	5	1	**8T-4192**	4	BOLT (M12X1.75X25-MM)	

M-METRIC PART

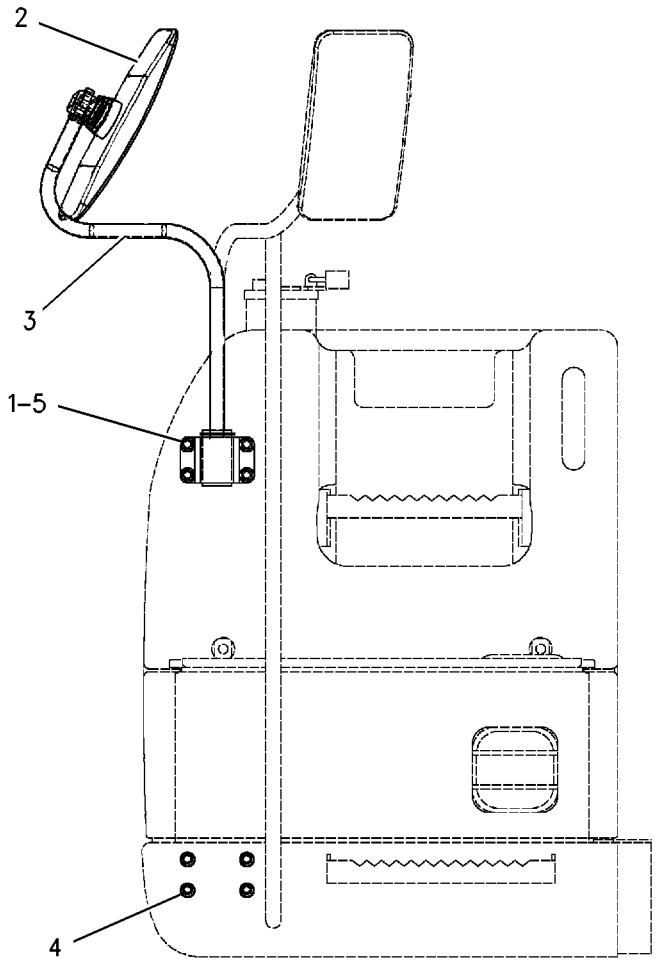

FRONT VIEW

GRAPHIC #1 **<END>** g00682738

OPERATOR STATION

327-6550 MIRROR GP-REAR VIEW

S/N: CJN1-UP

PART OF 235-8910 CAB GP, 327-6552, 327-6553 MIRROR GP-REAR VIEW

AN ATTACHMENT

SMCS-7319 **i03185260**

NOTE	REF NO	GRAPHIC REF	PART NUMBER	QTY	PART NAME 1 2 3 4 5 6 (PRODUCT LEVEL)	SEE PAGE
M	1	1	**8T-0269**	2	BOLT-SOCKET HEAD (M6X1X20-MM)	
	2	1	**9X-8256**	2	WASHER (6.6X12X2-MM THK)	

M-METRIC PART

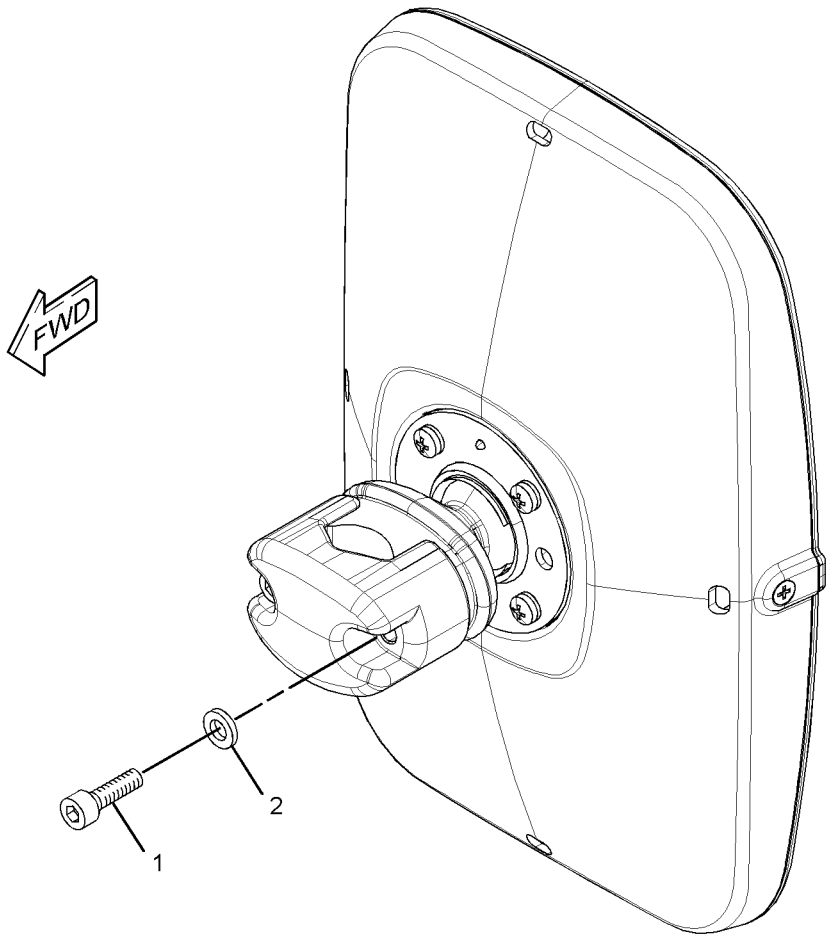

GRAPHIC #1 **<END>** g01615528

OPERATOR STATION

327-6552 MIRROR GP-REAR VIEW

S/N: CJN1-UP
CANNOT BE USED WITH GAURD
AN ATTACHMENT

SMCS-7319 **i03250686**

NOTE	REF NO	GRAPHIC REF	PART NUMBER	QTY	PART NAME 1 2 3 4 5 6 (PRODUCT LEVEL)	SEE PAGE
Y	1	1	**327-6550**	1	MIRROR GP-REAR VIEW	999
	2	1	**327-6576**	1	SUPPORT AS	
M	3	1	**8T-4175**	1	BOLT (M16X2X90-MM)	
	4	1	**9X-8257**	1	WASHER (17.5X30X3.5-MM THK)	

M-METRIC PART
Y-SEPARATE ILLUSTRATION

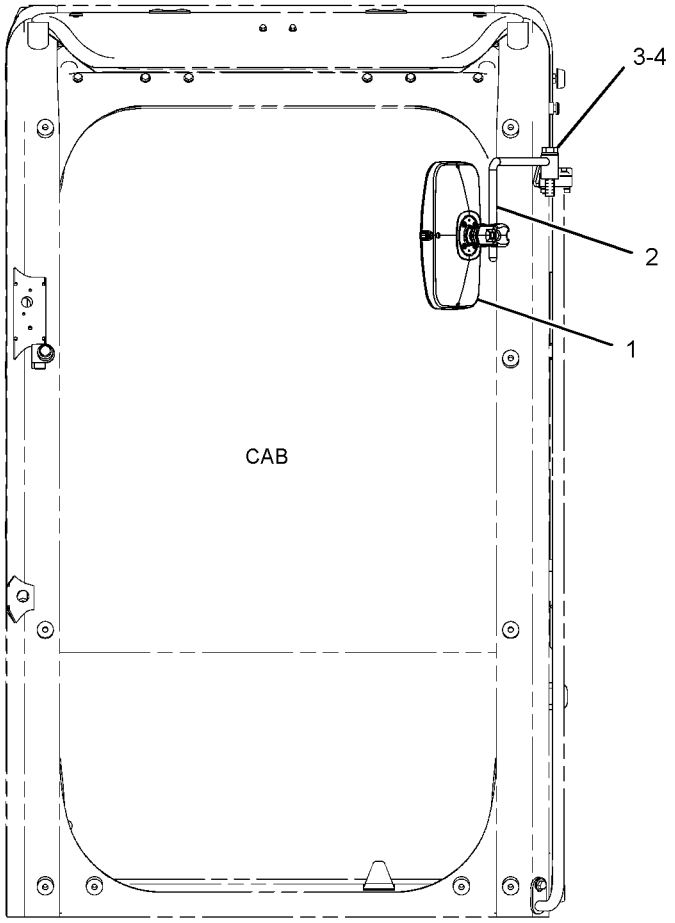

FRONT VIEW

GRAPHIC #1 **<END>** g01615557

OPERATOR STATION

327-6553 MIRROR GP-REAR VIEW

S/N: CJN1-UP
FOR USE WITH GUARD
AN ATTACHMENT

SMCS-7319 **i03082146**

NOTE	REF NO	GRAPHIC REF	PART NUMBER	QTY	PART NAME 1 2 3 4 5 6 (PRODUCT LEVEL)	SEE PAGE
	1	1	**316-8989**	1	SUPPORT AS	
Y	2	1	**327-6550**	1	MIRROR GP-REAR VIEW	999
M	3	1	**8T-4193**	1	BOLT (M16X2X50-MM)	
	4	1	**9X-8257**	1	WASHER (17.5X30X3.5-MM THK)	

M-METRIC PART
Y-SEPARATE ILLUSTRATION

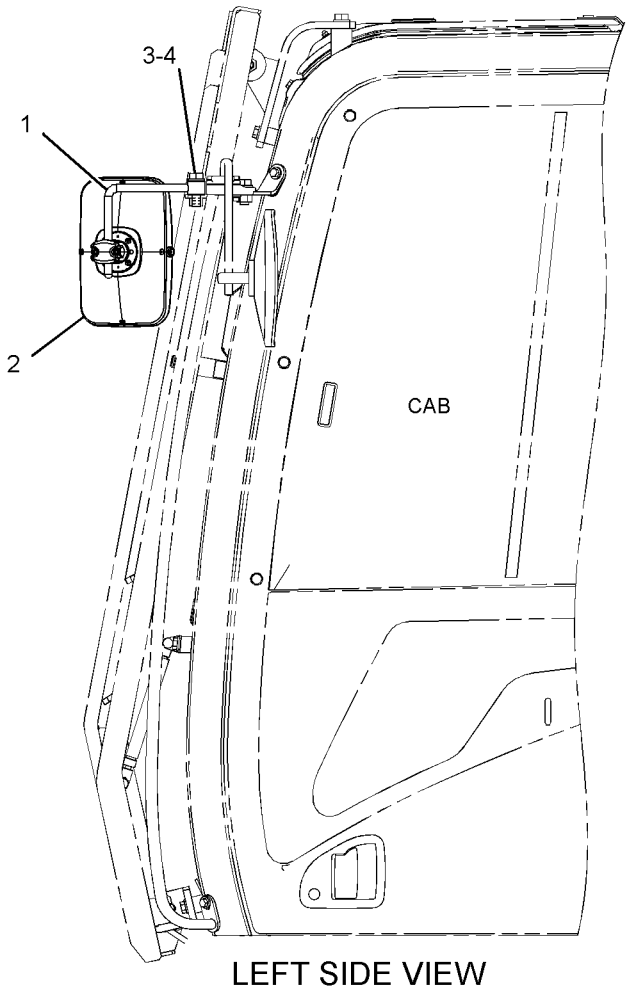

LEFT SIDE VIEW

GRAPHIC #1

<END>

g01615542

OPERATOR STATION

221-8813 MONITOR & MTG GP-OPERATOR

S/N: CJN1-UP

PART OF 259-7193 OPERATOR AR

SMCS-7490 **i03017455**

NOTE	REF NO	GRAPHIC REF	PART NUMBER	QTY	PART NAME 1 2 3 4 5 6 (PRODUCT LEVEL)	SEE PAGE
Y	1	1	**319-4353**	1	MONITOR GP-OPERATOR	1003
M	2	1	**9X-2046**	3	SCREW-TRUSS HEAD (M6X1X35-MM)	

M-METRIC PART
Y-SEPARATE ILLUSTRATION

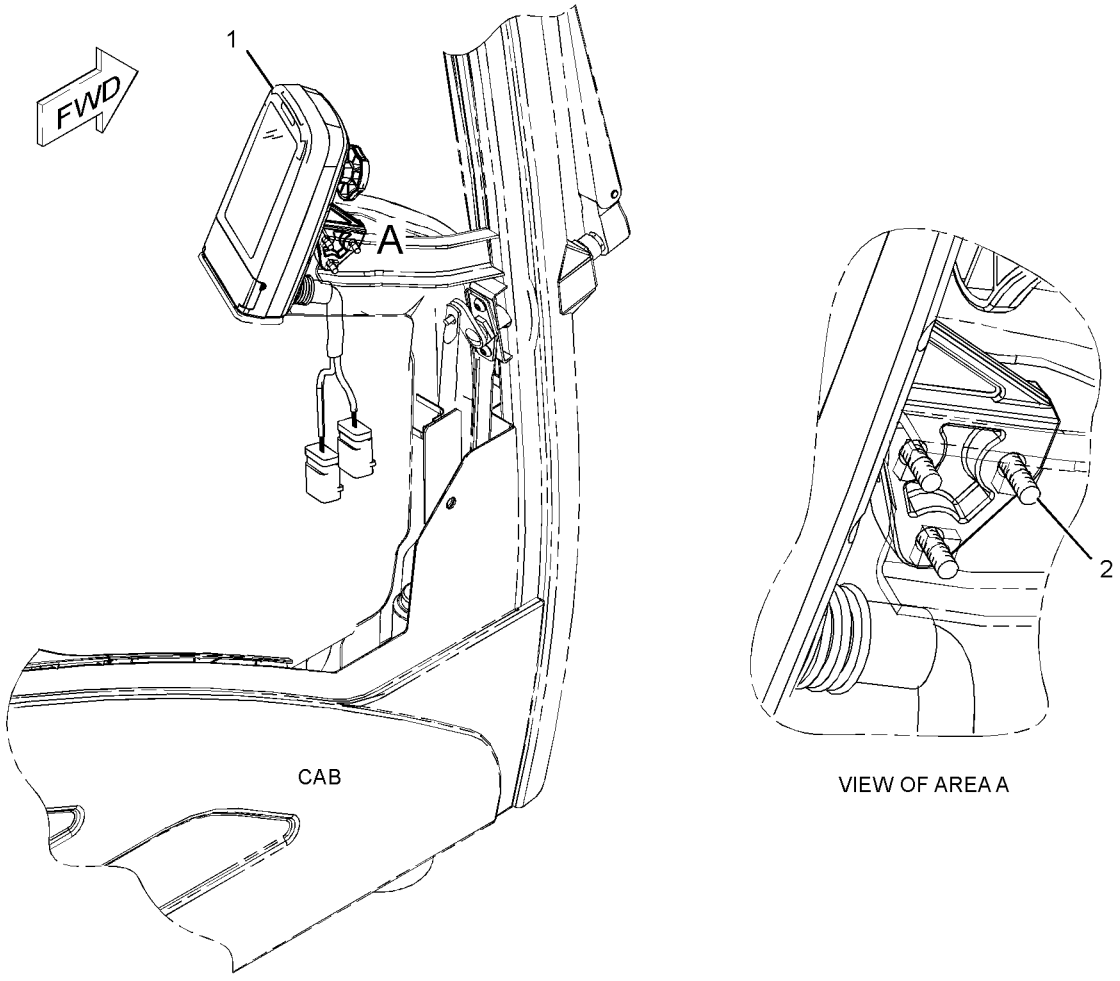

VIEW OF AREA A

GRAPHIC #1 **<END>** g01231835

OPERATOR STATION

319-4353 MONITOR GP-OPERATOR

S/N: CJN1-UP

PART OF 221-8813 MONITOR & MTG GP-OPERATOR

SMCS-7490 **i03022205**

NOTE	REF NO	GRAPHIC REF	PART NUMBER	QTY	PART NAME 1 2 3 4 5 6 (PRODUCT LEVEL)	SEE PAGE
	1	1	**247-2694**	1	RECEPTACLE AS-CONNECTOR (12-PIN)	
	2	1	**247-2695**	1	RECEPTACLE AS-CONNECTOR (12-PIN)	
	3	1	**9X-3401**	17	PIN-CONNECTOR (16-GA TO 18-GA)	
					—OR—	
		1	**126-1767**	17	PIN-CONNECTOR (14-GA)	
	4	1	**8T-8737**	7	PLUG-SEAL	

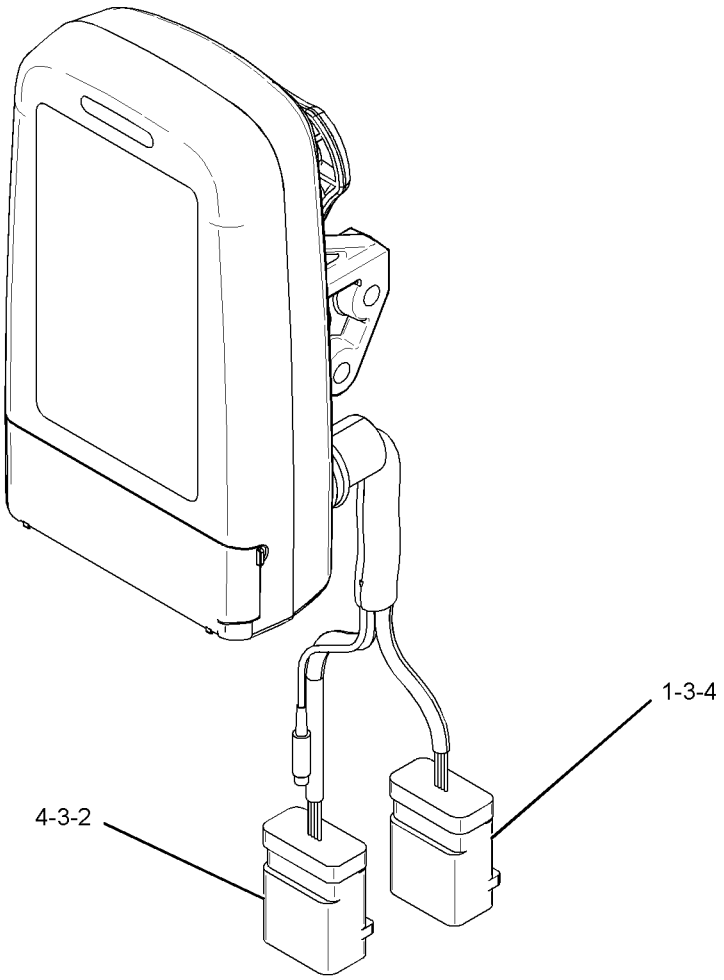

GRAPHIC #1 **<END>** g01528758

OPERATOR STATION

270-5603 MOUNTING GP-ANTENNA

S/N: CJN1-UP

PART OF 301-2479, 330-8775 SPECIAL AR

AN ATTACHMENT

SMCS-7338, 7606 **i02862871**

NOTE	REF NO	GRAPHIC REF	PART NUMBER	QTY	PART NAME 1 2 3 4 5 6 (PRODUCT LEVEL)	SEE PAGE
	1	1	**309-5849**	1	BRACKET AS	
M	2	1	**7X-2552**	2	BOLT (M16X2X30-MM)	
	3	1	**9X-8257**	2	WASHER (17.5X30X3.5-MM THK)	

M-METRIC PART

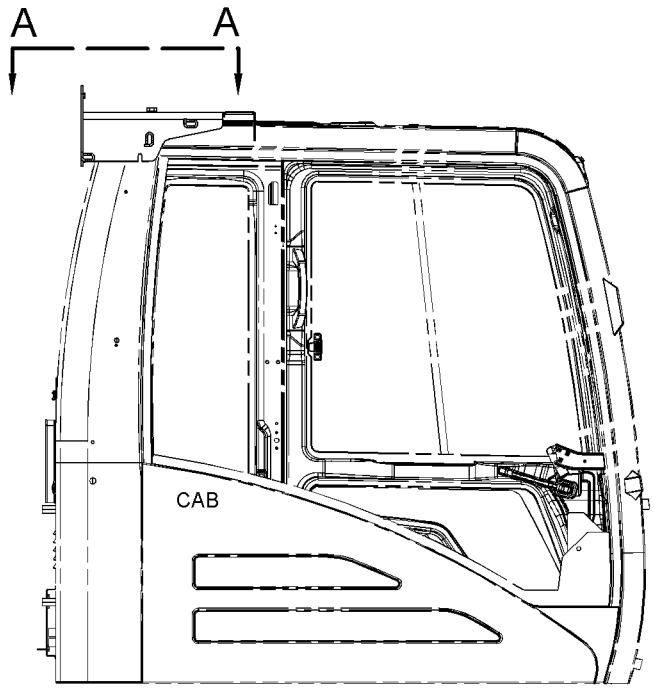

RIGHT SIDE VIEW
(WITHOUT CAB GUARD)

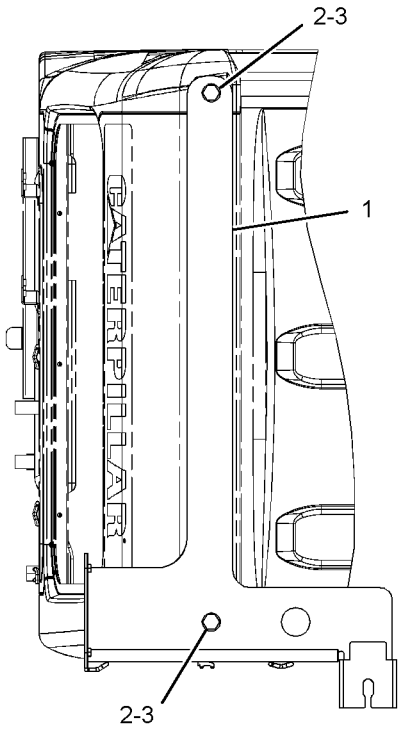

VIEW A-A

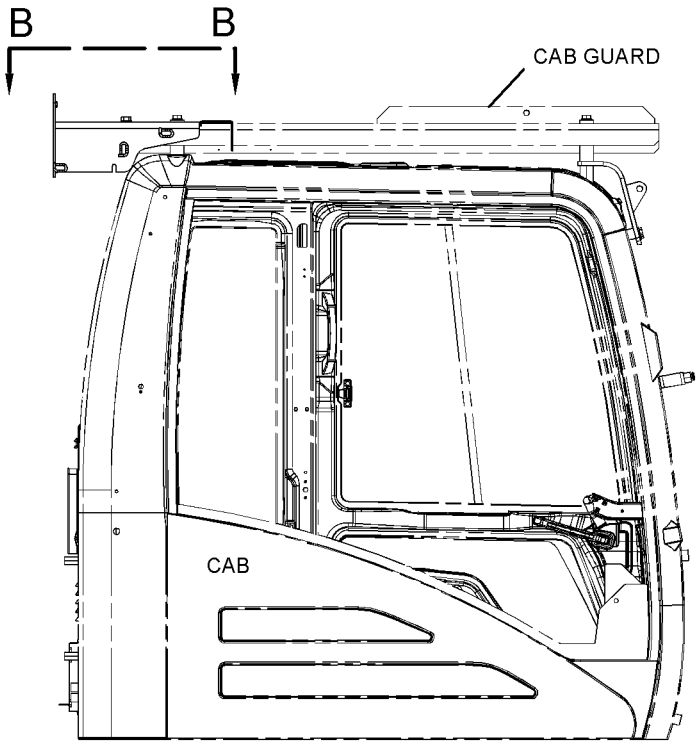

RIGHT SIDE VIEW
(WITH CAB GUARD)

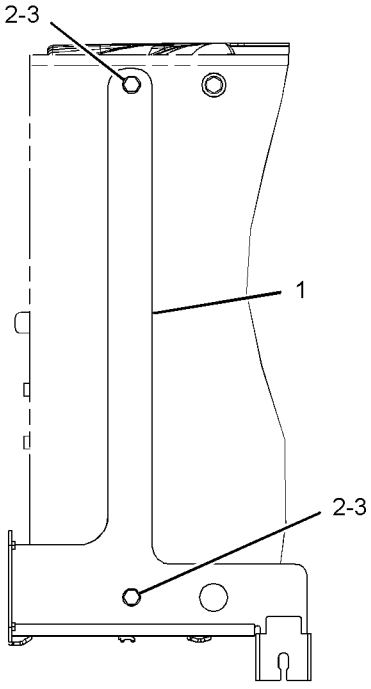

VIEW B-B

GRAPHIC #1 **<END>** g01435822

OPERATOR STATION

290-9464 MOUNTING GP-ANTENNA

S/N: CJN1-UP

PART OF 260-7072 INSTALLATION AR-COMMUNICATION

AN ATTACHMENT

SMCS-7338, 7606 **i02753038**

NOTE	REF NO	GRAPHIC REF	PART NUMBER	QTY	PART NAME 1 2 3 4 5 6 (PRODUCT LEVEL)	SEE PAGE
	1	1	**266-2861**	1	ANTENNA AS (PRODUCT LINK)	
		1	**223-4296**	1	ANTENNA (WHIP)	
	2	1	**270-5433**	1	BRACKET	
	3	1	**095-0910**	3	CLIP	
	4	1	**096-3872**	1	GROMMET	
	5	1	**161-6987**	3	WASHER-HARD (5.2X16X1.5-MM THK)	
M	6	1	**8C-7581**	3	SCREW-MACHINE (M4X0.7X8-MM)	
M	7	1	**8T-4171**	1	BOLT (M6X1X12-MM)	
M	8	1	**8T-4190**	1	BOLT (M16X2X25-MM)	
	9	1	**9X-6165**	1	WASHER (6.5X22X2.5-MM THK)	
	10	1	**9X-8257**	1	WASHER (17.5X30X3.5-MM THK)	

M-METRIC PART

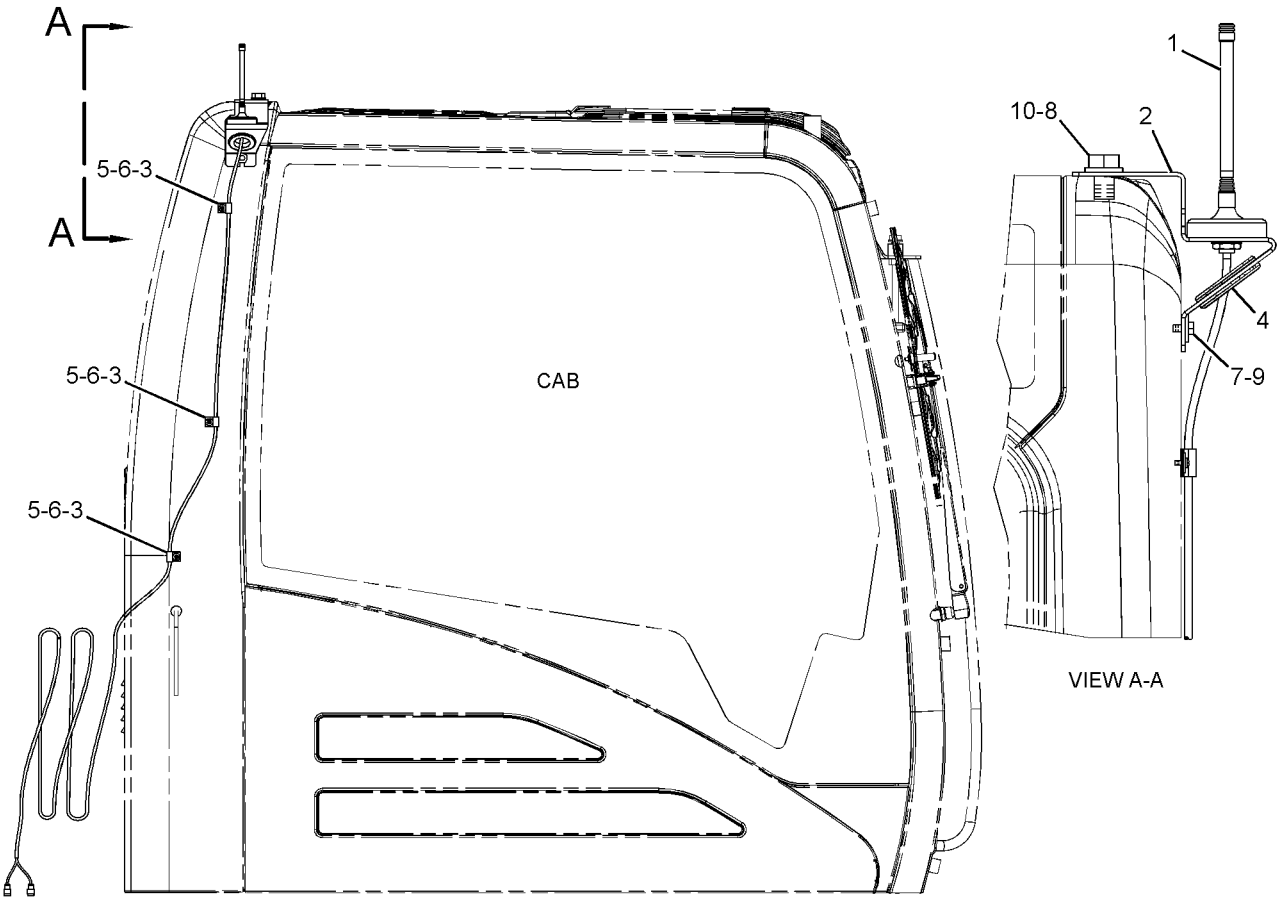

RIGHT SIDE VIEW

GRAPHIC #1 **<END>** g01380874

319-4255 MOUNTING GP-ANTENNA–PRODUCT LINK

S/N: CJN1-UP

PART OF 301-2586, 301-2590 INSTALLATION AR-COMMUNICATION

AN ATTACHMENT

SMCS-7338, 7606 **i03036048**

NOTE	REF NO	GRAPHIC REF	PART NUMBER	QTY	PART NAME 1 2 3 4 5 6 (PRODUCT LEVEL)	SEE PAGE
	1	1	**284-8532**	1	ANTENNA AS	
		1	**301-0589**	1	ANTENNA (WHIP)	
	2	1	**309-5751**	1	BRACKET	
	3	1	**095-0910**	4	CLIP	
	4	1	**161-6987**	3	WASHER-HARD (5.2X16X1.5-MM THK)	
M	5	1	**8T-0337**	3	SCREW-MACHINE (M4X0.7X12-MM)	
M	6	1	**8T-4190**	1	BOLT (M16X2X25-MM)	
M	7	1	**8T-4138**	1	BOLT (M6X1X20-MM)	
	8	1	**9X-2026**	1	WASHER (6.5X17X1-MM THK)	
	9	1	**9X-6165**	1	WASHER (6.5X22X2.5-MM THK)	
	10	1	**9X-8257**	1	WASHER (17.5X30X3.5-MM THK)	

M-METRIC PART

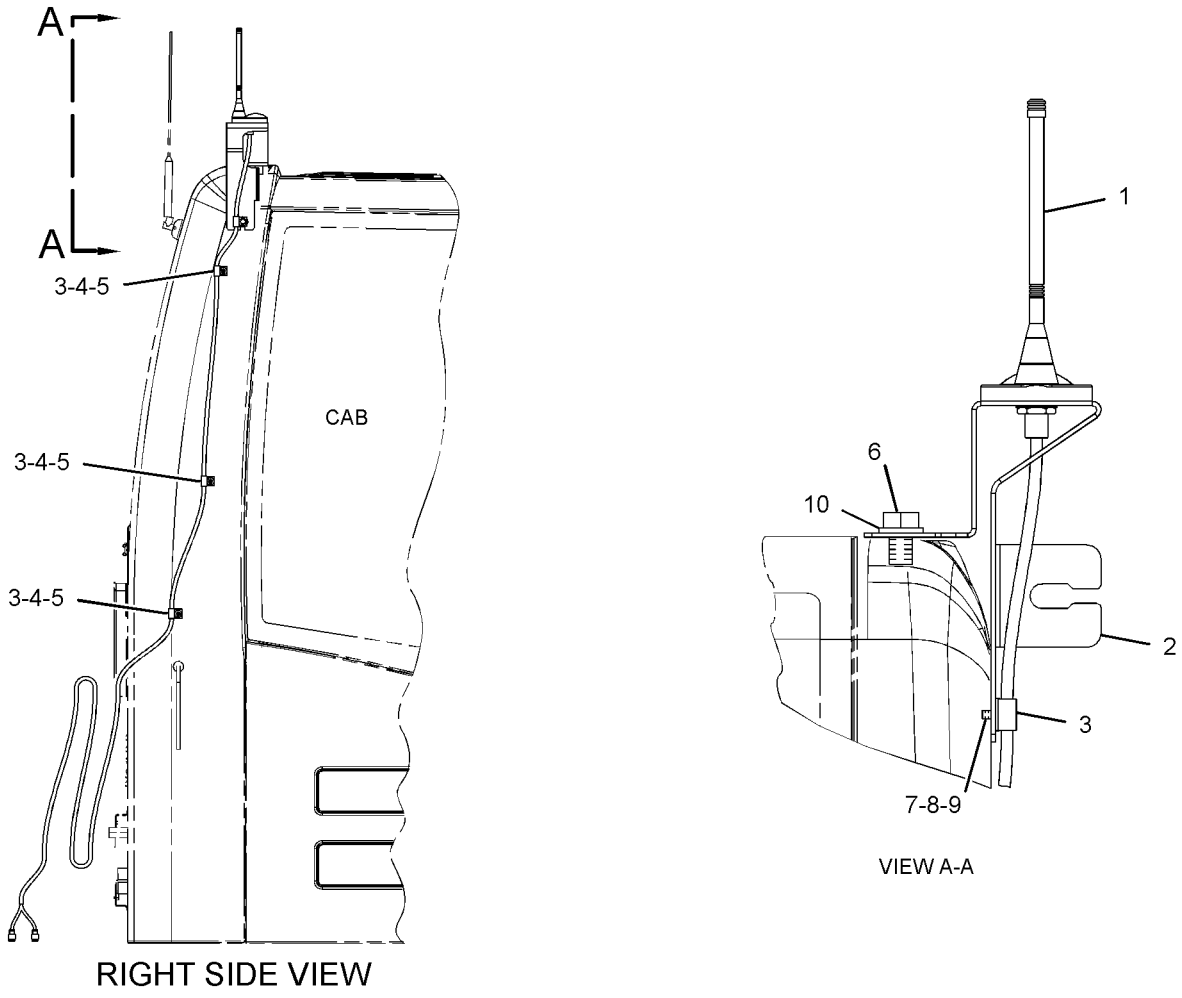

RIGHT SIDE VIEW

GRAPHIC #1 **<END>** g01457047

OPERATOR STATION

245-7811 MOUNTING GP-PLATFORM

S/N: CJN1-UP

PART OF 260-6960 CHASSIS AR

SMCS-7253 **i02217210**

NOTE	REF NO	GRAPHIC REF	PART NUMBER	QTY	PART NAME 1 2 3 4 5 6 (PRODUCT LEVEL)	SEE PAGE
	1	1	**235-8862**	4	MOUNT AS	
	2	1	**8T-4121**	16	WASHER-HARD (11X21X2.5-MM THK)	
M	3	1	**8T-4195**	16	BOLT (M10X1.5X30-MM)	

M-METRIC PART

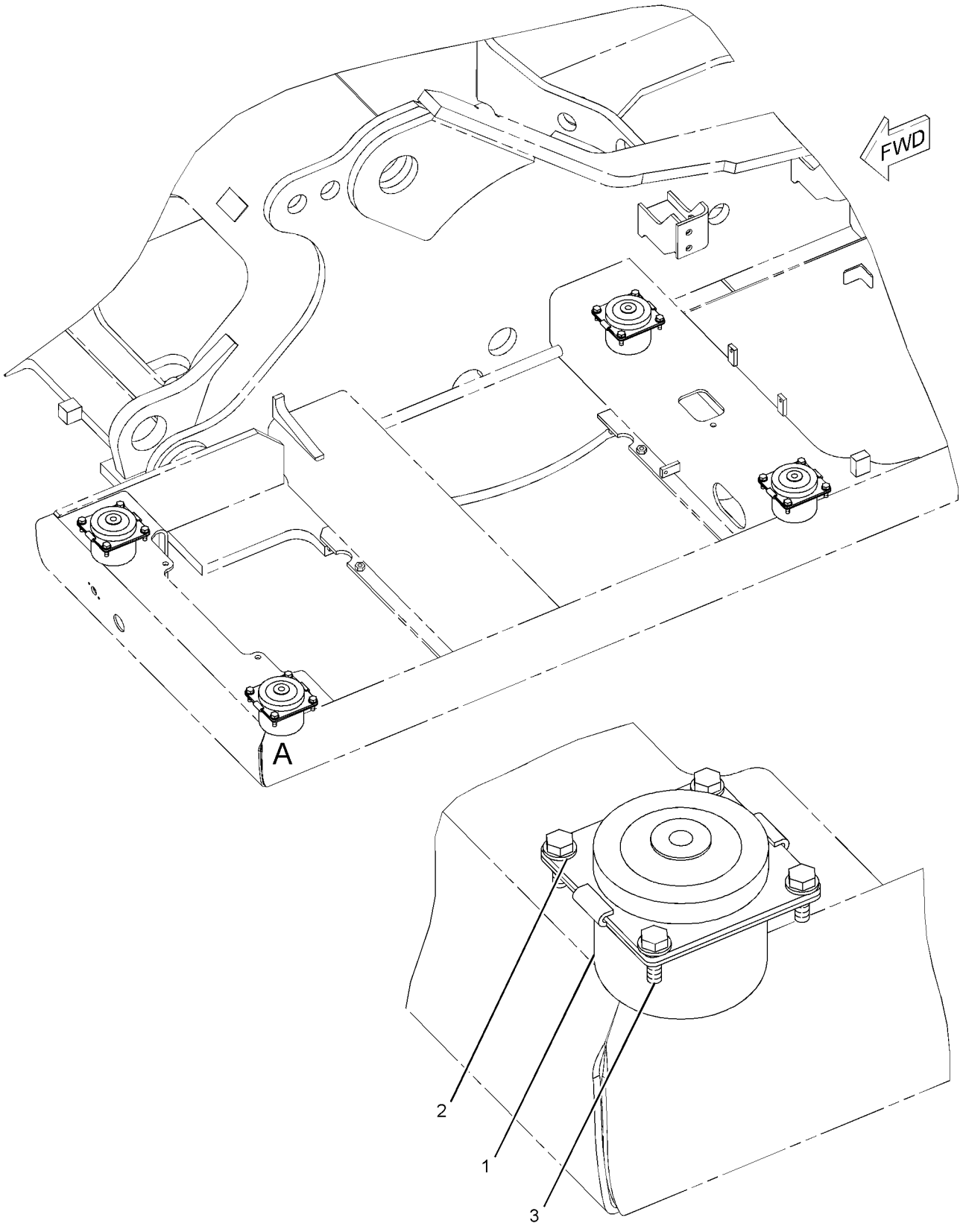

VIEW OF AREA A

GRAPHIC #1 **<END>** g01101486

OPERATOR STATION

259-7193 OPERATOR AR

S/N: CJN1-UP

PART OF 260-6960 CHASSIS AR

SMCS-7301 **i02600553**

NOTE	PART NUMBER	QTY	PART NAME 1 2 3 4 5 6 (PRODUCT LEVEL)	SEE PAGE
Y	*245-7922*	1	CONSOLE GP-OPERATOR	892
Y	*221-8872*	1	CONTROL & MTG GP-MACHINE	150
Y	*170-9497*	1	CONTROL GP-HYDRAULIC PEDAL (TRAVEL)	912
Y	*251-0538*	1	INSTALLATION GP-RADIO (AM, FM)	981
Y	*221-8813*	1	MONITOR & MTG GP-OPERATOR	1002
Y	*229-9078*	1	PLATFORM GP-OPERATOR	1011
Y	*235-8856*	1	SUPPORT GP-SEAT	1045
Y	*259-5161*	1	WIRING GP-CAB	216
Y	*251-0433*	1	WIRING GP-CONSOLE	236
Y	*275-6926*	1	PANEL & MTG GP-CIRCUIT BREAKER	180
Y	*259-5160*	1	WIRING GP-PLATFORM	260

Y-SEPARATE ILLUSTRATION

<END>

255-5845 PEDAL AR-AUXILIARY—LH

S/N: CJN1-UP

AN ATTACHMENT

SMCS-5059 **i03196539**

NOTE	PART NUMBER	QTY	PART NAME 1 2 3 4 5 6 (PRODUCT LEVEL)	SEE PAGE
Y	*221-8884*	1	CONTROL & MTG GP-PEDAL (LH)	903
Y	*259-5293*	1	FASTENER GP-WIRING HARNESS (PEDAL CONTROL)	156
Y	*247-7418*	1	FILM GP (OPERATOR CONTROLS, NOTICE)	1082

Y-SEPARATE ILLUSTRATION

<END>

259-7196 PEDAL AR-THIRD

S/N: CJN1-UP

AN ATTACHMENT

SMCS-5059, 5462 **i02748212**

NOTE	PART NUMBER	QTY	PART NAME 1 2 3 4 5 6 (PRODUCT LEVEL)	SEE PAGE
Y	*225-5730*	1	CONTROL GP-HYDRAULIC PEDAL	913
Y	*260-8047*	1	LINES GP-PILOT (TRAVEL, STRAIGHT TRAVEL)	549
Y	*260-8240*	1	LINES GP-PILOT (THIRD PEDAL, MAIN CTL VALVE)	571
	260-6948	1	FILM-INSTRUCTION (OPERATOR CONTROLS, READ OMM)	

Y-SEPARATE ILLUSTRATION

<END>

OPERATOR STATION

229-9078 PLATFORM GP-OPERATOR

S/N: CJN1-UP

PART OF 259-7193 OPERATOR AR

SMCS-7253 **i02348241**

NOTE	REF NO	GRAPHIC REF	PART NUMBER	QTY	PART NAME 1 2 3 4 5 6 (PRODUCT LEVEL)	SEE PAGE
	1	1	**135-8965**	1	GROMMET	
	2	1	**135-8966**	1	GROMMET	
	3	1	**245-7916**	1	PLATFORM AS	
	4	1	**161-3717**	1	STRIP	
	5	1	**4I-3266**	1	STRIP	
M	6	1	**7X-2553**	4	BOLT (M16X2X40-MM)	
	7	1	**8T-4121**	4	WASHER-HARD (11X21X2.5-MM THK)	
M	8	1	**8T-4191**	4	BOLT (M10X1.5X16-MM)	
	9	1	**9X-8257**	4	WASHER (17.5X30X3.5-MM THK)	

M-METRIC PART

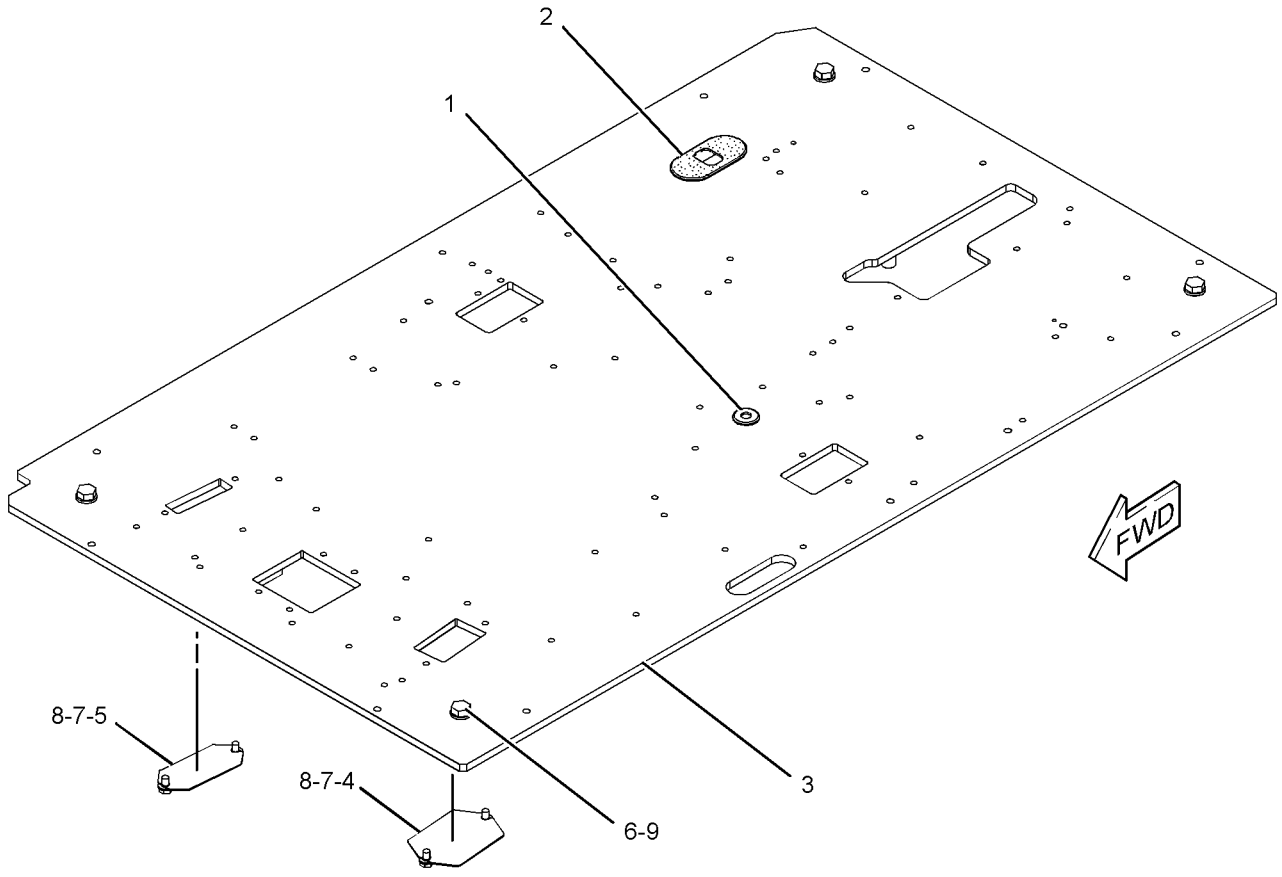

GRAPHIC #1 **<END>** g01188224

OPERATOR STATION

245-7881 SCREEN GP-SUN

S/N: CJN1-UP

AN ATTACHMENT

SMCS-7165 **i02440979**

NOTE	REF NO	GRAPHIC REF	PART NUMBER	QTY	PART NAME 1 2 3 4 5 6 (PRODUCT LEVEL)	SEE PAGE
	1	1	**255-4410**	1	SCREEN AS (CAB)	
	2	1	**259-7214**	3	HOOK-RETAINER	
	3	1	**259-7215**	3	HOOK-RETAINER	
M	4	1	**099-0822**	6	BOLT-SOCKET HEAD (M5X0.8X10-MM)	

M-METRIC PART

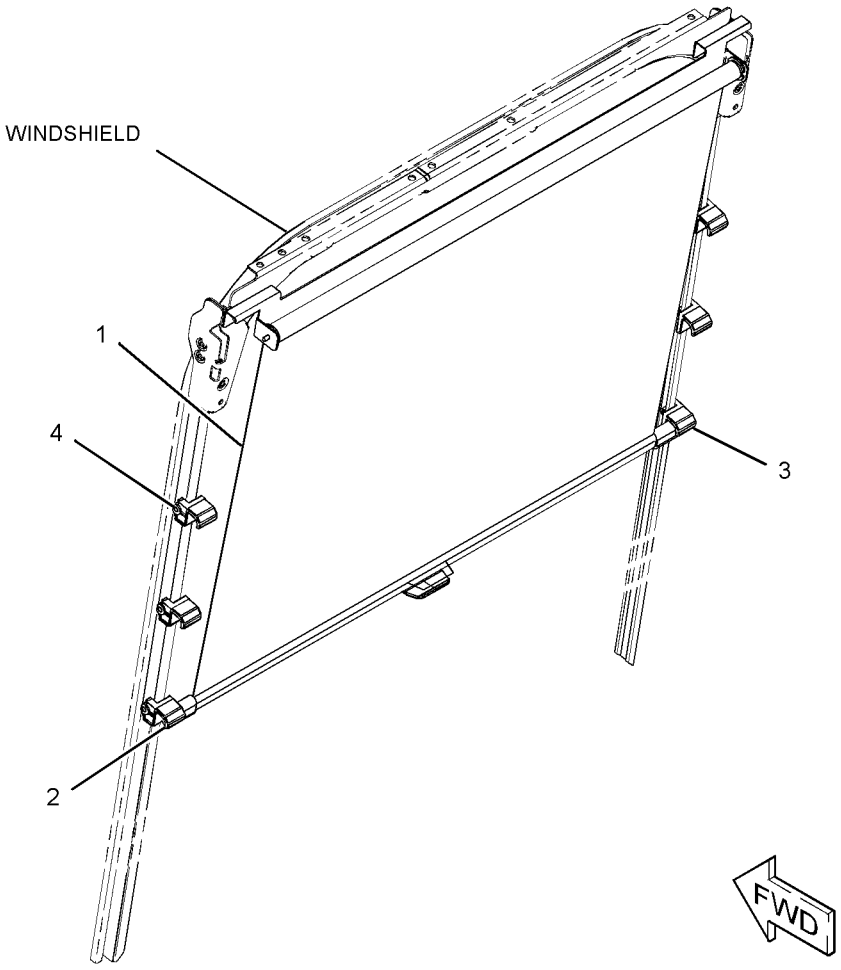

GRAPHIC #1 **<END>** g01177458

OPERATOR STATION

240-4999 SEAT & MOUNTING GP—LOW BACK WITH TILT

S/N: CJN1-UP
AN ATTACHMENT

SMCS-7312 **i02212239**

NOTE	REF NO	GRAPHIC REF	PART NUMBER	QTY	PART NAME 1 2 3 4 5 6 (PRODUCT LEVEL)	SEE PAGE
Y	1	1	*229-9075*	1	SEAT GP-SUSPENSION (LOW BACK, TILT)	1034
M	2	1	**6V-8202**	4	BOLT-SOCKET HEAD (M8X1.25X16-MM)	

M-METRIC PART
Y-SEPARATE ILLUSTRATION

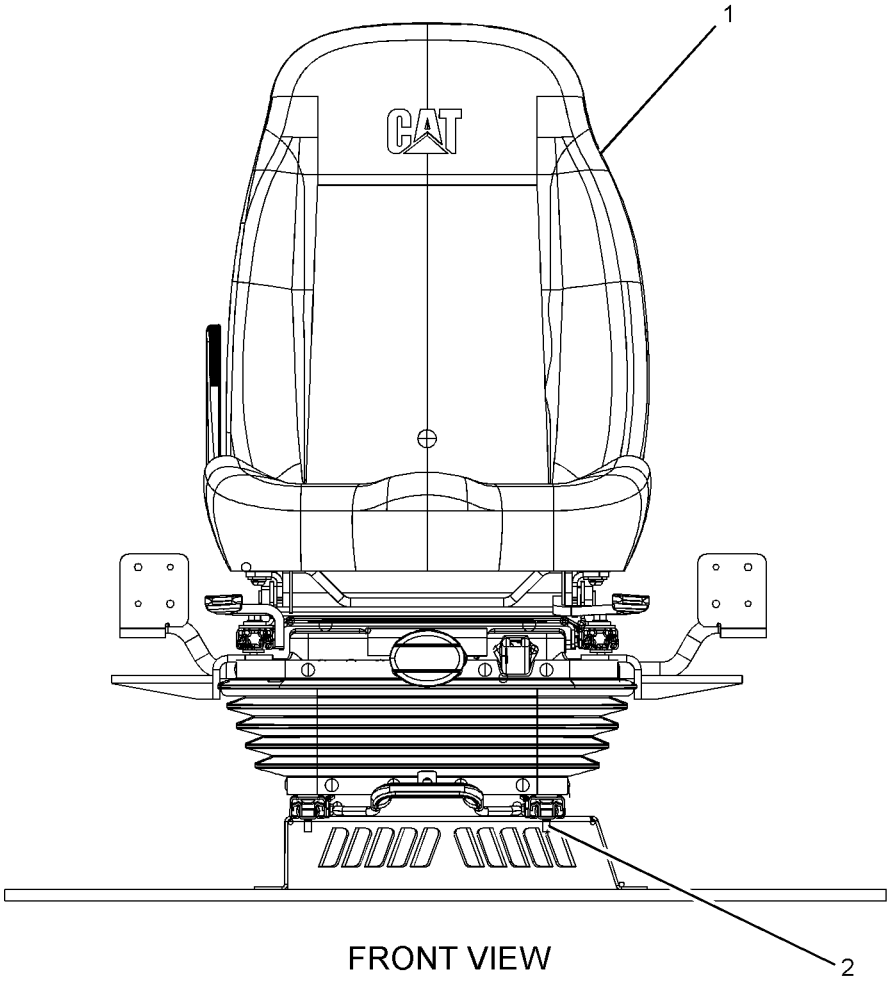

FRONT VIEW

GRAPHIC #1

<END>

g01089524

OPERATOR STATION

240-5003 SEAT & MOUNTING GP—HIGH BACK, TILT

S/N: CJN1-UP

AN ATTACHMENT

SMCS-7312 **i02707796**

NOTE	REF NO	GRAPHIC REF	PART NUMBER	QTY	PART NAME 1 2 3 4 5 6 (PRODUCT LEVEL)	SEE PAGE
Y	1	1	*229-9089*	1	SEAT GP-SUSPENSION (HIGH BACK, TILT)	1035
M	2	1	**6V-8202**	4	BOLT-SOCKET HEAD (M8X1.25X16-MM)	

M-METRIC PART
Y-SEPARATE ILLUSTRATION

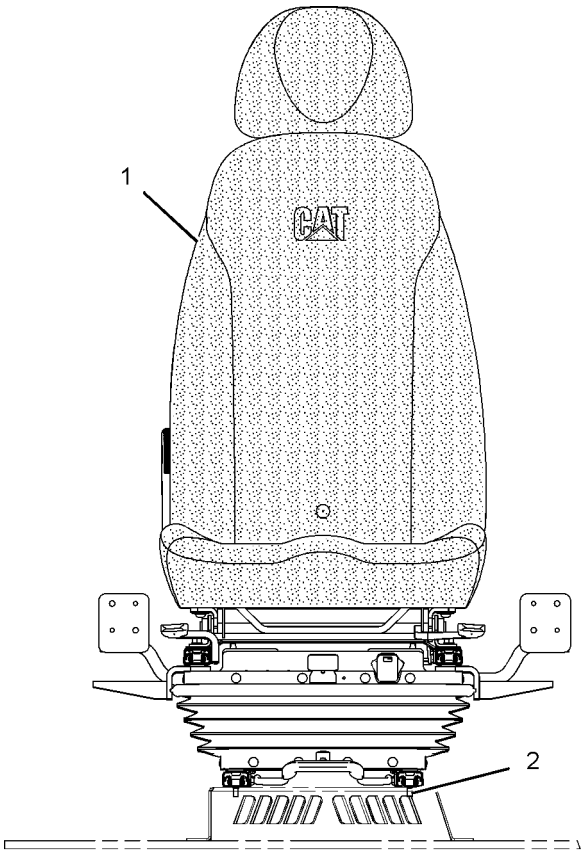

FRONT VIEW

GRAPHIC #1 **<END>** g01103598

OPERATOR STATION

327-6501 SEAT & MOUNTING GP—HIGH BACK, TILT

S/N: CJN1-UP
AN ATTACHMENT

SMCS-7312 **i03196559**

NOTE	REF NO	GRAPHIC REF	PART NUMBER	QTY	PART NAME 1 2 3 4 5 6 (PRODUCT LEVEL)	SEE PAGE
	1	1	**316-8987**	2	BRACKET	
Y	2	1	*327-6507*	1	SEAT GP-SUSPENSION (HIGH BACK, TILT)	1042
M	3	1	**5A-3604**	2	BOLT-SOCKET HEAD (M8X1.25X25-MM)	
M	4	1	**6V-8202**	2	BOLT-SOCKET HEAD (M8X1.25X16-MM)	

M-METRIC PART
Y-SEPARATE ILLUSTRATION

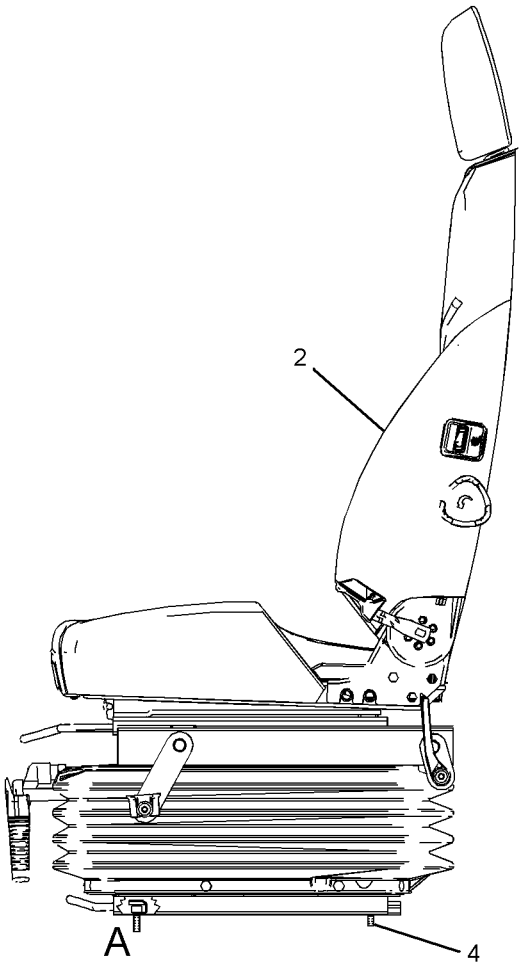

LEFT SIDE VIEW

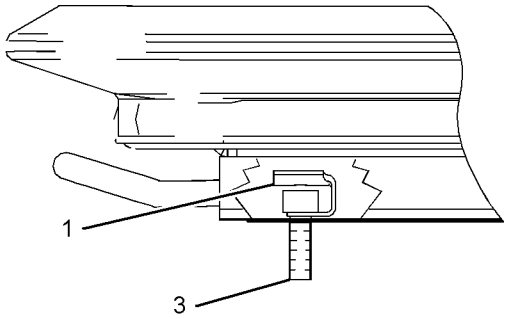

VIEW OF AREA A

GRAPHIC #1 **<END>** g01619849

OPERATOR STATION

327-6502 SEAT & MOUNTING GP—HIGH BACK, TILT

S/N: CJN1-UP

AN ATTACHMENT

SMCS-7312 **i03147963**

NOTE	REF NO	GRAPHIC REF	PART NUMBER	QTY	PART NAME 1 2 3 4 5 6 (PRODUCT LEVEL)	SEE PAGE
	1	1	**316-8987**	2	BRACKET	
Y	2	1	*327-6508*	1	SEAT GP-SUSPENSION	1043
M	3	1	**5A-3604**	2	BOLT-SOCKET HEAD (M8X1.25X25-MM)	
M	4	1	**6V-8202**	2	BOLT-SOCKET HEAD (M8X1.25X16-MM)	

M-METRIC PART
Y-SEPARATE ILLUSTRATION

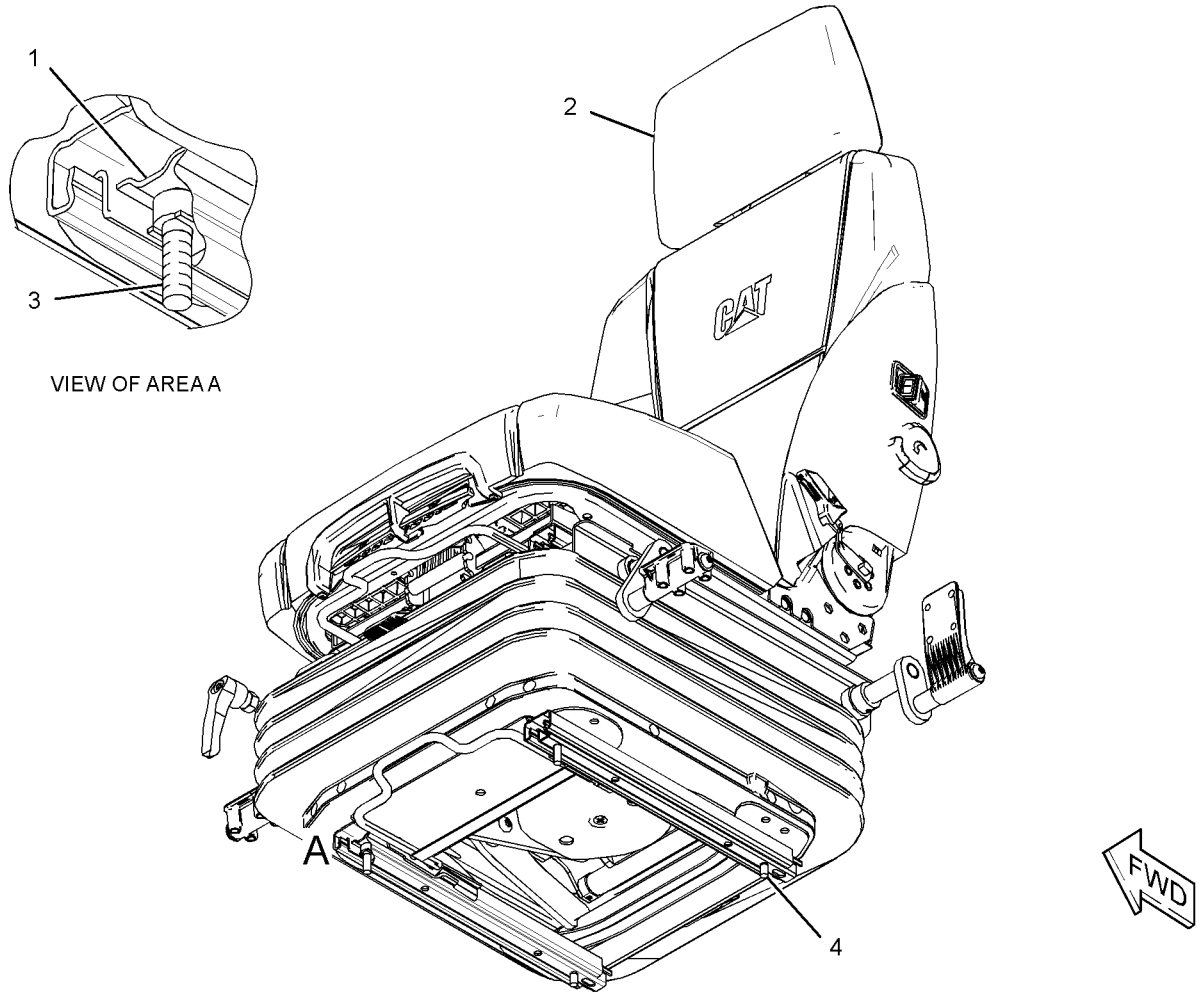

GRAPHIC #1 **<END>** g01624023

235-9020 SEAT BELT GP–RETRACTABLE

S/N: CJN1-UP
PART OF 240-5039 SEAT BELT GP
AN ATTACHMENT

SMCS-7327 **i02212218**

NOTE	REF NO	GRAPHIC REF	PART NUMBER	QTY	PART NAME 1 2 3 4 5 6 (PRODUCT LEVEL)	SEE PAGE
	1	1	**8S-4724**	1	BOLT (7/16-20X2.25-IN)	
	2	1	**8S-4723**	1	BOLT (7/16-20X1.5-IN)	
	3	1	**8S-0934**	1	LOCKNUT-FLANGE (7/16-20-THD)	

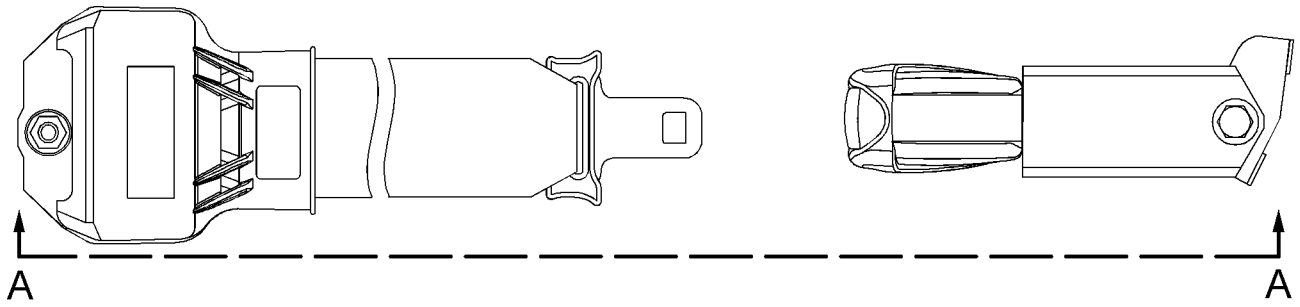

TOP VIEW

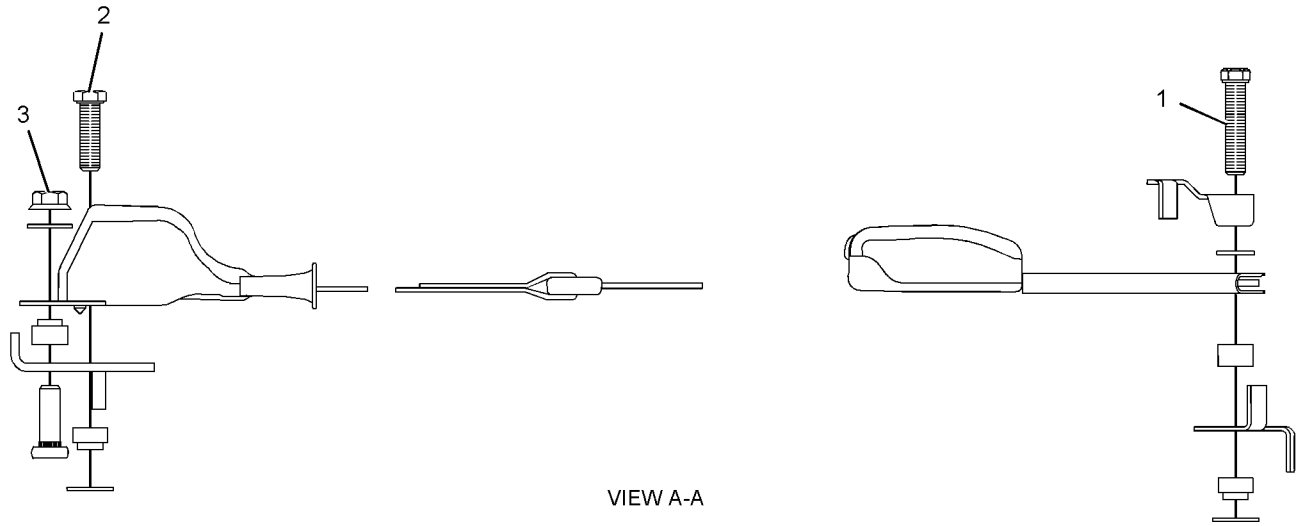

VIEW A-A

GRAPHIC #1 **<END>** g01131817

OPERATOR STATION

240-5037 SEAT BELT GP–RETRACTABLE, 46-MM

S/N: CJN1-UP

AN ATTACHMENT

SMCS-7327 **i02578051**

NOTE	REF NO	GRAPHIC REF	PART NUMBER	QTY	PART NAME 1 2 3 4 5 6 (PRODUCT LEVEL)	SEE PAGE
Y	1	1	**273-5446**	1	SEAT BELT GP (RETRACTABLE, 46-MM)	1020

Y-SEPARATE ILLUSTRATION

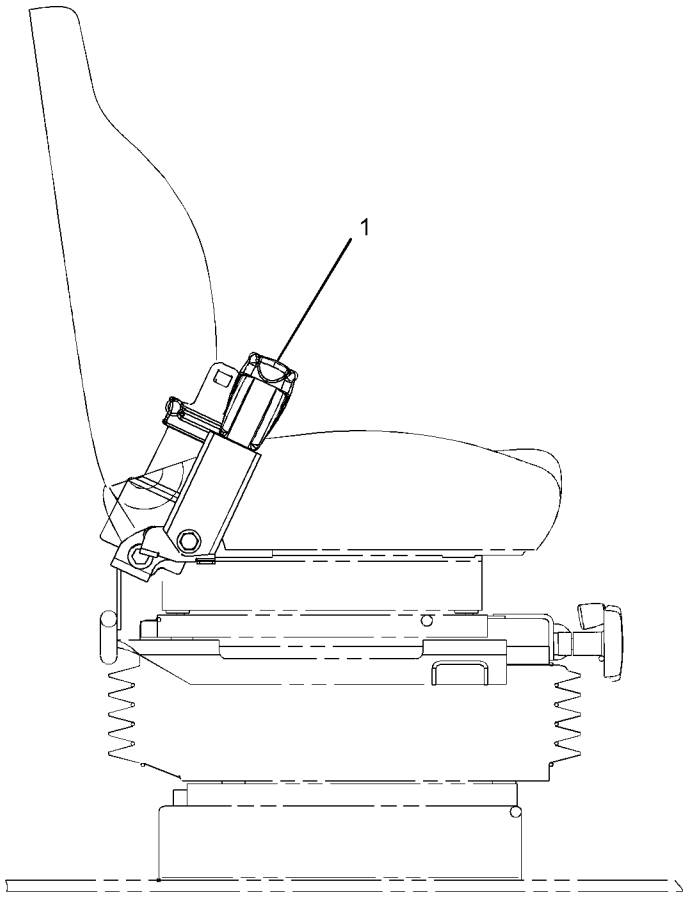

RIGHT SIDE VIEW

GRAPHIC #1

<END>

g01071615

240-5039 SEAT BELT GP–RETRACTABLE, 3-IN

S/N: CJN1-UP

AN ATTACHMENT

SMCS-7327 **i02497564**

NOTE	REF NO	GRAPHIC REF	PART NUMBER	QTY	PART NAME 1 2 3 4 5 6 (PRODUCT LEVEL)	SEE PAGE
Y	1	1	**235-9020**	1	SEAT BELT GP (RETRACTABLE, 3-IN)	1017

Y-SEPARATE ILLUSTRATION

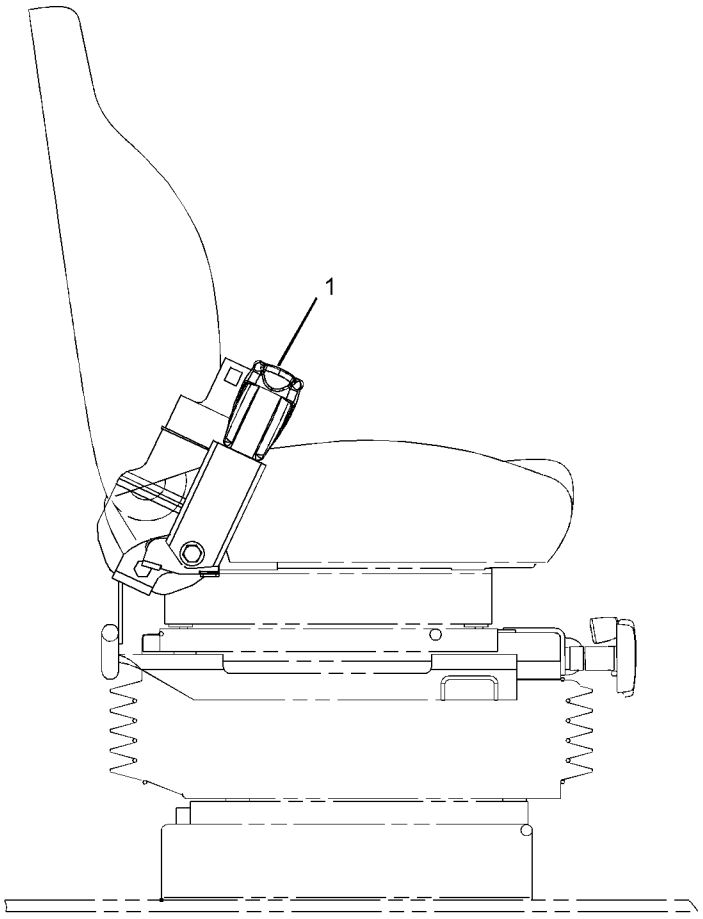

RIGHT SIDE VIEW

GRAPHIC #1

<END>

g01071676

OPERATOR STATION

273-5446 SEAT BELT GP–RETRACTABLE, 46-MM

S/N: CJN1-UP
PART OF 240-5037 SEAT BELT GP
AN ATTACHMENT

SMCS-7327 **i02578052**

NOTE	REF NO	GRAPHIC REF	PART NUMBER	QTY	PART NAME 1 2 3 4 5 6 (PRODUCT LEVEL)	SEE PAGE
	1	1	**8S-4724**	1	BOLT (7/16-20X2.25-IN)	
	2	1	**8S-4723**	1	BOLT (7/16-20X1.5-IN)	
	3	1	**8S-0934**	1	LOCKNUT-FLANGE (7/16-20-THD)	

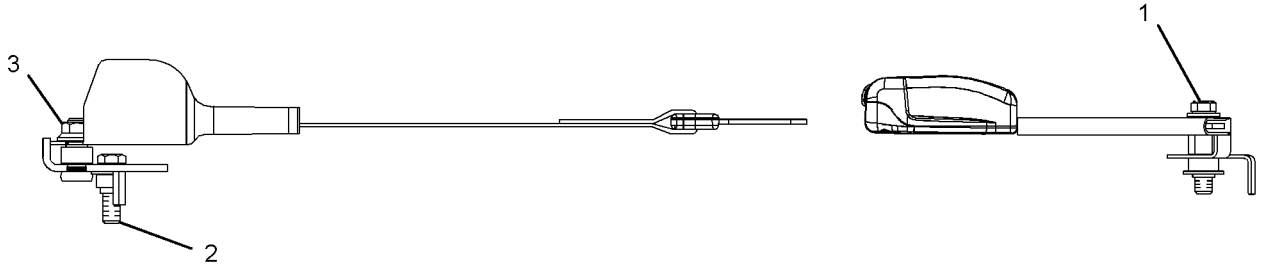

GRAPHIC #1 **<END>** g01253938

OPERATOR STATION

305-0466 SEAT BELT GP–RETRACTABLE

S/N: CJN1-UP

AN ATTACHMENT

SMCS-7327 **i03090282**

NOTE	REF NO	GRAPHIC REF	PART NUMBER	QTY	PART NAME 1 2 3 4 5 6 (PRODUCT LEVEL)	SEE PAGE
	1	1	**327-6540**	1	SEAT BELT GP	

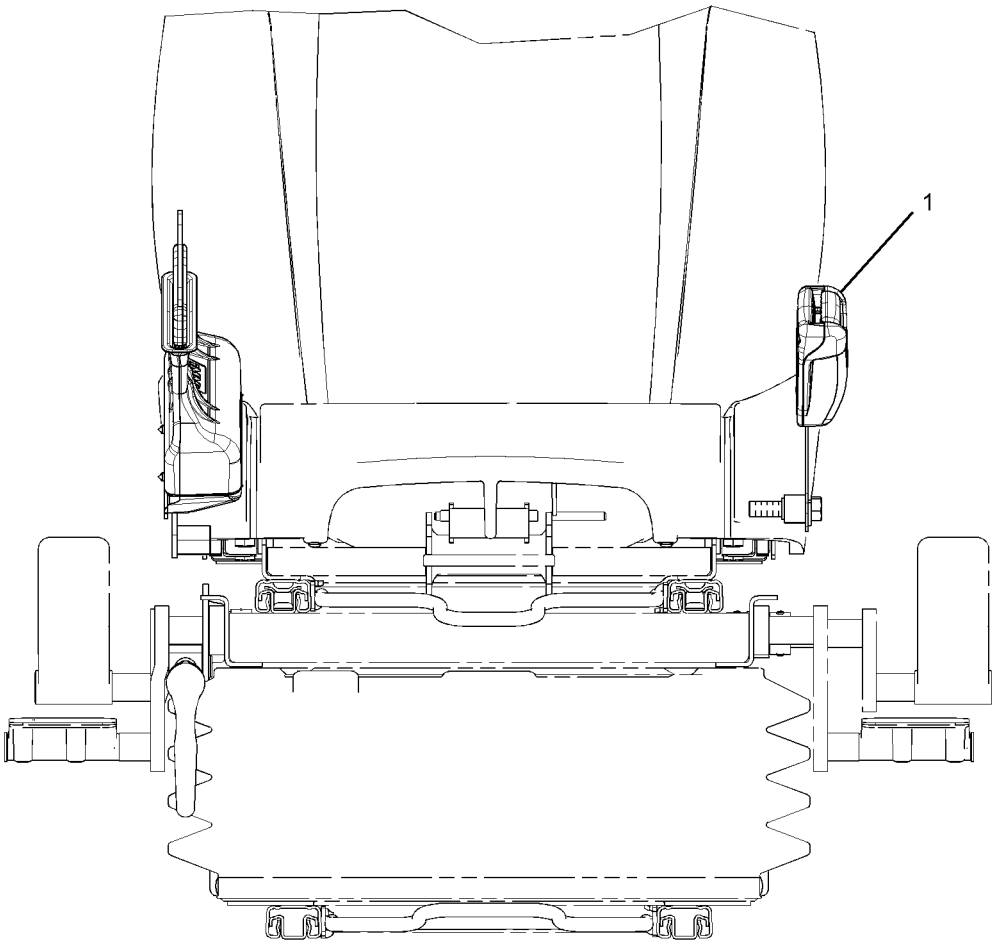

FRONT VIEW

GRAPHIC #1

<END>

g01576875

OPERATOR STATION

305-0467 SEAT BELT GP–RETRACTABLE

S/N: CJN1-UP

AN ATTACHMENT

SMCS-7327 **i03090307**

NOTE	REF NO	GRAPHIC REF	PART NUMBER	QTY	PART NAME 1 2 3 4 5 6 (PRODUCT LEVEL)	SEE PAGE
	1	1	**327-6541**	1	SEAT BELT GP	

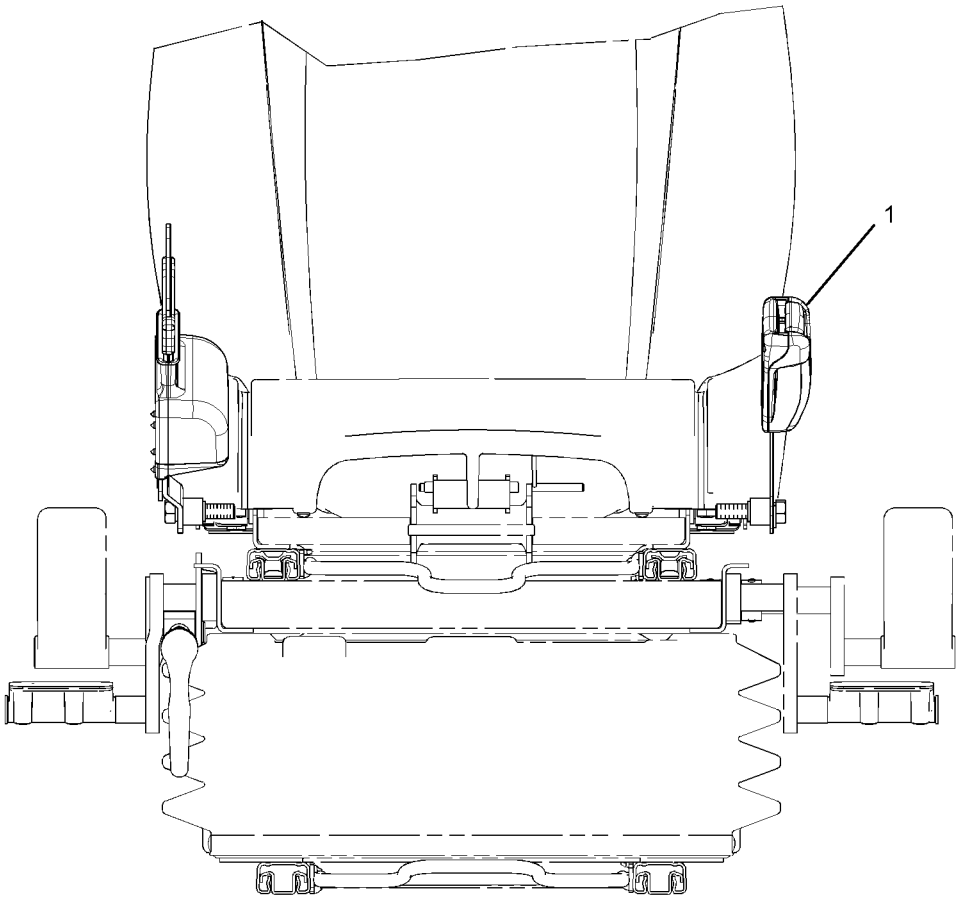

FRONT VIEW

GRAPHIC #1 **<END>** g01576478

OPERATOR STATION

229-9076 SEAT GP—LOW BACK WITH TILT

S/N: CJN1-UP

PART OF 229-9075 SEAT GP-SUSPENSION

AN ATTACHMENT

SMCS-7312 **i02526961**

NOTE	REF NO	GRAPHIC REF	PART NUMBER	QTY	PART NAME 1 2 3 4 5 6 (PRODUCT LEVEL)	SEE PAGE
	1	1	**245-7883**	1	KIT-SEAT (CONTROL HANDLE)	
	1A	1	**8T-4224**	4	WASHER-HARD (8.8X16X2-MM THK)	
	1B	1	**245-7887**	1	LEVER-CONTROL	
M	1C	1	**245-7898**	4	SCREW-BUTTON HEAD (M8X1.25X25-MM)	
	2	1	**245-7888**	1	KIT-SEAT SUPPORT	
M	2A	1	**5C-7261**	4	NUT (M8X1.25-THD)	
	2B	1	**8T-4224**	8	WASHER-HARD (8.8X16X2-MM THK)	
M	2C	1	**245-7898**	4	SCREW-BUTTON HEAD (M8X1.25X25-MM)	
					J-PARTS INCLUDED IN BOTH SEAT KIT AND SEAT SUPPORT KIT	

M-METRIC PART

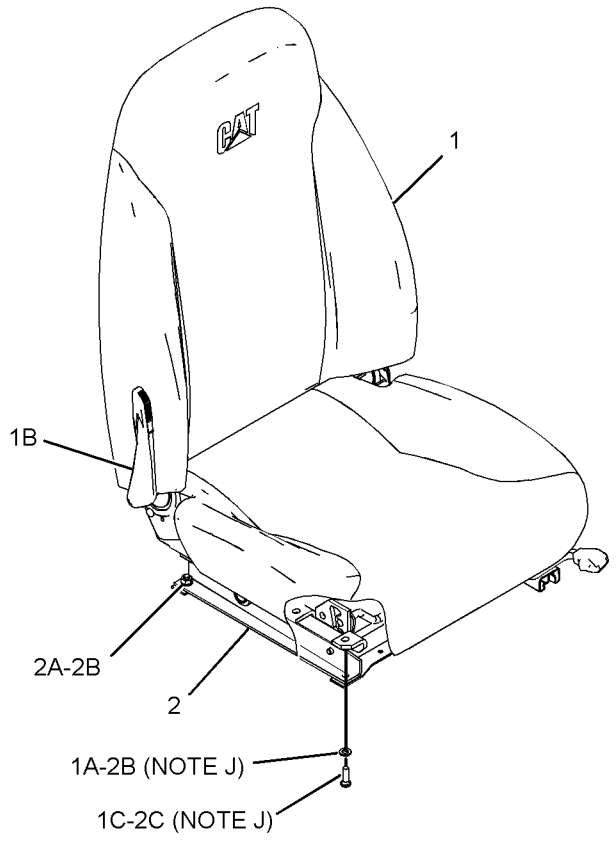

GRAPHIC #1 **<END>** g01263931

OPERATOR STATION

229-9090 SEAT GP–HIGH BACK, TILT

S/N: CJN1-UP
PART OF 229-9089 SEAT GP-SUSPENSION
AN ATTACHMENT

SMCS-7312 **i02212463**

NOTE	REF NO	GRAPHIC REF	PART NUMBER	QTY	PART NAME 1 2 3 4 5 6 (PRODUCT LEVEL)	SEE PAGE
	1	1	**245-7884**	1	KIT-SEAT	
M	1A	1	**245-7898**	4	SCREW-BUTTON HEAD (M8X1.25X25-MM)	
	1B	1	**8T-4224**	4	WASHER-HARD (8.8X16X2-MM THK)	
	1C	1	**178-5659**	1	HANDLE (LUMBAR SUPPORT ADJUSTER)	
	1D	1	**229-9094**	1	HEADREST AS-SEAT	
	1E	1	**245-7887**	1	LEVER-CONTROL	
	2	1	**245-7888**	1	KIT-SEAT SUPPORT	
M	2A	1	**245-7898**	4	SCREW-BUTTON HEAD (M8X1.25X25-MM)	
	2B	1	**8T-4224**	8	WASHER-HARD (8.8X16X2-MM THK)	
M	2C	1	**5C-7261**	4	NUT (M8X1.25-THD)	
					J-PARTS INCLUDED IN BOTH SEAT KIT AND SEAT SUPPORT KIT	

M-METRIC PART

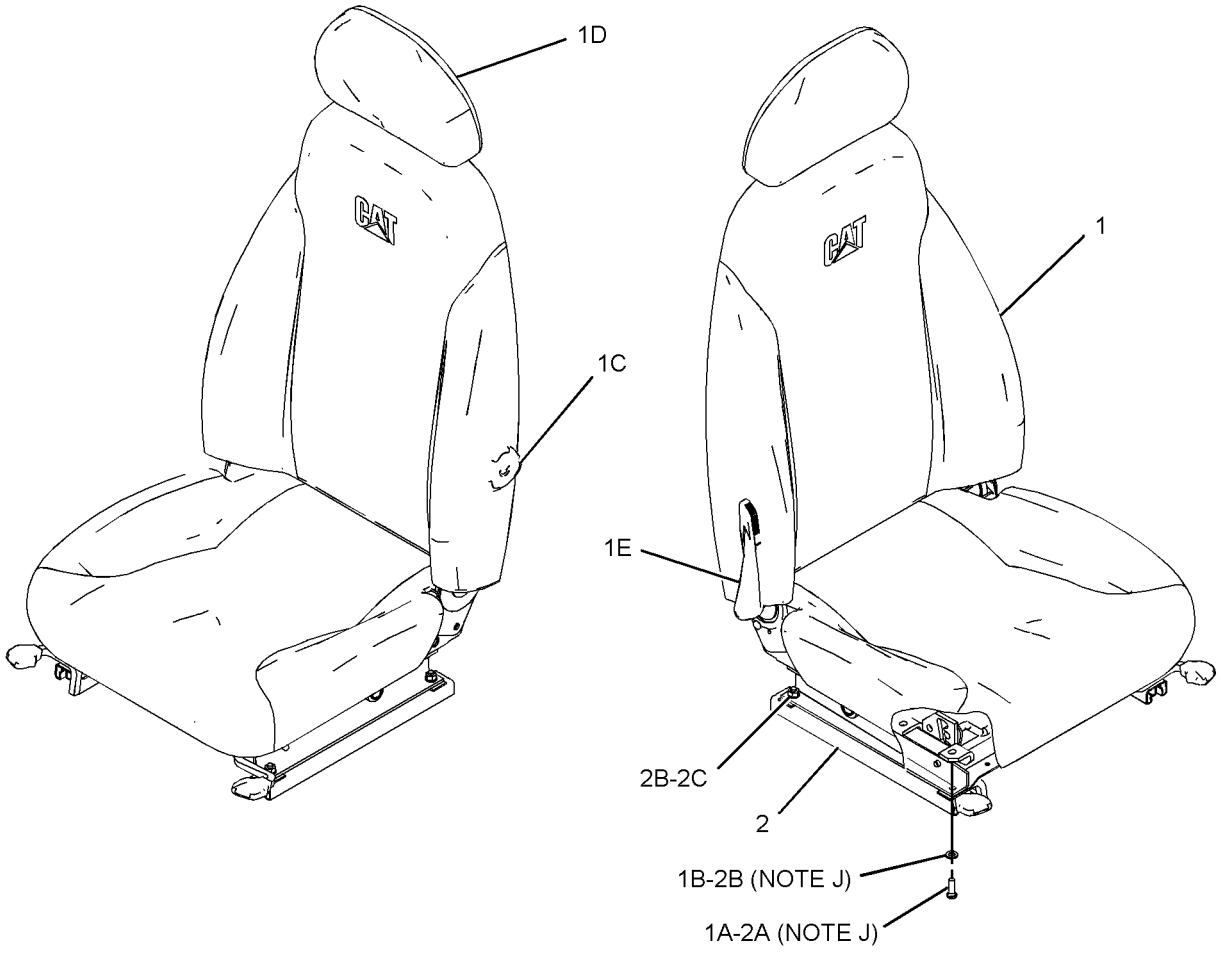

GRAPHIC #1 **<END>** g01118558

OPERATOR STATION

229-9093 SEAT GP—HIGH BACK, WITH HEATER

S/N: CJN1-UP

PART OF 240-5065 SEAT GP-SUSPENSION

AN ATTACHMENT

SMCS-7312 **i02212370**

NOTE	REF NO	GRAPHIC REF	PART NUMBER	QTY	PART NAME 1 2 3 4 5 6 (PRODUCT LEVEL)	SEE PAGE
	1	1	**245-7885**	1	SEAT GP	
		1	**8T-4224**	4	WASHER-HARD (8.8X16X2-MM THK)	
		1	**178-5659**	1	HANDLE (LUMBAR SUPPORT ADJUSTER)	
		1	**229-9094**	1	HEADREST AS-SEAT	
		1	**245-7887**	1	LEVER-CONTROL	
M		1	**245-7898**	4	SCREW-BUTTON HEAD (M8X1.25X25-MM)	
	2	1	**245-7888**	1	KIT-SEAT SUPPORT	
M		1	**5C-7261**	4	NUT (M8X1.25-THD)	
		1	**8T-4224**	8	WASHER-HARD (8.8X16X2-MM THK)	
M		1	**245-7898**	4	SCREW-BUTTON HEAD (M8X1.25X25-MM)	

M-METRIC PART

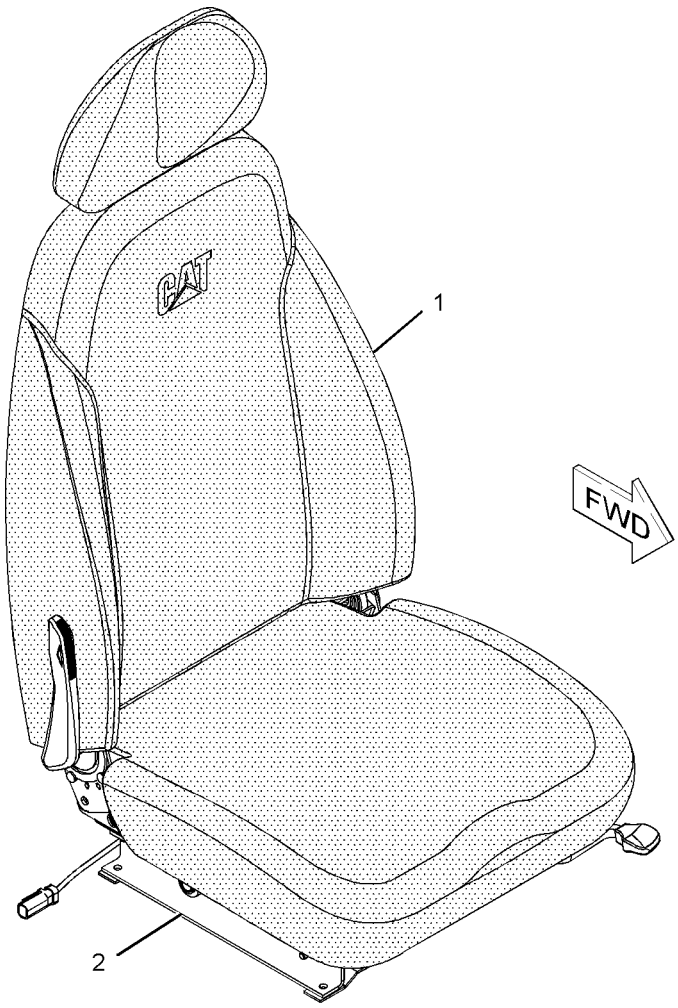

GRAPHIC #1

<END>

g01086049

OPERATOR STATION

327-6498 SEAT GP—LOW BACK, VINYL

S/N: CJN1-UP

AN ATTACHMENT

SMCS-7312 **i03213397**

NOTE	REF NO	GRAPHIC REF	PART NUMBER	QTY	PART NAME 1 2 3 4 5 6 (PRODUCT LEVEL)	SEE PAGE
	1	1	**316-8987**	2	BRACKET	
Y	2	1	*327-6504*	1	SEAT GP	1028
M	3	1	**5A-3604**	2	BOLT-SOCKET HEAD (M8X1.25X25-MM)	
M	4	1	**6V-8202**	2	BOLT-SOCKET HEAD (M8X1.25X16-MM)	

M-METRIC PART
Y-SEPARATE ILLUSTRATION

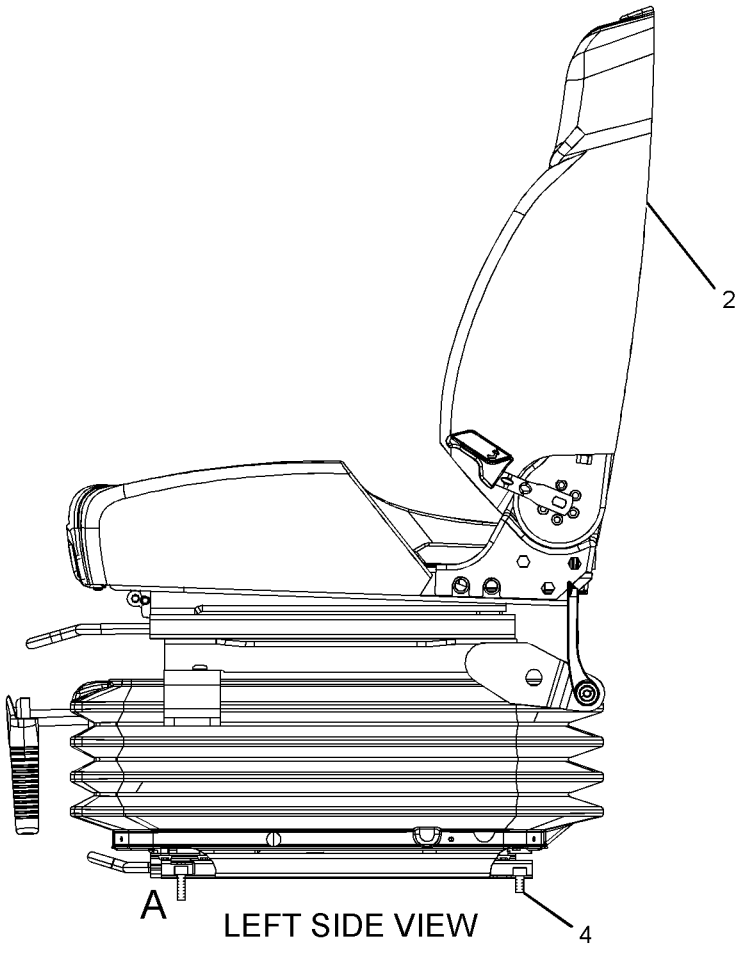

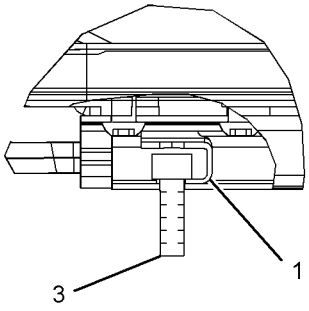

VIEW OF AREA A

GRAPHIC #1 **<END>** g01642053

OPERATOR STATION

327-6499 SEAT GP—LOW BACK, TILT

S/N: CJN1-UP
AN ATTACHMENT

SMCS-7312 **i03213460**

NOTE	REF NO	GRAPHIC REF	PART NUMBER	QTY	PART NAME 1 2 3 4 5 6 (PRODUCT LEVEL)	SEE PAGE
	1	1	**316-8987**	2	BRACKET	
Y	2	1	*327-6505*	1	SEAT GP	1029
M	3	1	**5A-3604**	2	BOLT-SOCKET HEAD (M8X1.25X25-MM)	
M	4	1	**6V-8202**	2	BOLT-SOCKET HEAD (M8X1.25X16-MM)	

M-METRIC PART
Y-SEPARATE ILLUSTRATION

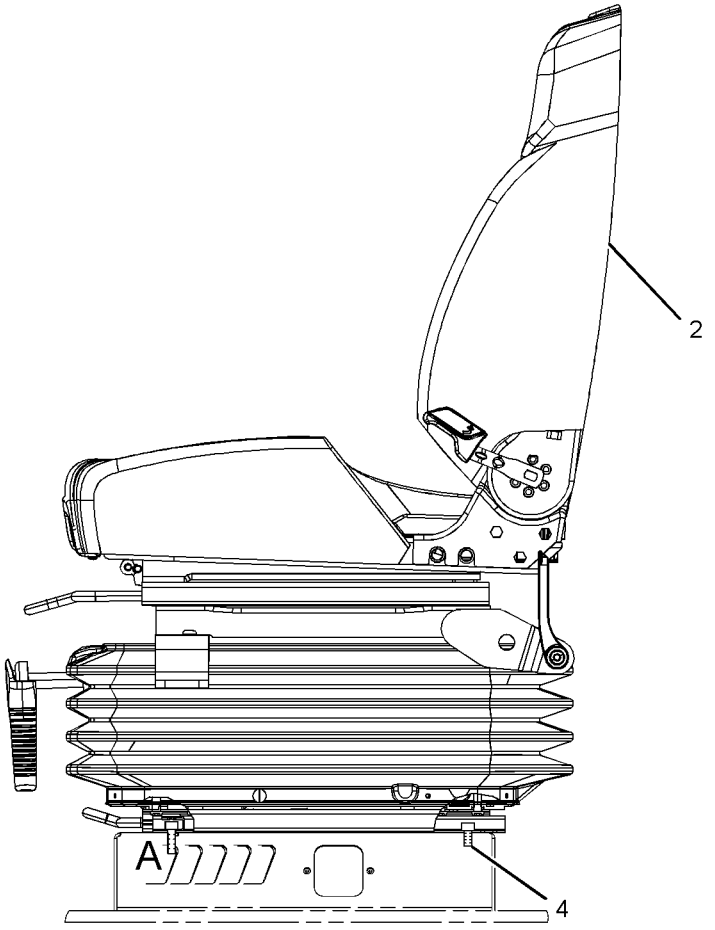

LEFT SIDE VIEW

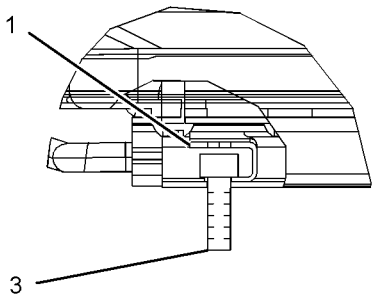

VIEW OF AREA A

GRAPHIC #1 **<END>** g01642156

OPERATOR STATION

327-6504 SEAT GP—LOW BACK, VINYL

S/N: CJN1-UP
PART OF 327-6498 SEAT GP
AN ATTACHMENT

SMCS-7312 **i03213408**

NOTE	REF NO	GRAPHIC REF	PART NUMBER	QTY	PART NAME 1 2 3 4 5 6 (PRODUCT LEVEL)	SEE PAGE
	1	1	**316-8987**	2	BRACKET	
Y	2	1	**327-6510**	1	SEAT GP	1030
Y	3	1	**327-6517**	1	SUSPENSION GP-SEAT	1050
M	4	1	**5A-3604**	4	BOLT-SOCKET HEAD (M8X1.25X25-MM)	

M-METRIC PART
Y-SEPARATE ILLUSTRATION

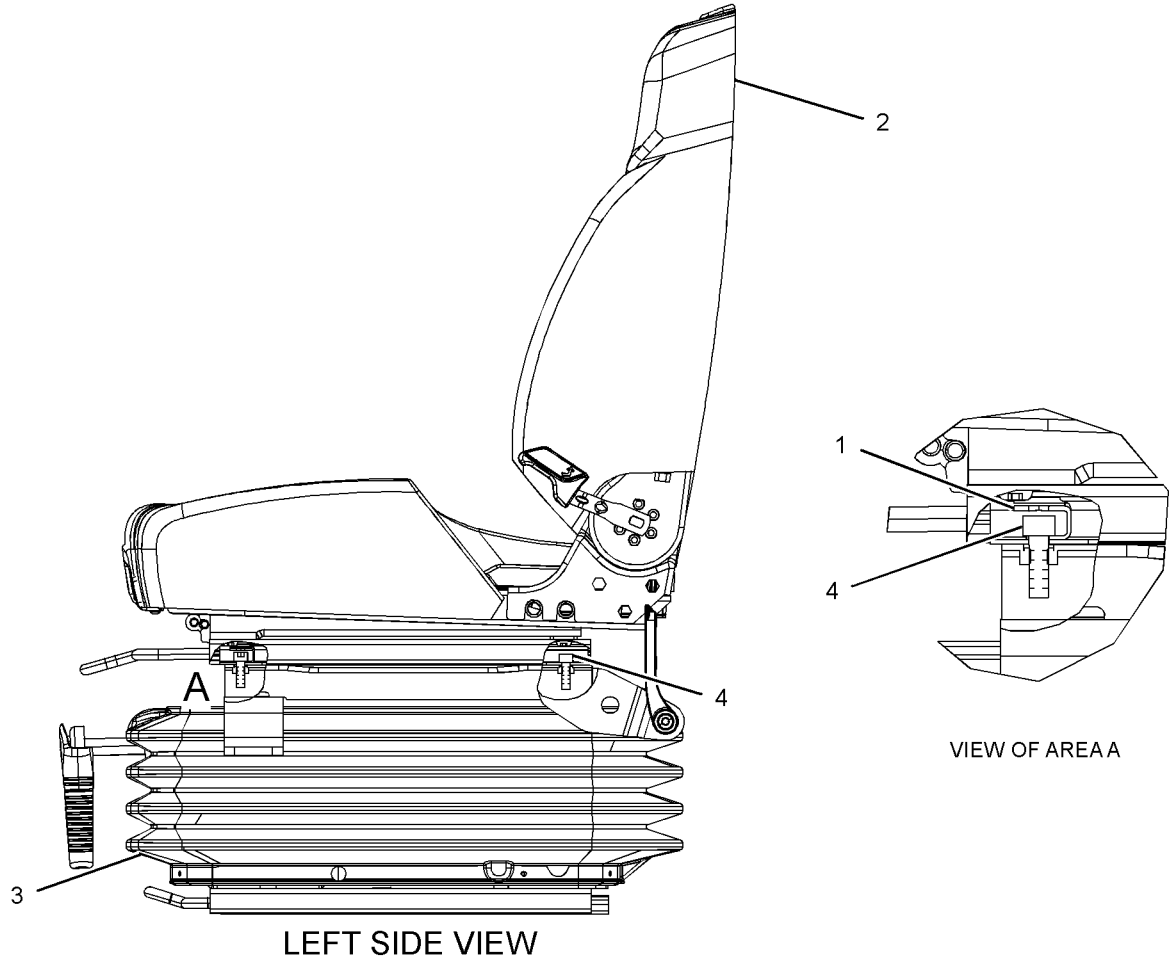

LEFT SIDE VIEW

GRAPHIC #1 **<END>** g01641812

OPERATOR STATION

327-6505 SEAT GP—LOW BACK, TILT

S/N: CJN1-UP
PART OF 327-6499 SEAT GP
AN ATTACHMENT

SMCS-7312 **i03213463**

NOTE	REF NO	GRAPHIC REF	PART NUMBER	QTY	PART NAME 1 2 3 4 5 6 (PRODUCT LEVEL)	SEE PAGE
	1	1	**316-8987**	2	BRACKET	
Y	2	1	**327-6511**	1	SEAT GP	1031
Y	3	1	**327-6517**	1	SUSPENSION GP-SEAT	1050
M	4	1	**5A-3604**	4	BOLT-SOCKET HEAD (M8X1.25X25-MM)	

M-METRIC PART
Y-SEPARATE ILLUSTRATION

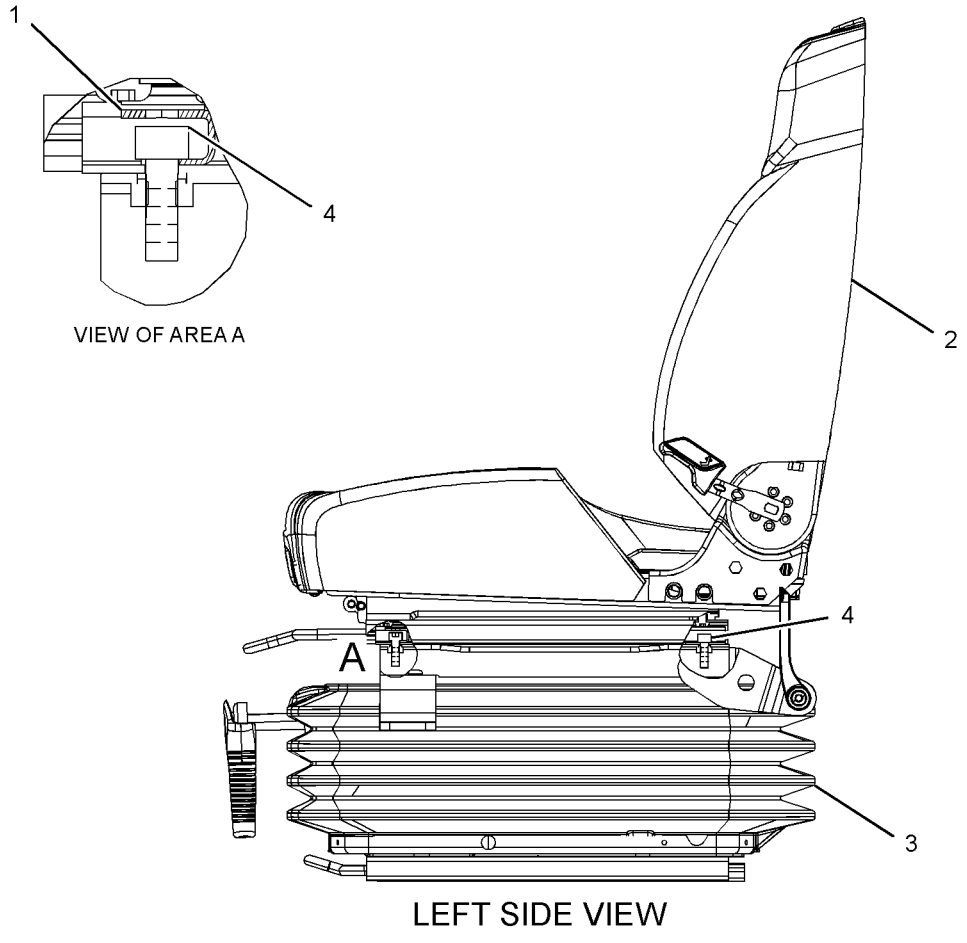

LEFT SIDE VIEW

GRAPHIC #1 **<END>** g01641267

OPERATOR STATION

327-6510 SEAT GP—LOW BACK, VINYL

S/N: CJN1-UP
PART OF 327-6504 SEAT GP
AN ATTACHMENT

SMCS-7312 **i03213421**

NOTE	REF NO	GRAPHIC REF	PART NUMBER	QTY	PART NAME 1 2 3 4 5 6 (PRODUCT LEVEL)	SEE PAGE
	1	1	**327-6642**	1	KIT-ADJUSTER (SEAT TILT)	
M		1	**9X-2616**	4	SCREW-SOCKET (M8X1.25X16-MM)	
		1	**333-4179**	2	BOLT	
	2	1	**327-6643**	1	KIT-ADJUSTER (CUSHION POSITIONING)	
M		1	**9X-2616**	4	SCREW-SOCKET (M8X1.25X16-MM)	
		1	**316-8987**	2	BRACKET	
J	3	1	**333-4172**	1	KIT-SEAT (LOW BACK, VINYL)	
		1	**333-4179**	2	BOLT	
					AVAILABLE REPAIR KIT(S):	
J			**327-6640**	1	KIT-HANDLE (RECLINER)	

J-KIT MARKED J SERVICES PART(S) MARKED J
M-METRIC PART

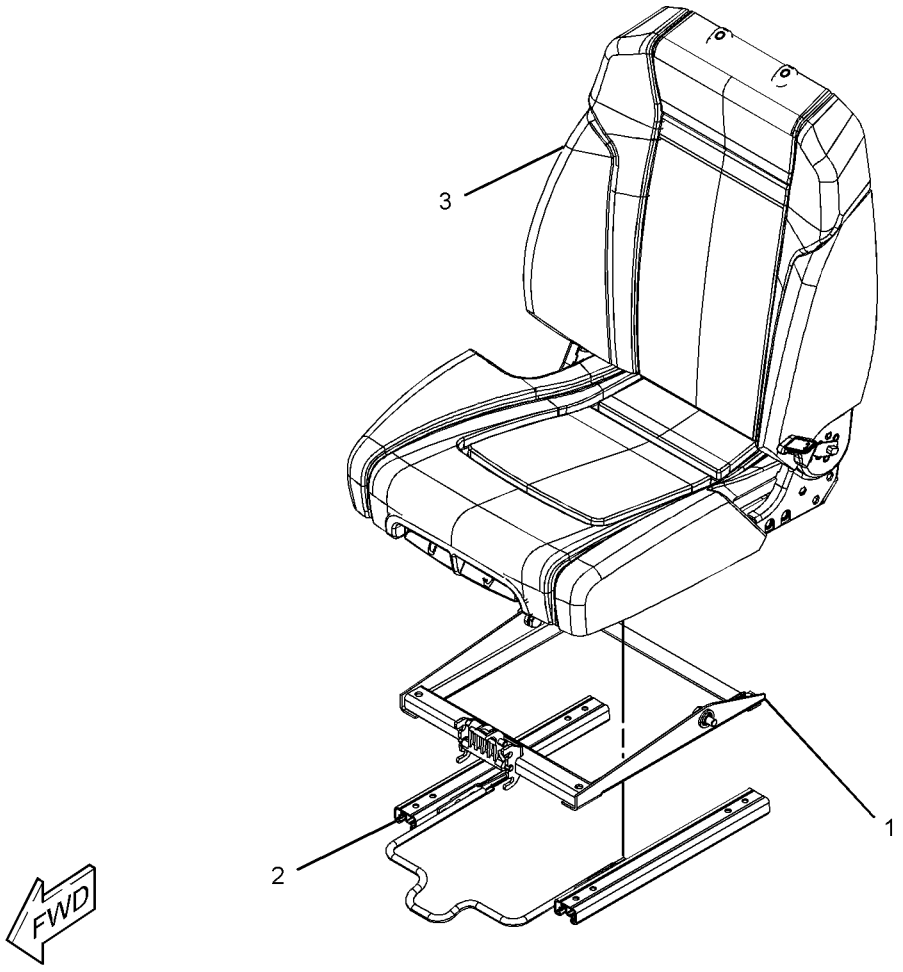

GRAPHIC #1 **<END>** g01641780

OPERATOR STATION

327-6511 SEAT GP

S/N: CJN1-UP

PART OF 327-6505 SEAT GP, 327-6506 SEAT GP-SUSPENSION

AN ATTACHMENT

SMCS-7312 **i03207831**

NOTE	REF NO	GRAPHIC REF	PART NUMBER	QTY	PART NAME 1 2 3 4 5 6 (PRODUCT LEVEL)	SEE PAGE
J	1	1	**327-6639**	1	KIT-SEAT (CLOTH, LOW BACK)	
		1	**333-4179**	2	BOLT	
	2	1	**327-6642**	1	KIT-ADJUSTER (SEAT TILT)	
M		1	**9X-2616**	4	SCREW-SOCKET (M8X1.25X16-MM)	
		1	**333-4179**	2	BOLT	
	3	1	**327-6643**	1	KIT-ADJUSTER (CUSHION POSITIONING)	
M		1	**9X-2616**	4	SCREW-SOCKET (M8X1.25X16-MM)	
		1	**316-8987**	2	BRACKET	
					AVAILABLE REPAIR KIT(S):	
J			**327-6640**	1	KIT-HANDLE (RECLINER)	

J-KIT MARKED J SERVICES PART(S) MARKED J
M-METRIC PART

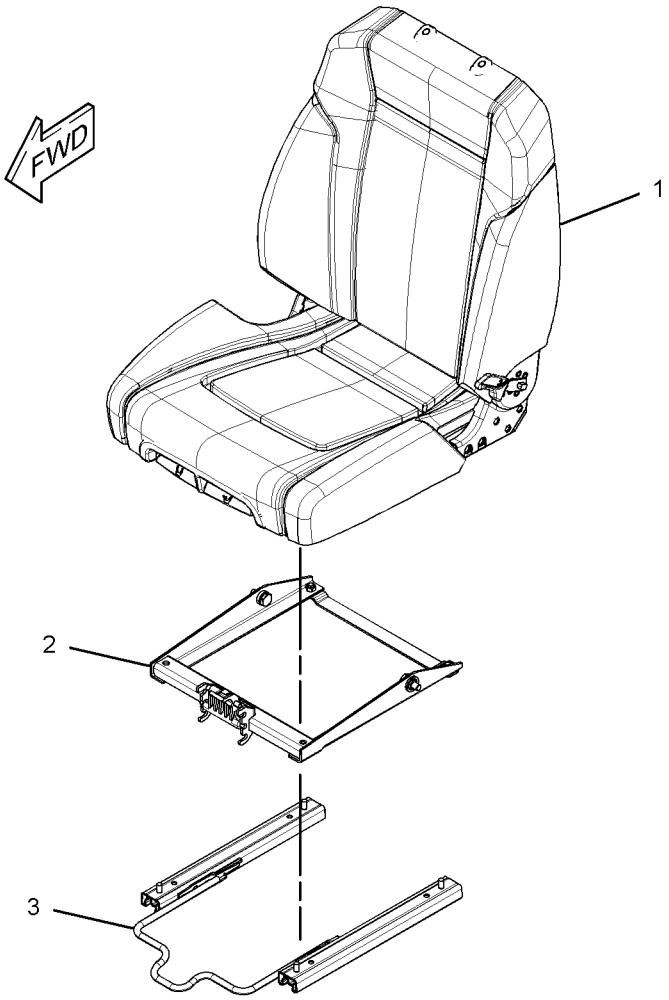

GRAPHIC #1

<END>

g01637855

OPERATOR STATION

327-6512 SEAT GP–HIGH BACK, TILT

S/N: CJN1-UP

PART OF 327-6507, 327-6508 SEAT GP-SUSPENSION

AN ATTACHMENT

SMCS-7312 **i03213644**

NOTE	REF NO	GRAPHIC REF	PART NUMBER	QTY	PART NAME 1 2 3 4 5 6 (PRODUCT LEVEL)	SEE PAGE
Y	1	1	**327-6515**	1	HEADREST AS-SEAT	972
	2	1	**327-6642**	1	KIT-ADJUSTER (SEAT TILT)	
M		1	**9X-2616**	4	SCREW-SOCKET (M8X1.25X16-MM)	
		1	**333-4179**	2	BOLT	
	3	1	**327-6643**	1	KIT-ADJUSTER (CUSHION POSITIONING)	
M		1	**9X-2616**	4	SCREW-SOCKET (M8X1.25X16-MM)	
		1	**316-8987**	2	BRACKET	
J	4	1	**333-4160**	1	KIT-SEAT (CLOTH, HIGH BACK)	
		1	**178-5659**	1	HANDLE (LUMBAR SUPPORT ADJUSTER)	
		1	**333-4179**	2	BOLT	
					AVAILABLE REPAIR KIT(S):	
J			**327-6640**	1	KIT-HANDLE (RECLINER)	

J-KIT MARKED J SERVICES PART(S) MARKED J
M-METRIC PART
Y-SEPARATE ILLUSTRATION

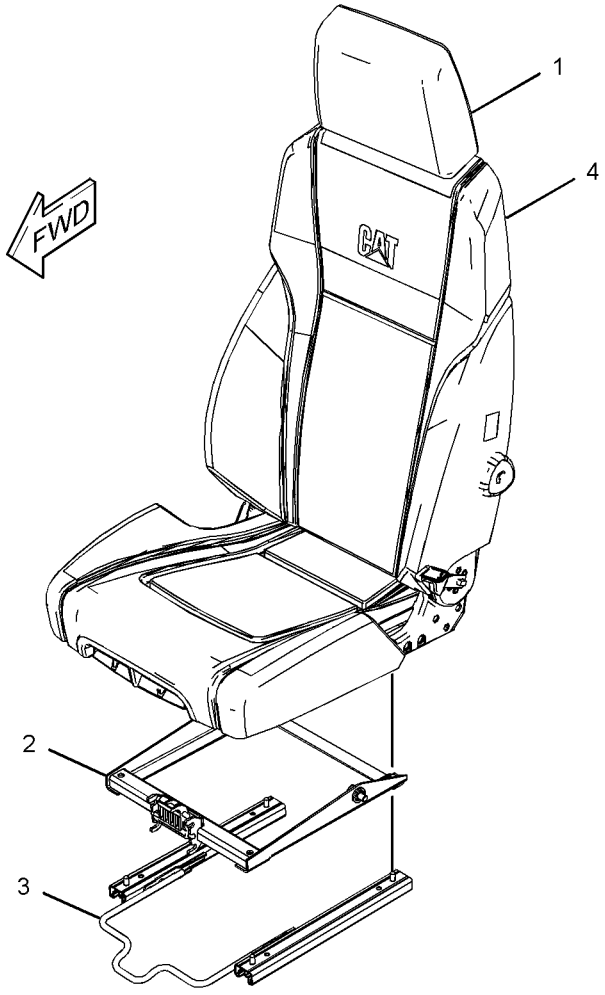

GRAPHIC #1

<END>

g01641173

327-6513 SEAT GP–HIGH BACK, WITH HEATER

S/N: CJN1-UP

PART OF 327-6509 SEAT GP-SUSPENSION

AN ATTACHMENT

SMCS-7312 **i03213502**

NOTE	REF NO	GRAPHIC REF	PART NUMBER	QTY	PART NAME 1 2 3 4 5 6 (PRODUCT LEVEL)	SEE PAGE
Y	1	1	**327-6515**	1	HEADREST AS-SEAT	972
	2	1	**327-6642**	1	KIT-ADJUSTER (SEAT TILT)	
M		1	**9X-2616**	4	SCREW-SOCKET (M8X1.25X16-MM)	
		1	**333-4179**	2	BOLT	
	3	1	**327-6643**	1	KIT-ADJUSTER (CUSHION POSITIONING)	
M		1	**9X-2616**	4	SCREW-SOCKET (M8X1.25X16-MM)	
		1	**316-8987**	2	BRACKET	
J	4	1	**327-6649**	1	KIT-SEAT (HIGH BACK, WITH HEATER)	
		1	**178-5659**	1	HANDLE (LUMBAR SUPPORT ADJUSTER)	
		1	**333-4179**	2	BOLT	
					AVAILABLE REPAIR KIT(S):	
J			**327-6640**	1	KIT-HANDLE (RECLINER)	

J-KIT MARKED J SERVICES PART(S) MARKED J
M-METRIC PART
Y-SEPARATE ILLUSTRATION

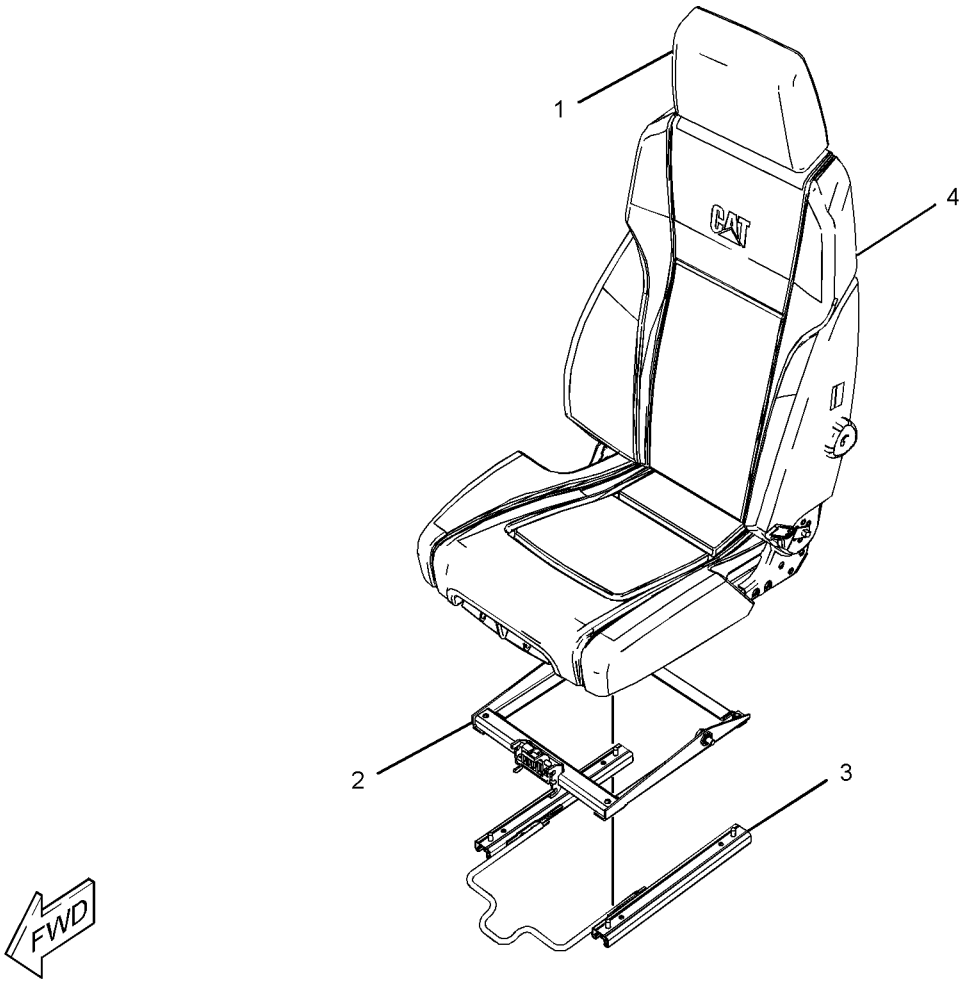

GRAPHIC #1 **<END>** g01641553

OPERATOR STATION

229-9075 SEAT GP-SUSPENSION—LOW BACK, TILT

S/N: CJN1-UP

PART OF 240-4999 SEAT & MOUNTING GP

AN ATTACHMENT

SMCS-7324, 7336 **i02212271**

NOTE	REF NO	GRAPHIC REF	PART NUMBER	QTY	PART NAME 1 2 3 4 5 6 (PRODUCT LEVEL)	SEE PAGE
Y	1	1	**229-9076**	1	SEAT GP (LOW BACK, TILT)	1023
Y	2	1	**229-9077**	1	SUSPENSION GP-SEAT	1046
M	3	1	**5C-7261**	4	NUT (M8X1.25-THD)	
	4	1	**8T-4224**	4	WASHER-HARD (8.8X16X2-MM THK)	

M-METRIC PART
Y-SEPARATE ILLUSTRATION

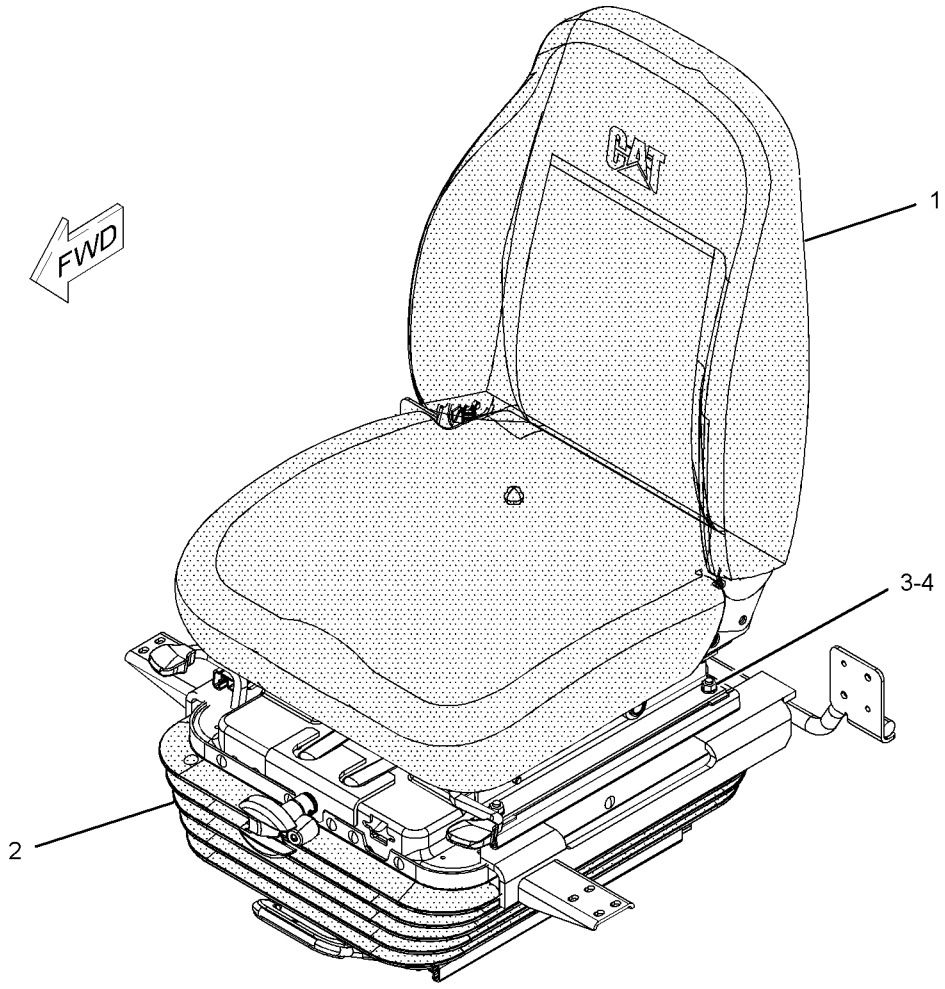

GRAPHIC #1 **<END>** g01092314

OPERATOR STATION

229-9089 SEAT GP-SUSPENSION—HIGH BACK, TILT

S/N: CJN1-UP

PART OF 240-5003 SEAT & MOUNTING GP

AN ATTACHMENT

SMCS-7324, 7336 **i03016833**

NOTE	REF NO	GRAPHIC REF	PART NUMBER	QTY	PART NAME 1 2 3 4 5 6 (PRODUCT LEVEL)	SEE PAGE
Y	1	1	**229-9077**	1	SUSPENSION GP-SEAT	1046
Y	2	1	**229-9090**	1	SEAT GP (HIGH BACK, TILT)	1024
M	3	1	**5C-7261**	4	NUT (M8X1.25-THD)	
	4	1	**8T-4224**	4	WASHER-HARD (8.8X16X2-MM THK)	

M-METRIC PART
Y-SEPARATE ILLUSTRATION

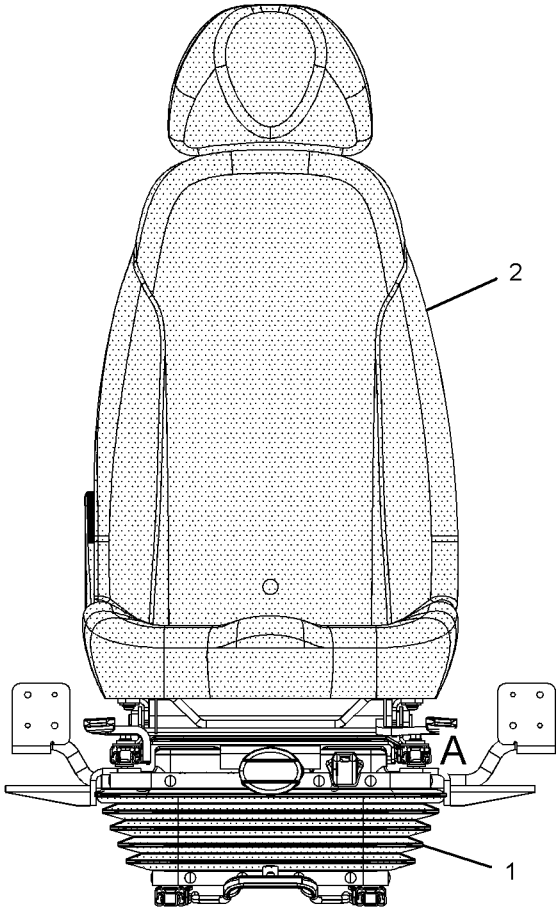

FRONT VIEW

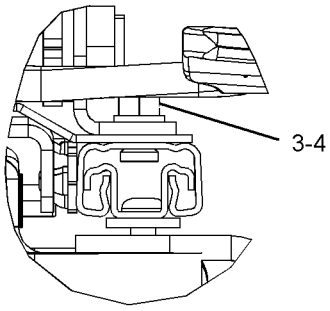

VIEW OF AREA A

GRAPHIC #1 **<END>** g01172597

OPERATOR STATION

240-5064 SEAT GP-SUSPENSION—AIR SUSP, HIGH BACK, WITH HTR

S/N: CJN1-UP

AN ATTACHMENT

SMCS-7324, 7336 **i02476000**

NOTE	REF NO	GRAPHIC REF	PART NUMBER	QTY	PART NAME 1 2 3 4 5 6 (PRODUCT LEVEL)	SEE PAGE
	1	1	**3S-2093**	2	STRAP-CABLE	
	2	1	**238-2211**	1	SWITCH AS-ROCKER (HEATED SEAT)	
		1	**167-3542**	1	CONNECTOR-RECEPTACLE	
		1	**167-3543**	4	TERMINAL (MALE)	
Y	3	1	*240-5065*	1	SEAT GP-SUSPENSION (AIR SUSP, HIGH BACK, WITH HTR)	1038
M	4	1	**6V-8202**	4	BOLT-SOCKET HEAD (M8X1.25X16-MM)	
	5	1	**7I-2673**	1	STRAP-CABLE	

M-METRIC PART
Y-SEPARATE ILLUSTRATION

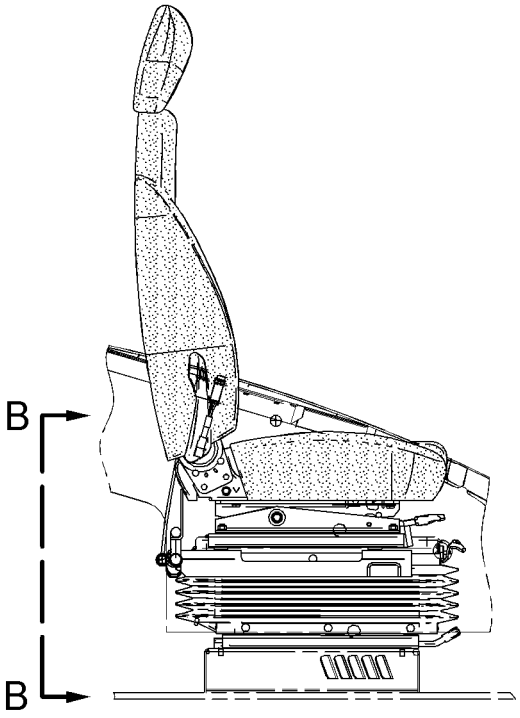

RIGHT SIDE VIEW

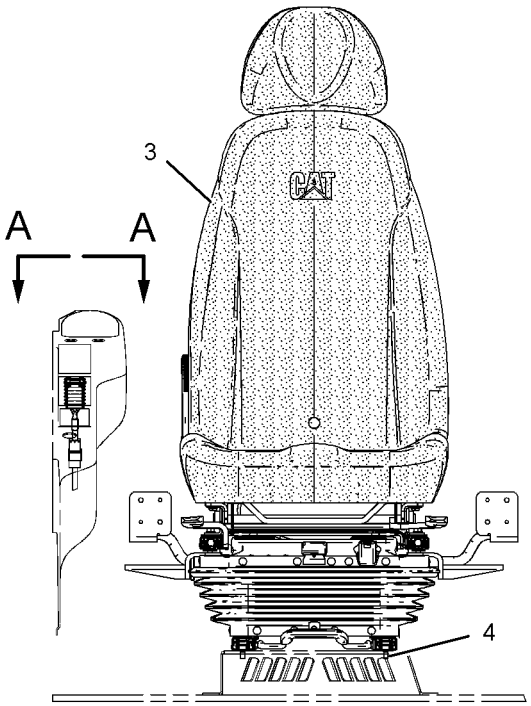

FRONT VIEW

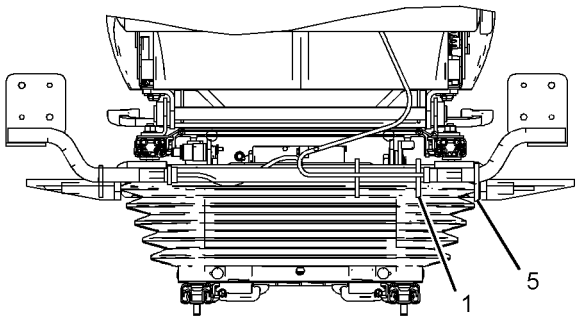

VIEW B-B

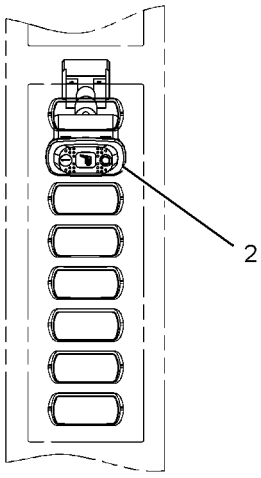

VIEW A-A

GRAPHIC #1 **<END>** g01122377

OPERATOR STATION

240-5065 SEAT GP-SUSPENSION—AIR SUSP, HIGH BACK, WITH HTR

S/N: CJN1-UP
PART OF 240-5064 SEAT GP-SUSPENSION
AN ATTACHMENT

SMCS-7324, 7336 **i02510753**

NOTE	REF NO	GRAPHIC REF	PART NUMBER	QTY	PART NAME 1 2 3 4 5 6 (PRODUCT LEVEL)	SEE PAGE
Y	1	1	**229-9093**	1	SEAT GP (HIGH BACK, WITH HEATER)	1025
Y	2	1	**240-5063**	1	SUSPENSION GP-SEAT (AIR)	1047
M	3	1	**5C-7261**	4	NUT (M8X1.25-THD)	
	4	1	**8T-4224**	4	WASHER-HARD (8.8X16X2-MM THK)	

M-METRIC PART
Y-SEPARATE ILLUSTRATION

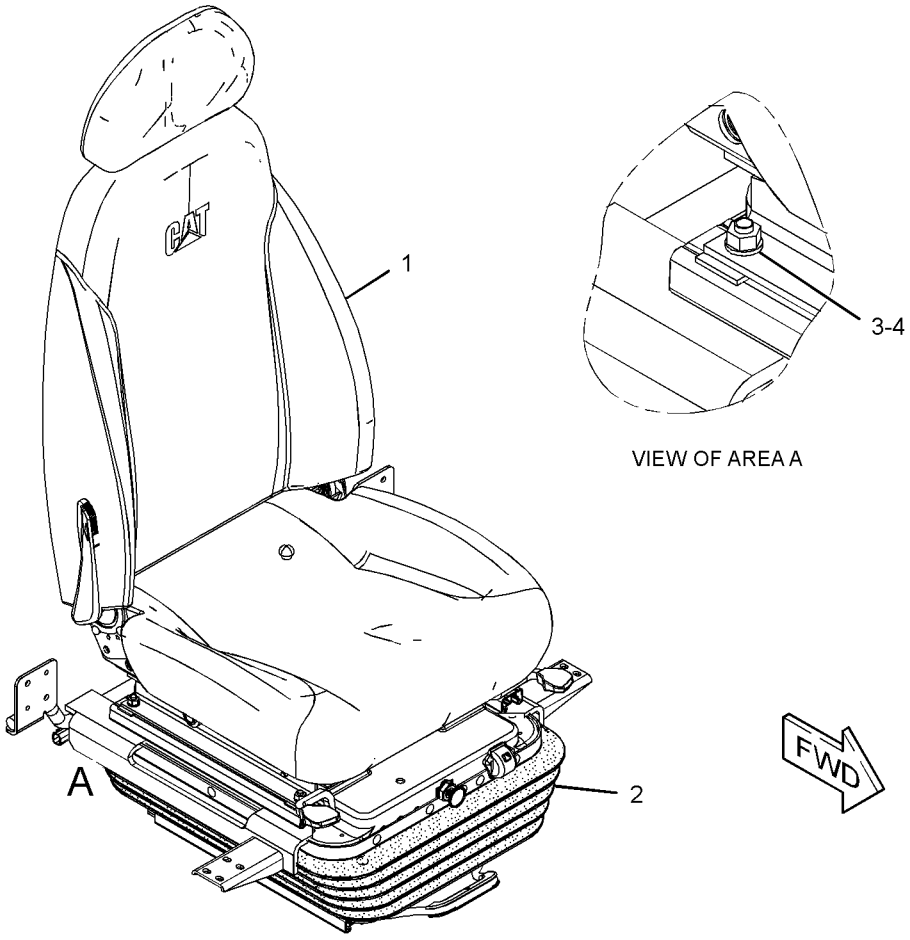

GRAPHIC #1 **<END>** g01235077

OPERATOR STATION

327-6500 SEAT GP-SUSPENSION—LOW BACK, TILT

S/N: CJN1-UP
AN ATTACHMENT

SMCS-7324, 7336 **i03196573**

NOTE	REF NO	GRAPHIC REF	PART NUMBER	QTY	PART NAME 1 2 3 4 5 6 (PRODUCT LEVEL)	SEE PAGE
	1	1	**316-8987**	2	BRACKET	
Y	2	1	*327-6506*	1	SEAT GP-SUSPENSION (LOW BACK, TILT)	1041
M	3	1	**5A-3604**	4	BOLT-SOCKET HEAD (M8X1.25X25-MM)	
M	4	1	**6V-8202**	2	BOLT-SOCKET HEAD (M8X1.25X16-MM)	

M-METRIC PART
Y-SEPARATE ILLUSTRATION

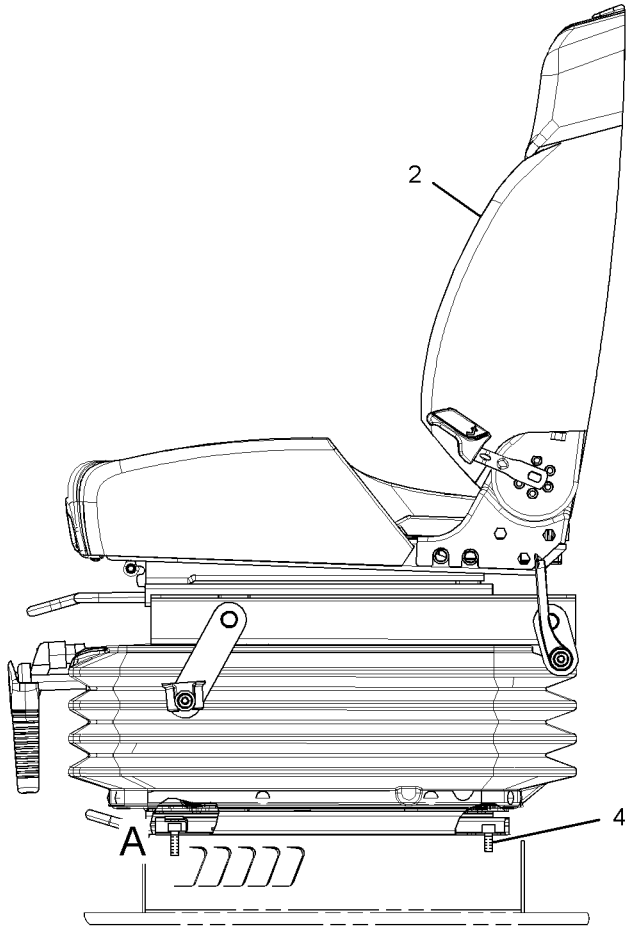

LEFT SIDE VIEW

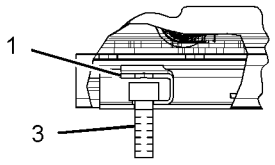

VIEW OF AREA A

GRAPHIC #1 **<END>** g01619401

OPERATOR STATION

327-6503 SEAT GP-SUSPENSION–HIGH BACK, WITH HEATER

S/N: CJN1-UP
AN ATTACHMENT

SMCS-7324, 7336 **i03213686**

NOTE	REF NO	GRAPHIC REF	PART NUMBER	QTY	PART NAME 1 2 3 4 5 6 (PRODUCT LEVEL)	SEE PAGE
	1	1	**316-8987**	2	BRACKET	
Y	2	1	*327-6509*	1	SEAT GP-SUSPENSION (HIGH BACK, WITH HEATER)	1044
M	3	1	**5A-3604**	2	BOLT-SOCKET HEAD (M8X1.25X25-MM)	
M	4	1	**6V-8202**	2	BOLT-SOCKET HEAD (M8X1.25X16-MM)	
	5	1	**238-2211**	1	SWITCH AS-ROCKER (HEATED SEAT)	
		1	**167-3542**	1	CONNECTOR-RECEPTACLE	
		1	**167-3543**	4	TERMINAL (MALE)	

M-METRIC PART
Y-SEPARATE ILLUSTRATION

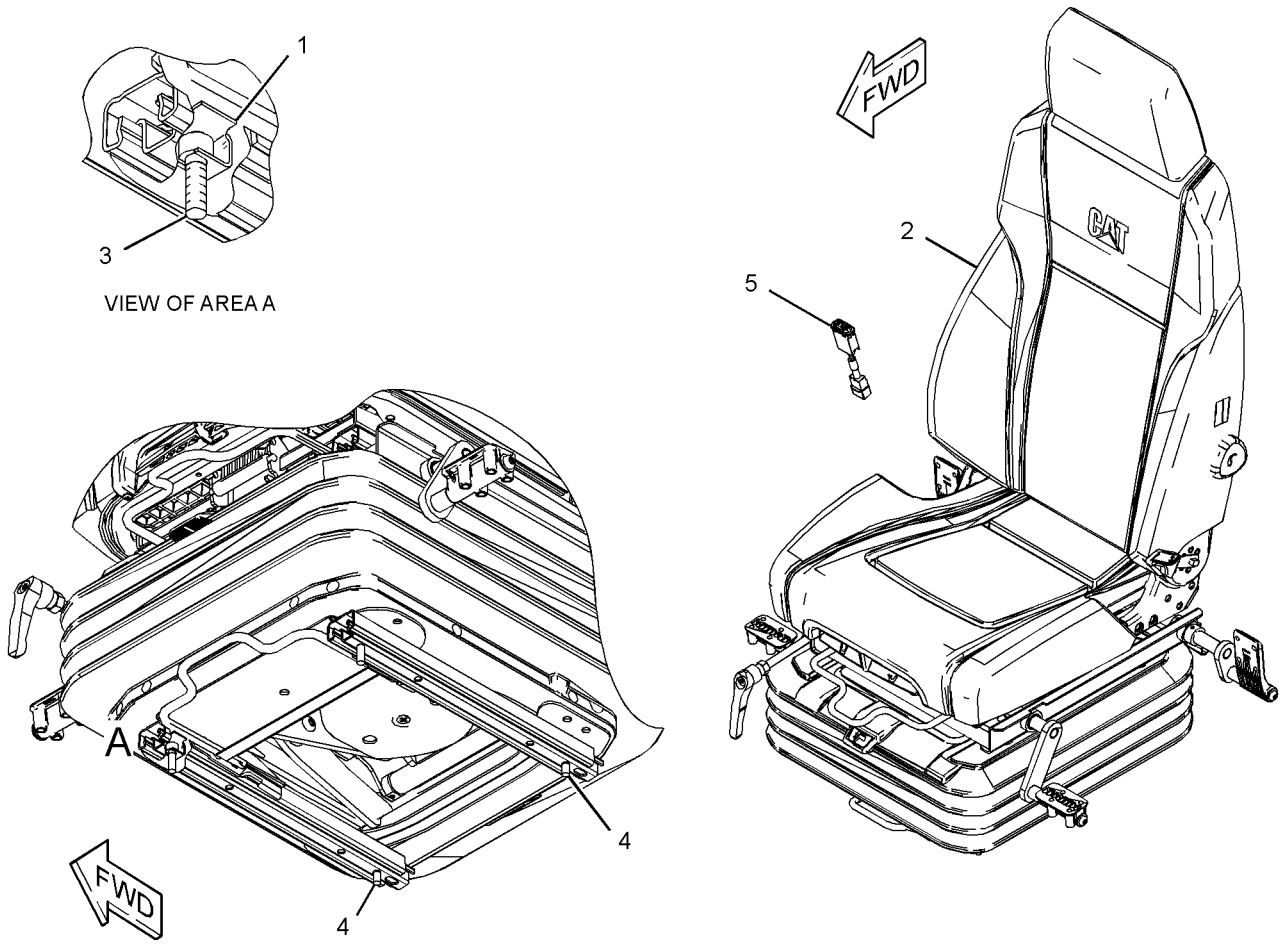

GRAPHIC #1 **<END>** g01641373

327-6506 SEAT GP-SUSPENSION–LOW BACK, TILT

S/N: CJN1-UP
PART OF 327-6500 SEAT GP-SUSPENSION
AN ATTACHMENT

SMCS-7324, 7336 **i03213928**

NOTE	REF NO	GRAPHIC REF	PART NUMBER	QTY	PART NAME 1 2 3 4 5 6 (PRODUCT LEVEL)	SEE PAGE
	1	1	**316-8987**	2	BRACKET	
Y	2	1	**327-6511**	1	SEAT GP	1031
Y	3	1	**327-6520**	1	SUSPENSION GP-SEAT	1051
M	4	1	**5A-3604**	4	BOLT-SOCKET HEAD (M8X1.25X25-MM)	

M-METRIC PART
Y-SEPARATE ILLUSTRATION

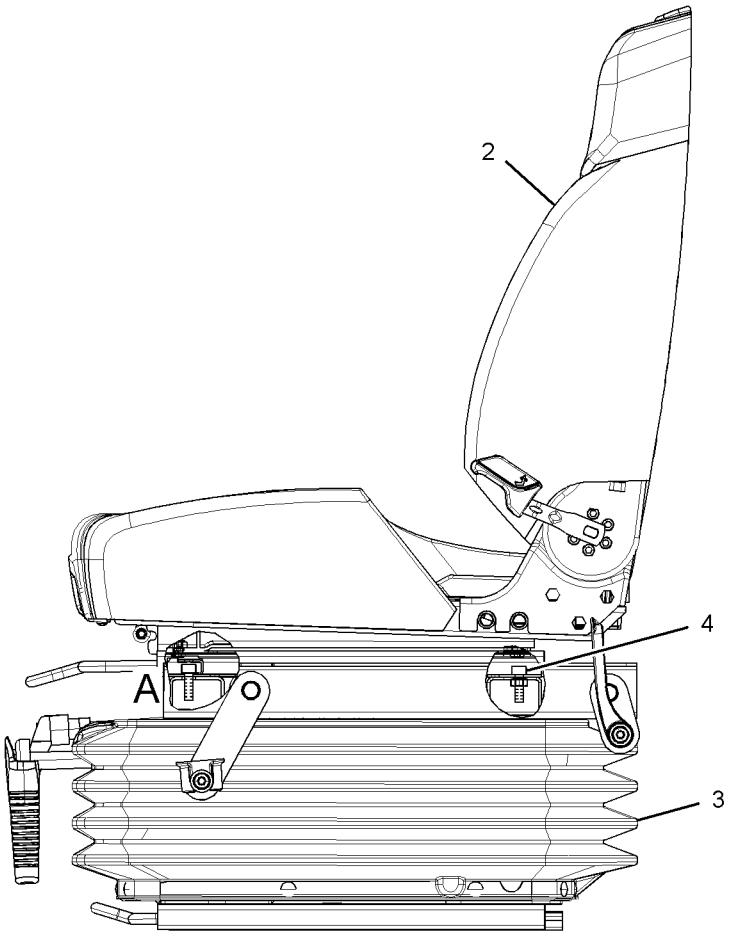

LEFT SIDE VIEW

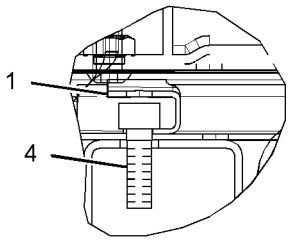

VIEW OF AREA A

GRAPHIC #1 **<END>** g01576297

OPERATOR STATION

327-6507 SEAT GP-SUSPENSION—HIGH BACK, TILT

S/N: CJN1-UP

PART OF 327-6501 SEAT & MOUNTING GP

AN ATTACHMENT

SMCS-7324, 7336 **i03213641**

NOTE	REF NO	GRAPHIC REF	PART NUMBER	QTY	PART NAME 1 2 3 4 5 6 (PRODUCT LEVEL)	SEE PAGE
	1	1	**316-8987**	2	BRACKET	
Y	2	1	**327-6512**	1	SEAT GP	1032
Y	3	1	**327-6520**	1	SUSPENSION GP-SEAT	1051
M	4	1	**5A-3604**	4	BOLT-SOCKET HEAD (M8X1.25X25-MM)	

M-METRIC PART
Y-SEPARATE ILLUSTRATION

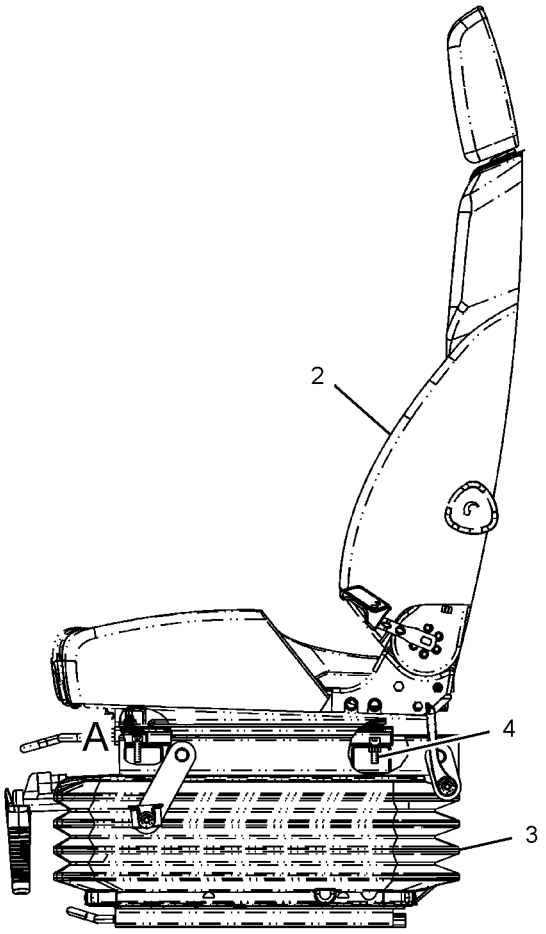

LEFT SIDE VIEW

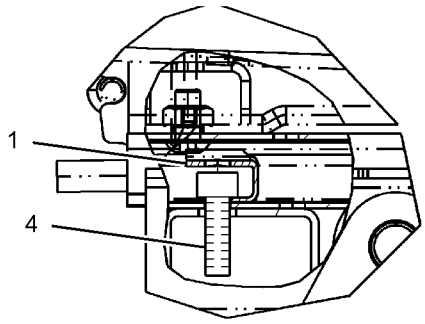

VIEW OF AREA A

GRAPHIC #1 **<END>** g01592076

OPERATOR STATION

327-6508 SEAT GP-SUSPENSION—HIGH BACK, TILT

S/N: CJN1-UP

PART OF 327-6502 SEAT & MOUNTING GP

AN ATTACHMENT

SMCS-7324, 7336 **i03213642**

NOTE	REF NO	GRAPHIC REF	PART NUMBER	QTY	PART NAME 1 2 3 4 5 6 (PRODUCT LEVEL)	SEE PAGE
	1	1	**316-8987**	2	BRACKET	
Y	2	1	**327-6512**	1	SEAT GP	1032
Y	3	1	**327-6521**	1	SUSPENSION GP-SEAT	1052
M	4	1	**5A-3604**	4	BOLT-SOCKET HEAD (M8X1.25X25-MM)	

M-METRIC PART
Y-SEPARATE ILLUSTRATION

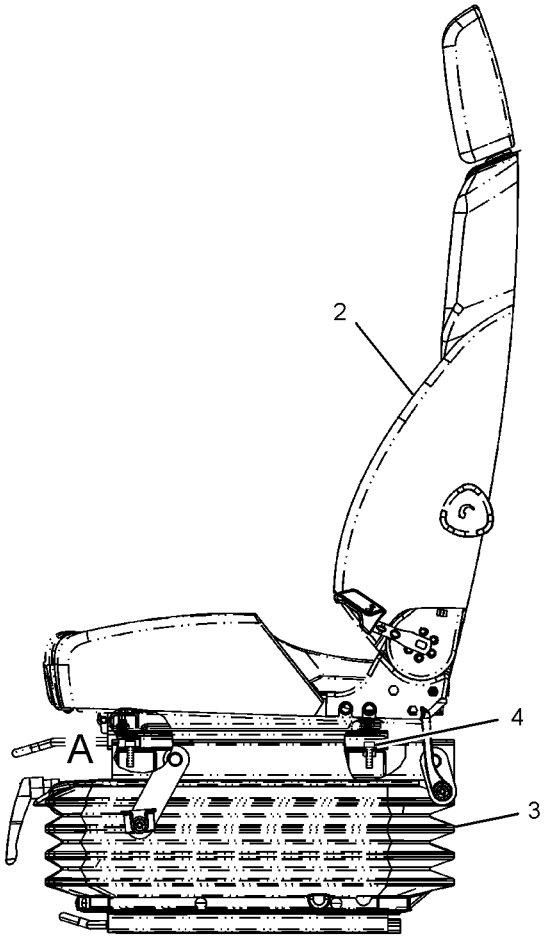

LEFT SIDE VIEW

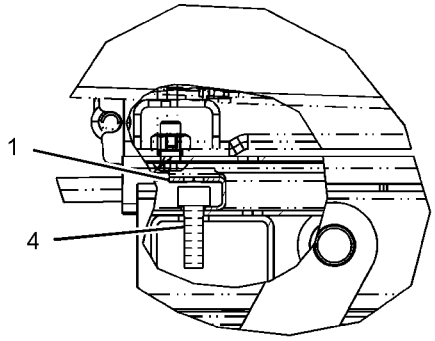

VIEW OF AREA A

GRAPHIC #1 **<END>** g01577953

OPERATOR STATION

327-6509 SEAT GP-SUSPENSION—HIGH BACK, WITH HEATER

S/N: CJN1-UP

PART OF 327-6503 SEAT GP-SUSPENSION

AN ATTACHMENT

SMCS-7324, 7336 **i03213688**

NOTE	REF NO	GRAPHIC REF	PART NUMBER	QTY	PART NAME 1 2 3 4 5 6 (PRODUCT LEVEL)	SEE PAGE
	1	1	**316-8987**	2	BRACKET	
Y	2	1	**327-6513**	1	SEAT GP	1033
Y	3	1	**327-6521**	1	SUSPENSION GP-SEAT	1052
M	4	1	**5A-3604**	4	BOLT-SOCKET HEAD (M8X1.25X25-MM)	
	5	1	**7I-2673**	1	STRAP-CABLE	

M-METRIC PART
Y-SEPARATE ILLUSTRATION

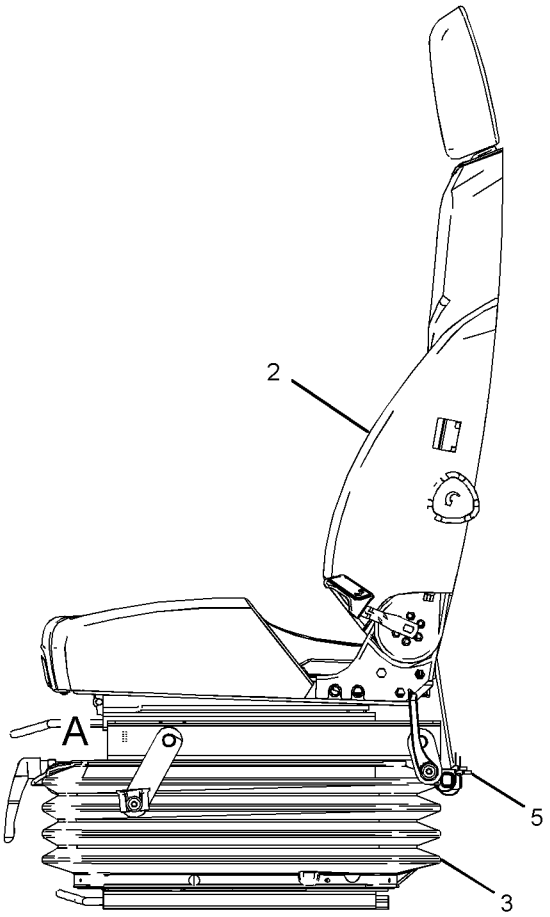

LEFT SIDE VIEW

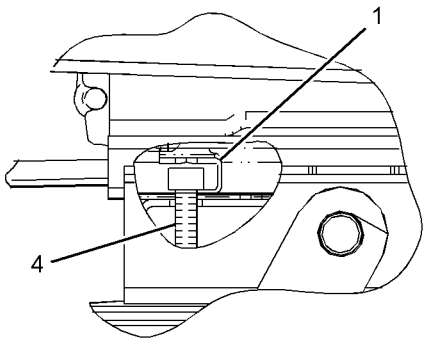

VIEW OF AREA A

GRAPHIC #1 **<END>** g01641377

OPERATOR STATION

235-8856 SUPPORT GP-SEAT

S/N: CJN1-UP

PART OF 259-7193 OPERATOR AR

SMCS-7321 **i02160706**

NOTE	REF NO	GRAPHIC REF	PART NUMBER	QTY	PART NAME 1 2 3 4 5 6 (PRODUCT LEVEL)	SEE PAGE
	1	1	**235-8857**	1	SUPPORT AS	
	2	1	**8T-4121**	4	WASHER-HARD (11X21X2.5-MM THK)	
M	3	1	**8T-4191**	4	BOLT (M10X1.5X16-MM)	

M-METRIC PART

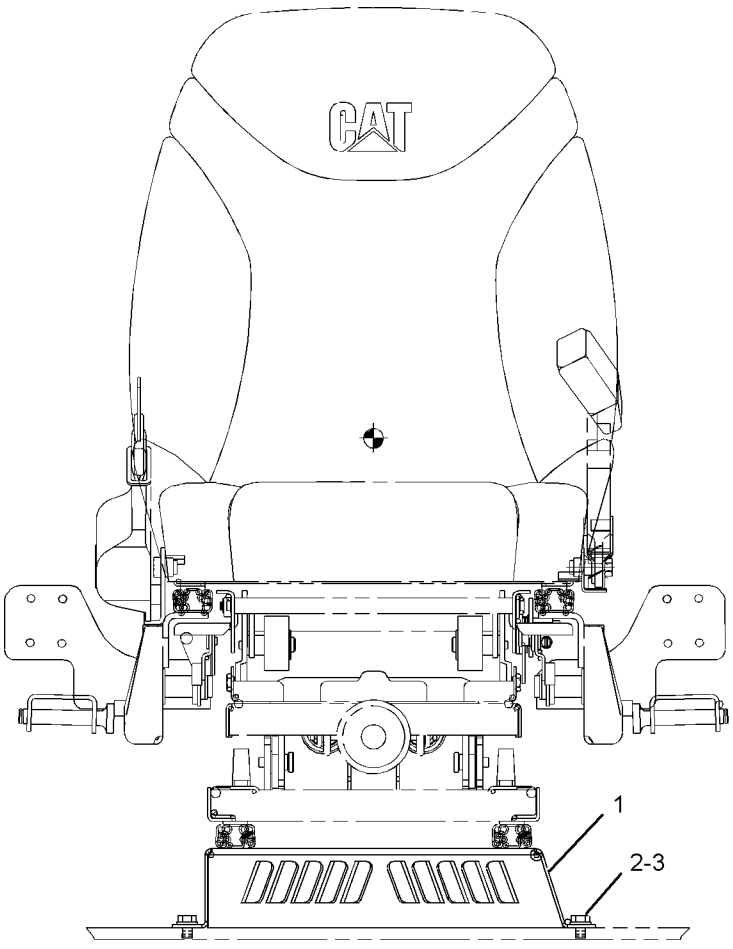

FRONT VIEW

GRAPHIC #1

<END>

g01097240

OPERATOR STATION

229-9077 SUSPENSION GP-SEAT

S/N: CJN1-UP

PART OF 229-9075, 229-9089 SEAT GP-SUSPENSION

AN ATTACHMENT

SMCS-7324 **i02177429**

NOTE	REF NO	GRAPHIC REF	PART NUMBER	QTY	PART NAME 1 2 3 4 5 6 (PRODUCT LEVEL)	SEE PAGE
	1	1	**242-8768**	1	COVER AS	
		1	**147-4921**	1	KIT-CLIP (SEAT)	
	2	1	**245-7889**	1	ADJUSTER GP-SEAT (UPPER SLIDE)	
M		1	**5C-7261**	8	NUT (M8X1.25-THD)	
		1	**8T-4224**	8	WASHER-HARD (8.8X16X2-MM THK)	
		1	**245-7897**	4	PLATE	
M		1	**245-7899**	4	SCREW-BUTTON HEAD (M8X1.25X30-MM)	
	3	1	**245-7890**	1	BRACKET GP-MOUNTING	
M		1	**5C-7261**	4	NUT (M8X1.25-THD)	
		1	**8T-4224**	4	WASHER-HARD (8.8X16X2-MM THK)	
		1	**245-7897**	4	PLATE	
M		1	**245-7899**	4	SCREW-BUTTON HEAD (M8X1.25X30-MM)	
Y	4	1	**245-7892**	1	SUSPENSION GP-SEAT	1048
	5	1	**245-7895**	1	KIT-CLIP (SUSPENSION SEAT)	
Y	6	1	**245-7896**	1	ADJUSTER GP-SEAT (LOWER SLIDE)	842

M-METRIC PART
Y-SEPARATE ILLUSTRATION

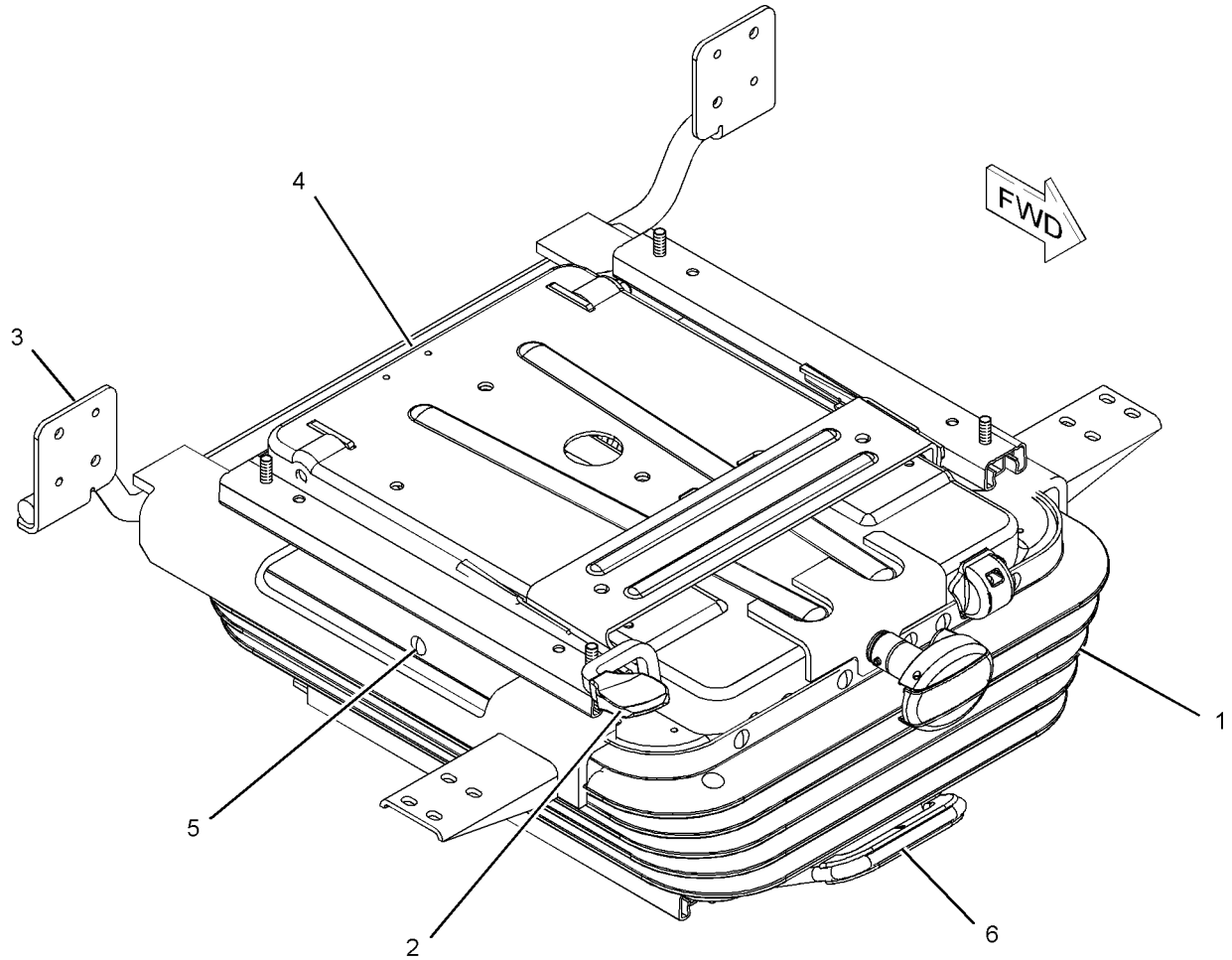

GRAPHIC #1 **<END>** g01087842

240-5063 SUSPENSION GP-SEAT–AIR

S/N: CJN1-UP
PART OF 240-5065 SEAT GP-SUSPENSION
AN ATTACHMENT

SMCS-7324 **i03130945**

NOTE	REF NO	GRAPHIC REF	PART NUMBER	QTY	PART NAME 1 2 3 4 5 6 (PRODUCT LEVEL)	SEE PAGE
	1	1	**7I-2673**	1	STRAP-CABLE	
	2	1	**242-8768**	1	COVER AS	
		1	**147-4921**	1	KIT-CLIP (SEAT)	
Y	3	1	**245-7889**	1	ADJUSTER GP-SEAT (UPPER SLIDE)	841
Y	4	1	**245-7890**	1	BRACKET GP-MOUNTING (SUSPENSION SEAT)	857
Y	5	1	**273-5384**	1	SUSPENSION GP-SEAT	1049
	6	1	**245-7895**	1	KIT-CLIP (SUSPENSION SEAT)	
Y	7	1	**245-7896**	1	ADJUSTER GP-SEAT (LOWER SLIDE)	842

Y-SEPARATE ILLUSTRATION

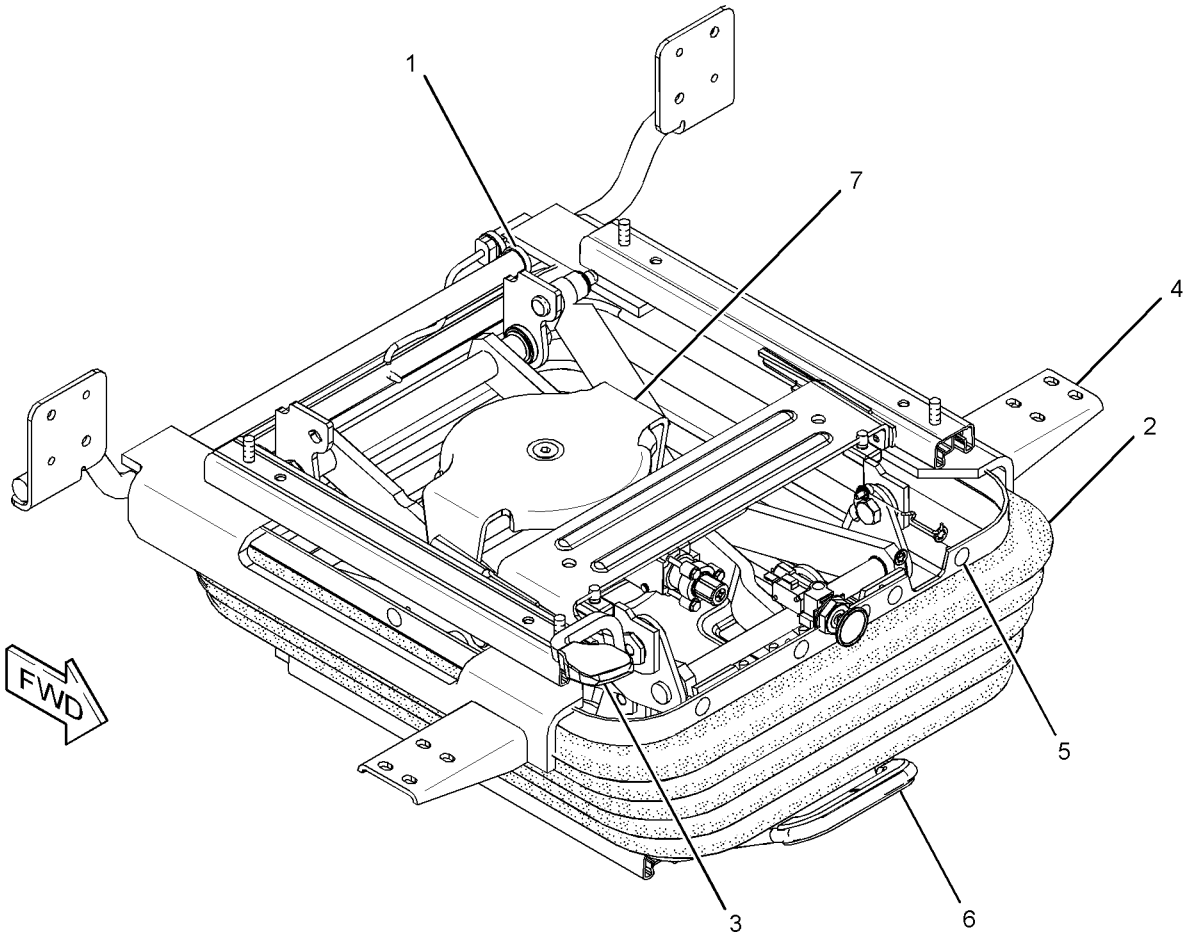

GRAPHIC #1 **<END>** g01307533

OPERATOR STATION

245-7892 SUSPENSION GP-SEAT

S/N: CJN1-UP
PART OF 229-9077 SUSPENSION GP-SEAT
AN ATTACHMENT

SMCS-7324 **i02178065**

NOTE	REF NO	GRAPHIC REF	PART NUMBER	QTY	PART NAME 1 2 3 4 5 6 (PRODUCT LEVEL)	SEE PAGE
M	1	1	**198-3899**	2	SCREW-BUTTON HEAD (M8X1.25X20-MM)	
	2	1	**209-4280**	1	CYLINDER-DAMPER	
	3	1	**245-7897**	8	PLATE	
M	4	1	**245-7898**	2	SCREW-BUTTON HEAD (M8X1.25X25-MM)	
M	5	1	**245-7899**	4	SCREW-BUTTON HEAD (M8X1.25X30-MM)	
M	6	1	**5C-7261**	8	NUT (M8X1.25-THD)	
	7	1	**8T-4224**	8	WASHER-HARD (8.8X16X2-MM THK)	

M-METRIC PART

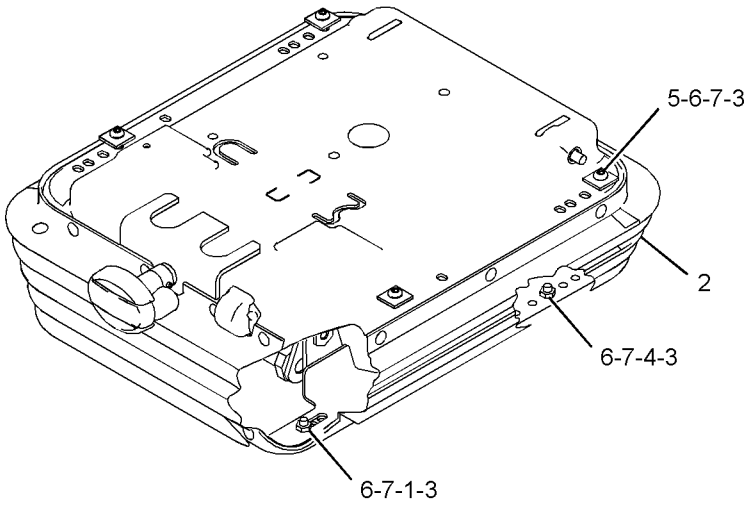

VIEW OF AREA A

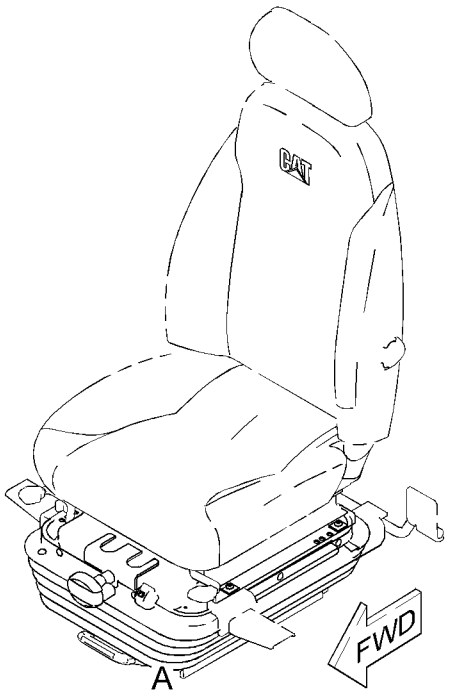

GRAPHIC #1 **<END>** g01103188

OPERATOR STATION

273-5384 SUSPENSION GP-SEAT

S/N: CJN1-UP

PART OF 240-5063 SUSPENSION GP-SEAT

AN ATTACHMENT

SMCS-7324 **i02795410**

NOTE	REF NO	GRAPHIC REF	PART NUMBER	QTY	PART NAME 1 2 3 4 5 6 (PRODUCT LEVEL)	SEE PAGE
M	1	1	**198-3899**	2	SCREW-BUTTON HEAD (M8X1.25X20-MM)	
	2	1	**209-0348**	1	DAMPER (SUSPENSION)	
	3	1	**245-7897**	8	PLATE	
M	4	1	**245-7898**	2	SCREW-BUTTON HEAD (M8X1.25X25-MM)	
M	5	1	**245-7899**	4	SCREW-BUTTON HEAD (M8X1.25X30-MM)	
M	6	1	**5C-7261**	8	NUT (M8X1.25-THD)	
	7	1	**8T-4224**	8	WASHER-HARD (8.8X16X2-MM THK)	
	8	1	**273-5386**	1	VALVE AS-AIR (SEAT)	

M-METRIC PART

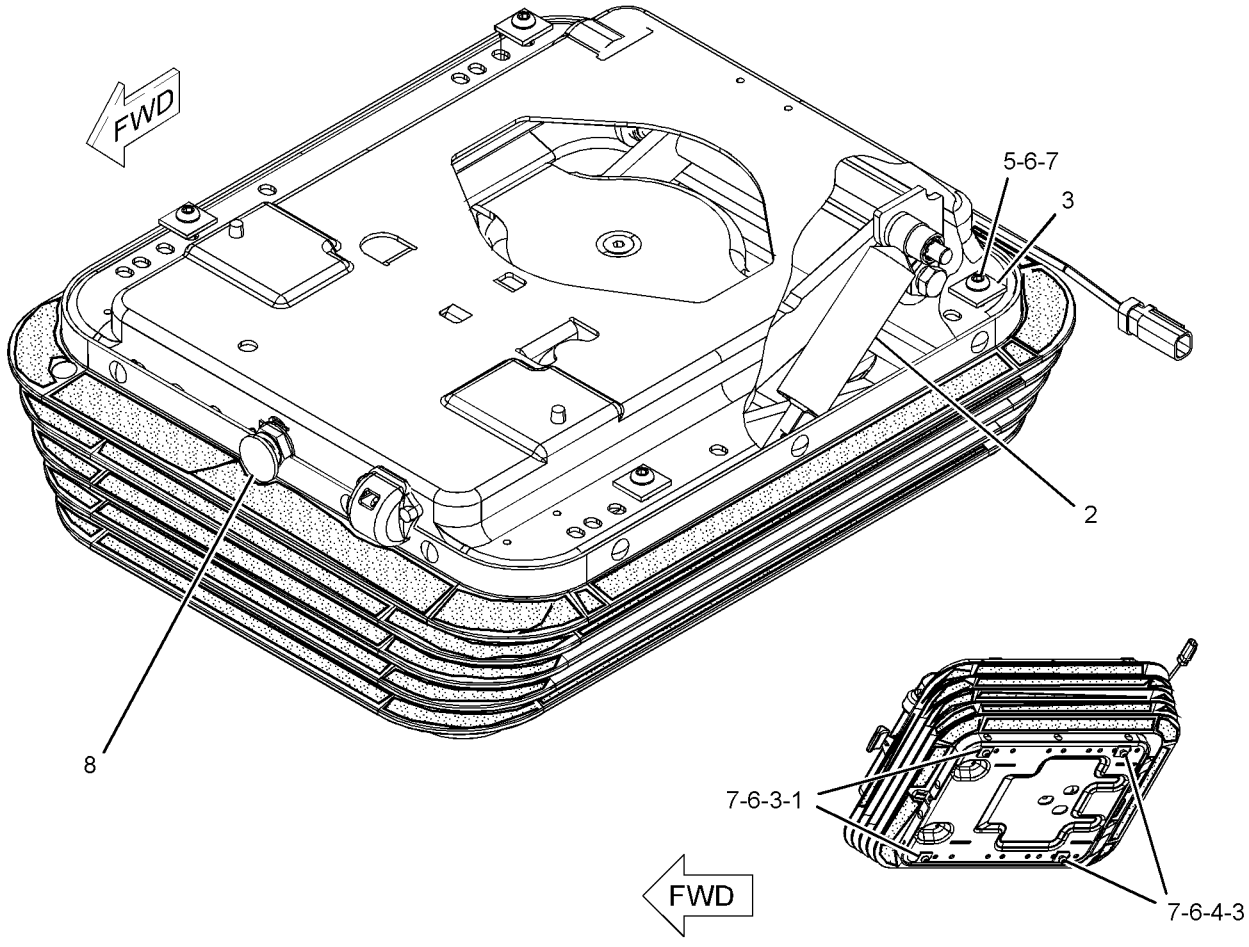

GRAPHIC #1 **<END>** g01254074

OPERATOR STATION

327-6517 SUSPENSION GP-SEAT

S/N: CJN1-UP
PART OF 327-6504, 327-6505 SEAT GP
AN ATTACHMENT

SMCS-7324 **i03213412**

NOTE	REF NO	GRAPHIC REF	PART NUMBER	QTY	PART NAME 1 2 3 4 5 6 (PRODUCT LEVEL)	SEE PAGE
	1	1	**327-6648**	1	KIT-ADJUSTER (SEAT POSITION)	
		1	**316-8987**	2	BRACKET	
		1	**333-4180**	6	SCREW-BUTTON HEAD	
Y	2	1	**333-4173**	1	KIT-SEAT SUSPENSION (MECHANICAL)	988
	3	1	**333-4175**	1	KIT-BRACKET (CONSOLE)	
M		1	**7Y-7394**	4	SCREW-BUTTON HEAD (M8X1.25X25-MM)	

M-METRIC PART
Y-SEPARATE ILLUSTRATION

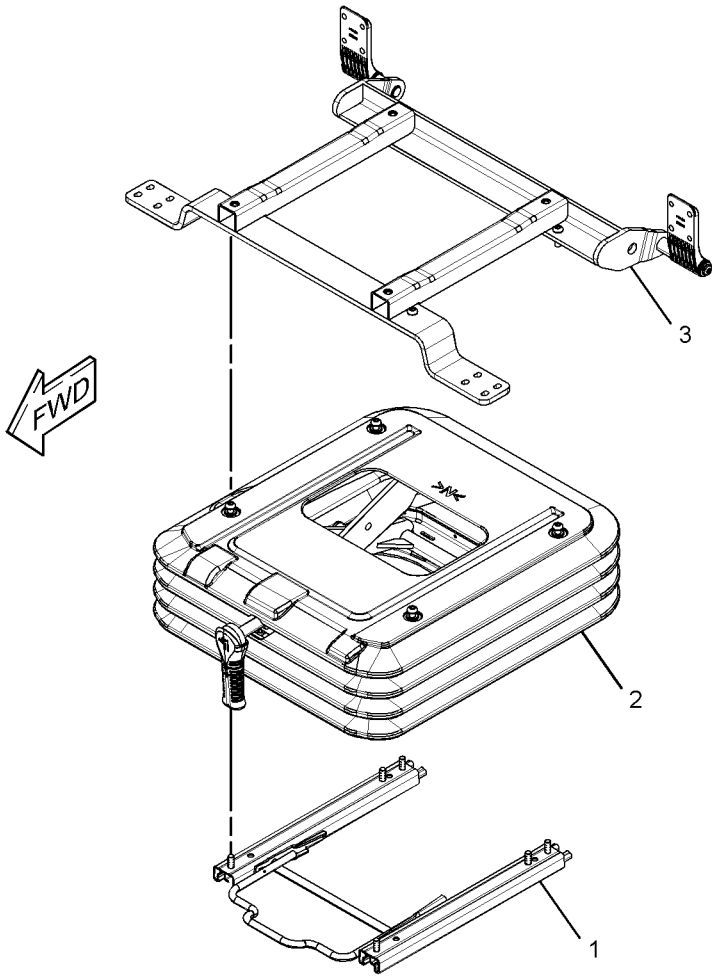

GRAPHIC #1 **<END>** g01644135

OPERATOR STATION

327-6520 SUSPENSION GP-SEAT

S/N: CJN1-UP

PART OF 327-6506, 327-6507 SEAT GP-SUSPENSION

AN ATTACHMENT

SMCS-7324 **i03207836**

NOTE	REF NO	GRAPHIC REF	PART NUMBER	QTY	PART NAME 1 2 3 4 5 6 (PRODUCT LEVEL)	SEE PAGE
	1	1	**327-6644**	1	KIT-BRACKET (CONSOLE RAISE, LOWER)	
		1	**327-6648**	4	KIT-ADJUSTER	
Y	2	1	**327-6645**	1	KIT-SEAT SUSPENSION (MECHANICAL) (SEAT HEIGHT)	986
	3	1	**327-6648**	1	KIT-ADJUSTER (SEAT POSITION)	
		1	**316-8987**	2	BRACKET	
		1	**333-4180**	6	SCREW-BUTTON HEAD	

Y-SEPARATE ILLUSTRATION

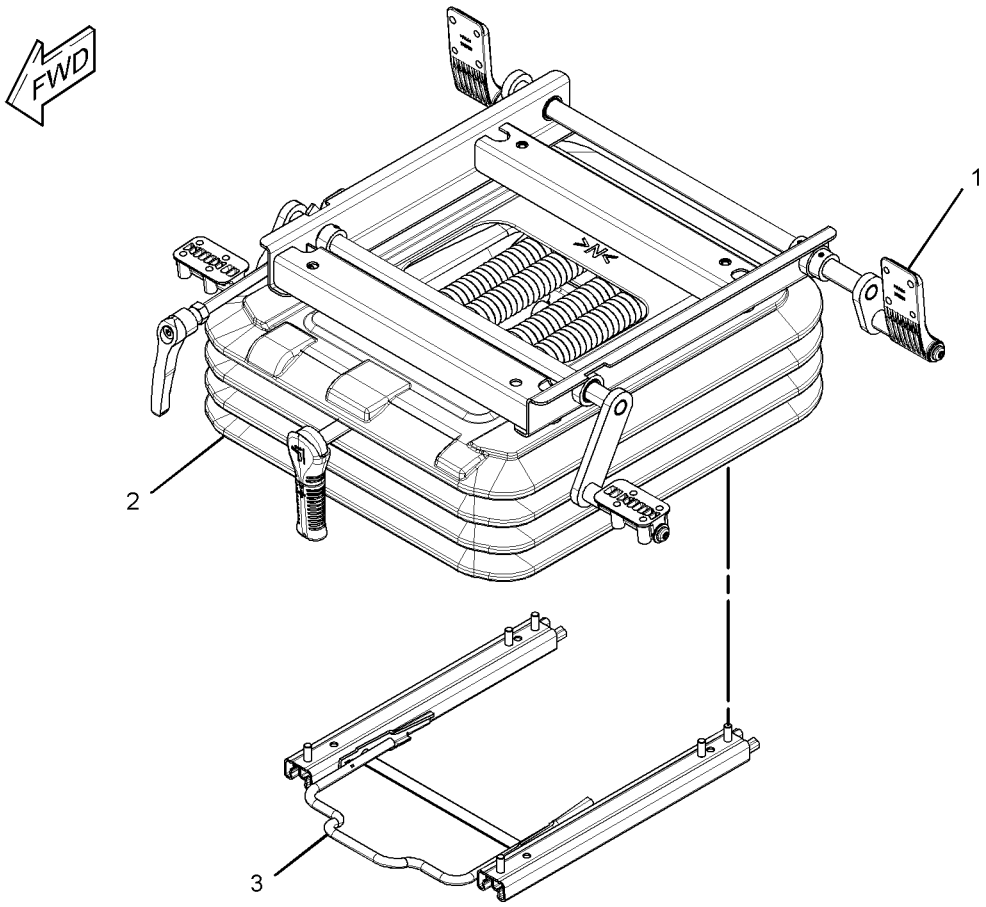

GRAPHIC #1 **<END>** g01637856

OPERATOR STATION

327-6521 SUSPENSION GP-SEAT

S/N: CJN1-UP

PART OF 327-6508, 327-6509 SEAT GP-SUSPENSION

AN ATTACHMENT

SMCS-7324 **i03207834**

NOTE	REF NO	GRAPHIC REF	PART NUMBER	QTY	PART NAME 1 2 3 4 5 6 (PRODUCT LEVEL)	SEE PAGE
	1	1	**7I-2673**	1	STRAP-CABLE	
	2	1	**327-6644**	1	KIT-BRACKET (CONSOLE RAISE, LOWER)	
M		1	**7Y-7394**	4	SCREW-BUTTON HEAD (M8X1.25X25-MM)	
	3	1	**327-6648**	1	KIT-ADJUSTER (SEAT POSITION)	
		1	**316-8987**	2	BRACKET	
		1	**333-4180**	6	SCREW-BUTTON HEAD	
Y	4	1	**333-4157**	1	KIT-SEAT SUSPENSION (AIR) (SEAT HEIGHT)	987

M-METRIC PART
Y-SEPARATE ILLUSTRATION

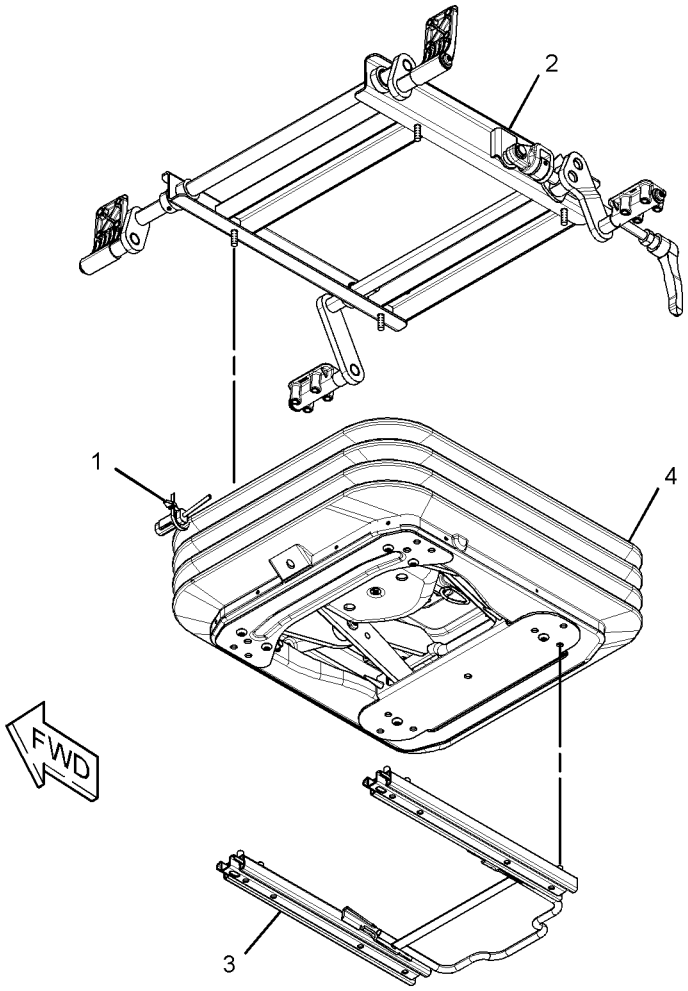

GRAPHIC #1 **<END>** g01637857

OPERATOR STATION

161-3751 VISOR GP-CAB

S/N: CJN1-UP
AN ATTACHMENT

SMCS-7301 **i02906060**

NOTE	REF NO	GRAPHIC REF	PART NUMBER	QTY	PART NAME 1 2 3 4 5 6 (PRODUCT LEVEL)	SEE PAGE
	1	1	**164-0639**	1	BRACKET AS	
	2	1	**210-5827**	1	PLATE	
	3	1	**210-5828**	1	PLATE	
	4	1	**210-5829**	2	BOLT	
	5	1	**210-5834**	1	BRACKET AS	
	6	1	**210-5836**	1	VISOR	
	7	1	**210-5837**	2	STRIP	
	8	1	**210-5838**	4	PACKING	
	9	1	**8H-3481**	2	LOCKWASHER	
M	10	1	**9X-2044**	8	SCREW-TRUSS HEAD (M6X1X16-MM)	
M	11	1	**9X-2046**	2	SCREW-TRUSS HEAD (M6X1X35-MM)	
	12	1	**9X-8256**	2	WASHER (6.6X12X2-MM THK)	

M-METRIC PART

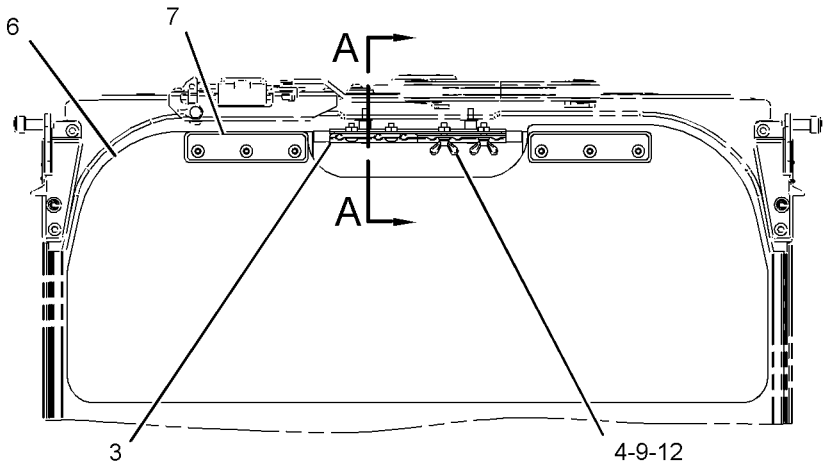

FRONT VIEW

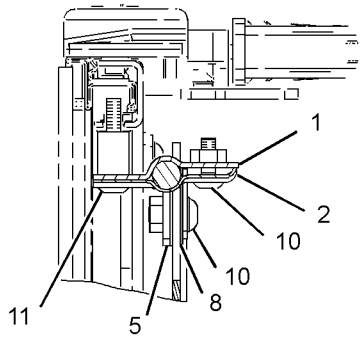

SECTION A-A

GRAPHIC #1 **<END>** g01447299

OPERATOR STATION

161-3750 VISOR GP-PROTECTION—RAIN

S/N: CJN1-UP

AN ATTACHMENT

SMCS-7340 **i03087900**

NOTE	REF NO	GRAPHIC REF	PART NUMBER	QTY	PART NAME 1 2 3 4 5 6 (PRODUCT LEVEL)	SEE PAGE
M	1	1	**4I-5049**	8	NUT-SPACER (M6X1-THD)	
	2	1	**164-0618**	2	BRACKET	
	3	1	**164-0619**	1	BRACKET	
	4	1	**164-0620**	1	BRACKET	
	5	1	**327-6581**	1	VISOR	
M	6	1	**6V-7357**	8	BOLT (M6X1X25-MM)	
M	7	1	**8T-4189**	4	BOLT (M8X1.25X20-MM)	
	8	1	**8T-4224**	4	WASHER-HARD (8.8X16X2-MM THK)	
	9	1	**9X-8256**	8	WASHER (6.6X12X2-MM THK)	
D	10	1	**5P-8292**		SEAL (1.4-M)	

D-ORDER BY THE METER
M-METRIC PART

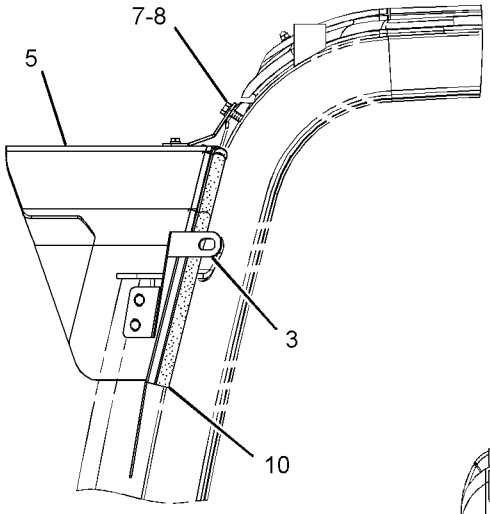

LEFT SIDE VIEW

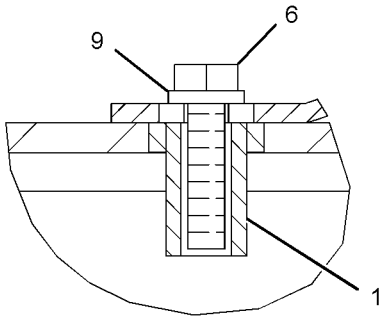

SECTION A-A

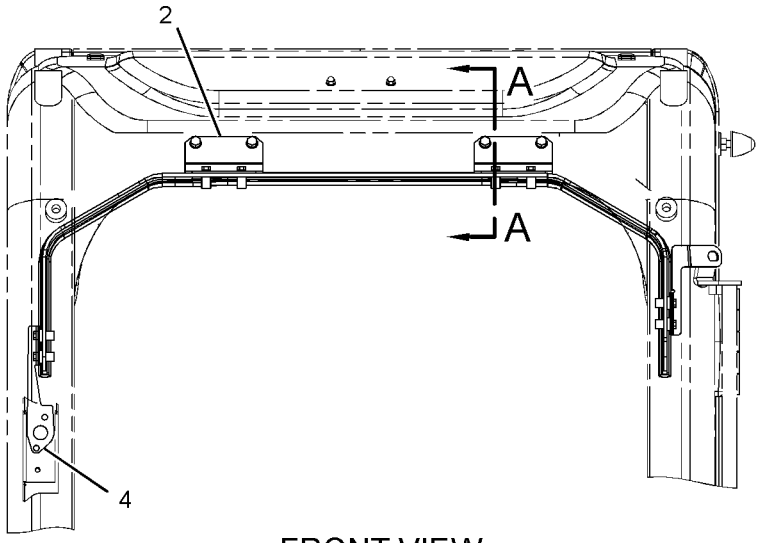

FRONT VIEW

GRAPHIC #1 **<END>** g01592616

OPERATOR STATION

229-9070 WASHER GP-WINDOW

S/N: CJN1-UP
AN ATTACHMENT

SMCS-7306 **i02593848**

NOTE	REF NO	GRAPHIC REF	PART NUMBER	QTY	PART NAME 1 2 3 4 5 6 (PRODUCT LEVEL)	SEE PAGE
	1	1	**7Y-3474**	1	VALVE AS-CHECK (WINDOW WASHER)	
	2	1	**163-6795**	2	STRAP-CABLE	
	3	1	**176-1931**	1	TANK AS-WINDOW WASHER	
		1	**5C-8138**	1	GROMMET	
		1	**7T-8890**	1	PUMP AS-WASHER	
		1	**178-5431**	1	CAP AS (WINDOW WASHER)	
		1	**3W-6399**		PACKING	
	4	1	**235-9012**	1	SUPPORT AS	
M	5	1	**8T-4970**	2	BOLT (M6X1X14-MM)	
	6	1	**9X-8256**	2	WASHER (6.6X12X2-MM THK)	
CE	7	1	**144-0195**		HOSE (13-CM)	
	8	1	**3S-2093**	1	STRAP-CABLE	

C-CHANGE FROM PREVIOUS TYPE
E-ORDER BY THE CENTIMETER
M-METRIC PART

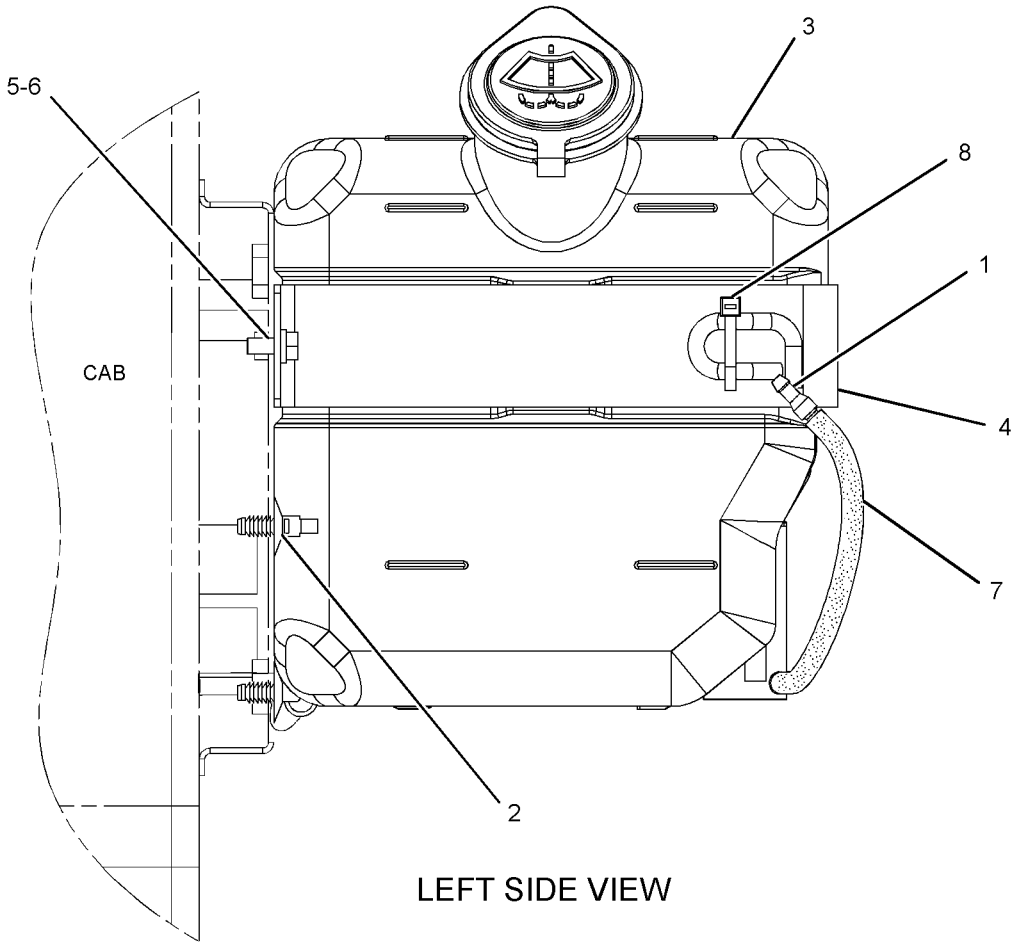

LEFT SIDE VIEW

GRAPHIC #1 **<END>** g01307642

OPERATOR STATION

229-9088 WASHER GP-WINDOW—LOWER

S/N: CJN1-UP

PART OF 273-5388 WIPER AR-WINDOW

AN ATTACHMENT

SMCS-7306 **i02703029**

NOTE	REF NO	GRAPHIC REF	PART NUMBER	QTY	PART NAME 1 2 3 4 5 6 (PRODUCT LEVEL)	SEE PAGE
	1	1	**3S-2093**	2	STRAP-CABLE	
	2	1	**293-1256**	2	VALVE AS-CHECK	
	3	1	**163-6795**	2	STRAP-CABLE	
	4	1	**170-9492**	1	PLATE	
E	5	1	**144-0195**		HOSE (290-CM)	
E	5A	1	**144-0195**		HOSE (30-CM)	
E	5B	1	**144-0195**		HOSE (13-CM)	
	6	1	**235-9012**	1	SUPPORT AS	
	7	1	**176-1932**	1	TANK AS-WINDOW WASHER	
	8	1	**178-5500**	1	NOZZLE AS	
		1	**085-8037**	1	NOZZLE	
		1	**105-9526**	1	ADAPTER	
		1	**105-9527**	1	GASKET	
M	9	1	**3E-9872**	2	SCREW AS (M4X0.7X12-MM)	
	10	1	**6V-3265**	10	CLIP	
	11	1	**8T-4121**	10	WASHER-HARD (11X21X2.5-MM THK)	
M	12	1	**8T-4191**	10	BOLT (M10X1.5X16-MM)	
M	13	1	**8T-4970**	2	BOLT (M6X1X14-MM)	
	14	1	**9X-8256**	2	WASHER (6.6X12X2-MM THK)	

E-ORDER BY THE CENTIMETER
M-METRIC PART

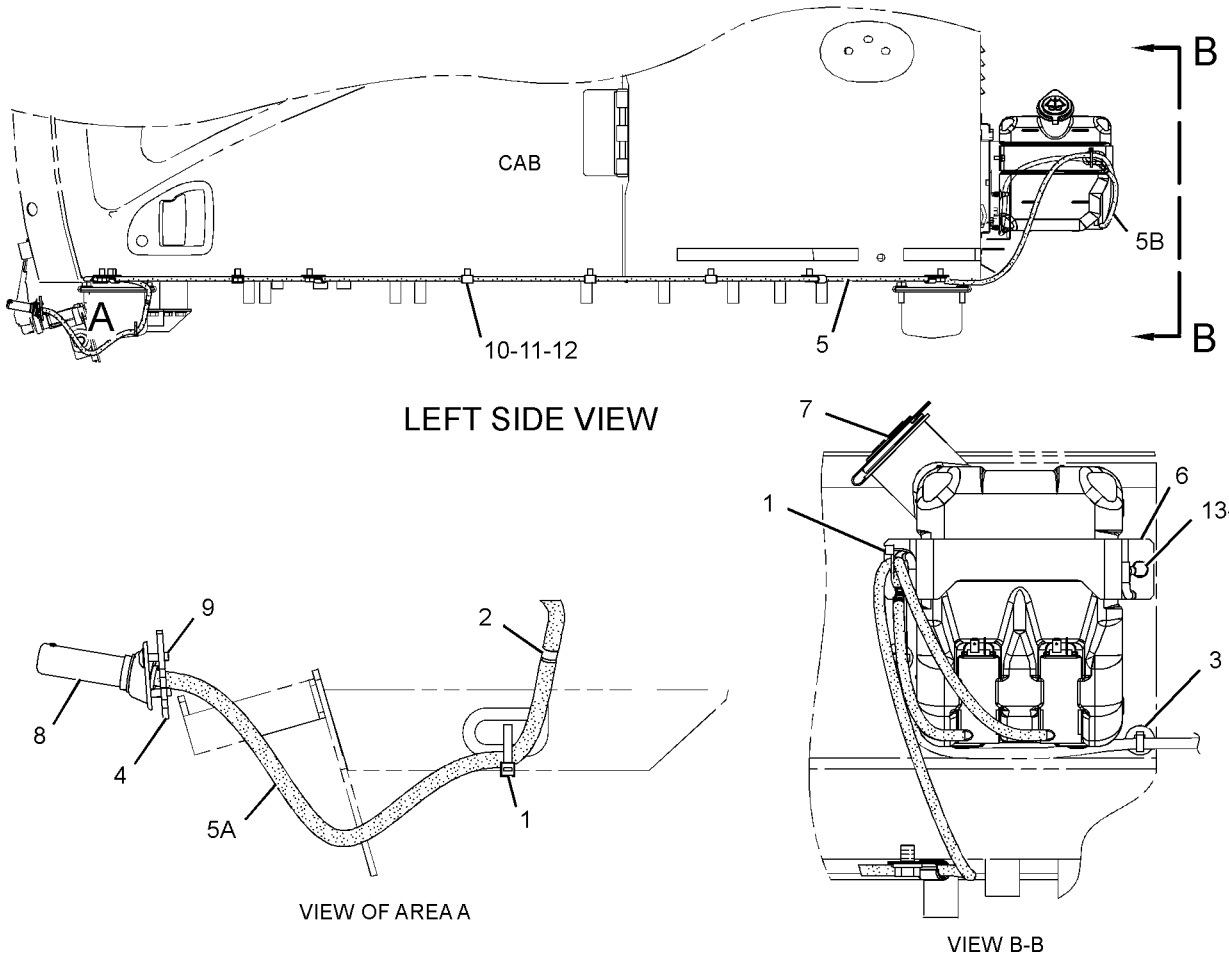

GRAPHIC #1 **<END>** g01292034

OPERATOR STATION

207-0144 WINDOW AS-FRONT–UPPER

S/N: CJN1-UP

PART OF 229-9097, 229-9099, 229-9101, 316-8815 CAB GP

AN ATTACHMENT

SMCS-7340 **i02857428**

NOTE	REF NO	GRAPHIC REF	PART NUMBER	QTY	PART NAME 1 2 3 4 5 6 (PRODUCT LEVEL)	SEE PAGE
	1	1	**170-9722**	1	CUSHION	
	2	1	**156-6472**	1	GLASS	
	3	1	**161-3698**	1	SEAL	
	4	1	**4I-0420**	1	STRIP	

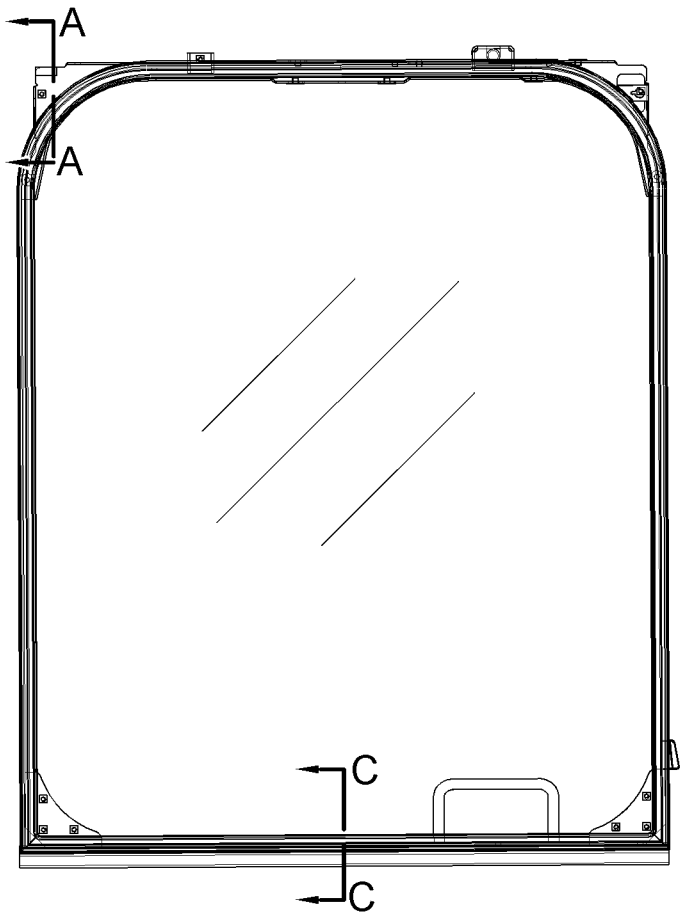

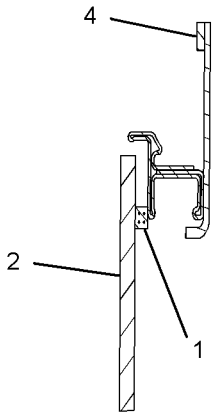

SECTION A-A

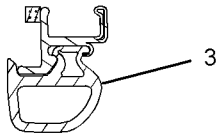

SECTION C-C

GRAPHIC #1 **<END>** g01439108

OPERATOR STATION

139-7101 WINDOW GP-CAB—FRONT, UPPER

S/N: CJN1-UP

PART OF 229-9097, 229-9099, 229-9101, 316-8815 CAB GP

AN ATTACHMENT

SMCS-7310 **i02836457**

NOTE	REF NO	GRAPHIC REF	PART NUMBER	QTY	PART NAME 1 2 3 4 5 6 (PRODUCT LEVEL)	SEE PAGE
	1	2	**170-9722**	1	CUSHION	
	2	1	**151-6703**	1	HANDLE-PULL	
	3	1	**151-6704**	2	CAP (HANDLE)	
	4	2	**151-6778**	1	FRAME AS	
	5	1	**151-6785**	1	BRACKET AS	
	6	1	**151-6813**	1	BRACKET AS	
	7	1	**151-6815**	1	BRACKET AS	
	8	1	**273-5345**	1	LINK AS	
	9	1	**273-5346**	1	LINK AS	
	10	1	**151-6831**	1	LOCK AS	
	11	1	**151-6832**	1	LEVER AS	
	12	2	**151-6844**	1	COVER	
	13	1	**151-9557**	2	STOP-RUBBER	
	14	2	**156-6472**	1	GLASS	
	15	2	**156-6554**	1	CABLE AS	
	16	1	**156-6555**	1	STRIKER AS	
	17	2	**156-6562**	1	BRACKET	
	18	2	**273-5274**	1	CATCH AS	
	19	2	**156-6579**	1	STOP	
	20	2	**156-6601**	1	SEAL AS	
	21	2	**156-6627**	1	STOP AS	
	22	1	**161-3684**	2	STOP	
	23	1	**161-3698**	1	SEAL	
	24	2	**164-0648**	1	BRACKET AS	
	25	1	**178-5576**	1	STOP	
M	26	2	**185-8181**	2	SCREW (M4X0.7X10-MM)	
M	27	2	**185-8182**	4	BOLT (M10X1.5X20-MM)	
M	28	2	**5C-8312**	1	NUT (M4X0.7-THD)	
	29	2	**185-8187**	4	WASHER (10.2X22X3.2-MM THK)	
M	30	1	**185-8197**	1	NUT (M10X1.15-THD)	
	31	1	**185-8221**	1	STOP	
M	32	1	**099-0823**	2	SCREW-MACHINE (M6X1X6-MM)	
M	33	1	**101-8900**	2	SCREW AS (M6X1X20-MM)	
	34	1	**117-6306**	1	SWITCH (WINDOW LOWER LIMIT)	
	35	1	**151-9576**	4	ROLLER	
	36	1	**4I-0420**	1	STRIP	
	37	1	**7X-0578**	1	WASHER-HARD (10.2X32X2.5-MM THK)	
M	38	2	**9X-2042**	20	SCREW-TRUSS HEAD (M6X1X12-MM)	
M	39	1,2	**9X-2044**	5	SCREW-TRUSS HEAD (M6X1X16-MM)	
M	40	2	**9X-2045**	3	SCREW-TRUSS HEAD (M6X1X20-MM)	
	41	2	**9X-8256**	2	WASHER (6.6X12X2-MM THK)	

M-METRIC PART

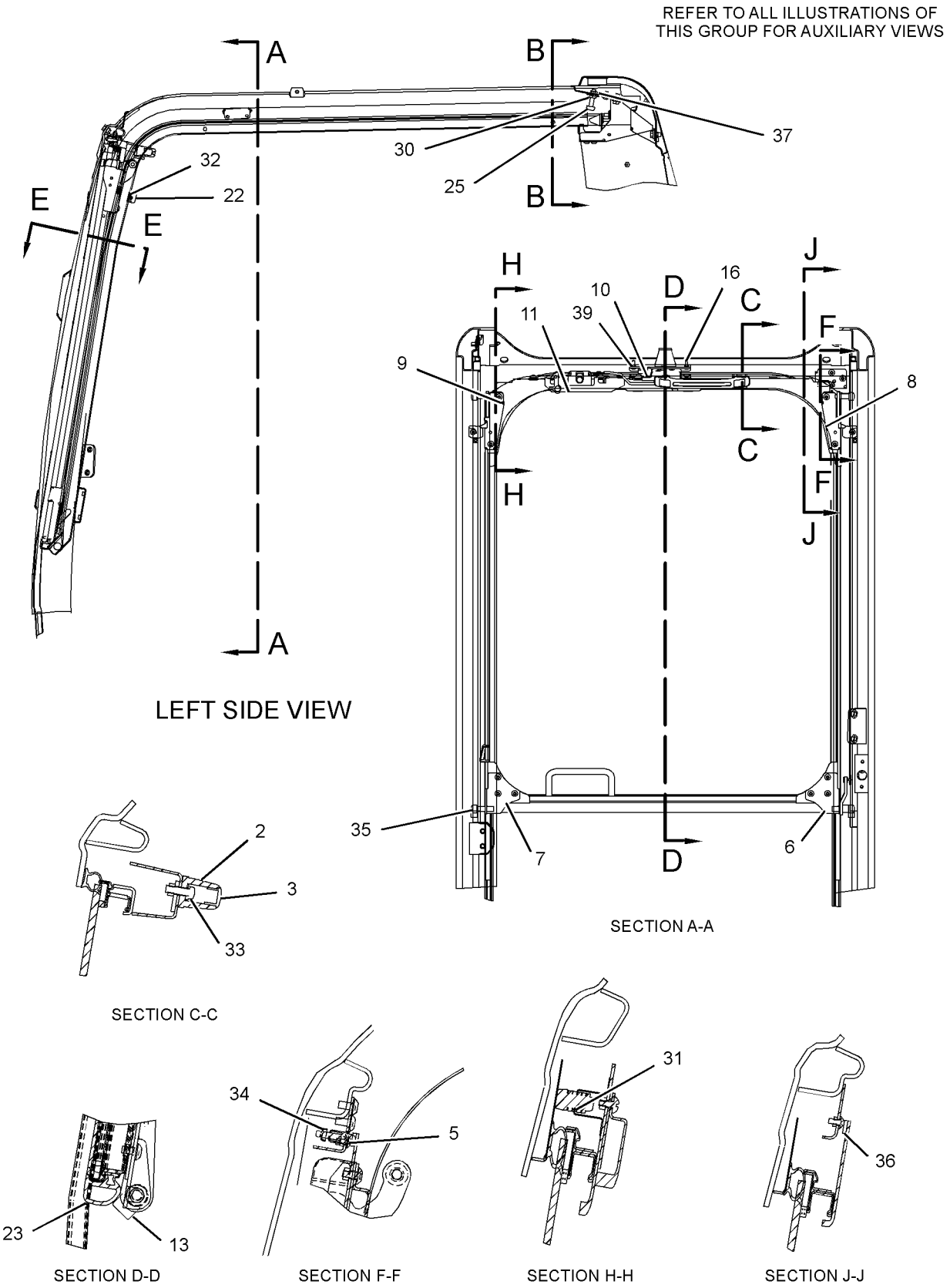

GRAPHIC #1

g01231378

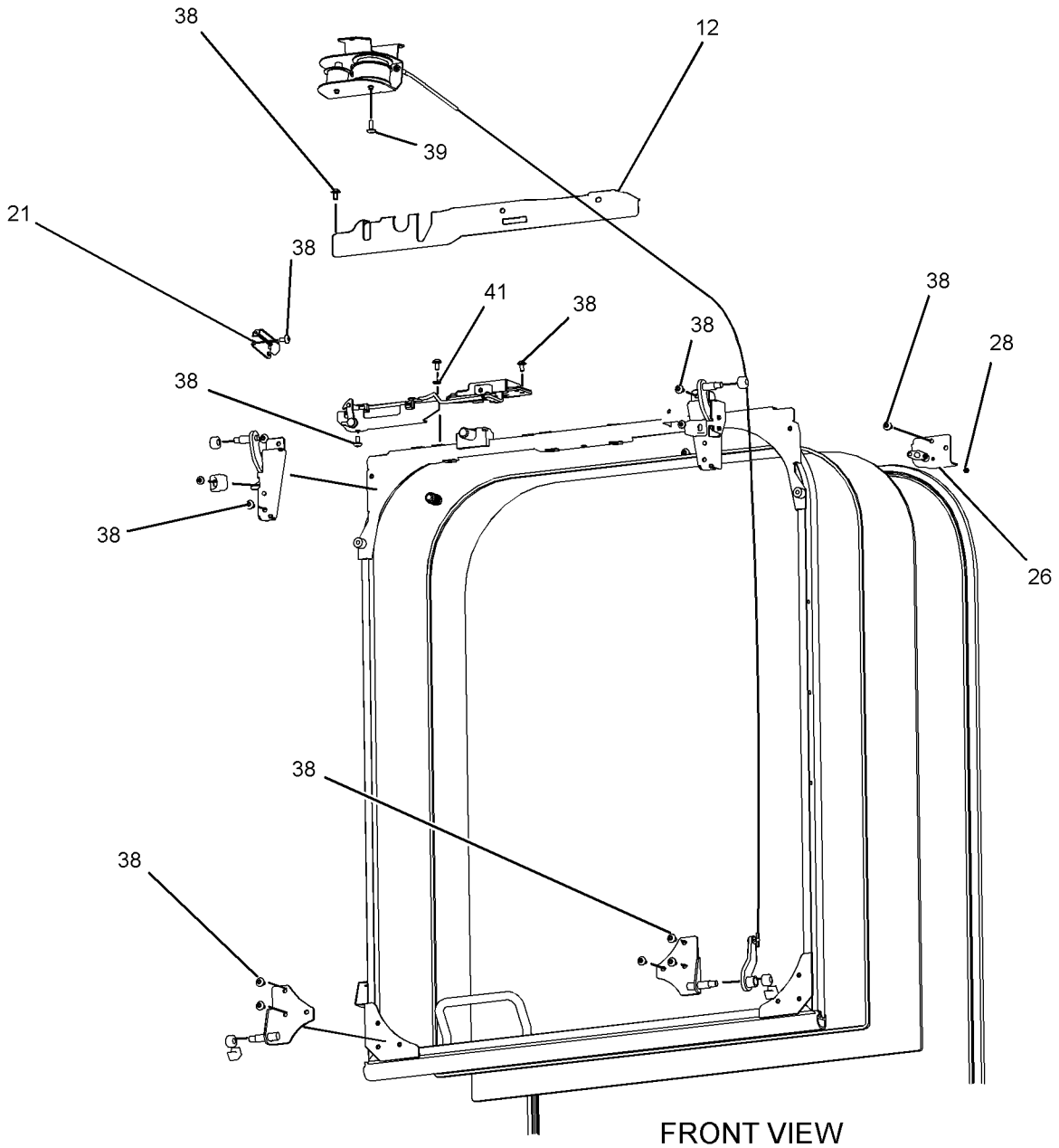

FRONT VIEW

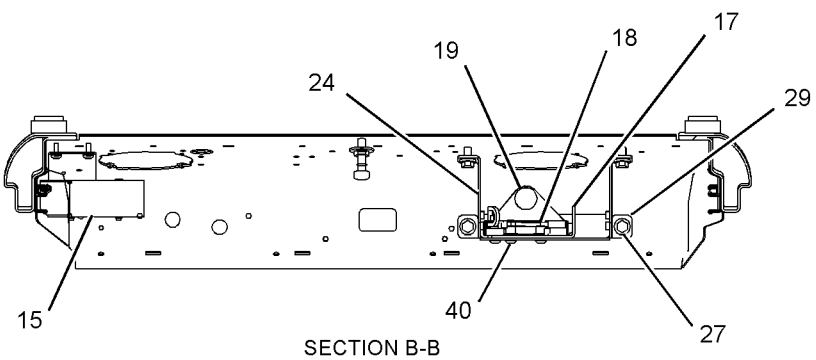

SECTION B-B

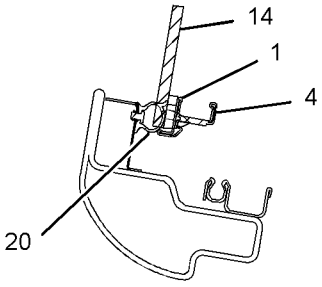

SECTION E-E

GRAPHIC #2 **<END>** g01231379

OPERATOR STATION

156-6647 WINDOW GP-CAB–FRONT, LOWER

S/N: CJN1-UP

PART OF 273-5389 WIPER & WASHER GP-WINDOW

AN ATTACHMENT

SMCS-7310 **i02243909**

NOTE	REF NO	GRAPHIC REF	PART NUMBER	QTY	PART NAME 1 2 3 4 5 6 (PRODUCT LEVEL)	SEE PAGE
	1	1	*156-6648*	1	GLASS	
M	2	1	**9X-2042**	2	SCREW-TRUSS HEAD (M6X1X12-MM)	
	3	1	**151-6705**	1	PACKING	
	4	1	**124-3966**	1	STOP	
	5	1	**144-9692**	2	RETAINER	
	6	1	**144-9691**	2	PACKING	

M-METRIC PART

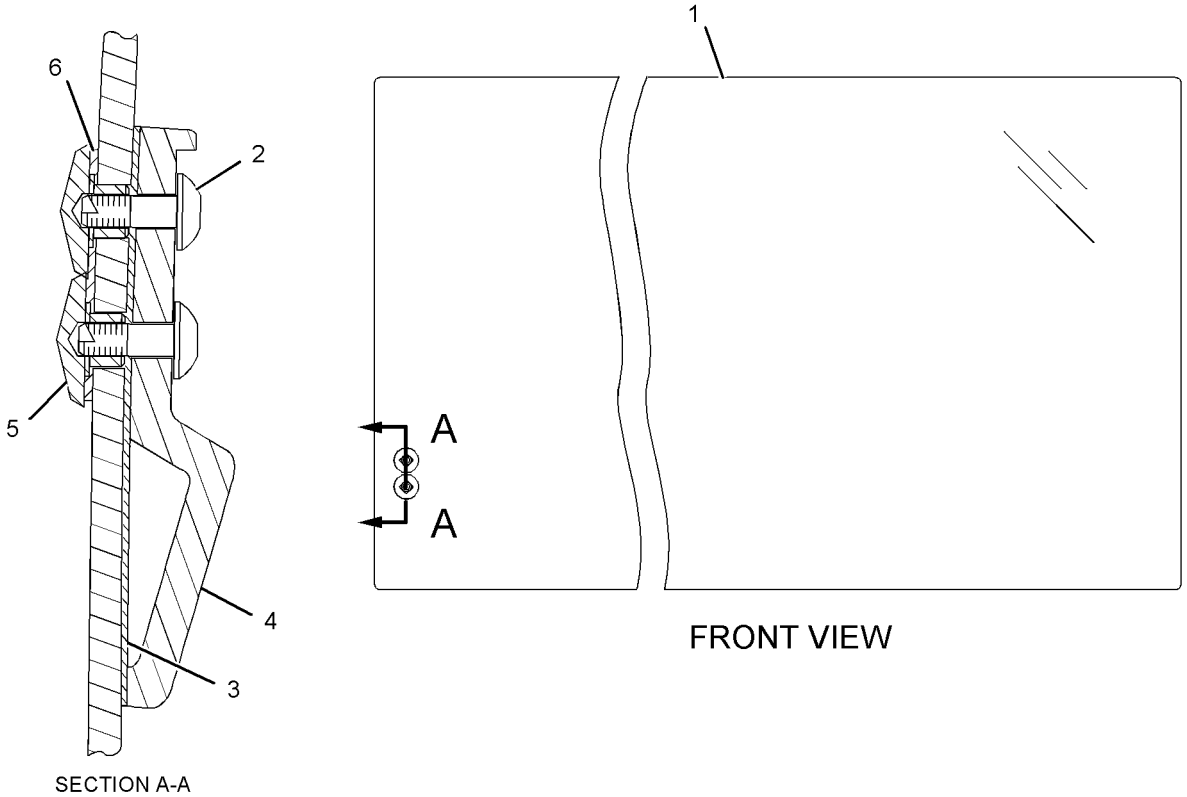

SECTION A-A

FRONT VIEW

GRAPHIC #1 **<END>** g01131367

OPERATOR STATION

176-1958 WINDOW GP-CAB—LOWER

S/N: CJN1-UP

PART OF 229-9097, 229-9099, 229-9101, 316-8815 CAB GP

AN ATTACHMENT

SMCS-7310 **i02793691**

NOTE	REF NO	GRAPHIC REF	PART NUMBER	QTY	PART NAME 1 2 3 4 5 6 (PRODUCT LEVEL)	SEE PAGE
	1	1	**156-6473**	1	GLASS (LOWER FRONT)	
	2	1	**156-6631**	2	STOP	
	3	1	**305-0361**	1	SEAL	
	4	1	**178-5569**	2	SEAL	
	5	1	**189-2702**	2	SEAL	
	6	1	**139-7119**	2	PLUG	

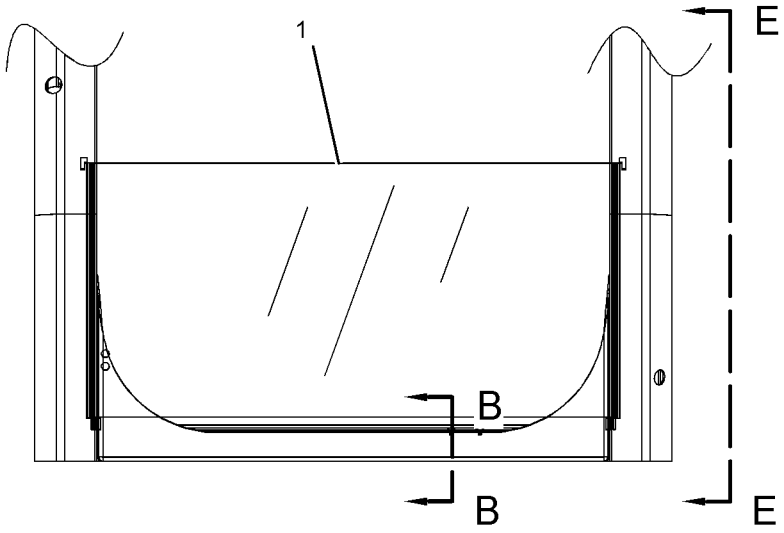

FRONT VIEW

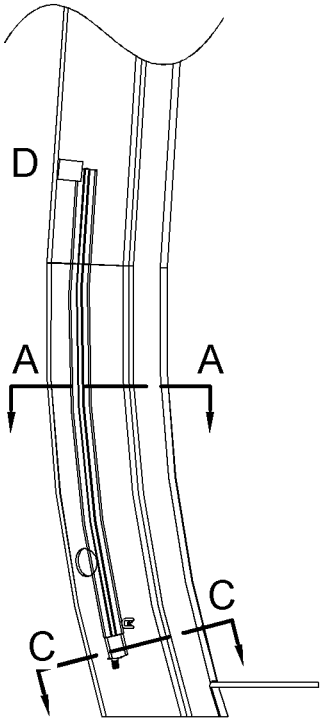

VIEW E-E

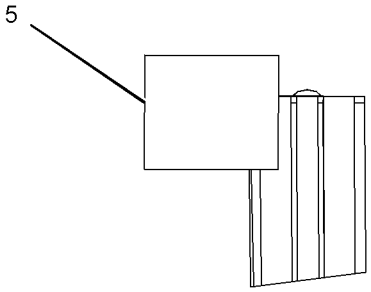

VIEW OF AREA D

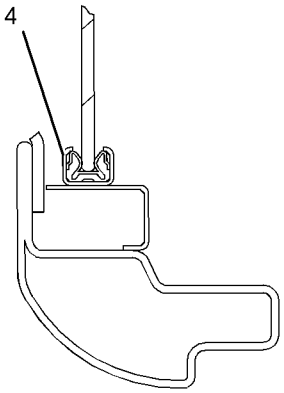

SECTION A-A

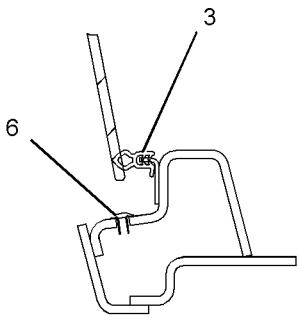

SECTION B-B

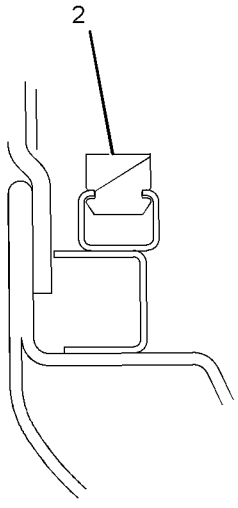

SECTION C-C

GRAPHIC #1 **<END>** g01398601

OPERATOR STATION

189-2778 WINDOW GP-CAB—REAR

S/N: CJN1-UP

AN ATTACHMENT

SMCS-7310 **i02742929**

NOTE	PART NUMBER	QTY	PART NAME 1 2 3 4 5 6 (PRODUCT LEVEL)	SEE PAGE
Y	*186-1305*	1	FILM GP (SECONDARY EXIT)	1078
Y	*189-2759*	1	WINDOW GP-REAR	1072

Y-SEPARATE ILLUSTRATION

<END>

OPERATOR STATION

235-8909 WINDOW GP-CAB—SIDE, REAR

S/N: CJN1-UP

PART OF 229-9097, 229-9099, 316-8815 CAB GP

AN ATTACHMENT

SMCS-7310 **i02877557**

NOTE	REF NO	GRAPHIC REF	PART NUMBER	QTY	PART NAME 1 2 3 4 5 6 (PRODUCT LEVEL)	SEE PAGE
	1	1	**151-6790**	1	GLASS	
	2	1	**156-6469**	1	GLASS	
	3	1	**164-0666**	1	SEAL	
	4	1	**178-5572**	4	SPACER	
	5	1	**234-6489**	1	GLASS	
	6	1	**099-3629**	1	RING-KEY	
	7	1	**178-5573**	4	SPACER	
	8	1	**178-5574**	9	SPACER	

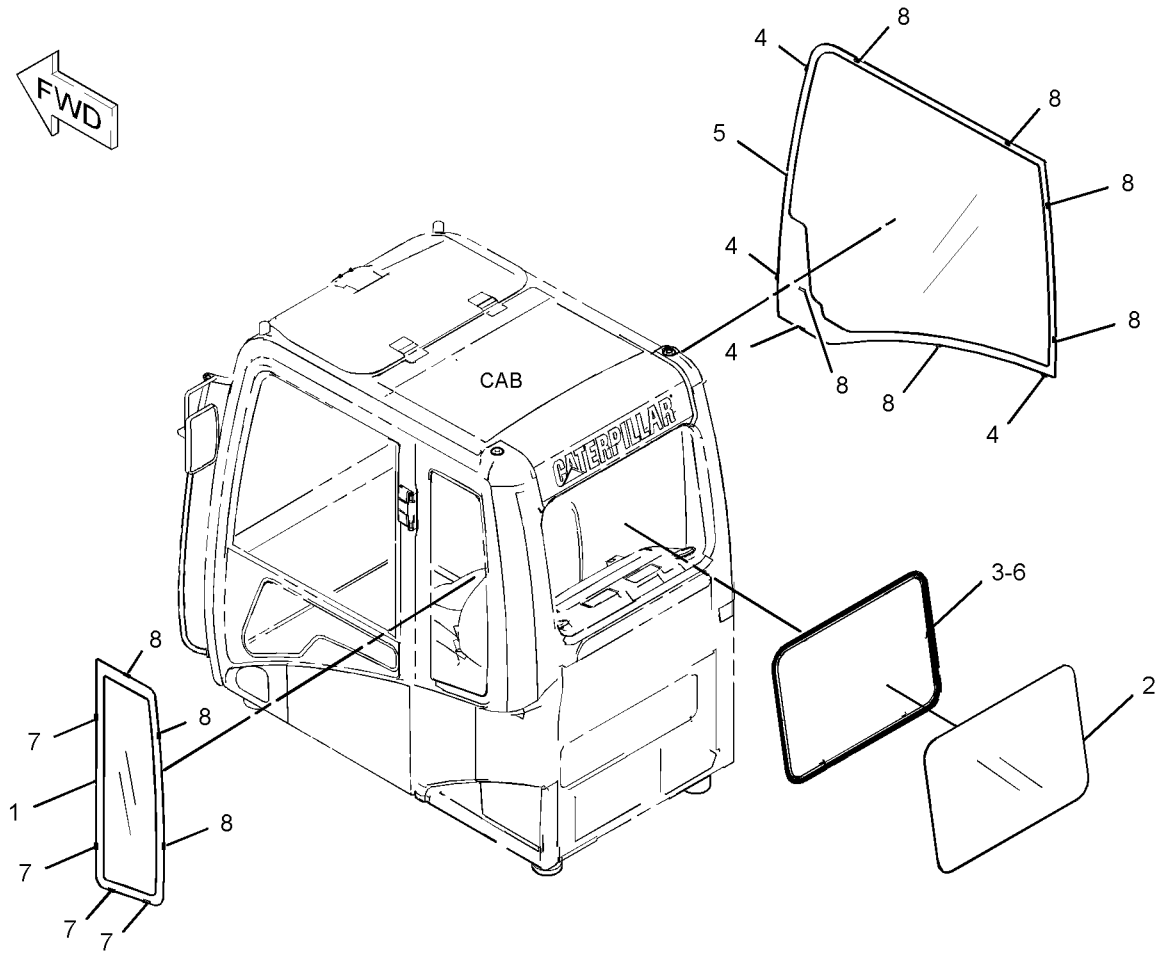

GRAPHIC #1 **<END>** g01432743

OPERATOR STATION

235-8915 WINDOW GP-CAB

S/N: CJN1-UP
PART OF 229-9101 CAB GP
AN ATTACHMENT

SMCS-7310 **i02862883**

NOTE	REF NO	GRAPHIC REF	PART NUMBER	QTY	PART NAME 1 2 3 4 5 6 (PRODUCT LEVEL)	SEE PAGE
	1	1	**164-0666**	1	SEAL	
	2	1	**167-7037**	1	GLASS (REAR)	
	3	1	**178-5572**	4	SPACER	
	4	1	**235-8911**	1	GLASS (RH)	
	5	1	**099-3629**	1	RING-KEY	
	6	1	**167-7036**	1	GLASS (LH)	
	7	1	**178-5573**	4	SPACER	
	8	1	**178-5574**	9	SPACER	

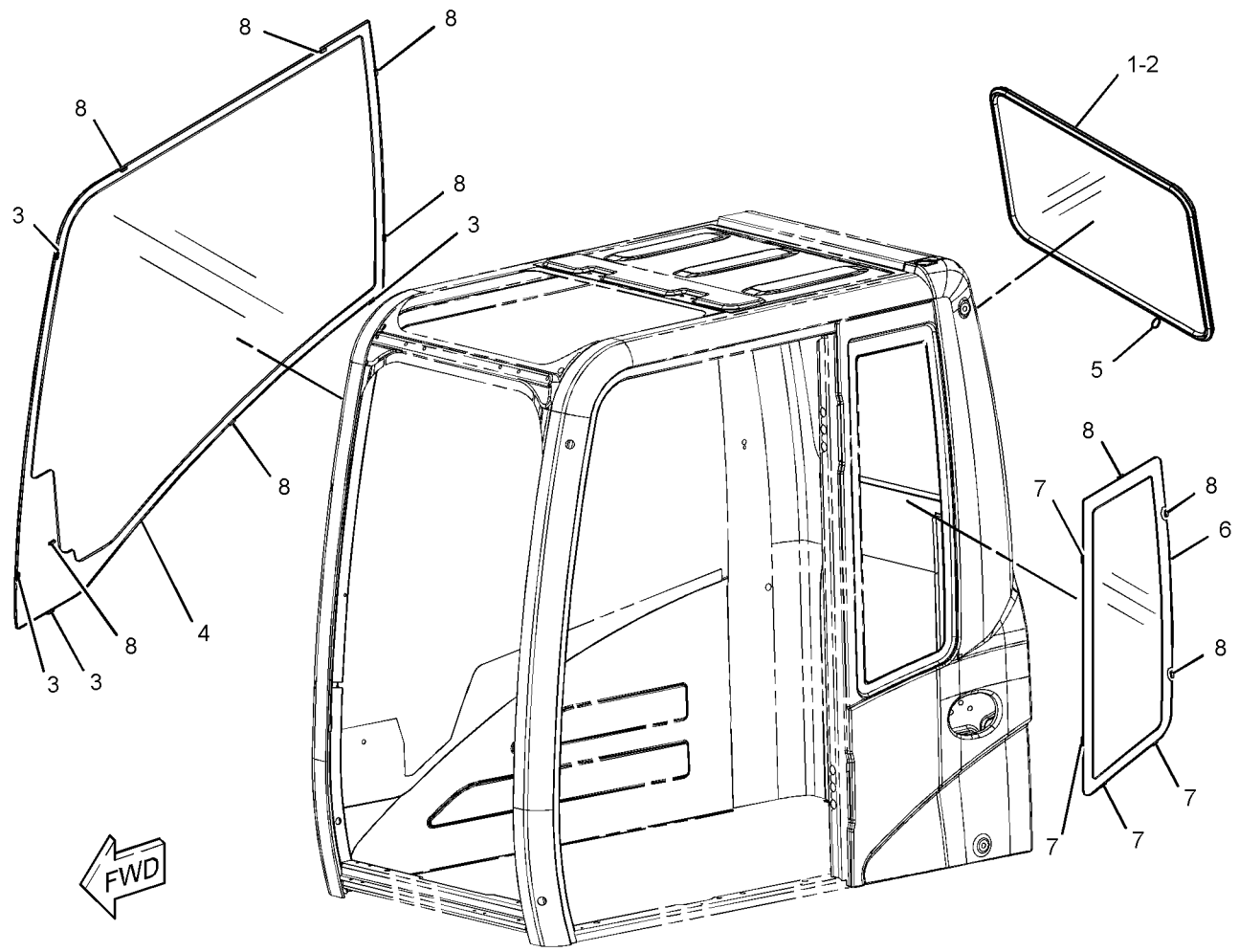

GRAPHIC #1 **<END>** g01427383

OPERATOR STATION

151-6792 WINDOW GP-DOOR

S/N: CJN1-UP

PART OF 139-7100, 176-1964 DOOR GP-CAB

AN ATTACHMENT

SMCS-7308, 7310 **i03214888**

NOTE	REF NO	GRAPHIC REF	PART NUMBER	QTY	PART NAME 1 2 3 4 5 6 (PRODUCT LEVEL)	SEE PAGE
	1	1	**085-6444**	2	LATCH GP-FRONT WINDOW	
					(EACH INCLUDES)	
		1	**085-6447**	1	RETAINER	
M		1	**085-6448**	2	SCREW-TAPPING	
		1	**085-6449**	1	PACKING	
	2	1	**151-6793**	1	FRAME AS	
		1	**4I-4298**	1	STOPPER	
		1	**4I-4300**	1	CATCH	
		1	**099-0139**	3	RIVET	
	3	1	**151-6841**	1	SEAL	
	4	1	**156-6474**	1	GLASS	
	5	1	**156-6475**	1	GLASS	
	6	1	**161-3695**	1	SEAL	
	7	1	**161-3705**	1	SEAL	
	8	1	**164-0516**	1	RUBBER	
	9	1	**164-0517**	1	RUBBER	
	10	1	**164-0518**	1	RUBBER	
	11	1	**171-7413**	1	SPACER	
	12	1	**171-7414**	1	SPACER	
	13	1	**176-1951**	1	SPACER	
	14	1	**176-1952**	1	SPACER	
	15	1	**176-1953**	1	STOP	
	16	1	**176-1954**	1	SEAL	
	17	1	**176-1955**	1	SEAL	
	18	1	**176-1956**	1	SEAL	
	19	1	**176-1957**	1	SEAL	

M-METRIC PART

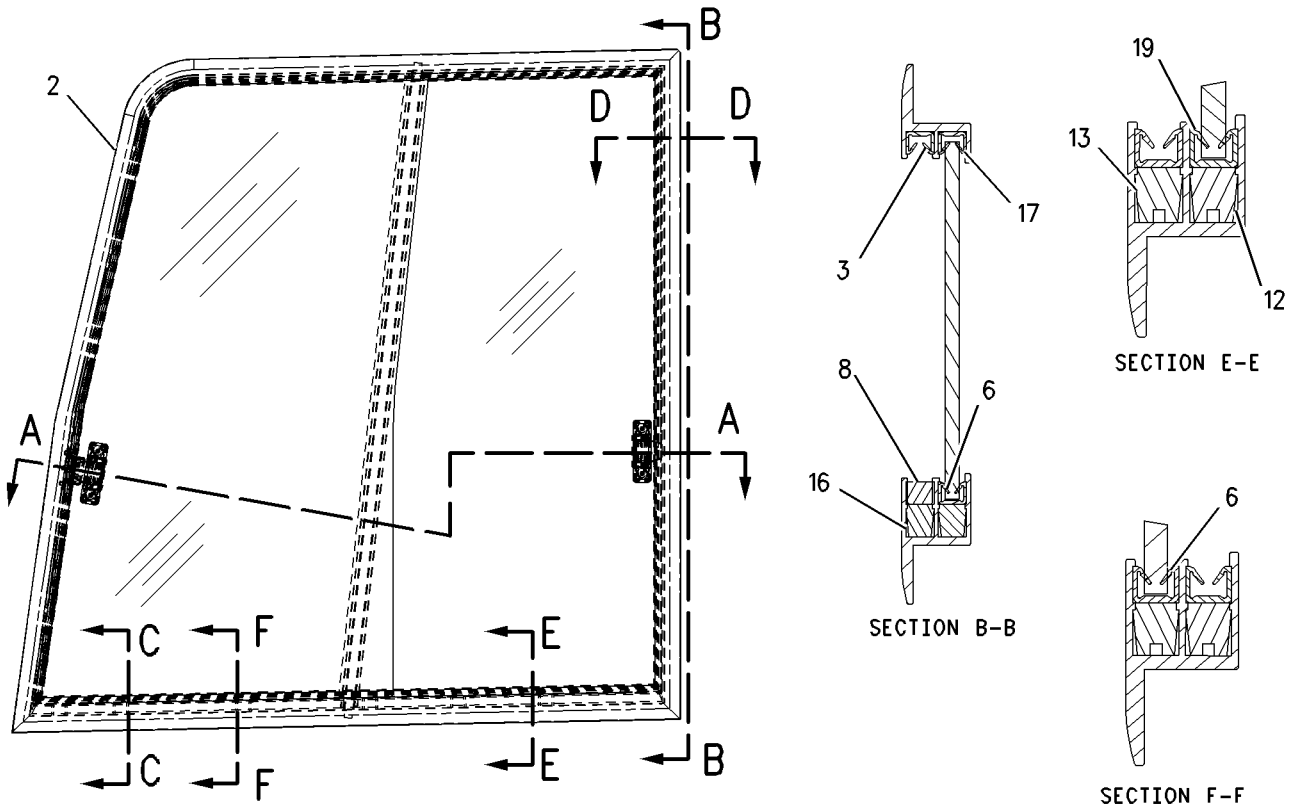

GRAPHIC #1

<END>

g00722948

OPERATOR STATION

185-8203 WINDOW GP-REAR

S/N: CJN1-UP
PART OF 189-2759 WINDOW GP-REAR
AN ATTACHMENT

SMCS-7310, 7340 **i01818870**

NOTE	REF NO	GRAPHIC REF	PART NUMBER	QTY	PART NAME 1 2 3 4 5 6 (PRODUCT LEVEL)	SEE PAGE
	1	1	**178-5574**	6	SPACER	
	2	1	**184-3971**	1	HANDLE	
	3	1	**184-3979**	1	PIN	
	4	1	**185-8200**	1	GLASS	
	5	1	**185-8201**	1	FRAME AS	
	6	1	**185-8204**	1	BRACKET	
	7	1	**185-8209**	1	LEVER	
	8	1	**189-2712**	1	COVER	
	9	1	**184-3978**	1	SPRING	
	10	1	**184-3980**	1	LEVER	
M	11	1	**9X-2044**	3	SCREW-TRUSS HEAD	

M-METRIC PART

185-8203 WINDOW GP-REAR *(contd.)* **i01818870**

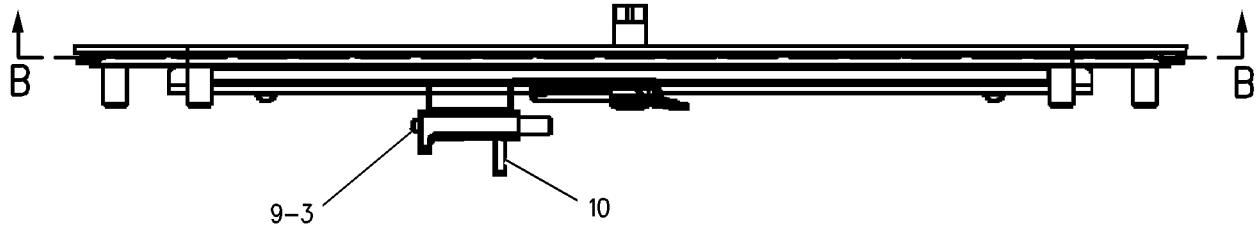

SECTION C-C

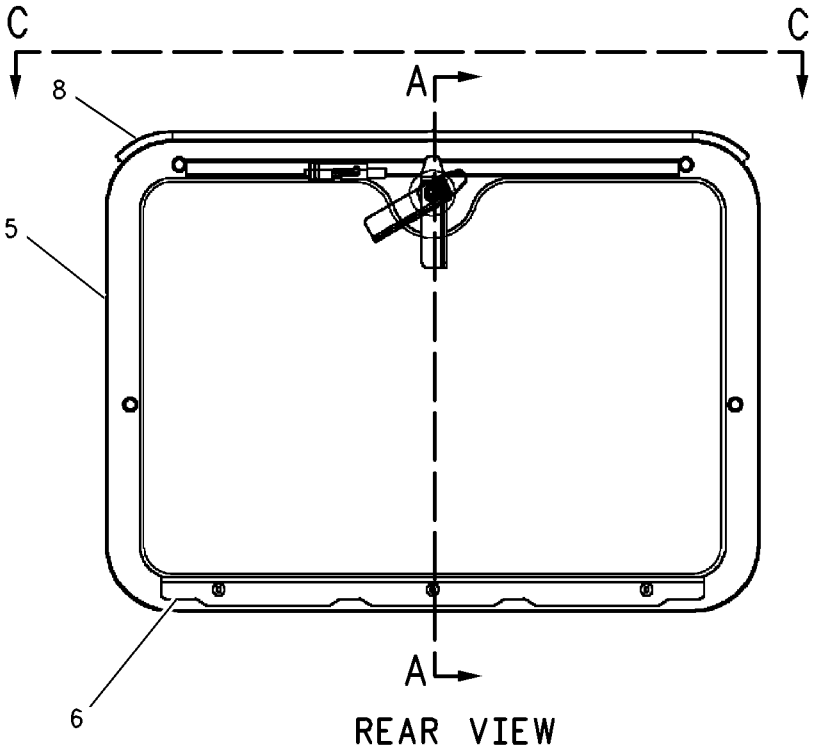

REAR VIEW

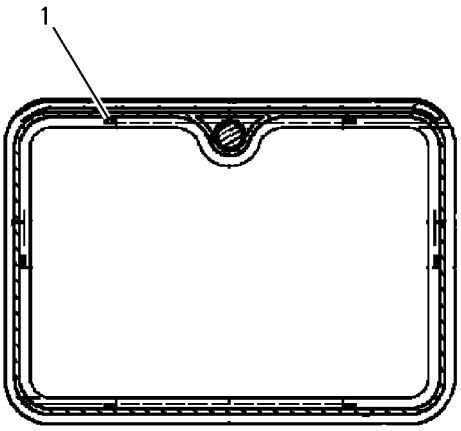

SECTION B-B

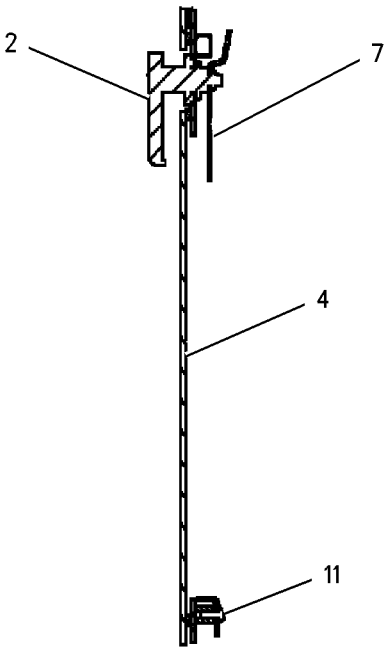

SECTION A-A

GRAPHIC #1 **<END>** g00852376

OPERATOR STATION

189-2759 WINDOW GP-REAR

S/N: CJN1-UP
PART OF 189-2778 WINDOW GP-CAB
AN ATTACHMENT

SMCS-7310, 7340 **i01426307**

NOTE	REF NO	GRAPHIC REF	PART NUMBER	QTY	PART NAME 1 2 3 4 5 6 (PRODUCT LEVEL)	SEE PAGE
Y	1	1	**185-8203**	1	WINDOW GP-REAR	1070
	2	1	**166-3215**	1	SEAL	
	3	1	**189-2705**	1	BRACKET AS	
	4	1	**185-8206**	1	BRACKET	
M	5	1	**9X-2044**	4	SCREW-TRUSS HEAD	

M-METRIC PART
Y-SEPARATE ILLUSTRATION

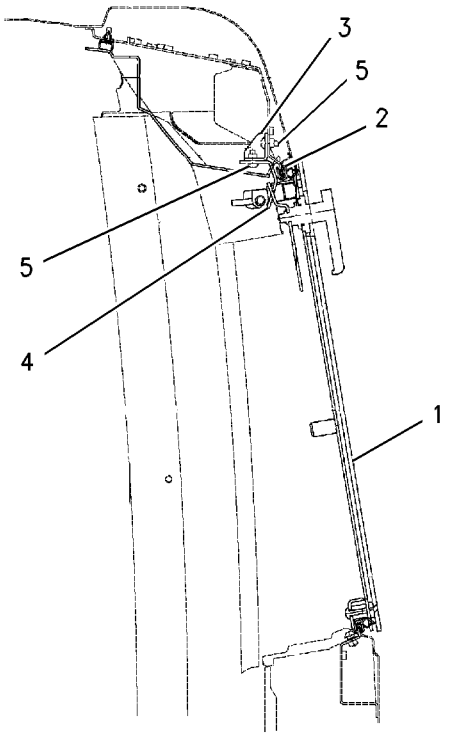

SECTION A-A

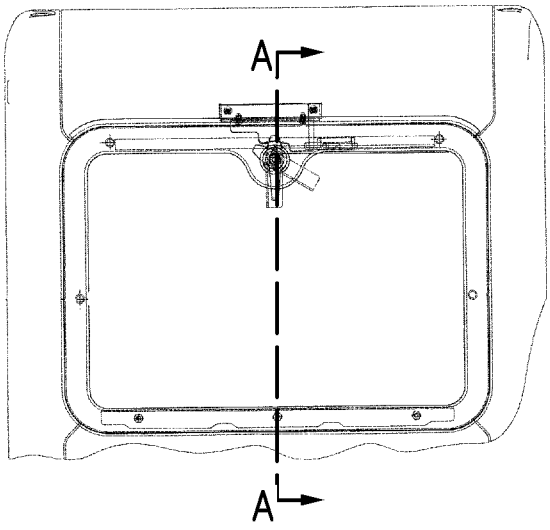

REAR VIEW

GRAPHIC #1 **<END>** g00748799

273-5389 WIPER & WASHER GP-WINDOW—LOWER

S/N: CJN1-UP

PART OF 273-5388 WIPER AR-WINDOW

AN ATTACHMENT

SMCS-7305, 7306 **i02736326**

NOTE	REF NO	GRAPHIC REF	PART NUMBER	QTY	PART NAME 1 2 3 4 5 6 (PRODUCT LEVEL)	SEE PAGE
	1	1	**3S-2093**	1	STRAP-CABLE	
	2	1	**4I-1163**	1	BRACKET	
	3	1	**129-6466**	1	SWITCH AS-ROLLER (LOWER WASHER/WIPER, DISABLE)	
		1	**2H-3922**	1	LOCKWASHER	
		1	**6V-8363**	2	SCREW (10-32X0.312-IN)	
		1	**6V-8370**	1	NUT-HEX (3/4-32-THD)	
		1	**8F-1434**	2	LOCKWASHER	
		1	**9X-0199**	1	BOOT-SWITCH	
	4	1	**156-6646**	1	BRACKET	
Y	5	1	**156-6647**	1	WINDOW GP-CAB (FRONT, LOWER)	1062
	6	1	**273-5390**	1	BRACKET AS	
	7	1	**167-7079**	1	MOTOR AS-WINDOW WIPER (LOWER)	
	8	1	**4I-5020**	1	ARM AS-WIPER	
	9	1	**4I-5021**	1	BLADE AS-WIPER (275-MM) (LOWER)	
M	10	1	**5C-2890**	3	NUT (M6X1-THD)	
M	11	1	**5C-9553**	2	BOLT (M6X1X16-MM)	
	12	1	**8T-4121**	4	WASHER-HARD (11X21X2.5-MM THK)	
M	13	1	**8T-4191**	4	BOLT (M10X1.5X16-MM)	
M	14	1	**9X-2044**	2	SCREW-TRUSS HEAD (M6X1X16-MM)	
	15	1	**9X-8256**	5	WASHER (6.6X12X2-MM THK)	

M-METRIC PART
Y-SEPARATE ILLUSTRATION

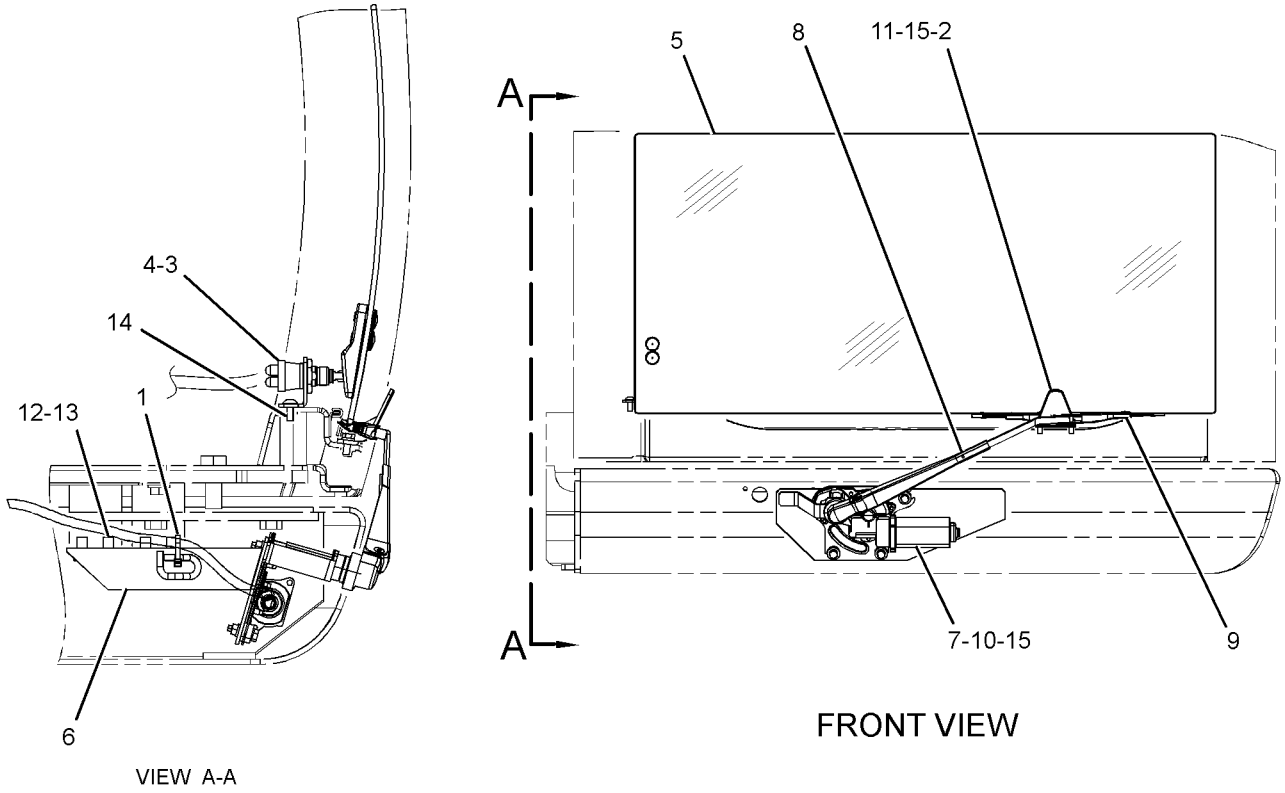

GRAPHIC #1 **<END>** g01374433

OPERATOR STATION

273-5388 WIPER AR-WINDOW

S/N: CJN1-UP

CANNOT BE USED WITH 229-9070—PAGE 1055

AN ATTACHMENT

SMCS-7305 **i03196576**

NOTE	PART NUMBER	QTY	PART NAME 1 2 3 4 5 6 (PRODUCT LEVEL)	SEE PAGE
Y	*238-2208*	1	SWITCH GP-WIPER (LOWER)	209
Y	*229-9088*	1	WASHER GP-WINDOW (LOWER)	1056
Y	*273-5389*	1	WIPER & WASHER GP-WINDOW (LOWER)	1073

Y-SEPARATE ILLUSTRATION

<END>

OPERATOR STATION

234-6594 WIPER GP-WINDOW—FRONT, UPPER

S/N: CJN1-UP

PART OF 229-9097, 229-9099, 229-9101, 316-8815 CAB GP

AN ATTACHMENT

SMCS-7305 **i02725441**

NOTE	REF NO	GRAPHIC REF	PART NUMBER	QTY	PART NAME 1 2 3 4 5 6 (PRODUCT LEVEL)	SEE PAGE
	1	1	**161-3677**	1	HOLDER	
	2	1	**245-7931**	1	MOTOR AS (WIPER)	
M		1	**6V-8231**	1	NUT (M10X1.25-THD)	
M		1	**7Y-3470**	1	NUT (M20X1-THD)	
		1	**7Y-3472**	1	CAP	
		1	**124-3953**	1	WASHER (20.5X30X2-MM THK)	
	3	1	**235-8932**	1	NOZZLE AS	
	4	1	**155-7042**	1	RELAY AS (WIPER)	
	5	1	**161-3668**	1	ARM AS	
		1	**161-3669**	1	GUIDE	
		1	**161-3670**	1	BLADE AS-WIPER (600-MM) (UPPER)	
		1	**185-8290**	1	SCREW AS (M35X0.06X9-MM)	
	6	1	**163-6795**	1	STRAP-CABLE	
M	7	1	**3E-9872**	2	SCREW AS (M4X0.7X12-MM)	
	8	1	**4I-3090**	1	SEAL	
	9	1	**7Y-7364**	1	GROMMET	
M	10	1	**8T-4134**	4	NUT (M6X1-THD)	
M	11	1	**9X-2042**	2	SCREW-TRUSS HEAD (M6X1X12-MM)	
M	12	1	**9X-2044**	3	SCREW-TRUSS HEAD (M6X1X16-MM)	

M-METRIC PART

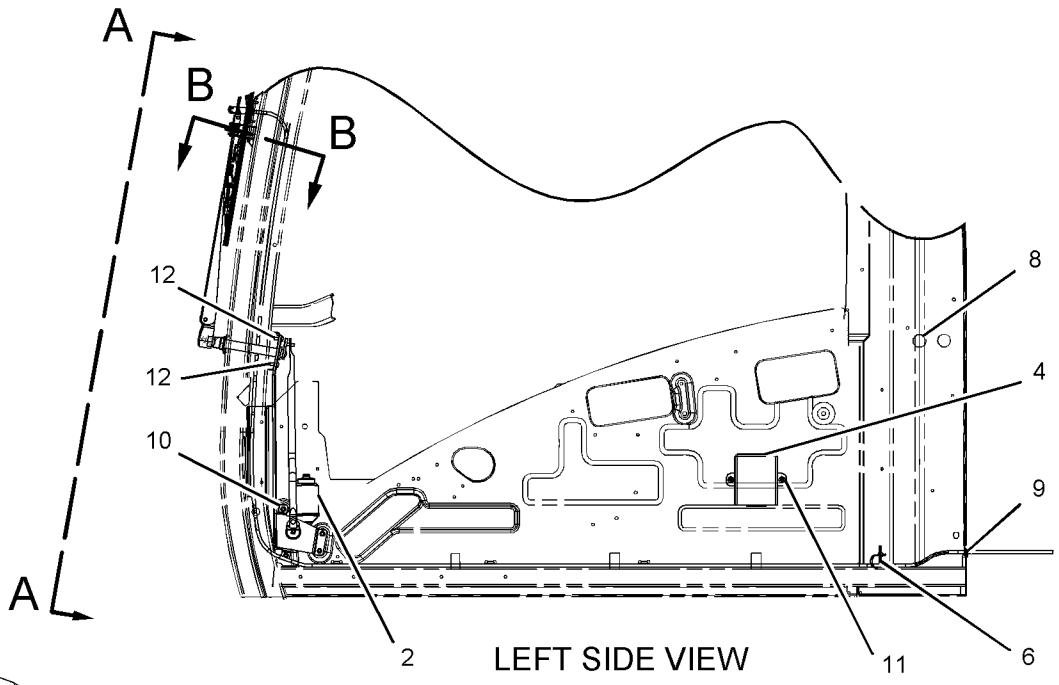

LEFT SIDE VIEW

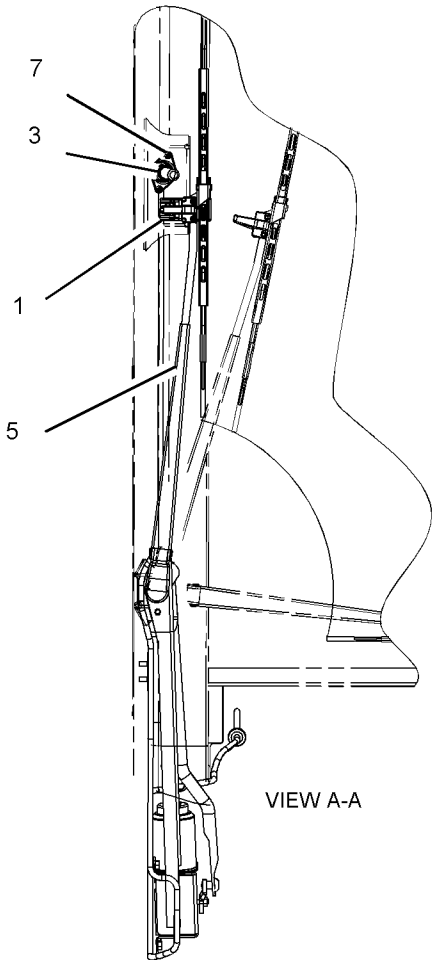

VIEW A-A

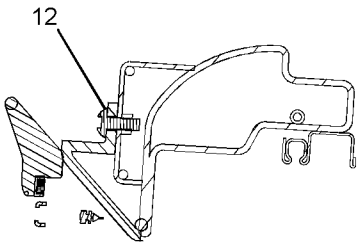

SECTION B-B

GRAPHIC #1 **<END>** g01098021

SERVICE EQUIPMENT AND SUPPLIES

186-1305 FILM GP—SECONDARY EXIT

S/N: CJN1-UP

PART OF 189-2778 WINDOW GP-CAB

AN ATTACHMENT

SMCS-7405, 7557 **i02514314**

NOTE	REF NO	GRAPHIC REF	PART NUMBER	QTY	PART NAME 1 2 3 4 5 6 (PRODUCT LEVEL)	SEE PAGE
	1	1	**224-1943**	1	FILM-INSTRUCTION (ALTERNATE EXIT, REMOVE WINDOW)	

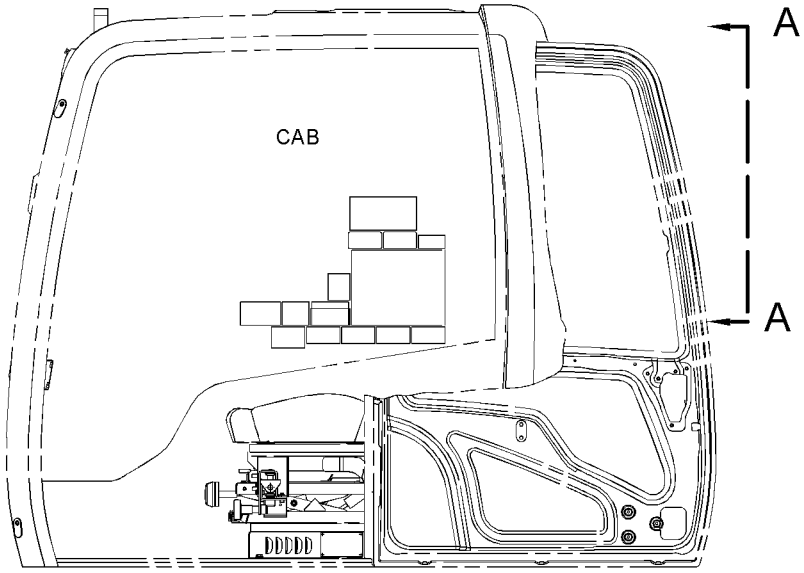

LEFT SIDE VIEW

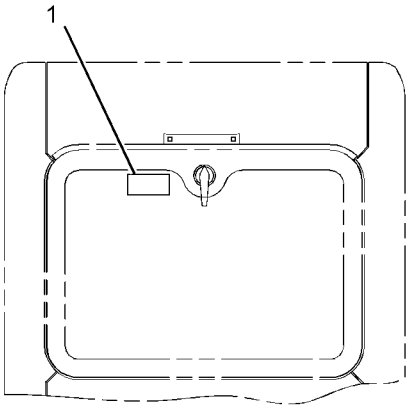

VIEW A-A

GRAPHIC #1 **<END>** g01274365

SERVICE EQUIPMENT AND SUPPLIES

247-7410 FILM GP—OPERATOR CONTROLS, NOTICE

S/N: CJN1-UP

PART OF 255-5843 CONTROL AR-AUXILIARY

AN ATTACHMENT

SMCS-7405, 7557 **i02426165**

NOTE	REF NO	GRAPHIC REF	PART NUMBER	QTY	PART NAME 1 2 3 4 5 6 (PRODUCT LEVEL)	SEE PAGE
	1	1	**250-8054**	1	FILM-NOTICE (HAMMER, READ OMM)	
	2	1	**260-6941**	1	FILM-INFORMATION (OPERATOR CONTROLS, READ OMM)	

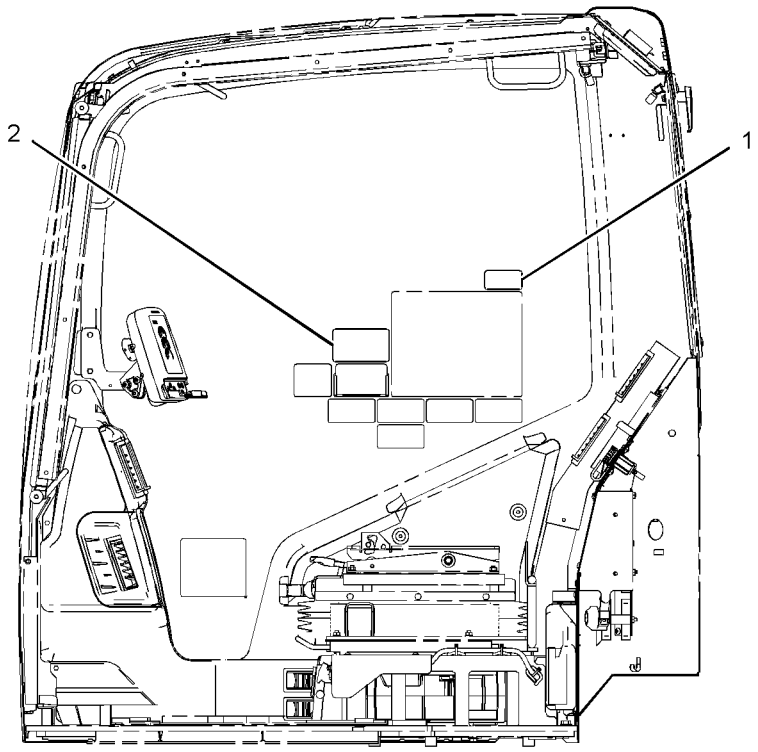

LEFT SIDE VIEW
(328D MODELS)

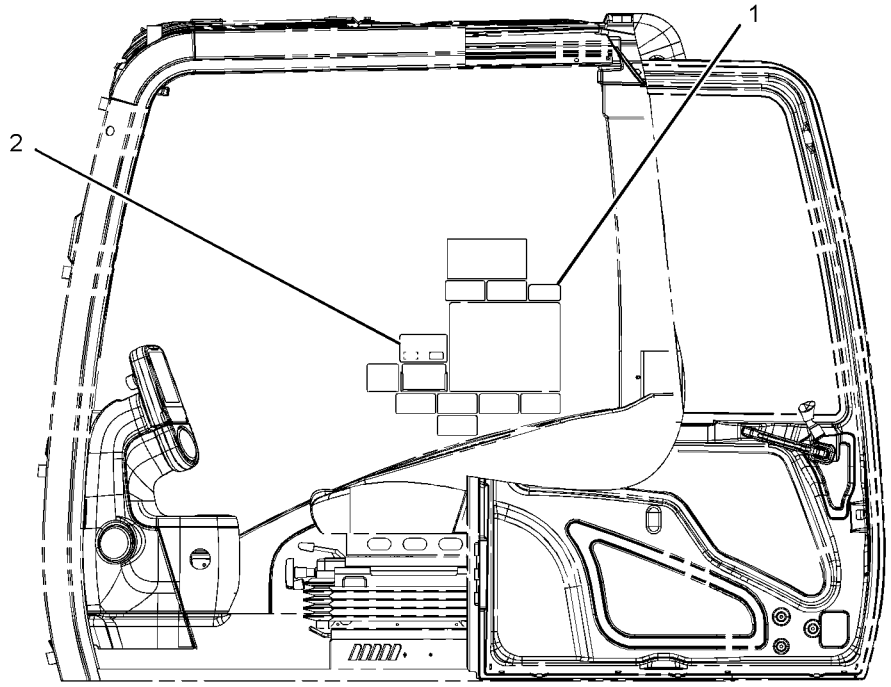

LEFT SIDE VIEW
(ALL OTHER MODELS)

GRAPHIC #1 **<END>** g01246655

SERVICE EQUIPMENT AND SUPPLIES

247-7411 FILM GP—OPERATOR CONTROLS, NOTICE

S/N: CJN1-UP

PART OF 255-5844 CONTROL AR-AUXILIARY

AN ATTACHMENT

SMCS-7405, 7557 **i02433607**

NOTE	REF NO	GRAPHIC REF	PART NUMBER	QTY	PART NAME 1 2 3 4 5 6 (PRODUCT LEVEL)	SEE PAGE
	1	1	**260-6942**	1	FILM-INFORMATION (OPERATOR CONTROLS, READ OMM)	
	2	1	**250-8054**	1	FILM-NOTICE (HAMMER, READ OMM)	

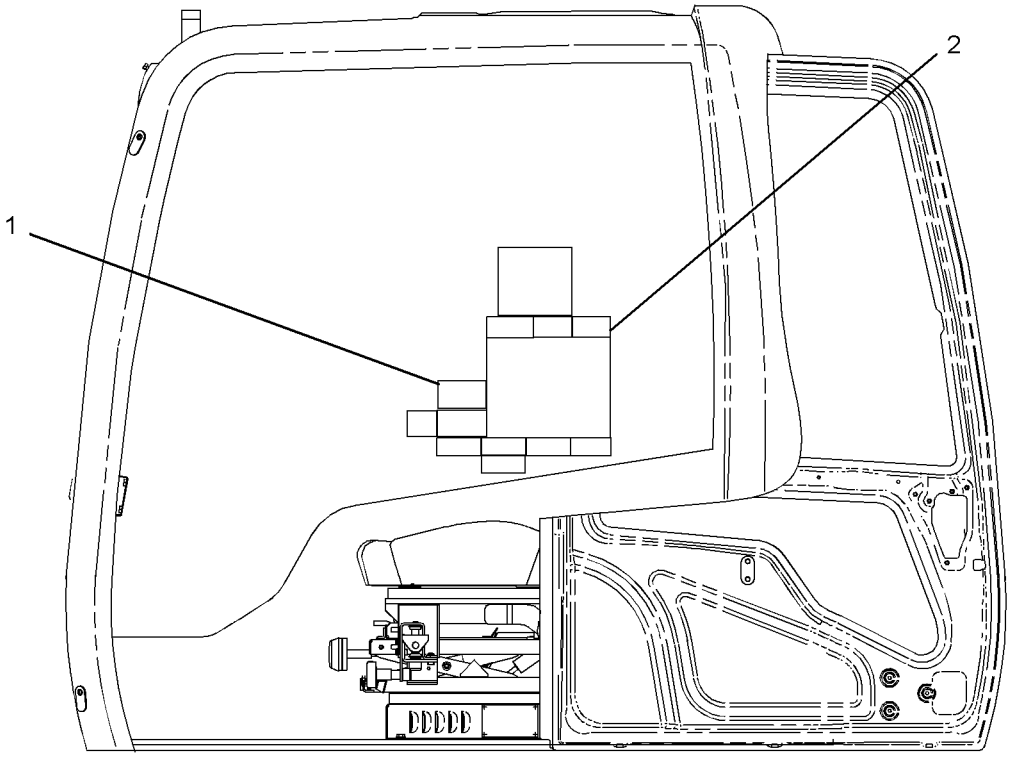

LEFT SIDE VIEW

GRAPHIC #1 **<END>** g01212938

SERVICE EQUIPMENT AND SUPPLIES

247-7418 FILM GP–PEDAL, LH

S/N: CJN1-UP

PART OF 255-5845 PEDAL AR-AUXILIARY

AN ATTACHMENT

SMCS-7405, 7557 **i02430392**

NOTE	REF NO	GRAPHIC REF	PART NUMBER	QTY	PART NAME 1 2 3 4 5 6 (PRODUCT LEVEL)	SEE PAGE
	1	1	**250-8054**	1	FILM-NOTICE (HAMMER, READ OMM)	
	2	1	**260-6948**	1	FILM-INSTRUCTION (OPERATOR CONTROLS, READ OMM)	

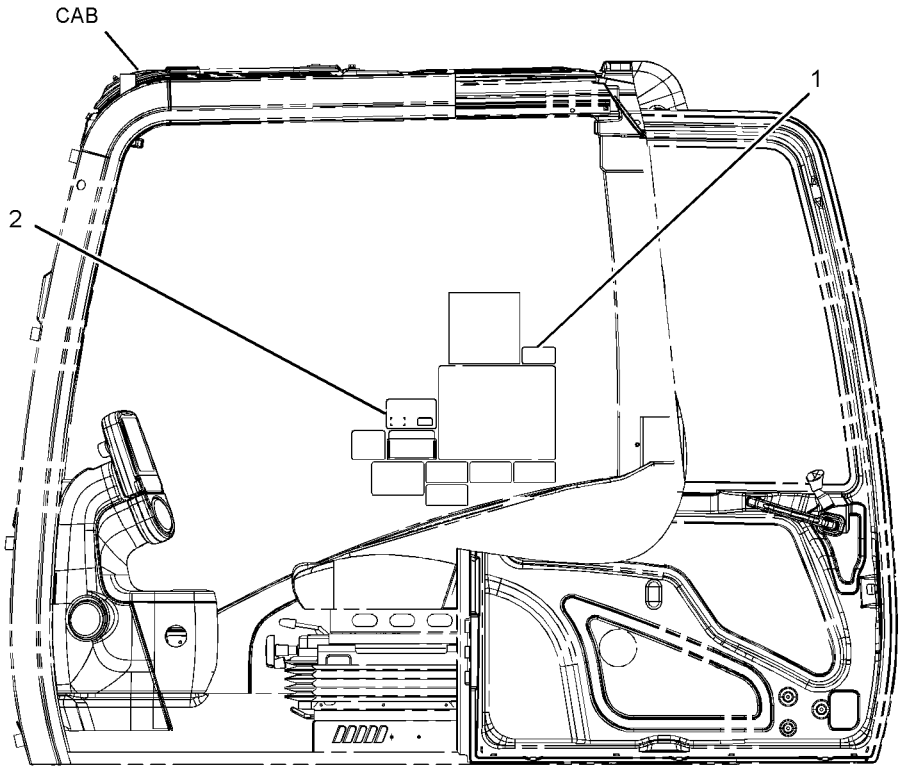

LEFT SIDE VIEW

GRAPHIC #1 **<END>** g01203264

SERVICE EQUIPMENT AND SUPPLIES

247-7465 FILM GP–HAMMER CONTROL, FOOT SWITCH

S/N: CJN1-UP

PART OF 270-6106 CONTROL AR-AUXILIARY

AN ATTACHMENT

SMCS-7405, 7557 **i02424961**

NOTE	REF NO	GRAPHIC REF	PART NUMBER	QTY	PART NAME 1 2 3 4 5 6 (PRODUCT LEVEL)	SEE PAGE
	1	1	**176-2815**	1	FILM-INSTRUCTION (HAMMER CONTROL)	
	2	1	**250-8054**	1	FILM-NOTICE (HAMMER, READ OMM)	

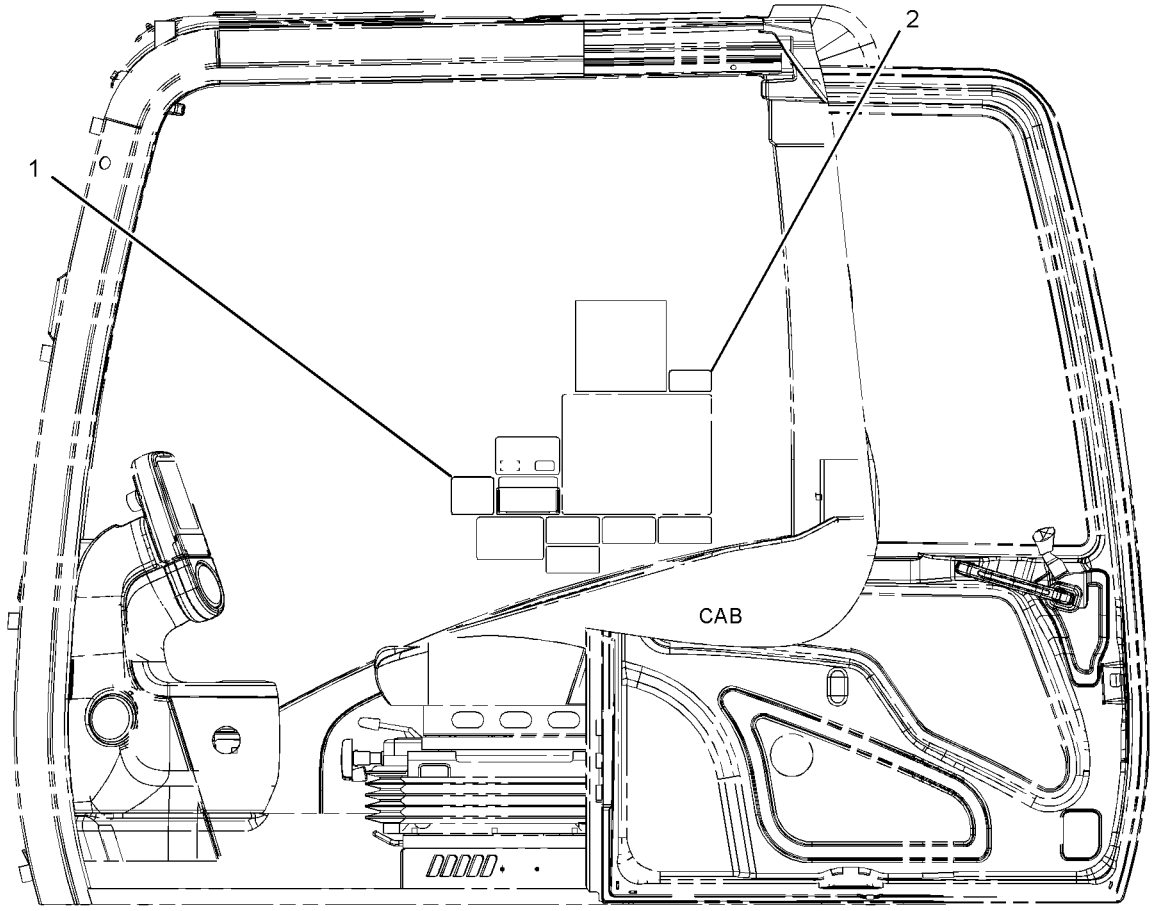

LEFT SIDE VIEW

GRAPHIC #1

<END>

g01157047

SERVICE EQUIPMENT AND SUPPLIES

247-7492 FILM GP—CONTROL PATTERN CHANGE, 4-WAY

S/N: CJN1-UP

PART OF 259-7575 VALVE & LINES GP-PILOT

AN ATTACHMENT

SMCS-7405, 7557 **i02436751**

NOTE	REF NO	GRAPHIC REF	PART NUMBER	QTY	PART NAME 1 2 3 4 5 6 (PRODUCT LEVEL)	SEE PAGE
	1	1	**4I-2885**	1	CASE	
	2	1	**176-2688**	1	FILM (QUICK CHANGES)	
	3	1	**214-4531**	1	PLATE-INSTRUCTION (OPERATOR CONTROLS, READ OMM)	
	4	1	**214-4532**	1	PLATE-INSTRUCTION (OPERATOR CONTROLS, READ OMM)	
	5	1	**257-4547**	1	FILM-WARNING (CRUSH HAZARD, READ OMM, INTL)	

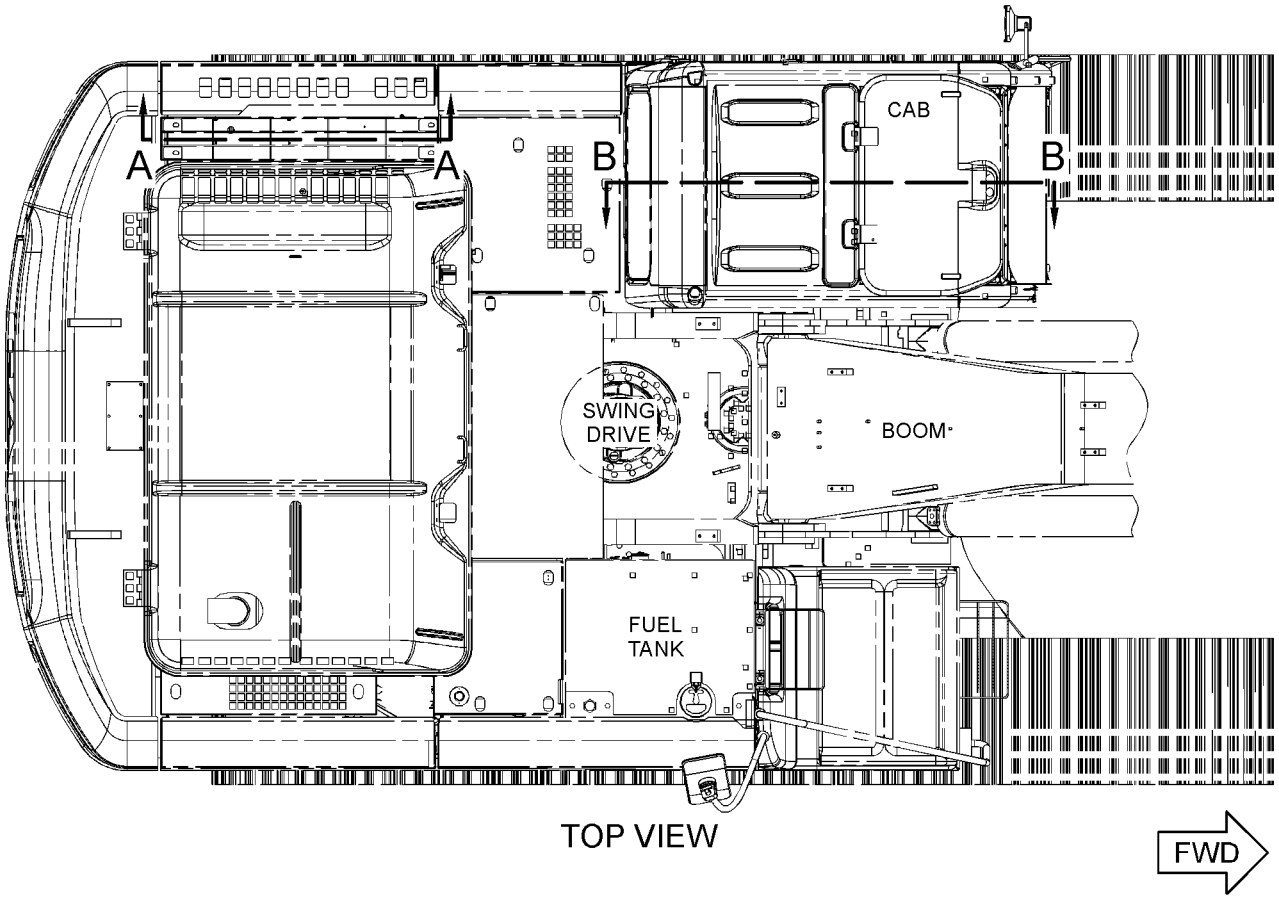

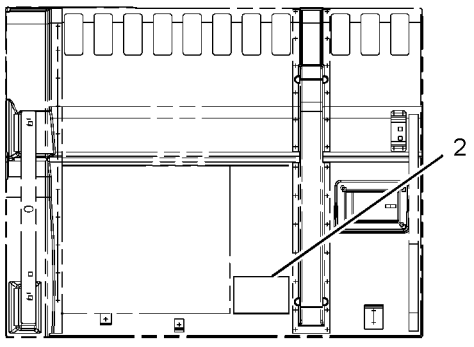

SECTION A-A

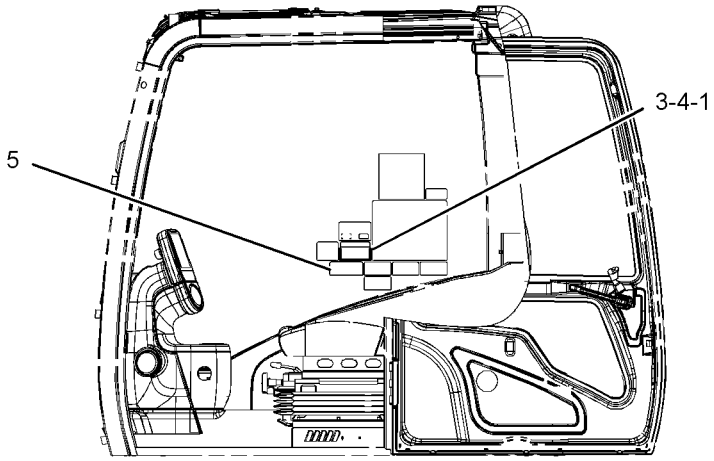

SECTION B-B

GRAPHIC #1 **<END>** g01217306

SERVICE EQUIPMENT AND SUPPLIES

260-7006 FILM GP–CONTROL PATTERN CHANGE, 2-WAY

S/N: CJN1-UP

PART OF 259-7577 VALVE AR-ALT PATTERN CONTROL

AN ATTACHMENT

SMCS-7405, 7557 **i02724704**

NOTE	REF NO	GRAPHIC REF	PART NUMBER	QTY	PART NAME 1 2 3 4 5 6 (PRODUCT LEVEL)	SEE PAGE
	1	1	**4I-2885**	1	CASE	
	2	1	**255-3171**	1	PLATE-INSTRUCTION (CONTROL PATTERN CHANGE)	
	3	1	**255-3173**	1	FILM-WARNING (CRUSH HAZARD, READ OMM, INTL)	
					–OR–	
		1	**257-5015**	1	FILM-WARNING (CRUSH HAZARD, READ OMM, U.S.)	

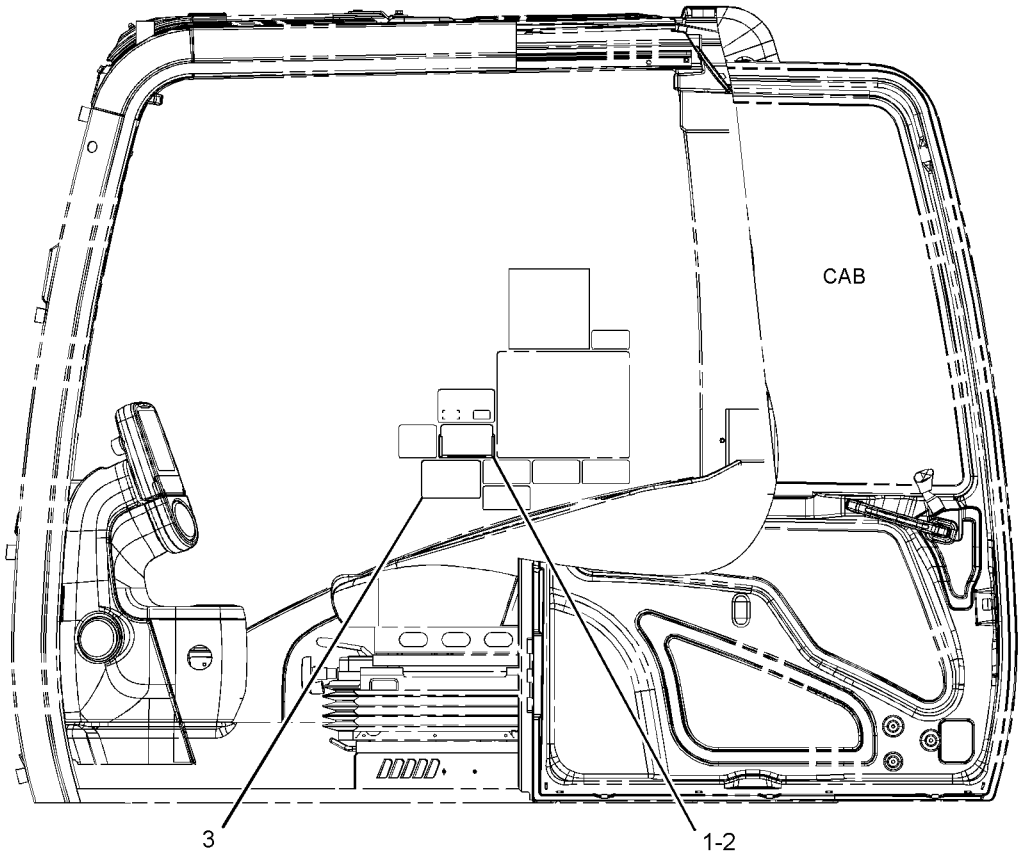

LEFT SIDE VIEW

GRAPHIC #1 **<END>** g01367678

SERVICE EQUIPMENT AND SUPPLIES

268-6816 FILM GP—QUICK COUPLER

S/N: CJN1-UP

PART OF 268-7253 CONTROL AR-COUPLER

AN ATTACHMENT

SMCS-7405, 7557 **i02490845**

NOTE	REF NO	GRAPHIC REF	PART NUMBER	QTY	PART NAME 1 2 3 4 5 6 (PRODUCT LEVEL)	SEE PAGE
	1	1	**268-6817**	1	FILM-IDENTIFICATION (QUICK COUPLER)	

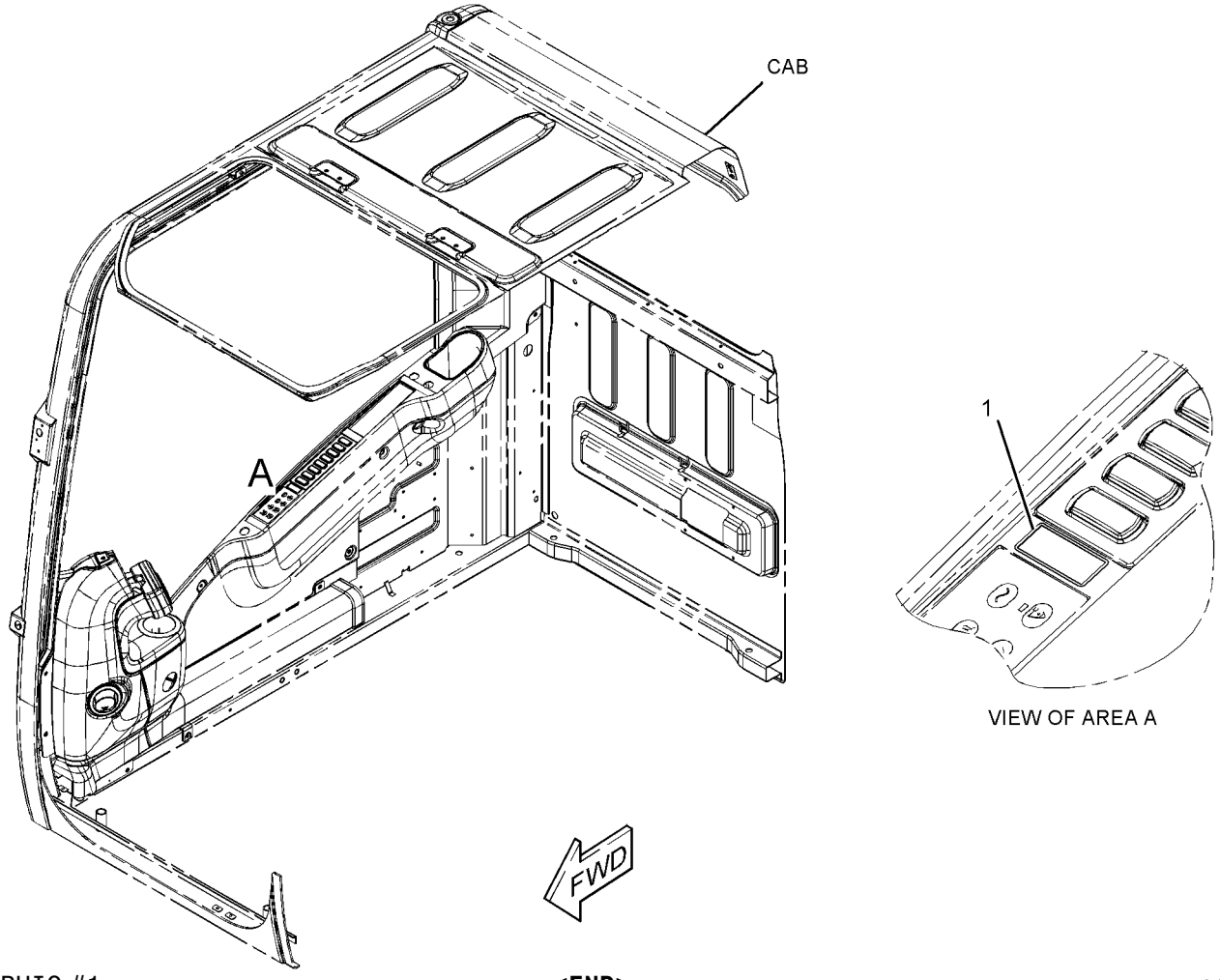

GRAPHIC #1 **<END>** g01199575

SERVICE EQUIPMENT AND SUPPLIES

282-5705 FILM GP—QUICK COUPLER

S/N: CJN1-UP
PART OF 262-3249 CONTROL AR-COUPLER
AN ATTACHMENT

SMCS-7405, 7557 **i02817497**

NOTE	REF NO	GRAPHIC REF	PART NUMBER	QTY	PART NAME 1 2 3 4 5 6 (PRODUCT LEVEL)	SEE PAGE
	1	1	**268-4530**	1	FILM-WARNING (CRUSH HAZARD, READ OMM, U.S.)	
					—OR—	
		1	**269-0120**	1	FILM-WARNING (CRUSH HAZARD, READ OMM, INTL)	
	2	1	**268-4531**	1	FILM-INSTRUCTION (COUPLER OPERATION)	
	3	1	**268-8872**	1	FILM-WARNING (CRUSH HAZARD, READ OMM, U.S.)	
					—OR—	
		1	**269-0121**	1	FILM-WARNING (CRUSH HAZARD, READ OMM, INTL)	

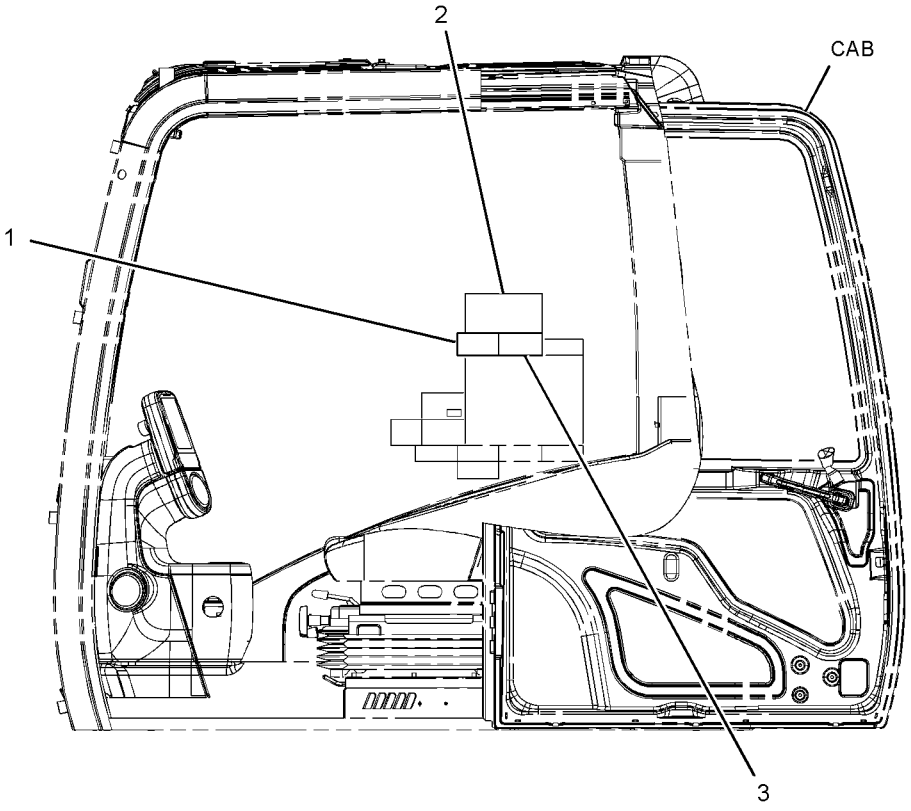

LEFT SIDE VIEW

GRAPHIC #1 **<END>** g01238116

SERVICE EQUIPMENT AND SUPPLIES

298-4281 FILM GP

S/N: CJN1-UP
CHINA
PART OF 301-2565, 301-2566, 301-2567 SPECIAL AR
AN ATTACHMENT

SMCS-7405, 7557 **i02842428**

NOTE	REF NO	GRAPHIC REF	PART NUMBER	QTY	PART NAME 1 2 3 4 5 6 (PRODUCT LEVEL)	SEE PAGE
	1	1	**158-7864**	1	FILM-IDENTIFICATION (HYDRAULIC OIL)	
	2	1	**298-4282**	2	FILM-WARNING (CRUSH HAZARD)	
	3	1	**312-5525**	1	FILM-WARNING (CUTTING HAZARD HAND, STAY BACK)	

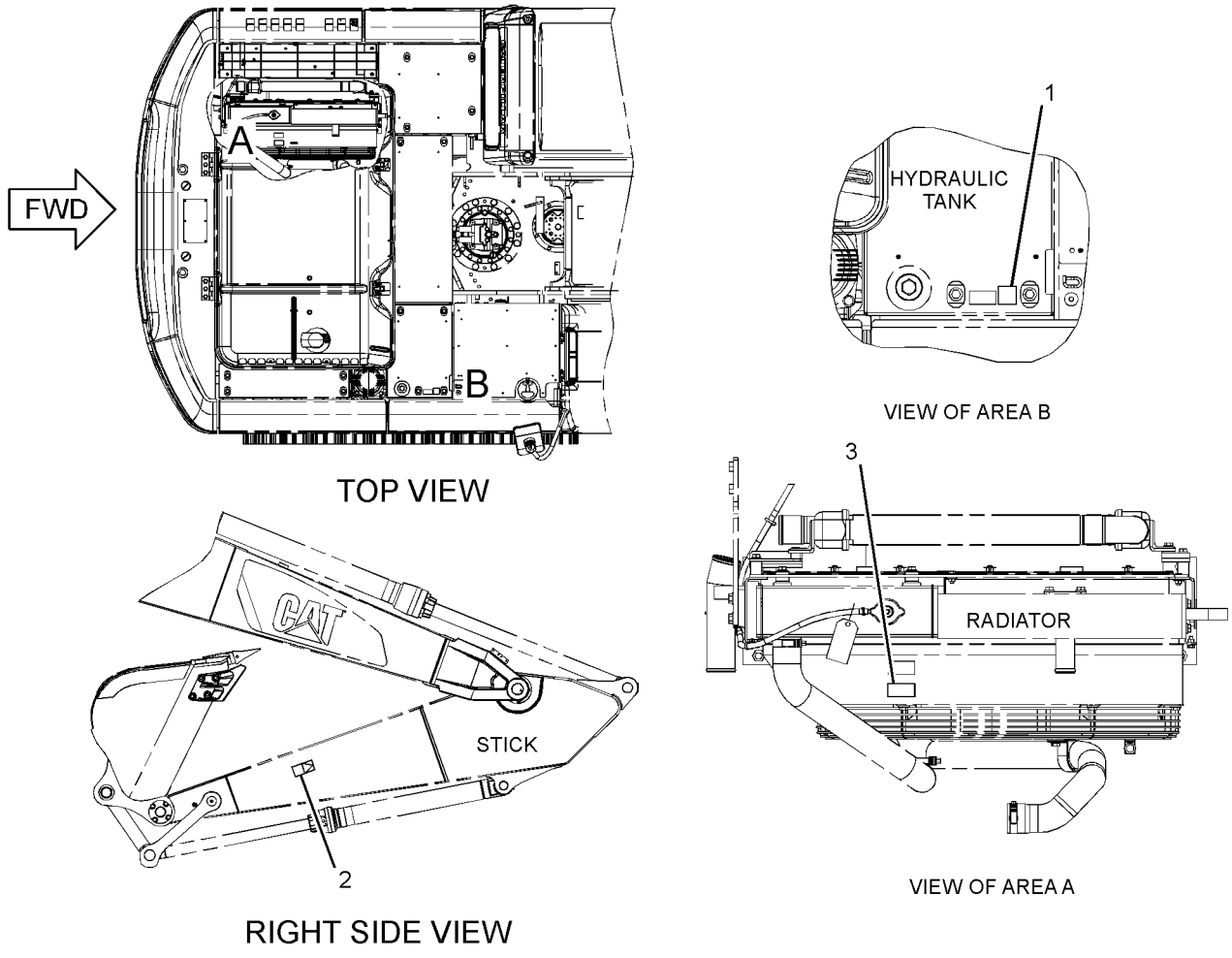

GRAPHIC #1 **<END>** g01441235

SERVICE EQUIPMENT AND SUPPLIES

301-2573 FILM GP–FUEL TRANSFER PUMP

S/N: CJN1-UP

PART OF 260-7007, 330-8780 PUMP AR-FUEL TRANSFER

AN ATTACHMENT

SMCS-7405, 7557 **i02883995**

NOTE	REF NO	GRAPHIC REF	PART NUMBER	QTY	PART NAME 1 2 3 4 5 6 (PRODUCT LEVEL)	SEE PAGE
B	1	1,2	**309-3872**	1	FILM-WARNING (EXPLOSION HAZARD, READ OMM)	

B-USE AS REQUIRED

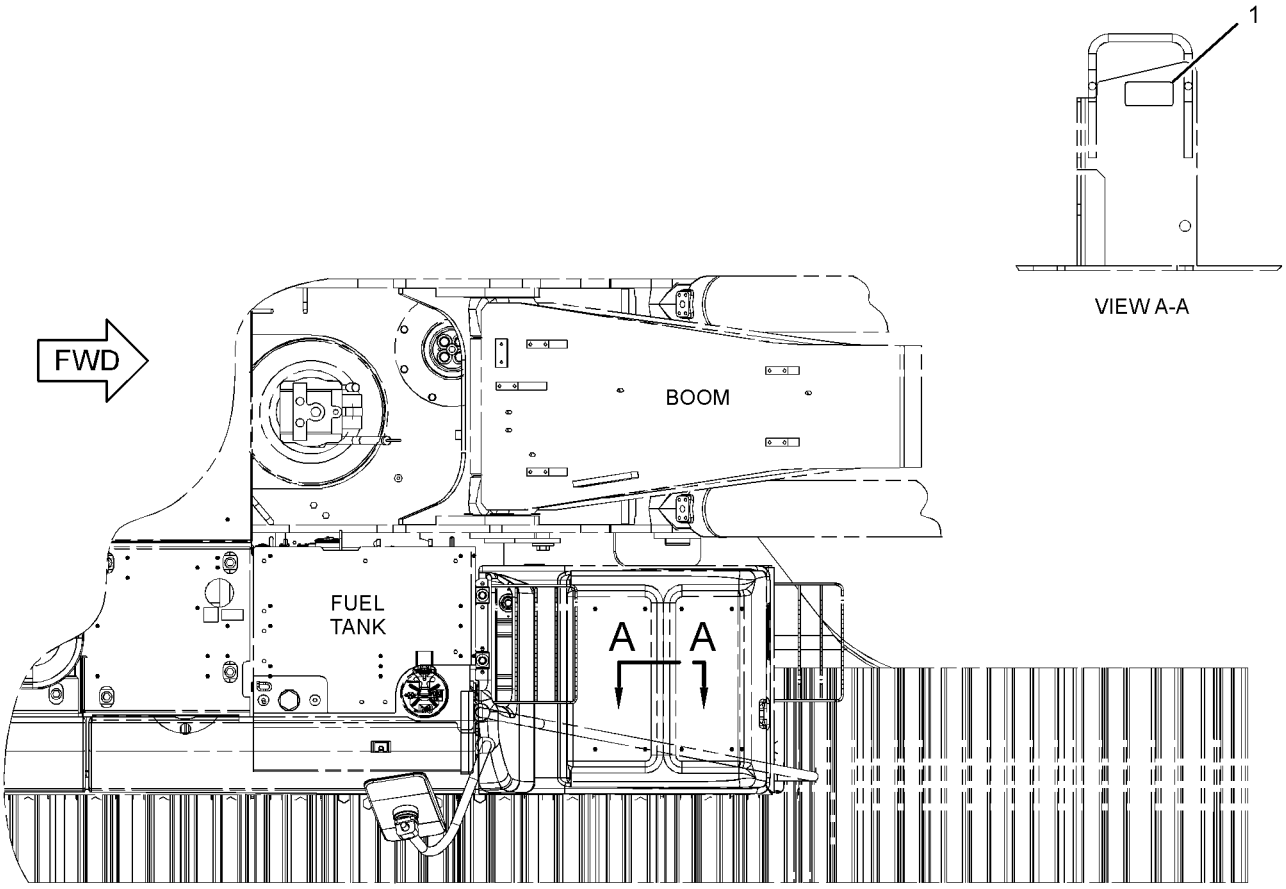

TOP VIEW
(315D & 319D)

GRAPHIC #1 g01441356

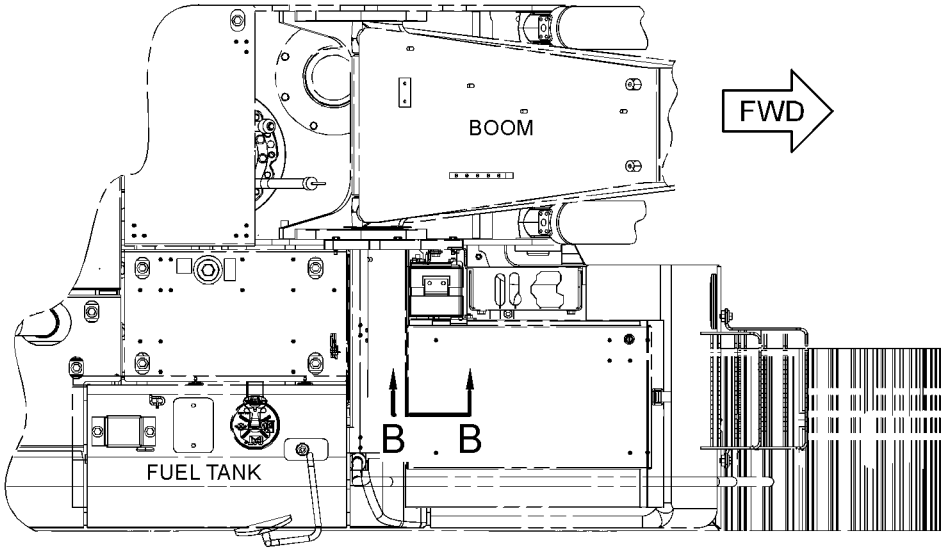

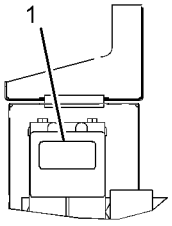

VIEW B-B

TOP VIEW
(311D)

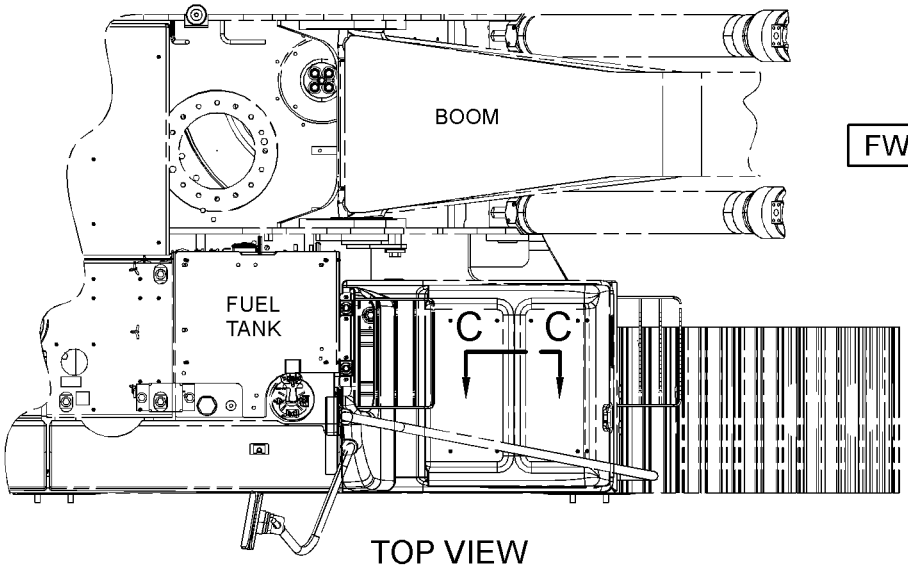

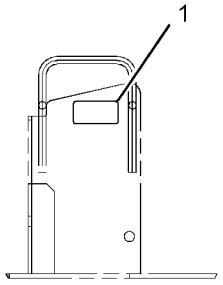

VIEW C-C

TOP VIEW
(312D)

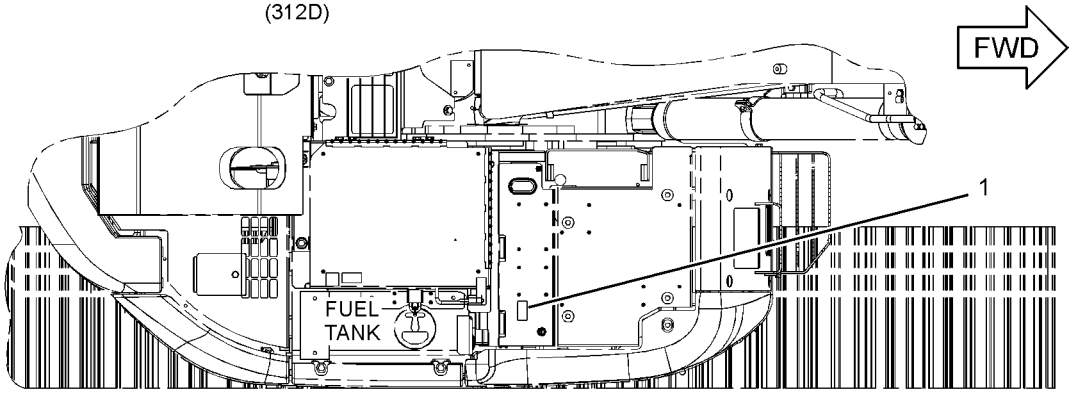

TOP VIEW
(314D)

GRAPHIC #2 **<END>** g01441201

SERVICE EQUIPMENT AND SUPPLIES

303-2787 FILM GP—WORK AREA VISUAL SYSTEM, REAR

S/N: CJN1-UP

PART OF 330-8753 INSTALLATION AR

AN ATTACHMENT

SMCS-7405, 7557 **i03128324**

NOTE	REF NO	GRAPHIC REF	PART NUMBER	QTY	PART NAME 1 2 3 4 5 6 (PRODUCT LEVEL)	SEE PAGE
	1	1	**319-9152**	1	FILM-INSTRUCTION (BATTERY LIFE, CAMERA)	

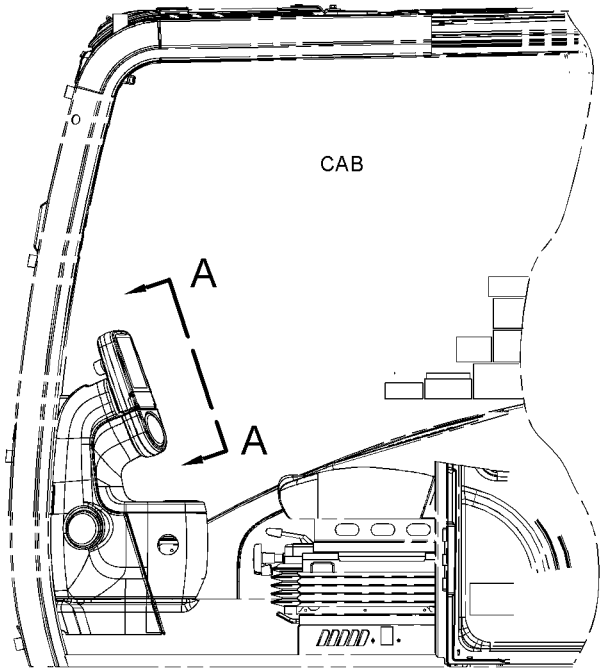

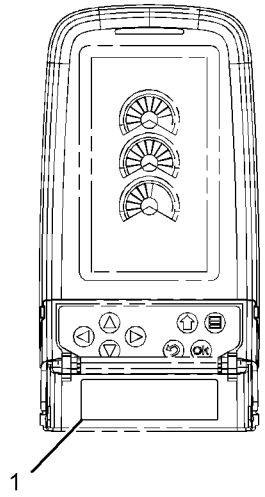

VIEW A-A

LEFT SIDE VIEW

GRAPHIC #1 **<END>** g01620358

SERVICE EQUIPMENT AND SUPPLIES

314-3768 FILM GP—OVERLOAD WARNING DEVICE

S/N: CJN1-UP

PART OF 323-7798 VALVE AR-CHECK & RELIEF

AN ATTACHMENT

SMCS-7405, 7557 **i03113101**

NOTE	REF NO	GRAPHIC REF	PART NUMBER	QTY	PART NAME 1 2 3 4 5 6 (PRODUCT LEVEL)	SEE PAGE
	1	1	**322-4582**	1	FILM-WARNING (TIPPING HAZARD, READ OMM)	
					(LOCATE ON RIGHT SIDE CAB WINDOW)	

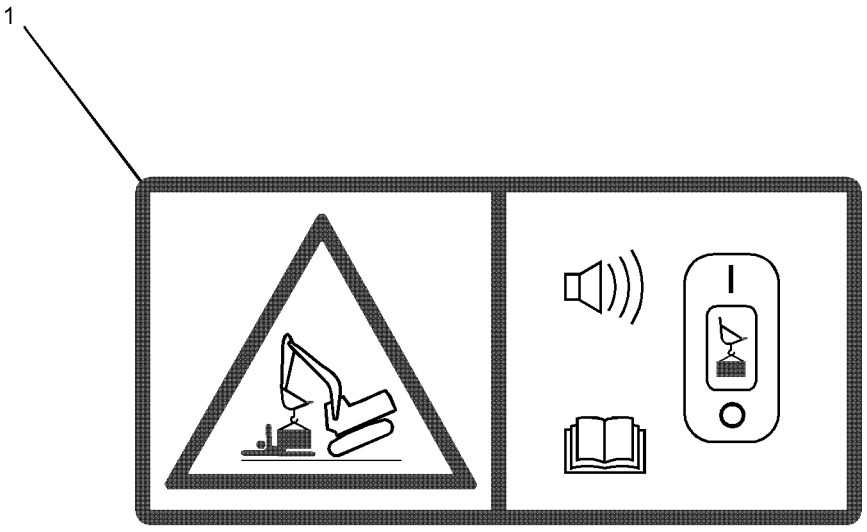

GRAPHIC #1 **<END>** g01622349

SERVICE EQUIPMENT AND SUPPLIES

314-3848 FILM GP

S/N: CJN1-UP
CHINA MARKET
PART OF 330-8810 SPECIAL AR
AN ATTACHMENT

SMCS-7405, 7557 **i03207790**

NOTE	REF NO	GRAPHIC REF	PART NUMBER	QTY	PART NAME 1 2 3 4 5 6 (PRODUCT LEVEL)	SEE PAGE
	1	1	**298-4282**	2	FILM-WARNING (CRUSH HAZARD)	
					(ON STICK)	
	2	1	**312-5525**	1	FILM-WARNING (CUTTING HAZARD HAND, STAY BACK)	
					(ON TOP OF RADIATOR)	
	3	1	**158-7864**	1	FILM-IDENTIFICATION (HYDRAULIC OIL)	
					(ON TOP OF HYDRAULIC TANK)	

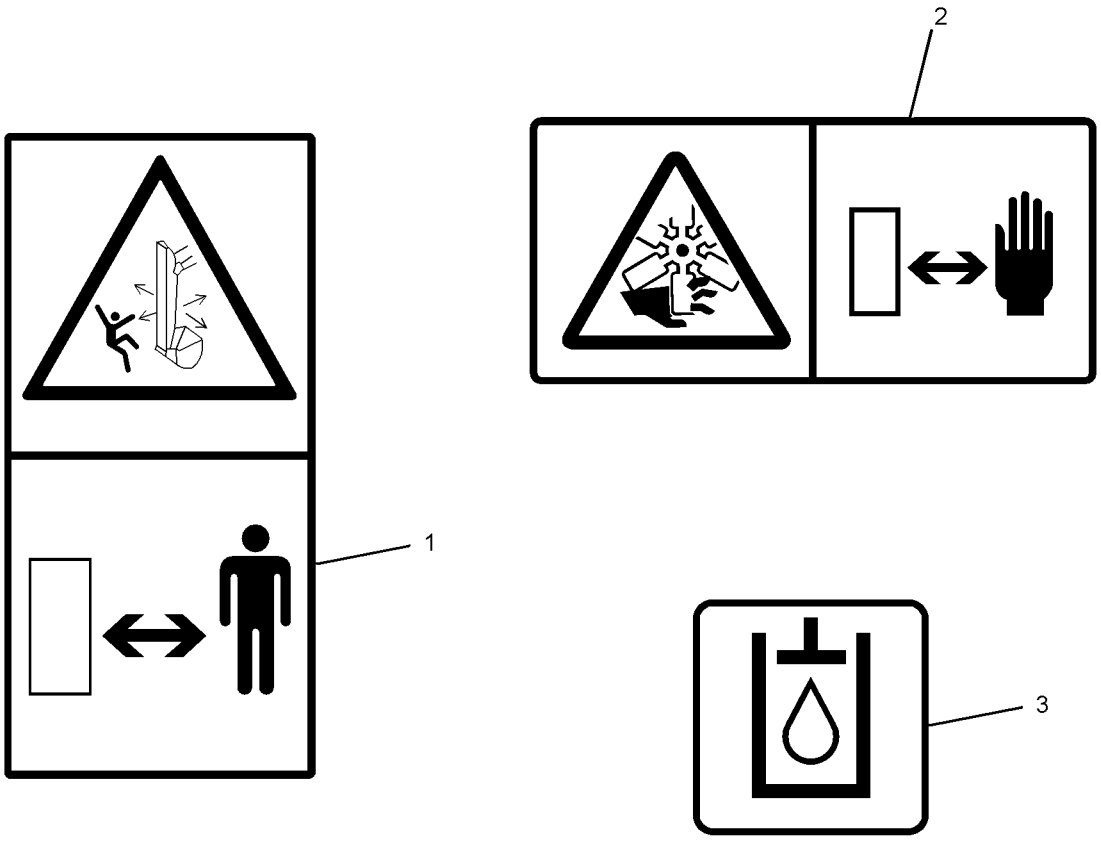

GRAPHIC #1 **<END>** g01641113

SERVICE EQUIPMENT AND SUPPLIES

260-6968 PLATE & FILM GP

S/N: CJN1-UP
PART OF 260-6960 CHASSIS AR
TYPE 1

SMCS-7405, 7557 **i02980596**

NOTE	REF NO	GRAPHIC REF	PART NUMBER	QTY	PART NAME 1 2 3 4 5 6 (PRODUCT LEVEL)	SEE PAGE
	1	1,3	**1P-2807**	4	FILM-INFORMATION (LIFT EYE LOCATION)	
	2	3	**4I-8472**	1	FILM-INSTRUCTION (OPERATOR CONTROLS, READ OMM)	
	3	2	**7X-7644**	4	FILM-INFORMATION (TIE-DOWN)	
	4	3	**8T-6842**	1	FILM-INSTRUCTION (PULL RING, ALTERNATE EXIT)	
	5	1,2	**290-1729**	2	FILM-IDENTIFICATION (CAT UPPER STRUCTURE)	
	6	1	**228-7316**	2	FILM-WARNING (HOT SURFACE, HANDS CLEAR)	
	7	1	**283-8982**	1	FILM-IDENTIFICATION (CAT, RH)	
	8	2	**283-8983**	1	FILM-IDENTIFICATION (CAT, LH)	
	9	1	**134-7258**	1	FILM-INFORMATION (EXTENDED LIFE COOLANT,READ OMM)	
	10	3	**144-9126**	1	FILM-INSTRUCTION (OIL)	
	11	2	**146-6747**	1	FILM-INFORMATION (24-VOLT)	
	12	1,3	**167-7270**	2	FILM-INSTRUCTION (NO STEP)	
	13	3	**187-0661**	1	FILM-INSTRUCTION (ALTERNATE EXIT)	
	14	2	**190-5386**	2	FILM-STRIPE (ROUND RED REFLECTIVE)	
	15	3	**214-7915**	1	FILM-INSTRUCTION (ENGINE SHUTOFF)	
	16	3	**221-8045**	1	FILM-WARNING (SEAT BELT, INTERNATIONAL)	
	17	3	**223-9818**	1	FILM-INSTRUCTION (WINDOW CLEANING, READ OMM)	
	18	3	**224-0554**	1	FILM-WARNING (UNIVERSAL, READ OMM, INTL)	
	19	2	**224-8946**	1	FILM-WARNING (NO ETHER SPRAY/AIR INTK, INTL)	
	20	2	**225-0312**	1	FILM-WARNING (JUMP START, READ OMM)	
	21	1,2	**225-4257**	2	FILM-WARNING (HOT FLUID UNDER PRESS, INTL)	
	22	1,2	**228-2781**	2	FILM-WARNING (MACHINE SWING, CRUSHING, INTL)	
	23	3	**228-9254**	1	FILM-WARNING (ELEC HAZARD, READ OMM, INTL)	
	24	2	**229-0887**	1	FILM-INFORMATION (AIR CLEANER)	
	25	1	**239-6986**	1	PLATE-IDENTIFICATION (MACHINE)	
	26	1	**242-1510**	1	FILM-INSTRUCTION (HYDRAULIC OIL CHECK)	
	27	3	**242-1588**	1	FILM-WARNING (FRONT WINDOW, READ OMM, INTL)	
	28	1	**242-6092**	1	FILM-WARNING (ACCUMULATOR PRESSURE)	
	29	3	**245-5457**	1	FILM-INSTRUCTION (BACKUP CONTROL)	
	30	2	**247-7436**	1	FILM-IDENTIFICATION (CAT)	
	31	2	**247-7437**	1	FILM-IDENTIFICATION (BATTERY CIRCUIT BREAKER)	
	32	2	**247-7438**	1	FILM-IDENTIFICATION (ELECTRICAL CIRCUIT BREAKER)	
	33	1,2	**253-0861**	2	FILM-INFORMATION (CAT POWER, ACERT TECHNOLOGY)	
	34	2	**257-4502**	1	FILM-IDENTIFICATION (CATERPILLAR)	
	35	1,2	**283-8984**	2	FILM-IDENTIFICATION (315D L)	
	36	3	**266-5431**	1	FILM-WARNING (CRUSH HAZARD, READ OMM, INTL)	
E	37	1,2	**290-1906**		FILM-STRIPE (RED) (45-CM EACH)	
	38	3	**260-7135**	1	FILM-IDENTIFICATION (FUSE PANEL)	
	39	3	**260-7138**	1	FILM-INFORMATION (LIFTING CAPACITIES, READ OMM)	
F			**310-6252**	1	FILM-INSTRUCTION (BACKUP CONTROL, READ OMM)	

E-ORDER BY THE CENTIMETER
F-NOT SHOWN

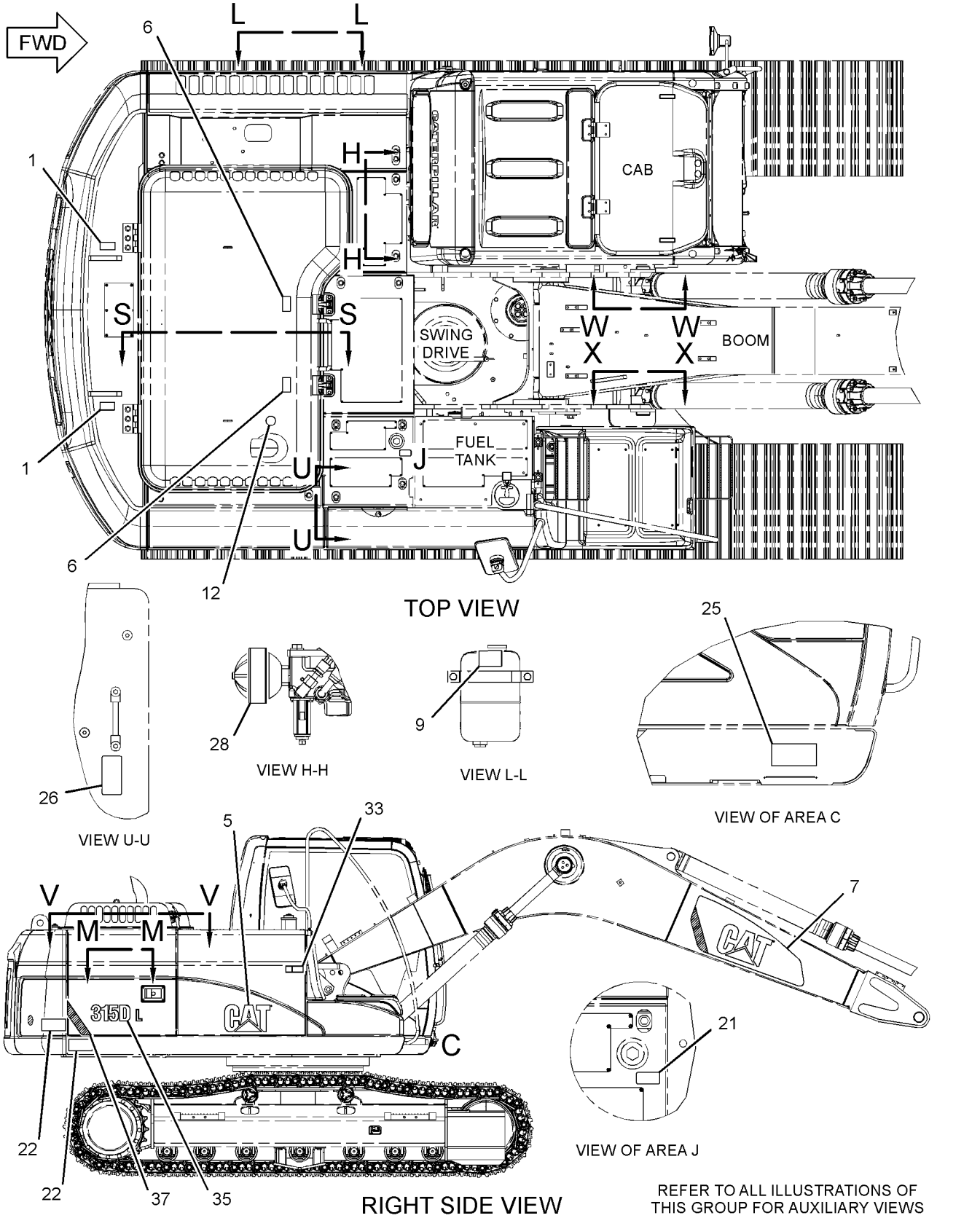

GRAPHIC #1

g01378164

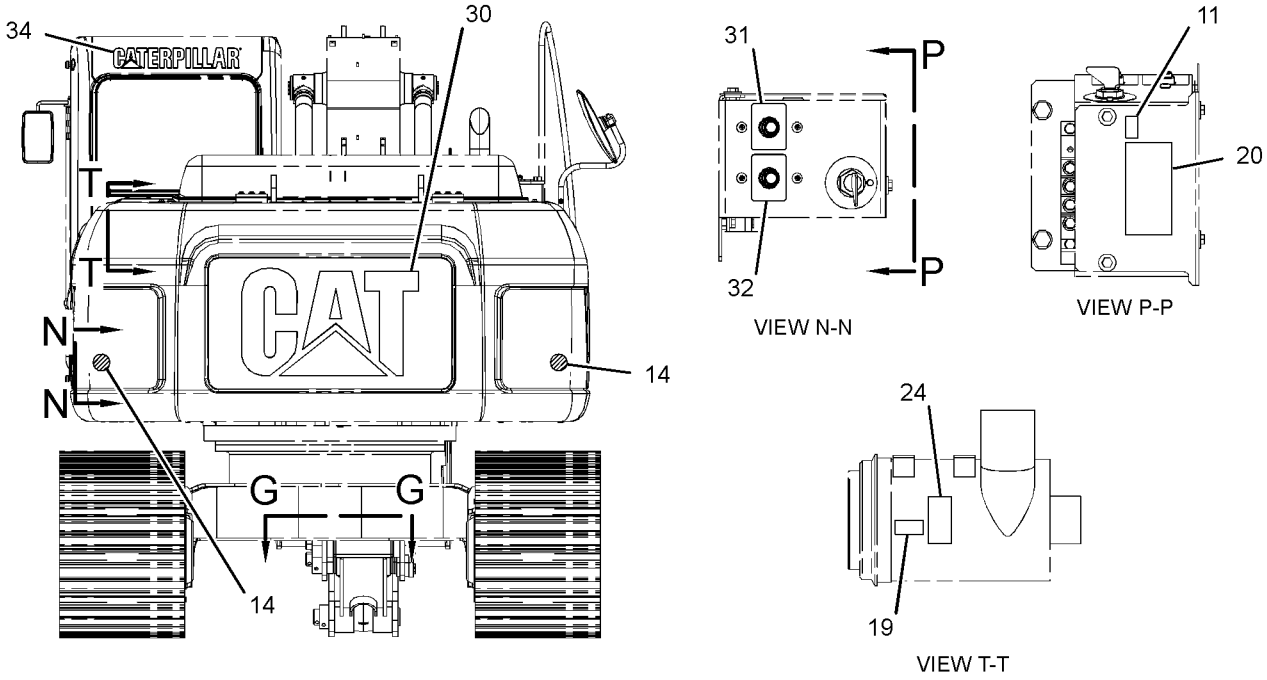

GRAPHIC #2

g01378171

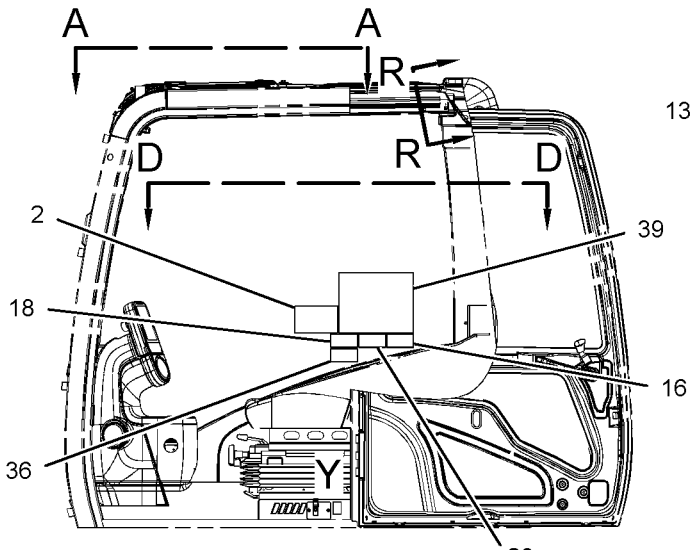

LEFT SIDE VIEW
(CAB)

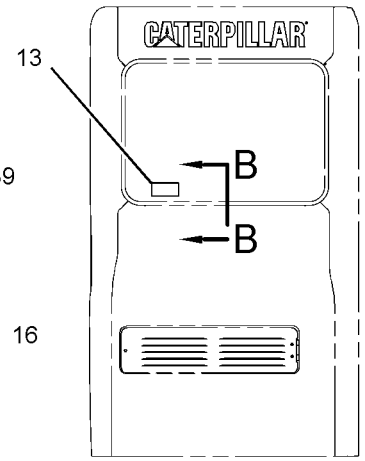

REAR VIEW
(CAB)

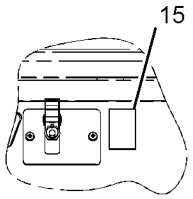

VIEW OF AREA Y

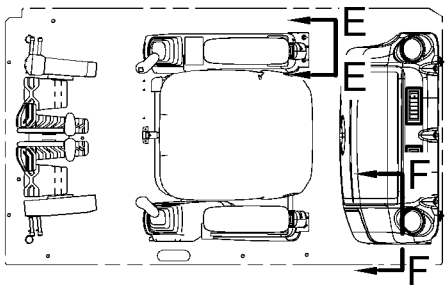

VIEW D-D

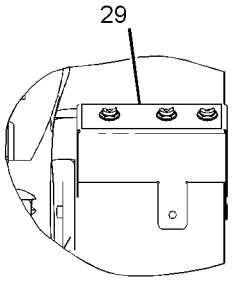

VIEW E-E

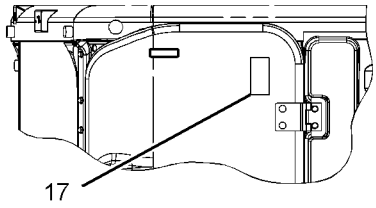

VIEW A-A

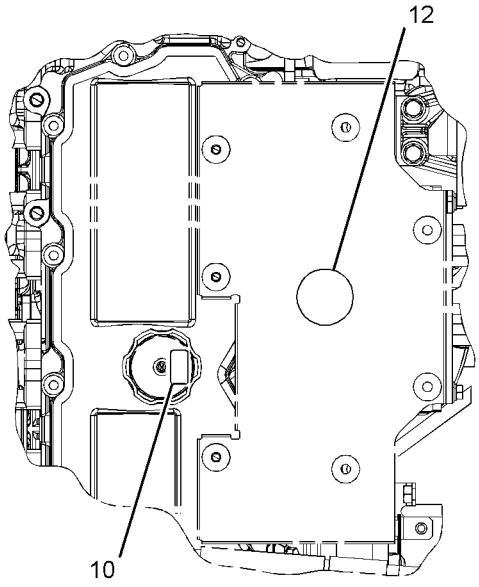

VIEW M-M

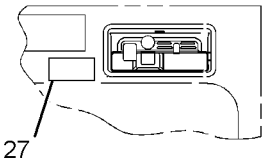

VIEW R-R

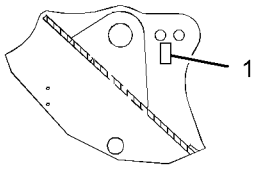

SECTION W-W

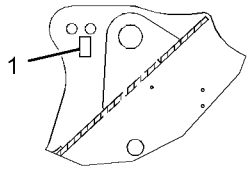

SECTION X-X

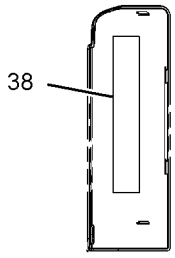

VIEW F-F

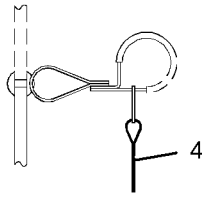

SECTION B-B

GRAPHIC #3 **<END>** g01378179

SERVICE EQUIPMENT AND SUPPLIES

260-6968 PLATE & FILM GP

S/N: CJN1-UP
PART OF 260-6960 CHASSIS AR
TYPE 2

SMCS-7405, 7557 **i03169083**

NOTE	REF NO	GRAPHIC REF	PART NUMBER	QTY	PART NAME 1 2 3 4 5 6 (PRODUCT LEVEL)	SEE PAGE
	1	1,3	**1P-2807**	4	FILM-INFORMATION (LIFT EYE LOCATION)	
	2	3	**4I-8472**	1	FILM-INSTRUCTION (OPERATOR CONTROLS, READ OMM)	
	3	2	**7X-7644**	4	FILM-INFORMATION (TIE-DOWN)	
	4	3	**8T-6842**	1	FILM-INSTRUCTION (PULL RING, ALTERNATE EXIT)	
	5	1,2	**290-1729**	2	FILM-IDENTIFICATION (CAT UPPER STRUCTURE)	
	6	1	**228-7316**	2	FILM-WARNING (HOT SURFACE, HANDS CLEAR)	
	7	1	**283-8982**	1	FILM-IDENTIFICATION (CAT, RH)	
	8	2	**283-8983**	1	FILM-IDENTIFICATION (CAT, LH)	
	9	1	**134-7258**	1	FILM-INFORMATION (EXTENDED LIFE COOLANT,READ OMM)	
	10	3	**144-9126**	1	FILM-INSTRUCTION (OIL)	
	11	2	**146-6747**	1	FILM-INFORMATION (24-VOLT)	
	12	1,3	**167-7270**	2	FILM-INSTRUCTION (NO STEP)	
	13	3	**187-0661**	1	FILM-INSTRUCTION (ALTERNATE EXIT)	
	14	2	**190-5386**	2	FILM-STRIPE (ROUND RED REFLECTIVE)	
	15	3	**214-7915**	1	FILM-INSTRUCTION (ENGINE SHUTOFF)	
	16	3	**221-8045**	1	FILM-WARNING (SEAT BELT, INTERNATIONAL)	
	17	3	**223-9818**	1	FILM-INSTRUCTION (WINDOW CLEANING, READ OMM)	
	18	3	**224-0554**	1	FILM-WARNING (UNIVERSAL, READ OMM, INTL)	
	19	2	**224-8946**	1	FILM-WARNING (NO ETHER SPRAY/AIR INTK, INTL)	
	20	2	**225-0312**	1	FILM-WARNING (JUMP START, READ OMM)	
	21	1,2	**225-4257**	2	FILM-WARNING (HOT FLUID UNDER PRESS, INTL)	
	22	1,2	**228-2781**	2	FILM-WARNING (MACHINE SWING, CRUSHING, INTL)	
	23	3	**228-9254**	1	FILM-WARNING (ELEC HAZARD, READ OMM, INTL)	
	24	2	**229-0887**	1	FILM-INFORMATION (AIR CLEANER)	
	25	1	**239-6986**	1	PLATE-IDENTIFICATION (MACHINE)	
	26	1	**242-1510**	1	FILM-INSTRUCTION (HYDRAULIC OIL CHECK)	
	27	3	**242-1588**	1	FILM-WARNING (FRONT WINDOW, READ OMM, INTL)	
	28	1	**242-6092**	1	FILM-WARNING (ACCUMULATOR PRESSURE)	
	29	3	**245-5457**	1	FILM-INSTRUCTION (BACKUP CONTROL)	
	30	2	**247-7436**	1	FILM-IDENTIFICATION (CAT)	
	31	2	**247-7437**	1	FILM-IDENTIFICATION (BATTERY CIRCUIT BREAKER)	
	32	2	**247-7438**	1	FILM-IDENTIFICATION (ELECTRICAL CIRCUIT BREAKER)	
	33	1,2	**253-0861**	2	FILM-INFORMATION (CAT POWER, ACERT TECHNOLOGY)	
	34	2	**257-4502**	1	FILM-IDENTIFICATION (CATERPILLAR)	
	35	1,2	**283-8984**	2	FILM-IDENTIFICATION (315D L)	
	36	3	**266-5431**	1	FILM-WARNING (CRUSH HAZARD, READ OMM, INTL)	
E	37	1,2	**290-1906**		FILM-STRIPE (RED) (45-CM EACH)	
	38	3	**260-7135**	1	FILM-IDENTIFICATION (FUSE PANEL)	
F			**310-6252**	1	FILM-INSTRUCTION (BACKUP CONTROL, READ OMM)	

E-ORDER BY THE CENTIMETER
F-NOT SHOWN

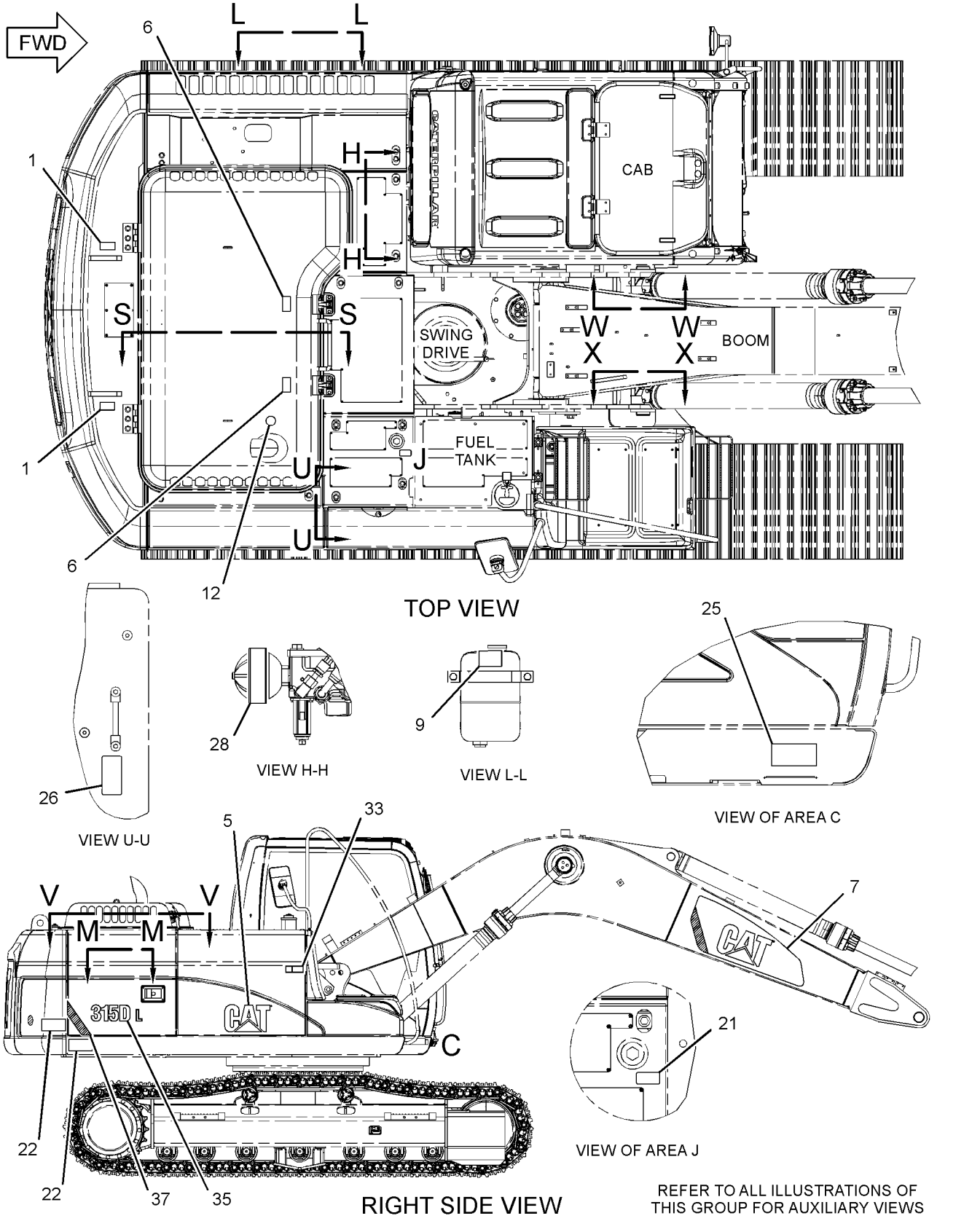

GRAPHIC #1

g01378164

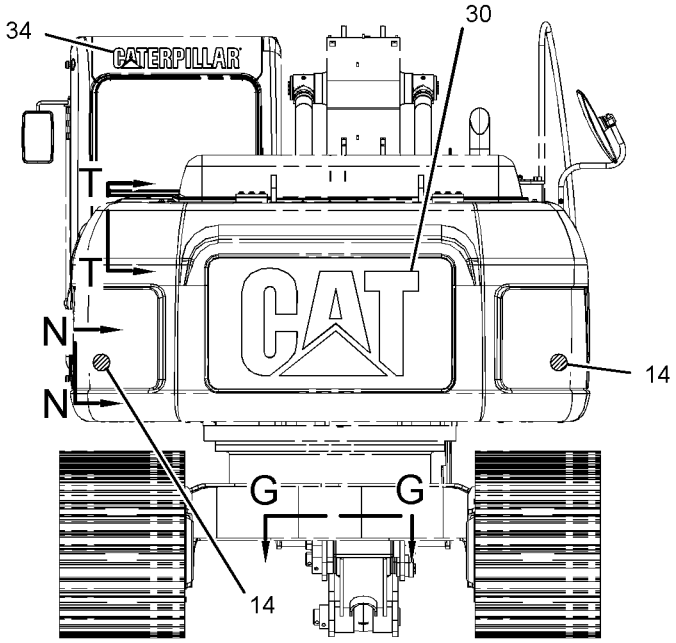

REAR VIEW

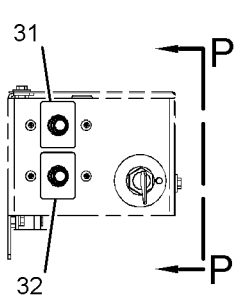

VIEW N-N

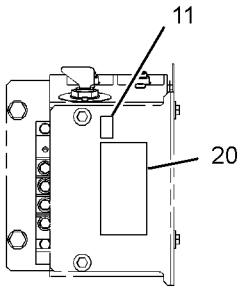

VIEW P-P

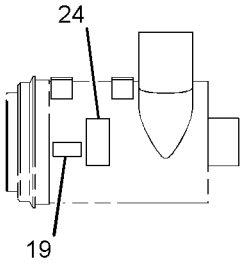

VIEW T-T

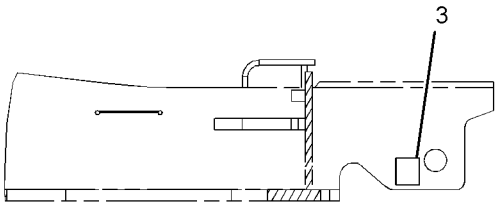

SECTION S-S

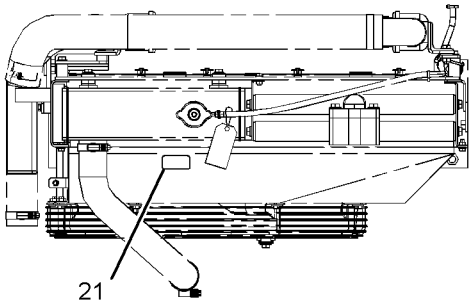

VIEW V-V

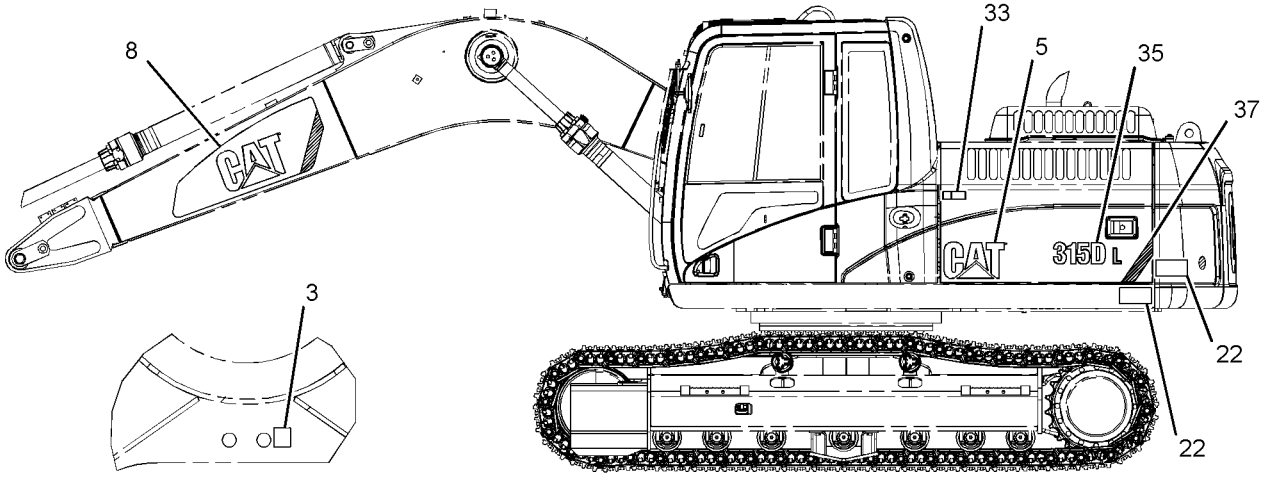

VIEW G-G

LEFT SIDE VIEW

GRAPHIC #2 g01378171

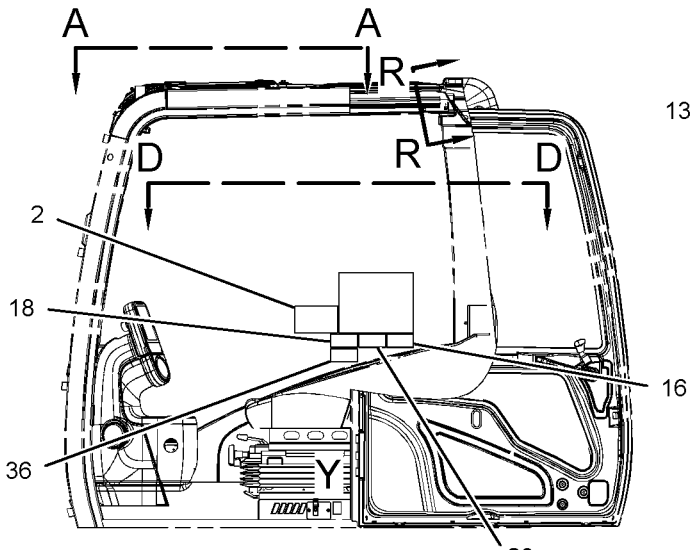

LEFT SIDE VIEW
(CAB)

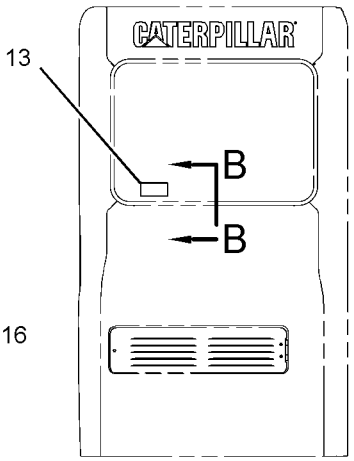

REAR VIEW
(CAB)

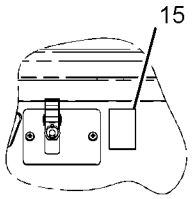

VIEW OF AREA Y

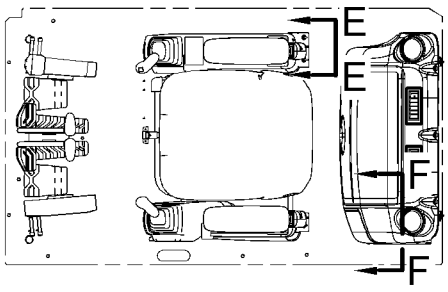

VIEW D-D

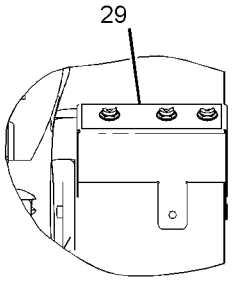

VIEW E-E

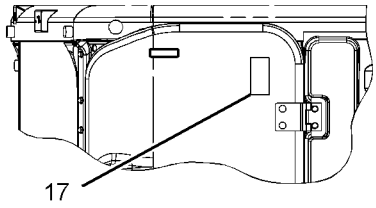

VIEW A-A

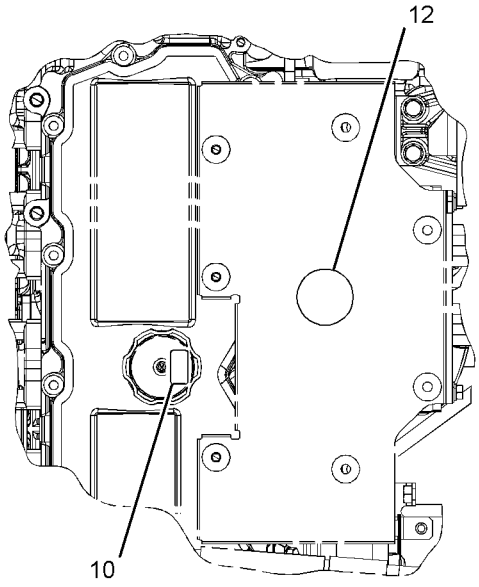

VIEW M-M

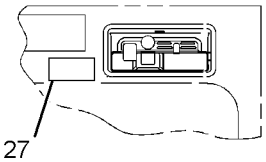

VIEW R-R

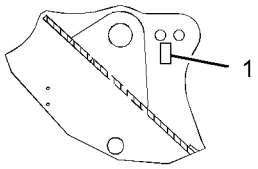

SECTION W-W

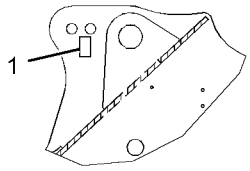

SECTION X-X

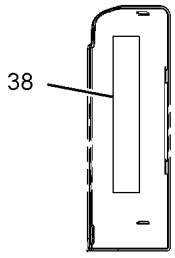

VIEW F-F

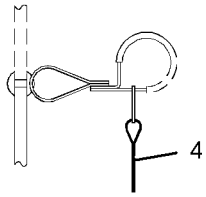

SECTION B-B

GRAPHIC #3 **<END>** g01623226

SERVICE EQUIPMENT AND SUPPLIES

298-4305 PLATE & FILM GP

S/N: CJN1-UP
PART OF 330-8769 PLATE & FILM GP
AN ATTACHMENT

SMCS-7405, 7557 **i02890837**

NOTE	REF NO	GRAPHIC REF	PART NUMBER	QTY	PART NAME 1 2 3 4 5 6 (PRODUCT LEVEL)	SEE PAGE
	1	2	**224-7717**	1	FILM-WARNING (SEAT BELT, U.S.)	
	2	2	**224-8945**	1	FILM-WARNING (DO NOT USE ETHER, U.S)	
	3	2	**225-0313**	1	FILM-WARNING (JUMP START, READ OMM, U.S.)	
	4	2	**225-3305**	1	FILM-WARNING (UNIVERSAL, READ OMM, U.S.)	
	5	1,2	**225-4256**	2	FILM-WARNING (HOT FLUID UNDER PRESSURE, U.S.)	
	6	2	**228-2780**	2	FILM-WARNING (MACHINE SWING, CRUSHING, U.S.)	
	7	1	**228-7315**	2	FILM-WARNING (HOT SURFACE, HANDS CLEAR, U.S.)	
	8	2	**228-9253**	1	FILM-WARNING (ELECTRICAL HAZARD, U.S.)	
	9	2	**242-1589**	1	FILM-WARNING (FRONT WINDOW, READ OMM, U.S.)	
	10	2	**267-4495**	1	FILM-WARNING (CRUSH HAZARD, READ OMM, U.S.)	

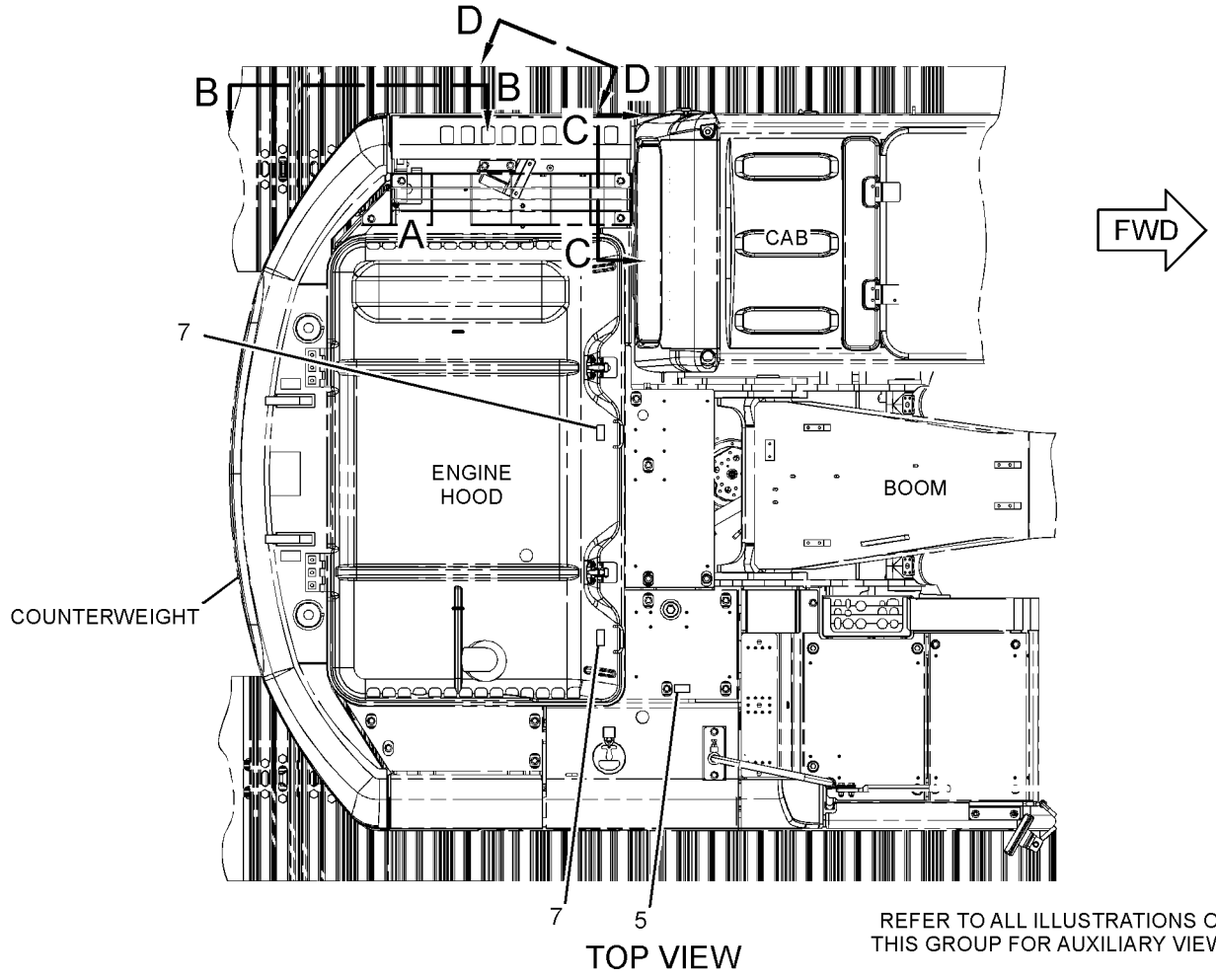

REFER TO ALL ILLUSTRATIONS OF THIS GROUP FOR AUXILIARY VIEWS

GRAPHIC #1 g01448702

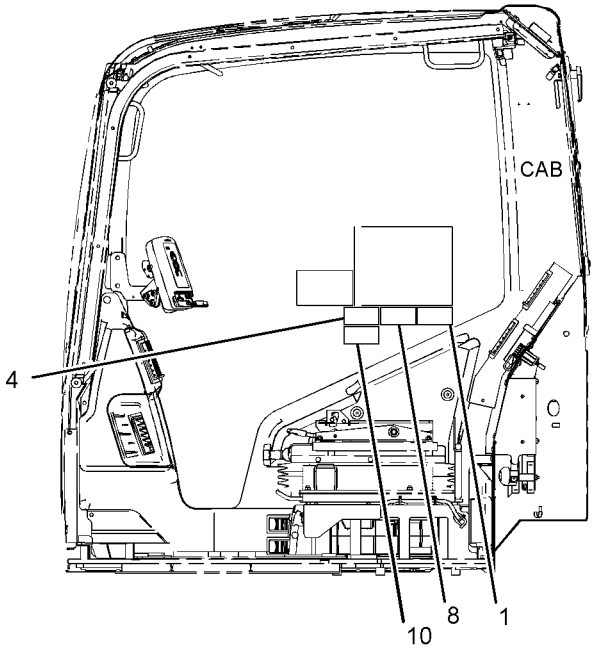

LEFT SIDE VIEW

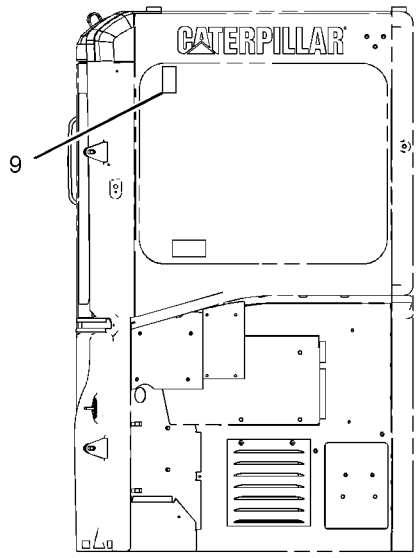

REAR VIEW
(CAB)

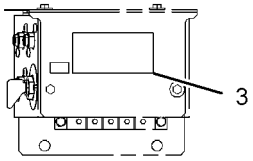

VIEW C-C

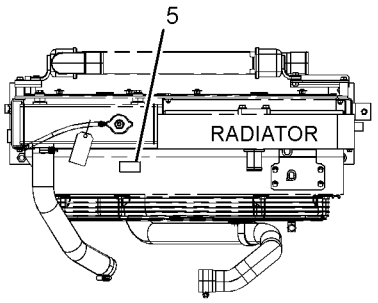

VIEW OF AREA A
(ENGINE HOOD REMOVED)

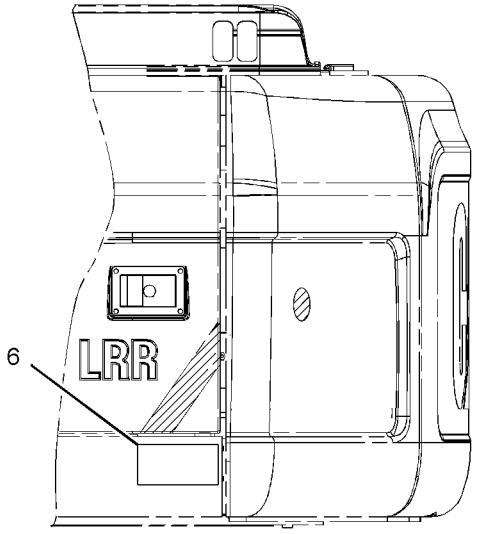

VIEW B-B

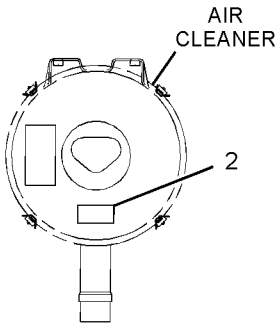

VIEW D-D

GRAPHIC #2 **<END>** g01448704

SERVICE EQUIPMENT AND SUPPLIES

330-8769 PLATE & FILM GP

S/N: CJN1-UP
U.S. MARKET
AN ATTACHMENT

SMCS-7405, 7557 **i03144669**

NOTE	REF NO	GRAPHIC REF	PART NUMBER	QTY	PART NAME 1 2 3 4 5 6 (PRODUCT LEVEL)	SEE PAGE
	1	1	**330-8722**	1	FILM-LIFTING CAP	
					(LOCATED ON RIGHT SIDE CAB WINDOW)	
FY			*298-4305*	1	PLATE & FILM GP	1103

F-NOT SHOWN
Y-SEPARATE ILLUSTRATION

1

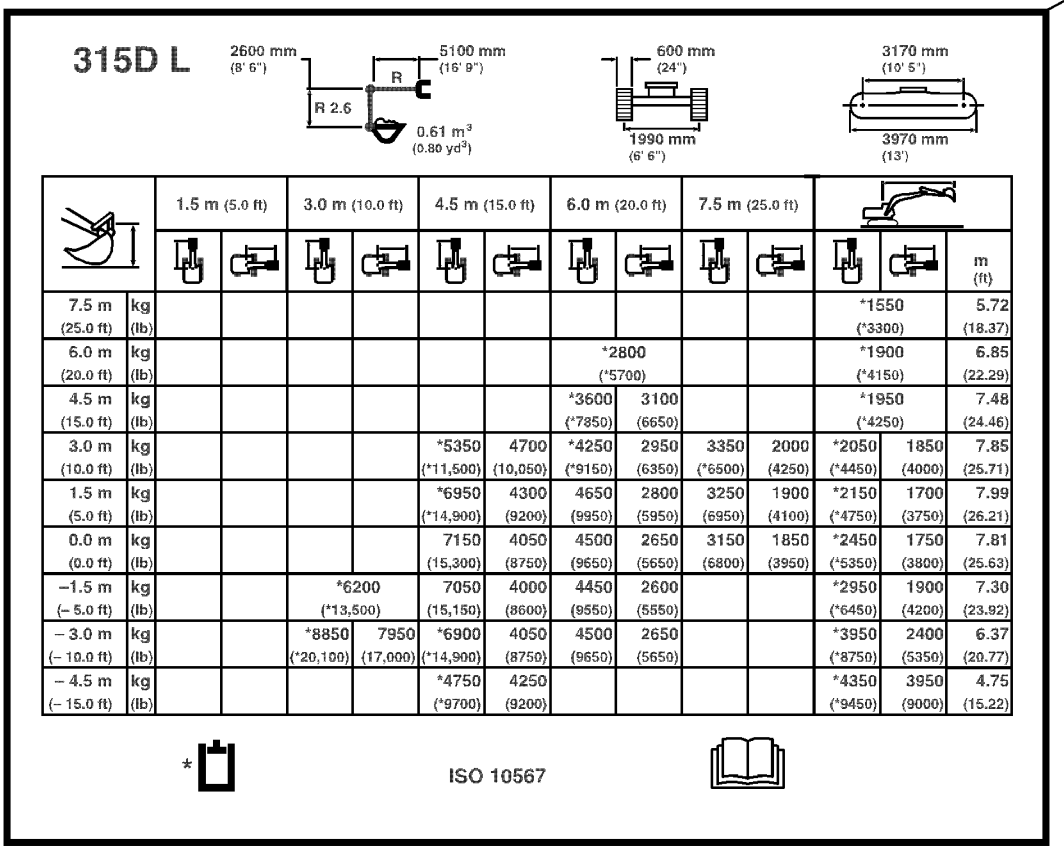

		1.5 m (5.0 ft)		3.0 m (10.0 ft)		4.5 m (15.0 ft)		6.0 m (20.0 ft)		7.5 m (25.0 ft)				
														m (ft)
7.5 m (25.0 ft)	kg											*1550		5.72
	(lb)											(*3300)		(18.37)
6.0 m (20.0 ft)	kg							*2800				*1900		6.85
	(lb)							(*5700)				(*4150)		(22.29)
4.5 m (15.0 ft)	kg							*3600	3100			*1950		7.48
	(lb)							(*7850)	(6650)			(*4250)		(24.46)
3.0 m (10.0 ft)	kg					*5350	4700	*4250	2950	3350	2000	*2050	1850	7.85
	(lb)					(*11,500)	(10,050)	(*9150)	(6350)	(*6500)	(4250)	(*4450)	(4000)	(25.71)
1.5 m (5.0 ft)	kg					*6950	4300	4650	2800	3250	1900	*2150	1700	7.99
	(lb)					(*14,900)	(9200)	(9950)	(5950)	(6950)	(4100)	(*4750)	(3750)	(26.21)
0.0 m (0.0 ft)	kg					7150	4050	4500	2650	3150	1850	*2450	1750	7.81
	(lb)					(15,300)	(8750)	(9650)	(5650)	(6800)	(3950)	(*5350)	(3800)	(25.63)
−1.5 m (− 5.0 ft)	kg			*6200		7050	4000	4450	2600			*2950	1900	7.30
	(lb)			(*13,500)		(15,150)	(8600)	(9550)	(5550)			(*6450)	(4200)	(23.92)
− 3.0 m (− 10.0 ft)	kg			*8850	7950	*6900	4050	4500	2650			*3950	2400	6.37
	(lb)			(*20,100)	(17,000)	(*14,900)	(8750)	(9650)	(5650)			(*8750)	(5350)	(20.77)
− 4.5 m (− 15.0 ft)	kg					*4750	4250					*4350	3950	4.75
	(lb)					(*9700)	(9200)					(*9450)	(9000)	(15.22)

* ISO 10567

GRAPHIC #1 **<END>** g01626804

MEMORANDA

PART NUMBER INDEX

Part	Page
1	
1D-5117	140
1F-0425	726
1H-3338	202
1H-7339	654
1J-2859	666
1J-6472	654
1M-6119	127
	133
	210
1M-6120	127
	133
	210
1M-7250	65
	66
1P-2807	1095
	1099
1P-3702	621
	622
	623
	624
	625
	629
1P-3703	454
	457
	460
	463
	466
	469
	472
	473
	476
	478
	479
	489
	491
	631
	633
1P-3704	626
	627
1P-4578	611
1R-0739	43
	46
1R-0751	81
1R-5998	872
	876
1R-6072	127
	133
1R-6573	86
1R-9958	324
1S-7251	210
1S-7252	127
	133
	210
1S-9593	501
	745
	746
1U-8846	270
	315
	430
	436
	631
	633

Part	Page
2	
2A-5222	50
2B-0858	666
2C-9259	787
	789
	791
	797
	798
	799
	800
	801
	802
	803
	804
	805
	806
	811
	812
	813
	814
	815
	816
	817
	818
2C-9589	819
	820
	▶823
2D-6642	644
	647
	728
2H-3814	56
2H-3922	200
	1073
2H-3934	666
2H-9247	451
2J-3506	823
2L-8076	204
2M-0849	998
2M-9780	542
	544
	598
	604
	615
	619
	645
	648
	666
	751
2P-2537	43
2Q-4703	904
2S-3440	42
	54
	94
	96
2S-4078	96
	108
	110
	118
	120
	204
2S-5926	372
	376
2S-8439	444
2T-2991	43

Part	Page
	46
2U-2552	856
2U-5338	422
2Y-5503	315
	436
2Y-5685	957
	959
	968
3	
3B-0551	108
	110
	118
	120
3B-4501	164
	165
3B-4505	39
	51
	54
	928
	932
3B-4615	297
	298
	303
	307
3B-4618	304
	306
	308
	324
3B-8489	315
	398
	399
	400
	401
	402
	403
	404
	405
	406
	407
	422
	762
	765
	767
	772
	773
	774
	775
	776
	777
	778
	779
	780
	781
	783
	784
	785
	822
3D-2824	204
	447
	474
	476
	489

Part	Page
	491
	505
	506
	509
	510
	513
	514
	518
	530
	534
	538
	541
	542
	544
	559
	615
	619
	627
	631
	633
	666
	699
3D-2891	451
3E-2310	493
	497
	501
	562
	565
	587
	597
	603
3E-2338	270
3E-3217	368
3E-3371	197
	476
	505
	509
	513
	541
3E-3377	416
3E-3383	205
3E-5169	260
3E-7410	522
	526
	587
3E-8020	872
	876
3E-8024	375
3E-8048	197
3E-8268	87
3E-8320	181
3E-9872	1056
	1076
3E-9874	872
	876
3F-9556	201
3J-1907	87
	104
	106
	108
	110
	113
	115
	118
	120

▶ **PRIMARY REFERENCE**

PART NUMBER INDEX

Part	Page	Part	Page	Part	Page	Part	Page
	122		487		203		373
	451		488		208		374
	474		613		212	4B-7739	666
	476		666		214	4B-9783	729
	487	3K-0360	386		216		730
	488		432		217	4B-9880	732
	493		433		222	4D-1836	260
	497		434		223	4H-6112	432
	501		458		225		433
	522		461		227		434
	523		464		228	4I-0117	324
	526		467		230	4I-0118	340
	527		474		233	4I-0232	297
	542		476		235		298
	544		505		237		303
	547		509		245		304
	549		513		246		306
	551		516		247		307
	552		518		248		308
	555		522		250	4I-0378	104
	556		526		251		106
	559		541		253		108
	561		542		254		110
	562		544		255		113
	564		559		256		115
	565		561		257		118
	567		565		258		120
	569		574		260	4I-0379	87
	572		578		263	4I-0420	1058
	574		580		265		1059
	577		582		266	4I-0754	666
	578		591		493	4I-0797	590
	580		592		497	4I-0800	590
	582		598		501	4I-0821	590
	585		604		843	4I-0836	551
	587		613		845		555
	588		631		973		561
	590		633		975		585
	591		636		979		597
	592		637		981	4I-1037	564
	597		644		982		572
	598		647		984		574
	599		664		1036	4I-1163	1073
	603		666		1055	4I-1205	297
	604	3L-8187	223		1056		298
	605	3P-1896	17		1073		303
	609	3P-9847	58	3S-6049	127		304
	615	3S-2093	58		133		306
	617		73		210		307
	619		127	3S-6050	127		308
	627		128		133		872
	631		133	3T-4004	216		876
	633		134	3T-5760	127	4I-1206	872
	636		147		133		876
	640		155	3V-0046	487	4I-1260	969
	642		158		488	4I-1536	▶381
	654		159	3V-2431	416		384
	666		171	3W-6399	1055	4I-1539	381
	691		173				387
	699		177			4I-1674	469
	728		183	**4**		4I-1676	469
	729		185			4I-1704	549
	730		187	4B-2049	204	4I-1760	590
	751		189	4B-4158	369	4I-1780	597
3J-7354	474		196		370		603

▶ PRIMARY REFERENCE

PART NUMBER INDEX

Part	Page	Part	Page	Part	Page	Part	Page
4I-1783	587		781		571		555
	590		783		572		567
	597		784		574		569
	603		785		580		571
4I-2187	275	4I-5020	1073		582		572
4I-2885	1084	4I-5021	1073		585		580
	1086	4I-5049	1054		587		582
4I-3038	203	4I-5394	666		590		587
4I-3063	872	4I-5409	1		597	4I-9527	522
	876		▶167		603		526
4I-3090	873	4I-5479	127	4I-9522	493		542
	877		133		497		544
	1076	4I-5480	127		501		551
4I-3123	872		133		522		555
	876	4I-5490	666		526		561
4I-3144	872	4I-5556	466		551		564
	876	4I-5795	590		555		567
4I-3266	1011	4I-5862	381		561		572
4I-3308	754		387		564		574
	756	4I-5906	564		571		580
	758		597		572		582
	760		603		580		587
4I-3309	754	4I-5933	587		582		590
	756	4I-6136	572		590		597
	758		574		597		603
	760		587		603	4I-9528	551
4I-3941	551	4I-6248	590	4I-9523	522		555
	555	4I-6287	562		526		572
	561		565		551		580
	564		599		555		582
	597		605		561		587
	603	4I-6365	706		564		590
4I-3953	551		711		569	4I-9664	17
	555		713		572		22
4I-3988	551	4I-6391	590		574		23
	555	4I-6602	957		577	4J-0522	611
4I-3991	587		959		580	4J-0523	546
4I-3994	551		961		582	4J-0527	542
	555		962		585		544
4I-4270	872	4I-7326	315		587		611
	876	4I-7444	315		590		666
4I-4286	928	4I-7446	315		597	4J-5267	666
	930	4I-7511	315		603		691
	932	4I-7512	315	4I-9524	551	4J-5477	481
	935	4I-7604	664		555		483
4I-4298	1068	4I-7605	664		561		484
4I-4300	1068	4I-7889	230		564		486
4I-4361	969		232		572		493
4I-4392	872		233		580		497
	876		549		582		501
4I-4580	990	4I-8267	382		590		522
	993	4I-8472	1095		597		523
4I-4811	754		1099		603		526
	756	4I-8785	622	4I-9525	551		527
	758		623		555		627
	760		624		571		631
	772	4I-9521	493		572		633
	773		497		574		749
	774		501		580		750
	775		522		582	4J-7533	445
	776		526		587		451
	777		551		590		636
	778		555		597	4K-8864	127
	779		561		603		133
	780		564	4I-9526	551	4N-9170	315

▶ **PRIMARY REFERENCE**

PART NUMBER INDEX

Part	Page
4P-7428	212
	214
	246
	247
	250
	266
4P-7581	128
	134
	212
	214
	217
	228
	256
	266
4P-8134	128
	134
4S-1962	248
	990
	993
4T-3009	823
5	
5A-3604	92
	680
	682
	685
	690
	699
	1015
	1016
	1026
	1027
	1028
	1029
	1039
	1040
	1041
	1042
	1043
	1044
5B-5947	41
5C-2889	164
	165
5C-2890	90
	202
	217
	222
	225
	233
	251
	1073
5C-6074	204
5C-6108	94
	▶204
5C-7261	51
	128
	134
	324
	718
	841
	842
	857
	1023
	1024
	1025
	1034
	1035
	1038
	1046
	1048
	1049
5C-7793	872
	876
5C-7883	128
	134
5C-8138	1055
5C-8312	1059
5C-9553	181
	251
	275
	562
	565
	599
	605
	666
	843
	845
	973
	975
	1073
5D-1026	436
	990
	993
5D-4822	962
5D-8159	60
5F-3144	445
5G-2247	368
5H-8624	613
5I-4076	572
	574
	587
5I-4363	664
5I-4396	561
	597
	603
5I-4494	621
	625
5I-4915	22
5I-4936	516
5I-4940	42
5I-4983	26
5I-4993	33
5I-5005	24
5I-5038	48
5I-5078	81
5I-5087	74
5I-5181	20
5I-5607	33
5I-7090	903
	913
5I-7505	17
5I-7525	17
5I-7528	17
5I-7529	17
5I-7540	37
5I-7549	74
5I-7550	74
5I-7558	27
5I-7561	50
5I-7588	20
5I-7599	32
5I-7601	74
5I-7607	26
5I-7610	27
5I-7623	50
5I-7630	39
5I-7632	27
5I-7633	76
	78
5I-7642	48
5I-7645	42
5I-7646	54
5I-7650	13
5I-7654	20
5I-7656	27
5I-7660	26
5I-7663	33
5I-7667	35
5I-7677	75
5I-7678	75
5I-7683	27
5I-7691	51
5I-7696	56
5I-7697	56
5I-7724	17
5I-7725	42
5I-7735	54
5I-7750	29
5I-7784	20
5I-7785	20
5I-7786	20
5I-7787	20
5I-7788	20
5I-7789	20
5I-7842	33
5I-7862	51
5I-7864	41
5I-7867	54
5I-7896	27
5I-7933	78
5I-7937	76
5I-7941	79
5I-7942	79
5I-7985	125
5I-7987	125
5I-7997	125
5I-8009	17
5I-8010	54
5I-8021	75
5I-8023	75
5I-8056	54
5I-8058	50
	81
5I-8066	41
5I-8067	33
5I-8080	125
5I-8086	125
5I-8087	125
5I-8088	125
5I-8089	125
5I-8090	125
5I-8091	125
5I-8094	125
5I-8095	125
5I-8097	125
5I-8098	125
5I-8110	33
5I-8124	79
5I-8270	127
	133
5I-8307	87
5I-8416	▶382
	384
5I-8670	439
	441
5I-9368	127
	133
5J-4771	823
5K-3294	990
5K-5338	493
	523
	527
	609
5K-8451	87
5K-9090	489
	491
	505
	506
	509
	510
	513
	514
	520
	530
	534
	538
	611
	613
	615
	617
	619
	627
5K-9243	315
	762
5L-3233	67
	69
5L-6326	56
5P-0743	49
5P-0747	127
	133
	210
5P-0761	127
	133
	210
5P-0767	436
	990
	993
5P-1075	275
	310
5P-1076	58
	94
	96
	318
	319
	320
	357
5P-1442	73
	87

▶ **PRIMARY REFERENCE**

PART NUMBER INDEX

Part	Page
5P-2369	562
	565
	592
	599
	605
5P-3454	251
	253
5P-3779	381
	383
5P-4115	181
	210
	297
	298
	303
	304
	306
	307
	308
5P-4116	124
	228
	275
	888
	890
5P-4325	562
	565
	990
5P-4924	87
	104
	106
	108
	110
	113
	115
	118
	120
5P-4961	73
5P-5148	597
	603
5P-5623	124
5P-5935	58
5P-5998	203
5P-6271	217
5P-7174	58
5P-7175	87
5P-7462	592
5P-7463	592
5P-7466	615
	619
5P-7467	615
	619
5P-7468	493
	497
	501
	506
	510
	514
	520
	530
	534
	538
	617
5P-7469	493
	497
	501
	506
	510
	514
	520
	530
	534
	538
	617
5P-7958	346
	995
5P-8112	615
	619
5P-8196	43
	46
5P-8292	1054
5P-8309	290
	295
	296
	304
	306
	308
	340
	342
5P-8500	99
	102
	995
5P-8522	250
5P-9297	176
	248
5P-9617	43
	46
5P-9909	58
5Q-4212	480
	481
	483
	484
	486
5Q-4213	480
6C-3679	311
6C-6760	458
	461
	464
	467
6C-8382	957
	959
	962
6C-8647	767
6D-1641	43
	46
	542
	544
	990
	993
6D-3479	990
6D-4246	128
	134
6D-4636	87
6E-2313	691
6E-5431	691
6E-5434	691
6E-5438	691
6E-5439	691
6F-4718	640
	642
6F-4855	448
6F-7045	200
6F-7556	27
6F-7557	27
6G-2263	128
	134
	245
	255
6I-1418	149
6I-5298	905
	906
6I-5342	969
6I-5470	873
	877
6I-6354	811
	812
6I-6355	811
	812
6I-6356	811
	812
6I-6923	726
6J-2680	613
6K-0806	914
	915
	916
	917
	918
	919
	920
	921
	922
	923
6K-8178	87
	599
	605
6L-3616	762
6P-2216	340
6P-8855	990
	993
6T-3631	223
6T-3632	223
6T-3633	223
6V-0400	454
	457
	460
	463
	466
	469
6V-0683	592
6V-0852	476
	493
	497
	501
	522
	526
	559
	562
	564
	569
6V-1874	506
	510
	514
	530
	534
	538
6V-2235	990
6V-2369	251
	253
6V-2722	140
	210
6V-3265	990
	1056
6V-3532	315
6V-3938	726
6V-3965	476
	493
	497
	501
	523
	527
	559
	562
	565
	569
	585
	588
	592
	599
	605
	615
	619
	666
6V-5049	196
6V-5210	164
	165
	217
6V-5215	13
	27
	81
6V-5266	43
	46
6V-5391	451
6V-5645	181
6V-5683	856
6V-7238	432
	433
	434
6V-7357	898
	899
	900
	901
	902
	990
	1054
6V-7636	872
	876

6

► **PRIMARY REFERENCE**

PART NUMBER INDEX

Part	Page	Part	Page	Part	Page	Part	Page
6V-7646	904		582		505		476
6V-7658	362		585		509		489
6V-7661	367		587		513		491
6V-8144	654		588		520	6V-8716	489
6V-8186	201		590		530		491
6V-8187	181		591		534		505
6V-8200	751		592		538		509
6V-8202	726		597		611		513
	1013		598		613		518
	1014		599		615		530
	1015		603		617		534
	1016		604		619		538
	1026		605	6V-8636	476	6V-8721	542
	1027		609		493		544
	1036		617		497		598
	1039		627		501		604
	1040		731		523	6V-8723	561
6V-8213	433	6V-8398	447		527		565
	434		455		547		598
6V-8223	416		458		549		604
6V-8231	32		461		551	6V-8724	476
	33		464		555		493
	76		467		561		497
	1076		474		565		501
6V-8236	27		480		569		523
6V-8337	706		481		572		527
6V-8362	207		483		574		549
6V-8363	1073		484		578		551
6V-8370	1073		486		580		555
6V-8374	223		516		582		562
6V-8378	201		518		585		565
6V-8397	471		522		587		569
	474		526		591		572
	476		542		598		574
	481		544		604		578
	483		559		617		580
	484		574	6V-8637	43		582
	486		580		46		585
	493		582		489		587
	497		591		491		591
	501		592		505		598
	522		598		509		604
	523		604		513	6V-8730	471
	524		631		541	6V-8774	523
	526		633		559		527
	527		733		631		591
	528		735		633	6V-8775	631
	547		736	6V-8638	542		633
	549	6V-8400	709		544	6V-8778	506
	551		715	6V-8639	474		510
	552	6V-8553	564		516		514
	555	6V-8556	447		542	6V-8781	523
	556	6V-8625	518		544		527
	559		633		591		551
	561	6V-8627	493		631		555
	562		497	6V-8640	615		567
	564		501		619		587
	565		627	6V-8641	523		591
	567		631		527		599
	569		633		627		605
	572	6V-8633	518		631		609
	574	6V-8634	598		633	6V-8784	447
	577		604	6V-8642	615		506
	578	6V-8635	489		619		510
	580		491	6V-8713	474		514

PART NUMBER INDEX

Part	Page
6V-8821	720
6V-8935	481
	483
	484
	486
	493
	497
	501
	523
	527
6V-8936	481
	483
	484
	486
6V-8942	447
	518
6V-8946	506
	510
	514
6V-8987	580
	582
6V-9001	523
	527
	547
	549
	551
	569
	572
	577
	591
	598
	604
6V-9002	544
	580
	582
6V-9004	489
	491
	530
	534
	538
6V-9005	617
6V-9007	474
	489
	491
	505
	509
	513
	530
	534
	538
	542
	544
	559
6V-9008	506
	510
	514
	520
	530
	534
	538
	613
	615
	617
	619
6V-9168	580
	582
6V-9182	615
	619
6V-9200	474
6V-9491	183
	185
	187
	189
6V-9632	348
6V-9672	217
6V-9746	447
	454
	457
	460
	463
	466
	469
	474
	489
	491
	505
	506
	509
	510
	513
	514
	518
	530
	538
	541
	542
	544
	559
	615
	619
	631
	633
6V-9829	592
6V-9836	476
	562
	564
	577
	591
	599
	605
	609
6V-9837	474
	518
	559
6V-9840	506
	510
	514
	530
	534
	538
	542
	559
6V-9850	523
	524
	527
	528
	559
	561
	565
	591
	598
6V-9851	516
6V-9853	506
	510
	514
6V-9854	506
	510
	514
	617
6V-9873	542
	544
	559
6V-9877	542
	544
6W-2464	487
	488
6W-6005	127
	133
6Y-0473	368
6Y-8186	365
	604
7C-1493	43
	46
7F-0560	140
7F-3708	324
7F-8268	368
7G-1060	260
7G-5984	611
	617
7G-5985	611
	617
7H-3171	362
	367
7I-0057	640
	642
7I-0058	640
	642
7I-0060	640
	642
7I-0061	640
	642
7I-0062	640
	642
7I-0063	640
	642
7I-0207	699
7I-0375	990
	993
7I-0986	737
7I-1024	46
7I-1377	559
7I-2272	636
	637
	654
	691
	742
	744
7I-2673	68
	69
	175
	176
	214
	248
	256
	266
	1036
	1044
	1047
	1052
7I-7192	699
7I-7203	658
	659
	660
	661
	662
	663
	684
	687
	688
	689
7I-7204	680
	682
	685
	690
	699
7I-7206	680
	682
	685
	690
	699
7I-7207	680
	682
	685
	690
7I-7208	680
	682
	685
	690
	699
7I-7235	699
7I-7241	700
7I-7250	700
7I-7321	664
7I-7403	737
7I-7439	476
	522
	526
	590
	591
	597
	598
	603
	609
7I-7625	430
7I-7733	375
7I-7734	376
7I-8081	720
7I-8084	693
	695
	697
	699
	732
	738
7I-8087	720
7I-8095	720
7I-8096	720
7I-8098	720

7

► **PRIMARY REFERENCE**

PART NUMBER INDEX

Part	Page	Part	Page	Part	Page	Part	Page
7I-8100	720		535	7X-0578	872		72
7I-8102	737		542		876		516
7I-8249	633		544		1059		843
7I-8252	551		551	7X-0613	592		845
	571		555	7X-0796	27		973
7J-9108	455		559		32		975
	474		561		33	7Y-0059	1
	476		564		53		▶995
	489		567	7X-0851	825	7Y-0225	270
	491		569	7X-2459	592	7Y-0466	393
	615		571	7X-2533	161	7Y-0468	393
	619		572	7X-2536	375		394
	693		574		903		706
	695		577		913	7Y-0623	957
	697		578	7X-2543	191		959
7K-1181	46		580	7X-2549	454		962
	58		582		455	7Y-0729	819
	94		585		480		820
	96		587	7X-2552	651		▶825
	127		590		1004	7Y-1686	371
	128		597	7X-2553	345	7Y-1746	369
	133		603		654		370
	134		609		957		373
	147		615		959		374
	155		619		962	7Y-1780	372
	159		631		1011	7Y-1781	371
	177		633	7X-2554	58		375
	212		892	7X-2556	654	7Y-1883	371
	214		981	7X-2559	964		375
	222		982	7X-2561	313	7Y-1900	393
	223		984	7X-2562	273	7Y-1901	393
	225		990	7X-2563	436	7Y-1902	393
	227		993	7X-2565	366	7Y-1904	393
	228	7M-7410	637	7X-2583	278	7Y-1976	58
	230	7M-8485	270		281		60
	232		489		282	7Y-2292	279
	233		491	7X-2619	128		280
	235		505		134		283
	237		506		225		284
	239		509		251		286
	246		510	7X-2621	128	7Y-3470	1076
	247		513		134	7Y-3472	1076
	250		514		156	7Y-3474	1055
	251		518		157	7Y-3732	454
	253		520		212		457
	254		530		214		460
	255		534		228		463
	256		538		245		466
	257		611		255	7Y-3919	979
	258		613		256	7Y-3920	979
	260		615		260	7Y-3950	208
	263		617		266		223
	265		619	7X-3164	458	7Y-3951	216
	266	7N-0718	181		461	7Y-3952	216
	471		▶200		464	7Y-3953	208
	476	7N-2353	208		467		223
	489		222	7X-4780	58	7Y-3954	216
	491	7N-3718	175	7X-6315	152	7Y-3955	216
	493	7N-5274	127		153	7Y-3958	216
	497		133	7X-7478	318	7Y-3962	98
	502	7T-2673	212	7X-7644	1095		168
	510	7T-6799	207		1099		170
	518	7T-8890	1055	7X-7729	43		173
	522	7W-9028	43		46	7Y-3963	98
	526		46		58		168

PART NUMBER INDEX

Part	Page
	170
	173
	237
7Y-3964	98
	168
	170
	173
7Y-3965	98
	168
	170
	173
	237
7Y-3967	237
7Y-4190	587
7Y-4193	587
7Y-4199	551
	555
	572
7Y-4202	644
7Y-4212	644
	647
7Y-4213	644
7Y-4215	644
	647
7Y-4216	645
	648
7Y-4217	644
	647
7Y-4222	645
7Y-4224	644
	648
7Y-4366	569
7Y-4868	454
	455
	457
	460
	463
	466
	469
7Y-5116	423
	425
	427
7Y-5119	423
	425
	427
7Y-5216	408
	410
	412
	414
	416
	418
	420
	423
	425
	427
7Y-5226	128
	134
7Y-5237	546
7Y-5456	127
	133
7Y-5458	205
	206
7Y-5464	205
	206
7Y-5505	216
7Y-7364	1076
7Y-7394	986
	987
	988
	1050
	1052
7Y-8167	87
7Y-8168	990
	993
7Y-8170	87
7Y-8379	590
7Y-8436	719
7Y-8437	719
7Y-8463	907
	908
	909
	910
	918
	919
7Y-8478	572
7Y-8561	890
7Y-8621	966
	967
7Y-8622	966
	967
8C-0564	522
	526
8C-3095	445
8C-3334	230
	232
8C-3338	654
8C-3347	430
8C-3445	43
	46
8C-3446	43
	46
	666
8C-3451	666
8C-5607	161
8C-5608	145
	146
	161
8C-5918	127
	133
8C-6354	217
8C-6358	140
8C-6364	822
8C-6561	487
	488
8C-6965	715
8C-7581	1006
8C-8400	474
	505
	509
	513
	530
	534
	538
8C-8451	128
	134
	145
	146
	191
8C-8580	904
8C-8988	476
	567
	609
8C-8989	516
	518
8C-8992	320
	357
	469
8E-4359	362
8E-5031	368
8E-5032	368
8E-5035	368
8E-5037	368
8E-5599	368
8E-5600	366
	▶367
8E-5601	367
8E-5602	367
8E-5604	367
8E-5605	367
8E-5606	367
8E-5607	367
8E-5608	367
8E-6792	367
8E-6793	367
8E-8585	365
8E-8586	365
8E-9805	273
8F-0212	691
8F-1434	201
	1073
8F-8882	445
8H-2282	966
	967
8H-3481	1053
8H-5303	200
8H-5306	200
8H-9819	666
8J-1256	128
	134
8J-9236	204
8M-2772	762
8N-0869	127
	133
	210
8N-1725	127
	133
	210
8P-9770	787
	789
	791
	794
	795
	796
	797
	798
	799
	800
	801
	802
	803
	804
	805
	806
	807
	808
	809
	810
	811
	812
	813
	814
	815
	816
	817
8S-0934	1017
	1020
8S-1812	204
8S-1814	204
8S-1815	204
8S-2634	210
8S-4723	1017
	1020
8S-4724	1017
	1020
8T-0075	552
	556
	561
	567
	569
	577
	585
	598
	604
8T-0077	516
	592
8T-0114	903
	913
8T-0164	522
	526
8T-0197	489
	491
	506
	510
	514
	518
	530
	534
	538
8T-0198	505
	509
	513
	530
	534
	538
8T-0266	886
8T-0269	904
	996
	999
8T-0286	128
8T-0288	738
	739
	740
	741
	747
	748
	749

8

▶ **PRIMARY REFERENCE**

PART NUMBER INDEX

Part	Page	Part	Page	Part	Page	Part	Page
	750		990		472		913
8T-0328	104		993		473		973
	106	8T-4121	43		478		975
	108		46		479		978
	110		53		481		990
	113		56		483		993
	115		58		484		1008
	118		60		486		1011
	120		63		494		1045
	122		65		497		1056
	128		66		502		1073
	134		70		506	8T-4123	354
	181		73		510		355
	217		76		514		356
	246		81		516		366
	332		87		520		436
	333		94		523		754
	334		96		527		756
	336		128		531		758
	843		134		535		760
	845		141		539		772
	973		155		541		773
	975		156		542		774
8T-0337	1007		157		544		775
8T-0343	709		159		546		776
8T-0347	640		170		547		777
	642		173		562		778
8T-0362	315		175		565		779
8T-0380	825		176		572		780
8T-0788	585		180		574		781
8T-1158	709		191		578		783
	715		192		580		784
8T-1159	367		196		582		785
8T-1160	192		210		592	8T-4127	217
8T-1686	559		212		599	8T-4132	451
8T-1687	542		214		605		765
8T-1779	549		228		609		767
8T-1905	523		230		611		823
	527		232		615		824
	549		239		619	8T-4133	65
	552		241		621		66
	555		245		622		87
	559		248		623		128
	562		255		624		134
	565		256		625		170
	569		257		626		173
	572		258		627		175
	574		260		629		176
	578		266		631		192
	588		297		633		245
	592		298		652		248
	599		303		653		275
	605		304		654		297
8T-2525	493		307		664		298
	497		308		666		303
	502		313		758		304
	617		315		762		306
8T-3440	611		324		843		307
8T-3490	348		430		845		308
	479		449		888		451
8T-3518	140		455		890		455
8T-3597	304		458		892		599
	348		461		903		605
8T-3647	588		464		904		657
	888		467		912		709

PART NUMBER INDEX

Part	Page	Part	Page	Part	Page	Part	Page
	715		159		458		283
	762		170		460		284
	890		173		461		286
8T-4134	1076		180		463		319
8T-4136	43		196		464		371
	46		212		466		375
	58		214		467		858
	70		248		480		862
	72		257		481		866
	87		258		483		882
	128		260		484		890
	134		315		486	8T-4182	245
	210		369		506		255
	230		370		510		621
	239		373		514		622
	241		374		531		623
	315		506		535		624
	458		510		539		625
	461		514		578	8T-4183	451
	464		520		611		454
	467		523		617		458
	506		527		654		461
	510		541		957		464
	514		542		959		467
	516		544		962		506
	523		547	8T-4140	99		510
	527		562		102		514
	531		565		360		520
	535		574		361		531
	539		580		363		535
	547		582		364		539
	562		592		436		592
	565		599		651		611
	580		605		654		617
	582		615		669	8T-4184	94
	592		619	8T-4171	163		96
	599		631		181		444
	605		633		239		454
	609		654		241		457
	654		666		251		460
	664		843		371		463
	666		845		891		466
	843		890		982		469
	845		904		984		516
	890		973		1006		518
	903		975	8T-4172	27		631
	912		978		888		633
	913		991		993		666
	973		993	8T-4174	30	8T-4185	65
	975	8T-4138	147		964		66
	990		177	8T-4175	1000		128
8T-4137	27		297	8T-4176	638		134
	29		298		639		230
	43		303	8T-4177	562		232
	46		304		565		455
	58		306		599		458
	63		307		605		461
	65		308	8T-4178	494		464
	66		967		523		467
	70		1007		527		472
	76	8T-4139	58		549		473
	87		179	8T-4179	128		478
	128		454		134		479
	134		455		279		493
	141		457		280		497

► **PRIMARY REFERENCE**

PART NUMBER INDEX

Part	Page
	502
	654
8T-4186	128
	134
	255
	313
	627
	758
8T-4189	60
	124
	559
	592
	627
	890
	1054
8T-4190	163
	175
	176
	858
	862
	866
	882
	1006
	1007
8T-4191	17
	20
	73
	128
	134
	155
	212
	214
	228
	230
	245
	257
	258
	572
	580
	582
	762
	903
	912
	913
	991
	993
	1011
	1045
	1056
	1073
8T-4192	321
	451
	474
	572
	574
	588
	599
	605
	617
	957
	959
	961
	962
	998
8T-4193	613
	786
	1001
8T-4194	489
	491
	562
	565
	599
	605
8T-4195	43
	46
	60
	87
	94
	96
	192
	245
	248
	310
	430
	481
	483
	484
	486
	506
	510
	514
	531
	535
	539
	653
	691
	892
	1008
8T-4196	43
	46
	449
	457
	460
	463
	466
	472
	473
	478
	479
	611
	626
	627
	629
	991
	993
8T-4197	43
	46
8T-4198	578
	580
	582
	621
	622
	623
	624
	625
8T-4199	315
8T-4200	58
	92
	168
	171
	275
	444
	966
	967
	979
	991
8T-4205	181
8T-4223	29
	30
	128
	134
	164
	165
	179
	242
	270
	275
	279
	280
	283
	284
	286
	306
	321
	429
	435
	444
	449
	454
	455
	457
	458
	460
	461
	463
	464
	466
	467
	469
	474
	478
	479
	480
	481
	483
	484
	486
	489
	491
	493
	497
	501
	506
	510
	514
	516
	518
	520
	523
	527
	531
	535
	539
	542
	544
	546
	562
	565
	572
	574
	578
	588
	592
	599
	605
	611
	615
	617
	619
	626
	627
	629
	631
	633
	666
	754
	756
	758
	760
	858
	862
	866
	882
	888
	890
	957
	959
	961
	962
	993
8T-4224	14
	43
	46
	58
	60
	128
	149
	168
	171
	191
	192
	275
	324
	340
	449
	559
	562
	565
	592
	599
	605
	627
	667
	691
	841
	842
	857
	888
	903
	913

► **PRIMARY REFERENCE**

PART NUMBER INDEX

Part	Page	Part	Page	Part	Page	Part	Page
	932		340	8T-5878	366	8T-7964	39
	935		449	8T-6338	522	8T-8729	666
	957		592		574		889
	959		667	8T-6385	765	8T-8737	205
	962	8T-4910	449		823		206
	966		474		824		416
	967		478	8T-6411	168		909
	979		479		171		910
	991		493	8T-6412	168		924
	993		497		171		984
	1023		501	8T-6429	394		993
	1024		523	8T-6466	629		1003
	1025		527		652	8T-8799	251
	1034		858	8T-6663	599		253
	1035		862		605	8T-8887	523
	1038		866	8T-6684	627		527
	1046		882	8T-6693	217		567
	1048		888		332		599
	1049		993		333		605
	1054	8T-4944	644		334	8T-8894	416
8T-4226	128		647		336	8T-8898	617
	134	8T-4956	30	8T-6703	58	8T-8899	43
8T-4241	423		457		70		46
	425		460		611		506
	427		463	8T-6759	637		510
8T-4244	164		466		664		514
	165		506		691	8T-9403	621
	455		510		709		622
	480		514		742		623
8T-4648	455		516		744		624
	469		518	8T-6763	405		625
	474		520		406	8T-9533	726
	480		531		407	8T-9598	36
	497		535	8T-6842	1095		56
	501		539		1099	8T-9599	654
	626		546	8T-6868	542	8T-9756	127
	627		592		544		133
	629		615		858	8V-1715	964
8T-4779	872		619		862	8Y-6352	870
	876		754		866		880
8T-4780	312		756		882	8Y-6967	858
	313		758	8T-6869	592		862
	754		760	8T-6870	54		866
	756	8T-4970	143		562		882
	758		168		565		
	760		171		569		
	772		181		585	**9**	
	773		210		599		
	774		251		605	9B-4499	204
	775		1055		691	9B-7233	207
	776		1056	8T-6876	474	9F-1399	667
	777	8T-4971	192	8T-7087	506	9F-2167	474
	778		890		510	9F-5644	200
	779	8T-4984	58		514	9G-0002	127
	780		70		520		133
	781	8T-4986	72		531	9G-0005	127
	783	8T-5001	617		535		133
	784	8T-5005	230		539	9G-4343	181
	785		232	8T-7338	344		216
8T-4896	457		233	8T-7547	43		251
	460	8T-5041	429		46		253
	463		435		599	9G-7641	183
	466	8T-5460	354		605		185
8T-4908	51		355		654		187
	324		356	8T-7929	270		189

► **PRIMARY REFERENCE**

PART NUMBER INDEX

Part	Page
	▶207
9G-8909	127
	133
9L-9188	43
	46
9M-2307	325
	340
	342
9M-5732	325
	340
	342
9M-8406	87
	523
	527
	599
	605
9M-9439	65
	66
9S-4167	87
9S-4181	489
	491
	506
	510
	514
	611
	613
9S-4182	613
9S-4183	699
9S-4185	578
	591
	613
	644
	647
9S-4188	43
	46
9S-4191	542
	544
	551
	555
	578
	580
	582
	585
	587
	591
	598
	604
	627
	640
	642
	654
	691
	699
9S-5282	444
9S-6130	108
	110
	118
	120
9S-8001	451
	636
9S-8004	87
	636
	751
9S-8005	636
	637
	664
9S-9015	210
9W-0335	216
9W-0852	98
9W-1951	217
9W-2142	368
9W-2201	362
9W-3137	365
9W-3138	365
9W-3340	422
9W-3361	377
	378
	379
9W-3619	377
	378
	379
9W-9455	362
9X-0199	1073
9X-1386	416
9X-1813	124
	197
9X-2026	1007
9X-2041	872
	876
	894
	896
	927
	938
9X-2042	171
	173
	217
	222
	223
	237
	264
	870
	872
	876
	880
	896
	928
	930
	932
	935
	954
	1059
	1062
	1076
9X-2043	171
	173
9X-2044	217
	870
	872
	876
	1053
	1059
	1070
	1072
	1073
	1076
9X-2045	872
	876
	892
	969
	1059
9X-2046	892
	1002
	1053
9X-2065	192
9X-2297	523
	527
9X-2480	150
9X-2492	526
9X-2616	1030
	1031
	1032
	1033
9X-3401	197
	206
	237
	416
	476
	505
	509
	513
	541
	547
	562
	564
	574
	587
	590
	597
	604
	907
	908
	909
	910
	924
	1003
9X-3402	551
	555
9X-3404	139
9X-3463	164
	165
	166
	170
	173
9X-3495	230
	232
9X-3592	423
	425
	427
9X-6153	856
9X-6165	145
	146
	161
	1006
	1007
9X-6580	518
9X-6582	481
	483
	484
	486
	493
	497
	501
	523
	527
9X-7298	412
	416
	418
9X-7301	408
	410
	414
	420
9X-8256	90
	128
	134
	143
	147
	150
	163
	168
	171
	177
	181
	191
	192
	217
	222
	225
	233
	239
	241
	251
	275
	562
	565
	599
	605
	667
	843
	845
	890
	891
	898
	899
	900
	901
	902
	904
	973
	975
	982
	984
	990
	996
	999
	1053
	1054
	1055
	1056
	1059
	1073
9X-8257	30
	163
	175
	176
	344
	345
	436
	613
	651
	786

▶ PRIMARY REFERENCE

PART NUMBER INDEX

Part	Page
	858
	862
	866
	873
	877
	882
	957
	959
	962
	964
	1000
	1001
	1004
	1006
	1007
	1011
9X-8259	371
9X-8600	80
	104
	106
	108
	110
9X-9896	145
	146
0	
003-7764	87
	104
	106
	108
	110
	113
	115
	118
	120
006-6803	726
012-0380	202
033-5853	43
	46
033-6038	43
	46
033-8248	762
061-7539	81
081-6344	493
085-6444	1068
085-6447	1068
085-6448	1068
085-6449	969
	1068
085-6452	873
	877
085-7079	726
085-7080	726
085-7081	726
085-7083	726
085-7084	726
085-7356	493
	497
	501
	522
	526
	542
	544
	559
	561
	564
	567
	569
	585
	592
	597
	603
085-8037	1056
085-9310	99
	102
	669
085-9429	125
085-9513	16
087-3591	617
087-3908	297
	298
	303
	304
	306
	307
	308
087-3909	297
	298
	303
	304
	306
	307
	308
087-4402	549
	580
	582
087-4411	569
	590
087-4454	382
	▶383
087-4456	▶384
	386
087-4532	592
087-4575	383
087-4576	383
087-4577	383
087-4587	127
	133
	551
	555
087-4683	203
087-4710	709
	715
087-4742	644
087-4743	644
	647
087-4757	644
	647
087-4786	645
	647
087-5303	597
	603
087-5317	657
087-5510	423
	425
	427
087-5708	709
	715
087-5759	567
087-5761	569
087-5762	549
	561
	564
	597
	603
087-5765	549
087-5766	549
	578
	597
	603
087-5771	590
087-5772	590
087-5773	567
	590
087-5783	590
087-5802	765
	767
087-5803	765
	767
087-5908	352
	▶354
087-6582	590
087-6585	569
	590
087-6643	457
090-8865	964
091-3474	39
	74
091-9035	127
	133
	230
	232
093-0084	754
	756
	758
	760
093-0086	312
	313
093-0118	312
	313
093-0349	312
	313
	754
	756
	758
	760
	772
	773
	774
	775
	776
	777
	778
	779
	780
	781
	783
	784
	785
093-0366	754
	756
	758
	760
093-1291	455
093-1292	449
	478
	479
093-1293	626
	627
	629
093-1294	627
093-1296	474
093-1434	401
	403
093-1435	372
	376
093-1515	372
	376
093-1519	412
	416
	418
093-2064	87
	159
	228
093-2068	87
093-2069	904
093-3093	678
093-3094	678
093-5432	60
093-6089	430
093-7521	446
094-0580	270
094-0611	270
094-0616	270
094-0876	706
	711
	713
094-1399	644
	647
094-1528	270
094-1542	270
094-1875	451
	644
	647
	654
094-1881	451
094-1882	644
	647
	654
094-2080	216
094-4628	13
	16
094-7134	35
094-7154	35
094-7516	35
094-7583	76
094-7741	17
094-9267	51
094-9424	17
094-9525	39
094-9725	81
094-9950	198
094-9980	198
095-0085	198
095-0410	198
095-0673	627
	715
095-0707	638

▶ **PRIMARY REFERENCE**

PART NUMBER INDEX

Part	Page	Part	Page	Part	Page	Part	Page
	639		721		718		427
095-0723	217		723		726		443
095-0728	260		724	095-1591	717	095-1725	666
	912		725		721	095-1750	733
095-0735	903	095-1578	680		723		735
	913		682		724		736
095-0736	104		685		725	095-1751	733
	106		690	095-1592	505		735
	108		699		509		736
	110		732		513	095-1777	559
	113		737		530	095-1783	717
	115	095-1579	682		534		720
	118		690		538		721
	120		699		693		723
	981		749		695		724
095-0742	217		750		697		725
095-0757	444	095-1580	640		700	095-1784	640
095-0772	932		642		717		642
095-0826	666		718		721	095-1785	719
	979	095-1581	433		723	095-1788	451
095-0827	891		434		724	095-1789	640
095-0843	275	095-1582	443		725		642
095-0863	365		693	095-1593	720	095-2005	17
095-0891	270		695	095-1594	640	095-2038	81
095-0893	430		697		642	095-2039	17
095-0910	1006		699	095-1596	439		20
	1007		718		440		90
095-0913	990		720		441	095-2040	33
	993	095-1584	439	095-1601	719	095-2927	372
095-0936	709		440	095-1608	666		376
095-0965	700		441	095-1625	664	095-6639	657
	726		693	095-1663	654	095-7378	644
095-1260	709		695	095-1685	644	095-7380	644
	715		697		647		647
095-1267	416		720	095-1696	680	095-7382	644
095-1299	270	095-1585	640		685	095-7383	644
095-1386	87		642		699		647
095-1388	49		644	095-1698	433	095-7384	644
095-1392	248		647		434	095-7386	644
095-1514	717		699		680		647
	721	095-1586	644		682	095-7387	644
	723		647		685	095-7930	979
	724		680		690	095-7993	315
	725		682		699	095-8024	717
095-1519	448		685	095-1700	644		721
	717		690		647		723
	720		699		680		724
	721		707		682		725
	723		711		685	095-8575	41
	724		713		690	095-8638	74
	725		719		699	095-8799	14
	737		733	095-1701	372		92
095-1537	445		734		751	096-0061	143
095-1543	60		735	095-1703	376	096-0854	401
095-1552	657		736	095-1710	726		403
095-1572	644		743	095-1714	412	096-1024	27
	647	095-1589	693		416	096-1054	408
095-1573	693		695		418		410
	695		697	095-1716	408		414
	697	095-1590	439		410		420
095-1575	644		440		414	096-1519	644
	647		441		420		647
	715		693		664	096-1521	644
	717		695	095-1717	423	096-1522	644
	720		697		425	096-1523	644

PART NUMBER INDEX

Part	Page
096-1628	706
	711
	713
096-1773	270
096-1774	270
096-1775	270
096-1776	270
096-1777	270
096-1778	270
096-1779	270
096-1780	270
096-1781	270
096-2500	81
096-2501	20
	24
	242
096-2617	905
	906
096-2622	928
	930
	932
	935
096-3741	17
	39
096-3780	275
096-3785	644
096-3786	644
096-3787	644
096-3788	644
096-3872	163
	1006
096-3884	930
	935
096-3978	644
	648
096-4003	644
	647
096-4035	58
	60
096-4129	332
	333
	334
	336
096-4177	64
	68
096-4255	362
096-4275	372
	376
096-4276	372
096-4376	644
	647
096-4377	644
	647
096-4378	644
	647
096-4498	706
096-4747	825
096-4748	825
096-4879	371
096-4882	957
	959
	962
096-4883	313
	546
	758
096-5766	472
	473
096-5915	644
	647
096-5916	644
	647
096-5919	644
	647
096-5932	640
	642
096-5933	640
	642
096-5934	640
	642
096-5962	217
096-6073	443
096-6166	183
	185
	187
	189
	217
	260
	912
096-8139	408
	410
	414
	420
096-8490	75
096-8569	14
096-8619	54
096-9260	90
096-9435	27
096-9528	27
096-9532	27
	54
099-0139	1068
099-0320	640
	642
099-0321	640
	642
099-0322	640
	642
099-0328	640
	642
099-0329	640
	642
099-0330	640
	642
099-0331	640
	642
099-0332	640
	642
099-0333	640
	642
099-0334	640
	642
099-0335	640
	642
099-0822	737
	1012
099-0823	872
	876
	1059
099-2374	843
	845
	973
	975
099-3506	968
099-3607	872
	876
099-3629	1066
	1067
099-3645	995
099-3649	591
099-3669	451
099-3671	451
099-4420	17
099-4437	81
	90
099-4460	242
099-4707	30
099-4749	640
	642
099-5041	81
	90
099-5400	412
	416
	418
099-5408	474
099-6109	451
099-6110	451
099-6111	451
099-6112	451
099-6113	451
099-6115	451
099-6137	706
	709
	711
	713
	715
099-6141	709
	715
099-6144	709
	715
099-6145	709
	715
099-6418	295
	296
	304
	306
	308
099-6530	640
	642
099-6531	640
	642
099-6532	640
	642
099-6535	640
	642
099-7127	216
099-7241	580
	582
099-7857	890
	1
100-2881	969
101-2846	217
101-7403	457
101-7404	611
101-8899	928
	930
	932
	935
	939
101-8900	928
	930
	932
	935
	954
	1059
101-9848	287
	290
	332
	333
	334
	336
102-2244	416
102-5420	139
102-6449	315
102-6495	430
102-7024	678
102-7685	587
102-7964	216
	237
102-7965	223
	237
102-8016	216
102-8120	352
	▶366
102-8802	33
	104
	106
	108
	110
	113
	115
	118
	120
	123
	124
	171
	173
	183
	187
	201
	202
	251
	260
	266
	547
	562
	564
	574
	590
	597
	604
	666
	678
102-8803	171
	173

▶ **PRIMARY REFERENCE**

PART NUMBER INDEX

Part	Page
	197
	203
	212
	217
102-8804	195
	260
	416
102-8805	205
102-8806	237
103-8236	440
103-8411	699
103-8412	699
103-8413	699
103-8441	423
	425
	427
103-8442	423
	425
	427
103-8443	423
	425
	427
103-9011	22
104-8107	699
104-8771	551
	555
	571
	597
	603
104-8774	551
	555
	572
104-8777	572
	574
104-8783	587
104-8838	561
	597
104-8903	569
	597
	603
104-8973	551
	555
104-8976	551
	555
105-1766	892
105-2169	873
	877
	968
105-3479	458
	461
	464
	467
105-3487	275
105-5175	223
105-6701	94
	96
105-7360	408
	410
	414
	420
105-7374	423
	425
	427
105-7405	699
105-9526	1056
105-9527	1056
106-0107	183
	187
	▶205
106-0210	205
	206
106-6757	▶786
	787
	788
	789
	790
	791
	792
	793
106-6773	▶355
106-6775	▶356
106-6876	765
	767
106-6877	765
	767
106-6878	765
	767
106-8715	474
	505
	509
	513
	530
	534
	538
107-1482	516
107-6479	732
107-6631	549
	580
	582
	590
107-6954	644
	647
107-6955	644
	647
107-6969	644
	647
107-6970	647
107-6971	647
107-6972	647
107-6974	647
107-6976	647
107-6977	647
107-6978	647
107-6979	647
107-6980	647
107-6981	647
107-6986	647
107-6987	647
107-6988	648
107-7640	422
107-9739	312
	313
107-9742	762
107-9743	762
107-9852	772
	773
	775
	776
	777
	778
	780
	781
	783
	784
	785
107-9965	786
107-9966	786
107-9967	786
107-9976	765
108-1781	613
108-7304	631
	633
108-7357	572
	574
108-7393	561
	597
108-7402	590
108-7516	592
108-7547	489
	491
108-7550	469
109-5815	489
	491
110-5499	572
	574
111-0106	355
	356
111-0985	561
111-4799	203
111-4816	216
111-4836	127
	133
	159
	175
	176
	212
	214
	228
	245
	248
	257
	258
111-4837	127
	133
	175
	228
	230
	248
	257
	258
111-4838	127
	133
	248
	260
111-4839	127
	133
	260
111-6752	551
	555
111-9916	654
	▶733
	738
	741
	747
	748
	749
	750
111-9998	718
112-0083	549
	▶728
112-0085	728
113-2127	754
	756
	758
	760
113-6452	577
113-8490	216
113-8491	216
	225
113-8492	216
113-8493	216
114-0514	719
114-0515	719
114-0516	719
114-0517	719
114-0518	719
114-0519	719
114-0623	733
	735
	736
114-0753	412
	416
	418
114-0755	408
	410
	414
	420
114-0756	423
	425
	427
114-1497	270
114-1539	270
114-6285	324
114-6289	332
	333
	334
	336
114-8223	430
114-8224	430
115-3667	597
115-3678	371
115-3796	518
115-8631	542
	544
115-8645	551
	555
	591
	991
116-0114	251
116-0118	127
	128
	133
	134
	155

▶ PRIMARY REFERENCE

PART NUMBER INDEX

Part	Page	Part	Page	Part	Page	Part	Page
	156	119-5362	751		590		907
	157	119-5364	751		597		908
	175	119-5365	751		603		909
	212	119-5388	709		▶729		910
	214		715	123-2511	730		924
	228	119-5389	709	123-2549	▶730		1003
	230		715		731	126-1768	551
	232	119-5391	709	123-2552	729		555
	233		715		730	126-1774	230
	245	119-5392	709	123-2790	493	126-1813	440
	248	120-7225	762		497	126-1865	709
	255	120-9027	203		501		715
	260	121-0307	43	123-4750	522	126-1866	709
	266		46		526		715
116-0210	216	121-0987	239	123-5349	762	126-5061	378
116-3526	▶734		241	123-7083	823	126-5062	377
	742	121-1022	217	124-0986	631	126-5063	379
117-1385	92	121-1023	181		633	126-6514	734
117-5540	353	121-1168	217	124-3548	216		743
117-6306	1059	121-1173	223	124-3953	1076	126-6515	734
117-6349	912	121-1459	719	124-3966	1062		743
117-6350	912	121-1490	▶735	124-4009	905	126-6516	734
117-6356	912		739		906		743
117-8683	907	121-1491	636	124-4010	905	126-6872	559
	908		637		906		590
	909		691	124-5814	▶140	126-7574	152
	910		▶736		210		153
118-4057	644		740	125-2947	56	126-9993	726
	647	121-1558	644	125-2950	27	127-0580	872
118-4086	707		647	125-2968	33		876
	711	121-1865	903	125-2983	81	127-5937	198
	713	121-6303	561	125-2994	29	127-5939	198
118-4087	706		564		▶125	127-5940	198
	711		597	125-2995	125	127-5941	198
	713		603	125-7874	214	127-5943	198
118-5982	312		▶737		222	127-5944	198
	313	121-6304	737		223	127-5947	198
	754	121-7098	990		230	127-5948	198
	756	121-7136	886		237	127-5949	198
	758		990		255	127-5950	198
	760	121-7137	990		256	127-5952	198
	772	121-7138	886		260	127-5953	198
	773		990	125-7875	214	128-2135	858
	774	122-1162	65		223		862
	775		66		230		866
	776	122-4021	94		237		870
	777	122-5114	644		260		880
	778		647	125-7876	98		882
	779	122-5253	375		181		894
	780	122-9605	990		216		896
	781		993	126-1767	206	128-2136	870
	783	122-9608	912		237		880
	784	122-9609	912		476	128-2173	903
	785	122-9610	912		505		913
118-9941	30	122-9617	892		509	128-4411	104
119-2321	627	122-9657	990		513		106
119-3662	197	123-2008	644		541		108
	214		647		547		110
	260	123-2143	640		562		113
119-5026	183		642		564		115
	185	123-2145	640		574		118
	187		642		587		120
	189	123-2430	561		590	128-7471	505
	981		564		597		509
119-5360	751		585		604		513

▶ **PRIMARY REFERENCE**

PART NUMBER INDEX

Part	Page
	530
	534
	538
129-3400	666
129-6466	1073
129-7932	751
129-8030	▶719
	751
129-8031	719
129-8068	408
	410
	414
	420
130-0270	990
130-6857	65
	66
130-7596	16
131-3983	191
	192
131-5767	699
131-5768	699
131-5818	709
	715
131-5915	706
	711
	713
131-9869	559
131-9878	396
	397
	▶478
131-9879	396
	▶479
131-9935	626
	627
	629
131-9938	478
	479
131-9939	478
131-9940	449
	478
131-9942	479
131-9943	621
	622
	623
	624
	625
131-9961	▶621
	768
	769
	770
131-9962	▶622
	768
	769
	770
131-9963	▶623
	768
	769
131-9964	▶624
	768
	770
132-0002	472
	473
	479
132-1805	127
	133
132-1829	▶123
	216
132-5789	155
	159
	212
	214
	217
	228
	230
	245
	255
	257
	258
	990
	993
133-2424	312
	313
133-5813	551
	555
	577
	580
	582
	590
133-6670	427
133-6677	412
	416
	418
133-6686	412
	418
133-6716	412
	416
	418
133-6777	644
	647
133-8011	990
133-8016	872
	876
134-3284	175
	176
134-3296	217
134-3297	217
	260
134-3299	127
	133
134-3379	153
134-4126	152
	153
134-6838	615
	619
134-7258	1095
	1099
134-8875	▶320
134-8876	320
134-8878	320
134-9137	762
135-1179	472
	473
135-2274	913
135-2366	198
135-2369	32
135-2370	32
135-2381	125
135-2382	125
135-2403	51
135-3980	480
135-5700	64
	68
135-5784	64
	68
135-5786	64
	68
135-5787	64
	68
135-5788	64
	68
135-8572	94
	96
135-8573	87
	291
	293
	294
	300
	302
	310
	340
	346
135-8575	290
	293
	294
	297
	298
	300
	302
	303
	304
	306
	307
	308
	323
	325
	332
	333
	334
	336
	340
	996
135-8576	317
	318
	357
135-8577	274
135-8578	321
	324
135-8965	1011
135-8966	1011
136-2369	372
	376
137-2270	998
137-3708	647
137-3723	647
137-5541	81
139-7099	860
	864
	868
	884
	▶968
139-7100	927
	▶928
	▶930
139-7101	860
	864
	868
	884
	▶1059
139-7119	1063
139-7126	872
	876
139-7127	872
	876
139-7814	17
141-2759	216
	982
141-6526	127
	133
142-0038	617
142-3836	1
	▶998
142-5546	912
143-8024	412
	416
	418
143-8025	412
	416
	418
143-8027	423
	425
	427
143-8031	408
	410
	414
	420
143-8033	412
	416
	418
143-8034	408
	410
	414
	420
143-8035	423
	425
	427
143-8150	408
	410
	414
	420
144-0195	1055
	1056
144-0367	70
	72
	613
144-1636	205
	666
144-9126	1095
	1099
144-9691	1062
144-9692	1062
145-0603	127
	133
145-2237	522
	526
145-3042	272
	▶273
145-5106	384
	▶385
145-8494	609
145-8495	598

▶ PRIMARY REFERENCE

PART NUMBER INDEX

Part	Page
	604
146-6747	1095
	1099
147-4131	709
	715
147-4921	1046
	1047
147-5818	408
	410
	414
	420
147-5819	408
	410
	414
	420
147-5835	423
	425
	427
147-5837	423
	425
	427
147-5860	644
	647
148-4685	315
148-4703	315
148-4704	315
148-4744	430
148-4747	430
148-4748	430
148-4751	430
148-4752	430
148-4754	430
148-4755	430
148-4756	430
148-4757	430
148-4758	430
148-4759	430
148-4760	430
148-4761	430
148-4762	430
148-4763	430
148-4764	430
148-8315	615
	619
148-8318	598
	604
148-8321	522
	526
148-8322	615
	619
148-8325	522
	526
	627
	631
	633
148-8327	489
	491
	505
	509
	513
	541
	559
	631
	633
148-8328	518
148-8330	505
	509
	513
	530
	534
	538
148-8335	489
	491
	505
	509
	513
	520
	530
	534
	538
	611
	613
	615
	617
	619
148-8336	474
	476
	493
	497
	501
	523
	527
	547
	549
	551
	555
	561
	564
	569
	572
	574
	578
	580
	582
	585
	587
	591
	598
	604
148-8338	552
	556
	561
	567
	569
	577
	585
	598
	604
148-8339	489
	491
	505
	509
	513
	518
	530
	534
	538
148-8340	474
	516
	542
	544
	591
	631
148-8341	474
	476
	489
	491
148-8345	542
	544
148-8346	559
148-8347	474
	489
	491
	505
	509
	513
	530
	534
	538
	542
	544
	559
148-8352	505
	509
	513
	617
148-8353	523
	527
	547
	549
	551
	569
	572
	577
	591
	598
	604
148-8354	544
	580
	582
148-8355	617
148-8357	506
	510
	514
	520
	530
	534
	538
	613
	615
	617
	619
148-8359	542
	544
148-8360	615
	619
148-8361	474
148-8362	627
148-8364	518
	633
148-8365	474
148-8366	580
	582
148-8367	523
	527
	559
	561
	565
	591
	604
148-8368	493
	497
	501
	627
	631
	633
148-8370	516
148-8371	476
	567
	609
148-8372	542
	544
	598
	604
148-8374	561
	565
	598
	604
148-8378	476
	493
	497
	501
	523
	527
	549
	551
	555
	561
	565
	569
	572
	574
	578
	580
	582
	585
	587
	591
	598
	604
148-8392	506
	510
	514
148-8407	542
	544
	551
	555
	578
	580
	582
	585
	587
	591
	598
	604
	691
148-8411	578
	591

► **PRIMARY REFERENCE**

PART NUMBER INDEX

Part	Page
	613
148-8415	481
	483
	484
	486
148-8418	518
148-8419	481
	483
	484
	486
	493
	497
	501
	523
	527
148-8420	522
	574
148-8429	506
	510
	514
	530
	534
	538
148-8433	476
	562
	564
	577
	591
	599
	604
	609
148-8435	523
	527
	551
	555
	567
	587
	591
	599
	605
	609
148-8436	631
	633
148-8439	523
	527
	591
148-8443	592
148-8444	474
	518
	559
149-1738	455
	458
	461
	464
	467
149-5050	222
	223
	233
149-5069	223
149-5070	223
150-3024	87
150-3036	523
	527
	549
	552
	555
	559
	562
	565
	569
151-9576	572
	574
	578
	587
	591
	599
	605
150-4027	493
	497
	501
	562
	565
	587
	597
	603
150-4043	542
	544
	559
150-4044	549
150-4050	585
150-5814	408
	410
150-6348	678
150-6351	678
151-6703	928
	932
	954
	1059
151-6704	928
	932
	954
	1059
151-6705	1062
151-6767	927
151-6777	927
	938
151-6778	954
	1059
151-6785	1059
151-6790	1066
151-6792	928
	930
	932
	935
	▶1068
151-6793	1068
151-6813	954
	1059
151-6815	954
	1059
151-6831	954
	1059
151-6832	954
	1059
151-6841	1068
151-6844	1059
151-9461	928
	930
	932
	935
151-9497	928
	930
	932
	935
151-9557	1059
151-9576	954
	1059
152-2938	43
	46
152-2939	43
	46
152-7217	67
	69
152-7219	67
	69
153-2521	▶164
	175
	176
153-2523	▶165
	167
153-2602	217
153-2620	260
153-4906	43
	46
153-5223	709
	715
153-6236	506
	510
	514
153-6237	489
	491
	530
	534
	538
153-6241	516
	518
153-6242	489
	491
	506
	510
	514
	518
	530
	534
	538
153-6248	599
	605
153-6249	523
	527
	599
	605
153-6270	591
153-8723	903
153-8800	469
153-8867	455
	516
	518
154-9024	54
155-0576	149
155-2027	617
155-2255	230
	232
155-2260	212
	214
	217
	235
155-2265	237
155-2270	183
	187
	195
	212
	214
	217
	245
	254
	255
	256
	260
	266
	551
	555
	904
155-2271	260
155-2274	163
	183
	187
155-3624	613
155-7024	990
	993
155-7042	1076
156-5970	745
	746
156-6469	1066
156-6471	928
	930
156-6472	954
	1058
	1059
156-6473	1063
156-6474	1068
156-6475	1068
156-6554	1059
156-6555	1059
156-6562	1059
156-6579	1059
156-6598	928
	930
	932
	935
156-6599	872
	876
156-6600	928
	930
	932
	935
156-6601	1059
156-6617	872
156-6627	1059
156-6631	1063
156-6642	989
156-6643	928
	930
	932
	935
156-6644	928
	930
	932
	935
156-6645	928
	930

▶ **PRIMARY REFERENCE**

PART NUMBER INDEX

Part	Page	Part	Page	Part	Page	Part	Page
	932	163-3754	352	164-0618	1054	164-6858	506
	935		▶357	164-0619	1054		510
156-6646	1073	163-3755	357	164-0620	1054		514
156-6647	▶1062	163-4143	366	164-0639	1053	164-6874	493
	1073		▶368	164-0643	967		497
156-6648	1062	163-6659	216	164-0646	870		501
156-6656	870	163-6699	216		880		522
156-6657	870	163-6700	104	164-0648	1059		526
157-0670	54		106	164-0655	870		542
157-3180	587		108		880		544
158-4380	365		110	164-0664	989		559
158-4381	365		113	164-0666	1066		561
158-7864	1089		115		1067		564
	1094		118	164-4180	489		567
158-8924	412		120		491		569
	418	163-6704	171		506		585
158-8987	▶438		173		510		592
	▶439	163-6711	237		514		597
	666	163-6758	216		611		603
159-4700	385	163-6759	260		613	164-6980	524
159-6003	67	163-6772	▶168	164-4858	▶80		528
	69	163-6773	260		104		▶731
159-7782	664	163-6795	168		106	164-6981	▶386
159-9322	230		170		108		590
160-7690	230		171		110	164-8474	858
161-3128	216		173		113		862
161-3639	928		216		115		866
	930		235		118		870
	932		237		120		880
	935		1055	164-5546	522		882
161-3650	928		1056		526	164-8908	516
	930		1076		587		592
	932	163-6803	216	164-5549	562	164-8988	564
	935		223		565	164-9640	522
161-3663	928	163-6813	168		599		526
	930		171		605	164-9869	523
	932	163-6814	168	164-5567	476		527
	935		171		493	165-2793	654
161-3665	928	164-0497	956		497	165-2799	654
	930		▶964		501	165-2801	654
	932	164-0514	930		523	165-2802	654
	935		932		527	165-2804	654
161-3668	1076		935		559	165-2805	654
161-3669	1076	164-0515	928		562	165-3065	998
161-3670	1076		930		565	165-3120	280
161-3677	1076		932		569		284
161-3684	1059		935		585	165-3838	654
161-3685	872	164-0516	1068		588	165-3839	654
	876	164-0517	1068		592	165-3847	654
161-3694	969	164-0518	1068		599	165-3853	654
161-3695	1068	164-0519	930		605	165-3892	270
161-3697	872		932		615	165-5777	▶267
	876		935		619		272
161-3698	954	164-0523	872		666	165-5785	270
	1058		876	164-5570	471	165-5786	270
	1059	164-0527	872	164-5574	506	165-5787	270
161-3705	1068		876		510	165-5788	270
161-3717	1011	164-0528	872		514	165-5790	270
161-3750	▶1054		876	164-5590	666	165-5792	270
161-3751	▶1053		▶989	164-5608	542	165-5793	270
161-6987	1006	164-0534	▶957	164-5628	549	165-5794	270
	1007		▶959		580	165-5795	270
162-4696	631	164-0535	▶961		582	165-5796	270
	633	164-0614	913		590	165-5797	270
	▶664	164-0617	913	164-5629	592	165-5800	270

▶ **PRIMARY REFERENCE**

PART NUMBER INDEX

Part	Page
165-9283	412
	416
	418
165-9285	408
	410
	414
	420
165-9286	423
	425
	427
165-9431	706
	711
	713
165-9435	707
	711
	713
165-9436	706
	711
	713
165-9438	707
	711
	713
165-9439	706
165-9442	706
	711
	713
165-9443	707
	711
	713
165-9444	706
	711
	713
165-9448	706
165-9460	706
	711
	713
165-9461	706
	713
165-9463	709
	715
165-9464	732
165-9470	572
	▶726
165-9497	680
	685
165-9523	913
165-9551	709
165-9552	709
	715
165-9553	709
	715
165-9554	709
	715
166-1482	772
	773
	774
	775
	776
	777
	778
	779
	780
	781
	783
	784
	785
166-1486	754
	756
	758
	760
	765
	767
166-1487	754
	756
	758
	760
166-1494	398
	399
	400
	402
	404
	765
	767
166-1495	754
	756
	758
	760
	772
	773
	774
	775
	776
	777
	778
	779
	780
	783
	784
166-1579	762
166-3215	1072
167-0278	▶818
	820
167-0286	818
167-0316	820
	▶823
167-3437	168
	171
167-3438	168
	171
167-3441	▶166
	168
	171
167-3456	168
	171
167-3542	209
	216
	217
	223
	245
	257
	258
	982
	984
	1036
	1040
167-3543	209
	216
	217
	245
	257
	258
	982
	984
	1036
	1040
167-3593	216
167-7018	872
	876
167-7036	1067
167-7037	1067
167-7038	932
	935
167-7039	928
	930
	932
	935
167-7042	872
	876
167-7055	961
167-7079	1073
167-7141	964
167-7270	1095
	1099
168-0794	706
168-1968	559
	590
168-6761	369
	370
	373
	374
168-8451	270
168-9602	520
168-9759	578
	580
	582
169-0417	191
	192
	▶197
169-3530	272
169-5520	430
169-5521	430
169-5522	430
169-5523	430
170-2602	1
	▶321
170-6738	652
170-6888	216
170-6929	127
	133
170-6941	979
170-6993	164
	165
170-8553	666
170-9294	▶170
170-9295	170
	173
170-9324	183
	185
170-9360	275
170-9394	217
170-9417	164
	165
170-9418	164
	165
170-9419	666
170-9492	1056
170-9497	▶912
	1010
170-9498	912
170-9499	912
170-9722	954
	1058
	1059
170-9724	870
	880
170-9841	412
	416
	418
170-9843	408
	410
	414
	420
170-9844	423
	425
	427
170-9857	412
	416
	418
170-9859	408
	410
	414
	420
170-9860	423
	425
	427
170-9997	682
	690
	700
171-0002	611
	▶679
171-0087	706
	711
	713
171-0123	718
171-0124	718
171-0126	718
171-0127	718
171-0128	718
171-0183	726
171-0184	726
171-0185	726
171-0188	562
	564
	597
	603
	▶738
171-0198	▶731
	738
171-0596	476
	505
	509
	513
	541
	587
171-2208	181
171-2210	181
171-3369	58
171-6723	506

▶ PRIMARY REFERENCE

PART NUMBER INDEX

Part	Page	Part	Page	Part	Page	Part	Page
	510	176-1951	1068		1067		308
	514	176-1952	1068		1070	184-9228	489
171-7325	854	176-1953	1068	178-5576	1059	184-9336	580
	855	176-1954	1068	178-5659	1024		582
	896	176-1955	1068		1025	184-9508	489
171-7413	1068	176-1956	1068		1032		491
171-7414	1068	176-1957	1068		1033	184-9512	489
171-7420	870	176-1958	860	178-5883	518		491
	880		864	178-6450	58	184-9516	489
171-7426	872		868		651		491
	876		884	178-6537	27	184-9543	474
171-7477	969		▶1063	178-6538	27	185-0169	451
171-7485	956	176-1964	868	178-6543	35	185-0383	547
	▶962		▶932	178-6544	35	185-0400	680
171-7503	860		▶935	178-6545	35		685
	864		938	178-6554	74	185-0407	731
	868	176-1972	870	178-6572	51	185-0423	718
	884		880	178-6599	29	185-0462	547
	▶954	176-1986	872	178-6600	29		▶732
171-9073	73		876	178-6601	29	185-0463	732
171-9077	58	176-1996	939	178-6633	56	185-0508	673
171-9464	315	176-2688	1084	178-6634	56		674
172-1482	197	176-2815	1083	178-6635	56	185-2478	587
172-4432	691	176-4684	572	178-6636	56	185-2793	41
172-8406	422	176-4791	590	179-3027	▶378	185-6952	267
172-8488	422	176-4852	▶377	179-3028	▶379		▶638
173-1170	451	176-8131	654		380	185-6953	638
173-1203	654	176-8132	654	179-7456	549		▶644
173-7864	458	177-1061	617	179-7541	666	185-8161	892
173-7865	461	177-2706	679	179-7644	395	185-8180	928
	467	177-2768	671		▶472		930
173-8073	991		672	179-7645	395		932
	993	177-5879	321		▶473		935
174-3016	217	177-5880	321	179-7855	626	185-8181	1059
174-7220	451	177-6315	998		629	185-8182	1059
174-7221	451	177-8197	812	179-9625	414	185-8187	1059
174-7222	451	177-8236	811		420	185-8196	872
174-7791	164	177-8407	483	179-9633	423		876
	165	177-8506	481		425	185-8197	1059
174-8529	2	177-9778	87	179-9638	412	185-8200	1070
	3	178-2334	195		416	185-8201	1070
	752	178-2335	195		418	185-8203	▶1070
	753	178-2345	▶195	180-3861	164		1072
	▶762		196		165	185-8204	1070
174-9570	▶84	178-5422	892	180-7755	754	185-8205	870
	87	178-5423	892		756		880
176-1902	990	178-5431	1055		758	185-8206	1072
176-1916	892	178-5500	1056		760	185-8209	1070
176-1925	962	178-5549	▶956	183-1035	170	185-8214	870
176-1928	957	178-5569	1063		173		880
	959	178-5570	872	183-1756	518	185-8221	1059
	962		876	183-8176	33	185-8280	989
176-1931	1055	178-5572	1066	184-3841	679	185-8281	989
176-1932	1056		1067	184-3971	1070	185-8284	894
176-1937	872	178-5573	928	184-3978	1070		984
	876		930	184-3979	1070	185-8286	203
176-1938	872		932	184-3980	1070		854
	876		935	184-4535	644		855
176-1939	872		1066		647	185-8290	1076
	876		1067	184-5394	70	185-8293	990
176-1941	989	178-5574	928	184-7496	822	185-8300	848
176-1942	872		930	184-8862	295		851
	876		932	184-8898	295		911
176-1946	870		935		296	185-8302	848
176-1947	870		1066		304		851

▶ **PRIMARY REFERENCE**

PART NUMBER INDEX

Part	Page
185-9208	183
	185
	187
	189
186-1305	1065
	▶1078
186-3735	96
	104
	106
	108
	110
	113
	115
	118
	120
	123
	124
	171
	173
	187
	195
	201
	202
	203
	251
	501
	678
	745
	746
186-3736	195
187-0661	1095
	1099
187-5873	474
187-5874	474
187-5915	631
	633
187-5916	631
187-9978	458
	461
	464
	467
187-9981	458
	461
	464
	467
188-2084	438
	▶440
188-2199	416
188-3064	365
189-2678	870
	880
189-2690	928
	930
	932
	935
189-2693	969
189-2694	969
189-2702	1063
189-2704	872
	876
189-2705	1072
189-2711	928
	930
189-2712	1070
189-2716	969
189-2759	1065
	▶1072
189-2768	860
	864
	884
	▶927
189-2778	▶1065
189-2793	868
	▶938
189-2796	938
189-2847	968
189-2849	968
	▶969
189-2853	880
189-2854	880
189-2855	870
	880
189-2864	873
	877
189-3396	872
	876
189-3409	872
	876
189-9377	43
	46
189-9763	451
	654
190-3523	365
190-3524	365
190-4896	654
	742
	744
190-5283	94
	96
190-5386	1095
	1099
190-5830	81
190-7674	451
190-7750	706
190-7751	706
190-7875	679
190-9775	80
	104
	106
	108
	110
191-2580	436
191-2599	430
191-2600	430
191-2601	430
191-2602	430
191-2603	430
191-2604	430
191-2605	430
191-2656	432
	433
	434
191-2657	432
	433
	434
191-8920	666
192-0573	451
	654
192-2376	451
192-3039	279
	280
	283
	284
192-6775	561
	587
193-2764	890
193-2765	890
193-5013	786
193-5014	786
193-6534	627
193-6606	455
	480
193-9710	318
193-9712	321
193-9933	617
193-9994	615
	619
194-0328	578
194-1134	▶365
	377
	378
	379
194-8400	640
194-9041	474
195-8212	27
195-8225	27
195-8256	90
195-8322	50
195-8351	48
196-0590	518
196-0737	516
196-0800	631
	633
196-0842	516
	518
196-0843	516
	518
196-1569	957
	959
	962
196-1571	957
	959
	962
196-1572	957
	959
	962
196-1599	957
196-1666	911
196-2036	526
196-3273	191
196-3369	476
196-7973	193
196-8015	76
196-8019	48
196-8366	27
	50
	51
197-0143	699
197-0144	699
197-0145	693
	695
	697
	699
197-0146	700
197-0147	700
197-0148	658
	659
	660
	661
	662
	663
	684
	687
	688
	689
197-0149	658
	659
	660
	661
	662
	663
	684
	687
	688
	689
197-0150	658
	659
	660
	661
	662
	663
	684
	687
	688
	689
197-0151	658
	659
	660
	662
	663
	687
	689
197-0152	661
197-0153	684
	688
197-0156	658
197-0165	680
	682
	685
	690
	699
197-0166	699
197-0167	699
197-0168	680
	682
	685
	690
	699
197-0169	699
197-0170	680
	682
	685
	690
	699
197-0173	▶658
	680
	682
	685
	690
	699

▶ PRIMARY REFERENCE

PART NUMBER INDEX

Part	Page
197-0196	636
	637
197-0199	636
	637
197-0219	▶659
	699
197-0220	659
197-0225	680
	685
	690
	699
197-0226	680
	685
197-0272	699
197-0273	636
	637
197-2299	454
197-4330	251
197-4385	260
197-7178	▶268
	269
197-7179	268
	▶639
197-7180	639
	▶647
198-0370	481
	483
	484
	486
198-3899	842
	1048
	1049
199-0504	638
	639
	▶751
199-0508	751
199-0518	654
199-1859	472
199-1860	473
199-1861	476
199-1862	476
199-1914	590
199-1965	590
199-2013	476
	597
	603
199-2046	615
	619
199-2187	39
199-2188	39
199-2189	39
199-2241	81
199-4505	▶269
	272
199-4600	▶429
	432
199-4602	429
	▶430
	435
199-4615	272
	▶432
199-4624	430
199-4625	430
199-4626	430
199-4627	430
199-4628	430
199-4629	430
199-4630	430
199-4631	430
199-4632	430
199-4634	430
199-4635	430
199-4636	430
199-4637	430
199-4638	430
199-7447	▶387
2	
200-3247	451
200-3255	451
200-3335	640
	642
200-3338	640
	642
200-4856	678
201-3664	822
201-4391	930
	932
	935
201-4417	872
	876
201-4530	872
	876
201-4534	957
	959
	962
201-4535	957
	959
	962
201-9283	693
	695
	697
201-9285	693
	695
	697
201-9287	693
	695
	697
201-9288	693
	695
	697
201-9290	697
201-9291	693
	695
	697
201-9294	693
	695
	697
201-9295	693
	695
	697
201-9296	693
	695
	697
201-9330	693
	695
	697
201-9331	693
	695
	697
202-1771	587
202-3631	567
202-3772	577
202-3937	522
	526
204-1611	228
	248
	250
	257
	258
	263
	990
204-1673	210
204-1790	225
204-2814	429
	▶640
204-8393	505
	509
	513
	530
	534
	538
205-0826	187
	189
205-1340	904
205-6295	872
	876
205-6788	24
205-8257	187
206-3305	▶706
	914
	915
	916
	917
206-5162	161
206-5208	189
207-0144	860
	864
	868
	884
	▶1058
207-0159	956
	▶966
207-0160	956
	▶967
207-0161	966
207-0164	966
	967
207-0167	966
	967
207-0170	966
	967
207-0173	966
	967
207-0176	967
207-0216	957
	959
207-2985	654
207-6282	466
207-6350	561
207-6403	666
207-6404	666
207-6418	585
208-9277	201
209-0348	1049
209-4280	1048
209-5582	201
209-5894	644
	647
209-5931	697
209-6002	657
209-6012	640
	642
210-2768	476
210-3529	267
	268
	▶270
210-3530	270
210-3531	270
210-3821	2
	3
	▶319
	752
210-3823	319
210-5808	872
	876
210-5827	1053
210-5828	1053
210-5829	1053
210-5834	1053
210-5836	1053
210-5837	1053
210-5838	1053
210-8117	60
210-9888	484
210-9892	484
210-9966	486
212-0907	416
212-2838	312
	313
212-5149	471
212-5326	460
212-5402	564
	603
212-8489	74
212-8521	125
212-8571	27
212-8572	27
212-8583	76
212-8642	63
	▶64
213-0677	33
	666
213-0772	216
213-3745	522
	526
213-9100	124
213-9433	81
214-4531	1084
214-4532	1084
214-7915	1095
	1099
215-1942	416
215-4855	699
215-4872	700
215-4909	439
	440

▶ **PRIMARY REFERENCE**

PART NUMBER INDEX

Part	Page
	441
215-5023	693
	695
	697
215-5032	749
	750
215-5033	749
	750
215-5034	749
	750
215-5035	749
	750
215-5037	590
	▶635
215-9962	451
216-5858	787
	789
	797
	798
	799
	800
	801
	802
	803
	804
	805
	806
216-6676	443
216-6677	443
216-6678	443
217-3312	416
217-4890	▶838
217-4891	▶827
217-4892	▶831
217-4893	▶833
217-4894	▶836
217-4895	▶826
217-4896	▶829
217-5513	53
217-5589	51
217-8763	416
218-0404	161
218-0557	652
219-0305	962
	964
219-6314	161
220-8678	84
220-9081	828
220-9082	832
220-9083	834
220-9084	787
	789
	794
	795
	796
	797
	798
	799
	800
	801
	802
	803
	804
	805
	806
220-9085	787
	789
	794
	795
	796
	797
	798
	799
	800
	801
	802
	803
	804
	805
	806
220-9086	787
	789
	794
	795
	796
	797
	798
	799
	800
	801
	802
	803
	804
	805
	806
220-9087	835
220-9088	837
220-9089	830
220-9090	826
	827
	828
	829
	830
	831
	832
	833
	834
	835
	836
	837
	838
	839
220-9091	827
220-9092	831
220-9093	833
220-9094	791
	807
	808
	809
	810
	813
	814
	815
	816
	817
220-9095	791
	807
	808
	809
	810
	813
	814
	815
	816
	817
220-9096	791
	807
	808
	809
	810
	813
	814
	815
	816
	817
220-9097	836
220-9099	829
221-4807	551
	555
	572
221-5069	▶447
	542
	544
221-5070	447
221-5071	447
221-8045	1095
	1099
221-8813	▶1002
	1010
221-8859	476
	505
	509
	513
	541
221-8861	1
	▶154
221-8872	▶150
	1010
221-8874	150
221-8884	▶903
	1010
221-8912	559
222-0225	905
	906
222-1080	839
222-1090	838
222-2062	652
222-8238	51
222-8292	27
223-4296	1006
223-7577	▶201
	242
223-9818	1095
	1099
224-0554	1095
	1099
224-1685	443
224-1687	▶443
	520
224-1914	590
224-1943	1078
224-2908	181
224-7717	1103
224-8945	1103
224-8946	1095
	1099
225-0224	451
225-0225	451
225-0312	1095
	1099
225-0313	1103
225-3305	1103
225-4256	1103
225-4257	1095
	1099
225-4539	474
225-4815	706
225-4816	706
225-5707	991
225-5714	991
225-5730	▶913
	1010
225-6216	654
226-3109	597
	603
	▶739
227-0384	493
	522
	526
227-0590	666
227-0620	▶448
	666
227-6034	270
227-6227	432
	433
	434
227-6229	272
	▶436
227-7575	216
227-7581	▶161
227-7625	903
227-8807	▶388
228-2780	1103
228-2781	1095
	1099
228-5614	772
	773
	774
	775
	776
	777
	778
	779
	780
	781
	783
	784
	785
228-5615	756
228-7092	43
	46
228-7315	1103
228-7316	1095
	1099
228-9253	1103
228-9254	1095
	1099
229-0887	1095
	1099
229-0993	640

▶ PRIMARY REFERENCE

PART NUMBER INDEX

Part	Page
	642
229-1023	611
229-1081	315
229-1085	▶660
	700
229-1086	660
229-1096	772
	773
	774
	775
	776
	777
	778
	779
	780
	781
	783
	784
	785
229-1132	423
	425
	427
229-3218	81
229-6963	▶839
229-6964	▶828
229-6965	▶832
229-6966	819
	820
	▶834
229-6967	▶835
229-6968	▶837
229-6969	▶830
229-7639	811
229-7640	811
229-7641	811
229-7642	811
229-7646	791
	812
	813
	814
	815
	816
	817
229-7774	812
229-7775	812
229-7776	812
229-7777	812
229-9070	▶1055
229-9075	1013
	▶1034
229-9076	▶1023
	1034
229-9077	1034
	1035
	▶1046
229-9078	1010
	▶1011
229-9082	847
	▶939
	977
229-9084	▶973
	▶975
	977
229-9088	▶1056
	1075
229-9089	1014
	▶1035
229-9090	▶1024
	1035
229-9093	▶1025
	1038
229-9094	▶970
	1024
	1025
229-9096	▶858
229-9097	858
	▶860
229-9098	▶862
229-9099	862
	▶864
229-9100	▶866
229-9101	866
	▶868
230-0496	480
230-1340	147
	177
230-1341	147
	177
230-4009	217
	237
	260
230-4011	212
	214
	217
	235
	237
	245
	260
	265
	979
230-4012	501
	745
	746
230-4013	217
	982
230-5008	223
	237
230-5010	230
	232
	235
	237
	984
231-1771	▶124
231-1836	▶235
	236
231-2295	237
	984
232-0082	▶840
233-1277	16
233-1279	198
233-1280	198
234-1034	181
234-1036	181
234-1037	181
234-1038	181
234-1097	216
234-1122	260
234-1124	984
234-1156	183
	185
	187
	189
234-1158	183
	185
234-3344	94
	96
234-4796	48
234-6467	860
234-6468	870
	880
234-6469	870
	880
234-6470	870
	880
234-6471	870
	880
234-6472	870
	880
234-6473	870
	880
234-6474	870
	880
234-6476	870
	880
234-6477	870
	880
234-6480	870
	880
234-6483	870
	880
234-6485	870
	880
234-6489	1066
234-6490	870
	880
234-6491	870
	880
234-6493	868
234-6497	870
	880
234-6498	870
	880
234-6499	925
234-6500	▶926
234-6501	858
	862
	866
	882
	▶925
234-6502	925
234-6521	870
	880
234-6547	870
	880
234-6548	870
	880
234-6549	870
	880
234-6550	870
	880
234-6579	870
	880
	894
	896
234-6580	894
	896
234-6593	925
234-6594	860
	864
	868
	884
	▶1076
234-6602	894
234-6603	896
234-6604	894
234-6605	896
234-6608	894
	896
234-6609	894
	896
234-6610	894
	896
234-6611	896
234-6612	896
234-6613	▶203
	896
234-6614	896
234-6615	203
235-7679	398
	399
	400
	402
	404
	405
	406
	407
	765
	767
	772
	773
	774
	775
	776
	777
	778
	779
	780
	781
	783
	784
	785
235-7764	4
	5
	▶344
	380
235-7765	344
235-8856	1010
	▶1045
235-8857	1045
235-8862	1008
235-8873	843
	845
	973
	975
235-8874	843
	845
	973
	975

▶ **PRIMARY REFERENCE**

PART NUMBER INDEX

Part	Page	Part	Page	Part	Page	Part	Page
235-8875	843		862		245		815
	845		866	238-2215	257	239-2722	808
	973		882	238-2216	982		815
	975	235-9003	▶847		984	239-2723	808
235-8876	939	235-9004	▶843	238-2260	981		815
235-8877	939		▶845	238-2280	181	239-2724	808
235-8878	939		847	238-2318	216		815
235-8879	939	235-9005	843	238-2319	217	239-2725	808
235-8880	891		845	238-2326	171		815
235-8891	990	235-9012	1055		173	239-2748	807
235-8893	892		1056	238-2390	216		814
235-8894	892	235-9014	990	238-2391	216	239-2760	789
235-8908	860		993	238-2392	181	239-2764	789
	864	235-9015	990	238-2478	▶208		800
	868		993		264		805
	▶870	235-9020	▶1017	238-2479	208	239-2767	789
235-8909	860		1019	238-2485	▶264		800
	864	236-2838	580		392		805
	884		582	238-2501	127	239-2768	789
	▶1066	236-2843	580		133		800
235-8910	860		582	238-2528	127		805
	864	236-2844	580		133	239-2769	789
	868		582	238-6189	522		800
	▶872	236-2848	580		526		805
	▶876		582		585	239-2771	794
	884	236-3200	493	239-2509	▶787		798
235-8911	1067		497		▶788		803
235-8912	872		501	239-2510	▶788	239-2772	794
	876	236-3257	448	239-2511	▶788		798
235-8914	894	236-3258	448	239-2512	▶789		803
	896	236-3259	448		▶790	239-2773	794
235-8915	868	236-3669	275	239-2513	▶790		798
	▶1067	236-3670	275	239-2514	▶791		803
235-8916	864	236-3671	275		▶792	239-2774	794
	884	236-3698	310	239-2515	▶792		798
235-8917	▶880	236-3702	310	239-2516	▶792		803
	884	236-3703	310	239-2517	▶793	239-2784	796
235-8922	870	236-4154	487	239-2518	▶793		801
	880		488	239-2520	788		806
235-8923	870		▶822		▶794	239-2786	796
	880	236-6365	765	239-2521	788	239-2787	796
235-8926	870		767		▶795		801
235-8928	870	236-9438	275	239-2523	790		806
235-8929	870	236-9440	275		▶796	239-2788	796
235-8930	880	236-9567	288	239-2525	792		801
235-8932	1076		289		▶807		806
235-8933	872	237-3227	463	239-2526	792	239-2789	796
	876	237-5586	346		▶808		801
235-8950	870	238-0112	193	239-2527	793		806
	880	238-0118	193		▶809	239-2792	809
235-8951	854	238-0120	92	239-2528	793		816
235-8952	855		193		▶810	239-2793	809
235-8965	896	238-0751	590	239-2619	795		816
235-8966	894		▶747		799	239-2794	809
235-8969	▶905	238-1463	984		804		816
	919	238-1506	181	239-2626	795	239-2795	809
235-8970	▶906	238-1627	▶171		799		816
	918	238-1628	▶173		804	239-2796	809
235-8971	905	238-2208	▶209	239-2627	795		816
235-8972	906		1075		799	239-2801	810
235-8996	854	238-2209	209		804		817
	855	238-2210	209	239-2628	795	239-2802	810
235-8997	854	238-2211	1036		799		817
235-8998	855		1040		804	239-2803	810
235-9001	858	238-2212	216	239-2716	808		817

▶ PRIMARY REFERENCE

PART NUMBER INDEX

Part	Page
239-2804	810
	817
239-2805	810
	817
239-2810	787
	797
	802
239-2812	787
	797
	802
239-2813	787
	797
	802
239-2814	787
	797
	802
239-2815	807
	814
239-2816	807
	814
239-2817	807
	814
239-2818	807
	814
239-2819	791
	813
239-2820	791
	813
239-2821	791
	813
239-2822	791
	813
239-2823	791
	813
239-4362	362
239-6604	74
239-6626	38
239-6627	38
239-6630	38
239-6631	38
239-6632	38
239-6681	125
239-6986	1095
	1099
239-7352	235
	237
	260
239-7356	217
239-8697	635
	▶636
239-8998	635
	▶637
239-9954	145
	▶152
240-2912	412
	416
	418
240-2913	414
	420
240-2988	354
240-4999	▶1013
240-5003	▶1014
240-5036	843
	▶848
	973
240-5037	▶1018
240-5039	▶1019
240-5063	1038
	▶1047
240-5064	▶1036
240-5065	1036
	▶1038
240-5071	▶948
240-5073	▶949
240-5074	939
241-2311	346
241-7380	408
	410
242-1510	1095
	1099
242-1588	1095
	1099
242-1589	1103
242-6092	1095
	1099
242-8768	1046
	1047
243-4505	96
	212
	217
	235
	237
	254
	260
	265
	889
	982
	984
	993
243-4506	98
	214
	217
	255
	256
	982
243-4507	260
	266
243-4508	163
	206
	212
	222
	230
	232
	235
	260
243-4509	260
	984
243-4510	212
	214
	237
	260
244-4277	754
	756
	758
	760
	772
	773
	774
	775
	776
	777
	778
	779
	780
	781
	783
	784
	785
244-4360	765
	767
244-8039	1
	▶274
244-8040	274
	▶275
244-8041	1
	▶310
244-8194	278
	281
	282
244-8494	706
244-8495	706
244-8496	706
244-8497	707
244-8498	706
244-8499	707
244-8500	706
244-8501	707
245-5079	580
	582
245-5457	1095
	1099
245-7749	890
	▶891
245-7750	891
245-7751	891
245-7760	216
245-7790	870
	880
	894
	896
245-7791	939
245-7792	939
245-7793	939
245-7794	▶950
245-7796	▶951
245-7811	1
	▶1008
245-7813	911
245-7814	911
245-7815	911
245-7816	911
245-7817	848
	851
245-7818	848
	851
245-7819	848
	851
245-7820	848
	851
245-7823	848
	851
245-7824	848
	851
245-7825	848
	851
245-7826	848
	851
245-7827	848
	851
245-7828	848
	851
245-7829	848
	851
245-7830	848
	851
245-7831	848
	851
245-7832	848
	851
245-7833	848
	851
245-7834	848
	851
245-7835	848
	851
245-7836	848
	851
	▶886
245-7837	886
245-7838	848
	851
245-7839	848
	851
245-7842	905
245-7844	906
245-7846	848
	851
	▶911
245-7847	848
	851
245-7850	990
245-7851	990
245-7856	848
	851
245-7858	973
	975
245-7872	939
245-7873	939
245-7881	▶1012
245-7883	1023
245-7884	1024
245-7885	1025
245-7886	842
245-7887	1023
	1024
	1025
245-7888	1023
	1024
	1025
245-7889	▶841
	1046
	1047
245-7890	▶857
	1046
	1047
245-7892	1046
	▶1048
245-7895	986
	987
	988

▶ **PRIMARY REFERENCE**

PART NUMBER INDEX

Part	Page	Part	Page	Part	Page	Part	Page
	1046	247-5284	▶145		1010	255-3050	▶196
	1047		160	251-0542	▶183	255-3171	1086
245-7896	▶842	247-6019	92		▶185	255-3173	1086
	1046	247-7410	389	251-0543	183	255-4410	1012
	1047		▶1079		187	255-5843	▶389
245-7897	841	247-7411	389	251-0544	161	255-5844	▶389
	842		▶1081		▶187	255-5845	▶1010
	857	247-7418	1010		▶189	256-9794	822
	1046		▶1082	251-0580	235	256-9795	▶422
	1048	247-7436	1095	251-0602	237		822
	1049		1099	251-0637	216	256-9797	822
245-7898	842	247-7437	1095	251-4162	142	256-9798	822
	1023		1099	251-8248	159	256-9807	822
	1024	247-7438	1095	252-6601	678	256-9808	822
	1025		1099	252-6602	678	257-4502	1095
	1048	247-7465	391	252-6603	678		1099
	1049		▶1083	253-0861	1095	257-4547	1084
245-7899	841	247-7492	670		1099	257-5015	1086
	857		▶1084	253-1346	369	258-0330	957
	1046	247-7587	691		370		959
	1048	247-8789	423		373		962
	1049		425		374	258-6749	522
245-7900	312		427	253-2111	181		526
	313	248-7132	352	253-6276	454		▶740
245-7901	312		▶358	253-6407	821	259-0837	2
	313		▶359		▶824		3
245-7905	886	248-7133	358	253-6694	463		▶395
245-7916	1011		▶360	254-2979	352		752
245-7922	▶892	248-7134	358		▶353		753
	1010		▶361	254-2981	353	259-0838	2
245-7925	896	248-7135	360	254-2982	353		3
245-7926	894		▶369	254-3080	522		▶395
245-7929	925	248-7136	361		526		752
245-7931	1076		▶370		▶691		753
245-7948	894	248-7137	369	255-1665	580	259-0839	395
	896		370		582		▶398
245-9205	58		▶371	255-1666	580	259-0840	398
245-9212	60	248-7138	371		582		▶408
245-9216	60		375	255-1929	544	259-0841	2
245-9217	60	248-7139	371	255-2966	64		3
245-9218	60		▶372		67		▶397
245-9310	12	248-7140	372		68		752
	▶58	248-7141	371		69		753
245-9311	58	248-7143	360	255-3016	888	259-0842	397
	▶60		361	255-3018	▶38		▶405
245-9312	12		▶362		888	259-0843	405
	▶70		363	255-3020	38		▶423
245-9368	58		364	255-3021	38	259-0844	▶396
245-9369	58	248-7173	372	255-3022	38		763
245-9370	58		376	255-3025	453		821
246-2641	99	248-7284	393		▶653	259-0845	396
	102	250-1440	458	255-3027	▶394		▶400
246-5425	362		461		653	259-0846	400
246-9113	416		464	255-3031	12		▶412
247-2693	235		467		▶72	259-0869	▶444
	237	250-8054	1079	255-3032	12		666
	260		1081		▶888	259-0914	▶396
	907		1082	255-3033	12		763
	908		1083		▶63		821
	909	251-0299	260	255-3035	12	259-0915	396
	910	251-0433	▶236		▶30		▶401
	924		1010	255-3036	12	259-0916	401
247-2694	1003	251-0435	236		▶73		▶414
247-2695	1003		▶237	255-3037	12	259-0917	390
247-5112	924	251-0538	▶981		▶49		391

▶ **PRIMARY REFERENCE**

PART NUMBER INDEX

Part	Page
	▶652
259-0918	657
259-0920	▶657
	666
259-3891	275
259-3893	275
259-3903	310
259-4877	237
259-4883	216
259-4884	223
	264
259-4887	230
259-4914	981
259-4940	230
	232
259-5050	▶139
259-5159	1
	▶127
	▶133
259-5160	▶260
	1010
259-5161	▶216
	1010
259-5163	2
	3
	▶175
	752
	753
259-5165	▶222
	389
259-5166	▶210
259-5167	▶265
	392
259-5168	▶212
	391
259-5169	▶214
	389
259-5171	▶255
	390
	391
259-5172	▶256
	390
259-5173	▶155
	675
259-5175	93
	▶246
	▶247
259-5253	▶982
259-5254	982
259-5271	▶254
	442
259-5274	181
	▶202
259-5290	216
259-5293	▶156
	1010
259-5294	▶157
	391
259-5295	▶158
	389
259-5296	216
259-5297	260
259-5300	127
	133
259-5301	127
	133
259-5303	127
	133
259-7180	264
259-7193	1
	▶1010
259-7194	1
	▶990
259-7195	12
	▶890
259-7196	▶1010
259-7197	▶977
259-7198	977
	▶993
259-7202	896
259-7214	1012
259-7215	1012
259-7219	222
259-7220	223
259-7244	888
	▶889
259-7286	889
259-7295	▶856
	872
	876
259-7345	855
259-7346	▶854
	894
259-7347	▶855
	896
259-7348	892
	▶894
259-7349	892
	▶896
259-7353	880
259-7354	928
	930
	932
	935
259-7430	561
	564
	569
	▶741
259-7545	516
	▶678
259-7547	1
	▶453
259-7550	453
	671
	672
	673
	674
	▶699
259-7557	▶389
259-7565	▶390
259-7569	▶390
259-7575	▶670
259-7577	▶675
259-7578	▶675
259-7585	▶675
259-7598	389
	▶898
	▶899
259-7599	389
	▶900
	▶901
259-7762	898
	▶914
259-7763	898
	▶915
259-7764	900
	▶916
259-7765	900
	▶917
259-7798	671
	▶680
259-7804	673
	▶682
259-7867	661
259-7868	▶661
	699
260-2042	145
	146
	163
260-2109	▶907
	914
	920
260-2110	▶908
	915
	921
260-2111	907
	908
	909
	910
260-2127	▶909
	916
	922
260-2128	▶910
	917
	923
260-2180	559
260-2191	559
260-2458	1
	▶312
260-2459	312
	313
260-2526	408
	410
260-2527	423
	425
	427
260-2528	412
	416
	418
260-2530	414
260-2555	▶277
260-3877	493
	497
	▶745
260-3883	501
	745
	746
260-6692	122
260-6941	1079
260-6942	1081
260-6948	1010
	1082
260-6952	▶1
260-6960	1
260-6968	1
	▶1095
	▶1099
260-6975	1
	▶352
260-6979	▶752
260-6981	▶768
260-6982	▶768
260-6983	▶768
260-6984	▶768
260-6990	▶380
260-7006	675
	▶1086
260-7007	▶93
260-7009	▶52
260-7017	▶956
260-7018	▶442
260-7020	▶763
260-7021	▶763
260-7070	▶771
260-7071	▶956
260-7072	▶160
260-7075	▶676
260-7076	▶329
260-7094	93
	▶94
	▶96
260-7135	1095
	1099
260-7138	1095
260-7891	389
	391
	▶547
260-8047	▶549
	1010
260-8071	597
	603
260-8203	453
	▶669
260-8204	▶542
	▶544
	669
260-8205	▶666
	669
260-8208	453
	▶489
	▶491
260-8209	453
	▶474
260-8210	453
	▶611
260-8212	453
	▶631
	▶633
260-8215	453
	▶546
260-8216	453
	▶613
260-8217	453
	▶551
	▶555
260-8219	453
	▶559
260-8220	2
	3
	▶469

▶ **PRIMARY REFERENCE**

PART NUMBER INDEX

Part	Page	Part	Page	Part	Page	Part	Page
	752	262-3236	▶480	266-1187	397		760
	753	262-3237	▶457		▶626	267-0061	312
260-8222	392	262-3238	▶458	266-1188	469	267-1626	451
	▶493	262-3239	▶481	266-1189	469	267-1628	654
	▶497	262-3240	▶460	266-1190	469	267-1629	654
	▶501	262-3241	▶461	266-1191	469	267-4495	1103
260-8225	391	262-3242	▶483	266-1192	469	267-6738	1
	▶561	262-3243	▶463	266-1193	469		▶272
	▶564	262-3244	▶464	266-1198	626	267-6744	432
260-8226	389	262-3245	▶484	266-1210	469		433
	▶505	262-3249	▶392	266-1293	597		434
	▶509	262-3251	▶471		603	267-6778	▶433
	▶513		675	266-1389	561		▶434
260-8233	390	262-3520	455		597		676
	391	262-3538	454		603	267-6779	433
	▶516	262-3592	469	266-2861	1006		434
260-8234	390	262-3596	469	266-5431	1095		▶435
	391	262-4781	362		1099	267-6786	432
	▶567	263-9088	147	266-6203	30		433
260-8235	390		▶151	266-6204	30		434
	▶615		177	266-6205	30	267-6831	315
260-8236	390	264-1581	353	266-6206	30	267-6832	▶315
	▶518	264-1593	752	266-6258	30		352
260-8238	390		▶754	266-6259	30	267-7583	210
	▶569	264-1594	754	266-6280	▶393	267-7584	210
260-8240	▶571	264-1600	768		394	267-7585	210
	1010		▶772	266-6303	30	267-7586	210
260-8241	▶572	264-1601	772	266-6304	30	267-7639	217
	670	264-1603	2	266-6310	993	267-7642	▶223
260-8242	▶574		3	266-7791	444		392
	675		763	266-7792	444	267-7644	223
260-8243	▶476		764		▶445	267-7671	223
	675		▶765	266-7793	445	267-7672	223
260-8246	▶577	264-1604	768	266-7796	445	267-7676	223
	675		▶773	266-7797	445	267-7683	127
260-8316	469	264-1605	768	266-7799	444		133
260-8325	442		▶774	266-7800	444	267-7689	127
	▶520	264-7029	212	266-7813	414		133
260-9174	489		217	266-7849	408	267-7692	222
	491		265	266-7859	408	267-7693	222
262-1421	146	264-7030	217		410	267-7694	222
	▶153	264-7032	232	266-7861	408	267-7695	222
262-2043	▶153	264-7034	217		410	267-7697	265
	160	264-9982	889	266-7862	423	267-7703	256
262-2256	1	264-9983	889	266-7867	423	267-7704	245
	▶278	264-9984	889	266-7874	423	267-7705	255
262-2257	278	265-3489	58		425	267-7706	254
	▶279	265-3490	58		427	267-7707	246
	▶280	265-3494	70	266-7875	412		247
262-2258	1	265-3623	58	266-7879	412	267-7708	246
	▶317	265-3629	60		418	267-7849	▶245
262-2259	1	265-3630	60	266-7885	414		676
	▶99	265-3632	60		420	267-7850	245
262-2260	99	265-9642	153	266-7932	433	267-7976	183
	▶103	265-9643	153		▶742		185
262-2261	1	266-0136	193	266-7940	474	267-7977	187
	▶87	266-0939	505	266-7941	474		189
262-2265	1		509	266-8046	435	267-8084	654
	▶322		513		▶642	267-8088	▶451
262-2269	93	266-0982	493	266-8070	742		654
	▶100		497		744	268-0457	306
262-2270	100		501	267-0055	765	268-0493	325
	▶103		522		767	268-0494	342
262-3234	▶454		526	267-0060	754	268-0495	340
262-3235	▶455	266-1085	▶578		756	268-0496	340

▶ PRIMARY REFERENCE

PART NUMBER INDEX

Part	Page
268-0497	341
268-0581	317
268-0582	317
268-0583	317
268-0584	317
268-0641	322
	▶323
268-0642	▶293
	322
268-0643	▶294
	322
268-0644	▶291
	322
268-0645	▶290
	322
268-0646	322
	▶324
268-0648	325
	▶347
268-0649	325
268-0650	325
268-0651	340
268-0653	325
268-0654	323
	▶339
268-0655	325
	▶340
268-0656	340
	▶341
268-0658	325
	▶342
268-0659	325
268-0660	▶287
	290
268-0661	290
268-0662	290
268-0663	▶288
	291
268-0664	324
	▶332
268-0665	▶295
	297
	307
268-0666	297
268-0667	▶296
	298
	303
268-0668	298
	304
	▶348
268-0669	294
	▶297
268-0670	293
	▶298
268-0673	325
268-0674	▶346
	956
268-0675	346
268-0677	▶299
	329
268-0679	▶300
	▶301
268-0684	325
	▶349
268-0689	290
268-0693	288
	289
268-0694	288
	289
268-0695	288
	289
268-0696	288
	289
268-0697	332
	333
	334
	336
268-0698	296
268-0699	295
268-0700	297
	298
	303
	304
	306
	307
	308
268-0703	332
	333
	334
268-0704	332
	333
	334
268-0705	347
268-0706	347
268-0709	332
268-0714	339
	343
268-0715	339
	343
268-0716	339
	343
268-0717	287
268-0719	347
268-0720	333
	334
	336
268-0721	332
	333
	334
268-0727	346
268-0731	342
268-0732	349
268-0733	348
	350
	351
268-0734	297
	307
268-0736	348
268-0737	287
268-0739	290
268-1964	216
268-3550	451
268-4201	451
268-4203	451
268-4530	1088
268-4531	1088
268-5145	474
268-6263	654
268-6265	654
268-6816	392
	▶1087
268-6817	1087
268-6886	455
268-6888	455
268-6889	455
268-6890	455
268-6891	455
268-6930	627
268-6940	454
268-6943	454
268-7245	▶466
268-7246	▶467
268-7247	▶486
268-7253	▶392
268-7258	▶821
268-7259	▶821
268-8872	1088
269-0120	1088
269-0121	1088
269-1609	771
	▶775
269-2433	654
269-9553	590
269-9573	489
	491
269-9577	489
	491
269-9700	564
269-9714	542
	544
269-9717	561
	564
	597
	603
269-9721	542
	544
269-9728	613
269-9730	613
269-9732	613
269-9754	597
	603
269-9773	651
269-9799	474
269-9853	666
269-9855	666
269-9858	666
269-9883	546
269-9886	546
269-9890	559
269-9901	611
269-9904	611
269-9907	611
269-9911	611
269-9915	611
269-9916	611
270-0016	489
	491
270-0034	666
270-5320	84
270-5433	163
	1006
270-5603	2
	4
	▶1004
270-5604	160
	▶177
270-5664	574
270-5672	505
	509
	513
	541
270-5750	▶390
270-5751	▶391
270-5757	505
	509
	513
	541
270-5766	597
	603
	▶748
270-5948	580
	▶709
270-5949	709
	715
270-5950	709
	715
270-5953	711
270-5954	▶391
270-5979	699
	▶720
270-5985	505
	530
	▶721
270-5987	680
	▶722
270-6106	▶391
270-6107	391
	▶904
270-6110	505
	509
	513
	530
	534
	538
270-6259	149
270-6338	54
270-9628	87
270-9762	279
270-9827	279
	283
270-9829	279
	280
	283
	284
	286
270-9830	279
	280
	283
	284
	286
270-9831	279
	280
	283
	284
	286
270-9832	279
	280
	283
	284
	286

▶ **PRIMARY REFERENCE**

PART NUMBER INDEX

Part	Page	Part	Page	Part	Page	Part	Page
270-9833	279	272-4180	522	273-7702	318		518
	280		561	273-7765	87	275-1624	591
	283		564	273-7766	317	275-1695	▶625
	284		597	273-7768	318		769
	286		603	273-7964	275		771
270-9834	279	272-4183	561	273-8035	324	275-1696	392
	280		564	273-8040	299		▶522
	283	272-4186	597		▶302		▶526
	284	272-4214	574	273-8041	302	275-1699	391
	286	272-4215	615		▶303		▶530
270-9836	279		619	273-8042	303		▶534
	280	272-4227	572		306		▶538
	283		587		▶350	275-1701	390
	284	272-4228	520	273-8043	350		▶541
	286	272-4231	520	273-8044	323	275-1715	453
270-9837	279	272-4264	617		▶325		▶580
	280	272-4265	615	273-8048	▶304		▶582
	283		619		327	275-1749	505
	284	272-4665	▶65	273-8049	304		509
	286		▶66		306		513
270-9838	279		329		308		530
	280	272-4667	65	273-8054	336		534
	283		▶67	273-8055	336		538
	284	272-4774	32	273-8057	304	275-1750	505
	286		▶198	273-8075	348		509
271-0016	341	272-4817	▶6		350		513
271-0017	349		9		351	275-1806	516
271-2158	94		10	273-8084	348	275-6810	260
	96		11		350	275-6874	1
	▶98	272-4819	9		351		▶978
272-0709	98		10	273-8085	52	275-6875	978
272-0710	98		11		▶327		▶979
272-4144	572		▶37		▶328	275-6876	979
	574	272-4822	7	273-8086	▶333	275-6877	▶266
	587		▶9		335		392
272-4149	530	273-4159	822	273-8087	333	275-6879	▶984
	534	273-4160	822	273-8091	340	275-6880	160
	538	273-4164	822	273-8315	652		▶230
272-4153	505	273-4166	822	273-8316	451	275-6881	160
	509	273-5274	1059	273-8317	451		▶232
	530	273-5333	952	273-8318	451	275-6883	▶239
	534	273-5345	954	273-8320	654	275-6884	▶241
272-4157	505		1059	274-2565	642	275-6926	▶180
	509	273-5346	954	274-2709	444		1010
	513		1059	274-6720	193	275-6927	180
	530	273-5358	2	274-6721	193		▶181
	534		▶952	275-1442	561	275-7047	230
	538		953		564		232
272-4159	505	273-5359	952		590	275-7048	239
	509	273-5360	952		598		241
	513	273-5384	1047		603	275-7216	127
	530		▶1049	275-1443	561	276-5007	6
	534	273-5386	1049		564	277-0917	457
	538	273-5388	▶1075		590	277-0921	481
272-4164	505	273-5389	▶1073		598		486
	509		1075		603	277-0924	481
	513	273-5390	1073	275-1444	561		486
	541	273-5446	1018		564	277-1059	483
272-4165	505		▶1020		591	277-1062	483
	509	273-6938	774		598	277-1089	460
	513	273-7689	318		603	277-1194	480
	530	273-7691	318	275-1487	561	277-1195	480
	534	273-7694	▶318		564	277-1198	480
	538	273-7698	318	275-1504	699	277-1201	480
272-4172	578	273-7700	318	275-1586	516	277-1204	480

▶ PRIMARY REFERENCE

PART NUMBER INDEX

Part	Page
277-1212	▶487
	▶488
	821
277-1213	▶767
	821
277-1215	487
277-1216	487
277-1251	484
278-3581	275
278-3711	103
	▶104
278-3712	103
	▶106
278-3715	103
	▶108
278-3720	103
	▶110
278-3818	310
	311
	330
	331
278-4014	279
	280
	283
	284
	286
278-6418	598
278-6419	598
	603
278-6424	615
278-6425	615
278-6438	389
	▶617
278-6465	▶630
	676
278-6466	615
	619
278-6469	617
278-6470	526
278-6473	617
278-6476	617
278-6480	617
278-6484	617
278-6488	617
278-6492	617
278-6493	619
278-6495	474
278-6517	489
	491
278-6520	489
	491
278-6557	630
278-6560	630
278-6592	619
278-6611	472
278-6612	473
278-6613	591
278-6619	516
	518
278-6623	591
278-6738	505
	509
	513
	530
	534
	538
278-6752	530
	534
	538
278-6753	530
	534
	538
278-6782	617
278-6801	520
278-6905	561
	564
	598
	603
278-9246	773
279-3161	854
279-7714	8
	▶10
279-7744	12
	▶43
279-7746	1
	▶11
279-7748	1
	▶12
279-7750	198
279-7784	73
279-7787	74
279-7834	65
	66
279-7856	▶7
279-7857	▶8
279-7859	13
280-2747	476
281-3491	58
281-3492	58
281-3524	60
281-3525	60
281-3526	60
281-3527	60
281-3528	60
281-3529	60
281-3530	60
281-3531	60
281-3532	60
281-3533	60
281-3572	70
281-3590	58
281-3640	70
281-5898	591
281-6847	451
281-8979	404
	▶416
281-8980	416
281-8984	416
281-8986	416
281-8989	416
282-5705	392
	▶1088
282-5875	463
282-5876	463
282-5877	464
282-5881	460
282-5882	460
282-5883	461
282-5884	464
282-5887	458
	461
282-5894	457
	460
	463
	466
	▶677
282-5895	457
	466
282-5896	457
	466
282-5897	458
	467
282-7080	391
	▶619
282-7106	510
	535
	562
	564
	598
	603
282-7113	598
	603
282-7123	516
	518
282-7198	562
	564
	598
	603
282-7615	522
	526
282-8567	242
282-9192	654
283-1224	201
283-2662	127
	133
283-2761	▶233
283-2762	233
283-2783	239
	241
	982
	984
283-2893	993
283-3060	257
283-3074	225
	237
283-6089	444
283-6090	444
283-6099	742
	744
283-8896	▶272
283-8897	272
283-8927	94
	96
283-8931	94
	96
283-8982	1095
	1099
283-8983	1095
	1099
283-8984	1095
	1099
283-9001	▶752
283-9002	▶769
283-9003	▶769
283-9004	▶769
283-9005	▶769
283-9006	▶770
283-9011	▶763
283-9012	▶763
284-4376	▶940
284-4377	▶941
284-4378	▶942
284-4379	▶943
284-4380	▶944
284-4426	872
	876
284-4499	990
284-4500	990
284-4501	990
284-4502	990
284-4507	890
284-4509	890
284-7077	277
284-7081	277
284-7311	420
284-8532	1007
285-1332	904
285-1333	904
285-1337	904
285-1503	699
285-1505	▶662
	700
285-1506	699
285-1507	699
285-1613	591
	▶718
285-1641	662
285-1667	▶684
	699
285-1669	▶663
	700
285-1685	476
	▶693
285-1686	476
	▶695
285-1687	627
	▶697
285-1736	390
	▶671
	▶672
285-1738	389
	▶673
	▶674
285-2663	493
	497
	501
	598
	603
285-2664	493
	497
	501
285-2906	493
	497
	501
286-3683	149
286-4271	▶142
	143
286-6560	591

▶ **PRIMARY REFERENCE**

PART NUMBER INDEX

Part	Page	Part	Page	Part	Page	Part	Page
	598		1099		▶779	294-1796	86
	603	290-9321	752	294-1361	779	294-1800	86
286-6663	598		▶756	294-1683	23	294-1802	90
	604	290-9322	756	294-1684	39	294-1803	86
286-6717	598	290-9327	769	294-1685	39	294-1804	81
	604		▶776	294-1686	39		193
286-6723	522	290-9328	776	294-1687	39	294-1805	86
	526	290-9330	769	294-1688	39	294-1808	90
287-0212	43		▶777	294-1689	39	294-1809	81
	46	290-9331	777	294-1693	39	294-1810	81
287-2352	691	290-9333	769	294-1698	39	294-1811	81
289-5749	2		▶778	294-1699	39	294-1812	90
	3	290-9334	775	294-1700	14	294-1819	81
	4		778		75	294-1820	81
	▶585	290-9378	2	294-1702	39	294-1821	14
289-5750	2		3	294-1708	14		81
	3		4	294-1710	14	294-1822	81
	4	290-9441	52	294-1711	14	294-1831	81
	▶587		▶153	294-1712	14	294-1834	92
289-6447	300	290-9444	1	294-1713	14	294-1836	92
	301		▶154	294-1714	14	294-1837	81
	▶306	290-9464	160	294-1716	13	294-1838	81
289-7836	438		▶1006	294-1720	17	294-1839	92
	▶441	291-7700	163	294-1721	17	294-1841	92
289-8090	▶395	291-7701	▶163	294-1722	17	294-1842	92
	752	291-7730	▶176	294-1723	20	294-1843	92
289-8091	▶395	291-7731	176	294-1724	20	294-1844	81
	752	291-7746	175	294-1726	26	294-1845	81
289-8092	395	291-7908	▶257		27	294-1846	92
	▶399		675		41	294-1850	32
289-8093	399	291-7909	257	294-1728	27	294-1851	32
	▶410	292-3751	92	294-1729	27	294-1855	198
289-8094	410	292-7147	587	294-1731	27	294-1857	198
289-8099	408	292-7151	587	294-1732	27	294-1858	198
	410	292-7176	559	294-1733	27	294-1860	29
289-8101	▶397	292-7198	585	294-1734	27	294-1861	29
	752	292-7327	505	294-1735	27	294-6486	▶627
289-8102	397		509	294-1737	26		675
	▶406		513	294-1738	26	294-6521	627
289-8103	406		530		51	294-6522	627
	▶425		534		56	294-6524	627
289-8104	425		538	294-1739	26	294-7251	26
	427	292-7446	591	294-1747	35		27
289-8109	425	292-7461	666	294-1748	35	295-9127	92
	427	292-7482	559	294-1751	16	295-9140	▶85
289-8111	▶396	292-7635	497	294-1753	25		86
	763		501	294-1754	25	295-9562	2
289-8112	396	293-1136	843	294-1755	25		3
	▶402		845	294-1756	25		▶449
289-8113	402	293-1137	848	294-1757	25		764
	▶418		851	294-1766	50	295-9563	449
289-8114	418	293-1138	973	294-1767	48	295-9566	449
289-8119	▶396		975	294-1768	48	295-9567	449
	763	293-1168	▶945		242	295-9573	445
289-8120	396	293-1184	939	294-1774	42	295-9617	445
	▶403	293-1222	▶946	294-1775	42	295-9618	445
289-8121	403	293-1230	991		149	295-9619	445
	▶420		993	294-1777	54	296-4618	242
289-8122	420	293-1238	990	294-1778	54	296-4619	242
289-8194	▶446	293-1256	1056	294-1780	54	296-4621	193
	666	293-1277	991	294-1784	36		242
289-8195	446	293-1279	990	294-1785	36	296-4631	193
290-1729	1095	293-1280	990	294-1786	36	296-4633	193
	1099	293-1281	990		39	296-4637	6
290-1906	1095	294-1360	770	294-1788	90		▶32

▶ PRIMARY REFERENCE

PART NUMBER INDEX

Part	Page
296-4651	6
	▶25
296-4655	6
	▶56
296-4663	35
296-4672	17
296-4673	25
296-4689	23
296-4692	14
296-4694	14
296-4695	14
296-4696	14
296-4699	▶17
	20
296-4700	27
296-4701	26
296-4702	33
296-4703	33
296-4704	33
296-4706	33
296-4710	16
296-4712	37
296-4713	24
296-4714	75
296-4716	74
296-4718	76
296-4719	76
296-4720	76
296-4724	79
296-4725	50
296-4726	50
296-4727	51
296-4728	41
296-4729	41
296-4731	37
296-4733	54
296-4736	53
296-4737	37
296-4738	▶36
	37
296-4739	36
296-4740	90
296-4741	90
296-4742	90
296-4743	90
296-4744	90
296-4747	90
296-4748	90
296-4749	81
296-4750	81
296-4752	81
296-4753	81
296-4754	81
296-4755	242
296-4758	29
296-4759	29
296-4761	149
296-4762	149
296-4766	242
296-4777	6
	▶50
296-4778	6
	▶42
296-4780	6
	▶33
296-4781	6
	▶48
296-4782	6
	▶51
296-4783	6
	▶24
296-4784	6
	▶23
296-4786	6
	▶14
296-4787	6
	▶20
296-4788	6
	▶27
296-4789	6
	▶16
296-4790	6
	▶75
296-4791	6
	▶74
296-4792	6
	▶41
296-4793	6
	▶90
296-4794	6
	▶81
296-4795	6
	▶54
296-4796	6
	▶35
296-4797	6
	▶53
296-4798	6
	▶29
296-4800	6
	▶149
296-4801	6
	▶242
296-4802	6
	▶193
296-4803	6
	▶26
296-4804	43
	46
296-4812	90
296-6986	518
296-7057	476
296-7204	609
297-0374	672
	▶685
297-0529	▶711
	918
	919
297-0532	902
	▶918
297-0533	902
	▶919
297-0534	899
	▶920
297-0535	899
	▶921
297-0536	901
	▶922
297-0537	901
	▶923
297-0589	▶713
	920
	921
	922
	923
297-0647	617
297-0684	585
	▶749
297-0685	587
	▶750
297-0686	693
	695
	697
297-4468	2
	4
	▶179
297-4469	2
	3
	4
	▶191
297-4470	2
	3
	▶192
	752
297-4478	179
297-4479	191
297-4589	907
297-4590	908
297-4595	909
	910
297-7558	2
	3
	4
	▶313
297-7646	27
297-7647	27
297-7648	35
297-7649	35
297-7650	35
297-7655	54
297-7657	90
297-7658	90
297-7660	81
297-7661	81
297-7667	888
297-7706	81
297-7830	53
297-9184	376
297-9185	359
	▶363
297-9186	359
	▶364
297-9187	363
	▶373
297-9188	364
	▶374
297-9189	373
	374
	▶375
297-9190	375
297-9191	375
	▶376
297-9192	375
297-9193	376
298-2942	295
298-2991	2
	4
	▶281
	▶282
298-2992	281
	▶283
	▶284
298-3147	87
	▶122
298-3257	122
298-3258	122
298-4195	962
298-4196	964
298-4281	3
	4
	▶1089
298-4282	1089
	1094
298-4305	▶1103
	1105
298-5732	654
299-2694	248
299-2695	250
299-2696	2
	3
	4
	▶228
299-2697	2
	3
	4
	▶225
299-2698	2
	3
	4
	▶248
299-2699	2
	3
	4
	▶250
299-2700	228
299-2701	225
299-2702	263
299-2786	127
299-2810	127
	133
299-2837	214
299-2838	212
299-2841	225
299-2901	128
	134
299-2932	266
299-2952	225
301-0589	1007
301-2461	▶770
301-2463	▶770
301-2479	▶2
301-2517	▶3
301-2545	1

3

▶ **PRIMARY REFERENCE**

PART NUMBER INDEX

Part	Page
	▶338
301-2546	338
301-2565	▶3
301-2566	▶4
301-2567	▶4
301-2570	338
301-2573	93
	▶1090
301-2575	▶753
301-2576	▶770
301-2586	▶160
301-2590	▶160
301-6874	451
301-8294	451
302-1730	397
	▶404
302-2988	476
302-3112	587
302-3188	561
	564
302-3195	453
	▶590
302-3225	453
	▶651
302-3226	651
302-3258	389
	▶597
	▶603
302-3325	598
	604
302-9466	677
303-2787	980
	▶1092
303-6261	75
303-8845	2
	3
	752
	▶758
303-8846	758
303-8848	770
	▶780
303-8849	780
303-8851	770
	▶781
303-8852	781
303-8860	313
303-8863	758
303-9791	2
	4
	▶330
303-9792	283
303-9858	340
303-9886	308
	▶351
303-9887	351
303-9888	▶307
	330
303-9889	307
303-9933	104
	106
	108
	110
	113
	115
	118
	120
303-9937	104
	106
	108
	110
	113
	115
	118
	120
303-9952	330
	331
303-9964	▶308
	328
	330
303-9965	330
	▶334
303-9966	334
303-9983	330
	331
	▶343
303-9985	3
	▶331
303-9986	325
303-9987	325
304-0041	87
305-0326	▶947
305-0329	939
305-0330	870
	880
305-0331	908
	910
305-0332	907
	909
305-0333	870
	880
305-0361	1063
305-0395	3
	4
305-0441	991
	993
305-0442	991
	993
305-0443	890
305-0466	▶1021
305-0467	▶1022
305-1667	▶793
305-1668	793
	▶811
305-1671	▶793
305-1672	793
	▶812
305-1676	811
305-1677	811
305-1678	812
305-1679	812
305-1689	788
	▶797
305-1690	788
	▶798
305-1691	788
	▶799
305-1692	790
	▶800
305-1693	790
	▶801
305-1694	792
	▶813
305-1695	792
	▶814
305-1696	792
	▶815
305-1697	793
	▶816
305-1698	793
	▶817
305-4680	6
	▶92
305-4691	75
305-4746	39
305-4747	39
305-4750	39
305-4751	39
305-4758	13
305-4761	43
305-4762	43
305-4766	▶22
	23
305-4767	14
305-4768	14
305-4769	79
305-4770	42
305-4771	42
305-4772	90
305-4883	22
305-4884	22
305-4885	22
305-4886	81
305-4891	242
305-4892	41
305-4895	242
305-4896	242
305-4897	242
305-4898	242
305-4900	81
305-4901	81
305-4902	81
305-4925	76
305-4926	6
	▶76
305-4927	39
305-4929	39
305-4931	39
305-4954	6
	▶39
305-4955	6
	▶13
305-4960	72
305-4961	72
305-7601	70
305-7662	70
306-1336	▶821
306-1337	▶821
306-8398	2
	3
	4
	▶263
306-8531	133
306-8539	128
306-8590	227
306-8718	133
306-8802	981
307-4836	▶609
	675
307-4847	598
	604
307-4923	522
	526
307-4924	522
	526
307-4928	522
	526
307-4929	522
	526
307-4933	522
	526
307-4939	522
	526
307-4943	497
	501
307-5000	564
	604
307-5087	609
307-5212	493
307-5238	598
	604
307-5289	604
307-7879	87
307-7880	87
307-7915	87
307-7971	340
307-7974	340
307-8125	87
308-8775	312
	313
308-8776	312
	313
308-8777	312
	313
308-8867	768
	▶783
308-8868	783
308-8881	4
	▶345
308-8882	345
308-8895	769
	▶784
308-8896	784
308-8914	313
	758
309-1098	826
309-3872	1090
309-5693	192
309-5694	191
	192
309-5695	192
309-5733	192
309-5734	192
309-5751	1007
309-5768	551
	555
309-5769	547
	562
	564
	574
	590

▶ PRIMARY REFERENCE

PART NUMBER INDEX

Part	Page
	597
	604
309-5808	903
	▶924
309-5842	▶146
	160
309-5849	1004
309-9960	699
309-9976	682
	▶723
309-9977	509
	513
	534
	538
	699
	▶717
310-0062	682
	690
	▶724
310-0063	685
	▶725
310-0072	▶687
	699
310-0074	▶688
	699
310-0076	▶689
	700
310-0078	▶902
310-0093	693
	695
310-0094	693
	695
310-0157	674
	▶690
310-0415	582
	▶715
310-0419	715
310-0420	715
310-1782	2
	3
	▶397
	764
310-6252	1095
	1099
310-9489	35
310-9490	35
310-9491	35
310-9528	75
310-9529	81
310-9530	81
310-9531	81
310-9532	23
310-9537	90
310-9572	12
	▶46
310-9573	46
310-9574	46
310-9608	6
	▶86
310-9616	6
	▶78
310-9663	▶68
310-9675	66
	▶69
310-9688	242
310-9695	78
	▶79
310-9701	79
311-6631	90
311-7405	653
	▶654
311-7407	654
312-2645	96
312-5525	1089
	1094
313-7833	141
	▶143
313-8080	317
313-8128	327
	328
	▶335
313-8129	335
	▶336
313-8130	336
313-8131	336
313-8251	280
	284
	286
313-8252	280
313-8258	284
314-3768	675
	▶1093
314-3848	5
	▶1094
315-0925	770
	▶785
315-0926	785
315-0943	753
	▶760
315-0944	760
315-4412	▶743
	744
316-4078	488
316-4079	488
316-8811	845
	▶851
	975
316-8814	▶882
316-8815	882
	▶884
316-8845	848
	851
316-8846	848
	851
316-8847	848
	851
316-8848	848
	851
316-8849	848
	851
316-8850	848
	851
316-8872	▶985
316-8908	962
316-8987	1015
	1016
	1026
	1027
	1028
	1029
316-8989	1001
317-4728	522
	526
317-4746	542
317-4747	615
	619
317-4751	590
317-4755	561
	564
	597
	604
319-1334	247
319-1344	251
319-1346	251
319-1348	251
	253
319-1349	251
	253
319-1354	251
319-1355	251
319-1364	▶251
319-1398	1
	▶253
319-4255	160
	▶1007
319-4258	▶147
	160
319-4304	153
319-4305	153
319-4306	154
319-4307	154
319-4353	1002
	▶1003
319-4420	185
	189
	▶206
319-9152	1092
320-0000	513
	538
320-0150	555
320-0199	397
	▶629
320-0200	629
320-5392	143
320-5396	141
320-5525	996
320-5777	340
322-4582	1093
322-8717	434
	▶744
322-8745	397
	▶407
322-8746	407
	▶427
323-7798	▶675
324-5753	258
324-5761	96
325-8876	590
325-8984	604
325-9013	564
325-9177	564
	604
325-9213	604
326-1644	84
327-3062	996
327-3063	996
327-3329	▶141
	980
327-3614	▶819
327-3615	▶802
	819
327-3617	▶819
327-3618	▶803
	819
327-3620	▶819
327-3621	▶804
	819
327-3623	▶820
327-3624	▶805
	820
327-3626	▶820
327-3627	▶806
	820
327-3650	▶820
327-6498	▶1026
327-6499	▶1027
327-6500	▶1039
327-6501	▶1015
327-6502	▶1016
327-6503	▶1040
327-6504	1026
	▶1028
327-6505	1027
	▶1029
327-6506	1039
	▶1041
327-6507	1015
	▶1042
327-6508	1016
	▶1043
327-6509	1040
	▶1044
327-6510	1028
	▶1030
327-6511	1029
	▶1031
	1041
327-6512	▶1032
	1042
	1043
327-6513	▶1033
	1044
327-6514	▶971
327-6515	▶972
	1032
	1033
327-6517	1028

▶ **PRIMARY REFERENCE**

PART NUMBER INDEX

Part	Page
	1029
	▶1050
327-6520	1041
	1042
	▶1051
327-6521	1043
	1044
	▶1052
327-6540	1021
327-6541	1022
327-6550	876
	▶999
	1000
	1001
327-6552	▶1000
327-6553	▶1001
327-6576	1000
327-6579	930
	935
327-6581	1054
327-6601	959
327-6639	1031
327-6640	1030
	1031
	1032
	1033
327-6642	1030
	1031
	1032
	1033
327-6643	1030
	1031
	1032
	1033
327-6644	1051
	1052
327-6645	▶986
	1051
327-6646	986
	987
327-6647	986
327-6648	1050
	1051
	1052
327-6649	1033
327-7483	154
327-7486	154
327-9936	258
327-9998	227
328-0021	185
	189
328-0028	258
328-0048	▶227
	980
328-0078	▶159
	980
328-0092	▶258
	675
328-2035	501
	▶746
330-1162	▶996
	997
330-1163	▶311
	997
330-1164	311
330-1324	980
	▶997
330-1335	282
	▶286
330-1336	286
330-1562	93
	▶101
330-1563	102
	▶112
330-1564	112
	▶113
330-1566	112
	▶115
330-1568	101
	▶117
330-1569	117
	▶118
330-1571	117
	▶120
330-1576	▶289
	292
330-1579	93
	▶292
	997
330-3408	151
330-3409	153
330-3410	153
330-8722	1105
330-8752	▶980
330-8753	▶980
330-8769	▶1105
330-8775	▶4
330-8777	▶752
330-8778	▶764
330-8779	▶953
330-8780	▶93
330-8810	▶5
333-4157	▶987
	1052
333-4158	987
333-4159	987
333-4160	1032
333-4172	1030
333-4173	▶988
	1050
333-4174	988
333-4175	1050
333-4178	987
333-4179	1030
	1031
	1032
	1033
333-4180	986
	987
	988
	1050
	1051
	1052
333-4181	986
	988
333-5084	▶102
	997

▶ PRIMARY REFERENCE



© 2008 CATERPILLAR
ALL RIGHTS RESERVED

CAT, CATERPILLAR, THEIR RESPECTIVE LOGOS, “CATERPILLAR YELLOW” AND THE POWER EDGE TRADE DRESS, AS WELL AS CORPORATE AND PRODUCT IDENTITY USED HEREIN, ARE TRADEMARKS OF CATERPILLAR AND MAY NOT BE USED WITHOUT PERMISSION.

PRINTED IN JAPAN