RUTHZIL TRATOR COMERCIAL DE PEÇAS LTDA 11 97083-6812 ROLANDO CITRANGULO

315SJ
BACKHOE LOADER

JOHN DEERE

PARTS CATALOG

315SJ
BACKHOE LOADER

PC10036 (Apr-07) English

ABRIL 2007

Worldwide Construction and Forestry Division
Worldwide Edition
Litho in U.S.A. (Revised)
COPYRIGHT © 2007
DEERE & COMPANY
Moline, Illinois
All rights reserved

INTRODUCTION AND CUSTOMER INFORMATION

TX1019853A -UN-19MAR07



SIDE VIEW OF JOHN DEERE BACKHOE LOADER
(MANUFACTURED 2007-)

TO THE CUSTOMER

THE PART NUMBERS IN THIS PARTS CATALOG WERE CORRECT AT THE TIME YOUR CATALOG WAS PUBLISHED. IT IS OUR POLICY TO CONSTANTLY IMPROVE OUR MACHINES AND, THEREFORE, PART NUMBERS MAY CHANGE. WHEN ORDERING PARTS, VERIFY PART NUMBERS THROUGH YOUR DEALER'S

(SPECIFICATIONS AND DESIGN SUBJECT TO CHANGE WITHOUT NOTICE.)

SERIAL NUMBER LOCATIONS

EACH 315SJ BACKHOE LOADER HAS SIX SERIAL NUMBERS, A PRODUCT IDENTIFICATION NUMBER PLATE, AN ENGINE SERIAL NUMBER PLATE, A HYDRAULIC PUMP SERIAL NUMBER PLATE, A MFWD AXLE SERIAL NUMBER PLATE, A TRANSMISSION SERIAL NUMBER PLATE, AND A REAR AXLE SERIAL NUMBER PLATE.

THE PRODUCT IDENTIFICATION NUMBER IS ON THE LEFT-HAND SIDE OF THE LOADER FRAME JUST ABOVE THE LIFT CYLINDER PIVOT BOSS.

THE ENGINE SERIAL NUMBER PLATE IS LOCATED ON THE RIGHT-HAND SIDE OF THE CYLINDER BLOCK NEAR THE FUEL PUMP.

THE MFWD AXLE SERIAL NUMBER PLATE IS LOCATED ON THE RIGHT-HAND (REAR) SIDE OF THE MFWD AXLE HOUSING.

THE REAR AXLE SERIAL NUMBER PLATE IS LOCATED NEAR THE REAR AXLEHOUSING FILL PLUG.

THE TRANSMISSION SERIAL NUMBER PLATE IS LOCATED ON THE BOTTOM-REAR FACE OF THE HOUSING.

THE HYDRAULIC PUMP SERIAL NUMBER IS LOCATED ON THE BOTTOM FACE OF THE PUMP.

LEFT-HAND SIDE, RIGHT-HAND SIDE, FRONT AND REAR OF THE BACKHOE LOADER ARE VIEWED BY FACING IN THE DIRECTION OF THE BACKHOE LOADER FORWARD TRAVEL.

LEFT-HAND SIDE, RIGHT-HAND SIDE, FRONT AND REAR OF THE BACKHOE COMPONENTS ARE DETERMINED WHEN SEATED IN THE BACKHOE OPERATING POSITION.

IF PRODUCT IDENTIFICATION NUMBERS OR SERIAL NUMBERS ARE REQUIRED FOR WARRANTY CLAIMS OR CORRESPONDENCE PERTAINING TO THIS PRODUCT. IT IS EXTREMELY IMPORTANT THAT ALL CHARACTERS BE FURNISHED. THIS POINT CANNOT BE OVEREMPHASIZED.

PRODUCT IDENTIFICATION NUMBER

TP16004 -UN-01JAN94

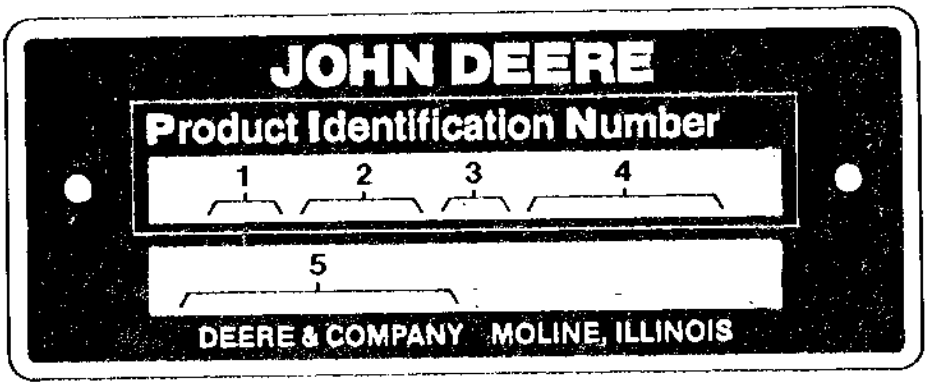

TP16004

1. DESIGNATES BACKHOE MANUFACTURER	T0 - JOHN DEERE DUBUQUE WORKS
2. DESIGNATES BACKHOE MODEL	315
3. DESIGNATES BACKHOE CONFIGURATION	SJ
4. DESIGNATES DUBUQUE WORKS SERIAL NUMBERS	
5. DESIGNATES UNIT TYPE	BACKHOE LOADER

ENGINE SERIAL NUMBER PLATE

T134833 -UN-23OCT00



T134833

1. DESIGNATES ENGINE MANUFACTURER	P-JOHN DEERE MOTORES
2. DESIGNATES NUMBER OF CYLINDERS AND LITERS.	4045 (4.5 LITER)
3. DESIGNATES FUEL TYPE OR SPECIAL COND.	DT NON-TURBOCHARGED DIESEL ENGINE TT TURBOCHARGED DIESEL ENGINE
4. DESIGNATES ENGINE SERIAL NUMBER	123456
5. DESIGNATES THE ENGINE APPLICATION AND FACTORY USER.	PE4045TT094 (WITH TURBOCHARGER)(315SJ)

SHORT BLOCK SERIAL NUMBER IDENTIFICATION

RGP4460 -UN-05MAR04

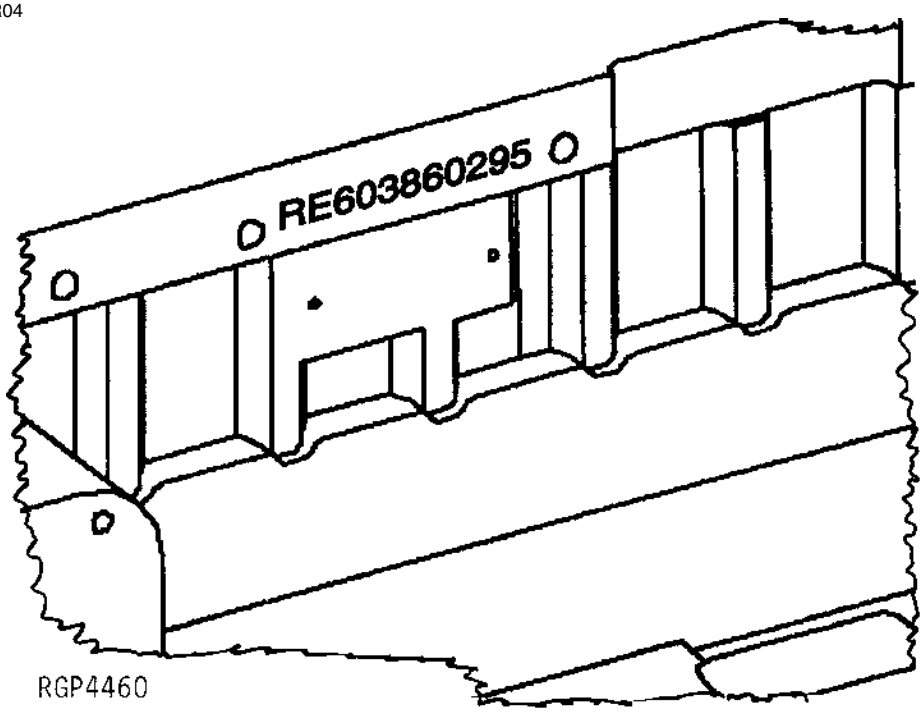

SERIAL NUMBER STAMPED INTO CASTING OF BLOCK NEAR PREVIOUS SERIAL NUMBER PLATE.

EXAMPLE: RE603860295

1. RE60386	SERVICE PART NUMBER
2. 02	MONTH ASSEMBLED
3. 95	YEAR ASSEMBLED

OPTION CODE STICKER

CD30524 -UN-27MAY98



TO ASSIST YOUR DEALER IN GIVING YOU PROMPT AND EFFICIENT SERVICE, AN OPTION CODE STICKER IS ATTACHED TO THE ROCKER ARM COVER. PLEASE REFERENCE THIS STICKER TO HELP IDENTIFY PARTS THAT ARE UNIQUE TO THE ORIGINAL EQUIPMENT MANUFACTURER'S APPLICATION BY OPTION CODE. THE BASE ENGINE CODE IDENTIFIES THE ENGINE MODEL.

PARTS THAT ARE COMMON TO MULTIPLE ENGINE MODELS WILL HAVE X'S IN THE MODEL COLUMNS ON EACH PAGE. CONVERSELY, UNIQUE ENGINES (AF01 AND TF001,FOR EXAMPLE) WILL BE IDENTIFIED AT THE TOP OF THE PAGE TO SIGNIFY "USE WITH" APPLICATIONS.

AF001	HF001
X	
X	

THIS IS DONE TO MINIMIZE THE DUPLICATION OF ART AND AT THE SAME TIME, IDENTIFY THE CORRECT PART NUMBERS BY OPTION CODE.

THE ORIGINAL EQUIPMENT MANUFACTURER FOR ACCESSORIES NOT SOLD BY YOUR DEALER, WILL BE RESPONSIBLE FOR WARRANTY SERVICE ON THIS CATEGORY OF ACCESSORIES.

MFWD AXLE SERIAL NUMBER PLATE

TP19438 -UN-01JAN94

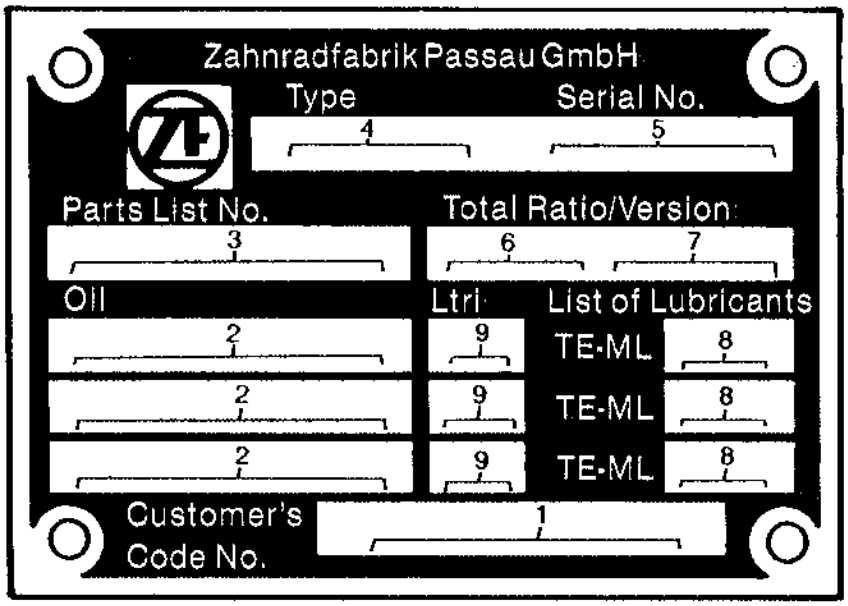

TP19438

1. DESIGNATES CUSTOMER'S CODE NUMBER	JOHN DEERE PART NUMBER
2. DESIGNATES TYPE OF LUBRICANT	JOHN DEERE HY GARD (J20C)
3. DESIGNATES ZF-PARTS-LIST NUMBER	4475 004 095 OR 4475 004 097
4. DESIGNATES AXLE TYPE	MS-B3025
5. DESIGNATES AXLE SERIAL NUMBER	12345
6. DESIGNATES TOTAL - RATIO OF THE AXLE	14.759 OR 12. 574
7. DESIGNATES VERSION	SP. DIFF. (WITH OR WITHOUT SELF-LOCKING DIFFERENTIAL)
8. DESIGNATES LUBRICANT SPECIFICATION	05
9. DESIGNATES CAPACITY	LTR (DIFFERENTIAL CARRIER AND PLANETARY GEAR ASSEMBLY

SERIAL NUMBER LISTING INFORMATION

SERIAL NUMBER INFORMATION IS LISTED TO SHOW ON WHICH MACHINES EACH PART CAN BE USED; FOR EXAMPLE:

- THE PART CAN BE USED ON ALL MACHINES.
000000- THE PART CAN BE USED ON ALL MACHINES BEGINNING WITH THE SERIAL NUMBER LISTED.
-000000 THE PART CAN BE USED ON ALL MACHINES UP TO AND INCLUDING THE SERIAL NUMBER LISTED.
000000-000000 THE PART CAN BE USED ON ALL MACHINES BETWEEN AND INCLUDING THE SERIAL NUMBERS LISTED.

WHEN XXXXXX'S ARE LISTED IN PLACE OF A SERIAL NUMBER, A SERIAL NUMBER CHANGE WAS MADE BUT THE EXACT SERIAL NUMBER WAS NOT AVAILABLE WHEN THE CATALOG WAS PRODUCED.
USE OF VEHICLE SERIAL NUMBERS ON ENGINE PAGES:
PLEASE PROVIDE THE VEHICLE SERIAL NUMBER (VSN-T0450HX910011), ENGINE SERIAL NUMBER (ESN-PE4045T19 0332), AND ENGINE MODEL NO. (PE4045TT058) WHEN ORDERING REPLACEMENT PARTS. ENGINE PARTS PAGES HAV E BEEN REVISED TO DETAIL THE VSN IN THE HEADER, ENGINE MODEL NO. IN THE REMARKS SECTION, AND VEHIC LE SERIAL NO. IN THE ALPHABETICAL INDEX. PLEASE PROVIDE ALL THREE NUMBERS WHEN ORDERING ENGINE PA RTS TO INSURE EFFICIENT SERVICE.

DIRECTION ARROW

ARROWS ARE USED WITH ILLUSTRATIONS TO INDICATE THE FRONT OF THE UNIT. "RIGHT-HAND" AND "LEFT-HAND" SIDES OF THE LOADER OR TRACTOR PARTS ARE DETERMINED BY FACING IN THE DIRECTION OF MACHINE FORWARD TRAVEL

EXCEPTION: FOR ALL BACKHOE PARTS, "RIGHT-HAND" AND "LEFT-HAND" SIDES, "FRONT" AND "REAR" ARE DETERMINED WHEN SEATED FOR BACKHOE OPERATION.

BOX-ENCLOSED ILLUSTRATIONS

A KEY NUMBER, SHOWN IN THE PARTS LIST, IS ASSIGNED TO A BOX ENCLOSING ALL PARTS SOLD AS A SERVICE ASSEMBLY.

COMPLETE GOODS LISTINGS

COMPLETE GOODS ARE LISTED IN THE REMARKS COLUMN AS WHOLE GOODS.
DO NOT INCLUDE ON REPLACEMENT PARTS ORDER.

SI UNITS OF MEASURE

METRIC DIMENSIONS ARE GIVEN, WHERE APPLICABLE, THROUGHOUT THIS PARTS CATALOG.

CHANGE INDICATOR LINE

CHANGES AFFECTING THE ORDERING OF PARTS ARE IDENTIFIED BY VERTICAL LINES MARKED IN THE LEFT-HAND MARGIN OF REVISED PARTS LISTING IMAGES. A LINE IS ALSO AT THE LEFT-HAND EDGE OF THE SAME PART NUMBER IN THE NUMERICAL INDEX TO SHOW THE LOCATION OF REVISED INFORMATION.

REMARKS AND ABBREVIATIONS

THE FOLLOWING REMARKS AND ABBREVIATIONS MAY APPEAR THROUGHOU T. THE PARTS CATALOG.
REFER TO THE FOLLOWING CHART FOR TRANSLATIONS.

REMARKS AND ABBREVIATIONS

TX1007193 -UN-04MAY06

PHRASE	ENGLISH	FRANCAIS	DEUTSCH	ITALIANO	ESPANOL	SVENSKA
ALSO ORDER, ORD W/	Also order	Commander aussi	Ebenso bestellen	Ordinare anche	Pedir también	Beställ även
AMP	Ampere	Ampère	Ampere	Ampere	Amperio	Ampere
APPL, APPL ONLY	This application only	Uniquement pour cette utilisation	Nur für diese Anwendung	Solo per questa applicazione	Solo para este propósito	Endast för denna användning
AR	As required	Selon le besoin	Nach Bedarf	Secondo necessità	Según necesidad	Vid behov
ASSY	Complete assembly	Ensemble complet	Kompl.-Zusammenbau	Gruppo completo	Montaje completo	Komplett montering
CA, CONVENIENCE ASSY	Convenience assembly	Ensemble convenance	Komfort-Zusammenbau	Montaggio pratico	Montaje de conveniencia	Lämplig montering
CCW	Counter-clockwise	Sens anti-horaire	Gegen Uhrzeigersinn	Senso antiorario	A la izquierda	Moturs
COMPLETE	Complete	Complet	Vollständig	Completo	Completo	Fullständig
COMPLETE GOODS	Complete goods	Compléter marchandises	Vollst. Waren	Merci complete	Mercancías completas	Kompletta varor
CTL CUT TO LENGTH	Cut to length	Couper à la longueur	Auf Länge zurechtschneiden	Tagliare alla lunghezza	Corte a la longitud	Skära till längd
CW	Clockwise	Sens horaire	Im Uhrzeigersinn	In senso orario	A la derecha	Medurs
FOR	For	Pour	Für	Per	Para	För
FRONT	Front	Avant	Vorn	Anteriore	Frente	Fram
GAS	Gasoline	Essence	Benzin	Benzina	Gasolina	Bensin
HP	Horsepower	Puissance en cv	Leistung	Potenza	Potencia	Hästkraft
HFWD	Hydraulic Front-wheel Drive	Traction Avant Hydraulique	Hydraulischer Vorderradantrieb	Trazione Anteriore Idraulica	Traccion Delantera Hidraulica	Hydraulisk Framhjulsdrift
HS, HEAD MARKED	High strength, head marked	Haute résistance, tête marquée	Hochfest, vorn gekennzeichnet	Contrassegnato in testa, ad alta resistenza	Alta fuerza, marca en cabeza	Hög styrka, huvudmärkt
ID	Inside diameter	Diamétre intérieur	Innendurch-messer	Diametro interno	Diá. interior	Innerdiameter
INCH	Inch	Pouce	In.	Pollice	Pulg.	Tum
INCL KEYS	Includes keys...	Comprend les positions...	Einschließlich Schlüssel...	Include le chiavette...	Incluye posiciones...	Inklusive nycklar...
INCL, INCLUDES	Includes...	Comprend...	Enthält...	Include...	Incluye...	Inkluderar...
INCLUDES PARTS/ ITEMS MARKED	Includes parts/items marked...	Comprend les pièces/articles marqués...	Enthält gekennzeichnete Teile/Pos. ...	Include i pezzi e gli elementi contrassegnati...	Incluye piezas marcadas...	Inkluderar markerade delar/artiklar...
INNER	Inner	Intérieur	Innerer	Interno	Interno	Inre, invändig
KIT	Kit	Kit	Kit	Kit	Juego	Sats
L	Number of links	Nombre de maillons	Anzahl der Glieder	Numero di maglie	Nº de eslabones	Antal länkar
LGTH	Length	Longueur	Länge	Lunghezza	Longitud	Längd
LGP	Low Ground Pressure	Faible Pression Au Sol	Niederer Bodendruck	Bassa Pressione Sul Suelo	Baja Presion Sobre El Suelo	Laagt Marktryck
LH	Left-hand	Gauche	Links	Sinistra	Izquierda	Vänster
LT	Long Track	Chenille Longue	Mit Langem Laufwerk	Cingolo Lungo	Cadena Largo	Laangt Larvband
LOW, LOWER	Lower	Inférieur	Unterer	Inferiore	Inferior	Nedre
MAKE FROM, MF	Make from	Faireavec	Herstellen von	Fabbricare da	Hacer de	Tillverka av
MARKED	Marked	Marqué	Markiert	Contrassegnato	Marcado	Märkt

TX1007193

REMARKS AND ABBREVIATIONS

TX1007195 -UN-04MAY06

PHRASE	ENGLISH	FRANCAIS	DEUTSCH	ITALIANO	ESPANOL	SVENSKA
MATCHED SET	Matched set	Ensemble assorti	Passender Satz	Set abbinato	Sistema emparejado	Anpassad sats
MFWD	Mechanical Front-Wheel Drive	Pont Avant	Allradantrieb	Ruota Motrice Meccanica Anteriore	Traccion Delantera Mecanica	Mekanisk Framhjulsdrift
NA, NOT USED THIS APPL	Not used this application	Ne sert pas pour cette application	In dieser Anwendung nicht benutzt	Non usato in questa applicazione	No se usa en esta aplicación	Ej använd i detta sammanhang
NLA	No longer available	Epuisé	Nicht mehr lieferbar	Non più disponibile	Descontinuado	Ej längre tillgänglig
NSEP	Not supplied separately	Non livré séparément	Nicht einzeln lieferbar	Non fornito separatamente	No se suministra por separado	Kan ej erhållas separat
OD	Outside diameter	Diamètre extérieur	Außendurch-messer	Diametro esterno	Diá. exterior	Ytterdiameter
OPTIONAL	Optional	En option	Wahlweise	Opzionale	Opcional	Valfri
OR	Or	Ou	Oder	Oppure	O	Eller
ORD, ORDER	Order	Commander	Bestellen	Ordinare	Pídase	Order
OS	Oversize	Sur-dimension	Übergröße	Maggiorato	Sobretamaño	Överdimension
OUTER	Outer	Externe	Äußerer	Esterno	Externo	Yttre, utvändig
PKG, PACKG	Package, Packet of	Emballage, paquet de	Verpackung, verpackt mit	In confezione da	Paquete de	I sats; paket
PTO	Power Take Off	Prise De Force	Zapfwelle	Presa Di Forza	Toma De Fuerza	Kraftuttag
RATIO	Ratio	Rapport	Übersetzungs-verhältnis	Rapporto	Índice	Förhållande
REAR	Rear	Arrière	Hinten	Posteriore	Trasero	Bak; bakre
REMAN	Remanufactured	Echange Standard	Generalveberholt	Refatto	Refabricador por	Renoverad
REPL	Replaces	Remplace	Ersetzt	Sostituisce	Sustituye	Ersätter
RH	Right-hand	Droit	Rechts	Destra	Derecha	Höger
SN	Serial number	Numéro de série	Seriennummer	Numero di serie	Nº de serie	Serienummer
STD	Standard	Standard	Standard	Standard	Normal	Standard
SUB	Replaced by	Remplacé par	Ersetzt durch	Sostituito da	Sustituido por	Ersatt med
SUB COMPONENTS	Substitute components (of the kit or assy)	Substituer les composants (du kit ou de l'ensemble)	Komponenten ersetzen (des Kits oder der Baugruppe)	Sostituire i componenti (del kito del gruppo)	Sustituir los componentes	Ersätta komponenterna (i satsen eller monteringen)
SUB FOR	Subsitutes for	Remplace	Ersatz für	Sostituisce	Sustitución para	Ersätter
TEETH, Z	Number of gear teeth	Nombre de dents d'engrenages	Zahl der Zahnradzähne	Numero di denti dell'ingranaggio	Nº de dientes de engranaje	Antal redskapständer
TK	Thickness	Épaisseur	Stärke	Spessore	Espesor	Tjocklek
UP, UPPER	Upper	Supérieur	Oberer	Superiore	Superior	Övre
US	Undersize	Sous-dimension	Untergröße	Minorato	Subtamaño	Underdimension
USE WITH	Use with	À utiliser avec	Verwenden mit	Usare con	Usar con	Använd med
USE UNTIL EXHAUSTED	Use until exhausted	Utilisation jusqu'à épuisé	Verwenden, bis erschöpft	Usare fino all'esaurimento	Usar hasta agotar	Använda till uttömd
W/	With	Avec	Mit	Con	Con	Med; inklusive
W/O	Without	Sans	Ohne	Senza	Sin	Utan; exklusive
WHOLE GOODS	Whole goods	Marchandises entières	Vollständige Waren	Merci intere	Mercancías enteras	Hela varor
XLT	Extra Long Track	Chenille Extra Longue	Mit Extra Langem Laufwerk	Cingolo Extra Lungo	Cadena Extra Larga	Extra Laangt Larvband
VEC	Vehicle Electronic Controller	Controleur Elektronisches Du Vehicule	Elektronisches Steuergeraet Des Fahrzeugs	Unità Di Comando Elettronica Del Veicolo	Unidad de Control Electronico del Vehiculo	Elektronisk Fordonsstyrenhet
VLC	Vehicle Load Center	Coffret De Repartition Du Vehicule	Verteilerstation Des Fahrzeugs	Centro Di Carico Del Veicolo	Centro De Cargas Del Vehiculo	Fordonets Elcentral

TX1007195

ALPHABETICAL INDEX

PAGE

A

A/C AND BASIC FAN PACKAGE....0510-8
A/C DIODE....1674-28
A/C SWITCH....1674-28
A/C WIRING HARNESS....1674-28
ACCELERATOR ELECTRICAL....0515-2
ACCESS COVER, INJECTION PUMP GEAR (TT094)....0400-8
ACCUMULATOR SEAL KIT....2160-24
ACCUMULATOR VALVE....2160-24
ACCUMULATOR, RIDE CONTROL....2160-24
ADAPTER KIT, STARTER MOTOR (TT094)....0400-52
ADJUSTING STRAP, ALTERNATOR (TT094)....0400-54
AIR CLEANER....0520-2
AIR CLEANER ELEMENT....0520-2
AIR CLEANER HOSE....0520-2
AIR CLEANER RESTRICTION INDICATOR SWITCH....0520-2
AIR CONDITIONING....1830-6
AIR CONDITIONING....1830-7A
AIR CONDITIONING (FREEZE/COMPRESSOR) SWITCH....1830-7A
AIR CONDITIONING COMPRESSOR....1830-12
AIR CONDITIONING COMPRESSOR MOUNTING BRACKETS....1830-12
AIR CONDITIONING COMPRESSOR DRIVE BELT....1830-12
AIR CONDITIONING COMPRESSOR HOSES....1830-12
AIR CONDITIONING CONDENSER....1830-12
AIR CONDITIONING RECEIVER DRYER....1830-12
AIR SUSPENSION SEAT SWITCH....1674-28
ALARM SYSTEM, BACK-UP....2004-4
ALARM, TRAVEL WARNING....2004-4
ALTERNATE SWITCH PLACEMENT....1674-28
ALTERNATOR....1672-6
ALTERNATOR ADJUSTING STRAP (TT094)....0400-54
ALTERNATOR FAN....1672-6
ALTERNATOR MOUNTING BRACKETS (TT094)....0400-54
ALTERNATOR PULLEY....1672-6
ANCHOR, TIE BAND MOUNT, HARNESS....1673-4
ANCHOR, TIE BAND MOUNT, HARNESS....1673-6
ANGLE,BACKREST ADJUSTMENT....1821-2
ANTENNA, RADIO....2001-2
ANTI-CAVITATION, BOOM SECTION....3162-4
ANTI-CAVITATION, BUCKET SECTION....3162-6
ANTI-THEFT LABELS....1675-10
ARM RESTS....1821-2
ARM, LOADER LIFT....3143-4
ARM, STANDARD....3346-2
ARMS, ROCKER (TT094)....0400-6
AUDIBLE ALARM, QUICK COUPLER PIN ENGAGEMENT....1674-6
AUXILIARY EQUIPMENT HYDRAULICS....3363-24
AUXILIARY FUNCION HYDRAULIC HOSES, LOADER....3163-12
AUXILIARY HYDRAULIC CONTROL SWITCH....1674-10
AUXILIARY SECTION RELIEF VALVE....3162-8
AUXILIARY SECTION, LOADER VALVE....3162-8
AUXILIARY, LOADER CONTROL VALVE....3162-2
AXLE HOUSING, FRONT (WITHOUT MFWD)....0230-6
AXLE SWIVEL HOUSING, FRONT (WITHOUT MFWD)....0230-7
AXLE,FRONT (W/MFWD)....0250-2

B

BACK-UP ALARM SYSTEM....2004-4
BACKHOE BOOM....3344-2
BACKHOE BOOM CYLINDER....3365-8
BACKHOE BOOM CYLINDER REPAIR KIT....3365-8
BACKHOE BOOM LOCK CONTROL LEVER....3315-22
BACKHOE BOOM LOCK CONTROL SOLENOID....3315-22
BACKHOE BOOM LOCK CONTROL WIRE HARNESS....3315-22
BACKHOE BOOM LOCK HYDRAULICS....3363-30
BACKHOE BOOM PINS....3344-2
BACKHOE BUCKET....3302-14
BACKHOE BUCKET....3302-16
BACKHOE BUCKET CUTTING EDGE....3302-14
BACKHOE BUCKET CUTTING EDGE....3302-16
BACKHOE BUCKET CYLINDER....3365-4
BACKHOE BUCKET CYLINDER....3365-12
BACKHOE BUCKET CYLINDER HYDRAULICS....3363-8
BACKHOE BUCKET CYLINDER REPAIR KIT....3365-4
BACKHOE BUCKET CYLINDER REPAIR KIT....3365-12
BACKHOE BUCKET PINS....3302-14
BACKHOE BUCKET PINS....3302-16
BACKHOE CONTROL VALVE....3362-4
BACKHOE CONTROLS COVER....1816-2
BACKHOE CYLINDER HYDRAULICS....3363-32
BACKHOE LEVERS COVER....1816-2
BACKHOE MAIN FRAME....1740-4
BACKHOE STABILIZER CYLINDER HYDRAULICS,....3363-4
BACKHOE STABLIZER CYLINDER HYDRAULICS....3363-4
BACKHOE SWING CYLINDER HYDRAULICS....3363-16
BACKHOE SWING LOCK CONTROL LEVER....3315-22
BACKHOE VALVE BOOM SECTION....3362-10
BACKHOE VALVE BUCKET SECTION....3362-12
BACKHOE VALVE CROWD SECTION....3362-14
BACKHOE VALVE EXTENDIBLE SECTION....3362-18
BACKHOE VALVE PRIORITY INLET SECTION....3362-8
BACKHOE VALVE SELECTIVE FLOW SECTION....3362-20
BACKHOE VALVE SWING SECTION....3362-16
BACKHOE VALVE SWING, PILOT SECTION....3362-46
BACKREST ADJUSTMENT ANGLE....1821-2
BAR, CYLINDER SERVICE LOCK....1313-2
BARRIER, HEAT AND NOISE....1834-2
BATTERIES,DUAL....1671-4
BATTERY BOX....1913-2
BATTERY CABLE, SINGLE....1671-2
BATTERY COVER....1913-2
BATTERY DISCONNECT SWITCH,MASTER....1671-6
BATTERY INSTALLATION, SINGLE....1671-2
BEACON, ROTATING....1673-2
BEACON, STROBE....1673-2
BEARING,FRONT AXLE HOUSING (WITHOUT MFWD)....0230-6
BEARINGS, MAIN (TT094)....0400-2
BEARINGS,C0NNECTING ROD (TT094)....0400-11
BELL LIGHTING OPTION....1673-6
BELT, SEAT....1821-14
BELT,AIR CONDITIONING COMPRESSOR DRIVE....1830-12
BLOCK, REMANUFACTURED COMPLETE (TT094)....0400-14
BLOCK, SHORT (TT094)....0400-14
BLOCK, TRUNNION SWING CYLINDER....3342-2
BLOWER MOTOR PRESSURIZER....1830-6
BLOWER MOTOR PRESSURIZER....1830-7A
BOLT, STRIKER, HOOD....1910-2
BOOM CYLINDER HYDRAULIC HOSES....3363-6
BOOM CYLINDER HYDRAULIC OIL LINES....3363-6
BOOM CYLINDER HYDRAULICS, LOADER....3163-2
BOOM CYLINDER REPAIR KIT, BACKHOE....3365-8
BOOM CYLINDER, BACKHOE....3365-8
BOOM LEVER LOCK COVER....1816-10
BOOM LIFT CYLINDER....3165-6

ALPHABETICAL INDEX - CONTINUED

PAGE

BOOM SECTION ANTI-CAVITATION RELIEF....3162-4
BOOM SECTION RELIEF VALVE....3162-4
BOOM SECTION RELIEF VALVE....3362-10
BOOM SECTION, BACKHOE VALVE....3362-10
BOOM SECTION, LOADER VALVE....3162-4
BOOM SERVICE LOCK BAR....1313-2
BOOM, BACKHOE....3344-2
BOOM, LOADER....3143-4
BOOM, LOADER CONTROL VALVE....3162-2
BOOT, MECHANICAL SUSPENDED SEAT....1821-8
BOX, BATTERY....1913-2
BOX, TOOL....1913-2
BRACKET, AIR CLEANER MOUNTING....0520-2
BRACKET, HOSE MOUNTING, EXTENDIBLE DIPPERSTICK....3363-26
BRACKET, INTERIOR REAR VIEW MIRROR....2002-4
BRACKET, LICENCE PLATE....1314-2
BRACKET, STRIKER BOLT....1910-2
BRACKET,RADIO ANTENA....2001-2
BRACKETS ,SEAT....1821-2
BRACKETS, ALTERNATOR MOUNTING (TT094)....0400-54
BRAKE DISC....1011-2
BRAKE LIGHT PRESSURE SWITCH....1060-2
BRAKE PEDAL....1060-2
BRAKE SERVICE, HYDRAULICS....1060-6
BRAKE VALVE....1060-2
BRAKE VALVE....1060-4
BRAKE VALVE BOOST PLUMBING (CAB)....1060-8
BRAKE VALVE HOUSING....1060-2
BRAKE VALVE HOUSING....1060-4
BRAKE VALVE KIT....1060-4
BRAKE VALVE MOUNTING PLATE....1060-2
BRAKE VALVE PUSH ROD....1060-4
BRAKE, PARK, HYDRAULIC....1111-2
BRAKE, PARK, PLUMBING....1111-2
BRAKES, SERVICE....1011-2
BREATHER FILTER, HYDRAULIC RESERVOIR....2160-12
BUCKET CYLINDER HYDRAULICS, BACKHOE....3363-8
BUCKET CYLINDER LINES, BACKHOE....3363-8
BUCKET CYLINDER, BACKHOE....3365-4
BUCKET CYLINDER, BACKHOE....3365-12
BUCKET CYLINDER, EXTENDIBLE DIPPERSTICK....3363-26
BUCKET CYLINDER, LOADER....3165-8
BUCKET CYLINDER, MULTI-PURPOSE....3102-13
BUCKET LEVELING LINKAGE....3115-2
BUCKET LEVELING ROD....3115-2
BUCKET LEVELING YOKE....3115-2
BUCKET LINKAGE, LOADER....3143-8
BUCKET LINKS AND PINS,BACKHOE....3345-2
BUCKET PIN....3346-2
BUCKET PINS,LOADER....3102-22
BUCKET SECTION ANTI-CAVITATION RELIEF....3162-6
BUCKET SECTION RELIEF VALVE....3162-6
BUCKET SECTION RELIEF VALVE....3362-12
BUCKET SECTION, BACKHOE VALVE....3362-12
BUCKET SECTION, LOADER VALVE....3162-6
BUCKET SPACER, SYNTHETIC....3346-2
BUCKET, LOADER .76 CUBIC METER (1.00 CUBIC YARD)....3102-2
BUCKET, LOADER .90 CUBIC METER (1.20 CUBIC YARD)....3102-2
BUCKET, LOADER .96 CUBIC METER (1.25 CUBIC YARD)....3102-2
BUCKET, LOADER CONTROL VALVE....3162-2
BUCKET, LOADER, COUPLER .96 CUBIC METER (1.25 CUBIC YARD)....3102-14

PAGE

BUCKET, MULTI-PURPOSE....3102-8
BUCKET,BACKHOE....3302-14
BUCKET,BACKHOE....3302-16
BUCKET,LOADER .86 CUBIC METER(1.13 CUBIC YARD)....3102-4
BUCKET,LOADER 1.00 CUBIC METER(1.30 CUBIC YARD)....3102-4
BUMPER....1747-4
BUMPER....1747-6
BUMPER, MAIN FRAME....1747-4
BUMPER, MAIN FRAME....1747-6
BUSHING, EXTENDIBLE ARM....3346-4
BUSHING,FRONT AXLE HOUSING (WITHOUT MFWD)....0230-6
BUSHING,SLIDING FRAME....3342-2

C

CAB DOME LIGHT....2001-2
CAB DOOR CYLINDER....1814-2
CAB DOOR HINGES....1814-2
CAB DOORS....1814-2
CAB FRAME....1811-4
CAB HEADLINER....1811-4
CAB HEATER....1830-6
CAB HEATER....1830-7A
CAB MOUNTING ISOLATORS....1811-4
CAB REAR WINDOWS....1814-8
CAB SIDE WINDOW LATCH....1814-2
CAB SIDE WINDOWS....1814-2
CAB SKIRT....1927-2
CAB WINDSHIELD....1814-6
CAB WIRE HARNESS....1674-4
CABLE, HEATER VALVE CONTROL....1830-6
CABLE, RADIO....2001-2
CABLE, SINGLE BATTERY....1671-2
CABLES, STABILIZER CONTROL....3315-2
CABLES,DUAL BATTERY....1671-4
CAMSHAFT (TT094)....0400-5
CAMSHAFT GEAR (TT094)....0400-5
CAN RESISTOR....1674-4
CAN TERMINATION RESISTOR....1674-8
CANOPY....1811-2
CAP, FUEL TANK....0560-2
CAP, RADIATOR....0510-4
CAP, RADIATOR....0510-6
CAP,ENGINE OIL FILL INLET (TT094)....0400-16
CARRIER,DISC BRAKE....1011-2
CARRIER,PARK BRAKE CLUTCH DISC....1111-4
CARRIER,REAR AXLE PLANET PINION....0201-2
CASE,DIFFERENTIAL....0210-6
CASE,DIFFERENTIAL....0230-4
CENTER KICK PANEL, REAR....1812-2
CHARGE PUMP,TRANSMISSION....0360-2
CHROME EXHAUST EXTENSION....0530-4
CLAMP,GATHERING....2160-16
CLUTCH ASSEMBLY,FIRST SPEED....0350-8
CLUTCH ASSEMBLY,HIGH RANGE FORWARD....0350-6
CLUTCH ASSEMBLY,LOW RANGE FORWARD....0350-4
CLUTCH ASSEMBLY,MFWD....0350-14
CLUTCH ASSEMBLY,SECOND SPEED....0350-10
CLUTCH ASSEMBLY,THIRD SPEED....0350-12
CLUTCH DISC,LIMITED SLIP DIFFERNTIAL (MFWD)....0250-10
CLUTCH DISC,MFWD....0350-14
CLUTCH DISC,PARK BRAKE....1111-4

ALPHABETICAL INDEX - CONTINUED

PAGE

CLUTCH DISK,FIRST SPEED 0350-8
CLUTCH DISK,HIGH RANGE FORWARD 0350-6
CLUTCH DISK,LOW RANGE FORWARD 0350-4
CLUTCH DISK,SECOND SPEED 0350-10
CLUTCH DISK,THIRD SPEED 0350-12
CLUTCH DISK,TRANSMISSION INPUT SHAFT 0350-2
CLUTCH,DISC BRAKE 1011-2
COLD WEATHER STARTING AID 0505-4
COLD WEATHER STARTING AID SOLENOID 0505-4
COLUMN, STEERING 0960-4
COLUMN, STEERING 0960-6
COLUMN, TILT STEERING 0960-4
COLUMN, TILT STEERING 0960-6
COMPLETE REAR AXLE ASSEMBLY 0201-8
COMPRESSOR MOUNTING BRACKETS, AIR CONDITIONING 1830-12
COMPRESSOR,AIR CONDITIONING 1830-12
CONDENSER,AIR CONDITIONING 1830-12
CONNECTING ROD (TT094) 0400-11
CONNECTING ROD BEARINGS (TT094) 0400-11
CONNECTOR, SOLENOID (TT094) 0400-36
CONNECTOR, SOLENOID, STANADYNE DE10 0400-37
CONSOLE WIRING HARNESS,SIDE, CAB 1674-4
CONSOLE, FRONT 1816-8
CONTROL CABLE, HEATER VALVE 1830-6
CONTROL COVER, BACKHOE, TWO LEVER 1816-2
CONTROL LEVER,BACKHOE BOOM LOCK 3315-22
CONTROL LEVER,BACKHOE SWING LOCK 3315-22
CONTROL LEVER,FORWARD,NEUTRAL AND REVERSE 0315-2
CONTROL VALVE ELECTRICAL HARNESS AND MOUNTING BRACKET 1674-10
CONTROL VALVE LINKAGE, STABILIZER 3315-2
CONTROL VALVE, BACKHOE 3362-4
CONTROL VALVE, LOADER 3162-2
CONTROL, PUMP RELAY 1674-30
CONTROL, RIDE 2160-24
CONTROL, RIDE , ELECTRICAL 1675-2
CONTROLLER, VECHICLE 1674-5A
CONTROLLER,ENGINE (TT094) 0400-34
CONVERTER, TORQUE 0350-1
COOLANT RECOVERY TANK 0510-4
COOLANT RECOVERY TANK 0510-6
COOLANT, ENGINE HEATER 0505-2
COOLER, TRANSMISSION, HYD. OIL 2160-18
COOLER,HYDRAULIC OIL AND HOSES 2160-18
CORD, MANUAL HOLDER ATTACHMENT 1811-2
CORNER WINDOWPANE, REAR 1814-8
COUNTERWEIGHT FRAME 1749-3
COUNTERWEIGHT, FRONT 1749-2
COUPLER LOADER BUCKET .96 CUBIC METER (1.25 CUBIC YARD) 3102-14
COUPLER, LOADER, ELECTRICAL 1675-10
COUPLER, QUICK (STANDARD) 3302-6
COUPLER, QUICK CONNECT 2160-16
COUPLER, QUICK COUPLER (UNIVERSAL) 3302-2
COVER, ACCESS, INJECTION PUMP GEAR (TT094) 0400-8
COVER, BACKHOE CONTROLS 1816-2
COVER, BACKHOE LEVERS 1816-2
COVER, BATTERY 1913-2
COVER, BOOM LEVER LOCK 1816-10
COVER, FLOOR TO FRONT CONSOLE 1812-2
COVER, FUSE PANEL 1816-8
COVER, LINKAGE 1812-2

PAGE

COVER, LOADER CONTROL 1816-12
COVER, MIDDLE FLOOR 1812-2
COVER, NO SHIFTER 1811-2
COVER, OIL FILLER OPENING (TT094) 0400-16
COVER, OPERATOR STATION 1927-2
COVER, REAR FLOOR 1812-2
COVER, STABILIZER CONTROL 1816-10
COVER, STABILIZER CONTROL 1816-12
COVER, STEERING COLUMN 1816-6
COVER, THERMOSTAT (TT094) 0400-42
COVER, TIMING GEAR (TT094) 0400-8
COVER, WHEEL HUB (WITHOUT MFWD) 0230-8
COVER,ROCKER ARM (TT094) 0400-7
COVER,TRANSMISSION TORQUE CONVERTER 0341-4
CRANKSHAFT (TT094) 0400-2
CRANKSHAFT FRONT OIL SEAL (TT094) 0400-8
CRANKSHAFT GEAR (TT094) 0400-2
CRANKSHAFT SPEED SENSOR (TT094) 0400-8
CRANKSHAFT TIMING WHEEL (TT094) 0400-2
CROSS AND BEARING REAR DRIVESHAFT 0325-2
CROWD CYLINDER 3365-18
CROWD CYLINDER HYDRAULIC HOSE 3363-12
CROWD CYLINDER HYDRAULIC OIL LINES 3363-12
CROWD CYLINDER REPAIR KIT 3365-18
CROWD PIN 3346-2
CROWD SECTION RELIEF VALVE 3362-14
CROWD SECTION, BACKHOE VALVE 3362-14
CROWD SPACER, SYNTHETIC 3346-2
CUSHIONS,SEAT 1821-2
CUTTING EDGE,BACKHOE BUCKET 3302-14
CUTTING EDGE,BACKHOE BUCKET 3302-16
CUTTING EDGE,LOADER BUCKET 3102-2
CUTTING EDGE,LOADER BUCKET 3102-4
CUTTING EDGE,LOADER BUCKET .96 CUBIC METER (1.25 CUBIC YARD) 3102-14
CUTTING EDGE,MULTI-PURPOSE BUCKET 3102-8
CYLINDER CAB DOOR 1814-2
CYLINDER HEAD (TT094) 0400-28
CYLINDER HEAD GASKET (TT094) 0400-28
CYLINDER HYDRAULICS,BACKHOE SWING 3363-16
CYLINDER LINER (TT094) 0400-11
CYLINDER LINER O-RING KIT (TT094) 0400-11
CYLINDER REPAIR KIT, BACKHOE BOOM 3365-8
CYLINDER REPAIR KIT, BACKHOE BUCKET 3365-4
CYLINDER REPAIR KIT, BACKHOE BUCKET 3365-12
CYLINDER REPAIR KIT, STABILIZER 3365-28
CYLINDER ROD LOCK BAR 1313-2
CYLINDER, BACKHOE BOOM 3365-8
CYLINDER, BACKHOE BUCKET 3365-4
CYLINDER, BACKHOE BUCKET 3365-12
CYLINDER, BACKHOE BUCKET HYDRAULICS 3363-8
CYLINDER, BACKHOE STABILIZER HYDRAULICS 3363-4
CYLINDER, BOOM LIFT 3165-6
CYLINDER, BUCKET, EXTENDIBLE DIPPERSTICK 3363-26
CYLINDER, CROWD 3365-18
CYLINDER, EXTENDIBLE DIPPERSTICK 3346-4
CYLINDER, EXTENSION, HYDRAULICS, EXTENDI BLE DIPPERSTICK 3363-26
CYLINDER, LOADER BUCKETR 3165-8
CYLINDER, LOCK SIDE SHIFT 3363-28
CYLINDER, MULTI-PURPOSE BUCKET 3102-13
CYLINDER, STABILIZER 3365-28
CYLINDER, SWING 3365-20
CYLINDER, SWING TRUNNION BLOCK 3342-2

ALPHABETICAL INDEX - CONTINUED

PAGE

CYLINDER,FRONT AXLE STEERING (WITHOUT MFWD) 0230-7
CYLINDER,STEERING (W/MFWD) 0960-2

D

DECALS....1320-2
DECALS....1320-6
DELUXE LIGHTS....1673-4
DIFFERENTIAL CASE....0210-6
DIFFERENTIAL CASE....0230-4
DIFFERENTIAL CASE,LIMITED SLIP (MFWD) 0250-10
DIFFERENTIAL GEAR,LIMITED SLIP (MFWD)....0250-10
DIFFERENTIAL GEARS....0210-6
DIFFERENTIAL GEARS....0230-4
DIFFERENTIAL HOUSING,REAR....0201-2
DIFFERENTIAL LOCK PLUMBING....0210-8
DIFFERENTIAL LOCK PUSH BUTTON 1674-12
DIFFERENTIAL LOCK SWITCH 1674-12
DIFFERENTIAL PINION SHAFT 0210-6
DIFFERENTIAL PINION SHAFT 0230-4
DIFFERENTIAL W/REAR AXLE ASSEMBLY 0201-8
DIFFERENTIAL,LIMITED SLIP (MFWD)....0250-10
DIODE, A/C....1674-28
DIODES 1674-8
DIPPERSTICK....3346-2
DIPPERSTICK AUXILIARY HYDRAULICS....3363-24
DIPPERSTICK EXTENDIBLE....3346-4
DIPPERSTICK PIN 3346-2
DIPSTICK TUBE, ENGINE OIL (TT094) 0400-18
DIPSTICK TUBE, TRANSMISSION 0341-6
DIPSTICK, ENGINE OIL (TT094) 0400-18
DIPSTICK, TRANSMISSION 0341-6
DIRT PAD,SLIDING FRAME 1740-4
DISC BRAKE 1011-2
DISC BRAKE CARRIER 1011-2
DISC BRAKE CLUTCH....1011-2
DISC BRAKE PISTON 1011-2
DOME LIGHT....1811-4
DOORS,CAB....1814-2
DP SWITCH KIT 2160-10
DRAIN VALVE,RADIATOR....0510-4
DRAIN VALVE,RADIATOR....0510-6
DRIVE SHAFT U-JOINT(W/MFWD) 0250-16
DRIVE SHAFT YOKE (MFWD) 0250-3
DRIVE SHAFT(W/MFWD) 0250-16
DRIVE SHAFT, UNIVERSAL (MFWD)....0250-3
DRIVE,PLANETARY (MFWD)....0250-8
DRIVER LINK 3345-2
DRIVESHAFT,REAR....0325-2
DRYER,RECEIVER, AIR CONDITIONING....1830-12
DUAL BATTERIES 1671-4
DUAL BATTERY CABLES 1671-4

E

ECU - ENGINE CONTROL UNIT (TT094)....0400-34
EDGING, ISOLATOR 0510-4
EDGING, ISOLATOR 0510-6
ELECTRICAL ACCELERATOR....0515-2
ELECTRICAL CONNECTORS, ROOF 1673-6
ELECTRICAL HARNESS, CONTROL VALVE, MOUNTING BRACKET....1674-10
ELECTRICAL LOADER COUPLER....1675-10

PAGE

ELECTRICAL, FRONT COUPLER HARNESS 1674-6
ELECTRICAL, PILOT ENABLE....1674-5A
ELECTRICAL, RIDE CONTROL.... 1675-2
ELECTRONIC ETHER STARTING AID 0505-4
ELEMENT, AIR CLEANER.... 0520-2
ELEMENT, ENGINE OIL FILTER (TT094) 0400-22
ELEMENT, FILTER.... 2160-10
ELEMENT, FUEL FILTER (TT094).... 0400-44
ELEMENT,TRANSMISSION OIL FILTER 0360-4
ENABLE SWITCH, REAR WIPER 1814-14
ENGINE CONTROLLER (TT094) 0400-34
ENGINE COOLANT HEATER.... 0505-2
ENGINE COOLANT TEMPERATURE SENSOR (TT094).... 0400-42
ENGINE FLYWHEEL (TT094).... 0400-56
ENGINE MAJOR OVERHAUL GASKET SET (TT094).... 0400-60
ENGINE MAJOR OVERHAUL GASKET SET (TT094).... 0400-62
ENGINE MOUNT 0540-2
ENGINE OIL DIPSTICK (TT094) 0400-18
ENGINE OIL DIPSTICK TUBE (TT094).... 0400-18
ENGINE OIL FILTER (TT094).... 0400-22
ENGINE OIL FILTER HEADER (TT094).... 0400-22
ENGINE OIL PAN (TT094).... 0400-20
ENGINE OIL PRESSURE SWITCH.... 1674-8
ENGINE OIL PUMP (TT094) 0400-24
ENGINE OIL PUMP GEAR (TT094) 0400-24
ENGINE OIL PUMP HOUSING (TT094).... 0400-24
ENGINE OIL PUMP INTAKE (TT094).... 0400-24
ENGINE OVERHAUL KIT (TT094).... 0400-58
ENGINE OVERHAUL KIT (TT094).... 0400-60
ENGINE OVERHAUL KIT (TT094).... 0400-62
ENGINE PISTON (TT094) 0400-11
ENGINE REBUILD KIT (TT094) 0400-60
ENGINE REBUILD KIT (TT094) 0400-62
ENGINE SHORT BLOCK (TT094).... 0400-14
ENGINE SIDE PANELS 1910-2
ENGINE SIDE SHIELDS.... 1910-2
ENGINE SUPPORT 0540-2
ENGINE SUPPORT ISOLATOR.... 0540-2
ENGINE THERMOSTAT (TT094).... 0400-42
ENGINE VENTILATING HOSE (TT094) 0400-26
ENGINE WIRING HARNESS.... 1674-8
EVAPORATOR 1830-6
EVAPORATOR 1830-7A
EVAPORATOR TEMPERATURE SWITCH 1830-7A
EXHAUST EXTENSION.... 0530-4
EXHAUST MANIFOLD (TT094) 0400-31
EXHAUST MANIFOLD GASKET (TT094) 0400-31
EXHAUST VALVE (TT094).... 0400-28
EXPANSION VALVE.... 1830-6
EXPANSION VALVE.... 1830-7A
EXTENDIBLE ARM LOCKING PIN.... 3346-4
EXTENDIBLE ARM PAD.... 3346-4
EXTENDIBLE ARM WEARSTRIPS 3346-4
EXTENDIBLE DIPPERSTICK.... 3346-4
EXTENDIBLE DIPPERSTICK EXTENSION CYLINDER HYDRAULICS.... 3363-26
EXTENDIBLE SECTION, BACKHOE VALVE 3362-18
EXTENSION CYLINDER HYDRAULICS, EXTENDIBLE DIPPERSTICK 3363-26
EXTENSION, EXHAUST.... 0530-4
EXTINGUISER, FIRE.... 2003-2

ALPHABETICAL INDEX - CONTINUED

PAGE

F

FAN SHROUD....0510-4
FAN SHROUD....0510-6
FAN SHROUD, RADIATOR....0510-4
FAN SHROUD, RADIATOR....0510-6
FAN, ALTERNATOR....1672-6
FAN, BASIC AND A/C....0510-8
FENDERS....1927-2
FIFTH FUNCTION FOOT CONTROL....3315-12
FIFTH FUNCTION PEDAL....3315-12
FILLER TUBE,TRANSMISSION OIL....0341-2
FILTER ELEMENT....2160-10
FILTER LINES, FUEL (TT094)....0400-46
FILTER, BREATHER, HYDRAULIC RESERVOIR....2160-12
FILTER, ENGINE OIL (TT094)....0400-22
FILTER, FRESH AIR....1816-12
FILTER, FUEL (TT094)....0400-44
FILTER, HYDRAULIC OIL....2160-10
FILTERS, AIR CLEANER....0520-2
FIRE EXTINGUISER....2003-2
FIRST SPEED CLUTCH ASSEMBLY....0350-8
FIRST SPEED CLUTCH DISK....0350-8
FITTINGS, BRAKE VALVE....1060-4
FLEXPLATE, TORQUE CONVERTOR....0350-1
FLOOR COVER, REAR....1812-2
FLOOR MATS....1812-2
FLUID SAMPLING PORTS....1390-2
FLUID, STARTING....0505-4
FLYWHEEL RING GEAR (TT094)....0400-56
FLYWHEEL, ENGINE (TT094)....0400-56
FOOT CONTROL, FIFTH FUNCTION....3315-12
FOOT, STABILIZER....1740-4
FORWARD,NEUTRAL AND REVERSE CONTROL LEVER....0315-2
FRAME, BACKHOE SLIDING....3342-2
FRAME, CAB....1811-4
FRAME, COUNTERWEIGHT....1749-3
FRAME, MAIN FRAME....1740-4
FRAME, ROPS....1811-2
FRAME, SLIDING....1740-4
FRAME, SWING....3343-4
FRAME,SLIDING....3342-2
FREEZE/COMPRESSOR SWITCH, AIR CONDITIONING....1830-7A
FRESH AIR FILTER....1816-12
FRONT AXLE (W/MFWD)....0250-2
FRONT AXLE HOUSING (MFWD)....0250-4
FRONT AXLE HOUSING (WITHOUT MFWD)....0230-6
FRONT AXLE HUB (MFWD)....0250-6
FRONT AXLE INPUT PINION GEAR YOKE (W/MFWD)....0250-14
FRONT AXLE KING PIN (MFWD)....0250-6
FRONT AXLE LUBE HOSE(W/MFWD)....0250-2
FRONT AXLE PIVOT PIN(W/MFWD)....0250-2
FRONT AXLE RING GEAR AND PINION (W/MFWD)....0250-14
FRONT AXLE RING GEAR(W/MFWD)....0250-14
FRONT AXLE SPIRAL BEVEL INPUT PINION GEAR(W/MFWD)....0250-14
FRONT AXLE SWIVEL HOUSING (WITHOUT MFWD)....0230-7
FRONT AXLE TIE ROD ASSEMBLY (MFWD)....0250-4
FRONT AXLE UNIVERSAL DRIVE SHAFT (MFWD)....0250-6
FRONT AXLE WHEEL HUB(WITHOUT MFWD)....0230-8
FRONT CONSOLE....1816-8
FRONT CONSOLE COVER,FLOOR....1812-2
FRONT CONSOLE SEAL....1811-2
FRONT COUNTERWEIGHT....1749-2
FRONT FLOOR MAT....1812-2
FRONT PLATE (TT094)....0400-13
FRONT TRANSMISSION HOUSING....0341-4
FRONT WHEEL (WITHOUT MFWD)....0120-1
FRONT WINDSHIELD WIPER MOTOR....1814-10
FUEL FILTER (TT094)....0400-44
FUEL FILTER HEATER (TT094)....0400-44
FUEL FILTER LINES (TT094)....0400-46
FUEL GAUGE SENDER....0560-2
FUEL HOSES....0560-2
FUEL INJECTION LINES (TT094)....0400-34
FUEL INJECTION NOZZLE (TT094)....0400-32
FUEL INJECTION PUMP (TT094)....0400-34
FUEL INJECTION PUMP DRIVE GEAR (TT094)....0400-34
FUEL LINES, FILTER (TT094)....0400-46
FUEL TANK....0560-2
FUEL TANK CAP....0560-2
FUEL TANK STRAINER....0560-2
FUEL TEMPERATURE SENSOR (TT094)....0400-36
FUEL TEMPERATURE SENSOR, STANADYNE DE10....0400-37
FUEL TRANSFER PUMP (TT094)....0400-47
FUEL TRANSFER PUMP PUSH ROD (TT094)....0400-47
FUSE PANEL COVER....1816-8

G

GAS PEDAL....0515-2
GASKET SET,ENGINE MAJOR OVERHAUL (TT094)....0400-60
GASKET SET,ENGINE MAJOR OVERHAUL (TT094)....0400-62
GASKET, CYLINDER HEAD (TT094)....0400-28
GASKET, EXHAUST MANIFOLD (TT094)....0400-31
GASKET, FRONT CONSOLE....1811-2
GASKET, TIMING GEAR COVER (TT094)....0400-8
GASKET,OIL PAN (TT094)....0400-20
GASKET,ROCKER ARM COVER (TT094)....0400-7
GATHERING CLAMP....2160-16
GEAR, CAMSHAFT (TT094)....0400-5
GEAR, CRANKSHAFT (TT094)....0400-2
GEAR, ENGINE OIL PUMP (TT094)....0400-24
GEAR, FUEL INJECTION PUMP DRIVE (TT094)....0400-34
GEAR,REAR AXLE PLANET....0201-6
GEAR,SPIRAL BEVEL INPUT PINION FRONT AXLE(W/MFWD)....0250-14
GEARS,DIFFERENTIAL....0210-6
GEARS,DIFFERENTIAL....0230-4
GRILLE....1921-2
GRILLE HOUSING....1921-2
GRILLE SCREEN....1921-2
GROUND CABLE....1674-8
GROUND STRAP....1674-8
GUARD, MAIN FRAME....1740-2
GUARD, MFWD....1740-2
GUARD, RADIATOR FAN....0510-4
GUARD, RADIATOR FAN....0510-6
GUARD, TRANSMISSION....1740-2
GUARD,MFWD....1740-4

H

HARNESS, AC COMPRESSOR....1830-12

ALPHABETICAL INDEX - CONTINUED

PAGE

HARNESS, ANCHOR, TIE BAND MOUNT 1673-4
HARNESS, ANCHOR, TIE BAND MOUNT 1673-6
HARNESS, AUXILIARY CONTROL SWITCH....1674-10
HARNESS, ENGINE WIRING....1674-8
HARNESS, LOAD COUPLER CONTROL CHASSIS 1674-6
HARNESS, LOADER COUPLER, CAB 1674-6
HARNESS, PILOT ENABLE WIRING 1674-5A
HARNESS, QUICK COUPLER....1674-6
HARNESS, RADIO 2001-2
HARNESS, RETURN TO DIG 1674-8
HARNESS, RIDE CONTROL....1674-6
HARNESS, RIDE CONTROL....1675-2
HARNESS, RIDE CONTROL....2160-24
HARNESS, ROOF WIRING....1673-4
HARNESS, ROOF WIRING....1673-6
HARNESS, SIDE CONSOLE WIRING, CAB....1674-4
HARNESS, SWITCH WIRING 1673-6
HARNESS, WIRING, A/C 1674-28
HARNESS, WIRING, TREE....1673-6
HARNESS,SIDE SHIFT LOCK CONT VALVE 3363-28
HEAD, CYLINDER (TT094) 0400-28
HEADER, ENGINE OIL FILTER (TT094)....0400-22
HEADER,TRANSMISSION OIL FILTER....0360-4
HEADLINER LAMP....1811-4
HEADLINER, CAB 1811-4
HEADLINER, ROPS 1811-2
HEAT AND NOISE BARRIER 1834-2
HEATER VALVE CONTROL CABLE....1830-6
HEATER, ENGINE COOLANT....0505-2
HEATER, FUEL FILTER (TT094)....0400-44
HIGH AMBIENT....0510-8
HIGH PRESSURE SWITCH 1830-6
HIGH PRESSURE SWITCH 1830-7A
HIGH RANGE FORWARD CLUTCH ASSEMBLY 0350-6
HIGH RANGE FORWARD CLUTCH DISK....0350-6
HINGE PINS, MULTI-PURPOSE BUCKET....3102-8
HINGES, CAB DOORS....1814-2
HOLDER, SWING LOCK PIN 1811-2
HOOD 1910-2
HOOD LATCH....1910-2
HOOD SUPPORT....1910-2
HORN 2004-6
HOSE SUPPORT, EXTENDIBLE DIPPERSTICK....3363-26
HOSE, AIR CLEANER....0520-2
HOSE, ENGINE VENTILATING (TT094) 0400-26
HOSE, HYDRAULIC, RIDE CONTROL 2160-24
HOSE, WINDSHIELD WASHER....1814-12
HOSES, EXTENSION CYLINDER, EXTENDIBLE DI PPERSTICK....3363-26
HOSES, FUEL 0560-2
HOSES, LOADER BOOM LIFT CYLINDER HOSES....3163-2
HOSES, LOADER BUCKET CYLINDER HOSES 3163-12
HOSES, MAIN HYDRAULIC....2160-16
HOSES, OIL COOLER....2160-18
HOSES, RADIATOR 0510-4
HOSES, RADIATOR 0510-6
HOSES, STEERING (WITH MFWD) 0960-8
HOSES, STEERING (WITHOUT MFWD)....0960-10
HOSES, THIRD FUNCTION HYDRAULIC HOSES....3163-12
HOSES,AIR CONDITIONING COMPRESSOR....1830-12
HOSES,AIR CONDITIONING COMPRESSOR, RECEIVER DRYER....1830-12
HOSES,RECEIVER DRYER, AIR CONDITIONING COMPRESSOR....1830-12
HOUSING, BRAKE VALVE 1060-2
HOUSING, BRAKE VALVE 1060-4

PAGE

HOUSING, FRONT INSTRUMENT PANEL 1816-8
HOUSING, GRILLE.... 1921-2
HOUSING, LOCK VALVE, SIDE SHIFT 3362-30
HOUSING, SIDE INSTRUMENT PANEL 1816-10
HOUSING, SIDE INSTRUMENT PANEL 1816-12
HOUSING, SWIVEL, FRONT AXLE (WITHOUT MFWD) 0230-7
HOUSING,ENGINE OIL PUMP (TT094).... 0400-24
HOUSING,FRONT AXLE (MWFD) 0250-4
HOUSING,FRONT AXLE (WITHOUT MFWD).... 0230-6
HOUSING,PARK BRAKE.... 1111-4
HOUSING,REAR AXLE 0201-2
HOUSING,REAR AXLE 0201-4
HOUSING,REAR DIFFERENTIAL.... 0201-4
HOUSING,TRANSMISSION FRONT.... 0341-4
HOUSING,TRANSMISSION TORQUE CONVERTER.... 0341-4
HUB, FRONT AXLE WHEEL (WITHOUT MFWD) 0230-8
HUB,FRONT AXLE (MFWD).... 0250-6
HUB,REAR AXLE PLANETARY DRIVE.... 0201-6
HYDRAULIC CONTROL, AUXILIARY, SWITCH 1674-10
HYDRAULIC FRONT COUPLER HARNESS.... 1674-6
HYDRAULIC HOSE, RIDE CONTROL 2160-24
HYDRAULIC HOSE,BOOM CYLINDER 3363-6
HYDRAULIC HOSE,CROWD CYLINDER 3363-12
HYDRAULIC OIL COOLER AND HOSES 2160-18
HYDRAULIC OIL COOLER LINES 2160-16
HYDRAULIC OIL FILTER.... 2160-10
HYDRAULIC OIL LINE,BOOM CYLINDER.... 3363-6
HYDRAULIC OIL LINES LOADER BUCKET CYLINDER 3163-12
HYDRAULIC OIL LINES,CROWD CYLINDER 3363-12
HYDRAULIC OIL LINES,THIRD FUNCTION.... 3163-12
HYDRAULIC PARK BRAKE 1111-2
HYDRAULIC RESERVOIR.... 2160-12
HYDRAULIC RESERVOIR BREATHER FILTER.... 2160-12
HYDRAULIC RIDE CONTROL 2160-24
HYDRAULIC TEMPERATURE SENDER.... 1674-8
HYDRAULIC TEMPERATURE SENSOR.... 1674-8
HYDRAULICS, AUXILIARY EQUIPMENT 3363-24
HYDRAULICS, BACKHOE BUCKET CYLINDER 3363-8
HYDRAULICS, BACKHOE STABILIZER CYLINDER 3363-4
HYDRAULICS, EXTENSION CYLINDER, EXTENDI BLE DIPPERSTICK.... 3363-26
HYDRAULICS, LOADER BOOM CYLINDER 3163-2
HYDRAULICS, MAIN 2160-16
HYDRAULICS, SERVICE BRAKE 1060-6
HYDRAULICS, STEERING VALVE (WITH MFWD) 0960-8
HYDRAULICS, STEERING,(WITHOUT MFWD).... 0960-10
HYDRAULICS,BACKHOE CYLINDERS 3363-32
HYDRAULICS,BACKHOE SWING CYLINDER 3363-16
HYDRAULICS,BOOM LOCK,BACKHOE.... 3363-30
HYDRAULICS,BRAKE VALVE BOOST (CAB).... 1060-8

I

IMPELLER,WATER PUMP (TT094).... 0400-39
INJECTION PUMP,FUEL (TT094) 0400-34
INLET OIL FILL (TT094) 0400-16
INLET PRIORITY SECTION, BACKHOE VALVE.... 3362-8
INLET, WATER PUMP (TT094).... 0400-38
INPUT PINION, SPIRAL BEVEL.... 0210-2
INPUT PINION, SPIRAL BEVEL.... 0210-4
INPUT SHAFT,TRANSMISSION.... 0350-2
INSIDE MIRROR.... 2002-4

ALPHABETICAL INDEX - CONTINUED

PAGE

INSTRUMENT PANEL VANDAL GUARD 1816-10
INSTRUMENT PANEL, SIDE....1816-10
INSTRUMENT PANEL, SIDE....1816-12
INTAKE VALVE (TT094)....0400-28
INTAKE, ENGINE OIL PUMP (TT094)....0400-24
INTERIOR REAR VIEW MIRROR 2002-4
ISOLATOR EDGING 0510-4
ISOLATOR EDGING 0510-6
ISOLATOR SEAL 0510-4
ISOLATOR SEAL 0510-6
ISOLATOR,ENGINE SUPPORT 0540-2
ISOLATOR,TRANSMISSION MOUNTING 0342-2
ISOLATORS, CAB MOUNTING 1811-4
ISOLATORS, ROPS FRAME 1811-2

K

KING PIN, FRONT AXLE (MFWD) 0250-6
KINGPIN, FRONT AXLE (WITHOUT MFWD) 0230-7
KIT, BACKHOE BOOM CYLINDER REPAIR 3365-8
KIT, BACKHOE BUCKET CYLINDER REPAIR....3365-4
KIT, BACKHOE BUCKET CYLINDER REPAIR....3365-12
KIT, BRAKE VALVE....1060-4
KIT, DP SWITCH....2160-10
KIT, ENGINE OVERHAUL (TT094)....0400-58
KIT, ENGINE OVERHAUL (TT094)....0400-60
KIT, ENGINE OVERHAUL (TT094)....0400-62
KIT, FUEL FILTER (TT094)....0400-44
KIT, FUEL FILTER HEATER (TT094)....0400-44
KIT, LOADER BUCKET CYLINDER REPAIR 3165-8
KIT, MAIN HYDRAULIC PUMP....2160-4
KIT, REAR WINDOW LATCH....1814-8
KIT, REPAIR, SWING CYLINDER....3365-20
KIT, STABILIZER CYLINDER REPAIR....3365-28
KIT, STARTER MOTOR ADAPTER (TT094)....0400-52
KIT, THIRD FUNCTION LOADER CONTROL....3115-6
KIT, UNIVERSAL DRIVE SHAFT (MFWD) 0250-3
KIT, WINDOW SEAL....1814-8
KIT,CROWD CYLINDER REPAIR....3365-18
KIT,ENGINE REBUILD (TT094)....0400-60
KIT,ENGINE REBUILD (TT094)....0400-62
KIT,HYDRAULIC RIDE CONTROL....2160-24
KIT,MULTI-PURPOSE BUCKET CYLINDER REPAIR....3102-13
KIT,SEAT SLIDE LATCH....1821-4
KIT,SLIDE PUCK SERVICE....1821-6
KIT,STARTER MOTOR (TT094)....0400-50
KIT,SWIVEL LATCH....1821-6
KIT,WATER PUMP REPAIR (TT094) 0400-39
KITS, BOOM LIFT CYLINDER....3165-6
KNOB, TEMPERATURE CONTROL....1674-28

L

LABELS 1320-2
LABELS 1320-6
LABELS, ANTI-THEFT....1675-10
LAMP, HEADLINER 1811-4
LATCH, HOOD....1910-2
LATCH, REAR WINDOW....1814-8
LATCH, SIDE WINDOW LATCH 1814-2
LATCH,SEAT SWIVEL 1821-6
LEVER, STABILIZER 3315-2
LEVER, THIRD FUNCTION LOADER CONTROL 3115-6
LEVER, TRANSMISSION CONTROL 0315-2

PAGE

LEVER,BACKHOE BOOM LOCK CONTROL.... 3315-22
LEVER,BACKHOE SWING LOCK CONTROL 3315-22
LEVER,LOADER CONTROL VALVE 3115-4
LEVER,SEAT LUMBAR SUPPORT CONTROL.... 1821-4
LEVER,SEAT SLIDE CONTROL.... 1821-4
LEVER,SEAT SWIVEL CONTROL 1821-4
LEVERS, BACKHOE COVER 1816-2
LICENCE PLATE BRACKET.... 1314-2
LIFT ARM CYLINDER.... 3165-6
LIFT ARM, LOADER 3143-4
LIGHT HARNESS, STEERING COLUMN 1673-6
LIGHT, DOME 1811-4
LIGHT,CAB DOME.... 2001-2
LIGHTING, BELL OPTION.... 1673-6
LIGHTS, DELUXE.... 1673-4
LIGHTS, STANDARD (OPTIONAL) 1673-4
LIMITED SLIP DIFFERENTIAL (MFWD) 0250-10
LIMITED SLIP DIFFERENTIAL CASE (MFWD) 0250-10
LIMITED SLIP DIFFERENTIAL CLUTCH DISC (MFWD) 0250-10
LIMITED SLIP DIFFERENTIAL SHAFT(MFWD) 0250-10
LINE, POWER BEYOND, HYDRAULIC 3362-4
LINE, STABILIZER HYDRAULIC 3362-4
LINER, CYLINDER (TT094).... 0400-11
LINES, AUXILIARY EQUIPMENT,.... 3363-24
LINES, BUCKET CYLINDER, BACKHOE.... 3363-8
LINES, FUEL FILTER (TT094).... 0400-46
LINES, FUEL INJECTION (TT094).... 0400-34
LINES, OIL COOLER, HYDRAULIC 2160-16
LINES, OIL, EXTENSION CYLINDER, EXTENDIB LE DIPPERSTICK 3363-26
LINES, SERVICE BRAKE 1060-6
LINKAGE FLOOR COVER.... 1812-2
LINKAGE, BUCKET LEVELING.... 3115-2
LINKAGE, STABILIZER VALVE.... 3315-2
LINKAGE,LOADER BUCKET 3143-8
LINKAGE,LOADER CONTROL VALVE.... 3115-4
LINKAGE,RETURN-TO-DIG 3115-2
LINKAGE,THIRD FUNCTION LOADER CONTROL VALVE.... 3115-6
LOAD SENSE RELIEF VALVE.... 3162-10
LOADER ARM SERVICE LOCK.... 1313-2
LOADER BOOM 3143-4
LOADER BOOM CYLINDER HYDRAULICS 3163-2
LOADER BOOM OIL LINES 3163-2
LOADER BOOM SERVICE LOCK 1313-2
LOADER BUCKET .76 CUBIC METER (1.00 CUBIC YARD).... 3102-2
LOADER BUCKET .86 CUBIC METER(1.13 CUBIC YARD).... 3102-4
LOADER BUCKET .90 CUBIC METER (1.20 CUBIC YARD).... 3102-2
LOADER BUCKET .96 CUBIC METER (1.25 CUBIC YARD).... 3102-2
LOADER BUCKET 1.00 CUBIC METER(1.30 CUBIC YARD).... 3102-4
LOADER BUCKET COUPLER .96 CUBIC METER (1.25 CUBIC YARD).... 3102-14
LOADER BUCKET CUTTING EDGE.... 3102-2
LOADER BUCKET CUTTING EDGE.... 3102-4
LOADER BUCKET CYLINDER.... 3165-8
LOADER BUCKET CYLINDER PINS 3102-22
LOADER BUCKET CYLINDER REPAIR KIT 3165-8
LOADER BUCKET HYDRAULIC CYLINDER 3165-8
LOADER BUCKET LIFT CYLINDER HYDRAULICS 3163-12
LOADER BUCKET LINK PINS.... 3102-22
LOADER BUCKET LINKAGE 3143-8

ALPHABETICAL INDEX - CONTINUED

PAGE

LOADER BUCKET PINS 3102-22
LOADER CONTROL COVER 1816-12
LOADER CONTROL VALVE 3162-2
LOADER CONTROL VALVE LEVER 3115-4
LOADER CONTROL VALVE LINKAGE 3115-4
LOADER COUPLER ELECTRICAL....1675-10
LOADER LIFT ARM 3143-4
LOADER LIFT ARM CYLINDER....3165-6
LOADER LIFT ARM PIN 3143-4
LOADER VALVE AUXILIARY SECTION 3162-8
LOADER VALVE BOOM SECTION 3162-4
LOADER VALVE BUCKET SECTION 3162-6
LOADER VALVE RELIEF....3162-10
LOCK BAR, BOOM SERVICE 1313-2
LOCK PIN, SWING 1811-2
LOCK SWITCH, DIFFERENTIAL 1674-12
LOCK VALVE, SIDE SHIFT....3362-30
LOCK, SLIDING FRAME HYDRAULICS 3363-28
LOCK,VANDAL GUARD 1816-10
LOCKING PIN, EXTENDIBLE ARM 3346-4
LOCKING VALVE, SIDE SHIFT 3362-30
LOCKOUT VALVE, STABILIZER....3162-10
LOW PRESSURE SWITCH....1830-6
LOW PRESSURE SWITCH 1830-7A
LOW RANGE FORWARD CLUTCH ASSEMBLY 0350-4
LOW RANGE FORWARD CLUTCH DISK....0350-4
LUBE HOSE,FRONT AXLE(W/MFWD) 0250-2

M

MAGNET, RETURN-TO-DIG....3162-6
MAIN BEARINGS (TT094)....0400-2
MAIN FRAME 1740-4
MAIN FRAME BUMPER 1747-4
MAIN FRAME BUMPER 1747-6
MAIN FRAME GUARD....1740-2
MAIN HYDRAULIC HOSES....2160-16
MAIN HYDRAULIC PUMP 2160-4
MAIN HYDRAULIC PUMP SOLENOID VALVE....2160-4
MAIN HYDRAULIC RESERVOIR....2160-12
MAIN HYDRAULIC SEAL KIT....2160-4
MAIN HYDRAULICS 2160-16
MANIFOLD,EXHAUST (TT094) 0400-31
MANUAL HOLDER CORD....1811-2
MANUAL HOLDER, OPERATOR....1811-2
MASTER DISCONNECT BATTERY SWITCH 1671-6
MASTER SWITCH MOUNTING PLATE 1671-6
MATS, FLOOR 1812-2
MFWD CLUTCH ASSEMBLY 0350-14
MFWD CLUTCH DISC....0350-14
MFWD CLUTCH DRIVE SOLENOID....0350-14
MFWD GUARD 1740-2
MFWD GUARD 1740-4
MFWD SWITCH....1674-28
MIDDLE FLOOR COVER 1812-2
MIRROR BRACKET, INTERIOR REAR VIEW....2002-4
MIRROR, INTERIOR REAR VIEW 2002-4
MODE DOOR 1816-8
MODE DOOR WIRING HARNESS....1816-8
MOLDBOARD,MULTI-PURPOSE BUCKET 3102-8
MOTOR, FRONT WINDSHIELD WIPER 1814-10
MOTOR, REAR WINDSHIELD WIPER....1814-14
MOUNT,ENGINE 0540-2
MOUNTING BRACKET, CONTROL VALVE ELECTRICAL HARNESS....1674-10

PAGE

MOUNTING BRACKETS, COMPRESSOR, AIR CONDITIONING 1830-12
MOUNTING PLATE, BRAKE VALVE.... 1060-2
MOUNTING PLATE, RADIO/SPEAKER 2001-2
MOUNTING PLATE,MASTER DISCONNECT SWITCH.... 1671-6
MOUNTING SUPPORT,TRANSMISSION 0342-2
MUFFLER 0530-4
MULTI-PURPOSE BUCKET 3102-8
MULTI-PURPOSE BUCKET CUTTING EDGE 3102-8
MULTI-PURPOSE BUCKET CYLINDER 3102-13
MULTI-PURPOSE BUCKET CYLINDER REPAIR KIT 3102-13
MULTI-PURPOSE BUCKET MOLDBOARD 3102-8

N

NOISE AND HEAT BARRIER 1834-2
NOZZLE, FUEL INJECTION (TT094) 0400-32

O

OIL COOLER 2160-18
OIL COOLER LINES,HYDRAULIC 2160-16
OIL COOLER, HYDRAULIC.... 2160-18
OIL COOLER, TRANSMISSION.... 2160-18
OIL FILL INLET (TT094) 0400-16
OIL FILLER OPENING COVER (TT094) 0400-16
OIL FILTER,ENGINE (TT094).... 0400-22
OIL FILTER,TRANSMISSION 0360-4
OIL LINES, LOADER BOOM 3163-2
OIL PAN GASKET (TT094) 0400-20
OIL PAN,ENGINE (TT094).... 0400-20
OIL PUMP,TRANSMISSION CHARGE.... 0360-2
OPERATOR MANUAL HOLDER.... 1811-2
OPERATOR STATION SKIRTS.... 1927-2
OUTPUT SHAFT,TRANSMISSION.... 0350-16
OVERHAUL KIT, ENGINE (TT094) 0400-58
OVERHUAL KIT, ENGINE (TT094) 0400-60

P

PACKAGE, A/C AND BASIC FAN 0510-8
PAD SEAT BACK.... 1821-2
PAD,EXTENDIBLE ARM 3346-4
PAN,ENGINE OIL (TT094).... 0400-20
PANEL, FRONT INSTRUMENT 1816-8
PANEL, RADIO TRIM.... 2001-2
PANEL, REAR KICK 1812-2
PANELS, ENGINE SIDE 1910-2
PARK BRAKE CLUTCH DISC 1111-4
PARK BRAKE CLUTCH DISC CARRIER 1111-4
PARK BRAKE HOUSING.... 1111-4
PARK BRAKE OIL PRESSURE SWITCH.... 1674-8
PARK BRAKE PISTON 1111-4
PARK BRAKE PLUMBING.... 1111-2
PARK BRAKE, HYDRAULIC 1111-2
PEDAL GAS 0515-2
PEDAL, BRAKE 1060-2
PEDAL, FIFTH FUNCTION.... 3315-12
PILOT BACKHOE SWING SECTION VALVE 3362-46
PILOT CONTROL VALVE, BACKHOE 3362-4
PILOT ENABLE.... 1674-5A
PILOT ENABLE SWITCH.... 1674-5A
PIN, BUCKET.... 3346-2

ALPHABETICAL INDEX - CONTINUED

PAGE

PIN, CROWD 3346-2
PIN, DIPPERSTICK 3346-2
PIN, KING, FRONT AXLE (MFWD) 0250-6
PIN,LOADER LIFT ARM 3143-4
PINION SHAFT,DIFFERENTIAL 0210-6
PINION SHAFT,DIFFERENTIAL 0230-4
PINS AND BUCKET LINKS,BACKHOE 3345-2
PINS, BACKHOE BOOM 3344-2
PINS, BACKHOE BUCKET AND LINKS 3345-2
PINS, LOADER BUCKET CYLINDER 3102-22
PINS, LOADER BUCKET LINK 3102-22
PINS, MULTI-PURPOSE BUCKET HINGE 3102-8
PINS, SWING FRAME 3343-4
PINS,BACKHOE BUCKET 3302-14
PINS,BACKHOE BUCKET 3302-16
PINS,LOADER BUCKET 3102-22
PIPE, EXHAUST PIPE 0530-4
PISTON RINGS (TT094) 0400-11
PISTON, BRAKE VALVE 1060-4
PISTON, ENGINE (TT094) 0400-11
PISTON, SLIDING FRAME LOCK 3363-28
PISTON,DISC BRAKE 1011-2
PISTON,PARK BRAKE 1111-4
PIVOT PIN,FRONT AXLE(W/MFWD) 0250-2
PLACEMENT, SWITCHES, ALTERNATE 1674-28
PLANET CARRIER,REAR AXLE 0201-6
PLANETARY DRIVE (MFWD) 0250-8
PLANETARY DRIVE RING GEAR (MFWD) 0250-8
PLANETARY DRIVE SUN GEAR SHAFT (MFWD) 0250-8
PLANETARY DRIVE,REAR AXLE 0201-6
PLATE, BULKHEAD 3363-32
PLATE, FLOOR, NO SHIFTER 1811-2
PLATE, FRONT (TT094) 0400-13
PLATE,BRAKE VALVE MOUNTING 1060-2
PLATE,REAR AXLE HOUSING MOUNTING 0201-2
PLATE,REAR AXLE HOUSING MOUNTING 0201-4
PLUG, TIMING PIN HOLE, STANADYNE DE10 0400-37
PLUMBING, BRAKE VALVE BOOST (CAB) 1060-8
PLUMBING, DIFFERENTIAL LOCK 0210-8
PLUMBING, PARK BRAKE 1111-2
POWER BEYOND HYDRAULIC LINE 3362-4
POWER LINK 3345-2
PRESSURE REGULATOR (TT094) 0400-36
PRESSURE REGULATOR, STANADYNE DE10 0400-37
PRESSURE SWITCH, BRAKE LIGHT 1060-2
PRESSURE, ENGINE OIL SWITCH 1674-8
PRIORITY VALVE INLET SECTION, BACKHOE 3362-8
PROTECTIVE SLEEVES 2160-18
PULLEY ALTERNATOR 1672-6
PULLEY, WATER PUMP (TT094) 0400-38
PULLY AND V-BELT 0510-8
PUMP CONTROL RELAY 1674-30
PUMP, ENGINE OIL (TT094) 0400-24
PUMP, FUEL INJECTION (TT094) 0400-34
PUMP, FUEL TRANSFER (TT094) 0400-47
PUMP, MAIN HYDRAULIC 2160-4
PUMP, WINDSHIELD WASHER 1814-12
PUMP,WATER (TT094) 0400-39
PUSH BUTTON, DIFFERENTIAL LOCK 1674-12
PUSH ROD, BRAKE VALVE 1060-4
PUSH ROD,FUEL TRANSFER PUMP (TT094) 0400-47
PUSH RODS (TT094) 0400-6

PAGE

Q

QUICK CONNECT COUPLER 2160-16
QUICK COUPLER (STANDARD) 3302-6
QUICK COUPLER (UNIVERSAL) 3302-2
QUICK COUPLER PIN ENGAGE AUDIBLE ALARM 1674-6
QUICK COUPLER PIN, DISCONNECT SWITCH 1674-6
QUICK COUPLER WIRING HARNESS 1674-6

R

RADIATOR 0510-4
RADIATOR 0510-6
RADIATOR CAP 0510-4
RADIATOR CAP 0510-6
RADIATOR DRAIN VALVE 0510-4
RADIATOR DRAIN VALVE 0510-6
RADIATOR FAN GUARD 0510-4
RADIATOR FAN GUARD 0510-6
RADIATOR FAN SHROUD 0510-4
RADIATOR FAN SHROUD 0510-6
RADIATOR HOSES 0510-4
RADIATOR HOSES 0510-6
RADIO 2001-2
RADIO ANTENA 2001-2
RADIO SPEAKER 2001-2
REAR AXLE ASSEMBLY W/DIFFERENTIAL 0201-8
REAR AXLE ASSEMBLY,COMPLETE 0201-8
REAR AXLE HOUSING 0201-2
REAR AXLE HOUSING 0201-4
REAR AXLE HOUSING MOUNTING PLATE 0201-2
REAR AXLE HOUSING MOUNTING PLATE 0201-4
REAR AXLE PLANET CARRIER 0201-6
REAR AXLE PLANET GEAR 0201-6
REAR AXLE PLANET PINION CARRIER 0201-2
REAR AXLE PLANETARY DRIVE 0201-6
REAR AXLE PLANETARY DRIVE HUB 0201-6
REAR AXLE PLANETARY DRIVE SHAFT 0201-6
REAR AXLE RING GEAR AND PINION 0210-2
REAR AXLE RING GEAR AND PINION 0210-4
REAR AXLE SPIRAL BEVEL INPUT PINION 0210-2
REAR AXLE SPIRAL BEVEL INPUT PINION 0210-4
REAR AXLE YOKE 0210-2
REAR AXLE YOKE 0210-4
REAR CORNER WINDOWPANE 1814-8
REAR DIFFERENTIAL HOUSING 0201-2
REAR DIFFERENTIAL HOUSING 0201-4
REAR DRIVE WHEEL 0110-2
REAR DRIVESHAFT 0325-2
REAR DRIVESHAFT CROSS AND BEARING 0325-2
REAR FLOOR COVER 1812-2
REAR FLOOR MAT 1812-2
REAR KICK PANEL 1812-2
REAR TRANSMISSION HOUSING 0341-2
REAR VIEW MIRROR, INTERIOR 2002-4
REAR WINDOW LATCH 1814-8
REAR WINDOW WEATHERSTRIP 1814-8
REAR WINDOWS 1814-8
REAR WINDSHIELD WIPER MOTOR 1814-14
REAR WIPER ENABLE SWITCH 1814-14
REAR WIPER SWITCH 1674-28
REAR WORKING LIGHTS SWITCH 1674-28
RECEIVER DRYER HOSES 1830-12
RECEIVER DRYER, AIR CONDITIONING 1830-12
REFRIGERANT HOSE 1830-6

ALPHABETICAL INDEX - CONTINUED

PAGE

REFRIGERANT HOSE 1830-7A
REFRIGERANT LINE 1830-6
REFRIGERANT LINE 1830-7A
REGULATOR, PRESSURE (TT094) 0400-36
REGULATOR, PRESSURE, STANADYNE DE10 0400-37
RELAY PUMP CONTROL 1674-30
RELAY, STARTER 1674-8
RELIEF VALVE, AUXILIARY SECTION 3162-8
RELIEF VALVE, BOOM SECTION 3162-4
RELIEF VALVE, BOOM SECTION 3362-10
RELIEF VALVE, BUCKET SECTION 3162-6
RELIEF VALVE, BUCKET SECTION 3362-12
RELIEF VALVE, CROWD SECTION 3362-14
RELIEF VALVE, LOADER 3162-10
RELIEF VALVE, SELECTIVE FLOW SECTION 3362-20
RELIEF VALVE, SIDE SHIFT 3362-30
RELIEF VALVE, SWING PILOT SECTION 3362-46
RELIEF VALVE, SWING SECTION 3362-16
RELIEF, MAIN HYDRAULIC PUMP 2160-4
REMANUFACTURED COMPLETE BLOCK (TT094) 0400-14
REPAIR KIT, BACKHOE BOOM CYLINDER 3365-8
REPAIR KIT, BACKHOE BUCKET CYLINDER 3365-4
REPAIR KIT, BACKHOE BUCKET CYLINDER 3365-12
REPAIR KIT, LOADER BUCKET CYLINDER 3165-8
REPAIR KIT, STABILIZER CYLINDER 3365-28
REPAIR KIT, SWING CYLINDER 3365-20
REPAIR KIT,CROWD CYLINDER 3365-18
REPAIR KIT,STEERING CYLINDER (W/MFWD) 0960-2
RESERVOIR BREATHER FILTER, HYDRAULIC 2160-12
RESERVOIR, MAIN HYDRAULIC SCREEN 2160-12
RESERVOIR, MAIN HYDRAULICS 2160-12
RESERVOIR, WINDSHIELD WASHER 1814-12
RESISTOR, CAN 1674-4
RESISTOR, CAN TERMINATION 1674-8
RESTRICTION INDICATOR SWITCH,AIR CLEANER 0520-2
RETURN TO DIG HARNESS 1674-8
RETURN-TO-DIG LINKAGE 3115-2
RETURN-TO-DIG MAGNET 3162-6
RETURN-TO-DIG SWITCH 1674-14
REVERSE ALARM 2004-4
RIDE CONTROL 2160-24
RIDE CONTROL ELECTRICAL 1675-2
RIDE CONTROL HARNESS 1674-6
RIDE CONTROL HYDRAULIC HOSE 2160-24
RIM, FRONT WHEEL (WITHOUT MFWD) 0120-1
RING GEAR AND PINION, REAR AXLE 0210-2
RING GEAR AND PINION, REAR AXLE 0210-4
RING GEAR AND PINION,FRONT AXLE (W/MFWD) 0250-14
RING GEAR, FLYWHEEL (TT094) 0400-56
RING GEAR,FRONT AXLE(W/MFWD) 0250-14
RING GEAR,PLANETARY DRIVE (MFWD) 0250-8
RINGS, PISTON (TT094) 0400-11
ROCKER ARM COVER GASKET (TT094) 0400-7
ROCKER ARM COVER TT094) 0400-7
ROCKER ARM SHAFT (TT094) 0400-6
ROCKER ARMS (TT094) 0400-6
ROD, BUCKET LEVELING 3115-2
ROD, CONNECTING (TT094) 0400-11
ROD, CYLINDER LOCK BAR 1313-2
RODS, PUSH (TT094) 0400-6
ROOF 1673-6
ROOF ELECTRICAL CONNECTORS 1673-6
ROOF WIRING HARNESS 1673-4
ROOF WIRING HARNESS 1673-6
ROPS FRAME 1811-2
ROPS FRAME ISOLATORS 1811-2
ROPS HEADLINER 1811-2
ROPS SKIRT 1927-2
ROTATING BEACON 1673-2
ROTATING BEACON SWITCH 1673-2

S

SCREEN, GRILLE 1921-2
SCREEN, MAIN HYDRAULIC RESERVOIR 2160-12
SCREW, TRANSFER PUMP TAP, STANADYNE DE10 0400-37
SEAL, FRONT CONSOLE 1811-2
SEAL, ISOLATOR 0510-4
SEAL, ISOLATOR 0510-6
SEAL, TRANSMISSION OUTPUT SHAFT 0350-16
SEAL,CRANKSHAFT FRONT OIL (TT094) 0400-8
SEAL,SLIDING YOKE (MFWD) 0250-3
SEAT BACK PAD 1821-2
SEAT BELT 1821-14
SEAT BRACKETS 1821-2
SEAT CUSHIONS 1821-2
SEAT LUMBAR SUPPORT CONTROL LEVER 1821-4
SEAT SLIDE CONTROL LEVER 1821-4
SEAT SLIDE LATCH KIT 1821-4
SEAT SPRING, MECHANICAL SUSPENDED 1821-8
SEAT SWIVEL 1821-6
SEAT SWIVEL CONTROL LEVER 1821-4
SEAT SWIVEL LATCH 1821-6
SECLETIVE FLOW SECTION RELIEF VALVE 3362-20
SECOND SPEED CLUTCH ASSEMBLY 0350-10
SECOND SPEED CLUTCH DISK 0350-10
SELECTIVE FLOW SECTION, BACKHOE VALVE 3362-20
SENDER, FUEL GAUGE 0560-2
SENDER, HYDRAULIC TEMPERATURE 1674-8
SENSOR, ENGINE COOLANT TEMPERATURE (TT094) 0400-42
SENSOR, FUEL TEMPERATURE (TT094) 0400-36
SENSOR, FUEL TEMPERATURE STANADYNE DE10 0400-37
SENSOR,CRANKSHAFT SPEED (TT094) 0400-8
SENS0R, HYDRAULIC TEMPERATURE 1674-8
SERVICE BRAKE HYDRAULICS 1060-6
SERVICE BRAKE LINES 1060-6
SERVICE BRAKES 1011-2
SERVICE LOCK BAR, BOOM 1313-2
SERVICE LOCK, LOADER ARM 1313-2
SHAFT, ROCKER ARM (TT094) 0400-6
SHAFT, UNIVERSAL DRIVE (MFWD) 0250-3
SHAFT,DRIVE(W/MFWD) 0250-16
SHAFT,LIMITED SLIP DIFFERENTIAL (MFWD) 0250-10
SHAFT,PLANETARY DRIVE SUN GEAR (MFWD) 0250-8
SHAFT,REAR AXLE PLANETARY DRIVE 0201-6
SHAFT,TRANSMISSION INPUT 0350-2
SHAFT,TRANSMISSION OUTPUT 0350-16
SHIELDS, ENGINE SIDE 1910-2
SHIFT CONTROL SOLENOIDS,TRANSMISSION 0360-6
SHOCK ABSORBER, SUSPENDED SEAT 1821-8
SHORT BLOCK,ENGINE ((TT094) 0400-14
SHROUD,FAN 0510-4
SHROUD,FAN 0510-6
SIDE CONSOLE SWITCHES 1674-28
SIDE CONSOLE WIRING HARNESS, CAB 1674-4
SIDE INSTRUMENT PANEL HOUSING 1816-10
SIDE INSTRUMENT PANEL HOUSING 1816-12
SIDE PANELS, ENGINE 1910-2

ALPHABETICAL INDEX - CONTINUED

PAGE

SIDE SHIELDS, ENGINE....1910-2
SIDE SHIFT CONTROL VALVE HARNESS....3363-28
SIDE SHIFT LOCK....3363-28
SIDE SHIFT, LOCK VALVE HOUSING....3362-30
SIDE SHIFT, LOCKING VALVE....3362-30
SIDE SHIFT, SOLENOID VALVE....3362-30
SIDE WINDOWS,CAB....1814-2
SIDE WORKING LIGHTS SWITCH....1674-28
SINGLE BATTERY CABLE....1671-2
SINGLE BATTERY INSTALLATION....1671-2
SKIRT, MECHANICAL SUSPENDED SEAT....1821-8
SKIRTS, OPERATOR STATION....1927-2
SLIDE LATCH KIT,SEAT....1821-4
SLIDE PUCK SERVICE KIT....1821-6
SLIDING FRAME....1740-4
SLIDING FRAME....3342-2
SLIDING FRAME DIRT PAD....1740-4
SLIDING FRAME LOCK....3363-28
SLIDING REAR WINDOWS....1814-8
SLIDING YOKE, SEAL (MFWD)....0250-3
SOLENOID CONNECTOR (TT094)....0400-36
SOLENOID CONNECTOR, STANADYNE DE10....0400-37
SOLENOID VALVE, MAIN HYDRAULIC PUMP....2160-4
SOLENOID VALVE, SIDE SHIFT....3362-30
SOLENOID, RETURN-TO-DIG....3162-6
SOLENOID,BACKHOE BOOM LOCK CONTROL....3315-22
SOLENOID,COLD WEATHER STARTING AID....0505-4
SOLENOID,MFDW CLUTCH DRIVE....0350-14
SOLENOIDS,TRANSMISSION SHIFT CONTROL....0360-6
SPACER, SYNTHETIC BUCKET....3346-2
SPACER, SYNTHETIC CROWD....3346-2
SPACER, WHEEL....0110-2
SPEAKER, RADIO....2001-2
SPIRAL BEVEL INPUT PINION....0210-2
SPIRAL BEVEL INPUT PINION....0210-4
SPRING, MECHANICAL SUSPENDED SEAT....1821-8
SPRING,VALVE (TT094)....0400-28
STABILIZER....1740-4
STABILIZER CONTROL CABLES....3315-2
STABILIZER CONTROL COVER....1816-10
STABILIZER CONTROL COVER....1816-12
STABILIZER CYLINDER....3365-28
STABILIZER CYLINDER HYDRAULICS,....3363-4
STABILIZER CYLINDER REPAIR KIT....3365-28
STABILIZER FOOT....1740-4
STABILIZER HYDRAULIC LINE....3362-4
STABILIZER LEVER....3315-2
STABILIZER LINKAGE....3315-2
STABILIZER LOCKOUT VALVE....3162-10
STABILIZER VALVE LINKAGE....3315-2
STABILIZER VALVE RELIEF....3162-10
STABILIZER/LOADER VALVE....3162-10
STABILIZER, LOADER CONTROL VALVE....3162-2
STANDARD ARM....3346-2
STANDARD LIGHTS (OPTIONAL)....1673-4
START AID SWITCH....1674-28
STARTER MOTOR ADAPTER KIT (TT094)....0400-52
STARTER RELAY....1674-8
STARTING AID, COLD WEATHER....0505-4
STARTING FLUID....0505-4
STARTING MOTOR (TT094)....0400-50
STC TOOL....1913-2
STEERING COLUMN....0960-4
STEERING COLUMN....0960-6
STEERING COLUMN COVER....1816-6
STEERING COLUMN, LIGHT HARNESS....1673-6
STEERING COLUMN, TILT....0960-4

PAGE

STEERING COLUMN, TILT....0960-6
STEERING CYLINDER (W/MFWD)....0960-2
STEERING CYLINDER REPAIR KIT (W/MFWD)....0960-2
STEERING CYLINDER, FRONT AXLE (WITHOUT MFWD)....0230-7
STEERING HOSES (WITH MFWD)....0960-8
STEERING HYDRAULICS (WITHOUT MFWD)....0960-10
STEERING VALVE (WITH MFWD)....0960-8
STEERING VALVE (WITHOUT MFWD)....0960-10
STEERING VALVE HOSE....2160-16
STEERING VALVE HYDRAULICS (WITH MFWD)....0960-8
STEERING WHEEL....0960-4
STEERING WHEEL....0960-6
STEM, VALVE (WITHOUT MFWD)....0120-1
STOP LIGHT SWITCH....1060-2
STRAINER, FUEL TANK....0560-2
STRIKER BOLT, HOOD....1910-2
STROBE BEACON....1673-2
STUDS, WHEEL (MFWD)....0250-6
SUPPORT, HOOD....1910-2
SUPPORT, HOSE, EXTENDIBLE DIPPERSTICK....3363-26
SUPPORT,ENGINE....0540-2
SUPPORT,TRANSMISSION MOUNTING....0342-2
SUSPENDED SEAT SHOCK ABSORBER....1821-8
SUSPENDED SEAT SUSPENSION....1821-8
SUSPENSION TETHER....1821-8
SUSPENSION,SUSPENDED SEAT....1821-8
SWING CYLINDER....3365-20
SWING CYLINDER HYDRAULICS,BACKHOE....3363-16
SWING CYLINDER REPAIR KIT....3365-20
SWING CYLINDER TRUNNION BLOCK....3342-2
SWING FRAME....3343-4
SWING FRAME PINS....3343-4
SWING LOCK CONTROL LEVER AND LINKAGE....3315-22
SWING LOCK PIN AND HOLDER....1811-2
SWING SECTION RELIEF VALVE....3362-16
SWING SECTION, BACKHOE VALVE....3362-16
SWING, PILOT SECTION RELIEF VALVE....3362-46
SWING, PILOT SECTION, BACKHOE VALVE....3362-46
SWITCH REAR WIPER....1674-28
SWITCH WIRING HARNESS....1673-6
SWITCH, A/C....1674-28
SWITCH, AIR CONDITIONING (FREEZE/COMPRESSOR)....1830-7A
SWITCH, AIR SUSPENSION SEAT....1674-28
SWITCH, AUXILIARY HYDRAULIC CONTROL....1674-10
SWITCH, BRAKE LIGHT, PRESSURE....1060-2
SWITCH, DIFFERENTIAL LOCK....1674-12
SWITCH, ENGINE OIL PRESSURE....1674-8
SWITCH, HIGH PRESSURE....1830-6
SWITCH, HIGH PRESSURE....1830-7A
SWITCH, LOW PRESSURE....1830-6
SWITCH, LOW PRESSURE....1830-7A
SWITCH, MFWD....1674-28
SWITCH, PARK BRAKE OIL PRESSURE....1674-8
SWITCH, PILOT ENABLE....1674-5A
SWITCH, PIN DISCONNECT, QUICK COUPLER....1674-6
SWITCH, REAR WIPER ENABLE....1814-14
SWITCH, REAR WORKING LIGHTS....1674-28
SWITCH, RETURN-TO-DIG....1674-14
SWITCH, ROTATING BEACON....1673-2
SWITCH, SIDE WORKING LIGHTS....1674-28
SWITCH, START AID....1674-28
SWITCH, STOP LIGHT....1060-2
SWITCH, WINDSHIELD WASHER....1814-12
SWITCH,BATTERY,MASTER DISCONNECT....1671-6

ALPHABETICAL INDEX - CONTINUED

PAGE

SWITCH,STARTER MOTOR (TT094) 0400-50
SWITCHES, SIDE CONSOLE 1674-28
SWIVEL HOUSING,FRONT AXLE (WITHOUT MFWD) 0230-7
SWIVEL SERVICE KIT 1821-6
SWIVEL,SEAT 1821-6
SYNTHETIC BUCKET SPACER 3346-2
SYNTHETIC CROWD SPACER 3346-2

T

TANK, FUEL 0560-2
TANK,COOLANT RECOVERY 0510-4
TANK,COOLANT RECOVERY 0510-6
TEETH, BACKHOE BUCKET 3302-14
TEETH, BACKHOE BUCKET 3302-16
TEMPERATURE CONTROL KNOB 1674-28
TEMPERATURE SENSOR, FUEL, STANADYNE DE10 0400-37
TERMINATION RESISTOR CAN 1674-8
TEST PORTS, FLUID 1390-2
TETHER BELT 1821-8
TETHER KIT, OPERATOR MANUAL 1811-2
THERMOSTAT COVER (TT094) 0400-42
THERMOSTAT COVER TUBE (TT094) 0400-42
THERMOSTAT, ENGINE (TT094) 0400-42
THIRD FUCTION HYDRAULIC OIL LINES 3163-12
THIRD FUNCTION LOADER CONTROL VALVE LINKAGE 3115-6
THIRD SPEED CLUTCH ASSEMBLY 0350-12
THIRD SPEED CLUTCH DISK 0350-12
THREE FUNCTION VALVE, LOADER VALVE 3162-2
TIE BAND MOUNT ANCHOR, HARNESS 1673-4
TIE BAND MOUNT ANCHOR, HARNESS 1673-6
TIE ROD ASSEMBLY,FRONT AXLE (MFWD) 0250-4
TILT STEERING COLUMN 0960-4
TILT STEERING COLUMN 0960-6
TIMING GEAR COVER (TT094) 0400-8
TIMING GEAR COVER GASKET (TT094) 0400-8
TIMING PIN HOLE PLUG, STANADYNE DE10 0400-37
TIMING, CRANKSHAFT WHEEL (TT094) 0400-2
TOOL BOX 1913-2
TOOTH, BACKHOE BUCKET 3302-14
TOOTH, BACKHOE BUCKET 3302-16
TORQUE CONVERTER 0350-1
TORQUE CONVERTOR FLEXPLATE 0350-1
TRADEMARKS 1320-2
TRADEMARKS 1320-6
TRANSFER PUMP TAP SCREW, STANADYNE DE10 0400-37
TRANSFER PUMP, FUEL (TT094) 0400-47
TRANSMISSION 0341-6
TRANSMISSION CHARGE OIL PUMP 0360-2
TRANSMISSION CHARGE PUMP 0360-2
TRANSMISSION CONTROL LEVER 0315-2
TRANSMISSION DIPSTICK TUBE 0341-6
TRANSMISSION FRONT HOUSING 0341-4
TRANSMISSION GUARD 1740-2
TRANSMISSION HOUSING,REAR 0341-2
TRANSMISSION INPUT SHAFT 0350-2
TRANSMISSION INPUT SHAFT CLUTCH DISK 0350-2
TRANSMISSION MOUNTING ISOLATOR 0342-2
TRANSMISSION MOUNTING SUPPORT 0342-2
TRANSMISSION OIL FILLER TUBE 0341-2
TRANSMISSION OIL FILTER 0360-4
TRANSMISSION OIL FILTER ELEMENT 0360-4

PAGE

TRANSMISSION OIL FILTER HEADER 0360-4
TRANSMISSION OUTPUT SHAFT 0350-16
TRANSMISSION SHIFT CONTROL SOLENOIDS 0360-6
TRANSMISSION TORQUE CONVERTER COVER 0341-4
TRANSMISSION TORQUE CONVERTER HOUSING 0341-4
TRANSMISSION WIRING HARNESS 1674-8
TRANSMISSION, OIL COOLER 2160-18
TRANSMISSSION DIPSTICK 0341-6
TRAVEL WARNING ALARM 2004-4
TREE, WIRING HARNESS 1673-6
TRUNION BULKHEAD PLATE 3363-32
TRUNNION BLOCK, SWING CYLINDER 3342-2
TUBE, ENGINE OIL DIPSTICK (TT094) 0400-18
TUBE, TRANSMISSION DIPSTICK 0341-6
TUBE,THERMOSTAT COVER (TT094) 0400-42
TUBE,TRANSMISSION OIL FILLER 0341-2
TWO FUNCTION VALVE, LOADER CONTROL VALVE 3162-2
TWO LEVER BACKHOE CONTROL COVER 1816-2

U

U-JOINT,DRIVE SHAFT(W/MFWD) 0250-16
UNIVERSAL DRIVE SHAFT (MFWD) 0250-3
UNIVERSAL DRIVE SHAFT KIT (MFWD) 0250-3
UNIVERSAL DRIVE SHAFT,FRONT AXLE (MFWD) 0250-6

V

V-BELT AND PULLY 0510-8
VALVE LINKAGE, STABILIZER 3315-2
VALVE SPRING (TT094) 0400-28
VALVE STEM (WITHOUT MFWD) 0120-1
VALVE, BACKHOE BOOM SECTION 3362-10
VALVE, BACKHOE BUCKET SECTION 3362-12
VALVE, BACKHOE CONTROL 3362-4
VALVE, BACKHOE CROWD SECTION 3362-14
VALVE, BACKHOE EXTENDIBLE SECTION 3362-18
VALVE, BACKHOE INLET PRIORITY SECTION 3362-8
VALVE, BACKHOE SELECTIVE FLOW SECTION 3362-20
VALVE, BACKHOE SWING SECTION 3362-16
VALVE, BACKHOE SWING, PILOT SECTION 3362-46
VALVE, BRAKE 1060-2
VALVE, BRAKE 1060-4
VALVE, EXHAUST (TT094) 0400-28
VALVE, INTAKE (TT094) 0400-28
VALVE, LOADER AUXILIARY SECTION 3162-8
VALVE, LOADER BOOM SECTION 3162-4
VALVE, LOADER BUCKET SECTION 3162-6
VALVE, LOCKING, SIDE SHIFT 3362-30
VALVE, RELIEF, SIDE SHIFT 3362-30
VALVE, SOLENOID SIDE SHIFT 3362-30
VALVE, STABILIZER LOCKOUT 3162-10
VALVE, STABILIZER/LOADER 3162-10
VALVE, STEERING (WITH MFWD) 0960-8
VALVE, STEERING (WITHOUT MFWD) 0960-10
VALVE,BRAKE VALVE BOOST HYDRAULICS (CAB) 1060-8
VANDAL GUARD LOCK 1816-10
VANDAL GUARD,INSTRUMENT PANEL 1816-10
VECHICLE CONTROLLER 1674-5A
VENTILATING HOSE (TT094) 0400-26

ALPHABETICAL INDEX - CONTINUED

PAGE

W

WARNING ALARM, TRAVEL....2004-4
WASHER, WINDSHIELD RESERVOIR....1814-12
WATER PUMP (TT094) 0400-39
WATER PUMP IMPELLER (TT094)....0400-39
WATER PUMP INLET (TT094) 0400-38
WATER PUMP PULLEY (TT094)....0400-38
WATER PUMP REPAIR KIT (TT094)....0400-39
WEARSTRIPS, EXTENDIBLE ARM....3346-4
WEATHERSTRIP, REAR WINDOW....1814-8
WHEEL HUB, FRONT AXLE (WITHOUT MFWD)....0230-8
WHEEL SPACER....0110-2
WHEEL STUDS (MFWD) 0250-6
WHEEL, DRIVE ,REAR 0110-2
WHEEL, FRONT (WITHOUT MFWD)....0120-1
WHEEL, STEERING....0960-4
WHEEL, STEERING....0960-6
WHEEL,CRANKSHAFT TIMING (TT094) 0400-2
WINDOW, CAB SIDE....1814-2
WINDOWPANE, REAR CORNER 1814-8
WINDOWS, REAR 1814-8
WINDSHIELD WASHER HOSE....1814-12
WINDSHIELD WASHER PUMP 1814-12
WINDSHIELD WASHER SWITCH....1814-12
WINDSHIELD WIPER MOTOR, FRONT 1814-10
WINDSHIELD WIPER MOTOR, REAR....1814-14
WINDSHIELD, CAB 1814-6
WINDSHIELD, WASHER RESERVOIR 1814-12
WINDSHILD WIPER BLADE, FRONT....1814-10
WINDSHILD WIPER BLADE, REAR 1814-14
WIPER BLADE, FRONT 1814-10
WIPER BLADE, REAR 1814-14
WIPER MOTOR, FRONT WINDSHIELD 1814-10
WIPER MOTOR, REAR WINDSHIELD....1814-14
WIRE HARNESS, AC COMPRESSOR 1830-12
WIRE HARNESS,BACKHOE BOOM LOCK CONTROL....3315-22
WIRE HARNESS,CAB....1674-4
WIRING HARNESS, A/C 1674-28
WIRING HARNESS, ENGINE....1674-8
WIRING HARNESS, MODE DOOR....1816-8
WIRING HARNESS, ROOF....1673-4
WIRING HARNESS, ROOF....1673-6
WIRING HARNESS, TRANSMISSION....1674-8
WIRING HARNESS, TREE....1673-6
WIRING HARNESS,FRONT COUPLER....1674-6
WIRING HARNESS,PILOT ENABLE.... 1674-5A
WIRING HARNESS,SIDE CONSOLE, CAB....1674-4

Y

YOKE, BUCKET LEVELING 3115-2
YOKE, DRIVE SHAFT (MFWD)....0250-3
YOKE, REAL AXLE....0210-2
YOKE, REAL AXLE....0210-4
YOKE,FRONT AXLE INPUT PINION GEAR (W/MFWD) 0250-14
YOKE,SEAL,SLIDING (MFWD) 0250-3

REAR DRIVE WHEEL
ROUE MOTRICE ARRIERE
RUEDA MOTRIZ TRASERA

TX1016393 -UN-08JAN07

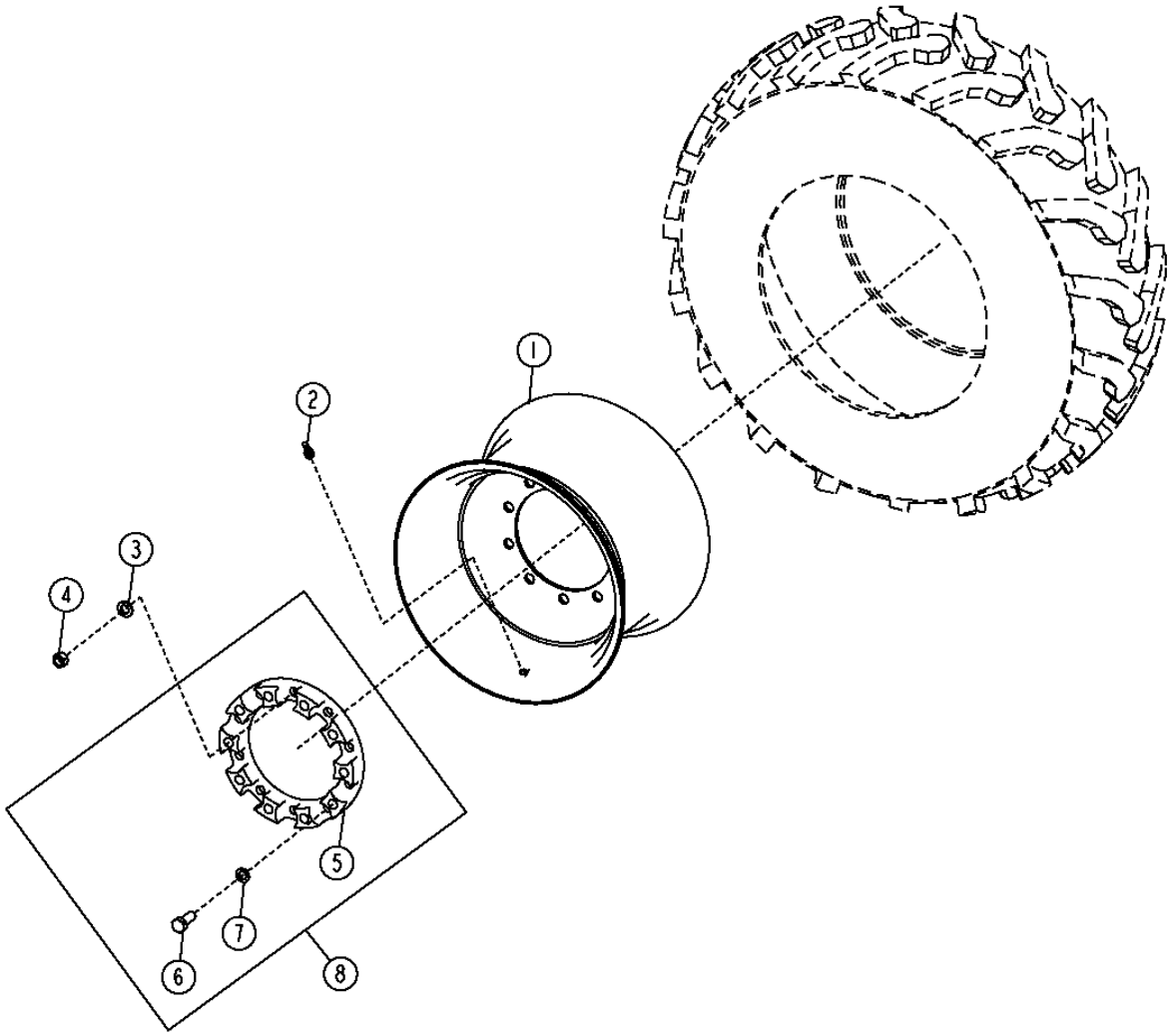

TX1016393

REAR DRIVE WHEEL
ROUE MOTRICE ARRIERE
RUEDA MOTRIZ TRASERA

KEY	*PART NO.*	*PART NAME*	*QTY.*	*SERIAL NO.*	*REMARKS*
1	AT317855	WHEEL	1		(FOR 19.5L X 24 TIRE)
	AT317855	WHEEL	1		(FOR 18L X 24)
	AT314892	WHEEL	1		(FOR 16.9L X 28)
2	AT25226	TIRE VALVE STEM	1		(WITH CALCIUM CHLORIDE)
	AN132749	TIRE VALVE STEM	1		(WITHOUT CALCIUM CHLORIDE) (TUBELESS)
3	R52006	WASHER	9		23.012 X 40.894 X 4.775 MM (29/32" X 1.610" X 3/16")
4	R94102	NUT	9		M22
5	T211111	SPACER	2		
6	19M9379	SCREW	20		M22 X 55
7	24M7344	WASHER	20		22 X 37 X 3 MM
8	**AT314898**	**WHEEL KIT**	**1**		**(WHOLE GOODS)**

MEMORANDA
MEMORANDA
MEMORANDA

FRONT WHEEL (WITHOUT MECHANICAL FRONT WHEEL DRIVE)
ROUE AVANT (SANS TRACTION AVANT MECANIQUE)
RUEDA MOTRIZ DELANTERA (SIN ETRACCION DELANTERA MECANICA)

TP3190 -UN-01JAN94

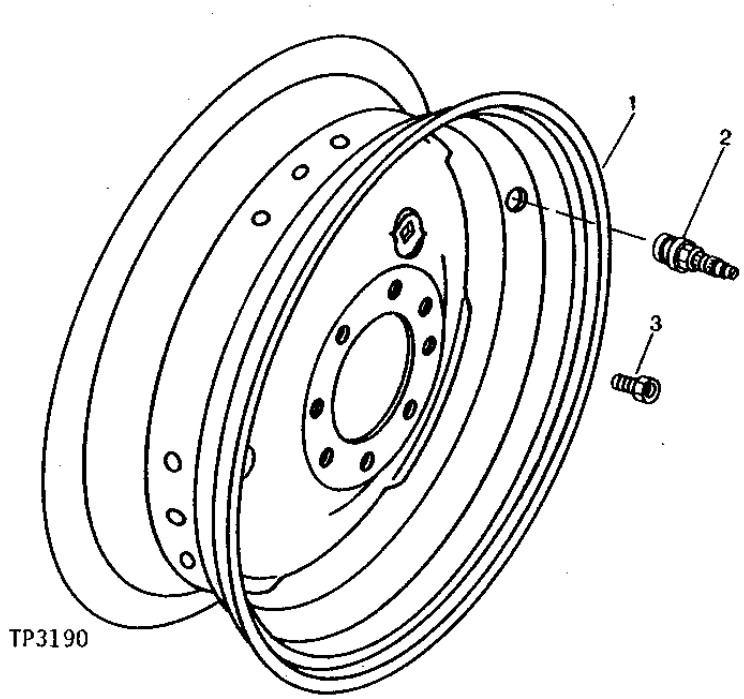

KEY	PART NO.	PART NAME	QTY.	SERIAL NO.	REMARKS
1	AT310291	WHEEL	1		(FOR 11L X 16 TIRE)
2	AN132749	TIRE VALVE STEM	1		(WITHOUT CALCIUM CHLORIDE) (TUBELESS)
3	JD27	BOLT	8		

DIFFERENTIAL AND REAR AXLE HOUSINGS
CARTER DE DIFFERENTIEL,
CAJA DEL DIFERENCIAL,

TX1016672 -UN-19DEC06

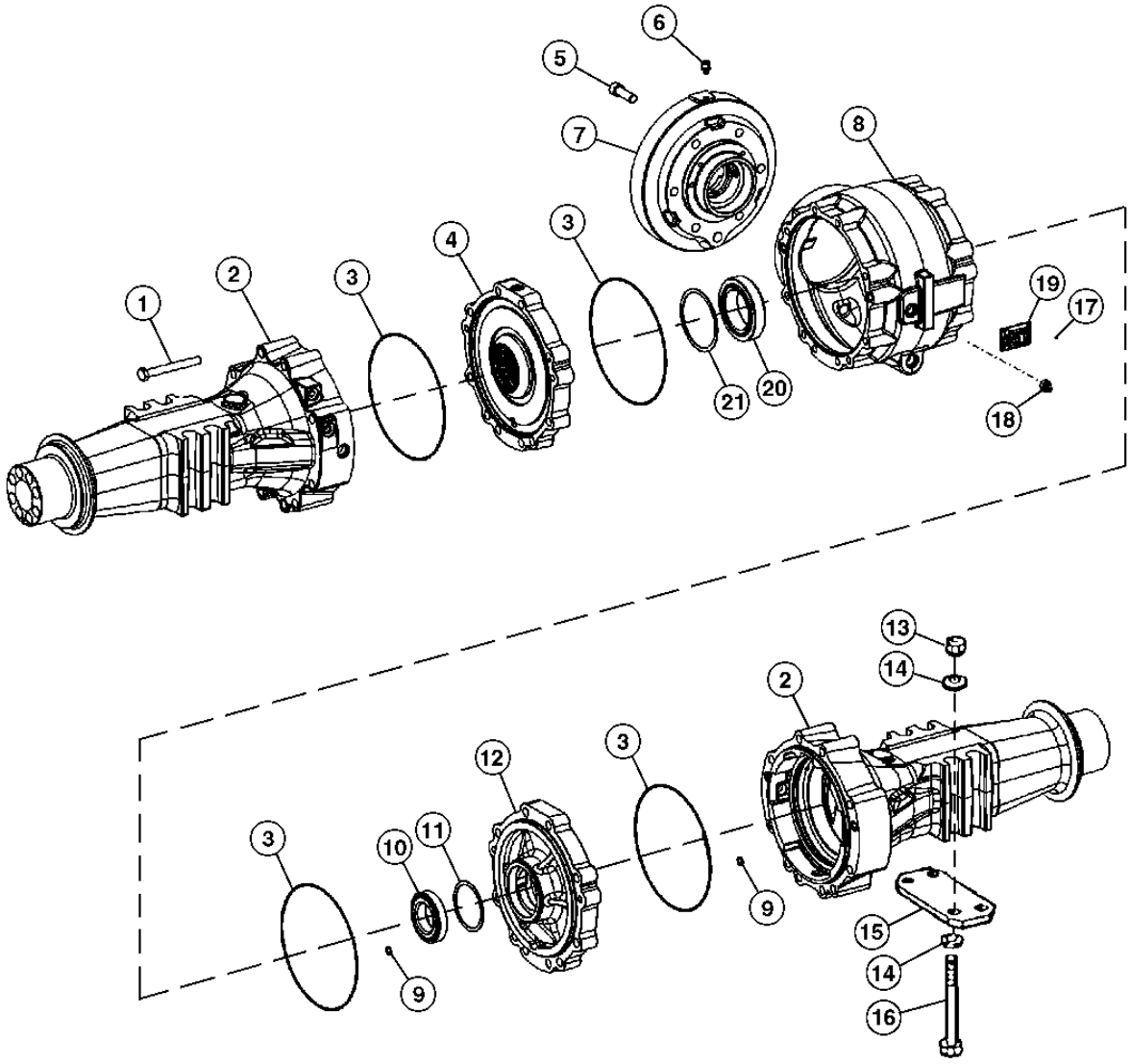

TX1016672

DIFFERENTIAL AND REAR AXLE HOUSINGS
CARTERS DE DIFFERENTIEL ET D'ESSIEU ARRIERE
CAJAS DEL DIFERENCIAL Y PUENTE TRASERO

KEY	PART NO.	PART NAME	QTY.	SERIAL NO.	REMARKS
1	T228913	SCREW	20		
2	T228970	HOUSING	2		
3	T218785	SEAL	4		
4	T228972	HOUSING	1		L.H.
5	T228939	SCREW	6		
6	AL32877	VENT	1		
7	T228908	PLANET PINION CARRIER	1		
8	T228957	HOUSING	1		
9	T159373	O-RING	8		
10	JD10229	BEARING CUP	1		
11	T228914	SHIM	1		2.0 MM
	T228915	SHIM	1		1.95 MM
	T228916	SHIM	1		1.9 MM
	T228917	SHIM	1		1.85 MM
	T228918	SHIM	1		1.8 MM
	T228919	SHIM	1		1.75 MM
	T228920	SHIM	1		1.7 MM
	T228921	SHIM	1		1.65 MM
	T228922	SHIM	1		1.6 MM
	T228923	SHIM	1		1.55 MM
	T228924	SHIM	1		1.5 MM
	T228925	SHIM	1		1.45 MM
	T228926	SHIM	1		1.4 MM
	T228927	SHIM	1		1.35 MM
	T228928	SHIM	1		1.3 MM
	T228929	SHIM	1		1.2 MM
	T228930	SHIM	1		1.20 MM
	T228931	SHIM	1		1.15 MM
	T228932	SHIM	1		1.1 MM
	T228933	SHIM	1		1.05 MM
	T228934	SHIM	1		1.00 MM
	T177394	SOLID SHIM	1		0.95 MM
	T228935	SHIM	1		0.9 MM
12	T228973	HOUSING	1		RH.
13	14M7315	NUT	6		M20
14	N231749	WASHER	16		
15	T147269	PLATE	4		
16	19M9749	CAP SCREW	8		M20 X 250
17	25M7021	GROOVE PIN	4		3 X 5 MM
18	.....	DRAIN PLUG	1		
19	.....	SERIAL NUMBER PLATE	1		
20	AT179504	TAPERED ROLLER BEARING	1		
21	T228936	SHIM	1		0.75MM
	T159446	SHIM	1		1.10MM
	T159447	SHIM	1		1.20MM
	T159448	SHIM	1		1.30MM
	T159449	SHIM	1		1.40MM
	T159450	SHIM	1		1.50MM
	T159451	SHIM	1		1.60MM
	T159452	SHIM	1		1.70MM
	T159453	SHIM	1		1.80MM
	TTZF160528	SHIM	1		2.00MM
	TTZF160529	SHIM	1		2.05MM
	TTZF160530	SHIM	1		2.10MM
	T183500	SOLID SHIM	1		2.15MM
	T183502	SOLID SHIM	1		2.25MM
	TTZF160534	SHIM	1		2.30MM
	TTZF160535	SHIM	1		2.35MM
	T183506	SOLID SHIM	1		2.45MM
	T183507	SOLID SHIM	1		2.50MM
	T159455	SHIM	1		2.70MM
	T159458	SHIM	1		2.90MM
	T159460	SHIM	1		3.10MM
	T159461	SHIM	1		3.20MM
	T159462	SHIM	1		3.30MM
	T159463	SHIM	1		3.40MM

DIFFERENTIAL AND REAR AXLE HOUSINGS
CARTER DE DIFFERENTIEL,
CAJA DEL DIFERENCIAL,

TX1016672 -UN-19DEC06

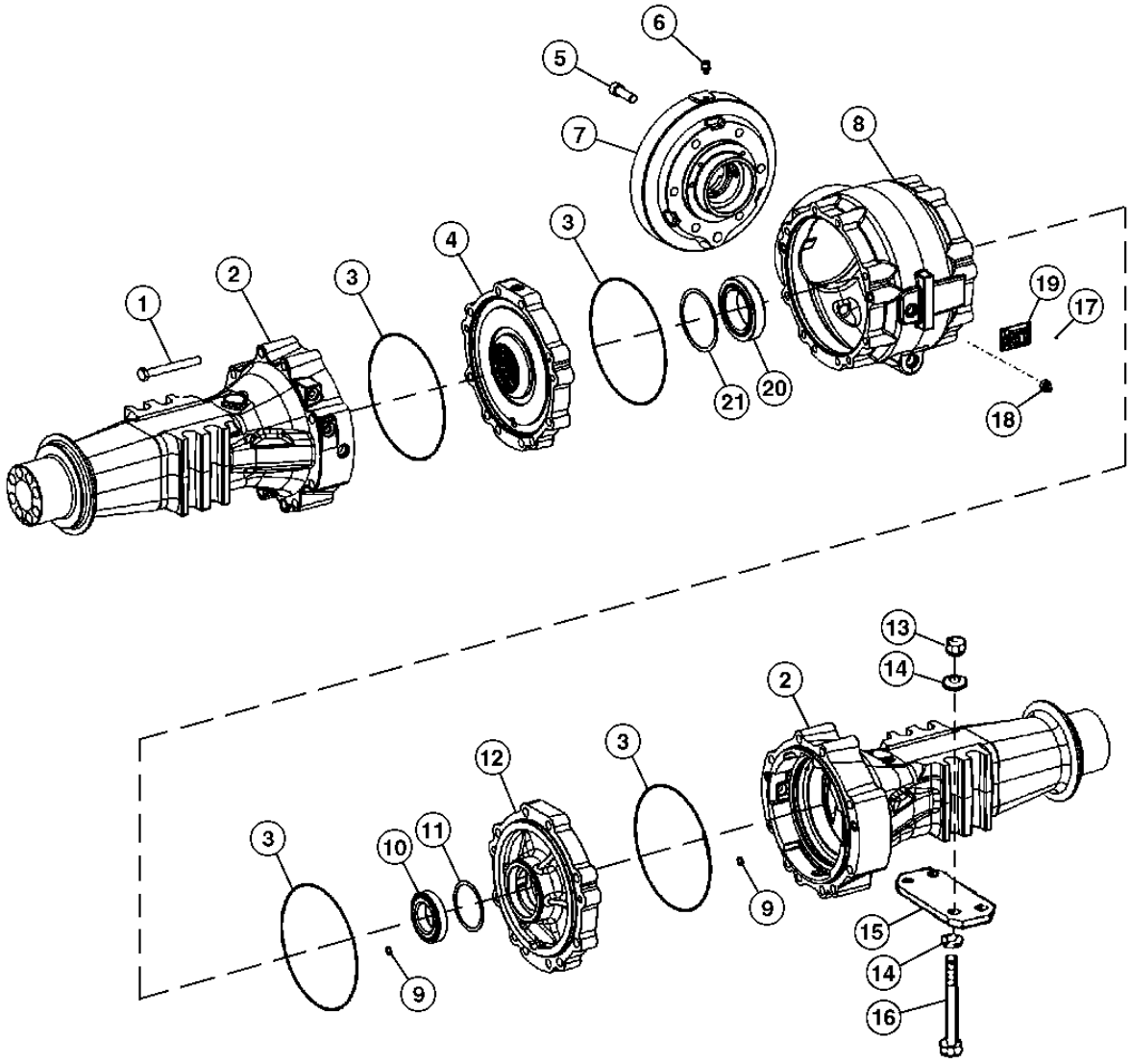

TX1016672

DIFFERENTIAL AND REAR AXLE HOUSINGS
CARTERS DE DIFFERENTIEL ET D'ESSIEU ARRIERE
CAJAS DEL DIFERENCIAL Y PUENTE TRASERO

KEY	*PART NO.*	*PART NAME*	*QTY.*	*SERIAL NO.*	*REMARKS*
16	19M8001	CAP SCREW	8		M20 X 260
17	25M7021	GROOVE PIN	4		
18	T159565	PLUG	2		
19	.....	PLATE	1		
20	AT179504	TAPERED ROLLER BEARING	1		
21	T159440	SHIM	1		0.3 MM
	T159441	SHIM	1		0.5 MM
	T159442	SHIM	1		1.0 MM
	T159443	SHIM	1		0.2 MM
	T159444	SHIM	1		0.1 MM
	T159445	SHIM	1		0.15 MM
	T159446	SHIM	1		1.1 MM
	T159447	SHIM	1		1.2 MM
	T159448	SHIM	1		1.3 MM
	T159449	SHIM	1		1.4 MM
	T159450	SHIM	1		1.5 MM
	T159451	SHIM	1		1.6 MM
	T159452	SHIM	1		1.7 MM
	T159453	SHIM	1		1.8 MM
	T159454	SHIM	1		2.6 MM
	T159455	SHIM	1		2.7 MM
	T159457	SHIM	1		2.8 MM
	T159458	SHIM	1		2.9 MM
	T159459	SHIM	1		3.0 MM
	T159460	SHIM	1		3.1 MM
	T159461	SHIM	1		3.2 MM
	T159462	SHIM	1		3.3 MM
	T159463	SHIM	1		3.4 MM
	TTZF160528	SHIM	1		2.0 MM
	TTZF160529	SHIM	1		2.05 MM
	TTZF160530	SHIM	1		2.1 MM
	T183500	SOLID SHIM	1		2.15 MM
	TTZF160532	SHIM	1		2.2 MM
	T183502	SOLID SHIM	1		2.25 MM
	TTZF160534	SHIM	1		2.3 MM
	TTZF160535	SHIM	1		2.35 MM
	T183505	SOLID SHIM	1		2.4 MM
	T183506	SOLID SHIM	1		2.45 MM
	T183507	SOLID SHIM	1		2.5 MM
	T228936	SHIM	1		0.75 MM

REAR AXLE PLANETARY DRIVE PINION CARRIER
PORTE-SATELLITES,ESSIEU ARRIERE
PORTAPINONES PLANETARIOS,EJE TRASERO

TX1016825 -UN-18DEC06

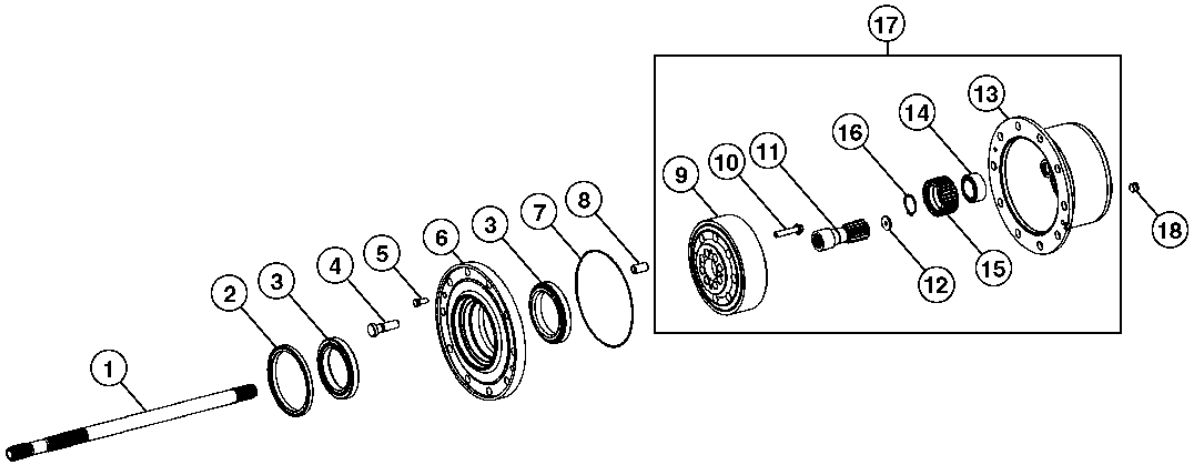

TX1016825

REAR AXLE PLANETARY DRIVE PINION CARRIER
PORTE-SATELLITES,ESSIEU ARRIERE
PORTAPINONES PLANETARIOS,EJE TRASERO

KEY	*PART NO.*	*PART NAME*	*QTY.*	*SERIAL NO.*	*REMARKS*
1	T228937	SHAFT	2		
2	T187684	SEAL	2		
3	AL81844	TAPERED ROLLER BEARING	4		
4	T218487	STUD	20		
5	AT321472	BOLT	4		
6	T228975	HUB	2		
7	T218785	SEAL	2		
8	T228942	BUSHING	16		
9	T228952	RING GEAR	2		
10	T228956	SCREW	16		
11	T228938	SHAFT	2		
12	T228974	PLUG	2		
13	T228940	PLANET PINION CARRIER	2		
14	AT339627	SPHERICAL ROLLER BEARING	8		
15	T228941	PLANET PINION	8		
16	40M7166	SNAP RING	8		
17	AT339615	PLANETARY ASSEMBLY	1		
18	T159565	PLUG	2		

COMPLETE REAR AXLE AND DIFFERENTIAL ASSEMBLY
ESSIEU ARRIERE AVEC DIFFERENTIEL
DIFERENCIAL Y FRENOS DE DISCO SECOS

TX1016834 -UN-21DEC06

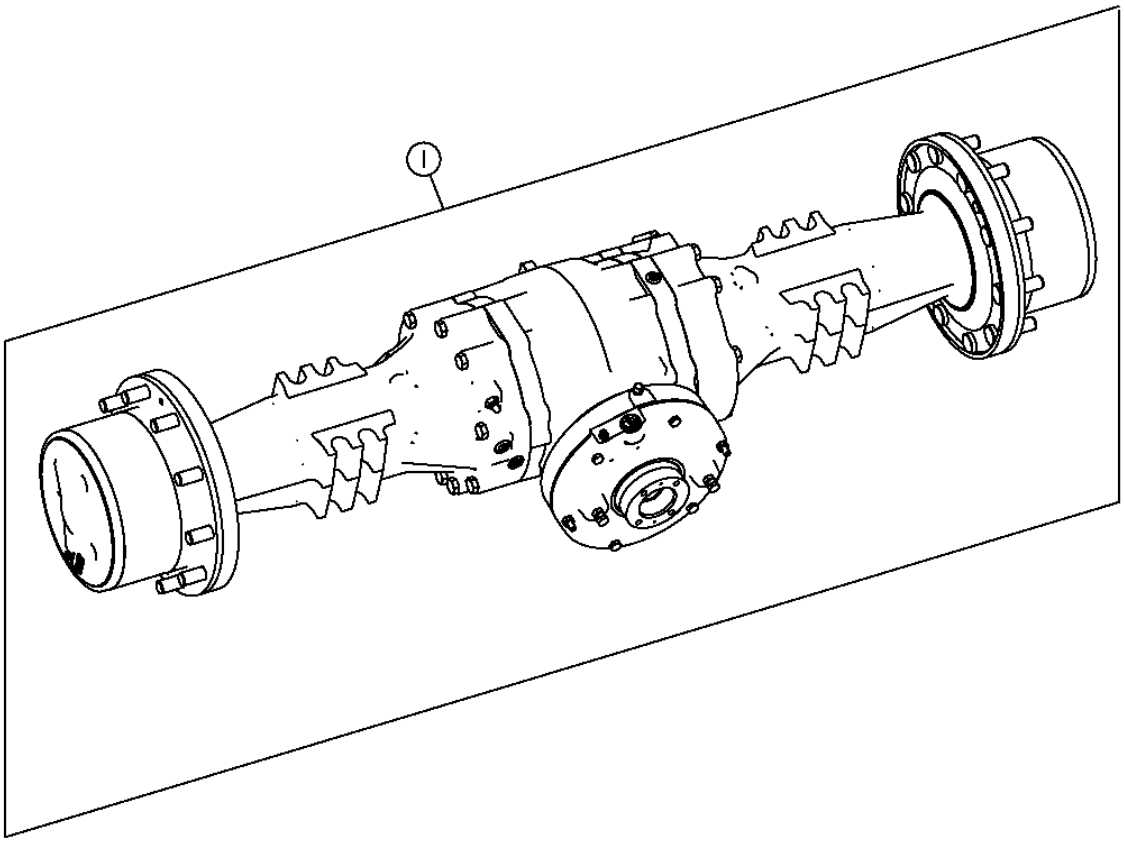

TX1016834

COMPLETE REAR AXLE AND DIFFERENTIAL ASSEMBLY
ESSIEU ARRIERE AVEC DIFFERENTIEL
DIFERENCIAL Y FRENOS DE DISCO SECOS

KEY	*PART NO.*	*PART NAME*	*QTY.*	*AXLE SERIAL NO.*	*REMARKS*
1	AT314904	REAR AXLE	1		CONVIENCE ASSEMBLY

SPIRAL BEVEL INPUT PINION AND RING GEAR SET
JEU DE PIGNONS CONIQUES HELICOIDAUX D'ENTREE ET COURONNES
JUEGO DE PINON DE ENTRADA CONICO EN ESPIRAL Y CORONA DENTADA

TX1020600 -UN-16MAR07

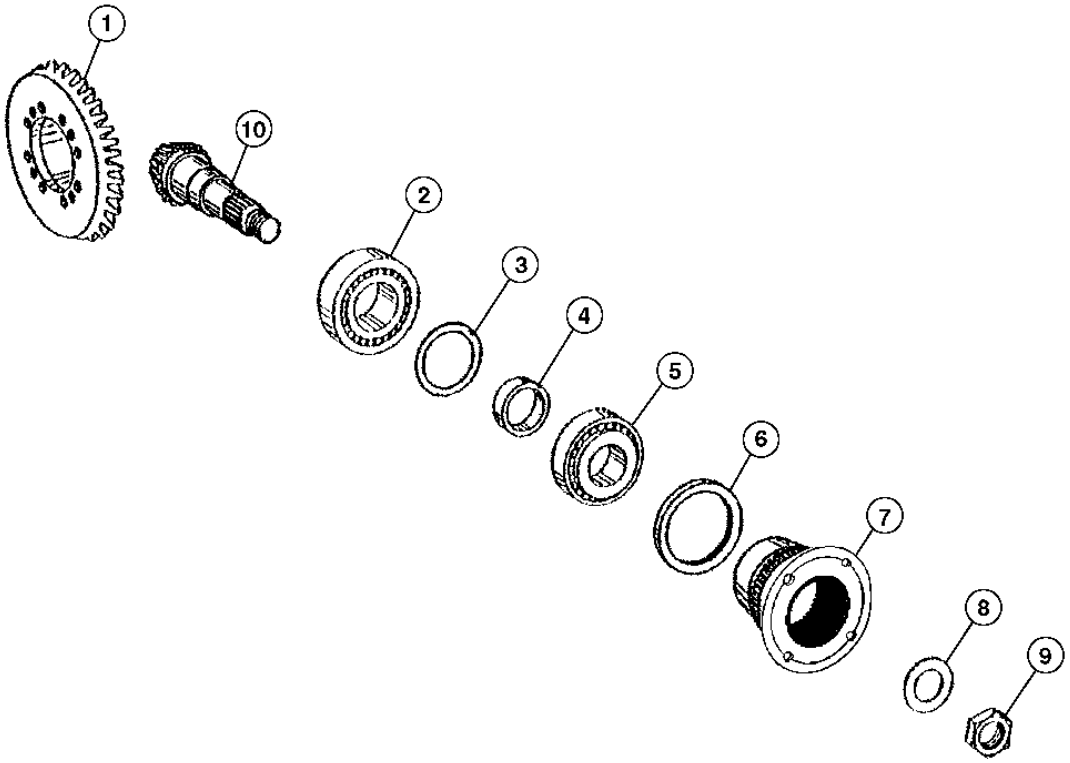

TX1020600

SPIRAL BEVEL INPUT PINION AND RING GEAR SET
JEU DE PIGNONS CONIQUES HELICOIDAUX D'ENTREE ET COURONNES
JUEGO DE PINON DE ENTRADA CONICO EN ESPIRAL Y CORONA DENTADA

KEY	*PART NO.*	*PART NAME*	*QTY.*	*SERIAL NO.*	*REMARKS*
1	T230865	BEVEL GEAR	1		
2	AT176491	CYLINDRICAL ROLLER BEARING	1		
3	T159310	SHIM	1		1.2 MM
	T159315	SHIM	1		1.3 MM
	T159314	SHIM	1		1.4 MM
	T159309	SHIM	1		1.5 MM
	T159313	SHIM	1		1.6 MM
	T159308	SHIM	1		1.8 MM
	T159311	SHIM	1		1.9 MM
	T159307	SHIM	1		2.0 MM
	AT321701	SHIM	1		1.7 MM
	AT321702	SHIM	1		1.0 MM
	AT321703	SHIM	1		0.9 MM
	AT321704	SHIM	1		0.8 MM
	AT321705	SHIM	1		0.7 MM
	AT321706	SHIM	1		0.6 MM
	R75834	SHIM	1		0.5 MM
	R75404	SHIM	1		0.3 MM
	R75403	SHIM	1		0.2 MM
	R75405	SHIM	1		0.1 MM
	T228664	SHIM	1		0.75 MM
	T228665	SHIM	1		0.65 MM
	T228666	SHIM	1		1.25 MM
	T228667	SHIM	1		1.35 MM
	T228668	SHIM	1		1.45 MM
	T228669	SHIM	1		1.55 MM
	T228671	SHIM	1		1.65 MM
	T228672	SHIM	1		1.75 MM
	T228673	SHIM	1		1.85 MM

THIS PARTS LISTING IS CONTINUED

SPIRAL BEVEL INPUT PINION AND RING GEAR SET
JEU DE PIGNONS CONIQUES HELICOIDAUX D'ENTREE ET COURONNES
JUEGO DE PINON DE ENTRADA CONICO EN ESPIRAL Y CORONA DENTADA

TX1020600 -UN-16MAR07

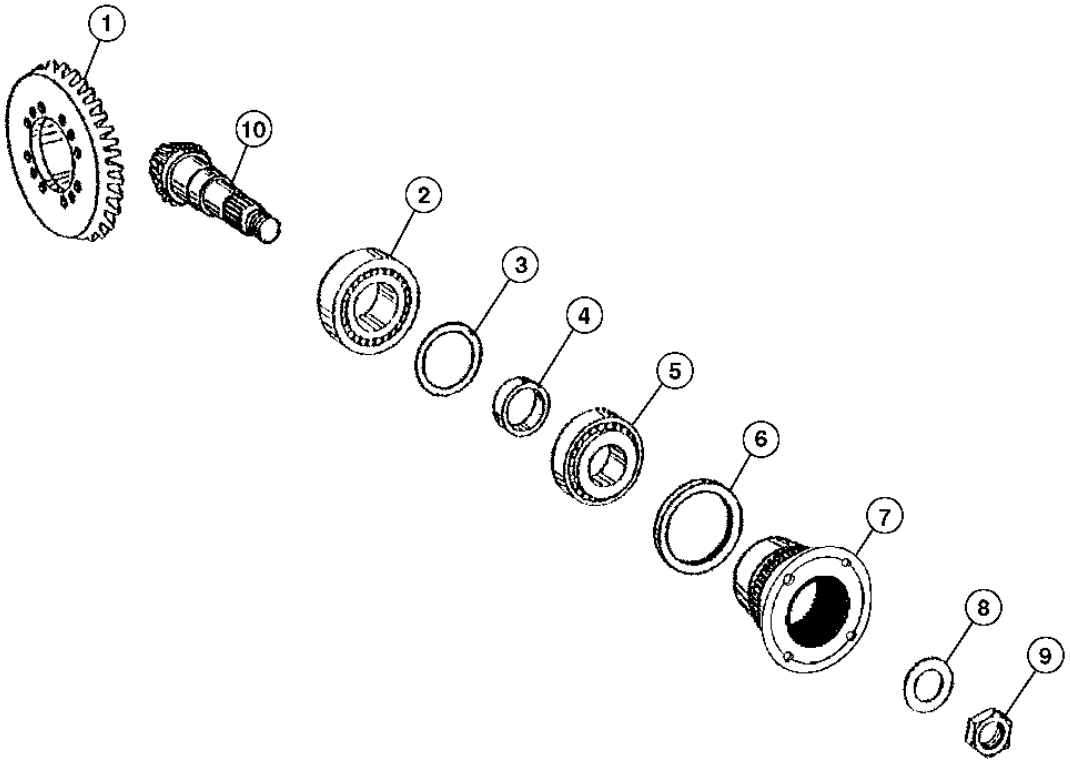

TX1020600

SPIRAL BEVEL INPUT PINION AND RING GEAR SET
JEU DE PIGNONS CONIQUES HELICOIDAUX D'ENTREE ET COURONNES
JUEGO DE PINON DE ENTRADA CONICO EN ESPIRAL Y CORONA DENTADA

KEY	PART NO.	PART NAME	QTY.	SERIAL NO.	REMARKS
4	T159322	RING	1		16.40 MM
	T159323	RING	1		16.50 MM
	T183482	SOLID SHIM	1		16.56 MM
	T159324	RING	1		16.60 MM
	T183483	SOLID SHIM	1		16.62 MM
	T183484	SOLID SHIM	1		16.64 MM
	T183485	SOLID SHIM	1		16.68 MM
	T159325	RING	1		16.70 MM
	T183486	SOLID SHIM	1		16.72 MM
	T183487	SOLID SHIM	1		16.74 MM
	T183489	SOLID SHIM	1		16.76 MM
	T183490	SOLID SHIM	1		16.78 MM
	T159326	RING	1		16.80 MM
	T183491	SOLID SHIM	1		16.82 MM
	T183492	SOLID SHIM	1		16.84 MM
	T159334	RING	1		16.86 MM
	T183493	SOLID SHIM	1		16.88 MM
	T183494	SOLID SHIM	1		16.90 MM
	T159327	RING	1		16.92 MM
	T183495	SOLID SHIM	1		16.94 MM
	T159337	RING	1		16.98 MM
	T159338	RING	1		17.04 MM
	T159329	RING	1		17.10 MM
	T159330	RING	1		17.20 MM
	T159331	RING	1		17.30 MM
	T159332	RING	1		17.40 MM
	T159318	SHIM	1		16.0 MM
	T159319	SHIM	1		16.1 MM
	T159320	SHIM	1		16.2 MM
	T228677	RING	1		16.66 MM
	T228679	RING	1		16.96 MM
	T228680	RING	1		17.0 MM
	T228681	RING	1		17.02 MM
	T228682	RING	1		17.06 MM
	T228683	RING	1		17.08 MM
	T228684	RING	1		17.12 MM
	T228685	RING	1		17.14 MM
	T228686	RING	1		17.16 MM
	T228687	RING	1		17.18 MM
	T228688	RING	1		17.2 MM
	T228689	RING	1		17.24 MM
	T228690	RING	1		17.26 MM
	T228691	RING	1		17.28 MM
	T159321	SHIM	1		16.30 MM
5	AL79794	TAPERED ROLLER BEARING	1		
6	T228722	GUARD	1		
7	T218489	FLANGE	1		
8	T159316	WASHER	1		
9	T228709	NUT	1		
10	T230866	PINION SHAFT	1		

DIFFERENTIAL CASE AND GEARS
ESSIEU ARRIERE AVEC DIFFERENTIEL
DIFERENCIAL Y FRENOS DE DISCO SECOS

TX1016644 -UN-18DEC06

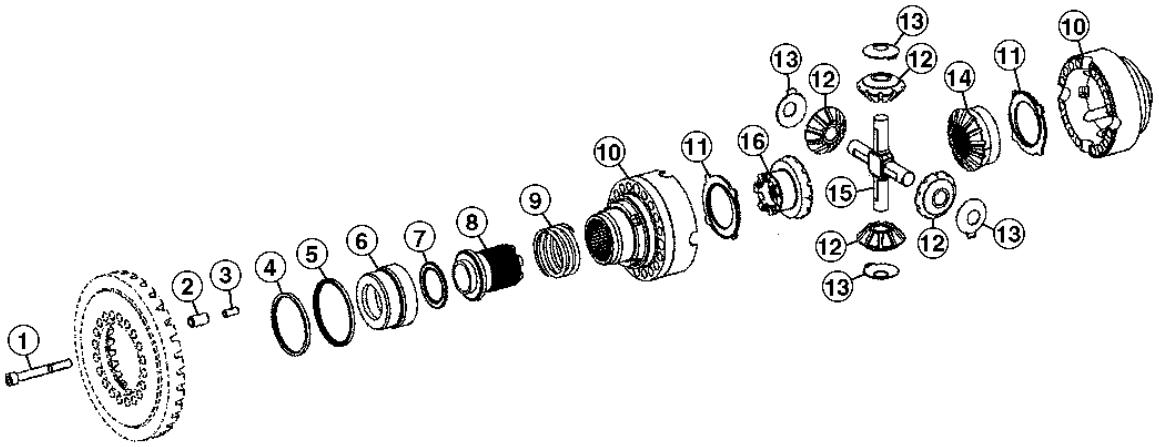

TX1016644

DIFFERENTIAL CASE AND GEARS
DIFFERENTIEL AVEC BLOCAGE
CONJUNTO DE DIFERENCIAL CON TRABA

KEY	*PART NO.*	*PART NAME*	*QTY.*	*SERIAL NO.*	*REMARKS*
1	T228723	SCREW	16		
2	T228712	SPRING PIN	4		
3	T228713	SPRING PIN	4		
4	T218481	SEAL	1		
5	T218482	SEAL	1		
6	T159343	PISTON	1		
7	AT179498	NEEDLE BEARING	1		
8	T166336	SHIFT COLLAR	1		
9	T159341	SPRING	1		
10	AT338976	DIFFERENTIAL	1		
11	T228714	THRUST WASHER	2		
12	T228711	BEVEL GEAR	4		
13	T228716	THRUST WASHER	4		
14	T228710	BEVEL GEAR	1		
15	T228717	PINION SHAFT	1		
16	T228715	BEVEL GEAR	1		

DIFFERENTIAL LOCK PLUMBING
TUYAUTERIE DU BLOCAGE DU DIFFERENTIEL
TUBERIA DE TRABA DE DIFERENCIAL

T154477 -UN-30APR02

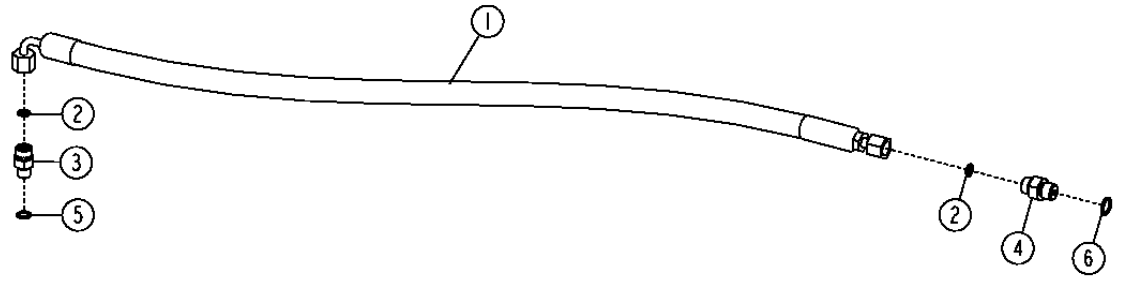

T154477

KEY	PART NO.	PART NAME	QTY.	SERIAL NO.	REMARKS
1	AT316670	HYDRAULIC HOSE - FABRICATE	1		9/16" X 1 168 MM (46") X 9/16"
2	T77814	O-RING	2		
3	38H1003	ELBOW FITTING	1		
4	38H1168	ADAPTER FITTING	1		
5	R28782	O-RING	1		
6	R26448	O-RING	1		

MEMORANDA
MEMORANDA
MEMORANDA

STANDARD FRONT AXLE (W/O MFWD)
ESSIEU AVANT STANDARD (W/O MFWD)
EJE DELANTERO ESTANDAR (W/O MFWD)

TX1016410 -UN-19DEC06

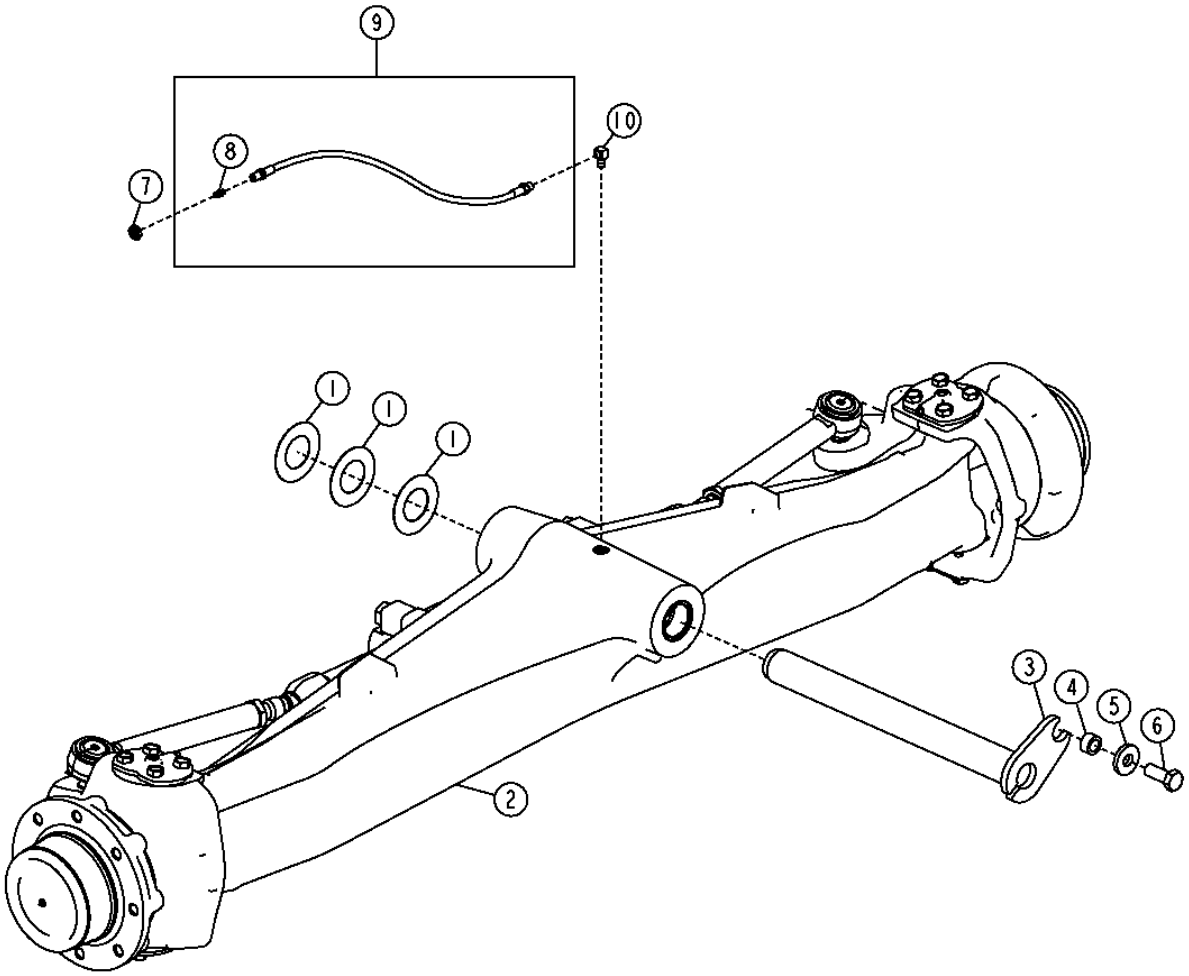

TX1016410

STANDARD FRONT AXLE (W/O MFWD)
ESSIEU AVANT STANDARD (W/O MFWD)
EJE DELANTERO ESTANDAR (W/O MFWD)

KEY	*PART NO.*	*PART NAME*	*QTY.*	*SERIAL NO.*	*REMARKS*
1	R46973	THRUST WASHER	3		
2	AT307741	FRONT AXLE	1		(COMPONENTS ON FOLLOWING PAGES)
3	AT306684	PIN	1		
4	T18145	BUSHING	1		
5	T119912	WASHER	1		
6	19M7488	CAP SCREW	1		
7	E12379	NUT	2		
8	JD7797	LUBRICATION FITTING	2		
9	AT224949	HOSE	1		
10	JD7838	ADAPTER FITTING	2		

STANDARD FRONT AXLE HOUSING (W/O MFWD)
ESSIEU AVANT STANDARD (W/O MFWD)
EJE DELANTERO ESTANDAR (W/O MFWD)

T188859 -UN-27MAR03

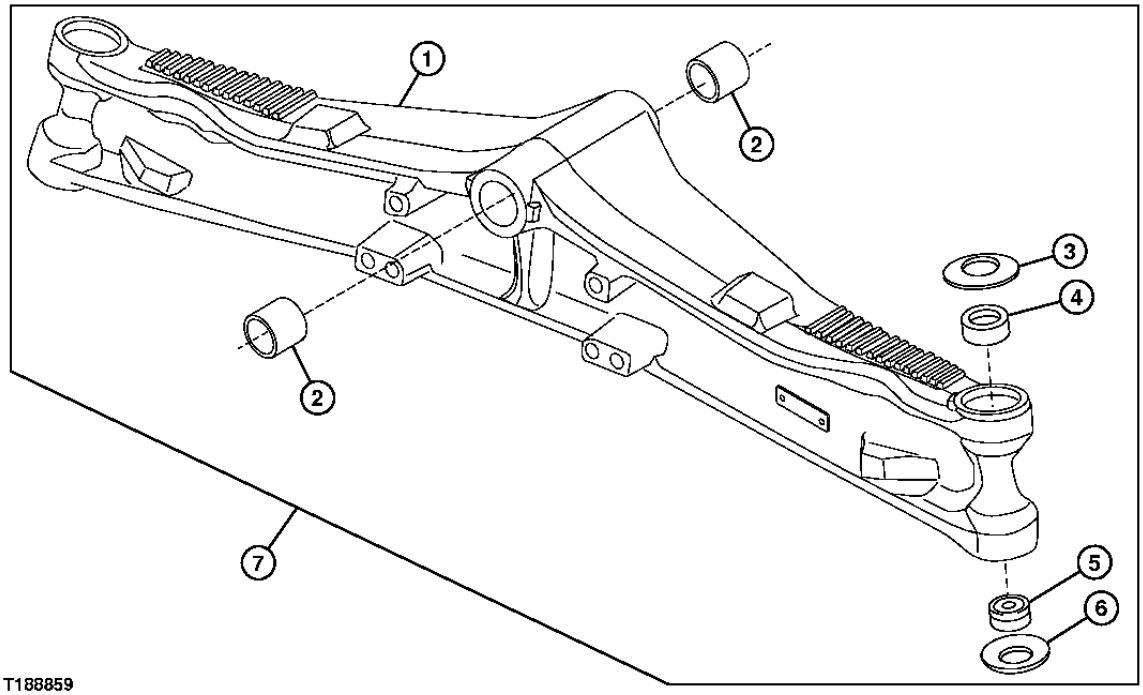

T188859

KEY	PART NO.	PART NAME	QTY.	SERIAL NO.	REMARKS
1	T218500	AXLE	1		
2	T202499	BUSHING	2		
3	R121593	WASHER	2		
4	R204271	BUSHING	2		
5	RE45896	BEARING	2		
6	R121594	WASHER	2		
7	AT307741	FRONT AXLE	1		(ADDITIONAL COMPONENTS ON FOLLOWING PAGES)

SWIVEL HOUSINGS AND STEERING CYLINDER (W/O MFWD)
CARTERS PIVOTANTS ET VERIN DE DIRECTION (W/O MFWD)
CAJAS DE GIRO Y CILINDRO DE DIRECCION (W/O MFWD)

T188860 -UN-27MAR03

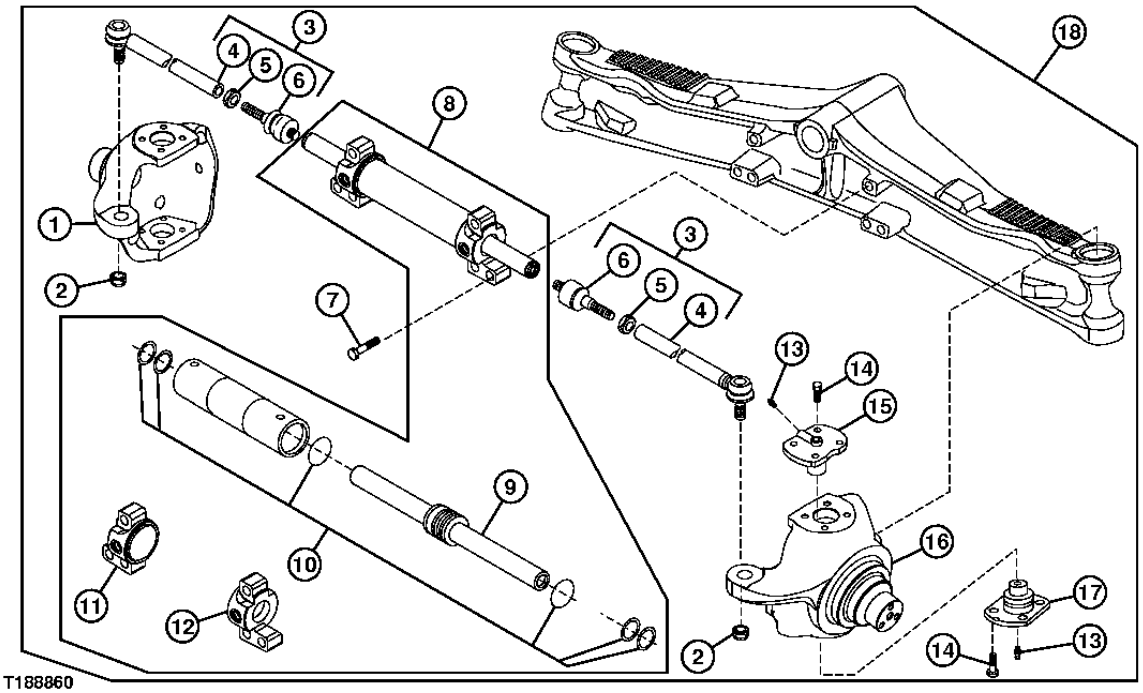

KEY	PART NO.	PART NAME	QTY.	SERIAL NO.	REMARKS
1	T190745	HOUSING	1		(LH)
2	AT280268	LOCK NUT	2		M20
3	AT198602	TIE ROD ASSEMBLY	2		
4	T191428	TIE ROD ASSEMBLY	2		
5	14M7309	NUT	2		M24
6	T191427	BALL JOINT	2		
7	T116290	BOLT	6		M20 X 80
8	AT326535	HYDRAULIC CYLINDER	1		
9	AT326536	ROD	1		
10	T218499	SEAL KIT	1		
11	.....	HYDRAULIC CYLINDER CAP	1		(LH)
12	.....	HYDRAULIC CYLINDER CAP	1		(RH)
13	R140070	LUBRICATION FITTING	4		
14	19M8011	CAP SCREW	16		M12 X 30
15	RE57471	TRUNNION	2		
	R122218	SPACER	AR		
16	T190746	HOUSING	1		(RH)
17	RE57472	TRUNNION	2		
18	**AT307741**	**FRONT AXLE**	**1**		**(CA) (ADDITIONAL COMPONENTS ON PREVIOUS AND FOLLOWING PAGES)**

WHEEL HUB (W/O MFWD)
MOYEU DE ROUE (W/O MFWD)
CUBO DE LA RUEDA (W/O MFWD)

T188861 -UN-27MAR03

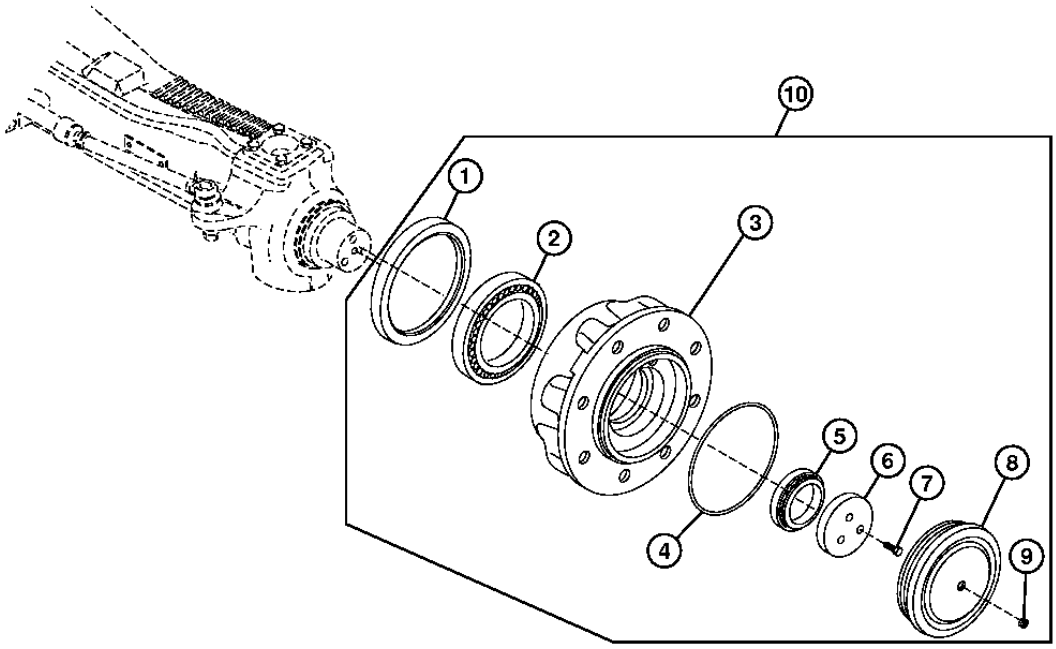

T188861

KEY	PART NO.	PART NAME	QTY.	SERIAL NO.	REMARKS
1	AT280866	SEAL	2		
2	AT196169	BEARING	2		
3	T190749	HUB	2		
4	T188441	O-RING	2		
5	JD10063	TAPERED ROLLER BEARING	2		
6	T188442	RING	2		
7	19M8011	CAP SCREW	6		M12 X 30
8	T188448	CAP	2		
9	R121079	PLUG	2		
10	AT314993	FRONT AXLE	1		(ADDITIONAL COMPONENTS ON PREVIOUS PAGES)

MEMORANDA
MEMORANDA
MEMORANDA

FRONT AXLE (W/MFWD)
ESSIEU AVANT (AVEC TRACTION AVANT MECANIQUE)
EJE DELANTERO (CON TRACCION DELANTERA MECANICA)

TX1016184 -UN-23DEC06

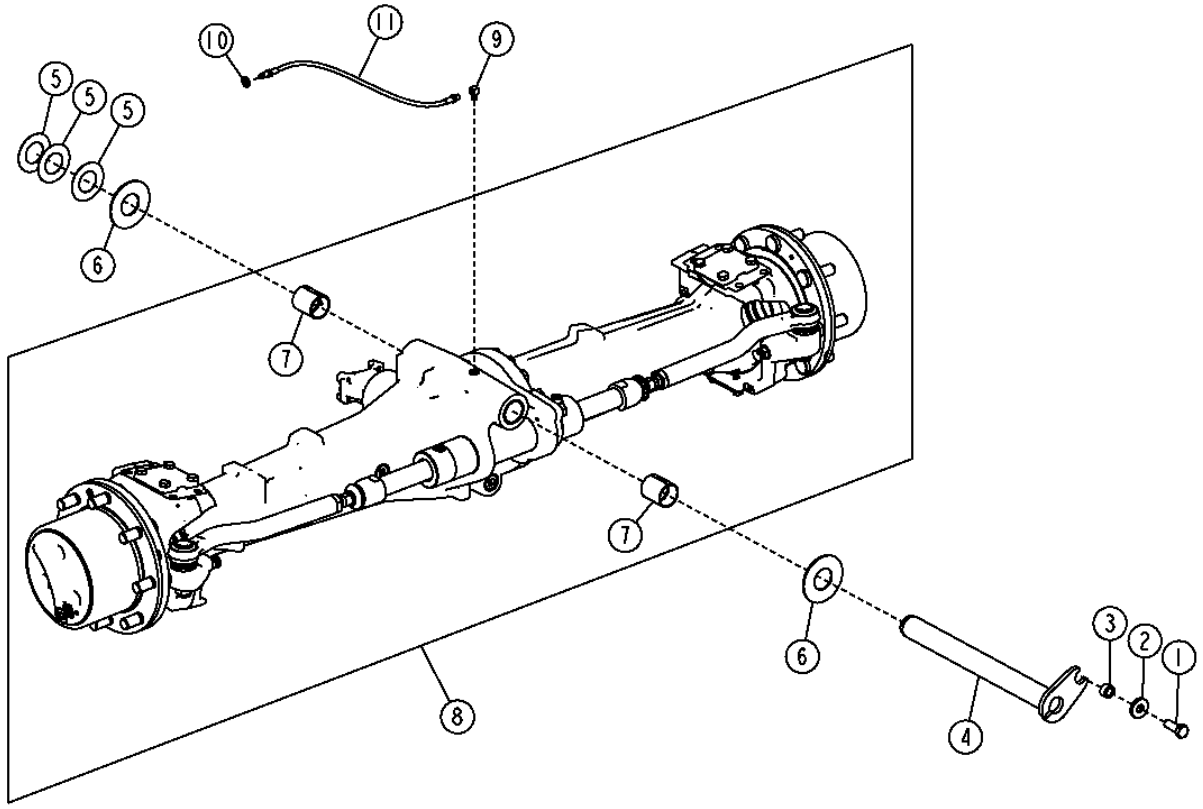

TX1016184

FRONT AXLE (W/MFWD)
ESSIEU AVANT (AVEC TRACTION AVANT MECANIQUE)
EJE DELANTERO (CON TRACCION DELANTERA MECANICA)

KEY	*PART NO.*	*PART NAME*	*QTY.*	*SERIAL NO.*	*REMARKS*
1	19M7488	CAP SCREW	1		M16 X 40
2	T119912	WASHER	1		
3	T18145	BUSHING	1		
4	AT314992	PIN	1		
5	R46973	THRUST WASHER	4		
6	T80027	THRUST WASHER	2		
7	T140211	BUSHING	2		
8	**AT311085**	**FRONT AXLE**	**1**		**CA**
9	JD7838	ADAPTER FITTING	1		
10	E12379	NUT	1		
11	AT224949	HOSE	1		

FRONT AXLE HOUSING AND TIE RODS (W/MFWD)
CARTER D'ESSIEU AVANT ET BARRES D'ACCOUPLEMENT (W/ MFWD)
CAJA DE EJE DELANTERO Y BARRAS DE ACOPLAMIENTO (W/ MFWD)

TX1016213 -UN-13DEC06

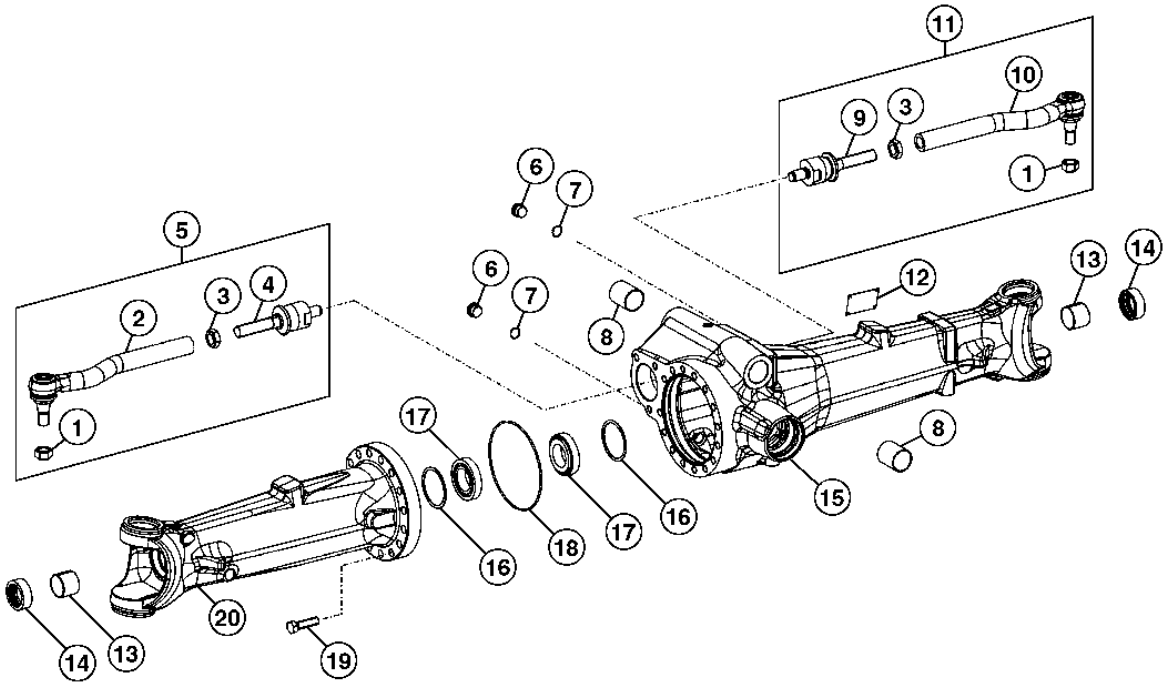

TX1016213

FRONT AXLE HOUSING AND TIE RODS (W/MFWD)
CARTER D'ESSIEU AVANT ET BARRES D'ACCOUPLEMENT (W/ MFWD)
CAJA DE EJE DELANTERO Y BARRAS DE ACOPLAMIENTO (W/ MFWD)

KEY	PART NO.	PART NAME	QTY.	SERIAL NO.	REMARKS
1	T229268	LOCK NUT	2		
2	AT326539	TIE ROD ASSEMBLY	1		LH.
3	AT309307	NUT	2		
4	AT339807	TIE ROD END	2		
5	AT326538	TIE ROD ASSEMBLY	1		LH
6	F436023	PLUG	2		
7	R82198	O-RING	2		21 X 2 MM
8	T140211	BUSHING	2		
9	AT339807	TIE ROD END	1		RH.
10	AT326540	TIE ROD ASSEMBLY	1		RH.
11	AT326537	TIE ROD ASSEMBLY	1		RH.
12	.....	PLATE	1		
13	AT321443	BUSHING	2		
14	L110233	SEAL	2		
15	T229262	HOUSING	1		RH.
16	T229086	SOLID SHIM	2		1.95 MM
	T229087	SOLID SHIM	2		1.90 MM
	T229088	SOLID SHIM	2		1.85 MM
	T229090	SOLID SHIM	2		1.75 MM
	T229091	SOLID SHIM	2		1.70 MM
	T229092	SOLID SHIM	2		1.65 MM
	T229093	SOLID SHIM	2		1.60 MM
	T229094	SOLID SHIM	2		1.55 MM
	T229096	SOLID SHIM	2		1.45 MM
	L112210	WASHER	2		1.40 MM
	L40997	WASHER	2		1.2 MM
	L40998	WASHER	2		1.0 MM
	L40999	WASHER	2		0.8 MM
	L41000	SHIM	2		0.6 MM
	L41001	SHIM	2		0.5 MM
	L41002	SHIM	2		0.4 MM
	L41003	SHIM	2		0.3 MM
	L41004	SHIM	2		0.2 MM
	L41005	SHIM	2		0.1 MM
	L112211	WASHER	2		0.65 MM
	L112212	WASHER	2		0.70 MM
	L112213	WASHER	2		0.75 MM
	L112214	WASHER	2		0.85 MM
	L112215	WASHER	2		0.90 MM
	L112216	WASHER	2		0.95 MM
	L112217	WASHER	2		1.10 MM
	L112218	WASHER	2		1.15 MM
	L112219	WASHER	2		1.25 MM
	L112220	WASHER	2		1.30 MM
	L112221	WASHER	2		1.35 MM
	L101689	SHIM	2		0.45 MM
	L101690	SHIM	2		0.55 MM
	L112222	WASHER	2		1.05 MM
	T229121	SOLID SHIM	2		2.05 MM
	T229122	SOLID SHIM	2		2.10 MM
	T229123	SOLID SHIM	2		2.15 MM
	T229124	SOLID SHIM	2		2.20 MM
	T229125	SOLID SHIM	2		2.25 MM
	T229126	SOLID SHIM	2		2.30 MM
	T229127	SOLID SHIM	2		2.35 MM
	T229128	SOLID SHIM	2		2.40 MM
	T229129	SOLID SHIM	2		2.45 MM
	T229130	SOLID SHIM	2		2.50 MM
17	AT303349	TAPERED ROLLER BEARING	2		
18	T218804	O-RING	1		
19	19M3005	CAP SCREW	15		M16 X 60
20	T229253	HOUSING	1		LH.

FRONT AXLE HOUSING HUBS,SHAFTS AND UNIVERSAL JOINTS(W/MFWD)
CARTERS D'ESSIEU AVANT,ARBRE,MOYEUX ET JOINTS UNIVERSELS (W/ MFWD)
CAJAS,EJE, CUBOS Y JUNTAS UNIVERSALES DE EJE DELANTERO (W/ MFWD)

TX1016261 -UN-13DEC06

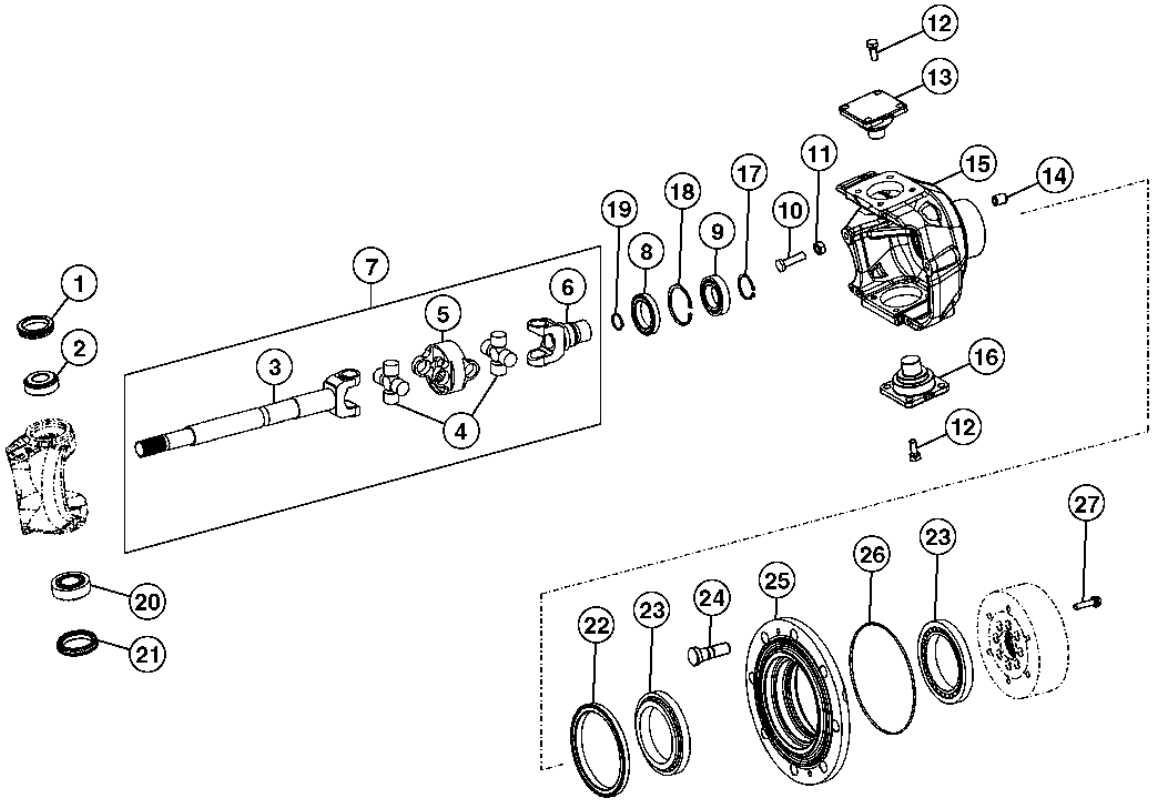

TX1016261

AXLE SHAFT, BEARINGS AND REDUCTION GEARS 0250

FRONT AXLE HOUSING HUBS,SHAFTS AND UNIVERSAL JOINTS(W/MFWD)
CARTERS D'ESSIEU AVANT,ARBRE,MOYEUX ET JOINTS UNIVERSELS (W/ MFWD)
CAJAS,EJE, CUBOS Y JUNTAS UNIVERSALES DE EJE DELANTERO (W/ MFWD)

KEY	*PART NO.*	*PART NAME*	*QTY.*	*SERIAL NO.*	*REMARKS*
1	AL79902	SEAL	2		
2	AT339808	TAPERED ROLLER BEARING	2		
3	T229254	SHAFT	2		
4	AT339809	CROSS AND BEARING ASSEMBLY	4		
5	T229270	YOKE	2		
6	T229255	SHAFT	2		
7	AT339629	UNIVERSAL DRIVESHAFT	2		
8	AL79951	SEAL	2		
9	R115119	BALL BEARING	2		
10	T229272	SCREW	4		
11	14M7437	NUT	4		M14
12	19M8011	CAP SCREW	16		M12 X 30
13	T229260	PIN	2		
14	T229271	BUSHING	16		
15	T229251	HOUSING	1		LH.
	T229252	HOUSING	1		RH. (NOT ILLUSTRATED)
16	T229285	PIN	2		0.2 MM
17	40M7047	SNAP RING	2		
18	40M5099	SNAP RING	2		
19	L40276	SNAP RING	2		
20	AT339806	TAPERED ROLLER BEARING	2		
21	AL110924	SEAL	2		
22	T218484	SEAL	2		
23	JD10249	TAPERED ROLLER BEARING	4		
24	T218487	STUD	16		
25	T229273	HUB	2		
26	L40317	O-RING	2		
27	19M8120	SCREW	16		M10 X 45

PLANETARY DRIVE (W/MFWD)
ENTRAINEMENT DE TRAIN PLANETAIRE (W/MFWD)
MANDO DE PLANETARIOS(W/ MFWD)

TX1016284 -UN-14DEC06

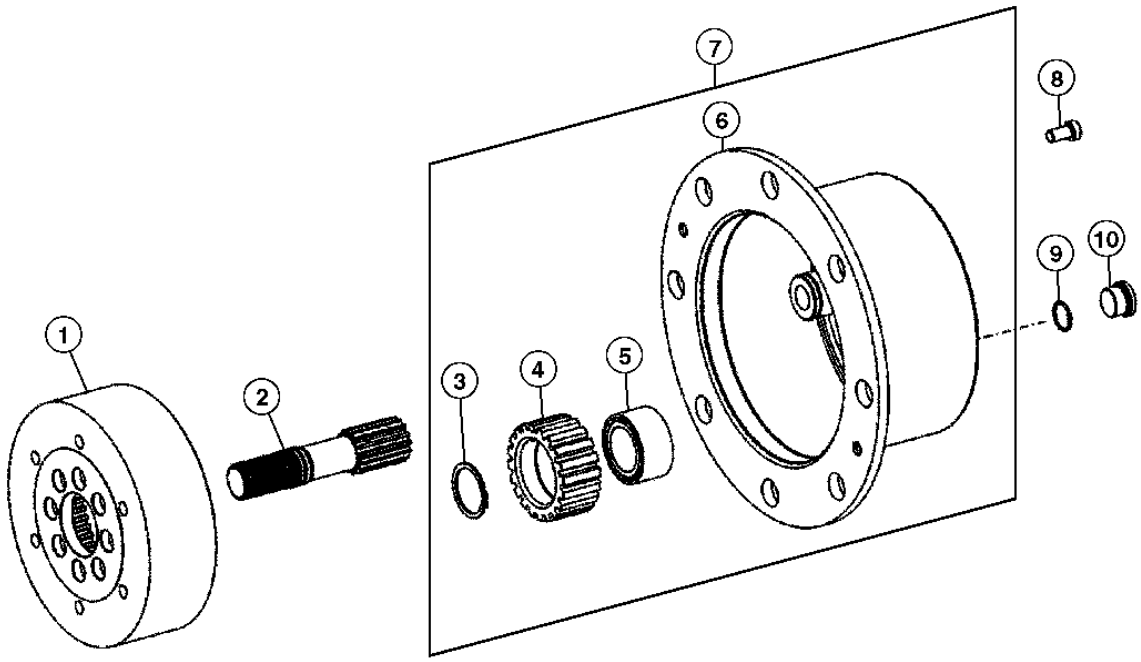

TX1016284

PLANETARY DRIVE (W/MFWD)
ENTRAINEMENT DE TRAIN PLANETAIRE (W/MFWD)
MANDO DE PLANETARIOS(W/ MFWD)

KEY	*PART NO.*	*PART NAME*	*QTY.*	*SERIAL NO.*	*REMARKS*
1	T229274	RING GEAR	2		
2	T229250	SUN GEAR	2		
3	T228911	SNAP RING	6		
4	T229258	PLANET PINION	6		
5	AT339811	CYLINDRICAL ROLLER BEARING	6		
6	T229259	PLANET PINION CARRIER	2		
7	AT339810	PLANETARY ASSEMBLY	2		
8	19M5039	SCREW	4		M10 X 20
9	R82198	O-RING	2		
10	T229212	PLUG	2		

LIMITED SLIP DIFFERENTIAL (W/MFWD)
DIFFERENTIEL AUTOBLOQUANT(W/ MFWD)
DIFERENCIAL DE PATINAJE LIMITADO(W/ MFWD)

TX1016309 -UN-13DEC06

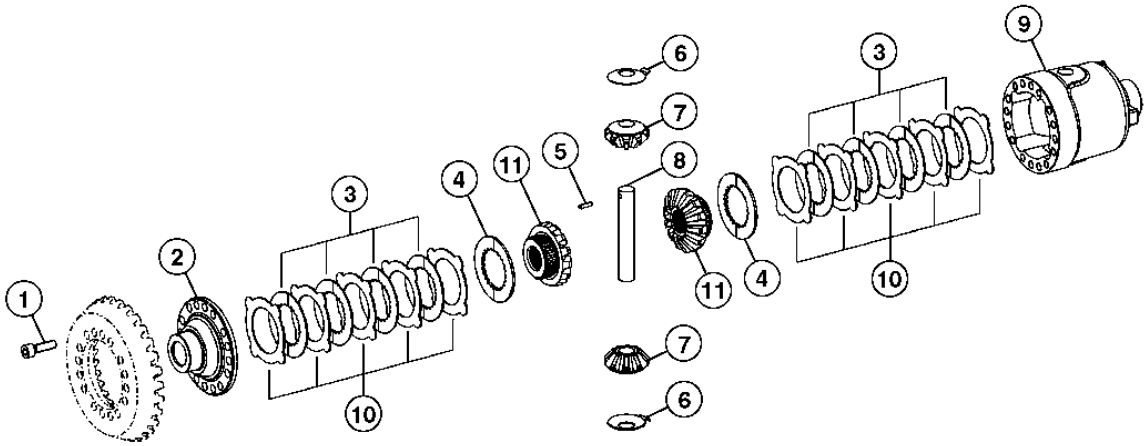

TX1016309

LIMITED SLIP DIFFERENTIAL (W/MFWD)
DIFFERENTIEL AUTOBLOQUANT(W/ MFWD)
DIFERENCIAL DE PATINAJE LIMITADO(W/ MFWD)

KEY	*PART NO.*	*PART NAME*	*QTY.*	*SERIAL NO.*	*REMARKS*
1	19M7180	CAP SCREW	16		M10 X 45
2	T229076	COVER	1		
3	AT339686	CLUTCH DISK	8		
4	T229082	THRUST WASHER	2		
5	34M7148	SPRING PIN	1		5 X 18 MM
6	T229083	THRUST WASHER	2		
7	T229080	BEVEL GEAR	2		
8	T229084	PINION SHAFT	1		
9	T229077	HOUSING	1		
10	.....	CLUTCH DISK	10		
11	T229081	BEVEL GEAR DRIVE	2		

FRONT SPIRAL BEVEL INPUT PINION AND RING GEAR(W/MFWD)
PIGNON DENTR˜E CONIQUE HELICOIDAL AVANT ET TRAIN DE COURONNES (W/MFWD)
JUEGO DE CORONA DENTADA Y PINON CONICO DE ENTRADA DE DIENTES HELICOIDALES DELANTERO(W/MFWD)

TX1016112 -UN-13DEC06

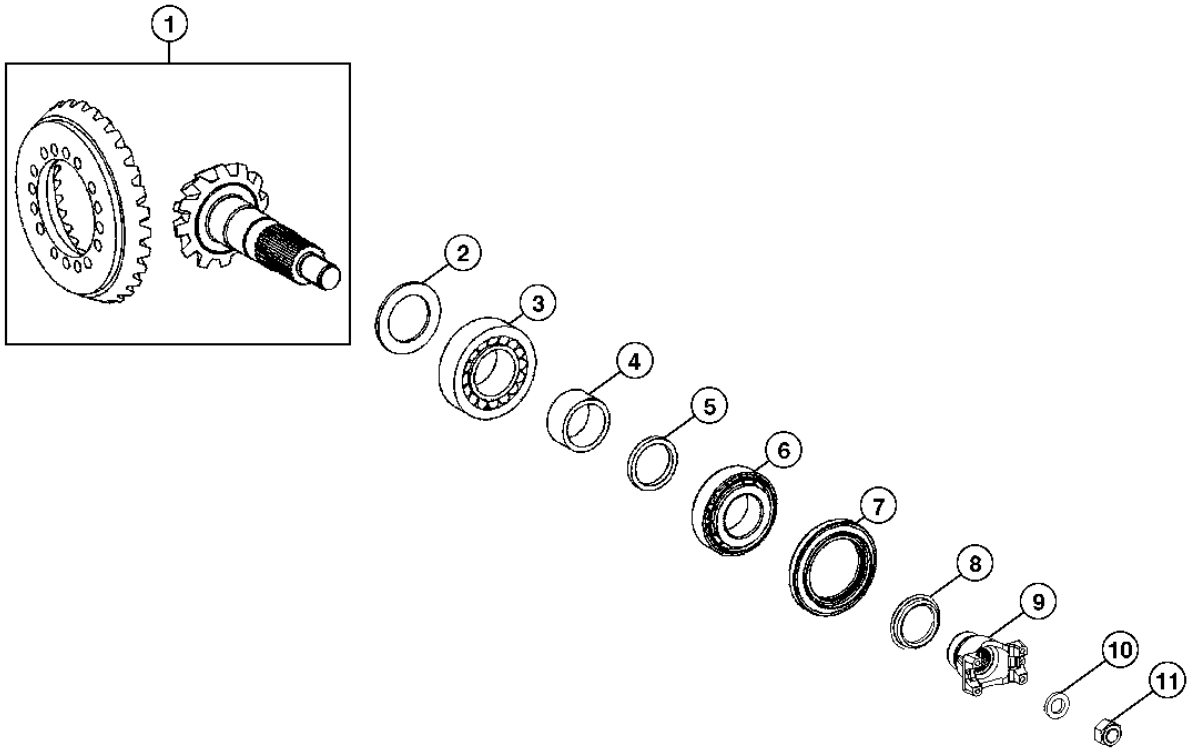

TX1016112

FRONT SPIRAL BEVEL INPUT PINION AND RING GEAR(W/MFWD)
PIGNON D ENTRˆE CONIQUE HELICOIDAL AVANT ET TRAIN DE COURONNES (W/MFWD)
JUEGO DE CORONA DENTADA Y PINON CONICO DE ENTRADA DE DIENTES HELICOIDALES DELANTERO(W/MFWD)

KEY	PART NO.	PART NAME	QTY.	SERIAL NO.	REMARKS
1	AT326923	BEVEL GEAR DRIVE	1		
2	T228998	SHIM	1		3.3 MM
	T228999	SHIM	1		3.4 MM
	T229000	SHIM	1		3.5 MM
	T229001	SHIM	1		3.6 MM
	T229002	SHIM	1		3.7 MM
3	AL79794	TAPERED ROLLER BEARING	1		
4	T229009	BUSHING	1		
5	T229010	RING	1		5.55 MM
	T229011	RING	1		5.60 MM
	T229012	RING	1		5.65 MM
	T229013	RING	1		5.70 MM
	T229014	RING	1		5.75 MM
	T229015	RING	1		5.80 MM
	T229016	RING	1		5.85 MM
	T229017	RING	1		5.90 MM
	T229018	RING	1		5.95 MM
	T229019	RING	1		6.10 MM
	T229020	RING	1		6.15 MM
	T229021	RING	1		6.20 MM
	T229022	RING	1		6.25 MM
	T229023	RING	1		6.30 MM
	T229024	RING	1		6.35 MM
	T229025	RING	1		6.40 MM
	T229026	RING	1		6.45 MM
	T229027	RING	1		6.50 MM
	T229028	RING	1		6.55 MM
	T229029	RING	1		6.60 MM
	T229030	RING	1		6.70 MM
	T229031	RING	1		5.70 MM
	T229032	RING	1		5.98 MM
	T229033	RING	1		6.00 MM
	T229034	RING	1		6.2 MM
	T229035	RING	1		6.4 MM
	T229036	RING	1		6.7 MM
6	AT339648	TAPERED ROLLER BEARING	1		
7	AT321949	SEAL	1		
8	T218833	GUARD	1		
9	T218832	UNIVERSAL JOINT YOKE	1		
10	L35714	WASHER	1		
11	14M7498	LOCK NUT	1		

DRIVE SHAFT (W/MFWD)
ARBRE D'ENTRAINEMENT (W/MFWD)
EJE DE TRANSMISION (W/MFWD)

TX1016524 -UN-18DEC06

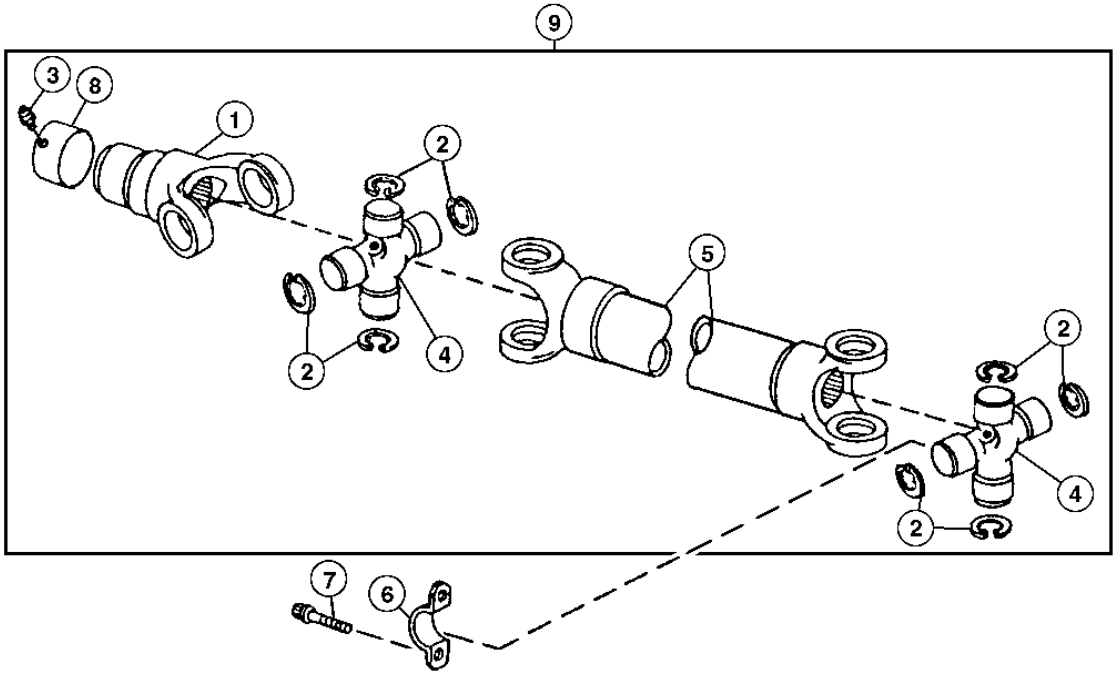

TX1016524

DRIVE SHAFT (W/MFWD)
ARBRE D'ENTRAINEMENT (W/MFWD)
EJE DE TRANSMISION (W/MFWD)

KEY	*PART NO.*	*PART NAME*	*QTY.*	*SERIAL NO.*	*REMARKS*
1	AT179596	UNIVERSAL JOINT YOKE	1		
2	N119316	SNAP RING	6		
3	JD7797	LUBRICATION FITTING	1		
4	AT178387	KIT	2		(U-JOINT) GREASEABLE
	AT178389	KIT	2		(U-JOINT) LUBED FOR LIFE
5	.....	DRIVE SHAFT	1		
6	T69938	HALF CLAMP	2		
7	T113128	SCREW	4		
8	AT179590	SEAL	1		
9	AT314922	UNIVERSAL DRIVESHAFT	1		

TRANSMISSION CONTROL LEVER
LEVIER DE VITESSES
PALANCA DE CONTROL DE TRANSMISION

TX1015124 -UN-18DEC06

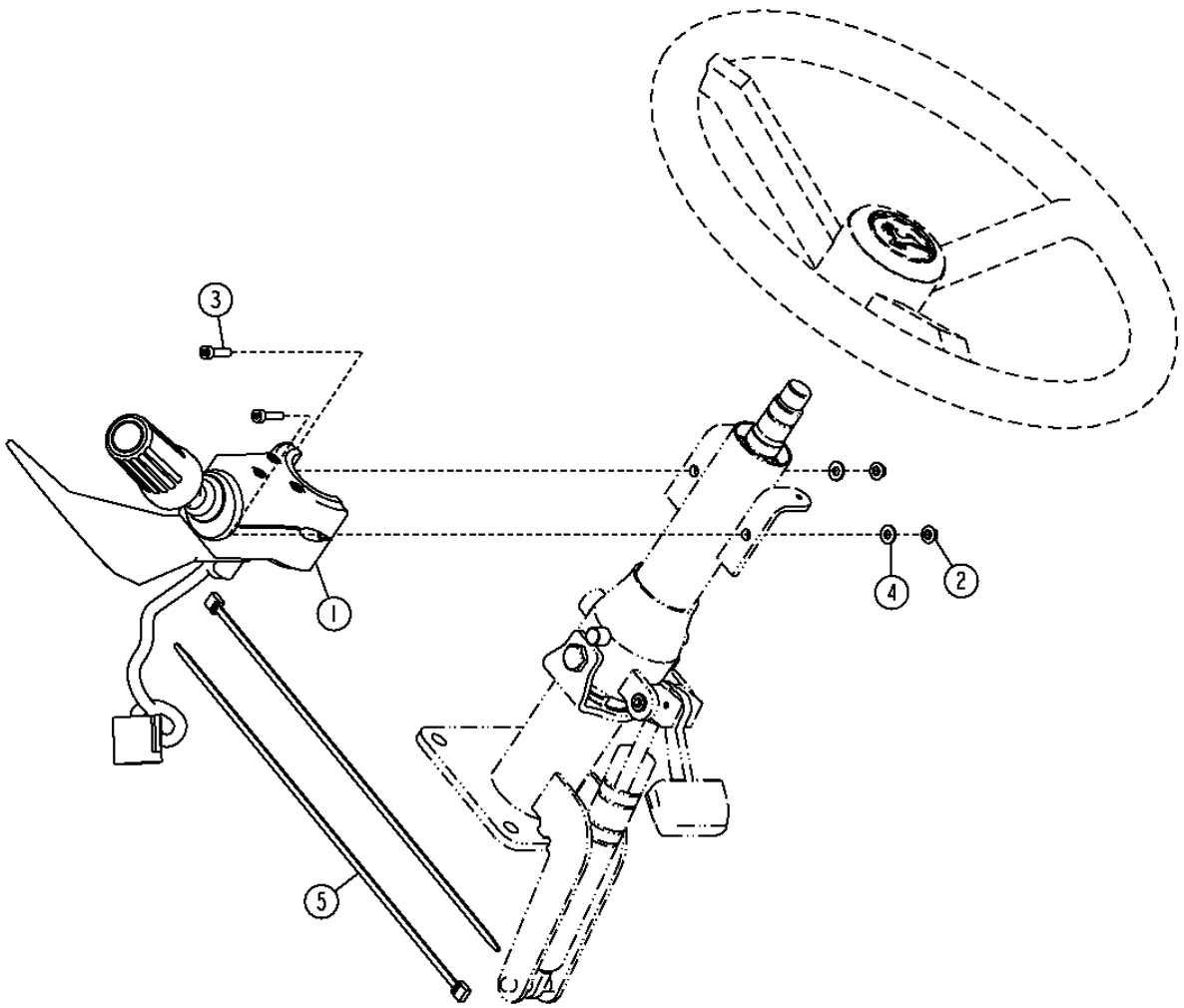

TX1015124

TRANSMISSION CONTROL LEVER
LEVIER DE VITESSES
PALANCA DE CONTROL DE TRANSMISION

KEY	*PART NO.*	*PART NAME*	*QTY.*	*SERIAL NO.*	*REMARKS*
1	AT314144	SWITCH	1		
2	14M7375	FLANGE NUT	2		M5
3	19M8581	SCREW	2		M5 X 20
4	24H1283	WASHER	2		5.563 X 12.700 X 1.245 MM
5	H77698	TIE BAND	2		

REAR DRIVESHAFT
ARBRE D'ENTRAINEMENT ARRIERE
EJE DE MANDO TRASERA

TX1014964 -UN-12DEC06

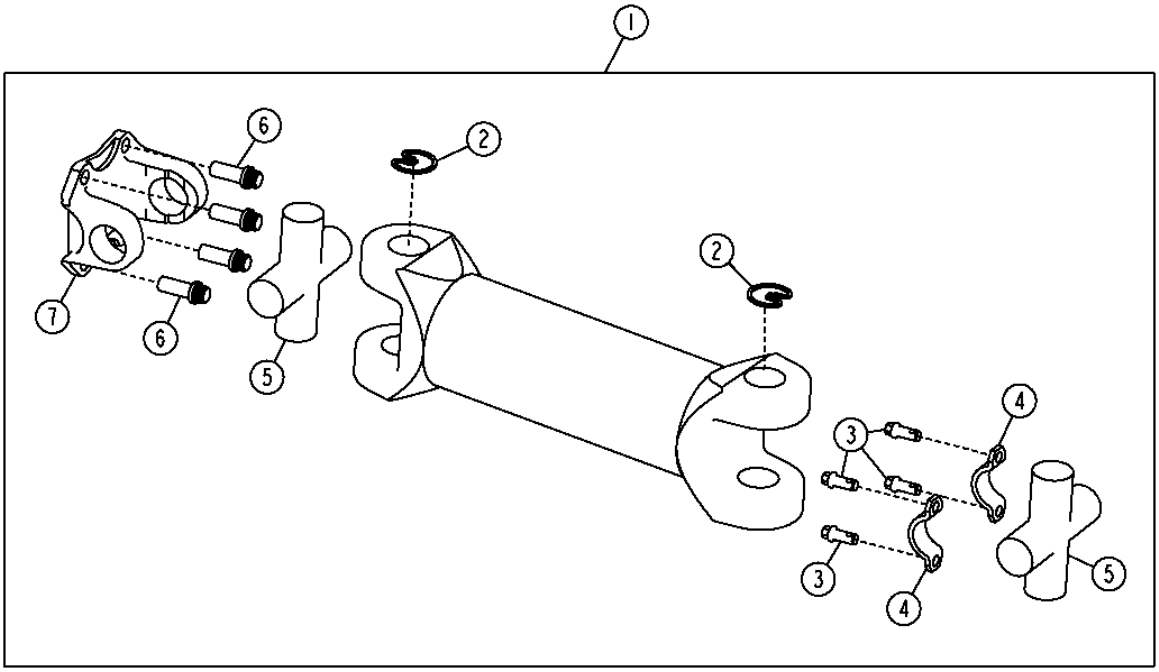

TX1014964

REAR DRIVESHAFT
ARBRE D'ENTRAINEMENT ARRIERE
EJE DE MANDO TRASERA

KEY	*PART NO.*	*PART NAME*	*QTY.*	*SERIAL NO.*	*REMARKS*
1	AT314592	UNIVERSAL DRIVESHAFT	1		
2	N119316	SNAP RING	4		
3	T113128	SCREW	4		
4	T69938	HALF CLAMP	2		
5	AT178390	CROSS AND BEARING ASSEMBLY	2		
6	T82430	SCREW	4		
7	T65974	UNIVERSAL JOINT YOKE	1		

TRANSMISSION REAR HOUSING AND OIL FILL TUBE
CARTER ARRIERE ET TUBE DE REMPLISSAGE D'HUILE DE TRANSMISSION
CAJA TRASERA DE TRANSMISION Y TUBO DE LLENADO DE ACEITE

TX1015148 -UN-09DEC06

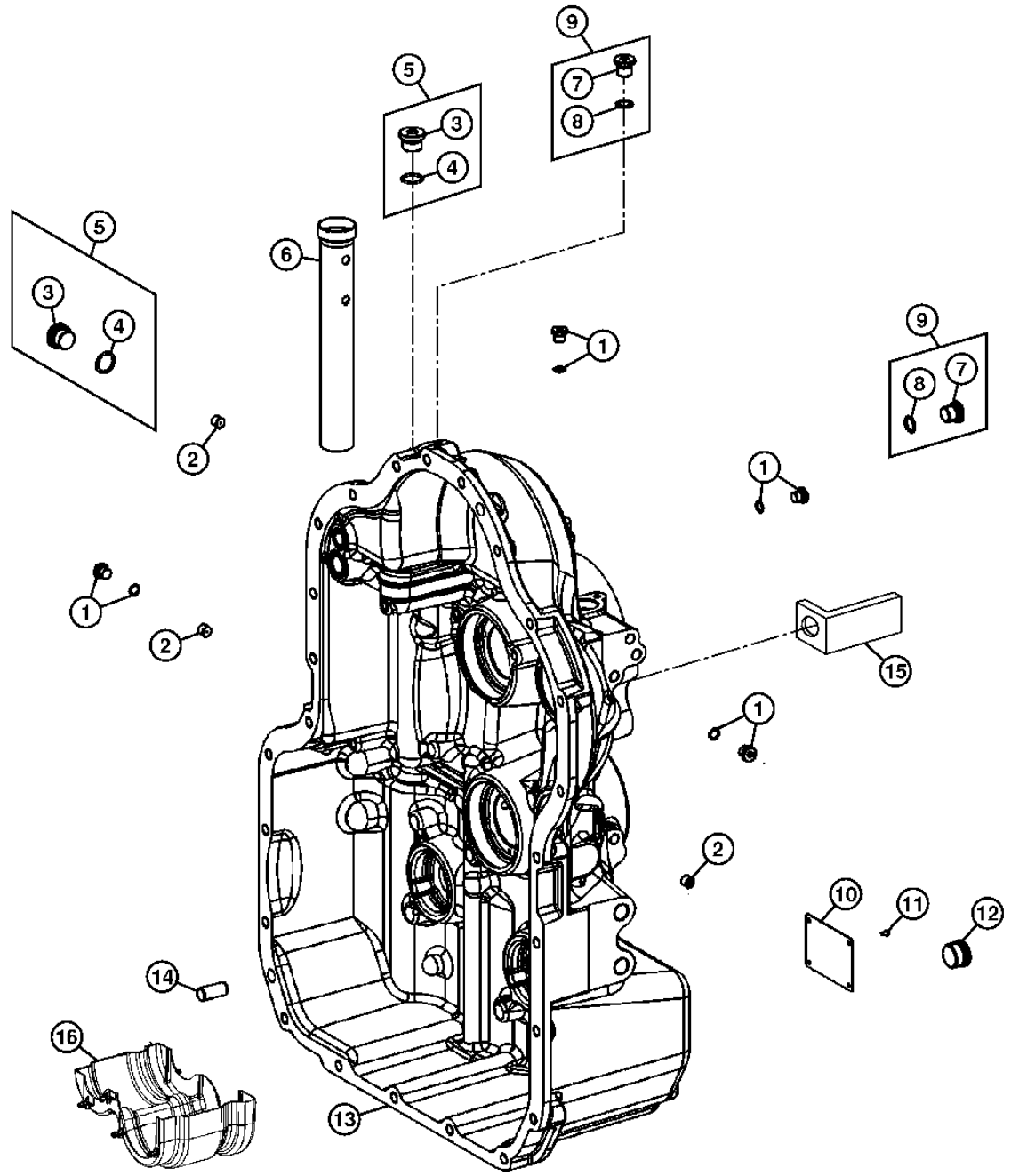

TX1015148

TRANSMISSION REAR HOUSING AND OIL FILL TUBE
CARTER ARRIERE ET TUBE DE REMPLISSAGE D'HUILE DE TRANSMISSION
CAJA TRASERA DE TRANSMISION Y TUBO DE LLENADO DE ACEITE

KEY	*PART NO.*	*PART NAME*	*QTY.*	*SERIAL NO.*	*REMARKS*
1	T161194	PLUG	AR		
2	T229354	ORIFICE	2		1.4 MM
	T229384	ORIFICE	2		1.7 MM
	T229361	ORIFICE	2		1.5 MM
	T230433	ORIFICE	2		1.55
3	.....	PLUG	2		
4	.....	O-RING	2		
5	AT339903	PLUG	2		(INCLUDES O-RING)
6	T229404	TUBE	1		
7	.....	PLUG	3		
8	.....	O-RING	3		
9	AT339901	PLUG	3		(INCLUDES O-RING)
10	.....	PLATE	1		
11	25M7021	GROOVE PIN	4		3 X 5 MM
12	T159565	PLUG	1		
13	T229391	HOUSING	1		(WITH MFWD)
	T229390	HOUSING	1		(WITHOUT MFWD)
14	T164662	PIN	4		
15	R73975	BRACKET	2		
16	AT339921	SCREEN	1		

TRANSMISSION FRONT HOUSING AND TORQUE CONVERTER COVER
CARTER AVANT DE TRANSMISSION ET PROTECTION DE CONVERTISSEUR DE COUPLE
CAJA DELANTERA DE TRANSMISION Y CUBIERTA DE CONVERTIDOR DE PAR

TX1015218 -UN-09DEC06

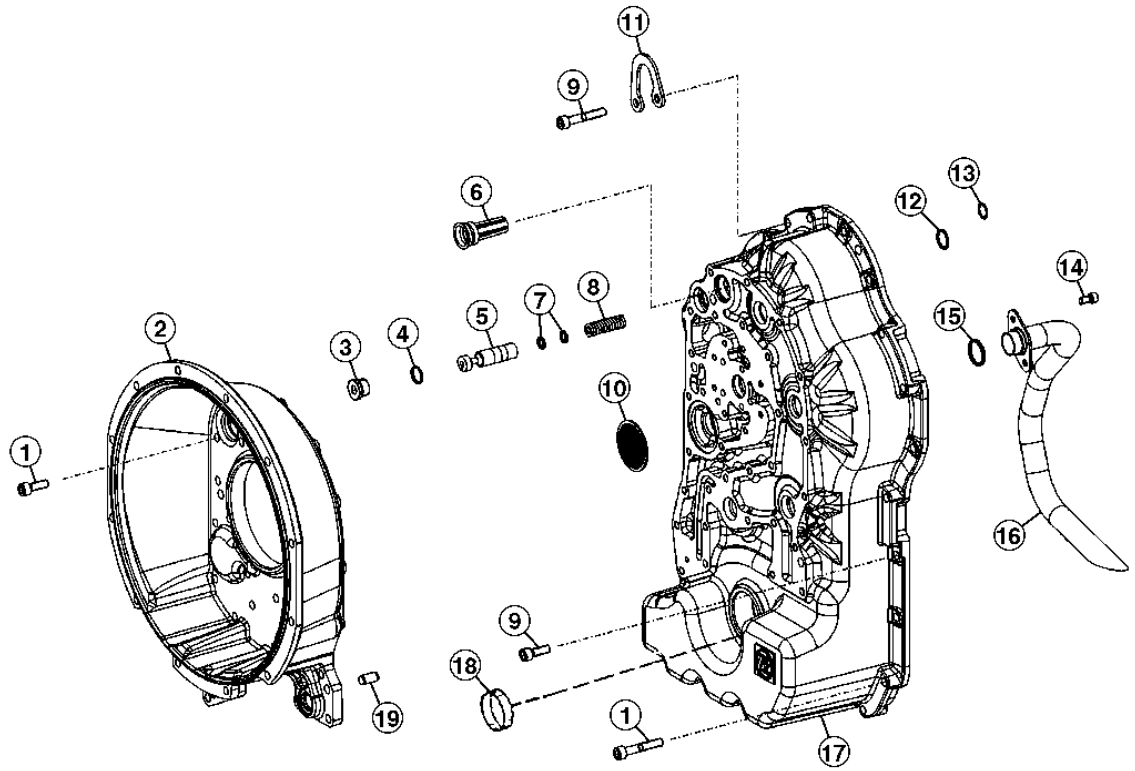

TX1015218

TRANSMISSION FRONT HOUSING AND TORQUE CONVERTER COVER
CARTER AVANT DE TRANSMISSION ET PROTECTION DE CONVERTISSEUR DE COUPLE
CAJA DELANTERA DE TRANSMISION Y CUBIERTA DE CONVERTIDOR DE PAR

KEY	*PART NO.*	*PART NAME*	*QTY.*	*SERIAL NO.*	*REMARKS*
1	T229351	CAP SCREW	44		
2	T229392	HOUSING	1		
3	15M7045	DRAIN PLUG	1		
4	T229399	O-RING	1		
5	T229400	PISTON	1		
6	T176526	VALVE	1		
7	T161197	SPACER	1		3.6 MM
	T161198	SPACER	1		3.2 MM
	T161199	SPACER	1		2.8 MM
	T161200	SPACER	1		2.4 MM
	T229360	SPACER	1		2.0 MM
	T229369	SPACER	1		2.2 MM
	T229376	SPACER	1		2.6 MM
8	T159586	SPRING	1		
9	T229363	CAP SCREW	10		
10	AT339923	SCREEN	1		
11	.....	BRACKET	1		
12	T229394	O-RING	1		
13	R104558	O-RING	1		
14	T164648	CAP SCREW	2		
15	T161181	O-RING	1		
16	AT339900	TUBE	1		
17	T229366	HOUSING	1		(WITH MFWD)
	T229362	HOUSING	1		(WITHOUT MFWD)
18	T159683	COVER	1		(WITHOUT MFWD)
19	T164662	PIN	4		(WITH MFWD)
	T164662	PIN	2		(WITHOUT MFWD)

TRANSMISSION, DIPSTICK AND TUBE
TRANSMISSION, JAUGE ET TUBE
TRANSMISION, VARILLA DE MEDICION Y TUBO

TX1016059 -UN-12DEC06

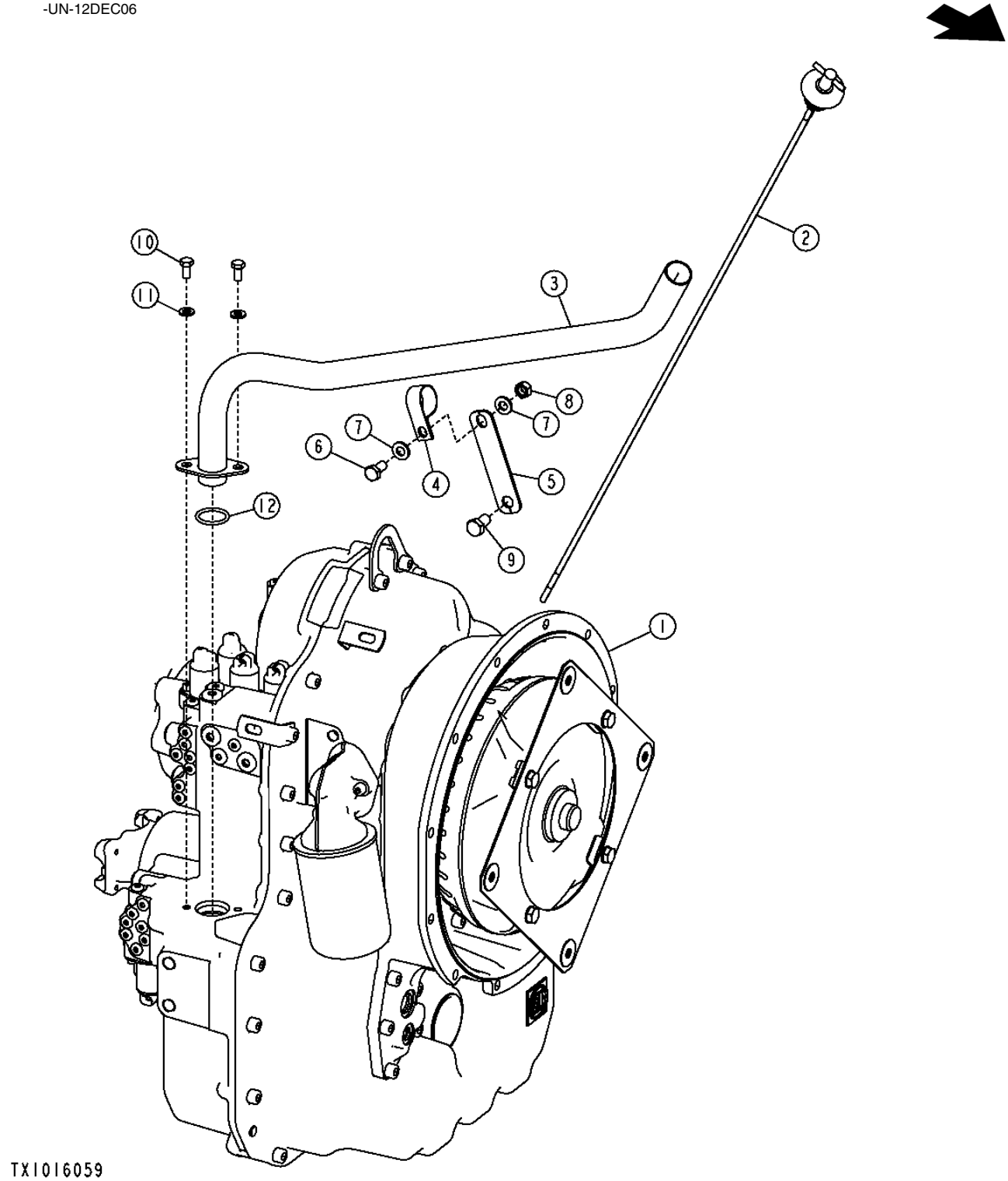

THIS PARTS LISTING IS CONTINUED

TRANSMISSION, DIPSTICK AND TUBE
TRANSMISSION, JAUGE ET TUBE
TRANSMISION, VARILLA DE MEDICION Y TUBO

KEY	*PART NO.*	*PART NAME*	*QTY.*	*SERIAL NO.*	*REMARKS*
1	AT316534	TRANSMISSION	1		(WITH MFWD) (CONVENIENCE ASSEMBLY) (INCLUDES HOUSING, TORQUE CONVERTER, CONTROL VALVE, SOLENOIDS, AND FILTER)
	AT316533	**TRANSMISSION**	**1**		**(WITHOUT MFWD) (CONVENIENCE ASSEMBLY) (INCLUDES HOUSING, TORQUE CONVERTER, CONTROL VALVE, SOLENOIDS, AND FILTER)**
2	AT303695	DIPSTICK	1		
3	AT311103	DIPSTICK TUBE	1		
4	T162675	CLAMP	1		
5	.....	PLATE	1		
6	19M7938	CAP SCREW	1		M10 X 20
7	24M7239	WASHER	2		10.700 X 21 X 2.500 MM
8	14M7274	NUT	1		M10
9	19M8017	CAP SCREW	1		M12 X 20
10	19M7932	CAP SCREW	2		M8 X 16
11	24M7238	WASHER	2		8.700 X 17 X 2 MM
12	R29463	O-RING	1		

TRANSMISSION REAR MOUNTING SUPPORT
SUPPORT DE MONTAGE ARRIERE DE TRANSMISSION
SOPORTE DE MONTAJE TRASERO DE LA TRANSMISION

TX1014880 -UN-28DEC06

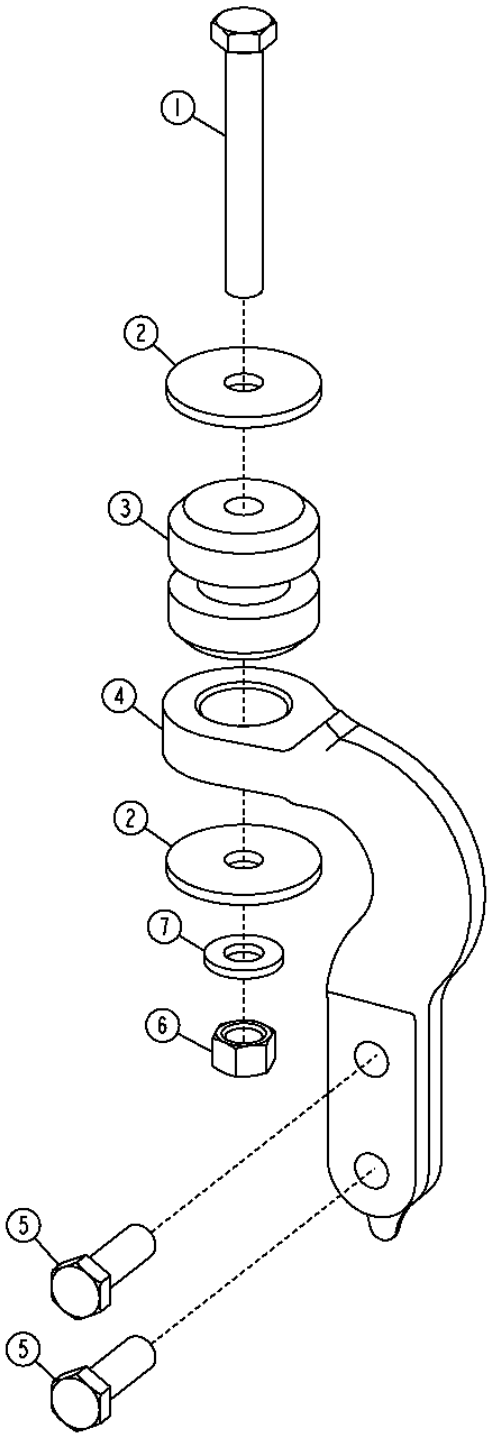

TX1014880

TRANSMISSION REAR MOUNTING SUPPORT
SUPPORT DE MONTAGE ARRIERE DE TRANSMISSION
SOPORTE DE MONTAJE TRASERO DE LA TRANSMISION

KEY	*PART NO.*	*PART NAME*	*QTY.*	*SERIAL NO.*	*REMARKS*
1	19M7941	CAP SCREW	2		M16 X 120
2	T179952	WASHER	4		
3	AT170854	ISOLATOR	2		
4	T214064	SUPPORT	2		
5	19M7489	CAP SCREW	4		M16 X 45, 1.50
6	14M7276	NUT	2		M16
8	24M7241	WASHER	2		17 X 34 X 4 MM

MEMORANDA
MEMORANDA
MEMORANDA

TORQUE CONVERTER
CONVERTISSEUR DE COUPLE
CONVERTIDOR DE PAR

TX1015943 -UN-13DEC06

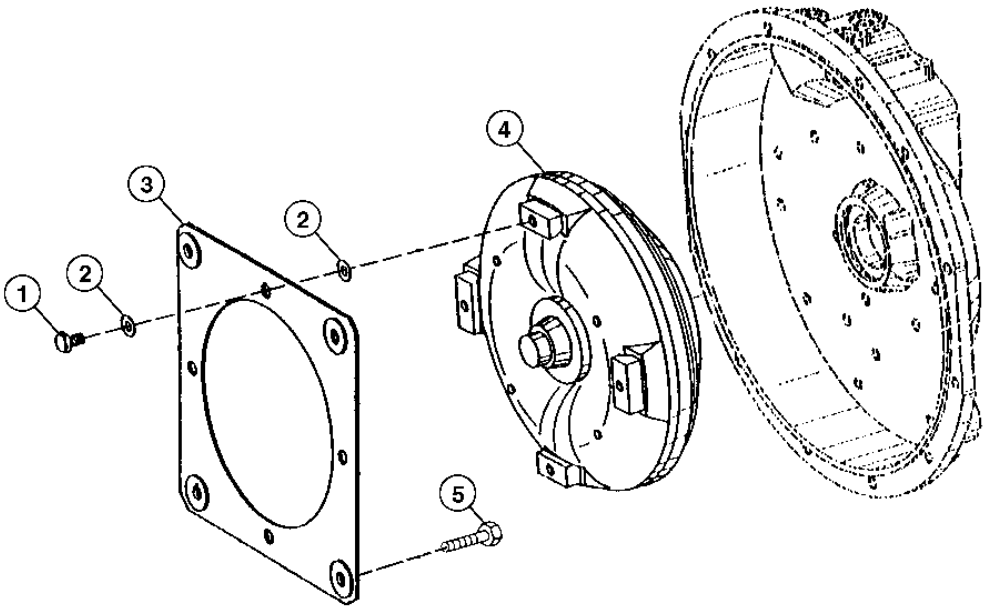

TX1015943

KEY	*PART NO.*	*PART NAME*	*QTY.*	*SERIAL NO.*	*REMARKS*
1	19M8289	CAP SCREW	4		M10 X 16
2	T155324	PLATE	8		
3	AT179312	PLATE	2		
4	AT338741	TORQUE CONVERTER	1		
5	19M7402	CAP SCREW	4		M10 X 25

TRANSMISSION INPUT SHAFT AND CLUTCH DISK
ARBRE PRIMAIRE DE LA TRANSMISSION ET DISQUE D'EMBRAYAGE
EJE DE ENTRADA DE LA TRANSMISION Y DISCO DE EMBRAGUE

TX1014398 -UN-01DEC06

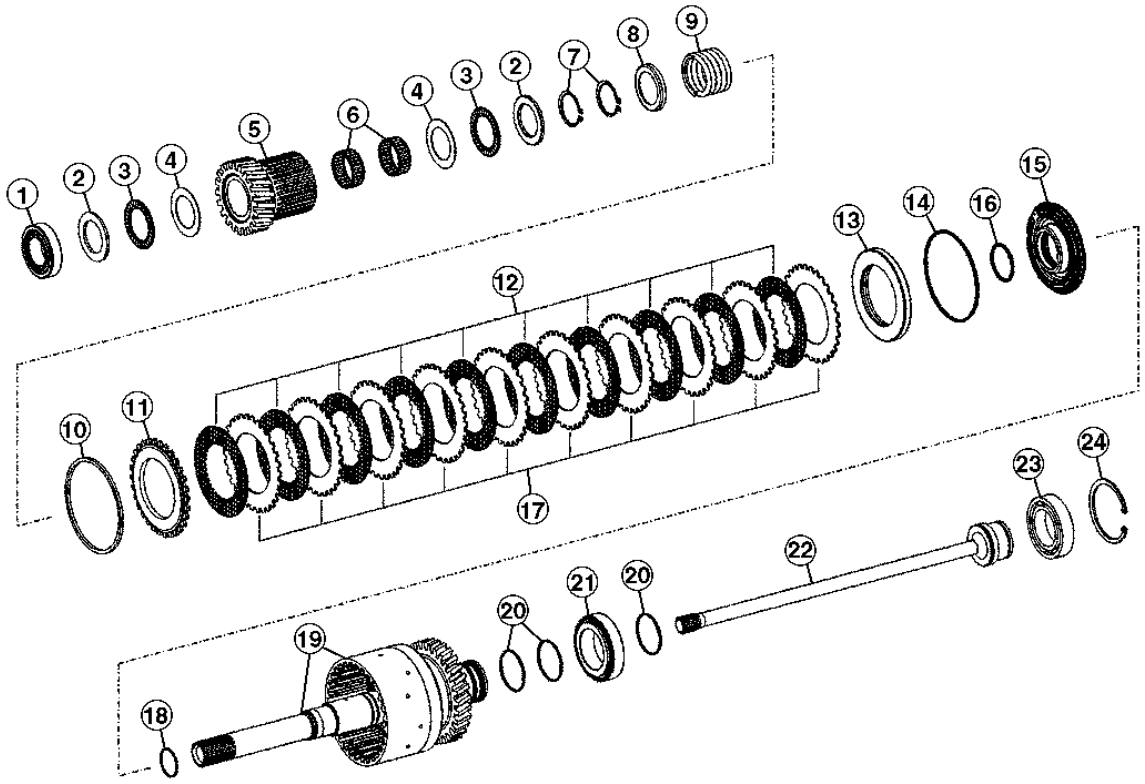

TX1014398

GEARS, SHAFTS, BEARINGS AND POWER SHIFT CLUTCH 0350

TRANSMISSION INPUT SHAFT AND CLUTCH DISK
ARBRE PRIMAIRE DE LA TRANSMISSION ET DISQUE D'EMBRAYAGE
EJE DE ENTRADA DE LA TRANSMISION Y DISCO DE EMBRAGUE

KEY	*PART NO.*	*PART NAME*	*QTY.*	*SERIAL NO.*	*REMARKS*
1	AT339915	TAPERED ROLLER BEARING	1		
2	T229356	THRUST WASHER	2		
3	JD37406	NEEDLE BEARING	2		
4	T158749	THRUST WASHER	2		
5	T229412	HUB	1		
6	AT339920	NEEDLE BEARING	2		
7	40M7058	SNAP RING	2		
8	T229468	ROUND RETAINER	1		
9	T229346	COMPRESSION SPRING	1		
10	T229341	SNAP RING	1		
	T229352	SNAP RING	1		
	T229359	SNAP RING	1		
	T229364	SNAP RING	1		
	T229379	SNAP RING	1		
	T229380	SNAP RING	1		
	T229381	SNAP RING	1		
11	T229340	DISK WITH OUTER SPLINE	1		
12	AT339922	CLUTCH DISK	10		
13	T229469	ROUND RETAINER	1		
14	T229398	O-RING	1		
15	T229403	PISTON	1		
16	AT258980	O-RING	1		
17	T229406	PLATE	10		
18	L153002	PISTON RING	1		
19	AT339910	MODULAR CLUTCH	1		
20	T172118	PISTON RING	3		
21	AT339914	TAPERED ROLLER BEARING	1		
22	T229347	SHAFT	1		
23	AT339899	BALL BEARING	1		
24	40M5099	SNAP RING	1		

LOW RANGE FORWARD CLUTCH ASSEMBLY
EMBRAYAGE GAMME BASSE MARCHE AVANT
EMBRAGUE GAMA BAJA DE AVANCE

TX1014588 -UN-14NOV06

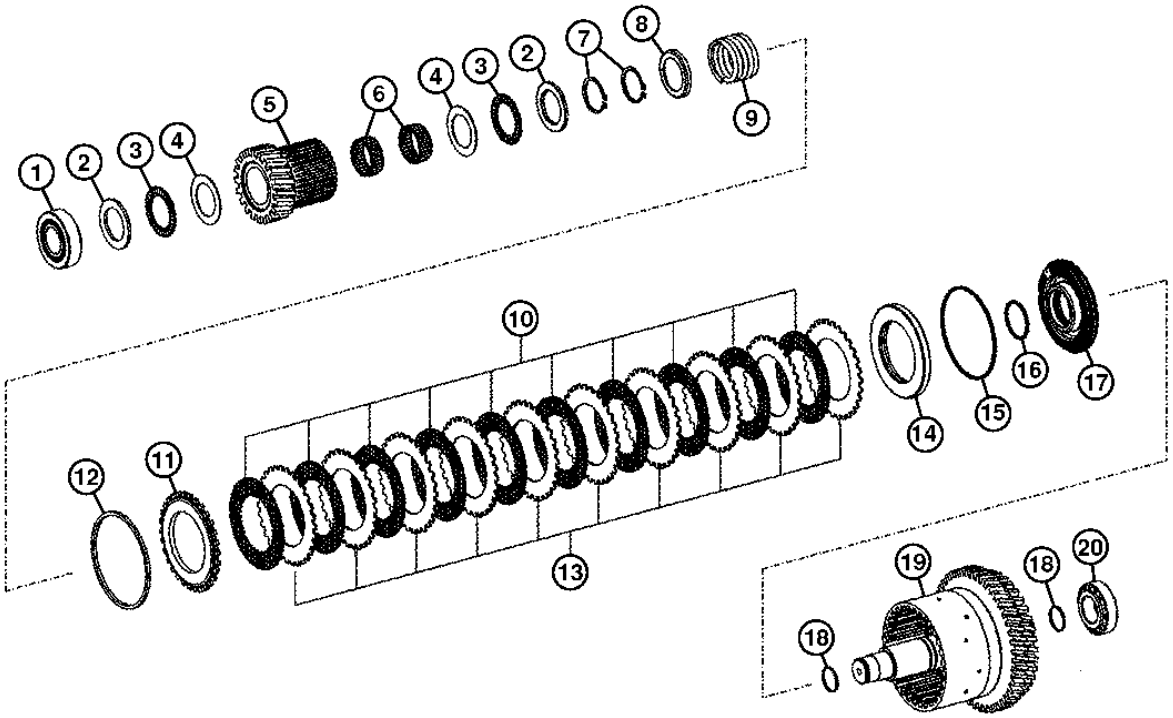

TX1014588

LOW RANGE FORWARD CLUTCH ASSEMBLY
EMBRAYAGE GAMME BASSE MARCHE AVANT
EMBRAGUE GAMA BAJA DE AVANCE

KEY	PART NO.	PART NAME	QTY.	SERIAL NO.	REMARKS
1	AT339917	TAPERED ROLLER BEARING	1		
2	T229356	THRUST WASHER	2		
3	JD37406	NEEDLE BEARING	2		
4	T158749	THRUST WASHER	2		
5	T229412	HUB	1		
6	AT339920	NEEDLE BEARING	2		
7	40M7058	SNAP RING	2		
8	T229468	ROUND RETAINER	1		
9	T229346	COMPRESSION SPRING	1		
10	AT339922	CLUTCH DISK	10		
11	T229340	DISK WITH OUTER SPLINE	1		
12	T229341	SNAP RING	1		2.0 MM
	T229352	SNAP RING	1		2.5 MM
	T229359	SNAP RING	1		3.0 MM
	T229364	SNAP RING	1		3.5 MM
	T229379	SNAP RING	1		2.75 MM
	T229380	SNAP RING	1		3.25 MM
	T229381	SNAP RING	1		2.25 MM
13	T229406	PLATE	10		
14	T229469	ROUND RETAINER	1		
15	T229398	O-RING	1		
16	AT258980	O-RING	1		
17	T229403	PISTON	1		
18	T158742	RING	2		
19	AT339912	MODULAR CLUTCH	1		
20	T158793	TAPERED ROLLER BEARING	1		

HIGH RANGE FORWARD CLUTCH ASSEMBLY
EMBRAYAGE MARCHE AVANT GAMME HAUTE
EMBRAGUE DE GAMA ALTA DE AVANCE

TX1014621 -UN-14NOV06

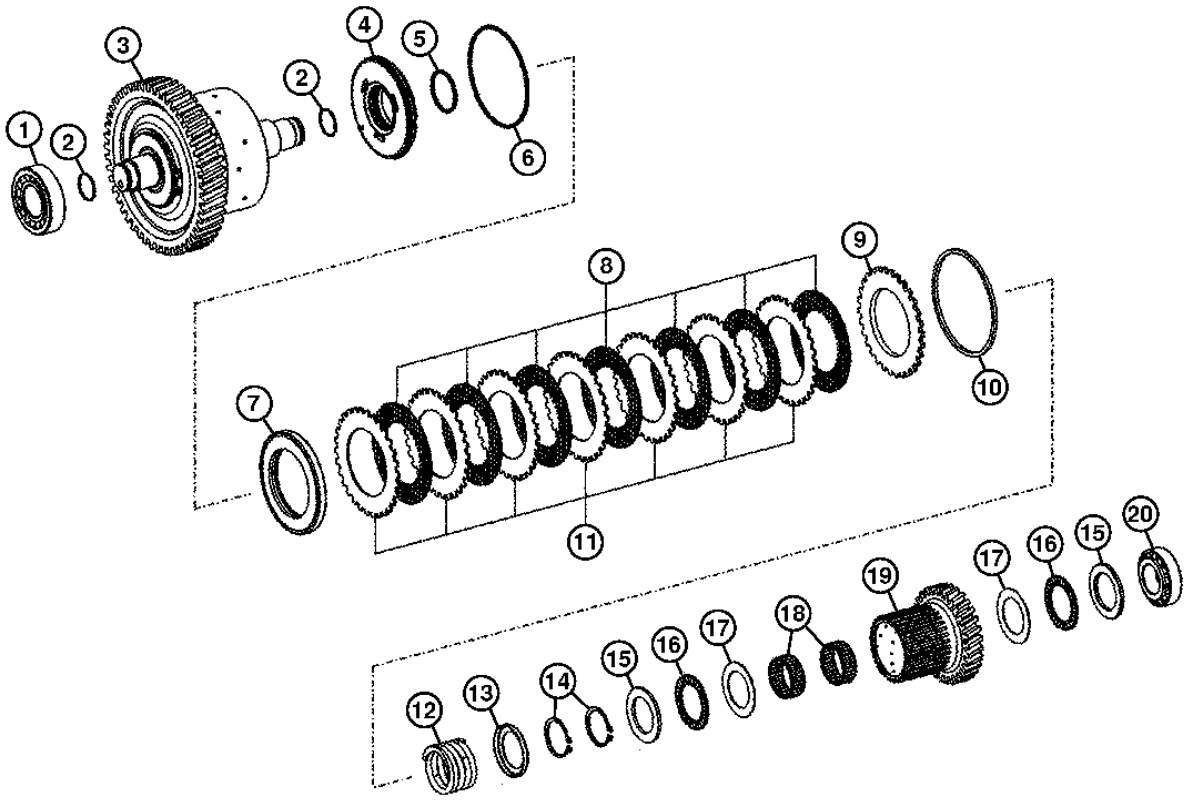

TX1014621

HIGH RANGE FORWARD CLUTCH ASSEMBLY
EMBRAYAGE MARCHE AVANT GAMME HAUTE
EMBRAGUE DE GAMA ALTA DE AVANCE

KEY	*PART NO.*	*PART NAME*	*QTY.*	*SERIAL NO.*	*REMARKS*
1	AT184042	BEARING	1		
2	T229466	RING	2		
3	AT339908	MODULAR CLUTCH	1		
4	T229403	PISTON	1		
5	AT258980	O-RING	1		
6	T229398	O-RING	1		
7	T229469	ROUND RETAINER	1		
8	AT339922	CLUTCH DISK	7		
9	T229340	DISK WITH OUTER SPLINE	1		
10	T229341	SNAP RING	1		2.0 MM
	T229352	SNAP RING	1		2.5 MM
	T229359	SNAP RING	1		3.0 MM
	T229364	SNAP RING	1		3.5 MM
	T229379	SNAP RING	1		2.75 MM
	T229380	SNAP RING	1		3.25 MM
	T229381	SNAP RING	1		2.25 MM
11	T229406	PLATE	7		
12	T229346	COMPRESSION SPRING	1		2.0 MM
13	T229468	ROUND RETAINER	1		
14	40M7058	SNAP RING	2		
15	T229356	THRUST WASHER	2		
16	JD37406	NEEDLE BEARING	2		
17	T158749	THRUST WASHER	2		
18	AT339920	NEEDLE BEARING	2		
19	T229411	HUB	1		
20	T158793	TAPERED ROLLER BEARING	1		

FIRST SPEED CLUTCH ASSEMBLY
EMBRAYAGE 1ER VITESSE
EMBRAGUE 1Œ VELOCIDAD

TX1014644 -UN-01DEC06

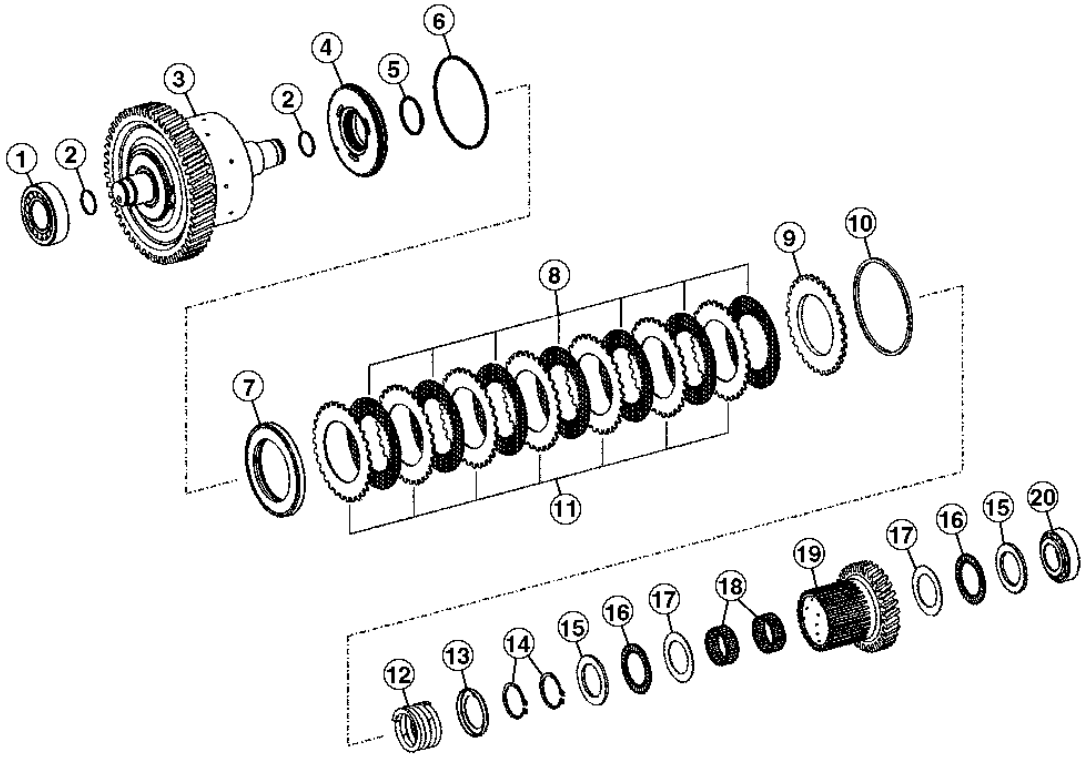

TX1014644

FIRST SPEED CLUTCH ASSEMBLY
EMBRAYAGE 1ER VITESSE
EMBRAGUE 1Œ VELOCIDAD

KEY	PART NO.	PART NAME	QTY.	SERIAL NO.	REMARKS
1	AT184042	BEARING	1		
2	T229466	RING	2		
3	AT339904	MODULAR CLUTCH	1		
4	T229402	PISTON	1		
5	AT258980	O-RING	1		
6	T229398	O-RING	1		
7	T229337	DISK SPRING	1		
8	AT339922	CLUTCH DISK	10		
9	T229340	DISK WITH OUTER SPLINE	1		
10	T229341	SNAP RING	1		2.0 MM
	T229352	SNAP RING	1		2.5 MM
	T229359	SNAP RING	1		3.0 MM
	T229364	SNAP RING	1		3.5 MM
	T229379	SNAP RING	1		2.75 MM
	T229380	SNAP RING	1		3.25 MM
	T229381	SNAP RING	1		2.25 MM
11	T229406	PLATE	10		
12	T229346	COMPRESSION SPRING	1		
13	T229468	ROUND RETAINER	1		
14	40M7058	SNAP RING	2		
15	T229356	THRUST WASHER	2		
16	JD37406	NEEDLE BEARING	2		
17	T158749	THRUST WASHER	2		
18	AT339920	NEEDLE BEARING	2		
19	T229408	HUB	1		
20	T158793	TAPERED ROLLER BEARING	1		

SECOND SPEED CLUTCH ASSEMBLY
EMBRAYAGE PREMIERE VITESSE
EMBRAGUE SEGUNDA VELOCIDAD

TX1014696 -UN-30NOV06

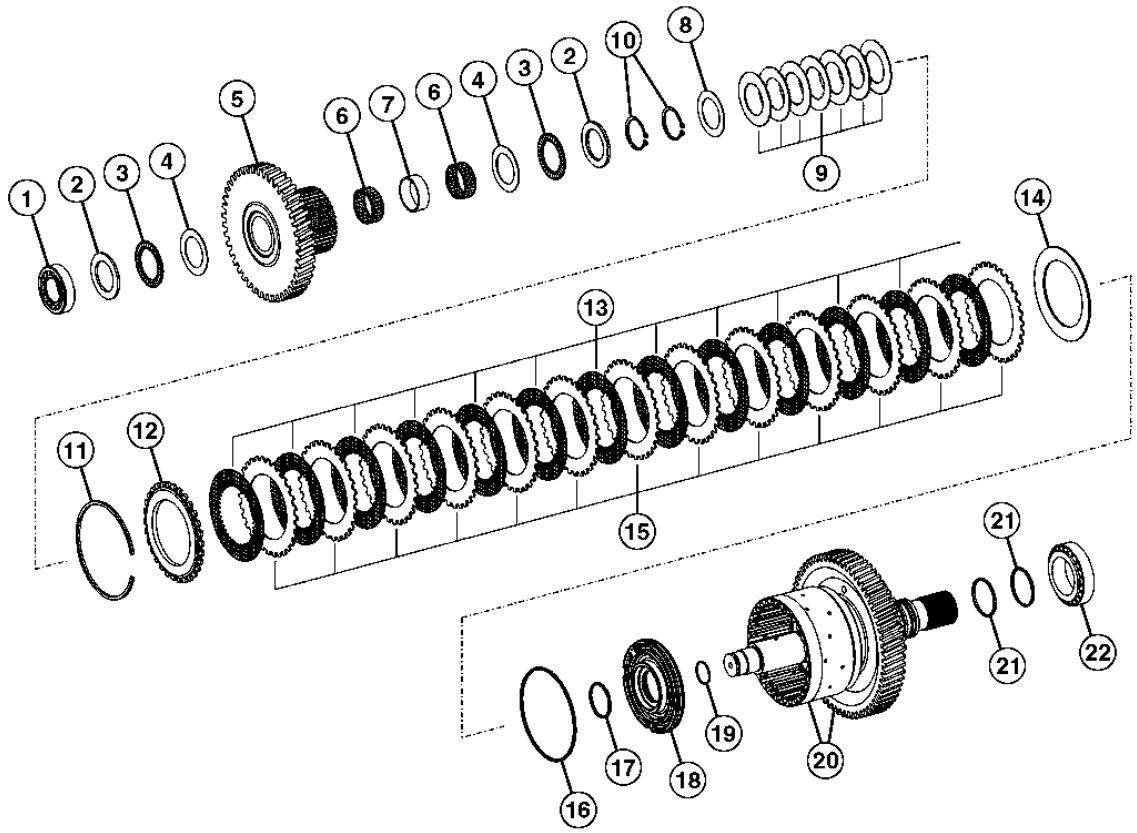

TX1014696

SECOND SPEED CLUTCH ASSEMBLY
EMBRAYAGE PREMIERE VITESSE
EMBRAGUE SEGUNDA VELOCIDAD

KEY	PART NO.	PART NAME	QTY.	SERIAL NO.	REMARKS
1	T158793	TAPERED ROLLER BEARING	1		
2	T229356	THRUST WASHER	2		
3	JD37406	NEEDLE BEARING	2		
4	T158749	THRUST WASHER	3		
5	T229409	HUB	1		
6	AT339920	NEEDLE BEARING	1		
7	T229353	SPACER	1		
8	T158749	THRUST WASHER	1		
9	T229373	DISK SPRING	7		
10	40M7058	SNAP RING	2		2.0 MM
11	T161183	SNAP RING	1		4.0 MM
	T158778	SNAP RING	1		3.5 MM
	T159568	SNAP RING	1		3.0 MM
	T159569	SNAP RING	1		2.5 MM
	T159570	SNAP RING	1		2.0 MM
	T229368	SNAP RING	1		3.25 MM
	T229375	SNAP RING	1		3.75 MM
	T229383	SNAP RING	1		2.25 MM
	T229386	SNAP RING	1		2.75 MM
12	T161147	PLATE	1		
13	T164626	DISK	13		
14	T229349	DISK SPRING	1		
15	T158801	CLUTCH PLATE	13		
16	T158739	RING	1		
17	AT258980	O-RING	1		
18	T229401	PISTON	1		
19	T229466	RING	1		
20	AT339905	MODULAR CLUTCH	1		
21	T172118	PISTON RING	2		
22	AT339914	TAPERED ROLLER BEARING	1		

THIRD SPEED CLUTCH ASSEMBLY
EMBRAYAGE TROISIEME VITESSE
EMBRAGUE TERCERA VELOCIDAD

TX1014727 -UN-29NOV06

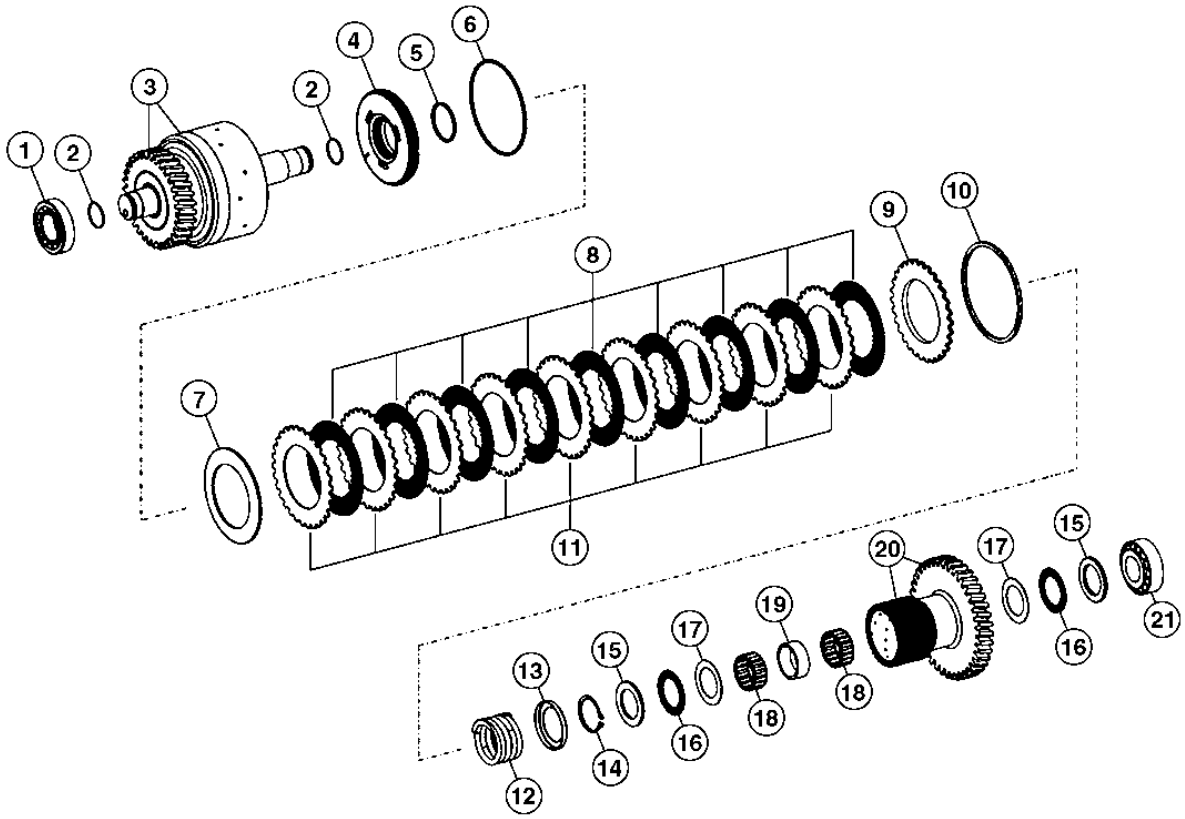

TX1014727

THIRD SPEED CLUTCH ASSEMBLY
EMBRAYAGE TROISIEME VITESSE
EMBRAGUE TERCERA VELOCIDAD

KEY	*PART NO.*	*PART NAME*	*QTY.*	*SERIAL NO.*	*REMARKS*
1	T158793	TAPERED ROLLER BEARING	1		
2	T229466	RING	2		
3	AT339906	MODULAR CLUTCH	1		
4	T229402	PISTON	1		
5	AT258590	CAP SCREW	1		
6	T229398	O-RING	1		
7	T229337	DISK SPRING	1		
8	AT339922	CLUTCH DISK	9		
9	T229340	DISK WITH OUTER SPLINE	1		
10	T229341	SNAP RING	1		2.0 MM
	T229352	SNAP RING	1		2.5 MM
	T229359	SNAP RING	1		3.0 MM
	T229364	SNAP RING	1		3.5 MM
	T229379	SNAP RING	1		2.75 MM
	T229380	SNAP RING	1		3.25 MM
	T229381	SNAP RING	1		2.25 MM
11	T229406	PLATE	9		4.0 MM
12	T229346	COMPRESSION SPRING	1		
13	T229468	ROUND RETAINER	1		
14	40M7058	SNAP RING	1		
15	T229348	THRUST WASHER	2		
16	AT339918	NEEDLE BEARING	2		
17	T229336	THRUST WASHER	2		
18	AT339919	NEEDLE BEARING	2		
19	T229342	SPACER	1		
20	T229410	HUB	1		
21	AT339916	TAPERED ROLLER BEARING	1		

MECHANICAL FRONT WHEEL DRIVE CLUTCH ASSEMBLY
EMBRAYAGE TRACTION AVANT MECANIQUE
CONJUNTO DEL EMBRAGUE ETRACCION DELANTERA MECANICA

TX1015039 -UN-07DEC06

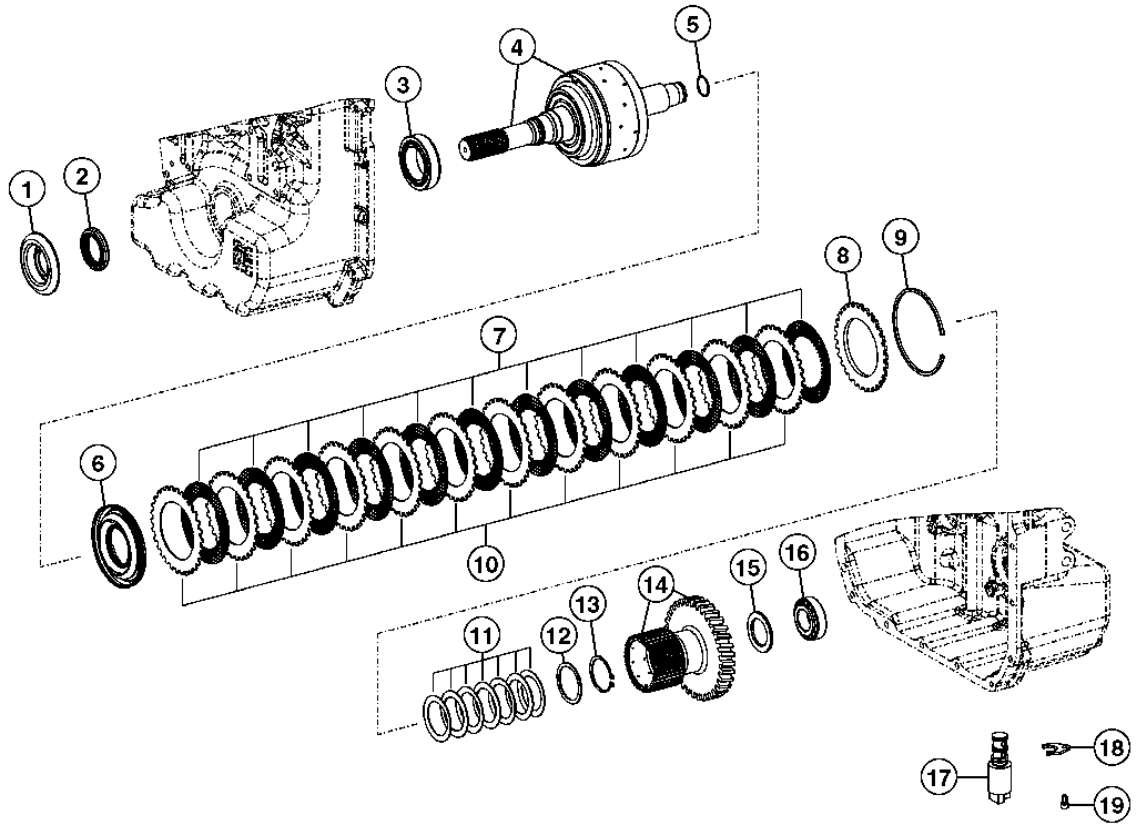

TX1015039

GEARS, SHAFTS, BEARINGS AND POWER SHIFT CLUTCH 0350

MECHANICAL FRONT WHEEL DRIVE CLUTCH ASSEMBLY
EMBRAYAGE TRACTION AVANT MECANIQUE
CONJUNTO DEL EMBRAGUE ETRACCION DELANTERA MECANICA

KEY	PART NO.	PART NAME	QTY.	SERIAL NO.	REMARKS
1	T218504	DUST SHIELD	1		
2	AT179466	SEAL	1		
	T229467	RING	1		
3	AT339914	TAPERED ROLLER BEARING	1		
4	AT339913	MODULAR CLUTCH	1		
5	T229466	RING	1		
6	AT193704	PISTON	1		
7	T164626	DISK	12		
8	T161147	PLATE	1		
9	T161183	SNAP RING	1		4.0 MM
	T158778	SNAP RING	1		3.5 MM
	T159568	SNAP RING	1		3.0 MM
	T159569	SNAP RING	1		2.5 MM
	T159570	SNAP RING	1		2.0 MM
	T229368	SNAP RING	1		3.25 MM
	T229375	SNAP RING	1		3.75 MM
	T229383	SNAP RING	1		2.25 MM
	T229386	SNAP RING	1		2.75 MM
10	T158801	CLUTCH PLATE	12		
11	T229357	DISK SPRING	7		
12	T229372	THRUST WASHER	1		
13	40M7166	SNAP RING	1		
14	T229407	HUB	1		
15	T229356	THRUST WASHER	1		
16	T158793	TAPERED ROLLER BEARING	1		
17	AT310584	SOLENOID HYDRAULIC VALVE	1		
18	T229343	PLATE	1		
19	L152999	SOCKET HEAD SCREW	1		

TRANSMISSION OUTPUT SHAFT
ARBRE DE SORTIE DE TRANSMISSION (ARRIERE)
EJE DE SALIDA DE LA TRANSMISION (TRASERO)

TX1014769 -UN-03JAN07

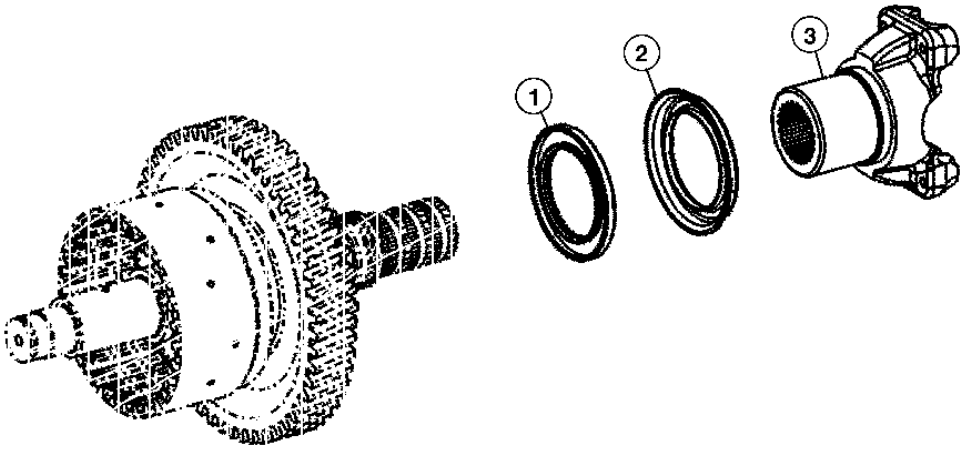

TX1014769

TRANSMISSION OUPUT SHAFT
ARBRE DE SORTIE DE TRANSMISSION (ARRIERE)
EJE DE SALIDA DE LA TRANSMISION (TRASERO)

KEY	*PART NO.*	*PART NAME*	*QTY.*	*SERIAL NO.*	*REMARKS*
1	AT179481	SEAL	1		
2	T229405	GUARD	1		
3	AT326541	UNIVERSAL JOINT YOKE	1		

TRANSMISSION CHARGE PUMP
POMPE DE GAVAGE DE TRANSMISSION
BOMBA DE CARGA DE LA TRANSMISION

TX1014801 -UN-13DEC06

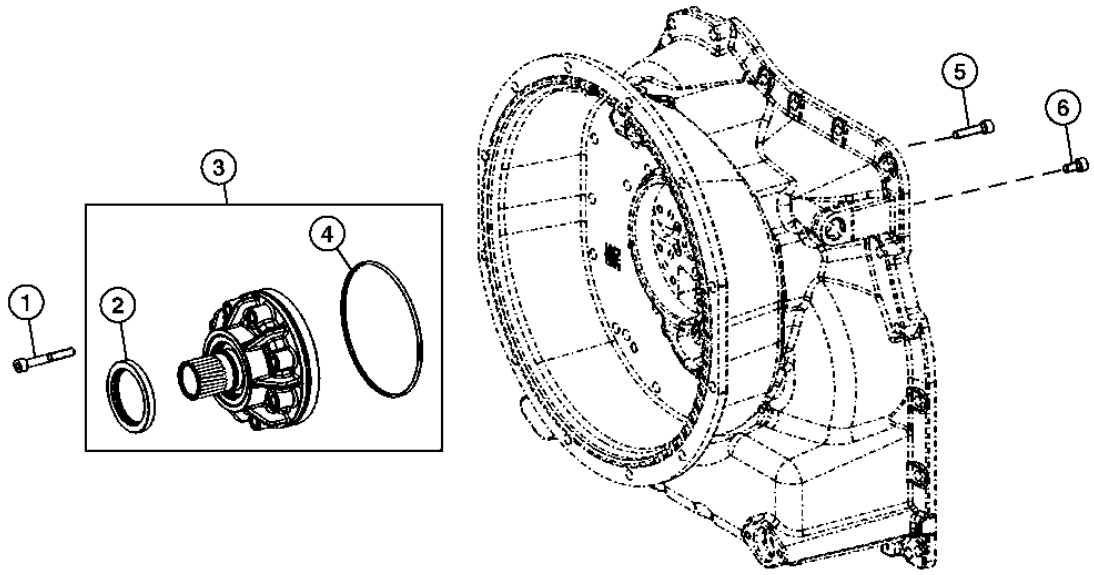

TX1014801

TRANSMISSION CHARGE PUMP
POMPE DE GAVAGE DE TRANSMISSION
BOMBA DE CARGA DE LA TRANSMISION

KEY	*PART NO.*	*PART NAME*	*QTY.*	*SERIAL NO.*	*REMARKS*
1	19M8658	SCREW	8		M8 X 60
2	AT179316	SEAL	1		
3	AT310590	HYDRAULIC PUMP	1		
4	T229393	O-RING	1		
5	T229382	CAP SCREW	2		
6	T164648	CAP SCREW	2		

TRANSMISSION OIL FILTER
FILTRE A HUILE DE BOITE
FILTRO DE ACEITE DE LA TRANSMISION

TX1014820 -UN-13DEC06

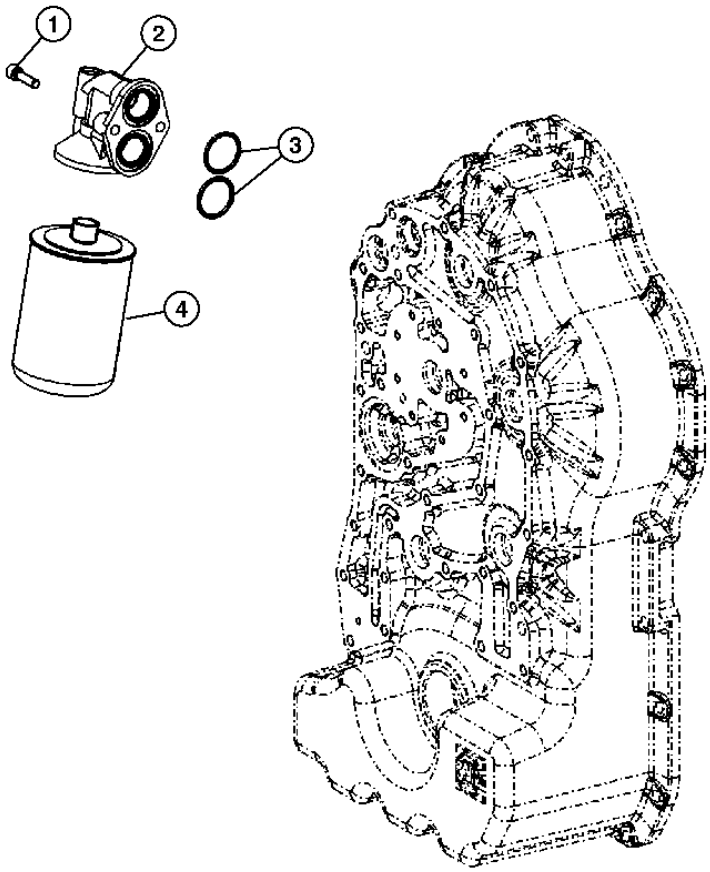

TX1014820

TRANSMISSION OIL FLTER
FILTRE A HUILE DE BOITE
FILTRO DE ACEITE DE LA TRANSMISION

KEY	*PART NO.*	*PART NAME*	*QTY.*	*SERIAL NO.*	*REMARKS*
1	T229385	CAP SCREW	2		
2	T177997	FILTER HEAD	1		
3	T172318	O-RING	2		
4	AT179323	OIL FILTER	1		

TRANSMISSION SHIFT CONTROL SOLENOIDS
SOLENOIDES COMMANDE DE PASSAGE DE VITESSES
SOLENOIDES CONTROL DE CAMBIOS DE TRANSMISION

TX1014830 -UN-13DEC06

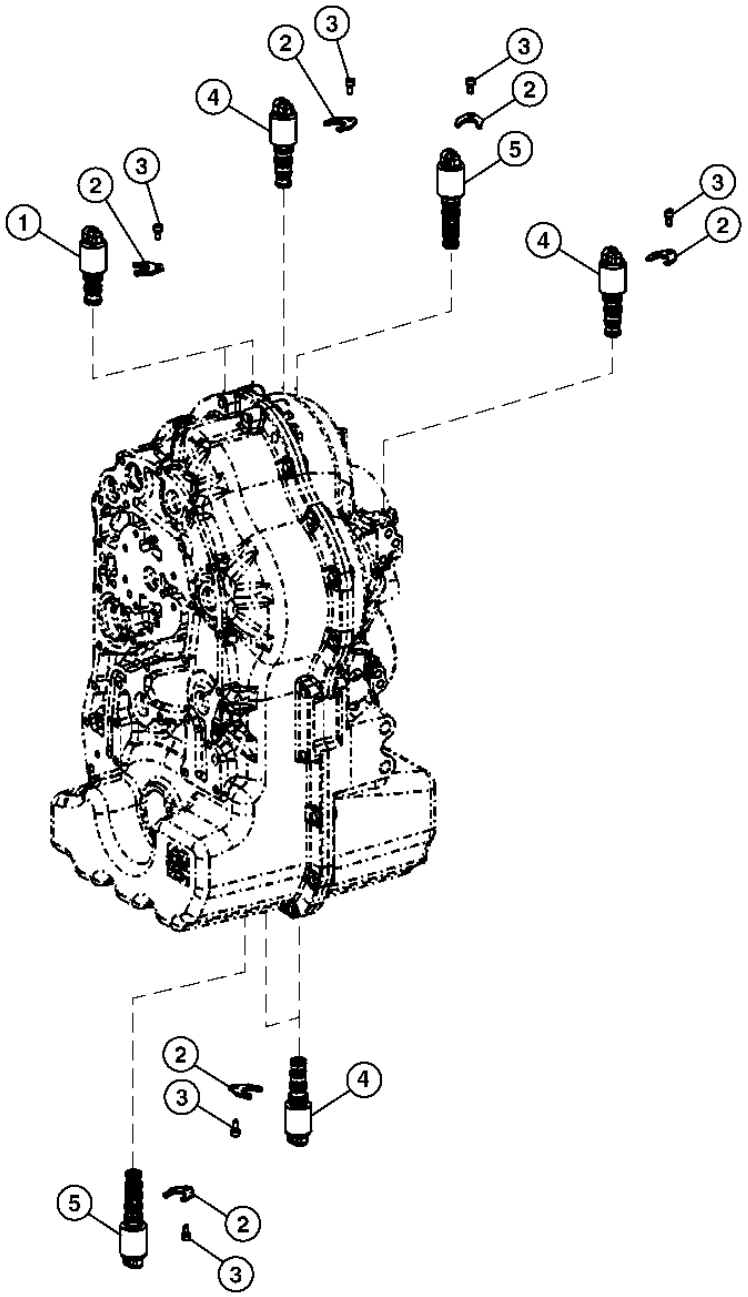

TX1014830

TRANSMISSION SHIFT CONTROL SOLENOIDS
SOLENOIDES COMMANDE DE PASSAGE DE VITESSES
SOLENOIDES CONTROL DE CAMBIOS DE TRANSMISION

KEY	*PART NO.*	*PART NAME*	*QTY.*	*SERIAL NO.*	*REMARKS*
1	AT310584	SOLENOID HYDRAULIC VALVE	2		
2	T229343	PLATE	8		
3	L152999	SOCKET HEAD SCREW	8		
4	AT310587	SOLENOID HYDRAULIC VALVE	4		
5	AT310586	SOLENOID HYDRAULIC VALVE	2		

CRANKSHAFT / BEARINGS
VILEBREQUIN / COUSSINETS
CIGUENAL / COJINETE

T145419 -UN-12NOV01

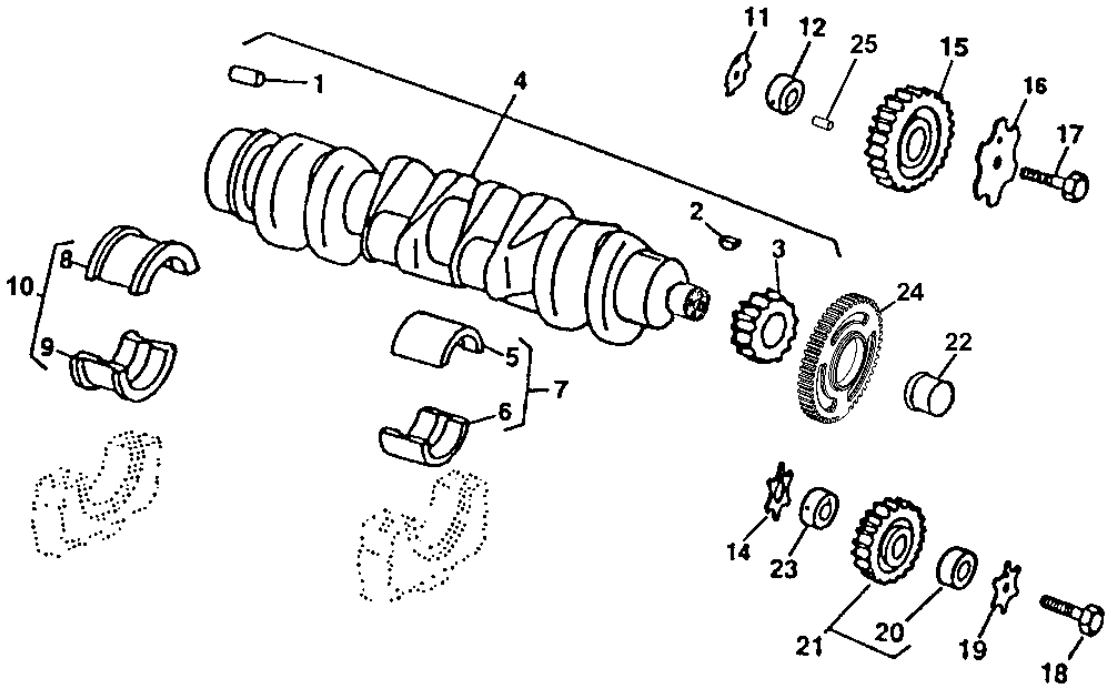

T145419

KEY	PART NO.	PART NAME	QTY.	ENGINE SERIAL NO.	REMARKS
1	R48685	DOWEL PIN	1		
2	R505609	SHAFT KEY	1		
3	R120631	GEAR	1		(Z = 30)
4	RE504638	CRANKSHAFT	1		(MARKED R113596) (ALSO ORDER RE59811)
5	.....	BEARING	4		0.254MM (.0100") (MARKED R130575)
	.....	BEARING	4		
6	.....	BEARING	4		
	.....	BEARING	4		
7	RE65165	BEARING KIT	4		(STD)
	RE65911	BEARING KIT	4		0.254MM (.0100")
8	.....	BEARING	1		
	.....	BEARING	1		
9	.....	BEARING	1		
	.....	BEARING	1		
10	RE65168	THRUST BEARING	1		(STD)
	RE65912	THRUST BEARING	1		0.254MM (.0100")
11	R123174	THRUST WASHER	1		
12	R120641	SHAFT	1		
14	R101225	THRUST WASHER	1		
15	RE56313	GEAR	1		(MARKED R500563)
16	R131206	THRUST WASHER	1		
17	19M8997	SCREW	1		M10 X 65
18	19M8966	SCREW	1		M10 X 50
19	R131283	THRUST WASHER	1		
20	R114193	BUSHING	1		
21	RE56369	GEAR	1		
22	RE59811	SLEEVE	1		
23	R114194	SHAFT	1		
24	R517471	WHEEL	1		
25	34H288	SPRING PIN	1		

MEMORANDA
MEMORANDA
MEMORANDA

CAMSHAFT
ARBRE A CAMES
ARBOL DE LEVAS

TP69520 -UN-02JUN00

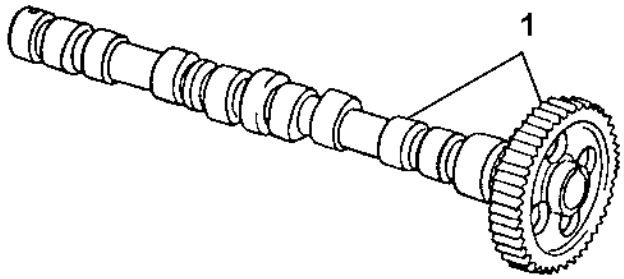

TP69520

KEY	PART NO.	PART NAME	QTY.	ENGINE SERIAL NO.	REMARKS
1	RE507595	CAMSHAFT	1		(MARKED R135439)

ROCKER ARM / SHAFT / TAPPET / PUSH ROD
CULBUTEUR / ARBRE / POUSSOIR DE SOUPAPE / TIGE
BALANCIN / ARBOL / BOTADOR / VARILLA DE EMPUJE

TP49263 -UN-20JUN95

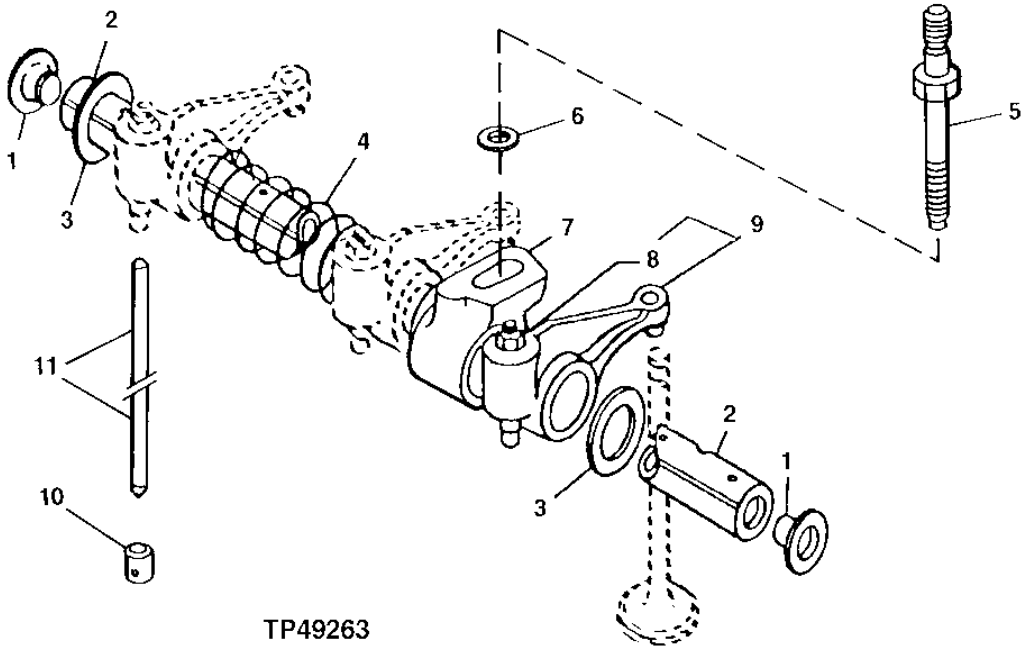

TP49263

KEY	PART NO.	PART NAME	QTY.	ENGINE SERIAL NO.	REMARKS
1	R54565	PLUG	2		
2	R123513	ROCKER ARM SHAFT	1		
3	T20316	WASHER	2		
4	T20314	SPRING	3		
5	R123271	STUD	4		
6	24M7346	WASHER	4		
7	R123161	SUPPORT	4		
8	14M7148	NUT	1		M10
9	RE68695	ROCKER ARM	8		
10	R123565	CAM FOLLOWER	8		
11	R107731	PUSH ROD	8		

ROCKER ARM COVER
CACHE-CULBUTEURS
TAPA DE BALANCINES

TP69529 -UN-26JUL00

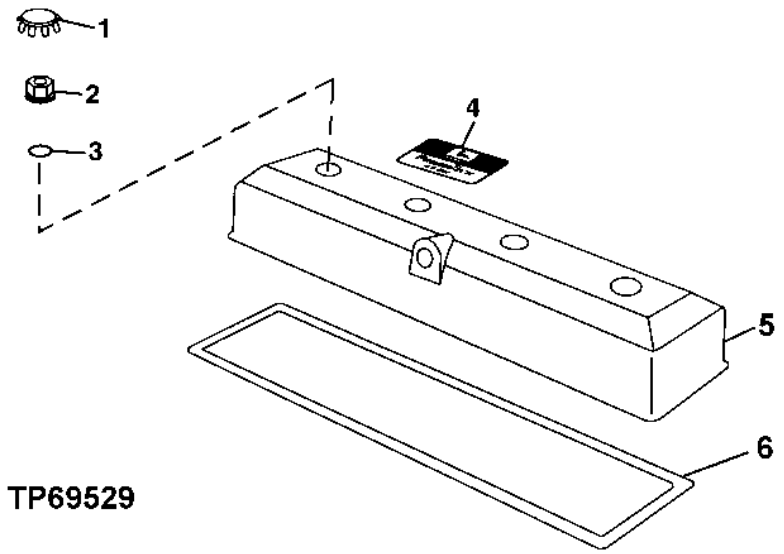

KEY	PART NO.	PART NAME	QTY.	ENGINE SERIAL NO.	REMARKS
1	H23125	PLUG	4		
2	R123574	NUT	4		
3	R123575	O-RING	4		
4	R116324	MEDALLION	1		
5	RE502969	VALVE COVER	1		
6	R123542	GASKET	1		

TIMING GEAR COVER, WATER PUMP
COUVERCLE DE DISTRIBUTION, POMPE A EAU
TAPA DE LA DISTRIBUCION, BOMBA DE AGUA

T145747 -UN-02OCT01

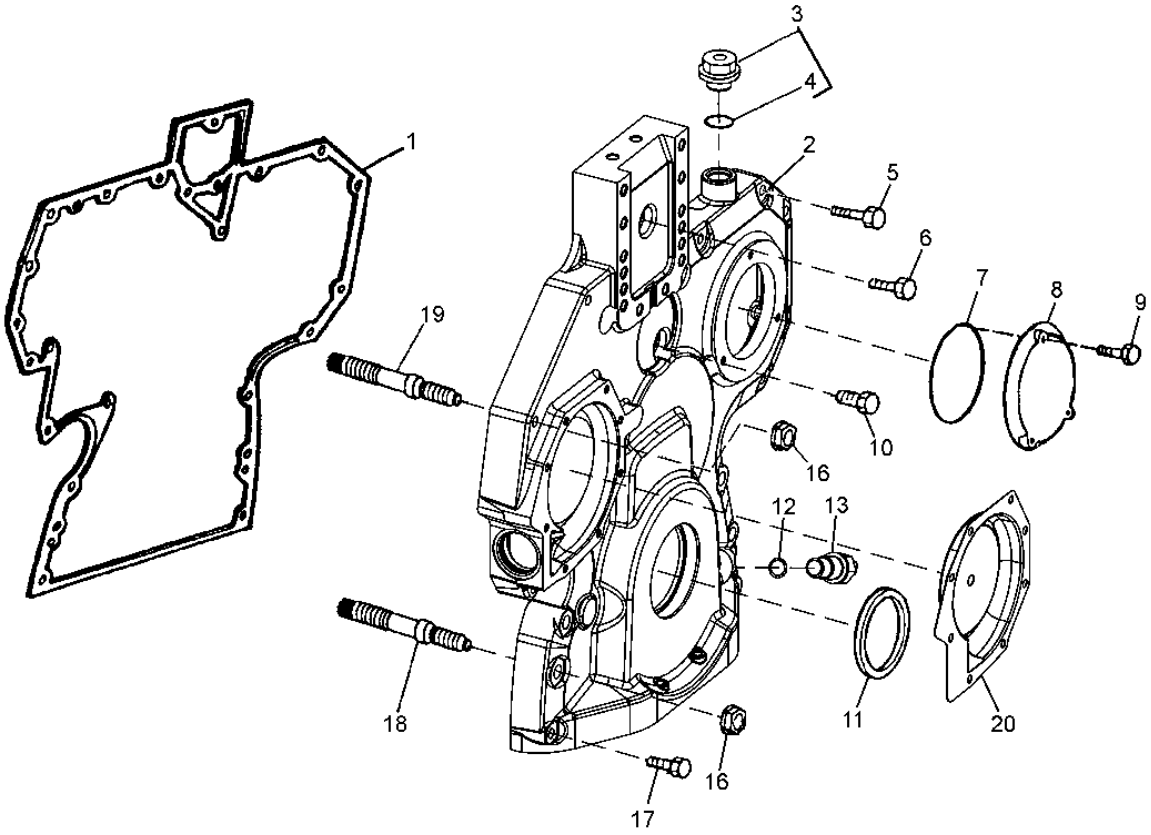

T145747

KEY	PART NO.	PART NAME	QTY.	ENGINE SERIAL NO.	REMARKS
1	R520132	GASKET	1		(USE WITH R520130)
2	R520130	COVER	1		(USE WITH R520132)
3	RE501938	PLUG	1		
4	51M7044	O-RING	1		17.300 X 2.200 MM
5	19M8317	SCREW	6		M8 X 40
	19M7867	SCREW	1		M8 X 25
	RE67239	SCREW	1		
6	19M8291	SCREW	1		M8 X 35
7	R121424	O-RING	1		
8	R121411	COVER	1		
9	19M7775	SCREW	3		M6 X 16
10	19M7801	SCREW	1		M8 X 60
11	RE516340	SEAL	1		(MARKED RE52346 OR RE505515)
12	51M7044	O-RING	1		17.300 X 2.200 MM
13	RE519144	SENSOR	1		
	RE517370	FITTING	1		
14	RE505501	BLEED VALVE	1		
15	RE515978	KIT	1		
16	14M7296	FLANGE NUT	6		M10
17	19M7979	SCREW	2		M8 X 55
18	R123584	STUD	4		
19	R134518	STUD	2		
20	RE508566	BEARING KIT	1		

MEMORANDA
MEMORANDA
MEMORANDA

PISTON/CONNECTING ROD/CYLINDER LINER
PISTON/BIELLE/CHEMISE DE CYLINDRE
PISTON/BIELA/CAMISA DEL CILINDRO

TP49283 -UN-17JUL95

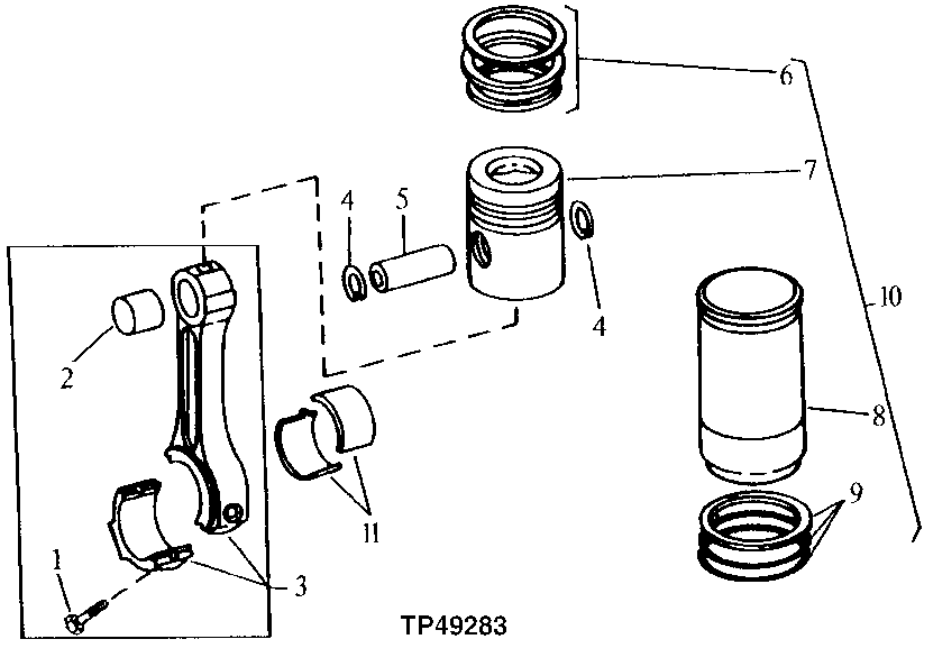

KEY	PART NO.	PART NAME	QTY.	ENGINE SERIAL NO.	REMARKS
1	R501124	SCREW	8		
2	R123960	BUSHING	4		
3	RE500002	CONNECTING ROD	4		(MARKED RE500000)
4	M41029	SNAP RING	8		
5	R123178	PISTON PIN	4		
6	RE507852	PISTON RING KIT	4		
7	.....	PISTON	4		(ORDER RE507920)
8	.....	CYLINDER LINER	4		
9	AR65507	O-RING KIT	4		
10	RE507920	PISTON-LINER KIT	4		
11	RE65908	BEARING	4		(STD)
	RE65909	BEARING	4		(.010" US)

MEMORANDA
MEMORANDA
MEMORANDA

FRONT PLATE
PLAQUE AVANT
PLACA DELANTERA

T145836 -UN-21SEP01

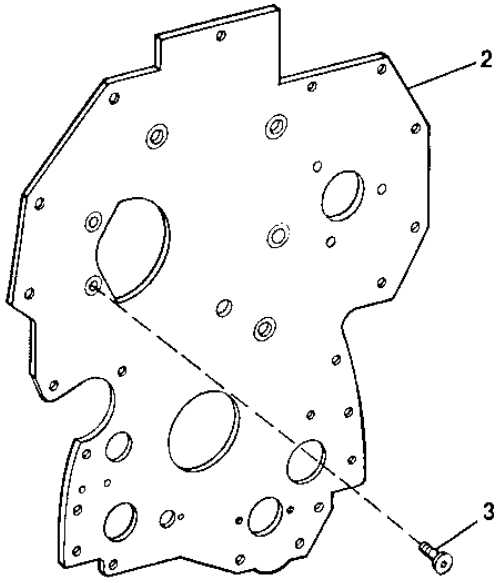

T145836

KEY	PART NO.	PART NAME	QTY.	ENGINE SERIAL NO.	REMARKS
2	R134527	PLATE	1		
3	R136475	SCREW	4		

FOR SHORT BLOCK
POUR BLOC AVEC EQUIP.MOBILE
PARA BLOQUE DE CILINDROS CON PIEZAS MOVILES

TX1004716 -UN-14MAR06

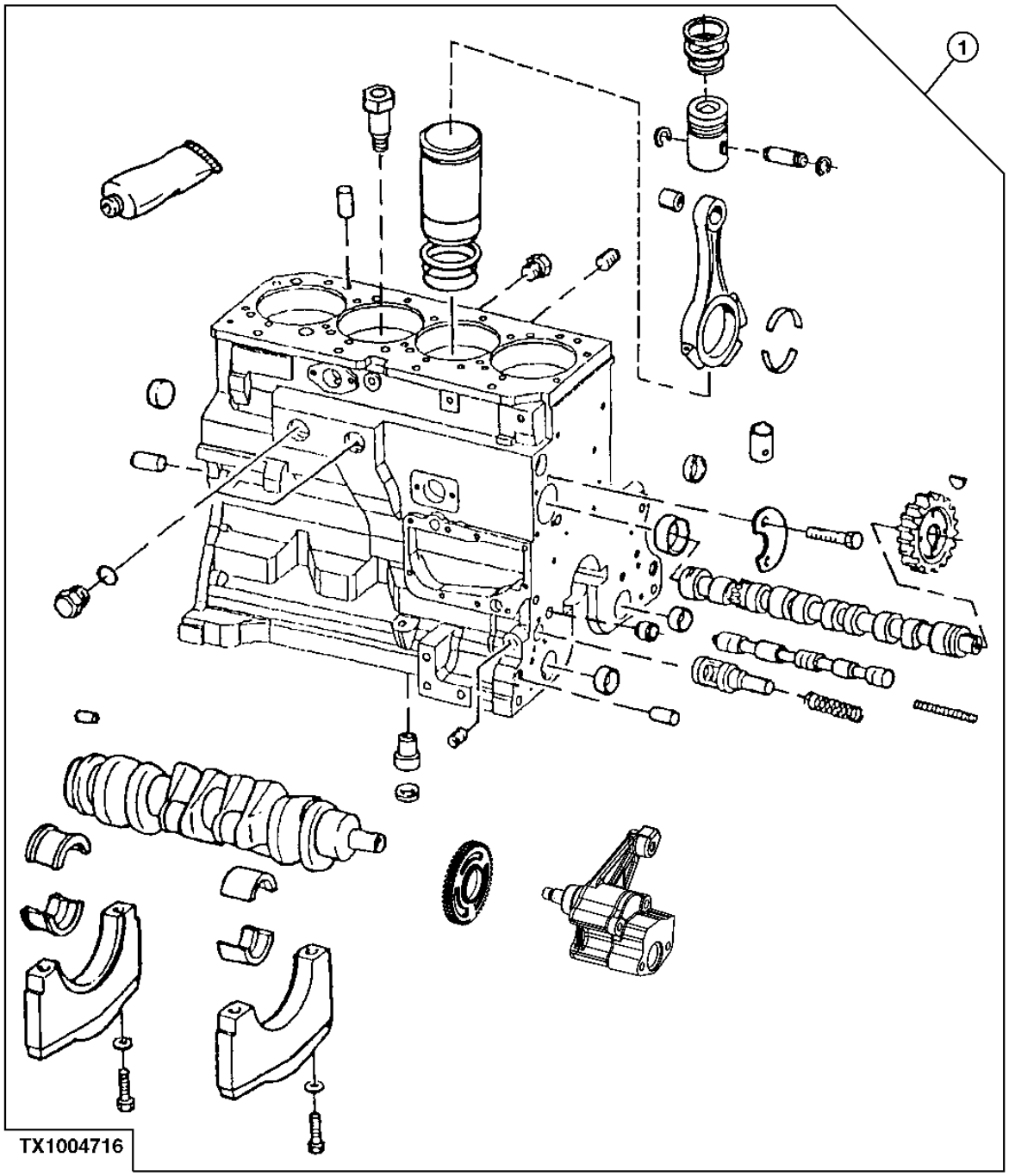

KEY	PART NO.	PART NAME	QTY.	ENGINE SERIAL NO.	REMARKS
1	RE520023	SHORT BLOCK ASSEMBLY	1		
	SE500717	COMPLETE BLOCK ASSEMBLY	1		

OIL FILLER NECK
GOULOTTE DE REMPLISSAGE D'HUILE
BOCA DE LLENADO DE ACEITE

TP69531 -UN-26JUL00

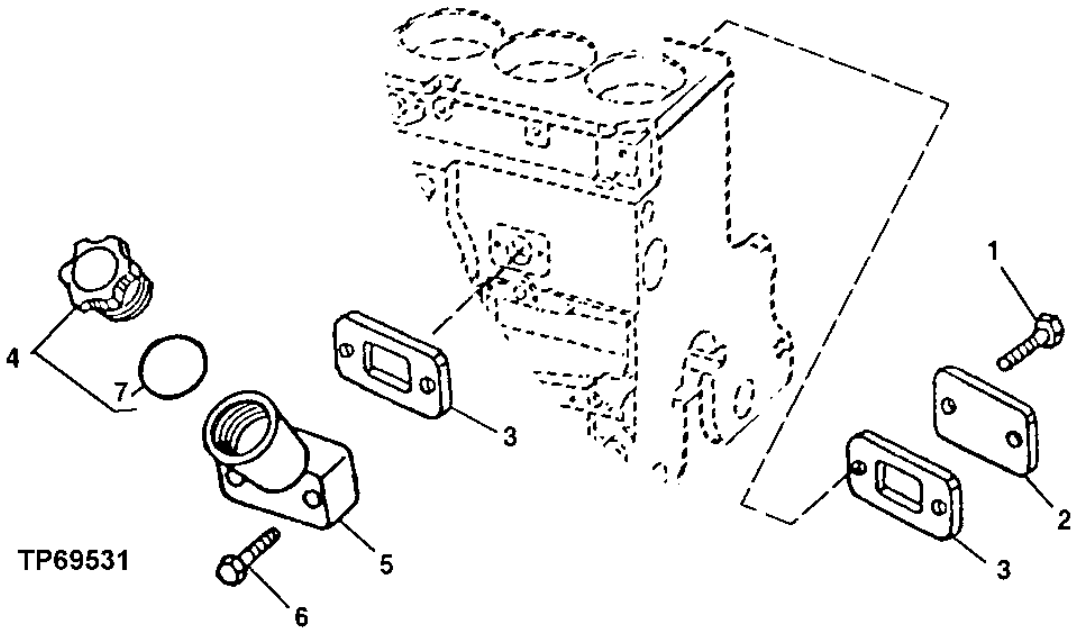

KEY	PART NO.	PART NAME	QTY.	ENGINE SERIAL NO.	REMARKS
1	RE67238	SCREW	2		M8 X 20
2	R116296	COVER	1		
3	R136495	GASKET	2		
4	RE500005	FILLER CAP	1		
5	RE501377	FILLER NECK	1		
6	RE67239	SCREW	2		M8 X 45
7	R502902	O-RING	1		

MEMORANDA
MEMORANDA
MEMORANDA

4003 (ENGINE OIL DIPSTICK)
4003 (JAUGE A HUILE MOTEUR)
4003 (ASPILLA PARA MEDIR EL NIVEL DE ACEITE DEL MOTOR)

TX1004717 -UN-14MAR06

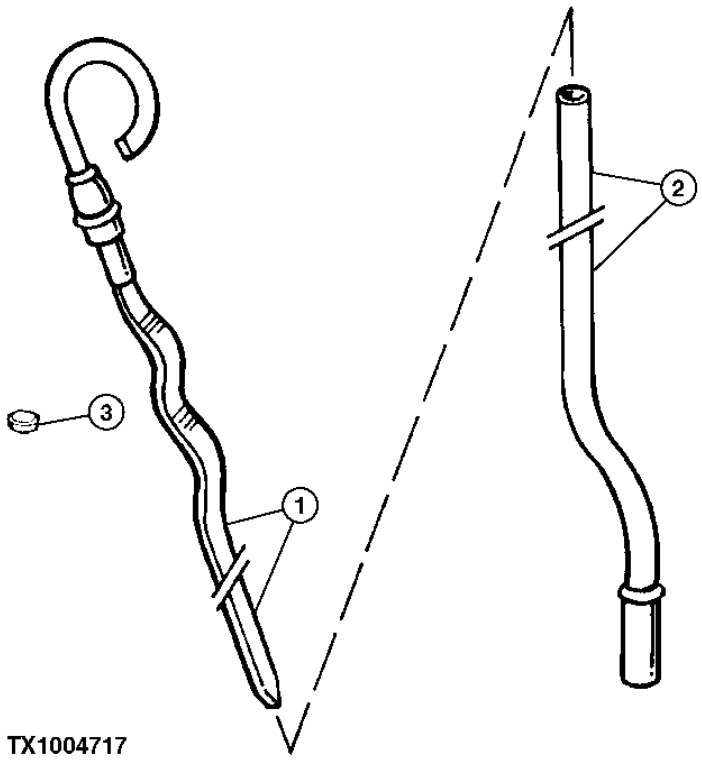

TX1004717

KEY	PART NO.	PART NAME	QTY.	ENGINE SERIAL NO.	REMARKS
1	RE69243	DIPSTICK	1		
2	R502604	DIPSTICK TUBE	1		
3	R502725	PLUG	1		

OIL PAN (1901)
CARTER D'HUILE (1901)
CARTER DEL MOTOR (1901)

T145708 -UN-21SEP01

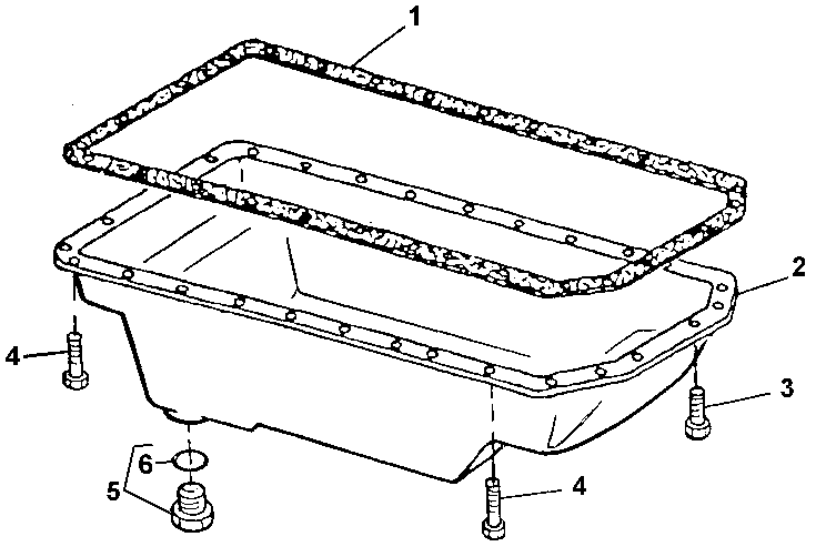

T145708

KEY	PART NO.	PART NAME	QTY.	ENGINE SERIAL NO.	REMARKS
1	R521493	GASKET	1		
2	RE59545	OIL PAN	1		
3	19M7866	SCREW	6		M8 X 20
4	19M8163	BOLT	22		M8 X 16
5	RE46685	FITTING PLUG	1		
6	51M7043	O-RING	1		15.300 X 2.200 MM

8801 (OIL FILTER)
8801 (FILTRE A HUILE)
8801 (FILTRO DE ACEITE)

T145377 -UN-14SEP01

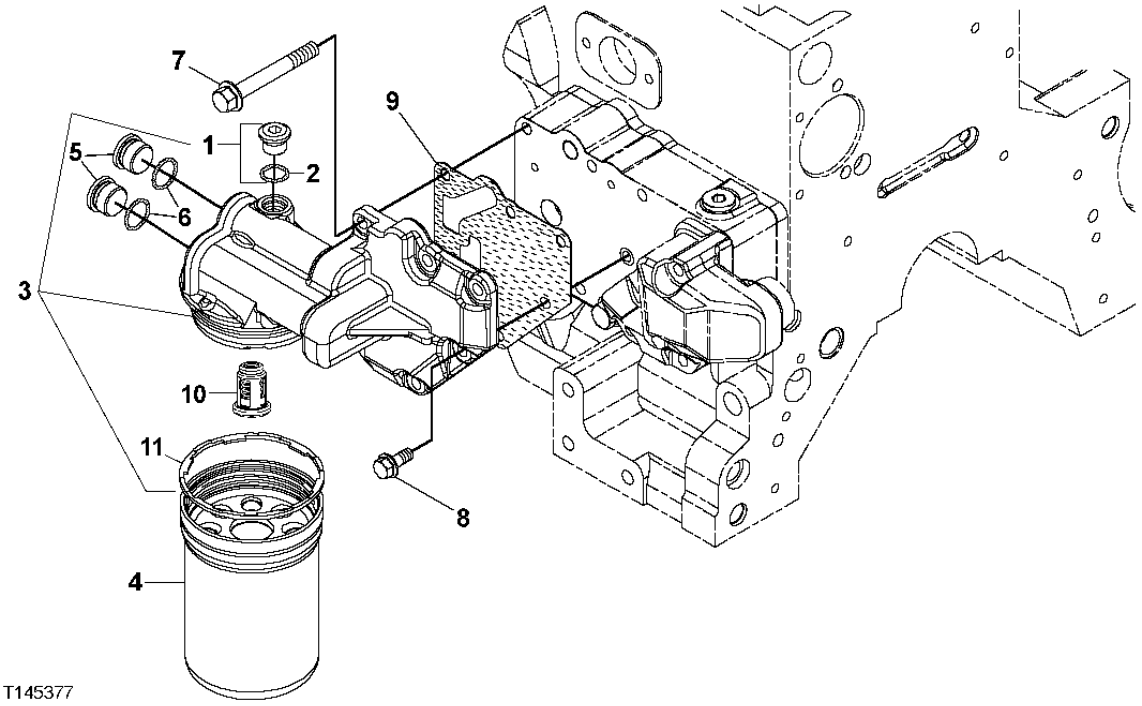

KEY	PART NO.	PART NAME	QTY.	ENGINE SERIAL NO.	REMARKS
1	RE52242	DRAIN PLUG	1		M16 X 1.5
2	51M7042	O-RING	1		
3	RE504564	FILTER HEAD	1		(MARKED R502505)
4	RE504836	OIL FILTER	1		(ALSO ORDER R502513)
5	R116115	FITTING	2		
6	51M7045	O-RING	2		
7	19M7802	SCREW	5		M8 X 65
8	RE67238	SCREW	1		
9	R500374	GASKET	1		
10	RE504543	VALVE	1		
11	R502513	SEAL	1		

MEMORANDA
MEMORANDA
MEMORANDA

OIL PUMP
POMPE A HUILE
BOMBA DE ACEITE

TX1004721 -UN-14MAR06

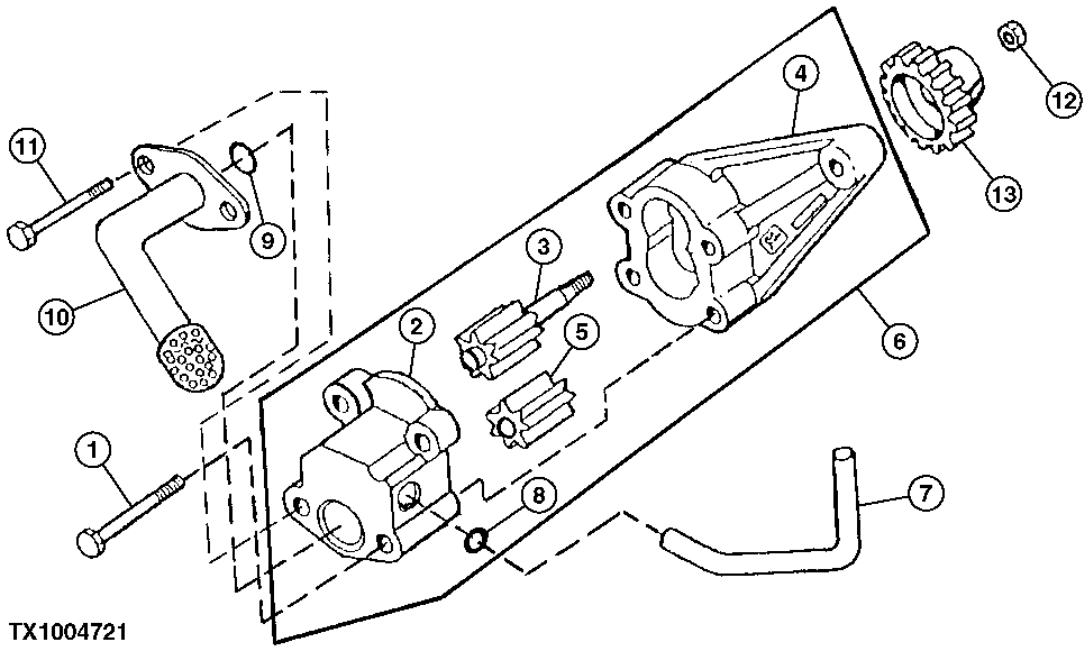

TX1004721

KEY	PART NO.	PART NAME	QTY.	ENGINE SERIAL NO.	REMARKS
1	19M8987	SCREW	2		M8 X 65
2	.....	COVER	1		
3	.....	GEAR	1		
4	.....	HOUSING	1		
5	.....	GEAR	1		
6	RE504914	OIL PUMP	1		(MARKED R502867)
7	R121376	TUBE	1		
8	R97185	O-RING	1		
9	R61871	O-RING	1		
10	RE57619	OIL PUMP INTAKE	1		
11	19M8986	SCREW	2		M8 X 100
12	14M7066	NUT	1		M12
13	R120638	GEAR	1		(Z = 30)

2917 (VENTILATING SYSTEM)
2917 (SYSTEME DE VENTILATION)
2917 (SISTEMA DE VENTILACION)

TP49041 -UN-06SEP95

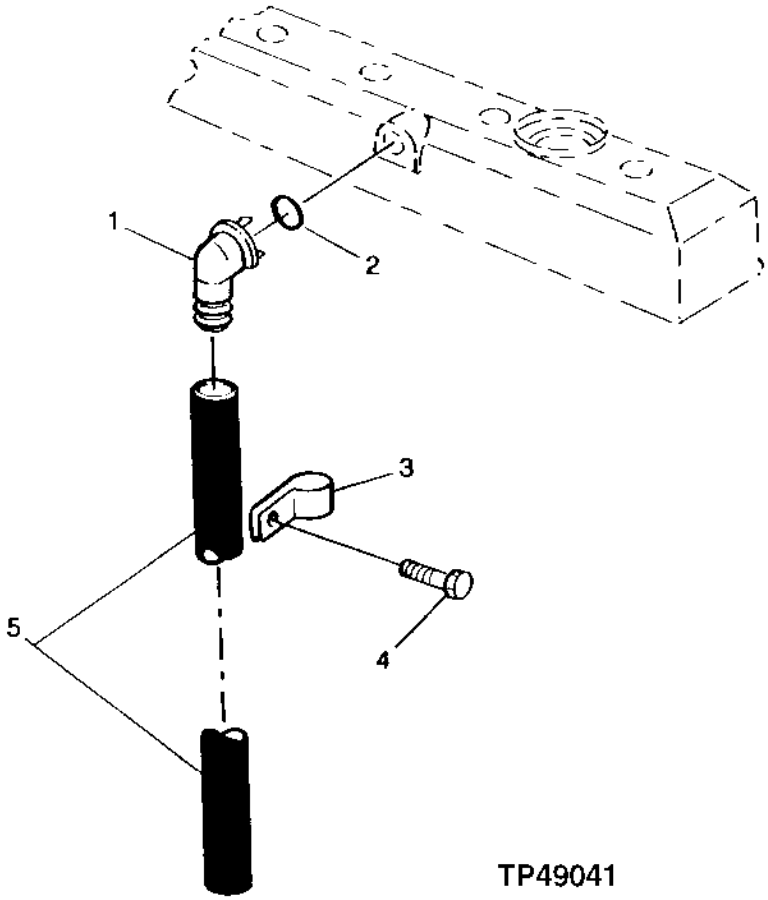

TP49041

KEY	PART NO.	PART NAME	QTY.	ENGINE SERIAL NO.	REMARKS
1	R120467	ELBOW FITTING	1		
2	R72328	O-RING	1		
3	R72659	CLAMP	1		
4	19M7866	SCREW	1		M8 X 20
5	TY24401	BULK HOSE	1		

CYLINDER HEAD
CULASSE
CULATA

T149672 -UN-10JAN02

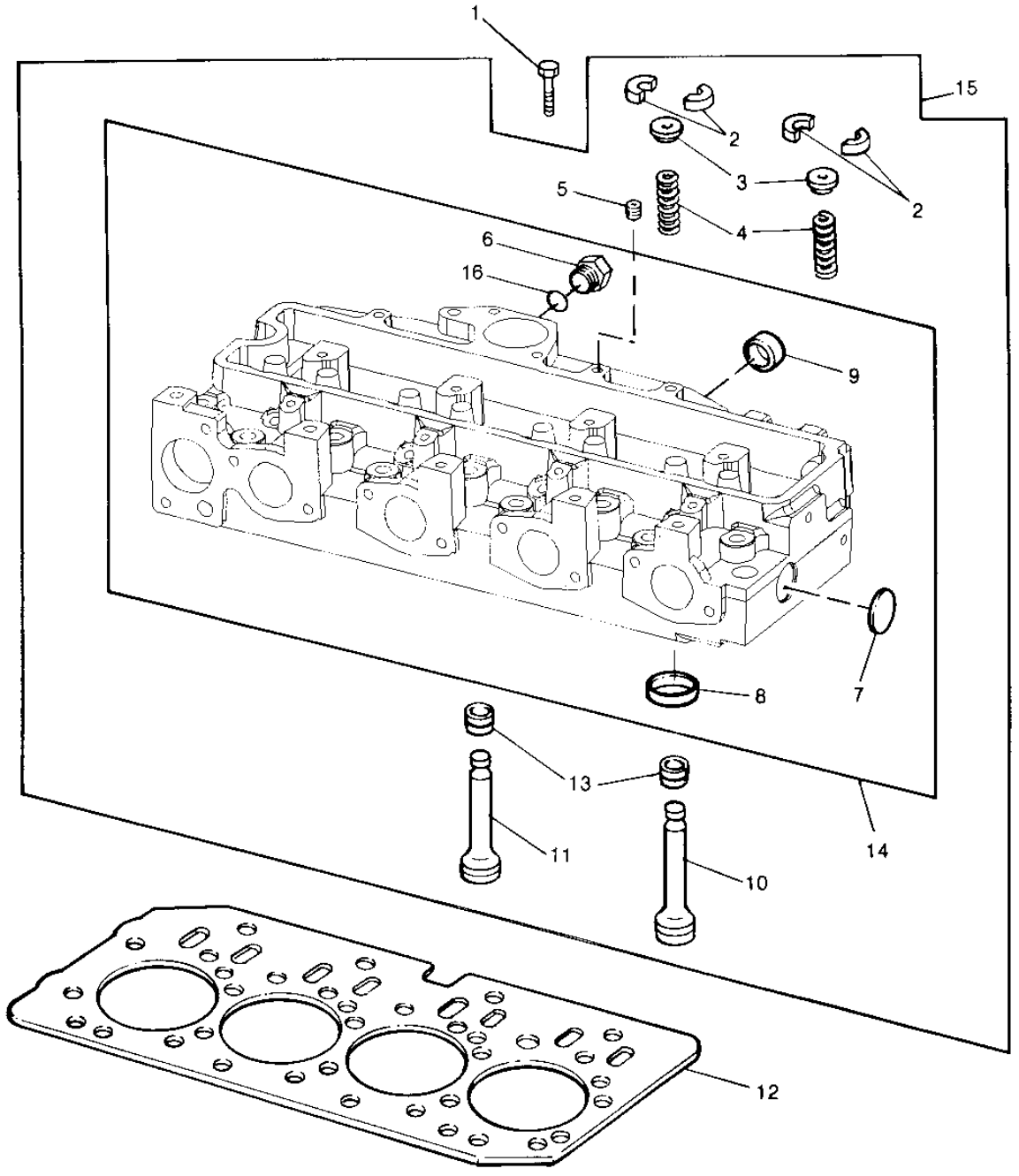

T149672

KEY	PART NO.	PART NAME	QTY.	ENGINE SERIAL NO.	REMARKS
1	R85363	CAP SCREW	18		
2	R91889	RETAINER	16		
3	RE60005	ROTATOR	8		
4	R26125	SPRING	8		
5	R104592	PIPE PLUG	1		
6	T58477	FITTING	1		
	R26906	O-RING	1		
7	CD16284	PLUG	1		
8	R98063	VALVE SEAT INSERT	4		
	R98335	VALVE SEAT INSERT	4		
	R85687	VALVE SEAT INSERT	4		
	R93910	VALVE SEAT INSERT	4		
9	R43409	PLUG	2		
10	R90692	EXHAUST VALVE	4		(STD)
11	R98062	INTAKE VALVE	4		(STD)
12	R116515	ENGINE CYLINDER HEAD GASKET	1		
13	RE31617	SEAL	8		
14	.....	CYLINDER HEAD	1		(MARKED R121402)
15	RE57234	CYLINDER HEAD	1		(MARKED R121402)
16	R26906	O-RING	1		

MEMORANDA
MEMORANDA
MEMORANDA

EXHAUST MANIFOLD
COLLECTEUR D'ECHAPPEMENT
COLECTOR DE ESCAPE

TP49344 -UN-22NOV95

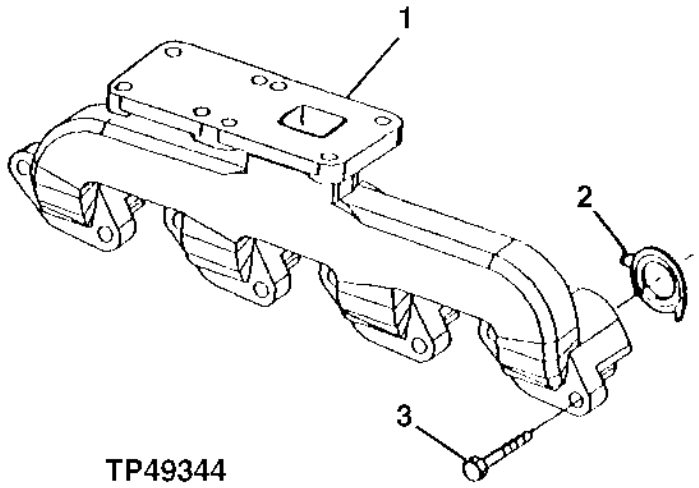

TP49344

KEY	PART NO.	PART NAME	QTY.	ENGINE SERIAL NO.	REMARKS
1	R132261	EXHAUST MANIFOLD	1		
2	R90658	GASKET	4		
3	19M7810	SCREW	8		M10 X 80

FUEL INJECTION NOZZLES AND LINES
INJECTEURS ET CONDUITES
INYECTORES Y TUBERIAS DE COMBUSTIBLE

TP48976 -UN-26OCT96

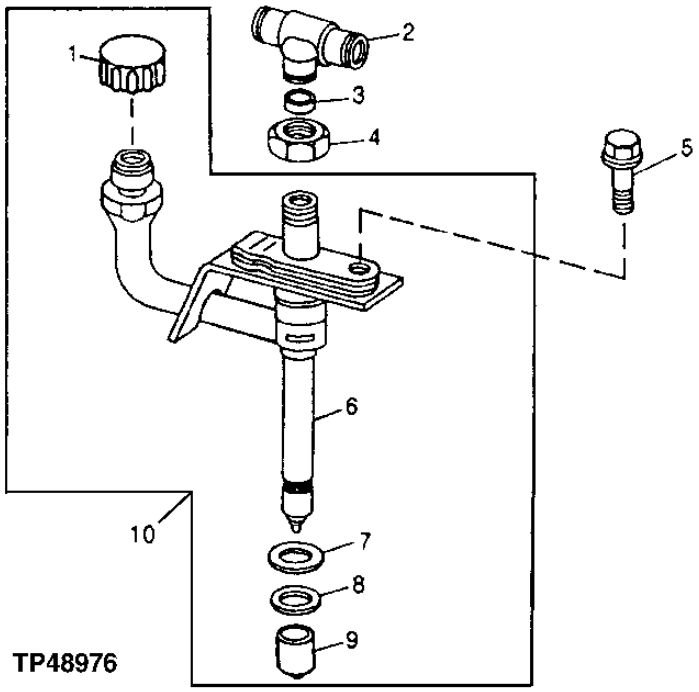

KEY	PART NO.	PART NAME	QTY.	ENGINE SERIAL NO.	REMARKS
1	.....	CAP (HAT)	1		
2	R71963	TEE FITTING	1		
3	R79605	WASHER	1		
4	R79604	TUBE NUT	1		
5	R116366	SCREW	1		
6	.....	NOZZLE	1		
7	R92352	PACKING	1		
8	R48000	SEAL	1		(NOT INCLUDED WITH RE48786)
	R500390	WASHER	1		(USE WITH STANDARD NOZZLE BORE)
9	T24472	CAP	1		
10	RE48786	INJECTION NOZZLE	1		
	SE500826	INJECTION NOZZLE	1		(REFABRICADO PARA RE48786) PKG 4
	SE501101	INJECTION NOZZLE	AR		(REMAN PARA RE48786) PKG 1

MEMORANDA
MEMORANDA
MEMORANDA

FUEL INJECTION PUMP, LINES AND ENGINE CONTROLLER
POMPE D'INJECTION DE CARBURANT, CONDUITES ET CONTROLEUR DE MOTEUR
BOMBA DE INYECCION DE COMBUSTIBLE, LINEAS Y UNIDAD DE CONTROL DEL MOTOR

RGP10110 -UN-23SEP03

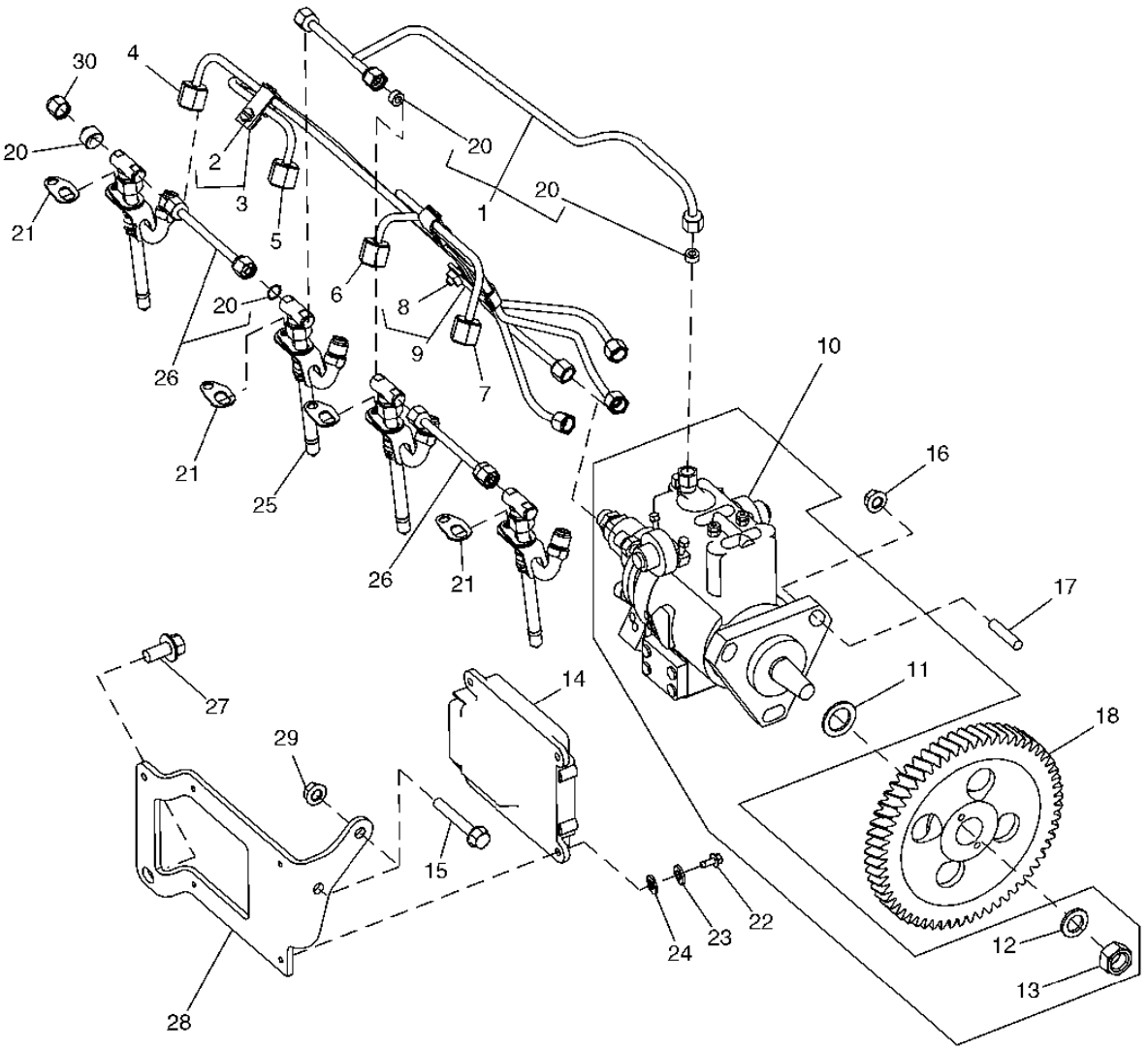

JOHN DEERE
RGP10110

KEY	PART NO.	PART NAME	QTY.	ENGINE SERIAL NO.	REMARKS
1	RE507598	FUEL LINE	1		
2	19M7923	CAP SCREW	2		M6 X 12
3	RE19797	CLAMP	2		
4	RE507649	FUEL LINE	1		NO.4
5	RE507648	FUEL LINE	1		NO.3
6	RE507647	FUEL LINE	1		NO.2
7	RE507646	FUEL LINE	1		NO.1
8	19M7923	CAP SCREW	1		M6 X 12
9	RE19799	CLAMP	1		
10	RE518087	FUEL INJECTION PUMP	1		(MARKED RE518166) (12V)
11	R502076	O-RING	1		
12	R132874	WASHER	1		
13	R91360	NUT	1		M14
14	RE532627	ENGINE CONTROLLER	1		(A)
15	19M7979	SCREW	2		M8 X 55
16	14M7298	FLANGE NUT	3		M8
17	R116386	STUD	3		
18	R505472	GEAR	1		
19	R123593	TUBE NUT	1		
20	R51936	SEALING WASHER	6		
21	RE508716	CLAMP	4		
22	19M7640	CAP SCREW	4		M5 X 12
23	12H316	LOCK WASHER	4		5.486 MM
24	24M7027	WASHER	4		5.300 X 10 X 1 MM
25	RE507766	INJECTION NOZZLE	4		
	SE500830	INJECTION NOZZLE	1		(REMAN) PKG 4
	SE501103	NOZZLE	AR		(REMAN) PKG 1
	RE531116	KIT	1		
26	RE68748	TUBE	2		
27	19M7784	SCREW	2		M10 X 20
28	R503520	BRACKET	1		
29	14M7298	FLANGE NUT	2		M8
30	AR85519	PLUG	2		

(A) WHEN ENGINE CONTROLLER IS BEING REPLACED YOU MUST PROVIDE THE ENGINE SERIAL NUMBER
(A) LORS DU REMPLACEMENT DU CONTROLEUR DU MOTEUR, FOURNIR LE NUMERO DE SERIE DU MOTEUR
(A) AL REEMPLAZAR UNIDAD DE CONTROL DEL MOTOR, DEBE PROPORCIONAR EL NUMERO DE SERIE DEL MOTOR

FUEL INJECTION PUMP
POMPE D'INJECTION
BOMBA DE INYECCION

TX1005987 -UN-11APR06

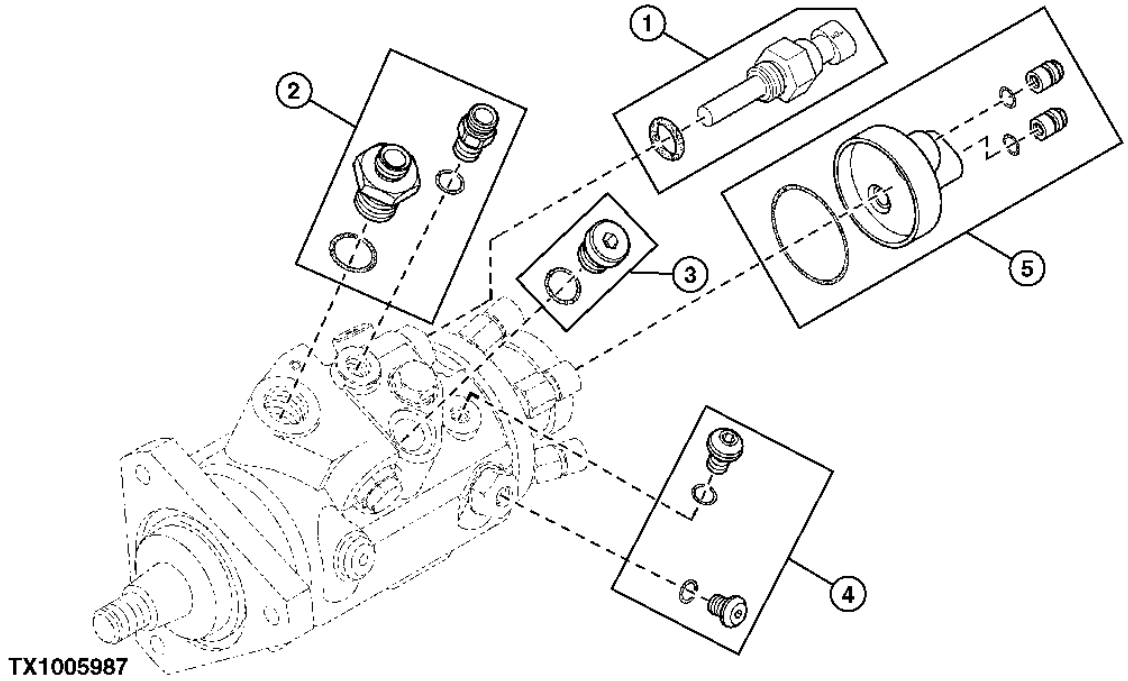

KEY	PART NO.	PART NAME	QTY.	ENGINE SERIAL NO.	REMARKS
1	RE521822	KIT	1		
2	RE521823	KIT	1		
3	RE521824	KIT	1		
4	RE521825	KIT	1		
5	RE522109	KIT	1		

WATER PUMP PULLEY
POULIE DE POMPE A EAU
POLEA DE LA BOMBA DE AGUA

TP49372 -UN-18JAN96

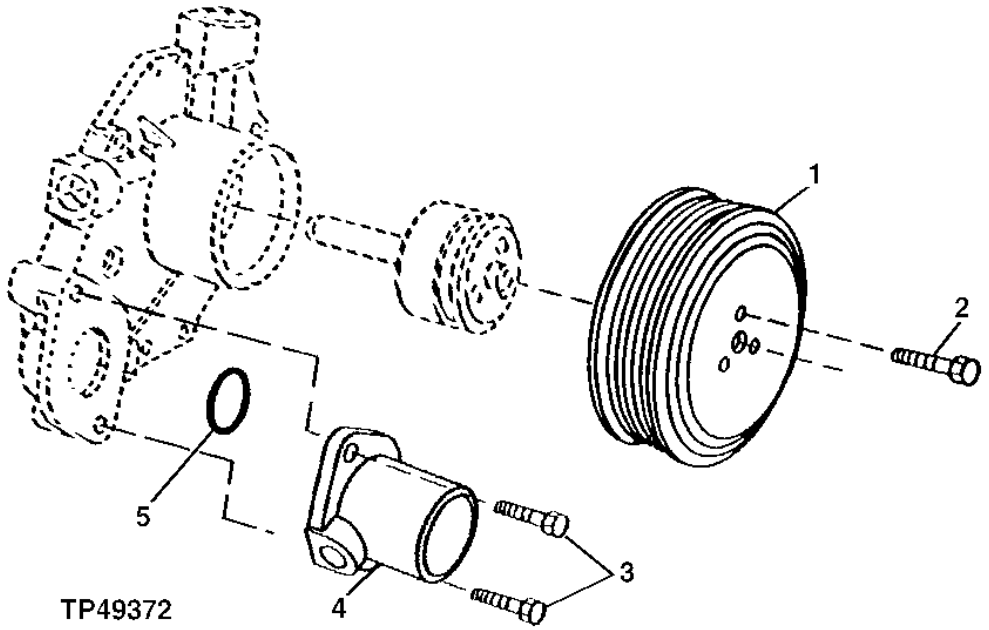

KEY	PART NO.	PART NAME	QTY.	ENGINE SERIAL NO.	REMARKS
1	R121038	PULLEY	1		
2	19M7774	SCREW	3		M6 X 12
3	19M7867	SCREW	2		M8 X 25
4	R121634	HOUSING	1		
5	R89944	O-RING	1		

WATER PUMP KIT

JONJUNTO DE BOMBA DE AGUA

T149718 -UN-07JAN02

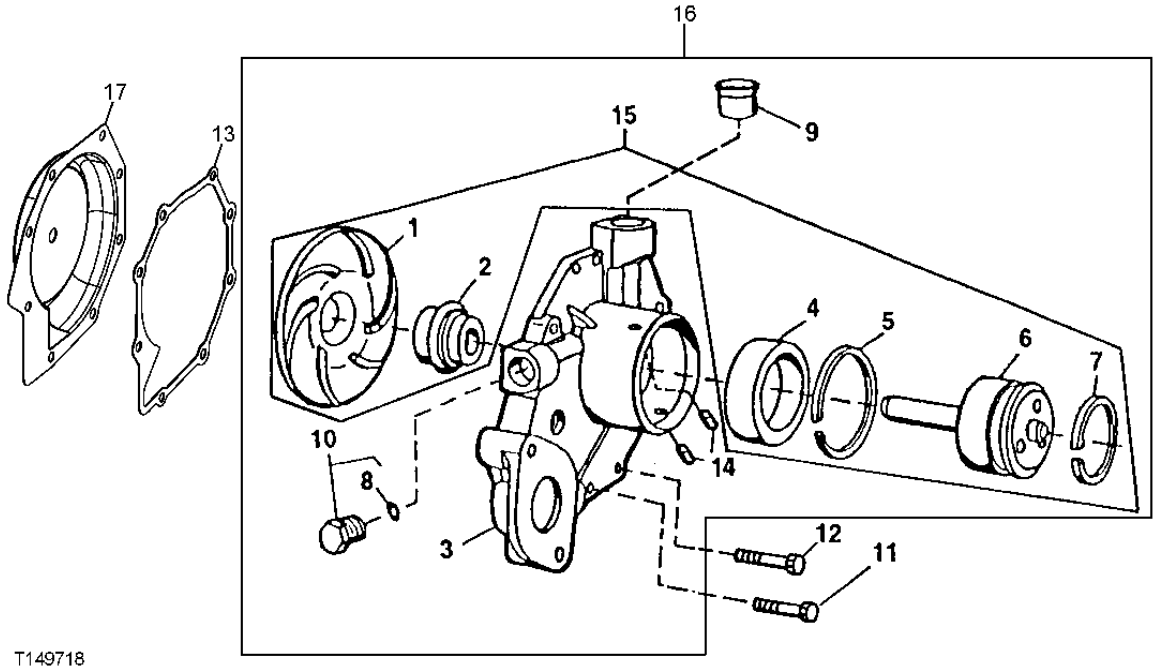

T149718

KEY	PART NO.	PART NAME	QTY.	ENGINE SERIAL NO.	REMARKS
1	.....	IMPELLER	1		(MARKED R503509)
2	.....	SEAL	1		
3	.....	HOUSING	1		
4	.....	BALL BEARING	1		
5	.....	RING	1		
6	.....	SHAFT	1		
7	A364R	SNAP RING	1		
8	51M7043	O-RING	1		15.300 X 2.200 MM
9	R123226	GASKET	1		
10	RE46685	FITTING PLUG	1		
11	19M7863	SCREW	5		M6 X 25
12	19M7796	SCREW	3		M6 X 30
13	R123417	GASKET	1		
14	R100369	FILTER	2		
15	RE70962	KIT	1		
16	RE505981	WATER PUMP	1		(MARKED R503509)
17	RE508566	BEARING KIT	1		

MEMORANDA
MEMORANDA
MEMORANDA

MEMORANDA
MEMORANDA
MEMORANDA

THERMOSTAT / COVER
THERMOSTAT / COUVERCLE
TERMOSTATO / TAPADERA

TX1006074 -UN-26APR06

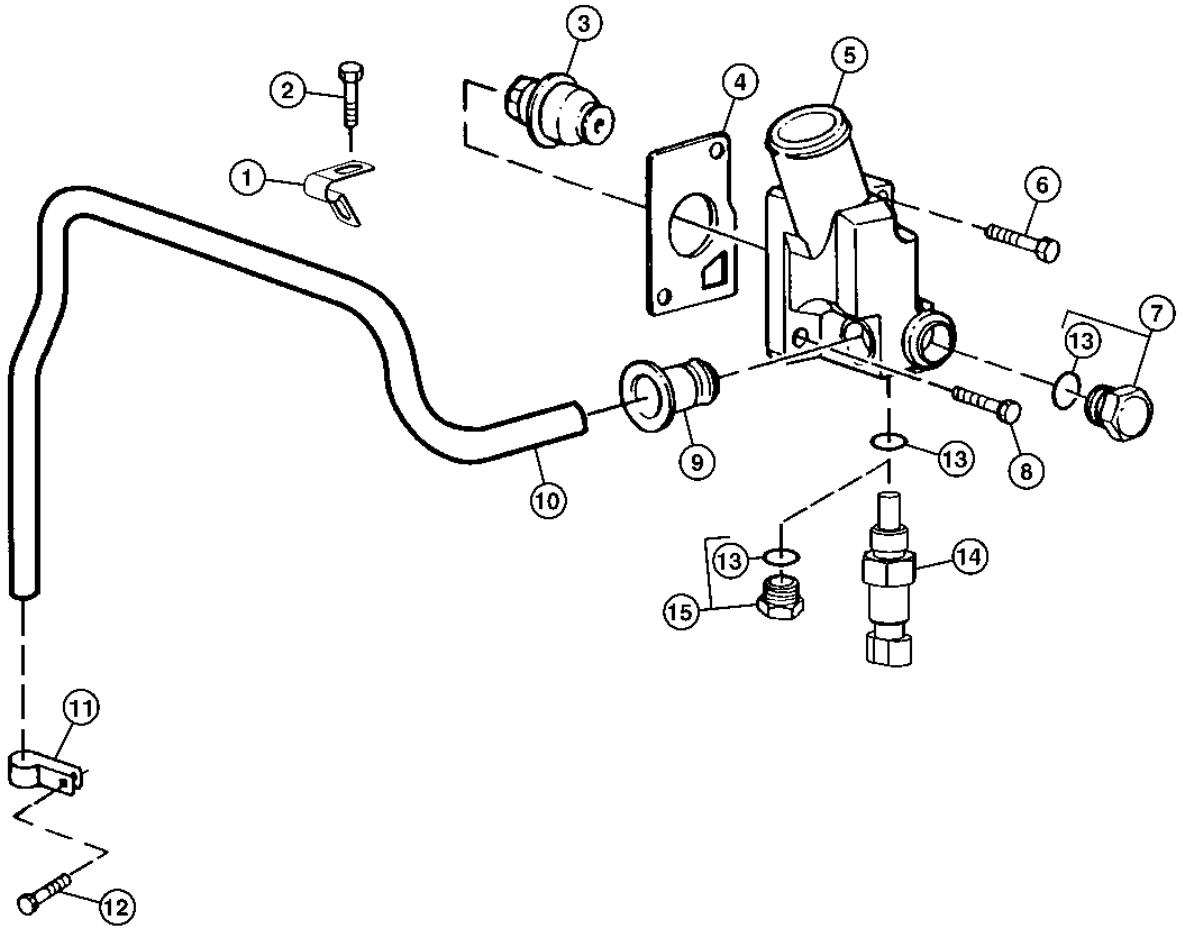

TX1006074

KEY	PART NO.	PART NAME	QTY.	ENGINE SERIAL NO.	REMARKS
1	R123323	CLAMP	1		
2	19M7788	SCREW	1		M12 X 25
3	RE522076	THERMOSTAT	1		82° C (180° F)
4	R502814	GASKET	1		
5	R131016	COVER	1		
6	19M8292	SCREW	1		M10 X 50
7	RE46684	FITTING PLUG	1		
8	19M7786	SCREW	1		M10 X 30
9	R123226	GASKET	1		
10	R501144	TUBE	1		
11	R123324	CLAMP	1		
12	19M7801	SCREW	1		M8 X 60
13	51M7041	O-RING	2		11.300 X 2.200 MM
14	RE52722	COOLANT TEMPERATURE SENSOR	1		
15	RE46684	FITTING PLUG	1		

FUEL FILTER
FILTRE A COMBUSTIBLE
FILTRO DE COMBUSTIBLE

RE529844PCDA01 -UN-23JAN07

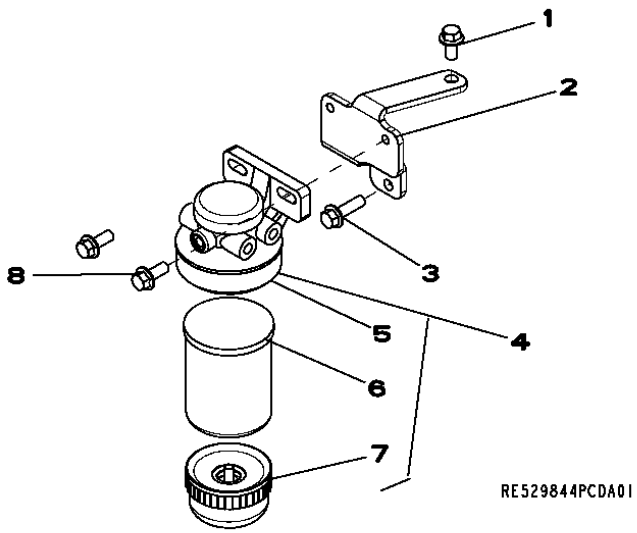

KEY	PART NO.	PART NAME	QTY.	ENGINE SERIAL NO.	REMARKS
1	19M7784	SCREW	1		M10 X 20
2	R523233	BRACKET	1		
3	19M7835	SCREW	1		M10 X 35
4	RE517382		1		
	RE516512	O-RING KIT	1		
	RE516553	SEAL KIT	1		
	RE526834	SEAL KIT	1		
	RE60854	DRAIN VALVE	1		
5	RE509794	FILTER HEAD	1		
6	RE509031	FILTER ELEMENT	1		
7	RE51650	SEDIMENT BOWL	1		
8	19M7785	SCREW	2		M10 X 25

FUEL FILTER AND LINES
FILTRE ET CONDUITES DE COMBUSTIBLE
FILTRO DE COMBUSTIBLE Y TUBERIAS

TX1006076 -UN-26APR06

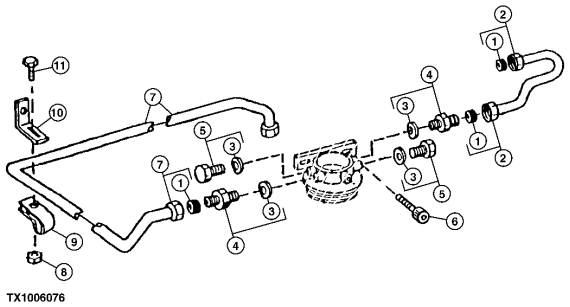

KEY	PART NO.	PART NAME	QTY.	ENGINE SERIAL NO.	REMARKS
1	R74012	SEALING WASHER	4		
2	RE60037	FUEL LINE	1		
3	51M7040	O-RING	1		(USE WITH RE60029)
	R26286	O-RING	1		
4	RE60029	ADAPTER FITTING	2		(USE WITH RE59487)
	RE59487	FITTING	2		
5	RE46686	FITTING PLUG	2		
6	19M7784	SCREW	2		M10 X 20
7	RE507597	FUEL LINE	1		
8	14M7298	FLANGE NUT	1		M8
9	T14050	CLAMP	1		
10	R116116	BRACKET	1		
11	19M7865	SCREW	1		M8 X 16

FUEL TRANSFER PUMP
POMPE D'ALIMENTATION
BOMBA DE ALIMENTACION DE COMBUSTIBLE

TP69536 -UN-18JUL00

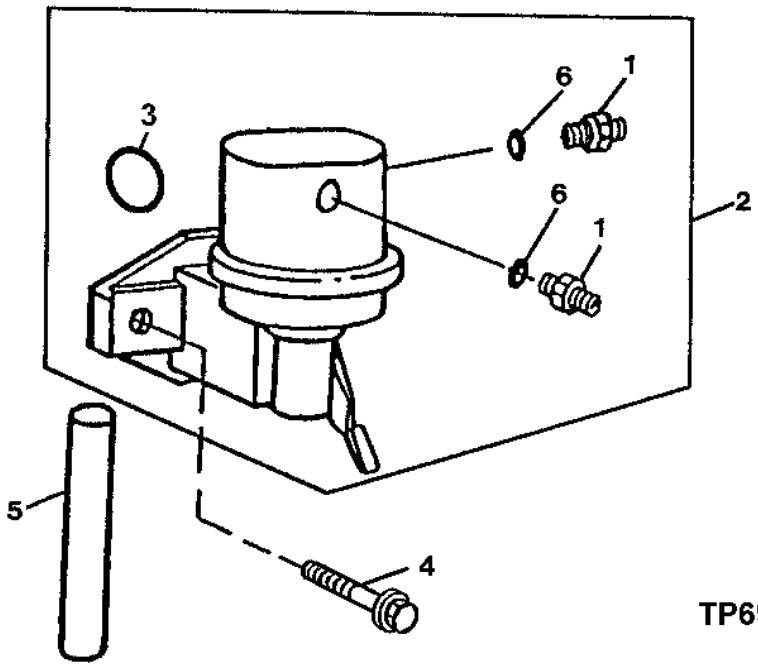

KEY	PART NO.	PART NAME	QTY.	ENGINE SERIAL NO.	REMARKS
1	R500270	FITTING	2		
2	RE66153	FUEL PUMP	1		
3	R123273	O-RING	1		
4	RE504233	CAP SCREW	2		
5	R133405	PIN	1		
6	R500271	O-RING	2		

MEMORANDA
MEMORANDA
MEMORANDA

MEMORANDA
MEMORANDA
MEMORANDA

STARTING MOTOR
DEMARREUR
MOTOR DA ARRANQUE

T149124 -UN-14DEC01

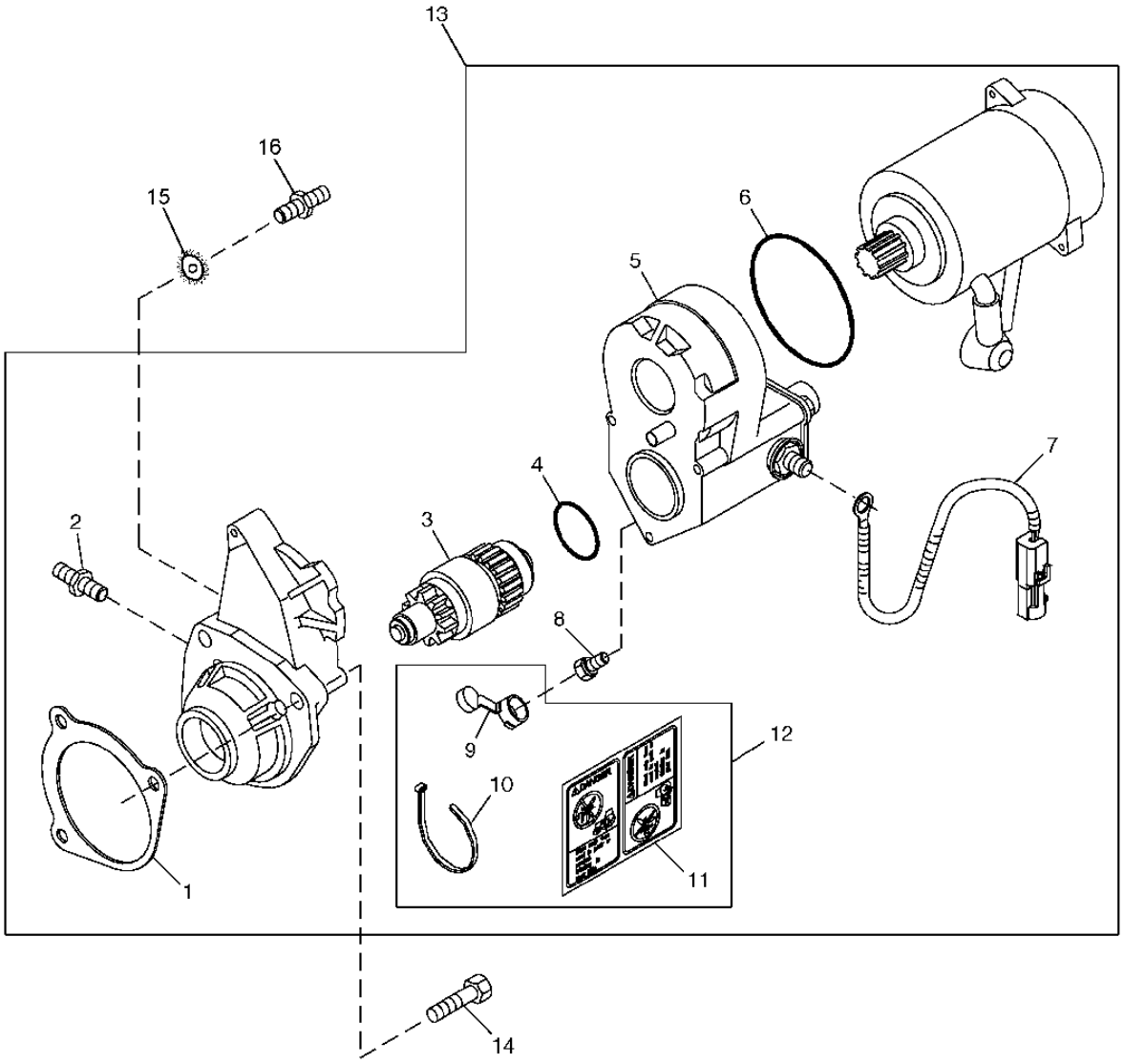

T149124

KEY	PART NO.	PART NAME	QTY.	ENGINE SERIAL NO.	REMARKS
1	R53108	GASKET	1		NA
2	R136052	STUD	1		
3	RE70487	CLUTCH	1		
4	R135510	O-RING	1		
5	RE70486	SWITCH	1		
6	R135509	SEAL	1		
7	RE505400	WIRING HARNESS	1		
8	RE71256	SCREW WITH WASHER	1		
9	.....	COVER	1		(ORDER RE70756)
10	R96703	TIE BAND	1		NA
11	T146102	LABEL	1		PELIGRO-ARRANQUE EN DERIVACION
12	RE70756	KIT	1		
13	RE506105	STARTER MOTOR KIT	1		(A) SELLADO EN BANO DE ACEITE 12V DENSO, (MARKED RE504244)
	RE501298	STARTER MOTOR KIT	1		(B)
14	19M7786	SCREW	2		M10 X 30
15	12M7033	LOCK WASHER	1		10.500 MM
16	R503419	STUD	1		

GUIDE, STARTING MOTOR
GUIDE, DEMARREUR
GUIA, MOTOR DE ARRANQUE

T143910 -UN-16JUL01

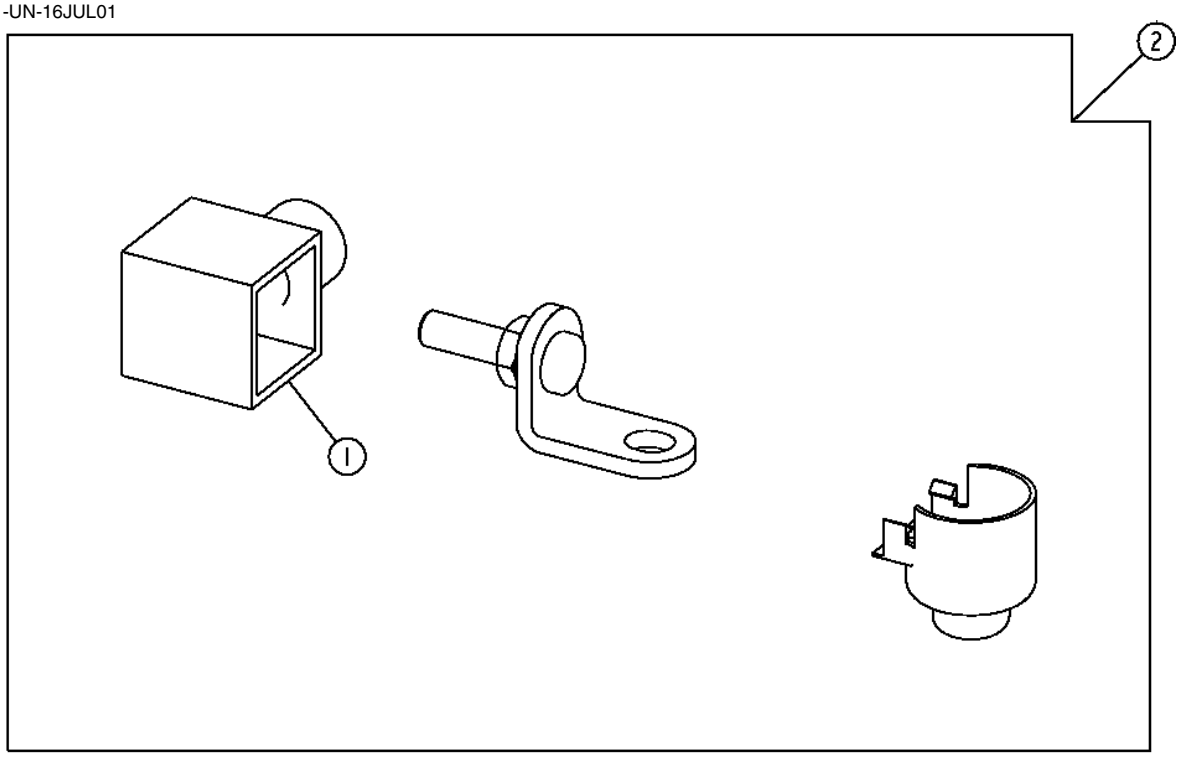

T143910

KEY	PART NO.	PART NAME	QTY.	SERIAL NO.	REMARKS
1	T129165	BOOT	1		
2	AT196314	KIT	1		(ALSO ORDER RE506105) (KIT DEL MOTOR DE ARRANCADOR)

ALTERNATOR BRACKETS
SUPPORTS DE L'ALTERNATEUR
SOPORTE DEL ALTERNADOR

TP69537 -UN-26JUL00

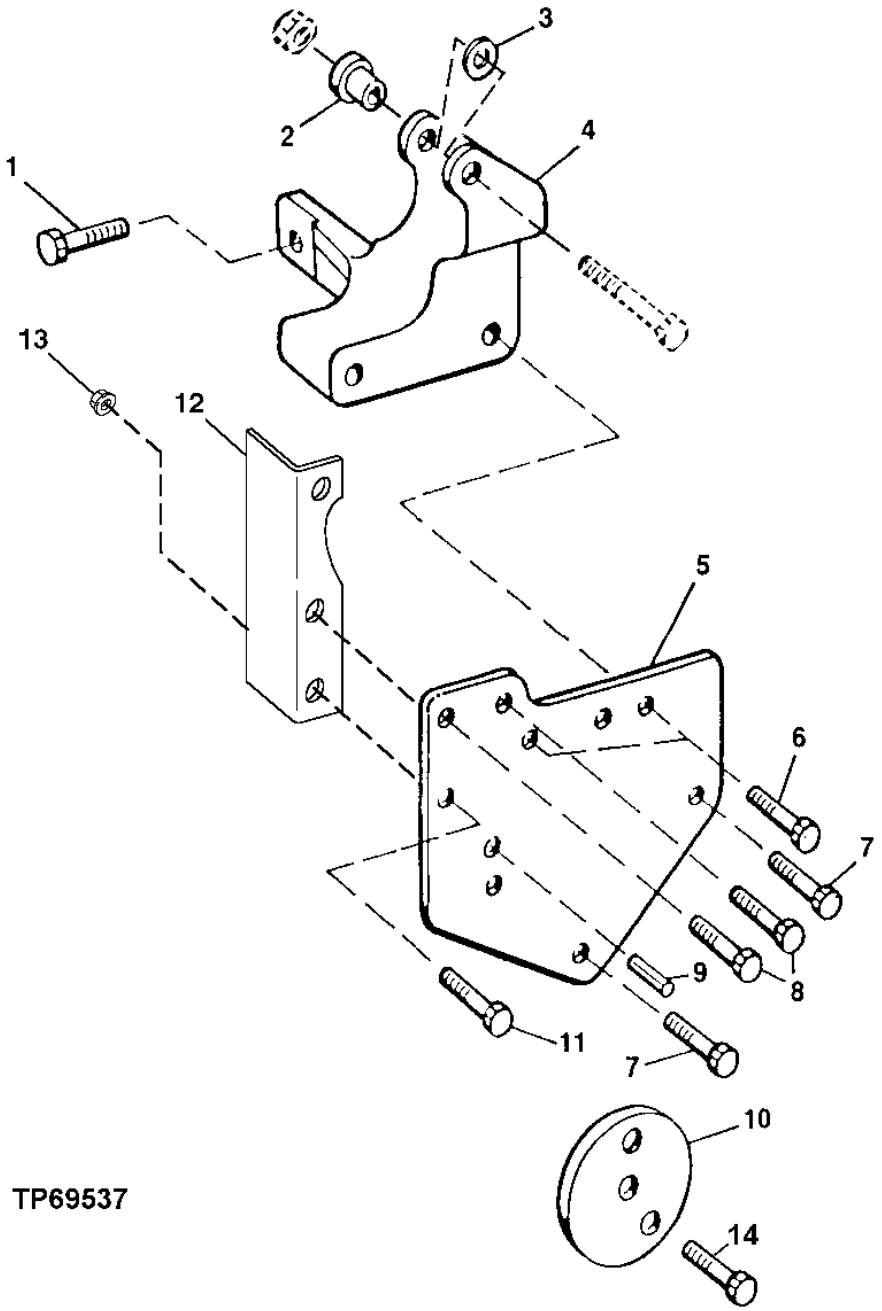

THIS PARTS LISTING IS CONTINUED

KEY	PART NO.	PART NAME	QTY.	ENGINE SERIAL NO.	REMARKS
1	19M7786	SCREW	2		M10 X 30
2	R100377	BUSHING	1		
3	R64525	THRUST WASHER	1		
4	R132166	BRACKET	1		
5	R133978	SUPPORT	1		
6	19M7785	SCREW	2		M10 X 25
7	19M7801	SCREW	2		M8 X 60
8	19M7786	SCREW	2		M10 X 30
9	34M7061	SPRING PIN	1		8 X 20 MM
10	R500322	SPACER	1		
11	19M7786	SCREW	4		M10 X 30
12	R500531	STRAP	1		
13	14M7296	FLANGE NUT	2		M10
14	19M7811	SCREW	1		M10 X 90

FLYWHEEL
VOLANT
VOLANTE MOTOR

TP69538 -UN-18JUL00

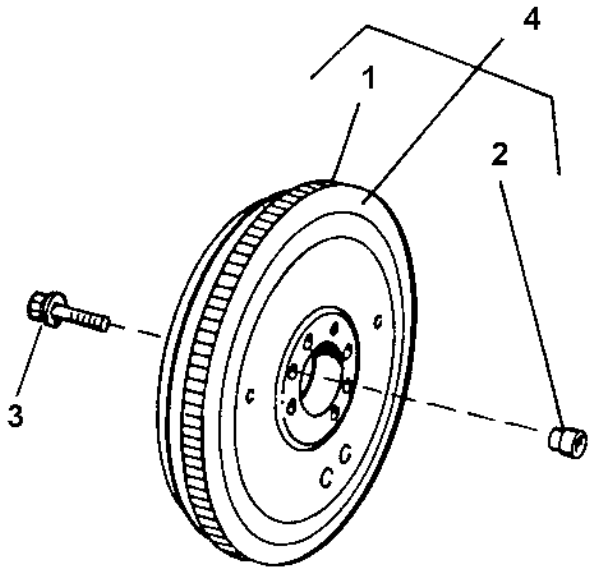

TP69538

KEY	PART NO.	PART NAME	QTY.	ENGINE SERIAL NO.	REMARKS
1	R28811	RING GEAR	1		(Z = 129)
2	R123521	SLEEVE	1		
3	R135918	BOLT	4		
4	RE500137	FLYWHEEL	4		(MARKED R500096)

MEMORANDA
MEMORANDA
MEMORANDA

ENGINE OVERHAUL KIT
JEU DE REMISE EN ETAT MOTEUR
CONJUNTO REPARACION MOTOR

TP28491 -UN-01JAN94

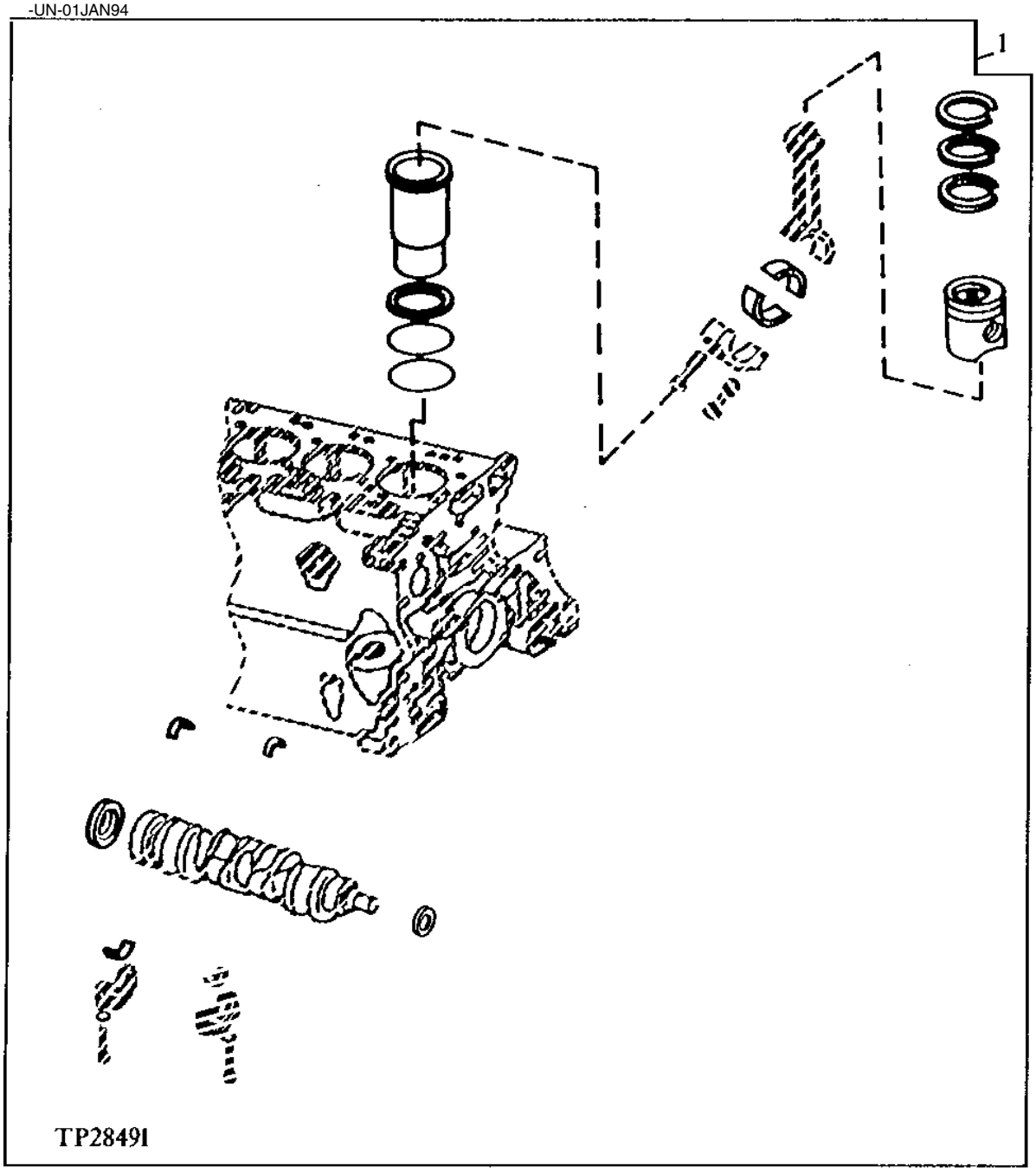

KEY	PART NO.	PART NAME	QTY.	ENGINE SERIAL NO.	REMARKS
1	RE527299	ENGINE OVERHAUL KIT	1		PISTON, (MARKED RE515372)

9901 (ENGINE GASKET KIT)
9901 (JEU DE JOINTS DE MOTEUR)
9901 (CONJUNTO PARA JUNTA DE MOTOR)

RGP7893 -UN-12JUL01

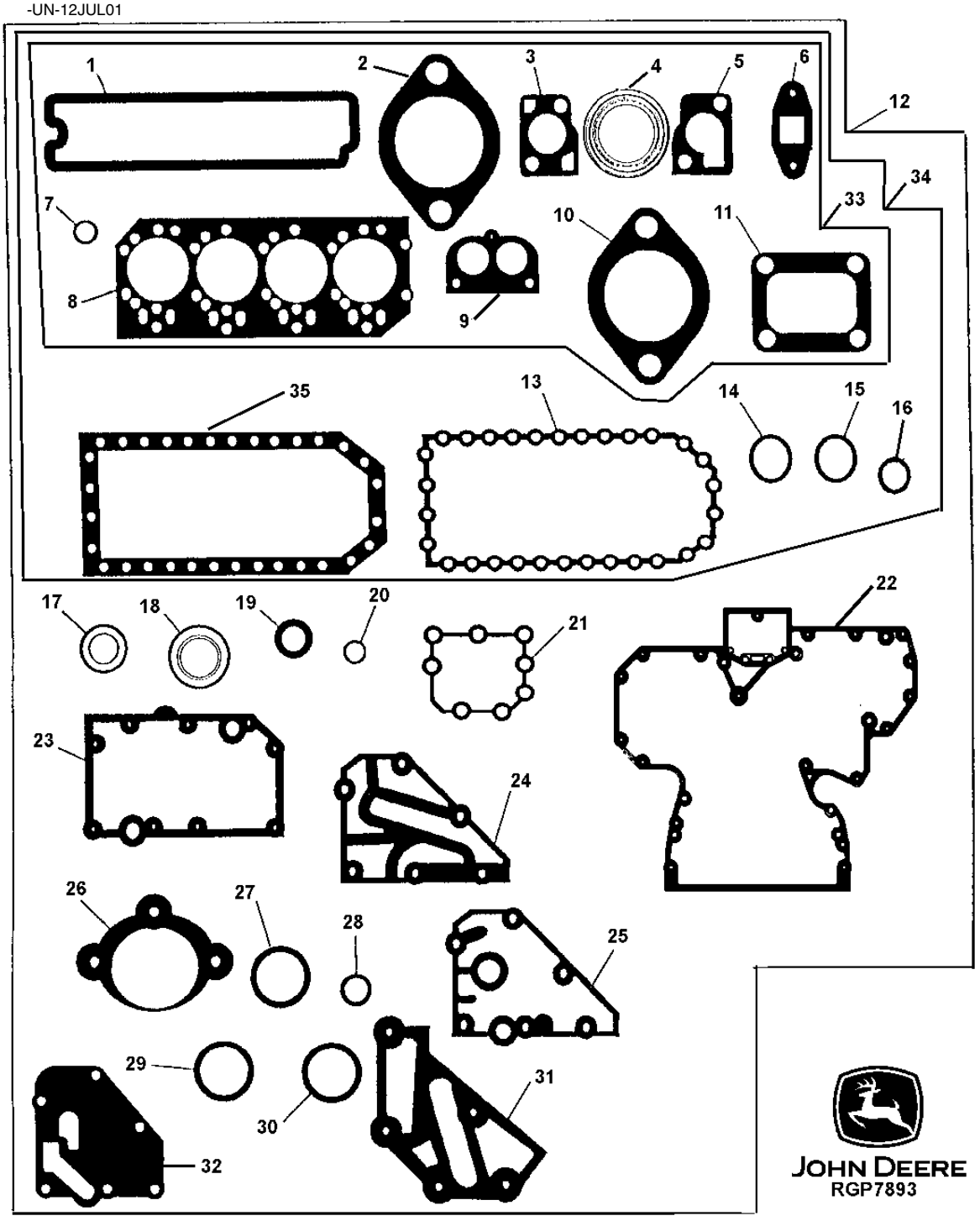

KEY	PART NO.	PART NAME	QTY.	ENGINE SERIAL NO.	REMARKS
1	R123542	GASKET	1		TAPA DE BALANCINES
	RE520539	GASKET KIT	1		(NO SE INCLUYE EN JUEGOS MAYORES)
2	R521439	GASKET	4		COLECTOR DE ESCAPE, (SUB FOR R90658)
3	R502814	GASKET	1		CUBIERTA DE TERMOSTATO
4	R123226	GASKET	2		TUBO DERIVADOR DE AGUA
5	R123345	GASKET	1		CAJA DE TERMOSTATO
6	R123570	GASKET	1		TUBO DE SALIDA DE ACEITE DE TURBOALIMENTADOR
	R503891	GASKET	1		TUBO DE SALIDA DE ACEITE DE TURBOALIMENTADOR
7	R123575	O-RING	4		ESPARRAGO SUJECION DE CUBIERTA DEL BALANCIN
8	R116515	ENGINE CYLINDER HEAD GASKET	1		CULATA
9	R501373	GASKET	1		CUBIERTA DE TERMOSTATO
10	R81275	GASKET	1		ENTRADA DE AIRE (OVALADO)
	R133893	GASKET	1		ENTRADA DE AIRE (CUADRADO)
11	R92097	GASKET	1		DE TURBOALIMENTADOR A MULTIPLE DE ESCAPE
12	RE527042	GASKET KIT	1		(CON TURBOALIMENTADOR) (SUB FOR RE501455)
	RE527298	ENGINE OVERHAUL KIT	1		Y COJINETES PRINCIPALES CIGUENAL)
	RE527299	ENGINE OVERHAUL KIT	1		MAIN BEARINGS)

9901 (ENGINE GASKET KIT)
9901 (JEU DE JOINTS DE MOTEUR)
9901 (CONJUNTO PARA JUNTA DE MOTOR)

RGP7893 -UN-12JUL01

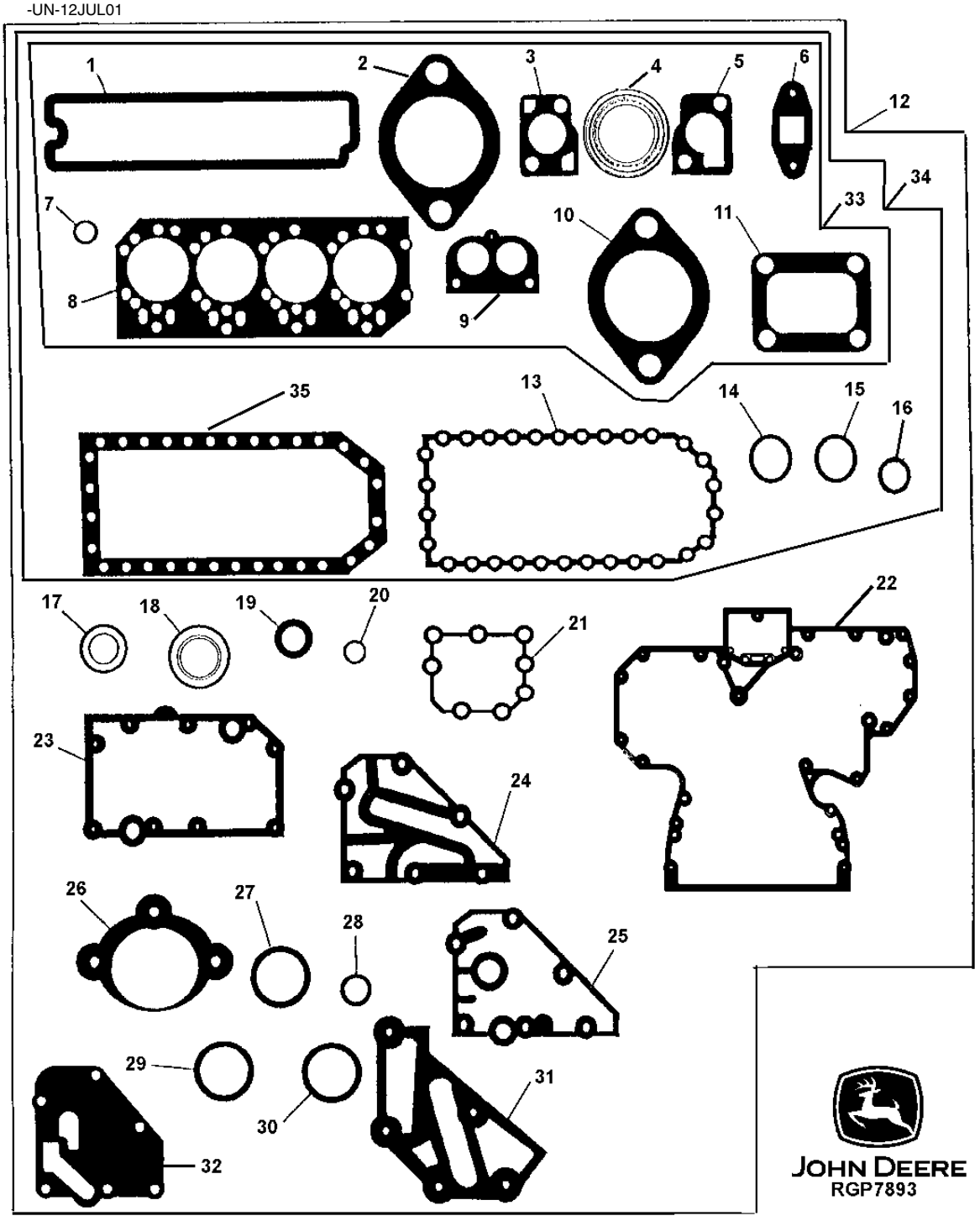

KEY	PART NO.	PART NAME	QTY.	ENGINE SERIAL NO.	REMARKS
13	R522030	GASKET	1		(NO SE INCLUYE EN JUEGOS MAYORES)
14	R75892	O-RING	1		CONECTOR DE TUBO DE BOMBA DE ACEITE
15	R97185	O-RING	1		DE TUBO DE SALIDA BOMBA DE ACEITE A CUBIERTA
16	R61871	O-RING	1		TUBO DE ADMISION DE BOMBA DE ACEITE
17	A4827R	WASHER	1		TAPON DE REGULADOR DE PRESION DE ACEITE
18	RE44574	SEAL	1		SELLO DE ACEITE TRASERO
19	RE516340	SEAL	1		SELLO DE ACEITE DELANTERO, (SUB FOR RE59810) (MARKED RE52346 OR RE505515)
20	R123273	O-RING	1		BOMBA DE TRANSFERENCIA DE COMBUSTIBLE
21	R123417	GASKET	1		BOMBA DE AGUA
22	R136515	GASKET	1		(CON MANDO AUXILIAR)
	R136516	GASKET	1		(SIN MANDO AUXILIAR)
23	R123501	GASKET	1		CAJA DEL ENFRIADOR DE ACEITE
24	R502864	GASKET	1		ADAPTADOR DE FILTRO DE ACEITE REMOTO
25	R123525	GASKET	1		COLECTOR DE FILTRO DE ACEITE
26	R53108	GASKET	1		ARRANCADOR
27	R72328	O-RING	4		TUBOS DE FILTRO DE ACEITE
28	R89944	O-RING	1		ENTRADA DE BOMBA DE AGUA
29	R504734	O-RING	2		TUBO DE CONECTOR A CUBIERTA ENGRANAJES DISTR.
30	T122075	O-RING	2		ENFRIADOR DE ACEITE A CAJA
31	R501428	GASKET	1		ADAPTADOR DE CONDUCTO DE REFRIGERANTE
32	R500374	GASKET	1		COLECTOR DE FILTRO DE ACEITE
33	RE526670	GASKET KIT	1		RETIRO DE CULATA, (SUB FOR RE66082)
34	RE526671	GASKET KIT	1		DURANTE REACONDICIONAMIENTO DEL CHASIS, (SUB FOR RE66084)
35	R123353	GASKET	1		CARTER DEL MOTOR

ENGINE COOLANT HEATER
CHAUFFE-BLOC MOTEUR
CALEFACTOR DE REFRIGERANTE DE MOTOR

TX1011738 -UN-11SEP06

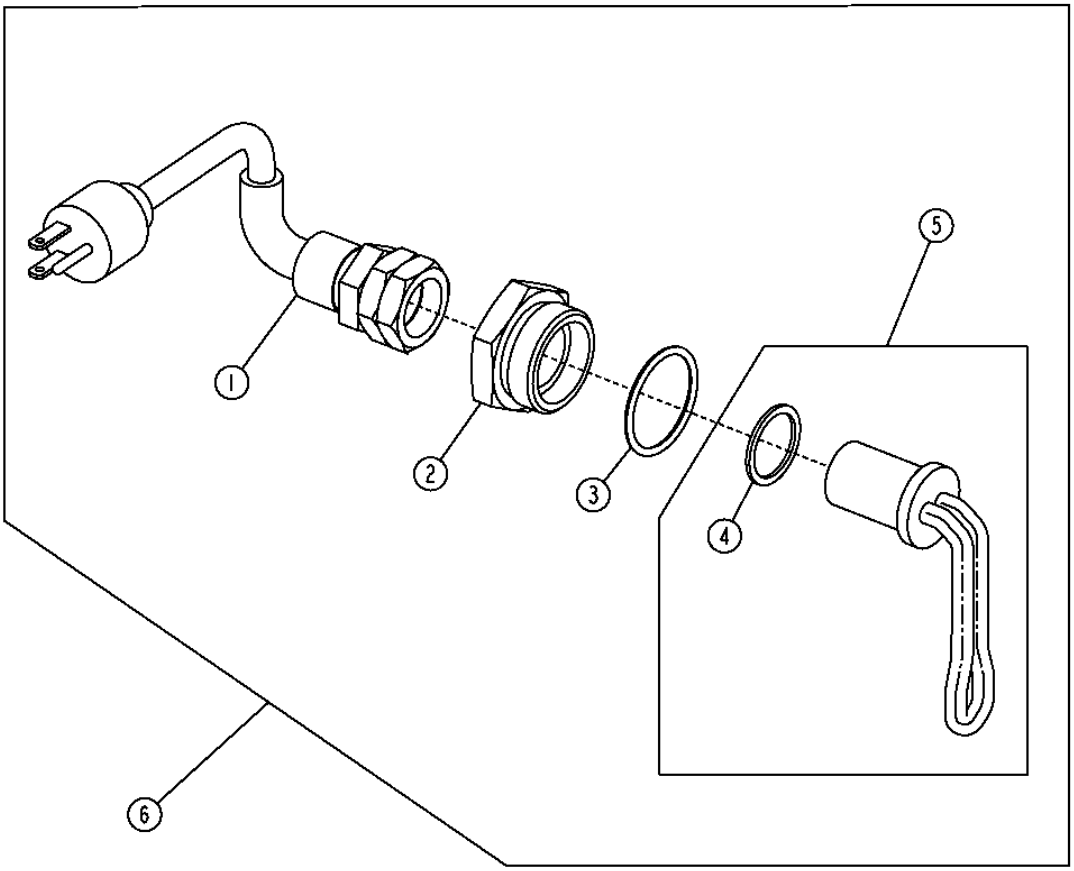

TX1011738

ENGINE COOLANT HEATER
CHAUFFE-BLOC MOTEUR
CALEFACTOR DE REFRIGERANTE DE MOTOR

KEY	*PART NO.*	*PART NAME*	*QTY.*	*SERIAL NO.*	*REMARKS*
1	AT73296	POWER CORD	1		
2	R54123	ADAPTER FITTING	1		
3	U13639	O-RING	1		
4	R206883	WASHER	1		
5	RE42139	HEATING ELEMENT	1		
6	AT74940	COOLANT HEATER	1		

COLD START AID
DISPOSITIF D'AIDE AU DEMARRAGE PAR TEMPS FROID
DISPOSITIVO PARA EL ARRANQUE EN TIEMPO FRIO

TX1015646 -UN-23DEC06

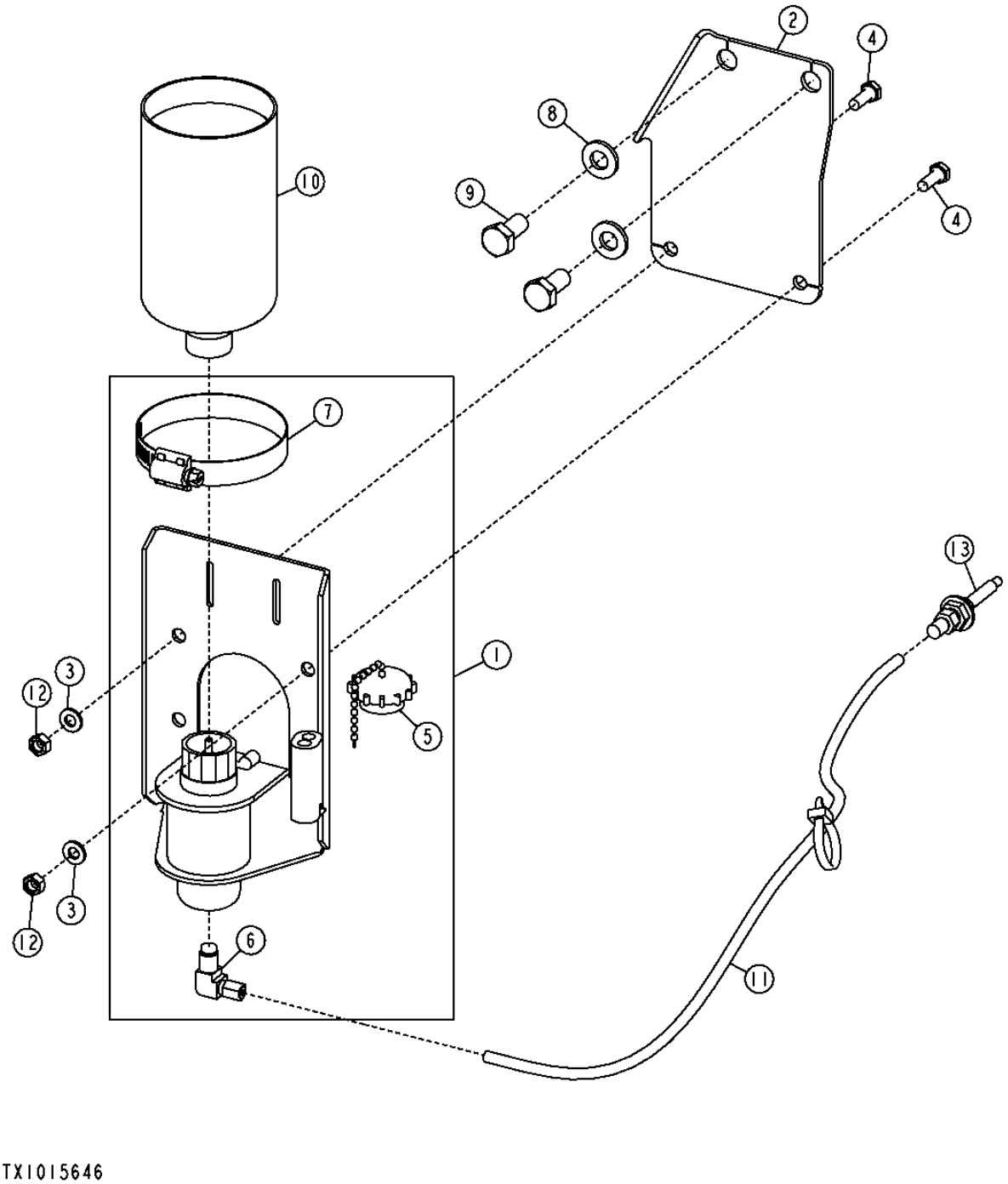

TX1015646

COLD START AID
DISPOSITIF D'AIDE AU DEMARRAGE PAR TEMPS FROID
DISPOSITIVO PARA EL ARRANQUE EN TIEMPO FRIO

KEY	*PART NO.*	*PART NAME*	*QTY.*	*SERIAL NO.*	*REMARKS*
1	AT173385	STARTING AID SOLENOID	1		
2	T216273	BRACKET	1		
3	24M7293	WASHER	2		6.500 X 13 X 1.600 MM
4	19M8425	CAP SCREW	2		M6 X 16
5	AT171539	CAP (HAT)	1		
6	AT181582	ELBOW FITTING	1		
7	AR21999	HOSE CLAMP	1		
8	24M7239	WASHER	3		10.700 X 21 X 2.500 MM
9	19M7938	CAP SCREW	3		M10 X 20
10	AT171162	STARTING FLUID	1		
11	.....	BULK HOSE	1		(MAKE FROM T78593) CTL
12	14M7272	NUT	2		M6
13	AT183222	NOZZLE	1		

RADIATOR, HOSES, FAN SHROUD AND GUARD
RADIATEUR, FLEXIBLES, CAPOT DE VENTILATEUR ET PROTECTION
RADIADOR, MANGUERAS, ENVUELTA DEL VENTILADOR Y PROTECTOR

TX1012974 -UN-25OCT06

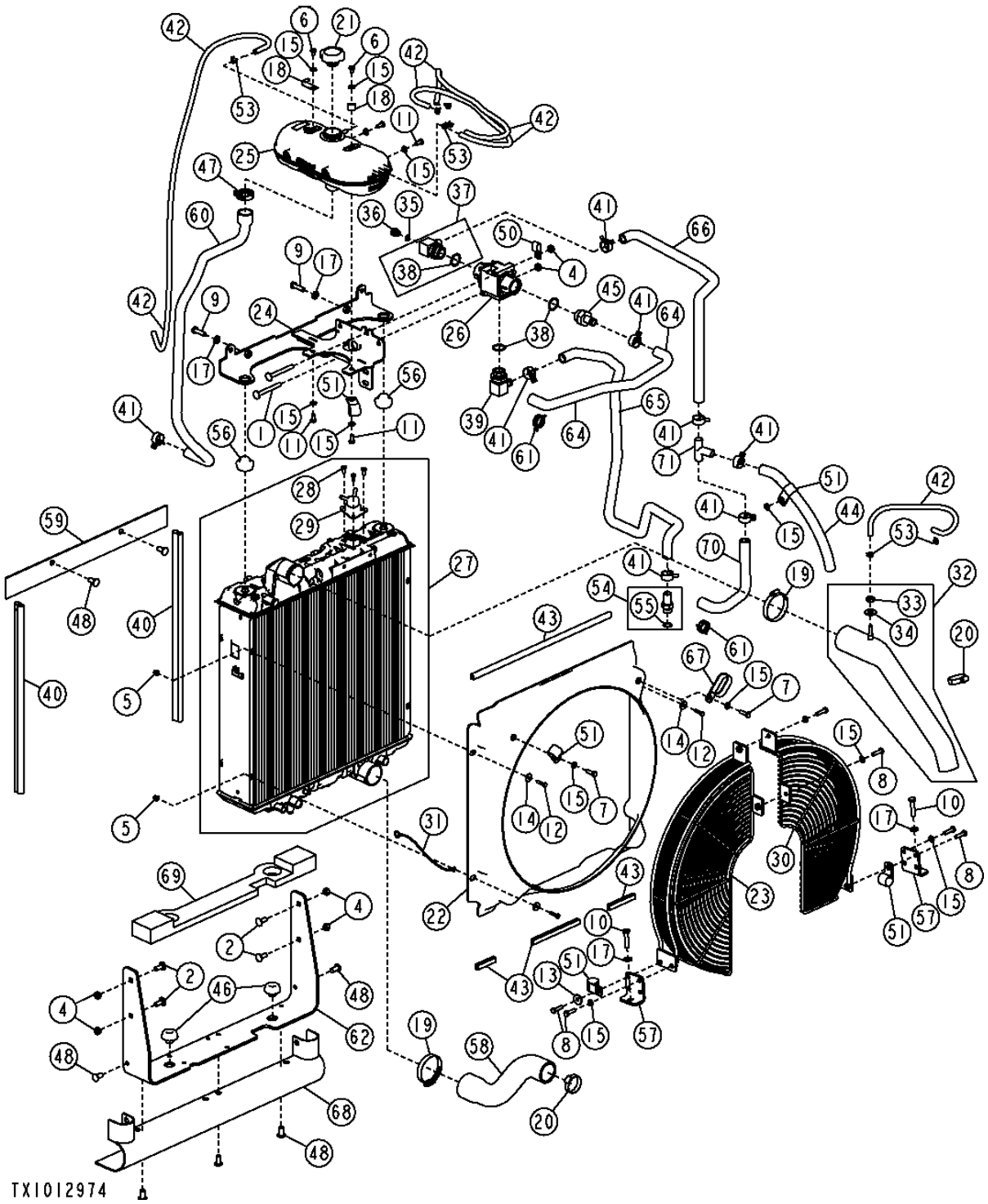

RADIATOR, HOSES, FAN SHROUD AND GUARD
RADIATEUR, FLEXIBLES, CAPOT DE VENTILATEUR ET PROTECTION
RADIADOR, MANGUERAS, ENVUELTA DEL VENTILADOR Y PROTECTOR

KEY	PART NO.	PART NAME	QTY.	SERIAL NO.	REMARKS
1	03M7247	BOLT	2		M10 X 90
2	03M7307	BOLT	4		M10 X 25
4	14M7274	NUT	6		M10
5	14M7397	LOCK NUT	4		M6
6	19M7008	CAP SCREW	2		M8 X 10
7	19M7407	CAP SCREW	2		M8 X 25
8	19M7922	CAP SCREW	6		M8 X 40
9	19M7550	CAP SCREW	2		M10 X 35
10	19M7572	CAP SCREW	2		M10 X 45
11	19M7932	CAP SCREW	4		M8 X 16
12	19M7933	CAP SCREW	4		M6 X 25
13	24M7024	WASHER	1		9 X 28 X 3 MM
14	24M7100	WASHER	4		6.600 X 22 X 2 MM
15	24M7238	WASHER	13		8.700 X 17 X 2 MM
17	24M7239	WASHER	5		
18	AH89557	CLIP	2		
19	AH170895	CLAMP	2		
20	RE56098	CLAMP	2		
21	AT310335	FILLER CAP	1		
22	AT312425	SHROUD	1		
23	AT312426	GUARD	1		
24	AT318095	ANGLE	1		
25	AT320220	TANK	1		
26	AT320238	THERMOSTATIC CONTROL VALVE	1		
27	AT320239	RADIATOR	1		
28	21M7246	SCREW	3		M6 X 16
29	T214276	ADAPTER FITTING	1		
30	AT323152	GUARD	1		
31	AT324273	GROUND CABLE	1		FASTENER
32	AT334333	RADIATOR HOSE	1		
33	14H856	NUT	1		
34	24H1789	WASHER	1		
35	R26448	O-RING	1		
36	T227450	DRAIN PLUG	1		
37	AT337030	ADAPTER FITTING	1		
38	R29936	O-RING	3		
39	AT43223	ELBOW FITTING	1		
40	T61861	ISOLATOR	2		CTL
41	T185826	CLAMP	13		
42	TY22566	BULK HOSE	4		CTL
43	T68144	ISOLATOR	5		CTL
44	TY22330	BULK HOSE	1		CTL
45	H65405	FITTING	1		

THIS PARTS LISTING IS CONTINUED

RADIATOR, HOSES, FAN SHROUD AND GUARD
RADIATEUR, FLEXIBLES, CAPOT DE VENTILATEUR ET PROTECTION
RADIADOR, MANGUERAS, ENVUELTA DEL VENTILADOR Y PROTECTOR

TX1012974 -UN-25OCT06

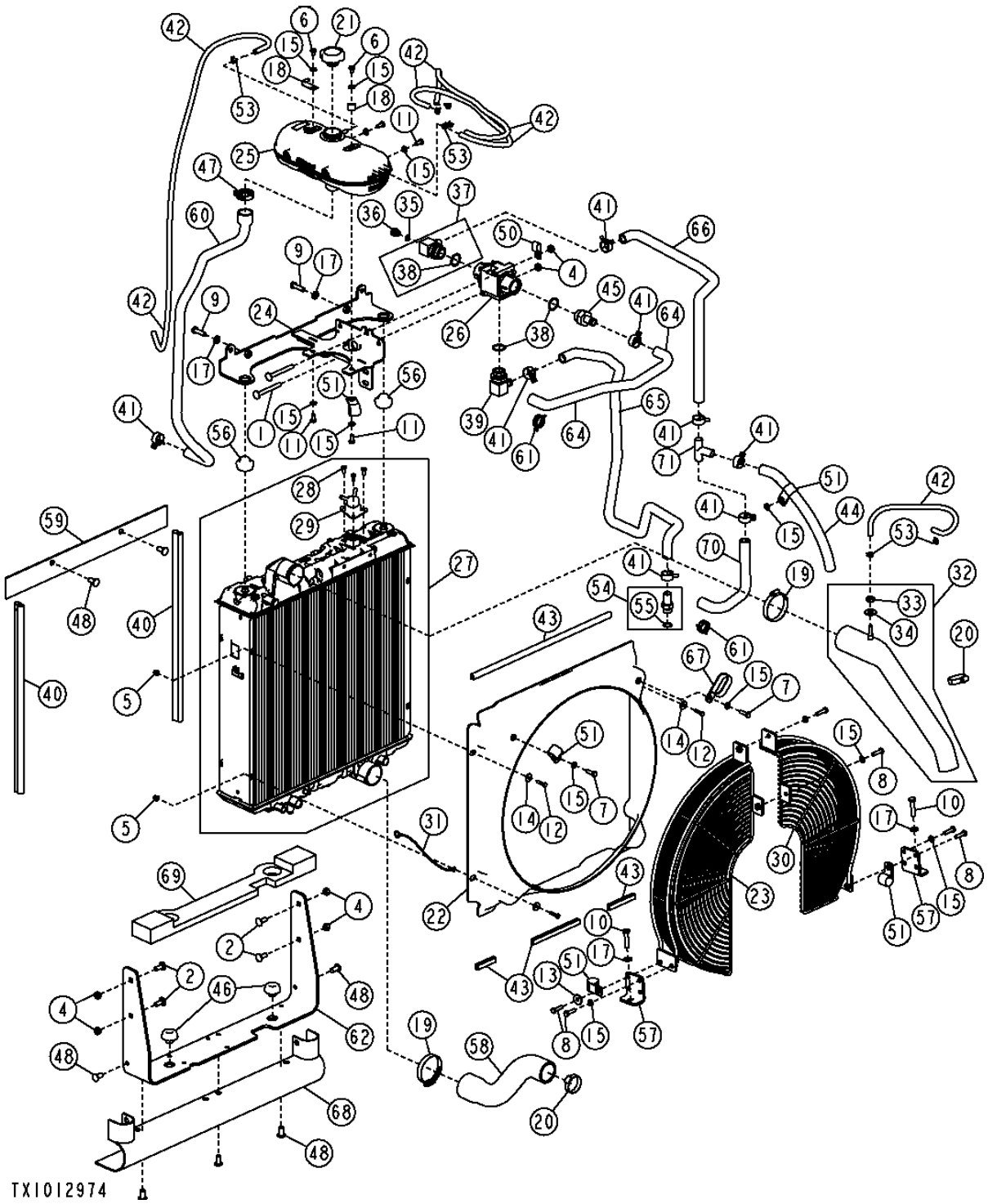

RADIATOR, HOSES, FAN SHROUD AND GUARD
RADIATEUR, FLEXIBLES, CAPOT DE VENTILATEUR ET PROTECTION
RADIADOR, MANGUERAS, ENVUELTA DEL VENTILADOR Y PROTECTOR

KEY	*PART NO.*	*PART NAME*	*QTY.*	*SERIAL NO.*	*REMARKS*
46	KV25173	ISOLATOR	2		
47	L154742	CLAMP	1		
48	MT2485	PLUG	7		
50	R35668	CLAMP	1		
51	R46667	CLAMP	5		
53	R56101	CLIP	7		
54	RE223627	HOSE FITTING	1		
55	51M7045	O-RING	1		
56	T216248	ISOLATOR	2		
57	T216350	PLATE	2		
58	T216620	RADIATOR HOSE	1		
59	T216877	DEFLECTOR	1		
60	T216934	RADIATOR HOSE	1		
61	T217175	HOSE CLAMP	2		
64	T225322	HOSE	1		
65	T225523	RADIATOR HOSE	1		
66	T225835	RADIATOR HOSE	1		
67	T225865	CLAMP	1		
68	T226097	DEFLECTOR	1		
69	T226132	DEFLECTOR	1		
70	.....	RADIATOR HOSE	1		
71	AT340617	TUBE	1		

A/C FAN PACKAGE AND BASIC FAN PACKAGE
CHAUFFE-BLOC MOTEUR
CALEFACTOR DE REFRIGERANTE DE MOTOR

TX1015645 -UN-06DEC06

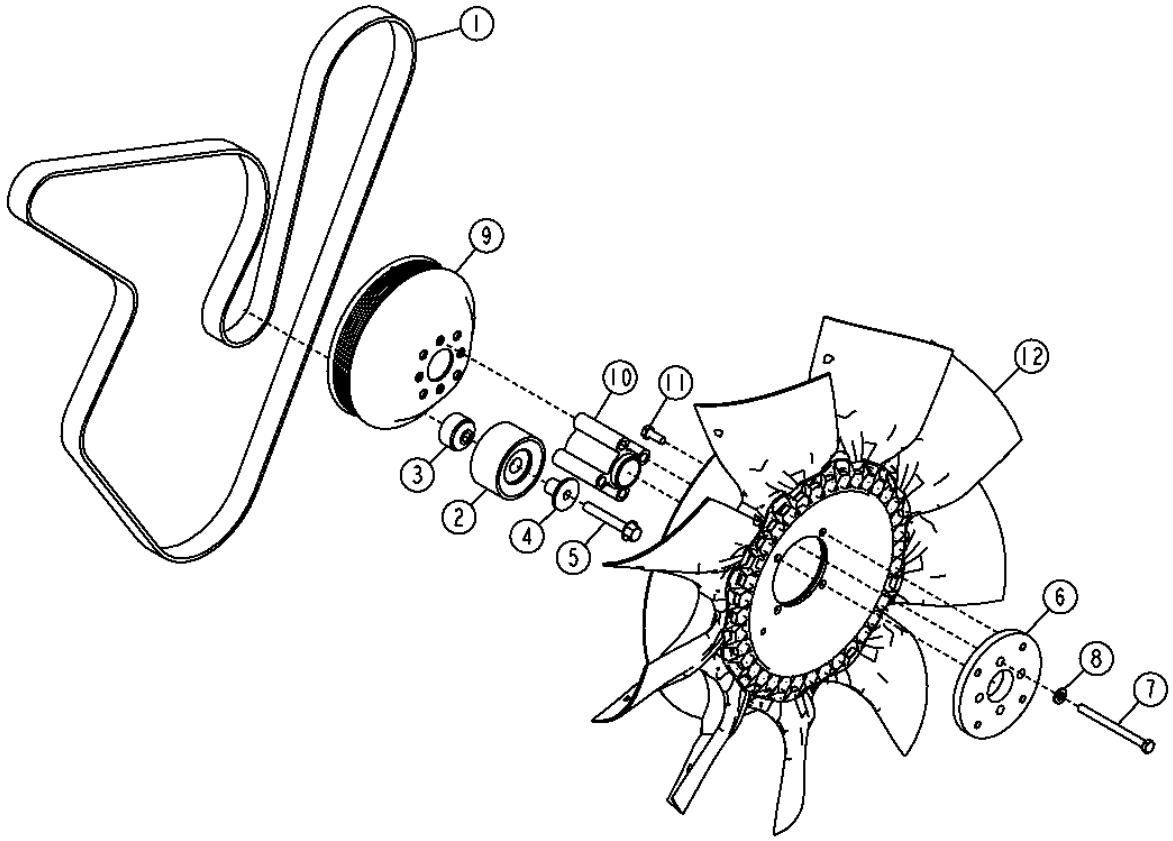

TX1015645

A/C FAN PACKAGE AND BASIC FAN PACKAGE
CHAUFFE-BLOC MOTEUR
CALEFACTOR DE REFRIGERANTE DE MOTOR

KEY	*PART NO.*	*PART NAME*	*QTY.*	*SERIAL NO.*	*REMARKS*
1	T227666	V-BELT	1		A/C FAN PACKAGE HIGH AMBIENT
	T227665	V-BELT	1		HIGH AMBIENT
	T227609	V-BELT	1		A/C FAN PACKAGE
	R504022	V-BELT	1		
2	RE505264	PULLEY	1		A/C FAN PACKAGE
3	R500320	SPACER	1		A/C FAN PACKAGE
4	R502079	SLEEVE	1		A/C FAN PACKAGE
5	19M7808	SCREW	1		M10 X 65, A/C FAN PACKAGE
6	T217238	HUB	1		
7	19M8456	CAP SCREW	1		M8 X 100
8	24M7238	WASHER	1		8.700 X 17 X 2 MM
9	R128661	PULLEY	1		HIGH AMBIENT
	R128662	PULLEY	1		
10	T208136	SPACER	1		
11	19M7881	SCREW	1		M8 X 20
12	AT322327	SUCTION FAN	1		HIGH AMBIENT
	AT312123	SUCTION FAN	1		

ELECTRICAL ACCEELERATOR
CHAUFFE-BLOC MOTEUR
CALEFACTOR DE REFRIGERANTE DE MOTOR

TX1015607 -UN-06DEC06

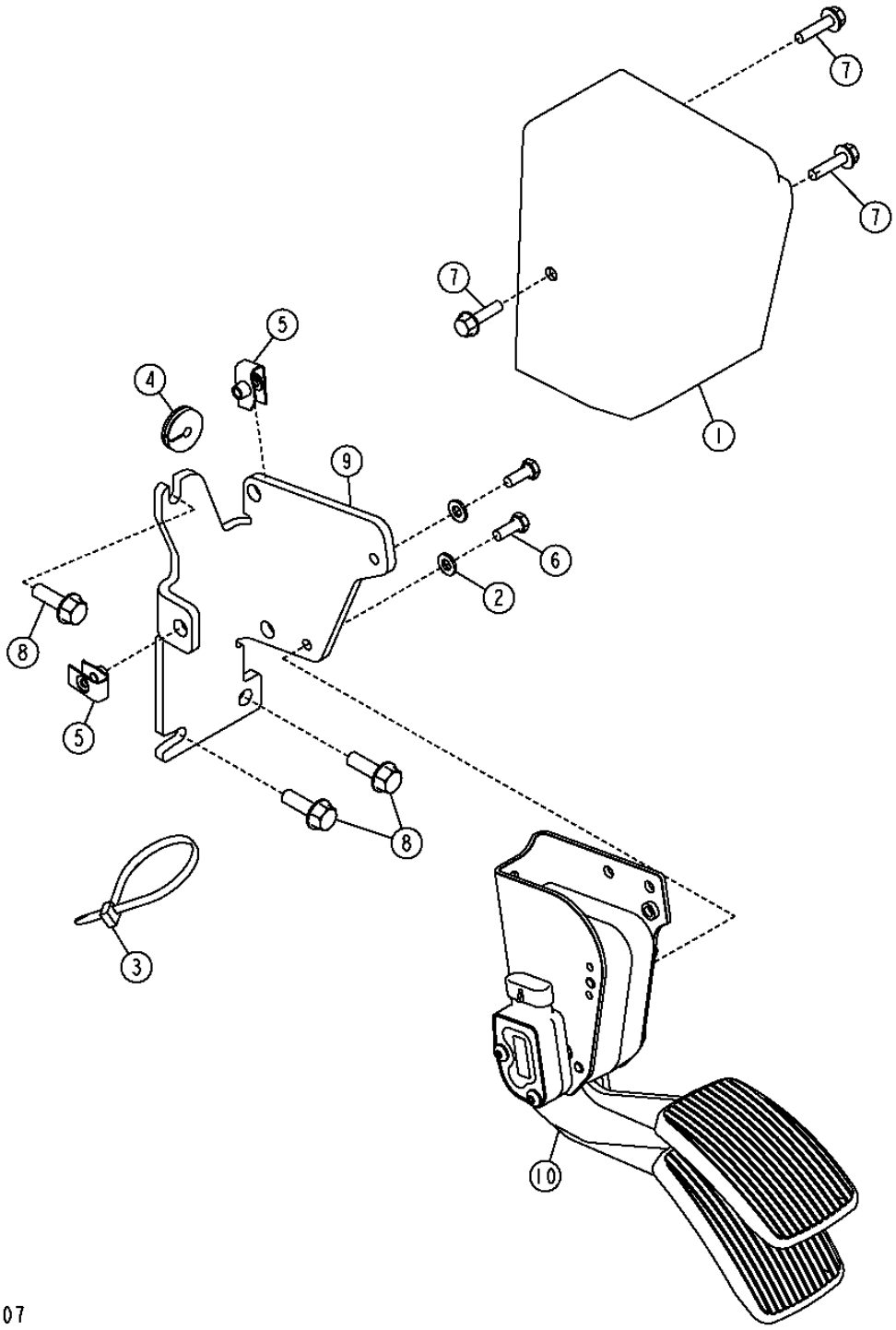

THIS PARTS LISTING IS CONTINUED

ELECTRICAL ACCELERATOR
CHAUFFE-BLOC MOTEUR
CALEFACTOR DE REFRIGERANTE DE MOTOR

KEY	*PART NO.*	*PART NAME*	*QTY.*	*SERIAL NO.*	*REMARKS*
1	T224315	COVER	1		
2	24M7293	WASHER	2		6.500 X 13 X 1.600 MM
3	R44302	TIE BAND	1		
4	T74952	GROMMET	1		
5	R134098	NUT	3		
6	19M8425	CAP SCREW	1		M6 X 16
7	19M7863	SCREW	3		M6 X 25
8	19M7867	SCREW	3		M8 X 25
9	T224233	BRACKET	1		
10	AT340698	PEDAL	1		

AIR CLEANER AND MOUNTING BRACKETS
FILTRE A AIR ET SUPPORTS DE MONTAGE
FILTRO DE AIRE Y SOPORTES DE MONTAJE

TX1012660 -UN-20NOV06

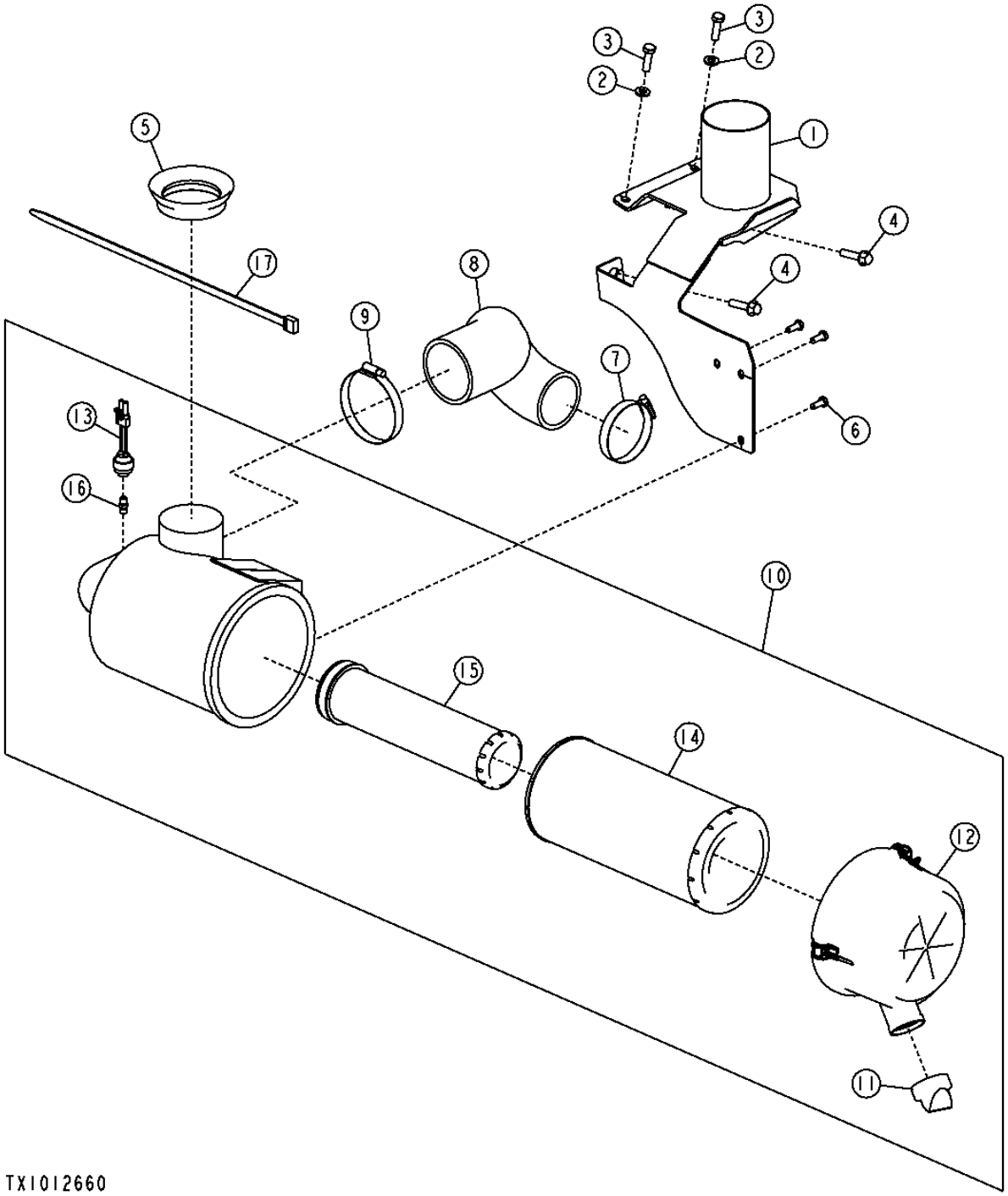

AIR CLEANER AND MOUNTING BRACKETS
FILTRE A AIR ET SUPPORTS DE MONTAGE
FILTRO DE AIRE Y SOPORTES DE MONTAJE

KEY	*PART NO.*	*PART NAME*	*QTY.*	*SERIAL NO.*	*REMARKS*
1	AT323269	SUPPORT	1		
2	24M7239	WASHER	2		
3	19M7550	CAP SCREW	2		M10 X 35
4	19M8320	SCREW	2		M10 X 45
5	T166091	SEAL	1		
6	19M7881	SCREW	3		M8 X 20
7	AH104837	HOSE CLAMP	1		(WITH TURBOCHARGER)
	AR85328	CLAMP	1		(WITHOUT TURBOCHARGER)
8	T216322	HOSE	1		(WITH TURB0CHARGER)
	T216258	SUCTION HOSE	1		(WITHOUT TURBOCHARGER)
9	AR85329	CLAMP	1		
10	AT186281	AIR CLEANER	1		
11	R48568	VALVE	1		
12	AT171855	COVER	1		
13	AT178542	AIR RESTRICTION SENSOR	1		
14	KV16429	AIR FILTER	1		PRIMARY
15	AT171854	AIR FILTER	1		SECONDARY
16	AR44361	FITTING	1		

EXHAUST EXTENSION AND MUFFLER (W/ TURBO)
RALLONGE D'ECHAPPEMENT ET SILENCIEUX (W/ TURBO)
EXTENSION DE ESCAPE Y SILENCIADOR (W/ TURBO)

TP58067 -UN-04OCT00

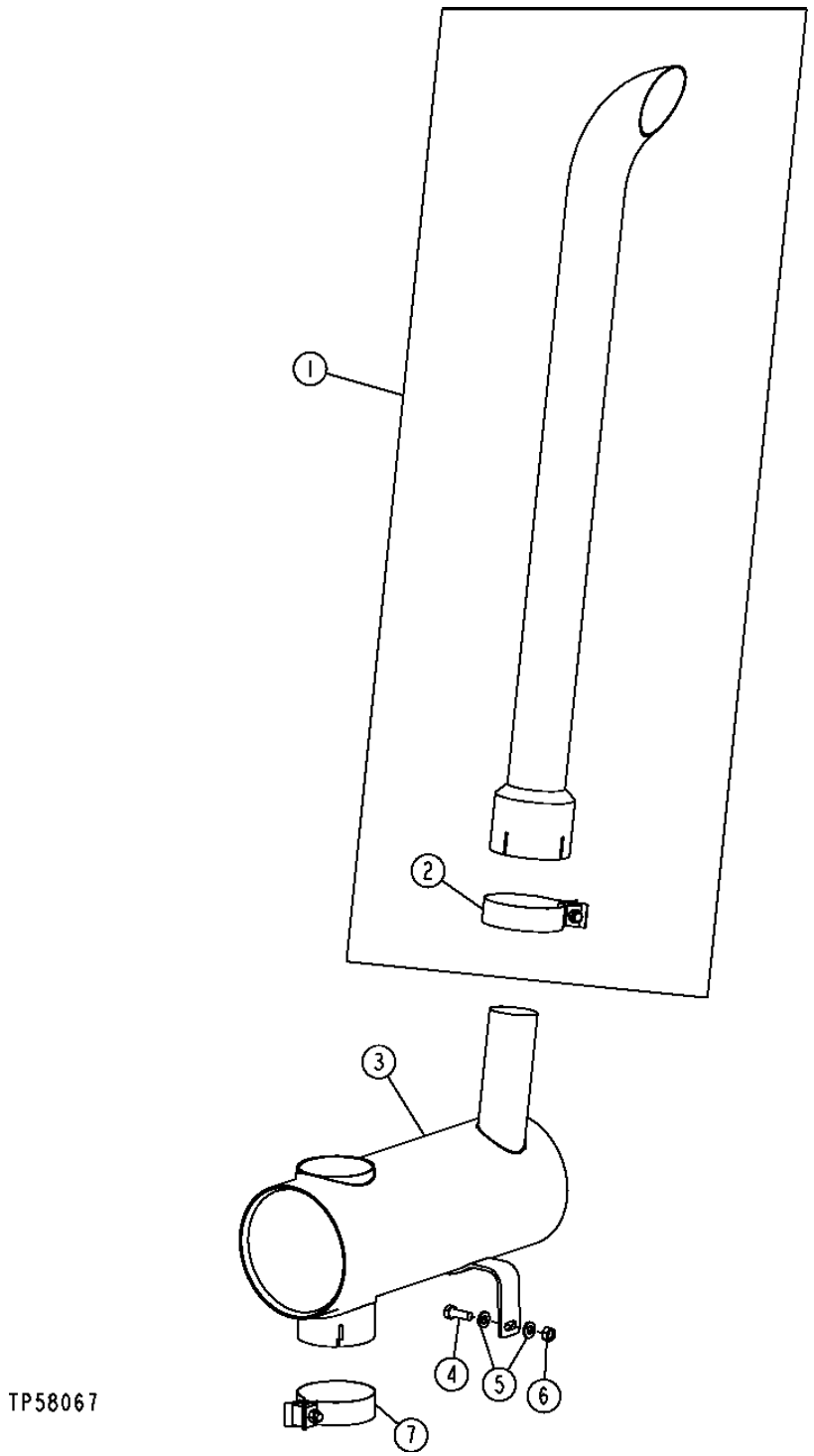

EXHAUST EXTENSION AND MUFFLER (W/ TURBO)
RALLONGE D'ECHAPPEMENT ET SILENCIEUX (W/ TURBO)
EXTENSION DE ESCAPE Y SILENCIADOR (W/ TURBO)

KEY	*PART NO.*	*PART NAME*	*QTY.*	*SERIAL NO.*	*REMARKS*
1	AT184716	MUFFLER EXTENSION	1		
	AT184848	MUFFLER EXTENSION	1		CHROME
2	RE52087	CLAMP	1		
3	AT323177	MUFFLER	1		(INCLUDES AT183426)
4	19M7402	CAP SCREW	1		M10 X 25
5	24M7239	WASHER	2		
6	14M7274	NUT	1		M10
7	AT183426	CLAMP	1		

ENGINE MOUNTING SUPPORTS
SUPPORTS MONTAGE MOTEUR
SOPORTES DE MONTAJE DEL MOTOR

TX1014848 -UN-28DEC06

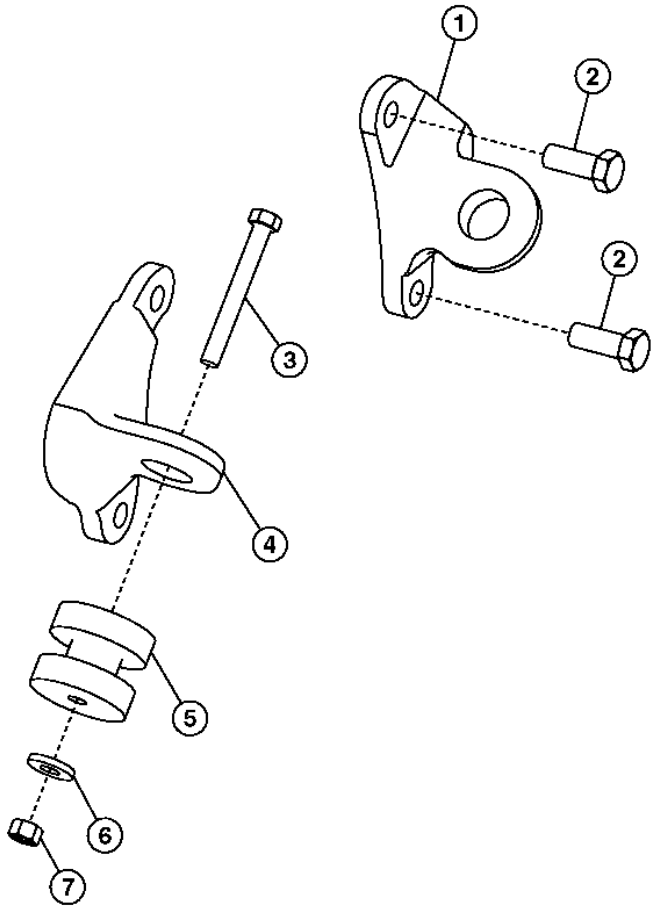

TX1014848

ENGINE MOUNTING SUPPORTS
SUPPORTS MONTAGE MOTEUR
SOPORTES DE MONTAJE DEL MOTOR

KEY	*PART NO.*	*PART NAME*	*QTY.*	*SERIAL NO.*	*REMARKS*
1	T187571	SUPPORT	1		LH
2	19M7488	CAP SCREW	4		M16 X 40
3	19M7949	CAP SCREW	2		M12 X 100
4	T170784	SUPPORT	1		R.H.
5	AT173400	ISOLATOR	2		
6	T29342	WASHER	2		
7	14M7275	NUT	2		M12

FUEL TANK AND FUEL TANK HOSES
RESERVOIR CARBURANT ET FLEXIBLES RESERVOIR CARBURANT
TANQUE DE COMBUSTIBLE Y MANGUERAS DEL TANQUE DE COMBUSTIBLE

TX1012682 -UN-28OCT06

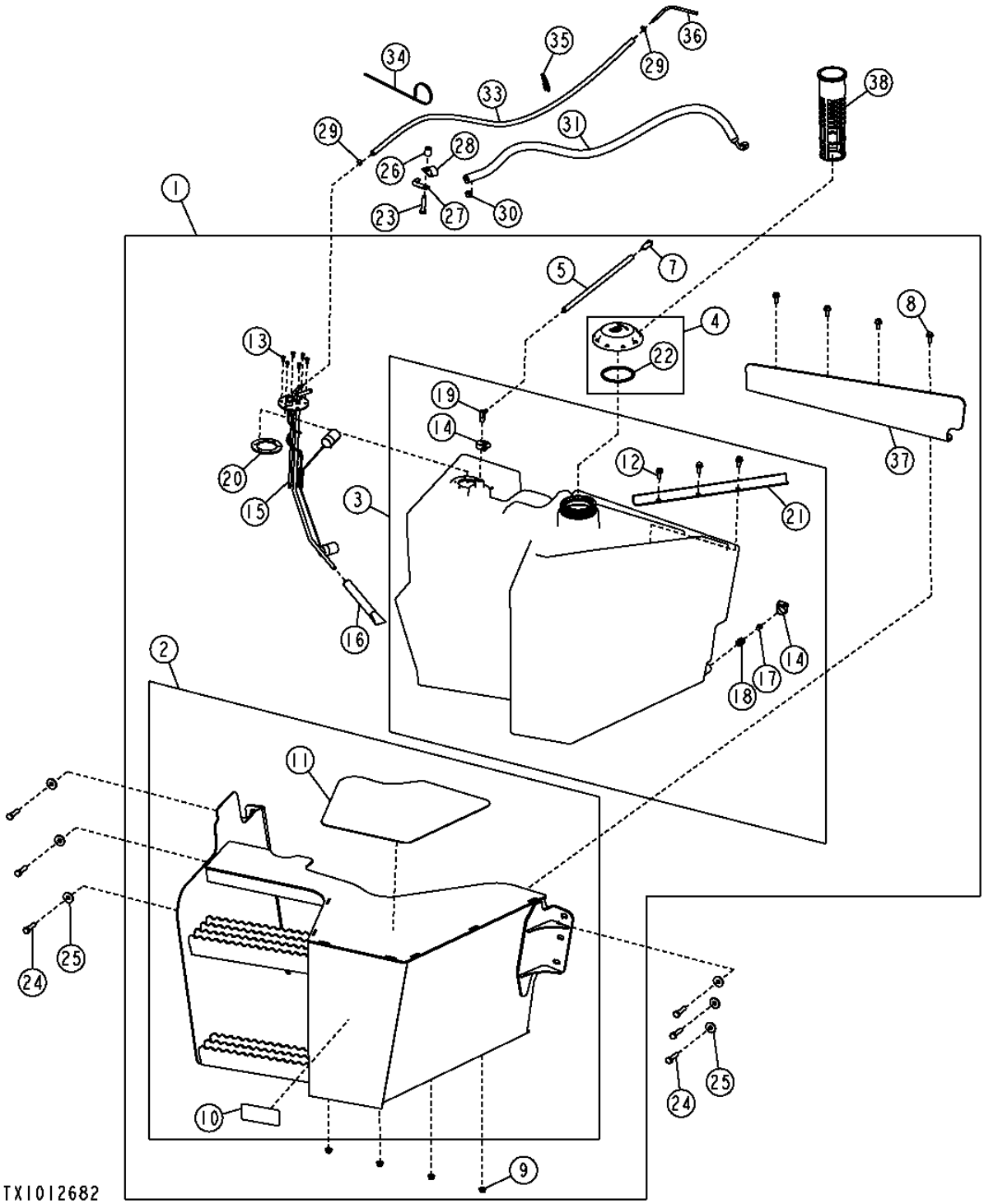

FUEL TANK AND FUEL TANK HOSES
RESERVOIR CARBURANT ET FLEXIBLES RESERVOIR CARBURANT
TANQUE DE COMBUSTIBLE Y MANGUERAS DEL TANQUE DE COMBUSTIBLE

KEY	*PART NO.*	*PART NAME*	*QTY.*	*SERIAL NO.*	*REMARKS*
1	AT322232	FUEL TANK	1		CONVENIENCE ASSEMBLY
2	AT320235	HOUSING	1		
3	AT339941	FUEL TANK	1		(ALSO ORDER T165292)
4	AT323593	CAP	1		
5	.....	HOSE	1		(MAKE FROM TY22559) CTL 52 INCH
7	AM107314	FUEL FILTER	1		
8	19M7866	SCREW	4		M8 X 20
9	14M7298	FLANGE NUT	4		M8
10	JD5933	REFLECTOR	1		
11	T215367	ANTI-SKID PAD	1		
12	19M7866	SCREW	3		M8 X 20
13	21M7265	SCREW	6		M5 X 12
14	AR21837	CLAMP	2		
15	AT300958	FUEL SENDER	1		
16	AT65241	STRAINER	1		
17	L2646N	PIPE PLUG	1		1/8"
18	N30405	ADAPTER FITTING	1		1/8"
19	RE179976	CHECK VALVE	1		
20	T165292	GASKET	1		
21	T224200	ANGLE	1		
22	R36424	O-RING	1		3.225" X 0.210"
23	19M7572	CAP SCREW	1		M10 X 45
24	19M8637	CAP SCREW	6		M10 X 40
25	24M7296	WASHER	6		10.500 X 30 X 2.500 MM
26	28H3383	BUSHING	1		0.493" X 0.675" X 3/4"
27	AH89557	CLIP	1		
28	AH96317	CLIP	1		
29	TY22462	CLAMP	2		
30	AR77962	HOSE CLAMP	1		
31	AT183881	HOSE	1		
32	E87197	PACKING	1		
33	.....	HOSE	1		(MAKE FROM TY22559) CTL 15 INCH
34	H77698	TIE BAND	1		
35	R44302	TIE BAND	2		
36	T66701	LINE	1		
37	T214270	SUPPORT	1		
38	AH162914	STRAINER	1		

STEERING CYLINDER AND REPAIR KIT (W/MFWD)
VERIN DE DIRECTION ET KIT DE REPARATION(W/MFWD)
CILINDRO DE LA DIRECCION Y JUEGO DE REPARACION (W/MFWD)

TX1016365 -UN-15DEC06

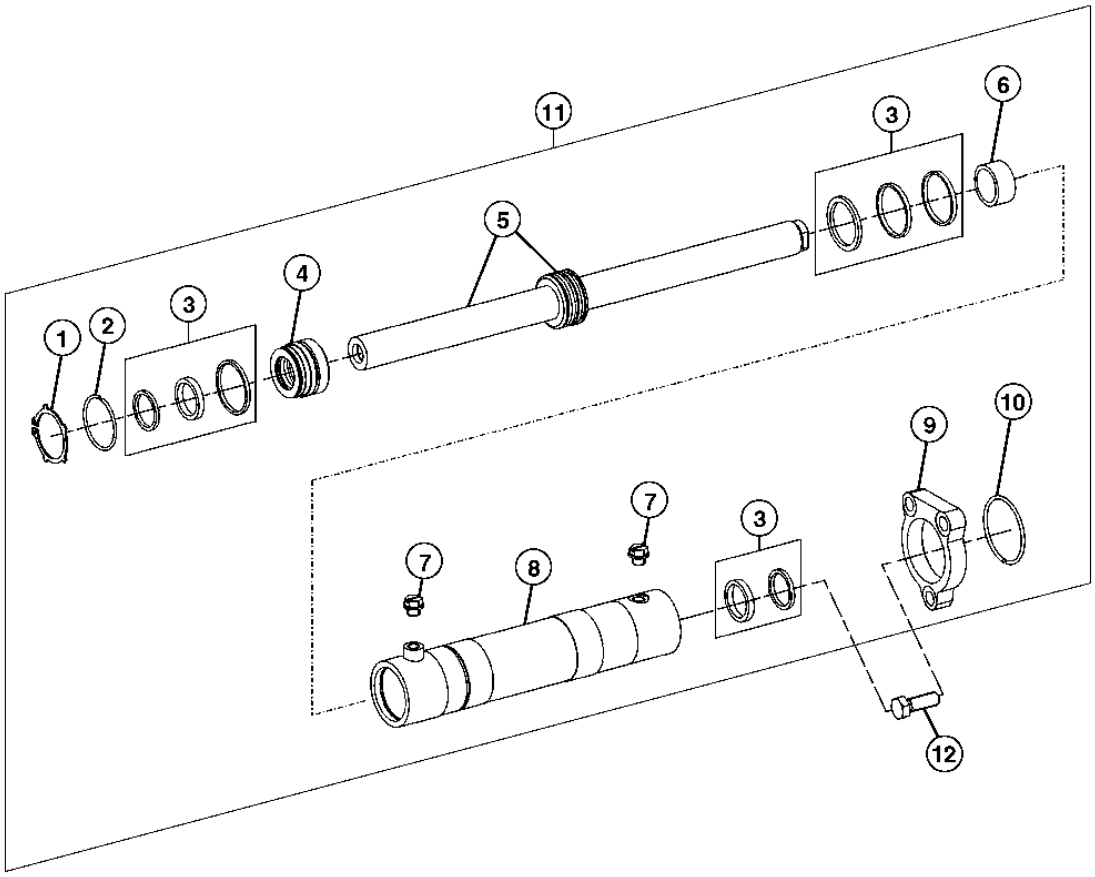

TX1016365

STEERING CYLINDER AND REPAIR KIT (W/MFWD)
VERIN DE DIRECTION ET KIT DE REPARATION(W/MFWD)
CILINDRO DE LA DIRECCION Y JUEGO DE REPARACION (W/MFWD)

KEY	*PART NO.*	*PART NAME*	*QTY.*	*SERIAL NO.*	*REMARKS*
1	T229279	SNAP RING	2		
2	T229275	SNAP RING	1		
3	T218502	HYDRAULIC CYLINDER KIT	1		
4	T229276	PLUG	1		
5	AT326543	ROD	1		
6	T229281	BUSHING	1		
7	T229277	PLUG	2		
8	T229261	HYDRAULIC CYLINDER BARREL	1		
9	T229280	FLANGE	1		
10	T229278	SNAP RING	1		
11	AT326542	HYDRAULIC CYLINDER	1		
12	T229282	CAP SCREW	3		

STEERING WHEEL AND TILT COLUMN
VOLANT ET COLONNE D'INCLINAISON
VOLANTE DE LA DIRECCION Y COLUMNA INCLINABLE

TX1013470 -UN-01DEC06

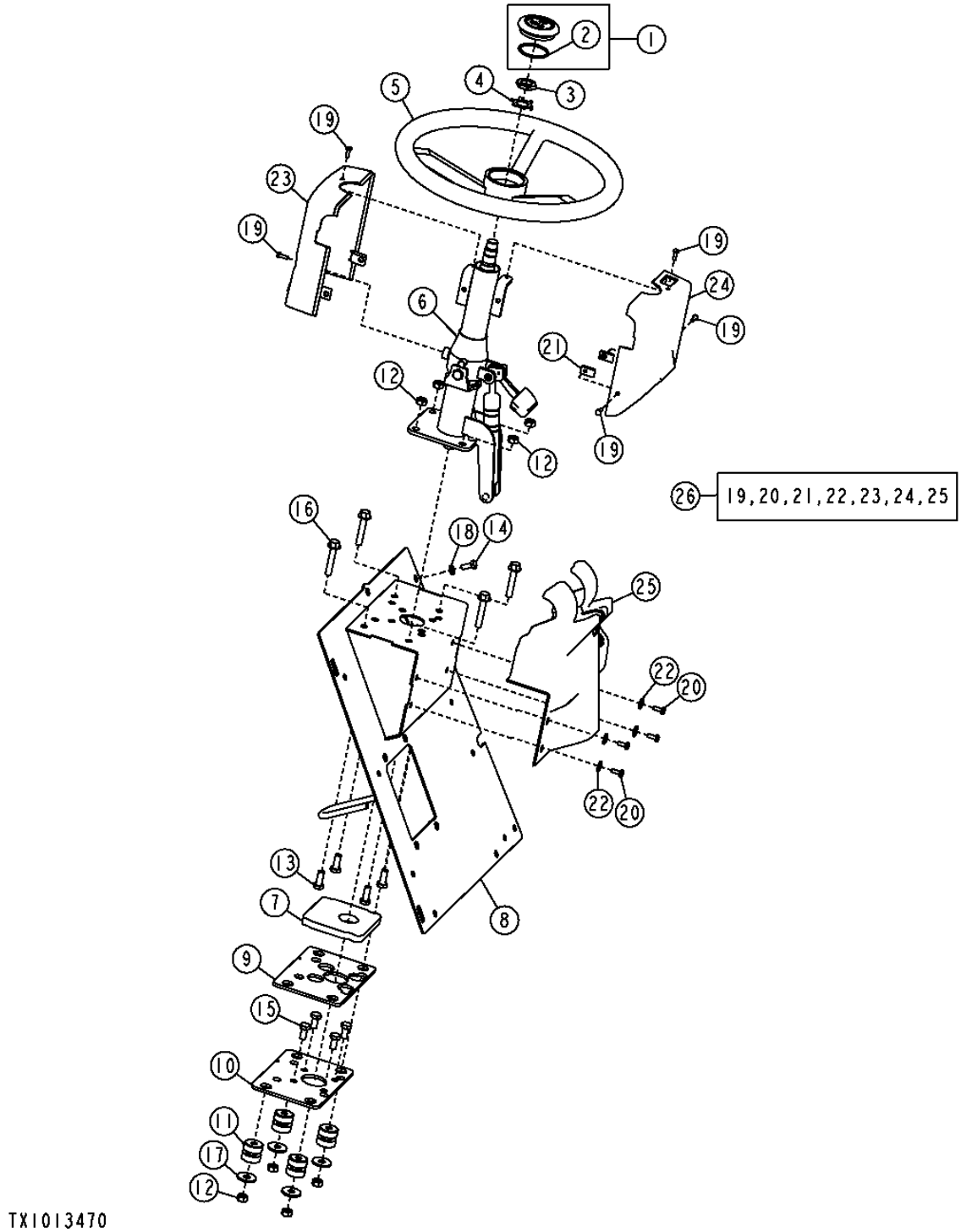

STEERING WHEEL AND TILT COLUMN
VOLANT ET COLONNE D'INCLINAISON
VOLANTE DE LA DIRECCION Y COLUMNA INCLINABLE

KEY	*PART NO.*	*PART NAME*	*QTY.*	*SERIAL NO.*	*REMARKS*
1	AL155227	COVER	1		
2	B3690R	O-RING	1		
3	T13630	NUT	1		
4	T17148	LOCK WASHER	1		
5	AT139694	STEERING WHEEL	1		
6	AT314024	STEERING COLUMN	1		
7	T216546	GASKET	1		
8	AT314030	SUPPORT	1		
9	T216524	PLATE	1		
10	T216525	PLATE	1		
11	AT219940	ISOLATOR	4		
12	14M7274	NUT	8		M10
13	19M7402	CAP SCREW	4		M10 X 25
14	19M7881	SCREW	1		M8 X 20
15	19M7938	CAP SCREW	4		M10 X 20
16	19M8528	SCREW	4		M10 X 55
17	24M7101	WASHER	4		11 X 34 X 3 MM
18	24M7238	WASHER	4		8.700 X 17 X 2 MM
19	21M7291	SCREW	5		M8 X 20
20	21M7292	SCREW	4		M6 X 16
21	R117892	NUT	2		
22	24H1881	WASHER	4		
23	T210623	COVER	1		
24	T210624	COVER	1		
25	T216833	COVER	1		
26	**AT313370**	**KIT**	**1**		**(WHOLE GOODS)**

STD STEERING COLUMN
VOLANT ET COLONNE D'INCLINAISON
VOLANTE DE LA DIRECCION Y COLUMNA INCLINABLE

TX1015716 -UN-06DEC06

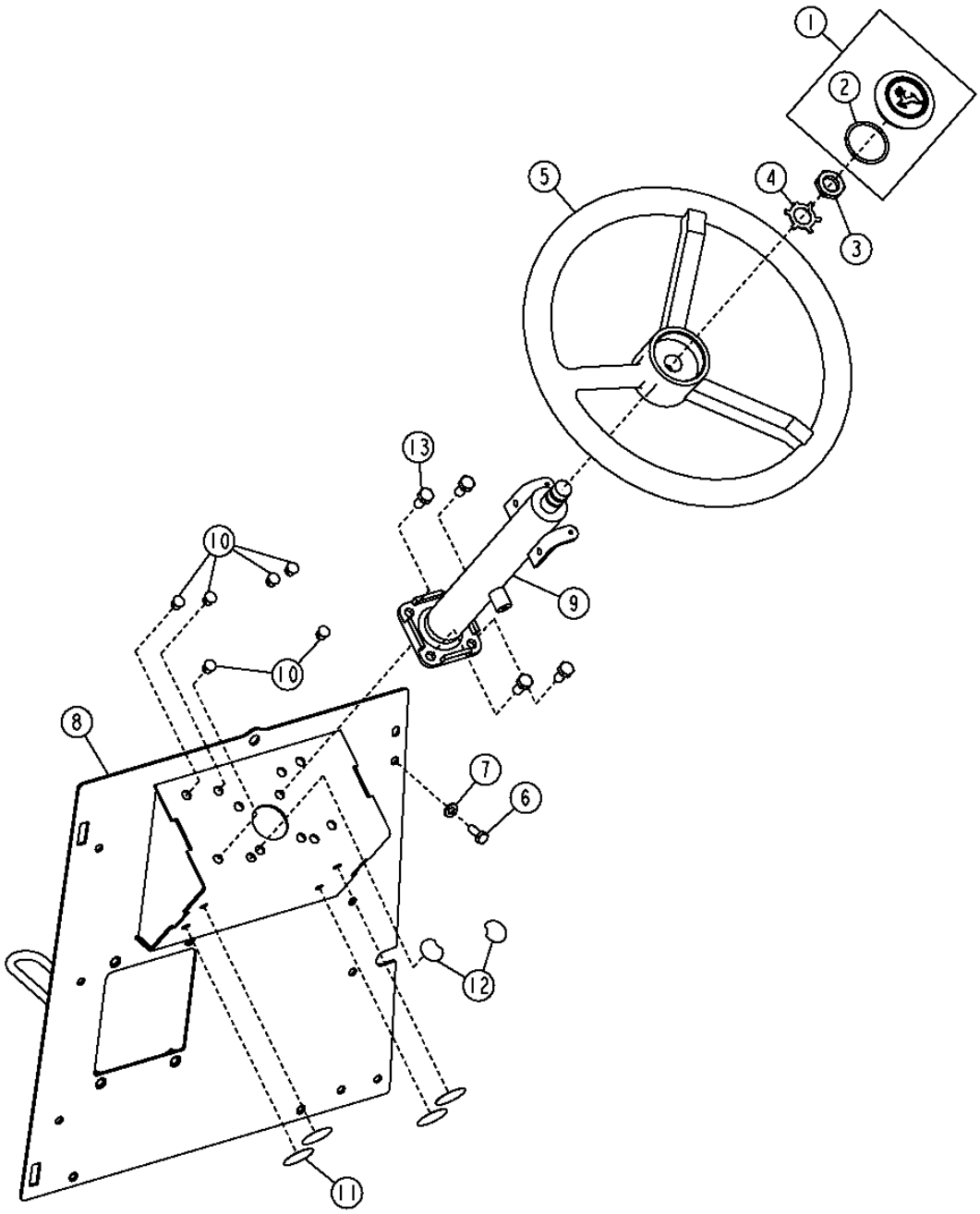

TX1015716

STD STEERING COLUMN
VOLANT ET COLONNE D'INCLINAISON
VOLANTE DE LA DIRECCION Y COLUMNA INCLINABLE

KEY	*PART NO.*	*PART NAME*	*QTY.*	*SERIAL NO.*	*REMARKS*
1	AL155227	COVER	1		
2	B3690R	O-RING	1		
3	T13630	NUT	1		
4	T17148	LOCK WASHER	1		
5	AT139694	STEERING WHEEL	1		
6	19M7881	SCREW	1		M8 X 20
7	24M7238	WASHER	1		8.700 X 17 X 2 MM
8	AT314030	SUPPORT	1		
9	AT307345	STEERING COLUMN	1		
10	H113924	PLUG	1		
11	T186793	LABEL	4		
12	T230236	LABEL	2		
13	19M7938	CAP SCREW	4		M10 X 20

STEERING HYDRAULICS (W/ MFWD)
CIRCUIT HYDRAULIQUE DE DIRECTION (W/ MFWD)
SISTEMA HIDRAULICO DE DIRECCION (W/ MFWD)

TX1015693 -UN-28DEC06

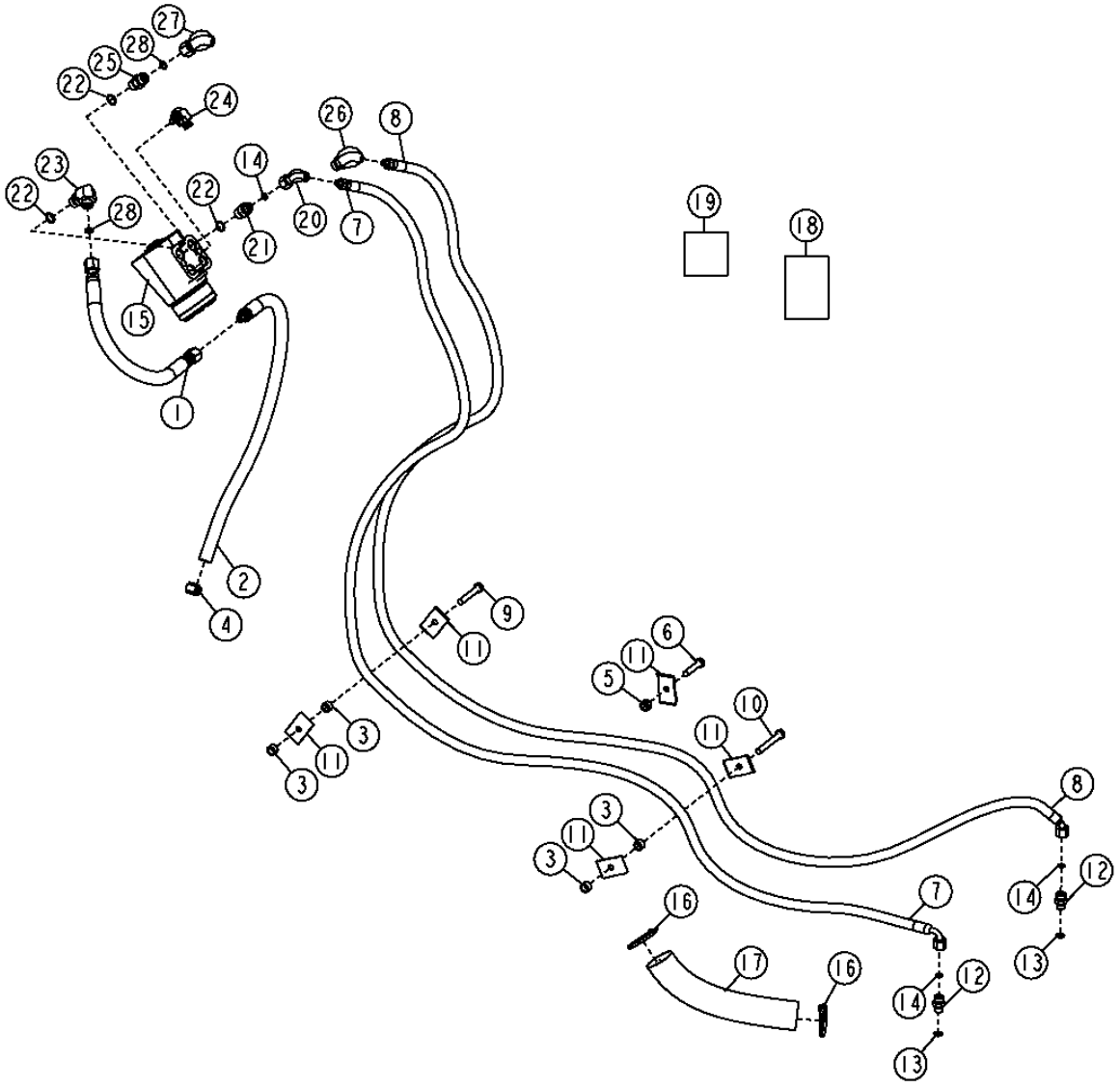

TX1015693

STEERING HYDRAULICS (WITH MFWD)
CIRCUIT HYDRAULIQUE DE DIRECTION (WITH MFWD)
SISTEMA HIDRAULICO DE DIRECCION (WITH MFWD)

KEY	PART NO.	PART NAME	QTY.	SERIAL NO.	REMARKS
1	AT101779	HYDRAULIC HOSE - FABRICATE	1		13/16" X 445 MM (17-1/2") X 13/16"
2	AT324031	HYDRAULIC HOSE	1		
3	28H3421	SPACER	4		
4	TY22464	CLAMP	1		
5	T166773	WASHER	1		
6	19M8600	CAP SCREW	1		M10 X 50
7	AT324158	HYDRAULIC HOSE - FABRICATE	1		
8	AT324159	HYDRAULIC HOSE - FABRICATE	1		
9	19M7742	CAP SCREW	1		M10 X 65
10	19M8081	CAP SCREW	1		M10 X 80
11	R46919	HALF CLAMP	5		
12	38H1160	ADAPTER FITTING	1		
13	R26448	O-RING	1		
14	T77613	O-RING	2		
15	AT318271	MANUAL HYDRAULIC VALVE	1		
	AT316249	SEAL KIT	1		
16	R44302	TIE BAND	4		
17	.....	HOSE GUARD	1		(MAKE FROM T78606) (CTL) 254MM (10")
18	T191425	LABEL	1		HOSE
19	T184320	LABEL	1		HOSE
20	AT195201	ELBOW FITTING	1		
21	38H1171	ADAPTER FITTING	1		
22	R26375	O-RING	1		
23	38H1005	ELBOW FITTING	1		
24	AT188010	ELBOW FITTING	1		
25	38H1161	ADAPTER FITTING	1		
26	AT195202	ELBOW FITTING	1		
27	AT195203	ELBOW FITTING	1		
28	T77857	O-RING	1		
29	AT193365	KIT	1		STC™REPAIR (-06)
	AT193366	KIT	1		STC™REPAIR (-08)

STEERING HYDRAULICS (WITHOUT MFWD)
CIRCUIT HYDRAULIQUE DE DIRECTION (WITHOUT MFWD)
SISTEMA HIDRAULICO DE DIRECCION (WITHOUT MFWD)

TX1016287 -UN-18DEC06

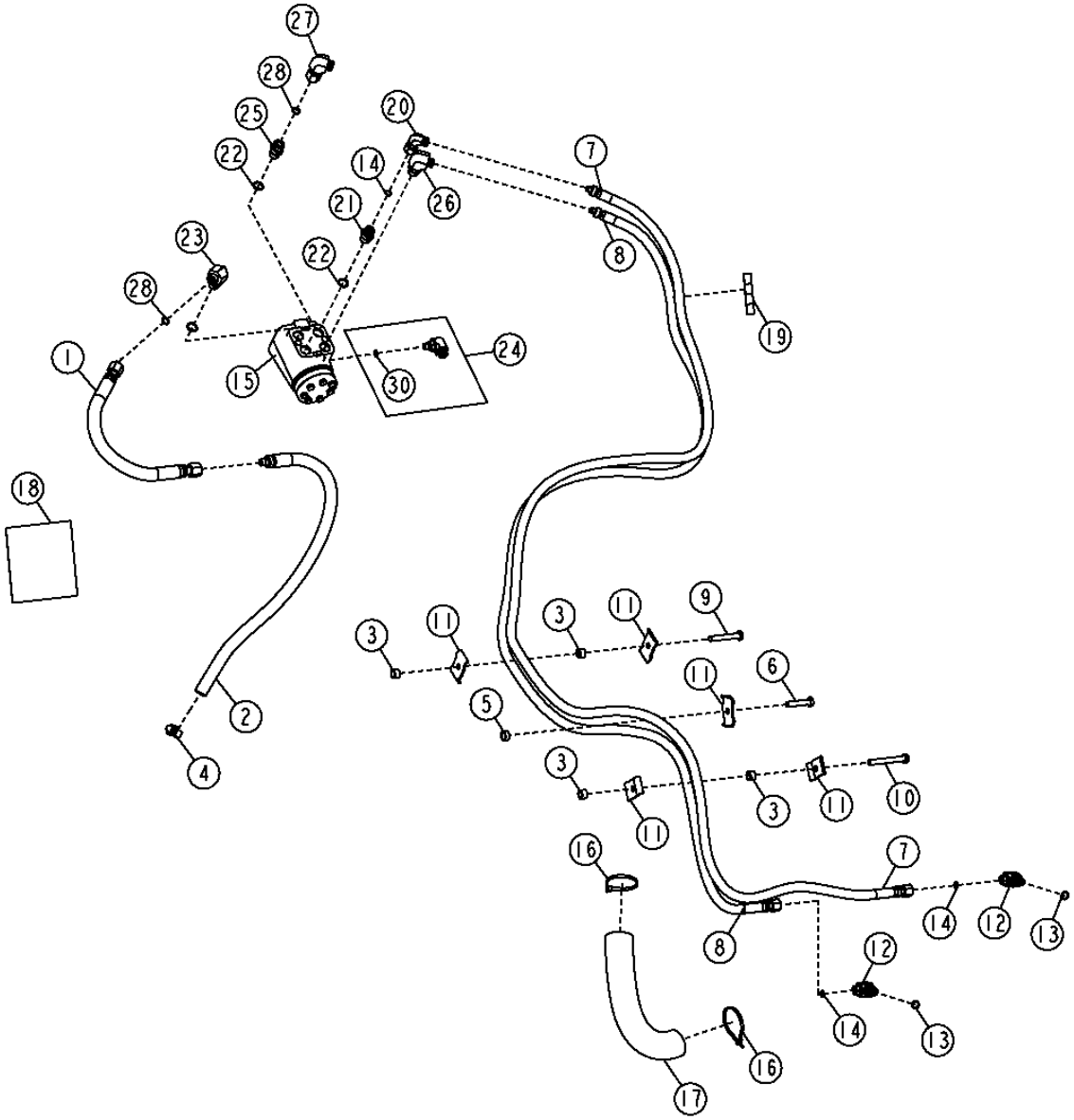

THIS PARTS LISTING IS CONTINUED

STEERING HYDRAULICS (WITHOUT MFWD)
CIRCUIT HYDRAULIQUE DE DIRECTION (WITHOUT MFWD)
SISTEMA HIDRAULICO DE DIRECCION (WITHOUT MFWD)

KEY	PART NO.	PART NAME	QTY.	SERIAL NO.	REMARKS
1	AT101779	HYDRAULIC HOSE - FABRICATE	1		
2	AT324031	HYDRAULIC HOSE	1		
3	28H3421	SPACER	4		
4	TY22464	CLAMP	1		
5	T166773	WASHER	1		
6	19M8600	CAP SCREW	1		M10 X 50
7	AT324160	HYDRAULIC HOSE - FABRICATE	1		
8	AT324157	HYDRAULIC HOSE - FABRICATE	1		
9	19M7742	CAP SCREW	1		M10 X 65
10	19M8081	CAP SCREW	1		M10 X 80
11	R46919	HALF CLAMP	5		
12	38H1004	ELBOW FITTING	1		
13	R26448	O-RING	1		
14	T77613	O-RING	2		
15	AT318271	MANUAL HYDRAULIC VALVE	1		
	AT316249	SEAL KIT	1		
16	R44302	TIE BAND	4		
17	.....	HOSE GUARD	1		(MAKE FROM T78606) (CTL) 254MM (10")
18	T191425	LABEL	1		HOSE
19	T184320	LABEL	1		HOSE
20	AT195201	ELBOW FITTING	1		
21	38H1171	ADAPTER FITTING	1		
22	R26375	O-RING	1		
23	38H1005	ELBOW FITTING	1		
24	AT188010	ELBOW FITTING	1		
25	38H1161	ADAPTER FITTING	1		
26	AT195202	ELBOW FITTING	1		
27	AT195203	ELBOW FITTING	1		
28	T77857	O-RING	1		
29	AT193365	KIT	1		STC™ REPAIR (-06) (NOT ILLISTRATED)
	AT193366	KIT	1		STC™ REPAIR (-08) (NOT ILLISTRATED)
30	R28782	O-RING	1		

SERVICE BRAKE CLUTCH DISC AND DISC CARRIER
FREIN DE SERVICE/DISQUE D'EMBRAYAGE/PORTE-DISQUE
FRENO DE SERVICIO/DISCO DE EMBRAGUE/PORTADISCO

TX1016729 -UN-18DEC06

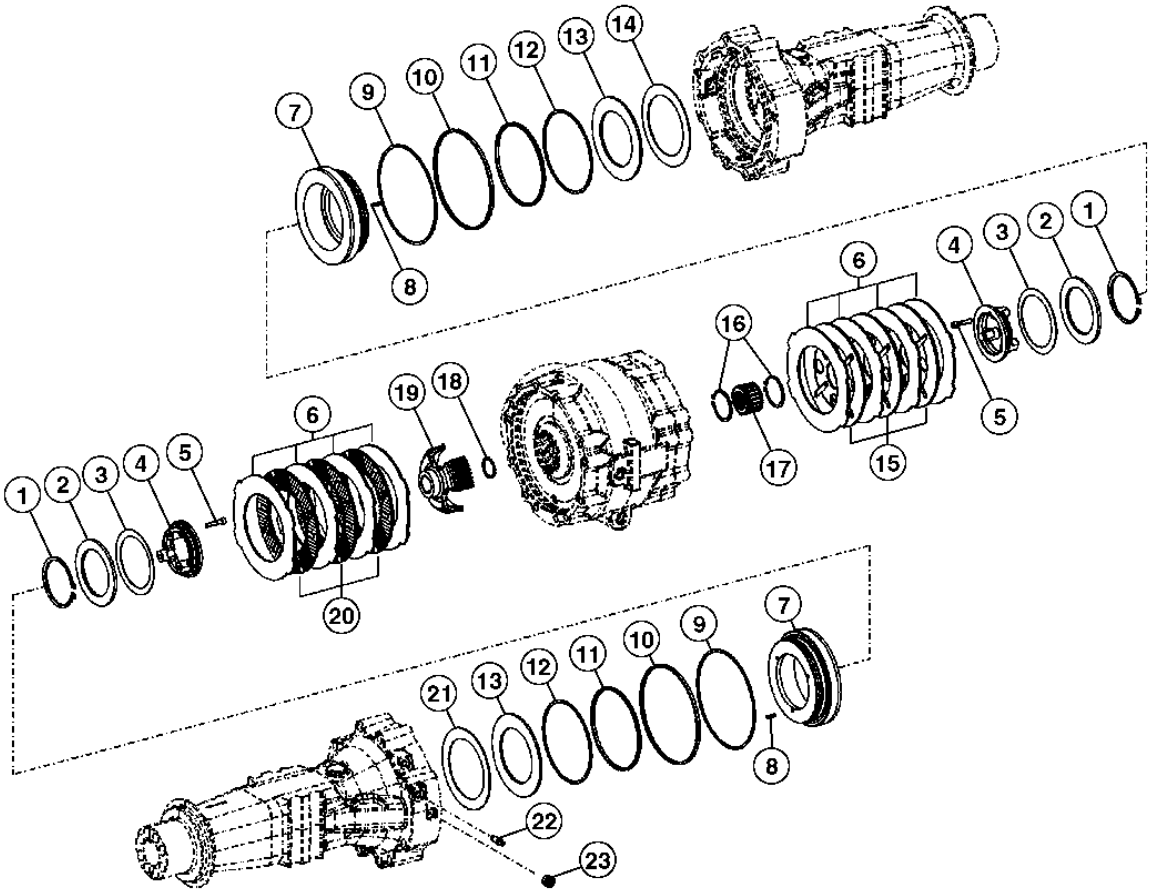

TX1016729

THIS PARTS LISTING IS CONTINUED

SERVICE BRAKE CLUTCH DISC AND DISC CARRIER
FREIN DE SERVICE/DISQUE D'EMBRAYAGE/PORTE-DISQUE
FRENO DE SERVICIO/DISCO DE EMBRAGUE/PORTADISCO

KEY	PART NO.	PART NAME	QTY.	SERIAL NO.	REMARKS
1	T228896	SNAP RING	2		
2	T228909	WASHER	2		
3	T228898	DISK SPRING	2		
4	T228728	SNAP RING	2		
5	19M8300	SCREW	6		M8 X 40
6	T228727	PLATE	6		
7	T228730	PISTON	2		
8	T228895	SPRING PIN	8		
9	T159403	BACK-UP RING	2		
10	T159402	SEAL	2		
11	T218485	SEAL	2		
12	T218483	BACK-UP RING	2		
13	T228910	WASHER	2		
14	T228912	DISK SPRING	2		
15	AT339059	BRAKE DISK	3		
16	T197832	SNAP RING	2		
17	T228729	DISK	1		
18	T228911	SNAP RING	1		
19	T228897	DISK	1		
20	AT339543	BRAKE DISK	3		
21	T228912	DISK SPRING	2		
22	T162517	BLEED VALVE	2		
23	T159565	PLUG	2		

BRAKE VALVE AND PEDALS
SOUPAPE ET PEDALES DES FREINS
VALVULA Y PEDLES DE FRENO

TX1013066 -UN-16NOV06

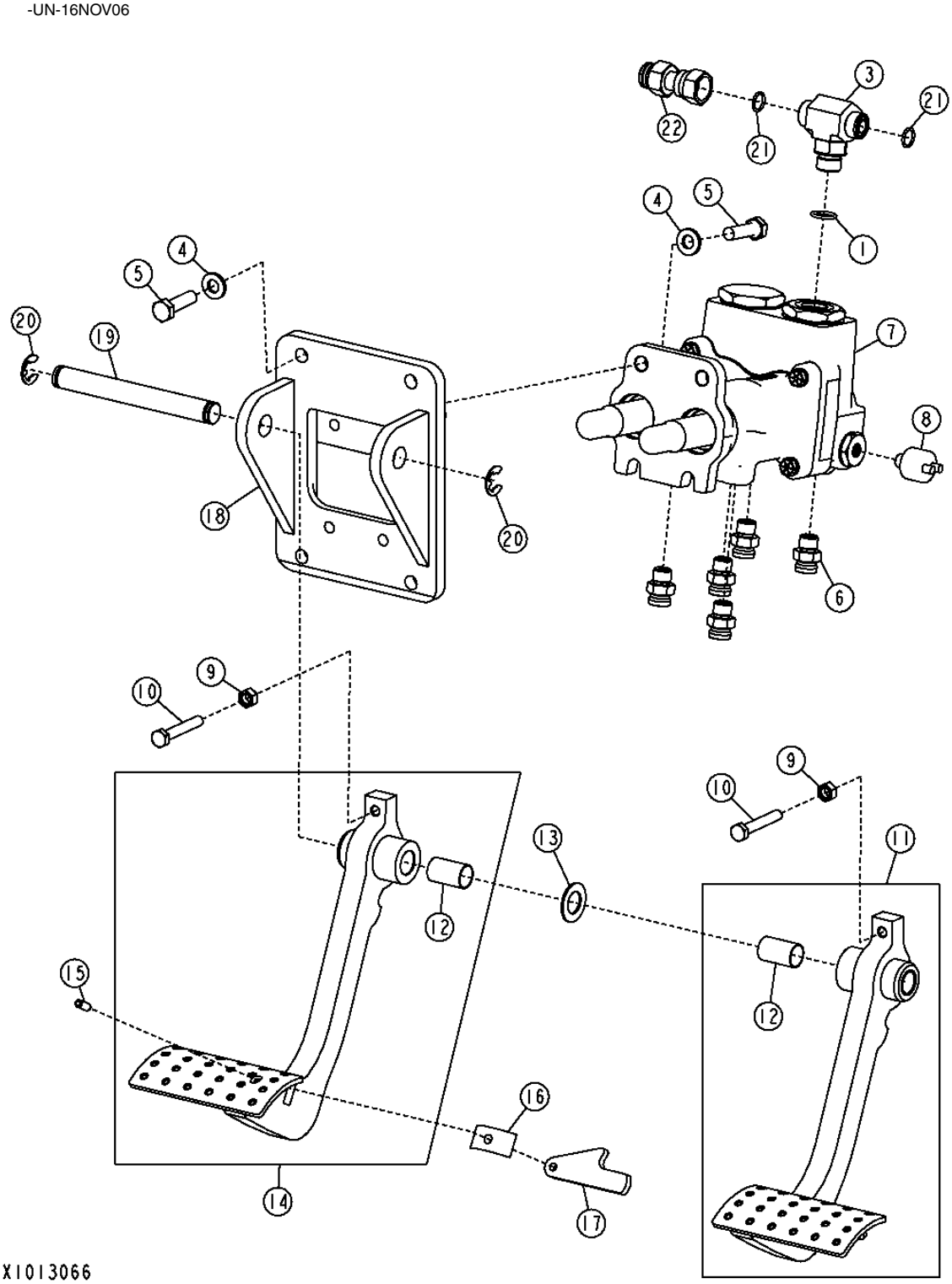

THIS PARTS LISTING IS CONTINUED

BRAKE VALVE AND PEDALS
SOUPAPE ET PEDALES DES FREINS
VALVULA Y PEDLES DE FRENO

KEY	*PART NO.*	*PART NAME*	*QTY.*	*SERIAL NO.*	*REMARKS*
1	R26375	O-RING	1		
3	38H1017	TEE FITTING	1		
4	24M7239	WASHER	8		
5	19M7550	CAP SCREW	8		M10 X 35
6	AT187666	ADAPTER FITTING	5		
	AT193365	KIT	1		
7	AT304761	MANUAL HYDRAULIC VALVE	1		
8	R32548	PRESSURE SWITCH	2		(BRAKE LIGHT)
9	14M7273	NUT	2		M8
10	19M7164	CAP SCREW	2		M8 X 50
11	AT336436	PEDAL	1		RH
12	B177R	BUSHING	2		
13	24H1381	WASHER	2		
14	AT336397	PEDAL	1		LH
15	34M7197	SPRING PIN	1		6 X 16 MM
16	R50034	LEAF SPRING	1		
17	R221354	ARM	1		
18	T227394	HOUSING	1		
19	T165282	PIN FASTENER	1		
20	F2863R	SNAP RING	2		
21	T77857	O-RING	2		
22	AT280459	ADAPTER FITTING	1		TO RESERVOIR

BRAKE VALVE ASSEMBLY
CLAPET DE FREIN
CONJUNTO DE VALVULA DE FRENOS

TX1007055 -UN-27APR06

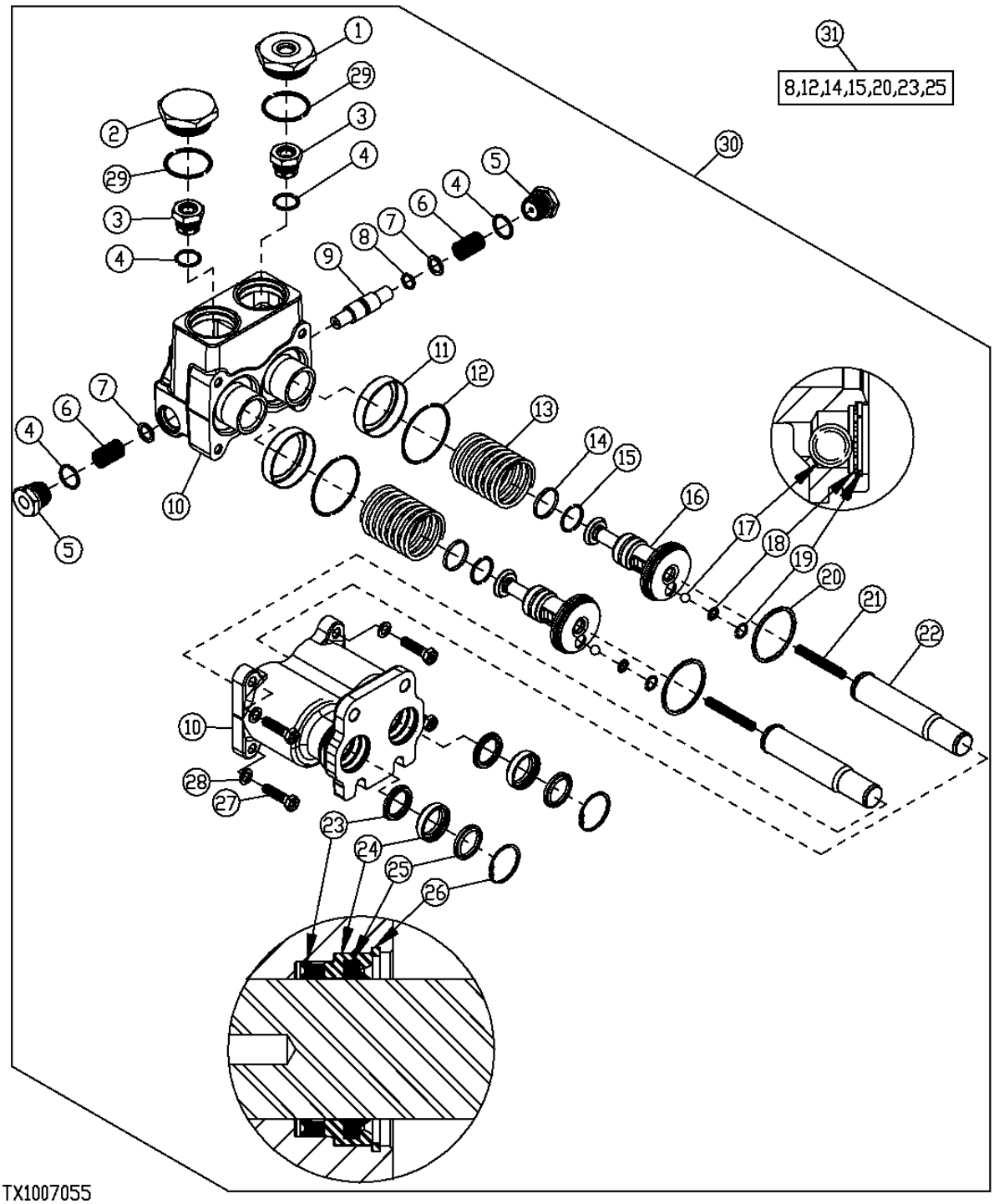

THIS PARTS LISTING IS CONTINUED

BRAKE VALVE ASSEMBLY
CLAPET DE FREIN
CONJUNTO DE VALVULA DE FRENOS

KEY	PART NO.	PART NAME	QTY.	SERIAL NO.	REMARKS
1	T203385	REDUCER	1		
2	T203374	FITTING PLUG	1		
3	AT188343	CHECK VALVE	2		
4	R26906	O-RING	4		
5	T185926	PLUG	2		
6	T183274	SPRING	2		
7	T183273	WASHER	2		
8	.....	RING	2		
9	T183272	PISTON	1		
10	.....	HOUSING	1		(ORDER AT304761)
11	T183271	RETAINER	2		
12	.....	O-RING	2		
13	T183270	SPRING	2		
14	.....	SEAL	2		
15	.....	RING	2		
16	T183276	PISTON	2		
17	R26552	BALL	2		
18	T185078	LOCK WASHER	2		
19	R48523	SNAP RING	2		
20	T183362	PISTON RING	2		
21	T183269	SPRING	2		
22	AT192151	PUSH ROD	2		
23	.....	SEAL	2		
24	T183357	RETAINER	2		
25	.....	SEAL	2		
26	M41029	SNAP RING	2		
27	19H1849	CAP SCREW	4		5/16" X 1-1/4"
28	T183310	WASHER	4		
29	U13639	O-RING	2		
30	AT304761	MANUAL HYDRAULIC VALVE	1		
31	AT192419	KIT	1		(BRAKE VALVE OVERHAUL) (REQUIRES 1 KIT PER VALVE)

SERVICE BRAKE HYDRAULICS
CIRCUIT HYDRAULIQUE DE FREINS DE SERVICE
SISTEMA HIDRAULICO DE FRENOS DE SERVICIO

TX1005714 -UN-03APR06

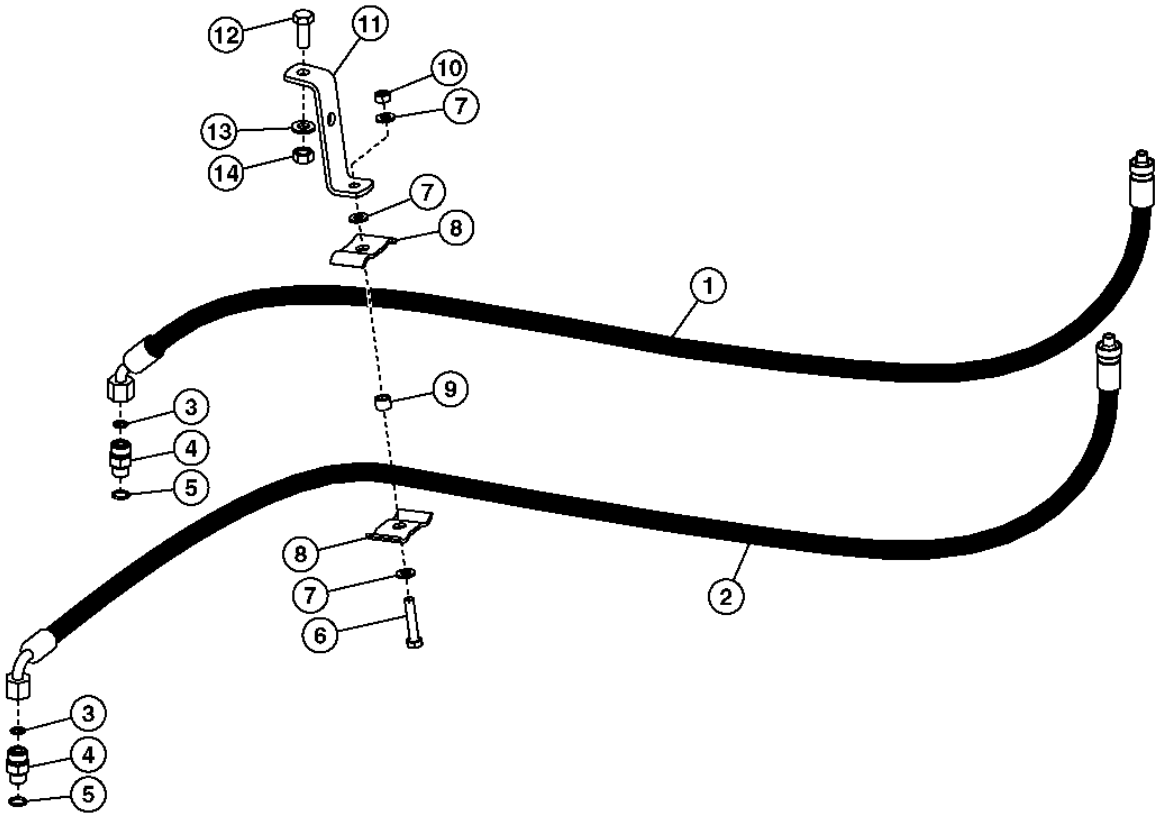

TX1005714

SERVICE BRAKE HYDRAULICS
CIRCUIT HYDRAULIQUE DE FREINS DE SERVICE
SISTEMA HIDRAULICO DE FRENOS DE SERVICIO

KEY	*PART NO.*	*PART NAME*	*QTY.*	*SERIAL NO.*	*REMARKS*
1	AT316689	HYDRAULIC HOSE - FABRICATE	1		TO BRAKE VALVE
2	AT316690	HYDRAULIC HOSE - FABRICATE	1		TO BRAKE VALVE
3	T77613	O-RING	2		
4	38H1160	ADAPTER FITTING	2		TO REAR AXLE
5	R26448	O-RING	2		
6	19M7922	CAP SCREW	1		M8 X 40
7	24M7238	WASHER	3		
8	R46919	HALF CLAMP	2		
9	T186859	WASHER	1		
10	14M7273	NUT	1		M8
11	T158245	STRAP	1		
12	19M7402	CAP SCREW	1		M10 X 25
13	24M7239	WASHER	1		
14	14M7274	NUT	1		M10

BRAKE VALVE BOOST PLUMBING (CAB)
CONDUITES HYDRAULIQUES SURALIMENTATION CLAPET DE FREIN
TUBERIA DE AUMENTO DE VALVULA DE FRENOS

TX1015731 -UN-06DEC06

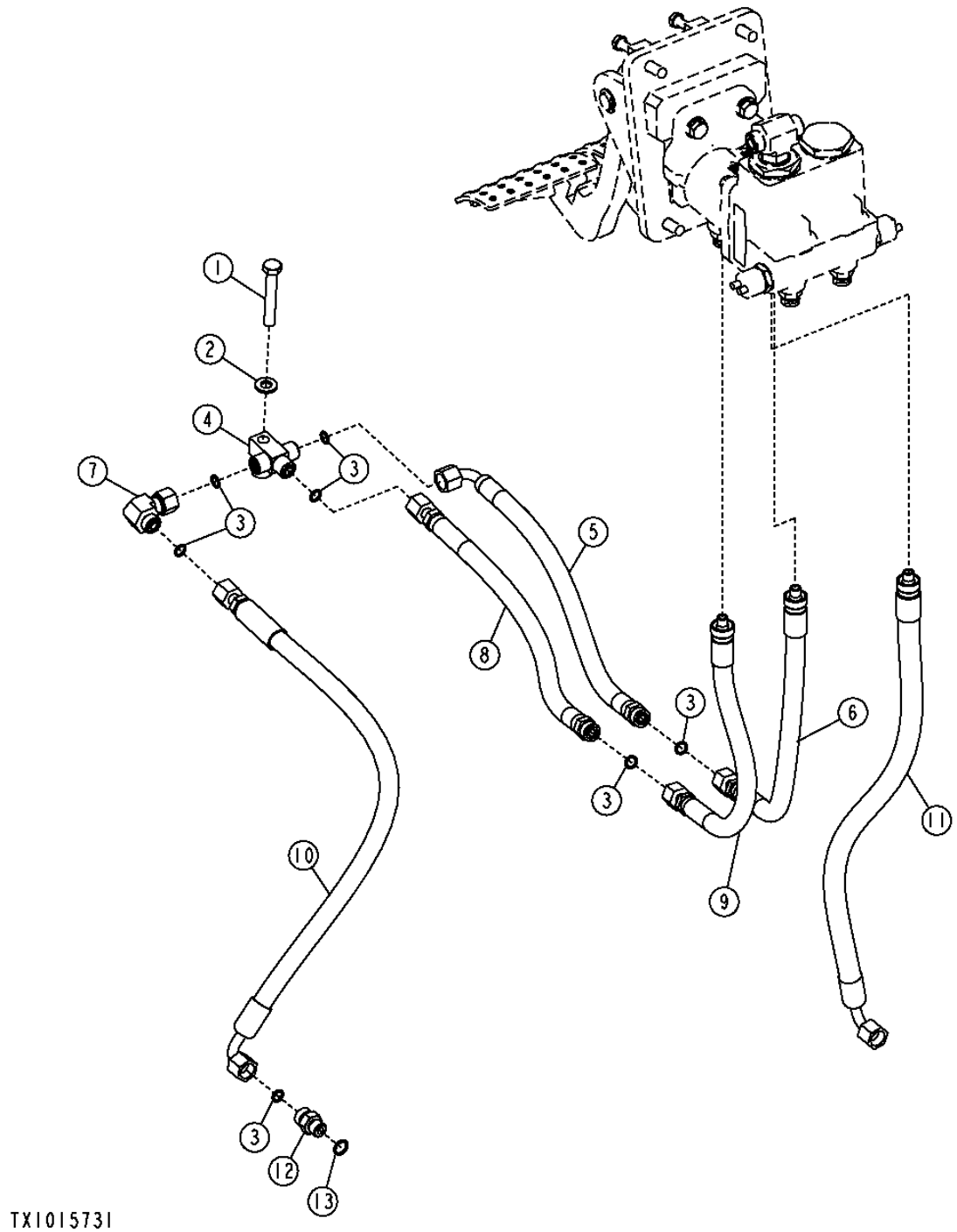

BRAKE VALVE BOOST PLUMBING (CAB)
CONDUITES HYDRAULIQUES SURALIMENTATION CLAPET FREIN
TUBERIA DE AUMENTO DE VALVULA DE FRENOS

KEY	*PART NO.*	*PART NAME*	*QTY.*	*SERIAL NO.*	*REMARKS*
1	19M7742	CAP SCREW	1		M10 X 65
2	24M7239	WASHER	1		10.700 X 21 X 2.500 MM
3	T77613	O-RING	7		
4	T212039	TEE FITTING	1		
5	AT194417	HYDRAULIC HOSE - FABRICATE	1		11/16" X 508 MM (20") X 11/16"
6	AT194412	HYDRAULIC HOSE - FABRICATE	1		
7	38H1094	ELBOW FITTING	1		
8	AT194416	HYDRAULIC HOSE - FABRICATE	1		11/16" X 465 MM (18-1/4") X 11/16"
9	AT318113	HYDRAULIC HOSE - FABRICATE	1		
10	AT322270	HYDRAULIC HOSE - FABRICATE	1		
11	AT322268	HYDRAULIC HOSE - FABRICATE	1		
12	38H1160	ADAPTER FITTING	1		
13	R26286	O-RING	1		

PARKING BRAKE PLUMBING
FREIN DE STATIONNEMENT
FRENO DE ESTACIONAMIENTO

TX1015741 -UN-05DEC06

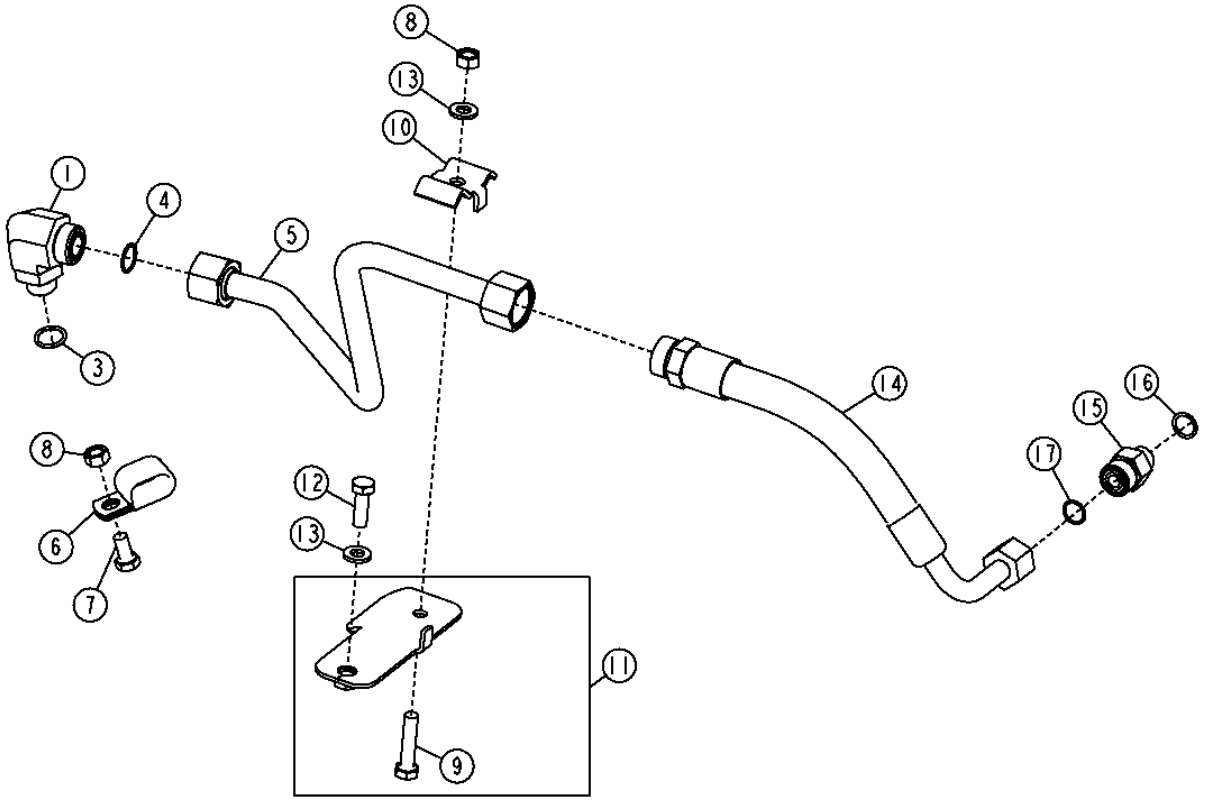

TX1015741

PARKING BRAKE PLUMBING
FREIN DE STATIONNEMENT
FRENO DE ESTACIONAMIENTO

KEY	*PART NO.*	*PART NAME*	*QTY.*	*SERIAL NO.*	*REMARKS*
1	38H1014	ELBOW FITTING	1		
3	R26906	O-RING	1		
4	T77858	O-RING	1		
5	AT336341	TUBE	1		
6	T32854	CLAMP	1		
7	19M7938	CAP SCREW	1		M10 X 20
8	14M7274	NUT	2		M10
9	19M7572	CAP SCREW	1		M10 X 45
10	T160554	CLAMP	1		
11	AT324452	HOSE SUPPORT	1		
12	19M7662	CAP SCREW	1		M10 X 30
13	24M7239	WASHER	2		10.700 X 21 X 2.500 MM
14	AT316681	HYDRAULIC HOSE - FABRICATE	1		
15	38H1317	FITTING	1		
16	R26375	O-RING	1		
17	T77932	O-RING	1		

PARKING BRAKE HOUSING AND CLUTCH DISC
FREIN DE STATIONNEMENT/CARTER/DISQUE D'EMBRAYAGE
FRENO DE ESTACIONAMIENTO/CARCASA/DISCO DE EMBRAGUE

TX1016766 -UN-18DEC06

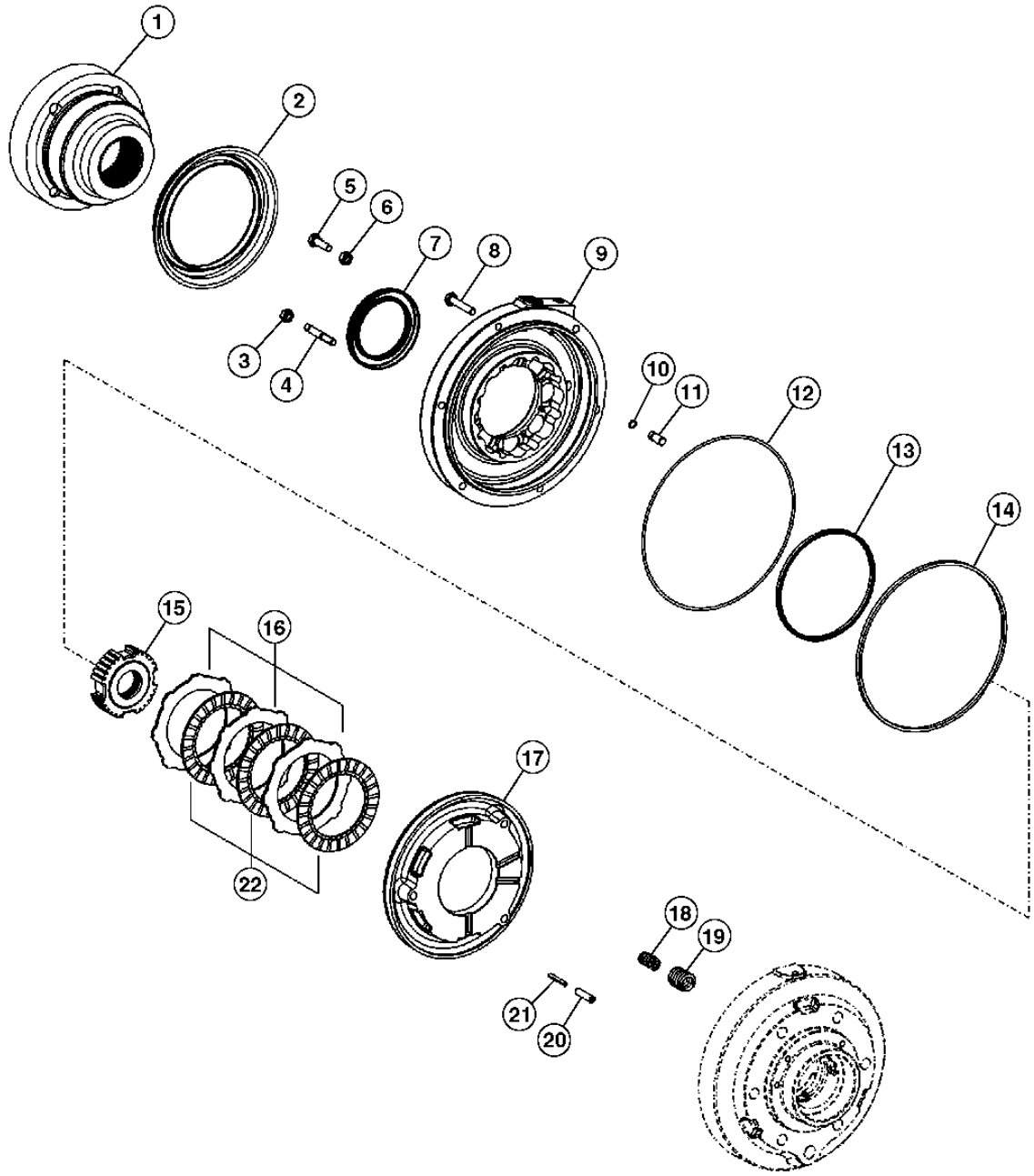

TX1016766

THIS PARTS LISTING IS CONTINUED

PARKING BRAKE HOUSING AND CLUTCH DISC
FREIN DE STATIONNEMENT/CARTER/DISQUE D'EMBRAYAGE
FRENO DE ESTACIONAMIENTO/CARCASA/DISCO DE EMBRAGUE

KEY	*PART NO.*	*PART NAME*	*QTY.*	*SERIAL NO.*	*REMARKS*
1	T218489	FLANGE	1		
2	T228722	GUARD	1		
3	T228995	NUT	2		
4	T228994	STUD	2		
5	T164922	SCREW	2		
6	T159502	LOCK NUT	2		
7	T218478	SEAL	1		
8	19M7181	CAP SCREW	4		M10 X 55
9	T218493	HOUSING	1		
10	T159487	O-RING	2		
11	T228996	PIN	2		
12	T218785	SEAL	1		
13	T218782	SEAL	1		
14	T218783	SEAL	1		
15	T218488	HUB	1		
16	T159474	PLATE	3		
17	T228997	PISTON	1		
18	T164917	COMPRESSION SPRING	14		
19	T164916	COMPRESSION SPRING	14		
20	T159359	SPRING PIN	3		
21	T164911	PIN	3		
22	T159475	CLUTCH DISK	3		

LOADER ARM SERVICE LOCK
VERROUILLAGE D'ENTRETIEN DE BRAS DE CHARGEUR
BLOQUEO DE SERVICIO DE BRAZO DE CARGADORA

TX1016038 -UN-29DEC06

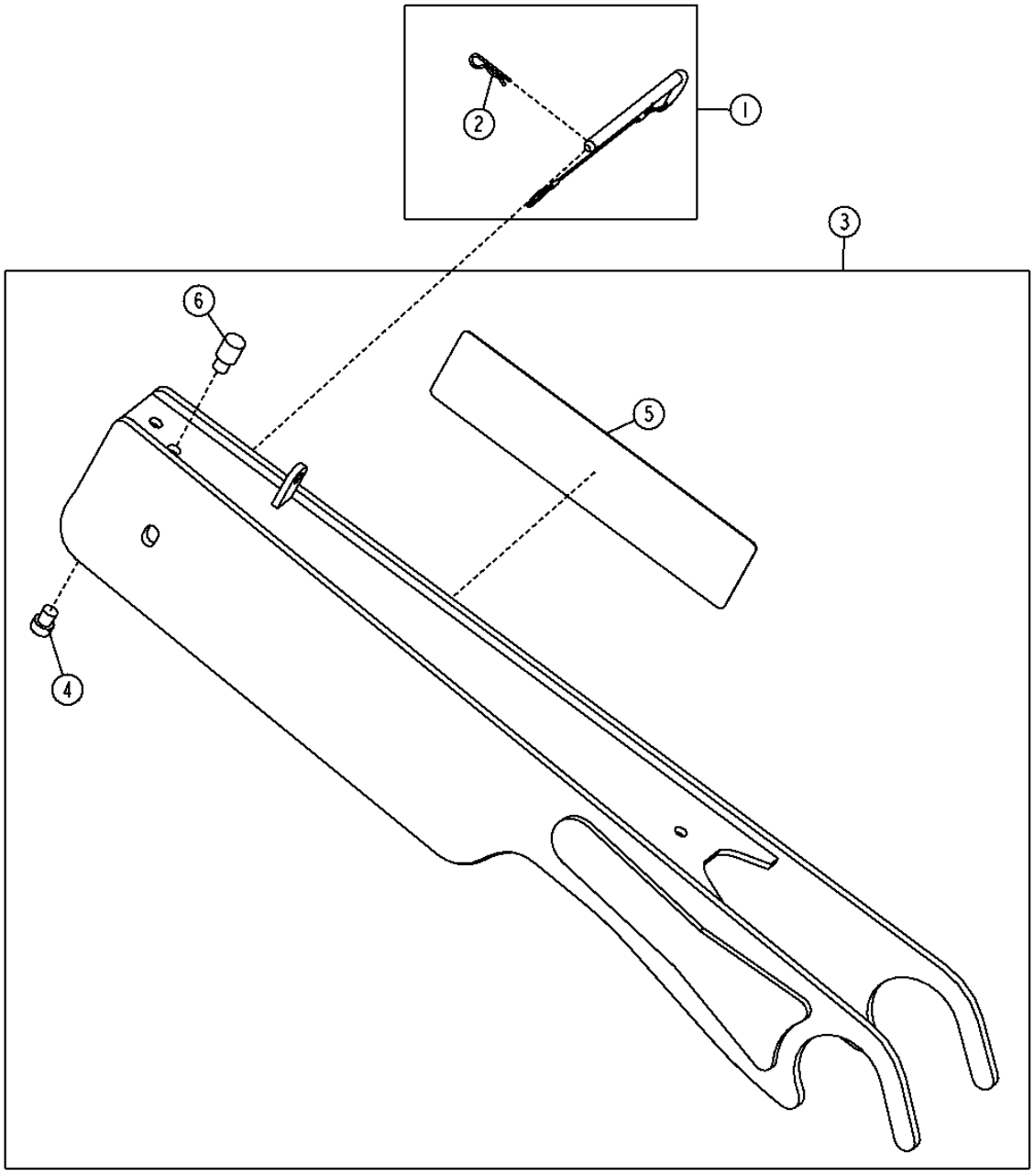

TX1016038

LOADER ARM SERVICE LOCK
VERROUILLAGE D'ENTRETIEN DE BRAS DE CHARGEUR
BLOQUEO DE SERVICIO DE BRAZO DE CARGADORA

KEY	*PART NO.*	*PART NAME*	*QTY.*	*SERIAL NO.*	*REMARKS*
1	AT195244	PIN FASTENER	1		
2	J16931	PIN	1		
3	AT337253	ARM	1		
4	T14083	BUMPER	1		
5	T185902	LABEL	1		
6	T211143	BUMPER	1		SERVICE LOCK

LICENSE PLATE LAMP AND BRACKET
PLAQUE MINERALOGIQUE, ECLAIRAGE ET SUPPORT
LUZ DE MATRICULA Y SOPORTE

TX1020702 -UN-21MAR07

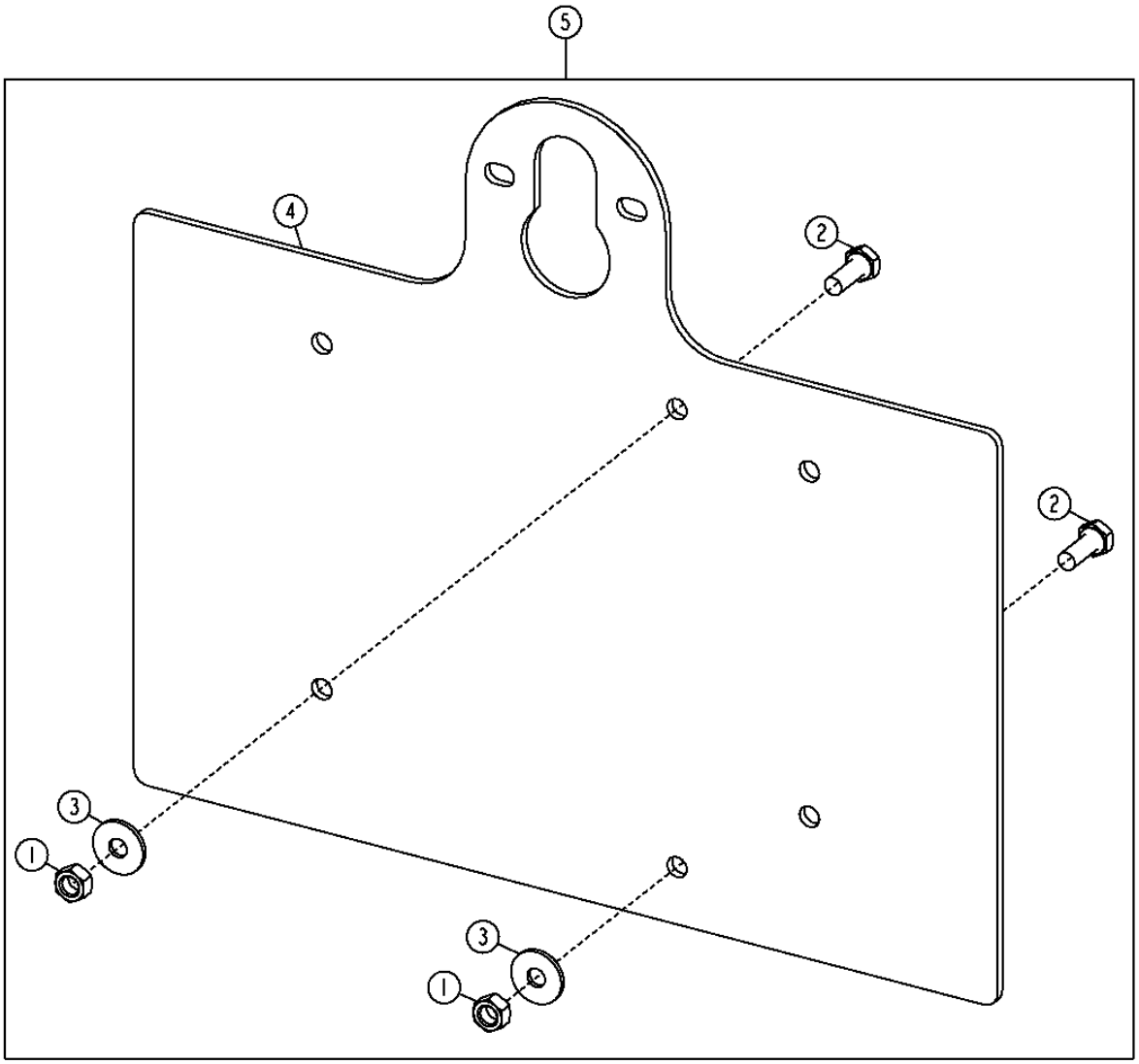

TX1020702

LICENSE PLATE LAMP AND BRACKET
PLAQUE MINERALOGIQUE, ECLAIRAGE ET SUPPORT
LUZ DE MATRICULA Y SOPORTE

KEY	*PART NO.*	*PART NAME*	*QTY.*	*SERIAL NO.*	*REMARKS*
1	14M7272	NUT	2		M6
2	19M8425	CAP SCREW	2		M6 X 16
3	24M7139	WASHER	2		
4	.....	PLATE	1		
5	AT330638	MOUNTING PARTS	1		

TRADEMARKS AND LABELS
MARQUES DEPOSEES ET ETIQUETTES
MARCAS REGISTRADAS Y ETIQUETAS

TX1020379 -UN-28MAR07

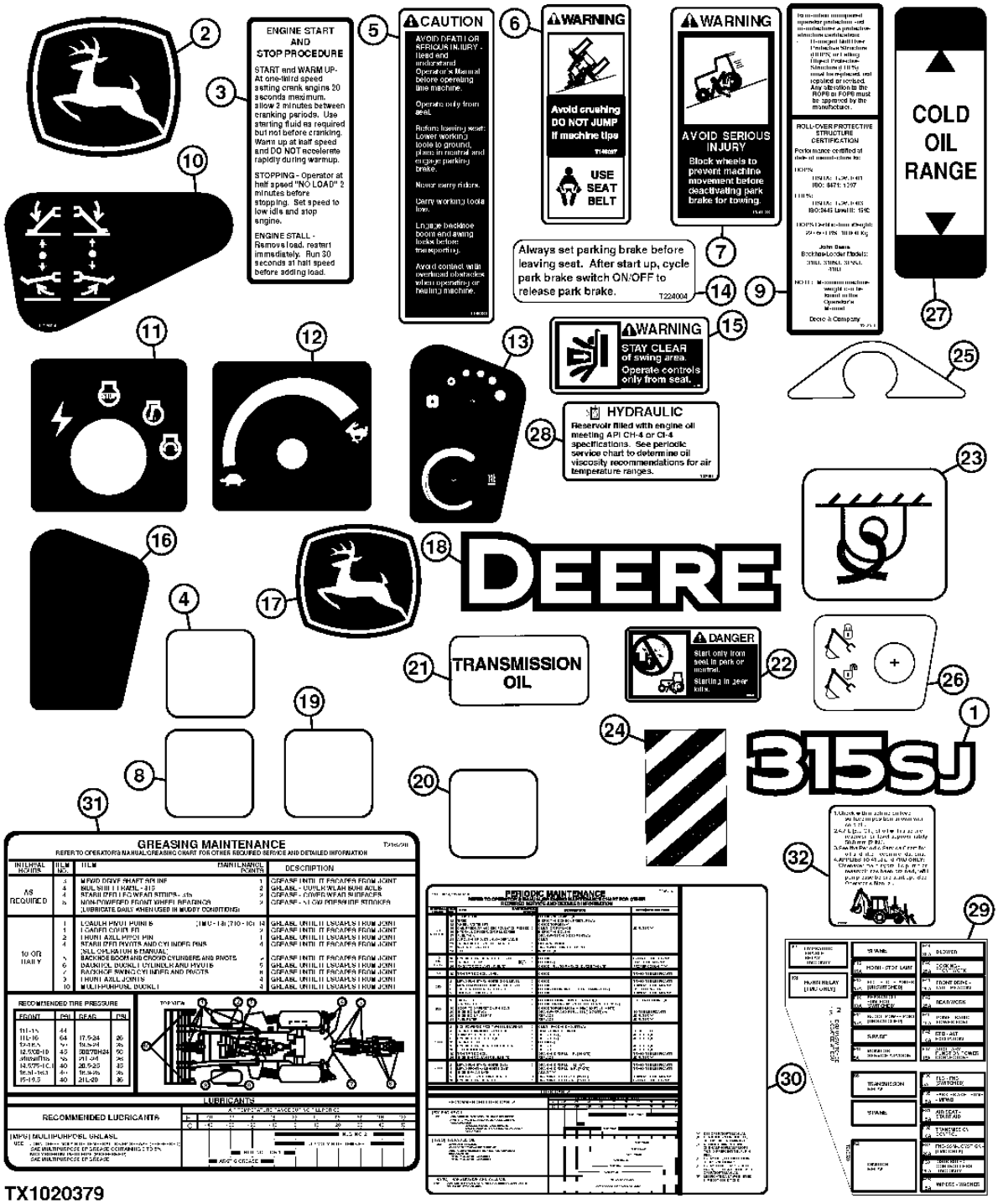

TRADEMARKS AND LABELS
MARQUES DEPOSEES ET ETIQUETES
MARCAS REGISTRADAS Y ETIQUETAS

KEY	PART NO.	PART NAME	QTY.	SERIAL NO.	REMARKS
1	T216711	LABEL	1		315SJ
2	JD5717	LABEL	2		LEAPING DEER
3	T131938	LABEL	1		ENGINE START/STOP
4	T137790	COVER	2		REFLECTIVE (YELLOW)
5	T146080	LABEL	1		CAUTION (READ OPERATOR'S MANUAL)
6	T146097	LABEL	1		WARNING (SEAT BELT)
7	T159028	LABEL	1		WARNING (PARK BRAKE)
8	T186793	LABEL	19		GRAY CIRCLE
9	T218011	LABEL	1		ROPS
10	T218014	LABEL	2		STABILIZER CONTROL
11	T218620	LABEL	1		IGNITION
12	T218622	LABEL	1		RED (REFLECTIVE)
13	T218623	LABEL	1		ENGINE START/STOP
14	T224004	LABEL	1		WARNING (PARK BRAKE)
15	T183768	LABEL	2		WARNING
16	T218624	LABEL	1		BLACK
17	JD5761	LABEL	1		LEAPING DEER (WINDOW)
18	JD5836	LABEL	2		DEERE (BOLD OUTLINE)
19	JD5920	REFLECTOR	2		RED (REFLECTIVE)
20	JD5933	REFLECTOR	1		REFLECTIVE (YELLOW)
21	T140311	LABEL	1		TRANSMISSION OIL
22	T146102	LABEL	4		BYPASS START
23	T153680	LABEL	4		TIE DOWN
24	T159815	LABEL	1		TRANSPORT
25	T161678	LABEL	1		PROTECTIVE
26	T185640	SERIAL NUMBER PLATE	1		BOOM LOCK (WITH HYDRAULIC PILOT)
27	T186123	LABEL	1		HYDRAULIC OIL RANGE
28	T207191	LABEL	1		HYDRAULIC RESERVOIR
29	T216528	LABEL	1		FUSE BLOCK
30	T216714	LABEL	2		PEROIDIC MAINTENANCE
31	T216720	LABEL	2		PERIODIC GREASING
32	T223060	LABEL	1		HYDRAULIC RESERVOIR

TRADEMARKS AND LABELS (FRENCH AND SPANISH)
MARQUES DEPOSEES ET ETIQUETTES (FRANCAIS ET ESPAGNOL)
MARCAS REGISTRADAS Y ETIQUETAS (FRANCES Y ESPANOL)

TX1017316 -UN-10JAN07

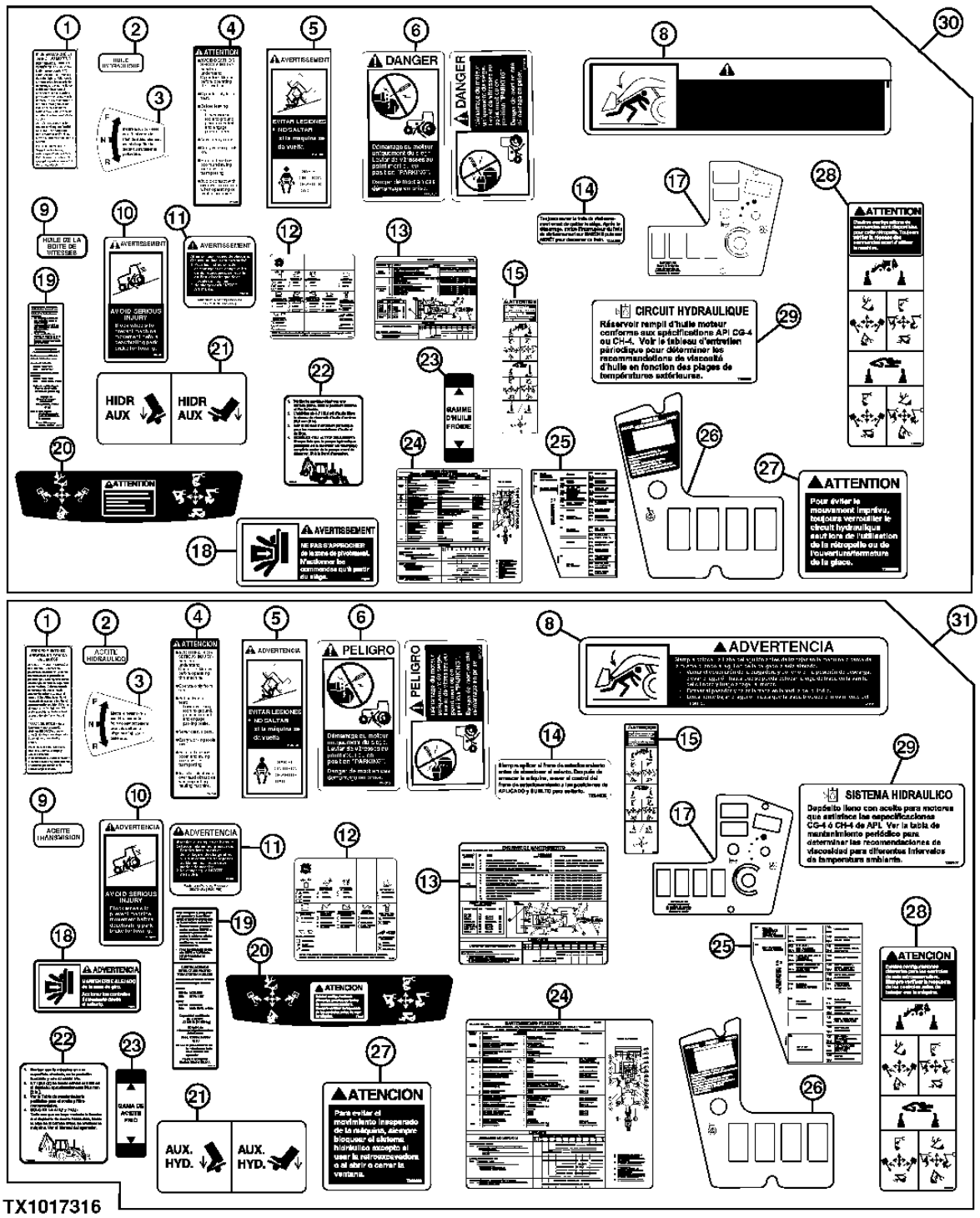

THIS PARTS LISTING IS CONTINUED

TRADEMARKS AND LABELS (FRENCH AND SPANISH)
MARQUES DEPOSEES ET ETIQUETTES (FRANCAIS ET ESPAGNOL)
MARCAS REGISTRADAS Y ETIQUETAS (FRANCES Y ESPANOL)

KEY	PART NO.	PART NAME	QTY.	SERIAL NO.	REMARKS
1	T139165	LABEL	1		ENGINE START AND STOP (FRENCH)
	T139167	LABEL	1		ENGINE START AND STOP (SPANISH)
2	T141093	LABEL	1		HYDRAULIC OIL (FRENCH)
	T141075	LABEL	1		HYDRAULIC OIL (SPANISH)
3	T141096	LABEL	1		DIRECTION CONTROL SWITCH (FRENCH)
	T141078	LABEL	1		DIRECTION CONTROL SWITCH (SPANISH)
4	T146095	SAFETY SIGN	1		CAUTION (READ OPERATOR'S MANUAL) (FRENCH)
	T146089	SAFETY SIGN	1		CAUTION (READ OPERATOR'S MANUAL) (SPANISH)
5	T146099	SAFETY SIGN	1		WARNING (SEAT BELT) (FRENCH)
	T146098	SAFETY SIGN	1		WARNING (SEAT BELT) (SPANISH)
6	T146104	LABEL	1		DANGER (BYPASS START) (FRENCH)
	T146106	LABEL	1		DANGER (BYPASS START) (SPANISH)
8	T152997	LABEL	1		WARNING (BOOM LOCK) (FRENCH)
	T152996	LABEL	1		WARNING (BOOM LOCK) (SPANISH)
9	T160761	LABEL	1		TRANSMISSION OIL (FRENCH)
	T160763	LABEL	1		TRANSMISSION OIL (SPANISH)
10	T160762	LABEL	1		WARNING (PARK BRAKE) (FRENCH)
	T160769	LABEL	1		WARNING (PARK BRAKE) (SPANISH)
11	T225375	LABEL	1		WARNING (ACCUMULATOR) (FRENCH)
	T225376	LABEL	1		WARNING (ACCUMULATOR) (SPANISH)
12	T221100	LABEL	1		BACKHOE SSM (FRENCH)
	T221099	LABEL	1		BACKHOE SSM (SPANISH)
13	T216722	LABEL	1		PERIODIC GREASING (FRENCH)
	T216721	LABEL	1		PERIODIC GREASING (FRENCH)
14	T224006	LABEL	1		SET PARK BRAKE (FRENCH)
	T224005	LABEL	1		SET PARK BRAKE (SPANISH)
15	T224017	LABEL	1		BACKHOE CONTROLS (FRENCH)
	T224015	LABEL	1		BACKHOE CONTROLS (SPANISH)
17	T185570	LABEL	1		INSTRUCTION (START) (RH) (FRENCH)
	T185548	LABEL	1		INSTRUCTION (START) (RH) (SPANISH)
18	T185571	LABEL	1		WARNING (STAY CLEAR) (FRENCH)
	T185549	LABEL	1		WARNING (STAY CLEAR) (SPANISH)
19	T218013	LABEL	1		ROPS (FRENCH)
	T218012	LABEL	1		ROPS (SPANISH)
20	T185577	LABEL	1		BACKHOE CONTROL (2 LEVER) (FRENCH)
	T185553	LABEL	1		BACKHOE CONTROL (2 LEVER) (SPANISH)
	T188018	LABEL	1		ATTENTION - BACKHOE CONTROL (2 LEVER) (SAE) (FRENCH)
	T188019	LABEL	1		ATTENTION - BACKHOE CONTROL (2 LEVER) (SAE) (SPANISH)
21	T185695	LABEL	1		FOOT PEDAL (FRENCH)
	T185696	LABEL	1		FOOT PEDAL (SPANISH)
22	T223062	LABEL	1		HYDRAULIC RESERVOIR (FRENCH)
	T223061	LABEL	1		HYDRAULIC RESERVOIR (SPANISH)
23	T186128	LABEL	1		HYDRAULIC OIL LEVEL (FRENCH)
	T186125	LABEL	1		HYDRAULIC OIL LEVEL (SPANISH)
24	T216715	LABEL	1		PERIODIC MAINTENANCE (FRENCH)
	T216716	LABEL	1		PERIODIC MAINTENANCE (SPANISH)
25	T216530	LABEL	1		FUSE BLOCK (FRENCH)
	T216529	LABEL	1		FUSE BLOCK (SPANISH)
26	T186441	LABEL	1		INSTRUMENT PANEL (FRENCH)
	T186442	LABEL	1		INSTRUMENT PANEL (SPANISH)
27	T200659	SAFETY SIGN	1		CAUTION (MOTION) (FRENCH)
	T200660	SAFETY SIGN	1		CAUTION (MOTION) (SPANISH)
28	T200895	SAFETY SIGN	1		BACKHOE CONTROLS (FRENCH)
	T200896	SAFETY SIGN	1		BACKHOE CONTROLS (SPANISH)
29	T208008	LABEL	1		HYDRAULIC RESERVOIR (FRENCH)
	T208007	LABEL	1		HYDRAULIC RESERVOIR (SPANISH)
30	.....	LABEL KIT	1		
31	.....	LABEL KIT	1		

THIS PARTS LISTING IS CONTINUED

FLUID SAMPLING PORTS
ORIFICES DECHANTILLONNAGE DES LIQUIDES
LUMBRERAS DE MUESTREO DE FLUIDOS

TX1012799 -UN-10OCT06

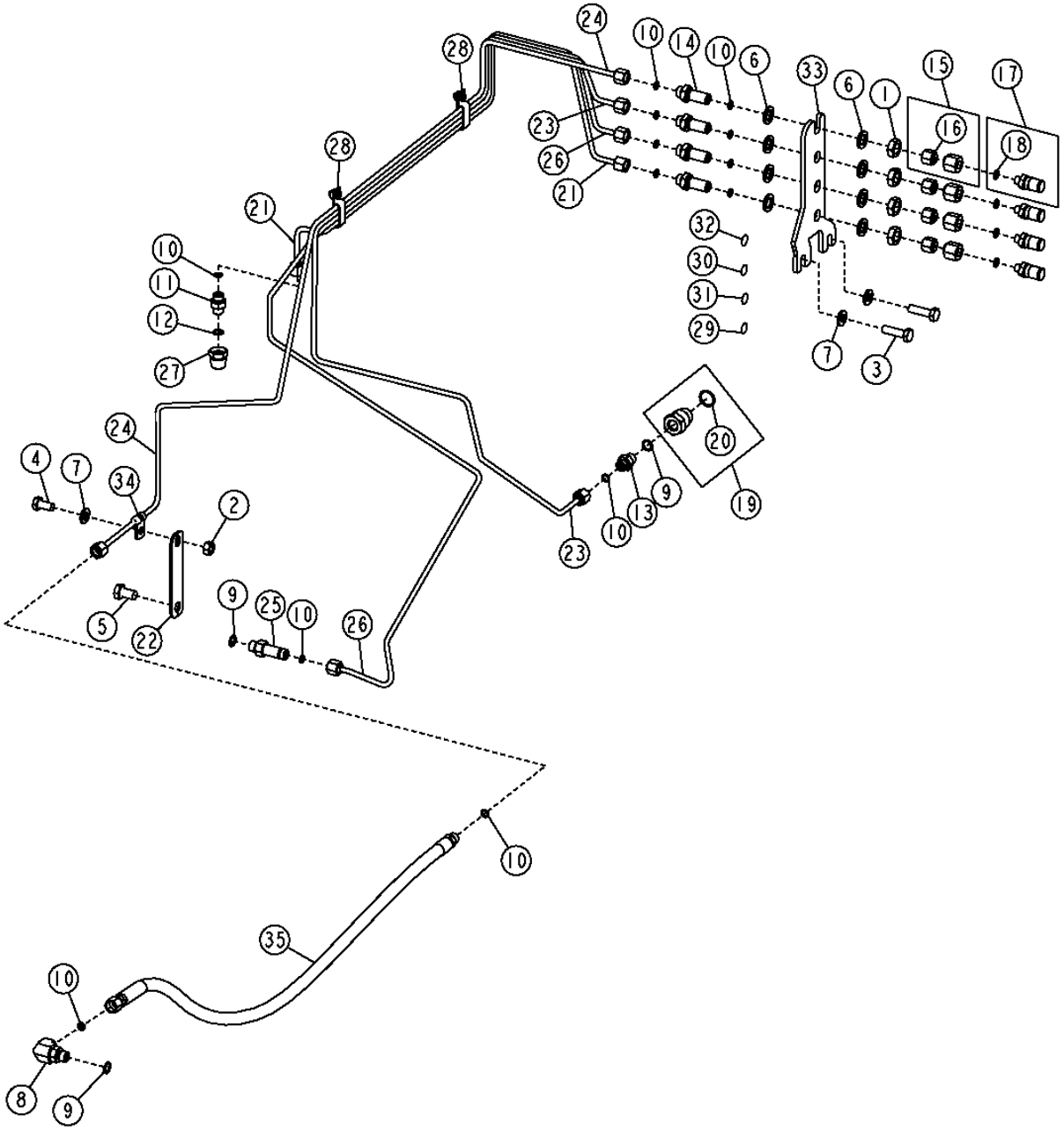

THIS PARTS LISTING IS CONTINUED

FLUID SAMPLING PORTS
ORIFICES DECHANTILLONNAGE DES LIQUIDES
LUMBRERAS DE MUESTREO DE FLUIDOS

KEY	PART NO.	PART NAME	QTY.	SERIAL NO.	REMARKS
1	14H832	NUT	4		14.275 MM
2	14M7274	NUT	1		M10
3	19M7550	CAP SCREW	2		M10 X 35
4	19M7938	CAP SCREW	1		M10 X 20
5	19M8017	CAP SCREW	1		M12 X 20
6	24M7145	WASHER	8		15 X 24 X 2.500 MM
7	24M7239	WASHER	3		10.700 X 21 X 2.500 MM
8	38H1009	ELBOW FITTING	1		
9	R26448	O-RING	3		
10	T77814	O-RING	13		
11	38H1167	ADAPTER FITTING	1		
12	R26286	O-RING	1		
13	38H1168	ADAPTER FITTING	1		
14	38H1284	ADAPTER FITTING	4		
15	AT225112	ADAPTER FITTING	4		
16	38H1414	FITTING	1		
17	AT321211	FITTING	4		
18	R28782	O-RING	1		
19	AT322359	ADAPTER FITTING	1		
20	51M7045	O-RING	1		19.300 X 2.200 MM
21	AT324481	OIL LINE	1		
22	T216078	PLATE	1		
23	AT324482	OIL LINE	1		
24	AT324483	OIL LINE	1		
25	T222521	FITTING	1		
26	AT328617	OIL LINE	1		
27	R71210	ADAPTER FITTING	1		
28	RE19799	CLAMP	2		
29	T217789	LABEL	1		ENGINE COOLANT
30	T217790	LABEL	1		ENGINE OIL
31	T217791	LABEL	1		TRANSMISSION OIL
32	T217792	LABEL	1		HYDRAULIC OIL
33	T224216	PLATE	1		
34	T74410	CLAMP	1		
35	AT342647	HYDRAULIC HOSE - FABRICATE	1		

SINGLE BATTERY INSTALLATION
INSTALLATION A BATTERIE UNIQUE
INSTALACION DE BATERIA SENCILLA

TX1013842 -UN-16NOV06

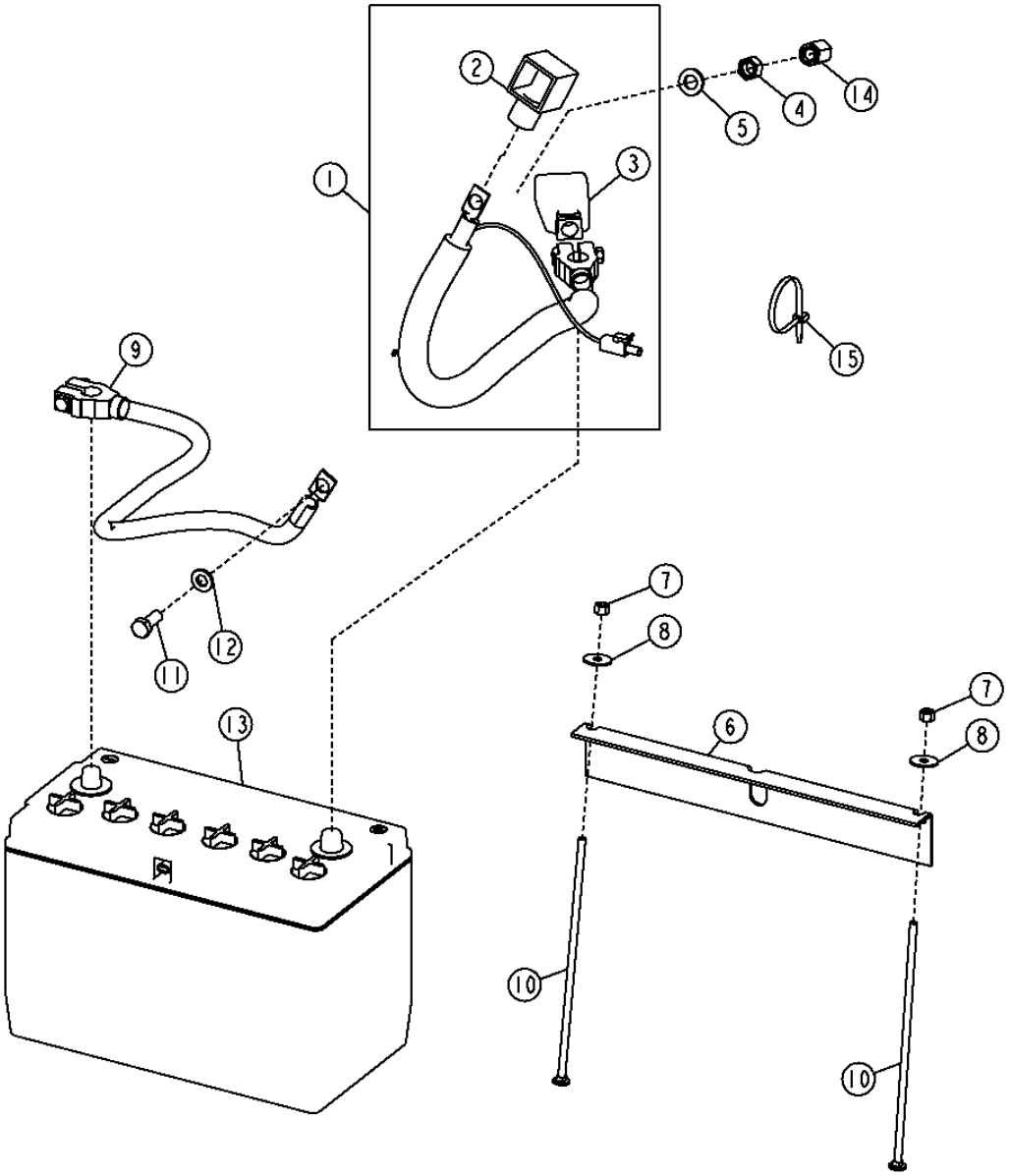

THIS PARTS LISTING IS CONTINUED

SINGLE BATTERY INSTALLATION
INSTALLATION A BATTERIE UNIQUE
INSTALACION DE BATERIA SENCILLA

KEY	*PART NO.*	*PART NAME*	*QTY.*	*SERIAL NO.*	*REMARKS*
1	AT322250	BATTERY CABLE	1		POSITIVE
2	T129165	BOOT	1		
3	T107117	COVER	1		
4	14M7275	NUT	1		M12
5	24M7047	WASHER	1		
6	T121288	ANGLE	1		
7	M40333	LOCK NUT	2		1/4"
8	24H1288	WASHER	2		
9	AT195995	BATTERY CABLE	1		NEGATIVE
10	03H2208	BOLT	2		1/4" X 9-1/4"
11	19M7402	CAP SCREW	1		M10 X 25
12	24M7239	WASHER	1		
13	TY6128	DRY CHARGED BATTERY	1		(WARRANTY NO. AT132864) (950 CCA)
14	E64052	NUT	1		
15	R44302	TIE BAND	1		

DUAL BATTERY INSTALLATION
INSTALLATION A BATTERIE DOUBLE
INSTALACION DE DOS BATERIAS

TX1013843 -UN-16NOV06

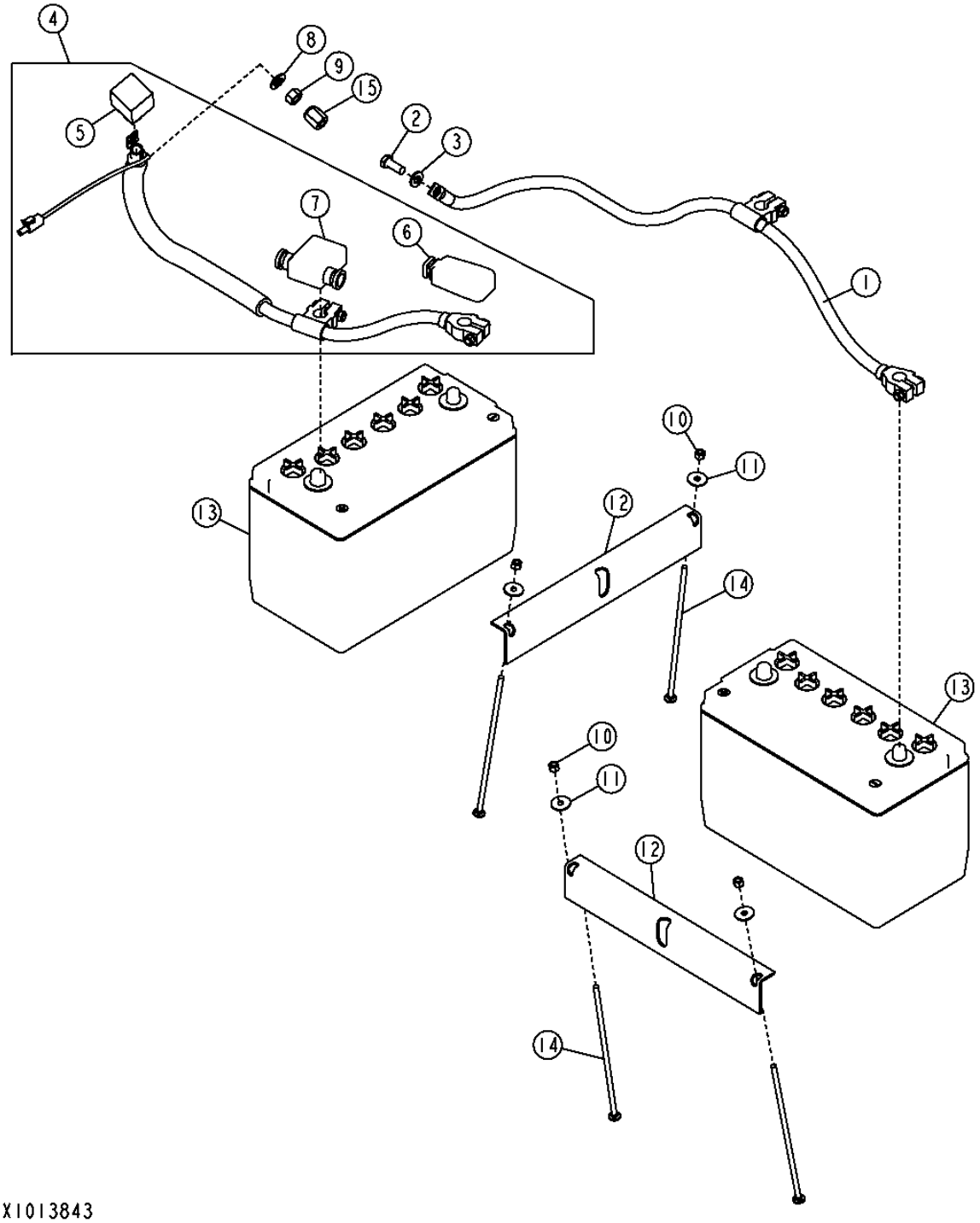

DUAL BATTERY INSTALLATION
INSTALLATION A BATTERIE DOUBLE
INSTALACION DE DOS BATERIAS

KEY	PART NO.	PART NAME	QTY.	SERIAL NO.	REMARKS
1	AT195911	BATTERY CABLE	1		NEGATIVE
2	19M7402	CAP SCREW	1		M10 X 25
3	24M7239	WASHER	1		
4	AT321526	BATTERY CABLE	1		POSITIVE
5	T129165	BOOT	1		
6	T107117	COVER	1		
7	T107116	COVER	1		
8	24M7047	WASHER	1		
9	14M7275	NUT	1		M12
10	M40333	LOCK NUT	4		6.350 MM
11	24H1288	WASHER	4		
12	T121288	ANGLE	2		
13	TY6128	DRY CHARGED BATTERY	2		(WARRANTY NO. AT132864) (950 CCA)
14	03H2208	BOLT	4		1/4" X 9-1/4"
15	E64052	NUT	1		

MASTER BATTERY DISCONNECT
SECTIONNEUR DE BATTERIE PRINCIPAL
DESCONEXION MAESTRA DE BATERIAS

T152635 -UN-21MAR02

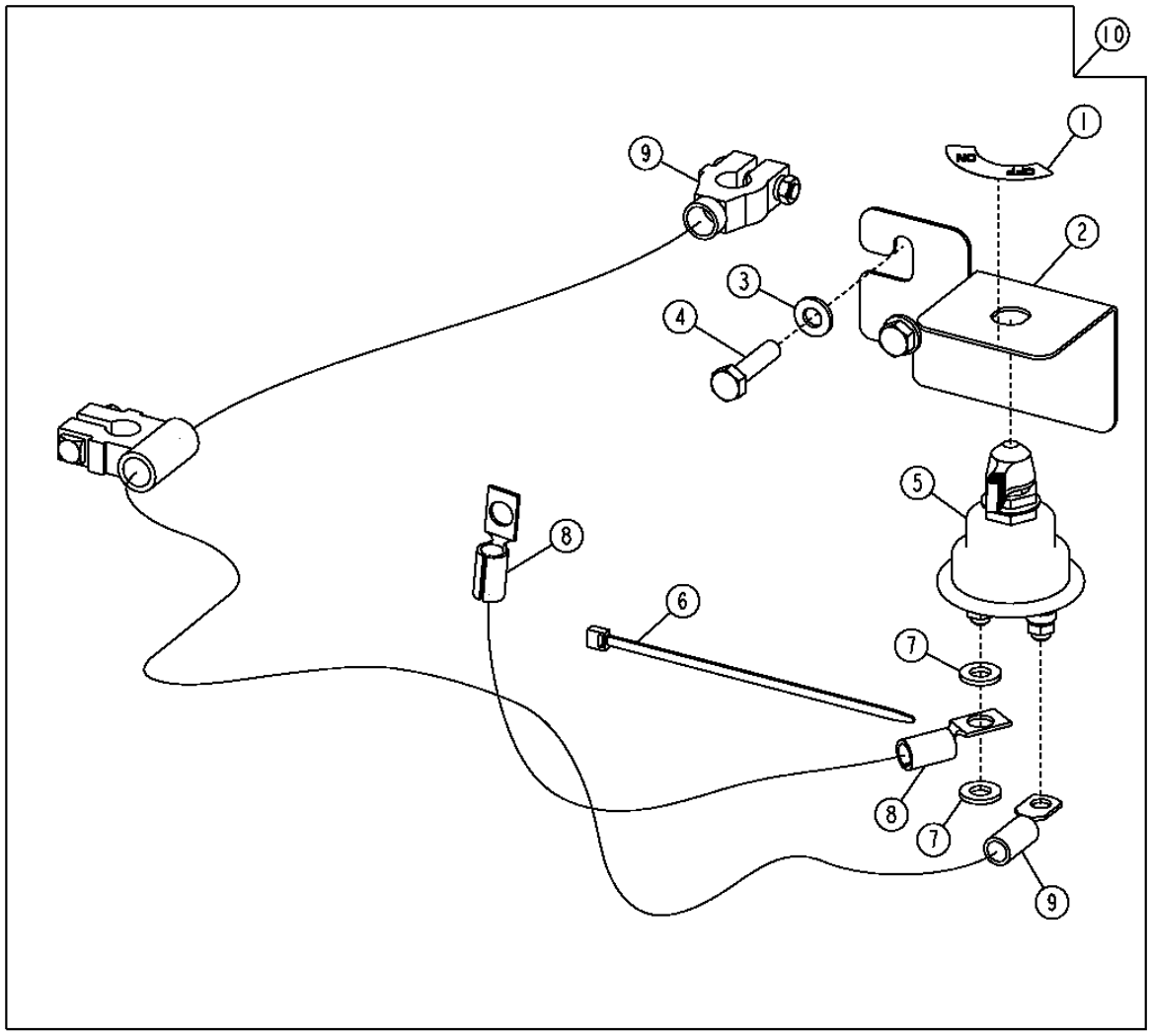

T152635

MASTER BATTERY DISCONNECT
SECTIONNEUR DE BATTERIE PRINCIPAL
DESCONEXION MAESTRA DE BATERIAS

KEY	*PART NO.*	*PART NAME*	*QTY.*	*SERIAL NO.*	*REMARKS*
1	T42199	LABEL	1		
2	T190658	BRACKET	1		
3	24M7239	WASHER	2		10.700 X 21 X 2.500 MM
4	19M7806	SCREW	2		M10 X 50
5	AT41188	SWITCH	1		DISCONNECT
6	R44302	TIE BAND	1		
7	24M7239	WASHER	2		10.700 X 21 X 2.500 MM
8	AR67069	GROUND CABLE	1		
9	AT197922	BATTERY CABLE	1		(DUAL BATTERY)
	AT179926	GROUND CABLE	1		(SINGLE BATTERY) (NOT ILLUSTRATED) (NOT INCLUDED IN KIT)
10	**AT198096**	**KIT**	**1**		**(WHOLE GOODS)**

ALTERNATOR
ALTERNATEUR
ALTERNADOR

TX1007739 -UN-22JUN06

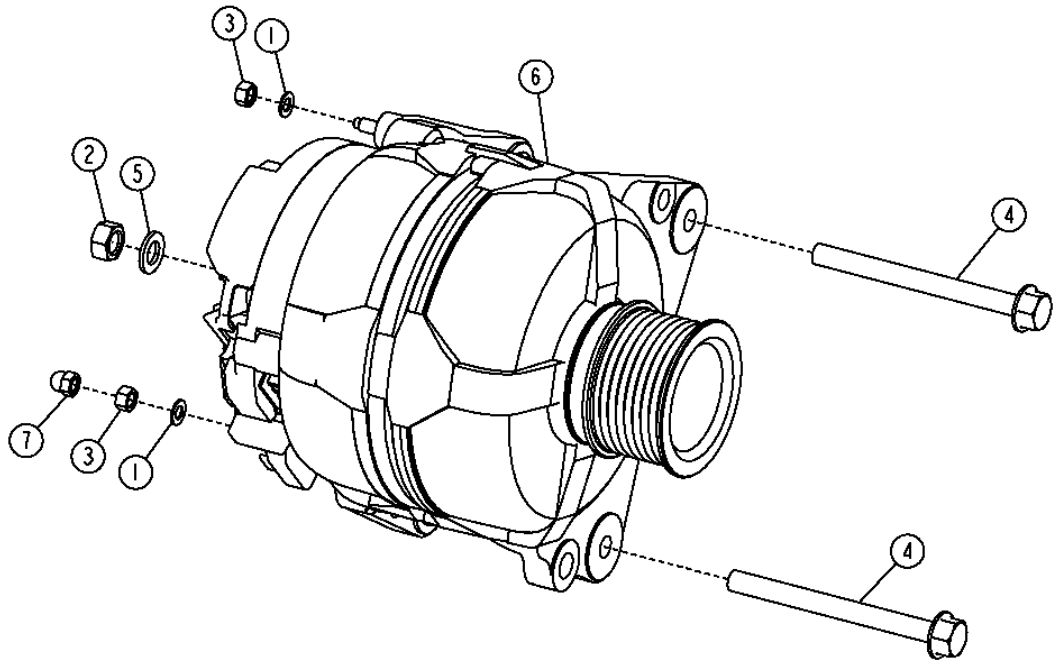

TX1007739

ALTERNATOR,¦REGULATOR¦&¦CHARGING¦SYSTEM¦WIRING 1672

ALTERNATOR
ALTERNATEUR
ALTERNADOR

KEY	*PART NO.*	*PART NAME*	*QTY.*	*SERIAL NO.*	*REMARKS*
1	12M7060	WASHER	2		5.300 MM
2	14M7273	NUT	1		M8
3	14M7297	NUT	2		M5
4	19M7913	SCREW	2		M8 X 90
5	24M7036	WASHER	1		
6	AT321280	ALTERNATOR	1		12 VOLT - 70 AMPERE
	AT318374	ALTERNATOR	1		12 VOLT - 90 AMPERE
	AT334722	PULLEY	1		
7	T224227	NUT	1		

ROTATING BEACON
PHARE A ECLATS
FARO GIRATORIO

TX1004828 -UN-16MAR06

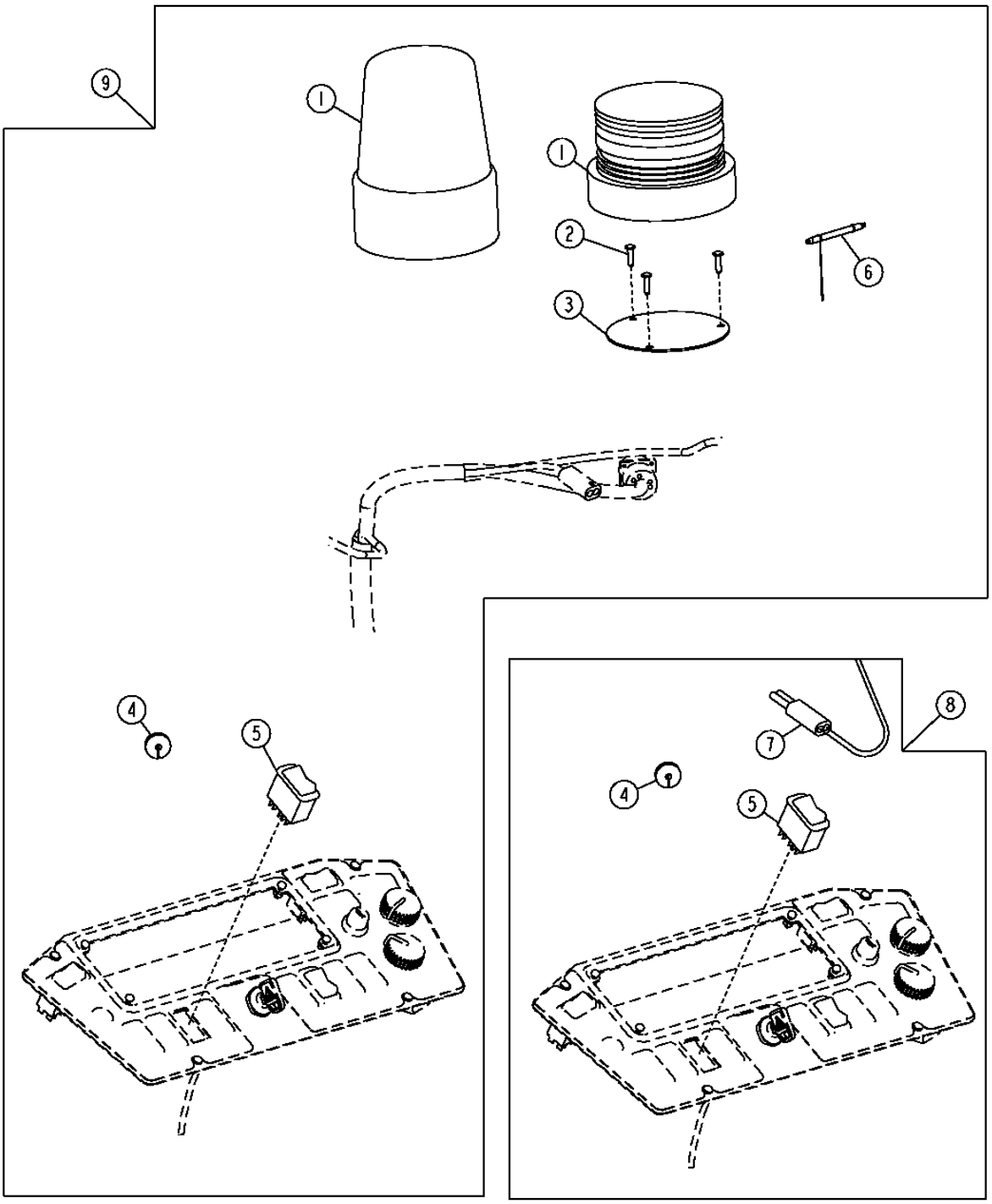

TX1004828

ROTATING BEACON
PHARE A ECLATS
FARO GIRATORIO

KEY	*PART NO.*	*PART NAME*	*QTY.*	*SERIAL NO.*	*REMARKS*
1	AT187816	STROBE LIGHT	1		STROBE
	AT194822	REVOLVING LIGHT DOME	1		ROTATING BEACON
2	37M7218	SCREW	3		
3	T167214	PLATE	1		
4	T74952	GROMMET	1		
5	AT317463	TOGGLE/ROCKER SWITCH	1		
6	PML377	STROBE LIGHT	1		12 VOLT
7	AT195461	ROOF WIRING HARNESS	1		
8	**AT313589**	**KIT**	**1**		**(WHOLE GOODS) WIRING KIT**
9	**AT313583**	**KIT**	**1**		**(WHOLE GOODS) STROBE LIGHT**
	AT313592	**KIT**	**1**		**(WHOLE GOODS) ROTATING BEACON**

DELUXE LIGHTS KIT AND ROOF HARNESS
ECLAIRAGE STANDARD, ECLAIRAGE DE LUXE ET FAISCEAU DE TOIT
LUCES ESTANDAR, LUCES DE LUJO Y ARNES DE TECHO

TX1014597 -UN-29DEC06

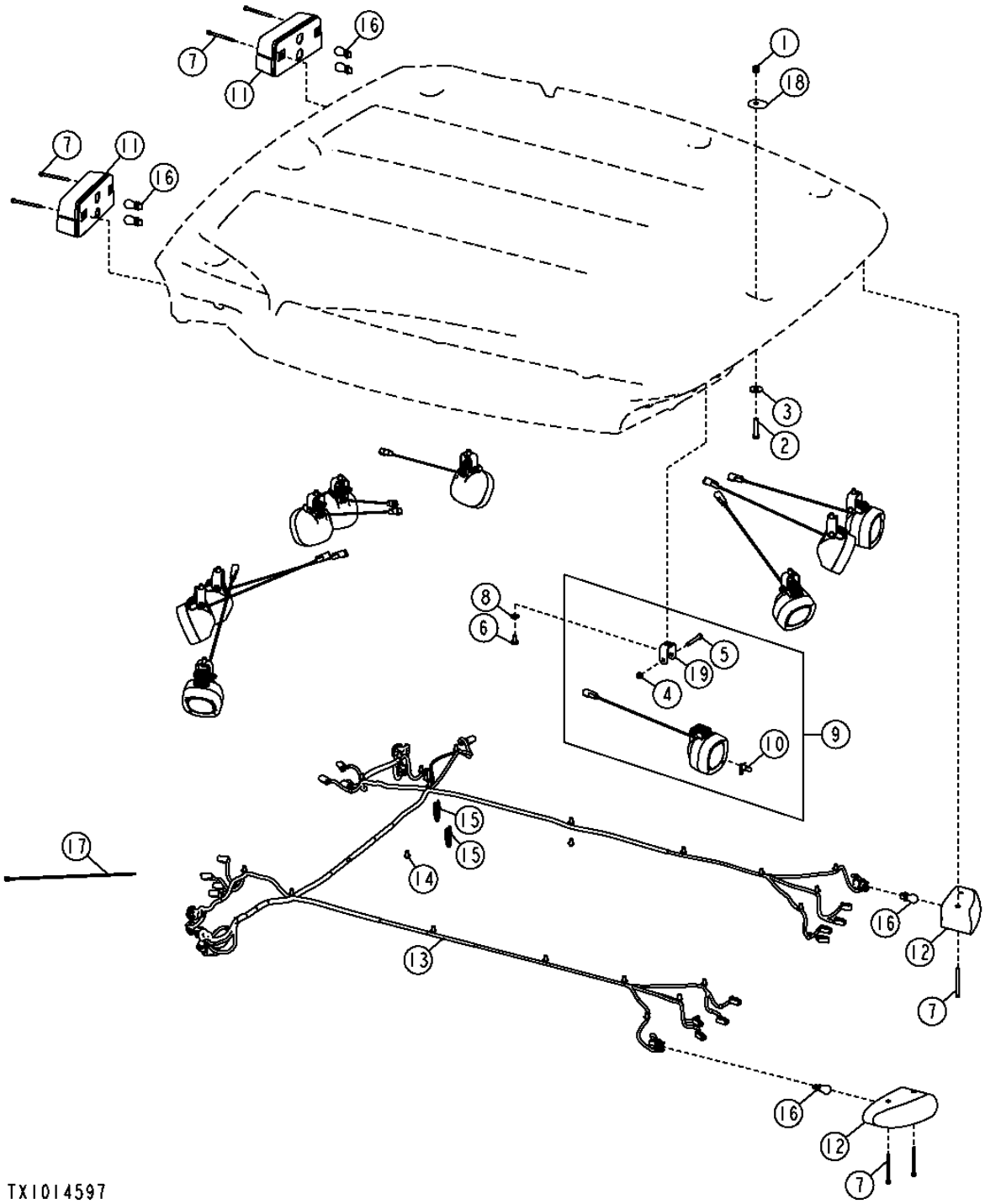

THIS PARTS LISTING IS CONTINUED

DELUXE LIGHTS KIT AND ROOF HARNESS
ECLAIRAGE STANDARD, ECLAIRAGE DE LUXE ET FAISCEAU DE TOIT
LUCES ESTANDAR, LUCES DE LUJO Y ARNES DE TECHO

KEY	*PART NO.*	*PART NAME*	*QTY.*	*SERIAL NO.*	*REMARKS*
1	14M7517	LOCK NUT	8		M10
2	19M8600	CAP SCREW	8		M10 X 50
3	24M7101	WASHER	8		11 X 34 X 3 MM
4	14M7426	LOCK NUT	6		M8
5	19M7165	CAP SCREW	6		M8 X 55
6	19M8324	CAP SCREW	6		M10 X 16
7	19M8482	SCREW	8		M6 X 80
8	24M7239	WASHER	6		10.700 X 21 X 2.500 MM
9	AT323301	FLOODLAMP	6		
10	AT130104	BULB	6		(HALOGEN LONG LIFE)
11	AT324938	STOP LIGHT	2		
12	AT326622	LAMP	2		(WARNING LAMP)
13	AT321365	ROOF WIRING HARNESS	1		(DELUXE LIGHTS)
14	T209627	CLAMP	3		
15	H77698	TIE BAND	13		
16	RE49778	BULB	6		
17	H77698	TIE BAND	13		
18	T185664	SEALING WASHER	8		
19	T216731	BRACKET	6		
20	**AT326908**	**FIELD INSTALLATION KIT**	**1**		**(DELUXE LIGHTS) (INCLUDES (6) 19M8324, (6) 24M7239, AT321365, (6) AT323301 AND AT309435)**

ROOF W/ BELL LIGHTING OPTION
ECLAIRAGE STANDARD, ECLAIRAGE DE LUXE ET FAISCEAU DE TOIT
LUCES ESTANDAR, LUCES DE LUJO Y ARNES DE TECHO

TX1020120 -UN-19MAR07

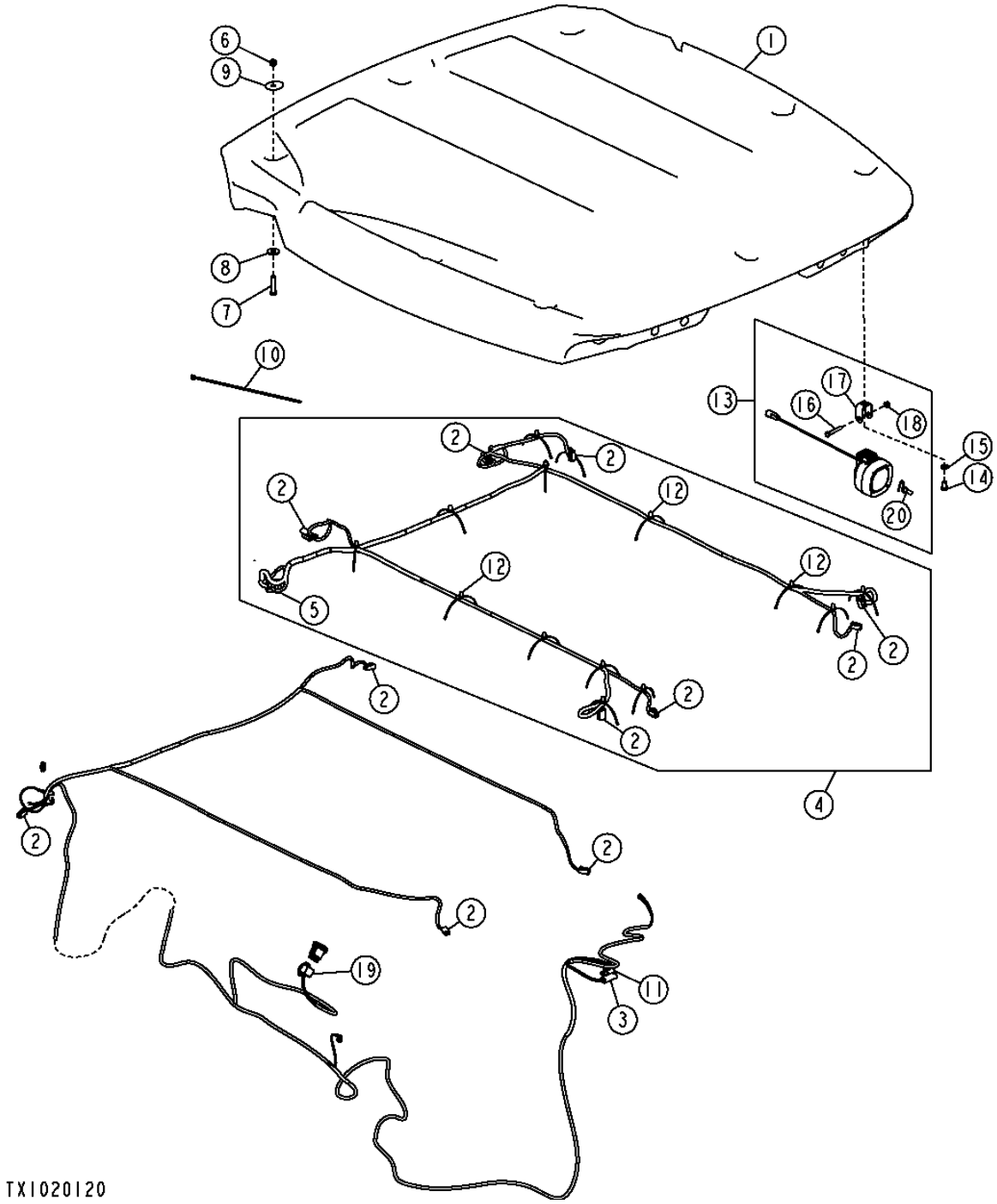

THIS PARTS LISTING IS CONTINUED

ROOF W/ BELL LIGHTING OPTION
ECLAIRAGE STANDARD, ECLAIRAGE DE LUXE ET FAISCEAU DE TOIT
LUCES ESTANDAR, LUCES DE LUJO Y ARNES DE TECHO

KEY	PART NO.	PART NAME	QTY.	SERIAL NO.	REMARKS
1	T215487	ROOF	1		
2	.....	ELEC. CONNECTOR TERMINAL	10		(MARKED 51M8021)
3	R78053	ELECTRICAL CONNECTOR ASSY	1		
4	AT327796	ROOF WIRING HARNESS	1		
5	N282065	ELEC. CONNECTOR TERMINAL	1		
6	14M7517	LOCK NUT	8		M10
7	19M8600	CAP SCREW	8		M10 X 50
8	24M7101	WASHER	8		11 X 34 X 3 MM
9	T185664	SEALING WASHER	8		11.500 X 44 X 3 MM
10	H77698	TIE BAND	4		
11	.....	ELEC. CONNECTOR TERMINAL	1		(MARKED R12363)
12	T209627	CLAMP	1		
13	AT323301	FLOODLAMP	10		
14	19M8324	CAP SCREW	10		M10 X 16
15	24M7239	WASHER	10		10.700 X 21 X 2.500 MM
16	19M7165	CAP SCREW	10		M8 X 55
17	T216731	BRACKET	10		
18	14M7426	LOCK NUT	10		M8
19	R15023	DIODE	1		
20	AT130104	BULB	4		(HALOGEN LONG LIFE)

SIDE CONSOLE WIRING HARNESSES
FAISCEAUX DE FILS DE CONSOLE LATERALE
ARNESES DE ALAMBRADO DE CONSOLA LATERAL

TX1020019 -UN-31MAR07

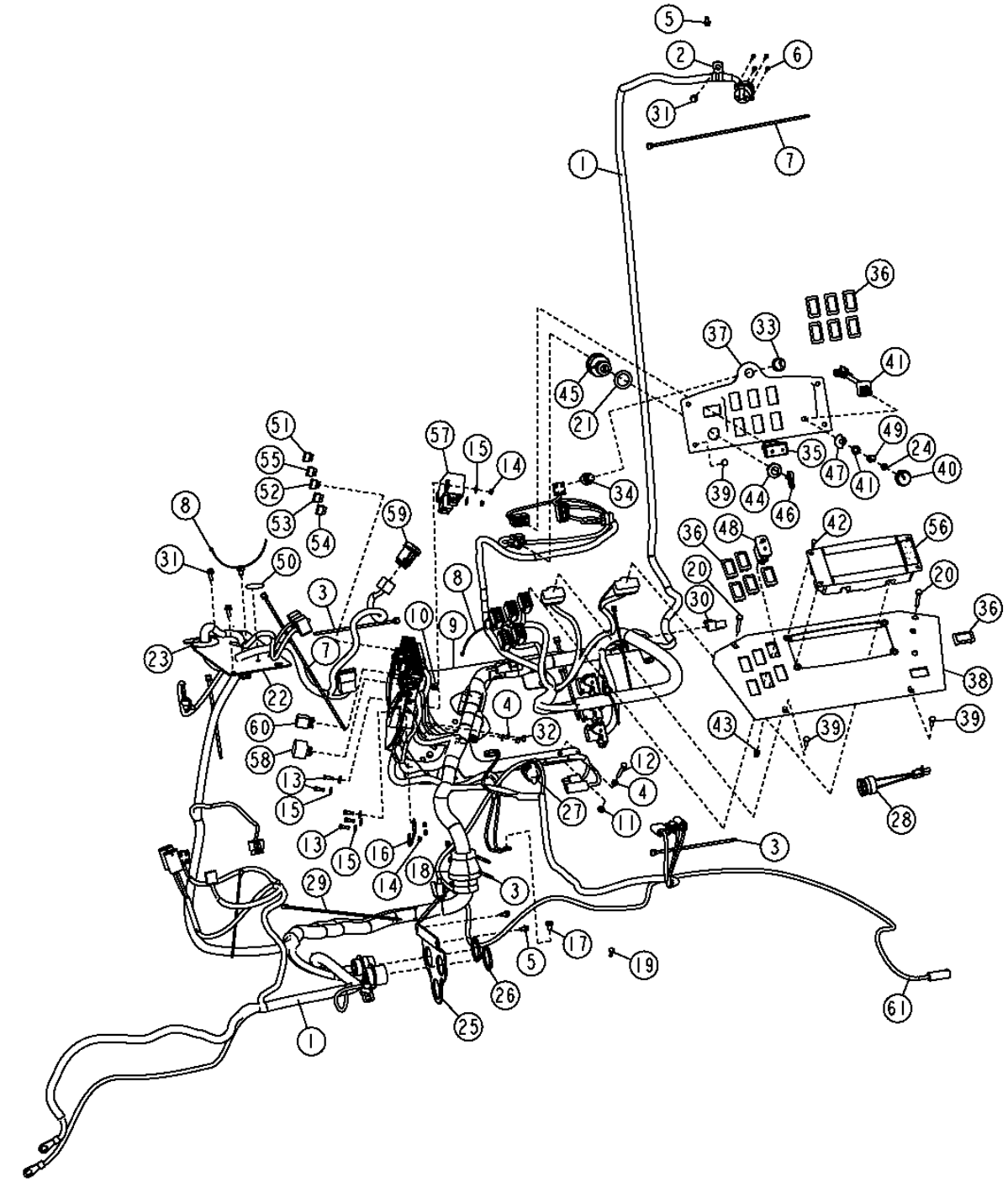

THIS PARTS LISTING IS CONTINUED

SIDE CONSOLE WIRING HARNESSES
FAISCEAUX DE FILS DE CONSOLE LATERALE
ARNESES DE ALAMBRADO DE CONSOLA LATERAL

KEY	PART NO.	PART NAME	QTY.	SERIAL NO.	REMARKS
1	AT314088	WIRING HARNESS	1		(CANOPY)
	AT327790	WIRING HARNESS	1		(CAB)
2	T210717	BRACKET	3		
3	R44302	TIE BAND	22		
4	24M7054	WASHER	5		6.400 X 12 X 1.600 MM
	14M7303	FLANGE NUT	1		M6
5	37M7089	SCREW	3		M6 X 12
6	37M7066	SCREW	4		
7	H77698	TIE BAND	7		
8	T209627	CLAMP	3		
9	T213429	PLATE	1		
10	19M7933	CAP SCREW	2		M6 X 25
11	R201796	NUT	3		
12	19M7529	CAP SCREW	2		M6 X 55
13	19M7372	CAP SCREW	7		M5 X 16
14	14M7265	LOCK NUT	7		M5
15	24M7138	WASHER	11		5.300 X 15 X 1.200 MM
16	T214725	PLATE	1		
17	19M7008	CAP SCREW	1		M8 X 10
18	T143596	GROMMET	1		
19	R44165	LOCK NUT	2		11.125 MM
20	21M7403	SCREW	1		M6 X 40
21	24H1441	WASHER	1		1-1/64" X 1-1/2" X 0.048"
22	T215153	PLATE	1		
23	T46876	GROMMET	1		
24	R78035	PUSH NUT	1		
25	T214566	BRACKET	1		
26	57M8035	NUT	2		
27	GY20126	SOCKET OUTLET	2		
28	AT178526	AUDIBLE WARNING ALARM	1		
29	AT327368	TIE BAND	2		
30	57M8131	RESISTOR NETWORK	1		CAN RISISTOR
31	19M7775	SCREW	3		M6 X 16
	28H3390	SPACER	1		0.364" X 0.540" X 1"
32	14M7528	LOCK NUT	2		M6
33	T55501	CAP	1		
34	R39554	SWITCH	1		(HORN)
35	AT317592	TOGGLE/ROCKER SWITCH	1		(PARK BRAKE)
36	M115279	PLUG	12		
37	T215594	INSTRUMENT PANEL	1		
38	T214214	INSTRUMENT PANEL	1		
39	21M7292	SCREW	6		
40	AL76568	KNOB	1		
41	AT340550	POTENTIOMETER	1		
42	T82791	SCREW	4		
43	T82792	NUT	4		
44	R44342	NUT	1		
45	AT195301	SWITCH	1		
46	AT195302	KEY	1		
47	T226430	STOP	1		
48	AT309435	TOGGLE/ROCKER SWITCH	1		(LIGHTS)
49	T226427	WASHER	1		
50	T186793	LABEL	1		
51	99M7069	FUSE	2		
52	99M7065	FUSE	5		
53	57M7121	FUSE	3		
54	57M7125	FUSE	2		
55	57M7120	FUSE	1		
56	AT329989	VEHICLE MONITOR	1		
57	AT318947	RELAY	1		
58	RE240999	RELAY	1		
59	AT317435	SWITCH	1		TURN SIGNAL
60	AT308380	RELAY	1		
61	AT191953	POWER SUPPLY	1		(POWER CBALE)

PILOT ENABLE
ACTIVATION PILOTE
HABILITACION DE PILOTO

TX1015121 -UN-23DEC06

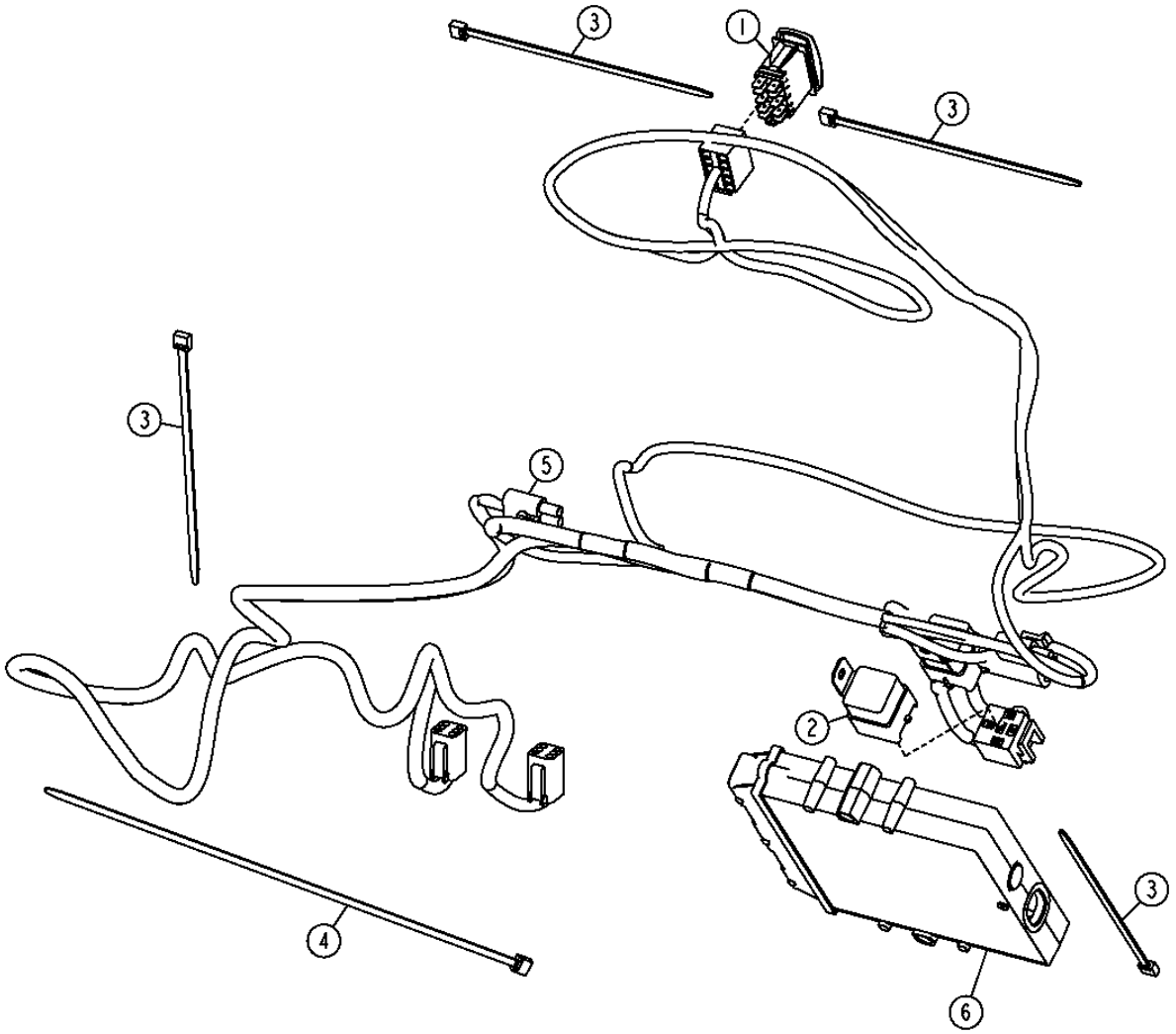

TX1015121

PILOT ENABLE
ACTIVATION PILOTE
HABILITACION DE PILOTO

KEY	*PART NO.*	*PART NAME*	*QTY.*	*SERIAL NO.*	*REMARKS*
1	AT317597	TOGGLE/ROCKER SWITCH	1		
2	AT75769	RELAY	1		
3	R44302	TIE BAND	4		
4	H77698	TIE BAND	1		
5	AT323159	WIRING HARNESS	1		
6	AT323254	VEHICLE CONTROLLER	1		

THIS PARTS LISTING IS CONTINUED

HYDRAULIC FRONT COUPLER HARNESS
FAISCEAU D'ACCOUPLEMENT AVANT HYDRAULIQUE
ARNES DE ACOPLADOR HIDRAULICO DELANTERO

TX1015058 -UN-18DEC06

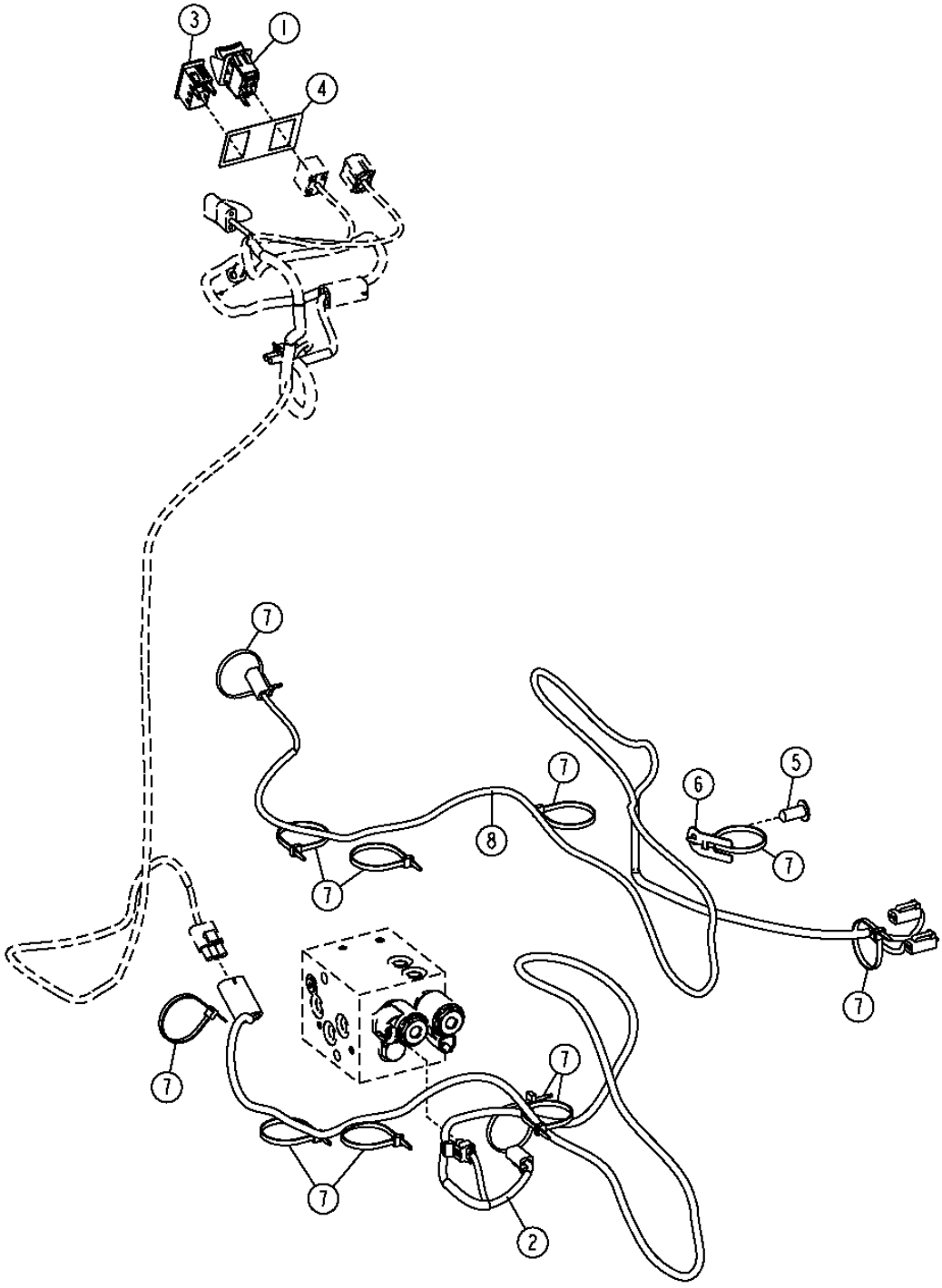

THIS PARTS LISTING IS CONTINUED

HYDRAULIC FRONT COUPLER HARNESS
FAISCEAU D'ACCOUPLEMENT AVANT HYDRAULIQUE
ARNES DE ACOPLADOR HIDRAULICO DELANTERO

KEY	*PART NO.*	*PART NAME*	*QTY.*	*SERIAL NO.*	*REMARKS*
1	AT225952	SWITCH	1		PIN DISCONNECT
2	AT329136	WIRING HARNESS	1		LOAD COUPLER CONTROL CHASSIS
3	AT311598	INDICATOR LAMP	1		PIN DISCONNECT
4	T209212	LABEL	1		ENABLE/DISABLE
5	MT2485	PLUG	1		
6	T210717	BRACKET	1		
7	R44302	TIE BAND	11		
8	AT329135	WIRING HARNESS	1		RIDE CONTROL

ENGINE AND TRANSMISSION HARNESS
FAISCEAU DE TRANSMISSION ET MOTEUR
ARNES DE LA TRANSMISION Y MOTOR

TX1015541 -UN-12DEC06

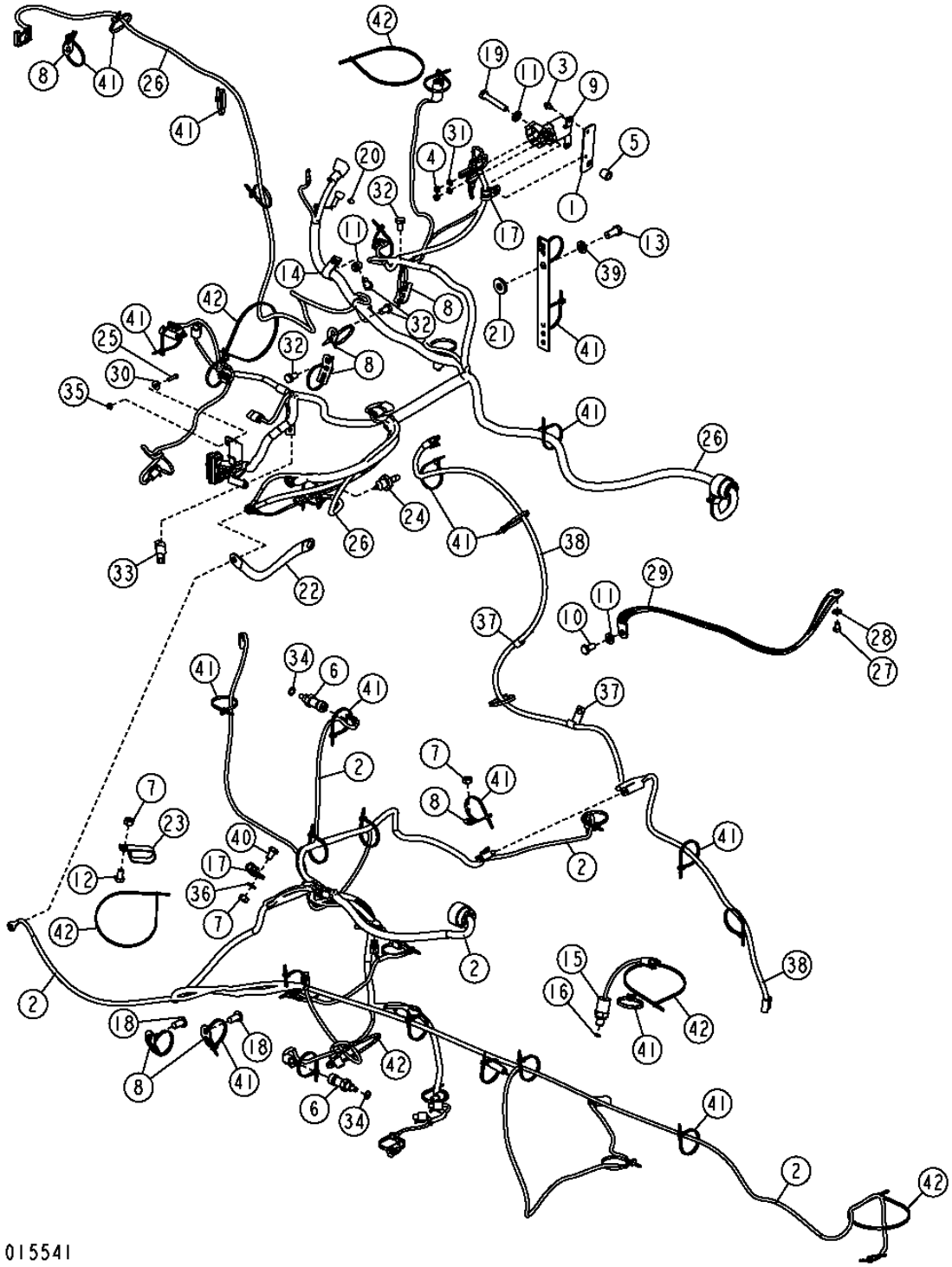

THIS PARTS LISTING IS CONTINUED

ENGINE AND TRANSMISSION HARNESS
FAISCEAU DE TRANSMISSION ET MOTEUR
ARNES DE LA TRANSMISION Y MOTOR

KEY	PART NO.	PART NAME	QTY.	SERIAL NO.	REMARKS
1	T184676	STRAP	1		
2	AT313210	WIRING HARNESS	1		TRANSMISSION
3	37H116	SCREW	2		
4	14M7272	NUT	2		M6
5	28H3381	SPACER	1		
6	RE52722	COOLANT TEMPERATURE SENSOR	1		HYDRAULIC TEMPERATURE, (INCLUDES 51M7041)
7	14M7274	NUT	2		M10
8	T210717	BRACKET	6		
9	AT141011	RELAY	1		(12V) STARTER
10	19M7938	CAP SCREW	1		M10 X 20
11	24M7239	WASHER	3		10.700 X 21 X 2.500 MM
12	19M7557	CAP SCREW	1		M10 X 16
13	19M7872	CAP SCREW	1		M12 X 25
14	T74416	CLAMP	1		
15	AT159811	SWITCH	1		PARK BRAKE OIL PRESSURE
16	51M7039	O-RING	1		
17	T74412	CLAMP	2		
18	MT2485	PLUG	1		FASTENER
19	19M8499	CAP SCREW	1		
20	T224227	NUT	1		
21	T29342	WASHER	1		
22	AT167399	GROUND CABLE	1		GROUND
23	AH77869	CLIP	1		
24	AT85174	SWITCH	1		ENGINE OIL PRESSURE
25	19M7373	CAP SCREW	1		
26	AT312543	WIRING HARNESS	1		ENGINE
27	19M7008	CAP SCREW	1		M8 X 10
28	24M7238	WASHER	1		
29	AT180705	GROUND CABLE	1		GROUND
30	24M7139	WASHER	1		6.400 X 18 X 1.600 MM
31	24M7088	WASHER	2		6.600 X 12 X 1.600 MM
32	19M8324	CAP SCREW	4		M10 X 16
33	57M8131	RESISTOR NETWORK	1		CAN RESISTOR
34	51M7041	O-RING	1		
35	14M7375	FLANGE NUT	1		M5
36	24M7096	WASHER	1		10.500 X 18 X 1.600 MM
37	AH89557	CLIP	2		
38	AT325190	WIRING HARNESS	1		RETURN TO DIG
39	24M7047	WASHER	1		
40	19M8324	CAP SCREW	1		
41	R44302	TIE BAND	20		
42	H77698	TIE BAND	20		

CONTROL FLOW ELECTRICAL HARNESS AND MOUNTING BRACKET
KIT DE COMMANDE DE SOLENOIDE DE DEBIT SELECTIF
JUEGO DE CONTROL DE SOLENOIDE DE CAUDAL SELECTIVO

TX1015467 -UN-22DEC06

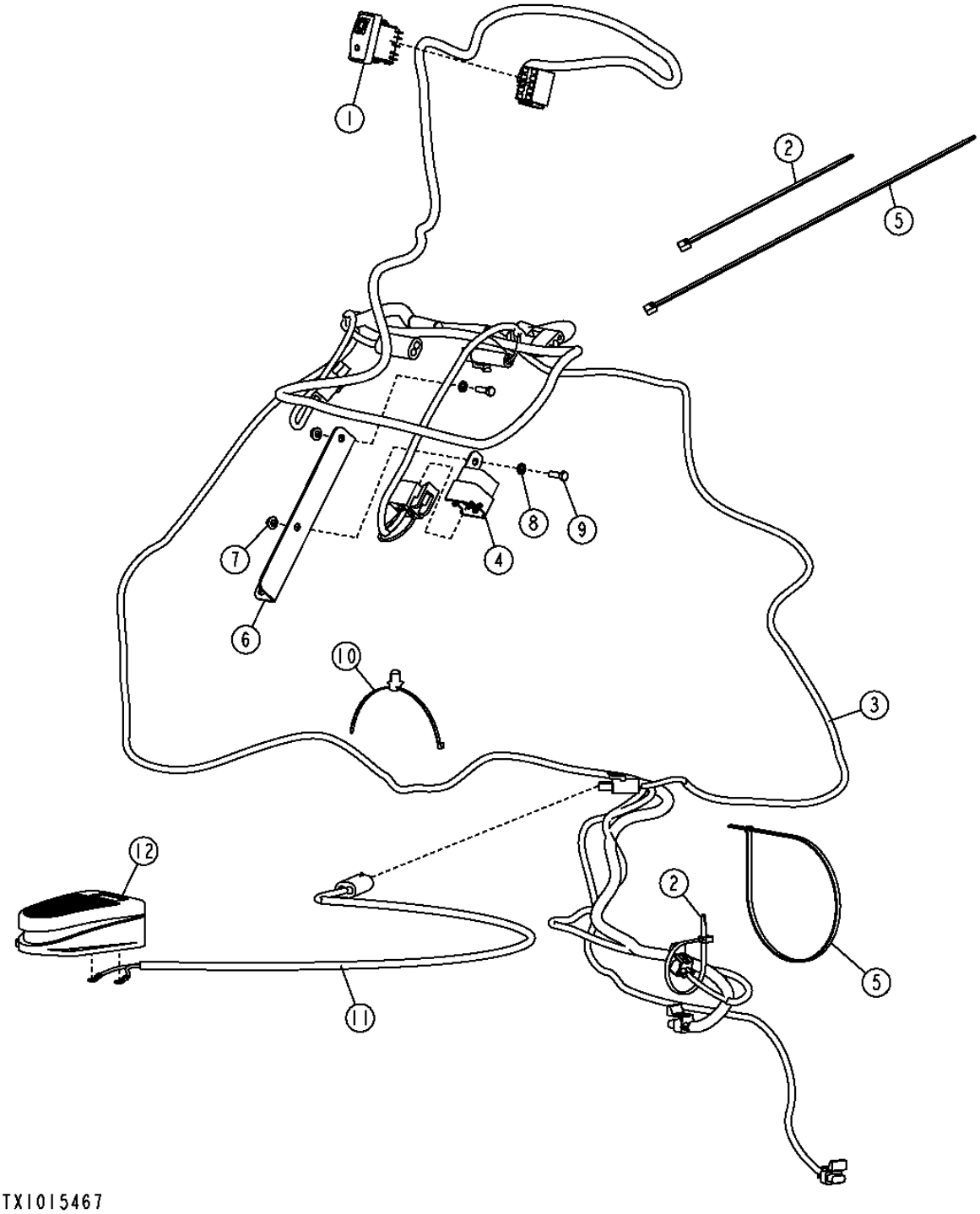

CONTROL FLOW ELECTRICAL HARNESS AND MOUNTING BRACKET
KIT DE COMMANDE DE SOLENOIDE DE DEBIT SELECTIF
JUEGO DE CONTROL DE SOLENOIDE DE CAUDAL SELECTIVO

KEY	*PART NO.*	*PART NAME*	*QTY.*	*SERIAL NO.*	*REMARKS*
1	AT317504	TOGGLE/ROCKER SWITCH	1		
2	R44302	TIE BAND	11		
3	AT322130	WIRING HARNESS	1		
4	AT75769	RELAY	1		
5	H77698	TIE BAND	2		
6	T216444	PLATE	1		
7	14M7375	FLANGE NUT	2		M5
8	24M7087	WASHER	2		5.500 X 10 X 1 MM
9	19M7372	CAP SCREW	2		M5 X 16
10	T209627	CLAMP	1		
11	AT156431	WIRING HARNESS	1		
12	AT82210	SWITCH	1		

DIFFERENTIAL LOCK SWITCH
INTERRUPTEUR DE BLOCAGE DU DIFFERENTIEL
CONTROL DE TRABA DEL DIFERENCIAL

TP58124 -UN-03OCT00

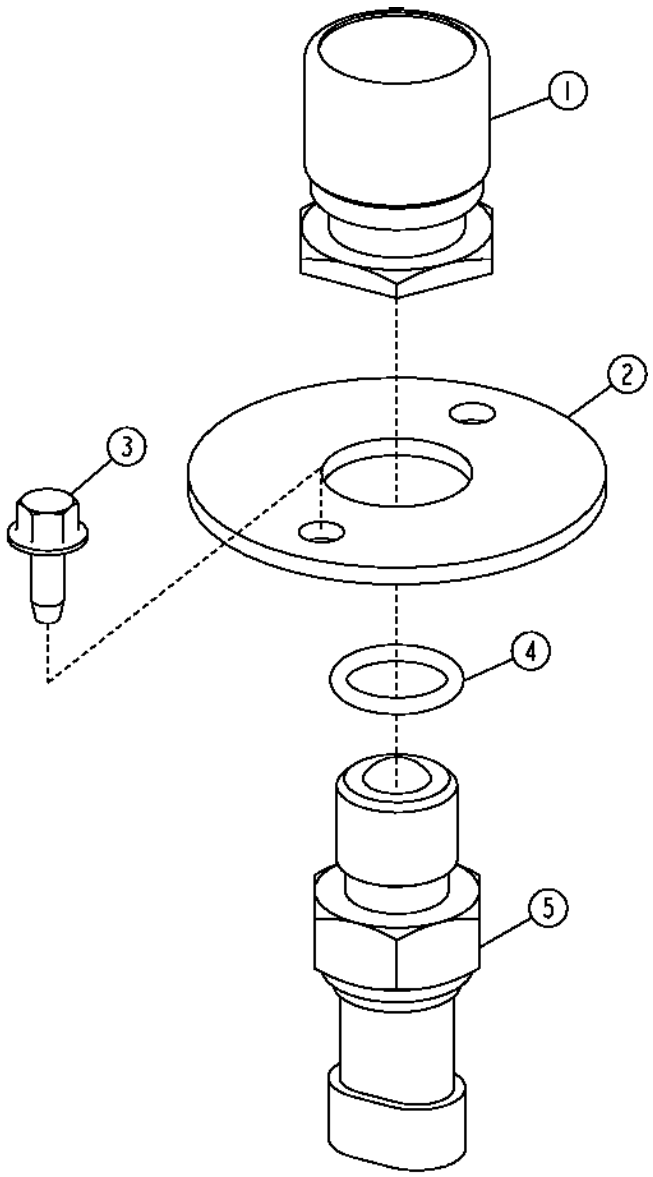

TP58124

DIFFERENTIAL LOCK SWITCH
INTERRUPTEUR DE BLOCAGE DU DIFFERENTIEL
CONTROL DE TRABA DEL DIFERENCIAL

KEY	*PART NO.*	*PART NAME*	*QTY.*	*SERIAL NO.*	*REMARKS*
1	RE43637	ACTUATOR	1		
2	T186024	PLATE	1		
3	37M7089	SCREW	2		M6 X 12
4	51M7042	O-RING	1		
5	RE46534	SWITCH	1		(DIFFERENTIAL LOCK)

RETURN-TO-DIG SWITCH
INTERRUPTEUR DE RETOUR EN POSITION DE CREUSEMENT
INTERRUPTOR DE RETORNO A EXCAVACION

TX1014987 -UN-28DEC06

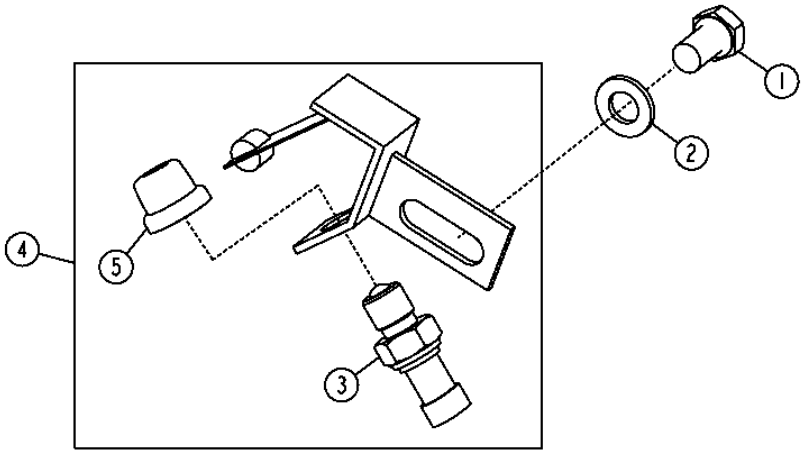

TX1014987

KEY	PART NO.	PART NAME	QTY.	SERIAL NO.	REMARKS
1	19M8017	CAP SCREW	1		M12 X 20
2	24M7047	WASHER	1		13 X 24 X 2.500 MM
3	RE46534	SWITCH	1		
4	AT183246	SWITCH	1		
5	T55501	CAP	1		

MEMORANDA
MEMORANDA
MEMORANDA

SIDE CONSOLE SWITCHES
INTERRUPTEURS DE CONSOLE LATERALE
INTERRUPTORES DE LA CONSOLA LATERAL

TX1016691 -UN-28DEC06

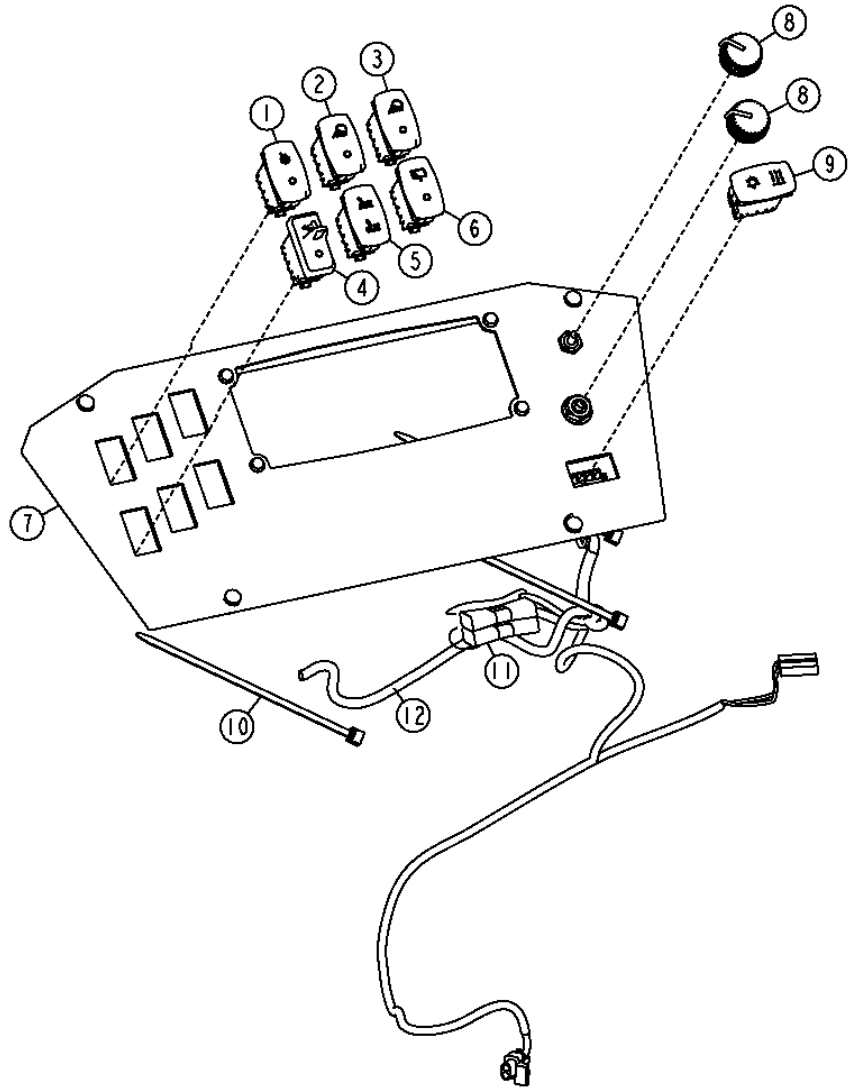

TX1016691

SIDE CONSOLE SWITCHES
INTERRUPTEURS DE CONSOLE LATERALE
INTERRUPTORES DE LA CONSOLA LATERAL

KEY	*PART NO.*	*PART NAME*	*QTY.*	*SERIAL NO.*	*REMARKS*
1	AT309946	TOGGLE/ROCKER SWITCH	1		START AID SWICTH
2	AT309435	TOGGLE/ROCKER SWITCH	1		SIDE LIGHT
3	AT309435	TOGGLE/ROCKER SWITCH	1		REAR LIGHT
4	AT317464	TOGGLE/ROCKER SWITCH	1		MFWD SWITCH
5	AT317596	TOGGLE/ROCKER SWITCH	1		AIR SEAT
6	AT317449	TOGGLE/ROCKER SWITCH	1		REAR WIPER
7	T214214	INSTRUMENT PANEL	1		
8	AL76568	KNOB	2		TEMPERATURE CONTROL
9	AT317594	TOGGLE/ROCKER SWITCH	1		A/C SWITCH
10	R44302	TIE BAND	3		
11	AT103399	DIODE	2		
12	AT321527	WIRING HARNESS	1		AIR CONDITIONING

PUMP CONTROL RELAY
INTERRUPTEURS DE CONSOLE LATERALE
INTERRUPTORES DE LA CONSOLA LATERAL

TX1016698 -UN-21DEC06

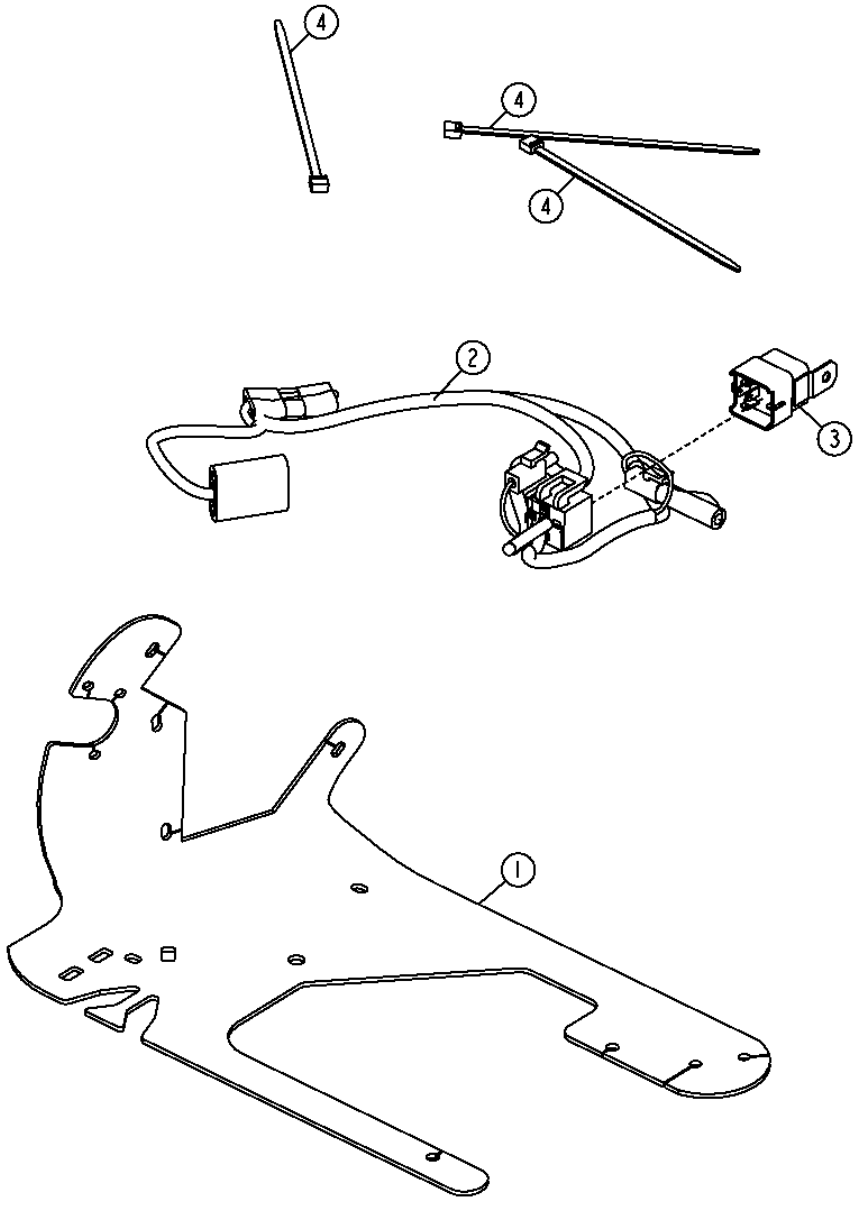

TX1016698

PUMP CONTROL RELAY
INTERRUPTEURS DE CONSOLE LATERALE
INTERRUPTORES DE LA CONSOLA LATERAL

KEY	*PART NO.*	*PART NAME*	*QTY.*	*SERIAL NO.*	*REMARKS*
1	T213429	PLATE	1		
2	AT322947	WIRING HARNESS	1		PUMP CONTROL
3	AT75769	RELAY	1		
4	R44302	TIE BAND	3		

RIDE CONTROL ELECTRICAL
COMMANDE DE POMPE
CONTROLE DE LA BOMBA

TX1015478 -UN-28DEC06

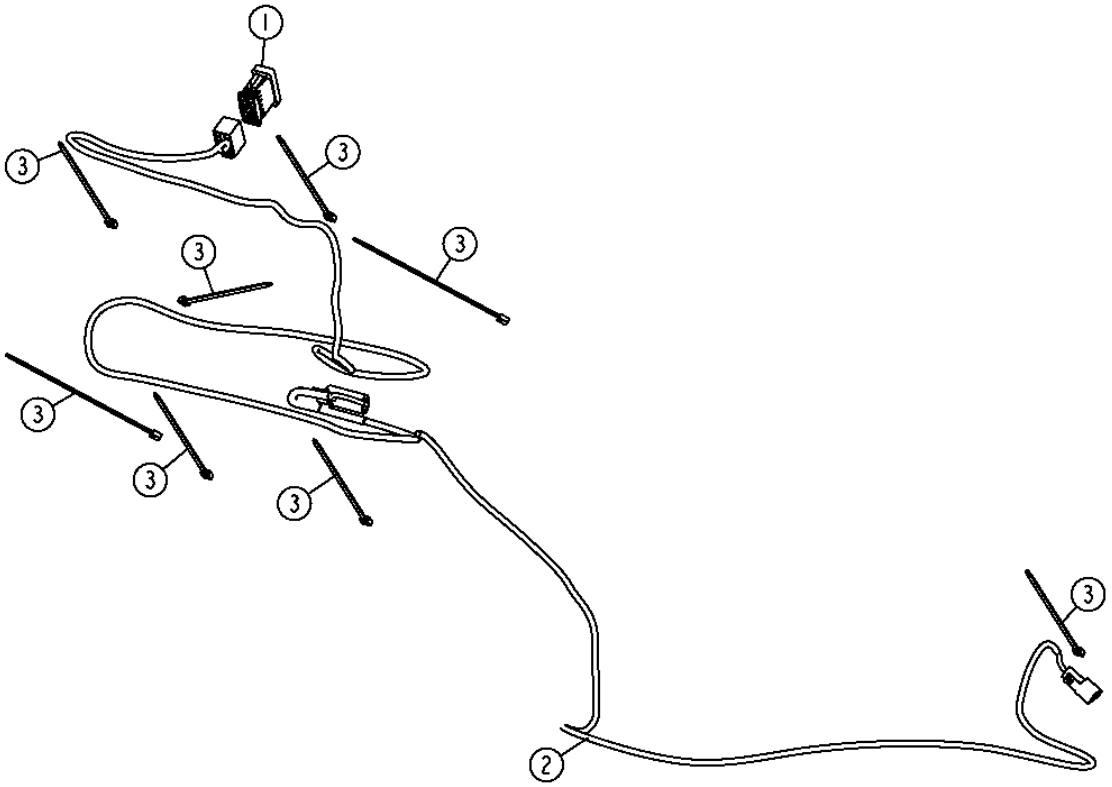

TX1015478

RIDE CONTROL ELECTRICAL
COMMANDE DE POMPE
CONTROLE DE LA BOMBA

KEY	*PART NO.*	*PART NAME*	*QTY.*	*SERIAL NO.*	*REMARKS*
1	AT317451	TOGGLE/ROCKER SWITCH	1		
2	AT321552	WIRING HARNESS	1		
3	R44302	TIE BAND	8		

LOADER COUPLER ELECTRICAL AND ANTI-THEFT
CIRCUIT ELECTRIQUE ET ANTI-VOL D'ACCOUPLEMENT DE CHARGEUR
ACOPLADOR ELECTRICO Y SISTEMA ANTIRROBO DE CARGADORA

TX1015192 -UN-05DEC06

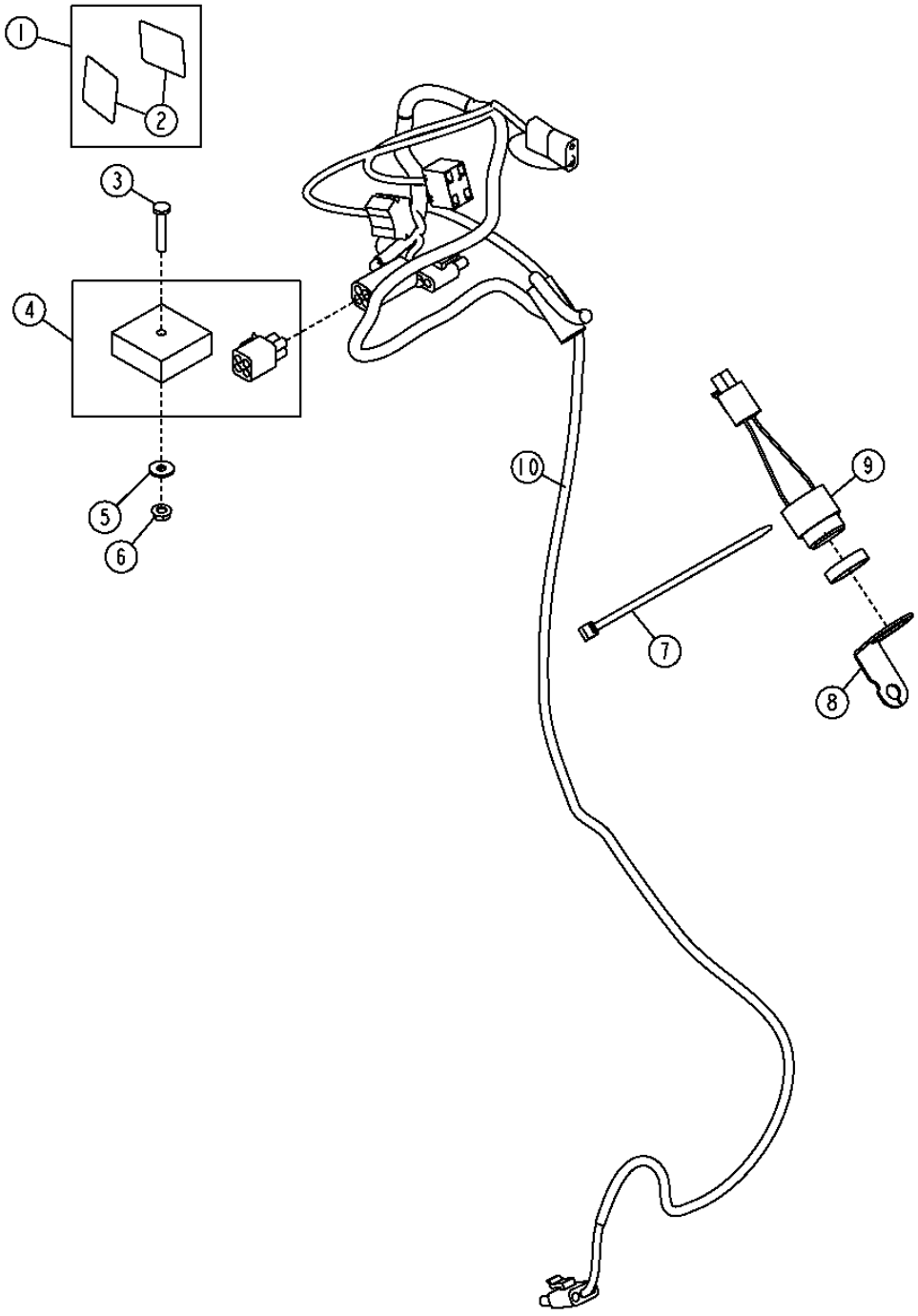

LOADER COUPLER ELECTRICAL AND ANTI-THEFT
CIRCUIT ELECTRIQUE ET ANTI-VOL D'ACCOUPLEMENT DE CHARGEUR
ACOPLADOR ELECTRICO Y SISTEMA ANTIRROBO DE CARGADORA

KEY	*PART NO.*	*PART NAME*	*QTY.*	*SERIAL NO.*	*REMARKS*
1	AT339526	LABEL KIT	1		ANTI-THEFT (WHOLE GOODS)
2	T228852	LABEL	2		ANTI-THEFT
3	21M7247	SCREW	1		M6 X 35
4	AT308237	RELAY MODULE	1		
5	24M7139	WASHER	1		6.400 X 18 X 1.600 MM
6	14M7303	FLANGE NUT	1		M6
7	R44302	TIE BAND	1		
8	T217077	BRACKET	1		ALARM MOUNTING
9	AE44436	HORN	1		
10	AT329137	WIRING HARNESS	1		

MAIN FRAME GUARDS
CHASSIS PRINCIPAL AVEC STABILISATEUR
CHASIS PRINCIPAL CON ESTABILIZADOR

TX1020322 -UN-16MAR07

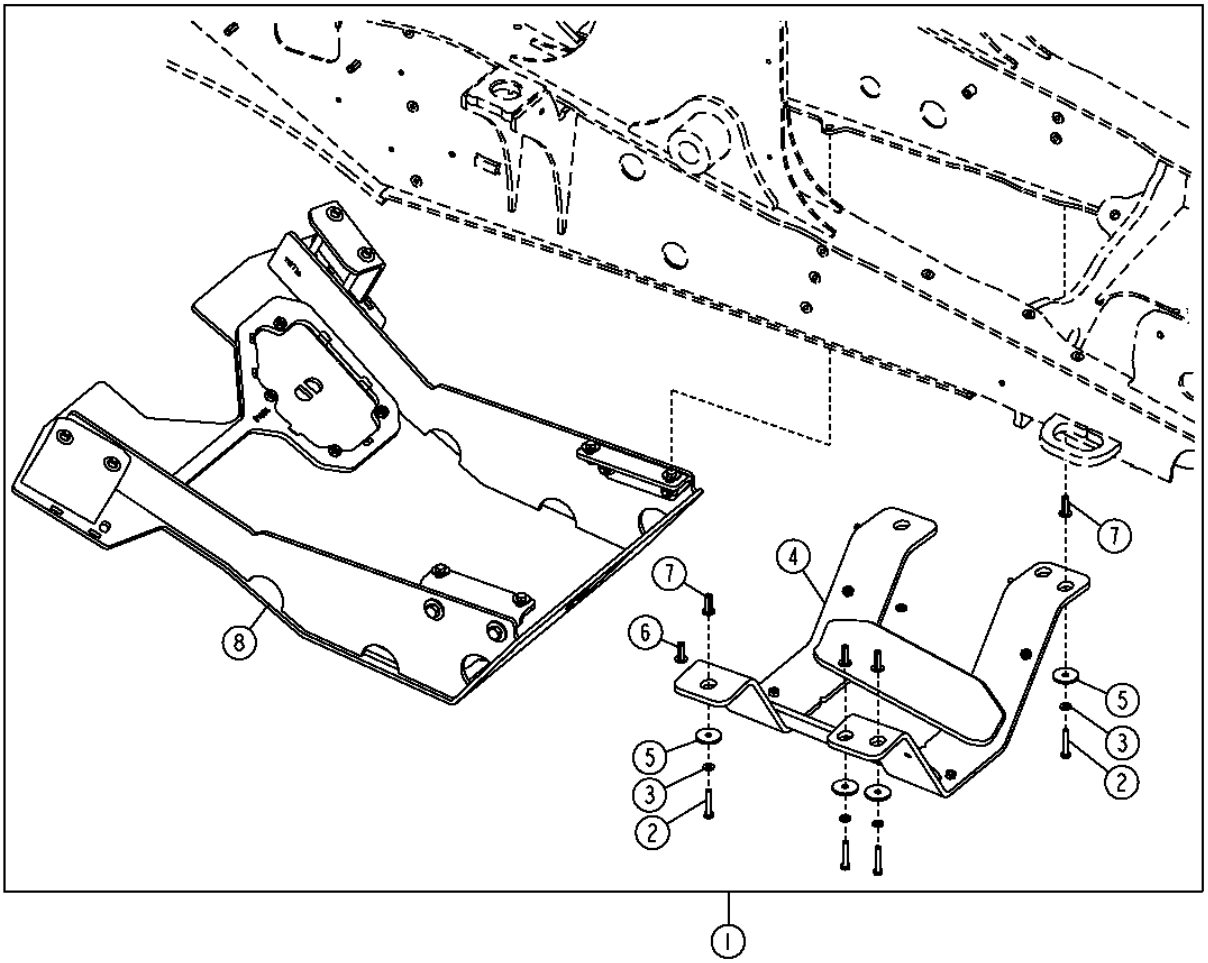

TX1020322

MAIN FRAME GUARDS
CHASSIS PRINCIPAL AVEC STABILISATEUR
CHASIS PRINCIPAL CON ESTABILIZADOR

KEY	*PART NO.*	*PART NAME*	*QTY.*	*SERIAL NO.*	*REMARKS*
1	AT325678	GUARD KIT	1		
2	19M7935	CAP SCREW	6		M10 X 55
3	24M7239	WASHER	6		10.700 X 21 X 2.500 MM
4	.....	GUARD	1		
5	R124347	WASHER	6		
6	T148410	NUT	6		
7	T148411	NUT	6		
8	**AT338274**	**GUARD KIT**	**1**		

MAIN FRAME WITH STABILIZER
CHASSIS PRINCIPAL AVEC STABILISATEUR
CHASIS PRINCIPAL CON ESTABILIZADOR

TX1020310 -UN-19MAR07

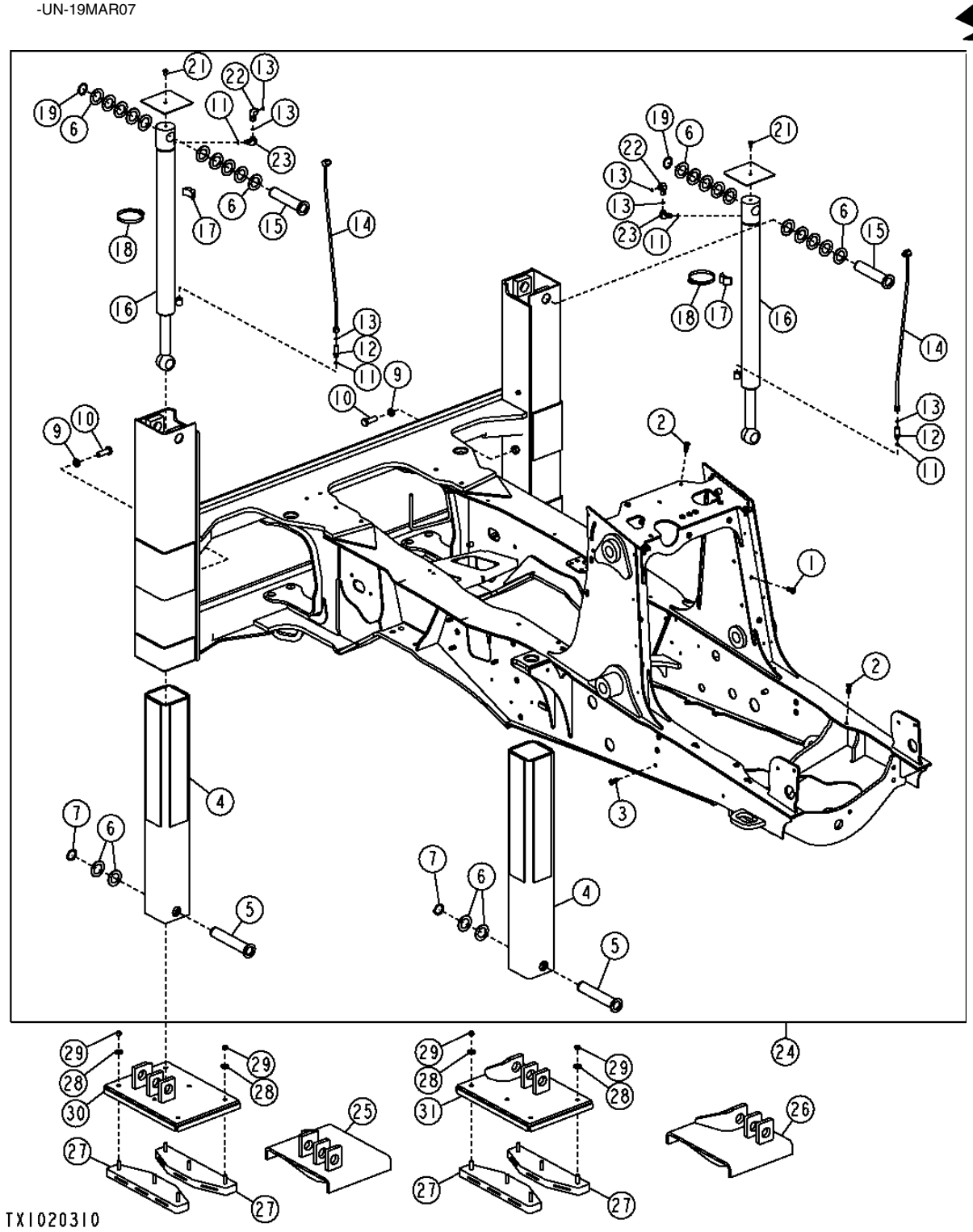

THIS PARTS LISTING IS CONTINUED

MAIN FRAME WITH STABILIZER
CHASSIS PRINCIPAL AVEC STABILISATEUR
CHASIS PRINCIPAL CON ESTABILIZADOR

KEY	PART NO.	PART NAME	QTY.	SERIAL NO.	REMARKS
1	T148410	NUT	18		M10
2	T148411	NUT	7		M10
3	T148409	NUT	23		M10
4	AT145849	ARM	2		
5	AT186254	PIN	2		
6	24H1571	WASHER	24		
7	U12167	SNAP RING	2		
8	14M7277	NUT	2		M20
9	14M7335	NUT	2		M20
10	19M8002	CAP SCREW	2		M20 X 55
11	R26448	O-RING	4		
12	38H1212	ADAPTER FITTING	2		
13	T77613	O-RING	2		
14	AT178683	LINE	2		
15	AT135084	PIN FASTENER	2		
16	AH211348	HYDRAULIC CYLINDER	2		
17	T181801	CLAMP	2		
18	AR21842	CLAMP	2		
19	40M7180	SNAP RING	2		
20	T126013	STRAP	2		
21	19M8324	CAP SCREW	2		M10 X 16
22	38H1094	ELBOW FITTING	2		
23	38H1004	ELBOW FITTING	2		
24	**AT313079**	**MAIN FRAME**	**1**		**CONVENIENCE ASSY, (ALSO ORDER T146102)**
25	AT172419	STABILIZER	1		DIRT PAD, LH
26	AT172420	STABILIZER	1		DIRT PAD, RH
27	AT195669	STREET PAD	4		
28	T29342	WASHER	12		
29	14H809	NUT	12		1/2"
30	AT330857	STABILIZER	1		STREET PAD, LH
31	AT330858	STABILIZER	1		STREET PAD, RH

BUMPER
PARE-CHOCS
PARAGOLPES

TX1015885 -UN-23DEC06

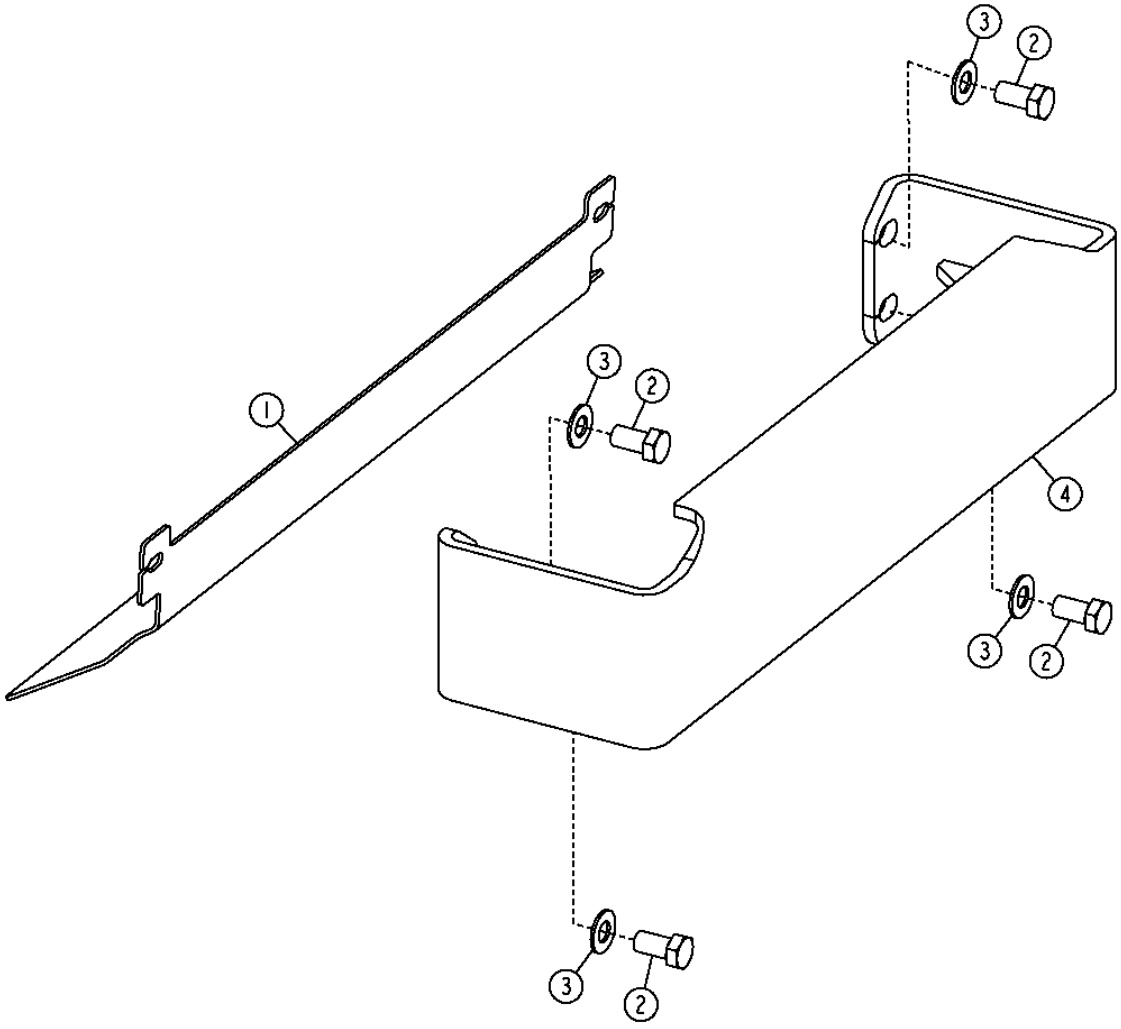

TX1015885

BUMPER
PARE-CHOCS
PARAGOLPES

KEY	*PART NO.*	*PART NAME*	*QTY.*	*SERIAL NO.*	*REMARKS*
1	T214677	BUMPER	1		
2	19M8029	CAP SCREW	4		M16 X 30
3	24H1368	WASHER	4		
4	AT335904	BUMPER	1		

BUMPER
PARE-CHOCS
PARAGOLPES

T211927 -UN-17JUN05

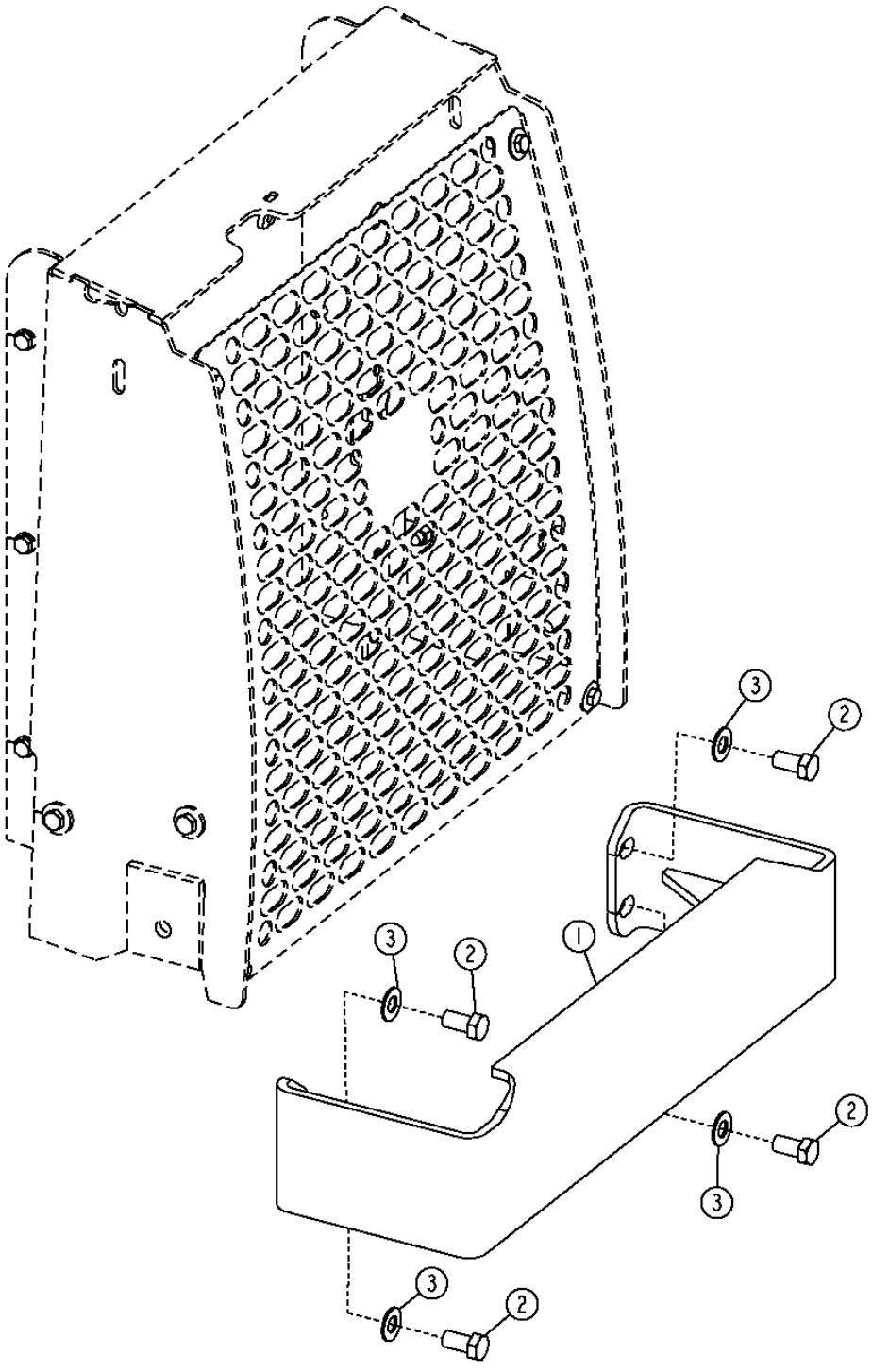

BUMPER
PARE-CHOCS
PARAGOLPES

KEY	*PART NO.*	*PART NAME*	*QTY.*	*SERIAL NO.*	*REMARKS*
1	AT321040	BUMPER	1		
2	19M8029	CAP SCREW	4		M16 X 30
3	24H1368	WASHER	4		16.662 X 33.325 X 2.286 MM

FRONT COUNTERWEIGHT
CONTREPOIDS AVANT
CONTRAPESO DELANTERO

TX1012850 -UN-10OCT06

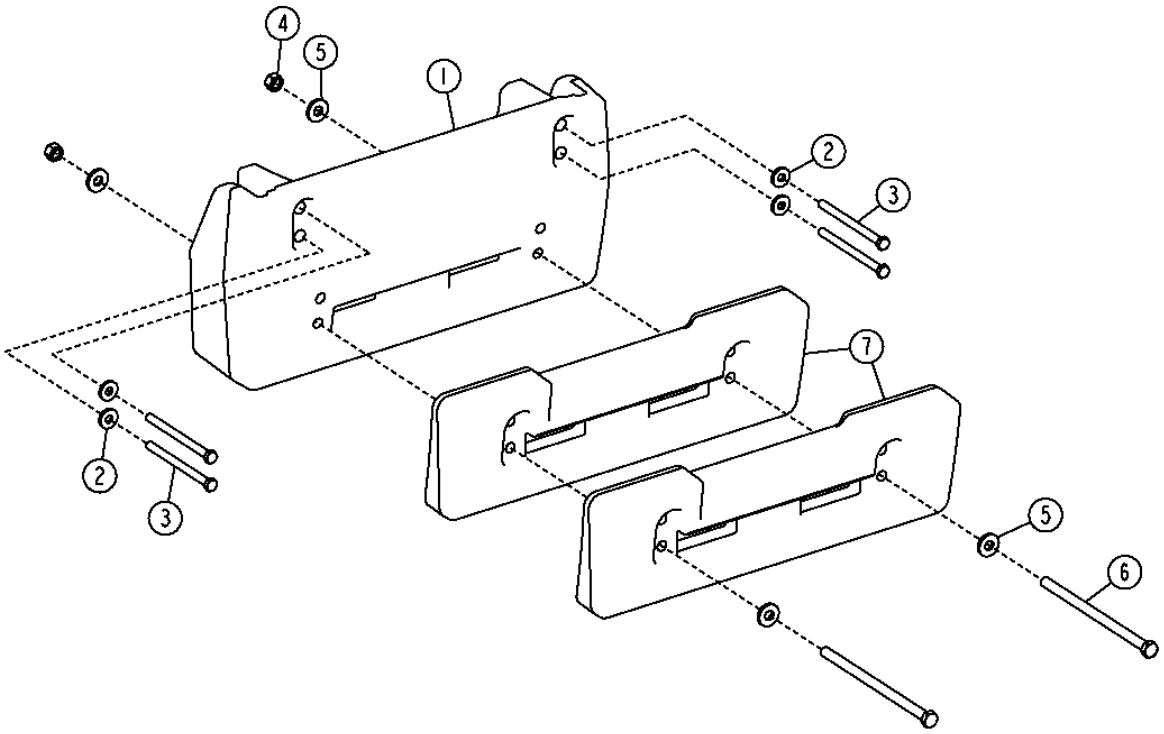

TX1012850

FRONT COUNTERWEIGHT
CONTREPOIDS AVANT
CONTRAPESO DELANTERO

KEY	*PART NO.*	*PART NAME*	*QTY.*	*SERIAL NO.*	*REMARKS*
1	T210306	COUNTERWEIGHT	1		(WHOLE GOODS) (450 LB.) PRIMARY COUNTERWEIGHT
	T210304	**COUNTERWEIGHT**	**1**		**(WHOLE GOODS) (970 LB.) PRIMARY COUNTERWEIGHT**
2	T119912	WASHER	4		(USE WITH PRIMARY COUNTERWEIGHT)
3	19M8044	BOLT	4		M16 X 210, (USE WITH PRIMARY COUNTERWEIGHT)
4	14M7277	NUT	2		M20, (USE WITH ADDITIONAL COUNTERWEIGHT)
5	T151797	WASHER	4		(USE WITH ADDITIONAL COUNTERWEIGHT)
6	19M7645	BOLT	2		M20 X 200, (235 LB.) ADDITIONAL COUNTERWEIGHT, (USE WITH T210304)
	19M8389	BOLT	2		M20 X 280, (235 LB.) ADDITIONAL COUNTERWEIGHT, (USE WITH T210306)
	19M8817	BOLT	2		M20 X 360, (470 LB.) ADDITIONAL COUNTERWEIGHT, (USE WITH T210306)
7	**T210305**	**COUNTERWEIGHT**	**1**		**(WHOLE GOODS) (235 LB.) ADDITIONAL COUNTERWEIGHT**

ROPS CANOPY HEADLINER AND MOUNTING ISOLATORS
REVETEMENT DE TOIT ET ISOLATEURS DE MONTAGE D'AUVENT D'ARCEAU DE SECURITE
FORRO INTERIOR DE DOSEL DE ROPS Y AMORTIGUADORES DE MONTAJE

TX1014118 -UN-18DEC06

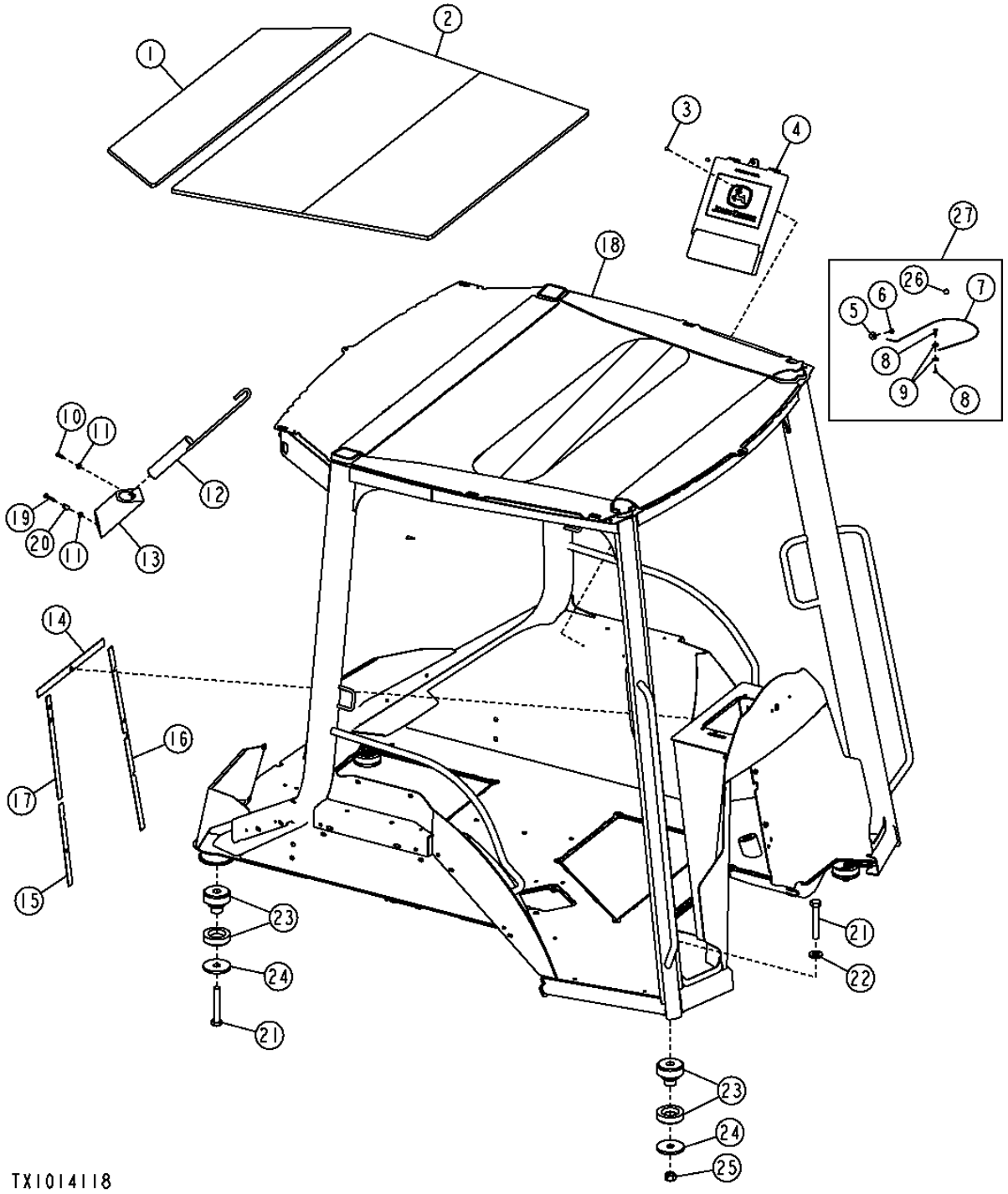

ROPS CANOPY HEADLINER AND MOUNTING ISOLATORS
REVETEMENT DE TOIT ET ISOLATEURS DE MONTAGE D'AUVENT D'ARCEAU DE SECURITE
FORRO INTERIOR DE DOSEL DE ROPS Y AMORTIGUADORES DE MONTAJE

KEY	PART NO.	PART NAME	QTY.	SERIAL NO.	REMARKS
1	T186029	HEADLINER	1		
2	T186030	HEADLINER	1		
3	R79033	RIVET	2		
4	AT195894	HOLDER	1		
5	24M7100	WASHER	1		
6	37M7109	SCREW	1		
7	AT164804	CABLE	1		
8	AT164803	BOLT	1		
9	24M7139	WASHER	2		
10	21M7310	SCREW	1		M6 X 25
11	24M7238	WASHER	2		
12	AT150725	PIN FASTENER	1		
13	T141234	HOLDER	1		
14	T185782	GASKET	1		
15	T185784	ISOLATOR	1		
16	T185783	GASKET	1		
17	T185783	GASKET	1		
18	AT188965	FRAME	1		(MANUAL CONTROLS) (INCLUDES T166896)
	AT304887	FRAME	1		(PILOT CONTROL) (INCLUDES T166896)
19	T134874	SELF-LOCKING SCREW	1		M6 X 40
20	H128841	SPACER	1		
21	19M7883	SCREW	4		M20 X 120
22	24M7242	WASHER	2		
23	AT165288	ISOLATOR	4		
24	T101807	WASHER	4		
25	14M7277	NUT	2		M20
26	R55326	RIVET	1		
27	**AT192032**	**KIT**	**1**		**(WHOLE GOODS) (OPERATOR MANUAL TETHER KIT)**

CAB FRAME, HEADLINER AND CAB MOUNTING ISOLATORS
OSSATURE DE CABINE, REVETEMENT DE TOIT ET ISOLATEURS DE MONTAGE DE CABINE
BASTIDOR DE CABINA, FORRO DE TECHO INTERIOR Y AMORTIGUADORES DE MONTAJE DE CABINA

TP58119 -UN-06OCT00

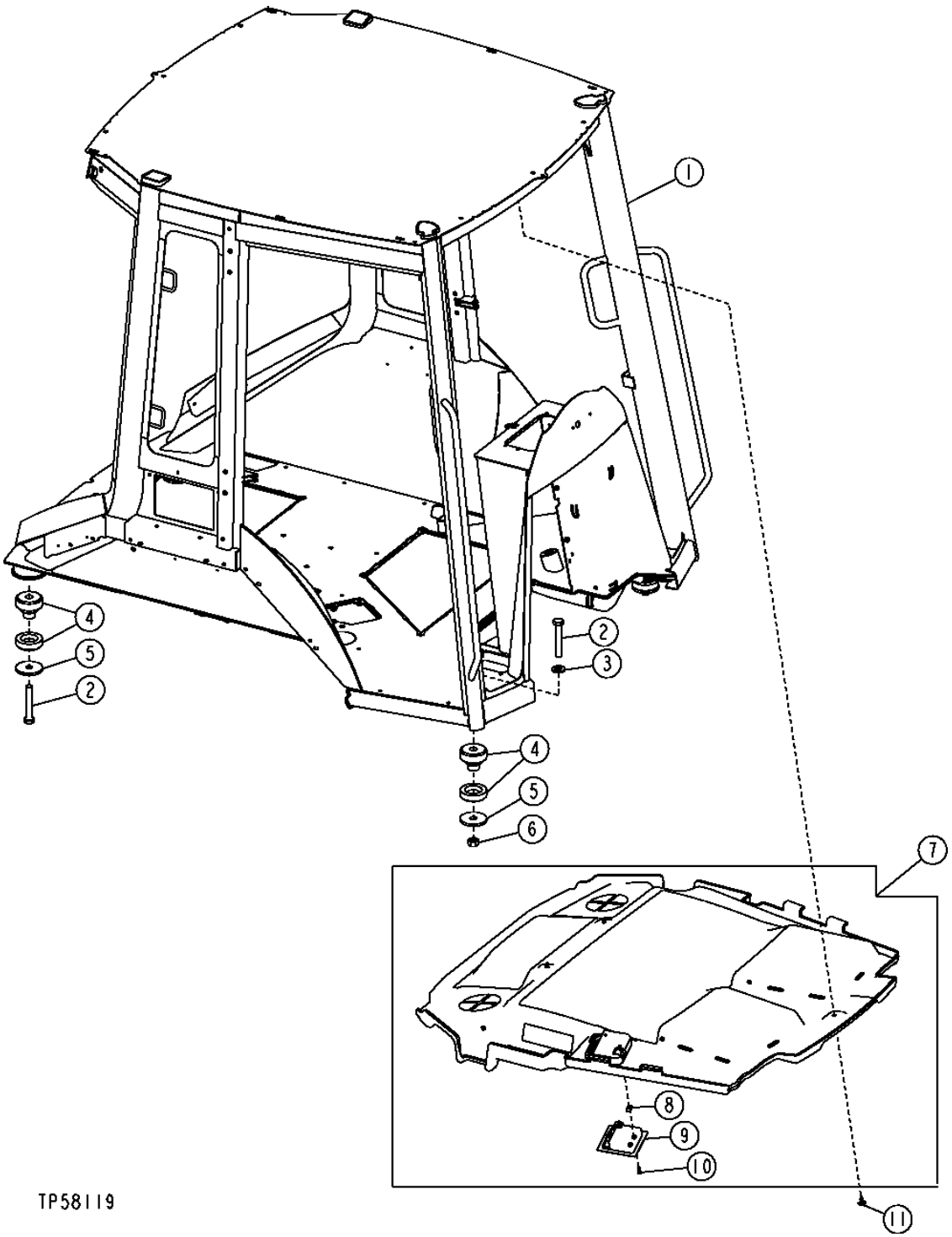

CAB FRAME, HEADLINER AND CAB MOUNTING ISOLATORS
OSSATURE DE CABINE, REVETEMENT DE TOIT ET ISOLATEURS DE MONTAGE DE CABINE
BASTIDOR DE CABINA, FORRO DE TECHO INTERIOR Y AMORTIGUADORES DE MONTAJE DE CABINA

KEY	*PART NO.*	*PART NAME*	*QTY.*	*SERIAL NO.*	*REMARKS*
1	AT187096	FRAME	1		(LEVER CONTROL)
	AT199734	FRAME	1		(PILOT CONTROL)
2	19M7883	SCREW	4		M20 X 120
3	24M7242	WASHER	2		
4	AT165288	ISOLATOR	4		
5	T101807	WASHER	4		
6	14M7277	NUT	2		M20
7	AT335595	HEADLINER	1		WITHOUT RADIO, (AT321004 NLA)
	AT335596	HEADLINER	1		WITH RADIO, (AT321005 NLA)
8	M84972	NUT	2		
9	AT320544	LAMP	1		(INCLUDES AT192414)
	AT192414	BULB	1		(NOT ILLUSTRATED)
10	T134895	SELF-LOCKING SCREW	2		
11	MT2485	PLUG	9		FASTENER

FLOOR MATS
TAPIS
FELPUDO

T136077 -UN-05DEC00

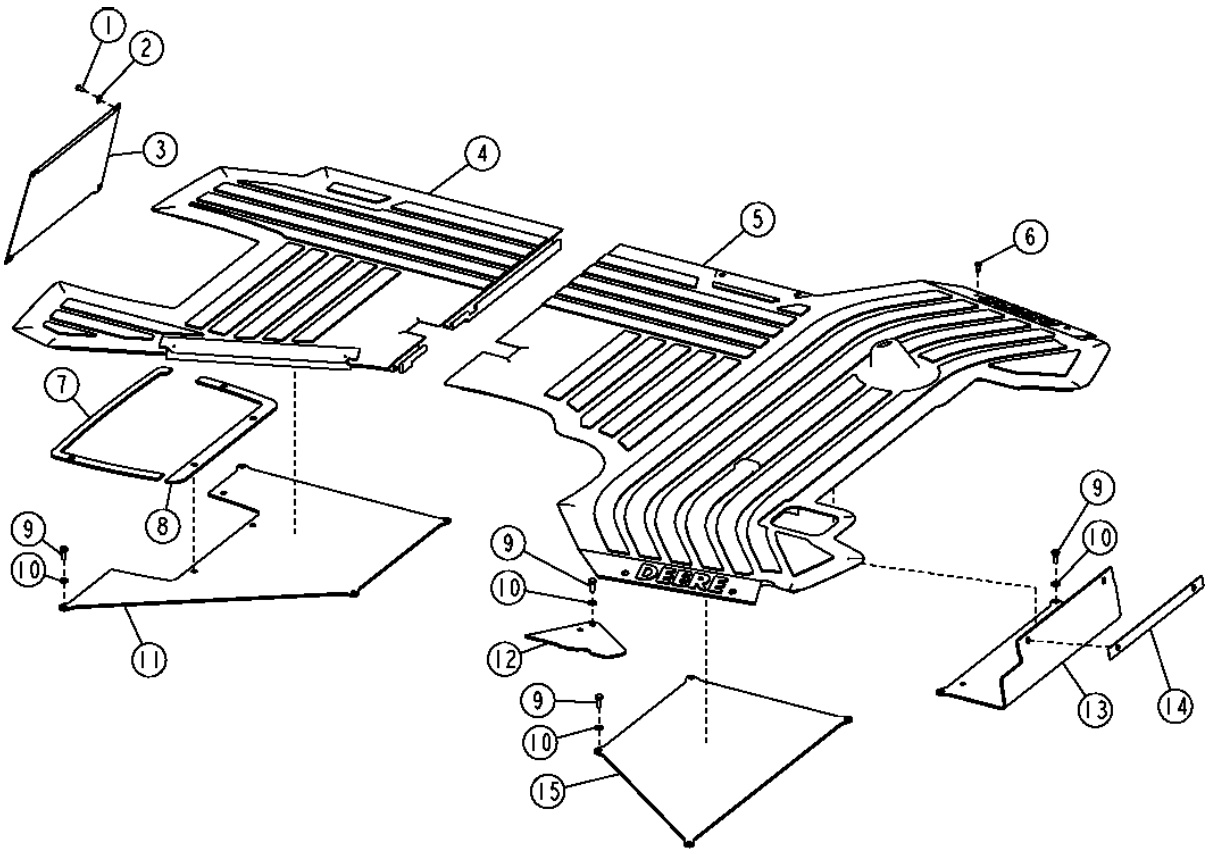

T136077

THIS PARTS LISTING IS CONTINUED

FLOOR MATS
TAPIS
FELPUDO

KEY	PART NO.	PART NAME	QTY.	SERIAL NO.	REMARKS
1	19M7923	CAP SCREW	4		M6 X 12
2	24M7139	WASHER	4		
3	T203458	PANEL	1		
4	T166000	MAT	1		REAR
	T188726	MAT	1		REAR (PILOT CONTROLS)
5	T165969	MAT	1		FRONT
6	T133674	SELF-LOCKING SCREW	4		M6 X 16
7	T185773	GASKET	1		
8	T185774	GASKET	1		(LEVER CONTROLS)
	T191142	GASKET	1		(PILOT CONTROLS)
9	19M7881	SCREW	14		M8 X 20
10	24M7238	WASHER	14		
11	AT186321	COVER	1		REAR
	AT196294	COVER	1		REAR (PILOT CONTROLS)
12	AT197479	COVER	1		LINKAGE
	AT300928	COVER	1		LINKAGE, WITH RIDE CONTROL, SELECTIVE FLOW VALVE OR HYDRAULIC FRONT COUPLER
13	T188565	COVER	1		FRONT
14	T185775	GASKET	1		
15	T165948	COVER	1		MIDDLE

DOORS AND SIDE WINDOWS FOR CAB
PORTIERES ET GLACES LATERALES POUR CABINE
PUERTAS Y VENTANAS LATERALES DE CABINA

TX1014673 -UN-29DEC06

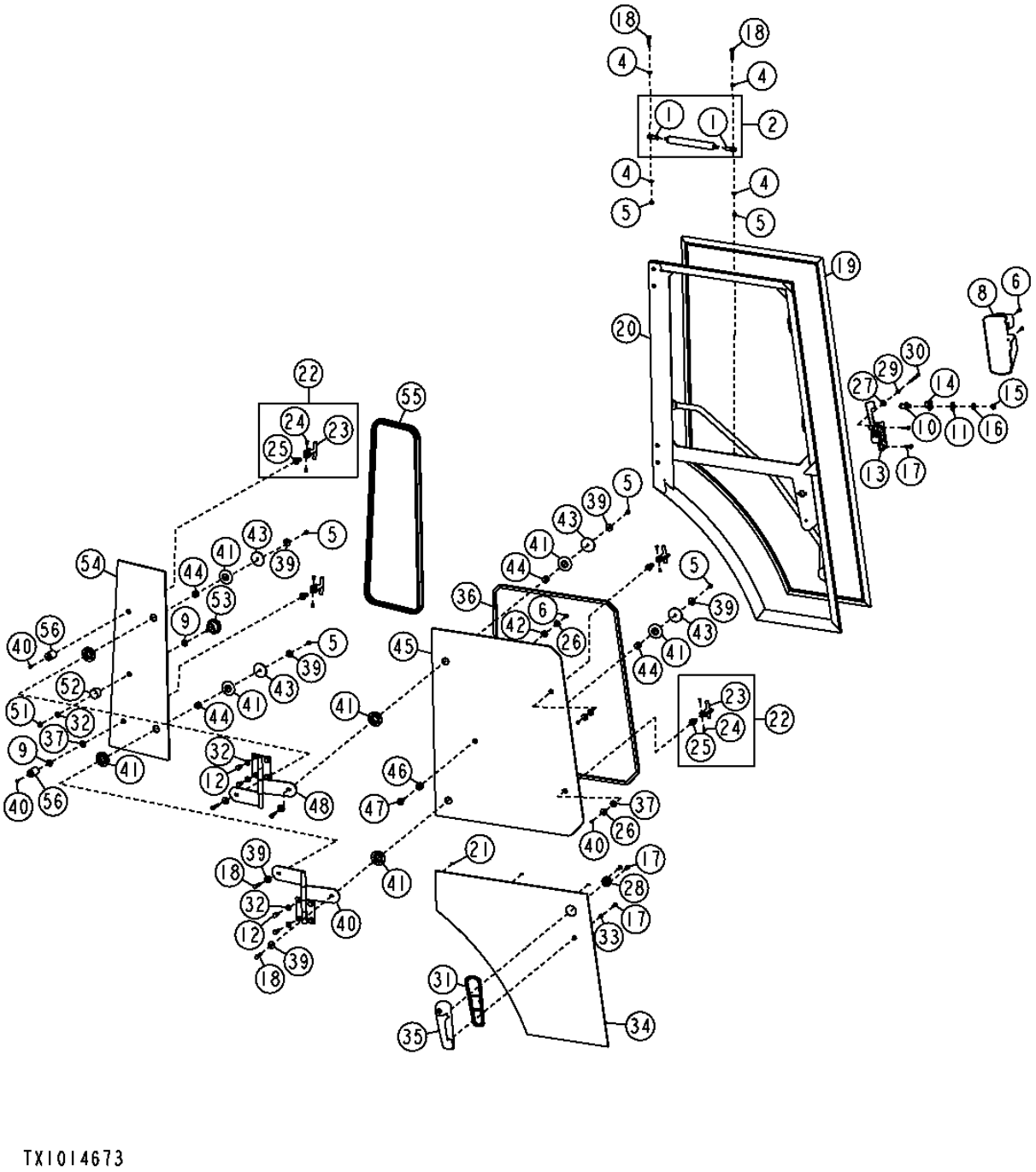

TX1014673

THIS PARTS LISTING IS CONTINUED

DOORS AND SIDE WINDOWS FOR CAB
PORTIERES ET GLACES LATERALES POUR CABINE
PUERTAS Y VENTANAS LATERALES DE CABINA

KEY	PART NO.	PART NAME	QTY.	SERIAL NO.	REMARKS
1	AM102062	LINK END	2		
2	AT340155	CYLINDER	1		
4	24M7238	WASHER	4		8.700 X 17 X 2 MM
5	14M7426	LOCK NUT	8		M8
6	T188806	SCREW	4		
	T133674	SELF-LOCKING SCREW	3		
8	T217432	COVER	1		RH
	T217433	COVER	1		LH
9	R52921	WASHER	2		PLASTIC
10	AR91896	STRIKER	2		
11	24H1330	WASHER	2		15/32" X 1-3/8" X 7/64"
12	19M7938	CAP SCREW	4		M10 X 20
13	AT326979	LATCH	1		RH
	AT326978	LATCH	1		LH
14	T135583	GUARD	1		STRICKER
15	14H1047	NUT	1		7/16"
16	T105740	WASHER	1		
17	19M7863	SCREW	5		M6 X 25
18	19M7922	CAP SCREW	4		M8 X 40
19	AT184652	ISOLATOR	1		RH
	AT184719	ISOLATOR	1		LH
20	.....	DOOR	1		RH
	.....	DOOR	1		LH
21	T135675	STAND-OFF	7		
22	AT196522	LATCH	4		
23	T119153	LATCH	4		
24	A48970	DUAL LOCK FASTENER	8		
25	.....	BASE	4		
26	24H1288	WASHER	3		9/32" X 1" X 1/16"
27	T218865	WASHER	1		PLASTIC
28	T205902	SPACER	2		
29	T218866	SPACER	2		
30	19M9402	CAP SCREW	3		M6 X 80
31	T204599	GASKET	2		
32	24M7239	WASHER	5		10.700 X 21 X 2.500 MM
33	T205901	WASHER	1		
34	T214548	WINDOWPANE	1		RH
	T214527	WINDOWPANE	1		LH
35	AT306181	HANDLE	1		
36	T165357	ISOLATOR	1		
37	T76833	WASHER	4		
39	24M7024	WASHER	8		9 X 28 X 3 MM
40	AT184524	HINGE	2		LOWER R.H. AND UPPER L.H.
41	T158081	WASHER	8		
42	T76832	WASHER	1		
43	T185678	WASHER	4		
44	T158358	BUSHING	4		
45	T164707	WINDOWPANE	2		RH AND LH
46	T186017	BUSHING	1		
47	T186016	BUSHING	1		
48	AT184651	HINGE	2		LOWER L.H. AND UPPER R.H.
51	14M7167	LOCK NUT	1		M10
52	T76830	GUARD	1		
53	AT75311	KNOB	1		
54	T164706	WINDOWPANE	1		RH
	T166060	WINDOWPANE	1		LH
55	T164710	ISOLATOR	1		RH
	T164709	ISOLATOR	1		LH
56	T186018	BUMPER	2		

THIS PARTS LISTING IS CONTINUED

WINDSHIELD GLASS FOR CAB
VITRE DE PARE-BRISE POUR CABINE
CRISTAL DE PARABRISAS PARA CABINA

TP69621 -UN-05OCT00

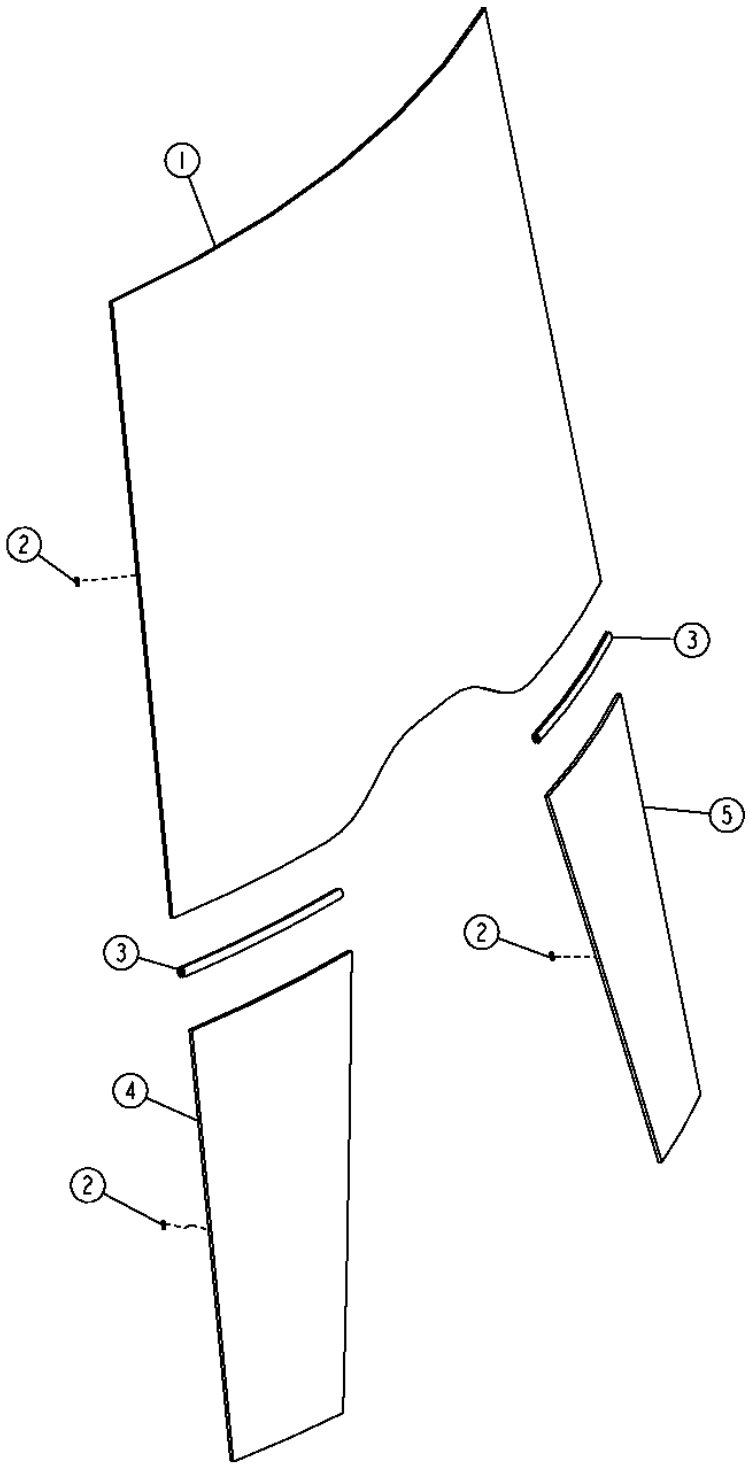

WINDSHIELD GLASS FOR CAB
VITRE DE PARE-BRISE POUR CABINE
CRISTAL DE PARABRISAS PARA CABINA

KEY	*PART NO.*	*PART NAME*	*QTY.*	*SERIAL NO.*	*REMARKS*
1	T191071	WINDOWPANE	1		
2	T135675	STAND-OFF	22		
3	T164697	ISOLATOR	2		
4	T191072	WINDOWPANE	1		LOWER RIGHT
5	T191073	WINDOWPANE	1		LOWER LEFT

SLIDING REAR WINDOWS AND CORNER WINDOWPANES
GLACES ARRIERE COULISSANTES ET GLACES DE COIN
VENTANAS TRASERAS DESLIZANTES Y CRISTALES DE ESQUINA

T200471 -UN-28MAY04

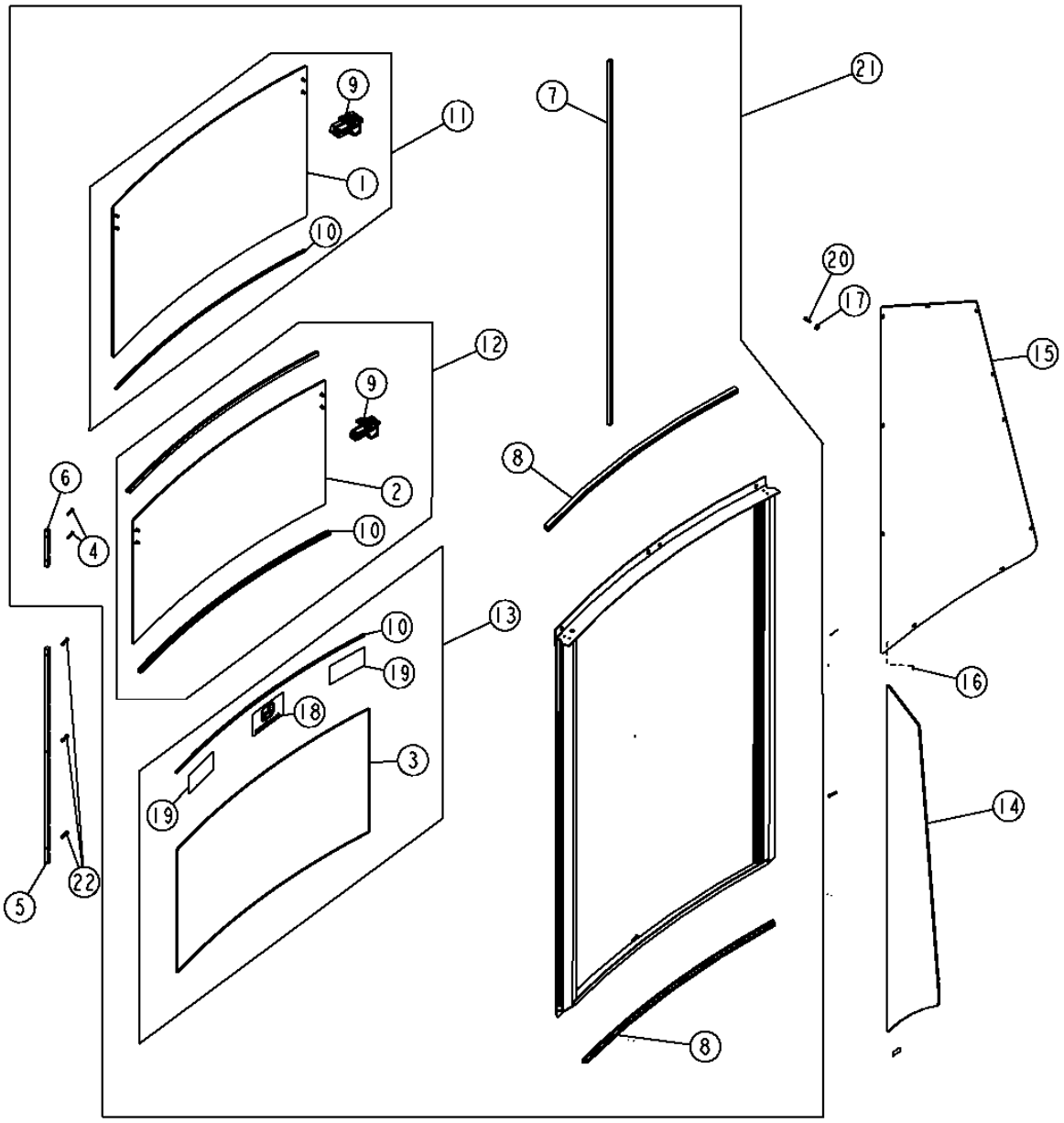

T200471

SLIDING REAR WINDOWS AND CORNER WINDOWPANES
GLACES ARRIERE COULISSANTES ET GLACES DE COIN
VENTANAS TRASERAS DESLIZANTES Y CRISTALES DE ESQUINA

KEY	*PART NO.*	*PART NAME*	*QTY.*	*SERIAL NO.*	*REMARKS*
1	T201955	WINDOWPANE	1		
2	T201954	WINDOWPANE	1		
3	T201953	WINDOWPANE	1		
4	T201952	SCREW	4		
5	T201957	FRAME	2		
6	T201956	FRAME	2		
7	T201958	WEATHERSTRIP	2		
8	T201968	GASKET	2		
9	AT302817	LATCH	1		(INCLUDES HARDWARE AND (1) LATCH)
	21H1395	SCREW	2		0.164" X 2", (TOP WINDOW)
	21H1367	SCREW	2		0.164" X 1-3/8", (MIDDLE WINDOW)
	T166371	GROMMET	2		
	T223289	INSERT	2		0.164"
10	AT307770	SEAL	4		
11	AT302816	WINDOW	1		
12	AT302815	WINDOW	1		
13	AT302813	WINDOW	1		
14	T164705	WINDOWPANE	1		(RIGHT REAR CORNER)
15	T164708	WINDOWPANE	1		(LEFT REAR CORNER)
16	T135675	STAND-OFF	22		
17	24M7139	WASHER	6		
18	JD5750	LABEL	1		
19	T183768	LABEL	1		
20	19M7775	SCREW	6		M6 X 16
21	AT302812	WINDOW	1		CONVENIENCE ASSY, (ALSO ORDER (2) T201957 AND (6) T208077)
22	T208077	SCREW	6		

FRONT WINDSHIELD WIPER SYSTEM
ESSUIE-GLACE AVANT
SISTEMA DE LIMPIAPARABRISAS

TX1014628 -UN-20DEC06

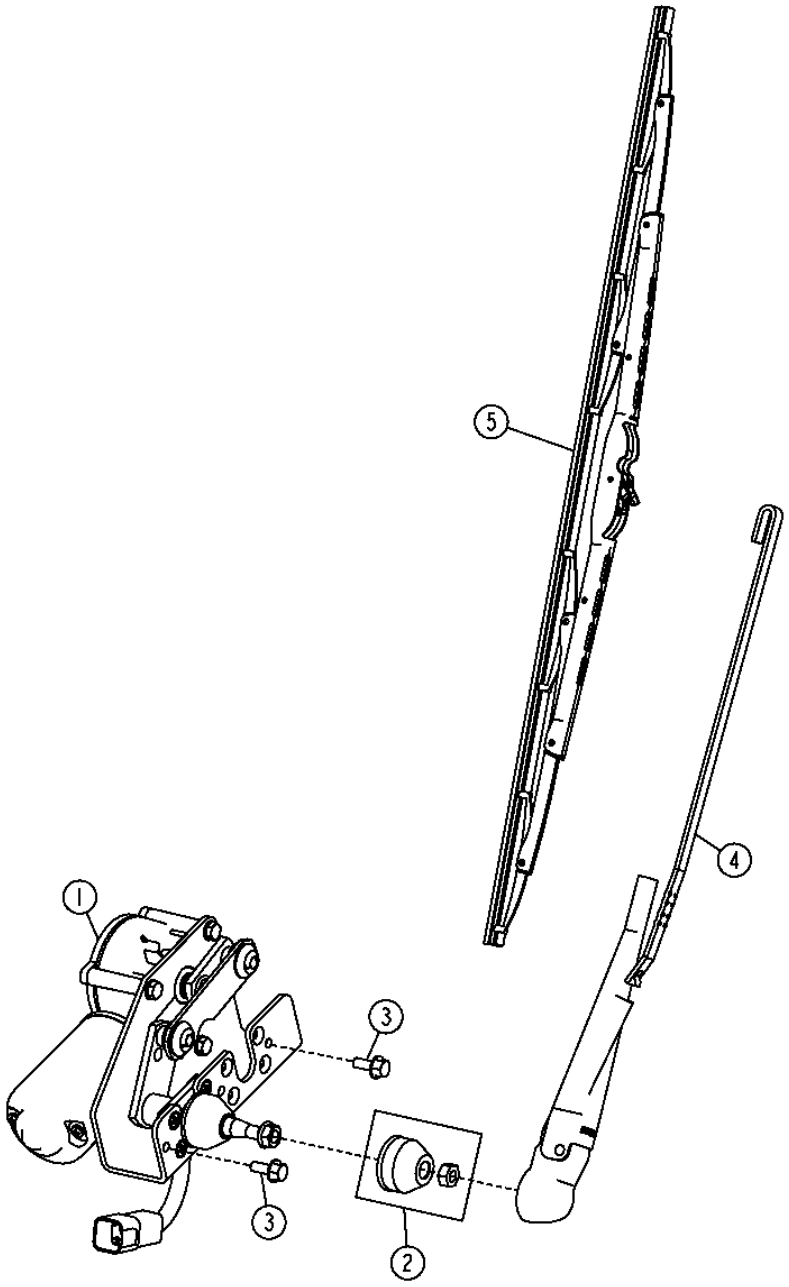

TX1014628

FRONT WINDSHIELD WIPER SYSTEM
ESSUIE-GLACE AVANT
SISTEMA DE LIMPIAPARABRISAS

KEY	*PART NO.*	*PART NAME*	*QTY.*	*SERIAL NO.*	*REMARKS*
1	AT315228	WIPER MOTOR	1		(INCLUDES RE40049)
2	RE40049	KIT	1		MOUNTING HARDWARE
3	19M7775	SCREW	2		M6 X 16
4	AT323012	WIPER ARM	1		
5	AL153661	WIPER BLADE	1		

FRONT WINDSHIELD WASHER RESERVOIR AND PUMP
RESERVOIR ET POMPE DE LAVE-GLACE AVANT
DEPOSITO DE LAVAPARABRISAS Y BOMBA

TP58145 -UN-05OCT00

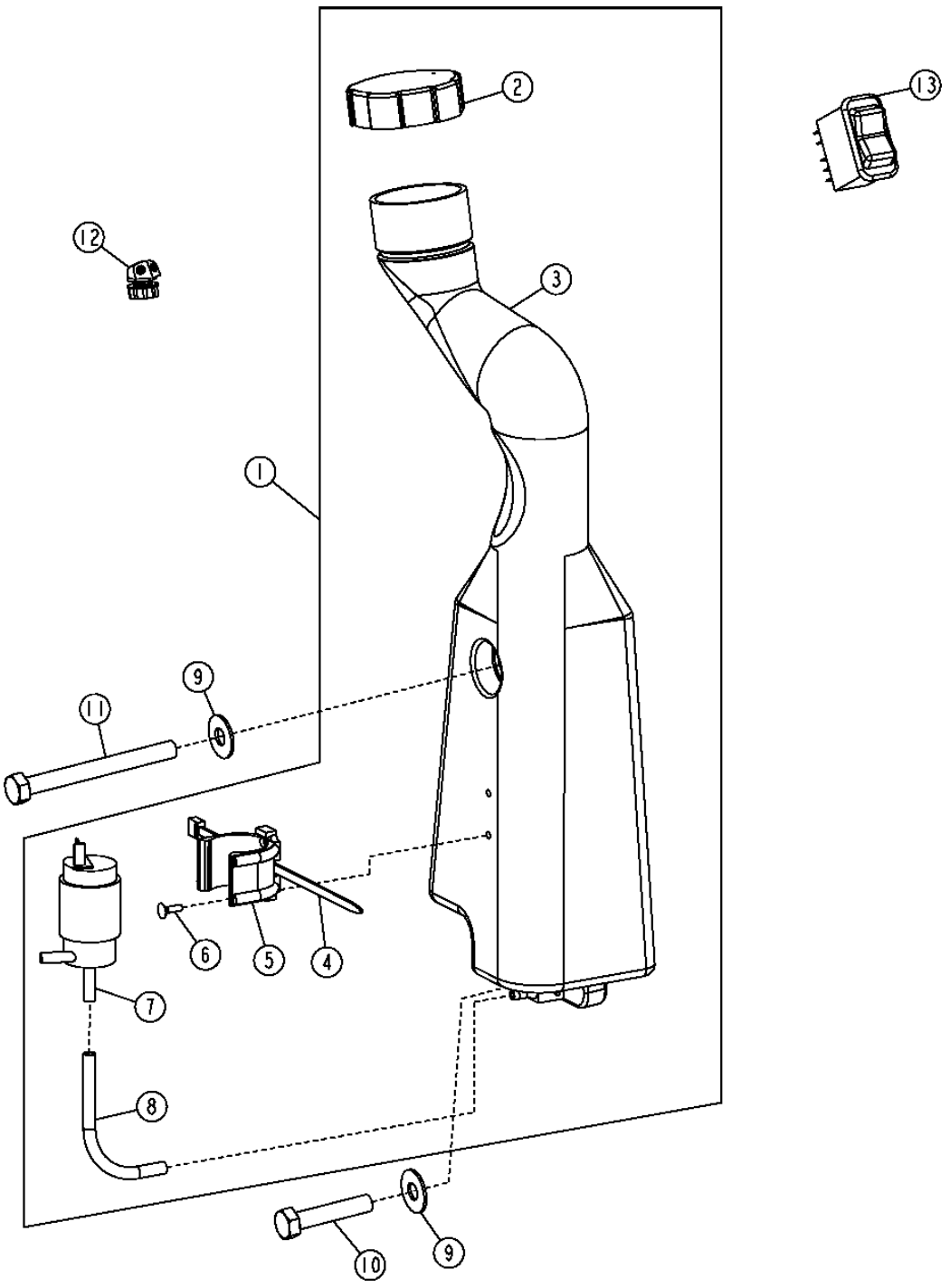

TP58145

FRONT WINDSHIELD WASHER RESERVOIR AND PUMP
RESERVOIR ET POMPE DE LAVE-GLACE AVANT
DEPOSITO DE LAVAPARABRISAS Y BOMBA

KEY	*PART NO.*	*PART NAME*	*QTY.*	*SERIAL NO.*	*REMARKS*
1	AT187710	WINDSHIELD WASHER	1		
2	AT173193	CAP	1		
3	T179055	RESERVOIR	1		
4	R44302	TIE BAND	1		
5	T183344	BRACKET	1		
6	R116089	SCREW	2		0.138" X 1/2"
7	AT174348	PUMP	1		
8	.....	HOSE	1		(MAKE FROM R120653 BULK MATERIAL, CUT TO LENGTH)
9	24H1307	WASHER	2		
10	R151507	CAP SCREW	1		M10 X 50
11	M132832	CAP SCREW	1		M10 X 100
12	AT188766	NOZZLE	1		
13	AT317446	TOGGLE/ROCKER SWITCH	1		

REAR WINDSHIELD WIPER SYSTEM
ESSUIE-GLACE ARRIERE
SISTEMA DE LIMPIACRISTAL

TX1014626 -UN-04DEC06

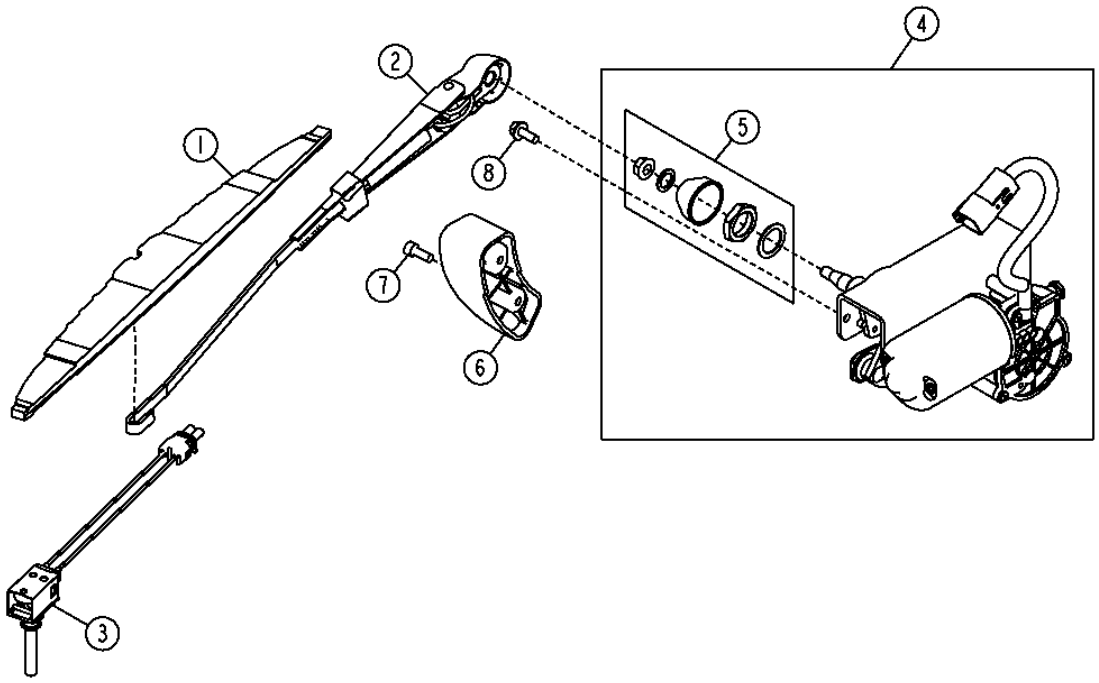

TX1014626

REAR WINDSHIELD WIPER SYSTEM
ESSUIE-GLACE ARRIERE
SISTEMA DE LIMPIACRISTAL

KEY	*PART NO.*	*PART NAME*	*QTY.*	*SERIAL NO.*	*REMARKS*
1	AT304631	WIPER BLADE	1		
2	AT323013	WIPER ARM	1		
3	AT305685	PUSH SWITCH	1		
4	AT315227	WIPER MOTOR	1		(INCLUDES RE40049)
5	RE40049	KIT	1		
6	AT340856	RAMP	2		
7	19M8553	SCREW	1		M6 X 16

BACKHOE CONTROL CONSOLE (TWO LEVER)
CONSOLE DE COMMANDE DE RETROPELLE (DEUX LEVIER)
CONSOLA DE CONTROL DE RETROEXCAVADORA (DOS PALANCA)

TP58177 -UN-12AUG00

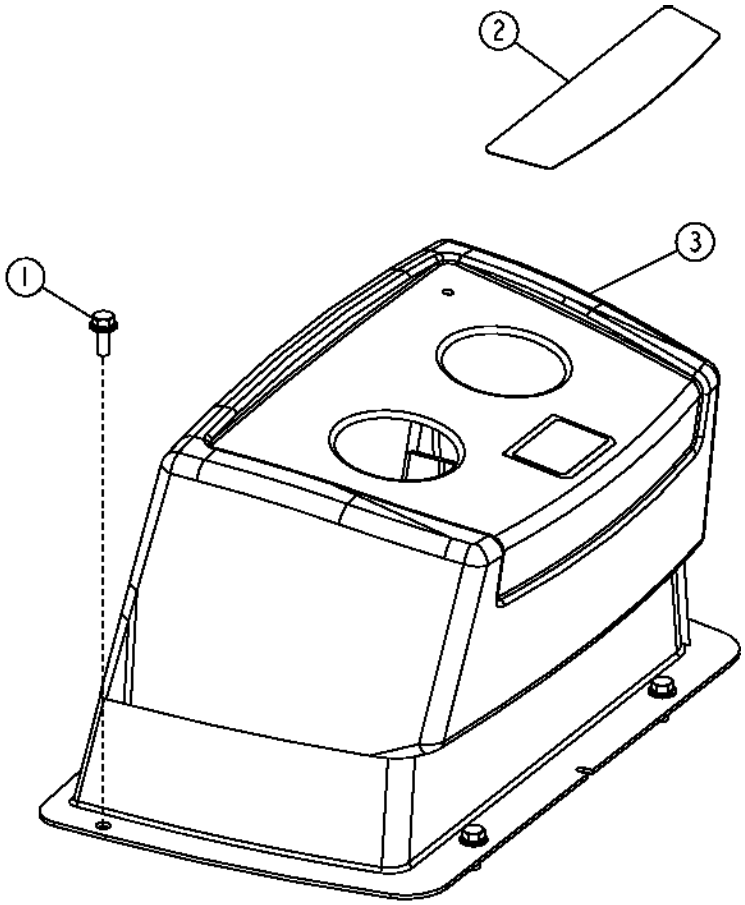

TP58177

BACKHOE CONTROL CONSOLE (TWO LEVER)
CONSOLE DE COMMANDE DE RETROPELLE (DEUX LEVIER)
CONSOLA DE CONTROL DE RETROEXCAVADORA (DOS PALANCA)

KEY	*PART NO.*	*PART NAME*	*QTY.*	*SERIAL NO.*	*REMARKS*
1	19M7866	SCREW	4		M8 X 20
2	T165584	LABEL	1		
3	AT193375	COVER	1		
	AT193526	COVER	1		WITH RH PEDAL

STEERING COLUMN COVERS
COUVERCLE DE COLONNE DE DIRECTION
CUBIERTA DE LA COLUMNA DE DIRECCION

TX1014870 -UN-20DEC06

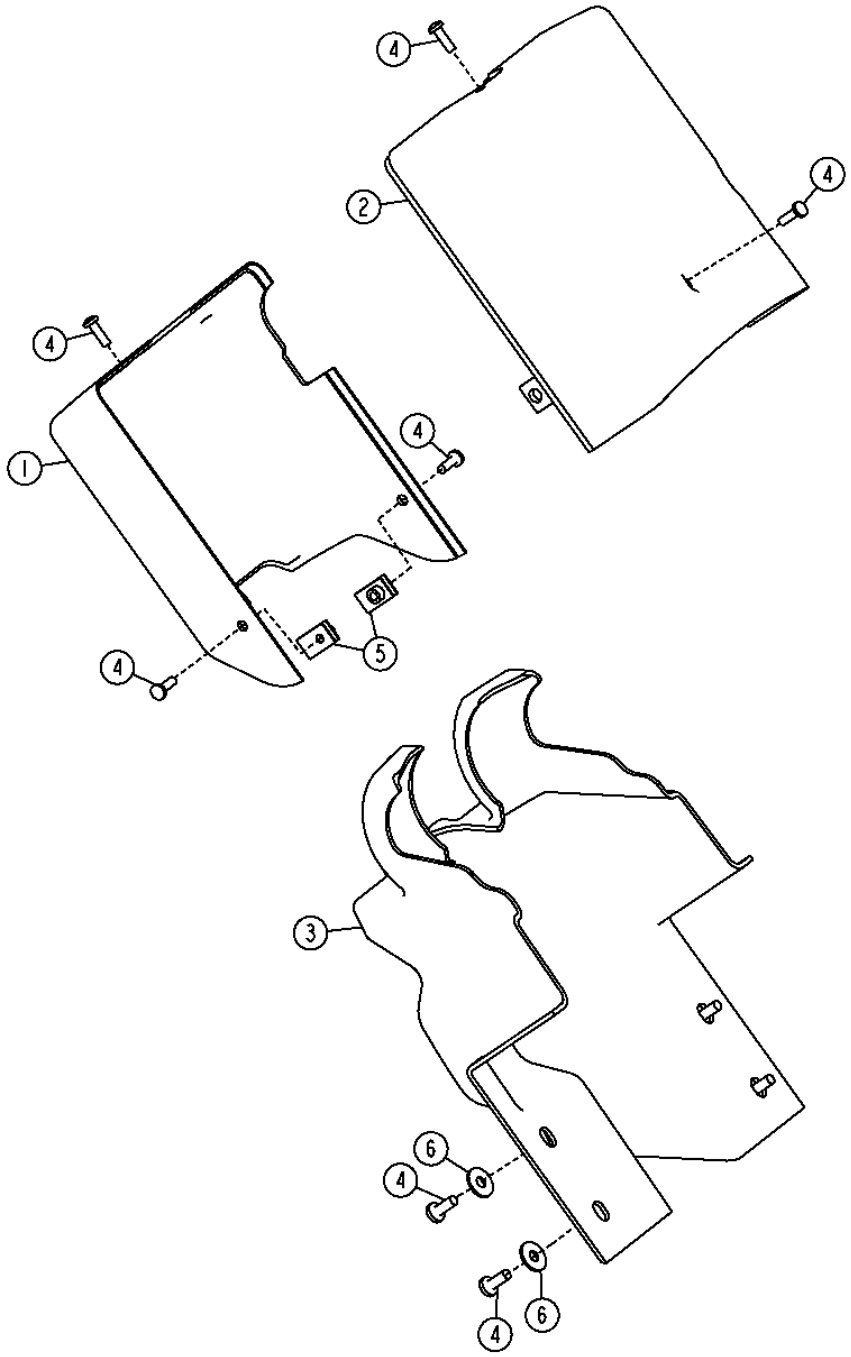

TX1014870

STEERING COLUMN COVERS
COUVERCLE DE COLONNE DE DIRECTION
CUBIERTA DE LA COLUMNA DE DIRECCION

KEY	*PART NO.*	*PART NAME*	*QTY.*	*SERIAL NO.*	*REMARKS*
1	T210624	COVER	1		COLUMN, LOWER
2	T210623	COVER	1		COLUMN, UPPER
3	T216833	COVER	1		STEERING COLUMN, STATIONARY
4	21M7271	SCREW	5		M5 X 16
5	R117892	NUT	2		
6	24H1646	WASHER	4		17/64" X 3/4" X 0.060"

FRONT CONSOLE (CAB OR CANOPY)
CONSOLE AVANT POUR CABINE ET AUVENT
CONSOLA DELANTERA DE CABINA Y DOSEL

TX1014847 -UN-29DEC06

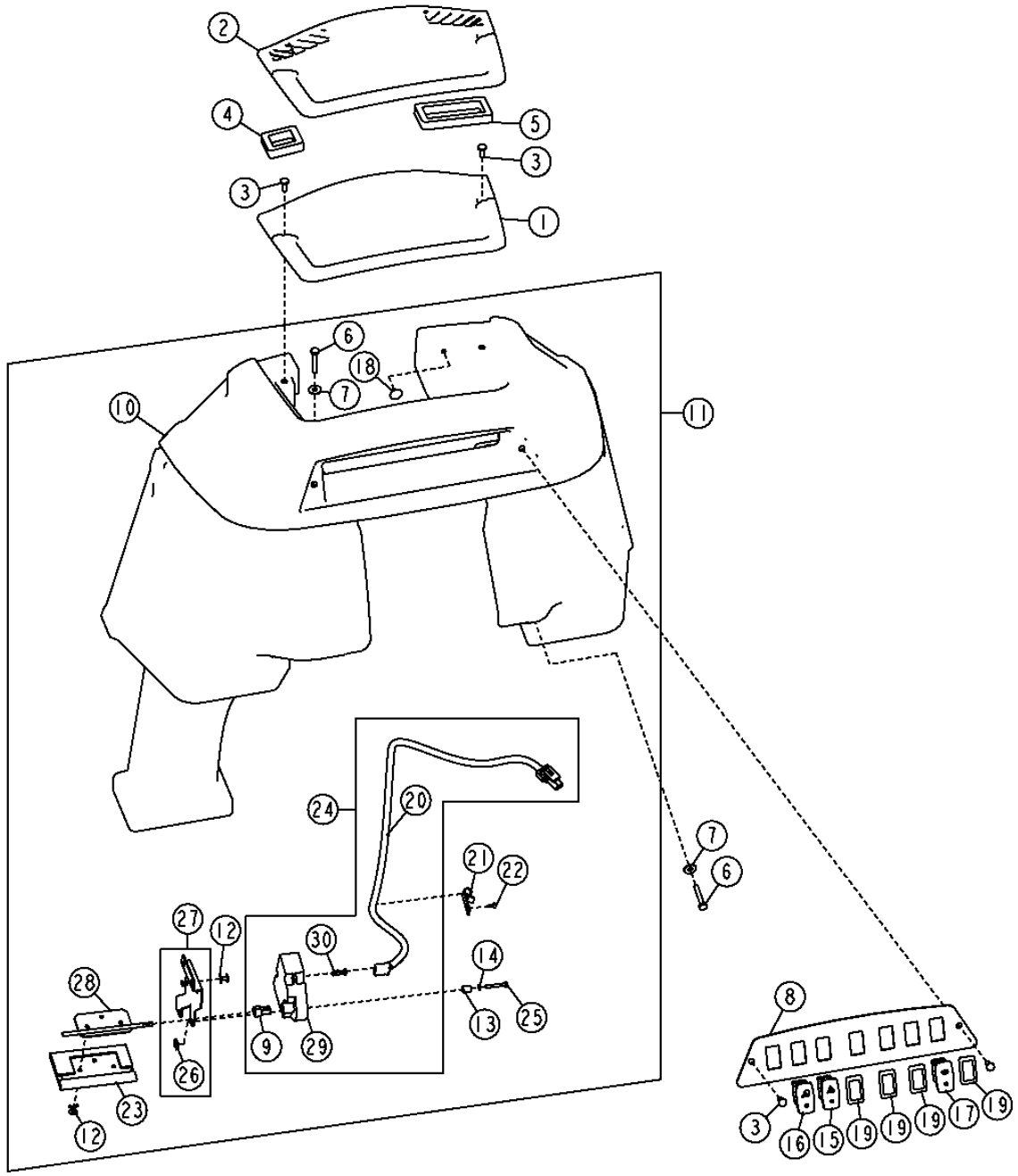

FRONT CONSOLE (CAB OR CANOPY)
CONSOLE AVANT POUR CABINE ET AUVENT
CONSOLA DELANTERA DE CABINA Y DOSEL

KEY	PART NO.	PART NAME	QTY.	SERIAL NO.	REMARKS
1	T183706	PANEL	1		(CANOPY)
2	T167083	PANEL	1		(CAB)
3	21M7292	SCREW	6		M6 X 16
4	T184008	ISOLATOR	1		LEFT
5	T184009	ISOLATOR	1		RIGHT
6	21M7403	SCREW	6		M6 X 40
7	24H1821	WASHER	4		9/32" X 47/64" X 1/16"
8	T216570	PANEL	1		(CAB)
9	T185485	ADAPTER FITTING	1		(CANOPY)
10	T167119	COVER	1		(CAB)
	T167082	COVER	1		(CANOPY/ROPS)
11	**AT191629**	**COVER**	**1**		**(WITH AIR CONDITIONING) (KIT)**
12	T184345	RIVET	6		
13	T134586	SPACER	1		6.580 X 9.525 X 12 MM
14	24M7117	WASHER	3		4.300 X 9 X 0.800 MM
15	AT304026	SWITCH	1		HAZARD
16	AT309435	TOGGLE/ROCKER SWITCH	1		FRONT LIGHTS
17	AT317445	TOGGLE/ROCKER SWITCH	1		FRONT WINDSHIELD WIPER
18	M111583	PLUG	1		
19	M115279	PLUG	4		(WITH SEAL)
20	AT191919	WIRING HARNESS	1		
21	T185743	CLIP	3		
22	T185769	SCREW	3		
23	AT191688	PLATE	1		(WITH SEAL)
24	**AT191876**	**KIT**	**1**		**ACTUATOR**
25	19M7715	CAP SCREW	3		M4 X 30
26	T185742	NUT	3		
27	AT191877	BRACKET	1		
28	AT191826	GATE	1		
29	.....	ACTUATOR	1		(ORDER AT191876) MOTOR
30	T186022	ELECTRICAL CONNECTOR ASSY	1		

SIDE INSTRUMENT PANEL HOUSING AND STABILIZER LEVER COVER (CANOPY)
LOGEMENT DE TABLEAU DE BORD LATERAL ET PROTECTION DE LEVIER DE STABILISATEUR (TOIT DE PROTECTION)
CAJA DE TABLERO LATERAL DE INSTRUMENTOS Y CUBIERTA DE PALANCA DE ESTABILIZADOR (TECHO)

TX1014889 -UN-27DEC06

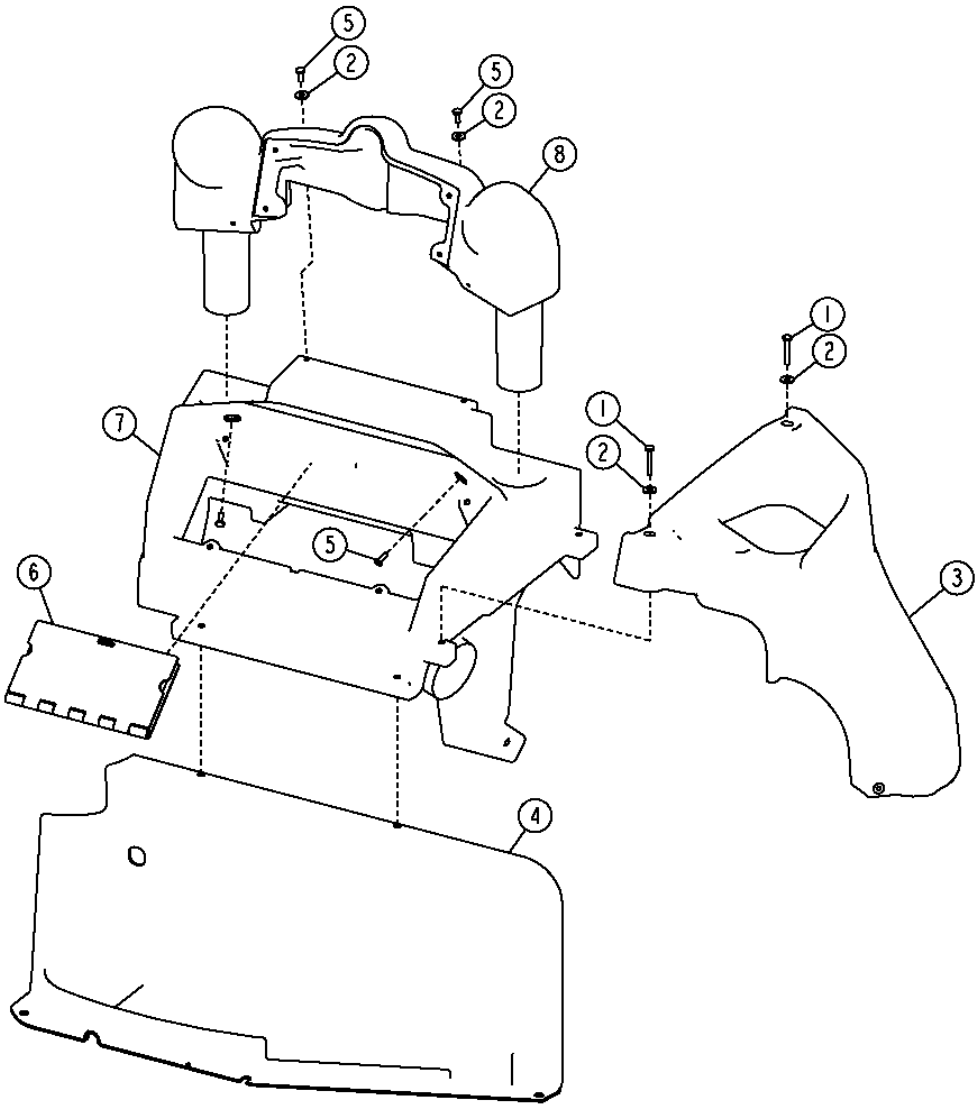

TX1014889

SIDE INSTRUMENT PANEL HOUSING AND STABILIZER LEVER COVER (CANOPY)
LOGEMENT DE TABLEAU DE BORD LATERAL ET PROTECTION DE LEVIER DE STABILISATEUR (TOIT DE PROTECTION)
CAJA DE TABLERO LATERAL DE INSTRUMENTOS Y CUBIERTA DE PALANCA DE ESTABILIZADOR (TECHO)

KEY	*PART NO.*	*PART NAME*	*QTY.*	*SERIAL NO.*	*REMARKS*
1	21M7403	SCREW	3		M6 X 40
2	24H1821	WASHER	9		9/32" X 47/64" X 1/16"
3	T185619	COVER	1		STABILIZER CONTROL
	AT304324	COVER	1		PILOT CONTROL
4	T216499	COVER	1		CENTER
5	21M7292	SCREW	4		M6 X 16
6	AT324916	COVER	1		VANDAL PROTECTION
7	T210390	HOUSING	1		
8	T215392	HOUSING	1		

SIDE INSTRUMENT PANEL HOUSING AND STABILIZER CONTROL COVER (CAB)
LOGEMENT DE TABLEAU DE BORD LATERAL ET PROTECTION DE COMMANDE DE STABILISATEUR (CABINE)
CAJA LATERAL DE TABLERO DE INSTRUMENTOS Y CUBIERTA DE CONTROL DEL ESTABILIZADOR (CABINA)

TX1014824 -UN-29DEC06

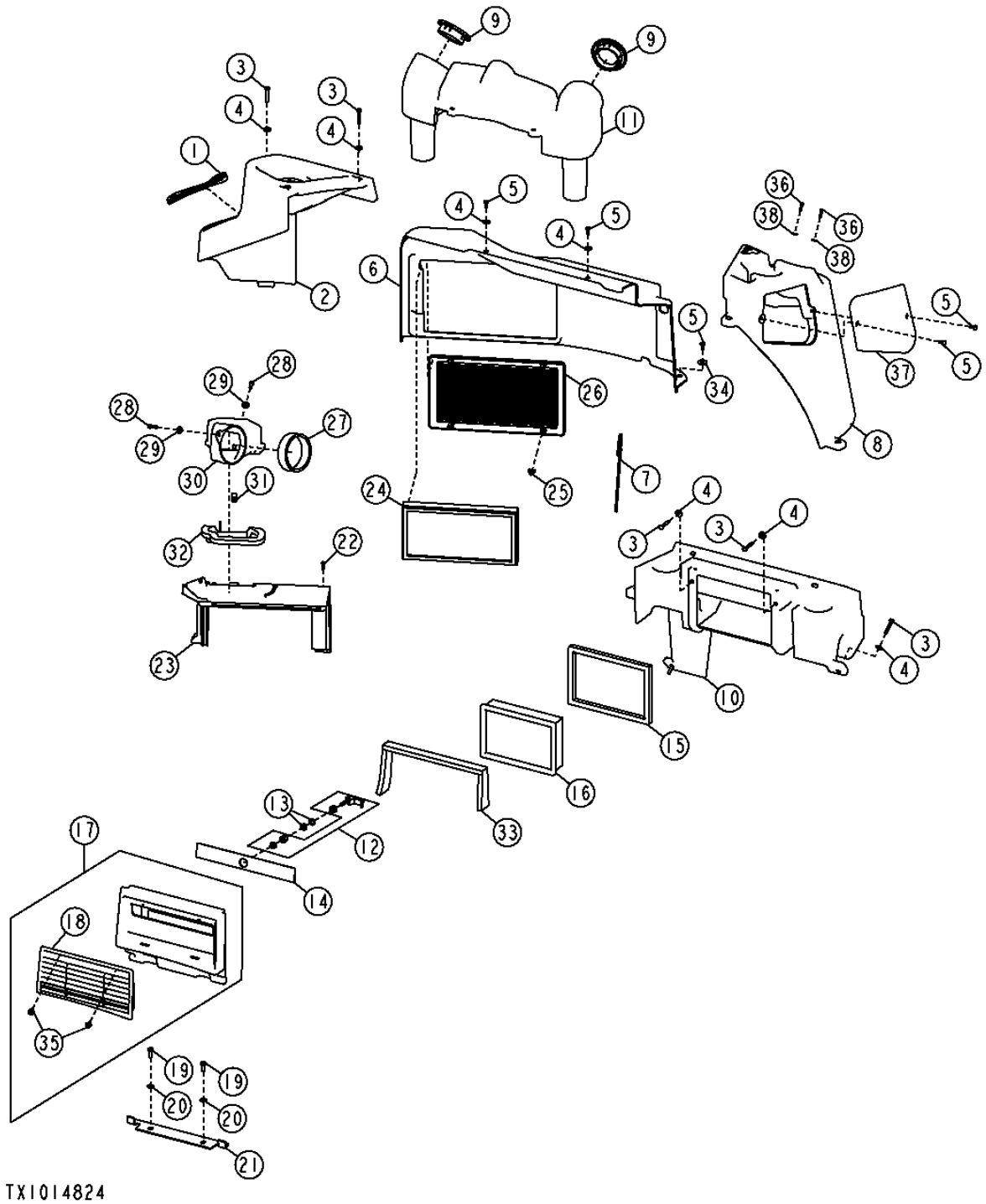

SIDE INSTRUMENT PANEL HOUSING AND STABILIZER CONTROL COVER (CAB)
LOGEMENT DE TABLEAU DE BORD LATERAL ET PROTECTION DE COMMANDE DE STABILISATEUR (CABINE)
CAJA LATERAL DE TABLERO DE INSTRUMENTOS Y CUBIERTA DE CONTROL DEL ESTABILIZADOR (CABINA)

KEY	PART NO.	PART NAME	QTY.	SERIAL NO.	REMARKS
1	T186452	ISOLATOR	1		
2	T185494	COVER	1		STABILIZER CONTROL
	T185619	COVER	1		STABILIZER CONTROL (FOR PILOT CONTROL WITH SELECTOR VALVE)
3	21M7403	SCREW	17		M6 X 40
4	24H1821	WASHER	17		9/32" X 47/64" X 1/16"
5	21M7292	SCREW	14		M6 X 16
6	T216498	COVER	1		CENTER
7	H77698	TIE BAND	1		
8	T210372	COVER	1		LOADER CONTROL
9	AT227669	LOUVER	2		
10	T210388	HOUSING	1		INSTRUMENT PANEL (AIR CONDITIONING)
11	T215457	HOUSING	2		
12	AT222150	LATCH	1		
13	24H1136	WASHER	2		11/32" X 11/16" X 0.065"
14	T185896	ISOLATOR	1		
15	T185770	ISOLATOR	1		
16	AT191102	AIR FILTER	1		FRESH AIR
17	AT185396	COVER	1		FRESH AIR
18	T165808	GRILLE	1		
19	19M7881	SCREW	2		M8 X 20
20	24M7238	WASHER	2		8.700 X 17 X 2 MM
21	T184164	BRACKET	1		
22	T184620	SCREW	4		
23	T164620	HOUSING	1		TOP ACCESS
24	AT184590	AIR FILTER	1		
25	R120160	CLIP	4		
26	T164621	GRILLE	1		
27	T185844	ISOLATOR	1		
28	19M7933	CAP SCREW	2		M6 X 25
29	24M7139	WASHER	2		6.400 X 18 X 1.600 MM
30	T166322	AIR DUCT	1		
31	M84972	NUT	1		
32	T184370	SEAL	1		
33	T187110	ISOLATOR	1		
34	24M7207	WASHER	6		8.400 X 24 X 2 MM
35	T184214	RIVET	2		
36	37M7333	SCREW	10		
37	T216111	PANEL	1		
38	T83061	WASHER	2		

SEAT / ARMREST
SIEGE / ACCOUDOIR
ASIENTO / REPOSABRAZOS

TX1014249 -UN-28DEC06

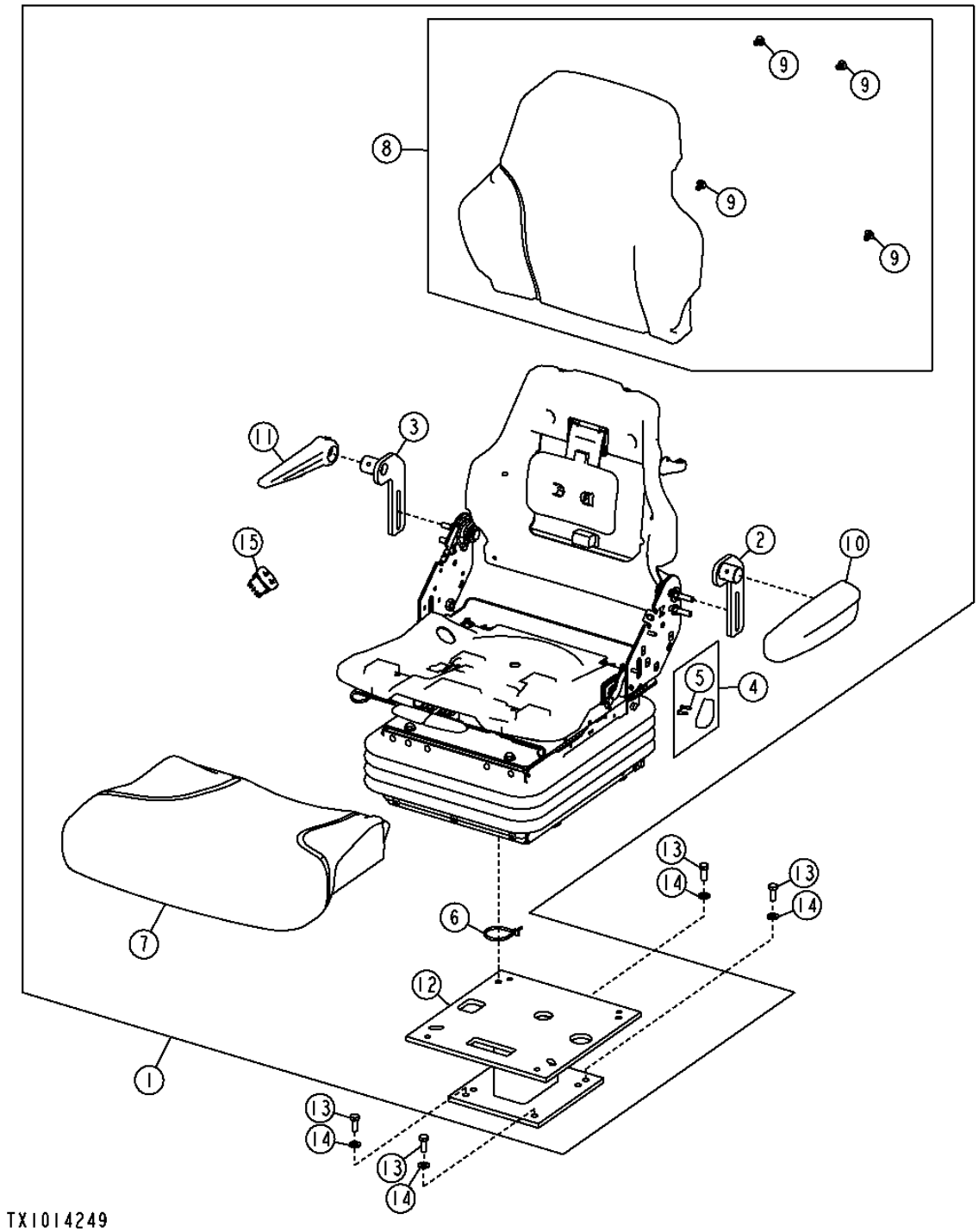

THIS PARTS LISTING IS CONTINUED

SEAT / ARMREST
SIEGE / ACCOUDOIR
ASIENTO / REPOSABRAZOS

KEY	PART NO.	PART NAME	QTY.	SERIAL NO.	REMARKS
1	AT322954	SEAT KIT	1		CLOTH WITH AIR SUSPENSION (W/O TMC) (INCLUDES SEAT, SUPENSION, ARMS AND BASE SHOWN ON OTHER PAGES)
	AT322955	SEAT KIT	1		VINYL WITH MECHANICAL SUSPENSION (W/O TMC) (INCLUDES SEAT, SUPENSION, ARMS AND BASE SHOWN ON OTHER PAGES)
	AT322956	SEAT KIT	1		CLOTH WITH MECHANICAL SUSPENSION (W/O TMC) (INCLUDES SEAT, SUPENSION, ARMS AND BASE SHOWN ON OTHER PAGES)
2	AT189030	BRACKET	1		LH
3	AT189059	BRACKET	1		RH
4	AT209025	KIT	1		
5	37H121	SCREW	2		
6	R44302	TIE BAND	1		
7	AT308795	CUSHION	1		(CLOTH SEAT BACK)
	AT221015	SEAT	1		(VINYL SEAT BACK)
8	AT308796	CUSHION	1		(CLOTH SEAT PAD)
	AT221016	PAD	1		(VINYL SEAT PAD)
9	T171686	CLIP	4		
10	AT312728	ARMREST KIT	1		LH
11	AT312730	ARMREST KIT	1		RH
12	AT209225	KIT	1		
13	19M7402	CAP SCREW	4		
14	24M7239	WASHER	4		
15	M115279	PLUG	1		

SEAT SLIDE AND ADJUSTER CONTROL LEVERS
GLISSIERE DE SIEGE ET LEVIERS DE COMMANDE DE REGLAGE
PALANCAS DE CONTROL DE DESLIZAMIENTO Y DE AJUSTE DEL ASIENTO

TX1014250 -UN-28DEC06

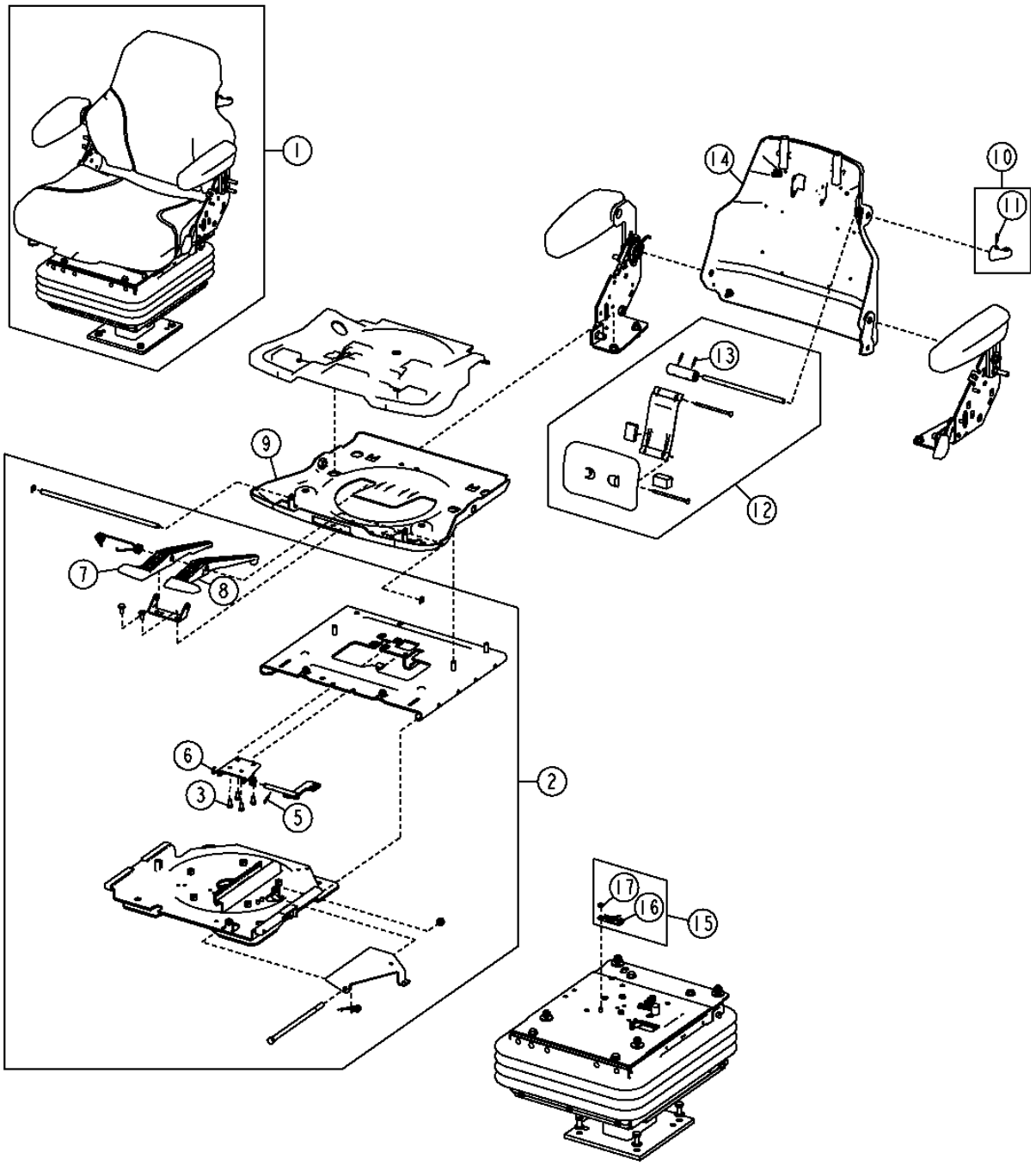

TX1014250

SEAT SLIDE AND ADJUSTER CONTROL LEVERS
GLISSIERE DE SIEGE ET LEVIERS DE COMMANDE DE REGLAGE
PALANCAS DE CONTROL DE DESLIZAMIENTO Y DE AJUSTE DEL ASIENTO

KEY	PART NO.	PART NAME	QTY.	SERIAL NO.	REMARKS
1	AT322954	SEAT KIT	1		CLOTH WITH AIR SUSPENSION (W/O TMC) (INCLUDES SEAT, SUPENSION, ARMS AND BASE SHOWN ON OTHER PAGES)
	AT322955	SEAT KIT	1		VINYL WITH MECHANICAL SUSPENSION (W/O TMC) (INCLUDES SEAT, SUPENSION, ARMS AND BASE SHOWN ON OTHER PAGES)
	AT322956	SEAT KIT	1		CLOTH WITH MECHANICAL SUSPENSION (W/O TMC) (INCLUDES SEAT, SUPENSION, ARMS AND BASE SHOWN ON OTHER PAGES)
2	AT179691	KIT	1		
3	19H1227	CAP SCREW	4		
4	21H1305	SCREW	2		
5	34H262	SPRING PIN	1		
6	R72655	SNAP RING	3		
7	AT179691	KIT	1		
8	AT179692	KIT	1		
9	AT191620	PAN	1		
10	AT209024	KIT	1		
11	34H262	SPRING PIN	1		5/32" X 3/4"
12	34H387	SPRING PIN	2		
13	AT209026	KIT	1		
14	AT280583	PAN	1		
15	AT304776	ELECTRICAL REPAIR KIT	1		
16	AT196793	SWITCH	1		
17	M453T	LOCK NUT	2		

SEAT SWIVEL AND SWIVEL LATCH
PIVOTEMENT DE SIEGE ET VERROU DE PIVOTEMENT
ADAPTADOR GIRATORIO DE ASIENTO Y BLOQUEO DE GIRO

TX1014251 -UN-28DEC06

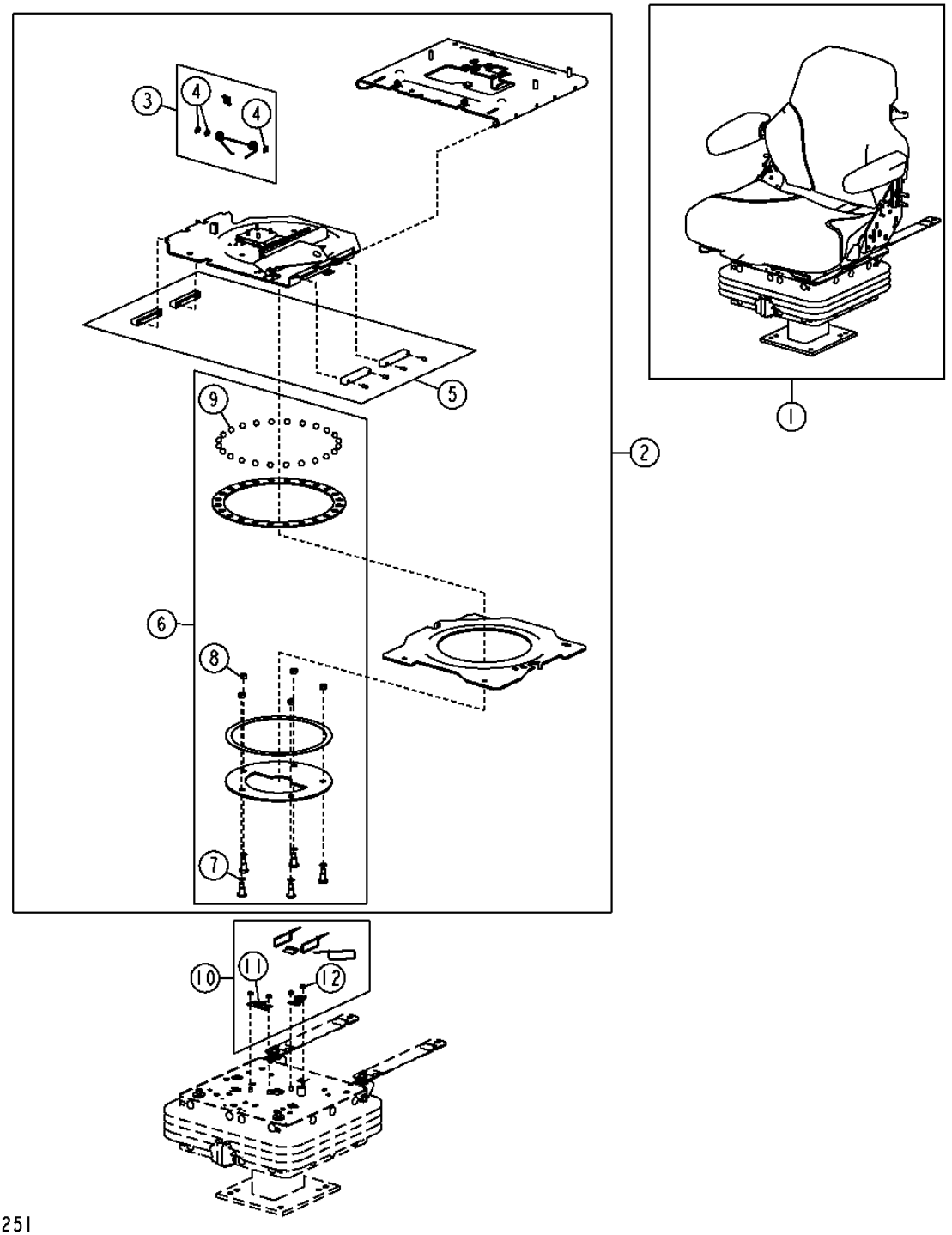

TX1014251

SEAT SWIVEL AND SWIVEL LATCH
PIVOTEMENT DE SIEGE ET VERROU DE PIVOTEMENT
ADAPTADOR GIRATORIO DE ASIENTO Y BLOQUEO DE GIRO

KEY	*PART NO.*	*PART NAME*	*QTY.*	*SERIAL NO.*	*REMARKS*
1	AT322954	SEAT KIT	1		CLOTH WITH AIR SUSPENSION (W/O TMC) (INCLUDES SEAT, SUPENSION, ARMS AND BASE SHOWN ON OTHER PAGES)
	AT322955	SEAT KIT	1		VINYL WITH MECHANICAL SUSPENSION (W/O TMC) (INCLUDES SEAT, SUPENSION, ARMS AND BASE SHOWN ON OTHER PAGES)
	AT322956	SEAT KIT	1		CLOTH WITH MECHANICAL SUSPENSION (W/O TMC) (INCLUDES SEAT, SUPENSION, ARMS AND BASE SHOWN ON OTHER PAGES)
2	AT335055	SWIVEL	1		
3	AT179688	KIT	1		
4	R72655	SNAP RING	3		
5	AT209020	KIT	1		
6	AT335110	KIT	1		
7	24M6504	WASHER	5		10 X 16 X 1.500 MM
8	M47031	LOCK NUT	5		3/8"
9	M87261	BALL	24		12.700 MM
10	AT335158	ELECTRICAL REPAIR KIT	1		
11	AT322915	SWITCH	1		
12	M453T	LOCK NUT	2		6.350 MM
13	AT304776	ELECTRICAL REPAIR KIT	1		
14	AT196793	SWITCH	1		
15	M453T	LOCK NUT	2		

SEAT SUSPENSION
SUSPENSION DE SIEGE
SUSPENSION DEL ASIENTO

TX1014252 -UN-28DEC06

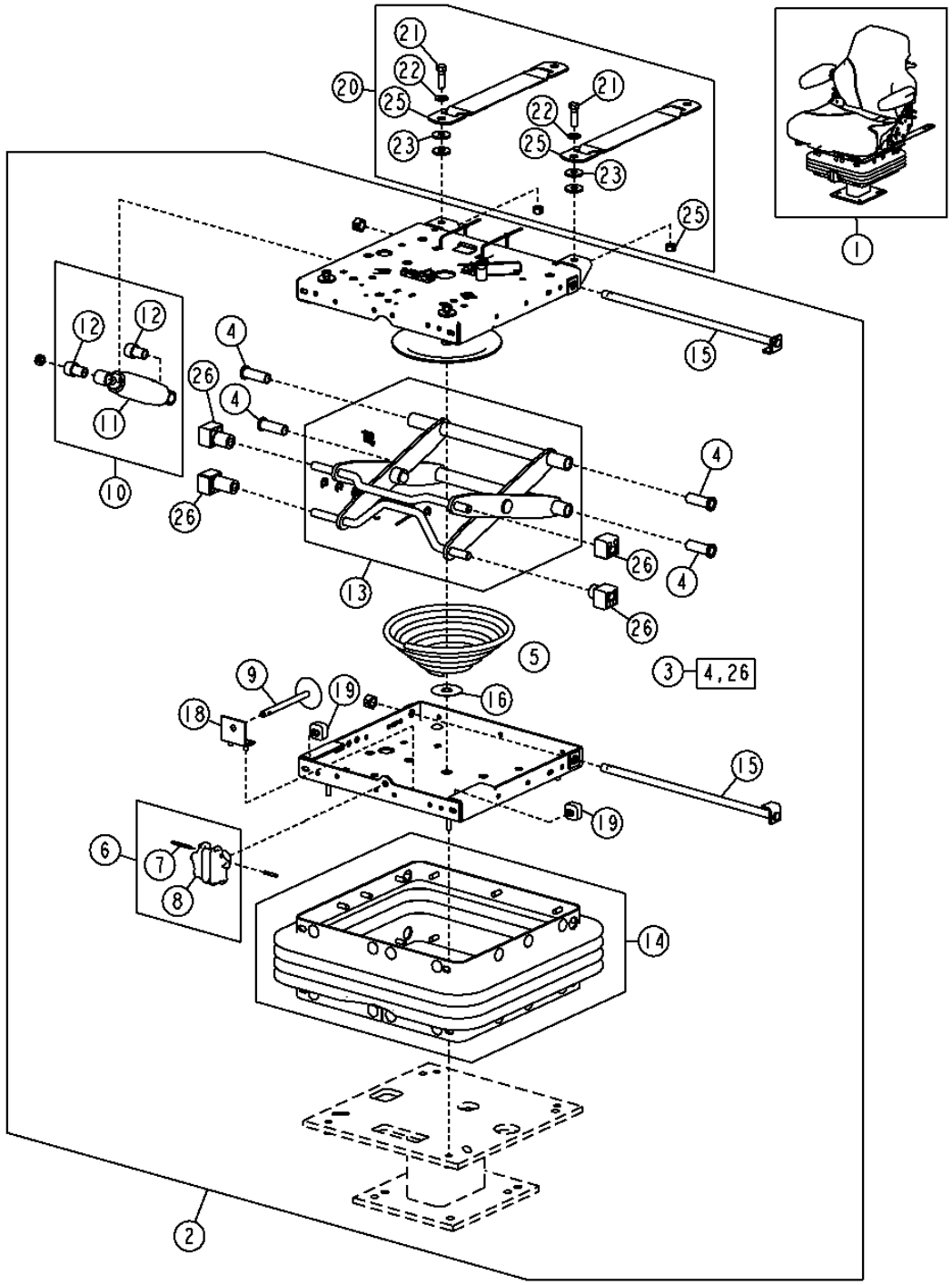

SEAT SUSPENSION
SUSPENSION DE SIEGE
SUSPENSION DEL ASIENTO

KEY	PART NO.	PART NAME	QTY.	SERIAL NO.	REMARKS
1	AT322955	SEAT KIT	1		VINYL WITH MECHANICAL SUSPENSION (W/O TMC) (INCLUDES SEAT, SUPENSION, ARMS AND BASE SHOWN ON OTHER PAGES)
	AT322956	SEAT KIT	1		CLOTH WITH MECHANICAL SUSPENSION (W/O TMC) (INCLUDES SEAT, SUPENSION, ARMS AND BASE SHOWN ON OTHER PAGES)
2	AT334381	SEAT SUSPENSION	1		
3	AT106397	BEARING KIT	1		
4	AT125801	SPRING	1		
5	AT125805	KIT	1		
6	34H266	SPRING PIN	1		
7	AT125829	KNOB	1		
8	AT175353	GEAR	1		
9	AT175436	KIT	1		
10	T55222	BUSHING	2		
11	AT191619	SEAT SUSPENSION	1		(ALSO ORDER AT106397)
12	AT335109	BOOT	1		
13	E67574	SHAFT	1		
14	T158481	WASHER	1		
15	T160315	SPRING	1		
16	T55214	ANGLE	1		
17	T55224	BUMPER	2		
18	AT179693	KIT	1		
19	19H1731	CAP SCREW	2		3/8" X 1"
20	24H1305	WASHER	2		
21	M1304T	WASHER	2		
22	M47031	LOCK NUT	2		3/8"
23	AT179693	KIT	2		

SEAT BELT
CEINTURE DE SECURITE
CINTURON DE SEGURIDAD

TX1014256 -UN-28DEC06

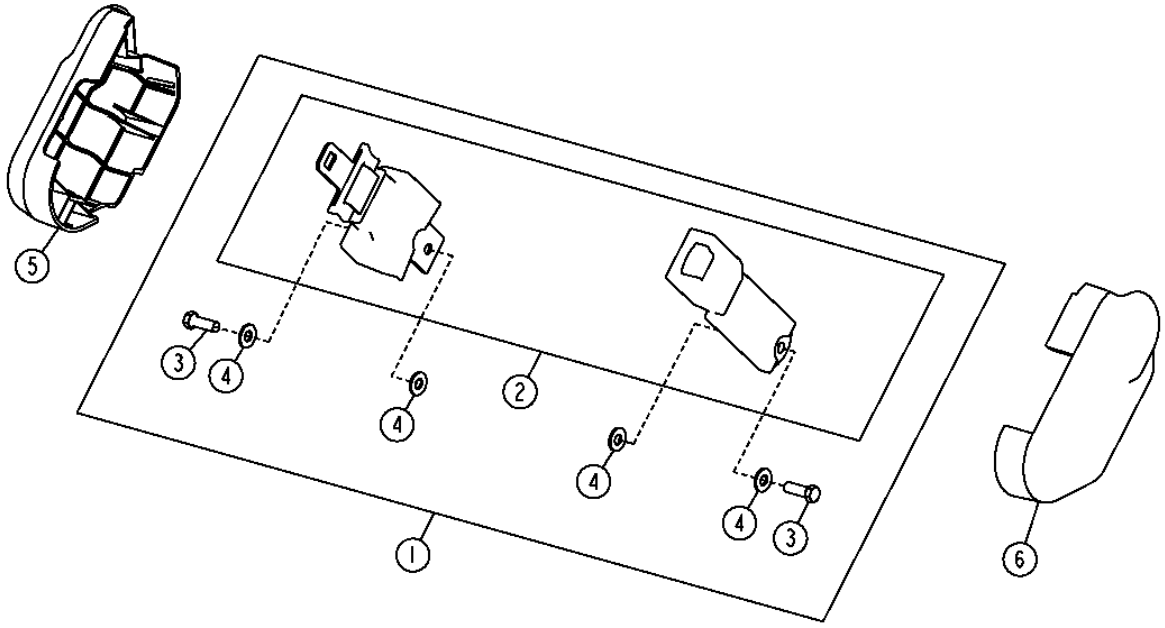

TX1014256

SEAT BELT
CEINTURE DE SECURITE
CINTURON DE SEGURIDAD

KEY	*PART NO.*	*PART NAME*	*QTY.*	*SERIAL NO.*	*REMARKS*
1	AT307769	KIT	1		2" SEAT BELT KIT
2	AT172910	SEAT BELT	1		2" SEAT BELT
	AT308199	SEAT BELT	1		3" SEAT BELT
3	19H2109	CAP SCREW	2		7/16" X 1-1/4"
4	T105740	WASHER	4		
5	T160896	COVER	1		LH
6	T163962	COVER	1		RH

HEATER AND AIR CONDITIONING WITH PRESSURIZER
CHAUFFAGE ET CLIMATISATION AVEC PRESSURISATEUR
CALEFACTOR Y ACONDICIONADOR DE AIRE CON PRESURIZADOR

T197624 -UN-03FEB04

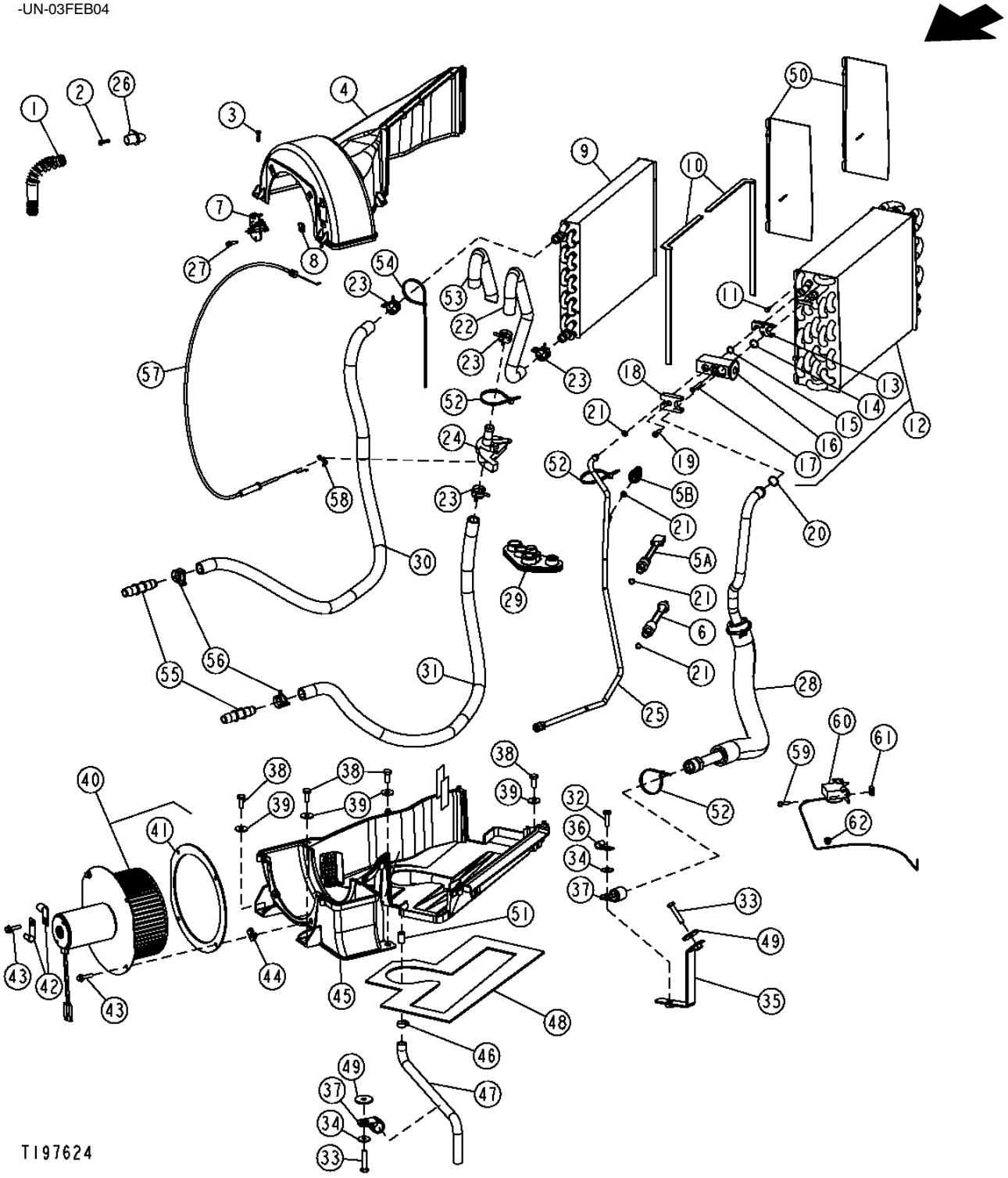

HEATER AND AIR CONDITIONING WITH PRESSURIZER
CHAUFFAGE ET CLIMATISATION AVEC PRESSURISATEUR
CALEFACTOR Y ACONDICIONADOR DE AIRE CON PRESURIZADOR

KEY	PART NO.	PART NAME	QTY.	SERIAL NO.	REMARKS
1	.....	SCREW	1		(NLA)
2	.....	TEMPERATURE SWITCH	1		(NLA)
3	T184620	SCREW	9		
4	T205969	HOUSING	1		
5	RE157329	SWITCH	1		
6	RE60888	PRESSURE SWITCH	1		
7	AT210515	RESISTOR	1		
8	R50279	NUT	2		
9	AT191993	CORE	1		(HEATER)
10	T184369	SEAL	2		
11	H85092	SCREW	4		
12	AT191994	EVAPORATOR	1		
13	T181522	PLATE	1		(SUB FOR T186760)
14	R33259	O-RING	1		
15	R113050	O-RING	1		
16	RE174764	VALVE	1		(EXPANSION) (SUB FOR AT189639, THIS APPLICATION)
17	PT11778	BOLT	2		
18	R125223	PLATE	1		
19	19M8553	SCREW	1		M6 X 16
20	T143169	O-RING	1		
21	R10093	O-RING	3		
22	T185789	RADIATOR HOSE	1		
23	T184924	HOSE CLAMP	4		
24	AT193500	HAND OPERATED VALVE	1		(WATER)
25	AT303214	LINE	1		(LIQUID REFRIGERANT)
26	.....	TUBE	1		(AIR OUTLET) (NLA)
27	37M7073	SCREW	2		
28	AT191990	REFRIGERANT HOSE	1		
29	T166297	GROMMET	1		
30	.....	BULK HOSE	1		(CUT TO LENGTH, 33 INCHES) (MAKE FROM T60811)
31	.....	BULK HOSE	1		(CUT TO LENGTH, 38 INCHES) (MAKE FROM T60811)
32	19M7407	CAP SCREW	1		M8 X 25
33	19M7922	CAP SCREW	2		M8 X 40
34	24M7207	WASHER	2		
35	AT192509	BRACKET	1		
36	T13814	CLAMP	1		
37	T70659	CLAMP	2		
38	19M7881	SCREW	4		M8 X 20
39	24M7207	WASHER	4		
40	AT307691	BLOWER MOTOR	1		

THIS PARTS LISTING IS CONTINUED

HEATER AND AIR CONDITIONING WITH PRESSURIZER (CONTINUED)
CHAUFFAGE ET CLIMATISATION AVEC PRESSURISATEUR (SUITE)
CALEFACTOR Y ACONDICIONADOR DE AIRE CON PRESURIZADOR (CONTINUACION)

T197624 -UN-03FEB04

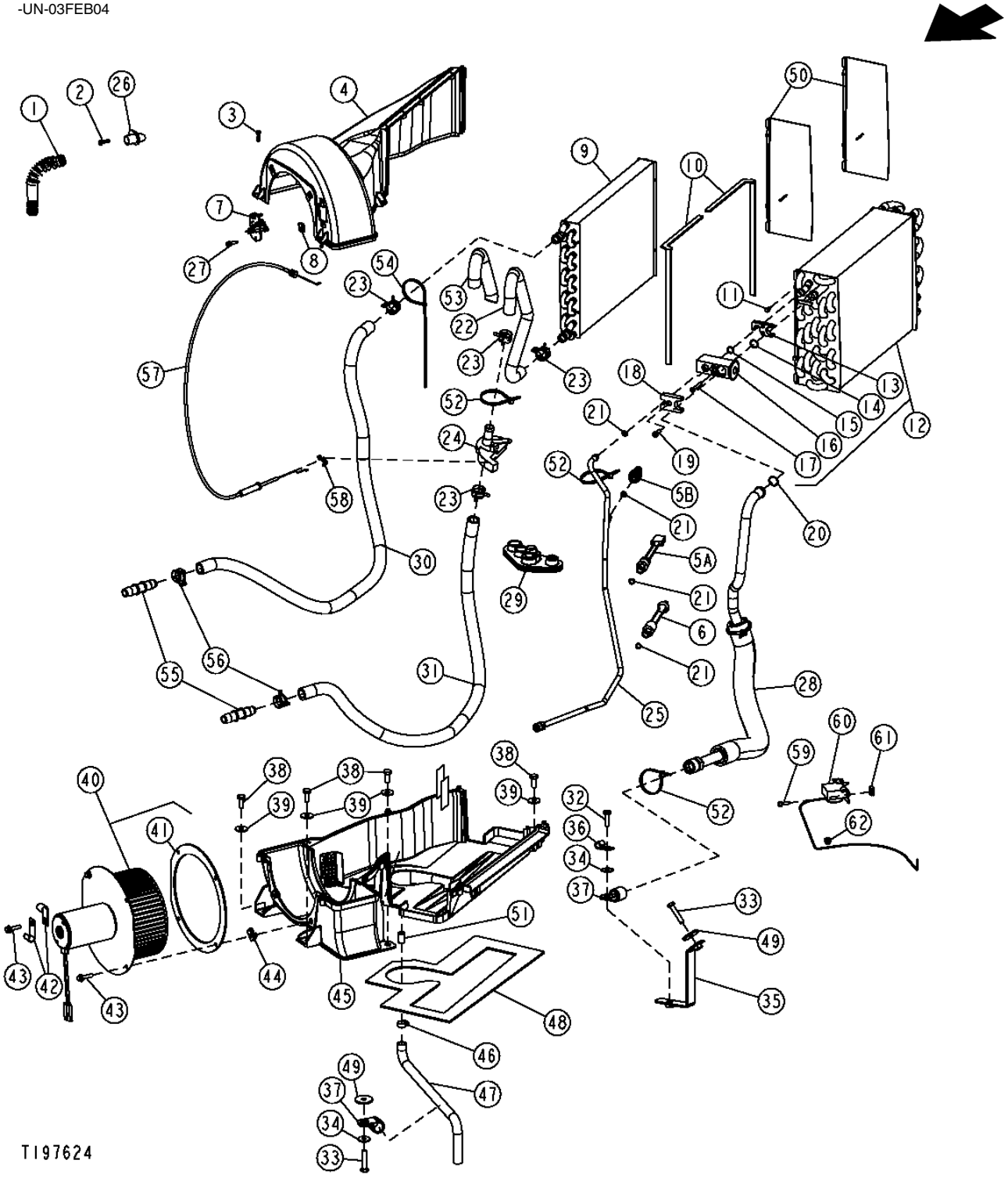

THIS PARTS LISTING IS CONTINUED

HEATER AND AIR CONDITIONING WITH PRESSURIZER (CONTINUED)
CHAUFFAGE ET CLIMATISATION AVEC PRESSURISATEUR (SUITE)
CALEFACTOR Y ACONDICIONADOR DE AIRE CON PRESURIZADOR (CONTINUACION)

KEY	PART NO.	PART NAME	QTY.	SERIAL NO.	REMARKS
41	T184368	SEAL	2		
42	AH89557	CLIP	2		
43	T178251	CAP SCREW	4		
44	M84972	NUT	5		
45	T164618	HOUSING	1		(BOTTOM)
46	AR77962	HOSE CLAMP	1		
47	AT186304	HOSE	1		(CONDENSATE)
48	T185845	ISOLATOR	1		
49	24H1296	WASHER	2		
50	T184414	SHEET	2		
51	T184415	PLUG	1		
52	R44302	TIE BAND	4		
53	T186766	HOSE GUARD	1		
54	H77698	TIE BAND	1		
55	T160492	ELEC. CONNECTOR ACCESSORY	2		
56	R117721	CLAMP	2		
57	AT186289	CABLE	1		(HEATER CONTROL)
58	L57881	CLIP	1		
59	37M7073	SCREW	2		
60	RE198074	TEMPERATURE SWITCH	1		A/C THERMOSTAT SWITCH, (SUB FOR AH144020)
61	R50279	NUT	2		
62	T178971	GROMMET	1		

AIR CONDITIONING, HARDWARE AND HOSES
CLIMATISATION, BOULONNERIE ET FLEXIBLES
ACONDICIONADOR DE AIRE, TORNILLERIA Y MANGUERAS

TX1017161 -UN-03JAN07

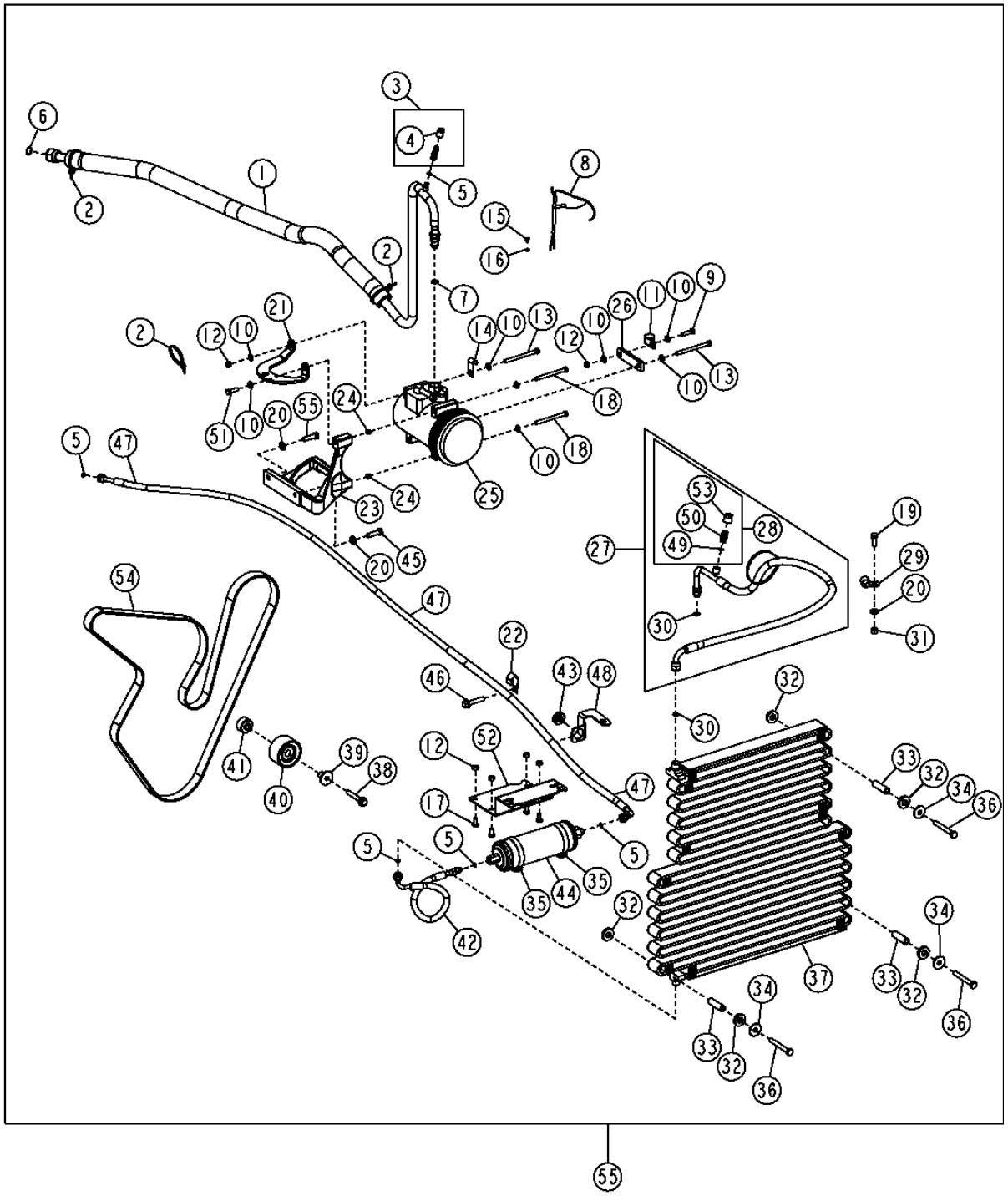

AIR CONDITIONING, HARDWARE AND HOSES
CLIMATISATION, BOULONNERIE ET FLEXIBLES
ACONDICIONADOR DE AIRE, TORNILLERIA Y MANGUERAS

KEY	PART NO.	PART NAME	QTY.	SERIAL NO.	REMARKS
1	AT188368	REFRIGERANT HOSE	1		
2	R44302	TIE BAND	3		
3	AT181530	FLOW CONTROL HYD. VALVE	1		(LOW SIDE)
4	T162557	CAP	1		
5	R10093	O-RING	8		
6	T143169	O-RING	1		
7	R33259	O-RING	1		
8	AT190658	AC COMPRESSOR WRG HARNESS	1		
9	19M7513	CAP SCREW	1		M8 X 30
10	24M7238	WASHER	11		
11	T78787	CLAMP	1		
12	14M7273	NUT	6		M8
13	19M8456	CAP SCREW	4		M8 X 100
14	AH89557	CLIP	1		
15	21M7283	SCREW	1		M5 X 8
16	12H316	LOCK WASHER	1		0.216"
17	19M7932	CAP SCREW	4		M8 X 16
18	19M8539	CAP SCREW	2		M8 X 90
19	19M7402	CAP SCREW	1		M10 X 25
	19M7550	CAP SCREW	2		M10 X 35
20	24M7239	WASHER	3		10.700 X 21 X 2.500 MM
21	R504191	BRACKET	1		
22	AH96317	CLIP	1		
23	R504192	BRACKET	1		
24	34M7189	SPRING PIN	2		11 X 8 MM
25	TY6764	COMPRESSOR	1		REMAN, (SUB FOR RE46609)
26	M86533	STRAP	1		
27	AT323702	REFRIGERANT HOSE	1		
28	AT178930	HYDRAULIC CYLINDER PORT	1		
29	T74416	CLAMP	1		
30	R113050	O-RING	2		
31	14M7274	NUT	1		M10
32	T158424	WASHER	8		RUBBER
33	L3483N	BUSHING	4		
34	24M7101	WASHER	4		11 X 34 X 3 MM
35	AR21999	HOSE CLAMP	2		
36	19M8081	CAP SCREW	4		M10 X 80
37	AT184522	VAPOR CONDENSER	1		
38	19M7808	SCREW	1		M10 X 65
39	R502079	SLEEVE	1		
40	RE505264	PULLEY	1		
41	R500320	SPACER	1		
42	AT323646	REFRIGERANT HOSE	1		
43	R115350	GROMMET	1		
44	RE214440	RECEIVER-DRYER	1		
45	19M7550	CAP SCREW	2		
46	19M7806	SCREW	1		M10 X 50
47	AT323647	REFRIGERANT HOSE	1		
48	T217367	BRACKET	1		
49	A3917R	O-RING	1		
50	AT178931	HYDRAULIC CYLINDER PORT	1		
51	19M7407	CAP SCREW	2		M8 X 25
52	T216548	BRACKET	1		
53	T160938	CAP	1		
54	T227609	V-BELT	1		28.450 X 2 520 MM
55	**AT314203**	**KIT**	**1**		**AIR CONDITIONER (WHOLE GOODS)**

HEAT AND NOISE BARRIER
CHAUFFAGE ET BARRIERE CONTRE LE BRUIT
BARRERA TERMICA Y DE RUIDOS

T145246 -UN-04SEP01

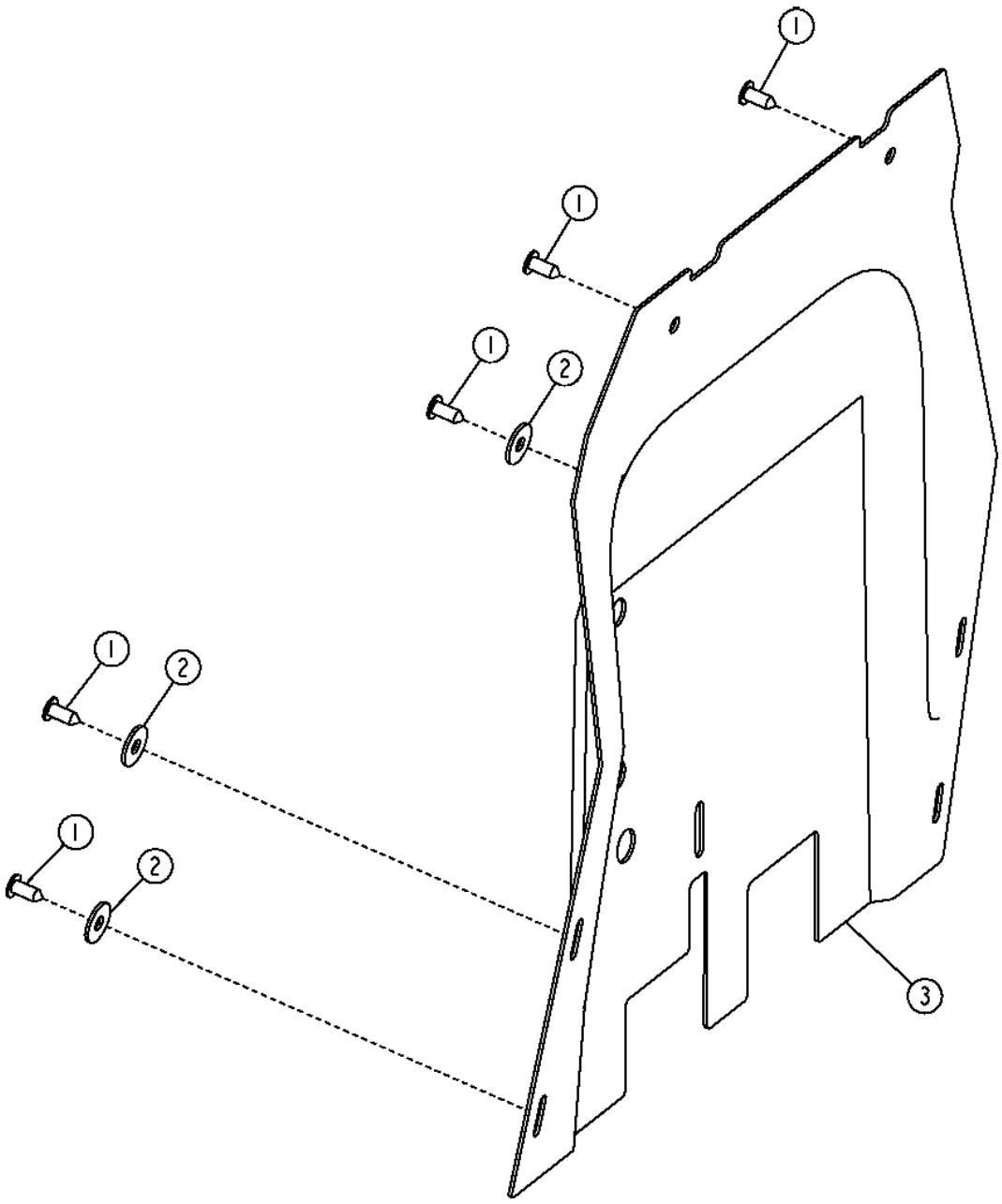

T145246

HEAT AND NOISE BARRIER
CHAUFFAGE ET BARRIERE CONTRE LE BRUIT
BARRERA TERMICA Y DE RUIDOS

KEY	*PART NO.*	*PART NAME*	*QTY.*	*SERIAL NO.*	*REMARKS*
1	MT2485	PLUG	5		FASTENER
2	24M7180	WASHER	3		
3	T216973	ISOLATOR	1		

HOOD AND SIDE PANELS
CAPOT ET PANNEAUX LATERAUX
CAPO Y PANELES LATERALES

TX1013669 -UN-09DEC06

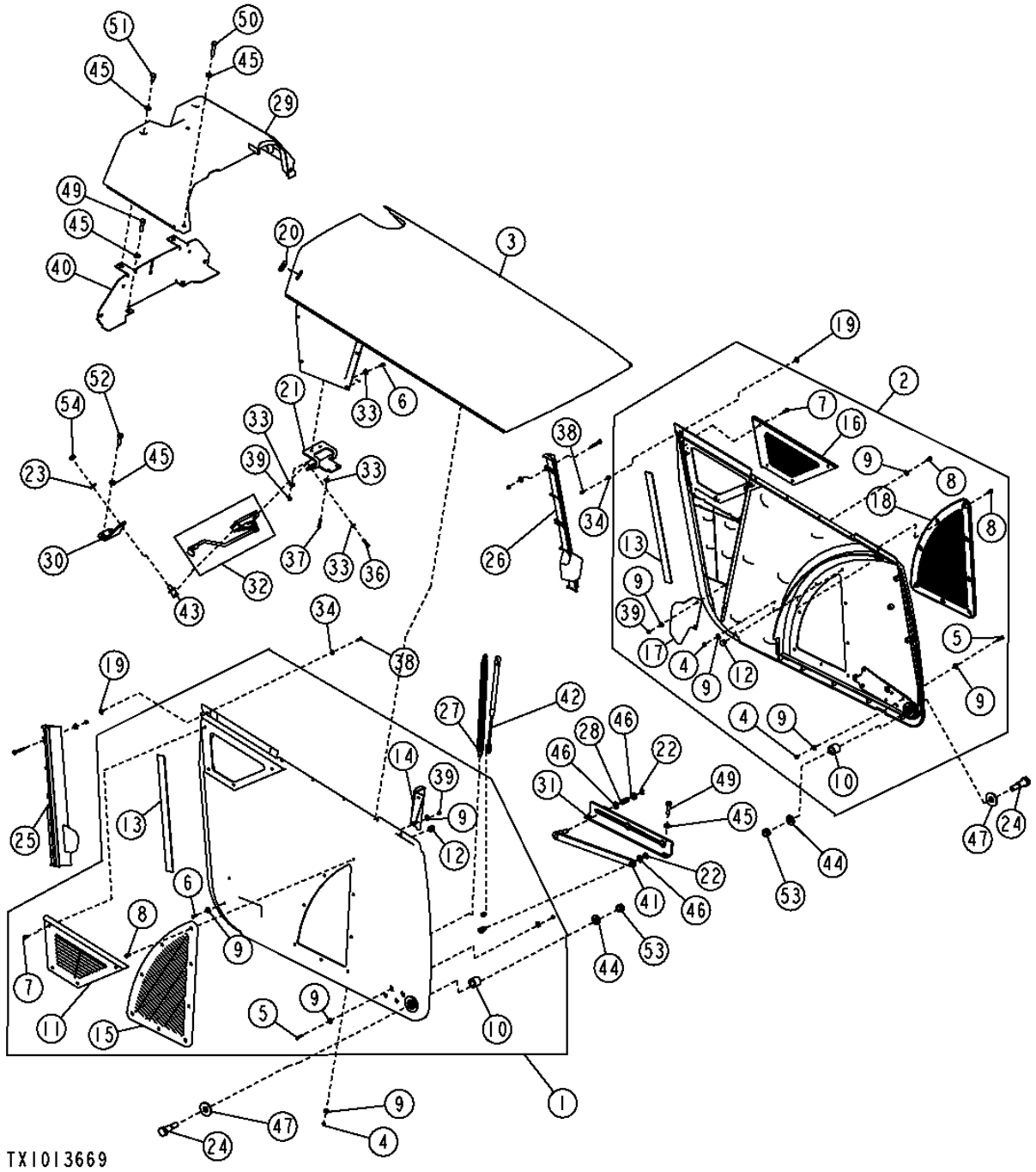

THIS PARTS LISTING IS CONTINUED

HOOD AND SIDE PANELS
CAPOT ET PANNEAUX LATERAUX
CAPO Y PANELES LATERALES

KEY	PART NO.	PART NAME	QTY.	SERIAL NO.	REMARKS
1	AT323237	PANEL	1		(RH)
2	AT323238	PANEL	1		(LH)
3	AT324645	HOOD	1		
4	14M7272	NUT	28		M6
5	19M7933	CAP SCREW	8		M6 X 25
6	19M8425	CAP SCREW	4		M6 X 16
7	21M7246	SCREW	8		M6 X 16
8	21M7267	SCREW	16		M6 X 20
9	24M7139	WASHER	40		6.400 X 18 X 1.600 MM
10	T165911	BUSHING	2		
11	T165915	LOUVER	1		
12	T165997	INSERT	2		
13	T184116	PROTECTIVE COATING MATERIAL	2		
14	T184787	BRACKET	1		
15	T211121	LOUVER	1		(RH)
16	T165916	LOUVER	1		(LH)
17	T184788	BRACKET	1		
18	T211122	LOUVER	1		
19	T183773	NUT	4		
20	T188642	GROMMET	1		
21	T201591	BRACKET	1		
22	R26871	SNAP RING	2		
23	T105740	WASHER	1		
24	T165975	BOLT	2		
25	T165976	GUIDE	1		(RH)
26	T184393	GUIDE	1		(LH)
27	T165977	EXTENSION SPRING	2		
28	T165981	COMPRESSION SPRING	1		
29	T209334	HOOD	1		
30	T215364	ANGLE	1		
31	T216614	GUIDE	1		
32	AT196358	LATCH	1		
33	24M7139	WASHER	28		6.400 X 18 X 1.600 MM
34	24M7138	WASHER	4		5.300 X 15 X 1.200 MM
35	19M8425	CAP SCREW	8		M6 X 16
36	19M7933	CAP SCREW	2		M6 X 25
37	19M7874	CAP SCREW	2		M6 X 30
38	19M7372	CAP SCREW	4		M5 X 16
39	14M7272	NUT	16		M6
40	AT324116	SUPPORT	1		
41	AT323670	BAR	1		
42	AT311334	GAS OPERATED CYLINDER	1		
43	AR91896	STRIKER	1		
44	24M7241	WASHER	2		17 X 34 X 4 MM
45	24M7239	WASHER	10		10.700 X 21 X 2.500 MM
46	24M7047	WASHER	3		13 X 24 X 2.500 MM
47	24H1236	WASHER	2		
48	19M9100	SCREW	6		M6 X 50
49	19M8637	CAP SCREW	4		M10 X 40
50	19M8600	CAP SCREW	2		M10 X 50
51	19M7938	CAP SCREW	2		M10 X 20
52	19M7550	CAP SCREW	2		M10 X 35
53	14M7238	FLANGE NUT	2		M18
54	14H1047	NUT	1		

BATTERY ENCLOSURE AND TOOL BOX
COMPARTIMENT BATTERIE ET BOITE A OUTILS
ENVUELTA DE BATERIA Y CAJA DE HERRAMIENTAS

TX1015821 -UN-18DEC06

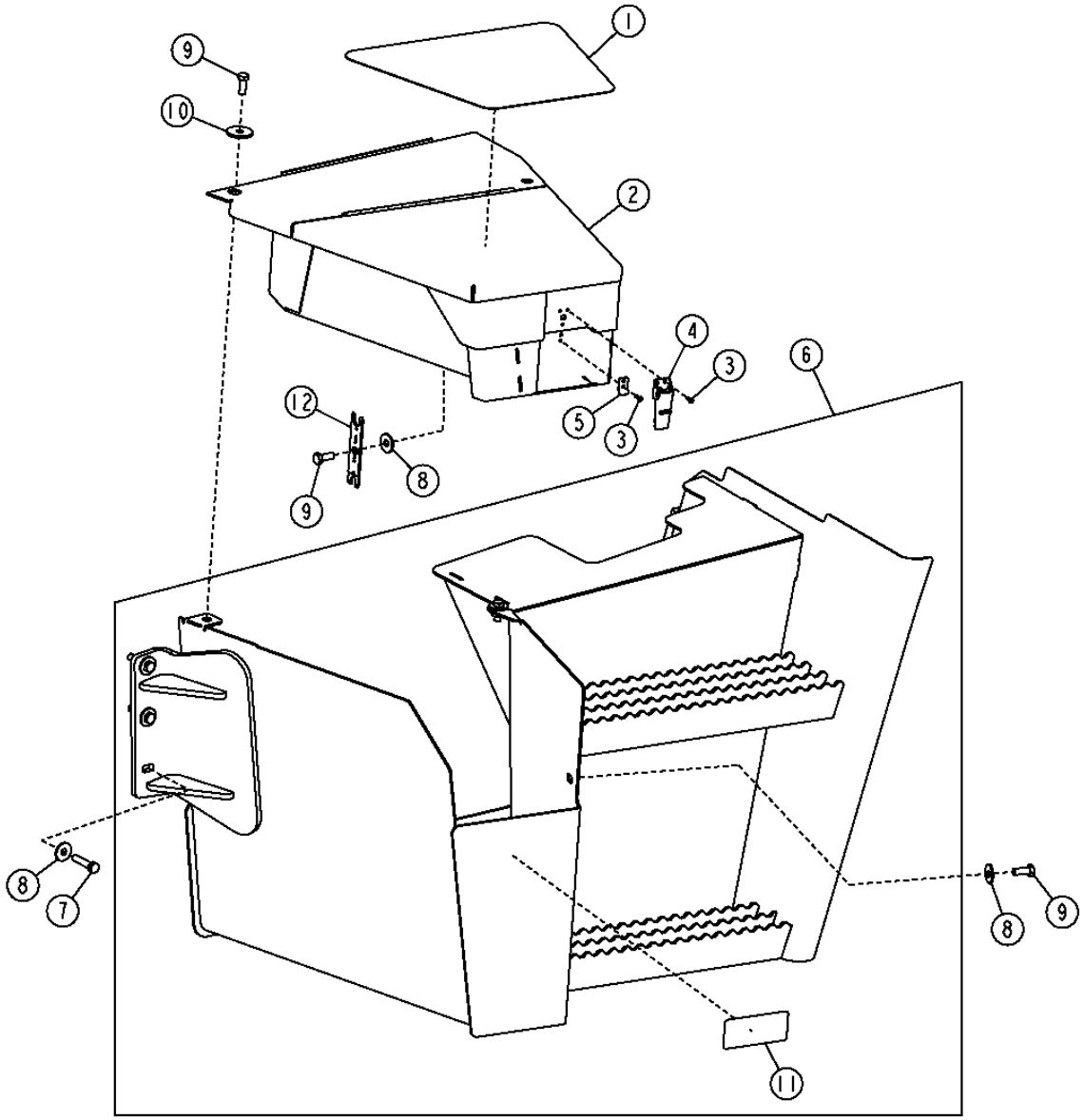

TX1015821

BATTERY ENCLOSURE AND TOOL BOX
COMPARTIMENT BATTERIE ET BOITE A OUTILS
ENVUELTA DE BATERIA Y CAJA DE HERRAMIENTAS

KEY	*PART NO.*	*PART NAME*	*QTY.*	*SERIAL NO.*	*REMARKS*
1	T165290	ANTI-SKID PAD	1		
2	AT332084	TOOLBOX	1		
3	AT333453	RIVET	5		
4	AT332153	LATCH	1		
5	T227945	ANGLE	1		
6	AT332597	BATTERY BOX	1		
7	19M8637	CAP SCREW	4		M10 X 40
8	24M7296	WASHER	6		
9	19M7402	CAP SCREW	4		M10 X 25
10	24H1718	WASHER	1		
11	JD5933	REFLECTOR	1		
12	T212304	TOOL	1		STC

EXTENDED GRILLE HOUSING
LOGEMENT DE CALANDRE ETENDU
CAJA DE PARRILLA EXTENDIDA

TX1013701 -UN-16NOV06

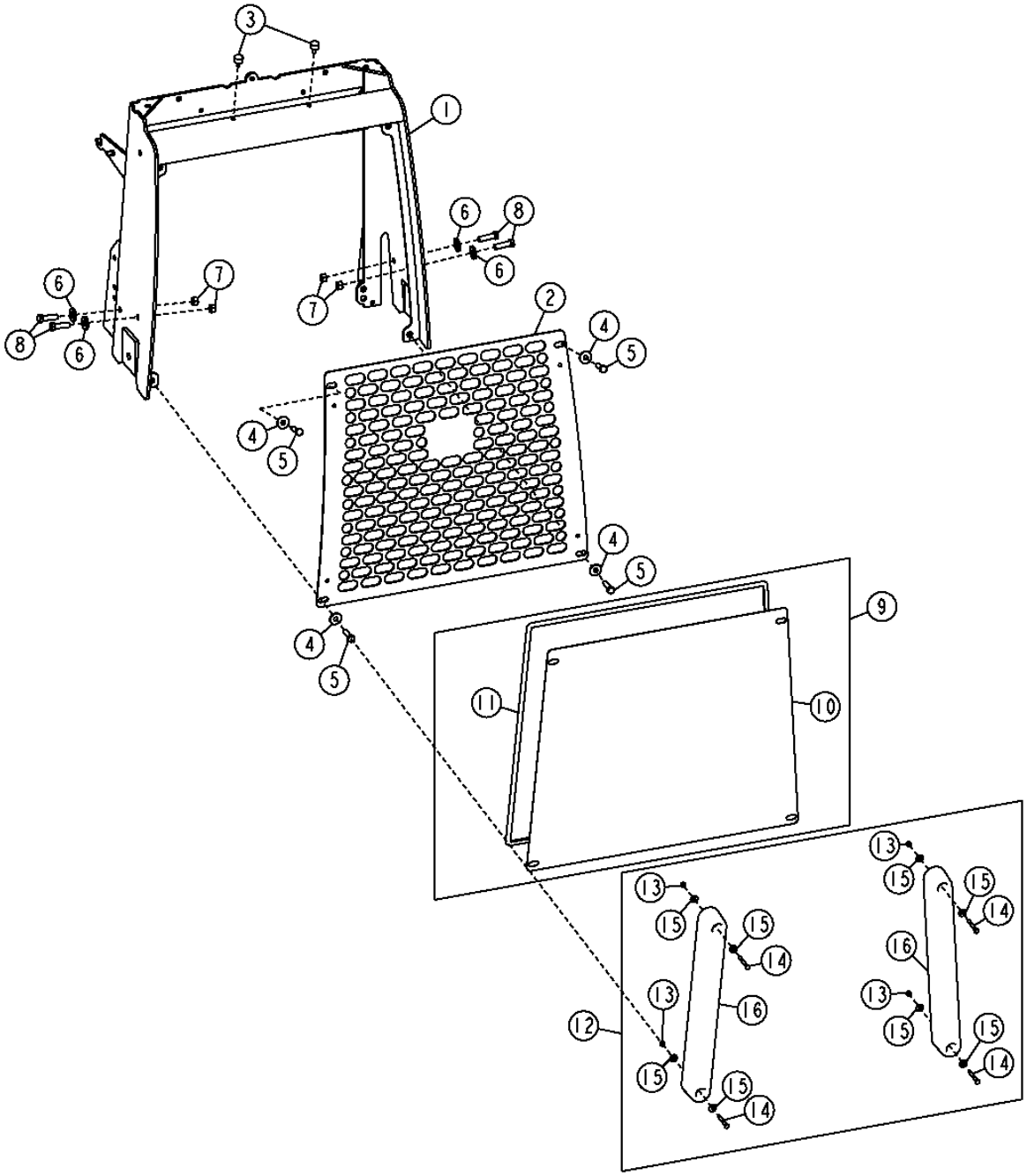

THIS PARTS LISTING IS CONTINUED

EXTENDED GRILLE HOUSING
LOGEMENT DE CALANDRE ETENDU
CAJA DE PARRILLA EXTENDIDA

KEY	*PART NO.*	*PART NAME*	*QTY.*	*SERIAL NO.*	*REMARKS*
1	AT318073	FRAME	1		
2	T210544	GRILLE	1		
3	H158596	BUMPER	2		
4	24M7296	WASHER	4		
5	19M7550	CAP SCREW	4		M10 X 35
6	T29342	WASHER	4		(WHOLE GOODS)
7	14M7275	NUT	4		(TRASH SCREEN)
8	19M7493	CAP SCREW	4		(MAKE FROM T58056)
9	**AT322742**	**SCREEN**	**1**		**(WHOLE GOODS)**
10	AT322743	SCREEN	1		
11	T58056	ISOLATOR	1		
12	**AT322879**	**GUARD KIT**	**1**		
13	14M7272	NUT	4		M6
14	19M8329	CAP SCREW	4		M6 X 50
15	24M7139	WASHER	8		6.400 X 18 X 1.600 MM
16	T212302	BUMPER	2		

OPERATOR STATION FENDERS AND SKIRTS
AILES ET JUPES DU POSTE DE CONDUITE
GUARDABARROS Y FALDILLAS DE PUESTO DEL OPERADOR

TP58069 -UN-05OCT00

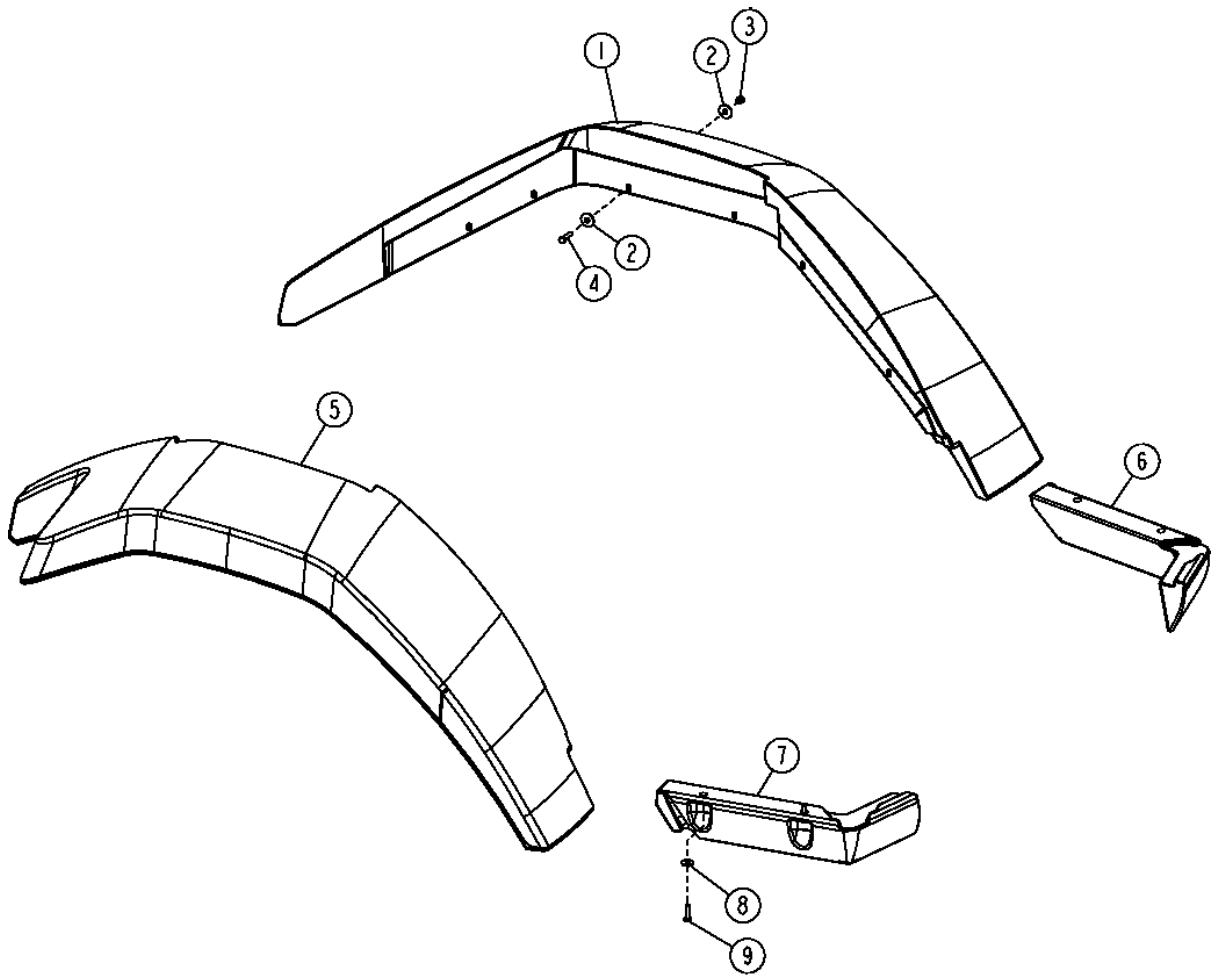

TP58069

OPERATOR STATION FENDERS AND SKIRTS
AILES ET JUPES DU POSTE DE CONDUITE
GUARDABARROS Y FALDILLAS DE PUESTO DEL OPERADOR

KEY	*PART NO.*	*PART NAME*	*QTY.*	*SERIAL NO.*	*REMARKS*
1	T177187	FENDER	1		LH
2	24M7296	WASHER	24		
3	14M7426	LOCK NUT	12		M8
4	19M7513	CAP SCREW	12		M8 X 30
5	T165870	FENDER	1		RH
6	.....	SKIRT	1		(NLA) LH (SERVICE ONLY)
7	.....	SKIRT	1		(NLA) RH (SERVICE ONLY)
8	24M7298	WASHER	4		
9	19M7513	CAP SCREW	4		M8 X 30

RADIO, ANTENNA, SPEAKERS AND WIRE HARNESS (FOR USE WITH CAB ONLY)
RADIO, HAUT-PARLEURS, FAISCEAU DE FILS ET ANTENNE (A UTILISER AVAC CABINE SEULE)
RADIO, ALTAVOCES, ARNES DE ALAMBRADO Y ANTENA (USAR CON CABINA SOLAMENTE)

TX1014614 -UN-18DEC06

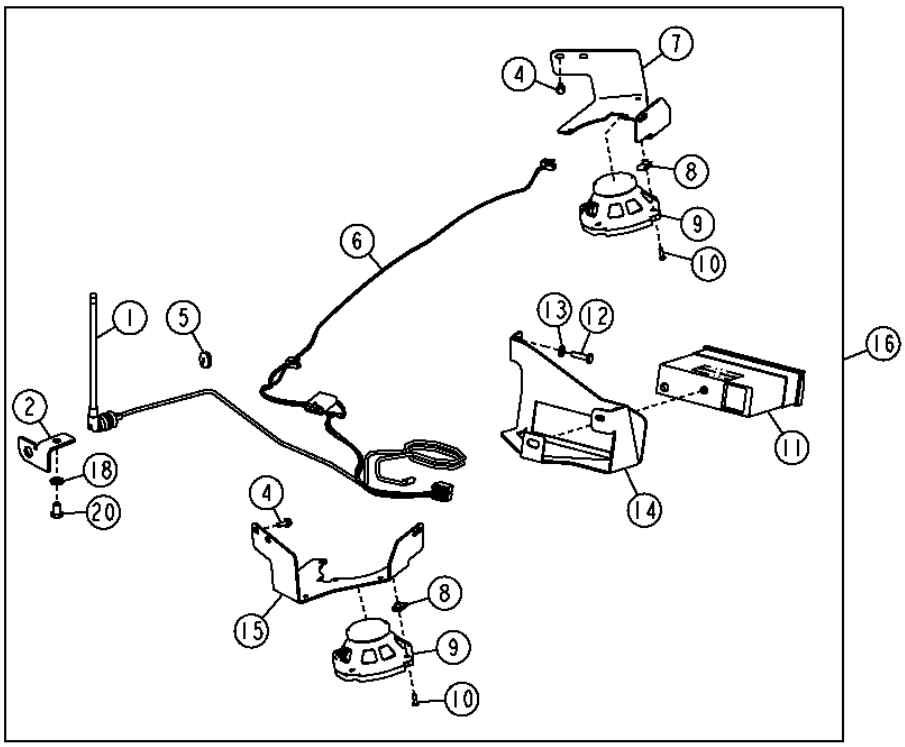

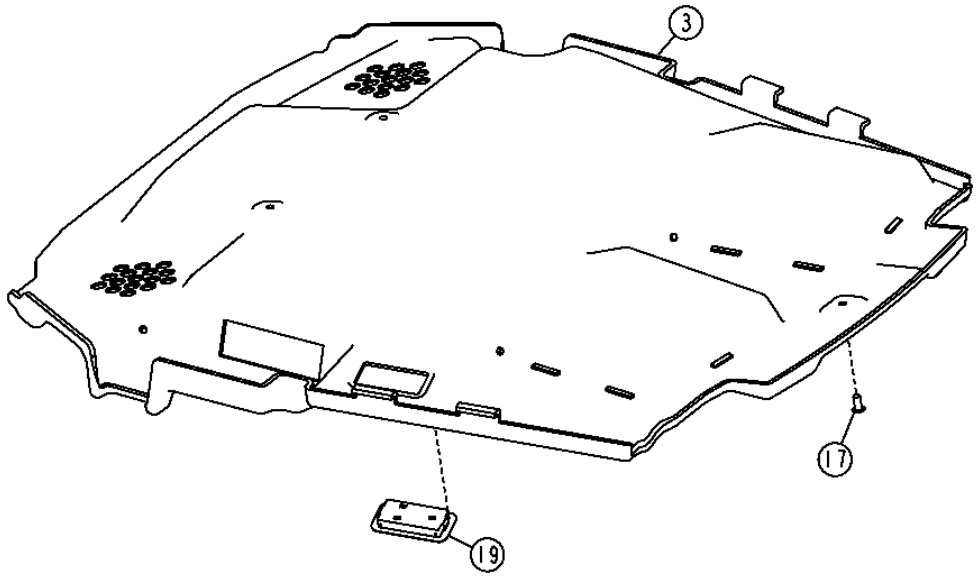

TX1014614

RADIO, ANTENNA, SPEAKERS AND WIRE HARNESS (FOR USE WITH CAB ONLY)
RADIO, HAUT-PARLEURS, FAISCEAU DE FILS ET ANTENNE (A UTILISER AVAC CABINE SEULE)
RADIO, ALTAVOCES, ARNES DE ALAMBRADO Y ANTENA (USAR CON CABINA SOLAMENTE)

KEY	*PART NO.*	*PART NAME*	*QTY.*	*SERIAL NO.*	*REMARKS*
1	AT199388	ANTENNA	1		
2	T204635	BRACKET	1		ANTENNA BRACKET
3	AT335596	HEADLINER	1		WITH RADIO
	AT335595	HEADLINER	1		WITHOUT RADIO
4	19M7933	CAP SCREW	6		M6 X 25
5	T74952	GROMMET	1		
6	AT191575	WIRING HARNESS	1		
7	T186443	BRACKET	1		LH SPEAKER
8	R117892	NUT	6		
9	AT188759	SPEAKER	2		
10	21M7271	SCREW	6		M5 X 16
11	RE190139	RADIO	1		AM/FM STEREO
	RE227953	RADIO	1		AM/FM/CD/WEATHER BAND STEREO
12	19M7513	CAP SCREW	2		M8 X 30
13	24M7238	WASHER	2		
14	T165951	BRACKET	1		RADIO
15	T186444	BRACKET	1		RH SPEAKER
16	**AT192217**	**RADIO**	**1**		**(WHOLE GOODS)**
17	MT2485	PLUG	9		(DRILL HOLE TO 10MM)
18	24M7239	WASHER	1		10.700 X 21 X 2.500 MM
19	AT320544	LAMP	1		
20	19M8324	CAP SCREW	1		M10 X 16

**INTERIOR REAR VIEW MIRROR
RETROVISEUR LINTERIEUR
RETROVISOR DEL INTERIOR**

TX1013261 -UN-16OCT06

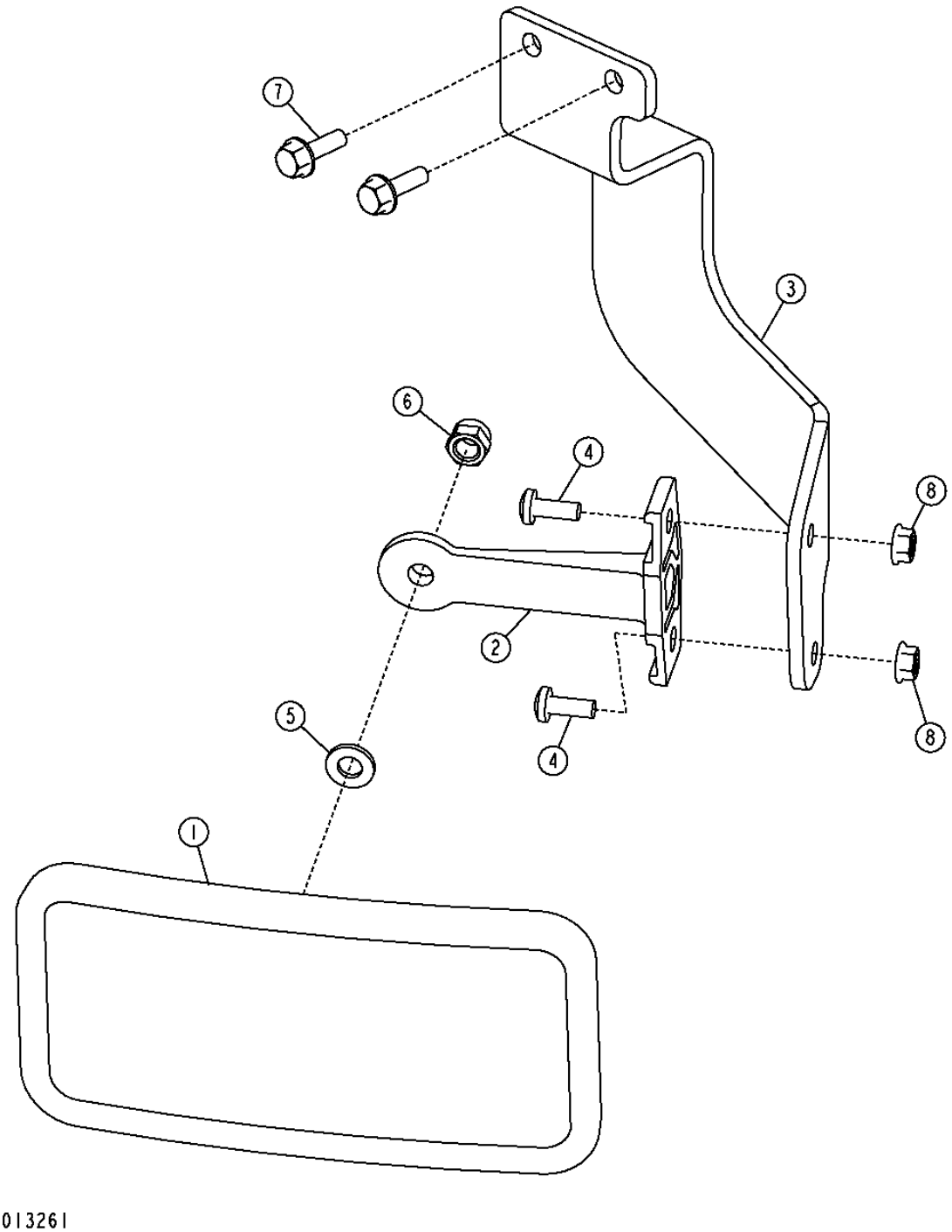

INTERIOR REAR VIEW MIRROR
RETROVISEUR L'INTERIEUR
RETROVISOR DEL INTERIOR

KEY	*PART NO.*	*PART NAME*	*QTY.*	*SERIAL NO.*	*REMARKS*
1	AT196427	REAR VIEW MIRROR	1		
2	L75379	BRACKET	1		
3	T226786	BRACKET	1		
4	21M7246	SCREW	2		M6 X 16
5	24M7238	WASHER	1		
6	14M7426	LOCK NUT	1		M8
7	19M7862	SCREW	2		M6 X 20
8	14M7303	FLANGE NUT	2		M6

FIRE EXTINGUISHER
EXTINCTEUR
EXTINTOR

TX1013736 -UN-20DEC06

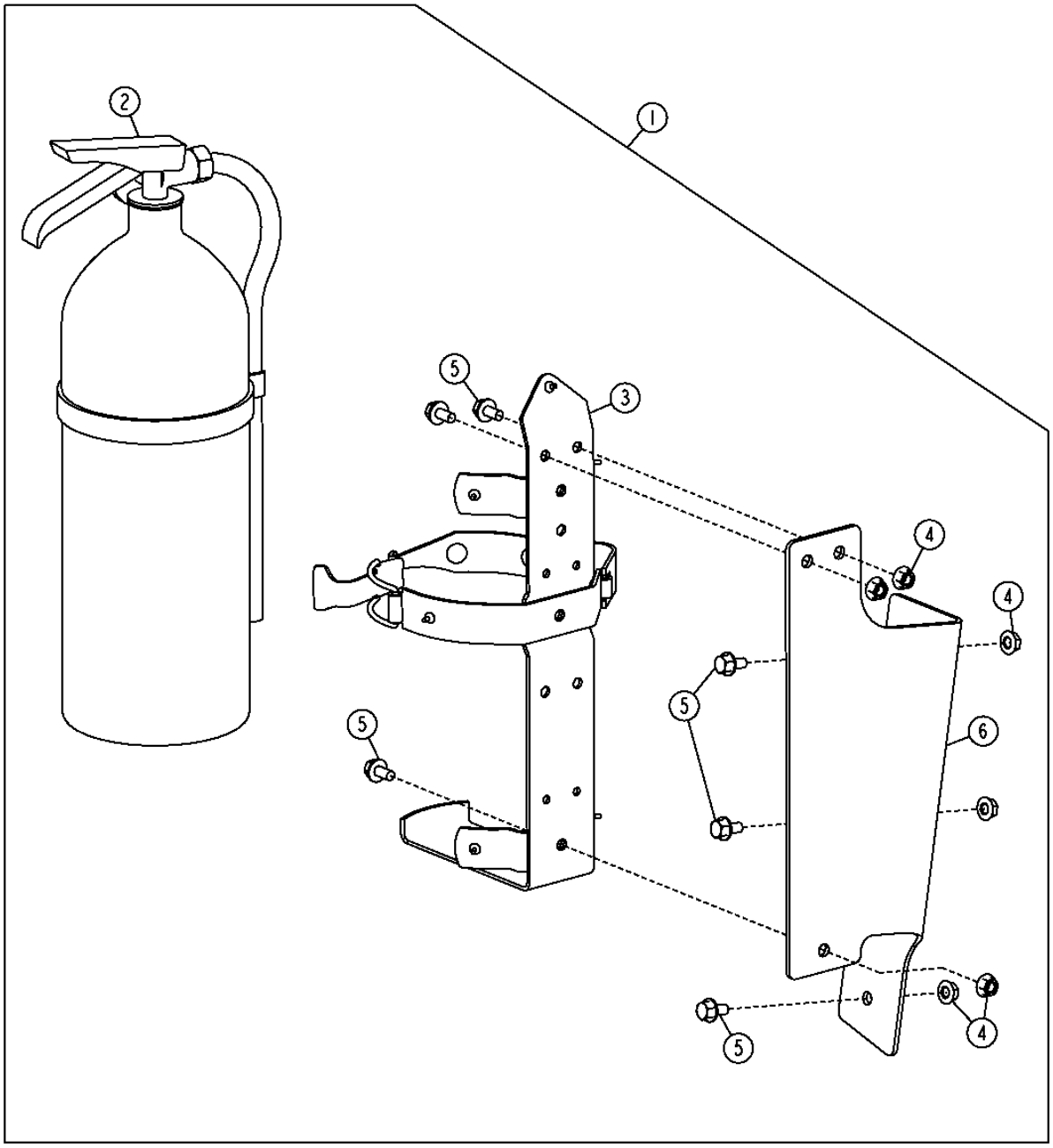

TX1013736

FIRE EXTINGUISER
EXTINCTEUR
EXTINTOR

KEY	PART NO.	PART NAME	QTY.	SERIAL NO.	REMARKS
1	AT334349	KIT	1		
2	AT189487	FIRE EXTINGUISHER	1		
3	AT189390	BRACKET	1		
4	14M7303	FLANGE NUT	6		M6
5	19M7774	SCREW	6		M6 X 12
6	T225838	PLATE	1		

WARNING DEVICES INCLUDING HORN AND REVERSE ALARM 2004

BACK-UP ALARM SYSTEM
SYSTEME AVERTISSEUR SONORE DE MARCHE ARRIERE
SISTEMA DE BOCINA DE RETROCESO

TP50607 -UN-19MAR97

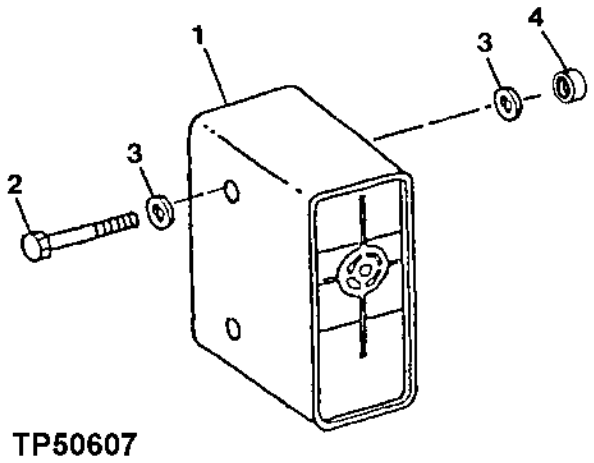

TP50607

KEY	PART NO.	PART NAME	QTY.	SERIAL NO.	REMARKS
1	AT78534	TRAVEL WARNING ALARM	1		
2	N275275	CAP SCREW	2		M10 X 125
3	24M7239	WASHER	2		
4	28H2547	SPACER	2		

MEMORANDA
MEMORANDA
MEMORANDA

WARNING DEVICES INCLUDING HORN AND REVERSE ALARM 2004

HORN
KLAXON
BOCINA

T154411 -UN-29APR02

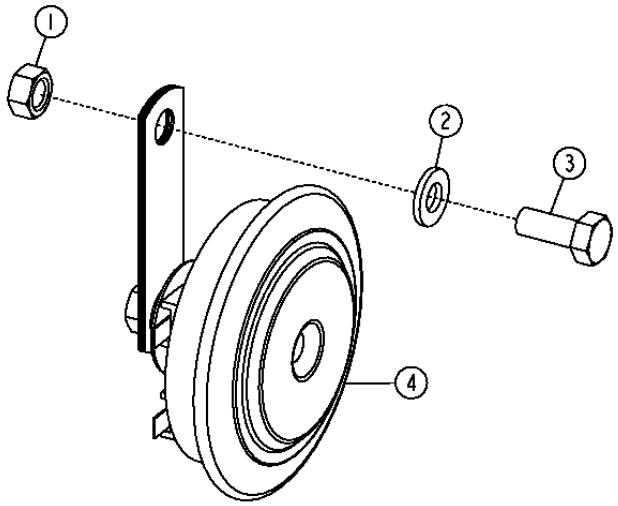

T154411

KEY	PART NO.	PART NAME	QTY.	SERIAL NO.	REMARKS
1	14M7273	NUT	1		M8
2	24M7238	WASHER	1		8.700 X 17 X 2 MM
3	M86877	BOLT	1		M8 X 20
4	AT226281	HORN	1		(12V)

MEMORANDA
MEMORANDA
MEMORANDA

MAIN HYDRAULIC PUMP
POMPE HYDRAULIQUE PRINCIPALE
BOMBA HIDRAULICA PRINCIPAL

TX1012544 -UN-29SEP06

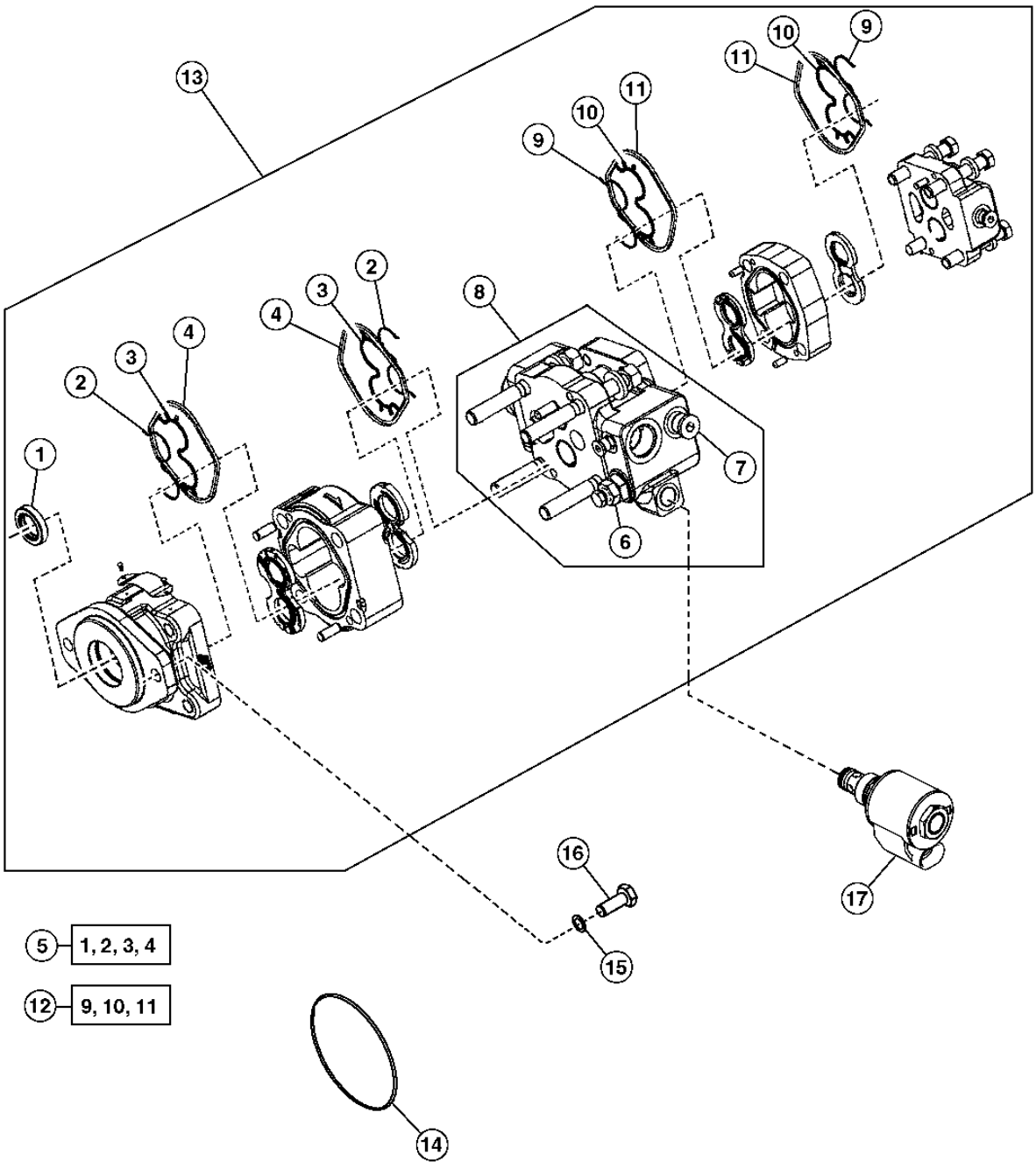

TX1012544

MAIN HYDRAULIC PUMP
POMPE HYDRAULIQUE PRINCIPALE
BOMBA HIDRAULICA PRINCIPAL

KEY	PART NO.	PART NAME	QTY.	SERIAL NO.	REMARKS
1	.....	SEAL	1		
2	.....	BACK-UP RING	2		
3	.....	SEAL	2		
4	.....	SEAL	2		
5	AT199930	SEAL KIT	1		(P330)
6	AT317385	PRESSURE RELIEF VALVE	1		(2900 PSI)
	T164075	SPRING	1		UNLOADER SPOOL
7	AT180530	CHECK VALVE	1		
	R26906	O-RING	1		
	R27474	DRAIN PLUG	1		
8	AT199938	SEAL KIT	1		
	AT332462	HYDR./PILOT CONTROL VALVE	1		UNLOADER
9	.....	BACK-UP RING	2		
10	.....	SEAL	2		
11	.....	SEAL	2		
12	AT199931	SEAL KIT	1		(P315)
13	AT331223	PUMP	1		
14	F37030242	O-RING	1		
15	24M7240	WASHER	2		
16	19M7403	CAP SCREW	2		M12 X 35
17	AT195142	HYD ACTUATED CONTROL VALVE	1		
	AT195143	SEAL KIT	1		
	T187815	O-RING	1		
	AT333807	SOLENOID VALVE COIL	1		
	T225291	NUT	1		

HYDRAULIC OIL FILTER
FILTRE A HUILE HYDRAULIQUE
FILTRO DE ACEITE HIDRAULICO

TX1014907 -UN-04DEC06

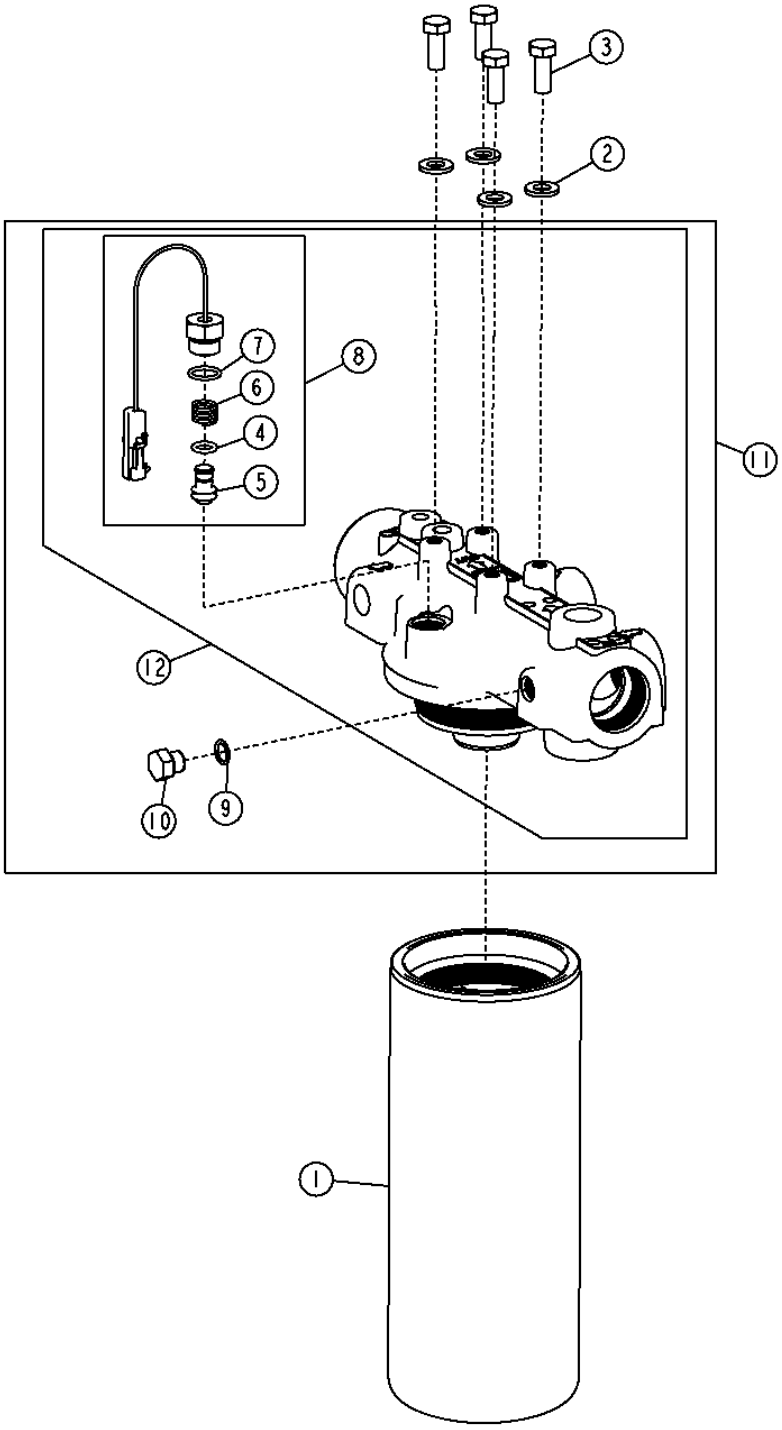

TX1014907

HYDRAULIC OIL FILTER
FILTRE A HUILE HYDRAULIQUE
FILTRO DE ACEITE HIDRAULICO

KEY	*PART NO.*	*PART NAME*	*QTY.*	*SERIAL NO.*	*REMARKS*
1	AT308274	OIL FILTER	1		
2	24M7239	WASHER	4		
3	19M7402	CAP SCREW	4		M10 X 25
4	T186154	O-RING	1		
5	.....	PISTON	1		
6	.....	SPRING	1		
7	R26375	O-RING	1		
8	AT192373	KIT	1		
9	R26448	O-RING	1		
10	R27218	FITTING PLUG	1		
11	AT192374	FILTER HEAD	1		
12	AT195276	FILTER HEAD	1		

MAIN HYDRAULIC SYSTEM RESERVOIR
RESERVOIR DE CIRCUIT HYDRAULIQUE PRINCIPAL
DEPOSITO DEL SISTEMA HIDRAULICO PRINCIPAL

TX1014897 -UN-20DEC06

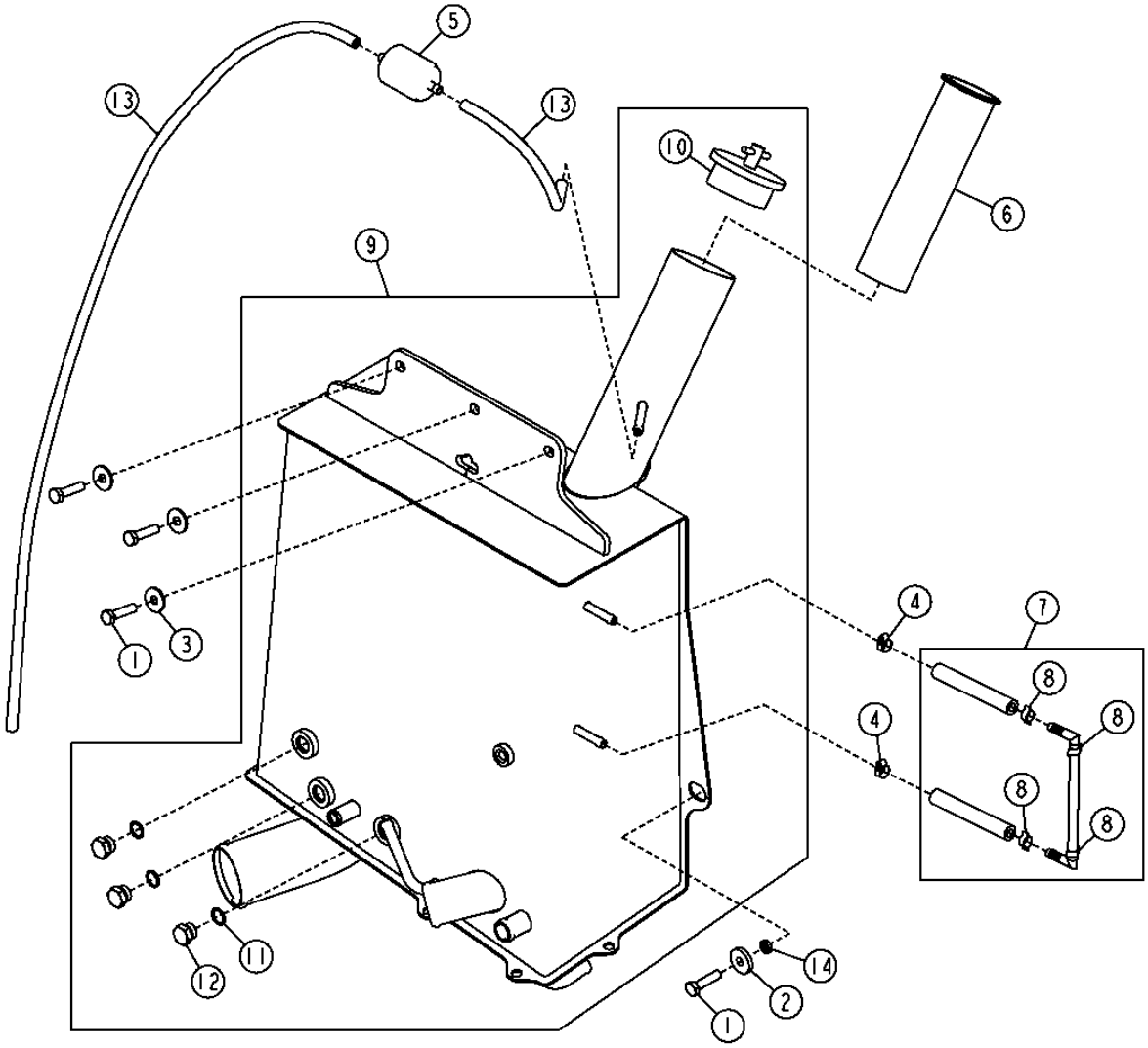

TX1014897

MAIN HYDRAULIC SYSTEM RESERVOIR
RESERVOIR DE CIRCUIT HYDRAULIQUE PRINCIPAL
DEPOSITO DEL SISTEMA HIDRAULICO PRINCIPAL

KEY	*PART NO.*	*PART NAME*	*QTY.*	*SERIAL NO.*	*REMARKS*
1	19M8637	CAP SCREW	4		M10 X 40
2	24H1311	WASHER	1		13/32" X 1-1/4" X 0.220"
3	24M7296	WASHER	3		10.500 X 30 X 2.500 MM
4	AR77962	HOSE CLAMP	2		
5	AT101565	AIR FILTER	1		
6	AT161638	STRAINER	1		
7	AT199541	LEVEL GAUGE	1		
8	AR21836	CLAMP	4		
9	AT317624	HYDRAULIC RESERVOIR	1		
10	AT174743	FILLER CAP	1		
11	R26375	O-RING	3		
12	R39112	FITTING	3		
13	.....	BULK HOSE	1		(CTL, 4.7') (MAKE FROM M87571)
14	T184657	SPACER	1		

MAIN HYDRAULIC SYSTEM
CIRCUIT HYDRAULIQUE PRINCIPAL
SISTEMA HIDRAULICO PRINCIPAL

TX1017176 -UN-03JAN07

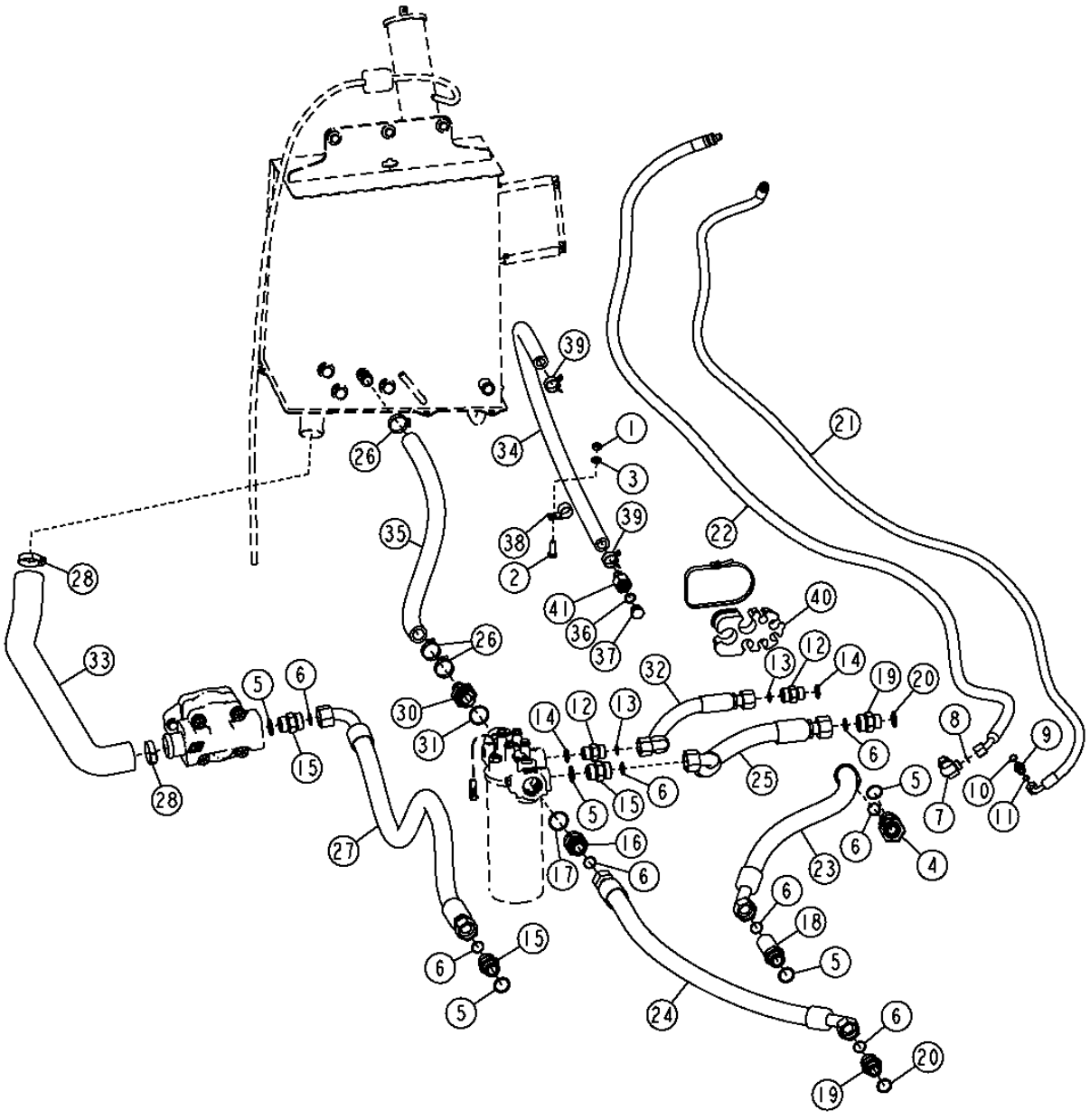

TX1017176

THIS PARTS LISTING IS CONTINUED

MAIN HYDRAULIC SYSTEM
CIRCUIT HYDRAULIQUE PRINCIPAL
SISTEMA HIDRAULICO PRINCIPAL

KEY	PART NO.	PART NAME	QTY.	SERIAL NO.	REMARKS
1	14M7274	NUT	1		M10
2	19M7662	CAP SCREW	1		M10 X 30
3	24M7239	WASHER	1		10.700 X 21 X 2.500 MM
4	38H1049	ELBOW FITTING	1		
5	R29936	O-RING	3		
6	T76938	O-RING	8		
7	38H1095	ELBOW FITTING	1		
8	T77857	O-RING	1		
9	38H1160	ADAPTER FITTING	1		
10	R26448	O-RING	1		
11	T77613	O-RING	1		
12	38H1163	ADAPTER FITTING	3		
13	T77858	O-RING	3		
14	U12547	O-RING	1		
15	38H1164	ADAPTER FITTING	2		
16	38H1180	ADAPTER FITTING	1		
17	U13639	O-RING	1		
18	38H1216	ADAPTER FITTING	1		
19	38H1346	ADAPTER FITTING	2		
20	U17409	O-RING	2		
21	AT184951	HYDRAULIC HOSE - FABRICATE	1		
22	AT184952	HYDRAULIC HOSE - FABRICATE	1		
23	AT196319	HYDRAULIC HOSE - FABRICATE	1		
24	AT196320	HYDRAULIC HOSE - FABRICATE	1		
25	AT196321	HYDRAULIC HOSE - FABRICATE	1		
26	AT300153	HOSE CLAMP	3		
27	AT303065	HYDRAULIC HOSE - FABRICATE	1		
28	AT308555	HOSE CLAMP	2		
30	T208467	FITTING	1		
31	U13639	O-RING	1		
32	AT323623	HYDRAULIC HOSE - FABRICATE	1		
33	AT323728	SUCTION HOSE	1		
34	.....	BULK HOSE	1		(CTL, 3.7') (MAKE FROM T78497)
35	.....	BULK HOSE	1		(CTL, 2.25') (MAKE FROM TY22556)
36	R26906	O-RING	1		
37	R27474	DRAIN PLUG	1		
38	T102934	CLAMP	1		
39	T185826	CLAMP	2		
40	T190669	HOSE CLAMP	1		
41	T190892	HOSE FITTING	1		

THIS PARTS LISTING IS CONTINUED

HYDRAULIC OIL COOLER AND HOSES
REFROIDISSEUR D'HUILE HYDRAULIQUE ET FLEXIBLES
ENFRIADOR DE ACEITE HIDRAULICO Y MANGUERAS

TX1017194 -UN-10JAN07

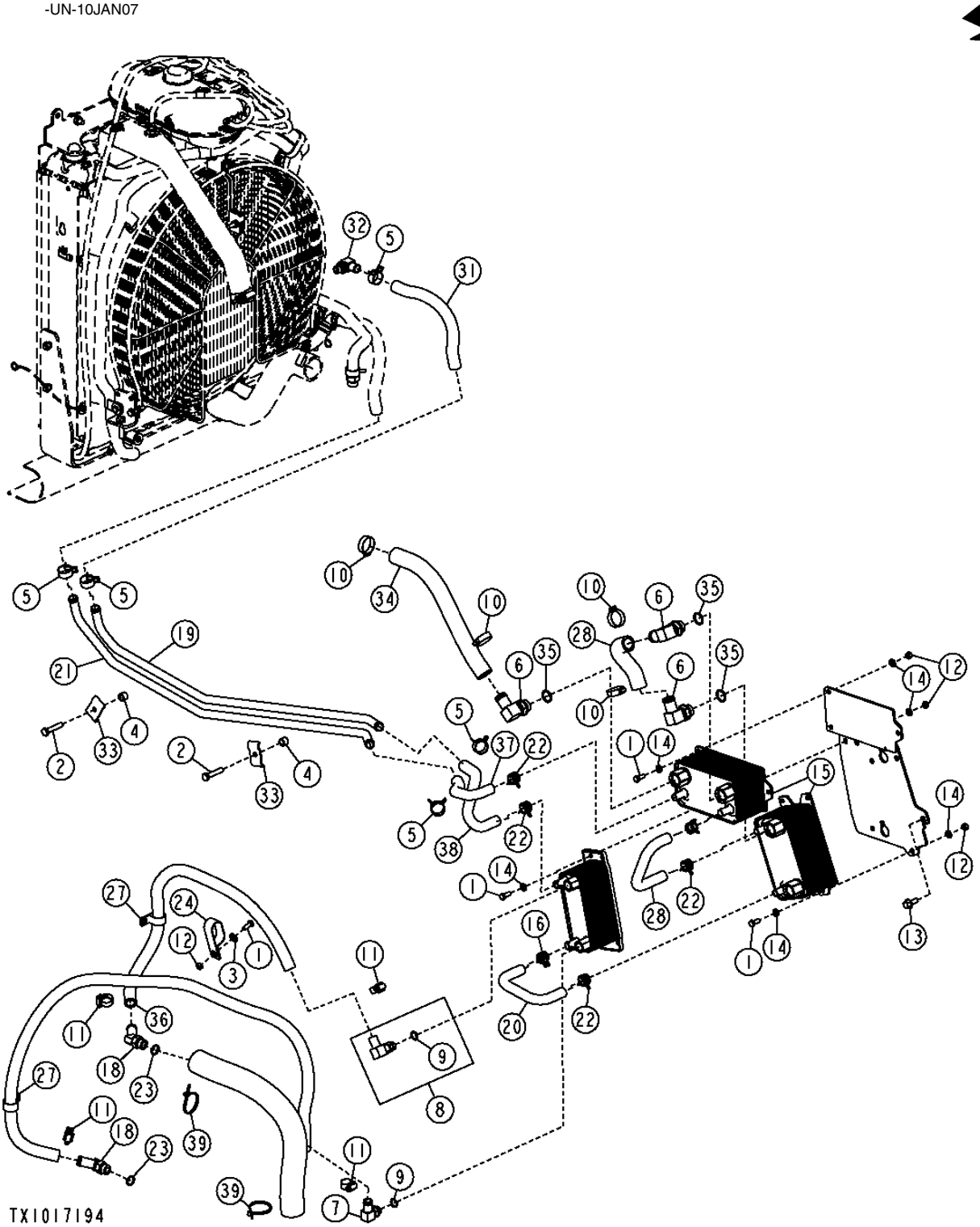

THIS PARTS LISTING IS CONTINUED

HYDRAULIC OIL COOLER AND HOSES
REFROIDISSEUR D'HUILE HYDRAULIQUE ET FLEXIBLES
ENFRIADOR DE ACEITE HIDRAULICO Y MANGUERAS

KEY	*PART NO.*	*PART NAME*	*QTY.*	*SERIAL NO.*	*REMARKS*
1	19M7881	SCREW	7		M8 X 20
2	19M8600	CAP SCREW	2		M10 X 50
3	24M7239	WASHER	5		10.700 X 21 X 2.500 MM
4	28H3394	BUSHING	2		
5	T185826	CLAMP	14		
6	AR68999	ELBOW FITTING	2		
7	AT118619	HOSE FITTING	1		
8	AT193927	HOSE FITTING	1		
9	R26375	O-RING	2		
10	AT300153	HOSE CLAMP	4		
11	AT301917	HOSE CLAMP	8		
12	14M7273	NUT	7		M8
13	19M7785	SCREW	3		M10 X 25
14	24M7238	WASHER	14		8.700 X 17 X 2 MM
15	AT318085	OIL COOLER	2		
16	RE201108	OIL COOLER	1		
18	AT324059	ELBOW FITTING	2		
19	AT330459	TUBE	1		
21	AT334340	TUBE	1		
22	R117721	CLAMP	4		
23	R26906	O-RING	2		
24	T149597	CLAMP	1		
26	T161463	SLEEVE	1		
27	T162675	CLAMP	2		
28	T216968	HOSE	1		
29	T223521	HOSE	1		
30	T223522	HOSE	1		
31	.....	BULK HOSE	1		(MAKE FROM TY22330) (CTL)
32	AH206095	ELBOW FITTING	1		
33	R46919	HALF CLAMP	2		
34	TY22556	HOSE	1		
35	U12547	O-RING	3		
36	.....	BULK HOSE	1		(MAKE FROM T78497) (CTL)
37	T223708	HOSE	1		
38	T223564	HOSE	1		
39	R44302	TIE BAND	1		

RIDE CONTROL KIT
KIT DE COMMANDE DE SUSPENSION
JUEGO DE CONTROL DE SUSPENSION

TX1016014 -UN-28DEC06

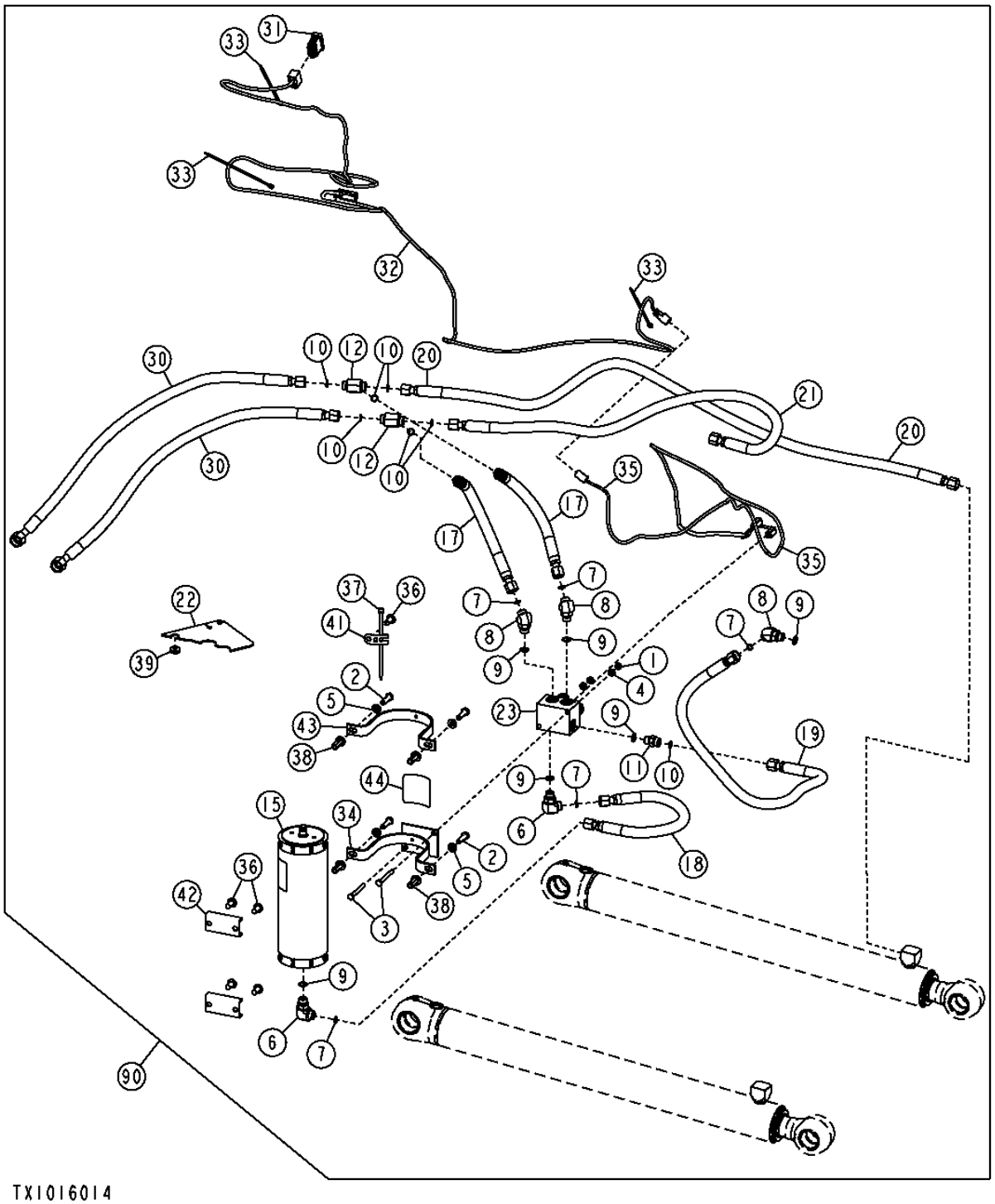

THIS PARTS LISTING IS CONTINUED

RIDE CONTROL KIT
KIT DE COMMANDE DE SUSPENSION
JUEGO DE CONTROL DE SUSPENSION

KEY	PART NO.	PART NAME	QTY.	SERIAL NO.	REMARKS
1	14M7273	NUT	4		M8
2	19M7550	CAP SCREW	4		M10 X 35
3	19M7663	CAP SCREW	2		M8 X 70
4	24M7238	WASHER	2		8.700 X 17 X 2 MM
5	24M7239	WASHER	4		10.700 X 21 X 2.500 MM
6	38H1005	ELBOW FITTING	2		
7	T77857	O-RING	4		
8	38H1046	ELBOW FITTING	3		
9	R26375	O-RING	6		
10	T77857	O-RING	7		
11	38H1161	ADAPTER FITTING	1		
12	38H5031	TEE FITTING	6		
15	AT196351	HYDRAULIC ACCUMULATOR	1		
	AT196760	KIT	1		GAS VALVE REPAIR
17	AT199639	HYDRAULIC HOSE - FABRICATE	2		
18	AT199640	HYDRAULIC HOSE - FABRICATE	1		
19	AT199641	HYDRAULIC HOSE - FABRICATE	1		
20	AT199644	HYDRAULIC HOSE - FABRICATE	1		
21	AT199645	HYDRAULIC HOSE - FABRICATE	1		
22	AT300928	PLATE	1		
23	AT310818	SOLENOID HYDRAULIC VALVE	1		
	14M7477	NUT	1		
	AT280440	SOLENOID HYDRAULIC VALVE	1		
	AT280441	SOLENOID VALVE COIL	1		
	E71998	BACK-UP RING	1		
	R28776	O-RING	1		
30	AT315450	HYDRAULIC HOSE - FABRICATE	2		
31	AT317451	TOGGLE/ROCKER SWITCH	1		
32	AT321552	WIRING HARNESS	1		
33	R44302	TIE BAND	8		
34	AT323844	CLAMP	1		
35	AT329135	WIRING HARNESS	1		
36	MT2485	PLUG	6		
37	R44302	TIE BAND	8		
38	T148409	NUT	4		
39	T162238	GROMMET	1		
41	T210717	BRACKET	1		
42	T216750	CHANNEL	2		
43	T216756	CLAMP	1		
44	T225374	LABEL	1		
90	**AT321323**	**FIELD INSTALLATION KIT**	**1**		**WHOLEGOODS, (INCLUDES AT193881 AND T187193) RIDE CONTROL KIT**
	AT193881	PLATE	1		
	T187193	LABEL	1		RIDE CONTROL

LOADER BUCKET AND CUTTING EDGE
BENNE DE CHARGEUR A ACCOUPLEMENT ET TRANCHANT
ACOPLADOR DE CUCHARON DE CARGADORA Y BORDE CORTANTE

TP69675 -UN-10OCT00

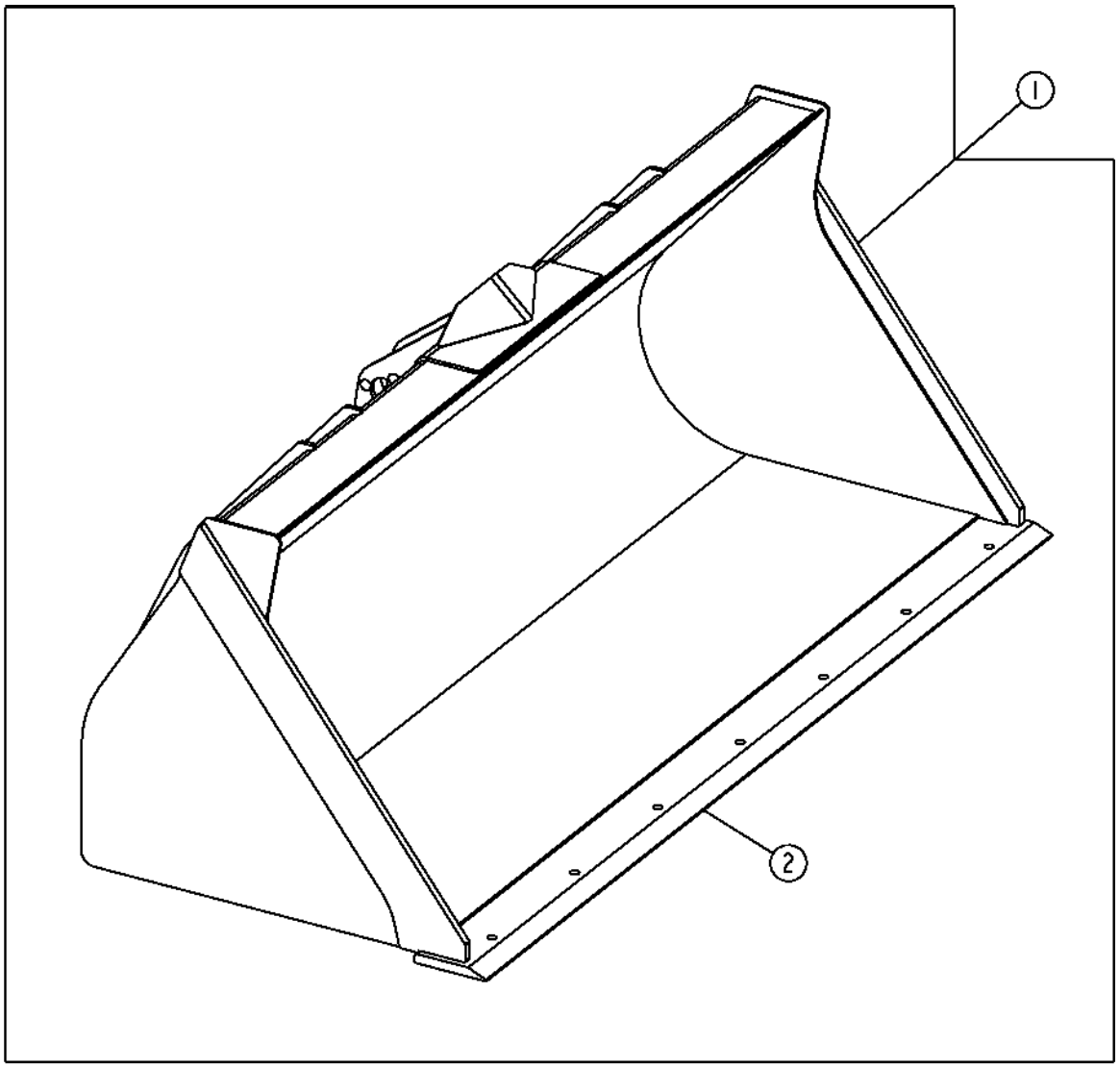

TP69675

LOADER BUCKET AND CUTTING EDGE
BENNE DE CHARGEUR ET TRANCHANT
CUCHARON DE CARGADORA Y BORDE CORTANTE

KEY	*PART NO.*	*PART NAME*	*QTY.*	*SERIAL NO.*	*REMARKS*
1	AT308188	LOADER BUCKET	1		.90 CUBIC METER (1.20 CUBIC YARD) (WHOLE GOODS) (MARKED AT308188) (USE WITH (2) T204908, (2) 14M7319 AND (2) 19M7949)
	AT308076	**LOADER BUCKET**	**1**		**.96 CUBIC METER (1.25 CUBIC YARD) (WHOLE GOODS) (MARKED AT308076) (USE WITH (2) T204908, (2) 14M7319 AND (2) 19M7949)**
2	T150487	CUTTING EDGE	1		(WELDED ON) SBF

LOADER BUCKET AND CUTTING EDGE
BENNE DE CHARGEUR ET TRANCHANT
CUCHARON DE CARGADORA Y BORDE CORTANTE

TP58156 -UN-10OCT00

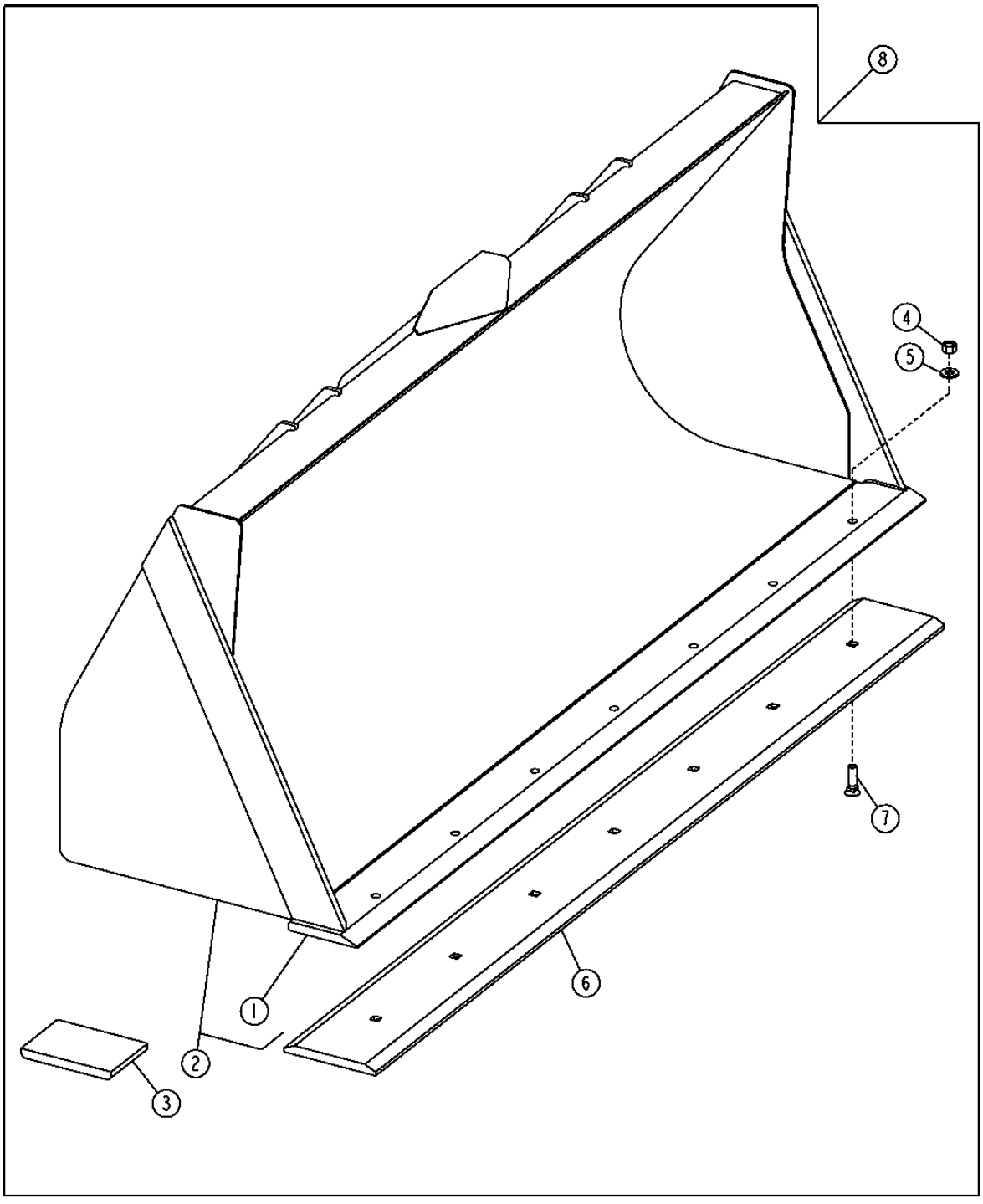

LOADER BUCKET AND CUTTING EDGE
BENNE DE CHARGEUR ET TRANCHANT
CUCHARON DE CARGADORA Y BORDE CORTANTE

KEY	PART NO.	PART NAME	QTY.	SERIAL NO.	REMARKS
1	T150487	CUTTING EDGE	1		(1.13 CUBIC YARD) SBF
	T118768	CUTTING EDGE	1		(1.30 CUBIC YARD) 3/4" SBF
2	.....	LOADER BUCKET	1		
3	T147296	SHOE	2		
4	14H1039	NUT	8		5/8"
5	24M7241	WASHER	8		17 X 34 X 4 MM
6	T150517	CUTTING EDGE	1		(AUXILIARY) 3/4 TK X 8" DBF X 86", (ALSO ORDER (7) 09H1759, (7) 14H1039 AND (7) 24M7241)
	T150517HD	DURA-MAX TM CUTTING EDGE	1		(AUXILIARY) 1" TK X 8" DBF X 86", (ALSO ORDER (7) 09H1764, (7) 14H1039 AND (7) 24M7241)
	T84194	CUTTING EDGE	1		(AUXILIARY) 3/4" TK X 8" DBF X 92 3/8" LONG, (ALSO ORDER (8) 09H1759, (8) 14H1039 AND (8) 24M7241)
	T84194HD	DURA-MAX TM CUTTING EDGE	1		(AUXILIARY) 1" TK X 8" DBF X 92 3/8" LONG, (ALSO ORDER (8) 09H1764, (8) 14H1039 AND (8) 24M7241)
7	09H1759	BOLT	8		5/8" X 2-1/4"
	09H1764	BOLT	8		5/8" X 2-1/2"
8	**AT308071**	**LOADER BUCKET**	**1**		**0.86 CUBIC METER (1.13 CUBIC YARD) (WHOLE GOODS) (USE WITH (2) T204908, (2) 14M7319 AND (2) 19M7949)**
	AT308080	**LOADER BUCKET**	**1**		**1.00 CUBIC METER (1.30 CUBIC YARD) (WHOLE GOODS) (MARKED AT308080) (USE WITH (2) T204908, (2) 14M7319 AND (2) 19M7949)**

MULTI-PURPOSE BUCKET
BENNE UNIVERSELLE
CUCHARA POLIVALENTE

T201293 -UN-29JUN04

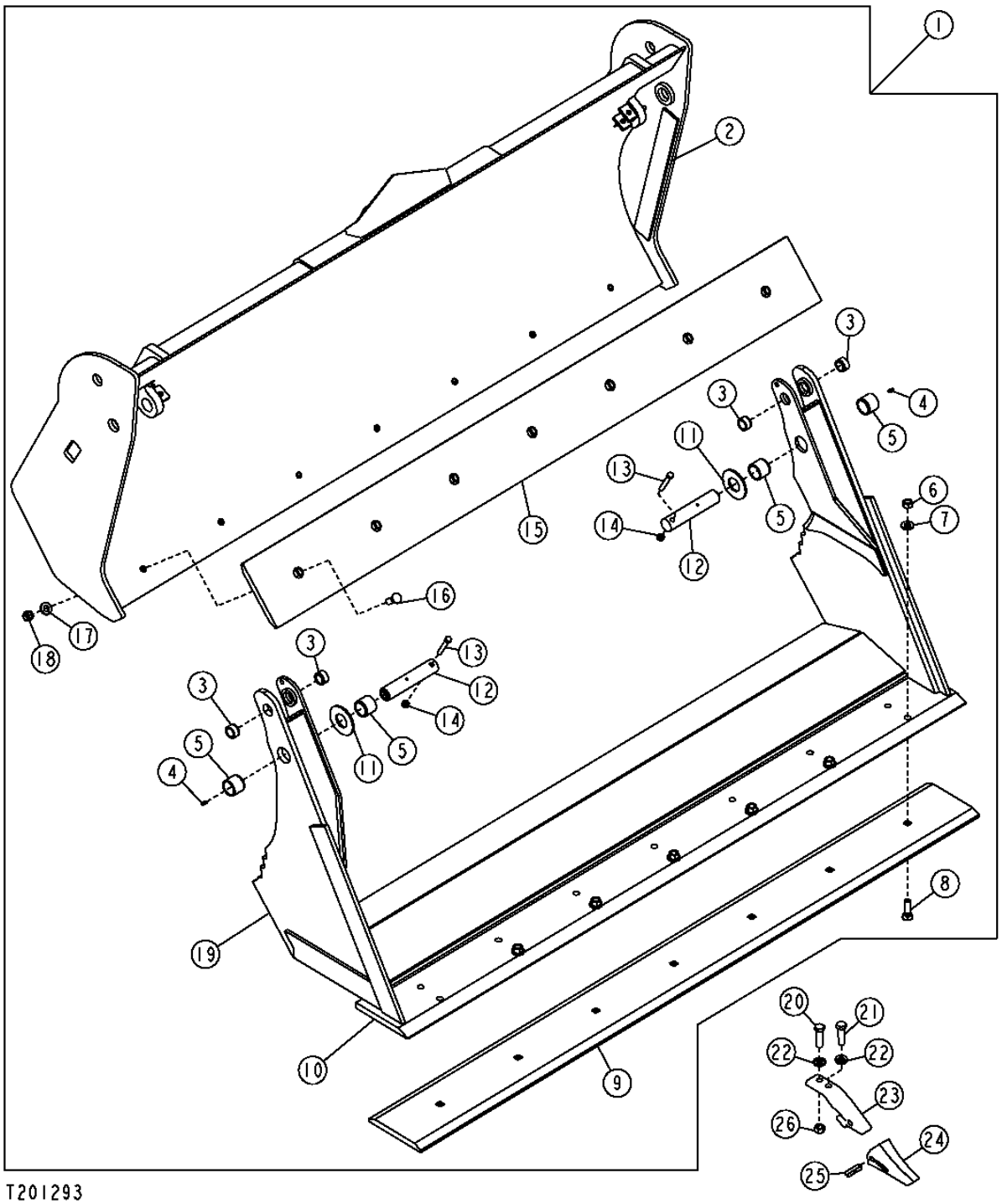

THIS PARTS LISTING IS CONTINUED

MULTI-PURPOSE BUCKET
BENNE UNIVERSELLE
CUCHARA POLIVALENTE

KEY	PART NO.	PART NAME	QTY.	SERIAL NO.	REMARKS
1	AT308042	MULTI-PURPOSE BUCKET	1		(2083MM - 82 INCH) INCLUDES CYLINDERS, LINES AND HOSES (WHOLE GOODS) (MARKED AT308049) (USE WITH (2) T204908, (2) 14M7319 AND (2) 19M7949)
	AT308191	**MULTI-PURPOSE BUCKET**	**1**		**(2184MM - 86 INCH) INCLUDES CYLINDERS, LINES AND HOSES (WHOLE GOODS) (MARKED AT308095) (USE WITH (2) T204908, (2) 14M7319 AND (2) 19M7949)**
	AT308193	**MULTI-PURPOSE BUCKET**	**1**		**(2337MM - 92 INCH) INCLUDES CYLINDERS, LINES AND HOSES (WHOLE GOODS) (MARKED AT308099) (USE WITH (2) T204908, (2) 14M7319 AND (2) 19M7949)**
2	.....	MOLDBOARD	1		(ORDER AT308042, AT308191 OR AT308193)
3	T166433	BUSHING	4		
4	JD7797	LUBRICATION FITTING	2		
5	T128533	BUSHING	4		
6	14H1039	NUT	8		5/8"
7	24M7241	WASHER	8		
8	09H1759	BOLT	8		5/8" X 2-1/4"
	09H1764	BOLT	8		
9	T166437	CUTTING EDGE	1		(82 INCH) AUXILIARY
	T150517	CUTTING EDGE	1		(86 INCH) AUXILIARY
	T150517HD	DURA-MAX TM CUTTING EDGE	1		(86 INCH) AUXILIARY
	T84194	CUTTING EDGE	1		(92 INCH) AUXILIARY
	T84194HD	DURA-MAX TM CUTTING EDGE	1		(92 INCH) AUXILIARY
10	T166419	CUTTING EDGE	1		(82 INCH)
	T166455	CUTTING EDGE	1		(86 INCH)
	T128538	CUTTING EDGE	1		(92 INCH)
11	24H1554	WASHER	2		
12	T167059	PIN	2		
13	19H2106	CAP SCREW	2		7/16" X 2-3/4"
14	K40006	LOCK NUT	2		7/16"
15	T143802	CUTTING EDGE	1		(82 INCH)
	T166454	CUTTING EDGE	1		(86 INCH)
	T143802	CUTTING EDGE	1		(92 INCH)
16	09H1776	BOLT	8		5/8" X 1-3/4"
17	24M7241	WASHER	8		
18	14H1039	NUT	8		5/8"
19	.....	HINGE	1		(ORDER AT308042, AT308191 OR AT308193)
20	19H3244	CAP SCREW	1		5/8" X 2-1/4"
21	19H2599	CAP SCREW	1		5/8" X 2-1/2"
22	24H1367	WASHER	2		
23	T221X230	ADAPTER FITTING	1		
24	T230SP	TOOTH	1		
25	T23P	PIN	1		
26	14H1039	NUT	1		

MEMORANDA
MEMORANDA
MEMORANDA

MULTI-PURPOSE BUCKET CYLINDER AND REPAIR KIT
VERIN DE BENNE UNIVERSELLE ET KIT DE REPARATION
CILINDRO DE CUCHARON UNIVERSAL Y JUEGO DE REPARACION

T197121 -UN-08JAN04

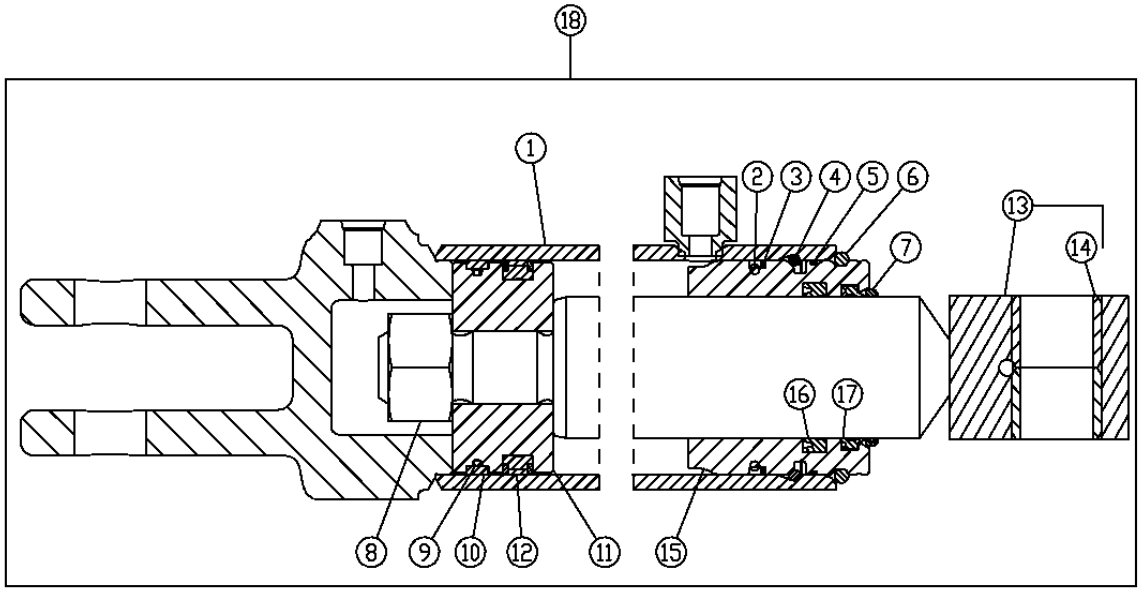

19 — 2,3,5,9,10,12,16,17

T197121

KEY	PART NO.	PART NAME	QTY.	SERIAL NO.	REMARKS
1	.....	HYDRAULIC CYLINDER BARREL	1		
2	T14065	O-RING	1		
3	.....	RING	2		
4	H177854	SNAP RING	1		
5	.....	O-RING	1		
6	H180927	SNAP RING	1		
7	.....	O-RING	1		
8	14H1112	NUT	1		1"
9	.....	WEAR RING	1		
10	.....	O-RING	1		
11	.....	PISTON	1		
12	.....	SEAL	1		
13	.....	ROD	1		
14	H180965	BUSHING	1		
15	.....	HYDR. CYLINDER ROD GUIDE	1		
16	H152203	SEAL	1		
17	.....	SEAL	1		
18	AH210737	HYDRAULIC CYLINDER	1		
19	AH209022	HYDRAULIC CYLINDER KIT	1		

COUPLER LOADER BUCKET AND CUTTING EDGE
BENNE DE CHARGEUR A ACCOUPLEMENT ET TRANCHANT
ACOPLADOR DE CUCHARON DE CARGADORA Y BORDE CORTANTE

TP69675 -UN-10OCT00

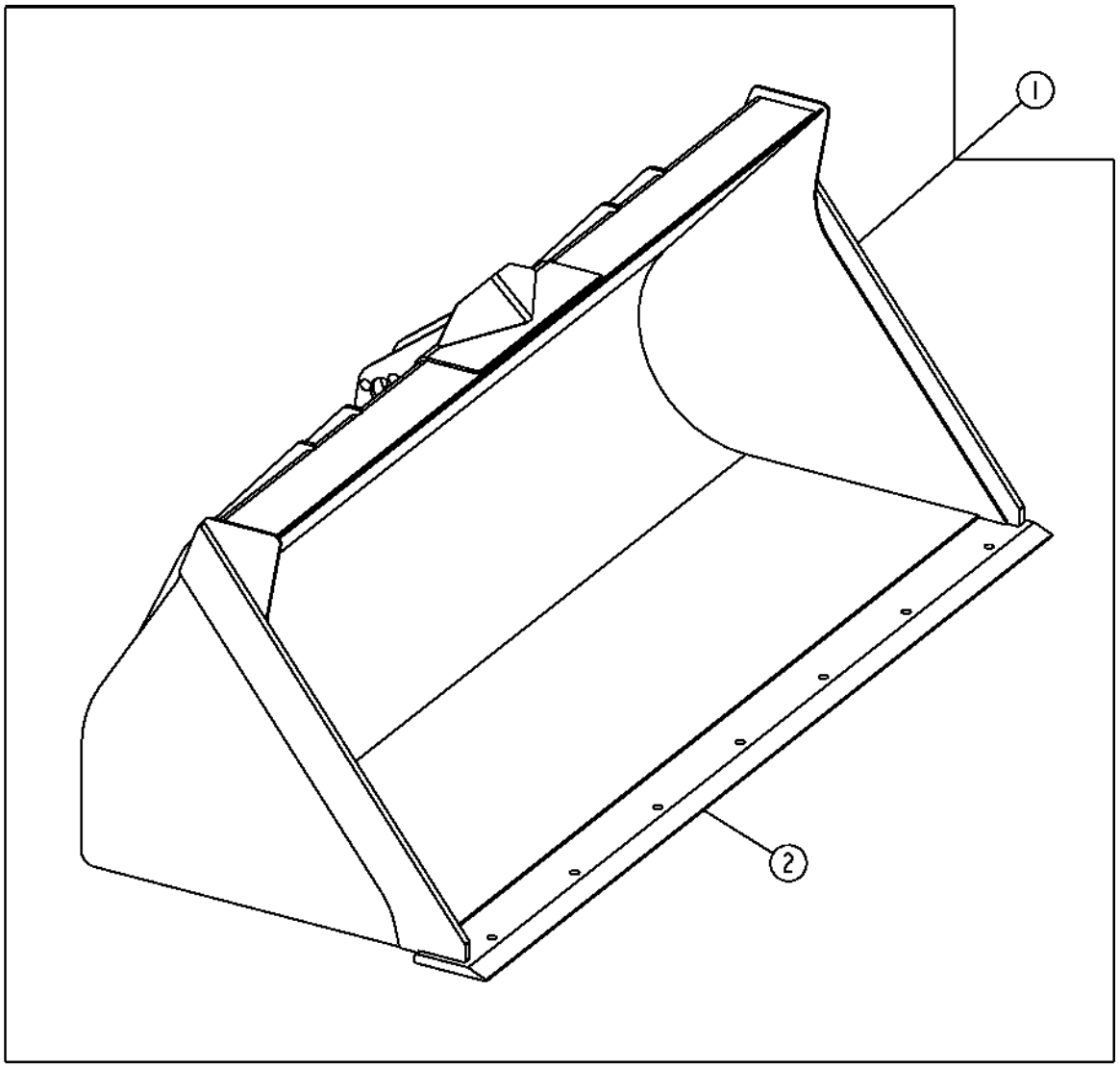

TP69675

COUPLER LOADER BUCKET AND CUTTING EDGE
BENNE DE CHARGEUR A ACCOUPLEMENT ET TRANCHANT
ACOPLADOR DE CUCHARON DE CARGADORA Y BORDE CORTANTE

KEY	*PART NO.*	*PART NAME*	*QTY.*	*SERIAL NO.*	*REMARKS*
1	AT308968	LOADER BUCKET	1		.96 CUBIC METER (1.25 CUBIC YARD), FRONT COUPLER BUCKET, (WHOLE GOODS) (MARKED AT308968)
2	T150487	CUTTING EDGE	1		(WELDED ON) SBF

LOADER BUCKET PINS
AXES DE BENNE DE CHARGEUR
PASADORES DE CUCHARON DE CARGADORA

TX1017846 -UN-24JAN07

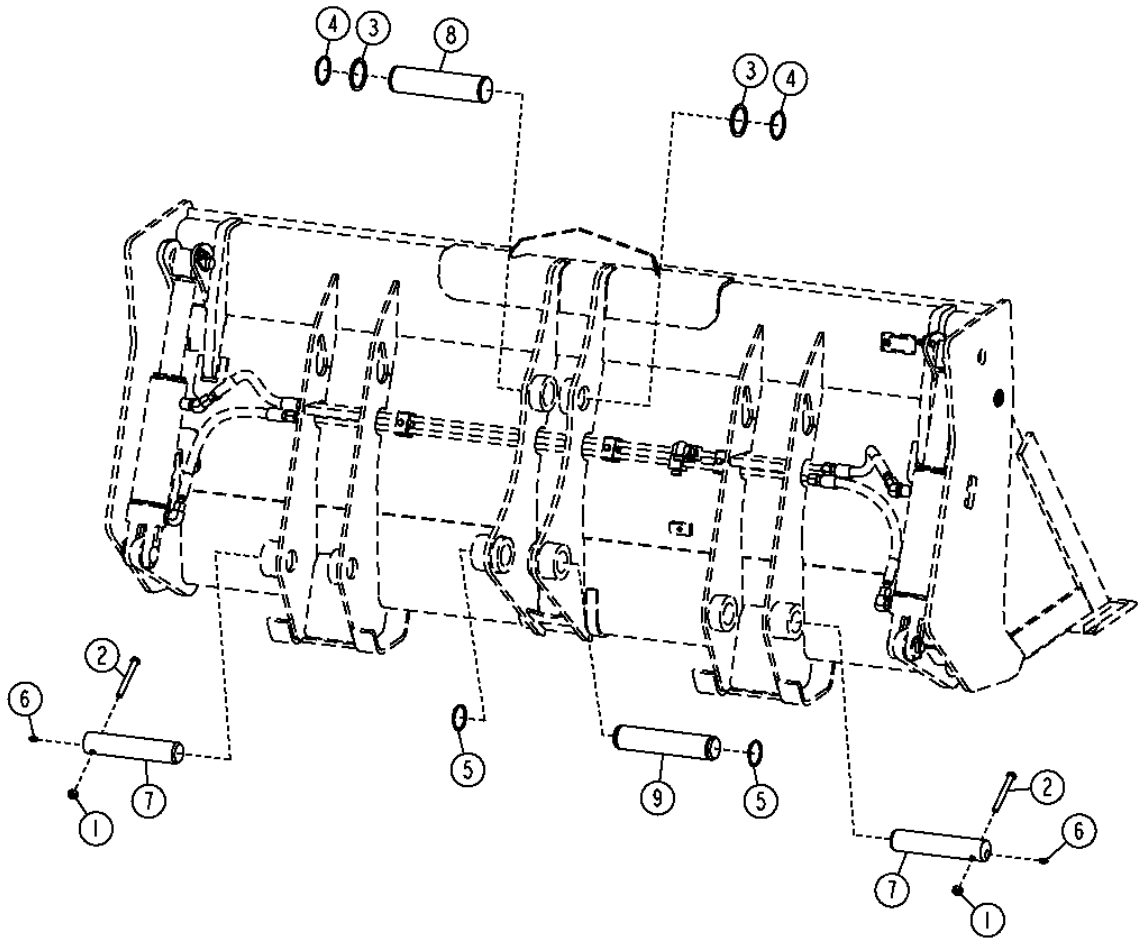

TX1017846

THIS PARTS LISTING IS CONTINUED

LOADER BUCKET PINS
AXES DE BENNE DE CHARGEUR
PASADORES DE CUCHARON DE CARGADORA

KEY	*PART NO.*	*PART NAME*	*QTY.*	*SERIAL NO.*	*REMARKS*
1	14M7168	LOCK NUT	2		M12
2	19M7949	CAP SCREW	2		M12 X 100
3	T161036	WASHER	4		56 X 80 X 2 MM
4	40M7066	SNAP RING	2		
5	40M7166	SNAP RING	2		
6	T162396	LUBRICATION FITTING	2		
7	T204908	PIN FASTENER	2		
8	T165333	PIN FASTENER	1		54.475 X 246 MM
9	T165332	PIN FASTENER	1		49.475 X 244.600 MM

BUCKET LEVELING AND RETURN-TO-DIG LINKAGE
TRINGLERIE DE MISE A NIVEAU DE BENNE ET DE RETOUR EN POSITION DE CREUSEMENT
VARILLAJE DE NIVELACION DE CUCHARON Y DE RETORNO A EXCAVACION

TX1005442 -UN-30MAR06

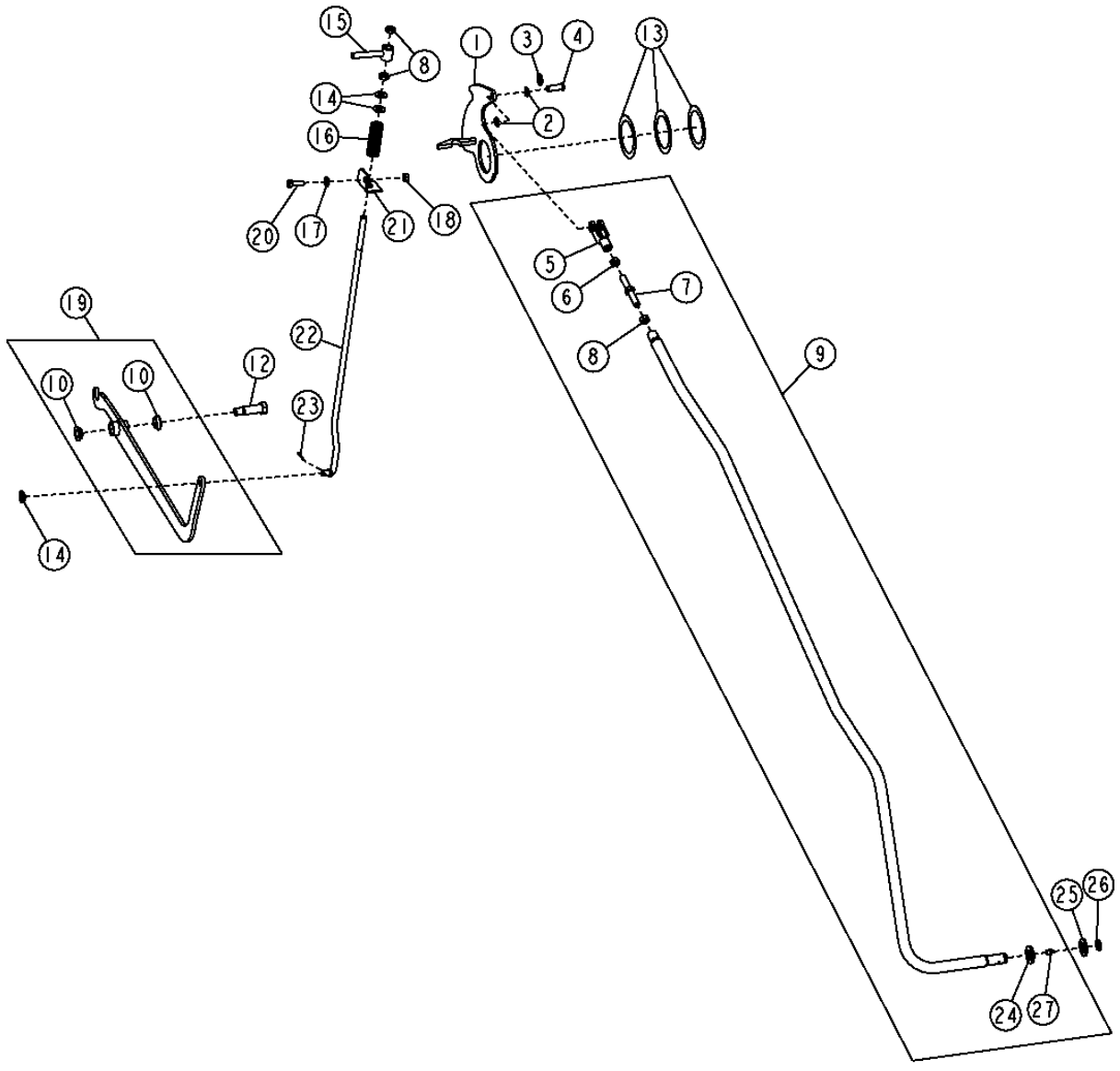

TX1005442

BUCKET LEVELING AND RETURN-TO-DIG LINKAGE
TRINGLERIE DE MISE A NIVEAU DE BENNE ET DE RETOUR EN POSITION DE CREUSEMENT
VARILLAJE DE NIVELACION DE CUCHARON Y DE RETORNO A EXCAVACION

KEY	PART NO.	PART NAME	QTY.	SERIAL NO.	REMARKS
1	AT322365	PLATE	1		
2	T146757	WASHER	2		
3	T148182	RING	1		
4	R72855	PIN FASTENER	1		
5	T159981	YOKE	1		
6	14H881	NUT	1		1/2"
7	T159980	STUD	1		
8	14H856	NUT	3		1/2"
9	AT184682	TUBE	1		
10	T166097	BEARING	2		
12	T191285	BOLT	1		
13	T161497	SHIM	3		
14	24H1111	WASHER	3		17/32" X 1-1/16" X 0.090"
15	AT326922	LINK	1		
16	T190992	COMPRESSION SPRING	1		
17	24M7239	WASHER	1		10.700 X 21 X 2.500 MM
18	14M7274	NUT	1		M10
19	AT199335	ARM	1		
20	19M7662	CAP SCREW	1		M10 X 30
21	T190357	SUPPORT	1		
22	T191226	ROD	1		
23	11M7082	COTTER PIN	1		
24	T160720	WASHER	1		
25	24H1659	WASHER	1		29/32" X 1-5/8" X 0.120"
26	5787YT	SNAP RING	1		
27	T162396	LUBRICATION FITTING	1		

LOADER CONTROL VALVE LINKAGE
TRINGLERIE DE DISTRIBUTEURS DE CHARGEUR
VARILLAJE DE VALVULA DE CONTROL DE CARGADORA

TX1015656 -UN-06DEC06

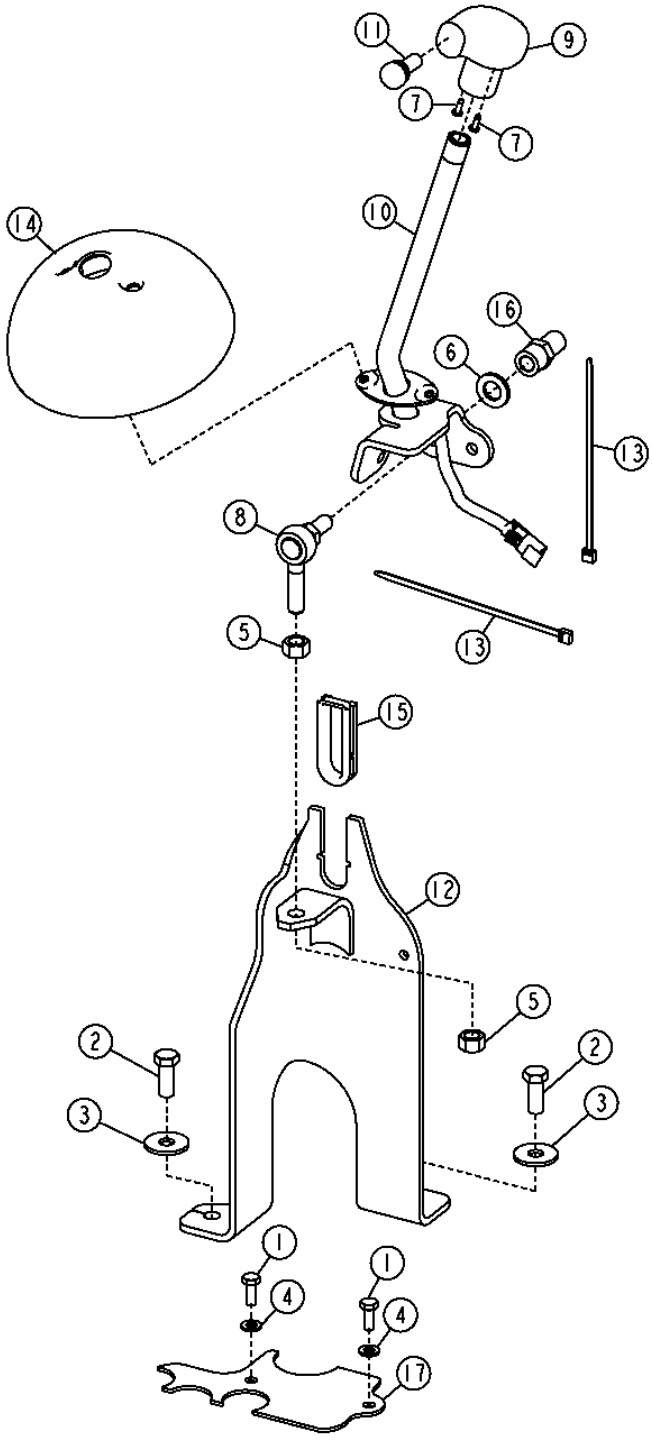

TX1015656

LOADER CONTROL VALVE LINKAGE
TRINGLERIE DE DISTRIBUTEURS DE CHARGEUR
VARILLAJE DE VALVULA DE CONTROL DE CARGADORA

KEY	*PART NO.*	*PART NAME*	*QTY.*	*SERIAL NO.*	*REMARKS*
1	19M7881	SCREW	2		M8 X 20
2	19M8011	CAP SCREW	2		M12 X 30
3	24M7180	WASHER	2		13 X 37 X 3 MM
4	24M7238	WASHER	2		8.700 X 17 X 2 MM
5	14H865	NUT	2		1/2"
6	24M7053	WASHER	1		17 X 30 X 3 MM
7	37H95	SCREW	2		
8	AT124107	BALL JOINT	1		
9	AT171550	KNOB	1		
10	AT196591	LEVER	1		
11	AT317764	SWITCH	1		
12	AT321366	CONTROL SUPPORT	1		
13	R44302	TIE BAND	2		
14	T166899	COVER	1		
15	T167192	INSERT	1		
16	T187072	SPACER	1		
17	T216928	PLATE	1		

THIRD FUNCTION LOADER CONTROL VALVE LINKAGE
TRINGLERIE DE DISTRIBUTEURS DE CHARGEUR A TROISIEME FONCTION
VARILLAJE DE VALVULA DE CONTROL DE CARGADORA DE TERCERA FUNCION

TX1015652 -UN-28DEC06

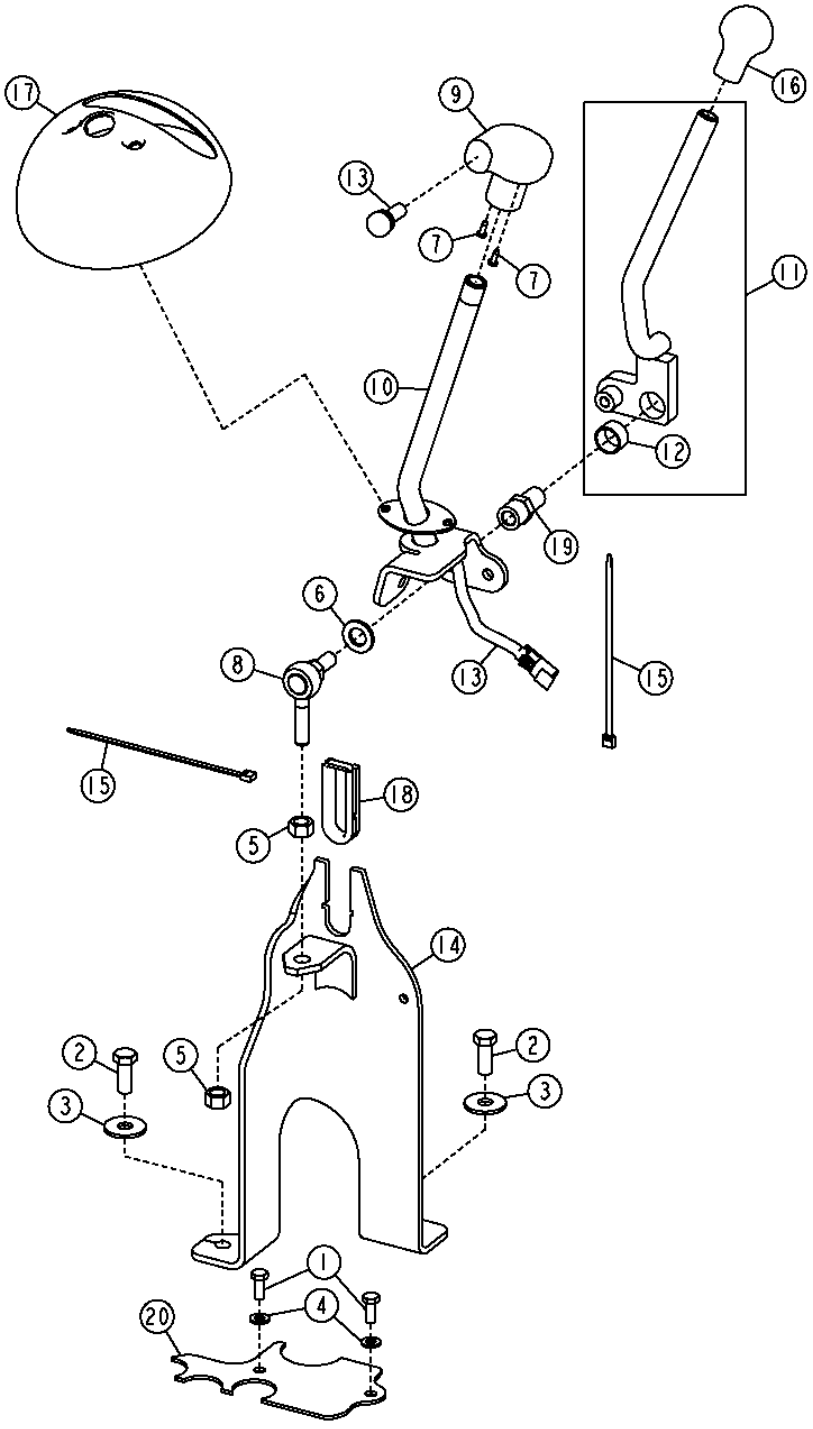

TX1015652

THIRD FUNCTION LOADER CONTROL VALVE LINKAGE
TRINGLERIE DE DISTRIBUTEURS DE CHARGEUR A TROISIEME FONCTION
VARILLAJE DE VALVULA DE CONTROL DE CARGADORA DE TERCERA FUNCION

KEY	*PART NO.*	*PART NAME*	*QTY.*	*SERIAL NO.*	*REMARKS*
1	19M7881	SCREW	2		M8 X 20
2	19M8011	CAP SCREW	2		M12 X 30
3	24M7180	WASHER	2		13 X 37 X 3 MM
4	24M7238	WASHER	2		8.700 X 17 X 2 MM
5	14H865	NUT	2		1/2"
6	24M7053	WASHER	1		17 X 30 X 3 MM
7	37H95	SCREW	2		
8	AT124107	BALL JOINT	1		
9	AT171550	KNOB	1		
10	AT196591	LEVER	1		
11	AT196596	LEVER	1		
	AT330850	**FIELD INSTALLATION KIT**	**1**		**(WHOLEGOODS) THIRD FUNCTION LOADER AUXILIARY VALVE KIT (INCLUDES CONTROLLER, LINKAGE, AND HOSES)**
12	L4694T	BUSHING	1		
13	AT317764	SWITCH	1		
14	AT321366	CONTROL SUPPORT	1		
15	R44302	TIE BAND	2		
16	T133291	KNOB	1		
17	T166900	COVER	1		
18	T167192	INSERT	1		
19	T187072	SPACER	1		
20	T216928	PLATE	1		

LOADER LIFT ARM
BRAS DE RELEVAGE DE CHARGEUR
BRAZO ELEVADOR DE CARGADORA

TX1017016 -UN-21DEC06

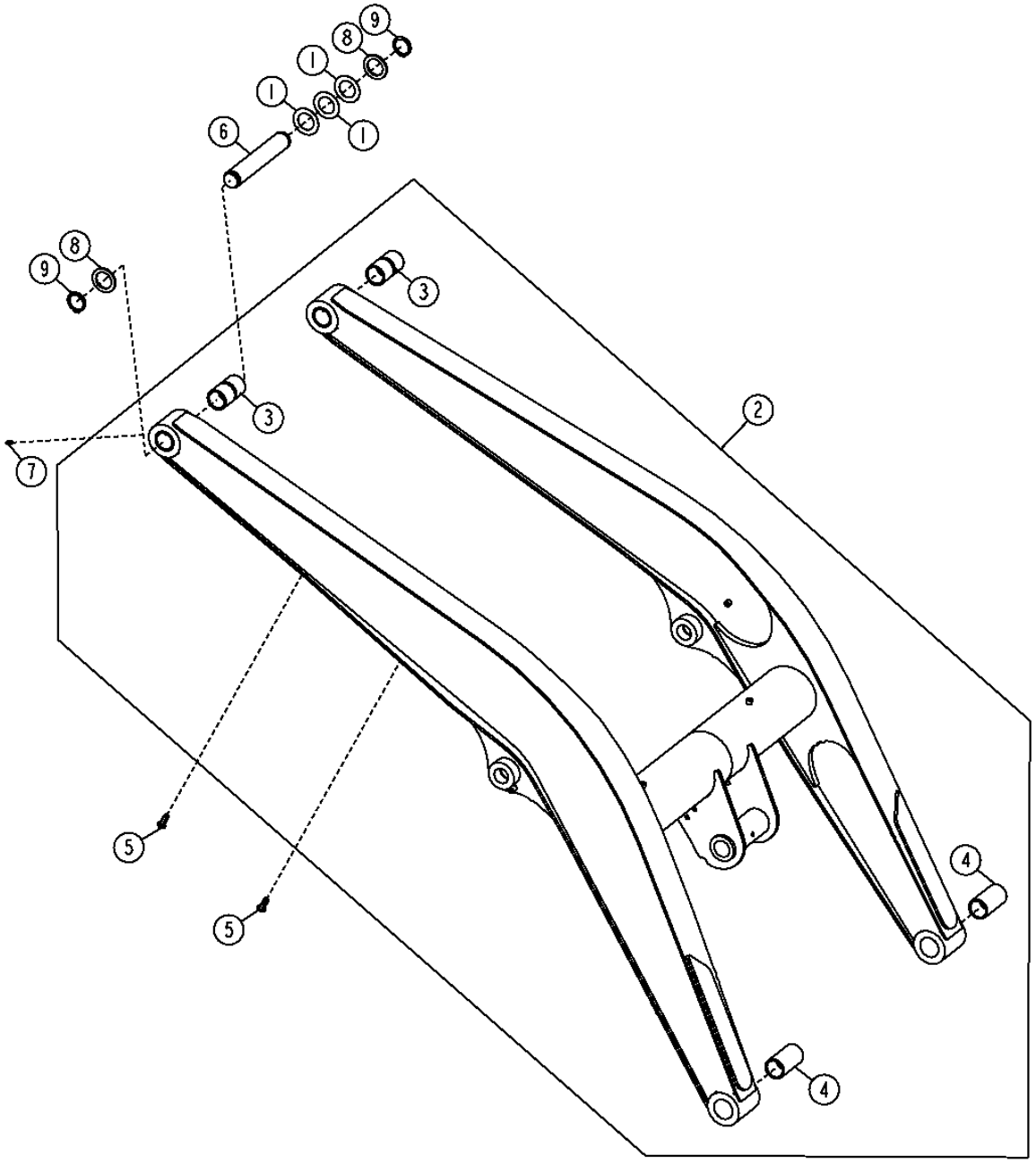

TX1017016

LOADER LIFT ARM
BRAS DE RELEVAGE DE CHARGEUR
BRAZO ELEVADOR DE CARGADORA

KEY	*PART NO.*	*PART NAME*	*QTY.*	*SERIAL NO.*	*REMARKS*
1	24H1589	WASHER	6		50.800 X 80.975 X 0.914 MM
2	AT323695	LIFT ARM	1		
3	T154166	BUSHING	2		49.940 X 60.130 X 110 MM
4	T154165	BUSHING	1		49.940 X 60.130 X 110 MM
5	T148410	NUT	2		M10
6	T154352	PIN	2		49.475 X 296.600 MM
7	T162396	LUBRICATION FITTING	2		
8	T228611	WASHER	4		50.500 X 72.500 X 5 MM
9	T61226	SNAP RING	4		

LOADER BUCKET LINKAGE
TRINGLERIE DE BENNE DE CHARGEUR
VARILLAJE DE CUCHARON DE CARGADORA

TX1016032 -UN-18DEC06

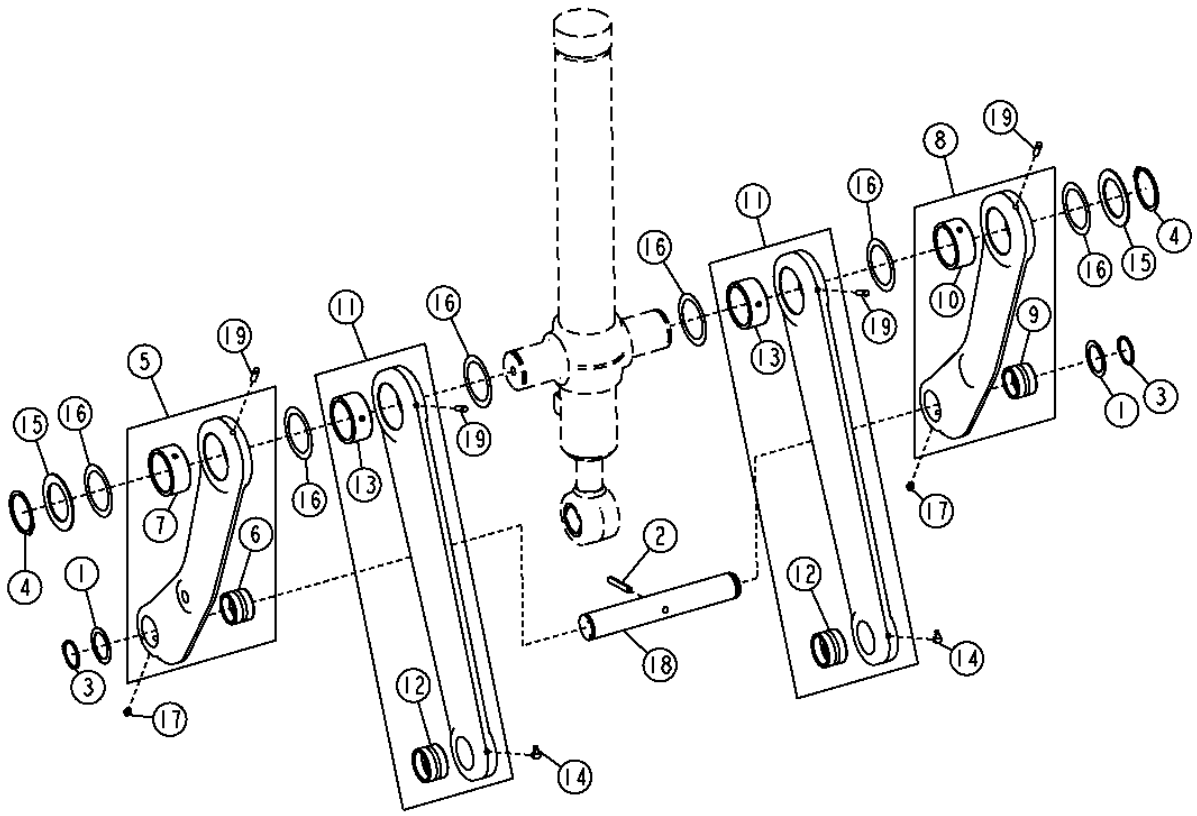

TX1016032

LOADER BUCKET LINKAGE
TRINGLERIE DE BENNE DE CHARGEUR
VARILLAJE DE CUCHARON DE CARGADORA

KEY	PART NO.	PART NAME	QTY.	SERIAL NO.	REMARKS
1	24H1683	WASHER	2		2-1/32" X 2-3/4" X 0.060"
2	34H364	SPRING PIN	1		7/16" X 3"
3	40M7166	SNAP RING	2		
4	40M7217	SNAP RING	2		
5	AT322637	LINK	1		
6	T154058	BUSHING	1		49.860 X 60.130 X 40 MM
7	T216397	BUSHING	1		
8	AT322638	LINK	1		
9	T154058	BUSHING	1		49.860 X 60.130 X 40 MM
10	T216397	BUSHING	1		
11	AT324277	LINK	2		
12	T183356	BUSHING	1		54.860 X 65.130 X 40 MM
13	T216397	BUSHING	1		
14	JD7799	LUBRICATION FITTING	2		90° X 19.558 MM LONG
15	T158579	WASHER	2		75 X 110 X 3 MM
16	T161497	SHIM	6		0.508 MM
17	T162396	LUBRICATION FITTING	2		
18	T216060	PIN	1		49.475 X 324.280 MM
19	T224857	DOWEL PIN	4		

LOADER CONTROL VALVE
DISTRIBUTEUR DE CHARGEUR (HUSCO)
VALVULA DE CONTROL DE CARGADORA (HUSCO)

TX1017174 -UN-03JAN07

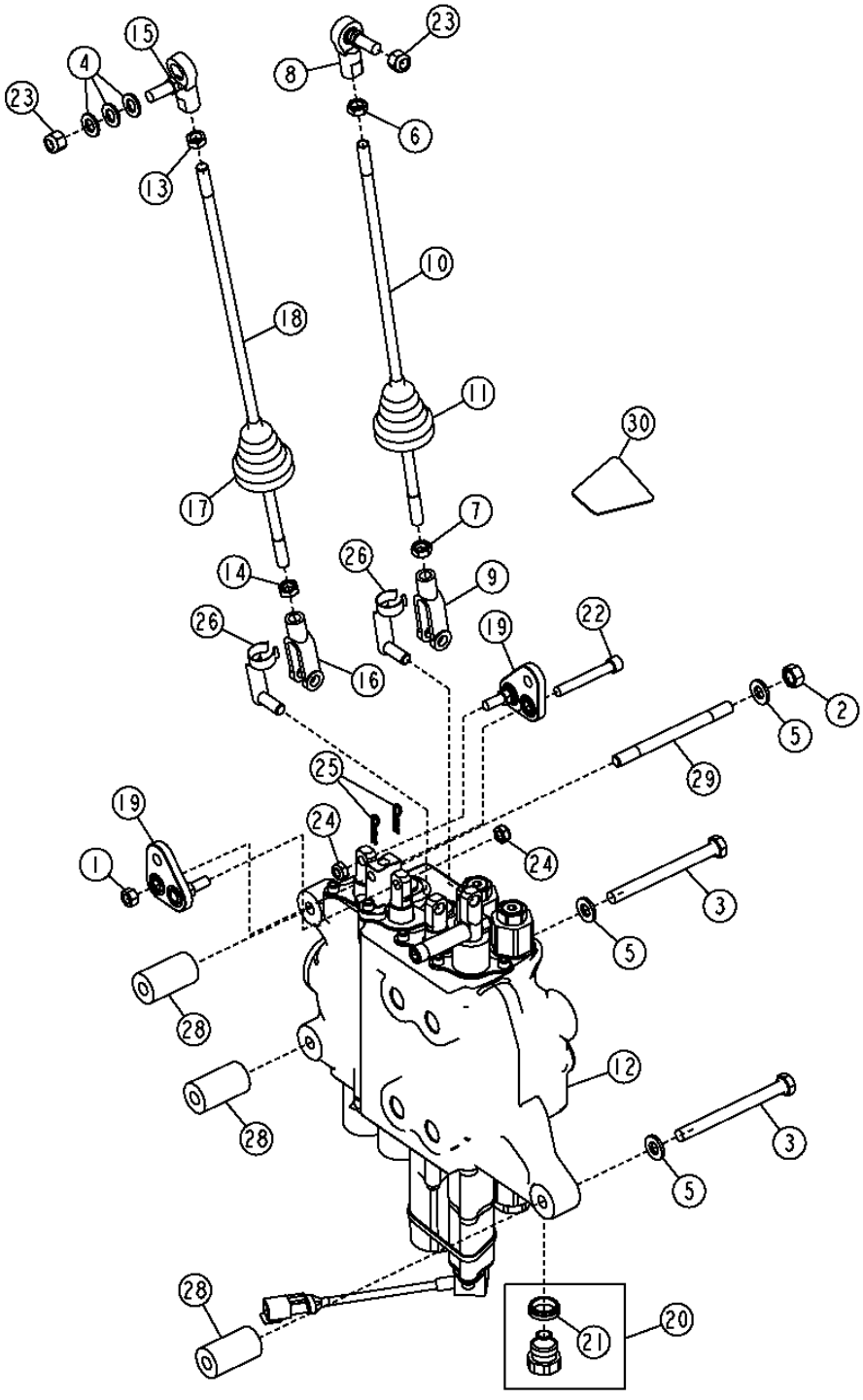

LOADER CONTROL VALVE
DISTRIBUTEUR DE CHARGEUR (HUSCO)
VALVULA DE CONTROL DE CARGADORA (HUSCO)

KEY	PART NO.	PART NAME	QTY.	SERIAL NO.	REMARKS
1	14H785	NUT	1		5/16"
2	14M7274	NUT	2		M10
3	19M8166	CAP SCREW	2		M10 X 110
4	24M7040	WASHER	3		11 X 20 X 2 MM
5	24M7239	WASHER	4		10.700 X 21 X 2.500 MM
6	14H774	NUT	1		3/8"
7	14H913	NUT	1		3/8"
8	AT169087	BALL JOINT	1		
9	T140328	YOKE	1		
10	T164259	ROD	1		
11	T185710	BOOT	1		
12	AT196622	CONTROL VALVE	1		TWO FUNCTION
	AT196622	CONTROL VALVE	1		THREE FUNCTION
	AT330850	**FIELD INSTALLATION KIT**	**1**		**(WHOLEGOODS) THREE FUNCTION (INCLUDES CONTROLLER, LINKAGE, AND HOSES)**
13	14H774	NUT	1		3/8"
14	14H913	NUT	1		3/8"
15	AT169087	BALL JOINT	1		
16	T140328	YOKE	1		
17	T185710	BOOT	1		
18	T188976	ROD	1		
19	AT199656	BELLCRANK	2		
20	AT78527	FITTING PLUG	1		
21	T183756	SEAL	1		
22	M1036T	SCREW	1		
23	M68954	LOCK NUT	2		
24	R11151	LOCK NUT	2		
25	R46528	SPRING LOCKING PIN	2		
26	T183617	PIN FASTENER	2		
28	T190296	SPACER	3		
29	T190300	STUD	1		
30	T223965	LABEL	1		TWO FUNCTION
	T223966	LABEL	1		THREE FUNCTION

BOOM SECTION (LOADER/STABILIZER VALVE)
SECTION DE FLECHE (SOUPAPE DE CHARGEUR/STABILISATEUR)
SECCION DE AGUILON (VALVULA DE CARGADORA/ESTABILIZADOR)

T163271 -UN-27DEC02

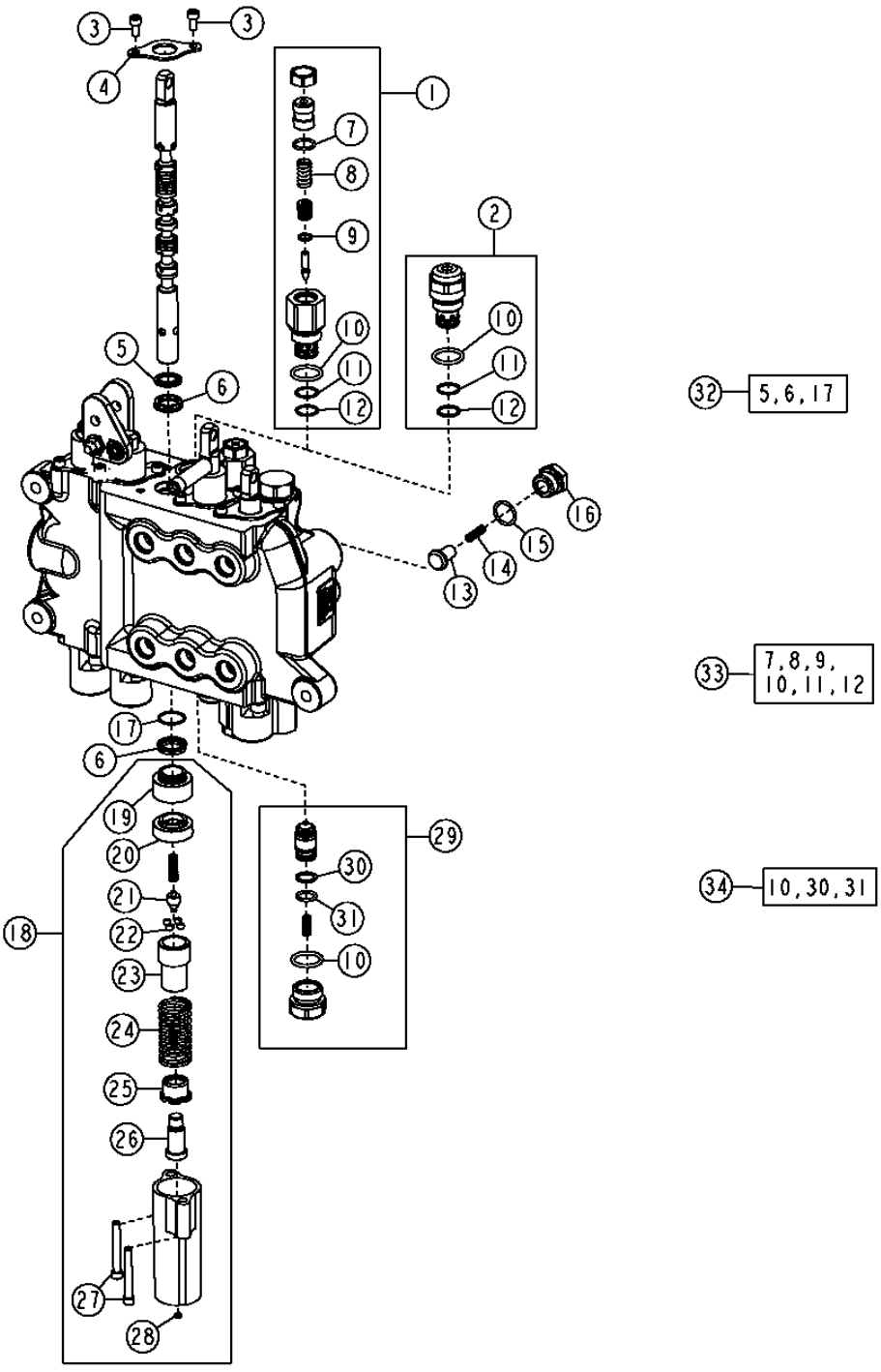

THIS PARTS LISTING IS CONTINUED

BOOM SECTION (LOADER/STABILIZER VALVE)
SECTION DE FLECHE (SOUPAPE DE CHARGEUR/STABILISATEUR)
SECCION DE AGUILON (VALVULA DE CARGADORA/ESTABILIZADOR)

KEY	*PART NO.*	*PART NAME*	*QTY.*	*SERIAL NO.*	*REMARKS*
1	AT300803	PRESSURE RELIEF VALVE	1		(NOT ANTI-CAVITATION) 34473 KPA (5000 PSI)
2	AT301128	PRESSURE RELIEF VALVE	1		(ANTI-CAVITATION) 34473 KPA (5000 PSI)
3	21H1352	SCREW	2		1/4" X 3/8"
4	T81524	PLATE	1		
5	.....	SEAL	1		
6	.....	SEAL	2		
7	.....	O-RING	1		
8	.....	SPRING	1		
9	R63548	O-RING	1		
10	T118681	O-RING	3		
11	.....	BACK-UP RING	2		
12	T107887	O-RING	2		
13	T118694	POPPET	1		
14	T118693	SPRING	1		
15	R26906	O-RING	1		
16	T118692	SEAT	1		
17	.....	O-RING	1		
18	AT192372	DETENT	1		
19	T152404	SLEEVE	1		
20	T152401	SLEEVE	1		
21	T118715	CAM	1		
22	T81535	BALL	4		
23	T118708	VALVE SEAT INSERT	1		
24	T118884	SPRING	1		
25	T118709	VALVE SEAT INSERT	1		
26	T118711	END	1		
27	T118712	SCREW	2		
28	T118799	FILTER	1		
29	AT169373	CHECK VALVE	1		
30	.....	BACK-UP RING	1		
31	.....	O-RING	1		
32	AT280406	SEAL KIT	1		(SPOOL)
33	AT300801	SEAL KIT	2		
34	AT314538	SEAL KIT	1		(7/8") (RELIEF VALVE)
	AT314539	SEAL KIT	1		(1 1/16") (RELIEF VALVE)

BUCKET SECTION (LOADER VALVE)
SECTION DE GODET (SOUPAPE DE CHARGEUR)
SECCION DE CUCHARON (VALVULA DE CARGADORA)

T163249 -UN-27DEC02

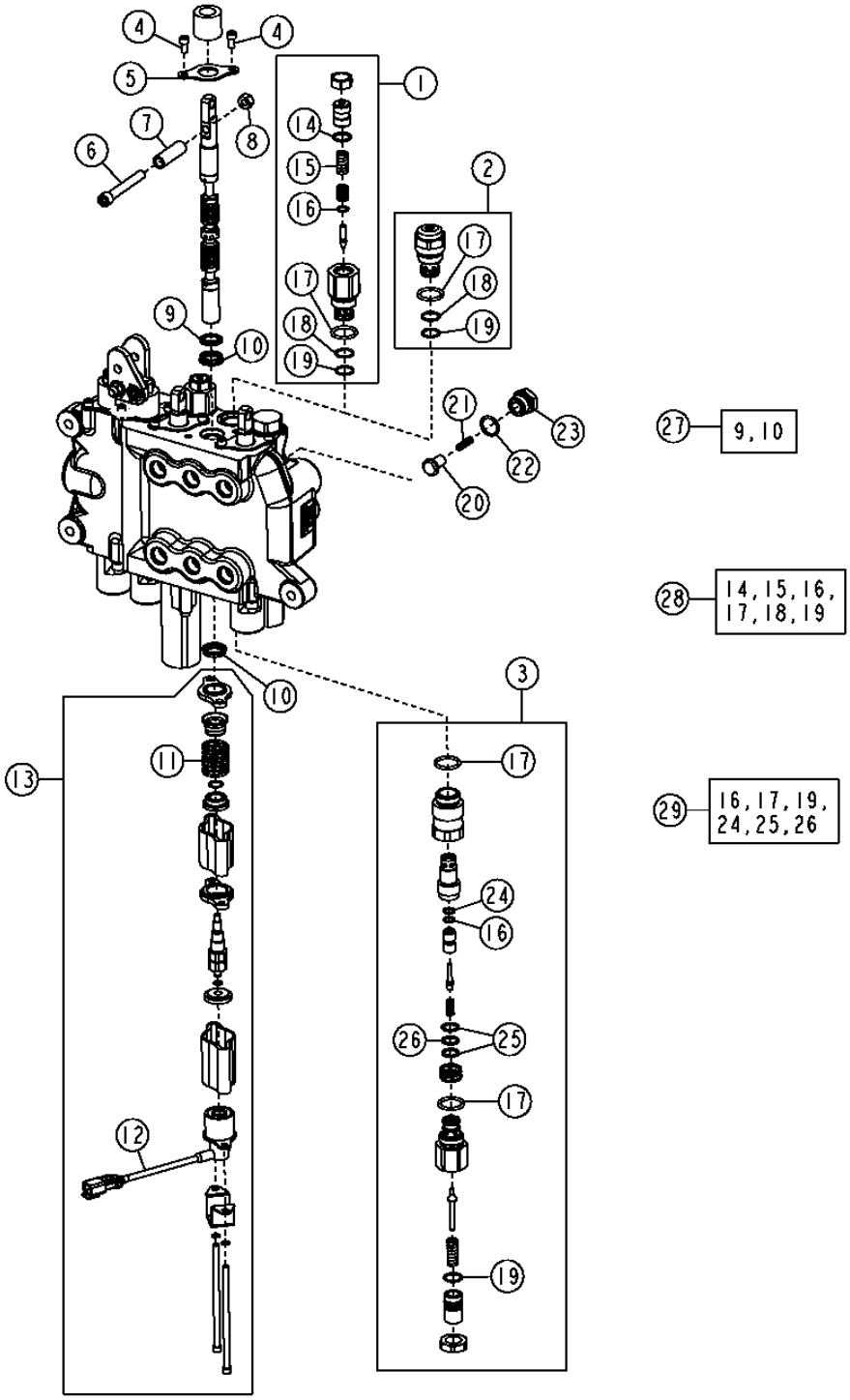

BUCKET SECTION (LOADER VALVE)
SECTION DE GODET (SOUPAPE DE CHARGEUR)
SECCION DE CUCHARON (VALVULA DE CARGADORA)

KEY	PART NO.	PART NAME	QTY.	SERIAL NO.	REMARKS
1	AT301526	PRESSURE RELIEF VALVE	1		(NOT ANTI-CAVITATION) 31715 KPA (4600 PSI)
2	AT301527	PRESSURE RELIEF VALVE	1		(ANTI-CAVITATION) 31715 KPA (4600 PSI)
3	AT192457	PRESSURE RELIEF VALVE	1		31715 KPA (4600 PSI)
4	21H1352	SCREW	2		1/4" X 3/8"
5	T81524	PLATE	1		
6	19H3317	SCREW	1		3/8" X 2-3/4"
7	T190795	TUBE	1		
8	14H1076	NUT	1		3/8"
9	.....	SEAL	1		
10	.....	SEAL	2		
11	T134881	SPRING	1		
12	AT196246	MAGNET	1		
13	AT196245	DETENT	1		
14	.....	O-RING	1		
15	.....	SPRING	1		
16	R63548	O-RING	2		
17	T118681	O-RING	4		
18	.....	BACK-UP RING	2		
19	T107887	O-RING	3		
20	T118694	POPPET	1		
21	T118693	SPRING	1		
22	R26906	O-RING	1		
23	T118692	FITTING PLUG	1		
24	T150958	BACK-UP RING	1		
25	.....	BACK-UP RING	2		
26	.....	O-RING	1		
27	AT280406	SEAL KIT	1		(SPOOL)
28	AT300801	SEAL KIT	2		
29	AT314538	SEAL KIT	1		(7/8") (RELIEF VALVE)
	AT314539	SEAL KIT	1		(1 1/16") (RELIEF VALVE)

AUXILIARY SECTION (LOADER/STABILIZER VALVE)
SECTION AUXILIAIRE (SOUPAPE DE CHARGEUR/STABILISATEUR)
SECCION AUXILIAR (VALVULA DE CARGADORA/ESTABILIZADOR)

T163042 -UN-06JAN03

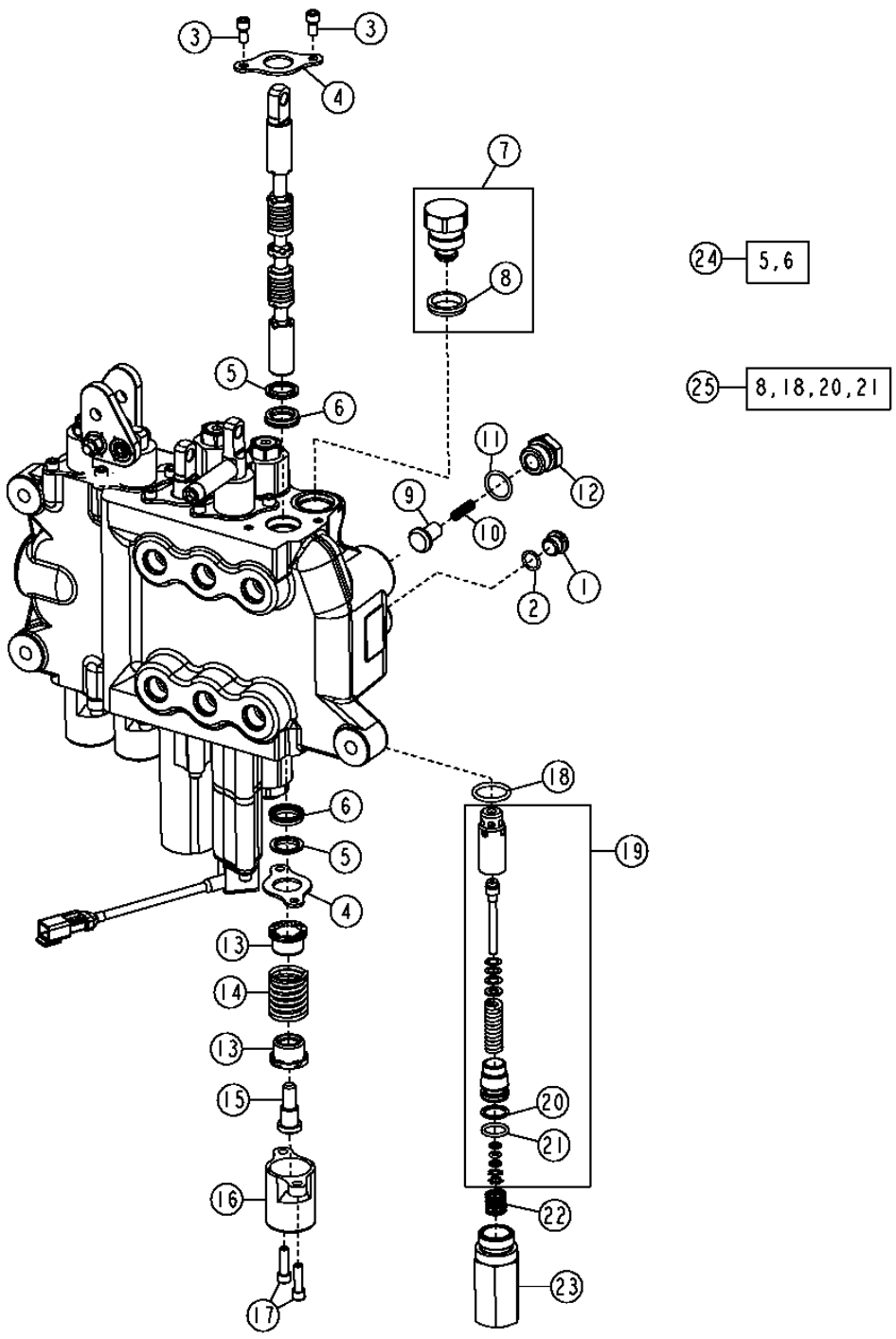

T163042

AUXILIARY SECTION (LOADER/STABILIZER VALVE)
SECTION AUXILIAIRE (SOUPAPE DE CHARGEUR/STABILISATEUR)
SECCION AUXILIAR (VALVULA DE CARGADORA/ESTABILIZADOR)

KEY	PART NO.	PART NAME	QTY.	SERIAL NO.	REMARKS
1	R111493	FITTING PLUG	1		
2	T70177	O-RING	1		
3	21H1352	SCREW	2		
4	T81524	PLATE	2		
5	.....	SEAL	2		
6	.....	SEAL	2		
7	AT83174	FITTING PLUG	1		
8	T183757	SEAL	1		
9	T118694	POPPET	1		
10	T118693	SPRING	1		
11	R26906	O-RING	1		
12	T118692	FITTING PLUG	1		
13	T81540	RETAINER	2		
14	T118879	SPRING	1		
15	T81541	SCREW	1		
16	T118808	CAP	1		
17	19H3554	SCREW	2		1/4" X 0.880"
18	T118681	O-RING	1		
19	AT178362	KIT	1		
20	.....	BACK-UP RING	1		
21	.....	O-RING	1		
22	T118867	SPRING	1		
23	T118866	HOUSING	1		
24	AT280406	SEAL KIT	1		(SPOOL)
25	AT314538	SEAL KIT	1		(7/8") (RELIEF VALVE)
	AT314539	SEAL KIT	1		(1 1/16") (RELIEF VALVE)

STABILIZER/LOADER VALVE
SOUPAPE DE STABILISATEUR/DE CHARGEUR
VALVULA ESTABILIZADORA/DE CARGADORA

TX1001608 -UN-21DEC05

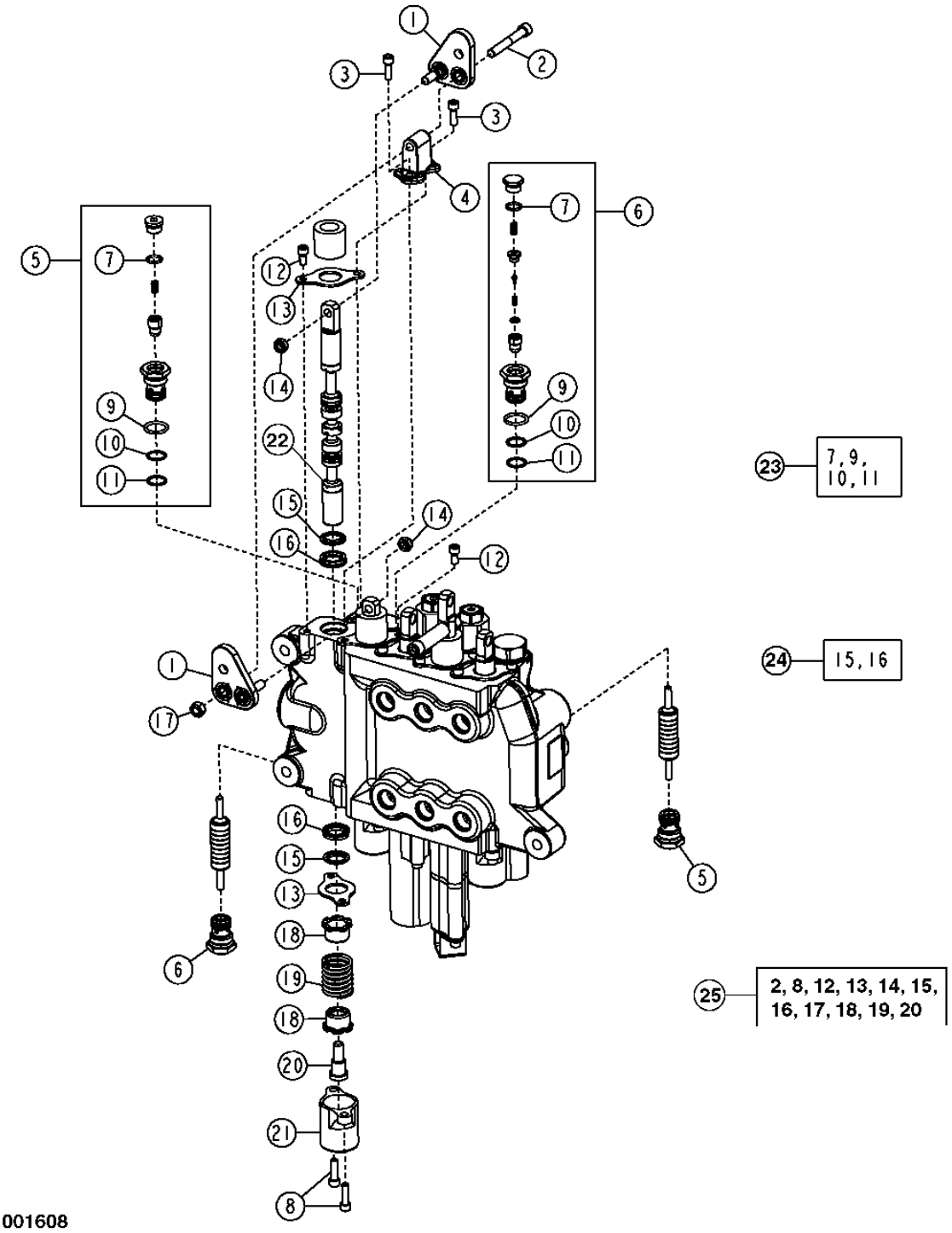

STABILIZER/LOADER VALVE
SOUPAPE DE STABILISATEUR / DE CHARGEUR
VALVULA ESTABILIZADORA / DE CARGADORA

KEY	PART NO.	PART NAME	QTY.	SERIAL NO.	REMARKS
1	AT199656	BELLCRANK	1		
2	M1036T	SCREW	1		5/16" X 2-1/4"
3	19H2924	SCREW	2		1/4" X 3/4"
4	AT199657	BASE	1		
5	AT337941	VALVE	2		(LOCKOUT) (WITHOUT THERMAL RELIEF VALVE)
6	AT330860	VALVE	2		(LOCKOUT) (WITH THERMAL RELIEF VALVE)
7	T70177	O-RING	2		
8	19H3554	SCREW	4		1/4" X 0.880"
9	R26906	O-RING	4		
10	.....	O-RING	4		
11	.....	BACK-UP RING	4		
12	21H1352	SCREW	4		1/4" X 3/8"
13	T81524	PLATE	4		
14	R11151	LOCK NUT	2		
15	.....	SEAL	4		
16	.....	SEAL	4		
17	14H785	NUT	1		5/16"
18	T81540	RETAINER	4		
19	T118683	SPRING	2		
20	T81541	SCREW	2		3/8" X 1-5/16"
21	T118808	CAP	2		
22	.....	SPOOL	2		
23	AT196924	SEAL KIT	4		
24	AT280406	SEAL KIT	2		(SPOOL)
25	AT328623	KIT	1		

LOADER BOOM LIFT CYLINDER HYDRAULICS
CIRCUIT HYDRAULIQUE DE VERIN DE RELEVAGE DE FLECHE DU CHARGEUR
SISTEMA HIDRAULICO DE CILINDRO ELEVADOR DE AGUILON DE CARGADORA

TX1017475 -UN-18JAN07

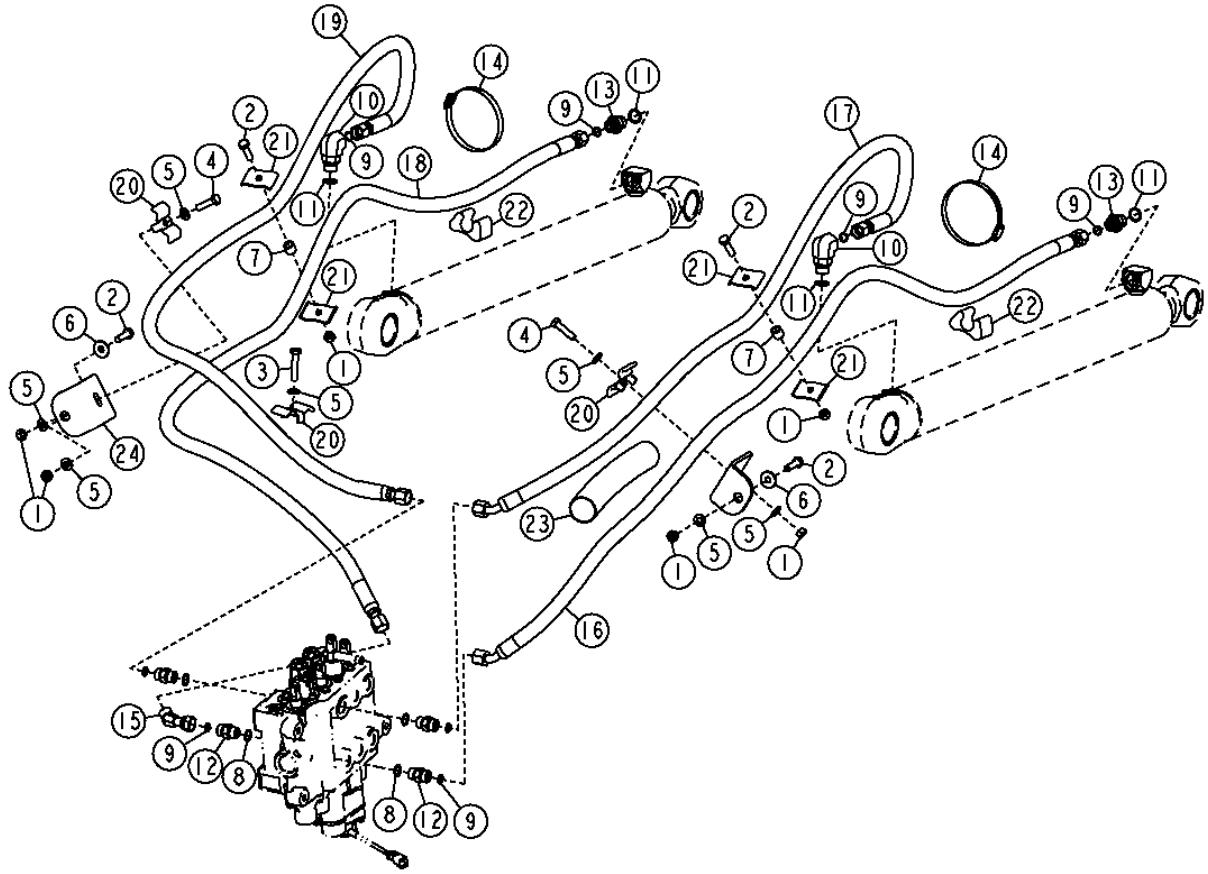

TX1017475

LOADER BOOM LIFT CYLINDER HYDRAULICS
CIRCUIT HYDRAULIQUE DE VERIN DE RELEVAGE DE FLECHE DU CHARGEUR
SISTEMA HIDRAULICO DE CILINDRO ELEVADOR DE AGUILON DE CARGADORA

KEY	*PART NO.*	*PART NAME*	*QTY.*	*SERIAL NO.*	*REMARKS*
1	14M7274	NUT	1		M10
2	19M7550	CAP SCREW	4		M10 X 35
3	19M8600	CAP SCREW	1		M10 X 50
4	19M8637	CAP SCREW	2		M10 X 40
5	24M7239	WASHER	1		10.700 X 21 X 2.500 MM
6	24M7296	WASHER	3		10.500 X 30 X 2.500 MM
7	28H3381	SPACER	5		0.493" X 0.675" X 5/8"
8	R26375	O-RING	3		
9	T77857	O-RING	6		
10	38H1012	ELBOW FITTING	2		
11	R26906	O-RING	4		
12	38H1161	ADAPTER FITTING	4		
13	38H1174	ADAPTER FITTING	2		
14	AR21842	CLAMP	2		
15	AT190910	ELBOW FITTING	1		
16	AT197645	HYDRAULIC HOSE - FABRICATE	1		
17	AT197646	HYDRAULIC HOSE - FABRICATE	1		
18	AT197647	HYDRAULIC HOSE - FABRICATE	1		
19	AT197654	HYDRAULIC HOSE - FABRICATE	1		
20	KV22609	CLAMP	3		
21	R46919	HALF CLAMP	8		
22	T105773	GUIDE	3		
23	.....	HOSE GUARD	3		(MAKE FROM T78606) (CTL, 10" (254MM))
24	T165864	ANGLE	2		

LOADER BUCKET CYLINDER AND THIRD FUNCTION HYDRAULICS
VERIN DE BENNE DE CHARGEUR ET CIRCUIT HYDRAULIQUE DE TROISIEME FONCTION
SISTEMA HIDRAULICO DE CILINDRO DE CUCHARON DE CARGADORA Y TERCERA FUNCION

TX1016222 -UN-28DEC06

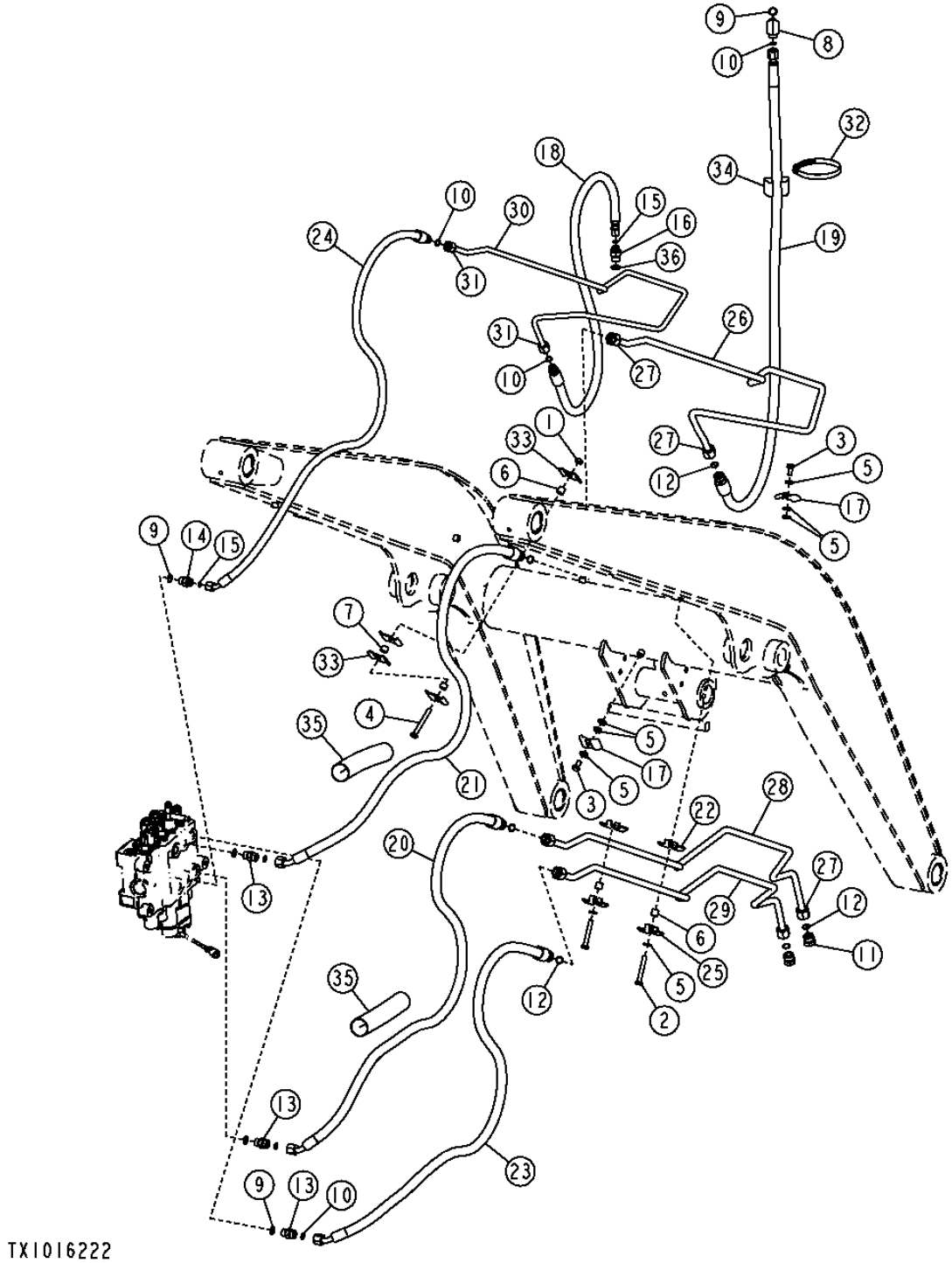

THIS PARTS LISTING IS CONTINUED

LOADER BUCKET CYLINDER AND THIRD FUNCTION HYDRAULICS
VERIN DE BENNE DE CHARGEUR ET CIRCUIT HYDRAULIQUE DE TROISIEME FONCTION
SISTEMA HIDRAULICO DE CILINDRO DE CUCHARON DE CARGADORA Y TERCERA FUNCION

KEY	PART NO.	PART NAME	QTY.	SERIAL NO.	REMARKS
1	14M7274	NUT	1		M10
2	19M7875	CAP SCREW	2		M10 X 70
3	19M7938	CAP SCREW	2		M10 X 20
4	19M8081	CAP SCREW	1		M10 X 80
5	24M7239	WASHER	1		10.700 X 21 X 2.500 MM
6	28H3381	SPACER	5		
7	28H3394	BUSHING	2		
8	38H1005	ELBOW FITTING	1		
9	R26375	O-RING	3		
10	T77857	O-RING	6		
11	38H1148	FITTING PLUG	1		
12	T77932	O-RING	5		
13	38H1161	ADAPTER FITTING	1		
14	38H1171	ADAPTER FITTING	1		
15	T77613	O-RING	1		
16	38H1172	ADAPTER FITTING	1		
17	T217085	CLAMP	1		
18	AT173120	HYDRAULIC HOSE - FABRICATE	1		
19	AT188560	HYDRAULIC HOSE - FABRICATE	1		
20	AT198254	HYDRAULIC HOSE - FABRICATE	1		
21	AT198258	HYDRAULIC HOSE - FABRICATE	1		
22	T159952	CLAMP	1		
23	AT198260	HYDRAULIC HOSE - FABRICATE	1		
24	AT301476	HYDRAULIC HOSE - FABRICATE	1		
25	T159954	CLAMP	1		
26	AT321152	OIL LINE	1		
27	38H1355	TUBE NUT	6		
28	AT321155	OIL LINE	1		
29	AT321156	OIL LINE	1		
30	AT324234	OIL LINE	1		
31	38H1354	TUBE NUT	2		
32	AU12450	HOSE CLAMP	1		
33	R46919	HALF CLAMP	1		
34	T105773	GUIDE	1		
35	.....	HOSE GUARD	3		(MAKE FROM T78606) (CTL, 10" (254MM))

BOOM LIFT CYLINDER AND REPAIR KITS
VERIN DE RELEVAGE DE FLECHE ET KITS DE REPARATION
CILINDRO ELEVADOR DE AGUILON Y JUEGOS DE REPARACION

TX1015310 -UN-22DEC06

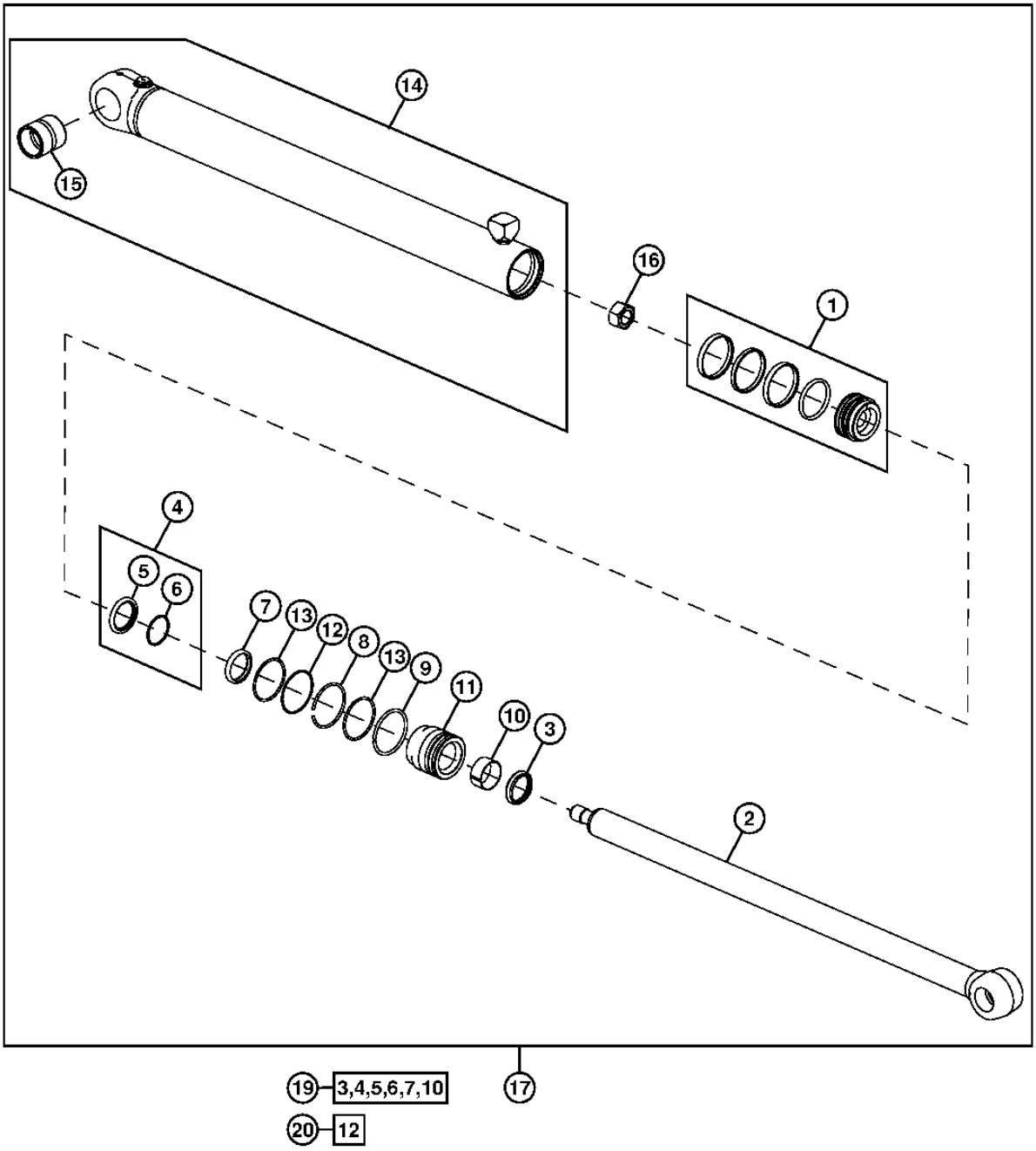

TX1015310

BOOM LIFT CYLINDER AND REPAIR KITS
VERIN DE RELEVAGE DE FLECHE ET KITS DE REPARATION
CILINDRO ELEVADOR DE AGUILON Y JUEGOS DE REPARACION

KEY	*PART NO.*	*PART NAME*	*QTY.*	*SERIAL NO.*	*REMARKS*
1	AH165826	PISTON	1		
2	AH176132	HYDRAULIC CYLINDER ROD	1		
3	AH146557	SEAL	1		
4	AH146561	SEAL	1		
5	.....	SEAL	1		
6	.....	BACK-UP RING	1		
7	H152203	SEAL	1		
8	H170216	SNAP RING	1		
9	H180787	SNAP RING	1		
10	H208987	WEAR RING	1		
11	H209221	HYDR. CYLINDER ROD GUIDE	1		
12	R81864	BACK-UP RING	1		
13	T12582	O-RING	2		
14	AH211204	HYDRAULIC CYLINDER BARREL	1		
15	H159941	BUSHING	1		
16	H170538	NUT	1		
17	AH211203	HYDRAULIC CYLINDER	2		
19	AH210484	HYDRAULIC CYLINDER KIT	1		
20	AH212092	HYDRAULIC CYLINDER KIT	1		

LOADER BUCKET CYLINDER AND REPAIR KITS
VERIN DE BENNE DE CHARGEUR ET KIT DE REPARATION
CILINDRO DE CUCHARON DE CARGADORA Y JUEGO DE REPARACION

TX1015324 -UN-28DEC06

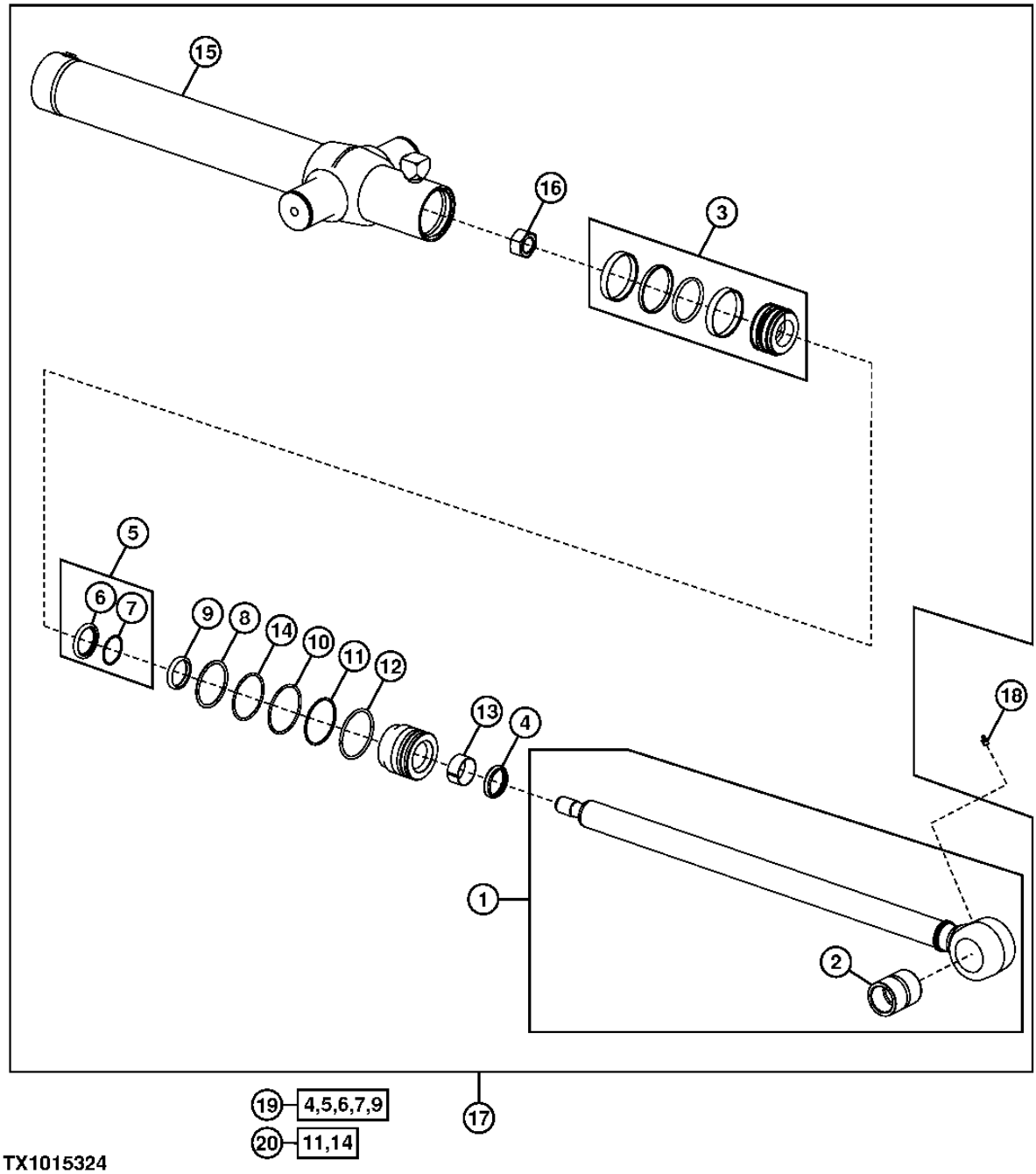

TX1015324

LOADER BUCKET CYLINDER AND REPAIR KIT
VERIN DE BENNE DE CHARGEUR ET KIT DE REPARATION
CILINDRO DE CUCHARON DE CARGADORA Y JUEGO DE REPARACION

KEY	*PART NO.*	*PART NAME*	*QTY.*	*SERIAL NO.*	*REMARKS*
1	AH162040	END	1		
2	H151594	BUSHING	1		
3	AH205060	PISTON	1		
4	AH146557	SEAL	1		
5	AH146561	SEAL	1		
6	.....	SEAL	1		
7	.....	BACK-UP RING	1		
8	F1430R	O-RING	1		
9	H152203	SEAL	1		
10	H180103	SNAP RING	1		
11	H181114	O-RING	1		
12	H206859	SNAP RING	1		
13	H208987	WEAR RING	1		
14	R79101	BACK-UP RING	1		
15	AH220551	HYDRAULIC CYLINDER BARREL	1		
16	H170539	NUT	1		
17	AH219634	HYDRAULIC CYLINDER	1		
18	T162396	LUBRICATION FITTING	1		
19	AH210484	HYDRAULIC CYLINDER KIT	1		
20	AH212097	HYDRAULIC CYLINDER KIT	1		

QUICK COUPLER (UNIVERSAL)
ACCOUPLEMENT RAPIDE (UNIVERSEL)
ACOPLAMIENTO RAPIDO (UNIVERSAL)

T151499 -UN-14FEB02

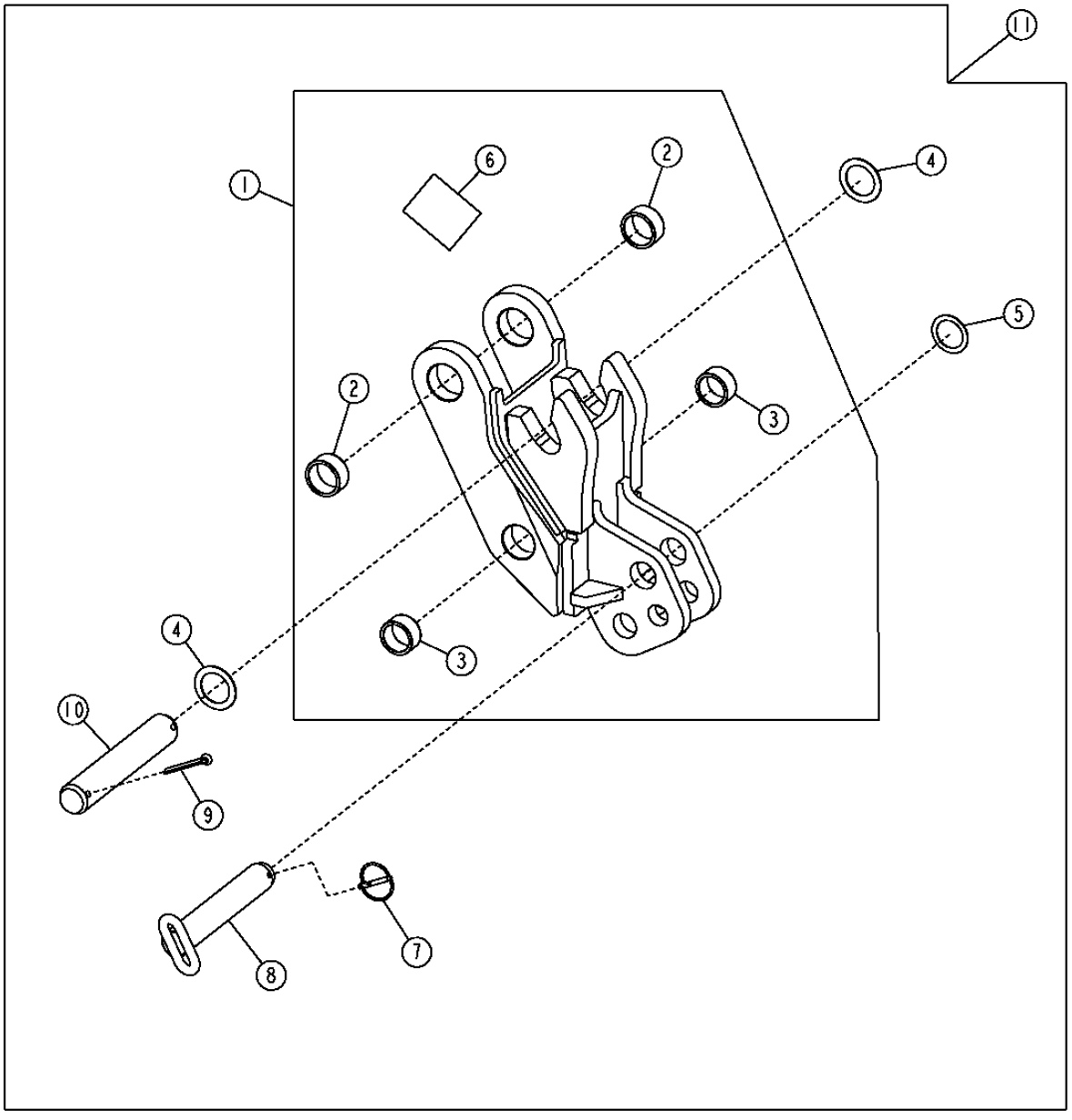

T151499

QUICK COUPLER (UNIVERSAL)
ACCOUPLEMENT RAPIDE (UNIVERSEL)
ACOPLAMIENTO RAPIDO (UNIVERSAL)

KEY	*PART NO.*	*PART NAME*	*QTY.*	*SERIAL NO.*	*REMARKS*
1	AT192106	QUICK COUPLER	1		
2	T187117	BUSHING	2		
3	T187116	BUSHING	2		
4	T161036	WASHER	2		
5	24H1683	WASHER	1		
6	T162847	LABEL	1		
7	AR83396	QUICK LOCK PIN	1		
8	AT192111	PIN	1		
9	11H227	COTTER PIN	2		
10	T185832	PIN FASTENER	1		
11	**AT192092**	**QUICK COUPLER**	**1**		**(WHOLE GOODS)**

QUICK COUPLER (STANDARD)
ACCOUPLEMENT RAPIDE (STANDARD)
ACOPLAMIENTO RAPIDO (ESTANDAR)

T151505 -UN-14FEB02

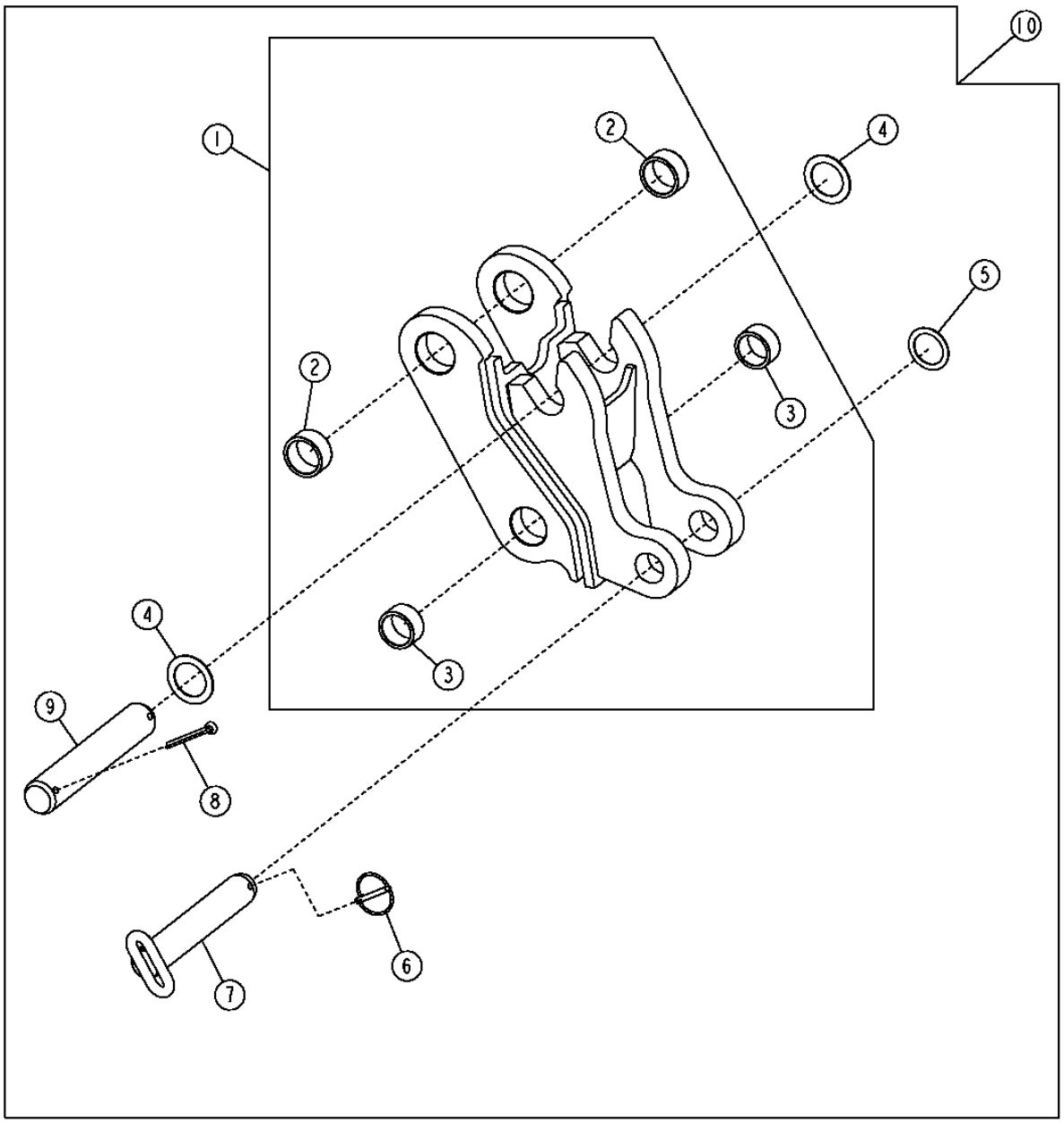

T151505

QUICK COUPLER (STANDARD)
ACCOUPLEMENT RAPIDE (STANDARD)
ACOPLAMIENTO RAPIDO (ESTANDAR)

KEY	*PART NO.*	*PART NAME*	*QTY.*	*SERIAL NO.*	*REMARKS*
1	AT192107	QUICK COUPLER	1		
2	T187117	BUSHING	2		
3	T187116	BUSHING	2		
4	T161036	WASHER	2		
5	24H1683	WASHER	1		
6	AR83396	QUICK LOCK PIN	1		
7	AT192111	PIN	1		
8	11H227	COTTER PIN	2		
9	T185832	PIN FASTENER	1		
10	**AT192093**	**QUICK COUPLER**	**1**		**(WHOLE GOODS)**

BACKHOE BUCKETS
GODETS DE RETROPELLE
CUCHARONES DE RETROEXCAVADORA

T214797 -UN-22SEP05

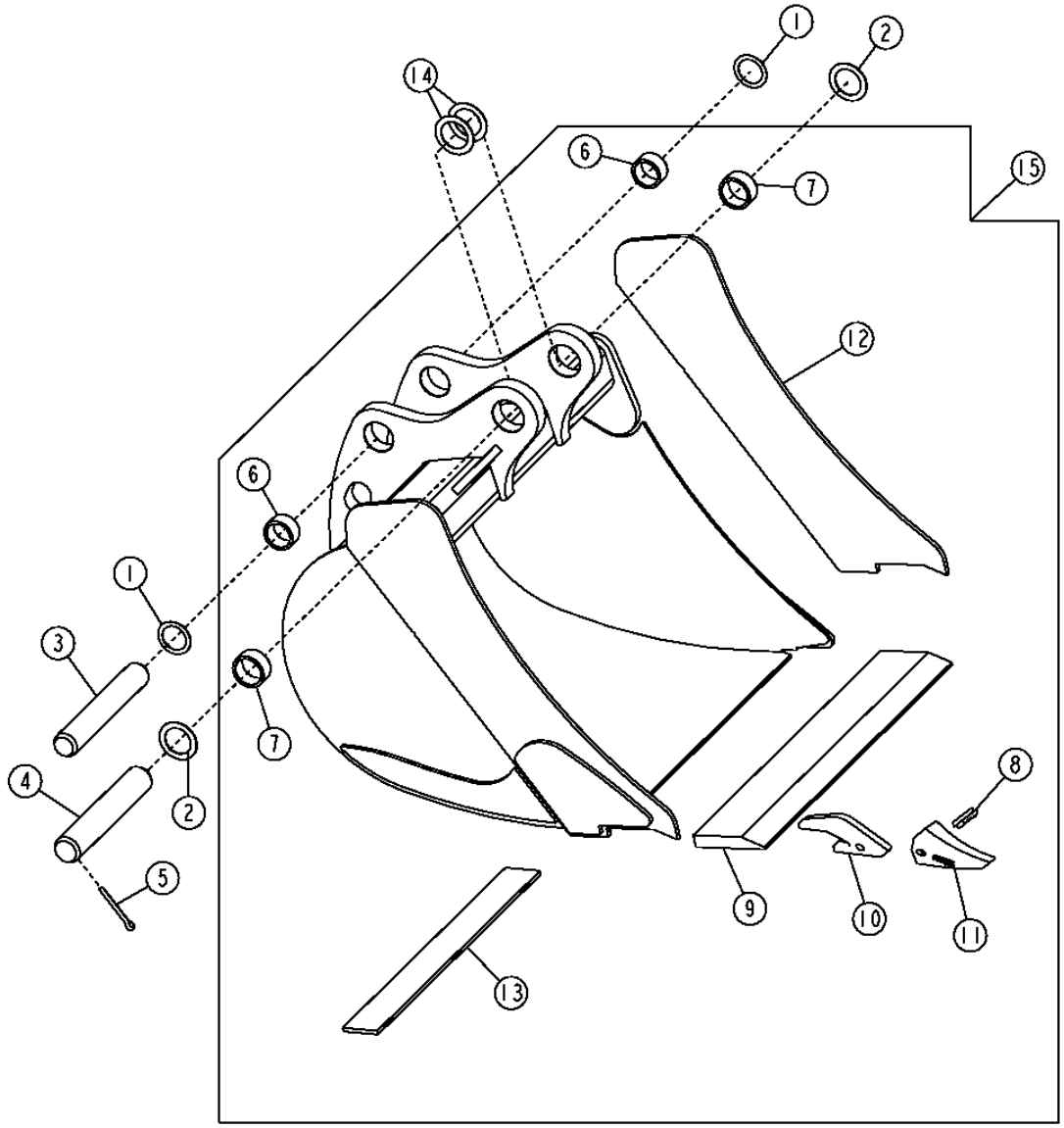

T214797

BACKHOE BUCKETS
GODETS DE RETROPELLE
CUCHARONES DE RETROEXCAVADORA

KEY	PART NO.	PART NAME	QTY.	SERIAL NO.	REMARKS
1	24H1683	WASHER	2		
2	T161036	WASHER	3		2.205" X 3.150" X 0.079"
3	T185831	PIN FASTENER	1		49.475 X 320 MM
4	T185832	PIN FASTENER	1		54.475 X 320 MM
5	11H227	COTTER PIN	4		
6	T187116	BUSHING	2		
7	T187117	BUSHING	2		
8	TF23P	PIN	AR		(FLEX)
9	T161279	CUTTING EDGE	1		(CTL)
	T161319	CUTTING EDGE	1		(CTL)
10	U43792	BUCKET TOOTH ADAPTER	AR		
11	TF23D	TOOTH	AR		(TIP)
12	T162535	PLATE	2		
	T162553	PLATE	2		
	T162569	PLATE	2		
13	.....	WEAR PLATE	AR		(USE WITH SEVERE DUTY BUCKETS) 692 X 76 X 8 MM
14	24H1679	WASHER	3		2-17/64" X 3-1/4" X 0.060"
15	**AT192011**	**BACKHOE BUCKET**	**1**		**304MM (12") 3.3 CUBIC FEET, HEAVY DUTY, (CONTAINS (2) T162535) (WHOLE GOODS)**
	AT192012	**BACKHOE BUCKET**	**1**		**457MM (18") 5.1 CUBIC FEET, HEAVY DUTY, (CONTAINS (2) T162535) (WHOLE GOODS)**
	AT192013	**BACKHOE BUCKET**	**1**		**457MM (18") 5.1 CUBIC FEET, SEVERE DUTY, (CONTAINS (2) T162553) (WHOLE GOODS)**

THIS PARTS LISTING IS CONTINUED

BACKHOE BUCKETS (CONTINUED)
GODETS DE RETROPELLE (SUITE)
CUCHARONES DE RETROEXCAVADORA (CONTINUACION)

T214797 -UN-22SEP05

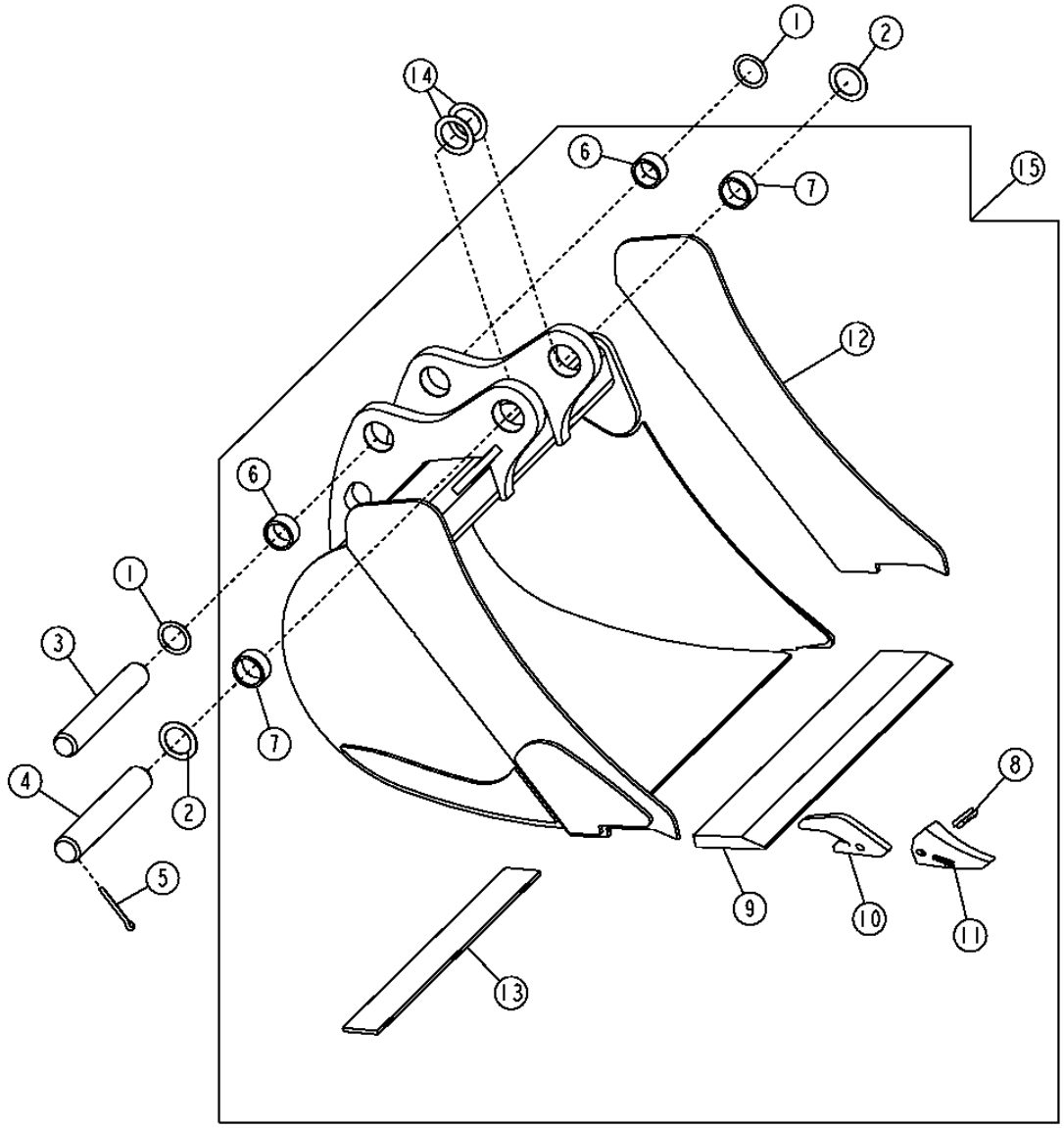

T214797

BACKHOE BUCKETS (CONTINUED)
GODETS DE RETROPELLE (SUITE)
CUCHARONES DE RETROEXCAVADORA (CONTINUACION)

KEY	PART NO.	PART NAME	QTY.	SERIAL NO.	REMARKS
15	AT192014	BACKHOE BUCKET	1		(A) (D) 610MM (24") 7.5 CUBIC FEET, STANDARD DUTY, (CONTAINS (2) T162535) (WHOLE GOODS)
	AT192015	**BACKHOE BUCKET**	**1**		**(A) (E) 610MM (24") 7.5 CUBIC FEET, HEAVY DUTY, (CONTAINS (2) T162535) (WHOLE GOODS)**
	AT192016	**BACKHOE BUCKET**	**1**		**(A) (F) 610MM (24") 7.5 CUBIC FEET, SEVERE DUTY, (CONTAINS (2) T162553) (WHOLE GOODS)**
	AT192017	**BACKHOE BUCKET**	**1**		**(A) (E) 610MM (24") 8.8 CUBIC FEET, HEAVY DUTY, (CONTAINS (2) T162569) (WHOLE GOODS)**
	AT192018	**BACKHOE BUCKET**	**1**		**(A) (F) 610MM (24") 8.8 CUBIC FEET, SEVERE DUTY, (CONTAINS (2) T162569) (WHOLE GOODS)**
	AT192019	**BACKHOE BUCKET**	**1**		**(C) (E) 762MM (30") 10.0 CUBIC FEET, HEAVY DUTY, (CONTAINS (2) T162535) (WHOLE GOODS)**
	AT192020	**BACKHOE BUCKET**	**1**		**(C) (F) 762MM (30") 10.0 CUBIC FEET, SEVERE DUTY, (CONTAINS (2) T162553) (WHOLE GOODS)**
	AT192022	**BACKHOE BUCKET**	**1**		**(C) 914MM (36") 12.5 CUBIC FEET, DITCHING BUCKET, (CONTAINS (2) T162553) (WHOLE GOODS)**
	AT192021	**BACKHOE BUCKET**	**1**		**(C) (E) 914MM (36") 12.5 CUBIC FEET, HEAVY DUTY, (CONTAINS (2) T162553) (WHOLE GOODS)**

(D) STANDARD DUTY
(D) USAGE STANDARD
(D) SERVICIO NORMAL

(E) HEAVY DUTY
(E) USAGE INTENSIF
(E) SERVICIO SEVERO

(F) SEVERE DUTY
(F) CONDITIONS DIFFICILES
(F) SERVICIO SEVERO

STABILIZER VALVE LINKAGE
TRINGLERIE DE SOUPAPE DE STABILISATEUR
VARILLAJE DE VALVULA ESTABILIZADORA

TX1016046 -UN-29DEC06

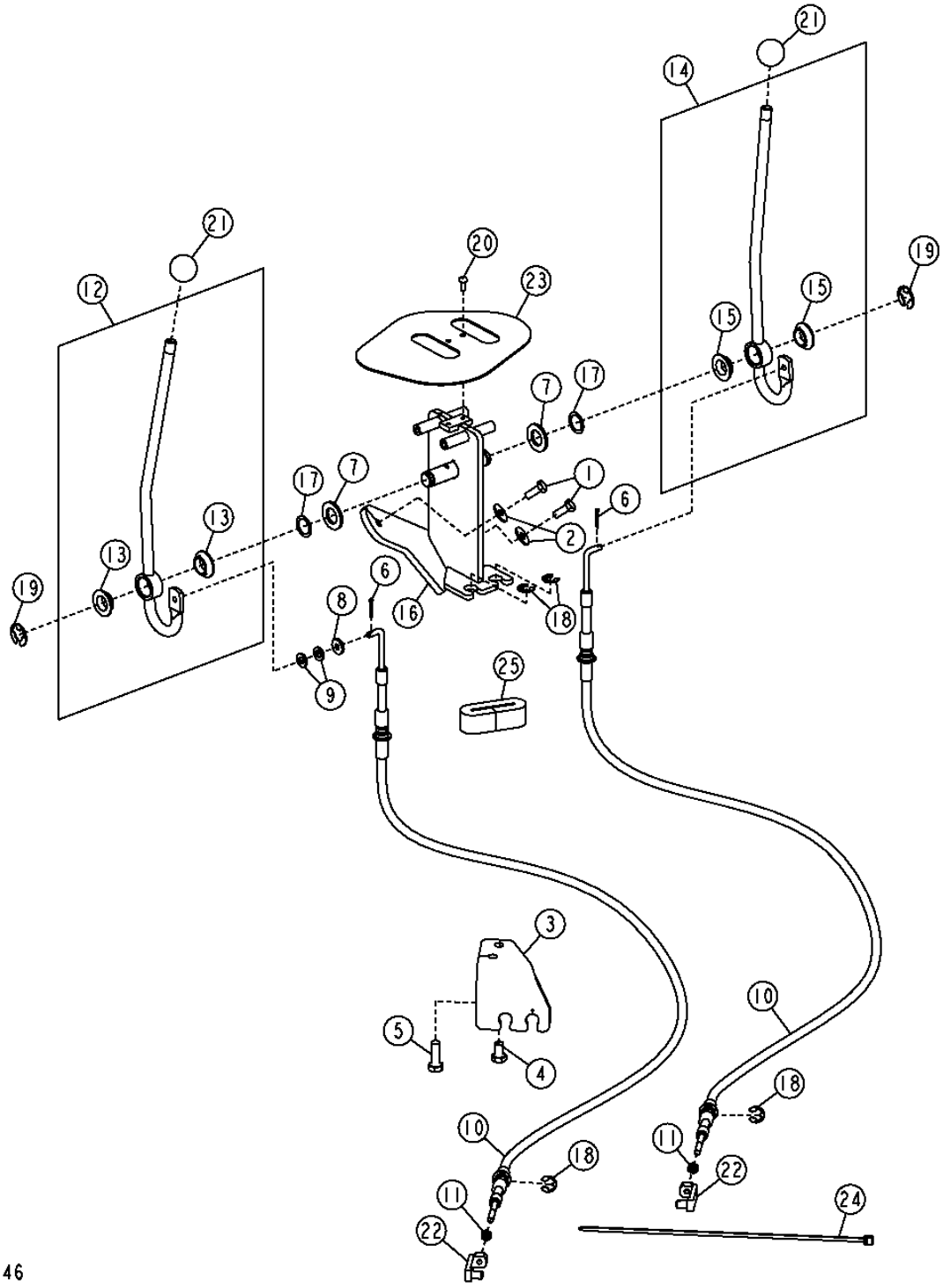

THIS PARTS LISTING IS CONTINUED

STABILIZER VALVE LINKAGE
TRINGLERIE DE SOUPAPE DE STABILISATEUR
VARILLAJE DE VALVULA ESTABILIZADORA

KEY	*PART NO.*	*PART NAME*	*QTY.*	*SERIAL NO.*	*REMARKS*
1	19M7881	SCREW	2		M8 X 20
2	24M7207	WASHER	2		8.400 X 24 X 2 MM
3	AT280363	BRACKET	1		
4	19M3141	CAP SCREW	1		M10 X 16
5	19M3202	CAP SCREW	1		M10 X 30
6	11M7081	COTTER PIN	2		2.500 X 20 MM
7	24H1392	WASHER	2		19.837 X 34.925 X 3.048 MM
8	24H1923	WASHER	1		7.137 X 19.050 X 3.048 MM
9	24M7238	WASHER	2		8.700 X 17 X 2 MM
10	AT196606	PUSH PULL CABLE	2		
11	14H649	NUT	2		6.350 MM
12	AT300770	LEVER	1		
13	T166097	BEARING	2		
14	AT300771	LEVER	1		
15	T166097	BEARING	2		
16	AT309137	BRACKET	1		
17	R26081	WASHER	2		19.837 X 26.975 X 0.406 MM
18	R26871	SNAP RING	4		
19	R27434	SNAP RING	2		
20	21H1316	SCREW	2		4.826 X 12.700 MM
21	T185766	KNOB	2		
22	T191245	SWIVEL	2		
23	T216572	PLATE	1		
24	H77698	TIE BAND	1		
25	T183905	SEAL	1		

FIFTH FUNCTION PEDAL
PEDALE DE CINQUIEME FONCTION
PEDAL DE QUINTA FUNCION

T193181 -UN-16JUL03

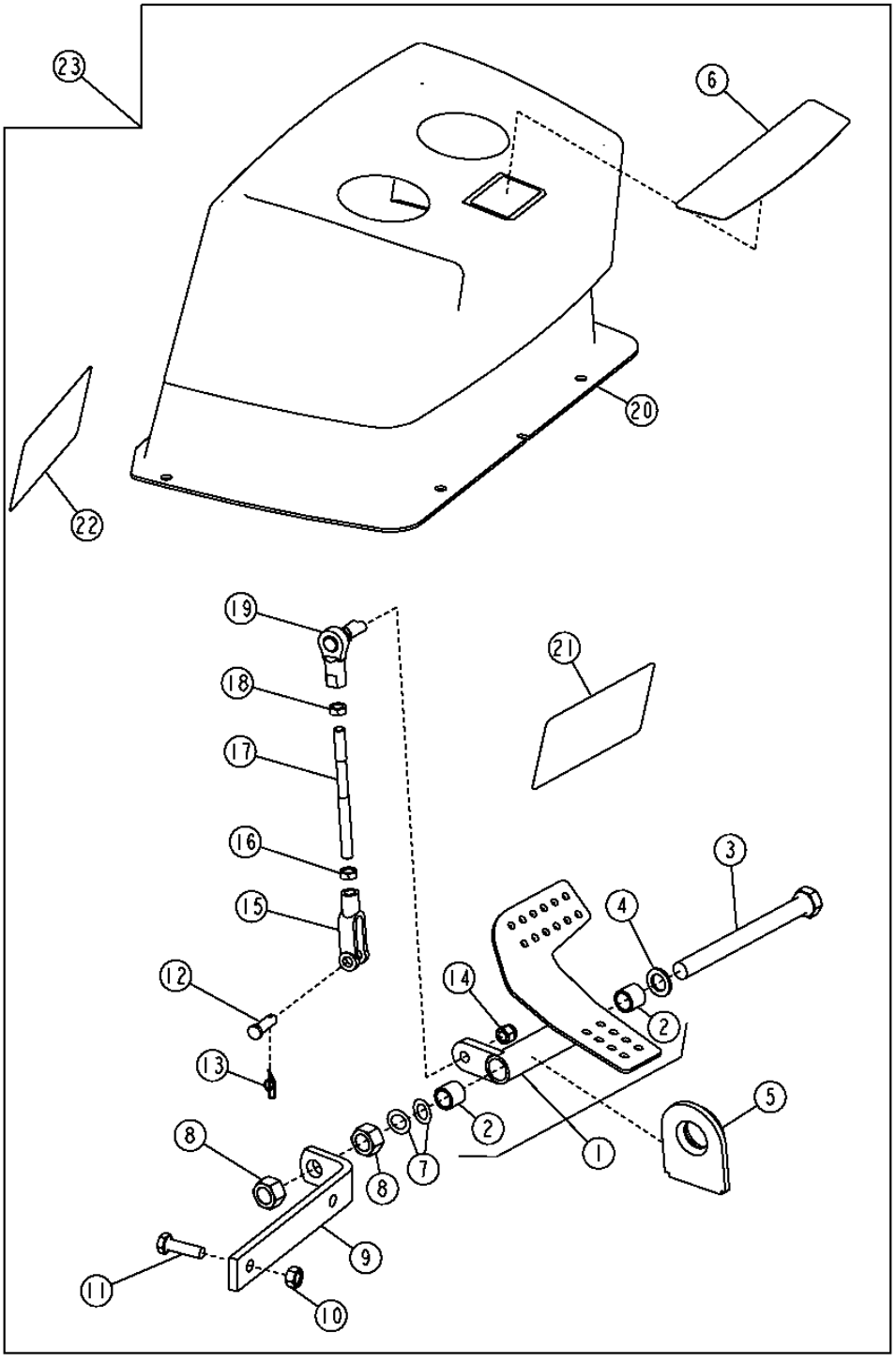

FIFTH FUNCTION PEDAL
PEDALE DE CINQUIEME FONCTION
PEDAL DE QUINTA FUNCION

KEY	*PART NO.*	*PART NAME*	*QTY.*	*SERIAL NO.*	*REMARKS*
1	AT191446	PEDAL	1		
2	T58109	BUSHING	2		
3	19H3450	CAP SCREW	1		5/8" X 6-3/4"
4	N119479	WASHER	1		
5	T166224	GROMMET	1		
6	T165584	LABEL	1		
7	M87534	SPRING WASHER	2		
8	14H1039	NUT	2		5/8"
9	T183548	ANGLE	1		
10	14M7274	NUT	2		M10
11	19M7550	CAP SCREW	2		M10 X 35
12	R65563	PIN FASTENER	1		
13	T202956	RETAINER	1		
14	M68954	LOCK NUT	1		3/8"
15	T140328	YOKE	1		
16	14H913	NUT	1		3/8"
17	T184129	STUD	1		
18	14H774	NUT	1		3/8"
19	AT169087	BALL JOINT	1		
20	AT189270	COVER	1		
21	T185691	LABEL	1		(WITH EXTENDABLE DIPPERSTICK)
22	T185692	LABEL	1		(WITHOUT EXTENDABLE DIPPERSTICK)
23	**AT185625**	**KIT**	**1**		**(WHOLE GOODS)**

BACKHOE BOOM LOCK CONTROL LEVER AND LINKAGE
TRINGLERIE ET LEVIER DE COMMANDE DE VERROUILLAGE DE FLECHE DE RETROPELLE
PALANCA DE CONTROL DE BLOQUEO DE AGUILON DE RETROEXCAVADORA Y VARILLAJE

TX1006084 -UN-26APR06

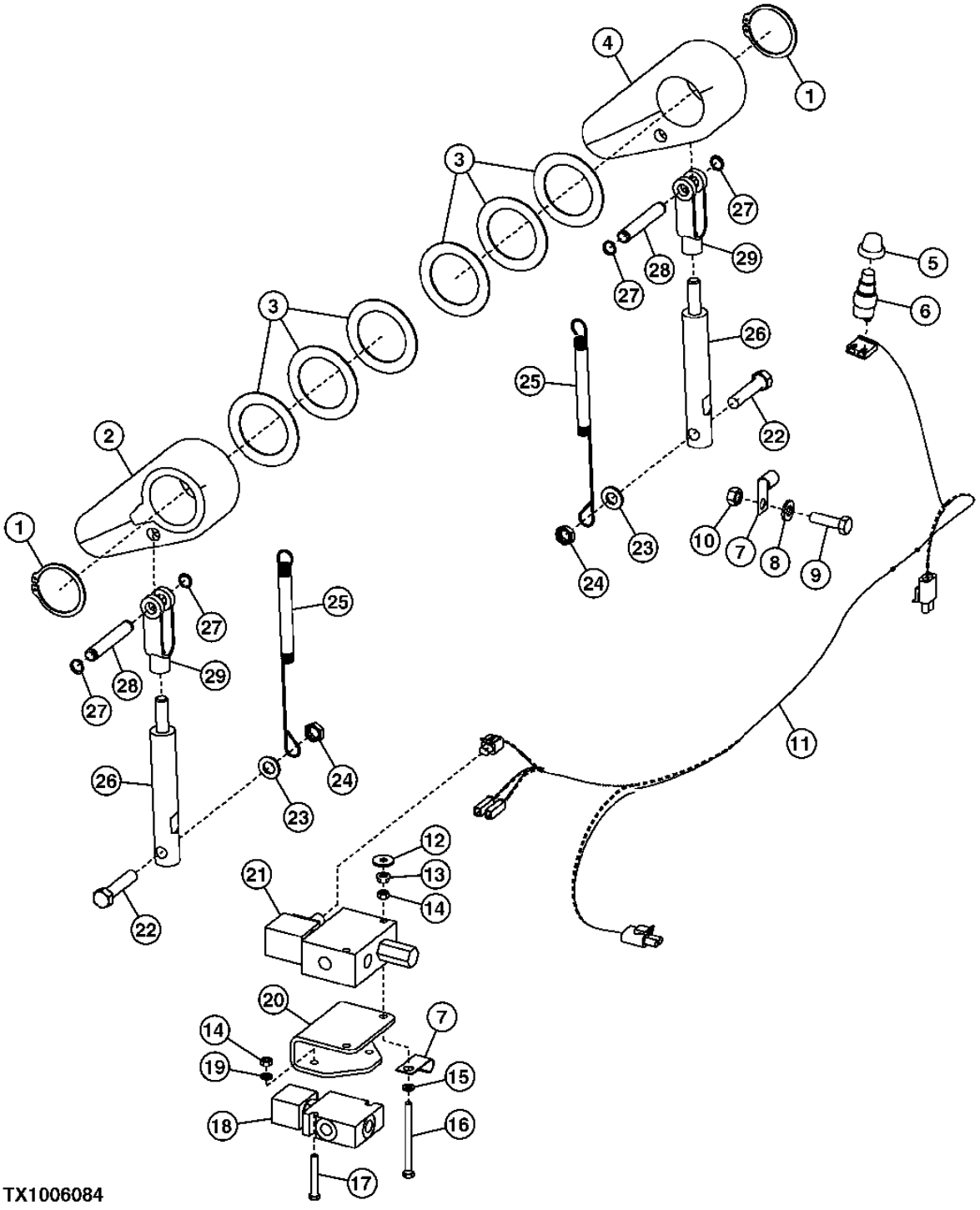

BACKHOE BOOM LOCK CONTROL LEVER AND LINKAGE
TRINGLERIE ET LEVIER DE COMMANDE DE VERROUILLAGE DE FLECHE DE RETROPELLE
PALANCA DE CONTROL DE BLOQUEO DE AGUILON DE RETROEXCAVADORA Y VARILLAJE

KEY	*PART NO.*	*PART NAME*	*QTY.*	*SERIAL NO.*	*REMARKS*
1	40M7066	SNAP RING	2		
2	T161012	LOCK	1		
3	24H1679	WASHER	2		
4	T161011	LOCK	1		
5	AR47374	CAP	1		
6	R39554	SWITCH	1		
7	AH89557	CLIP	2		
8	24M7239	WASHER	1		
9	19M7550	CAP SCREW	1		M10 X 35
10	14M7274	NUT	1		M10
11	AT194343	WIRING HARNESS	1		
12	24H1288	WASHER	2		
13	14M7303	FLANGE NUT	2		M6
14	14M7272	NUT	4		M6
15	24M7088	WASHER	2		
16	19M8880	CAP SCREW	2		M6 X 80
17	19M8321	SCREW	2		M6 X 45
18	AT179029	SOLENOID VALVE	1		(BACKHOE BOOM LOCK)
19	24M7088	WASHER	2		
20	T184957	BRACKET	1		
21	AT183556	SOLENOID HYDRAULIC VALVE	1		(SIDE SHIFT SLIDE LOCKING)
22	19M7362	CAP SCREW	2		M12 X 55
23	24M7047	WASHER	2		
24	14M7415	NUT	2		M12
25	T160590	SPRING	2		
26	AH171683	HYDRAULIC CYLINDER	2		
27	T161598	SNAP RING	4		
28	T161013	PIN	2		
29	T121474	YOKE	2		

SLIDING FRAME
CHASSIS COULISSANT
BASTIDOR DESLIZANTE

T135394 -UN-11JAN01

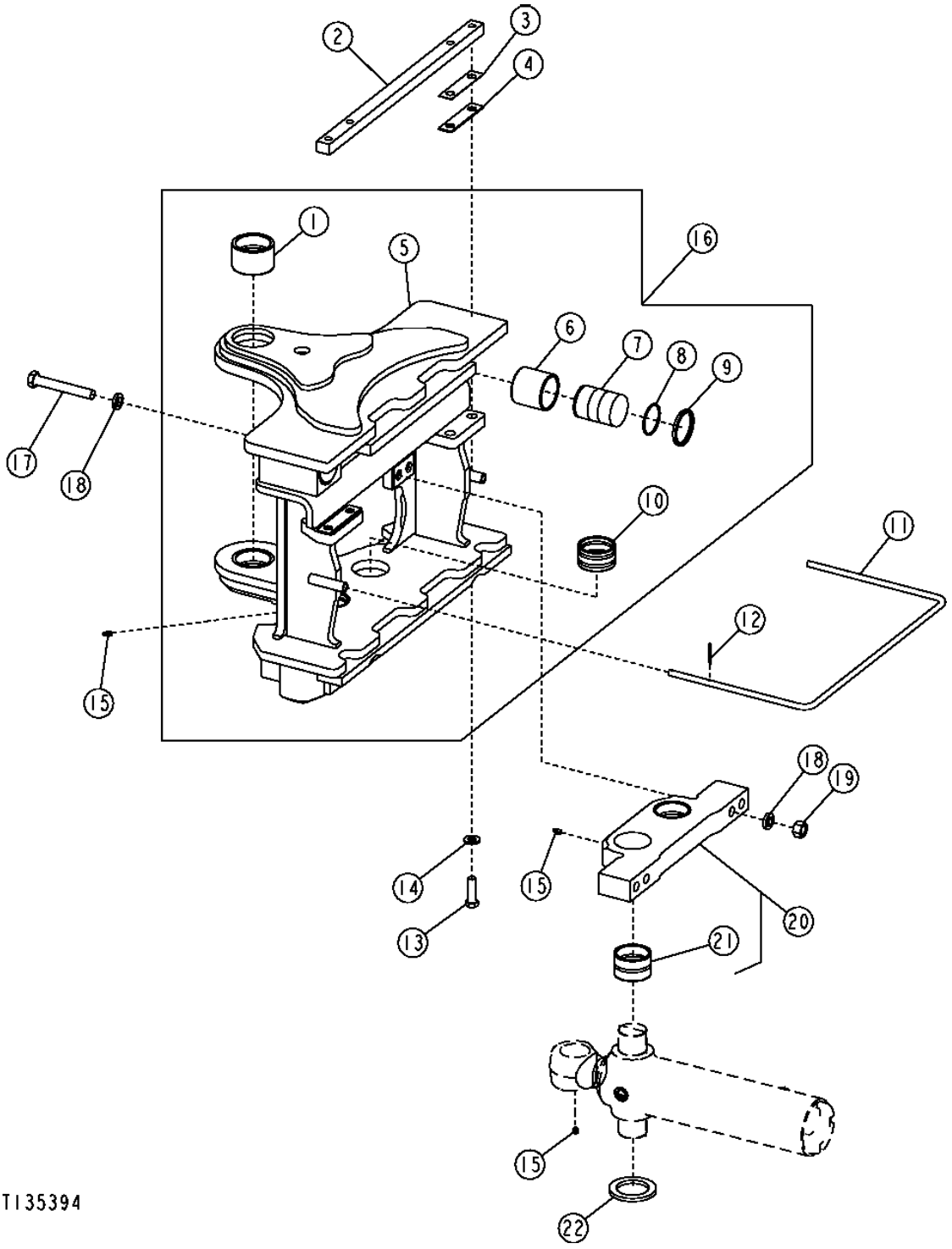

THIS PARTS LISTING IS CONTINUED

SLIDING FRAME
CHASSIS COULISSANT
BASTIDOR DESLIZANTE

KEY	PART NO.	PART NAME	QTY.	SERIAL NO.	REMARKS
1	T154621	BUSHING	2		SWING FRAME MOUNTING
2	T106066	BAR	1		LOCK BAR
3	T106399	STRAP	2		1 MM (.042" THICK) LOCKBAR
4	T106398	STRAP	6		3.2 MM (.125" THICK) LOCKBAR
5	.....	FRAME	1		SLIDING (WITH BUSHINGS)
6	T161813	BUSHING	4		LOCK CYLINDER BORES
7	T166535	PISTON	4		LOCKING CYLINDER
8	AT186563	SEAL KIT	4		
9	T157277	SEAL	4		LOCK CYLINDER BORE
10	T147070	BUSHING	2		SWING CYLINDER MOUNTING
11	T161770	ROD	1		PROTECTION
12	11M7012	COTTER PIN	4		PROTECTION ROD
13	19M8295	CAP SCREW	4		M16 X 55
14	24M7241	WASHER	4		
15	T162396	LUBRICATION FITTING	4		LOWER GREASE PASSAGE
16	AT182935	FRAME	1		SLIDING WITH PISTON
17	19M7907	SCREW	4		M20 X 140
18	T83426	WASHER	8		
19	14M7277	NUT	4		M20
20	AT175921	PLATE	1		
21	T153303	BUSHING	2		
22	T148387	WASHER	2		

SWING FRAME
CHASSIS DE PIVOTEMENT
BASTIDOR DE GIRO

TX1020070 -UN-16MAR07

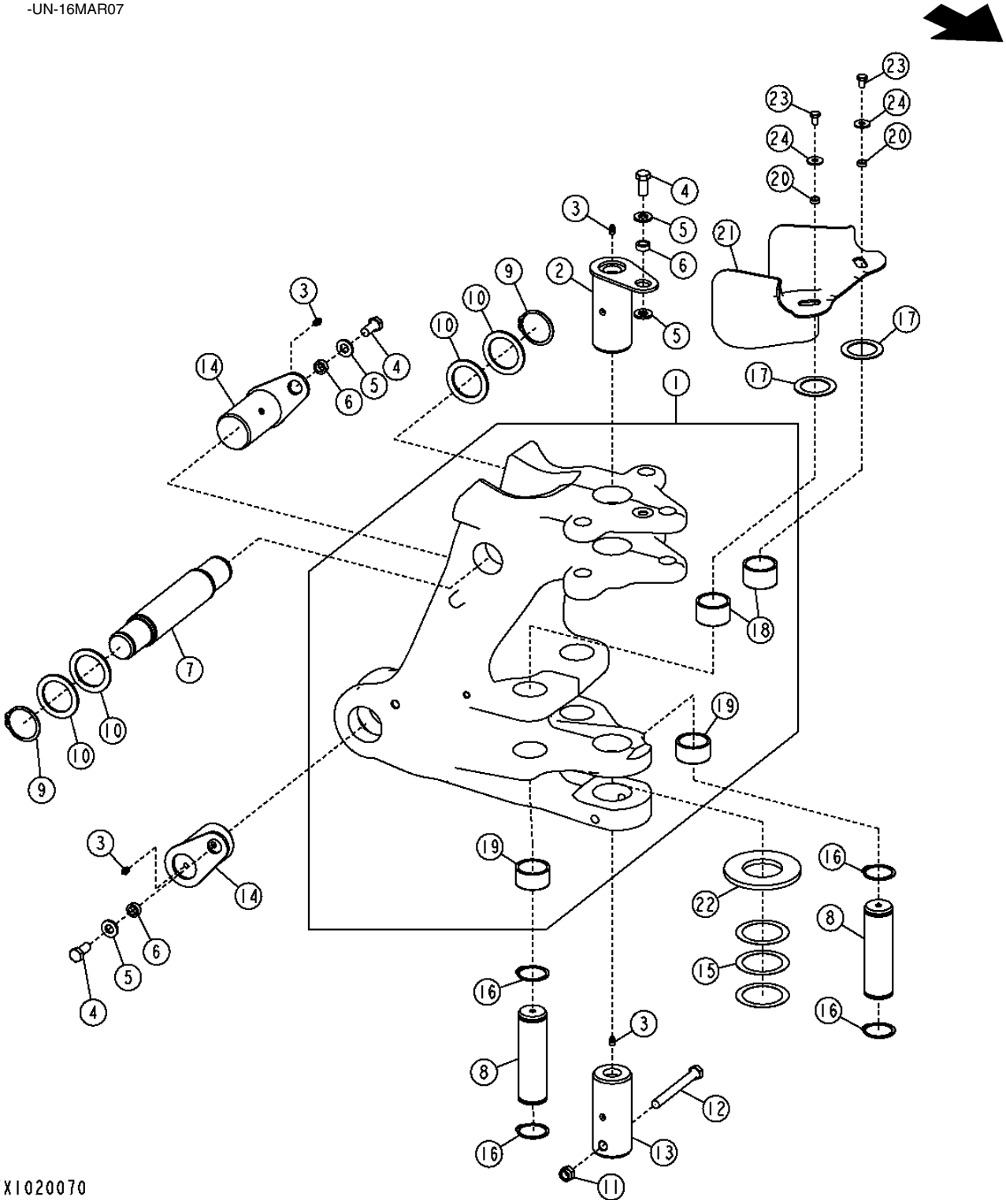

THIS PARTS LISTING IS CONTINUED

SWING FRAME
CHASSIS DE PIVOTEMENT
BASTIDOR DE GIRO

KEY	*PART NO.*	*PART NAME*	*QTY.*	*SERIAL NO.*	*REMARKS*
1	AT334606	FRAME	1		
2	AT177790	PIN FASTENER	1		STD
3	T162396	LUBRICATION FITTING	4		
4	19M8035	CAP SCREW	1		M16 X 35
5	24M7241	WASHER	2		
6	T215678	BUSHING	1		
7	T223076	PIN	1		
8	T201971	PIN	2		
9	40M7120	SNAP RING	4		
10	24H1615	WASHER	2		65.075 X 88.900 X 4.572 MM
11	14M7328	LOCK NUT	1		M16
12	19M7954	CAP SCREW	1		M16 X 150
13	T153531	PIN FASTENER	1		STD
14	AT306499	PIN	2		
15	T161497	SHIM	3		
16	40M7066	SNAP RING	8		
17	T161036	WASHER	4		
18	T201361	BUSHING	2		
19	T201362	BUSHING	2		
20	H140456	WASHER	2		
21	T190925	HOSE GUARD	1		
22	T205875	THRUST WASHER	1		
23	19M8324	CAP SCREW	4		M10 X 16
24	24M7178	WASHER	2		

BACKHOE BOOM
TRINGLERIES DE GODET DE RETROPELLE
BRAZOS DE CUCHARON DE RETROEXCAVADORA

TX1016159 -UN-29DEC06

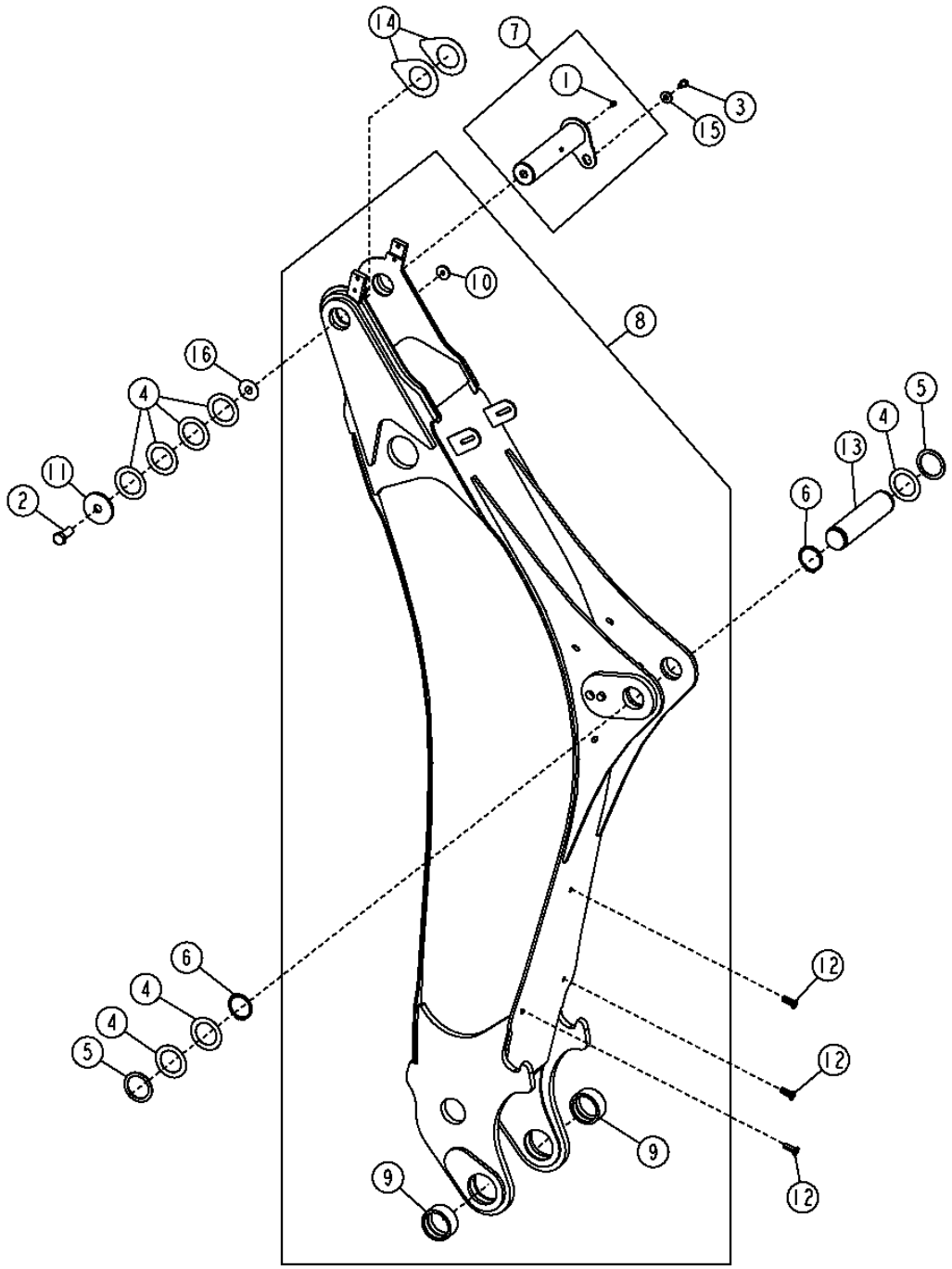

TX1016159

BACKHOE BOOM
TRINGLERIES DE GODET DE RETROPELLE
BRAZOS DE CUCHARON DE RETROEXCAVADORA

KEY	*PART NO.*	*PART NAME*	*QTY.*	*SERIAL NO.*	*REMARKS*
1	T162396	LUBRICATION FITTING	1		
2	19M7597	CAP SCREW	1		M20 X 50
3	19M8935	CAP SCREW	1		M12 X 16
4	24H1616	WASHER	7		2-9/16" X 3-3/4" X 0.036"
5	24H1635	WASHER	2		2-5/8" X 3-3/8" X 0.120"
6	40M7120	SNAP RING	2		
7	AT197726	PIN	1		
8	AT337223	BACKHOE BOOM	1		
9	T164183	BUSHING	2		74.730 X 90.130 X 39 MM
10	T188568	BUSHING	1		
11	T101807	WASHER	1		22 X 88.900 X 7.925 MM
12	T148410	NUT	3		M10
13	T153608	PIN	1		64.475 X 267 MM
14	T208510	WASHER	2		
15	T29342	WASHER	1		13.487 X 31.750 X 4.572 MM
16	T33376	SHIM	1		0.508 MM

BACKHOE BUCKET LINKS
TRINGLERIES DE GODET DE RETROPELLE
BRAZOS DE CUCHARON DE RETROEXCAVADORA

TX1016478 -UN-29DEC06

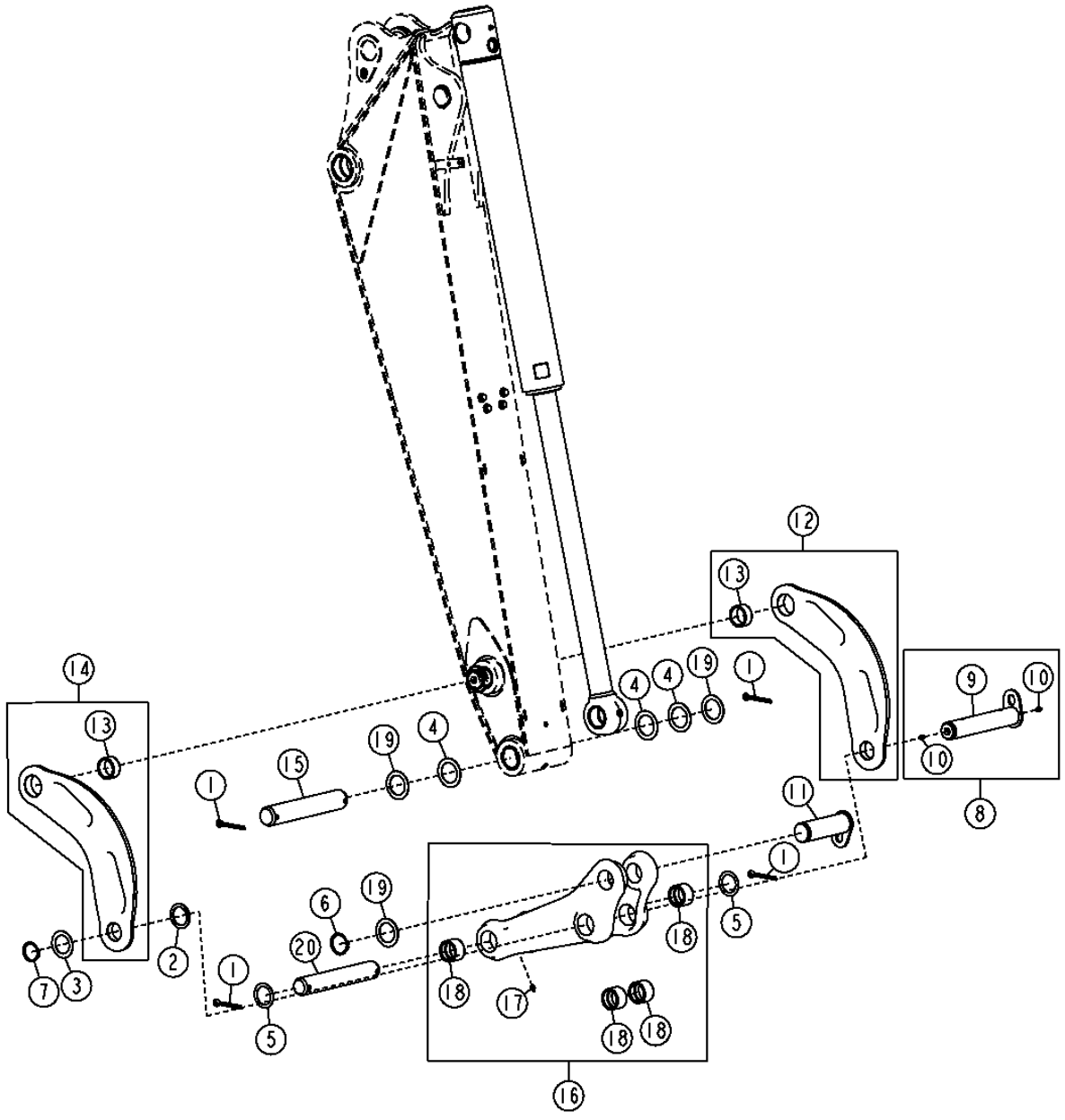

THIS PARTS LISTING IS CONTINUED

BACKHOE BUCKET LINKS
TRINGLERIES DE GODET DE RETROPELLE
BRAZOS DE CUCHARON DE RETROEXCAVADORA

KEY	*PART NO.*	*PART NAME*	*QTY.*	*SERIAL NO.*	*REMARKS*
1	11H227	COTTER PIN	4		3/8" X 3"
2	24H1594	WASHER	1		52.375 X 69.850 X 3.404 MM
3	24H1595	WASHER	1		52.375 X 76.200 X 1.905 MM
4	24H1679	WASHER	3		57.556 X 82.550 X 1.524 MM
5	24H1683	WASHER	2		51.587 X 69.850 X 1.524 MM
6	40M7066	SNAP RING	1		
7	40M7166	SNAP RING	1		
8	AT171077	PIN	1		
9	.....	PIN	1		(ORDER AT171077)
10	T162396	LUBRICATION FITTING	1		
11	AT324237	PIN FASTENER	1		
12	AT324620	LINK	1		
13	T166715	BUSHING	1		49.893 X 60.130 X 27 MM
14	AT324621	LINK	1		
15	T185832	PIN FASTENER	1		54.475 X 320 MM
16	AT324622	LINK	1		
17	JD7798	LUBRICATION FITTING	1		
18	T154273	BUSHING	4		49.780 X 60.130 X 38 MM
19	T161036	WASHER	3		56 X 80 X 2 MM
20	T185831	PIN FASTENER	1		49.475 X 320 MM

STANDARD DIPPERSTICK
BRAS STANDARD
BRAZO ESTANDAR

TX1016479 -UN-27DEC06

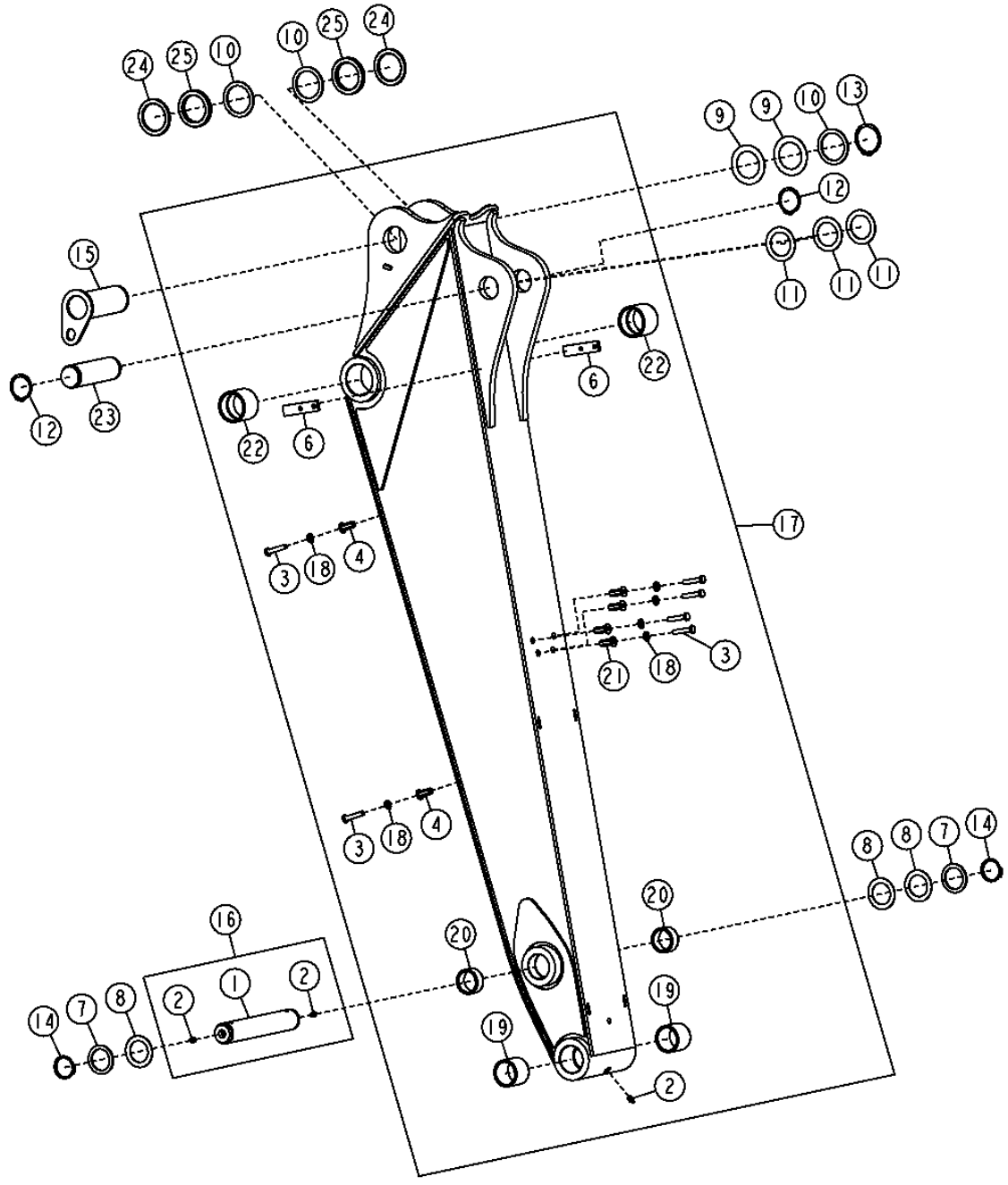

THIS PARTS LISTING IS CONTINUED

STANDARD DIPPERSTICK
BRAS STANDARD
BRAZO ESTANDAR

KEY	PART NO.	PART NAME	QTY.	SERIAL NO.	REMARKS
1	AT171079	PIN	1		
2	T162396	LUBRICATION FITTING	2		
3	19M8600	CAP SCREW	6		
4	T148409	NUT	2		(GOLD NO.6 FOR 6MM PLATE)
6	T222442	STRAP	2		
7	24H1594	WASHER	2		2-1/16" X 2-3/4" X 0.134"
8	24H1595	WASHER	3		2-1/16" X 3" X 0.075"
9	24H1616	WASHER	2		2-9/16" X 3-3/4" X 0.036"
10	24H1635	WASHER	3		2-5/8" X 3-3/8" X 0.120"
11	24H1679	WASHER	2		2-17/64" X 3-1/4" X 0.060"
12	40M7066	SNAP RING	2		
13	40M7120	SNAP RING	1		
14	40M7166	SNAP RING	2		
15	AT169831	PIN	1		
17	AT336635	DIPPERSTICK	1		
18	24M7239	WASHER	6		10.700 X 21 X 2.500 MM
19	T166686	BUSHING	2		
20	T166715	BUSHING	2		
21	T148410	NUT	4		
22	T162581	BUSHING	2		
23	T153567	PIN	1		STD
24	T160299	WEAR PLATE	2		
25	T160302	SPACER	2		

EXTENDABLE ARM AND LOCKING PIN
BRAS TELESCOPIQUE ET AXE DE BLOCAGE
BRAZO EXTENSIBLE Y PASADOR DE BLOQUEO

TX1016490 -UN-27DEC06

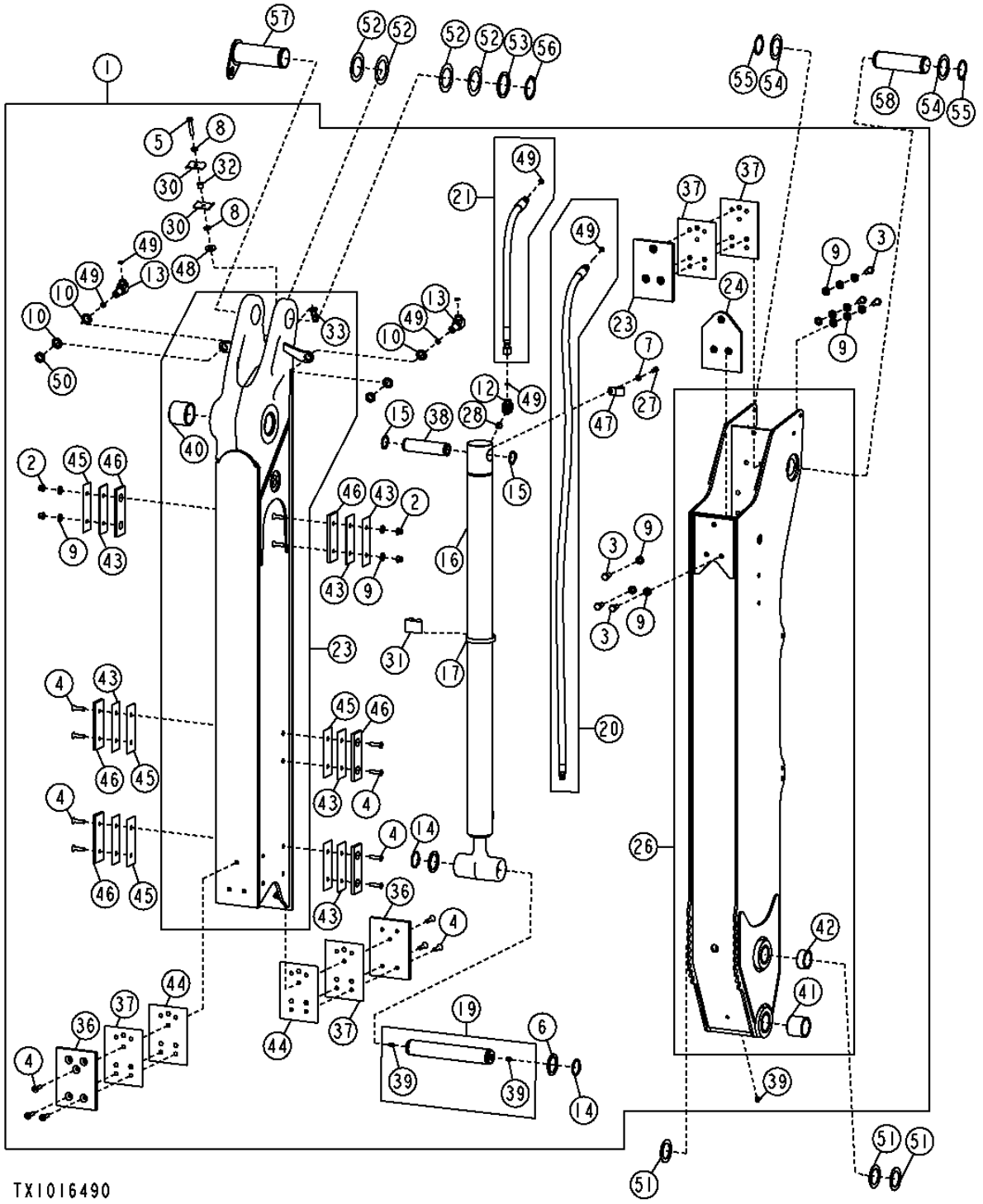

THIS PARTS LISTING IS CONTINUED

EXTENDABLE ARM AND LOCKING PIN
BRAS TELESCOPIQUE ET AXE DE BLOCAGE
BRAZO EXTENSIBLE Y PASADOR DE BLOQUEO

KEY	PART NO.	PART NAME	QTY.	SERIAL NO.	REMARKS
1	AT336136	KIT	1		
2	14M7400	LOCK NUT	18		M10
3	19H2472	CAP SCREW	6		1/2" X 1"
4	19M7666	SCREW	22		M10 X 40
5	19M7935	CAP SCREW	1		M10 X 55
6	24H1594	WASHER	2		
7	24M7238	WASHER	2		8.700 X 17 X 2 MM
8	24M7239	WASHER	4		10.700 X 21 X 2.500 MM
9	24M7240	WASHER	16		13 X 25 X 3 MM
10	24M7396	WASHER	4		21 X 34 X 3 MM
11	34M7054	SPRING PIN	1		
12	38H1005	ELBOW FITTING	1		
13	38H1323	ELBOW FITTING	2		
14	40M7166	SNAP RING	2		
15	40M7179	SNAP RING	2		
16	AH211361	HYDRAULIC CYLINDER	1		
17	AR21841	CLAMP	1		
18	AR83396	QUICK LOCK PIN	1		
19	AT171079	PIN	1		
20	AT172255	HYDRAULIC HOSE - FABRICATE	1		
21	AT172256	HYDRAULIC HOSE - FABRICATE	1		
22	AT173933	WEAR PLATE	1		
23	AT322951	DIPPERSTICK	1		
24	AT330944	WEAR PLATE	1		
25	**AT336137**	**ARM**	**1**		**(STATIONARY MEMBER) (CA)**
26	AT337761	DIPPERSTICK	1		
27	M86877	BOLT	1		
28	R26375	O-RING	1		(EXTENDABLE MEMBER)
29	R26448	O-RING	1		
30	R46919	HALF CLAMP	2		
31	T105774	GUIDE	1		
32	T126052	SPACER	1		
33	T148410	NUT	1		
34	T153322	PIN	1		
35	AT171079	PIN	1		(RED NO.10 FOR 8MM PLATE)
36	T157792	WEAR PLATE	2		
37	T157796	SHIM	4		
38	T160384	SPACER	1		
39	T162396	LUBRICATION FITTING	3		
40	T162581	BUSHING	2		
41	T166686	BUSHING	2		
42	T166715	BUSHING	2		
43	T227937	SHIM	8		
44	T228082	SHIM	4		
45	T228083	SHIM	8		
46	T228148	WEAR PLATE	8		
47	T24959	CLAMP	1		
48	T29342	WASHER	1		
49	T77857	O-RING	7		12.421 X 1.778 MM
50	T78716	NUT	2		20.625 MM
51	24H1595	WASHER	3		2-1/16" X 3" X 0.075"
52	24H1616	WASHER	4		2-9/16" X 3-3/4" X 0.036"
53	24H1635	WASHER	1		2-5/8" X 3-3/8" X 0.120"
54	24H1679	WASHER	2		2-17/64" X 3-1/4" X 0.060"
55	40M7066	SNAP RING	2		
56	40M7120	SNAP RING	1		
57	AT169831	PIN	1		
58	T153567	PIN	1		54.475 X 186 MM

THIS PARTS LISTING IS CONTINUED

BACKHOE CONTROL VALVE
DISTRIBUTEUR DE RETROPELLE
VALVULA DE CONTROL DE RETROEXCAVADORA

TX1014314 -UN-20NOV06

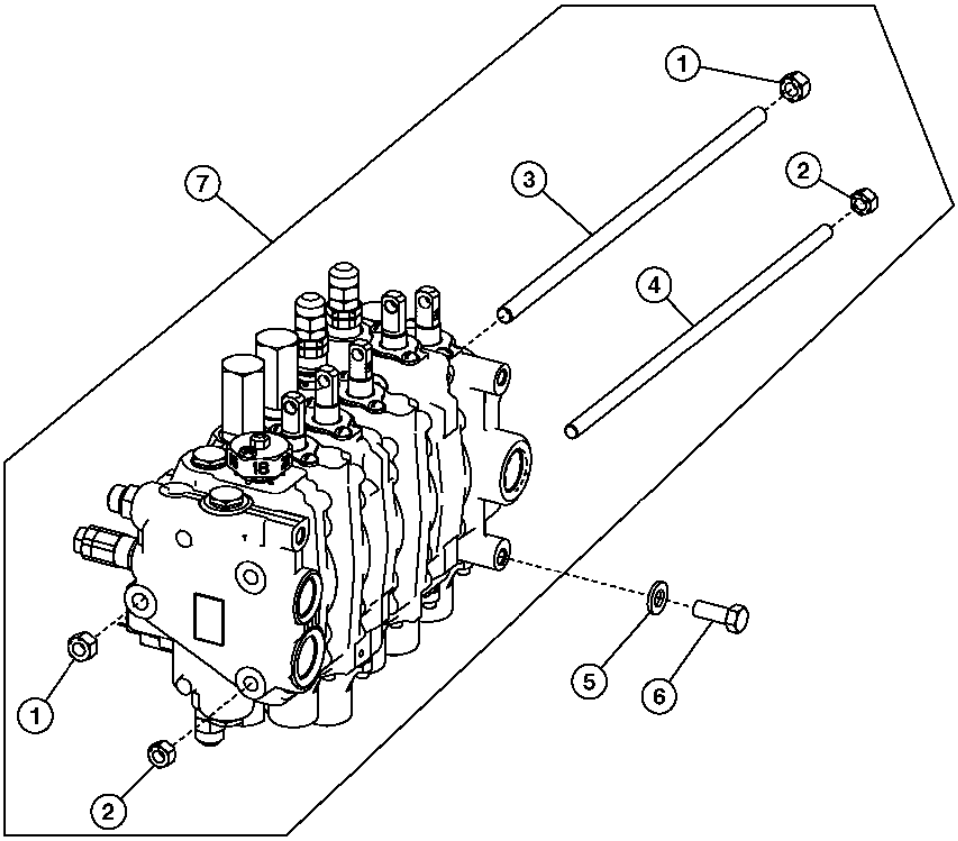

TX1014314

BACKHOE CONTROL VALVE
DISTRIBUTEUR DE RETROPELLE
VALVULA DE CONTROL DE RETROEXCAVADORA

KEY	*PART NO.*	*PART NAME*	*QTY.*	*SERIAL NO.*	*REMARKS*
1	14H865	NUT	2		1/2"
2	14H807	NUT	4		7/16"
3	T160628	STUD	1		
	T140699	ROD	1		
	T140700	ROD	1		
	T159264	STUD	1		
4	T160629	STUD	2		
	T118695	ROD	2		
	T118697	ROD	2		
5	24M7240	WASHER	3		
6	19M8011	CAP SCREW	3		M12 X 30
7	AT300570	CONTROL VALVE	1		CONVENIENCE ASSEMBLY
	AT317783	CONTROL VALVE	1		(PILOT CONTROL) CONVENIENCE ASSEMBLY
	AT300574	CONTROL VALVE	1		CONVENIENCE ASSEMBLY (WITH MANUAL AUXILIARY)
	AT317784	CONTROL VALVE	1		(PILOT CONTROL) CONVENIENCE ASSEMBLY (WITH SELECTIVE FLOW AUXILIARY)
	AT304502	CONTROL VALVE	1		CONVENIENCE ASSEMBLY (WITH SELECTIVE FLOW AUXILIARY)
	AT317786	CONTROL VALVE	1		(PILOT CONTROL) CONVENIENCE ASSEMBLY (WITH SELECTIVE FLOW AUXILIARY)
	AT300575	CONTROL VALVE	1		CONVENIENCE ASSEMBLY (WITH SELECTIVE FLOW AUXILIARY)
	AT317785	CONTROL VALVE	1		(PILOT CONTROL) CONVENIENCE ASSEMBLY (WITH SELECTIVE FLOW AUXILIARY)

PRIORITY INLET SECTION
SECTION D'ENTREE PRIORITAIRE
SECCION DE ENTRADA PRIORITARIA

TX1014319 -UN-20NOV06

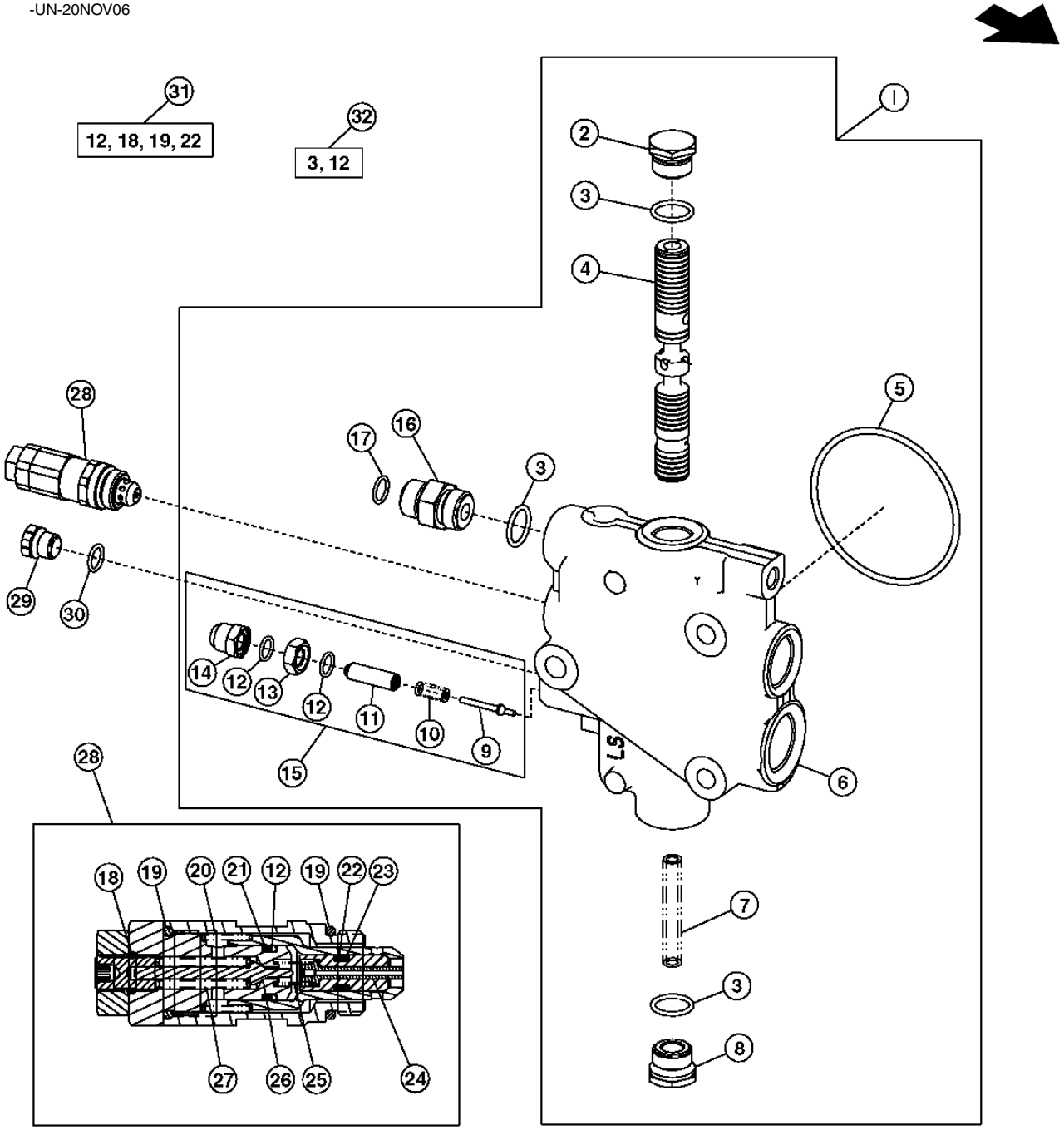

TX1014319

PRIORITY INLET SECTION
SECTION D'ENTREE PRIORITAIRE
SECCION DE ENTRADA PRIORITARIA

KEY	PART NO.	PART NAME	QTY.	SERIAL NO.	REMARKS
1	AT191768	VALVE SPOOL	1		
2	T76502	FITTING	1		
3	R26906	O-RING	3		
4	.....	SPOOL VALVE	1		
5	T118685	O-RING	1		
6	.....	HOUSING	1		
7	T152374	SPRING	1		
8	T160613	PLUG	1		
9	.....	POPPET	1		
10	.....	COMPRESSION SPRING	1		
11	.....	SCREW	1		
12	.....	RING	2		
13	.....	NUT	1		
14	.....	NUT	1		
15	AT168671	PRESSURE RELIEF VALVE	1		(LOAD SENSE)
16	38H1174	ADAPTER FITTING	1		
17	T77857	O-RING	2		
18	.....	O-RING	1		
19	.....	O-RING	1		
20	.....	SPRING	1		
21	.....	BACK-UP RING	1		
22	.....	O-RING	1		
23	.....	BACK-UP RING	1		
24	.....	PISTON	1		
25	.....	SPRING	1		
26	.....	POPPET	1		
27	.....	SPRING	1		
28	AT340275	PRESSURE RELIEF VALVE	1		(3625 PSI)
29	R27218	FITTING PLUG	1		
30	R26448	O-RING	1		
31	AT314538	SEAL KIT	1		22.23 MM (7/8") RELIEF VALVE
32	AT280406	SEAL KIT	1		SPOOL

BOOM SECTION
SECTION DE FLECHE
SECCION DE AGUILON

TX1014321 -UN-20NOV06

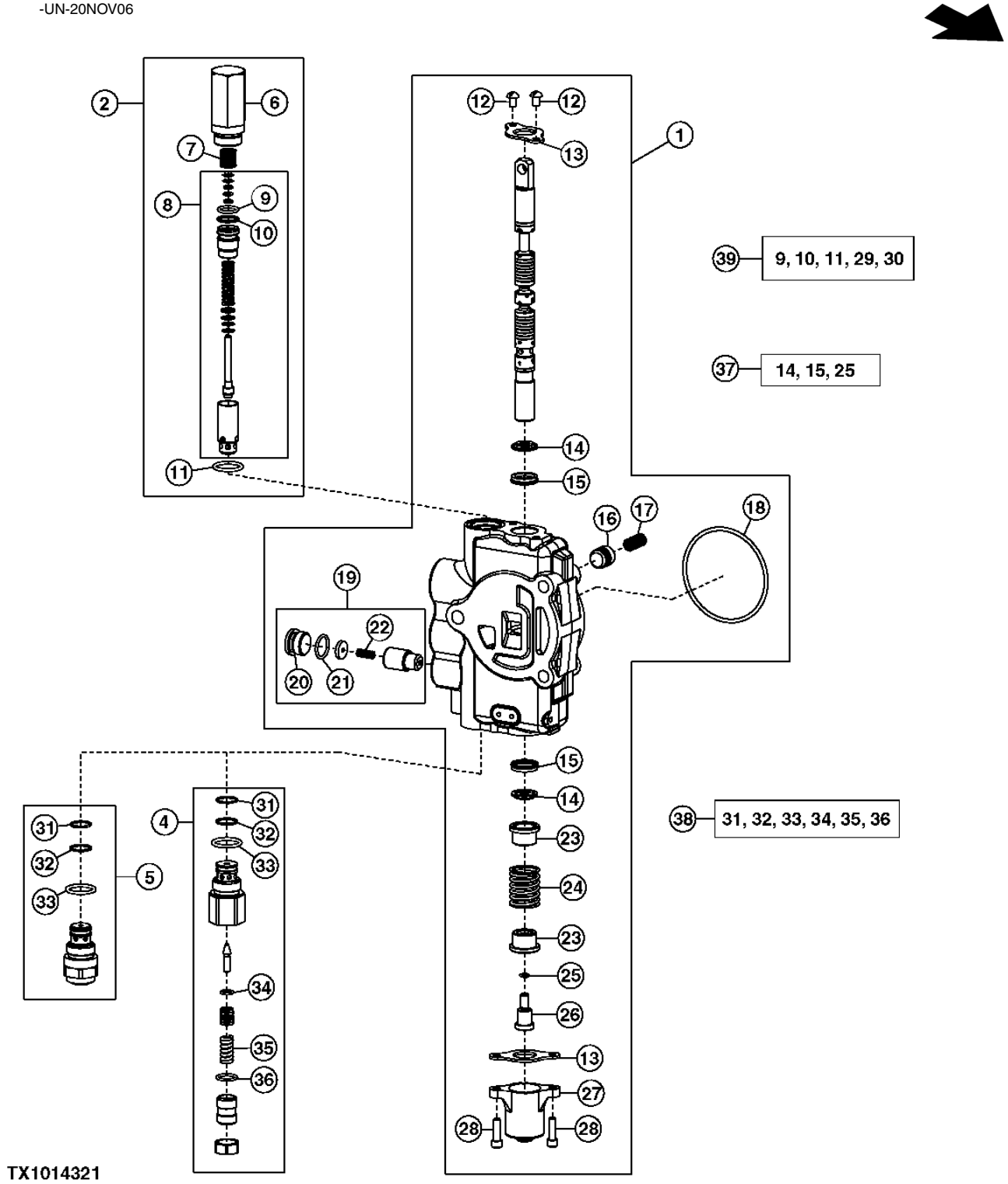

BOOM SECTION
SECTION DE FLECHE
SECCION DE AGUILON

KEY	PART NO.	PART NAME	QTY.	SERIAL NO.	REMARKS
1	AT301783	HYD ACTUATED CONTROL VALVE	1		
2	AT171403	PRESSURE RELIEF VALVE	1		(2150 PSI)
4	AT301447	PRESSURE RELIEF VALVE	1		(A) (5500 PSI) (1-1/16" PORT)
5	AT301487	PRESSURE RELIEF VALVE	1		(B) (5500 PSI) (1-1/16" PORT)
6	T118866	HOUSING	1		
7	T118867	SPRING	1		
8	AT178363	PRESSURE RELIEF VALVE	1		
9	.....	O-RING	1		
10	.....	BACK-UP RING	1		
11	T118681	O-RING	1		
12	21H1352	SCREW	2		1/4" X 3/8"
13	T81524	PLATE	2		
14	.....	SEAL	2		
15	.....	SEAL	2		
16	T81538	POPPET	1		
17	T81539	SPRING	1		
18	T118685	O-RING	1		
19	AT178371	SEAL KIT	1		(DRIFT CHECK)
20	T201424	PLUG	1		
21	R26906	O-RING	1		
22	R111238	SPRING	1		
23	T81540	RETAINER	2		
24	T160518	COMPRESSION SPRING	1		
25	R30903	O-RING	1		
26	T160519	SCREW	1		
27	T118808	CAP	1		
28	19H3554	SCREW	2		
31	T107887	O-RING	2		
32	.....	BACK-UP RING	2		
33	T118681	O-RING	2		
34	R63548	O-RING	1		
35	.....	SPRING	1		
36	.....	O-RING	1		
37	AT280406	SEAL KIT	1		SPOOL
38	AT300801	SEAL KIT	1		(SEAL AND SPRING)
39	AT314539	SEAL KIT	1		(1-1/16") RELIEF VALVE

(A) NOT ANTI-CAVITATION
(A) NON ANTI-CAVITATION
(A) SIN FUNCION ANTICAVITACION

(B) ANTI-CAVITATION
(B) ANTI-CAVITATION
(B) ANTICAVITACION

BUCKET SECTION
SECTION DE GODET
SECCION DE CUCHARON

TX1014324 -UN-14DEC06

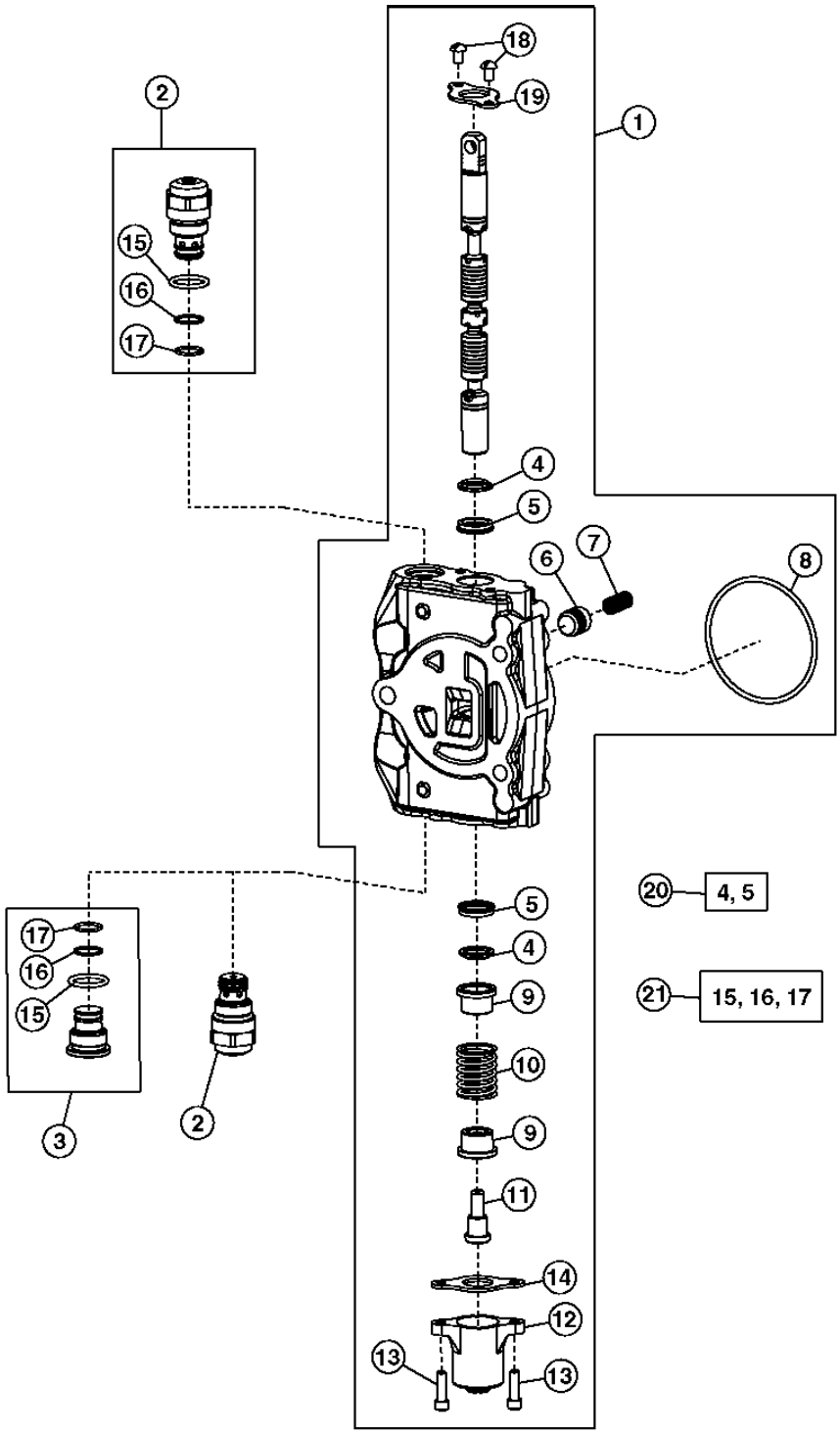

TX1014324

BUCKET SECTION
SECTION DE GODET
SECCION DE CUCHARON

KEY	PART NO.	PART NAME	QTY.	SERIAL NO.	REMARKS
1	AT301782	HYD ACTUATED CONTROL VALVE	1		
2	AT301527	PRESSURE RELIEF VALVE	2		(1-1/16" PORT) (6 AND 7 FUNCTION) (4600 PSI) ANTI-CAVITATION
	AT301527	PRESSURE RELIEF VALVE	1		(1-1/16" PORT) (4 AND 5 FUNCTION) (4600 PSI) ANTI-CAVITATION
3	AT307332	PLUG	1		(4 AND 5 FUNCTION)
4	.....	SEAL	2		
5	.....	SEAL	2		
6	T81538	POPPET	1		
7	T81539	SPRING	1		
8	T118685	O-RING	1		
9	T81540	RETAINER	2		
10	T160518	COMPRESSION SPRING	1		
11	T81541	SCREW	1		
12	T118808	CAP	1		
13	19H3554	SCREW	2		1/4" X 0.880"
14	T81524	PLATE	1		
15	T118681	O-RING	1		
16	.....	BACK-UP RING	1		
17	T107887	O-RING	1		
18	21H1352	SCREW	2		1/4" X 3/8"
19	T81524	PLATE	1		
20	AT280406	SEAL KIT	1		SPOOL
21	AT300801	SEAL KIT	1		

CROWD SECTION
SECTION DE CAVAGE
SECCION DE EMPUJE

TX1014326 -UN-14DEC06

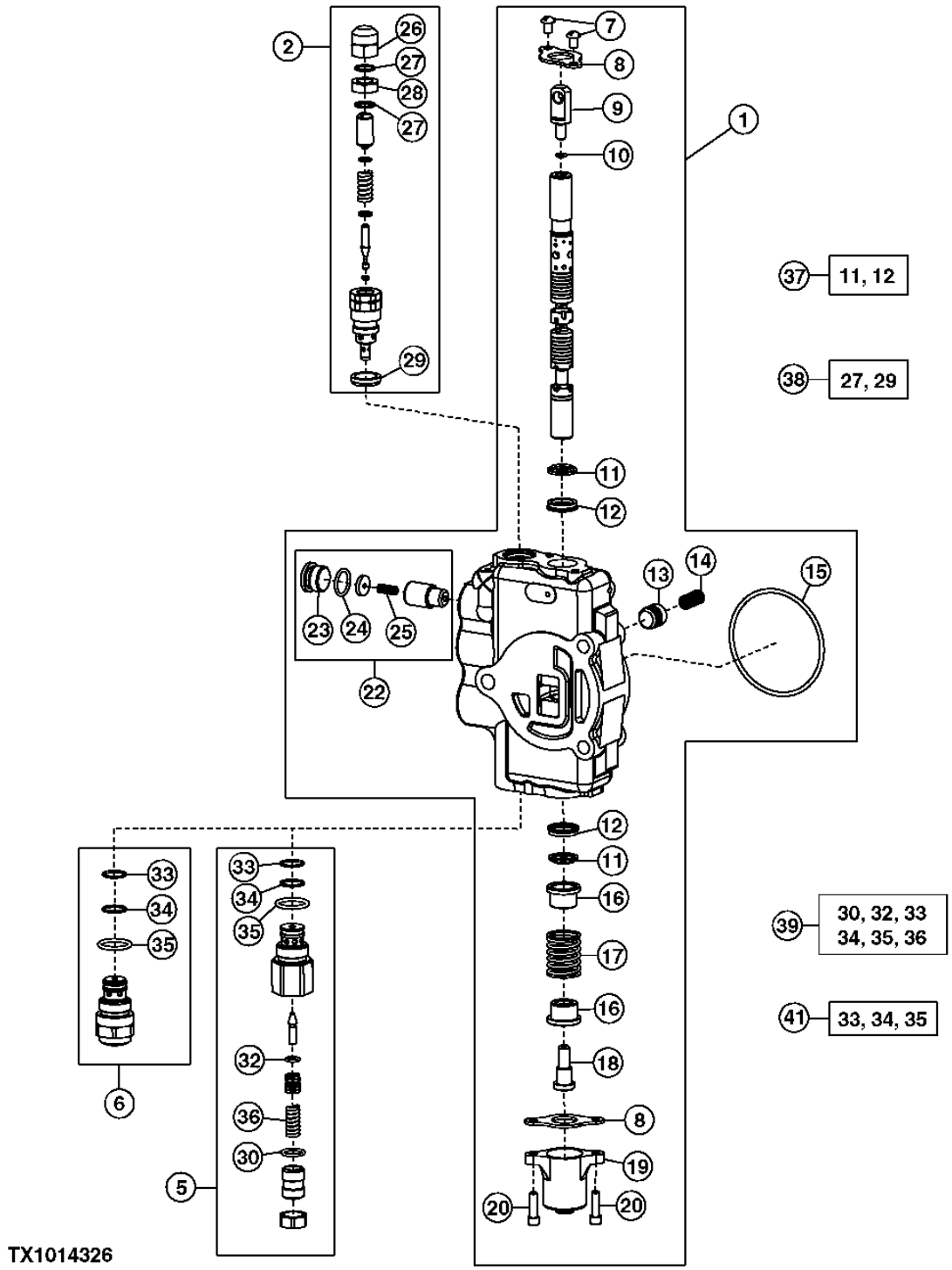

CROWD SECTION
SECTION DE CAVAGE
SECCION DE EMPUJE

KEY	PART NO.	PART NAME	QTY.	SERIAL NO.	REMARKS
1	AT301776	VALVE SPOOL	1		(4 FUNCTION)
	AT301784	VALVE SPOOL	1		(5,6 AND 7 FUNCTION)
2	AT171404	PRESSURE RELIEF VALVE	1		(4750 PSI) (7/8" PORT)
5	AT303954	PRESSURE RELIEF VALVE	1		(3800 PSI) (1-1/16" PORT) (NOT ANTI-CAVITATION)
6	AT301751	PRESSURE RELIEF VALVE	1		(3800 PSI) (1-1/16" PORT) (ANTI-CAVITATION)
7	21H1352	SCREW	2		1/4" X 3/8"
8	T81524	PLATE	2		
9	T160702	END	1		
10	R30903	O-RING	1		
11	.....	SEAL	2		
12	.....	SEAL	2		
13	T152406	POPPET	1		(4 FUNCTION)
	T81538	POPPET	1		
14	T152407	SPRING	1		(4 FUNCTION)
	T81539	SPRING	1		
15	T118685	O-RING	1		
16	T81540	RETAINER	2		
17	T160518	COMPRESSION SPRING	1		
18	T81541	SCREW	1		
19	T118808	CAP	1		
20	19H3554	SCREW	2		1/4" X 0.880"
22	AT194687	KIT	1		(DRIFT CHECK)
23	T201424	PLUG	1		
24	R26906	O-RING	1		
25	R111238	SPRING	1		
26	T67425	NUT	2		
27	.....	O-RING	4		
28	T67424	NUT	2		
29	T183756	SEAL	3		
30	.....	O-RING	1		
32	R63548	O-RING	1		
33	T107887	O-RING	2		
34	.....	BACK-UP RING	2		
35	T118681	O-RING	2		
36	.....	SPRING	1		
37	AT280406	SEAL KIT	1		SPOOL
38	AT314538	SEAL KIT	1		22.23 MM (7/8") RELIEF VALVE
	AT314539	SEAL KIT	1		27.0 MM (1-1/16") RELIEF VALVE
39	AT300801	SEAL KIT	1		(USE WITH AT303954)
41	AT301749	SEAL KIT	1		

SWING SECTION
SECTION DE PIVOTEMENT
SECCION DE GIRO

TX1014330 -UN-20NOV06

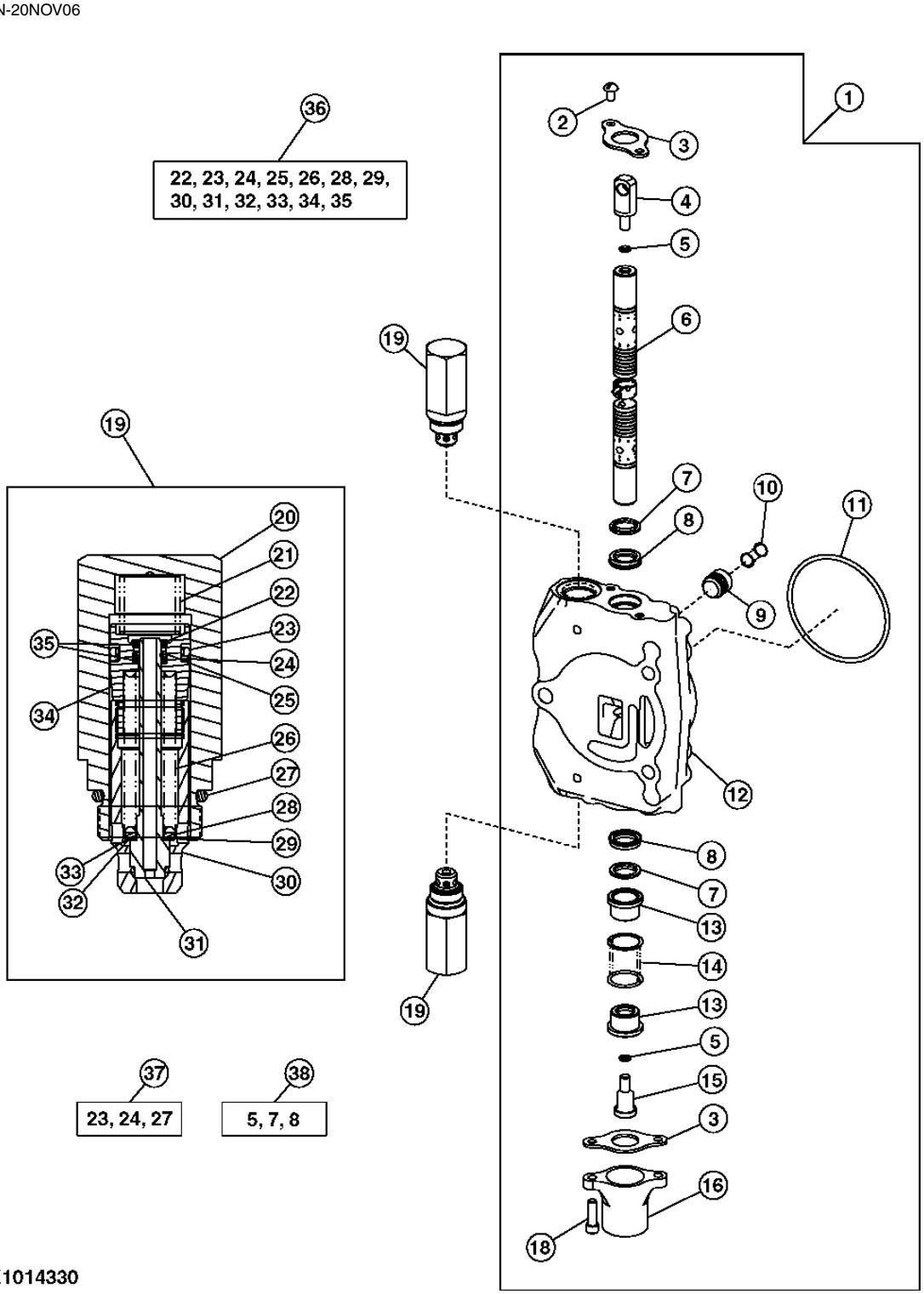

TX1014330

SWING SECTION
SECTION DE PIVOTEMENT
SECCION DE GIRO

KEY	PART NO.	PART NAME	QTY.	SERIAL NO.	REMARKS
1	AT170221	VALVE SPOOL	1		(4,5 AND 6 FUNCTION)
	AT179109	SPOOL VALVE	1		(6 AND 7 FUNCTION WITH MANUAL AUXILIARY)
2	21H1352	SCREW	2		1/4" X 3/8"
3	T81524	PLATE	2		
4	T160702	END	1		
5	R30903	O-RING	2		
6	.....	SPOOL VALVE	1		
7	.....	SEAL	2		
8	.....	SEAL	2		
9	T81538	POPPET	1		
10	T81539	SPRING	1		
11	T118685	O-RING	1		
12	.....	HOUSING	1		
13	T81540	RETAINER	2		
14	T160518	COMPRESSION SPRING	1		
15	T160519	SCREW	1		
16	T118808	CAP	1		
18	19H3554	SCREW	2		1/4" X 0.880"
19	.....	CHECK VALVE	2		(3800 PSI) (ORDER AT178362, T118866, T118867 AND T118681)
20	T118866	HOUSING	1		
21	T118867	SPRING	1		
22	.....	SNAP RING	1		
23	.....	O-RING	1		
24	.....	BACK-UP RING	1		
25	.....	O-RING	1		
26	.....	SPRING	1		
27	T118681	O-RING	1		
28	.....	WASHER	1		
29	.....	WASHER	1		
30	.....	SLEEVE	1		
31	.....	POPPET	1		
32	.....	WASHER	1		
33	.....	WASHER	1		
34	.....	SCREW	1		
35	.....	BACK-UP RING	1		
36	AT178362	SEAL KIT	1		RELIEF VALVE
37	AT314538	SEAL KIT	1		(7/8") RELIEF VALVE
	AT314539	SEAL KIT	1		(1-1/16") RELIEF VALVE
38	AT280406	SEAL KIT	1		SPOOL

EXTENDABLE SECTION
SECTION TELESCOPIQUE
SECCION EXTENSIBLE

TX1014332 -UN-20NOV06

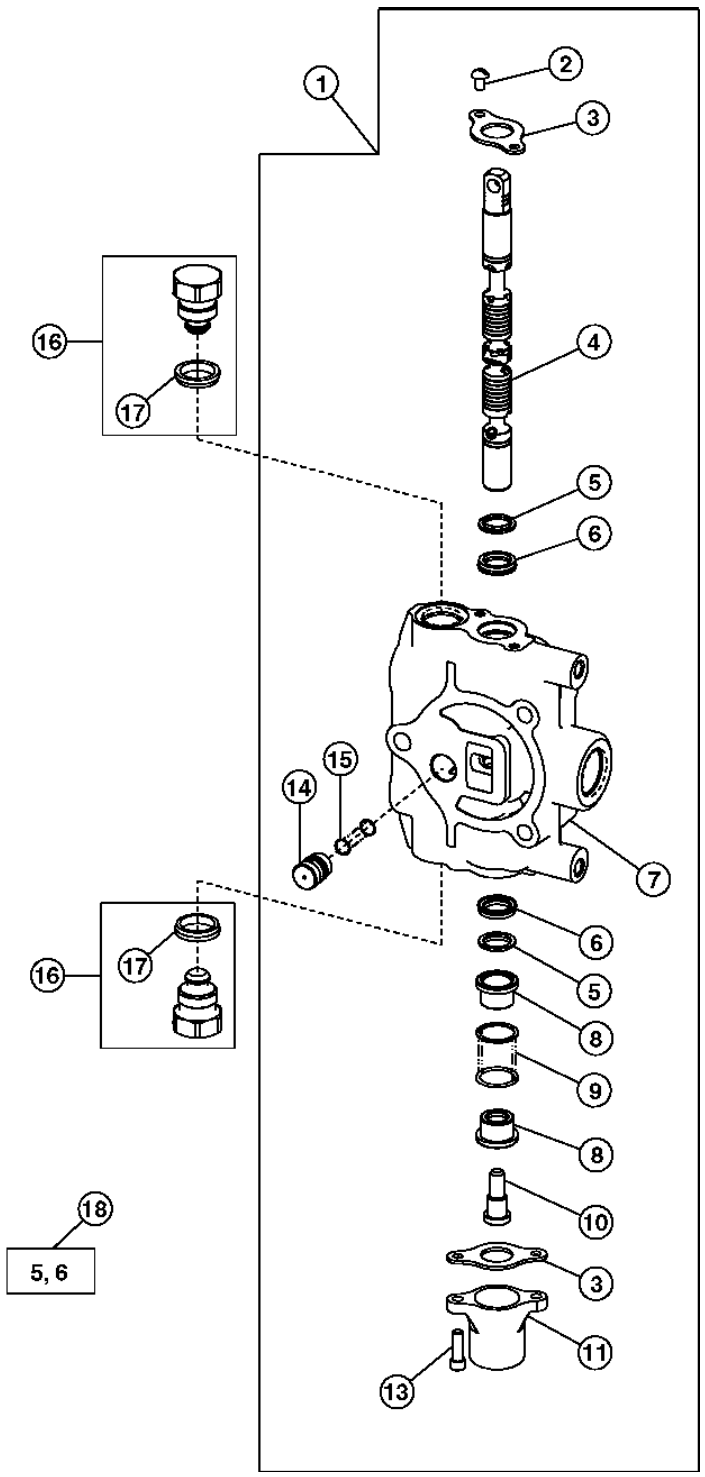

TX1014332

EXTENDABLE SECTION
SECTION TELESCOPIQUE
SECCION EXTENSIBLE

KEY	PART NO.	PART NAME	QTY.	SERIAL NO.	REMARKS
1	AT191704	VALVE SPOOL	1		(5,6 AND 7 FUNCTION)
2	21H1352	SCREW	2		1/4" X 3/8"
3	T81524	PLATE	2		
4	.....	SPOOL VALVE	1		
5	.....	SEAL	2		
6	.....	SEAL	2		
7	.....	HOUSING	1		
8	T81540	RETAINER	2		
9	T160518	COMPRESSION SPRING	1		
10	T81541	SCREW	1		
11	T118808	CAP	1		
13	19H3554	SCREW	2		1/4" X 0.880"
14	T152406	POPPET	1		
15	T152407	SPRING	1		
16	AT83174	FITTING PLUG	2		
17	T183757	SEAL	1		
18	AT280406	SEAL KIT	1		SPOOL

SELECTIVE FLOW SECTION
SECTION DE DEBIT SELECTIF
SECCION DE CAUDAL SELECTIVO

TX1014336 -UN-20NOV06

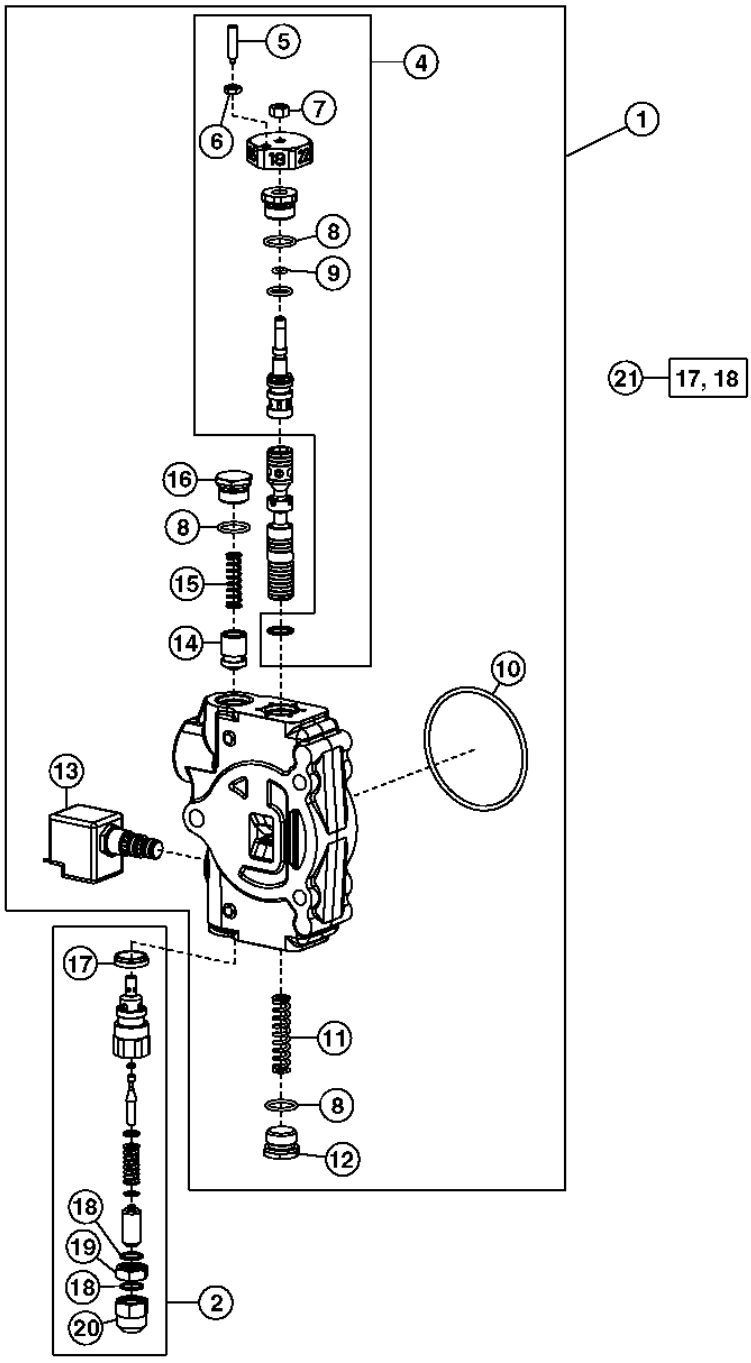

TX1014336

SELECTIVE FLOW SECTION
SECTION DE DEBIT SELECTIF
SECCION DE CAUDAL SELECTIVO

KEY	PART NO.	PART NAME	QTY.	SERIAL NO.	REMARKS
1	AT192384	VALVE SPOOL	1		
2	AT190234	PRESSURE RELIEF VALVE	1		(2900 PSI)
4	AT192385	HAND OPERATED VALVE	1		(FLOW ADJUSTMENT)
5	T160663	PLUNGER	1		
6	14H786	NUT	1		1/4"
7	14H785	NUT	1		5/16"
8	R26906	O-RING	3		
9	R10093	O-RING	1		
10	T118685	O-RING	1		
11	T184356	SPRING	1		
12	T76502	FITTING	1		
13	AT174923	HYD ACTUATED CONTROL VALVE	1		
	AT178475	SEAL KIT	1		(SOLENOID VALVE)
14	T184271	POPPET	1		
15	T160520	SPRING	1		
16	T160613	PLUG	1		
17	T183756	SEAL	1		
18	.....	O-RING	2		
19	T67424	NUT	1		
20	T67425	NUT	1		
21	AT314538	SEAL KIT	1		(7/8") RELIEF VALVE

LOCKING CONTROL VALVE
DISTRIBUTEUR VERROUILLABLE
VALVULA DE CONTROL DE BLOQUEO

TP40413 -UN-01JAN94

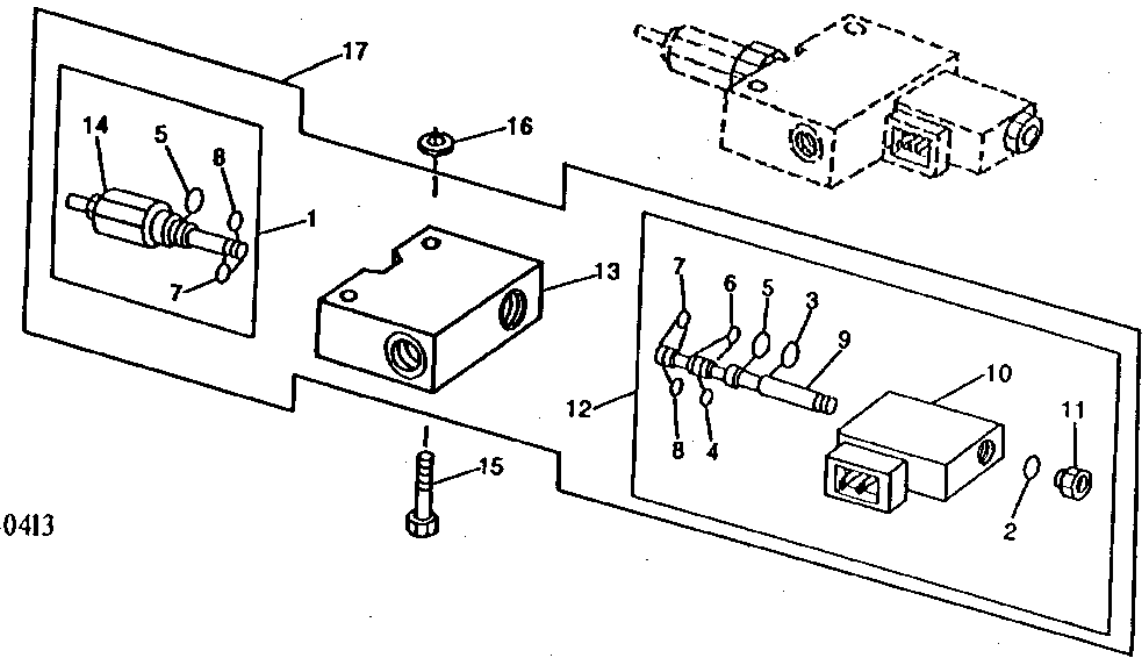

KEY	PART NO.	PART NAME	QTY.	SERIAL NO.	REMARKS
1	AT183592	PRESSURE RELIEF VALVE	1		
2	R26375	O-RING	1		
3	P50883	RING	1		
4	R33259	O-RING	1		
5	R26906	O-RING	2		
6	T101764	BACK-UP RING	2		
7	T101763	SHIM	4		
8	R28776	O-RING	3		
9	.....	SPOOL VALVE	1		
10	.....	HOUSING	1		
11	.....	FITTING	1		
12	.....	SOLENOID VALVE	1		(12-VOLT)
13	.....	HOUSING	1		
14	.....	RELIEF VALVE	1		
15	19M7529	CAP SCREW	2		M6 X 55
16	24M7293	WASHER	2		
17	AT183556	SOLENOID HYDRAULIC VALVE	1		

MEMORANDA
MEMORANDA
MEMORANDA

SWING SECTION, PILOT
SECTION DE PIVOTEMENT, SOUPAPE PILOTE
SECCION DE GIRO, PILOTO

T188872 -UN-22MAR03

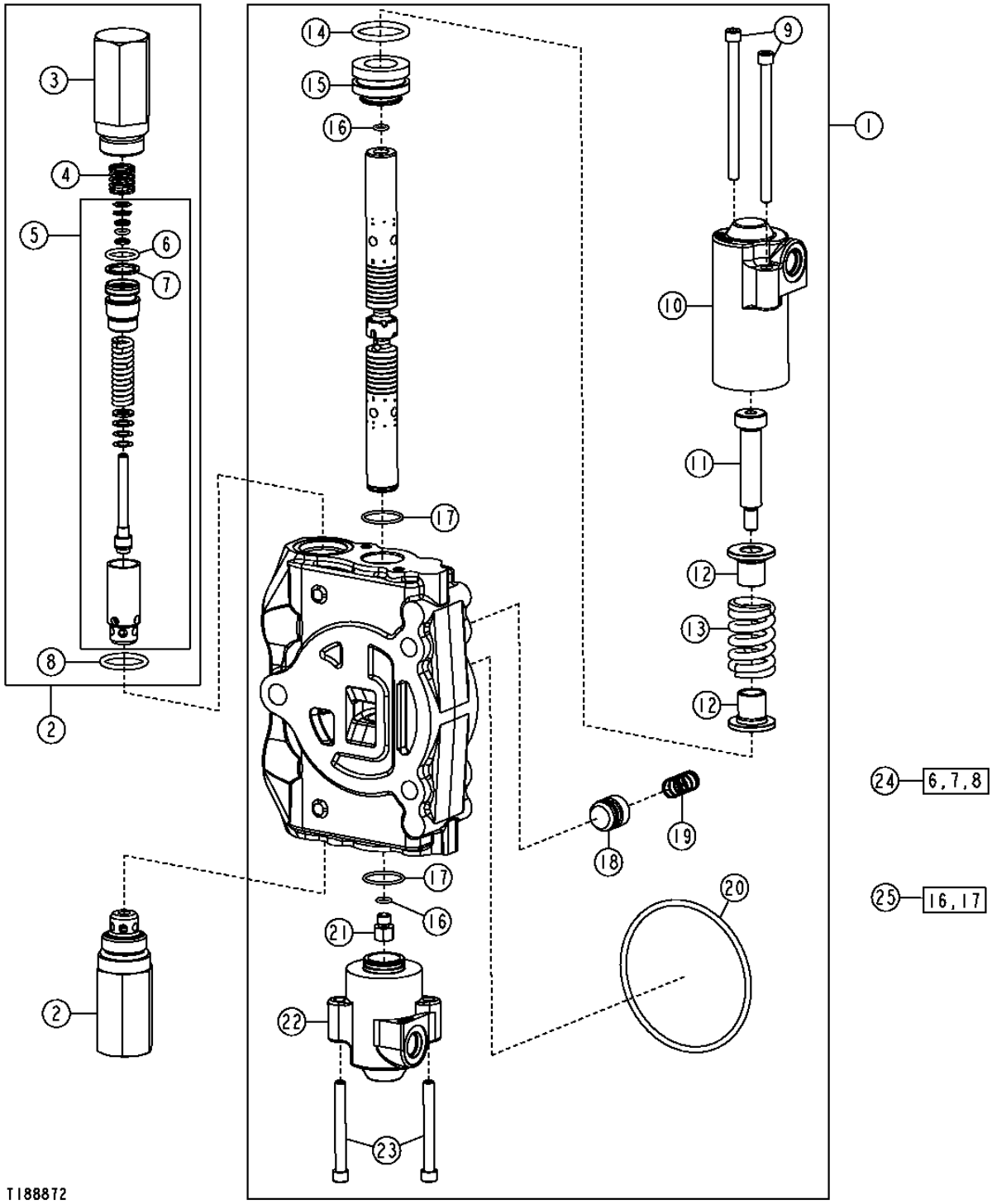

SWING SECTION, PILOT
SECTION DE PIVOTEMENT, SOUPAPE PILOTE
SECCION DE GIRO, PILOTO

KEY	*PART NO.*	*PART NAME*	*QTY.*	*SERIAL NO.*	*REMARKS*
1	AT320371	VALVE	1		4,5 FUNCTION AND 4,6 FUNCTION (W/FLOW CONTROL AUX.)
	AT323398	VALVE	1		6 FUNCTION
	AT301763	VALVE	1		4,5,AND 6 FUNCTION (W/FLOW CONTROL AUX.)
	AT300805	VALVE	1		6 AND 7 FUNCTION (W/MANUAL AUX.)
2	.....	CHECK VALVE	2		(3800 PSI) (ORDER AT178362, T118866, T118867 AND T118681)
3	T118866	HOUSING	2		
4	T118867	SPRING	2		
5	AT178362	SEAL KIT	2		(RELIEF VALVE)
6	.....	O-RING	2		
7	.....	BACK-UP RING	2		
8	T118681	O-RING	2		
9	T191335	SCREW	2		
10	T201072	CAP	1		
11	T191337	SCREW	1		
12	T201306	RETAINER	2		
13	T201071	COMPRESSION SPRING	1		4,5 AND 6 FUNCTION (W/FLOW CONTROL AUX.)
	T201071	SPRING	1		6 FUNCTION (W/ MANUAL AUX.) AND 7 FUNCTION
14	T191346	O-RING	1		
15	790106800	RETAINER	1		
16	R30903	O-RING	2		
17	T213059	O-RING	2		
18	T81538	POPPET	1		
19	T81539	SPRING	1		
20	T118685	O-RING	1		
21	T191336	PLUG	1		
22	T201069	CAP	1		
23	T191334	SCREW	2		
24	AT314538	SEAL KIT	1		(7/8") RELIEF VALVE
	AT314539	SEAL KIT	1		(1-1/16") RELIEF VALVE
25	AT280406	SEAL KIT	1		SPOOL

STABILIZER CYLINDER HYDRAULICS
FLEXIBLES HYDRAULIQUES DE VERIN DE STABILISATEUR
MANGUERAS HIDRAULICAS DE CILINDRO DE ESTABILIZADOR

TX1020220 -UN-26MAR07

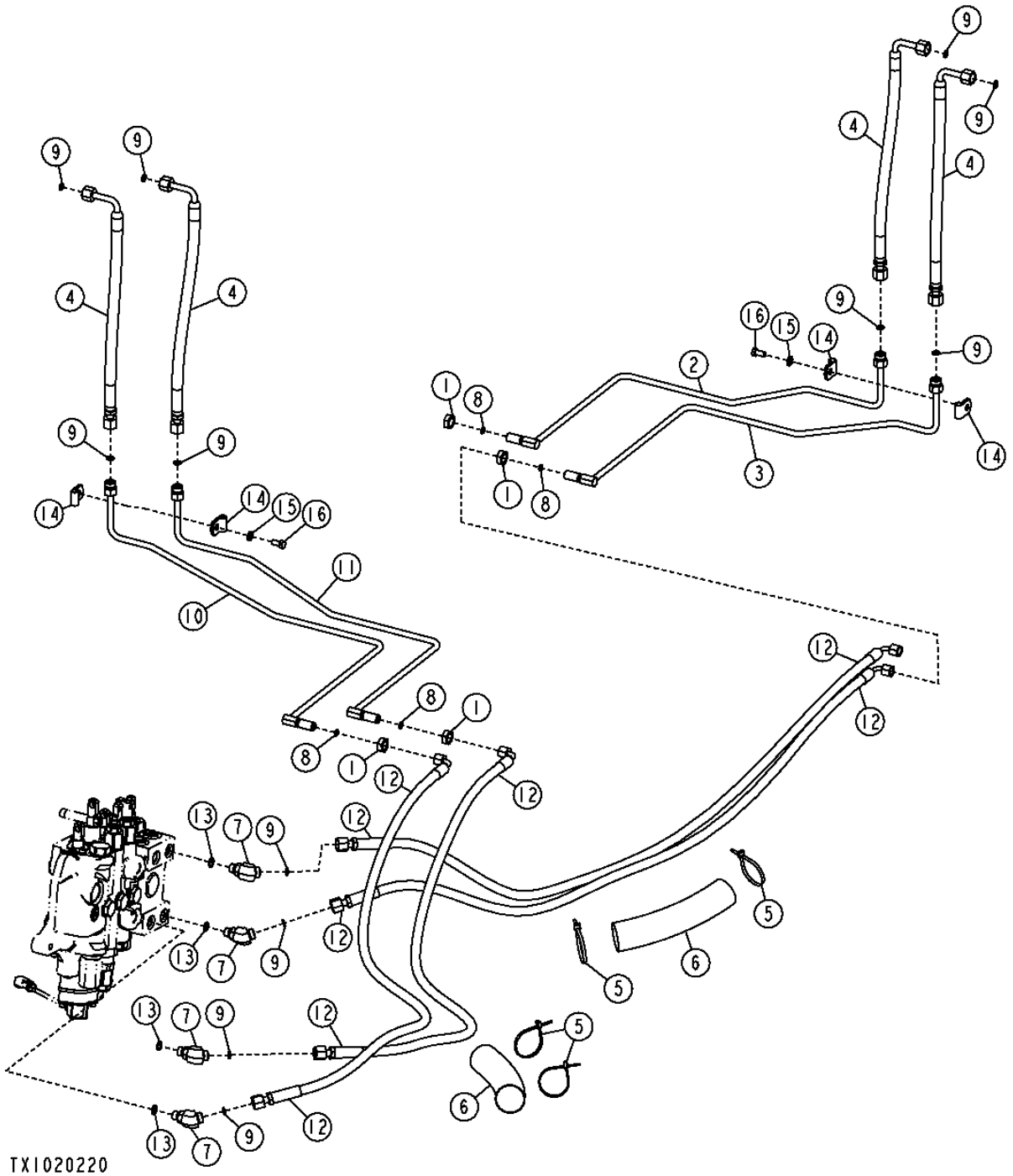

THIS PARTS LISTING IS CONTINUED

STABILIZER CYLINDER HYDRAULICS
FLEXIBLES HYDRAULIQUES DE VERIN DE STABILISATEUR
MANGUERAS HIDRAULICAS DE CILINDRO DE ESTABILIZADOR

KEY	*PART NO.*	*PART NAME*	*QTY.*	*SERIAL NO.*	*REMARKS*
1	14H832	NUT	4		9/16"
2	AT196755	OIL LINE	1		
3	AT196754	OIL LINE	1		
4	AT171098	HYDRAULIC HOSE - FABRICATE	4		
5	R44302	TIE BAND	8		
6	.....	HOSE GUARD	2		(MAKE FROM T78606) (CTL 254MM) (10.0")
7	38H1045	ELBOW FITTING	16		
8	T77814	O-RING	8		
9	T77613	O-RING	24		
10	AT196756	OIL LINE	1		
11	AT196757	OIL LINE	1		
12	AT196527	HYDRAULIC HOSE - FABRICATE	4		
13	R26448	O-RING	16		
14	T38545	CLAMP	8		
15	24M7055	WASHER	4		8.400 X 16 X 1.600 MM
16	19M7932	CAP SCREW	4		M8 X 16

BOOM CYLINDER, HYDRAULIC HOSES AND FITTINGS
CYLINDRE DE FLECHE, FLEXIBLES ET RACCORDS HYDRAULIQUES
CILINDRO DEL AGUILON, MANGUERAS HIDRAULICAS Y ADAPTADORES

TX1016340 -UN-20DEC06

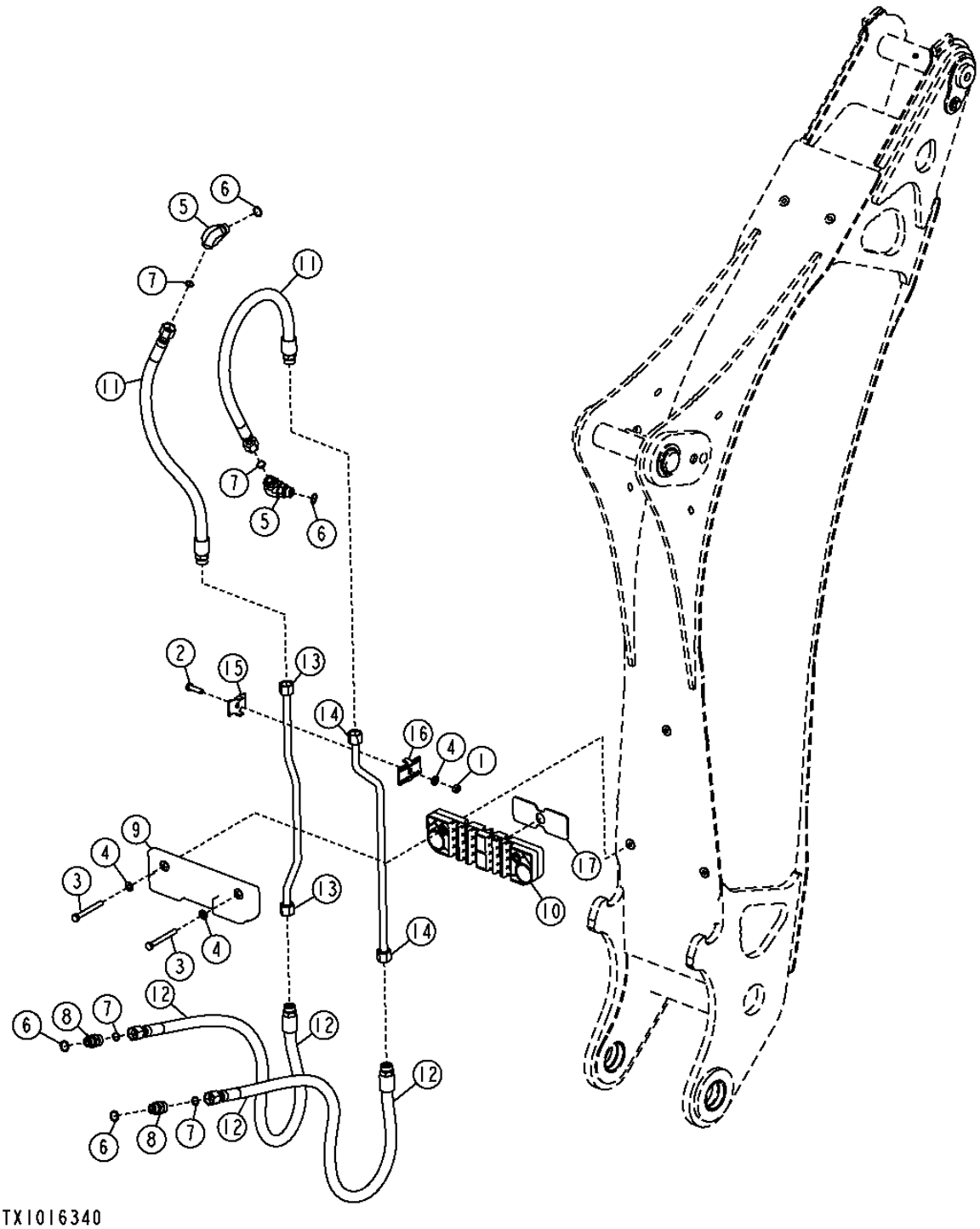

BOOM CYLINDER, HYDRAULIC HOSES AND FITTINGS
CYLINDRE DE FLECHE, FLEXIBLES ET RACCORDS HYDRAULIQUES
CILINDRO DEL AGUILON, MANGUERAS HIDRAULICAS Y ADAPTADORES

KEY	*PART NO.*	*PART NAME*	*QTY.*	*SERIAL NO.*	*REMARKS*
1	14M7274	NUT	1		M10
2	19M7550	CAP SCREW	1		M10 X 35
3	19M8183	CAP SCREW	2		M10 X 90
4	24M7239	WASHER	3		10.700 X 21 X 2.500 MM
5	38H1006	ELBOW FITTING	2		
6	R26906	O-RING	4		
7	T77932	O-RING	8		
8	38H1174	ADAPTER FITTING	4		
9	AT175993	STOP	1		
10	AT178025	CLAMP	1		
11	AT179083	HYDRAULIC HOSE - FABRICATE	2		
12	AT280346	HYDRAULIC HOSE - FABRICATE	2		
13	AT325040	OIL LINE	1		
14	AT325041	OIL LINE	1		
15	T159954	CLAMP	1		
16	T159956	CLAMP	1		
17	T165740	ISOLATOR	1		

BUCKET CYLINDER HYDRAULIC HOSES, LINES AND FITTINGS (STANDARD DIPPERSTICK)
CYLINDRE DE GODET, FLEXIBLES ET RACCORDS HYDRAULIQUES (BRAS STANDARD)
CILINDRO DE CUCHARON, MANGUERAS HIDRAULICAS Y ADAPTADORES (BRAZO ESTANDAR)

TX1016220 -UN-28DEC06

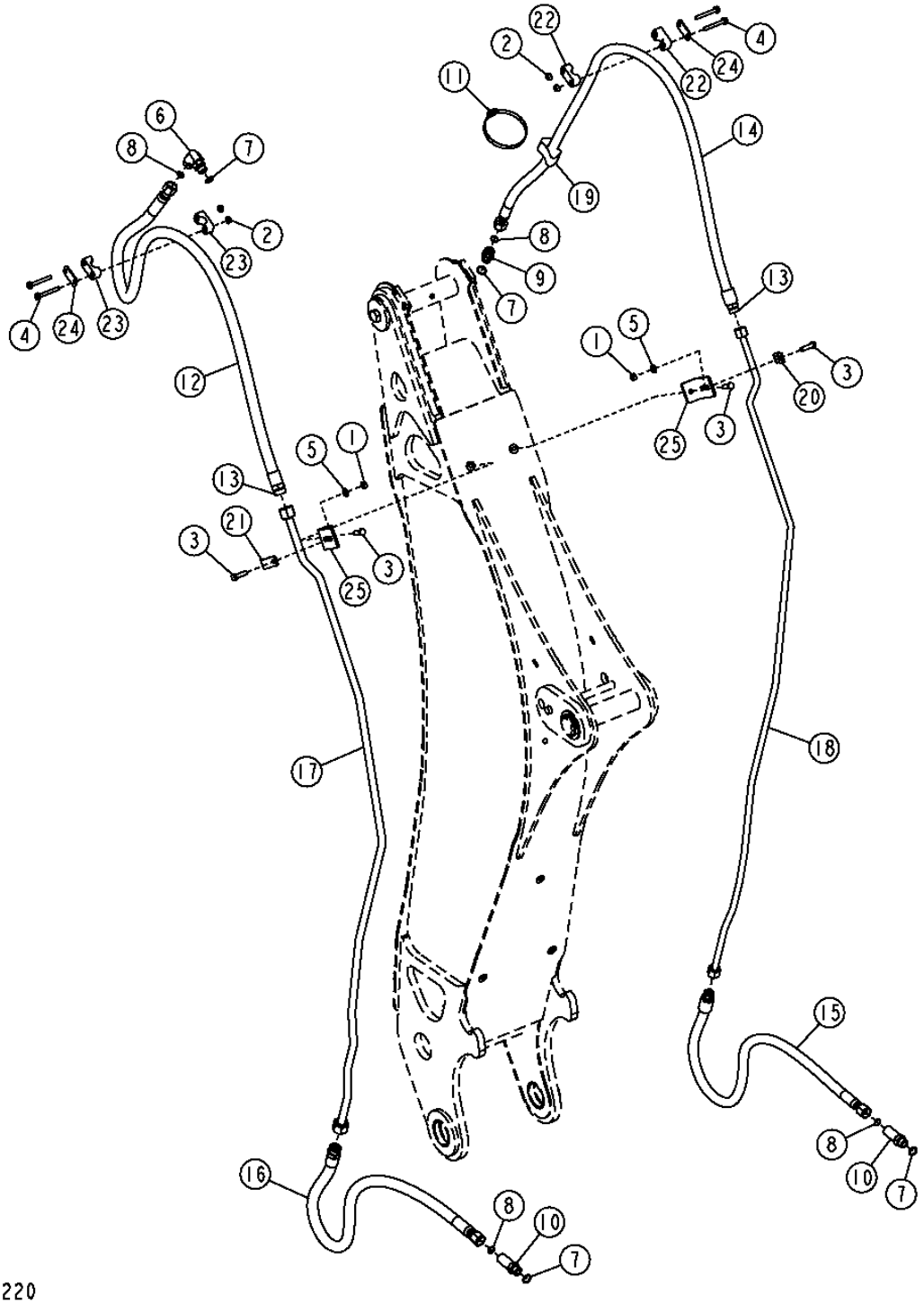

THIS PARTS LISTING IS CONTINUED

BUCKET CYLINDER HYDRAULIC HOSES, LINES AND FITTINGS (STANDARD DIPPERSTICK)
CYLINDRE DE GODET, FLEXIBLES ET RACCORDS HYDRAULIQUES (BRAS STANDARD)
CILINDRO DE CUCHARON, MANGUERAS HIDRAULICAS Y ADAPTADORES (BRAZO ESTANDAR)

KEY	*PART NO.*	*PART NAME*	*QTY.*	*SERIAL NO.*	*REMARKS*
1	14M7274	NUT	2		M10
2	14M7298	FLANGE NUT	4		M8
3	19M7550	CAP SCREW	4		M10 X 35
4	19M7802	SCREW	4		M8 X 65
5	24M7239	WASHER	2		10.700 X 21 X 2.500 MM
6	38H1006	ELBOW FITTING	1		
7	R26906	O-RING	4		
8	T77932	O-RING	4		
9	38H1162	ADAPTER FITTING	1		
10	38H1275	ADAPTER FITTING	2		
11	C16054	CLAMP	1		
12	AT174393	HYDRAULIC HOSE - FABRICATE	1		
13	T77858	O-RING	2		
14	AT174394	HYDRAULIC HOSE - FABRICATE	1		
15	AT280346	HYDRAULIC HOSE - FABRICATE	1		
16	AT280347	HYDRAULIC HOSE - FABRICATE	1		
17	AT325061	OIL LINE	1		
18	AT325062	OIL LINE	1		
19	T105774	GUIDE	1		
20	U12288	CLAMP	1		
21	T160376	CLAMP	1		
22	T162003	CLAMP	2		
23	T162004	CLAMP	2		
24	T162005	STRAP	2		
25	T202050	ANGLE	2		

CROWD CYLINDER HYDRAULIC HOSES AND FITTINGS
VERIN DE CAVAGE, FLEXIBLES ET RACCORDS HYDRAULIQUES
CILINDRO DE EMPUJE, MANGUERAS HIDRAULICAS Y ADAPTADORES

TX1016339 -UN-20DEC06

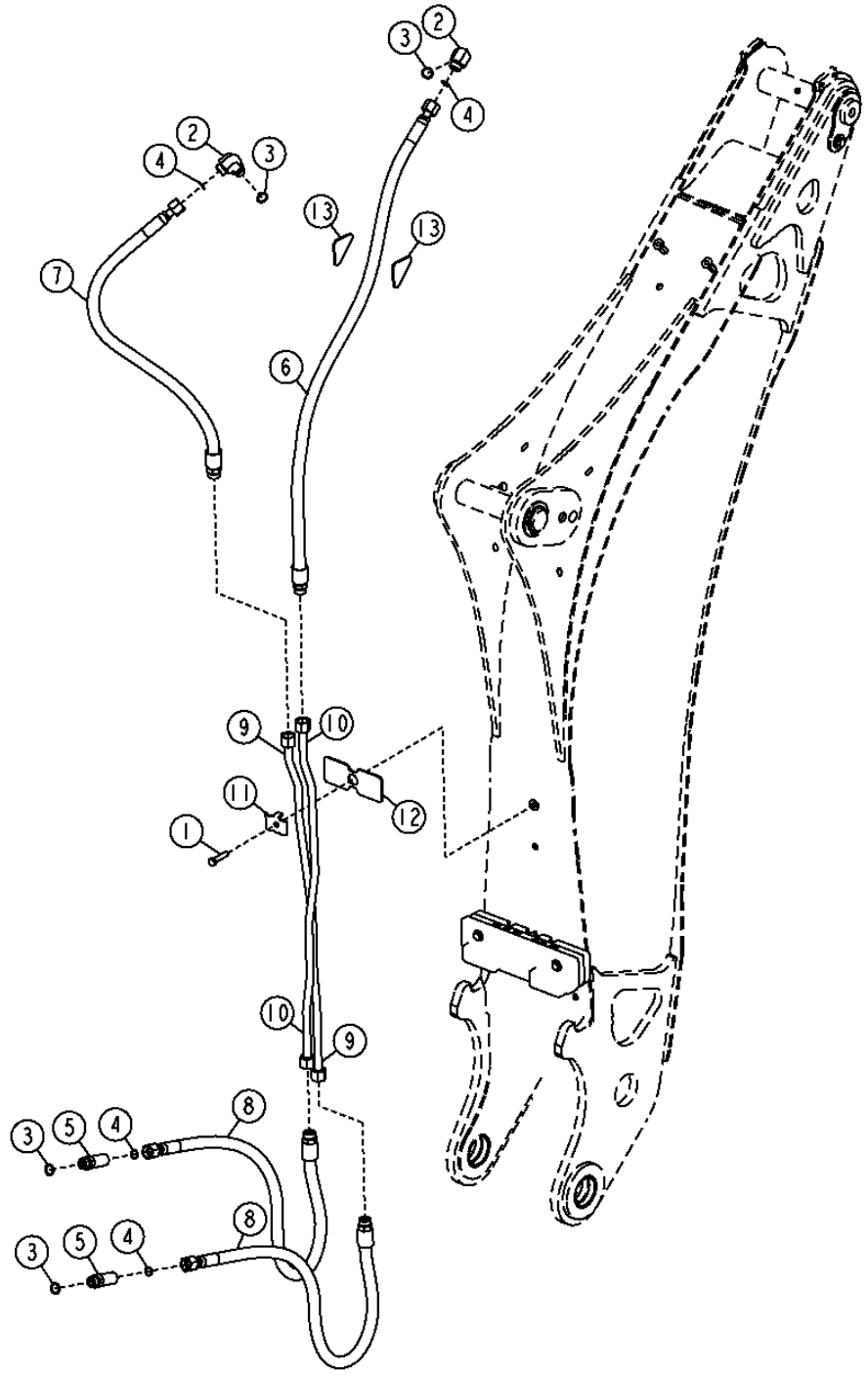

CROWD CYLINDER HYDRAULIC HOSES AND FITTINGS
VERIN DE CAVAGE, FLEXIBLES ET RACCORDS HYDRAULIQUES
CILINDRO DE EMPUJE, MANGUERAS HIDRAULICAS Y ADAPTADORES

KEY	*PART NO.*	*PART NAME*	*QTY.*	*SERIAL NO.*	*REMARKS*
1	19M7274	CAP SCREW	1		M8 X 70
2	38H1006	ELBOW FITTING	2		
3	R26906	O-RING	4		
4	T77932	O-RING	8		
5	38H1404	ELBOW FITTING	2		
6	AT174353	HYDRAULIC HOSE - FABRICATE	1		
7	AT179083	HYDRAULIC HOSE - FABRICATE	1		
8	AT280346	HYDRAULIC HOSE - FABRICATE	2		
9	AT325042	OIL LINE	1		
10	AT325043	OIL LINE	1		
11	T159954	CLAMP	1		
12	T165740	ISOLATOR	1		
13	T165742	ISOLATOR	1		

SWING CYLINDER HYDRAULIC HOSES AND FITTINGS
CYLINDEUR OSCILLANT, FLEXIBLES ET RACCORDS HYDRAULIQUES
CILINDRE GIRATORIO, MANGUERAS HIDRAULICAS Y ADAPTADORES

T136725 -UN-03JAN01

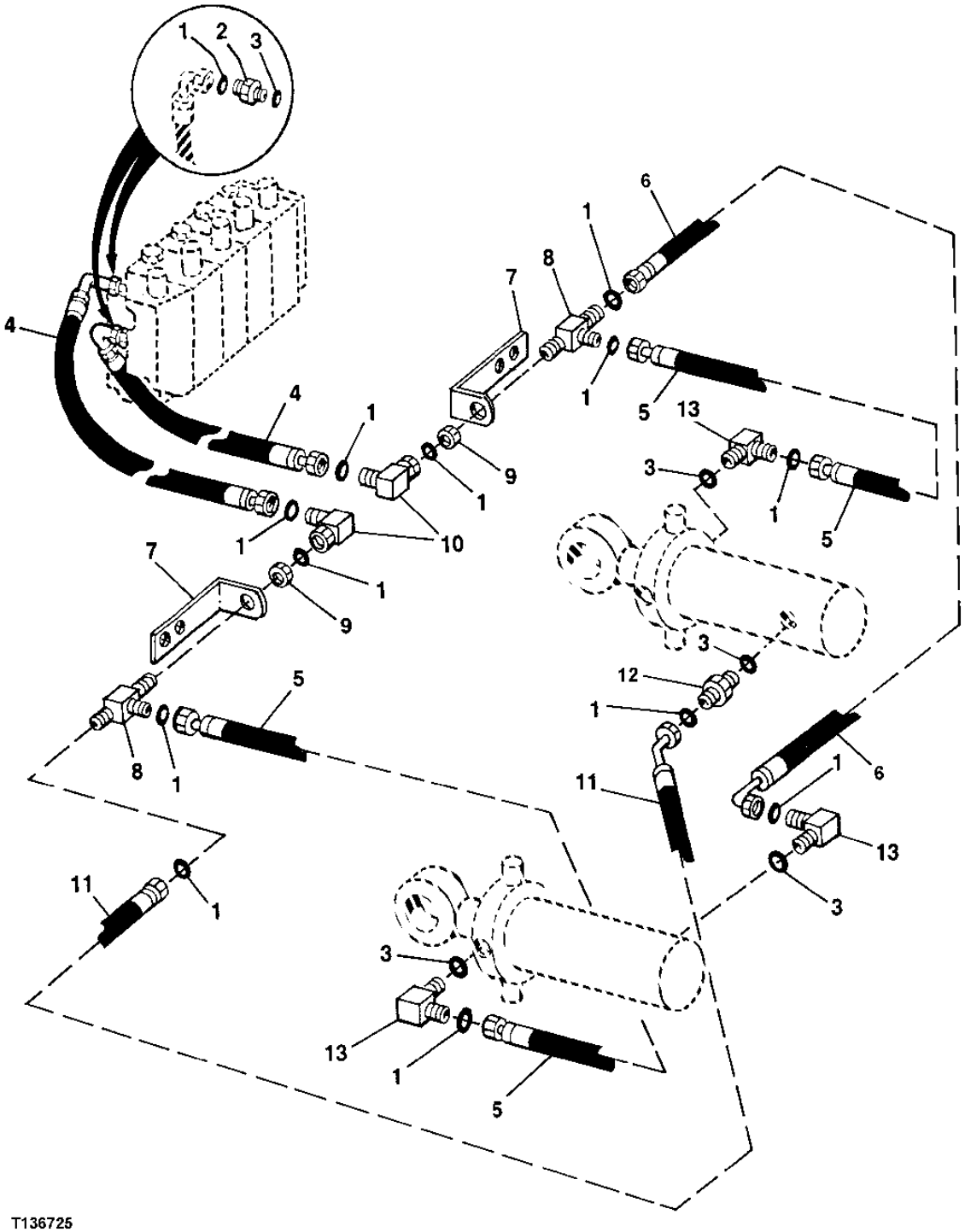

SWING CYLINDER HYDRAULIC HOSES AND FITTINGS
CYLINDEUR OSCILLANT, FLEXIBLES ET RACCORDS HYDRAULIQUES
CILINDRE GIRATORIO, MANGUERAS HIDRAULICAS Y ADAPTADORES

KEY	*PART NO.*	*PART NAME*	*QTY.*	*SERIAL NO.*	*REMARKS*
1	T77613	O-RING	16		
2	38H1171	ADAPTER FITTING	2		
3	R26375	O-RING	6		
4	AT191140	HYDRAULIC HOSE - FABRICATE	2		11/16" X 2 285 MM (90") X 11/16"
5	AT182599	HYDRAULIC HOSE - FABRICATE	2		11/16" X 525 MM (20-3/4") X 11/16"
6	AT182598	HYDRAULIC HOSE - FABRICATE	1		11/16" X 735 MM (29") X 11/16"
7	T223189	BRACKET	2		
	19M7872	CAP SCREW	2		M12 X 25
8	38H1503	TEE FITTING	2		
9	T81029	NUT	2		11/16"
10	38H1094	ELBOW FITTING	2		
11	AT182597	HYDRAULIC HOSE - FABRICATE	1		11/16" X 775 MM (30-1/2") X 11/16"
12	38H1171	ADAPTER FITTING	1		
13	38H1010	ELBOW FITTING	3		

AUXILIARY EQUIPMENT HYDRAULIC HOSES AND FITTINGS
EQUIPEMENT AUXILIAIRE, FLEXIBLES ET RACCORDS HYDRAULIQUES
EQUIPO AUXILIAR, MANGUERAS HIDRAULICAS Y ADAPTADORES

TX1020281 -UN-16MAR07

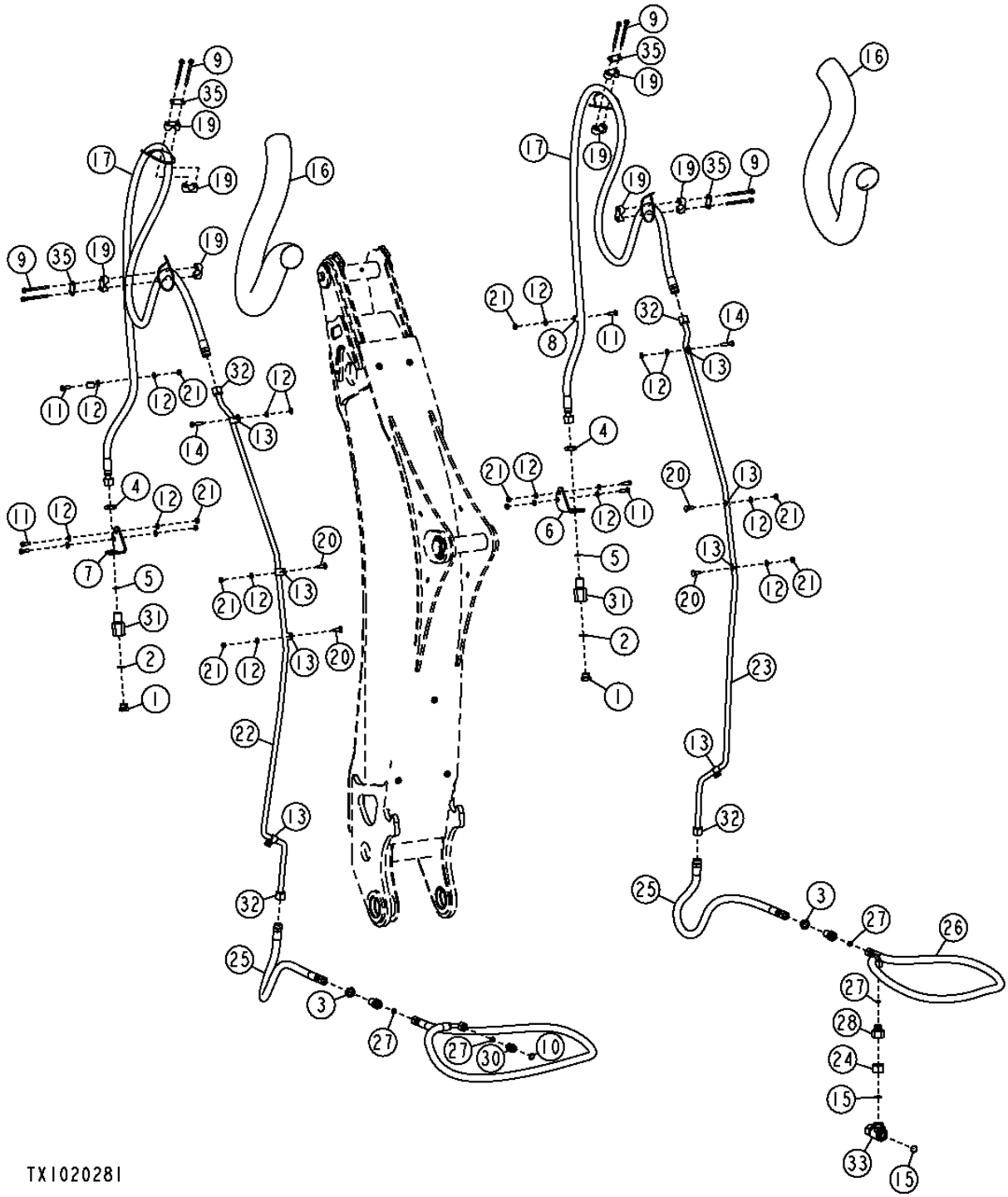

THIS PARTS LISTING IS CONTINUED

AUXILIARY EQUIPMENT HYDRAULIC HOSES AND FITTINGS
EQUIPEMENT AUXILIAIRE, FLEXIBLES ET RACCORDS HYDRAULIQUES
EQUIPO AUXILIAR, MANGUERAS HIDRAULICAS Y ADAPTADORES

KEY	PART NO.	PART NAME	QTY.	SERIAL NO.	REMARKS
1	R27175	PLUG	2		
2	U12547	O-RING	2		
3	T80306	NUT	2		
4	T78707	NUT	2		
5	T77858	O-RING	6		
6	T205636	BRACKET	1		
7	T205637	BRACKET	1		
8	T102934	CLAMP	2		
9	19M7873	SCREW	8		
10	R26906	O-RING	2		
11	19M7662	CAP SCREW	6		M10 X 30
12	24M7239	WASHER	20		10.700 X 21 X 2.500 MM
13	T160376	CLAMP	8		
14	19M7550	CAP SCREW	1		M10 X 35
	19M7572	CAP SCREW	2		M10 X 45
15	T76938	O-RING	2		
16	T161365	SLEEVE	2		FABRIC
17	AT308466	HYDRAULIC HOSE - FABRICATE	2		1-3/16" X 3 322 MM (130-3/4") X 1-3/16", EXTENDIBLE DIPPERSTICK
	AT310257	HYDRAULIC HOSE - FABRICATE	2		13/16" X 1 691 MM (66-1/2") X 13/16"
18	19M7185	CAP SCREW	1		M8 X 60
19	T162004	CLAMP	8		
20	03M7192	BOLT	4		M10 X 30
21	14M7274	NUT	11		M10
22	AT325067	OIL LINE	1		
23	AT325066	OIL LINE	1		
24	38H1358	TUBE NUT	1		
25	AT280347	HYDRAULIC HOSE - FABRICATE	2		1" X 1 140 MM (45") X 1-3/16", TO BACKHOE VALVE
26	AT191147	HYDRAULIC HOSE - FABRICATE	1		1" X 1 885 MM (74-1/4") X 1"
27	T77932	O-RING	3		
28	38H1476	REDUCER	1		
30	38H1162	ADAPTER FITTING	1		
31	T163702	REDUCER	1		
32	38H1121	TUBE NUT	2		
33	38H1002	TEE FITTING	1		
34	38H1121	TUBE NUT	2		
35	T162005	STRAP	2		

EXTENSION CYLINDER HYDRAULICS (EXTENDABLE DIPPERSTICK)(BUCKET)
CIRCUIT HYDRAULIQUE DE VERIN D'EXTENSION (BRAS TELESCOPIQUE) (BENNE)
SISTEMA HIDRAULICO DE CILINDRO DE EXTENSION (BRAZO EXTENSIBLE) (CUCHARON)

TX1017675 -UN-26JAN07

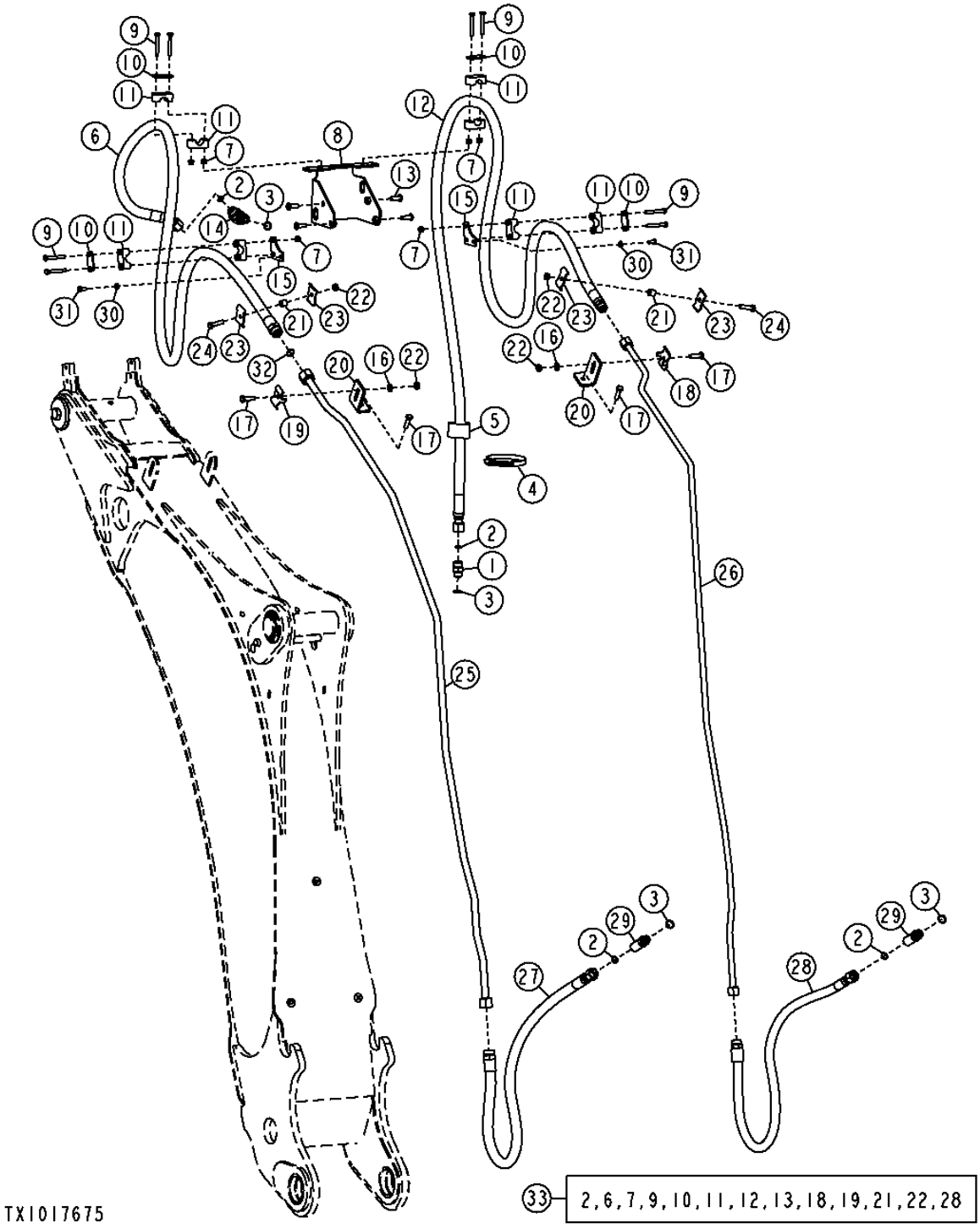

EXTENSION CYLINDER HYDRAULICS (EXTENDABLE DIPPERSTICK)(BUCKET)
CIRCUIT HYDRAULIQUE DE VERIN D'EXTENSION (BRAS TELESCOPIQUE) (BENNE)
SISTEMA HIDRAULICO DE CILINDRO DE EXTENSION (BRAZO EXTENSIBLE)(CUCHARON)

KEY	*PART NO.*	*PART NAME*	*QTY.*	*SERIAL NO.*	*REMARKS*
1	38H1162	ADAPTER FITTING	1		
2	T77932	O-RING	5		
3	R26906	O-RING	3		
4	C16054	CLAMP	1		
5	T105773	GUIDE	1		
6	AT170173	HYDRAULIC HOSE - FABRICATE	1		1" X 2 000 MM (78-3/4") X 1-3/16", (LH)
7	14M7426	LOCK NUT	4		M8
8	AT327155	HOSE SUPPORT	1		
9	19M7185	CAP SCREW	8		M8 X 60
10	T162005	STRAP	4		
11	T162004	CLAMP	8		
12	AT170172	HYDRAULIC HOSE - FABRICATE	1		1" X 2 892 MM (113-3/4") X 1", (RH)
13	T165889	SCREW	4		
14	38H1006	ELBOW FITTING	1		
15	T161342	PLATE	2		
16	24M7239	WASHER	3		10.700 X 21 X 2.500 MM
17	19M7550	CAP SCREW	4		M10 X 35
18	T159954	CLAMP	1		
19	T160554	CLAMP	1		
20	T202050	ANGLE	2		(LH)
21	28H3381	SPACER	1		0.493" X 0.675" X 5/8", (RH)
22	14M7274	NUT	4		M10
23	R46919	HALF CLAMP	4		
24	19M8637	CAP SCREW	2		
25	AT325061	OIL LINE	1		(LH)
26	AT325062	OIL LINE	1		(RH)
27	AT280347	HYDRAULIC HOSE - FABRICATE	1		
28	AT280346	HYDRAULIC HOSE - FABRICATE	3		
29	38H1274	TEE FITTING	1		
30	24M7238	WASHER	3		8.700 X 17 X 2 MM
31	19M7932	CAP SCREW	2		M8 X 16
32	T77858	O-RING	1		
33	**AT325052**	**KIT**	**1**		**(EXTENSION CYLINDER HYDRAULICS)**

SIDE SHIFT LOCK HYDRAULICS
CIRCUIT HYDRAULIQUE DE VERROUILLAGE DE DEPLACEMENT LATERAL
SISTEMA HIDRAULICO DE BLOQUEO DE DESPLAZAMIENTO LATERAL

TX1012733 -UN-05OCT06

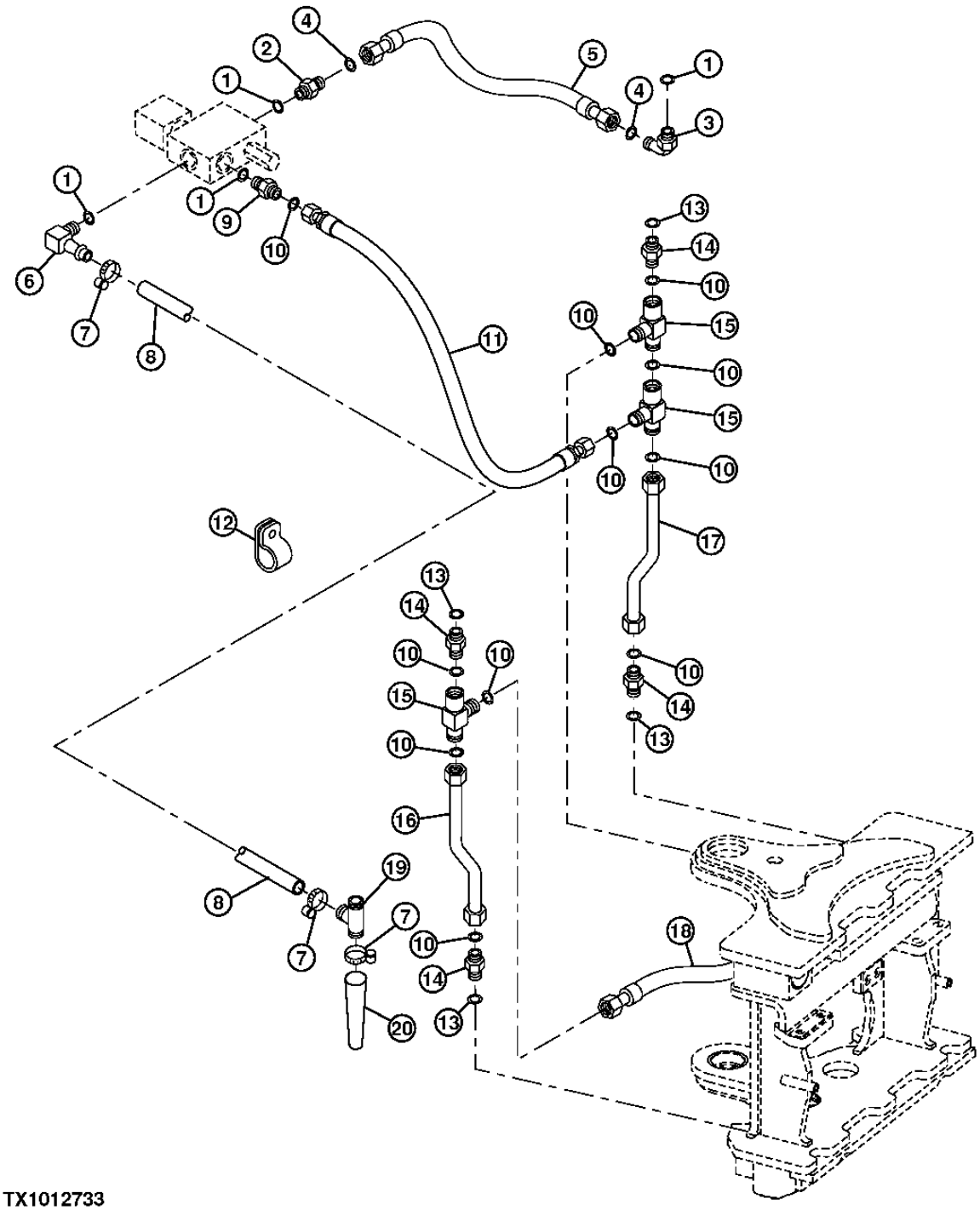

TX1012733

SIDE SHIFT LOCK HYDRAULICS
CIRCUIT HYDRAULIQUE DE VERROUILLAGE DE DEPLACEMENT LATERAL
SISTEMA HIDRAULICO DE BLOQUEO DE DESPLAZAMIENTO LATERAL

–



KEY	*PART NO.*	*PART NAME*	*QTY.*	*SERIAL NO.*	*REMARKS*
1	R26448	O-RING	4		
2	AT81867	CHECK VALVE	1		
3	38H1004	ELBOW FITTING	1		
4	T77613	O-RING	2		
5	AT189408	HYDRAULIC HOSE - FABRICATE	1		11/16" X 500 MM (19-3/4") X 11/16", TO BACKHOE VALVE
6	AT68978	ELBOW FITTING	1		
7	AR21836	CLAMP	4		
8	.....	HOSE	AR		CTL 2565.4MM (8'5")
9	38H1168	ADAPTER FITTING	1		
10	T77814	O-RING	12		
11	AT189407	HYDRAULIC HOSE - FABRICATE	1		9/16" X 2 465 MM (97") X 9/16"
12	T74416	CLAMP	1		
13	R28782	O-RING	4		
14	38H1159	ADAPTER FITTING	4		
15	38H1029	TEE FITTING	3		
16	AT176522	LINE	1		
17	AT176521	LINE	1		
18	AT177433	LINE	1		
19	XN8TUB8	TEE FITTING	1		FROM BRAKE VALVE
20	.....	HOSE	AR		CTL 152.4MM (6") (TO RESERVOIR)

BACKHOE BOOM LOCK VALVE HYDRAULICS
CIRCUIT HYDRAULIQUE DE SOUPAPE DE VERROUILLAGE DE FLECHE DE RETROPELLE
SISTEMA HIDRAULICO DE VALVULA DE BLOQUEO DE AGUILON DE RETROEXCAVADORA

TX1020223 -UN-16MAR07

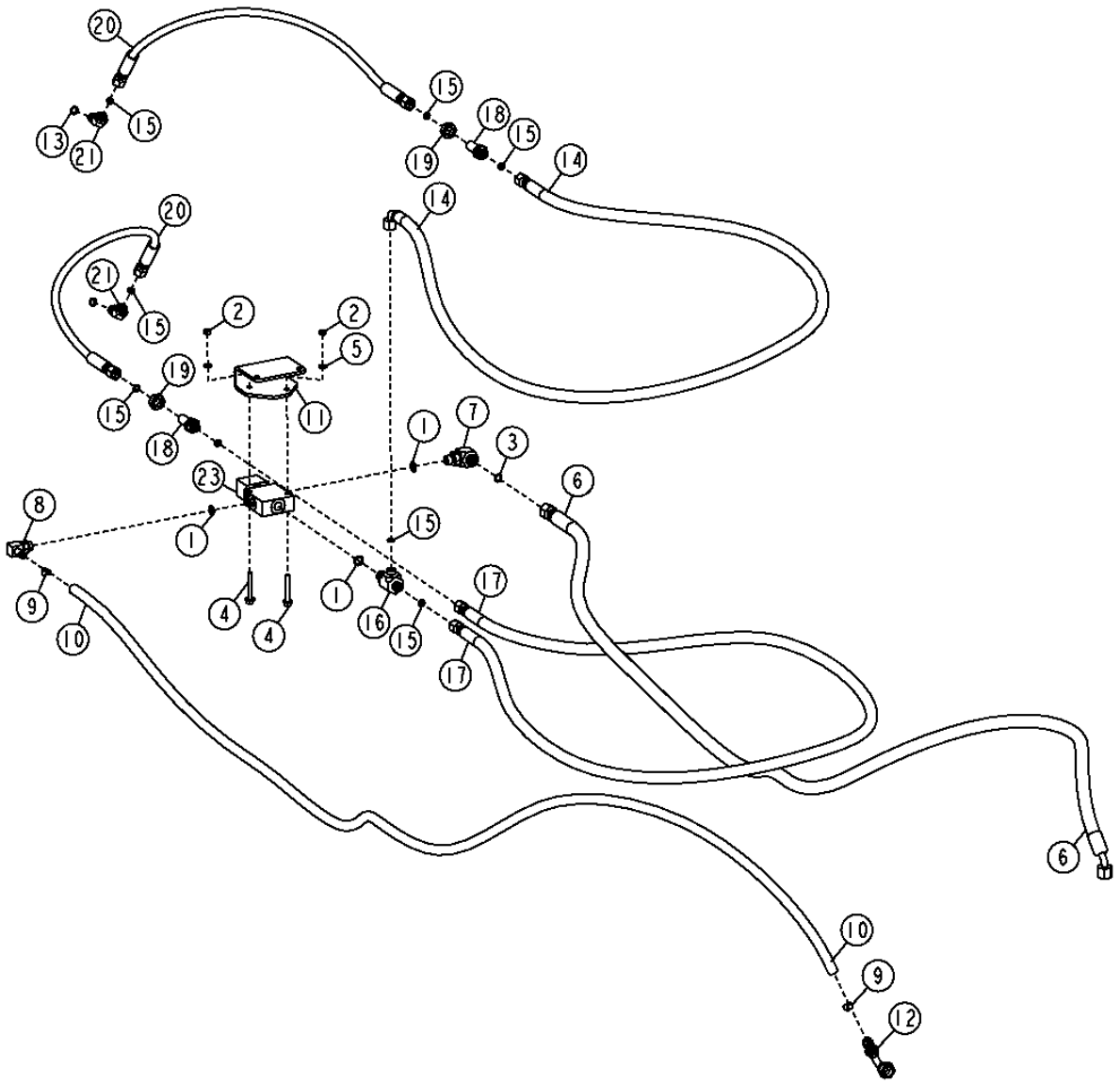

BACKHOE BOOM LOCK VALVE HYDRAULICS
CIRCUIT HYDRAULIQUE DE SOUPAPE DE VERROUILLAGE DE FLECHE DE RETROPELLE
SISTEMA HIDRAULICO DE VALVULA DE BLOQUEO DE AGUILON DE RETROEXCAVADORA

KEY	*PART NO.*	*PART NAME*	*QTY.*	*SERIAL NO.*	*REMARKS*
1	R26448	O-RING	3		
2	14M7272	NUT	2		M6
3	T77613	O-RING	4		
4	19M8321	SCREW	2		M6 X 45
5	24M7088	WASHER	2		6.600 X 12 X 1.600 MM
6	AT330918	HYDRAULIC HOSE - FABRICATE	1		
7	38H1004	ELBOW FITTING	1		
8	AR64705	ELBOW FITTING	1		
9	TY22462	CLAMP	2		(SUB FOR AR48236)
10	M87571	BULK HOSE	AR		(MAKE FROM M87571) CTL 1984MM (78.11")
11	T184957	BRACKET	1		
12	RE502954	ELBOW FITTING	1		TO TRANSMISSION
13	R28782	O-RING	4		
14	AT189405	HYDRAULIC HOSE - FABRICATE	1		9/16" X 2 250 MM (88-1/2") X 9/16"
15	T77814	O-RING	2		
16	38H1425	TEE FITTING	1		
17	AT189404	HYDRAULIC HOSE - FABRICATE	1		9/16" X 2 250 MM (88-1/2") X 9/16"
18	38H1284	ADAPTER FITTING	4		
19	14H832	NUT	2		9/16"
20	AT280348	HYDRAULIC HOSE - FABRICATE	2		9/16" X 610 MM (24") X 9/16", TO BOOM LOCK CYLINDERS
21	38H1044	ELBOW FITTING	8		45°
22	M87571	BULK HOSE	2		CTL
23	AT179029	SOLENOID VALVE	1		

BACKHOE CYLINDER HYDRAULICS
CIRCUIT HYDRAULIQUE DE VERIN DE RETROPELLE
SISTEMA HIDRAULICO DE CILINDRO DE RETROEXCAVADORA

TX1006095 -UN-17APR06

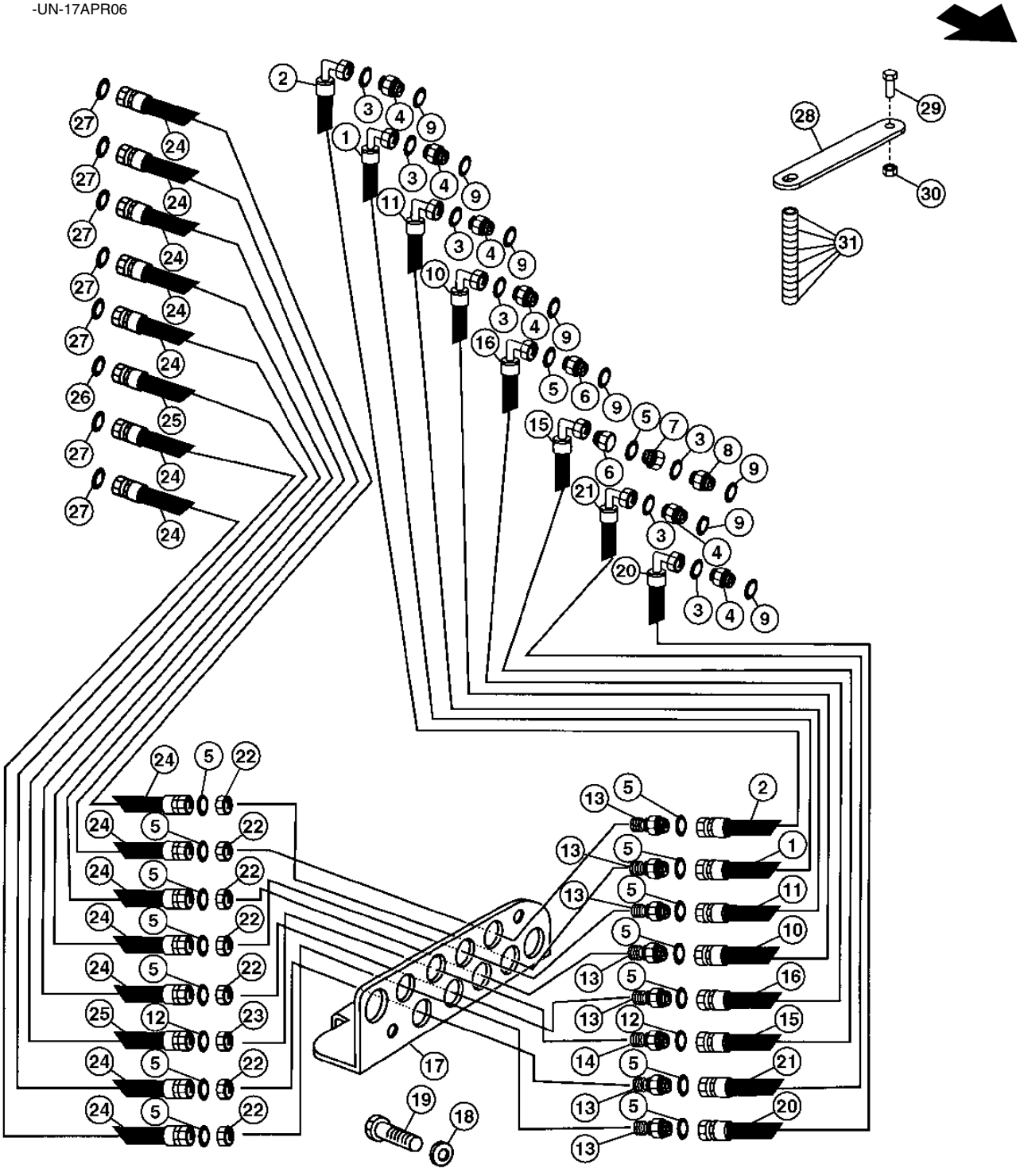

TX1006095

THIS PARTS LISTING IS CONTINUED

BACKHOE CYLINDER HYDRAULICS
CIRCUIT HYDRAULIQUE DE VERIN DE RETROPELLE
SISTEMA HIDRAULICO DE CILINDRO DE RETROEXCAVADORA

KEY	PART NO.	PART NAME	QTY.	SERIAL NO.	REMARKS
1	AT191143	HYDRAULIC HOSE - FABRICATE	1		13/16" X 2 400 MM (94-1/2") X 13/16", TO EXTENDABLE VALVE
2	AT191143	HYDRAULIC HOSE - FABRICATE	1		13/16" X 2 400 MM (94-1/2") X 13/16", TO EXTENDABLE VALVE
3	T77932	O-RING	8		
4	38H1174	ADAPTER FITTING	6		
5	T77857	O-RING	15		
6	38H1162	ADAPTER FITTING	1		
7	38H1471	REDUCER	1		
8	38H1162	ADAPTER FITTING	1		
9	R26906	O-RING	8		
10	AT191143	HYDRAULIC HOSE - FABRICATE	1		13/16" X 2 400 MM (94-1/2") X 13/16", TO CROWD VALVE
11	AT191143	HYDRAULIC HOSE - FABRICATE	1		13/16" X 2 400 MM (94-1/2") X 13/16", TO CROWD VALVE
12	T77932	O-RING	2		
13	38H1275	ADAPTER FITTING	7		
14	38H1286	ADAPTER FITTING	1		
15	AT191143	HYDRAULIC HOSE - FABRICATE	1		13/16" X 2 400 MM (94-1/2") X 13/16", TO BUCKET VALVE
16	AT191146	HYDRAULIC HOSE - FABRICATE	1		1" X 2 400 MM (94-1/2") X 1", TO BUCKET VALVE
17	T163225	PLATE	1		
18	24M7047	WASHER	2		
19	19M7872	CAP SCREW	2		M12 X 25
20	AT191143	HYDRAULIC HOSE - FABRICATE	1		13/16" X 2 400 MM (94-1/2") X 13/16", TO BOOM VALVE
21	AT191143	HYDRAULIC HOSE - FABRICATE	1		13/16" X 2 400 MM (94-1/2") X 13/16", TO BOOM VALVE
22	T78716	NUT	7		13/16"
23	T80306	NUT	1		1"
24	AT280346	HYDRAULIC HOSE - FABRICATE	7		1" X 1 056 MM (41-1/2") X 1", TO BOOM
25	AT280347	HYDRAULIC HOSE - FABRICATE	1		1" X 1 140 MM (45") X 1-3/16", TO BOOM
26	T77858	O-RING	1		
27	T77932	O-RING	7		
28	T185681	STRAP	1		
29	19M7402	CAP SCREW	1		M10 X 25
30	14M7274	NUT	1		M10
31	T185682	SPACER	13		

BUCKET CYLINDER AND REPAIR KIT (HEAVY DUTY)
VERIN DE BENNE ET KIT DE REPARATION (USAGE INTENSIF)
CILINDRO DE CUCHARON Y JUEGO DE REPARACION (SERVICIO SEVERO)

TX1015038 -UN-16NOV06

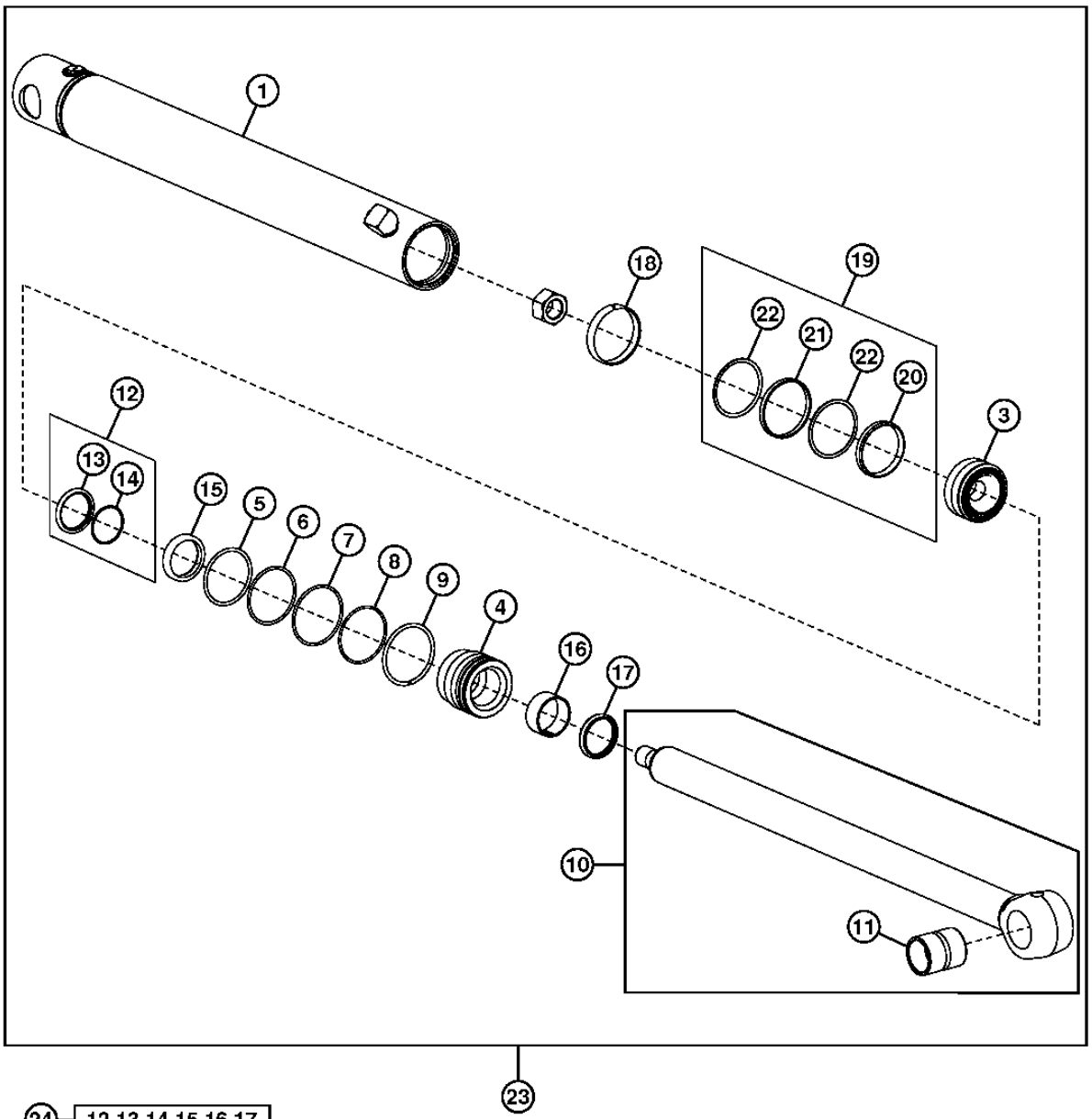

24 — 12,13,14,15,16,17

25 — 6,8,18,19,20,21,22

TX1015038

THIS PARTS LISTING IS CONTINUED

BUCKET CYLINDER AND REPAIR KIT (HEAVY DUTY)
VERIN DE BENNE ET KIT DE REPARATION (USAGE INTENSIF)
CILINDRO DE CUCHARON Y JUEGO DE REPARACION (SERVICIO SEVERO)

KEY	*PART NO.*	*PART NAME*	*QTY.*	*SERIAL NO.*	*REMARKS*
1	AH220523	HYDRAULIC CYLINDER BARREL	1		
3	H151893	PISTON	1		
4	H206792	HYDR. CYLINDER ROD GUIDE	1		
5	F950R	O-RING	1		
6	R81862	BACK-UP RING	1		
7	H180094	SNAP RING	1		
8	.....	O-RING	1		
9	H180080	SNAP RING	1		
10	AH209083	HYDRAULIC CYLINDER ROD	1		
11	H180402	BUSHING	1		
12	AH146563	SEAL	1		
13	.....	SEAL	1		
14	.....	BACK-UP RING	1		
15	H152205	SEAL	1		
16	H152796	WEAR RING	1		
17	AH146559	SEAL	1		
18	R81775	WEAR RING	1		
19	RE20343	SEAL	1		
20	.....	SEAL	1		
21	.....	SEAL	1		
22	.....	BACK-UP RING	2		
23	AH219638	HYDRAULIC CYLINDER KIT	1		
24	AH149815	HYDRAULIC CYLINDER KIT	1		(CYLINDER ROD REPAIR)
25	AH212101	HYDRAULIC CYLINDER KIT	1		(CYLINDER BORE REPAIR)
26	H170540	LOCK NUT	1		

BOOM CYLINDER
CYLINDRE DE FLECHE
CILINDRO DEL AGUILON

T195686 -UN-07NOV03

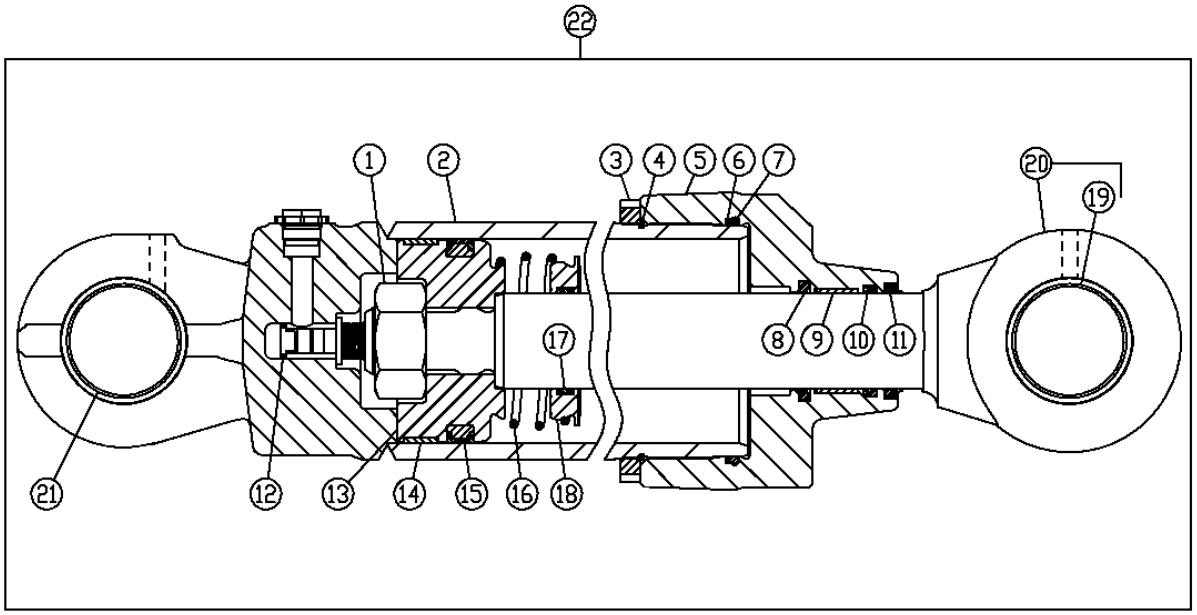

23 8,9,10,11 24 4,6,7,14,15

T195686

BOOM CYLINDER
CYLINDRE DE FLECHE
CILINDRO DEL AGUILON

KEY	*PART NO.*	*PART NAME*	*QTY.*	*SERIAL NO.*	*REMARKS*
1	H209712	NUT	1		
2	AH211134	HYDRAULIC CYLINDER BARREL	1		(INCLUDES (2) H150964)
3	H180433	NUT	1		
4	T105469	O-RING	1		
5	H155738	HYDR. CYLINDER ROD GUIDE	1		
6	H154898	BACK-UP RING	1		
7	R77857	RING	1		
8	AH146562	SEAL	1		
9	H152795	WEAR RING	1		
10	H152204	SEAL	1		
11	AH146558	SEAL	1		
12	AH216869	SCREW	1		
13	H180397	PISTON	1		
14	H154900	SCRAPER RING	1		
15	AH138083	SEAL	1		
16	H169161	SPRING	1		
17	H151831	RING	1		
18	H151830	PISTON	1		
19	H152140	BUSHING	1		
20	AH211138	HYDRAULIC CYLINDER ROD	1		
21	H150964	BUSHING	2		
22	AH217444	HYDRAULIC CYLINDER	1		
23	AH149814	KIT	1		(ROD SEAL)
24	AH149847	KIT	1		(BORE SEAL)

BUCKET CYLINDER AND REPAIR KIT
VERIN DE BENNE ET KIT DE REPARATION
CILINDRO DE CUCHARON Y JUEGO DE REPARACION

TX1015071 -UN-04DEC06

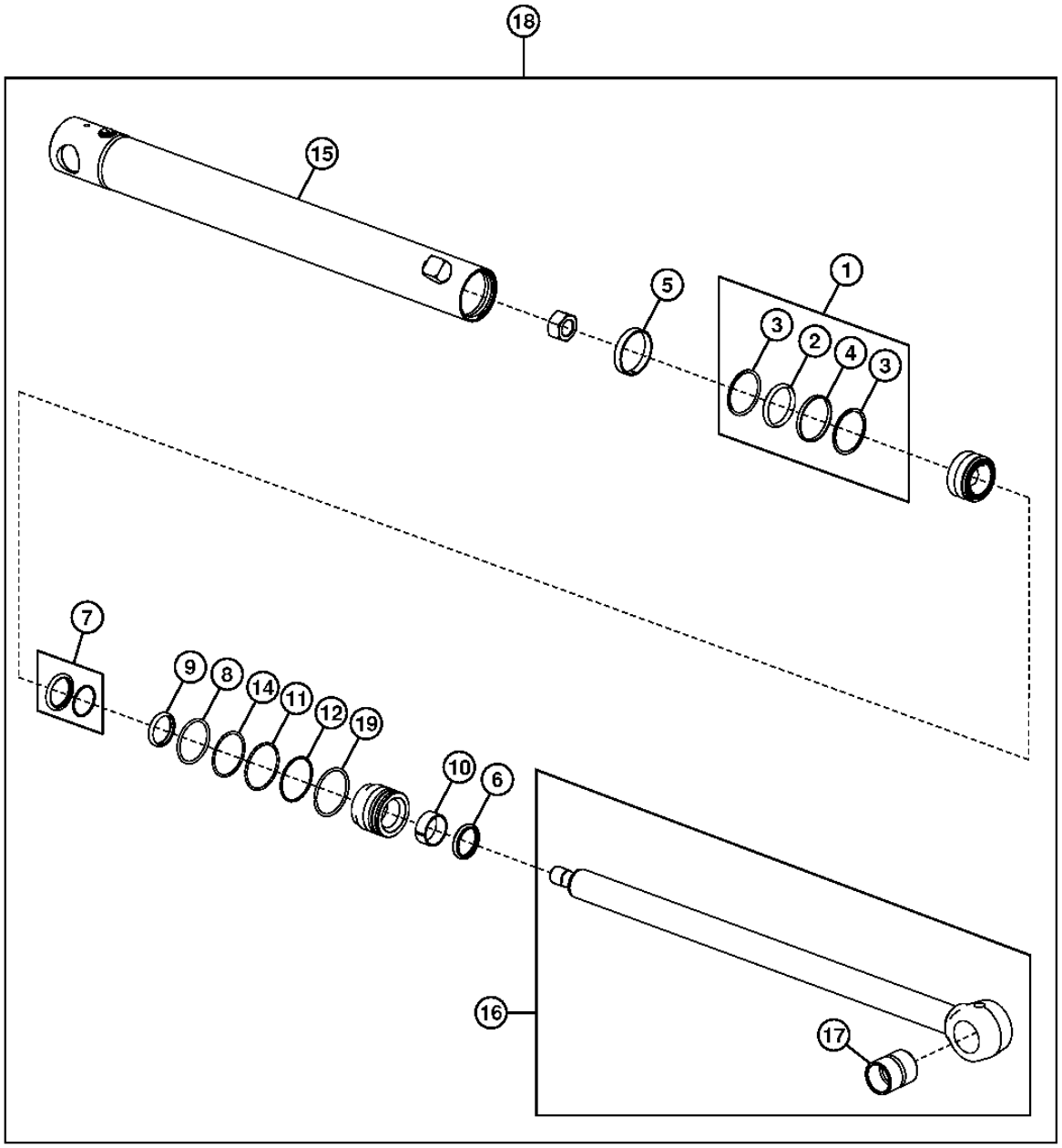

19 — 6,7,9,10

20 — 1,2,3,4,5,12,14

TX1015071

THIS PARTS LISTING IS CONTINUED

BUCKET CYLINDER AND REPAIR KIT
VERIN DE BENNE ET KIT DE REPARATION
CILINDRO DE CUCHARON Y JUEGO DE REPARACION

KEY	*PART NO.*	*PART NAME*	*QTY.*	*SERIAL NO.*	*REMARKS*
1	RE20344	SEAL	1		
2	.....	RING	1		
3	.....	WHEEL SEAL O-RING	2		
4	.....	SEAL	1		
5	R81776	WEAR RING	1		
6	AH146558	SEAL	1		
7	AH146562	SEAL	1		
8	F1430R	O-RING	1		
9	H152204	SEAL	1		
10	H152795	WEAR RING	1		
11	H180103	SNAP RING	1		
12	H181114	O-RING	1		
13	H206859	SNAP RING	1		
14	R79101	BACK-UP RING	1		
15	AH209078	HYDRAULIC CYLINDER BARREL	1		
16	AH209079	HYDRAULIC CYLINDER ROD	1		
17	H180402	BUSHING	1		
18	AH219636	HYDRAULIC CYLINDER KIT	1		
19	AH149814	HYDRAULIC CYLINDER KIT	1		(CYLINDER BORE REPAIR)
20	AH212096	HYDRAULIC CYLINDER KIT	1		

CROWD CYLINDER AND REPAIR KIT
VERIN DE CAVAGE ET KIT DE REPARATION
CILINDRO DE EMPUJE Y JUEGO DE REPARACION

TP62434 -UN-22JUN00

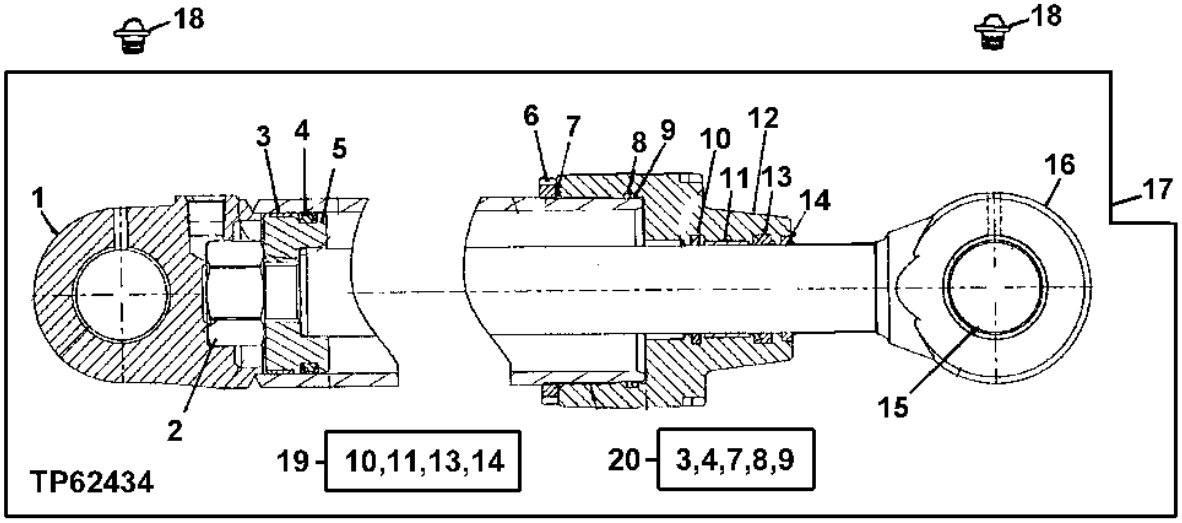

KEY	PART NO.	PART NAME	QTY.	SERIAL NO.	REMARKS
1	.....	HYDRAULIC CYLINDER BARREL	1		
2	H170372	NUT	1		
3	R82095	WEAR RING	1		
4	RE20809	SEAL	1		
5	H170371	PISTON	1		
6	H180432	NUT	1		
7	T12275	O-RING	1		
8	H151891	BACK-UP RING	1		
9	T38485	O-RING	1		
10	AH146563	SEAL	1		
11	H152796	WEAR RING	1		
12	H155769	HYDR. CYLINDER ROD GUIDE	1		
13	H152205	SEAL	1		
14	AH146559	SEAL	1		
15	H151820	BUSHING	1		
16	AH162394	ROD	1		
17	AH222437	CYLINDER	1		
18	T162396	LUBRICATION FITTING	2		
19	AH149815	HYDRAULIC CYLINDER KIT	1		(ROD REPAIR)
20	AH212103	HYDRAULIC CYLINDER KIT	1		(BORE REPAIR)

MEMORANDA
MEMORANDA
MEMORANDA

SWING CYLINDER AND REPAIR KIT
VERIN DE PIVOTEMENT ET KIT DE REPARATION
CILINDRO DE GIRO Y JUEGO DE REPARACION

T214927 -UN-27SEP05

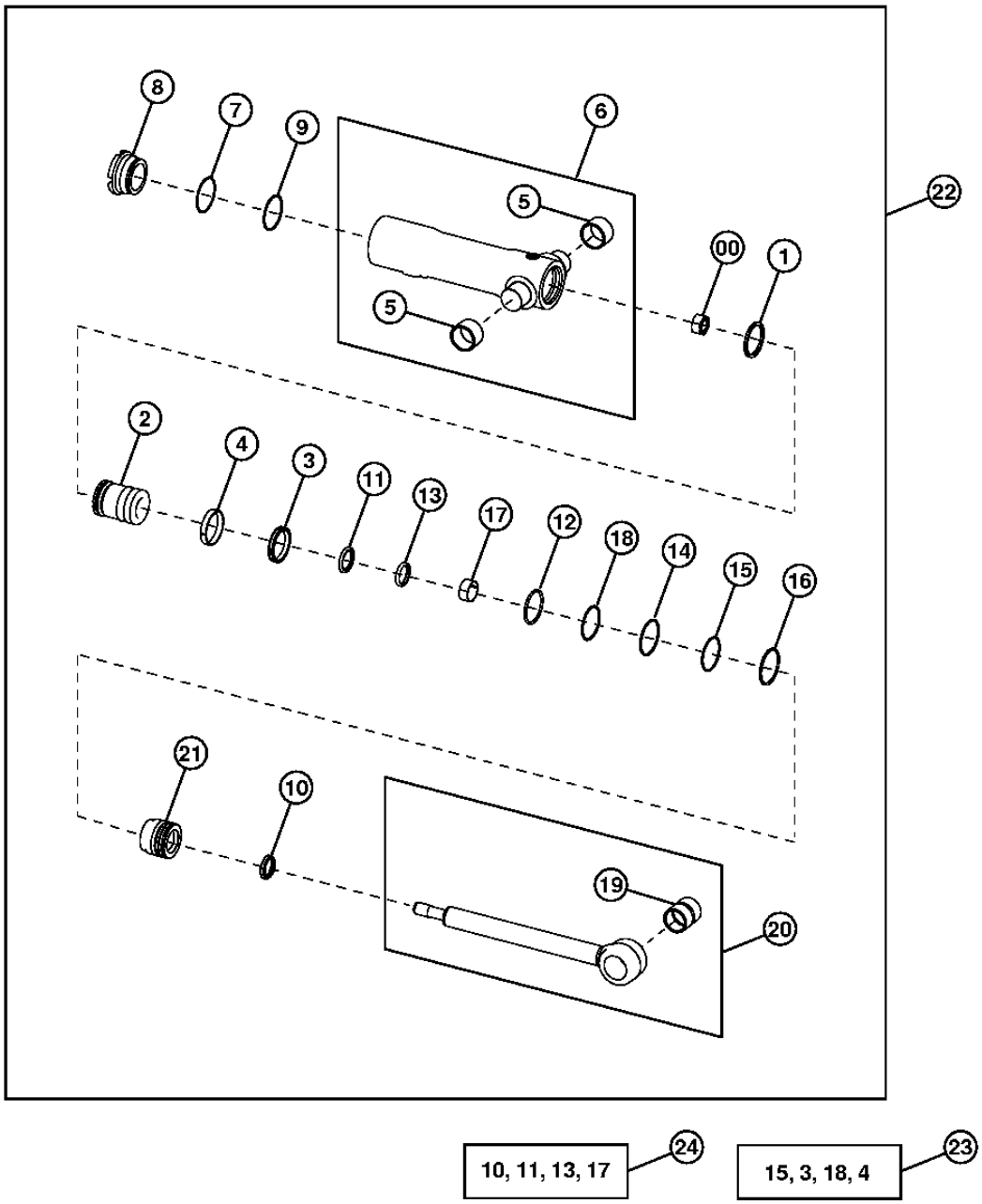

T214927

SWING CYLINDER AND REPAIR KIT
VERIN DE PIVOTEMENT ET KIT DE REPARATION
CILINDRO DE GIRO Y JUEGO DE REPARACION

KEY	*PART NO.*	*PART NAME*	*QTY.*	*SERIAL NO.*	*REMARKS*
0	H170539	NUT	1		
1	H150947	PISTON RING	1		
2	H154372	PISTON	1		
3	RE20344	SEAL	1		
4	R81776	WEAR RING	1		
5	H151328	BUSHING	1		
6	AH220114	HYDRAULIC CYLINDER BARREL	1		
7	H154373	BACK-UP RING	1		
8	H156486	HYDRAULIC CYLINDER CAP	1		
9	P48403	O-RING	1		
10	AH146557	SEAL	1		
11	AH146561	SEAL	1		
12	F1430R	O-RING	1		
13	H152203	SEAL	1		
14	H180103	SNAP RING	1		
15	H181114	O-RING	1		
16	H206859	SNAP RING	1		
17	H208987	WEAR RING	1		
18	R79101	BACK-UP RING	1		
19	H180402	BUSHING	1		
20	AH147893	HYDRAULIC CYLINDER ROD	1		
21	H208631	HYDR. CYLINDER ROD GUIDE	1		
22	AH220108	HYDRAULIC CYLINDER	1		
23	AH212096	HYDRAULIC CYLINDER KIT	1		(BORE SEAL)
24	AH210484	HYDRAULIC CYLINDER KIT	1		(ROD SEAL)

STABILIZER CYLINDER AND REPAIR KIT
VERIN DE STABILISATEUR ET KIT DE REPARATION
CILINDRO DE ESTABILIZADOR Y JUEGO DE REPARACION

T209067 -UN-10MAR05

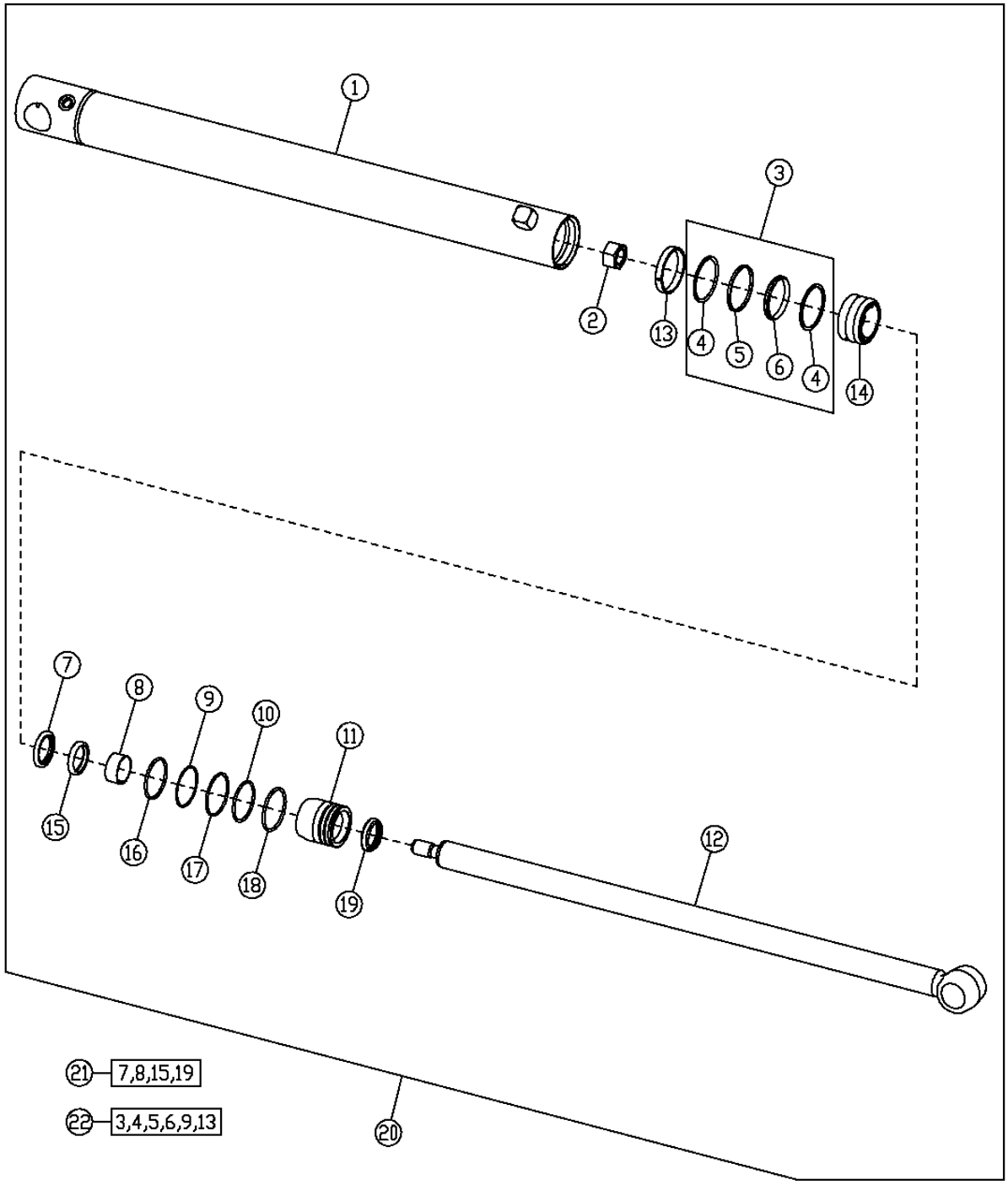

STABILIZER CYLINDER AND REPAIR KIT
VERIN DE STABILISATEUR ET KIT DE REPARATION
CILINDRO DE ESTABILIZADOR Y JUEGO DE REPARACION

KEY	*PART NO.*	*PART NAME*	*QTY.*	*SERIAL NO.*	*REMARKS*
1	AH211349	HYDRAULIC CYLINDER BARREL	1		
2	H170537	NUT	1		
3	RE20342	SEAL	1		
4	.....	BACK-UP RING	2		
5	.....	SEAL	1		
6	.....	SEAL	1		
7	AH146560	SEAL	1		
8	H157898	WEAR RING	1		
9	R81195	BACK-UP RING	1		
10	U12198	O-RING	1		
11	H210941	HYDR. CYLINDER ROD GUIDE	1		
12	RE32175	HYDRAULIC CYLINDER ROD	1		
13	R81774	SCRAPER RING	1		
14	R86380	PISTON	1		
15	H152202	SEAL	1		
16	R83469	O-RING	1		
17	H178765	SNAP RING	1		
18	H179657	SNAP RING	1		
19	AH146556	SEAL	1		
20	AH211348	HYDRAULIC CYLINDER	1		
21	AH149813	HYDRAULIC CYLINDER KIT	1		(ROD REPAIR)
22	AH212089	HYDRAULIC CYLINDER KIT	1		(BORE REPAIR)

MEMORANDA
MEMORANDA
MEMORANDA

NUMERICAL INDEX

PART NO.	KEY	PAGE
AE44436	9	1675-11
AH104837	7	0520-3
AH138083	15	3365-9
AH144020	60	1830-7B
AH146556	19	3365-29
AH146557	3	3165-7
AH146557	4	3165-9
AH146557	10	3365-21
AH146558	11	3365-9
AH146558	6	3365-13
AH146559	17	3365-5
AH146559	14	3365-18
AH146560	7	3365-29
AH146561	4	3165-7
AH146561	5	3165-9
AH146561	11	3365-21
AH146562	8	3365-9
AH146562	7	3365-13
AH146563	12	3365-5
AH146563	10	3365-18
AH147893	20	3365-21
AH149813	21	3365-29
AH149814	23	3365-9
AH149814	19	3365-13
AH149815	24	3365-5
AH149815	19	3365-18
AH149847	24	3365-9
AH162040	1	3165-9
AH162394	16	3365-18
AH162914	38	0560-3
AH165826	1	3165-7
AH170895	19	0510-5
AH171683	26	3315-23
AH176132	2	3165-7
AH205060	3	3165-9
AH206095	32	2160-19
AH209022	19	3102-13
AH209078	15	3365-13
AH209079	16	3365-13
AH209083	10	3365-5
AH210484	19	3165-7
AH210484	19	3165-9
AH210484	24	3365-21
AH210737	18	3102-13
AH211134	2	3365-9
AH211138	20	3365-9
AH211203	17	3165-7
AH211204	14	3165-7
AH211348	16	1740-5
AH211348	20	3365-29
AH211349	1	3365-29
AH211361	16	3346-5
AH212089	22	3365-29
AH212092	20	3165-7
AH212096	20	3365-13
AH212096	23	3365-21
AH212097	20	3165-9
AH212101	25	3365-5
AH212103	20	3365-18
AH216869	12	3365-9
AH217444	22	3365-9
AH219634	17	3165-9
AH219636	18	3365-13
AH219638	23	3365-5
AH220108	22	3365-21
AH220114	6	3365-21
AH220523	1	3365-5
AH220551	15	3165-9
AH222437	17	3365-18
AH77869	23	1674-9
AH89557	18	0510-5
AH89557	27	0560-3
AH89557	37	1674-9
AH89557	42	1830-7B
AH89557	14	1830-13
AH89557	7	3315-23
AH96317	28	0560-3
AH96317	22	1830-13
AL110924	21	0250-7
AL153661	5	1814-11
AL155227	1	0960-5
AL155227	1	0960-7
AL32877	6	0201-3
AL76568	40	1674-5
AL76568	8	1674-29
AL79794	5	0210-5
AL79794	3	0250-15
AL79902	1	0250-7
AL79951	8	0250-7
AL81844	3	0201-7
AM102062	1	1814-3
AM107314	7	0560-3
AN132749	2	0110-3
AN132749	2	0120-1
AR21836	8	2160-13
AR21836	7	3363-29
AR21837	14	0560-3
AR21841	17	3346-5
AR21842	18	1740-5
AR21842	14	3163-3
AR21999	7	0505-5
AR21999	35	1830-13
AR44361	16	0520-3
AR47374	5	3315-23
AR48236	9	3363-31
AR64705	8	3363-31
AR65507	9	0400-11
AR67069	8	1671-7
AR68999	6	2160-19
AR77962	30	0560-3
AR77962	46	1830-7B
AR77962	4	2160-13
AR83396	7	3302-3
AR83396	6	3302-7
AR83396	18	3346-5
AR85328	7	0520-3
AR85329	9	0520-3
AR85519	30	0400-35
AR91896	10	1814-3
AR91896	43	1910-3
AT101565	5	2160-13
AT101779	1	0960-9
AT101779	1	0960-11
AT103399	11	1674-29
AT106397	3	1821-9
AT106397	11	1821-9
AT118619	7	2160-19
AT124107	8	3115-5
AT124107	8	3115-7
AT125801	4	1821-9
AT125805	5	1821-9
AT125829	7	1821-9
AT130104	10	1673-5
AT130104	20	1673-7
AT132864	13	1671-3
AT132864	13	1671-5
AT135084	15	1740-5
AT139694	5	0960-5
AT139694	5	0960-7
AT141011	9	1674-9
AT145849	4	1740-5
AT150725	12	1811-3
AT156431	11	1674-11
AT159811	15	1674-9
AT161638	6	2160-13
AT164803	8	1811-3
AT164804	7	1811-3
AT165288	23	1811-3
AT165288	4	1811-5
AT167399	22	1674-9
AT168671	15	3362-9
AT169087	8	3162-3
AT169087	15	3162-3
AT169087	19	3315-13
AT169373	29	3162-5
AT169831	15	3346-3
AT169831	57	3346-5
AT170172	12	3363-27
AT170173	6	3363-27
AT170221	1	3362-17
AT170854	3	0342-3
AT171077	8	3345-3
AT171077	9	3345-3
AT171079	1	3346-3
AT171079	19	3346-5
AT171079	35	3346-5
AT171098	4	3363-5
AT171162	10	0505-5
AT171403	2	3362-11
AT171404	2	3362-15
AT171539	5	0505-5
AT171550	9	3115-5
AT171550	9	3115-7
AT171854	15	0520-3
AT171855	12	0520-3
AT172255	20	3346-5
AT172256	21	3346-5
AT172419	25	1740-5
AT172420	26	1740-5
AT172910	2	1821-15
AT173120	18	3163-13
AT173193	2	1814-13
AT173385	1	0505-5
AT173400	5	0540-3
AT173933	22	3346-5
AT174348	7	1814-13
AT174353	6	3363-13
AT174393	12	3363-9
AT174394	14	3363-9
AT174743	10	2160-13
AT174923	13	3362-21
AT175353	8	1821-9
AT175436	9	1821-9
AT175921	20	3342-3
AT175993	9	3363-7
AT176491	2	0210-3
AT176521	17	3363-29
AT176522	16	3363-29
AT177433	18	3363-29
AT177790	2	3343-5
AT178025	10	3363-7

NUMERICAL INDEX - CONTINUED

PART NO.	KEY	PAGE
AT178362	19	3162-9
AT178362	19	3362-17
AT178362	36	3362-17
AT178362	2	3362-47
AT178362	5	3362-47
AT178363	8	3362-11
AT178371	19	3362-11
AT178387	4	0250-17
AT178389	4	0250-17
AT178390	5	0325-3
AT178475	13	3362-21
AT178526	28	1674-5
AT178542	13	0520-3
AT178683	14	1740-5
AT178930	28	1830-13
AT178931	50	1830-13
AT179029	18	3315-23
AT179029	23	3363-31
AT179083	11	3363-7
AT179083	7	3363-13
AT179109	1	3362-17
AT179312	3	0350-1
AT179316	2	0360-3
AT179323	4	0360-5
AT179466	2	0350-15
AT179481	1	0350-17
AT179498	7	0210-7
AT179504	20	0201-3
AT179504	20	0201-5
AT179590	8	0250-17
AT179596	1	0250-17
AT179688	3	1821-7
AT179691	2	1821-5
AT179691	7	1821-5
AT179692	8	1821-5
AT179693	18	1821-9
AT179693	23	1821-9
AT179926	9	1671-7
AT180530	7	2160-5
AT180705	29	1674-9
AT181530	3	1830-13
AT181582	6	0505-5
AT182597	11	3363-17
AT182598	6	3363-17
AT182599	5	3363-17
AT182935	16	3342-3
AT183222	13	0505-5
AT183246	4	1674-14
AT183426	3	0530-5
AT183426	7	0530-5
AT183556	21	3315-23
AT183556	17	3362-30
AT183592	1	3362-30
AT183881	31	0560-3
AT184042	1	0350-7
AT184042	1	0350-9
AT184522	37	1830-13
AT184524	40	1814-3
AT184590	24	1816-13
AT184651	48	1814-3
AT184652	19	1814-3
AT184682	9	3115-3
AT184716	1	0530-5
AT184719	19	1814-3
AT184848	1	0530-5
AT184951	21	2160-17
AT184952	22	2160-17
AT185396	17	1816-13
AT185625	23	3315-13
AT186254	5	1740-5
AT186281	10	0520-3
AT186289	57	1830-7B
AT186304	47	1830-7B
AT186321	11	1812-3
AT186563	8	3342-3
AT187096	1	1811-5
AT187666	6	1060-3
AT187710	1	1814-13
AT187816	1	1673-3
AT188010	24	0960-9
AT188010	24	0960-11
AT188343	3	1060-5
AT188368	1	1830-13
AT188560	19	3163-13
AT188759	9	2001-3
AT188766	12	1814-13
AT188965	18	1811-3
AT189030	2	1821-3
AT189059	3	1821-3
AT189270	20	3315-13
AT189390	3	2003-3
AT189404	17	3363-31
AT189405	14	3363-31
AT189407	11	3363-29
AT189408	5	3363-29
AT189487	2	2003-3
AT189639	16	1830-7
AT190234	2	3362-21
AT190658	8	1830-13
AT190910	15	3163-3
AT191102	16	1816-13
AT191140	4	3363-17
AT191143	1	3363-33
AT191143	2	3363-33
AT191143	10	3363-33
AT191143	11	3363-33
AT191143	15	3363-33
AT191143	20	3363-33
AT191143	21	3363-33
AT191146	16	3363-33
AT191147	26	3363-25
AT191446	1	3315-13
AT191575	6	2001-3
AT191619	11	1821-9
AT191620	9	1821-5
AT191629	11	1816-9
AT191688	23	1816-9
AT191704	1	3362-19
AT191768	1	3362-9
AT191826	28	1816-9
AT191876	24	1816-9
AT191876	29	1816-9
AT191877	27	1816-9
AT191919	20	1816-9
AT191953	61	1674-5
AT191990	28	1830-7
AT191993	9	1830-7
AT191994	12	1830-7
AT192011	15	3302-15
AT192012	15	3302-15
AT192013	15	3302-15
AT192014	15	3302-17
AT192015	15	3302-17
AT192016	15	3302-17
AT192017	15	3302-17
AT192018	15	3302-17
AT192019	15	3302-17
AT192020	15	3302-17
AT192021	15	3302-17
AT192022	15	3302-17
AT192032	27	1811-3
AT192092	11	3302-3
AT192093	10	3302-7
AT192106	1	3302-3
AT192107	1	3302-7
AT192111	8	3302-3
AT192111	7	3302-7
AT192151	22	1060-5
AT192217	16	2001-3
AT192372	18	3162-5
AT192373	8	2160-11
AT192374	11	2160-11
AT192384	1	3362-21
AT192385	4	3362-21
AT192414	9	1811-5
AT192419	31	1060-5
AT192457	3	3162-7
AT192509	35	1830-7
AT193365	29	0960-9
AT193365	29	0960-11
AT193365	6	1060-3
AT193366	29	0960-9
AT193366	29	0960-11
AT193375	3	1816-3
AT193500	24	1830-7
AT193526	3	1816-3
AT193704	6	0350-15
AT193881	90	2160-25
AT193927	8	2160-19
AT194343	11	3315-23
AT194412	6	1060-9
AT194416	8	1060-9
AT194417	5	1060-9
AT194687	22	3362-15
AT194822	1	1673-3
AT195142	17	2160-5
AT195143	17	2160-5
AT195201	20	0960-9
AT195201	20	0960-11
AT195202	26	0960-9
AT195202	26	0960-11
AT195203	27	0960-9
AT195203	27	0960-11
AT195244	1	1313-3
AT195276	12	2160-11
AT195301	45	1674-5
AT195302	46	1674-5
AT195461	7	1673-3
AT195669	27	1740-5
AT195894	4	1811-3
AT195911	1	1671-5
AT195995	9	1671-3
AT196169	2	0230-8
AT196245	13	3162-7
AT196246	12	3162-7
AT196294	11	1812-3
AT196314	2	0400-53
AT196319	23	2160-17
AT196320	24	2160-17
AT196321	25	2160-17
AT196351	15	2160-25

NUMERICAL INDEX - CONTINUED

PART NO.	KEY	PAGE
AT196358	32	1910-3
AT196427	1	2002-5
AT196522	22	1814-3
AT196527	12	3363-5
AT196591	10	3115-5
AT196591	10	3115-7
AT196596	11	3115-7
AT196606	10	3315-3
AT196622	12	3162-3
AT196754	3	3363-5
AT196755	2	3363-5
AT196756	10	3363-5
AT196757	11	3363-5
AT196760	15	2160-25
AT196793	16	1821-5
AT196793	14	1821-7
AT196924	23	3162-11
AT197479	12	1812-3
AT197645	16	3163-3
AT197646	17	3163-3
AT197647	18	3163-3
AT197654	19	3163-3
AT197726	7	3344-3
AT197922	9	1671-7
AT198096	10	1671-7
AT198254	20	3163-13
AT198258	21	3163-13
AT198260	23	3163-13
AT198602	3	0230-7
AT199335	19	3115-3
AT199388	1	2001-3
AT199541	7	2160-13
AT199639	17	2160-25
AT199640	18	2160-25
AT199641	19	2160-25
AT199644	20	2160-25
AT199645	21	2160-25
AT199656	19	3162-3
AT199656	1	3162-11
AT199657	4	3162-11
AT199734	1	1811-5
AT199930	5	2160-5
AT199931	12	2160-5
AT199938	8	2160-5
AT209020	5	1821-7
AT209024	10	1821-5
AT209025	4	1821-3
AT209026	13	1821-5
AT209225	12	1821-3
AT210515	7	1830-7
AT219940	11	0960-5
AT221015	7	1821-3
AT221016	8	1821-3
AT222150	12	1816-13
AT224949	9	0230-5
AT224949	11	0250-3
AT225112	15	1390-3
AT225952	1	1674-7
AT226281	4	2004-6
AT227669	9	1816-13
AT25226	2	0110-3
AT258590	5	0350-13
AT258980	16	0350-3
AT258980	16	0350-5
AT258980	5	0350-7
AT258980	5	0350-9
AT258980	17	0350-11
AT280268	2	0230-7
AT280346	12	3363-7
AT280346	15	3363-9
AT280346	8	3363-13
AT280346	28	3363-27
AT280346	24	3363-33
AT280347	16	3363-9
AT280347	25	3363-25
AT280347	27	3363-27
AT280347	25	3363-33
AT280348	20	3363-31
AT280363	3	3315-3
AT280406	32	3162-5
AT280406	27	3162-7
AT280406	24	3162-9
AT280406	24	3162-11
AT280406	32	3362-9
AT280406	37	3362-11
AT280406	20	3362-13
AT280406	37	3362-15
AT280406	38	3362-17
AT280406	18	3362-19
AT280406	25	3362-47
AT280440	23	2160-25
AT280441	23	2160-25
AT280459	22	1060-3
AT280583	14	1821-5
AT280866	1	0230-8
AT300153	26	2160-17
AT300153	10	2160-19
AT300570	7	3362-5
AT300574	7	3362-5
AT300575	7	3362-5
AT300770	12	3315-3
AT300771	14	3315-3
AT300801	33	3162-5
AT300801	28	3162-7
AT300801	38	3362-11
AT300801	21	3362-13
AT300801	39	3362-15
AT300803	1	3162-5
AT300805	1	3362-47
AT300928	12	1812-3
AT300928	22	2160-25
AT300958	15	0560-3
AT301128	2	3162-5
AT301447	4	3362-11
AT301476	24	3163-13
AT301487	5	3362-11
AT301526	1	3162-7
AT301527	2	3162-7
AT301527	2	3362-13
AT301749	41	3362-15
AT301751	6	3362-15
AT301763	1	3362-47
AT301776	1	3362-15
AT301782	1	3362-13
AT301783	1	3362-11
AT301784	1	3362-15
AT301917	11	2160-19
AT302812	21	1814-9
AT302813	13	1814-9
AT302815	12	1814-9
AT302816	11	1814-9
AT302817	9	1814-9
AT303065	27	2160-17
AT303214	25	1830-7
AT303349	17	0250-5
AT303695	2	0341-7
AT303954	5	3362-15
AT303954	39	3362-15
AT304026	15	1816-9
AT304324	3	1816-11
AT304502	7	3362-5
AT304631	1	1814-15
AT304761	7	1060-3
AT304761	10	1060-5
AT304761	30	1060-5
AT304776	15	1821-5
AT304776	13	1821-7
AT304887	18	1811-3
AT305685	3	1814-15
AT306181	35	1814-3
AT306499	14	3343-5
AT306684	3	0230-5
AT307332	3	3362-13
AT307345	9	0960-7
AT307691	40	1830-7
AT307741	2	0230-5
AT307741	7	0230-6
AT307741	18	0230-7
AT307769	1	1821-15
AT307770	10	1814-9
AT308042	1	3102-9
AT308042	2	3102-9
AT308042	19	3102-9
AT308049	1	3102-9
AT308071	8	3102-5
AT308076	1	3102-3
AT308080	8	3102-5
AT308095	1	3102-9
AT308099	1	3102-9
AT308188	1	3102-3
AT308191	1	3102-9
AT308191	2	3102-9
AT308191	19	3102-9
AT308193	1	3102-9
AT308193	2	3102-9
AT308193	19	3102-9
AT308199	2	1821-15
AT308237	4	1675-11
AT308274	1	2160-11
AT308380	60	1674-5
AT308466	17	3363-25
AT308555	28	2160-17
AT308795	7	1821-3
AT308796	8	1821-3
AT308968	1	3102-15
AT309137	16	3315-3
AT309307	3	0250-5
AT309435	20	1673-5
AT309435	48	1674-5
AT309435	2	1674-29
AT309435	3	1674-29
AT309435	16	1816-9
AT309946	1	1674-29
AT310257	17	3363-25
AT310291	1	0120-1
AT310335	21	0510-5
AT310584	17	0350-15
AT310584	1	0360-7
AT310586	5	0360-7
AT310587	4	0360-7
AT310590	3	0360-3

NUMERICAL INDEX - CONTINUED

PART NO.	KEY	PAGE
AT310818	23	2160-25
AT311085	8	0250-3
AT311103	3	0341-7
AT311334	42	1910-3
AT311598	3	1674-7
AT312123	12	0510-9
AT312425	22	0510-5
AT312426	23	0510-5
AT312543	26	1674-9
AT312728	10	1821-3
AT312730	11	1821-3
AT313079	24	1740-5
AT313210	2	1674-9
AT313370	26	0960-5
AT313583	9	1673-3
AT313589	8	1673-3
AT313592	9	1673-3
AT314024	6	0960-5
AT314030	8	0960-5
AT314030	8	0960-7
AT314088	1	1674-5
AT314144	1	0315-3
AT314203	55	1830-13
AT314538	34	3162-5
AT314538	29	3162-7
AT314538	25	3162-9
AT314538	31	3362-9
AT314538	38	3362-15
AT314538	37	3362-17
AT314538	21	3362-21
AT314538	24	3362-47
AT314539	34	3162-5
AT314539	29	3162-7
AT314539	25	3162-9
AT314539	39	3362-11
AT314539	38	3362-15
AT314539	37	3362-17
AT314539	24	3362-47
AT314592	1	0325-3
AT314892	1	0110-3
AT314898	8	0110-3
AT314904	1	0201-9
AT314922	9	0250-17
AT314992	4	0250-3
AT314993	10	0230-8
AT315227	4	1814-15
AT315228	1	1814-11
AT315450	30	2160-25
AT316249	15	0960-9
AT316249	15	0960-11
AT316533	1	0341-7
AT316534	1	0341-7
AT316670	1	0210-8
AT316681	14	1111-3
AT316689	1	1060-7
AT316690	2	1060-7
AT317385	6	2160-5
AT317435	59	1674-5
AT317445	17	1816-9
AT317446	13	1814-13
AT317449	6	1674-29
AT317451	1	1675-3
AT317451	31	2160-25
AT317463	5	1673-3
AT317464	4	1674-29
AT317504	1	1674-11
AT317592	35	1674-5
AT317594	9	1674-29
AT317596	5	1674-29
AT317597	1	1674-5B
AT317624	9	2160-13
AT317764	11	3115-5
AT317764	13	3115-7
AT317783	7	3362-5
AT317784	7	3362-5
AT317785	7	3362-5
AT317786	7	3362-5
AT317855	1	0110-3
AT318073	1	1921-3
AT318085	15	2160-19
AT318095	24	0510-5
AT318113	9	1060-9
AT318271	15	0960-9
AT318271	15	0960-11
AT318374	6	1672-7
AT318947	57	1674-5
AT320220	25	0510-5
AT320235	2	0560-3
AT320238	26	0510-5
AT320239	27	0510-5
AT320371	1	3362-47
AT320544	9	1811-5
AT320544	19	2001-3
AT321040	1	1747-7
AT321152	26	3163-13
AT321155	28	3163-13
AT321156	29	3163-13
AT321211	17	1390-3
AT321280	6	1672-7
AT321323	90	2160-25
AT321365	13	1673-5
AT321365	20	1673-5
AT321366	12	3115-5
AT321366	14	3115-7
AT321443	13	0250-5
AT321472	5	0201-7
AT321526	4	1671-5
AT321527	12	1674-29
AT321552	2	1675-3
AT321552	32	2160-25
AT321701	3	0210-3
AT321702	3	0210-3
AT321703	3	0210-3
AT321704	3	0210-3
AT321705	3	0210-3
AT321706	3	0210-3
AT321949	7	0250-15
AT322130	3	1674-11
AT322232	1	0560-3
AT322250	1	1671-3
AT322268	11	1060-9
AT322270	10	1060-9
AT322327	12	0510-9
AT322359	19	1390-3
AT322365	1	3115-3
AT322637	5	3143-9
AT322638	8	3143-9
AT322742	9	1921-3
AT322743	10	1921-3
AT322879	12	1921-3
AT322915	11	1821-7
AT322947	2	1674-31
AT322951	23	3346-5
AT322954	1	1821-3
AT322954	1	1821-5
AT322954	1	1821-7
AT322955	1	1821-3
AT322955	1	1821-5
AT322955	1	1821-7
AT322955	1	1821-9
AT322956	1	1821-3
AT322956	1	1821-5
AT322956	1	1821-7
AT322956	1	1821-9
AT323012	4	1814-11
AT323013	2	1814-15
AT323152	30	0510-5
AT323159	5	1674-5B
AT323177	3	0530-5
AT323237	1	1910-3
AT323238	2	1910-3
AT323254	6	1674-5B
AT323269	1	0520-3
AT323301	9	1673-5
AT323301	20	1673-5
AT323301	13	1673-7
AT323398	1	3362-47
AT323593	4	0560-3
AT323623	32	2160-17
AT323646	42	1830-13
AT323647	47	1830-13
AT323670	41	1910-3
AT323695	2	3143-5
AT323702	27	1830-13
AT323728	33	2160-17
AT323844	34	2160-25
AT324031	2	0960-9
AT324031	2	0960-11
AT324059	18	2160-19
AT324116	40	1910-3
AT324157	8	0960-11
AT324158	7	0960-9
AT324159	8	0960-9
AT324160	7	0960-11
AT324234	30	3163-13
AT324237	11	3345-3
AT324273	31	0510-5
AT324277	11	3143-9
AT324452	11	1111-3
AT324481	21	1390-3
AT324482	23	1390-3
AT324483	24	1390-3
AT324620	12	3345-3
AT324621	14	3345-3
AT324622	16	3345-3
AT324645	3	1910-3
AT324916	6	1816-11
AT324938	11	1673-5
AT325040	13	3363-7
AT325041	14	3363-7
AT325042	9	3363-13
AT325043	10	3363-13
AT325052	33	3363-27
AT325061	17	3363-9
AT325061	25	3363-27
AT325062	18	3363-9
AT325062	26	3363-27
AT325066	23	3363-25
AT325067	22	3363-25
AT325190	38	1674-9
AT325678	1	1740-3

NUMERICAL INDEX - CONTINUED

PART NO.	KEY	PAGE
AT326535	8	0230-7
AT326536	9	0230-7
AT326537	11	0250-5
AT326538	5	0250-5
AT326539	2	0250-5
AT326540	10	0250-5
AT326541	3	0350-17
AT326542	11	0960-3
AT326543	5	0960-3
AT326622	12	1673-5
AT326908	20	1673-5
AT326922	15	3115-3
AT326923	1	0250-15
AT326978	13	1814-3
AT326979	13	1814-3
AT327155	8	3363-27
AT327368	29	1674-5
AT327790	1	1674-5
AT327796	4	1673-7
AT328617	26	1390-3
AT328623	25	3162-11
AT329135	8	1674-7
AT329135	35	2160-25
AT329136	2	1674-7
AT329137	10	1675-11
AT329989	56	1674-5
AT330459	19	2160-19
AT330638	5	1314-3
AT330850	11	3115-7
AT330850	12	3162-3
AT330857	30	1740-5
AT330858	31	1740-5
AT330860	6	3162-11
AT330918	6	3363-31
AT330944	24	3346-5
AT331223	13	2160-5
AT332084	2	1913-3
AT332153	4	1913-3
AT332462	8	2160-5
AT332597	6	1913-3
AT333453	3	1913-3
AT333807	17	2160-5
AT334333	32	0510-5
AT334340	21	2160-19
AT334349	1	2003-3
AT334381	2	1821-9
AT334606	1	3343-5
AT334722	6	1672-7
AT335055	2	1821-7
AT335109	12	1821-9
AT335110	6	1821-7
AT335158	10	1821-7
AT335595	7	1811-5
AT335595	3	2001-3
AT335596	7	1811-5
AT335596	3	2001-3
AT335904	4	1747-5
AT336136	1	3346-5
AT336137	25	3346-5
AT336341	5	1111-3
AT336397	14	1060-3
AT336436	11	1060-3
AT336635	17	3346-3
AT337030	37	0510-5
AT337223	8	3344-3
AT337253	3	1313-3
AT337761	26	3346-5
AT337941	5	3162-11
AT338274	8	1740-3
AT338741	4	0350-1
AT338976	10	0210-7
AT339059	15	1011-3
AT339526	1	1675-11
AT339543	20	1011-3
AT339615	17	0201-7
AT339627	14	0201-7
AT339629	7	0250-7
AT339648	6	0250-15
AT339686	3	0250-11
AT339806	20	0250-7
AT339807	4	0250-5
AT339807	9	0250-5
AT339808	2	0250-7
AT339809	4	0250-7
AT339810	7	0250-9
AT339811	5	0250-9
AT339899	23	0350-3
AT339900	16	0341-5
AT339901	9	0341-3
AT339903	5	0341-3
AT339904	3	0350-9
AT339905	20	0350-11
AT339906	3	0350-13
AT339908	3	0350-7
AT339910	19	0350-3
AT339912	19	0350-5
AT339913	4	0350-15
AT339914	21	0350-3
AT339914	22	0350-11
AT339914	3	0350-15
AT339915	1	0350-3
AT339916	21	0350-13
AT339917	1	0350-5
AT339918	16	0350-13
AT339919	18	0350-13
AT339920	6	0350-3
AT339920	6	0350-5
AT339920	18	0350-7
AT339920	18	0350-9
AT339920	6	0350-11
AT339921	16	0341-3
AT339922	12	0350-3
AT339922	10	0350-5
AT339922	8	0350-7
AT339922	8	0350-9
AT339922	8	0350-13
AT339923	10	0341-5
AT339941	3	0560-3
AT340155	2	1814-3
AT340275	28	3362-9
AT340550	41	1674-5
AT340617	71	0510-7
AT340698	10	0515-3
AT340856	6	1814-15
AT342647	35	1390-3
AT41188	5	1671-7
AT43223	39	0510-5
AT65241	16	0560-3
AT68978	6	3363-29
AT73296	1	0505-3
AT74940	6	0505-3
AT75311	53	1814-3
AT75769	2	1674-5B
AT75769	4	1674-11
AT75769	3	1674-31
AT78527	20	3162-3
AT78534	1	2004-4
AT81867	2	3363-29
AT82210	12	1674-11
AT83174	7	3162-9
AT83174	16	3362-19
AT85174	24	1674-9
AU12450	32	3163-13
A364R	7	0400-39
A3917R	49	1830-13
A4827R	17	0400-63
A48970	24	1814-3
B177R	12	1060-3
B3690R	2	0960-5
B3690R	2	0960-7
CD16284	7	0400-29
C16054	11	3363-9
C16054	4	3363-27
E12379	7	0230-5
E12379	10	0250-3
E64052	14	1671-3
E64052	15	1671-5
E67574	13	1821-9
E71998	23	2160-25
E87197	32	0560-3
F1430R	8	3165-9
F1430R	8	3365-13
F1430R	12	3365-21
F2863R	20	1060-3
F37030242	14	2160-5
F436023	6	0250-5
F950R	5	3365-5
GY20126	27	1674-5
H113924	10	0960-7
H128841	20	1811-3
H140456	20	3343-5
H150947	1	3365-21
H150964	2	3365-9
H150964	21	3365-9
H151328	5	3365-21
H151594	2	3165-9
H151820	15	3365-18
H151830	18	3365-9
H151831	17	3365-9
H151891	8	3365-18
H151893	3	3365-5
H152140	19	3365-9
H152202	15	3365-29
H152203	16	3102-13
H152203	7	3165-7
H152203	9	3165-9
H152203	13	3365-21
H152204	10	3365-9
H152204	9	3365-13
H152205	15	3365-5
H152205	13	3365-18
H152795	9	3365-9
H152795	10	3365-13
H152796	16	3365-5
H152796	11	3365-18
H154372	2	3365-21
H154373	7	3365-21
H154898	6	3365-9
H154900	14	3365-9
H155738	5	3365-9
H155769	12	3365-18

NUMERICAL INDEX - CONTINUED

PART NO.	KEY	PAGE
H156486	8	3365-21
H157898	8	3365-29
H158596	3	1921-3
H159941	15	3165-7
H169161	16	3365-9
H170216	8	3165-7
H170371	5	3365-18
H170372	2	3365-18
H170537	2	3365-29
H170538	16	3165-7
H170539	16	3165-9
H170539	0	3365-21
H170540	26	3365-5
H177854	4	3102-13
H178765	17	3365-29
H179657	18	3365-29
H180080	9	3365-5
H180094	7	3365-5
H180103	10	3165-9
H180103	11	3365-13
H180103	14	3365-21
H180397	13	3365-9
H180402	11	3365-5
H180402	17	3365-13
H180402	19	3365-21
H180432	6	3365-18
H180433	3	3365-9
H180787	9	3165-7
H180927	6	3102-13
H180965	14	3102-13
H181114	11	3165-9
H181114	12	3365-13
H181114	15	3365-21
H206792	4	3365-5
H206859	12	3165-9
H206859	13	3365-13
H206859	16	3365-21
H208631	21	3365-21
H208987	10	3165-7
H208987	13	3165-9
H208987	17	3365-21
H209221	11	3165-7
H209712	1	3365-9
H210941	11	3365-29
H23125	1	0400-7
H65405	45	0510-5
H77698	5	0315-3
H77698	34	0560-3
H77698	15	1673-5
H77698	17	1673-5
H77698	10	1673-7
H77698	7	1674-5
H77698	4	1674-5B
H77698	42	1674-9
H77698	5	1674-11
H77698	7	1816-13
H77698	54	1830-7B
H77698	24	3315-3
H85092	11	1830-7
JD10063	5	0230-8
JD10229	10	0201-3
JD10249	23	0250-7
JD27	3	0120-1
JD37406	3	0350-3
JD37406	3	0350-5
JD37406	16	0350-7
JD37406	16	0350-9
JD37406	3	0350-11
JD5717	2	1320-3
JD5750	18	1814-9
JD5761	17	1320-3
JD5836	18	1320-3
JD5920	19	1320-3
JD5933	10	0560-3
JD5933	20	1320-3
JD5933	11	1913-3
JD7797	8	0230-5
JD7797	3	0250-17
JD7797	4	3102-9
JD7798	17	3345-3
JD7799	14	3143-9
JD7838	10	0230-5
JD7838	9	0250-3
J16931	2	1313-3
KV16429	14	0520-3
KV22609	20	3163-3
KV25173	46	0510-7
K40006	14	3102-9
L101689	16	0250-5
L101690	16	0250-5
L110233	14	0250-5
L112210	16	0250-5
L112211	16	0250-5
L112212	16	0250-5
L112213	16	0250-5
L112214	16	0250-5
L112215	16	0250-5
L112216	16	0250-5
L112217	16	0250-5
L112218	16	0250-5
L112219	16	0250-5
L112220	16	0250-5
L112221	16	0250-5
L112222	16	0250-5
L152999	19	0350-15
L152999	3	0360-7
L153002	18	0350-3
L154742	47	0510-7
L2646N	17	0560-3
L3483N	33	1830-13
L35714	10	0250-15
L40276	19	0250-7
L40317	26	0250-7
L40997	16	0250-5
L40998	16	0250-5
L40999	16	0250-5
L41000	16	0250-5
L41001	16	0250-5
L41002	16	0250-5
L41003	16	0250-5
L41004	16	0250-5
L41005	16	0250-5
L4694T	12	3115-7
L57881	58	1830-7B
L75379	2	2002-5
MT2485	48	0510-7
MT2485	5	1674-7
MT2485	18	1674-9
MT2485	11	1811-5
MT2485	1	1834-3
MT2485	17	2001-3
MT2485	36	2160-25
M1036T	22	3162-3
M1036T	2	3162-11
M111583	18	1816-9
M115279	36	1674-5
M115279	19	1816-9
M115279	15	1821-3
M1304T	21	1821-9
M132832	11	1814-13
M40333	7	1671-3
M40333	10	1671-5
M41029	4	0400-11
M41029	26	1060-5
M453T	17	1821-5
M453T	12	1821-7
M453T	15	1821-7
M47031	8	1821-7
M47031	22	1821-9
M68954	23	3162-3
M68954	14	3315-13
M84972	8	1811-5
M84972	31	1816-13
M84972	44	1830-7B
M86533	26	1830-13
M86877	3	2004-6
M86877	27	3346-5
M87261	9	1821-7
M87534	7	3315-13
M87571	13	2160-13
M87571	10	3363-31
M87571	22	3363-31
N119316	2	0250-17
N119316	2	0325-3
N119479	4	3315-13
N231749	14	0201-3
N275275	2	2004-4
N282065	5	1673-7
N30405	18	0560-3
PML377	6	1673-3
PT11778	17	1830-7
P48403	9	3365-21
P50883	3	3362-30
RE157329	5	1830-7
RE174764	16	1830-7
RE179976	19	0560-3
RE190139	11	2001-3
RE19797	3	0400-35
RE19799	9	0400-35
RE19799	28	1390-3
RE198074	60	1830-7B
RE201108	16	2160-19
RE20342	3	3365-29
RE20343	19	3365-5
RE20344	1	3365-13
RE20344	3	3365-21
RE20809	4	3365-18
RE214440	44	1830-13
RE223627	54	0510-7
RE227953	11	2001-3
RE240999	58	1674-5
RE31617	13	0400-29
RE32175	12	3365-29
RE40049	1	1814-11
RE40049	2	1814-11
RE40049	4	1814-15
RE40049	5	1814-15
RE42139	5	0505-3
RE43637	1	1674-13
RE44574	18	0400-63
RE45896	5	0230-6

NUMERICAL INDEX - CONTINUED

PART NO.	KEY	PAGE
RE46534	5	1674-13
RE46534	3	1674-14
RE46609	25	1830-13
RE46684	7	0400-43
RE46684	15	0400-43
RE46685	5	0400-21
RE46685	10	0400-39
RE46686	5	0400-46
RE48786	8	0400-32
RE48786	10	0400-32
RE49778	16	1673-5
RE500000	3	0400-11
RE500002	3	0400-11
RE500005	4	0400-16
RE500137	4	0400-56
RE501298	13	0400-51
RE501377	5	0400-16
RE501455	12	0400-61
RE501938	3	0400-9
RE502954	12	3363-31
RE502969	5	0400-7
RE504233	4	0400-47
RE504244	13	0400-51
RE504543	10	0400-22
RE504564	3	0400-22
RE504638	4	0400-3
RE504836	4	0400-22
RE504914	6	0400-25
RE505264	2	0510-9
RE505264	40	1830-13
RE505400	7	0400-51
RE505501	14	0400-9
RE505515	11	0400-9
RE505515	19	0400-63
RE505981	16	0400-39
RE506105	13	0400-51
RE506105	2	0400-53
RE507595	1	0400-5
RE507597	7	0400-46
RE507598	1	0400-35
RE507646	7	0400-35
RE507647	6	0400-35
RE507648	5	0400-35
RE507649	4	0400-35
RE507766	25	0400-35
RE507852	6	0400-11
RE507920	7	0400-11
RE507920	10	0400-11
RE508566	20	0400-9
RE508566	17	0400-39
RE508716	21	0400-35
RE509031	6	0400-45
RE509794	5	0400-45
RE515372	1	0400-59
RE515978	15	0400-9
RE516340	11	0400-9
RE516340	19	0400-63
RE51650	7	0400-45
RE516512	4	0400-45
RE516553	4	0400-45
RE517370	13	0400-9
RE517382	4	0400-45
RE518087	10	0400-35
RE518166	10	0400-35
RE519144	13	0400-9
RE520023	1	0400-15
RE520539	1	0400-61
RE52087	2	0530-5
RE521822	1	0400-37
RE521823	2	0400-37
RE521824	3	0400-37
RE521825	4	0400-37
RE522076	3	0400-43
RE522109	5	0400-37
RE52242	1	0400-22
RE52346	11	0400-9
RE52346	19	0400-63
RE526670	33	0400-63
RE526671	34	0400-63
RE526834	4	0400-45
RE527042	12	0400-61
RE52722	14	0400-43
RE52722	6	1674-9
RE527298	12	0400-61
RE527299	1	0400-59
RE527299	12	0400-61
RE531116	25	0400-35
RE532627	14	0400-35
RE56098	20	0510-5
RE56313	15	0400-3
RE56369	21	0400-3
RE57234	15	0400-29
RE57471	15	0230-7
RE57472	17	0230-7
RE57619	10	0400-25
RE59487	4	0400-46
RE59545	2	0400-21
RE59810	19	0400-63
RE59811	4	0400-3
RE59811	22	0400-3
RE60005	3	0400-29
RE60029	3	0400-46
RE60029	4	0400-46
RE60037	2	0400-46
RE60854	4	0400-45
RE60888	6	1830-7
RE65165	7	0400-3
RE65168	10	0400-3
RE65908	11	0400-11
RE65909	11	0400-11
RE65911	7	0400-3
RE65912	10	0400-3
RE66082	33	0400-63
RE66084	34	0400-63
RE66153	2	0400-47
RE67238	1	0400-16
RE67238	8	0400-22
RE67239	5	0400-9
RE67239	6	0400-16
RE68695	9	0400-6
RE68748	26	0400-35
RE69243	1	0400-19
RE70486	5	0400-51
RE70487	3	0400-51
RE70756	9	0400-51
RE70756	12	0400-51
RE70962	15	0400-39
RE71256	8	0400-51
R100369	14	0400-39
R100377	2	0400-55
R10093	21	1830-7
R10093	5	1830-13
R10093	9	3362-21
R101225	14	0400-3
R104558	13	0341-5
R104592	5	0400-29
R107731	11	0400-6
R111238	22	3362-11
R111238	25	3362-15
R111493	1	3162-9
R11151	24	3162-3
R11151	14	3162-11
R113050	15	1830-7
R113050	30	1830-13
R113596	4	0400-3
R114193	20	0400-3
R114194	23	0400-3
R115119	9	0250-7
R115350	43	1830-13
R116089	6	1814-13
R116115	5	0400-22
R116116	10	0400-46
R116296	2	0400-16
R116324	4	0400-7
R116366	5	0400-32
R116386	17	0400-35
R116515	12	0400-29
R116515	8	0400-61
R117721	56	1830-7B
R117721	22	2160-19
R117892	21	0960-5
R117892	5	1816-7
R117892	8	2001-3
R120160	25	1816-13
R120467	1	0400-27
R120631	3	0400-3
R120638	13	0400-25
R120641	12	0400-3
R120653	8	1814-13
R121038	1	0400-38
R121079	9	0230-8
R121376	7	0400-25
R121402	14	0400-29
R121402	15	0400-29
R121411	8	0400-9
R121424	7	0400-9
R121593	3	0230-6
R121594	6	0230-6
R121634	4	0400-38
R122218	15	0230-7
R123161	7	0400-6
R123174	11	0400-3
R123178	5	0400-11
R123226	9	0400-39
R123226	9	0400-43
R123226	4	0400-61
R123271	5	0400-6
R123273	3	0400-47
R123273	20	0400-63
R123323	1	0400-43
R123324	11	0400-43
R123345	5	0400-61
R123353	35	0400-63
R123417	13	0400-39
R123417	21	0400-63
R123501	23	0400-63
R123513	2	0400-6
R123521	2	0400-56
R123525	25	0400-63
R123542	6	0400-7
R123542	1	0400-61

NUMERICAL INDEX - CONTINUED

PART NO.	KEY	PAGE
R123565	10	0400-6
R123570	6	0400-61
R123574	2	0400-7
R123575	3	0400-7
R123575	7	0400-61
R123584	18	0400-9
R123593	19	0400-35
R12363	11	1673-7
R123960	2	0400-11
R124347	5	1740-3
R125223	18	1830-7
R128661	9	0510-9
R128662	9	0510-9
R130575	5	0400-3
R131016	5	0400-43
R131206	16	0400-3
R131283	19	0400-3
R132166	4	0400-55
R132261	1	0400-31
R132874	12	0400-35
R133405	5	0400-47
R133893	10	0400-61
R133978	5	0400-55
R134098	5	0515-3
R134518	19	0400-9
R134527	2	0400-13
R135439	1	0400-5
R135509	6	0400-51
R135510	4	0400-51
R135918	3	0400-56
R136052	2	0400-51
R136475	3	0400-13
R136495	3	0400-16
R136515	22	0400-63
R136516	22	0400-63
R140070	13	0230-7
R15023	19	1673-7
R151507	10	1814-13
R201796	11	1674-5
R204271	4	0230-6
R206883	4	0505-3
R221354	17	1060-3
R26081	17	3315-3
R26125	4	0400-29
R26286	3	0400-46
R26286	13	1060-9
R26286	12	1390-3
R26375	22	0960-9
R26375	22	0960-11
R26375	1	1060-3
R26375	16	1111-3
R26375	7	2160-11
R26375	11	2160-13
R26375	9	2160-19
R26375	9	2160-25
R26375	8	3163-3
R26375	9	3163-13
R26375	28	3346-5
R26375	2	3362-30
R26375	3	3363-17
R26448	6	0210-8
R26448	35	0510-5
R26448	13	0960-9
R26448	13	0960-11
R26448	5	1060-7
R26448	9	1390-3
R26448	11	1740-5
R26448	9	2160-11
R26448	10	2160-17
R26448	29	3346-5
R26448	30	3362-9
R26448	13	3363-5
R26448	1	3363-29
R26448	1	3363-31
R26552	17	1060-5
R26871	22	1910-3
R26871	18	3315-3
R26906	6	0400-29
R26906	16	0400-29
R26906	4	1060-5
R26906	3	1111-3
R26906	7	2160-5
R26906	36	2160-17
R26906	23	2160-19
R26906	15	3162-5
R26906	22	3162-7
R26906	11	3162-9
R26906	9	3162-11
R26906	11	3163-3
R26906	3	3362-9
R26906	21	3362-11
R26906	24	3362-15
R26906	8	3362-21
R26906	5	3362-30
R26906	6	3363-7
R26906	7	3363-9
R26906	3	3363-13
R26906	10	3363-25
R26906	3	3363-27
R26906	9	3363-33
R27175	1	3363-25
R27218	10	2160-11
R27218	29	3362-9
R27434	19	3315-3
R27474	7	2160-5
R27474	37	2160-17
R28776	23	2160-25
R28776	8	3362-30
R28782	5	0210-8
R28782	30	0960-11
R28782	18	1390-3
R28782	13	3363-29
R28782	13	3363-31
R28811	1	0400-56
R29463	12	0341-7
R29936	38	0510-5
R29936	5	2160-17
R30903	25	3362-11
R30903	10	3362-15
R30903	5	3362-17
R30903	16	3362-47
R32548	8	1060-3
R33259	14	1830-7
R33259	7	1830-13
R33259	4	3362-30
R35668	50	0510-7
R36424	22	0560-3
R39112	12	2160-13
R39554	34	1674-5
R39554	6	3315-23
R43409	9	0400-29
R44165	19	1674-5
R44302	3	0515-3
R44302	35	0560-3
R44302	16	0960-9
R44302	16	0960-11
R44302	15	1671-3
R44302	6	1671-7
R44302	3	1674-5
R44302	3	1674-5B
R44302	7	1674-7
R44302	41	1674-9
R44302	2	1674-11
R44302	10	1674-29
R44302	4	1674-31
R44302	3	1675-3
R44302	7	1675-11
R44302	4	1814-13
R44302	6	1821-3
R44302	52	1830-7B
R44302	2	1830-13
R44302	39	2160-19
R44302	33	2160-25
R44302	37	2160-25
R44302	13	3115-5
R44302	15	3115-7
R44302	5	3363-5
R44342	44	1674-5
R46528	25	3162-3
R46667	51	0510-7
R46919	11	0960-9
R46919	11	0960-11
R46919	8	1060-7
R46919	33	2160-19
R46919	21	3163-3
R46919	33	3163-13
R46919	30	3346-5
R46919	23	3363-27
R46973	1	0230-5
R46973	5	0250-3
R48000	8	0400-32
R48523	19	1060-5
R48568	11	0520-3
R48685	1	0400-3
R500096	4	0400-56
R500270	1	0400-47
R500271	6	0400-47
R500320	3	0510-9
R500320	41	1830-13
R500322	10	0400-55
R50034	16	1060-3
R500374	9	0400-22
R500374	32	0400-63
R500390	8	0400-32
R500531	12	0400-55
R500563	15	0400-3
R501124	1	0400-11
R501144	10	0400-43
R501373	9	0400-61
R501428	31	0400-63
R502076	11	0400-35
R502079	4	0510-9
R502079	39	1830-13
R502505	3	0400-22
R502513	4	0400-22
R502513	11	0400-22
R502604	2	0400-19
R502725	3	0400-19
R50279	8	1830-7
R50279	61	1830-7B
R502814	4	0400-43

NUMERICAL INDEX - CONTINUED

PART NO.	KEY	PAGE
R502814	3	0400-61
R502864	24	0400-63
R502867	6	0400-25
R502902	7	0400-16
R503419	16	0400-51
R503509	1	0400-39
R503509	16	0400-39
R503520	28	0400-35
R503891	6	0400-61
R504022	1	0510-9
R504191	21	1830-13
R504192	23	1830-13
R504734	29	0400-63
R505472	18	0400-35
R505609	2	0400-3
R517471	24	0400-3
R51936	20	0400-35
R52006	3	0110-3
R520130	2	0400-9
R520132	1	0400-9
R521439	2	0400-61
R521493	1	0400-21
R522030	13	0400-63
R523233	2	0400-45
R52921	9	1814-3
R53108	1	0400-51
R53108	26	0400-63
R54123	2	0505-3
R54565	1	0400-6
R55326	26	1811-3
R56101	53	0510-7
R61871	9	0400-25
R61871	16	0400-63
R63548	9	3162-5
R63548	16	3162-7
R63548	34	3362-11
R63548	32	3362-15
R64525	3	0400-55
R65563	12	3315-13
R71210	27	1390-3
R71963	2	0400-32
R72328	2	0400-27
R72328	27	0400-63
R72655	6	1821-5
R72655	4	1821-7
R72659	3	0400-27
R72855	4	3115-3
R73975	15	0341-3
R74012	1	0400-46
R75403	3	0210-3
R75404	3	0210-3
R75405	3	0210-3
R75834	3	0210-3
R75892	14	0400-63
R77857	7	3365-9
R78035	24	1674-5
R78053	3	1673-7
R79033	3	1811-3
R79101	14	3165-9
R79101	14	3365-13
R79101	18	3365-21
R79604	4	0400-32
R79605	3	0400-32
R81195	9	3365-29
R81275	10	0400-61
R81774	13	3365-29
R81775	18	3365-5
R81776	5	3365-13
R81776	4	3365-21
R81862	6	3365-5
R81864	12	3165-7
R82095	3	3365-18
R82198	7	0250-5
R82198	9	0250-9
R83469	16	3365-29
R85363	1	0400-29
R85687	8	0400-29
R86380	14	3365-29
R89944	5	0400-38
R89944	28	0400-63
R90658	2	0400-31
R90658	2	0400-61
R90692	10	0400-29
R91360	13	0400-35
R91889	2	0400-29
R92097	11	0400-61
R92352	7	0400-32
R93910	8	0400-29
R94102	4	0110-3
R96703	10	0400-51
R97185	8	0400-25
R97185	15	0400-63
R98062	11	0400-29
R98063	8	0400-29
R98335	8	0400-29
SE500717	1	0400-15
SE500826	10	0400-32
SE500830	25	0400-35
SE501101	10	0400-32
SE501103	25	0400-35
TF23D	11	3302-15
TF23P	8	3302-15
TTZF160528	21	0201-3
TTZF160528	21	0201-5
TTZF160529	21	0201-3
TTZF160529	21	0201-5
TTZF160530	21	0201-3
TTZF160530	21	0201-5
TTZF160532	21	0201-5
TTZF160534	21	0201-3
TTZF160534	21	0201-5
TTZF160535	21	0201-3
TTZF160535	21	0201-5
TY22330	44	0510-5
TY22330	31	2160-19
TY22462	29	0560-3
TY22462	9	3363-31
TY22464	4	0960-9
TY22464	4	0960-11
TY22556	35	2160-17
TY22556	34	2160-19
TY22559	5	0560-3
TY22559	33	0560-3
TY22566	42	0510-5
TY24401	5	0400-27
TY6128	13	1671-3
TY6128	13	1671-5
TY6764	25	1830-13
T101763	7	3362-30
T101764	6	3362-30
T101807	24	1811-3
T101807	5	1811-5
T101807	11	3344-3
T102934	38	2160-17
T102934	8	3363-25
T105469	4	3365-9
T105740	16	1814-3
T105740	4	1821-15
T105740	23	1910-3
T105773	22	3163-3
T105773	34	3163-13
T105773	5	3363-27
T105774	31	3346-5
T105774	19	3363-9
T106066	2	3342-3
T106398	4	3342-3
T106399	3	3342-3
T107116	7	1671-5
T107117	3	1671-3
T107117	6	1671-5
T107887	12	3162-5
T107887	19	3162-7
T107887	31	3362-11
T107887	17	3362-13
T107887	33	3362-15
T113128	7	0250-17
T113128	3	0325-3
T116290	7	0230-7
T118681	10	3162-5
T118681	17	3162-7
T118681	18	3162-9
T118681	11	3362-11
T118681	33	3362-11
T118681	15	3362-13
T118681	35	3362-15
T118681	19	3362-17
T118681	27	3362-17
T118681	2	3362-47
T118681	8	3362-47
T118683	19	3162-11
T118685	5	3362-9
T118685	18	3362-11
T118685	8	3362-13
T118685	15	3362-15
T118685	11	3362-17
T118685	10	3362-21
T118685	20	3362-47
T118692	16	3162-5
T118692	23	3162-7
T118692	12	3162-9
T118693	14	3162-5
T118693	21	3162-7
T118693	10	3162-9
T118694	13	3162-5
T118694	20	3162-7
T118694	9	3162-9
T118695	4	3362-5
T118697	4	3362-5
T118708	23	3162-5
T118709	25	3162-5
T118711	26	3162-5
T118712	27	3162-5
T118715	21	3162-5
T118768	1	3102-5
T118799	28	3162-5
T118808	16	3162-9
T118808	21	3162-11
T118808	27	3362-11
T118808	12	3362-13
T118808	19	3362-15
T118808	16	3362-17

NUMERICAL INDEX - CONTINUED

PART NO.	KEY	PAGE
T118808	11	3362-19
T118866	23	3162-9
T118866	6	3362-11
T118866	19	3362-17
T118866	20	3362-17
T118866	2	3362-47
T118866	3	3362-47
T118867	22	3162-9
T118867	7	3362-11
T118867	19	3362-17
T118867	21	3362-17
T118867	2	3362-47
T118867	4	3362-47
T118879	14	3162-9
T118884	24	3162-5
T119153	23	1814-3
T119912	5	0230-5
T119912	2	0250-3
T119912	2	1749-3
T121288	6	1671-3
T121288	12	1671-5
T121474	29	3315-23
T122075	30	0400-63
T12275	7	3365-18
T12582	13	3165-7
T126013	20	1740-5
T126052	32	3346-5
T128533	5	3102-9
T128538	10	3102-9
T129165	1	0400-53
T129165	2	1671-3
T129165	5	1671-5
T131938	3	1320-3
T133291	16	3115-7
T133674	6	1812-3
T133674	6	1814-3
T134586	13	1816-9
T134874	19	1811-3
T134881	11	3162-7
T134895	10	1811-5
T135583	14	1814-3
T135675	21	1814-3
T135675	2	1814-7
T135675	16	1814-9
T13630	3	0960-5
T13630	3	0960-7
T137790	4	1320-3
T13814	36	1830-7
T139165	1	1320-7
T139167	1	1320-7
T140211	7	0250-3
T140211	8	0250-5
T140311	21	1320-3
T140328	9	3162-3
T140328	16	3162-3
T140328	15	3315-13
T14050	9	0400-46
T14065	2	3102-13
T140699	3	3362-5
T140700	3	3362-5
T14083	4	1313-3
T141075	2	1320-7
T141078	3	1320-7
T141093	2	1320-7
T141096	3	1320-7
T141234	13	1811-3
T143169	20	1830-7
T143169	6	1830-13
T143596	18	1674-5
T143802	15	3102-9
T146080	5	1320-3
T146089	4	1320-7
T146095	4	1320-7
T146097	6	1320-3
T146098	5	1320-7
T146099	5	1320-7
T146102	11	0400-51
T146102	22	1320-3
T146102	24	1740-5
T146104	6	1320-7
T146106	6	1320-7
T146757	2	3115-3
T147070	10	3342-3
T147269	15	0201-3
T147296	3	3102-5
T148182	3	3115-3
T148387	22	3342-3
T148409	3	1740-5
T148409	38	2160-25
T148409	4	3346-3
T148410	6	1740-3
T148410	1	1740-5
T148410	5	3143-5
T148410	12	3344-3
T148410	21	3346-3
T148410	33	3346-5
T148411	7	1740-3
T148411	2	1740-5
T149597	24	2160-19
T150487	2	3102-3
T150487	1	3102-5
T150487	2	3102-15
T150517	6	3102-5
T150517	9	3102-9
T150517HD	6	3102-5
T150517HD	9	3102-9
T150958	24	3162-7
T151797	5	1749-3
T152374	7	3362-9
T152401	20	3162-5
T152404	19	3162-5
T152406	13	3362-15
T152406	14	3362-19
T152407	14	3362-15
T152407	15	3362-19
T152996	8	1320-7
T152997	8	1320-7
T153303	21	3342-3
T153322	34	3346-5
T153531	13	3343-5
T153567	23	3346-3
T153567	58	3346-5
T153608	13	3344-3
T153680	23	1320-3
T154058	6	3143-9
T154058	9	3143-9
T154165	4	3143-5
T154166	3	3143-5
T154273	18	3345-3
T154352	6	3143-5
T154621	1	3342-3
T155324	2	0350-1
T157277	9	3342-3
T157792	36	3346-5
T157796	37	3346-5
T158081	41	1814-3
T158245	11	1060-7
T158358	44	1814-3
T158424	32	1830-13
T158481	14	1821-9
T158579	15	3143-9
T158739	16	0350-11
T158742	18	0350-5
T158749	4	0350-3
T158749	4	0350-5
T158749	17	0350-7
T158749	17	0350-9
T158749	4	0350-11
T158749	8	0350-11
T158778	11	0350-11
T158778	9	0350-15
T158793	20	0350-5
T158793	20	0350-7
T158793	20	0350-9
T158793	1	0350-11
T158793	1	0350-13
T158793	16	0350-15
T158801	15	0350-11
T158801	10	0350-15
T159028	7	1320-3
T159264	3	3362-5
T159307	3	0210-3
T159308	3	0210-3
T159309	3	0210-3
T159310	3	0210-3
T159311	3	0210-3
T159313	3	0210-3
T159314	3	0210-3
T159315	3	0210-3
T159316	8	0210-5
T159318	4	0210-5
T159319	4	0210-5
T159320	4	0210-5
T159321	4	0210-5
T159322	4	0210-5
T159323	4	0210-5
T159324	4	0210-5
T159325	4	0210-5
T159326	4	0210-5
T159327	4	0210-5
T159329	4	0210-5
T159330	4	0210-5
T159331	4	0210-5
T159332	4	0210-5
T159334	4	0210-5
T159337	4	0210-5
T159338	4	0210-5
T159341	9	0210-7
T159343	6	0210-7
T159359	20	1111-5
T159373	9	0201-3
T159402	10	1011-3
T159403	9	1011-3
T159440	21	0201-5
T159441	21	0201-5
T159442	21	0201-5
T159443	21	0201-5
T159444	21	0201-5
T159445	21	0201-5
T159446	21	0201-3
T159446	21	0201-5

NUMERICAL INDEX - CONTINUED

PART NO.	KEY	PAGE
T159447	21	0201-3
T159447	21	0201-5
T159448	21	0201-3
T159448	21	0201-5
T159449	21	0201-3
T159449	21	0201-5
T159450	21	0201-3
T159450	21	0201-5
T159451	21	0201-3
T159451	21	0201-5
T159452	21	0201-3
T159452	21	0201-5
T159453	21	0201-3
T159453	21	0201-5
T159454	21	0201-5
T159455	21	0201-3
T159455	21	0201-5
T159457	21	0201-5
T159458	21	0201-3
T159458	21	0201-5
T159459	21	0201-5
T159460	21	0201-3
T159460	21	0201-5
T159461	21	0201-3
T159461	21	0201-5
T159462	21	0201-3
T159462	21	0201-5
T159463	21	0201-3
T159463	21	0201-5
T159474	16	1111-5
T159475	22	1111-5
T159487	10	1111-5
T159502	6	1111-5
T159565	18	0201-5
T159565	18	0201-7
T159565	12	0341-3
T159565	23	1011-3
T159568	11	0350-11
T159568	9	0350-15
T159569	11	0350-11
T159569	9	0350-15
T159570	11	0350-11
T159570	9	0350-15
T159586	8	0341-5
T159683	18	0341-5
T159815	24	1320-3
T159952	22	3163-13
T159954	25	3163-13
T159954	15	3363-7
T159954	11	3363-13
T159954	18	3363-27
T159956	16	3363-7
T159980	7	3115-3
T159981	5	3115-3
T160299	24	3346-3
T160302	25	3346-3
T160315	15	1821-9
T160376	21	3363-9
T160376	13	3363-25
T160384	38	3346-5
T160492	55	1830-7B
T160518	24	3362-11
T160518	10	3362-13
T160518	17	3362-15
T160518	14	3362-17
T160518	9	3362-19
T160519	26	3362-11
T160519	15	3362-17
T160520	15	3362-21
T160554	10	1111-3
T160554	19	3363-27
T160590	25	3315-23
T160613	8	3362-9
T160613	16	3362-21
T160628	3	3362-5
T160629	4	3362-5
T160663	5	3362-21
T160702	9	3362-15
T160702	4	3362-17
T160720	24	3115-3
T160761	9	1320-7
T160762	10	1320-7
T160763	9	1320-7
T160769	10	1320-7
T160896	5	1821-15
T160938	53	1830-13
T161011	4	3315-23
T161012	2	3315-23
T161013	28	3315-23
T161036	3	3102-23
T161036	4	3302-3
T161036	4	3302-7
T161036	2	3302-15
T161036	17	3343-5
T161036	19	3345-3
T161147	12	0350-11
T161147	8	0350-15
T161181	15	0341-5
T161183	11	0350-11
T161183	9	0350-15
T161194	1	0341-3
T161197	7	0341-5
T161198	7	0341-5
T161199	7	0341-5
T161200	7	0341-5
T161279	9	3302-15
T161319	9	3302-15
T161342	15	3363-27
T161365	16	3363-25
T161463	26	2160-19
T161497	13	3115-3
T161497	16	3143-9
T161497	15	3343-5
T161598	27	3315-23
T161678	25	1320-3
T161770	11	3342-3
T161813	6	3342-3
T162003	22	3363-9
T162004	23	3363-9
T162004	19	3363-25
T162004	11	3363-27
T162005	24	3363-9
T162005	35	3363-25
T162005	10	3363-27
T162238	39	2160-25
T162396	6	3102-23
T162396	27	3115-3
T162396	7	3143-5
T162396	17	3143-9
T162396	18	3165-9
T162396	15	3342-3
T162396	3	3343-5
T162396	1	3344-3
T162396	10	3345-3
T162396	2	3346-3
T162396	39	3346-5
T162396	18	3365-18
T162517	22	1011-3
T162535	12	3302-15
T162535	15	3302-15
T162535	15	3302-17
T162553	12	3302-15
T162553	15	3302-15
T162553	15	3302-17
T162557	4	1830-13
T162569	12	3302-15
T162569	15	3302-17
T162581	22	3346-3
T162581	40	3346-5
T162675	4	0341-7
T162675	27	2160-19
T162847	6	3302-3
T163225	17	3363-33
T163702	31	3363-25
T163962	6	1821-15
T164075	6	2160-5
T164183	9	3344-3
T164259	10	3162-3
T164618	45	1830-7B
T164620	23	1816-13
T164621	26	1816-13
T164626	13	0350-11
T164626	7	0350-15
T164648	14	0341-5
T164648	6	0360-3
T164662	14	0341-3
T164662	19	0341-5
T164697	3	1814-7
T164705	14	1814-9
T164706	54	1814-3
T164707	45	1814-3
T164708	15	1814-9
T164709	55	1814-3
T164710	55	1814-3
T164911	21	1111-5
T164916	19	1111-5
T164917	18	1111-5
T164922	5	1111-5
T165282	19	1060-3
T165290	1	1913-3
T165292	3	0560-3
T165292	20	0560-3
T165332	9	3102-23
T165333	8	3102-23
T165357	36	1814-3
T165584	2	1816-3
T165584	6	3315-13
T165740	17	3363-7
T165740	12	3363-13
T165742	13	3363-13
T165808	18	1816-13
T165864	24	3163-3
T165870	5	1927-3
T165889	13	3363-27
T165911	10	1910-3
T165915	11	1910-3
T165916	16	1910-3
T165948	15	1812-3
T165951	14	2001-3
T165969	5	1812-3
T165975	24	1910-3

NUMERICAL INDEX - CONTINUED

PART NO.	KEY	PAGE
T165976	25	1910-3
T165977	27	1910-3
T165981	28	1910-3
T165997	12	1910-3
T166000	4	1812-3
T166060	54	1814-3
T166091	5	0520-3
T166097	10	3115-3
T166097	13	3315-3
T166097	15	3315-3
T166224	5	3315-13
T166297	29	1830-7
T166322	30	1816-13
T166336	8	0210-7
T166371	9	1814-9
T166419	10	3102-9
T166433	3	3102-9
T166437	9	3102-9
T166454	15	3102-9
T166455	10	3102-9
T166535	7	3342-3
T166686	19	3346-3
T166686	41	3346-5
T166715	13	3345-3
T166715	20	3346-3
T166715	42	3346-5
T166773	5	0960-9
T166773	5	0960-11
T166896	18	1811-3
T166899	14	3115-5
T166900	17	3115-7
T167059	12	3102-9
T167082	10	1816-9
T167083	2	1816-9
T167119	10	1816-9
T167192	15	3115-5
T167192	18	3115-7
T167214	3	1673-3
T170784	4	0540-3
T17148	4	0960-5
T17148	4	0960-7
T171686	9	1821-3
T172118	20	0350-3
T172118	21	0350-11
T172318	3	0360-5
T176526	6	0341-5
T177187	1	1927-3
T177394	11	0201-3
T177997	2	0360-5
T178251	43	1830-7B
T178971	62	1830-7B
T179055	3	1814-13
T179952	2	0342-3
T18145	4	0230-5
T18145	3	0250-3
T181522	13	1830-7
T181801	17	1740-5
T183269	21	1060-5
T183270	13	1060-5
T183271	11	1060-5
T183272	9	1060-5
T183273	7	1060-5
T183274	6	1060-5
T183276	16	1060-5
T183310	28	1060-5
T183344	5	1814-13
T183356	12	3143-9
T183357	24	1060-5
T183362	20	1060-5
T183482	4	0210-5
T183483	4	0210-5
T183484	4	0210-5
T183485	4	0210-5
T183486	4	0210-5
T183487	4	0210-5
T183489	4	0210-5
T183490	4	0210-5
T183491	4	0210-5
T183492	4	0210-5
T183493	4	0210-5
T183494	4	0210-5
T183495	4	0210-5
T183500	21	0201-3
T183500	21	0201-5
T183502	21	0201-3
T183502	21	0201-5
T183505	21	0201-5
T183506	21	0201-3
T183506	21	0201-5
T183507	21	0201-3
T183507	21	0201-5
T183548	9	3315-13
T183617	26	3162-3
T183706	1	1816-9
T183756	21	3162-3
T183756	29	3362-15
T183756	17	3362-21
T183757	8	3162-9
T183757	17	3362-19
T183768	15	1320-3
T183768	19	1814-9
T183773	19	1910-3
T183905	25	3315-3
T184008	4	1816-9
T184009	5	1816-9
T184116	13	1910-3
T184129	17	3315-13
T184164	21	1816-13
T184214	35	1816-13
T184271	14	3362-21
T184320	19	0960-9
T184320	19	0960-11
T184345	12	1816-9
T184356	11	3362-21
T184368	41	1830-7B
T184369	10	1830-7
T184370	32	1816-13
T184393	26	1910-3
T184414	50	1830-7B
T184415	51	1830-7B
T184620	22	1816-13
T184620	3	1830-7
T184657	14	2160-13
T184676	1	1674-9
T184787	14	1910-3
T184788	17	1910-3
T184924	23	1830-7
T184957	20	3315-23
T184957	11	3363-31
T185078	18	1060-5
T185485	9	1816-9
T185494	2	1816-13
T185548	17	1320-7
T185549	18	1320-7
T185553	20	1320-7
T185570	17	1320-7
T185571	18	1320-7
T185577	20	1320-7
T185619	3	1816-11
T185619	2	1816-13
T185640	26	1320-3
T185664	18	1673-5
T185664	9	1673-7
T185678	43	1814-3
T185681	28	3363-33
T185682	31	3363-33
T185691	21	3315-13
T185692	22	3315-13
T185695	21	1320-7
T185696	21	1320-7
T185710	11	3162-3
T185710	17	3162-3
T185742	26	1816-9
T185743	21	1816-9
T185766	21	3315-3
T185769	22	1816-9
T185770	15	1816-13
T185773	7	1812-3
T185774	8	1812-3
T185775	14	1812-3
T185782	14	1811-3
T185783	16	1811-3
T185783	17	1811-3
T185784	15	1811-3
T185789	22	1830-7
T185826	41	0510-5
T185826	39	2160-17
T185826	5	2160-19
T185831	3	3302-15
T185831	20	3345-3
T185832	10	3302-3
T185832	9	3302-7
T185832	4	3302-15
T185832	15	3345-3
T185844	27	1816-13
T185845	48	1830-7B
T185896	14	1816-13
T185902	5	1313-3
T185926	5	1060-5
T186016	47	1814-3
T186017	46	1814-3
T186018	56	1814-3
T186022	30	1816-9
T186024	2	1674-13
T186029	1	1811-3
T186030	2	1811-3
T186123	27	1320-3
T186125	23	1320-7
T186128	23	1320-7
T186154	4	2160-11
T186441	26	1320-7
T186442	26	1320-7
T186443	7	2001-3
T186444	15	2001-3
T186452	1	1816-13
T186760	13	1830-7
T186766	53	1830-7B
T186793	11	0960-7
T186793	8	1320-3
T186793	50	1674-5
T186859	9	1060-7

NUMERICAL INDEX - CONTINUED

PART NO.	KEY	PAGE
T187072	16	3115-5
T187072	19	3115-7
T187110	33	1816-13
T187116	3	3302-3
T187116	3	3302-7
T187116	6	3302-15
T187117	2	3302-3
T187117	2	3302-7
T187117	7	3302-15
T187193	90	2160-25
T187571	1	0540-3
T187684	2	0201-7
T187815	17	2160-5
T188018	20	1320-7
T188019	20	1320-7
T188441	4	0230-8
T188442	6	0230-8
T188448	8	0230-8
T188565	13	1812-3
T188568	10	3344-3
T188642	20	1910-3
T188726	4	1812-3
T188806	6	1814-3
T188976	18	3162-3
T190296	28	3162-3
T190300	29	3162-3
T190357	21	3115-3
T190658	2	1671-7
T190669	40	2160-17
T190745	1	0230-7
T190746	16	0230-7
T190749	3	0230-8
T190795	7	3162-7
T190892	41	2160-17
T190925	21	3343-5
T190992	16	3115-3
T191071	1	1814-7
T191072	4	1814-7
T191073	5	1814-7
T191142	8	1812-3
T191226	22	3115-3
T191245	22	3315-3
T191285	12	3115-3
T191334	23	3362-47
T191335	9	3362-47
T191336	21	3362-47
T191337	11	3362-47
T191346	14	3362-47
T191425	18	0960-9
T191425	18	0960-11
T191427	6	0230-7
T191428	4	0230-7
T197832	16	1011-3
T200659	27	1320-7
T200660	27	1320-7
T200895	28	1320-7
T200896	28	1320-7
T201069	22	3362-47
T201071	13	3362-47
T201072	10	3362-47
T201306	12	3362-47
T201361	18	3343-5
T201362	19	3343-5
T201424	20	3362-11
T201424	23	3362-15
T201591	21	1910-3
T201952	4	1814-9
T201953	3	1814-9
T201954	2	1814-9
T201955	1	1814-9
T201956	6	1814-9
T201957	5	1814-9
T201957	21	1814-9
T201958	7	1814-9
T201968	8	1814-9
T201971	8	3343-5
T202050	25	3363-9
T202050	20	3363-27
T202499	2	0230-6
T202956	13	3315-13
T20314	4	0400-6
T20316	3	0400-6
T203374	2	1060-5
T203385	1	1060-5
T203458	3	1812-3
T204599	31	1814-3
T204635	2	2001-3
T204908	1	3102-3
T204908	8	3102-5
T204908	1	3102-9
T204908	7	3102-23
T205636	6	3363-25
T205637	7	3363-25
T205875	22	3343-5
T205901	33	1814-3
T205902	28	1814-3
T205969	4	1830-7
T207191	28	1320-3
T208007	29	1320-7
T208008	29	1320-7
T208077	21	1814-9
T208077	22	1814-9
T208136	10	0510-9
T208467	30	2160-17
T208510	14	3344-3
T209212	4	1674-7
T209334	29	1910-3
T209627	14	1673-5
T209627	12	1673-7
T209627	8	1674-5
T209627	10	1674-11
T210304	1	1749-3
T210304	6	1749-3
T210305	7	1749-3
T210306	1	1749-3
T210306	6	1749-3
T210372	8	1816-13
T210388	10	1816-13
T210390	7	1816-11
T210544	2	1921-3
T210623	23	0960-5
T210623	2	1816-7
T210624	24	0960-5
T210624	1	1816-7
T210717	2	1674-5
T210717	6	1674-7
T210717	8	1674-9
T210717	41	2160-25
T211111	5	0110-3
T211121	15	1910-3
T211122	18	1910-3
T211143	6	1313-3
T212039	4	1060-9
T212302	16	1921-3
T212304	12	1913-3
T213059	17	3362-47
T213429	9	1674-5
T213429	1	1674-31
T214064	4	0342-3
T214214	38	1674-5
T214214	7	1674-29
T214270	37	0560-3
T214276	29	0510-5
T214527	34	1814-3
T214548	34	1814-3
T214566	25	1674-5
T214677	1	1747-5
T214725	16	1674-5
T215153	22	1674-5
T215364	30	1910-3
T215367	11	0560-3
T215392	8	1816-11
T215457	11	1816-13
T215487	1	1673-7
T215594	37	1674-5
T215678	6	3343-5
T216060	18	3143-9
T216078	22	1390-3
T216111	37	1816-13
T216248	56	0510-7
T216258	8	0520-3
T216273	2	0505-5
T216322	8	0520-3
T216350	57	0510-7
T216397	7	3143-9
T216397	10	3143-9
T216397	13	3143-9
T216444	6	1674-11
T216498	6	1816-13
T216499	4	1816-11
T216524	9	0960-5
T216525	10	0960-5
T216528	29	1320-3
T216529	25	1320-7
T216530	25	1320-7
T216546	7	0960-5
T216548	52	1830-13
T216570	8	1816-9
T216572	23	3315-3
T216614	31	1910-3
T216620	58	0510-7
T216711	1	1320-3
T216714	30	1320-3
T216715	24	1320-7
T216716	24	1320-7
T216720	31	1320-3
T216721	13	1320-7
T216722	13	1320-7
T216731	19	1673-5
T216731	17	1673-7
T216750	42	2160-25
T216756	43	2160-25
T216833	25	0960-5
T216833	3	1816-7
T216877	59	0510-7
T216928	17	3115-5
T216928	20	3115-7
T216934	60	0510-7
T216968	28	2160-19
T216973	3	1834-3
T217077	8	1675-11

NUMERICAL INDEX - CONTINUED

PART NO.	KEY	PAGE
T217085	17	3163-13
T217175	61	0510-7
T217238	6	0510-9
T217367	48	1830-13
T217432	8	1814-3
T217433	8	1814-3
T217789	29	1390-3
T217790	30	1390-3
T217791	31	1390-3
T217792	32	1390-3
T218011	9	1320-3
T218012	19	1320-7
T218013	19	1320-7
T218014	10	1320-3
T218478	7	1111-5
T218481	4	0210-7
T218482	5	0210-7
T218483	12	1011-3
T218484	22	0250-7
T218485	11	1011-3
T218487	4	0201-7
T218487	24	0250-7
T218488	15	1111-5
T218489	7	0210-5
T218489	1	1111-5
T218493	9	1111-5
T218499	10	0230-7
T218500	1	0230-6
T218502	3	0960-3
T218504	1	0350-15
T218620	11	1320-3
T218622	12	1320-3
T218623	13	1320-3
T218624	16	1320-3
T218782	13	1111-5
T218783	14	1111-5
T218785	3	0201-3
T218785	7	0201-7
T218785	12	1111-5
T218804	18	0250-5
T218832	9	0250-15
T218833	8	0250-15
T218865	27	1814-3
T218866	29	1814-3
T221X230	23	3102-9
T221099	12	1320-7
T221100	12	1320-7
T222442	6	3346-3
T222521	25	1390-3
T223060	32	1320-3
T223061	22	1320-7
T223062	22	1320-7
T223076	7	3343-5
T223189	7	3363-17
T223289	9	1814-9
T223521	29	2160-19
T223522	30	2160-19
T223564	38	2160-19
T223708	37	2160-19
T223965	30	3162-3
T223966	30	3162-3
T224004	14	1320-3
T224005	14	1320-7
T224006	14	1320-7
T224015	15	1320-7
T224017	15	1320-7
T224200	21	0560-3
T224216	33	1390-3
T224227	7	1672-7
T224227	20	1674-9
T224233	9	0515-3
T224315	1	0515-3
T224857	19	3143-9
T225291	17	2160-5
T225322	64	0510-7
T225374	44	2160-25
T225375	11	1320-7
T225376	11	1320-7
T225523	65	0510-7
T225835	66	0510-7
T225838	6	2003-3
T225865	67	0510-7
T226097	68	0510-7
T226132	69	0510-7
T226427	49	1674-5
T226430	47	1674-5
T226786	3	2002-5
T227394	18	1060-3
T227450	36	0510-5
T227609	1	0510-9
T227609	54	1830-13
T227665	1	0510-9
T227666	1	0510-9
T227937	43	3346-5
T227945	5	1913-3
T228082	44	3346-5
T228083	45	3346-5
T228148	46	3346-5
T228611	8	3143-5
T228664	3	0210-3
T228665	3	0210-3
T228666	3	0210-3
T228667	3	0210-3
T228668	3	0210-3
T228669	3	0210-3
T228671	3	0210-3
T228672	3	0210-3
T228673	3	0210-3
T228677	4	0210-5
T228679	4	0210-5
T228680	4	0210-5
T228681	4	0210-5
T228682	4	0210-5
T228683	4	0210-5
T228684	4	0210-5
T228685	4	0210-5
T228686	4	0210-5
T228687	4	0210-5
T228688	4	0210-5
T228689	4	0210-5
T228690	4	0210-5
T228691	4	0210-5
T228709	9	0210-5
T228710	14	0210-7
T228711	12	0210-7
T228712	2	0210-7
T228713	3	0210-7
T228714	11	0210-7
T228715	16	0210-7
T228716	13	0210-7
T228717	15	0210-7
T228722	6	0210-5
T228722	2	1111-5
T228723	1	0210-7
T228727	6	1011-3
T228728	4	1011-3
T228729	17	1011-3
T228730	7	1011-3
T228852	2	1675-11
T228895	8	1011-3
T228896	1	1011-3
T228897	19	1011-3
T228898	3	1011-3
T228908	7	0201-3
T228909	2	1011-3
T228910	13	1011-3
T228911	3	0250-9
T228911	18	1011-3
T228912	14	1011-3
T228912	21	1011-3
T228913	1	0201-3
T228914	11	0201-3
T228915	11	0201-3
T228916	11	0201-3
T228917	11	0201-3
T228918	11	0201-3
T228919	11	0201-3
T228920	11	0201-3
T228921	11	0201-3
T228922	11	0201-3
T228923	11	0201-3
T228924	11	0201-3
T228925	11	0201-3
T228926	11	0201-3
T228927	11	0201-3
T228928	11	0201-3
T228929	11	0201-3
T228930	11	0201-3
T228931	11	0201-3
T228932	11	0201-3
T228933	11	0201-3
T228934	11	0201-3
T228935	11	0201-3
T228936	21	0201-3
T228936	21	0201-5
T228937	1	0201-7
T228938	11	0201-7
T228939	5	0201-3
T228940	13	0201-7
T228941	15	0201-7
T228942	8	0201-7
T228952	9	0201-7
T228956	10	0201-7
T228957	8	0201-3
T228970	2	0201-3
T228972	4	0201-3
T228973	12	0201-3
T228974	12	0201-7
T228975	6	0201-7
T228994	4	1111-5
T228995	3	1111-5
T228996	11	1111-5
T228997	17	1111-5
T228998	2	0250-15
T228999	2	0250-15
T229000	2	0250-15
T229001	2	0250-15
T229002	2	0250-15
T229009	4	0250-15
T229010	5	0250-15
T229011	5	0250-15

NUMERICAL INDEX - CONTINUED

PART NO.	KEY	PAGE
T229012	5	0250-15
T229013	5	0250-15
T229014	5	0250-15
T229015	5	0250-15
T229016	5	0250-15
T229017	5	0250-15
T229018	5	0250-15
T229019	5	0250-15
T229020	5	0250-15
T229021	5	0250-15
T229022	5	0250-15
T229023	5	0250-15
T229024	5	0250-15
T229025	5	0250-15
T229026	5	0250-15
T229027	5	0250-15
T229028	5	0250-15
T229029	5	0250-15
T229030	5	0250-15
T229031	5	0250-15
T229032	5	0250-15
T229033	5	0250-15
T229034	5	0250-15
T229035	5	0250-15
T229036	5	0250-15
T229076	2	0250-11
T229077	9	0250-11
T229080	7	0250-11
T229081	11	0250-11
T229082	4	0250-11
T229083	6	0250-11
T229084	8	0250-11
T229086	16	0250-5
T229087	16	0250-5
T229088	16	0250-5
T229090	16	0250-5
T229091	16	0250-5
T229092	16	0250-5
T229093	16	0250-5
T229094	16	0250-5
T229096	16	0250-5
T229121	16	0250-5
T229122	16	0250-5
T229123	16	0250-5
T229124	16	0250-5
T229125	16	0250-5
T229126	16	0250-5
T229127	16	0250-5
T229128	16	0250-5
T229129	16	0250-5
T229130	16	0250-5
T229212	10	0250-9
T229250	2	0250-9
T229251	15	0250-7
T229252	15	0250-7
T229253	20	0250-5
T229254	3	0250-7
T229255	6	0250-7
T229258	4	0250-9
T229259	6	0250-9
T229260	13	0250-7
T229261	8	0960-3
T229262	15	0250-5
T229268	1	0250-5
T229270	5	0250-7
T229271	14	0250-7
T229272	10	0250-7
T229273	25	0250-7
T229274	1	0250-9
T229275	2	0960-3
T229276	4	0960-3
T229277	7	0960-3
T229278	10	0960-3
T229279	1	0960-3
T229280	9	0960-3
T229281	6	0960-3
T229282	12	0960-3
T229285	16	0250-7
T229336	17	0350-13
T229337	7	0350-9
T229337	7	0350-13
T229340	11	0350-3
T229340	11	0350-5
T229340	9	0350-7
T229340	9	0350-9
T229340	9	0350-13
T229341	10	0350-3
T229341	12	0350-5
T229341	10	0350-7
T229341	10	0350-9
T229341	10	0350-13
T229342	19	0350-13
T229343	18	0350-15
T229343	2	0360-7
T229346	9	0350-3
T229346	9	0350-5
T229346	12	0350-7
T229346	12	0350-9
T229346	12	0350-13
T229347	22	0350-3
T229348	15	0350-13
T229349	14	0350-11
T229351	1	0341-5
T229352	10	0350-3
T229352	12	0350-5
T229352	10	0350-7
T229352	10	0350-9
T229352	10	0350-13
T229353	7	0350-11
T229354	2	0341-3
T229356	2	0350-3
T229356	2	0350-5
T229356	15	0350-7
T229356	15	0350-9
T229356	2	0350-11
T229356	15	0350-15
T229357	11	0350-15
T229359	10	0350-3
T229359	12	0350-5
T229359	10	0350-7
T229359	10	0350-9
T229359	10	0350-13
T229360	7	0341-5
T229361	2	0341-3
T229362	17	0341-5
T229363	9	0341-5
T229364	10	0350-3
T229364	12	0350-5
T229364	10	0350-7
T229364	10	0350-9
T229364	10	0350-13
T229366	17	0341-5
T229368	11	0350-11
T229368	9	0350-15
T229369	7	0341-5
T229372	12	0350-15
T229373	9	0350-11
T229375	11	0350-11
T229375	9	0350-15
T229376	7	0341-5
T229379	10	0350-3
T229379	12	0350-5
T229379	10	0350-7
T229379	10	0350-9
T229379	10	0350-13
T229380	10	0350-3
T229380	12	0350-5
T229380	10	0350-7
T229380	10	0350-9
T229380	10	0350-13
T229381	10	0350-3
T229381	12	0350-5
T229381	10	0350-7
T229381	10	0350-9
T229381	10	0350-13
T229382	5	0360-3
T229383	11	0350-11
T229383	9	0350-15
T229384	2	0341-3
T229385	1	0360-5
T229386	11	0350-11
T229386	9	0350-15
T229390	13	0341-3
T229391	13	0341-3
T229392	2	0341-5
T229393	4	0360-3
T229394	12	0341-5
T229398	14	0350-3
T229398	15	0350-5
T229398	6	0350-7
T229398	6	0350-9
T229398	6	0350-13
T229399	4	0341-5
T229400	5	0341-5
T229401	18	0350-11
T229402	4	0350-9
T229402	4	0350-13
T229403	15	0350-3
T229403	17	0350-5
T229403	4	0350-7
T229404	6	0341-3
T229405	2	0350-17
T229406	17	0350-3
T229406	13	0350-5
T229406	11	0350-7
T229406	11	0350-9
T229406	11	0350-13
T229407	14	0350-15
T229408	19	0350-9
T229409	5	0350-11
T229410	20	0350-13
T229411	19	0350-7
T229412	5	0350-3
T229412	5	0350-5
T229466	2	0350-7
T229466	2	0350-9
T229466	19	0350-11
T229466	2	0350-13
T229466	5	0350-15
T229467	2	0350-15
T229468	8	0350-3

NUMERICAL INDEX - CONTINUED

PART NO.	KEY	PAGE
T229468	8	0350-5
T229468	13	0350-7
T229468	13	0350-9
T229468	13	0350-13
T229469	13	0350-3
T229469	14	0350-5
T229469	7	0350-7
T23P	25	3102-9
T230SP	24	3102-9
T230236	12	0960-7
T230433	2	0341-3
T230865	1	0210-3
T230866	10	0210-5
T24472	9	0400-32
T24959	47	3346-5
T29342	6	0540-3
T29342	21	1674-9
T29342	28	1740-5
T29342	6	1921-3
T29342	15	3344-3
T29342	48	3346-5
T32854	6	1111-3
T33376	16	3344-3
T38485	9	3365-18
T38545	14	3363-5
T42199	1	1671-7
T46876	23	1674-5
T55214	16	1821-9
T55222	10	1821-9
T55224	17	1821-9
T55501	33	1674-5
T55501	5	1674-14
T58056	8	1921-3
T58056	11	1921-3
T58109	2	3315-13
T58477	6	0400-29
T60811	30	1830-7
T60811	31	1830-7
T61226	9	3143-5
T61861	40	0510-5
T65974	7	0325-3
T66701	36	0560-3
T67424	28	3362-15
T67424	19	3362-21
T67425	26	3362-15
T67425	20	3362-21
T68144	43	0510-5
T69938	6	0250-17
T69938	4	0325-3
T70177	2	3162-9
T70177	7	3162-11
T70659	37	1830-7
T74410	34	1390-3
T74412	17	1674-9
T74416	14	1674-9
T74416	29	1830-13
T74416	12	3363-29
T74952	4	0515-3
T74952	4	1673-3
T74952	5	2001-3
T76502	2	3362-9
T76502	12	3362-21
T76830	52	1814-3
T76832	42	1814-3
T76833	37	1814-3
T76938	6	2160-17
T76938	15	3363-25
T77613	14	0960-9
T77613	14	0960-11
T77613	3	1060-7
T77613	3	1060-9
T77613	13	1740-5
T77613	11	2160-17
T77613	15	3163-13
T77613	9	3363-5
T77613	1	3363-17
T77613	4	3363-29
T77613	3	3363-31
T77814	2	0210-8
T77814	10	1390-3
T77814	8	3363-5
T77814	10	3363-29
T77814	15	3363-31
T77857	28	0960-9
T77857	28	0960-11
T77857	21	1060-3
T77857	8	2160-17
T77857	7	2160-25
T77857	10	2160-25
T77857	9	3163-3
T77857	10	3163-13
T77857	49	3346-5
T77857	17	3362-9
T77857	5	3363-33
T77858	4	1111-3
T77858	13	2160-17
T77858	13	3363-9
T77858	5	3363-25
T77858	32	3363-27
T77858	26	3363-33
T77932	17	1111-3
T77932	12	3163-13
T77932	7	3363-7
T77932	8	3363-9
T77932	4	3363-13
T77932	27	3363-25
T77932	2	3363-27
T77932	3	3363-33
T77932	12	3363-33
T77932	27	3363-33
T78497	34	2160-17
T78497	36	2160-19
T78593	11	0505-5
T78606	17	0960-9
T78606	17	0960-11
T78606	23	3163-3
T78606	35	3163-13
T78606	6	3363-5
T78707	4	3363-25
T78716	50	3346-5
T78716	22	3363-33
T78787	11	1830-13
T80027	6	0250-3
T80306	3	3363-25
T80306	23	3363-33
T81029	9	3363-17
T81524	4	3162-5
T81524	5	3162-7
T81524	4	3162-9
T81524	13	3162-11
T81524	13	3362-11
T81524	14	3362-13
T81524	19	3362-13
T81524	8	3362-15
T81524	3	3362-17
T81524	3	3362-19
T81535	22	3162-5
T81538	16	3362-11
T81538	6	3362-13
T81538	13	3362-15
T81538	9	3362-17
T81538	18	3362-47
T81539	17	3362-11
T81539	7	3362-13
T81539	14	3362-15
T81539	10	3362-17
T81539	19	3362-47
T81540	13	3162-9
T81540	18	3162-11
T81540	23	3362-11
T81540	9	3362-13
T81540	16	3362-15
T81540	13	3362-17
T81540	8	3362-19
T81541	15	3162-9
T81541	20	3162-11
T81541	11	3362-13
T81541	18	3362-15
T81541	10	3362-19
T82430	6	0325-3
T82791	42	1674-5
T82792	43	1674-5
T83061	38	1816-13
T83426	18	3342-3
T84194	6	3102-5
T84194	9	3102-9
T84194HD	6	3102-5
T84194HD	9	3102-9
U12167	7	1740-5
U12198	10	3365-29
U12288	20	3363-9
U12547	14	2160-17
U12547	35	2160-19
U12547	2	3363-25
U13639	3	0505-3
U13639	29	1060-5
U13639	17	2160-17
U13639	31	2160-17
U17409	20	2160-17
U43792	10	3302-15
XN8TUB8	19	3363-29
5787YT	26	3115-3
790106800	15	3362-47