SEBP7467
December 2014

RUTHZIL TRATOR COMERCIAL DE PEÇAS LTDA 11 97083-6812 ROLANDO

Parts Manual

318D2 L Excavator

HAH1-Up (Machine)
CST1-Up (Engine)

Powered By 3054C Engine

Product and Dealer Information

Note: For product identification plate locations, see the section “Product Identification Information” in the Operation and Maintenance Manual.

Delivery Date: _____

Product Information

Model: _____

Product Identification Number: _____

Engine Serial Number: _____

Transmission Serial Number: _____

Generator Serial Number: _____

Attachment Serial Numbers: _____

Attachment Information: _____

Customer Equipment Number: _____

Dealer Equipment Number: _____

Dealer Information

Name: _____ Branch: _____

Address: _____

_____

_____

	Dealer Contact	Phone Number	Hours
Sales:	_____	_____	_____
Parts:	_____	_____	_____
Service:	_____	_____	_____

MEMORANDA

TABLE OF CONTENTS

NAME	PAGE
GENERAL INFORMATION	**A4**
REPAIR ALTERNATIVES	**A7**
SUPPLEMENTAL COOLANT ADDITIVES	A8
MAINTENANCE PARTS	**A9**
INDEX	**A12**
MACHINE ARRANGEMENT	**1**
CHASSIS AR	1
DISTRIBUTION AR	1
GENERAL AR	2
OPTION AR-CAB	2
OPTION AR-HYDRAULIC	3
ENGINE ARRANGEMENT	**4**
ENGINE AR-COMPLETE	4
ENGINE AR-PRIMARY	4
INSTALLATION AR-ENGINE	6
BASIC ENGINE	**7**
CAMSHAFT GP	7
COVER GP-CYLINDER HEAD	8
COVER GP-VALVE MECHANISM	9
CRANKSHAFT GP	10
CYLINDER BLOCK GP	12
CYLINDER HEAD GP	14
DRIVE GP-FAN	16
FLYWHEEL GP	17
HOUSING GP-FLYWHEEL	18
HOUSING GP-FRONT	19
LIFTING GP-ENGINE	20
MOUNTING GP-ENGINE	21
PAN GP-OIL	23
PISTON & ROD GP	25
PLUG GP-ENGINE	26
PULLEY GP-CRANKSHAFT	30
PULLEY GP-FAN	31
ROCKER ARM GP	32
VALVE MECHANISM GP	33
LUBRICATION SYSTEM	**34**
FILTER & MTG GP-ENGINE OIL	34
FUMES DISPOSAL GP	36
PUMP GP-ENGINE OIL	37
COOLING SYSTEM	**38**
CONNECTION GP-WATER	38
COOLER GP-ENGINE OIL	40
COOLER GP-FLTR BASE & ENG OIL	41
FAN AR-SUCTION	42
FAN GP-SUCTION	43
LINES GP-COOLING	44
PUMP GP-WATER	45
RADIATOR & HYD OIL COOLER GP	47
VALVE GP-COOLANT SAMPLING	51
AIR INLET AND EXHAUST SYSTEM	**52**
AIR CLEANER & MOUNTING GP	52
AIR CLEANER GP	53
ELBOW GP-AIR INLET	54
LINES GP-AIR	56
MUFFLER GP	57
TURBOCHARGER GP	58
FUEL SYSTEM	**60**
CONTROL GP-GOVERNOR	60
FILTER GP-FUEL	62
LINES GP-FUEL	63
PUMP GP-FUEL INJECTION	68
TANK & MTG GP-FUEL	73
TANK GP-FUEL	74
ELECTRICAL AND STARTING SYSTEM	76
ALARM GP	76
ALTERNATOR GP-CHARGING	77
ANTENNA & MOUNTING GP	79
BATTERY & WIRING GP	82
BLOCK GP-JUNCTION	88
CONTROL & MTG GP-COMMUNICATION	89
CONTROL & MTG GP-ELECTRONIC	90
CONTROL AR-COMMUNICATION	91
CONTROL GP-COMMUNICATION	91
CONTROL GP-UNPROGRAMMED	92
ELECTRONICS GP-MACHINE	93
GLOW PLUG GP	94
LAMP GP-FLOOD	95
LIGHTING GP-FLOOD	97
PANEL & MTG GP-CIRCUIT BREAKER	99
PANEL GP-CIRCUIT BREAKER	100
PANEL GP-SWITCH	102
SENSOR GP-LIQUID LEVEL	104
SENSOR GP-PRESSURE	105
SENSOR GP-SPEED	106
SENSOR GP-TEMP & PRESS	107
STARTING MOTOR GP-ELECTRIC	108
SWITCH GP-DISCONNECT	109
SWITCH GP-LIMIT	110
SWITCH GP-MAGNETIC	111
SWITCH GP-START	113
WIRING GP-CAB	114
WIRING GP-COMMUNICATION	120
WIRING GP-CONSOLE	122
WIRING GP-PLATFORM	127

TABLE OF CONTENTS

NAME	PAGE
POWER TRAIN	**130**
DRIVE GP-FINAL	130
POWER TRAIN AR	134
SPROCKET GP	135
FRAME AND BODY	**136**
BOX & MTG GP-STORAGE	136
BOX GP-STORAGE	137
COUNTERWEIGHT & MOUNTING GP	139
COUNTERWEIGHT GP	140
COVER AS-SOUND SUPPRESSION	141
DOOR GP-ACCESS	142
FRAME GP-UPPER	144
GEAR & BEARING GP-SWING	146
GUARD GP-BOTTOM	149
HANDRAIL GP	150
HOOD & GUARD GP	151
HOOD GP-ENGINE	154
SHEET AS-SOUND SUPPRESSION	155
STEP GP	159
SUPPORT AS-SOUND SUPPRESSION	160
UNDERCARRIAGE	**163**
FRAME AR-UNDERCARRIAGE	163
FRAME AS-UNDERCARRIAGE	164
GUARD GP-TRACK GUIDE	165
GUARD GP-TRAVEL MOTOR	166
IDLER GP-FRONT	167
LINK AS-TRACK	171
ROLLER AR-TRACK & CARRIER	172
ROLLER GP-TRACK CARRIER	173
ROLLER GP-TRACK-SINGLE FLANGE	174
TRACK ADJUSTER & RECOIL GP	177
TRACK GP	181
HYDRAULIC SYSTEM	**182**
ACCUMULATOR GP-HYDRAULIC	182
COUPLING GP-FLEXIBLE	189
COUPLING GP-PUMP	190
CYLINDER & LINES GP-BOOM	191
CYLINDER & LINES GP-BUCKET	191
CYLINDER & LINES GP-STICK	191
CYLINDER & SEAL GP-BOOM	192
CYLINDER & SEAL GP-BUCKET	194
CYLINDER & SEAL GP-STICK	196
DRIVE GP-SWING	198
FASTENER GP-SWING & FINAL DR	202
FILTER & VALVE GP-PILOT	204
FILTER GP-OIL	205
FITTING GP-HYDRAULIC	207
GAUGE GP-SIGHT	208
HEAD GP-PUMP	209
HYDRAULIC AR	211
LINES GP-BOOM	212
LINES GP-BOOM CYLINDER	214
LINES GP-BUCKET CYLINDER	216
LINES GP-CYLINDER	217
LINES GP-DRAIN	220
LINES GP-FRONT	221
LINES GP-HYDRAULIC	224
LINES GP-HYDRAULIC OIL COOLER	226
LINES GP-PILOT	227
LINES GP-PUMP	242
LINES GP-STICK	246
LINES GP-STICK CYLINDER	248
LINES GP-TRAVEL MOTOR	249
MANIFOLD GP-CONTROL	251
MOTOR & MTG GP-TRAVEL	254
MOTOR GP-PISTON	255
MOTOR GP-SWING	257
MOTOR GP-TRAVEL	258
MOUNTING GP-MAIN CONTROL VALVE	261
PUMP & MTG GP-MAIN HYDRAULIC	262
PUMP GP-GEAR	263
PUMP GP-PISTON	264
SCREEN GP-HYDRAULIC	267
SPOOL GP-CONTROL VALVE	268
SWIVEL GP	279
TANK & FILTER GP-HYDRAULIC	281
TANK & MTG GP-HYDRAULIC	283
VALVE GP-CHECK	284
VALVE GP-MAIN CONTROL	285
VALVE GP-PILOT	291
VALVE GP-PILOT RELIEF	296
VALVE GP-PRESSURE REDUCING	298
VALVE GP-RELIEF	299
VALVE GP-SHUTTLE	304
VALVE GP-SOLENOID	305
VALVE GP-SWING CUSHION	307
VALVE GP-TRAVEL COUNTERBALANCE	308
IMPLEMENTS	**309**
BOOM AR-1 PIECE LONG	309
BOOM GP	310
LINES GP-GREASE	312
LINKAGE AR-BUCKET	313
LINKAGE GP-BUCKET	314
STICK AR-HOE	315
STICK GP-HOE	316
WORK TOOLS	**318**
ADJUSTER GP-BUCKET	318
BUCKET & ADJUSTER GP	319
BUCKET AR-GENERAL PURPOSE	320
BUCKET AR-SEVERE SERVICE ROCK	320

TABLE OF CONTENTS

NAME	PAGE
BUCKET AS-GENERAL PURPOSE	321
BUCKET AS-SEVERE SERVICE ROCK	322
SIDECUTTER GP	323
TIP GP-LONG	324
TIP GP-PENETRATION PLUS	325
OPERATOR STATION	**326**
AIR CONDITIONER & MOUNTING GP	326
AIR CONDITIONER AR	328
AIR CONDITIONER GP	329
ARMREST GP	331
BRACKET GP-MOUNTING	333
CAB GP	334
COIL GP-EVAPORATOR	353
COMPRESSOR & MTG GP-REFRIG	355
COMPRESSOR GP-REFRIGERANT	356
CONDENSER & MTG GP-REFRIGERANT	357
CONDENSER GP-REFRIGERANT	359
CONSOLE GP-OPERATOR	360
CONTROL & MTG GP-JOYSTICK	366
CONTROL GP-HANDLE	367
CONTROL GP-HEAT & AIR COND	370
CONTROL GP-JOYSTICK	371
CONTROL GP-MONITOR	373
CONTROL GP-PILOT OPERATED HYD	374
COVER GP-CAB	375
DOOR & MTG GP-CAB	376
DOOR GP-CAB	378
DUCT GP-CAB AIR	382
FLOOR MAT	383
HATCH GP-ROOF	384
HORN GP-ELECTRIC	387
LATCH GP-WINDOW	389
LEVER GP-CAB DOOR	390
LINES GP-AIR CONDITIONER	391
LITERATURE GP	394
MIRROR GP-REAR VIEW	395
MONITOR & MTG GP-OPERATOR	397
MONITOR GP-OPERATOR	398
MOUNTING GP-PLATFORM	399
OPERATOR AR	401
PLATFORM GP-OPERATOR	402
SEAT & MOUNTING GP	403
SEAT BELT GP	404
SEAT GP	405
SEAT GP-SUSPENSION	408
SUPPORT GP-SEAT	409
SUSPENSION GP-SEAT	410
WASHER GP-WINDOW	415
WINDOW GP-CAB	416
WINDOW GP-DOOR	431
WIPER GP-WINDOW	435
SERVICE EQUIPMENT AND SUPPLIES	438
PLATE & FILM GP	438
PART NUMBER INDEX	**B1**

1. MACHINE IDENTIFICATION

Cat machines are identified by Product Identification Numbers (PIN). Some components included in a machine may be identified by Serial Numbers (S/N). Typical components that will be serialized include engines, transmissions, bulldozers, and rippers. The machine and engine are further identified by arrangement numbers and in some cases modification numbers. These numbers are shown on the product identification plate(s) and on the master plate in the operator's compartment.

Cat dealers need all of these numbers to determine accurate parts identification.

Effective First Quarter 2001 the Cat Product Identification Number (PIN) changed from 8 to 17 characters. In an effort to provide uniform equipment identification, Caterpillar and other construction equipment manufacturers are moving to comply with the latest version of the product identification numbering standard. Non-road machine PINs are defined by ISO 10261. The new PIN format will apply to all Cat machines and generator sets. The PIN plates and frame marking will display the 17 character PIN. The new format will look like the following:

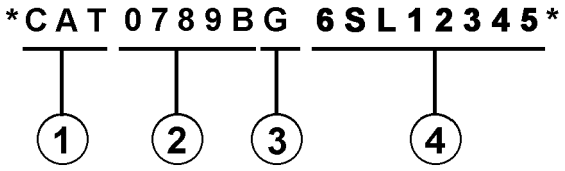

Where:

1. Caterpillar's World Manufacturing Code (characters 1-3)

2. Machine Descriptor (characters 4-8)

3. Check Character (character 9)

4. Machine Indicator Section (MIS) or Product Sequence Number (characters 10-17). These were previously referred to as the Serial Number.

Machines and generator sets produced before First Quarter 2001 will maintain their 8 character PIN format.

Components such as engines, transmissions, axles, etc. and work tools will continue to use an 8 character Serial Number (S/N).

2. ORDERING PARTS

⚠ WARNING

When replacement parts are required for this product Caterpillar recommends using Caterpillar replacement parts or parts with equivalent specifications including, but not limited to, physical dimensions, type, strength and material.

Failure to heed this warning can lead to premature failures, product damage, personal injury or death.

Quality Cat replacement parts are available from Cat dealers throughout the world. Their parts inventories are up to date and include all parts normally required to protect your investment in Cat machines. Dealers may offer repair kits or remanufactured parts to allow selection of the most effective repair alternative for a particular situation. When ordering parts, your order should specify the quantity, part number, part name, and the serial number/product identification number of the machine for which the parts are needed.

3. PARTS MANUAL ORGANIZATION

Product information in this manual is presented as "information elements" that represent all of the components for the specific model. Engine Arrangement and Seat Group are examples of information elements. The information elements are organized alphabetically by part name and secondarily by part number within each major section of the manual.

4. TABLE OF CONTENTS

A table of contents (TOC) is found at the beginning of the manual. The TOC lists each section of the manual with a complete list of all information elements organized as they appear in the manual. Page numbers are provided for quick reference to detailed parts identification illustrations and serviceable consist lists.

5. MAINTENANCE PARTS INDEX

The Maintenance Parts Index, located near the beginning of the manual, references most frequently used maintenance part numbers, providing description, quantity, usage and page number. This information is organized alphabetically by part description.

6. INDEX

The index located near the front of the manual is an alphabetical listing of all information elements included in the manual. Page numbers are provided for quick reference to detailed parts identification illustrations and serviceable consist lists.

7. PART NUMBER INDEX

A numerical index listing all part numbers and the corresponding page number(s) appears at the back of the manual.

8. CAPTIONS

Captions located at the beginning of each information element identify the part number and part name along with additional descriptive information. PIN and S/N information found in each caption should be used to select correct information for a specific machine. Field replacement options, identification of optional attachment components, and where used ("part of") information is also provided.

The first line of a caption is shown in larger type font to indicate the beginning of an information element. Captions for additional pages that may be required to illustrate an information element will be shown in standard type font and will include the term *(contd.)* .

9. NON-SERVICED PARTS

In some instances it is necessary to display non-serviced parts that are a link to a lower level serviceable consist lists. These non-serviced part numbers are shown in *italic* type indicating that they are not available.

10. PARTS LIST REFERENCE NUMBERS

Numbers shown in the Ref No column correspond to numbers used in the associated graphic(s). An alphabetic suffix may be added to a reference number to identify lower level consist items. Numbers shown in the Graphic Ref column refer to the graphic number identifier displayed in the lower left corner of each illustration. The Graphic Ref number may be used in combination with the item Ref No to determine the correct part number. There may be intentional omission of a Ref No in a consist list as information is updated to reflect the latest serviceable part numbers.

11. INDENTED PART NAMES

When a part name is indented in a parts list, it is part of (included in) the group or assembly under which it is indented.

12. ILLUSTRATION REFERENCE LETTERS

When necessary, illustrations contain reference letters (A, B, C etc.) that are intended to track lines and harnesses from one point to another. They are also used to show where to reconnect illustrations that have been separated.

13. ABBREVIATIONS AND SYMBOLS

O.D. – Outside Diameter
I.D. – Inside Diameter
A – Not Part Of This Group
B – Use As Required
C – Change From Previous Type
D – Order By The Meter
E – Order By The Centimeter
F – Not Shown
G – Order By The Inch
I – Refer To Hydraulic Information System
M – Metric Part
R – Remfg Part May Be Available
Y – Separate Illustration
Z – Not Serviced Separately

14. DESCRIPTION OF TYPE CHANGES

Type - A type is defined as any configuration change that requires an additional Information Element for an Arrangement, Group, or Assembly. If serial number breaks for types are not available, a type # (Type 1, Type 2, etc.) will be displayed in the caption. These "type" changes are identified with a "C" note (change from previous type) in the Parts List. Only the "types" that apply to this Parts Manual will be included. Additional types may exist causing "C" notes to appear on an Information Element when no other types are shown.

15.<END>

This symbol indicates the end of an information element.

NOTE:

Continuing improvement and advancement of product design may cause changes to your machine which may not be included in this publication. Whenever a question arises regarding your Cat product or this publication, please consult your Cat dealer for the latest available information.

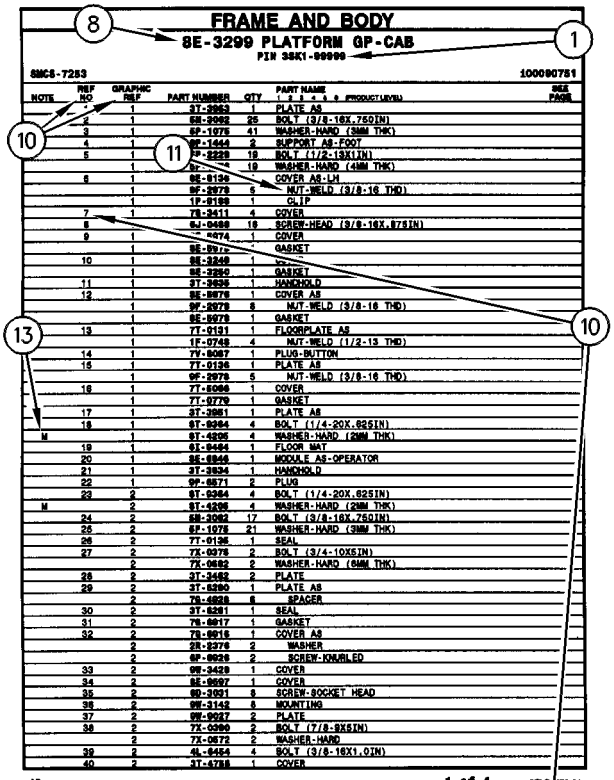

FRAME AND BODY

8E-3299 PLATFORM GP-CAB

PIN 3SK1-00999

SMCS-7283 100090751

NOTE	REF NO	GRAPHIC REF	PART NUMBER	QTY	PART NAME 1 2 3 4 5 6 (PRODUCT LEVEL)	SEE PAGE
	1	1	3T-3963	1	PLATE AS	
	2	1	6M-3982	25	BOLT (3/8-16X.75DIN)	
	3	1	5P-1078	41	WASHER-HARD (3MM THK)	
	4	1	9F-1444	2	SUPPORT AS-FOOT	
	5	1	7P-2229	19	BOLT (1/2-13X1IN)	
		1	9x-[illegible]	19	WASHER-HARD (4MM THK)	
	6	1	8E-8136	1	COVER AS-LH	
		1	9F-2979	6	NUT-WELD (3/8-16 THD)	
		1	1F-8188	1	CLIP	
	7	1	7S-3411	4	COVER	
	8		5J-0488	19	SCREW-HEAD (3/8-16X.875IN)	
	9	1	[illegible]-0474	1	COVER	
		1	8E-8976	1	GASKET	
	10	1	8E-3249	1	[illegible]	
		1	8E-3250	1	GASKET	
	11	1	3T-3935	1	HANDHOLD	
	12	1	8E-8978	1	COVER AS	
		1	9F-2979	8	NUT-WELD (3/8-16 THD)	
		1	8E-8979	1	GASKET	
	13	1	7T-0131	1	FLOORPLATE AS	
		1	1F-0748	4	NUT-WELD (1/2-13 THD)	
	14	1	7V-8067	1	PLUG-BUTTON	
	15	1	7T-0136	1	PLATE AS	
		1	9F-2979	5	NUT-WELD (3/8-16 THD)	
	16	1	7T-8068	1	COVER	
		1	7T-0779	1	GASKET	
	17	1	3T-3951	1	PLATE AS	
	18	1	6T-9364	4	BOLT (1/4-20X.625IN)	
M		1	6T-4236	4	WASHER-HARD (2MM THK)	
	19	1	6I-9494	1	FLOOR MAT	
	20	1	8E-8946	1	MODULE AS-OPERATOR	
	21	1	3T-3934	1	HANDHOLD	
	22	1	9F-8571	2	PLUG	
	23	2	6T-9364	4	BOLT (1/4-20X.625IN)	
M		2	6T-4236	4	WASHER-HARD (2MM THK)	
	24	2	6M-3982	17	BOLT (3/8-16X.75DIN)	
	25	2	5P-1078	21	WASHER-HARD (3MM THK)	
	26	2	7T-0136	1	SEAL	
	27	2	7X-0378	2	BOLT (3/4-10X5IN)	
		2	7X-0682	2	WASHER-HARD (6MM THK)	
	28	2	3T-3482	2	PLATE	
	29	2	3T-8280	1	PLATE AS	
		2	7S-4828	6	SPACER	
	30	2	3T-8281	1	SEAL	
	31	2	7S-8917	1	GASKET	
	32	2	7S-8916	1	COVER AS	
		2	2S-2376	2	WASHER	
		2	9F-8628	2	SCREW-KNURLED	
	33	2	9W-3429	1	COVER	
	34	2	8E-8697	1	COVER	
	35	2	9D-3931	8	SCREW-SOCKET HEAD	
	36	2	9W-3142	8	MOUNTING	
	37	2	9W-9927	2	PLATE	
	38	2	7X-0290	2	BOLT (7/8-9X5IN)	
		2	7X-0572	2	WASHER-HARD	
	39	2	4L-6454	4	BOLT (3/8-16X1.0IN)	
	40	2	3T-4788	1	COVER	

12 FRAME AND BODY 1 of 4 SELP[illegible]70-01

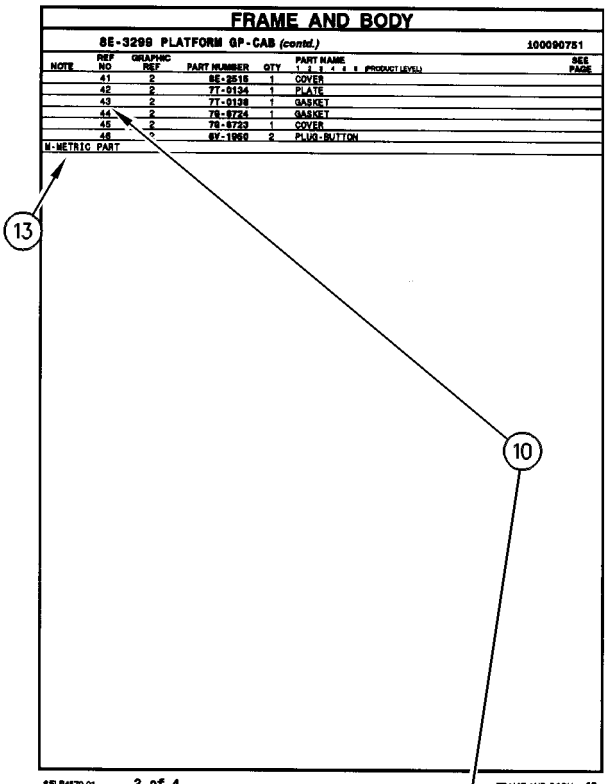

FRAME AND BODY

8E-3299 PLATFORM GP-CAB (contd.) 100090751

NOTE	REF NO	GRAPHIC REF	PART NUMBER	QTY	PART NAME 1 2 3 4 5 6 (PRODUCT LEVEL)	SEE PAGE
	41	2	8E-2516	1	COVER	
	42	2	7T-0134	1	PLATE	
	43	2	7T-0138	1	GASKET	
	44	2	7S-8724	1	GASKET	
	45	2	7S-8723	1	COVER	
	46	2	6V-1960	2	PLUG-BUTTON	

M-METRIC PART

SELP4570-01 2 of 4 FRAME AND BODY 13

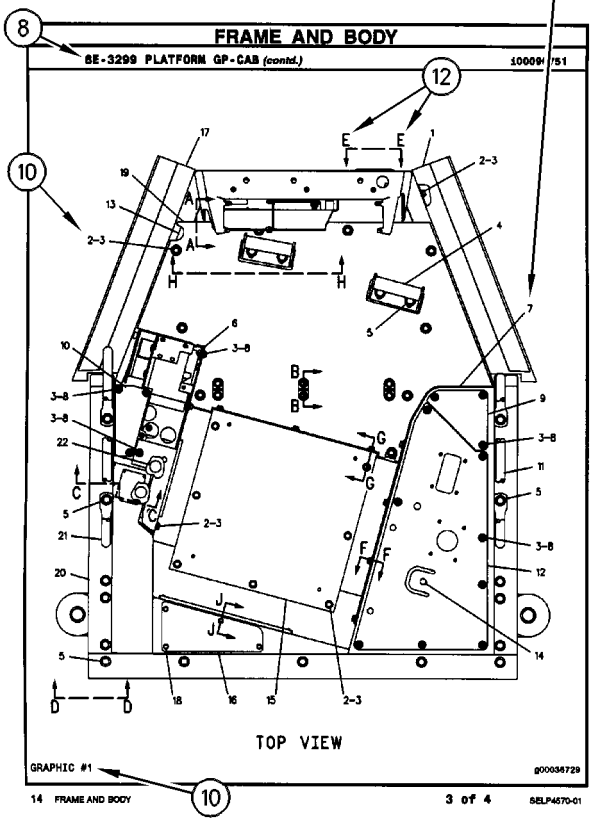

FRAME AND BODY

8E-3299 PLATFORM GP-CAB (contd.) 100090751

TOP VIEW

GRAPHIC #1 g00036729

14 FRAME AND BODY 3 of 4 SELP4570-01

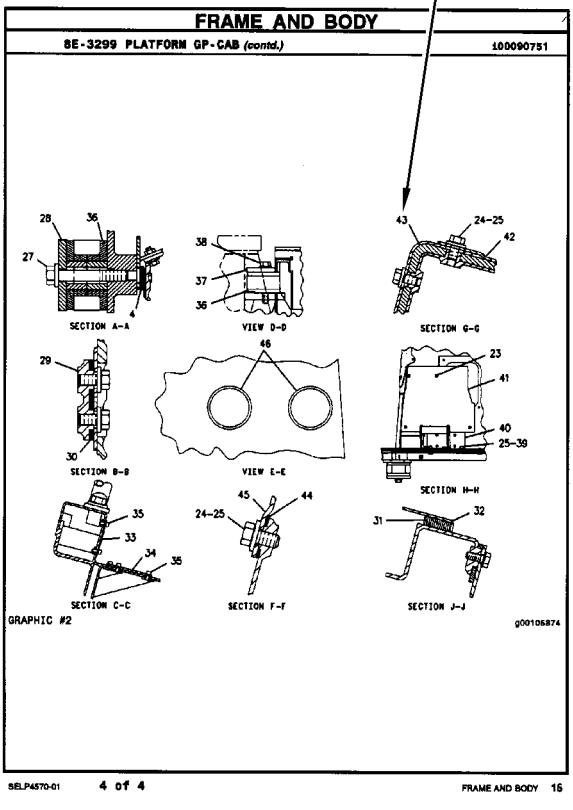

FRAME AND BODY

8E-3299 PLATFORM GP-CAB (contd.) 100090751

SECTION A-A

VIEW D-D

SECTION G-G

SECTION B-B

VIEW E-E

SECTION H-H

SECTION C-C

SECTION F-F

SECTION J-J

GRAPHIC #2 g00105874

SELP4570-01 4 of 4 FRAME AND BODY 15

REMANUFACTURED COMPONENTS

As an option when making repairs consider Cat Remanufactured Components. Components that are available through the Cat Remanufactured Program are identified three ways in the parts book:

- with the letter R in the note field of the parts list
- with an R* at the beginning of the first line of the caption
- with an *R at the end of the first line of the caption

Typical components included in the Remanufacturing Program include:

ALTERNATORS
CONNECTING RODS
CRANKSHAFTS - UNDERSIZE
CRANKSHAFTS - UPGRADE TO NEW
CYLINDER HEADS
ELECTRONIC CONTROL MODULES (ECM)
ELECTRONIC SENSORS
FUEL INJECTORS
FUEL NOZZLES
FUEL PUMPS
GOVERNORS
OIL PUMPS
PISTONS
SHORT BLOCKS
STARTERS
TURBOCHARGERS - COMPLETE
TURBOCHARGER CARTRIDGES
WATER PUMPS

Cat Remanufactured engines for many engine arrangements are also available.

SUPPLEMENTAL COOLANT ADDITIVES

CUSTOMER BENEFITS:

Protects against cavitation, foam, erosion, corrosion, and scale buildup in cooling systems.

- Provides measured coolant conditioner.

DESCRIPTION:

Additives deplete from the coolant with normal operation. For this reason, Supplemental Coolant Additives (SCA) must be added to all heavy duty coolants at regular intervals. In addition, when not using a fully formulated, pre-charged antifreeze, like Cat DEAC, an initial charge of SCA must be added to the cooling system. The amount of SCA added to the system is dependent on the capacity of the system.

The SCA for initial fill is provided as a liquid. SCA's for maintenance intervals are available in liquid form and as a spin-on element. (No Spin-on available for 3600 Family of Engines)

NOTE:

The amount of SCA added at initial fill is not the same as the amount added at maintenance intervals.

The coolant additive elements can be used with any ethylene or propylene glycol type antifreeze which meets ASTM D4985 or ASTM D5345 Specifications.

NOTE:

For use with standard heavy duty coolant only, not for use with Extended Life Coolant.

PARTS NEEDED:

Cooling System Capacity		Liquid SCA at Initial Fill	Liquid SCA at Maintenance*	Spin-on SCA Maintenance Element*
Liters	Gallons			
22-30	(6-8)	3P-2044 (1)	6V-3542 (1)	111-2370 (1)
30-38	(8-10)	3P-2044 (1) 6V-3542 (1)	111-2372 (1)	111-2369 (1)
38-49	(10-13)	3P-2044 (1) 8T-1589 (1)	111-2372 (1)	111-2369 (1)
49-64	(13-17)	3P-2044 (2)	8T-1589 (1)	9N-3368 (1)
64-83	(17-22)	3P-2044 (2) 8T-1589 (1)	111-2372 (1) 6V-3542 (1)	111-2371 (1)
83-114	(22-30)	3P-2044 (3) 8T-1589 (1)	3P-2044 (1)	9N-3718 (1)
114-163	(30-43)	3P-2044 (5)	3P-2044 (1) 6V-3542 (1)	111-2371 (2)
163-242	(43-64)	3P-2044 (8)	3P-2044 (2)	9N-3718 (2)

** Normal maintenance period is 250 hrs. See your Operation and Maintenance Manual for complete coolant maintenance instructions.*

( ) Indicates quantity required.

MAINTENANCE PARTS

DESCRIPTION	PART NUMBER	QTY	WHERE USED	PAGE
AIR INLET AND EXHAUST SYSTEM				
FILTER ELEMENT AS-AIR (PRIMARY)	222-9020	1	AIR CLEANER GP	53
FILTER ELEMENT AS-AIR (SECONDARY)	222-9021	1	AIR CLEANER GP	53
GASKET	114-2579	4	ELBOW GP-AIR INLET	54
	225-8536	1	TURBOCHARGER GP	58
GASKET-MANIFOLD	194-5390	1	TURBOCHARGER GP	58
GASKET-TURBOCHARGER	353-3477	1	TURBOCHARGER GP	58
	353-3478	1	TURBOCHARGER GP	58
BASIC ENGINE				
BELT-SERPENTINE	298-5872	1	PULLEY GP-FAN	31
CAP AS (ENGINE OIL FILLER)	136-3608	1	COVER GP-CYLINDER HEAD	8
GASKET	225-7944	1	CYLINDER BLOCK GP	12
GASKET (VALVE COVER)	225-6451	1	COVER GP-CYLINDER HEAD	8
GASKET-COVER	277-3012	1	HOUSING GP-FRONT	19
PLUG-DRAIN (ENGINE OIL)	7C-0351	1	PAN GP-OIL	23
COOLING SYSTEM				
CAP AS (COOLANT RECOVERY)	171-3369	1	RADIATOR & HYD OIL COOLER GP	49
CAP-RADIATOR	416-0965	1	RADIATOR & HYD OIL COOLER GP	47
GASKET	225-7944	2	COOLER GP-FLTR BASE & ENG OIL	41
HOSE-RADIATOR (LOWER)	399-2541	1	RADIATOR & HYD OIL COOLER GP	49
HOSE-RADIATOR (UPPER)	391-3704	1	RADIATOR & HYD OIL COOLER GP	49
REGULATOR GP-TEMPERATURE (INCLUDES CONNECTOR) (WATER)	254-2267	1	CONNECTION GP-WATER	38
ELECTRICAL AND STARTING SYSTEM				
BATTERY GP (12-VOLT, 750-CCA)	3T-5760	2	BATTERY & WIRING GP	82
CAP AS-FILLER (BATTERY)	123-1373	6	BATTERY & WIRING GP	82
CIRCUIT BREAKER AS (40-AMPERE) (GLOW PLUG)	171-2205	1	PANEL GP-CIRCUIT BREAKER	100
CIRCUIT BREAKER AS (60-AMPERE) (ALTERNATOR)	171-2208	1	PANEL GP-CIRCUIT BREAKER	100
CIRCUIT BREAKER AS (80-AMPERE) (MAIN)	171-2210	1	PANEL GP-CIRCUIT BREAKER	100
FUSE (10-AMPERE)	113-8490	20	WIRING GP-CAB	114
FUSE (15-AMPERE)	113-8491	6	WIRING GP-CAB	114
FUSE (20-AMPERE)	113-8492	2	WIRING GP-CAB	114
FUSE (25-AMPERE)	113-8493	2	WIRING GP-CAB	114
FUSE (30-AMPERE)	124-3548	2	WIRING GP-CAB	114
FUSE (5-AMPERE)	141-2759	1	PANEL GP-CIRCUIT BREAKER	100
		8	WIRING GP-CAB	114
GLOW PLUG (24-VOLT)	226-8770	4	GLOW PLUG GP	94
KEY (BATTERY DISCONNECT)	8H-5306	1	SWITCH GP-DISCONNECT	109
LAMP AS (24-VOLT, 3-WATT)	170-9324	1	PANEL GP-SWITCH	102

MAINTENANCE PARTS

DESCRIPTION	PART NUMBER	QTY	WHERE USED	PAGE
LAMP-HALOGEN (24-VOLT, 70-WATT)	351-9918	1	LAMP GP-FLOOD	95
	9X-3463	1	LAMP GP-FLOOD	96
FRAME AND BODY				
SPRING AS-GAS (ENGINE HOOD)	392-1262	1	HOOD & GUARD GP	151
FUEL SYSTEM				
CAP AS-FUEL (LOCKABLE, VENTED) (EXTREME SERVICE, LOCKABLE)	349-7059	1	TANK GP-FUEL	74
FILTER AS-WATER SEP & FUEL (ULTRA HIGH EFFICIENCY)	382-0664	1	LINES GP-FUEL	63
FILTER ELEMENT-WTR SEP & FUEL	1R-1804	1	FILTER GP-FUEL	62
STRAINER (FUEL FILTER)	387-6403	1	FILTER GP-FUEL	62
STRAINER AS-FUEL (FLOAT GAUGE)	303-9933	1	TANK GP-FUEL	74
HYDRAULIC SYSTEM				
BREATHER (HYDRAULIC TANK)	227-0590	1	TANK & FILTER GP-HYDRAULIC	281
BREATHER (SWING DRIVE)	4H-6112	1	DRIVE GP-SWING	200
BREATHER AS (SWING DRIVE)	267-6744	1	DRIVE GP-SWING	200
CAP AS	6V-9831	2	LINES GP-BOOM CYLINDER	214
		2	LINES GP-BOOM CYLINDER	215
ELEMENT (HYDRAULIC RETURN FILTER)	398-7171	1	FILTER GP-OIL	206
FILTER-OIL (ADVANCED EFFICIENCY) (HYDRAULIC, CASE DRAIN)	093-7521	1	FILTER GP-OIL	205
FILTER-OIL (ADVANCED EFFICIENCY) (HYDRAULIC, PILOT)	5I-8670	1	FILTER & VALVE GP-PILOT	204
PLUG-DRAIN (HYDRAULIC TANK)	9J-7031	1	TANK & FILTER GP-HYDRAULIC	281
SCREEN AS (HYDRAULIC TANK)	209-6002	1	SCREEN GP-HYDRAULIC	267
LUBRICATION SYSTEM				
FILTER AS-ENGINE OIL (ADVANCED EFFICIENCY)	1R-1807	1	FILTER & MTG GP-ENGINE OIL	34
OPERATOR STATION				
BLADE AS-WIPER (600-MM)	161-3670	1	WIPER GP-WINDOW	435
	424-0336	1	WIPER GP-WINDOW	437
CAP AS (WINDOW WASHER)	178-5431	1	WASHER GP-WINDOW	415
DRYER-REFRIGERANT (RECEIVER)	176-1902	1	LINES GP-AIR CONDITIONER	391
FILTER ELEMENT-CAB AIR	245-7823	1	AIR CONDITIONER GP	329
	293-1184	1	DUCT GP-CAB AIR	382
LAMP (24-VOLT, 10-WATT)	201-4417	1	CAB GP	334
		1	CAB GP	339
LAMP AS-DOME	176-1986	1	CAB GP	334
		1	CAB GP	339

MAINTENANCE PARTS

DESCRIPTION	PART NUMBER	QTY	WHERE USED	PAGE
SEAT BELT GP (RETRACTABLE, 51-MM (2-IN))	258-4095	1	SEAT & MOUNTING GP	403

INDEX

NAME PAGE

A

ACCUMULATOR GP-HYDRAULIC–CHARGED . . . 182
183
184
185
186
187
ACCUMULATOR GP-HYDRAULIC–UNCHARGED 188
ADJUSTER GP-BUCKET 318
AIR CLEANER & MOUNTING GP 52
AIR CLEANER GP 53
AIR CONDITIONER & MOUNTING GP 326
AIR CONDITIONER AR 328
AIR CONDITIONER GP 329
ALARM GP 76
ALTERNATOR GP-CHARGING 77
ANTENNA & MOUNTING GP–PRODUCT LINK CELLULAR 79
ARM GP-WINDOW WIPER (FRONT, UPPER) . . 435
437
ARMREST GP–LH 332
ARMREST GP–RH 331

B

BATTERY & WIRING GP 82
BATTERY GP (12-VOLT, 750-CCA) 82
BELT-SERPENTINE 31
BLADE AS-WIPER (600-MM) 435
437
BLOCK GP-JUNCTION 88
BOOM AR-1 PIECE LONG–AUXILIARY, HEAVY DUTY 309
BOOM GP 310
BOX & MTG GP-STORAGE 136
BOX GP-STORAGE 137
BRACKET GP-MOUNTING (MIRROR) 334
BRACKET GP-MOUNTING–MIRROR 333
BREATHER (HYDRAULIC TANK) 281
BREATHER (SWING DRIVE) 200
BREATHER AS (SWING DRIVE) 200
BUCKET & ADJUSTER GP–GENERAL PURPOSE 320
BUCKET & ADJUSTER GP–SEVERE SERVICE ROCK 319
BUCKET AR-GENERAL PURPOSE 320
BUCKET AR-SEVERE SERVICE ROCK 320
BUCKET AS-GENERAL PURPOSE 321
BUCKET AS-SEVERE SERVICE ROCK 322
BUS BAR GP 94

NAME PAGE

C

CAB GP 334
337
342
344
350
352
CAB GP–EXTERIOR 339
CAB GP–INTERIOR 346
348
CAMSHAFT GP 7
CAP AS 214
215
CAP AS (COOLANT RECOVERY) 49
CAP AS (ENGINE OIL FILLER) 8
CAP AS (WINDOW WASHER) 415
CAP AS-FILLER (BATTERY) 82
CAP AS-FUEL (LOCKABLE, VENTED) (EXTREME SERVICE, LOCKABLE) 74
CAP-RADIATOR 47
CHASSIS AR 1
CIRCUIT BREAKER AS (40-AMPERE) (GLOW PLUG) 100
CIRCUIT BREAKER AS (60-AMPERE) (ALTERNATOR) 100
CIRCUIT BREAKER AS (80-AMPERE) (MAIN) 100
COIL GP-EVAPORATOR 353
COMPRESSOR & MTG GP-REFRIG 355
COMPRESSOR GP-REFRIGERANT 356
CONDENSER & MTG GP-REFRIGERANT 357
CONDENSER GP-REFRIGERANT 359
CONNECTION GP-WATER 38
CONSOLE GP-OPERATOR 362
CONSOLE GP-OPERATOR–LH 364
CONSOLE GP-OPERATOR–RH 360
CONTROL & MTG GP-COMMUNICATION–PRODUCT LINK CELLULAR 89
CONTROL & MTG GP-ELECTRONIC 90
CONTROL & MTG GP-JOYSTICK 366
CONTROL AR-COMMUNICATION 91
CONTROL GP-COMMUNICATION–PRODUCT LINK CELLULAR, CHINA 91
CONTROL GP-GOVERNOR 60
CONTROL GP-HANDLE–JOYSTICK, LH 367
CONTROL GP-HANDLE–JOYSTICK, RH 369
CONTROL GP-HEAT & AIR COND 370
CONTROL GP-JOYSTICK–LH 372
CONTROL GP-JOYSTICK–RH 371
CONTROL GP-MONITOR 373
CONTROL GP-PILOT OPERATED HYD–TRAVEL 374
CONTROL GP-UNPROGRAMMED–PRODUCT LINK 522 92
COOLER GP-ENGINE OIL 40
COOLER GP-FLTR BASE & ENG OIL 41
CORE AS-HEATER 329
CORE AS-OIL COOLER (HYDRAULIC) 47
CORE AS-RADIATOR 47
COUNTERWEIGHT & MOUNTING GP 139

INDEX

NAME PAGE

COUNTERWEIGHT GP 140
COUPLING GP-FLEXIBLE 189
COUPLING GP-PUMP 190
COVER AS-SOUND SUPPRESSION 141
COVER GP-CAB–REAR 375
COVER GP-CYLINDER HEAD 8
COVER GP-VALVE MECHANISM 9
CRANKSHAFT GP 10
11
CYLINDER & LINES GP-BOOM–LH 191
CYLINDER & LINES GP-BOOM–RH 191
CYLINDER & LINES GP-BUCKET 191
CYLINDER & LINES GP-STICK 191
CYLINDER & SEAL GP-BOOM 192
CYLINDER & SEAL GP-BUCKET 194
CYLINDER & SEAL GP-STICK 196
CYLINDER BLOCK GP 12
13
CYLINDER HEAD GP 14
15

D

DISTRIBUTION AR 1
2
DOOR & MTG GP-CAB 376
377
DOOR GP-ACCESS 142
143
DOOR GP-ACCESS (RH) 151
DOOR GP-CAB 378
380
DRIVE GP-FAN 16
DRIVE GP-FINAL–WITH MOTOR 130
DRIVE GP-FINAL–WITH MOTOR, SPROCKET 133
DRIVE GP-FINAL–WITHOUT MOTOR 131
DRIVE GP-SWING–WITH MOTOR 200
201
DRIVE GP-SWING–WITHOUT MOTOR 198
DRYER-REFRIGERANT (RECEIVER) 391
DUCT GP-CAB AIR 382

E

ELBOW GP-AIR INLET 54
ELECTRONICS GP-MACHINE 93
ELEMENT (HYDRAULIC RETURN FILTER) 206
ENGINE AR-COMPLETE 4
ENGINE AR-PRIMARY 4
5

F

FAN AR-SUCTION 42
FAN GP-SUCTION–DIRECT DRIVE 43
FASTENER GP-SWING & FINAL DR 202
FILM-IDENTIFICATION (CAT) 92
FILM-INFORMATION (PRODUCT LINK, READ OMM) 89
FILM-INSTRUCTION (ALTERNATE EXIT) 438
FILM-INSTRUCTION (PULL RING, ALTERNATE EXIT) 438
FILM-INSTRUCTION (WINDOW CLEANING, READ OMM) 438
FILM-WARNING (HIGH PRESSURE CYLINDER) 186
FILM-WARNING (PRODUCT LINK RADIO, INTL) 89
FILM-WARNING (UNIVERSAL, READ OMM) 438
FILTER & MTG GP-ENGINE OIL 34
FILTER & VALVE GP-PILOT–HYDRAULIC OIL 204
FILTER AS-ENGINE OIL (ADVANCED EFFICIENCY) 34
FILTER AS-WATER SEP & FUEL (ULTRA HIGH EFFICIENCY) 63
FILTER BASE & ENG OIL COOLER 41
FILTER ELEMENT AS-AIR (PRIMARY) 53
FILTER ELEMENT AS-AIR (SECONDARY) 53
FILTER ELEMENT-CAB AIR 329
382
FILTER ELEMENT-WTR SEP & FUEL 62
FILTER GP-CAB AIR 382
FILTER GP-FUEL (24-VOLT, LONG BOWL) 63
FILTER GP-FUEL–24-VOLT, LONG BOWL 62
FILTER GP-OIL–HYDRAULIC, CASE DRAIN 205
FILTER GP-OIL–HYDRAULIC, MAIN RETURN 206
FILTER-OIL (ADVANCED EFFICIENCY) (HYDRAULIC, CASE DRAIN) 205
FILTER-OIL (ADVANCED EFFICIENCY) (HYDRAULIC, PILOT) 204
FINAL DRIVE GP 130
131
133
FITTING GP-HYDRAULIC 207
FLOOR MAT 383
FLYWHEEL GP 17
FRAME AR-UNDERCARRIAGE 163
FRAME AS-UNDERCARRIAGE 164
FRAME GP-UPPER 144
FUMES DISPOSAL GP 36
FUSE (10-AMPERE) 114
FUSE (15-AMPERE) 114
FUSE (20-AMPERE) 114
FUSE (25-AMPERE) 114
FUSE (30-AMPERE) 114
FUSE (5-AMPERE) 100
114

G

GASKET 12
41
54
58
GASKET (VALVE COVER) 8

INDEX

NAME PAGE

GASKET-COVER 19
GASKET-MANIFOLD 58
GASKET-TURBOCHARGER 58
GAUGE AS-OIL LEVEL (DIPSTICK) (ENGINE) . . . 23
GAUGE GP-SIGHT–HYDRAULIC OIL LEVEL . . . 208
GAUGE-OIL LEVEL 200
GEAR & BEARING GP-SWING 146
148
GENERAL AR 2
GLOW PLUG (24-VOLT) 94
GLOW PLUG GP 94
GUARD GP-BOTTOM 149
GUARD GP-TRACK GUIDE–CENTER 165
GUARD GP-TRAVEL MOTOR 166

H

HANDRAIL GP–FRONT, RH 150
HARNESS AS-CAB 114
397
HARNESS AS-CHASSIS (CAB BULKHEAD) 83
HARNESS AS-CHASSIS (FUEL) 64
HARNESS AS-CONSOLE 122
125
HARNESS AS-CONTROL (PRODUCT LINK) 120
HARNESS AS-HEATER & AIR COND 329
HARNESS AS-HEATER & AIR COND (HIGH SIDE) 326
HARNESS AS-HEATER & AIR COND (LOW SIDE) 326
HARNESS AS-LIGHTING (BOOM, LH) 98
HARNESS AS-PANEL 102
HARNESS AS-PLATFORM (BEACON) 127
HARNESS AS-WIRING (HORN) 388
HATCH GP-ROOF 384
385
386
HEAD GP-MOTOR 255
HEAD GP-PUMP 209
HOOD & GUARD GP 151
HOOD GP-ENGINE 154
HORN GP-ELECTRIC 387
388
HOSE-RADIATOR (LOWER) 49
HOSE-RADIATOR (UPPER) 49
HOUSING GP-FLYWHEEL 18
HOUSING GP-FRONT 19
HYDRAULIC AR 211

I

IDLER GP-FRONT 167
168
IDLER GP-FRONT–LH 170
IDLER GP-FRONT–RH 169
INDICATOR AS (SEAT ADJUSTMENT) 410
INDICATOR-FUEL FILTER CHANGE 63
INSTALLATION AR-ENGINE 6

NAME PAGE

K

KEY (BATTERY DISCONNECT) 109

L

LAMP (24-VOLT, 10-WATT) 334
339
LAMP AS (24-VOLT, 3-WATT) 102
LAMP AS-DOME 334
339
LAMP GP-FLOOD 95
96
LAMP-HALOGEN (24-VOLT, 70-WATT) 95
96
LATCH GP-WINDOW 389
LEVER GP-CAB DOOR 390
LIFTING GP-ENGINE 20
LIGHTING GP-FLOOD–BOOM, LH 98
LIGHTING GP-FLOOD–CHASSIS 97
LINES GP-AIR 56
LINES GP-AIR CONDITIONER 391
LINES GP-BOOM 212
LINES GP-BOOM CYLINDER–LH 214
LINES GP-BOOM CYLINDER–RH 215
LINES GP-BUCKET CYLINDER 216
LINES GP-COOLING 44
LINES GP-CYLINDER–BOOM 217
LINES GP-DRAIN 220
LINES GP-FRONT 221
LINES GP-FUEL 63
67
LINES GP-GREASE 312
LINES GP-HYDRAULIC OIL COOLER 226
LINES GP-HYDRAULIC–HYDRAULIC TANK, FILTER 224
LINES GP-PILOT–CONTROL VALVE 236
LINES GP-PILOT–FILTER, PILOT PUMP 233
LINES GP-PILOT–MAIN CONTROL VALVE 227
LINES GP-PILOT–PILOT CONTROL 231
LINES GP-PUMP 244
LINES GP-PUMP–REAR 242
LINES GP-STICK 246
247
LINES GP-STICK CYLINDER 248
LINES GP-TRAVEL MOTOR–LONG CARRIAGE 249
LINK AS-TRACK 171
LINKAGE AR-BUCKET–CB-FAMILY 313
LINKAGE GP-BUCKET–WITHOUT LIFTING EYE 314
LITERATURE GP 1
394

M

MANIFOLD GP-CONTROL 253
MANIFOLD GP-CONTROL–PILOT OIL 251

INDEX

NAME PAGE

MANIFOLD GP-CONTROL–PILOT OIL SUPPLY 252
MIRROR GP-REAR VIEW 334 339 395 396
MONITOR & MTG GP-OPERATOR 397
MONITOR GP-OPERATOR 398
MOTOR & MTG GP-TRAVEL 254
MOTOR AS-WINDOW WIPER 435
MOTOR GP-PISTON 255
MOTOR GP-SWING 257
MOTOR GP-TRAVEL 258
MOUNTING GP-ENGINE 21 22
MOUNTING GP-MAIN CONTROL VALVE 261
MOUNTING GP-PLATFORM 399
MUFFLER GP 57

O

OPERATOR AR 401
OPTION AR-CAB 2
OPTION AR-HYDRAULIC 3

P

PADLOCK GP 73
PAN GP-OIL 23
PANEL & MTG GP-CIRCUIT BREAKER 99
PANEL GP-CIRCUIT BREAKER 100
PANEL GP-SWITCH–CONSOLE 102
PISTON & ROD GP 25
PLATE & FILM GP 438 442
PLATE-WARNING (HIGH PRESSURE CYLINDER) 177 178
PLATFORM GP-OPERATOR 402
PLUG GP-ENGINE 26 27 28 29
PLUG-DRAIN (ENGINE OIL) 23
PLUG-DRAIN (HYDRAULIC TANK) 281
POWER TRAIN AR 134
PULLEY GP-CRANKSHAFT 30
PULLEY GP-FAN 31
PUMP & MTG GP-MAIN HYDRAULIC 262
PUMP GP-ENGINE OIL 37
PUMP GP-FUEL INJECTION 68 69 70
PUMP GP-GEAR 263
PUMP GP-PISTON–DOUBLE PISTON 264
PUMP GP-WATER 45

NAME PAGE

R

RADIATOR & HYD OIL COOLER GP 47 49
REGULATOR GP-TEMPERATURE (INCLUDES CONNECTOR) (WATER) 38
RELAY (24-VOLT) (BOOM FLOODLIGHT) 114
RELAY (24-VOLT) (CAB LIGHT) 114
RELAY (24-VOLT) (CHASSIS LIGHT) 114
RELAY (24-VOLT) (ELECTRIC PRIMING) 114
RELAY (24-VOLT) (ETHER START) 114
RELAY (24-VOLT) (HORN) 114
RELAY (24-VOLT) (NEUTRAL START) 114
RELAY (24-VOLT) (PUMP) 114
RELAY (BLOWER) 370
RELAY (COMPRESSOR CLUTCH) 370
RELAY AS (WIPER) 435 437
ROCKER ARM GP 32
ROLLER AR-TRACK & CARRIER 172
ROLLER GP-TRACK CARRIER 173
ROLLER GP-TRACK-SINGLE FLANGE 174 175 176

S

SCREEN AS (HYDRAULIC TANK) 267
SCREEN GP-HYDRAULIC–TANK 267
SEAT & MOUNTING GP–HIGH BACK, TILT 403
SEAT BELT GP (RETRACTABLE, 51-MM (2-IN)) 403
SEAT BELT GP–RETRACTABLE 404
SEAT GP-SUSPENSION–HIGH BACK, TILT 408
SEAT GP–DELUXE, CLOTH 405 407
SENDER AS-FUEL LEVEL 74
SENDER GP-TEMPERATURE (COOLANT) 107
SENSOR AS-PRESSURE (MAIN HYDRAULIC PUMP) 233
SENSOR AS-TEMPERATURE (AIR) 370
SENSOR AS-TEMPERATURE (AMBIENT AIR TEMP) 329
SENSOR AS-TEMPERATURE (COOLANT) 329
SENSOR GP-LIQUID LEVEL 104
SENSOR GP-PRESSURE 105
SENSOR GP-PRESSURE (FUEL) 63 105 107
SENSOR GP-SPEED 106
SENSOR GP-SPEED (MAGNETIC) 82
SENSOR GP-TEMP & PRESS 6 107
SENSOR-PRESSURE (AIR INLET) 56
SENSOR-TEMPERATURE (AMBIENT AIR) 326
SENSOR-TEMPERATURE (HYDRAULIC OIL) . . . 281
SHEET AS-SOUND SUPPRESSION 155 156 157 158

INDEX

NAME PAGE

SIDECUTTER GP 323
SOFTWARE GP-COMMUNICATION (PRODUCT LINK 522, CHINA) 91
SOFTWARE GP-ELECTRONIC (PRODUCT LINK 522) 92
SOFTWARE GP-MACHINE 93
SOFTWARE GP-MONITOR 373
SPOOL GP-CONTROL VALVE 269
SPOOL GP-CONTROL VALVE–BOOM 1 278
SPOOL GP-CONTROL VALVE–BOOM 2 273
SPOOL GP-CONTROL VALVE–BUCKET 277
SPOOL GP-CONTROL VALVE–COMBINED FLOW 271
SPOOL GP-CONTROL VALVE–STICK 1 274
SPOOL GP-CONTROL VALVE–STICK 2 275
SPOOL GP-CONTROL VALVE–STICK REGENERATION 276
SPOOL GP-CONTROL VALVE–SWING 270
SPOOL GP-CONTROL VALVE–SWING PRIORITY 272
SPOOL GP-CONTROL VALVE–WORK TOOL 268
SPRING AS-GAS (ENGINE HOOD) 151
SPRING AS-GAS (HATCH) 384 386
SPROCKET GP 135
STARTING MOTOR GP-ELECTRIC 108
STEP GP 159
STICK AR-HOE 315
STICK AR-HOE–REACH, HEAVY-DUTY, AUXILIARY 315
STICK GP-HOE 316 317
STRAINER (FUEL FILTER) 62
STRAINER AS-FUEL (FLOAT GAUGE) 74
SUPPORT AS-SOUND SUPPRESSION 160 161 162
SUPPORT GP-SEAT 409
SUSPENSION GP-SEAT–MECHANICAL 410 413
SWITCH (WINDOW LOWER LIMIT) 416 428
SWITCH AS-LIMIT (HYDRAULIC LOCKOUT) 110
SWITCH AS-LIQUID LEVEL (ENGINE OIL) 23
SWITCH AS-MAGNETIC (24-VOLT) (MAIN RELAY) 114
SWITCH AS-PRESSURE (HYDRAULIC OIL) 281
SWITCH AS-PRESSURE (IMPLEMENT) 227
SWITCH AS-PUSH BUTTON (HORN) 367
SWITCH AS-PUSH BUTTON (MANUAL LOW IDLE) 369
SWITCH AS-ROCKER (FINE SWING) 114
SWITCH AS-TOGGLE (SECONDARY SHUTDOWN) 127
SWITCH GP-DISCONNECT (BATTERY) 100
SWITCH GP-DISCONNECT–BATTERY 109
SWITCH GP-LIMIT–HYDRAULIC LOCKOUT 110
SWITCH GP-MAGNETIC 111 112
SWITCH GP-MAGNETIC (24-VOLT) (START RELAY) 100
SWITCH GP-START–ENGINE, KEY 113
SWITCH-TEMPERATURE (FUEL) 70
SWIVEL GP 279

T

TANK & FILTER GP-HYDRAULIC 281
TANK & MTG GP-FUEL 73
TANK & MTG GP-HYDRAULIC 283
TANK GP-FUEL 74
TIP GP-LONG–J-300 324
TIP GP-PENETRATION PLUS–J-350 325
TRACK ADJUSTER & RECOIL GP 179 180
TRACK ADJUSTER & RECOIL GP–LH 178
TRACK ADJUSTER & RECOIL GP–RH 177
TRACK GP–2-REQUIRED 181
TURBOCHARGER GP 58

V

VALVE GP-CHECK–COOLER BYPASS 284
VALVE GP-COOLANT SAMPLING 51
VALVE GP-FLUID SAMPLING (COOLANT) 51
VALVE GP-FLUID SAMPLING (HYDRAULIC OIL) 281
VALVE GP-MAIN CONTROL 285
VALVE GP-PILOT 293
VALVE GP-PILOT RELIEF 296
VALVE GP-PILOT RELIEF (HYDRAULIC FILTER) 204
VALVE GP-PILOT RELIEF–LINE 297
VALVE GP-PILOT–JOYSTICK 291
VALVE GP-PRESSURE REDUCING–BOOM PRIORITY 298
VALVE GP-RELIEF 299 300 301 308
VALVE GP-RELIEF–DIRECT OPERATED 303
VALVE GP-RELIEF–LINE 302
VALVE GP-SHUTTLE 304
VALVE GP-SOLENOID 305 306
VALVE GP-SOLENOID (24-VOLT) (FUEL SHUTOFF) 68
VALVE GP-SOLENOID (HYDRAULIC LOCKOUT) 252 253
VALVE GP-SOLENOID (PRESSURE REDUCING) (PUMP CONTROL) 264
VALVE GP-SOLENOID (SWING BRAKE RELEASE) 252 253
VALVE GP-SOLENOID (TRAVEL SPEED) 252 253

NAME PAGE

VALVE GP-SWING CUSHION–CROSSOVER RELIEF 307
VALVE GP-TRAVEL COUNTERBALANCE 308
VALVE MECHANISM GP. 33

W

WASHER GP-WINDOW 415
WINDOW GP-CAB–FRONT, LOWER 421
426
WINDOW GP-CAB–FRONT, UPPER 416
419
423
428
WINDOW GP-CAB–SIDE, REAR 424
425
WINDOW GP-DOOR 431
433
WIPER GP-WINDOW–FRONT, UPPER 435
437
WIRING GP-CAB 114
WIRING GP-COMMUNICATION–PRODUCT LINK 522. 120
WIRING GP-CONSOLE 124
WIRING GP-CONSOLE–LH. 122
WIRING GP-CONSOLE–RH. 125
WIRING GP-PLATFORM 127

MEMORANDA

MACHINE ARRANGEMENT

454-5575 CHASSIS AR

S/N: HAH1-UP

PART OF 454-5573 GENERAL AR

SMCS-7000 **i05845748**

NOTE	PART NUMBER	QTY	PART NAME 1 2 3 4 5 6 (PRODUCT LEVEL)	SEE PAGE
Y	*440-6914*	1	BATTERY & WIRING GP	82
Y	*393-8574*	1	BOX & MTG GP-STORAGE	136
Y	*388-6703*	1	CONTROL GP-GOVERNOR	60
Y	*387-3488*	1	FRAME GP-UPPER	144
Y	*170-2602*	1	HANDRAIL GP (FRONT, RH)	150
Y	*390-3675*	1	HOOD & GUARD GP	151
Y	*275-6874*	1	HORN GP-ELECTRIC	387
Y	*4I-5409*	1	LIGHTING GP-FLOOD (CHASSIS)	97
Y	*383-5676*	1	LINES GP-AIR CONDITIONER	391
Y	*387-2625*	1	LINES GP-FUEL	63
Y	*7Y-0059*	1	LITERATURE GP	394
Y	*142-3836*	1	MIRROR GP-REAR VIEW	395
Y	*245-7811*	1	MOUNTING GP-PLATFORM	399
Y	*451-3987*	1	OPERATOR AR	401
Y	*381-1362*	1	PLATE & FILM GP	438
Y	*384-9014*	1	STEP GP	159
Y	*391-4295*	1	TANK & MTG GP-FUEL	73

Y - SEPARATE ILLUSTRATION

<END>

454-5646 DISTRIBUTION AR

S/N: HAH1-UP

AN ATTACHMENT

SMCS-7000 **i05850018**

NOTE	PART NUMBER	QTY	PART NAME 1 2 3 4 5 6 (PRODUCT LEVEL)	SEE PAGE
Y	*385-4100*	1	BOOM AR-1 PIECE LONG (AUXILIARY, HEAVY-DUTY)	309
Y	*447-3349*	1	CONTROL AR-COMMUNICATION	91
Y	*394-6854*	1	COUNTERWEIGHT & MOUNTING GP	139
Y	*390-3677*	1	GUARD GP-BOTTOM	149
Y	*385-4103*	1	LINKAGE AR-BUCKET	313
Y	*454-5636*	1	OPTION AR-CAB	2
Y	*351-4572*	1	OPTION AR-HYDRAULIC	3
Y	*385-4101*	1	STICK AR-HOE (REACH, HEAVY-DUTY, AUXILIARY)	315
Y	*176-4852*	2	TRACK GP	181
Y	*229-9070*	1	WASHER GP-WINDOW	415

Y - SEPARATE ILLUSTRATION

<END>

MACHINE ARRANGEMENT

454-5647 DISTRIBUTION AR

S/N: HAH1-UP

AN ATTACHMENT

SMCS-7000 **i05850019**

NOTE	PART NUMBER	QTY	PART NAME 1 2 3 4 5 6 (PRODUCT LEVEL)	SEE PAGE
Y	*385-4100*	1	BOOM AR-1 PIECE LONG (AUXILIARY, HEAVY-DUTY)	309
Y	*447-3349*	1	CONTROL AR-COMMUNICATION	91
Y	*394-6854*	1	COUNTERWEIGHT & MOUNTING GP	139
Y	*390-3677*	1	GUARD GP-BOTTOM	149
Y	*385-4103*	1	LINKAGE AR-BUCKET	313
Y	*454-5636*	1	OPTION AR-CAB	2
Y	*351-4572*	1	OPTION AR-HYDRAULIC	3
Y	*385-4156*	1	STICK AR-HOE (REACH)	315
Y	*176-4852*	2	TRACK GP	181
Y	*229-9070*	1	WASHER GP-WINDOW	415

Y - SEPARATE ILLUSTRATION

<END>

454-5573 GENERAL AR

S/N: HAH1-UP

SMCS-7000 **i05844174**

NOTE	PART NUMBER	QTY	PART NAME 1 2 3 4 5 6 (PRODUCT LEVEL)	SEE PAGE
Y	*454-5575*	1	CHASSIS AR	1
Y	*436-1866*	1	ELECTRONICS GP-MACHINE	93
Y	*455-1948*	1	ENGINE AR-COMPLETE	4
Y	*260-6975*	1	FRAME AR-UNDERCARRIAGE	163
Y	*455-7664*	1	HYDRAULIC AR	211
Y	*392-0400*	1	INSTALLATION AR-ENGINE	6
Y	*267-6738*	1	POWER TRAIN AR	134

Y - SEPARATE ILLUSTRATION

<END>

454-5636 OPTION AR-CAB

S/N: HAH1-UP

PART OF 454-5646, 454-5647 DISTRIBUTION AR

AN ATTACHMENT

SMCS-7000 **i05850000**

NOTE	PART NUMBER	QTY	PART NAME 1 2 3 4 5 6 (PRODUCT LEVEL)	SEE PAGE
Y	*418-9897*	1	AIR CONDITIONER AR	328
Y	*399-0055*	1	CAB GP	342
Y	*398-7007*	1	PANEL GP-SWITCH	102
Y	*380-7183*	1	SEAT & MOUNTING GP (HIGH BACK, TILT)	403

Y - SEPARATE ILLUSTRATION

<END>

MACHINE ARRANGEMENT

351-4572 OPTION AR-HYDRAULIC

S/N: HAH1-UP

PART OF 454-5646, 454-5647 DISTRIBUTION AR

AN ATTACHMENT

SMCS-7000 **i03879694**

NOTE	PART NUMBER	QTY	PART NAME 1 2 3 4 5 6 (PRODUCT LEVEL)	SEE PAGE
Y	*310-0078*	1	CONTROL & MTG GP-JOYSTICK	366
	284-4376	1	FLOOR MAT	

Y - SEPARATE ILLUSTRATION

<END>

ENGINE ARRANGEMENT

455-1948 ENGINE AR-COMPLETE

S/N: HAH1-UP

PART OF 454-5573 GENERAL AR

SMCS-1000 **i05848309**

NOTE	PART NUMBER	QTY	PART NAME 1 2 3 4 5 6 (PRODUCT LEVEL)	SEE PAGE
Y	*456-1375*	1	ENGINE AR-PRIMARY	4
Y	*390-8835*	1	FAN AR-SUCTION	42
Y	*387-2646*	1	MUFFLER GP	57

Y - SEPARATE ILLUSTRATION

<END>

456-1375 ENGINE AR-PRIMARY

S/N: CST1-UP

7 BRAKE KW (97 BHP) AT 2000 RPM

FIELD REPLACEMENT ORDER 470-9228—PAGE: 5

PART OF 455-1948 ENGINE AR-COMPLETE

SMCS-1000 **i05861474**

NOTE	PART NUMBER	QTY	PART NAME 1 2 3 4 5 6 (PRODUCT LEVEL)	SEE PAGE
Y	*421-7109*	1	ALTERNATOR GP-CHARGING	77
Y	*458-3306*	1	CAMSHAFT GP	7
Y	*231-0033*	1	CONNECTION GP-WATER	38
Y	*460-0525*	1	COOLER GP-FLTR BASE & ENG OIL	41
Y	*460-0449*	1	COVER GP-VALVE MECHANISM	9
Y	*458-3301*	1	CRANKSHAFT GP	11
Y	*458-3300*	1	CYLINDER BLOCK GP	13
Y	*458-3303*	1	CYLINDER HEAD GP	15
Y	*421-7104*	1	DRIVE GP-FAN	16
Y	*256-4440*	1	ELBOW GP-AIR INLET	54
Y	*421-7102*	1	FLYWHEEL GP	17
Y	*233-9834*	1	GLOW PLUG GP	94
Y	*421-7101*	1	HOUSING GP-FLYWHEEL	18
Y	*460-0596*	1	HOUSING GP-FRONT	19
Y	*232-3713*	1	LIFTING GP-ENGINE	20
Y	*460-0656*	1	LINES GP-FUEL	67
Y	*460-0440*	1	STARTING MOTOR GP-ELECTRIC	108
Y	*421-7111*	1	MOUNTING GP-ENGINE	22
Y	*421-7105*	1	PAN GP-OIL	23
Y	*458-3302*	1	PISTON & ROD GP	25
Y	*230-7569*	1	PLUG GP-ENGINE	26
Y	*232-3716*	1	PLUG GP-ENGINE	27
Y	*232-6204*	1	PLUG GP-ENGINE	28
Y	*234-4215*	1	PLUG GP-ENGINE	29
Y	*360-7354*	1	PULLEY GP-CRANKSHAFT	30
Y	*230-7578*	1	PUMP GP-ENGINE OIL	37
Y	*421-7744*	1	PUMP GP-FUEL INJECTION	70
Y	*230-7355*	1	PUMP GP-WATER	45
Y	*234-3465*	1	TURBOCHARGER GP	58
Y	*458-3304*	1	VALVE MECHANISM GP	33
R	**359-0734**	1	CYLINDER BLOCK GP-SHORT	

R - REMFG PART MAY BE AVAILABLE
Y - SEPARATE ILLUSTRATION

<END>

470-9228 ENGINE AR-PRIMARY

S/N: CST1-UP
94 BRAKE KW (126 BHP) AT 2000 RPM
FIELD REPLACEMENT FOR 456-1375—PAGE: 4

SMCS-1000 **i05962696**

NOTE	PART NUMBER	QTY	PART NAME 1 2 3 4 5 6 (PRODUCT LEVEL)	SEE PAGE
Y	*421-7109*	1	ALTERNATOR GP-CHARGING	77
Y	*458-3306*	1	CAMSHAFT GP	7
Y	*231-0033*	1	CONNECTION GP-WATER	38
Y	*460-0525*	1	COOLER GP-FLTR BASE & ENG OIL	41
Y	*460-0449*	1	COVER GP-VALVE MECHANISM	9
Y	*458-3301*	1	CRANKSHAFT GP	11
Y	*458-3300*	1	CYLINDER BLOCK GP	13
Y	*458-3303*	1	CYLINDER HEAD GP	15
Y	*421-7104*	1	DRIVE GP-FAN	16
Y	*256-4440*	1	ELBOW GP-AIR INLET	54
Y	*421-7102*	1	FLYWHEEL GP	17
Y	*233-9834*	1	GLOW PLUG GP	94
Y	*421-7101*	1	HOUSING GP-FLYWHEEL	18
Y	*460-0596*	1	HOUSING GP-FRONT	19
Y	*232-3713*	1	LIFTING GP-ENGINE	20
Y	*460-0656*	1	LINES GP-FUEL	67
Y	*421-7111*	1	MOUNTING GP-ENGINE	22
Y	*421-7105*	1	PAN GP-OIL	23
Y	*458-3302*	1	PISTON & ROD GP	25
Y	*230-7569*	1	PLUG GP-ENGINE	26
Y	*232-3716*	1	PLUG GP-ENGINE	27
Y	*232-6204*	1	PLUG GP-ENGINE	28
Y	*234-4215*	1	PLUG GP-ENGINE	29
Y	*360-7354*	1	PULLEY GP-CRANKSHAFT	30
Y	*230-7578*	1	PUMP GP-ENGINE OIL	37
Y	*421-7744*	1	PUMP GP-FUEL INJECTION	70
Y	*230-7355*	1	PUMP GP-WATER	45
Y	*460-0440*	1	STARTING MOTOR GP-ELECTRIC	108
Y	*234-3465*	1	TURBOCHARGER GP	58
Y	*458-3304*	1	VALVE MECHANISM GP	33
R	**359-0734**	1	CYLINDER BLOCK GP-SHORT	

R - REMFG PART MAY BE AVAILABLE
Y - SEPARATE ILLUSTRATION

<END>

ENGINE ARRANGEMENT

392-0400 INSTALLATION AR-ENGINE

S/N: HAH1-UP

PART OF 454-5573 GENERAL AR

SMCS-1000 **i04944171**

NOTE	PART NUMBER	QTY	PART NAME 1 2 3 4 5 6 (PRODUCT LEVEL)	SEE PAGE
Y	*387-2620*	1	AIR CLEANER & MOUNTING GP	52
Y	*387-2610*	1	COMPRESSOR & MTG GP-REFRIG	355
Y	*383-5675*	1	CONDENSER & MTG GP-REFRIGERANT	357
Y	*392-0401*	1	FILTER & MTG GP-ENGINE OIL	34
Y	*387-2614*	1	FUMES DISPOSAL GP	36
Y	*387-2623*	1	LINES GP-AIR	56
Y	*390-8838*	1	LINES GP-COOLING	44
Y	*395-3380*	1	LINES GP-DRAIN	220
Y	*387-2615*	1	MOUNTING GP-ENGINE	21
Y	*390-8837*	1	RADIATOR & HYD OIL COOLER GP	49
Y	*392-3904*	1	SENSOR GP-TEMP & PRESS	107
Y	*396-0293*	1	VALVE GP-COOLANT SAMPLING	51

Y - SEPARATE ILLUSTRATION

<END>

458-3306 CAMSHAFT GP

S/N: CST1-UP

PART OF 456-1375, 470-9228 ENGINE AR-PRIMARY

SMCS-1210 **i05861519**

NOTE	REF NO	GRAPHIC REF	PART NUMBER	QTY	PART NAME 1 2 3 4 5 6 (PRODUCT LEVEL)	SEE PAGE
	1	1	**067-6095**	8	ROD	
	2	1	**138-2053**	8	TAPPET	
	3	1	**350-2374**	1	CAMSHAFT AS	
	3A	1	**1B-8736**	1	KEY-WOODRUFF	

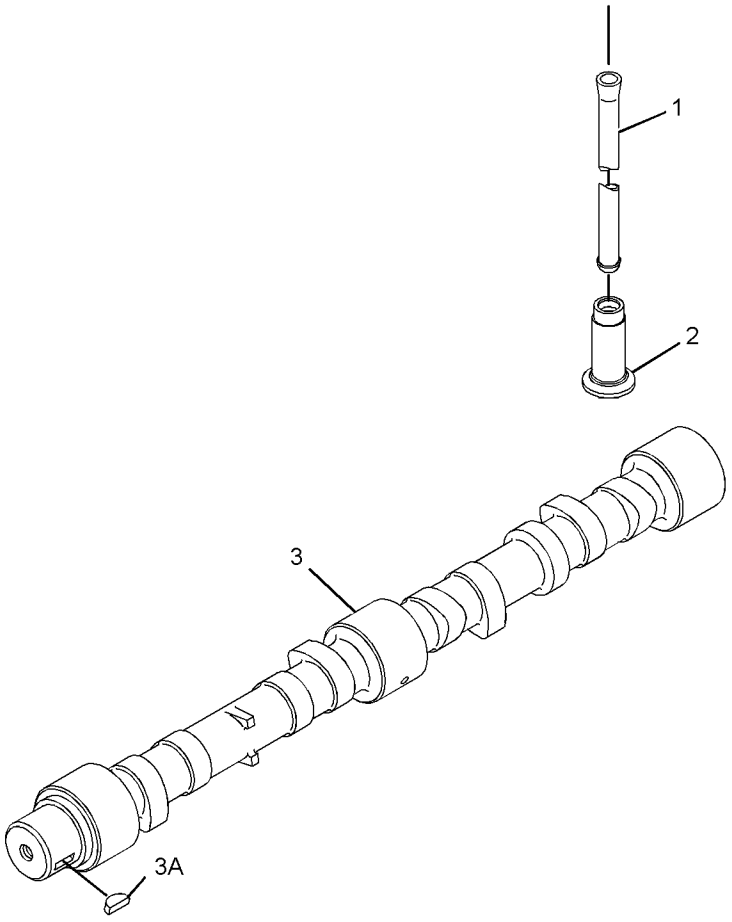

GRAPHIC #1 **<END>** g01964670

446-9163 COVER GP-CYLINDER HEAD

S/N: CST1-UP

PART OF 460-0449 COVER GP-VALVE MECHANISM

SMCS-1101 **i05859525**

NOTE	REF NO	GRAPHIC REF	PART NUMBER	QTY	PART NAME 1 2 3 4 5 6 (PRODUCT LEVEL)	SEE PAGE
	1	1	**225-6451**	1	GASKET (VALVE COVER)	
	2	1	**225-6478**	4	SCREW-MACHINE	
	3	1	**431-1704**	1	PLATE	
	4	1	**136-3608**	1	CAP AS (ENGINE OIL FILLER)	
	4A	1	**124-0506**	1	SEAL	
	5	1	**349-2746**	10	BOLT	

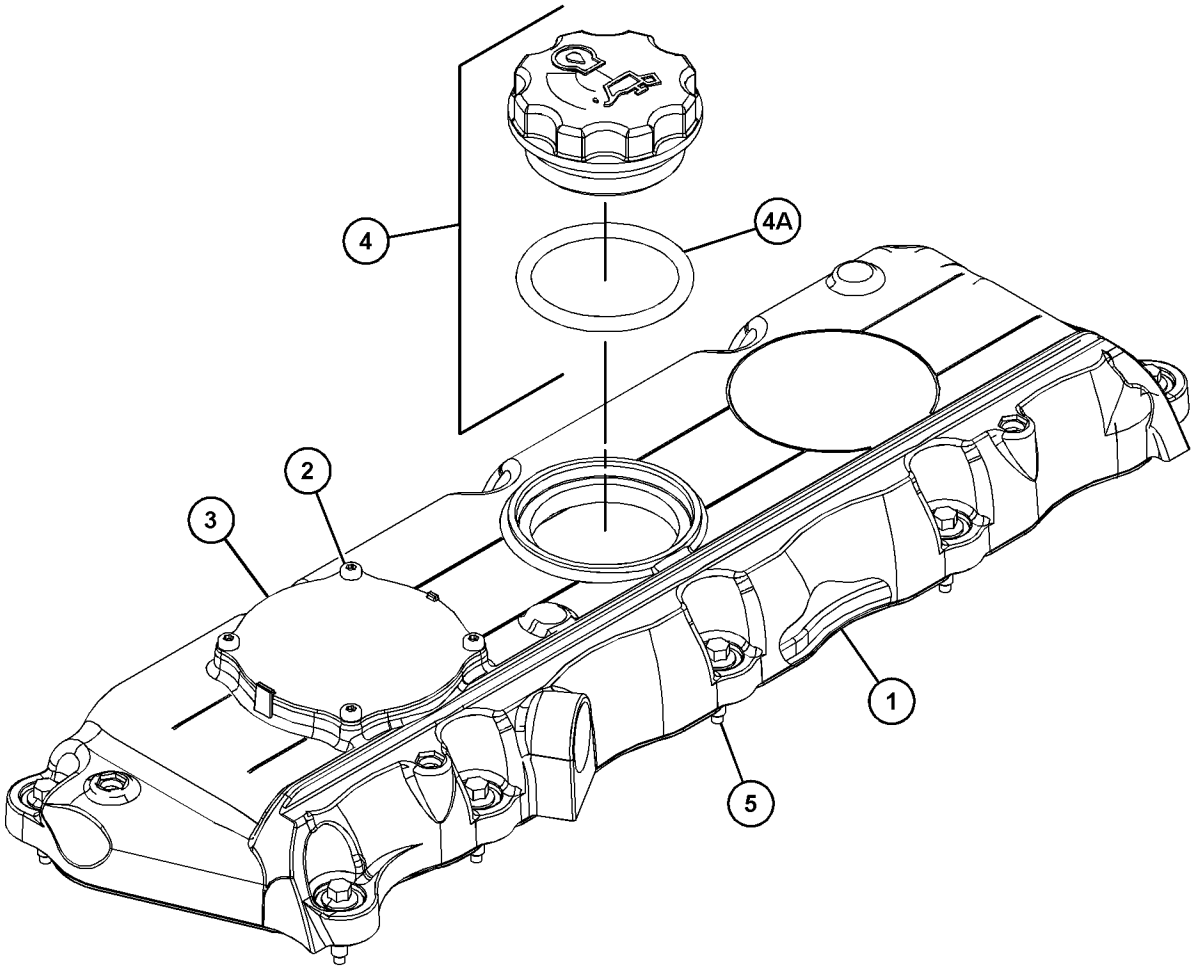

GRAPHIC #1 **<END>** g03702115

460-0449 COVER GP-VALVE MECHANISM

S/N: CST1-UP

PART OF 456-1375, 470-9228 ENGINE AR-PRIMARY

SMCS-1107 **i05859454**

NOTE	REF NO	GRAPHIC REF	PART NUMBER	QTY	PART NAME 1 2 3 4 5 6 (PRODUCT LEVEL)	SEE PAGE
	1	1	**6I-0846**	3	BOLT (M6X1X14-MM)	
	2	1	**100-4838**	2	BOLT (M6X1X20-MM)	
	3	1	**225-6522**	1	PLUG-CUP	
	4	1	**225-6524**	1	PLUG-CUP	
	5	1	**230-9127**	1	COVER	
	6	1	**287-8573**	1	PIPE AS	
	6A	1	**150-7732**	1	SEAL-O-RING	
	6B	1	**286-3030**	1	RING-SEAL	
Y	7	1	*446-9163*	1	COVER GP-CYLINDER HEAD	8

Y - SEPARATE ILLUSTRATION

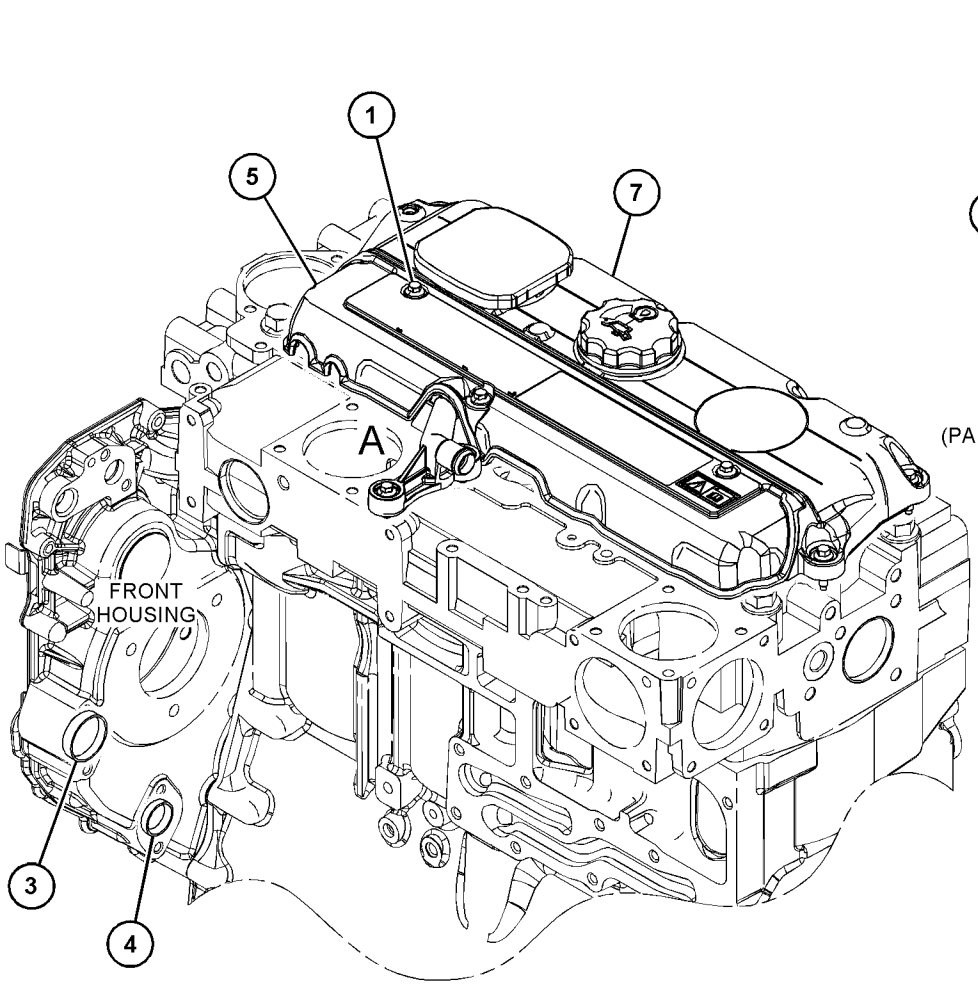

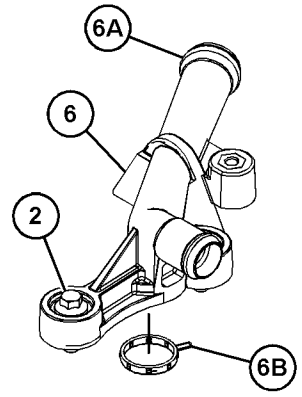

VIEW OF AREA A
(PARTS REMOVED FOR CLARITY)

GRAPHIC #1 **<END>** g03703094

359-0715 CRANKSHAFT GP

S/N: CST1-UP

PART OF 458-3301 CRANKSHAFT GP

SMCS-1202 **i05294626**

NOTE	REF NO	GRAPHIC REF	PART NUMBER	QTY	PART NAME 1 2 3 4 5 6 (PRODUCT LEVEL)	SEE PAGE
	1	1	**032-9090**	2	WASHER-THRUST (STANDARD-UPPER)	
AB		1	**067-6873**		WASHER-THRUST (0.18-MM OS)	
	2	1	**032-9091**	2	WASHER-THRUST (STANDARD-LOWER)	
AB		1	**067-6874**		WASHER-THRUST (0.18-MM OS)	
	3	1	**353-7423**	1	KIT-BEARING (MAIN)	
AB		1	**233-3786**		KIT-CRANKSHAFT BEARING (0.75-MM US)	
AB		1	**353-7424**		KIT-BEARING (0.25-MM US) (0.25-MM US)	
AB		1	**353-7425**		KIT-BEARING (0.50-MM US)	
AB		1	**353-7426**		KIT-BEARING (0.75-MM US)	
	4	1	**360-3986**	1	KIT-BEARING (CONNECTING ROD) (STANDARD)	

A - NOT PART OF THIS GROUP
B - USE AS REQUIRED

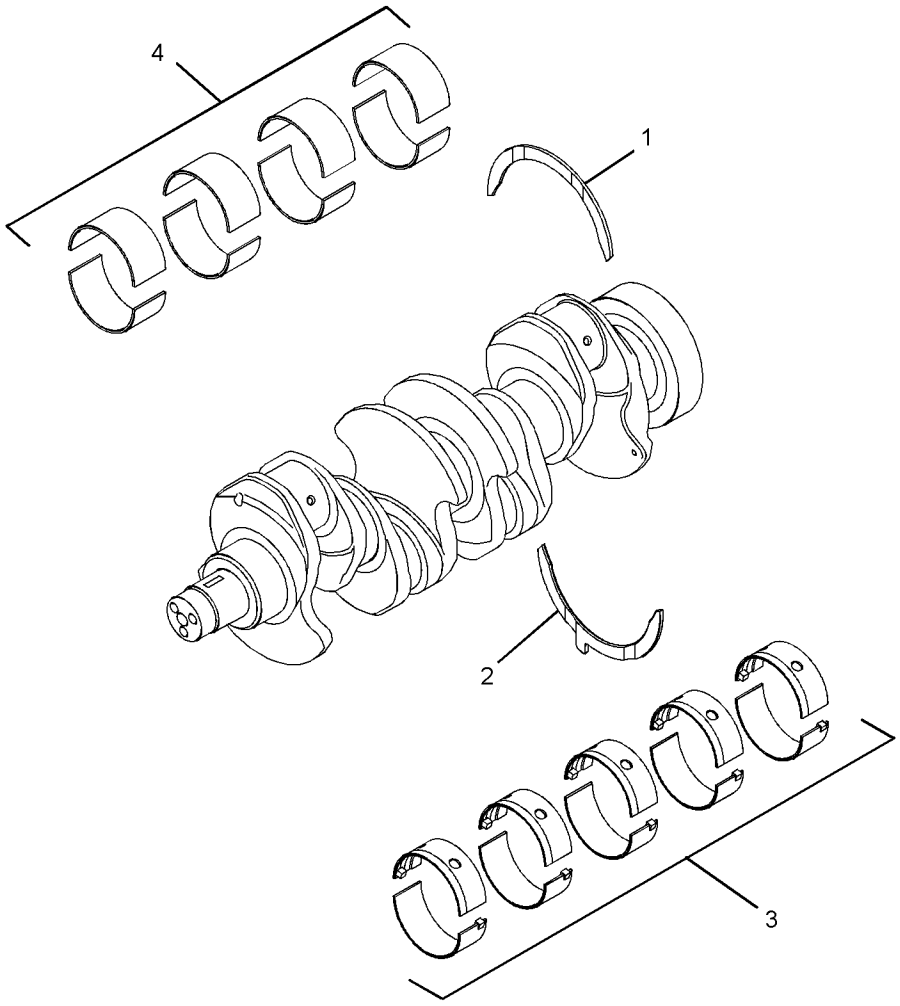

GRAPHIC #1

<END>

g02174712

458-3301 CRANKSHAFT GP

S/N: CST1-UP

PART OF 456-1375, 470-9228 ENGINE AR-PRIMARY

SMCS-1202 **i05861509**

NOTE	REF NO	GRAPHIC REF	PART NUMBER	QTY	PART NAME 1 2 3 4 5 6 (PRODUCT LEVEL)	SEE PAGE
	1	1	**216-8314**	1	GEAR-CRANKSHAFT (34-TEETH)	
JY	2	1	**359-0715**	1	CRANKSHAFT GP (W/O SPLINE) (CONNECTING ROD, 68-MM DIA)	10
	3	1	**067-6135**	1	KEY-WOODRUFF	

J - CHECK CONNECTING ROD JOURNAL TO ENSURE THIS IS THE CORRECT CRANKSHAFT
Y - SEPARATE ILLUSTRATION

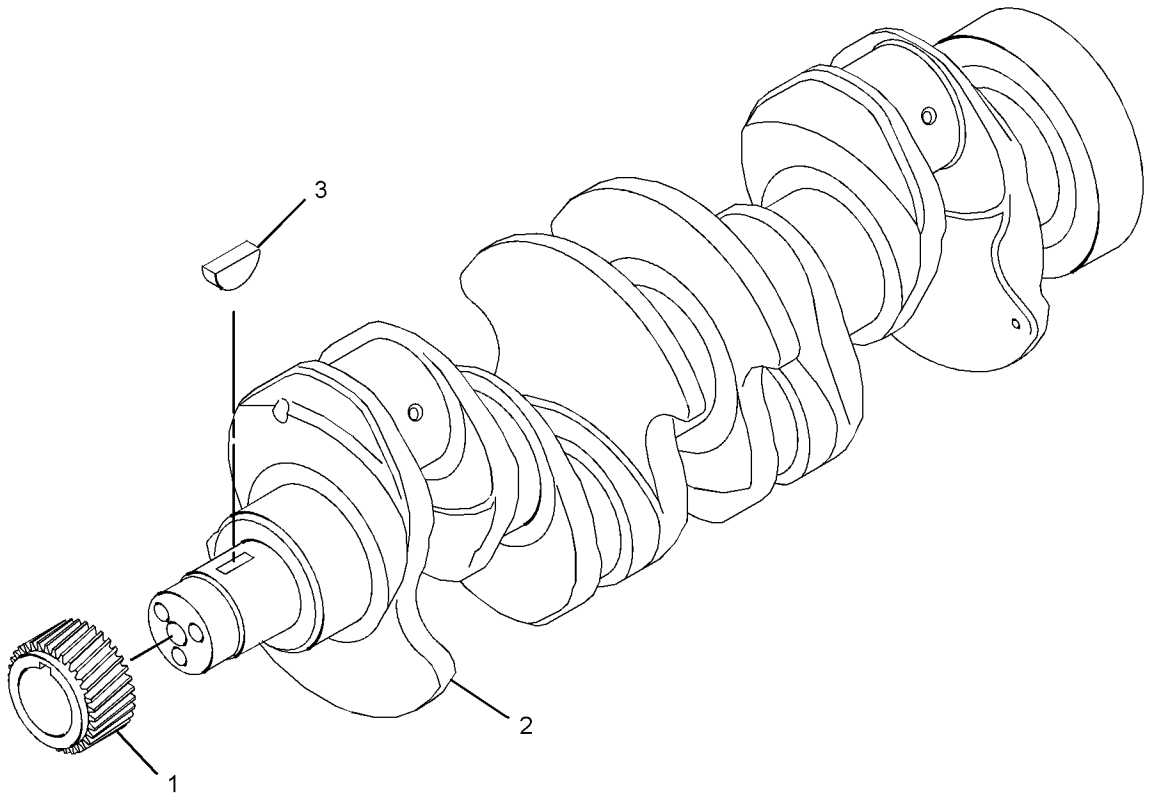

GRAPHIC #1 **<END>** g02163313

362-2190 CYLINDER BLOCK GP

S/N: CST1-UP

PART OF 458-3300 CYLINDER BLOCK GP

SMCS-1201 **i04340137**

NOTE	REF NO	GRAPHIC REF	PART NUMBER	QTY	PART NAME 1 2 3 4 5 6 (PRODUCT LEVEL)	SEE PAGE
M	1	1	**6I-0572**	1	BOLT (M8X1.25X20-MM)	
	2	1	**6I-0646**	1	BOLT (M10X1.5X14-MM)	
	3	1	**035-8063**	1	PLUG	
M	4	1	**100-4841**	4	BOLT (M6X1X10-MM)	
	5	1	**214-3203**	1	WASHER (SEALING)	
	6	1	**225-7944**	1	GASKET	
	7	1	**232-3751**	1	PLATE	
	8	1	**232-7600**	1	PLUG-CUP	
	9	1	**232-7603**	1	PLUG	
	10	1	**276-5605**	4	JET AS-PISTON COOLING	

M - METRIC PART

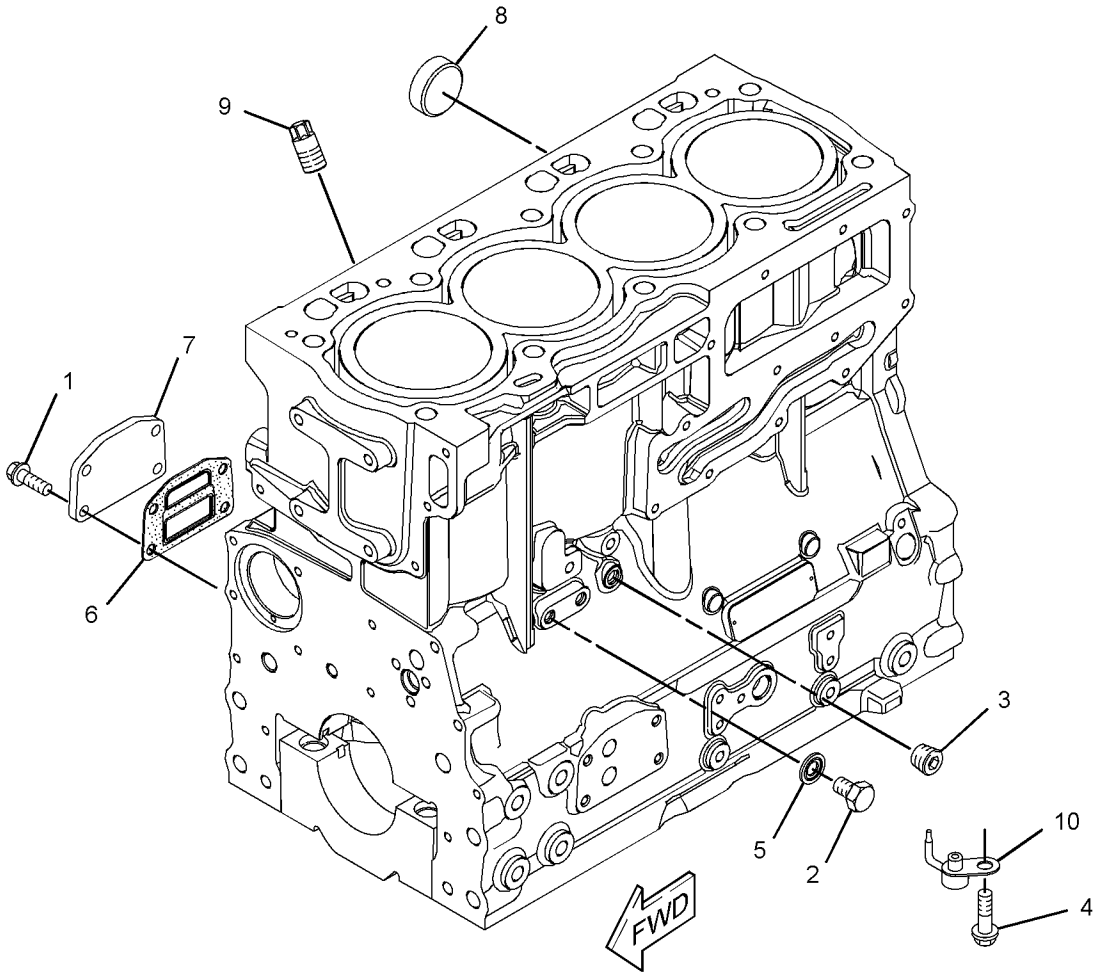

GRAPHIC #1 **<END>** g02500056

458-3300 CYLINDER BLOCK GP

S/N: CST1-UP

PART OF 456-1375, 470-9228 ENGINE AR-PRIMARY

SMCS-1201 **i05861508**

NOTE	REF NO	GRAPHIC REF	PART NUMBER	QTY	PART NAME 1 2 3 4 5 6 (PRODUCT LEVEL)	SEE PAGE
M	1	1	**209-9219**	10	BOLT (M8X1.25X16-MM)	
	2	1	**232-7449**	1	HOUSING AS	
Y	3	1	**362-2190**	1	CYLINDER BLOCK GP	12

M - METRIC PART
Y - SEPARATE ILLUSTRATION

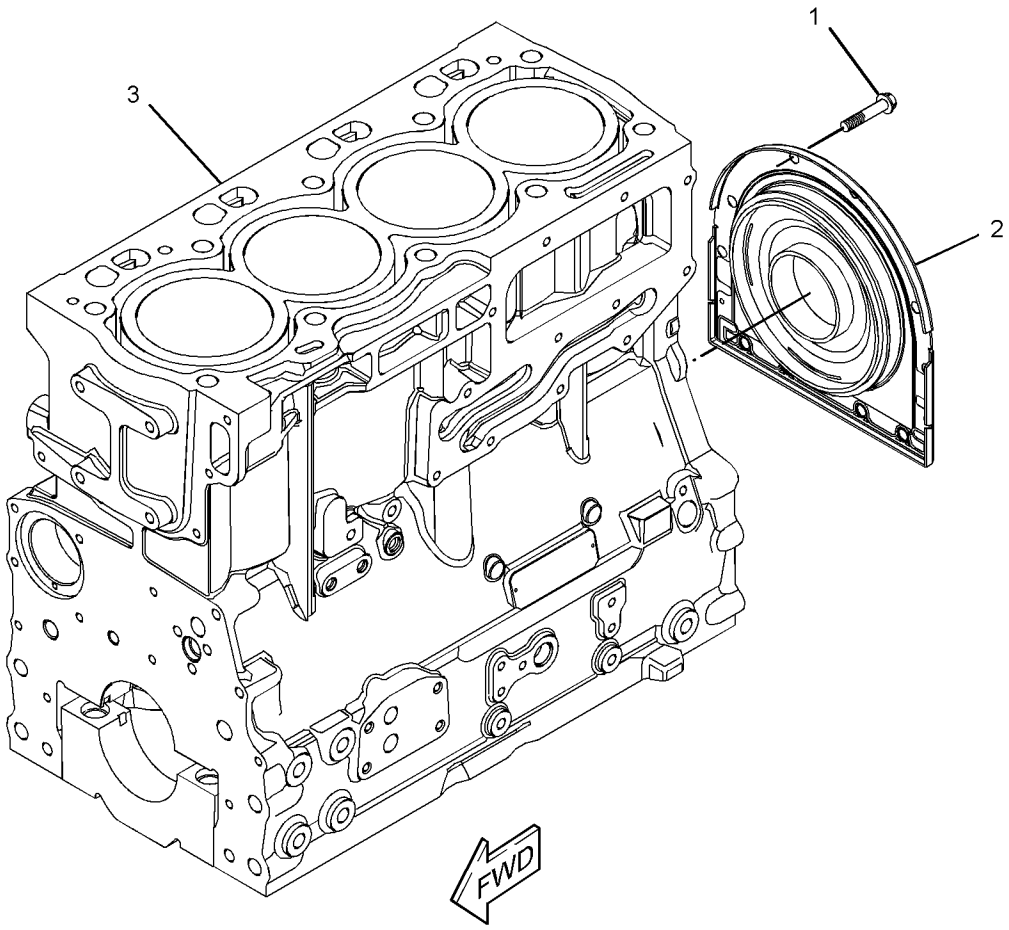

GRAPHIC #1 **<END>** g02500198

232-7519 CYLINDER HEAD GP

S/N: CST1-UP

PART OF 458-3303 CYLINDER HEAD GP

SMCS-1100 **i04921694**

NOTE	REF NO	GRAPHIC REF	PART NUMBER	QTY	PART NAME 1 2 3 4 5 6 (PRODUCT LEVEL)	SEE PAGE
	1	1	**2B-0858**	1	PLUG-PIPE	
	2	1	**9Y-5015**	2	PLUG-FREEZE	
	3	1	**067-6006**	4	PLUG	
	4	1	**147-1979**	16	RETAINER-VALVE SPRING	
	5	1	**185-0882**	8	GUIDE-VALVE	
	6	1	**199-9751**	1	SEAL-O-RING	
	7	1	**329-6655**	4	INSERT-VALVE SEAT (INLET)	
	8	1	**322-9663**	4	INSERT-VALVE SEAT (EXHAUST)	
	9	1	**225-5495**	4	VALVE-INLET	
	10	1	**225-5496**	8	SPRING-VALVE	
	11	1	**252-6438**	4	SEAL-INLET VALVE	
	12	1	**225-5498**	8	CAP	
	13	1	**225-5499**	4	VALVE-EXHAUST	
	14	1	**232-1322**	1	PLUG	
	15	1	**254-3954**	4	SEAL-EXHAUST VALVE	

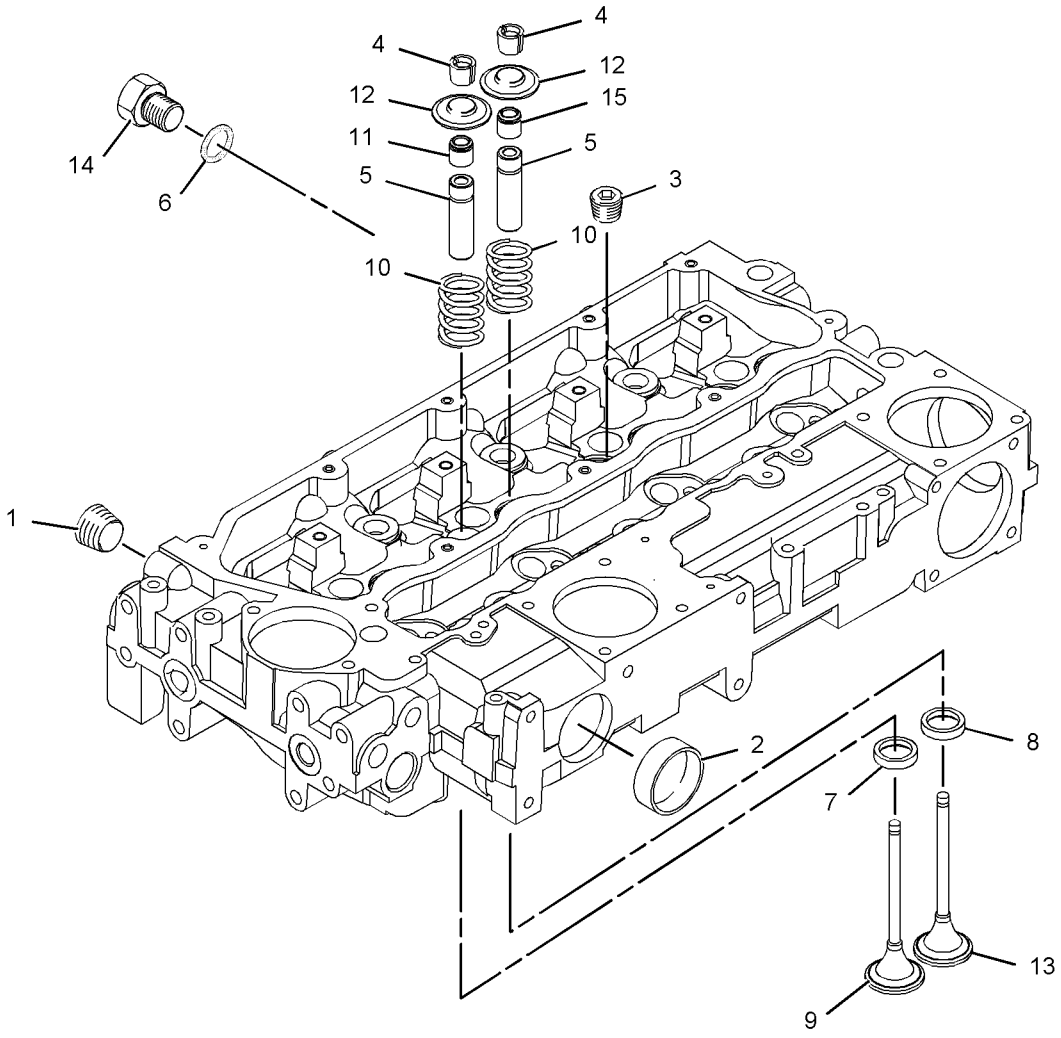

GRAPHIC #1 **<END>** g01095382

458-3303 CYLINDER HEAD GP

S/N: CST1-UP

PART OF 456-1375, 470-9228 ENGINE AR-PRIMARY

SMCS-1100 **i05861514**

NOTE	REF NO	GRAPHIC REF	PART NUMBER	QTY	PART NAME 1 2 3 4 5 6 (PRODUCT LEVEL)	SEE PAGE
	1	1	**225-5501**	7	BOLT (M15X1.5X137-MM)	
	2	1	**225-5502**	3	BOLT (M15X1.5X162-MM)	
	3	1	**258-4946**	1	GASKET-CYLINDER HEAD	
Y	4	1	**232-7519**	1	CYLINDER HEAD GP	14

Y - SEPARATE ILLUSTRATION

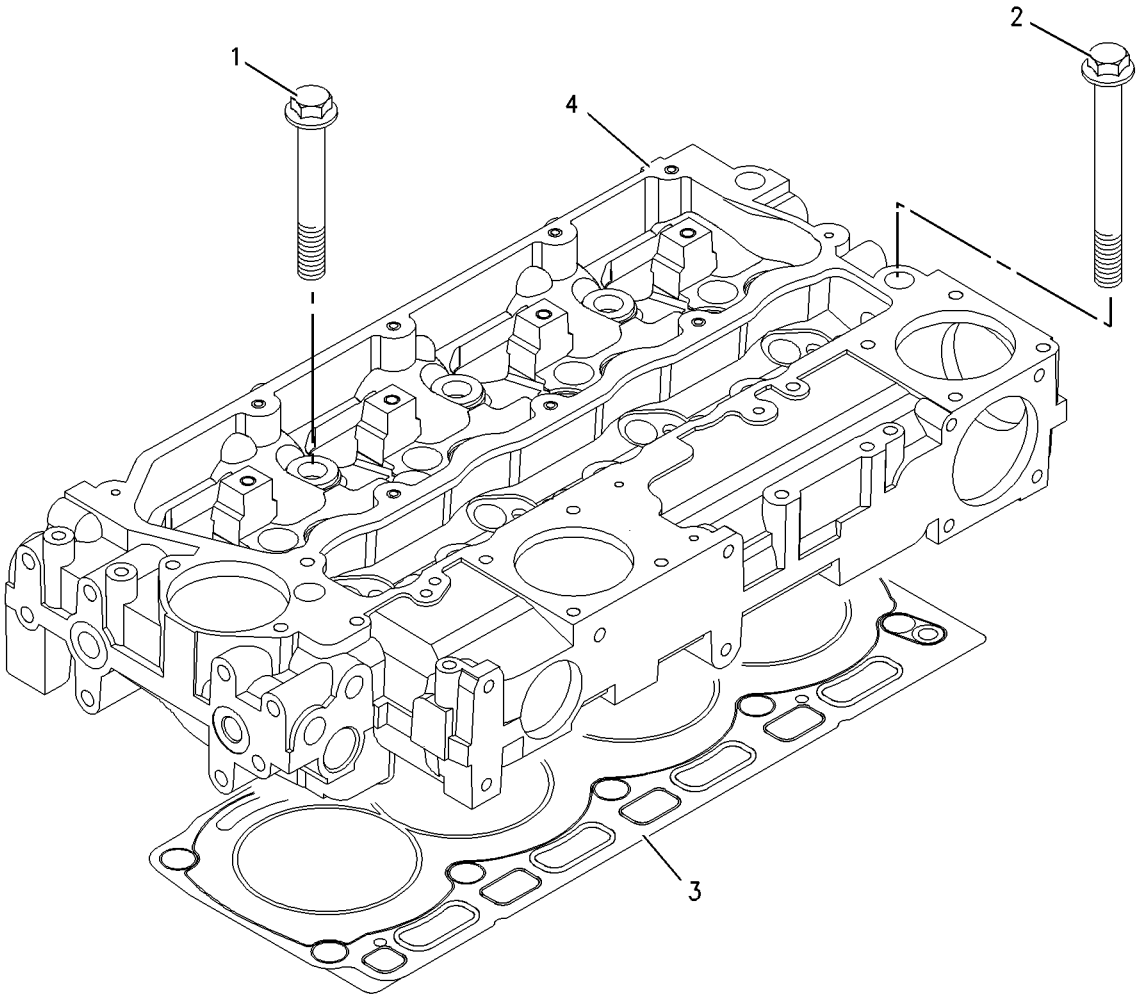

GRAPHIC #1 **<END>** g00994423

421-7104 DRIVE GP-FAN

S/N: CST1-UP

PART OF 456-1375, 470-9228 ENGINE AR-PRIMARY

SMCS-1359 **i04950492**

NOTE	REF NO	GRAPHIC REF	PART NUMBER	QTY	PART NAME 1 2 3 4 5 6 (PRODUCT LEVEL)	SEE PAGE
M	1	1	**111-0859**	4	BOLT (M10X1.5X35-MM)	
	2	1	**284-1026**	1	PULLEY (8-GROOVE)	
	3	1	**289-8336**	1	HOUSING AS	

M - METRIC PART

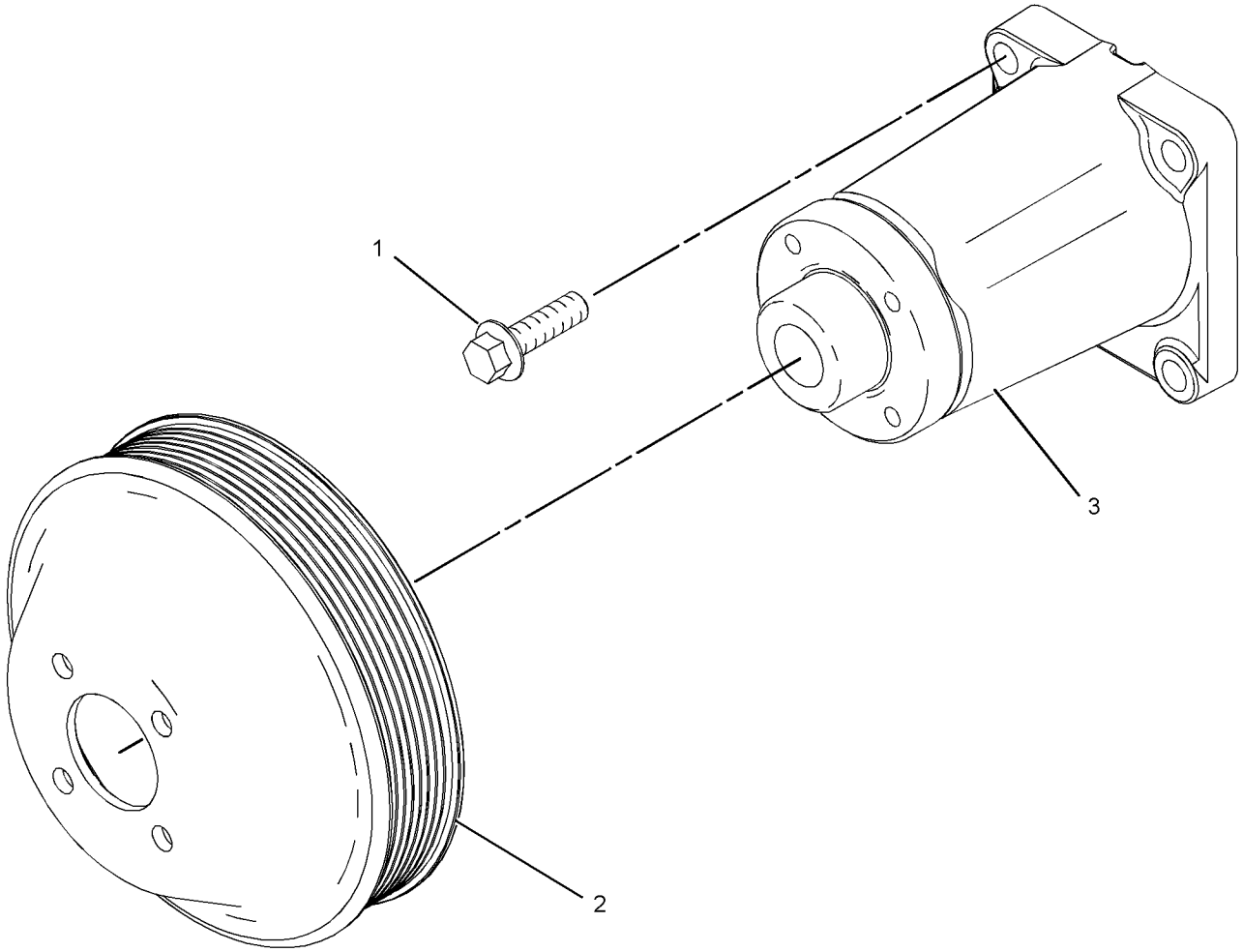

GRAPHIC #1 **<END>** g01411516

421-7102 FLYWHEEL GP

S/N: CST1-UP

PART OF 456-1375, 470-9228 ENGINE AR-PRIMARY

SMCS-1156 **i04950491**

NOTE	REF NO	GRAPHIC REF	PART NUMBER	QTY	PART NAME 1 2 3 4 5 6 (PRODUCT LEVEL)	SEE PAGE
	1	1	**145-4911**	10	WASHER	
	2	1	**367-3326**	1	FLYWHEEL AS	
	2A	1	**033-7687**	1	RING-STARTING MOTOR (126-TEETH)	
	3	1	**0S-1603**	10	BOLT (1/2-20X1.5-IN)	

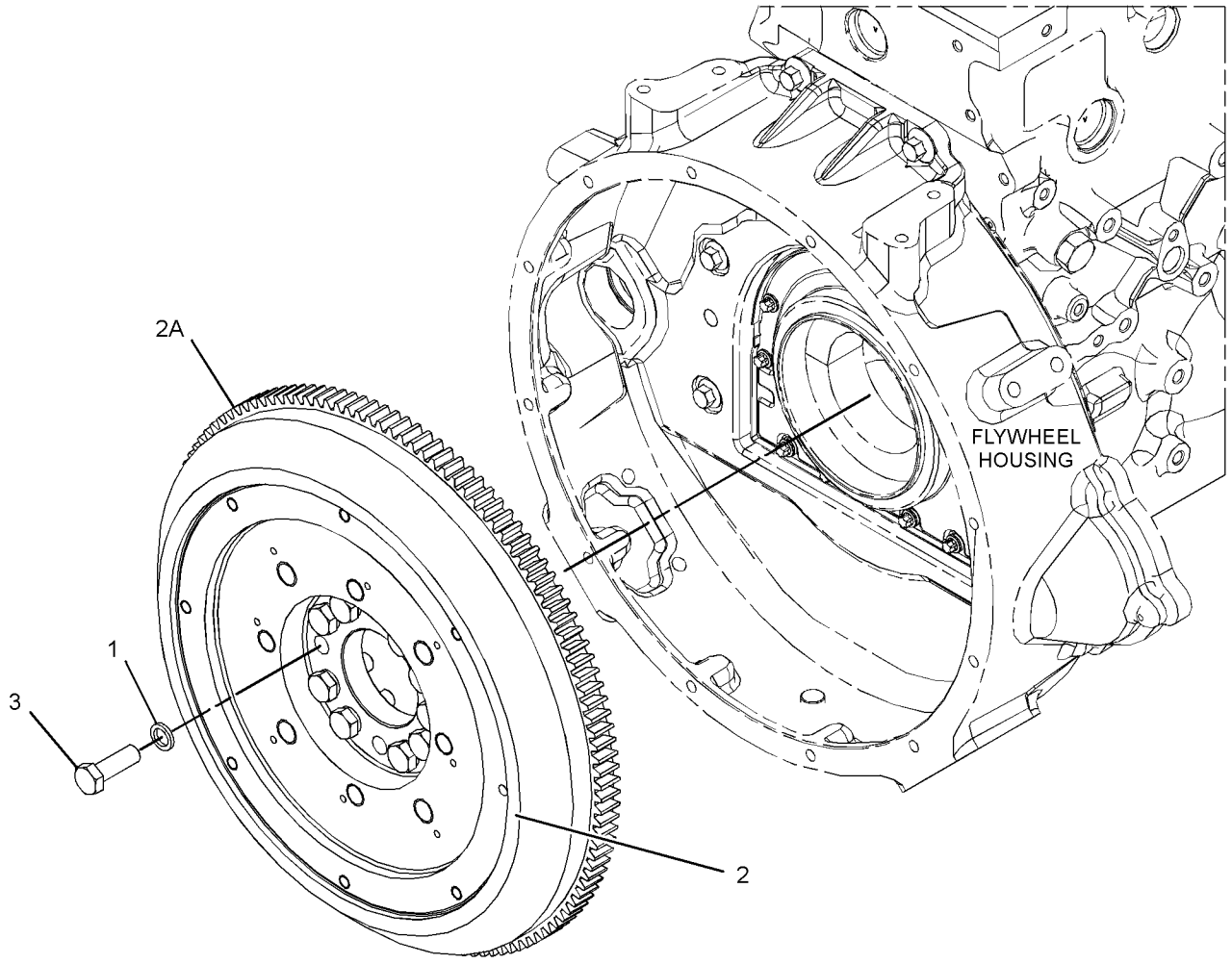

GRAPHIC #1 **<END>** g03146957

421-7101 HOUSING GP-FLYWHEEL

S/N: CST1-UP

PART OF 456-1375, 470-9228 ENGINE AR-PRIMARY

SMCS-1157 **i04952653**

NOTE	REF NO	GRAPHIC REF	PART NUMBER	QTY	PART NAME 1 2 3 4 5 6 (PRODUCT LEVEL)	SEE PAGE
	1	1	**277-0121**	1	PLUG	
M	2	1	**6I-0423**	2	BOLT (M12X1.75X30-MM)	
	3	1	**7W-4642**	1	SHIELD-DUST	
M	4	1	**121-0883**	6	BOLT (M10X1.5X30-MM)	
	5	1	**287-8597**	2	DOWEL	
	6	1	**335-2092**	1	COVER-FLYWHEEL	
	7	1	**392-0265**	1	HOUSING-FLYWEEL	
	8	1	**6I-0917**	2	BOLT (M6X1X25-MM)	

M - METRIC PART

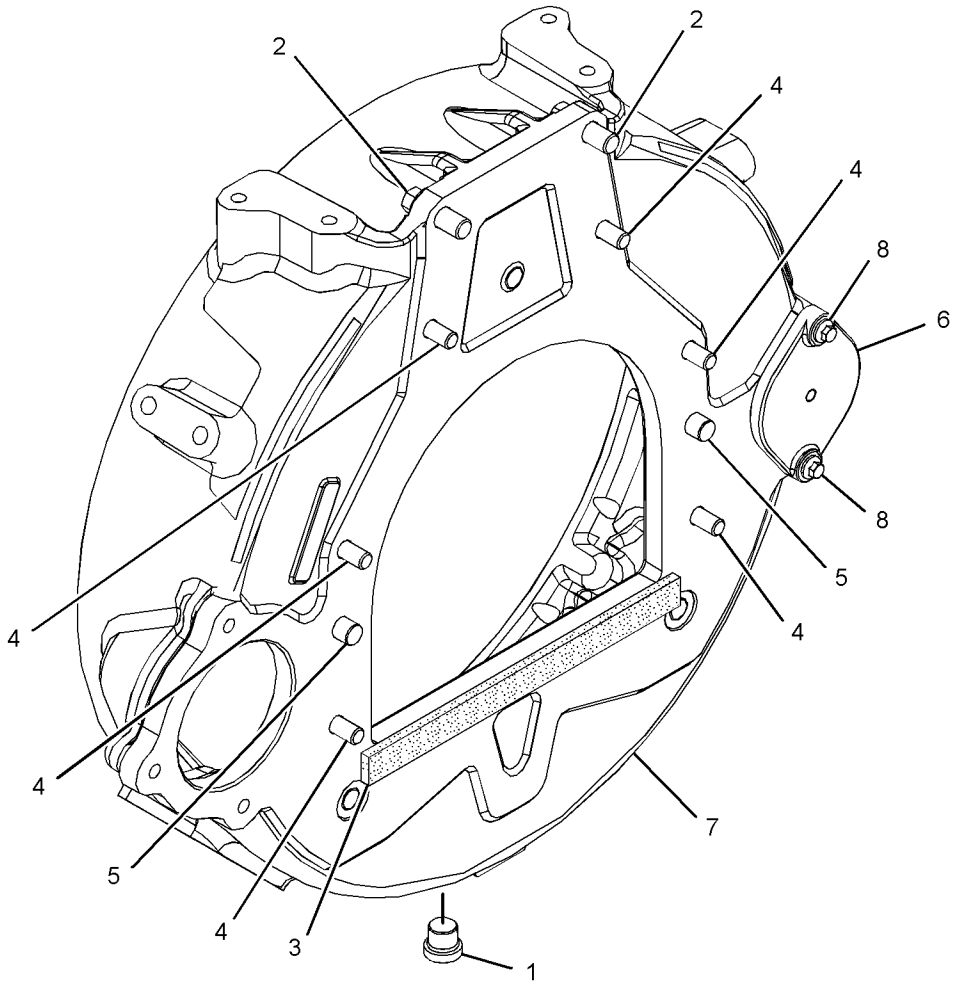

GRAPHIC #1 **<END>** g02675738

460-0596 HOUSING GP-FRONT

S/N: CST1-UP

PART OF 456-1375, 470-9228 ENGINE AR-PRIMARY

SMCS-1151, 1162, 1206 **i05859467**

NOTE	REF NO	GRAPHIC REF	PART NUMBER	QTY	PART NAME 1 2 3 4 5 6 (PRODUCT LEVEL)	SEE PAGE
M	1	1	**6I-0217**	6	BOLT (M8X1.25X20-MM)	
M	2	1	**6I-0645**	4	BOLT (M8X1.25X25-MM)	
M	3	1	**6I-0650**	3	BOLT (M10X1.5X65-MM)	
	4	1	**7C-4616**	1	BOLT (M12X1.75X45-MM)	
	5	1	**067-6179**	1	DOWEL	
M	6	1	**100-3751**	5	BOLT (M8X1.25X65-MM)	
M	7	1	**101-3895**	2	BOLT (M8X1.25X35-MM)	
M	8	1	**124-3815**	10	BOLT (M8X1.25X16-MM)	
	9	1	**133-1011**	1	WASHER	
	10	1	**216-8634**	1	GEAR-CAMSHAFT (68-TEETH)	
	11	1	**232-3657**	1	COVER AS-FRONT	
	11A	1	**225-8287**	1	GASKET	
	12	1	**232-3666**	1	WASHER-THRUST	
	13	1	**277-3012**	1	GASKET-COVER	
	14	1	**288-0422**	1	SEAL-OIL	
	15	1	**294-0288**	1	HOUSING-FRONT	
	16	1	**324-0444**	1	HUB-IDLER GEAR	
J	17	1	**346-0407**	1	GEAR-IDLER	
L	18	1	**346-0408**	1	PLATE	

J - USED ONLY WITH 346-0408 & 324-0444
L - USED ONLY WITH 346-0407
M - METRIC PART

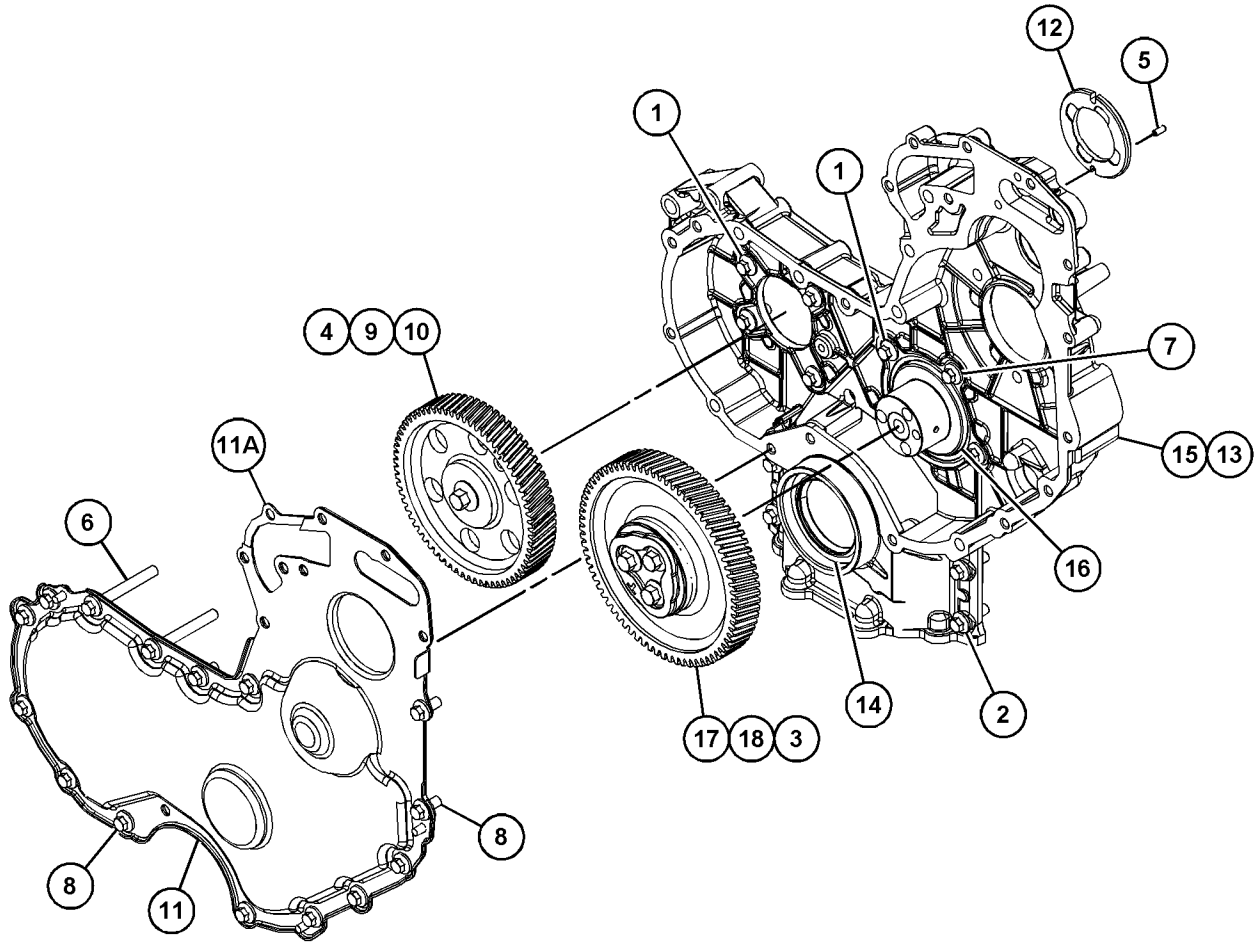

GRAPHIC #1 **<END>** g03704604

232-3713 LIFTING GP-ENGINE

S/N: CST1-UP

PART OF 456-1375, 470-9228 ENGINE AR-PRIMARY

SMCS-1122 **i02560646**

NOTE	REF NO	GRAPHIC REF	PART NUMBER	QTY	PART NAME 1 2 3 4 5 6 (PRODUCT LEVEL)	SEE PAGE
M	1	1	**100-4830**	4	BOLT (M10X1.5X20-MM)	
	2	1	**225-8848**	1	PLATE-LIFTING	
	3	1	**275-2452**	1	PLATE-LIFTING	

M - METRIC PART

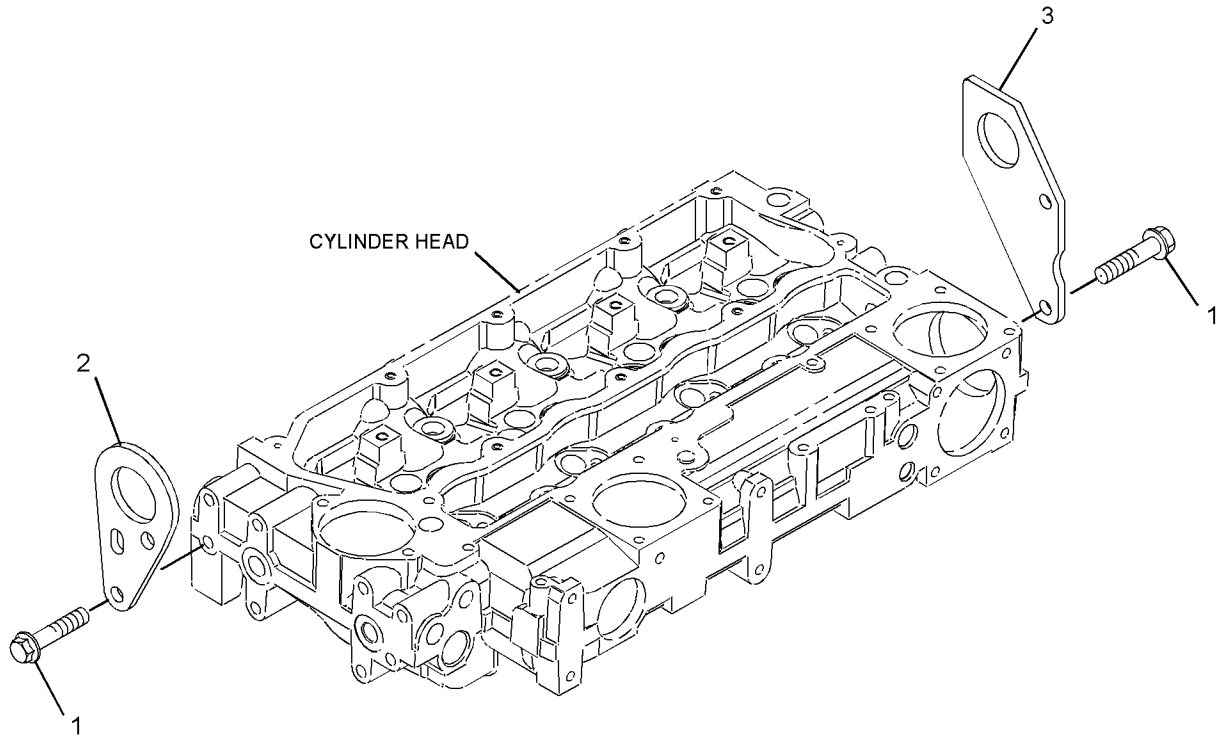

GRAPHIC #1 **<END>** g01210949

387-2615 MOUNTING GP-ENGINE

S/N: HAH1-UP

PART OF 392-0400 INSTALLATION AR-ENGINE

SMCS-1152 **i05896920**

NOTE	REF NO	GRAPHIC REF	PART NUMBER	QTY	PART NAME 1 2 3 4 5 6 (PRODUCT LEVEL)	SEE PAGE
	1	1	**339-7145**	2	BRACKET	
	2	1	**351-3928**	4	PLATE	
	3	1	**392-2053**	4	MOUNT-RUBBER	
	4	1	**368-6660**	4	MOUNT-RUBBER	
M	5	1	**447-1706**	4	BOLT (M16X2X130-MM)	
M	6	1	**453-3449**	8	BOLT (M12X1.75X50-MM)	
	7	1	**451-2182**	8	WASHER-HARD (13.5X25.5X3-MM THK)	
	8	1	**451-2175**	8	WASHER-HARD (17.5X30X3.5-MM THK)	
	9	1	**118-9941**	4	SUPPORT AS	

M - METRIC PART

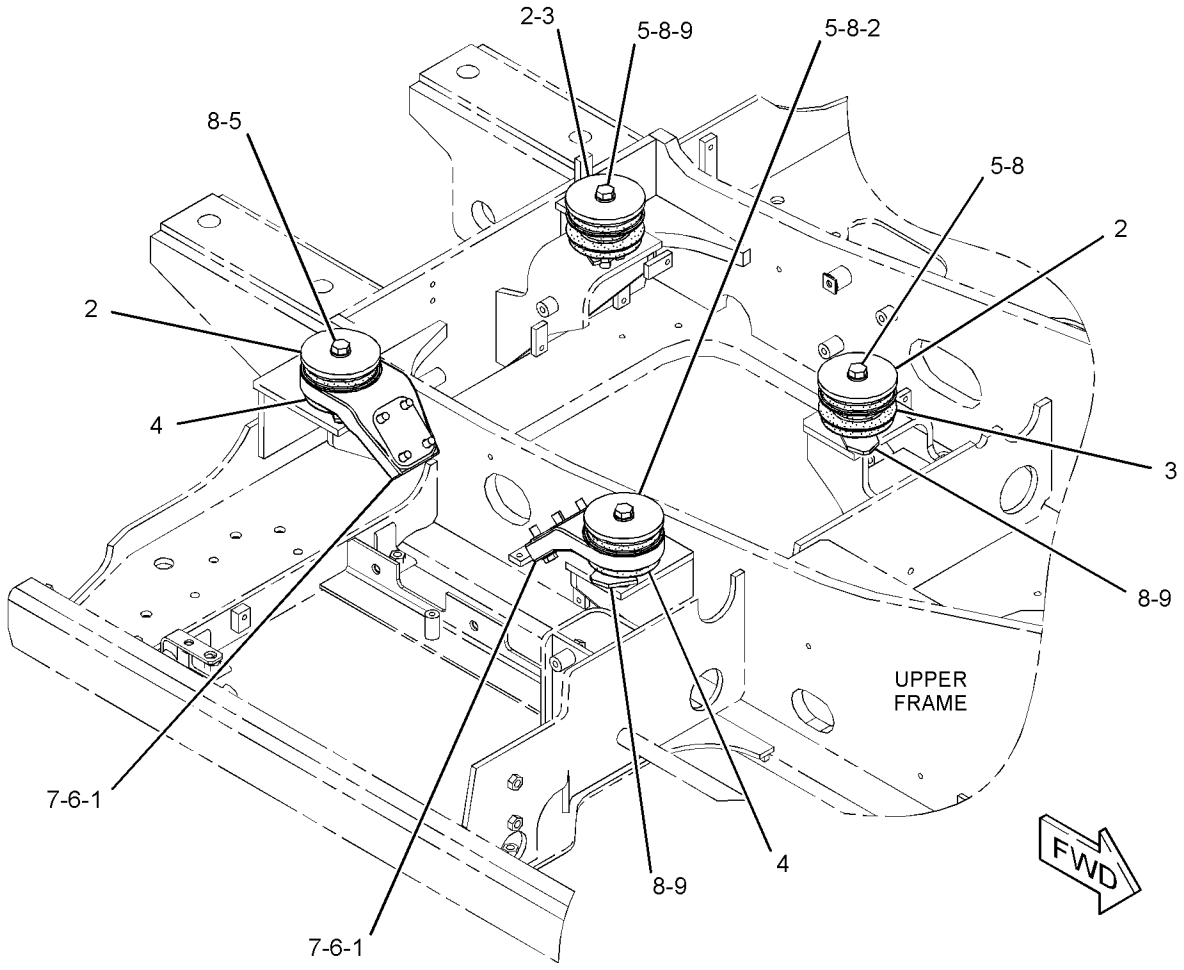

GRAPHIC #1 **<END>** g03716042

421-7111 MOUNTING GP-ENGINE

S/N: CST1-UP

PART OF 456-1375, 470-9228 ENGINE AR-PRIMARY

SMCS-1152 **i04950514**

NOTE	REF NO	GRAPHIC REF	PART NUMBER	QTY	PART NAME 1 2 3 4 5 6 (PRODUCT LEVEL)	SEE PAGE
	1	1	**339-7143**	1	BRACKET	
	2	1	**339-7144**	1	BRACKET	
	3	1	**382-5080**	4	BOLT-FLANGE HEAD (M12X1.75X45-MM)	
	4	1	**383-6627**	3	BOLT-FLANGE HEAD (M12X1.75X50-MM)	
	5	1	**383-8104**	1	BOLT	

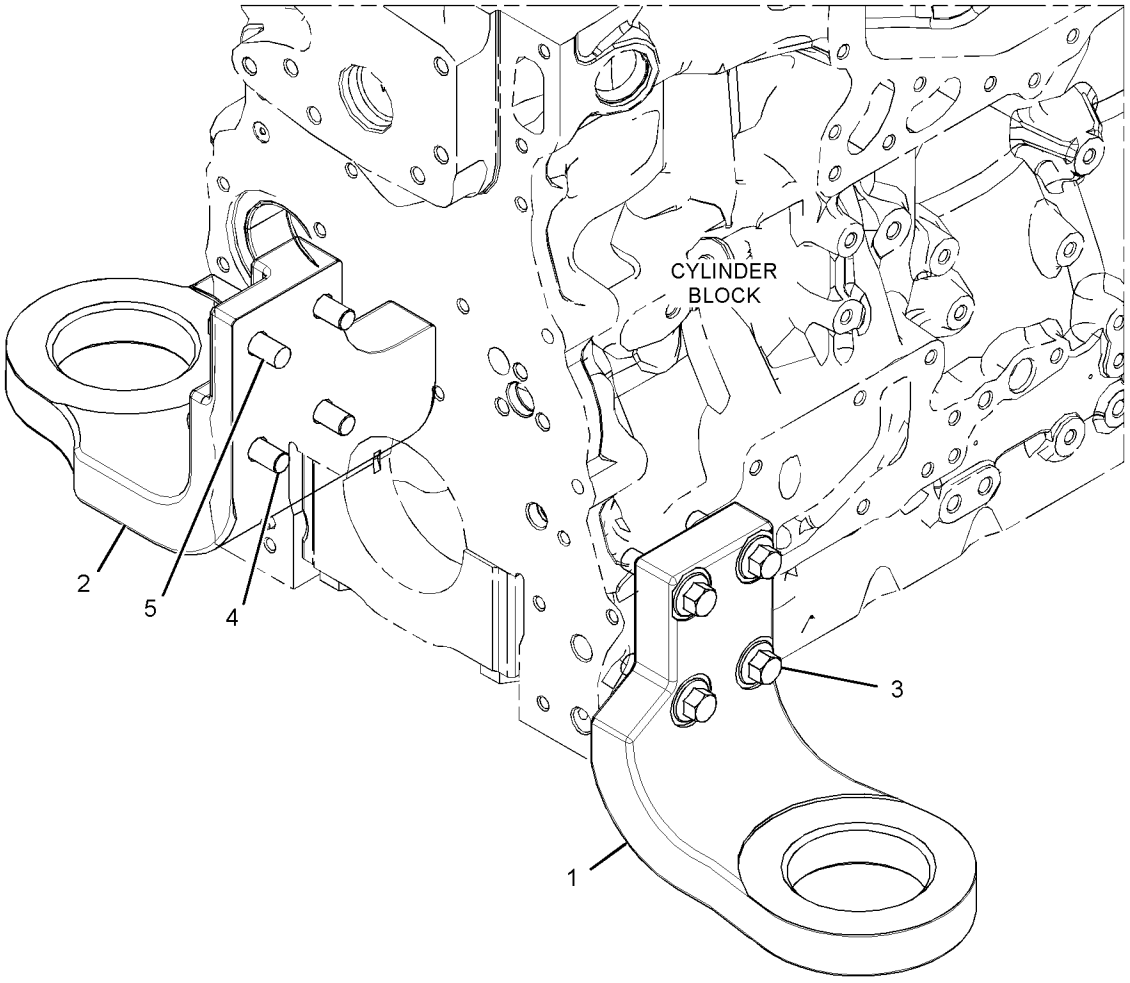

GRAPHIC #1 **<END>** g02711669

421-7105 PAN GP-OIL

S/N: CST1-UP

PART OF 456-1375, 470-9228 ENGINE AR-PRIMARY

SMCS-1302 **i05243210**

NOTE	REF NO	GRAPHIC REF	PART NUMBER	QTY	PART NAME 1 2 3 4 5 6 (PRODUCT LEVEL)	SEE PAGE
	1	1	**3K-0360**	1	SEAL-O-RING	
M	2	1	**6I-0260**	4	BOLT (M8X1.25X25-MM)	
	3	1	**6I-0289**	1	PLUG	
M	4	1	**6I-0363**	2	BOLT (M6X1X20-MM)	
M	5	1	**6I-0645**	2	BOLT (M8X1.25X25-MM)	
	6	1	**6V-7238**	1	VALVE-SHUTOFF	
	7	1	**7C-0351**	1	PLUG-DRAIN (ENGINE OIL)	
	8	1	**067-6213**	1	GASKET	
	9	1	**101-3805**	16	BOLT (M8X1.25X90-MM)	
M	10	1	**103-5687**	2	BOLT (M10X1.5X85-MM)	
	11	1	**189-9377**	1	SEAL-O-RING	
	12	1	**213-0677**	1	SWITCH AS-LIQUID LEVEL (ENGINE OIL)	
		1	**102-8802**	1	KIT-RECEPTACLE (2-PIN)	
					(INCLUDES RECEPTACLE AS & WEDGE)	
		1	**9X-3401**	2	PIN-CONNECTOR (16-GA TO 18-GA)	
					—OR—	
		1	**126-1767**	2	PIN-CONNECTOR (14-GA TO 16-GA)	
	13	1	**225-6005**	1	GASKET	
	14	1	**230-8094**	1	BRIDGE	
	15	1	**235-2435**	1	TUBE-SUCTION	
	16	1	**274-6609**	1	CLIP-HARNESS	
	17	1	**335-7585**	1	SEAL	
	18	1	**341-7597**	1	PAN-OIL	
	19	1	**350-9492**	1	GAUGE AS-OIL LEVEL (DIPSTICK) (ENGINE)	
	19A	1	**275-9891**	2	SEAL-O-RING	
	20	1	**393-0807**	1	TUBE AS	
	20A	1	**228-7089**	1	SEAL-O-RING	
	21	1	**393-5867**	2	SPACER	

M - METRIC PART

421-7105 **PAN GP-OIL (*contd.*)** **i05243210**

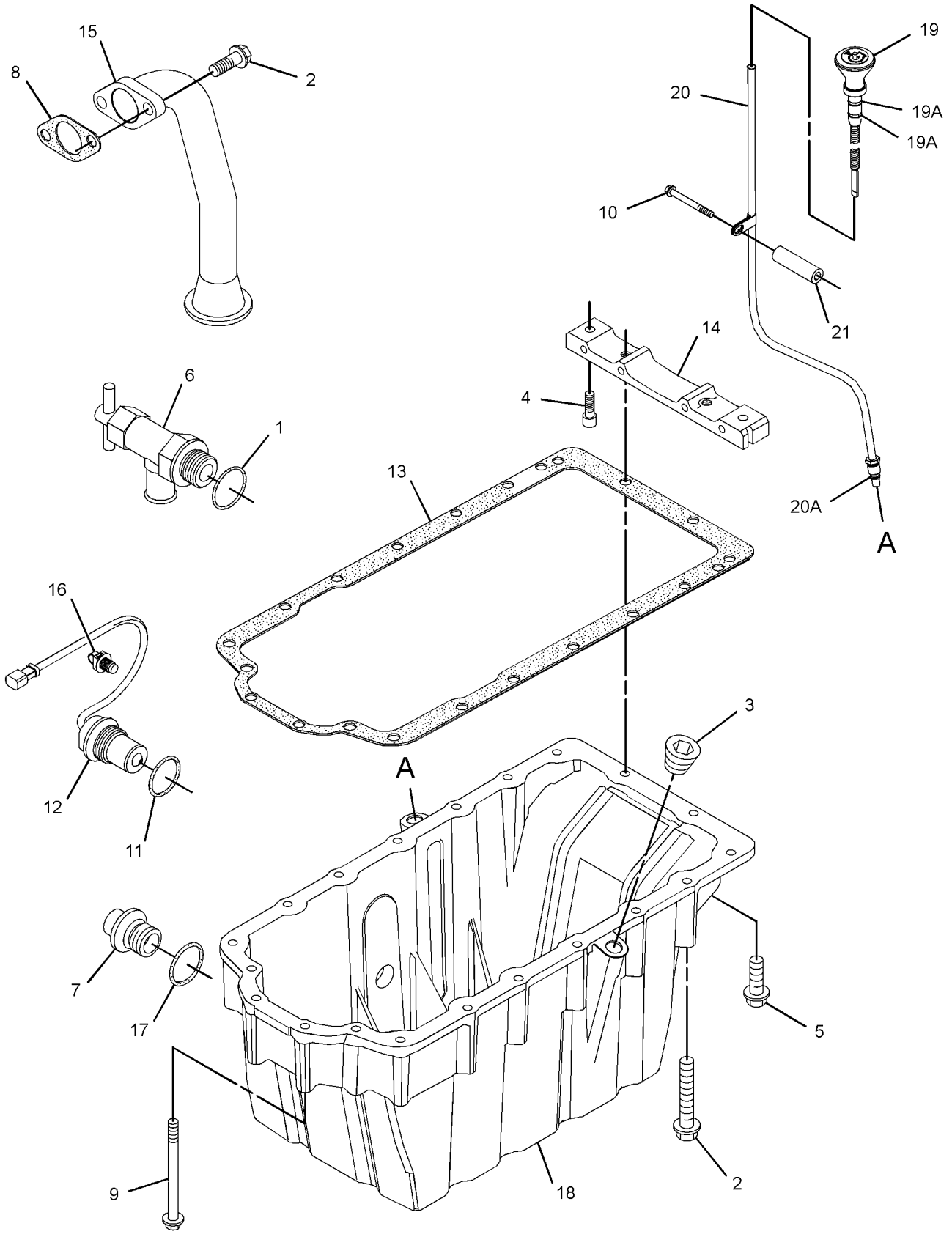

GRAPHIC #1 **<END>** g03161277

458-3302 PISTON & ROD GP

S/N: CST1-UP

PART OF 456-1375, 470-9228 ENGINE AR-PRIMARY

SMCS-1225 **i05861511**

NOTE	REF NO	GRAPHIC REF	PART NUMBER	QTY	PART NAME 1 2 3 4 5 6 (PRODUCT LEVEL)	SEE PAGE
BJ	1	1	**359-0719**	4	ROD AS-CONNECTING (LENGTH R)	
					—OR—	
BJ			**359-0720**	4	ROD AS-CONNECTING (LENGTH O)	
					—OR—	
BJ			**359-0721**	4	ROD AS-CONNECTING (LENGTH W)	
					—OR—	
BJ			**359-0722**	4	ROD AS-CONNECTING (LENGTH G)	
					—OR—	
BJ			**359-0723**	4	ROD AS-CONNECTING (LENGTH P)	
					—OR—	
BJ			**359-0724**	4	ROD AS-CONNECTING (LENGTH B)	
					(EACH INCLUDES)	
	1A	1	**225-5438**	1	BUSHING	
	1B	1	**323-9312**	2	BOLT (M10X1X50-MM)	
	2	1	**458-7586**	4	KIT-PISTON & RING	
					(EACH KIT INCLUDES PISTONS AND RINGS)	

B - USE AS REQUIRED
J - ENSURE THAT CORRECT ROD LENGTH IS FITTED

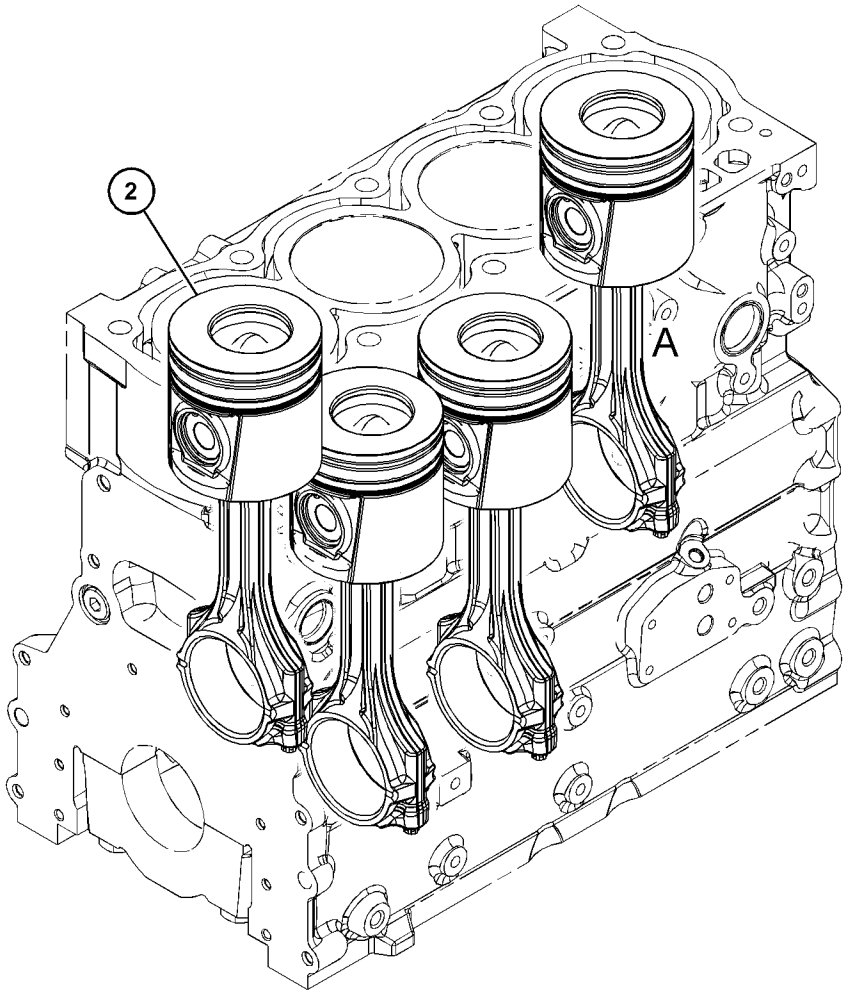

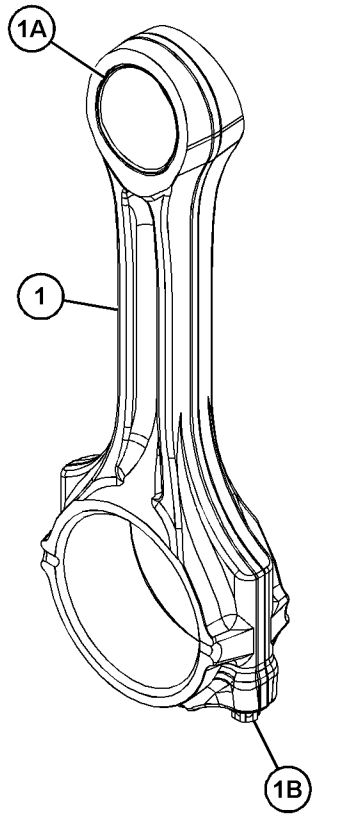

VIEW OF AREA A
(PARTS REMOVED FOR CLARITY)

GRAPHIC #1 **<END>** g03707398

230-7569 PLUG GP-ENGINE

S/N: CST1-UP

PART OF 456-1375, 470-9228 ENGINE AR-PRIMARY

SMCS-1000 **i04952082**

NOTE	REF NO	GRAPHIC REF	PART NUMBER	QTY	PART NAME 1 2 3 4 5 6 (PRODUCT LEVEL)	SEE PAGE
	1	1	**231-0046**	1	PLUG	

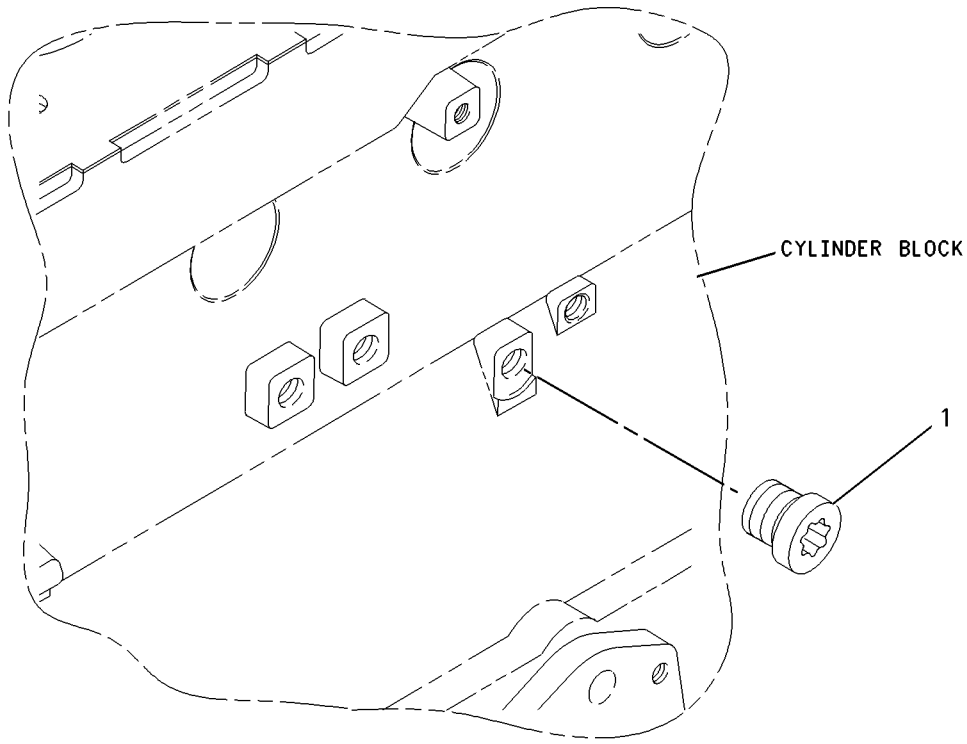

GRAPHIC #1 **<END>** g00911955

232-3716 PLUG GP-ENGINE

S/N: CST1-UP
CYLINDER BLOCK
PART OF 456-1375, 470-9228 ENGINE AR-PRIMARY

SMCS-1000 **i05859403**

NOTE	REF NO	GRAPHIC REF	PART NUMBER	QTY	PART NAME 1 2 3 4 5 6 (PRODUCT LEVEL)	SEE PAGE
	1	1	**035-8063**	1	PLUG	

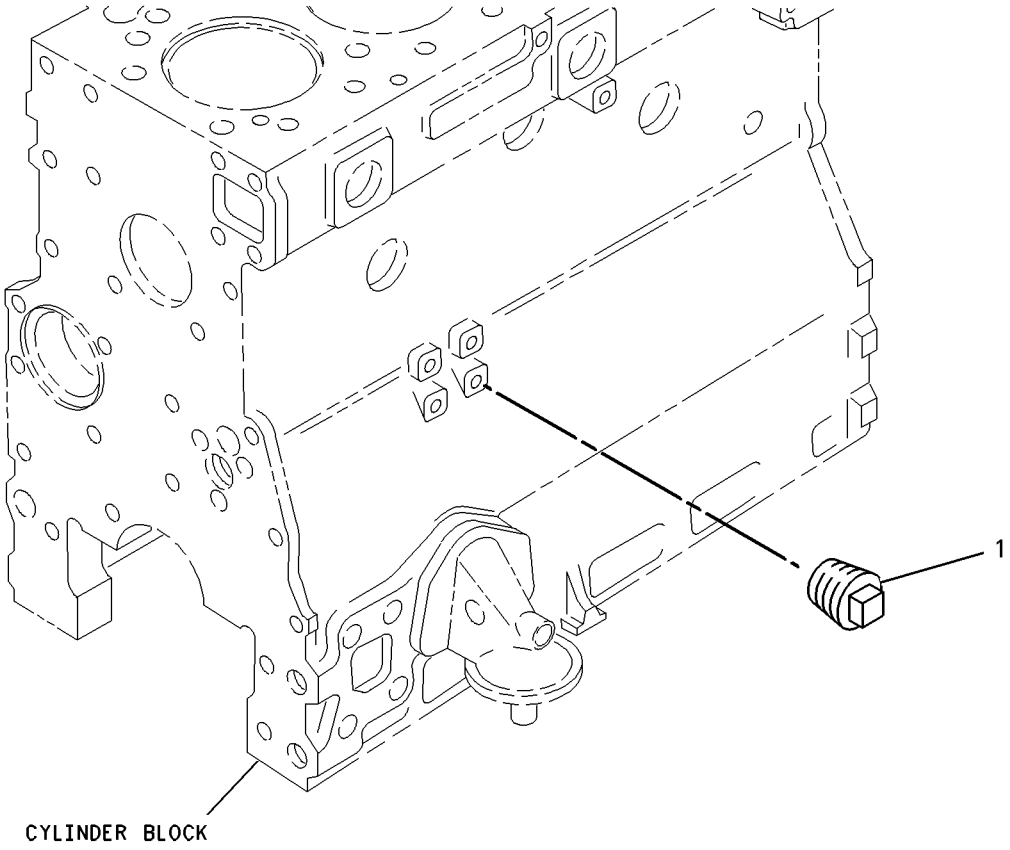

GRAPHIC #1 **<END>** g00777007

232-6204 PLUG GP-ENGINE

S/N: CST1-UP

PART OF 456-1375, 470-9228 ENGINE AR-PRIMARY

SMCS-1000 **i02564678**

NOTE	REF NO	GRAPHIC REF	PART NUMBER	QTY	PART NAME 1 2 3 4 5 6 (PRODUCT LEVEL)	SEE PAGE
	1	1	**199-9751**	1	SEAL-O-RING	
	2	1	**232-1322**	1	PLUG	

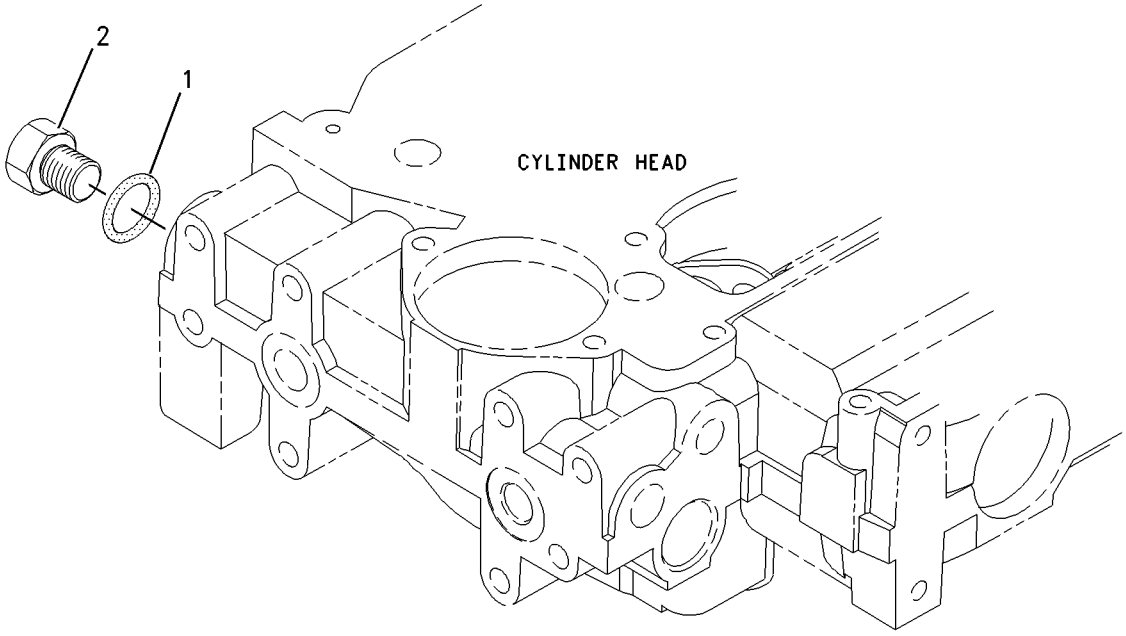

GRAPHIC #1 **<END>** g00950934

234-4215 PLUG GP-ENGINE

S/N: CST1-UP

PART OF 456-1375, 470-9228 ENGINE AR-PRIMARY

SMCS-1000 **i04952086**

NOTE	REF NO	GRAPHIC REF	PART NUMBER	QTY	PART NAME 1 2 3 4 5 6 (PRODUCT LEVEL)	SEE PAGE
	1	1	**2B-0858**	1	PLUG-PIPE	
	2	1	**7W-4669**	1	ADAPTER	
	3	1	**9X-3959**	1	ELBOW	

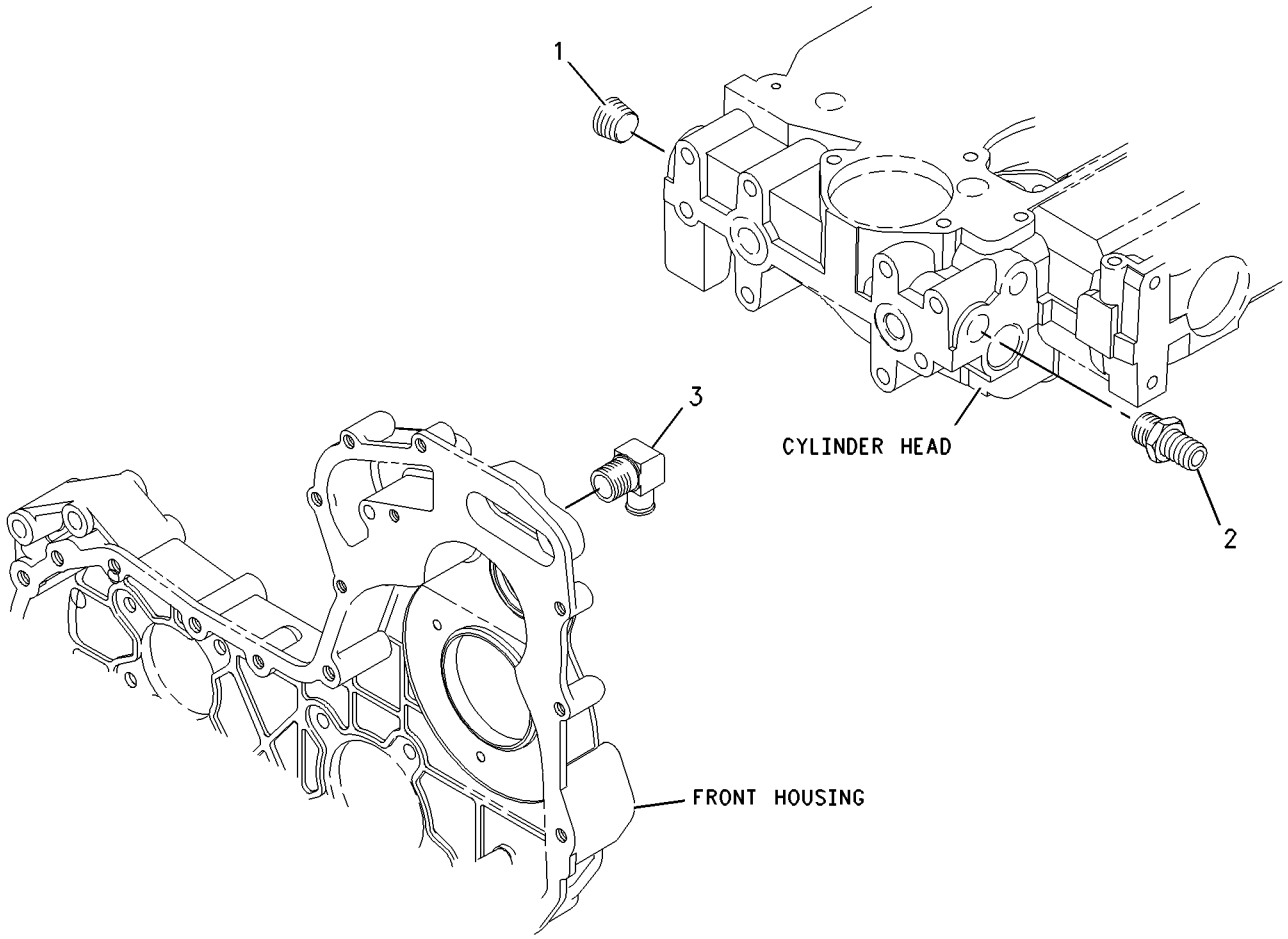

GRAPHIC #1 **<END>** g00975580

360-7354 PULLEY GP-CRANKSHAFT

S/N: CST1-UP

PART OF 456-1375, 470-9228 ENGINE AR-PRIMARY

SMCS-1205 **i05859442**

NOTE	REF NO	GRAPHIC REF	PART NUMBER	QTY	PART NAME 1 2 3 4 5 6 (PRODUCT LEVEL)	SEE PAGE
M	1	1	**102-9941**	3	BOLT (M12X1.75X25-MM)	
	2	1	**286-7848**	1	PULLEY GP-ENGINE (8-GROOVE)	
	3	1	**334-9334**	3	BOLT	
	4	1	**359-0750**	1	PULLEY-CRANKSHAFT	

M - METRIC PART

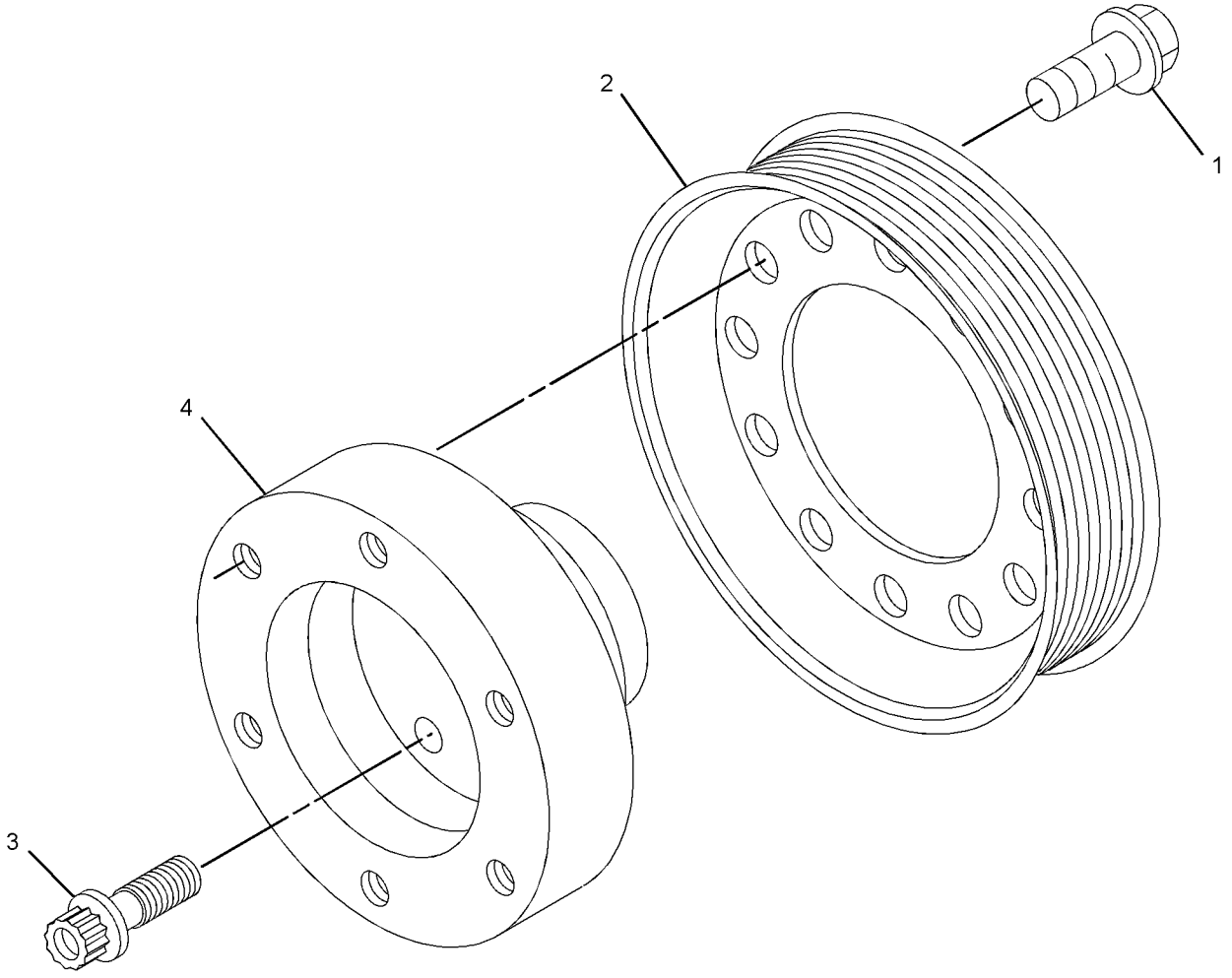

GRAPHIC #1 **<END>** g02232714

387-2628 PULLEY GP-FAN

S/N: HAH1-UP

PART OF 390-8835 FAN AR-SUCTION

SMCS-1356, 1359

i05440558

NOTE	REF NO	GRAPHIC REF	PART NUMBER	QTY	PART NAME 1 2 3 4 5 6 (PRODUCT LEVEL)	SEE PAGE
	1	1	**284-1026**	1	PULLEY (8-GROOVE)	
	2	1	**298-5872**	1	BELT-SERPENTINE	

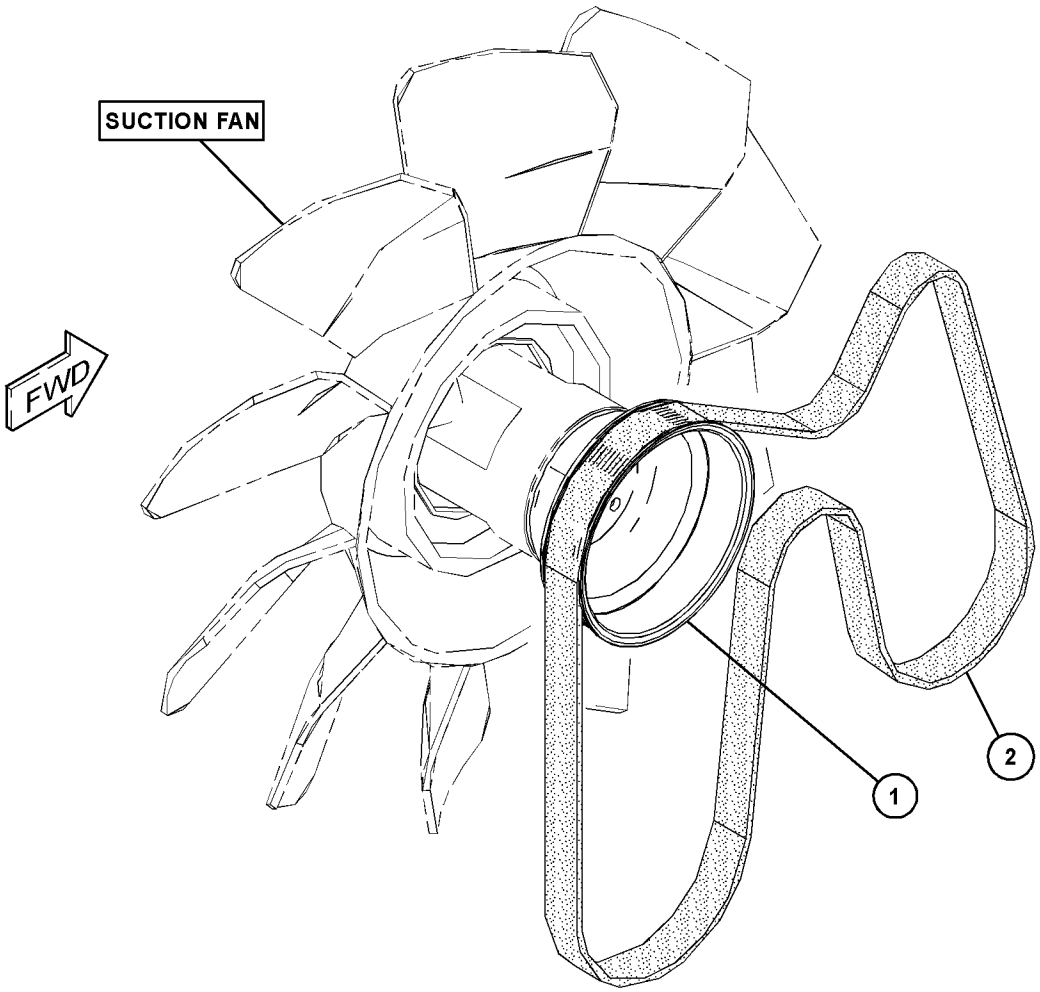

GRAPHIC #1

<END>

g03146979

225-5963 ROCKER ARM GP

S/N: CST1-UP

PART OF 458-3304 VALVE MECHANISM GP

SMCS-1123 **i03469082**

NOTE	REF NO	GRAPHIC REF	PART NUMBER	QTY	PART NAME 1 2 3 4 5 6 (PRODUCT LEVEL)	SEE PAGE
	1	1	**225-5625**	4	LEVER AS (INLET)	
					(EACH INCLUDES)	
	1A	1	**5B-9079**	1	NUT-JAM (3/8-24-THD)	
	1B	1	**185-1546**	1	SCREW	
	2	1	**225-5634**	1	SHAFT AS	
	2A	1	**225-5629**	2	PLUG	
	3	1	**225-5638**	3	SPRING	
	4	1	**225-5640**	4	LEVER AS (EXHAUST)	
					(EACH INCLUDES)	
	4A	1	**5B-9079**	1	NUT-JAM (3/8-24-THD)	
	4B	1	**185-1546**	1	SCREW	
	5	1	**225-5959**	2	CLIP	
	6	1	**225-5960**	1	BOLT (M8X1.25X60-MM)	
	7	1	**225-5961**	2	WASHER (26.7X34.32X0.38-MM THK)	
	8	1	**225-5962**	3	BOLT (M8X1.25X30-MM)	

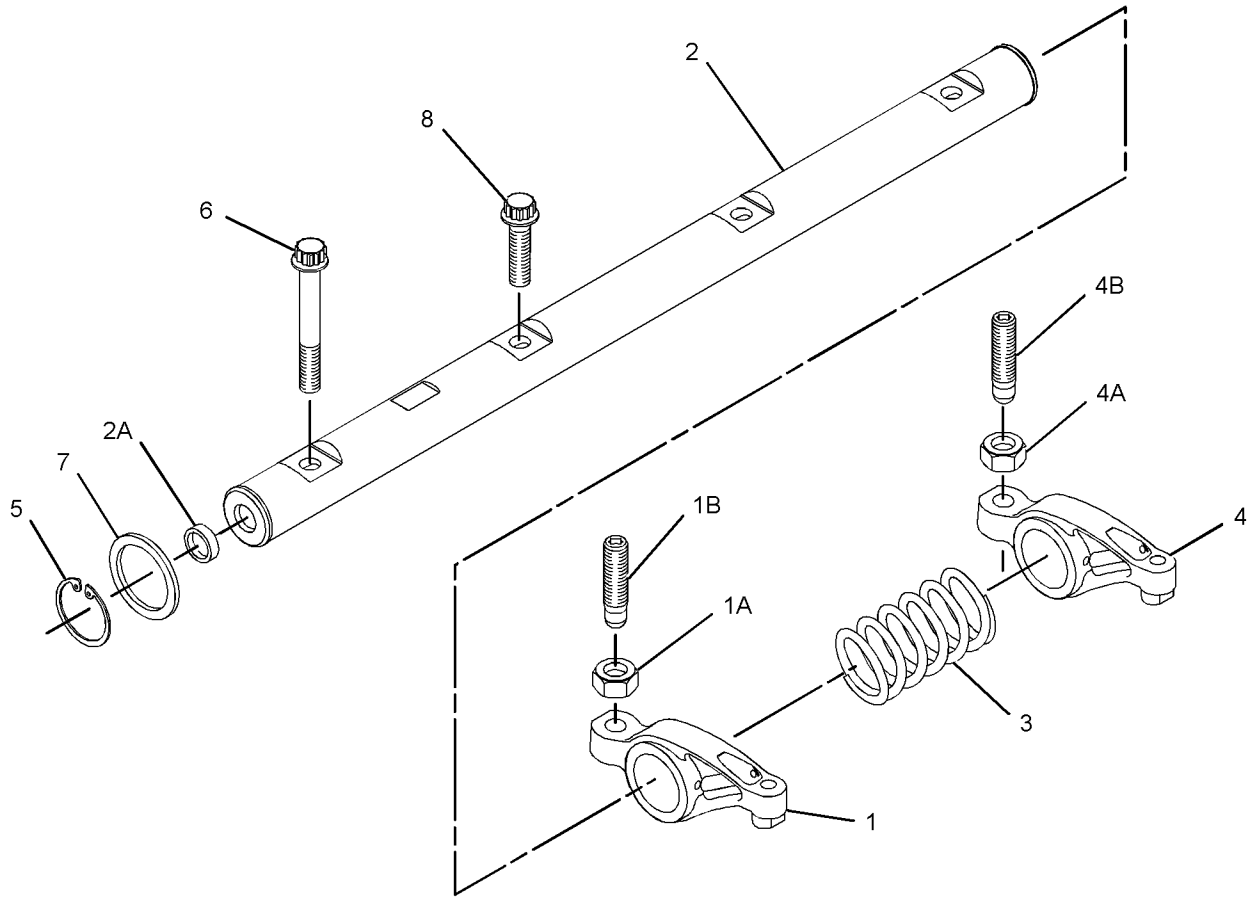

GRAPHIC #1 **<END>** g01368510

458-3304 VALVE MECHANISM GP

S/N: CST1-UP

PART OF 456-1375, 470-9228 ENGINE AR-PRIMARY

SMCS-1209 **i05861515**

NOTE	REF NO	GRAPHIC REF	PART NUMBER	QTY	PART NAME 1 2 3 4 5 6 (PRODUCT LEVEL)	SEE PAGE
Y	1	1	**225-5963**	1	ROCKER ARM GP	32

Y - SEPARATE ILLUSTRATION

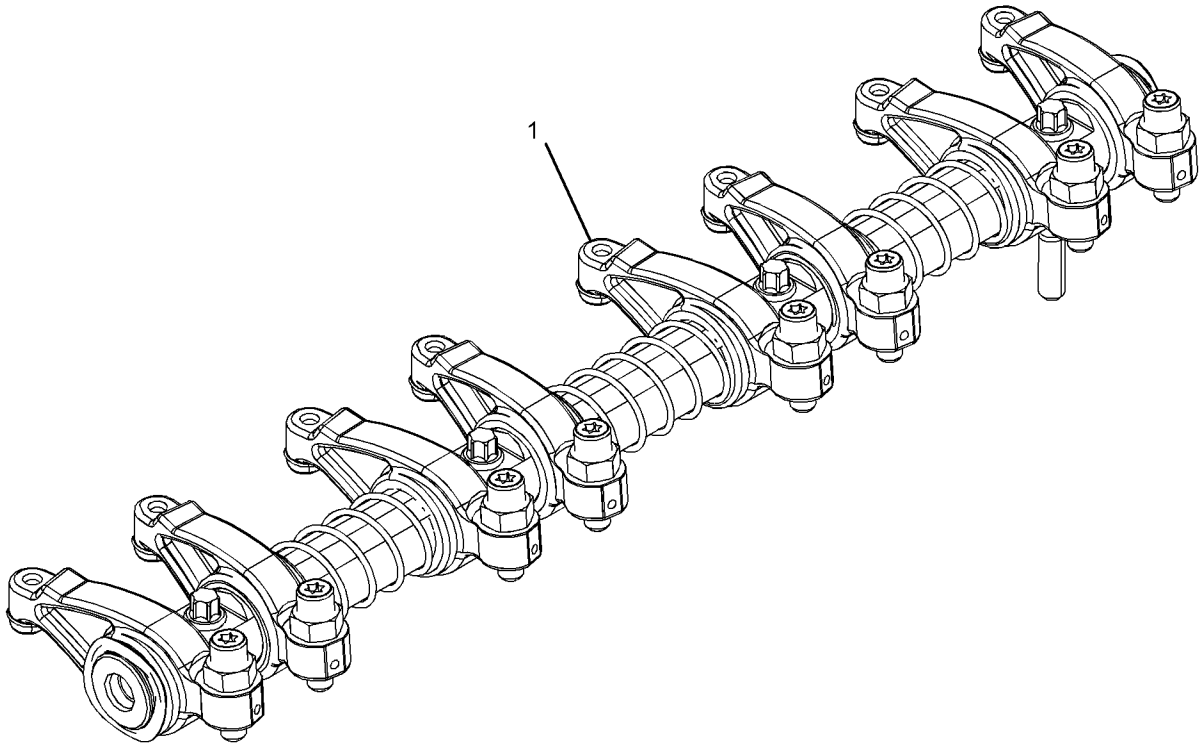

GRAPHIC #1 **<END>** g03349465

392-0401 FILTER & MTG GP-ENGINE OIL

S/N: HAH1-UP

PART OF 392-0400 INSTALLATION AR-ENGINE

SMCS-1306, 1308 **i04962335**

NOTE	REF NO	GRAPHIC REF	PART NUMBER	QTY	PART NAME 1 2 3 4 5 6 (PRODUCT LEVEL)	SEE PAGE
	1	1	**7C-1493**	1	VALVE AS-BYPASS (ENGINE OIL FILTER BASE)	
	2	1	**7W-9028**	1	BASE AS-OIL FILTER	
		1	**2P-2537**	1	STUD-HOLLOW	
	3	1	**9L-9188**	1	SPRING-VALVE	
	4	1	**121-0307**	1	BASE	
	5	1	**287-0212**	1	PLATE AS	
I	6	1	**387-2653**	1	HOSE AS	
I	7	1	**387-2654**	1	HOSE AS	
	8	1	**393-0826**	1	PLATE AS	
	9	1	**130-9984**	1	CLIP	
	10	1	**1R-1807**	1	FILTER AS-ENGINE OIL (ADVANCED EFFICIENCY)	
	11	1	**214-7568**	1	SEAL-O-RING	
	12	1	*281-5972*	1	CONNECTOR AS	
		1	**6V-8637**	1	CONNECTOR	
		1	**228-7092**	1	SEAL-O-RING	
		1	**238-5082**	1	SEAL-O-RING	
	13	1	*321-8647*	1	PLUG AS	
M		1	**5P-8196**	1	PLUG	
		1	**238-5081**	1	SEAL-O-RING	
	14	1	*321-8648*	3	CONNECTOR AS	
					(EACH INCLUDES)	
		1	**2T-2991**	1	CONNECTOR	
		1	**228-7092**	1	SEAL-O-RING	
		1	**238-5083**	1	SEAL-O-RING	
	15	1	*326-0319*	1	PLUG AS	
		1	**9S-4188**	1	PLUG	
		1	**238-5083**	1	SEAL-O-RING	
	16	1	*329-5528*	1	ELBOW AS	
		1	**8T-8899**	1	ELBOW	
		1	**228-7092**	1	SEAL-O-RING	
	17	1	**7X-7729**	3	WASHER (11X25X3-MM THK)	
	18	1	**8T-4121**	6	WASHER-HARD (11X21X2.5-MM THK)	
M	19	1	**8T-4136**	3	BOLT (M10X1.5X25-MM)	
M	20	1	**8T-4137**	2	BOLT (M10X1.5X20-MM)	
M	21	1	**8T-4195**	1	BOLT (M10X1.5X30-MM)	
M	22	1	**8T-4196**	3	BOLT (M10X1.5X35-MM)	
M	23	1	**8T-4197**	3	BOLT (M8X1.25X40-MM)	
	24	1	**8T-4224**	5	WASHER-HARD (8.8X16X2-MM THK)	
M	25	1	**8T-7547**	2	BOLT (M8X1.25X30-MM)	
	26	1	**9S-4191**	1	PLUG	

I - REFER TO HYDRAULIC INFORMATION SYSTEM
M - METRIC PART

392-0401 **FILTER & MTG GP-ENGINE OIL (*contd.*)** **i04962335**

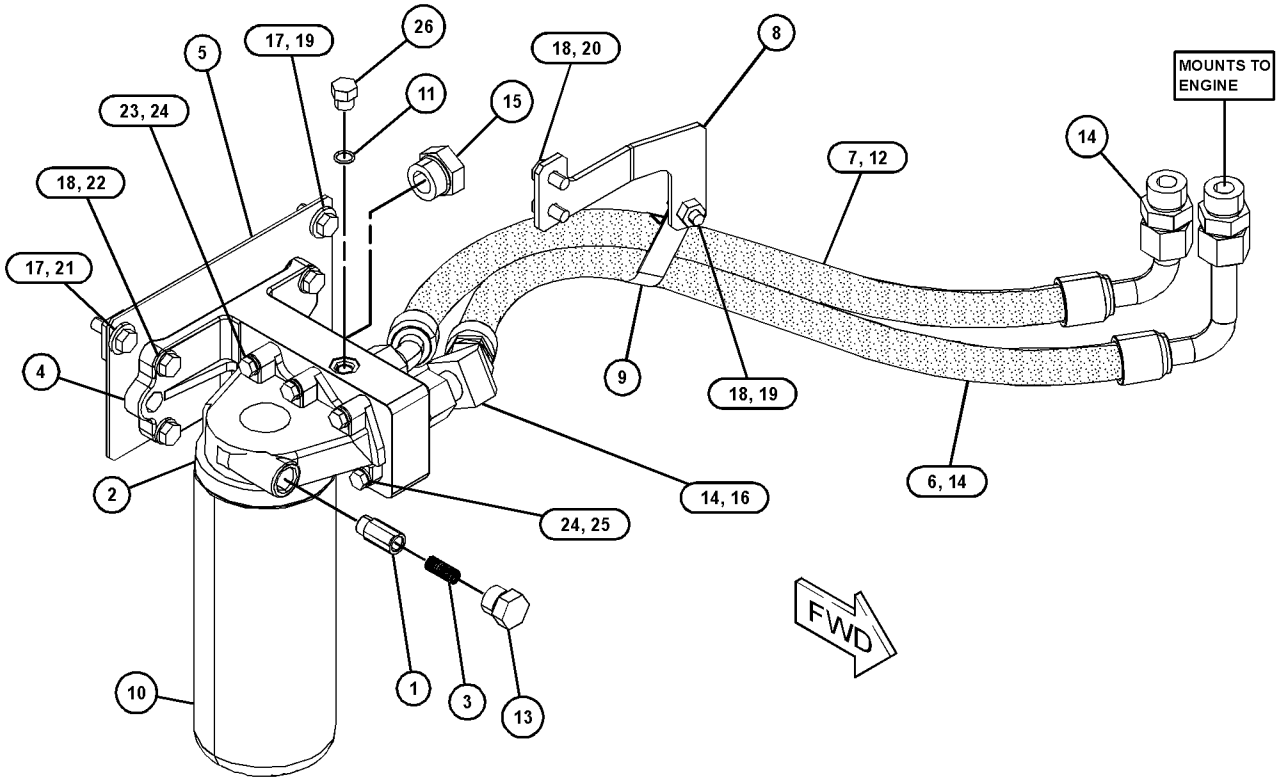

GRAPHIC #1 **<END>** g03151456

387-2614 FUMES DISPOSAL GP

S/N: HAH1-UP

PART OF 392-0400 INSTALLATION AR-ENGINE

SMCS-1317 **i04944066**

NOTE	REF NO	GRAPHIC REF	PART NUMBER	QTY	PART NAME 1 2 3 4 5 6 (PRODUCT LEVEL)	SEE PAGE
	1	1	**394-8706**	1	PLATE AS	
	2	1	**394-8709**	1	PLATE	
	3	1	**394-8711**	1	HOSE-FUMES DISPOSAL	
	4	1	**067-3045**	1	CLIP	
	5	1	**206-1345**	1	STRAP-CABLE	
M	6	1	**5C-9553**	2	BOLT (M6X1X16-MM)	
	7	1	**5P-4115**	2	WASHER-HARD (7.2X19X2-MM THK)	
	8	1	**5V-9155**	1	CLAMP-HOSE	
	9	1	**8T-4121**	1	WASHER-HARD (11X21X2.5-MM THK)	
M	10	1	**8T-4137**	1	BOLT (M10X1.5X20-MM)	
M	11	1	**8T-4189**	2	BOLT (M8X1.25X20-MM)	
	12	1	**8T-4224**	2	WASHER-HARD (8.8X16X2-MM THK)	

M - METRIC PART

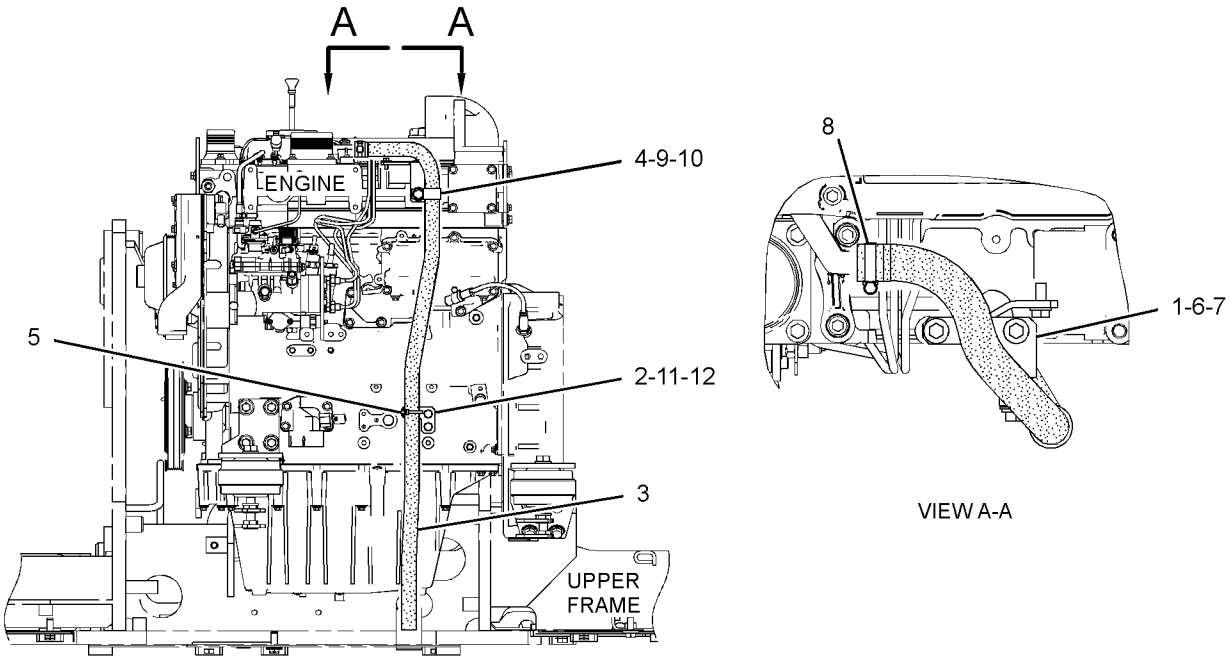

REAR VIEW

GRAPHIC #1 **<END>** g03122696

230-7578 PUMP GP-ENGINE OIL

S/N: CST1-UP

PART OF 456-1375, 470-9228 ENGINE AR-PRIMARY

SMCS-1304, 1315

i02564669

NOTE	REF NO	GRAPHIC REF	PART NUMBER	QTY	PART NAME 1 2 3 4 5 6 (PRODUCT LEVEL)	SEE PAGE
M	1	1	**100-4461**	5	BOLT (M10X1.50X50-MM)	
	2	1	**225-8329**	1	PUMP AS-ENGINE OIL	

M - METRIC PART

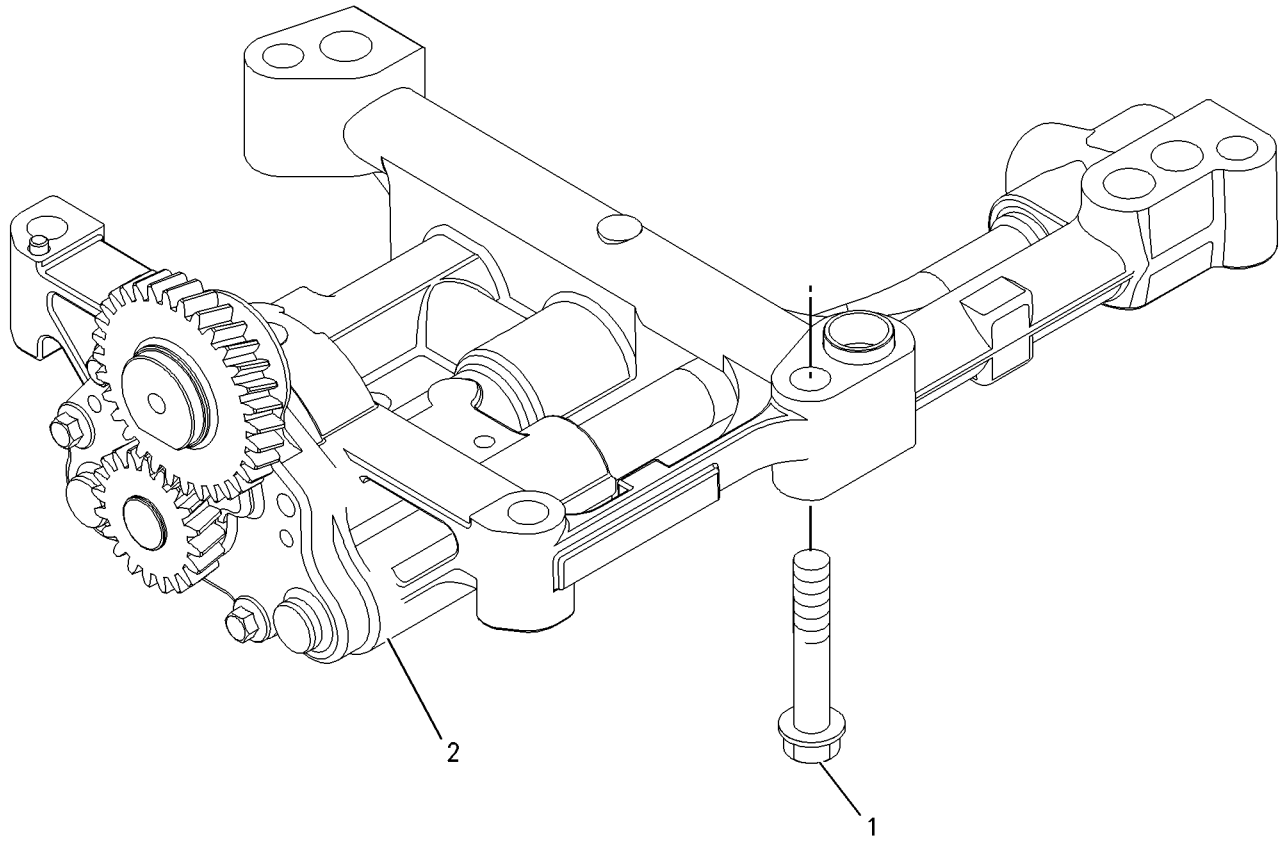

GRAPHIC #1 **<END>** g00911993

231-0033 CONNECTION GP-WATER

S/N: CST1-UP

PART OF 456-1375, 470-9228 ENGINE AR-PRIMARY

SMCS-1380 **i02560975**

NOTE	REF NO	GRAPHIC REF	PART NUMBER	QTY	PART NAME 1 2 3 4 5 6 (PRODUCT LEVEL)	SEE PAGE
M	1	1	**6I-0260**	2	BOLT (M8X1.25X25-MM)	
	2	1	**254-2267**	1	REGULATOR GP-TEMPERATURE (INCLUDES CONNECTOR) (WATER)	
	2A	1	**254-2270**	1	SEAL-O-RING (WATER TEMPERATURE REGULATOR)	

M - METRIC PART

231-0033 **CONNECTION GP-WATER (*contd.*)** **i02560975**

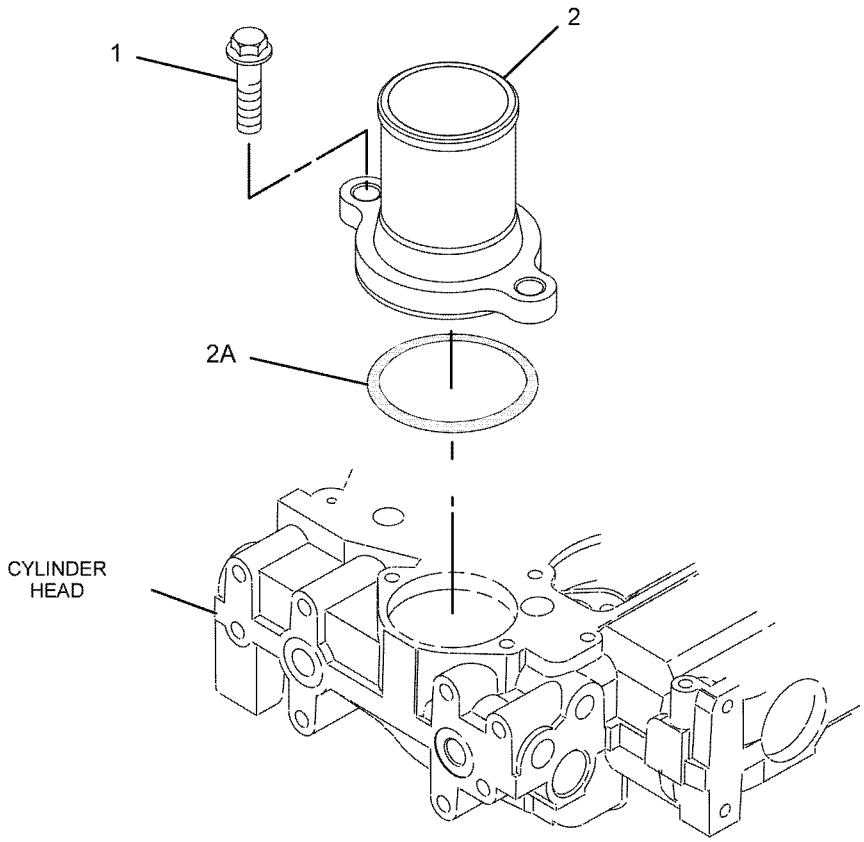

GRAPHIC #1 **<END>** g01081626

354-1274 COOLER GP-ENGINE OIL

S/N: CST1-UP

PART OF 460-0525 COOLER GP-FLTR BASE & ENG OIL

SMCS-1378 **i05979680**

NOTE	REF NO	GRAPHIC REF	PART NUMBER	QTY	PART NAME 1 2 3 4 5 6 (PRODUCT LEVEL)	SEE PAGE
M	1	1	**6I-0260**	10	BOLT (M8X1.25X25-MM)	
	2	1	**6I-4374**	3	BOLT (M8X1.25X60-MM)	
M	3	1	**101-3895**	4	BOLT (M8X1.25X35-MM)	
	4	1	**225-6817**	1	COOLER-OIL	
J	5	1	**225-6818**	2	SEAL	
	6	1	**272-2265**	1	SEAL	
					AVAILABLE REPAIR KIT(S):	
J			**416-8777**	1	KIT-SEAL (ENGINE OIL COOLER)	
					(INCLUDES SEALS)	

J - KIT MARKED J SERVICES PART(S) MARKED J
M - METRIC PART

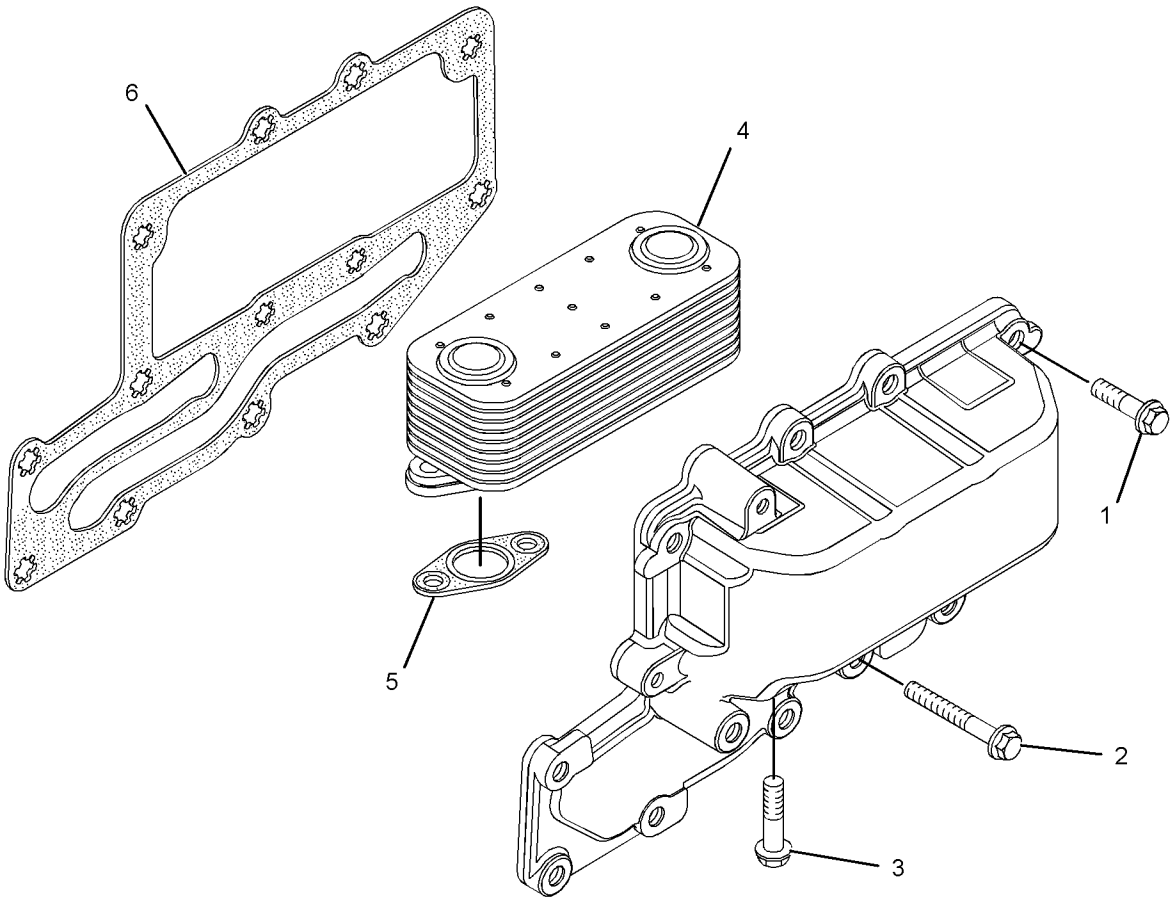

GRAPHIC #1 **<END>** g02140458

460-0525 COOLER GP-FLTR BASE & ENG OIL

S/N: CST1-UP

PART OF 456-1375, 470-9228 ENGINE AR-PRIMARY

SMCS-1306, 1378 **i05859371**

NOTE	REF NO	GRAPHIC REF	PART NUMBER	QTY	PART NAME 1 2 3 4 5 6 (PRODUCT LEVEL)	SEE PAGE
M	1	1	**6I-0572**	4	BOLT (M8X1.25X20-MM)	
M	2	1	**6I-0645**	4	BOLT (M8X1.25X25-MM)	
	3	1	**199-9267**	1	SEAL-O-RING	
	4	1	**225-7944**	2	GASKET	
	5	1	**232-3751**	1	PLATE	
	6	1	**232-3861**	1	PLUG (BLANKING)	
	7	1	**242-8660**	1	HEAD AS	
Y	8	1	**354-1274**	1	COOLER GP-ENGINE OIL	40

M - METRIC PART
Y - SEPARATE ILLUSTRATION

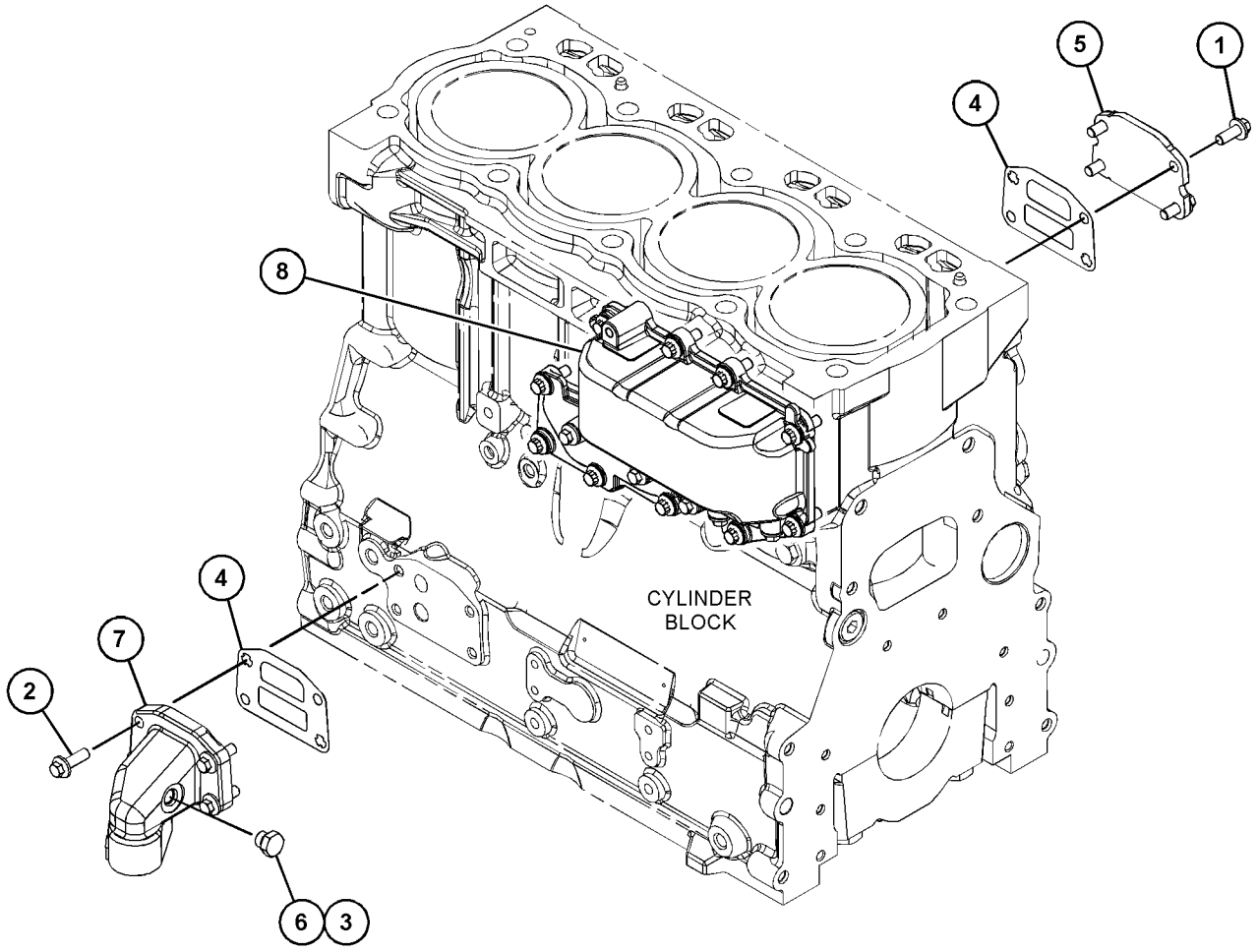

GRAPHIC #1 **<END>** g03703164

390-8835 FAN AR-SUCTION

S/N: HAH1-UP

PART OF 455-1948 ENGINE AR-COMPLETE

SMCS-1356 **i05895869**

NOTE	PART NUMBER	QTY	PART NAME 1 2 3 4 5 6 (PRODUCT LEVEL)	SEE PAGE
Y	*390-8836*	1	FAN GP-SUCTION	43
Y	*387-2628*	1	PULLEY GP-FAN	31

Y - SEPARATE ILLUSTRATION

<END>

390-8836 FAN GP-SUCTION—DIRECT DRIVE

S/N: HAH1-UP

PART OF 390-8835 FAN AR-SUCTION

SMCS-1356 **i04964696**

NOTE	REF NO	GRAPHIC REF	PART NUMBER	QTY	PART NAME 1 2 3 4 5 6 (PRODUCT LEVEL)	SEE PAGE
	1	1	**217-5513**	1	FAN (7-BLADE)	
	2	1	**391-4235**	1	SPACER-FAN	
	3	1	**8T-4121**	4	WASHER-HARD (11X21X2.5-MM THK)	
M	4	1	**8T-4136**	4	BOLT (M10X1.5X25-MM)	
	5	1	**8T-4224**	4	WASHER-HARD (8.8X16X2-MM THK)	
M	6	1	**8T-6869**	4	BOLT (M8X1.25X60-MM)	

M - METRIC PART

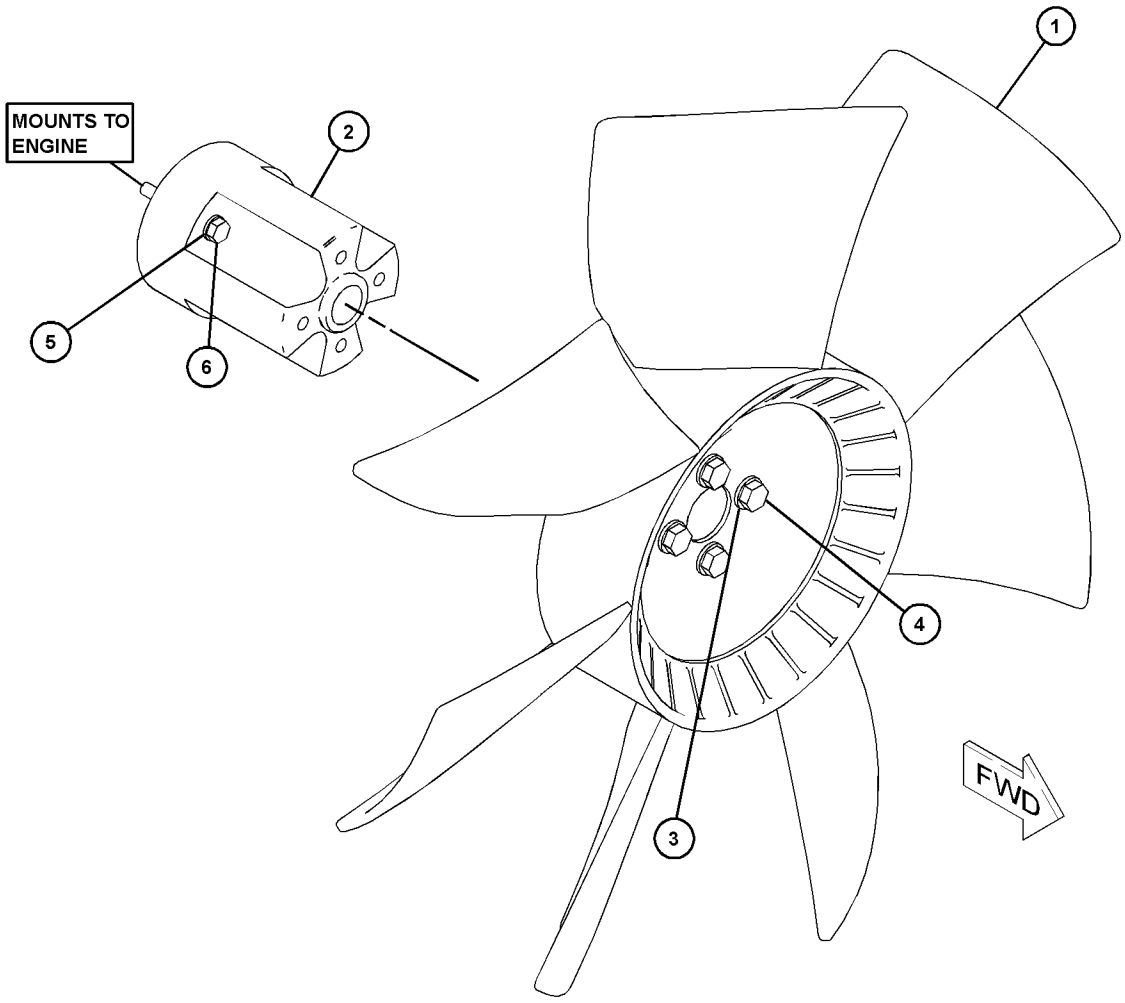

GRAPHIC #1 **<END>** g03129019

390-8838 LINES GP-COOLING

S/N: HAH1-UP

PART OF 392-0400 INSTALLATION AR-ENGINE

SMCS-1380, 5057 **i04962269**

NOTE	REF NO	GRAPHIC REF	PART NUMBER	QTY	PART NAME 1 2 3 4 5 6 (PRODUCT LEVEL)	SEE PAGE
	1	1	**369-2263**	1	HOSE (AFTERCOOLER)	
	2	1	**369-2264**	1	HOSE (LOW TEMPERATURE AFTERCOOLER)	
	3	1	**391-3199**	1	HOSE (AFTERCOOLER)	
	4	1	**391-3253**	1	HOSE (LOW TEMPERATURE AFTERCOOLER)	
	5	1	**391-3712**	1	PIPE AS	
	6	1	**391-3714**	1	PIPE AS	
	7	1	**144-0367**	8	CLAMP-HOSE	
	8	1	**7X-7729**	7	WASHER (11X25X3-MM THK)	
M	9	1	**8T-4136**	3	BOLT (M10X1.5X25-MM)	
M	10	1	**8T-4137**	4	BOLT (M10X1.5X20-MM)	
	11	1	**8T-4985**	1	CLAMP-HOSE	
	12	1	**8T-6703**	1	CLAMP-HOSE	

M - METRIC PART

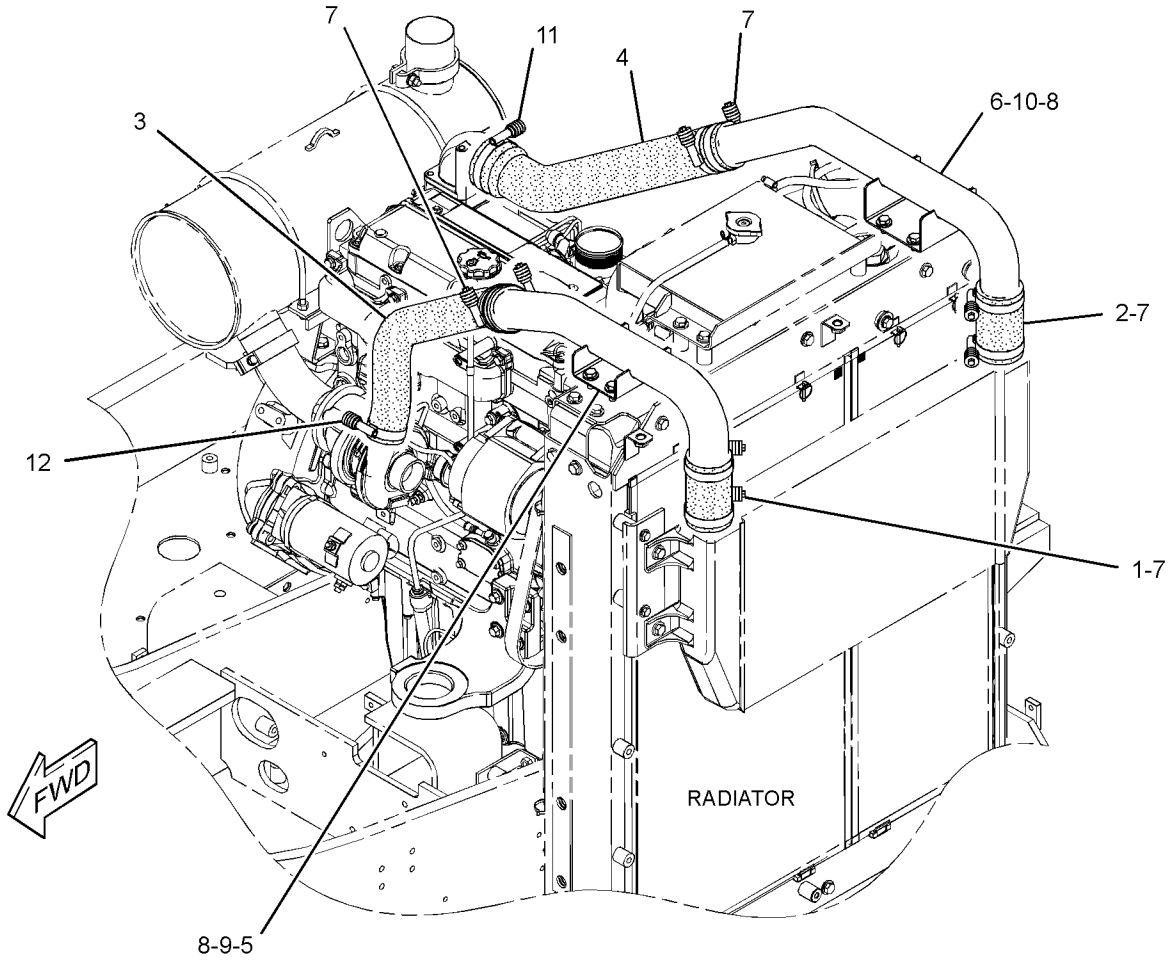

GRAPHIC #1 **<END>** g03133244

230-7355 PUMP GP-WATER

S/N: CST1-UP

PART OF 456-1375, 470-9228 ENGINE AR-PRIMARY

SMCS-1361 **i05907282**

NOTE	REF NO	GRAPHIC REF	PART NUMBER	QTY	PART NAME 1 2 3 4 5 6 (PRODUCT LEVEL)	SEE PAGE
M	1	1	**6I-0217**	2	BOLT (M8X1.25X20-MM)	
M	2	1	**6I-0254**	2	BOLT (M8X1.25X30-MM)	
M	3	1	**100-3751**	5	BOLT (M8X1.25X65-MM)	
	4	1	**113-8129**	2	BOLT (M8X1.25X75-MM)	
	5	1	**225-7741**	1	CONNECTION AS	
	6	1	**225-7738**	1	SEAL-O-RING	
	7	1	**225-7739**	1	SEAL-O-RING	
	8	1	**225-8016**	1	PUMP GP-WATER	
	8A	1	**225-8019**	1	GASKET	
	8B	1	**286-3592**	1	GEAR-WATER PUMP	
					AVAILABLE REPAIR KIT(S):	
			247-0144	1	KIT-GASKET (WATER PUMP)	
					(INCLUDES PUMP HOUSING GASKET & COVER GASKET)	

M - METRIC PART

230-7355 **PUMP GP-WATER (*contd.*)** **i05907282**

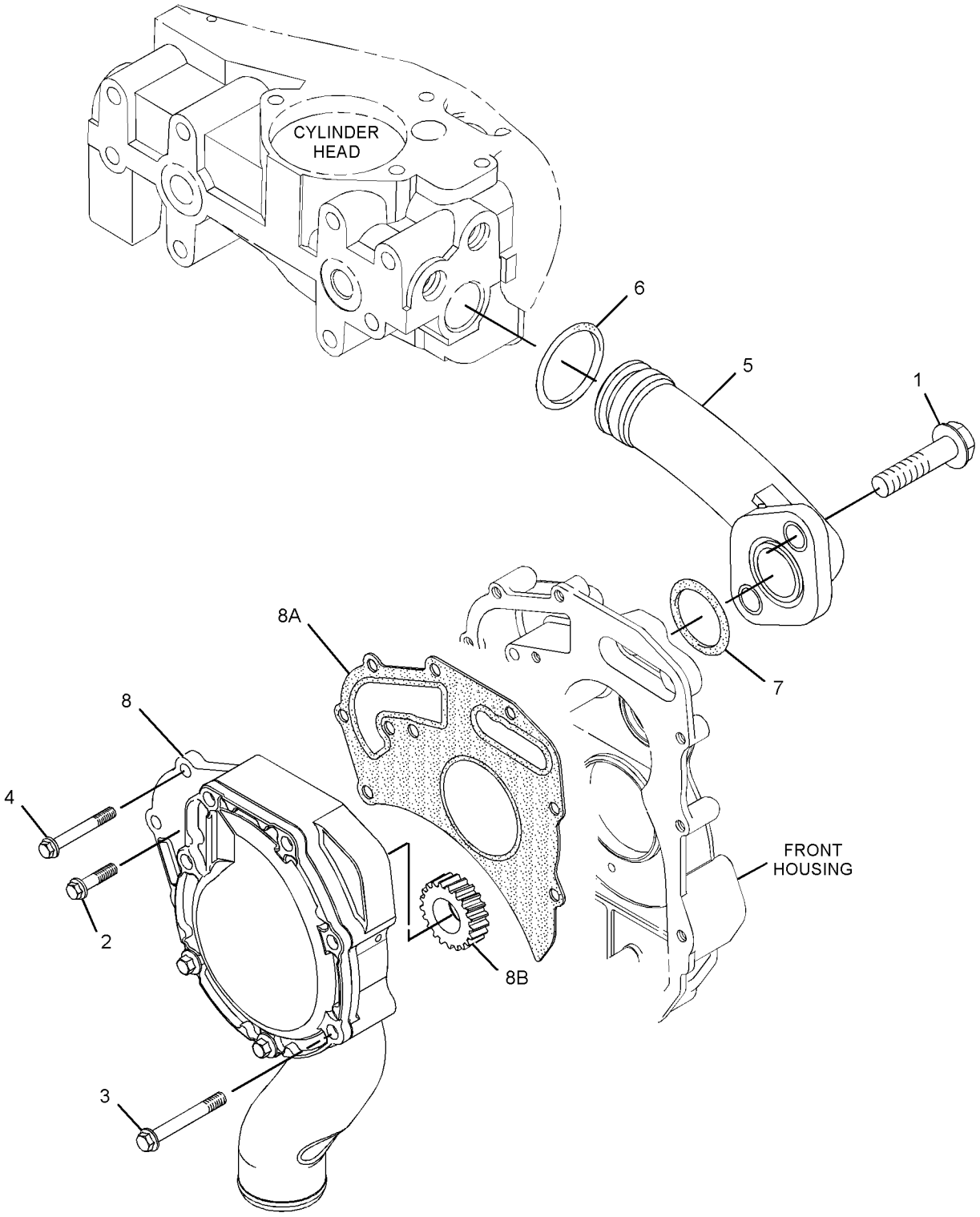

GRAPHIC #1 **<END>** g01897273

377-7808 RADIATOR & HYD OIL COOLER GP

S/N: HAH1-UP

PART OF 390-8837 RADIATOR & HYD OIL COOLER GP

SMCS-1351 **i05922069**

NOTE	REF NO	GRAPHIC REF	PART NUMBER	QTY	PART NAME 1 2 3 4 5 6 (PRODUCT LEVEL)	SEE PAGE
	1	1	**433-1677**	1	CORE AS-RADIATOR	
		1	**332-4191**	1	PLUG	
		1	**332-4192**	1	SEAL-O-RING	
	2	1	**5D-8159**	4	PIN AS	
	3	1	**313-3762**	2	CUSHION-RUBBER	
	4	1	**313-3763**	2	SCREEN AS (RADIATOR)	
	5	1	**313-3766**	2	SLEEVE	
	6	1	**313-3769**	2	CUSHION-RUBBER	
	7	1	**314-6506**	2	CUSHION-RUBBER	
	8	1	**314-6510**	2	PIN	
	9	1	**352-7775**	2	SEAL	
	10	1	**360-9262**	1	CORE AS-OIL COOLER (HYDRAULIC)	
	11	1	**365-6882**	1	BRACKET AS	
	12	1	**365-6883**	1	SEAL-AIR	
	13	1	**365-6884**	1	SEAL-AIR	
	14	1	**365-6886**	2	SEAL-AIR	
	15	1	**365-6887**	2	SEAL-AIR	
	16	1	**365-6888**	2	SEAL-AIR	
	17	1	**365-6889**	2	SEAL-AIR	
	18	1	**365-6890**	1	SEAL-AIR	
	19	1	**378-6179**	1	AFTERCOOLER AS	
	20	1	**385-7931**	1	FRAME AS	
	21	1	**385-7935**	2	BRACKET AS	
	22	1	**385-7943**	1	PLATE AS	
	23	1	**385-7944**	2	SEAL-AIR	
	24	1	**385-7945**	1	SHROUD AS	
	25	1	**385-7948**	1	BRACKET AS	
	26	1	**416-0965**	1	CAP-RADIATOR	
	27	1	**096-4035**	3	CLIP	
	28	1	**134-3196**	2	WASHER (10.2X39.6X2.3-MM THK)	
	29	1	**5P-4116**	8	WASHER-HARD (8.8X20.5X2-MM THK)	
	30	1	**7X-7729**	23	WASHER (11X25X3-MM THK)	
M	31	1	**8T-4136**	13	BOLT (M10X1.5X25-MM)	
M	32	1	**8T-4182**	2	BOLT (M10X1.5X45-MM)	
M	33	1	**8T-4185**	4	BOLT (M10X1.5X50-MM)	
M	34	1	**8T-4195**	8	BOLT (M10X1.5X30-MM)	
M	35	1	**8T-4200**	8	BOLT (M8X1.25X16-MM)	
E	36	1	**7Y-1976**		HOSE-WATER (95-CM)	
E	36A	1	**7Y-1976**		HOSE-WATER (8-CM)	

E - ORDER BY THE CENTIMETER
M - METRIC PART

377-7808 **RADIATOR & HYD OIL COOLER GP (*contd.*)** **i05922069**

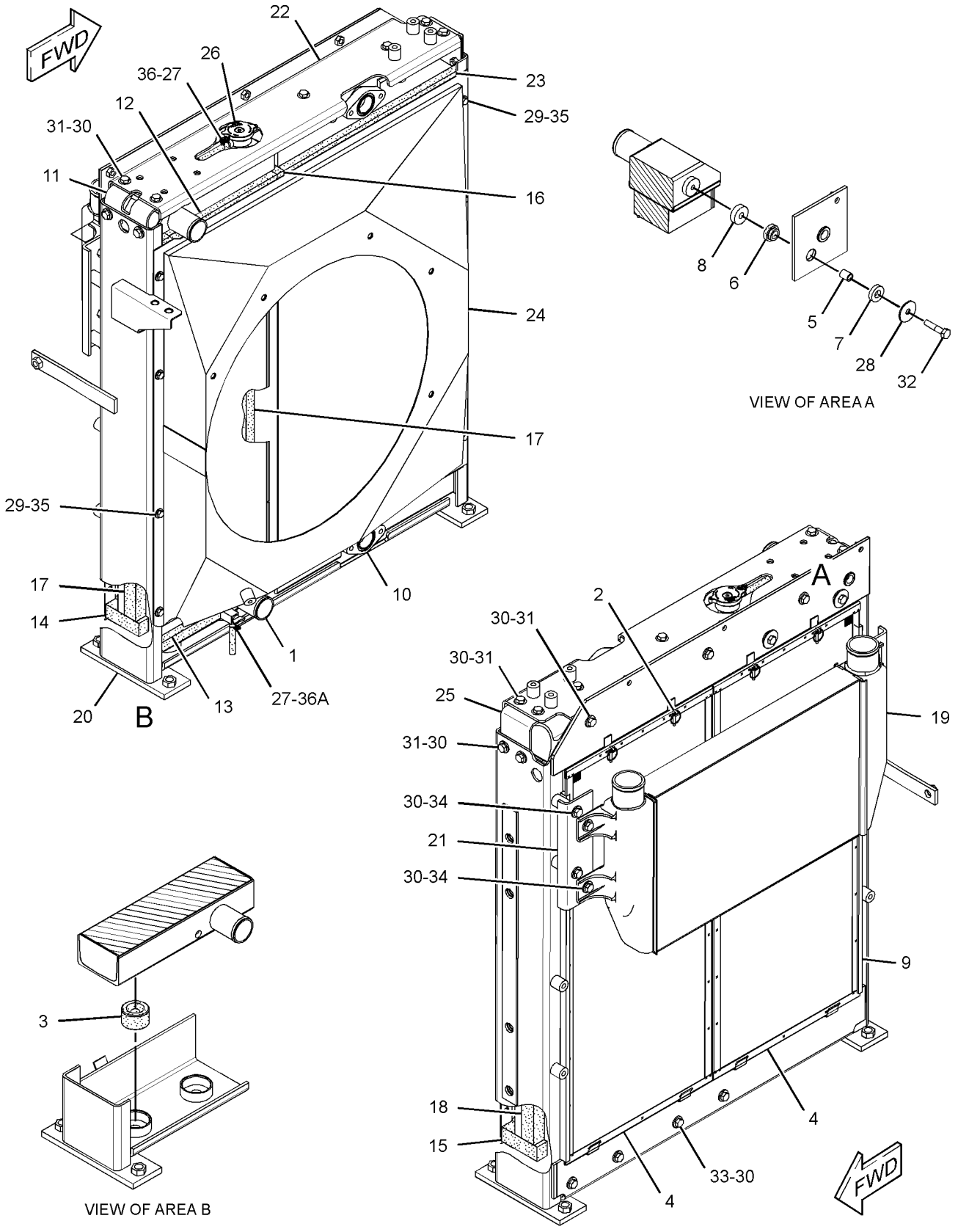

GRAPHIC #1 **<END>** g03145180

390-8837 RADIATOR & HYD OIL COOLER GP

S/N: HAH1-UP

PART OF 392-0400 INSTALLATION AR-ENGINE

SMCS-1351 **i05872047**

NOTE	REF NO	GRAPHIC REF	PART NUMBER	QTY	PART NAME 1 2 3 4 5 6 (PRODUCT LEVEL)	SEE PAGE
	1	1	**096-4035**	1	CLIP	
	2	1	**096-5819**	1	TANK AS-COOLANT (RECOVERY)	
		1	**171-3369**	1	CAP AS (COOLANT RECOVERY)	
	3	1	**099-6607**	1	BAND	
	4	1	**265-3623**	1	PLATE	
	5	1	**281-3492**	1	SEAL	
Y	6	1	**377-7808**	1	RADIATOR & HYD OIL COOLER GP	47
	7	1	**391-3704**	1	HOSE-RADIATOR (UPPER)	
	8	1	**398-0782**	1	GUARD AS-FAN	
	9	1	**399-2541**	1	HOSE-RADIATOR (LOWER)	
	10	1	**178-6450**	4	SPACER (17X35X30-MM THK)	
	11	1	**3P-9847**	1	CLIP	
	12	1	**3S-2093**	1	STRAP-CABLE	
	13	1	**5P-1076**	3	WASHER-HARD (13.5X30X4-MM THK)	
	14	1	**7K-1181**	1	STRAP-CABLE	
M	15	1	**453-2838**	4	BOLT (M16X2X70-MM)	
	16	1	**7X-7729**	5	WASHER (11X25X3-MM THK)	
	17	1	**8T-4121**	1	WASHER-HARD (11X21X2.5-MM THK)	
M	18	1	**8T-4137**	6	BOLT (M10X1.5X20-MM)	
M	19	1	**8T-4139**	3	BOLT (M12X1.75X30-MM)	
M	20	1	**8T-4200**	2	BOLT (M8X1.25X16-MM)	
	21	1	**8T-4224**	2	WASHER-HARD (8.8X16X2-MM THK)	
	22	1	**8T-6703**	4	CLAMP-HOSE	
E	23	1	**7Y-1976**		HOSE-WATER (88-CM)	
D	24	1	**5P-9909**		SEAL (0.2-M)	
D	24A	1	**5P-9909**		SEAL (0.8-M)	

D - ORDER BY THE METER
E - ORDER BY THE CENTIMETER
M - METRIC PART
Y - SEPARATE ILLUSTRATION

390-8837 **RADIATOR & HYD OIL COOLER GP (*contd.*)** **i05872047**

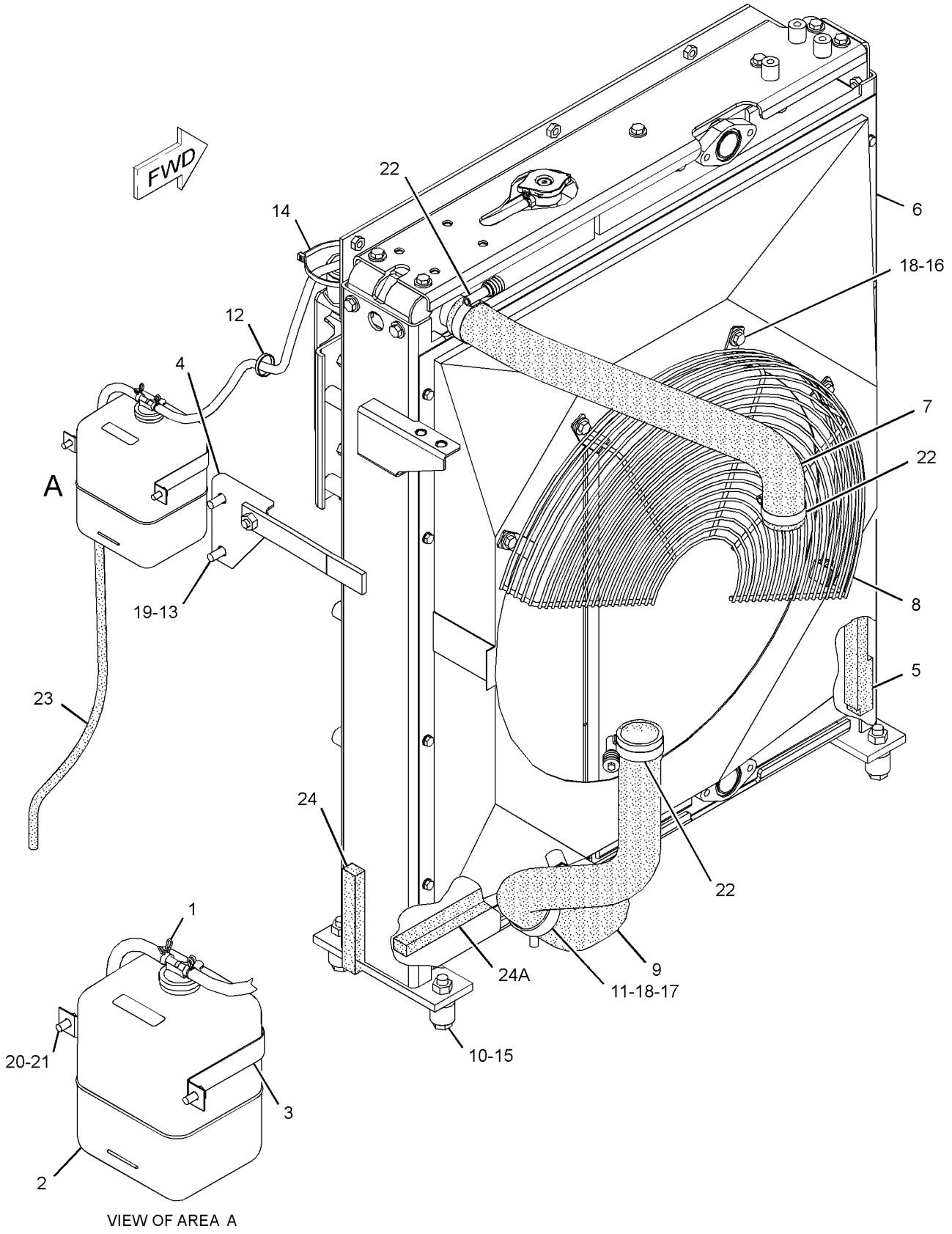

VIEW OF AREA A

GRAPHIC #1 **<END>** g03133478

396-0293 VALVE GP-COOLANT SAMPLING

S/N: HAH1-UP

PART OF 392-0400 INSTALLATION AR-ENGINE

SMCS-1380, 1395, 7542

i05907389

NOTE	REF NO	GRAPHIC REF	PART NUMBER	QTY	PART NAME 1 2 3 4 5 6 (PRODUCT LEVEL)	SEE PAGE
	1	1	**154-9024**	1	VALVE GP-FLUID SAMPLING (COOLANT)	
	2	1	**157-0670**	1	CAP-DUST	
	3	1	**3B-7255**	1	BUSHING-REDUCER	

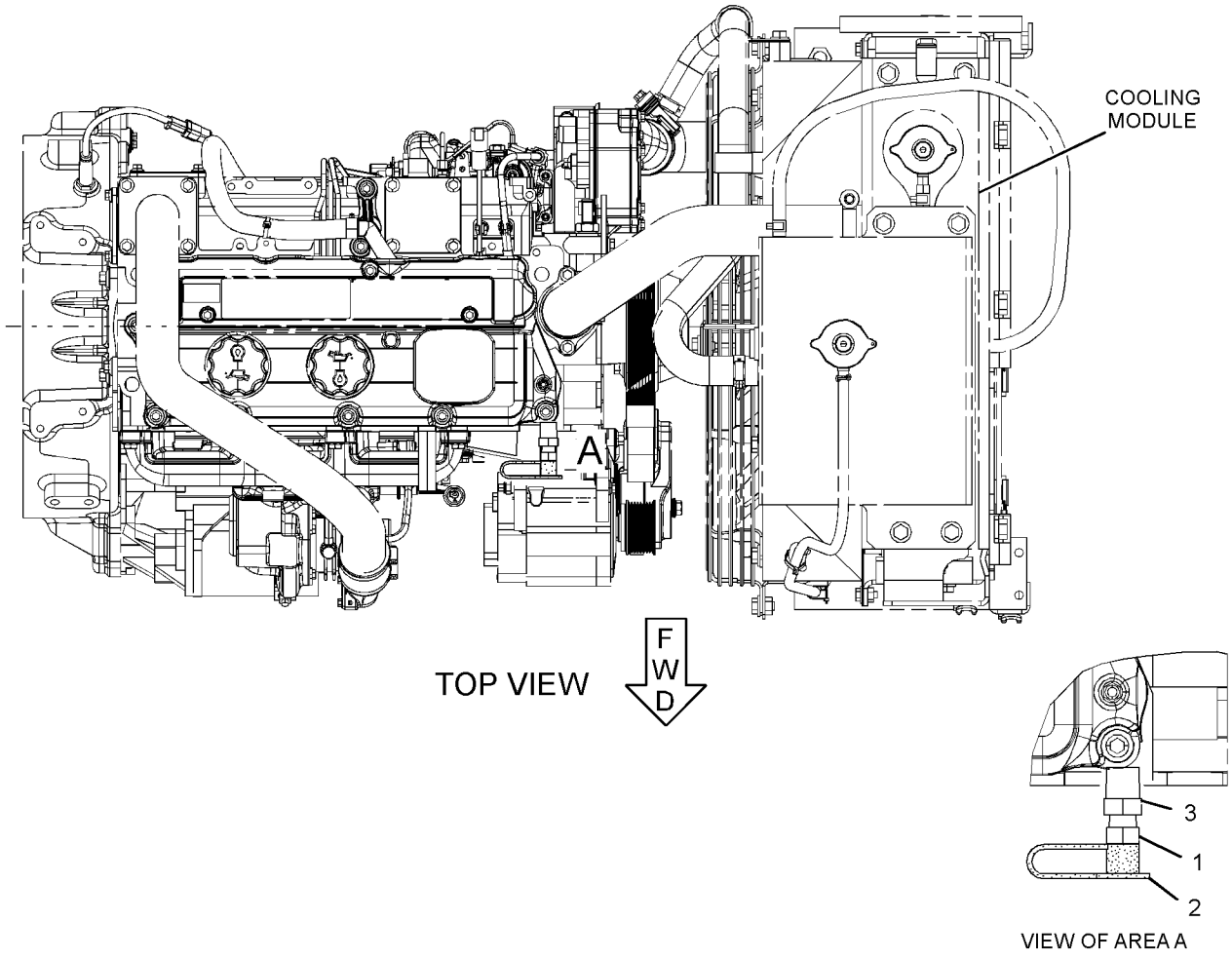

GRAPHIC #1

<END>

g03120461

AIR INLET AND EXHAUST SYSTEM

387-2620 AIR CLEANER & MOUNTING GP

S/N: HAH1-UP

PART OF 392-0400 INSTALLATION AR-ENGINE

SMCS-1051, 1054, 7452 **i04961930**

NOTE	REF NO	GRAPHIC REF	PART NUMBER	QTY	PART NAME 1 2 3 4 5 6 (PRODUCT LEVEL)	SEE PAGE
Y	1	1	**396-2185**	1	AIR CLEANER GP	53
M	2	1	**7X-2537**	2	BOLT (M8X1.25X35-MM)	
	3	1	**8T-4224**	2	WASHER-HARD (8.8X16X2-MM THK)	

M - METRIC PART
Y - SEPARATE ILLUSTRATION

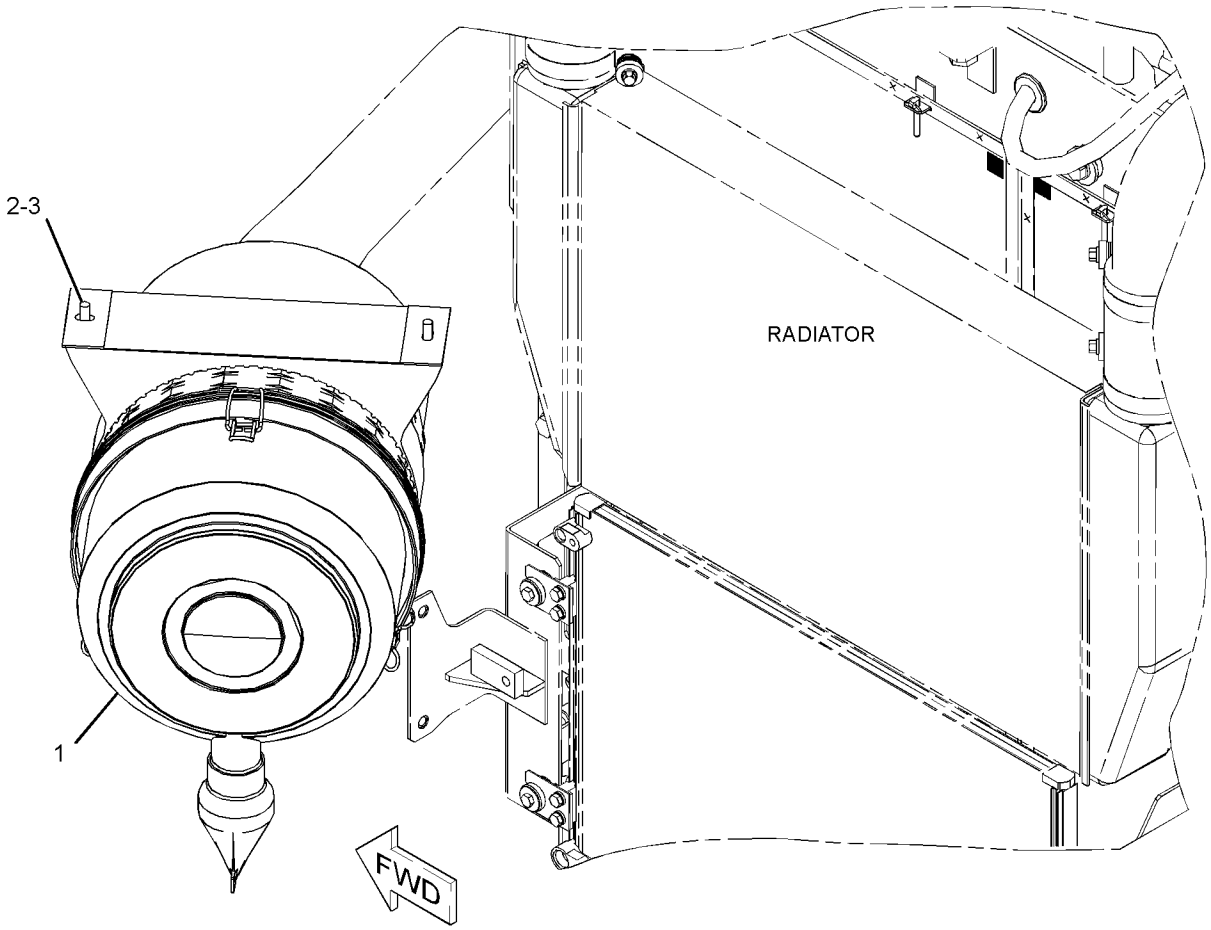

GRAPHIC #1 **<END>** g03133336

396-2185 AIR CLEANER GP

S/N: HAH1-UP

PART OF 387-2620 AIR CLEANER & MOUNTING GP

SMCS-1051, 1054

i04961969

NOTE	REF NO	GRAPHIC REF	PART NUMBER	QTY	PART NAME 1 2 3 4 5 6 (PRODUCT LEVEL)	SEE PAGE
	1	1	**222-9020**	1	FILTER ELEMENT AS-AIR (PRIMARY)	
	2	1	**222-9021**	1	FILTER ELEMENT AS-AIR (SECONDARY)	
	3	1	**224-2263**	1	VALVE AS-AIR (DUST)	
	4	1	**243-5054**	1	BRACKET	
	5	1	**282-8856**	1	COVER AS	

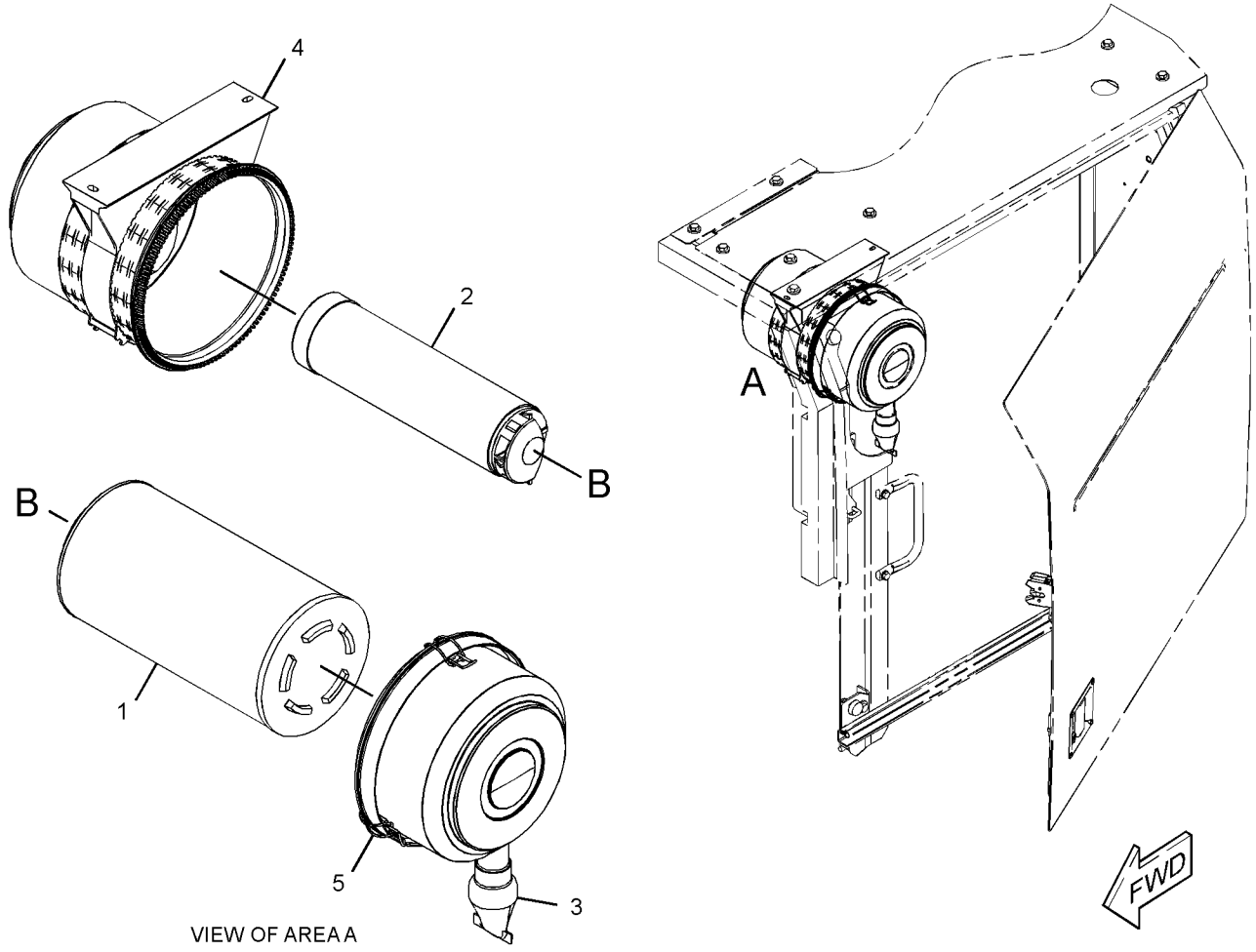

GRAPHIC #1

<END>

g02730452

256-4440 ELBOW GP-AIR INLET

S/N: CST1-UP

PART OF 456-1375, 470-9228 ENGINE AR-PRIMARY

SMCS-1058 **i04952493**

NOTE	REF NO	GRAPHIC REF	PART NUMBER	QTY	PART NAME 1 2 3 4 5 6 (PRODUCT LEVEL)	SEE PAGE
	1	1	**111-8222**	12	BOLT (M8X16-MM)	
M	2	1	**100-8451**	2	BOLT (M8X1.25X130-MM)	
	3	1	**114-2579**	4	GASKET	
	4	1	**185-6627**	3	PLATE	
	5	1	**256-4447**	1	ELBOW AS-AIR INLET	
	5A	1	**238-8288**	1	GASKET-INLET	
	6	1	**235-2451**	2	BOLT (M6X1X35-MM)	
	7	1	**261-6700**	1	SPACER	

M - METRIC PART

256-4440 **ELBOW GP-AIR INLET (*contd.*)** **i04952493**

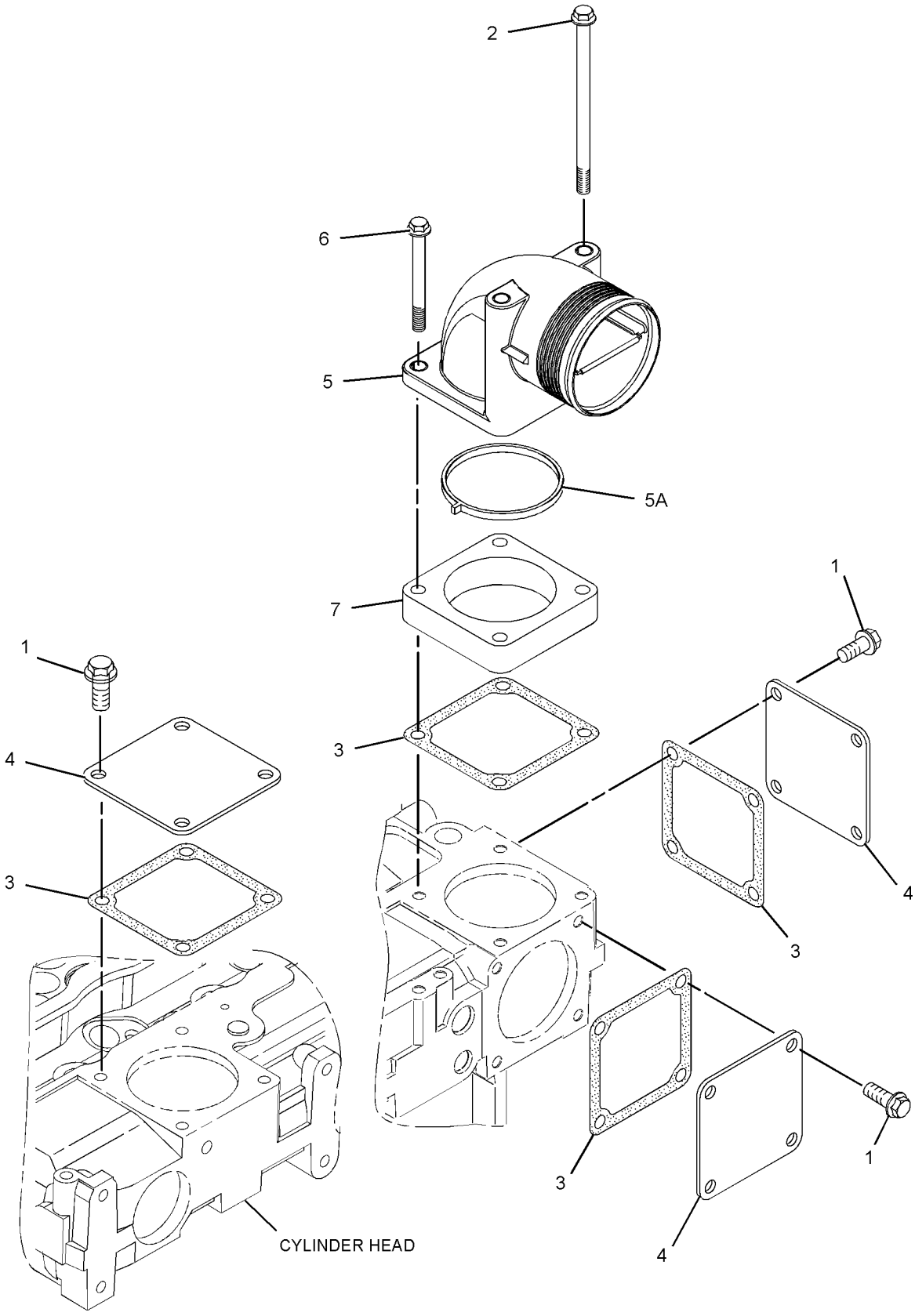

GRAPHIC #1 **<END>** g02099654

387-2623 LINES GP-AIR

S/N: HAH1-UP

PART OF 392-0400 INSTALLATION AR-ENGINE

SMCS-1071 **i04961889**

NOTE	REF NO	GRAPHIC REF	PART NUMBER	QTY	PART NAME 1 2 3 4 5 6 (PRODUCT LEVEL)	SEE PAGE
	1	1	**9X-2201**	1	CLAMP-HOSE	
	2	1	**144-0367**	3	CLAMP-HOSE	
	3	1	**320-3063**	1	SENSOR-PRESSURE (AIR INLET)	
	4	1	**391-5297**	1	HOSE-AIR	
	5	1	**391-5298**	1	HOSE-AIR	
	6	1	**393-0822**	1	PIPE AS	
	7	1	**228-7100**	1	SEAL-O-RING	
	8	1	**8T-4121**	2	WASHER-HARD (11X21X2.5-MM THK)	
M	9	1	**8T-4195**	2	BOLT (M10X1.5X30-MM)	

M - METRIC PART

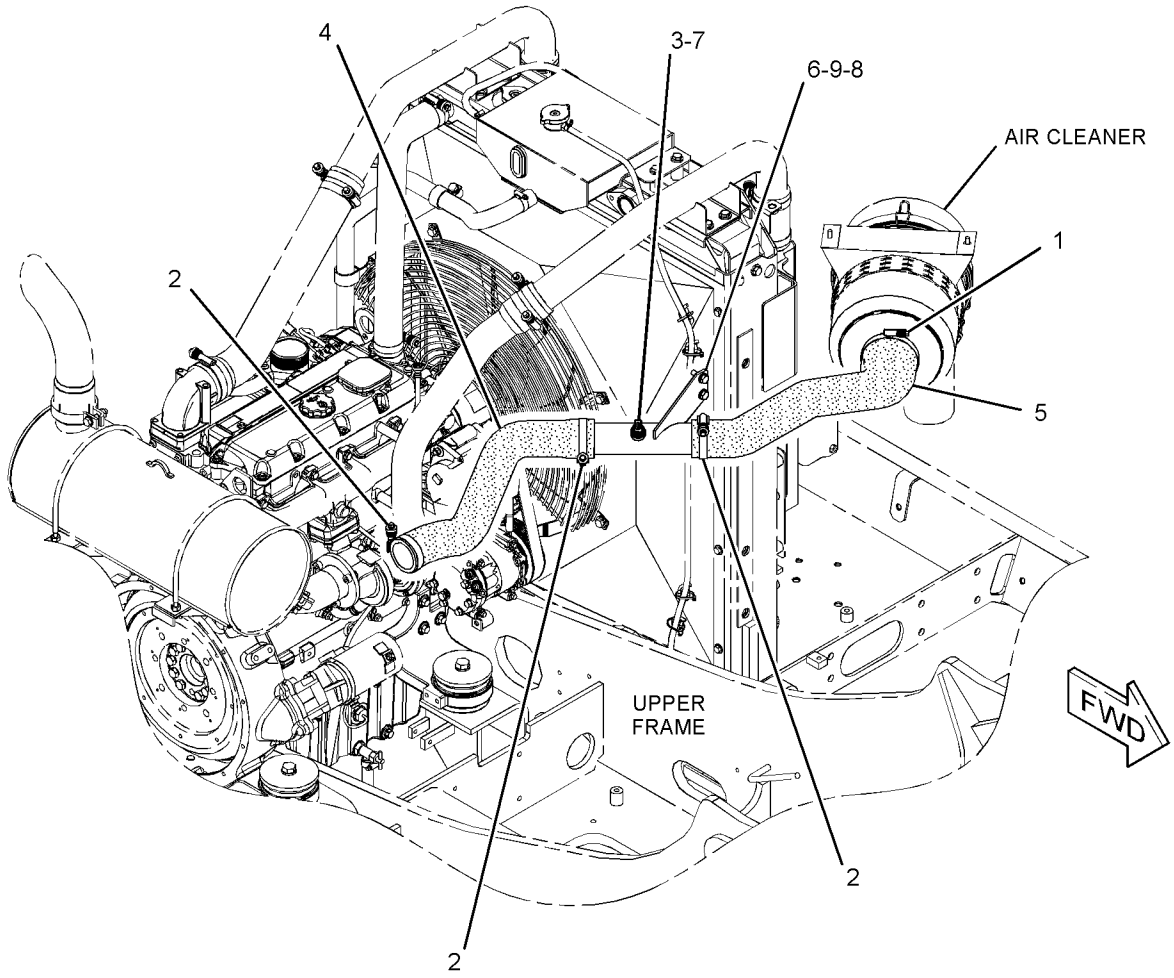

GRAPHIC #1 **<END>** g03131238

387-2646 MUFFLER GP

S/N: HAH1-UP

PART OF 455-1948 ENGINE AR-COMPLETE

SMCS-1062 **i04939082**

NOTE	REF NO	GRAPHIC REF	PART NUMBER	QTY	PART NAME 1 2 3 4 5 6 (PRODUCT LEVEL)	SEE PAGE
	1	1	**241-7688**	1	CLAMP	
	2	1	**392-0245**	1	MUFFLER AS	
	3	1	**392-0250**	1	PIPE AS	
	4	1	**398-7021**	1	SUPPORT AS	
	5	1	**398-7027**	2	U-BOLT	
	6	1	**399-4202**	1	PIPE-TAIL	
	7	1	**5S-0580**	1	CLAMP	
M	8	1	**6V-3938**	3	BOLT (M10X1.5X20-MM)	
M	9	1	**6V-9189**	1	LOCKNUT (M8X1.25-THD)	
M	10	1	**7X-0818**	1	BOLT (M8X1.25X45-MM)	
	11	1	**8T-4121**	8	WASHER-HARD (11X21X2.5-MM THK)	
M	12	1	**8T-4133**	9	NUT (M10X1.5-THD)	
M	13	1	**8T-4136**	6	BOLT (M10X1.5X25-MM)	
M	14	1	**8T-4185**	1	BOLT (M10X1.5X50-MM)	
	15	1	**8T-4224**	2	WASHER-HARD (8.8X16X2-MM THK)	

M - METRIC PART

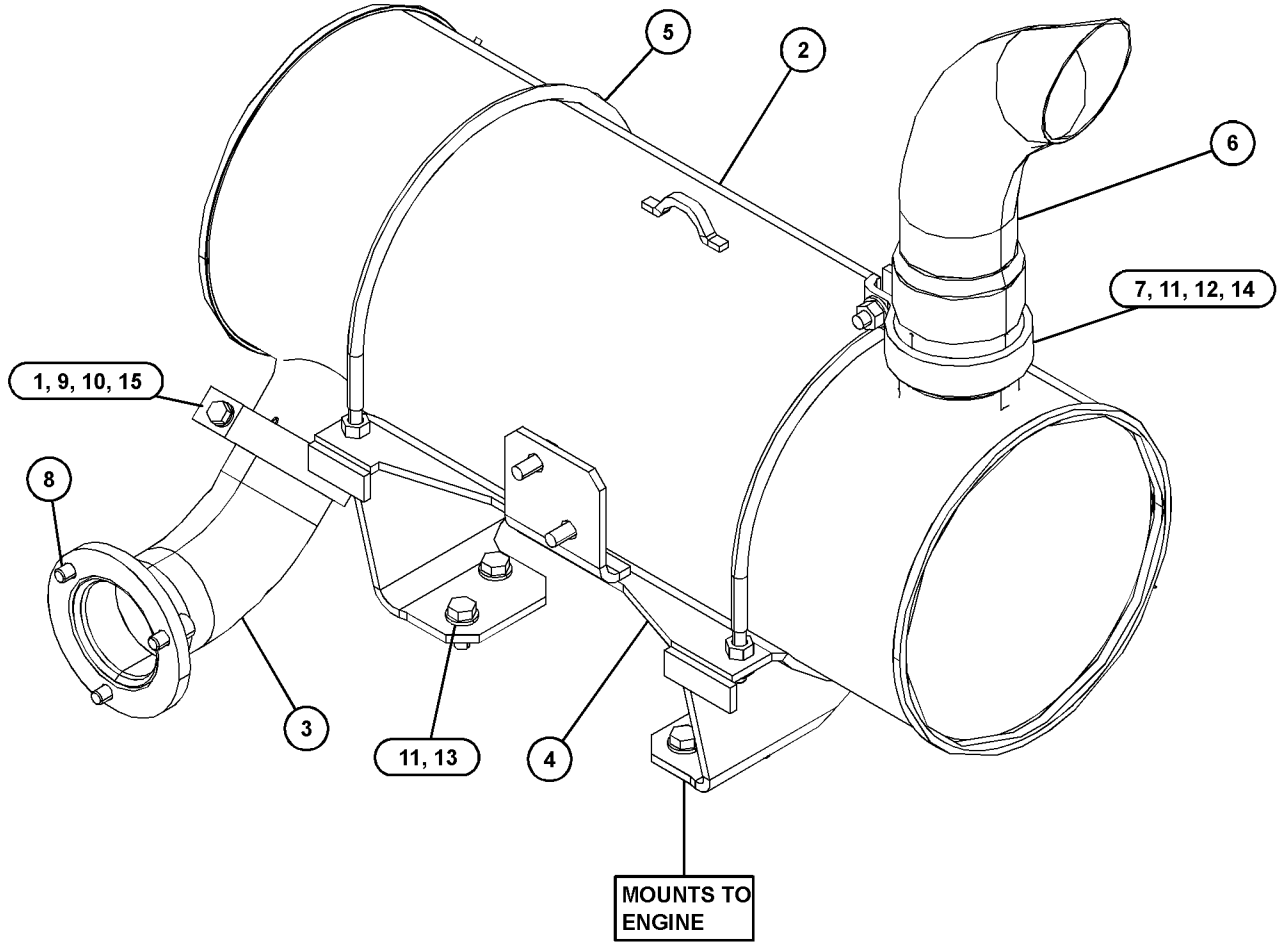

GRAPHIC #1 **<END>** g03125239

234-3465 TURBOCHARGER GP

S/N: CST1-UP

PART OF 456-1375, 470-9228 ENGINE AR-PRIMARY

SMCS-1052, 1053 **i05171165**

NOTE	REF NO	GRAPHIC REF	PART NUMBER	QTY	PART NAME 1 2 3 4 5 6 (PRODUCT LEVEL)	SEE PAGE
M	1	1	**6I-0217**	1	BOLT (M8X1.25X20-MM)	
M	2	1	**6I-0563**	4	NUT (M10X1.5-THD)	
	3	1	**149-4236**	4	STUD (M10X1.5X37-MM)	
	4	1	**174-9638**	8	BOLT	
	5	1	**194-5390**	1	GASKET-MANIFOLD	
	7	1	**353-3477**	1	GASKET-TURBOCHARGER	
	8	1	**353-3478**	1	GASKET-TURBOCHARGER	
	9	1	**225-8536**	1	GASKET	
R	10	1	**226-8771**	1	TURBOCHARGER GP	
M	11	1	**106-8916**	1	BOLT (M6X16-MM)	
	12	1	**233-9536**	1	TUBE AS	
	12A	1	**225-8524**	3	BOLT-SPECIAL (BANJO)	
	12B	1	**225-8526**	7	WASHER (10.4X13.75X1.37-MM THK)	
	13	1	**233-9537**	1	TUBE AS	
	14	1	**371-6116**	1	MANIFOLD-EXHAUST	

M - METRIC PART
R - REMFG PART MAY BE AVAILABLE

234-3465 **TURBOCHARGER GP (*contd.*)** **i05171165**

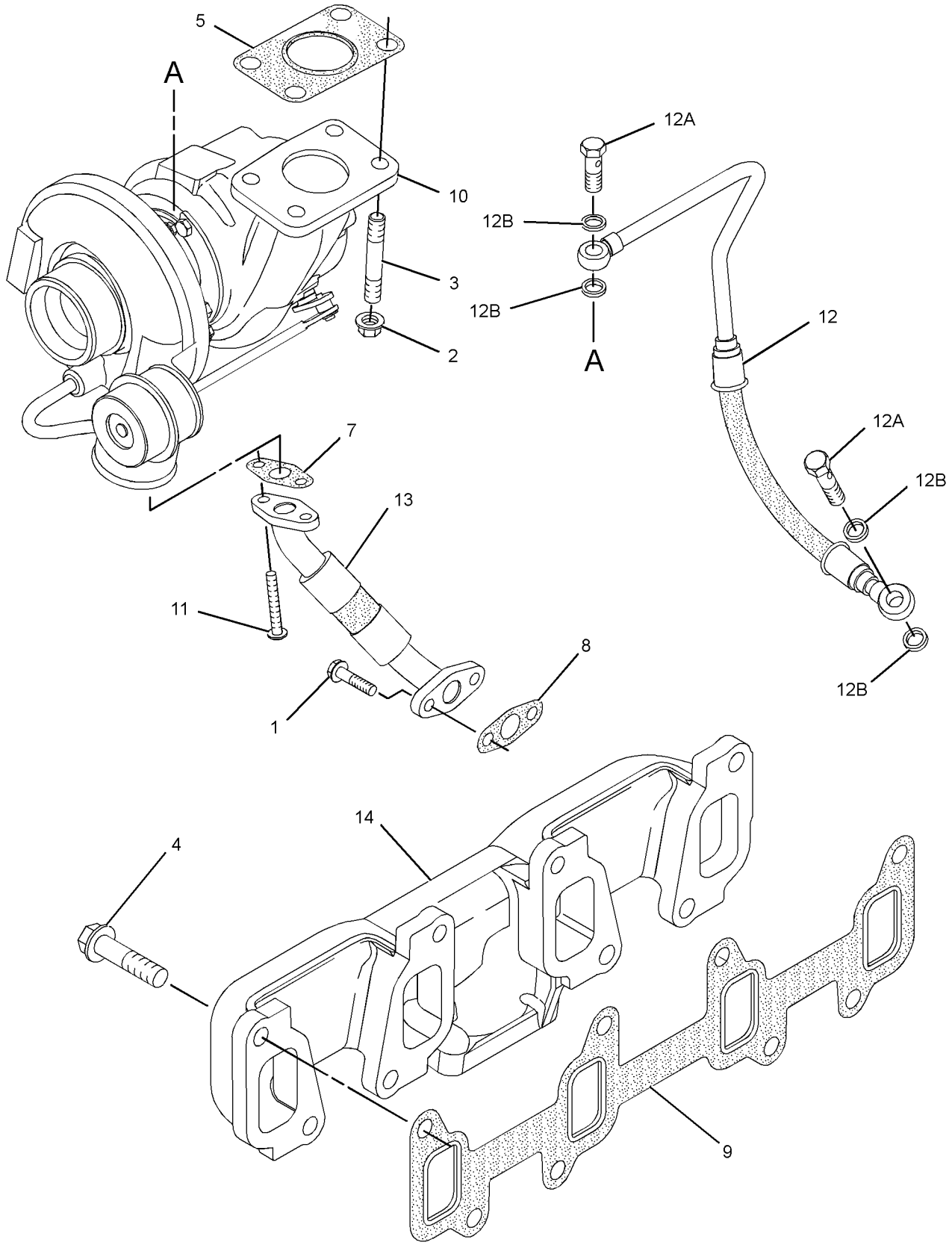

GRAPHIC #1 **<END>** g01424374

388-6703 CONTROL GP-GOVERNOR

S/N: HAH1-UP

PART OF 454-5575 CHASSIS AR

SMCS-1265, 1276 **i05859416**

NOTE	REF NO	GRAPHIC REF	PART NUMBER	QTY	PART NAME 1 2 3 4 5 6 (PRODUCT LEVEL)	SEE PAGE
	1	1	**386-3435**	1	MOTOR AS-GOVERNOR	
		1	**8T-8737**	1	PLUG-SEAL	
		1	**9X-3401**	7	PIN-CONNECTOR (16-GA TO 18-GA)	
					—OR—	
		1	**126-1767**	7	PIN-CONNECTOR (14-GA TO 16-GA)	
		1	**157-3184**	1	JOINT	
		1	**243-4509**	1	RECEPTACLE AS-CONNECTOR (8-PIN)	
	2	1	**388-6793**	1	BRACKET AS	
	3	1	**388-6794**	1	BRACKET AS	
		1	**121-1029**	1	CLIP	
	4	1	**388-6797**	1	BRACKET AS	
	5	1	**399-0966**	1	PLATE	
	6	1	**441-8511**	1	BRACKET AS	
M	7	1	**105-3481**	1	BOLT-SOCKET HEAD (M8X1.25X20-MM)	
M	8	1	**5C-2890**	1	NUT (M6X1-THD)	
	9	1	**6V-3265**	2	CLIP	
M	10	1	**7X-2537**	2	BOLT (M8X1.25X35-MM)	
	11	1	**7X-3392**	2	WASHER-HARD (13.5X22.5X3-MM THK)	
M	12	1	**105-3487**	3	BOLT-SOCKET HEAD (M6X1X20-MM)	
M	13	1	**8T-4139**	2	BOLT (M12X1.75X30-MM)	
M	14	1	**8T-4189**	7	BOLT (M8X1.25X20-MM)	
	15	1	**8T-4224**	10	WASHER-HARD (8.8X16X2-MM THK)	
M	16	1	**8T-4970**	2	BOLT (M6X1X14-MM)	
	17	1	**9X-8256**	6	WASHER (6.6X12X2-MM THK)	

M - METRIC PART

388-6703 **CONTROL GP-GOVERNOR (*contd.*)** **i05859416**

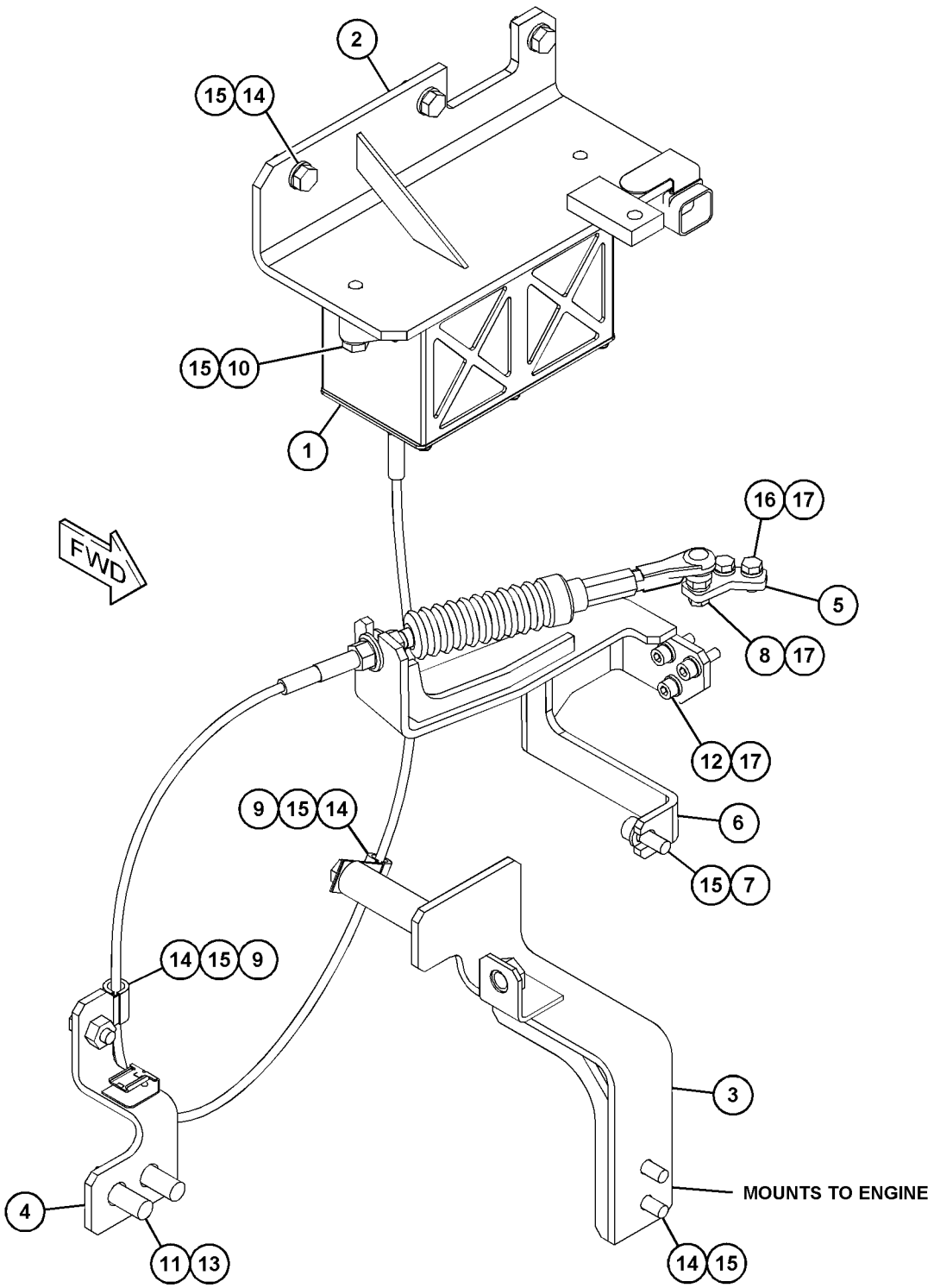

GRAPHIC #1 **<END>** g03415560

446-1895 FILTER GP-FUEL–24-VOLT, LONG BOWL

S/N: HAH1-UP
BRUSHLESS FUEL PUMP MODULE
PART OF 387-2625 LINES GP-FUEL

SMCS-1261 **i05979702**

NOTE	REF NO	GRAPHIC REF	PART NUMBER	QTY	PART NAME 1 2 3 4 5 6 (PRODUCT LEVEL)	SEE PAGE
	1	1	**395-3439**	1	BOWL AS (FUEL FILTER)	
	2	1	**1R-1804**	1	FILTER ELEMENT-WTR SEP & FUEL	
		1	**207-2757**	1	SEAL	
	3	1	**387-6403**	1	STRAINER (FUEL FILTER)	
	4	1	**395-3437**	1	VALVE AS-DRAIN (FUEL FILTER)	

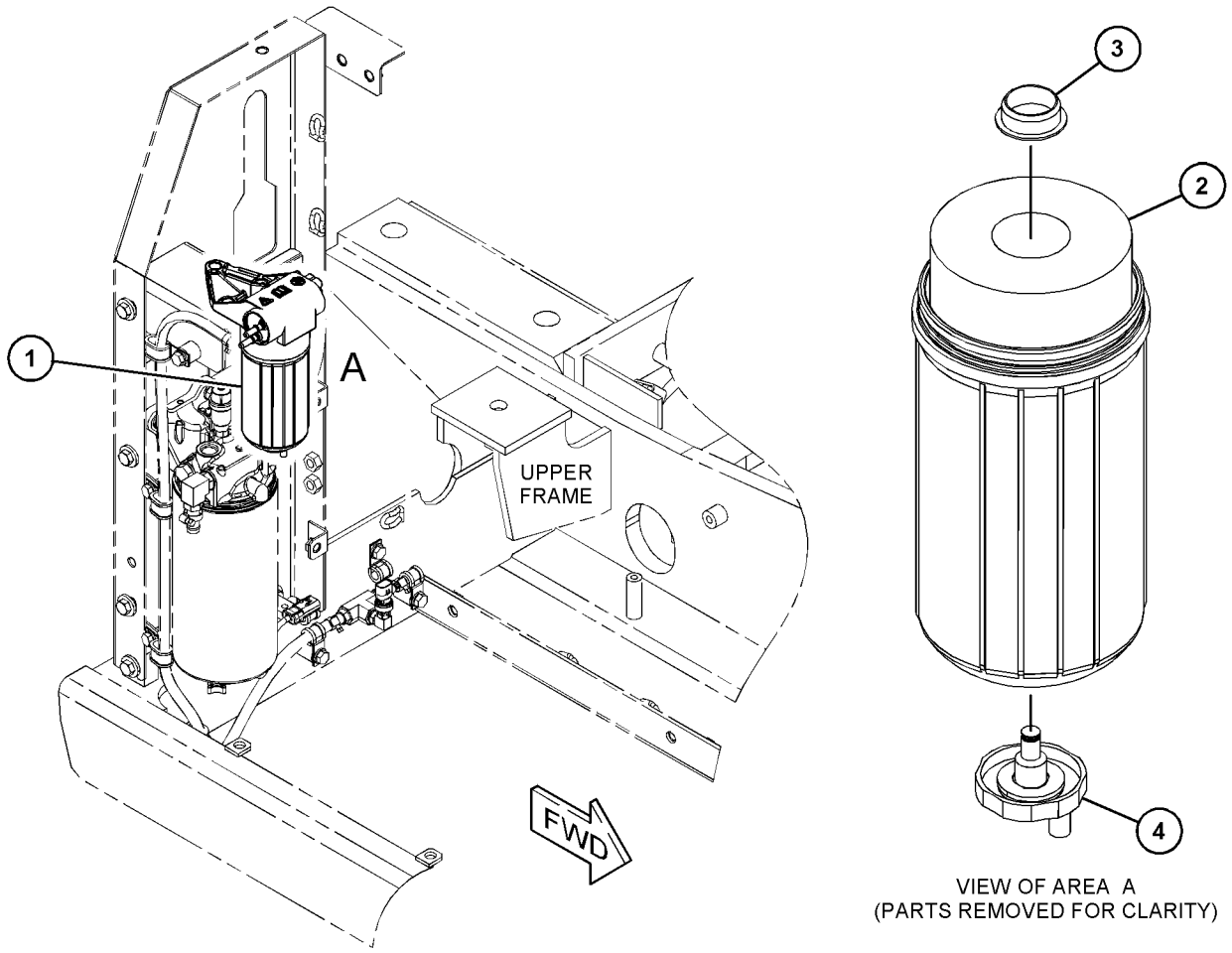

VIEW OF AREA A
(PARTS REMOVED FOR CLARITY)

GRAPHIC #1 **<END>** g03737125

387-2625 LINES GP-FUEL

S/N: HAH1-UP

PART OF 454-5575 CHASSIS AR

SMCS-1274 **i05948365**

NOTE	REF NO	GRAPHIC REF	PART NUMBER	QTY	PART NAME 1 2 3 4 5 6 (PRODUCT LEVEL)	SEE PAGE
	1	2	**3S-2093**	3	STRAP-CABLE	
	2	1,2	**4I-0379**	2	VALVE-MANUAL (FUEL SHUTOFF)	
	3	1	**8D-0482**	1	GROMMET	
	4	2	**9X-9896**	6	MOUNT (ISOLATION)	
	5	1	**141-6526**	1	GROMMET	
	6	1	*164-5562*	1	CONNECTOR AS	
		1	**3J-1907**	1	SEAL-O-RING	
		1	**5P-1046**	1	CONNECTOR	
	7	2	*165-7951*	2	CONNECTOR AS	
					(EACH INCLUDES)	
		2	**3J-1907**	1	SEAL-O-RING	
		2	**157-1669**	1	CONNECTOR	
	8	1	**175-7060**	1	BASE AS	
	9	2	*216-1304*	1	TEE AS	
		2	**3J-7354**	1	SEAL-O-RING	
		2	**216-1302**	1	TEE	
	10	2	**260-9244**	1	ELBOW	
	11	1	*268-1517*	1	CONNECTOR AS	
		1	**3K-0360**	1	SEAL-O-RING	
		1	**149-8142**	1	CONNECTOR	
Y	12	2	**446-1895**	1	FILTER GP-FUEL (24-VOLT, LONG BOWL)	62
	14	2	**305-6873**	1	SENSOR GP-PRESSURE (FUEL)	
	15	2	**307-8125**	1	GROMMET	
	16	2	**342-8584**	2	CONNECTOR	
	17	1	**343-3917**	2	CONNECTION	
	18	1	**343-7352**	1	CONNECTOR-FUEL	
	19	2	*351-0289*	1	ELBOW AS	
		2	**2M-9780**	1	SEAL-O-RING	
		2	**6V-9208**	1	ELBOW	
	20	1	**354-6246**	3	CONNECTOR	
	21	2	**355-0632**	1	CONNECTOR-SPECIAL	
Y	22	2	**423-6434**	1	SENSOR GP-LIQUID LEVEL (WATER IN FUEL)	104
	23	2	**381-9064**	1	INDICATOR-FUEL FILTER CHANGE	
	24	1	**382-0664**	1	FILTER AS-WATER SEP & FUEL (ULTRA HIGH EFFICIENCY)	
	25	1	**387-2637**	1	ADAPTER-TEE	
	26	2	**387-2642**	2	CLIP	
	27	1	**387-2650**	1	HOSE	
	28	1	**387-2651**	1	HOSE	
	29	1	**387-2652**	1	HOSE	
	30	1	**387-2660**	2	CLIP	
	31	1	**387-2665**	1	HOSE	
	32	1	**387-2666**	1	HOSE	
	33	1	**437-0436**	1	HOSE	
	34	2	**387-2668**	1	HOSE	
	35	1	**387-2669**	1	HOSE	
	36	2	**438-1304**	1	PLATE AS	
	37	1	**398-7981**	1	PLATE AS	
	38	2	**399-2641**	1	PLATE AS	
	39	1	**093-2068**	1	GROMMET	
	40	2	**132-5789**	2	CLIP	
M	41	2	**135-8573**	6	BOLT AS	
	42	1	*260-9144*	1	CONNECTOR AS	
		1	**3K-0360**	1	SEAL-O-RING	
		1	**168-8806**	1	CONNECTOR	
	43	2	**268-1562**	1	TEE	
	44	2	**2M-9780**	2	SEAL-O-RING	
	45	1	**309-5146**	1	ADAPTER	
	46	2	**337-6501**	1	FITTING	

387-2625 **LINES GP-FUEL (*contd.*)** **i05948365**

NOTE	REF NO	GRAPHIC REF	PART NUMBER	QTY	PART NAME 1 2 3 4 5 6 (PRODUCT LEVEL)	SEE PAGE
	47	1,2	**344-5360**	15	CLIP	
	48	1,2	**347-4416**	3	ADAPTER	
	49	1	**351-4089**	4	GROMMET	
	50	1,2	**351-4318**	12	CLIP	
	51	1,2	**351-4321**	2	CLIP	
	52	1	**5I-8307**	1	GROMMET	
	53	1,2	**5V-9155**	4	CLAMP-HOSE	
	54	1,2	**6S-8620**	17	CLAMP-HOSE	
	55	1	**6V-9028**	2	SEAL-O-RING	
	56	2	**8C-5608**	3	SPACER (6.5X9.5X25.4-MM THK)	
	57	1	**8T-1889**	4	CLIP (SLOT)	
	58	1	**8T-1890**	4	CLIP (TAB)	
	59	1,2	**8T-4121**	39	WASHER-HARD (11X21X2.5-MM THK)	
M	60	1,2	**8T-4136**	3	BOLT (M10X1.5X25-MM)	
M	61	1,2	**8T-4137**	30	BOLT (M10X1.5X20-MM)	
M	62	2	**8T-4191**	2	BOLT (M10X1.5X16-MM)	
M	63	1	**8T-4195**	3	BOLT (M10X1.5X30-MM)	
M	64	1	**8T-4196**	1	BOLT (M10X1.5X35-MM)	
	67	2	**9M-5501**	1	ELBOW-STREET	
M	68	2	**9X-2480**	3	BOLT (M6X1X45-MM)	
	69	2	**9X-6165**	3	WASHER (6.5X22X2.5-MM THK)	
E	70	2	**5P-0743**		HOSE (35-CM)	
E	71	1	**5P-1442**		HOSE (28.5-CM)	
E	71A	2	**5P-1442**		HOSE (59.5-CM)	
	72	1	**7I-2673**	1	STRAP-CABLE	
	73	2	**432-8577**	1	HARNESS AS-CHASSIS (FUEL)	
		2	**102-8803**	1	KIT-RECEPTACLE (3-PIN)	
					(INCLUDES RECEPTACLE AS & WEDGE)	
		2	**9W-0852**	2	PIN-CONNECTOR (14-GA TO 16-GA)	
		2	**8T-8737**	1	PLUG-SEAL	
		2	**9W-0844**	2	SOCKET-CONNECTOR (14-GA TO 16-GA)	
		2	**155-2270**	1	KIT-CONNECTING PLUG (2-PIN)	
					(INCLUDES PLUG AS,WEDGE & INTERFACE SEAL)	

E - ORDER BY THE CENTIMETER
M - METRIC PART
Y - SEPARATE ILLUSTRATION

387-2625 **LINES GP-FUEL (*contd.*)** **i05948365**

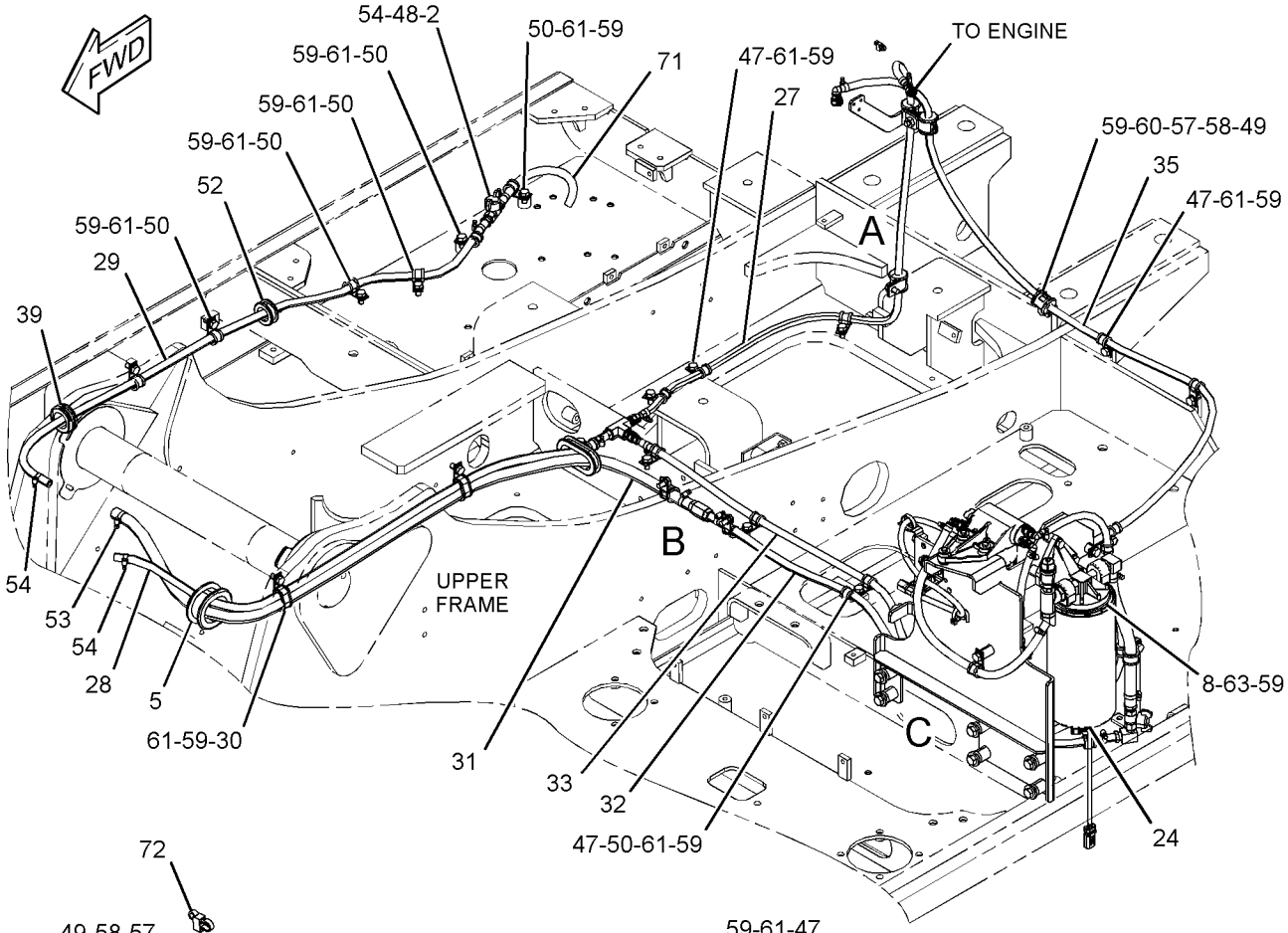

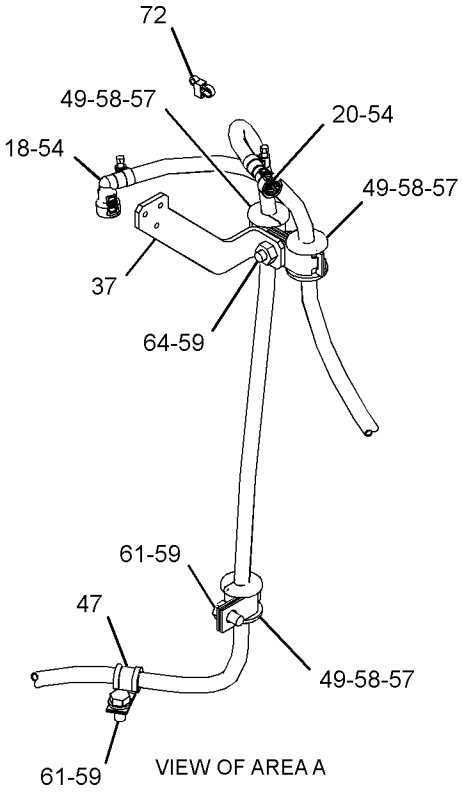

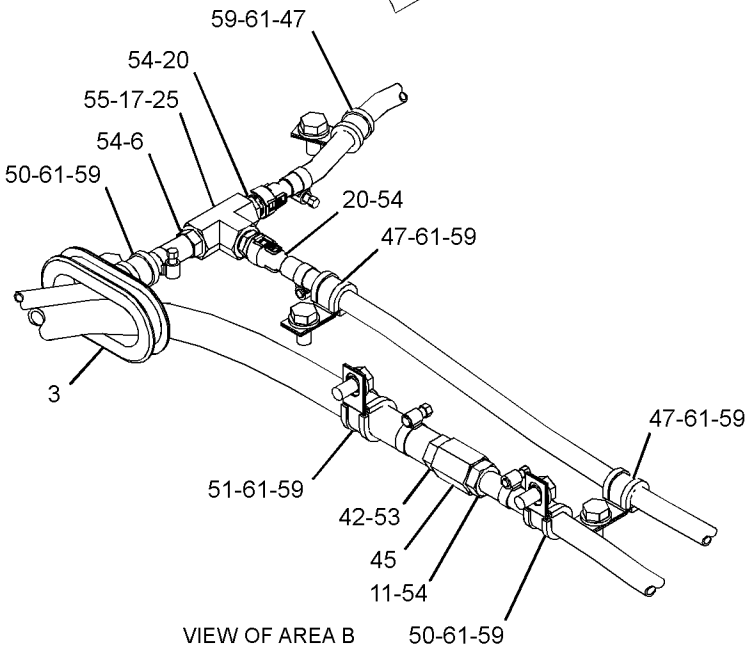

REFER TO ALL ILLUSTRATIONS OF THIS GROUP FOR AUXILIARY VIEWS

GRAPHIC #1

g03685284

387-2625 **LINES GP-FUEL (*contd.*)** **i05948365**

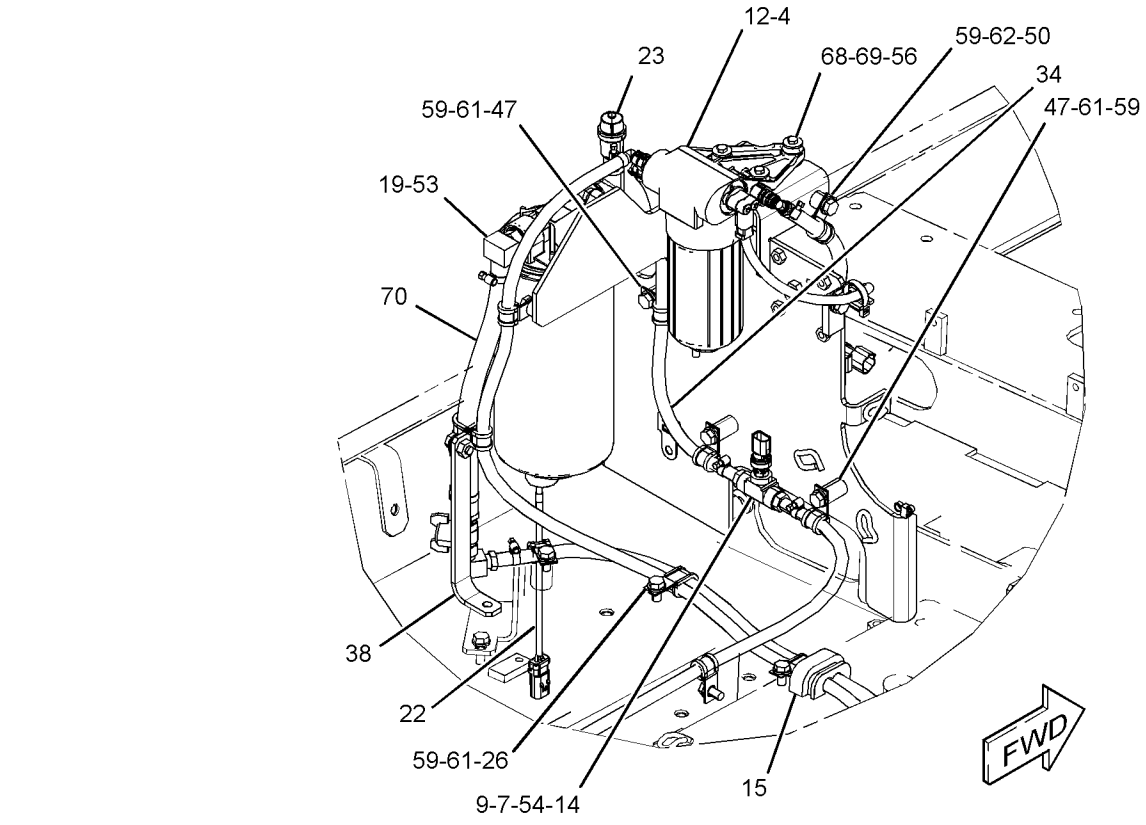

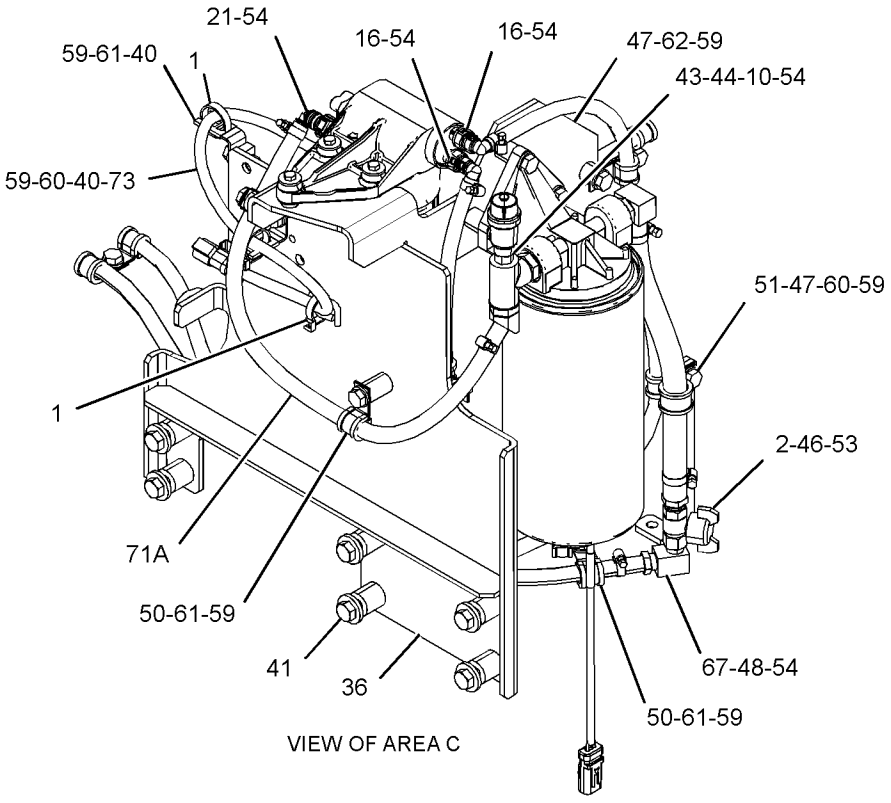

VIEW OF AREA C

GRAPHIC #2 **<END>** g03685286

460-0656 LINES GP-FUEL

S/N: CST1-UP

PART OF 456-1375, 470-9228 ENGINE AR-PRIMARY

SMCS-1274 **i05859471**

NOTE	REF NO	GRAPHIC REF	PART NUMBER	QTY	PART NAME 1 2 3 4 5 6 (PRODUCT LEVEL)	SEE PAGE
	1	1	**232-3126**	1	CLIP	
	2	1	**247-4884**	1	TUBE AS	

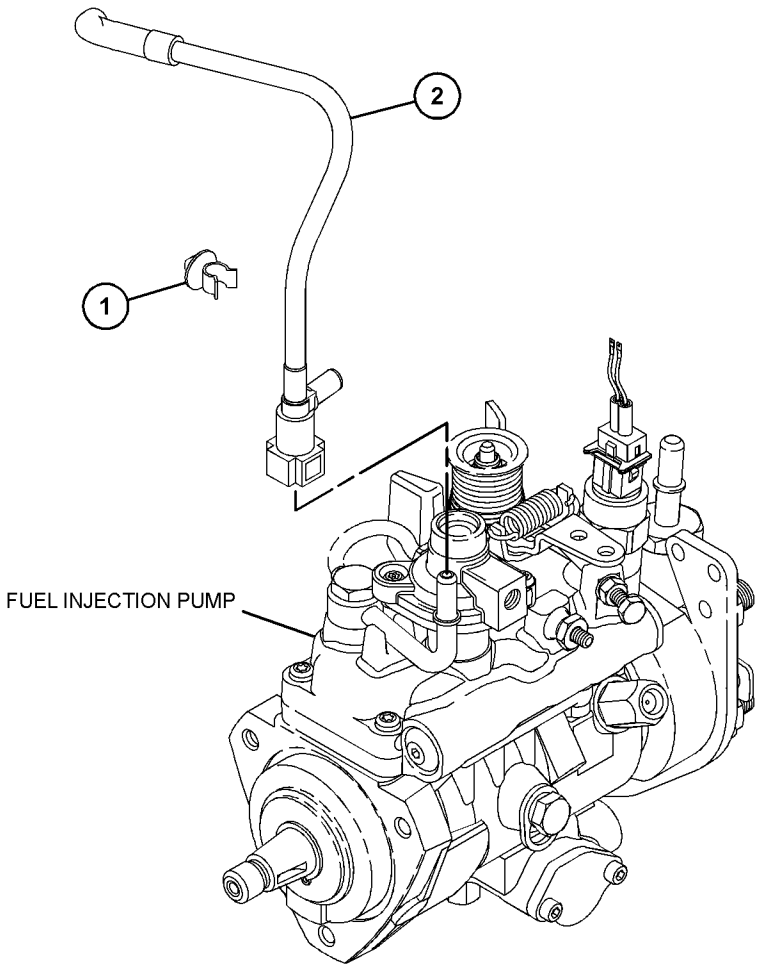

GRAPHIC #1 **<END>** g03703210

284-4999 PUMP GP-FUEL INJECTION

S/N: CST1-UP

FIELD REPLACEMENT ORDER 284-5000—PAGE: 69

PART OF 421-7744 PUMP GP-FUEL INJECTION

SMCS-1251, 1290

i03055163

NOTE	REF NO	GRAPHIC REF	PART NUMBER	QTY	PART NAME 1 2 3 4 5 6 (PRODUCT LEVEL)	SEE PAGE
	1	1	**152-3968**	1	SEAL-O-RING	
	2	1	**147-2645**	1	VALVE GP-SOLENOID (24-VOLT) (FUEL SHUTOFF)	

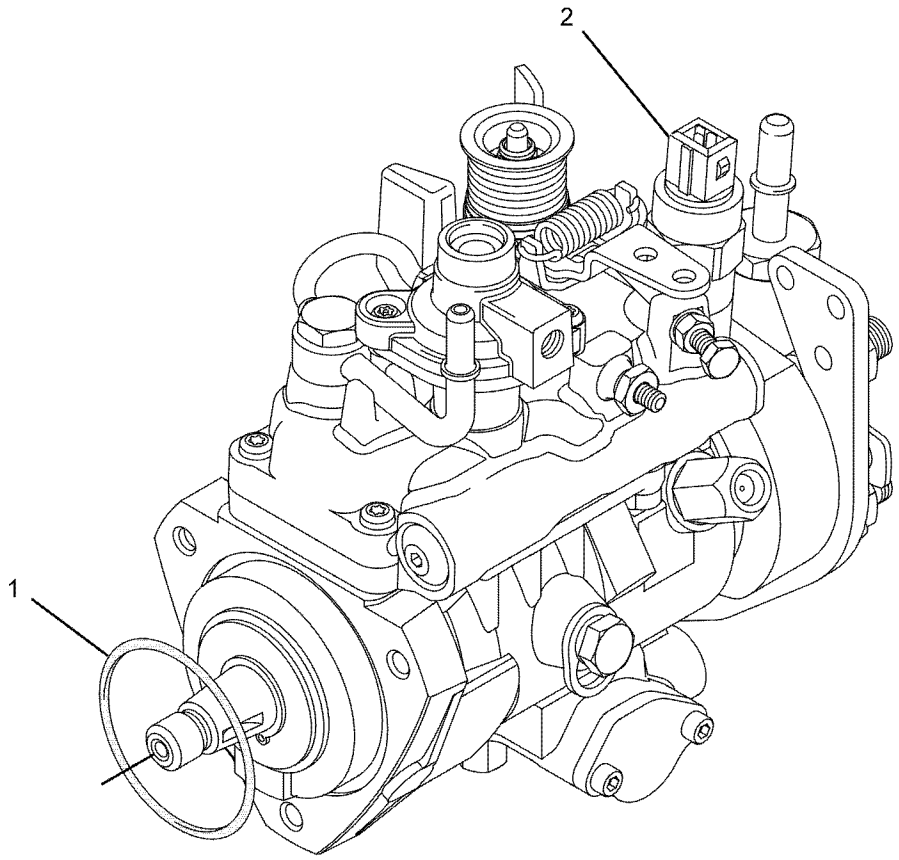

GRAPHIC #1

<END>

g01085467

284-5000 PUMP GP-FUEL INJECTION

S/N: CST1-UP

FIELD REPLACEMENT FOR 284-4999 PUMP GP-FUEL INJECTION

SMCS-1251, 1290

i04891658

NOTE	PART NUMBER	QTY	PART NAME 1 2 3 4 5 6 (PRODUCT LEVEL)	SEE PAGE
			(NO SERVICED PARTS)	

<END>

421-7744 PUMP GP-FUEL INJECTION

S/N: CST1-UP

PART OF 456-1375, 470-9228 ENGINE AR-PRIMARY

SMCS-1251, 1290 **i05979716**

NOTE	REF NO	GRAPHIC REF	PART NUMBER	QTY	PART NAME 1 2 3 4 5 6 (PRODUCT LEVEL)	SEE PAGE
M	1	1	**6I-0217**	1	BOLT (M8X1.25X20-MM)	
M	2	1	**6I-0260**	3	BOLT (M8X1.25X25-MM)	
M	3	1	**6I-0291**	1	NUT (M8X1.25-THD)	
	4	1	**035-8017**	1	UNION	
	5	1	**067-6265**	1	FITTING-BRASS	
M	6	1	**100-4830**	1	BOLT (M10X1.5X20-MM)	
M	7	1	**124-3815**	1	BOLT (M8X1.25X16-MM)	
	8	1	**140-8714**	1	CLIP	
	9	1	**230-8989**	1	GEAR-FUEL PUMP (68-TEETH)	
	10	1	**230-8995**	1	TUBE AS (CYL NO. 1)	
	11	1	**230-8996**	1	TUBE AS (CYL NO. 2)	
	12	1	**230-8997**	1	TUBE AS (CYL NO. 3)	
	13	1	**230-8998**	1	TUBE AS (CYL NO. 4)	
	14	1	**232-1328**	1	CAP	
	15	2	**232-1793**	1	CABLE	
	16	1	**232-1794**	3	HOSE	
	17	1	**232-2725**	2	CLIP	
	18	1	**232-2726**	1	CLIP	
	19	1	**232-3149**	3	WASHER (8.35X16.85X1.55-MM THK)	
	20	1	**232-3157**	1	BRACKET	
	21	1	**232-3274**	4	BOLT (M8X1.25X48.1-MM)	
	22	2	**235-1790**	1	SWITCH-TEMPERATURE (FUEL)	
R	23	1	**230-8999**	4	INJECTOR AS-FUEL	
					(EACH INCLUDES)	
	23A	1	**140-8718**	1	WASHER	
	23B	1	**232-2724**	1	NOZZLE	
	23C	1	**275-1038**	1	SEAL-O-RING	
	24	1	**236-2144**	1	TUBE AS	
	24A	1	**067-6999**	1	FERRULE	
	25	1	**238-8671**	4	CLAMP-INJECTOR	
	26	1	**240-5571**	1	BRACKET	
Y	27	1	**284-4999**	1	PUMP GP-FUEL INJECTION	68
	28	1	**318-2365**	1	CLIP	
	29	1	**365-3308**	1	NUT-COMPRESSION	

M - METRIC PART
R - REMFG PART MAY BE AVAILABLE
Y - SEPARATE ILLUSTRATION

421-7744 **PUMP GP-FUEL INJECTION (*contd.*)** **i05979716**

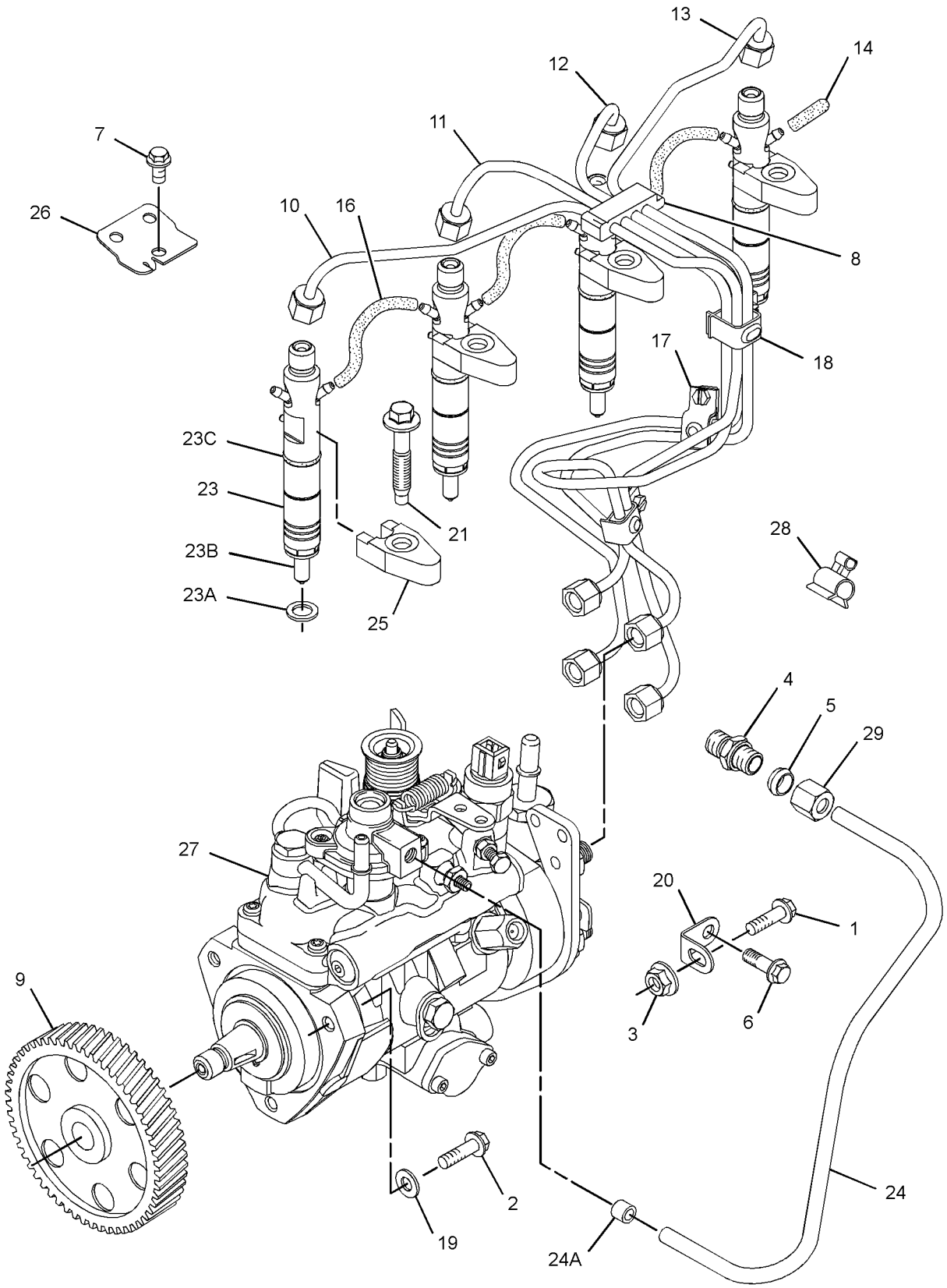

GRAPHIC #1 g03159236

421-7744 **PUMP GP-FUEL INJECTION (*contd.*)** **i05979716**

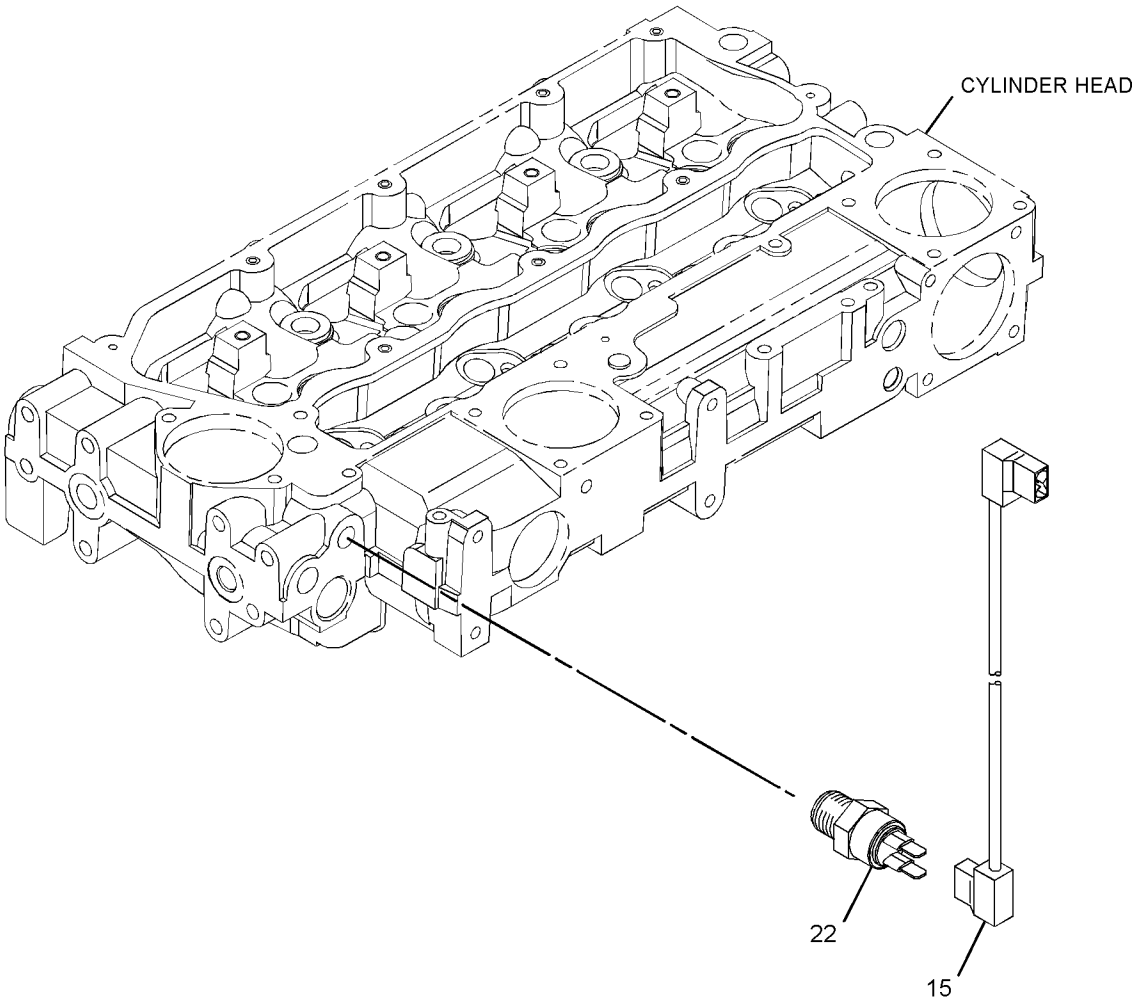

GRAPHIC #2 **<END>** g03159336

391-4295 TANK & MTG GP-FUEL

S/N: HAH1-UP

PART OF 454-5575 CHASSIS AR

SMCS-1273 **i05795043**

NOTE	REF NO	GRAPHIC REF	PART NUMBER	QTY	PART NAME 1 2 3 4 5 6 (PRODUCT LEVEL)	SEE PAGE
	1	1	**246-2641**	1	PADLOCK GP	
		1	**5P-8500**	1	KEY	
Y	2	1	*391-4305*	1	TANK GP-FUEL	74
	3	1	**085-9310**	4	SPACER (16.6X32X26-MM THK)	
M	4	1	**447-1707**	4	BOLT (M16X2X60-MM)	

M - METRIC PART
Y - SEPARATE ILLUSTRATION

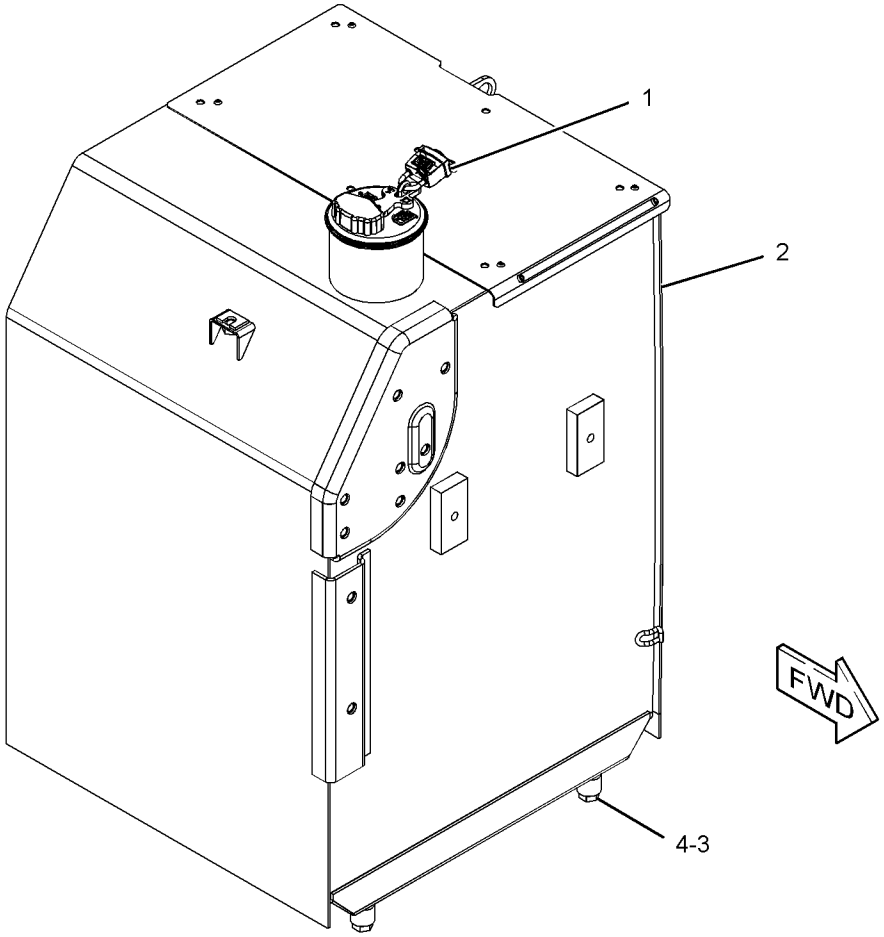

GRAPHIC #1 **<END>** g03129596

391-4305 TANK GP-FUEL

S/N: HAH1-UP

300-L (79.3-U.S. GAL)

PART OF 391-4295 TANK & MTG GP-FUEL

SMCS-1273 **i05871663**

NOTE	REF NO	GRAPHIC REF	PART NUMBER	QTY	PART NAME 1 2 3 4 5 6 (PRODUCT LEVEL)	SEE PAGE
	1	1	**4I-0378**	1	GASKET-RUBBER	
	2	1	*217-8185*	1	ELBOW AS	
		1	**3K-0360**	1	SEAL-O-RING	
		1	**9X-3982**	1	ELBOW	
J	3	1	**303-9933**	1	STRAINER AS-FUEL (FLOAT GAUGE)	
	4	1	**341-1842**	1	SENDER AS-FUEL LEVEL	
		1	**8T-8729**	2	PIN-CONNECTOR (16-GA TO 18-GA)	
		1	**102-8802**	1	KIT-RECEPTACLE (2-PIN)	
					(INCLUDES RECEPTACLE AS & WEDGE)	
	5	1	**349-7059**	1	CAP AS-FUEL (LOCKABLE, VENTED) (EXTREME SERVICE, LOCKABLE)	
		1	**9X-8600**	1	SEAL-O-RING	
		1	**350-7735**	1	KIT-CAP FILTER (FUEL TANK)	
					(INCLUDES BODY, GASKET, SCREWS & WASHERS)	
	6	1	**8T-0328**	5	WASHER-HARD (5.5X10X1-MM THK)	
M	7	1	**095-0736**	5	SCREW-MACHINE (M5X0.8X10-MM)	
	8	1	*150-3024*	1	ELBOW AS	
		1	**3J-1907**	1	SEAL-O-RING	
		1	**5P-4924**	1	ELBOW	
	9	1	*170-0967*	1	ELBOW AS	
		1	**3K-0360**	1	SEAL-O-RING	
		1	**5P-4906**	1	ELBOW	
					AVAILABLE REPAIR KIT(S):	
J			**303-9937**	1	KIT-GAUGE (FUEL STRAINER)	
					(INCLUDES STOPPER & GAUGE)	

J - KIT MARKED J SERVICES PART(S) MARKED J
M - METRIC PART

391-4305 **TANK GP-FUEL (*contd.*)** **i05871663**

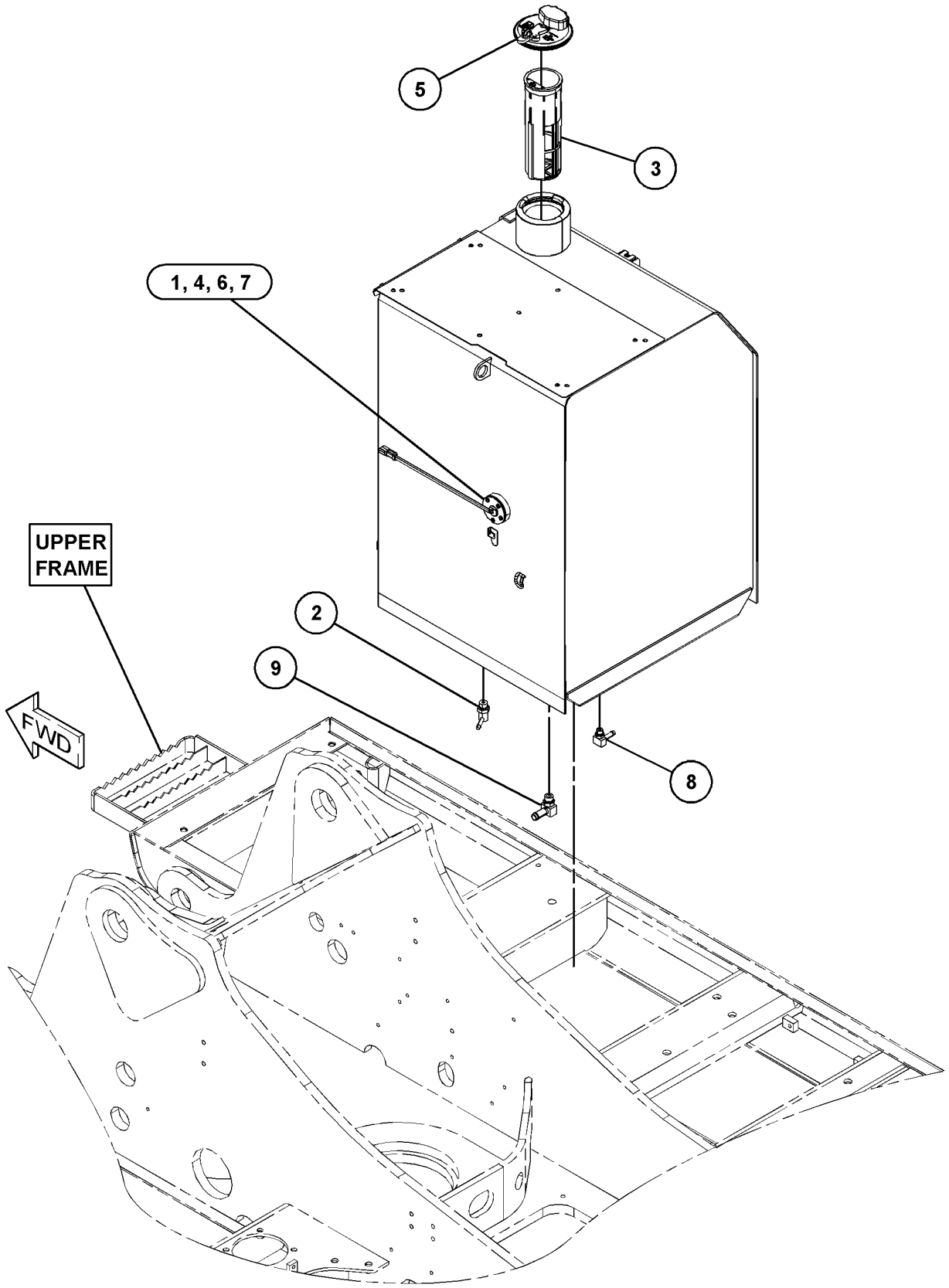

GRAPHIC #1 **<END>** g03128916

132-1829 ALARM GP

S/N: HAH1-UP
24-VOLT
PART OF 398-7003 WIRING GP-CAB

SMCS-7400, 7402, 7407 **i05979746**

NOTE	REF NO	GRAPHIC REF	PART NUMBER	QTY	PART NAME 1 2 3 4 5 6 (PRODUCT LEVEL)	SEE PAGE
	1	1	**102-8802**	1	KIT-RECEPTACLE (2-PIN)	
					(INCLUDES RECEPTACLE AS & WEDGE)	
	2	1	**8T-8729**	2	PIN-CONNECTOR (16-GA TO 18-GA)	

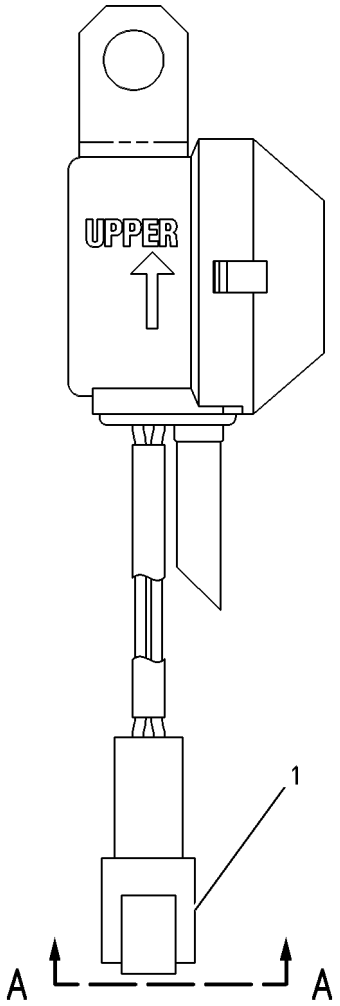

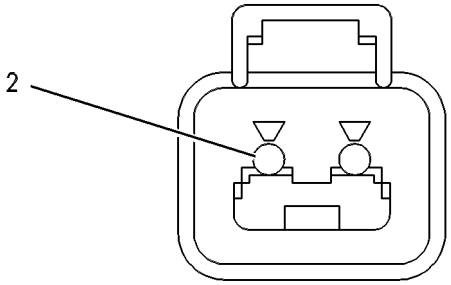

VIEW A-A

GRAPHIC #1 **<END>** g00272185

421-7109 ALTERNATOR GP-CHARGING

S/N: CST1-UP

PART OF 456-1375, 470-9228 ENGINE AR-PRIMARY

SMCS-1405 **i05440283**

NOTE	REF NO	GRAPHIC REF	PART NUMBER	QTY	PART NAME 1 2 3 4 5 6 (PRODUCT LEVEL)	SEE PAGE
M	1	1	**6I-0260**	1	BOLT (M8X1.25X25-MM)	
M	2	1	**6I-0593**	3	BOLT (M10X1.5X30-MM)	
M	3	1	**6I-0650**	1	BOLT (M10X1.5X65-MM)	
	4	1	**113-6349**	1	NUT (M8X1.25-THD)	
M	5	1	**140-8783**	2	BOLT (M10X1.5X45-MM)	
	6	1	**261-0428**	1	PULLEY AS-IDLER	
M	6A	1	**307-2242**	1	BOLT (M10X1.5X45-MM)	
	7	1	**284-3425**	1	PULLEY-ALTERNATOR	
	8	1	**305-7881**	1	BRACKET AS-ALTERNATOR	
	8A	1	**161-9820**	2	PIN	
	9	1	**424-6821**	1	ALTERNATOR	
	10	1	**348-8149**	1	PLATE-MOUNTING	
	11	1	**359-9666**	1	BOLT-FLANGE HEAD	
	12	1	**377-9082**	1	BELT TENSIONER	

M - METRIC PART

421-7109 **ALTERNATOR GP-CHARGING (*contd.*)** **i05440283**

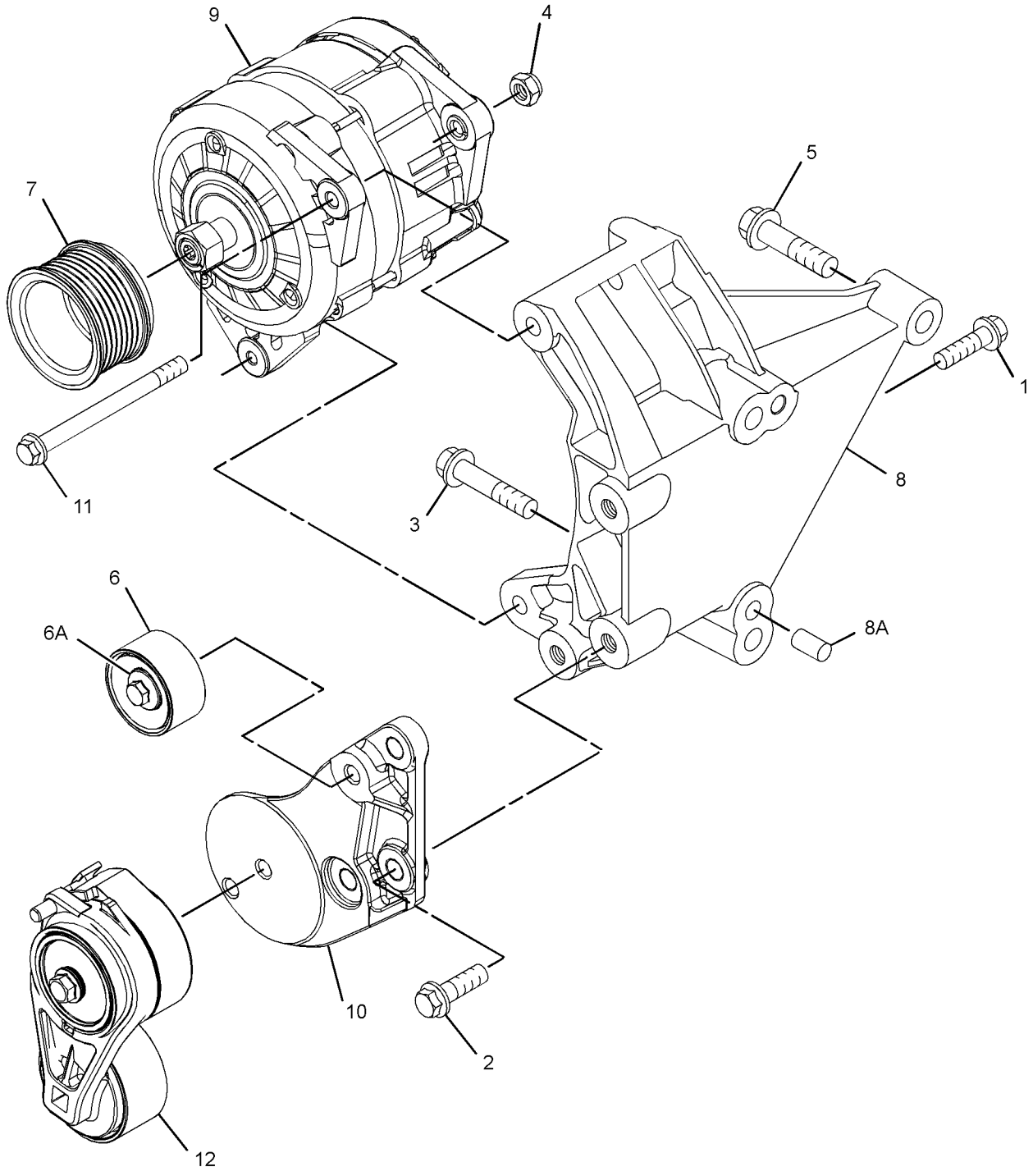

GRAPHIC #1 **<END>** g03465639

366-9354 ANTENNA & MOUNTING GP–PRODUCT LINK CELLULAR

S/N: HAH1-UP

PART OF 447-3349 CONTROL AR-COMMUNICATION

AN ATTACHMENT

SMCS-7338, 733T

i05797248

NOTE	REF NO	GRAPHIC REF	PART NUMBER	QTY	PART NAME 1 2 3 4 5 6 (PRODUCT LEVEL)	SEE PAGE
	1	1,2	**3S-2093**	4	STRAP-CABLE	
	2	2	**7I-2673**	1	STRAP-CABLE	
	3	1	**7K-1181**	4	STRAP-CABLE	
M	4	2	**143-9397**	3	SCREW-PAN HEAD (M4X0.7X12-MM)	
	5	2	**346-9376**	1	ANTENNA AS	
		2	**355-1213**	1	PLUG	
		2	**361-1045**	1	NUT-SPECIAL (5/8-18-THD)	
	6	2	**381-7417**	1	BRACKET AS	
M		2	**9T-6001**	4	BOSS (M10X1.5-THD)	
	7	2	**373-8961**	1	BRACKET	
	8	1	**373-8970**	1	CABLE AS-ANTENNA	
	9	2	**096-2626**	3	CLIP	
	10	2	**161-6987**	3	WASHER-HARD (5.2X16X1.5-MM THK)	
	11	2	**8T-4121**	2	WASHER-HARD (11X21X2.5-MM THK)	
M	12	2	**8T-4190**	1	BOLT (M16X2X25-MM)	
M	13	2	**8T-4191**	2	BOLT (M10X1.5X16-MM)	
M	14	2	**8T-4970**	1	BOLT (M6X1X14-MM)	
	15	2	**114-6658**	1	WASHER (6.5X17X1-MM THK)	
	16	2	**9X-8257**	1	WASHER (17.5X30X3.5-MM THK)	

M - METRIC PART

366-9354 **ANTENNA & MOUNTING GP (*contd.*)** **i05797248**

REFER TO ALL ILLUSTRATIONS OF
THIS GROUP FOR AUXILIARY VIEWS

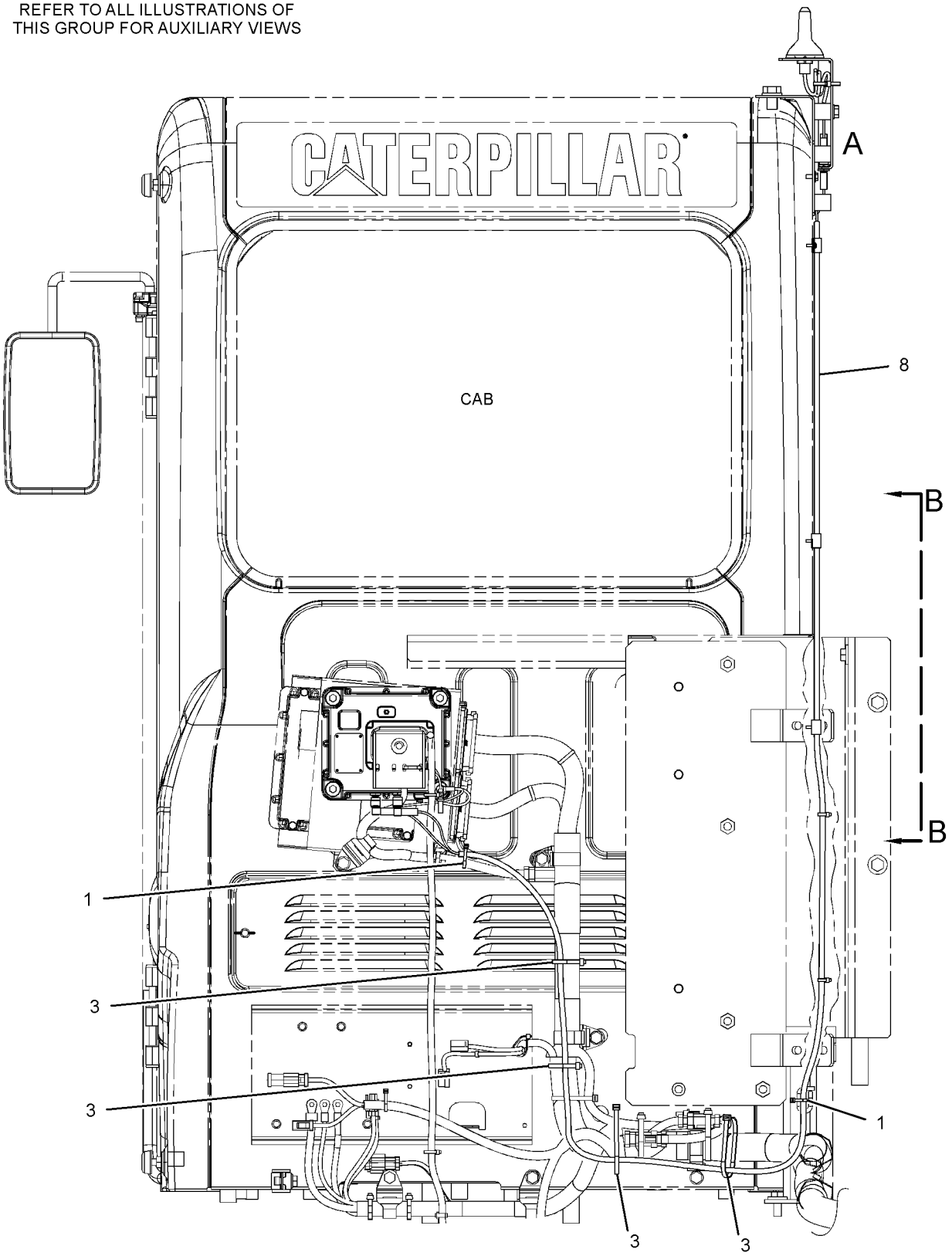

REAR VIEW

GRAPHIC #1 g03151202

366-9354 **ANTENNA & MOUNTING GP (*contd.*)** **i05797248**

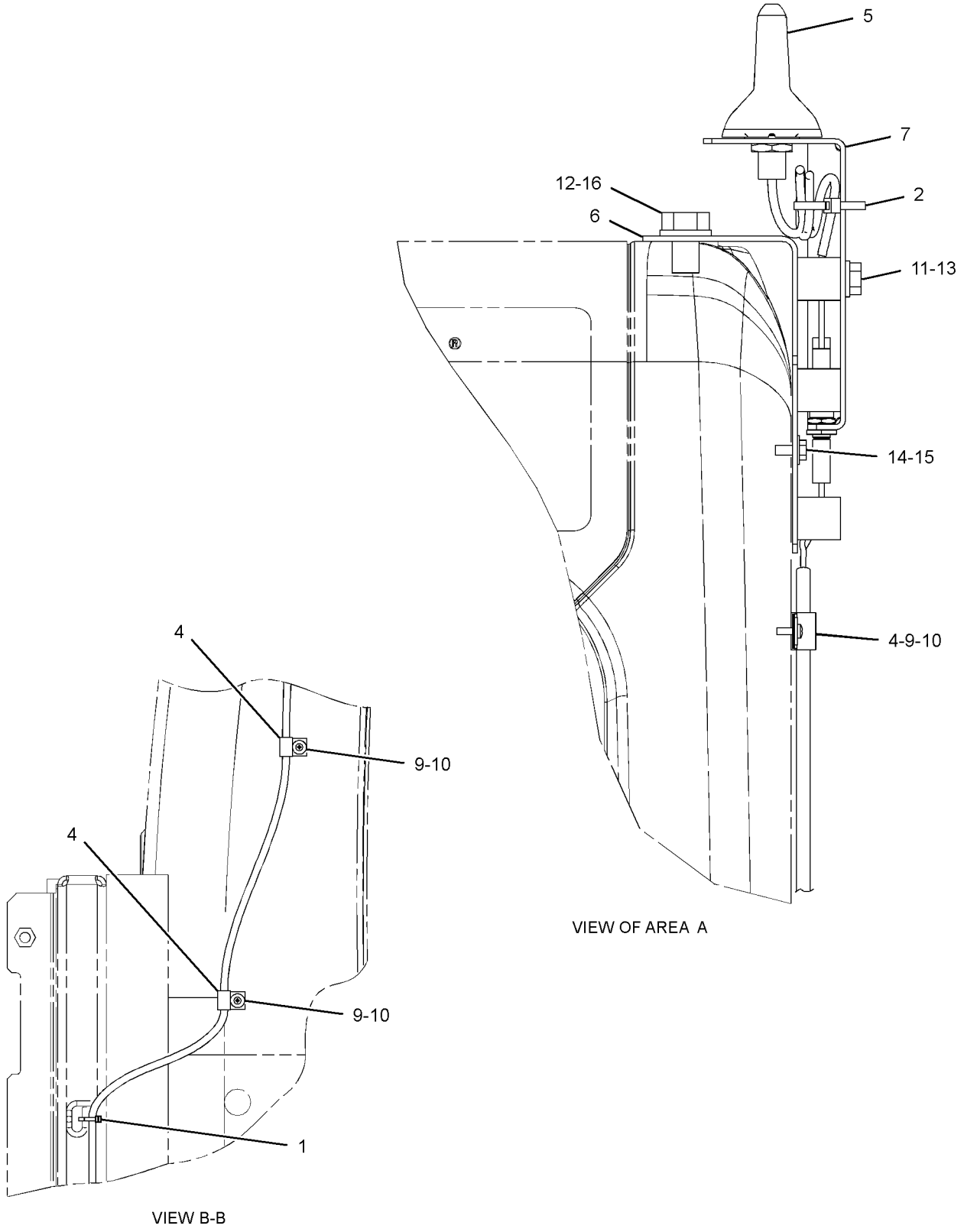

VIEW OF AREA A

VIEW B-B

GRAPHIC #2 **<END>** g03151204

440-6914 BATTERY & WIRING GP

S/N: HAH1-UP

PART OF 454-5575 CHASSIS AR

SMCS-1401, 1402, 1408 **i05846023**

NOTE	REF NO	GRAPHIC REF	PART NUMBER	QTY	PART NAME 1 2 3 4 5 6 (PRODUCT LEVEL)	SEE PAGE
	1	3	**2G-8767**	1	WASHER (10.5X60X3-MM THK)	
	2	2,3	**3S-2093**	34	STRAP-CABLE	
	3	3	**3T-5760**	2	BATTERY GP (12-VOLT, 750-CCA)	
		3	**123-1373**	6	CAP AS-FILLER (BATTERY)	
	4	2	**4I-7889**	1	SPACER (11X25X45-MM THK)	
	5	3	**5I-8270**	1	COVER-BATTERY	
	6	3	**6G-2256**	1	CLAMP	
	7	3	**6W-6005**	1	HOLD-DOWN-BATTERY	
	8	2	**7I-2673**	2	STRAP-CABLE	
	9	2,3	**7K-1181**	22	STRAP-CABLE	
	10	3	**7Y-5456**	2	GROMMET	
	11	3	**087-4587**	1	GROMMET	
	12	2	**091-9035**	2	SPACER (11X25X20-MM THK)	
	13	1,2	**111-4836**	13	CLIP	
	14	2,3	**111-4837**	12	CLIP	
	15	2,3	**111-4838**	9	CLIP	
	16	2,3	**111-4839**	9	STRAP	
	17	1,2,3	**116-0118**	8	CLIP	
	18	2,3	**132-1805**	2	STRAP AS-GROUND	
	19	1,3	**134-3299**	2	GROMMET	
	20	1	**141-6526**	1	GROMMET	
	21	2	**145-0603**	1	GROMMET	
	22	1	**170-6929**	1	CABLE AS (JUMPER)	
	23	3	**204-1673**	2	STRAP-CABLE	
	24	2	**228-8146**	1	SPACER (11X25X12.5-MM THK)	
	25	3	**238-2501**	1	KNOB	
	26	3	**238-2528**	1	ROD	
	27	3	**259-5301**	1	BRACKET AS	
	28	2	**259-5303**	1	BRACKET AS	
	29	3	**267-7586**	1	BRACKET AS	
	30	2	**299-2901**	1	GROMMET	
	31	2,3	**306-8526**	3	GROMMET	
	32	2	**306-8531**	1	BRACKET AS	
Y	33	2	**318-1181**	1	SENSOR GP-SPEED (MAGNETIC)	106
	34	3	**319-1252**	1	CABLE AS (JUNCTION BLOCK)	
		3	**030-1706**	1	TERMINAL-RING (00-GA, 1/4-IN SCREW)	
		3	**159-8049**		CABLE (00-GA, RED) (116-CM)	
		3	**1S-7251**	1	TERMINAL-CABLE (00-GA, 1/2-IN SCREW)	
		3	**301-0091**	1	COVER-TERMINAL (RED)	
		3	**8N-0869**	1	COVER-TERMINAL (RED)	
	35	3	**319-1253**	1	BRACKET AS	
	36	3	**319-1277**	1	CABLE AS (DISCONNECT SWITCH)	
		3	**159-8050**		CABLE (00-GA, BLACK) (111-CM)	
		3	**1S-7252**	1	TERMINAL-CABLE (00-GA, 3/8-IN SCREW)	
		3	**7N-5274**	1	COVER AS-TERMINAL (BLACK)	
		3	**9G-8909**	1	COVER-TERMINAL (BLACK)	
		3	**3S-6050**	1	TERMINAL AS-BATTERY (NEGATIVE)	
		3	**1M-6119**	1	BOLT (5/16-18X1.375-IN)	
		3	**1M-6120**	1	NUT (5/16-18-THD)	
	37	2	**328-0181**	1	STRAP AS-GROUND	
	38	3	**328-0385**	1	CABLE AS (REAR)	
		3	**159-8049**		CABLE (00-GA, RED) (71-CM)	
		3	**1S-7251**	1	TERMINAL-CABLE (00-GA, 1/2-IN SCREW)	
		3	**301-0091**	1	COVER-TERMINAL (RED)	
		3	**8N-1725**	1	COVER AS-TERMINAL (RED)	
		3	**3S-6049**	1	TERMINAL AS-BATTERY (POSITIVE)	
		3	**1M-6119**	1	BOLT (5/16-18X1.375-IN)	

440-6914 **BATTERY & WIRING GP (*contd.*)** **i05846023**

NOTE	REF NO	GRAPHIC REF	PART NUMBER	QTY	PART NAME 1 2 3 4 5 6 (PRODUCT LEVEL)	SEE PAGE
		3	**1M-6120**	1	NUT (5/16-18-THD)	
	39	2	**388-6769**	1	BRACKET AS	
	40	2	**388-6771**	1	PLATE AS (ALTERNATOR)	
	41	2	**388-6801**	1	BRACKET AS	
	42	1	**440-6917**	1	HARNESS AS-CHASSIS (CAB BULKHEAD)	
		1	**102-8802**	7	KIT-RECEPTACLE (2-PIN)	
		1	**102-8803**	2	KIT-RECEPTACLE (3-PIN)	
					(EACH KIT INCLUDES RECEPTACLE AS & WEDGE)	
		1	**8T-8729**	12	PIN-CONNECTOR (16-GA TO 18-GA)	
		1	**8T-8730**	45	SOCKET-CONNECTOR (16-GA TO 18-GA)	
		1	**3S-2093**	17	STRAP-CABLE	
		1	**9X-0196**	1	TERMINAL AS	
		1	**8T-8737**	66	PLUG-SEAL	
		1	**8T-8799**	1	BOOT (RED)	
		1	**100-3320**	1	PLUG AS-CONNECTOR (2-PIN)	
		1	**126-5011**	1	SEAL-CONNECTOR	
E		1	**103-2529**		HOSE (70-CM)	
		1	**9W-0852**	10	PIN-CONNECTOR (14-GA TO 16-GA)	
		1	**9W-0844**	13	SOCKET-CONNECTOR (14-GA TO 16-GA)	
		1	**305-5362**	2	TERMINAL AS (18-GA)	
E		1	**119-3662**		TUBE-HEAT SHRINK (10.85-MM DIA) (20-CM)	
E		1	**125-7874**		TUBE-HEAT SHRINK (5.72-MM DIA) (70-CM)	
E		1	**125-7875**		TUBE-HEAT SHRINK (7.44-MM DIA) (50-CM)	
		1	**9X-3402**	74	SOCKET-CONNECTOR (16-GA TO 18-GA)	
					—OR—	
		1	**126-1768**	74	SOCKET-CONNECTOR (14-GA TO 16-GA)	
		1	**2L-8049**	1	TERMINAL-RING (6-GA, NO. 10 SCREW)	
					—OR—	
		1	**2L-8057**	1	TERMINAL-RING (8-GA, NO. 10 SCREW)	
		1	**2L-8050**	4	TERMINAL-RING (6-GA, 1/4-IN SCREW)	
					—OR—	
		1	**2L-8058**	4	TERMINAL-RING (8-GA, 1/4-IN SCREW)	
		1	**2L-8069**	6	TERMINAL-RING (2-GA TO 10-GA, 3/8-IN SCREW)	
		1	**2L-8075**	4	TERMINAL-RING (14-GA TO 16-GA, NO. 8 SCREW)	
		1	**2L-8076**	1	TERMINAL-RING (14-GA TO 16-GA, NO. 10 SCREW)	
		1	**2L-8078**	1	TERMINAL-RING (14-GA TO 16-GA, 5/16-IN SCREW)	
		1	**176-9299**	1	KIT-RECEPTACLE (3-PIN)	
					(INCLUDES RECEPTACLE AS & WEDGE)	
		1	**9X-3401**	34	PIN-CONNECTOR (16-GA TO 18-GA)	
					—OR—	
		1	**126-1767**	34	PIN-CONNECTOR (14-GA TO 16-GA)	
		1	**155-2260**	1	KIT-CONNECTING PLUG (3-PIN)	
		1	**155-2270**	13	KIT-CONNECTING PLUG (2-PIN)	
					(EACH KIT INCLUDES RECEPTACLE AS, WEDGE & INTERFACE SEAL)	
		1	**160-7689**	1	PLUG AS-CONNECTOR (70-PIN)	
		1	**159-9322**		SEAL-O-RING	
		1	**163-6637**	1	RECEPTACLE AS-CONNECTOR (54-PIN, BLACK)	
		1	**174-3016**	2	PLUG AS-CONNECTOR (3-PIN)	
		1	**197-4385**	1	DIODE	
		1	**204-6195**	1	SOCKET-CONNECTOR (10-GA)	
		1	**221-9804**	1	PLUG-CONNECTOR (8-GA TO 10-GA)	
		1	**230-4009**	1	PLUG AS-CONNECTOR (12-PIN)	
		1	**455-0709**	1	SEAL-CONNECTOR	
		1	**230-4011**	6	PLUG AS-CONNECTOR (2-PIN)	
					(EACH INCLUDES)	
		1	**455-0704**	1	SEAL-CONNECTOR	
		1	**281-8803**	3	PLUG AS-CONNECTOR (3-PIN)	
		1	**281-8804**	1	PLUG AS-CONNECTOR (3-PIN)	
		1	**230-4013**	5	PLUG AS-CONNECTOR (3-PIN)	

440-6914 **BATTERY & WIRING GP (*contd.*)** **i05846023**

NOTE	REF NO	GRAPHIC REF	PART NUMBER	QTY	PART NAME 1 2 3 4 5 6 (PRODUCT LEVEL)	SEE PAGE
					(EACH PLUG AS INCLUDES)	
		1	**455-0705**		SEAL-CONNECTOR	
		1	**230-5010**	1	PLUG AS-CONNECTOR (6-PIN)	
		1	**455-0707**	1	SEAL-CONNECTOR	
		1	**231-2295**	1	PLUG AS-CONNECTOR (8-PIN)	
		1	**455-0708**	1	SEAL-CONNECTOR	
		1	**243-4505**	1	RECEPTACLE AS-CONNECTOR (2-PIN)	
		1	**243-4510**	1	RECEPTACLE AS-CONNECTOR (12-PIN)	
		1	**342-2972**	1	CAP-CONNECTOR (2-PIN)	
		1	**342-2973**	3	CAP-CONNECTOR (3-PIN)	
		1	**342-2974**	1	CAP-CONNECTOR (6-PIN)	
		1	**342-2976**	1	CAP-CONNECTOR (12-PIN)	
		1	**349-5084**	1	TERMINAL-BLADE	
		1	**349-5085**	1	RECEPTACLE AS-CONNECTOR	
	43	1	**441-8612**	1	CABLE AS-STARTER	
		1	**8N-0869**	1	COVER-TERMINAL (RED)	
E		1	**159-8049**		CABLE (00-GA, RED) (263-CM)	
		1	**1S-7251**	1	TERMINAL-CABLE (00-GA, 1/2-IN SCREW)	
		1	**1S-7252**	1	TERMINAL-CABLE (00-GA, 3/8-IN SCREW)	
D		1	**6V-2722**		TUBE-HEAT SHRINK (25.4-MM DIA) (1-M)	
		1	**8C-5064**		CONDUIT-FLEXIBLE (17.75-MM ID, SPLIT) (123-CM)	
M	44	2	**099-6418**	1	NUT (M6X1-THD)	
Y	45	3	**124-5814**	1	BLOCK GP-JUNCTION	88
M	46	2	**199-1187**	1	NUT (M5X0.8-THD)	
	47	1	**1R-6072**	1	GROMMET	
	48	2	**1S-0994**	1	CLIP	
	49	2	**269-7680**	1	CLIP	
	50	2	**4P-7429**	1	CLIP	
	51	2,3	**4P-7581**	10	CLIP	
	52	2	**4P-8134**	1	CLIP	
M	53	3	**5C-7261**	1	NUT (M8X1.25-THD)	
M	54	3	**5C-7883**	4	BOLT-SOCKET HEAD (M6X1X16-MM)	
	55	2	**5P-4116**	1	WASHER-HARD (8.8X20.5X2-MM THK)	
	56	3	**6D-3479**	4	CLIP	
	57	2	**6D-4246**	4	CLIP	
	58	2,3	**6G-2263**	5	SPACER (10.5X19X28.5-MM THK)	
M	59	1,2,3	**7X-2621**	9	BOLT (M10X1.5X12-MM)	
	60	2,3	**8T-1889**	3	CLIP (SLOT)	
	61	2,3	**8T-1890**	3	CLIP (TAB)	
	62	1,2,3	**8T-4121**	73	WASHER-HARD (11X21X2.5-MM THK)	
M	63	3	**8T-4133**	1	NUT (M10X1.5-THD)	
M	64	2,3	**8T-4136**	8	BOLT (M10X1.5X25-MM)	
M	65	1,2,3	**8T-4137**	40	BOLT (M10X1.5X20-MM)	
M	66	2	**8T-4179**	2	BOLT (M12X1.75X20-MM)	
M	67	2	**8T-4182**	1	BOLT (M10X1.5X45-MM)	
M	68	2,3	**8T-4185**	4	BOLT (M10X1.5X50-MM)	
M	69	2	**8T-4186**	2	BOLT (M10X1.5X40-MM)	
M	70	2,3	**8T-4191**	4	BOLT (M10X1.5X16-MM)	
M	71	2,3	**8T-4195**	4	BOLT (M10X1.5X30-MM)	
M	72	2	**8T-4196**	1	BOLT (M10X1.5X35-MM)	
M	73	2	**8T-4200**	2	BOLT (M8X1.25X16-MM)	
	74	2	**8T-4223**	2	WASHER-HARD (13.5X25.5X3-MM THK)	
	75	2	**8T-4224**	2	WASHER-HARD (8.8X16X2-MM THK)	
	76	3	**8T-4226**	1	WASHER-PLATED (10.5X45X3-MM THK)	
M	77	2	**8T-5005**	1	BOLT (M10X1.5X70-MM)	
M	78	2	**8T-6912**	1	BOLT (M8X1.25X50-MM)	
	79	3	**9X-8256**	4	WASHER (6.6X12X2-MM THK)	

D - ORDER BY THE METER
E - ORDER BY THE CENTIMETER
M - METRIC PART
Y - SEPARATE ILLUSTRATION

440-6914 **BATTERY & WIRING GP (*contd.*)** **i05846023**

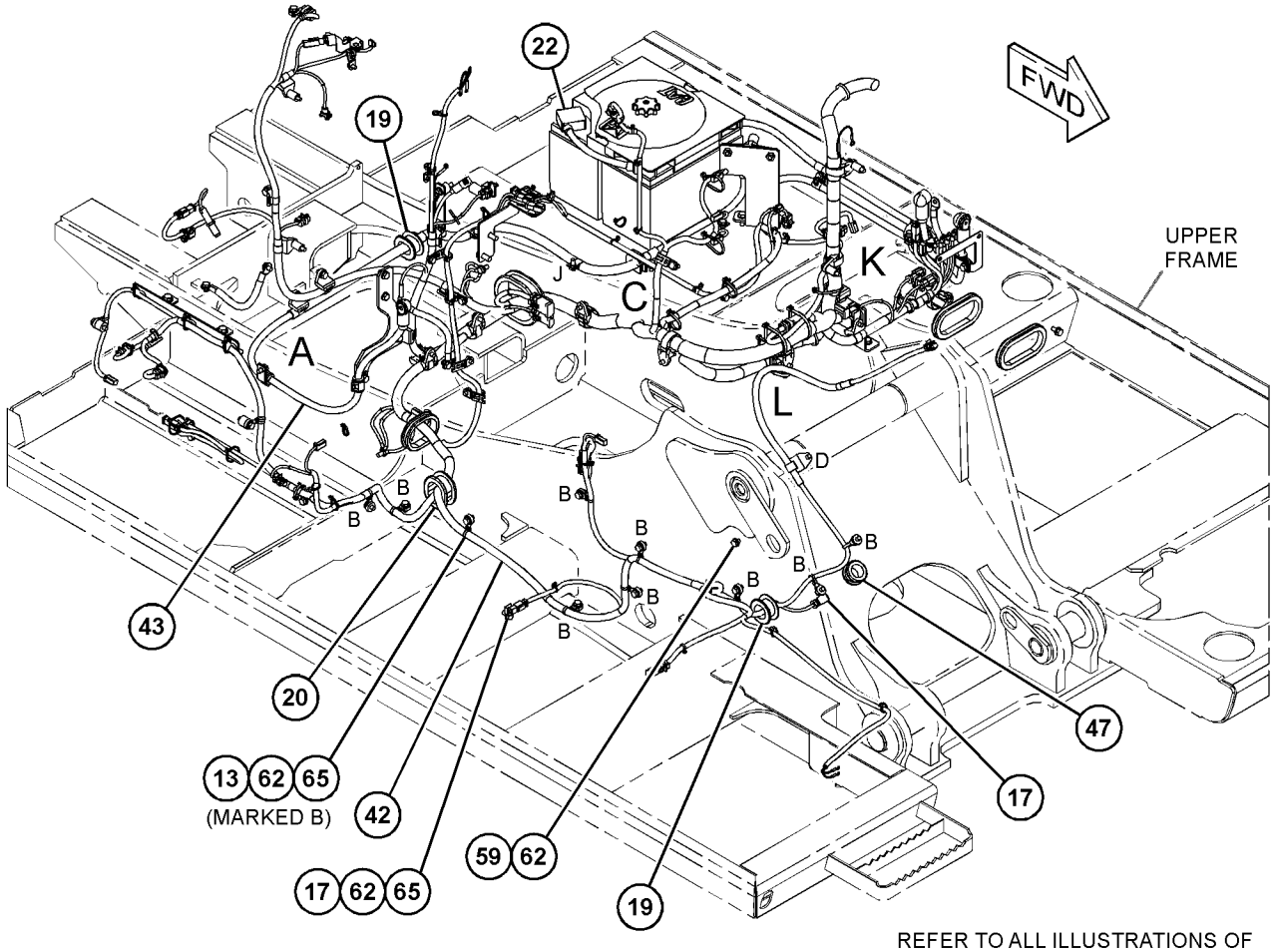

REFER TO ALL ILLUSTRATIONS OF
THIS GROUP FOR AUXILIARY VIEWS

GRAPHIC #1 g03688564

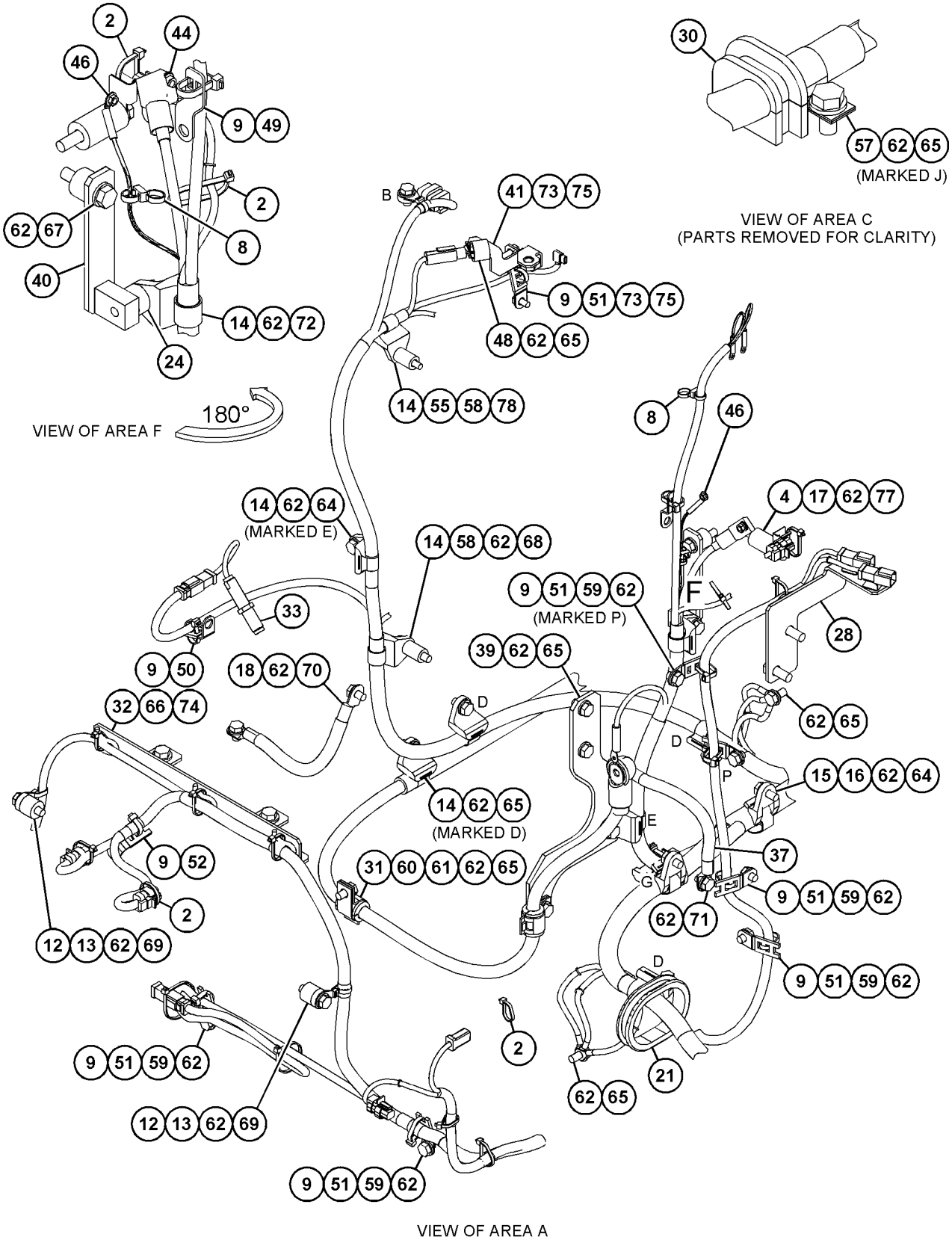

GRAPHIC #2 g03688565

440-6914 **BATTERY & WIRING GP (*contd.*)** **i05846023**

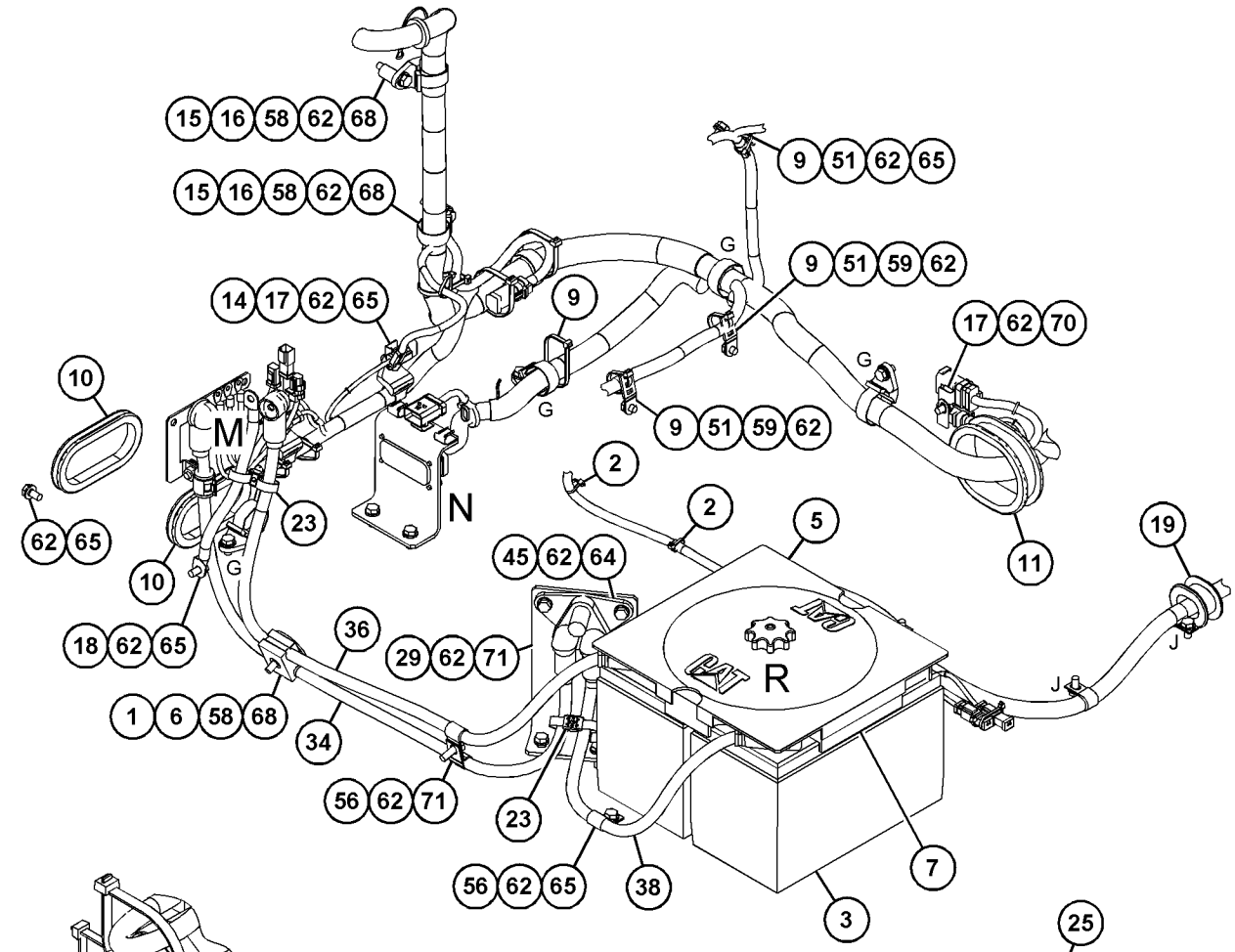

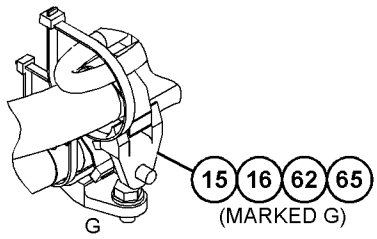

VIEW OF AREA L
(PARTS REMOVED FOR CLARITY)

VIEW OF AREA K

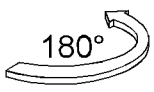

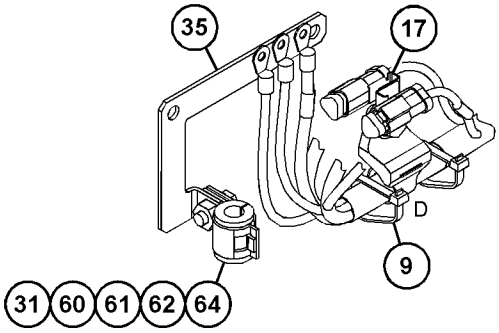

VIEW OF AREA M
(PARTS REMOVED FOR CLARITY)

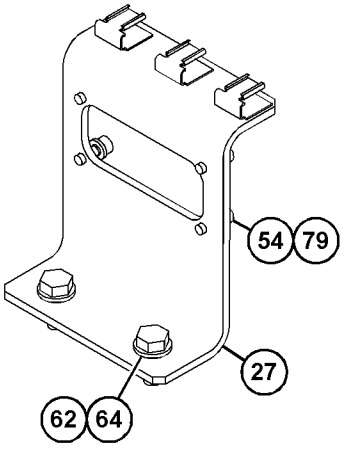

VIEW OF AREA N

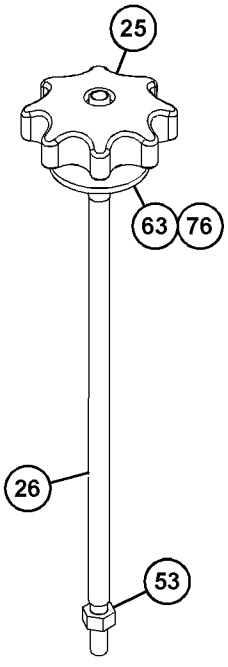

VIEW OF AREA R
(PARTS REMOVED FOR CLARITY)

GRAPHIC #3 **<END>** g03688566

124-5814 BLOCK GP-JUNCTION

S/N: HAH1-UP

PART OF 440-6914 BATTERY & WIRING GP

SMCS-7426 **i05921214**

NOTE	REF NO	GRAPHIC REF	PART NUMBER	QTY	PART NAME 1 2 3 4 5 6 (PRODUCT LEVEL)	SEE PAGE
	1	1	**435-2848**	1	COVER-TERMINAL	
	2	1	**8C-6358**	1	BLOCK AS-JUNCTION (BATTERY)	
	2A	1	**8T-3518**	6	NUT-FULL (1/2-13-THD)	
	2B	1	**7F-0560**	6	WASHER (0.516X0.938X0.101-IN THK)	

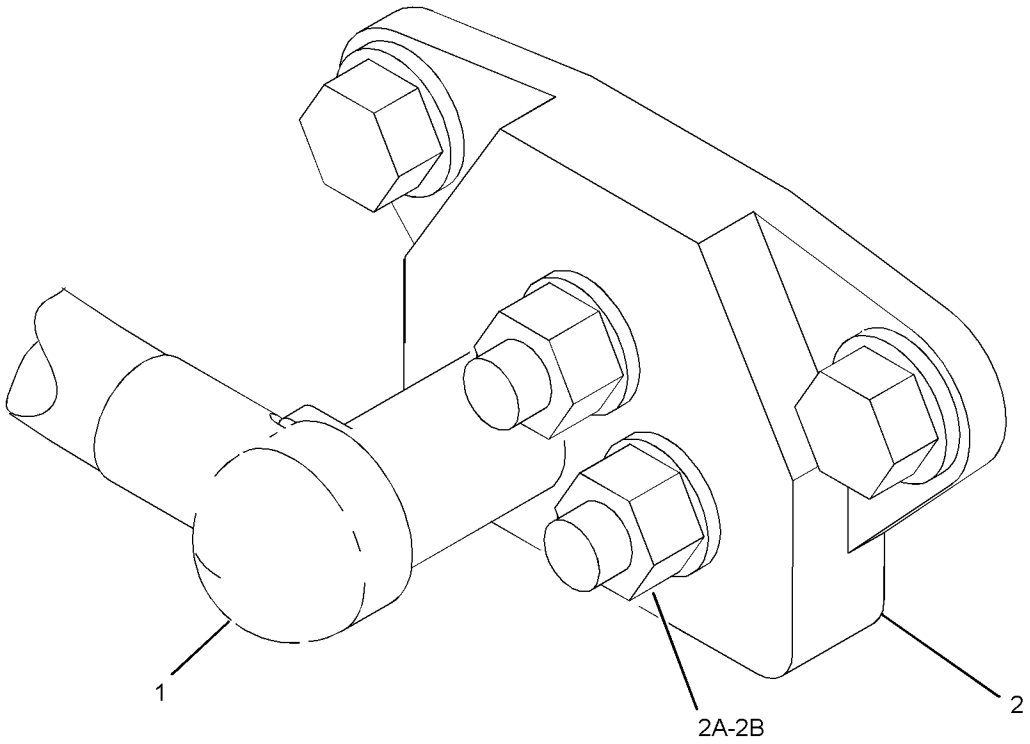

GRAPHIC #1 **<END>** g03732641

399-4218 CONTROL & MTG GP-COMMUNICATION—PRODUCT LINK CELLULAR

S/N: HAH1-UP

PART OF 447-3349 CONTROL AR-COMMUNICATION

AN ATTACHMENT

SMCS-7606 **i05464614**

NOTE	REF NO	GRAPHIC REF	PART NUMBER	QTY	PART NAME 1 2 3 4 5 6 (PRODUCT LEVEL)	SEE PAGE
	1	1	**9X-9896**	8	MOUNT (ISOLATION)	
Y	2	1	*376-4616*	1	CONTROL GP-COMMUNICATION (PRODUCT LINK CELLULAR, CHINA)	91
	3	1	**8C-5608**	4	SPACER (6.5X9.5X25.4-MM THK)	
M	4	1	**8C-8451**	4	BOLT (M6X1X40-MM)	
	5	1	**9X-6165**	4	WASHER (6.5X22X2.5-MM THK)	
	6	1	**230-1341**	1	FILM-WARNING (PRODUCT LINK RADIO, INTL)	
	7	1	**307-0047**	1	FILM-INFORMATION (PRODUCT LINK, READ OMM)	

M - METRIC PART
Y - SEPARATE ILLUSTRATION

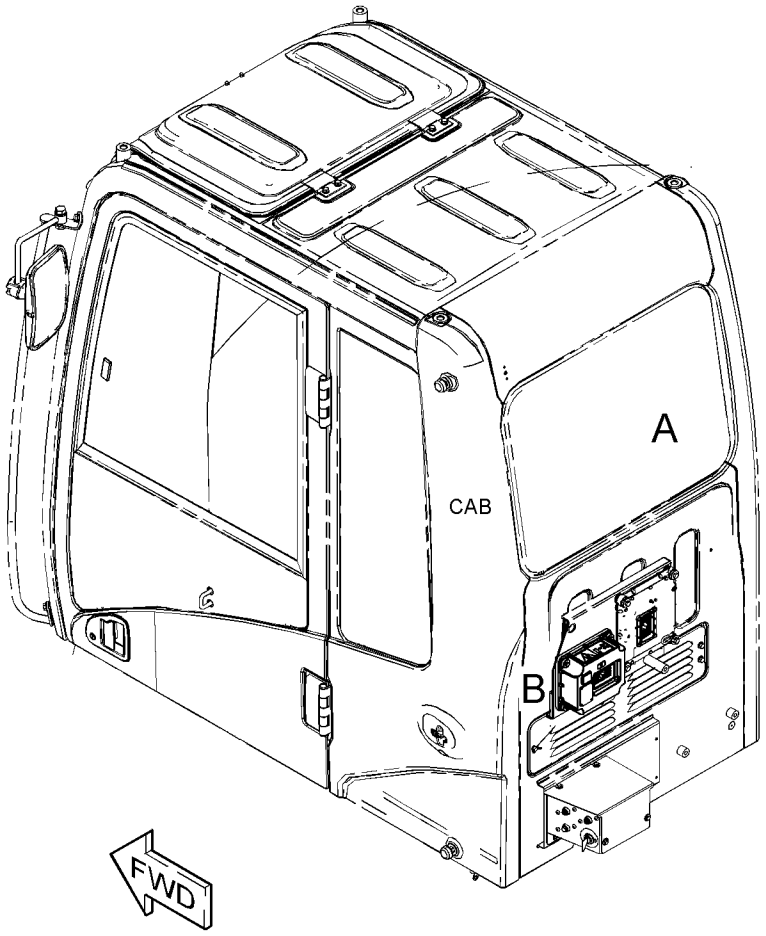

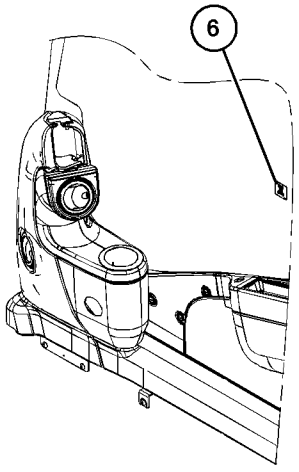

VIEW OF AREA A

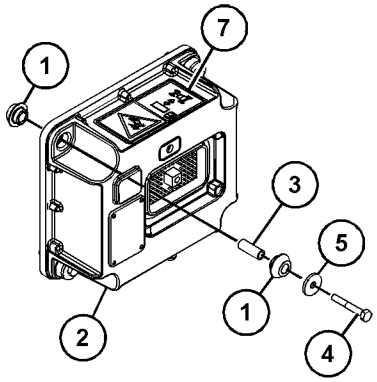

VIEW OF AREA B

GRAPHIC #1 **<END>** g03457960

399-2618 CONTROL & MTG GP-ELECTRONIC

S/N: HAH1-UP

PART OF 451-3987 OPERATOR AR

SMCS-1901, 3168, 7490, 7610 **i05454331**

NOTE	REF NO	GRAPHIC REF	PART NUMBER	QTY	PART NAME 1 2 3 4 5 6 (PRODUCT LEVEL)	SEE PAGE
	1	1	**155-0576**	8	MOUNT-ISOLATION	
	2	1	**386-3444**	1	CONTROL GP-UNPROGRAMMED	
	3	1	**399-5308**	1	BRACKET AS	
	4	1	**6I-1418**	4	SPACER (8.2X12.7X28.7-MM THK)	
M	5	1	**7X-0818**	4	BOLT (M8X1.25X45-MM)	
	6	1	**8T-4224**	1	WASHER-HARD (8.8X16X2-MM THK)	
M	7	1	**8T-4970**	4	BOLT (M6X1X14-MM)	
	8	1	**9N-0869**	8	WASHER-HARD (8.8X25.5X2-MM THK)	
	9	1	**9X-8256**	4	WASHER (6.6X12X2-MM THK)	

M - METRIC PART

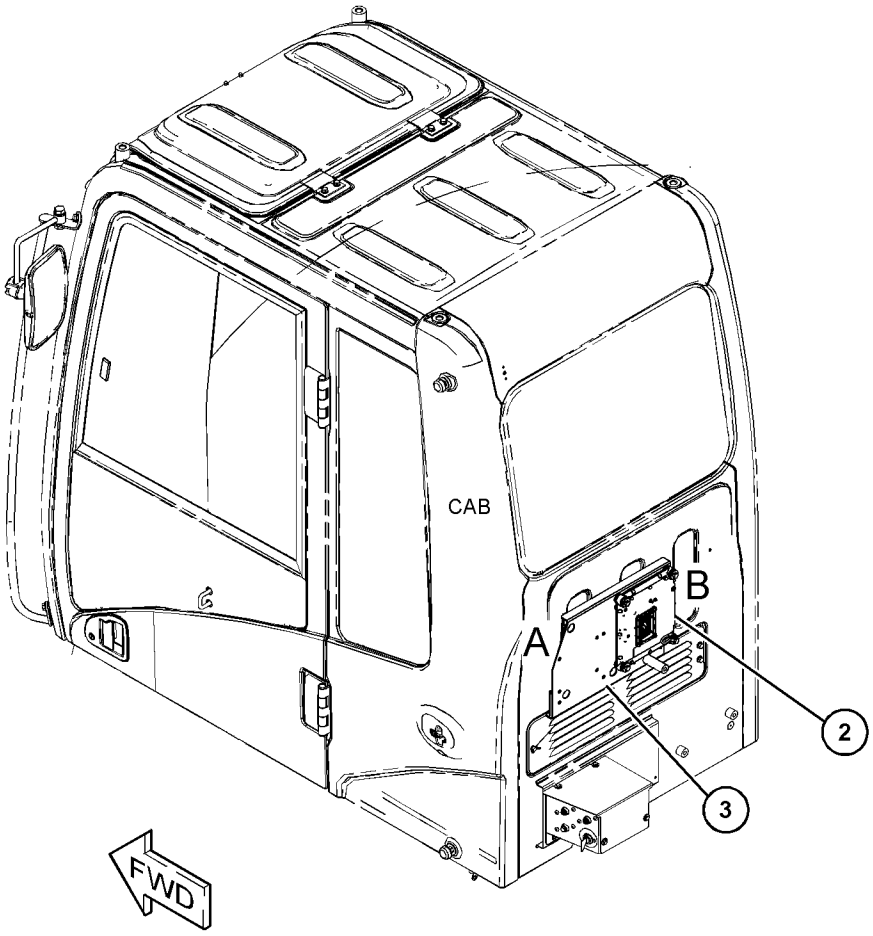

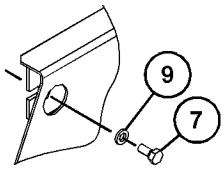

VIEW OF AREA A

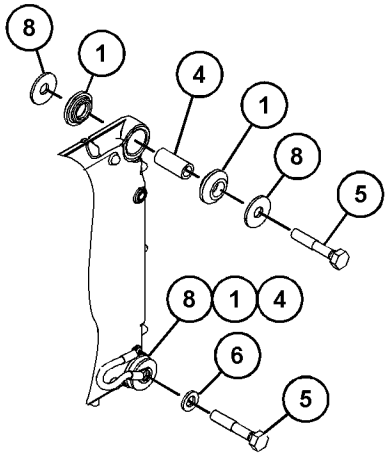

VIEW OF AREA B

GRAPHIC #1 **<END>** g03457163

447-3349 CONTROL AR-COMMUNICATION

S/N: HAH1-UP
PRODUCT LINK CELLULAR
PART OF 454-5646, 454-5647 DISTRIBUTION AR
AN ATTACHMENT

SMCS-1400, 7600 **i05849341**

NOTE	PART NUMBER	QTY	PART NAME 1 2 3 4 5 6 (PRODUCT LEVEL)	SEE PAGE
Y	*366-9354*	1	ANTENNA & MOUNTING GP (PRODUCT LINK)	79
Y	*399-4218*	1	CONTROL & MTG GP-COMMUNICATION	89
Y	*399-1110*	1	WIRING GP-COMMUNICATION (PRODUCT LINK 522)	120

Y - SEPARATE ILLUSTRATION

<END>

376-4616 CONTROL GP-COMMUNICATION—PRODUCT LINK CELLULAR, CHINA

S/N: HAH1-UP
PART OF 399-4218 CONTROL & MTG GP-COMMUNICATION
AN ATTACHMENT

SMCS-7606, 7610, 7620 **i05880305**

NOTE	PART NUMBER	QTY	PART NAME 1 2 3 4 5 6 (PRODUCT LEVEL)	SEE PAGE
Y	**372-4531**	1	CONTROL GP-UNPROGRAMMED (PRODUCT LINK 522, CHINA)	92
	453-8394	1	SOFTWARE GP-COMMUNICATION (PRODUCT LINK 522, CHINA)	

Y - SEPARATE ILLUSTRATION

<END>

372-4531 CONTROL GP-UNPROGRAMMED–PRODUCT LINK 522

S/N: HAH1-UP

PART OF 376-4616 CONTROL GP-COMMUNICATION

AN ATTACHMENT

SMCS-7610 **i05880338**

NOTE	REF NO	GRAPHIC REF	PART NUMBER	QTY	PART NAME 1 2 3 4 5 6 (PRODUCT LEVEL)	SEE PAGE
	1	1	**346-7763**	1	COVER AS	
	2	1	**372-4532**	1	CARD-MEMORY (SUBSCRIBER IDENTITY MODULE)	
	3	1	**7X-6315**	1	STRAP AS-GROUND	
	4	1	**342-9022**	4	SCREW-PAN HEAD (M2.5X0.45-THD)	
	5	1	**342-9290**	1	SCREW-PAN HEAD (M4X0.7-THD)	
	6	1	**134-4126**	1	WASHER (4.52X8.28X0.76-MM THK)	
	7	1	**276-4053**	1	FILM-IDENTIFICATION (CAT)	
F			**449-6277**	1	SOFTWARE GP-ELECTRONIC (PRODUCT LINK 522)	

F - NOT SHOWN

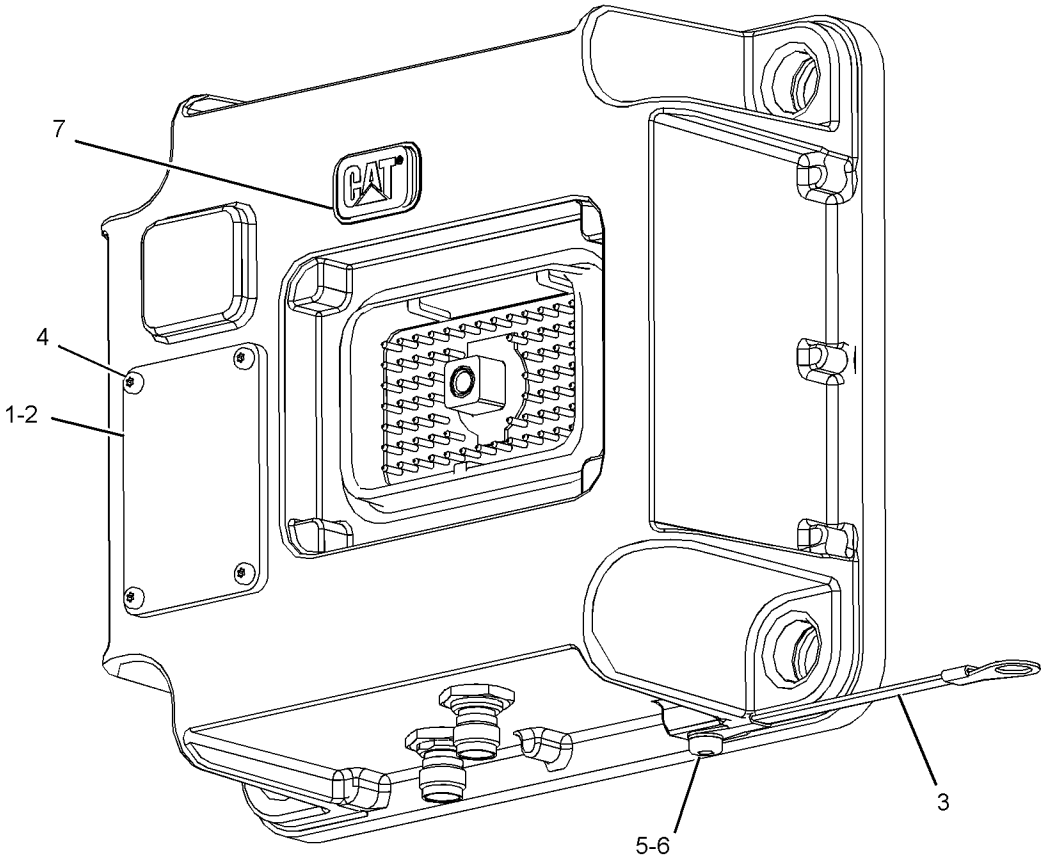

GRAPHIC #1 **<END>** g03009457

436-1866 ELECTRONICS GP-MACHINE

S/N: HAH1-UP

PART OF 454-5573 GENERAL AR

SMCS-7610, 7620

i05845901

NOTE	PART NUMBER	QTY	PART NAME 1 2 3 4 5 6 (PRODUCT LEVEL)	SEE PAGE
	436-1867	1	SOFTWARE GP-MACHINE	

<END>

233-9834 GLOW PLUG GP

S/N: CST1-UP

PART OF 456-1375, 470-9228 ENGINE AR-PRIMARY

SMCS-1412 **i04948453**

NOTE	REF NO	GRAPHIC REF	PART NUMBER	QTY	PART NAME 1 2 3 4 5 6 (PRODUCT LEVEL)	SEE PAGE
	1	1	**368-3151**	1	BUS BAR GP	
	1A	1	**369-2472**	1	SPACER	
	2	1	**226-8770**	4	GLOW PLUG (24-VOLT)	
	3	1	**232-3126**	1	CLIP	

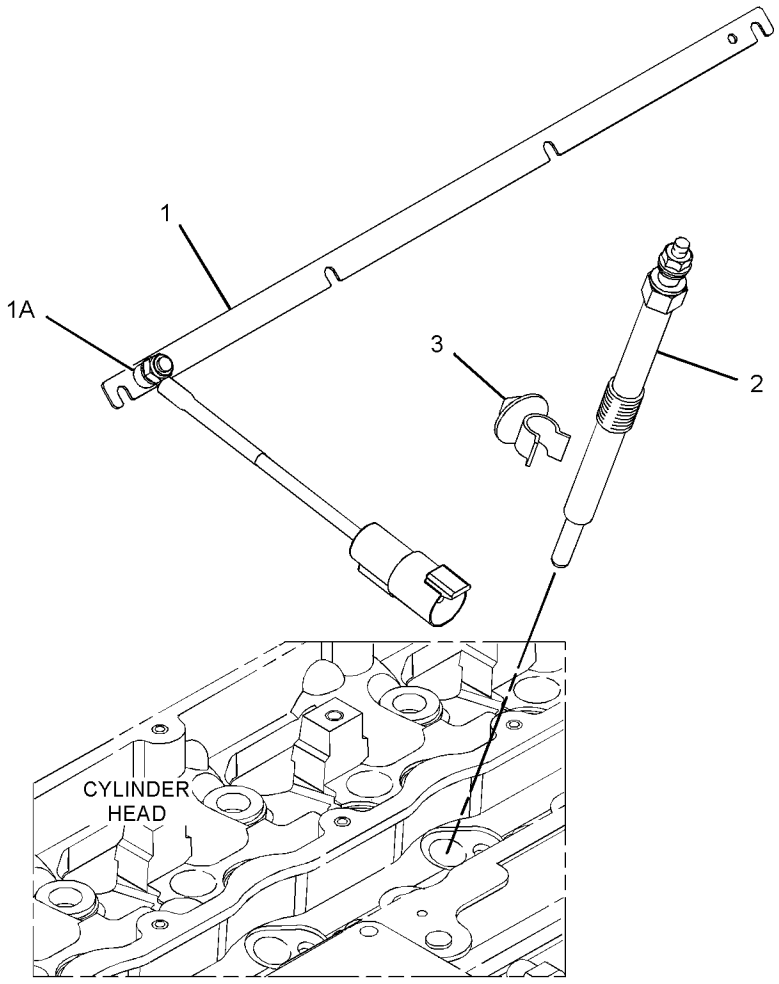

GRAPHIC #1 **<END>** g03139739

153-2521 LAMP GP-FLOOD

S/N: HAH1-UP
24-VOLT
PART OF 259-5163 LIGHTING GP-FLOOD
AN ATTACHMENT

SMCS-1434 **i05856227**

NOTE	REF NO	GRAPHIC REF	PART NUMBER	QTY	PART NAME 1 2 3 4 5 6 (PRODUCT LEVEL)	SEE PAGE
M	1	1	**6V-5210**	2	SCREW-MACHINE (M4X0.7X10-MM)	
	2	1	**3B-4501**	2	LOCKWASHER	
	3	1	**351-9918**	1	LAMP-HALOGEN (24-VOLT, 70-WATT)	
	4	1	**8T-4223**	1	WASHER-HARD (13.5X25.5X3-MM THK)	
M	5	1	**8T-4244**	1	NUT (M12X1.75-THD)	
M	6	1	**174-7791**	1	SCREW-TAPPING	
	7	1	**9B-0453**	1	LOCKWASHER	
	8	1	**170-6993**	1	COVER	
M	9	1	**180-3861**	4	SCREW-TAPPING	
	10	1	**170-9417**	1	LENS AS	
	11	1	**170-9418**	1	BAND	

M - METRIC PART

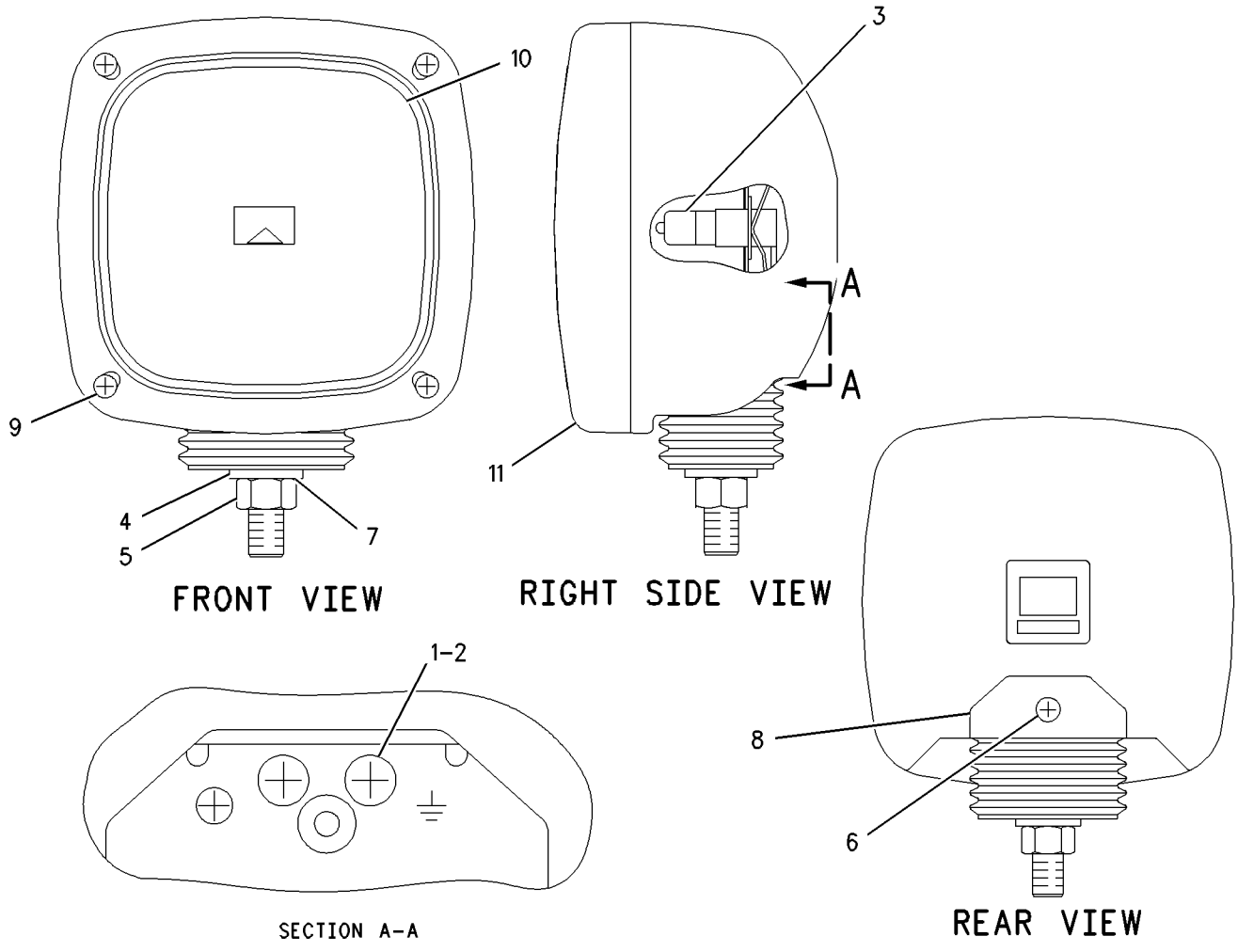

GRAPHIC #1 **<END>** g00646000

153-2523 LAMP GP-FLOOD

S/N: HAH1-UP
24-VOLT
PART OF 4I-5409 LIGHTING GP-FLOOD

SMCS-1434 **i05785817**

NOTE	REF NO	GRAPHIC REF	PART NUMBER	QTY	PART NAME 1 2 3 4 5 6 (PRODUCT LEVEL)	SEE PAGE
M	1	1	**6V-5210**	2	SCREW-MACHINE (M4X0.7X10-MM)	
	2	1	**3B-4501**	2	LOCKWASHER	
	3	1	**9X-3463**	1	LAMP-HALOGEN (24-VOLT, 70-WATT)	
	4	1	**8T-4223**	1	WASHER-HARD (13.5X25.5X3-MM THK)	
M	5	1	**8T-4244**	1	NUT (M12X1.75-THD)	
M	6	1	**174-7791**	1	SCREW-TAPPING	
	7	1	**5C-2889**	1	LOCKWASHER	
	8	1	**170-6993**	1	COVER	
M	9	1	**180-3861**	4	SCREW-TAPPING	
	10	1	**170-9417**	1	LENS AS	
	11	1	**170-9418**	1	BAND	

M - METRIC PART

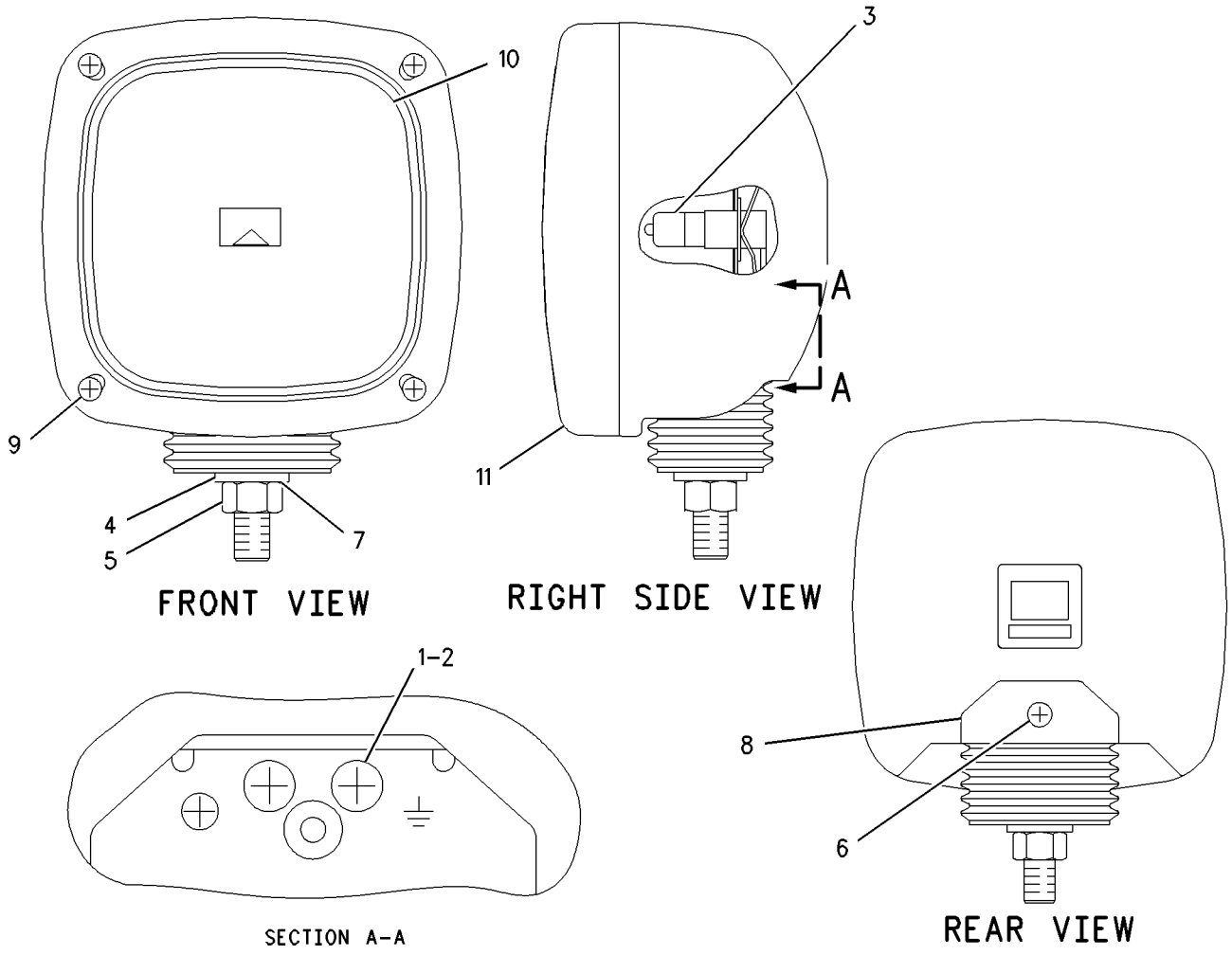

GRAPHIC #1 **<END>** g00876667

4I-5409 LIGHTING GP-FLOOD–CHASSIS

S/N: HAH1-UP

PART OF 454-5575 CHASSIS AR

SMCS-1434 **i05330061**

NOTE	REF NO	GRAPHIC REF	PART NUMBER	QTY	PART NAME 1 2 3 4 5 6 (PRODUCT LEVEL)	SEE PAGE
Y	1	1	**153-2523**	1	LAMP GP-FLOOD (24-VOLT)	96

Y - SEPARATE ILLUSTRATION

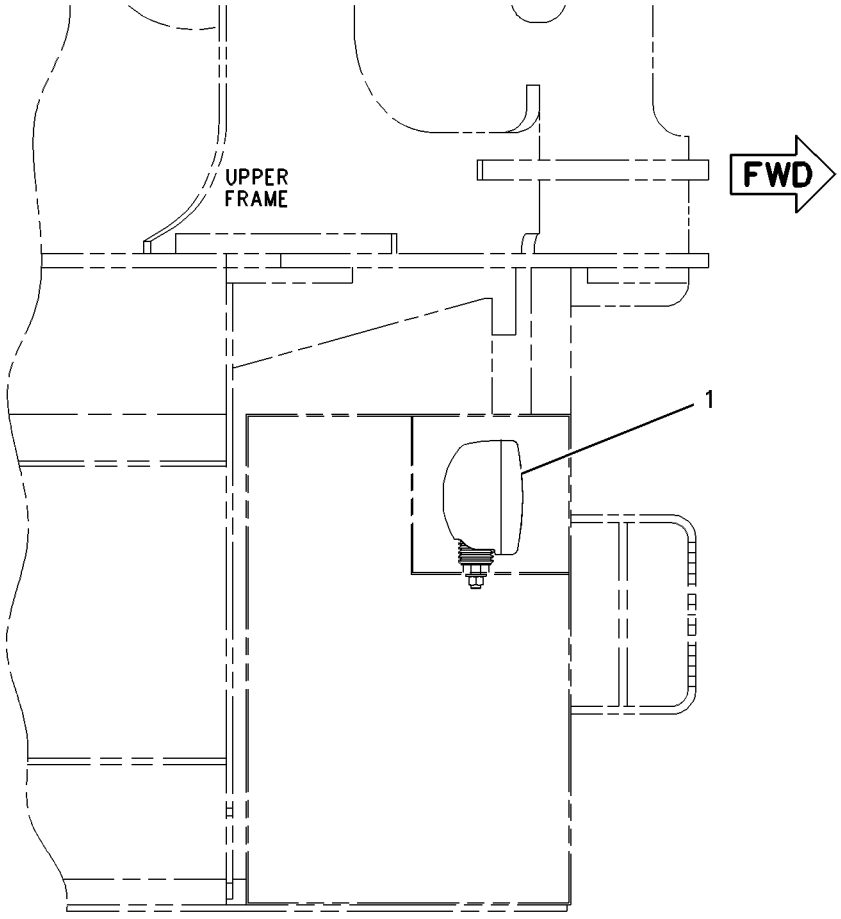

TOP VIEW

GRAPHIC #1 **<END>** g00588573

259-5163 LIGHTING GP-FLOOD—BOOM, LH

S/N: HAH1-UP
PART OF 385-4100 BOOM AR-1 PIECE LONG
AN ATTACHMENT

SMCS-1434 **i05254553**

NOTE	REF NO	GRAPHIC REF	PART NUMBER	QTY	PART NAME 1 2 3 4 5 6 (PRODUCT LEVEL)	SEE PAGE
	1	1	**7I-2673**	3	STRAP-CABLE	
	2	1	**111-4836**	4	CLIP	
	3	1	**116-0118**	1	CLIP	
	4	1	**134-3284**	1	BRACKET	
Y	5	1	**153-2521**	1	LAMP GP-FLOOD (24-VOLT)	95
	6	1	**291-7746**	1	HARNESS AS-LIGHTING (BOOM, LH)	
	7	1	**111-4837**	1	CLIP	
	8	1	**7N-3718**	2	CLIP	
	9	1	**8T-4121**	5	WASHER-HARD (11X21X2.5-MM THK)	
M	10	1	**8T-4133**	5	NUT (M10X1.5-THD)	
M	11	1	**7X-2552**	1	BOLT (M16X2X30-MM)	
	12	1	**9X-8257**	1	WASHER (17.5X30X3.5-MM THK)	

M - METRIC PART
Y - SEPARATE ILLUSTRATION

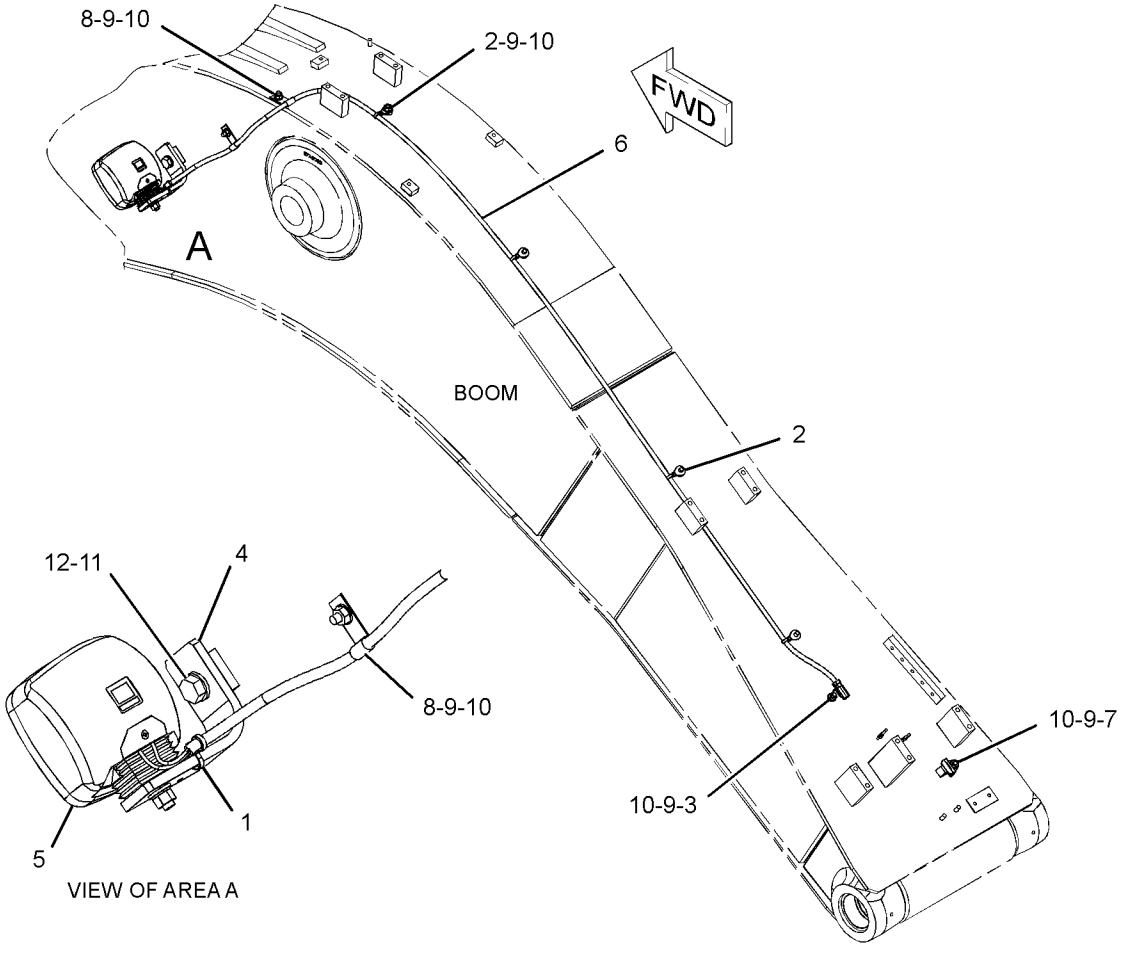

GRAPHIC #1 **<END>** g01378409

388-6701 PANEL & MTG GP-CIRCUIT BREAKER

S/N: HAH1-UP

PART OF 451-3987 OPERATOR AR

SMCS-1417, 1420

i04944223

NOTE	REF NO	GRAPHIC REF	PART NUMBER	QTY	PART NAME 1 2 3 4 5 6 (PRODUCT LEVEL)	SEE PAGE
Y	1	1	*388-6702*	1	PANEL GP-CIRCUIT BREAKER	100
	2	1	**8T-4121**	4	WASHER-HARD (11X21X2.5-MM THK)	
M	3	1	**8T-4137**	4	BOLT (M10X1.5X20-MM)	

M - METRIC PART
Y - SEPARATE ILLUSTRATION

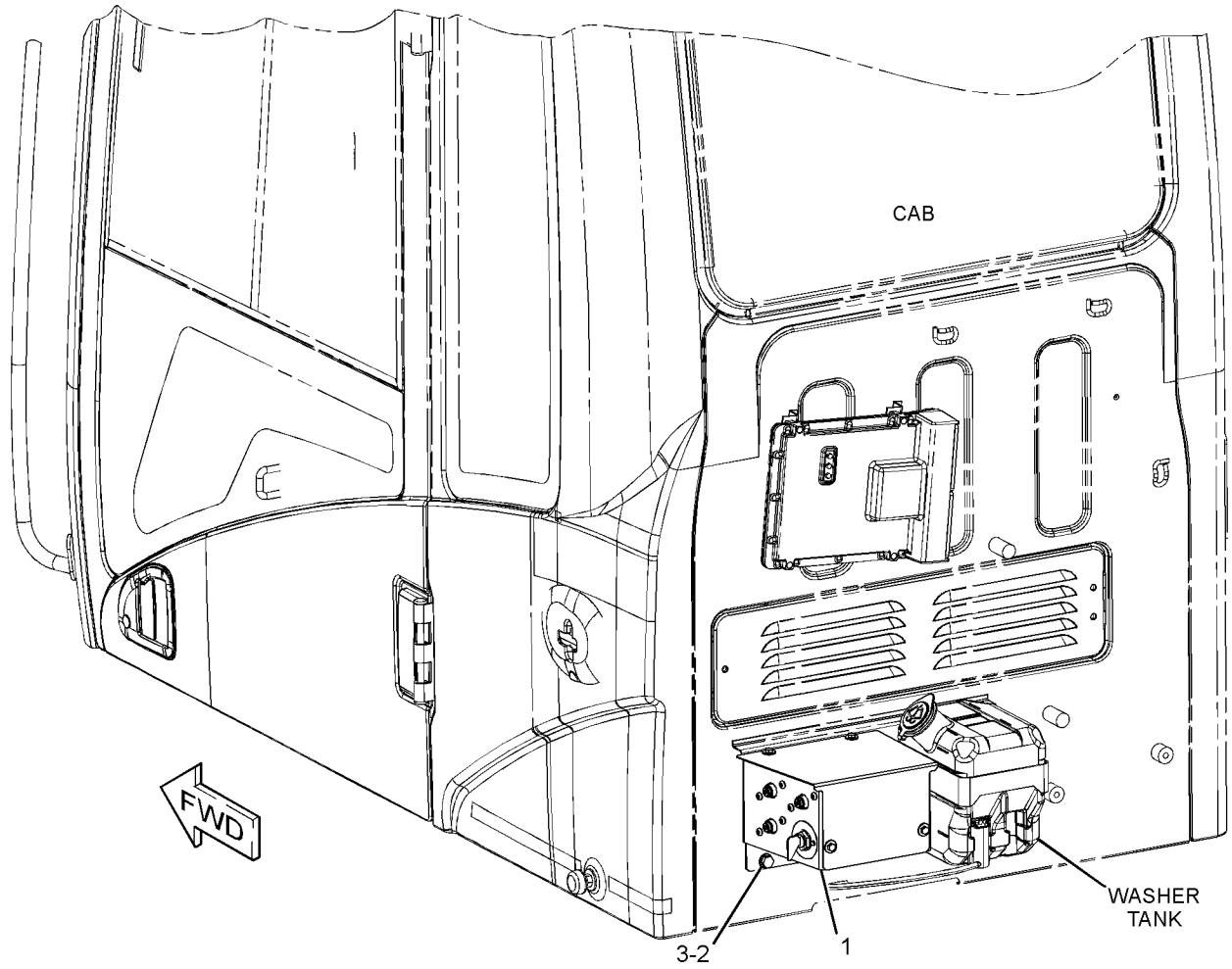

GRAPHIC #1

<END>

g01806741

388-6702 PANEL GP-CIRCUIT BREAKER

S/N: HAH1-UP

PART OF 388-6701 PANEL & MTG GP-CIRCUIT BREAKER

SMCS-1417 **i04944514**

NOTE	REF NO	GRAPHIC REF	PART NUMBER	QTY	PART NAME 1 2 3 4 5 6 (PRODUCT LEVEL)	SEE PAGE
	1	1	**3E-8320**	1	PLATE-INSTRUCTION (BATTERY)	
	2	1	**3S-2093**	1	STRAP-CABLE	
Y	3	1	**7N-0718**	1	SWITCH GP-DISCONNECT (BATTERY)	109
	4	1	**7Y-5499**	1	BLOCK AS-TERMINAL	
	5	1	**9G-8451**	1	BLOCK AS	
		1	**1H-3244**	1	LOCKWASHER	
		1	**4B-4276**	2	WASHER (7X16X1.6-MM THK)	
		1	**4L-7124**	1	BOLT (1/4-20X1.25-IN)	
		1	**6V-8185**	2	NUT (1/4-20-THD)	
Y	6	1	**125-1302**	1	SWITCH GP-MAGNETIC (24-VOLT) (START RELAY)	111
	7	1	**141-2759**	1	FUSE (5-AMPERE)	
	8	1	**171-2205**	1	CIRCUIT BREAKER AS (40-AMPERE) (GLOW PLUG)	
		1	**4E-5724**	2	WASHER (7X12X1-MM THK)	
		1	**8T-0122**	2	NUT-FULL (1/4-28-THD)	
		1	**253-2111**	2	LOCKWASHER	
	9	1	**171-2208**	1	CIRCUIT BREAKER AS (60-AMPERE) (ALTERNATOR)	
		1	**4E-5724**	2	WASHER (7X12X1-MM THK)	
		1	**8T-0122**	2	NUT-FULL (1/4-28-THD)	
		1	**253-2111**	2	LOCKWASHER	
	10	1	**171-2210**	1	CIRCUIT BREAKER AS (80-AMPERE) (MAIN)	
		1	**4E-5724**	2	WASHER (7X12X1-MM THK)	
		1	**8T-0122**	2	NUT-FULL (1/4-28-THD)	
		1	**253-2111**	2	LOCKWASHER	
	11	1	**238-1506**	1	COVER	
	12	1	**238-2279**	1	BAR-BUS	
	13	1	**238-2280**	1	WIRE AS	
Y	14	1	**241-8368**	1	SWITCH GP-MAGNETIC (24-VOLT) (GLOW PLUG RELAY)	112
	15	1	**251-0303**	1	CABLE AS	
D		1	**6V-2369**		CABLE (4-GA, BLACK) (0.2-M)	
		1	**9G-4343**	2	TERMINAL-RING (4-GA, 1/4-IN SCREW)	
	16	1	**251-0304**	1	CABLE AS	
D		1	**6V-2369**		CABLE (4-GA, BLACK) (0.2-M)	
		1	**9G-4343**	2	TERMINAL-RING (4-GA, 1/4-IN SCREW)	
	17	1	**266-7379**	1	STRAP-CABLE	
	18	1	**324-5804**	1	WIRE AS	
	19	1	**324-5805**	1	WIRE AS	
	20	1	**324-5808**	1	HOLDER AS-FUSE	
		1	**8T-8737**	1	PLUG-SEAL	
		1	**9W-0852**	1	PIN-CONNECTOR (14-GA TO 16-GA)	
		1	**2L-8078**	1	TERMINAL-RING (14-GA TO 16-GA, 5/16-IN SCREW)	
		1	**243-4505**	1	RECEPTACLE AS-CONNECTOR (2-PIN)	
	21	1	**388-6773**	1	BRACKET AS-PANEL	
M		1	**6V-9632**	10	NUT-WELD (M6X1-THD)	
	22	1	**388-6775**	1	WIRE AS	
	23	1	**388-6776**	1	WIRE AS	
M	24	1	**5C-9553**	2	BOLT (M6X1X16-MM)	
	25	1	**5P-4115**	4	WASHER-HARD (7.2X19X2-MM THK)	
	26	1	**6V-5645**	6	SCREW-MACHINE (10-32X0.87-IN)	
	27	1	**8T-0328**	6	WASHER-HARD (5.5X10X1-MM THK)	
M	28	1	**8T-4171**	4	BOLT (M6X1X12-MM)	
M	29	1	**8T-4970**	10	BOLT (M6X1X14-MM)	
	30	1	**9X-8256**	12	WASHER (6.6X12X2-MM THK)	

D - ORDER BY THE METER
M - METRIC PART
Y - SEPARATE ILLUSTRATION

388-6702 **PANEL GP-CIRCUIT BREAKER (*contd.*)** **i04944514**

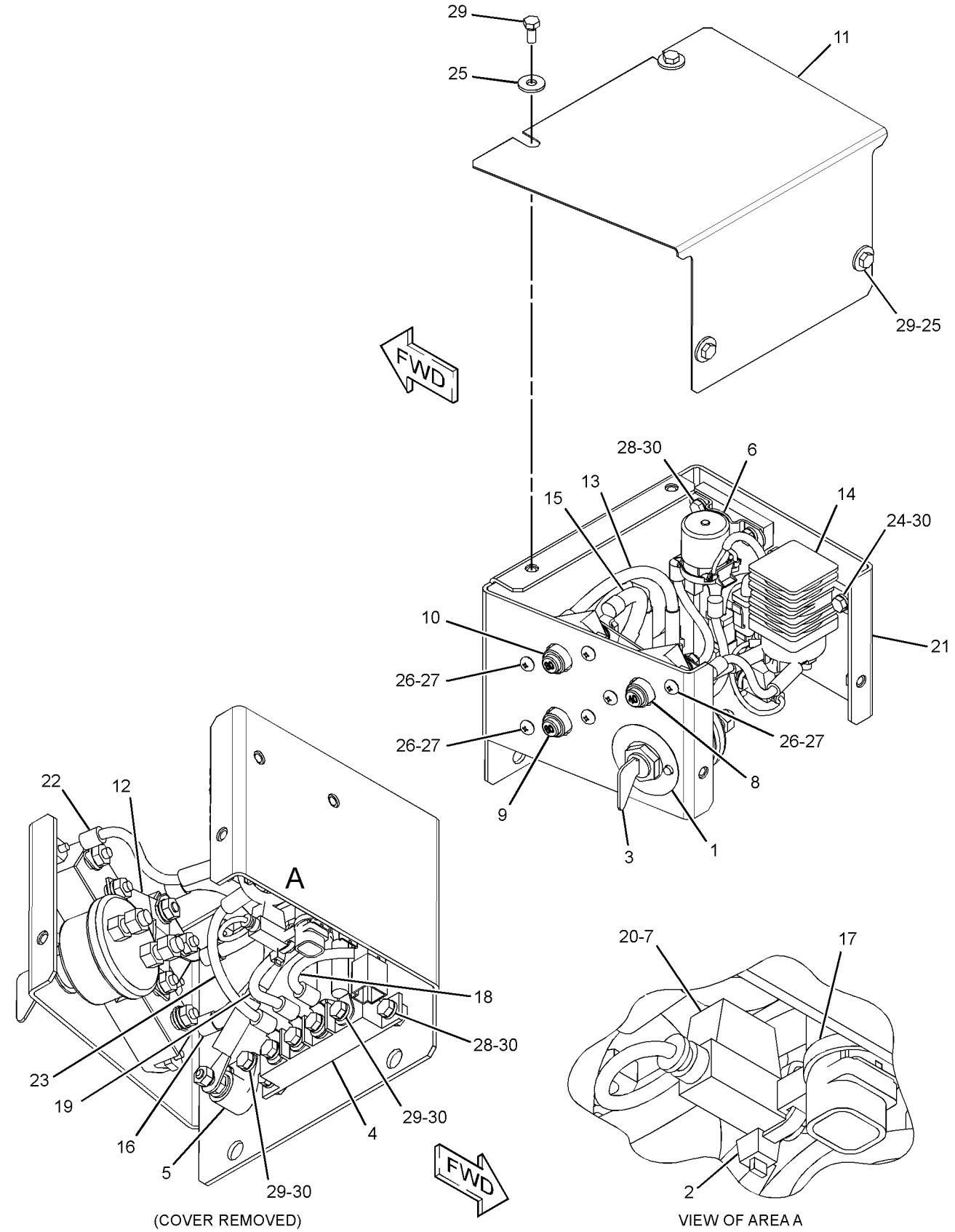

(COVER REMOVED)

VIEW OF AREA A

GRAPHIC #1

<END>

g03125002

398-7007 PANEL GP-SWITCH—CONSOLE

S/N: HAH1-UP
PART OF 454-5636 OPTION AR-CAB
AN ATTACHMENT

SMCS-1408, 1429, 7332, 7451 **i05464660**

NOTE	REF NO	GRAPHIC REF	PART NUMBER	QTY	PART NAME 1 2 3 4 5 6 (PRODUCT LEVEL)	SEE PAGE
	1	1	**3S-2093**	4	STRAP-CABLE	
	2	1	**170-9324**	1	LAMP AS (24-VOLT, 3-WATT)	
	3	1	**234-1158**	1	COVER	
Y	4	1	**255-2751**	1	SWITCH GP-START (ENGINE, KEY)	113
	5	1	**267-7976**	1	PANEL	
	6	1	**398-7013**	1	HARNESS AS-PANEL	
		1	**102-8802**	1	KIT-RECEPTACLE (2-PIN)	
					(INCLUDES RECEPTACLE AS AND WEDGE)	
		1	**3S-2093**	3	STRAP-CABLE	
		1	**7Y-3951**	2	TERMINAL-BLADE (14-GA)	
		1	**7Y-3952**	1	PLUG-CONNECTOR (2-PIN)	
		1	*7Y-3966*	1	TERMINAL AS	
		1	**7Y-3962**	1	TERMINAL-BULLET (MALE)	
		1	**7Y-3964**	1	TUBE (CONNECTOR TERMINAL)	
		1	*7Y-3967*	1	TERMINAL AS	
		1	**7Y-3963**	1	TERMINAL-BULLET (FEMALE)	
		1	**7Y-3965**	1	TUBE (RECEPTACLE TERMINAL)	
		1	**8T-8737**	2	PLUG-SEAL	
		1	**121-1168**	1	CONNECTOR-RECEPTACLE	
		1	**121-1173**	14	TERMINAL (MALE)	
		1	**9X-3402**	2	SOCKET-CONNECTOR (16-GA TO 18-GA)	
		1	**2L-8075**	4	TERMINAL-RING (14-GA TO 16-GA, NO. 8 SCREW)	
		1	**153-2540**	10	TERMINAL (FEMALE)	
		1	**153-2541**	1	PLUG-CONNECTOR (10-PIN)	
		1	**155-2270**	1	KIT-CONNECTING PLUG (2-PIN)	
					(INCLUDES PLUG AS, WEDGE & INTERFACE SEAL)	
		1	**238-2366**	2	TERMINAL (MALE)	
	7	1	**398-8931**	1	COVER	
	8	1	**096-6166**	4	WASHER-HARD (4.5X9X1-MM THK)	
	9	1	**119-5026**	4	SCREW-PAN HEAD (10-16X0.63-IN)	
M	10	1	**6V-9491**	4	SCREW-MACHINE (M4X0.7X20-MM)	

M - METRIC PART
Y - SEPARATE ILLUSTRATION

398-7007 **PANEL GP-SWITCH (*contd.*)** **i05464660**

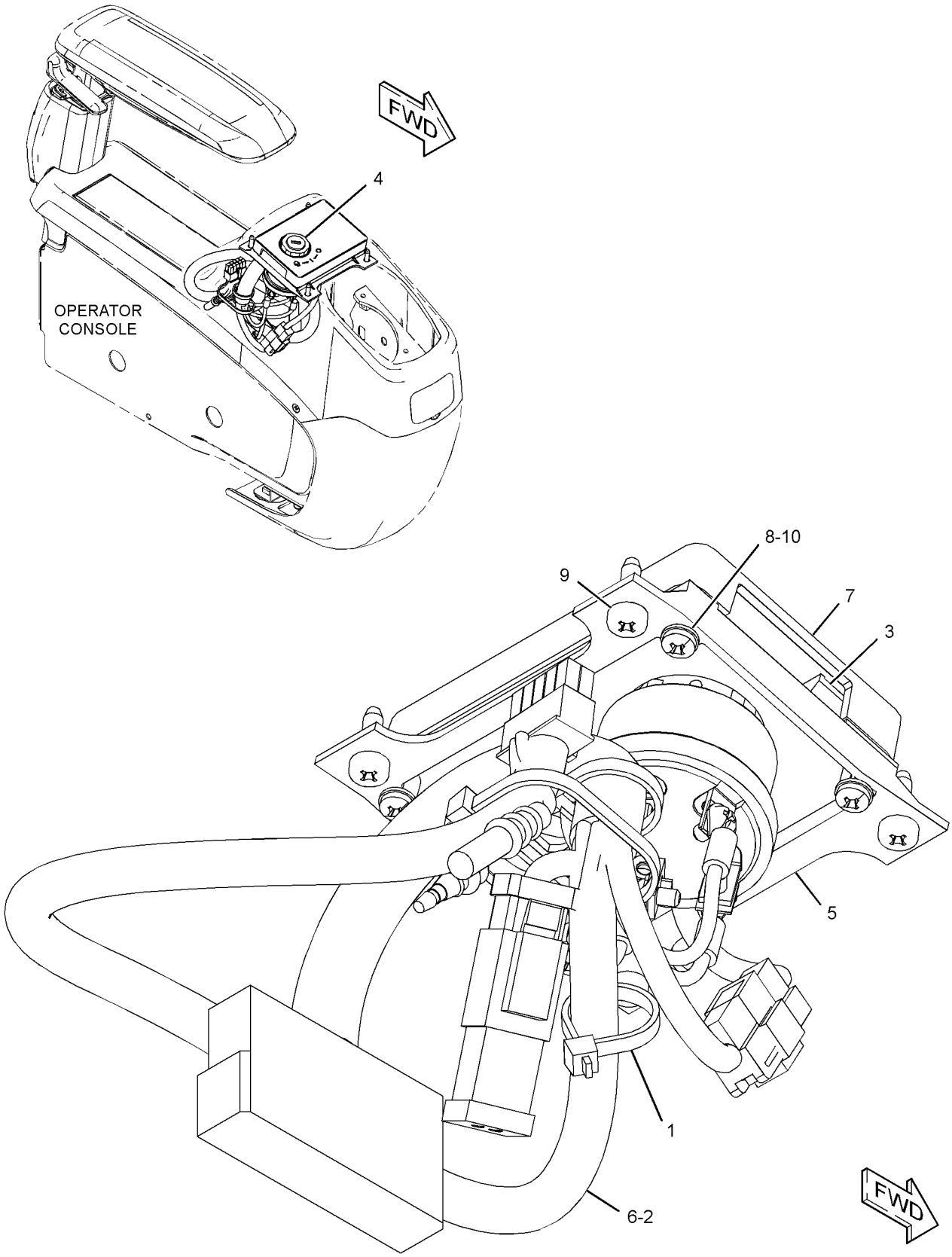

GRAPHIC #1 **<END>** g03445597

423-6434 SENSOR GP-LIQUID LEVEL

S/N: HAH1-UP

PART OF 387-2625 LINES GP-FUEL

SMCS-7422 **i05818083**

NOTE	REF NO	GRAPHIC REF	PART NUMBER	QTY	PART NAME 1 2 3 4 5 6 (PRODUCT LEVEL)	SEE PAGE
	1	1	**214-7568**	1	SEAL-O-RING	
	2	1	**281-8805**	1	RECEPTACLE AS-CONNECTOR	
	3	1	**9X-3401**	3	PIN-CONNECTOR (16-GA TO 18-GA)	

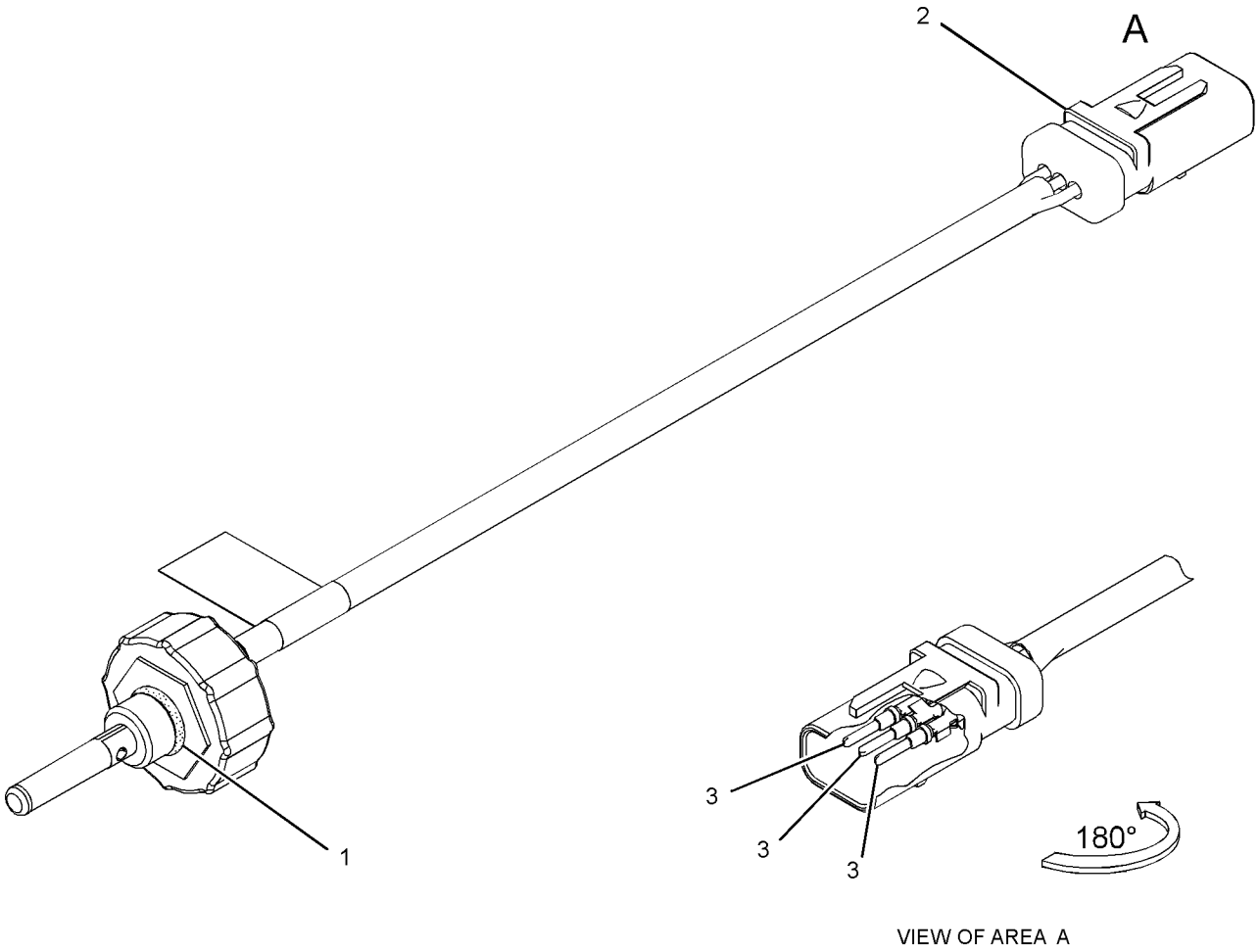

VIEW OF AREA A

GRAPHIC #1 **<END>** g02423836

325-8634 SENSOR GP-PRESSURE

S/N: HAH1-UP

PART OF 392-3904 SENSOR GP-TEMP & PRESS

SMCS-1439, 1916, 1917, 1923, 1924

i05900579

NOTE	REF NO	GRAPHIC REF	PART NUMBER	QTY	PART NAME 1 2 3 4 5 6 (PRODUCT LEVEL)	SEE PAGE
	1	1	**320-3060**	1	SENSOR GP-PRESSURE (FUEL)	
	2	1	**228-7100**	1	SEAL-O-RING	

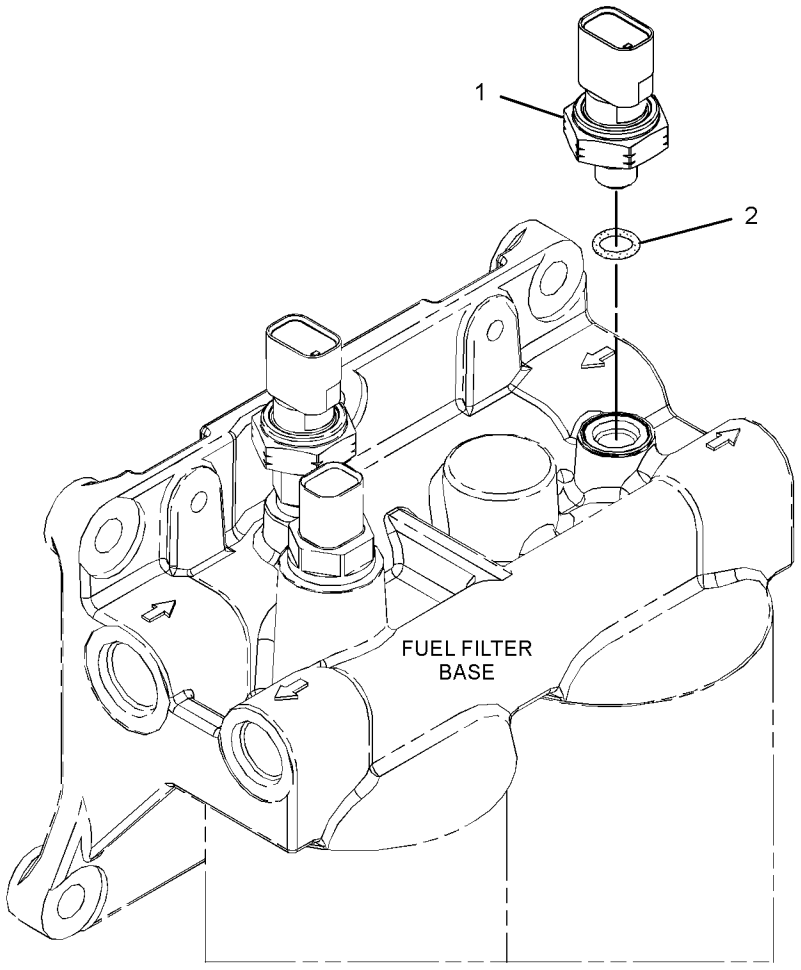

GRAPHIC #1

<END>

g02080674

318-1181 SENSOR GP-SPEED

S/N: HAH1-UP

PART OF 440-6914 BATTERY & WIRING GP

SMCS-1907, 1912, 4803, 7493 **i05338154**

NOTE	REF NO	GRAPHIC REF	PART NUMBER	QTY	PART NAME 1 2 3 4 5 6 (PRODUCT LEVEL)	SEE PAGE
	1	1	**171-5349**	1	STRAP-MARKER	
	2	1	**102-8802**	1	KIT-RECEPTACLE (2-PIN)	
					(INCLUDES RECEPTACLE AS & WEDGE)	
	3	1	**9X-3401**	2	PIN-CONNECTOR (16-GA TO 18-GA)	
					–OR–	
		1	**126-1767**	2	PIN-CONNECTOR (14-GA TO 16-GA)	
E	4	1	**9X-1386**		SLEEVE (14-CM)	

E - ORDER BY THE CENTIMETER

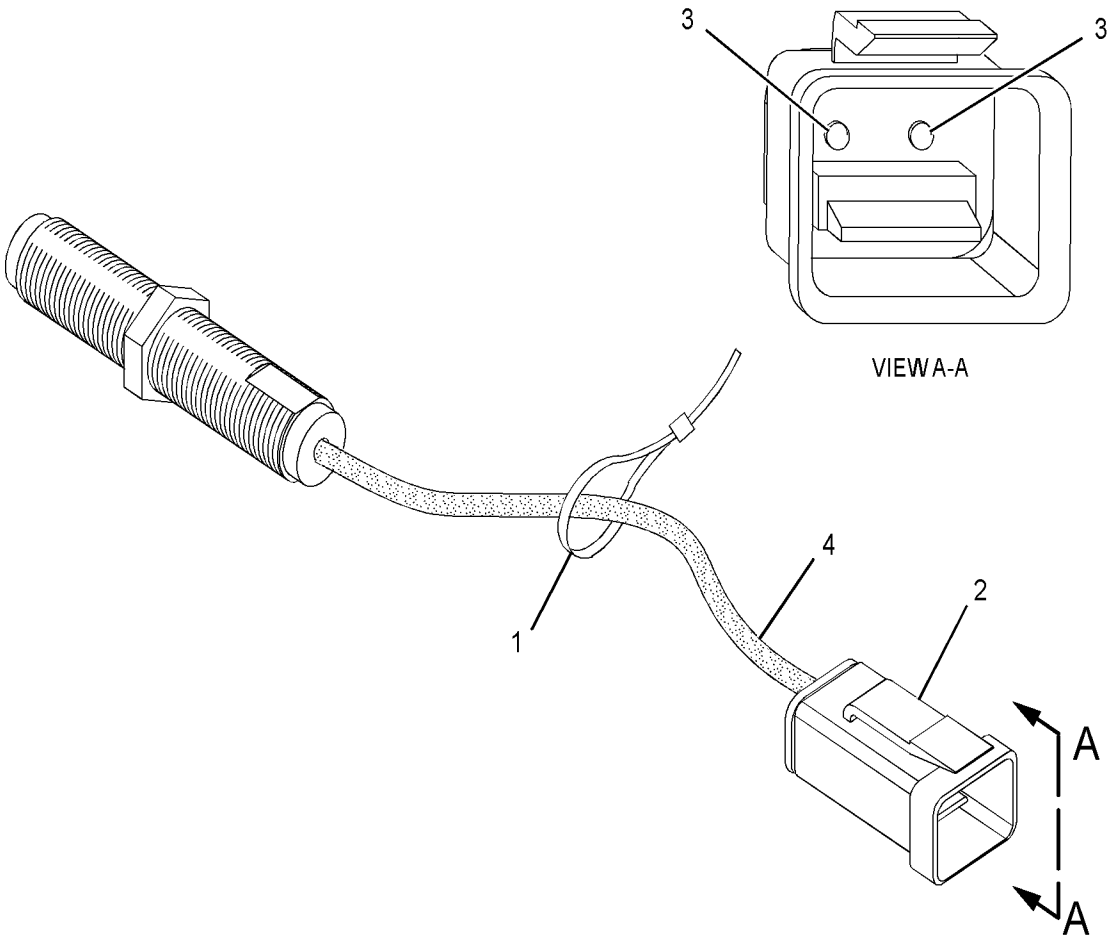

GRAPHIC #1 **<END>** g03381476

392-3904 SENSOR GP-TEMP & PRESS

S/N: HAH1-UP

PART OF 392-0400 INSTALLATION AR-ENGINE

SMCS-1408, 1435, 1439, 1906, 1924, 7400 **i05871888**

NOTE	REF NO	GRAPHIC REF	PART NUMBER	QTY	PART NAME 1 2 3 4 5 6 (PRODUCT LEVEL)	SEE PAGE
Y	1	1	*325-8634*	1	SENSOR GP-PRESSURE (FUEL)	105
	2	1	**394-4837**	1	SENDER GP-TEMPERATURE (COOLANT)	
		1	**1H-4393**	2	LOCKWASHER	
M		1	**095-7930**	2	SCREW-MACHINE (M4X0.7X6-MM)	
	3	1	**199-9751**	1	SEAL-O-RING	

M - METRIC PART
Y - SEPARATE ILLUSTRATION

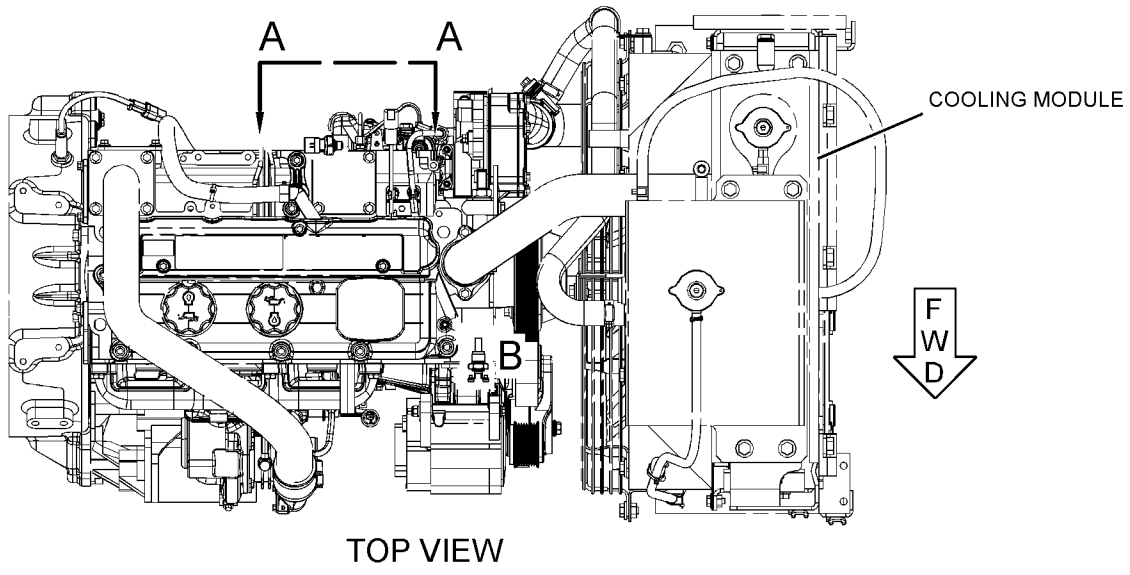

TOP VIEW

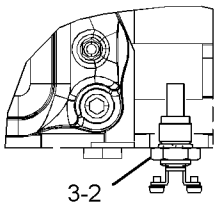

VIEW OF AREA B

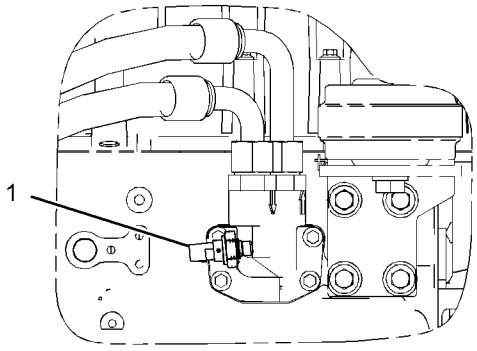

VIEW A-A

GRAPHIC #1 **<END>** g03119637

460-0440 STARTING MOTOR GP-ELECTRIC

S/N: CST1-UP

PART OF 456-1375, 470-9228 ENGINE AR-PRIMARY

SMCS-1453 **i05907299**

NOTE	REF NO	GRAPHIC REF	PART NUMBER	QTY	PART NAME 1 2 3 4 5 6 (PRODUCT LEVEL)	SEE PAGE
M	1	1	**6I-0364**	3	STUD (M10X1.5X45-MM)	
M	2	1	**6I-0594**	3	NUT (M10X1.5-THD)	
	3	1	**357-5205**	1	MOTOR-STARTING	

M - METRIC PART

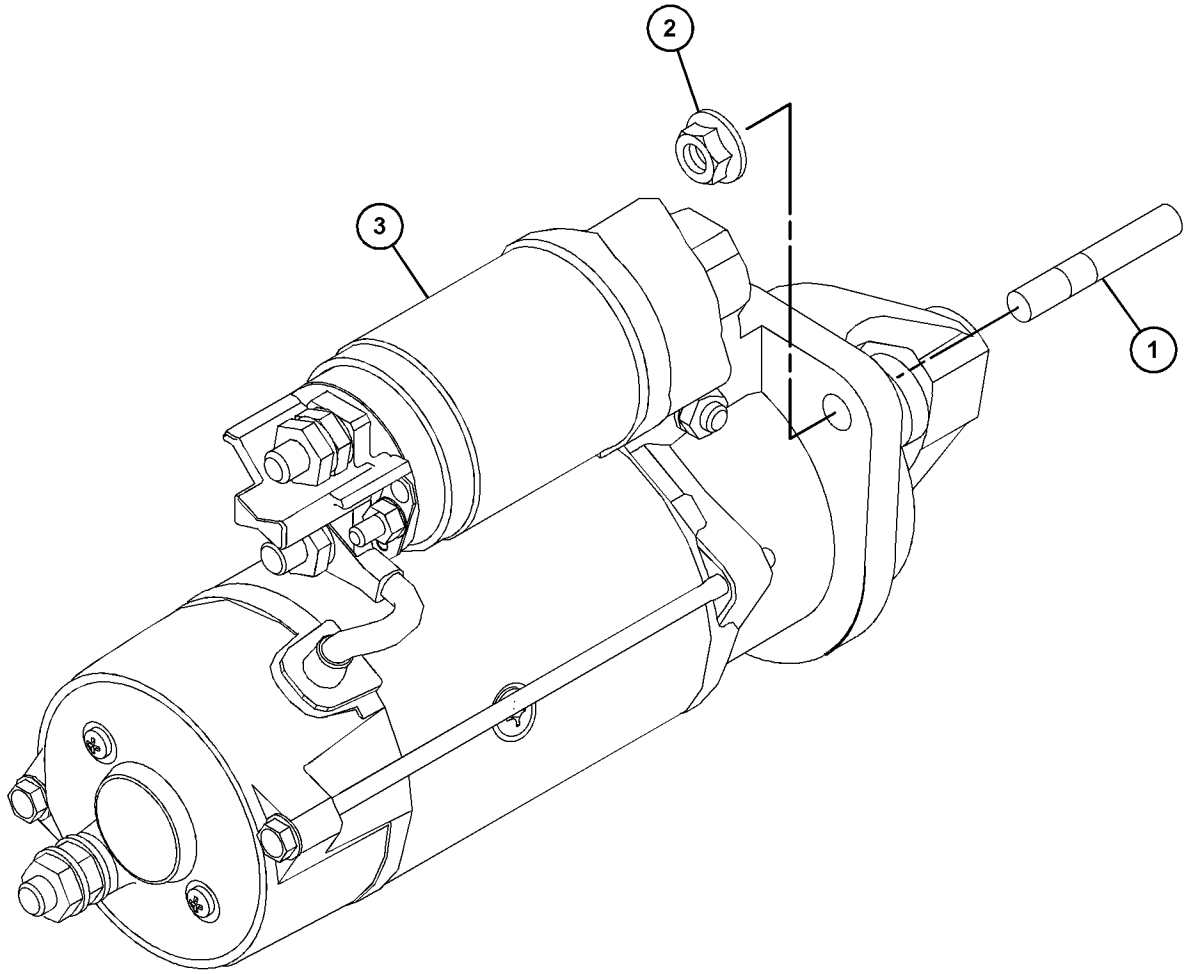

GRAPHIC #1 **<END>** g03702211

7N-0718 SWITCH GP-DISCONNECT–BATTERY

S/N: HAH1-UP

PART OF 388-6702 PANEL GP-CIRCUIT BREAKER

SMCS-1411 **i02636136**

NOTE	REF NO	GRAPHIC REF	PART NUMBER	QTY	PART NAME 1 2 3 4 5 6 (PRODUCT LEVEL)	SEE PAGE
	1	1	**2H-3922**	2	LOCKWASHER	
	2	1	**8H-5303**	1	NUT (3/4-16-THD)	
	3	1	**9F-5644**	2	LOCKWASHER	
	4	1	**6F-7045**	2	NUT-FULL (3/8-24-THD)	
	5	1	**8H-5306**	1	KEY (BATTERY DISCONNECT)	

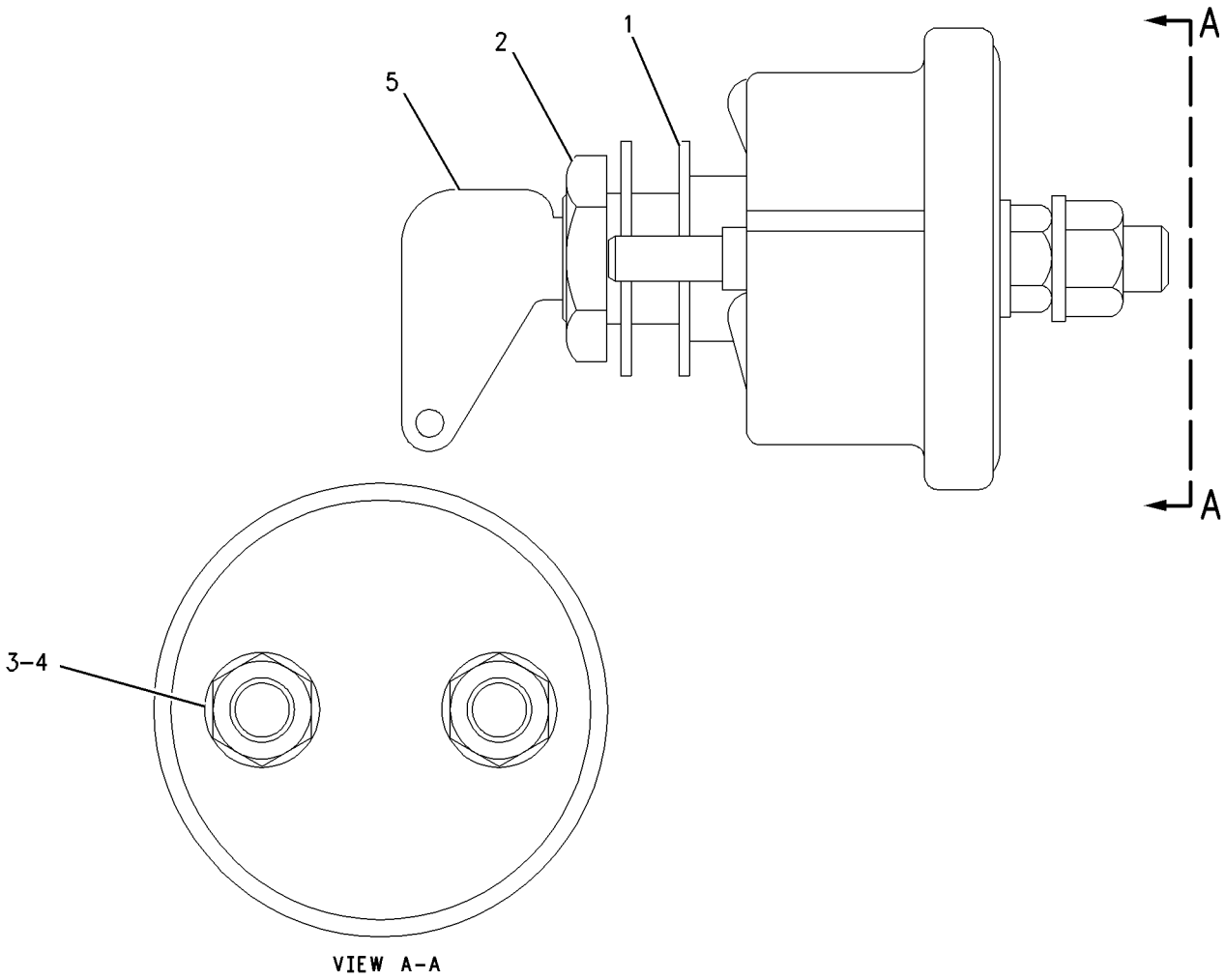

GRAPHIC #1 **<END>** g00664195

234-6613 SWITCH GP-LIMIT–HYDRAULIC LOCKOUT

S/N: HAH1-UP

PART OF 421-1434 CONSOLE GP-OPERATOR

SMCS-1435 **i04119613**

NOTE	REF NO	GRAPHIC REF	PART NUMBER	QTY	PART NAME 1 2 3 4 5 6 (PRODUCT LEVEL)	SEE PAGE
	1	1	**3S-2093**	1	STRAP-CABLE	
	2	1	**4I-3038**	2	WASHER (3.3X8X0.5-MM THK)	
	3	1	**111-4799**	1	SWITCH AS-LIMIT (HYDRAULIC LOCKOUT)	
		1	**102-8803**	1	KIT-RECEPTACLE (3-PIN)	
					(INCLUDES RECEPTACLE AS & WEDGE)	
		1	**186-3735**		PIN-CONNECTOR (16-GA TO 18-GA)	
D		1	**5P-5998**		TUBE (0.3-M)	
M	4	1	**185-8286**	2	SCREW-MACHINE (M4X0.7X8-MM)	
	5	1	**234-6615**	1	KNOB	
	6	1	**087-4683**	2	LOCKWASHER	
M	7	1	**120-9027**	2	SCREW-PAN HEAD (M3X0.5X16-MM)	

D - ORDER BY THE METER
M - METRIC PART

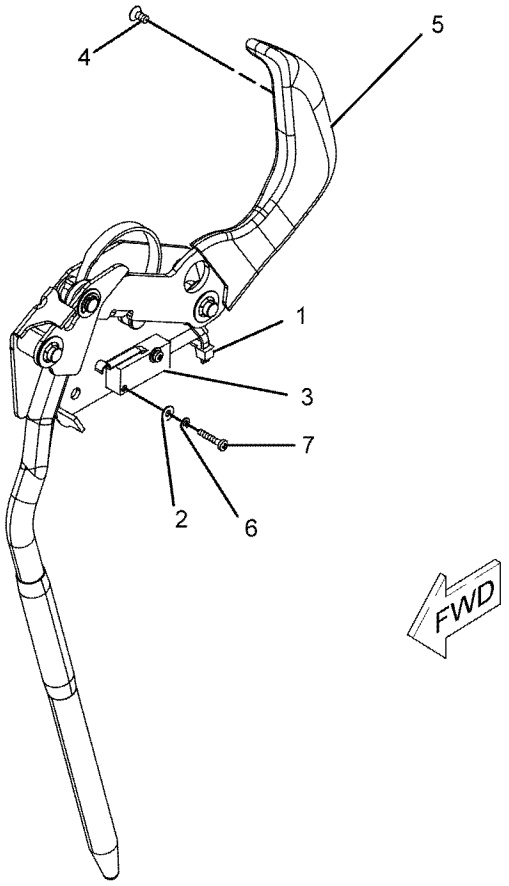

GRAPHIC #1 **<END>** g01096293

125-1302 SWITCH GP-MAGNETIC

S/N: HAH1-UP
24-VOLT
PART OF 388-6702 PANEL GP-CIRCUIT BREAKER

SMCS-7499 **i05241624**

NOTE	REF NO	GRAPHIC REF	PART NUMBER	QTY	PART NAME 1 2 3 4 5 6 (PRODUCT LEVEL)	SEE PAGE
	1	1	**102-8802**	1	KIT-RECEPTACLE (2-PIN)	
					(INCLUDES RECEPTACLE AS & WEDGE)	
	2	1	**186-3735**	2	PIN-CONNECTOR (16-GA TO 18-GA)	
	3	1	**1H-3338**	2	LOCKWASHER (EXTERNAL TOOTH)	
	4	1	**012-0380**	2	LOCKWASHER (SPLIT)	
M	5	1	**5C-2890**	2	NUT (M6X1-THD)	
E	6	1	**9X-1813**		SLEEVE (16-CM)	

E - ORDER BY THE CENTIMETER
M - METRIC PART

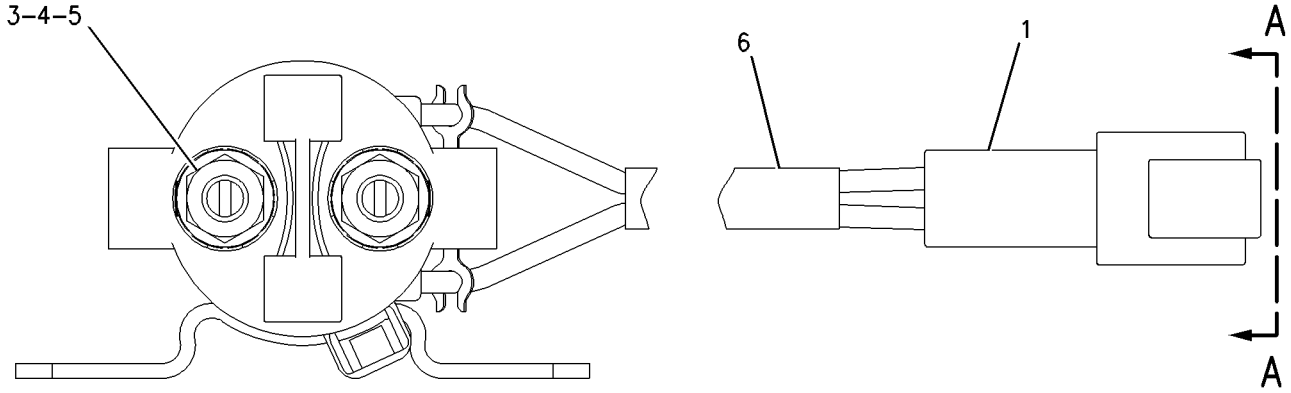

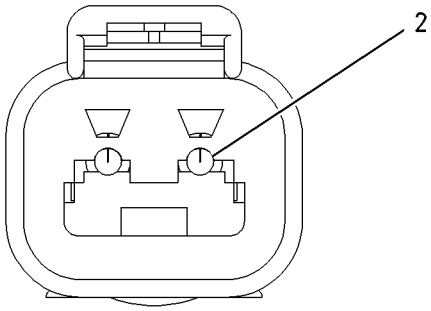

VIEW A-A

GRAPHIC #1 **<END>** g00988004

241-8368 SWITCH GP-MAGNETIC

S/N: HAH1-UP
24-VOLT
PART OF 388-6702 PANEL GP-CIRCUIT BREAKER

SMCS-7499 **i05510215**

NOTE	REF NO	GRAPHIC REF	PART NUMBER	QTY	PART NAME 1 2 3 4 5 6 (PRODUCT LEVEL)	SEE PAGE
	1	1	**155-2270**	1	KIT-CONNECTING PLUG (2-PIN)	
					(INCLUDES PLUG AS, WEDGE & INTERFACE SEAL)	
	2	1	**4F-2294**	2	NUT-JAM (5/16-24-THD)	
	3	1	**8T-8730**	2	SOCKET-CONNECTOR (16-GA TO 18-GA)	

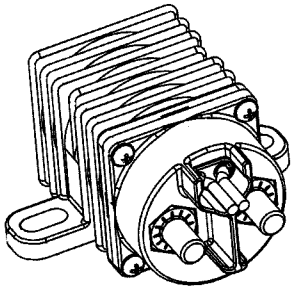

ISOMETRIC VIEW

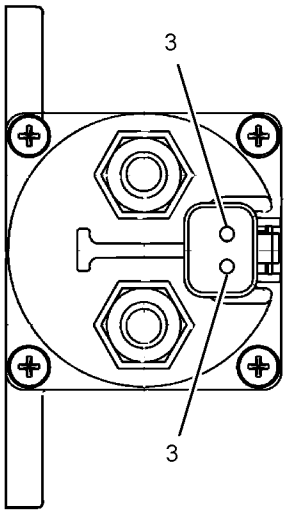

VIEW A-A

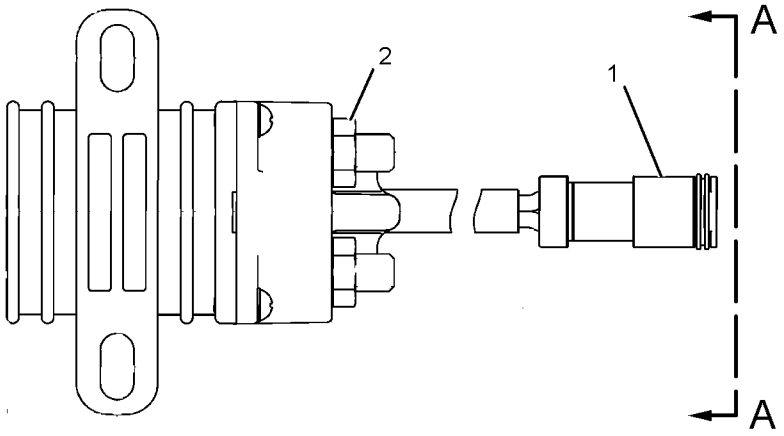

GRAPHIC #1

<END>

g01077362

255-2751 SWITCH GP-START–ENGINE, KEY

S/N: HAH1-UP
PART OF 398-7007 PANEL GP-SWITCH
AN ATTACHMENT

SMCS-1416 **i04528289**

NOTE	REF NO	GRAPHIC REF	PART NUMBER	QTY	PART NAME 1 2 3 4 5 6 (PRODUCT LEVEL)	SEE PAGE
	1	1	**6V-8362**	4	SCREW-MACHINE (8-32X0.31-IN)	
	2	1	**9B-7233**	4	LOCKWASHER	
	3	1	**7T-6799**	1	NUT-MOUNTING (1-32-THD)	
AF			**5P-8500**	1	KEY (IGNITION)	

A - NOT PART OF THIS GROUP
F - NOT SHOWN

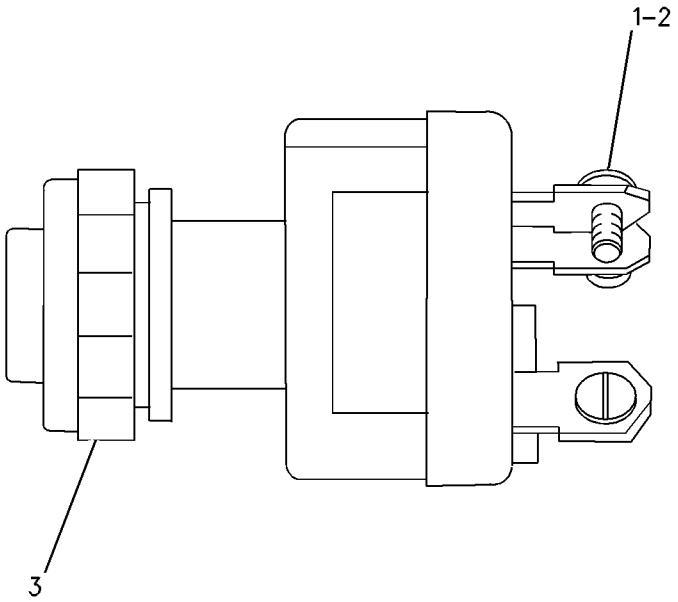

GRAPHIC #1 **<END>** g00699802

398-7003 WIRING GP-CAB

S/N: HAH1-UP

PART OF 451-3987 OPERATOR AR

SMCS-1408, 7301 **i05881198**

NOTE	REF NO	GRAPHIC REF	PART NUMBER	QTY	PART NAME 1 2 3 4 5 6 (PRODUCT LEVEL)	SEE PAGE
	1	2,3	**7K-1181**	7	STRAP-CABLE	
	2	2	**7Y-5505**	2	SPEAKER AS	
		2	**7Y-3951**	2	TERMINAL-BLADE (14-GA)	
		2	**7Y-3954**	1	CONNECTOR-PLUG (3-PIN)	
	3	2	**9W-0335**	1	LIGHTER AS-CIGAR (24-VOLT)	
					—OR—	
		2	**238-2318**	1	LIGHTER AS-CIGAR (24-VOLT)	
M	4	2	**099-7127**	8	SCREW-MACHINE (M4X0.7X12-MM)	
	5	3	**113-8490**	20	FUSE (10-AMPERE)	
	6	3	**113-8491**	6	FUSE (15-AMPERE)	
	7	3	**113-8492**	2	FUSE (20-AMPERE)	
	8	3	**113-8493**	2	FUSE (25-AMPERE)	
	9	2	**116-0210**	4	BRACKET AS	
	10	3	**124-3548**	2	FUSE (30-AMPERE)	
Y	11	2	**132-1829**	1	ALARM GP (24-VOLT) (FAULT)	76
	12	3	**141-2759**	8	FUSE (5-AMPERE)	
	13	3	**161-3128**	1	RELAY (24-VOLT) (BOOM FLOODLIGHT)	
	13A	3	**161-3128**	1	RELAY (24-VOLT) (CHASSIS LIGHT)	
	13B	3	**161-3128**	1	RELAY (24-VOLT) (CAB LIGHT)	
	13C	3	**161-3128**	1	RELAY (24-VOLT) (HORN)	
	13D	3	**161-3128**	1	RELAY (24-VOLT) (NEUTRAL START)	
	13E	3	**161-3128**	1	RELAY (24-VOLT) (ETHER START)	
	13F	3	**161-3128**	1	RELAY (24-VOLT) (ELECTRIC PRIMING)	
	13G	3	**161-3128**	1	RELAY (24-VOLT) (PUMP)	
	14	2	**163-6795**	15	STRAP-CABLE	
	15	2	**167-3593**	1	STRAP	
	16	3	**170-6888**	1	PULLER-FUSE	
	17	3	**213-0772**	1	SWITCH AS-MAGNETIC (24-VOLT) (MAIN RELAY)	
	18	2	**234-1097**	1	BRACKET	
	19	2	**238-2212**	1	SWITCH AS-ROCKER (FINE SWING)	
		2	**167-3542**	1	RECEPTACLE-CONNECTOR (5-PIN)	
		2	**167-3543**	5	TERMINAL (MALE)	
	21	3	**238-2390**	1	CABLE AS (RED)	
	22	3	**238-2391**	1	CABLE AS (PURPLE)	
					(EACH CABLE AS INCLUDES)	
		3	**9G-4343**	2	TERMINAL-RING (4-GA, 1/4-IN SCREW)	
E		3	**125-7876**		TUBE-HEAT SHRINK (17.78-MM DIA) (4-CM)	
	23	2	**245-7760**	8	INSULATION	
	24	2	**251-0637**	1	INSULATION	
	25	1	**259-4883**	1	ANTENNA AS	
		1	**259-5081**	1	ROD	
		1	**259-5082**	1	CABLE AS	
	26	2	**327-7538**	1	PANEL AS-SWITCH	
		2	**356-7732**	1	KNOB (SWITCH PANEL)	
	27	2	**366-4622**	1	KIT-SERVICE METER	
					(INCLUDES FILM & METER GP)	
	28	2	**441-7658**	1	HARNESS AS-CAB	
		2	**102-8803**	2	KIT-RECEPTACLE (3-PIN)	
					(INCLUDES RECEPTACLE AS AND WEDGE)	
		2	**8T-8730**	5	SOCKET-CONNECTOR (16-GA TO 18-GA)	
		2	**3S-2093**	109	STRAP-CABLE	
		2	**7Y-3950**	4	TERMINAL-BLADE (14-GA TO 20-GA)	
		2	**7Y-3951**	11	TERMINAL-BLADE (14-GA)	
		2	**7Y-3952**	3	PLUG-CONNECTOR (2-PIN)	
		2	**7Y-3955**	2	CONNECTOR-RECEPTACLE	
		2	**7Y-3958**	1	CONNECTOR-PLUG (6-PIN)	
		2	*7Y-3966*	2	TERMINAL AS	

398-7003 **WIRING GP-CAB (*contd.*)** **i05881198**

NOTE	REF NO	GRAPHIC REF	PART NUMBER	QTY	PART NAME 1 2 3 4 5 6 (PRODUCT LEVEL)	SEE PAGE
					(EACH INCLUDES)	
		2	**7Y-3962**	1	TERMINAL-BULLET (MALE)	
		2	**7Y-3964**	1	TUBE (CONNECTOR TERMINAL)	
		2	*7Y-3967*	6	TERMINAL AS	
					(EACH INCLUDES)	
		2	**7Y-3963**	1	TERMINAL-BULLET (FEMALE)	
		2	**7Y-3965**	1	TUBE (RECEPTACLE TERMINAL)	
		2	**8C-6354**	1	CAP-RECEPTACLE (ET CONNECTOR)	
		2	**8T-8737**	8	PLUG-SEAL	
		2	**5P-6271**	1	CONNECTOR AS	
		2	**9W-1951**	1	RECEPTACLE-CONNECTOR (9-PIN)	
		2	**102-7964**	2	PLUG-CONNECTOR (16-PIN)	
		2	**102-7965**	82	TERMINAL (FEMALE)	
		2	**9W-0844**	2	SOCKET-CONNECTOR (14-GA TO 16-GA)	
		2	**111-4816**	1	PLUG-CONNECTOR (13-PIN)	
		2	**116-0255**	1	TERMINAL-BLADE (10-GA TO 20-GA)	
E		2	**119-3662**		TUBE-HEAT SHRINK (10.85-MM DIA) (26-CM)	
		2	**121-1022**	1	DIODE	
		2	**121-1168**	1	CONNECTOR-RECEPTACLE	
		2	**121-1173**	19	TERMINAL (MALE)	
		2	**125-4784**	1	PLUG-CONNECTOR (12-PIN)	
		2	**125-4785**	30	TERMINAL (FEMALE)	
		2	**125-4840**	1	WEDGE-PLUG LOCK (13-PIN)	
		2	**125-4841**	2	WEDGE-PLUG LOCK (21-PIN)	
E		2	**125-7874**		TUBE-HEAT SHRINK (5.72-MM DIA) (35-CM)	
E		2	**125-7875**		TUBE-HEAT SHRINK (7.44-MM DIA) (55-CM)	
		2	**9X-3402**	6	SOCKET-CONNECTOR (16-GA TO 18-GA)	
					—OR—	
		2	**126-1768**	6	SOCKET-CONNECTOR (14-GA TO 16-GA)	
		2	**2L-8065**	3	TERMINAL-RING (10-GA TO 12-GA, NO. 8 SCREW)	
		2	**2L-8066**	2	TERMINAL-RING (10-GA TO 12-GA, NO. 10 SCREW)	
		2	**2L-8067**	6	TERMINAL-RING (10-GA TO 12-GA, 1/4-IN SCREW)	
		2	**2L-8075**	3	TERMINAL-RING (14-GA TO 16-GA, NO. 8 SCREW)	
		2	**2L-8076**	2	TERMINAL-RING (14-GA TO 16-GA, NO. 10 SCREW)	
		2	**128-8950**	1	CONNECTOR-RECEPTACLE	
		2	**5P-2321**	1	TERMINAL-FORK (14-GA TO 16-GA, NO. 6 SCREW)	
		2	**176-9299**	2	KIT-RECEPTACLE (3-PIN)	
					(INCLUDES RECEPTACLE AS & WEDGES)	
		2	**134-3296**	1	HOUSING-PLUG	
		2	**134-3297**	1	SEAL	
		2	**138-5184**	1	PLUG-CONNECTOR (20-PIN)	
		2	**9X-3401**	12	PIN-CONNECTOR (16-GA TO 18-GA)	
					—OR—	
		2	**126-1767**	12	PIN-CONNECTOR (14-GA TO 16-GA)	
		2	**149-5069**	9	TERMINAL-BLADE (14-GA TO 20-GA)	
		2	**149-5070**	18	TERMINAL-BLADE (16-GA TO 20-GA)	
		2	**149-5071**	9	TERMINAL-BLADE (12-GA TO 14-GA)	
		2	**153-2602**	3	RECEPTACLE-CONNECTOR (1-PIN)	
		2	**153-2631**	3	TERMINAL (FEMALE)	
		2	**155-2270**	1	KIT-CONNECTING PLUG (2-PIN)	
					(INCLUDES PLUG AS, WEDGE & INTERFACE SEAL)	
		2	**163-6803**	8	PLUG-CONNECTOR (5-PIN)	
		2	**167-3487**	8	WEDGE-PLUG LOCK (5-PIN)	
		2	**167-3630**	1	CONNECTOR-PLUG	
		2	**167-3631**	2	TERMINAL (FEMALE)	
		2	**170-6890**	6	TERMINAL-BLADE (14-GA)	
		2	**170-6891**	25	TERMINAL-BLADE (16-GA TO 18-GA)	
		2	**174-3016**	2	PLUG AS-CONNECTOR (3-PIN)	
		2	**230-4009**	1	PLUG AS-CONNECTOR (12-PIN)	
		2	**264-7034**	1	SEAL-CONNECTOR	

398-7003 **WIRING GP-CAB (*contd.*)** **i05881198**

NOTE	REF NO	GRAPHIC REF	PART NUMBER	QTY	PART NAME 1 2 3 4 5 6 (PRODUCT LEVEL)	SEE PAGE
		2	**230-4011**	1	PLUG AS-CONNECTOR (2-PIN)	
		2	**264-7029**	1	SEAL-CONNECTOR	
		2	**238-2319**	1	BASE AS (FUSE, RELAY PANEL)	
		2	**9X-8256**	2	WASHER (6.6X12X2-MM THK)	
M		2	**095-0742**	2	SCREW-MACHINE (M6X1X16-MM)	
		2	**170-9394**	40	TERMINAL	
		2	**238-2363**	6	TERMINAL (FEMALE)	
		2	**238-2366**	13	TERMINAL (MALE)	
		2	**243-4505**	1	RECEPTACLE AS-CONNECTOR (2-PIN)	
		2	**342-2972**	1	CAP-CONNECTOR (2-PIN)	
		2	**349-5084**	3	TERMINAL-BLADE	
		2	**349-5085**	3	RECEPTACLE AS-CONNECTOR	
M	29	2	**095-0723**	3	SCREW-SPECIAL	
	30	2	**096-5962**	3	WASHER-HARD (3.4X7X0.8-MM THK)	
	31	1,2	**096-6166**	6	WASHER-HARD (4.5X9X1-MM THK)	
	32	2,3	**132-5789**	6	CLIP	
	33	2	**3S-2093**	1	STRAP-CABLE	
	34	3	**4P-7581**	1	CLIP	
M	35	2	**5C-2890**	3	NUT (M6X1-THD)	
M	36	2	**6V-5210**	12	SCREW-MACHINE (M4X0.7X10-MM)	
M	37	1	**6V-9672**	2	SCREW-MACHINE (M4X0.7X16-MM)	
	38	2,3	**8T-0328**	3	WASHER-HARD (5.5X10X1-MM THK)	
M	39	3	**8T-4127**	2	SCREW-MACHINE (M5X0.8X20-MM)	
M	40	2	**8T-6693**	1	SCREW-MACHINE (M5X0.8X16-MM)	
M	41	2,3	**9X-2042**	8	SCREW-TRUSS HEAD (M6X1X12-MM)	
M	42	3	**9X-2044**	5	SCREW-TRUSS HEAD (M6X1X16-MM)	
	43	2	**9X-8256**	3	WASHER (6.6X12X2-MM THK)	
E	44	2	**101-2846**		GUARD (28-CM)	

E - ORDER BY THE CENTIMETER
M - METRIC PART
Y - SEPARATE ILLUSTRATION

398-7003 **WIRING GP-CAB (*contd.*)** **i05881198**

REFER TO ALL ILLUSTRATIONS OF
THIS GROUP FOR AUXILIARY VIEWS

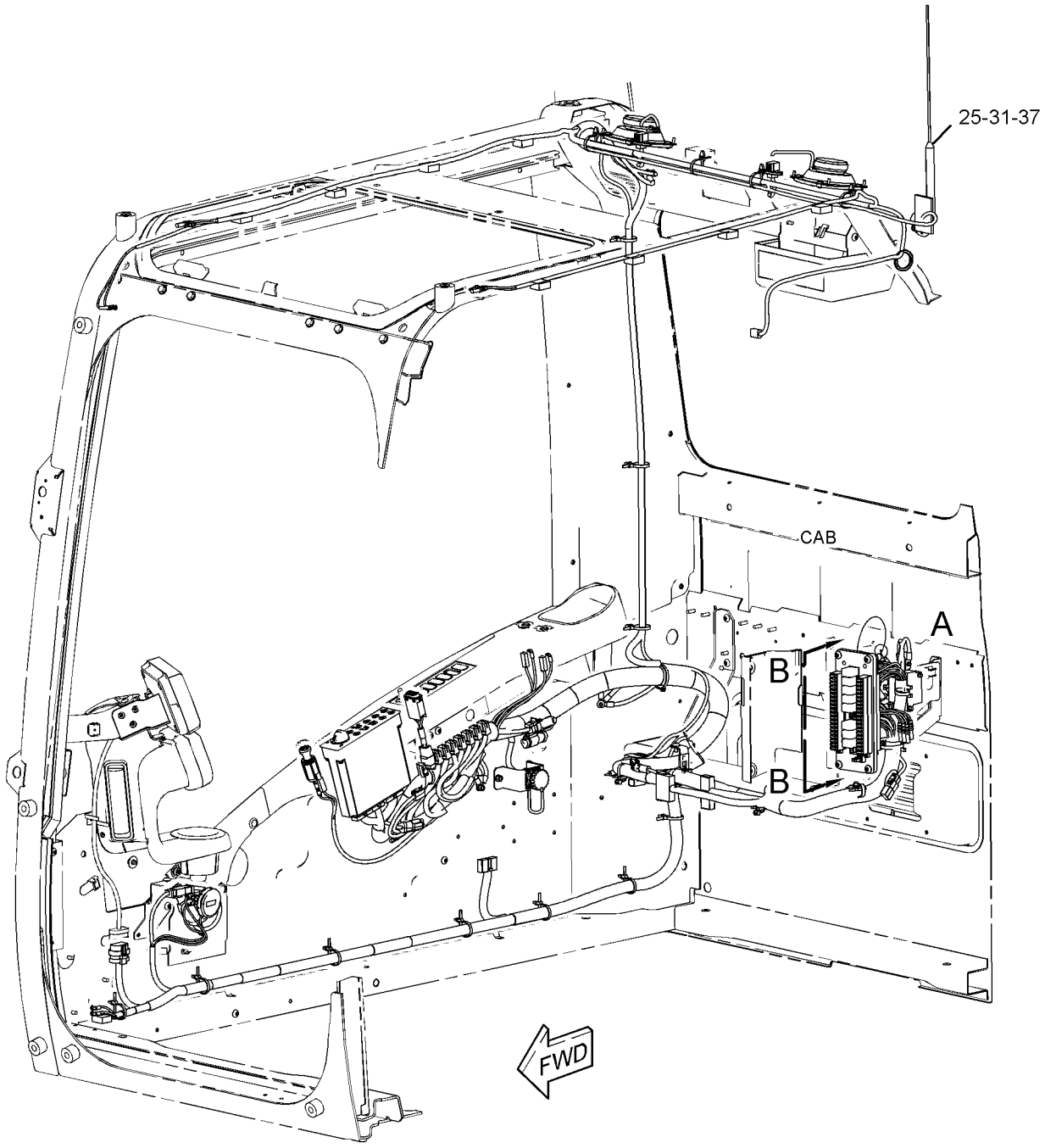

GRAPHIC #1 g03431114

398-7003 **WIRING GP-CAB (*contd.*)** **i05881198**

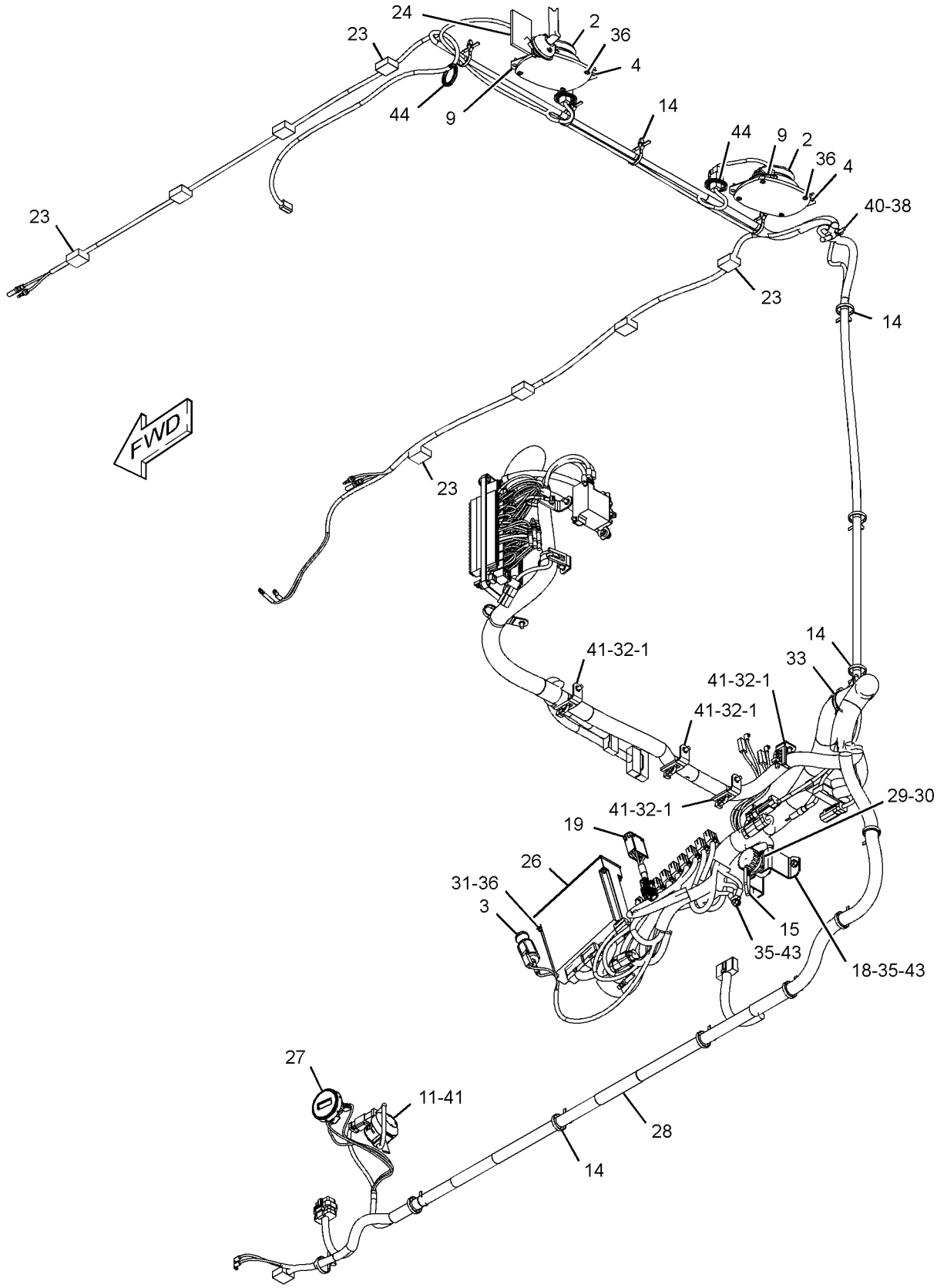

GRAPHIC #2 g03709230

398-7003 **WIRING GP-CAB (*contd.*)** **i05881198**

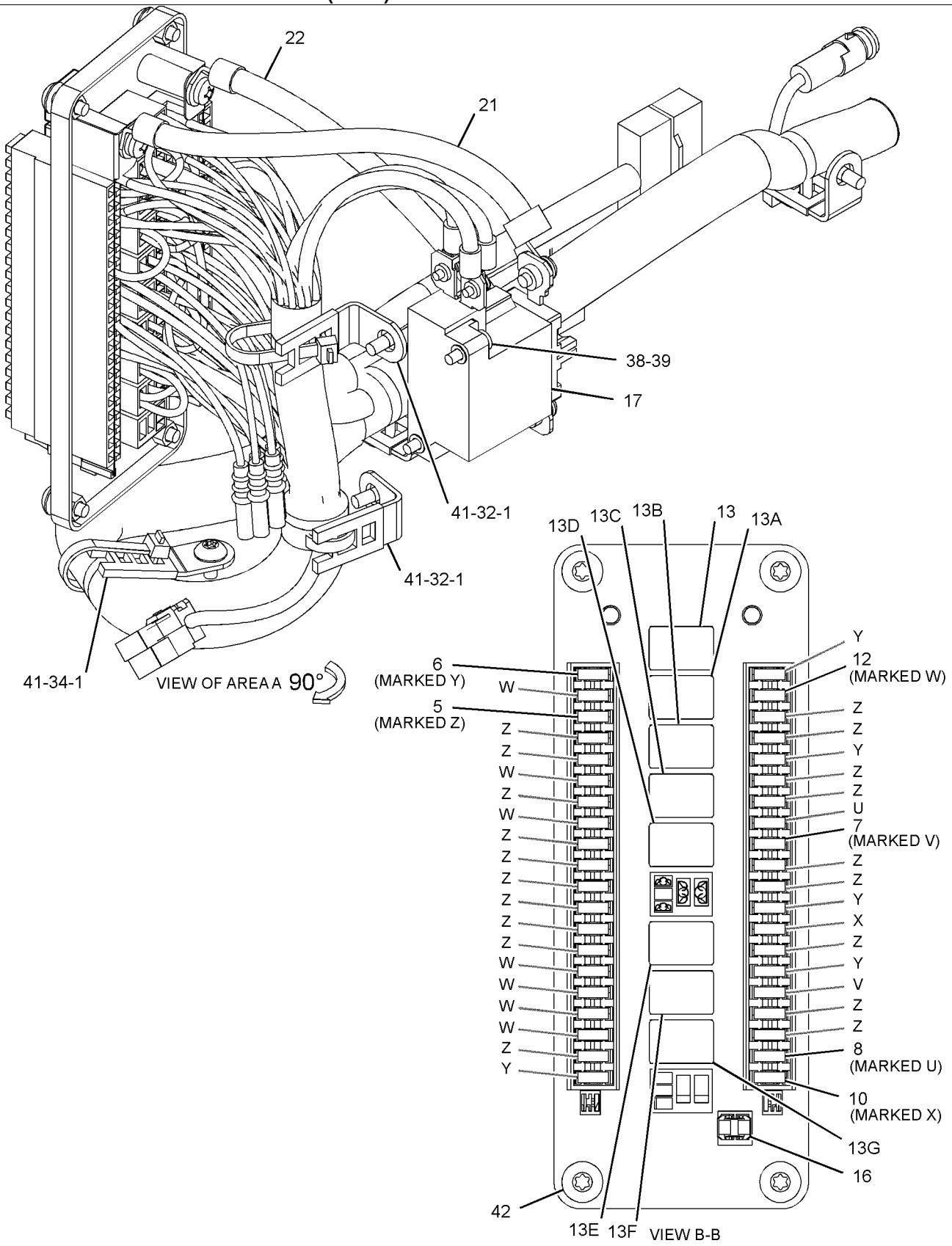

GRAPHIC #3 **<END>** g03431212

399-1110 WIRING GP-COMMUNICATION—PRODUCT LINK 522

S/N: HAH1-UP

PART OF 447-3349 CONTROL AR-COMMUNICATION

AN ATTACHMENT

SMCS-1408 **i05771692**

NOTE	REF NO	GRAPHIC REF	PART NUMBER	QTY	PART NAME 1 2 3 4 5 6 (PRODUCT LEVEL)	SEE PAGE
	1	1	**7K-1181**	5	STRAP-CABLE	
	2	1	**116-0118**	1	CLIP	
	3	1	**421-1894**	1	HARNESS AS-CONTROL (PRODUCT LINK)	
		1	**126-1774**	1	COVER-CONNECTOR	
		1	**155-2260**	1	KIT-CONNECTING PLUG (3-PIN)	
					(INCLUDES PLUG AS, WEDGE & INTERFACE SEAL)	
		1	**102-8803**	1	KIT-RECEPTACLE (3-PIN)	
					(INCLUDES RECEPTAVLE AS & WEDGE)	
		1	**8T-8729**	1	PIN-CONNECTOR (16-GA TO 18-GA)	
		1	**9W-0852**	1	PIN-CONNECTOR (14-GA TO 16-GA)	
		1	**9X-3401**	6	PIN-CONNECTOR (16-GA TO 18-GA)	
					—OR—	
		1	**126-1767**	6	PIN-CONNECTOR (14-GA TO 16-GA)	
		1	**160-7690**	1	PLUG AS-CONNECTOR (70-PIN)	
		1	**159-9322**	1	SEAL-O-RING	
		1	**8T-8737**	64	PLUG-SEAL	
		1	**243-4508**	1	RECEPTACLE AS-CONNECTOR (6-PIN)	
		1	**9X-3402**	10	SOCKET-CONNECTOR (16-GA TO 18-GA)	
		1	**3S-2093**	3	STRAP-CABLE	
		1	**2L-8077**	1	TERMINAL-RING (14-GA TO 16-GA, 1/4-IN SCREW)	
E		1	**125-7874**		TUBE-HEAT SHRINK (5.72-MM DIA) (15-CM)	
M	4	1	**7X-2621**	1	BOLT (M10X1.5X12-MM)	
	5	1	**8T-4121**	1	WASHER-HARD (11X21X2.5-MM THK)	

E - ORDER BY THE CENTIMETER
M - METRIC PART

399-1110 **WIRING GP-COMMUNICATION (*contd.*)** **i05771692**

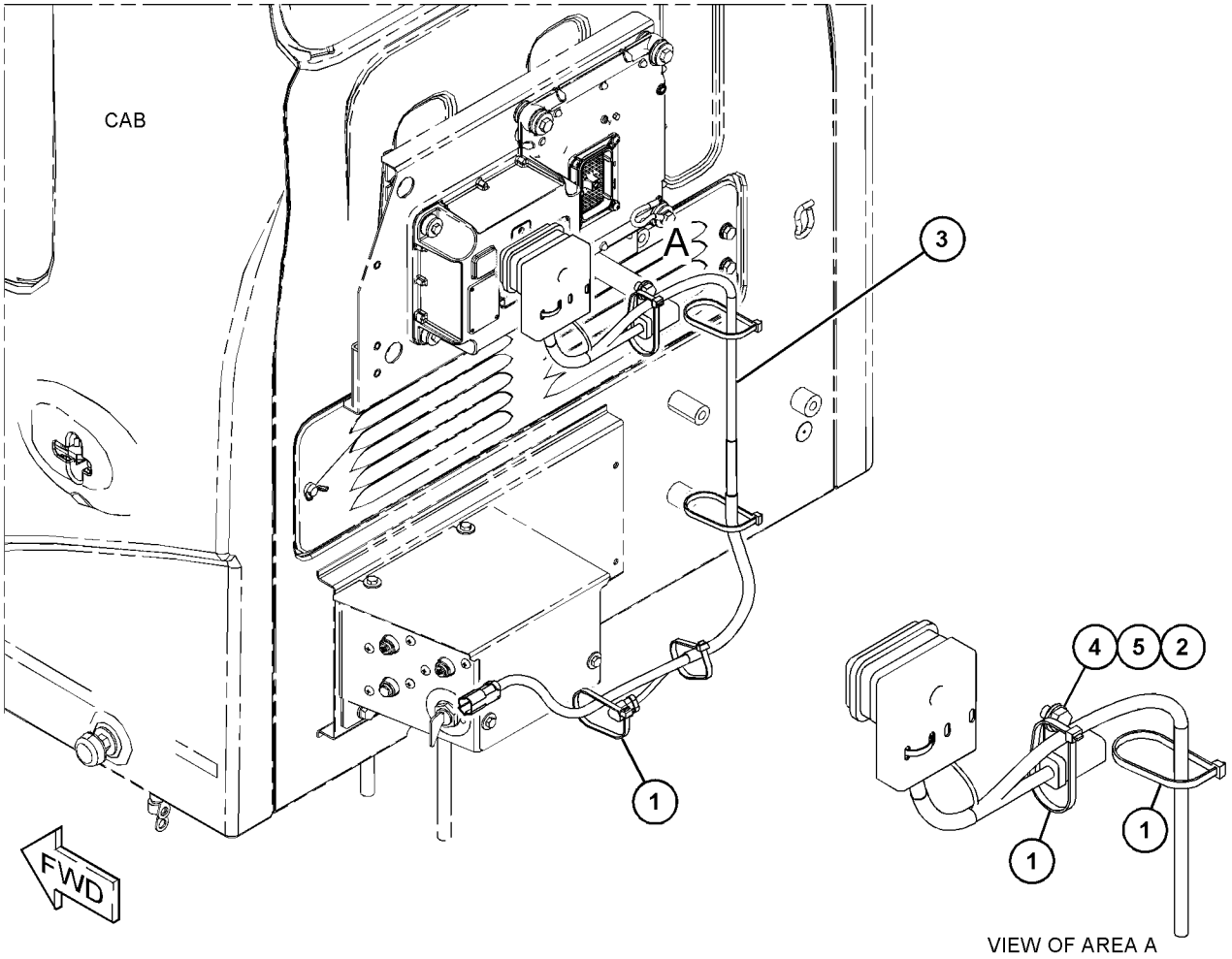

GRAPHIC #1 **<END>** g03459266

231-1836 WIRING GP-CONSOLE—LH

S/N: HAH1-UP

PART OF 398-7005 WIRING GP-CONSOLE

SMCS-1408 **i04913379**

NOTE	REF NO	GRAPHIC REF	PART NUMBER	QTY	PART NAME 1 2 3 4 5 6 (PRODUCT LEVEL)	SEE PAGE
	1	1	**3S-2093**	2	STRAP-CABLE	
	2	1	**7K-1181**	1	STRAP-CABLE	
	3	1	**163-6795**	2	STRAP-CABLE	
	4	1	**251-0580**	1	HARNESS AS-CONSOLE	
		1	**8T-8729**	4	PIN-CONNECTOR (16-GA TO 18-GA)	
		1	**8T-8730**	3	SOCKET-CONNECTOR (16-GA TO 18-GA)	
		1	**3S-2093**	9	STRAP-CABLE	
D		1	**5P-5995**		TUBE (0.3-M)	
		1	**7Y-3963**	2	TERMINAL-BULLET (FEMALE)	
		1	**7Y-3965**	2	TUBE (RECEPTACLE TERMINAL)	
		1	**8T-8737**	9	PLUG-SEAL	
		1	**9W-0852**	2	PIN-CONNECTOR (14-GA TO 16-GA)	
		1	**9W-0844**	2	SOCKET-CONNECTOR (14-GA TO 16-GA)	
E		1	**125-7874**		TUBE-HEAT SHRINK (5.72-MM DIA) (5-CM)	
E		1	**125-7875**		TUBE-HEAT SHRINK (7.44-MM DIA) (5-CM)	
		1	**9X-3402**	11	SOCKET-CONNECTOR (16-GA TO 18-GA)	
					—OR—	
		1	**126-1768**	11	SOCKET-CONNECTOR (14-GA TO 16-GA)	
		1	**155-2260**	1	KIT-CONNECTING PLUG (3-PIN)	
					(INCLUDES PLUG AS, WEDGE & INTERFACE SEAL)	
		1	**230-4011**	1	PLUG AS-CONNECTOR (2-PIN)	
		1	**264-7029**	1	SEAL-CONNECTOR	
		1	**230-5010**	1	PLUG AS-CONNECTOR (6-PIN)	
		1	**264-7032**	1	SEAL-CONNECTOR	
		1	**239-7352**	1	PLUG AS-CONNECTOR (6-PIN)	
		1	**264-7032**	1	SEAL-CONNECTOR	
		1	**243-4505**	1	RECEPTACLE AS-CONNECTOR (2-PIN)	
		1	**243-4508**	1	RECEPTACLE AS-CONNECTOR (6-PIN)	
		1	**247-2693**	1	RECEPTACLE AS-CONNECTOR (6-PIN)	

D - ORDER BY THE METER
E - ORDER BY THE CENTIMETER

231-1836 **WIRING GP-CONSOLE (*contd.*)** **i04913379**

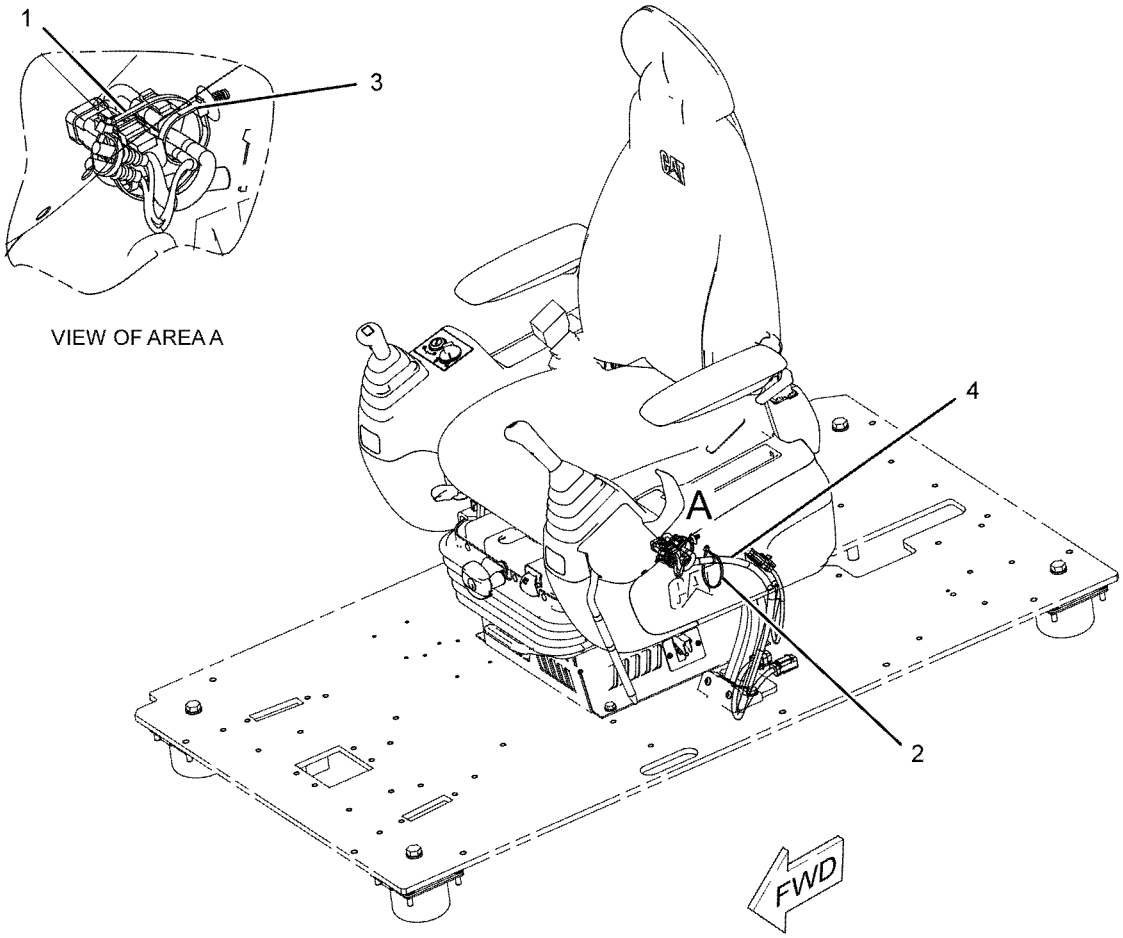

GRAPHIC #1 **<END>** g01150799

398-7005 WIRING GP-CONSOLE

S/N: HAH1-UP

PART OF 451-3987 OPERATOR AR

SMCS-1408 **i05444813**

NOTE	PART NUMBER	QTY	PART NAME 1 2 3 4 5 6 (PRODUCT LEVEL)	SEE PAGE
Y	*231-1836*	1	WIRING GP-CONSOLE (LH)	122
Y	*398-7006*	1	WIRING GP-CONSOLE (RH)	125

Y - SEPARATE ILLUSTRATION

<END>

398-7006 WIRING GP-CONSOLE—RH

S/N: HAH1-UP

PART OF 398-7005 WIRING GP-CONSOLE

SMCS-1408 **i05454051**

NOTE	REF NO	GRAPHIC REF	PART NUMBER	QTY	PART NAME 1 2 3 4 5 6 (PRODUCT LEVEL)	SEE PAGE
	1	1	**3S-2093**	4	STRAP-CABLE	
	2	1	**7K-1181**	2	STRAP-CABLE	
	3	1	**163-6795**	1	STRAP-CABLE	
	4	1	**398-7012**	1	HARNESS AS-CONSOLE	
		1	**102-8806**	1	KIT-RECEPTACLE (8-PIN)	
					(INCLUDES RECEPTACLE AS AND WEDGE)	
		1	**8T-8730**	9	SOCKET-CONNECTOR (16-GA TO 18-GA)	
		1	**3S-2093**	10	STRAP-CABLE	
		1	*7Y-3967*	2	TERMINAL AS	
					(EACH INCLUDES)	
		1	**7Y-3963**	1	TERMINAL-BULLET (FEMALE)	
		1	**7Y-3965**	1	TUBE (RECEPTACLE TERMINAL)	
		1	**8T-8737**	17	PLUG-SEAL	
		1	**102-7964**	1	PLUG-CONNECTOR (16-PIN)	
		1	**102-7965**	14	TERMINAL (FEMALE)	
		1	**9W-0844**	8	SOCKET-CONNECTOR (14-GA TO 16-GA)	
		1	**125-4841**	1	WEDGE-PLUG LOCK (21-PIN)	
E		1	**125-7875**		TUBE-HEAT SHRINK (7.44-MM DIA) (15-CM)	
		1	**9X-3402**	20	SOCKET-CONNECTOR (16-GA TO 18-GA)	
		1	**155-2259**	1	WEDGE-PLUG LOCK (8-PIN)	
		1	**155-2265**	1	KIT-CONNECTING PLUG (8-PIN)	
					(EACH PLUG KIT INCLUDES PLUG AS, WEDGE & INTERFACE SEAL)	
		1	**230-4009**	1	PLUG AS-CONNECTOR (12-PIN)	
		1	**264-7034**	1	SEAL-CONNECTOR	
		1	**230-4011**	1	PLUG AS-CONNECTOR (2-PIN)	
		1	**264-7029**	1	SEAL-CONNECTOR	
		1	**230-5008**	1	PLUG AS-CONNECTOR (4-PIN)	
		1	**264-7031**	1	SEAL-CONNECTOR	
		1	**230-5010**	1	PLUG AS-CONNECTOR (6-PIN)	
		1	**264-7032**	1	SEAL-CONNECTOR	
		1	**231-2295**	1	PLUG AS-CONNECTOR (8-PIN)	
		1	**264-7033**	1	SEAL-CONNECTOR	
		1	**238-2363**	2	TERMINAL (FEMALE)	
		1	**239-7352**	1	PLUG AS-CONNECTOR (6-PIN)	
		1	**264-7032**	1	SEAL-CONNECTOR	
		1	*251-0579*	1	HOSE	
		1	**342-2972**	1	CAP-CONNECTOR (2-PIN)	
		1	**342-2974**	1	CAP-CONNECTOR (6-PIN)	
	5	1	**3E-9375**		CONDUIT (10-CM)	

E - ORDER BY THE CENTIMETER

398-7006 **WIRING GP-CONSOLE (*contd.*)** **i05454051**

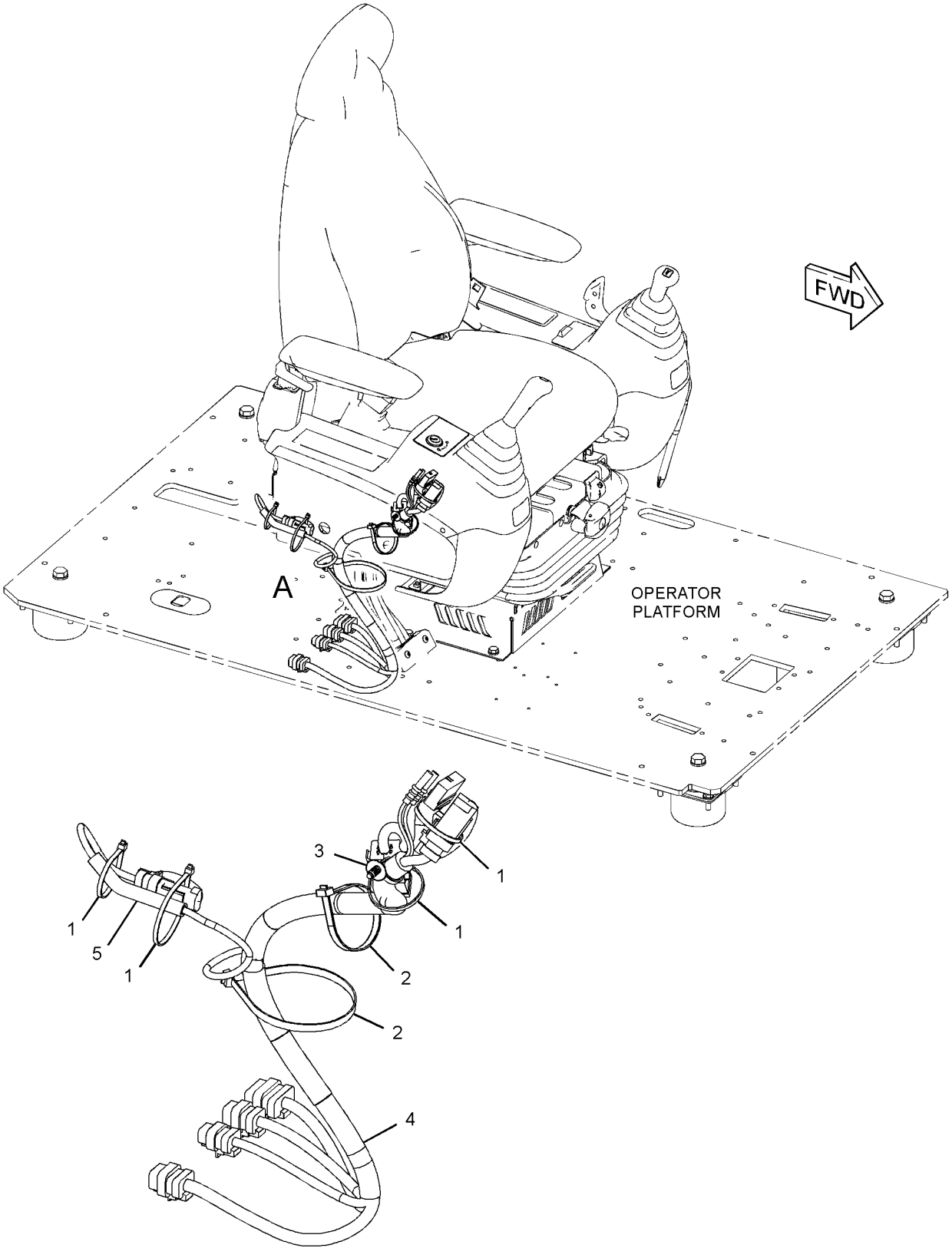

VIEW OF AREA A

GRAPHIC #1 **<END>** g03431459

440-6915 WIRING GP-PLATFORM

S/N: HAH1-UP

PART OF 451-3987 OPERATOR AR

SMCS-1408 **i05860087**

NOTE	REF NO	GRAPHIC REF	PART NUMBER	QTY	PART NAME 1 2 3 4 5 6 (PRODUCT LEVEL)	SEE PAGE
	1	1	**3E-5169**	1	GUARD-SWITCH	
	2	1	**3S-2093**	4	STRAP-CABLE	
	3	1	**7G-1060**	1	STRAP AS-GROUND	
	4	1	**7K-1181**	12	STRAP-CABLE	
	5	1	**111-4836**	4	CLIP	
	6	1	**111-4839**	2	STRAP	
	7	1	**116-0118**	8	CLIP	
	8	1	**234-1122**	1	COVER	
	9	1	**275-6810**	1	RECEPTACLE AS	
		1	**134-3297**	1	SEAL	
		1	**163-6773**	1	PLUG-SEAL	
	10	1	**301-2981**	1	SWITCH AS-TOGGLE (SECONDARY SHUTDOWN)	
	11	1	**440-6918**	1	HARNESS AS-PLATFORM (BEACON)	
		1	**102-8802**	2	KIT-RECEPTACLE (2-PIN)	
					(EACH INCLUDES RECEPTACLE AS & WEDGE)	
		1	**8T-8729**	8	PIN-CONNECTOR (16-GA TO 18-GA)	
		1	**8T-8730**	14	SOCKET-CONNECTOR (16-GA TO 18-GA)	
		1	**3S-2093**	17	STRAP-CABLE	
		1	**8T-8737**	45	PLUG-SEAL	
		1	**102-7964**	1	PLUG-CONNECTOR (16-PIN)	
		1	**102-7965**	8	TERMINAL (FEMALE)	
		1	**9W-0852**	6	PIN-CONNECTOR (14-GA TO 16-GA)	
		1	**9W-0844**	22	SOCKET-CONNECTOR (14-GA TO 16-GA)	
E		1	**119-3662**		TUBE-HEAT SHRINK (10.85-MM DIA) (7-CM)	
		1	**121-1168**	2	CONNECTOR-RECEPTACLE	
		1	**121-1173**	28	TERMINAL (MALE)	
		1	**125-4766**	1	PLUG-CONNECTOR (17-PIN)	
		1	**125-4841**	1	WEDGE-PLUG LOCK (21-PIN)	
E		1	**125-7874**		TUBE-HEAT SHRINK (5.72-MM DIA) (5-CM)	
E		1	**125-7875**		TUBE-HEAT SHRINK (7.44-MM DIA) (20-CM)	
		1	**9X-3402**	35	SOCKET-CONNECTOR (16-GA TO 18-GA)	
					—OR—	
		1	**126-1768**	35	SOCKET-CONNECTOR (14-GA TO 16-GA)	
		1	**2L-8050**	2	TERMINAL-RING (6-GA, 1/4-IN SCREW)	
					—OR—	
		1	**2L-8058**	2	TERMINAL-RING (8-GA, 1/4-IN SCREW)	
		1	**2L-8069**	4	TERMINAL-RING (2-GA TO 10-GA, 3/8-IN SCREW)	
		1	**9X-3401**	11	PIN-CONNECTOR (16-GA TO 18-GA)	
					—OR—	
		1	**126-1767**	11	PIN-CONNECTOR (14-GA TO 16-GA)	
		1	**153-2620**	1	PLUG AS-CONNECTOR (54-PIN, BLACK)	
		1	**163-6759**	1	SEAL	
		1	**155-2270**	2	KIT-CONNECTING PLUG (2-PIN)	
		1	**155-2260**	1	KIT-CONNECTING PLUG (3-PIN)	
					(EACH PLUG KIT INCLUDES PLUG AS,WEDGE & INTERFACE SEAL)	
		1	**230-4009**	2	PLUG AS-CONNECTOR (12-PIN)	
					(EACH INCLUDES)	
		1	**455-0709**	1	SEAL-CONNECTOR	
		1	**230-4011**	2	PLUG AS-CONNECTOR (2-PIN)	
					(EACH INCLUDES)	
		1	**455-0704**	1	SEAL-CONNECTOR	
		1	**230-5010**	2	PLUG AS-CONNECTOR (6-PIN)	
					(EACH INCLUDES)	
		1	**455-0707**	1	SEAL-CONNECTOR	
		1	**238-2363**	11	TERMINAL (FEMALE)	
		1	**238-2366**	5	TERMINAL (MALE)	

440-6915 **WIRING GP-PLATFORM (*contd.*)** **i05860087**

NOTE	REF NO	GRAPHIC REF	PART NUMBER	QTY	PART NAME 1 2 3 4 5 6 (PRODUCT LEVEL)	SEE PAGE
		1	**243-4507**	1	RECEPTACLE AS-CONNECTOR (4-PIN)	
		1	**243-4508**	2	RECEPTACLE AS-CONNECTOR (6-PIN)	
		1	**243-4509**	1	RECEPTACLE AS-CONNECTOR (8-PIN)	
		1	**243-4510**	1	RECEPTACLE AS-CONNECTOR (12-PIN)	
		1	**342-2972**	1	CAP-CONNECTOR (2-PIN)	
		1	**342-2974**	1	CAP-CONNECTOR (6-PIN)	
	12	1	**096-6166**	2	WASHER-HARD (4.5X9X1-MM THK)	
	13	1	**111-4838**	2	CLIP	
M	14	1	**7X-2621**	5	BOLT (M10X1.5X12-MM)	
M	15	1	**8T-0337**	2	SCREW-MACHINE (M4X0.7X12-MM)	
	16	1	**8T-4121**	12	WASHER-HARD (11X21X2.5-MM THK)	
M	17	1	**8T-4137**	7	BOLT (M10X1.5X20-MM)	

E - ORDER BY THE CENTIMETER
M - METRIC PART

440-6915 **WIRING GP-PLATFORM (*contd.*)** **i05860087**

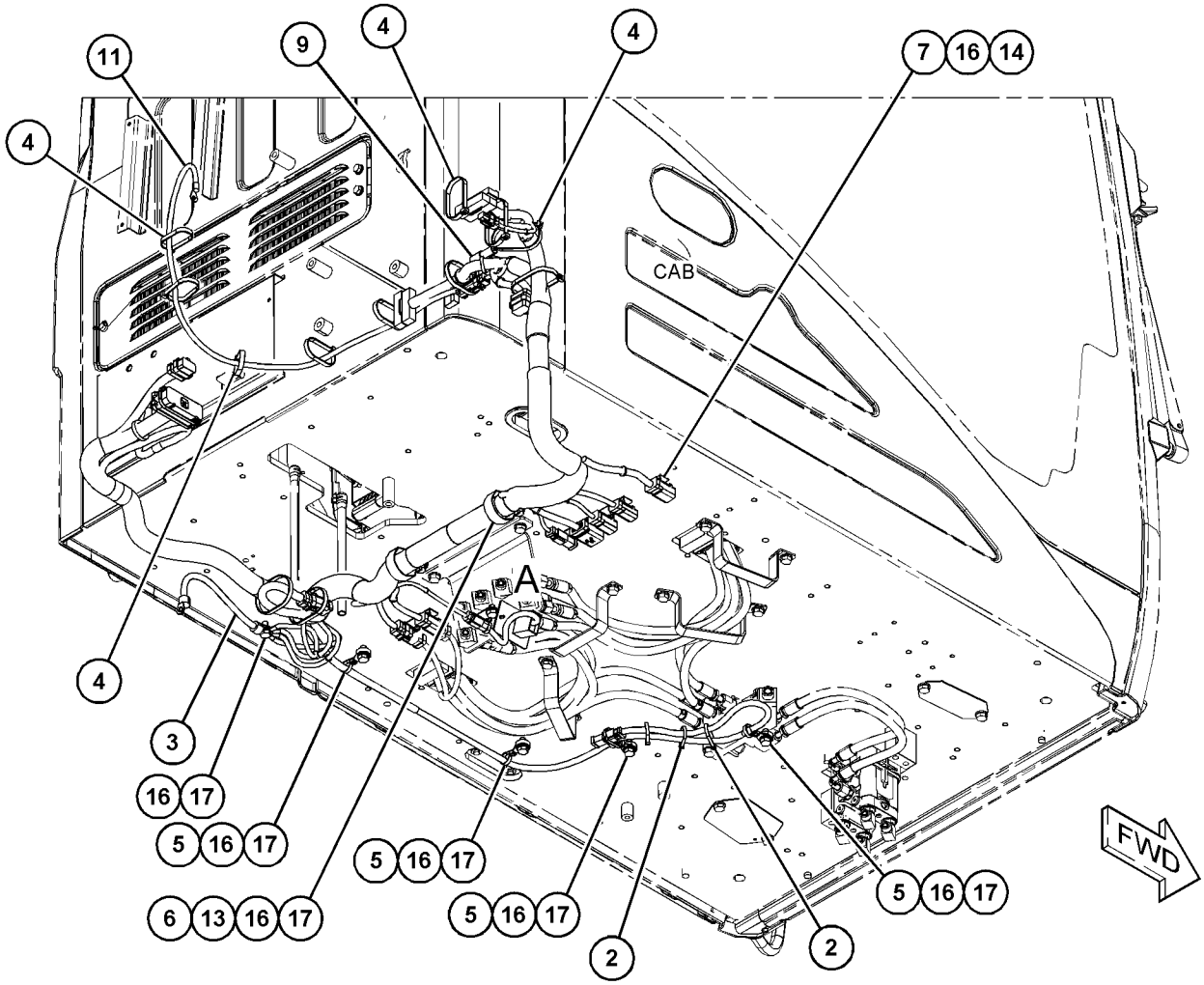

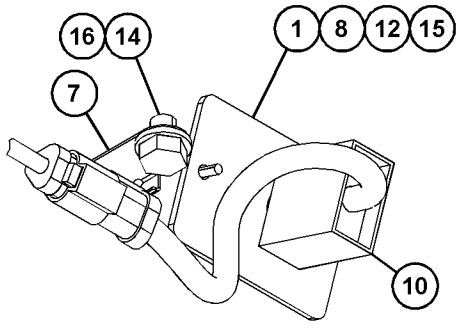

VIEW OF AREA A

GRAPHIC #1 **<END>** g03687928

350-0450 DRIVE GP-FINAL—WITH MOTOR

S/N: HAH1-UP

PART OF 353-0586 DRIVE GP-FINAL

SMCS-4050 **i04941454**

NOTE	REF NO	GRAPHIC REF	PART NUMBER	QTY	PART NAME 1 2 3 4 5 6 (PRODUCT LEVEL)	SEE PAGE
Y	1	1	*185-6952*	1	MOTOR & MTG GP-TRAVEL	254
Y	2	1	**350-0452**	1	DRIVE GP-FINAL (WITHOUT MOTOR)	131

Y - SEPARATE ILLUSTRATION

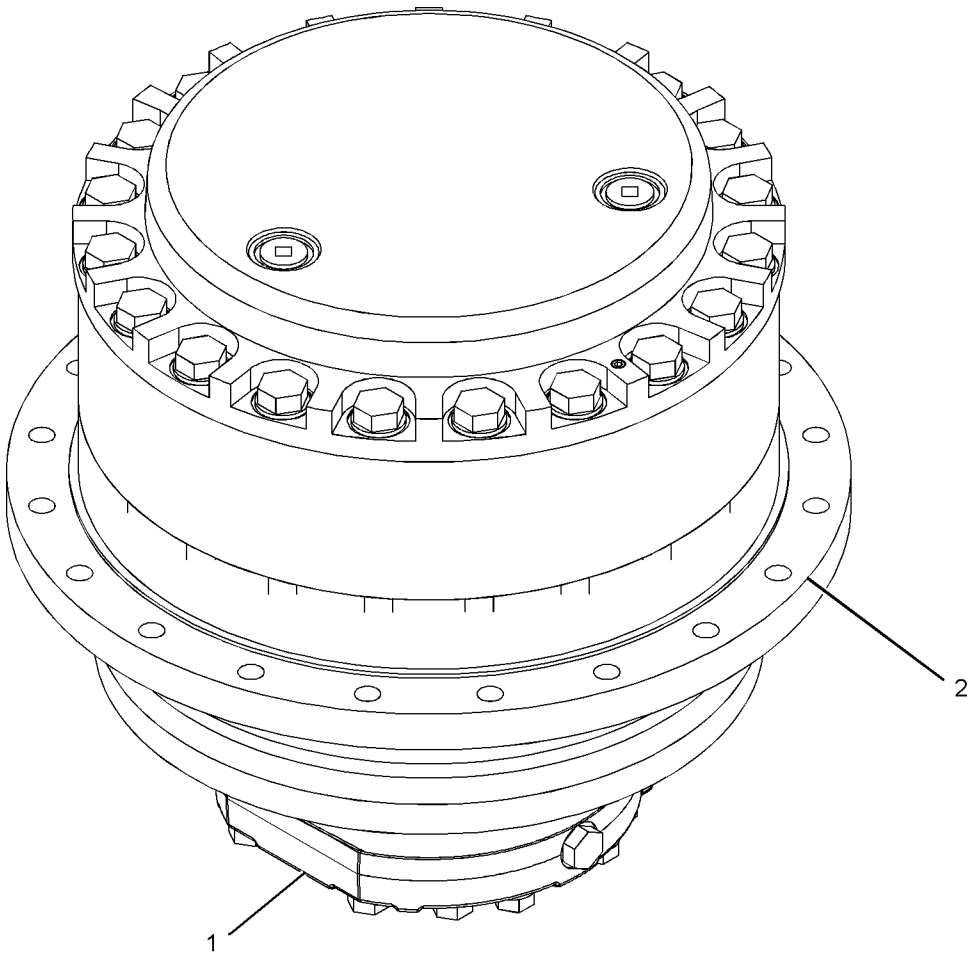

GRAPHIC #1 **<END>** g01099096

350-0452 DRIVE GP-FINAL—WITHOUT MOTOR

S/N: HAH1-UP

PART OF 350-0450 DRIVE GP-FINAL

SMCS-4050 **i05872167**

NOTE	REF NO	GRAPHIC REF	PART NUMBER	QTY	PART NAME 1 2 3 4 5 6 (PRODUCT LEVEL)	SEE PAGE
	1	1	**165-5785**	1	SPACER (40X60.9X1-MM THK)	
B	2	1	**096-1773**	1	SHIM (0.15-MM THK)	
B		1	**096-1774**	1	SHIM (0.3-MM THK)	
B		1	**096-1775**	1	SHIM (0.4-MM THK)	
B		1	**096-1776**	1	SHIM (0.5-MM THK)	
B		1	**096-1777**	1	SHIM (0.6-MM THK)	
B		1	**096-1778**	1	SHIM (0.7-MM THK)	
B		1	**096-1779**	1	SHIM (0.8-MM THK)	
B		1	**096-1780**	1	SHIM (1-MM THK)	
B		1	**096-1781**	1	SHIM (1.6-MM THK)	
	11	1	**227-6034**	16	BOLT-FLANGE HEAD (M16X2X60-MM)	
	12	1	**165-5786**	3	SHAFT	
	13	1	**296-6269**	6	BEARING-ROLLER	
	14	1	**165-5787**	3	GEAR-PLANETARY (26-TEETH)	
M	15	1	**094-1528**	6	WASHER (53X84X1-MM THK)	
	16	1	**095-0891**	6	PIN-SPRING	
	17	1	**165-5788**	3	GEAR-PLANETARY (29-TEETH)	
	18	1	**296-6268**	3	BEARING AS-ROLLER	
	19	1	**3E-2338**	2	PLUG-PIPE (FINAL DRIVE, OIL DRAIN, FILL)	
	20	1	**7M-8485**	2	SEAL-O-RING	
	21	1	**165-5790**	1	COVER	
	22	1	**7Y-0225**	3	SHAFT-PLANETARY	
	23	1	**094-0611**	6	WASHER (47.3X76X1-MM THK)	
	24	1	**094-0580**	1	PLATE (10-MM THK)	
	25	1	**165-5792**	1	GEAR-SUN (14-TEETH)	
	26	1	**165-5793**	1	GEAR-SUN (17-TEETH)	
	27	1	**165-5794**	1	SPACER (72X101X7-MM THK)	
	28	1	**165-5795**	1	CARRIER	
M	29	1	**8T-7929**	16	BOLT (M12X1.75X180-MM)	
	30	1	**8T-4223**	16	WASHER-HARD (13.5X25.5X3-MM THK)	
	31	1	**095-1299**	3	DOWEL	
	32	1	**165-3892**	1	GEAR-RING (73-TEETH)	
	33	1	**165-5796**	1	CARRIER	
	34	1	**165-5797**	1	GEAR (51-TEETH)	
	35	1	**165-5800**	1	WASHER (241X282X3-MM THK)	
	36	1	**210-3530**	1	HOUSING	
	37	1	**114-1539**	4	PIN-DOWEL	
	38	1	**296-6220**	2	BALL BEARING	
	39	1	**210-3531**	1	HOUSING-MOTOR	
	40	1	**174-4874**	1	SEAL GP-DUO-CONE	
BF			**1U-8846**		SEALANT-GASKET	

B - USE AS REQUIRED
F - NOT SHOWN
M - METRIC PART

350-0452 **DRIVE GP-FINAL (*contd.*)** **i05872167**

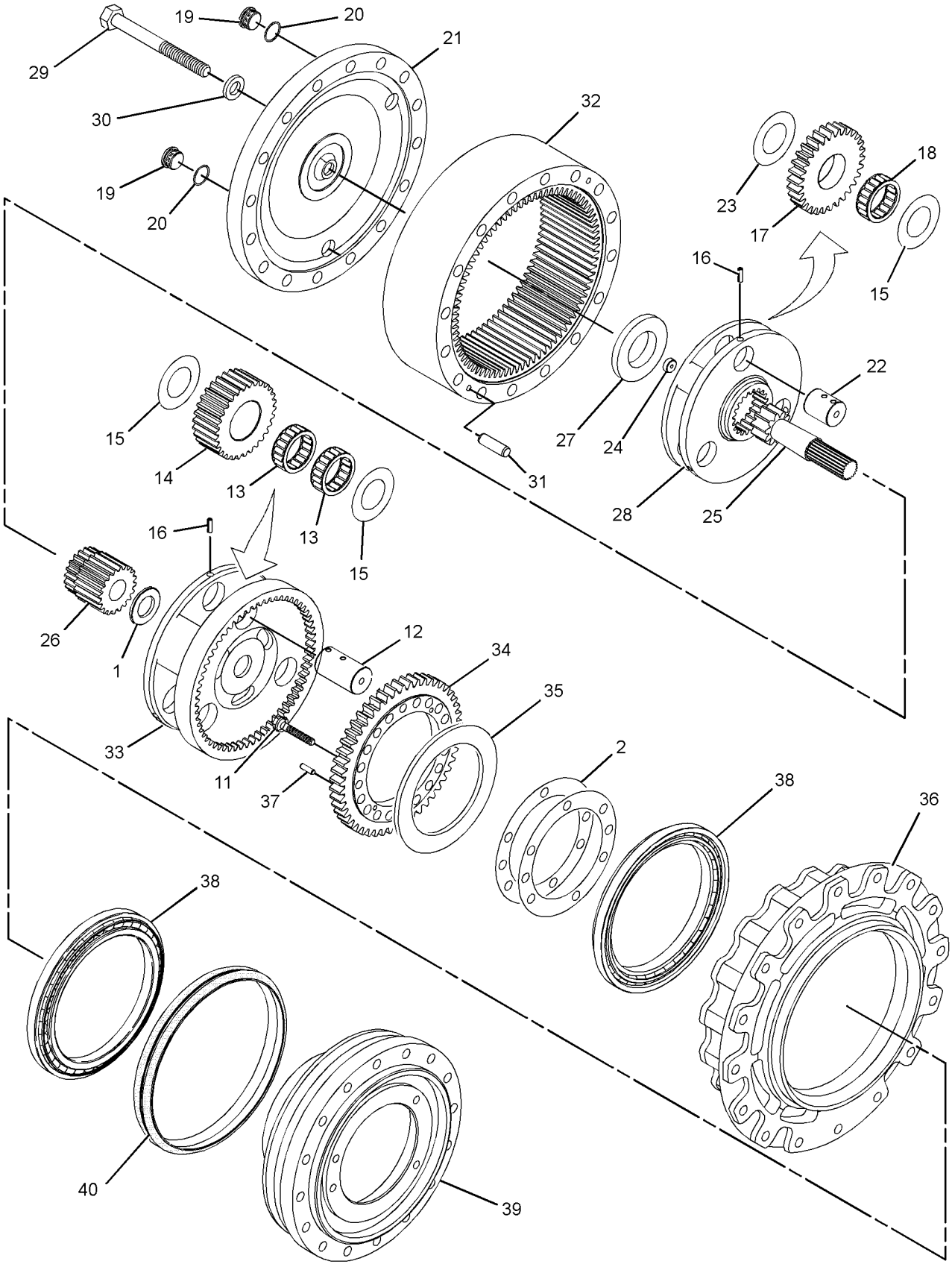

GRAPHIC #1 **<END>** g03710449

353-0586 DRIVE GP-FINAL—WITH MOTOR, SPROCKET

S/N: HAH1-UP

PART OF 267-6738 POWER TRAIN AR

SMCS-4050 **i04941411**

NOTE	REF NO	GRAPHIC REF	PART NUMBER	QTY	PART NAME 1 2 3 4 5 6 (PRODUCT LEVEL)	SEE PAGE
Y	1	1	*145-3042*	1	SPROCKET GP (NON-SEGMENTED)	135
Y	2	1	*350-0450*	1	DRIVE GP-FINAL (WITH MOTOR)	130

Y - SEPARATE ILLUSTRATION

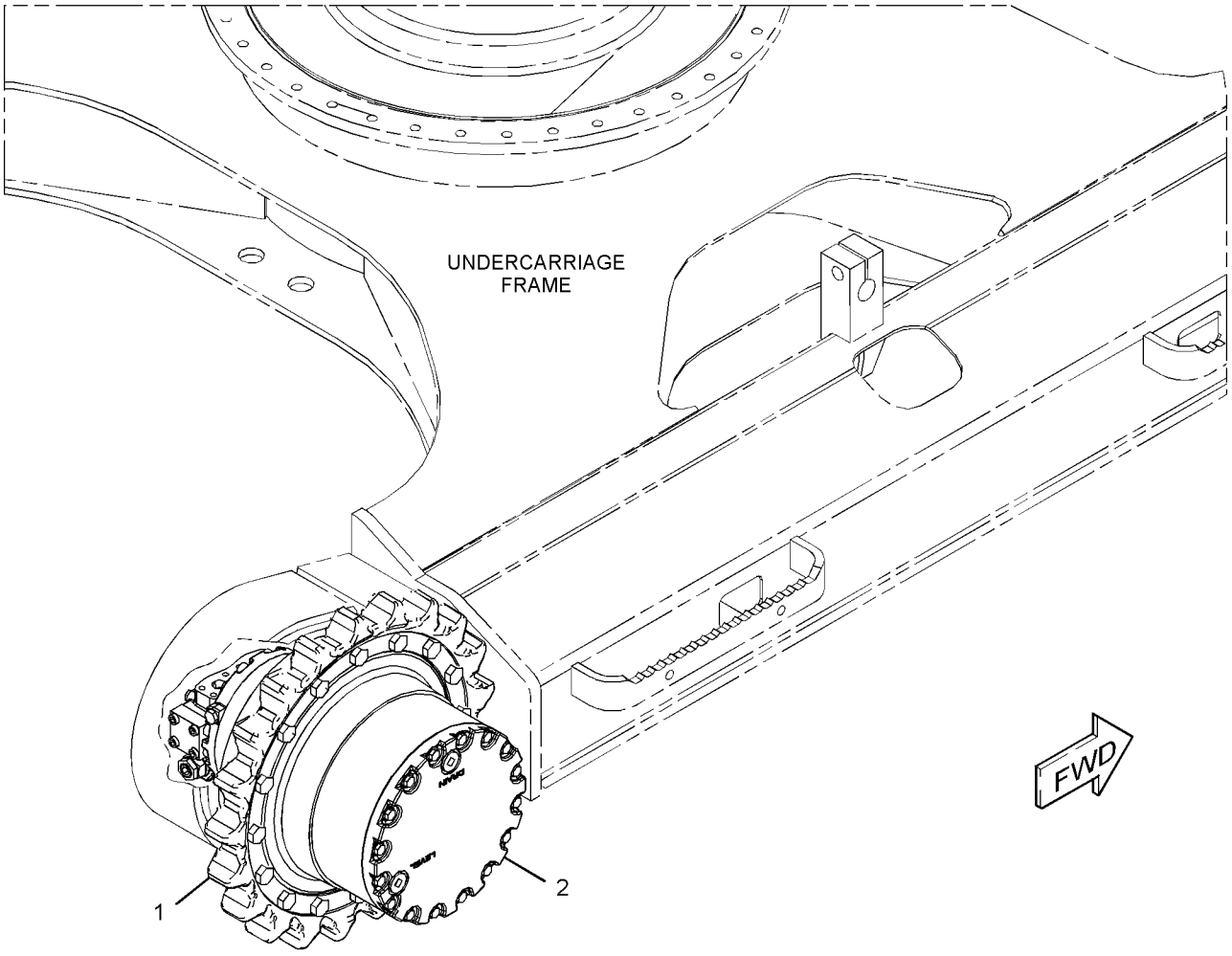

GRAPHIC #1 **<END>** g02731114

267-6738 POWER TRAIN AR

S/N: HAH1-UP

PART OF 454-5573 GENERAL AR

SMCS-3000, 4000 **i04943637**

NOTE	PART NUMBER	QTY	PART NAME 1 2 3 4 5 6 (PRODUCT LEVEL)	SEE PAGE
Y	*353-0586*	2	DRIVE GP-FINAL (WITH MOTOR, SPROCKET)	133
Y	*367-8338*	1	DRIVE GP-SWING (WITH MOTOR)	200
Y	*227-6229*	1	FASTENER GP-SWING & FINAL DR	202

Y - SEPARATE ILLUSTRATION

<END>

145-3042 SPROCKET GP

S/N: HAH1-UP

PART OF 353-0586 DRIVE GP-FINAL

SMCS-4164 **i05656850**

NOTE	REF NO	GRAPHIC REF	PART NUMBER	QTY	PART NAME 1 2 3 4 5 6 (PRODUCT LEVEL)	SEE PAGE
	1	1	**8E-9805**	1	SPROCKET-TRACK (21-TEETH)	
M	2	1	**447-1717**	16	BOLT (M20X2.5X45-MM)	

M - METRIC PART

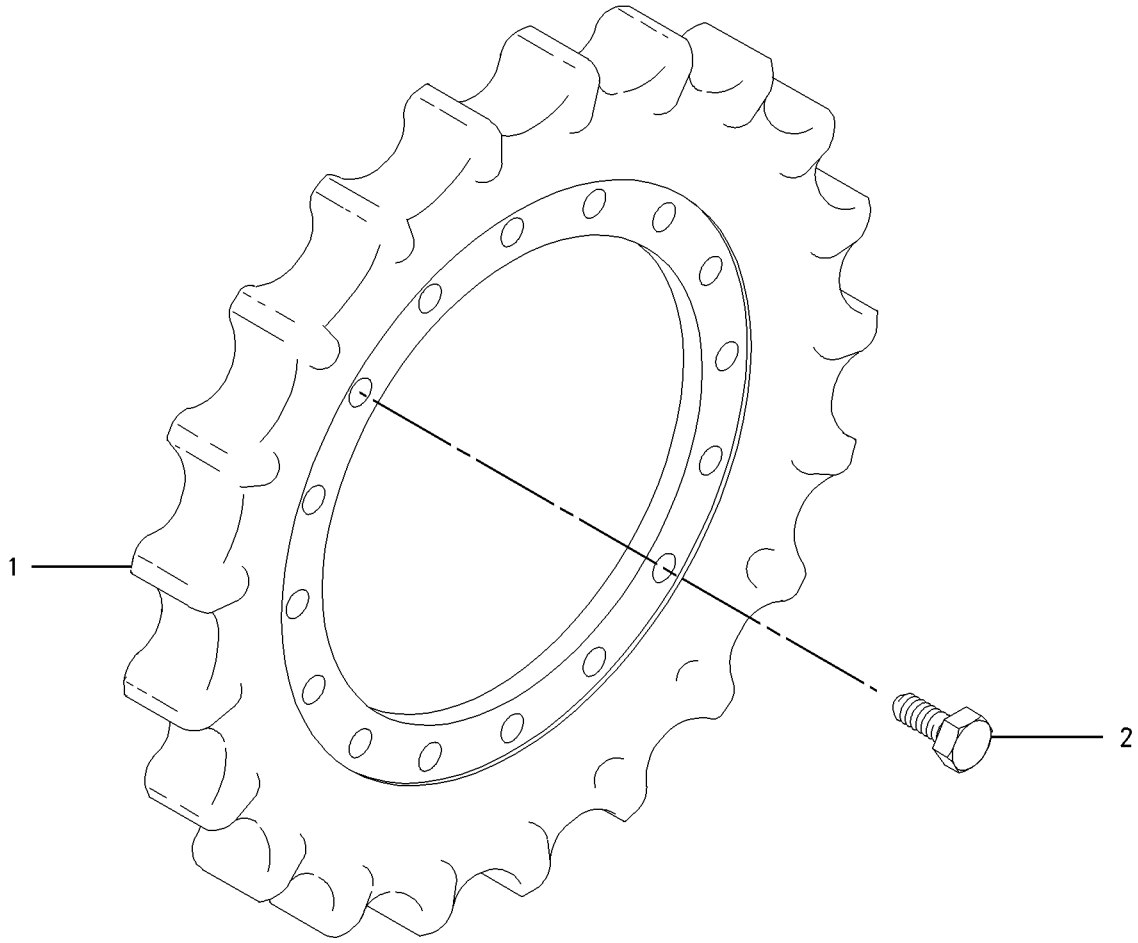

GRAPHIC #1 **<END>** g00670016

393-8574 BOX & MTG GP-STORAGE

S/N: HAH1-UP

PART OF 454-5575 CHASSIS AR

SMCS-7268 **i04941570**

NOTE	REF NO	GRAPHIC REF	PART NUMBER	QTY	PART NAME 1 2 3 4 5 6 (PRODUCT LEVEL)	SEE PAGE
Y	1	1	**393-8575**	1	BOX GP-STORAGE	137
M	2	1	**135-8577**	4	BOLT AS	

M - METRIC PART
Y - SEPARATE ILLUSTRATION

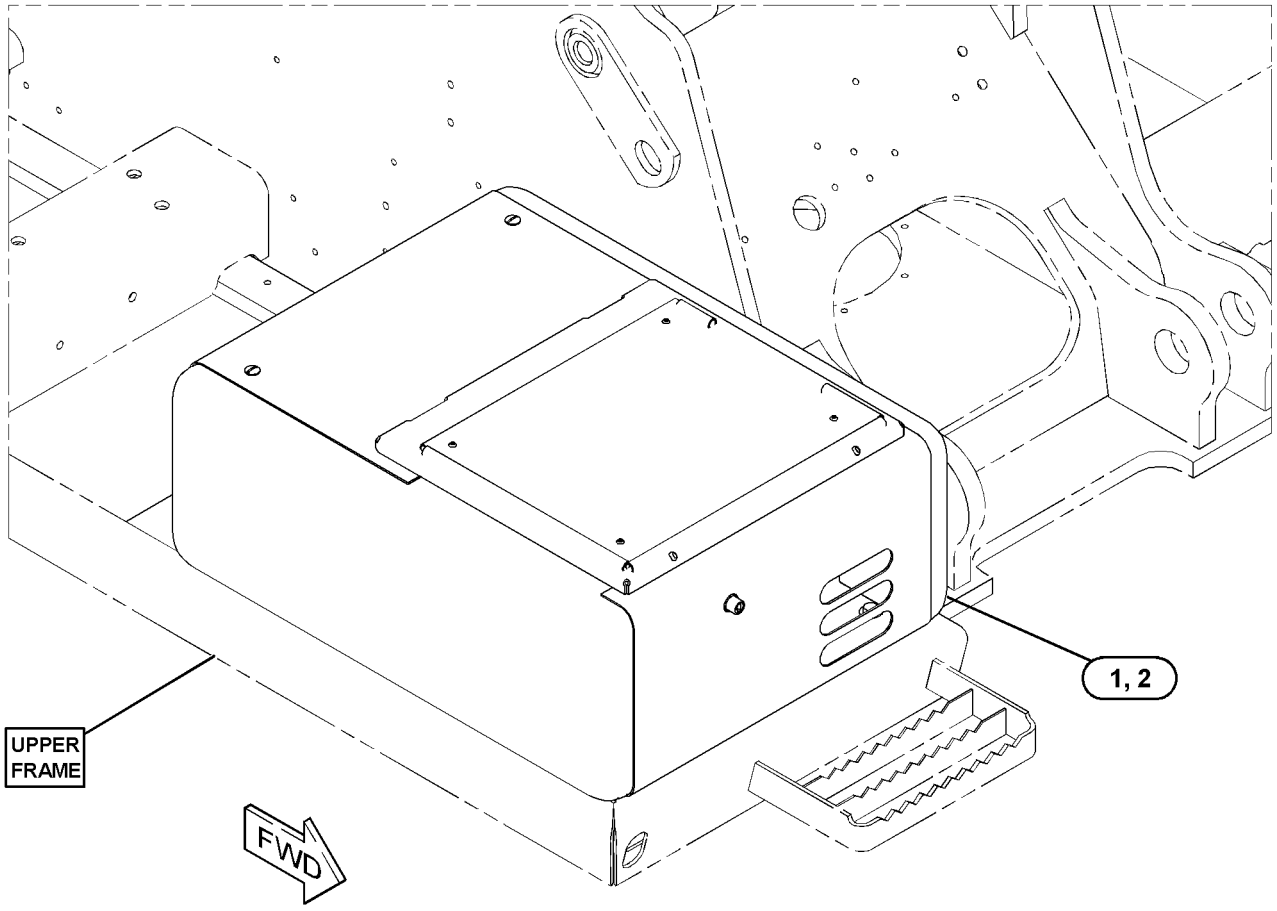

GRAPHIC #1 **<END>** g03120637

393-8575 BOX GP-STORAGE

S/N: HAH1-UP

PART OF 393-8574 BOX & MTG GP-STORAGE

SMCS-7268 **i04941582**

NOTE	REF NO	GRAPHIC REF	PART NUMBER	QTY	PART NAME 1 2 3 4 5 6 (PRODUCT LEVEL)	SEE PAGE
	1	1	**4I-2187**	1	SUPPORT AS	
		1	**4B-4278**	1	WASHER (10.2X20.5X1.6-MM THK)	
	2	1	**170-2755**	1	HOOK AS	
B	3	1	**184-8850**	2	SHIM (0.5-MM THK)	
	4	1	**214-6197**	2	PLUG	
	5	1	**236-9440**	1	SHEET	
	6	1	**320-5737**	1	LOCK AS	
	7	1	*393-8576*	1	BOX AS	
J		1	**348-5409**		SEAL (15-DM)	
	8	1	**393-8586**	1	DOOR AS-ACCESS	
	8A	1	**3D-9143**	2	HINGE-BUTT	
	9	1	**095-0843**	1	PIN-COTTER	
	10	1	**096-3780**	1	PIN-CLEVIS	
M	11	1	**105-3487**	4	BOLT-SOCKET HEAD (M6X1X20-MM)	
	12	1	**170-2983**	1	SEAL	
	13	1	**170-9360**	1	GROMMET	
M	14	1	**5C-9553**	3	BOLT (M6X1X16-MM)	
	15	1	**5P-1075**	4	WASHER-HARD (10.2X22.5X3-MM THK)	
	16	1	**5P-4116**	1	WASHER-HARD (8.8X20.5X2-MM THK)	
M	17	1	**8T-4133**	4	NUT (M10X1.5-THD)	
	18	1	**9X-8256**	7	WASHER (6.6X12X2-MM THK)	

B - USE AS REQUIRED
J - ORDER BY THE DECIMETER
M - METRIC PART

393-8575 **BOX GP-STORAGE (*contd.*)** **i04941582**

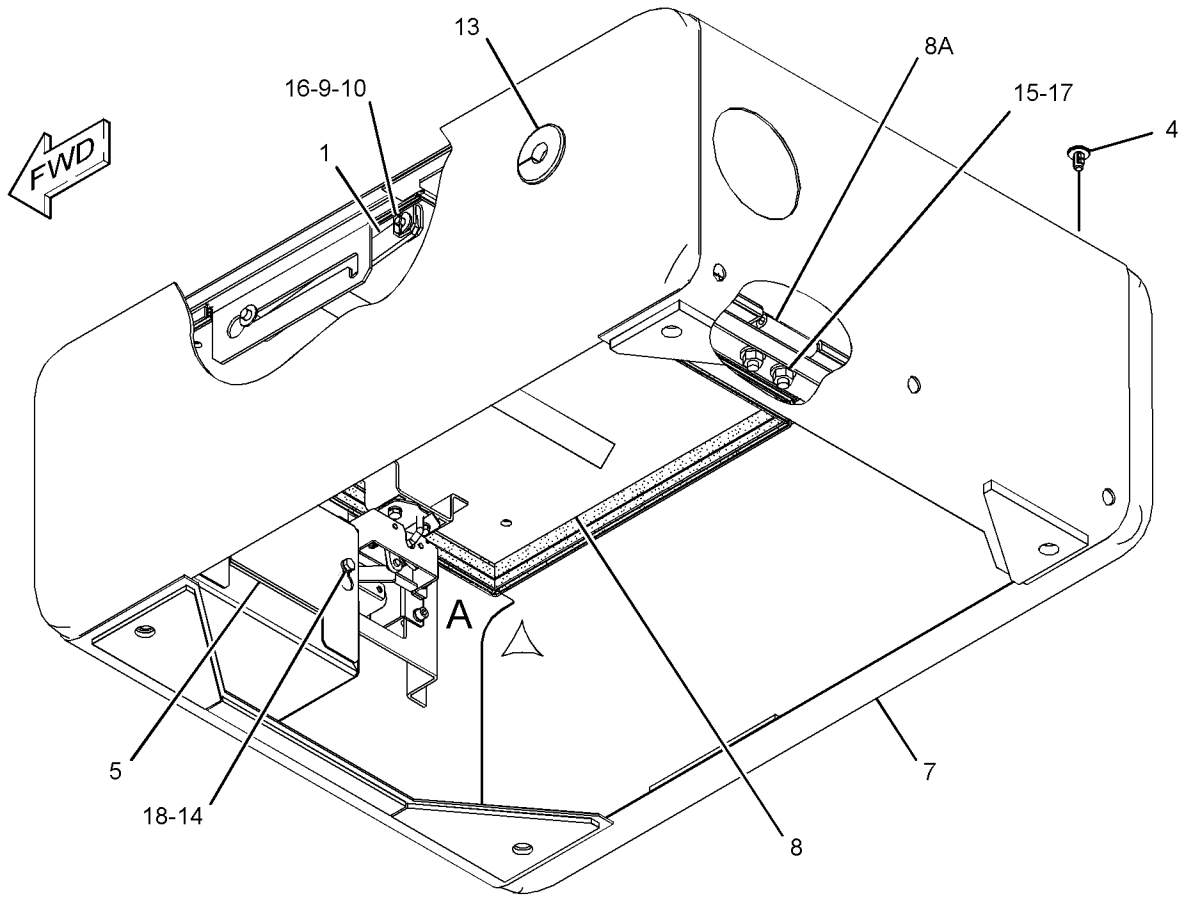

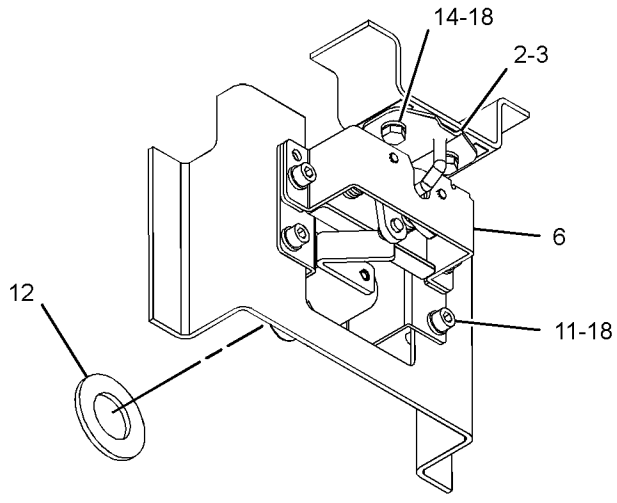

VIEW OF AREA A

GRAPHIC #1 **<END>** g03124961

394-6854 COUNTERWEIGHT & MOUNTING GP

S/N: HAH1-UP
PART OF 454-5646, 454-5647 DISTRIBUTION AR
AN ATTACHMENT

SMCS-7056 **i05884843**

NOTE	REF NO	GRAPHIC REF	PART NUMBER	QTY	PART NAME 1 2 3 4 5 6 (PRODUCT LEVEL)	SEE PAGE
M	1	1	**447-1733**	4	BOLT (M30X3.5X120-MM)	
	2	1	**136-0139**	2	CAP	
	3	1	**244-8194**	4	SPACER (32X65X30-MM THK)	
Y	4	1	*394-6855*	1	COUNTERWEIGHT GP	140

M - METRIC PART
Y - SEPARATE ILLUSTRATION

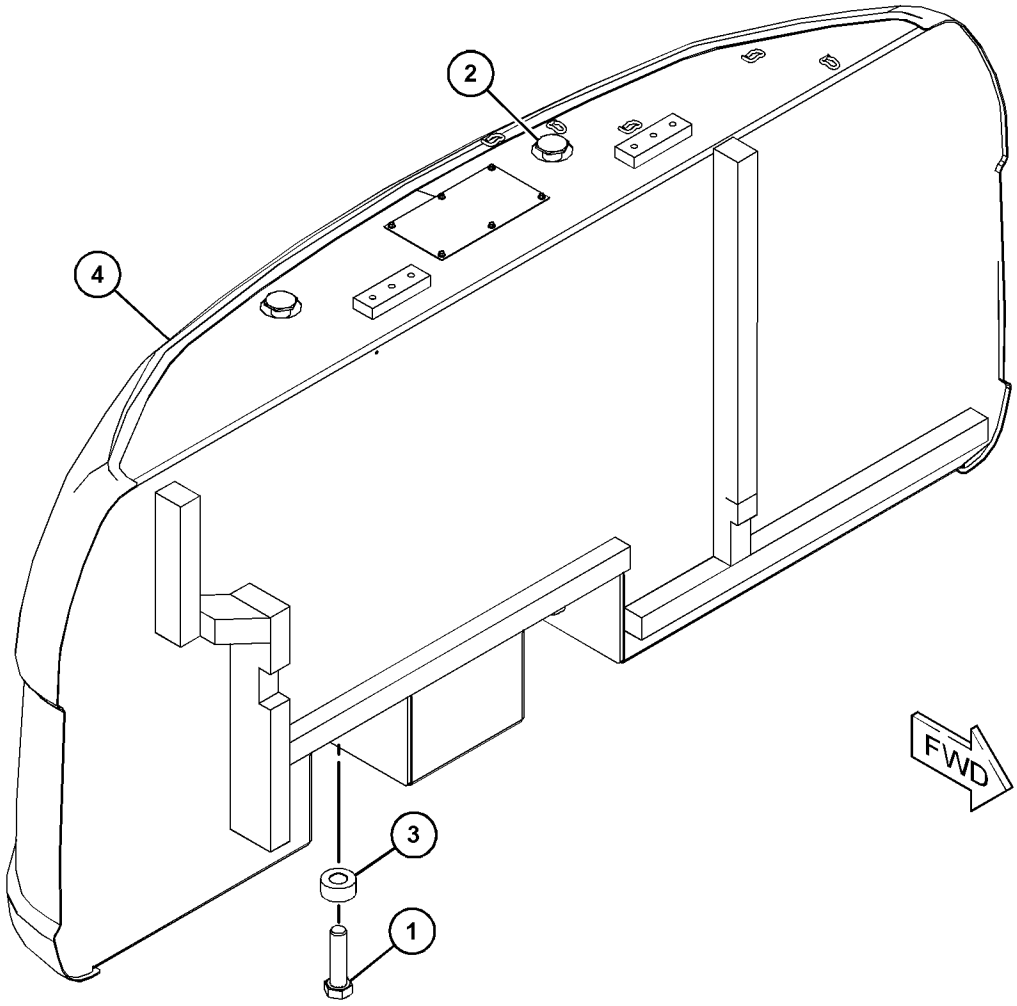

GRAPHIC #1 **<END>** g03711638

394-6855 COUNTERWEIGHT GP

S/N: HAH1-UP
3170-KG (6989-LB)
PART OF 394-6854 COUNTERWEIGHT & MOUNTING GP
AN ATTACHMENT

SMCS-7056 **i04954476**

NOTE	REF NO	GRAPHIC REF	PART NUMBER	QTY	PART NAME 1 2 3 4 5 6 (PRODUCT LEVEL)	SEE PAGE
	1	1	**270-9833**	1	LINER	
	2	1	**391-9675**	1	LINER	
	3	1	**394-6856**	1	COUNTERWEIGHT AS	
	3A	1	**165-3120**	1	SHEET	
M	3B	1	**192-3039**	6	SCREW-HEX FLANGE (6.3X1.8X19-MM)	
	4	1	**419-3328**	1	LINER	
	5	1	**419-3329**	1	LINER	
	6	1	**419-3330**	1	LINER	
	7	1	**419-5161**	1	LINER	

M - METRIC PART

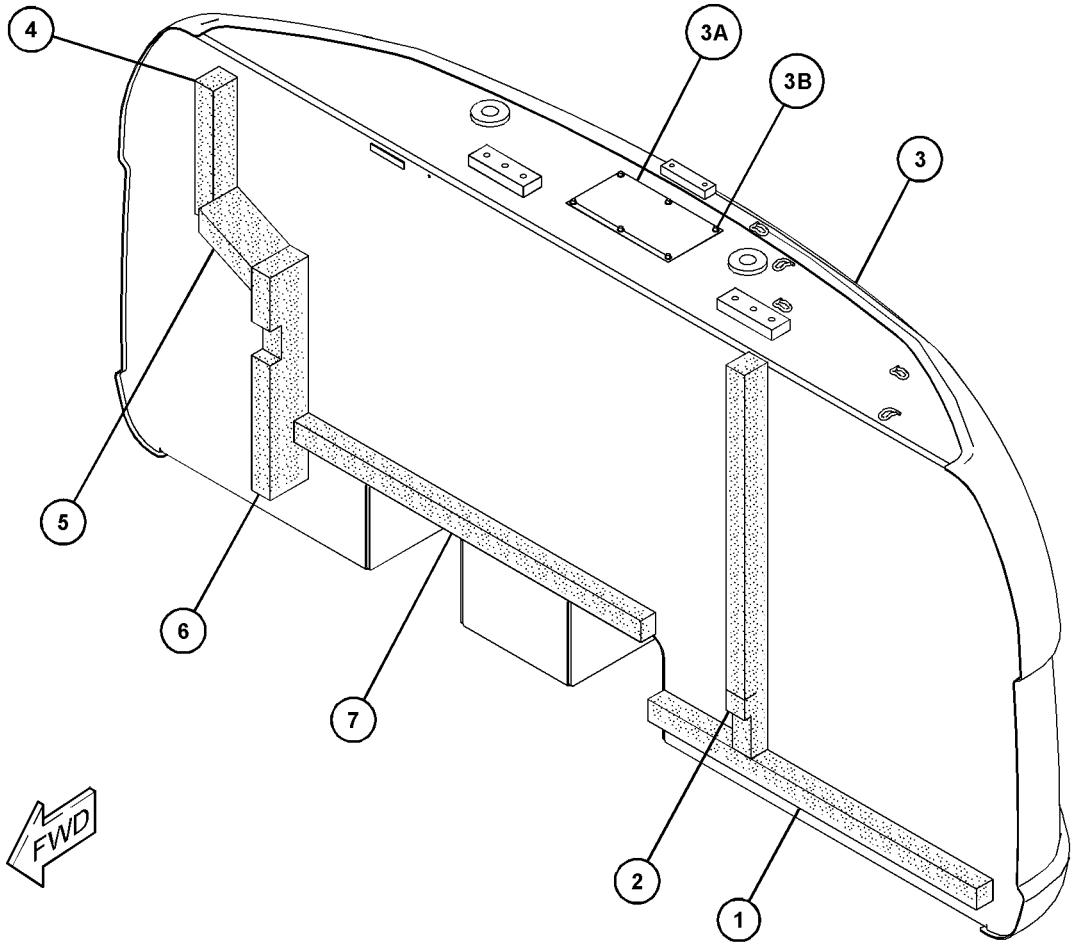

GRAPHIC #1 **<END>** g03147749

384-9089 COVER AS-SOUND SUPPRESSION

S/N: HAH1-UP

PART OF 390-3675 HOOD & GUARD GP

SMCS-7253, 7263, 7276, 795C

i04967595

NOTE	REF NO	GRAPHIC REF	PART NUMBER	QTY	PART NAME 1 2 3 4 5 6 (PRODUCT LEVEL)	SEE PAGE
	1	1	**236-9567**	2	SHEET-RUBBER	
	2	1	**268-0693**	2	LINER	
	3	1	**268-0694**	1	LINER	
	4	1	**268-0695**	1	LINER	
	5	1	**268-0696**	1	LINER	

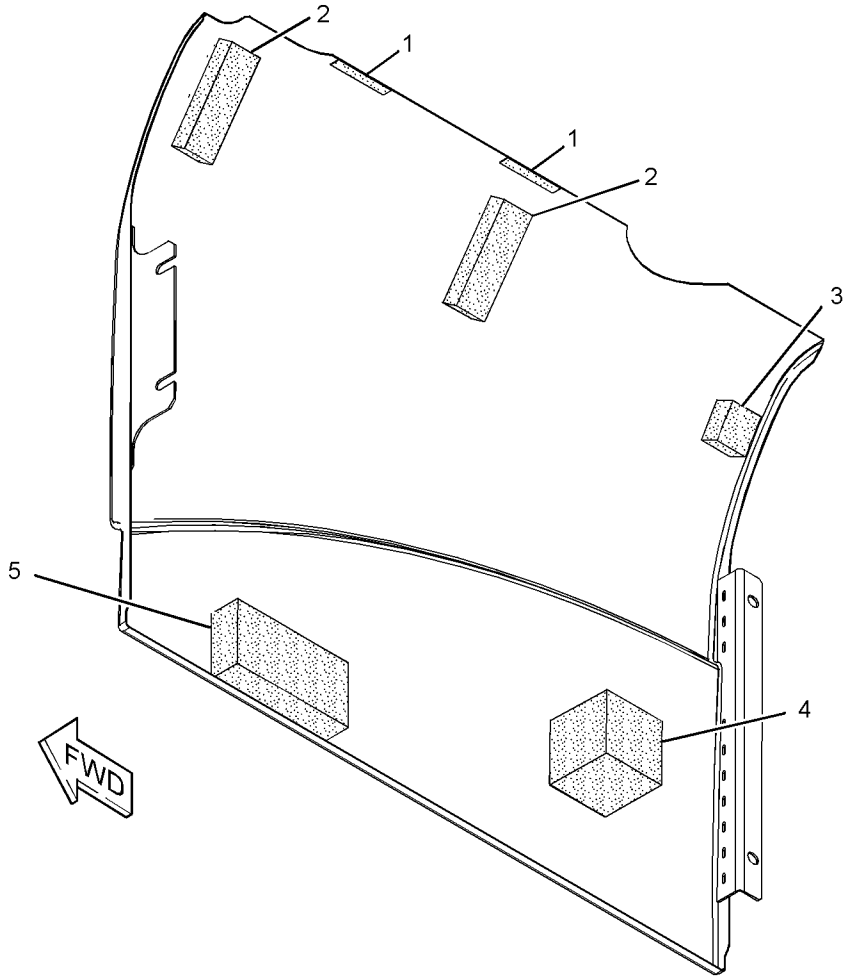

GRAPHIC #1

<END>

g03129096

421-3714 DOOR GP-ACCESS

S/N: HAH1-UP

PART OF 390-3675 HOOD & GUARD GP

SMCS-7273 **i05976735**

NOTE	REF NO	GRAPHIC REF	PART NUMBER	QTY	PART NAME 1 2 3 4 5 6 (PRODUCT LEVEL)	SEE PAGE
M	1	1	**099-6418**	4	NUT (M6X1-THD)	
J	2	1	**358-0880**	1	LATCH AS	
	2A	1	**385-3458**	1	LOCK AS	
	3	1	*384-9083*	1	DOOR AS-ACCESS	
	3A	1	**184-8898**	2	HINGE	
P	4	1	**348-5409**		SEAL (41-DM)	

J - REQUIRES CORPORATE KEY
M - METRIC PART
P - ORDER BY THE DECIMETER

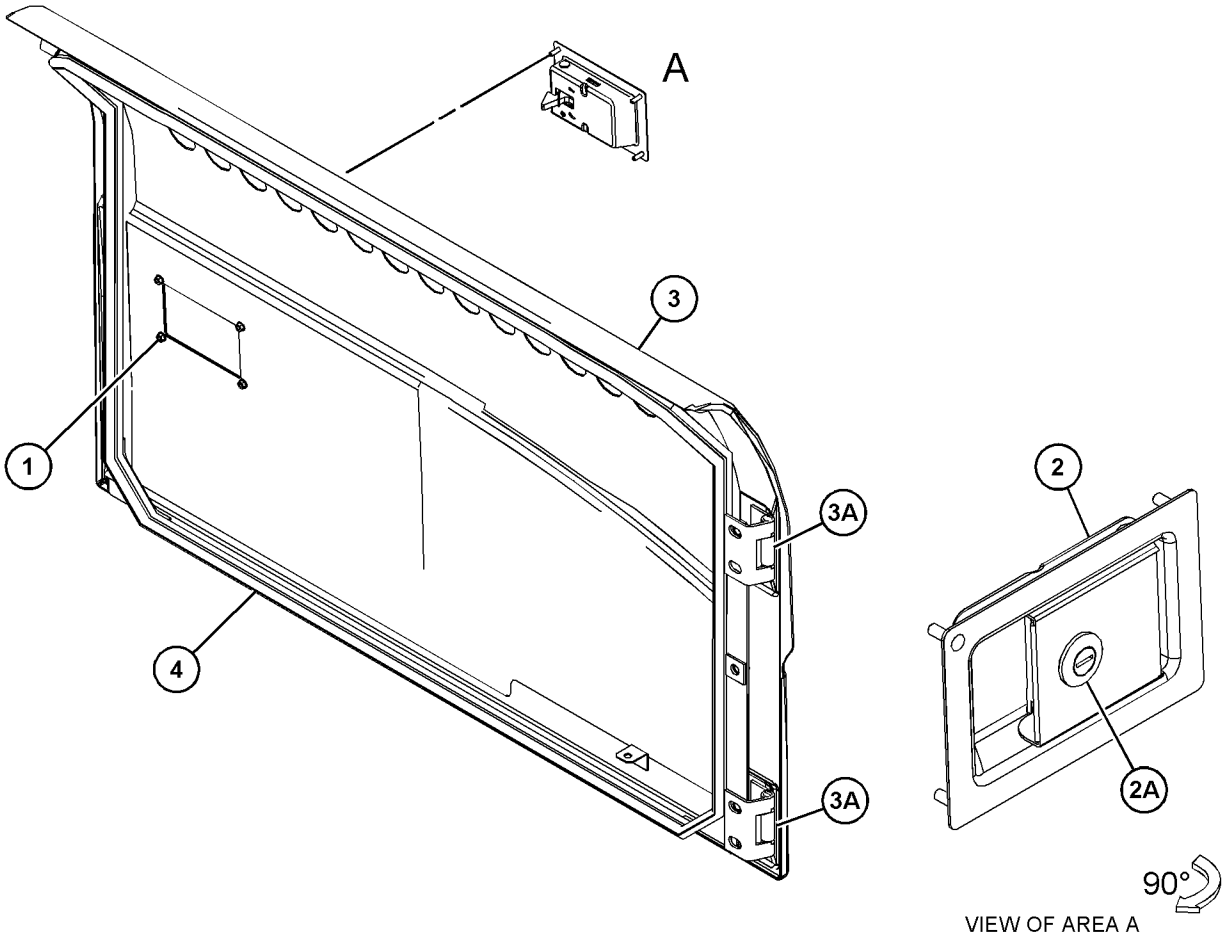

VIEW OF AREA A

GRAPHIC #1 **<END>** g03646797

421-3716 DOOR GP-ACCESS

S/N: HAH1-UP

PART OF 390-3675 HOOD & GUARD GP

SMCS-7273 **i05976736**

NOTE	REF NO	GRAPHIC REF	PART NUMBER	QTY	PART NAME 1 2 3 4 5 6 (PRODUCT LEVEL)	SEE PAGE
M	1	1	**099-6418**	4	NUT (M6X1-THD)	
	2	1	**184-8862**	1	COVER	
J	3	1	**358-0921**	1	LATCH AS	
	3A	1	**385-3458**	1	LOCK AS	
	4	1	*384-9087*	1	DOOR AS	
	4A	1	**184-8898**	2	HINGE	
P	5	1	**348-5409**		SEAL (32-DM)	

J - REQUIRES CORPORATE KEY
M - METRIC PART
P - ORDER BY THE DECIMETER

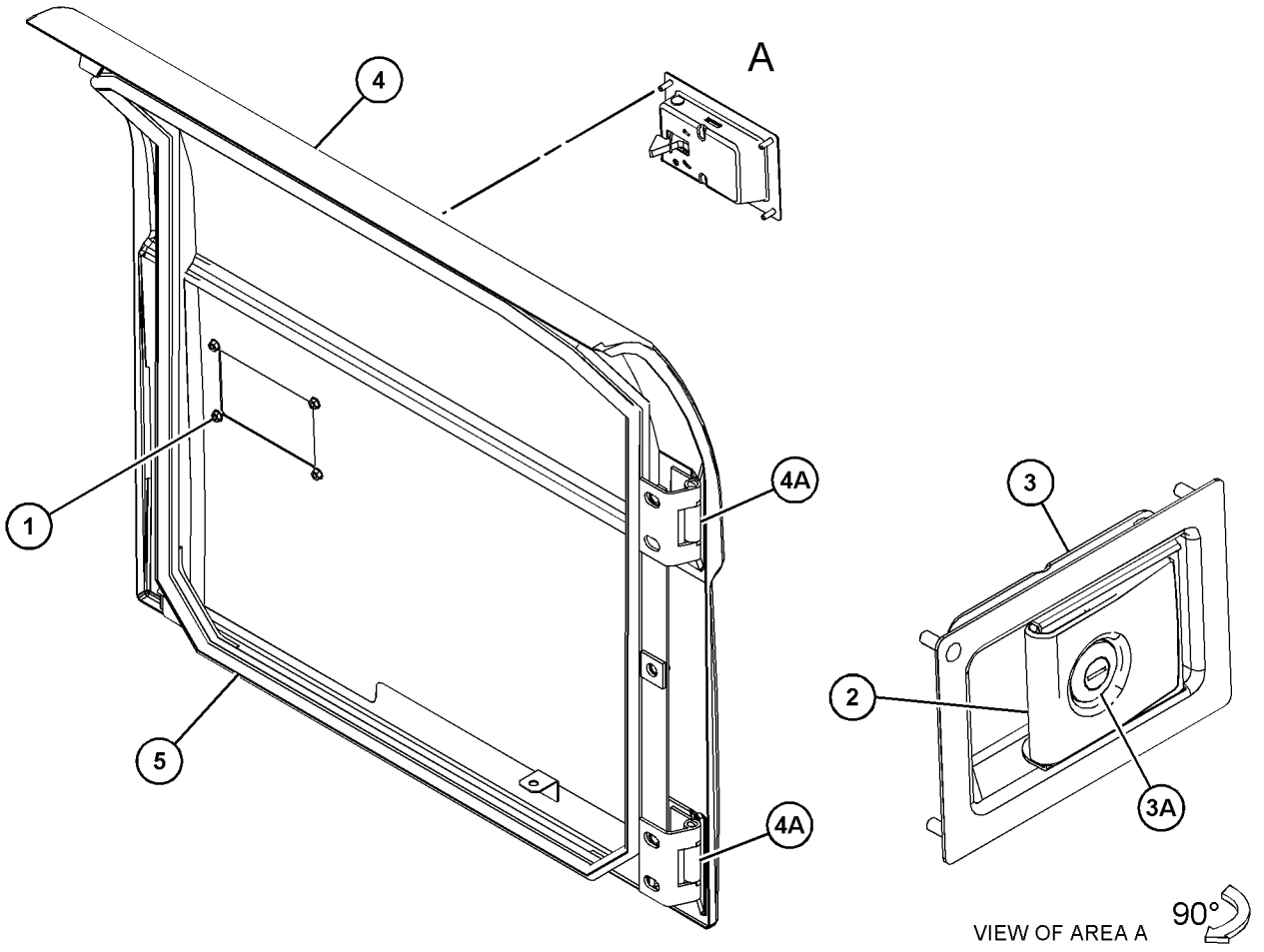

GRAPHIC #1 **<END>** g03646828

387-3488 FRAME GP-UPPER

S/N: HAH1-UP

PART OF 454-5575 CHASSIS AR

SMCS-7051 **i05845975**

NOTE	REF NO	GRAPHIC REF	PART NUMBER	QTY	PART NAME 1 2 3 4 5 6 (PRODUCT LEVEL)	SEE PAGE
B	1	1	**093-0086**	4	SHIM (1-MM THK)	
B	2	1	**093-0118**	2	SHIM (2-MM THK)	
	3	1	**093-0349**	3	WASHER (22X60X6-MM THK)	
	4	1	**107-9739**	2	PIN AS	
	5	1	**118-5982**	2	SPACER (73X105X14-MM THK)	
B	6	1	**133-2424**	2	SHIM (0.5-MM THK)	
	7	1	**212-2838**	2	SHIM (2-MM THK)	
	8	1	**267-0061**	1	PIN AS	
B	9	1	**308-8775**	1	SHIM (0.5-MM THK)	
B	10	1	**308-8776**	2	SHIM (1-MM THK)	
B	11	1	**308-8777**	1	SHIM (2-MM THK)	
	12	1	**387-3489**	1	FRAME AS-UPPER	
	12A	1	**186-5639**	1	STEP AS	
M	13	1	**453-2844**	3	BOLT (M20X2.5X30-MM)	
					THE FOLLOWING REPAIR PART IS AVAILABLE FOR REPAIR OF DAMAGED SKIRTS	
F			**180-7614**	1	PLATE-SKIRT (1100-MM)	

B - USE AS REQUIRED
F - NOT SHOWN
M - METRIC PART

387-3488 **FRAME GP-UPPER (*contd.*)** **i05845975**

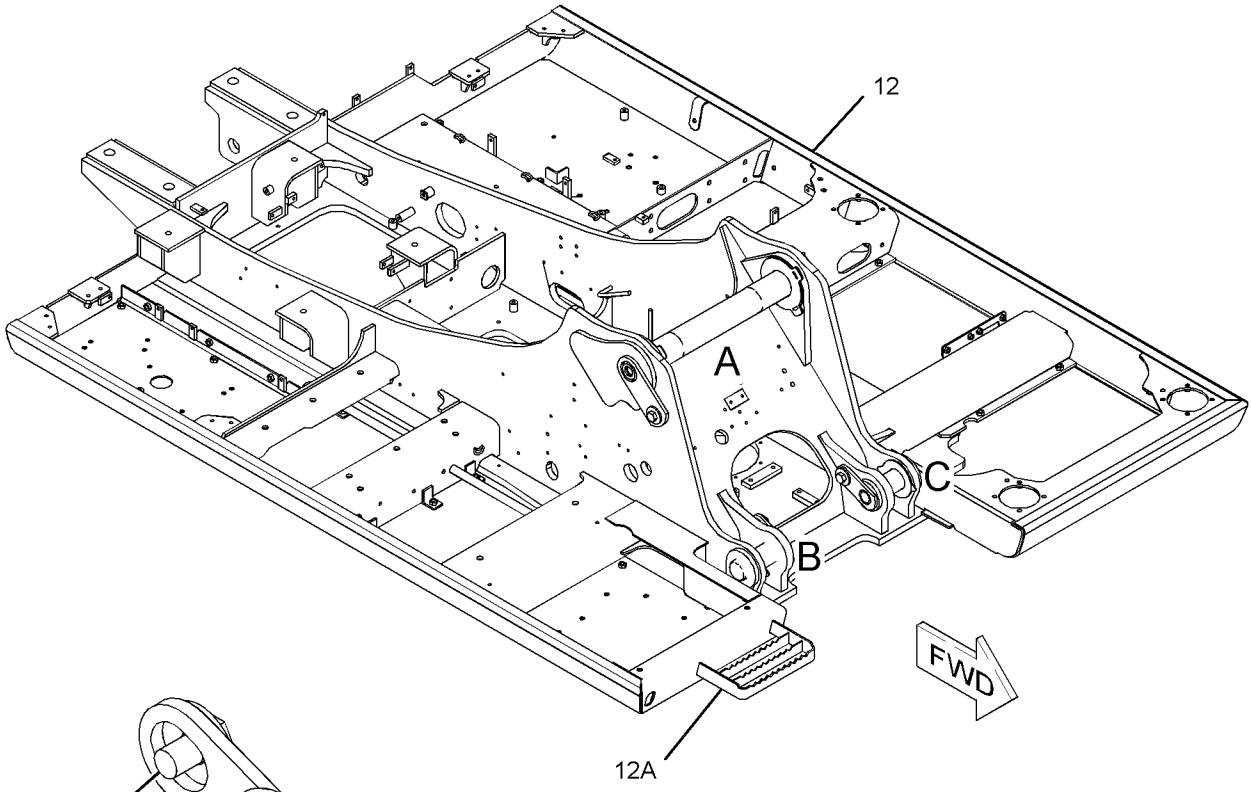

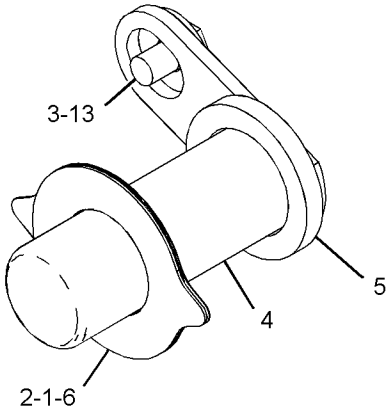

VIEW OF AREA B

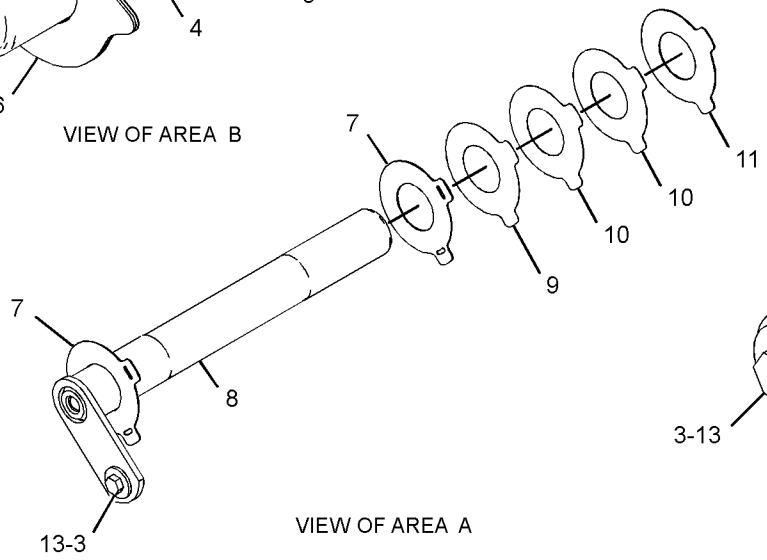

VIEW OF AREA A

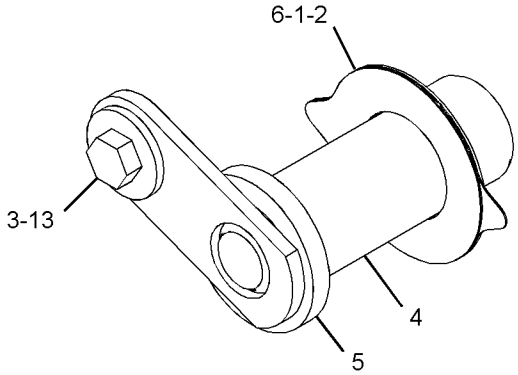

VIEW OF AREA C

GRAPHIC #1 **<END>** g03129203

378-9606 GEAR & BEARING GP-SWING

S/N: HAH1-UP

PART OF 260-6975 FRAME AR-UNDERCARRIAGE

SMCS-7063 **i05972453**

NOTE	REF NO	GRAPHIC REF	PART NUMBER	QTY	PART NAME 1 2 3 4 5 6 (PRODUCT LEVEL)	SEE PAGE
	1	1	**2Y-5503**	1	CORK	
	2	1	**4I-7444**	1	BOOT	
	3	1	**4I-7446**	1	GASKET	
	4	1	**4I-7511**	1	RETAINER	
	5	1	**171-9464**	68	SPACER (20.6X38X6-MM THK)	
Y	6	1	**378-9608**	1	GEAR & BEARING GP-SWING	148
	7	1	**095-7993**	1	DOWEL	
	8	1	**148-4703**	1	COVER	
	9	1	**148-4704**	1	GASKET	
	10	1	**4I-7326**	1	STRIP	
	11	1	**4I-7512**	1	CLAMP-HOSE	
M	12	1	**6V-3532**	36	BOLT (M20X2.5X60-MM)	
M	13	1	**8T-0362**	32	BOLT (M20X2.5X110-MM)	
	14	1	**8T-4121**	14	WASHER-HARD (11X21X2.5-MM THK)	
M	15	1	**8T-4136**	12	BOLT (M10X1.5X25-MM)	
M	16	1	**8T-4137**	2	BOLT (M10X1.5X20-MM)	
BF			**1U-8846**	1	SEALANT-GASKET	

B - USE AS REQUIRED
F - NOT SHOWN
M - METRIC PART
Y - SEPARATE ILLUSTRATION

378-9606 **GEAR & BEARING GP-SWING (*contd.*)** **i05972453**

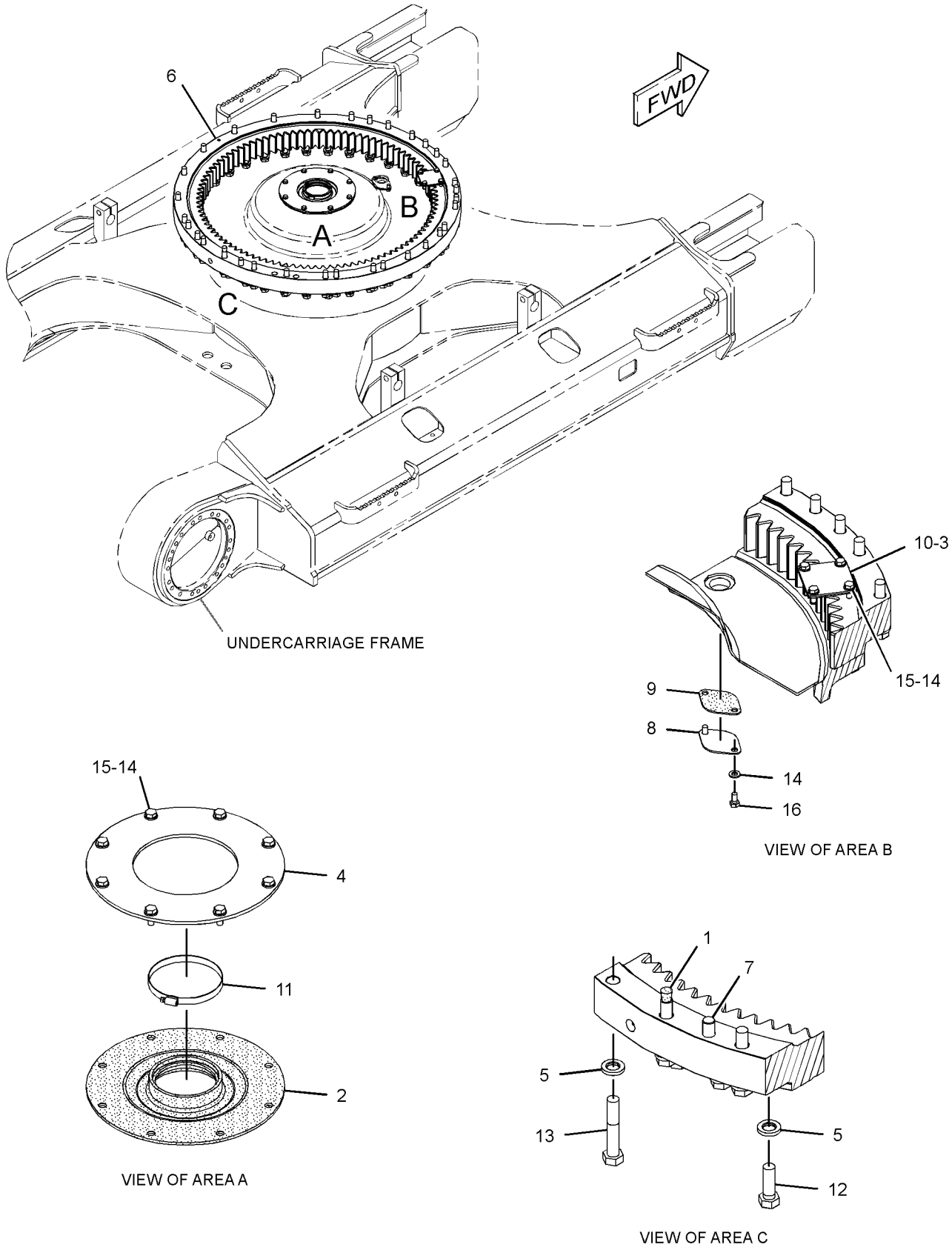

GRAPHIC #1 **<END>** g03128944

378-9608 GEAR & BEARING GP-SWING

S/N: HAH1-UP

PART OF 378-9606 GEAR & BEARING GP-SWING

SMCS-7063 **i05972469**

NOTE	REF NO	GRAPHIC REF	PART NUMBER	QTY	PART NAME 1 2 3 4 5 6 (PRODUCT LEVEL)	SEE PAGE
	1	1	**229-1081**	1	SEAL-DUST	
	2	1	**3B-8489**	2	FITTING-GREASE	
E	3	1	**148-4685**		SEAL (335-CM)	

E - ORDER BY THE CENTIMETER

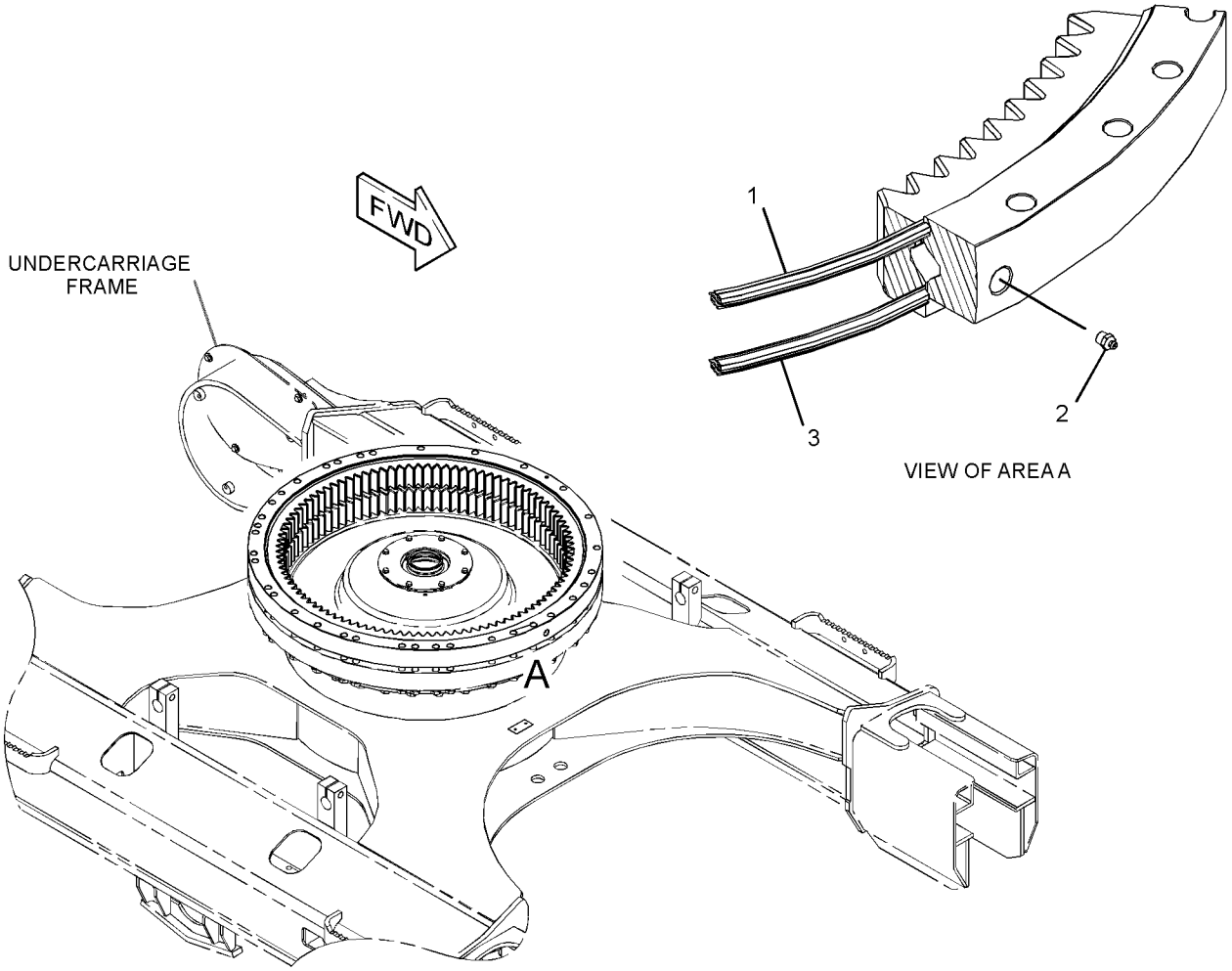

GRAPHIC #1 **<END>** g03146837

390-3677 GUARD GP-BOTTOM

S/N: HAH1-UP
PART OF 454-5646, 454-5647 DISTRIBUTION AR
AN ATTACHMENT

SMCS-7153 **i04942939**

NOTE	REF NO	GRAPHIC REF	PART NUMBER	QTY	PART NAME 1 2 3 4 5 6 (PRODUCT LEVEL)	SEE PAGE
	1	1	**268-0581**	1	SHEET	
	2	1	**268-0582**	1	SHEET	
	3	1	**313-8080**	1	SHEET	
	4	1	**391-9681**	1	SHEET	
	5	1	**391-9683**	1	SHEET	
	6	1	**392-2673**	1	SHEET AS	
M	7	1	**135-8576**	28	BOLT AS-LOCKING	

M - METRIC PART

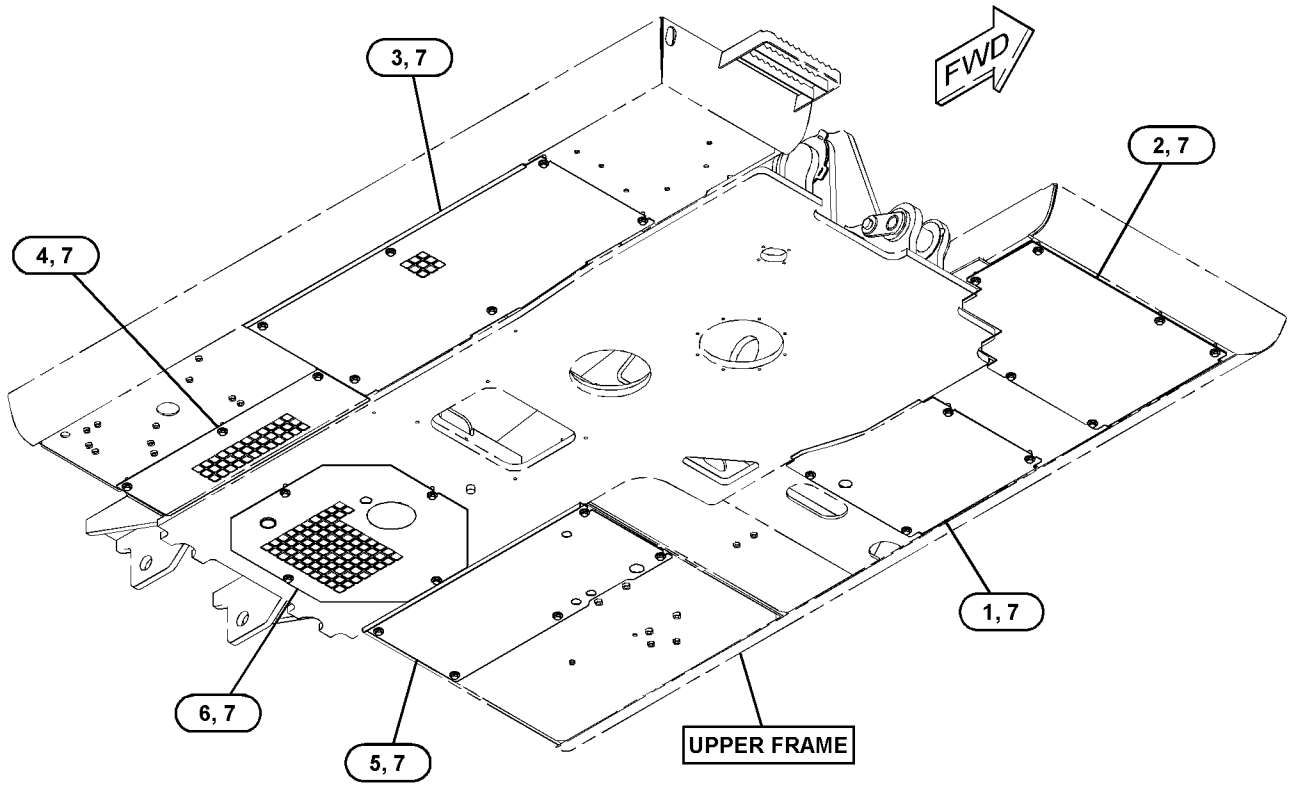

GRAPHIC #1 **<END>** g03128776

170-2602 HANDRAIL GP–FRONT, RH

S/N: HAH1-UP

PART OF 454-5575 CHASSIS AR

SMCS-7256 **i04232829**

NOTE	REF NO	GRAPHIC REF	PART NUMBER	QTY	PART NAME 1 2 3 4 5 6 (PRODUCT LEVEL)	SEE PAGE
	1	1	**193-9712**	1	HANDRAIL AS	
	2	1	**177-5880**	2	SLEEVE	
	3	1	**177-5879**	1	CLAMP	
M	4	1	**135-8578**	3	BOLT AS	
M	5	1	**135-8573**	2	BOLT AS	

M - METRIC PART

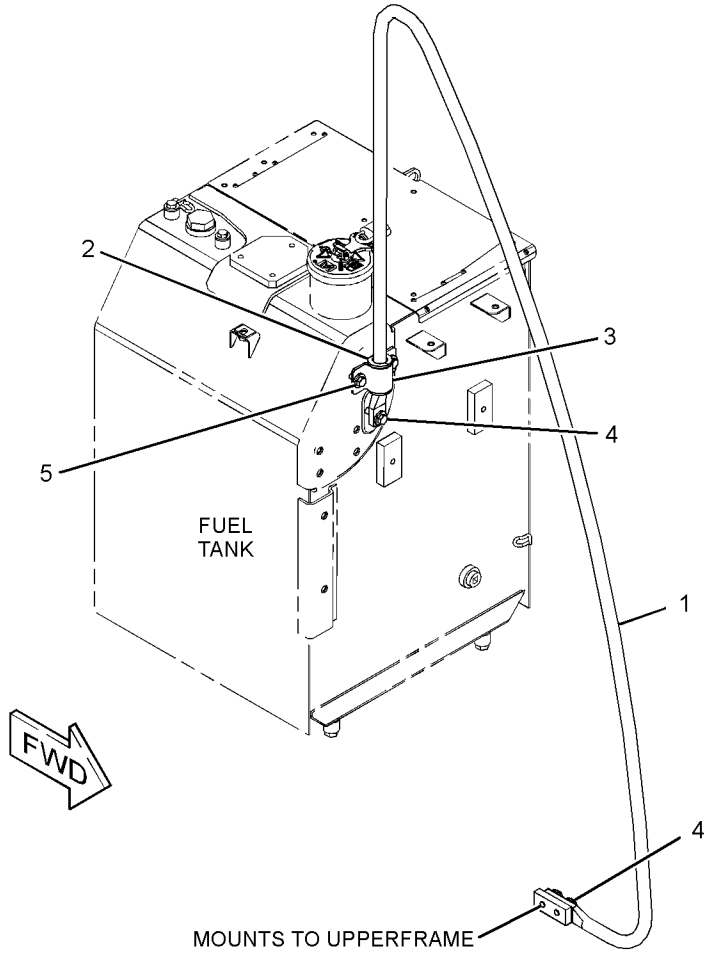

GRAPHIC #1 **<END>** g02351108

390-3675 HOOD & GUARD GP

S/N: HAH1-UP

PART OF 454-5575 CHASSIS AR

SMCS-7251, 7276 **i05976734**

NOTE	REF NO	GRAPHIC REF	PART NUMBER	QTY	PART NAME 1 2 3 4 5 6 (PRODUCT LEVEL)	SEE PAGE
	1	2	**4I-0118**	2	HOOK AS	
	2	2	**4I-0232**	2	STRIKER	
	3	2	**087-3908**	2	SHIM (1-MM THK)	
	4	2	**087-3909**	2	SHIM (2-MM THK)	
	5	2	**122-4120**	2	ROD	
	6	2	**268-0651**	1	SUPPORT AS	
CY	7	1	**421-3714**	1	DOOR GP-ACCESS (LH)	142
CY	8	1	**421-3716**	1	DOOR GP-ACCESS (RH)	143
Y	9	1	**384-9089**	1	COVER AS-SOUND SUPPRESSION	141
	10	2	**392-1170**	1	SHEET AS	
	11	2	**392-1172**	1	SUPPORT AS	
	12	2	**392-1177**	1	SUPPORT AS	
	13	2	**392-1179**	1	SUPPORT AS	
		2	**7T-1099**	3	LINK	
M		2	**8T-3490**	2	NUT-WELD (M10X1.5-THD)	
M		2	**8T-3597**	3	NUT-WELD (M12X1.75-THD)	
Y	14	2	**392-1182**	1	SUPPORT AS-SOUND SUPPRESSION	160
	15	2	**392-1185**	1	SUPPORT AS	
Y	16	2	**392-1191**	1	SHEET AS-SOUND SUPPRESSION	155
Y	17	2	**392-1195**	1	SHEET AS-SOUND SUPPRESSION	156
	18	2	**392-1199**	1	SHEET AS	
	19	2	**392-1202**	1	SHEET AS	
Y	20	2	**392-1204**	1	SHEET AS-SOUND SUPPRESSION	157
Y	21	2	**392-1208**	1	SUPPORT AS-SOUND SUPPRESSION	161
	22	2	**392-1216**	1	SUPPORT AS	
Y	23	1	**392-1218**	1	SHEET AS-SOUND SUPPRESSION	158
	24	1	**392-1245**	1	SHEET AS	
	25	1	**392-1249**	1	SHEET AS	
Y	26	1	**392-1250**	1	HOOD GP-ENGINE	154
	27	2	**392-1262**	1	SPRING AS-GAS (ENGINE HOOD)	
	28	2	**392-1263**	1	SHEET AS	
M		2	**8T-3597**	2	NUT-WELD (M12X1.75-THD)	
	29	2	**392-1276**	1	SUPPORT AS	
M		2	**8T-3597**	2	NUT-WELD (M12X1.75-THD)	
M		2	**8T-3612**	2	NUT-WELD (M8X1.25-THD)	
Y	30	2	**392-2678**	1	SUPPORT AS-SOUND SUPPRESSION	162
	31	1	**392-2688**	1	COVER AS-HOOD	
	32	2	**392-2689**	1	SUPPORT AS	
M		2	**8T-3597**	2	NUT-WELD (M12X1.75-THD)	
M		2	**8T-3612**	3	NUT-WELD (M8X1.25-THD)	
	33	1	**396-8008**	1	SHEET AS	
M		1	**8T-3490**	2	NUT-WELD (M10X1.5-THD)	
	34	1	**396-8009**	1	SHEET AS-SOUND SUPPRESSION	
J		1	**348-5409**		SEAL (9-DM)	
		1	**392-1281**	2	LINER	
	35	2	**114-6285**	2	BAR	
M	36	1,2	**135-8573**	41	BOLT AS	
M	37	1,2	**135-8575**	55	BOLT AS	
M	38	2	**135-8577**	2	BOLT AS	
M	39	2	**135-8578**	6	BOLT AS	
	40	2	**3B-4618**	3	PIN-COTTER	
	41	2	**4I-1205**	4	BUMPER	
M	42	2	**5C-7261**	1	NUT (M8X1.25-THD)	
	43	2	**5P-4115**	4	WASHER-HARD (7.2X19X2-MM THK)	
	44	2	**7F-3708**	1	PIN	
	45	1,2	**8T-4121**	9	WASHER-HARD (11X21X2.5-MM THK)	
M	46	2	**8T-4133**	4	NUT (M10X1.5-THD)	
M	47	1	**8T-4136**	3	BOLT (M10X1.5X25-MM)	

390-3675 **HOOD & GUARD GP (*contd.*)** **i05976734**

NOTE	REF NO	GRAPHIC REF	PART NUMBER	QTY	PART NAME 1 2 3 4 5 6 (PRODUCT LEVEL)	SEE PAGE
M	48	1	**8T-4137**	2	BOLT (M10X1.5X20-MM)	
M	49	2	**8T-4138**	4	BOLT (M6X1X20-MM)	
	50	2	**8T-4224**	5	WASHER-HARD (8.8X16X2-MM THK)	
M	51	2	**8T-4908**	4	BOLT (M8X1.25X25-MM)	

C - CHANGE FROM PREVIOUS TYPE
J - ORDER BY THE DECIMETER
M - METRIC PART
Y - SEPARATE ILLUSTRATION

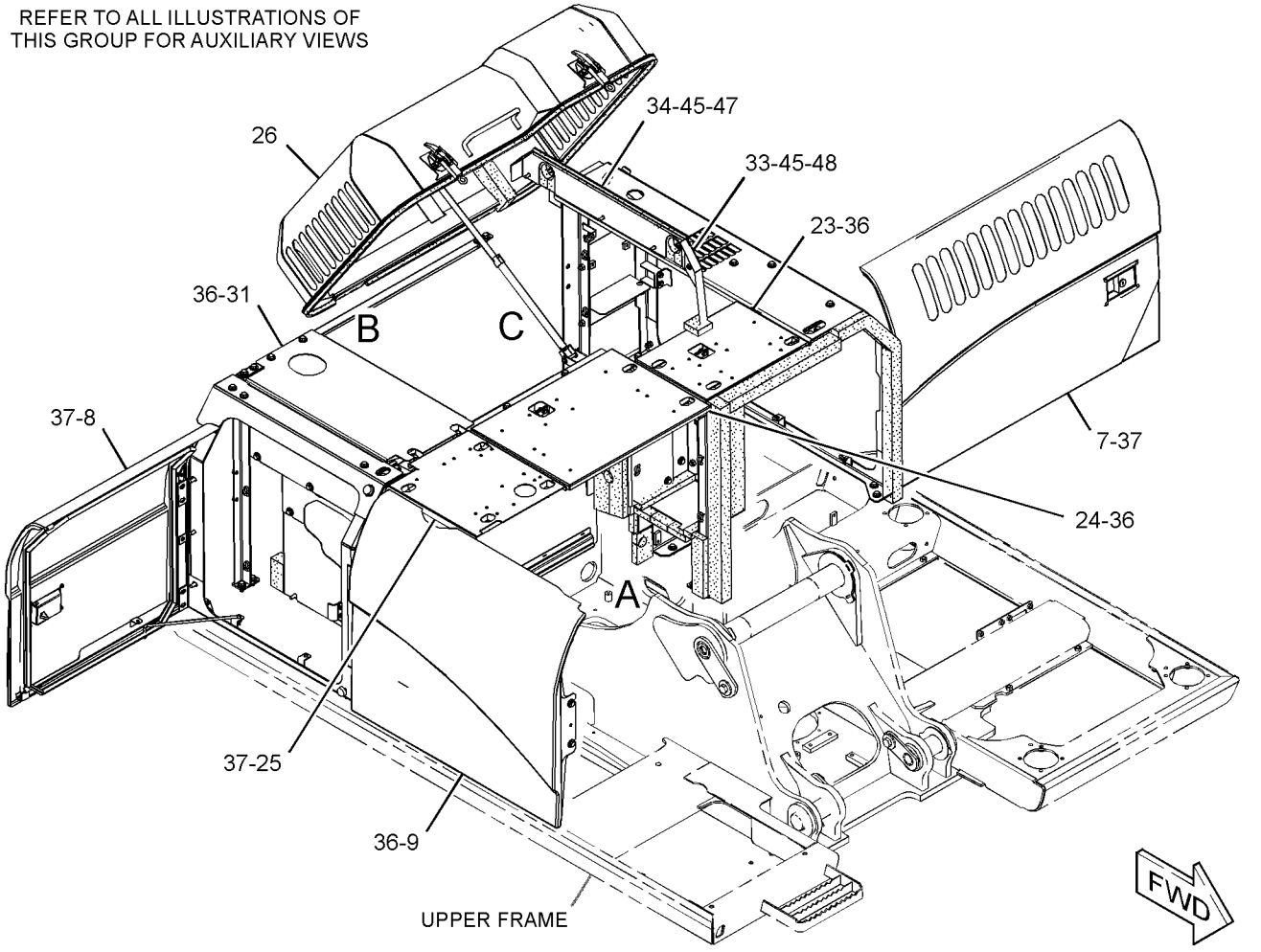

GRAPHIC #1 g03142236

390-3675 **HOOD & GUARD GP (*contd.*)** **i05976734**

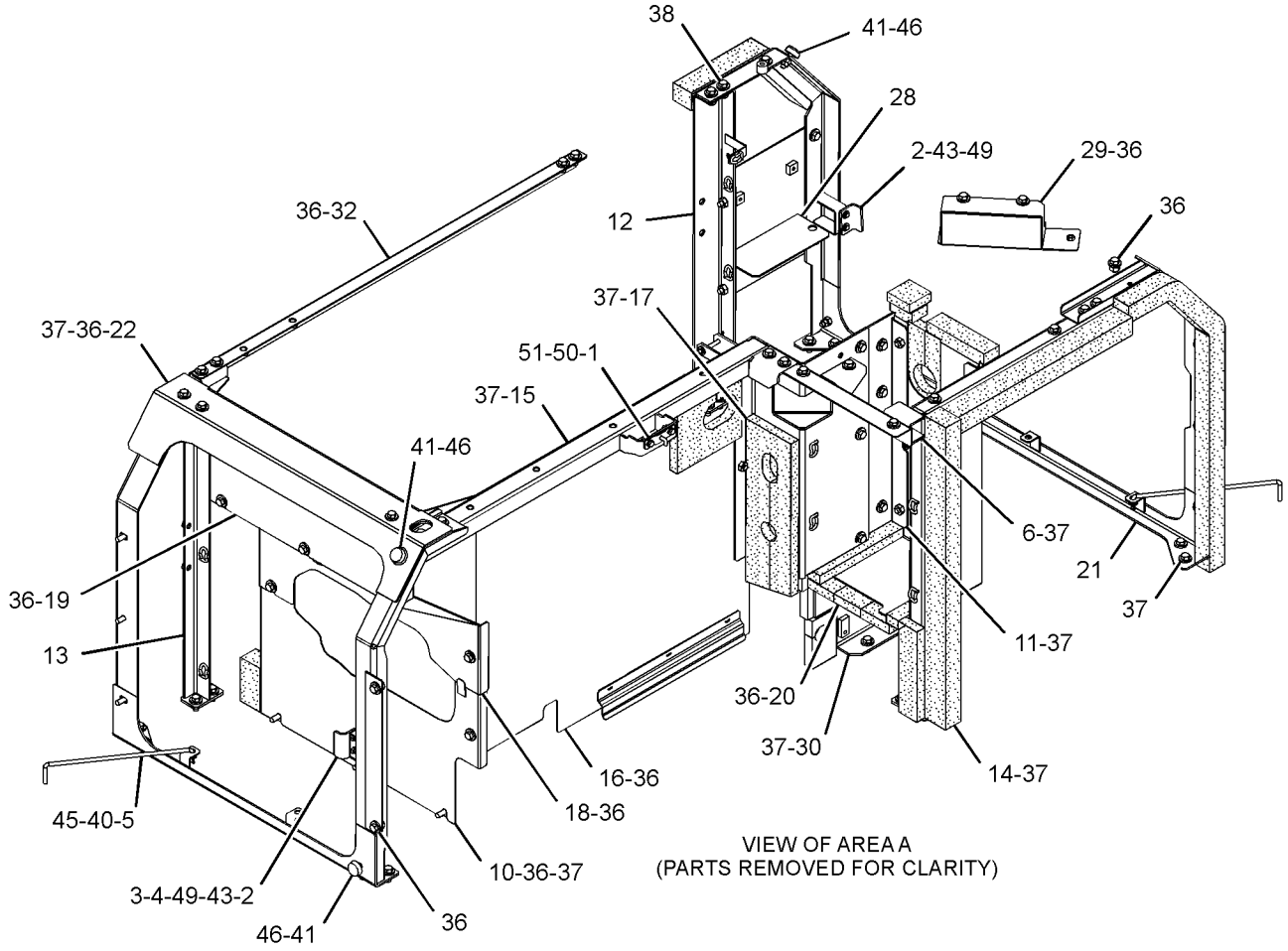

VIEW OF AREA A
(PARTS REMOVED FOR CLARITY)

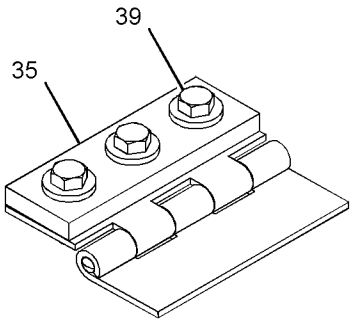

VIEW OF AREA B

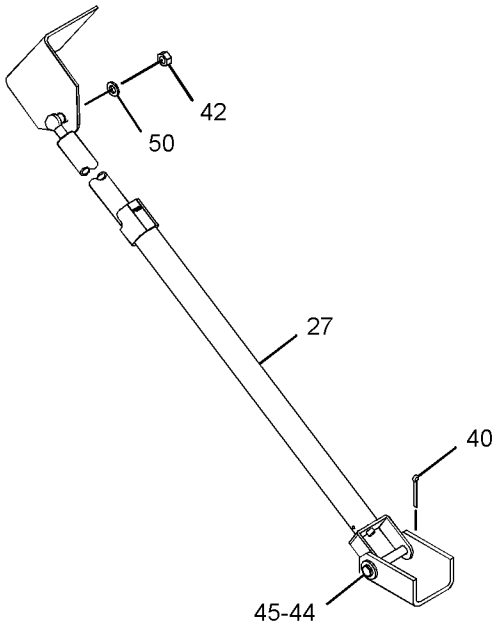

VIEW OF AREA C

GRAPHIC #2 **<END>** g03142237

392-1250 HOOD GP-ENGINE

S/N: HAH1-UP

PART OF 390-3675 HOOD & GUARD GP

SMCS-7251 **i04954016**

NOTE	REF NO	GRAPHIC REF	PART NUMBER	QTY	PART NAME 1 2 3 4 5 6 (PRODUCT LEVEL)	SEE PAGE
	1	1	**096-4129**	2	CUSHION	
J	2	1	**375-8749**	1	LATCH AS	
	3	1	**375-8750**	1	LATCH AS	
	4	1	*392-1251*	1	HOOD AS	
	4A	1	**114-6289**	2	HINGE	
	4B	1	**268-0720**	1	HANDLE	
	5	1	**392-1260**	1	LINER	
	6	1	**392-1261**	1	LINER	
	7	1	**8T-0328**	4	WASHER-HARD (5.5X10X1-MM THK)	
	8	1	**8T-4224**	4	WASHER-HARD (8.8X16X2-MM THK)	
M	9	1	**8T-4908**	4	BOLT (M8X1.25X25-MM)	
M	10	1	**8T-6693**	4	SCREW-MACHINE (M5X0.8X16-MM)	
D	11	1	**101-9848**	1	SEAL (0.52-M)	
D	11A	1	**101-9848**	1	SEAL (3.7-M)	

D - ORDER BY THE METER
J - REQUIRES CORPORATE KEY
M - METRIC PART

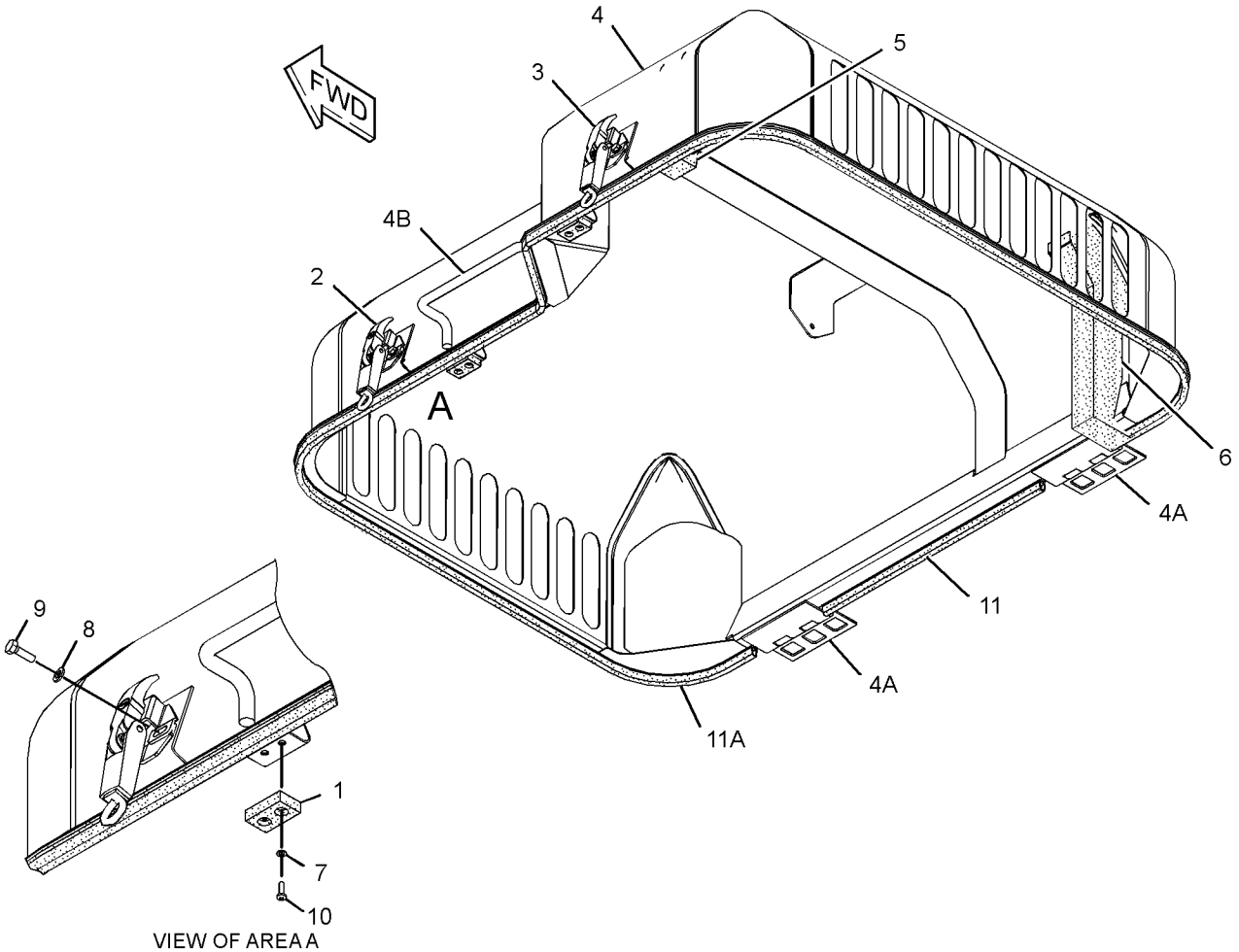

VIEW OF AREA A

GRAPHIC #1 **<END>** g03137197

392-1191 SHEET AS-SOUND SUPPRESSION

S/N: HAH1-UP

PART OF 390-3675 HOOD & GUARD GP

SMCS-1801, 7076, 7251, 7267

i04953989

NOTE	REF NO	GRAPHIC REF	PART NUMBER	QTY	PART NAME 1 2 3 4 5 6 (PRODUCT LEVEL)	SEE PAGE
	1	1	**268-0495**	1	LINER	
	2	1	**392-1194**	1	LINER	

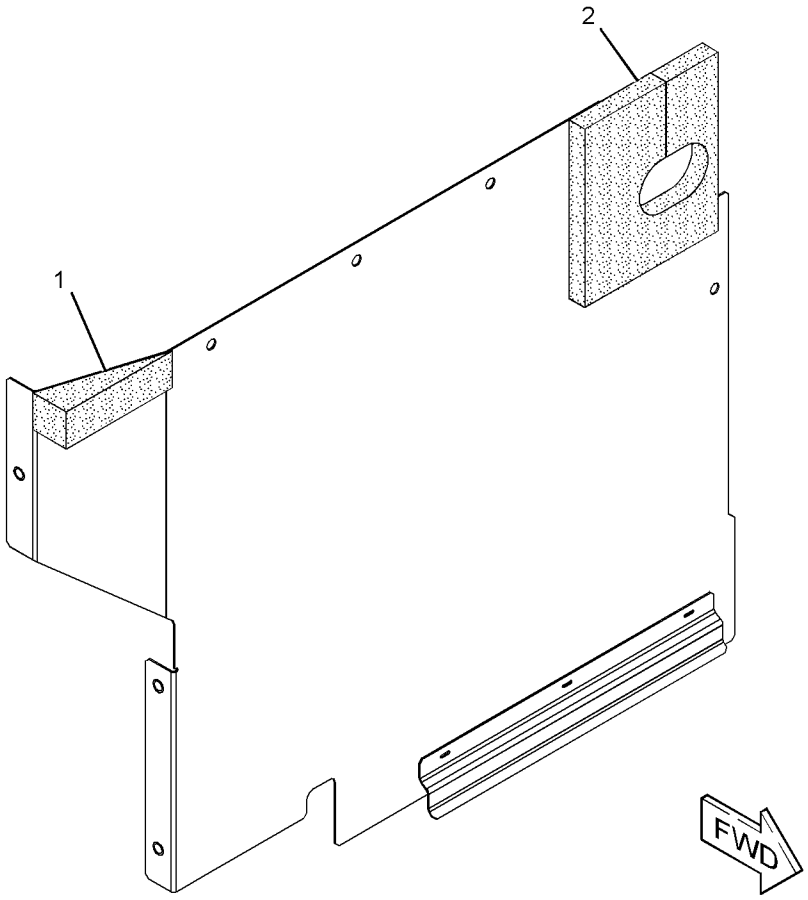

GRAPHIC #1

<END>

g03135597

392-1195 SHEET AS-SOUND SUPPRESSION

S/N: HAH1-UP

PART OF 390-3675 HOOD & GUARD GP

SMCS-1801, 7076, 7251, 7267

i04954012

NOTE	REF NO	GRAPHIC REF	PART NUMBER	QTY	PART NAME 1 2 3 4 5 6 (PRODUCT LEVEL)	SEE PAGE
	1	1	**268-0497**	1	LINER	
	2	1	**391-9690**	1	LINER	

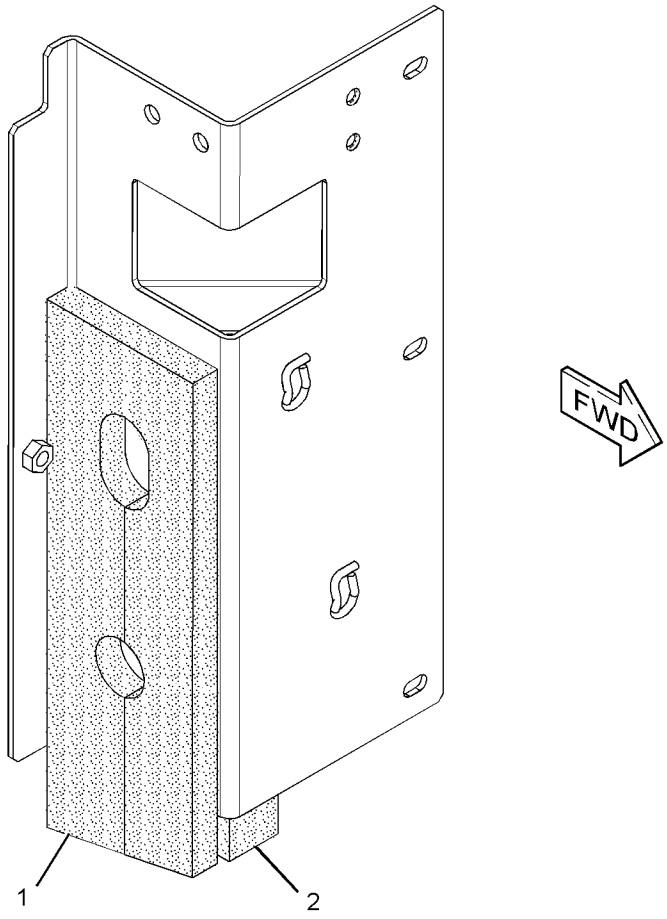

GRAPHIC #1

<END>

g03135580

392-1204 SHEET AS-SOUND SUPPRESSION

S/N: HAH1-UP

PART OF 390-3675 HOOD & GUARD GP

SMCS-1801, 7076, 7251, 7267

i04951932

NOTE	REF NO	GRAPHIC REF	PART NUMBER	QTY	PART NAME 1 2 3 4 5 6 (PRODUCT LEVEL)	SEE PAGE
	1	1	**268-0714**	1	LINER	
	2	1	**268-0715**	2	LINER	
	3	1	**268-0716**	1	LINER	
	4	1	**392-1207**	1	LINER	

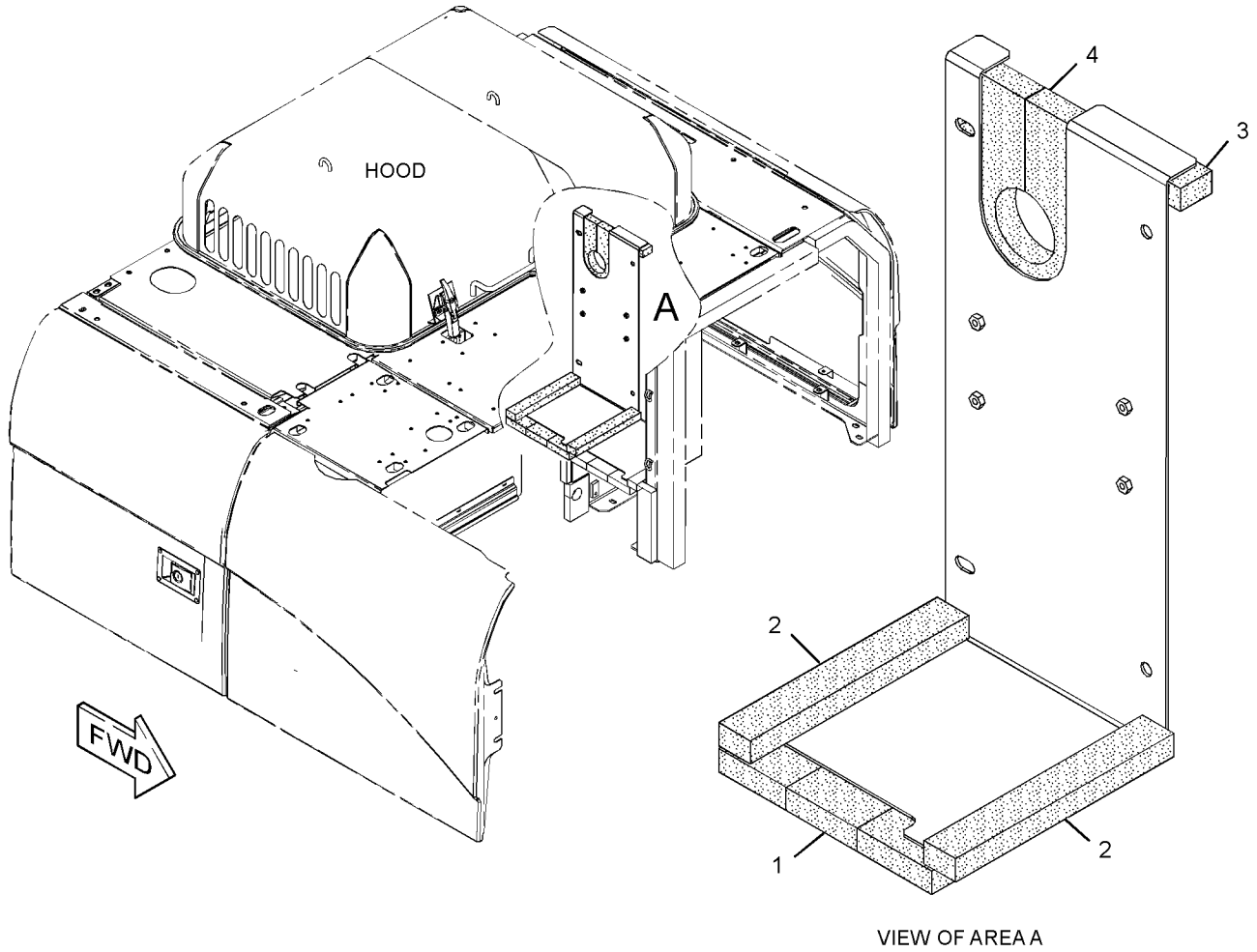

VIEW OF AREA A

GRAPHIC #1

<END>

g03135657

392-1218 SHEET AS-SOUND SUPPRESSION

S/N: HAH1-UP

PART OF 390-3675 HOOD & GUARD GP

SMCS-1801, 7076, 7251, 7267 **i04951970**

NOTE	REF NO	GRAPHIC REF	PART NUMBER	QTY	PART NAME 1 2 3 4 5 6 (PRODUCT LEVEL)	SEE PAGE
	1	1	**268-0717**	1	LINER	
	2	1	**391-1926**	1	LINER	
	3	1	**391-1927**	1	LINER	

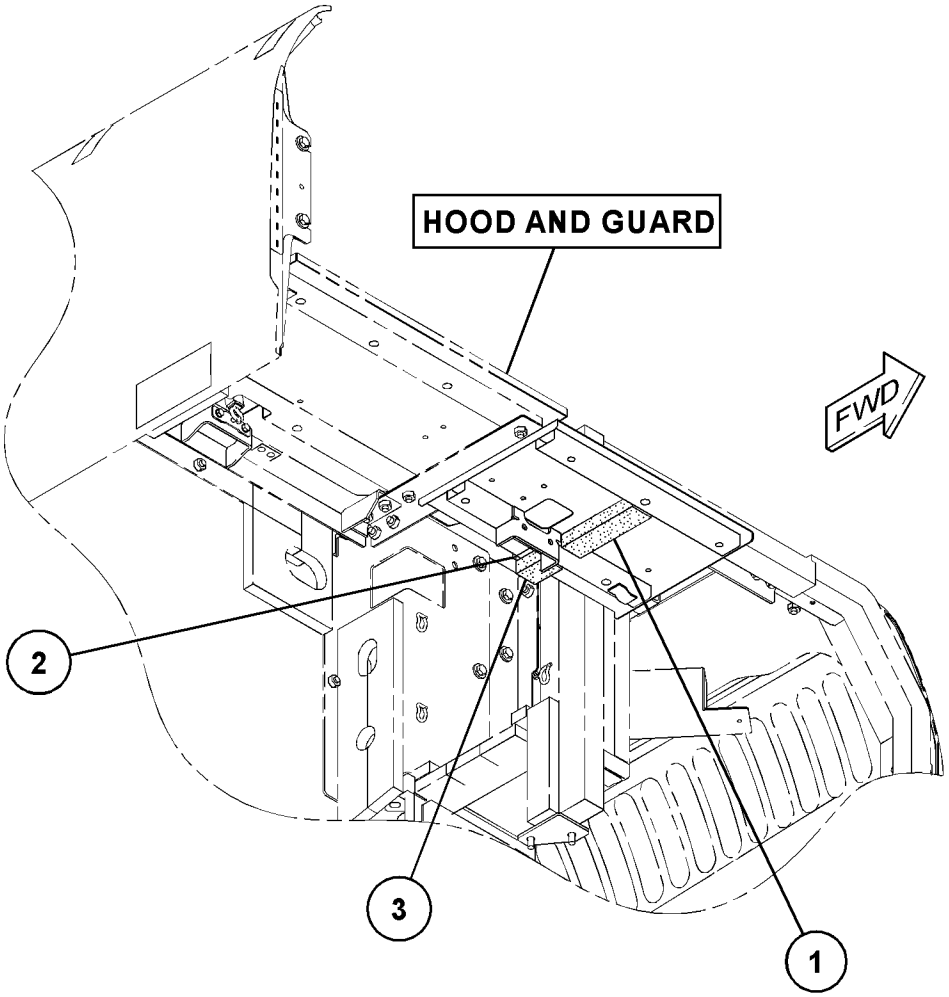

GRAPHIC #1 **<END>** g03130827

384-9014 STEP GP

S/N: HAH1-UP

PART OF 454-5575 CHASSIS AR

SMCS-7254 **i04940571**

NOTE	REF NO	GRAPHIC REF	PART NUMBER	QTY	PART NAME 1 2 3 4 5 6 (PRODUCT LEVEL)	SEE PAGE
M	1	1	**135-8573**	2	BOLT AS	
	2	1	**384-9076**	1	STEP AS	

M - METRIC PART

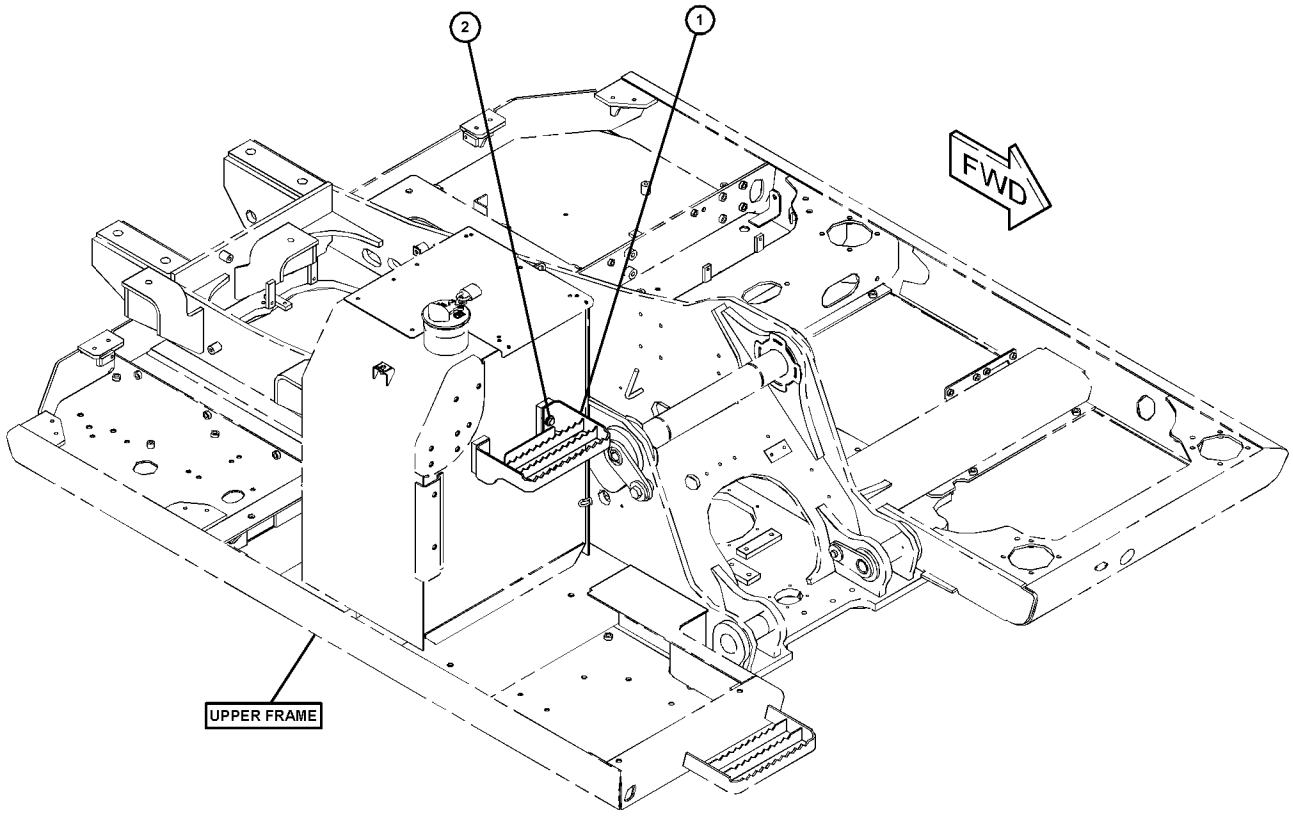

GRAPHIC #1 **<END>** g03123020

392-1182 SUPPORT AS-SOUND SUPPRESSION

S/N: HAH1-UP

PART OF 390-3675 HOOD & GUARD GP

SMCS-7276 **i04951978**

NOTE	REF NO	GRAPHIC REF	PART NUMBER	QTY	PART NAME 1 2 3 4 5 6 (PRODUCT LEVEL)	SEE PAGE
	1	1	**268-0705**	1	LINER	
	2	1	**268-0706**	1	LINER	
	3	1	**268-0719**	1	LINER	

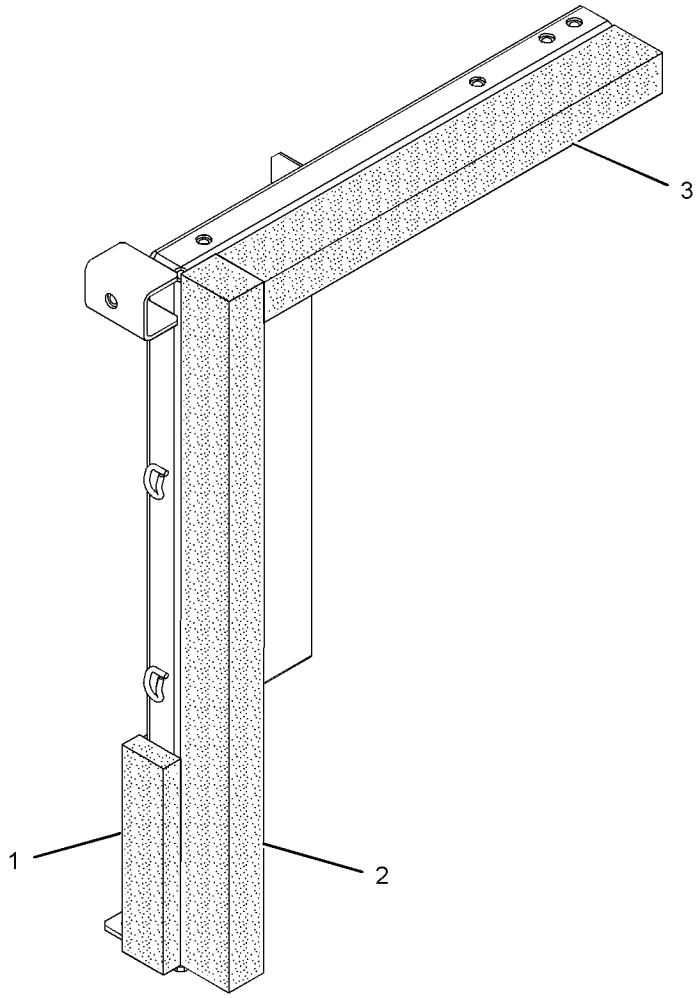

GRAPHIC #1 **<END>** g01408947

392-1208 SUPPORT AS-SOUND SUPPRESSION

S/N: HAH1-UP

PART OF 390-3675 HOOD & GUARD GP

SMCS-7276 **i04951950**

NOTE	REF NO	GRAPHIC REF	PART NUMBER	QTY	PART NAME 1 2 3 4 5 6 (PRODUCT LEVEL)	SEE PAGE
	1	1	**268-0733**	1	INSULATION	
	2	1	**273-8075**	1	LINER	

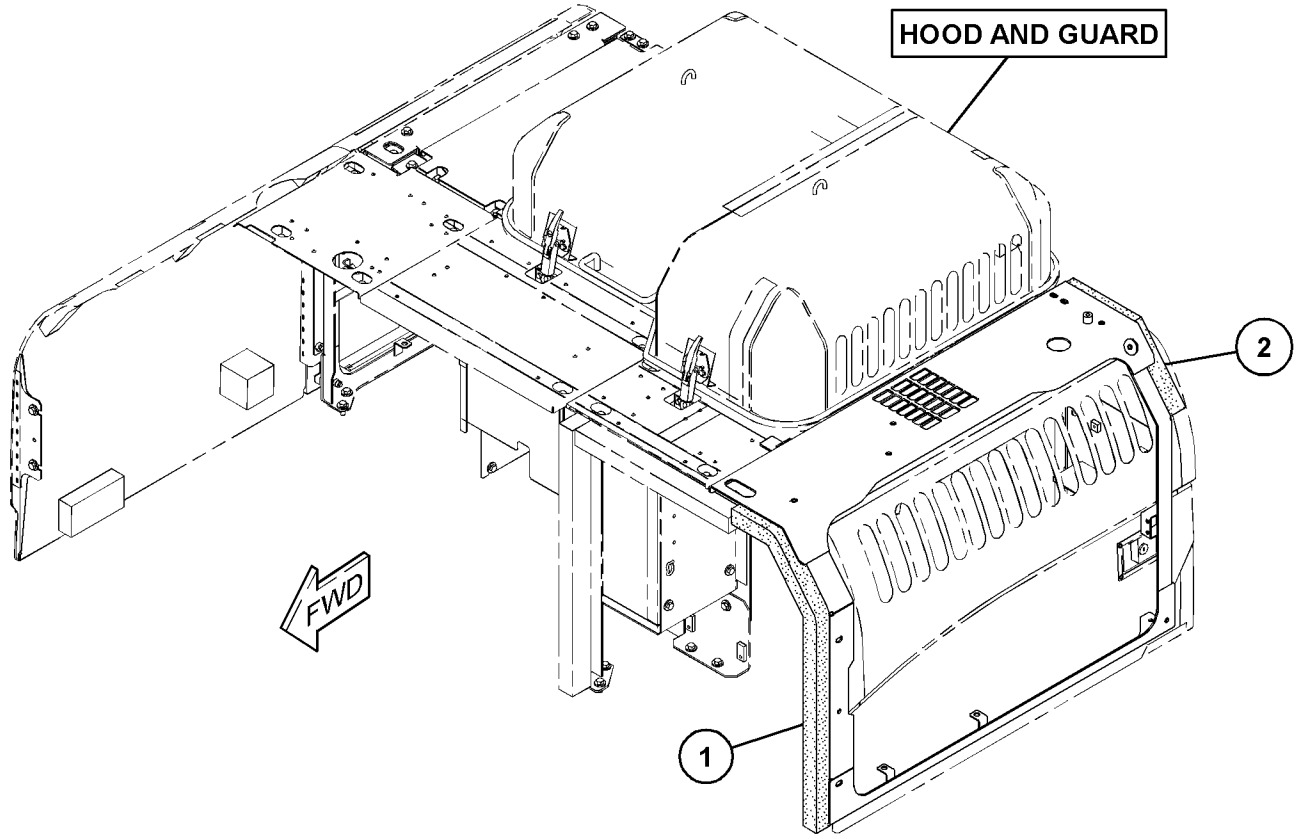

GRAPHIC #1 **<END>** g03131076

392-2678 SUPPORT AS-SOUND SUPPRESSION

S/N: HAH1-UP

PART OF 390-3675 HOOD & GUARD GP

SMCS-7276 **i04951971**

NOTE	REF NO	GRAPHIC REF	PART NUMBER	QTY	PART NAME 1 2 3 4 5 6 (PRODUCT LEVEL)	SEE PAGE
	1	1	**391-9686**	1	LINER	
	2	1	**392-1285**	1	LINER	

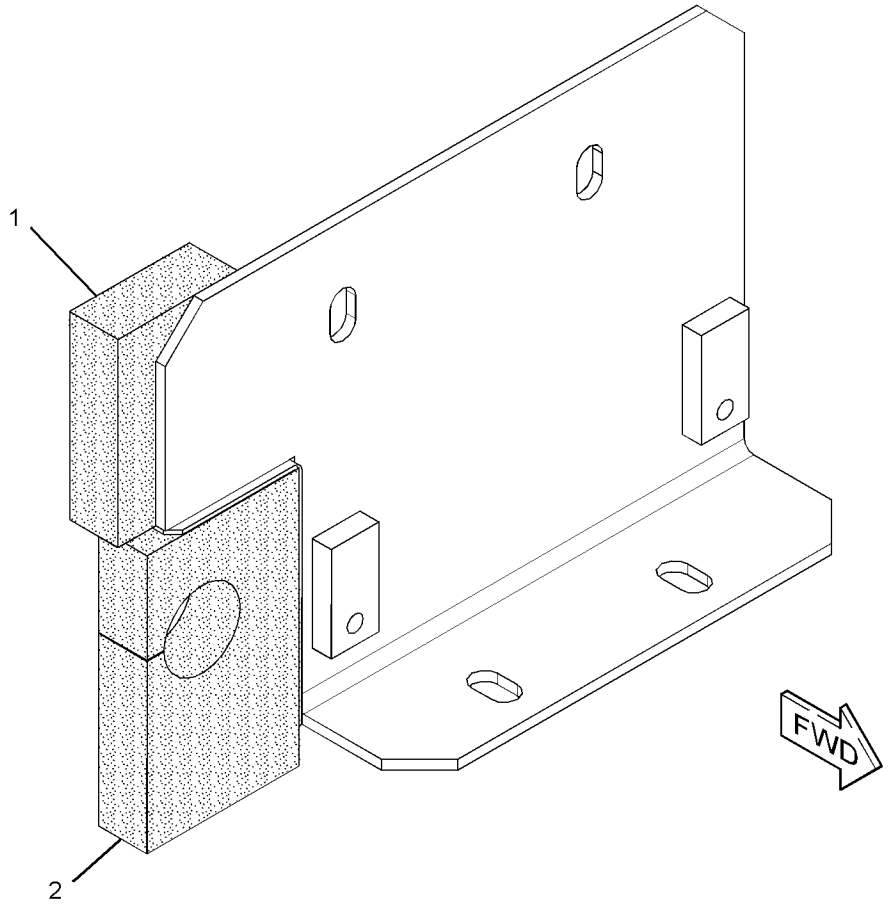

GRAPHIC #1 **<END>** g03136985

260-6975 FRAME AR-UNDERCARRIAGE

S/N: HAH1-UP

PART OF 454-5573 GENERAL AR

SMCS-4151 **i05976657**

NOTE	PART NUMBER	QTY	PART NAME 1 2 3 4 5 6 (PRODUCT LEVEL)	SEE PAGE
Y	**254-2979**	1	FRAME AS-UNDERCARRIAGE	164
Y	*378-9606*	1	GEAR & BEARING GP-SWING	146
Y	*087-5908*	2	GUARD GP-TRACK GUIDE (CENTER)	165
Y	*346-7204*	1	GUARD GP-TRAVEL MOTOR	166
Y	*248-7132*	1	IDLER GP-FRONT	167
Y	*357-7534*	1	ROLLER AR-TRACK & CARRIER	172

Y - SEPARATE ILLUSTRATION

<END>

254-2979 FRAME AS-UNDERCARRIAGE

S/N: HAH1-UP

PART OF 260-6975 FRAME AR-UNDERCARRIAGE

SMCS-4150, 7062 **i05972417**

NOTE	REF NO	GRAPHIC REF	PART NUMBER	QTY	PART NAME 1 2 3 4 5 6 (PRODUCT LEVEL)	SEE PAGE
	1	1	*359-5687*	1	FRAME AS-TRACK ROLLER (RH)	
	1A	1	**117-5540**	2	BRACKET	
	1B	1	**264-1581**	2	STEP	
	2	1	*359-5688*	1	FRAME AS-TRACK ROLLER (LH)	
	2A	1	**117-5540**	2	BRACKET	
	2B	1	**264-1581**	2	STEP	

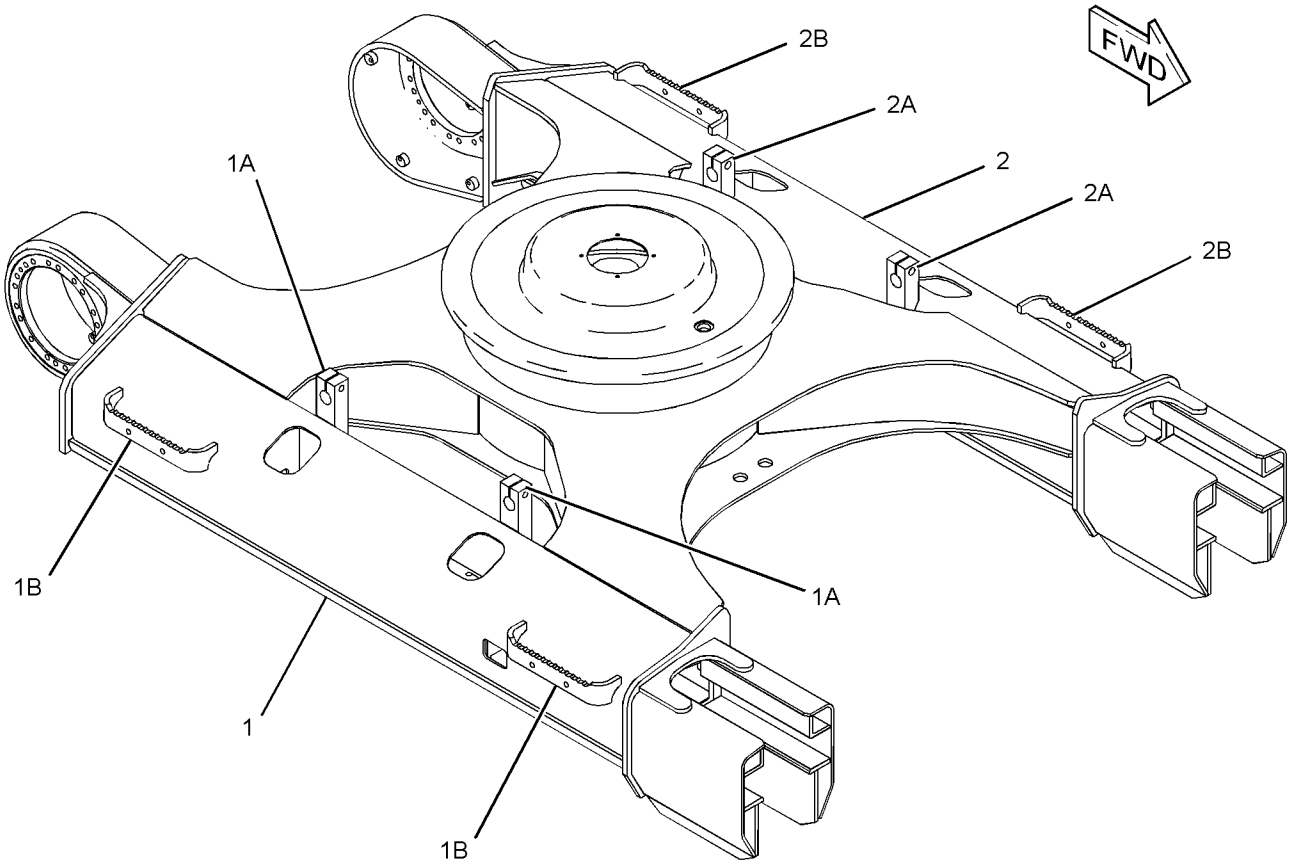

GRAPHIC #1 **<END>** g01408175

087-5908 GUARD GP-TRACK GUIDE–CENTER

S/N: HAH1-UP

PART OF 260-6975 FRAME AR-UNDERCARRIAGE

SMCS-4177 **i05811034**

NOTE	REF NO	GRAPHIC REF	PART NUMBER	QTY	PART NAME 1 2 3 4 5 6 (PRODUCT LEVEL)	SEE PAGE
	1	1	**240-2988**	1	GUARD AS-TRACK GUIDE	
	2	1	**451-2176**	4	WASHER-HARD (22X35X3.5-MM THK)	
M	3	1	**453-2845**	4	BOLT (M20X2.5X40-MM)	

M - METRIC PART

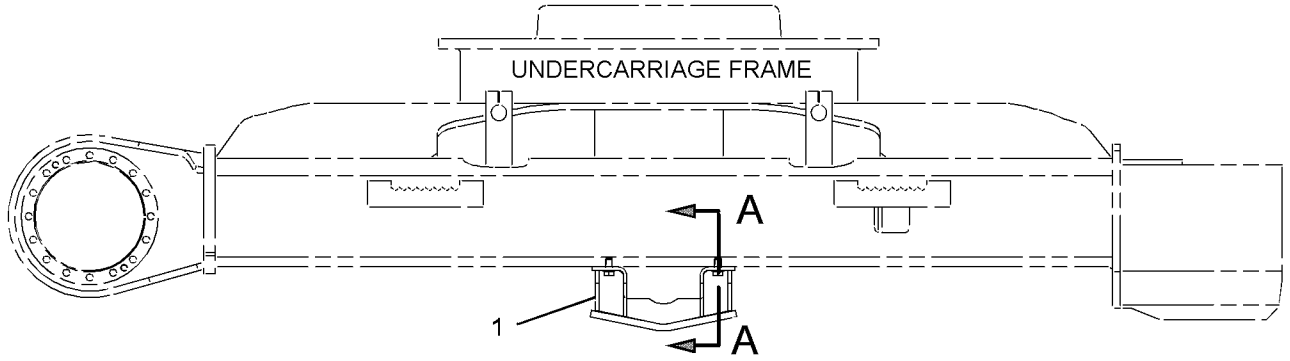

RIGHT SIDE VIEW

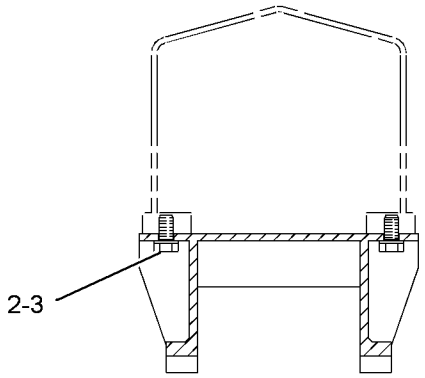

SECTION A-A

GRAPHIC #1 **<END>** g02758637

346-7204 GUARD GP-TRAVEL MOTOR

S/N: HAH1-UP

PART OF 260-6975 FRAME AR-UNDERCARRIAGE

SMCS-7163 **i04543478**

NOTE	REF NO	GRAPHIC REF	PART NUMBER	QTY	PART NAME 1 2 3 4 5 6 (PRODUCT LEVEL)	SEE PAGE
M	1	1	**135-8576**	8	BOLT AS-LOCKING	
	2	1	**346-7236**	1	COVER (RH)	
	3	1	**346-7237**	1	COVER (LH)	

M - METRIC PART

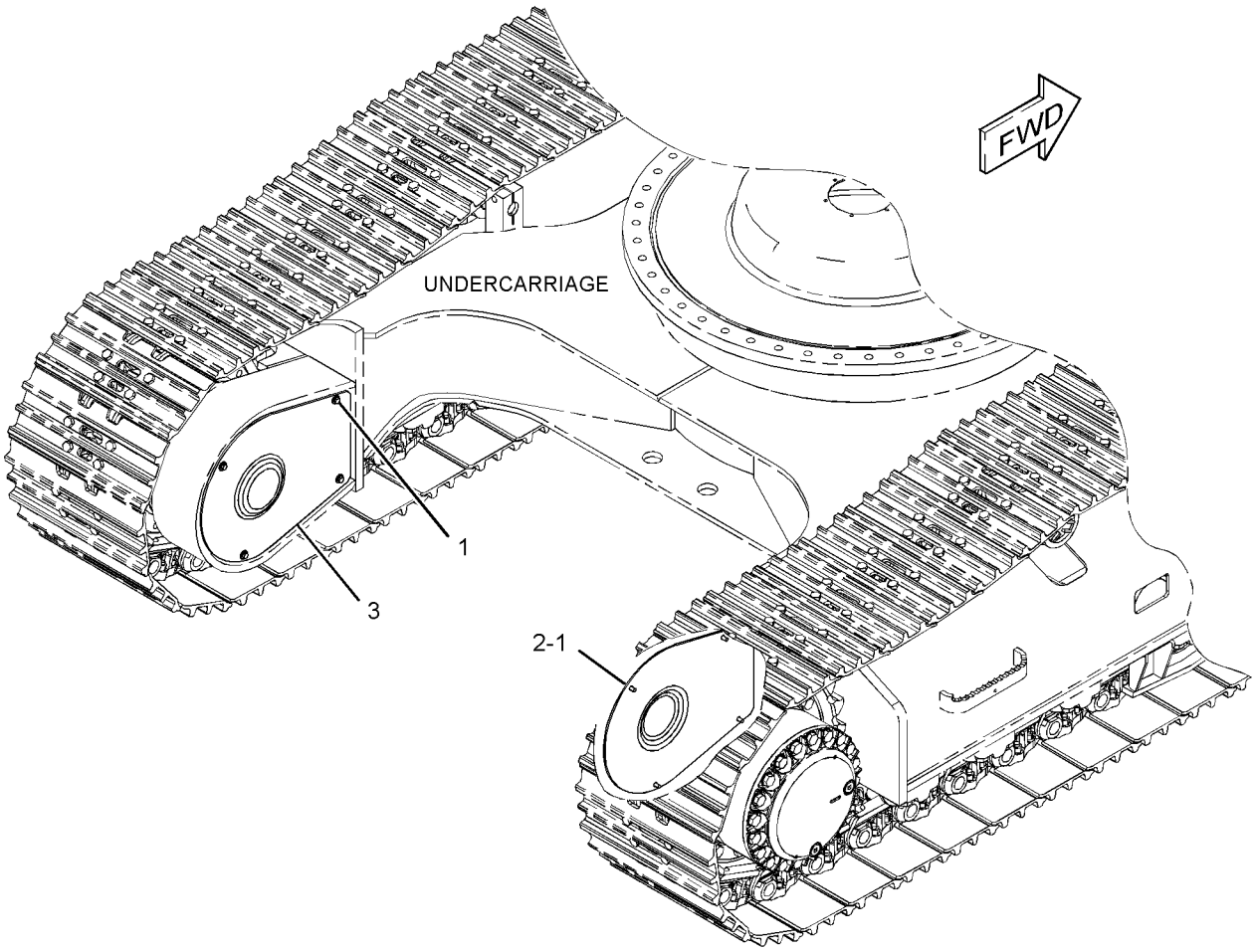

GRAPHIC #1 **<END>** g02579596

248-7132 IDLER GP-FRONT

S/N: HAH1-UP

PART OF 260-6975 FRAME AR-UNDERCARRIAGE

SMCS-4159 **i05872251**

NOTE	REF NO	GRAPHIC REF	PART NUMBER	QTY	PART NAME 1 2 3 4 5 6 (PRODUCT LEVEL)	SEE PAGE
Y	1	1	*297-9185*	1	IDLER GP-FRONT (RH)	169
Y	2	1	*297-9186*	1	IDLER GP-FRONT (LH)	170

Y - SEPARATE ILLUSTRATION

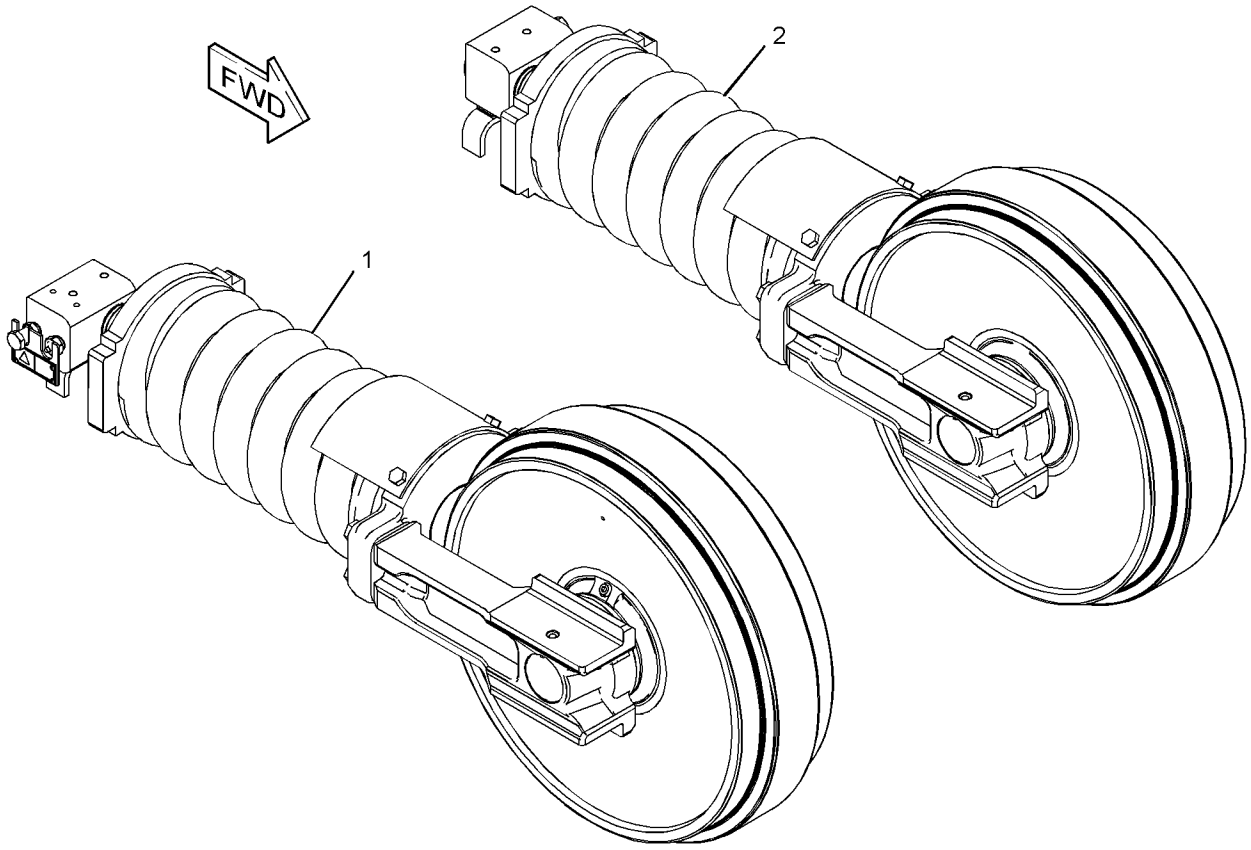

GRAPHIC #1 **<END>** g01455992

248-7143 IDLER GP-FRONT

S/N: HAH1-UP

PART OF 297-9185, 297-9186 IDLER GP-FRONT

SMCS-4159 **i02545749**

NOTE	REF NO	GRAPHIC REF	PART NUMBER	QTY	PART NAME 1 2 3 4 5 6 (PRODUCT LEVEL)	SEE PAGE
	1	1	**9W-2201**	2	SEAL GP-DUO-CONE	
					(EACH INCLUDES)	
		1	**096-4255**	2	RING	
	2	1	**239-4362**	2	BEARING (FRONT IDLER)	
	3	1	**246-5425**	1	SHAFT	
	4	1	**262-4781**	1	IDLER & BEARING AS	
		1	**8E-4359**	2	BEARING	
	5	1	**6V-7658**	2	SEAL-O-RING	
	6	1	**7H-3171**	1	PLUG-PIPE	
	7	1	**9W-9455**	2	PIN	

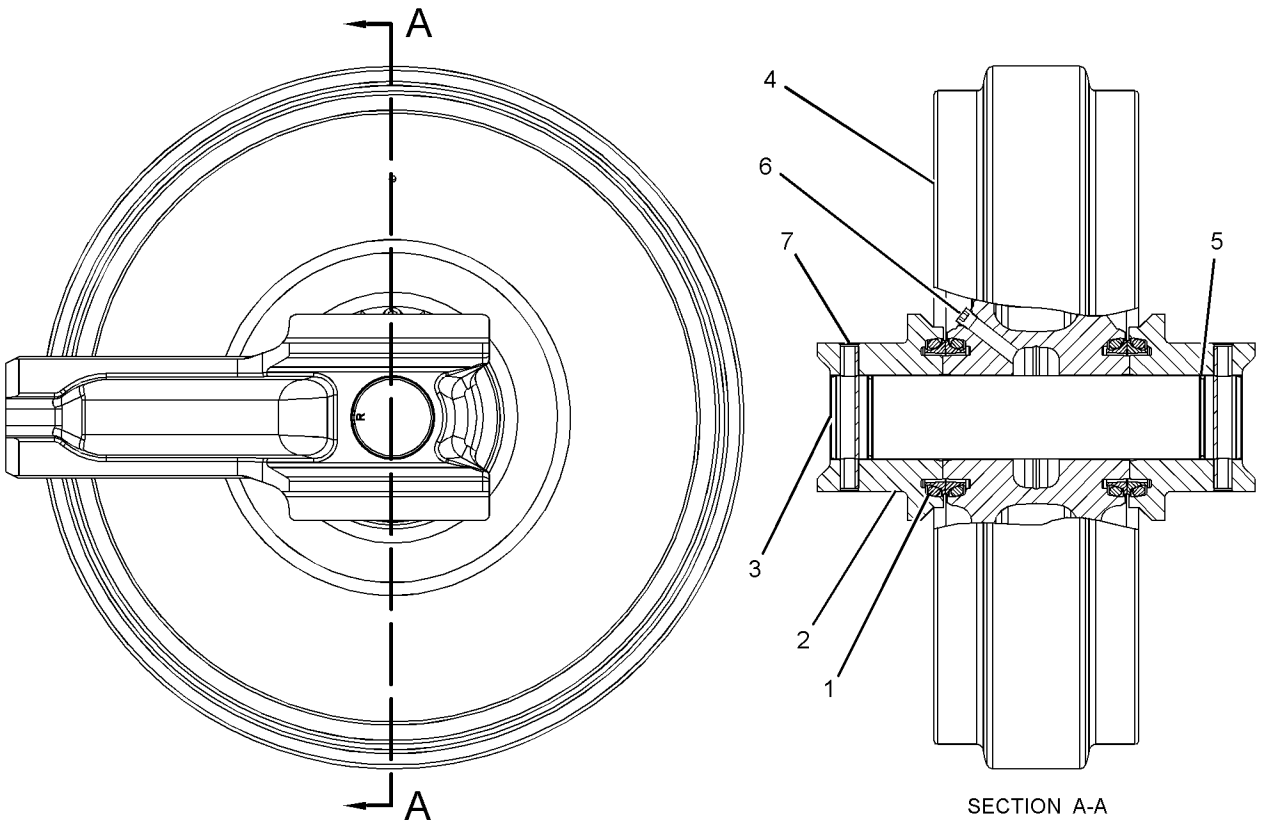

SECTION A-A

GRAPHIC #1 **<END>** g01206925

297-9185 IDLER GP-FRONT–RH

S/N: HAH1-UP

PART OF 248-7132 IDLER GP-FRONT

SMCS-4159 **i05893045**

NOTE	REF NO	GRAPHIC REF	PART NUMBER	QTY	PART NAME 1 2 3 4 5 6 (PRODUCT LEVEL)	SEE PAGE
Y	1	1	**248-7143**	1	IDLER GP-FRONT	168
Y	2	1	*297-9187*	1	TRACK ADJUSTER & RECOIL GP	177
M	3	1	**447-1707**	4	BOLT (M16X2X60-MM)	

M - METRIC PART
Y - SEPARATE ILLUSTRATION

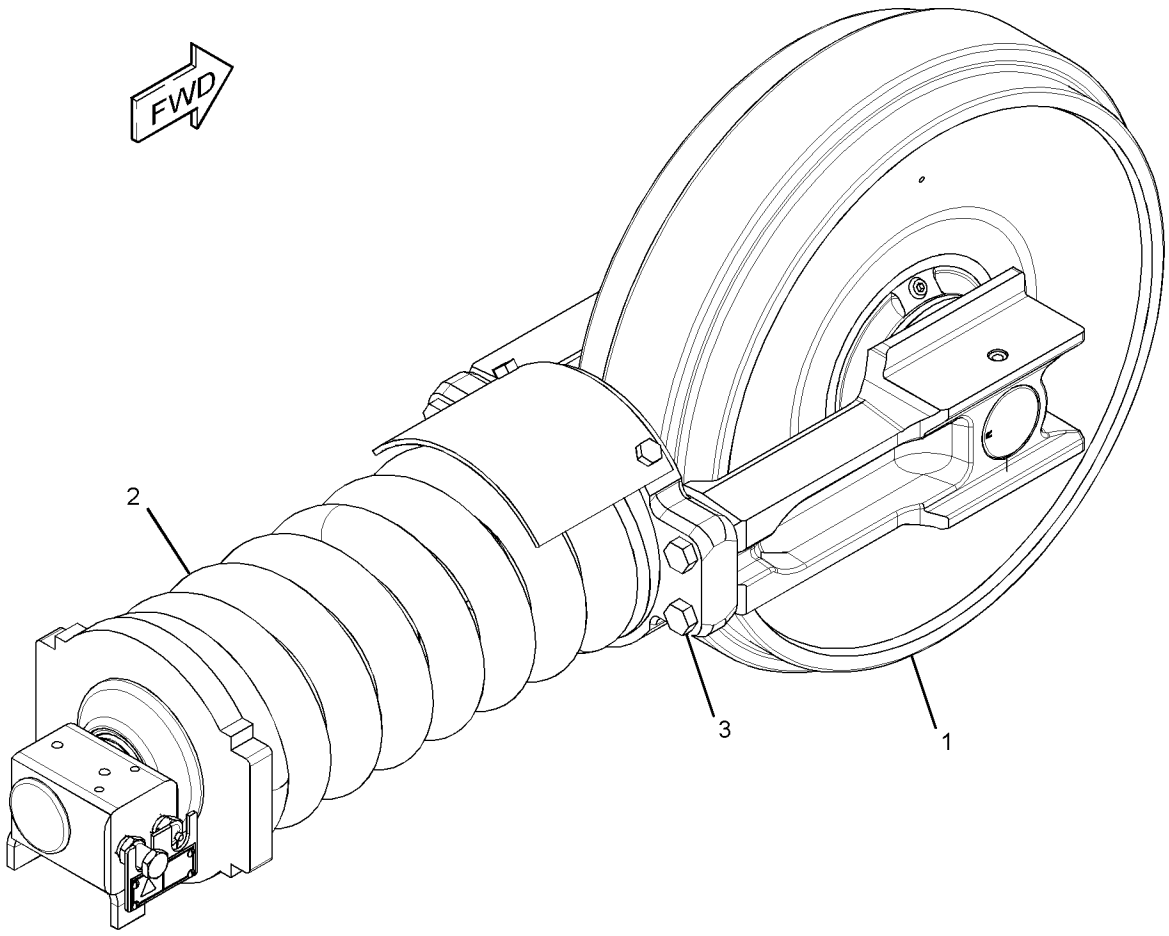

GRAPHIC #1 **<END>** g01456197

297-9186 IDLER GP-FRONT–LH

S/N: HAH1-UP

PART OF 248-7132 IDLER GP-FRONT

SMCS-4159 **i05809782**

NOTE	REF NO	GRAPHIC REF	PART NUMBER	QTY	PART NAME 1 2 3 4 5 6 (PRODUCT LEVEL)	SEE PAGE
Y	1	1	**248-7143**	1	IDLER GP-FRONT	168
Y	2	1	*297-9188*	1	TRACK ADJUSTER & RECOIL GP	178
M	3	1	**447-1707**	4	BOLT (M16X2X60-MM)	

M - METRIC PART
Y - SEPARATE ILLUSTRATION

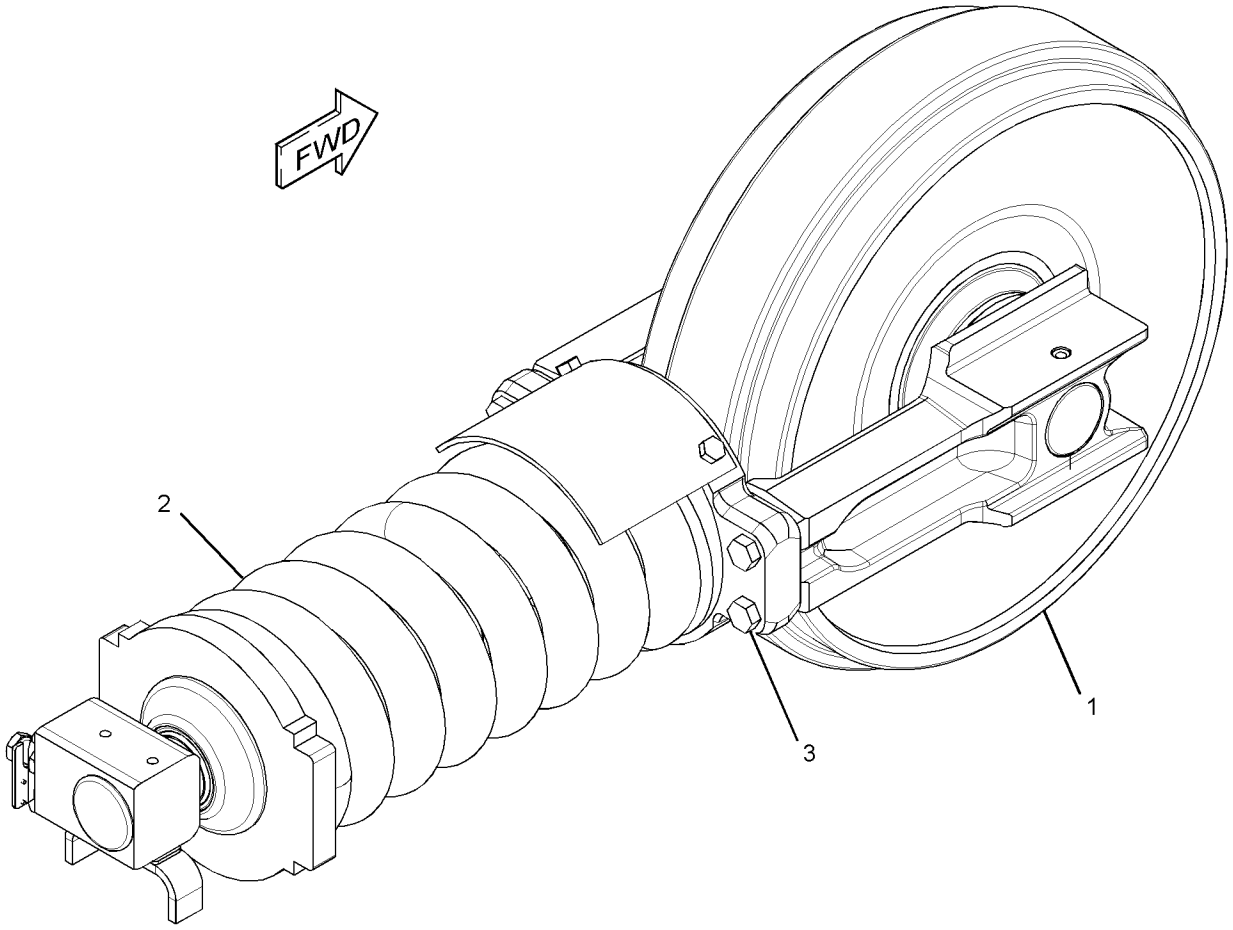

GRAPHIC #1 **<END>** g01456169

194-1134 LINK AS-TRACK

S/N: HAH1-UP
PART OF 176-4852 TRACK GP
AN ATTACHMENT

SMCS-4169, 4171

i03852970

NOTE	REF NO	GRAPHIC REF	PART NUMBER	QTY	PART NAME 1 2 3 4 5 6 (PRODUCT LEVEL)	SEE PAGE
	1	1	**9W-3138**	43	LINK-TRACK (LH)	
	2	1	**095-0863**	1	PIN-COTTER	
	3	1	**8E-8586**	1	LINK-MASTER (LH)	
	4	1	**190-3523**	43	BUSHING-TRACK	
	5	1	**8E-8585**	1	LINK-MASTER (RH)	
	6	1	**188-3064**	1	PIN-TRACK MASTER	
	7	1	**158-4381**	2	SEAL-TRACK MASTER	
	8	1	**9W-3137**	43	LINK-TRACK (RH)	
	9	1	**6Y-8186**	43	PIN-TRACK	
	10	1	**158-4380**	86	SEAL-TRACK	
	11	1	**190-3524**	1	BUSHING-TRACK MASTER	

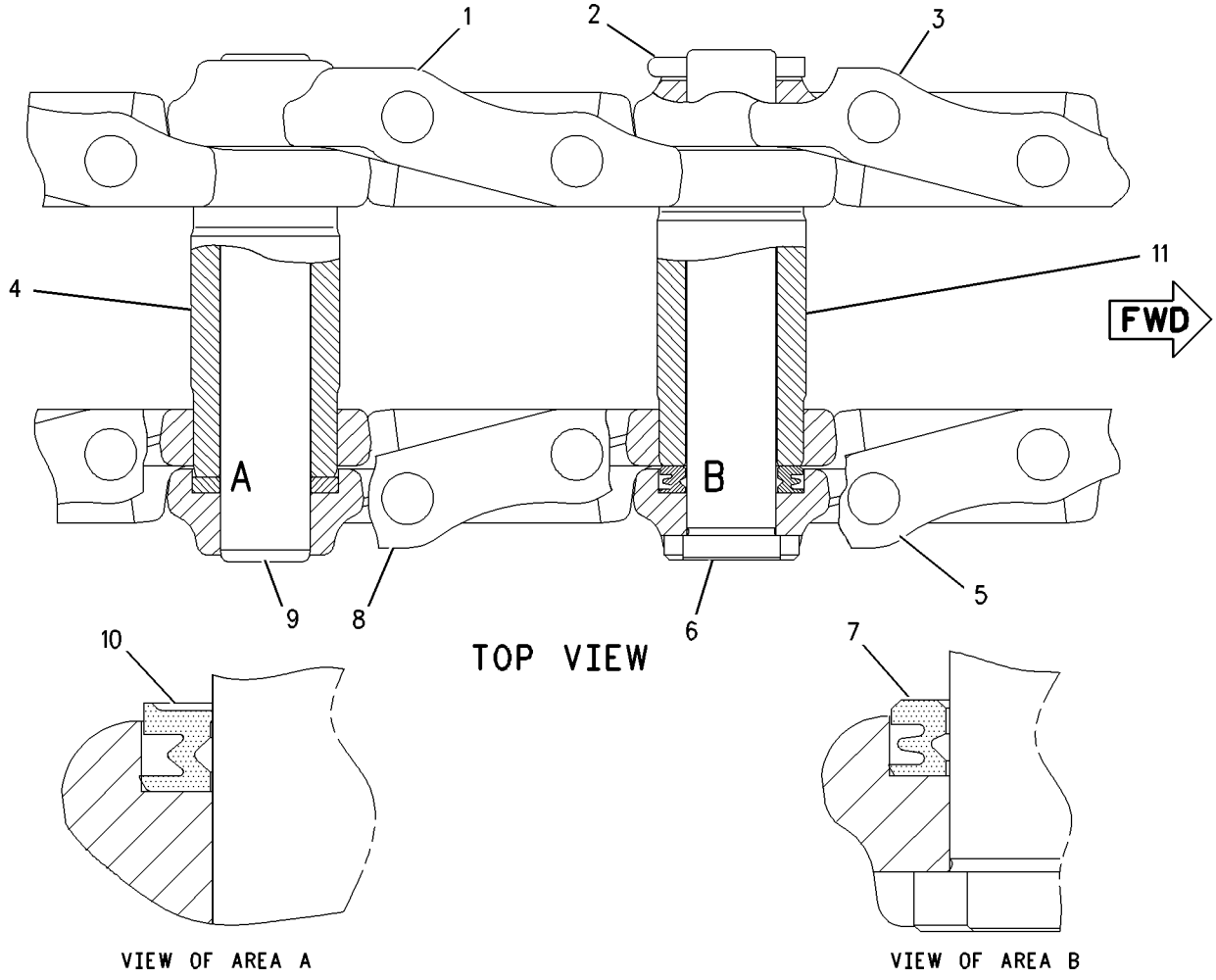

GRAPHIC #1

<END>

g00770657

357-7534 ROLLER AR-TRACK & CARRIER

S/N: HAH1-UP

PART OF 260-6975 FRAME AR-UNDERCARRIAGE

SMCS-4154, 4180 **i05845414**

NOTE	REF NO	GRAPHIC REF	PART NUMBER	QTY	PART NAME 1 2 3 4 5 6 (PRODUCT LEVEL)	SEE PAGE
M	1	1	**447-1725**	4	BOLT (M24X3X80-MM)	
Y	2	1	**8E-5600**	4	ROLLER GP-TRACK CARRIER	173
Y	3	1	**348-1867**	14	ROLLER GP-TRACK-SINGLE FLANGE	174
M	4	1	**447-1731**	56	BOLT (M20X2.5X100-MM)	
	5	1	**451-2176**	56	WASHER-HARD (22X35X3.5-MM THK)	

M - METRIC PART
Y - SEPARATE ILLUSTRATION

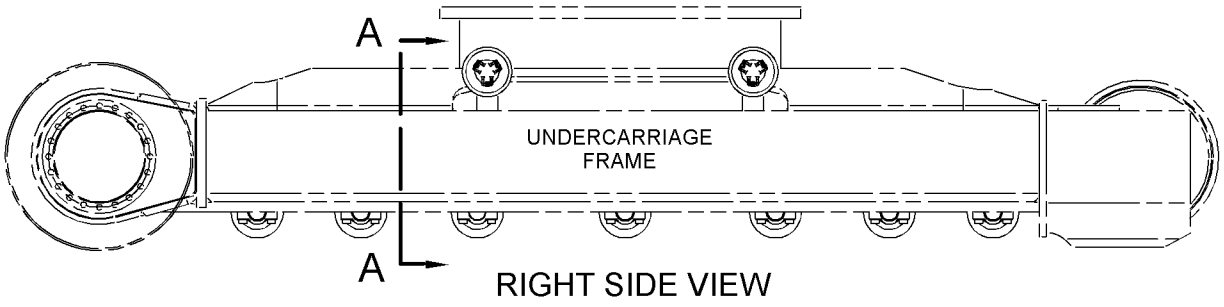

RIGHT SIDE VIEW

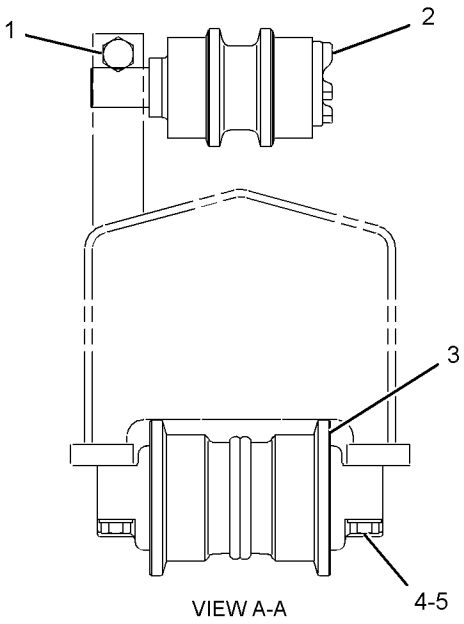

VIEW A-A

GRAPHIC #1 **<END>** g02731447

8E-5600 ROLLER GP-TRACK CARRIER

S/N: HAH1-UP

PART OF 357-7534 ROLLER AR-TRACK & CARRIER

SMCS-4154 **i05881210**

NOTE	REF NO	GRAPHIC REF	PART NUMBER	QTY	PART NAME 1 2 3 4 5 6 (PRODUCT LEVEL)	SEE PAGE
	1	1	**8E-5601**	1	SHAFT AS-TRACK ROLLER	
	2	1	**8E-5608**	1	SEAL GP-DUO-CONE	
		1	**096-4279**	2	RING-TORIC	
	3	1	**8E-5602**	1	ROLLER & BEARING AS	
	3A	1	**8E-6792**	1	BEARING-TRACK ROLLER	
	3B	1	**8E-6793**	1	BEARING-TRACK ROLLER	
	4	1	**8E-5606**	1	RETAINER	
	5	1	**6V-7661**	1	SEAL-O-RING	
M	6	1	**8T-1159**	5	BOLT-SOCKET HEAD (M10X1.5X25-MM)	
	7	1	**8E-5605**	1	COVER-CARRIER ROLLER	
	8	1	**7H-3171**	1	PLUG-PIPE	

M - METRIC PART

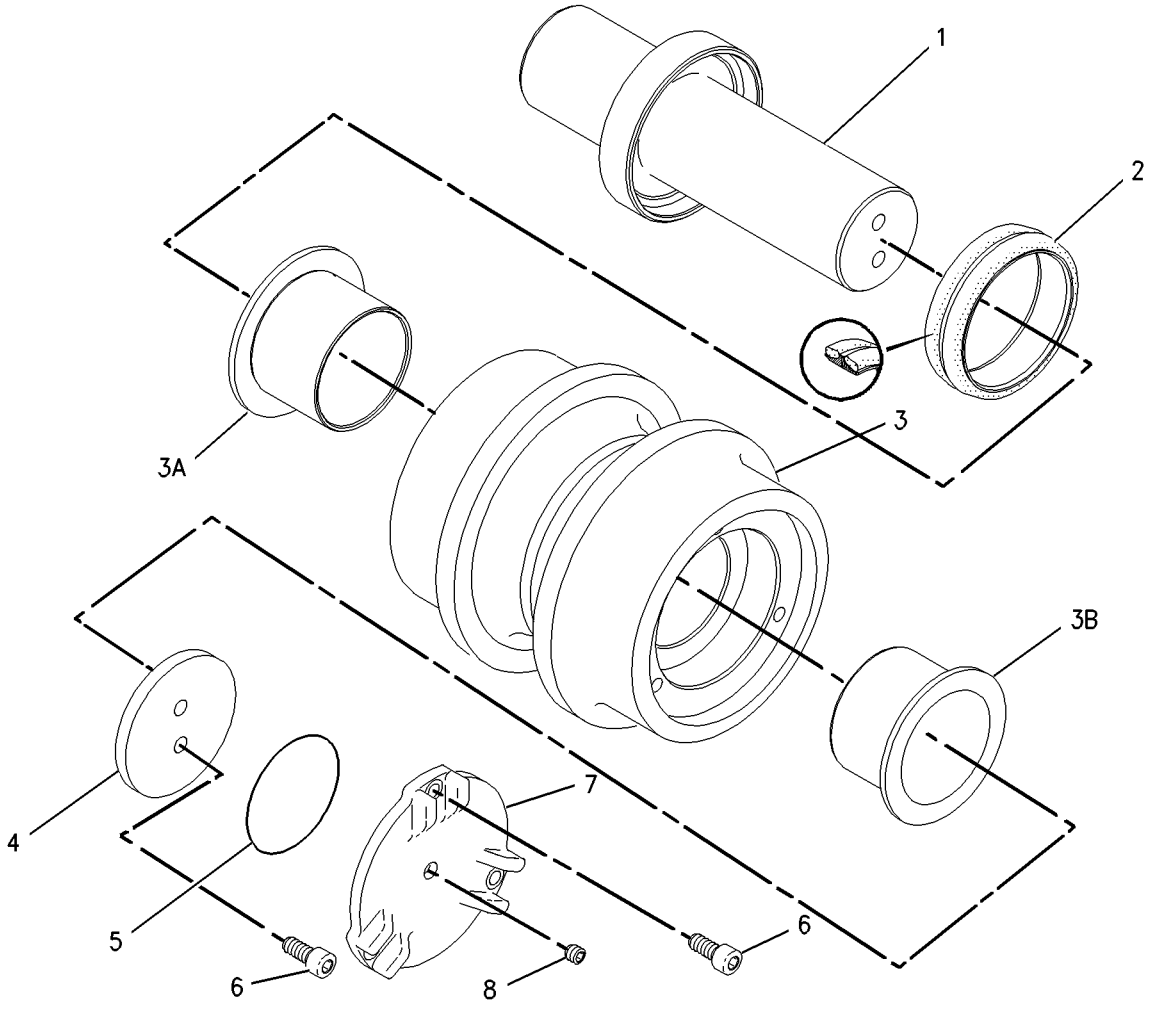

GRAPHIC #1 **<END>** g00715793

348-1867 ROLLER GP-TRACK-SINGLE FLANGE

S/N: HAH1-UP

PART OF 357-7534 ROLLER AR-TRACK & CARRIER

SMCS-4180 **i05344654**

NOTE	PART NUMBER	QTY	PART NAME 1 2 3 4 5 6 (PRODUCT LEVEL)	SEE PAGE
Y	*360-5863*	1	ROLLER GP-TRACK-SINGLE FLANGE	175
			(OIL HOLE IN RIM)	
			—OR—	
Y	*360-5864*	1	ROLLER GP-TRACK-SINGLE FLANGE	176
			(OIL HOLE IN COLLAR)	

Y - SEPARATE ILLUSTRATION

<END>

360-5863 ROLLER GP-TRACK-SINGLE FLANGE

S/N: HAH1-UP

PART OF 348-1867 ROLLER GP-TRACK-SINGLE FLANGE

SMCS-4180 **i04609689**

NOTE	REF NO	GRAPHIC REF	PART NUMBER	QTY	PART NAME 1 2 3 4 5 6 (PRODUCT LEVEL)	SEE PAGE
	1	1	**8E-5037**	2	COLLAR-TRACK ROLLER	
	2	1	**9W-2142**	2	SEAL GP-DUO-CONE	
					(EACH INCLUDES)	
		1	**096-4295**	2	RING-SEALING	
	3	1	**9W-2146**	1	PLUG	
	4	1	*360-5865*	1	ROLLER & BEARING AS	
	4A	1	**8E-5599**	2	BEARING-TRACK ROLLER	
	5	1	**7F-8268**	2	SEAL-O-RING	
	6	1	**3E-3217**	2	DOWEL	

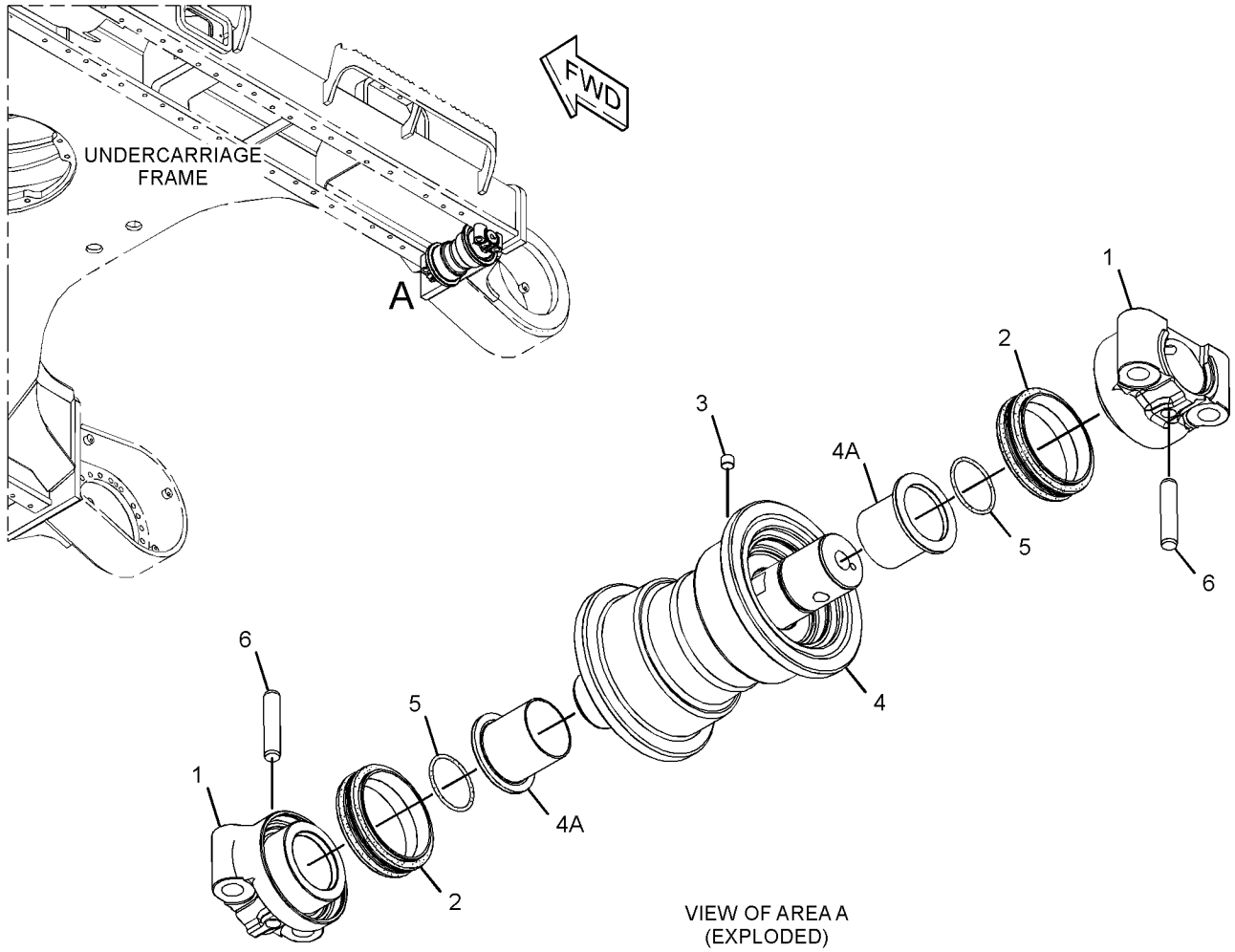

VIEW OF AREA A
(EXPLODED)

GRAPHIC #1 **<END>** g02723063

360-5864 ROLLER GP-TRACK-SINGLE FLANGE

S/N: HAH1-UP

PART OF 348-1867 ROLLER GP-TRACK-SINGLE FLANGE

SMCS-4180 **i04609730**

NOTE	REF NO	GRAPHIC REF	PART NUMBER	QTY	PART NAME 1 2 3 4 5 6 (PRODUCT LEVEL)	SEE PAGE
	1	1	**8E-5032**	1	ROLLER & BEARING AS	
	1A	1	**8E-5599**	2	BEARING-TRACK ROLLER	
	2	1	**9W-2142**	2	SEAL GP-DUO-CONE	
					(EACH INCLUDES)	
		1	**096-4295**	2	RING-SEALING	
	3	1	**348-1869**	1	COLLAR-TRACK ROLLER	
	4	1	**348-1870**	1	COLLAR-TRACK ROLLER	
	5	1	**348-1871**	1	SHAFT	
	6	1	**3E-3217**	2	DOWEL	
	7	1	**7F-8268**	2	SEAL-O-RING	
	8	1	**7H-3171**	1	PLUG-PIPE	

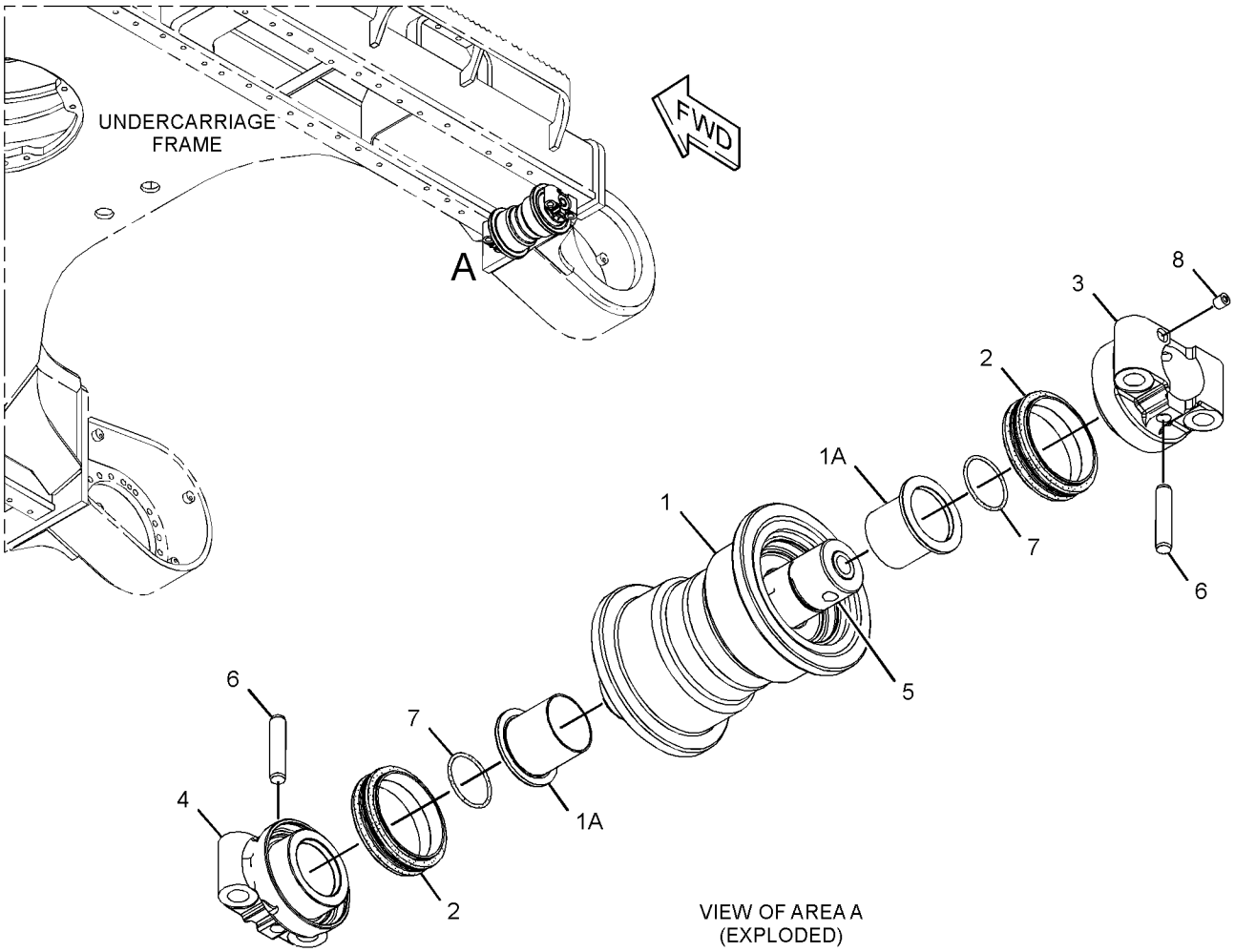

VIEW OF AREA A (EXPLODED)

GRAPHIC #1 **<END>** g02723066

297-9187 TRACK ADJUSTER & RECOIL GP–RH

S/N: HAH1-UP

PART OF 297-9185 IDLER GP-FRONT

SMCS-4157, 4158 **i03817591**

NOTE	REF NO	GRAPHIC REF	PART NUMBER	QTY	PART NAME 1 2 3 4 5 6 (PRODUCT LEVEL)	SEE PAGE
	1	1	**7Y-1746**	1	PLATE	
	2	1	**168-6761**	1	PLATE AS	
		1	**4B-4158**	4	SCREW-DRIVE (NO 4X0.25-IN)	
		1	**253-1346**	1	PLATE-WARNING (HIGH PRESSURE CYLINDER)	
Y	3	1	*297-9189*	1	TRACK ADJUSTER & RECOIL GP	179
M	4	1	**8T-4137**	2	BOLT (M10X1.5X20-MM)	

M - METRIC PART
Y - SEPARATE ILLUSTRATION

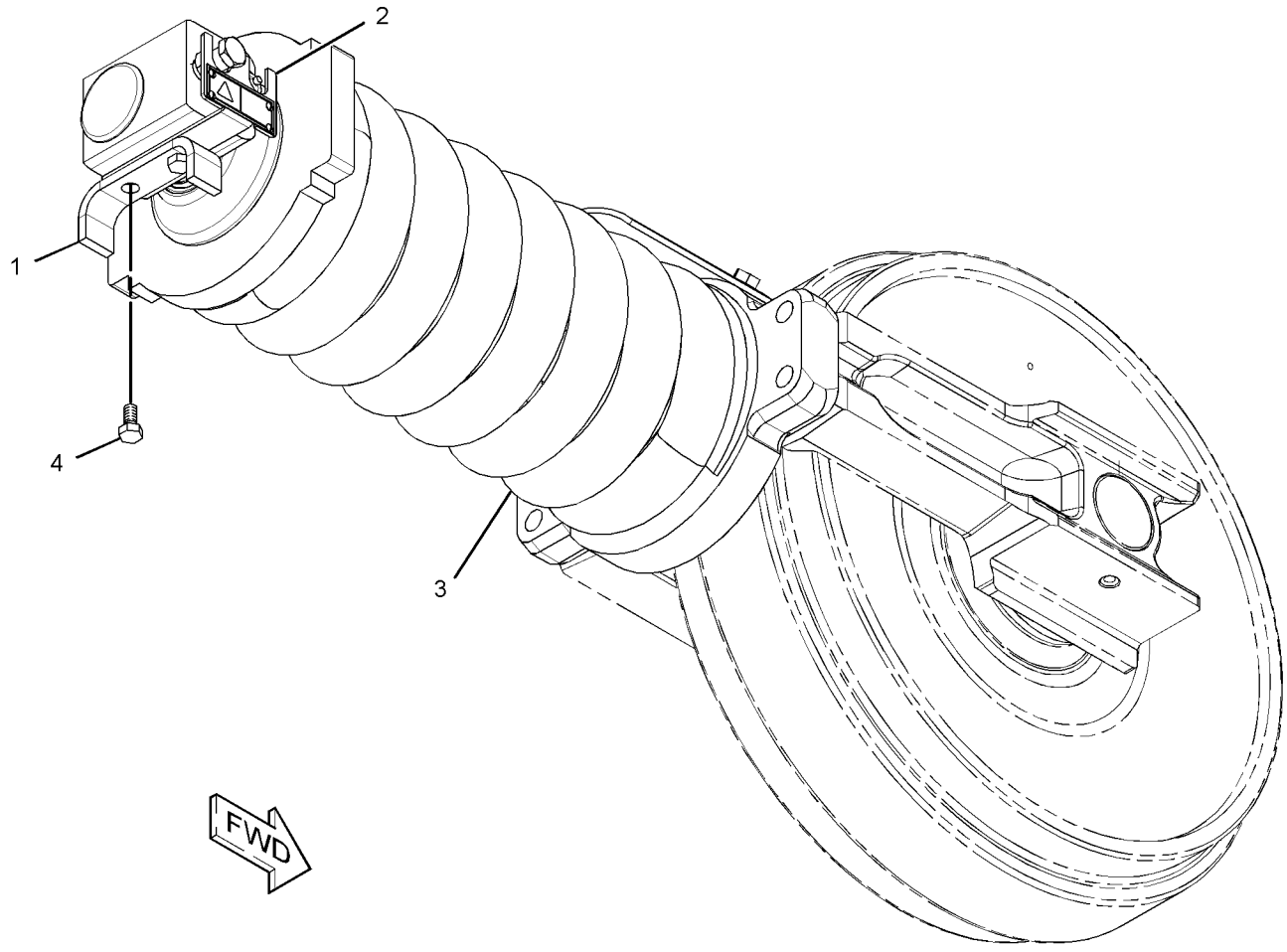

GRAPHIC #1 **<END>** g01456182

297-9188 TRACK ADJUSTER & RECOIL GP–LH

S/N: HAH1-UP

PART OF 297-9186 IDLER GP-FRONT

SMCS-4157, 4158 **i03817592**

NOTE	REF NO	GRAPHIC REF	PART NUMBER	QTY	PART NAME 1 2 3 4 5 6 (PRODUCT LEVEL)	SEE PAGE
	1	1	**7Y-1746**	1	PLATE	
	2	1	**168-6761**	1	PLATE AS	
		1	**4B-4158**	4	SCREW-DRIVE (NO 4X0.25-IN)	
		1	**253-1346**	1	PLATE-WARNING (HIGH PRESSURE CYLINDER)	
Y	3	1	*297-9189*	1	TRACK ADJUSTER & RECOIL GP	179
M	4	1	**8T-4137**	2	BOLT (M10X1.5X20-MM)	

M - METRIC PART
Y - SEPARATE ILLUSTRATION

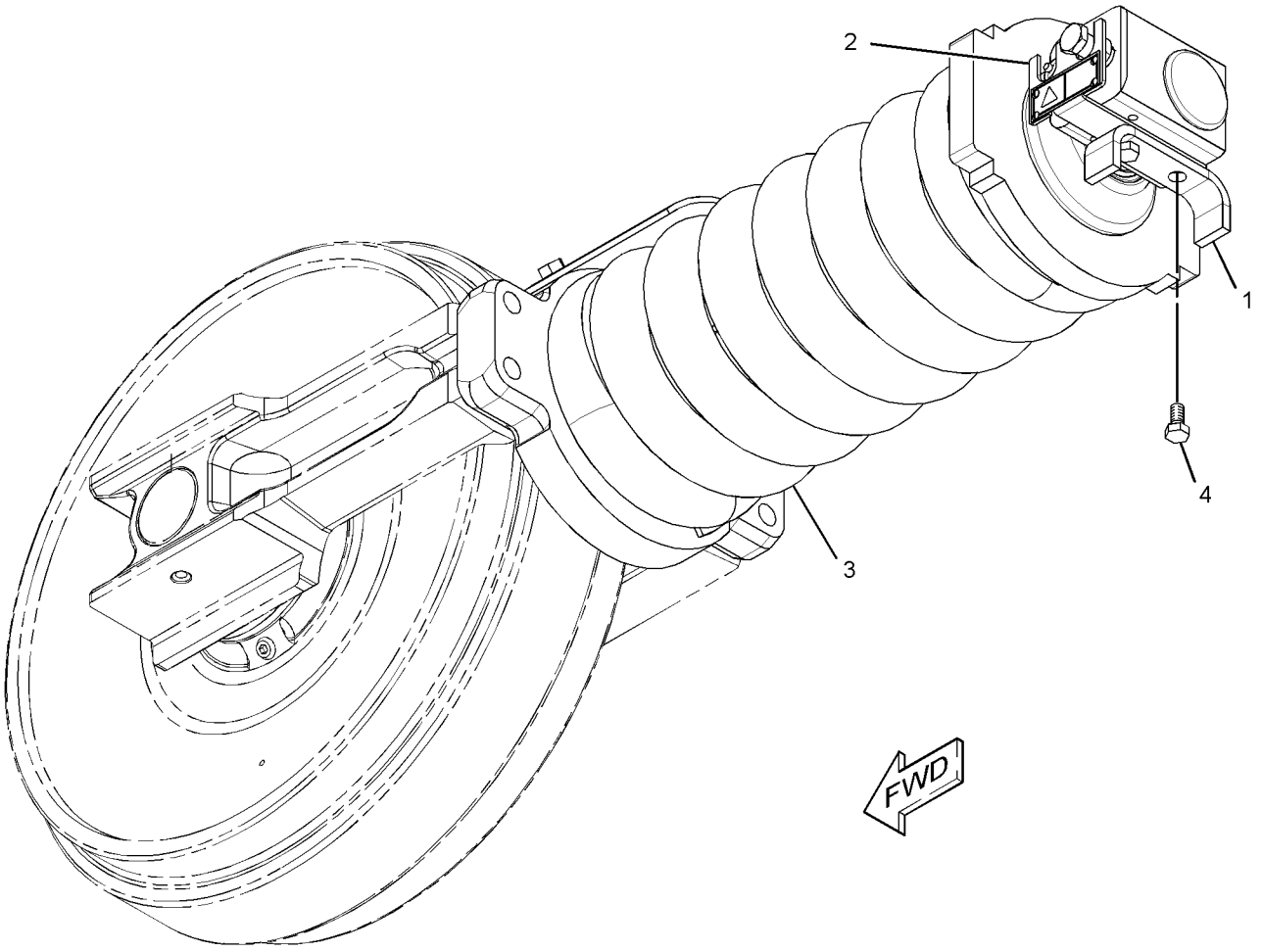

GRAPHIC #1 **<END>** g01456190

297-9189 TRACK ADJUSTER & RECOIL GP

S/N: HAH1-UP

PART OF 297-9187, 297-9188 TRACK ADJUSTER & RECOIL GP

SMCS-4157, 4158 **i03817595**

NOTE	REF NO	GRAPHIC REF	PART NUMBER	QTY	PART NAME 1 2 3 4 5 6 (PRODUCT LEVEL)	SEE PAGE
	1	1	**7I-7733**	1	WASHER (44X68X8-MM THK)	
	2	1	**7Y-1781**	1	COVER	
	3	1	**7Y-1883**	1	PLATE	
	4	1	**122-5253**	1	STRIP	
	5	1	**248-7138**	1	SPRING	
	6	1	**297-9190**	1	SUPPORT	
Y	7	1	*297-9191*	1	TRACK ADJUSTER & RECOIL GP	180
	8	1	**297-9192**	1	SPACER	
M	9	1	**3E-8024**	1	NUT-HEX (M42X4.5-THD)	
M	10	1	**7X-2536**	2	BOLT (M8X1.25X14-MM)	
M	11	1	**8T-4179**	2	BOLT (M12X1.75X20-MM)	

M - METRIC PART
Y - SEPARATE ILLUSTRATION

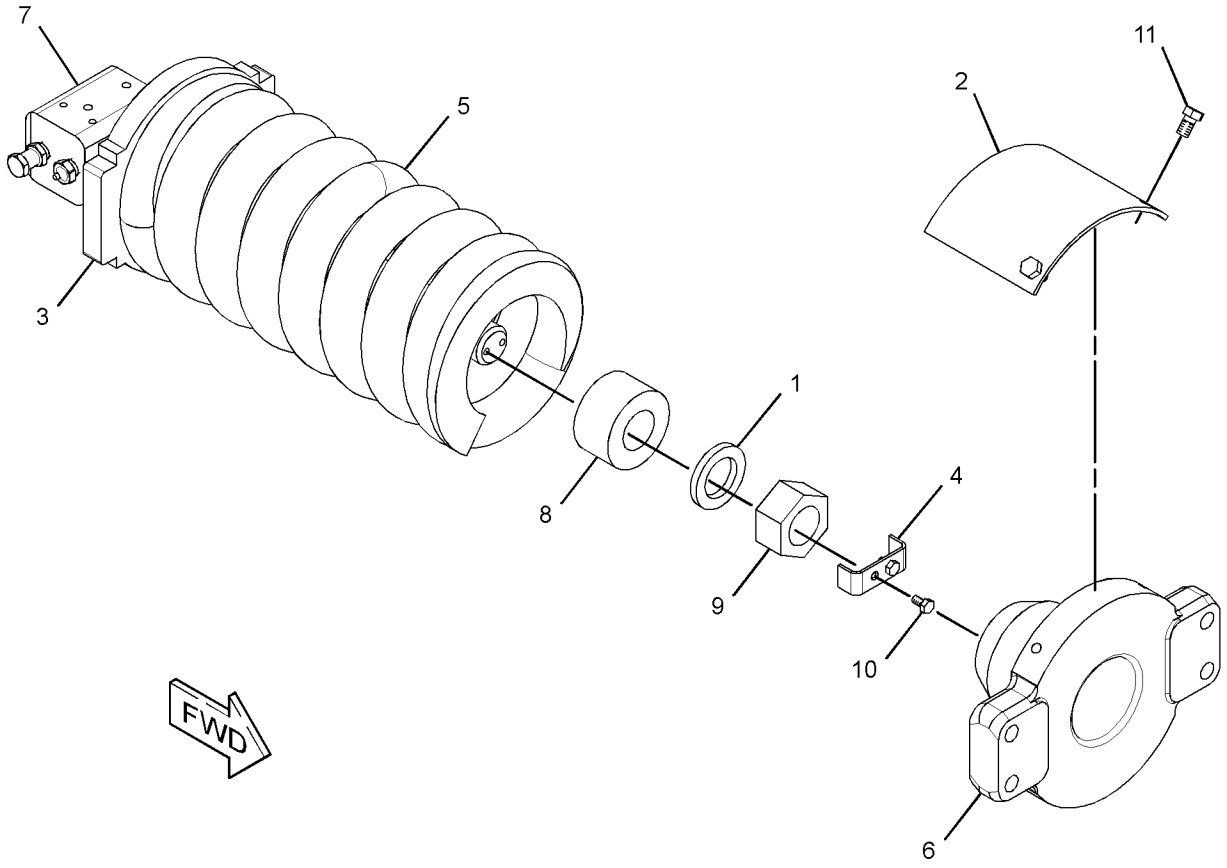

GRAPHIC #1 **<END>** g01456208

297-9191 TRACK ADJUSTER & RECOIL GP

S/N: HAH1-UP

PART OF 297-9189 TRACK ADJUSTER & RECOIL GP

SMCS-4157, 4158 **i04610482**

NOTE	REF NO	GRAPHIC REF	PART NUMBER	QTY	PART NAME 1 2 3 4 5 6 (PRODUCT LEVEL)	SEE PAGE
	1	1	**2S-5926**	1	VALVE-RELIEF	
	2	1	**7I-7734**	1	RING-BACKUP	
	3	1	**093-1435**	1	SEAL-LIP TYPE	
	4	1	**357-7540**	1	VALVE-FILL	
	5	1	**248-7173**	2	SEAL-O-RING	
	6	1	**297-9184**	1	ROD	
	7	1	**297-9193**	1	CYLINDER	
	8	1	**093-1515**	2	RING	
	9	1	**095-1703**	1	SEAL-O-RING	
	10	1	**096-4275**	2	RING	
	11	1	**136-2369**	1	PISTON AS	

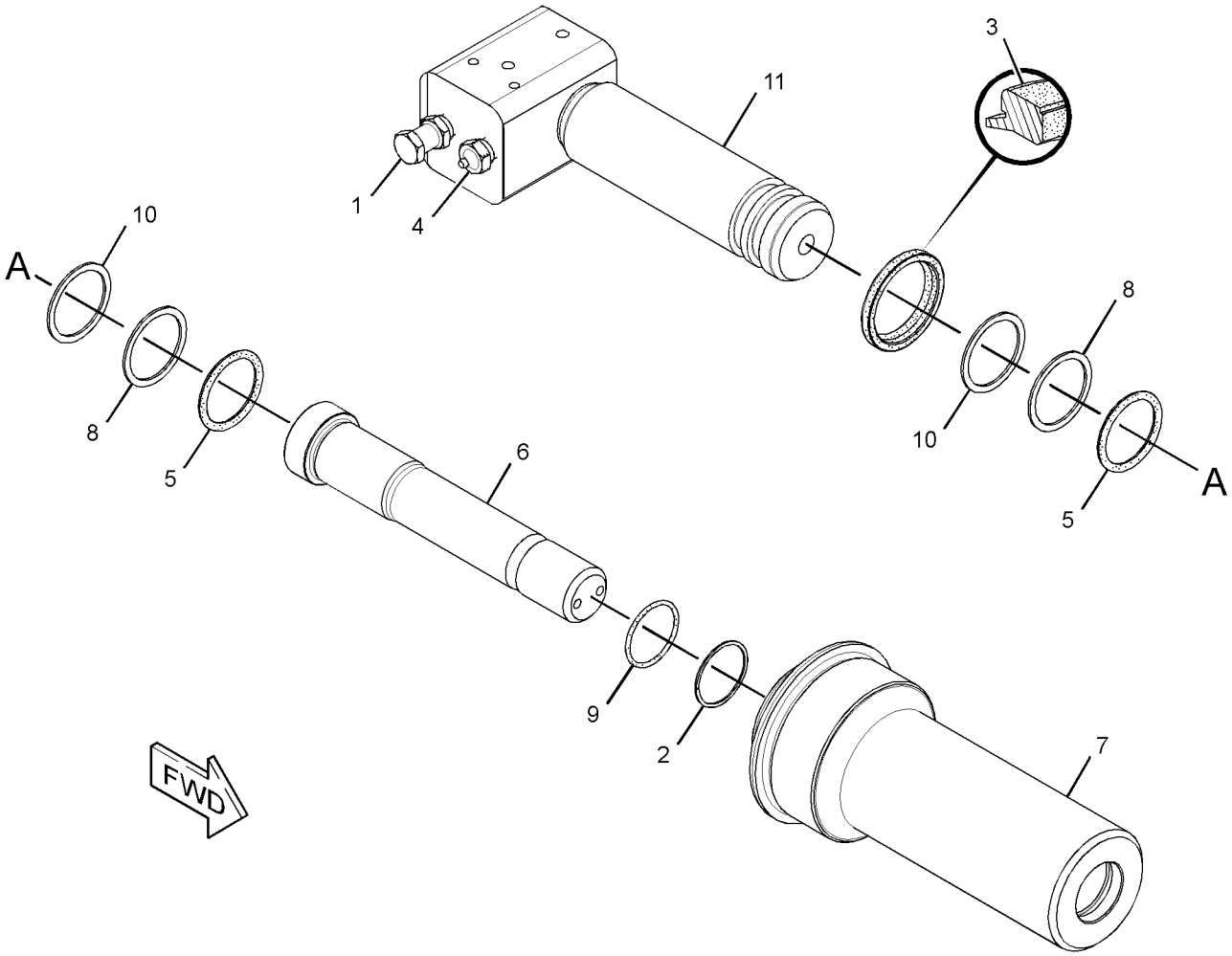

GRAPHIC #1 **<END>** g01456253

176-4852 TRACK GP–2-REQUIRED

S/N: HAH1-UP
600-MM (23.6-IN) TRIPLE GROUSER SHOE
PART OF 454-5646, 454-5647 DISTRIBUTION AR
AN ATTACHMENT

SMCS-4170 **i03933472**

NOTE	PART NUMBER	QTY	PART NAME 1 2 3 4 5 6 (PRODUCT LEVEL)	SEE PAGE
Y	**194-1134**	1	LINK AS-TRACK	171
M	**9W-3619**	176	BOLT-TRACK (M20X1.5X55-MM)	
M	**9W-3361**	176	NUT-TRACK (M20X1.5-THD)	
	126-5062	44	SHOE-TRACK	

M - METRIC PART
Y - SEPARATE ILLUSTRATION

<END>

4I-1536 ACCUMULATOR GP-HYDRAULIC—CHARGED

S/N: HAH1-UP

PART OF 087-4456 ACCUMULATOR GP-HYDRAULIC

SMCS-5077 **i01323932**

NOTE	REF NO	GRAPHIC REF	PART NUMBER	QTY	PART NAME 1 2 3 4 5 6 (PRODUCT LEVEL)	SEE PAGE
	1	1	**4I-5862**	1	CAP	
	2	1	**4I-1539**	1	CORE	

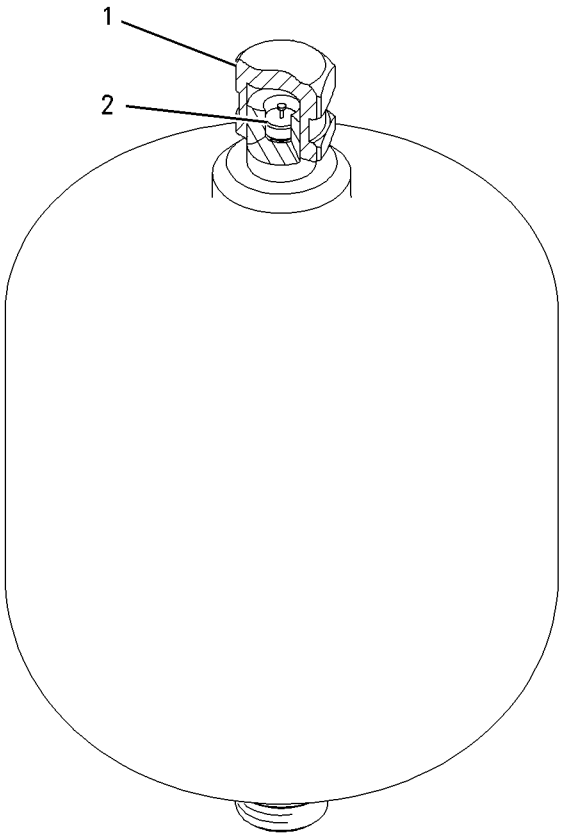

GRAPHIC #1 **<END>** g00700818

5I-8416 ACCUMULATOR GP-HYDRAULIC–CHARGED

S/N: HAH1-UP

PART OF 087-4456 ACCUMULATOR GP-HYDRAULIC

SMCS-5077 **i02095188**

NOTE	REF NO	GRAPHIC REF	PART NUMBER	QTY	PART NAME 1 2 3 4 5 6 (PRODUCT LEVEL)	SEE PAGE
	1	1	**4I-8267**	1	CAP	
Y	2	1	*087-4454*	1	ACCUMULATOR GP-HYDRAULIC (CHARGED)	184

Y - SEPARATE ILLUSTRATION

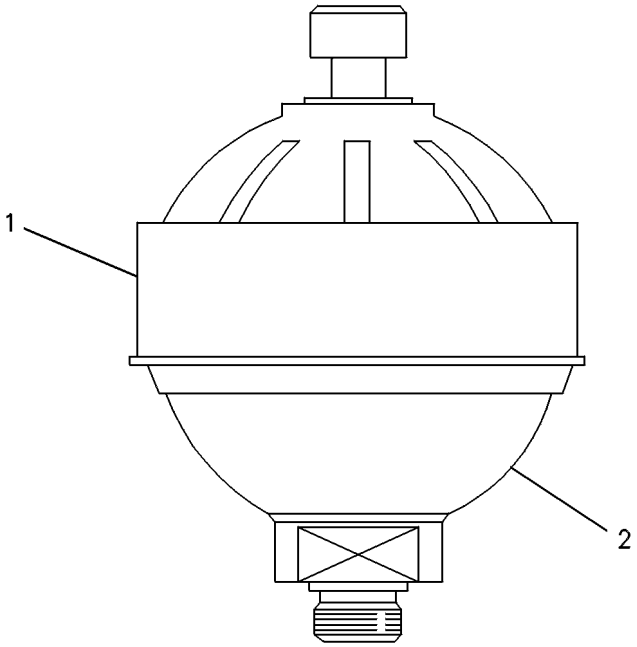

GRAPHIC #1 **<END>** g00237219

087-4454 ACCUMULATOR GP-HYDRAULIC—CHARGED

S/N: HAH1-UP

PART OF 5I-8416 ACCUMULATOR GP-HYDRAULIC

SMCS-5077 **i02253738**

NOTE	REF NO	GRAPHIC REF	PART NUMBER	QTY	PART NAME 1 2 3 4 5 6 (PRODUCT LEVEL)	SEE PAGE
	1	1	**087-4577**	1	SEAL	
	2	1	**087-4576**	1	CAP	
	3	1	**087-4575**	1	CORE	

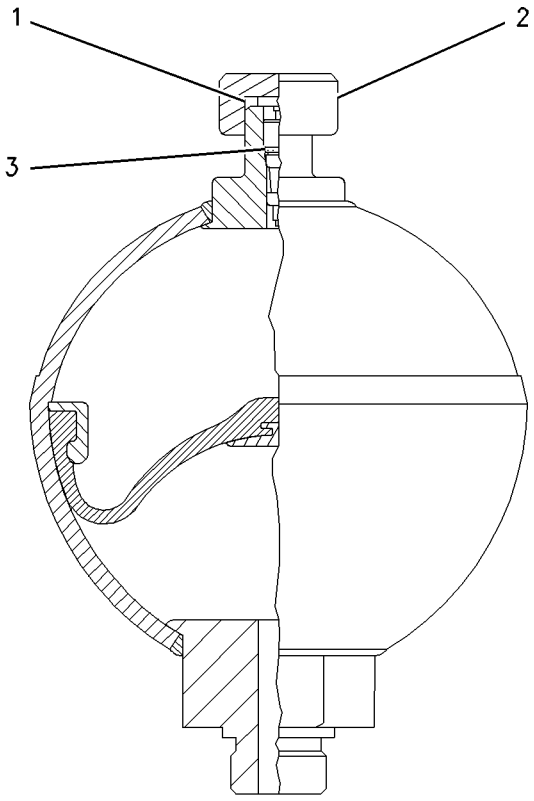

GRAPHIC #1 **<END>** g00700380

087-4456 ACCUMULATOR GP-HYDRAULIC—CHARGED

S/N: HAH1-UP

FIELD REPLACEMENT ORDER 227-8807—PAGE: 188

PART OF 164-6981 ACCUMULATOR GP-HYDRAULIC

SMCS-5077 **i03873556**

NOTE	PART NUMBER	QTY	PART NAME 1 2 3 4 5 6 (PRODUCT LEVEL)	SEE PAGE
Y	*4I-1536*	1	ACCUMULATOR GP-HYDRAULIC (CHARGED)	182
			—OR—	
Y	*5I-8416*	1	ACCUMULATOR GP-HYDRAULIC (CHARGED)	183
			—OR—	
Y	*145-5106*	1	ACCUMULATOR GP-HYDRAULIC (CHARGED)	186

Y - SEPARATE ILLUSTRATION

<END>

145-5106 ACCUMULATOR GP-HYDRAULIC—CHARGED

S/N: HAH1-UP

FIELD REPLACEMENT ORDER 227-8807—PAGE: 188

PART OF 087-4456 ACCUMULATOR GP-HYDRAULIC

SMCS-5077 **i04807222**

NOTE	REF NO	GRAPHIC REF	PART NUMBER	QTY	PART NAME 1 2 3 4 5 6 (PRODUCT LEVEL)	SEE PAGE
	1	1	**159-4700**	1	FILM-WARNING (HIGH PRESSURE CYLINDER)	

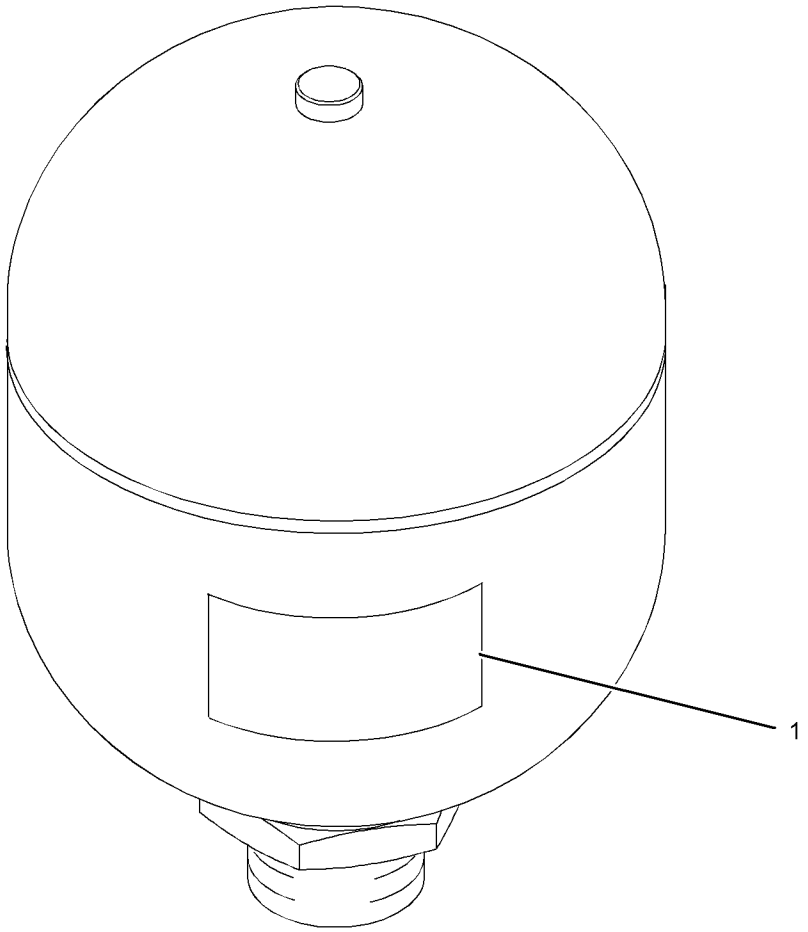

GRAPHIC #1 **<END>** g01288209

164-6981 ACCUMULATOR GP-HYDRAULIC—CHARGED

S/N: HAH1-UP

PART OF 391-7835 LINES GP-PILOT

SMCS-5077 **i01324172**

NOTE	PART NUMBER	QTY	PART NAME 1 2 3 4 5 6 (PRODUCT LEVEL)	SEE PAGE
Y	**087-4456**	1	ACCUMULATOR GP-HYDRAULIC (CHARGED)	185
	3K-0360	1	SEAL-O-RING	

Y - SEPARATE ILLUSTRATION

<END>

227-8807 ACCUMULATOR GP-HYDRAULIC—UNCHARGED

S/N: HAH1-UP

FIELD REPLACEMENT FOR 087-4456—PAGE: 185: FOR 145-5106—PAGE: 186

SMCS-5077 **i04082590**

NOTE	REF NO	GRAPHIC REF	PART NUMBER	QTY	PART NAME 1 2 3 4 5 6 (PRODUCT LEVEL)	SEE PAGE
					(NO SERVICED PARTS)	

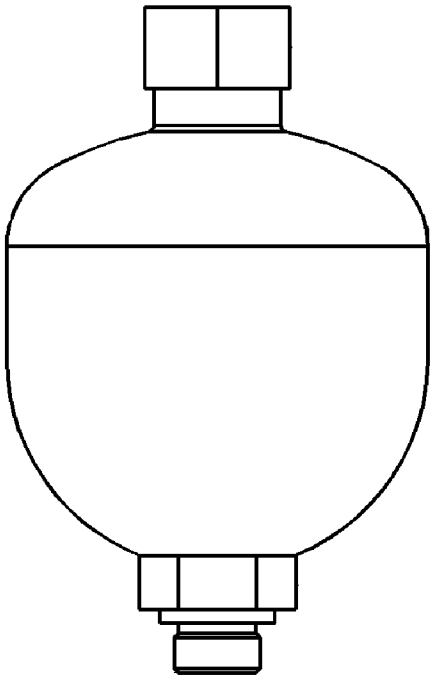

GRAPHIC #1 **<END>** g01423820

351-3869 COUPLING GP-FLEXIBLE

S/N: HAH1-UP

PART OF 344-0688 COUPLING GP-PUMP

SMCS-3252 **i04651749**

NOTE	REF NO	GRAPHIC REF	PART NUMBER	QTY	PART NAME 1 2 3 4 5 6 (PRODUCT LEVEL)	SEE PAGE
	1	1	**351-4126**	4	INSERT-COUPLING	
	2	1	**7Y-1901**	1	ELEMENT-COUPLING	
	3	1	**7Y-1902**	4	INSERT-COUPLING	
M	4	1	**7Y-1904**	4	BOLT-SOCKET HEAD (M16X2X50-MM)	
	5	1	**248-7284**	1	HUB	
M	6	1	**7Y-0466**	2	SETSCREW-SOCKET (M16X2X22-MM)	
	7	1	**7Y-0468**	8	PIN-SPRING	

M - METRIC PART

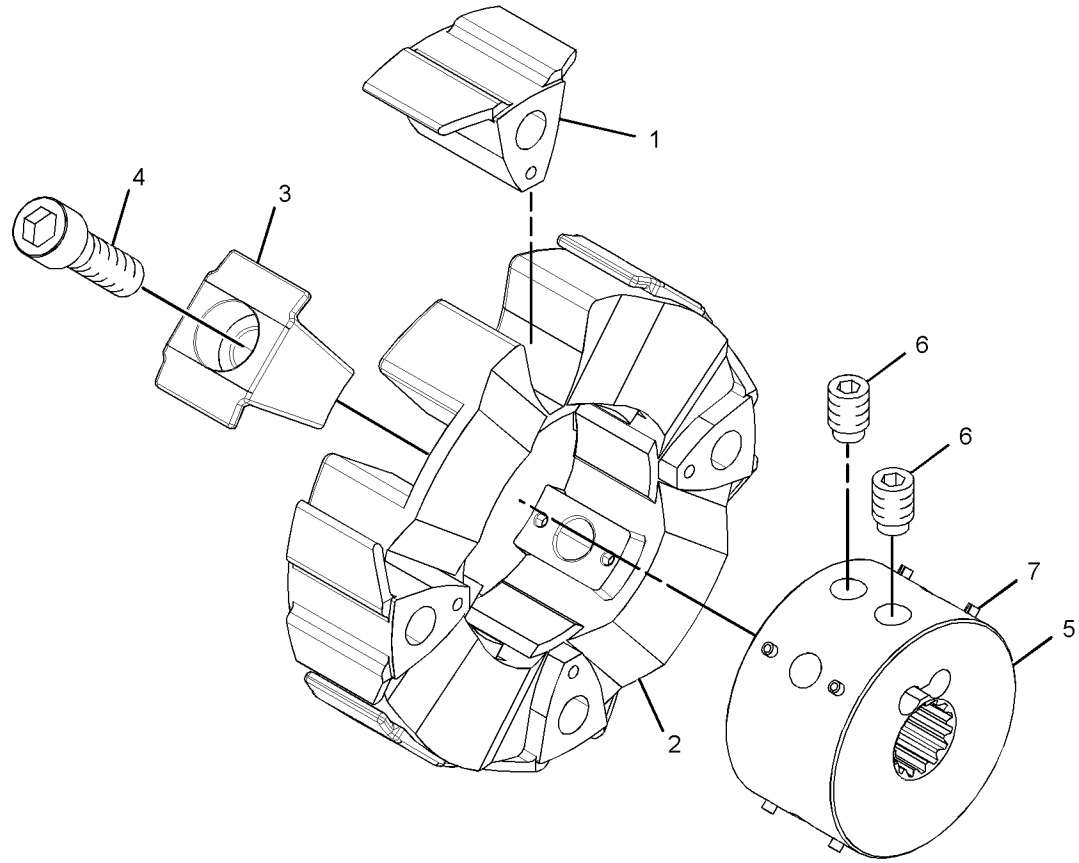

GRAPHIC #1 **<END>** g02620243

344-0688 COUPLING GP-PUMP

S/N: HAH1-UP

PART OF 387-2618 PUMP & MTG GP-MAIN HYDRAULIC

SMCS-5062 **i04943378**

NOTE	REF NO	GRAPHIC REF	PART NUMBER	QTY	PART NAME 1 2 3 4 5 6 (PRODUCT LEVEL)	SEE PAGE
Y	1	1	**351-3869**	1	COUPLING GP-FLEXIBLE	189
M	2	1	**324-4118**	4	BOLT-SOCKET HEAD (M16X2X55-MM)	
	3	1	**7Y-0468**	4	PIN-SPRING	

M - METRIC PART
Y - SEPARATE ILLUSTRATION

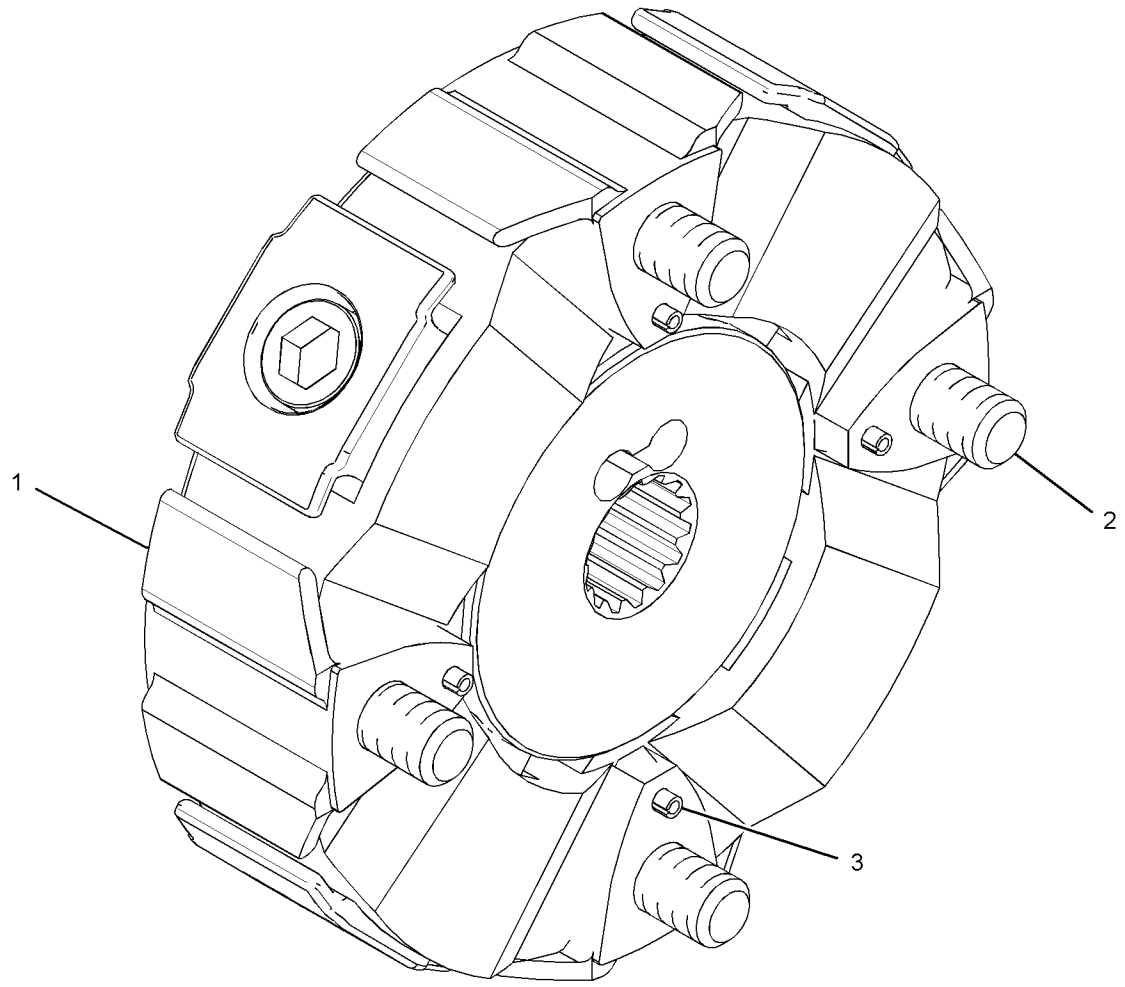

GRAPHIC #1 **<END>** g01891883

381-8968 CYLINDER & LINES GP-BOOM–LH

S/N: HAH1-UP
PART OF 385-4100 BOOM AR-1 PIECE LONG
AN ATTACHMENT

SMCS-5456, 7562 **i05299995**

NOTE	PART NUMBER	QTY	PART NAME 1 2 3 4 5 6 (PRODUCT LEVEL)	SEE PAGE
Y	*385-2913*	1	CYLINDER & SEAL GP-BOOM	192
Y	*385-2911*	1	LINES GP-BOOM CYLINDER (LH)	214

Y - SEPARATE ILLUSTRATION

<END>

381-8969 CYLINDER & LINES GP-BOOM–RH

S/N: HAH1-UP
PART OF 385-4100 BOOM AR-1 PIECE LONG
AN ATTACHMENT

SMCS-5456, 7562 **i05299997**

NOTE	PART NUMBER	QTY	PART NAME 1 2 3 4 5 6 (PRODUCT LEVEL)	SEE PAGE
Y	*385-2913*	1	CYLINDER & SEAL GP-BOOM	192
Y	*385-2912*	1	LINES GP-BOOM CYLINDER (RH)	215

Y - SEPARATE ILLUSTRATION

<END>

381-8971 CYLINDER & LINES GP-BUCKET

S/N: HAH1-UP
PART OF 385-4103 LINKAGE AR-BUCKET
AN ATTACHMENT

SMCS-5457 **i05299999**

NOTE	PART NUMBER	QTY	PART NAME 1 2 3 4 5 6 (PRODUCT LEVEL)	SEE PAGE
Y	*385-2917*	1	CYLINDER & SEAL GP-BUCKET	194
Y	*385-2916*	1	LINES GP-BUCKET CYLINDER	216

Y - SEPARATE ILLUSTRATION

<END>

381-8970 CYLINDER & LINES GP-STICK

S/N: HAH1-UP
PART OF 385-4100 BOOM AR-1 PIECE LONG
AN ATTACHMENT

SMCS-5458 **i05299998**

NOTE	PART NUMBER	QTY	PART NAME 1 2 3 4 5 6 (PRODUCT LEVEL)	SEE PAGE
Y	*385-2915*	1	CYLINDER & SEAL GP-STICK	196
Y	*385-2914*	1	LINES GP-STICK CYLINDER	248

Y - SEPARATE ILLUSTRATION

<END>

385-2913 CYLINDER & SEAL GP-BOOM

S/N: HAH1-UP
110-MM (4.3-IN) BORE X 1193-MM (46.7-IN) STROKE
PART OF 381-8968, 381-8969 CYLINDER & LINES GP-BOOM
AN ATTACHMENT

SMCS-5456 **i05858240**

NOTE	REF NO	GRAPHIC REF	PART NUMBER	QTY	PART NAME 1 2 3 4 5 6 (PRODUCT LEVEL)	SEE PAGE
	1	1	**385-2860**	1	CYLINDER AS-BOOM	
	1A	1	**228-5614**	1	BUSHING	
	2	1	**385-2861**	1	ROD AS	
	2A	1	**240-2913**	1	BUSHING	
	3	1	**385-2895**	1	HEAD	
	4	1	**385-2899**	1	RING-RETAINING	
	5	1	**385-2900**	1	BUSHING	
	6	1	**422-9140**	1	STOP	
	7	1	**385-2889**	1	PISTON	
	8	1	**385-2905**	1	RING-SNAP	
C	9	1	**385-2922**	1	BALL	
C	10	1	**422-9120**	1	SETSCREW-HEX SOCKET	
M	11	1	**095-0703**	12	BOLT-SOCKET HEAD (M16X2X75-MM)	
	12	1	**235-7679**	2	SEAL-LIP TYPE	
	13	1	**385-2888**	1	WASHER	
	14	1	**166-1494**	2	SEAL-LIP TYPE	
	15	1	**385-2901**	1	LOCKNUT-SPECIAL	
	16	1	**3B-8489**	1	FITTING-GREASE	
CJ	17	1	**416-1284**	1	SEAL-WIPER	
CJ	18	1	**416-1285**	1	SEAL-U-CUP	
CJ	19	1	**416-1287**	1	SEAL-BUFFER	
CJ	20	1	**416-1286**	1	RING-BACKUP	
CJ	21	1	**416-1277**	1	SEAL-O-RING	
CJ	22		**416-1278**	1	RING-BACKUP	
CJ	23	1	**416-1280**	1	SEAL AS	
CJ	24	1	**416-1279**	2	RING-WEAR	
CJ	25	1	**416-1282**	2	RING-WEAR	
CJ	26	1	**416-1293**	1	RING-SEAL	
					AVAILABLE REPAIR KIT(S):	
CJ			**385-2908**	1	KIT-SEAL (BOOM CYLINDER)	

C - CHANGE FROM PREVIOUS TYPE
J - KIT J SERVICES PART(S) MARKED J
M - METRIC PART

385-2913 **CYLINDER & SEAL GP-BOOM (*contd.*)** **i05858240**

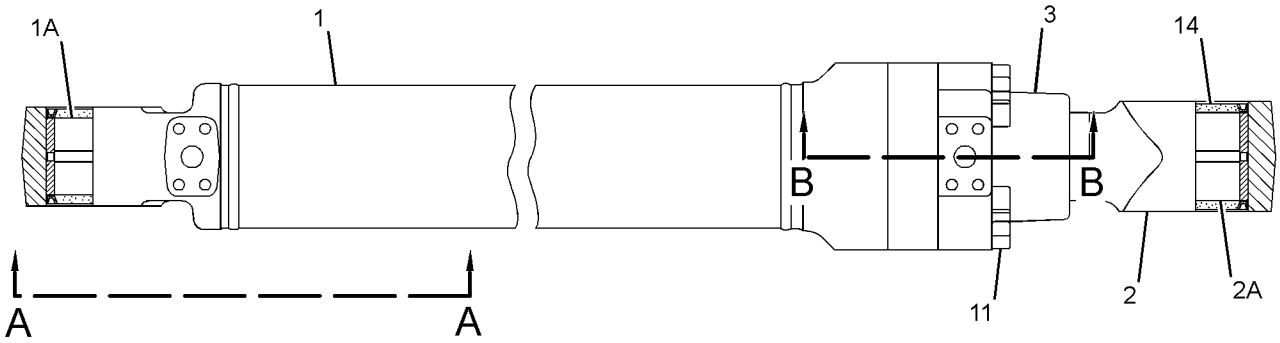

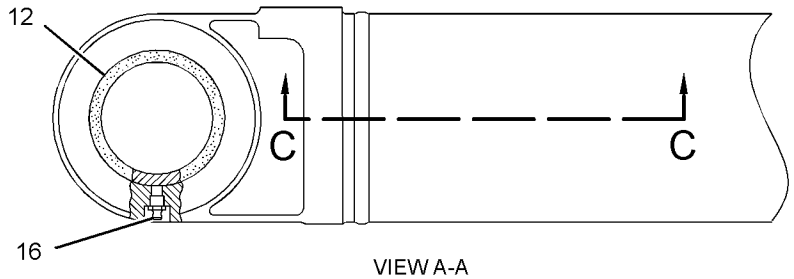

VIEW A-A

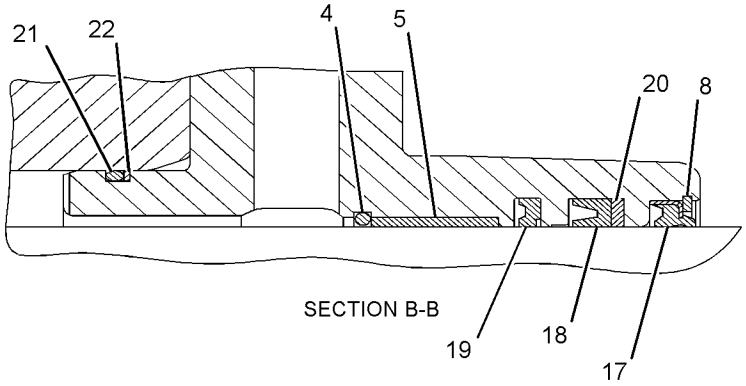

SECTION B-B

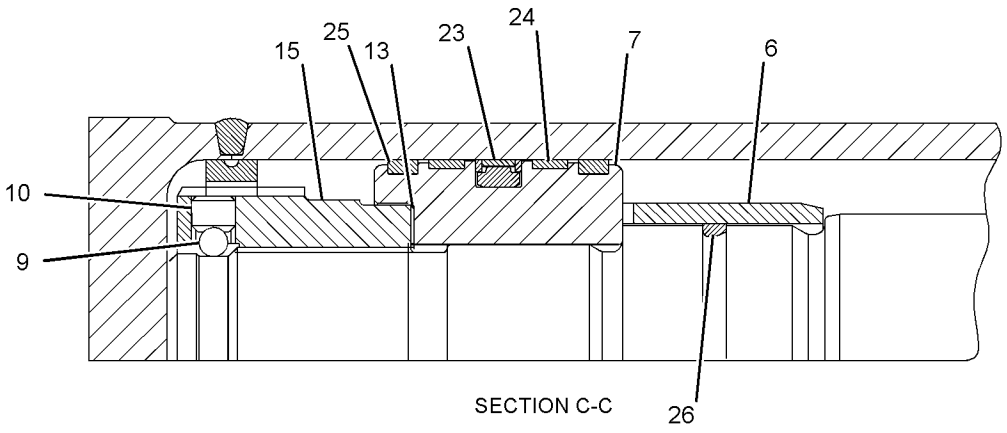

SECTION C-C

GRAPHIC #1 **<END>** g03410849

385-2917 CYLINDER & SEAL GP-BUCKET

S/N: HAH1-UP

PART OF 381-8971 CYLINDER & LINES GP-BUCKET

AN ATTACHMENT

SMCS-5457 **i05241666**

NOTE	REF NO	GRAPHIC REF	PART NUMBER	QTY	PART NAME 1 2 3 4 5 6 (PRODUCT LEVEL)	SEE PAGE
	1	1	**385-2864**	1	CYLINDER AS-BOOM	
	1A	1	**248-7857**	1	BUSHING	
	2	1	**385-2865**	1	ROD AS	
	2A	1	**240-2912**	1	BUSHING	
	3	1	**399-5122**	1	HEAD	
	4	1	**385-2900**	1	BUSHING	
	5	1	**385-2899**	1	RING-RETAINING	
	6	1	**385-2905**	1	RING-SNAP	
	7	1	**385-2945**	1	PISTON	
	8	1	**385-2891**	1	SETSCREW-SOCKET	
	9	1	**385-2890**	1	BALL	
M	10	1	**095-0703**	12	BOLT-SOCKET HEAD (M16X2X75-MM)	
	11	1	**235-7679**	2	SEAL-LIP TYPE	
	12	1	**166-1494**	2	SEAL-LIP TYPE	
	13	1	**385-2944**	1	WASHER	
	14	1	**385-2943**	1	NUT-LOCKING	
	15	1	**3B-8489**	2	FITTING-GREASE	
					AVAILABLE REPAIR KIT(S):	
			385-2946	1	KIT-SEAL	
					(INCLUDES SEAL-O-RING, RING-BACK UP, RING-WEAR, SEAL-AS-PISTON, SEAL-WIPER, SEAL-U-CUP,& SEAL-BUFFER)	

M - METRIC PART

385-2917 **CYLINDER & SEAL GP-BUCKET (*contd.*)** **i05241666**

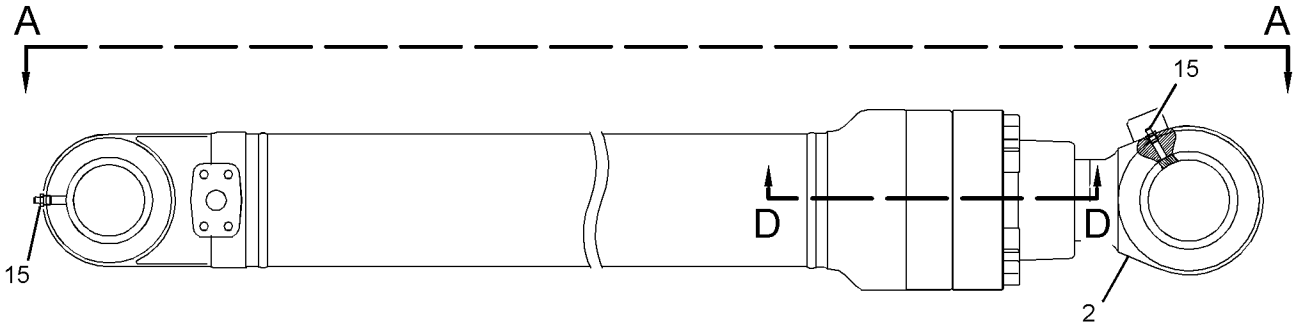

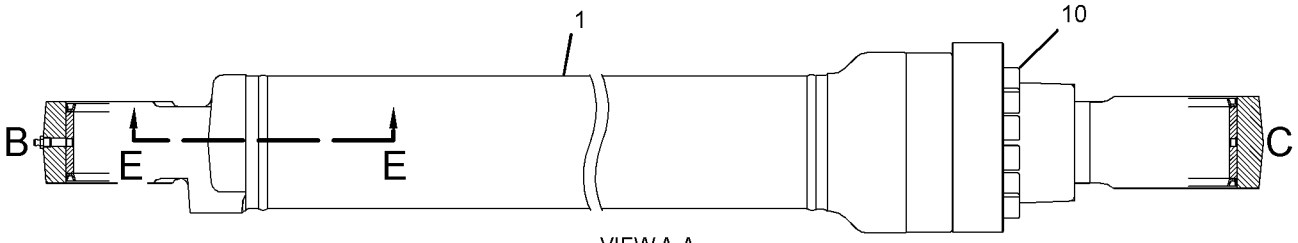

VIEW A-A

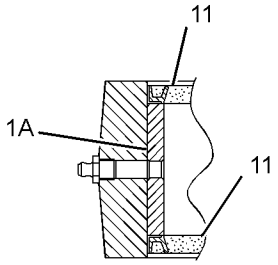

VIEW OF AREA B

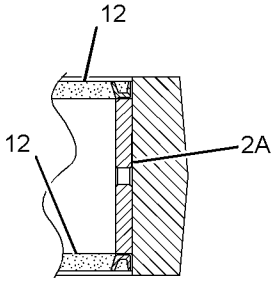

VIEW OF AREA C

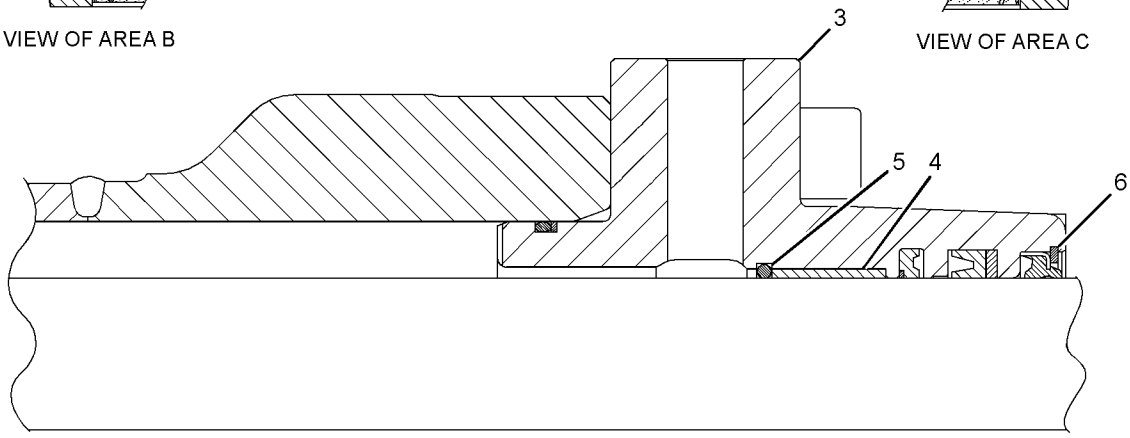

SECTION D-D

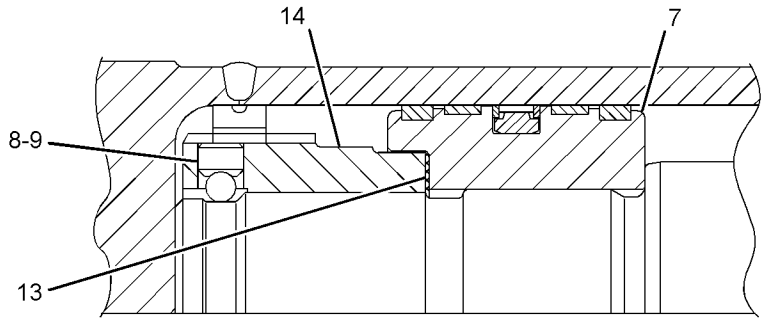

SECTION E-E

GRAPHIC #1

<END>

g03038257

385-2915 CYLINDER & SEAL GP-STICK

S/N: HAH1-UP
120-MM (4.7-IN) BORE X 1331-MM (52.4-IN) STROKE
PART OF 381-8970 CYLINDER & LINES GP-STICK
AN ATTACHMENT

SMCS-5458 **i05858568**

NOTE	REF NO	GRAPHIC REF	PART NUMBER	QTY	PART NAME 1 2 3 4 5 6 (PRODUCT LEVEL)	SEE PAGE
	1	1	**385-2862**	1	CYLINDER AS-STICK	
	1A	1	**241-7231**	1	BUSHING	
	2	1	**385-2863**	1	ROD AS	
	2A	1	**241-7231**	1	BUSHING	
	3	1	**385-2929**	1	HEAD	
	4	1	**385-2934**	1	BUSHING	
	5	1	**385-2933**	1	RING-RETAINING	
	6	1	**385-2927**	1	STOP	
	7	1	**385-2923**	1	PISTON	
	8	1	**385-2939**	1	RING-SNAP	
C	9	1	**422-9122**	1	BALL	
C	10	1	**385-2891**	1	SETSCREW-SOCKET	
	11	1	**385-2910**	1	RING-RETAINING	
	12	1	**385-2920**	1	RING-RETAINING	
	13	1	**385-2909**	1	STOP	
M	14	1	**095-9806**	12	BOLT-SOCKET HEAD (M16X2X80-MM)	
	15	1	**235-7679**	4	SEAL-LIP TYPE	
	16	1	**8T-6763**	1	PLUG-PIPE (1/4-18-THD)	
	17	1	**3B-8489**	1	FITTING-GREASE (1/8-27 PTF)	
CJ	18	1	**416-1312**	1	SEAL-WIPER	
CJ	19	1	**416-1313**	1	SEAL-U-CUP	
CJ	20	1	**416-1315**	1	SEAL-BUFFER	
CJ	21	1	**416-1314**	1	RING-BACKUP	
CJ	22	1	**416-1288**	1	SEAL-O-RING	
CJ	23	1	**416-1289**	1	RING-BACKUP	
CJ	24	1	**416-1291**	1	SEAL AS	
CJ	25	1	**416-1290**	2	RING-WEAR	
CJ	26	1	**416-1292**	2	RING-WEAR	
CJ	27	1	**416-1316**	1	RING-SEAL	
CJ	28	1	**416-1294**	1	RING-SEAL	
					AVAILABLE REPAIR KIT(S):	
J			**385-2942**	1	KIT-SEAL (STICK CYLINDER)	

C - CHANGE FROM PREVIOUS TYPE
J - KIT MARKED J SERVICES PART(S) MARKED J
M - METRIC PART

385-2915 **CYLINDER & SEAL GP-STICK (*contd.*)** **i05858568**



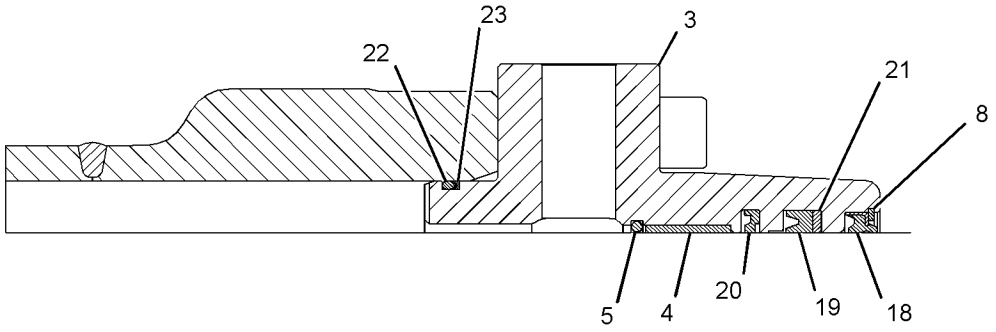

SECTION A-A

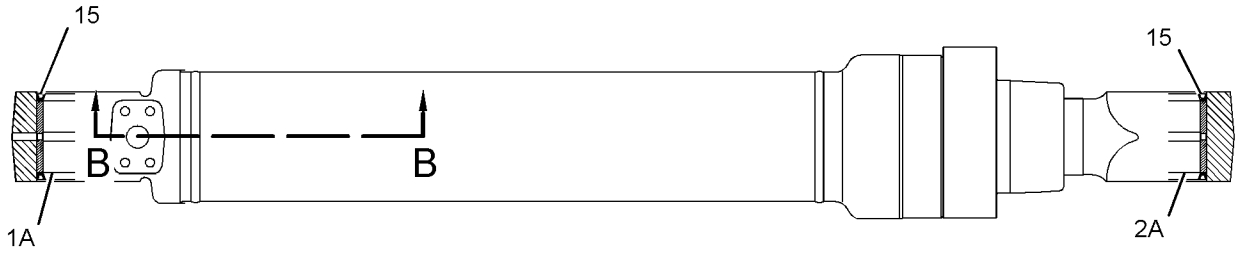

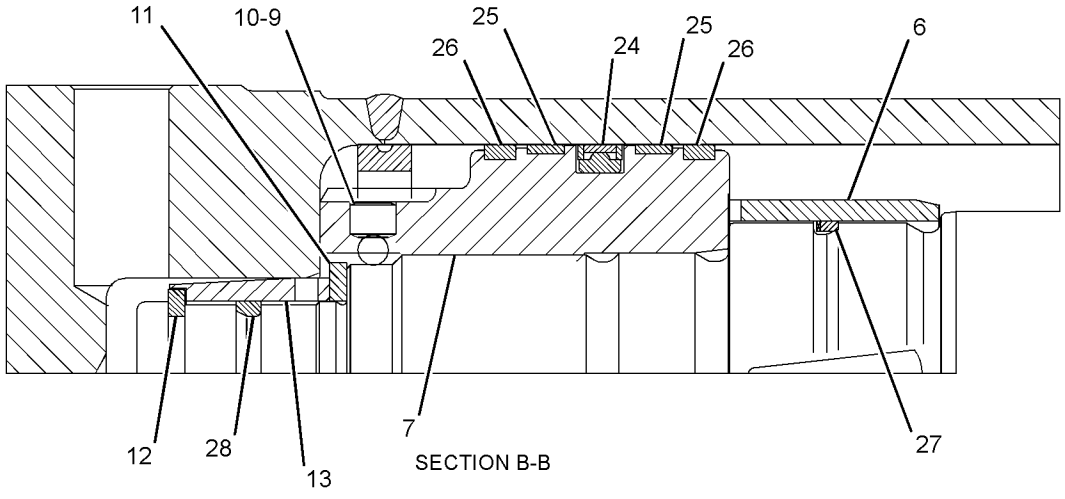

SECTION B-B

GRAPHIC #1 **<END>** g03371878

333-3015 DRIVE GP-SWING—WITHOUT MOTOR

S/N: HAH1-UP

PART OF 367-8339 DRIVE GP-SWING

SMCS-5459 **i04943671**

NOTE	REF NO	GRAPHIC REF	PART NUMBER	QTY	PART NAME 1 2 3 4 5 6 (PRODUCT LEVEL)	SEE PAGE
	1	1	**333-3043**	1	BEARING	
	2	1	**333-3042**	1	BEARING	
	3	1	**333-3057**	1	CASE	
	4	1	**333-3047**	1	COLLAR	
	5	1	**333-3064**	1	RING	
M	6	1	**7X-2619**	6	BOLT (M6X1X10-MM)	
	7	1	**333-3062**	2	PLATE	
	8	1	**333-3061**	1	SEAL	
	9	1	**333-3060**	1	SEAL	
	10	1	**333-3056**	1	PINION	
	11	1	**093-6089**	2	DOWEL	
	12	1	**199-4631**	1	GEAR-RING	
	13	1	**333-3055**	1	GEAR-SUN	
	14	1	**199-4629**	1	GEAR-SUN	
	15	1	**8C-3347**	3	PIN-ROLL	
	16	1	**199-4628**	3	SHAFT-PLANETARY	
	17	1	**199-4627**	12	WASHER	
	18	1	**199-4626**	3	BEARING	
	19	1	**199-4625**	3	GEAR-PLANETARY	
	20	1	**333-3053**	1	CARRIER	
	21	1	**333-3059**	3	RING-RETAINING	
	22	1	**333-3058**	3	WASHER-THRUST (30X47X2-MM THK)	
	23	1	**191-2605**	1	WASHER (30X75X3-MM THK)	
	24	1	**095-0879**	3	PIN-SPRING	
	25	1	**333-3051**	3	SHAFT	
	26	1	**333-3050**	3	BEARING	
	27	1	**333-3049**	3	GEAR-PLANETARY	
	28	1	**333-3048**	1	CARRIER	

M - METRIC PART

333-3015 **DRIVE GP-SWING (*contd.*)** **i04943671**

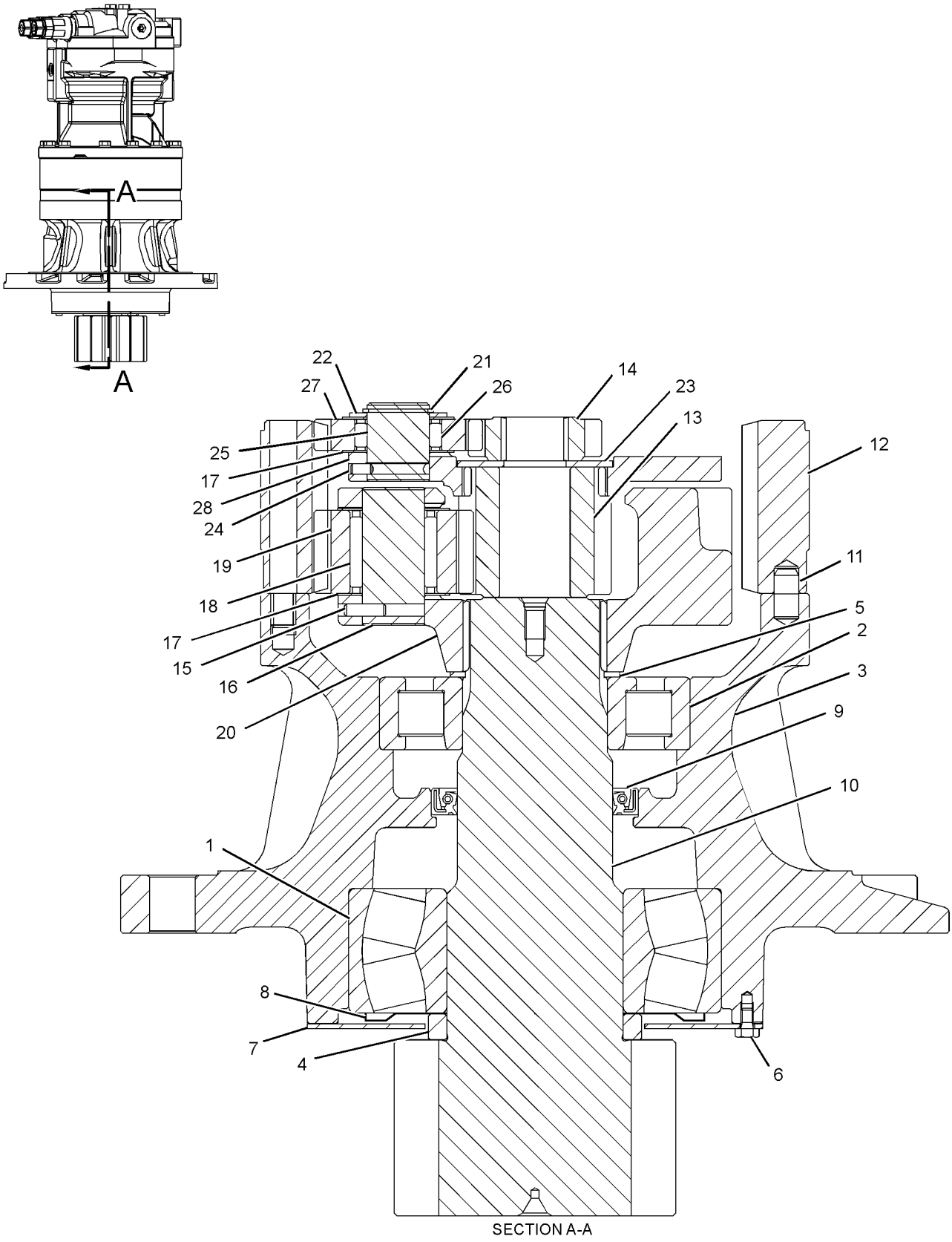

SECTION A-A

GRAPHIC #1 **<END>** g02714858

367-8338 DRIVE GP-SWING—WITH MOTOR

S/N: HAH1-UP

PART OF 267-6738 POWER TRAIN AR

SMCS-5459 **i04943659**

NOTE	REF NO	GRAPHIC REF	PART NUMBER	QTY	PART NAME 1 2 3 4 5 6 (PRODUCT LEVEL)	SEE PAGE
	1	1	**6V-7238**	1	VALVE-SHUTOFF (SWING DRIVE)	
	2	1	**267-6744**	1	BREATHER AS (SWING DRIVE)	
		1	**4H-6112**	1	BREATHER (SWING DRIVE)	
		1	**227-6227**	1	BOSS	
		1	**267-6786**	1	FITTING	
Y	3	1	*367-8339*	1	DRIVE GP-SWING (WITH MOTOR)	201
	4	1	**367-8355**	1	GAUGE-OIL LEVEL	
	5	1	**378-9521**	1	PIPE-GAUGE	
	6	1	**3K-0360**	1	SEAL-O-RING	

Y - SEPARATE ILLUSTRATION

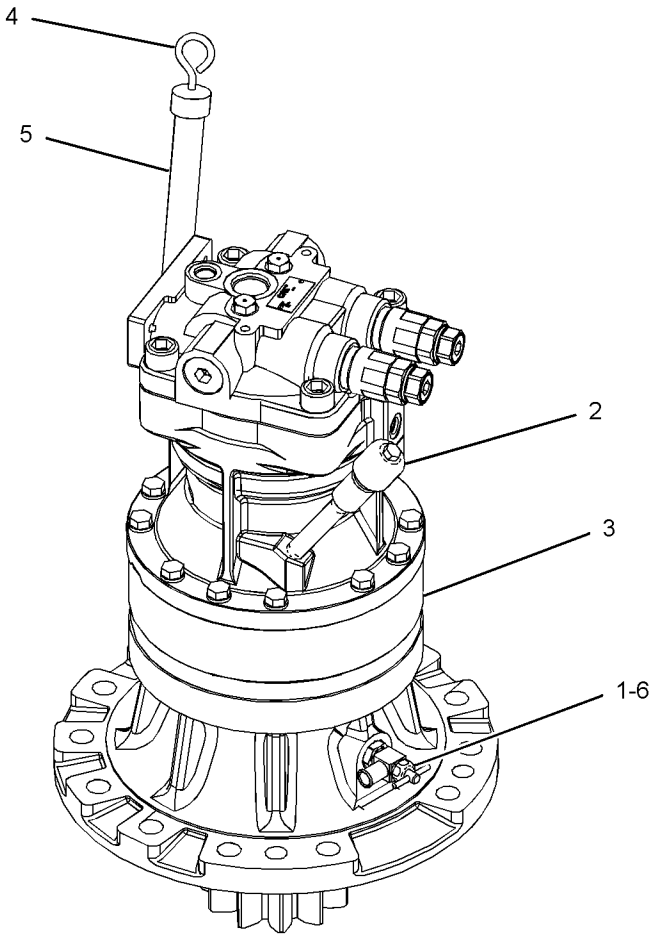

GRAPHIC #1 **<END>** g02726192

367-8339 DRIVE GP-SWING—WITH MOTOR

S/N: HAH1-UP

PART OF 367-8338 DRIVE GP-SWING

SMCS-5459 **i04943665**

NOTE	REF NO	GRAPHIC REF	PART NUMBER	QTY	PART NAME 1 2 3 4 5 6 (PRODUCT LEVEL)	SEE PAGE
	1	1	**095-0817**	12	LOCKWASHER	
Y	2	1	**333-3015**	1	DRIVE GP-SWING (WITHOUT MOTOR)	198
Y	3	1	**369-9604**	1	MOTOR GP-SWING	257
	4	1	**6V-7644**	1	RING-RETAINING	
M	5	1	**8T-5041**	12	BOLT (M12X1.75X120-MM)	

M - METRIC PART
Y - SEPARATE ILLUSTRATION

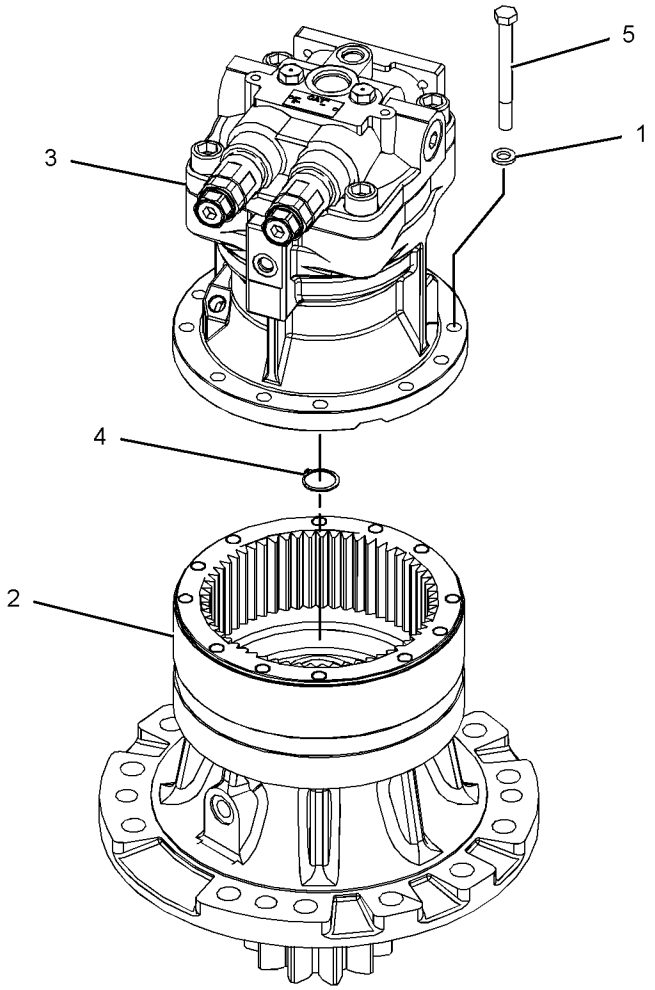

GRAPHIC #1 **<END>** g02726201

227-6229 FASTENER GP-SWING & FINAL DR

S/N: HAH1-UP

PART OF 267-6738 POWER TRAIN AR

SMCS-4050, 5459 **i05772892**

NOTE	REF NO	GRAPHIC REF	PART NUMBER	QTY	PART NAME 1 2 3 4 5 6 (PRODUCT LEVEL)	SEE PAGE
	1	1	**2Y-5503**	2	CORK	
	2	1	**5D-1026**	1	CLAMP-BAND	
	3	1	**191-2580**	1	PIN	
M	4	1	**447-1719**	13	BOLT (M20X2.5X60-MM)	
	5	1	**451-2176**	13	WASHER-HARD (22X35X3.5-MM THK)	
M	6	1	**447-1707**	40	BOLT (M16X2X60-MM)	
	7	1	**451-2175**	40	WASHER-HARD (17.5X30X3.5-MM THK)	
E	8	1	**5P-0767**		HOSE (90-CM)	
	9	1	**352-7063**	2	CAP	
BF			**1U-8846**		SEALANT-GASKET	

B - USE AS REQUIRED
E - ORDER BY THE CENTIMETER
F - NOT SHOWN
M - METRIC PART

227-6229 **FASTENER GP-SWING & FINAL DR (*contd.*)** **i05772892**

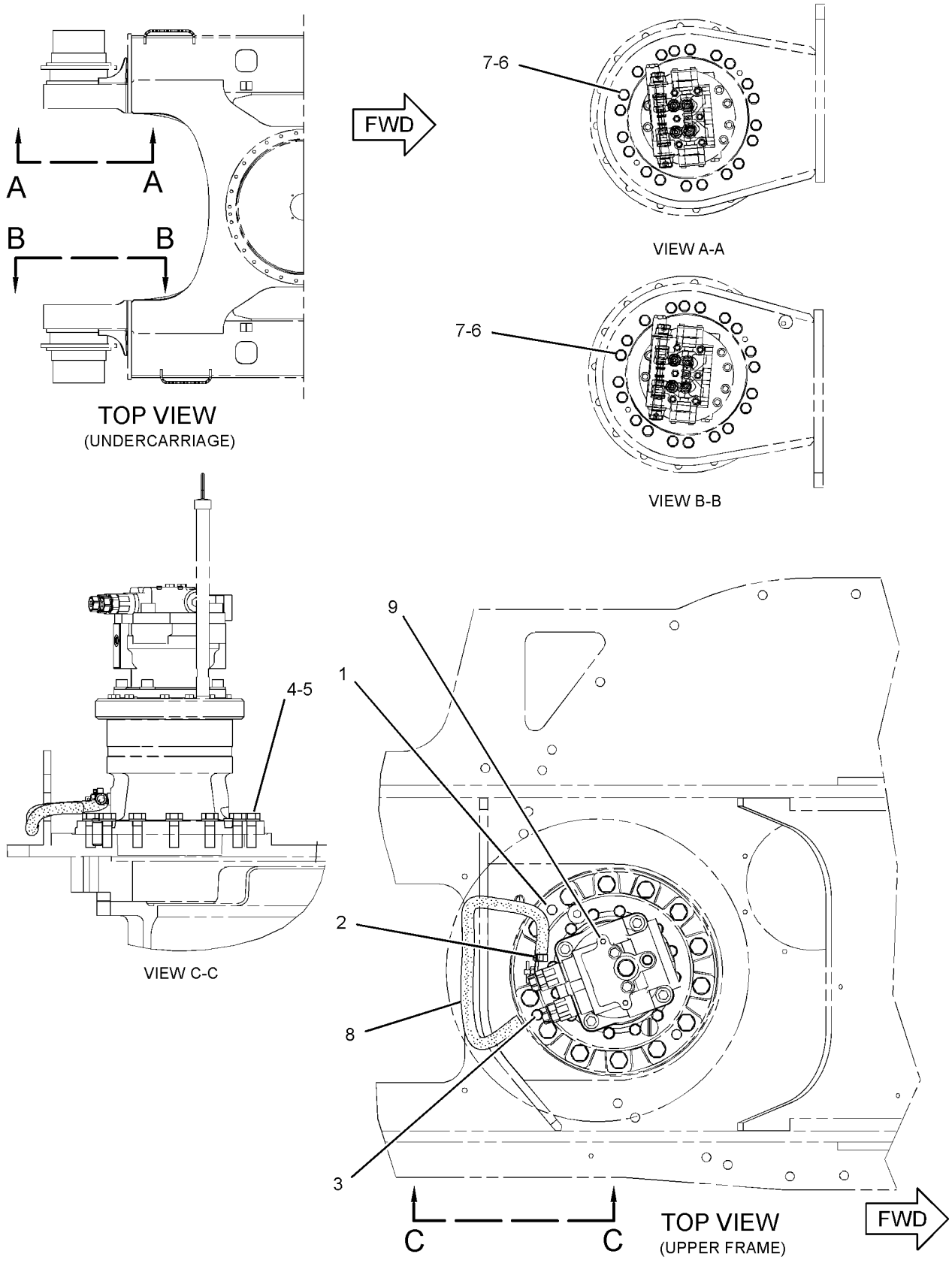

GRAPHIC #1

<END>

g03681537

158-8987 FILTER & VALVE GP-PILOT–HYDRAULIC OIL

S/N: HAH1-UP

PART OF 454-7359 TANK & FILTER GP-HYDRAULIC

SMCS-5072, 5092 **i05495692**

NOTE	REF NO	GRAPHIC REF	PART NUMBER	QTY	PART NAME 1 2 3 4 5 6 (PRODUCT LEVEL)	SEE PAGE
C	1	1	**5I-8670**	1	FILTER-OIL (ADVANCED EFFICIENCY) (HYDRAULIC, PILOT)	
C	2	1	**215-4909**	1	VALVE GP-PILOT RELIEF (HYDRAULIC FILTER)	
	2A	1	**095-1584**	1	SEAL-O-RING	
	2B	1	**095-1590**	1	SEAL-O-RING	
	2C	1	**095-1596**	1	SEAL-O-RING	

C - CHANGE FROM PREVIOUS TYPE

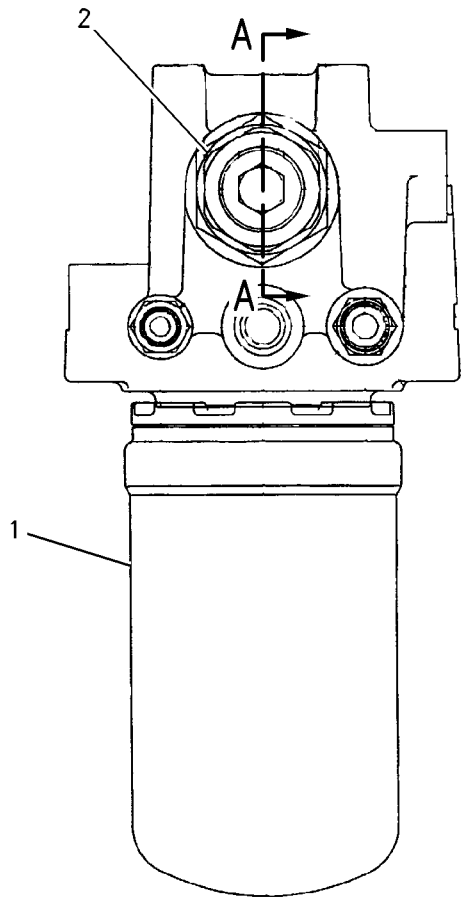

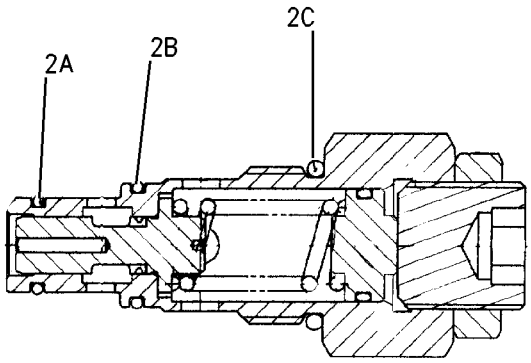

SECTION A–A

GRAPHIC #1 **<END>** g00842119

289-8194 FILTER GP-OIL—HYDRAULIC, CASE DRAIN

S/N: HAH1-UP

PART OF 454-7359 TANK & FILTER GP-HYDRAULIC

SMCS-3004, 4295, 431F, 5068, 5091, 5092

i02995608

NOTE	REF NO	GRAPHIC REF	PART NUMBER	QTY	PART NAME 1 2 3 4 5 6 (PRODUCT LEVEL)	SEE PAGE
	1	1	**093-7521**	1	FILTER-OIL (ADVANCED EFFICIENCY) (HYDRAULIC, CASE DRAIN)	
	2	1	**289-8195**	1	HEAD AS-FILTER	

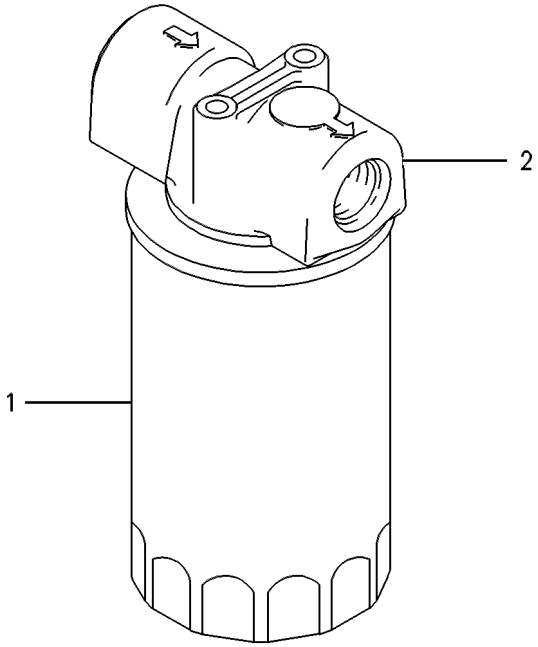

GRAPHIC #1

<END>

g00258224

392-2876 FILTER GP-OIL—HYDRAULIC, MAIN RETURN

S/N: HAH1-UP

PART OF 454-7359 TANK & FILTER GP-HYDRAULIC

SMCS-3004, 4295, 431F, 5068, 5091, 5092

i04943471

NOTE	REF NO	GRAPHIC REF	PART NUMBER	QTY	PART NAME 1 2 3 4 5 6 (PRODUCT LEVEL)	SEE PAGE
	1	1	**283-6090**	1	SEAL-O-RING	
	2	1	**398-7170**	1	HOUSING AS	
	3	1	**398-7171**	1	ELEMENT (HYDRAULIC RETURN FILTER)	
	4	1	**398-7172**	1	VALVE AS	
	5	1	**398-7173**	1	SPRING	
	6	1	**398-7174**	1	COVER	
M	7	1	**8T-4184**	4	BOLT (M12X1.75X45-MM)	
	8	1	**8T-4223**	4	WASHER-HARD (13.5X25.5X3-MM THK)	

M - METRIC PART

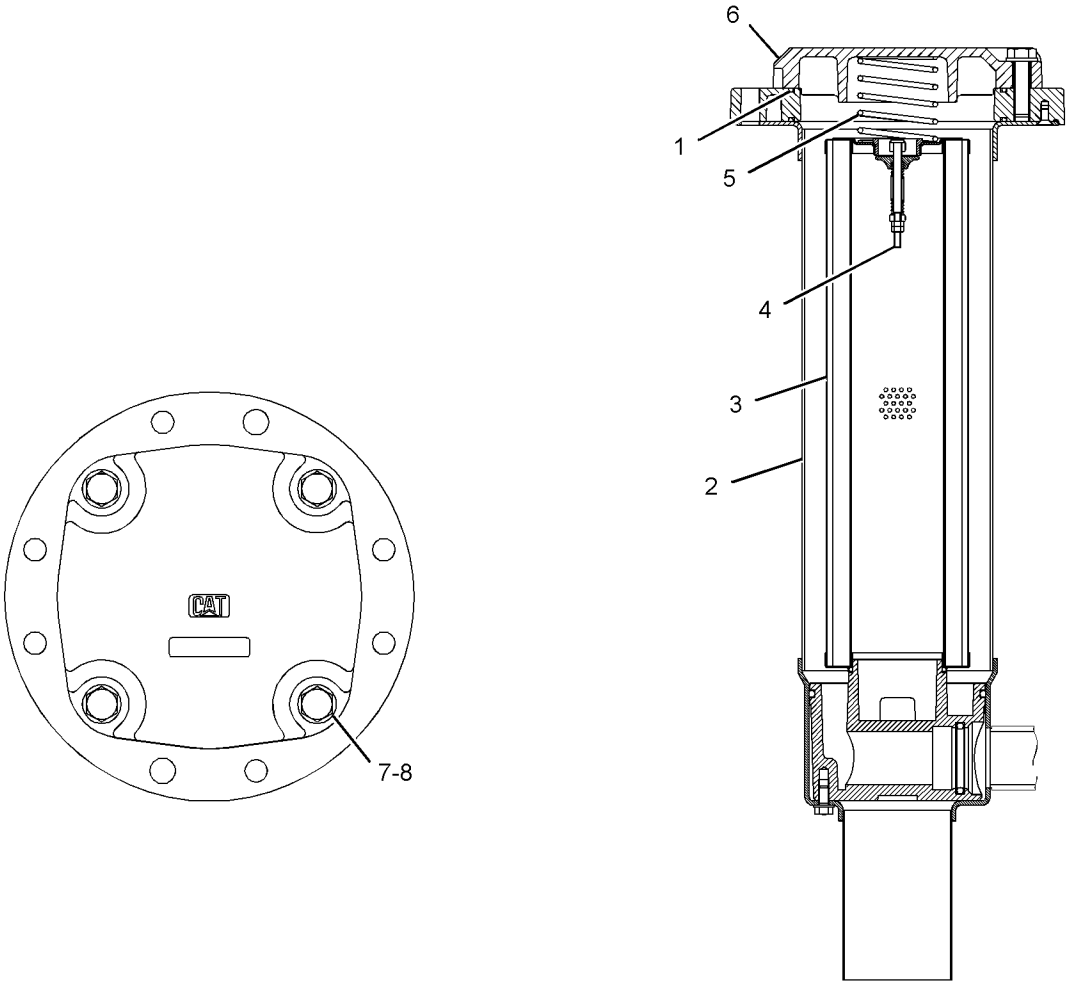

GRAPHIC #1

<END>

g03139580

221-5069 FITTING GP-HYDRAULIC

S/N: HAH1-UP

PART OF 260-8204 LINES GP-HYDRAULIC

SMCS-5057, 7553

i03819072

NOTE	PART NUMBER	QTY	PART NAME 1 2 3 4 5 6 (PRODUCT LEVEL)	SEE PAGE
	221-5070	1	TEE AS (TEE,REDUCER & NUT)	
	6V-8556	1	NUT (1-3/16-12-THD)	
	6V-8398	1	SEAL-O-RING	
	6V-8942	1	REDUCER-O-RING	
	3D-2824	1	SEAL-O-RING	
	6V-8784	1	TEE-FACE SEAL	
	6V-9746	2	SEAL-O-RING	
			-OR-	
	221-5071	1	TEE AS (FABRICATED TEE)	
	3D-2824	1	SEAL-O-RING	
	6V-8398	1	SEAL-O-RING	
	6V-9746	1	SEAL-O-RING	

<END>

347-6081 GAUGE GP-SIGHT—HYDRAULIC OIL LEVEL

S/N: HAH1-UP

PART OF 454-7359 TANK & FILTER GP-HYDRAULIC

SMCS-7479 **i04232569**

NOTE	REF NO	GRAPHIC REF	PART NUMBER	QTY	PART NAME 1 2 3 4 5 6 (PRODUCT LEVEL)	SEE PAGE
	1	1	**236-3257**	1	PIPE	
M	2	1	**236-3259**	2	BOLT-SPECIAL	
	3	1	**347-6082**	2	BLOCK	
	4	1	**6F-6672**	4	SEAL-O-RING	
	5	1	**6F-4855**	4	SEAL-O-RING	

M - METRIC PART

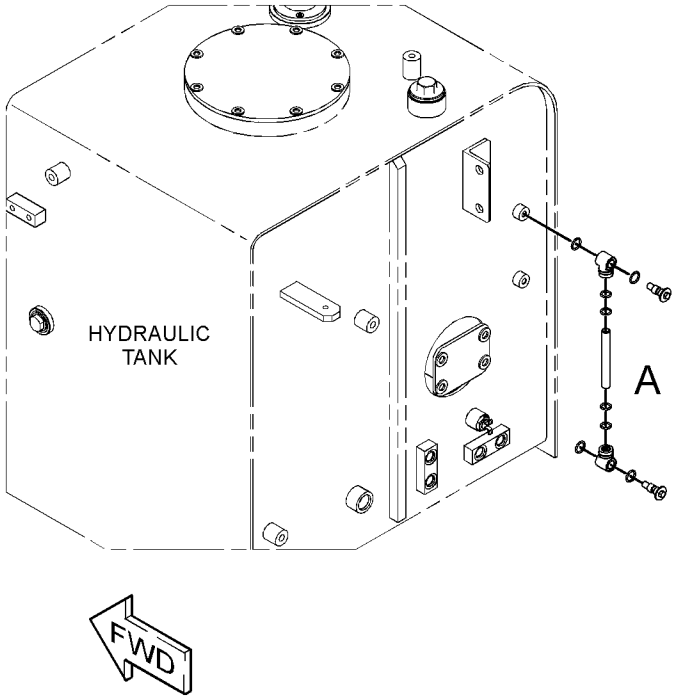

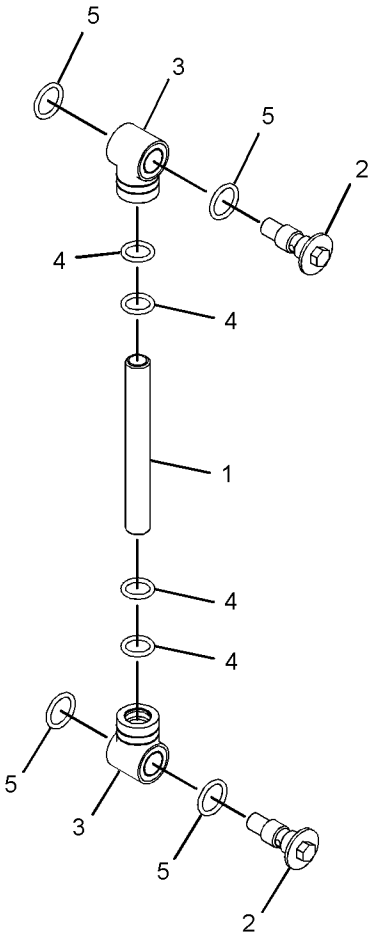

VIEW OF AREA A

GRAPHIC #1 **<END>** g02303838

267-1624 HEAD GP-PUMP

S/N: HAH1-UP

PART OF 391-9452 PUMP GP-PISTON

SMCS-3222, 5070, 5086 **i04946722**

NOTE	REF NO	GRAPHIC REF	PART NUMBER	QTY	PART NAME 1 2 3 4 5 6 (PRODUCT LEVEL)	SEE PAGE
B	1	1	**099-3669**	2	SHIM (1-MM THK)	
B		1	**099-6109**	2	SHIM (1.05-MM THK)	
B		1	**099-6110**	2	SHIM (1.1-MM THK)	
B		1	**099-6111**	2	SHIM (1.15-MM THK)	
B		1	**099-6112**	2	SHIM (1.2-MM THK)	
B		1	**099-6113**	2	SHIM (1.25-MM THK)	
B		1	**099-6115**	2	SHIM (1.3-MM THK)	
	8	1	**173-1170**	1	SPRING	
	9	1	**173-3389**	2	STOPPER	
	10	1	**174-7220**	2	COVER	
	11	1	**174-7221**	1	COVER	
	12	1	**174-7222**	1	COVER	
	14	1	**192-2376**	1	PIN AS	
		1	**192-0573**	1	PIN-DOWEL	
	15	1	**200-3247**	1	SPRING	
M	16	1	**225-0224**	1	SETSCREW (M16X2X55-MM)	
M	17	1	**225-0225**	1	SETSCREW (M16X2X45-MM)	
	18	1	**267-1626**	1	SPOOL AS	
	19	1	**268-4201**	1	LEVER AS	
		1	**094-1875**	1	DOWEL	
	20	1	**268-4203**	1	PIN	
	21	1	**273-8316**	1	SEAL-O-RING	
	22	1	**273-8317**	1	SEAL-O-RING	
	23	1	**273-8318**	1	SEAL-O-RING	
	24	1	**281-6847**	1	PISTON	
	26	1	**301-6874**	1	RETAINER	
	27	1	**301-8294**	1	ADJUSTER	
	28	1	**094-1881**	1	PLATE-SLIDE	
	29	1	**095-1788**	2	RING-BACKUP	
	30	1	**099-3671**	1	SPRING	
	31	1	**185-0169**	1	GUIDE	
	32	1	**189-9763**	3	SEAL-O-RING	
	33	1	**190-7674**	2	SEAL-O-RING	
M	34	1	**200-3255**	1	NUT (M20X1.5-THD)	
	35	1	**267-1625**	1	SPRING	
	36	1	**2H-9247**	1	SEAL-O-RING	
	37	1	**3D-2891**	1	BALL	
	38	1	**3J-1907**	1	SEAL-O-RING	
	39	1	**4J-7533**	9	SEAL-O-RING	
	40	1	**6V-5391**	1	SEAL-O-RING	
M	41	1	**8T-4132**	2	NUT (M16X2-THD)	
M	42	1	**8T-4133**	1	NUT (M10X1.5-THD)	
M	43	1	**8T-4183**	8	BOLT (M12X1.75X40-MM)	
M	44	1	**8T-4192**	2	BOLT (M12X1.75X25-MM)	
	45	1	**9S-8001**	9	PLUG-O-RING	

B - USE AS REQUIRED
M - METRIC PART

267-1624 **HEAD GP-PUMP (*contd.*)** **i04946722**

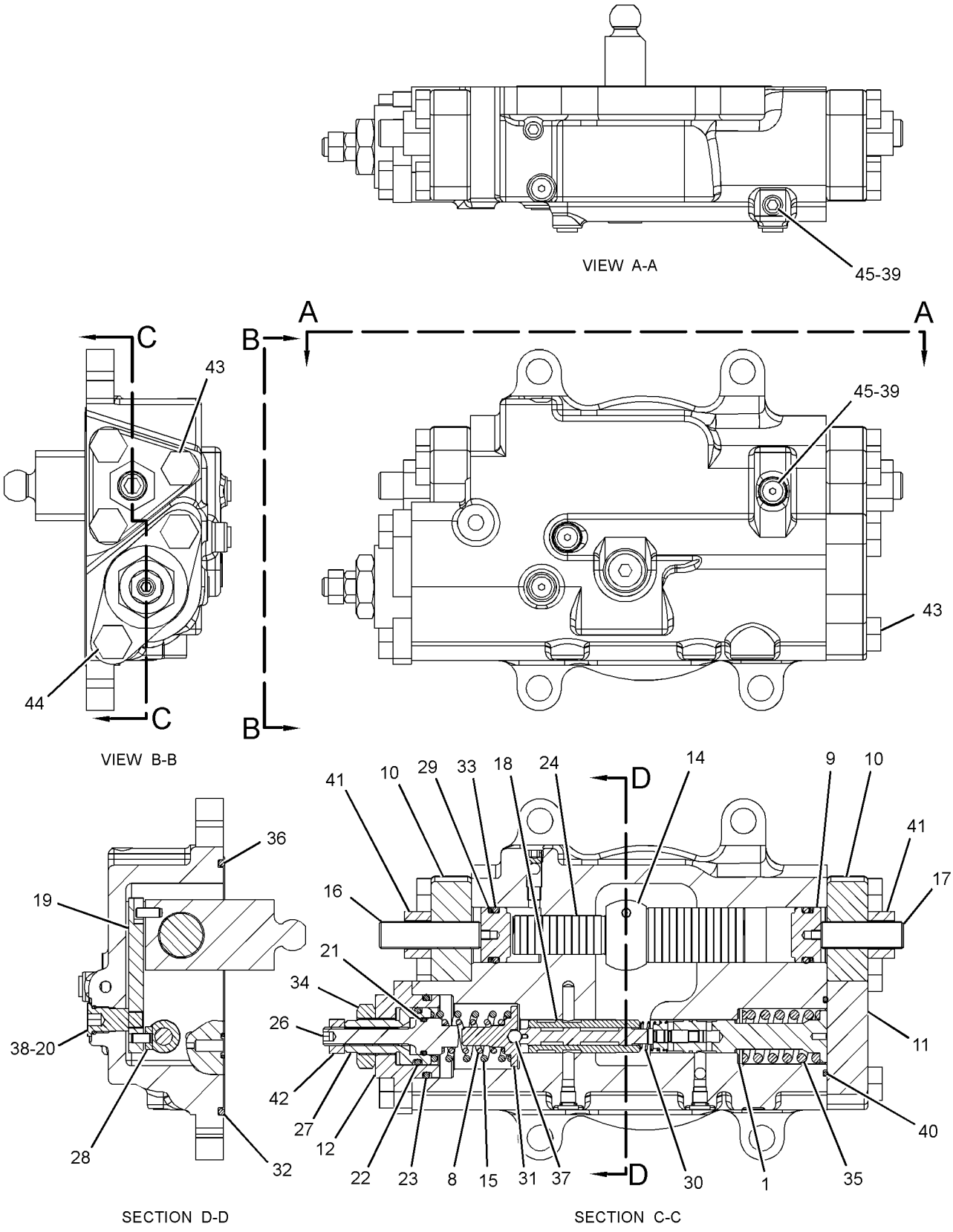

GRAPHIC #1 **<END>** g01611833

455-7664 HYDRAULIC AR

S/N: HAH1-UP

PART OF 454-5573 GENERAL AR

SMCS-5050 **i05848310**

NOTE	PART NUMBER	QTY	PART NAME 1 2 3 4 5 6 (PRODUCT LEVEL)	SEE PAGE
Y	*435-8395*	1	LINES GP-CYLINDER (BOOM)	217
Y	*366-8650*	1	LINES GP-FRONT	221
Y	*391-7830*	1	LINES GP-HYDRAULIC OIL COOLER	226
Y	*260-8217*	1	LINES GP-PILOT (MAIN CONTROL VALVE)	227
Y	*275-1715*	1	LINES GP-PILOT (PILOT CONTROL)	231
Y	*387-3716*	1	LINES GP-PILOT (FILTER, PILOT PUMP)	233
Y	*391-7835*	1	LINES GP-PILOT (MAIN CONTROL VALVE)	236
Y	*391-7825*	1	LINES GP-PUMP (OUTPUT, HYD OIL CLR BYPASS)	242
Y	*391-7836*	1	LINES GP-PUMP (SUPPLY, MAIN PUMP)	244
Y	*260-8212*	1	LINES GP-TRAVEL MOTOR (LONG CARRIAGE)	249
Y	*302-3225*	1	MOUNTING GP-MAIN CONTROL VALVE	261
Y	*387-2618*	1	PUMP & MTG GP-MAIN HYDRAULIC	262
Y	*455-4106*	1	TANK & MTG GP-HYDRAULIC	283
Y	**420-2243**	1	VALVE GP-MAIN CONTROL	285

Y - SEPARATE ILLUSTRATION

<END>

260-8220 LINES GP-BOOM

S/N: HAH1-UP
PART OF 385-4100 BOOM AR-1 PIECE LONG
AN ATTACHMENT

SMCS-5057 **i04958517**

NOTE	REF NO	GRAPHIC REF	PART NUMBER	QTY	PART NAME 1 2 3 4 5 6 (PRODUCT LEVEL)	SEE PAGE
	1	1	**4I-1674**	2	CLIP	
	2	1	**4I-1676**	8	CLIP	
	3	1	**7Y-4868**	8	CLIP	
	4	1	**108-7550**	2	CLIP	
CM	5	1	**8T-4139**	20	BOLT (M12X1.75X30-MM)	
I	6	1	**260-8316**	1	HOSE AS	
M	7	1	**8T-4184**	16	BOLT (M12X1.75X45-MM)	
	8	1	**8T-4223**	36	WASHER-HARD (13.5X25.5X3-MM THK)	
	9	1	**266-1188**	1	TUBE AS	
	10	1	**266-1189**	1	TUBE AS	
	11	1	**266-1190**	1	TUBE AS	
	12	1	**266-1191**	1	TUBE AS	
	13	1	**266-1192**	1	TUBE AS	
	14	1	**266-1193**	1	TUBE AS	
I	15	1	**266-1210**	1	HOSE AS	
	16	1	**1P-3703**	4	SEAL-RECTANGULAR	
	17	1	**6V-0400**	8	FLANGE-HALF	
	18	1	**6V-9746**	6	SEAL-O-RING	

C - CHANGE FROM PREVIOUS TYPE
I - REFER TO HYDRAULIC INFORMATION SYSTEM
M - METRIC PART

260-8220 **LINES GP-BOOM (*contd.*)** **i04958517**

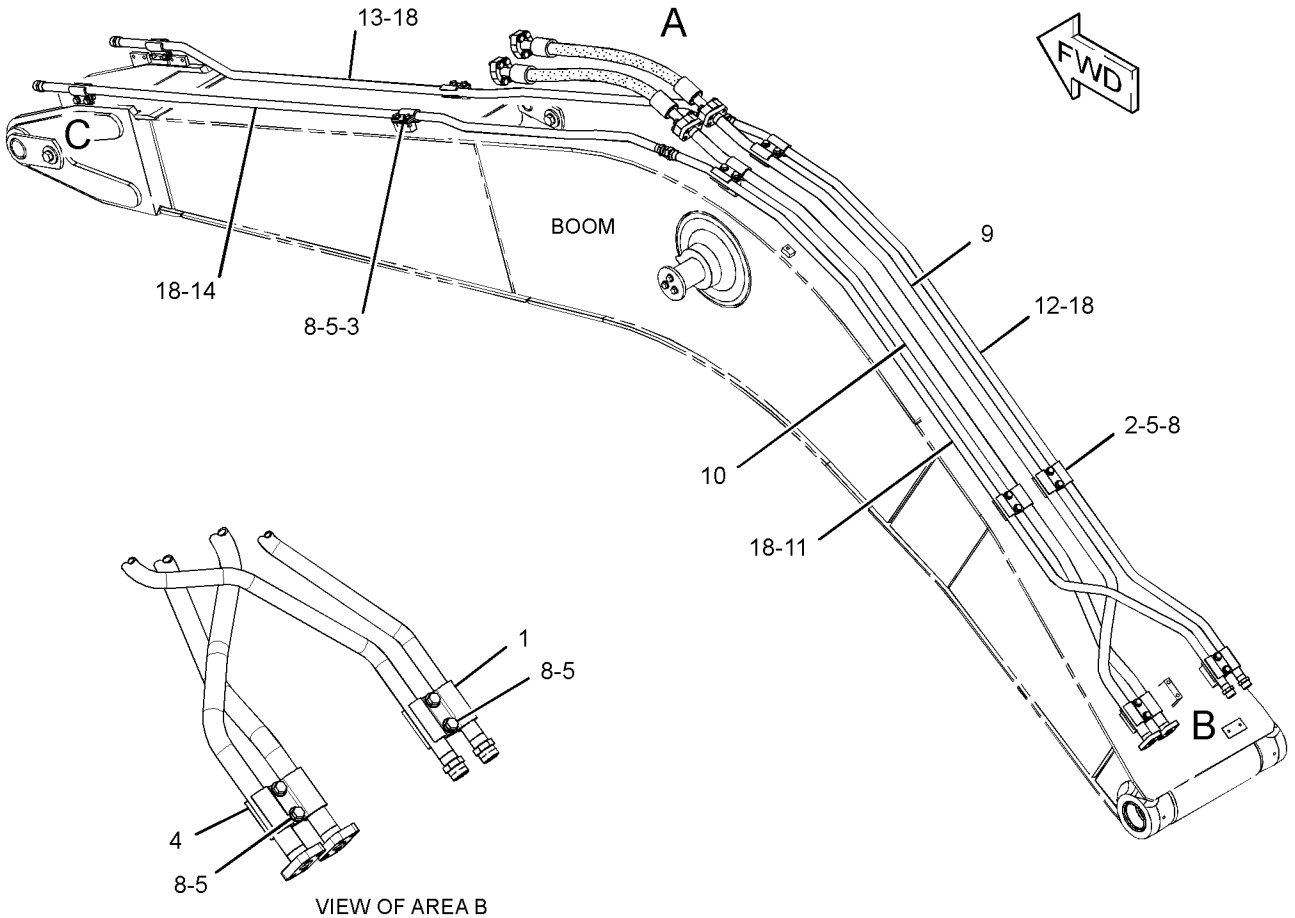

VIEW OF AREA B

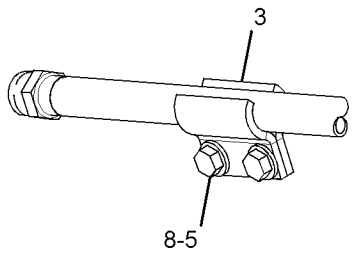

VIEW OF AREA C

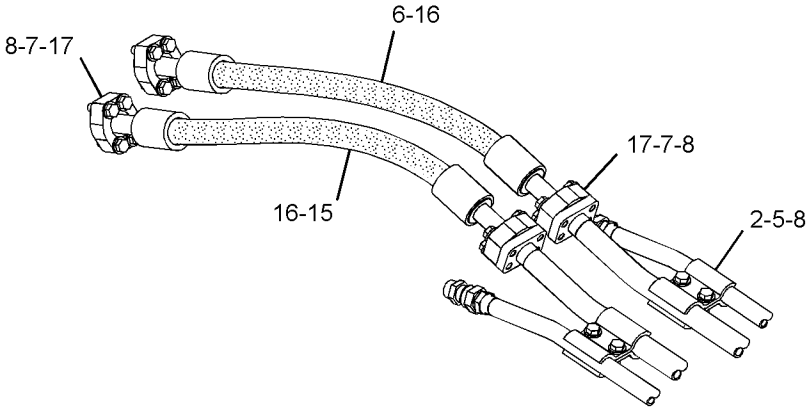

VIEW OF AREA A

GRAPHIC #1 **<END>** g02920057

385-2911 LINES GP-BOOM CYLINDER—LH

S/N: HAH1-UP

PART OF 381-8968 CYLINDER & LINES GP-BOOM

AN ATTACHMENT

SMCS-5057, 5456 **i05858119**

NOTE	REF NO	GRAPHIC REF	PART NUMBER	QTY	PART NAME 1 2 3 4 5 6 (PRODUCT LEVEL)	SEE PAGE
	1	1	**390-4135**	1	TUBE AS	
	2	1	**390-4136**	1	TUBE AS	
	3	1	**6V-0357**	2	SEAL-O-RING	
M	4	1	**8T-0271**	8	BOLT-SOCKET HEAD (M10X1.5X35-MM)	
	5	1	**422-9135**	1	SUPPORT AS	
M		1	**096-4876**	1	NUT (M14X2-THD)	
		1	**424-8398**	2	NUT-WELD (M10X1.5-THD)	
M	7	1	**6V-5842**	2	BOLT (M10X1.5X40-MM)	
	8	1	**7X-0796**	2	LOCKWASHER	
M	9	1	**269-5224**	1	BOLT (M14X2X80-MM)	
	10	1	**3B-4509**	1	LOCKWASHER	
	11	1	**390-4242**	2	CLAMP	
	13	1	**6V-9831**	2	CAP AS	
	14	1	**7J-9108**	2	SEAL-O-RING	

M - METRIC PART

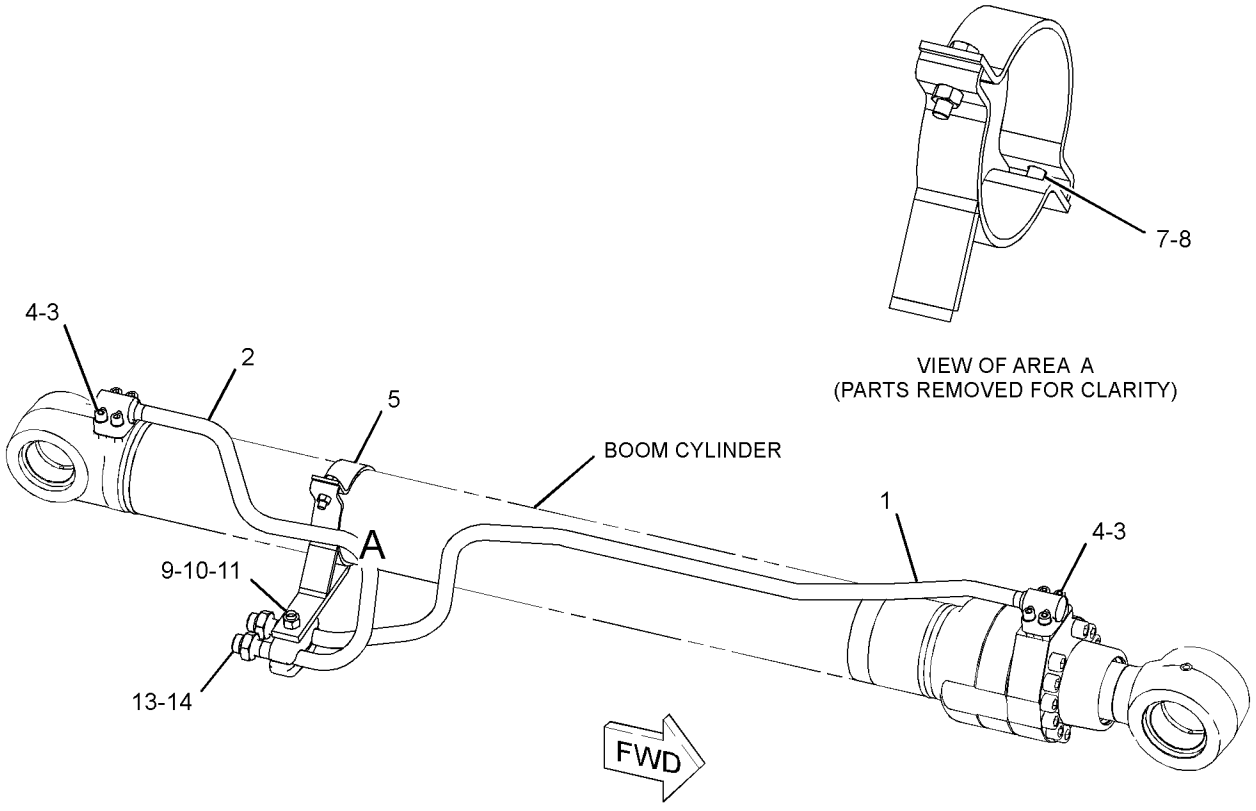

GRAPHIC #1 **<END>** g03346797

385-2912 LINES GP-BOOM CYLINDER—RH

S/N: HAH1-UP
PART OF 381-8969 CYLINDER & LINES GP-BOOM
AN ATTACHMENT

SMCS-5057, 5456 **i05858618**

NOTE	REF NO	GRAPHIC REF	PART NUMBER	QTY	PART NAME 1 2 3 4 5 6 (PRODUCT LEVEL)	SEE PAGE
	1	1	**6V-0357**	2	SEAL-O-RING	
M	2	1	**8T-0271**	8	BOLT-SOCKET HEAD (M10X1.5X35-MM)	
	3	1	**390-4149**	1	TUBE AS	
	4	1	**390-4150**	1	TUBE AS	
	5	1	**390-4242**	2	CLAMP	
M	6	1	**269-5224**	1	BOLT (M14X2X80-MM)	
	7	1	**3B-4509**	1	LOCKWASHER	
M	8	1	**6V-5842**	2	BOLT (M10X1.5X40-MM)	
	9	1	**7X-0796**	2	LOCKWASHER	
	10	1	**6V-9831**	2	CAP AS	
C	11	1	**422-9135**	1	SUPPORT AS	
M		1	**096-4876**	1	NUT (M14X2-THD)	
		1	**424-8398**	2	NUT-WELD (M10X1.5-THD)	
	12	1	**7J-9108**	2	SEAL-O-RING	

C - CHANGE FROM PREVIOUS TYPE
M - METRIC PART

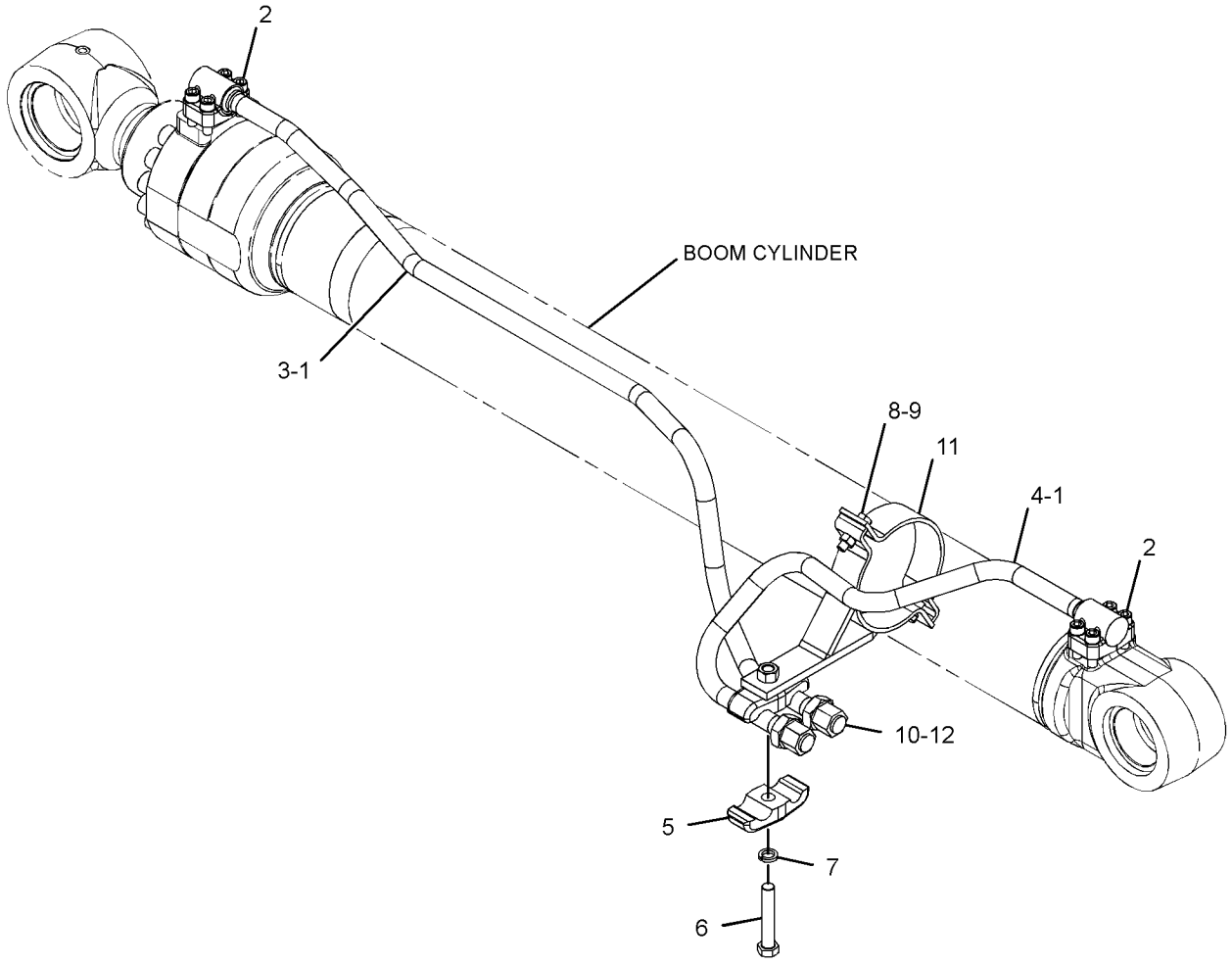

GRAPHIC #1 **<END>** g03344204

385-2916 LINES GP-BUCKET CYLINDER

S/N: HAH1-UP

PART OF 381-8971 CYLINDER & LINES GP-BUCKET

AN ATTACHMENT

SMCS-5457 **i05967892**

NOTE	REF NO	GRAPHIC REF	PART NUMBER	QTY	PART NAME 1 2 3 4 5 6 (PRODUCT LEVEL)	SEE PAGE
M	1	1	**8T-0271**	4	BOLT-SOCKET HEAD (M10X1.5X35-MM)	
	2	1	**6V-0357**	1	SEAL-O-RING	
	3	1	**390-4173**	1	TUBE AS	
M	4	1	**8T-4133**	2	NUT (M10X1.5-THD)	
M	5	1	**6V-5842**	2	BOLT (M10X1.5X40-MM)	
	6	1	**7X-0796**	3	LOCKWASHER	
	7	1	**422-9136**	1	SUPPORT AS	
	8	1	**385-2967**	1	CLAMP	
M	9	1	**6V-4249**	1	BOLT (M10X1.5X50-MM)	

M - METRIC PART

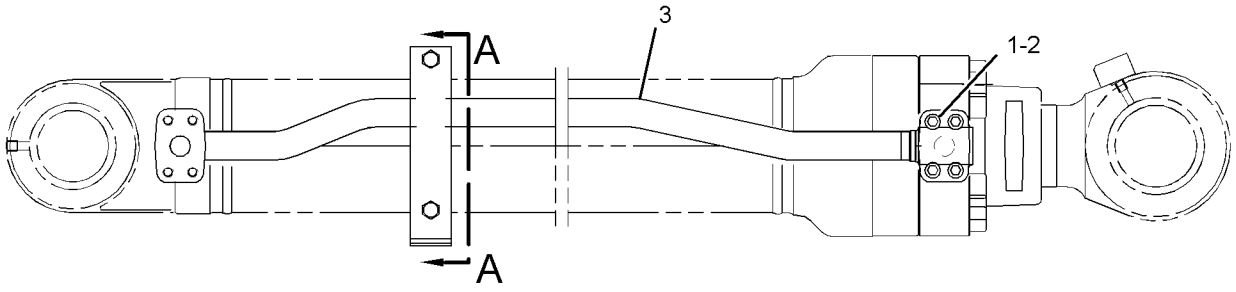

RIGHT SIDE VIEW

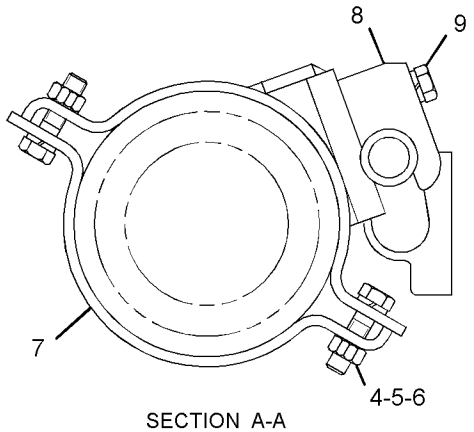

SECTION A-A

GRAPHIC #1 **<END>** g03148836

HYDRAULIC SYSTEM

435-8395 LINES GP-CYLINDER—BOOM

S/N: HAH1-UP

PART OF 455-7664 HYDRAULIC AR

SMCS-5057 **i05848863**

NOTE	REF NO	GRAPHIC REF	PART NUMBER	QTY	PART NAME 1 2 3 4 5 6 (PRODUCT LEVEL)	SEE PAGE
	1	1	**9F-2167**	1	SCREW-PURGE (3/8-24X1.164-IN)	
	2	1	**093-1296**	1	CLAMP	
	3	1	**099-5408**	1	CLAMP	
I	4	1	**184-9543**	4	HOSE AS	
	5	1	**187-5873**	1	TUBE AS	
	6	1	**266-7940**	1	ROD AS	
		1	**225-4539**	1	WASHER-SPECIAL (17X30X6-MM THK)	
	7	1	*268-5145*	1	ELBOW AS	
		1	**3D-2824**	1	SEAL-O-RING	
		1	**6V-9746**	1	SEAL-O-RING	
		1	**194-9041**	1	ELBOW	
	8	1	**269-9799**	1	SUPPORT AS	
I	9	1	**368-9376**	1	HOSE AS	
	10	1	**368-9379**	1	TUBE AS	
Y	11	1	**369-9628**	1	VALVE GP-SWING CUSHION (CROSSOVER RELIEF)	307
	12	1	*106-8715*	2	ELBOW AS	
					(EACH INCLUDES)	
		1	**3D-2824**	1	SEAL-O-RING	
		1	**6V-9746**	1	SEAL-O-RING	
		1	**8C-8400**	1	ELBOW	
	13	1	*148-8327*	1	CONNECTOR AS	
		1	**3D-2824**	1	SEAL-O-RING	
		1	**6V-8637**	1	CONNECTOR	
		1	**6V-9746**	1	SEAL-O-RING	
	14	1	*148-8336*	1	CONNECTOR AS	
		1	**3J-1907**	1	SEAL-O-RING	
		1	**6V-8397**	1	SEAL-O-RING	
		1	**6V-8636**	1	CONNECTOR	
	15	1	*148-8340*	2	CONNECTOR AS	
					(EACH INCLUDES)	
		1	**3K-0360**	1	SEAL-O-RING	
		1	**6V-8398**	1	SEAL-O-RING	
		1	**6V-8639**	1	CONNECTOR	
	16	1	*148-8347*	1	ELBOW AS	
		1	**3D-2824**	1	SEAL-O-RING	
		1	**6V-9007**	1	ELBOW	
		1	**6V-9746**	1	SEAL-O-RING	
	17	1	*148-8357*	1	ELBOW AS	
		1	**5K-9090**	1	SEAL-O-RING	
		1	**6V-9008**	1	ELBOW	
		1	**7M-8485**	1	SEAL-O-RING	
	18	1	*148-8378*	1	ELBOW AS	
		1	**3J-1907**	1	SEAL-O-RING	
		1	**6V-8397**	1	SEAL-O-RING	
		1	**6V-8724**	1	ELBOW	
	19	1	*148-8444*	1	TEE AS-SWIVEL	
		1	**6V-8398**	2	SEAL-O-RING	
		1	**6V-9837**	1	TEE-SWIVEL	
	20	1	*153-6237*	1	ELBOW AS	
		1	**3D-2824**	1	SEAL-O-RING	
		1	**6V-9004**	1	ELBOW	
		1	**6V-9746**	1	SEAL-O-RING	
	21	1	**6H-3615**	1	PLUG-PROTECTION	
	22	1	**7J-9108**	4	SEAL-O-RING	
M	23	1	**8T-4178**	6	BOLT (M10X1.5X90-MM)	
M	24	1	**8T-4192**	2	BOLT (M12X1.75X25-MM)	
	25	1	**8T-4223**	4	WASHER-HARD (13.5X25.5X3-MM THK)	
M	26	1	**8T-4648**	1	BOLT (M12X1.75X70-MM)	
M	27	1	**8T-4910**	1	BOLT (M12X1.75X60-MM)	

435-8395 **LINES GP-CYLINDER (*contd.*)** **i05848863**

NOTE	REF NO	GRAPHIC REF	PART NUMBER	QTY	PART NAME 1 2 3 4 5 6 (PRODUCT LEVEL)	SEE PAGE

I - REFER TO HYDRAULIC INFORMATION SYSTEM
M - METRIC PART
Y - SEPARATE ILLUSTRATION

435-8395 **LINES GP-CYLINDER (*contd.*)** **i05848863**

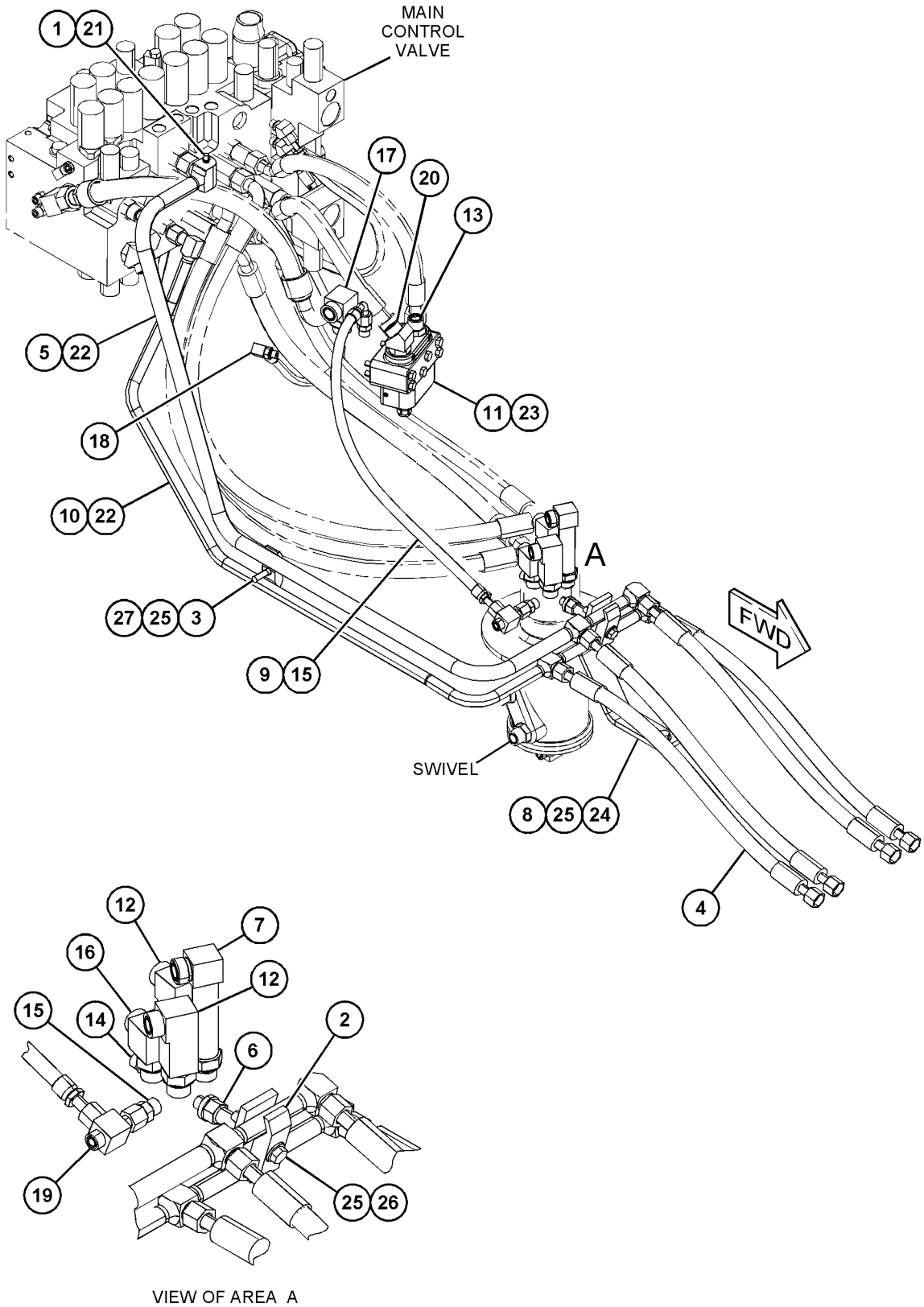

VIEW OF AREA A

GRAPHIC #1 **<END>** g03676536

395-3380 LINES GP-DRAIN

S/N: HAH1-UP

PART OF 392-0400 INSTALLATION AR-ENGINE

SMCS-5057 **i04961897**

NOTE	REF NO	GRAPHIC REF	PART NUMBER	QTY	PART NAME 1 2 3 4 5 6 (PRODUCT LEVEL)	SEE PAGE
	1	1	**095-1388**	1	CLAMP-HOSE	
E	2	1	**5P-0743**		HOSE (18-CM)	

E - ORDER BY THE CENTIMETER

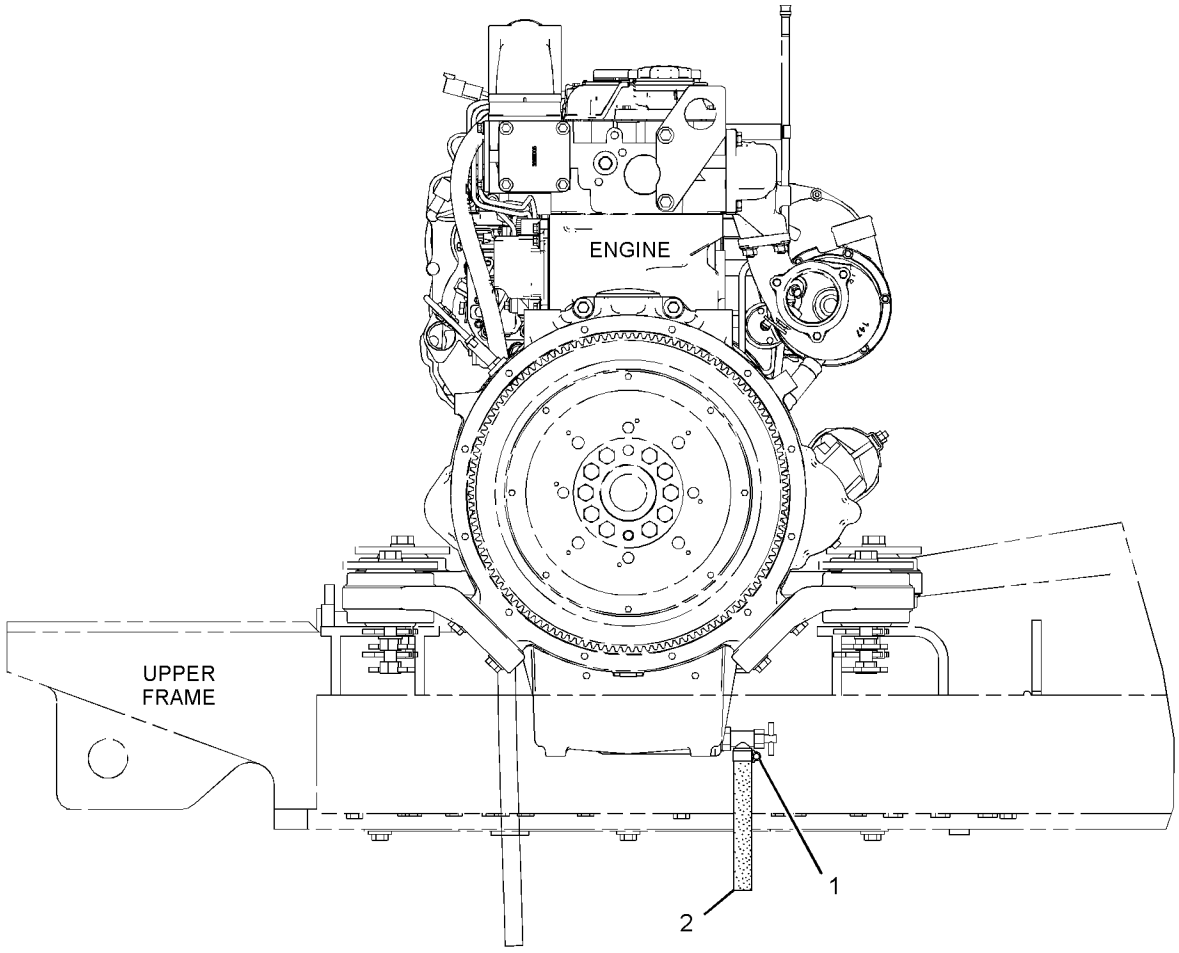

RIGHT SIDE VIEW

GRAPHIC #1 **<END>** g03128478

366-8650 LINES GP-FRONT

S/N: HAH1-UP

PART OF 455-7664 HYDRAULIC AR

SMCS-5057 **i05848772**

NOTE	REF NO	GRAPHIC REF	PART NUMBER	QTY	PART NAME 1 2 3 4 5 6 (PRODUCT LEVEL)	SEE PAGE
I	1	1	**269-9573**	1	HOSE AS	
I	2	1	**269-9577**	1	HOSE AS	
I	3	1	**269-9585**	2	HOSE AS	
I	4	1	**269-9589**	1	HOSE AS	
I	5	1	**269-9593**	1	HOSE AS	
I	6	1	**269-9920**	1	HOSE AS	
I	7	1	**275-1582**	1	HOSE AS	
	8	1	*278-6505*	1	CONNECTOR AS	
		1	**6V-9746**	1	SEAL-O-RING	
		1	**7M-8485**	1	SEAL-O-RING	
		1	**278-6506**	1	CONNECTOR	
	9	1	*286-6499*	2	CONNECTOR AS	
					(EACH INCLUDES)	
		1	**6V-9746**	1	SEAL-O-RING	
		1	**7M-8485**	1	SEAL-O-RING	
		1	**184-9330**	1	CONNECTOR	
I	10	1	**368-9380**	1	HOSE AS	
I	11	1	**375-6625**	1	HOSE AS	
I	12	1	**375-6628**	1	HOSE AS	
	13	1	*148-8327*	1	CONNECTOR AS	
		1	**3D-2824**	1	SEAL-O-RING	
		1	**6V-8637**	1	CONNECTOR	
		1	**6V-9746**	1	SEAL-O-RING	
	14	1	*148-8339*	1	CONNECTOR AS	
		1	**6V-8716**	1	CONNECTOR (STRAIGHT)	
		1	**6V-9746**	1	SEAL-O-RING	
		1	**7M-8485**	1	SEAL-O-RING	
	15	1	*148-8341*	1	CONNECTOR AS	
		1	**3D-2824**	1	SEAL-O-RING	
		1	**6V-8713**	1	CONNECTOR	
		1	**7J-9108**	1	SEAL-O-RING	
	16	1	*148-8344*	2	CONNECTOR AS	
					(EACH INCLUDES)	
		1	**3D-2824**	1	SEAL-O-RING	
		1	**6V-9162**	1	CONNECTOR	
		1	**6V-9746**	1	SEAL-O-RING	
	17	1	*148-8362*	1	ELBOW AS	
		1	**3D-2824**	1	SEAL-O-RING	
		1	**5K-9090**	1	SEAL-O-RING	
		1	**8T-6684**	1	ELBOW	
	18	1	*153-6237*	1	ELBOW AS	
		1	**3D-2824**	1	SEAL-O-RING	
		1	**6V-9004**	1	ELBOW	
		1	**6V-9746**	1	SEAL-O-RING	
	19	1	*153-6242*	1	CONNECTOR AS	
		1	**6V-9746**	1	SEAL-O-RING	
		1	**7M-8485**	1	SEAL-O-RING	
		1	**8T-0197**	1	CONNECTOR	
	20	1	*155-2027*	2	CONNECTOR AS	
					(EACH INCLUDES)	
		1	**5K-9090**	1	SEAL-O-RING	
		1	**7M-8485**	1	SEAL-O-RING	
		1	**8T-8898**	1	CONNECTOR	
	21	1	*164-4180*	2	PLUG AS	
					(EACH INCLUDES)	
		1	**7M-8485**	1	SEAL-O-RING	
		1	**9S-4181**	1	PLUG	
	22	1	**1P-3703**	2	SEAL-RECTANGULAR	
	23	1	**6V-0400**	4	FLANGE-HALF	

366-8650 **LINES GP-FRONT (*contd.*)** **i05848772**

NOTE	REF NO	GRAPHIC REF	PART NUMBER	QTY	PART NAME 1 2 3 4 5 6 (PRODUCT LEVEL)	SEE PAGE
M	24	1	**8T-4184**	8	BOLT (M12X1.75X45-MM)	
	25	1	**8T-4223**	8	WASHER-HARD (13.5X25.5X3-MM THK)	

I - REFER TO HYDRAULIC INFORMATION SYSTEM
M - METRIC PART

366-8650 **LINES GP-FRONT (*contd.*)** **i05848772**

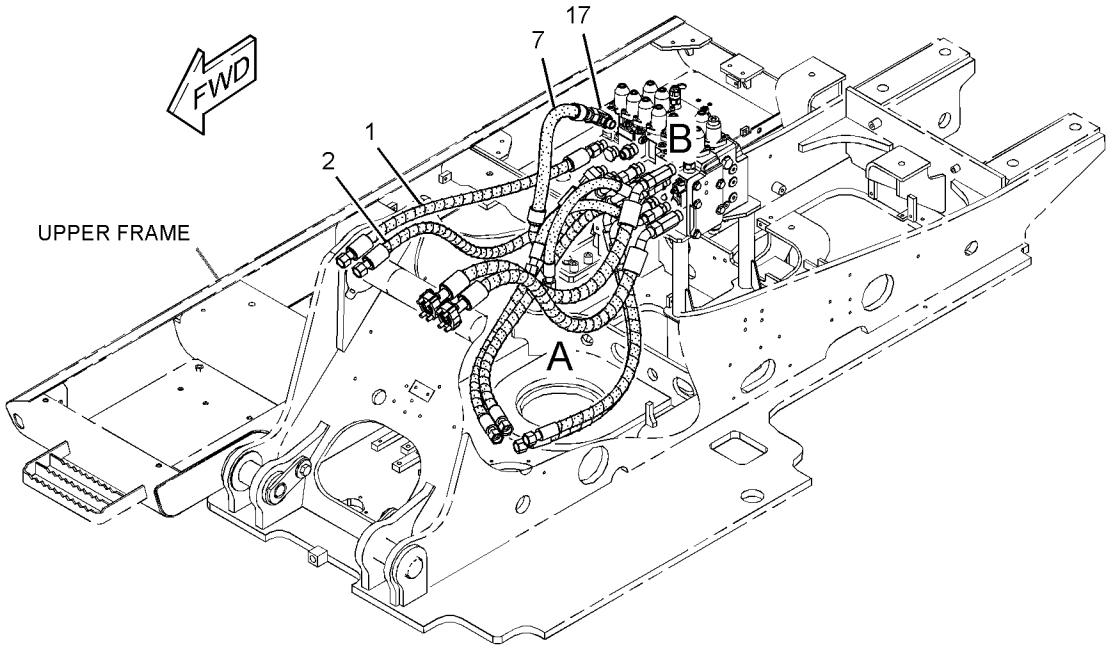

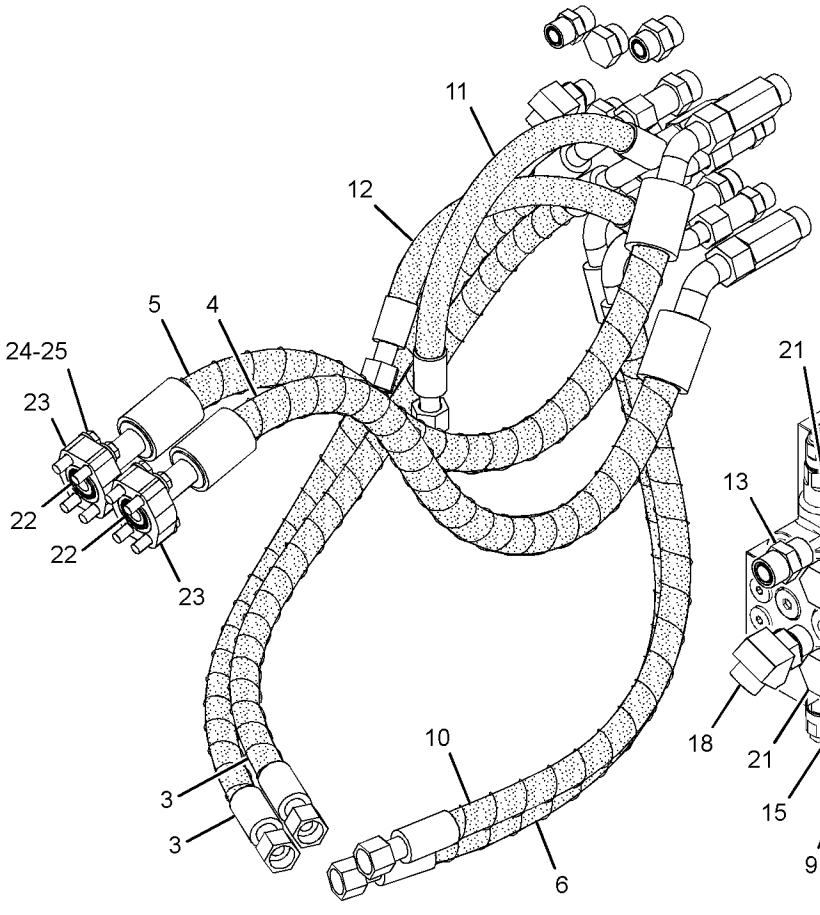

VIEW OF AREA A
(PARTS REMOVED FOR CLARITY)

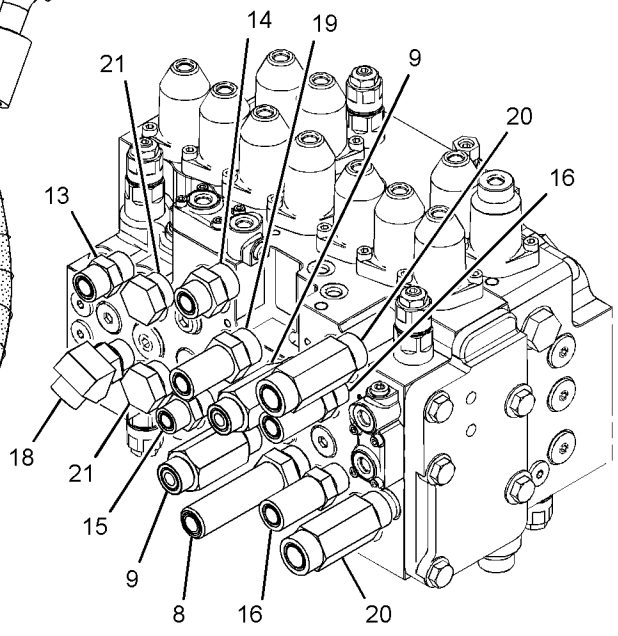

VIEW OF AREA B
(PARTS REMOVED FOR CLARITY)

GRAPHIC #1 **<END>** g02798790

260-8204 LINES GP-HYDRAULIC—HYDRAULIC TANK, FILTER

S/N: HAH1-UP

PART OF 455-4106 TANK & MTG GP-HYDRAULIC

SMCS-5057 **i03819051**

NOTE	REF NO	GRAPHIC REF	PART NUMBER	QTY	PART NAME 1 2 3 4 5 6 (PRODUCT LEVEL)	SEE PAGE
	1	1	**4I-9527**	2	BAND-MARKER (GREEN, R3)	
	2	1	**7K-1181**	4	STRAP-CABLE	
	3	1	*164-6874*	1	FITTING AS-ELBOW (QUICK DISCONNECT, MALE)	
		1	**3J-1907**	1	SEAL-O-RING	
		1	**085-7356**	1	FITTING	
Y	4	1	**221-5069**	1	FITTING GP-HYDRAULIC (TEE)	207
I	5	1	**269-9714**	1	HOSE AS	
	6	1	**269-9721**	1	TUBE AS	
I	7	1	**255-1929**	1	HOSE AS	
I	8	1	**115-8631**	1	HOSE AS	
	9	1	*148-8340*	2	CONNECTOR AS	
					(EACH INCLUDES)	
		1	**3K-0360**	1	SEAL-O-RING	
		1	**6V-8398**	1	SEAL-O-RING	
		1	**6V-8639**	1	CONNECTOR	
	10	1	*148-8345*	1	CONNECTOR AS	
		1	**2M-9780**	1	SEAL-O-RING	
		1	**6V-8398**	1	SEAL-O-RING	
		1	**6V-8638**	1	CONNECTOR	
	11	1	*148-8347*	1	ELBOW AS	
		1	**3D-2824**	1	SEAL-O-RING	
		1	**6V-9007**	1	ELBOW	
		1	**6V-9746**	1	SEAL-O-RING	
	12	1	*148-8359*	1	ELBOW AS	
		1	**3K-0360**	1	SEAL-O-RING	
		1	**6V-9746**	1	SEAL-O-RING	
		1	**6V-9877**	1	ELBOW	
	13	1	*148-8372*	1	ELBOW AS	
		1	**2M-9780**	1	SEAL-O-RING	
		1	**6V-8398**	1	SEAL-O-RING	
		1	**6V-8721**	1	ELBOW	
	14	1	*148-8407*	1	PLUG AS	
		1	**3J-1907**	1	SEAL-O-RING	
		1	**9S-4191**	1	PLUG	
	15	1	*150-4043*	1	CONNECTOR AS	
		1	**3J-1907**	1	SEAL-O-RING	
		1	**6V-8398**	1	SEAL-O-RING	
		1	**6V-9873**	1	CONNECTOR	
	16	1	*148-8354*	1	ELBOW AS	
		1	**3K-0360**	1	SEAL-O-RING	
		1	**6V-8398**	1	SEAL-O-RING	
		1	**6V-9002**	1	ELBOW	
	17	1	**4J-0527**	1	SEAL-O-RING	
	18	1	**6D-1641**	1	CLIP	
	19	1	**8T-4121**	1	WASHER-HARD (11X21X2.5-MM THK)	
M	20	1	**8T-4137**	1	BOLT (M10X1.5X20-MM)	
	21	1	**8T-4223**	4	WASHER-HARD (13.5X25.5X3-MM THK)	
M	22	1	**8T-6868**	4	BOLT (M12X1.75X80-MM)	

I - REFER TO HYDRAULIC INFORMATION SYSTEM
M - METRIC PART
Y - SEPARATE ILLUSTRATION

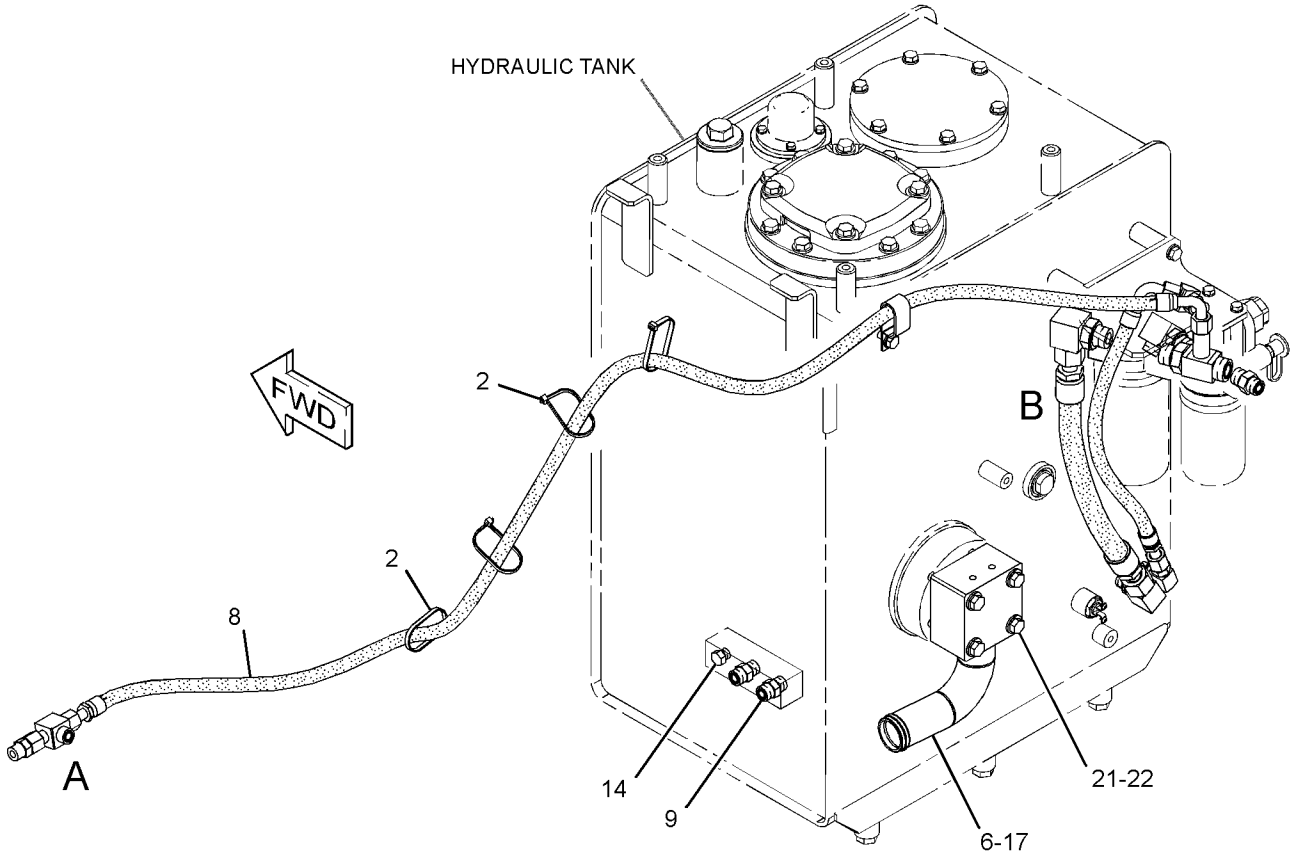

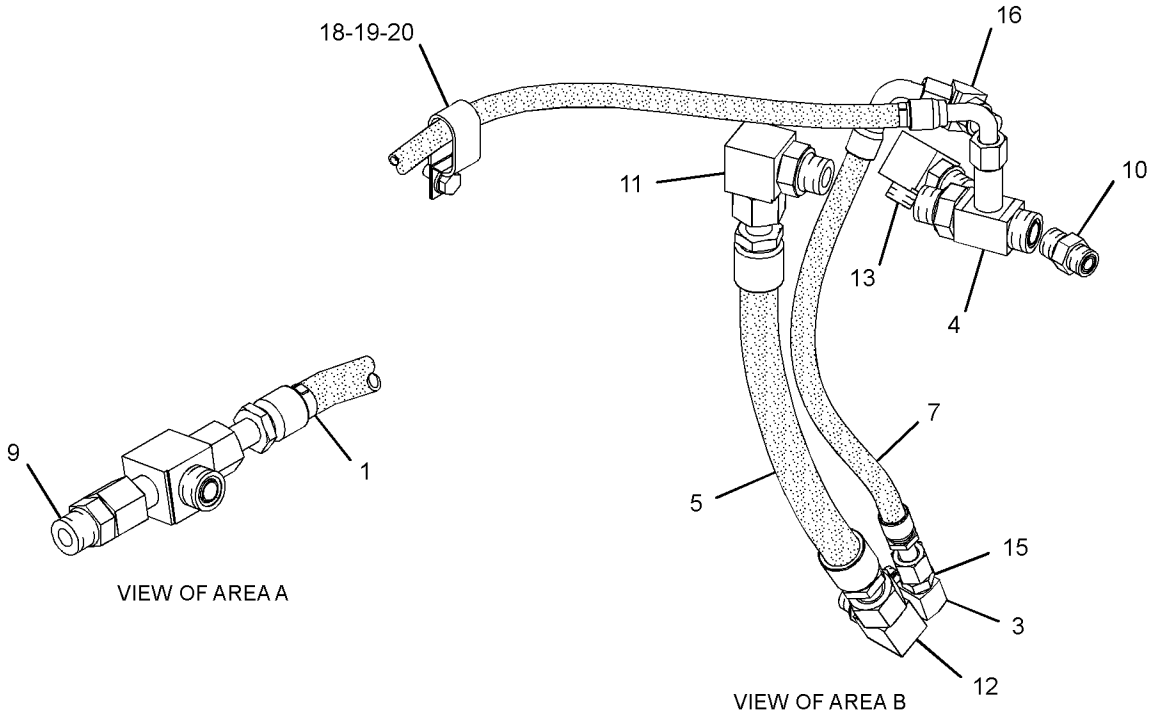

GRAPHIC #1 **<END>** g01620517

391-7830 LINES GP-HYDRAULIC OIL COOLER

S/N: HAH1-UP

PART OF 455-7664 HYDRAULIC AR

SMCS-1374 **i04945608**

NOTE	REF NO	GRAPHIC REF	PART NUMBER	QTY	PART NAME 1 2 3 4 5 6 (PRODUCT LEVEL)	SEE PAGE
	1	1	**392-6726**	1	PIPE AS	
	2	1	**269-9886**	1	TUBE AS	
M	3	1	**096-4883**	4	LOCKNUT (M10X1.5-THD)	
	4	1	**4J-0523**	2	SEAL-O-RING	
M	5	1	**7Y-5237**	2	U-BOLT	
	6	1	**8T-4121**	4	WASHER-HARD (11X21X2.5-MM THK)	
	7	1	**8T-4223**	4	WASHER-HARD (13.5X25.5X3-MM THK)	
M	8	1	**8T-4956**	4	BOLT (M12X1.75X35-MM)	

M - METRIC PART

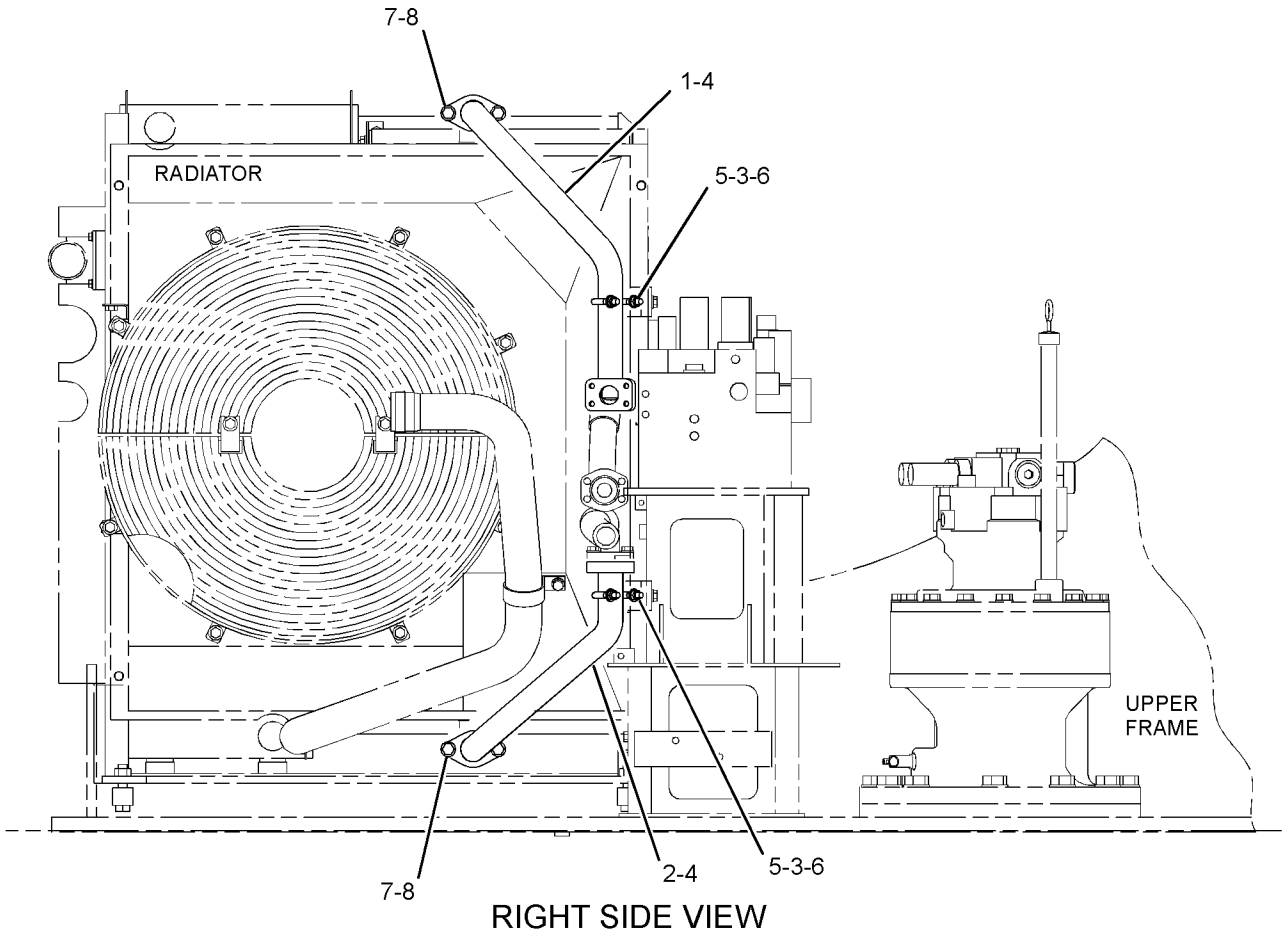

RIGHT SIDE VIEW

GRAPHIC #1 **<END>** g01621853

260-8217 LINES GP-PILOT—MAIN CONTROL VALVE

S/N: HAH1-UP

PART OF 455-7664 HYDRAULIC AR

SMCS-5057, 5059 **i03820271**

NOTE	REF NO	GRAPHIC REF	PART NUMBER	QTY	PART NAME 1 2 3 4 5 6 (PRODUCT LEVEL)	SEE PAGE
I	1	2	**4I-0836**	1	HOSE AS	
	2	2	**4I-3941**	2	FITTING AS	
	3	1	**4I-3953**	2	GROMMET	
I	4	2	**4I-3988**	1	HOSE AS	
I	5	2	**4I-3994**	1	HOSE AS	
	6	2	**4I-9521**	6	BAND-MARKER (RED, L1)	
	7	2	**4I-9522**	6	BAND-MARKER (YELLOW, L2)	
	8	2	**4I-9523**	2	BAND-MARKER (BLUE, L3)	
	9	2	**4I-9524**	2	BAND-MARKER (BROWN, L4)	
	10	2	**4I-9525**	6	BAND-MARKER (ORANGE, R1)	
	11	2	**4I-9526**	6	BAND-MARKER (WHITE, R2)	
	12	2	**4I-9527**	2	BAND-MARKER (GREEN, R3)	
	13	2	**4I-9528**	2	BAND-MARKER (PURPLE, R4)	
I	14	2	**320-0150**	2	HOSE AS	
	15	1,2	**7K-1181**	14	STRAP-CABLE	
I	16	2	**7Y-4199**	1	HOSE AS	
	17	1	**087-4587**	2	GROMMET	
I	18	2	**104-8771**	2	HOSE AS	
I	19	2	**104-8774**	1	HOSE AS	
I	20	2	**104-8973**	1	HOSE AS	
I	21	2	**104-8976**	1	HOSE AS	
I	22	2	**111-6752**	1	HOSE AS	
	23	2	**133-5813**	2	BAND-MARKER (GRAY, P)	
	24	2	**309-5768**	2	SWITCH AS-PRESSURE (IMPLEMENT)	
					(EACH INCLUDES)	
		2	**9X-3402**	2	SOCKET-CONNECTOR (16-GA TO 18-GA)	
					—OR—	
		2	**126-1768**	2	SOCKET-CONNECTOR (14-GA TO 16-GA)	
		2	**155-2270**	1	KIT-CONNECTING PLUG (2-PIN)	
					(INCLUDES PLUG AS, WEDGE & INTERFACE SEAL)	
I	25	2	**221-4807**	1	HOSE AS	
	26	1,2	**115-8645**	5	GUARD	
	27	2	*148-8336*	4	CONNECTOR AS	
					(EACH INCLUDES)	
		2	**3J-1907**	1	SEAL-O-RING	
		2	**6V-8397**	1	SEAL-O-RING	
		2	**6V-8636**	1	CONNECTOR	
	29	2	*148-8378*	2	ELBOW AS	
					(EACH INCLUDES)	
		2	**3J-1907**	1	SEAL-O-RING	
		2	**6V-8397**	1	SEAL-O-RING	
		2	**6V-8724**	1	ELBOW	
	30	2	*148-8407*	2	PLUG AS	
					(EACH INCLUDES)	
		2	**3J-1907**	1	SEAL-O-RING	
		2	**9S-4191**	1	PLUG	
	31	2	*148-8435*	4	TEE AS	
					(EACH INCLUDES)	
		2	**3J-1907**	1	SEAL-O-RING	
		2	**6V-8397**	2	SEAL-O-RING	
		2	**6V-8781**	1	TEE	
	32	2	*150-3036*	3	ELBOW AS	
					(EACH INCLUDES)	
		2	**3J-1907**	1	SEAL-O-RING	
		2	**6V-8397**	1	SEAL-O-RING	
		2	**8T-1905**	1	ELBOW	
	33	2	*148-8338*	1	CONNECTOR AS	
		2	**3J-1907**	1	SEAL-O-RING	

260-8217 **LINES GP-PILOT (*contd.*)** **i03820271**

NOTE	REF NO	GRAPHIC REF	PART NUMBER	QTY	PART NAME 1 2 3 4 5 6 (PRODUCT LEVEL)	SEE PAGE
		2	**6V-8397**	1	SEAL-O-RING	
		2	**8T-0075**	1	CONNECTOR	

I - REFER TO HYDRAULIC INFORMATION SYSTEM

260-8217 **LINES GP-PILOT (*contd.*)** **i03820271**

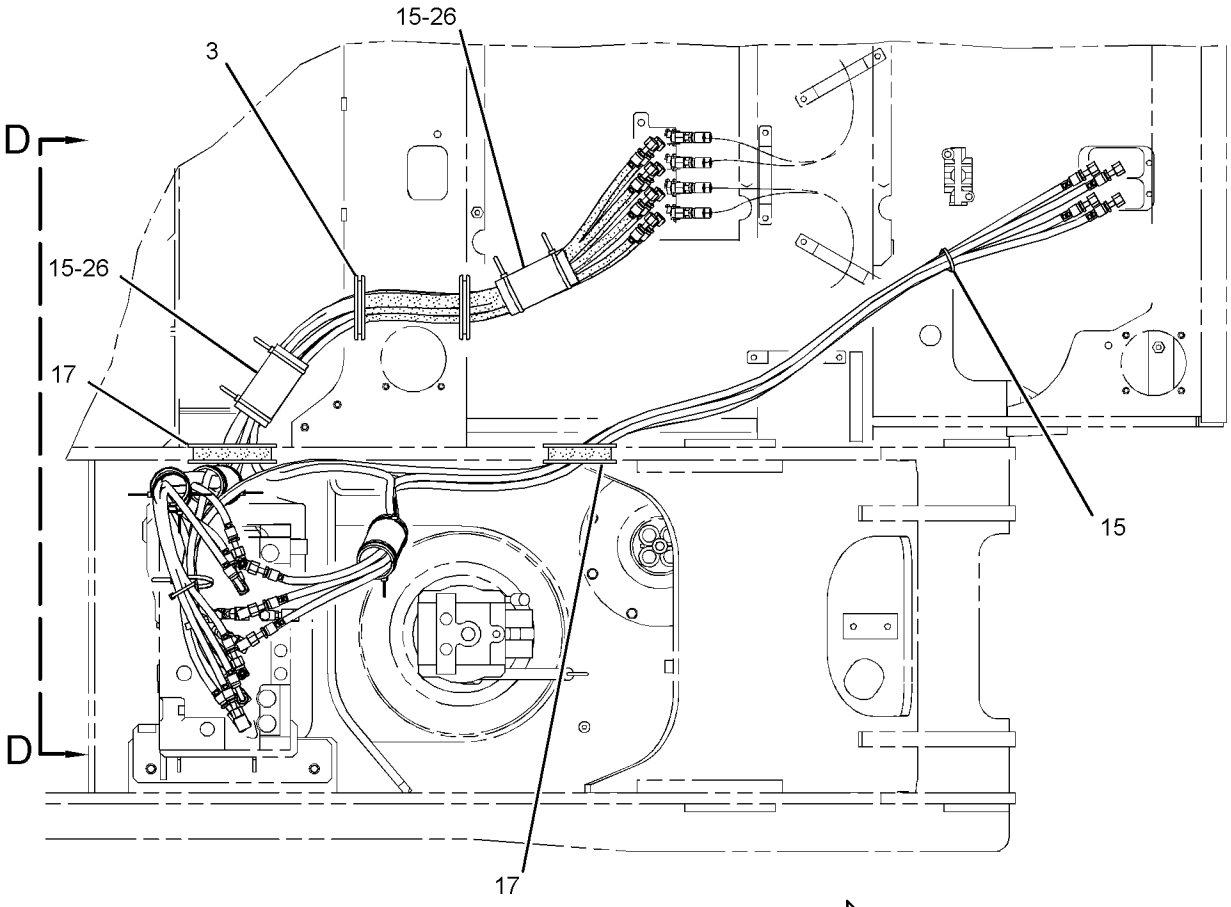

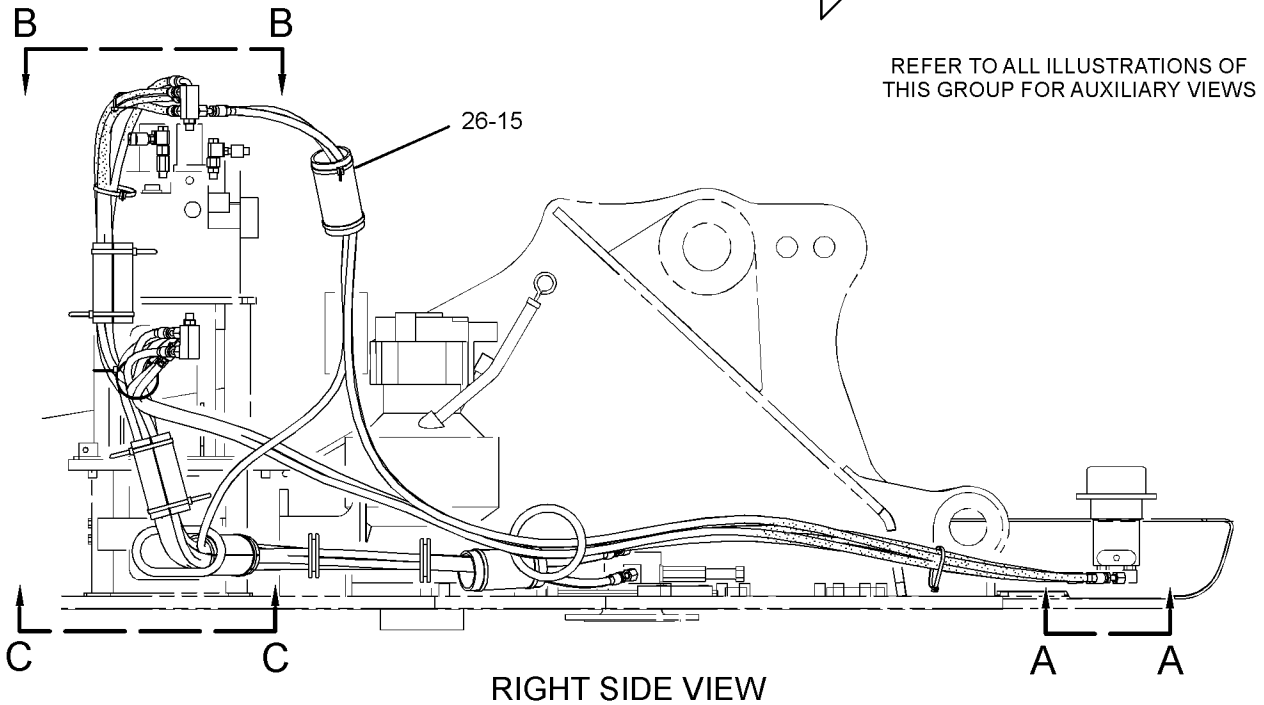

GRAPHIC #1 g01578693

260-8217 **LINES GP-PILOT (*contd.*)** **i03820271**

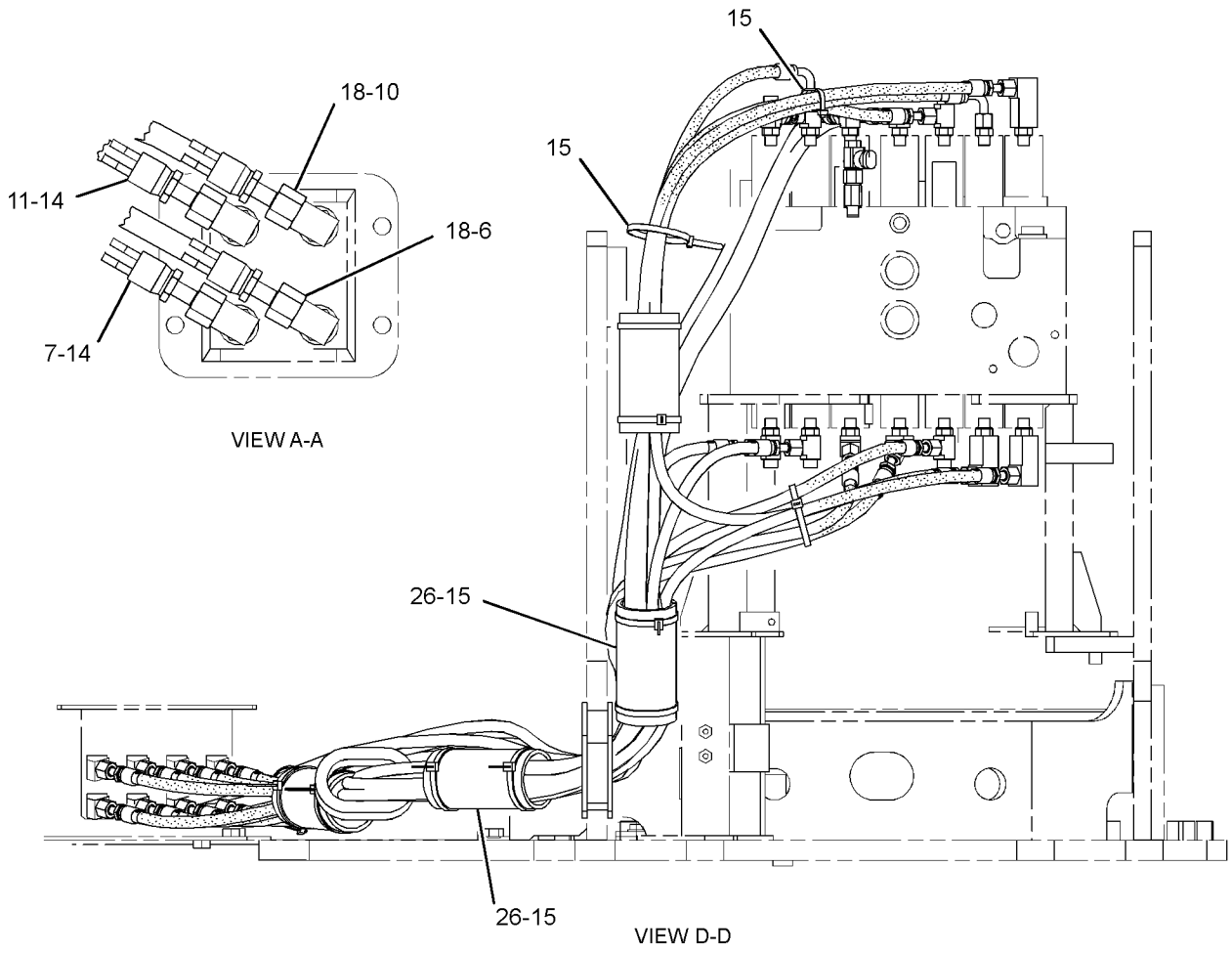

GRAPHIC #2 **<END>** g01588013

275-1715 LINES GP-PILOT—PILOT CONTROL

S/N: HAH1-UP

PART OF 455-7664 HYDRAULIC AR

SMCS-5057, 5059 **i04901500**

NOTE	REF NO	GRAPHIC REF	PART NUMBER	QTY	PART NAME 1 2 3 4 5 6 (PRODUCT LEVEL)	SEE PAGE
	1	1	**4I-9521**	2	BAND-MARKER (RED, L1)	
	2	1	**4I-9522**	2	BAND-MARKER (YELLOW, L2)	
	3	1	**4I-9523**	2	BAND-MARKER (BLUE, L3)	
	4	1	**4I-9524**	2	BAND-MARKER (BROWN, L4)	
	5	1	**4I-9525**	2	BAND-MARKER (ORANGE, R1)	
	6	1	**4I-9526**	2	BAND-MARKER (WHITE, R2)	
	7	1	**4I-9527**	2	BAND-MARKER (GREEN, R3)	
	8	1	**4I-9528**	2	BAND-MARKER (PURPLE, R4)	
	9	1	**7K-1181**	2	STRAP-CABLE	
I	10	1	**087-4402**	2	HOSE AS	
	11	1	**133-5813**	4	BAND-MARKER (GRAY, P)	
CY	12	1	**369-8503**	1	VALVE GP-PILOT (WITHOUT SHUTTLE)	293
	13	1	**168-9759**	1	BLOCK	
	14	1	**392-2185**	4	SUPPORT	
	15	1	**236-2838**	1	PLATE	
	16	1	**236-2843**	4	HOSE AS	
	17	1	**236-2844**	4	HOSE AS	
	18	1	**236-2848**	1	HOSE AS	
	19	1	**245-5079**	1	HOSE AS	
	20	1	**255-1665**	1	HOSE AS	
	21	1	**255-1666**	1	HOSE AS	
	22	1	**099-7241**	8	WASHER-HARD (19X34X3-MM THK)	
	23	1	*148-8336*	15	CONNECTOR AS	
					(EACH INCLUDES)	
		1	**3J-1907**	1	SEAL-O-RING	
		1	**6V-8397**	1	SEAL-O-RING	
		1	**6V-8636**	1	CONNECTOR	
	24	1	*148-8354*	2	ELBOW AS	
					(EACH INCLUDES)	
		1	**3K-0360**	1	SEAL-O-RING	
		1	**6V-8398**	1	SEAL-O-RING	
		1	**6V-9002**	1	ELBOW	
	25	1	*148-8366*	8	ELBOW AS	
					(EACH INCLUDES)	
		1	**6V-8397**	2	SEAL-O-RING	
		1	**6V-8987**	1	ELBOW	
	26	1	*148-8378*	6	ELBOW AS	
					(EACH INCLUDES)	
		1	**3J-1907**	1	SEAL-O-RING	
		1	**6V-8397**	1	SEAL-O-RING	
		1	**6V-8724**	1	ELBOW	
	27	1	*148-8407*	4	PLUG AS	
					(EACH INCLUDES)	
		1	**3J-1907**	1	SEAL-O-RING	
		1	**9S-4191**	1	PLUG	
	28	1	*164-5628*	3	CONNECTOR AS	
					(EACH INCLUDES)	
		1	**3J-1907**	1	SEAL-O-RING	
		1	**6V-8397**	1	SEAL-O-RING	
		1	**107-6631**	1	CONNECTOR-FILTER	
	29	1	**6V-9168**	8	NUT (11/16-16-THD)	
	30	1	**8T-4121**	16	WASHER-HARD (11X21X2.5-MM THK)	
CM	32	1	**8T-4137**	4	BOLT (M10X1.5X20-MM)	
M	33	1	**8T-4191**	10	BOLT (M10X1.5X16-MM)	
M	34	1	**8T-4198**	2	BOLT (M10X1.5X100-MM)	

C - CHANGE FROM PREVIOUS TYPE
I - REFER TO HYDRAULIC INFORMATION SYSTEM
M - METRIC PART
Y - SEPARATE ILLUSTRATION

275-1715 **LINES GP-PILOT (*contd.*)** **i04901500**

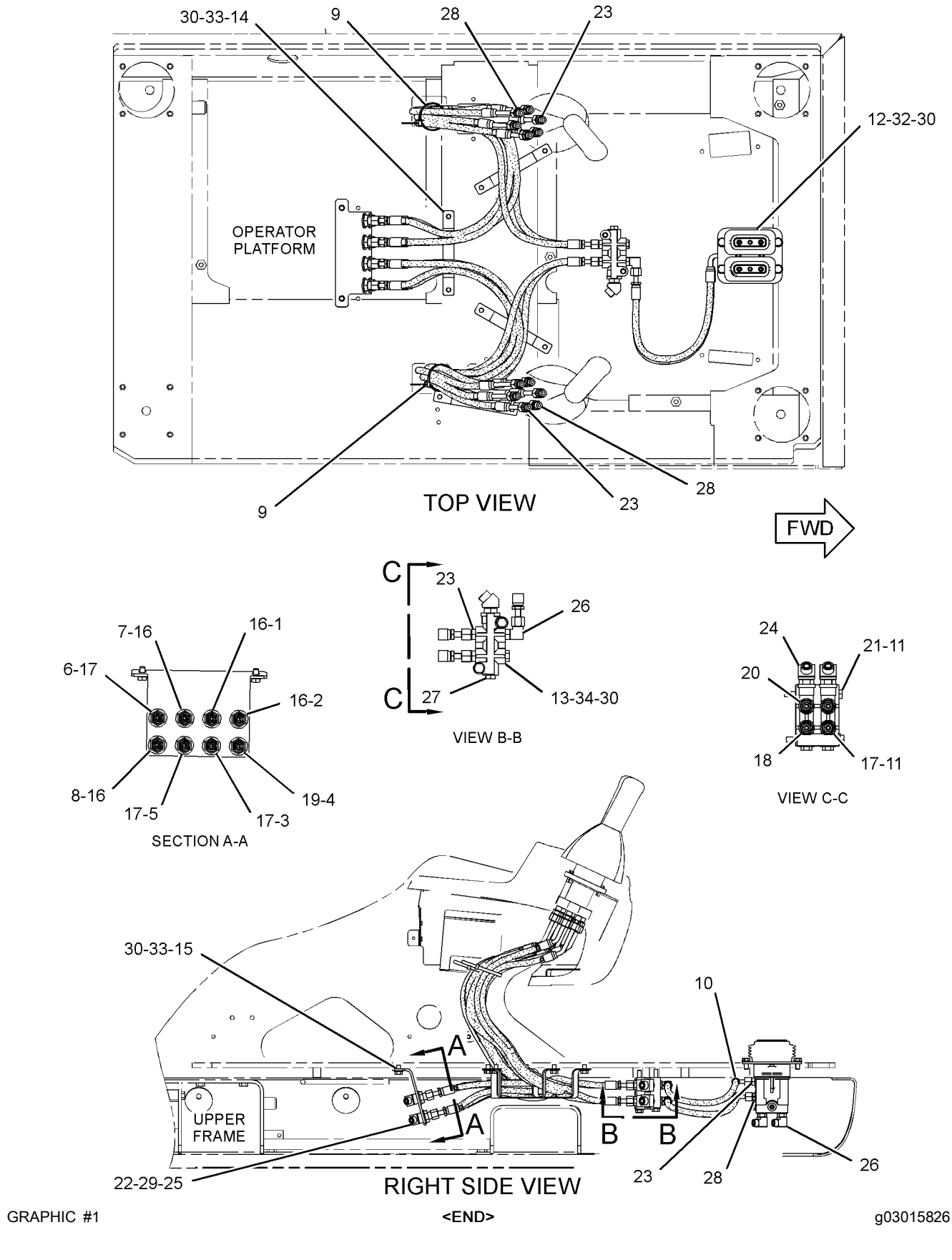

GRAPHIC #1 **<END>** g03015826

387-3716 LINES GP-PILOT—FILTER, PILOT PUMP

S/N: HAH1-UP

PART OF 455-7664 HYDRAULIC AR

SMCS-5057, 5059 **i04944241**

NOTE	REF NO	GRAPHIC REF	PART NUMBER	QTY	PART NAME 1 2 3 4 5 6 (PRODUCT LEVEL)	SEE PAGE
	1	1	**6V-0852**	4	CAP-DUST	
I	2	1	**7I-1377**	1	HOSE AS	
	3	1	**7K-1181**	4	STRAP-CABLE	
	4	1	**221-8912**	2	FLANGE	
	5	1	**260-2180**	2	SENSOR AS-PRESSURE (MAIN HYDRAULIC PUMP)	
					(EACH INCLUDES)	
		1	**095-1777**	1	RING-BACKUP	
		1	**260-2191**	1	SEAL-O-RING	
I	6	1	**285-2564**	1	HOSE AS	
I	7	1	**292-7482**	1	HOSE AS	
I	8	1	**381-5989**	1	HOSE AS	
	9	1	**387-3601**	1	HOSE AS	
	10	1	*148-8327*	1	CONNECTOR AS	
		1	**3D-2824**	1	SEAL-O-RING	
		1	**6V-8637**	1	CONNECTOR	
		1	**6V-9746**	1	SEAL-O-RING	
	11	1	*148-8340*	1	CONNECTOR AS	
		1	**3K-0360**	1	SEAL-O-RING	
		1	**6V-8398**	1	SEAL-O-RING	
		1	**6V-8639**	1	CONNECTOR	
	12	1	*148-8347*	1	ELBOW AS	
		1	**3D-2824**	1	SEAL-O-RING	
		1	**6V-9007**	1	ELBOW	
		1	**6V-9746**	1	SEAL-O-RING	
	13	1	*148-8367*	1	ELBOW AS	
		1	**6V-8397**	1	SEAL-O-RING	
		1	**6V-9850**	1	ELBOW	
	14	1	*148-8378*	1	ELBOW AS	
		1	**3J-1907**	1	SEAL-O-RING	
		1	**6V-8397**	1	SEAL-O-RING	
		1	**6V-8724**	1	ELBOW	
	15	1	*148-8444*	1	TEE AS-SWIVEL	
		1	**6V-8398**	2	SEAL-O-RING	
		1	**6V-9837**	1	TEE-SWIVEL	
	16	1	*150-3036*	2	ELBOW AS	
					(EACH INCLUDES)	
		1	**3J-1907**	1	SEAL-O-RING	
		1	**6V-8397**	1	SEAL-O-RING	
		1	**8T-1905**	1	ELBOW	
	17	1	*150-4043*	1	CONNECTOR AS	
		1	**3J-1907**	1	SEAL-O-RING	
		1	**6V-8398**	1	SEAL-O-RING	
		1	**6V-9873**	1	CONNECTOR	
	18	1	*153-6237*	1	ELBOW AS	
		1	**3D-2824**	1	SEAL-O-RING	
		1	**6V-9004**	1	ELBOW	
		1	**6V-9746**	1	SEAL-O-RING	
	19	1	*164-5567*	4	COUPLER AS-QUICK DISCONNECT (MALE)	
					(EACH INCLUDES)	
		1	**6V-3965**	1	FITTING (QUICK DISCONNECT)	
		1	**214-7568**	1	SEAL-O-RING	
	20	1	*164-6874*	1	FITTING AS-ELBOW (QUICK DISCONNECT, MALE)	
		1	**3J-1907**	1	SEAL-O-RING	
		1	**085-7356**	1	FITTING	
	21	1	*168-1968*	1	TEE AS	
		1	**3J-1907**	1	SEAL-O-RING	
		1	**6V-8397**	1	SEAL-O-RING	
		1	**126-6872**	1	TEE	

387-3716 **LINES GP-PILOT (*contd.*)** **i04944241**

NOTE	REF NO	GRAPHIC REF	PART NUMBER	QTY	PART NAME 1 2 3 4 5 6 (PRODUCT LEVEL)	SEE PAGE
M	22	1	**8T-4189**	4	BOLT (M8X1.25X20-MM)	
	23	1	**8T-4224**	4	WASHER-HARD (8.8X16X2-MM THK)	

I - REFER TO HYDRAULIC INFORMATION SYSTEM
M - METRIC PART

387-3716 **LINES GP-PILOT (*contd.*)** **i04944241**

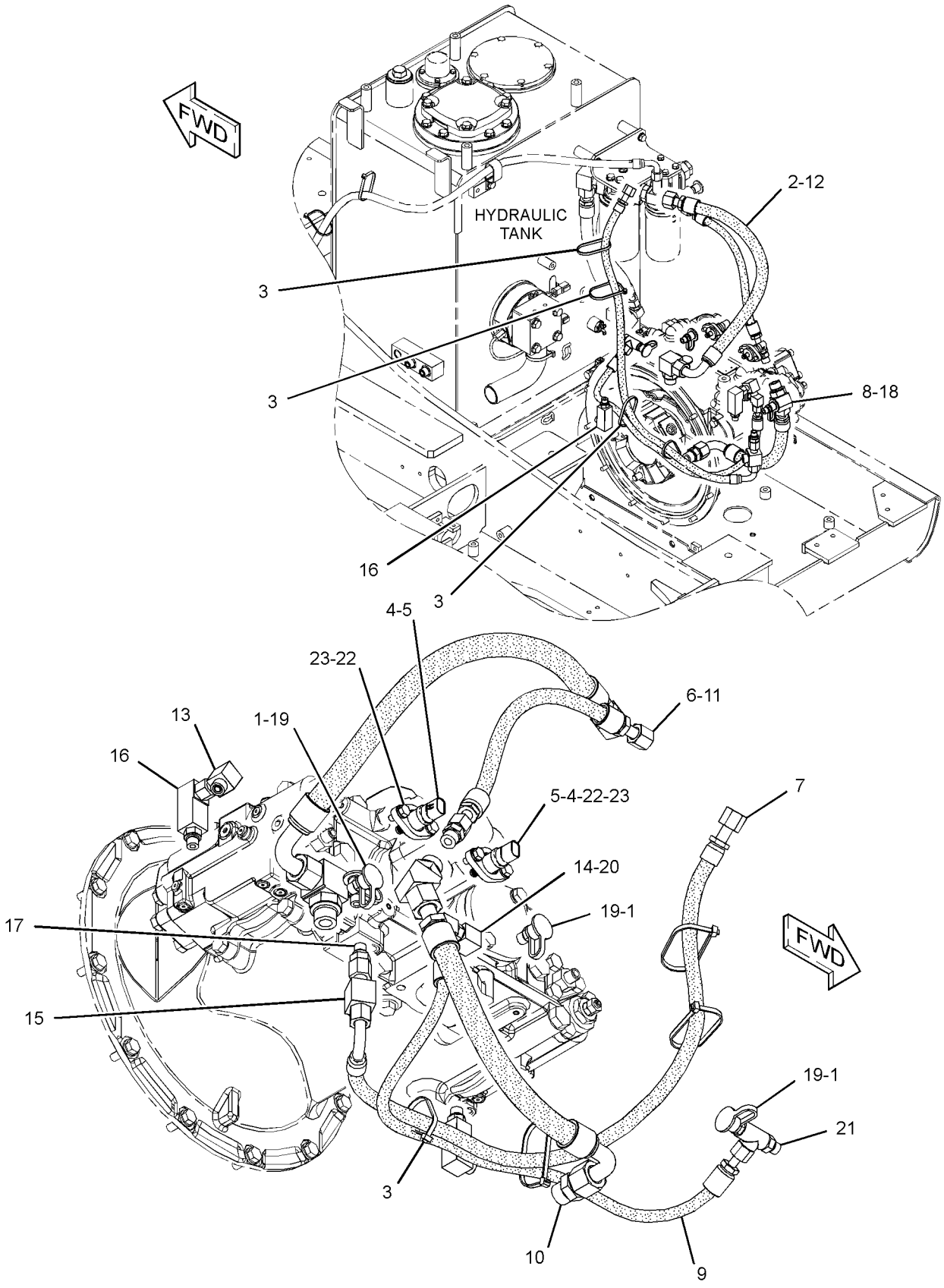

GRAPHIC #1 **<END>** g03133677

391-7835 LINES GP-PILOT—CONTROL VALVE

S/N: HAH1-UP

PART OF 455-7664 HYDRAULIC AR

SMCS-5057, 5059 **i05848821**

NOTE	REF NO	GRAPHIC REF	PART NUMBER	QTY	PART NAME 1 2 3 4 5 6 (PRODUCT LEVEL)	SEE PAGE
I	1	4	**4I-0800**	1	HOSE AS	
I	2	2,4	**4I-0821**	2	HOSE AS	
I	3	4	**4I-1760**	1	HOSE AS	
I	4	4	**4I-1783**	1	HOSE AS	
I	5	4	**4I-5795**	1	HOSE AS	
I	6	4	**4I-6248**	1	HOSE AS	
I	7	4	**4I-6391**	1	HOSE AS	
	8	4	**4I-9521**	6	BAND-MARKER (RED, L1)	
	9	4	**4I-9522**	2	BAND-MARKER (YELLOW, L2)	
	10	2,4	**4I-9523**	8	BAND-MARKER (BLUE, L3)	
	11	4	**4I-9524**	2	BAND-MARKER (BROWN, L4)	
	12	4	**4I-9525**	4	BAND-MARKER (ORANGE, R1)	
	13	2,4	**4I-9527**	6	BAND-MARKER (GREEN, R3)	
	14	3	**4I-9528**	4	BAND-MARKER (PURPLE, R4)	
	15	2,4	**7K-1181**	14	STRAP-CABLE	
I	16	4	**7Y-8379**	1	HOSE AS	
I	17	4	**087-5771**	1	HOSE AS	
I	18	4	**087-5772**	1	HOSE AS	
I	19	4	**087-5773**	1	HOSE AS	
I	20	3	**087-5783**	1	HOSE AS	
I	21	2	**087-6582**	1	HOSE AS	
	22	4	**115-8645**	1	GUARD	
	23	4	**133-5813**	2	BAND-MARKER (GRAY, P)	
	24	4	*164-5628*	1	CONNECTOR AS	
		4	**3J-1907**	1	SEAL-O-RING	
		4	**6V-8397**	1	SEAL-O-RING	
		4	**107-6631**	1	CONNECTOR-FILTER	
Y	25	2	**164-6979**	1	VALVE GP-SHUTTLE (PILOT OIL SUPPLY)	304
Y	26	3	*164-6981*	1	ACCUMULATOR GP-HYDRAULIC (CHARGED)	187
I	27	4	**176-4471**	1	HOSE AS	
Y	28	3	**215-5037**	1	MANIFOLD GP-CONTROL (PILOT OIL SUPPLY)	251
I	29	4	**224-1914**	1	HOSE AS	
	30	3	**269-9553**	1	PLATE	
I	31	4	**275-1624**	1	HOSE AS	
	32	2	**278-6613**	1	SUPPORT AS	
I	33	2	**278-6623**	1	HOSE AS	
	34	3	**278-6905**	2	HOSE AS	
Y	35	2	**285-1613**	1	VALVE GP-PRESSURE REDUCING (BOOM PRIORITY)	298
	36	2	**458-6746**	1	HOSE AS	
I	37	2	**292-7446**	1	HOSE AS	
I	38	2	**296-7278**	1	HOSE AS	
I	39	2	**325-8876**	1	HOSE AS	
	40	3	**329-2840**	1	BLOCK	
I	41	3	**329-2843**	1	HOSE AS	
I	42	4	**356-9229**	1	HOSE AS	
	43	3	*363-6139*	1	ADAPTER AS	
		3	**3K-0360**	1	SEAL-O-RING	
		3	**6V-8398**	1	SEAL-O-RING	
		3	**363-6122**	1	ADAPTER-FILTER	
	44	2	**383-9558**	1	HOSE AS	
	45	2	**275-1442**	2	CLIP (TAB)	
		2	**275-1443**	2	CLIP (SLOT)	
	46	2	**5P-7462**	1	CLIP (SLOT) (USE WITH 30-MM OD GROMMET)	
		2	**5P-7463**	1	CLIP (TAB) (USE WITH 30-MM OD GROMMET)	
		2	**6V-0683**	1	GROMMET (19-MM ID) (30-MM OD)	
					—OR—	
		2	**5P-7464**	1	CLIP (SLOT) (USE WITH 37-MM OD GROMMET)	
		2	**5P-7465**	1	CLIP (TAB) (USE WITH 37-MM OD GROMMET)	

391-7835 **LINES GP-PILOT (*contd.*)** **i05848821**

NOTE	REF NO	GRAPHIC REF	PART NUMBER	QTY	PART NAME 1 2 3 4 5 6 (PRODUCT LEVEL)	SEE PAGE
		2	**6V-1249**	1	GROMMET (22-MM ID) (37-MM OD)	
M	47	2	**099-3649**	2	BOLT (M8X1.25X40-MM)	
	48	2,3,4	*148-8336*	11	CONNECTOR AS	
					(EACH INCLUDES)	
		2,3,4	**3J-1907**	1	SEAL-O-RING	
		2,3,4	**6V-8397**	1	SEAL-O-RING	
		2,3,4	**6V-8636**	1	CONNECTOR	
	49	3	*148-8340*	2	CONNECTOR AS	
					(EACH INCLUDES)	
		3	**3K-0360**	1	SEAL-O-RING	
		3	**6V-8398**	1	SEAL-O-RING	
		3	**6V-8639**	1	CONNECTOR	
	50	2,4	*148-8353*	3	ELBOW AS	
					(EACH INCLUDES)	
		2,4	**3J-1907**	1	SEAL-O-RING	
		2,4	**6V-8397**	1	SEAL-O-RING	
		2,4	**6V-9001**	1	ELBOW	
	51	2	*148-8367*	1	ELBOW AS	
		2	**6V-8397**	1	SEAL-O-RING	
		2	**6V-9850**	1	ELBOW	
	52	2,3,4	*148-8378*	9	ELBOW AS	
					(EACH INCLUDES)	
		2,3,4	**3J-1907**	1	SEAL-O-RING	
		2,3,4	**6V-8397**	1	SEAL-O-RING	
		2,3,4	**6V-8724**	1	ELBOW	
	53	3,4	*148-8407*	10	PLUG AS	
					(EACH INCLUDES)	
		3,4	**3J-1907**	1	SEAL-O-RING	
		3,4	**9S-4191**	1	PLUG	
	54	3	*148-8411*	1	PLUG AS	
		3	**3K-0360**	1	SEAL-O-RING	
		3	**9S-4185**	1	PLUG	
	55	2,4	*148-8433*	2	TEE AS	
					(EACH INCLUDES)	
		2,4	**6V-8397**	2	SEAL-O-RING	
		2,4	**6V-9836**	1	TEE-SWIVEL	
	56	2,4	*148-8435*	2	TEE AS	
					(EACH INCLUDES)	
		2,4	**3J-1907**	1	SEAL-O-RING	
		2,4	**6V-8397**	2	SEAL-O-RING	
		2,4	**6V-8781**	1	TEE	
	57	3	*148-8436*	1	TEE AS	
		3	**3K-0360**	1	SEAL-O-RING	
		3	**6V-8398**	2	SEAL-O-RING	
		3	**6V-8775**	1	TEE-FACE SEAL	
	58	3	*148-8439*	1	TEE AS	
		3	**3J-1907**	1	SEAL-O-RING	
		3	**6V-8397**	2	SEAL-O-RING	
		3	**6V-8774**	1	TEE	
	59	2	*150-3036*	1	ELBOW AS	
		2	**3J-1907**	1	SEAL-O-RING	
		2	**6V-8397**	1	SEAL-O-RING	
		2	**8T-1905**	1	ELBOW	
	60	2	**5P-2369**	1	CLIP	
	61	3	**6V-9829**	1	CAP AS	
	62	2	**8T-4121**	6	WASHER-HARD (11X21X2.5-MM THK)	
M	63	2	**8T-4136**	5	BOLT (M10X1.5X25-MM)	
M	64	2	**8T-4137**	1	BOLT (M10X1.5X20-MM)	
M	65	3	**8T-4183**	4	BOLT (M12X1.75X40-MM)	
M	66	2	**8T-4189**	2	BOLT (M8X1.25X20-MM)	
	67	3	**8T-4223**	6	WASHER-HARD (13.5X25.5X3-MM THK)	

391-7835 **LINES GP-PILOT (*contd.*)** **i05848821**

NOTE	REF NO	GRAPHIC REF	PART NUMBER	QTY	PART NAME 1 2 3 4 5 6 (PRODUCT LEVEL)	SEE PAGE
	68	2	**8T-4224**	2	WASHER-HARD (8.8X16X2-MM THK)	
M	69	3	**8T-4956**	2	BOLT (M12X1.75X35-MM)	
M	70	3	**8T-6869**	2	BOLT (M8X1.25X60-MM)	
	71	2	**275-1444**	2	GROMMET (19-MM ID) (19MM ID)	
					–OR–	
		2	**333-4609**	2	GROMMET (21-MM ID) (21MM ID)	

I - REFER TO HYDRAULIC INFORMATION SYSTEM
M - METRIC PART
Y - SEPARATE ILLUSTRATION

REFER TO ALL ILLUSTRATIONS OF
THIS GROUP FOR AUXILIARY VIEWS

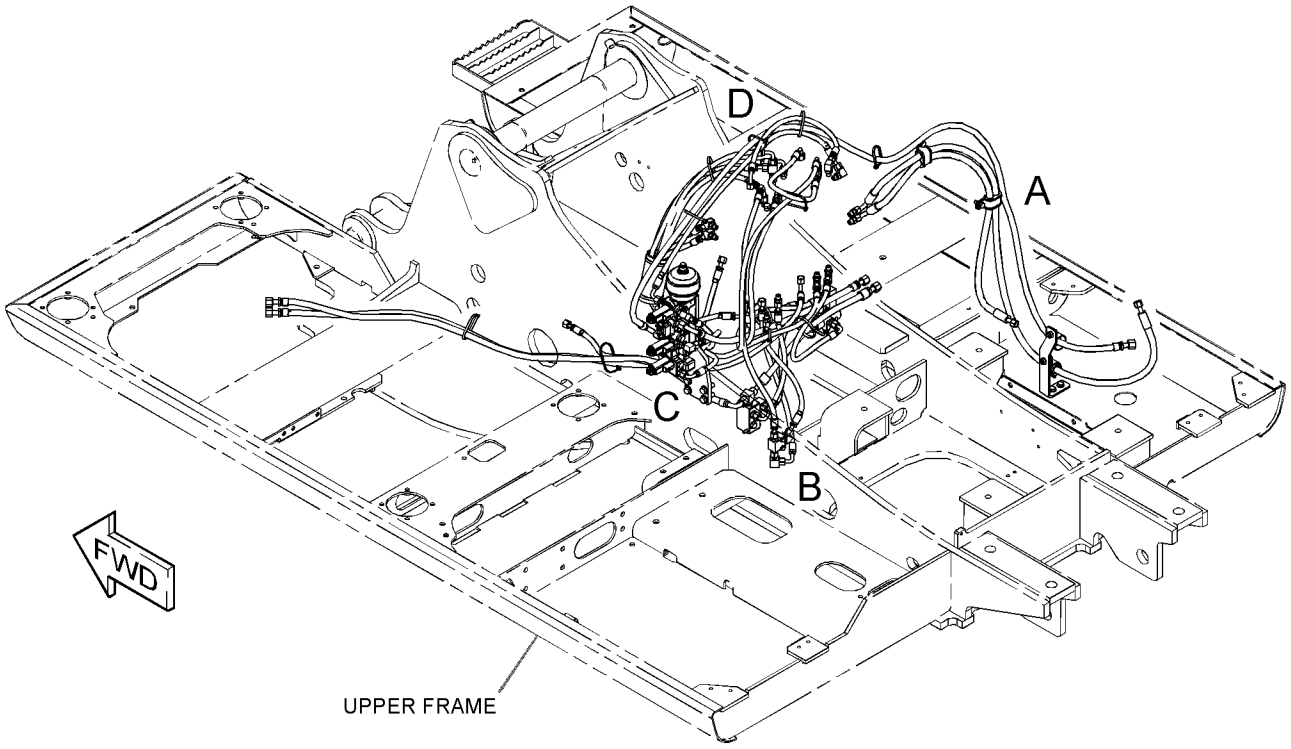

GRAPHIC #1 g03137252

391-7835 **LINES GP-PILOT (*contd.*)** **i05848821**

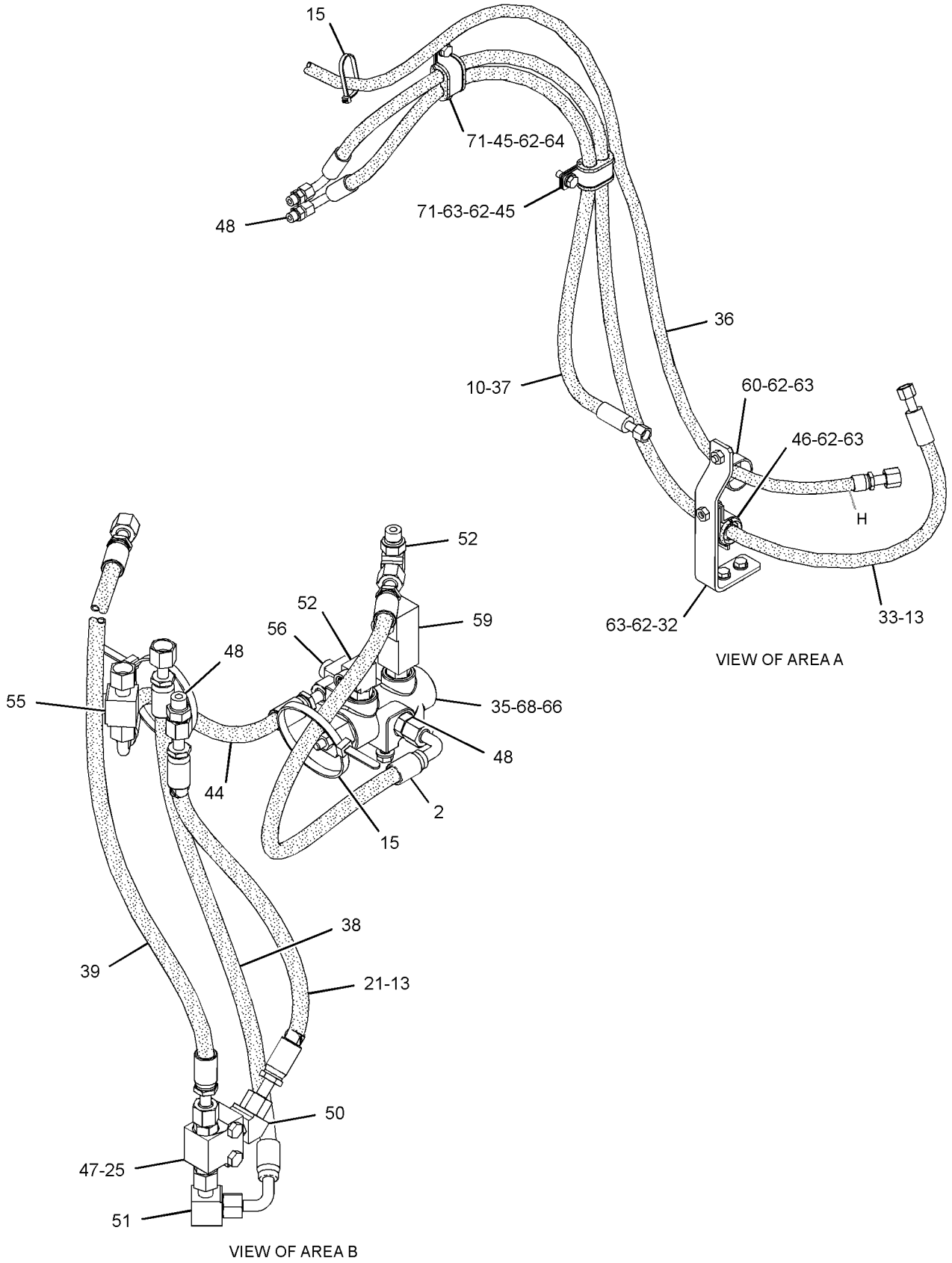

GRAPHIC #2

g03142305

391-7835 **LINES GP-PILOT (*contd.*)** **i05848821**

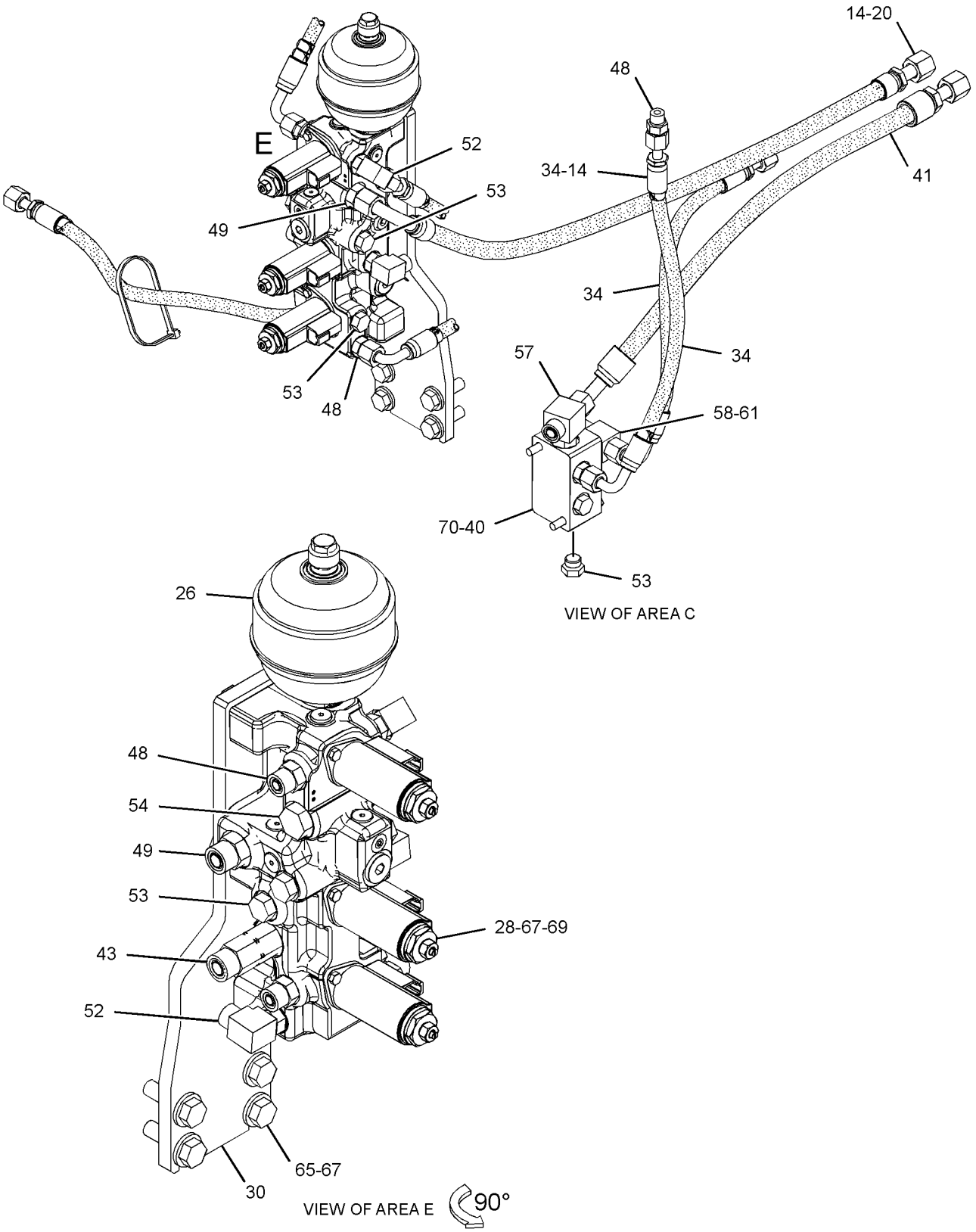

GRAPHIC #3 g03137249

391-7835 **LINES GP-PILOT (*contd.*)** **i05848821**

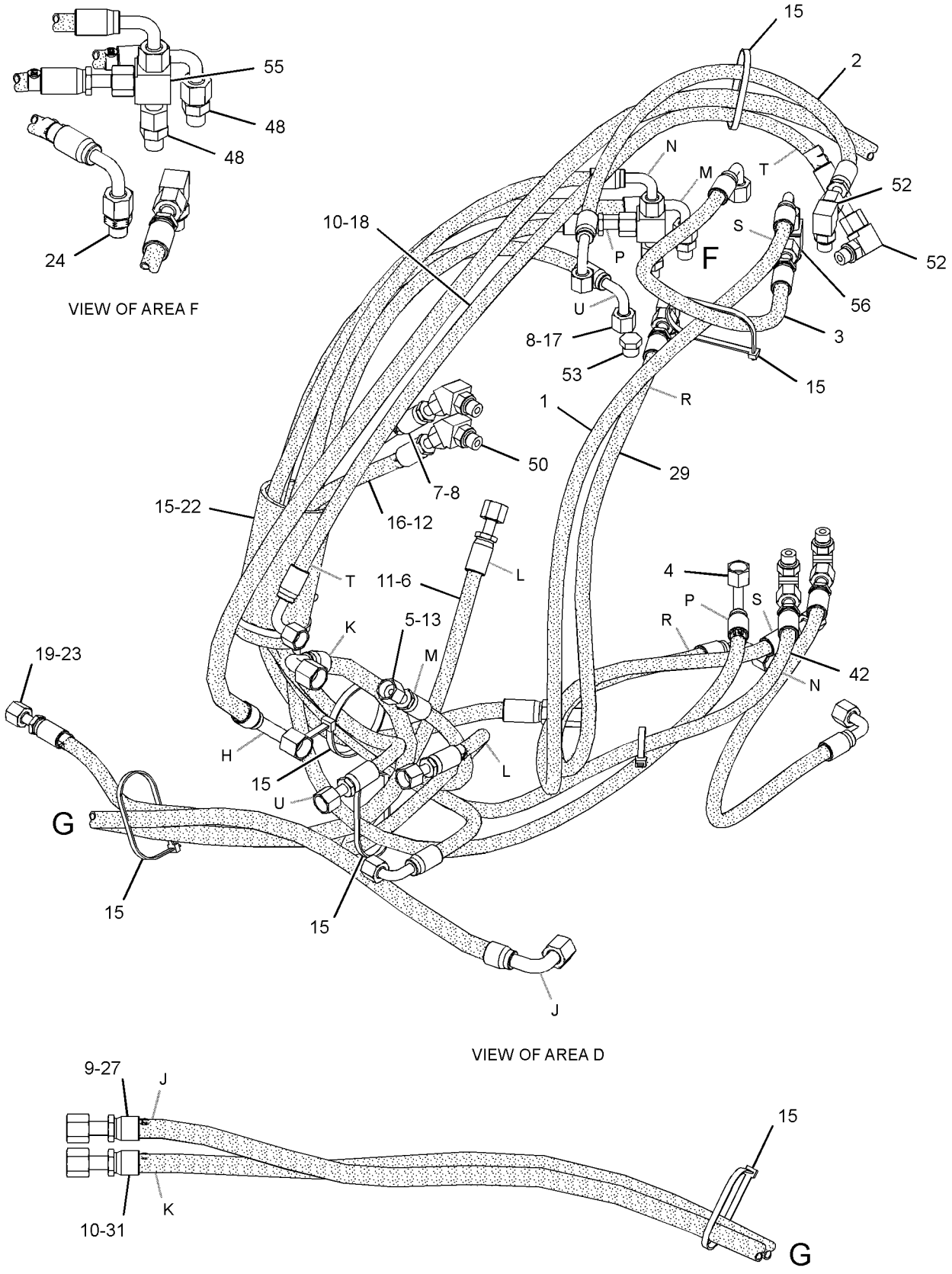

GRAPHIC #4 **<END>** g03137251

391-7825 LINES GP-PUMP–REAR

S/N: HAH1-UP

PART OF 455-7664 HYDRAULIC AR

SMCS-5057 **i04945552**

NOTE	REF NO	GRAPHIC REF	PART NUMBER	QTY	PART NAME 1 2 3 4 5 6 (PRODUCT LEVEL)	SEE PAGE
Y	1	1	**171-0002**	1	VALVE GP-CHECK (OIL COOLER BYPASS)	284
I	2	1	**230-0185**	1	HOSE AS	
	3	1	**236-6336**	1	HOSE	
I	4	1	**269-9901**	1	HOSE AS	
I	5	1	**269-9904**	1	HOSE AS	
I	6	1	**269-9911**	1	HOSE AS	
	7	1	**269-9915**	1	SUPPORT	
	8	1	**354-3757**	1	PIPE AS	
M	9	1	**101-7404**	4	BOLT-SOCKET HEAD (M10X1.5X30-MM)	
	10	1	*148-8335*	2	CONNECTOR AS	
					(EACH INCLUDES)	
		1	**5K-9090**	1	SEAL-O-RING	
		1	**6V-8635**	1	CONNECTOR	
		1	**7M-8485**	1	SEAL-O-RING	
	11	1	*164-4180*	2	PLUG AS	
					(EACH INCLUDES)	
		1	**7M-8485**	1	SEAL-O-RING	
		1	**9S-4181**	1	PLUG	
	12	1	**1P-4578**	8	FLANGE-HALF	
	13	1	**4J-0522**	4	SEAL-O-RING	
	14	1	**4J-0527**	2	SEAL-O-RING	
	15	1	**7G-5984**	1	CLIP (TAB)	
	16	1	**7G-5985**	1	CLIP (SLOT)	
	17	1	**278-6469**	1	GROMMET	
	18	1	**8T-4121**	20	WASHER-HARD (11X21X2.5-MM THK)	
M	19	1	**8T-4139**	4	BOLT (M12X1.75X30-MM)	
M	20	1	**8T-4183**	4	BOLT (M12X1.75X40-MM)	
M	21	1	**8T-4196**	16	BOLT (M10X1.5X35-MM)	
	22	1	**8T-4223**	8	WASHER-HARD (13.5X25.5X3-MM THK)	
	23	1	**8T-6703**	2	CLAMP-HOSE	

I - REFER TO HYDRAULIC INFORMATION SYSTEM
M - METRIC PART
Y - SEPARATE ILLUSTRATION

391-7825 **LINES GP-PUMP (*contd.*)** **i04945552**

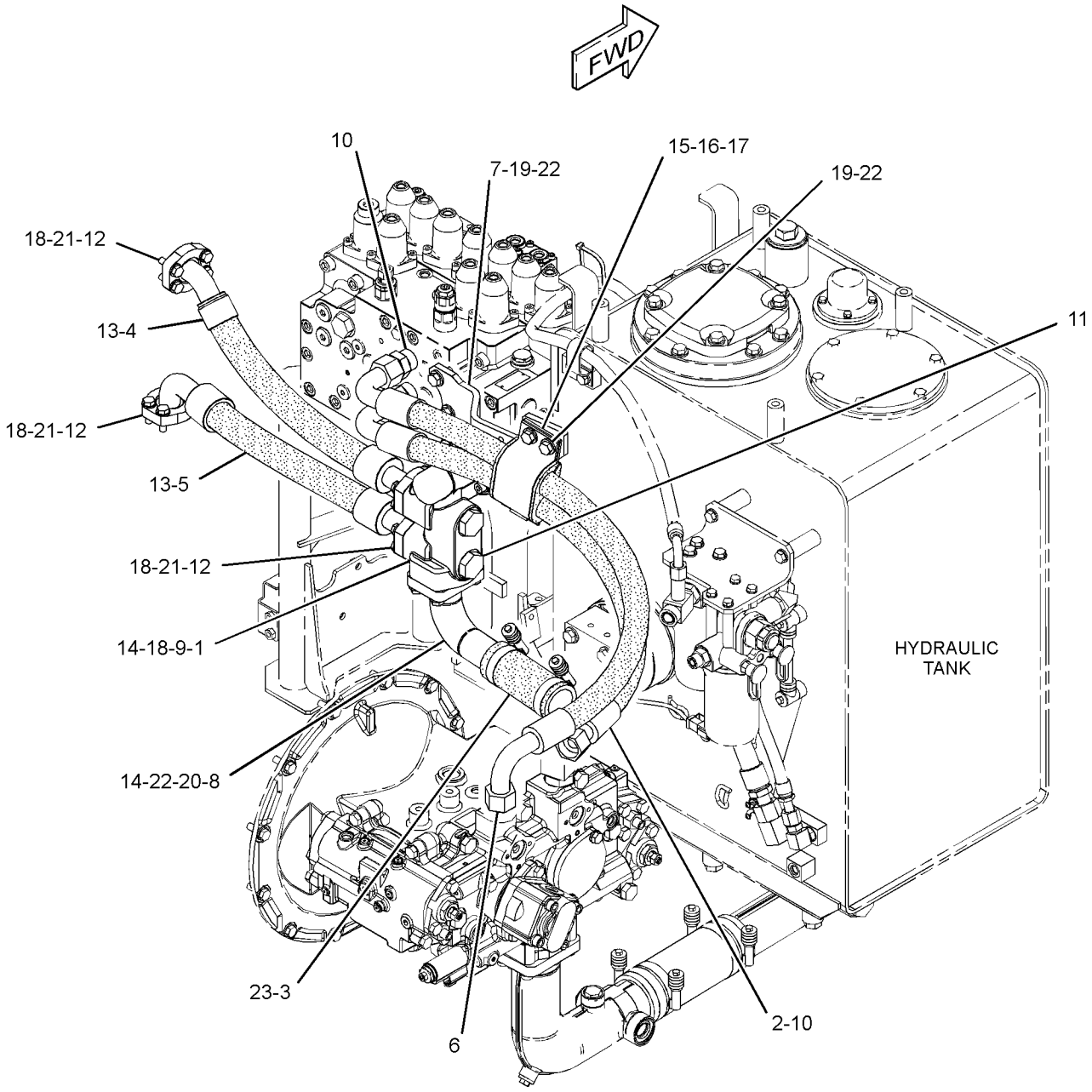

GRAPHIC #1 **<END>** g03134106

391-7836 LINES GP-PUMP

S/N: HAH1-UP

PART OF 455-7664 HYDRAULIC AR

SMCS-5057 **i05823502**

NOTE	REF NO	GRAPHIC REF	PART NUMBER	QTY	PART NAME 1 2 3 4 5 6 (PRODUCT LEVEL)	SEE PAGE
	1	1	**399-7625**	1	PIPE AS	
	2	1	**399-7619**	1	PIPE AS	
	3	1	**392-6728**	1	HOSE	
M	4	1	**108-1781**	4	BOLT-SOCKET HEAD (M12X1.75X35-MM)	
	5	1	**144-0367**	4	CLAMP-HOSE	
	6	1	*148-8335*	1	CONNECTOR AS	
		1	**5K-9090**	1	SEAL-O-RING	
		1	**6V-8635**	1	CONNECTOR	
		1	**7M-8485**	1	SEAL-O-RING	
	7	1	*148-8357*	1	ELBOW AS	
		1	**5K-9090**	1	SEAL-O-RING	
		1	**6V-9008**	1	ELBOW	
		1	**7M-8485**	1	SEAL-O-RING	
	8	1	*148-8411*	2	PLUG AS	
					(EACH INCLUDES)	
		1	**3K-0360**	1	SEAL-O-RING	
		1	**9S-4185**	1	PLUG	
	9	1	*155-3624*	1	PLUG AS	
		1	**3J-7354**	1	SEAL-O-RING	
		1	**9S-4182**	1	PLUG	
	10	1	*164-4180*	1	PLUG AS	
		1	**7M-8485**	1	SEAL-O-RING	
		1	**9S-4181**	1	PLUG	
	11	1	**5H-8624**	1	SEAL-O-RING	
	12	1	**6J-2680**	1	SEAL-O-RING	
M	13	1	**447-1711**	4	BOLT (M16X2X50-MM)	
	14	1	**451-2175**	4	WASHER-HARD (17.5X30X3.5-MM THK)	
	15	1	**8T-4223**	4	WASHER-HARD (13.5X25.5X3-MM THK)	

M - METRIC PART

391-7836 **LINES GP-PUMP (*contd.*)** **i05823502**

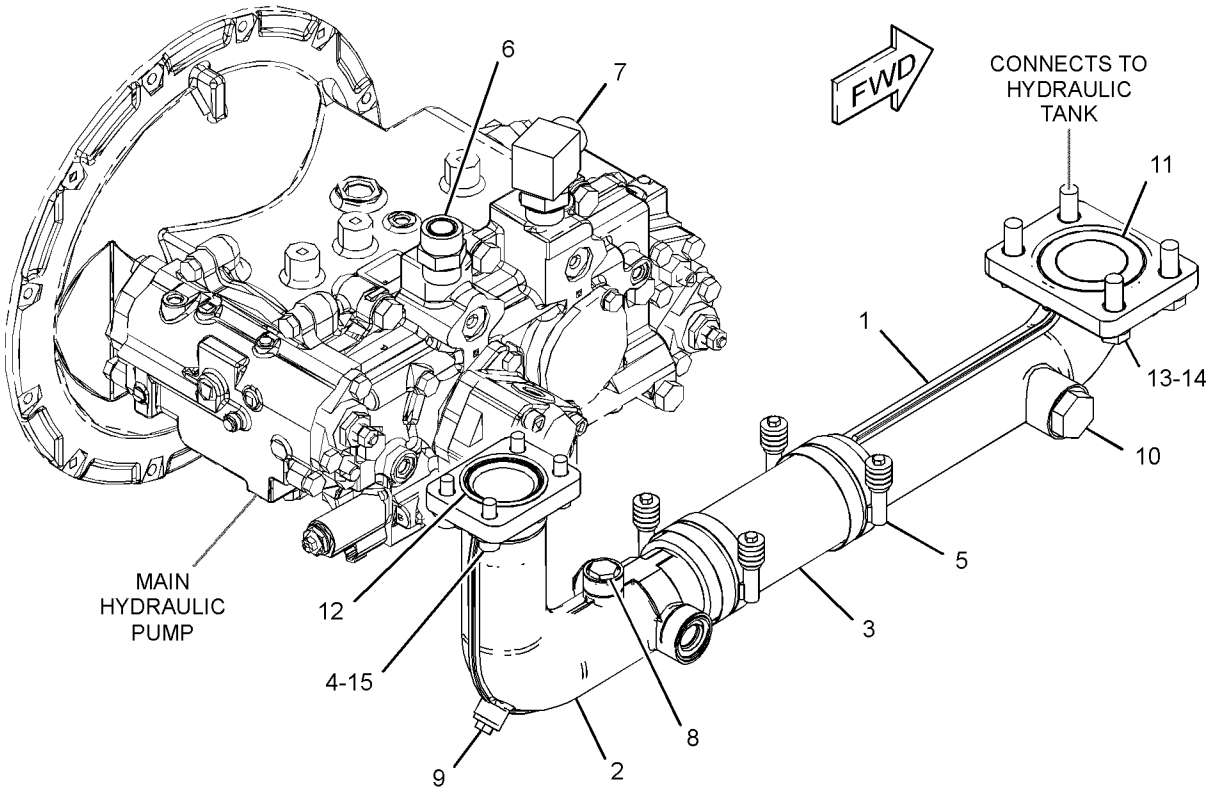

GRAPHIC #1 **<END>** g03339350

131-9962 LINES GP-STICK

S/N: HAH1-UP
FOR USE WITH 2.6-M (8.5-FT) STICK
PART OF 385-4101 STICK AR-HOE
AN ATTACHMENT

SMCS-5057, 5458 **i03853250**

NOTE	REF NO	GRAPHIC REF	PART NUMBER	QTY	PART NAME 1 2 3 4 5 6 (PRODUCT LEVEL)	SEE PAGE
I	1	1	**4I-8785**	2	HOSE AS	
	2	1	**1P-3702**	3	SEAL-RECTANGULAR	
M	3	1	**8T-4182**	4	BOLT (M10X1.5X45-MM)	
	4	1	**8T-9403**	4	FLANGE-HALF	
	5	1	**131-9943**	1	BLOCK	
	6	1	**8T-4121**	8	WASHER-HARD (11X21X2.5-MM THK)	
M	7	1	**8T-4198**	4	BOLT (M10X1.5X100-MM)	

I - REFER TO HYDRAULIC INFORMATION SYSTEM
M - METRIC PART

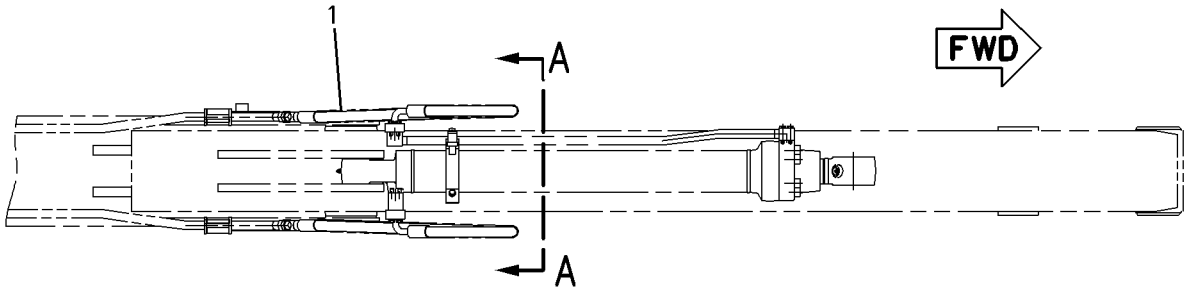

TOP VIEW

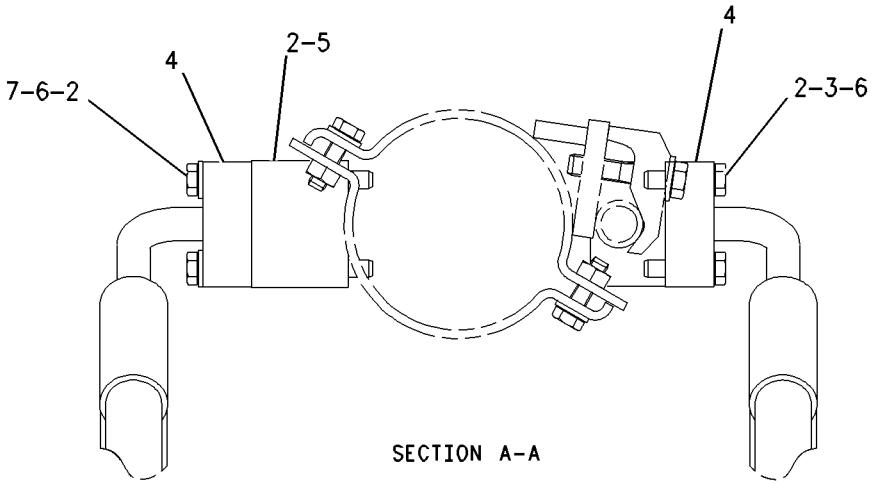

SECTION A-A

GRAPHIC #1 **<END>** g00756004

275-1695 LINES GP-STICK

S/N: HAH1-UP
FOR USE WITH 2.9-M (9.5-FT) STICK
PART OF 385-4156 STICK AR-HOE
AN ATTACHMENT

SMCS-5057, 5458 **i04529137**

NOTE	REF NO	GRAPHIC REF	PART NUMBER	QTY	PART NAME 1 2 3 4 5 6 (PRODUCT LEVEL)	SEE PAGE
I	1	1	**5I-4494**	2	HOSE AS	
	2	1	**131-9943**	1	BLOCK	
	3	1	**1P-3702**	3	SEAL-RECTANGULAR	
	4	1	**8T-4121**	8	WASHER-HARD (11X21X2.5-MM THK)	
M	5	1	**8T-4182**	4	BOLT (M10X1.5X45-MM)	
M	6	1	**8T-4198**	4	BOLT (M10X1.5X100-MM)	
	7	1	**8T-9403**	4	FLANGE-HALF	

I - REFER TO HYDRAULIC INFORMATION SYSTEM
M - METRIC PART

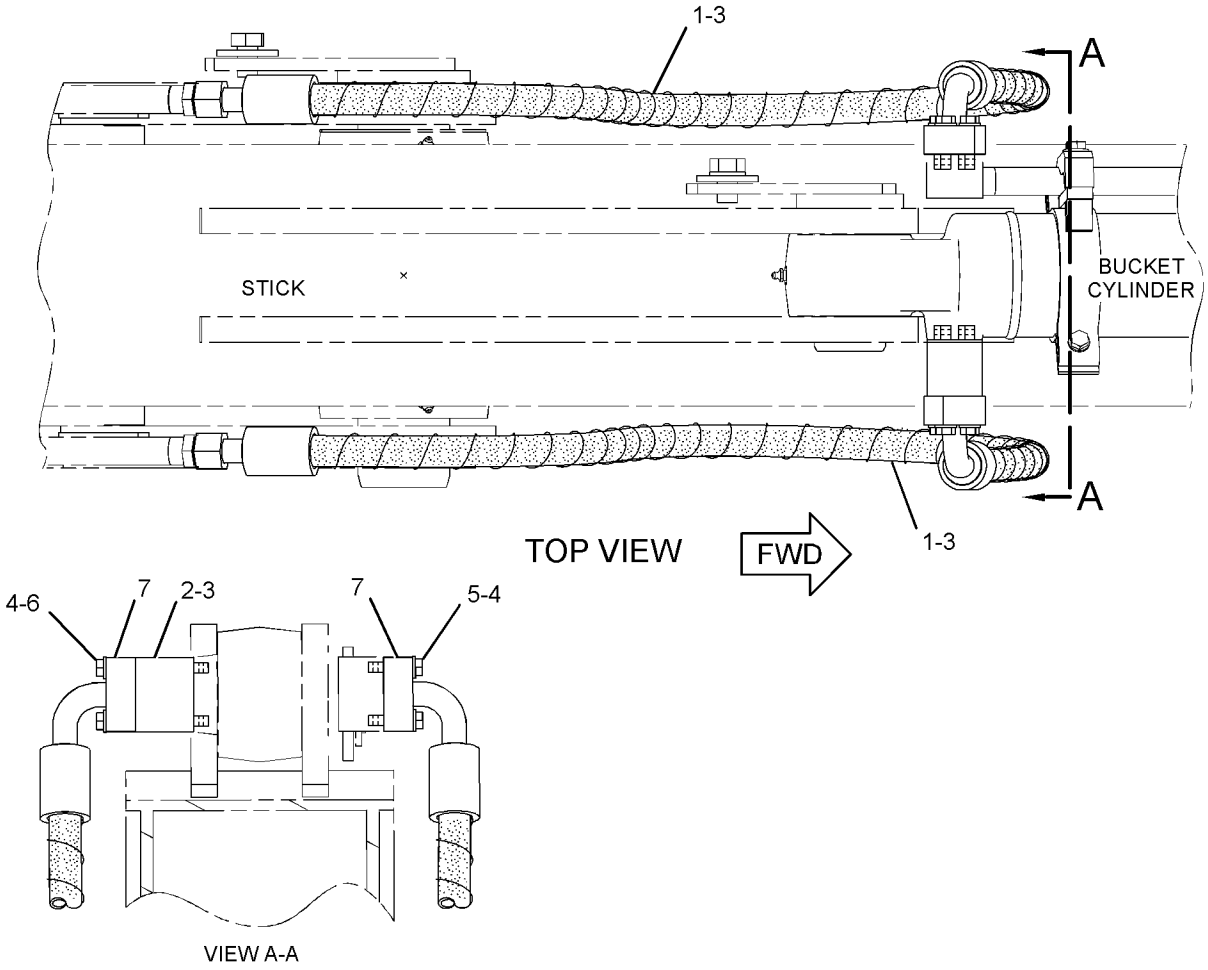

GRAPHIC #1 **<END>** g01382013

385-2914 LINES GP-STICK CYLINDER

S/N: HAH1-UP

PART OF 381-8970 CYLINDER & LINES GP-STICK

AN ATTACHMENT

SMCS-5458 **i05858604**

NOTE	REF NO	GRAPHIC REF	PART NUMBER	QTY	PART NAME 1 2 3 4 5 6 (PRODUCT LEVEL)	SEE PAGE
	1	1	**390-4165**	1	CLAMP	
	2	1	**422-9137**	1	SUPPORT AS	
		1	**424-8398**	2	NUT-WELD (M10X1.5-THD)	
M	3	1	**8T-0273**	4	BOLT-SOCKET HEAD (M12X1.75X40-MM)	
	4	1	**390-4163**	1	TUBE AS	
	5	1	**4J-0520**	1	SEAL-O-RING	
	6	1	**7X-0796**	2	LOCKWASHER	
M	7	1	**6V-5842**	2	BOLT (M10X1.5X40-MM)	
	8	1	**3B-4508**	1	LOCKWASHER	
M	9	1	**6V-3823**	1	BOLT (M12X1.75X60-MM)	

M - METRIC PART

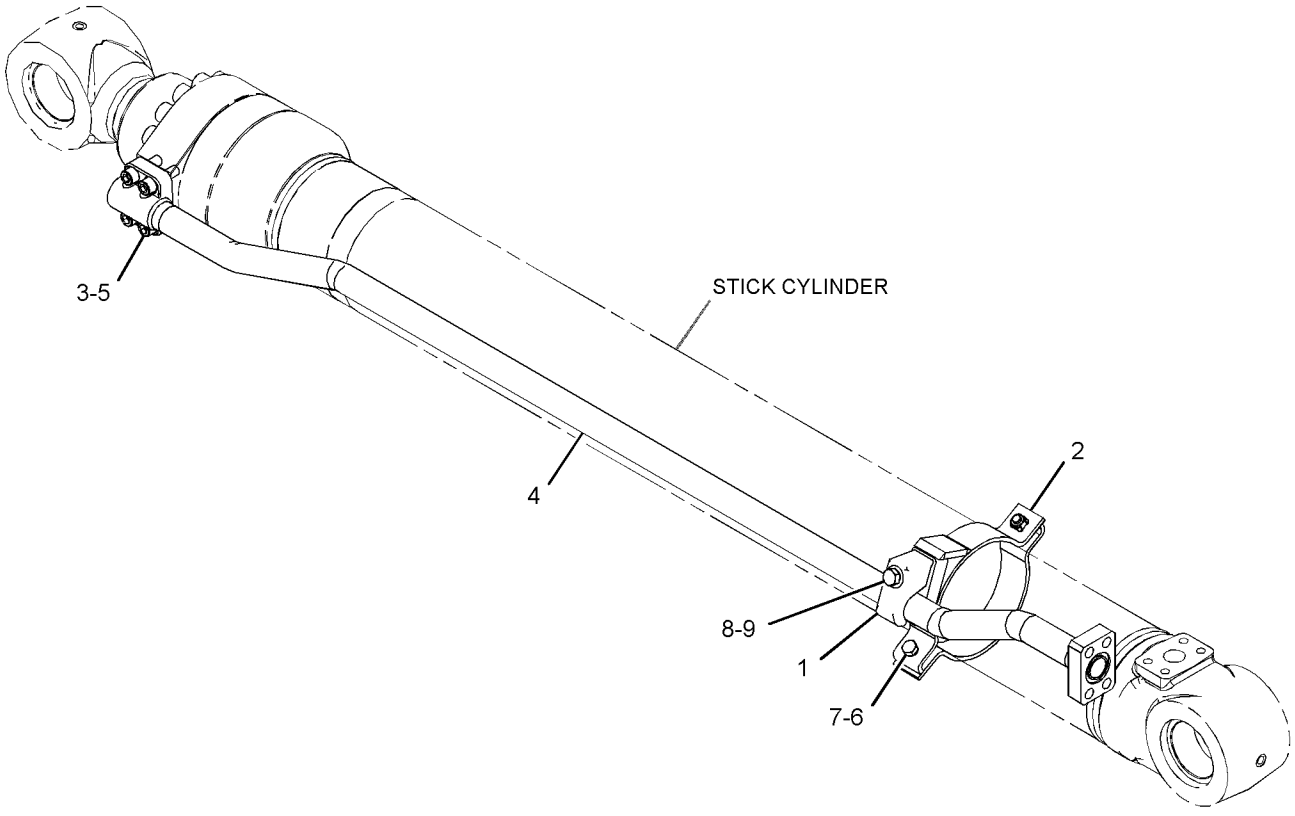

GRAPHIC #1 **<END>** g03343273

260-8212 LINES GP-TRAVEL MOTOR—LONG CARRIAGE

S/N: HAH1-UP

PART OF 455-7664 HYDRAULIC AR

SMCS-5057, 5058 **i03847649**

NOTE	REF NO	GRAPHIC REF	PART NUMBER	QTY	PART NAME 1 2 3 4 5 6 (PRODUCT LEVEL)	SEE PAGE
	1	1	**108-7304**	2	GROMMET	
	2	1	**124-0986**	2	GROMMET	
Y	3	1	**162-4696**	1	SWIVEL GP	279
	4	1	**187-5915**	2	HOSE AS	
I	5	1	**7I-8249**	2	HOSE AS	
I	6	1	**196-0800**	4	HOSE AS	
	7	1	*148-8325*	2	CONNECTOR AS	
					(EACH INCLUDES)	
		1	**3J-1907**	1	SEAL-O-RING	
		1	**4J-5477**	1	SEAL-O-RING	
		1	**6V-8641**	1	CONNECTOR	
	8	1	*148-8327*	4	CONNECTOR AS	
					(EACH INCLUDES)	
		1	**3D-2824**	1	SEAL-O-RING	
		1	**6V-8637**	1	CONNECTOR	
		1	**6V-9746**	1	SEAL-O-RING	
	9	1	*148-8364*	2	ELBOW AS	
					(EACH INCLUDES)	
		1	**3K-0360**	1	SEAL-O-RING	
		1	**6V-8398**	1	SEAL-O-RING	
		1	**6V-8625**	1	ELBOW	
	10	1	*148-8368*	2	ELBOW AS	
					(EACH INCLUDES)	
		1	**3J-1907**	1	SEAL-O-RING	
		1	**4J-5477**	1	SEAL-O-RING	
		1	**6V-8627**	1	ELBOW	
	11	1	*148-8436*	1	TEE AS	
		1	**3K-0360**	1	SEAL-O-RING	
		1	**6V-8398**	2	SEAL-O-RING	
		1	**6V-8775**	1	TEE-FACE SEAL	
	12	1	**1P-3703**	4	SEAL-RECTANGULAR	
	13	1	**6V-0400**	8	FLANGE-HALF	
	14	1	**7K-1181**	4	STRAP-CABLE	
	15	1	**8T-4121**	4	WASHER-HARD (11X21X2.5-MM THK)	
M	16	1	**8T-4137**	4	BOLT (M10X1.5X20-MM)	
M	17	1	**8T-4184**	16	BOLT (M12X1.75X45-MM)	
	18	1	**8T-4223**	16	WASHER-HARD (13.5X25.5X3-MM THK)	
B	19	1	**1U-8846**		SEALANT-GASKET	

B - USE AS REQUIRED
I - REFER TO HYDRAULIC INFORMATION SYSTEM
M - METRIC PART
Y - SEPARATE ILLUSTRATION

260-8212 **LINES GP-TRAVEL MOTOR (*contd.*)** **i03847649**

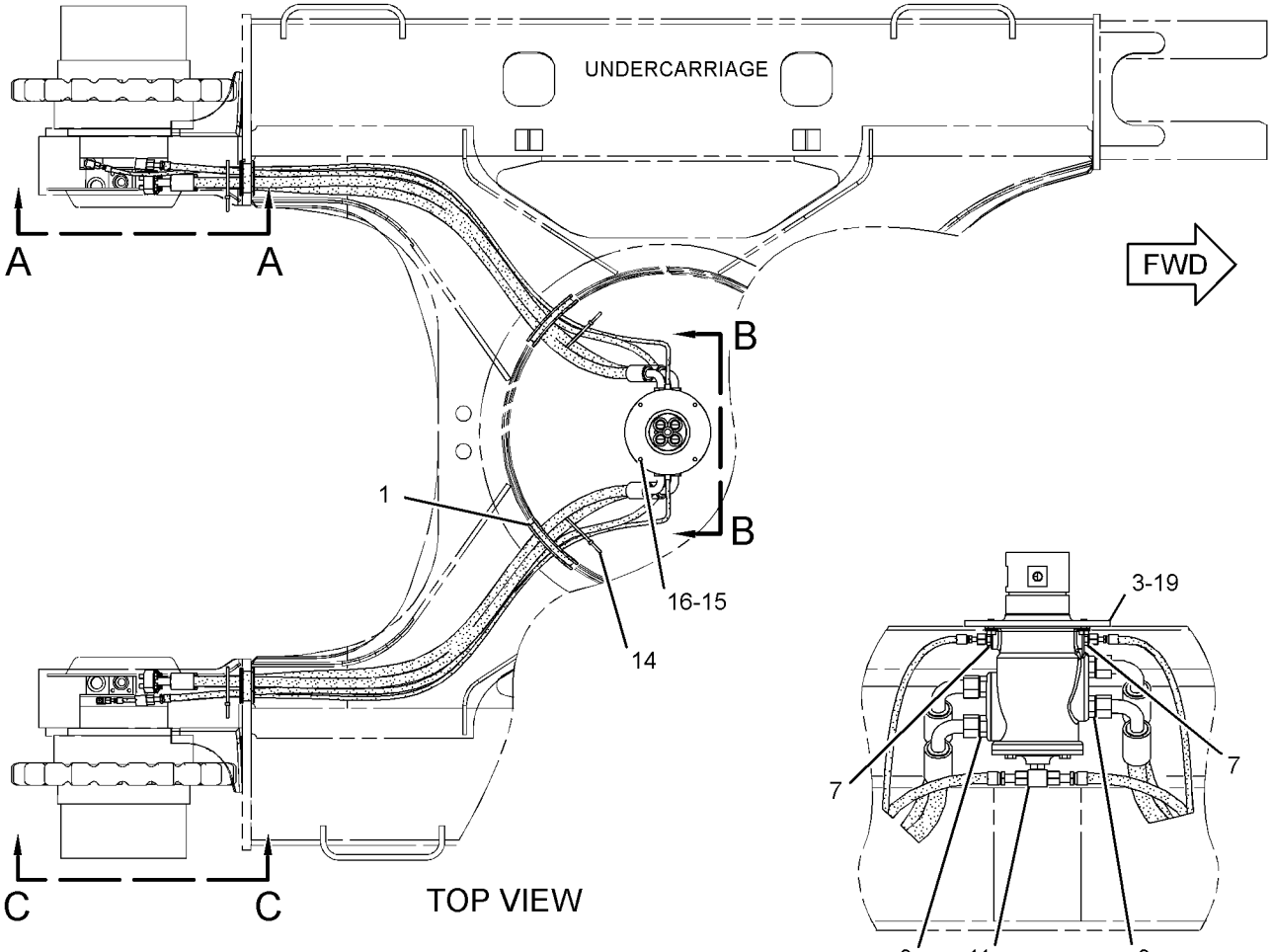

VIEW B-B

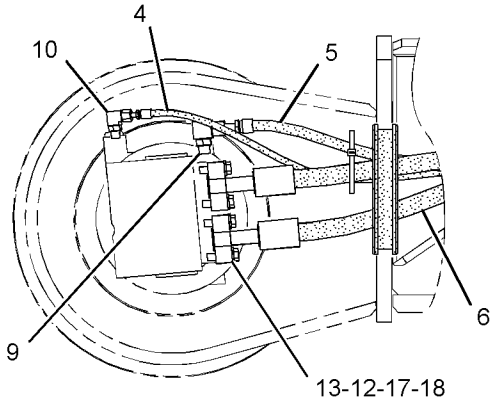

VIEW A-A

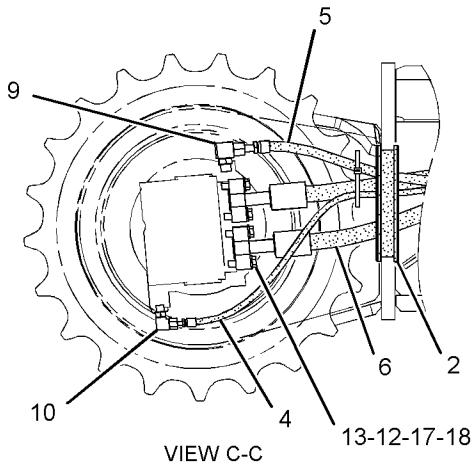

VIEW C-C

GRAPHIC #1 **<END>** g01617114

215-5037 MANIFOLD GP-CONTROL–PILOT OIL

S/N: HAH1-UP

PART OF 391-7835 LINES GP-PILOT

SMCS-5264 **i02205444**

NOTE	PART NUMBER	QTY	PART NAME 1 2 3 4 5 6 (PRODUCT LEVEL)	SEE PAGE
Y	*239-8998*	1	MANIFOLD GP-CONTROL (PILOT OIL SUPPLY) (STEEL BODY)	253
			-OR-	
Y	*239-8697*	1	MANIFOLD GP-CONTROL (PILOT OIL SUPPLY) (ALUMINUM BODY)	252

Y - SEPARATE ILLUSTRATION

<END>

239-8697 MANIFOLD GP-CONTROL—PILOT OIL SUPPLY

S/N: HAH1-UP
ALUMINUM BODY
PART OF 215-5037 MANIFOLD GP-CONTROL

SMCS-5264 **i04249889**

NOTE	REF NO	GRAPHIC REF	PART NUMBER	QTY	PART NAME 1 2 3 4 5 6 (PRODUCT LEVEL)	SEE PAGE
Y	1	1	**121-1491**	1	VALVE GP-SOLENOID (SWING BRAKE RELEASE)	306
Y	1A	1	**121-1491**	1	VALVE GP-SOLENOID (HYDRAULIC LOCKOUT)	306
Y	1B	1	**121-1491**	1	VALVE GP-SOLENOID (TRAVEL SPEED)	306
	4	1	**197-0196**	1	VALVE-CHECK	
	5	1	**197-0199**	1	SPRING	
	6	1	**197-0273**	1	SPRING	
	7	1	**9S-8005**	4	PLUG-O-RING	
	8	1	**3J-1907**	1	SEAL-O-RING	
	9	1	**3K-0360**	4	SEAL-O-RING	
M	11	1	**7I-2272**	6	BOLT (M5X0.8X12-MM)	
	12	1	*225-4818*	6	PLUG AS	
					(EACH INCLUDES)	
		1	**4J-7533**	1	SEAL-O-RING	
		1	**225-4804**	1	PLUG	
	13	1	**9S-8004**	1	PLUG	

M - METRIC PART
Y - SEPARATE ILLUSTRATION

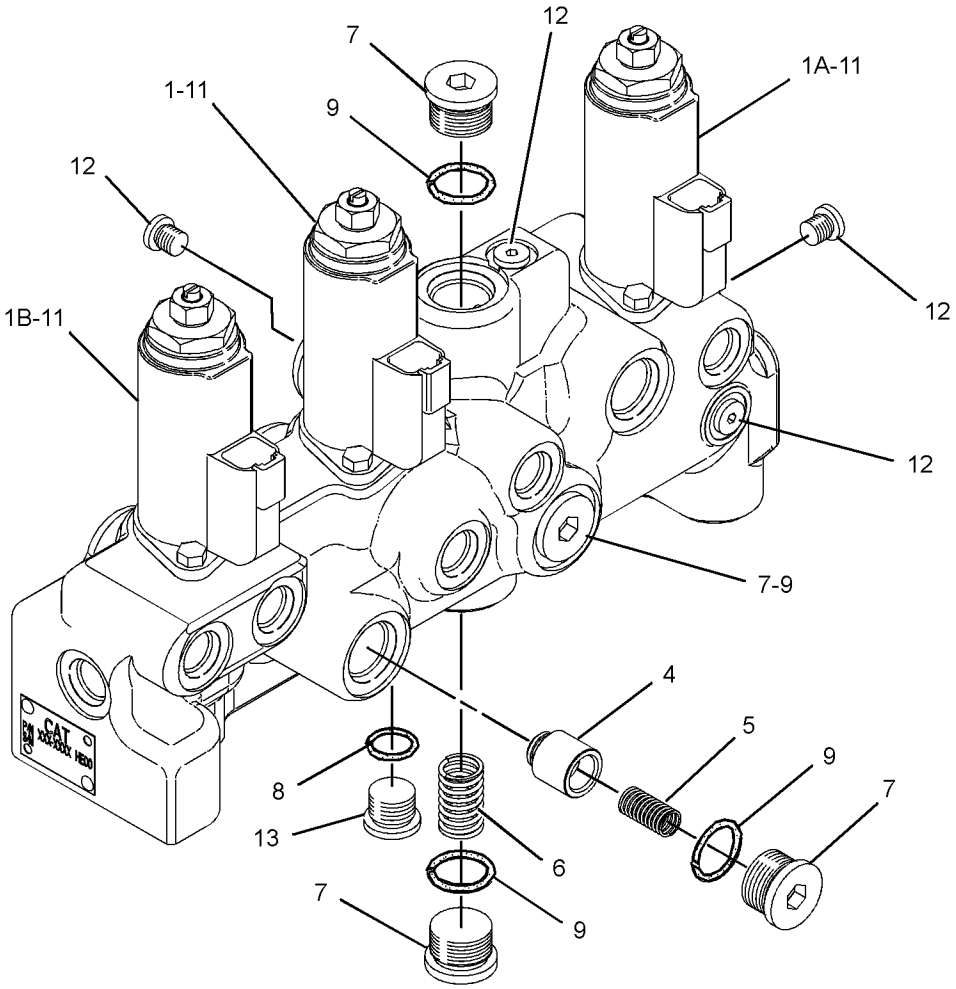

GRAPHIC #1 **<END>** g02345260

239-8998 MANIFOLD GP-CONTROL

S/N: HAH1-UP
STEEL BODY
PART OF 215-5037 MANIFOLD GP-CONTROL

SMCS-5264 **i04922934**

NOTE	REF NO	GRAPHIC REF	PART NUMBER	QTY	PART NAME 1 2 3 4 5 6 (PRODUCT LEVEL)	SEE PAGE
Y	1	1	**121-1491**	1	VALVE GP-SOLENOID (SWING BRAKE RELEASE)	306
Y	1A	1	**121-1491**	1	VALVE GP-SOLENOID (HYDRAULIC LOCKOUT)	306
Y	1B	1	**121-1491**	1	VALVE GP-SOLENOID (TRAVEL SPEED)	306
	2	1	**7M-7410**	2	PLUG-PIPE	
	3	1	**8T-6759**	6	PLUG-PIPE	
	4	1	**197-0196**	1	VALVE-CHECK	
	5	1	**9S-8005**	3	PLUG-O-RING	
	6	1	**197-0199**	1	SPRING	
	7	1	**197-0273**	1	SPRING	
	8	1	**3K-0360**	3	SEAL-O-RING	
M	9	1	**7I-2272**	6	BOLT (M5X0.8X12-MM)	

M - METRIC PART
Y - SEPARATE ILLUSTRATION

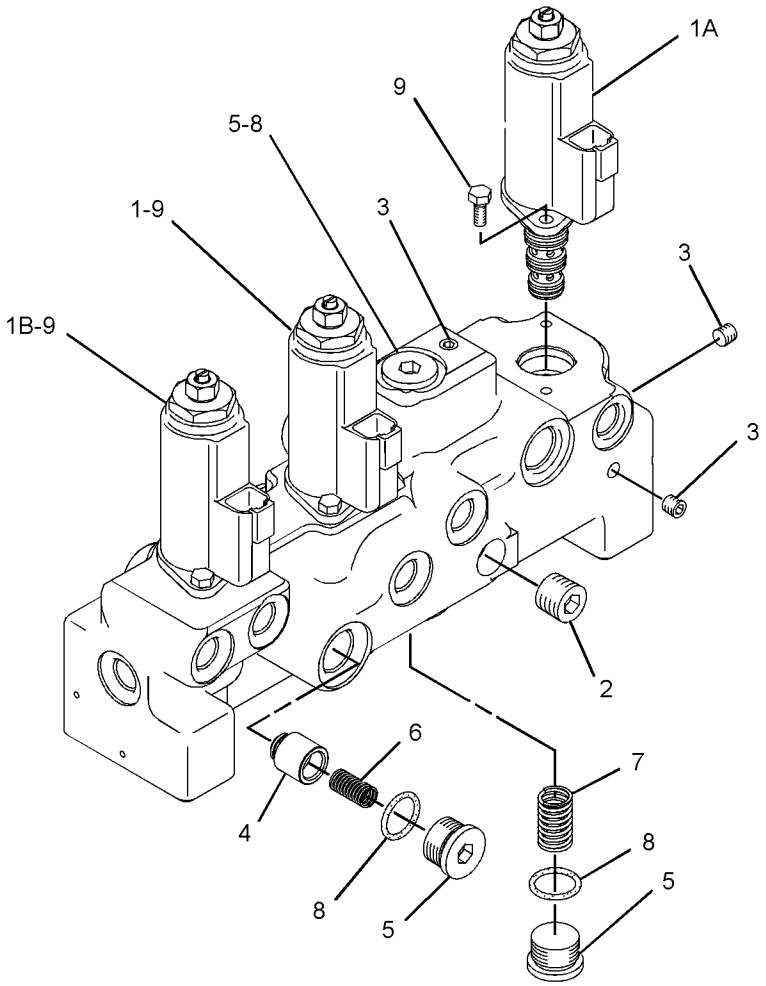

GRAPHIC #1 **<END>** g03089517

185-6952 MOTOR & MTG GP-TRAVEL

S/N: HAH1-UP

PART OF 350-0450 DRIVE GP-FINAL

SMCS-4351 **i03821000**

NOTE	REF NO	GRAPHIC REF	PART NUMBER	QTY	PART NAME 1 2 3 4 5 6 (PRODUCT LEVEL)	SEE PAGE
Y	1	1	**185-6953**	1	MOTOR GP-TRAVEL	258
Y	2	1	**199-0504**	1	VALVE GP-TRAVEL COUNTERBALANCE	308
M	3	1	**8T-4176**	6	BOLT (M12X1.75X90-MM)	
M	4	1	**095-0707**	3	BOLT (M16X2X120-MM)	
	5	1	**095-1685**	1	SEAL-O-RING	

M - METRIC PART
Y - SEPARATE ILLUSTRATION

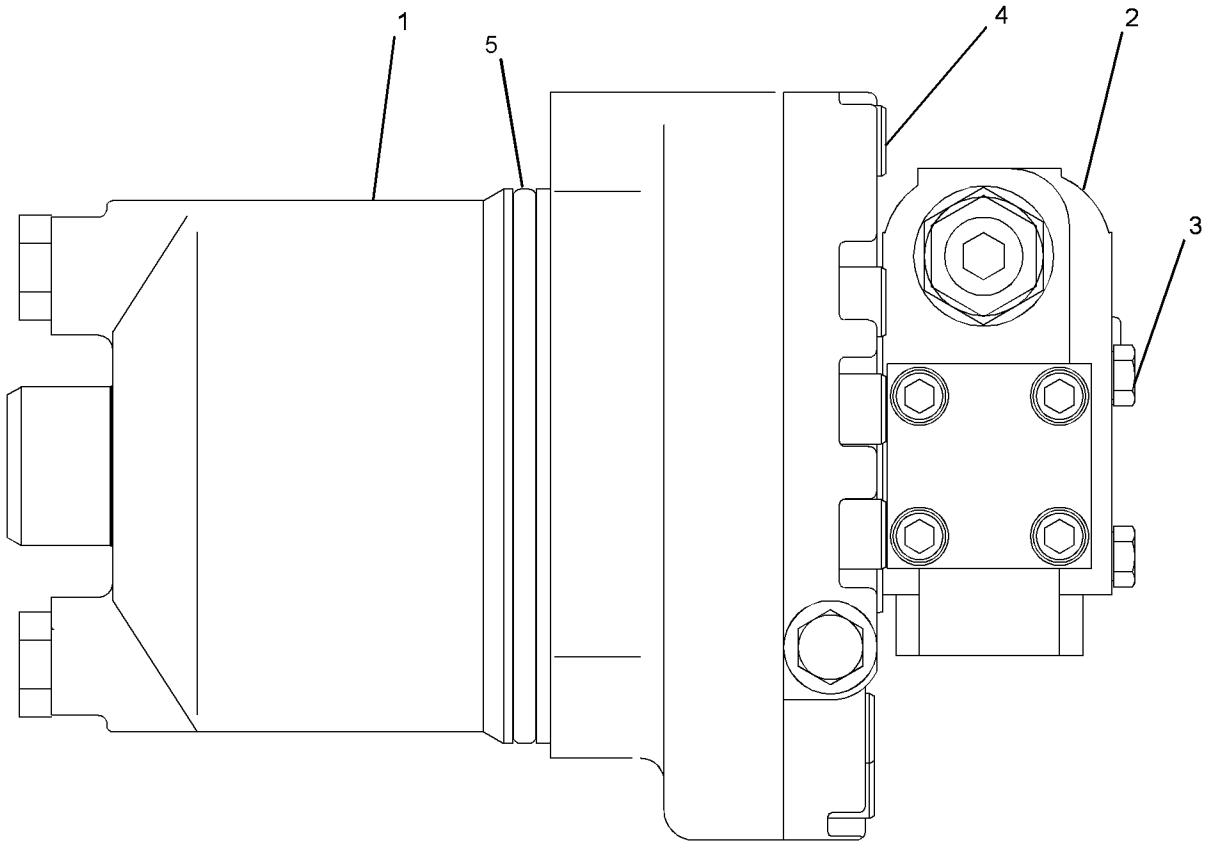

GRAPHIC #1 **<END>** g01953516

369-9624 MOTOR GP-PISTON

S/N: HAH1-UP

PART OF 369-9604 MOTOR GP-SWING

SMCS-5058 **i05868002**

NOTE	REF NO	GRAPHIC REF	PART NUMBER	QTY	PART NAME 1 2 3 4 5 6 (PRODUCT LEVEL)	SEE PAGE
	1	1	**173-3444**	1	PLATE	
	2	1	**173-3443**	1	PLATE	
	3	1	**334-9981**	1	PISTON AS-PUMP	
	4	1	**173-3441**	1	BARREL	
J	5	1	**5I-8426**	1	SEAL-O-RING	
J	6	1	**5I-8417**	1	SEAL-O-RING	
	7	1	**177-2584**	1	PISTON-BRAKE	
J	8	1	**5I-8623**	1	SEAL-O-RING	
	9	1	**126-2055**	14	SPRING	
	10	1	**173-3439**	1	HEAD GP-MOTOR	
		1	**095-0882**	2	PIN-SPRING	
	11	1	**110-5525**	2	PLUG	
J	12	1	**3J-1907**	2	SEAL-O-RING	
	13	1	**5I-8625**	1	BEARING	
	14	1	**173-3445**	1	PLATE-VALVE	
	15	1	**173-3451**	4	PLATE-SEPARATOR	
	16	1	**173-3450**	3	PLATE-FRICTION	
	17	1	**173-3442**	1	SPRING	
	18	1	**369-9625**	1	BODY	
	19	1	**364-0979**	1	SHAFT	
J	20	1	**173-3447**	1	SEAL-OIL	
	21	1	**122-5318**	1	BEARING	
	22	1	**094-1900**	2	PLUG	
J	23	1	**095-1595**	2	SEAL-O-RING	
	24	1	**7Y-4268**	2	SPRING	
	25	1	**7Y-4267**	2	VALVE	
M	26	1	**7Y-5221**	4	BOLT-SOCKET HEAD (M20X2.5X45-MM)	
					AVAILABLE REPAIR KIT(S):	
J			**173-3454**	1	KIT-SEAL (SWING MOTOR)	

J - KIT MARKED J SERVICES PARTS MARKED J
M - METRIC PART

369-9624 **MOTOR GP-PISTON (*contd.*)** **i05868002**

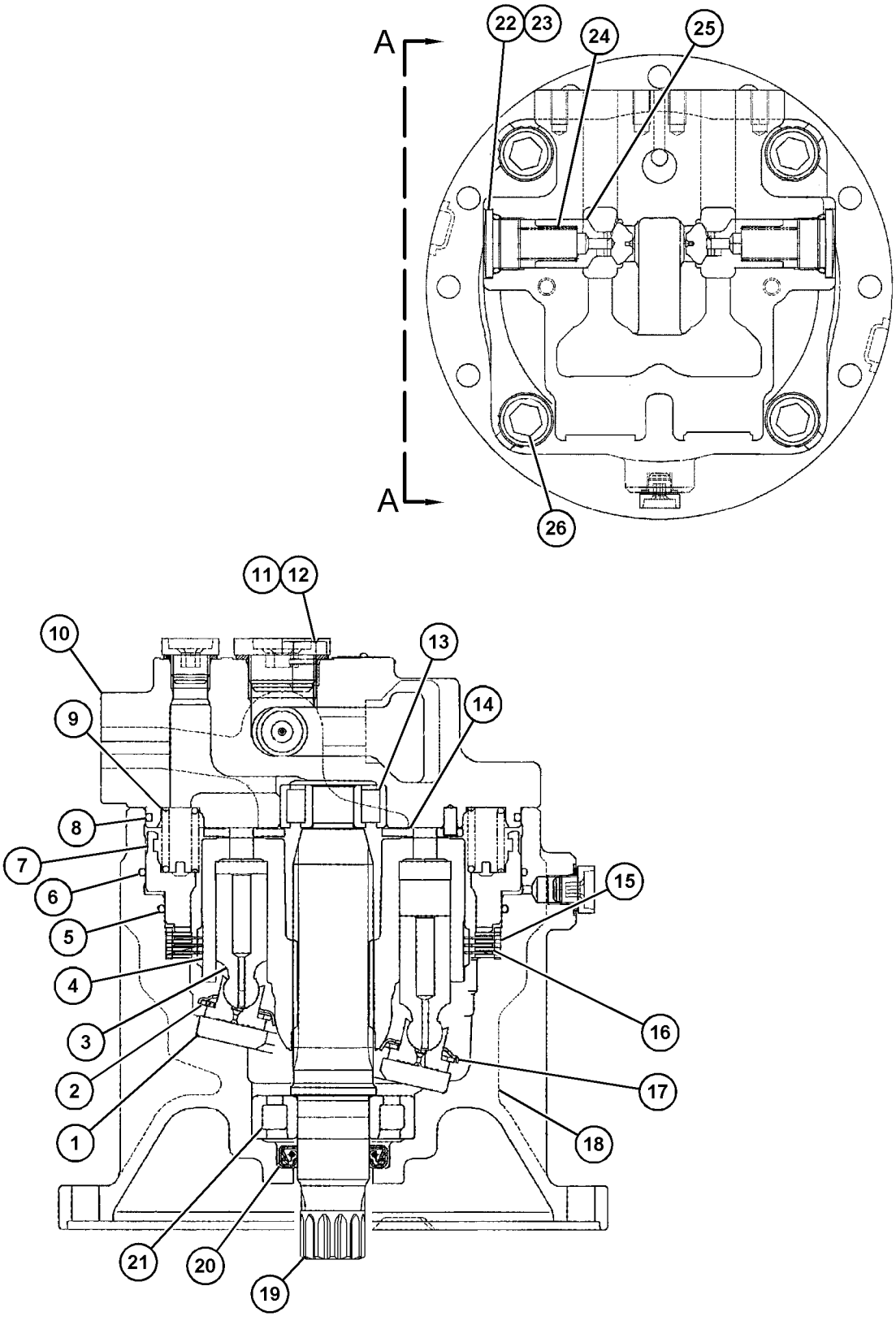

VIEW A-A

GRAPHIC #1 **<END>** g03676713

369-9604 MOTOR GP-SWING

S/N: HAH1-UP

PART OF 367-8339 DRIVE GP-SWING

SMCS-5058 **i05845054**

NOTE	REF NO	GRAPHIC REF	PART NUMBER	QTY	PART NAME 1 2 3 4 5 6 (PRODUCT LEVEL)	SEE PAGE
Y	1	1	**369-9624**	1	MOTOR GP-PISTON	255
Y	2	1	**364-0981**	2	VALVE GP-RELIEF (DIRECT OPERATED)	303
	3	1	**095-1698**	2	SEAL-O-RING	

Y - SEPARATE ILLUSTRATION

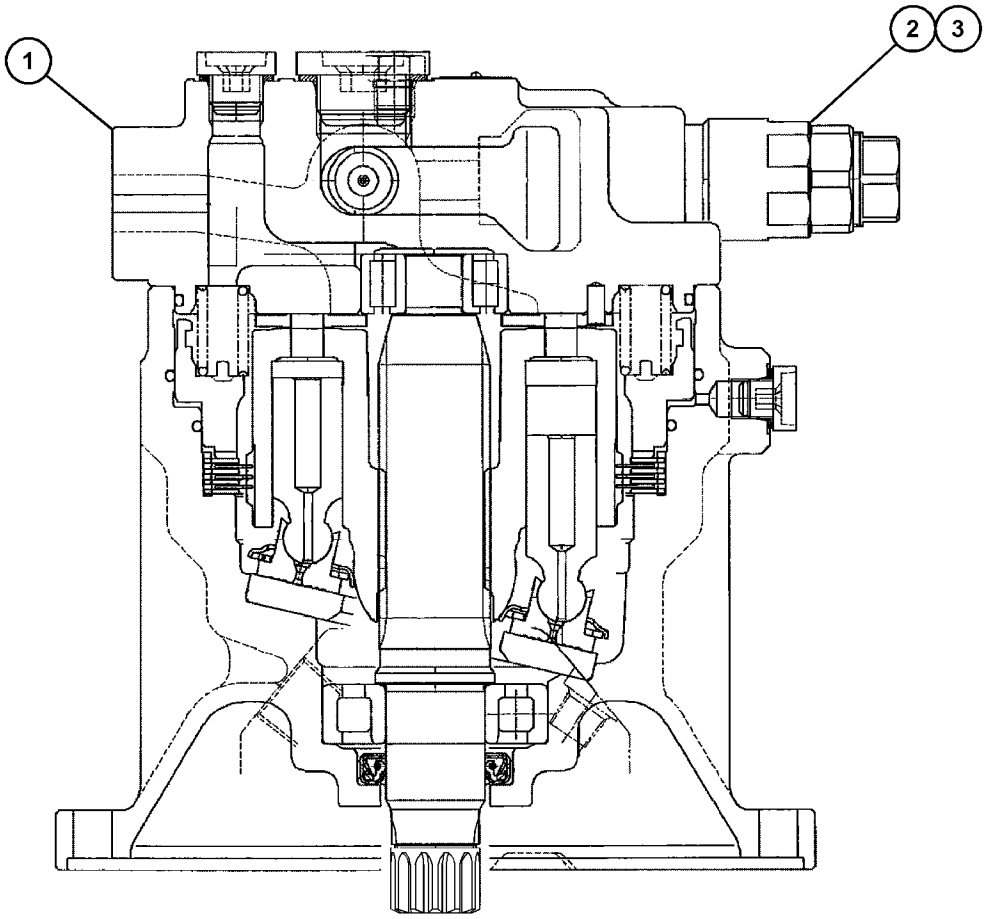

GRAPHIC #1 **<END>** g03676743

185-6953 MOTOR GP-TRAVEL

S/N: HAH1-UP

PART OF 185-6952 MOTOR & MTG GP-TRAVEL

SMCS-4351, 5058 **i05857672**

NOTE	REF NO	GRAPHIC REF	PART NUMBER	QTY	PART NAME 1 2 3 4 5 6 (PRODUCT LEVEL)	SEE PAGE
	1	1	**209-5894**	1	SHAFT	
	2	1	**087-4743**	2	STOP	
	3	1	**094-1399**	1	RING-RETAINING	
	4	1	**7Y-4212**	1	BEARING	
	5	1	**087-4757**	2	PISTON	
	6	1	**107-6969**	1	BODY	
	7	1	**122-5114**	1	GUIDE-BALL	
	8	1	**184-4535**	1	PLATE-CAM	
	9	1	**147-5860**	1	PISTON AS	
	10	1	**133-6777**	1	BARREL AS	
	11	1	**107-6954**	4	PLATE-FRICTION	
	12	1	**107-6955**	5	PLATE-SEPARATOR	
	13	1	**096-1523**	1	GUIDE-PISTON	
	14	1	**7Y-4213**	1	PISTON-BRAKE	
	15	1	**7Y-4202**	1	HEAD	
M	16	1	**8T-4944**	10	BOLT-SOCKET HEAD (M16X2X40-MM)	
B	17	1	**096-1521**	1	SHIM (1-MM THK)	
B	18	1	**096-3785**	1	SHIM (1.2-MM THK)	
B	19	1	**096-3787**	1	SHIM (1.6-MM THK)	
B	20	1	**096-3786**	1	SHIM (1.4-MM THK)	
B	21	1	**096-1522**	1	SHIM (2-MM THK)	
B	22	1	**096-3788**	1	SHIM (1.8-MM THK)	
	23	1	**096-5916**	2	SEAT	
	24	1	**2D-6642**	2	BALL	
J	25	1	**095-1572**	2	SEAL-O-RING	
J	26	1	**096-5919**	2	RING-BACKUP	
	27	1	**096-5915**	2	RETAINER	
	28	1	**096-4003**	1	SET-BEARING	
J	29	1	**095-1585**	1	SEAL-O-RING	
	30	1	**087-4742**	1	VALVE	
	31	1	**096-1519**	1	SEAT	
	32	1	**095-7380**	1	SPRING	
	33	1	**095-7382**	1	RETAINER	
	34	1	**094-1875**	1	DOWEL	
	35	1	**095-7378**	1	WASHER SET	
	36	1	**094-1882**	11	PLUG	
J	37	1	**095-1575**	3	SEAL-O-RING	
J	38	1	**096-4378**	1	RING-BACKUP	
J	39	1	**096-4377**	2	SEAL-O-RING	
J	40	1	**095-7384**	1	SEAL-O-RING	
J	41	1	**095-7383**	1	SEAL-O-RING	
J	42	1	**095-7386**	1	RING-BACKUP	
J	43	1	**095-7387**	1	RING	
J	44	1	**095-1685**	1	SEAL-O-RING	
	45	1	**118-4057**	9	SPRING	
	46	1	**7Y-4215**	1	SPACER	
J	47	1	**095-1586**	2	SEAL-O-RING	
J	48	1	**7Y-4217**	2	RING-BACKUP	
J	49	1	**096-4376**	1	SEAL-LIP TYPE	
	50	1	**123-2008**	2	KEY	
	52	1	**121-1558**	2	PIN	
J	53	1	**3K-0360**	1	SEAL-O-RING	
	54	1	**9S-4185**	1	PLUG	
J	55	1	**095-1700**	2	SEAL-O-RING	
	56	1	**7Y-4224**	2	ORIFICE	
	57	1	**096-3978**	1	SPRING	
	58	1	**7Y-4216**	1	SPOOL	
J	59	1	**2M-9780**	1	SEAL-O-RING	
	60	1	**087-4786**	1	ADAPTER	

185-6953 **MOTOR GP-TRAVEL (*contd.*)** **i05857672**

NOTE	REF NO	GRAPHIC REF	PART NUMBER	QTY	PART NAME 1 2 3 4 5 6 (PRODUCT LEVEL)	SEE PAGE
					AVAILABLE REPAIR KIT(S):	
J			**7Y-4222**	1	KIT-SEAL (TRAVEL MOTOR)	

B - USE AS REQUIRED
J - KIT MARKED J SERVICES PARTS MARKED J
M - METRIC PART

185-6953 **MOTOR GP-TRAVEL (*contd.*)** **i05857672**

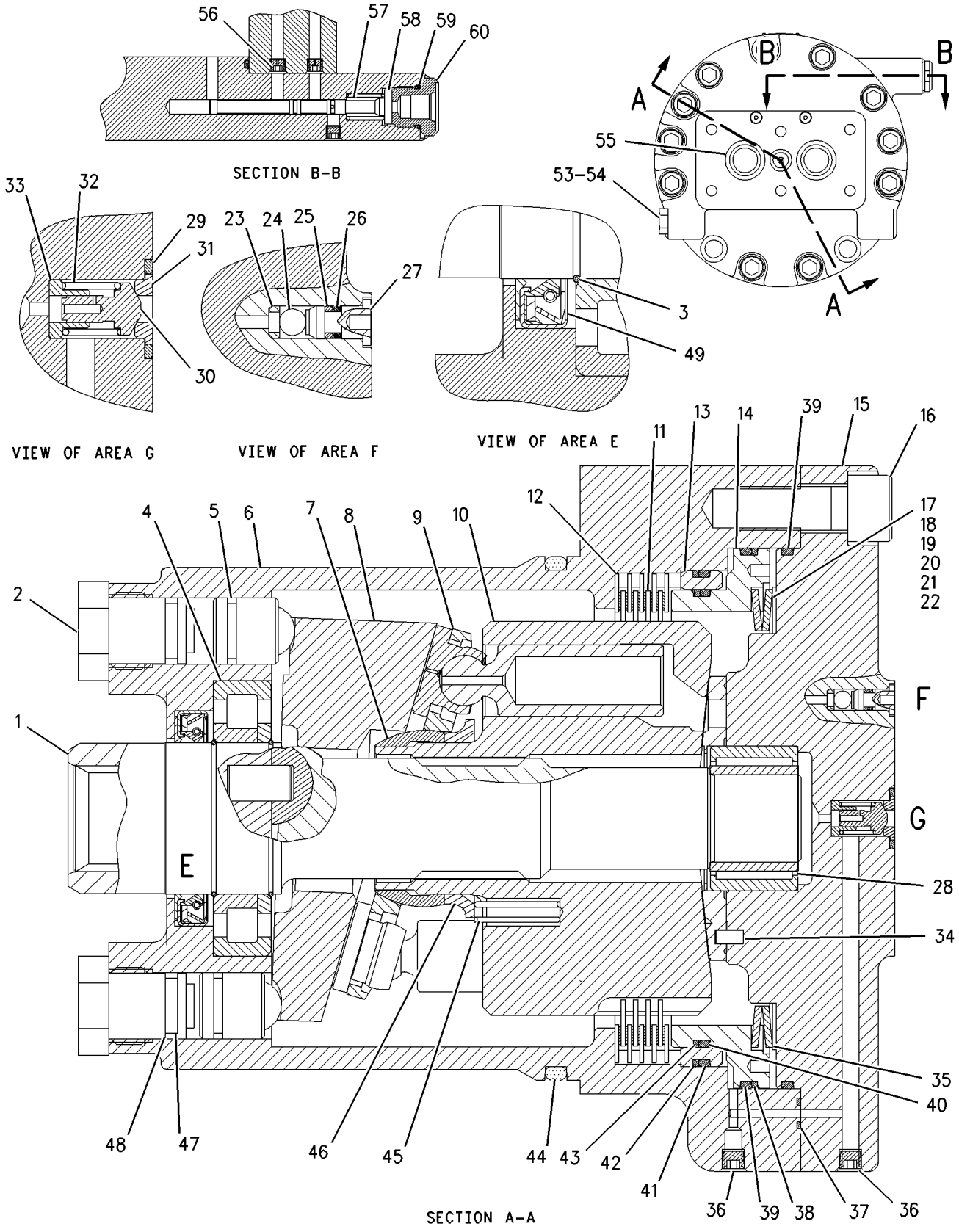

GRAPHIC #1 **<END>** g00935725

302-3225 MOUNTING GP-MAIN CONTROL VALVE

S/N: HAH1-UP

PART OF 455-7664 HYDRAULIC AR

SMCS-5051 **i05806175**

NOTE	REF NO	GRAPHIC REF	PART NUMBER	QTY	PART NAME 1 2 3 4 5 6 (PRODUCT LEVEL)	SEE PAGE
	1	1	**178-6450**	4	SPACER (17X35X30-MM THK)	
	2	1	**387-3739**	1	SUPPORT AS	
	3	1	**387-3738**	1	SUPPORT AS	
M	4	1	**453-2834**	3	BOLT (M16X2X30-MM)	
M	5	1	**447-1707**	4	BOLT (M16X2X60-MM)	
	6	1	**451-2175**	3	WASHER-HARD (17.5X30X3.5-MM THK)	

M - METRIC PART

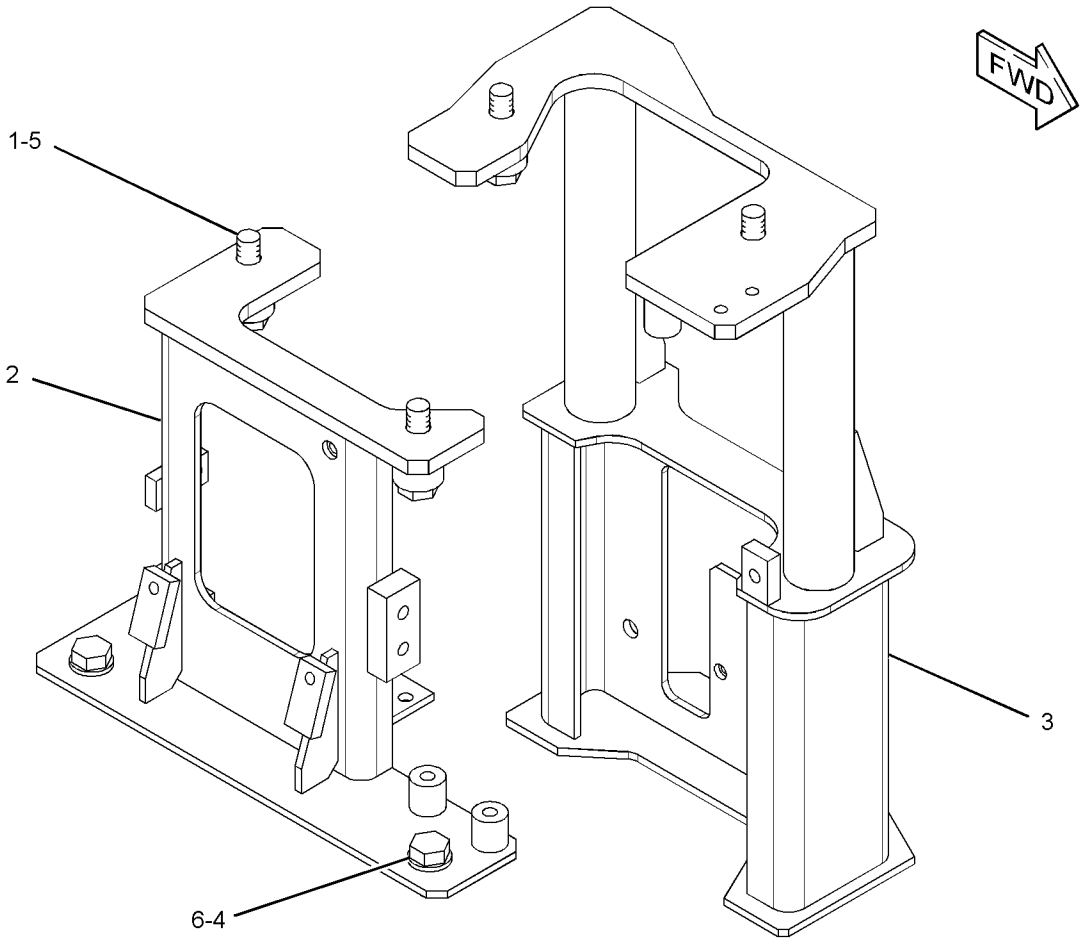

GRAPHIC #1 **<END>** g01848213

387-2618 PUMP & MTG GP-MAIN HYDRAULIC

S/N: HAH1-UP

PART OF 455-7664 HYDRAULIC AR

SMCS-5070 **i04944233**

NOTE	REF NO	GRAPHIC REF	PART NUMBER	QTY	PART NAME 1 2 3 4 5 6 (PRODUCT LEVEL)	SEE PAGE
Y	1	1	*344-0688*	1	COUPLING GP-PUMP	190
Y	2	1	**391-9452**	1	PUMP GP-PISTON (DOUBLE PISTON)	264
	3	1	**8T-4121**	12	WASHER-HARD (11X21X2.5-MM THK)	
M	4	1	**8T-4195**	12	BOLT (M10X1.5X30-MM)	

M - METRIC PART
Y - SEPARATE ILLUSTRATION

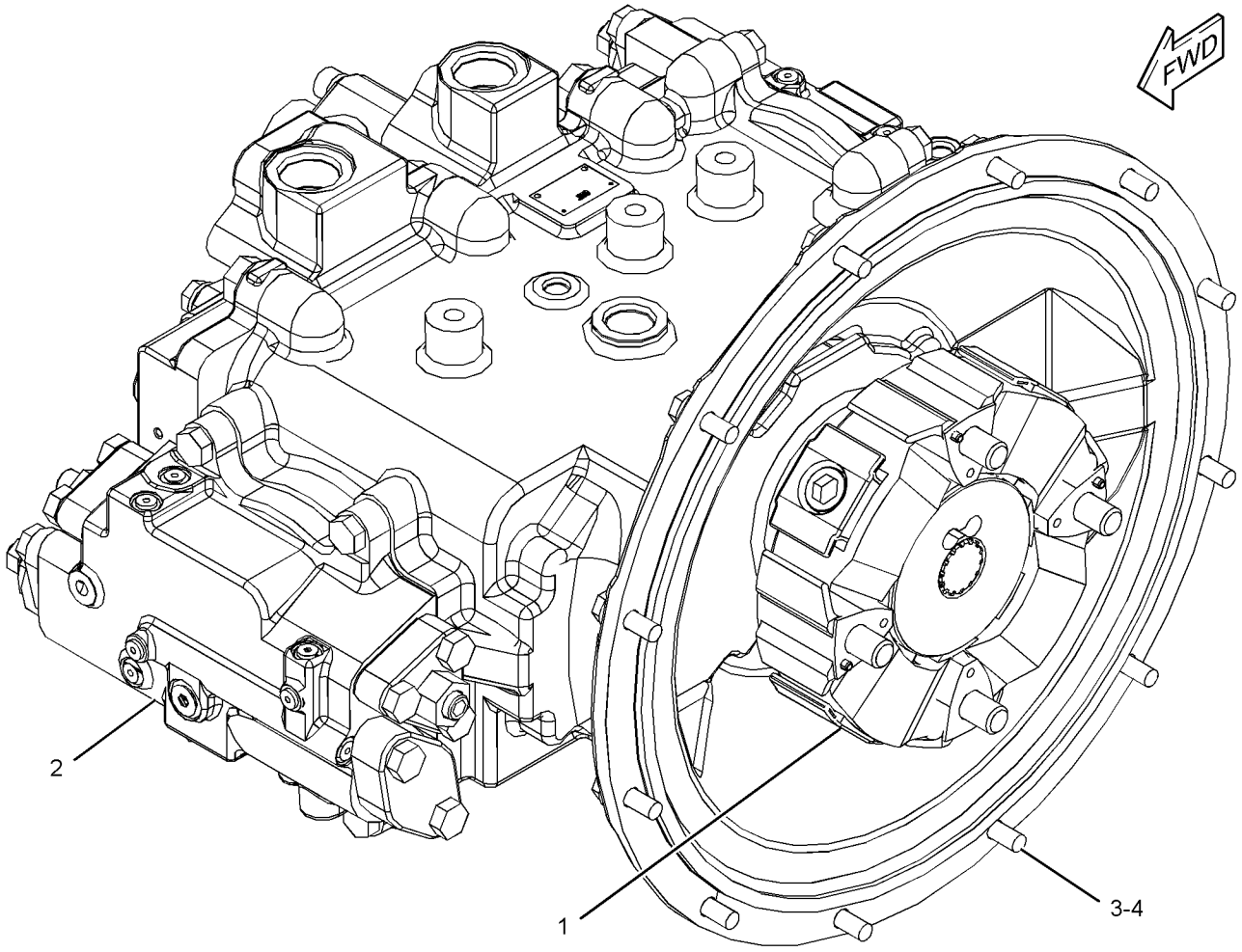

GRAPHIC #1 **<END>** g03135395

341-2860 PUMP GP-GEAR

S/N: HAH1-UP

PART OF 391-9452 PUMP GP-PISTON

SMCS-5073 **i04943472**

NOTE	REF NO	GRAPHIC REF	PART NUMBER	QTY	PART NAME 1 2 3 4 5 6 (PRODUCT LEVEL)	SEE PAGE
					AVAILABLE REPAIR KIT(S):	
			327-8740	1	KIT-SEAL (GEAR PUMP)	
					(KIT INCLUDES GASKETS, LIP TYPE SEAL, SEAL & RETAINING RING)	

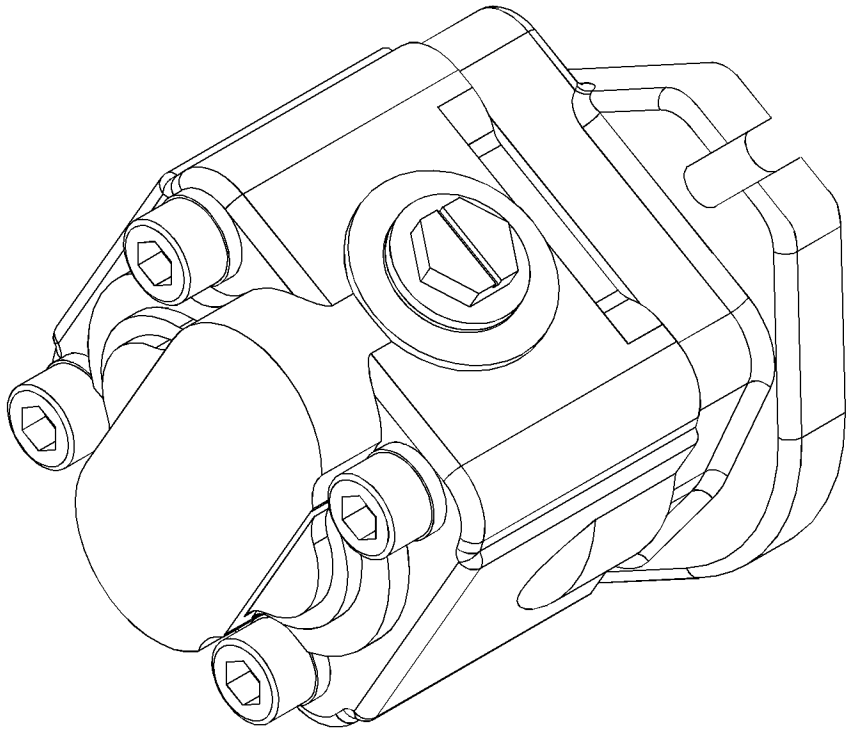

GRAPHIC #1 **<END>** g02484156

391-9452 PUMP GP-PISTON—DOUBLE PISTON

S/N: HAH1-UP

PART OF 387-2618 PUMP & MTG GP-MAIN HYDRAULIC

SMCS-5070 **i05848812**

NOTE	REF NO	GRAPHIC REF	PART NUMBER	QTY	PART NAME 1 2 3 4 5 6 (PRODUCT LEVEL)	SEE PAGE
Y	1	1	**111-9916**	1	VALVE GP-SOLENOID (PRESSURE REDUCING) (PUMP CONTROL)	305
	2	2	**165-2799**	12	SPRING	
	3	2	**165-2801**	2	BEARING-ROLLER	
	4	1	**165-2804**	1	FLANGE	
	5	2	**165-2805**	2	BLOCK	
	6	2	**165-3838**	1	BARREL AS	
	7	2	**165-3839**	1	BARREL AS	
	8	2	**165-3853**	1	COVER	
	9	2	**176-8131**	2	SPACER-SPECIAL	
	10	2	**176-8132**	2	BEARING	
	11	1	**190-4896**	2	PLUG	
	12	2	**192-0573**	4	PIN-DOWEL	
	13	2	**199-0518**	2	SEAL-O-RING	
	14	1	**207-2985**	2	ORIFICE	
	15	1	**225-6216**	1	GASKET	
Y	16	1	**267-1624**	2	HEAD GP-PUMP	209
	17	2	**267-8084**	2	BEARING-NEEDLE	
	18	2	**268-6263**	2	CAM	
	19	2	**269-2433**	4	BEARING-CRADLE	
	20	1	**273-8315**	1	SEAL-O-RING	
	21	1	**282-9192**	1	CASE-FLANGE	
Y	22	1	**341-2860**	1	PUMP GP-GEAR	263
	23	2	**353-5829**	2	GUIDE-BALL	
	24	2	**353-5837**	1	SEAL-LIP TYPE	
	25	2	**368-9994**	1	PLATE	
	26	2	**368-9995**	2	GEAR (47-TEETH)	
	27	2	**368-9996**	1	SHAFT-DRIVE	
	28	2	**368-9997**	1	SHAFT-DRIVEN	
	29	2	**379-3002**	2	PISTON AS	
					(EACH INCLUDES)	
		2	**165-3847**	9	PISTON AS	
		2	**353-5825**	1	RETAINER	
	30	1	**391-9438**	1	BLOCK-PORT	
	32	1	**094-1875**	6	DOWEL	
	33	1	**094-1882**	13	PLUG	
	35	2	**189-9763**	4	SEAL-O-RING	
	36	2	**1H-7339**	1	SEAL-O-RING	
	37	2	**1J-6472**	2	RING-RETAINING	
	38	2	**5P-2545**	1	SEAL-O-RING	
	39	1,2	**3J-1907**	2	SEAL-O-RING	
	40	2	**388-8368**	2	RING-RETAINING	
	41	2	**6V-8757**	2	RING-RETAINING	
M	42	1	**7I-2272**	2	BOLT (M5X0.8X12-MM)	
M	43	1	**7X-2553**	5	BOLT (M16X2X40-MM)	
M	44	1	**7X-2556**	1	BOLT (M16X2X100-MM)	
	45	1,2	**2Y-5578**	4	PIN	
	46	1	**8T-4121**	2	WASHER-HARD (11X21X2.5-MM THK)	
M	47	1	**8T-4136**	4	BOLT (M10X1.5X25-MM)	
M	48	1	**8T-4139**	8	BOLT (M12X1.75X30-MM)	
M	49	1	**8T-4140**	2	BOLT (M16X2X60-MM)	
M	50	2	**8T-4185**	4	BOLT (M10X1.5X50-MM)	
M	51	2	**8T-7547**	4	BOLT (M8X1.25X30-MM)	
	52	2	**8T-9599**	1	RING-RETAINING	
	53	1,2	**9S-4191**	2	PLUG	

M - METRIC PART
Y - SEPARATE ILLUSTRATION

391-9452 **PUMP GP-PISTON (*contd.*)** **i05848812**

REFER TO ALL ILLUSTRATIONS OF
THIS GROUP FOR AUXILIARY VIEWS

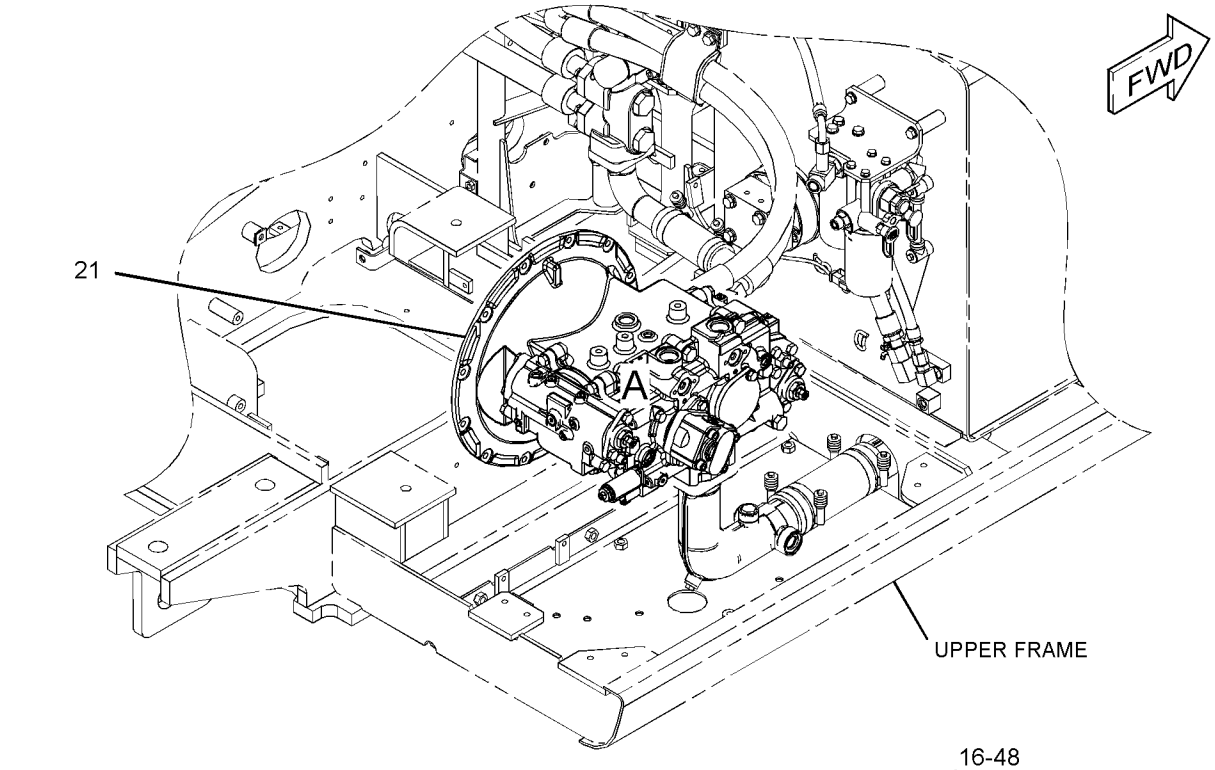

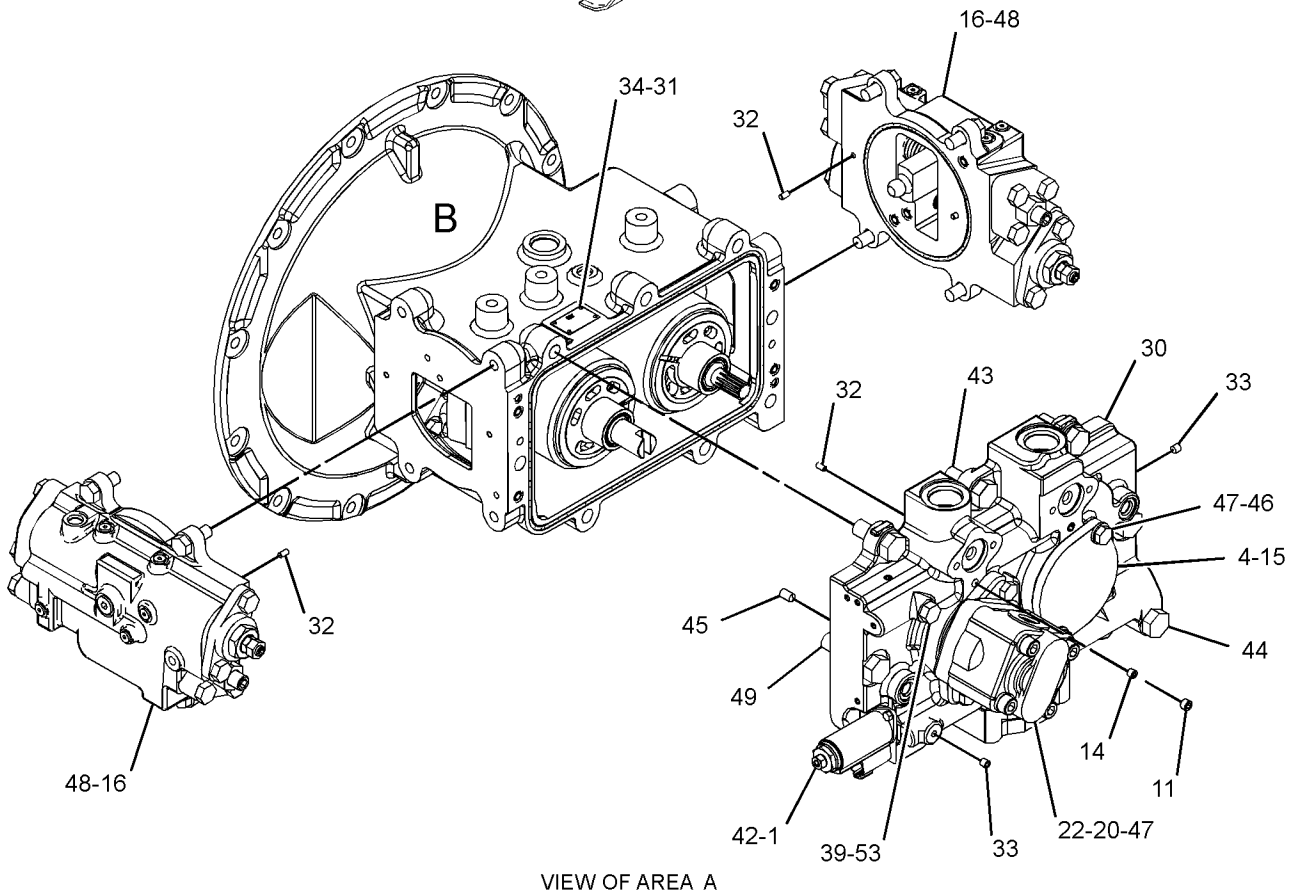

VIEW OF AREA A

GRAPHIC #1

g03385625

391-9452 **PUMP GP-PISTON (*contd.*)** **i05848812**

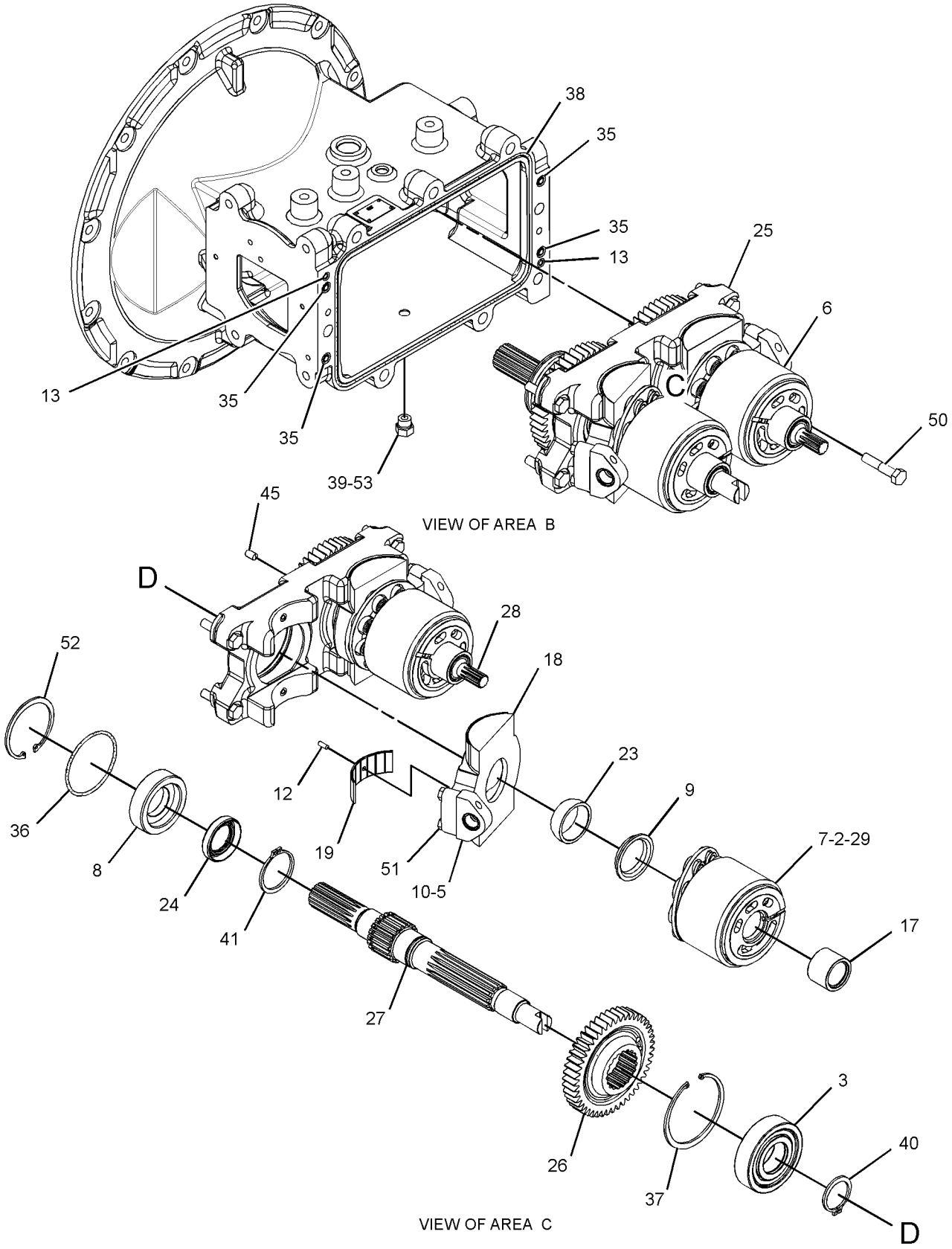

GRAPHIC #2 **<END>** g03135405

274-2726 SCREEN GP-HYDRAULIC–TANK

S/N: HAH1-UP

PART OF 454-7359 TANK & FILTER GP-HYDRAULIC

SMCS-5068 **i03882029**

NOTE	REF NO	GRAPHIC REF	PART NUMBER	QTY	PART NAME 1 2 3 4 5 6 (PRODUCT LEVEL)	SEE PAGE
	1	1	**087-5317**	1	ROD	
	2	1	**209-6002**	1	SCREEN AS (HYDRAULIC TANK)	
	3	1	**259-0918**	1	GUIDE	
	4	1	**095-1552**	1	SEAL-O-RING	
	5	1	**095-6639**	1	SPRING	
M	6	1	**8T-4133**	2	NUT (M10X1.5-THD)	

M - METRIC PART

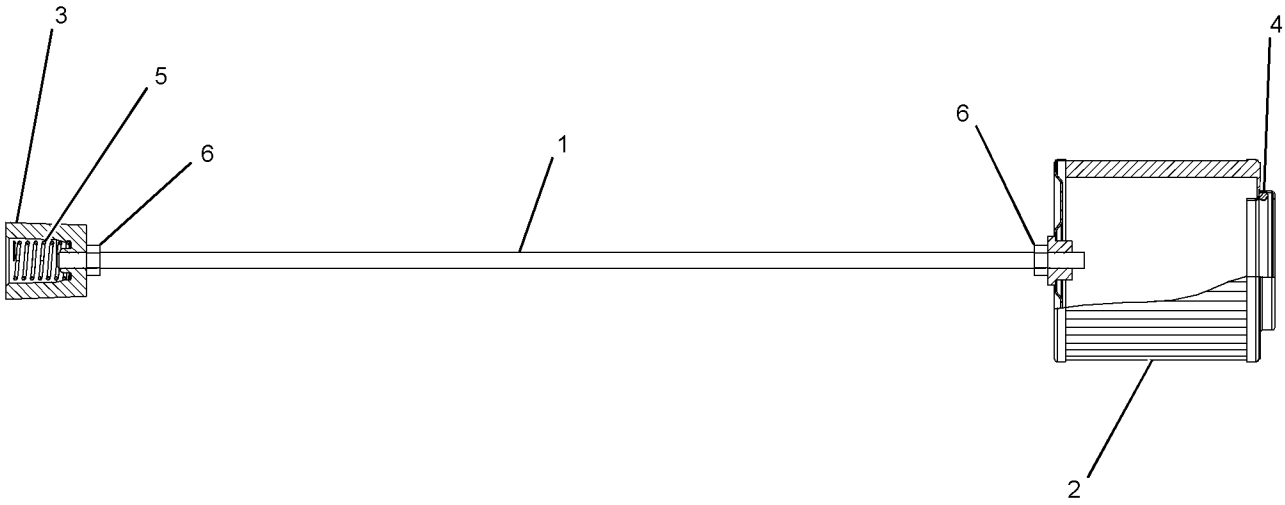

GRAPHIC #1 **<END>** g01311910

197-0173 SPOOL GP-CONTROL VALVE–WORK TOOL

S/N: HAH1-UP

PART OF 420-2243 VALVE GP-MAIN CONTROL

SMCS-5051, 5464 **i05434396**

NOTE	REF NO	GRAPHIC REF	PART NUMBER	QTY	PART NAME 1 2 3 4 5 6 (PRODUCT LEVEL)	SEE PAGE
M	1	1	**197-0148**	1	BOLT-SPECIAL	
	2	1	**7I-7203**	2	SEAT	
	3	1	**197-0151**	1	SPRING	
	4	1	**197-0150**	1	SPRING	
	5	1	**197-0149**	1	STOP	
	6	1	**197-0156**	1	SPOOL	

M - METRIC PART

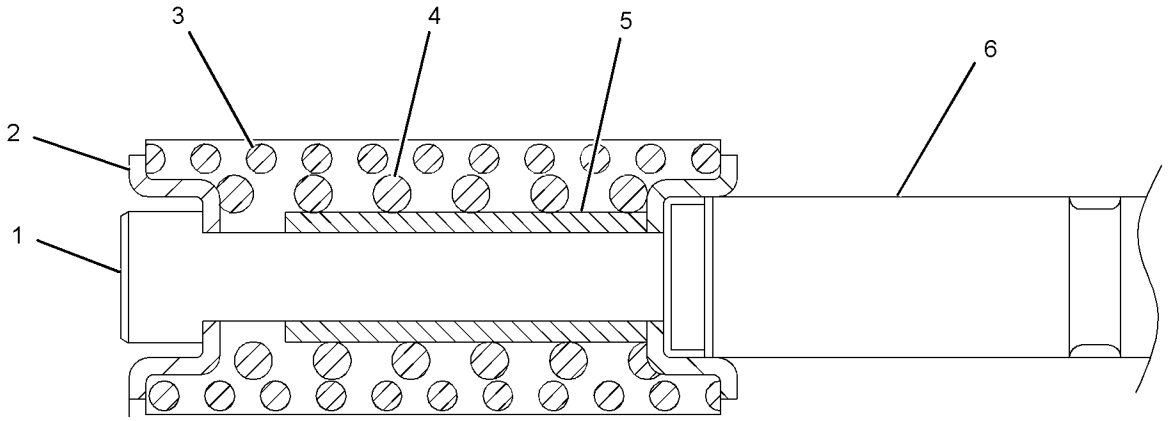

GRAPHIC #1 **<END>** g03429859

197-0219 SPOOL GP-CONTROL VALVE

S/N: HAH1-UP

PART OF 420-2243 VALVE GP-MAIN CONTROL

SMCS-5051, 5464 **i03818610**

NOTE	REF NO	GRAPHIC REF	PART NUMBER	QTY	PART NAME 1 2 3 4 5 6 (PRODUCT LEVEL)	SEE PAGE
M	1	1	**197-0148**	1	BOLT-SPECIAL	
	2	1	**7I-7203**	2	SEAT	
	3	1	**197-0151**	1	SPRING	
	4	1	**197-0150**	1	SPRING	
	5	1	**197-0149**	1	STOP	
	6	1	**197-0220**	1	SPOOL	

M - METRIC PART

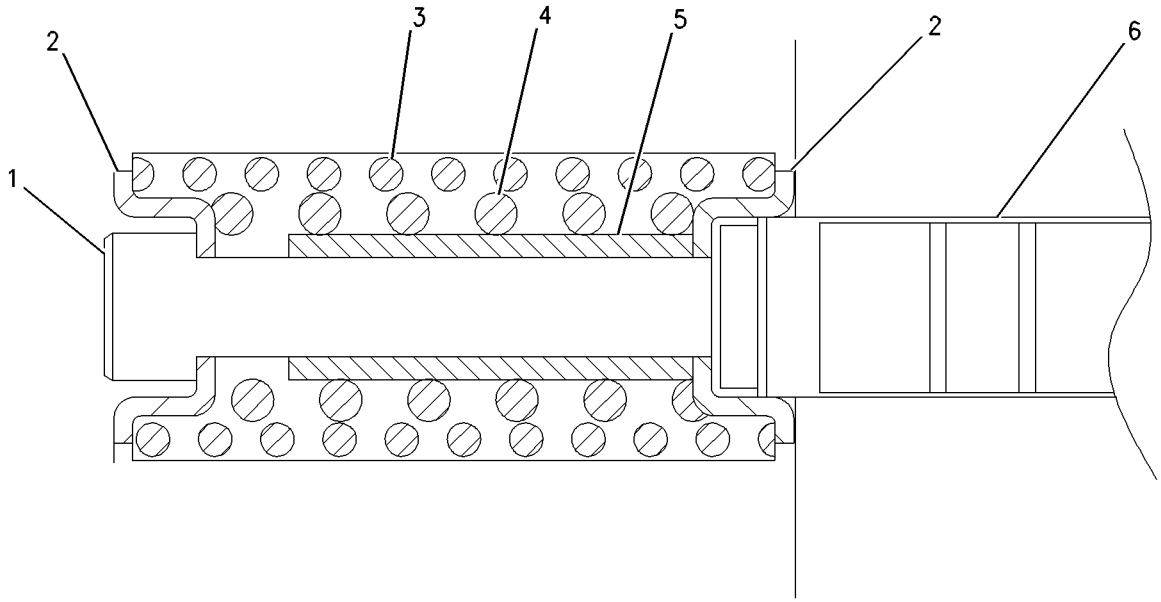

GRAPHIC #1 **<END>** g00766482

229-1085 SPOOL GP-CONTROL VALVE–SWING

S/N: HAH1-UP

PART OF 420-2243 VALVE GP-MAIN CONTROL

SMCS-5051, 5464 **i03818612**

NOTE	REF NO	GRAPHIC REF	PART NUMBER	QTY	PART NAME 1 2 3 4 5 6 (PRODUCT LEVEL)	SEE PAGE
M	1	1	**197-0148**	1	BOLT-SPECIAL	
	2	1	**7I-7203**	2	SEAT	
	3	1	**197-0151**	1	SPRING	
	4	1	**197-0150**	1	SPRING	
	5	1	**197-0149**	1	STOP	
	6	1	**229-1086**	1	SPOOL	

M - METRIC PART

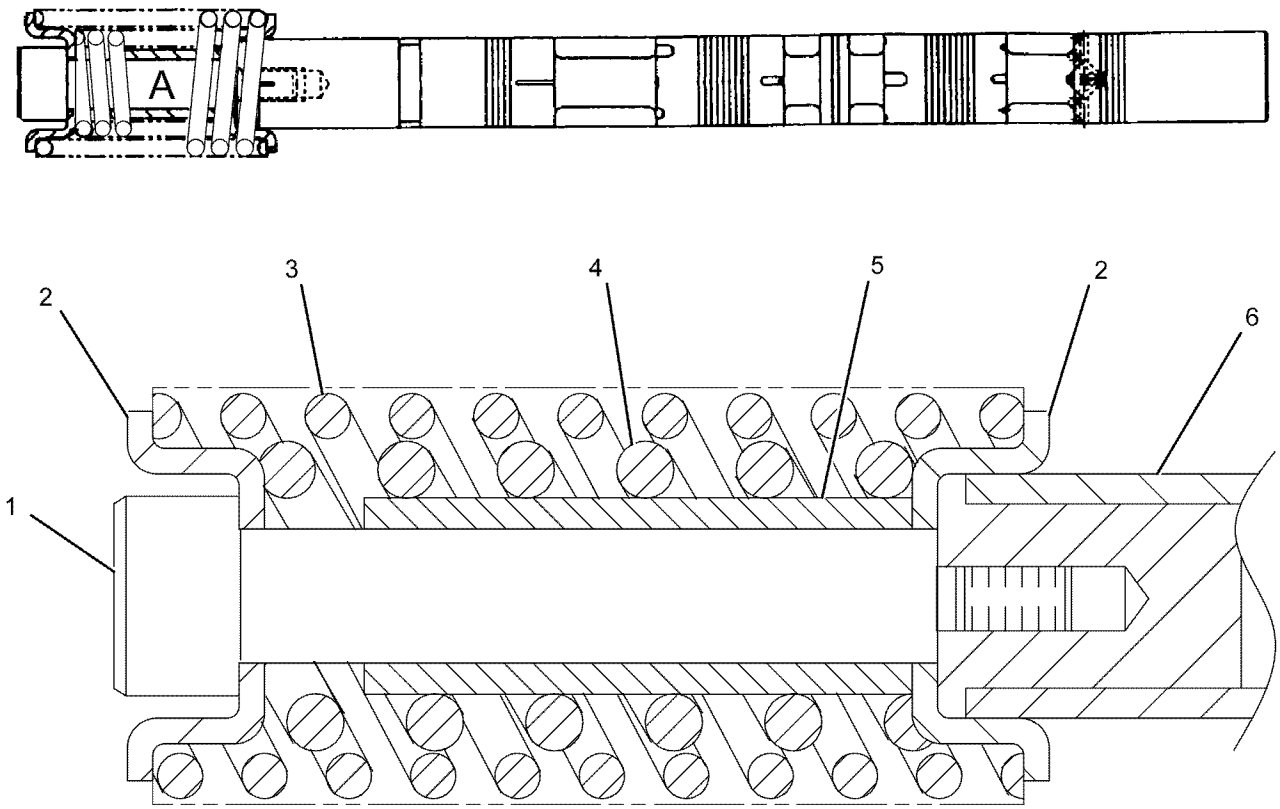

VIEW OF AREA A

GRAPHIC #1 **<END>** g01098051

285-1504 SPOOL GP-CONTROL VALVE–COMBINED FLOW

S/N: HAH1-UP

PART OF 420-2243 VALVE GP-MAIN CONTROL

SMCS-5051, 5464 **i03818669**

NOTE	REF NO	GRAPHIC REF	PART NUMBER	QTY	PART NAME 1 2 3 4 5 6 (PRODUCT LEVEL)	SEE PAGE
	1	1	**297-0366**	1	STOP	
M	2	1	**197-0148**	1	BOLT-SPECIAL	
	3	1	**7I-7203**	2	SEAT	
	4	1	**197-0151**	1	SPRING	
	5	1	**197-0150**	1	SPRING	

M - METRIC PART

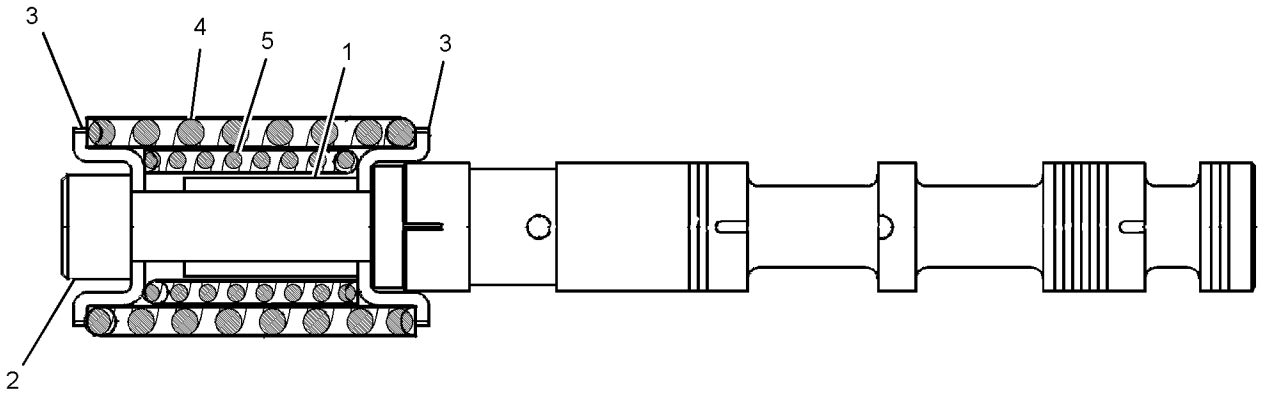

GRAPHIC #1 **<END>** g01424755

285-1505 SPOOL GP-CONTROL VALVE–SWING PRIORITY

S/N: HAH1-UP

PART OF 420-2243 VALVE GP-MAIN CONTROL

SMCS-5051, 5464 **i03818807**

NOTE	REF NO	GRAPHIC REF	PART NUMBER	QTY	PART NAME 1 2 3 4 5 6 (PRODUCT LEVEL)	SEE PAGE
	1	1	**197-0149**	1	STOP	
M	2	1	**197-0148**	1	BOLT-SPECIAL	
	3	1	**7I-7203**	2	SEAT	
	4	1	**197-0151**	1	SPRING	
	5	1	**197-0150**	1	SPRING	

M - METRIC PART

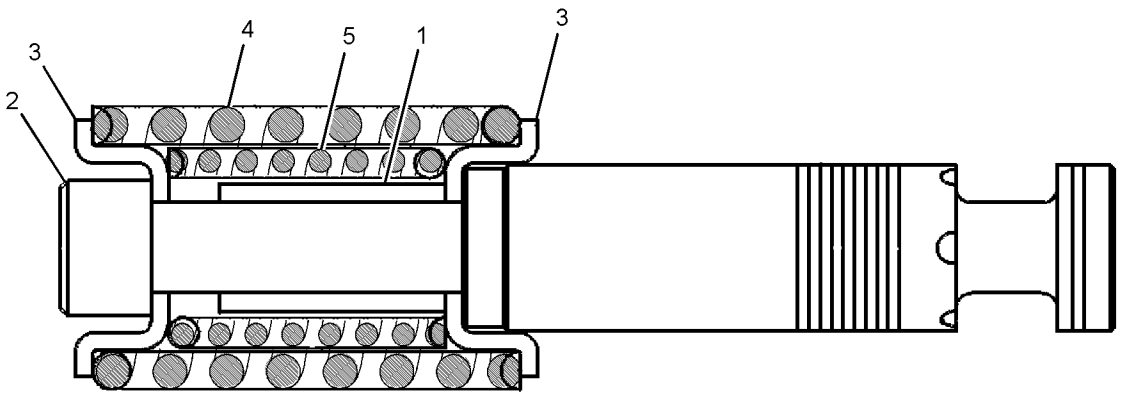

GRAPHIC #1 **<END>** g01682819

352-7282 SPOOL GP-CONTROL VALVE–BOOM 2

S/N: HAH1-UP

PART OF 420-2243 VALVE GP-MAIN CONTROL

SMCS-5051, 5464 **i04949512**

NOTE	REF NO	GRAPHIC REF	PART NUMBER	QTY	PART NAME 1 2 3 4 5 6 (PRODUCT LEVEL)	SEE PAGE
	1	1	**197-0153**	1	SPRING	
	2	1	**7I-7203**	2	SEAT	
M	3	1	**197-0148**	1	BOLT-SPECIAL	
	4	1	**197-0149**	1	STOP	
	5	1	**197-0150**	1	SPRING	

M - METRIC PART

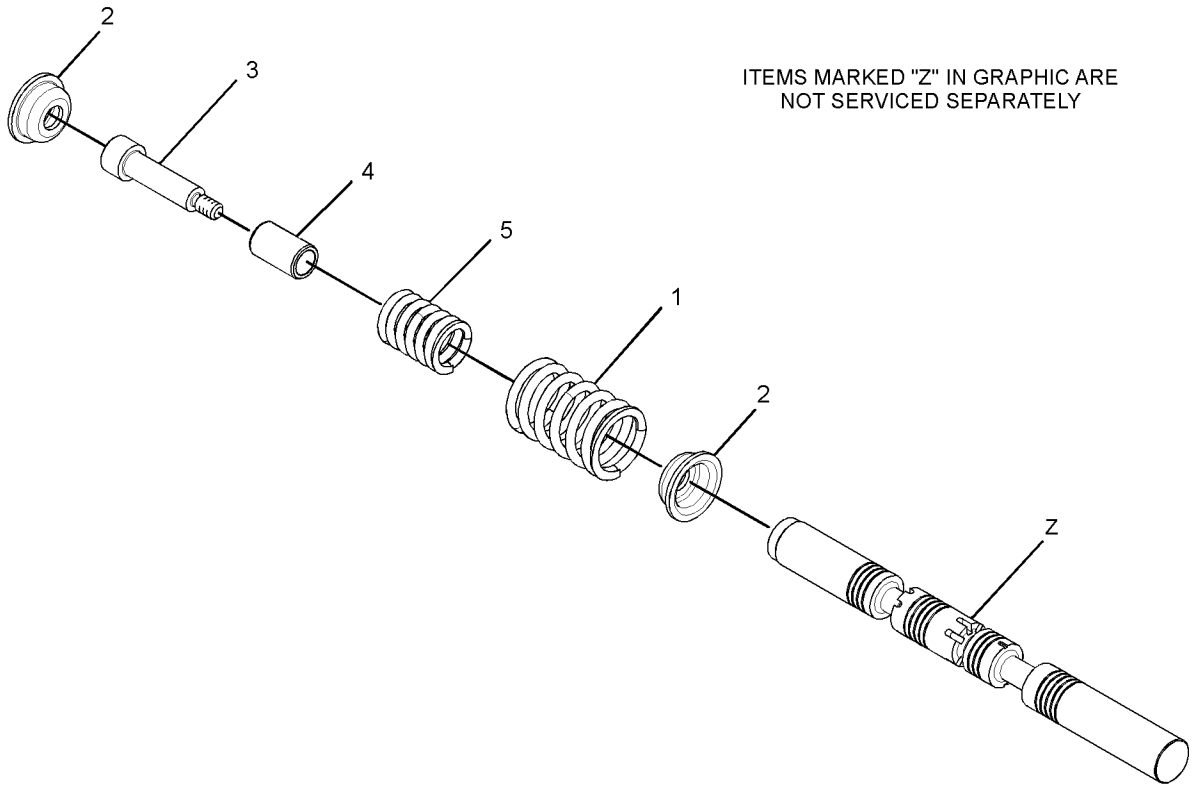

ITEMS MARKED "Z" IN GRAPHIC ARE NOT SERVICED SEPARATELY

GRAPHIC #1 **<END>** g01801813

352-7283 SPOOL GP-CONTROL VALVE–STICK 1

S/N: HAH1-UP

PART OF 420-2243 VALVE GP-MAIN CONTROL

SMCS-5051, 5464 **i04949529**

NOTE	REF NO	GRAPHIC REF	PART NUMBER	QTY	PART NAME 1 2 3 4 5 6 (PRODUCT LEVEL)	SEE PAGE
	1	1	**7I-7203**	2	SEAT	
M	2	1	**197-0148**	1	BOLT-SPECIAL	
	3	1	**197-0149**	1	STOP	
	4	1	**197-0150**	1	SPRING	
	5	1	**197-0151**	1	SPRING	

M - METRIC PART

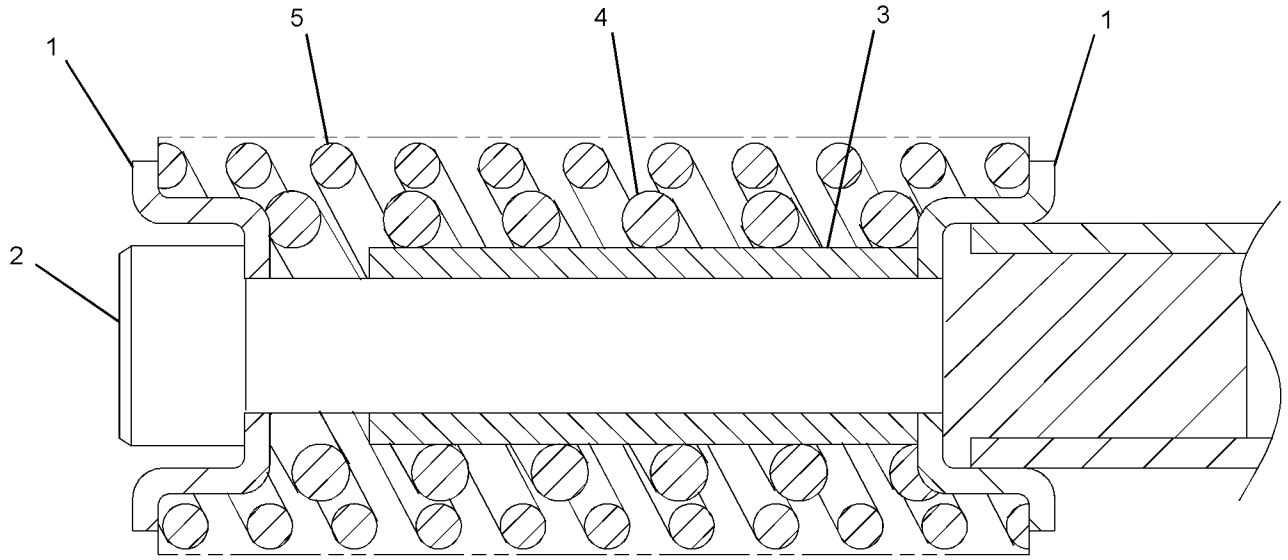

GRAPHIC #1 **<END>** g02641976

352-7284 SPOOL GP-CONTROL VALVE–STICK 2

S/N: HAH1-UP

PART OF 420-2243 VALVE GP-MAIN CONTROL

SMCS-5051, 5464 **i04949549**

NOTE	REF NO	GRAPHIC REF	PART NUMBER	QTY	PART NAME 1 2 3 4 5 6 (PRODUCT LEVEL)	SEE PAGE
	1	1	**7I-7203**	2	SEAT	
M	2	1	**197-0148**	1	BOLT-SPECIAL	
	3	1	**197-0149**	1	STOP	
	4	1	**197-0150**	1	SPRING	
	5	1	**197-0153**	1	SPRING	

M - METRIC PART

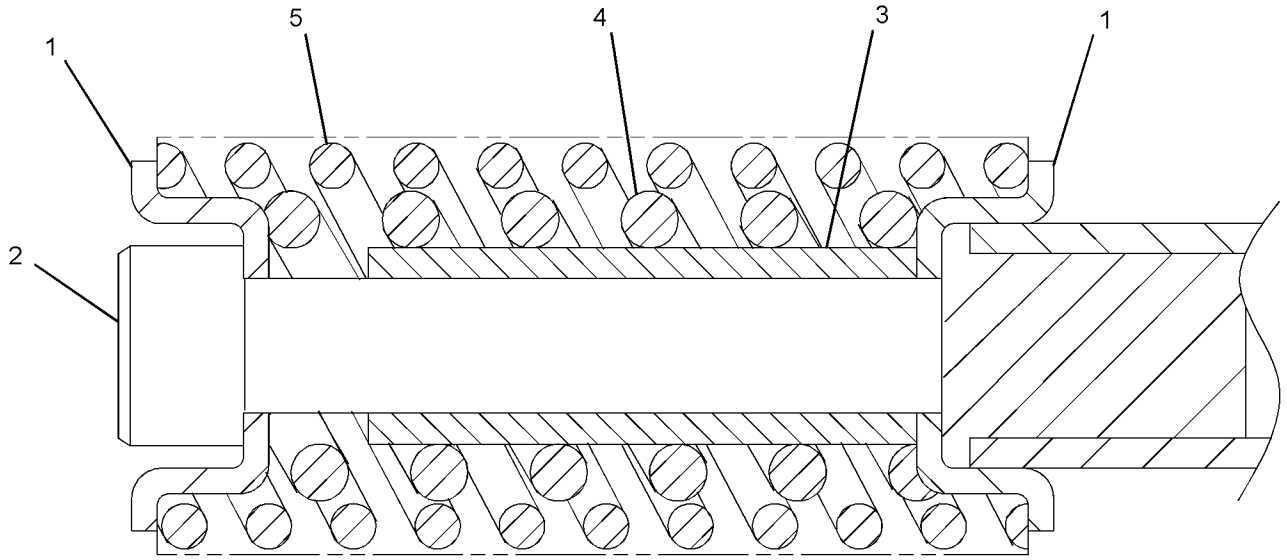

GRAPHIC #1 **<END>** g02641976

352-7285 SPOOL GP-CONTROL VALVE–STICK REGENERATION

S/N: HAH1-UP

PART OF 420-2243 VALVE GP-MAIN CONTROL

SMCS-5051, 5464 **i04949554**

NOTE	REF NO	GRAPHIC REF	PART NUMBER	QTY	PART NAME 1 2 3 4 5 6 (PRODUCT LEVEL)	SEE PAGE
	1	1	**7I-7203**	2	SEAT	
M	2	1	**197-0148**	1	BOLT-SPECIAL	
	3	1	**197-0149**	1	STOP	
	4	1	**197-0150**	1	SPRING	
	5	1	**197-0151**	1	SPRING	

M - METRIC PART

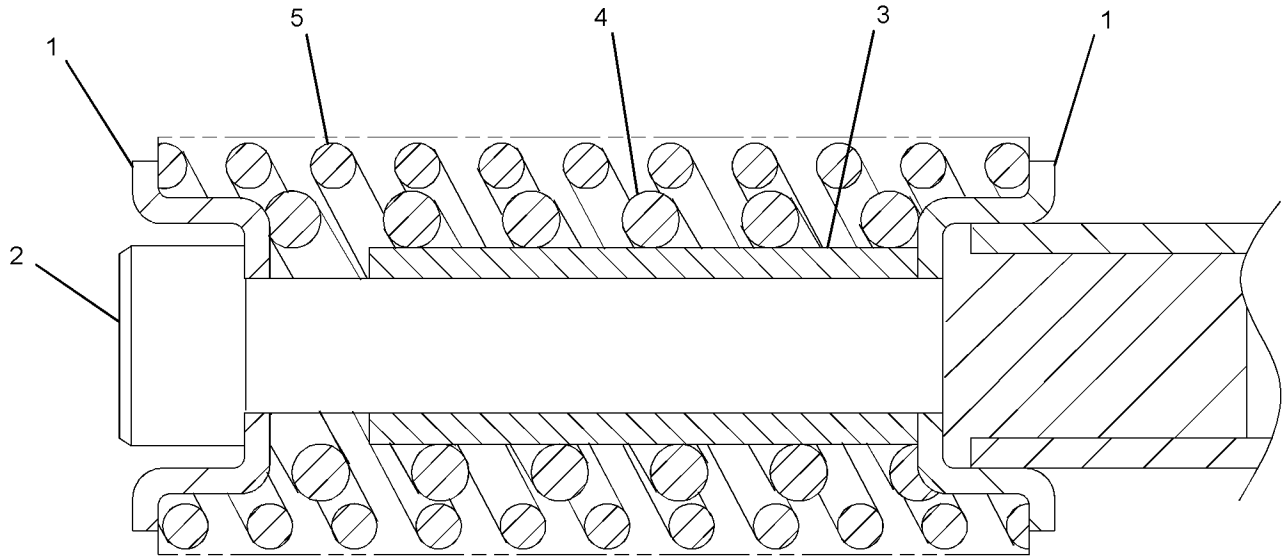

GRAPHIC #1 **<END>** g02641976

352-7286 SPOOL GP-CONTROL VALVE–BUCKET

S/N: HAH1-UP

PART OF 420-2243 VALVE GP-MAIN CONTROL

SMCS-5051, 5464 **i04949555**

NOTE	REF NO	GRAPHIC REF	PART NUMBER	QTY	PART NAME 1 2 3 4 5 6 (PRODUCT LEVEL)	SEE PAGE
	1	1	**7I-7203**	2	SEAT	
M	2	1	**197-0148**	1	BOLT-SPECIAL	
	3	1	**197-0149**	1	STOP	
	4	1	**197-0150**	1	SPRING	
	5	1	**197-0152**	1	SPRING	

M - METRIC PART

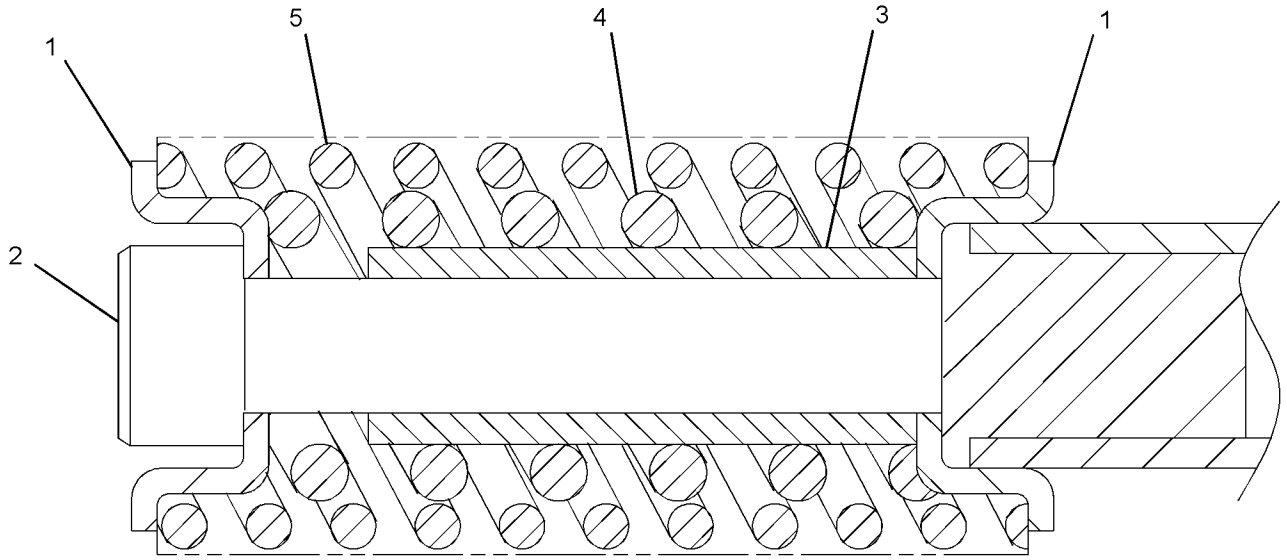

GRAPHIC #1 **<END>** g02641976

369-8335 SPOOL GP-CONTROL VALVE–BOOM 1

S/N: HAH1-UP

PART OF 420-2243 VALVE GP-MAIN CONTROL

SMCS-5051, 5464 **i04974891**

NOTE	REF NO	GRAPHIC REF	PART NUMBER	QTY	PART NAME 1 2 3 4 5 6 (PRODUCT LEVEL)	SEE PAGE
	1	1	**7I-7203**	2	SEAT	
M	2	1	**197-0148**	1	BOLT-SPECIAL	
	3	1	**197-0149**	1	STOP	
	4	1	**197-0150**	1	SPRING	
	5	1	**197-0151**	1	SPRING	

M - METRIC PART

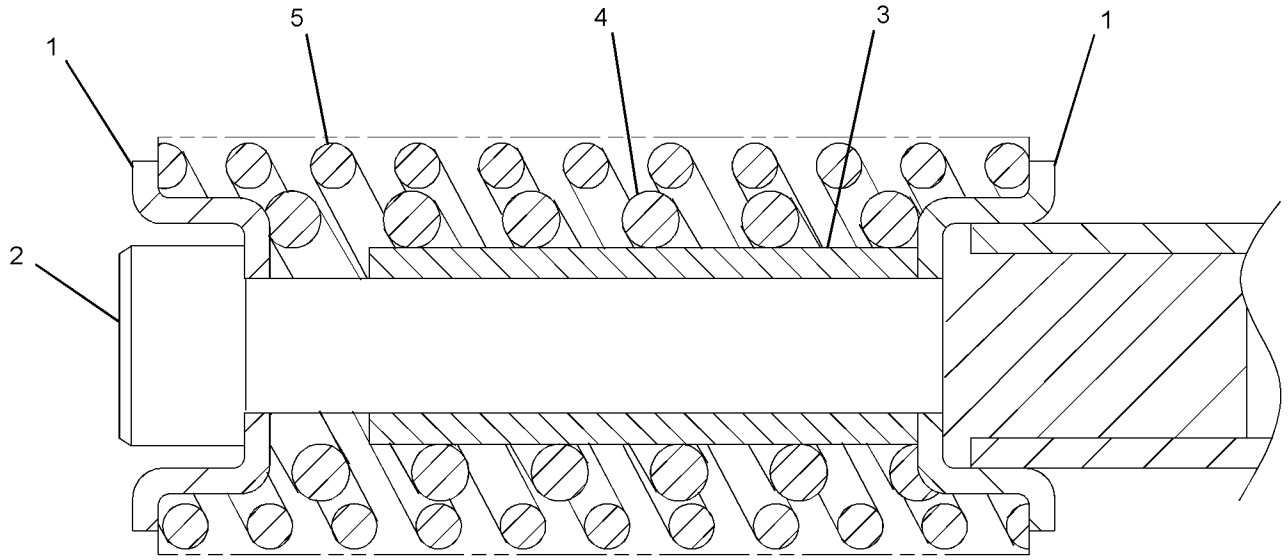

GRAPHIC #1 **<END>** g02641976

162-4696 SWIVEL GP

S/N: HAH1-UP

PART OF 260-8212 LINES GP-TRAVEL MOTOR

SMCS-5060 **i03820260**

NOTE	REF NO	GRAPHIC REF	PART NUMBER	QTY	PART NAME 1 2 3 4 5 6 (PRODUCT LEVEL)	SEE PAGE
M	1	1	**8T-4136**	6	BOLT (M10X1.5X25-MM)	
	2	1	**8T-4121**	2	WASHER-HARD (11X21X2.5-MM THK)	
	3	1	**5I-4363**	1	COVER	
	4	1	**095-1716**	1	SEAL-O-RING	
	5	1	**7I-7321**	1	RETAINER	
	6	1	**4I-7604**	1	HOUSING	
	7	1	**159-7782**	5	SEAL	
	8	1	**095-1625**	3	SEAL-O-RING	
	9	1	**4I-7605**	1	ROTOR	
	10	1	**8T-6759**	1	PLUG-PIPE	
	11	1	**3K-0360**	1	SEAL-O-RING	
	12	1	**9S-8005**	1	PLUG-O-RING	

M - METRIC PART

162-4696 **SWIVEL GP (*contd.*)** **i03820260**

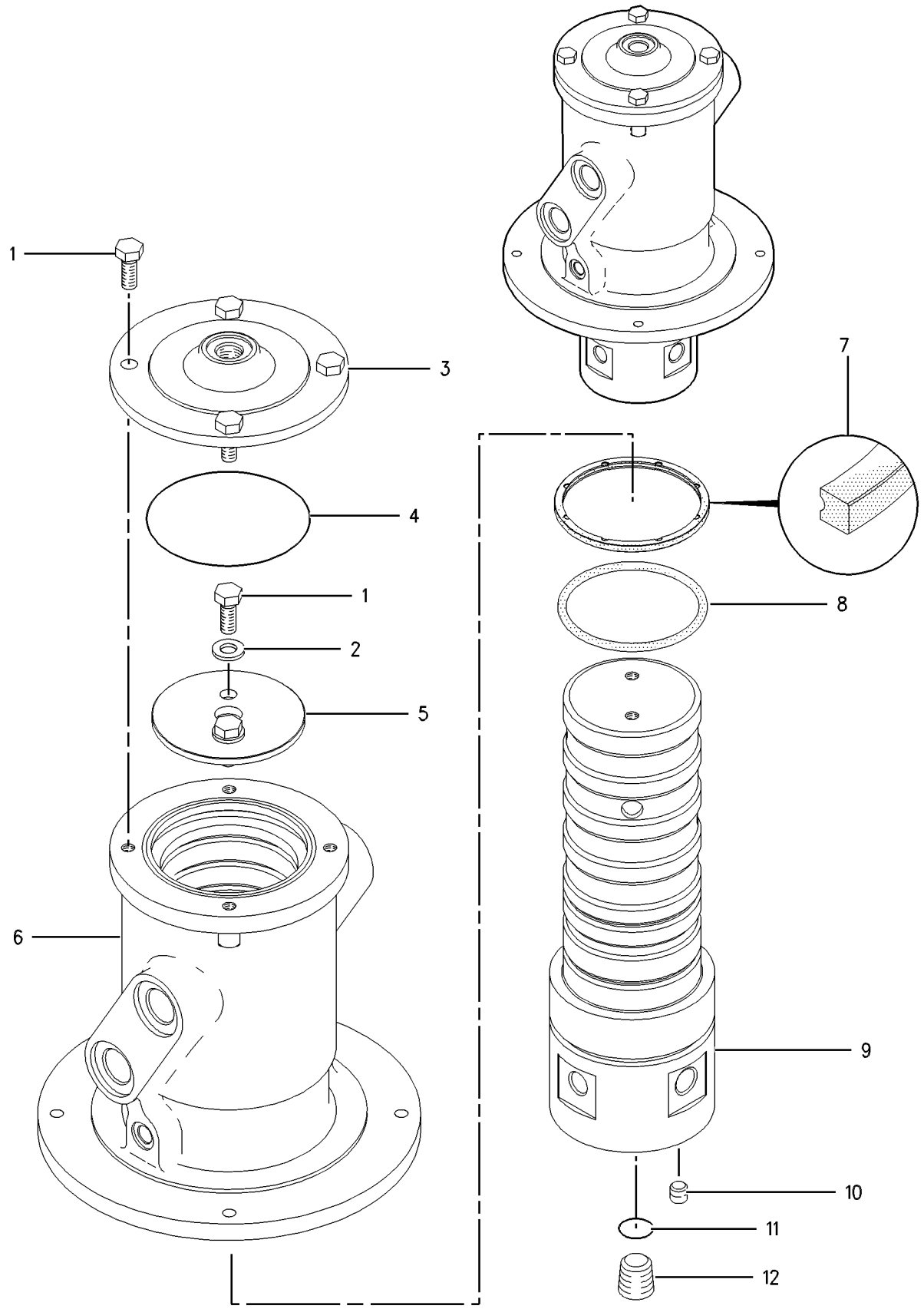

GRAPHIC #1 **<END>** g00590219

454-7359 TANK & FILTER GP-HYDRAULIC

S/N: HAH1-UP
185-L (48.9-GAL US)
PART OF 455-4106 TANK & MTG GP-HYDRAULIC

SMCS-5056, 5068 **i05848907**

NOTE	REF NO	GRAPHIC REF	PART NUMBER	QTY	PART NAME 1 2 3 4 5 6 (PRODUCT LEVEL)	SEE PAGE
	1	1	**1U-2827**	1	GUIDE-VALVE	
	2	1	**7K-1181**	2	STRAP-CABLE	
	3	1	**8J-8782**	1	BODY-DRAIN VALVE	
	4	1	**8J-8783**	1	VALVE-DRAIN	
	5	1	**9J-7031**	1	PLUG-DRAIN (HYDRAULIC TANK)	
Y	6	1	**158-8987**	1	FILTER & VALVE GP-PILOT (HYDRAULIC OIL)	204
	7	1	**179-7541**	1	PIPE AS	
	8	1	**207-6403**	1	PLUG	
	9	1	**227-0590**	1	BREATHER (HYDRAULIC TANK)	
	10	1	**269-9853**	1	COVER AS	
	11	1	**269-9858**	1	PIPE	
Y	12	1	**274-2726**	1	SCREEN GP-HYDRAULIC (TANK)	267
Y	13	1	**289-8194**	1	FILTER GP-OIL (HYDRAULIC, CASE DRAIN)	205
	14	1	**292-7461**	1	SUPPORT	
	15	1	**315-4441**	1	SWITCH AS-PRESSURE (HYDRAULIC OIL)	
Y	16	1	**347-6081**	1	GAUGE GP-SIGHT (HYDRAULIC OIL LEVEL)	208
	17	1	**361-8998**	1	FLANGE AS	
		1	**283-6089**	1	SEAL-O-RING	
		1	*337-1224*	1	FLANGE	
Y	18	1	**392-2876**	1	FILTER GP-OIL (HYDRAULIC, MAIN RETURN)	206
	20	1	**432-6291**	1	SENSOR-TEMPERATURE (HYDRAULIC OIL)	
	21	1	**095-1608**	1	SEAL-O-RING	
	22	1	**095-1725**	1	SEAL-O-RING	
	23	1	**129-3400**	1	GUARD	
	24	1	*164-5567*	1	COUPLER AS-QUICK DISCONNECT (MALE)	
		1	**6V-3965**	1	FITTING (QUICK DISCONNECT)	
		1	**214-7568**	1	SEAL-O-RING	
	25	1	*164-5590*	1	VALVE GP-FLUID SAMPLING (HYDRAULIC OIL)	
		1	**3J-7354**	1	SEAL-O-RING	
		1	**8C-3446**	1	VALVE-SAMPLING	
M	26	1	**170-8553**	4	BOLT-SOCKET HEAD (M12X1.75X40-MM)	
M	27	1	**191-8920**	2	BOLT-SOCKET HEAD (M6X1X12-MM)	
	28	1	**1J-2859**	1	SEAL-O-RING	
	29	1	**207-6404**	1	WASHER (49.5X60.5X1.5-MM THK)	
	30	1	**2H-3934**	1	SEAL-O-RING	
	31	1	**3K-0360**	1	SEAL-O-RING	
	32	1	**4J-0527**	1	SEAL-O-RING	
M	33	1	**5C-9553**	4	BOLT (M6X1X16-MM)	
	34	1	**5M-2057**	1	SEAL-O-RING	
	35	1	**6V-0852**	1	CAP-DUST	
	36	1	**7B-3039**	1	SPRING	
	37	1	**8C-3451**	1	CAP-DUST	
	38	1	**8T-3298**	1	SEAL-RECTANGULAR	
	39	1	**8T-4121**	13	WASHER-HARD (11X21X2.5-MM THK)	
M	40	1	**8T-4136**	11	BOLT (M10X1.5X25-MM)	
M	41	1	**8T-4184**	8	BOLT (M12X1.75X45-MM)	
M	42	1	**8T-4196**	2	BOLT (M10X1.5X35-MM)	
	43	1	**8T-4223**	8	WASHER-HARD (13.5X25.5X3-MM THK)	
	44	1	**8T-4224**	4	WASHER-HARD (8.8X16X2-MM THK)	
M	45	1	**8T-4908**	4	BOLT (M8X1.25X25-MM)	
	46	1	**9F-1399**	1	SEAL-O-RING	
	47	1	**9X-8256**	4	WASHER (6.6X12X2-MM THK)	

M - METRIC PART
Y - SEPARATE ILLUSTRATION

454-7359 **TANK & FILTER GP-HYDRAULIC (*contd.*)** **i05848907**

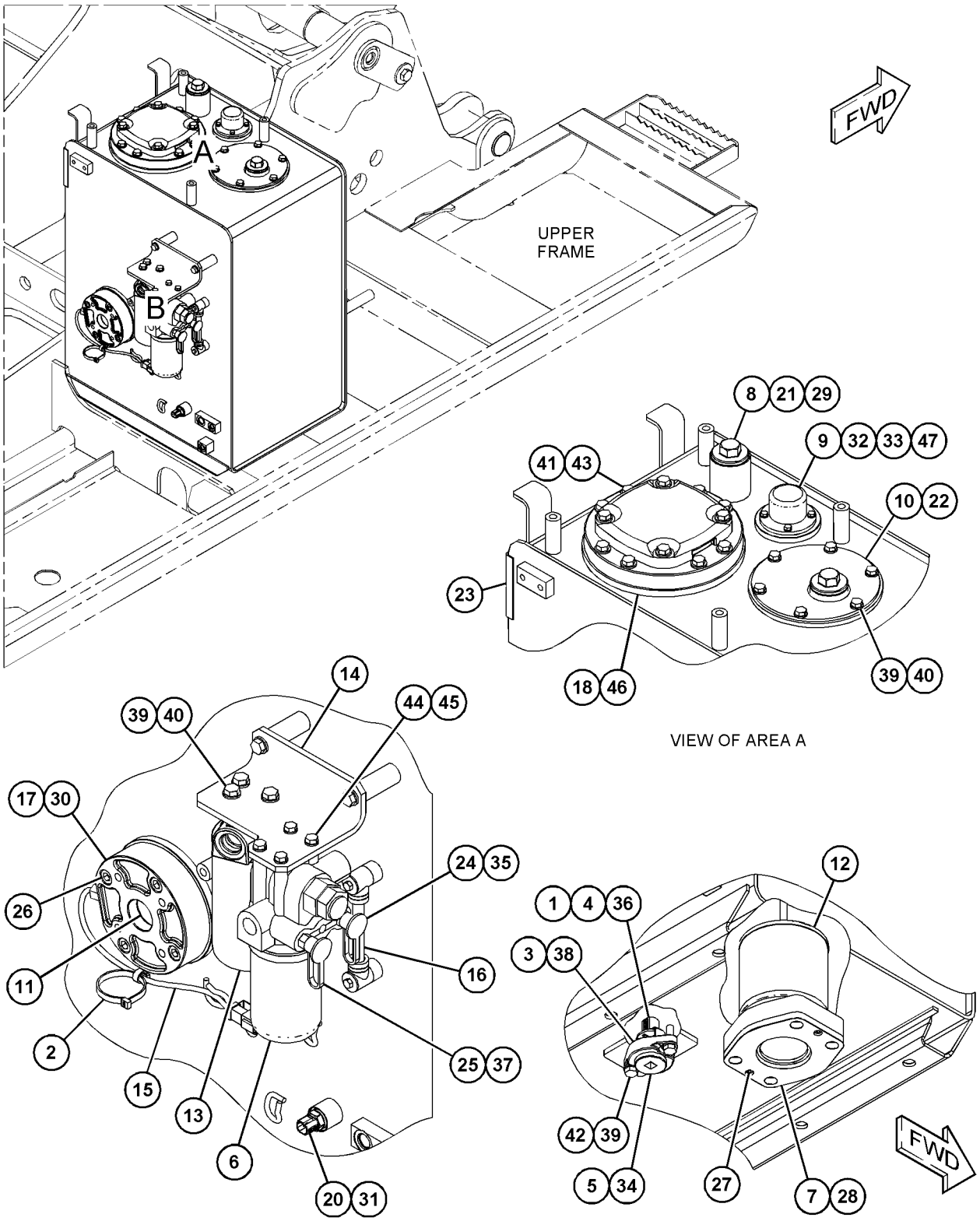

GRAPHIC #1 **<END>** g03701719

455-4106 TANK & MTG GP-HYDRAULIC

S/N: HAH1-UP

PART OF 455-7664 HYDRAULIC AR

SMCS-5056 **i05848876**

NOTE	REF NO	GRAPHIC REF	PART NUMBER	QTY	PART NAME 1 2 3 4 5 6 (PRODUCT LEVEL)	SEE PAGE
Y	1	1	*260-8204*	1	LINES GP-HYDRAULIC (HYDRAULIC TANK, FILTER)	224
M	2	1	**447-1707**	6	BOLT (M16X2X60-MM)	
Y	3	1	**454-7359**	1	TANK & FILTER GP-HYDRAULIC	281
	4	1	**085-9310**	6	SPACER (16.6X32X26-MM THK)	

M - METRIC PART
Y - SEPARATE ILLUSTRATION

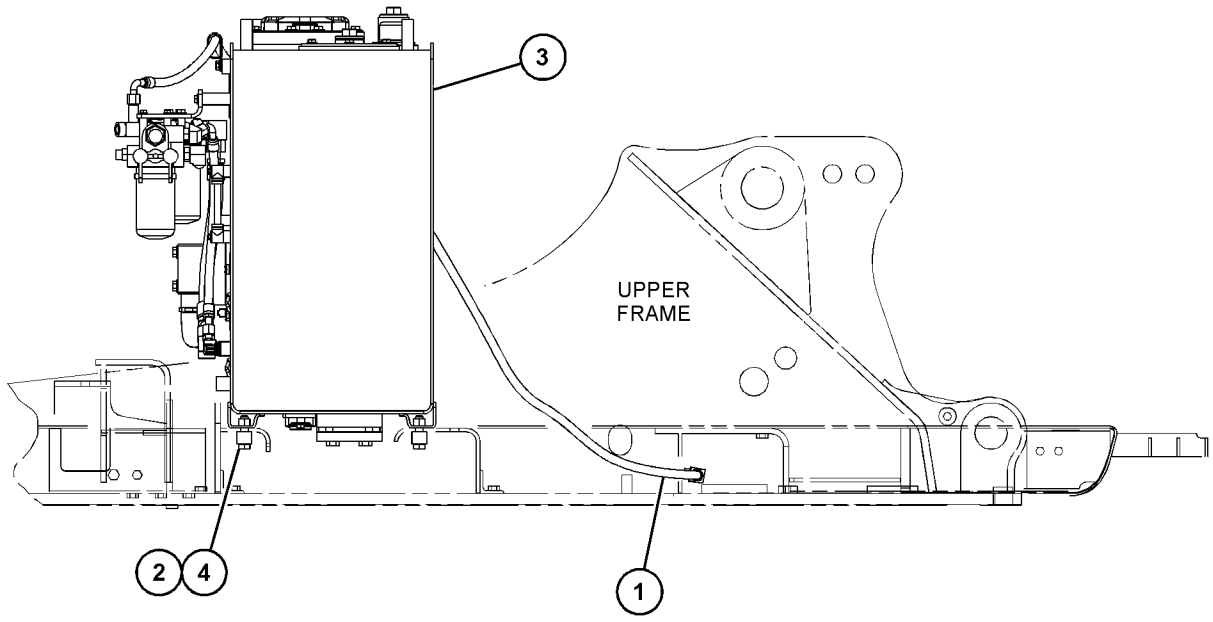

RIGHT SIDE VIEW

GRAPHIC #1 **<END>** g03703843

171-0002 VALVE GP-CHECK–COOLER BYPASS

S/N: HAH1-UP

PART OF 391-7825 LINES GP-PUMP

SMCS-5067 **i04945563**

NOTE	REF NO	GRAPHIC REF	PART NUMBER	QTY	PART NAME 1 2 3 4 5 6 (PRODUCT LEVEL)	SEE PAGE
	1	1	**177-2706**	1	VALVE AS	
	2	1	**190-7875**	1	VALVE AS	
	3	1	**184-3841**	1	RING	

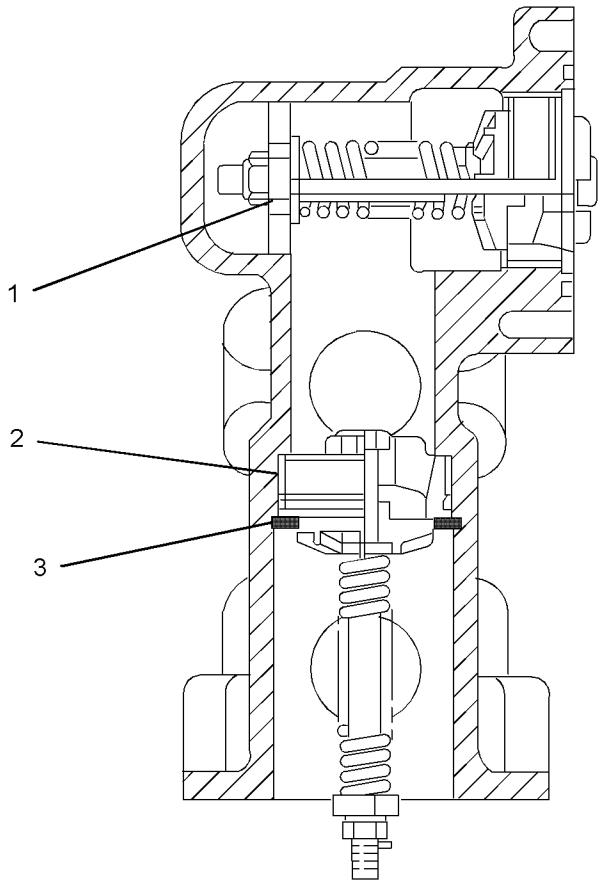

GRAPHIC #1 **<END>** g03023758

420-2243 VALVE GP-MAIN CONTROL

S/N: HAH1-UP

PART OF 455-7664 HYDRAULIC AR

SMCS-5051 **i04946748**

NOTE	REF NO	GRAPHIC REF	PART NUMBER	QTY	PART NAME 1 2 3 4 5 6 (PRODUCT LEVEL)	SEE PAGE
	1	4	**9S-4191**	1	PLUG	
	2	4	**7I-7192**	2	PLUG	
	3	4,5	**7I-7204**	12	SEAL	
	4	1,4,5	**7I-7206**	13	PLUG	
	5	1,4,5	**7I-7207**	13	SPRING	
	6	1,4,5	**7I-7208**	10	VALVE-LOAD CHECK	
	7	4	**7I-7235**	2	PLUG	
	8	5	**7I-7241**	2	ORIFICE	
	9	5	**352-7288**	1	VALVE	
	10	4,5	**7I-8084**	6	PLUG	
M	11	3	**085-9768**	5	BOLT (M14X2X40-MM)	
	12	5	**095-0965**	2	PLUG	
	13	4	**103-8411**	1	SPRING	
	14	4	**103-8412**	1	SPRING	
	15	4	**103-8413**	1	ROD	
	16	4,5	**105-7405**	2	SPRING	
	17	4,5	**131-5767**	2	PLUG	
	18	4,5	**131-5768**	2	VALVE-LOAD CHECK	
	19	2	**170-9997**	1	PLUG	
M	20	2	**197-0143**	3	BOLT (M14X2X95-MM)	
M	21	2	**197-0144**	13	BOLT (M14X2X130-MM)	
	22	1,2,3,4,5	**197-0145**	13	PLUG	
	23	1	**197-0146**	1	SPRING	
	24	1	**197-0147**	1	VALVE	
M	25	2	**197-0165**	20	BOLT (M8X1.25X20-MM)	
	26	4	**197-0166**	1	PLUG	
	27	3	**197-0167**	1	PLATE	
	28	4,5	**197-0168**	10	COVER	
	29	1	**197-0169**	1	VALVE AS (STICK DRIFT REDUCTION)	
	29A	5	**197-0169**	1	VALVE AS (BOOM DRIFT REDUCTION)	
	30	4,5	**197-0170**	10	COVER	
Y	31	4	**197-0173**	1	SPOOL GP-CONTROL VALVE (WORK TOOL)	268
Y	32	4	**197-0219**	1	SPOOL GP-CONTROL VALVE (TRAVEL, RH)	269
Y	32A	5	**197-0219**	1	SPOOL GP-CONTROL VALVE (TRAVEL, LH)	269
	33	4	**197-0225**	2	PLUG AS	
	34	2,3,4,5	**197-0272**	8	PLUG	
	35	4	**215-4855**	2	VALVE AS-CHECK (MAKEUP)	
	36	5	**215-4872**	2	VALVE	
Y	37	5	**229-1085**	1	SPOOL GP-CONTROL VALVE (SWING)	270
Y	38	4	**352-7286**	1	SPOOL GP-CONTROL VALVE (BUCKET)	277
Y	39	5	**270-5979**	1	VALVE GP-RELIEF (MAIN)	301
	40	5	**285-1503**	2	COVER	
Y	41	5	**285-1504**	1	SPOOL GP-CONTROL VALVE (COMBINED FLOW)	271
Y	42	5	**285-1505**	1	SPOOL GP-CONTROL VALVE (SWING PRIORITY)	272
	43	4	**285-1506**	1	VALVE	
	44	4	**285-1507**	1	SPRING	
Y	45	4	**352-7284**	1	SPOOL GP-CONTROL VALVE (STICK 2)	275
Y	46	5	**352-7285**	1	SPOOL GP-CONTROL VALVE (STICK REGENERATION)	276
	47	4	**309-9960**	1	SPOOL AS	
Y	48	4	**309-9974**	1	VALVE GP-PILOT RELIEF	296
Y	49	1,4,5	**309-9977**	4	VALVE GP-RELIEF (LINE) (STICK)	302
Y	50	5	**352-7283**	1	SPOOL GP-CONTROL VALVE (STICK 1)	274
Y	51	4	**335-0210**	1	VALVE GP-PILOT RELIEF (LINE)	297
Y	52	4	**369-8335**	1	SPOOL GP-CONTROL VALVE (BOOM 1)	278
Y	53	4	**352-7282**	1	SPOOL GP-CONTROL VALVE (BOOM 2)	273
	54	3	**095-1578**	12	SEAL-O-RING	
	55	2	**095-1579**	1	SEAL-O-RING	

420-2243 **VALVE GP-MAIN CONTROL (*contd.*)** **i04946748**

NOTE	REF NO	GRAPHIC REF	PART NUMBER	QTY	PART NAME 1 2 3 4 5 6 (PRODUCT LEVEL)	SEE PAGE
	56	1,2,3,4,5	**095-1582**	13	SEAL-O-RING	
	57	2,3,4,5	**095-1585**	11	SEAL-O-RING	
	58	1,4,5	**095-1586**	15	SEAL-O-RING	
	59	4	**095-1592**	2	SEAL-O-RING	
	60	3,4	**095-1696**	8	SEAL-O-RING	
	61	3	**095-1698**	18	SEAL-O-RING	
	62	4,5	**095-1700**	10	SEAL-O-RING	
	63	2	**3D-2824**	1	SEAL-O-RING	
	64	4	**3J-1907**	1	SEAL-O-RING	
M	65	2,3	**5A-3604**	24	BOLT-SOCKET HEAD (M8X1.25X25-MM)	
	67	2	**9S-4183**	1	PLUG	

M - METRIC PART
Y - SEPARATE ILLUSTRATION

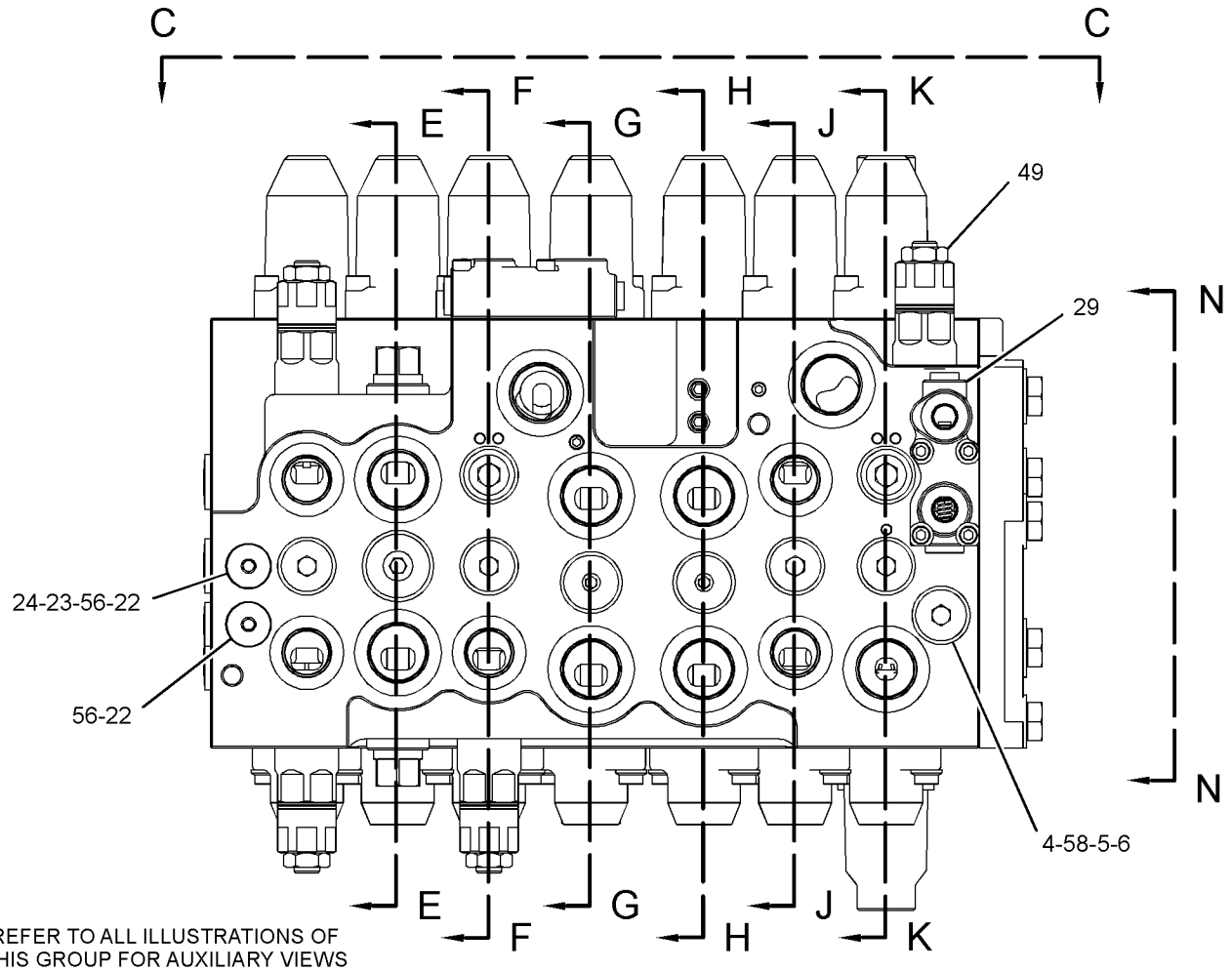

REFER TO ALL ILLUSTRATIONS OF THIS GROUP FOR AUXILIARY VIEWS

GRAPHIC #1

g02361977

420-2243 **VALVE GP-MAIN CONTROL (*contd.*)** **i04946748**

REFER TO ALL ILLUSTRATIONS OF
THIS GROUP FOR AUXILIARY VIEWS

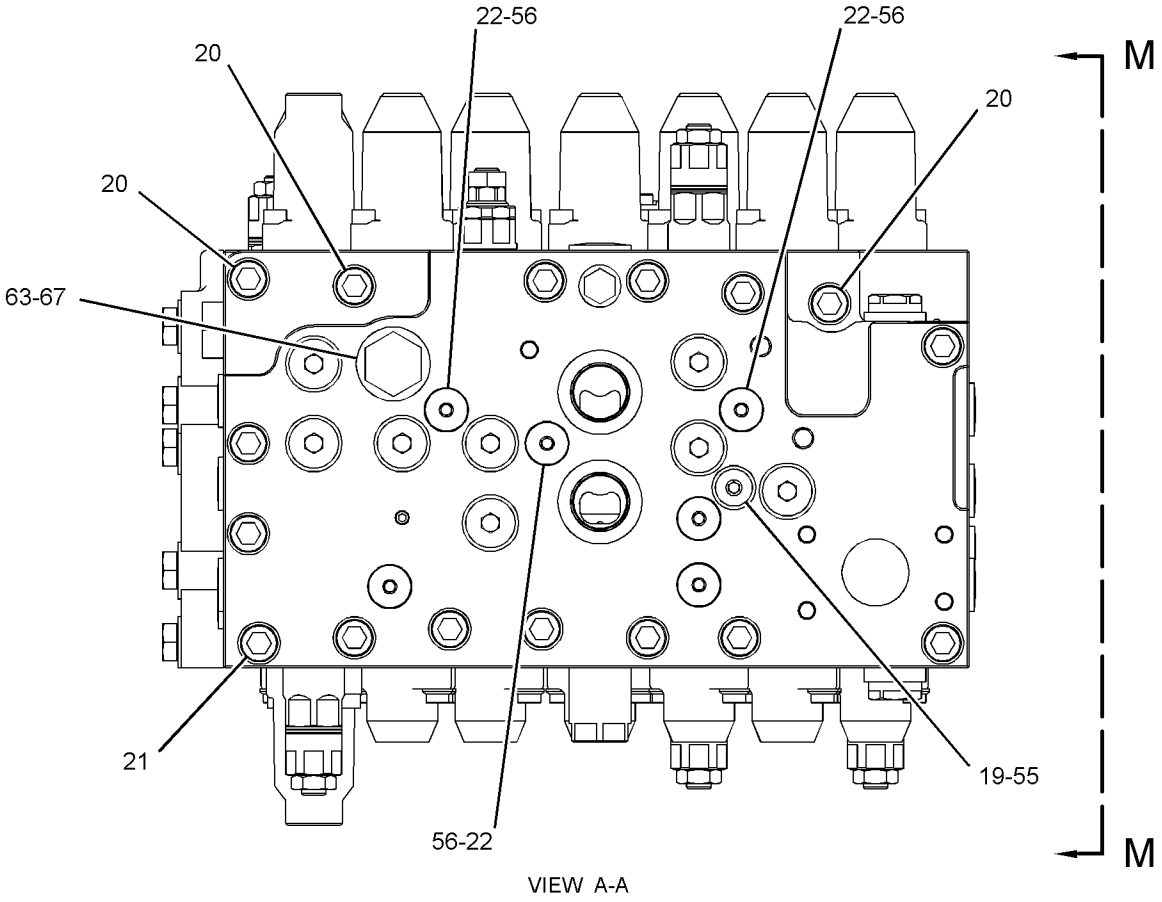

VIEW A-A

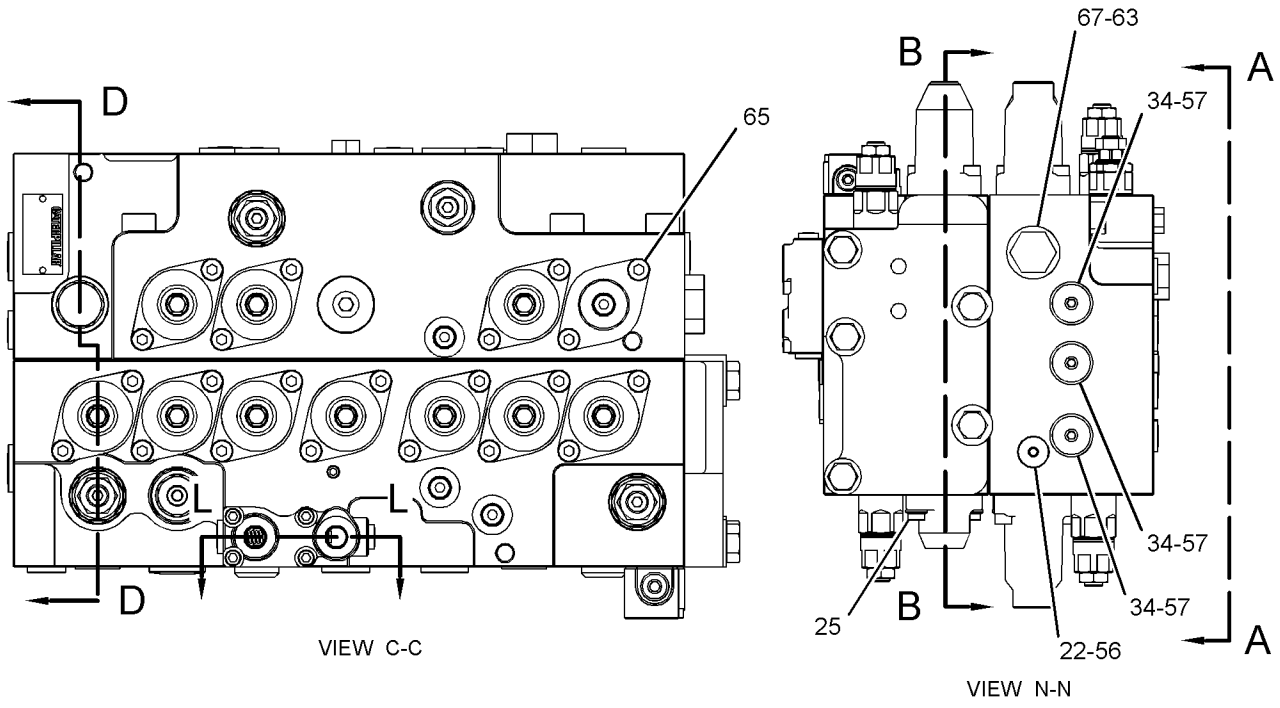

VIEW C-C

VIEW N-N

GRAPHIC #2

g02361996

420-2243 **VALVE GP-MAIN CONTROL (*contd.*)** **i04946748**

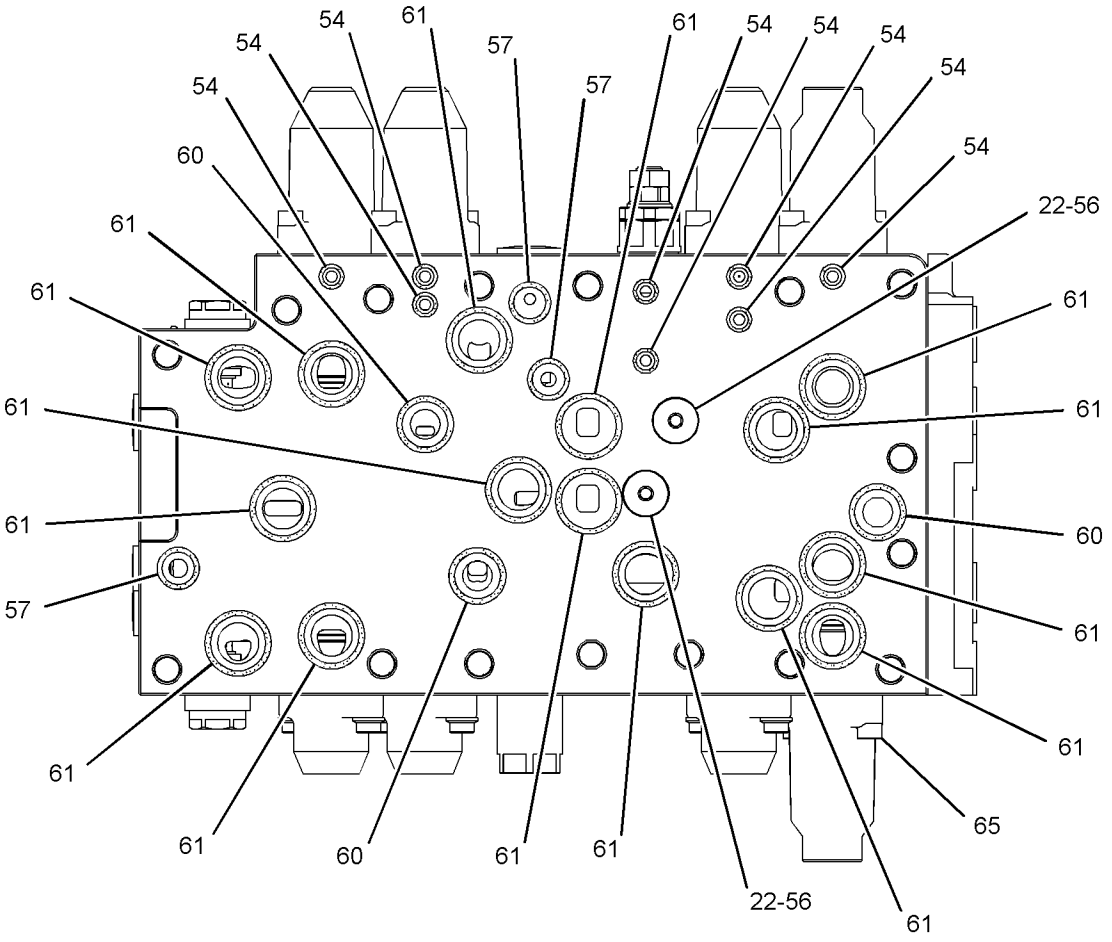

SECTION P-P

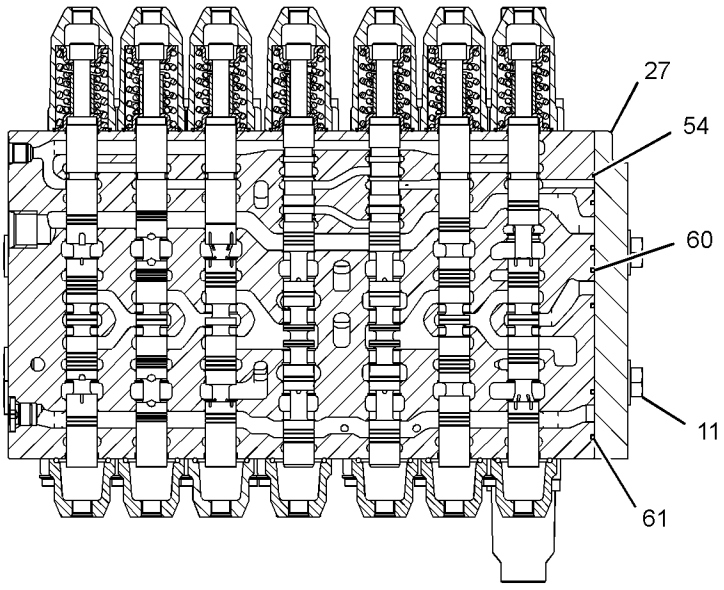

SECTION B-B

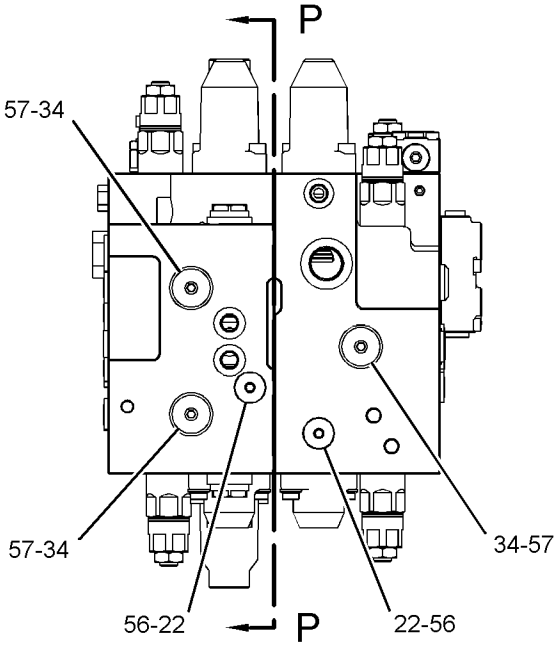

VIEW M-M

GRAPHIC #3

g02361997

420-2243 **VALVE GP-MAIN CONTROL (*contd.*)** **i04946748**

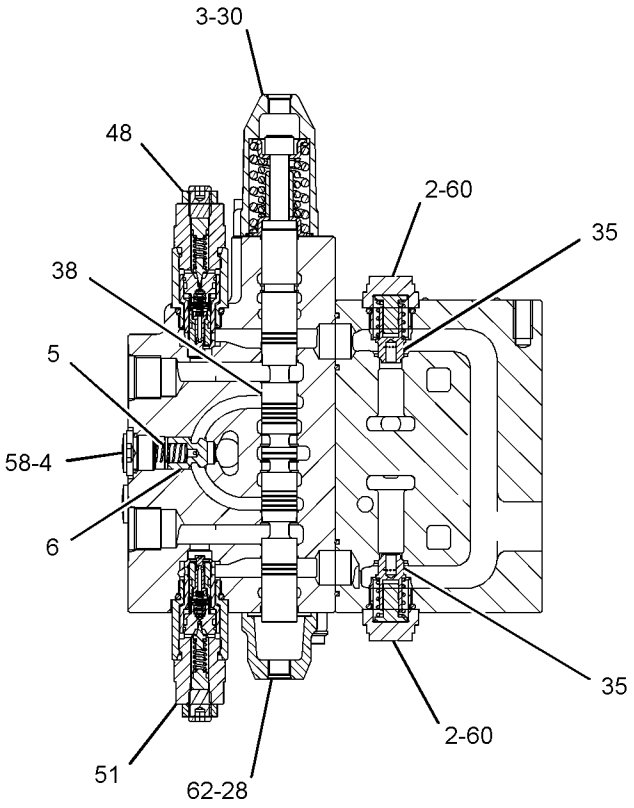

SECTION D-D

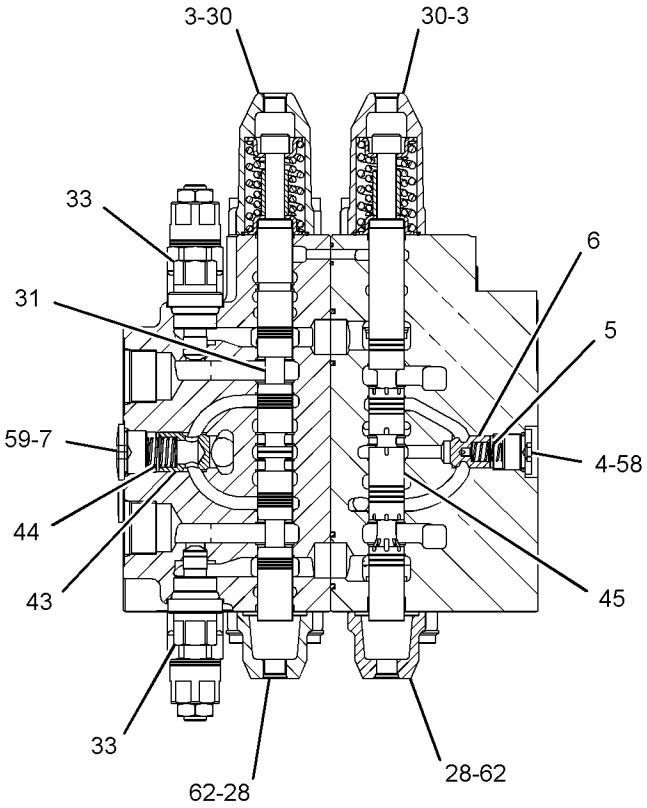

SECTION E-E

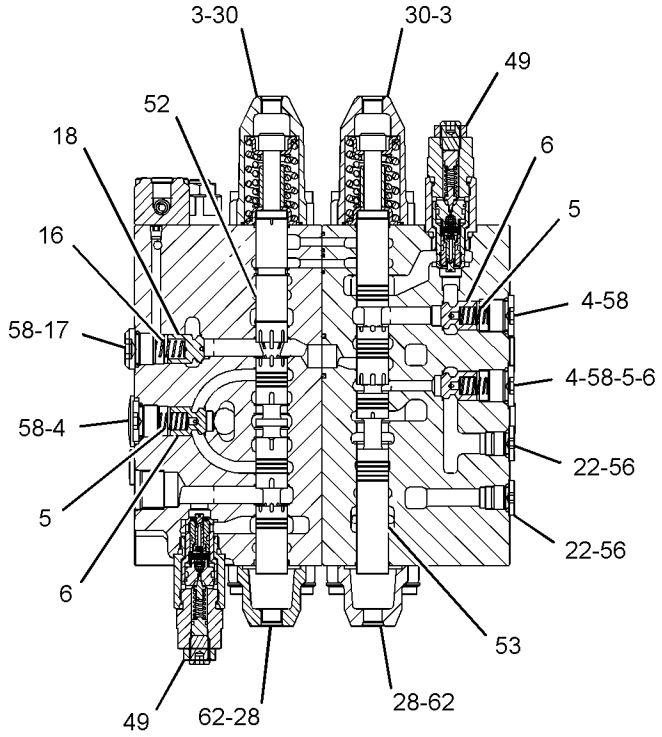

SECTION F-F

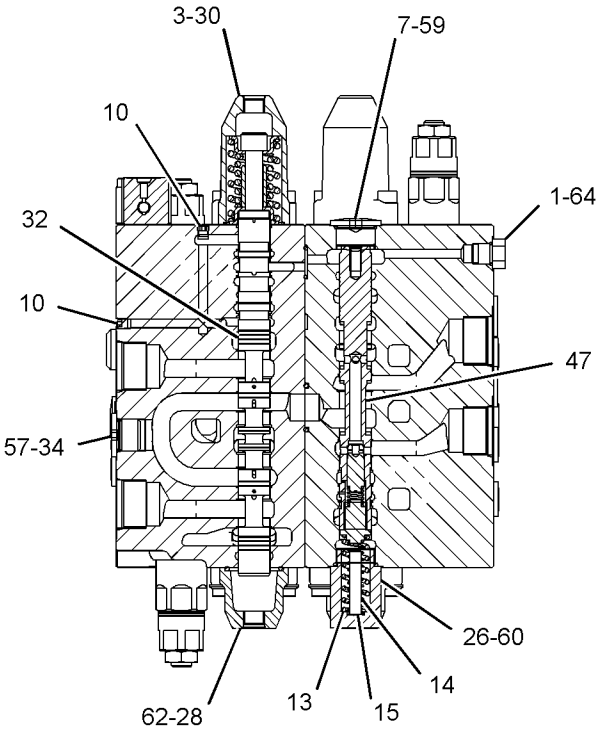

SECTION G-G

GRAPHIC #4

g02361998

420-2243 **VALVE GP-MAIN CONTROL (*contd.*)** **i04946748**

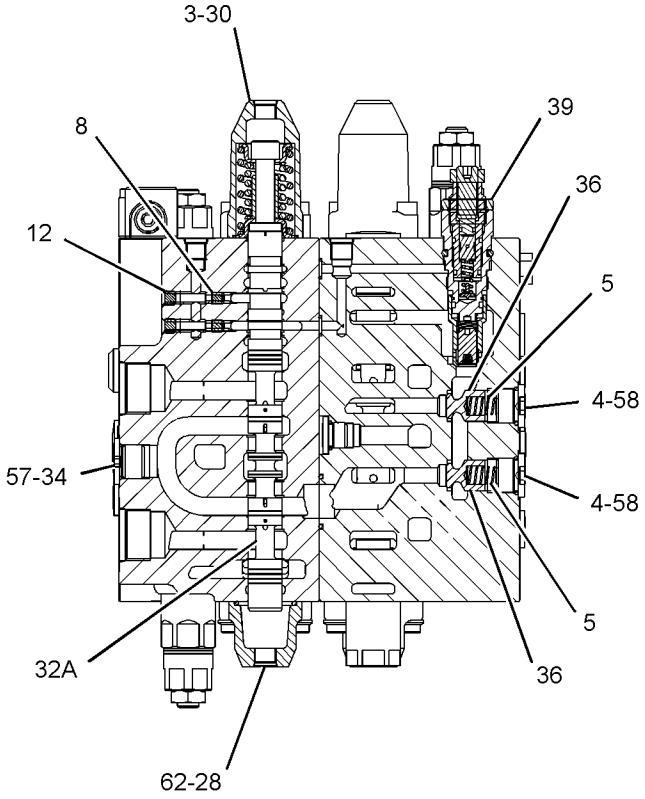

SECTION H-H

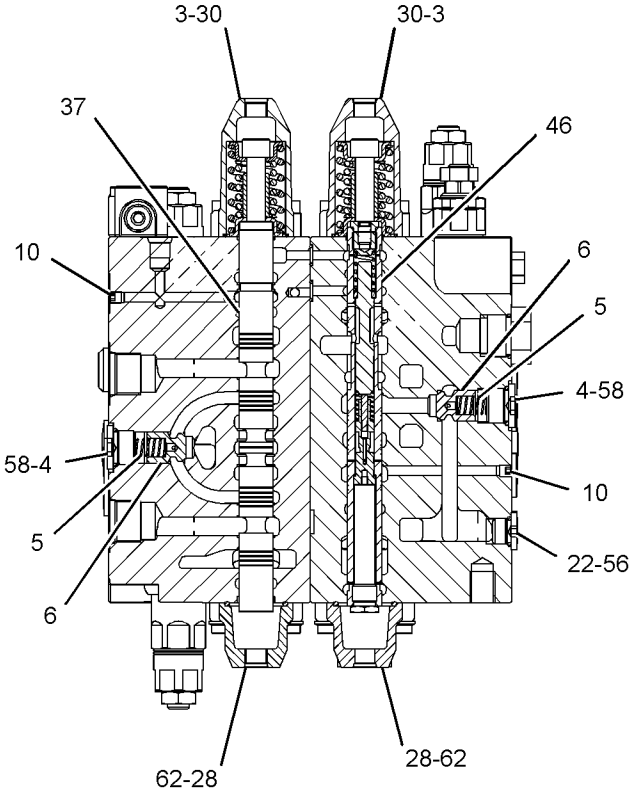

SECTION J-J

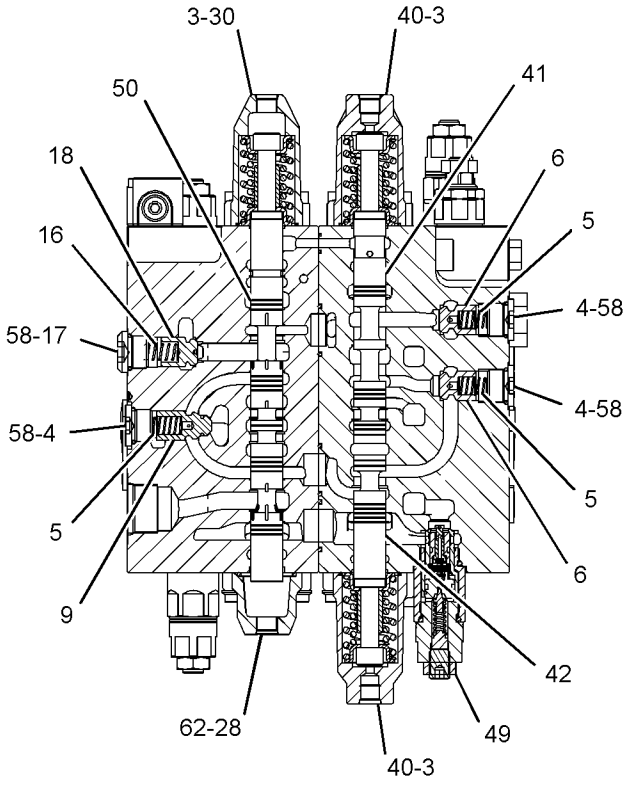

SECTION K-K

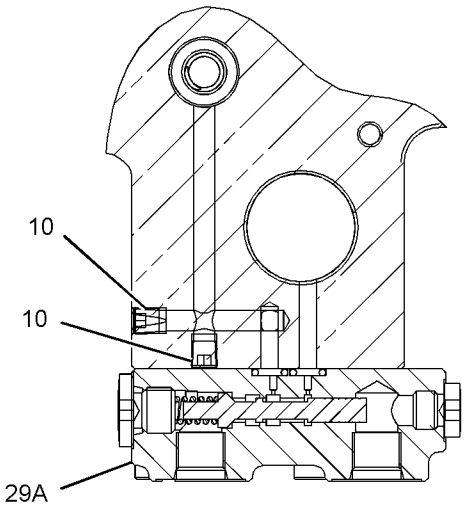

SECTION L-L

GRAPHIC #5 **<END>** g02990598

297-0529 VALVE GP-PILOT–JOYSTICK

S/N: HAH1-UP

PART OF 297-0532, 297-0533 CONTROL GP-JOYSTICK

AN ATTACHMENT

SMCS-5059 **i03023574**

NOTE	REF NO	GRAPHIC REF	PART NUMBER	QTY	PART NAME 1 2 3 4 5 6 (PRODUCT LEVEL)	SEE PAGE
	1	1	**270-5953**	4	SPRING	
	2	1	**095-1586**	4	SEAL-O-RING	
	3	1	**4I-6365**	1	JOINT	
	4	1	**094-0876**	4	SEAL	
	5	1	**096-1628**	4	PLUG	
B	6	1	**099-6137**	4	WASHER (6.1X9X0.2-MM THK)	
	7	1	**118-4086**	4	ROD	
	8	1	**118-4087**	4	SPRING	
M	9	1	**131-5915**	1	NUT-SPECIAL	
	10	1	**165-9431**	1	PLATE	
	11	1	**165-9435**	2	SEAT	
	12	1	**165-9436**	2	SEAT	
	13	1	**165-9438**	1	PLATE	
	14	1	**165-9442**	2	SPRING	
	15	1	**165-9443**	2	SEAT-SPRING	
	16	1	**165-9444**	2	SEAT-SPRING	
	17	1	**165-9460**	2	SPRING	
	18	1	**171-0087**	1	BELLOWS	
					PARTS SHOWN IN GRAPHIC(S) WITHOUT A REFERENCE NUMBER ARE NOT SERVICED SEPARATELY	

B - USE AS REQUIRED
M - METRIC PART

297-0529 **VALVE GP-PILOT (*contd.*)** **i03023574**

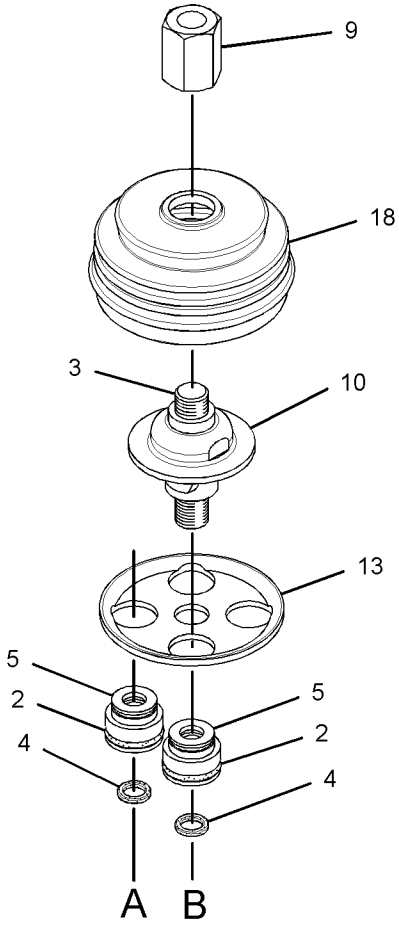

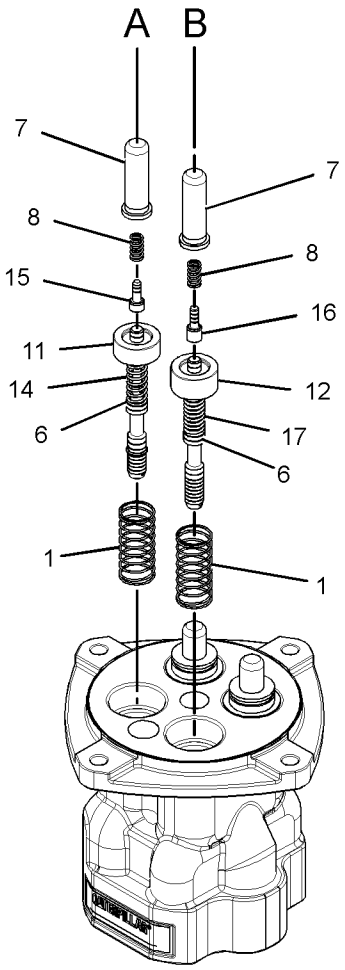

GRAPHIC #1 **<END>** g01528724

369-8503 VALVE GP-PILOT

S/N: HAH1-UP

PART OF 275-1715 LINES GP-PILOT

SMCS-5059 **i04577925**

NOTE	REF NO	GRAPHIC REF	PART NUMBER	QTY	PART NAME 1 2 3 4 5 6 (PRODUCT LEVEL)	SEE PAGE
	1	1	**087-5708**	2	PEDAL	
	2	2	**099-6137**	4	WASHER (6.1X9X0.2-MM THK)	
	3	2	**099-6141**	4	WASHER (6.1X11X1.5-MM THK)	
	4	1	**099-6144**	4	BUSHING-TERMINAL	
	5	1	**099-6145**	2	CAMSHAFT	
	6	1	**119-5388**	4	CAP	
	7	1	**119-5389**	4	PACKING	
	8	1	**119-5391**	4	SEAT	
	9	1	**126-1865**	4	SPRING	
	10	1	**126-1866**	4	SPRING	
	11	2	**131-5818**	4	SPRING	
	12	1	**153-5223**	12	BALL	
	13	1	**165-9552**	4	PUSHROD	
	14	1	**165-9554**	4	PLUG	
	15	1	**270-5949**	4	PISTON	
	16	2	**270-5950**	4	SPRING	
	17	2	**310-0419**	4	SEAT	
	18	2	**310-0420**	4	SEAL-O-RING	
	19	1	**369-8509**	2	COVER	
	20	1	**369-8510**	1	COVER	
M	21	1	**369-8568**	2	BOLT-SOCKET HEAD (M10X1.5X65-MM)	
	22	1	**369-8569**	2	BELLOWS	
M	23	1	**087-4710**	4	SETSCREW (M10X21-MM)	
M	24	1	**095-1260**	2	SETSCREW-SOCKET (M6X1X6-MM)	
	25	2	**095-1575**	2	SEAL-O-RING	
M	26	1	**6V-8202**	2	BOLT-SOCKET HEAD (M8X1.25X16-MM)	
	27	1	**6V-8400**	4	SEAL-O-RING	
M	28	1	**8C-6965**	2	BOLT-SOCKET HEAD (M6X1X45-MM)	
M	29	1	**8T-4133**	4	NUT (M10X1.5-THD)	
	30	2	**8T-6759**	1	PLUG-PIPE	

M - METRIC PART

369-8503 **VALVE GP-PILOT (*contd.*)** **i04577925**

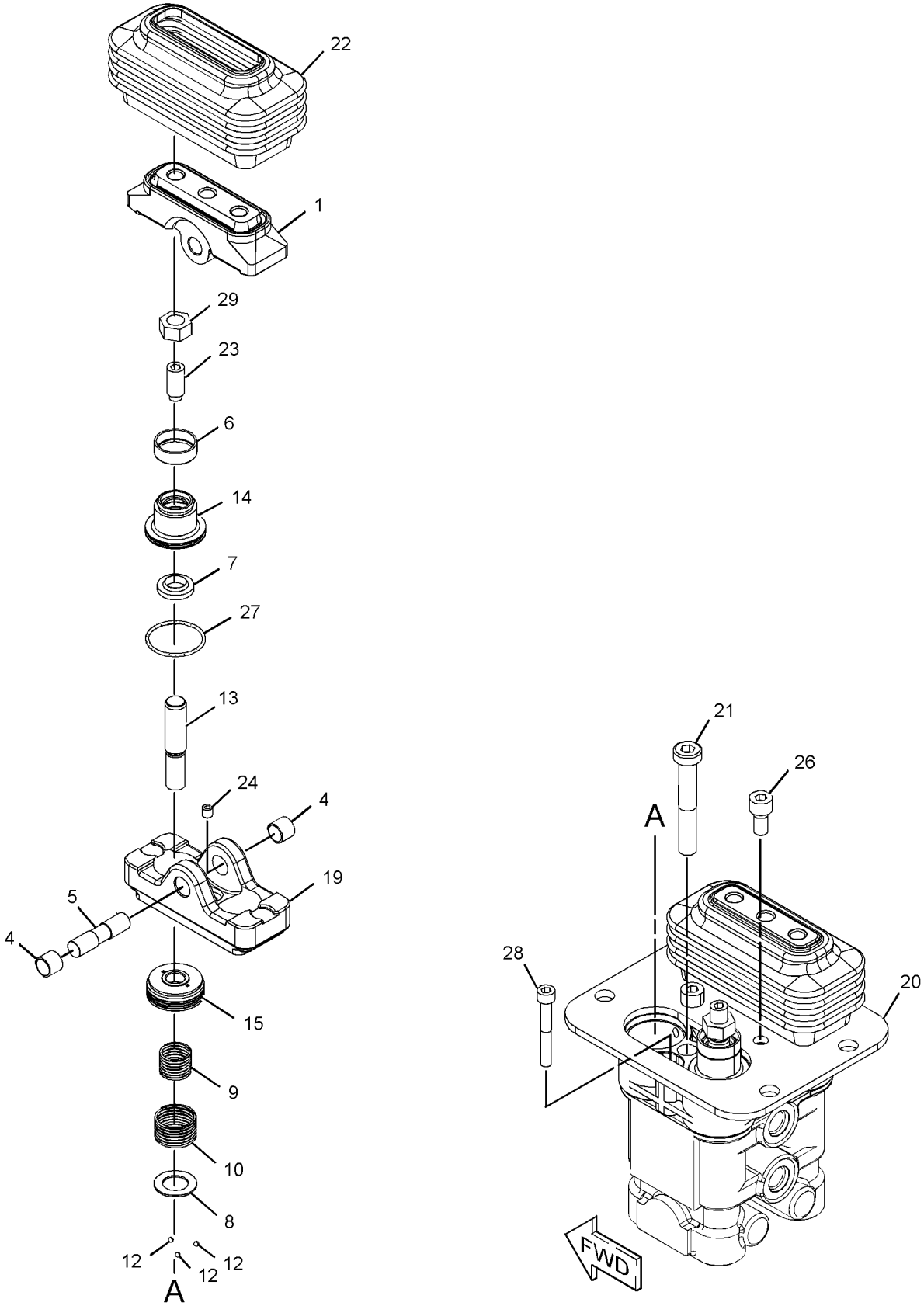

GRAPHIC #1 g02778436

369-8503 **VALVE GP-PILOT (*contd.*)** **i04577925**

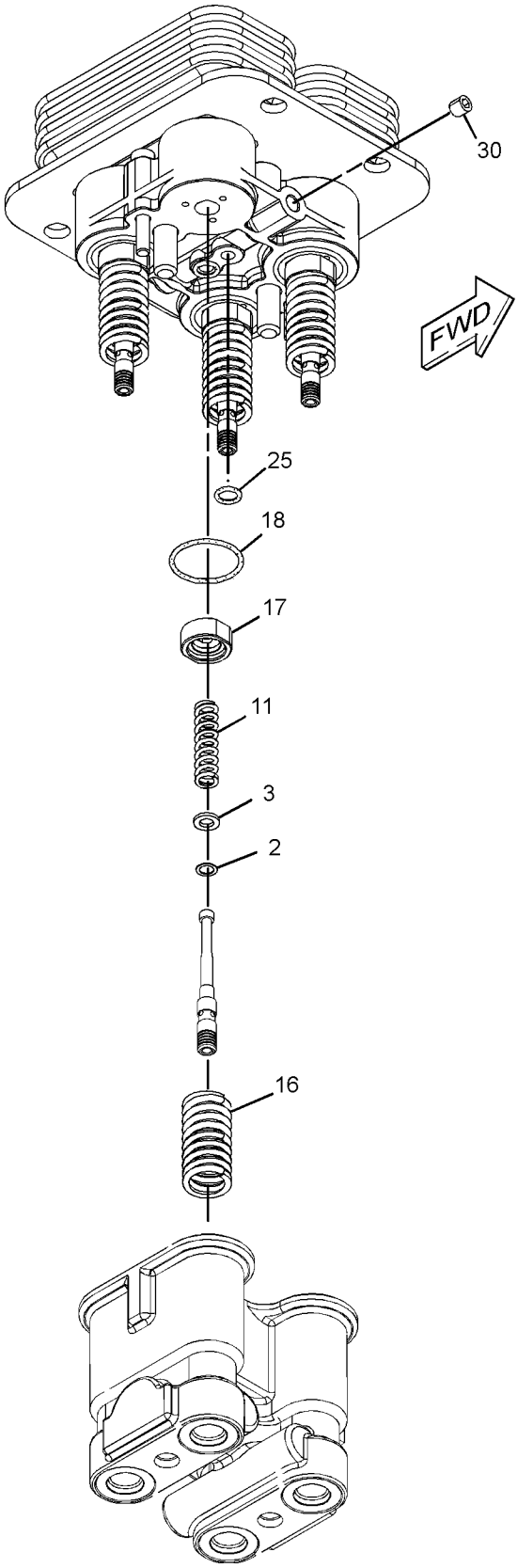

GRAPHIC #2 **<END>** g02750476

309-9974 VALVE GP-PILOT RELIEF

S/N: HAH1-UP

PART OF 420-2243 VALVE GP-MAIN CONTROL

SMCS-5072 **i03818893**

NOTE	REF NO	GRAPHIC REF	PART NUMBER	QTY	PART NAME 1 2 3 4 5 6 (PRODUCT LEVEL)	SEE PAGE
	1	1	**095-1514**	1	SEAL-O-RING	
	2	1	**095-1519**	1	SEAL-O-RING	
	3	1	**095-1575**	1	SEAL-O-RING	
	4	1	**095-1591**	1	SEAL-O-RING	
	5	1	**095-1592**	1	SEAL-O-RING	
	6	1	**095-1783**	1	RING-BACKUP	
	7	1	**095-8024**	1	RING-BACKUP	

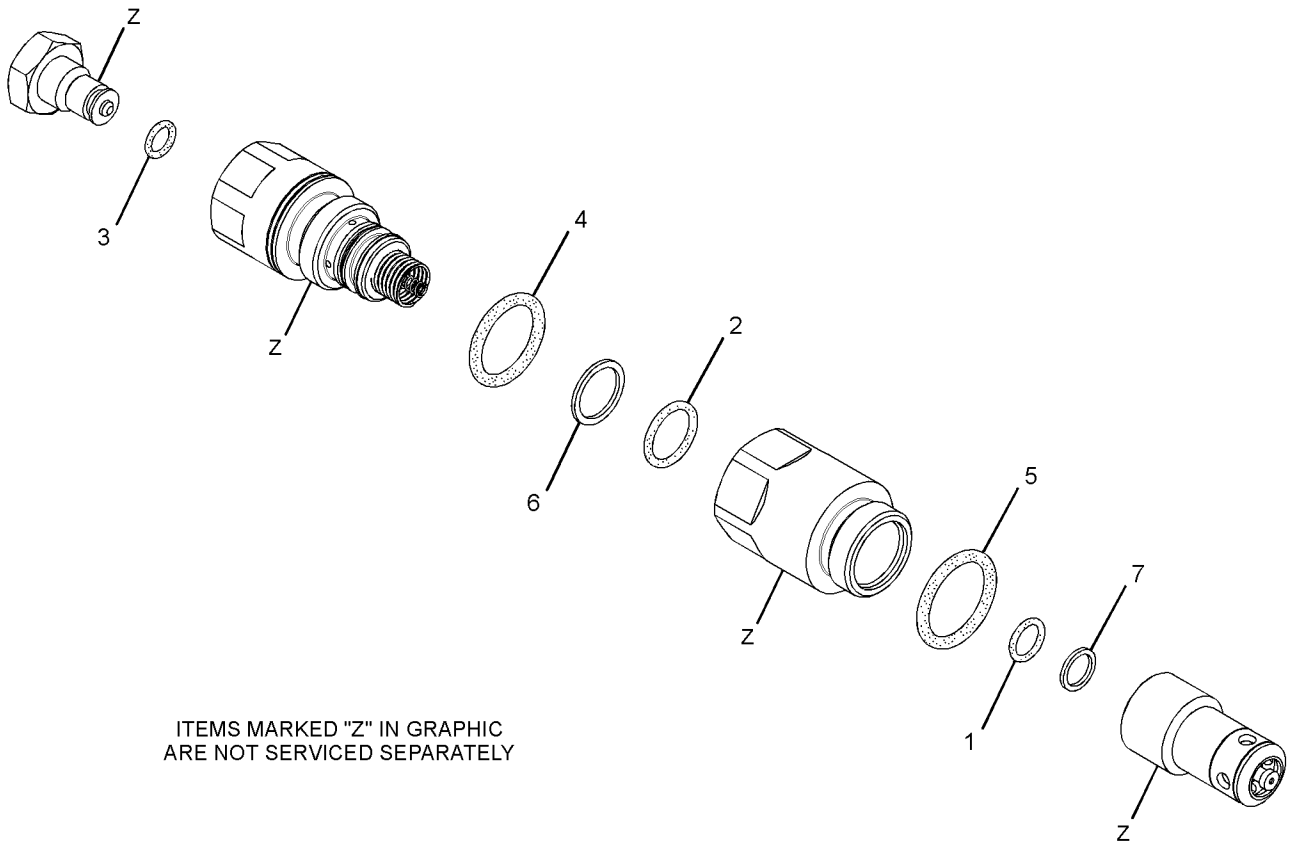

ITEMS MARKED "Z" IN GRAPHIC
ARE NOT SERVICED SEPARATELY

GRAPHIC #1 **<END>** g01445060

335-0210 VALVE GP-PILOT RELIEF–LINE

S/N: HAH1-UP

PART OF 420-2243 VALVE GP-MAIN CONTROL

SMCS-5072 **i03818795**

NOTE	REF NO	GRAPHIC REF	PART NUMBER	QTY	PART NAME 1 2 3 4 5 6 (PRODUCT LEVEL)	SEE PAGE
	1	1	**095-1514**	1	SEAL-O-RING	
	2	1	**095-1519**	1	SEAL-O-RING	
	3	1	**095-1575**	1	SEAL-O-RING	
	4	1	**095-1591**	1	SEAL-O-RING	
	5	1	**095-1592**	1	SEAL-O-RING	
	6	1	**095-1783**	1	RING-BACKUP	
	7	1	**095-8024**	1	RING-BACKUP	

ITEMS MARKED "Z" IN GRAPHIC ARE NOT SERVICED SEPARATELY

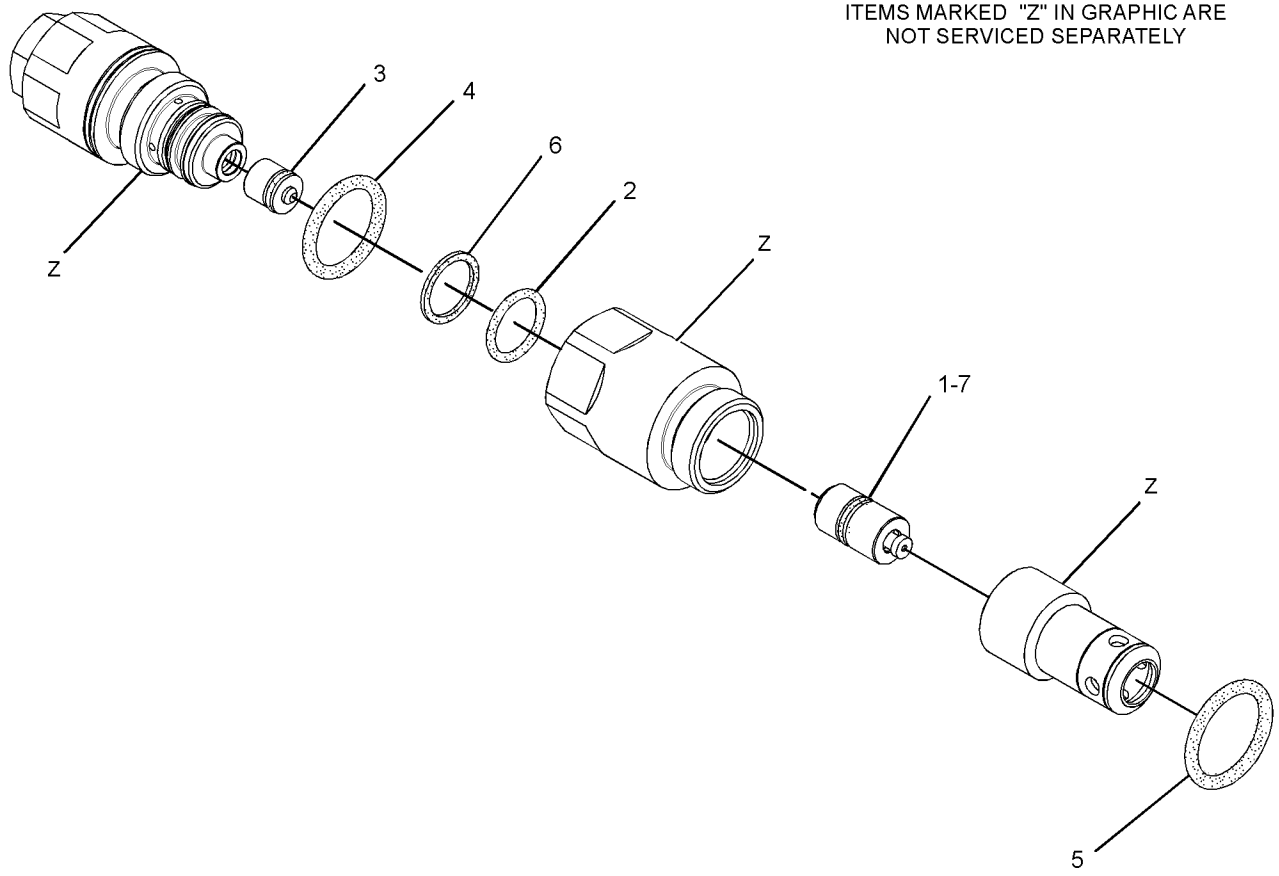

GRAPHIC #1 **<END>** g01807059

285-1613 VALVE GP-PRESSURE REDUCING—BOOM PRIORITY

S/N: HAH1-UP

PART OF 391-7835 LINES GP-PILOT

SMCS-5117 **i03848929**

NOTE	REF NO	GRAPHIC REF	PART NUMBER	QTY	PART NAME 1 2 3 4 5 6 (PRODUCT LEVEL)	SEE PAGE
	1	1	**171-0123**	1	PLUG	
M	2	1	**171-0124**	1	SETSCREW (M8X1.25X18-MM)	
	3	1	**185-0423**	1	STOP	
	4	1	**095-1582**	1	SEAL-O-RING	
	5	1	**111-9998**	1	PLUG	
	6	1	**171-0127**	1	SEAT-SPRING	
	7	1	**171-0128**	1	SPRING	
	8	1	**171-0126**	1	SEAT-SPRING	
	9	1	**095-1590**	1	SEAL-O-RING	
	10	1	**095-1580**	1	SEAL-O-RING	
M	11	1	**5C-7261**	1	NUT (M8X1.25-THD)	

M - METRIC PART

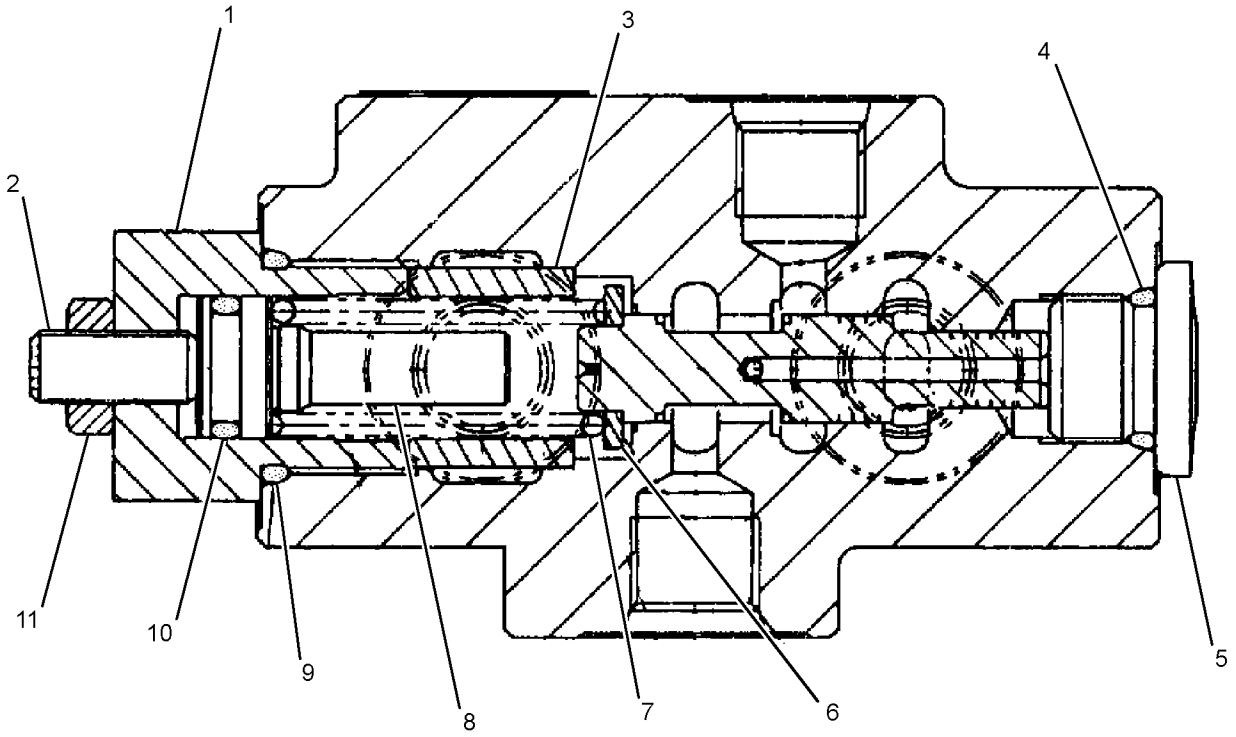

GRAPHIC #1 **<END>** g01363363

129-8030 VALVE GP-RELIEF

S/N: HAH1-UP

PART OF 199-0504 VALVE GP-TRAVEL COUNTERBALANCE

SMCS-5069, 5117 **i01328019**

NOTE	REF NO	GRAPHIC REF	PART NUMBER	QTY	PART NAME 1 2 3 4 5 6 (PRODUCT LEVEL)	SEE PAGE
	1	1	**114-0515**	1	SEAT	
	2	1	**095-1785**	3	RING-BACKUP	
	3	1	**095-1586**	3	SEAL-O-RING	
	4	1	**114-0516**	1	SPRING	
	5	1	**114-0519**	1	STOP	
M	6	1	**7Y-8436**	1	SETSCREW (M27X2X27-MM)	
M	7	1	**7Y-8437**	1	NUT (M27X2-THD)	
	8	1	**114-0518**	1	BODY	
	9	1	**095-1601**	1	SEAL-O-RING	
	10	1	**121-1459**	2	RING-BACKUP	
	11	1	**114-0517**	1	PISTON	
	12	1	**114-0514**	1	SPRING	
	13	1	**129-8031**	1	VALVE GP-RELIEF	

M - METRIC PART

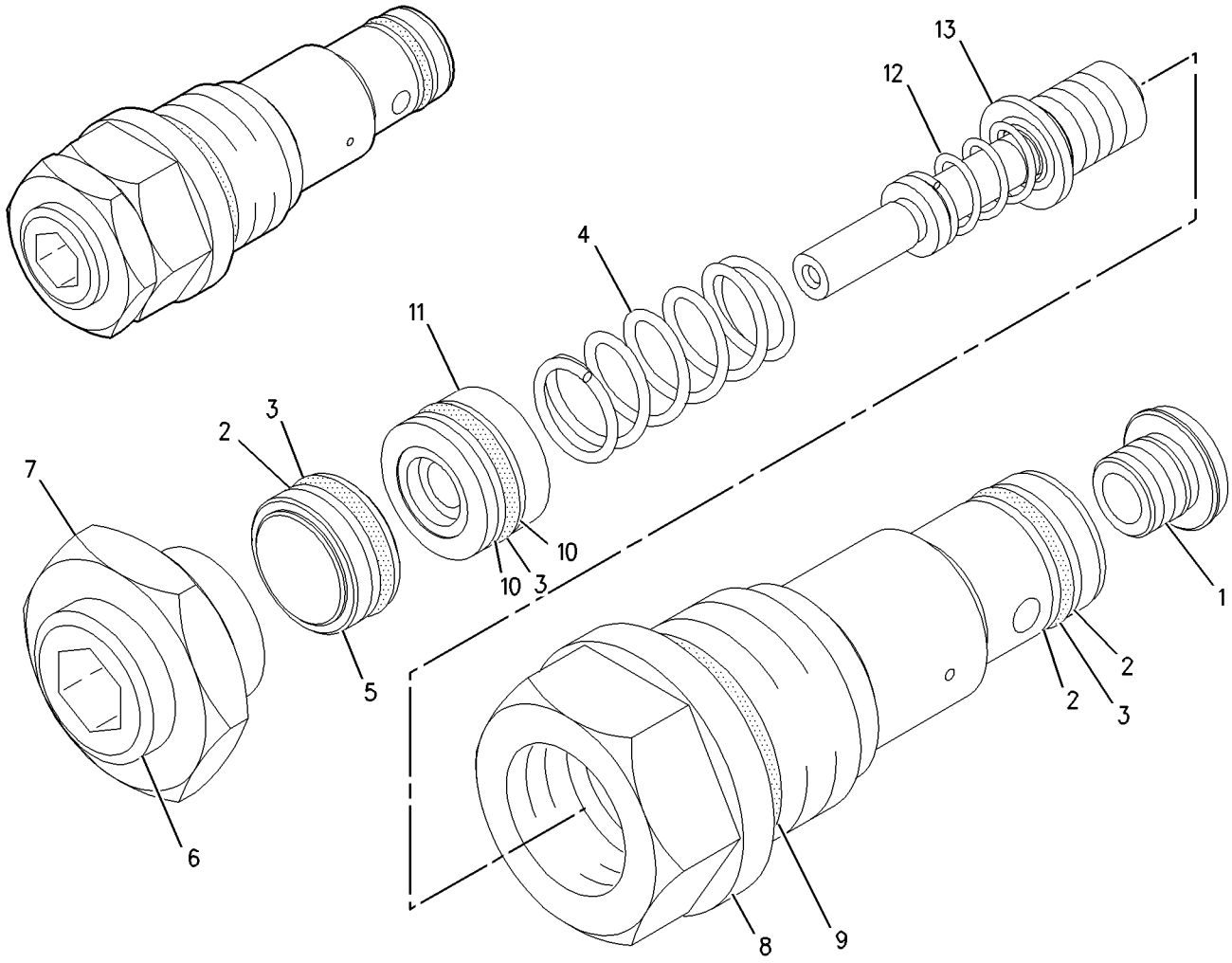

GRAPHIC #1 **<END>** g00702851

173-3536 VALVE GP-RELIEF

S/N: HAH1-UP

PART OF 369-9628 VALVE GP-SWING CUSHION

SMCS-5069, 5117 **i01328528**

NOTE	REF NO	GRAPHIC REF	PART NUMBER	QTY	PART NAME 1 2 3 4 5 6 (PRODUCT LEVEL)	SEE PAGE
	1	1	**095-1785**	1	RING-BACKUP	
	2	1	**095-1586**	1	SEAL-O-RING	

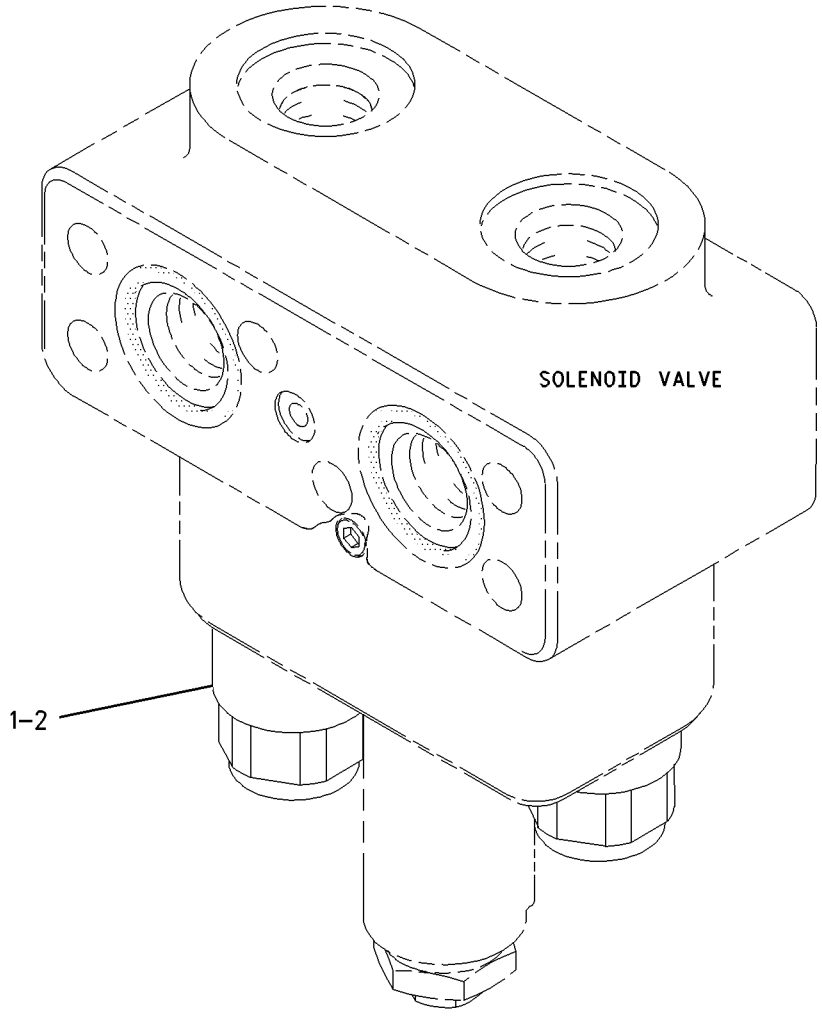

GRAPHIC #1 **<END>** g00672771

270-5979 VALVE GP-RELIEF

S/N: HAH1-UP

PART OF 420-2243 VALVE GP-MAIN CONTROL

SMCS-5069, 5117 **i03850352**

NOTE	REF NO	GRAPHIC REF	PART NUMBER	QTY	PART NAME 1 2 3 4 5 6 (PRODUCT LEVEL)	SEE PAGE
	1	1	**095-1519**	1	SEAL-O-RING	
	2	1	**095-1575**	1	SEAL-O-RING	
	3	1	**095-1582**	1	SEAL-O-RING	
	4	1	**095-1584**	1	SEAL-O-RING	
	5	1	**095-1593**	1	SEAL-O-RING	
	6	1	**095-1783**	1	RING-BACKUP	

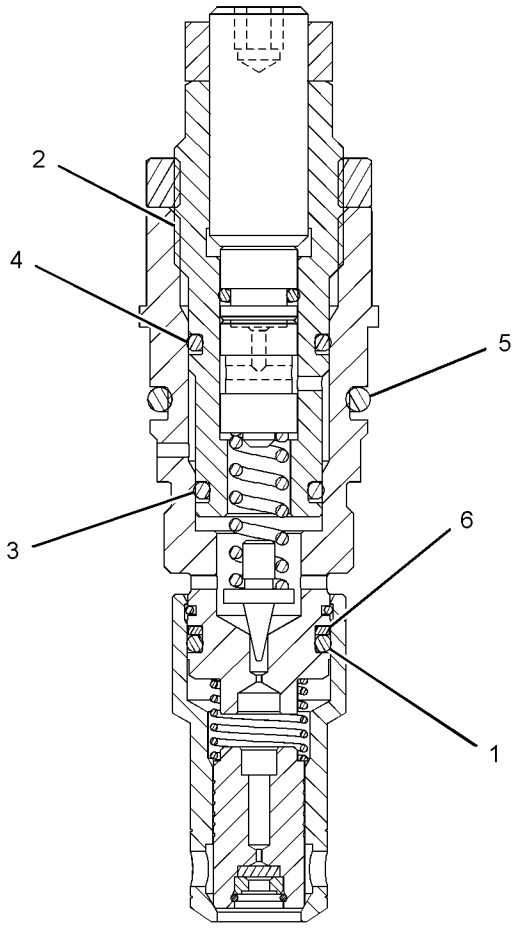

GRAPHIC #1 **<END>** g01891833

309-9977 VALVE GP-RELIEF–LINE

S/N: HAH1-UP

PART OF 420-2243 VALVE GP-MAIN CONTROL

SMCS-5069, 5117 **i03818731**

NOTE	REF NO	GRAPHIC REF	PART NUMBER	QTY	PART NAME 1 2 3 4 5 6 (PRODUCT LEVEL)	SEE PAGE
	1	1	**095-1514**	1	SEAL-O-RING	
	2	1	**095-1519**	1	SEAL-O-RING	
	3	1	**095-1575**	1	SEAL-O-RING	
	4	1	**095-1591**	1	SEAL-O-RING	
	5	1	**095-1592**	1	SEAL-O-RING	
	6	1	**095-1783**	1	RING-BACKUP	
	7	1	**095-8024**	1	RING-BACKUP	

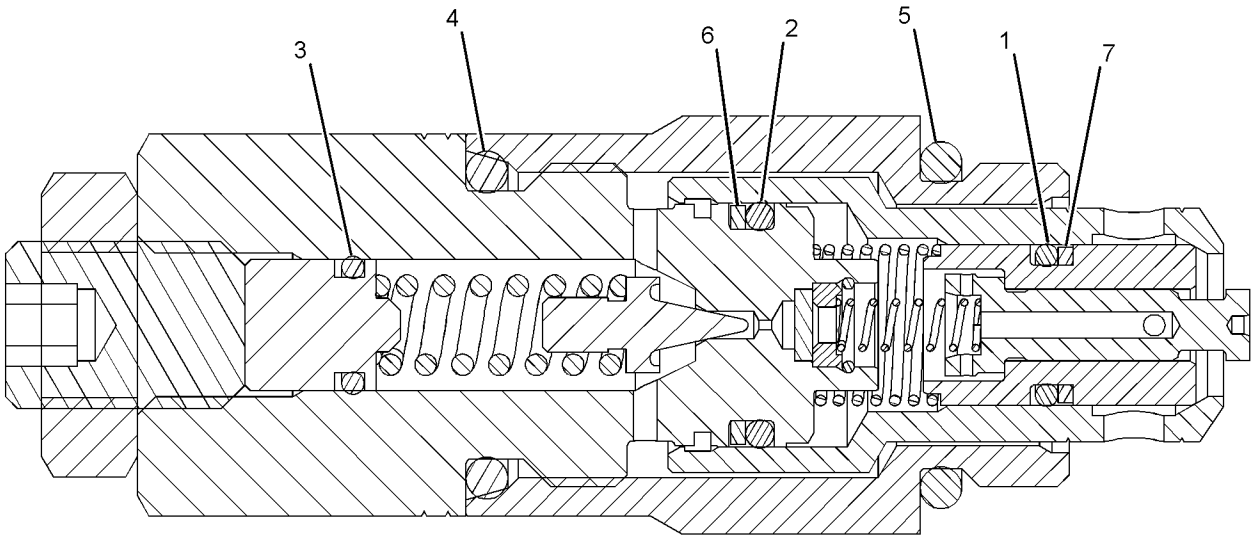

GRAPHIC #1 **<END>** g01426401

364-0981 VALVE GP-RELIEF—DIRECT OPERATED

S/N: HAH1-UP

PART OF 369-9604 MOTOR GP-SWING

SMCS-5069, 5117

i04421904

NOTE	REF NO	GRAPHIC REF	PART NUMBER	QTY	PART NAME 1 2 3 4 5 6 (PRODUCT LEVEL)	SEE PAGE
	1	1	**168-0765**	1	RING-BACKUP	
	2	1	**7J-9933**	1	SEAL-O-RING	
	3	1	**7I-0966**	1	RING-BACKUP	
	4	1	**6V-5556**	1	SEAL-O-RING	
	5	1	**095-1698**	1	SEAL-O-RING	

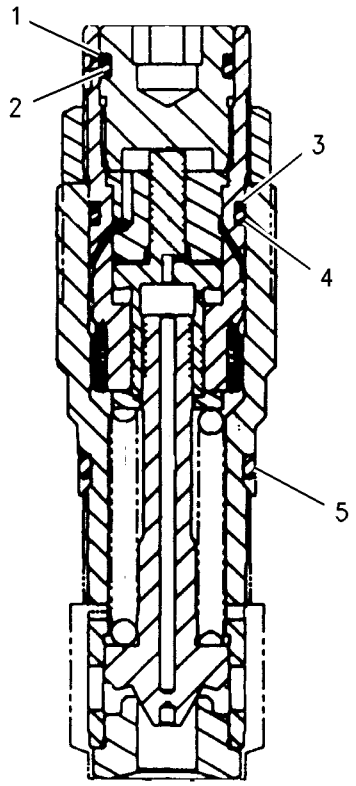

GRAPHIC #1

<END>

g00881313

164-6979 VALVE GP-SHUTTLE

S/N: HAH1-UP

PART OF 391-7835 LINES GP-PILOT

SMCS-5079 **i04561414**

NOTE	REF NO	GRAPHIC REF	PART NUMBER	QTY	PART NAME 1 2 3 4 5 6 (PRODUCT LEVEL)	SEE PAGE
	1	1	**352-6815**	1	BODY-VALVE	
	2	1	**4B-9783**	1	BALL	
	3	1	*175-4430*	2	CONNECTOR AS	
					(EACH INCLUDES)	
		1	**3J-1907**	1	SEAL-O-RING	
		1	**6V-8397**	1	SEAL-O-RING	
		1	**123-2552**	1	CONNECTOR	

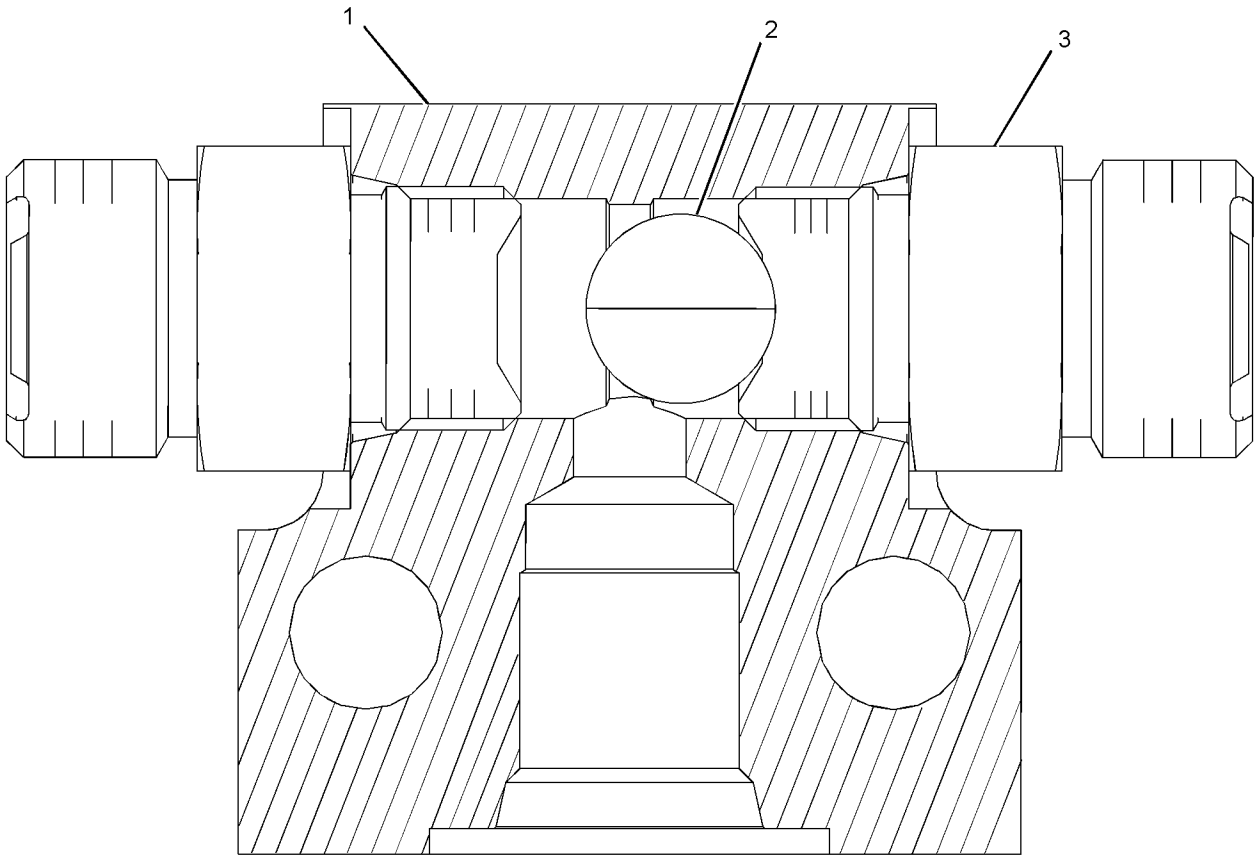

GRAPHIC #1 **<END>** g01955237

111-9916 VALVE GP-SOLENOID

S/N: HAH1-UP

PART OF 391-9452 PUMP GP-PISTON

SMCS-5479 **i05606715**

NOTE	REF NO	GRAPHIC REF	PART NUMBER	QTY	PART NAME 1 2 3 4 5 6 (PRODUCT LEVEL)	SEE PAGE
	1	1	**095-1750**	1	SEAL-O-RING	
	2	1	**6V-8398**	1	SEAL-O-RING	
	3	1	**095-1751**	1	SEAL-O-RING	
	4	1	**095-1586**	1	SEAL-O-RING	
M	5	1	**114-0623**	1	NUT AS (M6X1-THD)	

M - METRIC PART

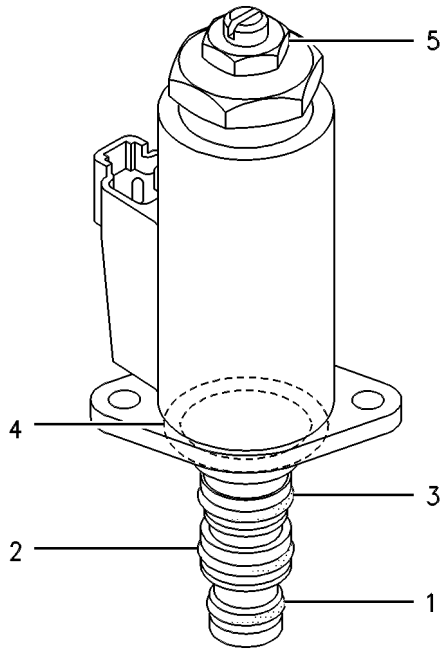

GRAPHIC #1 **<END>** g00258219

121-1491 VALVE GP-SOLENOID

S/N: HAH1-UP

PART OF 239-8697, 239-8998 MANIFOLD GP-CONTROL

SMCS-5479 **i02247491**

NOTE	REF NO	GRAPHIC REF	PART NUMBER	QTY	PART NAME 1 2 3 4 5 6 (PRODUCT LEVEL)	SEE PAGE
	1	1	**095-1750**	1	SEAL-O-RING	
	2	1	**6V-8398**	1	SEAL-O-RING	
	3	1	**095-1751**	1	SEAL-O-RING	
	4	1	**095-1586**	1	SEAL-O-RING	
M	5	1	**114-0623**	1	NUT AS (M6X1-THD)	

M - METRIC PART

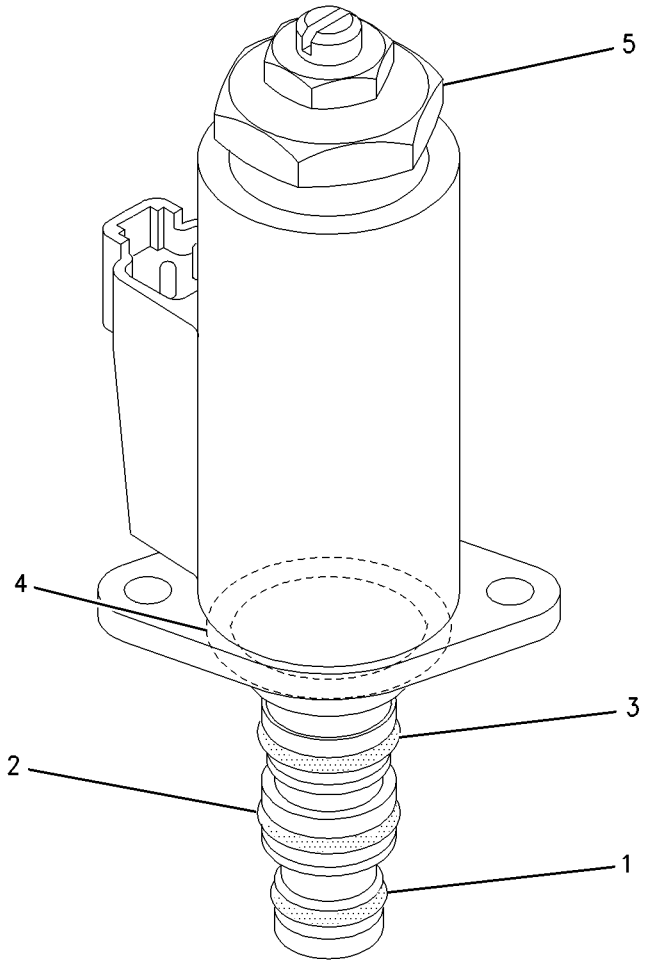

GRAPHIC #1 **<END>** g00928680

369-9628 VALVE GP-SWING CUSHION–CROSSOVER RELIEF

S/N: HAH1-UP

PART OF 435-8395 LINES GP-CYLINDER

SMCS-5480 **i04692829**

NOTE	REF NO	GRAPHIC REF	PART NUMBER	QTY	PART NAME 1 2 3 4 5 6 (PRODUCT LEVEL)	SEE PAGE
	1	1	**8T-6759**	4	PLUG-PIPE	
	2	1	**095-1576**	1	SEAL-O-RING	
Y	3	1	**173-3536**	2	VALVE GP-RELIEF	300
	4	1	**095-1698**	2	SEAL-O-RING	

Y - SEPARATE ILLUSTRATION

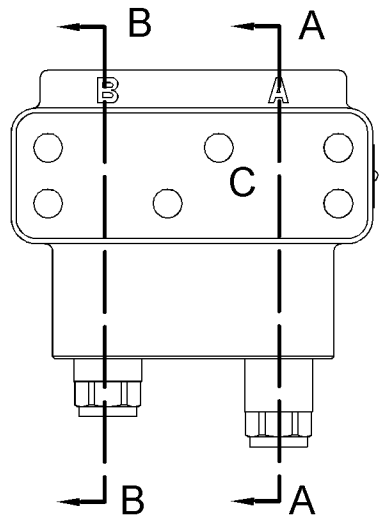

FRONT VIEW

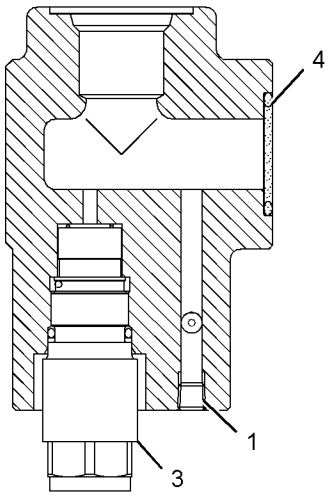

SECTION B-B

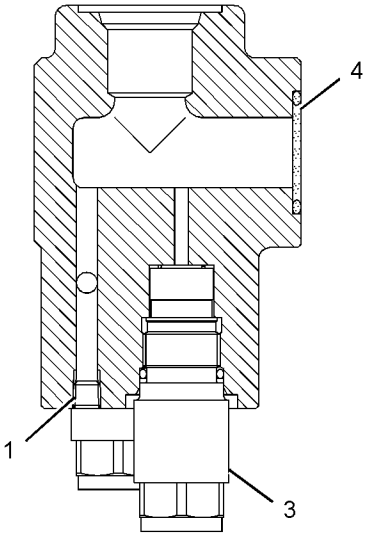

SECTION A-A

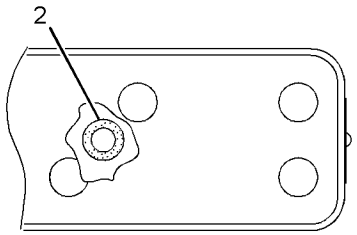

VIEW OF AREA C

GRAPHIC #1 **<END>** g02712577

199-0504 VALVE GP-TRAVEL COUNTERBALANCE

S/N: HAH1-UP

PART OF 185-6952 MOTOR & MTG GP-TRAVEL

SMCS-5811 **i03821010**

NOTE	REF NO	GRAPHIC REF	PART NUMBER	QTY	PART NAME 1 2 3 4 5 6 (PRODUCT LEVEL)	SEE PAGE
Z	1	1		1	VALVE GP-CONTROL	
M	2	1	**6V-8200**	8	BOLT-SOCKET HEAD (M12X1.75X35-MM)	
	3	1	**9S-8004**	2	PLUG	
	4	1	**3J-1907**	2	SEAL-O-RING	
	5	1	**129-7932**	2	GUIDE	
	6	1	**199-0508**	2	SPRING	
	7	1	**095-1701**	2	SEAL-O-RING	
	8	1	**119-5360**	2	COVER	
Y	9	1	**129-8030**	2	VALVE GP-RELIEF	299
	10	1	**2M-9780**	2	SEAL-O-RING	
	11	1	**119-5364**	2	PLUG	
	12	1	**119-5362**	2	SPRING	
	13	1	**119-5365**	2	VALVE	

M - METRIC PART
Y - SEPARATE ILLUSTRATION
Z - NOT SERVICED SEPARATELY

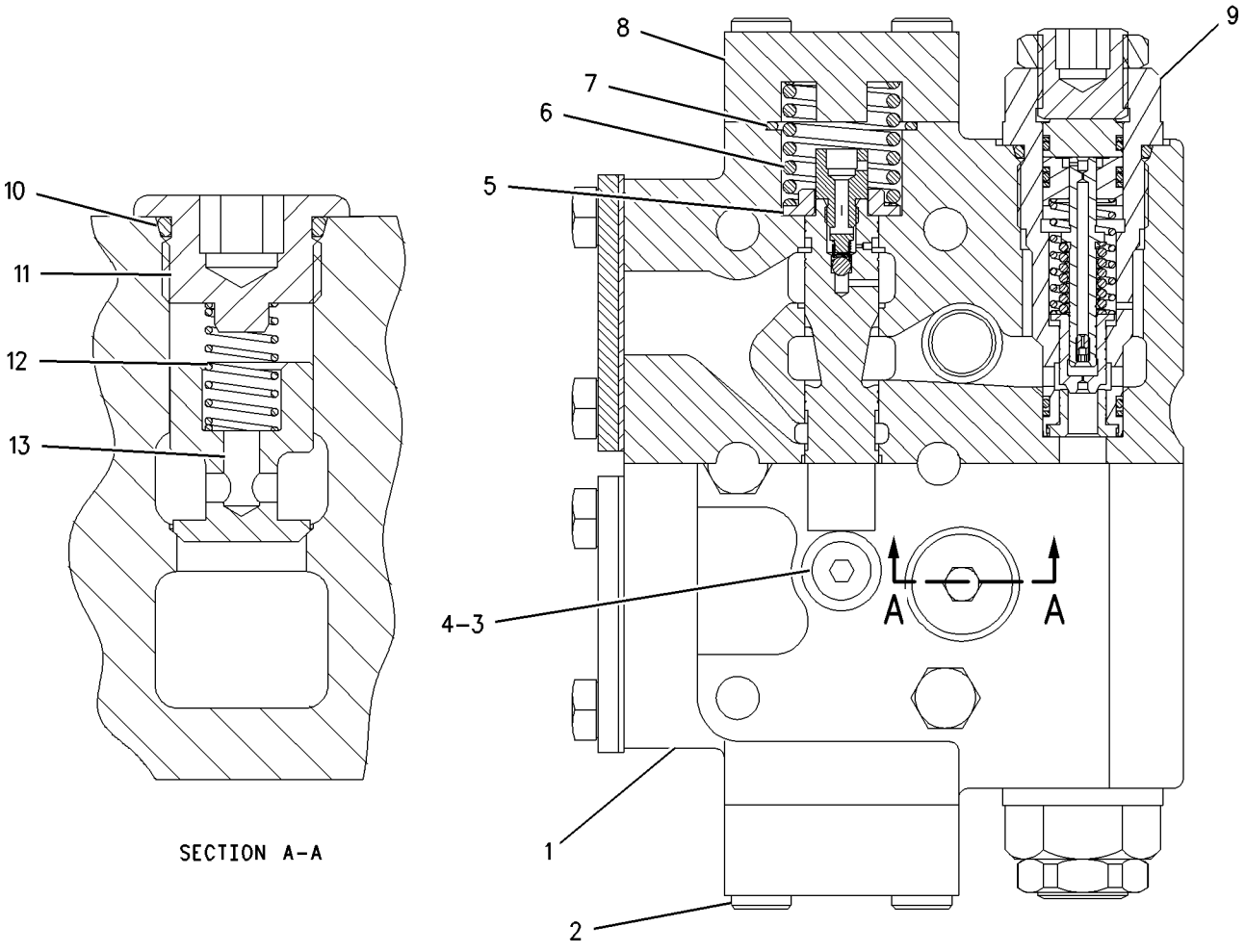

GRAPHIC #1 **<END>** g00754563

385-4100 BOOM AR-1 PIECE LONG—AUXILIARY, HEAVY DUTY

S/N: HAH1-UP

PART OF 454-5646, 454-5647 DISTRIBUTION AR

AN ATTACHMENT

SMCS-6501 **i04954866**

NOTE	PART NUMBER	QTY	PART NAME 1 2 3 4 5 6 (PRODUCT LEVEL)	SEE PAGE
Y	*392-2328*	1	BOOM GP	310
Y	*381-8968*	1	CYLINDER & LINES GP-BOOM (LH)	191
Y	*381-8969*	1	CYLINDER & LINES GP-BOOM (RH)	191
Y	*381-8970*	1	CYLINDER & LINES GP-STICK	191
Y	*259-5163*	1	LIGHTING GP-FLOOD (BOOM, LH)	98
Y	*260-8220*	1	LINES GP-BOOM	212
Y	*174-8529*	1	LINES GP-GREASE (REACH BOOM)	312

Y - SEPARATE ILLUSTRATION

<END>

392-2328 BOOM GP

S/N: HAH1-UP
5.1-M (16.7-FT)
PART OF 385-4100 BOOM AR-1 PIECE LONG
AN ATTACHMENT

SMCS-6301, 6302, 6460, 6501, 6516, 6521, 6535, 6536 **i05982779**

NOTE	REF NO	GRAPHIC REF	PART NUMBER	QTY	PART NAME 1 2 3 4 5 6 (PRODUCT LEVEL)	SEE PAGE
	1	1	**4I-3308**	2	PLATE	
	2	1	**4I-3309**	2	SPACER (82X110X3-MM THK)	
	3	1	**4I-4811**	1	PIN AS	
B	4	1	**093-0084**	1	SHIM (1-MM THK)	
	5	1	**093-0349**	2	WASHER (22X60X6-MM THK)	
B	6	1	**113-2127**	2	SHIM (0.5-MM THK)	
	7	1	**118-5982**	1	SPACER (73X105X14-MM THK)	
	8	1	**166-1486**	2	SHIM (2-MM THK)	
	9	1	**166-1495**	2	SEAL-LIP TYPE	
	10	1	**180-7755**	1	PIN	
	11	1	**267-0060**	1	PIN AS	
	12	1	**392-2329**	1	BOOM & BEARING AS	
	12A	1	**244-4277**	2	BUSHING (1000 SERVICE HOURS)	
	13	1	**093-0366**	1	SPACER (93X130X12-MM THK)	
	14	1	**166-1487**	2	SHIM (2-MM THK)	
	15	1	**451-2176**	2	WASHER-HARD (22X35X3.5-MM THK)	
	16	1	**8T-4223**	6	WASHER-HARD (13.5X25.5X3-MM THK)	
M	17	1	**453-2844**	2	BOLT (M20X2.5X30-MM)	
M	18	1	**8T-4956**	6	BOLT (M12X1.75X35-MM)	

B - USE AS REQUIRED
M - METRIC PART

392-2328 **BOOM GP (*contd.*)** **i05982779**

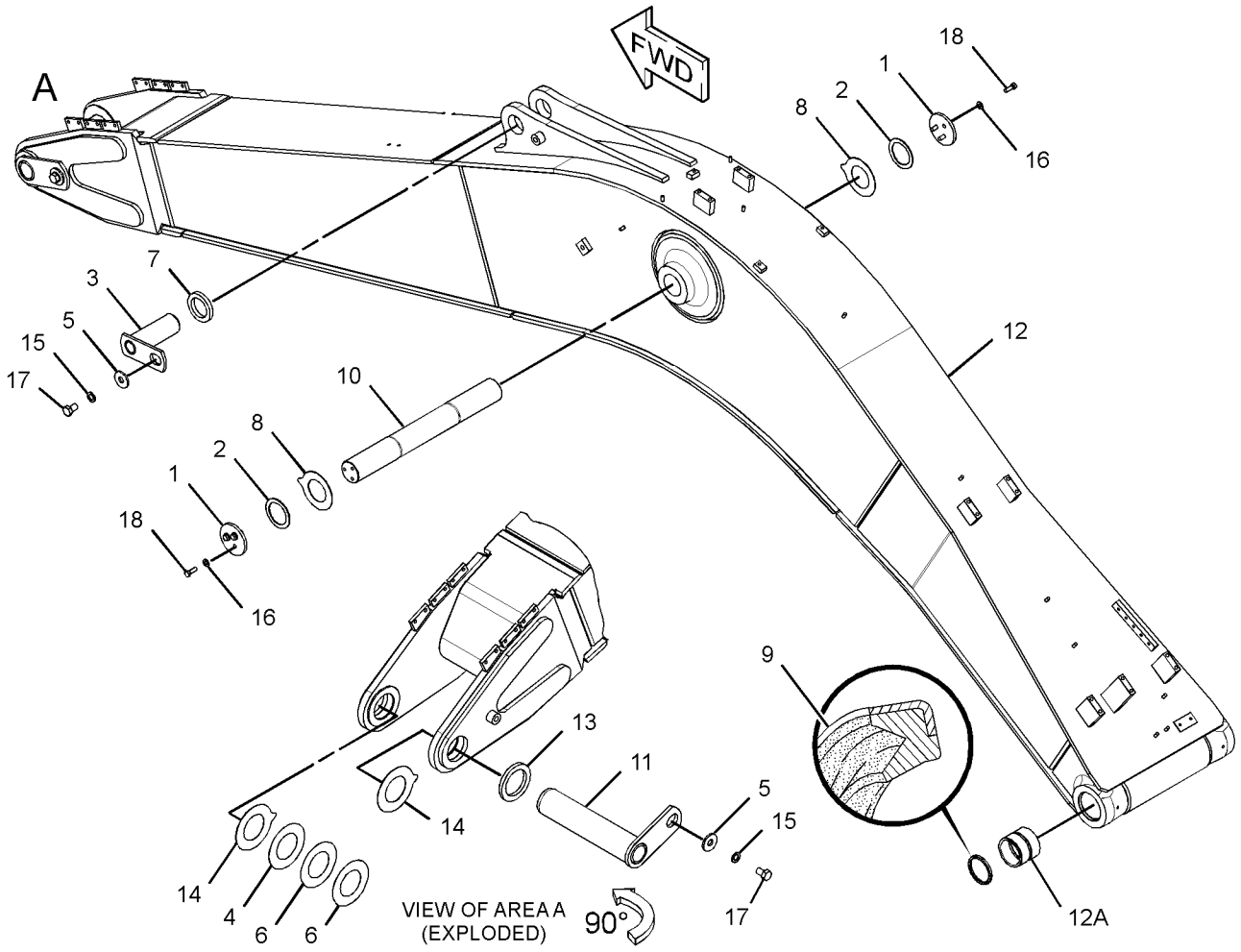

GRAPHIC #1

<END>

g01570853

174-8529 LINES GP-GREASE

S/N: HAH1-UP
PART OF 385-4100 BOOM AR-1 PIECE LONG
AN ATTACHMENT

SMCS-7510 **i05412226**

NOTE	REF NO	GRAPHIC REF	PART NUMBER	QTY	PART NAME 1 2 3 4 5 6 (PRODUCT LEVEL)	SEE PAGE
	1	1	**8M-2772**	2	CLIP	
M	2	1	**8T-4133**	5	NUT (M10X1.5-THD)	
	3	1	**8T-4121**	8	WASHER-HARD (11X21X2.5-MM THK)	
	4	1	**166-1579**	3	CLIP	
	5	1	**033-8248**	3	CLIP	
M	6	1	**8T-4191**	3	BOLT (M10X1.5X16-MM)	
	7	1	**123-5349**	1	HOSE AS	
	8	1	**134-9137**	1	HOSE AS	
					(EACH HOSE AS INCLUDES)	
		1	**105-6431**	1	CONNECTOR	
	9	1	**3B-8489**	5	FITTING-GREASE	
	10	1	**6L-3616**	2	CONNECTOR	
	11	1	**5K-9243**	2	ELBOW-FLARED	
	12	1	**107-9742**	1	TUBE AS	
	13	1	**107-9743**	1	TUBE AS	
	14	1	**120-7225**	1	HOSE AS	
		1	**105-6431**	1	CONNECTOR	

M - METRIC PART

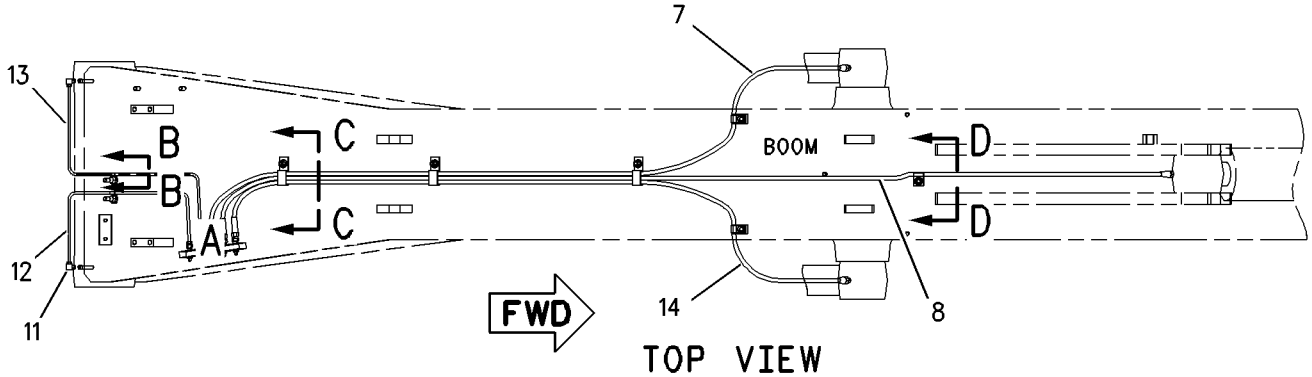

TOP VIEW

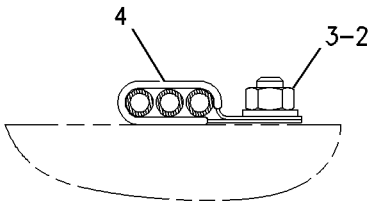

SECTION C-C

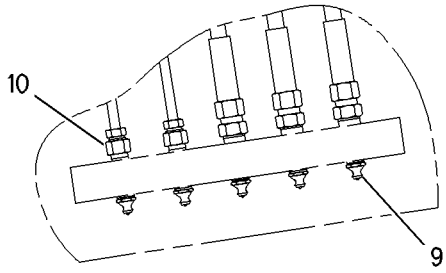

VIEW OF AREA A

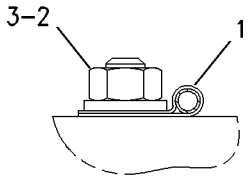

SECTION B-B

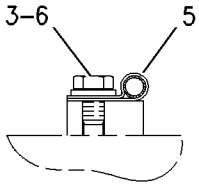

SECTION D-D

GRAPHIC #1 **<END>** g00751475

385-4103 LINKAGE AR-BUCKET—CB-FAMILY

S/N: HAH1-UP
PART OF 454-5646, 454-5647 DISTRIBUTION AR
AN ATTACHMENT

SMCS-6513 **i04958877**

NOTE	PART NUMBER	QTY	PART NAME 1 2 3 4 5 6 (PRODUCT LEVEL)	SEE PAGE
Y	*381-8971*	1	CYLINDER & LINES GP-BUCKET	191
Y	*385-3234*	1	LINKAGE GP-BUCKET (WITHOUT LIFTING EYE)	314

Y - SEPARATE ILLUSTRATION

<END>

385-3234 LINKAGE GP-BUCKET—WITHOUT LIFTING EYE

S/N: HAH1-UP
PART OF 385-4103 LINKAGE AR-BUCKET
AN ATTACHMENT

SMCS-6513 **i05952944**

NOTE	REF NO	GRAPHIC REF	PART NUMBER	QTY	PART NAME 1 2 3 4 5 6 (PRODUCT LEVEL)	SEE PAGE
	1	1	**087-5802**	1	LINK AS (RH)	
	2	1	**087-5803**	1	LINK AS	
		1	**7Y-3529**	2	TUBE	
		1	**087-5802**	1	LINK AS (RH)	
	3	1	**458-0545**	1	PIN	
	4	1	**458-0543**	1	PIN	
	5	1	**106-6878**	2	PIN	
	6	1	**166-1486**	2	SHIM (2-MM THK)	
M	7	1	**236-6365**	2	BOLT (M16X2X150-MM)	
	8	1	**235-7679**	2	SEAL-LIP TYPE	
	9	1	**278-9373**	1	LINK & BEARING AS	
	9A	1	**244-4360**	2	BUSHING	
	9B	1	**228-5614**	2	BUSHING	
	10	1	**166-1494**	4	SEAL-LIP TYPE	
	11	1	**367-8466**	4	SEAL-O-RING	
	12	1	**3B-8489**	5	FITTING-GREASE (1/8-27 PTF)	
M	13	1	**451-2183**	8	NUT (M16X2-THD)	
	14	1	**453-2843**	2	BOLT (M16X2X180-MM)	

M - METRIC PART

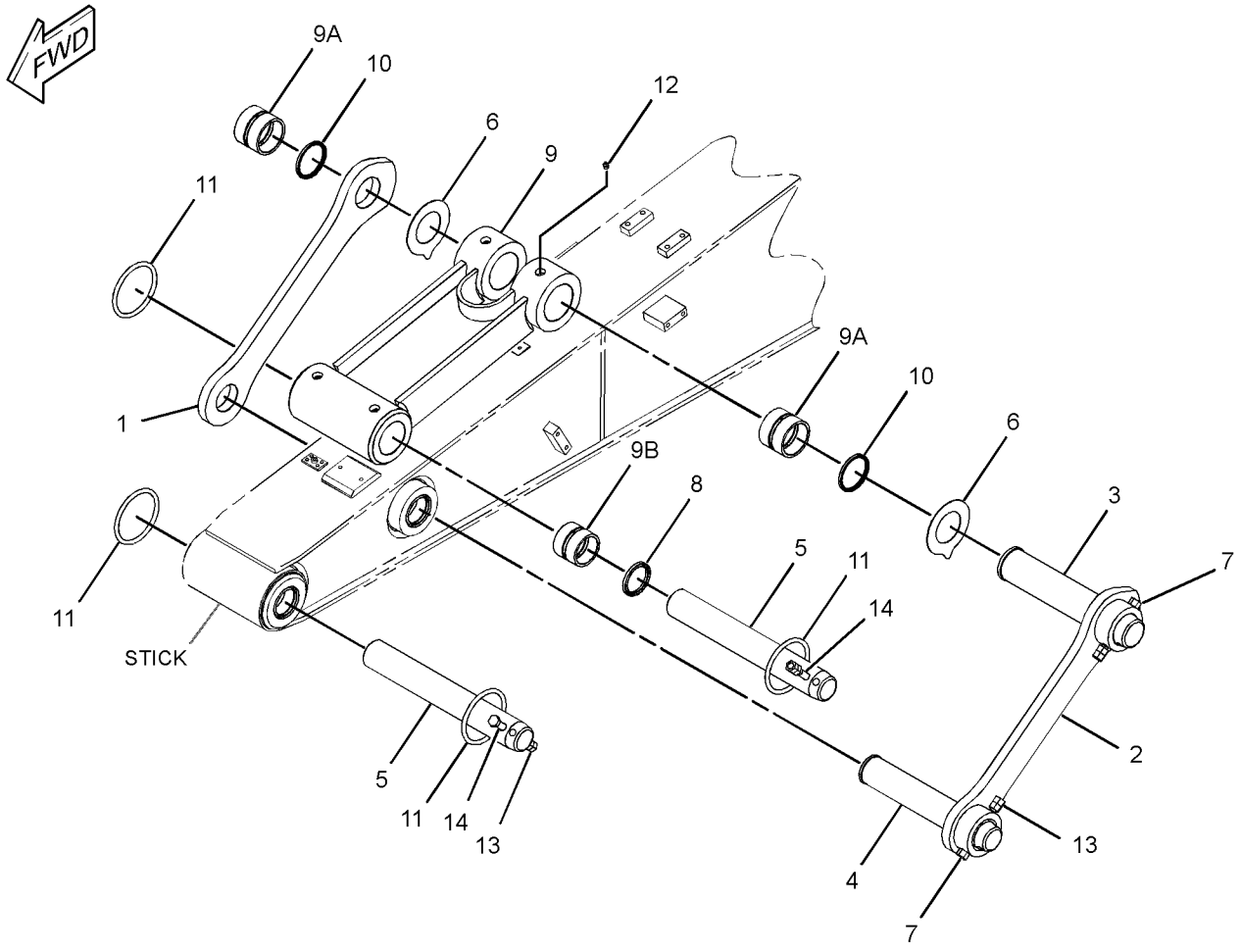

GRAPHIC #1 **<END>** g02795636

385-4101 STICK AR-HOE—REACH, HEAVY-DUTY, AUXILIARY

S/N: HAH1-UP
2.6-M (8.5-FT)
PART OF 454-5646 DISTRIBUTION AR
AN ATTACHMENT

SMCS-6502 **i04958571**

NOTE	PART NUMBER	QTY	PART NAME 1 2 3 4 5 6 (PRODUCT LEVEL)	SEE PAGE
Y	*131-9962*	1	LINES GP-STICK (LONG)	246
Y	*392-2339*	1	STICK GP-HOE	316

Y - SEPARATE ILLUSTRATION

<END>

385-4156 STICK AR-HOE

S/N: HAH1-UP
PART OF 454-5647 DISTRIBUTION AR
AN ATTACHMENT

SMCS-6502 **i04961749**

NOTE	PART NUMBER	QTY	PART NAME 1 2 3 4 5 6 (PRODUCT LEVEL)	SEE PAGE
Y	*275-1695*	1	LINES GP-STICK	247
Y	*393-2879*	1	STICK GP-HOE	317

Y - SEPARATE ILLUSTRATION

<END>

392-2339 STICK GP-HOE

S/N: HAH1-UP
2.6-M (8.5-FT)
PART OF 385-4101 STICK AR-HOE
AN ATTACHMENT

SMCS-6502 **i05966541**

NOTE	REF NO	GRAPHIC REF	PART NUMBER	QTY	PART NAME 1 2 3 4 5 6 (PRODUCT LEVEL)	SEE PAGE
	1	1	**3B-8489**	3	FITTING-GREASE (1/8-27 PTF)	
	2	1	**4I-4811**	1	PIN AS	
	3	1	**093-0349**	2	WASHER (22X60X6-MM THK)	
	4	1	**107-9852**	1	PIN AS	
	5	1	**118-5982**	2	SPACER (73X105X14-MM THK)	
	6	1	**166-1482**	2	SHIM (2-MM THK)	
	7	1	**166-1495**	2	SEAL-LIP TYPE	
	8	1	**235-7679**	4	SEAL-LIP TYPE	
	9	1	**392-2340**	1	STICK & BEARING AS	
	9A	1	**228-5614**	2	BUSHING (500 SERVICE HOURS)	
	9B	1	**229-1096**	2	BUSHING	
	9C	1	**244-4277**	2	BUSHING (1000 SERVICE HOURS)	
	10	1	**451-2176**	2	WASHER-HARD (22X35X3.5-MM THK)	
M	11	1	**453-2844**	2	BOLT (M20X2.5X30-MM)	

M - METRIC PART

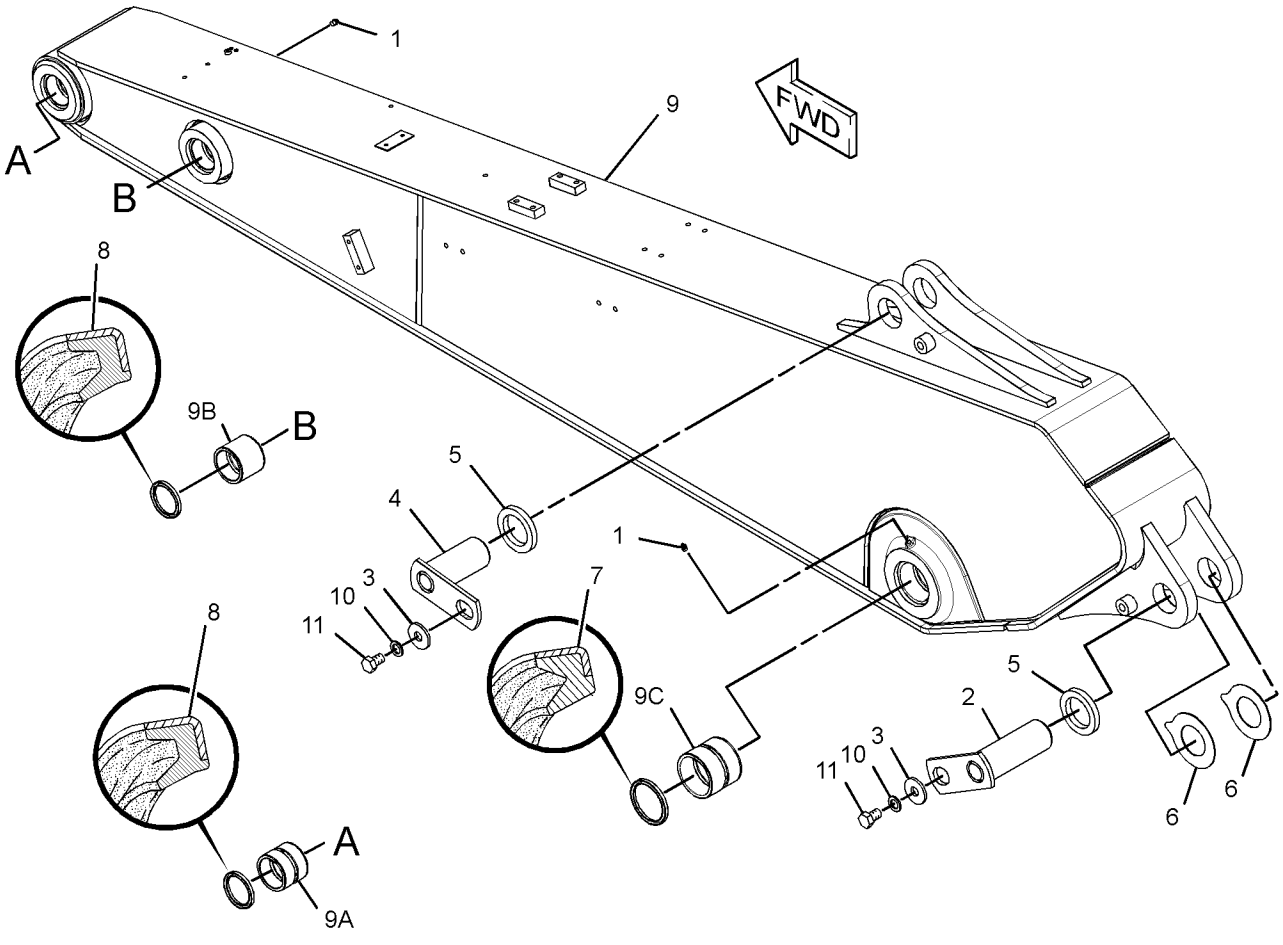

GRAPHIC #1 **<END>** g01622710

393-2879 STICK GP-HOE

S/N: HAH1-UP
2.9-M (9.5-FT)
PART OF 385-4156 STICK AR-HOE
AN ATTACHMENT

SMCS-6502 **i05966542**

NOTE	REF NO	GRAPHIC REF	PART NUMBER	QTY	PART NAME 1 2 3 4 5 6 (PRODUCT LEVEL)	SEE PAGE
	1	1	**3B-8489**	3	FITTING-GREASE (1/8-27 PTF)	
	2	1	**4I-4811**	1	PIN AS	
	3	1	**093-0349**	2	WASHER (22X60X6-MM THK)	
	4	1	**107-9852**	1	PIN AS	
	5	1	**118-5982**	2	SPACER (73X105X14-MM THK)	
	6	1	**166-1482**	2	SHIM (2-MM THK)	
	7	1	**166-1495**	2	SEAL-LIP TYPE	
	8	1	**235-7679**	4	SEAL-LIP TYPE	
	9	1	**393-2888**	1	STICK & BEARING AS	
	9A	1	**228-5614**	2	BUSHING (500 SERVICE HOURS)	
	9B	1	**229-1096**	2	BUSHING	
	9C	1	**228-5615**	2	BUSHING (500 SERVICE HOURS)	
	10	1	**451-2176**	2	WASHER-HARD (22X35X3.5-MM THK)	
M	11	1	**453-2844**	2	BOLT (M20X2.5X30-MM)	

M - METRIC PART

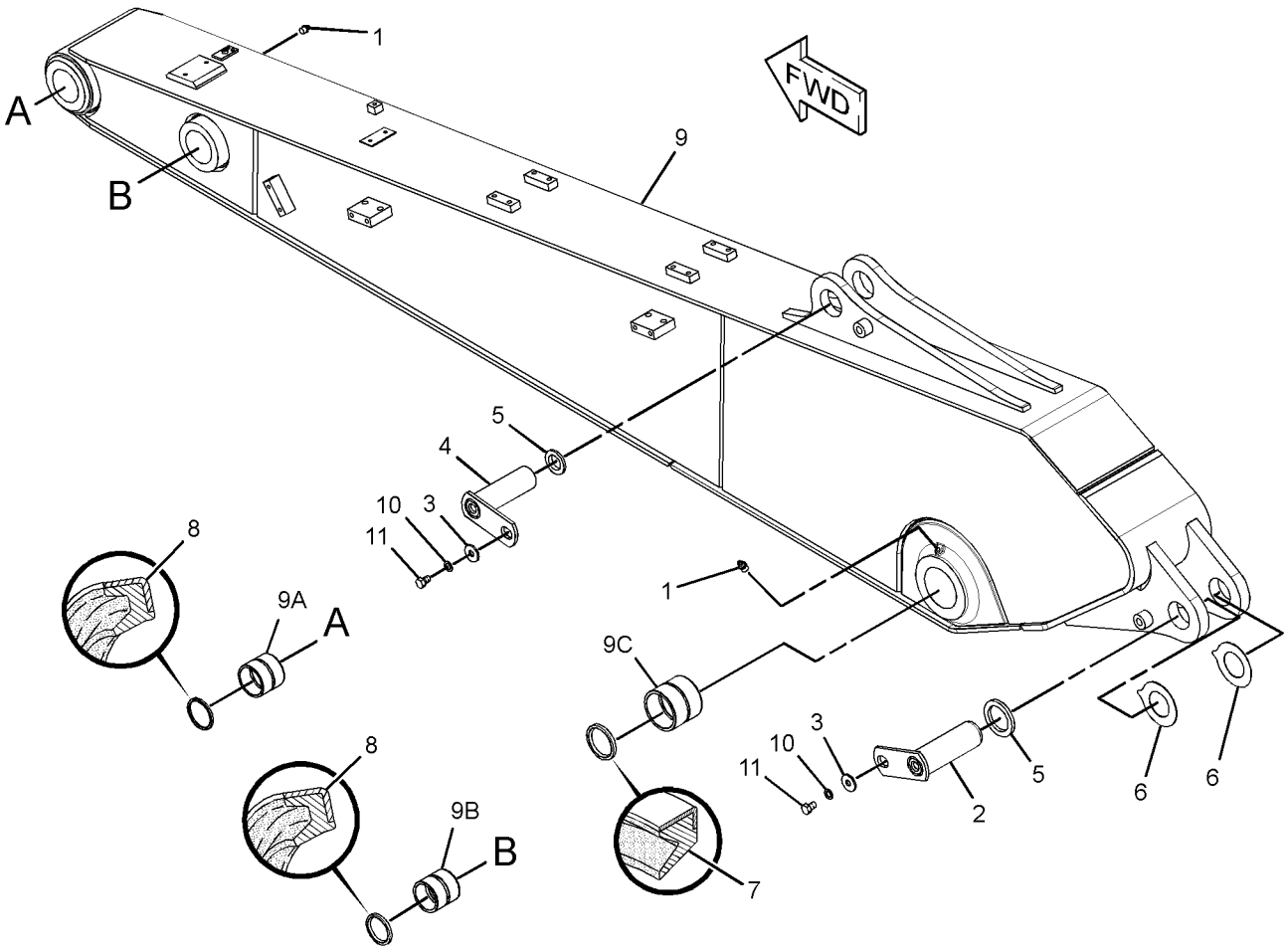

GRAPHIC #1 **<END>** g01380667

106-6757 ADJUSTER GP-BUCKET

S/N: HAH1-UP

PART OF 353-1589, 432-6783 BUCKET & ADJUSTER GP

AN ATTACHMENT

SMCS-6513, 6700 **i03853511**

NOTE	REF NO	GRAPHIC REF	PART NUMBER	QTY	PART NAME 1 2 3 4 5 6 (PRODUCT LEVEL)	SEE PAGE
B	1	1	**107-9965**	6	SHIM (1-MM THK)	
B	2	1	**107-9966**	4	SHIM (0.5-MM THK)	
	3	1	**193-5014**	1	PIN	
	4	1	**107-9967**	1	PLATE	
M	5	1	**8T-4193**	4	BOLT (M16X2X50-MM)	
	6	1	**9X-8257**	4	WASHER (17.5X30X3.5-MM THK)	
	7	1	**193-5013**	1	FLANGE	

B - USE AS REQUIRED
M - METRIC PART

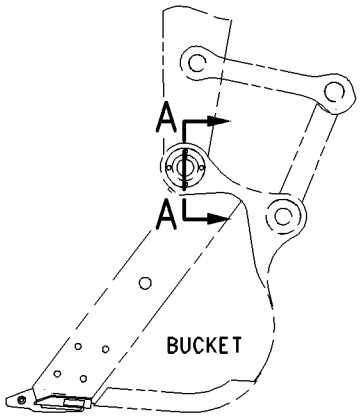

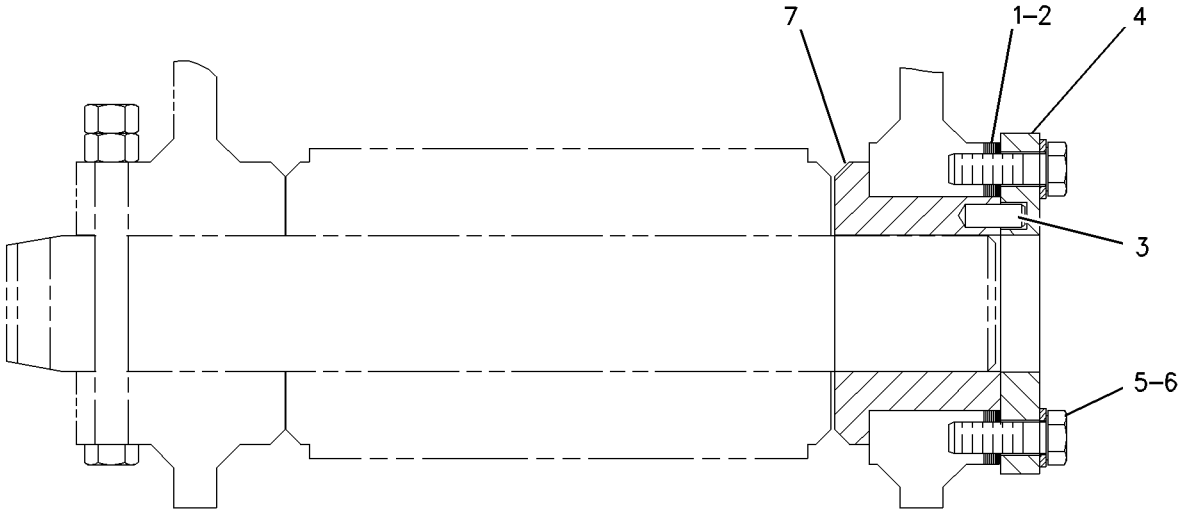

SECTION A–A

GRAPHIC #1 **<END>** g00767965

353-1589 BUCKET & ADJUSTER GP–SEVERE SERVICE ROCK

S/N: HAH1-UP
1072-MM (42-IN) WIDE X 0.8-CU M (1.0-CU YD) CAPACITY. J350 ADAPTERS, QTY OF 5
PART OF 394-2345 BUCKET AR-SEVERE SERVICE ROCK
AN ATTACHMENT

SMCS-6503, 6513 **i05242370**

NOTE	REF NO	GRAPHIC REF	PART NUMBER	QTY	PART NAME 1 2 3 4 5 6 (PRODUCT LEVEL)	SEE PAGE
Y	1	1	**106-6757**	1	ADJUSTER GP-BUCKET	318
	2	1	**312-5694**	1	SETSCREW (1/4-20X0.25-IN)	
Y	3	1	*353-1595*	1	BUCKET AS-SEVERE SERVICE ROCK	322
	4	1	**2C-9259**	1	PLATE-IDENTIFICATION (CAT)	

Y - SEPARATE ILLUSTRATION

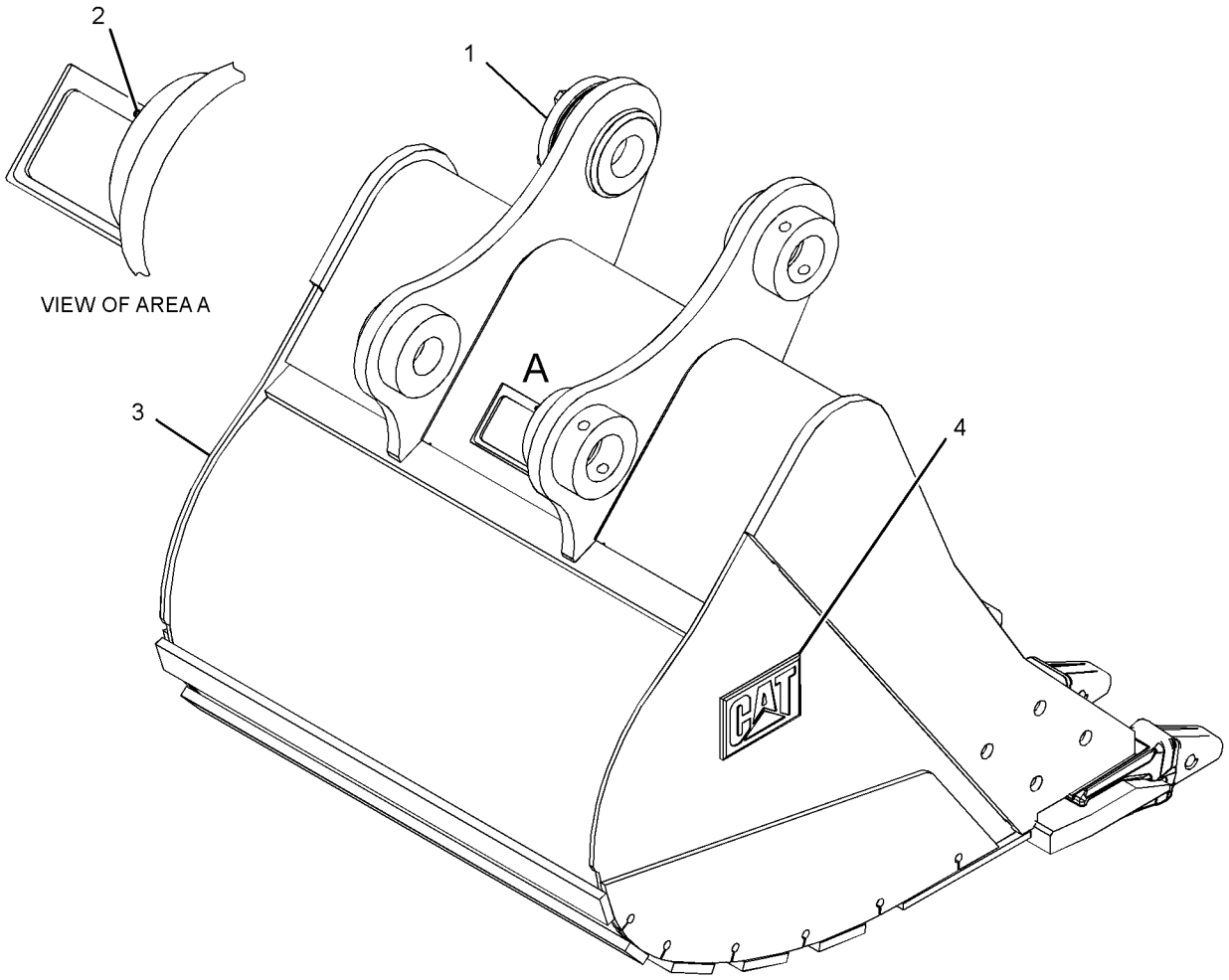

GRAPHIC #1 **<END>** g02716053

432-6783 BUCKET & ADJUSTER GP—GENERAL PURPOSE

S/N: HAH1-UP
1200-MM (47-IN) WIDE X 0.8-CU M (1.1-CU YD) CAPACITY. J-300 ADAPTERS, QTY OF 6
PART OF 433-0313 BUCKET AR-GENERAL PURPOSE
AN ATTACHMENT

SMCS-6503, 6513 **i05296582**

NOTE	PART NUMBER	QTY	PART NAME 1 2 3 4 5 6 (PRODUCT LEVEL)	SEE PAGE
Y	**106-6757**	1	ADJUSTER GP-BUCKET	318
Y	*432-6784*	1	BUCKET AS-GENERAL PURPOSE	321
	2C-9259	1	PLATE-IDENTIFICATION (CAT)	
			(ON LEFT SIDE OF BUCKET)	
	312-5694	1	SETSCREW (1/4-20X0.25-IN)	
			(USE TO MOUNT BUCKET INFORMATION PLATE)	
Y - SEPARATE ILLUSTRATION				

<END>

433-0313 BUCKET AR-GENERAL PURPOSE

S/N: HAH1-UP
1200-MM (47-IN) WIDE X 0.8-CU M (1.1-CU YD) CAPACITY
AN ATTACHMENT

SMCS-6101 **i05296557**

NOTE	PART NUMBER	QTY	PART NAME 1 2 3 4 5 6 (PRODUCT LEVEL)	SEE PAGE
Y	*432-6783*	1	BUCKET & ADJUSTER GP (GENERAL PURPOSE)	320
Y	*380-1204*	1	SIDECUTTER GP	323
Y	*9J-3167*	6	TIP GP-LONG (J-300)	324
Y - SEPARATE ILLUSTRATION				

<END>

394-2345 BUCKET AR-SEVERE SERVICE ROCK

S/N: HAH1-UP
1072-MM (42-IN) WIDE X 0.76-CU M (1-CU YD) CAPACITY
AN ATTACHMENT

SMCS-6102, 6529 **i05242358**

NOTE	PART NUMBER	QTY	PART NAME 1 2 3 4 5 6 (PRODUCT LEVEL)	SEE PAGE
Y	**353-1589**	1	BUCKET & ADJUSTER GP (SEVERE SERVICE ROCK)	319
Y	*380-1204*	1	SIDECUTTER GP	323
Y	*195-9181*	5	TIP GP-PENETRATION PLUS (J-350)	325
Y - SEPARATE ILLUSTRATION				

<END>

432-6784 BUCKET AS-GENERAL PURPOSE

S/N: HAH1-UP
1200-MM (47-IN) WIDE X 0.8-CU M (1.1-CU YD) CAPACITY. J-300 ADAPTERS, QTY OF 6
PART OF 432-6783 BUCKET & ADJUSTER GP
AN ATTACHMENT

SMCS-6101 **i05296593**

NOTE	REF NO	GRAPHIC REF	PART NUMBER	QTY	PART NAME 1 2 3 4 5 6 (PRODUCT LEVEL)	SEE PAGE
	1	1	*432-6786*	1	EDGE AS	
	1A	1	**8E-9490**	6	ADAPTER-TIP (J-300, 2-STRAP)	
	1B	1	**8P-9770**	1	PLATE	
	2	1	**424-1296**	1	PLATE-WEAR	
	3	1	**432-6797**	2	PLATE-WEAR	
	4	1	**358-8606**	4	PLATE-WEAR	
	5	1	**373-3782**	1	PLATE AS-HINGE	

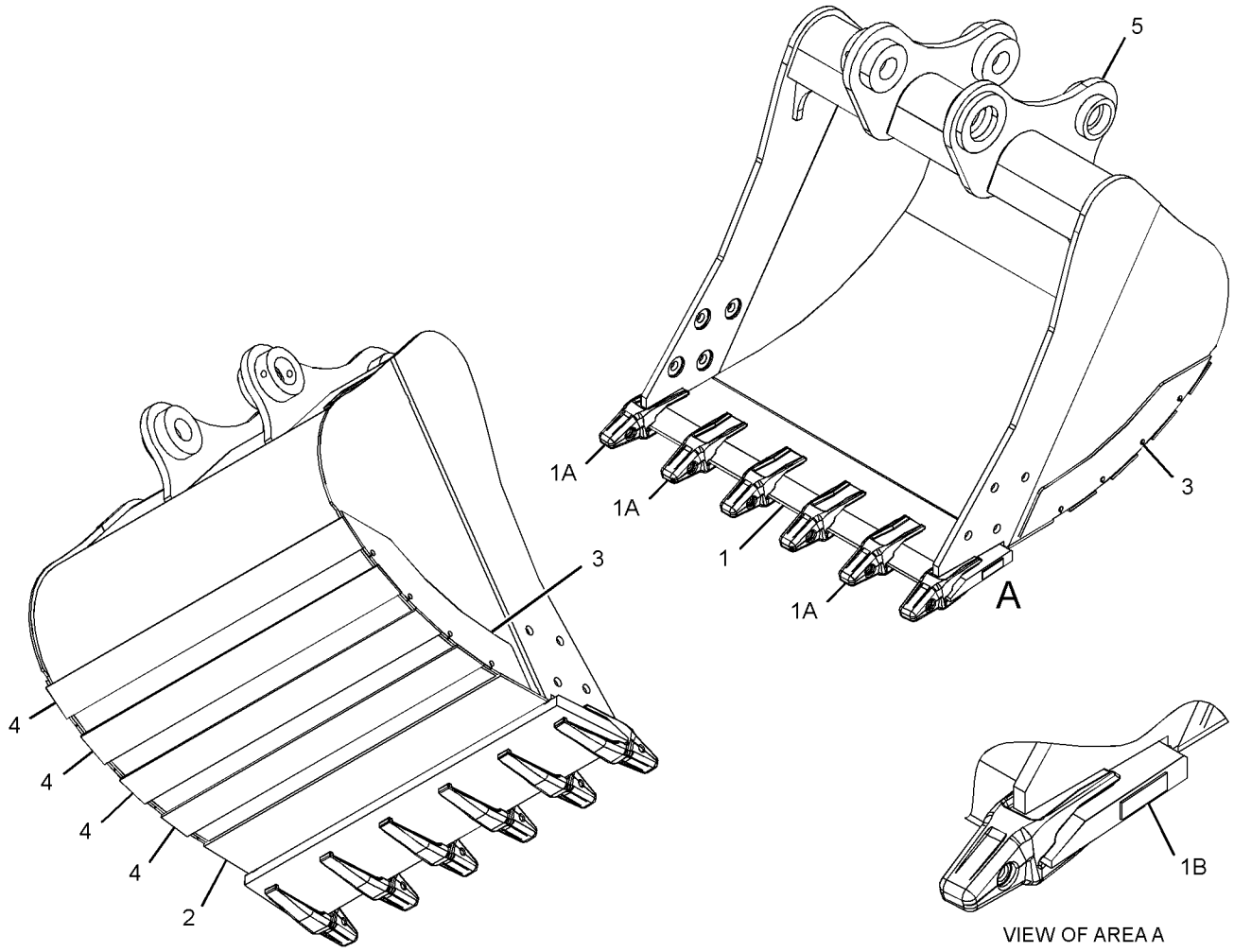

GRAPHIC #1

VIEW OF AREA A

g03377206

<END>

353-1595 BUCKET AS-SEVERE SERVICE ROCK

S/N: HAH1-UP
1072-MM (42-IN) WIDE X 0.8-CU M (1.0-CU YD) CAPACITY. J350 ADAPTERS, QTY OF 5
PART OF 353-1589 BUCKET & ADJUSTER GP
AN ATTACHMENT

SMCS-6001 **i05242397**

NOTE	REF NO	GRAPHIC REF	PART NUMBER	QTY	PART NAME 1 2 3 4 5 6 (PRODUCT LEVEL)	SEE PAGE
	1	1	**377-2244**	1	PLATE-WEAR	
	2	1	**377-8725**	1	EDGE AS	
	2A	1	**6I-6354**	3	ADAPTER-TIP (J-350, 2-STRAP, CENTER)	
	2B	1	**6I-6355**	1	ADAPTER-TIP (J-350, 2-STRAP, RH)	
	2C	1	**6I-6356**	1	ADAPTER-TIP (J-350, 2-STRAP, LH)	
	2D	1	**8P-9770**	1	PLATE	
	3	1	**377-8729**	1	PLATE (LH)	
	4	1	**377-8730**	1	PLATE (RH)	
	5	1	**349-8500**	2	PLATE-WEAR	
	6	1	**377-8731**	1	PLATE AS-HINGE	
	7	1	**273-3427**	3	PLATE-WEAR	
	8	1	**273-3430**	2	PLATE-WEAR	

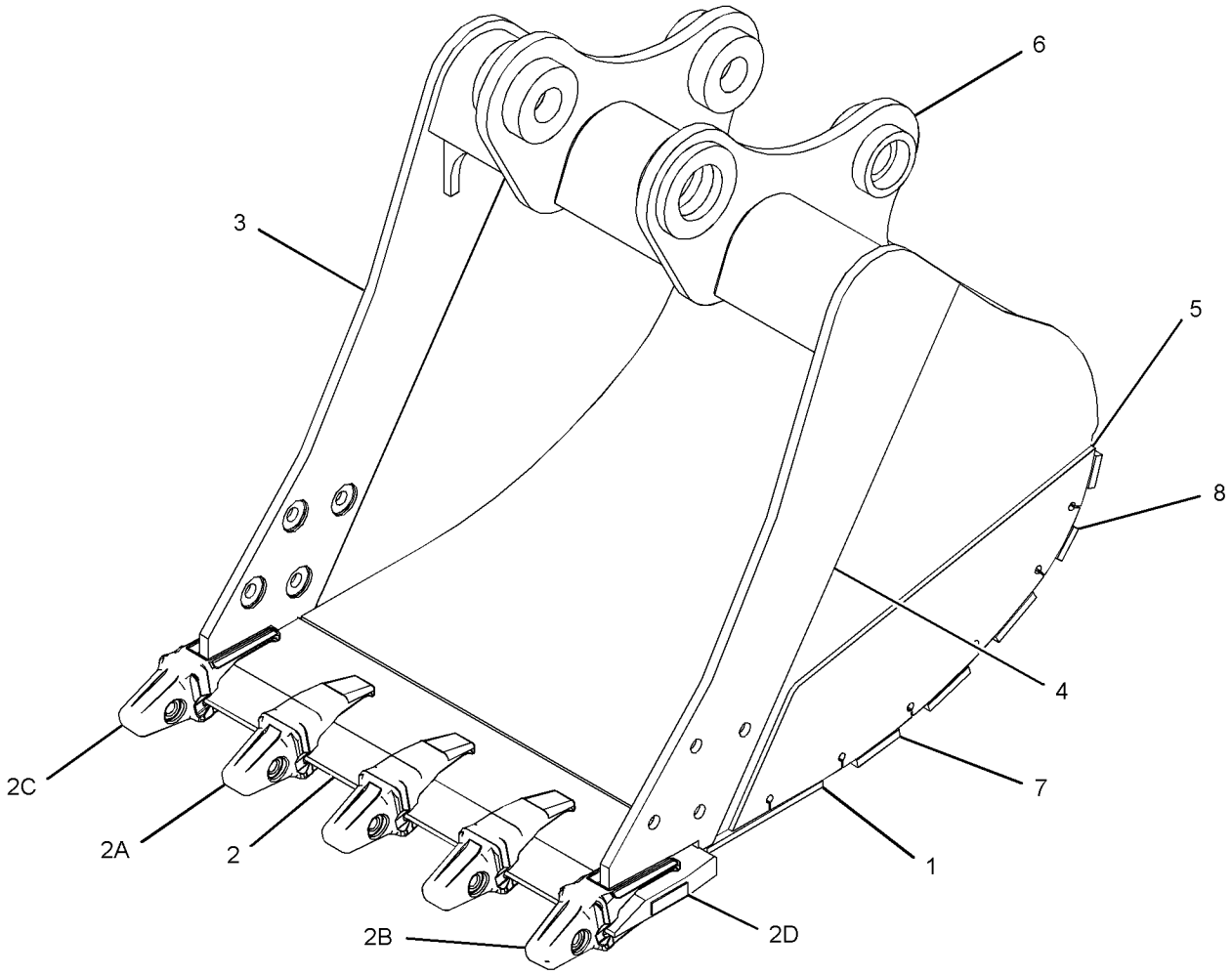

GRAPHIC #1 **<END>** g02750176

380-1204 SIDECUTTER GP

S/N: HAH1-UP

PART OF 433-0313 BUCKET AR-GENERAL PURPOSE, 394-2345 BUCKET AR-SEVERE SERVICE ROCK AN ATTACHMENT

SMCS-6813 **i05876405**

NOTE	REF NO	GRAPHIC REF	PART NUMBER	QTY	PART NAME 1 2 3 4 5 6 (PRODUCT LEVEL)	SEE PAGE
	1	1	**357-2713**	1	SIDECUTTER (LH)	
	2	1	**357-2714**	1	SIDECUTTER (RH)	
M	3	1	**7X-0851**	8	NUT (M24X3-THD)	
M	4	1	**8T-0380**	8	BOLT (M24X3X60-MM)	

M - METRIC PART

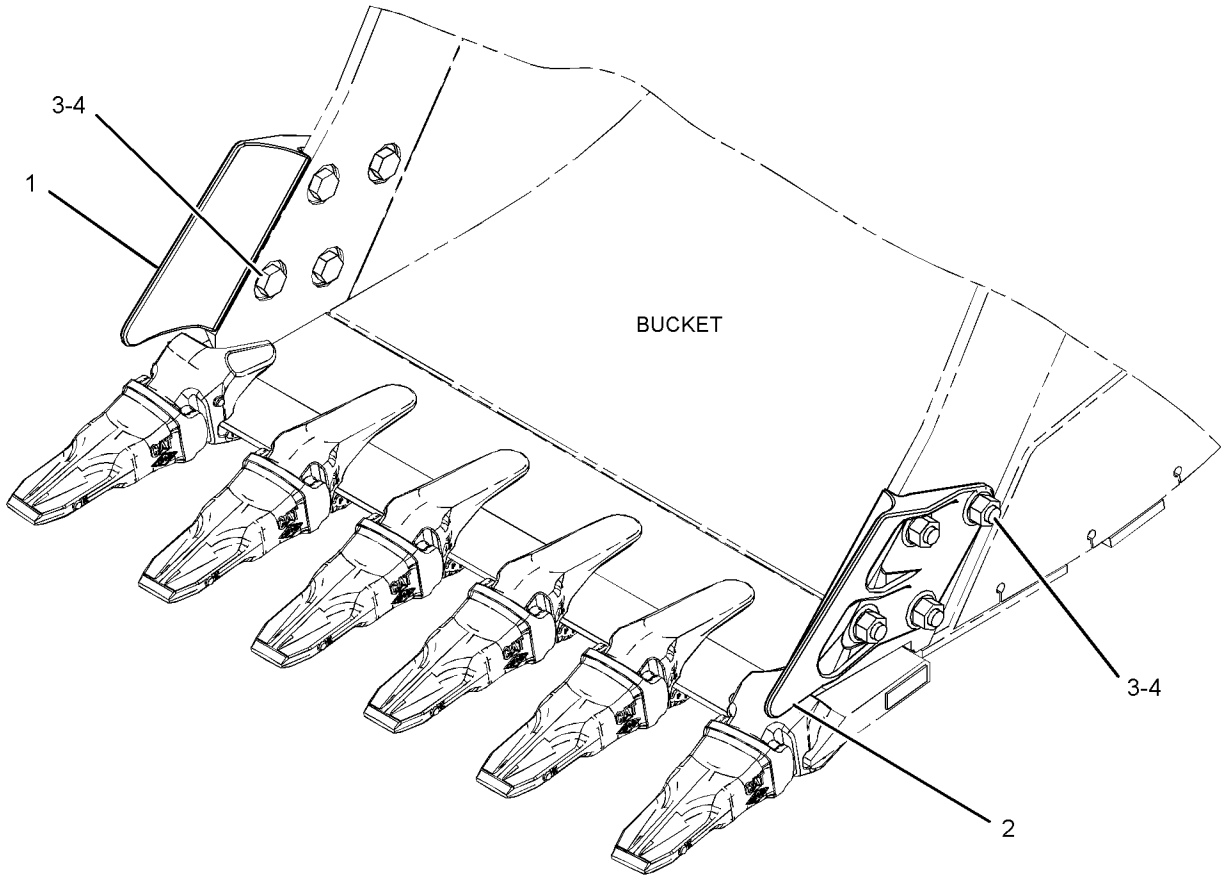

GRAPHIC #1 **<END>** g02719648

9J-3167 TIP GP-LONG—J-300

S/N: HAH1-UP

PART OF 433-0313 BUCKET AR-GENERAL PURPOSE

AN ATTACHMENT

SMCS-6805 **i04364304**

NOTE	REF NO	GRAPHIC REF	PART NUMBER	QTY	PART NAME 1 2 3 4 5 6 (PRODUCT LEVEL)	SEE PAGE
	1	1	**107-3308**	1	PIN	
	2	1	**8E-6259**	1	RETAINER AS	
	3	1	**1U-3302**	1	TIP-LONG	

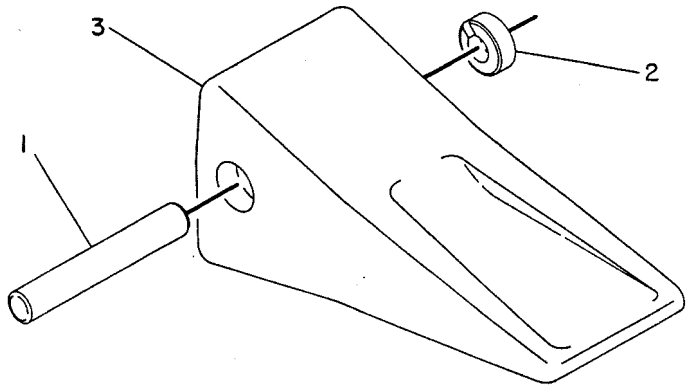

GRAPHIC #1 **<END>** g00115577

195-9181 TIP GP-PENETRATION PLUS–J-350

S/N: HAH1-UP

PART OF 394-2345 BUCKET AR-SEVERE SERVICE ROCK

AN ATTACHMENT

SMCS-6805 **i05335223**

NOTE	REF NO	GRAPHIC REF	PART NUMBER	QTY	PART NAME 1 2 3 4 5 6 (PRODUCT LEVEL)	SEE PAGE
	1	1	**114-0358**	1	PIN	
	2	1	**114-0359**	1	RETAINER AS	
	3	1	**168-1359**	1	TIP-PENETRATION	

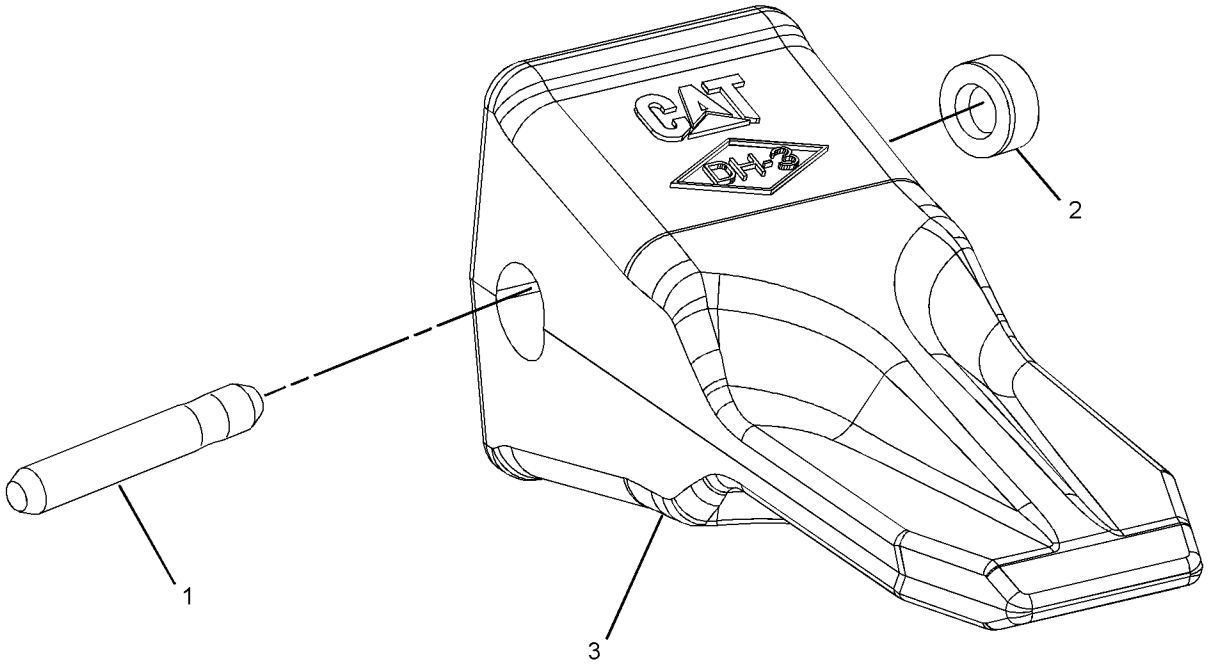

GRAPHIC #1 **<END>** g01381522

416-1798 AIR CONDITIONER & MOUNTING GP

S/N: HAH1-UP
PART OF 418-9897 AIR CONDITIONER AR
AN ATTACHMENT

SMCS-7320 **i05528713**

NOTE	REF NO	GRAPHIC REF	PART NUMBER	QTY	PART NAME 1 2 3 4 5 6 (PRODUCT LEVEL)	SEE PAGE
	1	1	**111-4836**	3	CLIP	
	2	1	**235-8874**	1	SENSOR-TEMPERATURE (AMBIENT AIR)	
	3	1	**235-8875**	1	BRACKET	
	4	1	**235-9005**	1	HARNESS AS-HEATER & AIR COND (LOW SIDE)	
Y	5	1	**316-8916**	1	AIR CONDITIONER GP	329
	6	1	**396-6895**	1	PANEL AS-CONTROL	
	7	1	**416-1802**	1	HARNESS AS-HEATER & AIR COND (HIGH SIDE)	
	8	1	**119-5026**	4	SCREW-PAN HEAD (10-16X0.63-IN)	
	9	1	**3S-2093**	1	STRAP-CABLE	
	10	1	**4P-7581**	1	CLIP	
M	11	1	**5C-9553**	1	BOLT (M6X1X16-MM)	
	12	1	**7X-7729**	7	WASHER (11X25X3-MM THK)	
	13	1	**8T-4121**	3	WASHER-HARD (11X21X2.5-MM THK)	
M	14	1	**8T-4136**	7	BOLT (M10X1.5X25-MM)	
M	15	1	**8T-4137**	3	BOLT (M10X1.5X20-MM)	
	16	1	**9X-8256**	1	WASHER (6.6X12X2-MM THK)	

M - METRIC PART
Y - SEPARATE ILLUSTRATION

416-1798 **AIR CONDITIONER & MOUNTING GP (*contd.*)** **i05528713**

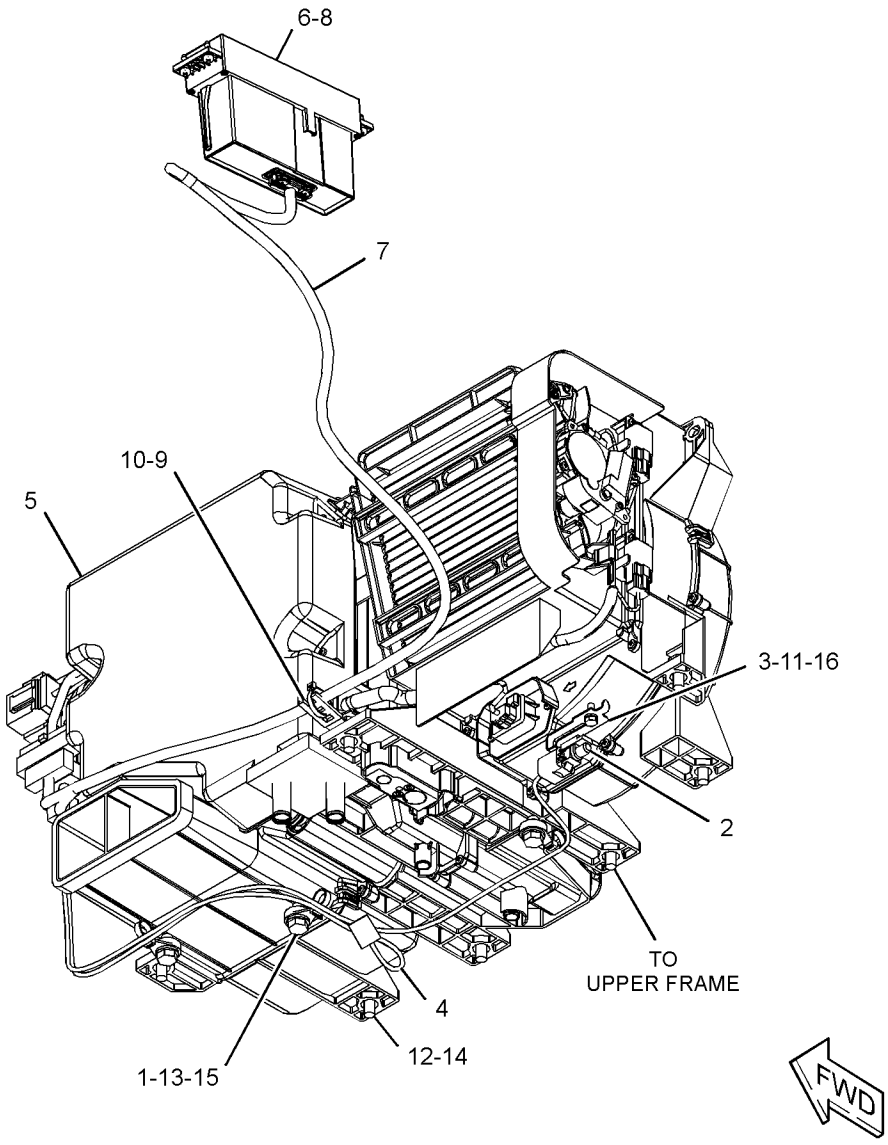

GRAPHIC #1 **<END>** g03312776

418-9897 AIR CONDITIONER AR

S/N: HAH1-UP

PART OF 454-5636 OPTION AR-CAB

AN ATTACHMENT

SMCS-7320 **i05335334**

NOTE	PART NUMBER	QTY	PART NAME 1 2 3 4 5 6 (PRODUCT LEVEL)	SEE PAGE
Y	*416-1798*	1	AIR CONDITIONER & MOUNTING GP	326
Y	*229-9082*	1	DUCT GP-CAB AIR	382
	185-8284	1	COVER	
	235-8950	2	CLIP	
			(LOCATED ON RH CAB CONSOLE SWITCH PANEL)	

Y - SEPARATE ILLUSTRATION

<END>

316-8916 AIR CONDITIONER GP

S/N: HAH1-UP

PART OF 416-1798 AIR CONDITIONER & MOUNTING GP

AN ATTACHMENT

SMCS-7320 **i03492341**

NOTE	REF NO	GRAPHIC REF	PART NUMBER	QTY	PART NAME 1 2 3 4 5 6 (PRODUCT LEVEL)	SEE PAGE
	1	1	**185-8300**	35	SCREW-TAPPING	
	2	1	**185-8302**	3	SCREW AS-TAPPING	
	3	1	**245-7817**	2	MOTOR AS	
	4	1	**245-7818**	3	CLIP	
	5	1	**245-7819**	2	CLIP	
	6	1	**245-7820**	1	COVER-FRONT	
	7	1	**245-7825**	1	INSULATOR	
	8	1	**245-7826**	1	INSULATOR	
	9	1	**245-7827**	1	INSULATOR	
	10	1	**245-7828**	1	INSULATOR	
	11	1	**245-7829**	1	PACKING	
	12	1	**245-7830**	1	CLIP	
	13	1	**245-7831**	1	SENSOR AS-TEMPERATURE (COOLANT)	
	14	1	**245-7832**	1	CONTROL AS	
	15	1	**245-7833**	1	CORE AS-HEATER	
	16	1	**245-7834**	1	DAMPER AS	
	17	1	**245-7835**	1	SENSOR AS-TEMPERATURE (AMBIENT AIR TEMP)	
Y	18	1	**245-7836**	1	COIL GP-EVAPORATOR	353
	19	1	**245-7838**	1	PACKING	
	20	1	**245-7839**	1	MOTOR AS (WITH FAN)	
Y	21	1	**245-7846**	1	CONTROL GP-HEAT & AIR COND (AIR INLET)	370
	22	1	**245-7847**	1	HARNESS AS-HEATER & AIR COND	
	23	1	**245-7856**	3	SCREW AS-TAPPING	
	24	1	**293-1137**	1	FILTER GP-AIR (AIR CONDITIONER)	
		1	**245-7823**	1	FILTER ELEMENT-CAB AIR	
		1	**245-7824**	1	PACKING	
	25	1	**316-8846**	1	PLATE	
	26	1	**316-8847**	2	ROD	
	27	1	**316-8849**	1	ROD	
	28	1	**316-8918**	1	PLATE	
	29	1	**316-8920**	1	ROD	
	30	1	**316-8921**	1	ROD	

Y - SEPARATE ILLUSTRATION

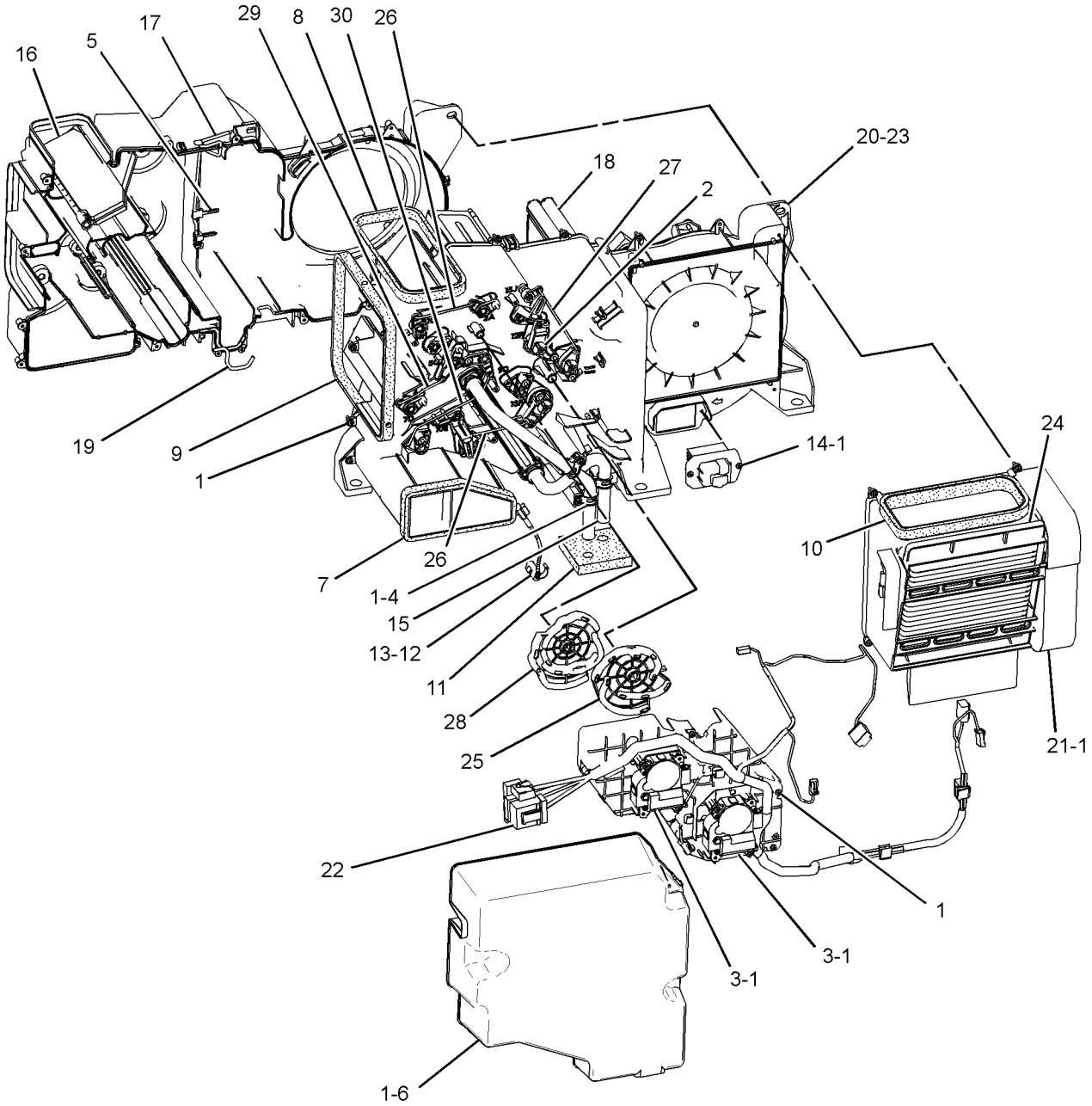

FRONT VIEW
(UPPER RIGHT)

GRAPHIC #1 **<END>** g01684274

259-7346 ARMREST GP–RH

S/N: HAH1-UP

PART OF 259-7348 CONSOLE GP-OPERATOR

SMCS-7307 **i05509649**

NOTE	REF NO	GRAPHIC REF	PART NUMBER	QTY	PART NAME 1 2 3 4 5 6 (PRODUCT LEVEL)	SEE PAGE
M	1	1	**171-7325**	3	SCREW-TAPPING (M5X0.8-THD)	
M	2	1	**185-8286**	2	SCREW-MACHINE (M4X0.7X8-MM)	
	3	1	**235-8951**	1	SUPPORT AS	
	4	1	**235-8996**	1	COVER	
	5	1	**235-8997**	1	KNOB	
	6	1	**259-7345**	1	CUSHION	

M - METRIC PART

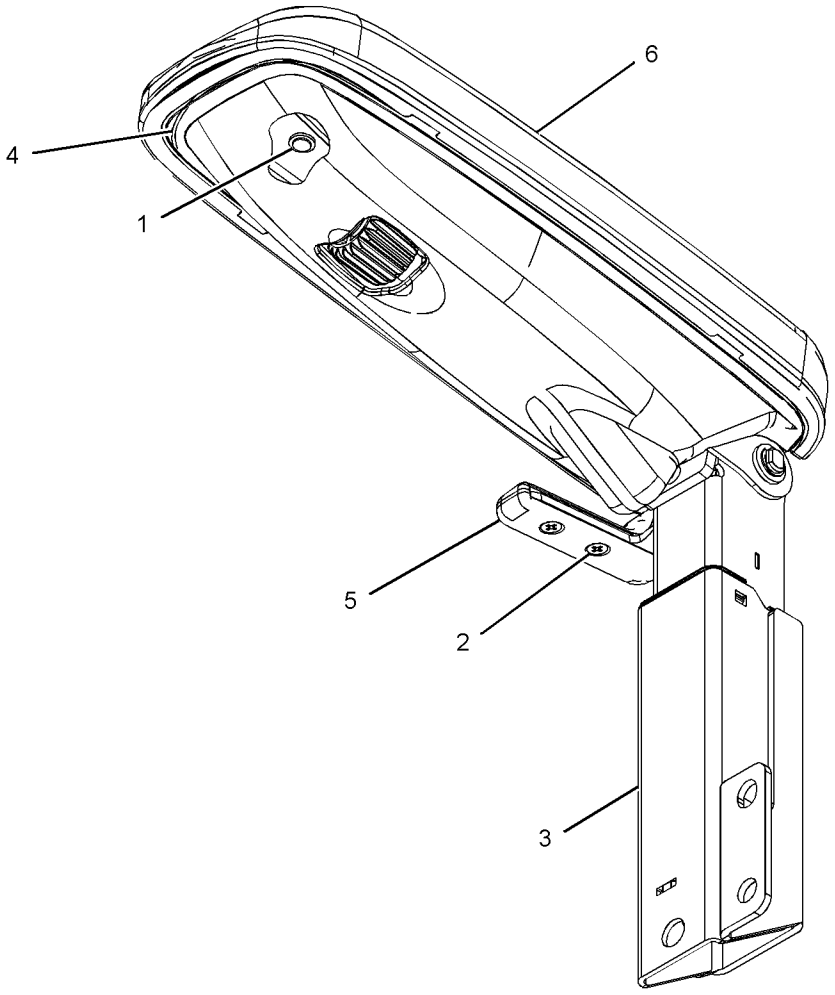

GRAPHIC #1 **<END>** g03482800

259-7347 ARMREST GP–LH

S/N: HAH1-UP

PART OF 421-1434 CONSOLE GP-OPERATOR

SMCS-7307 **i02534955**

NOTE	REF NO	GRAPHIC REF	PART NUMBER	QTY	PART NAME 1 2 3 4 5 6 (PRODUCT LEVEL)	SEE PAGE
M	1	1	**171-7325**	3	SCREW-TAPPING (M5X0.8-THD)	
M	2	1	**185-8286**	2	SCREW-MACHINE (M4X0.7X8-MM)	
	3	1	**235-8952**	1	SUPPORT AS	
	4	1	**235-8996**	1	COVER	
	5	1	**235-8998**	1	KNOB	
	6	1	**259-7345**	1	CUSHION	

M - METRIC PART

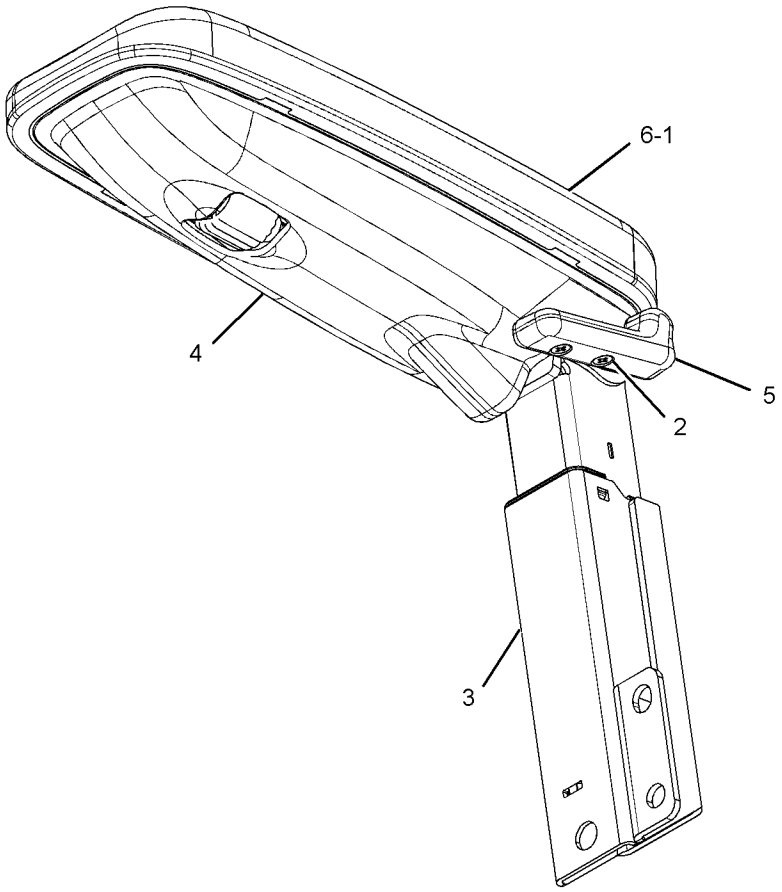

GRAPHIC #1 **<END>** g01210886

346-7375 BRACKET GP-MOUNTING-MIRROR

S/N: HAH1-UP
PART OF 346-8058 CAB GP
AN ATTACHMENT

SMCS-0635 **i05847743**

NOTE	REF NO	GRAPHIC REF	PART NUMBER	QTY	PART NAME 1 2 3 4 5 6 (PRODUCT LEVEL)	SEE PAGE
	1	1	**2U-2552**	5	LOCKWASHER	
M	2	1	**6V-5683**	3	BOLT (M6X1X16-MM)	
M	3	1	**9X-6153**	2	BOLT (M6X1X10-MM)	
					PARTS SHOWN IN GRAPHIC(S) WITHOUT A REFERENCE NUMBER ARE NOT SERVICED SEPARATELY	

M - METRIC PART

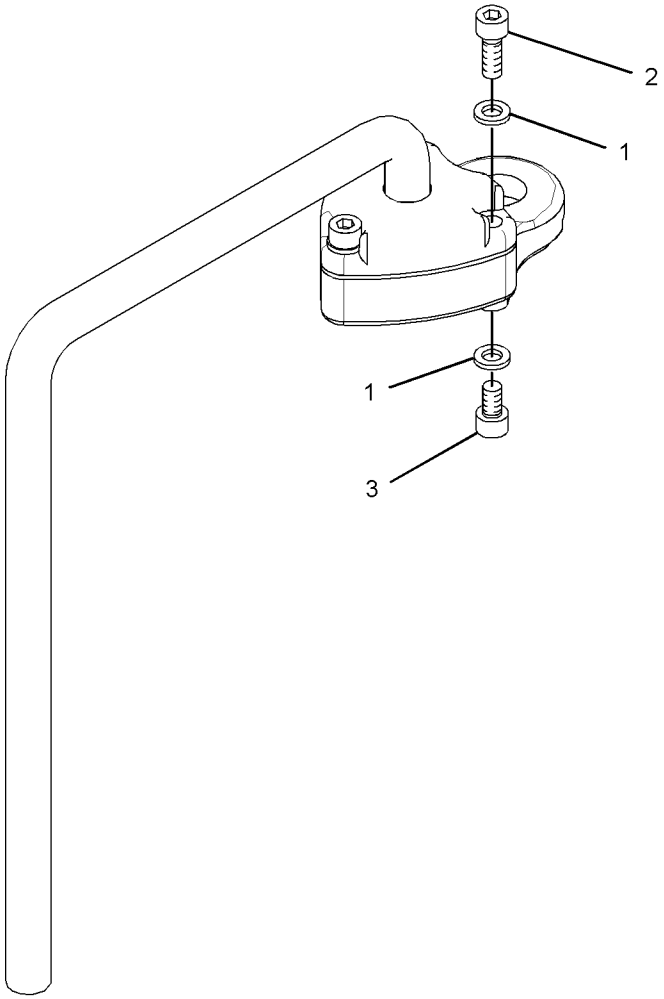

GRAPHIC #1 **<END>** g01962144

OPERATOR STATION

346-8058 CAB GP

S/N: HAH1-UP
PART OF 399-0057 CAB GP
AN ATTACHMENT

SMCS-7301, 7325 **i05845885**

NOTE	REF NO	GRAPHIC REF	PART NUMBER	QTY	PART NAME 1 2 3 4 5 6 (PRODUCT LEVEL)	SEE PAGE
	1	1	**139-7126**	1	HOLDER	
	2	1	**139-7127**	1	HOLDER	
	3	1	**156-6599**	1	STRIKER	
	4	1	**161-3685**	1	ROD	
	5	1	**161-3697**	1	GUARD	
	6	1	**164-0523**	1	LEVER AS	
	7	1	**164-0527**	1	ROD	
Y	8	1	*164-0528*	1	LEVER GP-CAB DOOR	390
	9	1	**167-7018**	1	COVER AS	
	10	1	**167-7042**	2	SEAL	
	11	1	**171-7426**	1	CABLE AS	
	12	1	*176-1939*	1	LEVER AS	
M		1	**9X-2044**	1	SCREW-TRUSS HEAD (M6X1X16-MM)	
		1	**176-1937**	1	BRACKET AS	
		1	**176-1938**	1	LEVER	
	13	1	**178-5570**	2	GROMMET	
	14	1	**185-8196**	1	GROMMET	
	15	1	**189-2704**	1	SEAL	
M	16	1	**189-2864**	2	SCREW-FLAT HEAD (M8X1.25X30-MM)	
	17	1	**4B-4278**	3	WASHER (10.2X20.5X1.6-MM THK)	
	18	1	**201-4530**	1	BRACKET AS	
	19	1	**205-6295**	1	LATCH AS	
	20	1	**416-4309**	1	SEAL	
	21	1	**235-8912**	1	HANDLE AS	
	22	1	**235-8933**	1	HANDLE AS	
M	23	1	**284-4426**	1	BOLT-WING (M8X1.25X15-MM)	
	24	1	**315-5313**	1	COVER	
Y	25	1	**327-6550**	1	MIRROR GP-REAR VIEW	396
Y	26	1	**346-7375**	1	BRACKET GP-MOUNTING (MIRROR)	333
	27	1	**9X-8257**	1	WASHER (17.5X30X3.5-MM THK)	
M	28	1	**099-0823**	3	SCREW-MACHINE (M6X1X6-MM)	
M	30	1	**105-2169**	2	BOLT AS (M8X1.25X16-MM)	
M	31	1	**127-0580**	2	SCREW-FLAT HEAD (M8X1.25X20-MM)	
	32	1	**133-8016**	1	PACKING	
	33	1	**176-1986**	1	LAMP AS-DOME	
		1	**201-4417**	1	LAMP (24-VOLT, 10-WATT)	
	34	1	**1R-5998**	4	LOCKWASHER	
M	35	1	**3E-8020**	6	SCREW-TRUSS HEAD (M6X1X25-MM)	
M	36	1	**095-0755**	2	SCREW-MACHINE (M4X0.7X12-MM)	
	37	1	**4I-1205**	2	BUMPER	
	38	1	**4I-1206**	2	GUIDE	
	39	1	**4I-3063**	1	SPRING	
	40	1	**4I-3090**	4	SEAL	
M	41	1	**8T-4137**	2	BOLT (M10X1.5X20-MM)	
	42	1	**4I-3144**	2	WASHER-HARD (10.2X22X3.2-MM THK)	
	43	1	**4I-4270**	1	HOLDER-GLASS	
	44	1	**4I-4392**	3	CLIP	
	45	1	**5C-7793**	1	HOOK-COAT	
	46	1	**6V-7636**	4	PIN AS-SPRING	
	47	1	**7X-0578**	2	WASHER-HARD (10.2X32X2.5-MM THK)	
M	48	1	**8T-4133**	5	NUT (M10X1.5-THD)	
M	49	1	**8T-4779**	1	BOLT (M16X2X35-MM)	
M	50	1	**9X-2041**	3	SCREW-TRUSS HEAD (M10X1.5X20-MM)	
M	51	1	**9X-2042**	5	SCREW-TRUSS HEAD (M6X1X12-MM)	
M	52	1	**9X-2044**	5	SCREW-TRUSS HEAD (M6X1X16-MM)	
M	53	1	**9X-2045**	2	SCREW-TRUSS HEAD (M6X1X20-MM)	
E	54	1	**6I-5470**		SEAL (140-CM)	

346-8058 **CAB GP (*contd.*)** **i05845885**

NOTE	REF NO	GRAPHIC REF	PART NUMBER	QTY	PART NAME 1 2 3 4 5 6 (PRODUCT LEVEL)	SEE PAGE

E - ORDER BY THE CENTIMETER
M - METRIC PART
Y - SEPARATE ILLUSTRATION

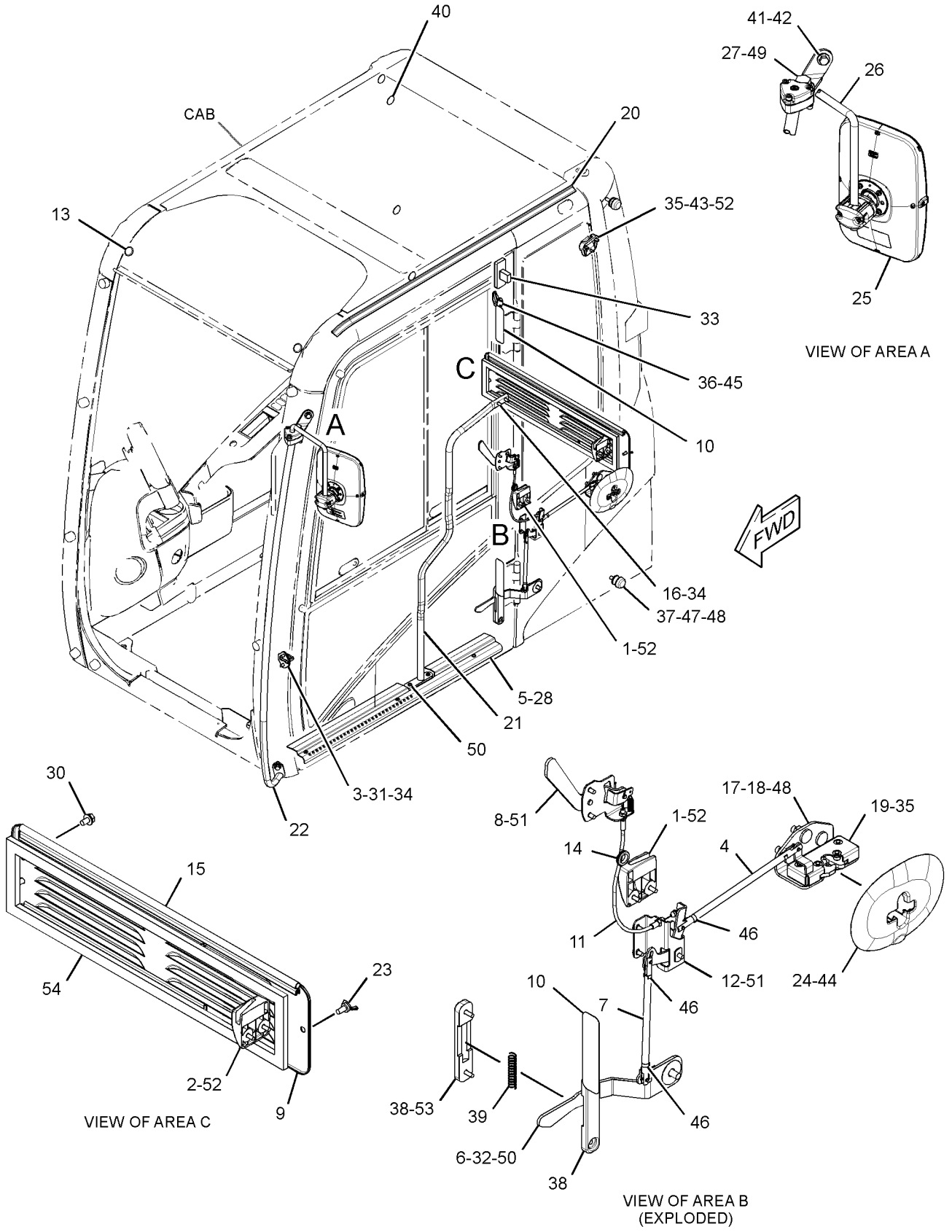

GRAPHIC #1 **<END>** g03696006

388-9093 CAB GP

S/N: HAH1-UP
PART OF 420-3810 CAB GP
AN ATTACHMENT

SMCS-7301, 7325

i05819662

NOTE	REF NO	GRAPHIC REF	PART NUMBER	QTY	PART NAME 1 2 3 4 5 6 (PRODUCT LEVEL)	SEE PAGE
Y	1	1	*439-2524*	1	CAB GP	352
Y	2	1	*388-9102*	1	CAB GP (EXTERIOR)	339
Y	3	1	*416-9608*	1	CAB GP (INTERIOR)	348
Y	4	1	*388-9107*	1	WINDOW GP-CAB (SIDE, REAR)	425
Y	5	1	*436-1116*	1	WIPER GP-WINDOW (FRONT, UPPER)	437
Y	6	1	*388-9105*	1	DOOR GP-CAB (INTERIOR)	380
Y	7	1	*388-9109*	1	WINDOW GP-CAB (FRONT, UPPER)	428
Y	8	1	*388-9108*	1	WINDOW GP-CAB (FRONT, LOWER)	426
Y	9	1	*259-7350*	1	HATCH GP-ROOF	386

Y - SEPARATE ILLUSTRATION

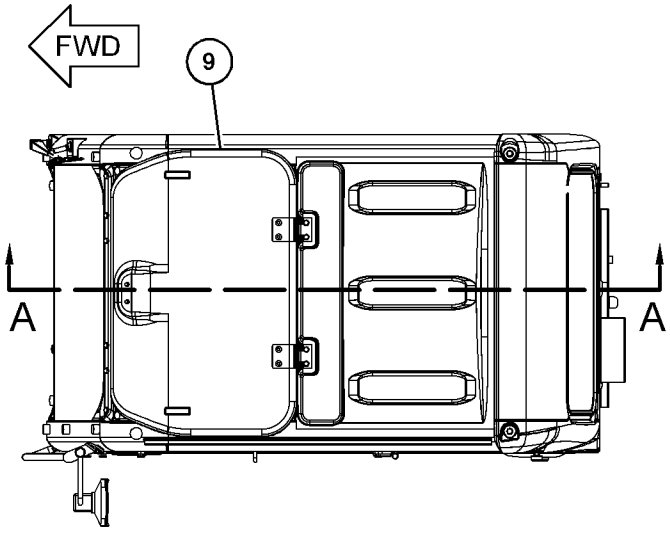

TOP VIEW

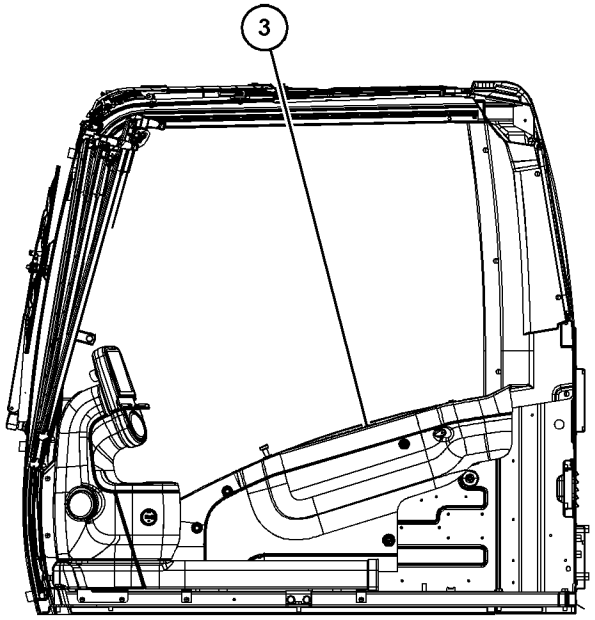

SECTION A-A

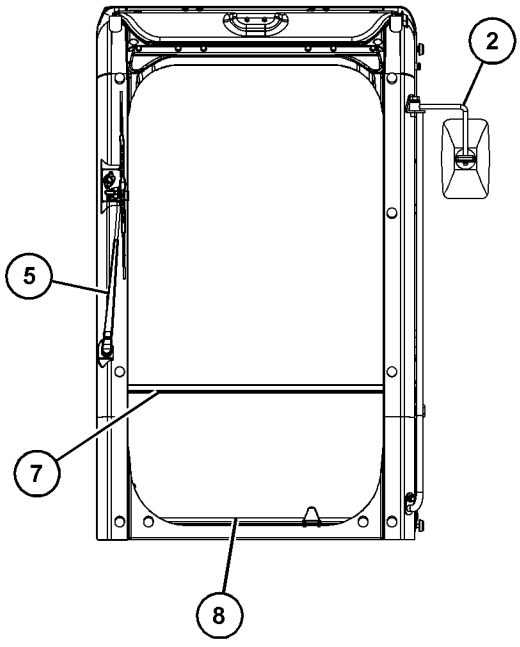

FRONT VIEW

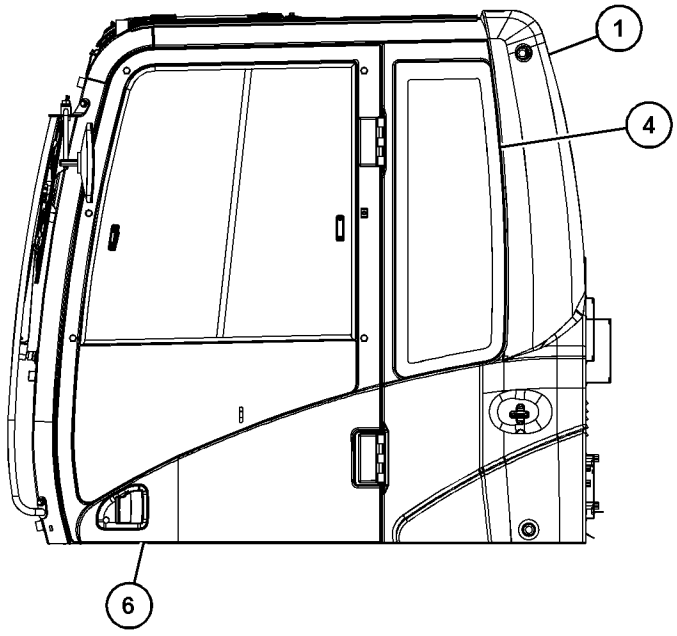

LEFT SIDE VIEW

GRAPHIC #1 **<END>** g03690631

388-9102 CAB GP—EXTERIOR

S/N: HAH1-UP
PART OF 388-9093 CAB GP
AN ATTACHMENT

SMCS-7301, 7325 **i05873386**

NOTE	REF NO	GRAPHIC REF	PART NUMBER	QTY	PART NAME 1 2 3 4 5 6 (PRODUCT LEVEL)	SEE PAGE
	1	1	**139-7126**	1	HOLDER	
	2	1	**139-7127**	1	HOLDER	
	3	1	**156-6599**	1	STRIKER	
	4	1	**161-3685**	1	ROD	
	5	1	**161-3697**	1	GUARD	
	6	1	**164-0523**	1	LEVER AS	
	7	1	**164-0527**	1	ROD	
Y	8	1	*164-0528*	1	LEVER GP-CAB DOOR	390
	9	1	**167-7018**	1	COVER AS	
	10	1	**167-7042**	2	SEAL	
	11	1	**171-7426**	1	CABLE AS	
	12	1	*176-1939*	1	LEVER AS	
M		1	**9X-2044**	1	SCREW-TRUSS HEAD (M6X1X16-MM)	
		1	**176-1937**	1	BRACKET AS	
		1	**176-1938**	1	LEVER	
	13	1	**178-5570**	2	GROMMET	
	14	1	**185-8196**	1	GROMMET	
	15	1	**189-2704**	1	SEAL	
M	16	1	**189-2864**	2	SCREW-FLAT HEAD (M8X1.25X30-MM)	
	17	1	**4B-4278**	3	WASHER (10.2X20.5X1.6-MM THK)	
	18	1	**201-4530**	1	BRACKET AS	
	19	1	**205-6295**	1	LATCH AS	
	20	1	**210-5808**	1	SEAL	
	21	1	**235-8912**	1	HANDLE AS	
	22	1	**235-8933**	1	HANDLE AS	
M	23	1	**284-4426**	1	BOLT-WING (M8X1.25X15-MM)	
	24	1	**315-5313**	1	COVER	
Y	25	1	**327-6550**	1	MIRROR GP-REAR VIEW	396
	26	1	**156-6618**	1	SUPPORT AS	
	27	1	**9X-8257**	1	WASHER (17.5X30X3.5-MM THK)	
M	28	1	**099-0823**	3	SCREW-MACHINE (M6X1X6-MM)	
	29	1	**3B-4510**	1	LOCKWASHER	
M	30	1	**105-2169**	2	BOLT AS (M8X1.25X16-MM)	
M	31	1	**127-0580**	2	SCREW-FLAT HEAD (M8X1.25X20-MM)	
	32	1	**133-8016**	1	PACKING	
	33	1	**176-1986**	1	LAMP AS-DOME	
		1	**201-4417**	1	LAMP (24-VOLT, 10-WATT)	
	34	1	**1R-5998**	4	LOCKWASHER	
M	35	1	**3E-8020**	6	SCREW-TRUSS HEAD (M6X1X25-MM)	
M	36	1	**095-0755**	2	SCREW-MACHINE (M4X0.7X12-MM)	
	37	1	**4I-1205**	2	BUMPER	
	38	1	**4I-1206**	2	GUIDE	
	39	1	**4I-3063**	1	SPRING	
	40	1	**4I-3090**	4	SEAL	
M	41	1	**6V-6317**	2	BOLT (M10X1.5X20-MM)	
	42	1	**5P-1075**	2	WASHER-HARD (10.2X22.5X3-MM THK)	
	43	1	**4I-4270**	1	HOLDER-GLASS	
	44	1	**4I-4392**	3	CLIP	
	45	1	**5C-7793**	1	HOOK-COAT	
	46	1	**6V-7636**	4	PIN AS-SPRING	
	47	1	**7X-0578**	2	WASHER-HARD (10.2X32X2.5-MM THK)	
M	48	1	**8T-4133**	5	NUT (M10X1.5-THD)	
M	49	1	**8T-4193**	1	BOLT (M16X2X50-MM)	
M	50	1	**9X-2041**	3	SCREW-TRUSS HEAD (M10X1.5X20-MM)	
M	51	1	**9X-2042**	5	SCREW-TRUSS HEAD (M6X1X12-MM)	
M	52	1	**9X-2044**	5	SCREW-TRUSS HEAD (M6X1X16-MM)	

388-9102 **CAB GP (*contd.*)** **i05873386**

NOTE	REF NO	GRAPHIC REF	PART NUMBER	QTY	PART NAME 1 2 3 4 5 6 (PRODUCT LEVEL)	SEE PAGE
M	53	1	**9X-2045**	2	SCREW-TRUSS HEAD (M6X1X20-MM)	
E	54	1	**6I-5470**		SEAL (150-CM)	

E - ORDER BY THE CENTIMETER
M - METRIC PART
Y - SEPARATE ILLUSTRATION

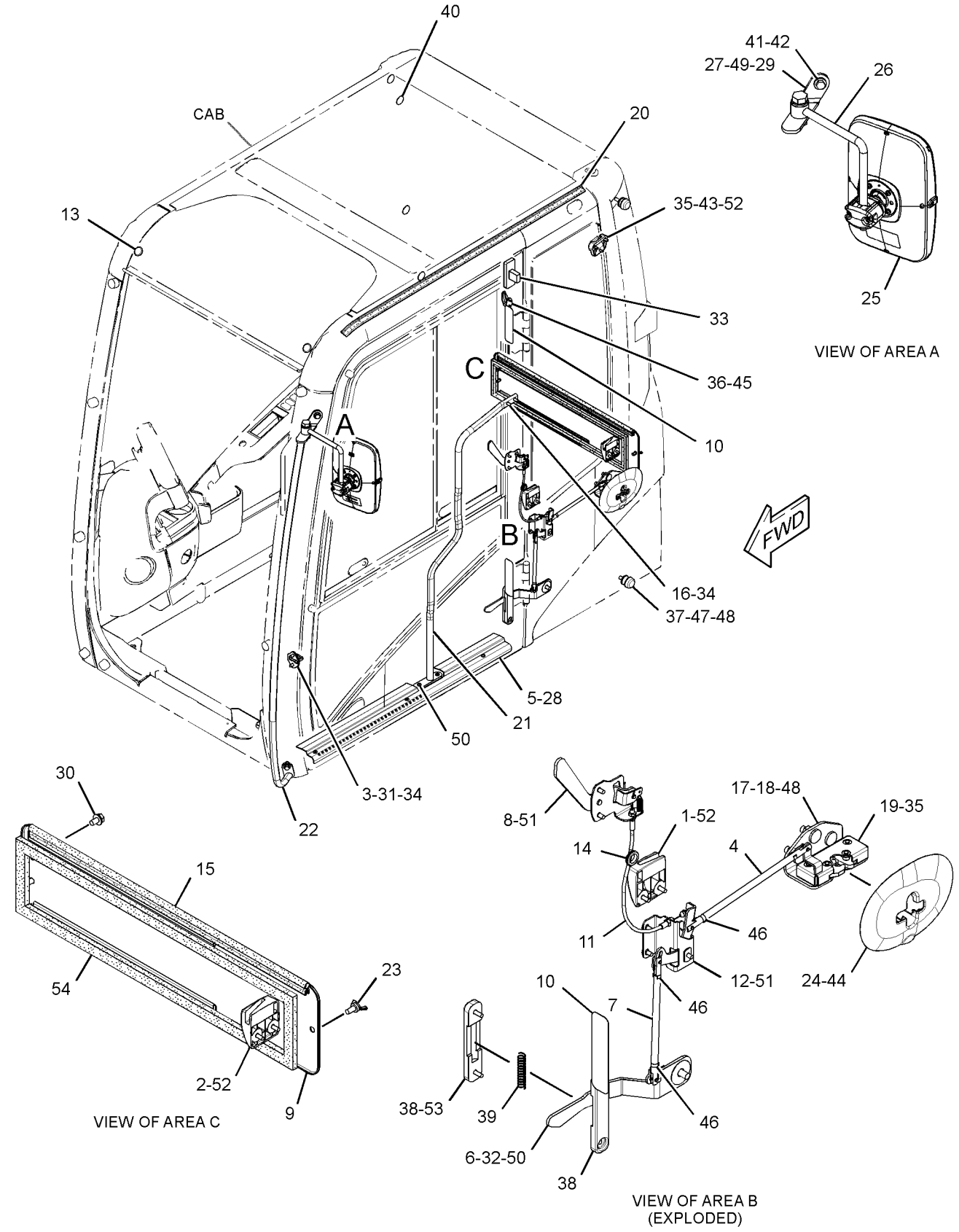

GRAPHIC #1 **<END>** g03179316

OPERATOR STATION

399-0055 CAB GP

S/N: HAH1-UP
PART OF 454-5636 OPTION AR-CAB
AN ATTACHMENT

SMCS-7301, 7325

i05784626

NOTE	REF NO	GRAPHIC REF	PART NUMBER	QTY	PART NAME 1 2 3 4 5 6 (PRODUCT LEVEL)	SEE PAGE
M	1	1	**128-2135**	5	SCREW-TRUSS HEAD (M6X1X13-MM)	
	2	1	**164-8474**	2	LOUVER AS-VENT	
Y	3	1	**399-0057**	1	CAB GP	344
Y	4	1	**234-6501**	1	COVER GP-CAB (REAR)	375
	5	1	**235-9001**	1	SUPPORT	
M	6	1	**8T-4179**	5	BOLT (M12X1.75X20-MM)	
M	7	1	**8T-4190**	4	BOLT (M16X2X25-MM)	
	8	1	**8T-4223**	13	WASHER-HARD (13.5X25.5X3-MM THK)	
M	9	1	**8T-4910**	6	BOLT (M12X1.75X60-MM)	
M	10	1	**8T-6868**	2	BOLT (M12X1.75X80-MM)	
	11	1	**8Y-6967**	2	LOUVER AS-VENT	
	12	1	**9X-8257**	6	WASHER (17.5X30X3.5-MM THK)	

M - METRIC PART
Y - SEPARATE ILLUSTRATION

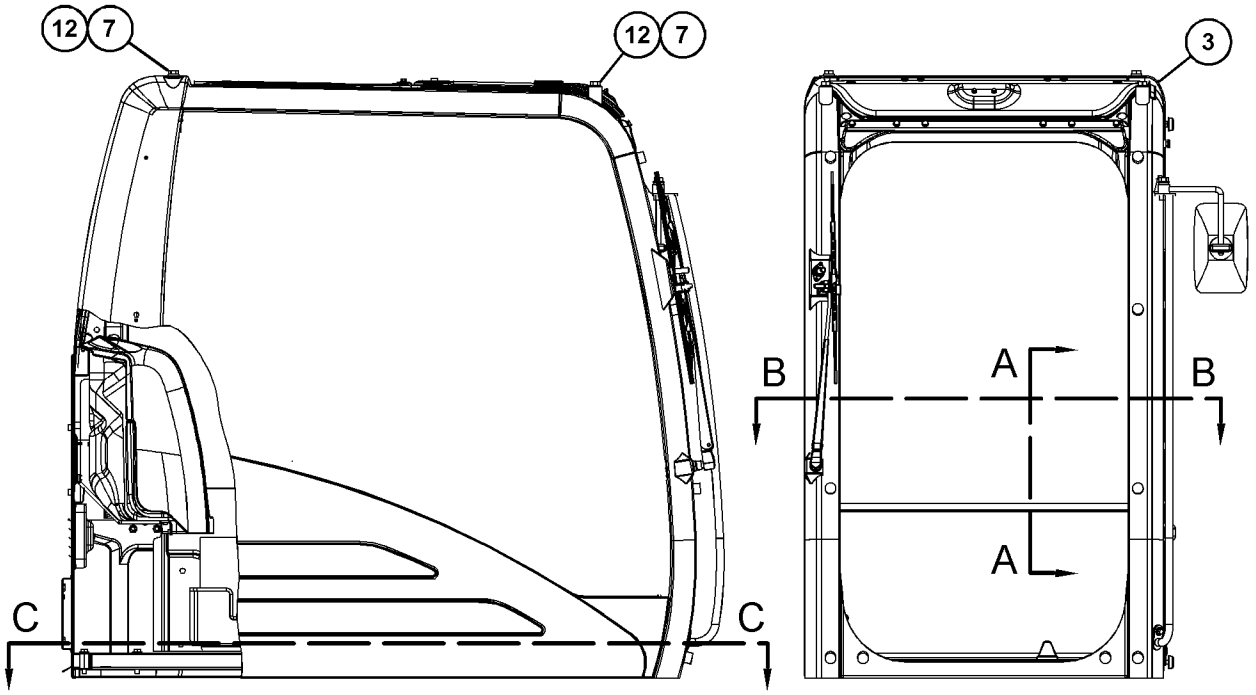

RIGHT SIDE VIEW

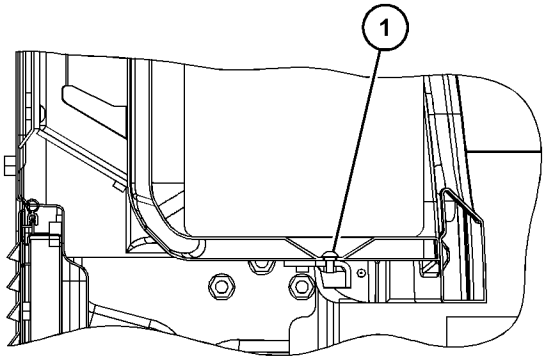

FRONT VIEW

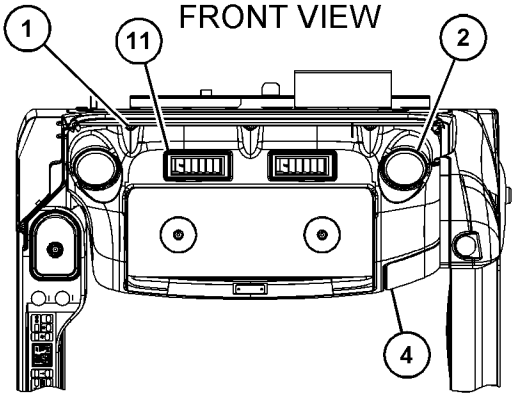

SECTION A-A

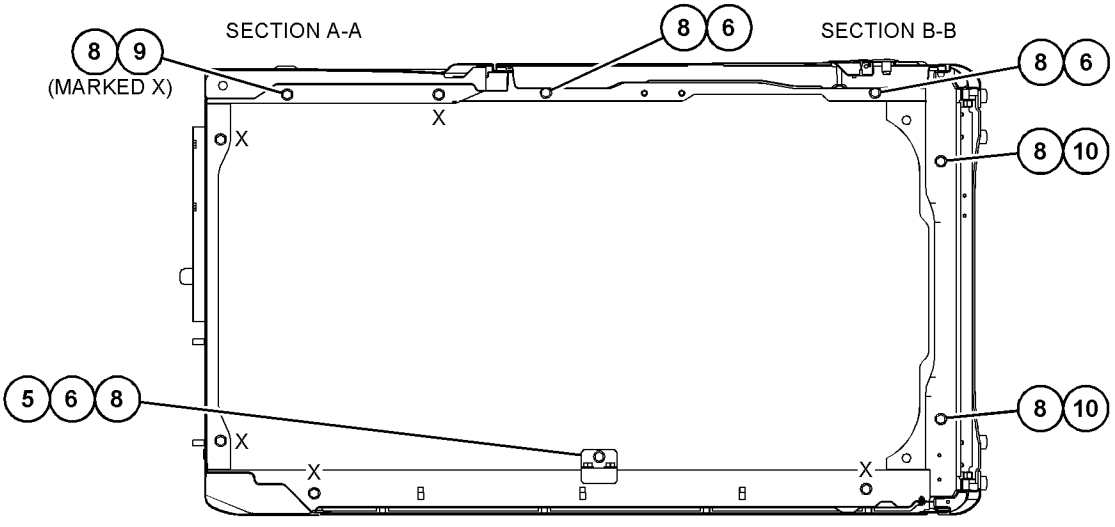

SECTION C-C

GRAPHIC #1 **<END>** g03671952

399-0057 CAB GP

S/N: HAH1-UP
PART OF 399-0055 CAB GP
AN ATTACHMENT

SMCS-7301, 7325

i05910777

NOTE	REF NO	GRAPHIC REF	PART NUMBER	QTY	PART NAME 1 2 3 4 5 6 (PRODUCT LEVEL)	SEE PAGE
	1	1	*235-8916*	1	CAB AS	
M	1A	1	**9X-2041**	6	SCREW-TRUSS HEAD (M10X1.5X20-MM)	
	1B	1	**151-6777**	2	HINGE	
M	1C	1	**185-8182**	6	BOLT (M10X1.5X20-MM)	
	1D	1	**185-8187**	6	WASHER (10.2X22X3.2-MM THK)	
Y	2	1	*346-8058*	1	CAB GP (EXTERIOR)	334
Y	3	1	*399-0059*	1	CAB GP (INTERIOR)	346
Y	4	1	*235-8909*	1	WINDOW GP-CAB (SIDE, REAR)	424
Y	5	1	*234-6594*	1	WIPER GP-WINDOW (FRONT, UPPER)	435
Y	6	1	**316-6166**	1	DOOR & MTG GP-CAB	376
JY	7	1	*139-7101*	1	WINDOW GP-CAB (FRONT, UPPER)	416
Y	8	1	*176-1958*	1	WINDOW GP-CAB (FRONT, LOWER)	421
Y	9	1	*139-7099*	1	HATCH GP-ROOF	384
FJY		1	**171-7503**	1	WINDOW GP-CAB (FRONT, UPPER)	419
FJY		1	**207-0144**	1	WINDOW GP-CAB (FRONT, UPPER)	423

F - NOT SHOWN
J - ITEMS MARKED J AVAILABLE FOR SERVICE REPAIR OF WINDOW GP MARKED J
M - METRIC PART
Y - SEPARATE ILLUSTRATION

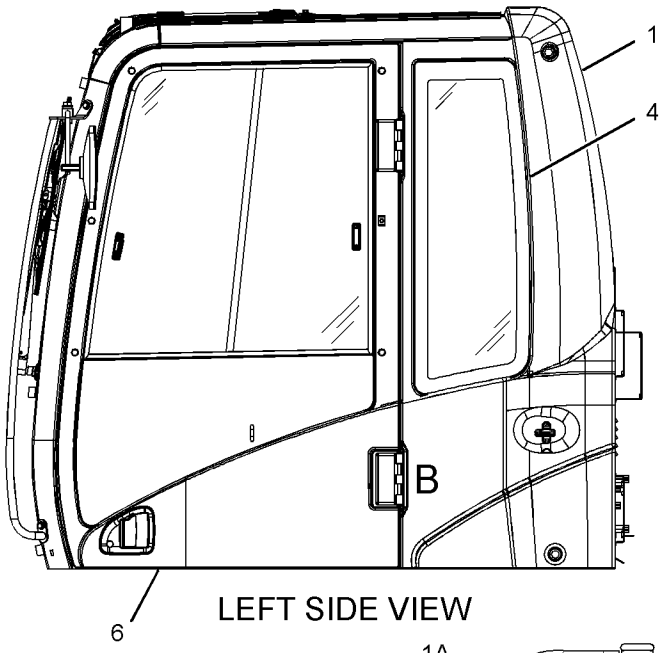

LEFT SIDE VIEW

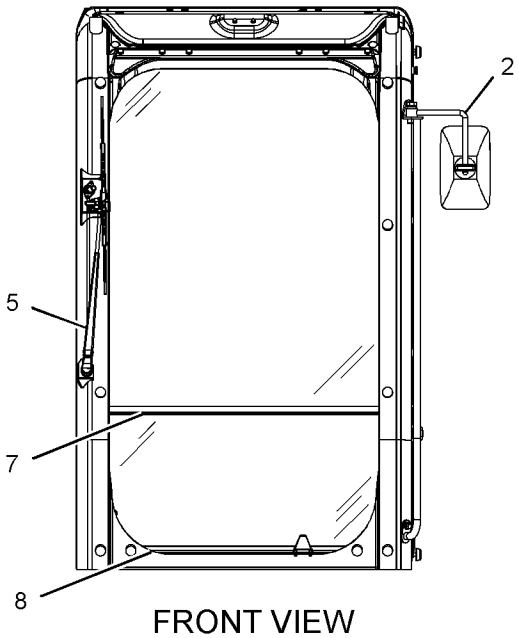

FRONT VIEW

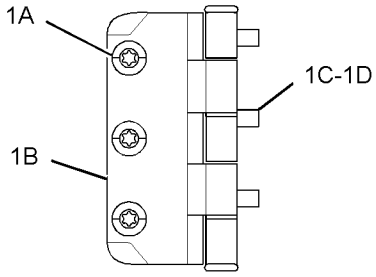

VIEW OF AREA B
(HINGE COVER REMOVED)

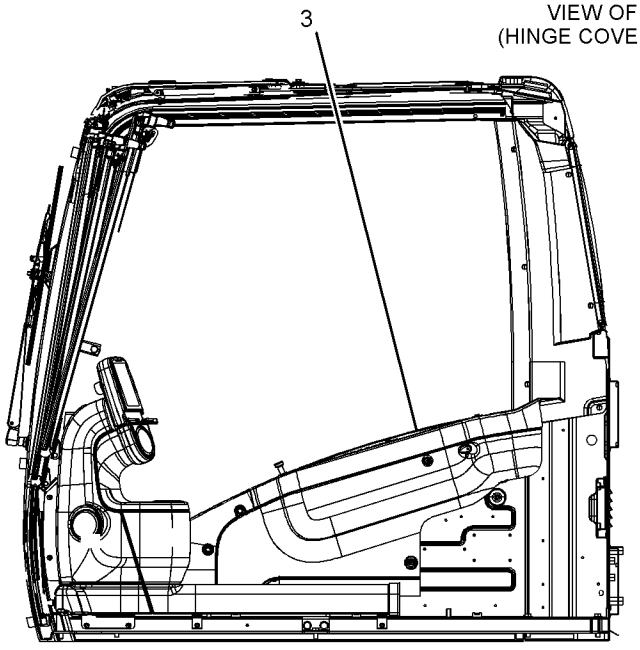

SECTION A-A

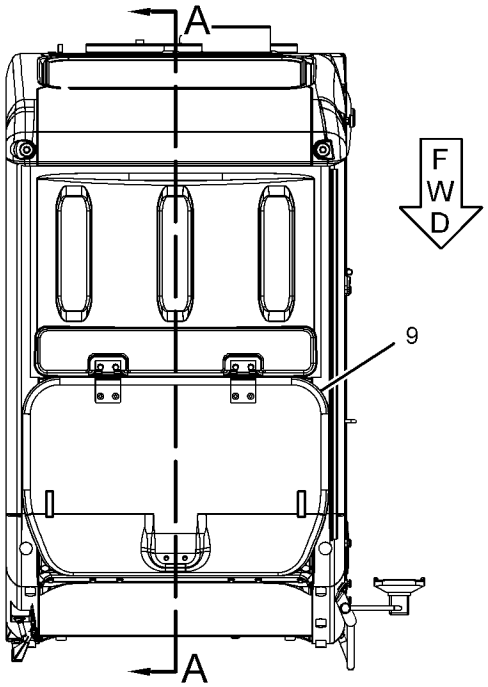

TOP VIEW

GRAPHIC #1 **<END>** g02793335

OPERATOR STATION

399-0059 CAB GP–INTERIOR

S/N: HAH1-UP
PART OF 399-0057 CAB GP
AN ATTACHMENT

SMCS-7301, 7325 **i05934385**

NOTE	REF NO	GRAPHIC REF	PART NUMBER	QTY	PART NAME 1 2 3 4 5 6 (PRODUCT LEVEL)	SEE PAGE
	1	1	**8Y-6352**	1	LOUVER AS	
	2	1	**156-6656**	1	RAIL	
	3	1	**156-6657**	1	RAIL	
	4	1	**164-0646**	1	CUP	
	5	1	**164-0655**	1	PANEL-SWITCH	
	6	1	**164-8474**	2	LOUVER AS-VENT	
	7	1	**170-9724**	5	CLIP	
	8	1	**171-7420**	6	CLIP	
	9	1	**176-1946**	1	PLATE	
	10	1	**176-1947**	1	PLATE	
	11	1	**176-1972**	1	COVER	
	12	1	**185-8214**	1	BRACKET AS	
	13	1	**189-2678**	3	SPACER	
	14	1	**234-6468**	1	COVER AS	
	15	1	**234-6469**	1	COVER	
	16	1	**234-6470**	1	COVER-MONITOR	
	17	1	**234-6471**	1	COVER-DUCT	
	18	1	**234-6472**	1	COVER	
	19	1	**234-6473**	1	COVER-FRONT (UPPER, RH)	
	20	1	**234-6476**	1	DUCT	
	21	1	**234-6477**	1	BRACKET AS	
	22	1	**234-6483**	1	BRACKET AS	
	23	1	**234-6485**	1	BRACKET AS	
	24	1	**234-6490**	1	CUP	
	25	1	**234-6491**	1	COVER	
	26	1	**234-6497**	1	COVER	
	27	1	**234-6498**	3	RIVET	
	28	1	**234-6547**	1	COVER	
	29	1	**234-6548**	1	COVER	
	30	1	**234-6549**	1	COVER	
	31	1	**234-6550**	1	COVER	
	32	1	**234-6579**	2	NUT-SPEED	
	33	1	**235-8922**	1	COVER	
	34	1	**235-8923**	2	CAP	
	35	1	**235-8928**	1	LINER	
	36	1	**235-8950**	12	CLIP	
	37	1	**245-7790**	2	SCREW-TAPPING	
	38	1	**305-0330**	1	COVER (LOWER, RH)	
	39	1	**383-5706**	1	VISOR	
	40	1	**383-5767**	1	COVER	
	41	1	**399-0061**	1	BRACKET AS	
	42	1	**399-0062**	1	COVER	
	43	1	**399-0065**	1	BRACKET	
M	44	1	**128-2135**	13	SCREW-TRUSS HEAD (M6X1X13-MM)	
M	45	1	**128-2136**	1	SCREW-TRUSS HEAD (M6X1X16-MM)	
	46	1	**185-8205**	5	CLIP	
	47	1	**189-2855**	1	COVER	
M	48	1	**9X-2042**	22	SCREW-TRUSS HEAD (M6X1X12-MM)	
M	49	1	**9X-2044**	6	SCREW-TRUSS HEAD (M6X1X16-MM)	
	50	1	**8R-1803**	1	WASHER (10.5X18X1-MM THK)	

M - METRIC PART

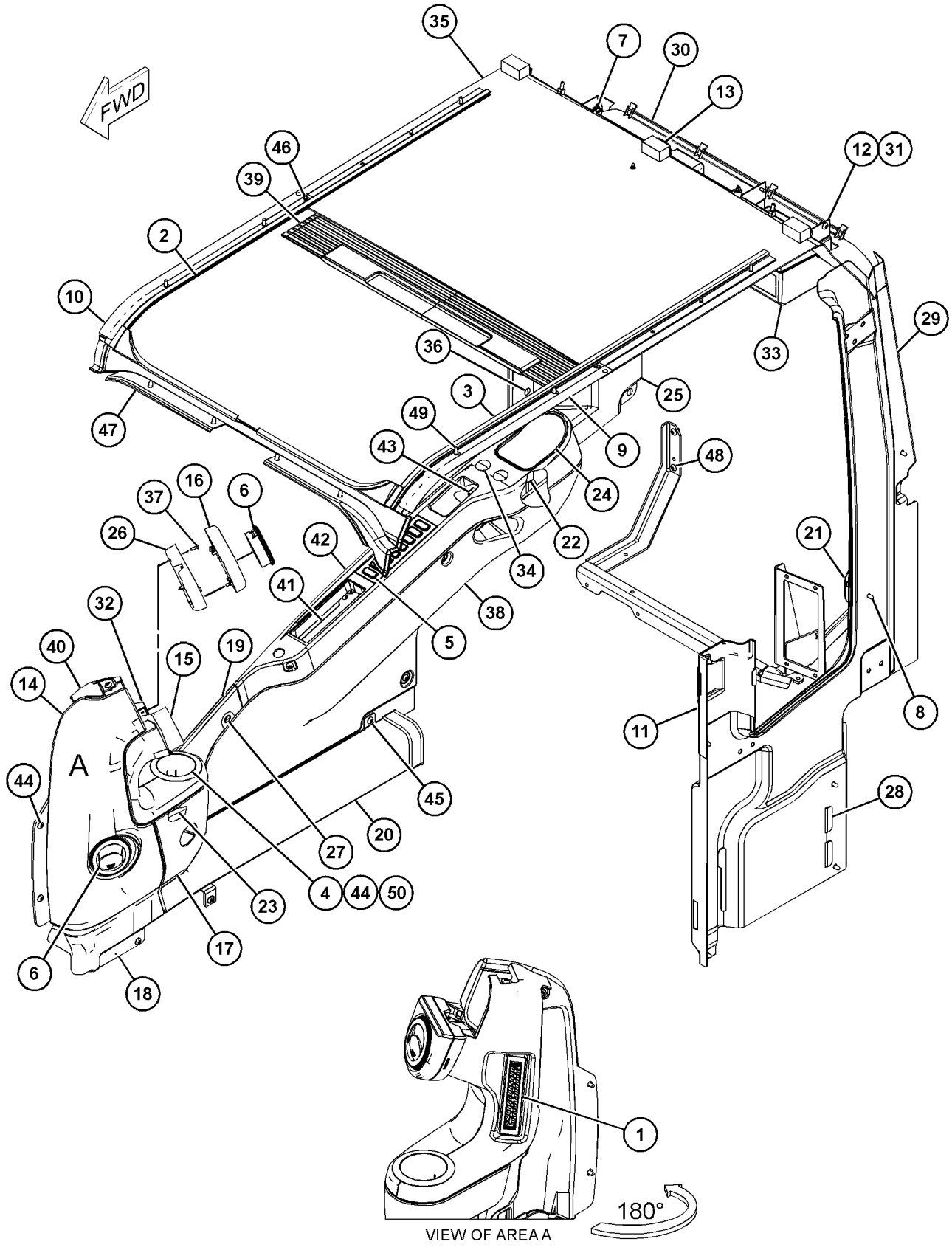

VIEW OF AREA A

GRAPHIC #1

<END>

g03739493

OPERATOR STATION

416-9608 CAB GP—INTERIOR

S/N: HAH1-UP
PART OF 388-9093 CAB GP
AN ATTACHMENT

SMCS-7301, 7325 **i05465198**

NOTE	REF NO	GRAPHIC REF	PART NUMBER	QTY	PART NAME 1 2 3 4 5 6 (PRODUCT LEVEL)	SEE PAGE
	1	1	**164-0646**	1	CUP	
	2	1	**164-0655**	1	PANEL-SWITCH	
	3	1	**170-9724**	5	CLIP	
	4	1	**171-7420**	6	CLIP	
	5	1	**176-1972**	1	COVER	
	6	1	**185-8205**	7	CLIP	
	7	1	**189-2678**	3	SPACER	
	8	1	**189-2853**	1	COVER	
	9	1	**189-2854**	1	COVER	
	10	1	**234-6468**	1	COVER AS	
		1	**259-7353**	4	CLIP	
	11	1	**234-6470**	1	COVER-MONITOR	
	12	1	**234-6471**	1	COVER-DUCT	
	13	1	**234-6472**	1	COVER	
	14	1	**234-6473**	1	COVER-FRONT (UPPER, RH)	
	15	1	**234-6476**	1	DUCT	
	16	1	**234-6477**	1	BRACKET AS	
	17	1	**234-6483**	1	BRACKET AS	
	18	1	**234-6485**	1	BRACKET AS	
	19	1	**234-6490**	1	CUP	
	20	1	**234-6491**	1	COVER	
	21	1	**234-6497**	1	COVER	
	22	1	**234-6498**	3	RIVET	
	23	1	**234-6579**	2	NUT-SPEED	
	24	1	**235-8923**	2	CAP	
	25	1	**235-8930**	1	LINER	
	26	1	**235-8950**	12	CLIP	
	27	1	**245-7790**	2	SCREW-TAPPING	
	28	1	**305-0330**	1	COVER (LOWER, RH)	
	29	1	**383-5767**	1	COVER	
	30	1	**388-9091**	1	COVER	
	31	1	**388-9094**	1	COVER	
	32	1	**388-9095**	1	COVER	
	33	1	**396-2351**	1	LOUVER AS	
	34	1	**396-2352**	2	LOUVER AS	
	35	1	**399-0061**	1	BRACKET AS	
	36	1	**399-0062**	1	COVER	
	37	1	**399-0065**	1	BRACKET	
M	38	1	**128-2135**	10	SCREW-TRUSS HEAD (M6X1X13-MM)	
M	39	1	**128-2136**	1	SCREW-TRUSS HEAD (M6X1X16-MM)	
	40	1	**234-6469**	1	COVER	
M	41	1	**9X-2042**	11	SCREW-TRUSS HEAD (M6X1X12-MM)	

M - METRIC PART

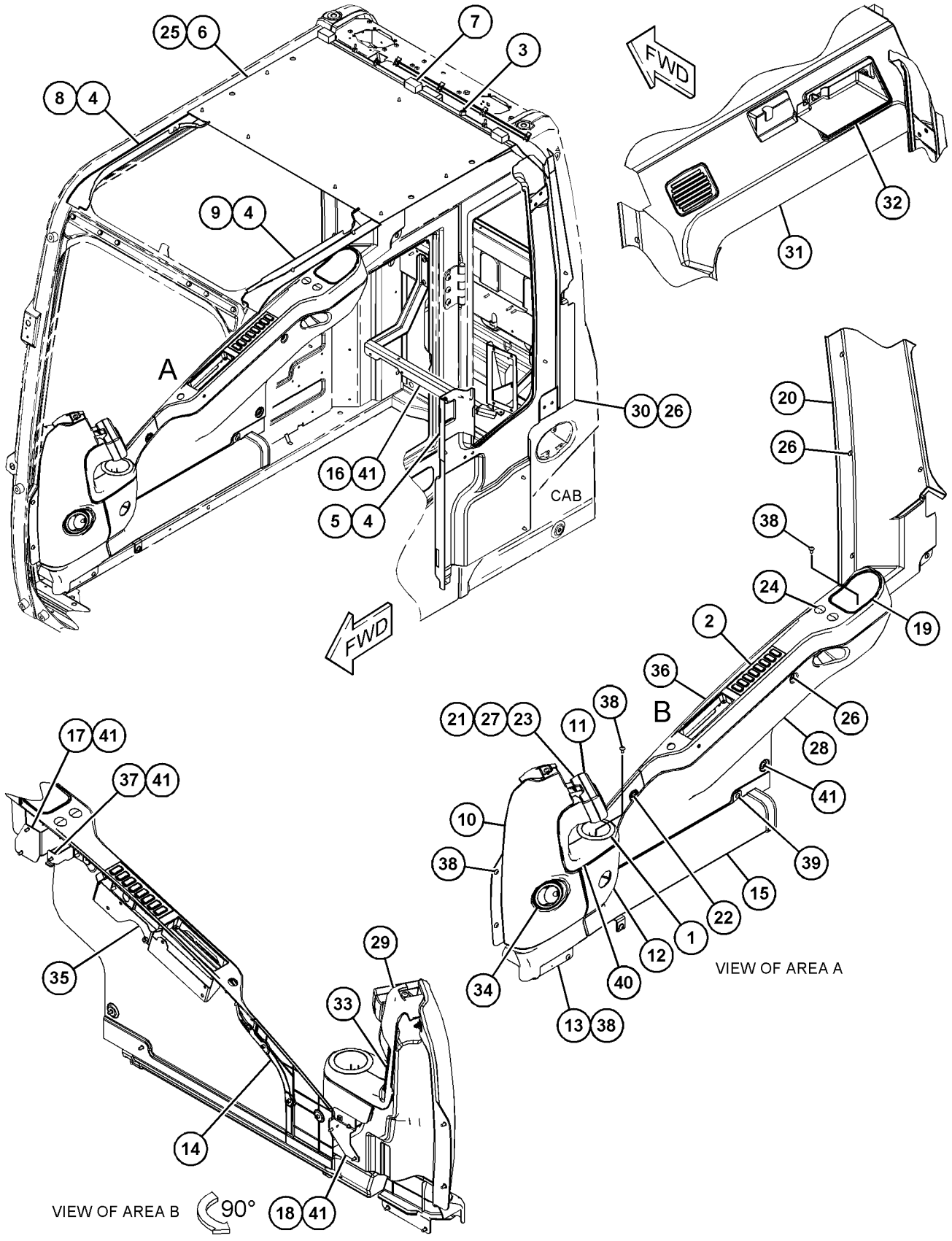

GRAPHIC #1 **<END>** g03431204

OPERATOR STATION

420-3810 CAB GP

S/N: HAH1-UP

AN ATTACHMENT

SMCS-7301, 7325 **i05819639**

NOTE	REF NO	GRAPHIC REF	PART NUMBER	QTY	PART NAME 1 2 3 4 5 6 (PRODUCT LEVEL)	SEE PAGE
M	1	1	**128-2135**	5	SCREW-TRUSS HEAD (M6X1X13-MM)	
	2	1	**164-8474**	2	LOUVER AS-VENT	
Y	3	1	**388-9093**	1	CAB GP	337
Y	4	1	**234-6501**	1	COVER GP-CAB (REAR)	375
	5	1	**235-9001**	1	SUPPORT	
M	6	1	**8T-4179**	5	BOLT (M12X1.75X20-MM)	
M	7	1	**8T-4190**	4	BOLT (M16X2X25-MM)	
	8	1	**8T-4223**	13	WASHER-HARD (13.5X25.5X3-MM THK)	
M	9	1	**8T-4910**	6	BOLT (M12X1.75X60-MM)	
M	10	1	**8T-6868**	2	BOLT (M12X1.75X80-MM)	
	11	1	**8Y-6967**	2	LOUVER AS-VENT	
	12	1	**9X-8257**	6	WASHER (17.5X30X3.5-MM THK)	

M - METRIC PART
Y - SEPARATE ILLUSTRATION

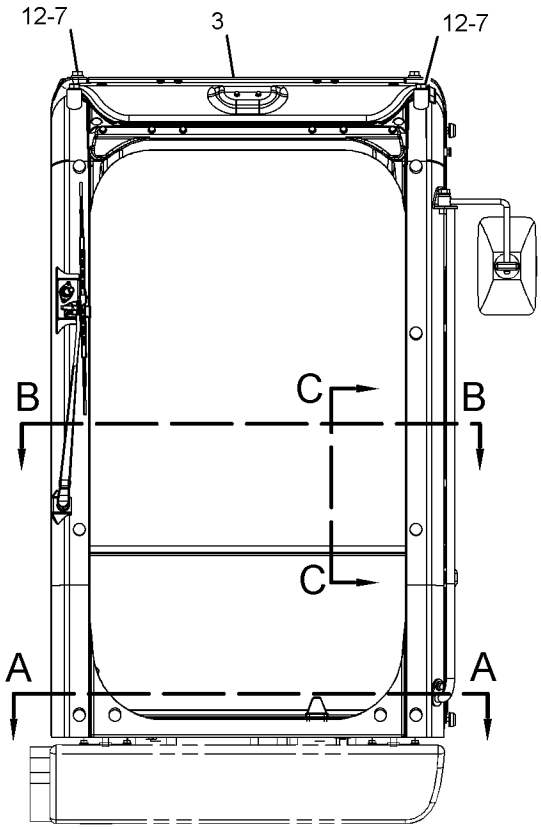

FRONT VIEW

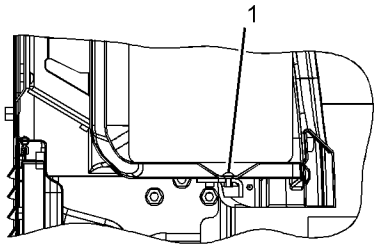

VIEW C-C

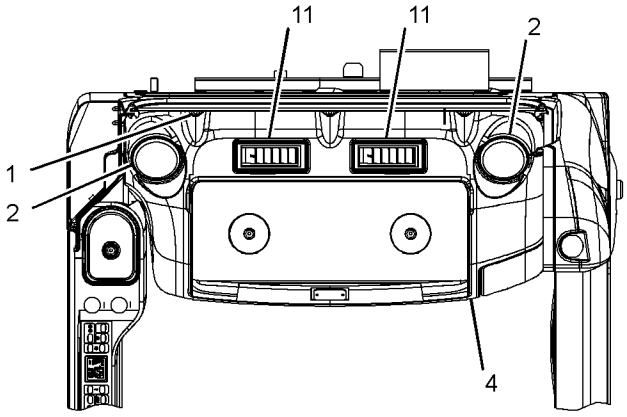

SECTION B-B

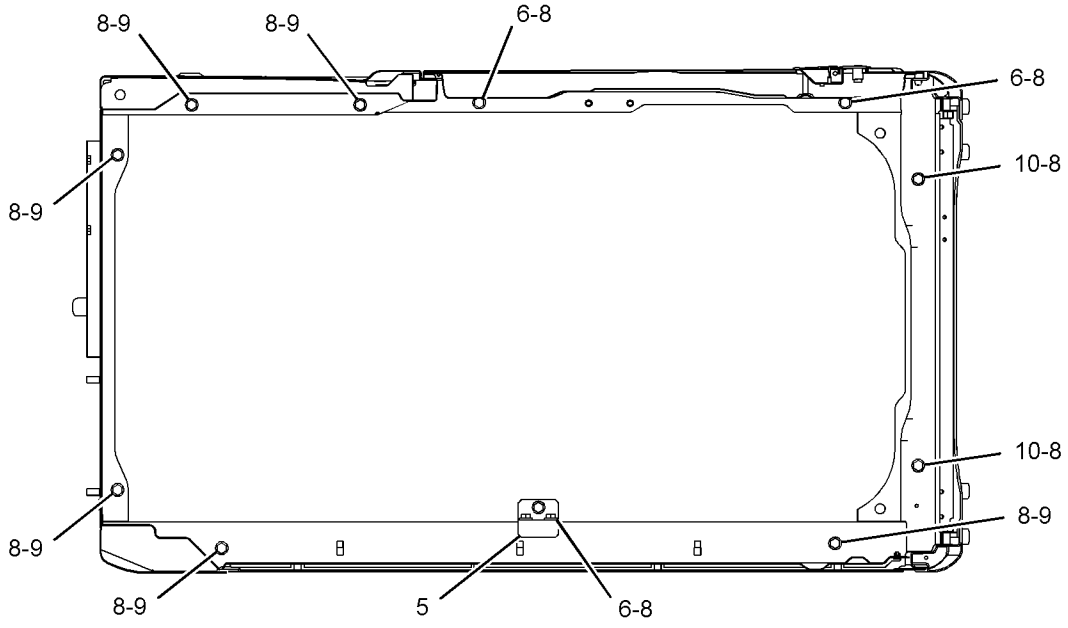

SECTION A-A

GRAPHIC #1 **<END>** g02131362

OPERATOR STATION

439-2524 CAB GP

S/N: HAH1-UP
PART OF 388-9093 CAB GP
AN ATTACHMENT

SMCS-7301, 7325 **i05819669**

NOTE	REF NO	GRAPHIC REF	PART NUMBER	QTY	PART NAME 1 2 3 4 5 6 (PRODUCT LEVEL)	SEE PAGE
Y	1	1	*420-3151*	1	DOOR & MTG GP-CAB	377
	2	1	**5P-1075**	6	WASHER-HARD (10.2X22.5X3-MM THK)	
M	3	1	**185-8182**	6	BOLT (M10X1.5X20-MM)	

M - METRIC PART
Y - SEPARATE ILLUSTRATION

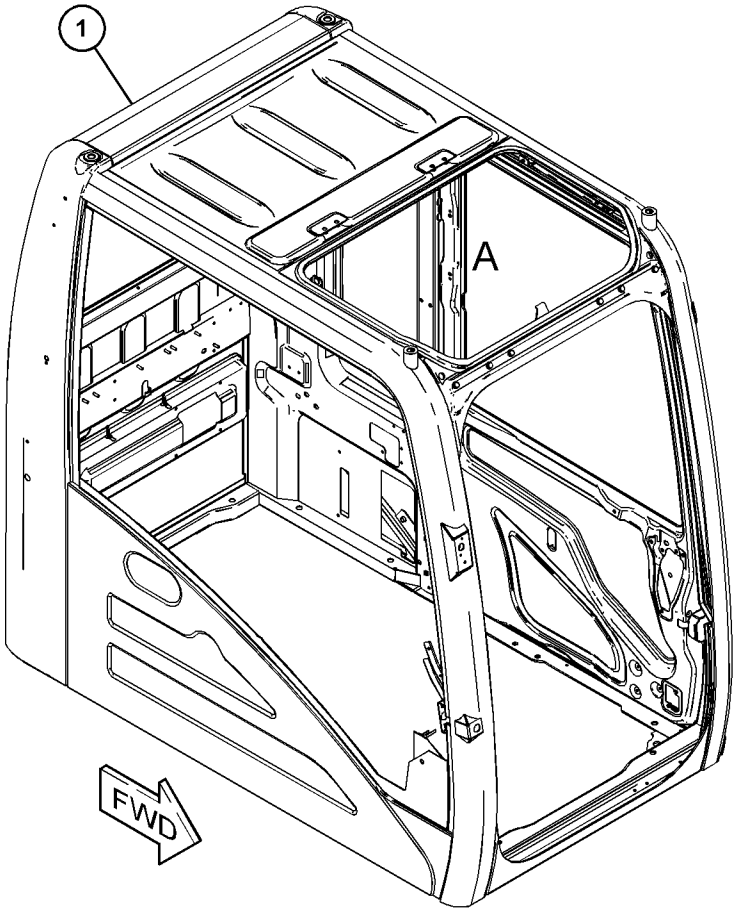

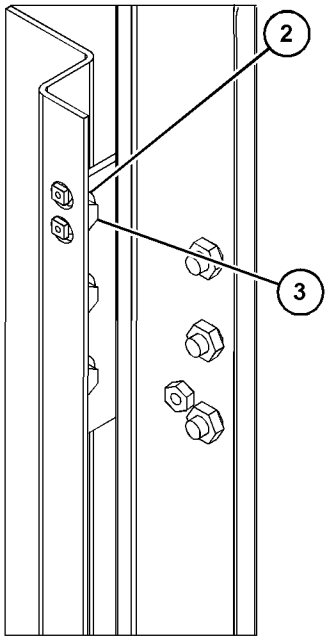

VIEW OF AREA A
(PARTS REMOVED FOR CLARITY)

GRAPHIC #1 **<END>** g03687029

245-7836 COIL GP-EVAPORATOR

S/N: HAH1-UP

PART OF 316-8916 AIR CONDITIONER GP

AN ATTACHMENT

SMCS-7343 **i05422591**

NOTE	REF NO	GRAPHIC REF	PART NUMBER	QTY	PART NAME 1 2 3 4 5 6 (PRODUCT LEVEL)	SEE PAGE
	1	1	**245-7837**	1	VALVE AS-EXPANSION	
	2	1	**245-7905**	1	INSULATOR	
	3	1	**281-0791**	2	BOLT-SOCKET HEAD (M5X0.8X40-MM)	
	4	1	**121-7136**	1	SEAL-O-RING	
	5	1	**121-7137**	1	SEAL-O-RING	

245-7836 **COIL GP-EVAPORATOR (*contd.*)** **i05422591**

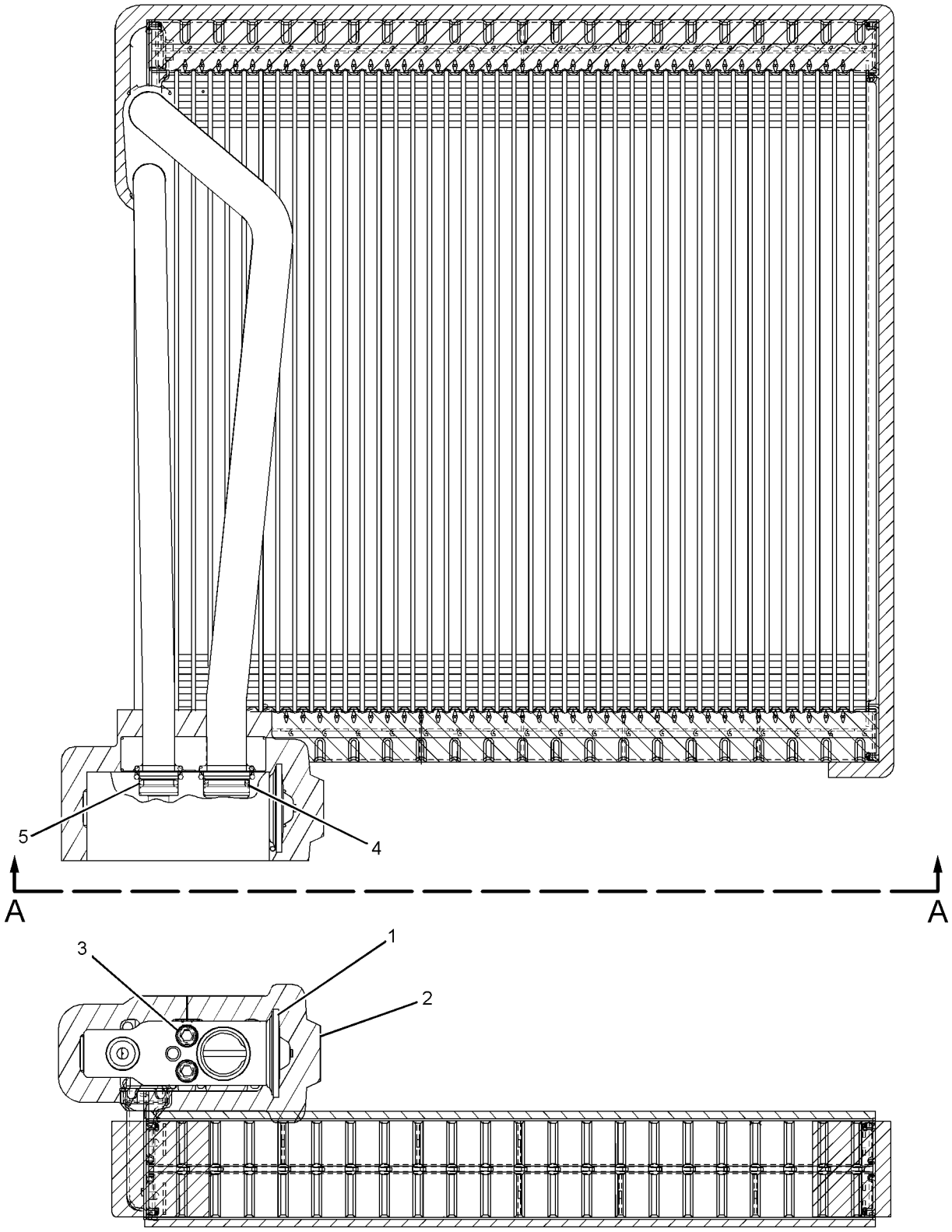

VIEW A-A

GRAPHIC #1 **<END>** g01134658

387-2610 COMPRESSOR & MTG GP-REFRIG

S/N: HAH1-UP

PART OF 392-0400 INSTALLATION AR-ENGINE

SMCS-1802 **i05871781**

NOTE	REF NO	GRAPHIC REF	PART NUMBER	QTY	PART NAME 1 2 3 4 5 6 (PRODUCT LEVEL)	SEE PAGE
Y	1	1	**372-9493**	1	COMPRESSOR GP-REFRIGERANT (24-VOLT)	356
	2	1	**392-1165**	1	BRACKET AS	
M		1	**8T-3490**	2	NUT-WELD (M10X1.5-THD)	
	3	1	**393-8618**	1	BRACKET	
	4	1	**364-1614**	4	BOLT-FLANGE HEAD (M8X1.25X95-MM)	
M	5	1	**453-1259**	2	BOLT (M16X2X40-MM)	
	6	1	**8T-4121**	2	WASHER-HARD (11X21X2.5-MM THK)	
M	7	1	**8T-4136**	1	BOLT (M10X1.5X25-MM)	
M	8	1	**8T-4137**	1	BOLT (M10X1.5X20-MM)	
	9	1	**451-2175**	2	WASHER-HARD (17.5X30X3.5-MM THK)	

M - METRIC PART
Y - SEPARATE ILLUSTRATION

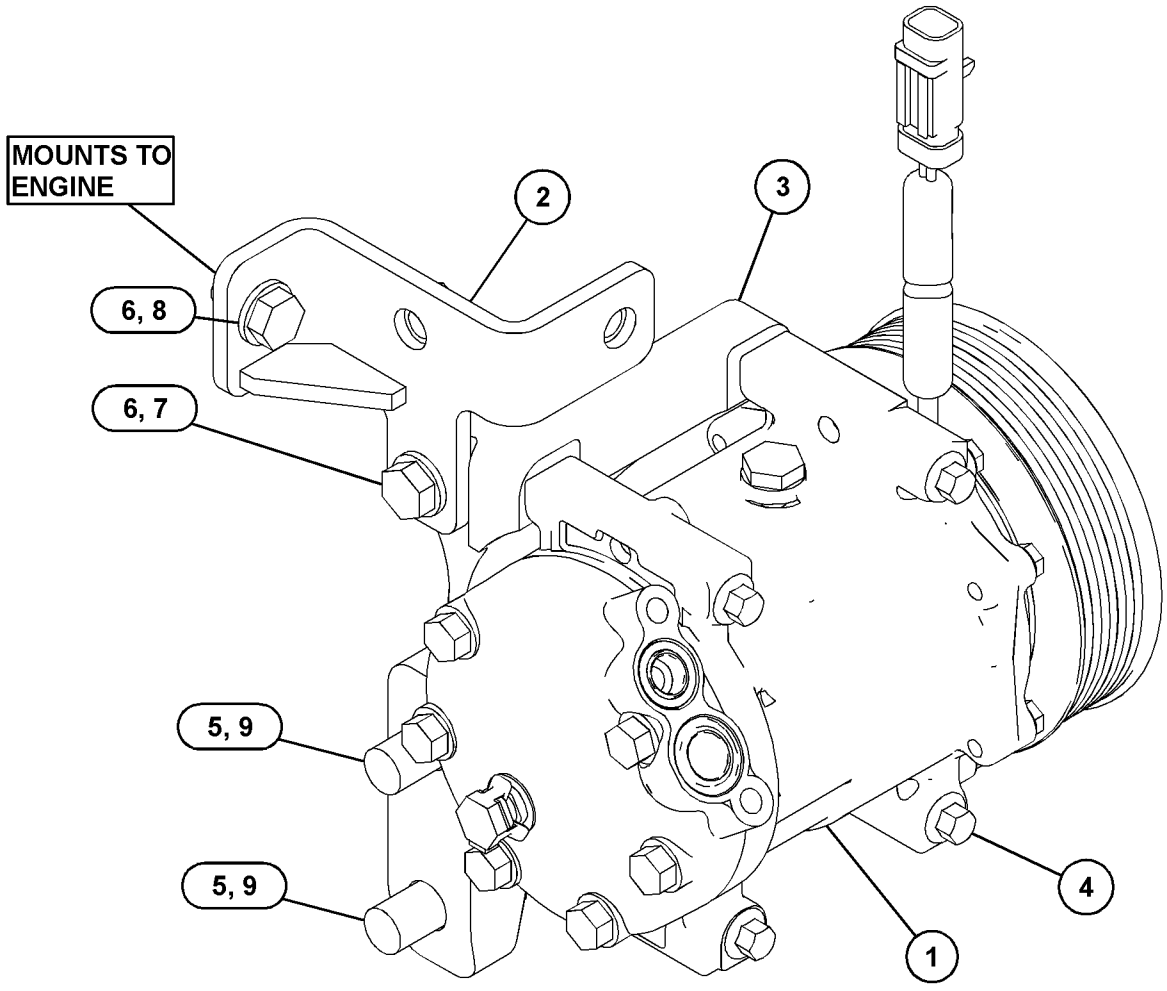

GRAPHIC #1 **<END>** g03122396

372-9493 COMPRESSOR GP-REFRIGERANT

S/N: HAH1-UP

24-VOLT

PART OF 387-2610 COMPRESSOR & MTG GP-REFRIG

SMCS-1802 **i04944057**

NOTE	REF NO	GRAPHIC REF	PART NUMBER	QTY	PART NAME 1 2 3 4 5 6 (PRODUCT LEVEL)	SEE PAGE
	1	1	**9W-0852**	2	PIN-CONNECTOR (14-GA TO 16-GA)	
	2	1	**327-6593**	1	SEAL-O-RING	
	3	1	**327-6594**	1	SEAL-O-RING	
	4	1	**243-4505**	1	RECEPTACLE AS-CONNECTOR (2-PIN)	

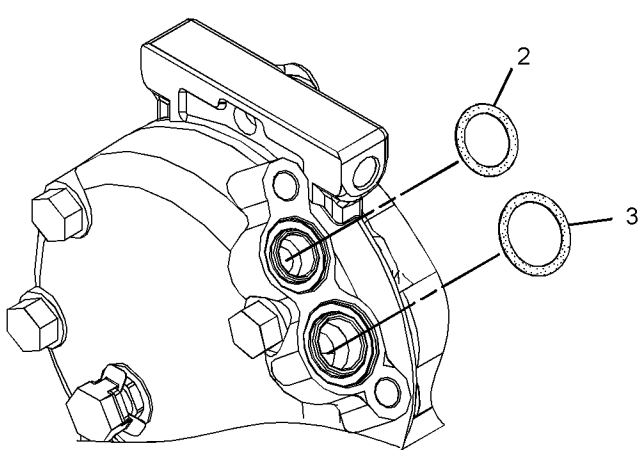

VIEW OF AREA A

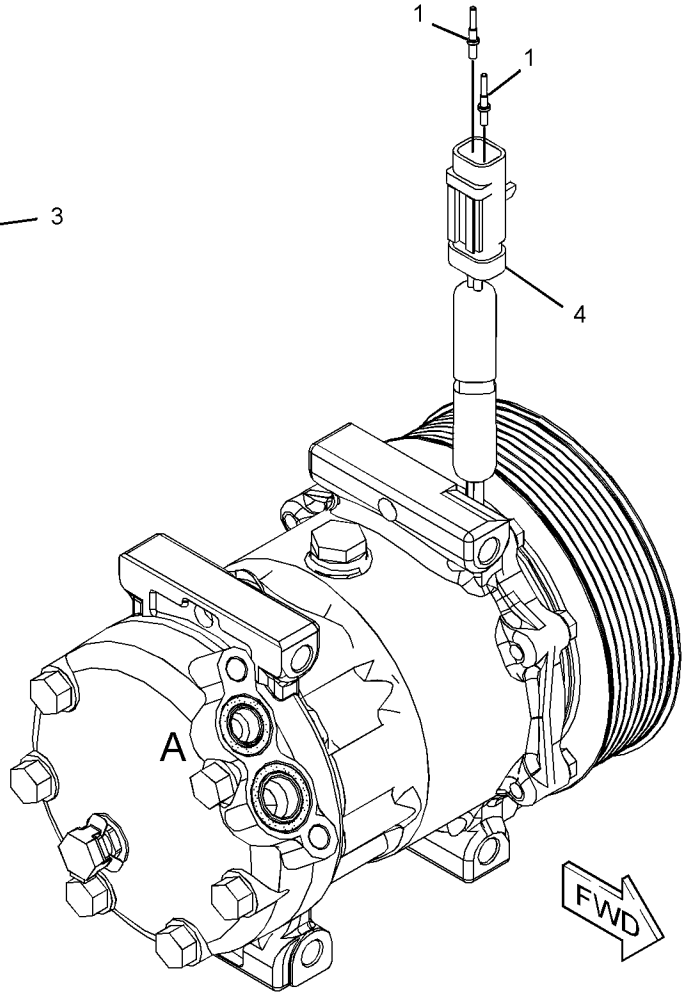

GRAPHIC #1 **<END>** g02919656

383-5675 CONDENSER & MTG GP-REFRIGERANT

S/N: HAH1-UP

PART OF 392-0400 INSTALLATION AR-ENGINE

SMCS-1805 **i04961871**

NOTE	REF NO	GRAPHIC REF	PART NUMBER	QTY	PART NAME 1 2 3 4 5 6 (PRODUCT LEVEL)	SEE PAGE
Y	1	1	**245-7749**	1	CONDENSER GP-REFRIGERANT	359
	2	1	**383-5700**	1	BRACKET AS	
M		1	**6V-9632**	2	NUT-WELD (M6X1-THD)	
	3	1	**383-5702**	1	BRACKET AS	
M		1	**6V-9632**	2	NUT-WELD (M6X1-THD)	
M		1	**8T-3612**	2	NUT-WELD (M8X1.25-THD)	
	4	1	**117-8929**	4	WASHER (6.6X22X2-MM THK)	
	5	1	**8T-4121**	4	WASHER-HARD (11X21X2.5-MM THK)	
M	6	1	**8T-4137**	4	BOLT (M10X1.5X20-MM)	
M	7	1	**8T-4971**	4	BOLT (M6X1X30-MM)	

M - METRIC PART
Y - SEPARATE ILLUSTRATION

383-5675 **CONDENSER & MTG GP-REFRIGERANT (*contd.*)** **i04961871**

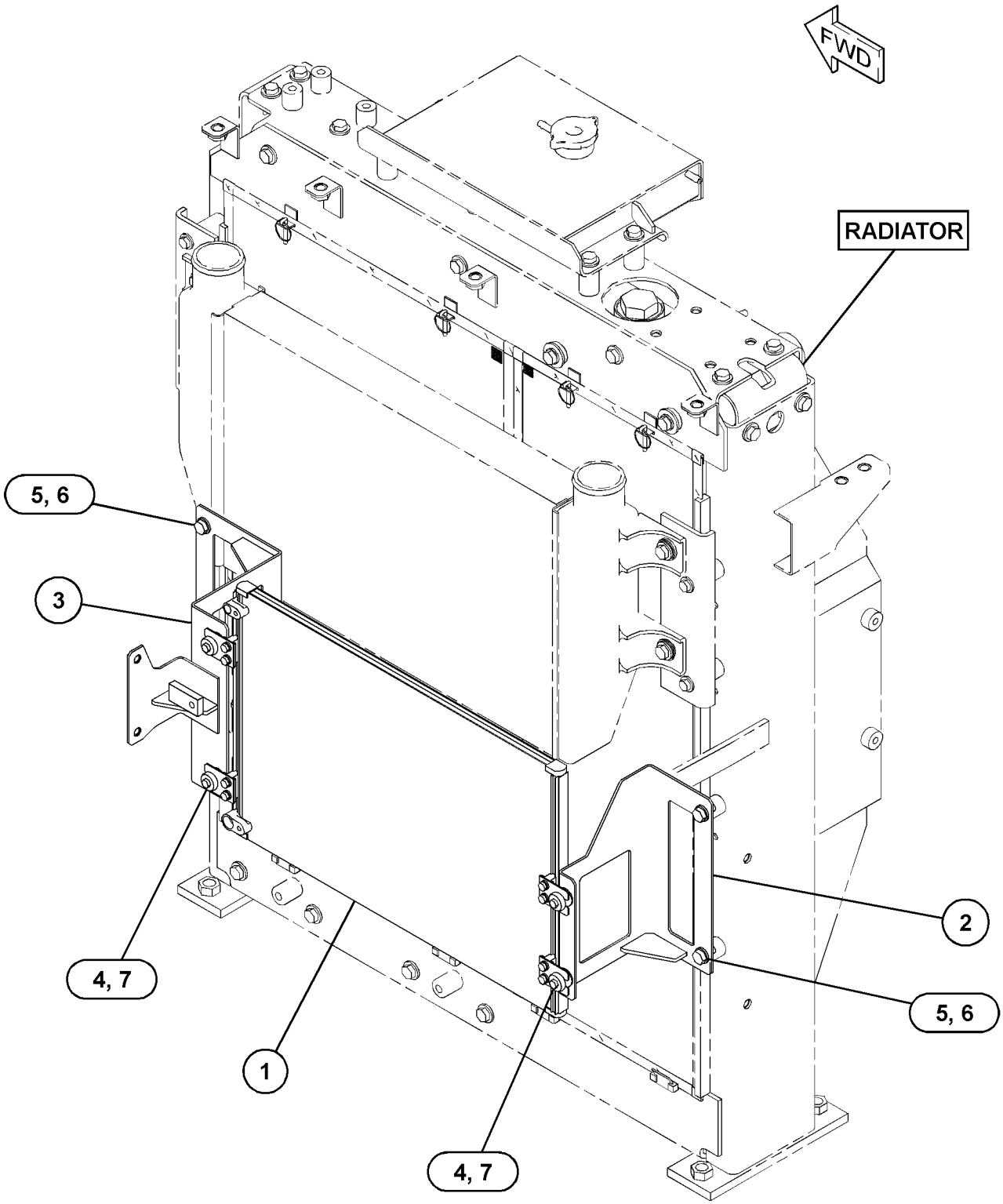

GRAPHIC #1 **<END>** g03128857

245-7749 CONDENSER GP-REFRIGERANT

S/N: HAH1-UP

PART OF 383-5675 CONDENSER & MTG GP-REFRIGERANT

SMCS-1805 **i02544954**

NOTE	REF NO	GRAPHIC REF	PART NUMBER	QTY	PART NAME 1 2 3 4 5 6 (PRODUCT LEVEL)	SEE PAGE
	1	1	**235-8880**	1	CONDENSER AS	
	2	1	**245-7750**	4	BUSHING-RUBBER	
	3	1	**245-7751**	4	BRACKET	
	4	1	**095-0827**	8	LOCKWASHER	
M	5	1	**8T-4171**	8	BOLT (M6X1X12-MM)	
	6	1	**9X-8256**	8	WASHER (6.6X12X2-MM THK)	

M - METRIC PART

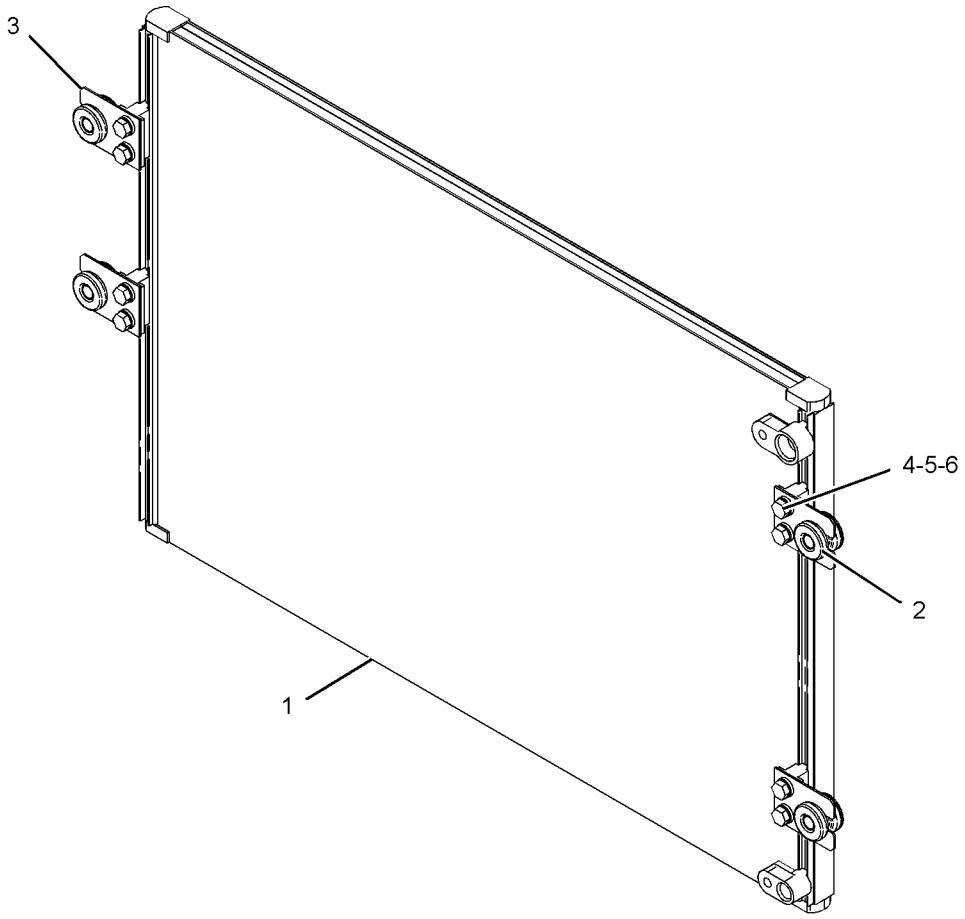

GRAPHIC #1 **<END>** g01086695

259-7348 CONSOLE GP-OPERATOR–RH

S/N: HAH1-UP

PART OF 421-1431 CONSOLE GP-OPERATOR

SMCS-5258 **i02534952**

NOTE	REF NO	GRAPHIC REF	PART NUMBER	QTY	PART NAME 1 2 3 4 5 6 (PRODUCT LEVEL)	SEE PAGE
M	1	1	**128-2135**	4	SCREW-TRUSS HEAD (M6X1X13-MM)	
	2	1	**185-8284**	1	COVER	
	3	1	**234-6579**	2	NUT-SPEED	
	4	1	**234-6580**	2	CAP	
	5	1	**234-6602**	1	COVER	
	6	1	**234-6604**	1	COVER	
	7	1	**234-6608**	1	COVER	
	8	1	**234-6609**	1	COVER	
	9	1	**234-6610**	1	COVER	
	10	1	**235-8914**	4	NUT-SPEED	
	11	1	**235-8966**	2	BASE-MOUNTING	
	12	1	**245-7790**	2	SCREW-TAPPING	
	13	1	**245-7926**	1	SUPPORT AS	
	14	1	**245-7948**	4	SCREW-TAPPING	
Y	15	1	**259-7346**	1	ARMREST GP (RH)	331
M	16	1	**9X-2041**	3	SCREW-TRUSS HEAD (M10X1.5X20-MM)	

M - METRIC PART
Y - SEPARATE ILLUSTRATION

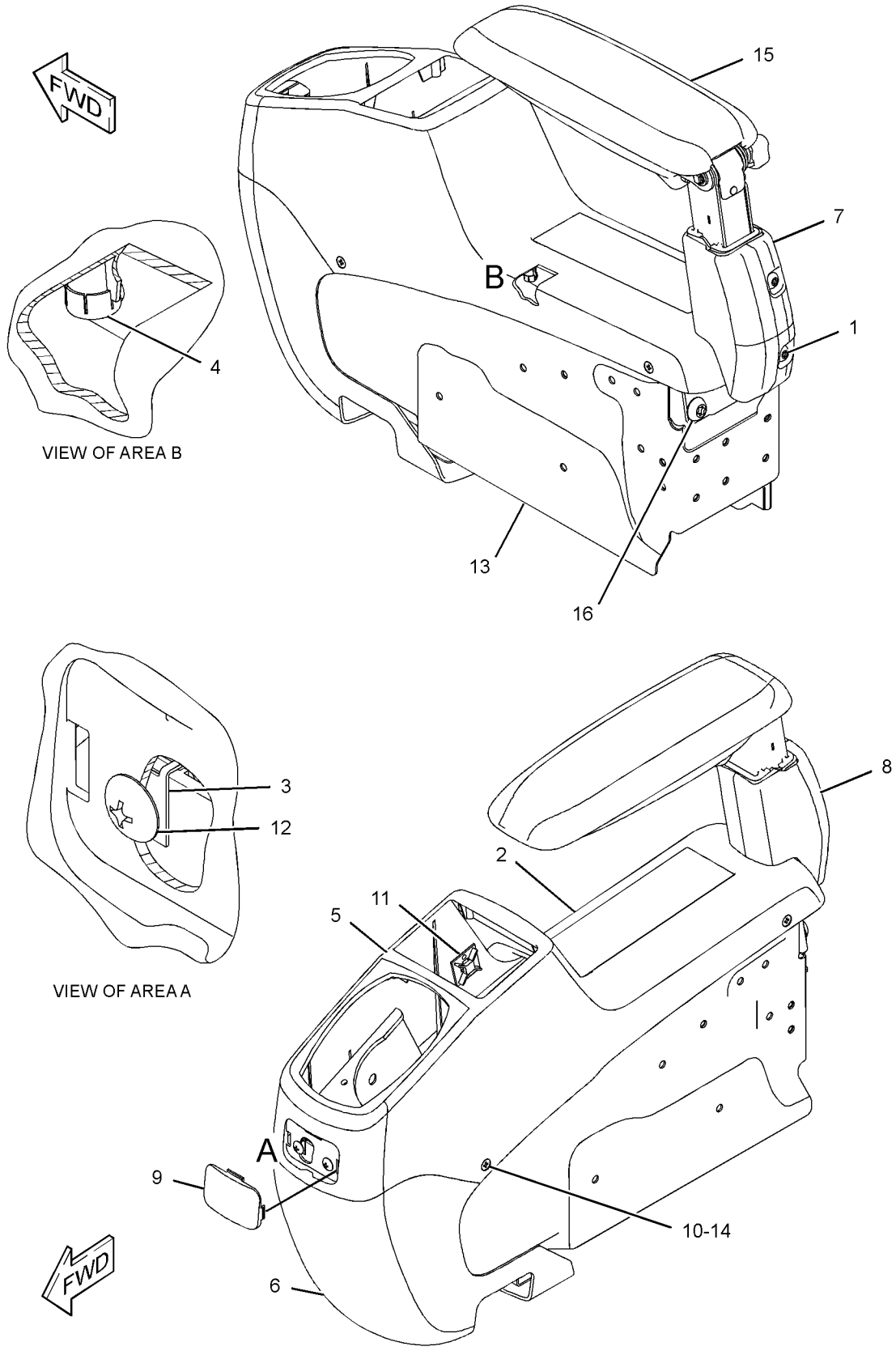

GRAPHIC #1 **<END>** g01217107

421-1431 CONSOLE GP-OPERATOR

S/N: HAH1-UP

PART OF 451-3987 OPERATOR AR

SMCS-5258 **i05415673**

NOTE	REF NO	GRAPHIC REF	PART NUMBER	QTY	PART NAME 1 2 3 4 5 6 (PRODUCT LEVEL)	SEE PAGE
	1	1	**176-1916**	2	GROMMET	
	2	1	**178-5422**	2	GROMMET	
	3	1	**178-5423**	2	GROMMET	
	4	1	**185-8161**	2	INSULATOR	
	5	1	**235-8893**	2	SUPPORT	
	6	1	**235-8894**	2	SUPPORT	
Y	7	1	*421-1434*	1	CONSOLE GP-OPERATOR (LH)	364
Y	8	1	*259-7348*	1	CONSOLE GP-OPERATOR (RH)	360
	9	1	**8T-4121**	4	WASHER-HARD (11X21X2.5-MM THK)	
M	10	1	**8T-4195**	4	BOLT (M10X1.5X30-MM)	
M	11	1	**9X-2046**	8	SCREW-TRUSS HEAD (M6X1X35-MM)	
M	12	1	**9X-2045**	12	SCREW-TRUSS HEAD (M6X1X20-MM)	
	13	1	**7K-1181**	4	STRAP-CABLE	
	14	1	**122-9617**	2	GUARD	

M - METRIC PART
Y - SEPARATE ILLUSTRATION

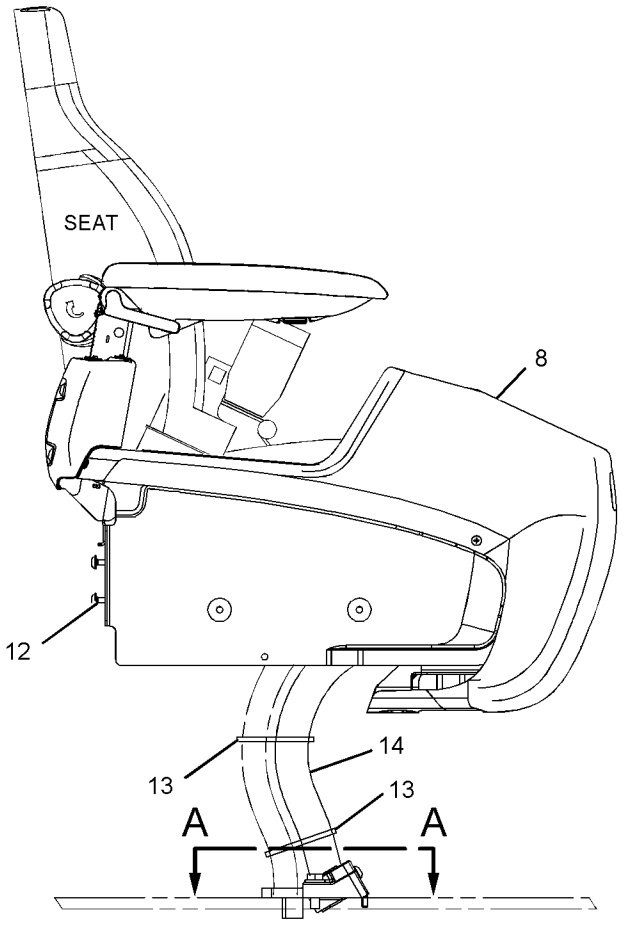

RIGHT SIDE VIEW

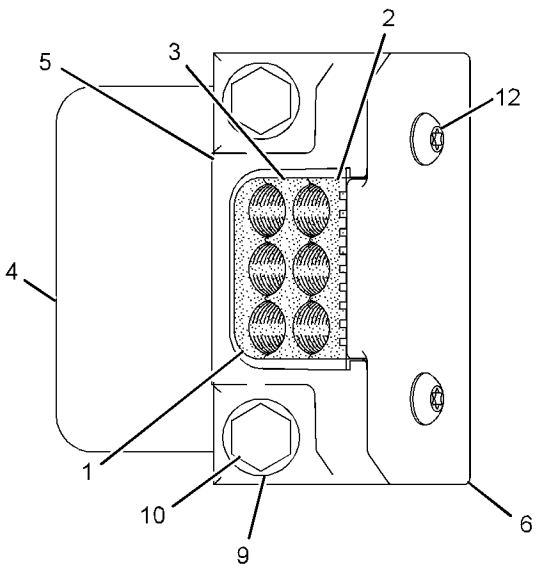

SECTION A-A

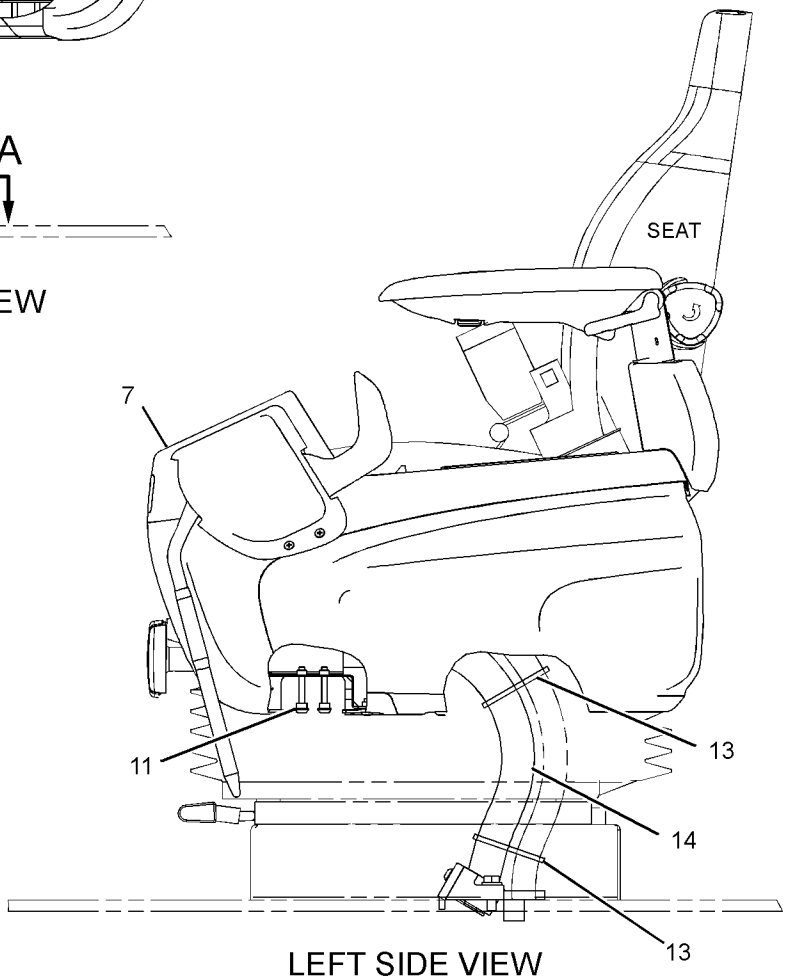

LEFT SIDE VIEW

GRAPHIC #1 **<END>** g01844714

421-1434 CONSOLE GP-OPERATOR–LH

S/N: HAH1-UP

PART OF 421-1431 CONSOLE GP-OPERATOR

SMCS-5258 **i05415852**

NOTE	REF NO	GRAPHIC REF	PART NUMBER	QTY	PART NAME 1 2 3 4 5 6 (PRODUCT LEVEL)	SEE PAGE
M	1	1	**128-2135**	5	SCREW-TRUSS HEAD (M6X1X13-MM)	
M	2	1	**171-7325**	3	SCREW-TAPPING (M5X0.8-THD)	
	3	1	**234-6579**	6	NUT-SPEED	
	4	1	**234-6580**	4	CAP	
	5	1	**234-6603**	1	COVER	
	6	1	**234-6605**	1	COVER	
	7	1	**234-6608**	1	COVER	
	8	1	**234-6609**	1	COVER	
	9	1	**234-6610**	1	COVER	
	11	1	**234-6612**	1	COVER	
Y	12	1	**234-6613**	1	SWITCH GP-LIMIT (HYDRAULIC LOCKOUT)	110
	13	1	**234-6614**	1	COVER	
	14	1	**235-8914**	4	NUT-SPEED	
	15	1	**235-8965**	1	GUARD	
	16	1	**245-7790**	3	SCREW-TAPPING	
	17	1	**245-7925**	1	SUPPORT AS	
	18	1	**245-7948**	7	SCREW-TAPPING	
	19	1	**259-7202**	1	ASHTRAY	
Y	20	1	**259-7347**	1	ARMREST GP (LH)	332
M	21	1	**9X-2041**	3	SCREW-TRUSS HEAD (M10X1.5X20-MM)	
M	22	1	**9X-2042**	2	SCREW-TRUSS HEAD (M6X1X12-MM)	

M - METRIC PART
Y - SEPARATE ILLUSTRATION

421-1434 **CONSOLE GP-OPERATOR (*contd.*)** **i05415852**

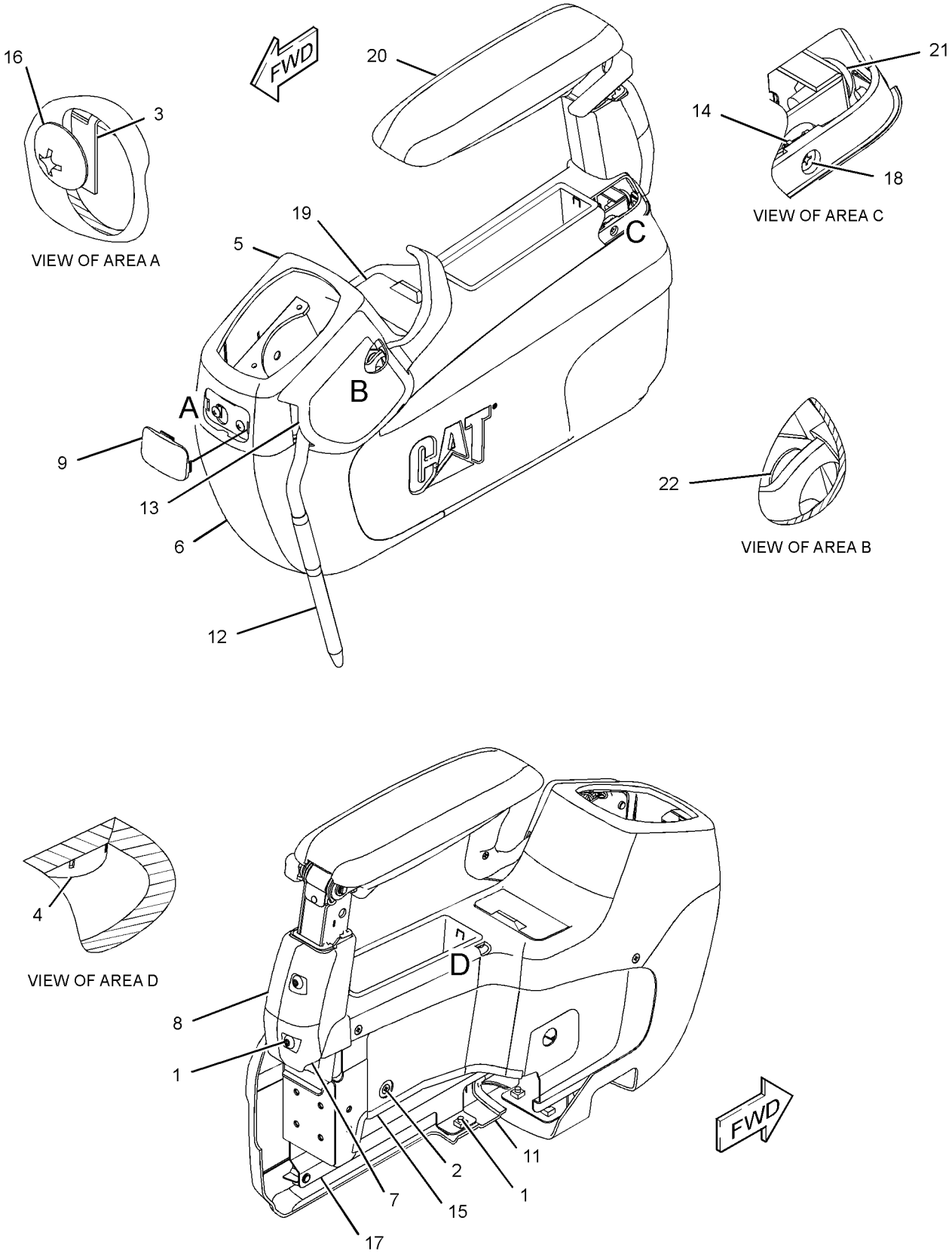

GRAPHIC #1 **<END>** g03401396

310-0078 CONTROL & MTG GP-JOYSTICK

S/N: HAH1-UP
PART OF 351-4572 OPTION AR-HYDRAULIC
AN ATTACHMENT

SMCS-5063, 5705

i03023345

NOTE	REF NO	GRAPHIC REF	PART NUMBER	QTY	PART NAME 1 2 3 4 5 6 (PRODUCT LEVEL)	SEE PAGE
Y	1	1	**297-0532**	1	CONTROL GP-JOYSTICK (RH)	371
Y	2	1	**297-0533**	1	CONTROL GP-JOYSTICK (LH)	372
M	3	1	**6V-7357**	6	BOLT (M6X1X25-MM)	
	4	1	**9X-8256**	6	WASHER (6.6X12X2-MM THK)	

M - METRIC PART
Y - SEPARATE ILLUSTRATION

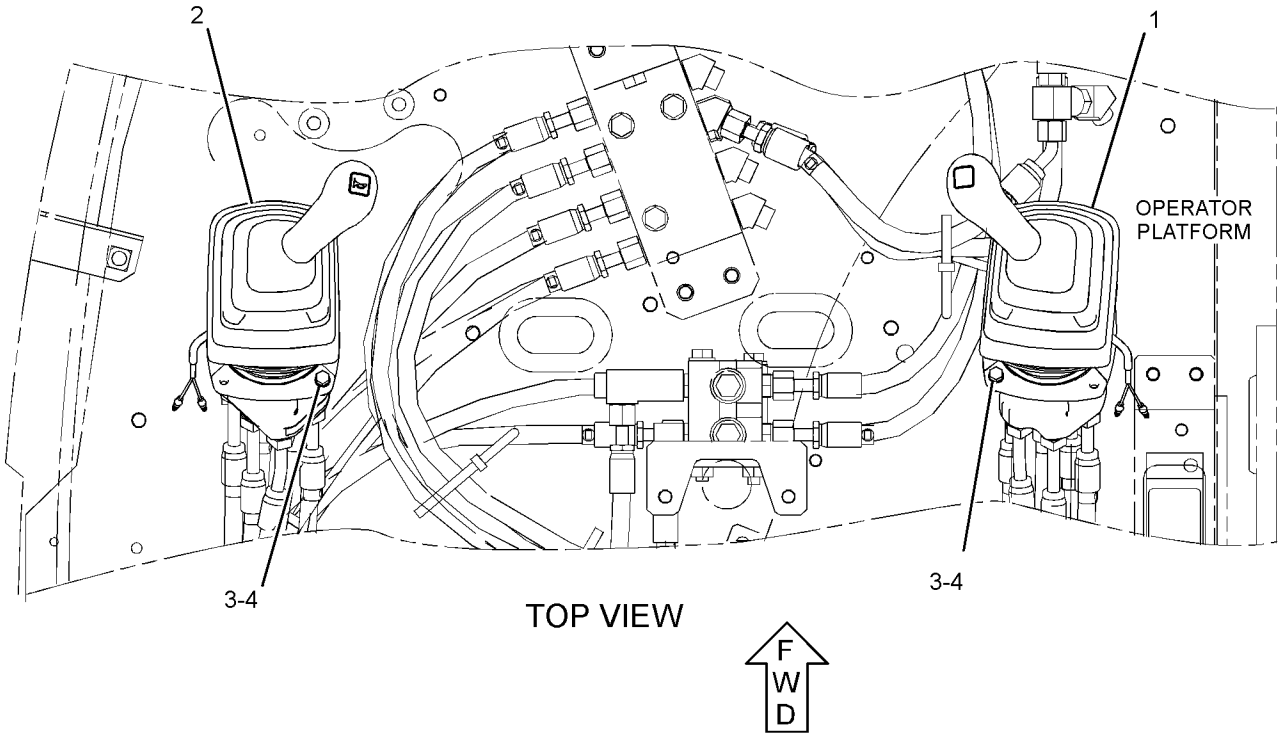

GRAPHIC #1

<END>

g01442248

235-8969 CONTROL GP-HANDLE—JOYSTICK, LH

S/N: HAH1-UP

PART OF 297-0533 CONTROL GP-JOYSTICK

AN ATTACHMENT

SMCS-5705 **i04942910**

NOTE	REF NO	GRAPHIC REF	PART NUMBER	QTY	PART NAME 1 2 3 4 5 6 (PRODUCT LEVEL)	SEE PAGE
	1	1	**124-4010**	1	LEVER	
	2	1	**353-2149**	1	BOOT	
	3	1	**245-7842**	1	KNOB AS	
M		1	**6I-5298**	1	SCREW-TAPPING	
		1	**124-4009**	1	SHAFT	
		1	**222-0225**	1	SWITCH AS-PUSH BUTTON (HORN)	
M	4	1	**095-0735**	2	SCREW-MACHINE (M5X0.8X8-MM)	

M - METRIC PART

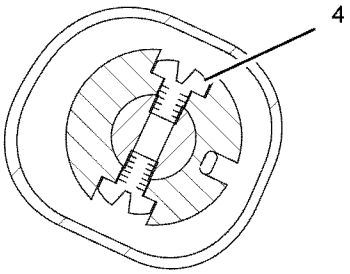

SECTION B-B

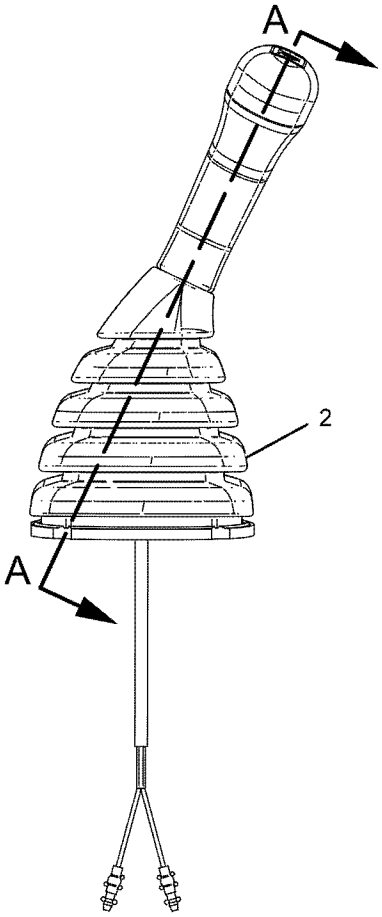

LEFT SIDE VIEW

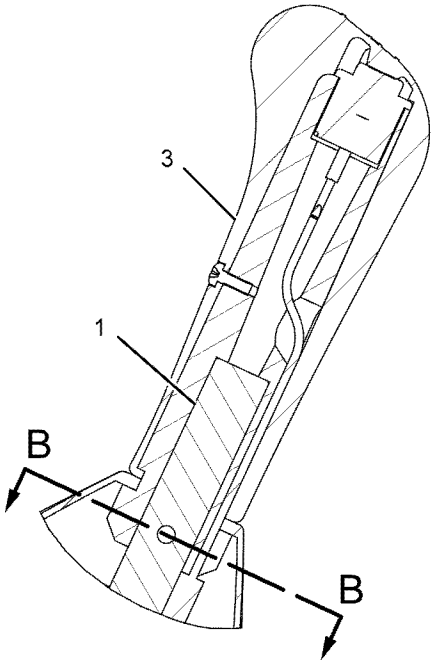

SECTION A-A

GRAPHIC #1 **<END>** g01082395

235-8970 CONTROL GP-HANDLE–JOYSTICK, RH

S/N: HAH1-UP

PART OF 297-0532 CONTROL GP-JOYSTICK

AN ATTACHMENT

SMCS-5705 **i04942874**

NOTE	REF NO	GRAPHIC REF	PART NUMBER	QTY	PART NAME 1 2 3 4 5 6 (PRODUCT LEVEL)	SEE PAGE
	1	1	**124-4010**	1	LEVER	
	2	1	**353-2150**	1	BOOT	
	3	1	**245-7844**	1	KNOB AS	
M		1	**6I-5298**	1	SCREW-TAPPING	
		1	**124-4009**	1	SHAFT	
		1	**222-0225**	1	SWITCH AS-PUSH BUTTON (MANUAL LOW IDLE)	
M	4	1	**095-0735**	2	SCREW-MACHINE (M5X0.8X8-MM)	

M - METRIC PART

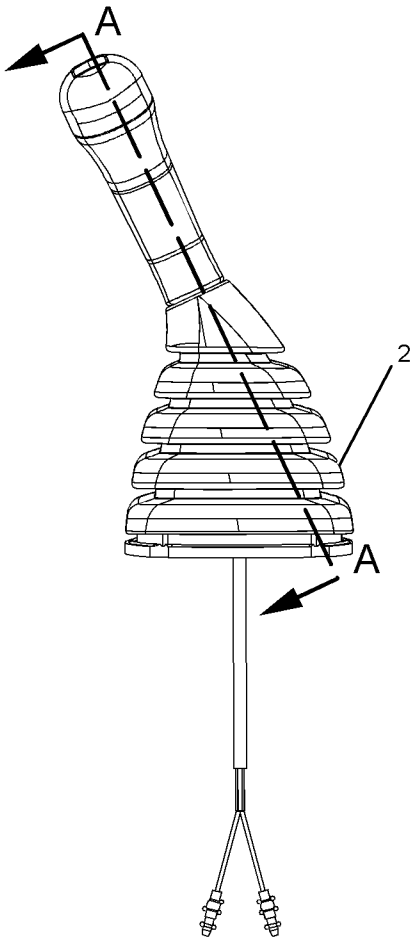

RIGHT SIDE VIEW

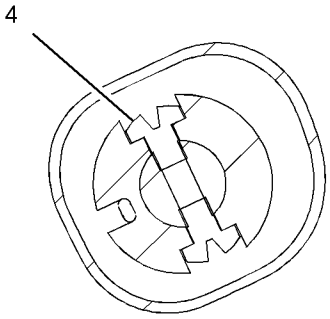

SECTION B-B

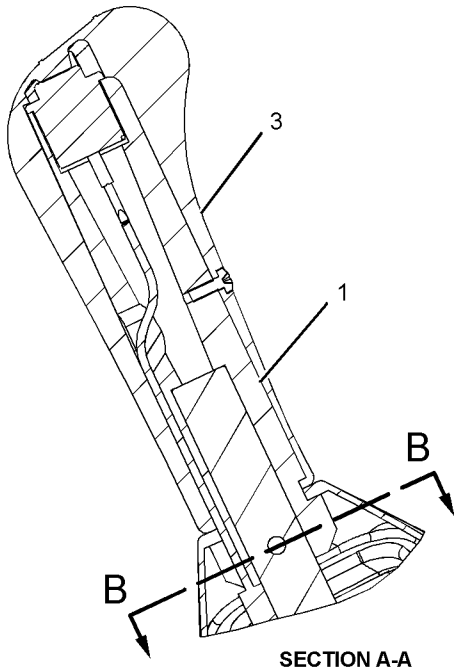

SECTION A-A

GRAPHIC #1 **<END>** g01082427

245-7846 CONTROL GP-HEAT & AIR COND

S/N: HAH1-UP
PART OF 316-8916 AIR CONDITIONER GP
AN ATTACHMENT

SMCS-7309 **i05332896**

NOTE	REF NO	GRAPHIC REF	PART NUMBER	QTY	PART NAME 1 2 3 4 5 6 (PRODUCT LEVEL)	SEE PAGE
	1	1	**185-8300**	4	SCREW-TAPPING	
	2	1	**196-1666**	1	RELAY (COMPRESSOR CLUTCH)	
	2A	1	**196-1666**	1	RELAY (BLOWER)	
	3	1	**245-7813**	1	MOTOR AS	
	4	1	**245-7814**	1	BRACKET	
	5	1	**245-7815**	1	SENSOR AS-TEMPERATURE (AIR)	
	6	1	**245-7816**	1	DAMPER AS	

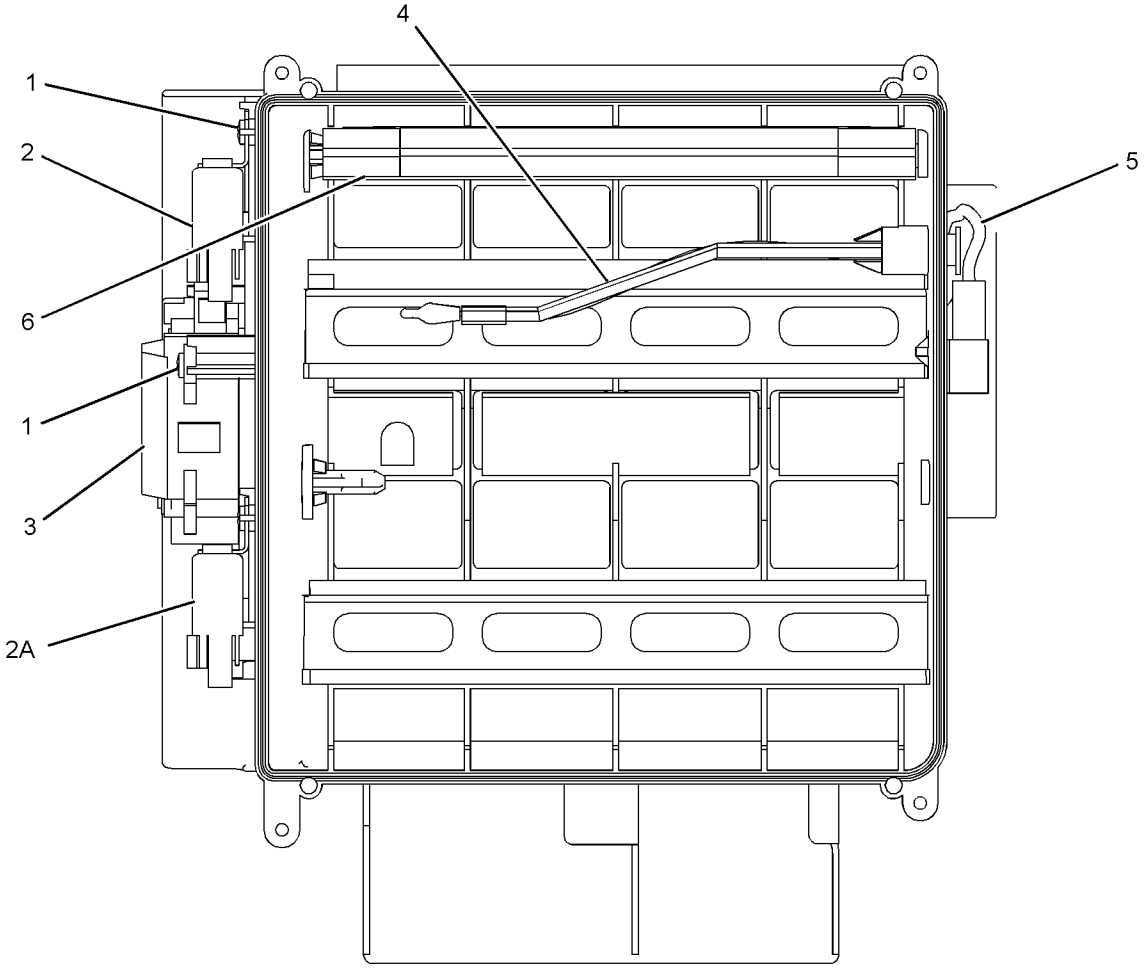

GRAPHIC #1 **<END>** g01245591

297-0532 CONTROL GP-JOYSTICK–RH

S/N: HAH1-UP
PART OF 310-0078 CONTROL & MTG GP-JOYSTICK
AN ATTACHMENT

SMCS-5705 **i05349606**

NOTE	REF NO	GRAPHIC REF	PART NUMBER	QTY	PART NAME 1 2 3 4 5 6 (PRODUCT LEVEL)	SEE PAGE
M	1	1	**271-7843**	1	NUT (M14X2-THD)	
Y	2	1	**235-8970**	1	CONTROL GP-HANDLE (JOYSTICK, RH)	369
Y	3	1	**297-0529**	1	VALVE GP-PILOT (JOYSTICK)	291
	4	1	**6K-0806**	1	STRAP-CABLE	

M - METRIC PART
Y - SEPARATE ILLUSTRATION

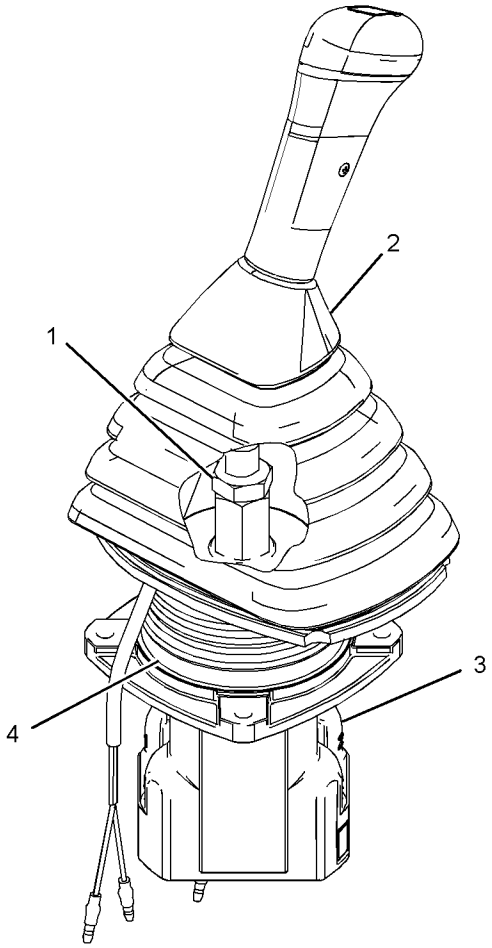

GRAPHIC #1 **<END>** g03057522

297-0533 CONTROL GP-JOYSTICK–LH

S/N: HAH1-UP

PART OF 310-0078 CONTROL & MTG GP-JOYSTICK

AN ATTACHMENT

SMCS-5705 **i05349637**

NOTE	REF NO	GRAPHIC REF	PART NUMBER	QTY	PART NAME 1 2 3 4 5 6 (PRODUCT LEVEL)	SEE PAGE
M	1	1	**271-7843**	1	NUT (M14X2-THD)	
Y	2	1	**235-8969**	1	CONTROL GP-HANDLE (JOYSTICK, LH)	367
Y	3	1	**297-0529**	1	VALVE GP-PILOT (JOYSTICK)	291
	4	1	**6K-0806**	1	STRAP-CABLE	

M - METRIC PART
Y - SEPARATE ILLUSTRATION

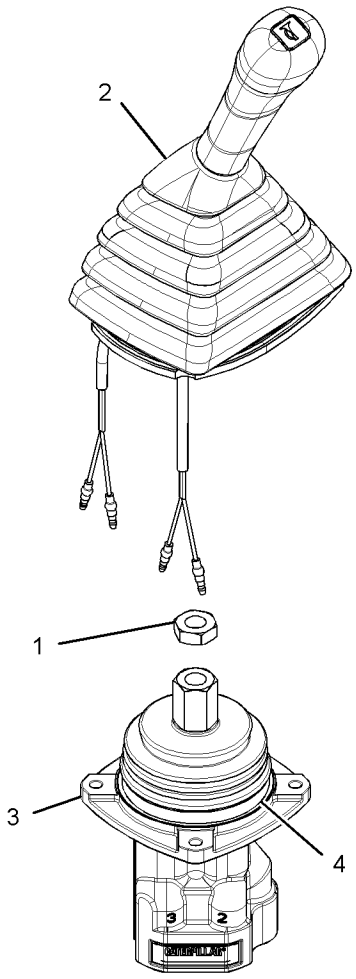

GRAPHIC #1 **<END>** g03057536

457-3306 CONTROL GP-MONITOR

S/N: HAH1-UP

PART OF 399-2620 MONITOR & MTG GP-OPERATOR

SMCS-7490 **i05841733**

NOTE	REF NO	GRAPHIC REF	PART NUMBER	QTY	PART NAME 1 2 3 4 5 6 (PRODUCT LEVEL)	SEE PAGE
Y	1	1	**455-6834**	1	MONITOR GP-OPERATOR	398
	2	1	**457-3308**	1	SOFTWARE GP-MONITOR	

Y - SEPARATE ILLUSTRATION

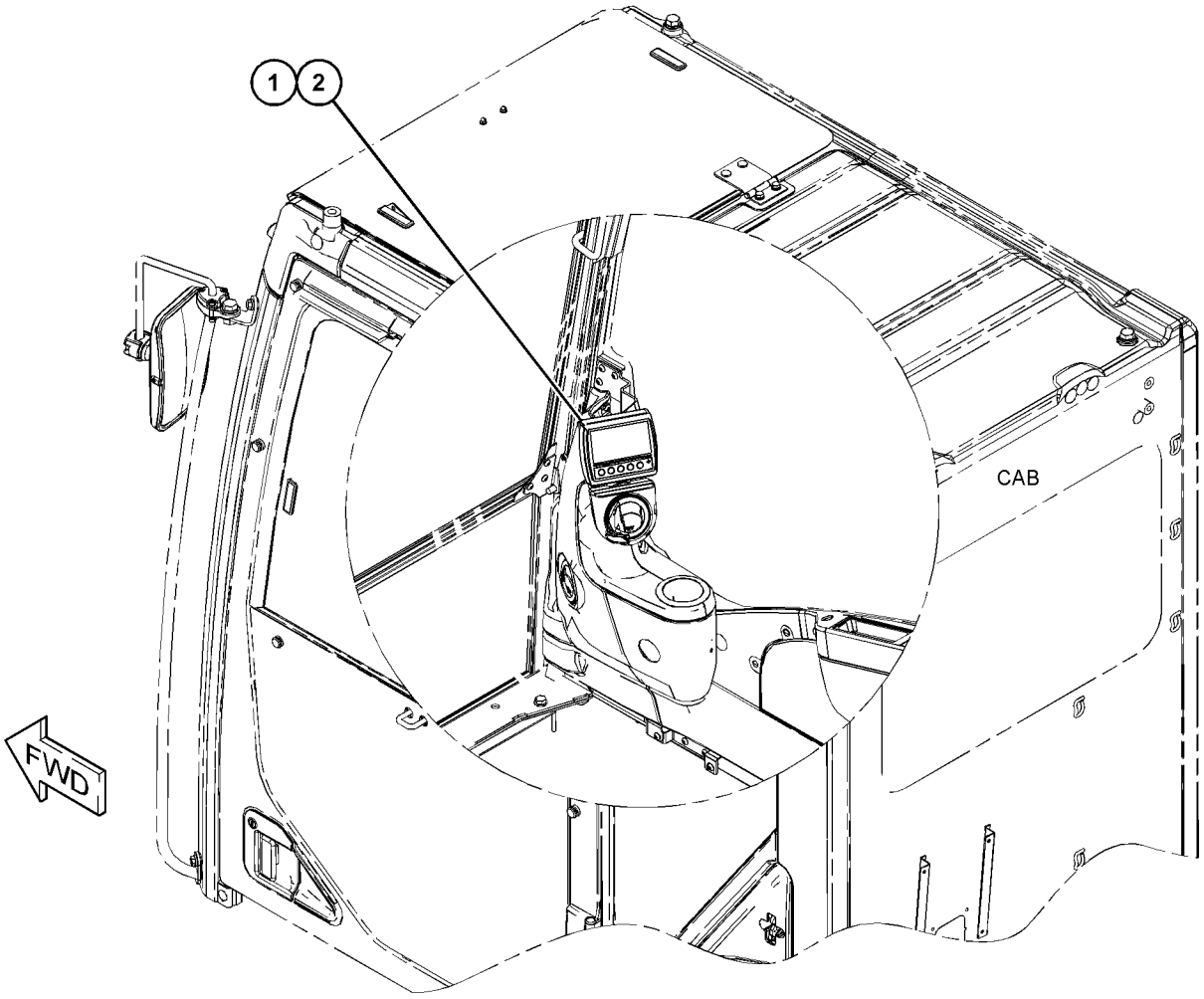

GRAPHIC #1 **<END>** g03682146

170-9497 CONTROL GP-PILOT OPERATED HYD–TRAVEL

S/N: HAH1-UP

PART OF 451-3987 OPERATOR AR

SMCS-5059 **i02996213**

NOTE	REF NO	GRAPHIC REF	PART NUMBER	QTY	PART NAME 1 2 3 4 5 6 (PRODUCT LEVEL)	SEE PAGE
	1	1	**096-6166**	2	WASHER-HARD (4.5X9X1-MM THK)	
M	2	1	**095-0728**	2	SCREW-MACHINE (M4X0.7X12-MM)	
	3	1	**8T-4121**	12	WASHER-HARD (11X21X2.5-MM THK)	
M	4	1	**8T-4136**	4	BOLT (M10X1.5X25-MM)	
M	5	1	**8T-4191**	8	BOLT (M10X1.5X16-MM)	
	6	1	**142-5546**	2	KNOB	
	7	1	**117-6356**	2	STEP AS	
	8	1	**122-9610**	2	STEP	
	9	1	**170-9499**	1	LEVER AS (LH)	
	10	1	**170-9498**	1	LEVER AS (RH)	
	11	1	**122-9608**	1	PEDAL-RUBBER (RH)	
	12	1	**117-6350**	1	PEDAL AS (RH)	
	13	1	**122-9609**	1	PEDAL-RUBBER (LH)	
	14	1	**117-6349**	1	PEDAL AS (LH)	

M - METRIC PART

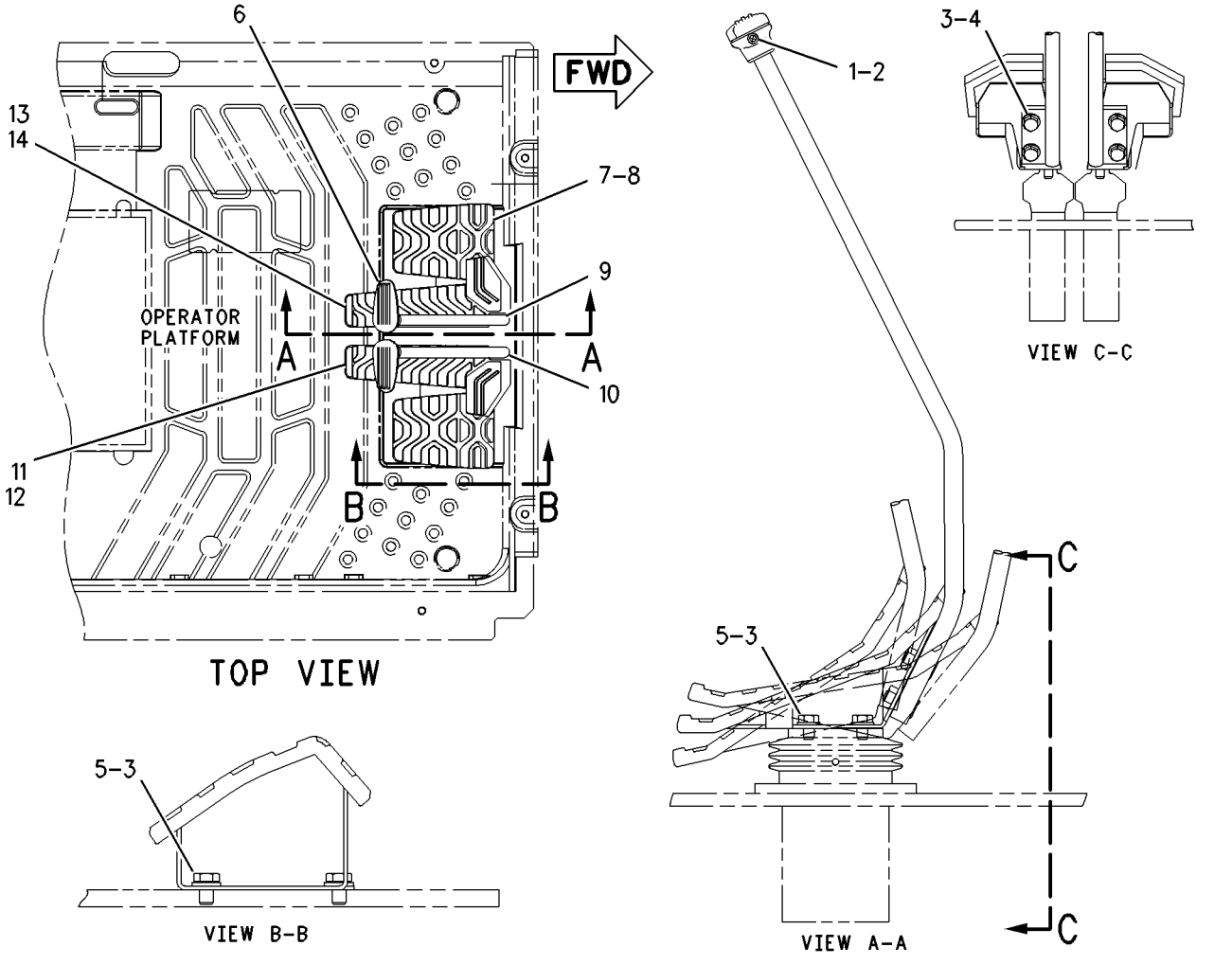

GRAPHIC #1 **<END>** g00672963

234-6501 COVER GP-CAB–REAR

S/N: HAH1-UP
PART OF 399-0055, 420-3810 CAB GP
AN ATTACHMENT

SMCS-7301, 7308

i05349655

NOTE	REF NO	GRAPHIC REF	PART NUMBER	QTY	PART NAME 1 2 3 4 5 6 (PRODUCT LEVEL)	SEE PAGE
	1	1	**234-6499**	1	COVER AS	
	2	1	**234-6502**	1	COVER-ACCESS (FUSE-REAR PANEL)	
	3	1	**234-6593**	2	FASTENER	
					USE WITH COVER WITH A 9-MM DIAMETER UPPER MOUNTING HOLE	
					–OR–	
		1	**245-7929**	2	CLIP	
					USE WITH COVER WITH A 7.6-MM DIAMETER UPPER MOUNTING HOLE	

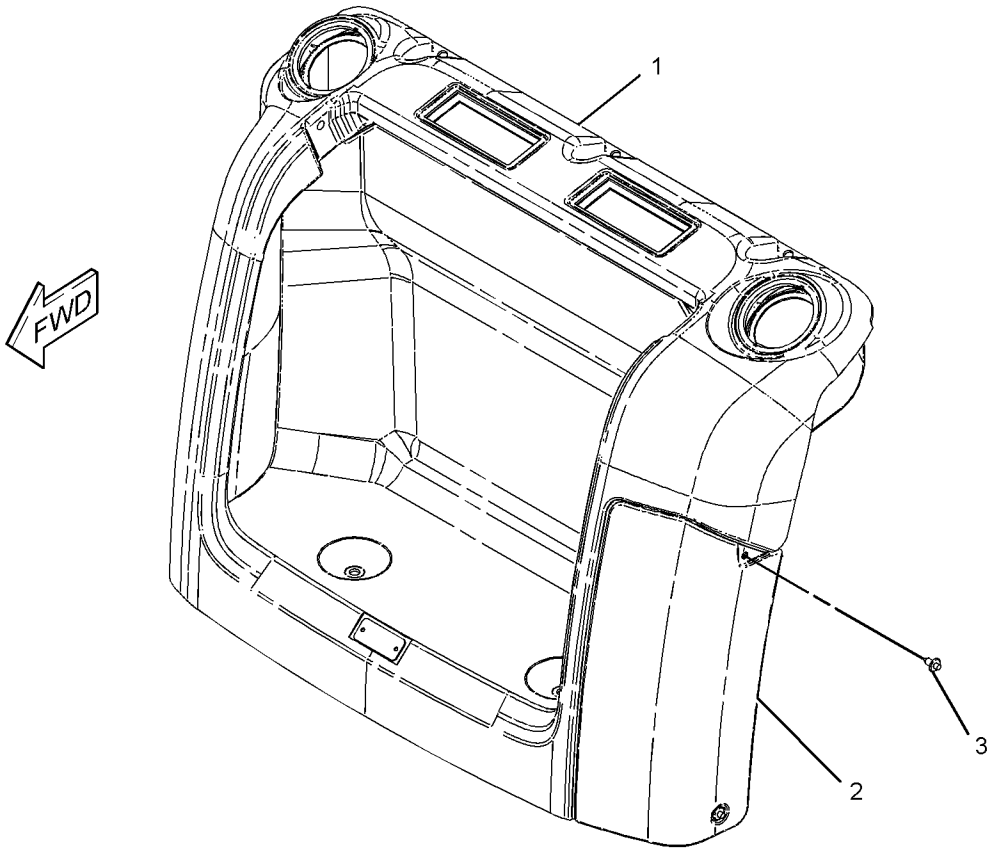

GRAPHIC #1

<END>

g03389225

316-6166 DOOR & MTG GP-CAB

S/N: HAH1-UP
PART OF 399-0057 CAB GP
AN ATTACHMENT

SMCS-7308 **i05910772**

NOTE	REF NO	GRAPHIC REF	PART NUMBER	QTY	PART NAME 1 2 3 4 5 6 (PRODUCT LEVEL)	SEE PAGE
Y	1	1	*307-1818*	1	DOOR GP-CAB	378
	2	1	*151-6767*	1	DOOR AS	
M		1	**9X-2041**	6	SCREW-TRUSS HEAD (M10X1.5X20-MM)	
		1	**151-6777**	2	HINGE	

M - METRIC PART
Y - SEPARATE ILLUSTRATION

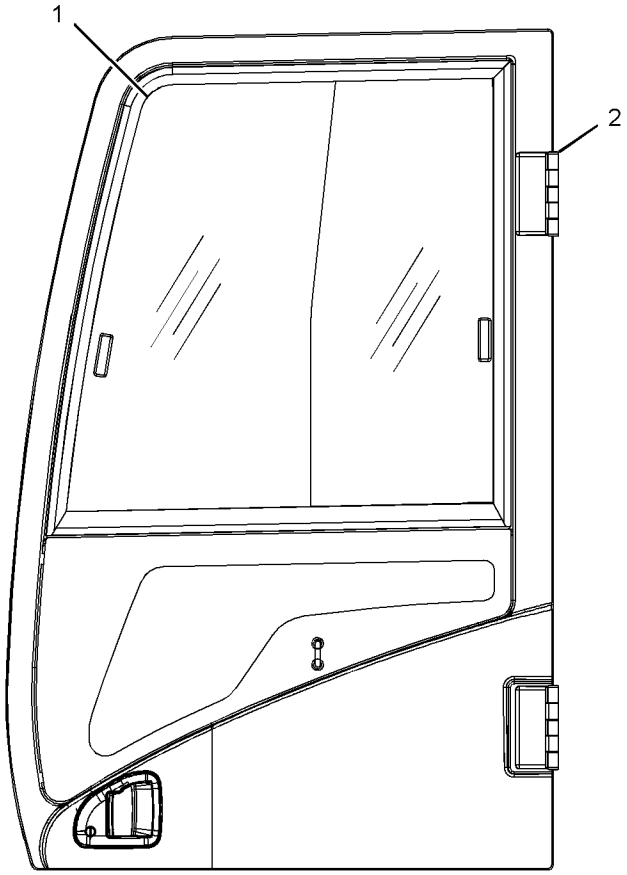

LEFT SIDE VIEW

GRAPHIC #1 **<END>** g01889494

420-3151 DOOR & MTG GP-CAB

S/N: HAH1-UP
PART OF 439-2524 CAB GP
AN ATTACHMENT

SMCS-7308 **i05968254**

NOTE	REF NO	GRAPHIC REF	PART NUMBER	QTY	PART NAME 1 2 3 4 5 6 (PRODUCT LEVEL)	SEE PAGE
	1	1	**436-1901**	2	HINGE	
	2	1	**425-7079**	1	PANEL AS-DOOR	
M	3	1	**9X-2041**	6	SCREW-TRUSS HEAD (M10X1.5X20-MM)	

M - METRIC PART

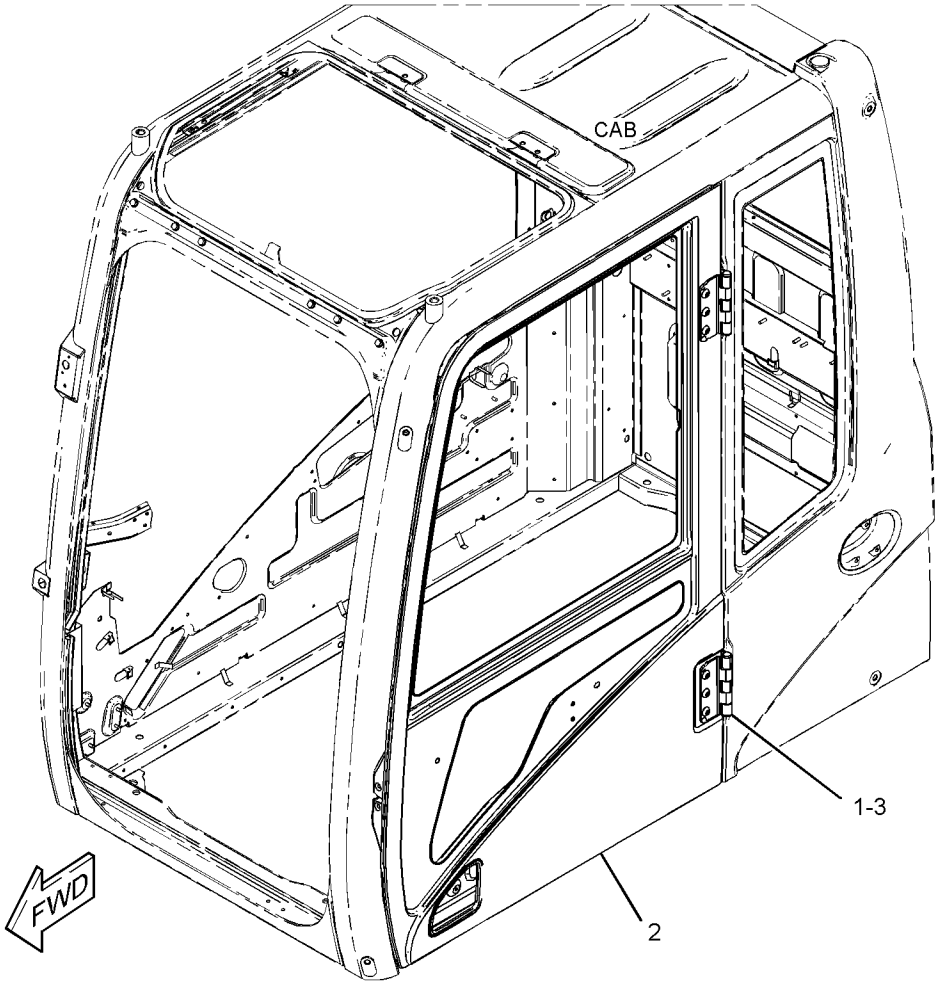

GRAPHIC #1 **<END>** g03440163

307-1818 DOOR GP-CAB

S/N: HAH1-UP
PART OF 316-6166 DOOR & MTG GP-CAB
AN ATTACHMENT

SMCS-7308 **i05332914**

NOTE	REF NO	GRAPHIC REF	PART NUMBER	QTY	PART NAME 1 2 3 4 5 6 (PRODUCT LEVEL)	SEE PAGE
	1	1	**151-6703**	1	HANDLE-PULL	
	2	1	**151-6704**	2	CAP	
Y	3	1	**151-6792**	1	WINDOW GP-DOOR	431
	4	1	**156-6471**	1	GLASS	
	5	1	**156-6598**	1	HOOK	
	6	1	**156-6600**	1	LOCK AS	
		1	**164-0514**	1	CLIP	
	6A	1	**164-0519**	1	CLIP	
	7	1	**156-6643**	2	COVER	
	8	1	**156-6645**	1	HANDLE AS	
		1	**201-4391**	1	CLIP	
	9	1	**161-3639**	1	HANDLE AS	
	10	1	**161-3650**	1	COVER AS	
	11	1	**161-3663**	1	SEAL AS	
		1	**151-9497**	45	CLIP	
	12	1	**161-3665**	1	SEAL	
	13	1	**164-0515**	1	JOINT	
	14	1	**167-7039**	1	GROMMET	
M	15	1	**185-8180**	3	SCREW (M6X1X16-MM)	
	16	1	**8T-4224**	2	WASHER-HARD (8.8X16X2-MM THK)	
	17	1	**259-7354**	1	COVER	
M	18	1	**096-2622**	2	SCREW-MACHINE (M4X0.7X8-MM)	
M	19	1	**096-3884**	2	NUT-SPRING (M8X1.25-THD)	
M	20	1	**101-8899**	2	SCREW AS (M6X1.0X16-MM)	
M	21	1	**101-8900**	2	SCREW AS (M6X1X20-MM)	
	22	1	**151-9461**	4	SPACER	
	23	1	**178-5573**	4	SPACER	
	24	1	**178-5574**	2	SPACER	
	25	1	**189-2690**	1	HANDLE	
	26	1	**4I-4286**	1	KNOB	
M	27	1	**9X-2042**	8	SCREW-TRUSS HEAD (M6X1X12-MM)	

M - METRIC PART
Y - SEPARATE ILLUSTRATION

307-1818 **DOOR GP-CAB (*contd.*)** **i05332914**

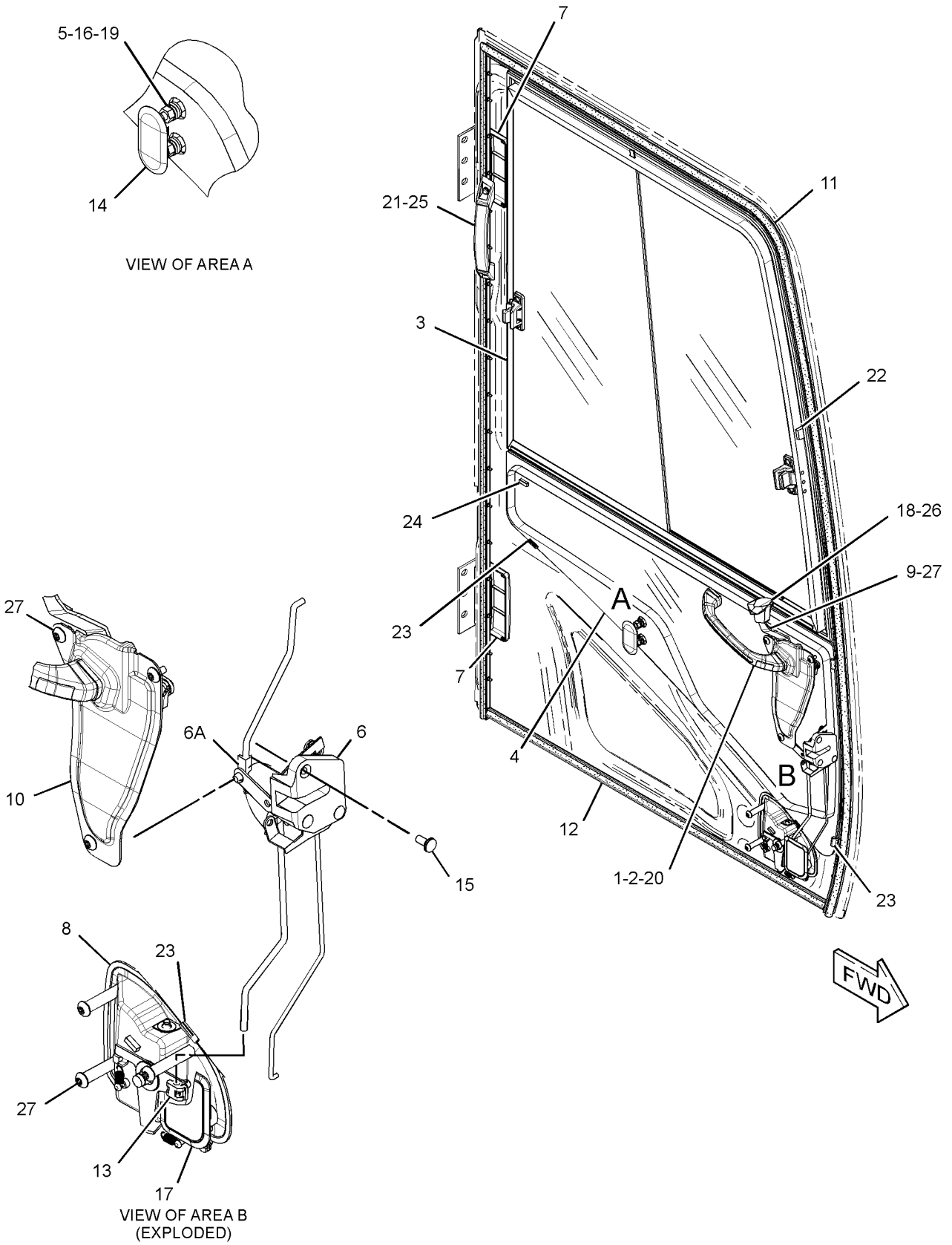

GRAPHIC #1 **<END>** g02178270

388-9105 DOOR GP-CAB

S/N: HAH1-UP
PART OF 388-9093 CAB GP
AN ATTACHMENT

SMCS-7308 **i05963639**

NOTE	REF NO	GRAPHIC REF	PART NUMBER	QTY	PART NAME 1 2 3 4 5 6 (PRODUCT LEVEL)	SEE PAGE
	1	1	**151-6703**	1	HANDLE-PULL	
	2	1	**151-6704**	2	CAP	
Y	3	1	**384-6533**	1	WINDOW GP-DOOR	433
	4	1	**383-6933**	1	GLASS	
	5	1	**156-6598**	1	HOOK	
	6	1	**398-7107**	1	LOCK AS	
	6A	1	**398-7105**	1	CLIP	
		1	**398-7105**	1	CLIP	
	7	1	**156-6643**	2	COVER	
	8	1	**398-7111**	1	HANDLE AS	
		1	**398-7106**	1	CLIP	
	9	1	**161-3639**	1	HANDLE AS	
	10	1	**161-3650**	1	COVER AS	
	11	1	**161-3663**	1	SEAL AS	
		1	**151-9497**	45	CLIP	
	12	1	**449-9326**	1	SEAL	
	13	1	**164-0515**	1	JOINT	
	14	1	**167-7039**	1	GROMMET	
M	15	1	**185-8180**	3	SCREW (M6X1X16-MM)	
	16	1	**8T-4224**	2	WASHER-HARD (8.8X16X2-MM THK)	
	17	1	**259-7354**	1	COVER	
M	18	1	**096-2622**	2	SCREW-MACHINE (M4X0.7X8-MM)	
M	19	1	**096-3884**	2	NUT-SPRING (M8X1.25-THD)	
M	20	1	**101-8899**	2	SCREW AS (M6X1.0X16-MM)	
M	21	1	**101-8900**	2	SCREW AS (M6X1X20-MM)	
	22	1	**151-9461**	4	SPACER	
	23	1	**178-5573**	4	SPACER	
	24	1	**178-5574**	3	SPACER	
	25	1	**448-9502**	1	HANDLE	
	26	1	**4I-4286**	1	KNOB (HANDLE)	
M	27	1	**9X-2042**	8	SCREW-TRUSS HEAD (M6X1X12-MM)	

M - METRIC PART
Y - SEPARATE ILLUSTRATION

388-9105 **DOOR GP-CAB (*contd.*)** **i05963639**

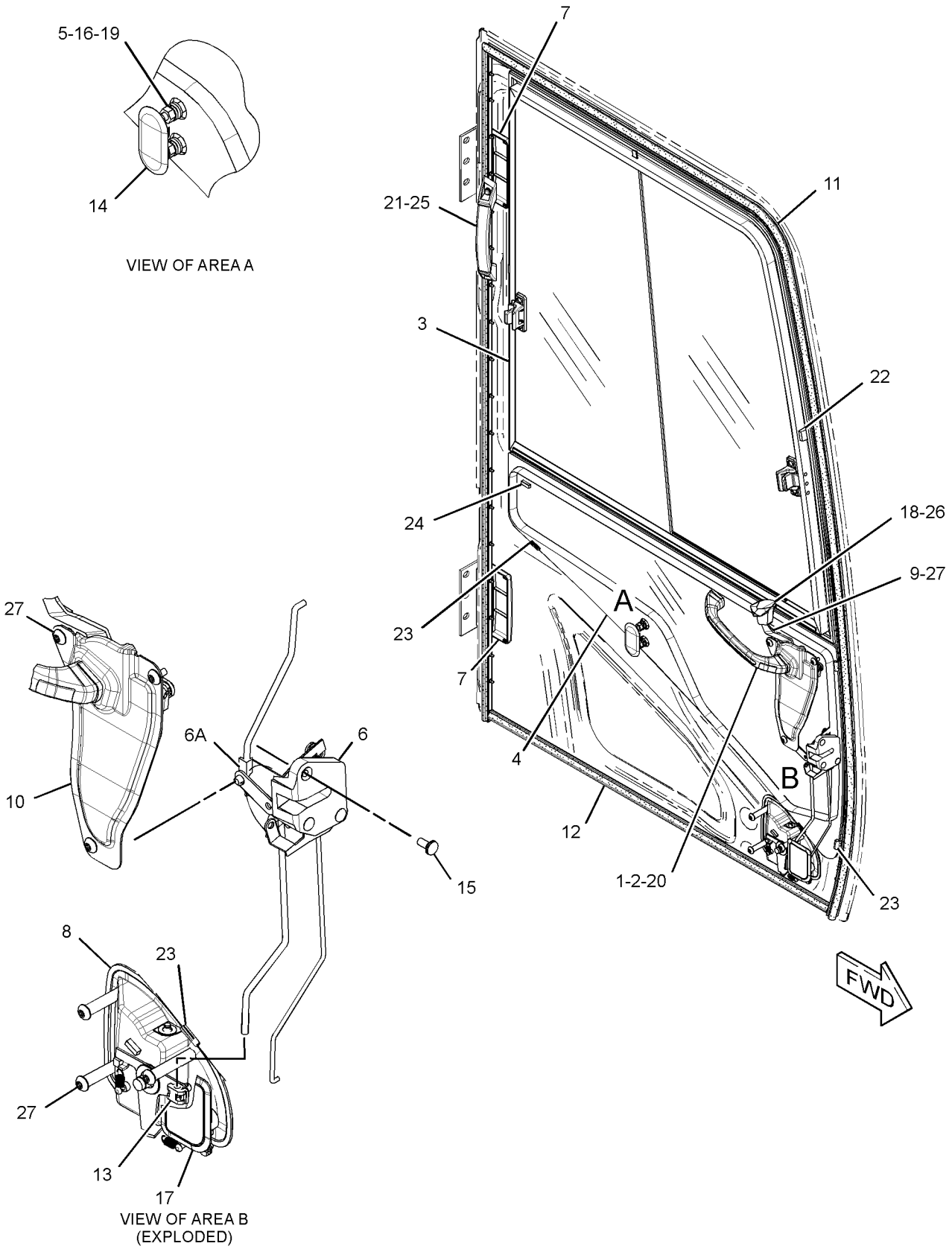

GRAPHIC #1 **<END>** g02178270

229-9082 DUCT GP-CAB AIR

S/N: HAH1-UP
PART OF 418-9897 AIR CONDITIONER AR
AN ATTACHMENT

SMCS-734D **i05496633**

NOTE	REF NO	GRAPHIC REF	PART NUMBER	QTY	PART NAME 1 2 3 4 5 6 (PRODUCT LEVEL)	SEE PAGE
	1	1	**293-1183**	1	FILTER GP-CAB AIR	
		1	**293-1184**	1	FILTER ELEMENT-CAB AIR	
	2	1	**235-8876**	1	DUCT AS (FRESH AIR, UPPER)	
		1	**245-7872**	1	INSULATOR	
	3	1	**235-8877**	1	DUCT AS (VENT, REAR)	
		1	**245-7792**	1	INSULATOR	
	4	1	**235-8878**	1	DUCT AS (VENT, FRONT)	
		1	**245-7793**	1	INSULATOR	
	5	1	**235-8879**	1	DUCT AS (FLOOR)	
		1	**245-7873**	1	INSULATOR	
	6	1	**240-5074**	1	DUCT AS (FRESH AIR, LOWER)	
		1	**245-7791**	1	INSULATOR	
M	7	1	**101-8899**	2	SCREW AS (M6X1.0X16-MM)	
	8	1	**176-1996**	5	CLIP	

M - METRIC PART

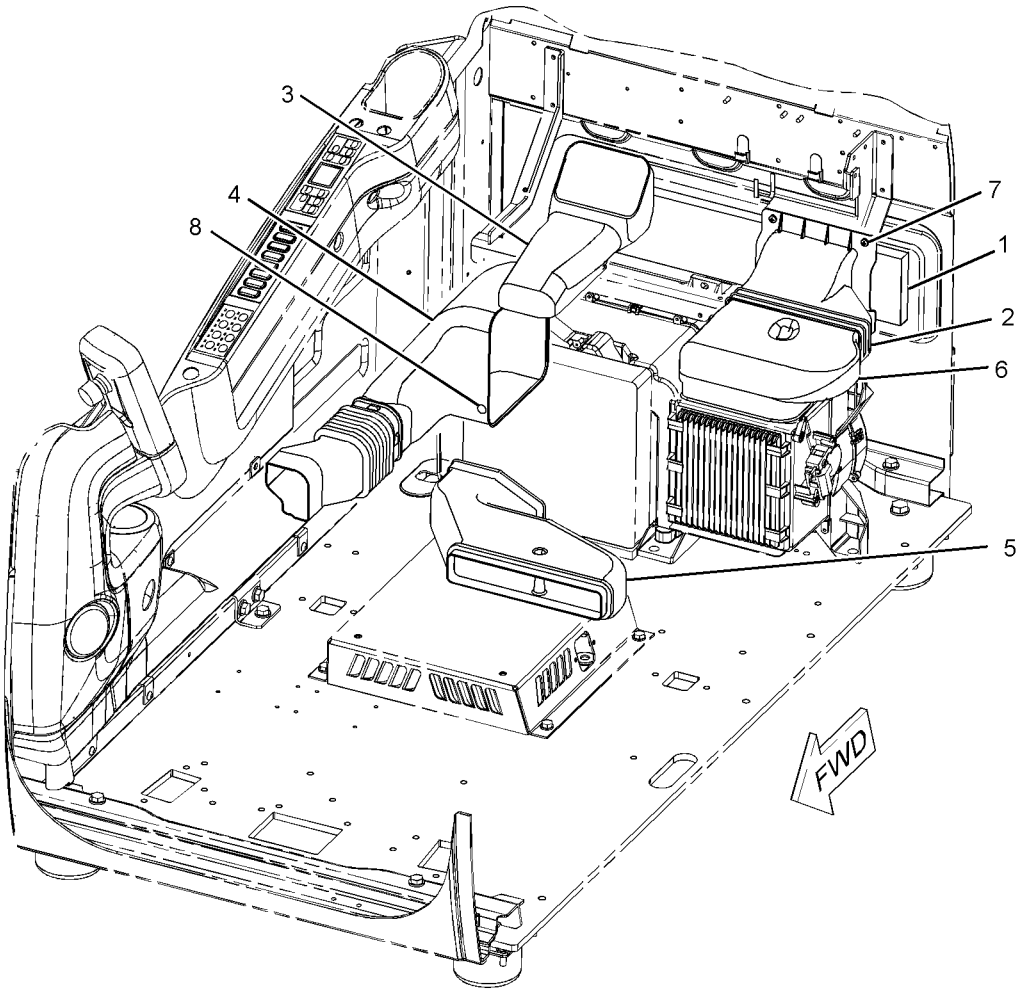

GRAPHIC #1 **<END>** g01126665

OPERATOR STATION

284-4376 FLOOR MAT

S/N: HAH1-UP

AN ATTACHMENT

SMCS-726M **i04952291**

NOTE	REF NO	GRAPHIC REF	PART NUMBER	QTY	PART NAME 1 2 3 4 5 6 (PRODUCT LEVEL)	SEE PAGE
					(NO SERVICED PARTS)	

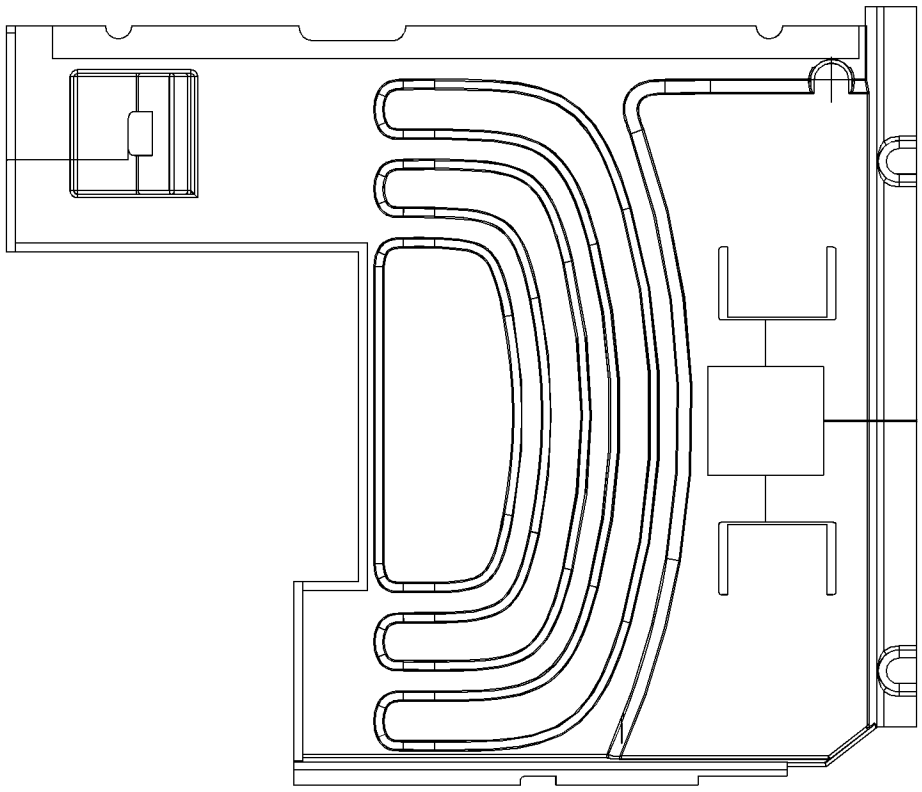

GRAPHIC #1 **<END>** g01420854

139-7099 HATCH GP-ROOF

S/N: HAH1-UP
PART OF 399-0057 CAB GP
AN ATTACHMENT

SMCS-7303 **i05845867**

NOTE	REF NO	GRAPHIC REF	PART NUMBER	QTY	PART NAME 1 2 3 4 5 6 (PRODUCT LEVEL)	SEE PAGE
	1	1	**5D-4822**	4	RING-RETAINING	
	2	1	**099-3506**	2	SPRING AS-GAS (HATCH)	
M	3	1	**105-2169**	4	BOLT AS (M8X1.25X16-MM)	
Y	4	1	**189-2849**	1	HATCH GP-ROOF	385
	5	1	**189-2847**	1	SEAL	

M - METRIC PART
Y - SEPARATE ILLUSTRATION

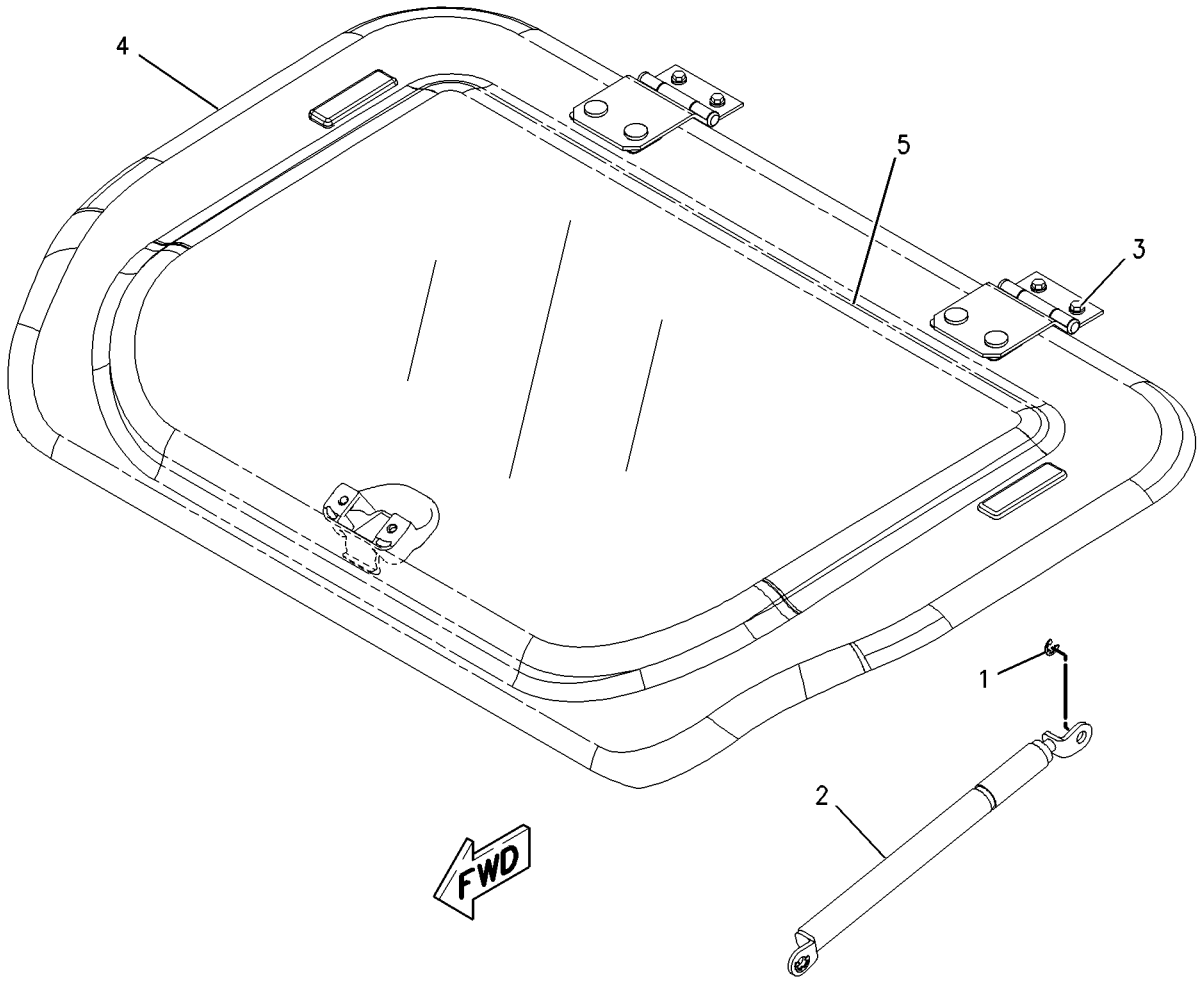

GRAPHIC #1 **<END>** g00737364

189-2849 HATCH GP-ROOF

S/N: HAH1-UP
PART OF 139-7099 HATCH GP-ROOF
AN ATTACHMENT

SMCS-7303 **i03523523**

NOTE	REF NO	GRAPHIC REF	PART NUMBER	QTY	PART NAME 1 2 3 4 5 6 (PRODUCT LEVEL)	SEE PAGE
	1	1	**161-3694**	1	CATCH	
	2	1	**189-2693**	1	BRACKET AS	
	3	1	**189-2694**	1	BRACKET AS	
	4	1	**189-2716**	2	HINGE AS	
	6	1	**085-6449**	2	PACKING	
M	7	1	**100-2881**	4	SCREW-TRUSS HEAD (M5X0.8X10-MM)	
	8	1	**171-7477**	2	NUT	
	9	1	**4I-1260**	2	PACKING	
	10	1	**4I-4361**	2	RETAINER	
M	11	1	**6I-5342**	4	NUT (M8X1.25-THD)	
M	12	1	**9X-2045**	2	SCREW-TRUSS HEAD (M6X1X20-MM)	

M - METRIC PART

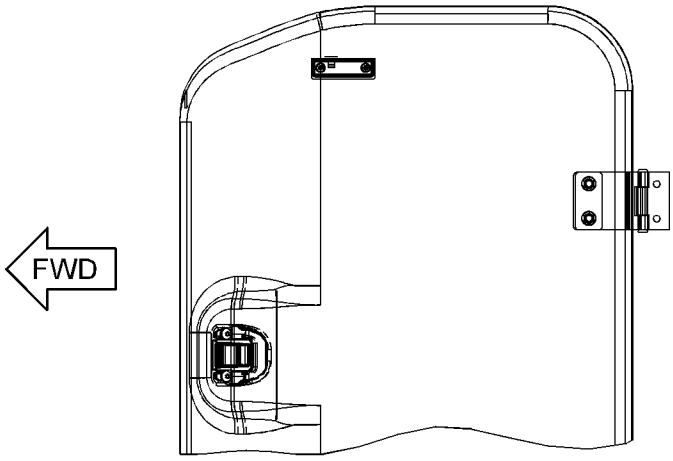

TOP VIEW

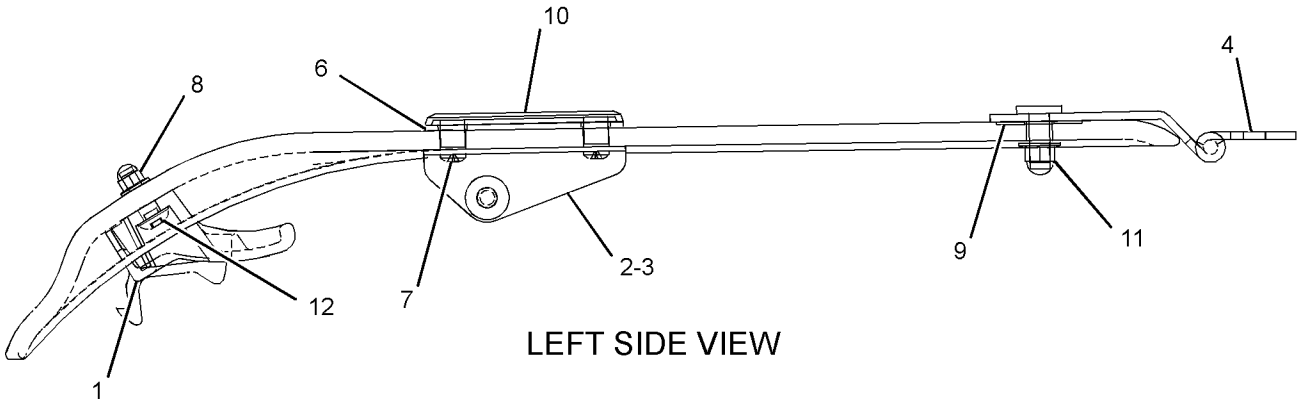

LEFT SIDE VIEW

GRAPHIC #1 **<END>** g01852853

259-7350 HATCH GP-ROOF

S/N: HAH1-UP
PART OF 388-9093 CAB GP
AN ATTACHMENT

SMCS-7303 **i05864652**

NOTE	REF NO	GRAPHIC REF	PART NUMBER	QTY	PART NAME 1 2 3 4 5 6 (PRODUCT LEVEL)	SEE PAGE
	1	1	**259-7352**	1	CATCH	
	2	1	**189-2847**	1	SEAL	
	3	1	**259-7351**	1	HATCH AS	
	3A	1	**176-1949**	2	BRACKET AS	
	3B	1	**189-2717**	2	HINGE AS	
	4	1	**099-3506**	2	SPRING AS-GAS (HATCH)	
M	5	1	**105-2169**	4	BOLT AS (M8X1.25X16-MM)	
	6	1	**5D-4822**	4	RING-RETAINING	
M	7	1	**9X-2042**	2	SCREW-TRUSS HEAD (M6X1X12-MM)	

M - METRIC PART

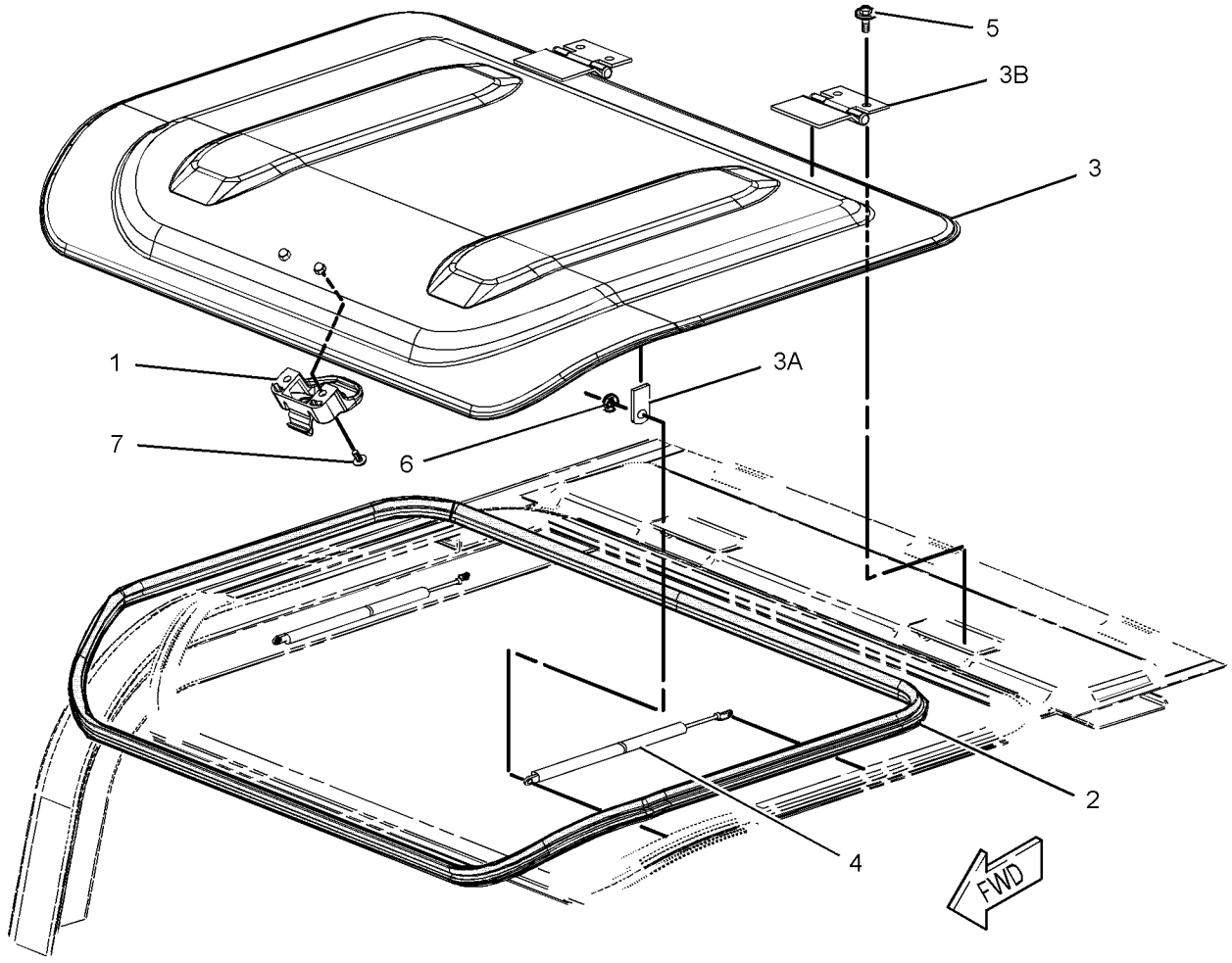

GRAPHIC #1 **<END>** g01242907

275-6874 HORN GP-ELECTRIC

S/N: HAH1-UP

PART OF 454-5575 CHASSIS AR

SMCS-7402 **i03815918**

NOTE	REF NO	GRAPHIC REF	PART NUMBER	QTY	PART NAME 1 2 3 4 5 6 (PRODUCT LEVEL)	SEE PAGE
Y	1	1	*275-6875*	1	HORN GP-ELECTRIC	388
	2	1	**8T-4121**	2	WASHER-HARD (11X21X2.5-MM THK)	
M	3	1	**8T-4137**	2	BOLT (M10X1.5X20-MM)	

M - METRIC PART
Y - SEPARATE ILLUSTRATION

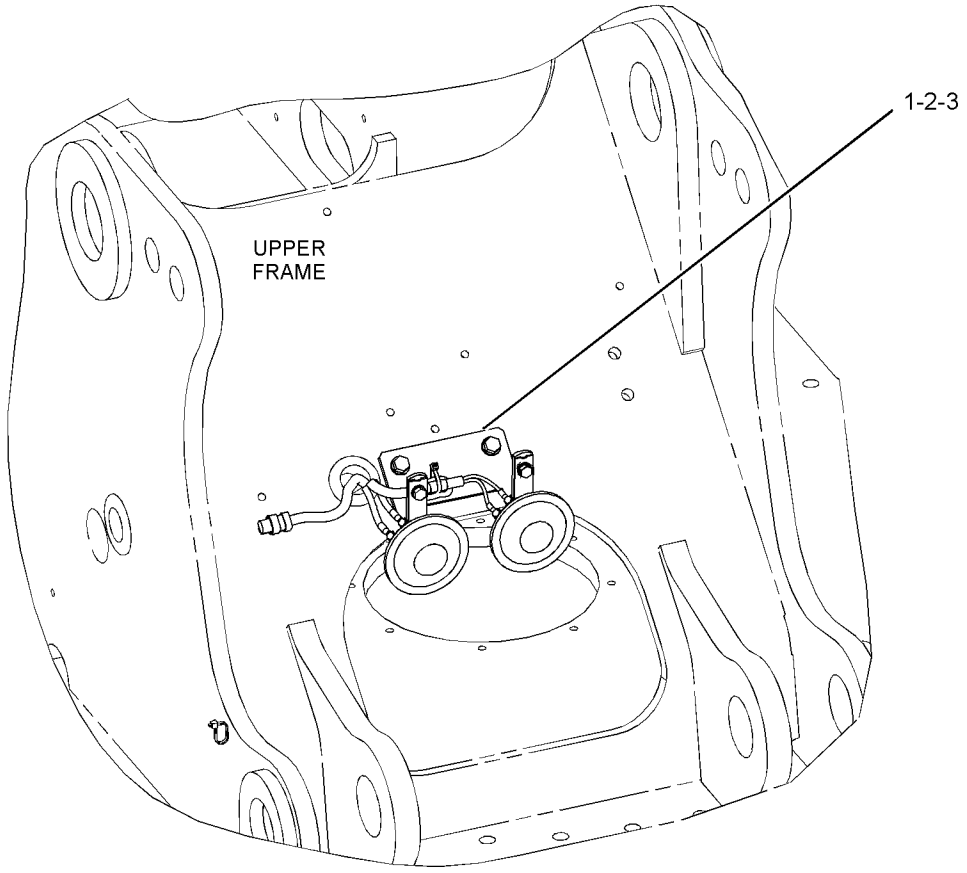

FRONT VIEW
(UPPER RIGHT)

GRAPHIC #1 **<END>** g01304388

275-6875 HORN GP-ELECTRIC

S/N: HAH1-UP

PART OF 275-6874 HORN GP-ELECTRIC

SMCS-7402 **i03815919**

NOTE	REF NO	GRAPHIC REF	PART NUMBER	QTY	PART NAME 1 2 3 4 5 6 (PRODUCT LEVEL)	SEE PAGE
	1	1	**3S-2093**	1	STRAP-CABLE	
	2	1	**7Y-3919**	1	HORN AS (24-VOLT, LOW TONE)	
		1	**095-0826**	2	LOCKWASHER	
M		1	**095-7930**	2	SCREW-MACHINE (M4X0.7X6-MM)	
	3	1	**7Y-3920**	1	HORN AS (24-VOLT, HIGH TONE)	
		1	**095-0826**	2	LOCKWASHER	
M		1	**095-7930**	2	SCREW-MACHINE (M4X0.7X6-MM)	
	4	1	**170-6941**	1	BRACKET AS	
	5	1	**275-6876**	1	HARNESS AS-WIRING (HORN)	
		1	**3S-2093**	2	STRAP-CABLE	
		1	**230-4011**	1	PLUG AS-CONNECTOR (2-PIN)	
M	6	1	**8T-4200**	2	BOLT (M8X1.25X16-MM)	
	7	1	**8T-4224**	2	WASHER-HARD (8.8X16X2-MM THK)	

M - METRIC PART

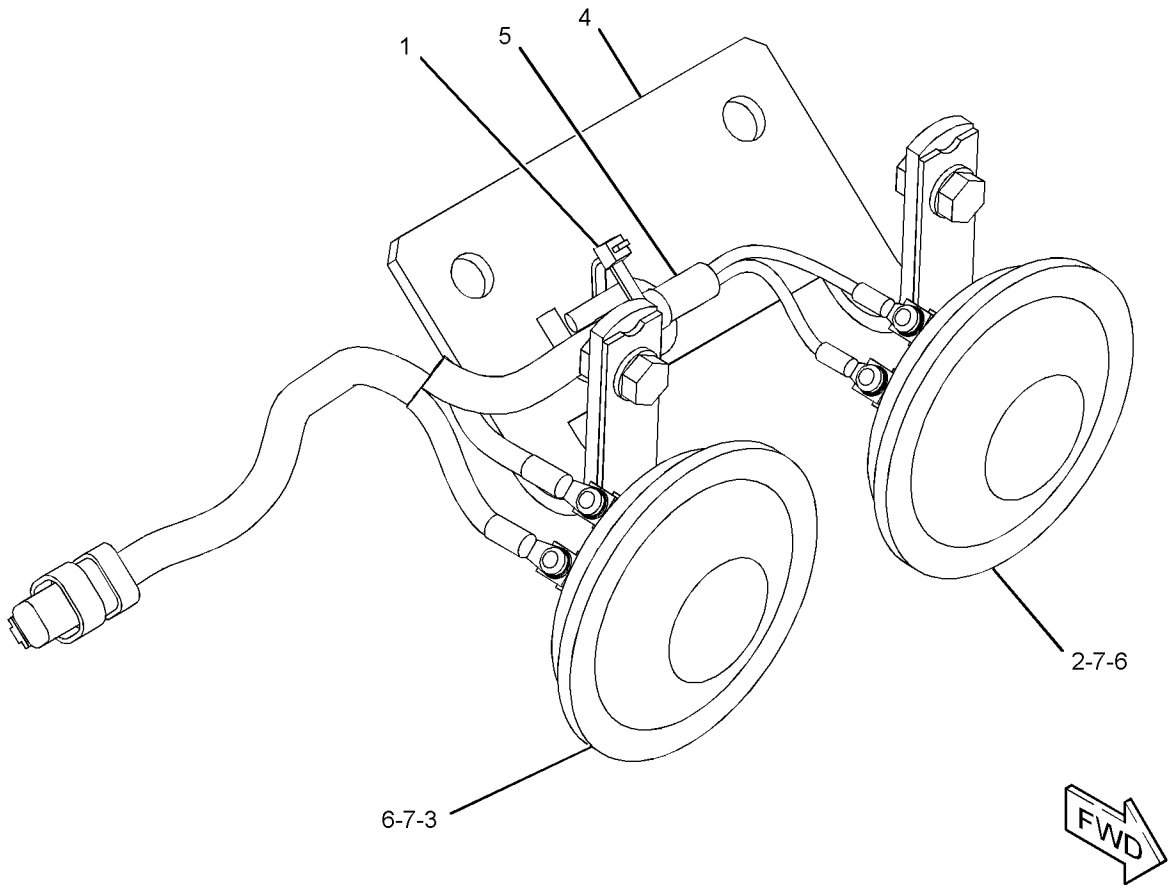

GRAPHIC #1 **<END>** g01304939

085-6444 LATCH GP-WINDOW

S/N: HAH1-UP
PART OF 151-6792 WINDOW GP-DOOR
AN ATTACHMENT

SMCS-7310 **i02499478**

NOTE	REF NO	GRAPHIC REF	PART NUMBER	QTY	PART NAME 1 2 3 4 5 6 (PRODUCT LEVEL)	SEE PAGE
	1	1	**085-6445**	1	LOCK	
	2	1	**085-6446**	1	LOCK	
	3	1	**085-6447**	1	RETAINER	
M	4	1	**085-6448**	2	SCREW-TAPPING	
	5	1	**085-6449**	1	PACKING	

M - METRIC PART

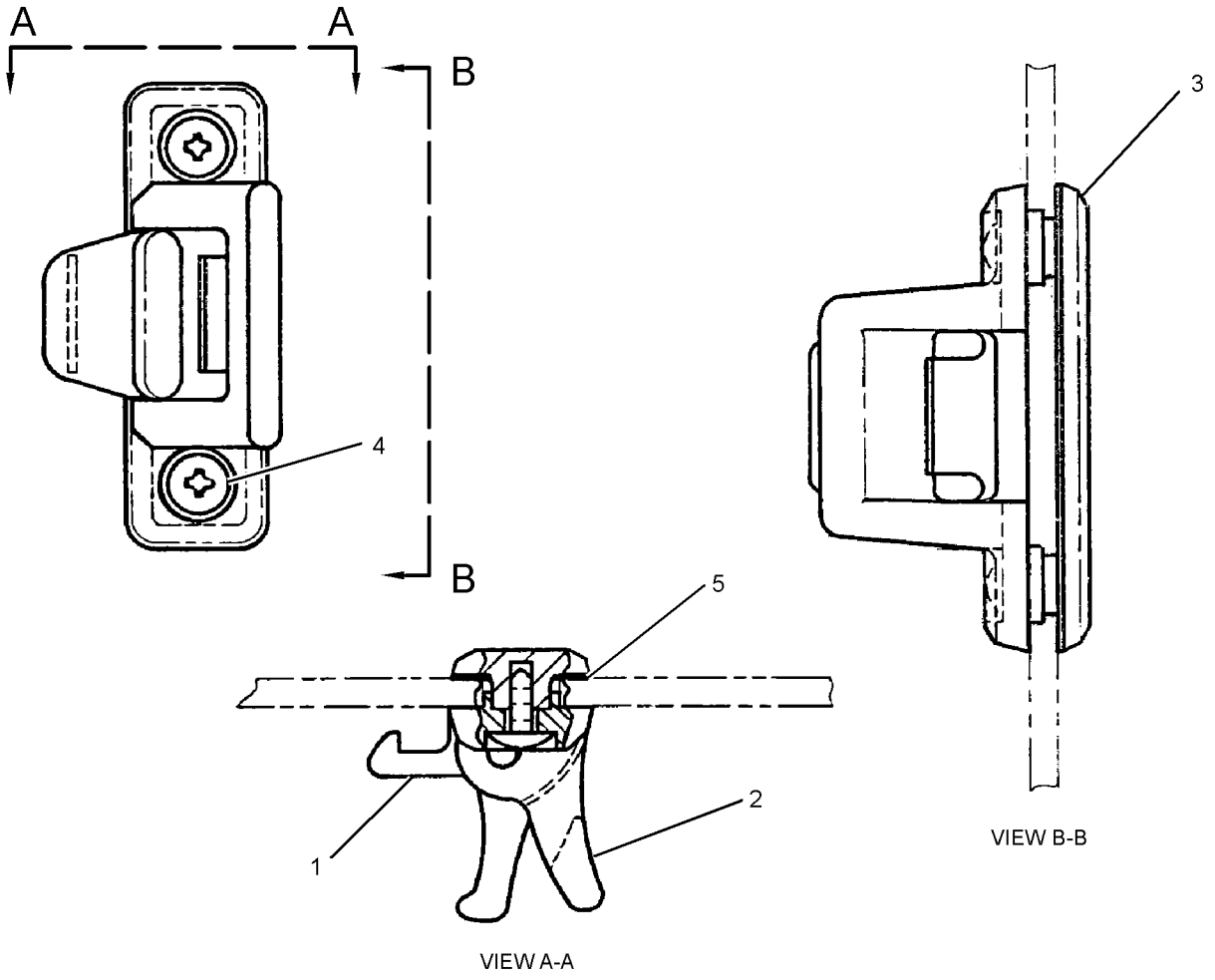

GRAPHIC #1 **<END>** g01164280

164-0528 LEVER GP-CAB DOOR

S/N: HAH1-UP
PART OF 346-8058, 388-9102 CAB GP
AN ATTACHMENT

SMCS-7308 **i02536658**

NOTE	REF NO	GRAPHIC REF	PART NUMBER	QTY	PART NAME 1 2 3 4 5 6 (PRODUCT LEVEL)	SEE PAGE
	1	1	**156-6642**	1	LEVER AS	
	2	1	**164-0664**	1	BRACKET	
	3	1	**176-1941**	1	PIN	
	4	1	**185-8280**	1	WASHER-WAVE (10.5X15X0.3-MM THK)	
	5	1	**185-8281**	1	SPRING	

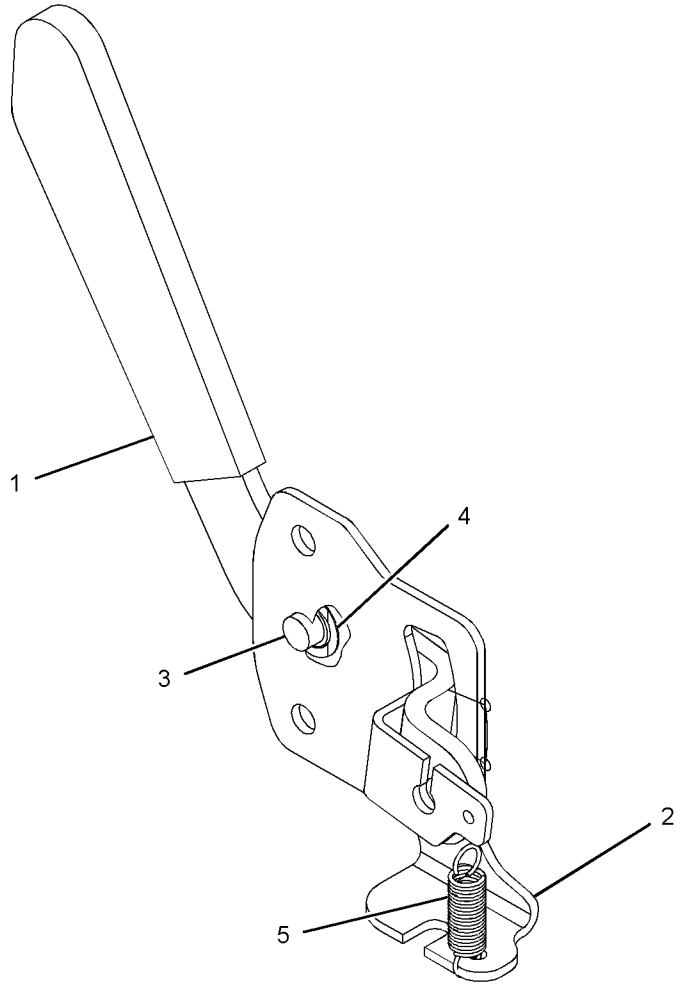

GRAPHIC #1 **<END>** g01217036

OPERATOR STATION

383-5676 LINES GP-AIR CONDITIONER

S/N: HAH1-UP

PART OF 454-5575 CHASSIS AR

SMCS-1808 **i04940544**

NOTE	REF NO	GRAPHIC REF	PART NUMBER	QTY	PART NAME 1 2 3 4 5 6 (PRODUCT LEVEL)	SEE PAGE
	1	2	**7Y-8168**	2	GROMMET	
	2	1	**122-9605**	2	TUBE	
	3	1	**122-9657**	2	CLAMP	
	4	1	**133-8011**	1	FITTING AS	
		1	**121-7138**	1	SEAL-O-RING	
	5	1	**176-1902**	1	DRYER-REFRIGERANT (RECEIVER)	
	6	1	**204-1611**	1	STRAP (DUAL)	
	7	1	**235-8891**	1	PLATE	
	8	1,2	**235-9014**	8	CLAMP-SPRING	
	9	1	**235-9015**	2	HOSE	
	10	1	**284-4500**	1	TUBE AS	
		1	**121-7137**	1	SEAL-O-RING	
	11	1	**284-4501**	1	TUBE AS	
		1	**121-7138**	1	SEAL-O-RING	
	12	2	**284-4502**	1	HOSE AS	
	13	1	**293-1238**	2	HOSE-DRAIN	
	14	2	**305-0441**	2	BAND-MARKER (HS)	
	15	2	**305-0442**	2	BAND-MARKER (HR)	
	16	2	**383-5687**	1	BRACKET AS	
	17	2	**383-5707**	1	HOSE AS	
	18	2	**383-5708**	1	HOSE AS	
	19	1	**121-7098**	1	BRACKET AS	
	20	1	**132-5789**	1	CLIP	
	21	2	**4S-1962**	2	CLIP	
	22	1,2	**5K-3294**	2	CLIP	
	23	2	**5K-5338**	1	CLIP	
	24	2	**5P-4325**	1	CLIP	
	25	2	**6D-1641**	5	CLIP	
	26	1,2	**6D-3479**	2	CLIP	
	27	1	**6V-3265**	1	CLIP	
M	28	1	**6V-7357**	4	BOLT (M6X1X25-MM)	
	29	1,2	**7K-1181**	3	STRAP-CABLE	
	30	1,2	**8T-4121**	12	WASHER-HARD (11X21X2.5-MM THK)	
M	31	1,2	**8T-4136**	3	BOLT (M10X1.5X25-MM)	
M	32	2	**8T-4137**	7	BOLT (M10X1.5X20-MM)	
M	33	2	**8T-4189**	2	BOLT (M8X1.25X20-MM)	
M	34	1	**8T-4191**	2	BOLT (M10X1.5X16-MM)	
M	35	1	**8T-4200**	2	BOLT (M8X1.25X16-MM)	
	36	1,2	**8T-4224**	6	WASHER-HARD (8.8X16X2-MM THK)	
M	37	2	**8T-4908**	2	BOLT (M8X1.25X25-MM)	
M	38	1	**8T-4971**	1	BOLT (M6X1X30-MM)	
	39	1	**9X-8256**	5	WASHER (6.6X12X2-MM THK)	
E	40	2	**225-5714**		GUARD (15-CM EACH)	
E	41	2	**225-5707**		GUARD (66-CM)	
E	41A	2	**225-5707**		GUARD (43-CM)	
E	41B	2	**225-5707**		GUARD (12-CM)	
E	42	2	**5P-0767**		HOSE (326-CM)	
E	42A	2	**5P-0767**		HOSE (305-CM)	

E - ORDER BY THE CENTIMETER
M - METRIC PART

REFER TO ALL ILLUSTRATIONS OF
THIS GROUP FOR AUXILIARY VIEWS

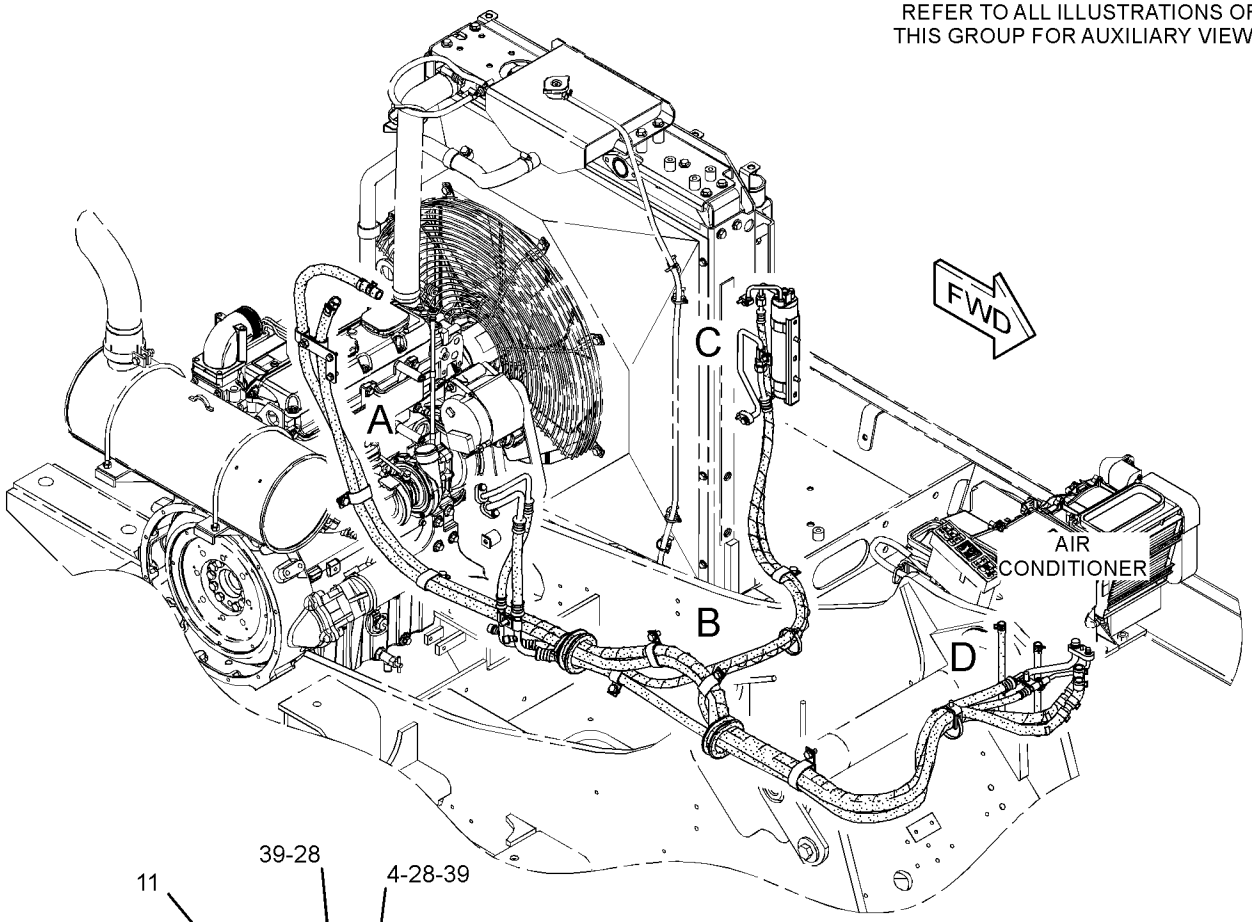

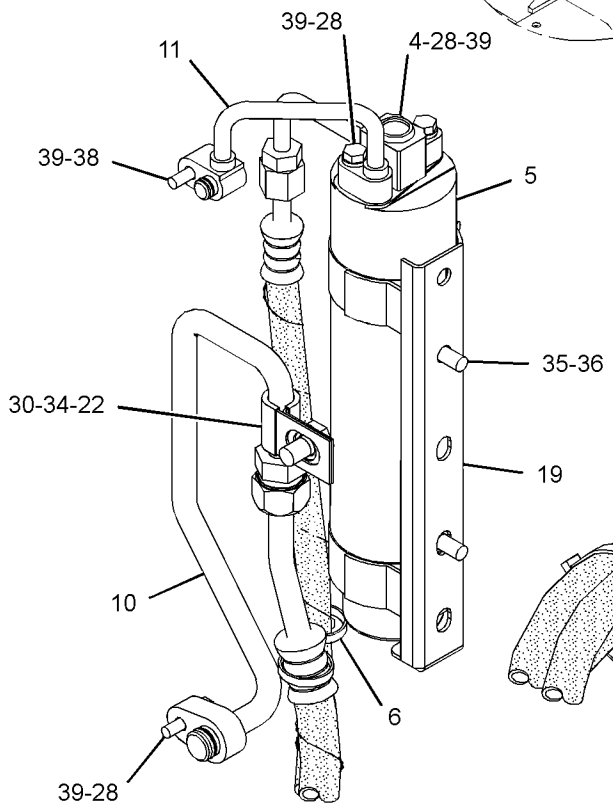

VIEW OF AREA C

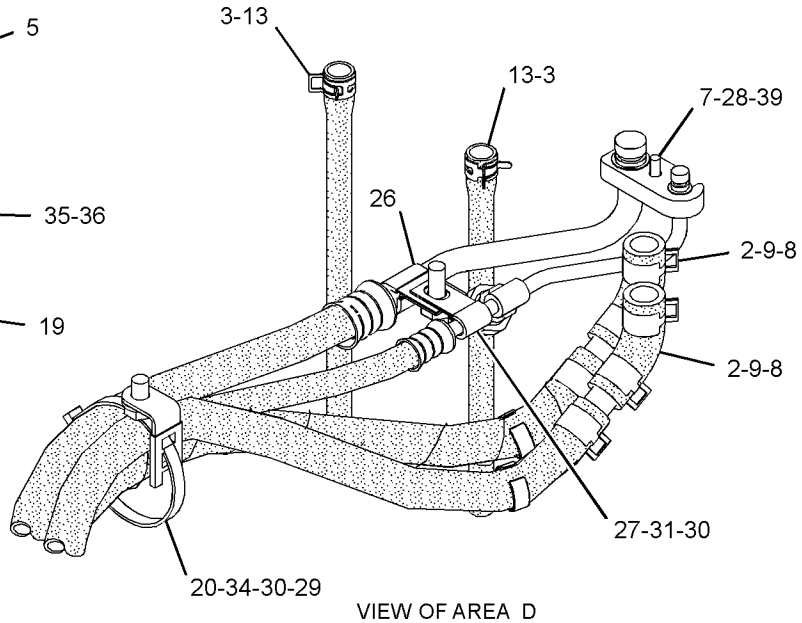

VIEW OF AREA D

GRAPHIC #1

g03128941

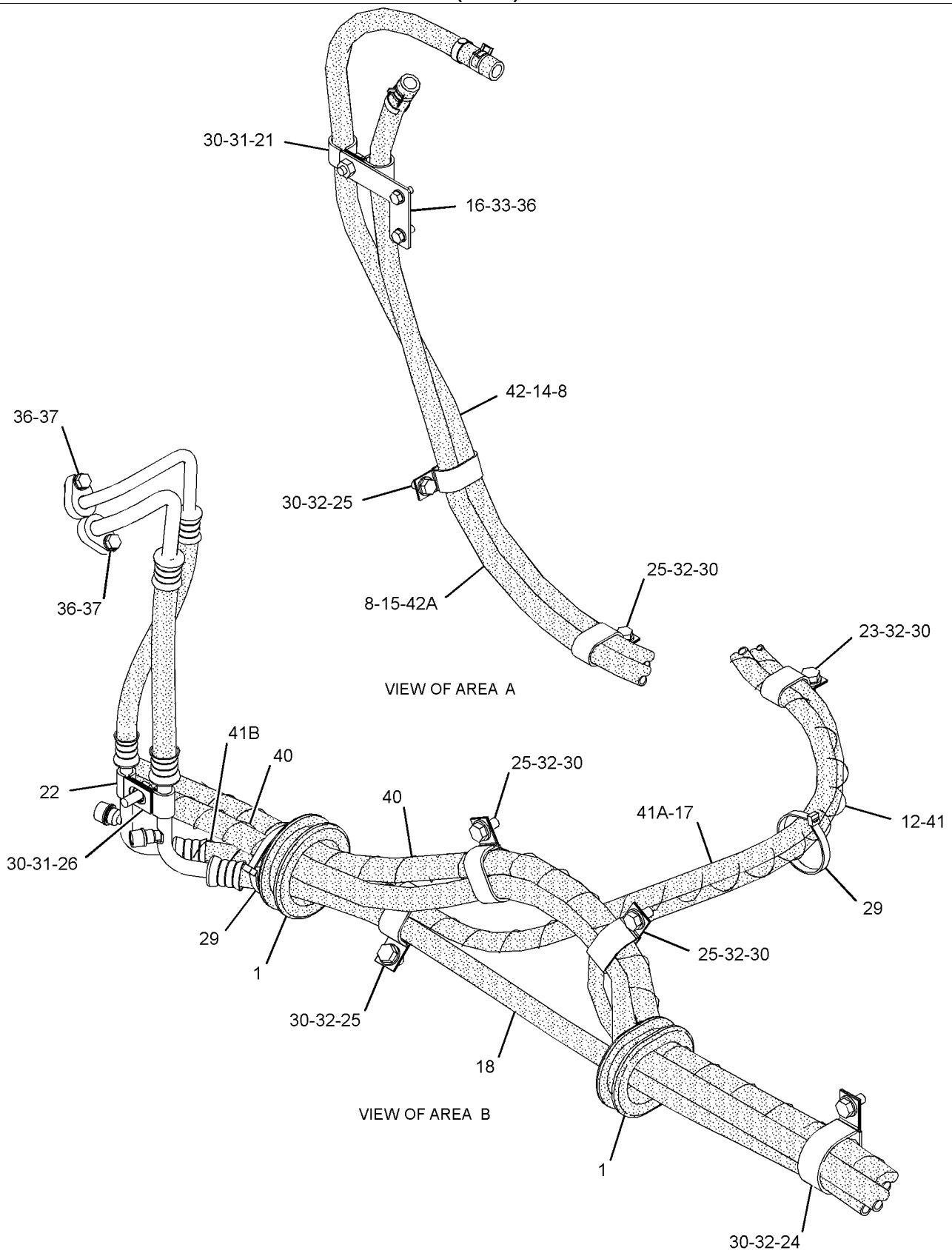

GRAPHIC #2 **<END>** g03128942

OPERATOR STATION

7Y-0059 LITERATURE GP

S/N: HAH1-UP

PART OF 454-5575 CHASSIS AR

SMCS-7300 **i01306224**

NOTE	PART NUMBER	QTY	PART NAME 1 2 3 4 5 6 (PRODUCT LEVEL)	SEE PAGE
	099-3645	1	CABLE-LANYARD	
	5P-8500	2	KEY	
	5P-7958	2	SLEEVE-CABLE SPLICE	

<END>

142-3836 MIRROR GP-REAR VIEW

S/N: HAH1-UP

PART OF 454-5575 CHASSIS AR

SMCS-7319 **i05253858**

NOTE	REF NO	GRAPHIC REF	PART NUMBER	QTY	PART NAME 1 2 3 4 5 6 (PRODUCT LEVEL)	SEE PAGE
	1	1	**8T-7971**	4	WASHER-HARD (13.5X25.5X5-MM THK)	
	2	1	**137-2270**	1	MIRROR	
	3	1	**165-3065**	1	BRACKET-MIRROR	
M	4	1	**8T-4192**	4	BOLT (M12X1.75X25-MM)	

M - METRIC PART

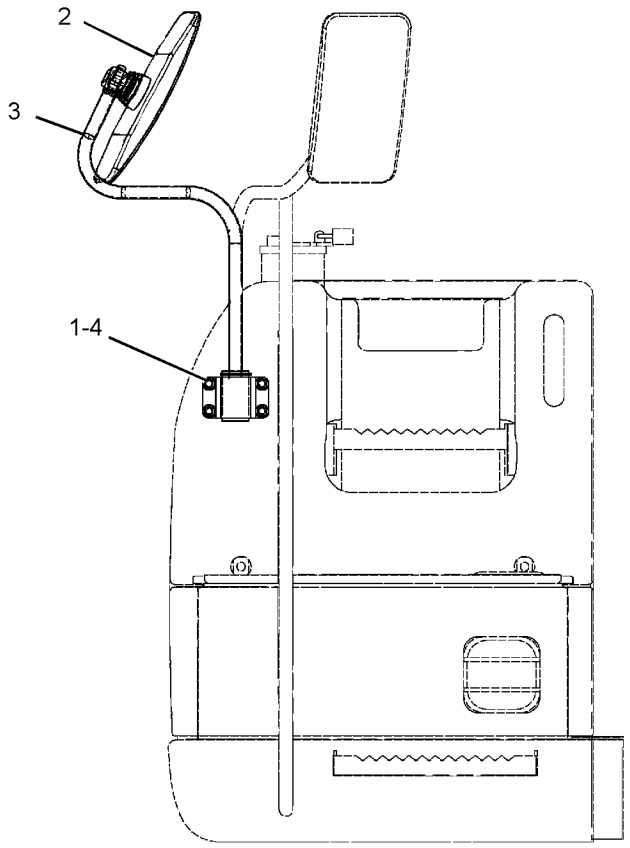

FRONT VIEW

GRAPHIC #1 **<END>** g02089313

327-6550 MIRROR GP-REAR VIEW

S/N: HAH1-UP
PART OF 346-8058, 388-9102 CAB GP
AN ATTACHMENT

SMCS-7319 **i05030180**

NOTE	REF NO	GRAPHIC REF	PART NUMBER	QTY	PART NAME 1 2 3 4 5 6 (PRODUCT LEVEL)	SEE PAGE
M	1	1	**105-3487**	2	BOLT-SOCKET HEAD (M6X1X20-MM)	
	2	1	**9X-8256**	2	WASHER (6.6X12X2-MM THK)	

M - METRIC PART

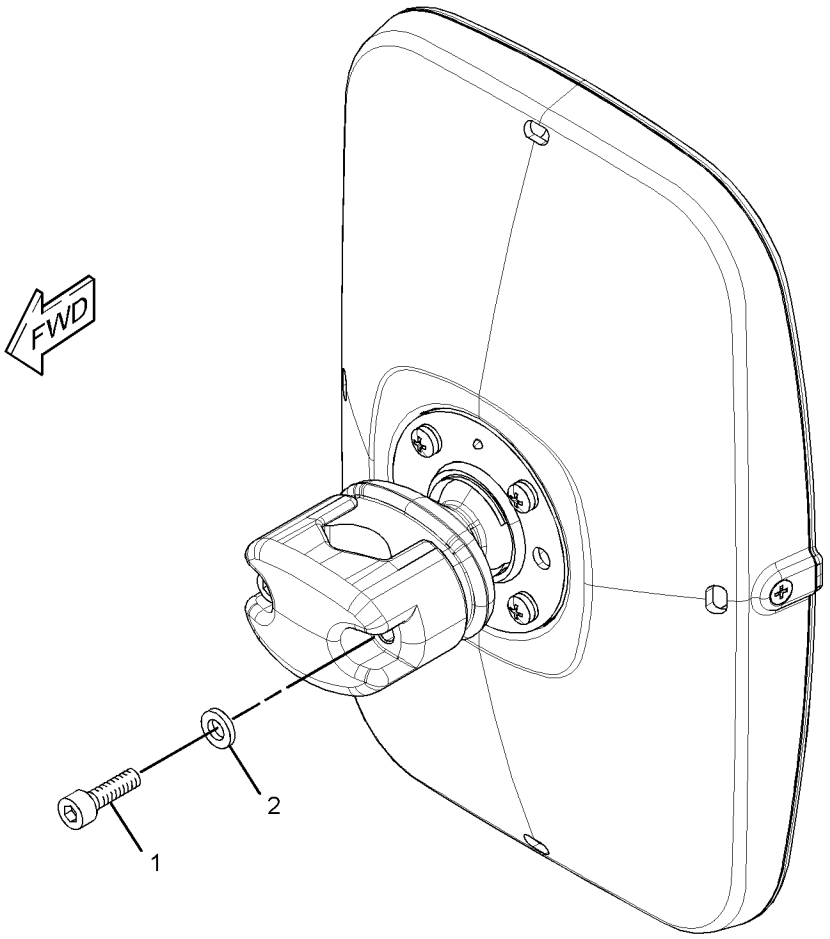

GRAPHIC #1 **<END>** g01615528

399-2620 MONITOR & MTG GP-OPERATOR

S/N: HAH1-UP

PART OF 451-3987 OPERATOR AR

SMCS-7490 **i05841730**

NOTE	REF NO	GRAPHIC REF	PART NUMBER	QTY	PART NAME 1 2 3 4 5 6 (PRODUCT LEVEL)	SEE PAGE
Y	1	1	**457-3306**	1	CONTROL GP-MONITOR	373
	2	1	**399-5313**	1	BRACKET AS	
	3	1	**421-1370**	1	HARNESS AS-CAB	
		1	**8T-8729**	3	PIN-CONNECTOR (16-GA TO 18-GA)	
		1	**3S-2093**	2	STRAP-CABLE	
D		1	**5P-5998**		TUBE (0.5-M)	
		1	**8T-8737**	13	PLUG-SEAL	
		1	**9X-3401**	8	PIN-CONNECTOR (16-GA TO 18-GA)	
		1	**230-5010**	1	PLUG AS-CONNECTOR (6-PIN)	
		1	**264-7032**	1	SEAL-CONNECTOR	
		1	**243-4508**	1	RECEPTACLE AS-CONNECTOR (6-PIN)	
		1	**243-4510**	1	RECEPTACLE AS-CONNECTOR (12-PIN)	
		1	**340-2567**	11	WIRE AS	
		1	**340-2566**	23	PLUG-SEAL	
		1	**379-0830**	1	PLUG AS-CONNECTOR	
M	4	1	**9X-2042**	7	SCREW-TRUSS HEAD (M6X1X12-MM)	

D - ORDER BY THE METER
M - METRIC PART
Y - SEPARATE ILLUSTRATION

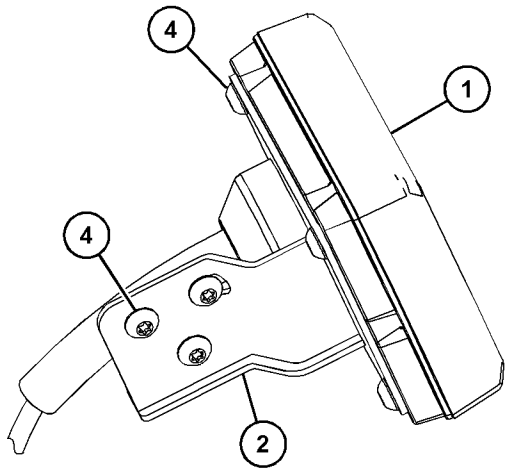

VIEW OF AREA A

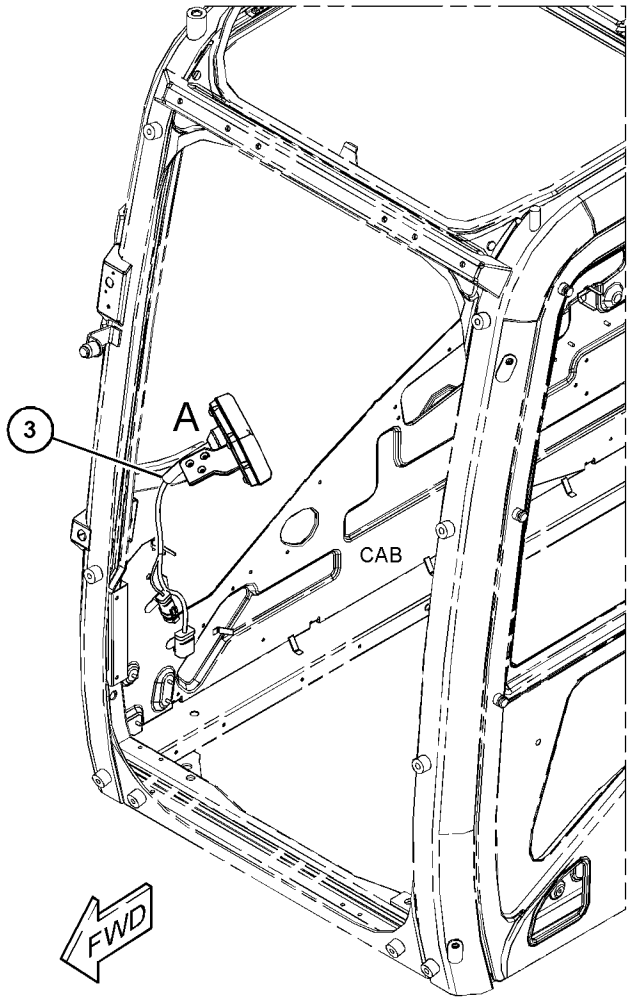

GRAPHIC #1

<END>

g03682387

OPERATOR STATION

455-6834 MONITOR GP-OPERATOR

S/N: HAH1-UP

PART OF 457-3306 CONTROL GP-MONITOR

SMCS-7490 **i05841736**

NOTE	REF NO	GRAPHIC REF	PART NUMBER	QTY	PART NAME 1 2 3 4 5 6 (PRODUCT LEVEL)	SEE PAGE
	1	1	**455-6836**	1	SOFTWARE GP-MONITOR	

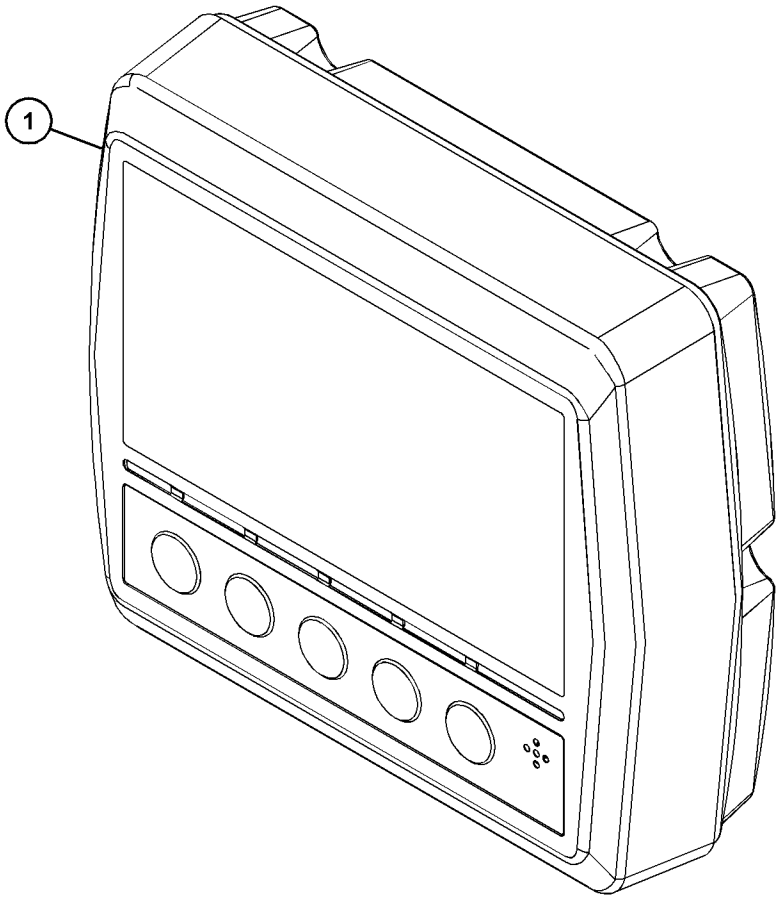

GRAPHIC #1 **<END>** g03685524

245-7811 MOUNTING GP-PLATFORM

S/N: HAH1-UP

PART OF 454-5575 CHASSIS AR

SMCS-7253 **i02534063**

NOTE	REF NO	GRAPHIC REF	PART NUMBER	QTY	PART NAME 1 2 3 4 5 6 (PRODUCT LEVEL)	SEE PAGE
	1	1	**235-8862**	4	MOUNT AS	
	2	1	**8T-4121**	16	WASHER-HARD (11X21X2.5-MM THK)	
M	3	1	**8T-4195**	16	BOLT (M10X1.5X30-MM)	

M - METRIC PART

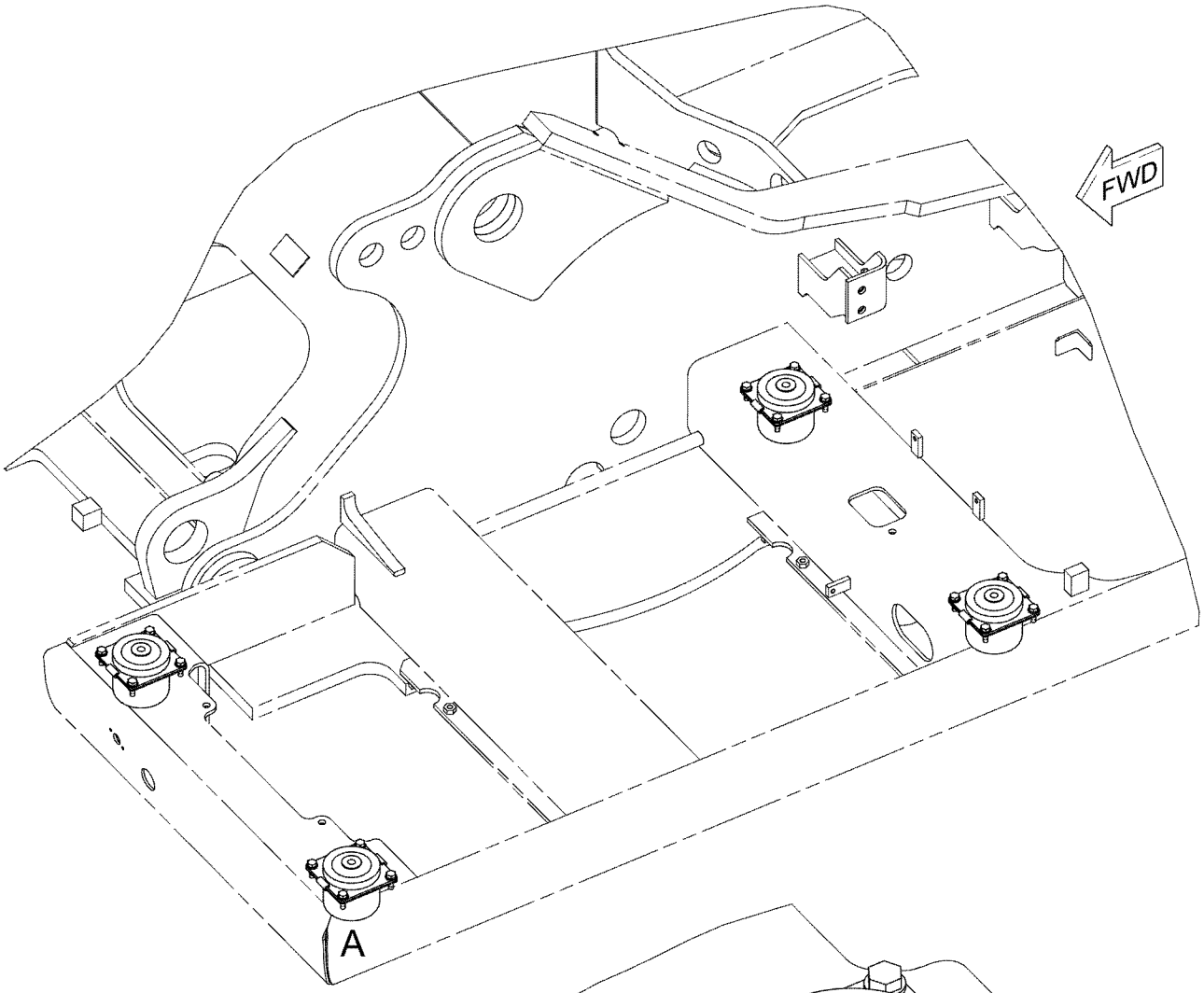

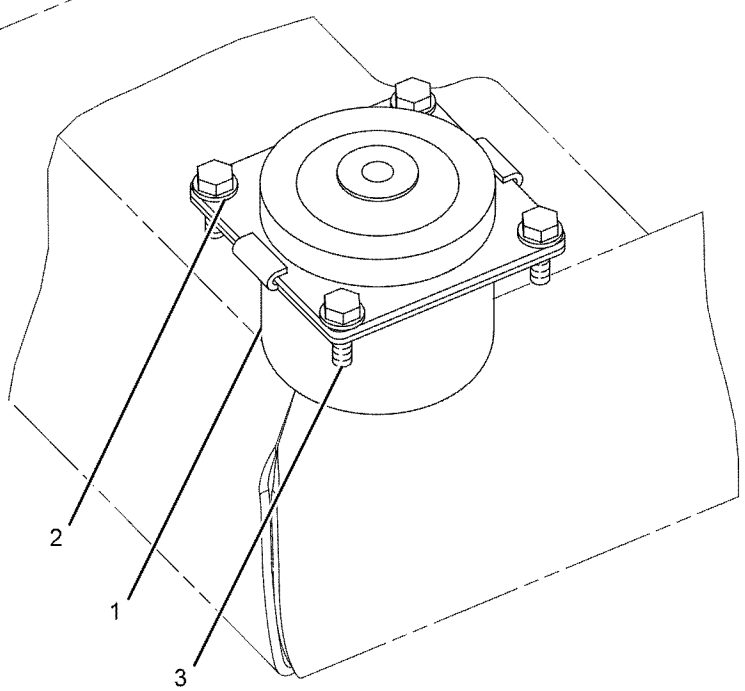

VIEW OF AREA A

GRAPHIC #1 **<END>** g01101486

OPERATOR STATION

451-3987 OPERATOR AR

S/N: HAH1-UP

PART OF 454-5575 CHASSIS AR

SMCS-7301 **i05846146**

NOTE	PART NUMBER	QTY	PART NAME 1 2 3 4 5 6 (PRODUCT LEVEL)	SEE PAGE
Y	*421-1431*	1	CONSOLE GP-OPERATOR	362
Y	*399-2618*	1	CONTROL & MTG GP-ELECTRONIC	90
Y	*170-9497*	1	CONTROL GP-PILOT OPERATED HYD (TRAVEL)	374
Y	*399-2620*	1	MONITOR & MTG GP-OPERATOR	397
Y	*388-6701*	1	PANEL & MTG GP-CIRCUIT BREAKER	99
Y	*229-9078*	1	PLATFORM GP-OPERATOR	402
Y	*327-6523*	1	SUPPORT GP-SEAT	409
Y	*398-7003*	1	WIRING GP-CAB	114
Y	*398-7005*	1	WIRING GP-CONSOLE	124
Y	*440-6915*	1	WIRING GP-PLATFORM	127

Y - SEPARATE ILLUSTRATION

<END>

OPERATOR STATION

229-9078 PLATFORM GP-OPERATOR

S/N: HAH1-UP

PART OF 451-3987 OPERATOR AR

SMCS-7253 **i05637014**

NOTE	REF NO	GRAPHIC REF	PART NUMBER	QTY	PART NAME 1 2 3 4 5 6 (PRODUCT LEVEL)	SEE PAGE
	1	1	**135-8965**	1	GROMMET	
	2	1	**135-8966**	1	GROMMET	
	3	1	**245-7916**	1	PLATFORM AS	
	4	1	**161-3717**	1	STRIP	
	5	1	**4I-3266**	1	STRIP	
M	6	1	**453-1259**	4	BOLT (M16X2X40-MM)	
	7	1	**8T-4121**	4	WASHER-HARD (11X21X2.5-MM THK)	
M	8	1	**8T-4191**	4	BOLT (M10X1.5X16-MM)	
	9	1	**451-2175**	4	WASHER-HARD (17.5X30X3.5-MM THK)	

M - METRIC PART

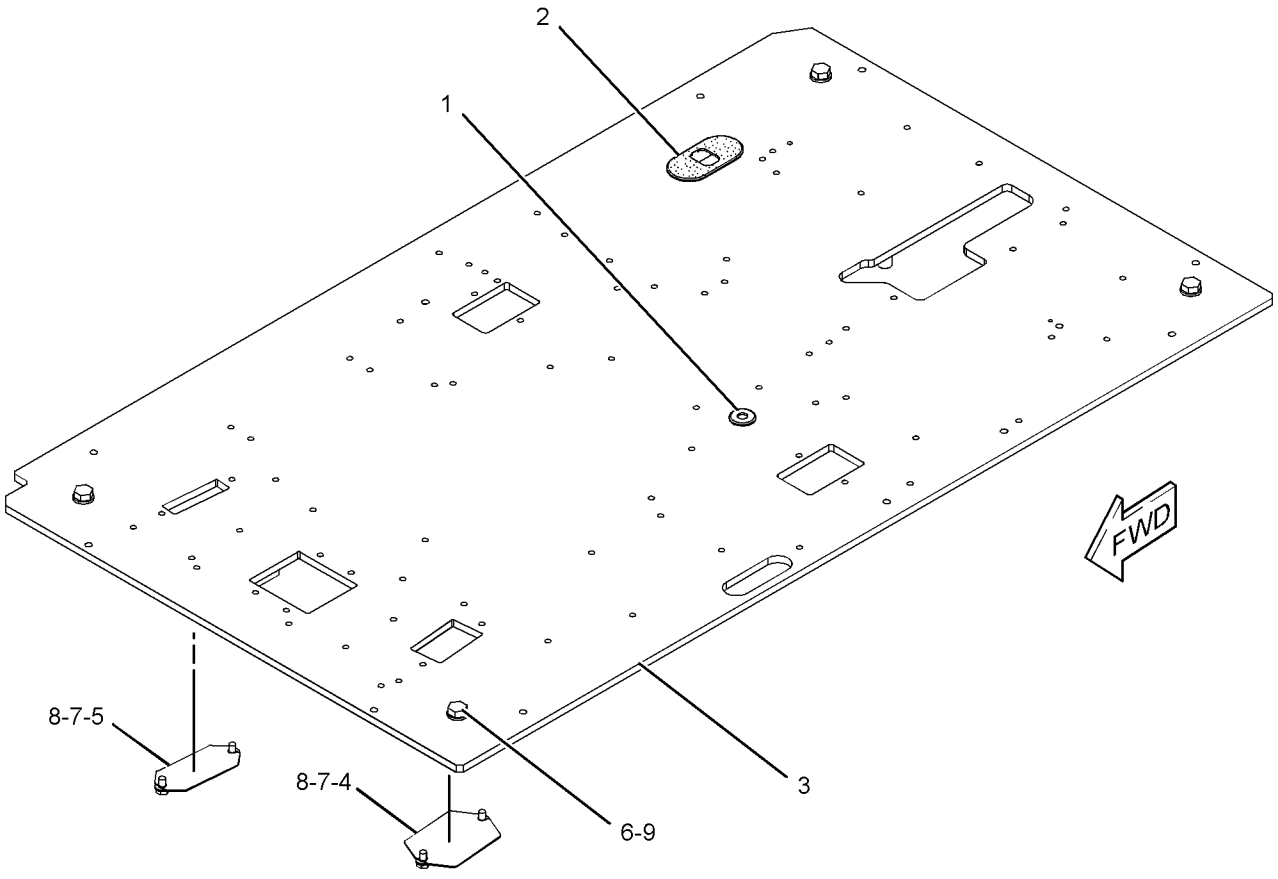

GRAPHIC #1 **<END>** g01188224

380-7183 SEAT & MOUNTING GP—HIGH BACK, TILT

S/N: HAH1-UP
PART OF 454-5636 OPTION AR-CAB
AN ATTACHMENT

SMCS-7312 **i04544350**

NOTE	REF NO	GRAPHIC REF	PART NUMBER	QTY	PART NAME 1 2 3 4 5 6 (PRODUCT LEVEL)	SEE PAGE
Y	1	1	**258-4095**	1	SEAT BELT GP (RETRACTABLE, 51-MM (2-IN))	404
Y	2	1	*366-5260*	1	SEAT GP-SUSPENSION	408
	3	1	**0T-0489**	1	BOLT (7/16-20X2-IN)	
	4	1	**1V-5872**	1	SPACER (0.493X0.675X0.95-IN THK)	
M	5	1	**6V-8202**	4	BOLT-SOCKET HEAD (M8X1.25X16-MM)	
	6	1	**7J-8337**	1	BOLT (7/16-20-THD)	
	7	1	**7X-0599**	1	WASHER-HARD (13X20X2-MM THK)	
	8	1	**8T-4223**	1	WASHER-HARD (13.5X25.5X3-MM THK)	

M - METRIC PART
Y - SEPARATE ILLUSTRATION

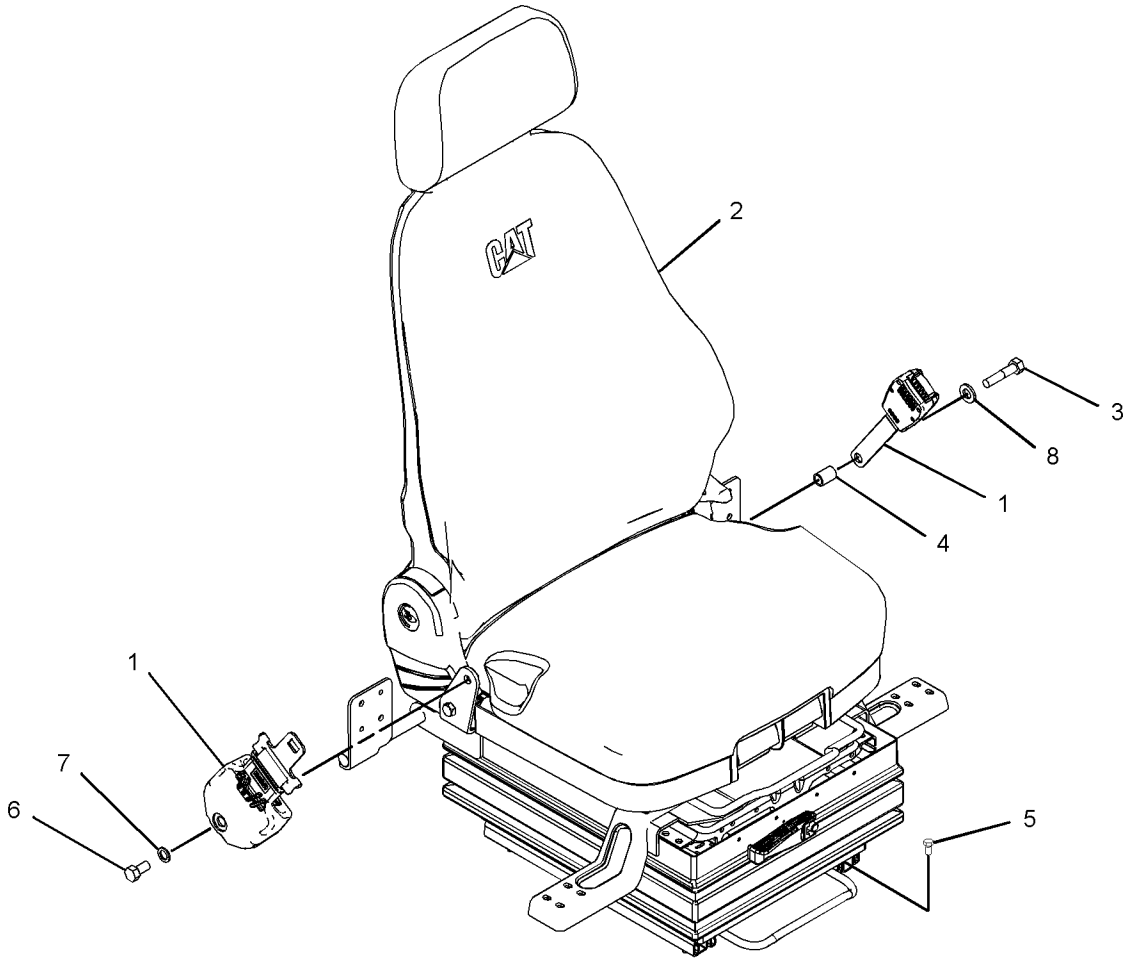

GRAPHIC #1 **<END>** g02735335

258-4095 SEAT BELT GP–RETRACTABLE

S/N: HAH1-UP
51-MM (2-IN)
PART OF 380-7183 SEAT & MOUNTING GP
AN ATTACHMENT

SMCS-7327 **i04544358**

NOTE	REF NO	GRAPHIC REF	PART NUMBER	QTY	PART NAME 1 2 3 4 5 6 (PRODUCT LEVEL)	SEE PAGE
F			**2D-6412**	2	WASHER (7/16X15/16X1/4-IN THK)	
F			**8S-0934**	2	LOCKNUT-FLANGE (7/16-20-THD)	
F			**8S-4723**	2	BOLT (7/16-20X1.5-IN)	
F			**8T-4223**	2	WASHER-HARD (13.5X25.5X3-MM THK)	

F - NOT SHOWN

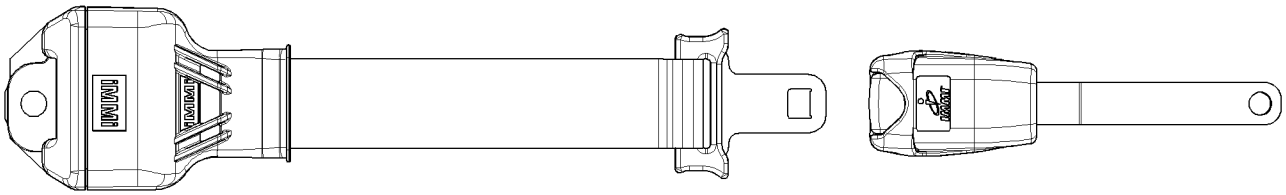

GRAPHIC #1 **<END>** g01345229

366-5257 SEAT GP—DELUXE, CLOTH

S/N: HAH1-UP
PART OF 384-2207 SEAT GP
AN ATTACHMENT

SMCS-7312 **i04908846**

NOTE	REF NO	GRAPHIC REF	PART NUMBER	QTY	PART NAME 1 2 3 4 5 6 (PRODUCT LEVEL)	SEE PAGE
	1	1	**3H-5368**	1	BOLT (7/16-14X1.375-IN)	
	2	1	**190-0386**	10	BOLT (M5X0.8X16-MM)	
	3	1	**366-5267**	1	CUSHION AS-BACK	
	4	1	**366-5269**	1	CUSHION AS-SEAT	
	5	1	**366-5271**	1	PAN AS	
	6	1	**373-2588**	1	HEADREST AS-SEAT	
	7	1	**373-2590**	1	PAN AS-SEAT	
	8	1	**373-2591**	1	PAN AS-SEAT	
	9	1	**373-2594**	1	BUSHING	
	10	1	**373-2595**	1	BRACKET AS	
	11	1	**373-2596**	1	COVER (LH)	
	12	1	**373-2597**	1	COVER (RH)	
	13	1	**373-2600**	2	SPRING	
	14	1	**374-5958**	1	HANDLE	
	15	1	**377-2843**	1	HOLDER	
	16	1	**4K-9429**	4	RIVET-POP	
M	17	1	**8T-3991**	2	SCREW-BUTTON HEAD (M6X1X20-MM)	
	18	1	**8U-7803**	1	SCREW	
E	19	1	**7X-7877**		STRIP-EDGE (13-CM)	

E - ORDER BY THE CENTIMETER
M - METRIC PART

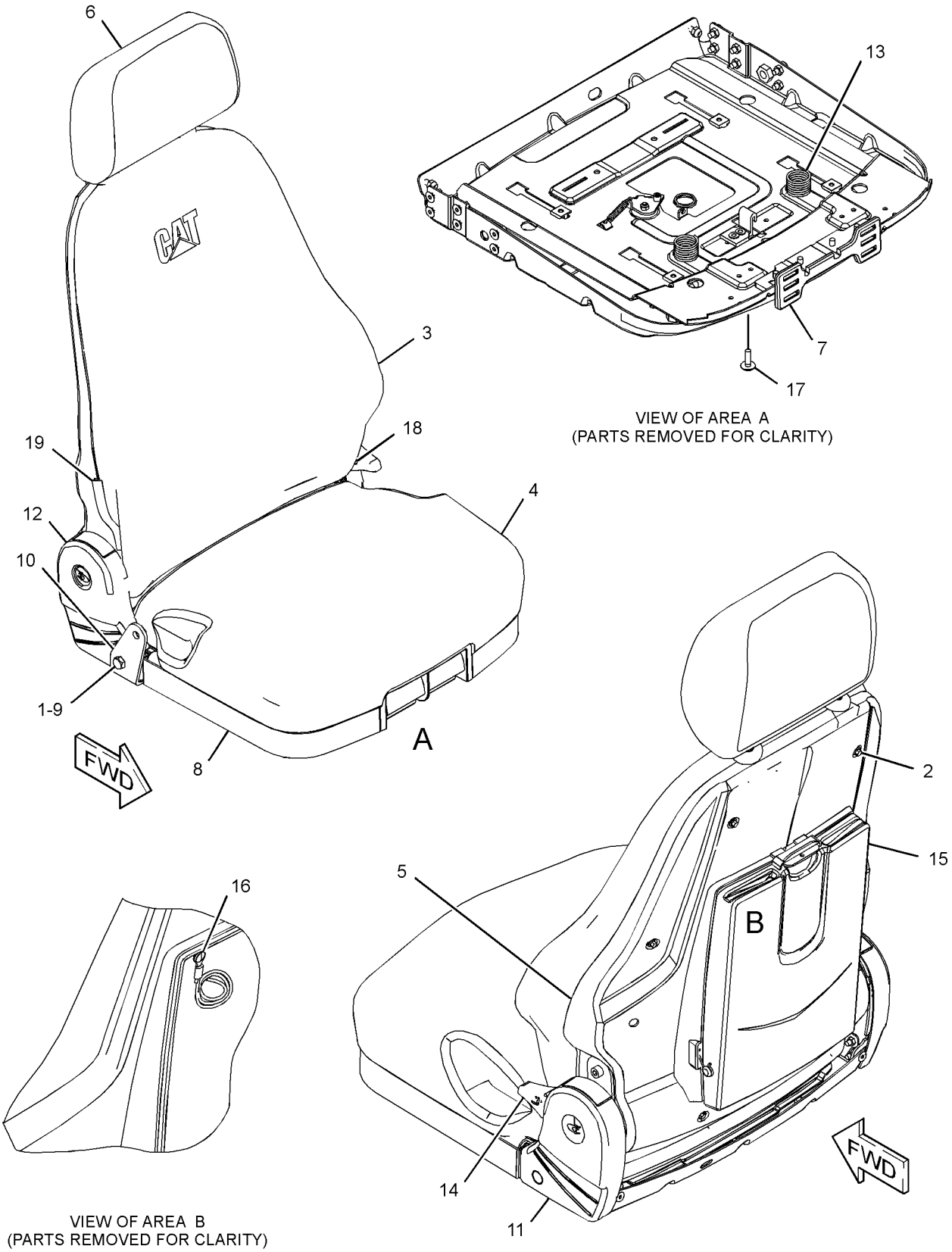

GRAPHIC #1 **<END>** g03078058

384-2207 SEAT GP–DELUXE, CLOTH

S/N: HAH1-UP

PART OF 366-5260 SEAT GP-SUSPENSION

AN ATTACHMENT

SMCS-7312 **i04677029**

NOTE	REF NO	GRAPHIC REF	PART NUMBER	QTY	PART NAME 1 2 3 4 5 6 (PRODUCT LEVEL)	SEE PAGE
Y	1	1	*366-5257*	1	SEAT GP (DELUXE, CLOTH)	405
	2	1	**366-5265**	1	KIT-SLIDE (UPPER)	
					(ALSO INCLUDES BAR, LH & RH SLIDE AS)	
M		1	**6V-7743**	2	LOCKNUT (M6X1-THD)	
		1	**8T-0334**	4	WASHER-HARD (6.6X12.5X1.6-MM THK)	
	3	1	**107-2961**	4	WASHER (8.25X17X1.136-MM THK)	
M	4	1	**6V-8202**	4	BOLT-SOCKET HEAD (M8X1.25X16-MM)	
	5	1	**7X-0579**	4	WASHER-HARD (8.8X25.5X2-MM THK)	

M - METRIC PART
Y - SEPARATE ILLUSTRATION

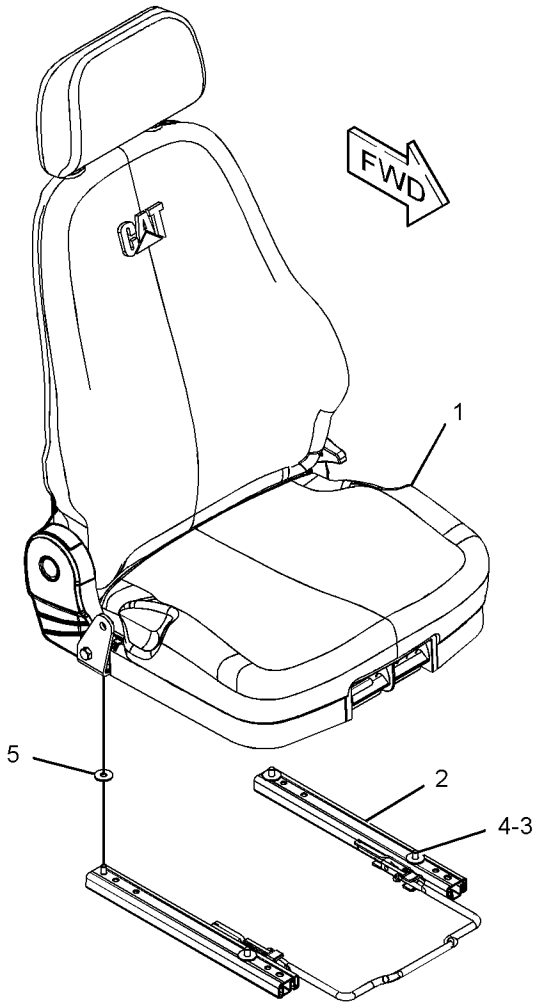

GRAPHIC #1 **<END>** g02798928

366-5260 SEAT GP-SUSPENSION—HIGH BACK, TILT

S/N: HAH1-UP

PART OF 380-7183 SEAT & MOUNTING GP

AN ATTACHMENT

SMCS-7324, 7336 **i05873739**

NOTE	REF NO	GRAPHIC REF	PART NUMBER	QTY	PART NAME 1 2 3 4 5 6 (PRODUCT LEVEL)	SEE PAGE
Y	1	1	**384-2207**	1	SEAT GP (DELUXE, CLOTH)	407
	2	1	**373-3495**	4	PLATE	
Y	3	1	*377-2012*	1	SUSPENSION GP-SEAT (MECHANICAL)	413
M	4	1	**096-0001**	4	BOLT-SOCKET HEAD (M8X1.25X40-MM)	

M - METRIC PART
Y - SEPARATE ILLUSTRATION

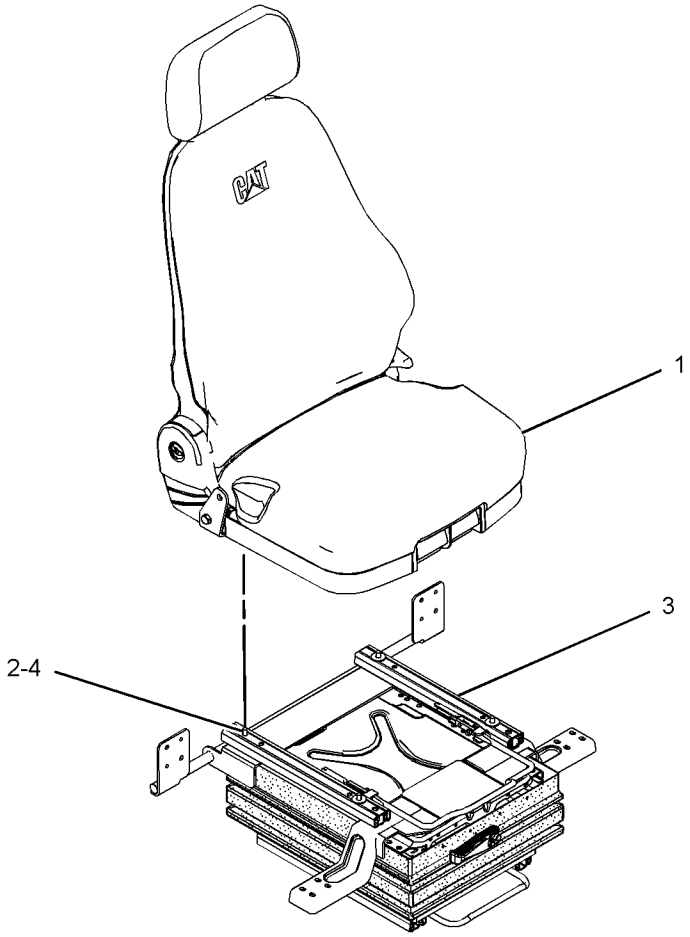

GRAPHIC #1 **<END>** g02797187

OPERATOR STATION

327-6523 SUPPORT GP-SEAT

S/N: HAH1-UP

PART OF 451-3987 OPERATOR AR

SMCS-7321 **i03313081**

NOTE	REF NO	GRAPHIC REF	PART NUMBER	QTY	PART NAME 1 2 3 4 5 6 (PRODUCT LEVEL)	SEE PAGE
	1	1	**327-6538**	1	SUPPORT AS-SEAT	
	2	1	**8T-4121**	4	WASHER-HARD (11X21X2.5-MM THK)	
M	3	1	**8T-4191**	4	BOLT (M10X1.5X16-MM)	

M - METRIC PART

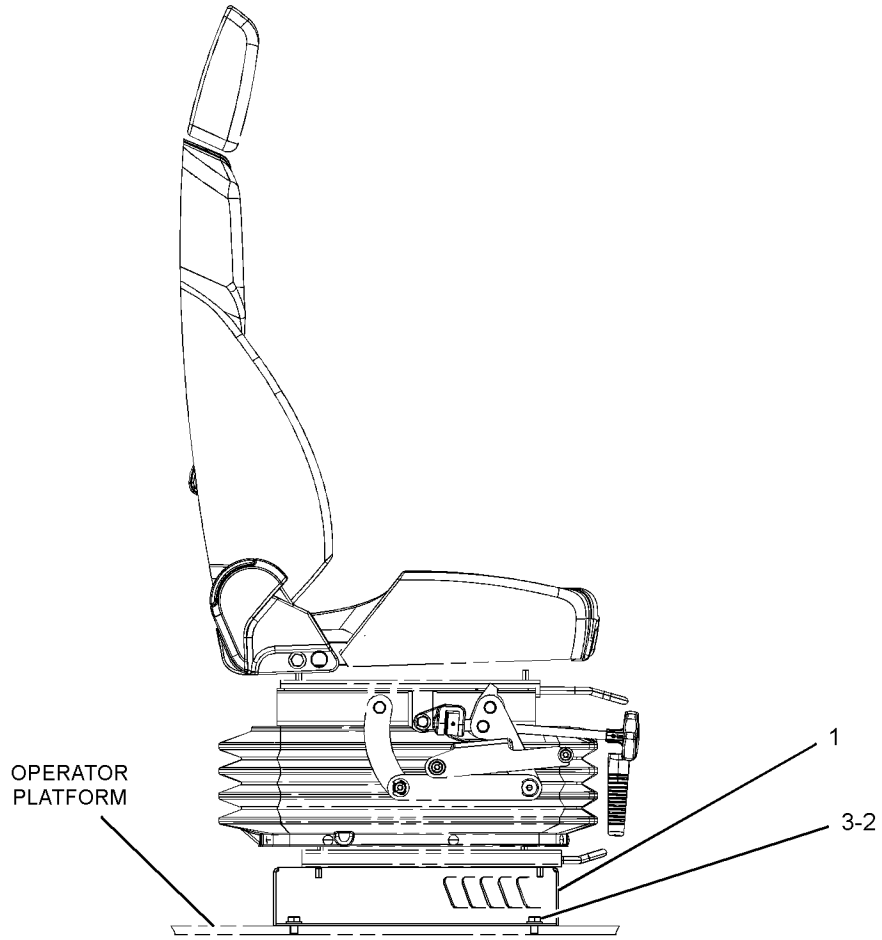

RIGHT SIDE VIEW

GRAPHIC #1 **<END>** g01528767

366-5262 SUSPENSION GP-SEAT—MECHANICAL

S/N: HAH1-UP

PART OF 377-2012 SUSPENSION GP-SEAT

AN ATTACHMENT

SMCS-7324 **i04697331**

NOTE	REF NO	GRAPHIC REF	PART NUMBER	QTY	PART NAME 1 2 3 4 5 6 (PRODUCT LEVEL)	SEE PAGE
	1	2	**6W-8281**	2	BUMPER	
	2	1	**9V-6754**	31	FASTENER	
	3	2	**039-9452**	2	WASHER	
	4	1	**356-2353**	1	BUSHING	
	5	1	**359-3576**	1	PLATE	
	6	1	**359-3582**	1	BOOT	
	7	2	**371-7140**	1	ARM AS-SUSPENSION	
	8	1	**371-7141**	1	HOUSING AS (UPPER)	
	9	2	**371-7142**	1	HOUSING AS (LOWER)	
	10	2	**371-7144**	4	ROLLER	
	11	2	**371-7146**	1	KIT-SPRING (SUSPENSION SEAT)	
	12	2	**371-7148**	1	SHAFT	
	13	2	**380-6351**	2	BUSHING	
	14	2	**385-1278**	1	LINK AS	
	15	1	**385-1279**	1	ADJUSTER AS	
		1	**6V-8235**	1	PIN-SPRING	
		1	**371-7147**	1	HANDLE	
	16	1,2	**385-1400**	4	BUMPER	
	17	2	**386-6071**	2	BOLT-PIVOT	
	18	1	**386-6072**	1	BOLT-PIVOT	
	19	1	**107-2961**	1	WASHER (8.25X17X1.136-MM THK)	
	20	2	**5P-8244**	2	WASHER-HARD (12X22.5X2.5-MM THK)	
	21	2	**5V-1497**	1	RETAINER	
	22	1	**8T-0114**	1	PIN-SPRING	
M	23	1	**8T-0389**	1	LOCKNUT (M10X1.5-THD)	
	24	2	**9M-5048**	2	LOCKNUT (7/16-14-THD)	
	25	2	**385-2474**	1	INDICATOR AS (SEAT ADJUSTMENT)	
	26	2	**371-7143**	1	KIT-SHOCK ABSORBER (SUSPENSION SEAT)	

M - METRIC PART

REFER TO ALL ILLUSTRATIONS OF
THIS GROUP FOR AUXILIARY VIEWS

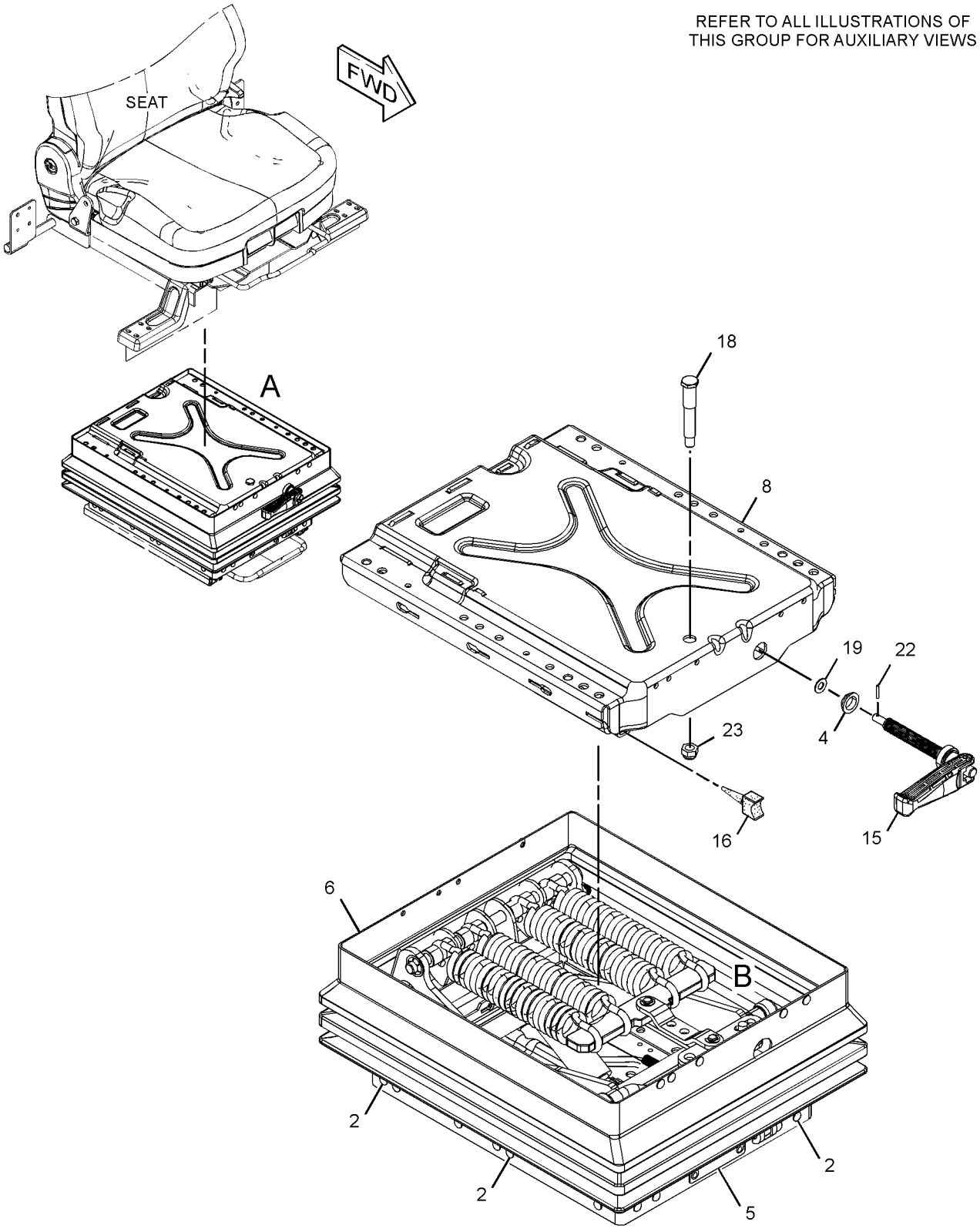

VIEW OF AREA A
(EXPLODED)

GRAPHIC #1 g02805016

366-5262 **SUSPENSION GP-SEAT (*contd.*)** **i04697331**

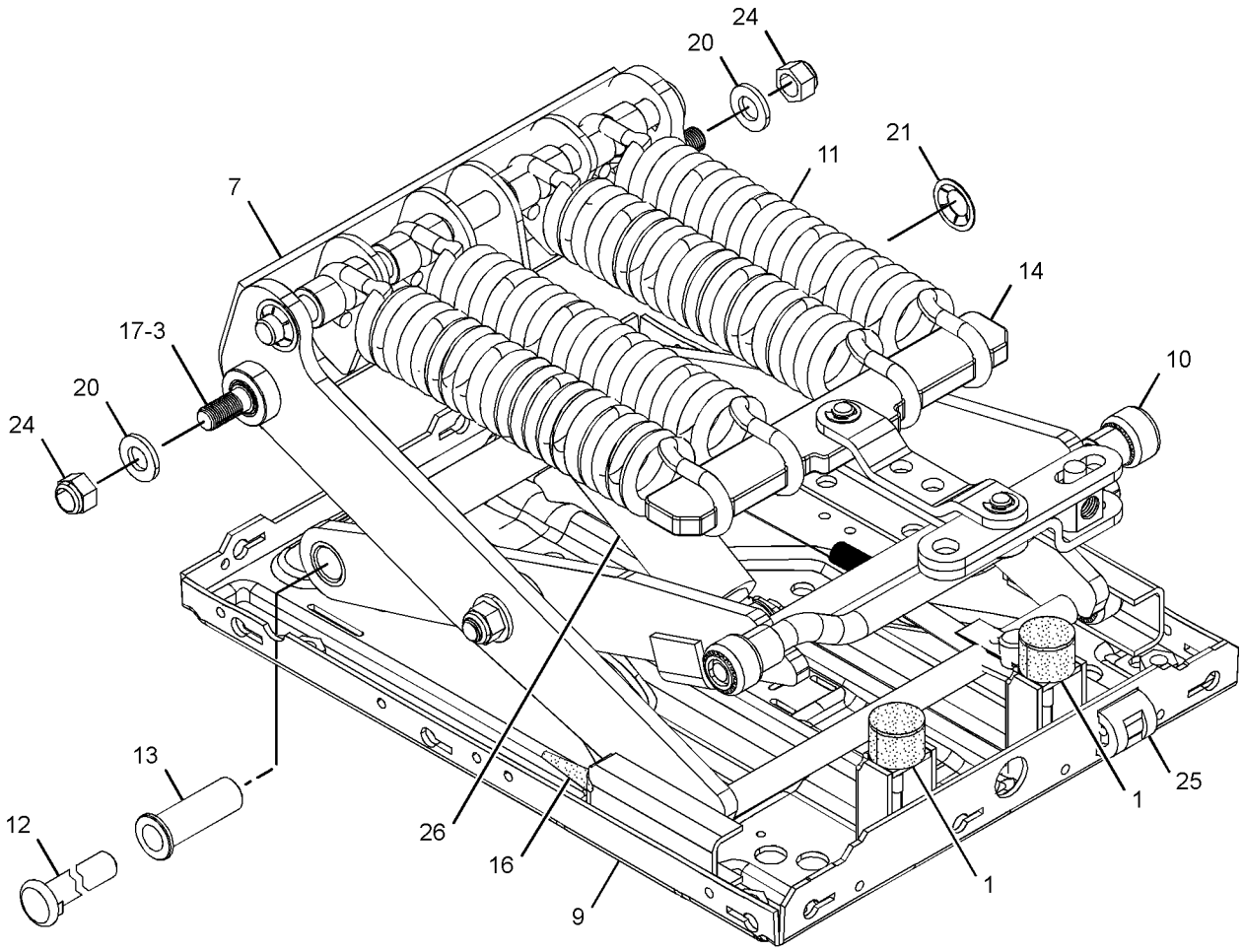

VIEW OF AREA B
(PARTS REMOVED FOR CLARITY)

GRAPHIC #2 **<END>** g02805017

377-2012 SUSPENSION GP-SEAT—MECHANICAL

S/N: HAH1-UP
PART OF 366-5260 SEAT GP-SUSPENSION
AN ATTACHMENT

SMCS-7324 **i05496289**

NOTE	REF NO	GRAPHIC REF	PART NUMBER	QTY	PART NAME 1 2 3 4 5 6 (PRODUCT LEVEL)	SEE PAGE
Y	1	1	**366-5262**	1	SUSPENSION GP-SEAT (MECHANICAL)	410
	2	1	**366-5264**	1	BRACKET AS	
	3	1	**366-5266**	1	KIT-SLIDE (LOWER)	
					(ALSO INCLUDES BAR, LH & RH SLIDE ASSEMBLIES)	
M		1	**6V-7743**	2	LOCKNUT (M6X1-THD)	
		1	**8T-0334**	4	WASHER-HARD (6.6X12.5X1.6-MM THK)	
	4	1	**384-2205**	4	BLOCK	
	5	1	**107-2961**	4	WASHER (8.25X17X1.136-MM THK)	
M	6	1	**193-7720**	4	SCREW-BUTTON HEAD (M6X1X35-MM)	
M	7	1	**209-8296**	4	BOLT-SOCKET HEAD (M8X1.25X25-MM)	

M - METRIC PART
Y - SEPARATE ILLUSTRATION

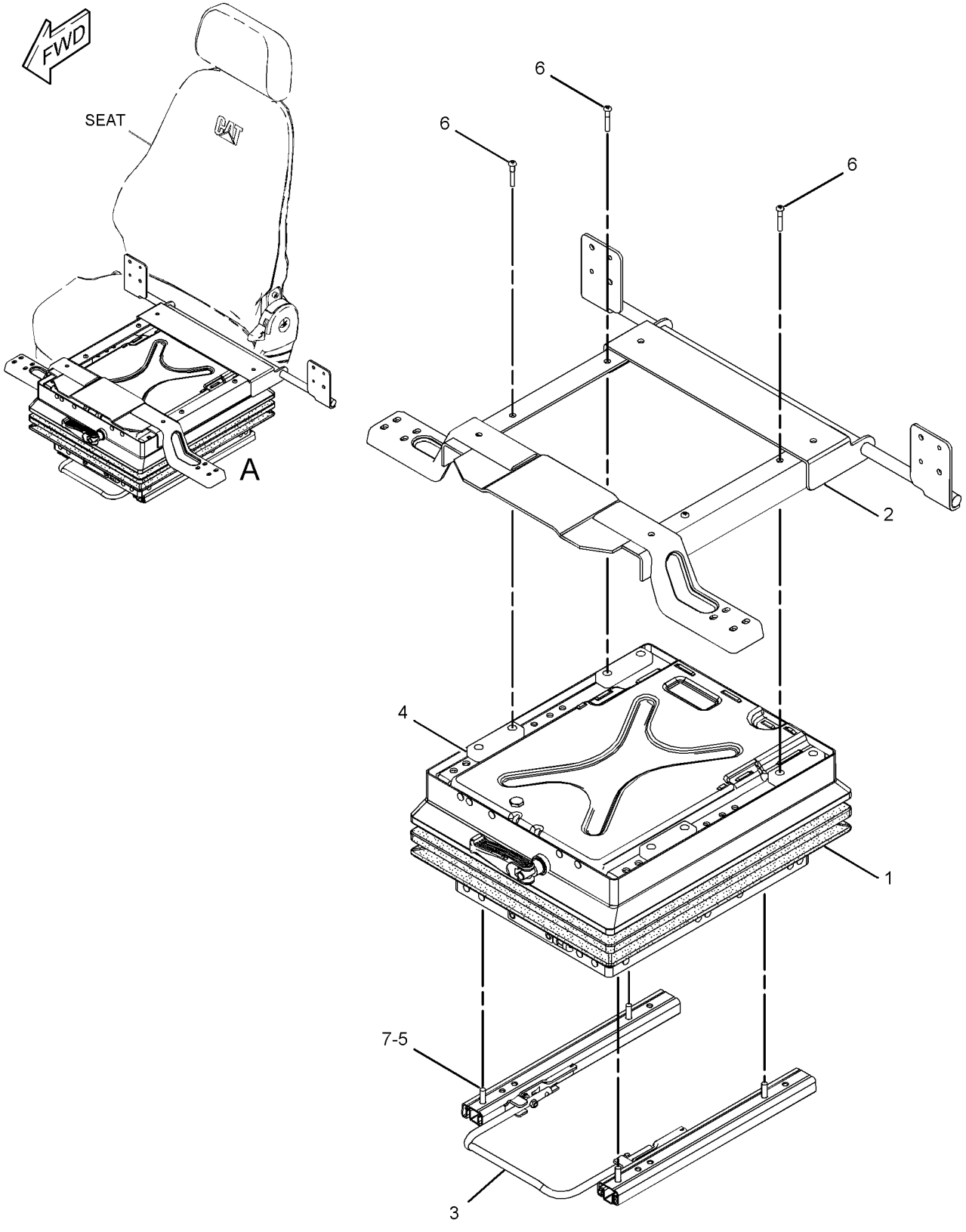

VIEW OF AREA A

GRAPHIC #1 **<END>** g03476567

229-9070 WASHER GP-WINDOW

S/N: HAH1-UP
PART OF 454-5646, 454-5647 DISTRIBUTION AR
AN ATTACHMENT

SMCS-7306 **i02593864**

NOTE	REF NO	GRAPHIC REF	PART NUMBER	QTY	PART NAME 1 2 3 4 5 6 (PRODUCT LEVEL)	SEE PAGE
	1	1	**7Y-3474**	1	VALVE AS-CHECK (WINDOW WASHER)	
	2	1	**163-6795**	2	STRAP-CABLE	
	3	1	**176-1931**	1	TANK AS-WINDOW WASHER	
		1	**5C-8138**	1	GROMMET	
		1	**7T-8890**	1	PUMP AS-WASHER (24-VOLT)	
		1	**178-5431**	1	CAP AS (WINDOW WASHER)	
		1	**3W-6399**		PACKING	
	4	1	**235-9012**	1	SUPPORT AS	
M	5	1	**8T-4970**	2	BOLT (M6X1X14-MM)	
	6	1	**9X-8256**	2	WASHER (6.6X12X2-MM THK)	
E	7	1	**144-0195**		HOSE (13-CM)	
	8	1	**3S-2093**	1	STRAP-CABLE	

E - ORDER BY THE CENTIMETER
M - METRIC PART

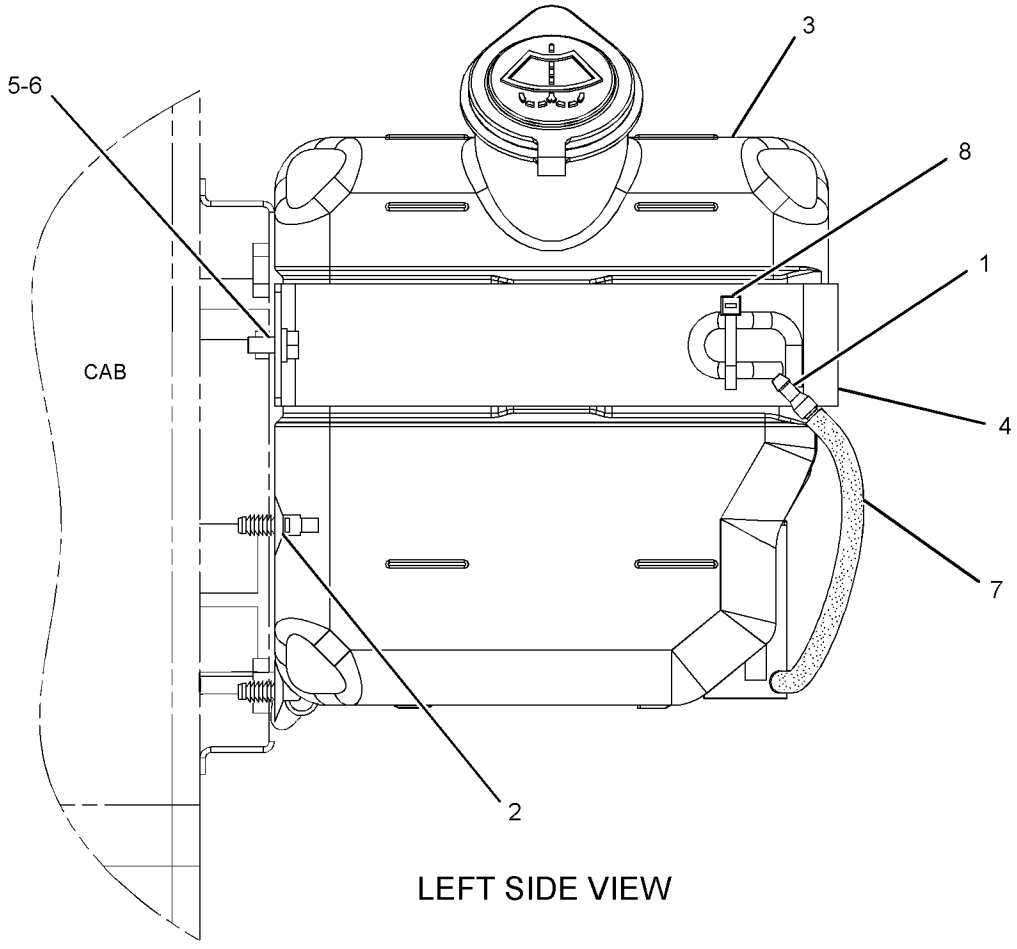

LEFT SIDE VIEW

GRAPHIC #1 **<END>** g01307642

139-7101 WINDOW GP-CAB—FRONT, UPPER

S/N: HAH1-UP
PART OF 399-0057 CAB GP
AN ATTACHMENT

SMCS-7310 **i05852596**

NOTE	REF NO	GRAPHIC REF	PART NUMBER	QTY	PART NAME 1 2 3 4 5 6 (PRODUCT LEVEL)	SEE PAGE
	1	2	**170-9722**	1	CUSHION	
	2	1	**151-6703**	1	HANDLE-PULL	
	3	1	**151-6704**	2	CAP	
	4	2	**151-6778**	1	FRAME AS	
	4A	2	**156-6470**	1	HANDLE	
	5	1	**151-6785**	1	BRACKET AS	
	6	1	**151-6813**	1	BRACKET AS	
	7	1	**151-6815**	1	BRACKET AS	
	8	1	**273-5345**	1	LINK AS	
	9	1	**273-5346**	1	LINK AS	
	10	1	**151-6831**	1	LOCK AS	
	11	1	**151-6832**	1	LEVER AS	
	12	2	**151-6844**	1	COVER	
	13	1	**151-9557**	2	STOP-RUBBER	
	14	2	**156-6472**	1	GLASS	
	15	2	**156-6554**	1	CABLE AS	
	16	1	**156-6555**	1	STRIKER AS	
	17	2	**156-6562**	1	BRACKET	
	18	2	**273-5274**	1	CATCH AS	
					(ONE JAW)	
					—OR—	
		2	**156-6563**	1	CATCH AS	
					(TWO JAWS)	
	19	2	**156-6579**	1	STOP	
	20	2	**156-6601**	1	SEAL AS	
	21	2	**156-6627**	1	STOP AS	
	22	1	**161-3684**	2	STOP	
	23	1	**161-3698**	1	SEAL	
	24	2	**164-0648**	1	BRACKET AS	
	25	1	**178-5576**	1	STOP	
	26	2	**183-8454**	2	HOUSING	
M	27	2	**185-8182**	4	BOLT (M10X1.5X20-MM)	
M	28	2	**5C-8312**	1	NUT (M4X0.7-THD)	
	29	2	**185-8187**	4	WASHER (10.2X22X3.2-MM THK)	
M	30	1	**142-0485**	1	NUT (M10X1.5-THD)	
	31	1	**185-8221**	1	STOP	
M	32	1	**099-0823**	2	SCREW-MACHINE (M6X1X6-MM)	
M	33	1	**101-8900**	2	SCREW AS (M6X1X20-MM)	
	34	1	**117-6306**	1	SWITCH (WINDOW LOWER LIMIT)	
	35	1	**151-9576**	4	ROLLER	
	36	1	**4I-0420**	1	STRIP	
	37	1	**7X-0578**	1	WASHER-HARD (10.2X32X2.5-MM THK)	
M	38	2	**9X-2042**	20	SCREW-TRUSS HEAD (M6X1X12-MM)	
M	39	1,2	**9X-2044**	5	SCREW-TRUSS HEAD (M6X1X16-MM)	
M	40	2	**9X-2045**	3	SCREW-TRUSS HEAD (M6X1X20-MM)	
	41	2	**9X-8256**	2	WASHER (6.6X12X2-MM THK)	

M - METRIC PART

REFER TO ALL ILLUSTRATIONS OF
THIS GROUP FOR AUXILIARY VIEWS

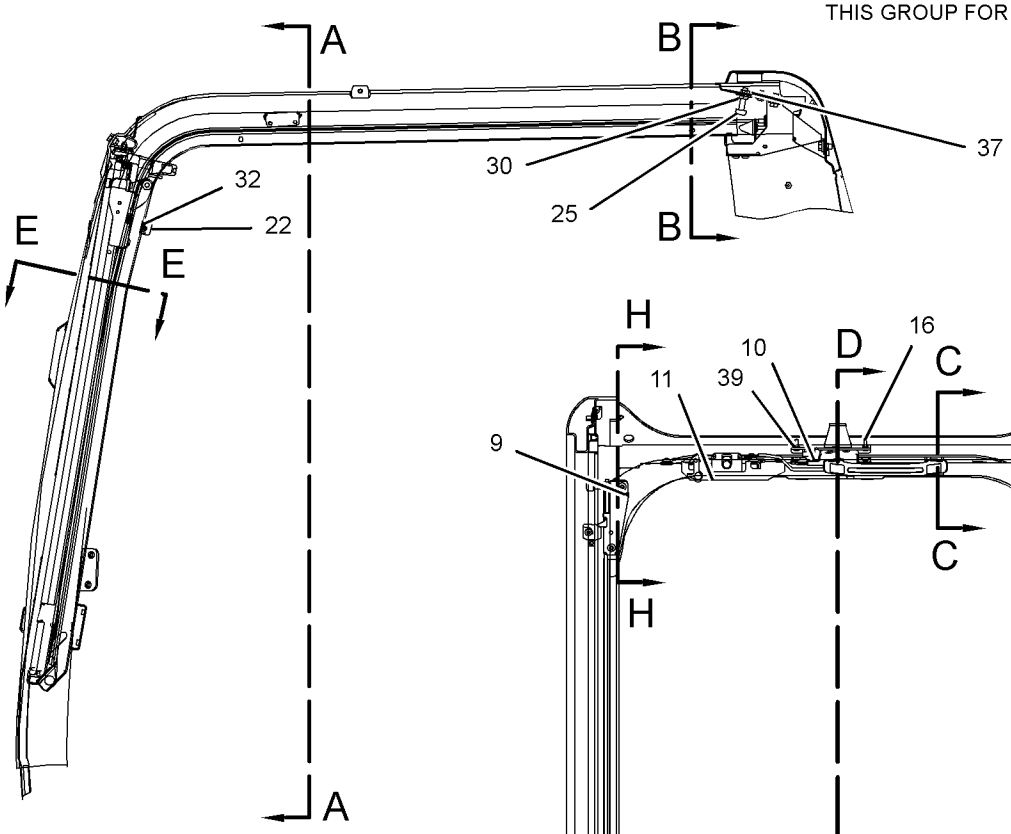

LEFT SIDE VIEW

SECTION A-A

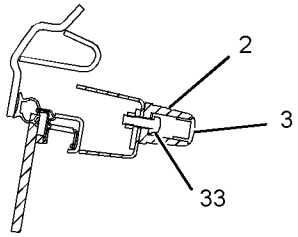

SECTION C-C

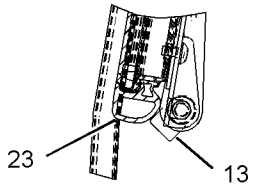

SECTION D-D

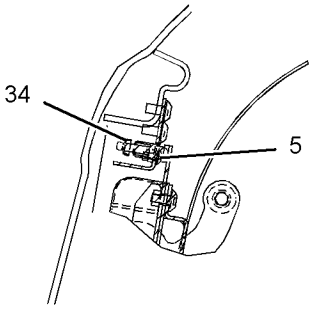

SECTION F-F

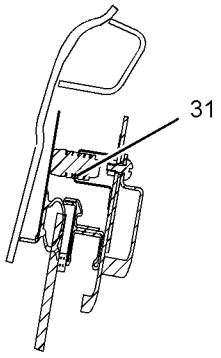

SECTION H-H

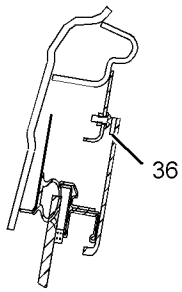

SECTION J-J

GRAPHIC #1 g01231378

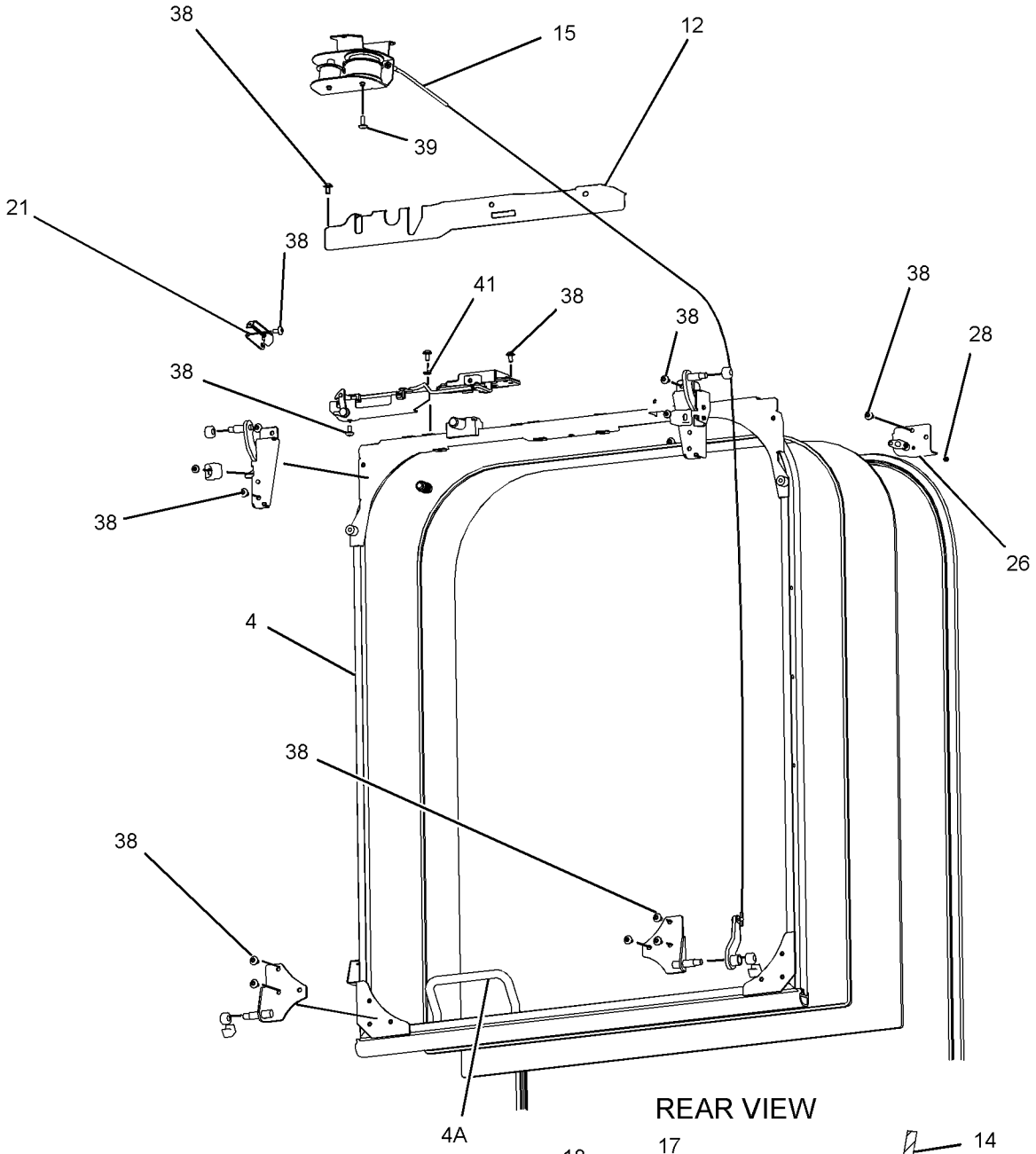

GRAPHIC #2 **<END>** g02157234

171-7503 WINDOW GP-CAB—FRONT, UPPER

S/N: HAH1-UP
FOR SERVICE REPAIR OF 139-7101 WINDOW
PART OF 399-0057 CAB GP
AN ATTACHMENT

SMCS-7310 **i05407008**

NOTE	REF NO	GRAPHIC REF	PART NUMBER	QTY	PART NAME 1 2 3 4 5 6 (PRODUCT LEVEL)	SEE PAGE
	1	1	**161-3698**	1	SEAL	
M	2	1	**101-8900**	2	SCREW AS (M6X1X20-MM)	
	3	1	**151-6703**	1	HANDLE-PULL	
	4	1	**151-6704**	2	CAP	
	5	1	**151-6778**	1	FRAME AS	
	5A	1	**156-6470**	1	HANDLE	
	6	1	**151-6813**	1	BRACKET AS	
	7	1	**151-6815**	1	BRACKET AS	
	8	1	**273-5345**	1	LINK AS	
	9	1	**273-5346**	1	LINK AS	
	10	1	**151-6831**	1	LOCK AS	
	11	1	**151-6832**	1	LEVER AS	
	12	1	**156-6472**	1	GLASS	
	13	1	**170-9722**	1	CUSHION	
	14	1	**151-9576**	4	ROLLER	
M	15	1	**9X-2042**	15	SCREW-TRUSS HEAD (M6X1X12-MM)	

M - METRIC PART

171-7503 **WINDOW GP-CAB (*contd.*)** **i05407008**

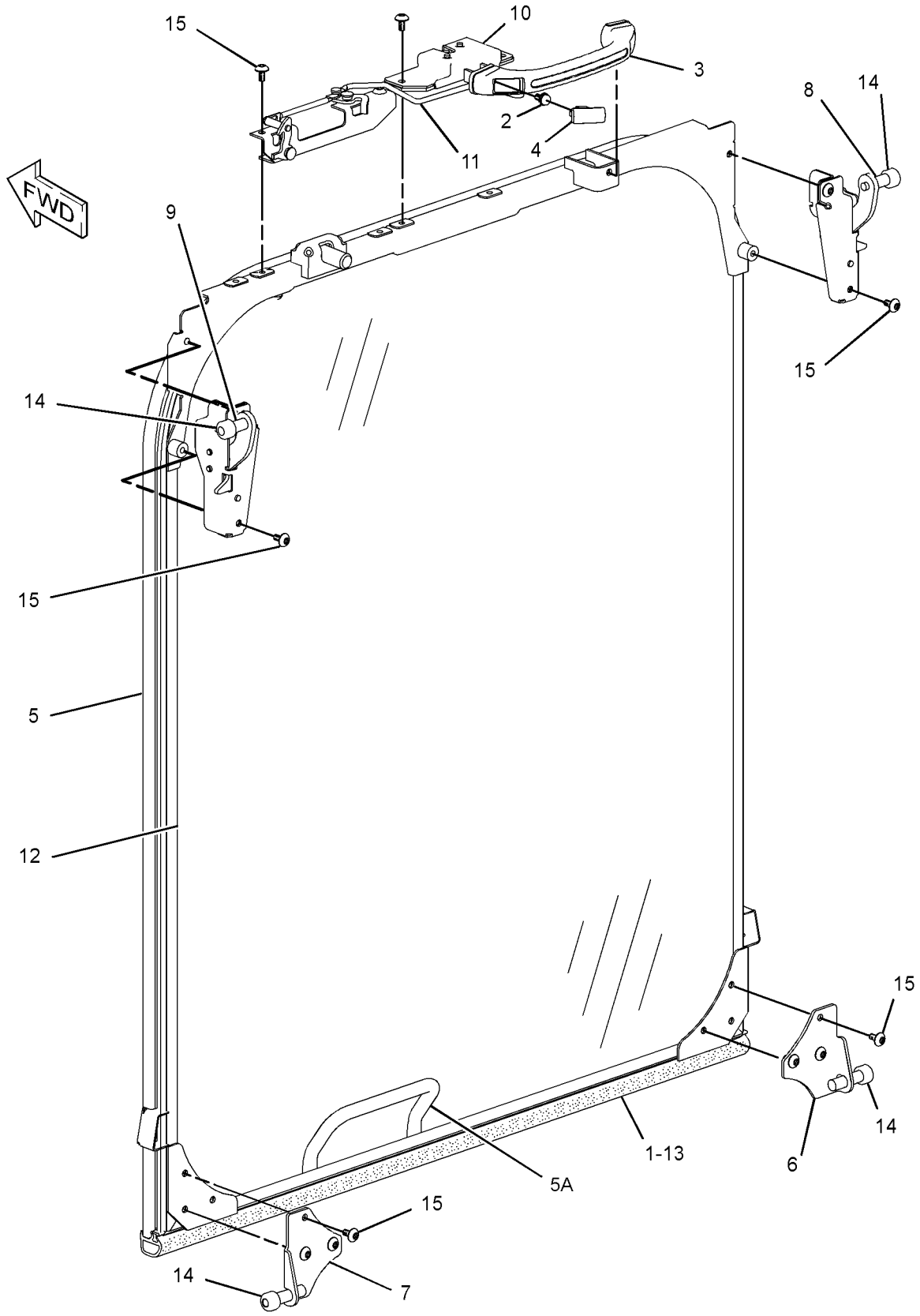

GRAPHIC #1 **<END>** g01935199

176-1958 WINDOW GP-CAB—FRONT, LOWER

S/N: HAH1-UP
PART OF 399-0057 CAB GP
AN ATTACHMENT

SMCS-7310 **i02973067**

NOTE	REF NO	GRAPHIC REF	PART NUMBER	QTY	PART NAME 1 2 3 4 5 6 (PRODUCT LEVEL)	SEE PAGE
	1	1	**156-6473**	1	GLASS (LOWER FRONT)	
	2	1	**156-6631**	2	STOP	
	3	1	**305-0361**	1	SEAL	
	4	1	**178-5569**	2	SEAL	
	5	1	**189-2702**	2	SEAL	
	6	1	**139-7119**	2	PLUG	

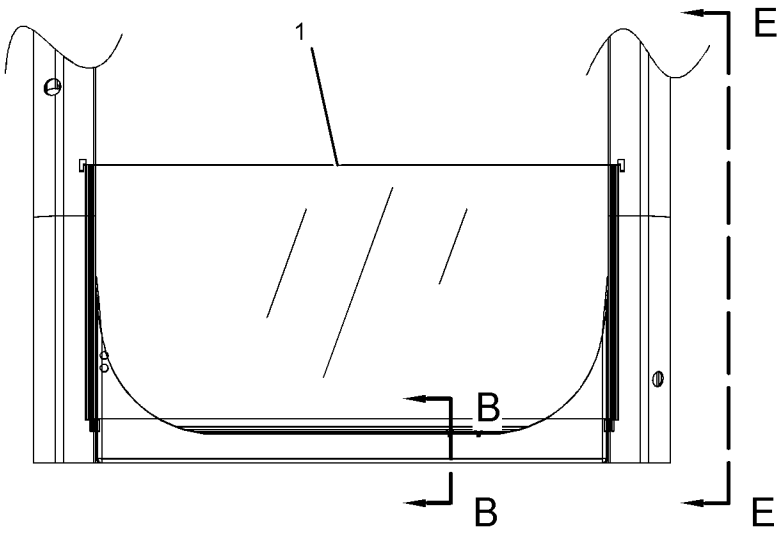

FRONT VIEW

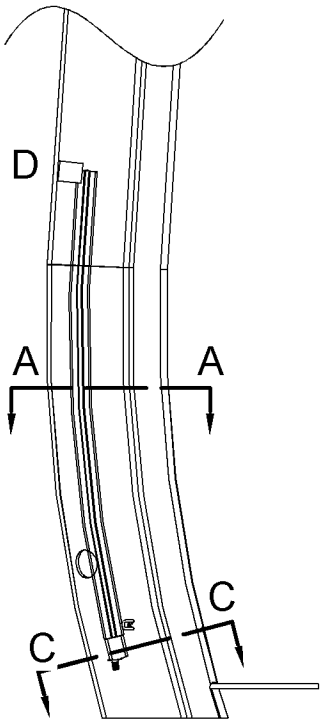

VIEW E-E

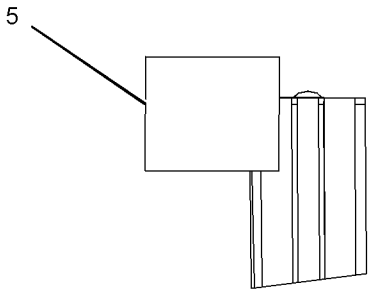

VIEW OF AREA D

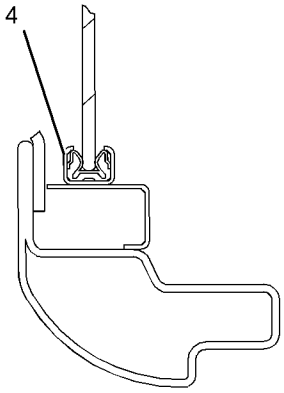

SECTION A-A

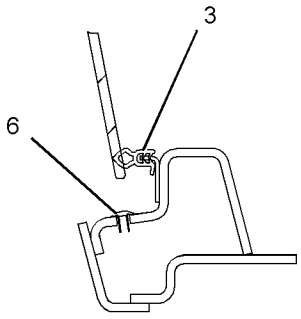

SECTION B-B

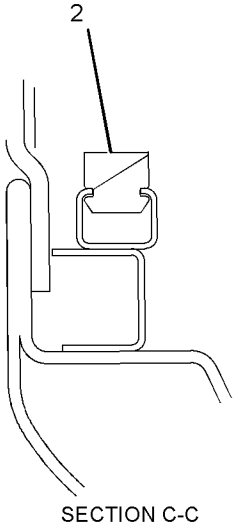

SECTION C-C

GRAPHIC #1 **<END>** g01398601

207-0144 WINDOW GP-CAB–FRONT, UPPER

S/N: HAH1-UP
PART OF 399-0057 CAB GP
AN ATTACHMENT

SMCS-7310 **i05498689**

NOTE	REF NO	GRAPHIC REF	PART NUMBER	QTY	PART NAME 1 2 3 4 5 6 (PRODUCT LEVEL)	SEE PAGE
	1	1	**170-9722**	1	CUSHION	
	2	1	**156-6472**	1	GLASS	
	3	1	**161-3698**	1	SEAL	
	4	1	**4I-0420**	1	STRIP	
	5	1	**156-6470**	1	HANDLE	

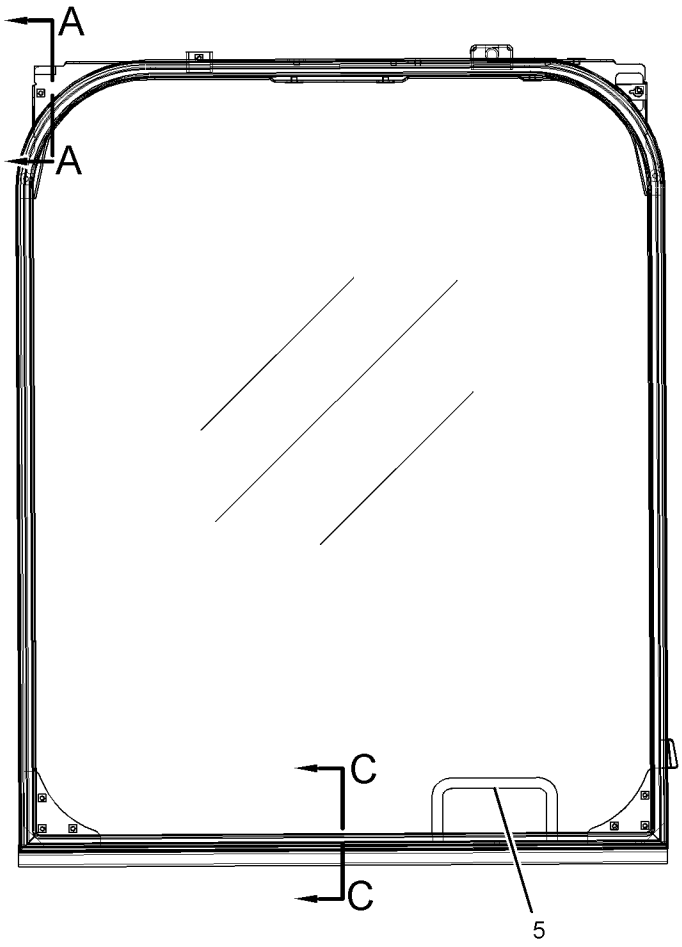

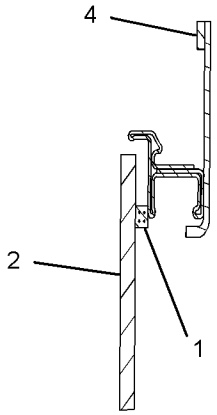

SECTION A-A

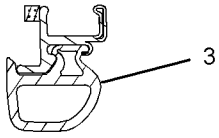

SECTION C-C

GRAPHIC #1 **<END>** g01935314

235-8909 WINDOW GP-CAB—SIDE, REAR

S/N: HAH1-UP
PART OF 399-0057 CAB GP
AN ATTACHMENT

SMCS-7310 **i05907461**

NOTE	REF NO	GRAPHIC REF	PART NUMBER	QTY	PART NAME 1 2 3 4 5 6 (PRODUCT LEVEL)	SEE PAGE
	1	1	**151-6790**	1	GLASS (LH)	
	2	1	**156-6469**	1	GLASS (REAR)	
	3	1	**164-0666**	1	SEAL	
	4	1	**178-5572**	4	SPACER-SPECIAL (WINDOW)	
	5	1	**234-6489**	1	GLASS (RH)	
	6	1	**099-3629**	1	RING-KEY	
	7	1	**178-5573**	4	SPACER	
	8	1	**178-5574**	9	SPACER	

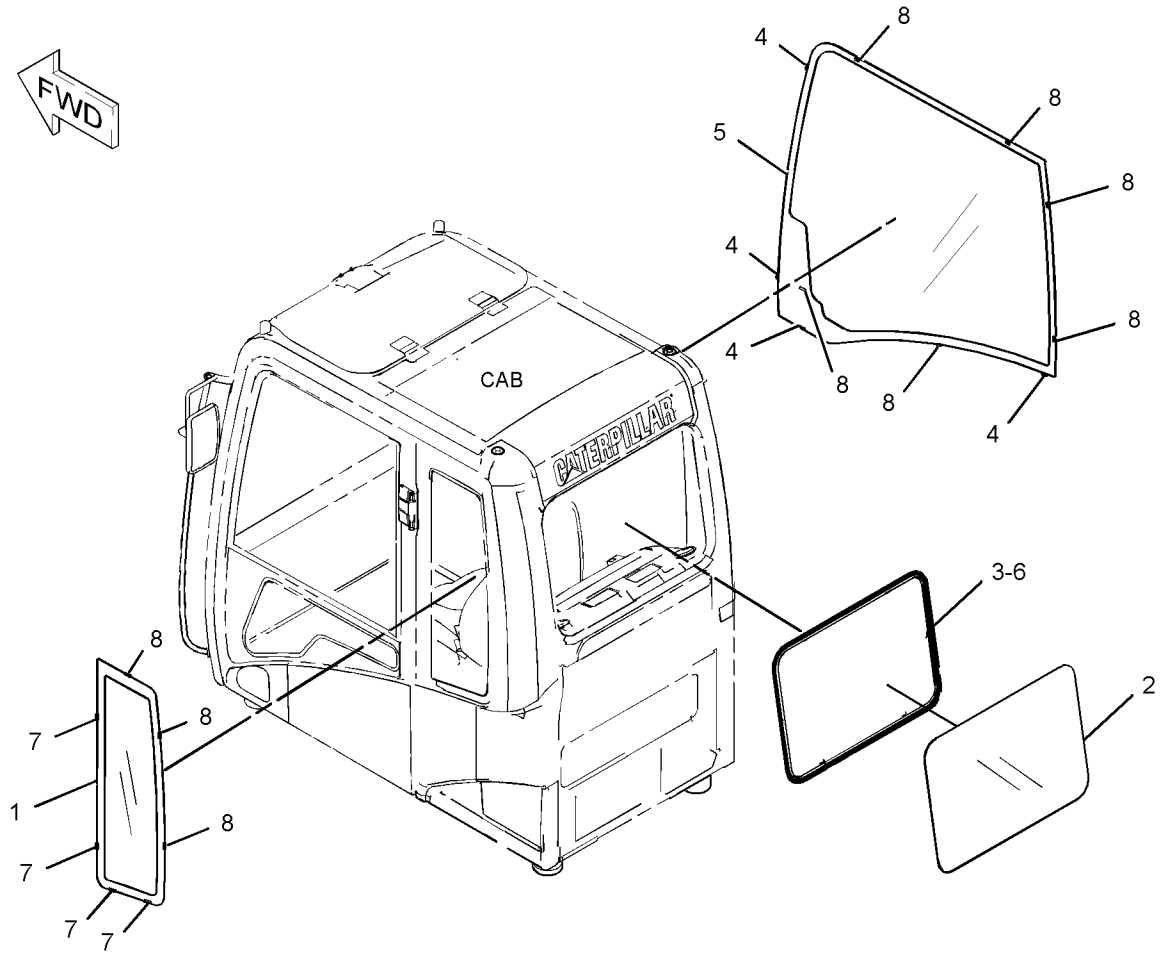

GRAPHIC #1 **<END>** g01432743

388-9107 WINDOW GP-CAB—SIDE, REAR

S/N: HAH1-UP
PART OF 388-9093 CAB GP
AN ATTACHMENT

SMCS-7310 **i05626650**

NOTE	REF NO	GRAPHIC REF	PART NUMBER	QTY	PART NAME 1 2 3 4 5 6 (PRODUCT LEVEL)	SEE PAGE
	1	1	**383-6931**	1	GLASS (LH)	
	2	1	**383-6929**	1	GLASS (REAR)	
	3	1	**164-0666**	1	SEAL	
	4	1	**178-5572**	4	SPACER-SPECIAL (WINDOW)	
	5	1	**383-6932**	1	GLASS (RH)	
	6	1	**099-3629**	1	RING-KEY	
	7	1	**178-5573**	4	SPACER	
	8	1	**178-5574**	10	SPACER	

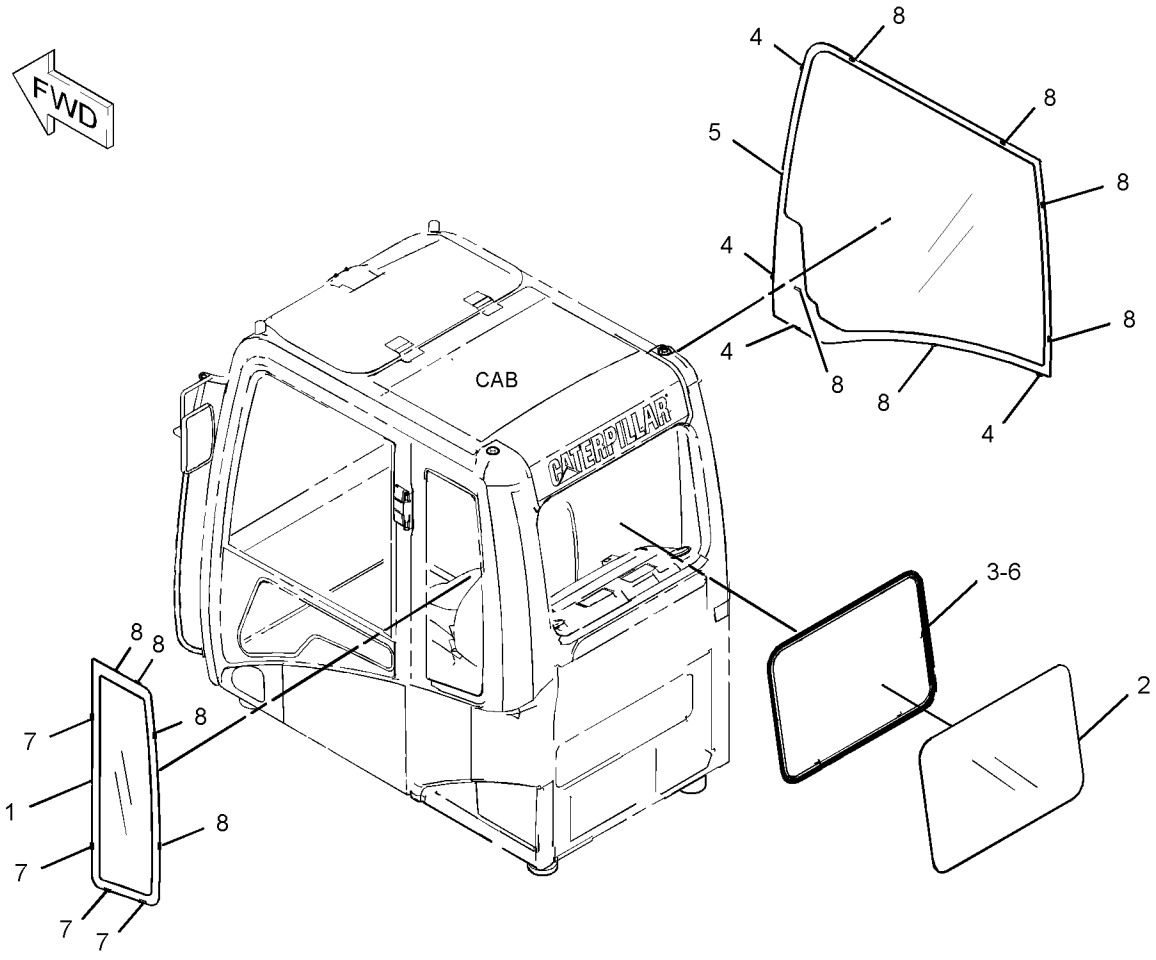

GRAPHIC #1 **<END>** g03499618

388-9108 WINDOW GP-CAB—FRONT, LOWER

S/N: HAH1-UP
PART OF 388-9093 CAB GP
AN ATTACHMENT

SMCS-7310 **i04665970**

NOTE	REF NO	GRAPHIC REF	PART NUMBER	QTY	PART NAME 1 2 3 4 5 6 (PRODUCT LEVEL)	SEE PAGE
	1	1	**383-6930**	1	GLASS (FRONT, LOWER)	
	2	1	**156-6631**	2	STOP	
	3	1	**305-0361**	1	SEAL	
	4	1	**178-5569**	2	SEAL	
	5	1	**189-2702**	2	SEAL	
	6	1	**139-7119**	2	PLUG	

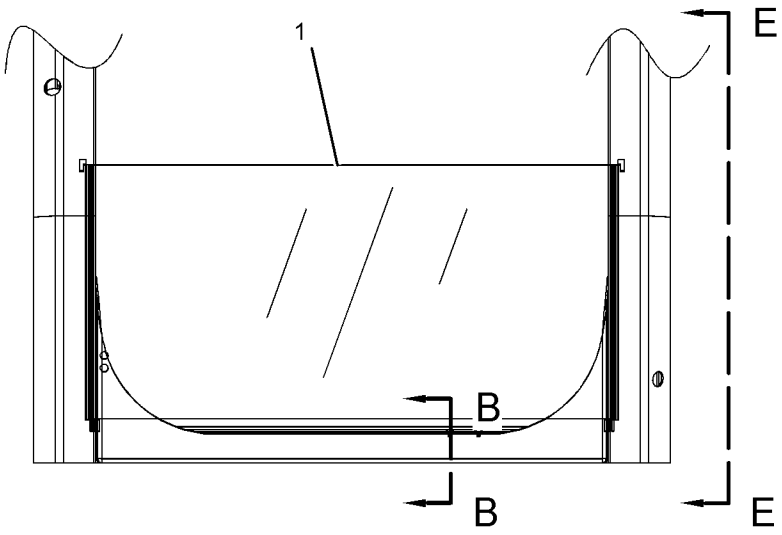

FRONT VIEW

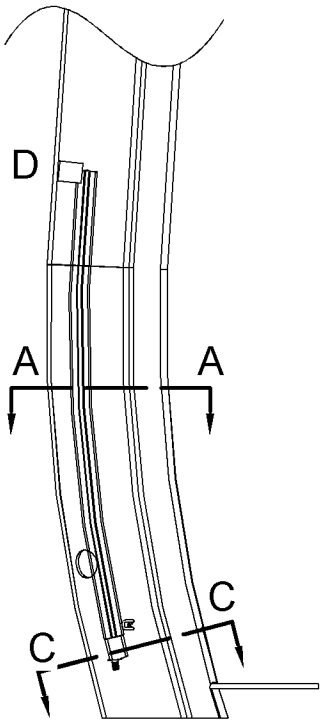

VIEW E-E

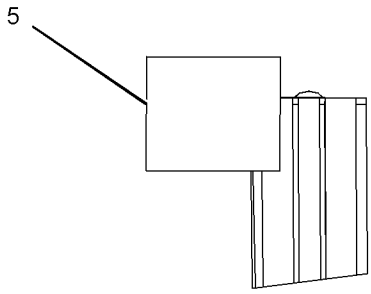

VIEW OF AREA D

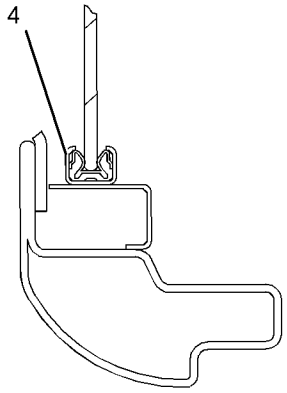

SECTION A-A

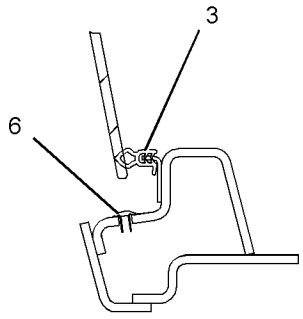

SECTION B-B

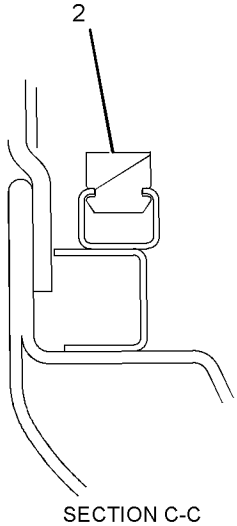

SECTION C-C

GRAPHIC #1 **<END>** g01398601

388-9109 WINDOW GP-CAB—FRONT, UPPER

S/N: HAH1-UP
PART OF 388-9093 CAB GP
AN ATTACHMENT

SMCS-7310 **i05437818**

NOTE	REF NO	GRAPHIC REF	PART NUMBER	QTY	PART NAME 1 2 3 4 5 6 (PRODUCT LEVEL)	SEE PAGE
	1	2	**170-9722**	1	CUSHION	
	2	1	**151-6703**	1	HANDLE-PULL	
	3	1	**151-6704**	2	CAP	
	4	2	**151-6778**	1	FRAME AS	
	4A	2	**156-6470**	1	HANDLE	
	5	1	**417-1143**	1	BRACKET AS	
	6	1	**151-6813**	1	BRACKET AS	
	7	1	**151-6815**	1	BRACKET AS	
	8	1	**273-5345**	1	LINK AS	
	9	1	**273-5346**	1	LINK AS	
	10	1	**398-7109**	1	LOCK AS	
	11	1	**151-6832**	1	LEVER AS	
	12	2	**388-9097**	1	COVER	
	13	1	**151-9557**	2	STOP-RUBBER	
	14	2	**383-8541**	1	GLASS	
	15	2	**156-6554**	1	CABLE AS	
	16	1	**398-7110**	1	STRIKER AS	
	17	2	**156-6562**	1	BRACKET	
	18	2	**156-6563**	1	CATCH AS	
					(TWO JAW)	
					—OR—	
			273-5274	1	CATCH AS	
					(ONE JAW)	
	19	2	**156-6579**	1	STOP	
	20	2	**418-8379**	1	SEAL AS	
	21	2	**156-6627**	1	STOP AS	
	22	1	**161-3684**	2	STOP	
	23	1	**161-3698**	1	SEAL	
	24	2	**164-0648**	1	BRACKET AS	
	25	1	**178-5576**	1	STOP	
M	26	2	**138-8454**	2	SCREW-TRUSS HEAD (M4X0.7X10-MM)	
M	27	2	**185-8182**	4	BOLT (M10X1.5X20-MM)	
M	28	2	**5C-8312**	1	NUT (M4X0.7-THD)	
	29	1	**5P-1075**	4	WASHER-HARD (10.2X22.5X3-MM THK)	
M	30	1	**142-0485**	1	NUT (M10X1.5-THD)	
	31	1	**185-8221**	1	STOP	
M	32	1	**099-0823**	2	SCREW-MACHINE (M6X1X6-MM)	
M	33	1	**101-8900**	2	SCREW AS (M6X1X20-MM)	
	34	1	**117-6306**	1	SWITCH (WINDOW LOWER LIMIT)	
	35	1	**151-9576**	4	ROLLER	
	36	1	**4I-0420**	1	STRIP	
	37	1	**7X-0578**	1	WASHER-HARD (10.2X32X2.5-MM THK)	
M	38	2	**9X-2042**	20	SCREW-TRUSS HEAD (M6X1X12-MM)	
M	39	1,2	**9X-2044**	5	SCREW-TRUSS HEAD (M6X1X16-MM)	
M	40	2	**9X-2045**	3	SCREW-TRUSS HEAD (M6X1X20-MM)	
	41	2	**9X-8256**	2	WASHER (6.6X12X2-MM THK)	

M - METRIC PART

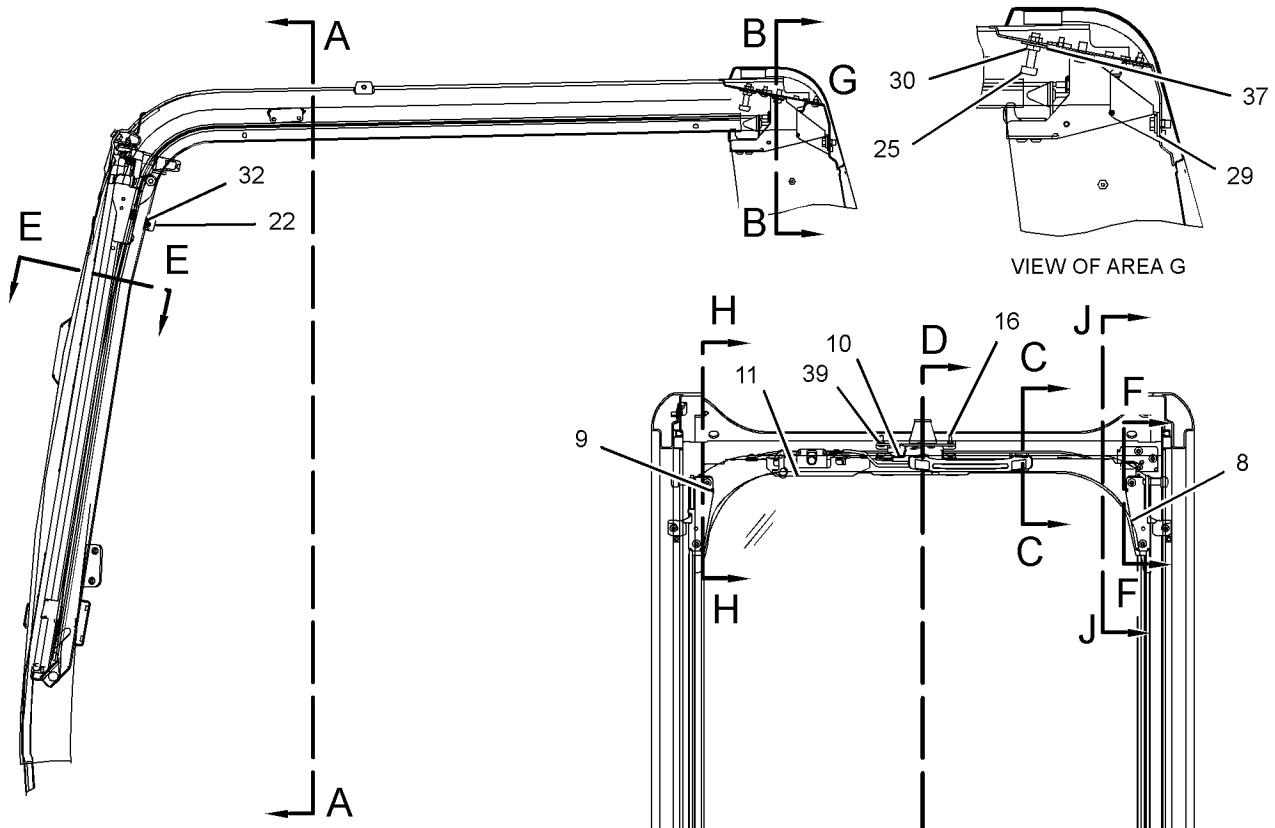

LEFT SIDE VIEW

SECTION A-A

REFER TO ALL ILLUSTRATIONS OF THIS GROUP FOR AUXILIARY VIEWS

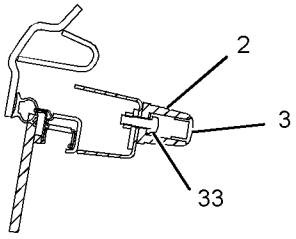

SECTION C-C

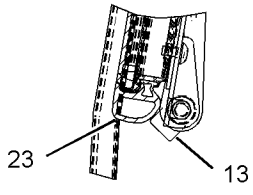

SECTION D-D

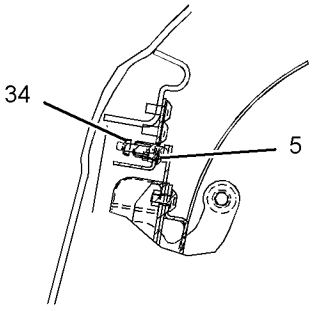

SECTION F-F

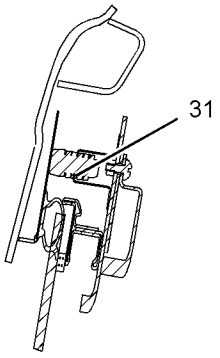

SECTION H-H

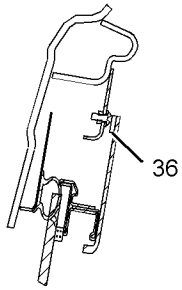

SECTION J-J

GRAPHIC #1 g03445379

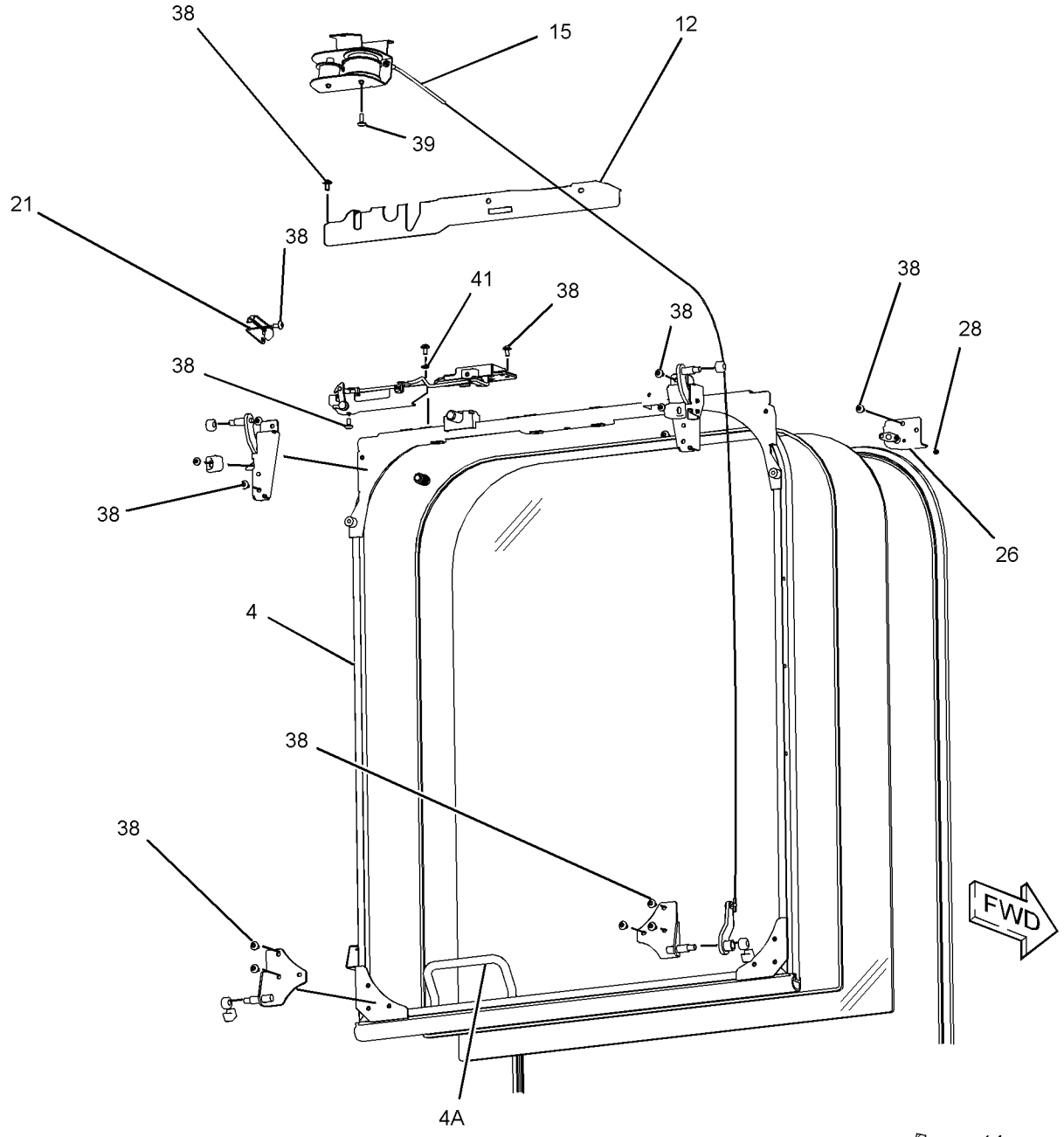

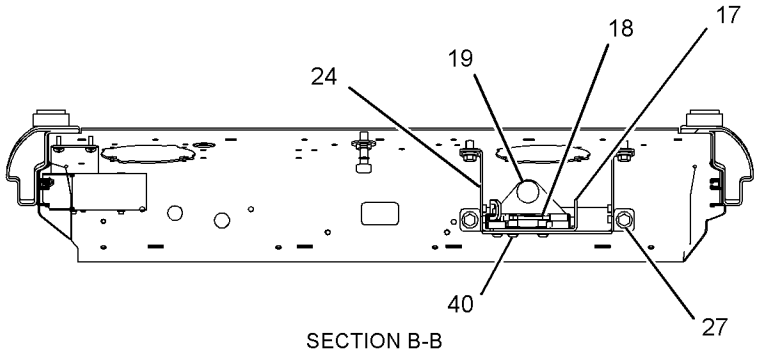

SECTION B-B

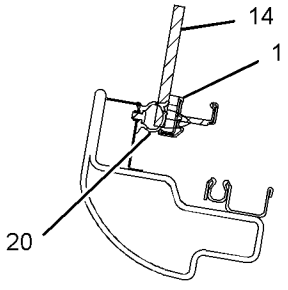

SECTION E-E

GRAPHIC #2 **<END>** g03445380

151-6792 WINDOW GP-DOOR

S/N: HAH1-UP
PART OF 307-1818 DOOR GP-CAB
AN ATTACHMENT

SMCS-7308, 7310 **i05405455**

NOTE	REF NO	GRAPHIC REF	PART NUMBER	QTY	PART NAME 1 2 3 4 5 6 (PRODUCT LEVEL)	SEE PAGE
Y	1	1	**085-6444**	2	LATCH GP-WINDOW	389
	2	1	**151-6793**	1	FRAME AS	
		1	**4I-4300**	1	CATCH	
		1	**099-0139**	3	RIVET	
	3	1	**151-6841**	1	SEAL	
	4	1	**156-6474**	1	GLASS	
	5	1	**156-6475**	1	GLASS	
	6	1	**161-3695**	1	SEAL	
	7	1	**161-3705**	1	SEAL	
	8	1	**164-0516**	1	RUBBER	
	9	1	**164-0517**	1	RUBBER	
	10	1	**164-0518**	1	RUBBER	
	11	1	**171-7413**	1	SPACER	
	12	1	**171-7414**	1	SPACER	
	13	1	**176-1951**	1	SPACER	
	14	1	**176-1952**	1	SPACER	
	15	1	**176-1953**	1	STOP	
	16	1	**176-1954**	1	SEAL	
	17	1	**176-1955**	1	SEAL	
	18	1	**176-1956**	1	SEAL	
	19	1	**176-1957**	1	SEAL	

Y - SEPARATE ILLUSTRATION

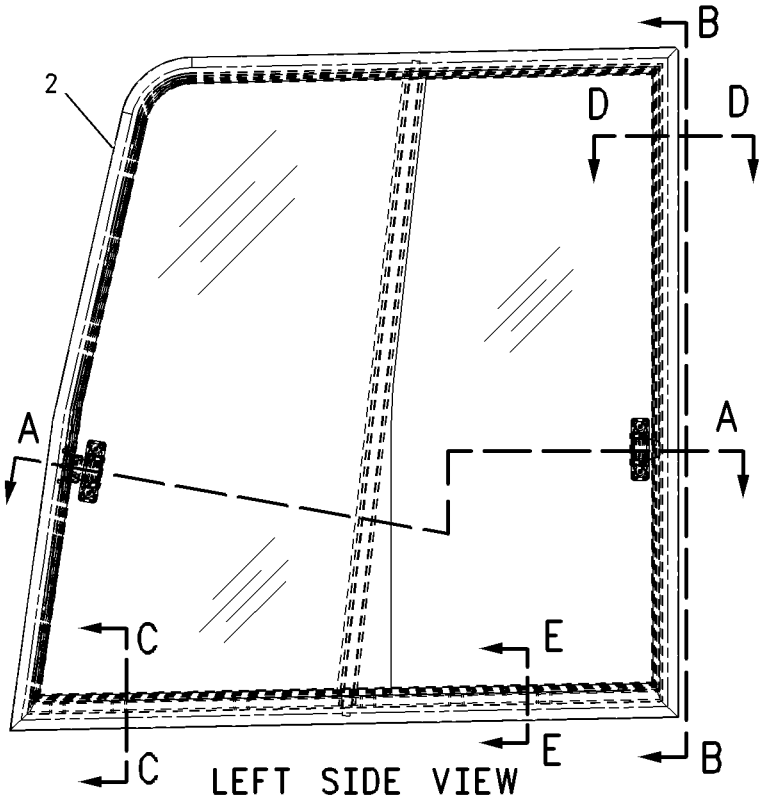

LEFT SIDE VIEW

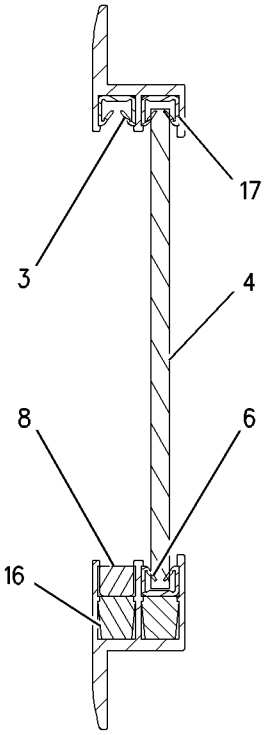

SECTION B-B

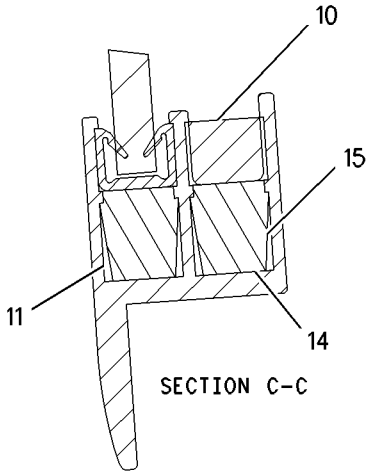

SECTION C-C

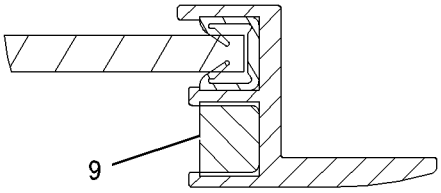

SECTION D-D

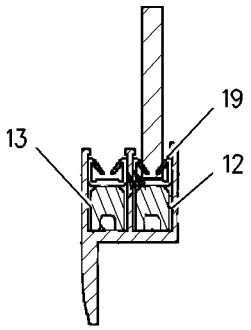

VIEW E-E

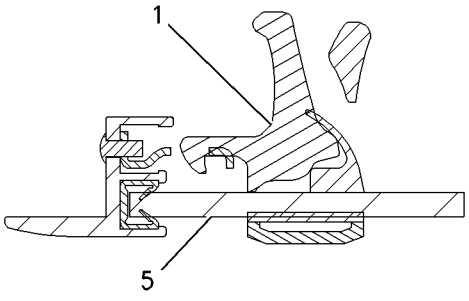

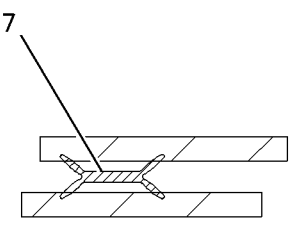

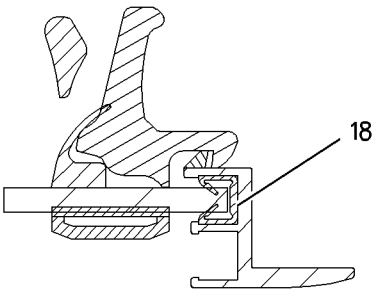

SECTION A-A

GRAPHIC #1 **<END>** g00721578

384-6533 WINDOW GP-DOOR

S/N: HAH1-UP
PART OF 388-9105 DOOR GP-CAB
AN ATTACHMENT

SMCS-7308, 7310

i05444051

NOTE	REF NO	GRAPHIC REF	PART NUMBER	QTY	PART NAME 1 2 3 4 5 6 (PRODUCT LEVEL)	SEE PAGE
	1	1	**385-8757**	2	CATCH AS	
	2	1	**387-2846**	1	GLASS	
	3	1	**387-2847**	1	GLASS	
	4	1	**387-2848**	1	PILLAR	
	5	1	**387-2849**	1	HOOK	
	6	1	**438-4951**	1	SEAL	
	7	1	**438-4952**	1	SEAL	
	8	1	**438-4953**	1	SEAL	
	9	1	**438-4954**	1	SEAL	
	10	1	**438-4955**	1	SEAL	
	11	1	**438-4956**	1	SEAL	
	12	1	**438-4957**	1	SEAL	
	13	1	**438-4958**	1	SEAL	
E	14	1	**430-4119**		RUBBER (10-CM)	
E	14A	1	**430-4119**		RUBBER (5.2-CM EACH)	

E - ORDER BY THE CENTIMETER

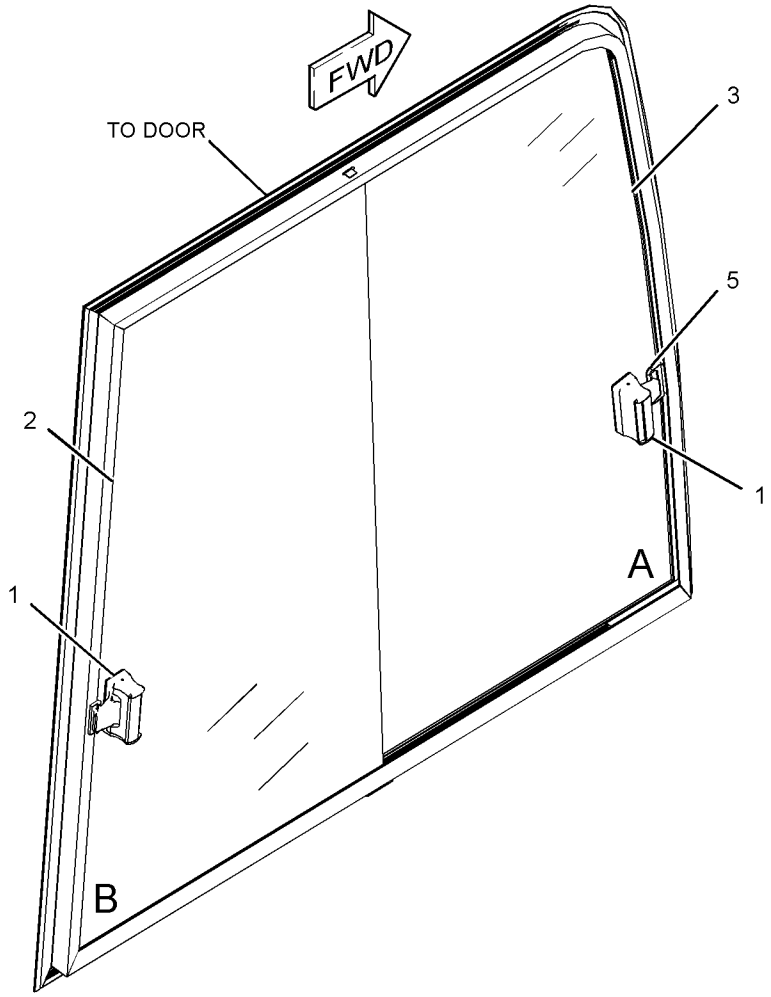

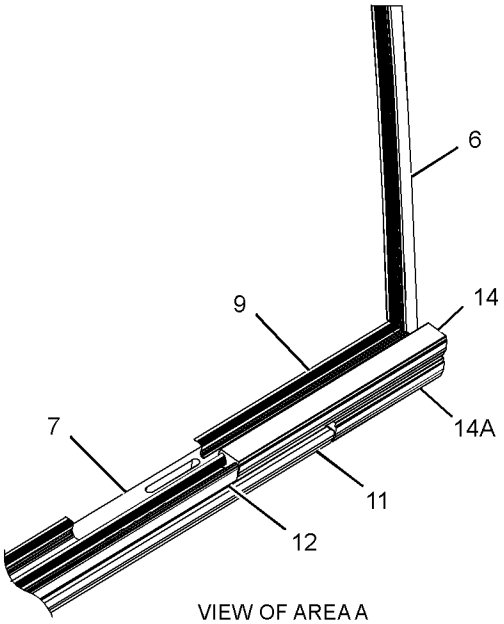

VIEW OF AREA A
(PARTS REMOVED FOR CLARITY)

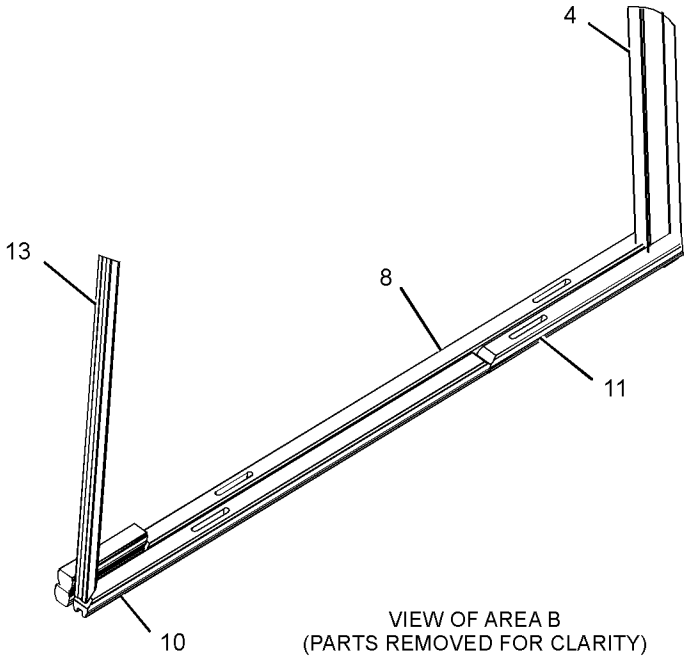

VIEW OF AREA B
(PARTS REMOVED FOR CLARITY)

GRAPHIC #1 **<END>** g03405579

234-6594 WIPER GP-WINDOW—FRONT, UPPER

S/N: HAH1-UP
PART OF 399-0057 CAB GP
AN ATTACHMENT

SMCS-7305 **i05881256**

NOTE	REF NO	GRAPHIC REF	PART NUMBER	QTY	PART NAME 1 2 3 4 5 6 (PRODUCT LEVEL)	SEE PAGE
	1	1	**161-3677**	1	HOLDER	
	2	1	**245-7931**	1	MOTOR AS-WINDOW WIPER	
M		1	**6V-8231**	1	NUT (M10X1.25-THD)	
M		1	**7Y-3470**	1	NUT (M20X1-THD)	
		1	**7Y-3472**	1	CAP	
		1	**124-3953**	1	WASHER (20.5X30X2-MM THK)	
	3	1	**235-8932**	1	NOZZLE AS	
	4	1	**155-7042**	1	RELAY AS (WIPER)	
	5	1	**372-9334**	1	ARM GP-WINDOW WIPER (FRONT, UPPER)	
		1	**161-3669**	1	GUIDE	
		1	**161-3670**	1	BLADE AS-WIPER (600-MM)	
		1	**185-8290**	1	SCREW AS (M3.5X0.6X9-MM)	
		1	**372-9285**	1	ARM AS-WIPER (UPPER)	
	6	1	**163-6795**	1	STRAP-CABLE	
M	7	1	**3E-9872**	2	SCREW AS (M4X0.7X12-MM)	
	8	1	**4I-3090**	1	SEAL	
	9	1	**7Y-7364**	1	GROMMET	
M	10	1	**5C-2890**	4	NUT (M6X1-THD)	
M	11	1	**9X-2042**	2	SCREW-TRUSS HEAD (M6X1X12-MM)	
M	12	1	**9X-2044**	3	SCREW-TRUSS HEAD (M6X1X16-MM)	

M - METRIC PART

234-6594 **WIPER GP-WINDOW (*contd.*)** **i05881256**

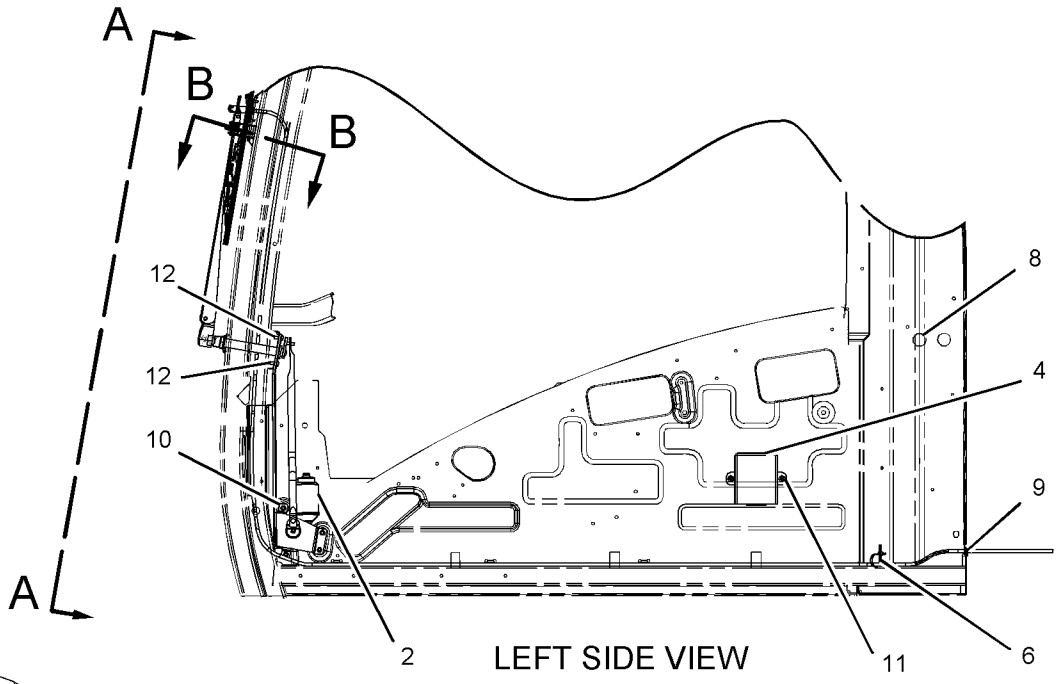

LEFT SIDE VIEW

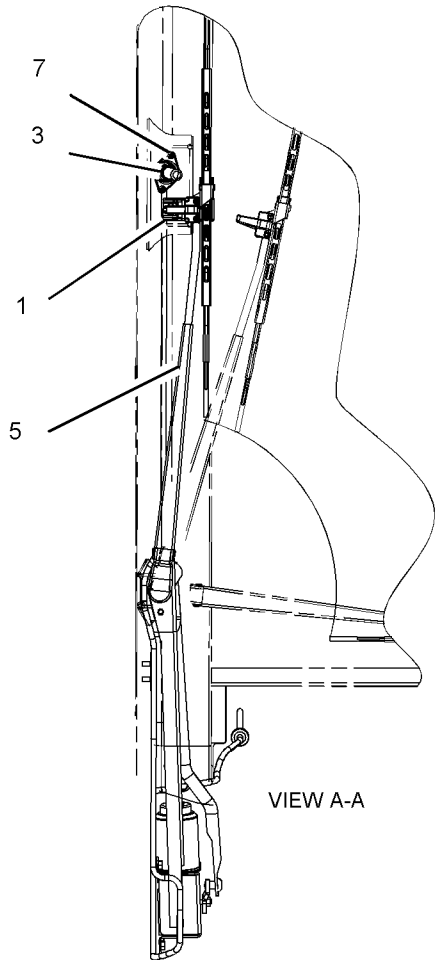

VIEW A-A

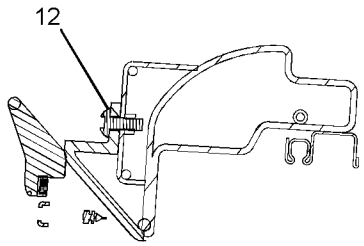

SECTION B-B

GRAPHIC #1 **<END>** g01098021

436-1116 WIPER GP-WINDOW—FRONT, UPPER

S/N: HAH1-UP
PART OF 388-9093 CAB GP
AN ATTACHMENT

SMCS-7305 **i05907478**

NOTE	REF NO	GRAPHIC REF	PART NUMBER	QTY	PART NAME 1 2 3 4 5 6 (PRODUCT LEVEL)	SEE PAGE
E	1	1	**444-2791**		HOSE (360-CM)	
	2	1	**099-3633**	1	GROMMET	
	3	1	**424-0331**	1	HOLDER	
	4	1	**424-0332**	1	NOZZLE AS	
	5	1	**424-0333**	1	MOTOR AS-WINDOW WIPER	
M		1	**175-7141**	1	NUT-HEX FLANGE (M10X1.5-THD)	
		1	**438-1294**	1	CAP	
	6	1	**424-0334**	1	ARM GP-WINDOW WIPER (FRONT, UPPER)	
		1	**424-0335**	1	GUIDE	
		1	**424-0336**	1	BLADE AS-WIPER (600-MM)	
		1	**424-0337**	1	ARM AS-WIPER	
	7	1	**424-0338**	1	RELAY AS (WIPER)	
	8	1	**096-6166**	2	WASHER-HARD (4.5X9X1-MM THK)	
	9	1	**163-6795**	1	STRAP-CABLE	
	10	1	**4I-3090**	1	SEAL	
M	11	1	**5C-2890**	4	NUT (M6X1-THD)	
M	12	1	**8T-0337**	2	SCREW-MACHINE (M4X0.7X12-MM)	
M	13	1	**9X-2042**	2	SCREW-TRUSS HEAD (M6X1X12-MM)	
M	14	1	**9X-2044**	3	SCREW-TRUSS HEAD (M6X1X16-MM)	

E - ORDER BY THE CENTIMETER
M - METRIC PART

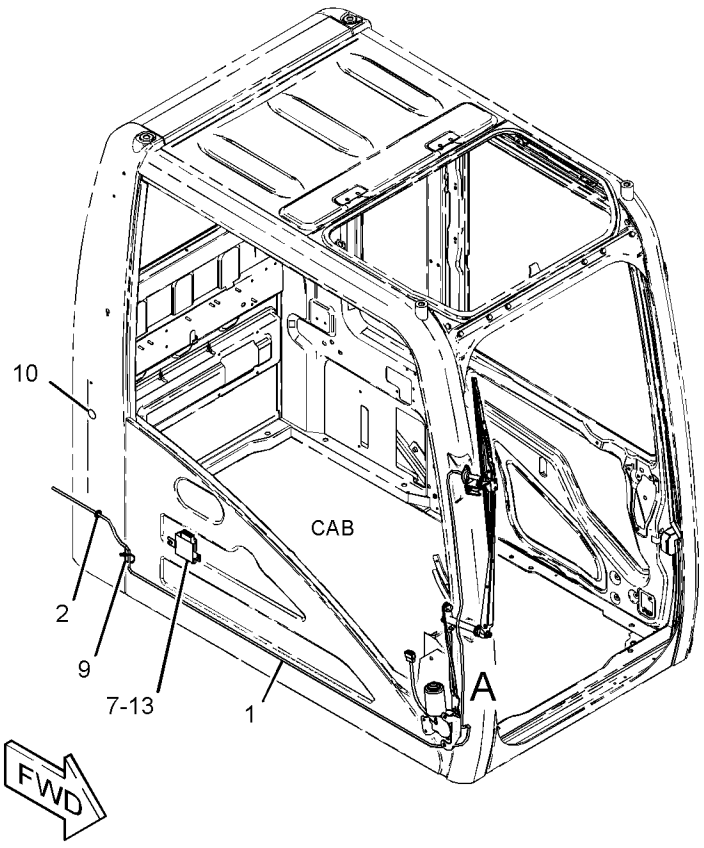

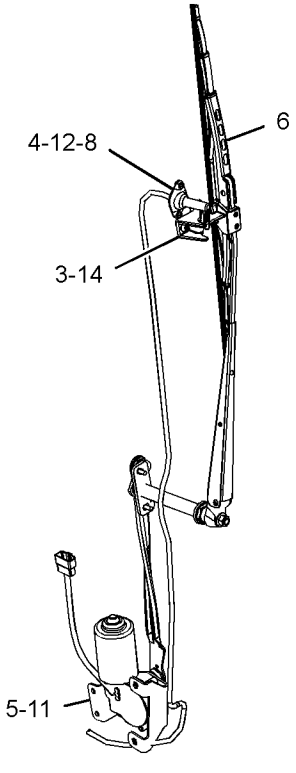

VIEW OF AREA A

GRAPHIC #1 **<END>** g03400173

381-1362 PLATE & FILM GP

S/N: HAH1-UP

PART OF 454-5575 CHASSIS AR

SMCS-7405, 7557 **i05573335**

NOTE	REF NO	GRAPHIC REF	PART NUMBER	QTY	PART NAME 1 2 3 4 5 6 (PRODUCT LEVEL)	SEE PAGE
	1	1,2	**1P-2807**	4	FILM-IDENTIFICATION (LIFT EYE LOCATION)	
	2	2	**7X-7644**	4	FILM-IDENTIFICATION (TIE-DOWN)	
	3	1	**134-7258**	1	FILM-INFORMATION (EXTENDED LIFE COOLANT)	
	4	1	**144-9126**	1	FILM-INSTRUCTION (OIL)	
	5	2	**146-6747**	1	FILM-INFORMATION (24-VOLT)	
	6	1	**334-4603**	1	FILM-INFORMATION (HYDO ADVANCED 10)	
	7	1	**167-7270**	2	FILM-INSTRUCTION (NO STEP)	
	8	2	**190-5386**	2	FILM-IDENTIFICATION (ROUND RED REFLECTIVE)	
	9	2	**224-8946**	1	FILM-WARNING (NO ETHER SPRAY/AIR INTK, INTL)	
	10	2	**225-0312**	1	FILM-WARNING (JUMP START, READ OMM, INTL)	
	11	1	**225-4257**	2	FILM-WARNING (HOT FLUID UNDER PRESS)	
	12	1,2	**228-2781**	2	FILM-WARNING (MACHINE SWING, CRUSHING, INTL)	
	13	1	**228-7316**	2	FILM-WARNING (HOT SURFACE, HANDS CLEAR, INTL)	
	14	2	**229-0887**	1	FILM-INFORMATION (AIR CLEANER)	
	15	1	**239-6986**	1	PLATE-SERIAL NUMBER (MACHINE)	
	16	1	**242-1510**	1	FILM-INSTRUCTION (HYDRAULIC OIL CHECK)	
	17	1	**242-6092**	1	FILM-WARNING (ACCUMULATOR PRESSURE)	
	18	2	**247-7437**	1	FILM-IDENTIFICATION (BATTERY CIRCUIT BREAKER)	
	19	2	**247-7438**	1	FILM-IDENTIFICATION (ELECTRICAL CIRCUIT BREAKER)	
	20	1,2	**290-1729**	2	FILM-IDENTIFICATION (CAT)	
	21	1,2	**298-4282**	2	FILM-WARNING (CRUSH HAZARD, STAY BACK, INTL)	
	22	3	**439-5680**	1	FILM-INSTRUCTION (SERVICE CHART)	
	23	2	**358-6390**	1	FILM-STRIPE (LH) (LH)	
	24	1	**362-3642**	1	FILM-IDENTIFICATION (CAT, RH)	
	25	2	**362-3643**	1	FILM-IDENTIFICATION (CAT, LH)	
	26	1	**367-0844**	1	FILM-INSTRUCTION (FUEL, READ OMM)	
	27	1	**370-7639**	1	FILM-INFORMATION (BELT ROUTING)	
	28	2	**381-1373**	1	FILM-IDENTIFICATION (CIRCUIT BREAKER)	
	29	1,2	**381-1419**	2	FILM-IDENTIFICATION (318D2 L)	
	30	1	**385-4093**	1	FILM-STRIPE (RH) (RH)	
	31	2	**394-1310**	1	FILM-IDENTIFICATION (CAT) (CAT)	
	32	3	**4I-8472**	1	FILM-INSTRUCTION (OPERATOR CONTROLS)	
	33	3	**8T-6842**	1	FILM-INSTRUCTION (PULL RING, ALTERNATE EXIT)	
	34	2	**187-0661**	1	FILM-INSTRUCTION (ALTERNATE EXIT)	
	35	3	**214-7915**	1	FILM-INSTRUCTION (ENGINE SHUTOFF)	
	36	3	**221-8045**	1	FILM-WARNING (SEAT BELT, INTERNATIONAL)	
	37	3	**223-9818**	1	FILM-INSTRUCTION (WINDOW CLEANING, READ OMM)	
	38	3	**224-0554**	1	FILM-WARNING (UNIVERSAL, READ OMM)	
	39	3	**228-9254**	1	FILM-WARNING (ELEC HAZARD, READ OMM, INTL)	
	40	3	**242-1588**	1	FILM-WARNING (FRONT WINDOW, READ OMM, INTL)	
	41	3	**266-5431**	1	FILM-WARNING (CRUSH HAZARD, READ OMM, INTL)	
	42	3	**381-1372**	1	FILM-IDENTIFICATION (FUSE, RELAY PANEL)	
	43	3	**110-6393**	1	PLATE-INSTRUCTION (AIR CONDITIONER)	
FY			*417-9101*	1	PLATE & FILM GP	442

F - NOT SHOWN
Y - SEPARATE ILLUSTRATION

381-1362 **PLATE & FILM GP (*contd.*)** **i05573335**

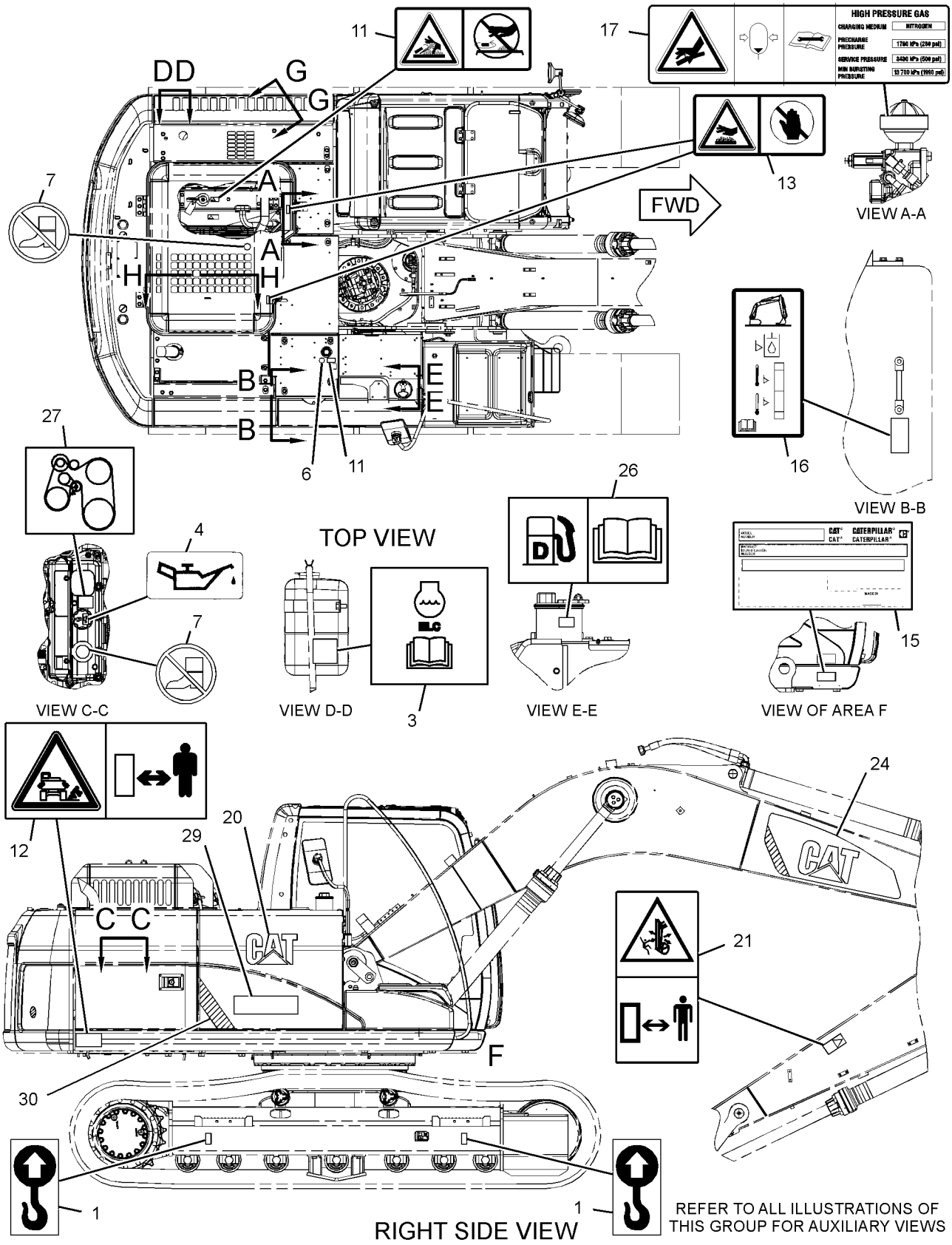

GRAPHIC #1 g03621195

381-1362 **PLATE & FILM GP (*contd.*)** **i05573335**

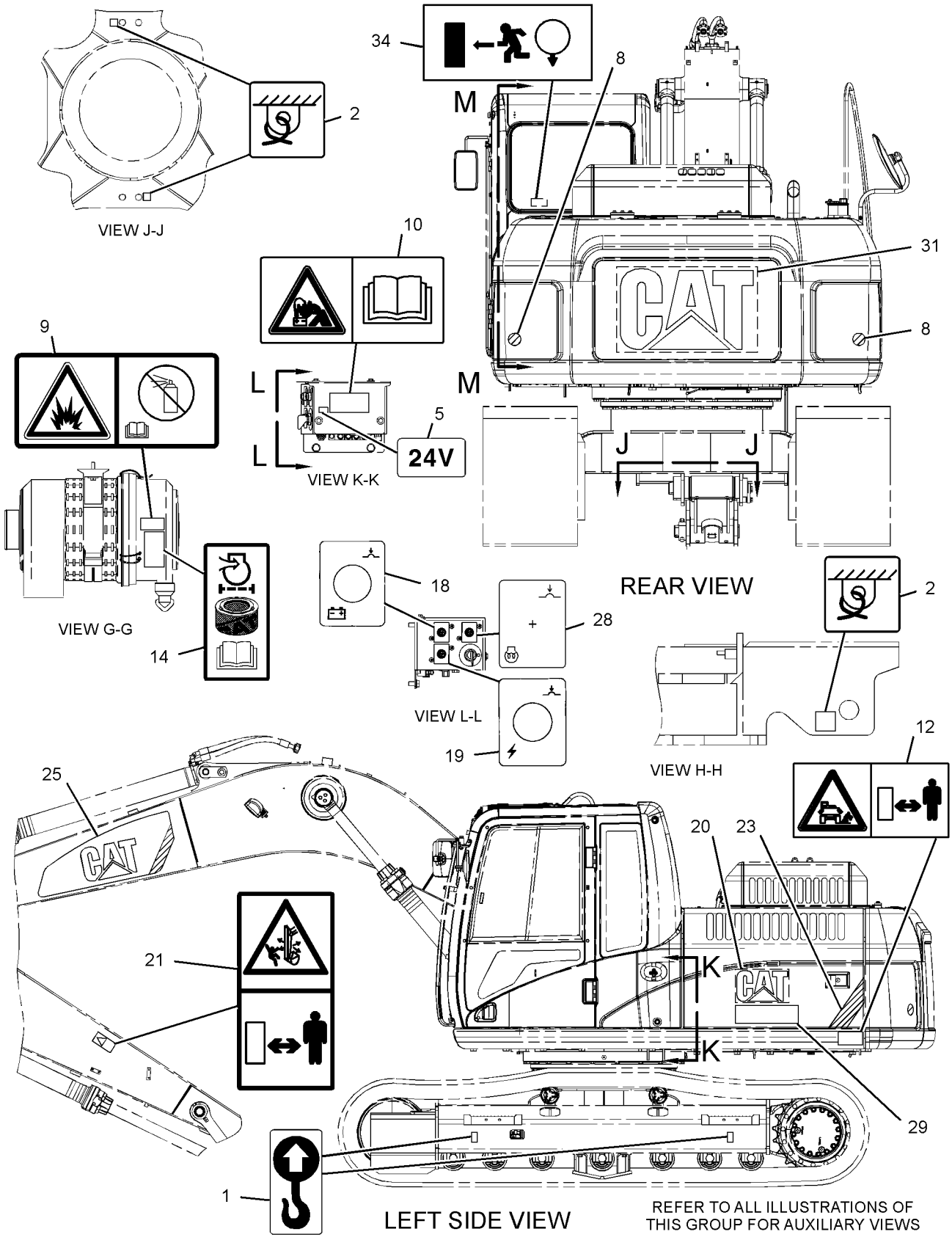

GRAPHIC #2 g03131206

381-1362 **PLATE & FILM GP (*contd.*)** **i05573335**

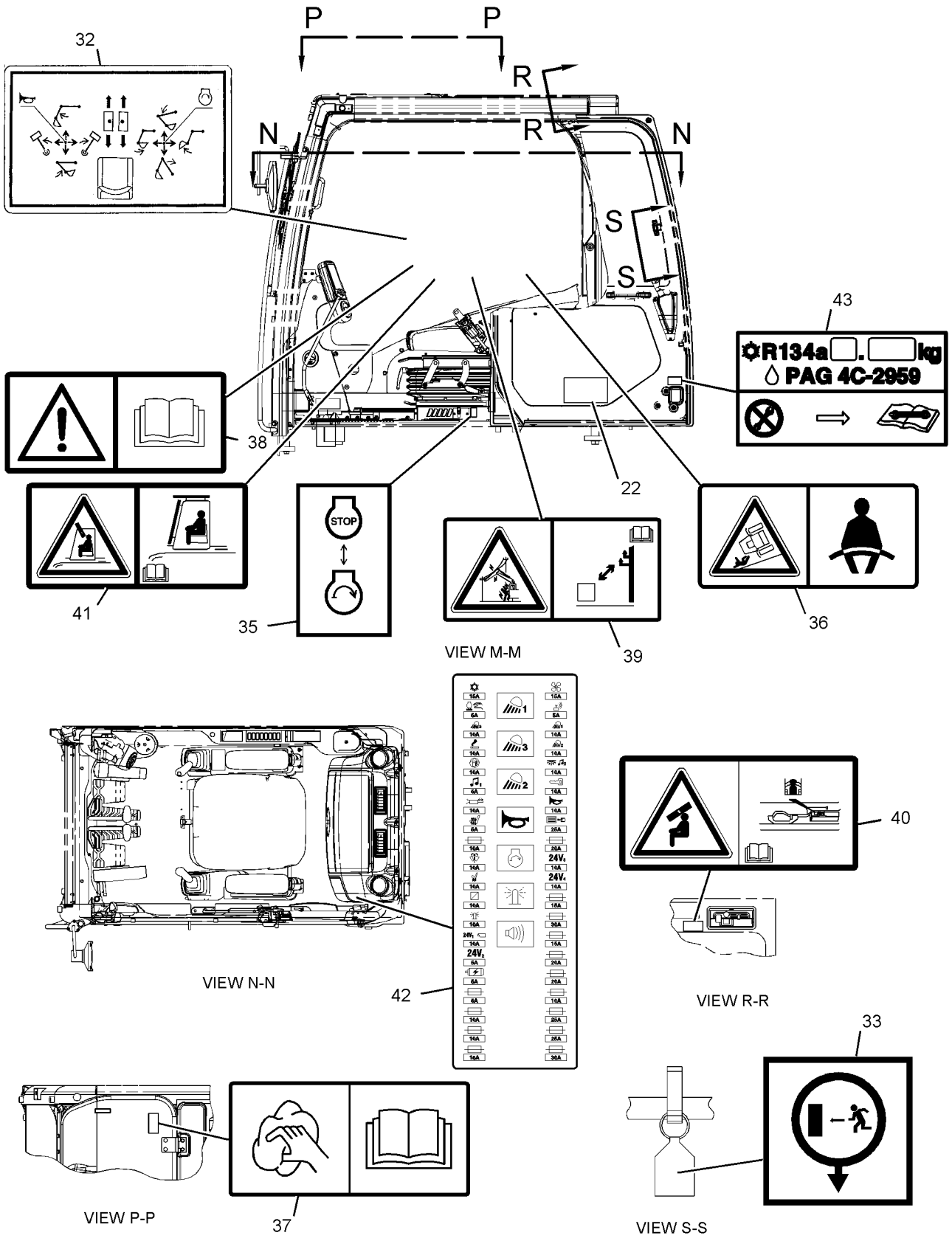

GRAPHIC #3 **<END>** g03621202

417-9101 PLATE & FILM GP

S/N: HAH1-UP
CHINA MARKET
PART OF 381-1362 PLATE & FILM GP

SMCS-7405, 7557 **i05910786**

NOTE	REF NO	GRAPHIC REF	PART NUMBER	QTY	PART NAME 1 2 3 4 5 6 (PRODUCT LEVEL)	SEE PAGE
	1	1	**158-7864**	1	FILM-IDENTIFICATION (HYDRAULIC OIL)	
					(ON TOP OF HYDRAULIC TANK)	
	2	1	**312-5525**	1	FILM-WARNING (CUTTING HAZARD HAND, STAY BACK)	
					(ON TOP OF RADIATOR)	

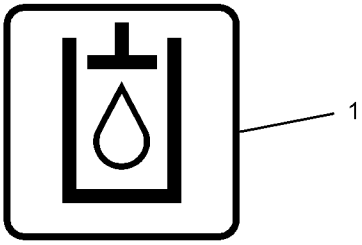

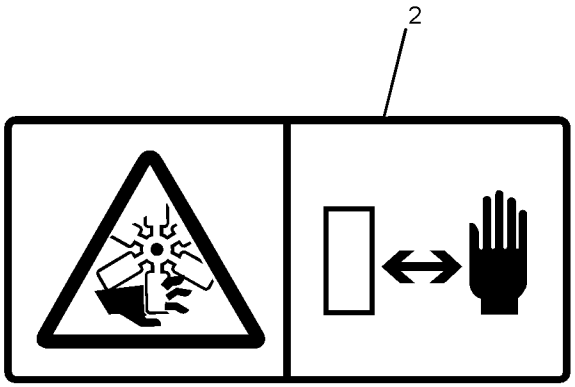

GRAPHIC #1 **<END>** g03670900

PART NUMBER INDEX

Part	Page
0	
0S-1603	17
0T-0489	403
1	
1B-8736	7
1H-3244	100
1H-3338	111
1H-4393	107
1H-7339	264
1J-2859	281
1J-6472	264
1M-6119	82
1M-6120	82
	83
1P-2807	438
1P-3702	246
	247
1P-3703	212
	221
	249
1P-4578	242
1R-1804	62
1R-1807	34
1R-5998	334
	339
1R-6072	84
1S-0994	84
1S-7251	82
	84
1S-7252	82
	84
1U-2827	281
1U-3302	324
1U-8846	131
	146
	202
	249
1V-5872	403
2	
2B-0858	14
	29
2C-9259	319
	320
2D-6412	404
2D-6642	258
2G-8767	82
2H-3922	109
2H-3934	281
2H-9247	209
2L-8049	83
2L-8050	83
	127
2L-8057	83
2L-8058	83
	127
2L-8065	115
2L-8066	115
2L-8067	115
2L-8069	83
	127
2L-8075	83
	102
	115
2L-8076	83
	115
2L-8077	120
2L-8078	83
	100
2M-9780	63
	224
	258
	308
2P-2537	34
2S-5926	180
2T-2991	34
2U-2552	333
2Y-5503	146
	202
2Y-5578	264
3	
3B-4501	95
	96
3B-4508	248
3B-4509	214
	215
3B-4510	339
3B-4618	151
3B-7255	51
3B-8489	148
	192
	194
	196
	312
	314
	316
	317
3D-2824	207
	217
	221
	224
	233
	249
	286
3D-2891	209
3D-9143	137
3E-2338	131
3E-3217	175
	176
3E-5169	127
3E-8020	334
	339
3E-8024	179
3E-8320	100
3E-9375	125
3E-9872	435
3H-5368	405
3J-1907	63
	74
	209
	217
	224
	227
	231
	233
	236
	237
	249
	252
	255
	264
	286
	304
	308
3J-7354	63
	244
	281
3K-0360	23
	63
	74
	187
	200
	217
	224
	231
	233
	236
	237
	244
	249
	252
	253
	258
	279
	281
3P-9847	49
3S-2093	49
	63
	79
	82
	83
	100
	102
	110
	114
	116
	120
	122
	125
	127
	326
	388
	397
	415
3S-6049	82
3S-6050	82
3T-5760	82
3W-6399	415
4	
4B-4158	177
	178
4B-4276	100
4B-4278	137
	334
	339
4B-9783	304
4E-5724	100
4F-2294	112
4H-6112	200
4I-0118	151
4I-0232	151
4I-0378	74
4I-0379	63
4I-0420	416
	423
	428
4I-0800	236
4I-0821	236
4I-0836	227
4I-1205	151
	334
	339
4I-1206	334
	339
4I-1260	385
4I-1536	►182
	185
4I-1539	182
4I-1674	212
4I-1676	212
4I-1760	236
4I-1783	236
4I-2187	137
4I-3038	110
4I-3063	334
	339
4I-3090	334
	339
	435
	437
4I-3144	334
4I-3266	402
4I-3308	310
4I-3309	310
4I-3941	227
4I-3953	227
4I-3988	227
4I-3994	227
4I-4270	334
	339
4I-4286	378
	380
4I-4300	431
4I-4361	385
4I-4392	334
	339
4I-4811	310
	316
	317
4I-5409	1
	97
4I-5795	236
4I-5862	182
4I-6248	236
4I-6365	291
4I-6391	236
4I-7326	146
4I-7444	146
4I-7446	146
4I-7511	146
4I-7512	146
4I-7604	279
4I-7605	279
4I-7889	82
4I-8267	183
4I-8472	438
4I-8785	246
4I-9521	227
	231
	236
4I-9522	227
	231
	236
4I-9523	227
	231
	236
4I-9524	227
	231
	236
4I-9525	227
	231
	236
4I-9526	227
	231
4I-9527	224
	227
	231
	236
4I-9528	227
	231

► **PRIMARY REFERENCE**

PART NUMBER INDEX

Part	Page
	236
4J-0520	248
4J-0522	242
4J-0523	226
4J-0527	224
	242
	281
4J-5477	249
4J-7533	209
	252
4K-9429	405
4L-7124	100
4P-7429	84
4P-7581	84
	116
	326
4P-8134	84
4S-1962	391
5	
5A-3604	286
5B-9079	32
5C-2889	96
5C-2890	60
	111
	116
	435
	437
5C-7261	84
	151
	298
5C-7793	334
	339
5C-7883	84
5C-8138	415
5C-8312	416
	428
5C-9553	36
	100
	137
	281
	326
5D-1026	202
5D-4822	384
	386
5D-8159	47
5H-8624	244
5I-4363	279
5I-4494	247
5I-8270	82
5I-8307	64
5I-8416	▶183
	185
5I-8417	255
5I-8426	255
5I-8623	255
5I-8625	255
5I-8670	204
5K-3294	391
5K-5338	391
5K-9090	217
	221
	242
	244
5K-9243	312
5M-2057	281
5P-0743	64
	220
5P-0767	202
	391
5P-1046	63
5P-1075	137
	339
	352
	428
5P-1076	49
5P-1442	64
5P-2321	115
5P-2369	237
5P-2545	264
5P-4115	36
	100
	151
5P-4116	47
	84
	137
5P-4325	391
5P-4906	74
5P-4924	74
5P-5995	122
5P-5998	110
	397
5P-6271	115
5P-7462	236
5P-7463	236
5P-7464	236
5P-7465	236
5P-7958	394
5P-8196	34
5P-8244	410
5P-8500	73
	113
	394
5P-9909	49
5S-0580	57
5V-1497	410
5V-9155	36
	64
6	
6D-1641	224
	391
6D-3479	84
	391
6D-4246	84
6F-4855	208
6F-6672	208
6F-7045	109
6G-2256	82
6G-2263	84
6H-3615	217
6I-0217	19
	45
	58
	70
6I-0254	45
6I-0260	23
	38
	40
	70
	77
6I-0289	23
6I-0291	70
6I-0363	23
6I-0364	108
6I-0423	18
6I-0563	58
6I-0572	12
	41
6I-0593	77
6I-0594	108
6I-0645	19
	23
	41
6I-0646	12
6I-0650	19
	77
6I-0846	9
6I-0917	18
6I-1418	90
6I-4374	40
6I-5298	367
	369
6I-5342	385
6I-5470	334
	340
6I-6354	322
6I-6355	322
6I-6356	322
6J-2680	244
6K-0806	371
	372
6L-3616	312
6S-8620	64
6V-0357	214
	215
	216
6V-0400	212
	221
	249
6V-0683	236
6V-0852	233
	281
6V-1249	237
6V-2369	100
6V-2722	84
6V-3265	60
	391
6V-3532	146
6V-3823	248
6V-3938	57
6V-3965	233
	281
6V-4249	216
6V-5210	95
	96
	116
6V-5391	209
6V-5556	303
6V-5645	100
6V-5683	333
6V-5842	214
	215
	216
	248
6V-6317	339
6V-7238	23
	200
6V-7357	366
	391
6V-7636	334
	339
6V-7644	201
6V-7658	168
6V-7661	173
6V-7743	407
	413
6V-8185	100
6V-8200	308
6V-8202	293
	403
	407
6V-8231	435
6V-8235	410
6V-8362	113
6V-8397	217
	227
	228
	231
	233
	236
	237
	304
6V-8398	207
	217
	224
	231
	233
	236
	237
	249
	305
	306
6V-8400	293
6V-8556	207
6V-8625	249
6V-8627	249
6V-8635	242
	244
6V-8636	217
	227
	231
	237
6V-8637	34
	217
	221
	233
	249
6V-8638	224
6V-8639	217
	224
	233
	237
6V-8641	249
6V-8713	221
6V-8716	221
6V-8721	224
6V-8724	217
	227
	231
	233
	237
6V-8757	264
6V-8774	237
6V-8775	237
	249
6V-8781	227
	237
6V-8784	207
6V-8942	207
6V-8987	231
6V-9001	237
6V-9002	224
	231
6V-9004	217
	221
	233
6V-9007	217
	224
	233
6V-9008	217
	244
6V-9028	64
6V-9162	221
6V-9168	231
6V-9189	57
6V-9208	63
6V-9491	102
6V-9632	100
	357

PART NUMBER INDEX

Part	Page
6V-9672	116
6V-9746	207
	212
	217
	221
	224
	233
	249
6V-9829	237
6V-9831	214
	215
6V-9836	237
6V-9837	217
	233
6V-9850	233
	237
6V-9873	224
	233
6V-9877	224
6W-6005	82
6W-8281	410
6Y-8186	171
7	
7B-3039	281
7C-0351	23
7C-1493	34
7C-4616	19
7F-0560	88
7F-3708	151
7F-8268	175
	176
7G-1060	127
7G-5984	242
7G-5985	242
7H-3171	168
	173
	176
7I-0966	303
7I-1377	233
7I-2272	252
	253
	264
7I-2673	64
	79
	82
	98
7I-7192	285
7I-7203	268
	269
	270
	271
	272
	273
	274
	275
	276
	277
	278
7I-7204	285
7I-7206	285
7I-7207	285
7I-7208	285
7I-7235	285
7I-7241	285
7I-7321	279
7I-7733	179
7I-7734	180
7I-8084	285
7I-8249	249
7J-8337	403
7J-9108	214
	215
	217
	221
7J-9933	303
7K-1181	49
	79
	82
	114
	120
	122
	125
	127
	224
	227
	231
	233
	236
	249
	281
	362
	391
7M-7410	253
7M-8485	131
	217
	221
	242
	244
7N-0718	100
	109
7N-3718	98
7N-5274	82
7T-1099	151
7T-6799	113
7T-8890	415
7W-4642	18
7W-4669	29
7W-9028	34
7X-0578	334
	339
	416
	428
7X-0579	407
7X-0599	403
7X-0796	214
	215
	216
	248
7X-0818	57
	90
7X-0851	323
7X-2536	179
7X-2537	52
	60
7X-2552	98
7X-2553	264
7X-2556	264
7X-2619	198
7X-2621	84
	120
	128
7X-3392	60
7X-6315	92
7X-7644	438
7X-7729	34
	44
	47
	49
	326
7X-7877	405
7Y-0059	1
	394
7Y-0225	131
7Y-0466	189
7Y-0468	189
	190
7Y-1746	177
	178
7Y-1781	179
7Y-1883	179
7Y-1901	189
7Y-1902	189
7Y-1904	189
7Y-1976	47
	49
7Y-3470	435
7Y-3472	435
7Y-3474	415
7Y-3529	314
7Y-3919	388
7Y-3920	388
7Y-3950	114
7Y-3951	102
	114
7Y-3952	102
	114
7Y-3954	114
7Y-3955	114
7Y-3958	114
7Y-3962	102
	115
7Y-3963	102
	115
	122
	125
7Y-3964	102
	115
7Y-3965	102
	115
	122
	125
7Y-3966	102
	114
7Y-3967	102
	115
	125
7Y-4199	227
7Y-4202	258
7Y-4212	258
7Y-4213	258
7Y-4215	258
7Y-4216	258
7Y-4217	258
7Y-4222	259
7Y-4224	258
7Y-4267	255
7Y-4268	255
7Y-4868	212
7Y-5221	255
7Y-5237	226
7Y-5456	82
7Y-5499	100
7Y-5505	114
7Y-7364	435
7Y-8168	391
7Y-8379	236
7Y-8436	299
7Y-8437	299
8	
8C-3347	198
8C-3446	281
8C-3451	281
8C-5064	84
8C-5608	64
	89
8C-6354	115
8C-6358	88
8C-6965	293
8C-8400	217
8C-8451	89
8D-0482	63
8E-4359	168
8E-5032	176
8E-5037	175
8E-5599	175
	176
8E-5600	172
	173
8E-5601	173
8E-5602	173
8E-5605	173
8E-5606	173
8E-5608	173
8E-6259	324
8E-6792	173
8E-6793	173
8E-8585	171
8E-8586	171
8E-9490	321
8E-9805	135
8H-5303	109
8H-5306	109
8J-8782	281
8J-8783	281
8M-2772	312
8N-0869	82
	84
8N-1725	82
8P-9770	321
	322
8R-1803	346
8S-0934	404
8S-4723	404
8T-0075	228
8T-0114	410
8T-0122	100
8T-0197	221
8T-0271	214
	215
	216
8T-0273	248
8T-0328	74
	100
	116
	154
8T-0334	407
	413
8T-0337	128
	437
8T-0362	146
8T-0380	323
8T-0389	410
8T-1159	173
8T-1889	64
	84
8T-1890	64
	84
8T-1905	227
	233
	237
8T-3298	281
8T-3490	151
	355
8T-3518	88
8T-3597	151
8T-3612	151
	357
8T-3991	405

► **PRIMARY REFERENCE**

PART NUMBER INDEX

Part	Page
8T-4121	34
	36
	43
	49
	56
	57
	64
	79
	84
	98
	99
	120
	128
	146
	151
	224
	226
	231
	237
	242
	246
	247
	249
	262
	264
	279
	281
	312
	326
	355
	357
	362
	374
	387
	391
	399
	402
	409
8T-4127	116
8T-4132	209
8T-4133	57
	84
	98
	137
	151
	209
	216
	267
	293
	312
	334
	339
8T-4136	34
	43
	44
	47
	57
	64
	84
	146
	151
	237
	264
	279
	281
	326
	355
	374
	391
8T-4137	34
	36
	44
	49
	64
	84
	99
	128
	146
	152
	177
	178
	224
	231
	237
	249
	326
	334
	355
	357
	387
	391
8T-4138	152
8T-4139	49
	60
	212
	242
	264
8T-4140	264
8T-4171	100
	359
8T-4176	254
8T-4178	217
8T-4179	84
	179
	342
	350
8T-4182	47
	84
	246
	247
8T-4183	209
	237
	242
8T-4184	206
	212
	222
	249
	281
8T-4185	47
	57
	84
	264
8T-4186	84
8T-4189	36
	60
	234
	237
	391
8T-4190	79
	342
	350
8T-4191	64
	79
	84
	231
	312
	374
	391
	402
	409
8T-4192	209
	217
	395
8T-4193	318
	339
8T-4195	34
	47
	56
	64
	84
	90
	262
	362
	399
8T-4196	34
	64
	84
	242
	281
8T-4197	34
8T-4198	231
	246
	247
8T-4200	47
	49
	84
	388
	391
8T-4223	84
	95
	96
	131
	206
	212
	217
	222
	224
	226
	237
	242
	244
	249
	281
	310
	342
	350
	403
	404
8T-4224	34
	36
	43
	49
	52
	57
	60
	84
	90
	152
	154
	234
	238
	281
	378
	380
	388
	391
8T-4226	84
8T-4244	95
	96
8T-4648	217
8T-4779	334
8T-4908	152
	154
	281
	391
8T-4910	217
	342
	350
8T-4944	258
8T-4956	226
	238
	310
8T-4970	60
	79
	90
	100
	415
8T-4971	357
	391
8T-4985	44
8T-5005	84
8T-5041	201
8T-6684	221
8T-6693	116
	154
8T-6703	44
	49
	242
8T-6759	253
	279
	293
	307
8T-6763	196
8T-6842	438
8T-6868	224
	342
	350
8T-6869	43
	238
8T-6912	84
8T-7547	34
	264
8T-7929	131
8T-7971	395
8T-8729	74
	76
	83
	120
	122
	127
	397
8T-8730	83
	112
	114
	122
	125
	127
8T-8737	60
	64
	83
	100
	102
	115
	120
	122
	125
	127
	397
8T-8799	83
8T-8898	221
8T-8899	34
8T-9403	246
	247
8T-9599	264
8U-7803	405
8Y-6352	346
8Y-6967	342
	350
9	
9B-0453	95
9B-7233	113
9F-1399	281
9F-2167	217

PART NUMBER INDEX

Part	Page
9F-5644	109
9G-4343	100
	114
9G-8451	100
9G-8909	82
9J-3167	320
	324
9J-7031	281
9L-9188	34
9M-5048	410
9M-5501	64
9N-0869	90
9S-4181	221
	242
	244
9S-4182	244
9S-4183	286
9S-4185	237
	244
	258
9S-4188	34
9S-4191	34
	224
	227
	231
	237
	264
	285
9S-8001	209
9S-8004	252
	308
9S-8005	252
	253
	279
9T-6001	79
9V-6754	410
9W-0335	114
9W-0844	64
	83
	115
	122
	125
	127
9W-0852	64
	83
	100
	120
	122
	127
	356
9W-1951	115
9W-2142	175
	176
9W-2146	175
9W-2201	168
9W-3137	171
9W-3138	171
9W-3361	181
9W-3619	181
9W-9455	168
9X-0196	83
9X-1386	106
9X-1813	111
9X-2041	334
	339
	344
	360
	364
	376
	377
9X-2042	116
	334
	339
	346
	348
	364
	378
	380
	386
	397
	416
	419
	428
	435
	437
9X-2044	116
	334
	339
	346
	416
	428
	435
	437
9X-2045	334
	340
	362
	385
	416
	428
9X-2046	362
9X-2201	56
9X-2480	64
9X-3401	23
	60
	83
	104
	106
	115
	120
	127
	397
9X-3402	83
	102
	115
	120
	122
	125
	127
	227
9X-3463	96
9X-3959	29
9X-3982	74
9X-6153	333
9X-6165	64
	89
9X-8256	60
	84
	90
	100
	116
	137
	281
	326
	359
	366
	391
	396
	415
	416
	428
9X-8257	79
	98
	318
	334
	339
	342
	350
9X-8600	74
9X-9896	63
	89
9Y-5015	14

0

Part	Page
012-0380	111
030-1706	82
032-9090	10
032-9091	10
033-7687	17
033-8248	312
035-8017	70
035-8063	12
	27
039-9452	410
067-3045	36
067-6006	14
067-6095	7
067-6135	11
067-6179	19
067-6213	23
067-6265	70
067-6873	10
067-6874	10
067-6999	70
085-6444	►389
	431
085-6445	389
085-6446	389
085-6447	389
085-6448	389
085-6449	385
	389
085-7356	224
	233
085-9310	73
	283
085-9768	285
087-3908	151
087-3909	151
087-4402	231
087-4454	183
	►184
087-4456	►185
	187
087-4575	184
087-4576	184
087-4577	184
087-4587	82
	227
087-4683	110
087-4710	293
087-4742	258
087-4743	258
087-4757	258
087-4786	258
087-5317	267
087-5708	293
087-5771	236
087-5772	236
087-5773	236
087-5783	236
087-5802	314
087-5803	314
087-5908	163
	►165
087-6582	236
091-9035	82
093-0084	310
093-0086	144
093-0118	144
093-0349	144
	310
	316
	317
093-0366	310
093-1296	217
093-1435	180
093-1515	180
093-2068	63
093-6089	198
093-7521	205
094-0580	131
094-0611	131
094-0876	291
094-1399	258
094-1528	131
094-1875	209
	258
	264
094-1881	209
094-1882	258
	264
094-1900	255
095-0703	192
	194
095-0707	254
095-0723	116
095-0728	374
095-0735	367
	369
095-0736	74
095-0742	116
095-0755	334
	339
095-0817	201
095-0826	388
095-0827	359
095-0843	137
095-0863	171
095-0879	198
095-0882	255
095-0891	131
095-0965	285
095-1260	293
095-1299	131
095-1388	220
095-1514	296
	297
	302
095-1519	296
	297
	301
	302
095-1552	267
095-1572	258
095-1575	258
	293
	296
	297
	301
	302
095-1576	307
095-1578	285
095-1579	285
095-1580	298
095-1582	286
	298
	301
095-1584	204
	301
095-1585	258
	286
095-1586	258
	286

► **PRIMARY REFERENCE**

PART NUMBER INDEX

Part	Page
	291
	299
	300
	305
	306
095-1590	204
	298
095-1591	296
	297
	302
095-1592	286
	296
	297
	302
095-1593	301
095-1595	255
095-1596	204
095-1601	299
095-1608	281
095-1625	279
095-1685	254
	258
095-1696	286
095-1698	257
	286
	303
	307
095-1700	258
	286
095-1701	308
095-1703	180
095-1716	279
095-1725	281
095-1750	305
	306
095-1751	305
	306
095-1777	233
095-1783	296
	297
	301
	302
095-1785	299
	300
095-1788	209
095-6639	267
095-7378	258
095-7380	258
095-7382	258
095-7383	258
095-7384	258
095-7386	258
095-7387	258
095-7930	107
	388
095-7993	146
095-8024	296
	297
	302
095-9806	196
096-0001	408
096-1519	258
096-1521	258
096-1522	258
096-1523	258
096-1628	291
096-1773	131
096-1774	131
096-1775	131
096-1776	131
096-1777	131
096-1778	131
096-1779	131
096-1780	131
096-1781	131
096-2622	378
	380
096-2626	79
096-3780	137
096-3785	258
096-3786	258
096-3787	258
096-3788	258
096-3884	378
	380
096-3978	258
096-4003	258
096-4035	47
	49
096-4129	154
096-4255	168
096-4275	180
096-4279	173
096-4295	175
	176
096-4376	258
096-4377	258
096-4378	258
096-4876	214
	215
096-4883	226
096-5819	49
096-5915	258
096-5916	258
096-5919	258
096-5962	116
096-6166	102
	116
	128
	374
	437
099-0139	431
099-0823	334
	339
	416
	428
099-3506	384
	386
099-3629	424
	425
099-3633	437
099-3645	394
099-3649	237
099-3669	209
099-3671	209
099-5408	217
099-6109	209
099-6110	209
099-6111	209
099-6112	209
099-6113	209
099-6115	209
099-6137	291
	293
099-6141	293
099-6144	293
099-6145	293
099-6418	84
	142
	143
099-6607	49
099-7127	114
099-7241	231

1

Part	Page
100-2881	385
100-3320	83
100-3751	19
	45
100-4461	37
100-4830	20
	70
100-4838	9
100-4841	12
100-8451	54
101-2846	116
101-3805	23
101-3895	19
	40
101-7404	242
101-8899	378
	380
	382
101-8900	378
	380
	416
	419
	428
101-9848	154
102-7964	115
	125
	127
102-7965	115
	125
	127
102-8802	23
	74
	76
	83
	102
	106
	111
	127
102-8803	64
	83
	110
	114
	120
102-8806	125
102-9941	30
103-2529	83
103-5687	23
103-8411	285
103-8412	285
103-8413	285
104-8771	227
104-8774	227
104-8973	227
104-8976	227
105-2169	334
	339
	384
	386
105-3481	60
105-3487	60
	137
	396
105-6431	312
105-7405	285
106-6757	▶318
	319
	320
106-6878	314
106-8715	217
106-8916	58
107-2961	407
	410
	413
107-3308	324
107-6631	231
	236
107-6954	258
107-6955	258
107-6969	258
107-9739	144
107-9742	312
107-9743	312
107-9852	316
	317
107-9965	318
107-9966	318
107-9967	318
108-1781	244
108-7304	249
108-7550	212
110-5525	255
110-6393	438
111-0859	16
111-4799	110
111-4816	115
111-4836	82
	98
	127
	326
111-4837	82
	98
111-4838	82
	128
111-4839	82
	127
111-6752	227
111-8222	54
111-9916	264
	▶305
111-9998	298
113-2127	310
113-6349	77
113-8129	45
113-8490	114
113-8491	114
113-8492	114
113-8493	114
114-0358	325
114-0359	325
114-0514	299
114-0515	299
114-0516	299
114-0517	299
114-0518	299
114-0519	299
114-0623	305
	306
114-1539	131
114-2579	54
114-6285	151
114-6289	154
114-6658	79
115-8631	224
115-8645	227
	236
116-0118	82
	98
	120
	127
116-0210	114
116-0255	115
117-5540	164
117-6306	416
	428
117-6349	374
117-6350	374

PART NUMBER INDEX

Part	Page
117-6356	374
117-8929	357
118-4057	258
118-4086	291
118-4087	291
118-5982	144
	310
	316
	317
118-9941	21
119-3662	83
	115
	127
119-5026	102
	326
119-5360	308
119-5362	308
119-5364	308
119-5365	308
119-5388	293
119-5389	293
119-5391	293
120-7225	312
120-9027	110
121-0307	34
121-0883	18
121-1022	115
121-1029	60
121-1168	102
	115
	127
121-1173	102
	115
	127
121-1459	299
121-1491	252
	253
	▶306
121-1558	258
121-7098	391
121-7136	353
121-7137	353
	391
121-7138	391
122-4120	151
122-5114	258
122-5253	179
122-5318	255
122-9605	391
122-9608	374
122-9609	374
122-9610	374
122-9617	362
122-9657	391
123-1373	82
123-2008	258
123-2552	304
123-5349	312
124-0506	8
124-0986	249
124-3548	114
124-3815	19
	70
124-3953	435
124-4009	367
	369
124-4010	367
	369
124-5814	84
	▶88
125-1302	100
	▶111
125-4766	127
125-4784	115
125-4785	115
125-4840	115
125-4841	115
	125
	127
125-7874	83
	115
	120
	122
	127
125-7875	83
	115
	122
	125
	127
125-7876	114
126-1767	23
	60
	83
	106
	115
	120
	127
126-1768	83
	115
	122
	127
	227
126-1774	120
126-1865	293
126-1866	293
126-2055	255
126-5011	83
126-5062	181
126-6872	233
127-0580	334
	339
128-2135	342
	346
	348
	350
	360
	364
128-2136	346
	348
128-8950	115
129-3400	281
129-7932	308
129-8030	▶299
	308
129-8031	299
130-9984	34
131-5767	285
131-5768	285
131-5818	293
131-5915	291
131-9943	246
	247
131-9962	▶246
	315
132-1805	82
132-1829	▶76
	114
132-5789	63
	116
	391
133-1011	19
133-2424	144
133-5813	227
	231
	236
133-6777	258
133-8011	391
133-8016	334
	339
134-3196	47
134-3284	98
134-3296	115
134-3297	115
	127
134-3299	82
134-4126	92
134-7258	438
134-9137	312
135-8573	63
	150
	151
	159
135-8575	151
135-8576	149
	166
135-8577	136
	151
135-8578	150
	151
135-8965	402
135-8966	402
136-0139	139
136-2369	180
136-3608	8
137-2270	395
138-2053	7
138-5184	115
138-8454	428
139-7099	344
	▶384
139-7101	344
	▶416
139-7119	421
	426
139-7126	334
	339
139-7127	334
	339
140-8714	70
140-8718	70
140-8783	77
141-2759	100
	114
141-6526	63
	82
142-0485	416
	428
142-3836	1
	▶395
142-5546	374
143-9397	79
144-0195	415
144-0367	44
	56
	244
144-9126	438
145-0603	82
145-3042	133
	▶135
145-4911	17
145-5106	185
	▶186
146-6747	438
147-1979	14
147-2645	68
147-5860	258
148-4685	148
148-4703	146
148-4704	146
148-8325	249
148-8327	217
	221
	233
	249
148-8335	242
	244
148-8336	217
	227
	231
	237
148-8338	227
148-8339	221
148-8340	217
	224
	233
	237
148-8341	221
148-8344	221
148-8345	224
148-8347	217
	224
	233
148-8353	237
148-8354	224
	231
148-8357	217
	244
148-8359	224
148-8362	221
148-8364	249
148-8366	231
148-8367	233
	237
148-8368	249
148-8372	224
148-8378	217
	227
	231
	233
	237
148-8407	224
	227
	231
	237
148-8411	237
	244
148-8433	237
148-8435	227
	237
148-8436	237
	249
148-8439	237
148-8444	217
	233
149-4236	58
149-5069	115
149-5070	115
149-5071	115
149-8142	63
150-3024	74
150-3036	227
	233
	237
150-4043	224
	233
150-7732	9
151-6703	378
	380
	416
	419
	428
151-6704	378
	380
	416
	419
	428

▶ **PRIMARY REFERENCE**

PART NUMBER INDEX

Part	Page
151-6767	376
151-6777	344
	376
151-6778	416
	419
	428
151-6785	416
151-6790	424
151-6792	378
	▶431
151-6793	431
151-6813	416
	419
	428
151-6815	416
	419
	428
151-6831	416
	419
151-6832	416
	419
	428
151-6841	431
151-6844	416
151-9461	378
	380
151-9497	378
	380
151-9557	416
	428
151-9576	416
	419
	428
152-3968	68
153-2521	▶95
	98
153-2523	▶96
	97
153-2540	102
153-2541	102
153-2602	115
153-2620	127
153-2631	115
153-5223	293
153-6237	217
	221
	233
153-6242	221
154-9024	51
155-0576	90
155-2027	221
155-2259	125
155-2260	83
	120
	122
	127
155-2265	125
155-2270	64
	83
	102
	112
	115
	127
	227
155-3624	244
155-7042	435
156-6469	424
156-6470	416
	419
	423
	428
156-6471	378
156-6472	416
	419
	423
156-6473	421
156-6474	431
156-6475	431
156-6554	416
	428
156-6555	416
156-6562	416
	428
156-6563	416
	428
156-6579	416
	428
156-6598	378
	380
156-6599	334
	339
156-6600	378
156-6601	416
156-6618	339
156-6627	416
	428
156-6631	421
	426
156-6642	390
156-6643	378
	380
156-6645	378
156-6656	346
156-6657	346
157-0670	51
157-1669	63
157-3184	60
158-4380	171
158-4381	171
158-7864	442
158-8987	▶204
	281
159-4700	186
159-7782	279
159-8049	82
	84
159-8050	82
159-9322	83
	120
160-7689	83
160-7690	120
161-3128	114
161-3639	378
	380
161-3650	378
	380
161-3663	378
	380
161-3665	378
161-3669	435
161-3670	435
161-3677	435
161-3684	416
	428
161-3685	334
	339
161-3694	385
161-3695	431
161-3697	334
	339
161-3698	416
	419
	423
	428
161-3705	431
161-3717	402
161-6987	79
161-9820	77
162-4696	249
	▶279
163-6637	83
163-6759	127
163-6773	127
163-6795	114
	122
	125
	415
	435
	437
163-6803	115
164-0514	378
164-0515	378
	380
164-0516	431
164-0517	431
164-0518	431
164-0519	378
164-0523	334
	339
164-0527	334
	339
164-0528	334
	339
	▶390
164-0646	346
	348
164-0648	416
	428
164-0655	346
	348
164-0664	390
164-0666	424
	425
164-4180	221
	242
	244
164-5562	63
164-5567	233
	281
164-5590	281
164-5628	231
	236
164-6874	224
	233
164-6979	236
	▶304
164-6981	▶187
	236
164-8474	342
	346
	350
165-2799	264
165-2801	264
165-2804	264
165-2805	264
165-3065	395
165-3120	140
165-3838	264
165-3839	264
165-3847	264
165-3853	264
165-3892	131
165-5785	131
165-5786	131
165-5787	131
165-5788	131
165-5790	131
165-5792	131
165-5793	131
165-5794	131
165-5795	131
165-5796	131
165-5797	131
165-5800	131
165-7951	63
165-9431	291
165-9435	291
165-9436	291
165-9438	291
165-9442	291
165-9443	291
165-9444	291
165-9460	291
165-9552	293
165-9554	293
166-1482	316
	317
166-1486	310
	314
166-1487	310
166-1494	192
	194
	314
166-1495	310
	316
	317
166-1579	312
167-3487	115
167-3542	114
167-3543	114
167-3593	114
167-3630	115
167-3631	115
167-7018	334
	339
167-7039	378
	380
167-7042	334
	339
167-7270	438
168-0765	303
168-1359	325
168-1968	233
168-6761	177
	178
168-8806	63
168-9759	231
170-0967	74
170-2602	1
	▶150
170-2755	137
170-2983	137
170-6888	114
170-6890	115
170-6891	115
170-6929	82
170-6941	388
170-6993	95
	96
170-8553	281
170-9324	102
170-9360	137
170-9394	116
170-9417	95
	96
170-9418	95
	96
170-9497	▶374
	401
170-9498	374
170-9499	374
170-9722	416
	419
	423
	428
170-9724	346

▶ **PRIMARY REFERENCE**

PART NUMBER INDEX

Part	Page
	348
170-9997	285
171-0002	242
	▶284
171-0087	291
171-0123	298
171-0124	298
171-0126	298
171-0127	298
171-0128	298
171-2205	100
171-2208	100
171-2210	100
171-3369	49
171-5349	106
171-7325	331
	332
	364
171-7413	431
171-7414	431
171-7420	346
	348
171-7426	334
	339
171-7477	385
171-7503	344
	▶419
171-9464	146
173-1170	209
173-3389	209
173-3439	255
173-3441	255
173-3442	255
173-3443	255
173-3444	255
173-3445	255
173-3447	255
173-3450	255
173-3451	255
173-3454	255
173-3536	▶300
	307
174-3016	83
	115
174-4874	131
174-7220	209
174-7221	209
174-7222	209
174-7791	95
	96
174-8529	309
	▶312
174-9638	58
175-4430	304
175-7060	63
175-7141	437
176-1902	391
176-1916	362
176-1931	415
176-1937	334
	339
176-1938	334
	339
176-1939	334
	339
176-1941	390
176-1946	346
176-1947	346
176-1949	386
176-1951	431
176-1952	431
176-1953	431
176-1954	431
176-1955	431
176-1956	431
176-1957	431
176-1958	344
	▶421
176-1972	346
	348
176-1986	334
	339
176-1996	382
176-4471	236
176-4852	1
	2
	▶181
176-8131	264
176-8132	264
176-9299	83
	115
177-2584	255
177-2706	284
177-5879	150
177-5880	150
178-5422	362
178-5423	362
178-5431	415
178-5569	421
	426
178-5570	334
	339
178-5572	424
	425
178-5573	378
	380
	424
	425
178-5574	378
	380
	424
	425
178-5576	416
	428
178-6450	49
	261
179-7541	281
180-3861	95
	96
180-7614	144
180-7755	310
183-8454	416
184-3841	284
184-4535	258
184-8850	137
184-8862	143
184-8898	142
	143
184-9330	221
184-9543	217
185-0169	209
185-0423	298
185-0882	14
185-1546	32
185-6627	54
185-6952	130
	▶254
185-6953	254
	▶258
185-8161	362
185-8180	378
	380
185-8182	344
	352
	416
	428
185-8187	344
	416
185-8196	334
	339
185-8205	346
	348
185-8214	346
185-8221	416
	428
185-8280	390
185-8281	390
185-8284	328
	360
185-8286	110
	331
	332
185-8290	435
185-8300	329
	370
185-8302	329
186-3735	110
	111
186-5639	144
187-0661	438
187-5873	217
187-5915	249
188-3064	171
189-2678	346
	348
189-2690	378
189-2693	385
189-2694	385
189-2702	421
	426
189-2704	334
	339
189-2716	385
189-2717	386
189-2847	384
	386
189-2849	384
	▶385
189-2853	348
189-2854	348
189-2855	346
189-2864	334
	339
189-9377	23
189-9763	209
	264
190-0386	405
190-3523	171
190-3524	171
190-4896	264
190-5386	438
190-7674	209
190-7875	284
191-2580	202
191-2605	198
191-8920	281
192-0573	209
	264
192-2376	209
192-3039	140
193-5013	318
193-5014	318
193-7720	413
193-9712	150
194-1134	▶171
	181
194-5390	58
194-9041	217
195-9181	320
	▶325
196-0800	249
196-1666	370
197-0143	285
197-0144	285
197-0145	285
197-0146	285
197-0147	285
197-0148	268
	269
	270
	271
	272
	273
	274
	275
	276
	277
	278
197-0149	268
	269
	270
	272
	273
	274
	275
	276
	277
	278
197-0150	268
	269
	270
	271
	272
	273
	274
	275
	276
	277
	278
197-0151	268
	269
	270
	271
	272
	274
	276
	278
197-0152	277
197-0153	273
	275
197-0156	268
197-0165	285
197-0166	285
197-0167	285
197-0168	285
197-0169	285
197-0170	285
197-0173	▶268
	285
197-0196	252
	253
197-0199	252
	253
197-0219	▶269
	285
197-0220	269
197-0225	285
197-0272	285
197-0273	252
	253
197-4385	83
199-0504	254
	▶308
199-0508	308
199-0518	264
199-1187	84

▶ **PRIMARY REFERENCE**

PART NUMBER INDEX

Part	Page
199-4625	198
199-4626	198
199-4627	198
199-4628	198
199-4629	198
199-4631	198
199-9267	41
199-9751	14
	28
	107
2	
200-3247	209
200-3255	209
201-4391	378
201-4417	334
	339
201-4530	334
	339
204-1611	391
204-1673	82
204-6195	83
205-6295	334
	339
206-1345	36
207-0144	344
	▶423
207-2757	62
207-2985	264
207-6403	281
207-6404	281
209-5894	258
209-6002	267
209-8296	413
209-9219	13
210-3530	131
210-3531	131
210-5808	339
212-2838	144
213-0677	23
213-0772	114
214-3203	12
214-6197	137
214-7568	34
	104
	233
	281
214-7915	438
215-4855	285
215-4872	285
215-4909	204
215-5037	236
	▶251
216-1302	63
216-1304	63
216-8314	11
216-8634	19
217-5513	43
217-8185	74
221-4807	227
221-5069	▶207
	224
221-5070	207
221-5071	207
221-8045	438
221-8912	233
221-9804	83
222-0225	367
	369
222-9020	53
222-9021	53
223-9818	438
224-0554	438
224-1914	236
224-2263	53
224-8946	438
225-0224	209
225-0225	209
225-0312	438
225-4257	438
225-4539	217
225-4804	252
225-4818	252
225-5438	25
225-5495	14
225-5496	14
225-5498	14
225-5499	14
225-5501	15
225-5502	15
225-5625	32
225-5629	32
225-5634	32
225-5638	32
225-5640	32
225-5707	391
225-5714	391
225-5959	32
225-5960	32
225-5961	32
225-5962	32
225-5963	▶32
	33
225-6005	23
225-6216	264
225-6451	8
225-6478	8
225-6522	9
225-6524	9
225-6817	40
225-6818	40
225-7738	45
225-7739	45
225-7741	45
225-7944	12
	41
225-8016	45
225-8019	45
225-8287	19
225-8329	37
225-8524	58
225-8526	58
225-8536	58
225-8848	20
226-8770	94
226-8771	58
227-0590	281
227-6034	131
227-6227	200
227-6229	134
	▶202
227-8807	▶188
228-2781	438
228-5614	192
	314
	316
	317
228-5615	317
228-7089	23
228-7092	34
228-7100	56
	105
228-7316	438
228-8146	82
228-9254	438
229-0887	438
229-1081	148
229-1085	▶270
	285
229-1086	270
229-1096	316
	317
229-9070	1
	2
	▶415
229-9078	401
	▶402
229-9082	328
	▶382
230-0185	242
230-1341	89
230-4009	83
	115
	125
	127
230-4011	83
	116
	122
	125
	127
	388
230-4013	83
230-5008	125
230-5010	84
	122
	125
	127
	397
230-7355	4
	5
	▶45
230-7569	4
	5
	▶26
230-7578	4
	5
	▶37
230-8094	23
230-8989	70
230-8995	70
230-8996	70
230-8997	70
230-8998	70
230-8999	70
230-9127	9
231-0033	4
	5
	▶38
231-0046	26
231-1836	▶122
	124
231-2295	84
	125
232-1322	14
	28
232-1328	70
232-1793	70
232-1794	70
232-2724	70
232-2725	70
232-2726	70
232-3126	67
	94
232-3149	70
232-3157	70
232-3274	70
232-3657	19
232-3666	19
232-3713	4
	5
	▶20
232-3716	4
	5
	▶27
232-3751	12
	41
232-3861	41
232-6204	4
	5
	▶28
232-7449	13
232-7519	▶14
	15
232-7600	12
232-7603	12
233-3786	10
233-9536	58
233-9537	58
233-9834	4
	5
	▶94
234-1097	114
234-1122	127
234-1158	102
234-3465	4
	5
	▶58
234-4215	4
	5
	▶29
234-6468	346
	348
234-6469	346
	348
234-6470	346
	348
234-6471	346
	348
234-6472	346
	348
234-6473	346
	348
234-6476	346
	348
234-6477	346
	348
234-6483	346
	348
234-6485	346
	348
234-6489	424
234-6490	346
	348
234-6491	346
	348
234-6497	346
	348
234-6498	346
	348
234-6499	375
234-6501	342
	350
	▶375
234-6502	375
234-6547	346
234-6548	346
234-6549	346
234-6550	346
234-6579	346
	348
	360
	364
234-6580	360

PART NUMBER INDEX

Part	Page
	364
234-6593	375
234-6594	344
	▶435
234-6602	360
234-6603	364
234-6604	360
234-6605	364
234-6608	360
	364
234-6609	360
	364
234-6610	360
	364
234-6612	364
234-6613	▶110
	364
234-6614	364
234-6615	110
235-1790	70
235-2435	23
235-2451	54
235-7679	192
	194
	196
	314
	316
	317
235-8862	399
235-8874	326
235-8875	326
235-8876	382
235-8877	382
235-8878	382
235-8879	382
235-8880	359
235-8891	391
235-8893	362
235-8894	362
235-8909	344
	▶424
235-8912	334
	339
235-8914	360
	364
235-8916	344
235-8922	346
235-8923	346
	348
235-8928	346
235-8930	348
235-8932	435
235-8933	334
	339
235-8950	328
	346
	348
235-8951	331
235-8952	332
235-8965	364
235-8966	360
235-8969	▶367
	372
235-8970	▶369
	371
235-8996	331
	332
235-8997	331
235-8998	332
235-9001	342
	350
235-9005	326
235-9012	415
235-9014	391
235-9015	391
236-2144	70
236-2838	231
236-2843	231
236-2844	231
236-2848	231
236-3257	208
236-3259	208
236-6336	242
236-6365	314
236-9440	137
236-9567	141
238-1506	100
238-2212	114
238-2279	100
238-2280	100
238-2318	114
238-2319	116
238-2363	116
	125
	127
238-2366	102
	116
	127
238-2390	114
238-2391	114
238-2501	82
238-2528	82
238-5081	34
238-5082	34
238-5083	34
238-8288	54
238-8671	70
239-4362	168
239-6986	438
239-7352	122
	125
239-8697	251
	▶252
239-8998	251
	▶253
240-2912	194
240-2913	192
240-2988	165
240-5074	382
240-5571	70
241-7231	196
241-7688	57
241-8368	100
	▶112
242-1510	438
242-1588	438
242-6092	438
242-8660	41
243-4505	84
	100
	116
	122
	356
243-4507	128
243-4508	120
	122
	128
	397
243-4509	60
	128
243-4510	84
	128
	397
243-5054	53
244-4277	310
	316
244-4360	314
244-8194	139
245-5079	231
245-7749	357
	▶359
245-7750	359
245-7751	359
245-7760	114
245-7790	346
	348
	360
	364
245-7791	382
245-7792	382
245-7793	382
245-7811	1
	▶399
245-7813	370
245-7814	370
245-7815	370
245-7816	370
245-7817	329
245-7818	329
245-7819	329
245-7820	329
245-7823	329
245-7824	329
245-7825	329
245-7826	329
245-7827	329
245-7828	329
245-7829	329
245-7830	329
245-7831	329
245-7832	329
245-7833	329
245-7834	329
245-7835	329
245-7836	329
	▶353
245-7837	353
245-7838	329
245-7839	329
245-7842	367
245-7844	369
245-7846	329
	▶370
245-7847	329
245-7856	329
245-7872	382
245-7873	382
245-7905	353
245-7916	402
245-7925	364
245-7926	360
245-7929	375
245-7931	435
245-7948	360
	364
246-2641	73
246-5425	168
247-0144	45
247-2693	122
247-4884	67
247-7437	438
247-7438	438
248-7132	163
	▶167
248-7138	179
248-7143	▶168
	169
	170
248-7173	180
248-7284	189
248-7857	194
251-0303	100
251-0304	100
251-0579	125
251-0580	122
251-0637	114
252-6438	14
253-1346	177
	178
253-2111	100
254-2267	38
254-2270	38
254-2979	163
	▶164
254-3954	14
255-1665	231
255-1666	231
255-1929	224
255-2751	102
	▶113
256-4440	4
	5
	▶54
256-4447	54
258-4095	403
	▶404
258-4946	15
259-0918	267
259-4883	114
259-5081	114
259-5082	114
259-5163	▶98
	309
259-5301	82
259-5303	82
259-7202	364
259-7345	331
	332
259-7346	▶331
	360
259-7347	▶332
	364
259-7348	▶360
	362
259-7350	337
	▶386
259-7351	386
259-7352	386
259-7353	348
259-7354	378
	380
260-2180	233
260-2191	233
260-6975	2
	▶163
260-8204	▶224
	283
260-8212	211
	▶249
260-8217	211
	▶227
260-8220	▶212
	309
260-8316	212
260-9144	63
260-9244	63
261-0428	77
261-6700	54
262-4781	168
264-1581	164
264-7029	116
	122
	125
264-7031	125
264-7032	122
	125

▶ **PRIMARY REFERENCE**

PART NUMBER INDEX

Part	Page
	397
264-7033	125
264-7034	115
	125
265-3623	49
266-1188	212
266-1189	212
266-1190	212
266-1191	212
266-1192	212
266-1193	212
266-1210	212
266-5431	438
266-7379	100
266-7940	217
267-0060	310
267-0061	144
267-1624	▶209
	264
267-1625	209
267-1626	209
267-6738	2
	▶134
267-6744	200
267-6786	200
267-7586	82
267-7976	102
267-8084	264
268-0495	155
268-0497	156
268-0581	149
268-0582	149
268-0651	151
268-0693	141
268-0694	141
268-0695	141
268-0696	141
268-0705	160
268-0706	160
268-0714	157
268-0715	157
268-0716	157
268-0717	158
268-0719	160
268-0720	154
268-0733	161
268-1517	63
268-1562	63
268-4201	209
268-4203	209
268-5145	217
268-6263	264
269-2433	264
269-5224	214
	215
269-7680	84
269-9553	236
269-9573	221
269-9577	221
269-9585	221
269-9589	221
269-9593	221
269-9714	224
269-9721	224
269-9799	217
269-9853	281
269-9858	281
269-9886	226
269-9901	242
269-9904	242
269-9911	242
269-9915	242
269-9920	221
270-5949	293
270-5950	293
270-5953	291
270-5979	285
	▶301
270-9833	140
271-7843	371
	372
272-2265	40
273-3427	322
273-3430	322
273-5274	416
	428
273-5345	416
	419
	428
273-5346	416
	419
	428
273-8075	161
273-8315	264
273-8316	209
273-8317	209
273-8318	209
274-2726	▶267
	281
274-6609	23
275-1038	70
275-1442	236
275-1443	236
275-1444	238
275-1582	221
275-1624	236
275-1695	▶247
	315
275-1715	211
	▶231
275-2452	20
275-6810	127
275-6874	1
	▶387
275-6875	387
	▶388
275-6876	388
275-9891	23
276-4053	92
276-5605	12
277-0121	18
277-3012	19
278-6469	242
278-6505	221
278-6506	221
278-6613	236
278-6623	236
278-6905	236
278-9373	314
281-0791	353
281-3492	49
281-5972	34
281-6847	209
281-8803	83
281-8804	83
281-8805	104
282-8856	53
282-9192	264
283-6089	281
283-6090	206
284-1026	16
	31
284-3425	77
284-4376	3
	▶383
284-4426	334
	339
284-4500	391
284-4501	391
284-4502	391
284-4999	▶68
	70
284-5000	▶69
285-1503	285
285-1504	▶271
	285
285-1505	▶272
	285
285-1506	285
285-1507	285
285-1613	236
	▶298
285-2564	233
286-3030	9
286-3592	45
286-6499	221
286-7848	30
287-0212	34
287-8573	9
287-8597	18
288-0422	19
289-8194	▶205
	281
289-8195	205
289-8336	16
290-1729	438
291-7746	98
292-7446	236
292-7461	281
292-7482	233
293-1137	329
293-1183	382
293-1184	382
293-1238	391
294-0288	19
296-6220	131
296-6268	131
296-6269	131
296-7278	236
297-0366	271
297-0529	▶291
	371
	372
297-0532	366
	▶371
297-0533	366
	▶372
297-9184	180
297-9185	167
	▶169
297-9186	167
	▶170
297-9187	169
	▶177
297-9188	170
	▶178
297-9189	177
	178
	▶179
297-9190	179
297-9191	179
	▶180
297-9192	179
297-9193	180
298-4282	438
298-5872	31
299-2901	82

3

Part	Page
301-0091	82
301-2981	127
301-6874	209
301-8294	209
302-3225	211
	▶261
303-9933	74
303-9937	74
305-0330	346
	348
305-0361	421
	426
305-0441	391
305-0442	391
305-5362	83
305-6873	63
305-7881	77
306-8526	82
306-8531	82
307-0047	89
307-1818	376
	▶378
307-2242	77
307-8125	63
308-8775	144
308-8776	144
308-8777	144
309-5146	63
309-5768	227
309-9960	285
309-9974	285
	▶296
309-9977	285
	▶302
310-0078	3
	▶366
310-0419	293
310-0420	293
312-5525	442
312-5694	319
	320
313-3762	47
313-3763	47
313-3766	47
313-3769	47
313-8080	149
314-6506	47
314-6510	47
315-4441	281
315-5313	334
	339
316-6166	344
	▶376
316-8846	329
316-8847	329
316-8849	329
316-8916	326
	▶329
316-8918	329
316-8920	329
316-8921	329
318-1181	82
	▶106
318-2365	70
319-1252	82
319-1253	82
319-1277	82
320-0150	227
320-3060	105
320-3063	56
320-5737	137
321-8647	34

PART NUMBER INDEX

Part	Page
321-8648	34
322-9663	14
323-9312	25
324-0444	19
324-4118	190
324-5804	100
324-5805	100
324-5808	100
325-8634	▶105
	107
325-8876	236
326-0319	34
327-6523	401
	▶409
327-6538	409
327-6550	334
	339
	▶396
327-6593	356
327-6594	356
327-7538	114
327-8740	263
328-0181	82
328-0385	82
329-2840	236
329-2843	236
329-5528	34
329-6655	14
332-4191	47
332-4192	47
333-3015	▶198
	201
333-3042	198
333-3043	198
333-3047	198
333-3048	198
333-3049	198
333-3050	198
333-3051	198
333-3053	198
333-3055	198
333-3056	198
333-3057	198
333-3058	198
333-3059	198
333-3060	198
333-3061	198
333-3062	198
333-3064	198
333-4609	238
334-4603	438
334-9334	30
334-9981	255
335-0210	285
	▶297
335-2092	18
335-7585	23
337-1224	281
337-6501	63
339-7143	22
339-7144	22
339-7145	21
340-2566	397
340-2567	397
341-1842	74
341-2860	▶263
	264
341-7597	23
342-2972	84
	116
	125
	128
342-2973	84
342-2974	84
	125
	128
342-2976	84
342-8584	63
342-9022	92
342-9290	92
343-3917	63
343-7352	63
344-0688	▶190
	262
344-5360	64
346-0407	19
346-0408	19
346-7204	163
	▶166
346-7236	166
346-7237	166
346-7375	▶333
	334
346-7763	92
346-8058	▶334
	344
346-9376	79
347-4416	64
347-6081	▶208
	281
347-6082	208
348-1867	172
	▶174
348-1869	176
348-1870	176
348-1871	176
348-5409	137
	142
	143
	151
348-8149	77
349-2746	8
349-5084	84
	116
349-5085	84
	116
349-7059	74
349-8500	322
350-0450	▶130
	133
350-0452	130
	▶131
350-2374	7
350-7735	74
350-9492	23
351-0289	63
351-3869	▶189
	190
351-3928	21
351-4089	64
351-4126	189
351-4318	64
351-4321	64
351-4572	1
	2
	▶3
351-9918	95
352-6815	304
352-7063	202
352-7282	▶273
	285
352-7283	▶274
	285
352-7284	▶275
	285
352-7285	▶276
	285
352-7286	▶277
	285
352-7288	285
352-7775	47
353-0586	▶133
	134
353-1589	▶319
	320
353-1595	319
	▶322
353-2149	367
353-2150	369
353-3477	58
353-3478	58
353-5825	264
353-5829	264
353-5837	264
353-7423	10
353-7424	10
353-7425	10
353-7426	10
354-1274	▶40
	41
354-3757	242
354-6246	63
355-0632	63
355-1213	79
356-2353	410
356-7732	114
356-9229	236
357-2713	323
357-2714	323
357-5205	108
357-7534	163
	▶172
357-7540	180
358-0880	142
358-0921	143
358-6390	438
358-8606	321
359-0715	▶10
	11
359-0719	25
359-0720	25
359-0721	25
359-0722	25
359-0723	25
359-0724	25
359-0734	4
	5
359-0750	30
359-3576	410
359-3582	410
359-5687	164
359-5688	164
359-9666	77
360-3986	10
360-5863	174
	▶175
360-5864	174
	▶176
360-5865	175
360-7354	4
	5
	▶30
360-9262	47
361-1045	79
361-8998	281
362-2190	▶12
	13
362-3642	438
362-3643	438
363-6122	236
363-6139	236
364-0979	255
364-0981	257
	▶303
364-1614	355
365-3308	70
365-6882	47
365-6883	47
365-6884	47
365-6886	47
365-6887	47
365-6888	47
365-6889	47
365-6890	47
366-4622	114
366-5257	▶405
	407
366-5260	403
	▶408
366-5262	▶410
	413
366-5264	413
366-5265	407
366-5266	413
366-5267	405
366-5269	405
366-5271	405
366-8650	211
	▶221
366-9354	▶79
	91
367-0844	438
367-3326	17
367-8338	134
	▶200
367-8339	200
	▶201
367-8355	200
367-8466	314
368-3151	94
368-6660	21
368-9376	217
368-9379	217
368-9380	221
368-9994	264
368-9995	264
368-9996	264
368-9997	264
369-2263	44
369-2264	44
369-2472	94
369-8335	▶278
	285
369-8503	231
	▶293
369-8509	293
369-8510	293
369-8568	293
369-8569	293
369-9604	201
	▶257
369-9624	▶255
	257
369-9625	255
369-9628	217
	▶307
370-7639	438
371-6116	58
371-7140	410
371-7141	410
371-7142	410
371-7143	410
371-7144	410
371-7146	410
371-7147	410
371-7148	410

▶ **PRIMARY REFERENCE**

PART NUMBER INDEX

Part	Page
372-4531	91
	▶92
372-4532	92
372-9285	435
372-9334	435
372-9493	355
	▶356
373-2588	405
373-2590	405
373-2591	405
373-2594	405
373-2595	405
373-2596	405
373-2597	405
373-2600	405
373-3495	408
373-3782	321
373-8961	79
373-8970	79
374-5958	405
375-6625	221
375-6628	221
375-8749	154
375-8750	154
376-4616	89
	▶91
377-2012	408
	▶413
377-2244	322
377-2843	405
377-7808	▶47
	49
377-8725	322
377-8729	322
377-8730	322
377-8731	322
377-9082	77
378-6179	47
378-9521	200
378-9606	▶146
	163
378-9608	146
	▶148
379-0830	397
379-3002	264
380-1204	320
	▶323
380-6351	410
380-7183	2
	▶403
381-1362	1
	▶438
381-1372	438
381-1373	438
381-1419	438
381-5989	233
381-7417	79
381-8968	▶191
	309
381-8969	▶191
	309
381-8970	▶191
	309
381-8971	▶191
	313
381-9064	63
382-0664	63
382-5080	22
383-5675	6
	▶357
383-5676	1
	▶391
383-5687	391
383-5700	357
383-5702	357
383-5706	346
383-5707	391
383-5708	391
383-5767	346
	348
383-6627	22
383-6929	425
383-6930	426
383-6931	425
383-6932	425
383-6933	380
383-8104	22
383-8541	428
383-9558	236
384-2205	413
384-2207	▶407
	408
384-6533	380
	▶433
384-9014	1
	▶159
384-9076	159
384-9083	142
384-9087	143
384-9089	▶141
	151
385-1278	410
385-1279	410
385-1400	410
385-2474	410
385-2860	192
385-2861	192
385-2862	196
385-2863	196
385-2864	194
385-2865	194
385-2888	192
385-2889	192
385-2890	194
385-2891	194
	196
385-2895	192
385-2899	192
	194
385-2900	192
	194
385-2901	192
385-2905	192
	194
385-2908	192
385-2909	196
385-2910	196
385-2911	191
	▶214
385-2912	191
	▶215
385-2913	191
	▶192
385-2914	191
	▶248
385-2915	191
	▶196
385-2916	191
	▶216
385-2917	191
	▶194
385-2920	196
385-2922	192
385-2923	196
385-2927	196
385-2929	196
385-2933	196
385-2934	196
385-2939	196
385-2942	196
385-2943	194
385-2944	194
385-2945	194
385-2946	194
385-2967	216
385-3234	313
	▶314
385-3458	142
	143
385-4093	438
385-4100	1
	2
	▶309
385-4101	1
	▶315
385-4103	1
	2
	▶313
385-4156	2
	▶315
385-7931	47
385-7935	47
385-7943	47
385-7944	47
385-7945	47
385-7948	47
385-8757	433
386-3435	60
386-3444	90
386-6071	410
386-6072	410
387-2610	6
	▶355
387-2614	6
	▶36
387-2615	6
	▶21
387-2618	211
	▶262
387-2620	6
	▶52
387-2623	6
	▶56
387-2625	1
	▶63
387-2628	▶31
	42
387-2637	63
387-2642	63
387-2646	4
	▶57
387-2650	63
387-2651	63
387-2652	63
387-2653	34
387-2654	34
387-2660	63
387-2665	63
387-2666	63
387-2668	63
387-2669	63
387-2846	433
387-2847	433
387-2848	433
387-2849	433
387-3488	1
	▶144
387-3489	144
387-3601	233
387-3716	211
	▶233
387-3738	261
387-3739	261
387-6403	62
388-6701	▶99
	401
388-6702	99
	▶100
388-6703	1
	▶60
388-6769	83
388-6771	83
388-6773	100
388-6775	100
388-6776	100
388-6793	60
388-6794	60
388-6797	60
388-6801	83
388-8368	264
388-9091	348
388-9093	▶337
	350
388-9094	348
388-9095	348
388-9097	428
388-9102	337
	▶339
388-9105	337
	▶380
388-9107	337
	▶425
388-9108	337
	▶426
388-9109	337
	▶428
390-3675	1
	▶151
390-3677	1
	2
	▶149
390-4135	214
390-4136	214
390-4149	215
390-4150	215
390-4163	248
390-4165	248
390-4173	216
390-4242	214
	215
390-8835	4
	▶42
390-8836	42
	▶43
390-8837	6
	▶49
390-8838	6
	▶44
391-1926	158
391-1927	158
391-3199	44
391-3253	44
391-3704	49
391-3712	44
391-3714	44
391-4235	43
391-4295	1
	▶73
391-4305	73
	▶74
391-5297	56
391-5298	56
391-7825	211
	▶242
391-7830	211
	▶226

▶ PRIMARY REFERENCE

PART NUMBER INDEX

Part	Page
391-7835	211
	▶236
391-7836	211
	▶244
391-9438	264
391-9452	262
	▶264
391-9675	140
391-9681	149
391-9683	149
391-9686	162
391-9690	156
392-0245	57
392-0250	57
392-0265	18
392-0400	2
	▶6
392-0401	6
	▶34
392-1165	355
392-1170	151
392-1172	151
392-1177	151
392-1179	151
392-1182	151
	▶160
392-1185	151
392-1191	151
	▶155
392-1194	155
392-1195	151
	▶156
392-1199	151
392-1202	151
392-1204	151
	▶157
392-1207	157
392-1208	151
	▶161
392-1216	151
392-1218	151
	▶158
392-1245	151
392-1249	151
392-1250	151
	▶154
392-1251	154
392-1260	154
392-1261	154
392-1262	151
392-1263	151
392-1276	151
392-1281	151
392-1285	162
392-2053	21
392-2185	231
392-2328	309
	▶310
392-2329	310
392-2339	315
	▶316
392-2340	316
392-2673	149
392-2678	151
	▶162
392-2688	151
392-2689	151
392-2876	▶206
	281
392-3904	6
	▶107
392-6726	226
392-6728	244
393-0807	23
393-0822	56
393-0826	34
393-2879	315
	▶317
393-2888	317
393-5867	23
393-8574	1
	▶136
393-8575	136
	▶137
393-8576	137
393-8586	137
393-8618	355
394-1310	438
394-2345	▶320
394-4837	107
394-6854	1
	2
	▶139
394-6855	139
	▶140
394-6856	140
394-8706	36
394-8709	36
394-8711	36
395-3380	6
	▶220
395-3437	62
395-3439	62
396-0293	6
	▶51
396-2185	52
	▶53
396-2351	348
396-2352	348
396-6895	326
396-8008	151
396-8009	151
398-0782	49
398-7003	▶114
	401
398-7005	▶124
	401
398-7006	124
	▶125
398-7007	2
	▶102
398-7012	125
398-7013	102
398-7021	57
398-7027	57
398-7105	380
398-7106	380
398-7107	380
398-7109	428
398-7110	428
398-7111	380
398-7170	206
398-7171	206
398-7172	206
398-7173	206
398-7174	206
398-7981	63
398-8931	102
399-0055	2
	▶342
399-0057	342
	▶344
399-0059	344
	▶346
399-0061	346
	348
399-0062	346
	348
399-0065	346
	348
399-0966	60
399-1110	91
	▶120
399-2541	49
399-2618	▶90
	401
399-2620	▶397
	401
399-2641	63
399-4202	57
399-4218	▶89
	91
399-5122	194
399-5308	90
399-5313	397
399-7619	244
399-7625	244
4	
416-0965	47
416-1277	192
416-1278	192
416-1279	192
416-1280	192
416-1282	192
416-1284	192
416-1285	192
416-1286	192
416-1287	192
416-1288	196
416-1289	196
416-1290	196
416-1291	196
416-1292	196
416-1293	192
416-1294	196
416-1312	196
416-1313	196
416-1314	196
416-1315	196
416-1316	196
416-1798	▶326
	328
416-1802	326
416-4309	334
416-8777	40
416-9608	337
	▶348
417-1143	428
417-9101	438
	▶442
418-8379	428
418-9897	2
	▶328
419-3328	140
419-3329	140
419-3330	140
419-5161	140
420-2243	211
	▶285
420-3151	352
	▶377
420-3810	▶350
421-1370	397
421-1431	▶362
	401
421-1434	362
	▶364
421-1894	120
421-3714	▶142
	151
421-3716	▶143
	151
421-7101	4
	5
	▶18
421-7102	4
	5
	▶17
421-7104	4
	5
	▶16
421-7105	4
	5
	▶23
421-7109	4
	5
	▶77
421-7111	4
	5
	▶22
421-7744	4
	5
	▶70
422-9120	192
422-9122	196
422-9135	214
	215
422-9136	216
422-9137	248
422-9140	192
423-6434	63
	▶104
424-0331	437
424-0332	437
424-0333	437
424-0334	437
424-0335	437
424-0336	437
424-0337	437
424-0338	437
424-1296	321
424-6821	77
424-8398	214
	215
	248
425-7079	377
430-4119	433
431-1704	8
432-6291	281
432-6783	▶320
432-6784	320
	▶321
432-6786	321
432-6797	321
432-8577	64
433-0313	▶320
433-1677	47
435-2848	88
435-8395	211
	▶217
436-1116	337
	▶437
436-1866	2
	▶93
436-1867	93
436-1901	377
437-0436	63
438-1294	437
438-1304	63
438-4951	433
438-4952	433

▶ **PRIMARY REFERENCE**

PART NUMBER INDEX

Part	Page
438-4953	433
438-4954	433
438-4955	433
438-4956	433
438-4957	433
438-4958	433
439-2524	337
	▶352
439-5680	438
440-6914	1
	▶82
440-6915	▶127
	401
440-6917	83
440-6918	127
441-7658	114
441-8511	60
441-8612	84
444-2791	437
446-1895	▶62
	63
446-9163	▶8
	9
447-1706	21
447-1707	73
	169
	170
	202
	261
	283
447-1711	244
447-1717	135
447-1719	202
447-1725	172
447-1731	172
447-1733	139
447-3349	1
	2
	▶91
448-9502	380
449-6277	92
449-9326	380
451-2175	21
	202
	244
	261
	355
	402
451-2176	165
	172
	202
	310
	316
	317
451-2182	21
451-2183	314
451-3987	1
	▶401
453-1259	355
	402
453-2834	261
453-2838	49
453-2843	314
453-2844	144
	310
	316
	317
453-2845	165
453-3449	21
453-8394	91
454-5573	▶2
454-5575	▶1
	2
454-5636	1
	2
	▶2
454-5646	▶1
454-5647	▶2
454-7359	▶281
	283
455-0704	83
	127
455-0705	84
455-0707	84
	127
455-0708	84
455-0709	83
	127
455-1948	2
	▶4
455-4106	211
	▶283
455-6834	373
	▶398
455-6836	398
455-7664	2
	▶211
456-1375	▶4
457-3306	▶373
	397
457-3308	373
458-0543	314
458-0545	314
458-3300	4
	5
	▶13
458-3301	4
	5
	▶11
458-3302	4
	5
	▶25
458-3303	4
	5
	▶15
458-3304	4
	5
	▶33
458-3306	4
	5
	▶7
458-6746	236
458-7586	25
460-0440	4
	5
	▶108
460-0449	4
	5
	▶9
460-0525	4
	5
	▶41
460-0596	4
	5
	▶19
460-0656	4
	5
	▶67
470-9228	▶5



©2014 Caterpillar
All Rights Reserved

CAT, CATERPILLAR, their respective logos, “Caterpillar Yellow”, and the POWER EDGE trade dress as well as corporate and product identity used herein, are trademarks of Caterpillar and may not be used without permission.