RUTHZIL TRATOR COMERCIAL DE PEÇAS LTDA 11 97083-6812 ROLANDO CITRANGULO

SEBP7450
November 2014

Parts Manual

318D2 L Excavator

XAH1-Up (Machine)
G4D1-Up (Engine)

Powered By 3054C Engine

Product and Dealer Information

Note: For product identification plate locations, see the section “Product Identification Information” in the Operation and Maintenance Manual.

Delivery Date: _____

Product Information

Model: _____

Product Identification Number: _____

Engine Serial Number: _____

Transmission Serial Number: _____

Generator Serial Number: _____

Attachment Serial Numbers: _____

Attachment Information: _____

Customer Equipment Number: _____

Dealer Equipment Number: _____

Dealer Information

Name: _____ Branch: _____

Address: _____

_____

_____

	Dealer Contact	Phone Number	Hours
Sales:	_____	_____	_____
Parts:	_____	_____	_____
Service:	_____	_____	_____

MEMORANDA

TABLE OF CONTENTS

NAME PAGE

GENERAL INFORMATION **A4**

REPAIR ALTERNATIVES **A7**

SUPPLEMENTAL COOLANT ADDITIVES A8

MAINTENANCE PARTS **A9**

INDEX **A12**

MACHINE ARRANGEMENT **1**
- CHASSIS AR 1
- GENERAL AR 1
- OPTION AR-CAB 1
- OPTION AR-REGIONAL 2

ENGINE ARRANGEMENT **3**
- ENGINE AR-COMPLETE 3
- ENGINE AR-PRIMARY 3
- INSTALLATION AR-ENGINE 5

BASIC ENGINE **6**
- CAMSHAFT GP 6
- COVER GP-CYLINDER HEAD 8
- COVER GP-VALVE MECHANISM 9
- CRANKSHAFT GP 10
- CYLINDER BLOCK GP 13
- CYLINDER HEAD GP 16
- DRIVE GP-FAN 19
- FLYWHEEL GP 20
- HOUSING GP-FLYWHEEL 21
- HOUSING GP-FRONT 22
- LIFTING GP-ENGINE 25
- MOUNTING GP-ENGINE 26
- PAN GP-OIL 28
- PISTON & ROD GP 30
- PLUG GP-ENGINE 33
- PULLEY GP-CRANKSHAFT 37
- PULLEY GP-FAN 38
- ROCKER ARM GP 39
- VALVE MECHANISM GP 40

LUBRICATION SYSTEM **42**
- FILTER & MTG GP-ENGINE OIL 42
- FUMES DISPOSAL GP 44
- PUMP GP-ENGINE OIL 45

COOLING SYSTEM **46**
- CONNECTION GP-WATER 46
- COOLER GP-ENGINE OIL 48
- COOLER GP-FLTR BASE & ENG OIL 50
- FAN AR-SUCTION 51
- FAN GP-SUCTION 52
- LINES GP-COOLING 53
- PUMP GP-WATER 54
- RADIATOR & HYD OIL COOLER GP 56
- VALVE GP-COOLANT SAMPLING 60

AIR INLET AND EXHAUST SYSTEM **61**
- AIR CLEANER & MOUNTING GP 61
- AIR CLEANER GP 62
- ELBOW GP-AIR INLET 63
- LINES GP-AIR 65
- MUFFLER GP 66
- TURBOCHARGER GP 67

FUEL SYSTEM **69**
- CONTROL GP-GOVERNOR 69
- FILTER GP-FUEL 71
- LINES GP-FUEL 72
- PUMP GP-FUEL INJECTION 77
- TANK & MTG GP-FUEL 84
- TANK GP-FUEL 85

ELECTRICAL AND STARTING SYSTEM 87
- ALARM GP 87
- ALARM GP-TRAVEL 88
- ALTERNATOR GP-CHARGING 89
- BATTERY & WIRING GP 91
- BLOCK GP-JUNCTION 97
- CONTROL & MTG GP-COMMUNICATION 98
- CONTROL & MTG GP-ELECTRONIC 101
- ELECTRONICS GP-COMMUNICATION 102
- ELECTRONICS GP-MACHINE 102
- GLOW PLUG GP 103
- INSTALLATION AR-COMMUNICATION 104
- LAMP GP-FLOOD 105
- LIGHTING GP-FLOOD 108
- PANEL & MTG GP-CIRCUIT BREAKER 113
- PANEL GP-CIRCUIT BREAKER 114
- PANEL GP-SWITCH 117
- RADIO GP-COMMUNICATION 119
- SENSOR GP-LIQUID LEVEL 120
- SENSOR GP-PRESSURE 121
- SENSOR GP-SPEED 122
- SENSOR GP-TEMP & PRESS 123
- STARTING MOTOR GP-ELECTRIC 124
- SWITCH GP-DISCONNECT 125
- SWITCH GP-LIMIT 126
- SWITCH GP-MAGNETIC 127
- SWITCH GP-START 128
- WIRING GP-CAB 129
- WIRING GP-COMMUNICATION 135
- WIRING GP-CONSOLE 137
- WIRING GP-CONVERTER 142

TABLE OF CONTENTS

NAME	PAGE
WIRING GP-PLATFORM	143
POWER TRAIN	**146**
DRIVE GP-FINAL	146
POWER TRAIN AR	150
SPROCKET GP	151
FRAME AND BODY	**152**
BOX & MTG GP-STORAGE	152
BOX GP-STORAGE	153
COUNTERWEIGHT & MOUNTING GP	155
COUNTERWEIGHT GP	156
COVER AS-SOUND SUPPRESSION	157
FRAME GP-UPPER	158
GEAR & BEARING GP-SWING	160
GUARD GP-BOTTOM	163
HANDRAIL GP	164
HOOD & GUARD GP	165
HOOD GP-ENGINE	168
SHEET AS-SOUND SUPPRESSION	169
STEP GP	173
SUPPORT AS-SOUND SUPPRESSION	174
UNDERCARRIAGE	**177**
FRAME AR-UNDERCARRIAGE	177
FRAME AS-UNDERCARRIAGE	178
GUARD GP-TRACK GUIDE	179
GUARD GP-TRAVEL MOTOR	180
IDLER GP-FRONT	181
LINK AS-TRACK	185
ROLLER AR-TRACK & CARRIER	186
ROLLER GP-TRACK CARRIER	187
ROLLER GP-TRACK-SINGLE FLANGE	188
TRACK ADJUSTER & RECOIL GP	191
TRACK GP	195
HYDRAULIC SYSTEM	**196**
ACCUMULATOR GP-HYDRAULIC	196
COUPLING GP-FLEXIBLE	203
COUPLING GP-PUMP	204
CYLINDER & LINES GP-BOOM	205
CYLINDER & LINES GP-BUCKET	205
CYLINDER & LINES GP-STICK	205
CYLINDER & SEAL GP-BOOM	206
CYLINDER & SEAL GP-BUCKET	208
CYLINDER & SEAL GP-STICK	210
DRIVE GP-SWING	212
FASTENER GP-SWING & FINAL DR	216
FILTER & VALVE GP-PILOT	218
FILTER GP-OIL	219
FITTING GP-HYDRAULIC	221
GAUGE GP-SIGHT	222
HEAD GP-PUMP	223
HYDRAULIC AR	225
LINES GP-BOOM	226
LINES GP-BOOM CYLINDER	228
LINES GP-BUCKET CYLINDER	230
LINES GP-CYLINDER	231
LINES GP-DRAIN	234
LINES GP-FRONT	235
LINES GP-HYDRAULIC	238
LINES GP-HYDRAULIC OIL COOLER	240
LINES GP-PILOT	241
LINES GP-PUMP	257
LINES GP-STICK	261
LINES GP-STICK CYLINDER	262
LINES GP-TRAVEL MOTOR	263
MANIFOLD GP-CONTROL	265
MOTOR & MTG GP-TRAVEL	268
MOTOR GP-PISTON	269
MOTOR GP-SWING	271
MOTOR GP-TRAVEL	272
MOUNTING GP-MAIN CONTROL VALVE	275
PUMP & MTG GP-MAIN HYDRAULIC	276
PUMP GP-GEAR	277
PUMP GP-PISTON	278
SCREEN GP-HYDRAULIC	281
SPOOL GP-CONTROL VALVE	282
SWIVEL GP	293
TANK & FILTER GP-HYDRAULIC	295
TANK & MTG GP-HYDRAULIC	298
VALVE GP-CHECK	299
VALVE GP-MAIN CONTROL	300
VALVE GP-PILOT	306
VALVE GP-PILOT RELIEF	310
VALVE GP-PRESSURE REDUCING	312
VALVE GP-RELIEF	313
VALVE GP-SHUTTLE	318
VALVE GP-SOLENOID	319
VALVE GP-SWING CUSHION	321
VALVE GP-TRAVEL COUNTERBALANCE	322
IMPLEMENTS	**323**
BOOM AR-1 PIECE LONG	323
BOOM GP	324
LINES GP-GREASE	326
LINKAGE AR-BUCKET	327
LINKAGE GP-BUCKET	328
STICK AR-HOE	330
STICK GP-HOE	331
WORK TOOLS	**332**
ADJUSTER GP-BUCKET	332
BUCKET & ADJUSTER GP	333
BUCKET AS-GENERAL PURPOSE	334

TABLE OF CONTENTS

NAME	PAGE
BUCKET AS-SEVERE SERVICE ROCK	335
SIDECUTTER GP	336
TIP GP-PENETRATION PLUS	337
OPERATOR STATION	**339**
AIR CONDITIONER & MOUNTING GP	339
AIR CONDITIONER AR	341
AIR CONDITIONER GP	342
ARMREST GP	344
CAB GP	346
COIL GP-EVAPORATOR	356
COMPRESSOR & MTG GP-REFRIG	358
COMPRESSOR GP-REFRIGERANT	359
CONDENSER & MTG GP-REFRIGERANT	360
CONDENSER GP-REFRIGERANT	362
CONSOLE GP-OPERATOR	363
CONTROL & MTG GP-JOYSTICK	369
CONTROL GP-HANDLE	370
CONTROL GP-HEAT & AIR COND	372
CONTROL GP-JOYSTICK	373
CONTROL GP-PILOT OPERATED HYD	375
COVER GP-CAB	376
DOOR & MTG GP-CAB	377
DOOR GP-CAB	380
DUCT GP-CAB AIR	384
FLOOR MAT	385
HATCH GP-ROOF	386
HORN GP-ELECTRIC	387
LEVER GP-CAB DOOR	389
LINES GP-AIR CONDITIONER	390
LITERATURE GP	393
MIRROR GP-REAR VIEW	394
MONITOR & MTG GP-OPERATOR	396
MONITOR GP-OPERATOR	397
MOUNTING GP-ANTENNA	399
MOUNTING GP-PLATFORM	400
OPERATOR AR	402
PLATFORM GP-OPERATOR	403
SCREEN GP-SUN	404
SEAT & MOUNTING GP	405
SEAT BELT GP	406
SEAT GP	407
SEAT GP-SUSPENSION	408
SUPPORT GP-SEAT	409
SUSPENSION GP-SEAT	410
WASHER GP-WINDOW	411
WINDOW GP-CAB	412
WINDOW GP-DOOR	421
WIPER GP-WINDOW	425
SERVICE EQUIPMENT AND SUPPLIES	427
FILM GP	427
PLATE & FILM GP	428
PART NUMBER INDEX	**B1**

1. MACHINE IDENTIFICATION

Cat machines are identified by Product Identification Numbers (PIN). Some components included in a machine may be identified by Serial Numbers (S/N). Typical components that will be serialized include engines, transmissions, bulldozers, and rippers. The machine and engine are further identified by arrangement numbers and in some cases modification numbers. These numbers are shown on the product identification plate(s) and on the master plate in the operator's compartment.

Cat dealers need all of these numbers to determine accurate parts identification.

Effective First Quarter 2001 the Cat Product Identification Number (PIN) changed from 8 to 17 characters. In an effort to provide uniform equipment identification, Caterpillar and other construction equipment manufacturers are moving to comply with the latest version of the product identification numbering standard. Non-road machine PINs are defined by ISO 10261. The new PIN format will apply to all Cat machines and generator sets. The PIN plates and frame marking will display the 17 character PIN. The new format will look like the following:

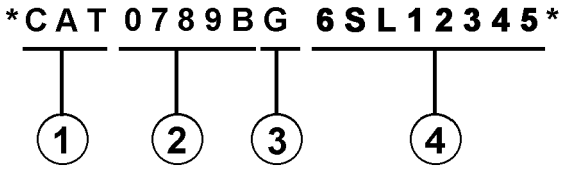

Where:

1. Caterpillar's World Manufacturing Code (characters 1-3)

2. Machine Descriptor (characters 4-8)

3. Check Character (character 9)

4. Machine Indicator Section (MIS) or Product Sequence Number (characters 10-17). These were previously referred to as the Serial Number.

Machines and generator sets produced before First Quarter 2001 will maintain their 8 character PIN format.

Components such as engines, transmissions, axles, etc. and work tools will continue to use an 8 character Serial Number (S/N).

2. ORDERING PARTS

⚠ WARNING

When replacement parts are required for this product Caterpillar recommends using Caterpillar replacement parts or parts with equivalent specifications including, but not limited to, physical dimensions, type, strength and material.

Failure to heed this warning can lead to premature failures, product damage, personal injury or death.

Quality Cat replacement parts are available from Cat dealers throughout the world. Their parts inventories are up to date and include all parts normally required to protect your investment in Cat machines. Dealers may offer repair kits or remanufactured parts to allow selection of the most effective repair alternative for a particular situation. When ordering parts, your order should specify the quantity, part number, part name, and the serial number/product identification number of the machine for which the parts are needed.

3. PARTS MANUAL ORGANIZATION

Product information in this manual is presented as "information elements" that represent all of the components for the specific model. Engine Arrangement and Seat Group are examples of information elements. The information elements are organized alphabetically by part name and secondarily by part number within each major section of the manual.

4. TABLE OF CONTENTS

A table of contents (TOC) is found at the beginning of the manual. The TOC lists each section of the manual with a complete list of all information elements organized as they appear in the manual. Page numbers are provided for quick reference to detailed parts identification illustrations and serviceable consist lists.

5. MAINTENANCE PARTS INDEX

The Maintenance Parts Index, located near the beginning of the manual, references most frequently used maintenance part numbers, providing description, quantity, usage and page number. This information is organized alphabetically by part description.

6. INDEX

The index located near the front of the manual is an alphabetical listing of all information elements included in the manual. Page numbers are provided for quick reference to detailed parts identification illustrations and serviceable consist lists.

7. PART NUMBER INDEX

A numerical index listing all part numbers and the corresponding page number(s) appears at the back of the manual.

8. CAPTIONS

Captions located at the beginning of each information element identify the part number and part name along with additional descriptive information. PIN and S/N information found in each caption should be used to select correct information for a specific machine. Field replacement options, identification of optional attachment components, and where used ("part of") information is also provided.

The first line of a caption is shown in larger type font to indicate the beginning of an information element. Captions for additional pages that may be required to illustrate an information element will be shown in standard type font and will include the term *(contd.)* .

9. NON-SERVICED PARTS

In some instances it is necessary to display non-serviced parts that are a link to a lower level serviceable consist lists. These non-serviced part numbers are shown in *italic* type indicating that they are not available.

10. PARTS LIST REFERENCE NUMBERS

Numbers shown in the Ref No column correspond to numbers used in the associated graphic(s). An alphabetic suffix may be added to a reference number to identify lower level consist items. Numbers shown in the Graphic Ref column refer to the graphic number identifier displayed in the lower left corner of each illustration. The Graphic Ref number may be used in combination with the item Ref No to determine the correct part number. There may be intentional omission of a Ref No in a consist list as information is updated to reflect the latest serviceable part numbers.

11. INDENTED PART NAMES

When a part name is indented in a parts list, it is part of (included in) the group or assembly under which it is indented.

12. ILLUSTRATION REFERENCE LETTERS

When necessary, illustrations contain reference letters (A, B, C etc.) that are intended to track lines and harnesses from one point to another. They are also used to show where to reconnect illustrations that have been separated.

13. ABBREVIATIONS AND SYMBOLS

O.D. – Outside Diameter
I.D. – Inside Diameter
A – Not Part Of This Group
B – Use As Required
C – Change From Previous Type
D – Order By The Meter
E – Order By The Centimeter
F – Not Shown
G – Order By The Inch
I – Refer To Hydraulic Information System
M – Metric Part
R – Remfg Part May Be Available
Y – Separate Illustration
Z – Not Serviced Separately

14. DESCRIPTION OF TYPE CHANGES

Type - A type is defined as any configuration change that requires an additional Information Element for an Arrangement, Group, or Assembly. If serial number breaks for types are not available, a type # (Type 1, Type 2, etc.) will be displayed in the caption. These "type" changes are identified with a "C" note (change from previous type) in the Parts List. Only the "types" that apply to this Parts Manual will be included. Additional types may exist causing "C" notes to appear on an Information Element when no other types are shown.

15.<END>

This symbol indicates the end of an information element.

NOTE:

Continuing improvement and advancement of product design may cause changes to your machine which may not be included in this publication. Whenever a question arises regarding your Cat product or this publication, please consult your Cat dealer for the latest available information.

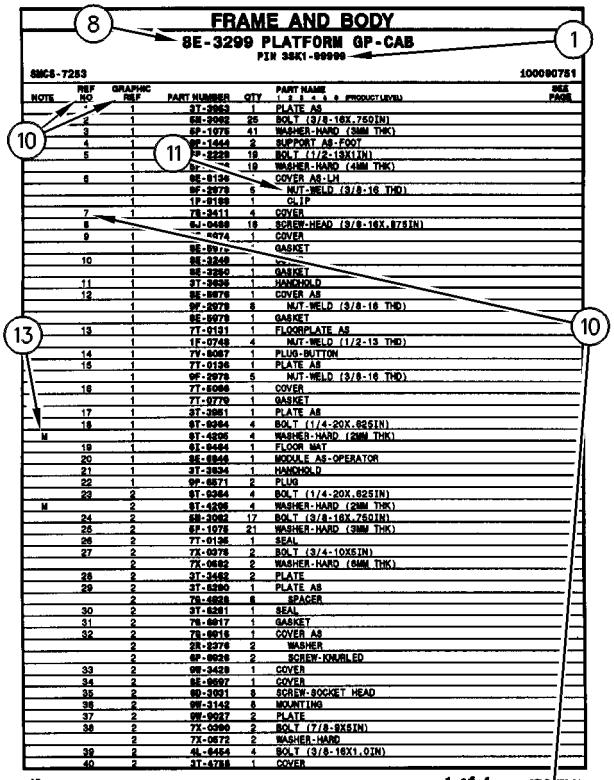

FRAME AND BODY

8E-3299 PLATFORM GP-CAB

PIN 3SK1-00999

SMCS-7283 100090751

NOTE	REF NO	GRAPHIC REF	PART NUMBER	QTY	PART NAME (1 2 3 4 5 6 PRODUCT LEVEL)	SEE PAGE
	1	1	3T-3963	1	PLATE AS	
	2	1	6M-3982	25	BOLT (3/8-16X.75DIN)	
	3	1	5P-1078	41	WASHER-HARD (3MM THK)	
	4	1	9F-1444	2	SUPPORT AS-FOOT	
	5	1	7P-2229	18	BOLT (1/2-13X1IN)	
		1	5P-[illegible]	18	WASHER-HARD (4MM THK)	
	6	1	8E-8136	1	COVER AS-LH	
		1	9F-2979	6	NUT-WELD (3/8-16 THD)	
		1	1F-8188	1	CLIP	
	7	1	7S-3411	4	COVER	
	8		6J-0488	18	SCREW-HEAD (3/8-16X.875IN)	
	9	1	[illegible]-0474	1	COVER	
		1	8E-8976	1	GASKET	
	10	1	8E-3249	1	[illegible]	
		1	8E-3250	1	GASKET	
	11	1	3T-3935	1	HANDHOLD	
	12	1	8E-8978	1	COVER AS	
		1	9F-2979	6	NUT-WELD (3/8-16 THD)	
		1	8E-8979	1	GASKET	
	13	1	7T-0131	1	FLOORPLATE AS	
		1	1F-0748	4	NUT-WELD (1/2-13 THD)	
	14	1	7V-8067	1	PLUG-BUTTON	
	15	1	7T-0136	1	PLATE AS	
		1	9F-2979	5	NUT-WELD (3/8-16 THD)	
	16	1	7T-8066	1	COVER	
		1	7T-0779	1	GASKET	
	17	1	3T-3961	1	PLATE AS	
	18	1	6T-9364	4	BOLT (1/4-20X.625IN)	
M		1	6T-4236	4	WASHER-HARD (2MM THK)	
	19	1	6T-9494	1	FLOOR MAT	
	20	1	8E-8946	1	MODULE AS-OPERATOR	
	21	1	3T-3934	1	HANDHOLD	
	22	1	9F-8571	2	PLUG	
	23	2	6T-9364	4	BOLT (1/4-20X.625IN)	
M		2	6T-4236	4	WASHER-HARD (2MM THK)	
	24	2	6M-3982	17	BOLT (3/8-16X.75DIN)	
	25	2	5P-1078	21	WASHER-HARD (3MM THK)	
	26	2	7T-0136	1	SEAL	
	27	2	7X-0378	2	BOLT (3/4-10X5IN)	
		2	7X-0682	2	WASHER-HARD (6MM THK)	
	28	2	3T-3462	2	PLATE	
	29	2	3T-8280	1	PLATE AS	
		2	7S-4828	6	SPACER	
	30	2	3T-8281	1	SEAL	
	31	2	7S-8817	1	GASKET	
	32	2	7S-8816	1	COVER AS	
		2	2S-2376	2	WASHER	
		2	9F-8628	2	SCREW-KNURLED	
	33	2	9W-3429	1	COVER	
	34	2	8E-8697	1	COVER	
	35	2	9D-3931	8	SCREW-SOCKET HEAD	
	36	2	9W-3142	8	MOUNTING	
	37	2	9W-9927	2	PLATE	
	38	2	7X-0290	2	BOLT (7/8-9X5IN)	
		2	7X-0572	2	WASHER-HARD	
	39	2	4L-6454	4	BOLT (3/8-16X1.0IN)	
	40	2	3T-4788	1	COVER	

12 FRAME AND BODY 1 of 4 SELP[illegible]70-01

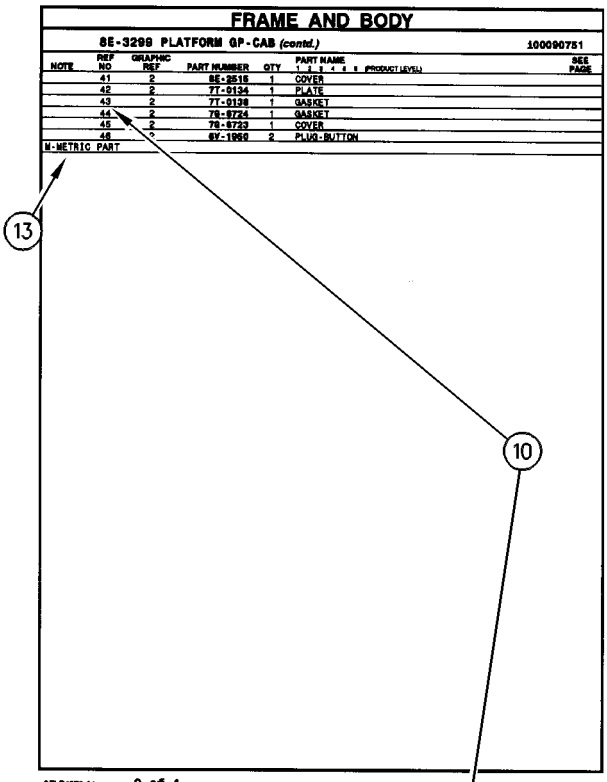

FRAME AND BODY

8E-3299 PLATFORM GP-CAB (contd.) 100090751

NOTE	REF NO	GRAPHIC REF	PART NUMBER	QTY	PART NAME (1 2 3 4 5 6 PRODUCT LEVEL)	SEE PAGE
	41	2	8E-2516	1	COVER	
	42	2	7T-0134	1	PLATE	
	43	2	7T-0138	1	GASKET	
	44	2	7S-8724	1	GASKET	
	45	2	7S-8723	1	COVER	
	46	2	6V-1960	2	PLUG-BUTTON	

M-METRIC PART

SELP4570-01 2 of 4 FRAME AND BODY 13

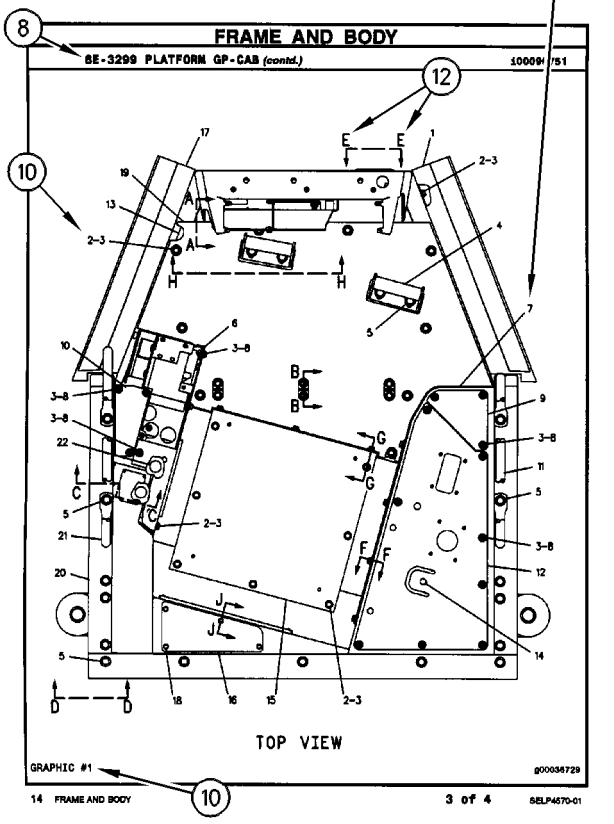

FRAME AND BODY

8E-3299 PLATFORM GP-CAB (contd.) 100090751

TOP VIEW

GRAPHIC #1 g00036729

14 FRAME AND BODY 3 of 4 SELP4570-01

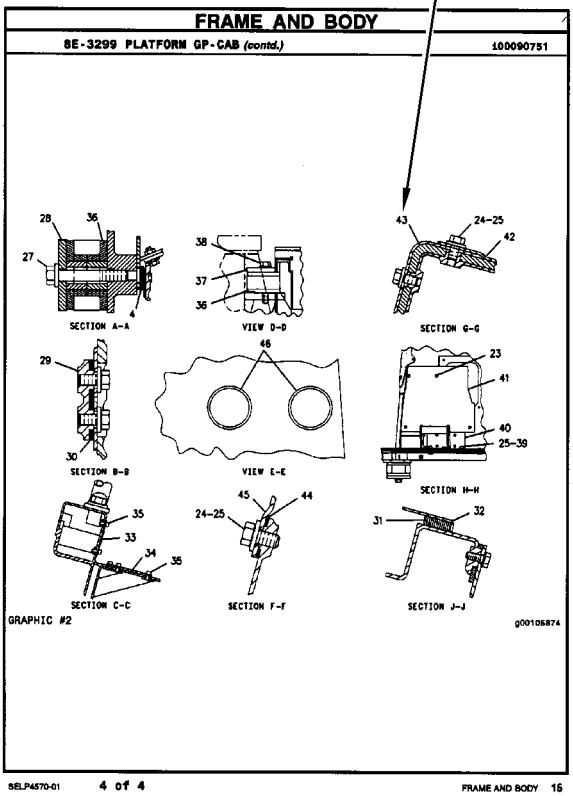

FRAME AND BODY

8E-3299 PLATFORM GP-CAB (contd.) 100090751

SECTION A-A VIEW D-D SECTION G-G

SECTION B-B VIEW E-E SECTION H-H

SECTION C-C SECTION F-F SECTION J-J

GRAPHIC #2 g00105874

SELP4570-01 4 of 4 FRAME AND BODY 15

REMANUFACTURED COMPONENTS

As an option when making repairs consider Cat Remanufactured Components. Components that are available through the Cat Remanufactured Program are identified three ways in the parts book:

- with the letter R in the note field of the parts list
- with an R* at the beginning of the first line of the caption
- with an *R at the end of the first line of the caption

Typical components included in the Remanufacturing Program include:

ALTERNATORS
CONNECTING RODS
CRANKSHAFTS - UNDERSIZE
CRANKSHAFTS - UPGRADE TO NEW
CYLINDER HEADS
ELECTRONIC CONTROL MODULES (ECM)
ELECTRONIC SENSORS
FUEL INJECTORS
FUEL NOZZLES
FUEL PUMPS
GOVERNORS
OIL PUMPS
PISTONS
SHORT BLOCKS
STARTERS
TURBOCHARGERS - COMPLETE
TURBOCHARGER CARTRIDGES
WATER PUMPS

Cat Remanufactured engines for many engine arrangements are also available.

SUPPLEMENTAL COOLANT ADDITIVES

CUSTOMER BENEFITS:

Protects against cavitation, foam, erosion, corrosion, and scale buildup in cooling systems.

- Provides measured coolant conditioner.

DESCRIPTION:

Additives deplete from the coolant with normal operation. For this reason, Supplemental Coolant Additives (SCA) must be added to all heavy duty coolants at regular intervals. In addition, when not using a fully formulated, pre-charged antifreeze, like Cat DEAC, an initial charge of SCA must be added to the cooling system. The amount of SCA added to the system is dependent on the capacity of the system.

The SCA for initial fill is provided as a liquid. SCA's for maintenance intervals are available in liquid form and as a spin-on element. (No Spin-on available for 3600 Family of Engines)

NOTE:

The amount of SCA added at initial fill is not the same as the amount added at maintenance intervals.

The coolant additive elements can be used with any ethylene or propylene glycol type antifreeze which meets ASTM D4985 or ASTM D5345 Specifications.

NOTE:

For use with standard heavy duty coolant only, not for use with Extended Life Coolant.

PARTS NEEDED:

Cooling System Capacity		Liquid SCA at Initial Fill	Liquid SCA at Maintenance*	Spin-on SCA Maintenance Element*
Liters	Gallons			
22-30	(6-8)	3P-2044 (1)	6V-3542 (1)	111-2370 (1)
30-38	(8-10)	3P-2044 (1) 6V-3542 (1)	111-2372 (1)	111-2369 (1)
38-49	(10-13)	3P-2044 (1) 8T-1589 (1)	111-2372 (1)	111-2369 (1)
49-64	(13-17)	3P-2044 (2)	8T-1589 (1)	9N-3368 (1)
64-83	(17-22)	3P-2044 (2) 8T-1589 (1)	111-2372 (1) 6V-3542 (1)	111-2371 (1)
83-114	(22-30)	3P-2044 (3) 8T-1589 (1)	3P-2044 (1)	9N-3718 (1)
114-163	(30-43)	3P-2044 (5)	3P-2044 (1) 6V-3542 (1)	111-2371 (2)
163-242	(43-64)	3P-2044 (8)	3P-2044 (2)	9N-3718 (2)

** Normal maintenance period is 250 hrs. See your Operation and Maintenance Manual for complete coolant maintenance instructions.*

( ) Indicates quantity required.

MAINTENANCE PARTS

DESCRIPTION	PART NUMBER	QTY	WHERE USED	PAGE
AIR INLET AND EXHAUST SYSTEM				
FILTER ELEMENT AS-AIR (PRIMARY)	222-9020	1	AIR CLEANER GP	62
FILTER ELEMENT AS-AIR (SECONDARY)	222-9021	1	AIR CLEANER GP	62
GASKET	114-2579	4	ELBOW GP-AIR INLET	63
	225-8536	1	TURBOCHARGER GP	67
GASKET-MANIFOLD	194-5390	1	TURBOCHARGER GP	67
GASKET-TURBOCHARGER	353-3477	1	TURBOCHARGER GP	67
	353-3478	1	TURBOCHARGER GP	67
BASIC ENGINE				
BELT-SERPENTINE	298-5872	1	PULLEY GP-FAN	38
CAP AS (ENGINE OIL FILLER)	136-3608	1	COVER GP-CYLINDER HEAD	8
GASKET	225-7944	1	CYLINDER BLOCK GP	13
GASKET (VALVE COVER)	225-6451	1	COVER GP-CYLINDER HEAD	8
PLUG-DRAIN (ENGINE OIL)	7C-0351	1	PAN GP-OIL	28
COOLING SYSTEM				
CAP AS (COOLANT RECOVERY)	171-3369	1	RADIATOR & HYD OIL COOLER GP	58
CAP-RADIATOR	416-0965	1	RADIATOR & HYD OIL COOLER GP	56
GASKET	225-7944	2	COOLER GP-FLTR BASE & ENG OIL	50
HOSE-RADIATOR (LOWER)	399-2541	1	RADIATOR & HYD OIL COOLER GP	58
HOSE-RADIATOR (UPPER)	391-3704	1	RADIATOR & HYD OIL COOLER GP	58
REGULATOR GP-TEMPERATURE (INCLUDES CONNECTOR)	254-2267	1	CONNECTION GP-WATER	46
ELECTRICAL AND STARTING SYSTEM				
BATTERY GP (12-VOLT, 750-CCA)	3T-5760	2	BATTERY & WIRING GP	91
CAP AS-FILLER (BATTERY)	123-1373	6	BATTERY & WIRING GP	91
CIRCUIT BREAKER AS (40-AMPERE) (GLOW PLUG)	171-2205	1	PANEL GP-CIRCUIT BREAKER	114
CIRCUIT BREAKER AS (60-AMPERE) (ALTERNATOR)	171-2208	1	PANEL GP-CIRCUIT BREAKER	114
CIRCUIT BREAKER AS (80-AMPERE) (MAIN)	171-2210	1	PANEL GP-CIRCUIT BREAKER	114
FUSE (10-AMPERE)	113-8490	20	WIRING GP-CAB	129
FUSE (15-AMPERE)	113-8491	6	WIRING GP-CAB	129
FUSE (20-AMPERE)	113-8492	2	WIRING GP-CAB	129
FUSE (25-AMPERE)	113-8493	2	WIRING GP-CAB	129
FUSE (30-AMPERE)	124-3548	2	WIRING GP-CAB	129
FUSE (5-AMPERE)	141-2759	1	PANEL GP-CIRCUIT BREAKER	114
		8	WIRING GP-CAB	129
GLOW PLUG (24-VOLT)	226-8770	4	GLOW PLUG GP	103
KEY (BATTERY DISCONNECT)	8H-5306	1	SWITCH GP-DISCONNECT	125
LAMP AS (24-VOLT, 3-WATT)	170-9324	1	PANEL GP-SWITCH	117
LAMP-HALOGEN (24-VOLT, 70-WATT)	351-9918	1	LAMP GP-FLOOD	105

MAINTENANCE PARTS

DESCRIPTION	PART NUMBER	QTY	WHERE USED	PAGE
	9X-3463	1	LAMP GP-FLOOD	106
LAMP-HALOGEN (24-VOLT, 70-WATT) (FLOODLIGHT)	351-9918	1	LAMP GP-FLOOD	107
FRAME AND BODY				
SPRING AS-GAS (ENGINE HOOD)	392-1262	1	HOOD & GUARD GP	165
FUEL SYSTEM				
CAP AS-FUEL (LOCKABLE, VENTED)	349-7059	1	TANK GP-FUEL	85
FILTER AS-WATER SEP & FUEL (ULTRA HIGH EFFICIENCY)	438-5386	1	LINES GP-FUEL	72
FILTER ELEMENT-WTR SEP & FUEL	1R-1804	1	FILTER GP-FUEL	71
STRAINER (FUEL FILTER)	387-6403	1	FILTER GP-FUEL	71
STRAINER AS-FUEL (FLOAT GAUGE)	303-9933	1	TANK GP-FUEL	85
HYDRAULIC SYSTEM				
BREATHER (HYDRAULIC TANK)	227-0590	1	TANK & FILTER GP-HYDRAULIC	295
BREATHER (SWING DRIVE)	4H-6112	1	DRIVE GP-SWING	214
BREATHER AS (SWING DRIVE)	267-6744	1	DRIVE GP-SWING	214
CAP AS	6V-9831	2	LINES GP-BOOM CYLINDER	228
		2	LINES GP-BOOM CYLINDER	229
ELEMENT (HYDRAULIC RETURN FILTER)	398-7171	1	FILTER GP-OIL	220
FILTER-OIL (ADVANCED EFFICIENCY) (HYDRAULIC, CASE DRAIN)	093-7521	1	FILTER GP-OIL	219
FILTER-OIL (ADVANCED EFFICIENCY) (HYDRAULIC, PILOT)	5I-8670	1	FILTER & VALVE GP-PILOT	218
PLUG-DRAIN (HYDRAULIC OIL)	9J-7031	1	TANK & FILTER GP-HYDRAULIC	295
SCREEN AS (HYDRAULIC TANK)	209-6002	1	SCREEN GP-HYDRAULIC	281
LUBRICATION SYSTEM				
CAP-DUST	8C-3445	1	FILTER & MTG GP-ENGINE OIL	42
FILTER AS-ENGINE OIL (ADVANCED EFFICIENCY)	1R-1807	1	FILTER & MTG GP-ENGINE OIL	42
OPERATOR STATION				
BLADE AS-WIPER (600-MM)	161-3670	1	WIPER GP-WINDOW	425
CAP AS (WINDOW WASHER)	178-5431	1	WASHER GP-WINDOW	411
DRYER-REFRIGERANT (RECEIVER)	176-1902	1	LINES GP-AIR CONDITIONER	390
FILTER ELEMENT-CAB AIR	245-7823	1	AIR CONDITIONER GP	342
	293-1184	1	CAB GP	355
		1	DUCT GP-CAB AIR	384
LAMP (24-VOLT, 10-WATT)	201-4417	1	CAB GP	346
LAMP AS-DOME	176-1986	1	CAB GP	346
SEAT BELT GP (RETRACTABLE, 51-MM (2-IN))	327-6541	1	SEAT BELT GP	406

MAINTENANCE PARTS

DESCRIPTION	PART NUMBER	QTY	WHERE USED	PAGE
SEAT BELT GP (RETRACTABLE)	305-0467	1	CAB GP	355

INDEX

NAME PAGE

A

ACCUMULATOR GP-HYDRAULIC–CHARGED . . . 196
197
198
199
200
201
ACCUMULATOR GP-HYDRAULIC–UNCHARGED 202
ADJUSTER GP-BUCKET 332
AIR CLEANER & MOUNTING GP 61
AIR CLEANER GP 62
AIR CONDITIONER & MOUNTING GP 339
AIR CONDITIONER AR 341
AIR CONDITIONER GP 342
ALARM GP 87
ALARM GP-TRAVEL–BACKUP 88
ALTERNATOR GP-CHARGING 89
ARM GP-WINDOW WIPER 425
ARMREST GP–LH 345
ARMREST GP–RH 344

B

BATTERY & WIRING GP 91
BATTERY GP (12-VOLT, 750-CCA) 91
BELT-SERPENTINE 38
BLADE AS-WIPER (600-MM) 425
BLOCK GP-JUNCTION 97
BOOM AR-1 PIECE LONG 323
BOOM GP 324
BOX & MTG GP-STORAGE 152
BOX GP-STORAGE 153
BREATHER (HYDRAULIC TANK) 295
BREATHER (SWING DRIVE) 214
BREATHER AS (SWING DRIVE) 214
BUCKET & ADJUSTER GP–GENERAL PURPOSE 333
BUCKET & ADJUSTER GP–SEVERE SERVICE ROCK 333
BUCKET AS-GENERAL PURPOSE 334
BUCKET AS-SEVERE SERVICE ROCK 335
BUS BAR GP 103

C

CAB GP 349
351
355
CAB GP–EXTERIOR 346
CAB GP–INTERIOR 353
CAMSHAFT GP 6
7
CAP AS 228
229
CAP AS (COOLANT RECOVERY) 58
CAP AS (ENGINE OIL FILLER) 8
CAP AS (WINDOW WASHER) 411
CAP AS-FILLER (BATTERY) 91
CAP AS-FUEL (LOCKABLE, VENTED) 85
CAP-DUST 42
CAP-RADIATOR 56
CHASSIS AR 1
CIRCUIT BREAKER AS (40-AMPERE) (GLOW PLUG) 114
CIRCUIT BREAKER AS (60-AMPERE) (ALTERNATOR) 114
CIRCUIT BREAKER AS (80-AMPERE) (MAIN) 114
COIL GP-EVAPORATOR 356
COMPRESSOR & MTG GP-REFRIG 358
COMPRESSOR GP-REFRIGERANT 359
CONDENSER & MTG GP-REFRIGERANT 360
CONDENSER GP-REFRIGERANT 362
CONNECTION GP-WATER 46
CONSOLE GP-OPERATOR 365
CONSOLE GP-OPERATOR–LH 367
CONSOLE GP-OPERATOR–RH 363
CONTROL & MTG GP-COMMUNICATION–PRODUCT LINK 121SR 98
CONTROL & MTG GP-COMMUNICATION–PRODUCT LINK 321SR 100
CONTROL & MTG GP-ELECTRONIC 101
CONTROL & MTG GP-JOYSTICK 369
CONTROL GP-GOVERNOR 69
CONTROL GP-HANDLE–JOYSTICK, LH 370
CONTROL GP-HANDLE–JOYSTICK, RH 371
CONTROL GP-HEAT & AIR COND–AIR INLET 372
CONTROL GP-JOYSTICK–LH 374
CONTROL GP-JOYSTICK–RH 373
CONTROL GP-PILOT OPERATED HYD–TRAVEL 375
CONTROL GP-UNPROGRAMMED 102
COOLER GP-ENGINE OIL 48
49
COOLER GP-FLTR BASE & ENG OIL 50
CORE AS-HEATER 342
CORE AS-OIL COOLER (HYDRAULIC) 56
CORE AS-RADIATOR 56
COUNTERWEIGHT & MOUNTING GP 155
COUNTERWEIGHT GP 156
COUPLING GP-FLEXIBLE 203
COUPLING GP-PUMP 204
COVER AS-SOUND SUPPRESSION 157
COVER GP-CAB–REAR 376
COVER GP-CYLINDER HEAD 8
COVER GP-VALVE MECHANISM 9
CRANKSHAFT GP 10
11
12
CYLINDER & LINES GP-BOOM–LH 205
CYLINDER & LINES GP-BOOM–RH 205
CYLINDER & LINES GP-BUCKET 205
CYLINDER & LINES GP-STICK 205
CYLINDER & SEAL GP-BOOM 206
CYLINDER & SEAL GP-BUCKET 208
CYLINDER & SEAL GP-STICK 210

INDEX

NAME PAGE

CYLINDER BLOCK GP 13
14
15
CYLINDER HEAD GP. 16
17
18

D

DOOR & MTG GP-CAB. 377
378
379
DOOR GP-CAB 380
382
DRIVE GP-FAN 19
DRIVE GP-FINAL–WITH MOTOR 146
DRIVE GP-FINAL–WITH MOTOR, SPROCKET 149
DRIVE GP-FINAL–WITHOUT MOTOR 147
DRIVE GP-SWING–WITH MOTOR 214
215
DRIVE GP-SWING–WITHOUT MOTOR 212
DRYER-REFRIGERANT (RECEIVER). 390
DUCT GP-CAB AIR. 384

E

ELBOW GP-AIR INLET 63
ELECTRONICS GP-COMMUNICATION 102
ELECTRONICS GP-MACHINE 102
ELEMENT (HYDRAULIC RETURN FILTER). 220
ENGINE AR-COMPLETE 3
ENGINE AR-PRIMARY 3
4

F

FAN AR-SUCTION. 51
FAN GP-SUCTION–DIRECT DRIVE 52
FASTENER GP-SWING & FINAL DR 216
FILM GP–BRAZIL. 427
FILM-IDENTIFICATION (LIFT EYE LOCATION) 428
FILM-IDENTIFICATION (TIE-DOWN). 428
FILM-INFORMATION (24-VOLT). 428
FILM-INFORMATION (HYDO ADVANCED 10). . . 428
FILM-INFORMATION (PRODUCT LINK, READ OMM). 98
FILM-INSTRUCTION (PULL RING, ALTERNATE EXIT) 428
FILM-WARNING (CRUSH HAZARD, READ OMM, INTL) 428
FILM-WARNING (HIGH PRESSURE CYLINDER) 200
FILM-WARNING (PRODUCT LINK RADIO, INTL) 98
FILM-WARNING (PRODUCT LINK RADIO, U. S.). 98

NAME PAGE

FILM-WARNING (SEAT BELT, INTERNATIONAL). 428
FILM-WARNING (UNIVERSAL, READ OMM). . . . 428
FILTER & MTG GP-ENGINE OIL 42
FILTER & VALVE GP-PILOT–HYDRAULIC OIL 218
FILTER AS-ENGINE OIL (ADVANCED EFFICIENCY). 42
FILTER AS-WATER SEP & FUEL (ULTRA HIGH EFFICIENCY). 72
FILTER BASE & ENG OIL COOLER. 50
FILTER ELEMENT AS-AIR (PRIMARY). 62
FILTER ELEMENT AS-AIR (SECONDARY) 62
FILTER ELEMENT-CAB AIR. 342
355
384
FILTER ELEMENT-WTR SEP & FUEL 71
FILTER GP-CAB AIR 355
384
FILTER GP-FUEL. 71
FILTER GP-FUEL (24-VOLT, LONG BOWL) 72
FILTER GP-OIL–HYDRAULIC, CASE DRAIN. . . . 219
FILTER GP-OIL–HYDRAULIC, MAIN RETURN. 220
FILTER-OIL (ADVANCED EFFICIENCY) (HYDRAULIC, CASE DRAIN) 219
FILTER-OIL (ADVANCED EFFICIENCY) (HYDRAULIC, PILOT) 218
FINAL DRIVE GP 146
147
149
FITTING GP-HYDRAULIC 221
FLOOR MAT 385
FLYWHEEL GP 20
FRAME AR-UNDERCARRIAGE 177
FRAME AS-UNDERCARRIAGE 178
FRAME GP-UPPER. 158
FUMES DISPOSAL GP 44
FUSE (10-AMPERE) 129
FUSE (15-AMPERE) 129
FUSE (20-AMPERE) 129
FUSE (25-AMPERE) 129
FUSE (30-AMPERE) 129
FUSE (5-AMPERE) 114
129

G

GASKET 13
50
63
67
GASKET (VALVE COVER) 8
GASKET-MANIFOLD 67
GASKET-TURBOCHARGER 67
GAUGE AS-OIL LEVEL (DIPSTICK) (ENGINE). . . 28
GAUGE GP-SIGHT–HYDRAULIC OIL LEVEL . . . 222
GAUGE-OIL LEVEL. 214
GEAR & BEARING GP-SWING. 160
161

INDEX

NAME PAGE

GENERAL AR 1
GLOW PLUG (24-VOLT) 103
GLOW PLUG GP 103
GUARD GP-BOTTOM 163
GUARD GP-TRACK GUIDE–CENTER 179
GUARD GP-TRAVEL MOTOR 180

H

HANDRAIL GP–FRONT, RH 164
HARNESS AS-CAB 129
HARNESS AS-CAB (MONITOR) 396
HARNESS AS-CHASSIS (CAB BULKHEAD) 92
HARNESS AS-CHASSIS (FUEL) 73
HARNESS AS-CONSOLE 137
140
HARNESS AS-CONTROL (PRODUCT LINK 321SR, ISO) 135
HARNESS AS-HEATER & AIR COND 342
HARNESS AS-HEATER & AIR COND (LOW SIDE) 339
HARNESS AS-LIGHTING (BOOM, LH) 109
HARNESS AS-LIGHTING (BOOM, RH) 110
HARNESS AS-LIGHTING (CAB LIGHT) 111
HARNESS AS-PANEL 117
HARNESS AS-PLATFORM (BEACON) 143
HARNESS AS-WIRING (HORN) 388
HATCH GP-ROOF 386
HEAD GP-MOTOR 269
HEAD GP-PUMP 223
HOOD & GUARD GP 165
HOOD GP-ENGINE 168
HORN GP-ELECTRIC 387
388
HOSE-RADIATOR (LOWER) 58
HOSE-RADIATOR (UPPER) 58
HOUSING GP-FLYWHEEL 21
HOUSING GP-FRONT 22
24
HYDRAULIC AR 225

I

IDLER GP-FRONT 181
182
IDLER GP-FRONT–LH 184
IDLER GP-FRONT–RH 183
INDICATOR-FUEL FILTER CHANGE 72
INSTALLATION AR-COMMUNICATION–PRODUCT LINK 321SR 104
INSTALLATION AR-ENGINE 5

K

KEY (BATTERY DISCONNECT) 125

NAME PAGE

L

LAMP (24-VOLT, 10-WATT) 346
LAMP AS (24-VOLT, 3-WATT) 117
LAMP AS-DOME 346
LAMP GP-FLOOD 105
106
107
LAMP-HALOGEN (24-VOLT, 70-WATT) 105
106
LAMP-HALOGEN (24-VOLT, 70-WATT) (FLOODLIGHT) 107
LEVER GP-CAB DOOR 389
LIFTING GP-ENGINE 25
LIGHTING GP-FLOOD 111
LIGHTING GP-FLOOD–BOOM, LH 109
LIGHTING GP-FLOOD–BOOM, RH 110
LIGHTING GP-FLOOD–CHASSIS 108
LINES GP-AIR 65
LINES GP-AIR CONDITIONER 390
LINES GP-BOOM 226
LINES GP-BOOM CYLINDER–LH 228
LINES GP-BOOM CYLINDER–RH 229
LINES GP-BUCKET CYLINDER 230
LINES GP-COOLING 53
LINES GP-CYLINDER–BOOM 231
LINES GP-DRAIN 234
LINES GP-FRONT 235
LINES GP-FUEL 72
76
LINES GP-GREASE 326
LINES GP-HYDRAULIC OIL COOLER 240
LINES GP-HYDRAULIC–HYDRAULIC TANK, FILTER 238
LINES GP-PILOT–CONTROL VALVE 251
LINES GP-PILOT–FILTER, PILOT PUMP 248
LINES GP-PILOT–MAIN CONTROL VALVE 241
LINES GP-PILOT–PILOT CONTROL 245
LINES GP-PUMP 259
LINES GP-PUMP–REAR 257
LINES GP-STICK 261
LINES GP-STICK CYLINDER 262
LINES GP-TRAVEL MOTOR–LONG CARRIAGE 263
LINK AS-TRACK 185
LINKAGE AR-BUCKET–WITH LIFTING EYE 327
LINKAGE GP-BUCKET–WITH LIFTING EYE 328
LITERATURE GP 1
393

M

MANIFOLD GP-CONTROL–PILOT OIL SUPPLY 265
266
267
METER GP-SERVICE 129
MIRROR GP-REAR VIEW 346
394
395

INDEX

NAME PAGE

MONITOR & MTG GP-OPERATOR 396
MONITOR GP-OPERATOR 397
398
MOTOR & MTG GP-TRAVEL. 268
MOTOR AS-WINDOW WIPER 425
MOTOR GP-PISTON. 269
MOTOR GP-SWING 271
MOTOR GP-TRAVEL 272
MOUNTING GP-ANTENNA–PRODUCT LINK 399
MOUNTING GP-ENGINE 26
27
MOUNTING GP-MAIN CONTROL VALVE. 275
MOUNTING GP-PLATFORM 400
MUFFLER GP. 66

O

OPERATOR AR 402
OPTION AR-CAB 1
OPTION AR-REGIONAL. 2

P

PADLOCK GP. 84
PAN GP-OIL 28
PANEL & MTG GP-CIRCUIT BREAKER. 113
PANEL GP-CIRCUIT BREAKER 114
PANEL GP-SWITCH–CONSOLE 117
PISTON & ROD GP 30
32
PLATE & FILM GP 428
PLATE-WARNING (HIGH PRESSURE CYLINDER) 191
192
PLATFORM GP-OPERATOR. 403
PLUG GP-ENGINE 33
34
35
36
PLUG-DRAIN (ENGINE OIL). 28
PLUG-DRAIN (HYDRAULIC OIL) 295
POWER TRAIN AR. 150
PULLEY GP-CRANKSHAFT 37
PULLEY GP-FAN. 38
PUMP & MTG GP-MAIN HYDRAULIC. 276
PUMP GP-ENGINE OIL 45
PUMP GP-FUEL INJECTION 77
78
79
82
PUMP GP-GEAR 277
PUMP GP-PISTON–DOUBLE PISTON. 278
PUMP GP-WATER. 54

R

RADIATOR & HYD OIL COOLER GP. 56
58
RADIO GP-COMMUNICATION–PRODUCT LINK 121SR 119
REGULATOR GP-TEMPERATURE (INCLUDES CONNECTOR). 46
RELAY (24-VOLT) (BOOM FLOODLIGHT) 129
RELAY (24-VOLT) (CAB LIGHT) 129
RELAY (24-VOLT) (CHASSIS LIGHT) 129
RELAY (24-VOLT) (ELECTRIC PRIMING). 129
RELAY (24-VOLT) (ETHER START). 129
RELAY (24-VOLT) (HORN) 129
RELAY (24-VOLT) (NEUTRAL START) 129
RELAY (24-VOLT) (PUMP) 129
RELAY (BLOWER). 372
RELAY (COMPRESSOR CLUTCH). 372
RELAY AS (WIPER) 425
ROCKER ARM GP 39
ROLLER AR-TRACK & CARRIER. 186
ROLLER GP-TRACK CARRIER 187
ROLLER GP-TRACK-SINGLE FLANGE 188
189
190

S

SCREEN AS (HYDRAULIC TANK) 281
SCREEN GP-HYDRAULIC–TANK 281
SCREEN GP-SUN 404
SEAT & MOUNTING GP–HIGH BACK, TILT. . . . 405
SEAT BELT GP (RETRACTABLE, 51-MM (2-IN)). 406
SEAT BELT GP (RETRACTABLE) 355
SEAT BELT GP–RETRACTABLE 406
SEAT GP-SUSPENSION–HIGH BACK, TILT 408
SEAT GP–HIGH BACK, TILT 407
SENDER AS-FUEL LEVEL 85
SENDER GP-TEMPERATURE (COOLANT) 123
SENSOR AS-PRESSURE (MAIN HYDRAULIC PUMP). 248
SENSOR AS-TEMPERATURE (AIR). 372
SENSOR AS-TEMPERATURE (AMBIENT AIR TEMP) 342
SENSOR AS-TEMPERATURE (COOLANT) 342
SENSOR GP-LIQUID LEVEL 120
SENSOR GP-LIQUID LEVEL (WATER IN FUEL) 72
SENSOR GP-PRESSURE 121
SENSOR GP-PRESSURE (AIR INLET) 65
SENSOR GP-PRESSURE (FUEL). 72
121
123
SENSOR GP-SPEED 122
SENSOR GP-SPEED (MAGNETIC). 91
SENSOR GP-TEMP & PRESS 5
123
SENSOR-TEMPERATURE (AMBIENT AIR) 339
SENSOR-TEMPERATURE (HYDRAULIC OIL) . . . 295
SHEET AS-SOUND SUPPRESSION 169
170
171
172

INDEX

NAME PAGE

SIDECUTTER GP 336
SOFTWARE GP-COMMUNICATION (PRODUCT LINK 121SR) 119
SOFTWARE GP-MACHINE 102
SOFTWARE GP-MONITOR 397 398
SOFTWARE GP-MONITOR (VIMS MAIN, PROGRAM) 102
SPOOL GP-CONTROL VALVE 283
SPOOL GP-CONTROL VALVE–BOOM 1 292
SPOOL GP-CONTROL VALVE–BOOM 2 287
SPOOL GP-CONTROL VALVE–BUCKET 291
SPOOL GP-CONTROL VALVE–COMBINED FLOW 285
SPOOL GP-CONTROL VALVE–STICK 1 288
SPOOL GP-CONTROL VALVE–STICK 2 289
SPOOL GP-CONTROL VALVE–STICK REGENERATION 290
SPOOL GP-CONTROL VALVE–SWING 284
SPOOL GP-CONTROL VALVE–SWING PRIORITY 286
SPOOL GP-CONTROL VALVE–WORK TOOL 282
SPRING AS-GAS (ENGINE HOOD) 165
SPRING AS-GAS (HATCH) 386
SPROCKET GP 151
STARTING MOTOR GP-ELECTRIC 124
STEP GP 173
STICK AR-HOE–REACH 330
STICK GP-HOE 331
STRAINER (FUEL FILTER) 71
STRAINER AS-FUEL (FLOAT GAUGE) 85
SUPPORT AS-SOUND SUPPRESSION 174 175 176
SUPPORT GP-SEAT 409
SUSPENSION GP-SEAT–MECHANICAL 410
SWITCH (WINDOW LOWER LIMIT) 415
SWITCH AS-LIMIT (HYDRAULIC LOCKOUT) 126
SWITCH AS-LIQUID LEVEL (ENGINE OIL) 28
SWITCH AS-MAGNETIC (24-VOLT) (MAIN RELAY) 129
SWITCH AS-PRESSURE (HYDRAULIC OIL) 295
SWITCH AS-PRESSURE (IMPLEMENT) 241
SWITCH AS-PUSH BUTTON (HORN) 370
SWITCH AS-PUSH BUTTON (MANUAL LOW IDLE) 371
SWITCH AS-TOGGLE (SECONDARY SHUTDOWN) 143
SWITCH GP-DISCONNECT (BATTERY) 114
SWITCH GP-DISCONNECT–BATTERY 125
SWITCH GP-LIMIT–HYDRAULIC LOCKOUT 126
SWITCH GP-MAGNETIC 127
SWITCH GP-MAGNETIC (24-VOLT) (START RELAY) 114
SWITCH GP-START–ENGINE, KEY 128
SWITCH-TEMPERATURE (FUEL) 79 82
SWIVEL GP 293

NAME PAGE

T

TANK & FILTER GP-HYDRAULIC 295
TANK & MTG GP-FUEL 84
TANK & MTG GP-HYDRAULIC 298
TANK GP-FUEL 85
TIP GP-PENETRATION PLUS 337 338
TRACK ADJUSTER & RECOIL GP 193 194
TRACK ADJUSTER & RECOIL GP–LH 192
TRACK ADJUSTER & RECOIL GP–RH 191
TRACK GP–2-REQUIRED 195
TURBOCHARGER GP 67

V

VALVE GP-CHECK–COOLER BYPASS 299
VALVE GP-COOLANT SAMPLING 60
VALVE GP-FLUID SAMPLING 295
VALVE GP-FLUID SAMPLING (COOLANT) 60
VALVE GP-MAIN CONTROL 300
VALVE GP-PILOT RELIEF 310
VALVE GP-PILOT RELIEF (HYDRAULIC FILTER) 218
VALVE GP-PILOT RELIEF–LINE 311
VALVE GP-PILOT–JOYSTICK 306
VALVE GP-PILOT–WITHOUT SHUTTLE 308
VALVE GP-PRESSURE REDUCING–BOOM PRIORITY 312
VALVE GP-RELIEF 313 314 315 322
VALVE GP-RELIEF–DIRECT OPERATED 317
VALVE GP-RELIEF–LINE 316
VALVE GP-SHUTTLE 318
VALVE GP-SOLENOID 319 320
VALVE GP-SOLENOID (24-VOLT) 82
VALVE GP-SOLENOID (24-VOLT) (FUEL SHUTOFF) 77
VALVE GP-SOLENOID (HYDRAULIC LOCKOUT) 266 267
VALVE GP-SOLENOID (PRESSURE REDUCING) (PUMP CONTROL) 278
VALVE GP-SOLENOID (SWING BRAKE RELEASE) 266 267
VALVE GP-SOLENOID (TRAVEL SPEED) 266 267
VALVE GP-SWING CUSHION–CROSSOVER RELIEF 321
VALVE GP-TRAVEL COUNTERBALANCE 322
VALVE MECHANISM GP 40 41

NAME PAGE NAME PAGE

W

WASHER GP-WINDOW 411
WINDOW GP-CAB–FRONT, LOWER 413
WINDOW GP-CAB–FRONT, UPPER 415
418
420
WINDOW GP-CAB–SIDE, REAR 412
WINDOW GP-DOOR 421
423
WIPER GP-WINDOW–FRONT, UPPER 425
WIRING GP-CAB 129
WIRING GP-COMMUNICATION–PRODUCT LINK 321SR 135
WIRING GP-CONSOLE 139
WIRING GP-CONSOLE–LH 137
WIRING GP-CONSOLE–RH 140
WIRING GP-CONVERTER 142
WIRING GP-PLATFORM 143

MEMORANDA

MACHINE ARRANGEMENT

454-5583 CHASSIS AR

S/N: XAH1-UP

PART OF 454-5582 GENERAL AR

SMCS-7000 **i05984027**

NOTE	PART NUMBER	QTY	PART NAME 1 2 3 4 5 6 (PRODUCT LEVEL)	SEE PAGE
Y	*440-6914*	1	BATTERY & WIRING GP	91
Y	*393-8574*	1	BOX & MTG GP-STORAGE	152
Y	*388-6703*	1	CONTROL GP-GOVERNOR	69
Y	*387-3488*	1	FRAME GP-UPPER	158
Y	*170-2602*	1	HANDRAIL GP (FRONT, RH)	164
Y	*390-3675*	1	HOOD & GUARD GP	165
Y	*275-6874*	1	HORN GP-ELECTRIC	387
Y	*4I-5409*	1	LIGHTING GP-FLOOD (CHASSIS)	108
Y	*383-5676*	1	LINES GP-AIR CONDITIONER	390
Y	*387-2625*	1	LINES GP-FUEL	72
Y	*7Y-0059*	1	LITERATURE GP	393
Y	*142-3836*	1	MIRROR GP-REAR VIEW	394
Y	*245-7811*	1	MOUNTING GP-PLATFORM	400
Y	*451-3987*	1	OPERATOR AR	402
Y	*471-2096*	1	PLATE & FILM GP	428
Y	*384-9014*	1	STEP GP	173
Y	*391-4295*	1	TANK & MTG GP-FUEL	84

Y - SEPARATE ILLUSTRATION

<END>

454-5582 GENERAL AR

S/N: XAH1-UP

SMCS-7000 **i05963159**

NOTE	PART NUMBER	QTY	PART NAME 1 2 3 4 5 6 (PRODUCT LEVEL)	SEE PAGE
Y	*454-5583*	1	CHASSIS AR	1
Y	*436-1866*	1	ELECTRONICS GP-MACHINE	102
Y	*455-1948*	1	ENGINE AR-COMPLETE	3
Y	*260-6975*	1	FRAME AR-UNDERCARRIAGE	177
Y	*455-7664*	1	HYDRAULIC AR	225
Y	*387-2619*	1	INSTALLATION AR-ENGINE	5
Y	*267-6738*	1	POWER TRAIN AR	150

Y - SEPARATE ILLUSTRATION

<END>

454-5645 OPTION AR-CAB

S/N: XAH1-UP

AN ATTACHMENT

SMCS-7000 **i05957231**

NOTE	PART NUMBER	QTY	PART NAME 1 2 3 4 5 6 (PRODUCT LEVEL)	SEE PAGE
Y	*418-9897*	1	AIR CONDITIONER AR	341
Y	*416-9606*	1	CAB GP	349
Y	*456-6742*	1	CAB GP (COMFORT)	355
Y	*229-9070*	1	WASHER GP-WINDOW	411
Y	*350-8254*	1	WIRING GP-CONVERTER (12-VOLT, 10-AMPERE)	142

Y - SEPARATE ILLUSTRATION

<END>

MACHINE ARRANGEMENT

397-4688 OPTION AR-REGIONAL

S/N: XAH1-UP

AN ATTACHMENT

SMCS-7000 **i05412655**

NOTE	PART NUMBER	QTY	PART NAME 1 2 3 4 5 6 (PRODUCT LEVEL)	SEE PAGE
Y	*231-1771*	1	ALARM GP-TRAVEL (BACKUP)	88

Y - SEPARATE ILLUSTRATION

<END>

ENGINE ARRANGEMENT

455-1948 ENGINE AR-COMPLETE

S/N: XAH1-UP

PART OF 454-5582 GENERAL AR

SMCS-1000 **i05962477**

NOTE	PART NUMBER	QTY	PART NAME 1 2 3 4 5 6 (PRODUCT LEVEL)	SEE PAGE
Y	*456-1375*	1	ENGINE AR-PRIMARY	3
Y	*390-8835*	1	FAN AR-SUCTION	51
Y	*387-2646*	1	MUFFLER GP	66
			PLEASE USE THE GASKET KIT LINK IN SIS OR CONTACT YOUR LOCAL DEALER FOR THE LATEST GASKET KIT INFORMATION	

Y - SEPARATE ILLUSTRATION

<END>

456-1375 ENGINE AR-PRIMARY

S/N: G4D1-UP

94 BRAKE KW (126 BHP) AT 2000 RPM

FIELD REPLACEMENT ORDER 470-9228—PAGE: 4

PART OF 455-1948 ENGINE AR-COMPLETE

SMCS-1000 **i05955450**

NOTE	PART NUMBER	QTY	PART NAME 1 2 3 4 5 6 (PRODUCT LEVEL)	SEE PAGE
Y	*421-7109*	1	ALTERNATOR GP-CHARGING	89
Y	*441-4677*	1	CAMSHAFT GP	6
Y	*231-0033*	1	CONNECTION GP-WATER	46
Y	*421-7107*	1	COOLER GP-ENGINE OIL	49
Y	*460-0449*	1	COVER GP-VALVE MECHANISM	9
Y	*441-4672*	1	CRANKSHAFT GP	11
Y	*441-4671*	1	CYLINDER BLOCK GP	14
Y	*441-4674*	1	CYLINDER HEAD GP	17
Y	*421-7104*	1	DRIVE GP-FAN	19
Y	*256-4440*	1	ELBOW GP-AIR INLET	63
Y	*421-7102*	1	FLYWHEEL GP	20
Y	*233-9834*	1	GLOW PLUG GP	103
Y	*421-7101*	1	HOUSING GP-FLYWHEEL	21
Y	*313-1380*	1	HOUSING GP-FRONT	22
Y	*232-3713*	1	LIFTING GP-ENGINE	25
Y	*460-0656*	1	LINES GP-FUEL	76
Y	*421-7111*	1	MOUNTING GP-ENGINE	27
Y	*421-7105*	1	PAN GP-OIL	28
Y	*441-4673*	1	PISTON & ROD GP	30
Y	*230-7569*	1	PLUG GP-ENGINE	33
Y	*232-3716*	1	PLUG GP-ENGINE	34
Y	*232-6204*	1	PLUG GP-ENGINE	35
Y	*234-4215*	1	PLUG GP-ENGINE	36
Y	*360-7354*	1	PULLEY GP-CRANKSHAFT	37
Y	*230-7578*	1	PUMP GP-ENGINE OIL	45
Y	*462-8135*	1	PUMP GP-FUEL INJECTION	82
Y	*230-7355*	1	PUMP GP-WATER	54
Y	*460-0440*	1	STARTING MOTOR GP-ELECTRIC	124
Y	*234-3465*	1	TURBOCHARGER GP	67
Y	*441-4675*	1	VALVE MECHANISM GP	40
R	**359-0734**	1	CYLINDER BLOCK GP-SHORT	

R - REMFG PART MAY BE AVAILABLE
Y - SEPARATE ILLUSTRATION

<END>

ENGINE ARRANGEMENT

470-9228 ENGINE AR-PRIMARY

S/N: G4D1-UP

94 BRAKE KW (126 BHP) AT 2000 RPM

FIELD REPLACEMENT FOR 456-1375—PAGE: 3

SMCS-1000 **i05962694**

NOTE	PART NUMBER	QTY	PART NAME 1 2 3 4 5 6 (PRODUCT LEVEL)	SEE PAGE
Y	*421-7109*	1	ALTERNATOR GP-CHARGING	89
Y	*458-3306*	1	CAMSHAFT GP	7
Y	*231-0033*	1	CONNECTION GP-WATER	46
Y	*460-0525*	1	COOLER GP-FLTR BASE & ENG OIL	50
Y	*460-0449*	1	COVER GP-VALVE MECHANISM	9
Y	*458-3301*	1	CRANKSHAFT GP	12
Y	*458-3300*	1	CYLINDER BLOCK GP	15
Y	*458-3303*	1	CYLINDER HEAD GP	18
Y	*421-7104*	1	DRIVE GP-FAN	19
Y	*256-4440*	1	ELBOW GP-AIR INLET	63
Y	*421-7102*	1	FLYWHEEL GP	20
Y	*233-9834*	1	GLOW PLUG GP	103
Y	*421-7101*	1	HOUSING GP-FLYWHEEL	21
Y	*460-0596*	1	HOUSING GP-FRONT	24
Y	*232-3713*	1	LIFTING GP-ENGINE	25
Y	*460-0656*	1	LINES GP-FUEL	76
Y	*421-7111*	1	MOUNTING GP-ENGINE	27
Y	*421-7105*	1	PAN GP-OIL	28
Y	*458-3302*	1	PISTON & ROD GP	32
Y	*230-7569*	1	PLUG GP-ENGINE	33
Y	*232-3716*	1	PLUG GP-ENGINE	34
Y	*232-6204*	1	PLUG GP-ENGINE	35
Y	*234-4215*	1	PLUG GP-ENGINE	36
Y	*360-7354*	1	PULLEY GP-CRANKSHAFT	37
Y	*230-7578*	1	PUMP GP-ENGINE OIL	45
Y	*421-7744*	1	PUMP GP-FUEL INJECTION	79
Y	*230-7355*	1	PUMP GP-WATER	54
Y	*460-0440*	1	STARTING MOTOR GP-ELECTRIC	124
Y	*234-3465*	1	TURBOCHARGER GP	67
Y	*458-3304*	1	VALVE MECHANISM GP	41
R	**359-0734**	1	CYLINDER BLOCK GP-SHORT	

R - REMFG PART MAY BE AVAILABLE
Y - SEPARATE ILLUSTRATION

<END>

ENGINE ARRANGEMENT

387-2619 INSTALLATION AR-ENGINE

S/N: XAH1-UP

PART OF 454-5582 GENERAL AR

SMCS-1000 **i05775913**

NOTE	PART NUMBER	QTY	PART NAME 1 2 3 4 5 6 (PRODUCT LEVEL)	SEE PAGE
Y	*387-2620*	1	AIR CLEANER & MOUNTING GP	61
Y	*387-2610*	1	COMPRESSOR & MTG GP-REFRIG	358
Y	*383-5675*	1	CONDENSER & MTG GP-REFRIGERANT	360
Y	*387-2622*	1	FILTER & MTG GP-ENGINE OIL	42
Y	*387-2614*	1	FUMES DISPOSAL GP	44
Y	*387-2623*	1	LINES GP-AIR	65
Y	*390-8838*	1	LINES GP-COOLING	53
Y	*395-3380*	1	LINES GP-DRAIN	234
Y	*387-2615*	1	MOUNTING GP-ENGINE	26
Y	*390-8837*	1	RADIATOR & HYD OIL COOLER GP	58
Y	*392-3904*	1	SENSOR GP-TEMP & PRESS	123
Y	*396-0293*	1	VALVE GP-COOLANT	60

Y - SEPARATE ILLUSTRATION

<END>

441-4677 CAMSHAFT GP

S/N: G4D1-UP

PART OF 456-1375 ENGINE AR-PRIMARY

SMCS-1210 **i05955476**

NOTE	REF NO	GRAPHIC REF	PART NUMBER	QTY	PART NAME 1 2 3 4 5 6 (PRODUCT LEVEL)	SEE PAGE
	1	1	**067-6095**	8	ROD	
	2	1	**138-2053**	8	TAPPET	
	3	1	**350-2374**	1	CAMSHAFT AS	
	3A	1	**067-6135**	1	KEY-WOODRUFF	

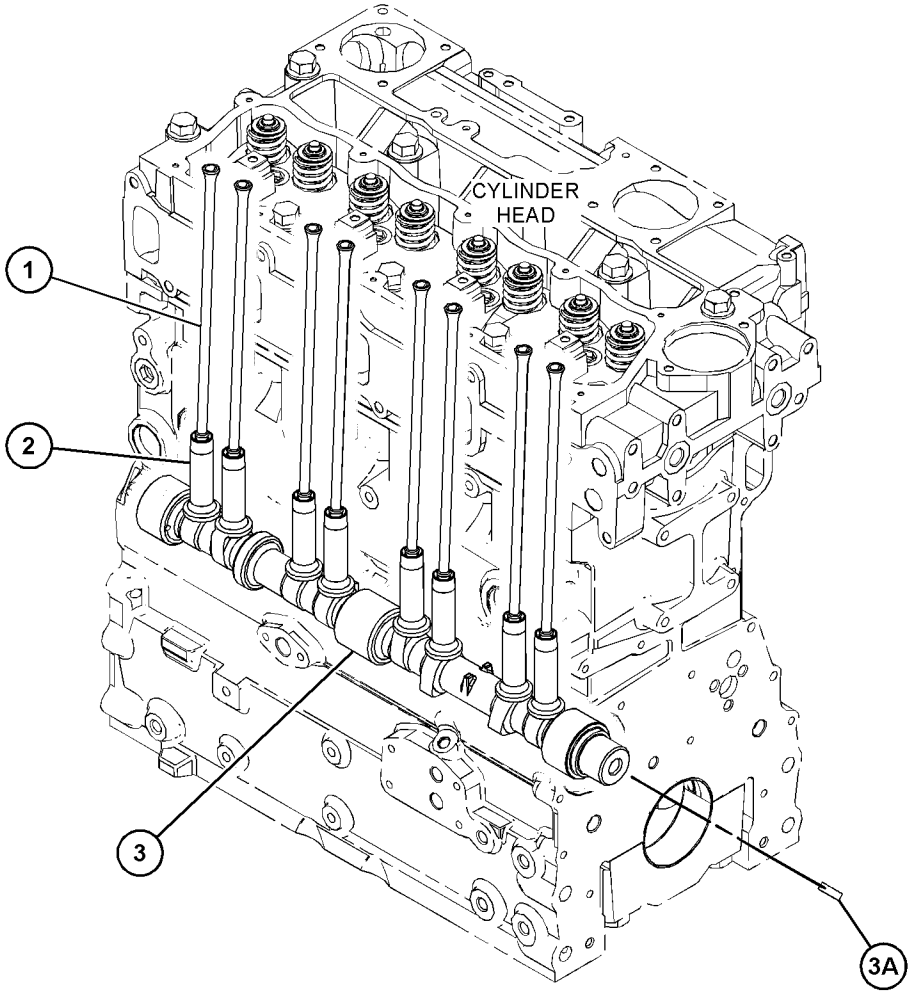

GRAPHIC #1 **<END>** g03744601

458-3306 CAMSHAFT GP

S/N: G4D1-UP

PART OF 470-9228 ENGINE AR-PRIMARY

SMCS-1210 **i05962763**

NOTE	REF NO	GRAPHIC REF	PART NUMBER	QTY	PART NAME 1 2 3 4 5 6 (PRODUCT LEVEL)	SEE PAGE
	1	1	**067-6095**	8	ROD	
	2	1	**138-2053**	8	TAPPET	
	3	1	**350-2374**	1	CAMSHAFT AS	
	3A	1	**1B-8736**	1	KEY-WOODRUFF	

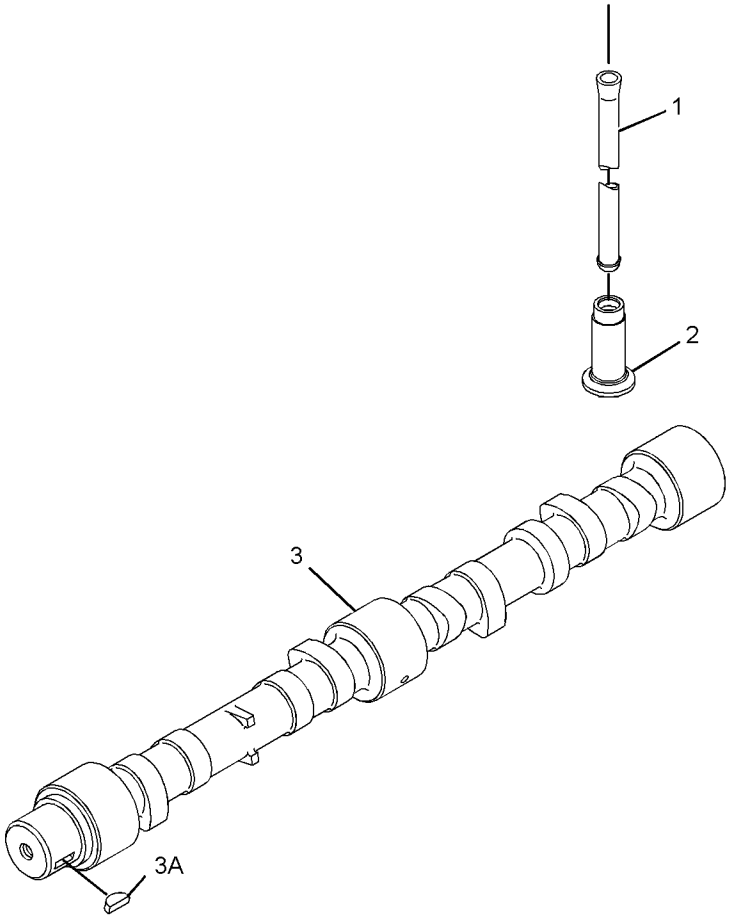

GRAPHIC #1 **<END>** g01964670

446-9163 COVER GP-CYLINDER HEAD

S/N: G4D1-UP

PART OF 460-0449 COVER GP-VALVE MECHANISM

SMCS-1101 **i05865920**

NOTE	REF NO	GRAPHIC REF	PART NUMBER	QTY	PART NAME 1 2 3 4 5 6 (PRODUCT LEVEL)	SEE PAGE
	1	1	**225-6451**	1	GASKET (VALVE COVER)	
	2	1	**225-6478**	4	SCREW-MACHINE	
	3	1	**431-1704**	1	PLATE	
	4	1	**136-3608**	1	CAP AS (ENGINE OIL FILLER)	
	4A	1	**124-0506**	1	SEAL	
	5	1	**349-2746**	10	BOLT	

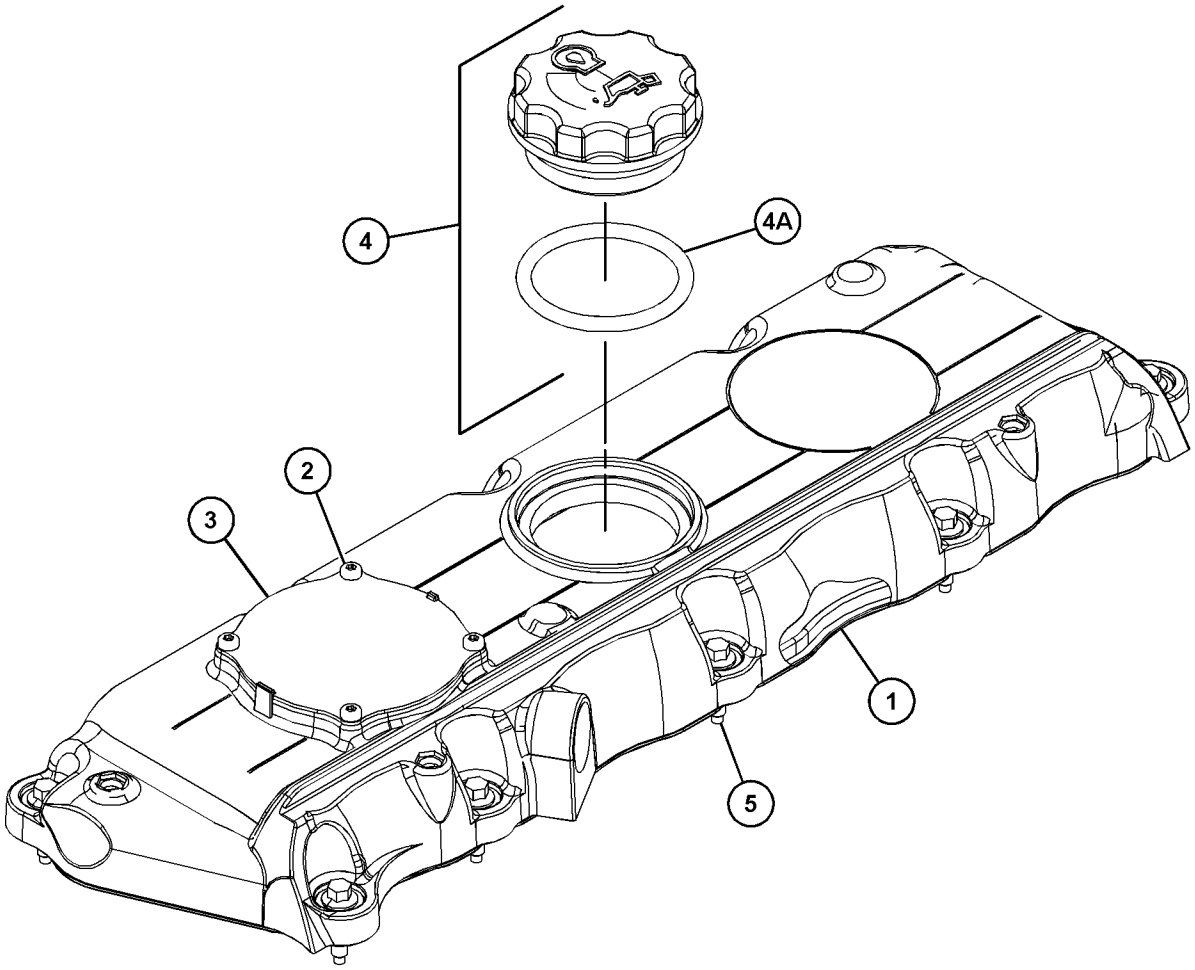

GRAPHIC #1 **<END>** g03702115

460-0449 COVER GP-VALVE MECHANISM

S/N: G4D1-UP

PART OF 456-1375, 470-9228 ENGINE AR-PRIMARY

SMCS-1107 **i05955457**

NOTE	REF NO	GRAPHIC REF	PART NUMBER	QTY	PART NAME 1 2 3 4 5 6 (PRODUCT LEVEL)	SEE PAGE
	1	1	**6I-0846**	3	BOLT (M6X1X14-MM)	
	2	1	**100-4838**	2	BOLT (M6X1X20-MM)	
	3	1	**225-6522**	1	PLUG-CUP	
	4	1	**225-6524**	1	PLUG-CUP	
	5	1	**230-9127**	1	COVER	
	6	1	**287-8573**	1	PIPE AS	
	6A	1	**150-7732**	1	SEAL-O-RING	
	6B	1	**286-3030**	1	RING-SEAL	
Y	7	1	*446-9163*	1	COVER GP-CYLINDER HEAD	8

Y - SEPARATE ILLUSTRATION

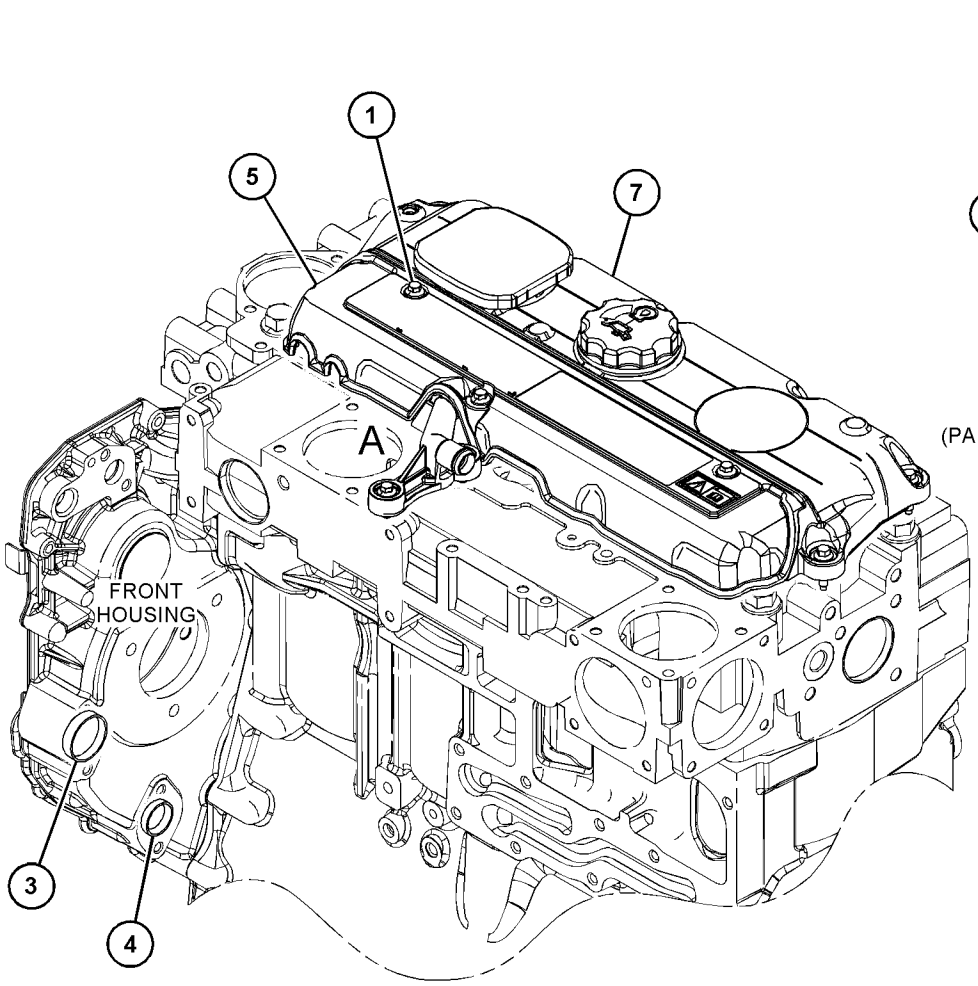

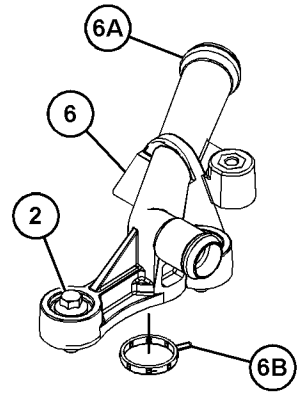

VIEW OF AREA A
(PARTS REMOVED FOR CLARITY)

GRAPHIC #1 **<END>** g03703094

359-0715 CRANKSHAFT GP

S/N: G4D1-UP
W/O SPLINE
PART OF 441-4672, 458-3301 CRANKSHAFT GP

SMCS-1202 **i05294623**

NOTE	REF NO	GRAPHIC REF	PART NUMBER	QTY	PART NAME 1 2 3 4 5 6 (PRODUCT LEVEL)	SEE PAGE
	1	1	**032-9090**	2	WASHER-THRUST (STANDARD-UPPER)	
AB		1	**067-6873**		WASHER-THRUST (0.18-MM OS)	
	2	1	**032-9091**	2	WASHER-THRUST (STANDARD-LOWER)	
AB		1	**067-6874**		WASHER-THRUST (0.18-MM OS)	
	3	1	**353-7423**	1	KIT-BEARING (MAIN)	
AB		1	**233-3786**		KIT-CRANKSHAFT BEARING (0.75-MM US)	
AB		1	**353-7424**		KIT-BEARING (0.25-MM US) (0.25-MM US)	
AB		1	**353-7425**		KIT-BEARING (0.50-MM US)	
AB		1	**353-7426**		KIT-BEARING (0.75-MM US)	
	4	1	**360-3986**	1	KIT-BEARING (CONNECTING ROD) (STANDARD)	

A - NOT PART OF THIS GROUP
B - USE AS REQUIRED

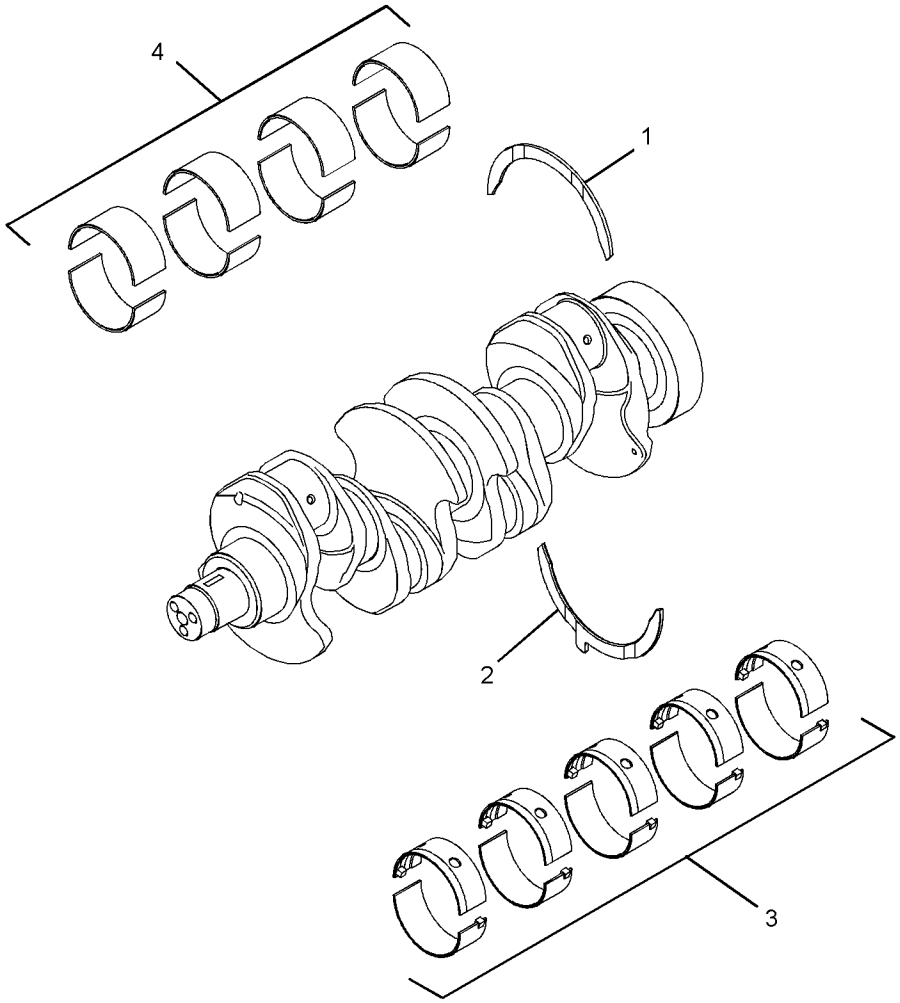

GRAPHIC #1 **<END>** g02174712

441-4672 CRANKSHAFT GP

S/N: G4D1-UP

PART OF 456-1375 ENGINE AR-PRIMARY

SMCS-1202 **i05955473**

NOTE	REF NO	GRAPHIC REF	PART NUMBER	QTY	PART NAME 1 2 3 4 5 6 (PRODUCT LEVEL)	SEE PAGE
	1	1	**067-6135**	1	KEY-WOODRUFF	
	2	1	**216-8314**	1	GEAR-CRANKSHAFT (34-TEETH)	
Y	3	1	**359-0715**	1	CRANKSHAFT GP (W/O SPLINE)	10

Y - SEPARATE ILLUSTRATION

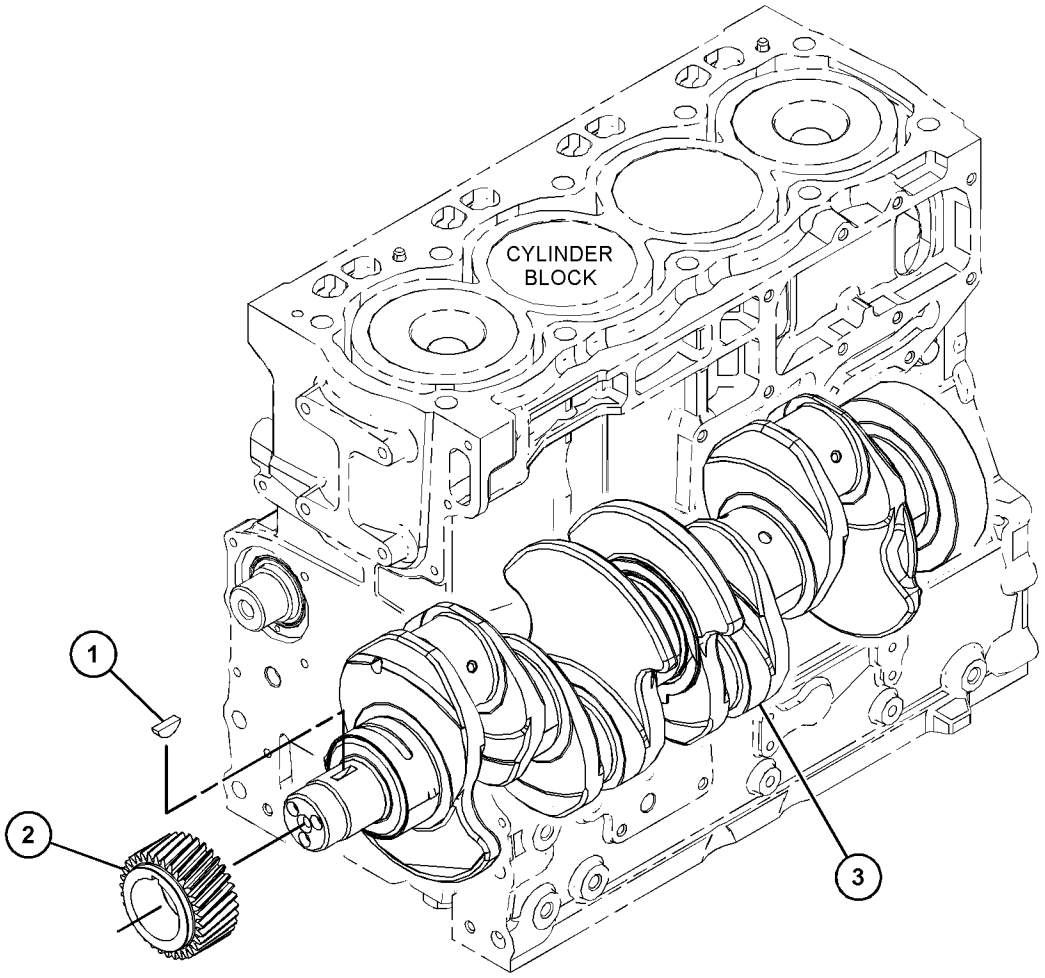

GRAPHIC #1 **<END>** g03743306

458-3301 CRANKSHAFT GP

S/N: G4D1-UP

PART OF 470-9228 ENGINE AR-PRIMARY

SMCS-1202 **i05962768**

NOTE	REF NO	GRAPHIC REF	PART NUMBER	QTY	PART NAME 1 2 3 4 5 6 (PRODUCT LEVEL)	SEE PAGE
	1	1	**216-8314**	1	GEAR-CRANKSHAFT (34-TEETH)	
JY	2	1	**359-0715**	1	CRANKSHAFT GP (W/O SPLINE) (CONNECTING ROD, 68-MM DIA)	10
	3	1	**067-6135**	1	KEY-WOODRUFF	

J - CHECK CONNECTING ROD JOURNAL TO ENSURE THIS IS THE CORRECT CRANKSHAFT
Y - SEPARATE ILLUSTRATION

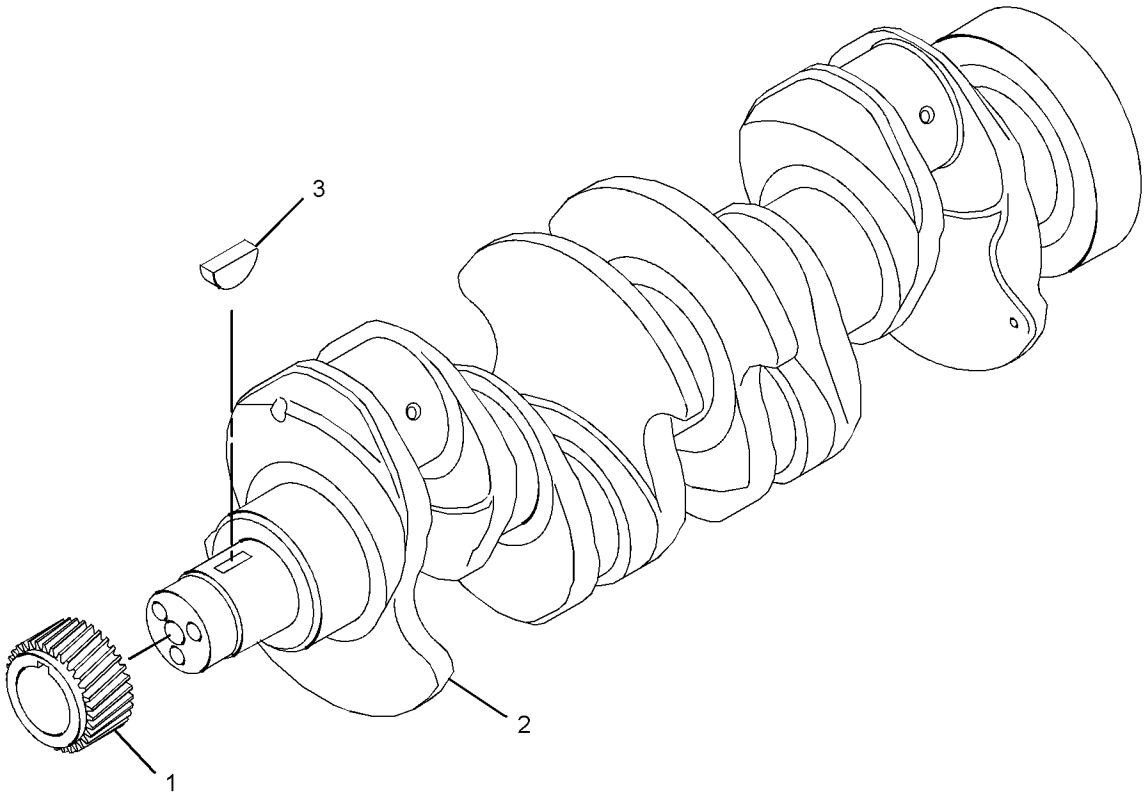

GRAPHIC #1 **<END>** g02163313

362-2190 CYLINDER BLOCK GP

S/N: G4D1-UP

PART OF 441-4671, 458-3300 CYLINDER BLOCK GP

SMCS-1201 **i04340136**

NOTE	REF NO	GRAPHIC REF	PART NUMBER	QTY	PART NAME 1 2 3 4 5 6 (PRODUCT LEVEL)	SEE PAGE
M	1	1	**6I-0572**	1	BOLT (M8X1.25X20-MM)	
	2	1	**6I-0646**	1	BOLT (M10X1.5X14-MM)	
	3	1	**035-8063**	1	PLUG	
M	4	1	**100-4841**	4	BOLT (M6X1X10-MM)	
	5	1	**214-3203**	1	WASHER (SEALING)	
	6	1	**225-7944**	1	GASKET	
	7	1	**232-3751**	1	PLATE	
	8	1	**232-7600**	1	PLUG-CUP	
	9	1	**232-7603**	1	PLUG	
	10	1	**276-5605**	4	JET AS-PISTON COOLING	

M - METRIC PART

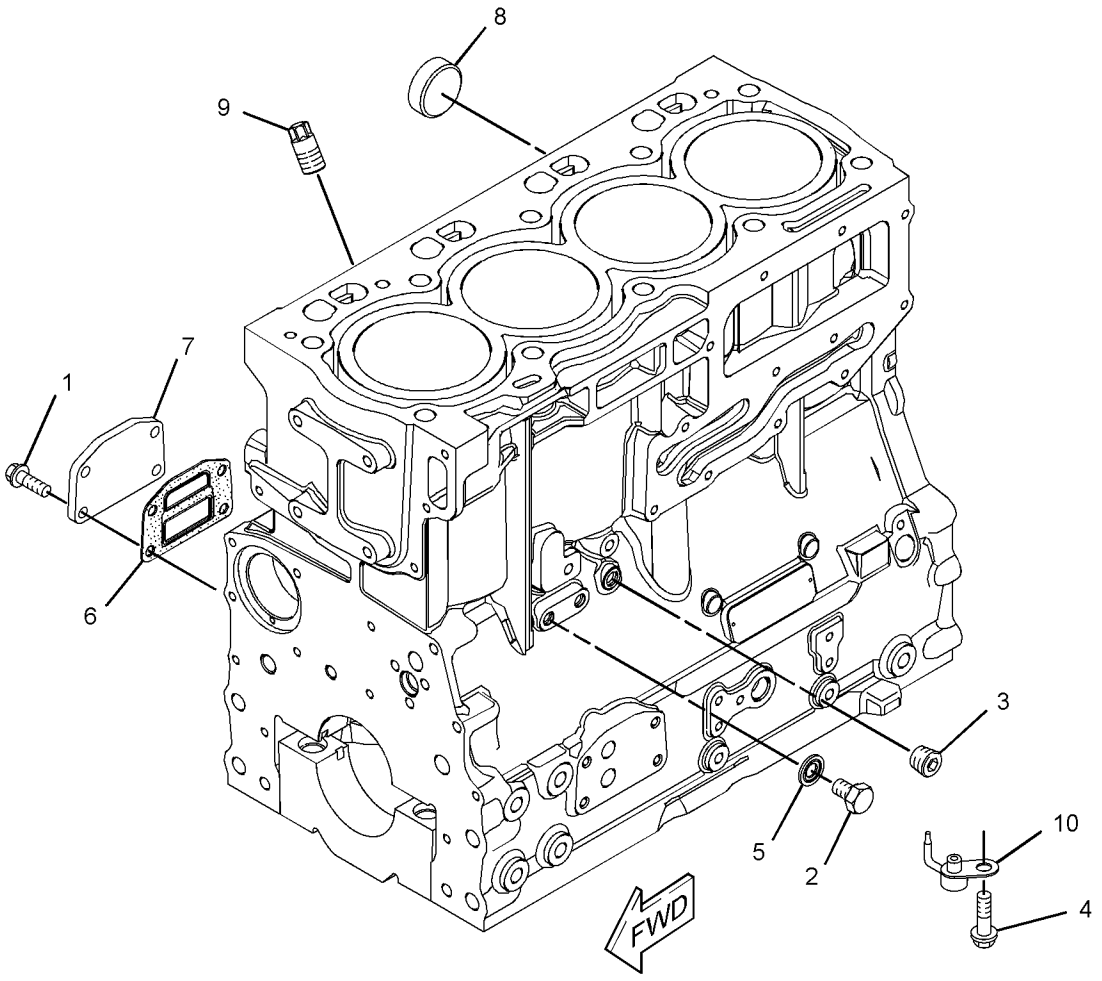

GRAPHIC #1 **<END>** g02500056

441-4671 CYLINDER BLOCK GP

S/N: G4D1-UP

PART OF 456-1375 ENGINE AR-PRIMARY

SMCS-1201 **i05955472**

NOTE	REF NO	GRAPHIC REF	PART NUMBER	QTY	PART NAME 1 2 3 4 5 6 (PRODUCT LEVEL)	SEE PAGE
M	1	1	**209-9219**	10	BOLT (M8X1.25X16-MM)	
	2	1	**232-7449**	1	HOUSING AS	
Y	3	1	**362-2190**	1	CYLINDER BLOCK GP	13

M - METRIC PART
Y - SEPARATE ILLUSTRATION

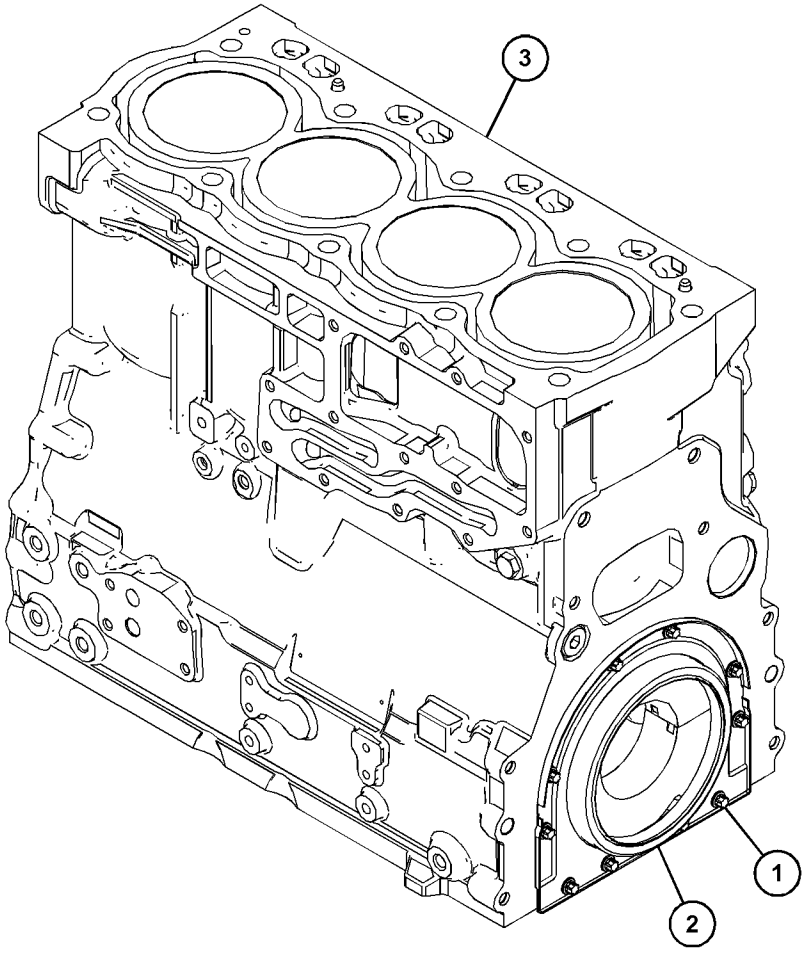

GRAPHIC #1 **<END>** g03743234

458-3300 CYLINDER BLOCK GP

S/N: G4D1-UP

PART OF 470-9228 ENGINE AR-PRIMARY

SMCS-1201 **i05962769**

NOTE	REF NO	GRAPHIC REF	PART NUMBER	QTY	PART NAME 1 2 3 4 5 6 (PRODUCT LEVEL)	SEE PAGE
M	1	1	**209-9219**	10	BOLT (M8X1.25X16-MM)	
	2	1	**232-7449**	1	HOUSING AS	
Y	3	1	**362-2190**	1	CYLINDER BLOCK GP	13

M - METRIC PART
Y - SEPARATE ILLUSTRATION

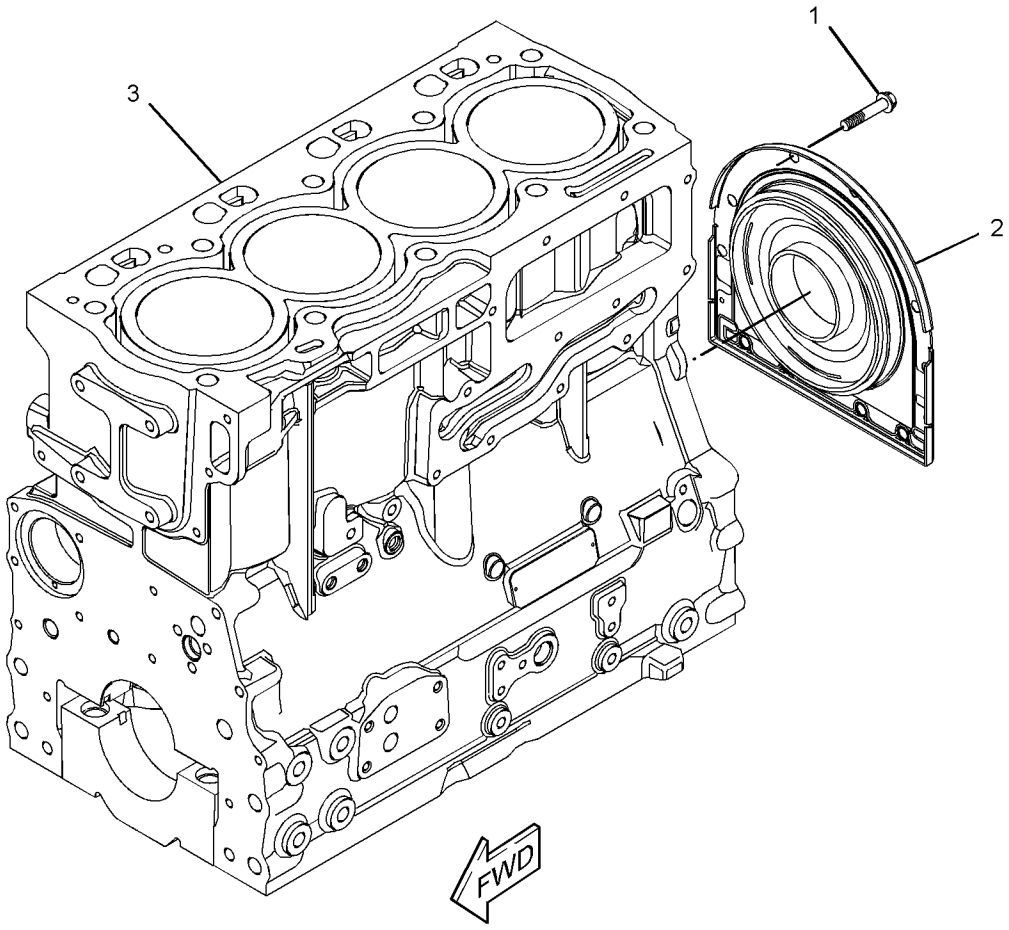

GRAPHIC #1 **<END>** g02500198

232-7519 CYLINDER HEAD GP

S/N: G4D1-UP

PART OF 441-4674, 458-3303 CYLINDER HEAD GP

SMCS-1100 **i03286650**

NOTE	REF NO	GRAPHIC REF	PART NUMBER	QTY	PART NAME 1 2 3 4 5 6 (PRODUCT LEVEL)	SEE PAGE
	1	1	**2B-0858**	1	PLUG-PIPE	
	2	1	**9Y-5015**	2	PLUG-FREEZE	
	3	1	**067-6006**	4	PLUG	
	4	1	**147-1979**	16	RETAINER-VALVE SPRING	
	5	1	**185-0882**	8	GUIDE-VALVE (INTAKE)	
	6	1	**199-9751**	1	SEAL-O-RING	
	7	1	**329-6655**	4	INSERT-VALVE SEAT	
	8	1	**322-9663**	4	INSERT-VALVE SEAT (EXHAUST)	
	9	1	**225-5495**	4	VALVE-INLET	
	10	1	**225-5496**	8	SPRING-VALVE	
	11	1	**252-6438**	4	SEAL-INLET VALVE	
	12	1	**225-5498**	8	CAP	
	13	1	**225-5499**	4	VALVE-EXHAUST	
	14	1	**232-1322**	1	PLUG	
	15	1	**254-3954**	4	SEAL-EXHAUST VALVE	

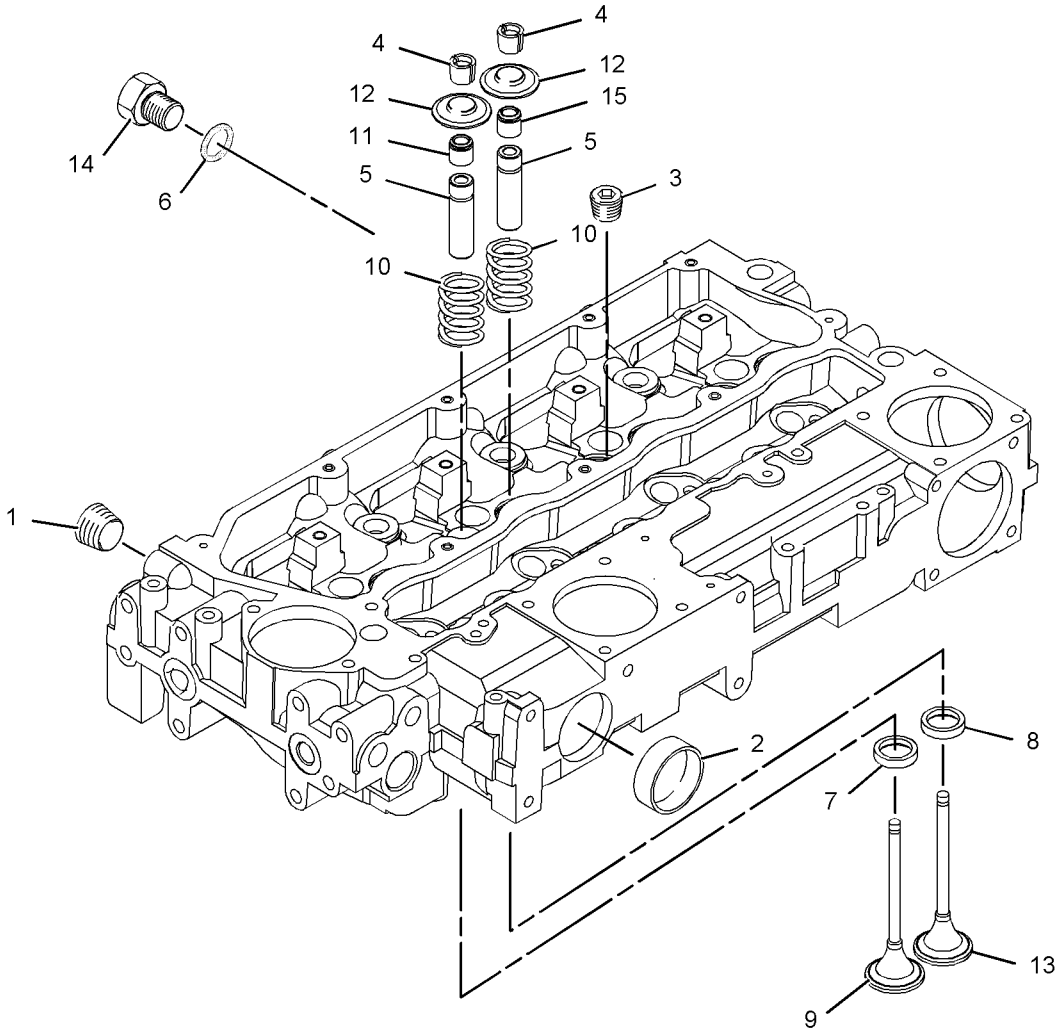

GRAPHIC #1 **<END>** g01095382

441-4674 CYLINDER HEAD GP

S/N: G4D1-UP

PART OF 456-1375 ENGINE AR-PRIMARY

SMCS-1100 **i05955458**

NOTE	REF NO	GRAPHIC REF	PART NUMBER	QTY	PART NAME 1 2 3 4 5 6 (PRODUCT LEVEL)	SEE PAGE
	1	1	**225-5501**	7	BOLT (M15X1.5X137-MM)	
	2	1	**225-5502**	3	BOLT (M15X1.5X162-MM)	
Y	3	1	**232-7519**	1	CYLINDER HEAD GP	16
	4	1	**258-4946**	1	GASKET-CYLINDER HEAD	

Y - SEPARATE ILLUSTRATION

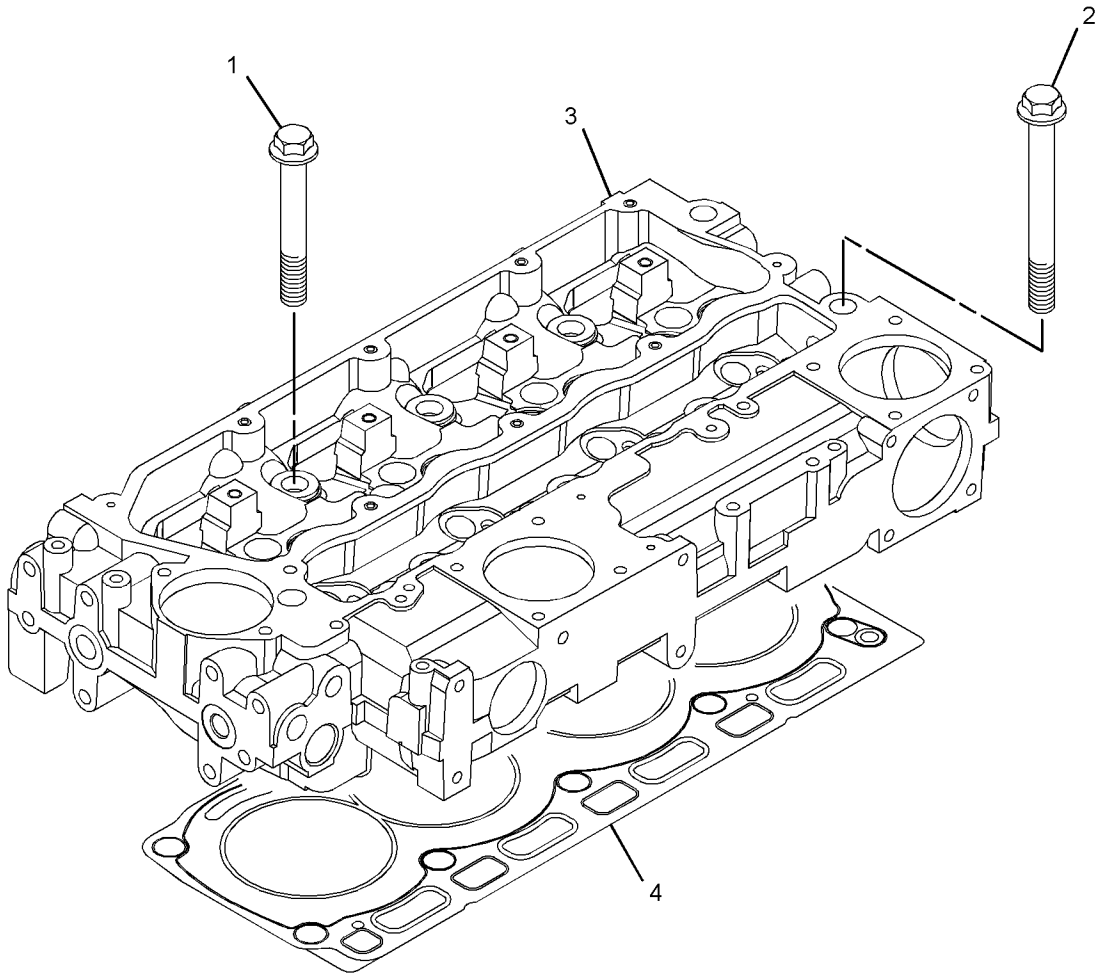

GRAPHIC #1 **<END>** g03349488

458-3303 CYLINDER HEAD GP

S/N: G4D1-UP

PART OF 470-9228 ENGINE AR-PRIMARY

SMCS-1100 **i05962771**

NOTE	REF NO	GRAPHIC REF	PART NUMBER	QTY	PART NAME 1 2 3 4 5 6 (PRODUCT LEVEL)	SEE PAGE
	1	1	**225-5501**	7	BOLT (M15X1.5X137-MM)	
	2	1	**225-5502**	3	BOLT (M15X1.5X162-MM)	
	3	1	**258-4946**	1	GASKET-CYLINDER HEAD	
Y	4	1	**232-7519**	1	CYLINDER HEAD GP	16

Y - SEPARATE ILLUSTRATION

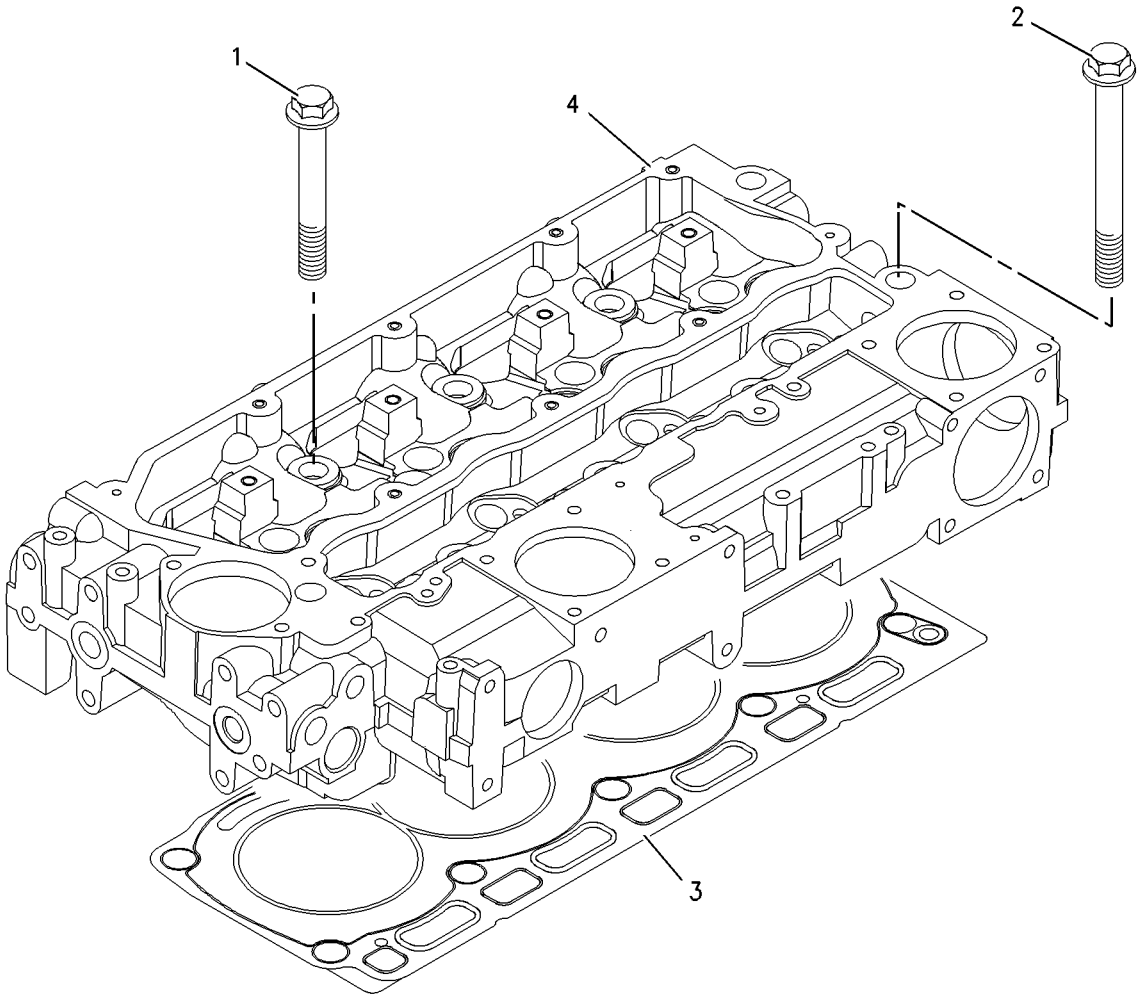

GRAPHIC #1 **<END>** g00994423

421-7104 DRIVE GP-FAN

S/N: G4D1-UP

PART OF 456-1375, 470-9228 ENGINE AR-PRIMARY

SMCS-1359 **i05413869**

NOTE	REF NO	GRAPHIC REF	PART NUMBER	QTY	PART NAME 1 2 3 4 5 6 (PRODUCT LEVEL)	SEE PAGE
	1	1	**111-0859**	4	BOLT (M10X1.5X35-MM)	
	2	1	**284-1026**	1	PULLEY (8-GROOVE)	
	3	1	**289-8336**	1	HOUSING AS	

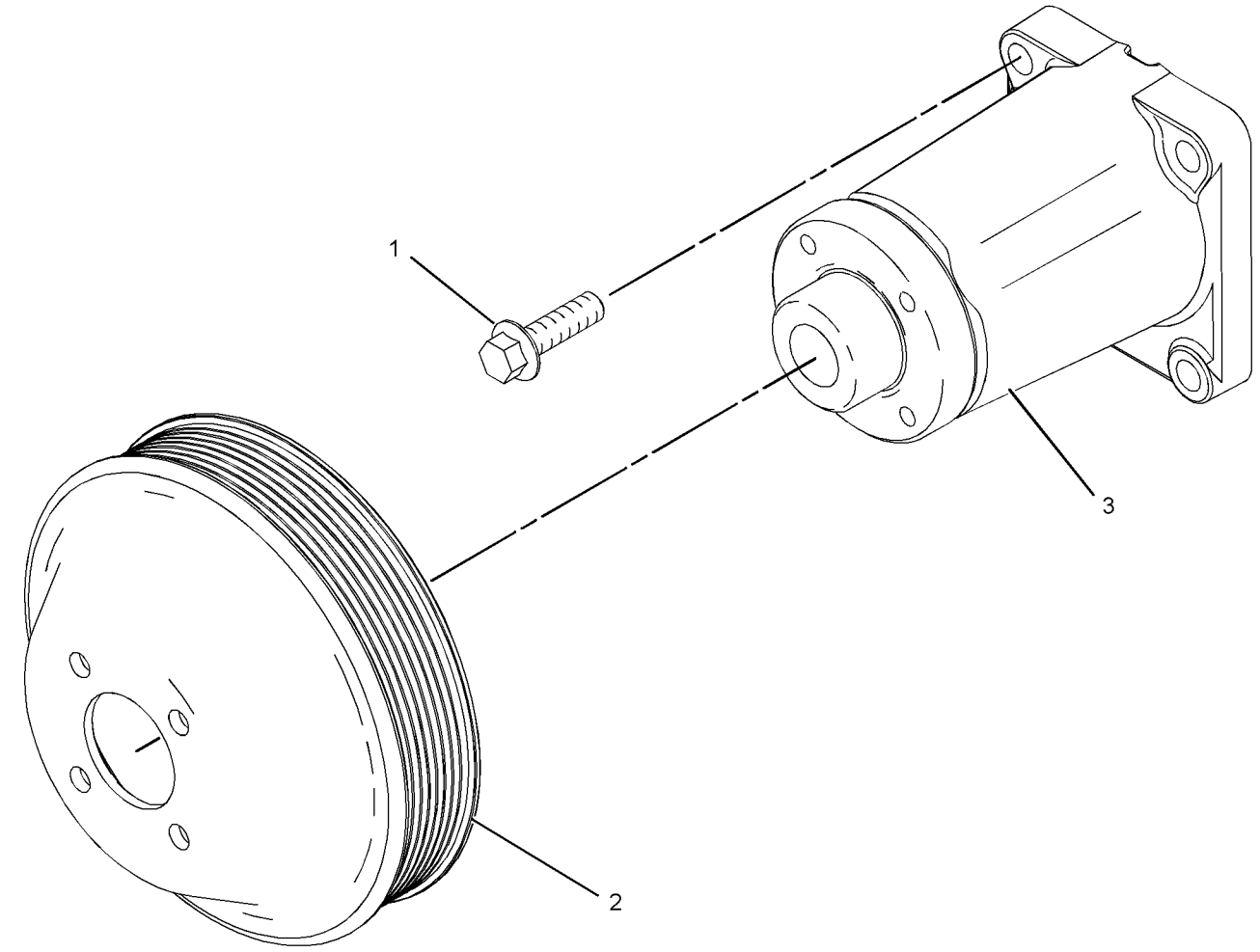

GRAPHIC #1 **<END>** g01411516

421-7102 FLYWHEEL GP

S/N: G4D1-UP

PART OF 456-1375, 470-9228 ENGINE AR-PRIMARY

SMCS-1156 **i05413886**

NOTE	REF NO	GRAPHIC REF	PART NUMBER	QTY	PART NAME 1 2 3 4 5 6 (PRODUCT LEVEL)	SEE PAGE
	1	1	**145-4911**	10	WASHER	
	2	1	**367-3326**	1	FLYWHEEL AS	
	2A	1	**033-7687**	1	RING-STARTING MOTOR (126-TEETH)	
	3	1	**0S-1603**	10	BOLT (1/2-20X1.5-IN)	

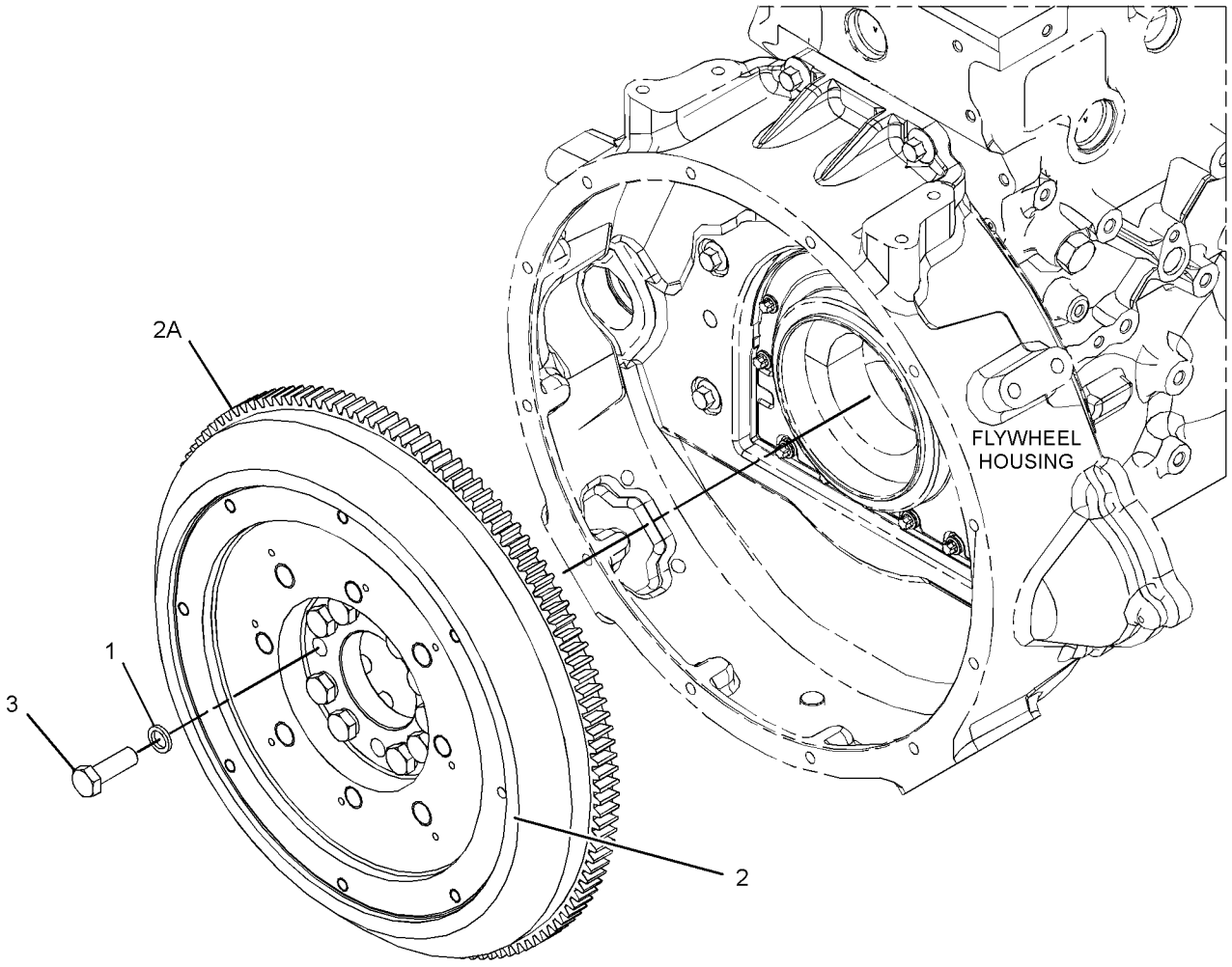

GRAPHIC #1 **<END>** g03146957

421-7101 HOUSING GP-FLYWHEEL

S/N: G4D1-UP

PART OF 456-1375, 470-9228 ENGINE AR-PRIMARY

SMCS-1157 **i05413896**

NOTE	REF NO	GRAPHIC REF	PART NUMBER	QTY	PART NAME 1 2 3 4 5 6 (PRODUCT LEVEL)	SEE PAGE
	1	1	**277-0121**	1	PLUG	
M	2	1	**6I-0423**	2	BOLT (M12X1.75X30-MM)	
	3	1	**7W-4642**	1	SHIELD-DUST	
M	4	1	**121-0883**	6	BOLT (M10X1.5X30-MM)	
	5	1	**287-8597**	2	DOWEL	
	6	1	**335-2092**	1	COVER-FLYWHEEL	
	7	1	**392-0265**	1	HOUSING-FLYWEEL	
	8	1	**6I-0917**	2	BOLT (M6X1X25-MM)	

M - METRIC PART

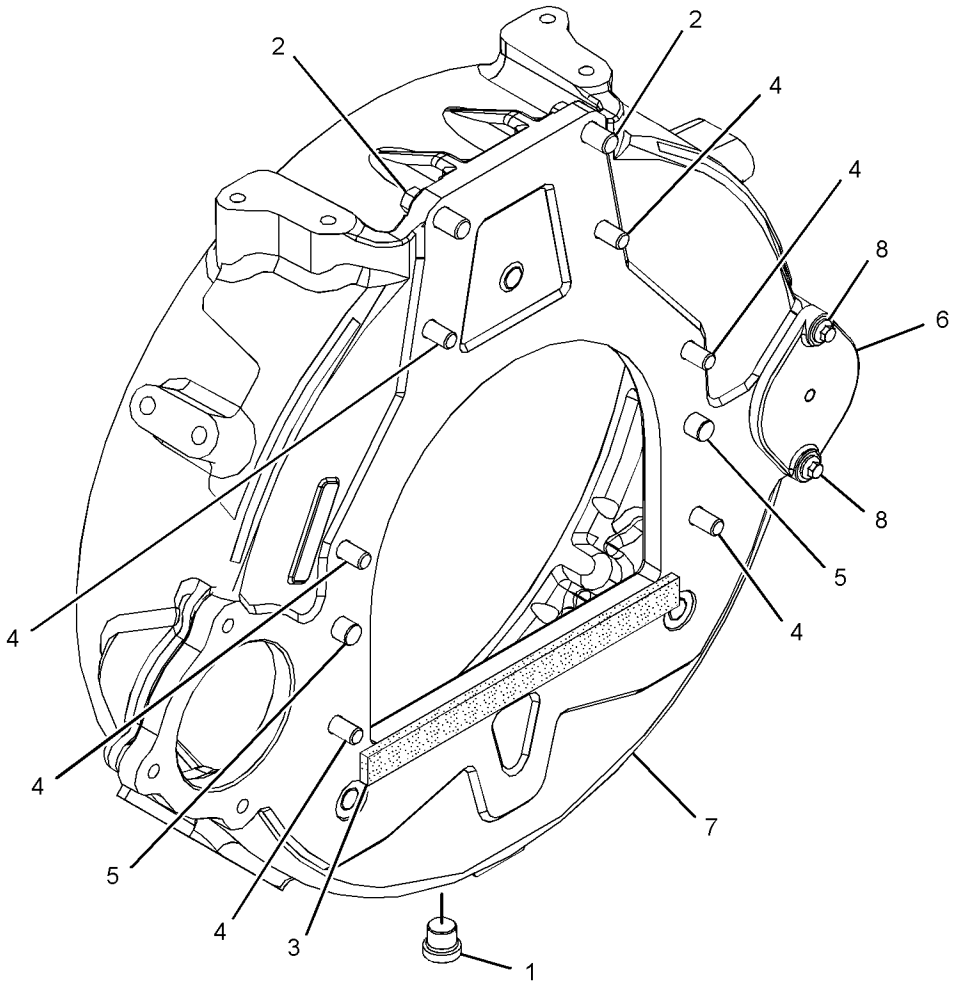

GRAPHIC #1 **<END>** g02675738

313-1380 HOUSING GP-FRONT

S/N: G4D1-UP

PART OF 456-1375 ENGINE AR-PRIMARY

SMCS-1151, 1162, 1206

i04003826

NOTE	REF NO	GRAPHIC REF	PART NUMBER	QTY	PART NAME 1 2 3 4 5 6 (PRODUCT LEVEL)	SEE PAGE
	1	1	**295-1711**	1	PLATE-RETAINING	
M	2	1	**6I-0217**	6	BOLT (M8X1.25X20-MM)	
M	3	1	**6I-0645**	4	BOLT (M8X1.25X25-MM)	
M	4	1	**6I-0650**	3	BOLT (M10X1.5X65-MM)	
	5	1	**7C-4616**	1	BOLT (M12X1.75X45-MM)	
	6	1	**067-6179**	1	DOWEL	
M	7	1	**100-3751**	5	BOLT (M8X1.25X65-MM)	
M	8	1	**124-3815**	10	BOLT (M8X1.25X16-MM)	
	9	1	**133-1011**	1	WASHER	
	10	1	**216-8634**	1	GEAR-CAMSHAFT (68-TEETH)	
	11	1	**232-3657**	1	COVER AS-FRONT	
	11A	1	**225-8287**	1	GASKET	
	12	1	**232-3666**	1	WASHER-THRUST	
	13	1	**251-4336**	1	GEAR AS-IDLER (73-TEETH)	
	14	1	**277-3012**	1	GASKET-COVER (HOUSING)	
	15	1	**324-0444**	1	HUB-IDLER GEAR	
	16	1	**288-0422**	1	SEAL-OIL	
	17	1	**294-0288**	1	HOUSING-FRONT	
M	18	1	**101-3895**	2	BOLT (M8X1.25X35-MM)	

M - METRIC PART

313-1380 **HOUSING GP-FRONT (*contd.*)** **i04003826**

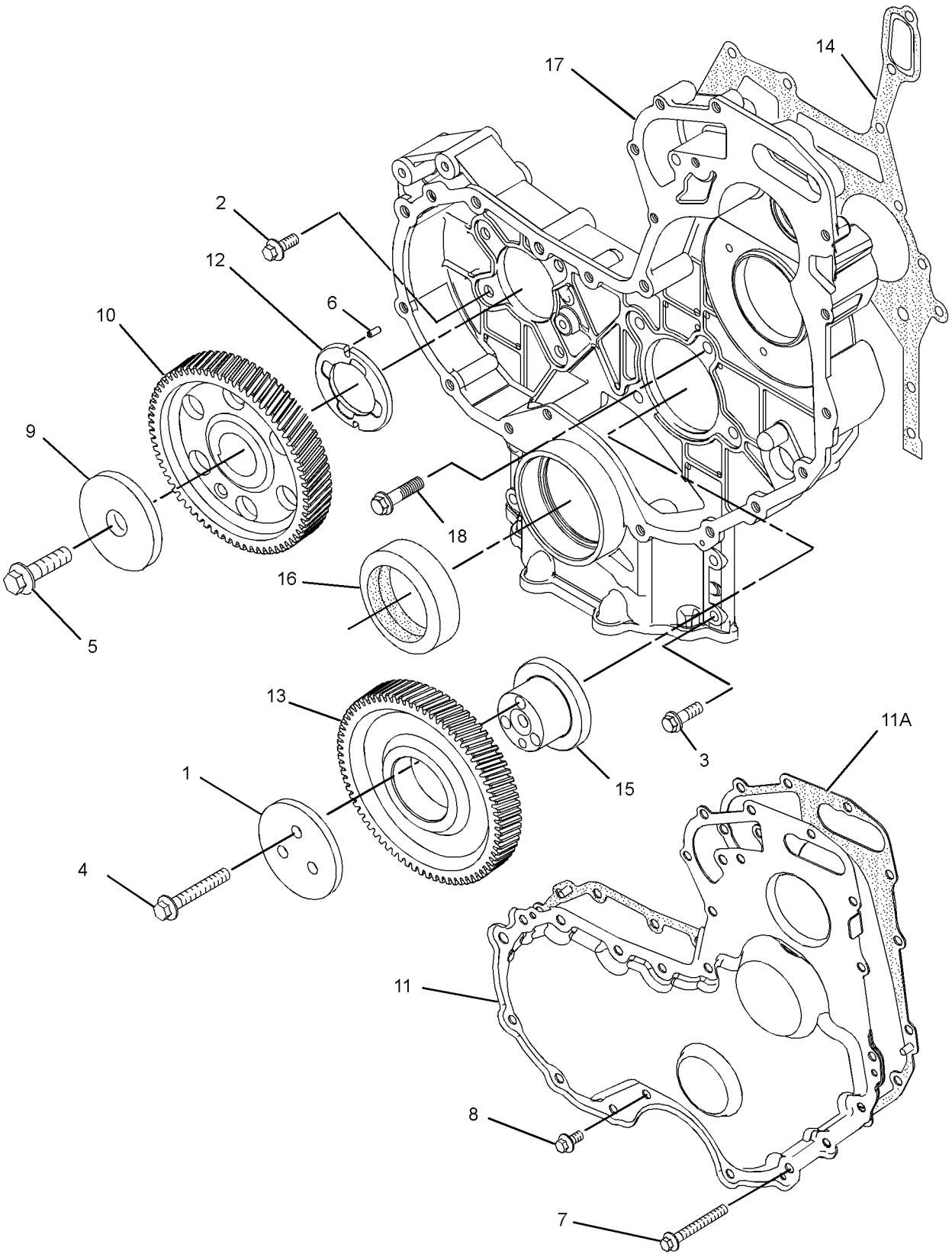

GRAPHIC #1 **<END>** g02204593

460-0596 HOUSING GP-FRONT

S/N: G4D1-UP

PART OF 470-9228 ENGINE AR-PRIMARY

SMCS-1151, 1162, 1206 **i05962772**

NOTE	REF NO	GRAPHIC REF	PART NUMBER	QTY	PART NAME 1 2 3 4 5 6 (PRODUCT LEVEL)	SEE PAGE
M	1	1	**6I-0217**	6	BOLT (M8X1.25X20-MM)	
M	2	1	**6I-0645**	4	BOLT (M8X1.25X25-MM)	
M	3	1	**6I-0650**	3	BOLT (M10X1.5X65-MM)	
	4	1	**7C-4616**	1	BOLT (M12X1.75X45-MM)	
	5	1	**067-6179**	1	DOWEL	
M	6	1	**100-3751**	5	BOLT (M8X1.25X65-MM)	
M	7	1	**101-3895**	2	BOLT (M8X1.25X35-MM)	
M	8	1	**124-3815**	10	BOLT (M8X1.25X16-MM)	
	9	1	**133-1011**	1	WASHER	
	10	1	**216-8634**	1	GEAR-CAMSHAFT (68-TEETH)	
	11	1	**232-3657**	1	COVER AS-FRONT	
	11A	1	**225-8287**	1	GASKET	
	12	1	**232-3666**	1	WASHER-THRUST	
	13	1	**277-3012**	1	GASKET-COVER	
	14	1	**288-0422**	1	SEAL-OIL	
	15	1	**294-0288**	1	HOUSING-FRONT	
	16	1	**324-0444**	1	HUB-IDLER GEAR	
J	17	1	**346-0407**	1	GEAR-IDLER	
L	18	1	**346-0408**	1	PLATE	

J - USED ONLY WITH 346-0408 & 324-0444
L - USED ONLY WITH 346-0407
M - METRIC PART

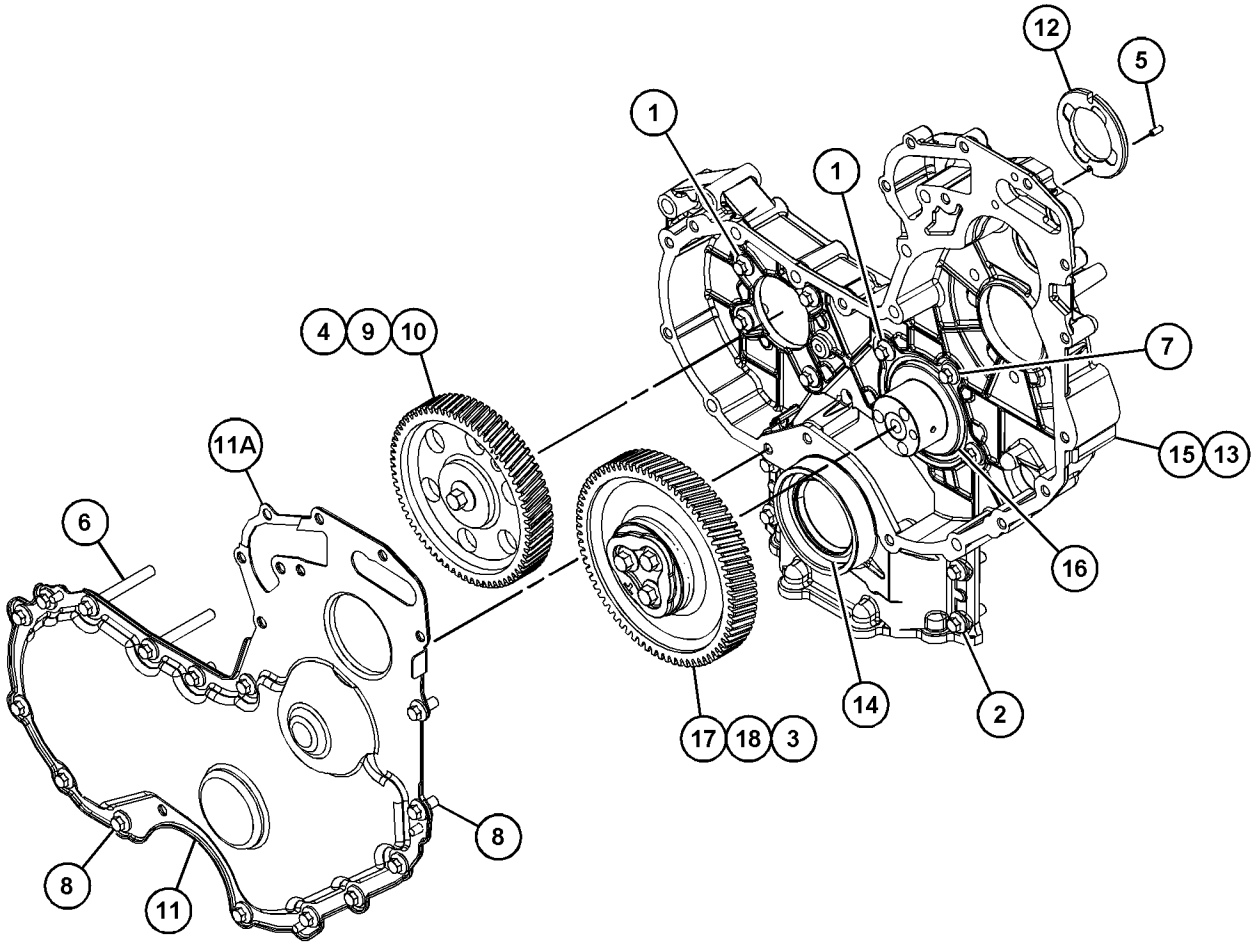

GRAPHIC #1 **<END>** g03704604

232-3713 LIFTING GP-ENGINE

S/N: G4D1-UP

PART OF 456-1375, 470-9228 ENGINE AR-PRIMARY

SMCS-1122 **i02419719**

NOTE	REF NO	GRAPHIC REF	PART NUMBER	QTY	PART NAME 1 2 3 4 5 6 (PRODUCT LEVEL)	SEE PAGE
M	1	1	**100-4830**	4	BOLT (M10X1.5X20-MM)	
	2	1	**225-8848**	1	PLATE-LIFTING	
	3	1	**275-2452**	1	PLATE-LIFTING	

M - METRIC PART

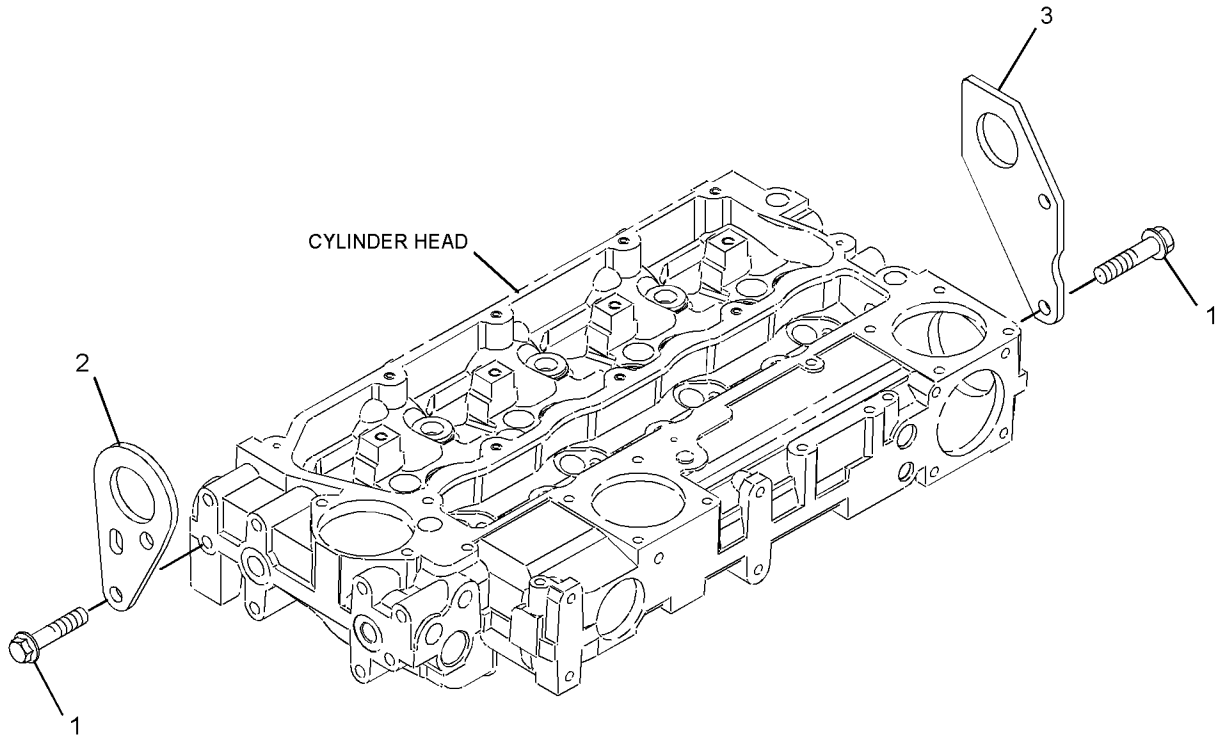

GRAPHIC #1 **<END>** g01210949

387-2615 MOUNTING GP-ENGINE

S/N: XAH1-UP

PART OF 387-2619 INSTALLATION AR-ENGINE

SMCS-1152 **i05896923**

NOTE	REF NO	GRAPHIC REF	PART NUMBER	QTY	PART NAME 1 2 3 4 5 6 (PRODUCT LEVEL)	SEE PAGE
	1	1	**339-7145**	2	BRACKET	
	2	1	**351-3928**	4	PLATE	
	3	1	**392-2053**	4	MOUNT-RUBBER	
	4	1	**368-6660**	4	MOUNT-RUBBER	
M	5	1	**447-1706**	4	BOLT (M16X2X130-MM)	
M	6	1	**453-3449**	8	BOLT (M12X1.75X50-MM)	
	7	1	**451-2182**	8	WASHER-HARD (13.5X25.5X3-MM THK)	
	8	1	**451-2175**	8	WASHER-HARD (17.5X30X3.5-MM THK)	
	9	1	**118-9941**	4	SUPPORT AS	

M - METRIC PART

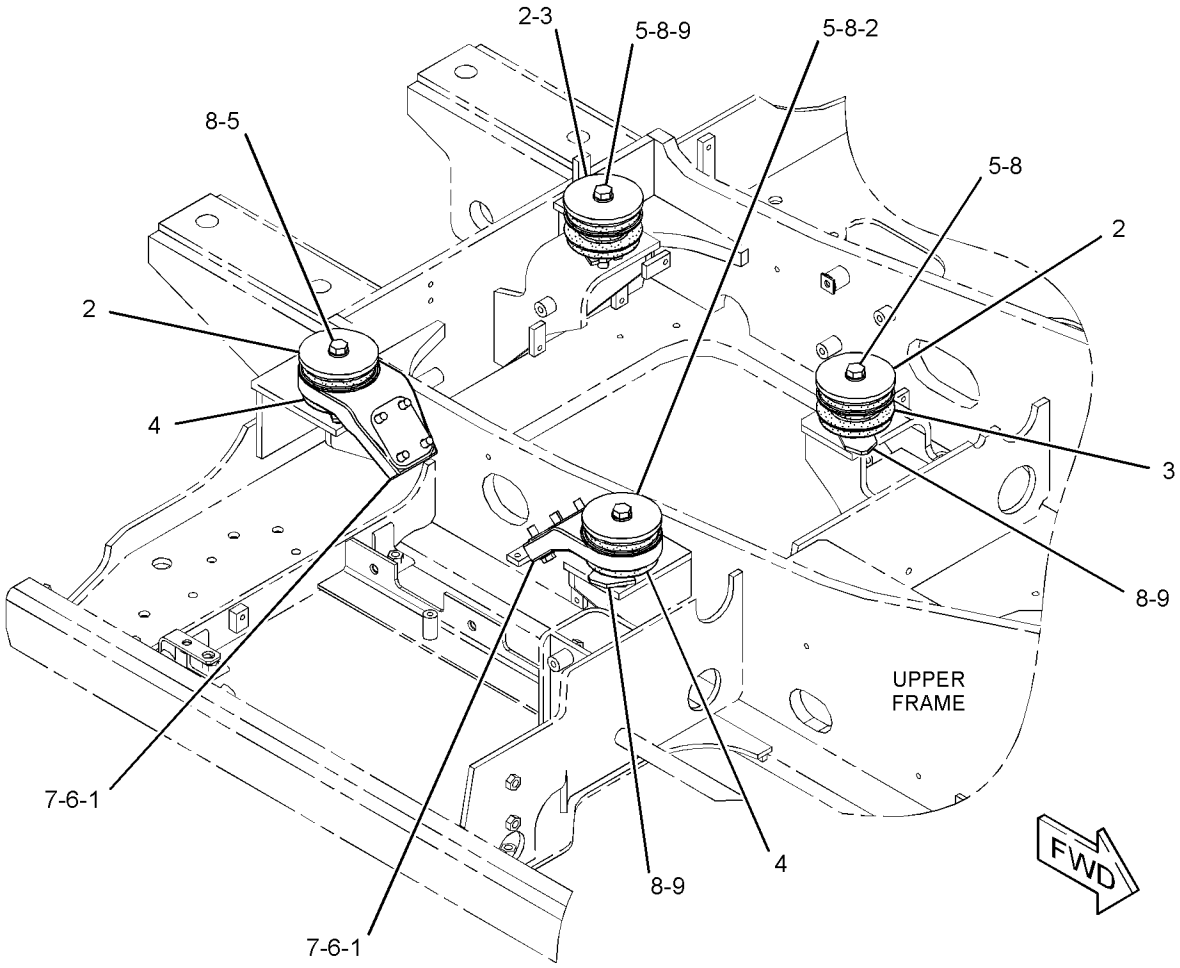

GRAPHIC #1 **<END>** g03716042

421-7111 MOUNTING GP-ENGINE

S/N: G4D1-UP

PART OF 456-1375, 470-9228 ENGINE AR-PRIMARY

SMCS-1152 **i05413907**

NOTE	REF NO	GRAPHIC REF	PART NUMBER	QTY	PART NAME 1 2 3 4 5 6 (PRODUCT LEVEL)	SEE PAGE
	1	1	**339-7143**	1	BRACKET	
	2	1	**339-7144**	1	BRACKET	
	3	1	**382-5080**	4	BOLT-FLANGE HEAD (M12X1.75X45-MM)	
	4	1	**383-6627**	3	BOLT-FLANGE HEAD (M12X1.75X50-MM)	
	5	1	**383-8104**	1	BOLT	

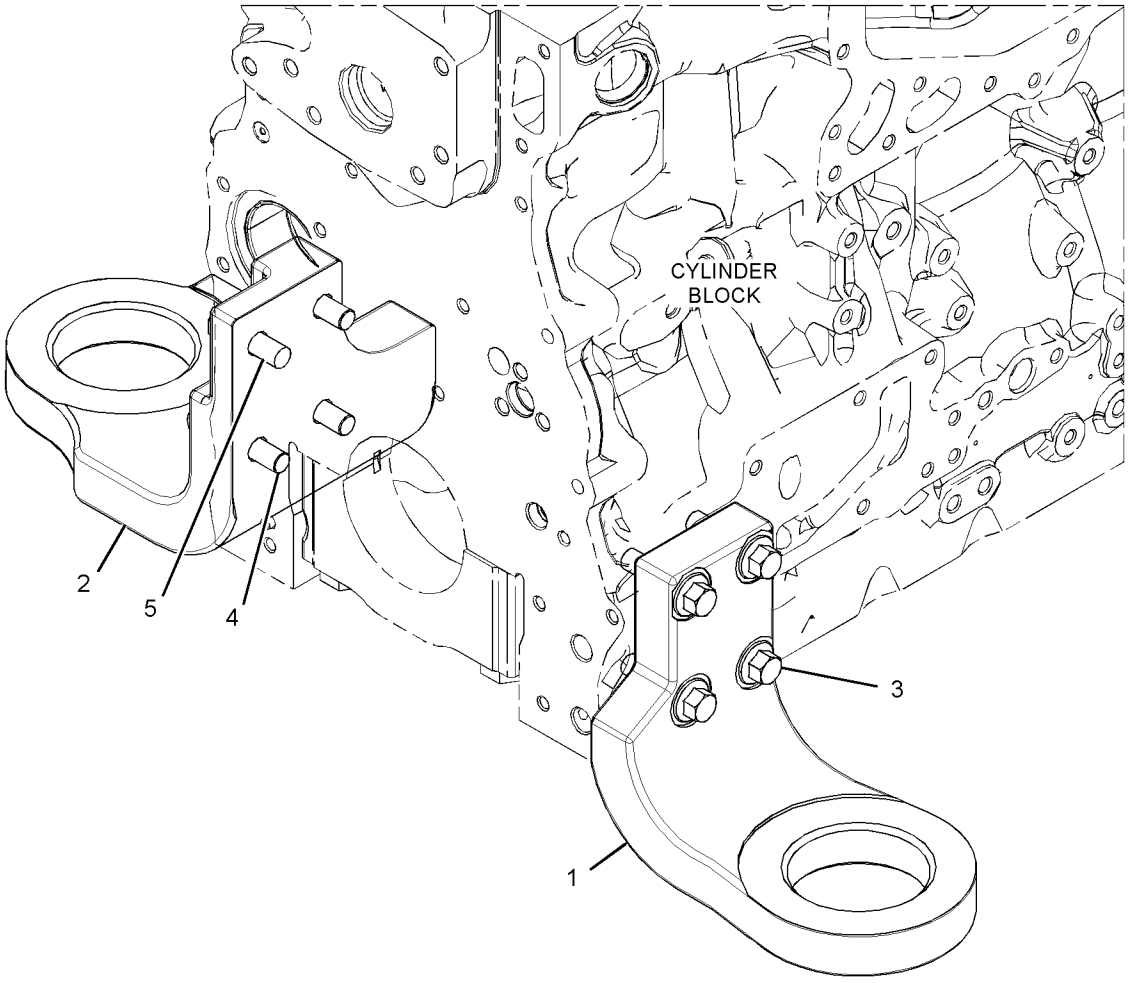

GRAPHIC #1 **<END>** g02711669

421-7105 PAN GP-OIL

S/N: G4D1-UP

PART OF 456-1375, 470-9228 ENGINE AR-PRIMARY

SMCS-1302 **i05413935**

NOTE	REF NO	GRAPHIC REF	PART NUMBER	QTY	PART NAME 1 2 3 4 5 6 (PRODUCT LEVEL)	SEE PAGE
	1	1	**3K-0360**	1	SEAL-O-RING	
M	2	1	**6I-0260**	4	BOLT (M8X1.25X25-MM)	
	3	1	**6I-0289**	1	PLUG	
M	4	1	**6I-0363**	2	BOLT (M6X1X20-MM)	
M	5	1	**6I-0645**	2	BOLT (M8X1.25X25-MM)	
	6	1	**6V-7238**	1	VALVE-SHUTOFF	
	7	1	**7C-0351**	1	PLUG-DRAIN (ENGINE OIL)	
	8	1	**067-6213**	1	GASKET	
	9	1	**101-3805**	16	BOLT (M8X1.25X90-MM)	
M	10	1	**103-5687**	2	BOLT (M10X1.5X85-MM)	
	11	1	**189-9377**	1	SEAL-O-RING	
	12	1	**213-0677**	1	SWITCH AS-LIQUID LEVEL (ENGINE OIL)	
		1	**102-8802**	1	KIT-RECEPTACLE (2-PIN)	
					(INCLUDES RECEPTACLE AS & WEDGE)	
		1	**9X-3401**	2	PIN-CONNECTOR (16-GA TO 18-GA)	
					—OR—	
		1	**126-1767**	2	PIN-CONNECTOR (14-GA TO 16-GA)	
	13	1	**225-6005**	1	GASKET	
	14	1	**230-8094**	1	BRIDGE	
	15	1	**235-2435**	1	TUBE-SUCTION	
	16	1	**274-6609**	1	CLIP-HARNESS	
	17	1	**335-7585**	1	SEAL	
	18	1	**341-7597**	1	PAN-OIL	
	19	1	**350-9492**	1	GAUGE AS-OIL LEVEL (DIPSTICK) (ENGINE)	
	19A	1	**275-9891**	2	SEAL-O-RING	
	20	1	**393-0807**	1	TUBE AS	
	20A	1	**228-7089**	1	SEAL-O-RING	
	21	1	**393-5867**	2	SPACER	

M - METRIC PART

421-7105 **PAN GP-OIL (*contd.*)** **i05413935**

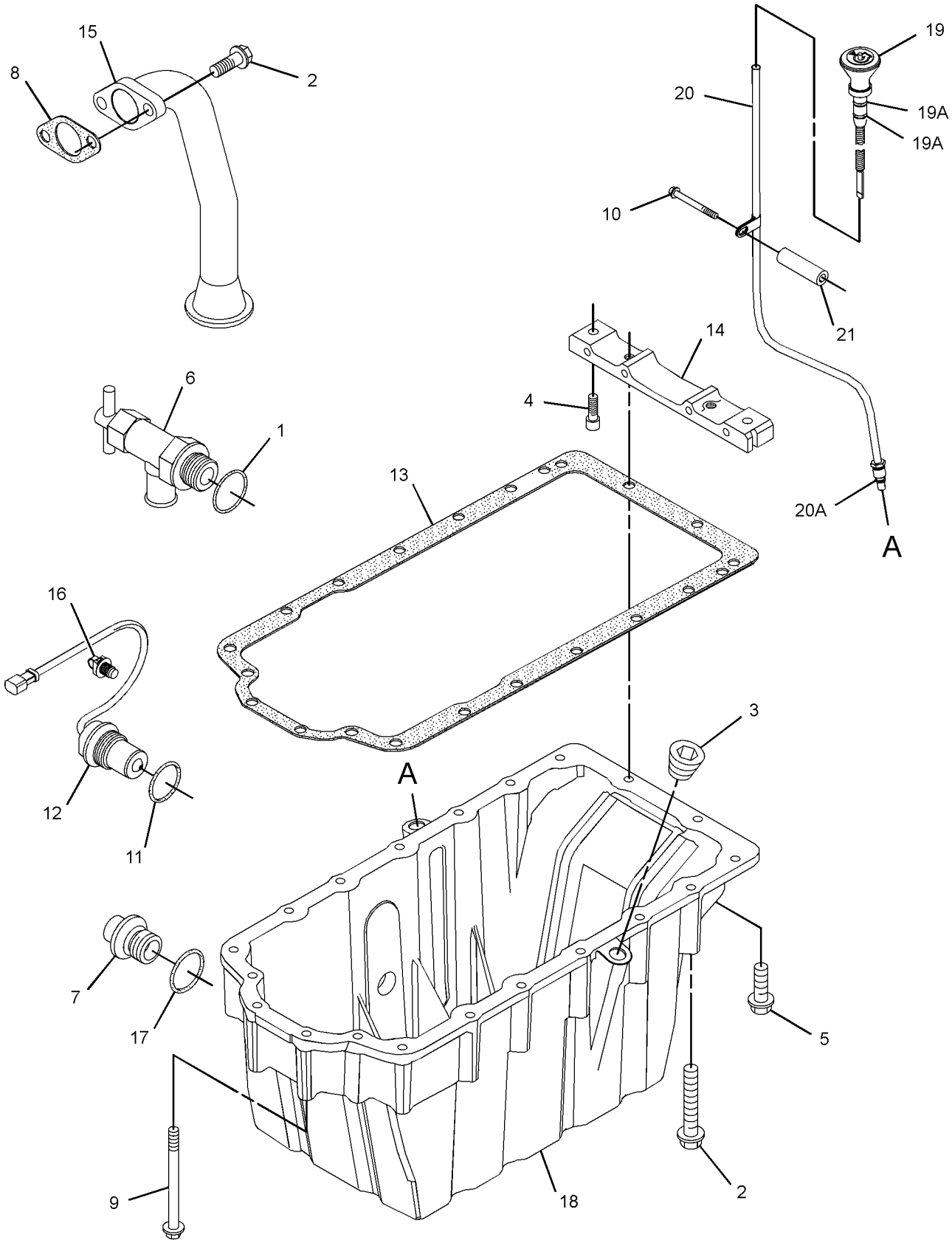

GRAPHIC #1 **<END>** g03161277

441-4673 PISTON & ROD GP

S/N: G4D1-UP

PART OF 456-1375 ENGINE AR-PRIMARY

SMCS-1225 **i05955474**

NOTE	REF NO	GRAPHIC REF	PART NUMBER	QTY	PART NAME 1 2 3 4 5 6 (PRODUCT LEVEL)	SEE PAGE
	1	1	**225-5437**	4	PISTON AS	
					(EACH PISTON AS INCLUDES)	
	1A	1	**124-3536**	2	RING-RETAINING	
	1B	1	**225-5436**	1	KIT-PISTON RING	
AB		1	**334-2318**		KIT-PISTON RING (1-MM OS)	
AB		1	**334-2319**		KIT-PISTON RING (0.5-MM OS)	
AB		1	**288-1394**		PISTON AS (0.5-MM OS)	
AB		1	**288-1395**		PISTON AS (1-MM OS)	
BJ	2	1	**359-0719**	4	ROD AS-CONNECTING (LENGTH R)	
					—OR—	
BJ			**359-0720**	4	ROD AS-CONNECTING (LENGTH O)	
					—OR—	
BJ			**359-0721**	4	ROD AS-CONNECTING (LENGTH W)	
					—OR—	
BJ			**359-0722**	4	ROD AS-CONNECTING (LENGTH G)	
					—OR—	
BJ			**359-0723**	4	ROD AS-CONNECTING (LENGTH P)	
					—OR—	
BJ			**359-0724**	4	ROD AS-CONNECTING (LENGTH B)	
					(EACH ROD AS INCLUDES)	
	2A	1	**225-5438**	1	BUSHING	
	2B	1	**323-9312**	2	BOLT (M10X1X50-MM)	
					PARTS SHOWN IN GRAPHIC(S) WITHOUT A REFERENCE NUMBER ARE NOT SERVICED SEPARATELY	

A - NOT PART OF THIS GROUP
B - USE AS REQUIRED
J - ENSURE THAT CORRECT ROD LENGTH IS FITTED

441-4673 **PISTON & ROD GP (*contd.*)** **i05955474**

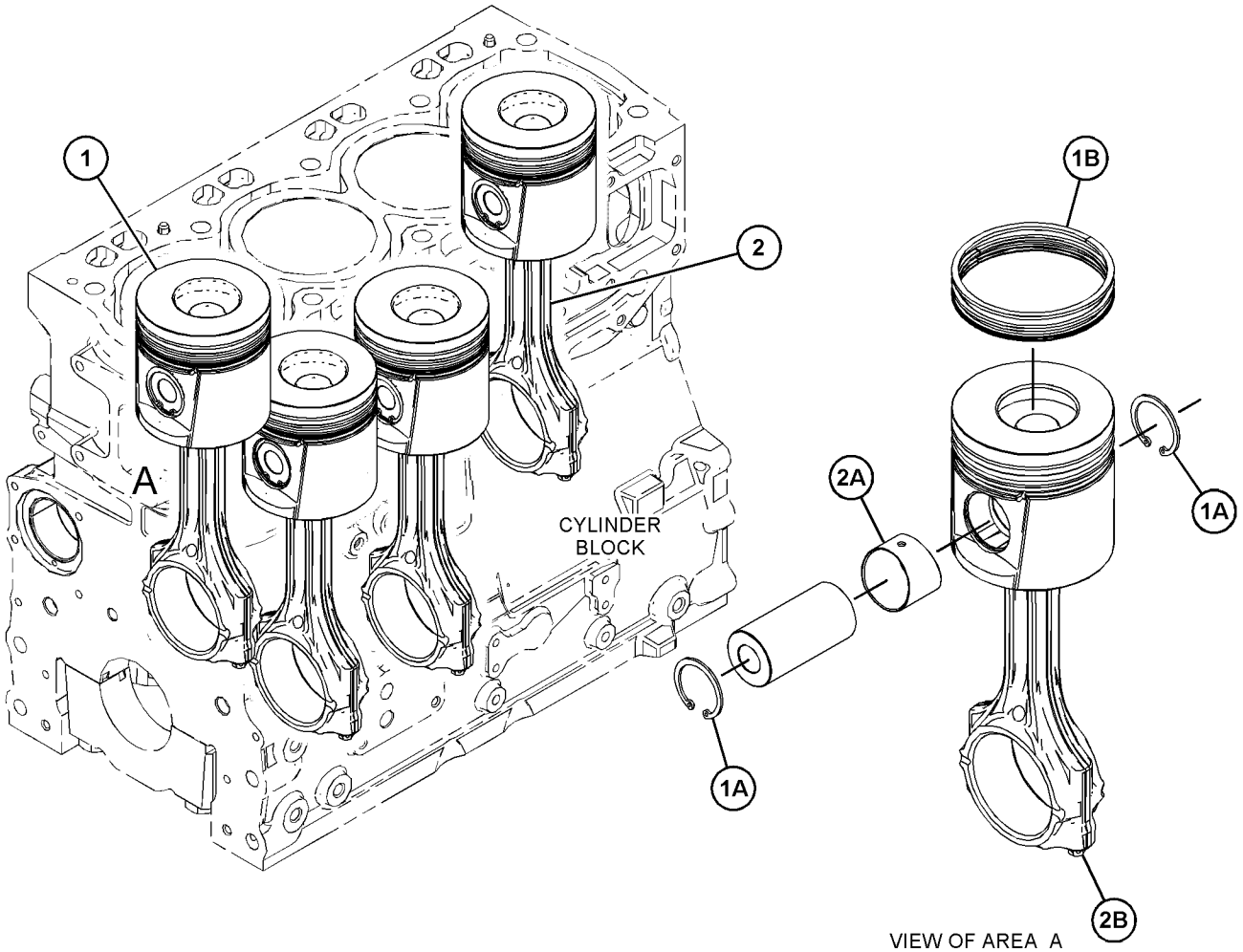

GRAPHIC #1 **<END>** g03743341

458-3302 PISTON & ROD GP

S/N: G4D1-UP

PART OF 470-9228 ENGINE AR-PRIMARY

SMCS-1225 **i05962773**

NOTE	REF NO	GRAPHIC REF	PART NUMBER	QTY	PART NAME 1 2 3 4 5 6 (PRODUCT LEVEL)	SEE PAGE
BJ	1	1	**359-0719**	4	ROD AS-CONNECTING (LENGTH R)	
					—OR—	
BJ			**359-0720**	4	ROD AS-CONNECTING (LENGTH O)	
					—OR—	
BJ			**359-0721**	4	ROD AS-CONNECTING (LENGTH W)	
					—OR—	
BJ			**359-0722**	4	ROD AS-CONNECTING (LENGTH G)	
					—OR—	
BJ			**359-0723**	4	ROD AS-CONNECTING (LENGTH P)	
					—OR—	
BJ			**359-0724**	4	ROD AS-CONNECTING (LENGTH B)	
					(EACH INCLUDES)	
	1A	1	**225-5438**	1	BUSHING	
	1B	1	**323-9312**	2	BOLT (M10X1X50-MM)	
	2	1	**458-7586**	4	KIT-PISTON & RING	
					(EACH KIT INCLUDES PISTONS AND RINGS)	

B - USE AS REQUIRED
J - ENSURE THAT CORRECT ROD LENGTH IS FITTED

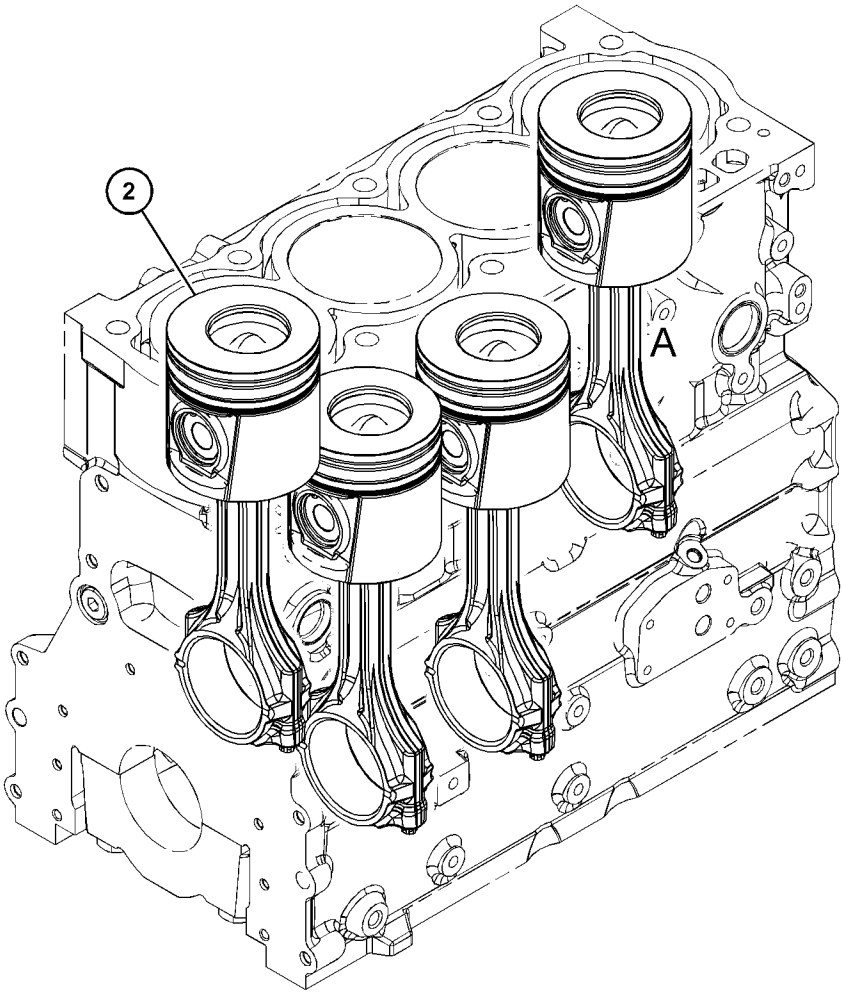

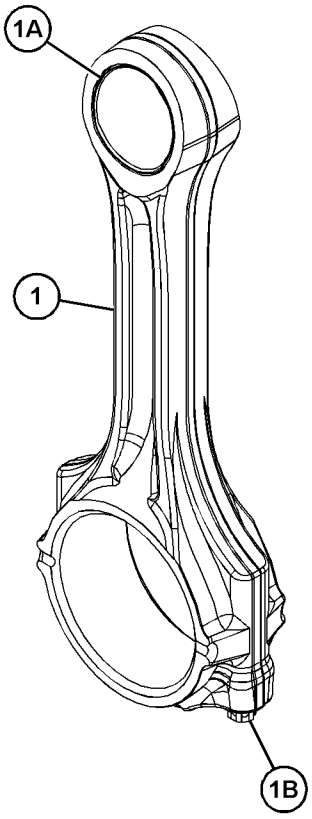

VIEW OF AREA A
(PARTS REMOVED FOR CLARITY)

GRAPHIC #1 **<END>** g03707398

230-7569 PLUG GP-ENGINE

S/N: G4D1-UP

PART OF 456-1375, 470-9228 ENGINE AR-PRIMARY

SMCS-1000 **i02052073**

NOTE	REF NO	GRAPHIC REF	PART NUMBER	QTY	PART NAME 1 2 3 4 5 6 (PRODUCT LEVEL)	SEE PAGE
	1	1	**231-0046**	1	PLUG	

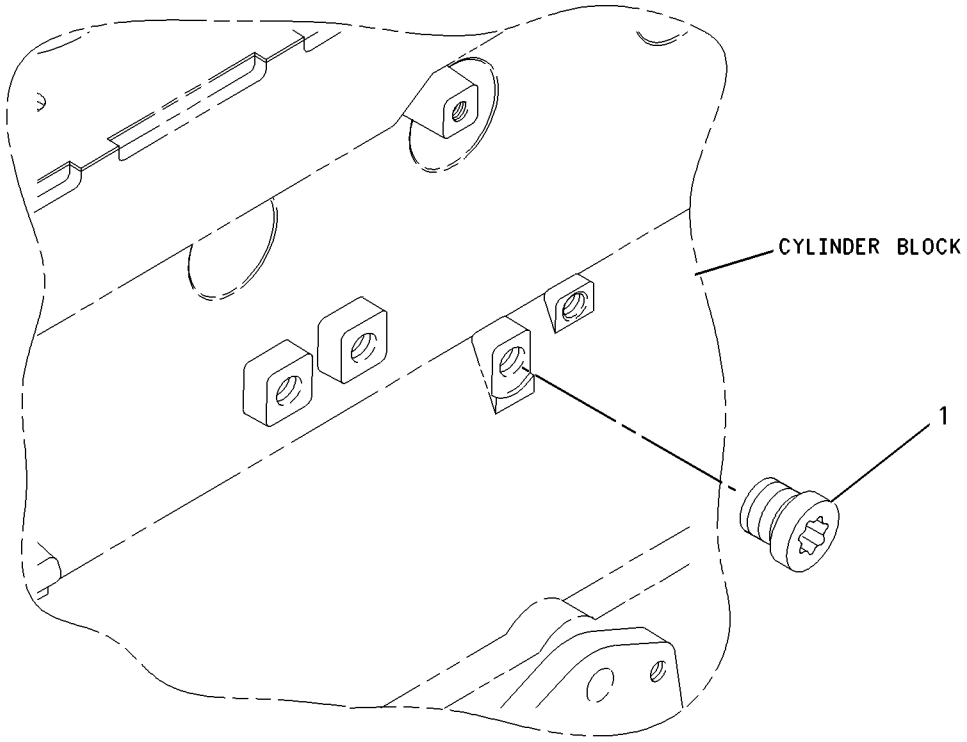

GRAPHIC #1 **<END>** g00911955

232-3716 PLUG GP-ENGINE

S/N: G4D1-UP

PART OF 456-1375, 470-9228 ENGINE AR-PRIMARY

SMCS-1000 **i02089630**

NOTE	REF NO	GRAPHIC REF	PART NUMBER	QTY	PART NAME 1 2 3 4 5 6 (PRODUCT LEVEL)	SEE PAGE
	1	1	**035-8063**	1	PLUG	

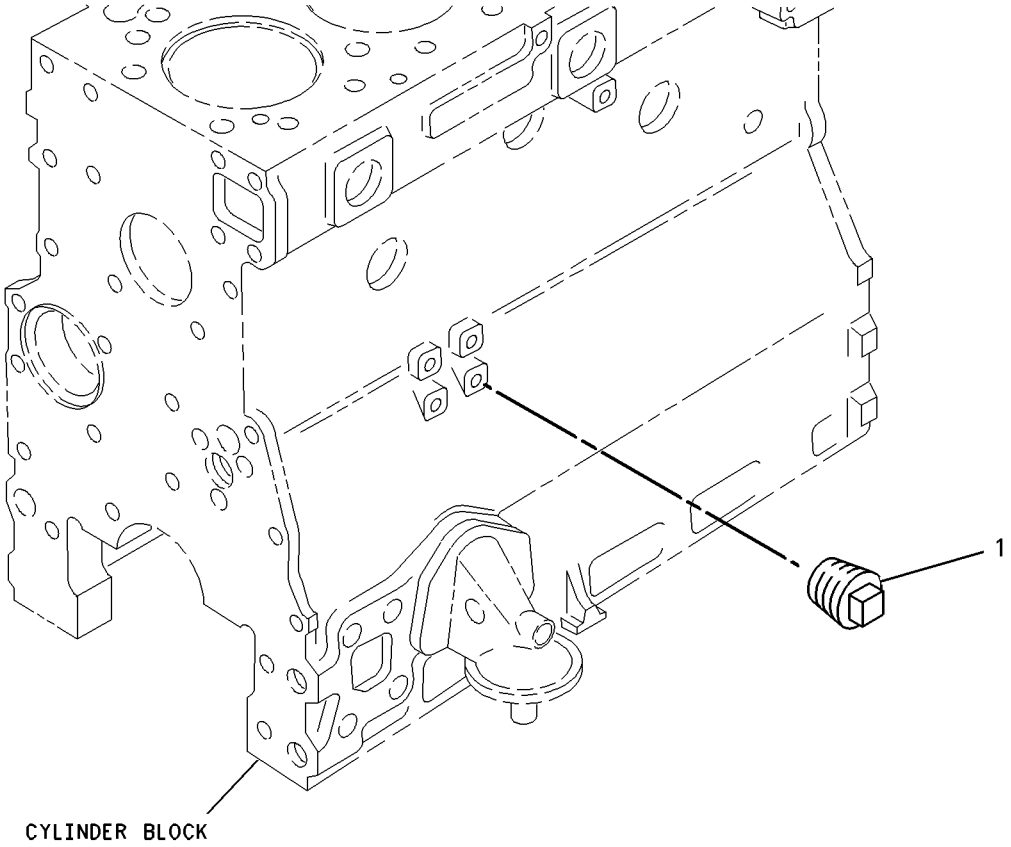

GRAPHIC #1 **<END>** g00777007

232-6204 PLUG GP-ENGINE

S/N: G4D1-UP

PART OF 456-1375, 470-9228 ENGINE AR-PRIMARY

SMCS-1000 **i02089627**

NOTE	REF NO	GRAPHIC REF	PART NUMBER	QTY	PART NAME 1 2 3 4 5 6 (PRODUCT LEVEL)	SEE PAGE
	1	1	**199-9751**	1	SEAL-O-RING	
	2	1	**232-1322**	1	PLUG	

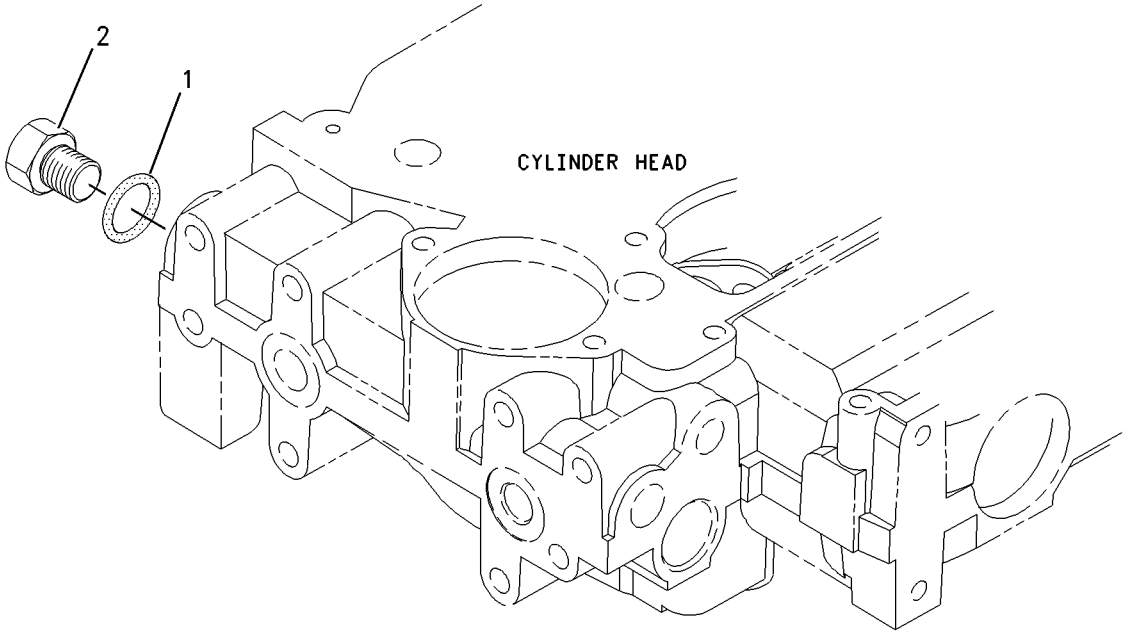

GRAPHIC #1 **<END>** g00950934

234-4215 PLUG GP-ENGINE

S/N: G4D1-UP

PART OF 456-1375, 470-9228 ENGINE AR-PRIMARY

SMCS-1000 **i05413947**

NOTE	REF NO	GRAPHIC REF	PART NUMBER	QTY	PART NAME 1 2 3 4 5 6 (PRODUCT LEVEL)	SEE PAGE
	1	1	**2B-0858**	1	PLUG-PIPE	
	2	1	**7W-4669**	1	ADAPTER	
	3	1	**134-3856**	1	ELBOW	

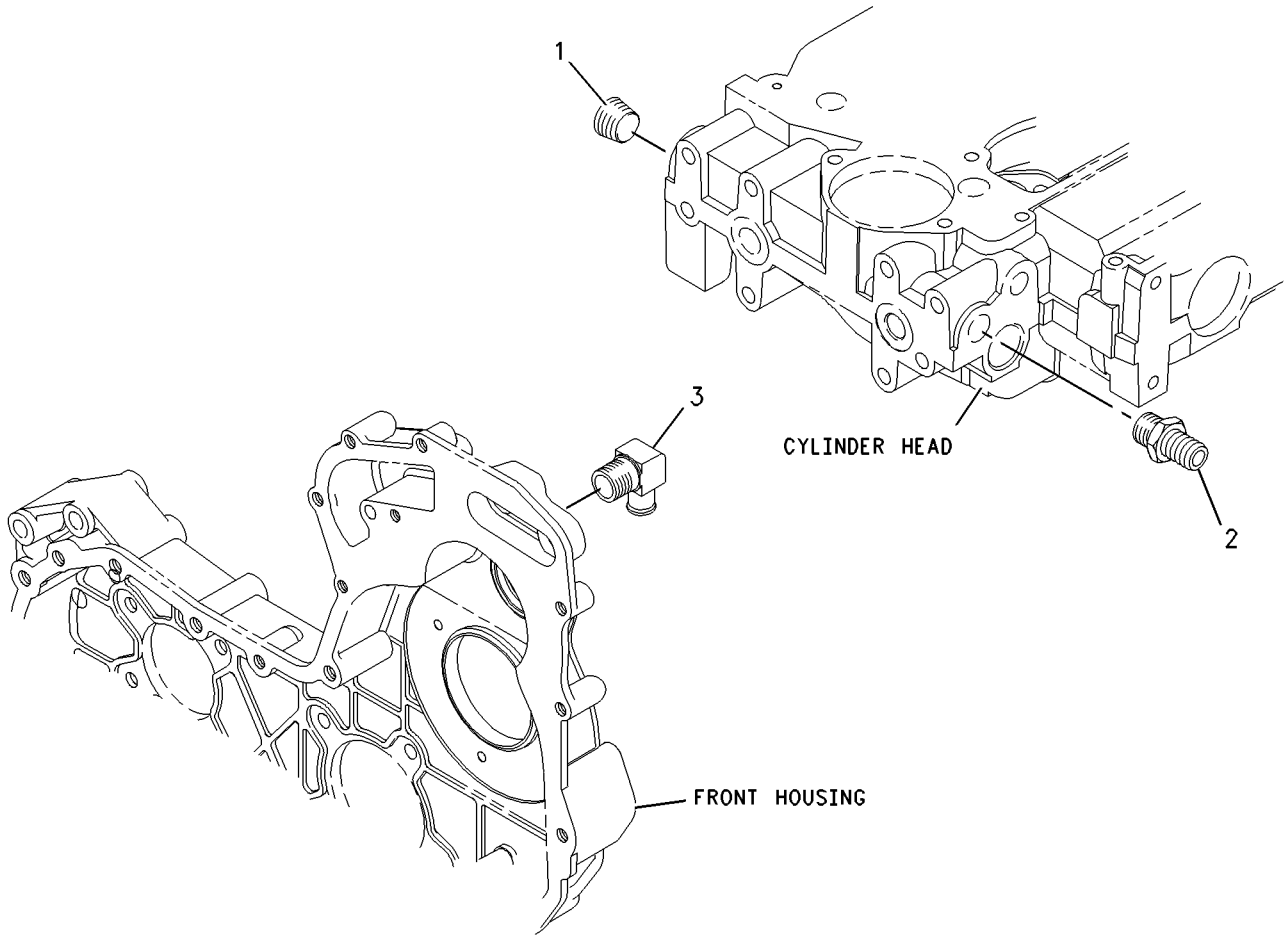

GRAPHIC #1 **<END>** g00975580

360-7354 PULLEY GP-CRANKSHAFT

S/N: G4D1-UP

PART OF 456-1375, 470-9228 ENGINE AR-PRIMARY

SMCS-1205 **i05955462**

NOTE	REF NO	GRAPHIC REF	PART NUMBER	QTY	PART NAME 1 2 3 4 5 6 (PRODUCT LEVEL)	SEE PAGE
M	1	1	**102-9941**	3	BOLT (M12X1.75X25-MM)	
	2	1	**286-7848**	1	PULLEY GP-ENGINE (8-GROOVE)	
	3	1	**334-9334**	3	BOLT	
	4	1	**359-0750**	1	PULLEY-CRANKSHAFT	

M - METRIC PART

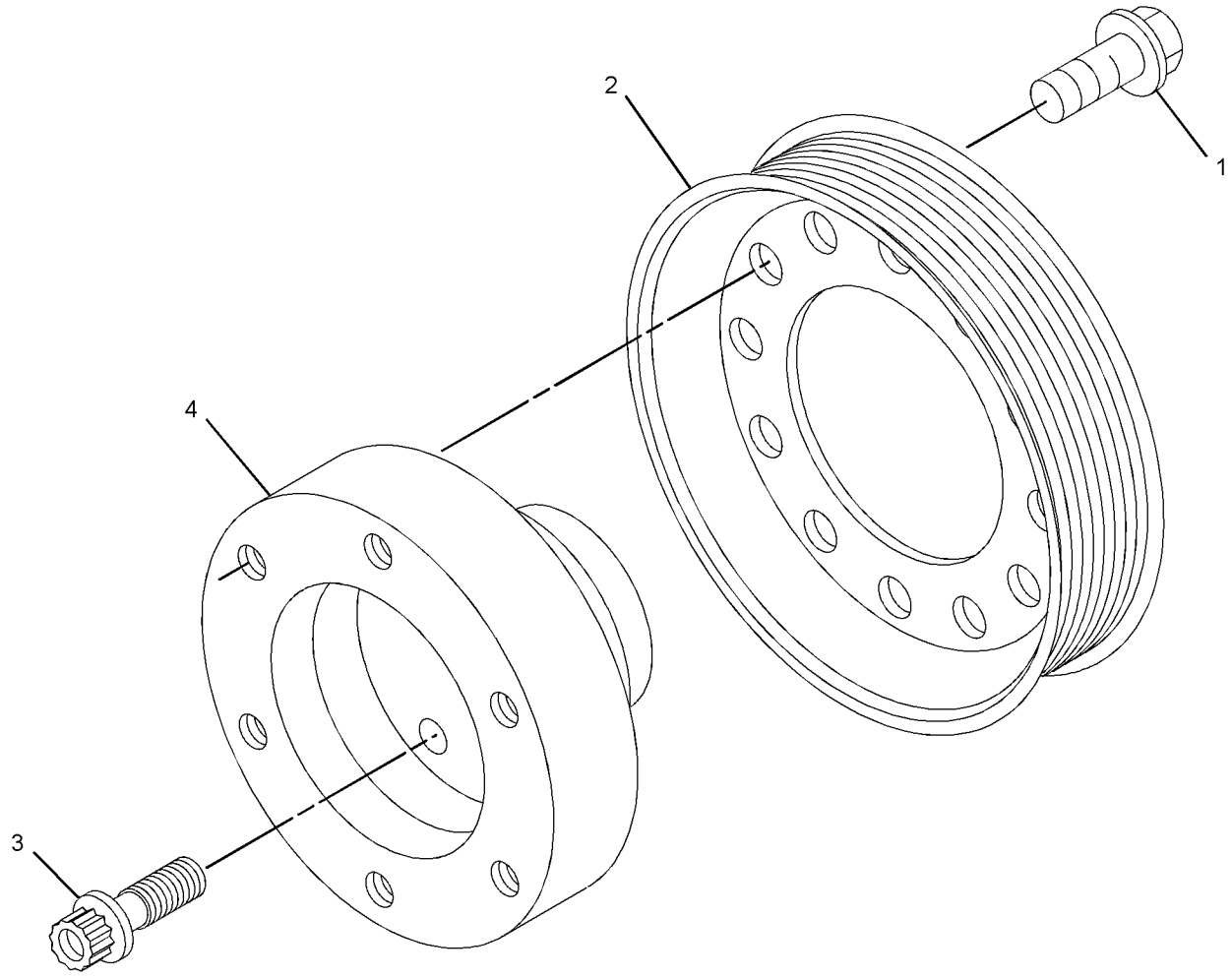

GRAPHIC #1 **<END>** g02232714

387-2628 PULLEY GP-FAN

S/N: XAH1-UP

PART OF 390-8835 FAN AR-SUCTION

SMCS-1356, 1359 **i05439104**

NOTE	REF NO	GRAPHIC REF	PART NUMBER	QTY	PART NAME 1 2 3 4 5 6 (PRODUCT LEVEL)	SEE PAGE
	1	1	**284-1026**	1	PULLEY (8-GROOVE)	
	2	1	**298-5872**	1	BELT-SERPENTINE	

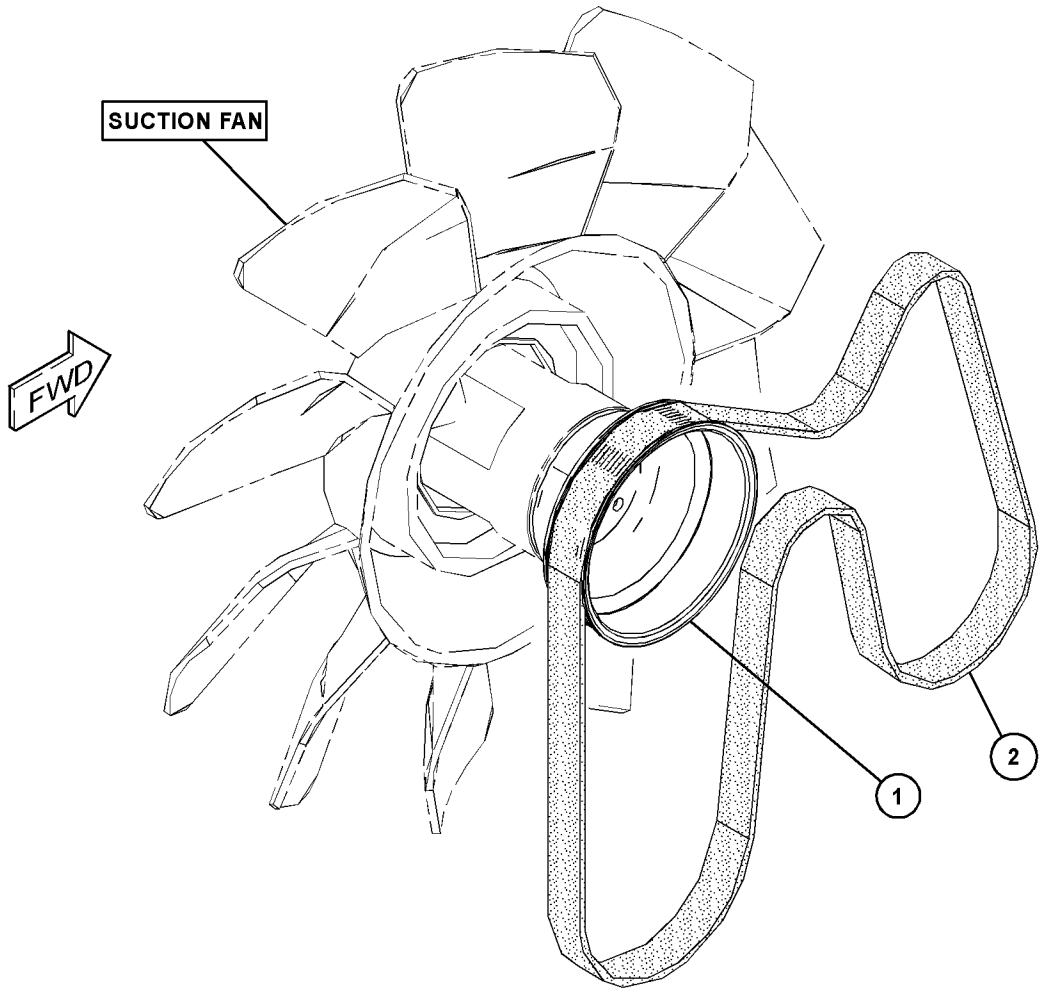

GRAPHIC #1 **<END>** g03146979

225-5963 ROCKER ARM GP

S/N: G4D1-UP

PART OF 441-4675, 458-3304 VALVE MECHANISM GP

SMCS-1123 **i03469127**

NOTE	REF NO	GRAPHIC REF	PART NUMBER	QTY	PART NAME 1 2 3 4 5 6 (PRODUCT LEVEL)	SEE PAGE
	1	1	**225-5625**	4	LEVER AS (INLET)	
					(EACH INCLUDES)	
	1A	1	**5B-9079**	1	NUT-JAM (3/8-24-THD)	
	1B	1	**185-1546**	1	SCREW	
	2	1	**225-5634**	1	SHAFT AS	
	2A	1	**225-5629**	2	PLUG	
	3	1	**225-5638**	3	SPRING	
	4	1	**225-5640**	4	LEVER AS (EXHAUST)	
					(EACH INCLUDES)	
	4A	1	**5B-9079**	1	NUT-JAM (3/8-24-THD)	
	4B	1	**185-1546**	1	SCREW	
	5	1	**225-5959**	2	CLIP	
	6	1	**225-5960**	1	BOLT (M8X1.25X60-MM)	
	7	1	**225-5961**	2	WASHER (26.7X34.32X0.38-MM THK)	
	8	1	**225-5962**	3	BOLT (M8X1.25X30-MM)	

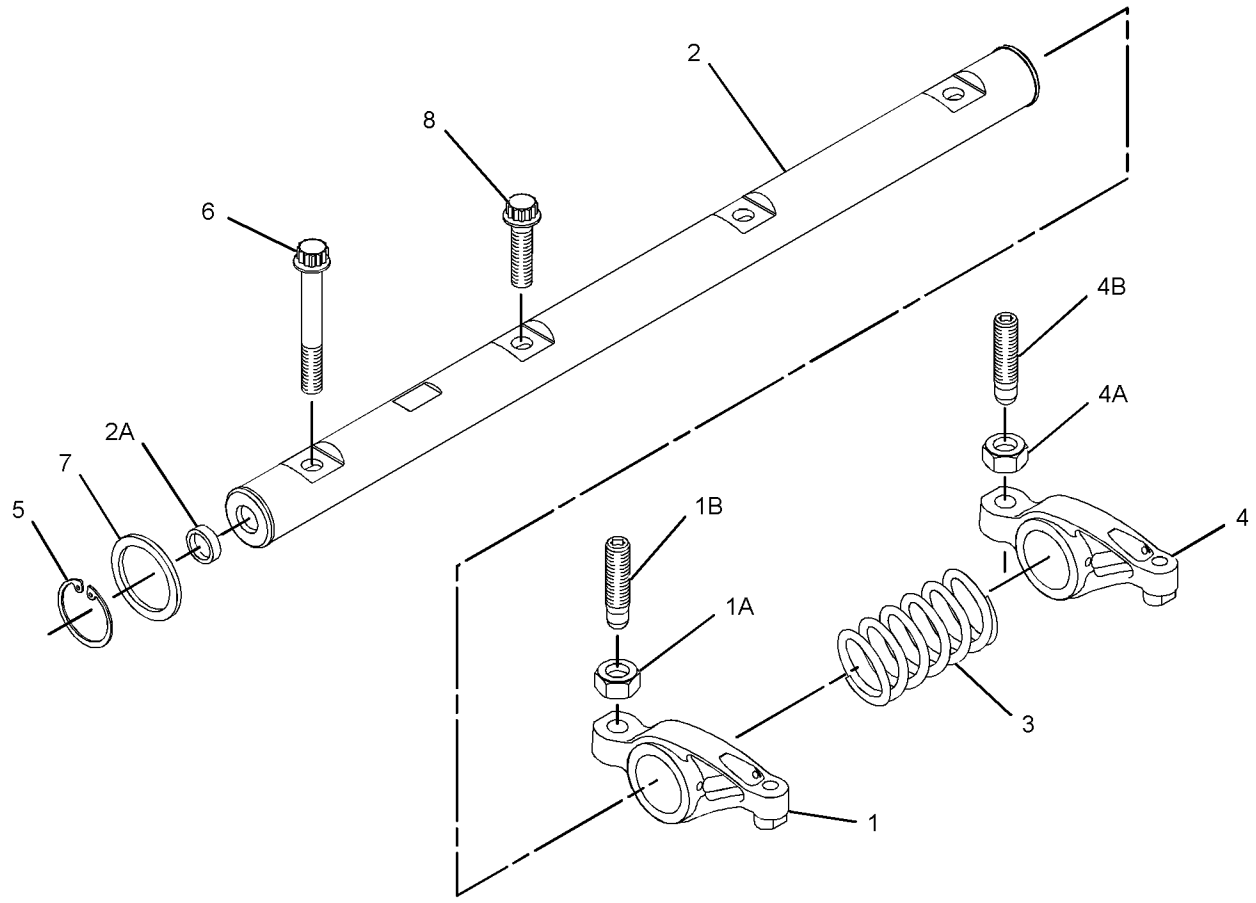

GRAPHIC #1 **<END>** g01368510

441-4675 VALVE MECHANISM GP

S/N: G4D1-UP

PART OF 456-1375 ENGINE AR-PRIMARY

SMCS-1209 **i05955475**

NOTE	REF NO	GRAPHIC REF	PART NUMBER	QTY	PART NAME 1 2 3 4 5 6 (PRODUCT LEVEL)	SEE PAGE
Y	1	1	**225-5963**	1	ROCKER ARM GP	39

Y - SEPARATE ILLUSTRATION

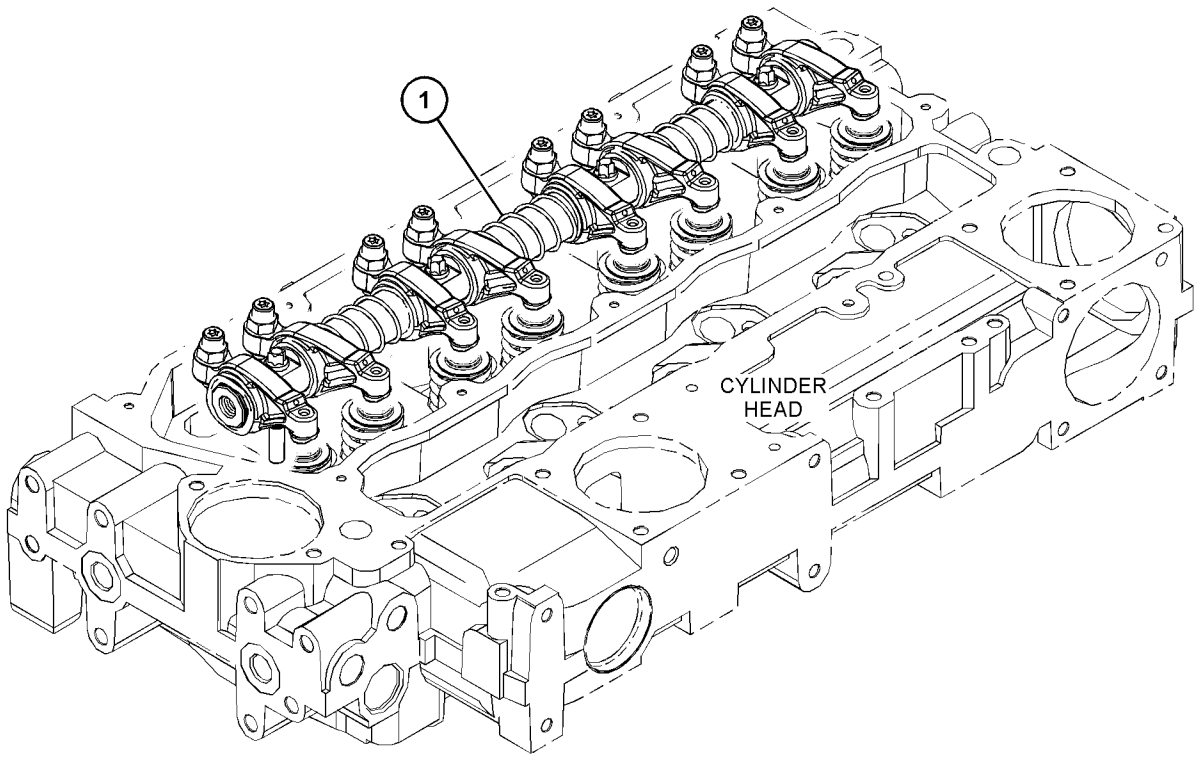

GRAPHIC #1 **<END>** g03743377

458-3304 VALVE MECHANISM GP

S/N: G4D1-UP

PART OF 470-9228 ENGINE AR-PRIMARY

SMCS-1209 **i05962776**

NOTE	REF NO	GRAPHIC REF	PART NUMBER	QTY	PART NAME 1 2 3 4 5 6 (PRODUCT LEVEL)	SEE PAGE
Y	1	1	**225-5963**	1	ROCKER ARM GP	39

Y - SEPARATE ILLUSTRATION

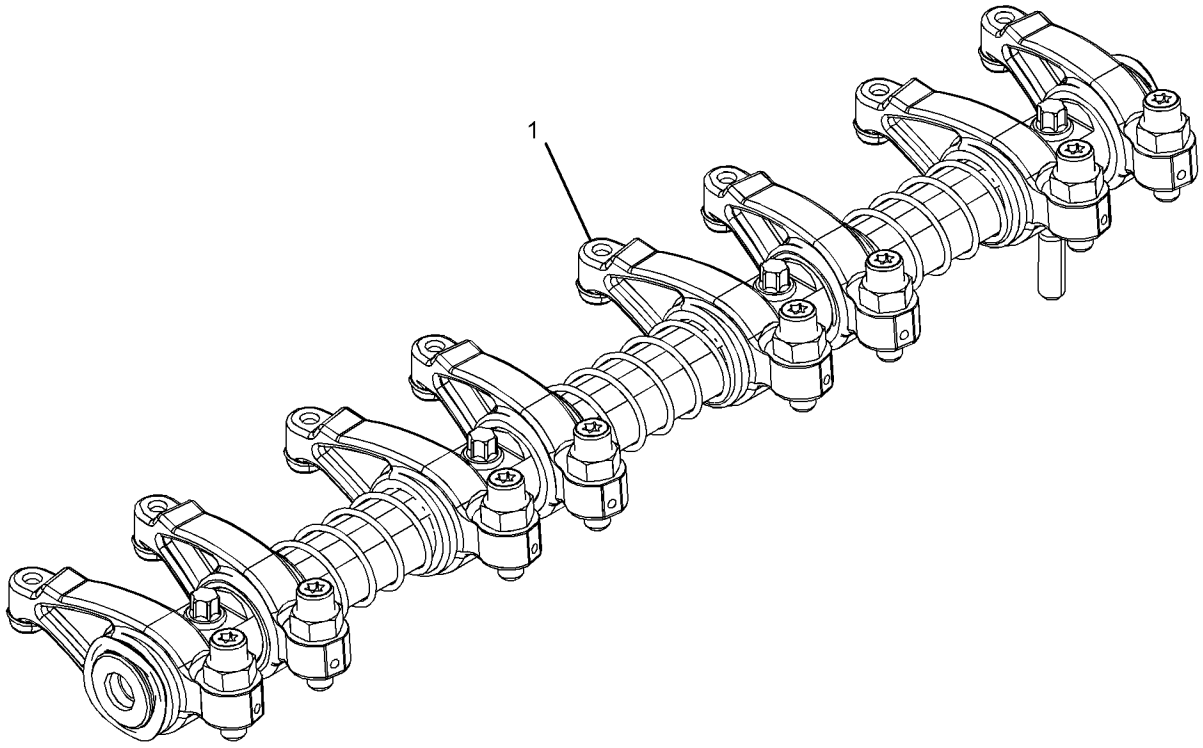

GRAPHIC #1 **<END>** g03349465

387-2622 FILTER & MTG GP-ENGINE OIL

S/N: XAH1-UP

PART OF 387-2619 INSTALLATION AR-ENGINE

SMCS-1306, 1308 **i05775984**

NOTE	REF NO	GRAPHIC REF	PART NUMBER	QTY	PART NAME 1 2 3 4 5 6 (PRODUCT LEVEL)	SEE PAGE
	1	1	**7C-1493**	1	VALVE AS-BYPASS	
	2	1	**7W-9028**	1	BASE AS-OIL FILTER	
		1	**2P-2537**	1	STUD-HOLLOW	
	3	1	**9L-9188**	1	SPRING-VALVE	
	4	1	**121-0307**	1	BASE	
	5	1	**287-0212**	1	PLATE AS	
I	6	1	**387-2653**	1	HOSE AS	
I	7	1	**387-2654**	1	HOSE AS	
	8	1	**393-0826**	1	PLATE AS	
M		1	**8T-3490**	1	NUT-WELD (M10X1.5-THD)	
	9	1	**130-9984**	1	CLIP	
	10	1	**1R-1807**	1	FILTER AS-ENGINE OIL (ADVANCED EFFICIENCY)	
	11	1	*281-5972*	1	CONNECTOR AS	
		1	**6V-8637**	1	CONNECTOR	
		1	**228-7092**	1	SEAL-O-RING	
		1	**238-5082**	1	SEAL-O-RING	
	12	1	*319-6208*	1	ADAPTER AS	
		1	**5P-9617**	1	ADAPTER	
		1	**214-7568**	1	SEAL-O-RING	
	13	1	*321-8647*	1	PLUG AS	
M		1	**5P-8196**	1	PLUG	
		1	**238-5081**	1	SEAL-O-RING	
	14	1	*321-8648*	3	CONNECTOR AS	
					(EACH INCLUDES)	
		1	**2T-2991**	1	CONNECTOR	
		1	**228-7092**	1	SEAL-O-RING	
		1	**238-5083**	1	SEAL-O-RING	
	15	1	*321-8649*	1	VALVE AS-FLUID SAMPLING	
		1	**8C-3446**	1	VALVE-FLUID SAMPLING	
		1	**214-7566**	1	SEAL-O-RING	
	16	1	*326-0319*	1	PLUG AS	
		1	**9S-4188**	1	PLUG	
		1	**238-5083**	1	SEAL-O-RING	
	17	1	*329-5528*	1	ELBOW AS	
		1	**8T-8899**	1	ELBOW	
		1	**228-7092**	1	SEAL-O-RING	
	18	1	**7X-7729**	3	WASHER (11X25X3-MM THK)	
	19	1	**8C-3445**	1	CAP-DUST	
	20	1	**8T-4121**	6	WASHER-HARD (11X21X2.5-MM THK)	
M	21	1	**8T-4136**	3	BOLT (M10X1.5X25-MM)	
M	22	1	**8T-4137**	2	BOLT (M10X1.5X20-MM)	
M	23	1	**8T-4195**	1	BOLT (M10X1.5X30-MM)	
M	24	1	**8T-4196**	3	BOLT (M10X1.5X35-MM)	
M	25	1	**8T-4197**	3	BOLT (M8X1.25X40-MM)	
	26	1	**8T-4224**	5	WASHER-HARD (8.8X16X2-MM THK)	
M	27	1	**8T-7547**	2	BOLT (M8X1.25X30-MM)	

I - REFER TO HYDRAULIC INFORMATION SYSTEM
M - METRIC PART

387-2622 **FILTER & MTG GP-ENGINE OIL (*contd.*)** **i05775984**

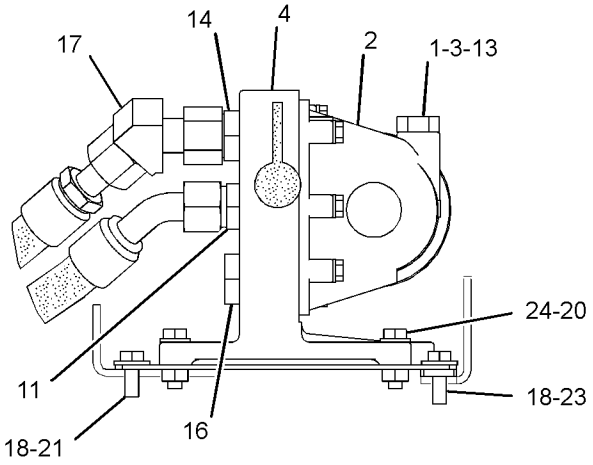

VIEW A-A

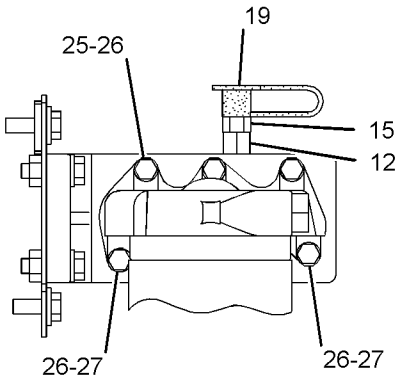

VIEW B-B

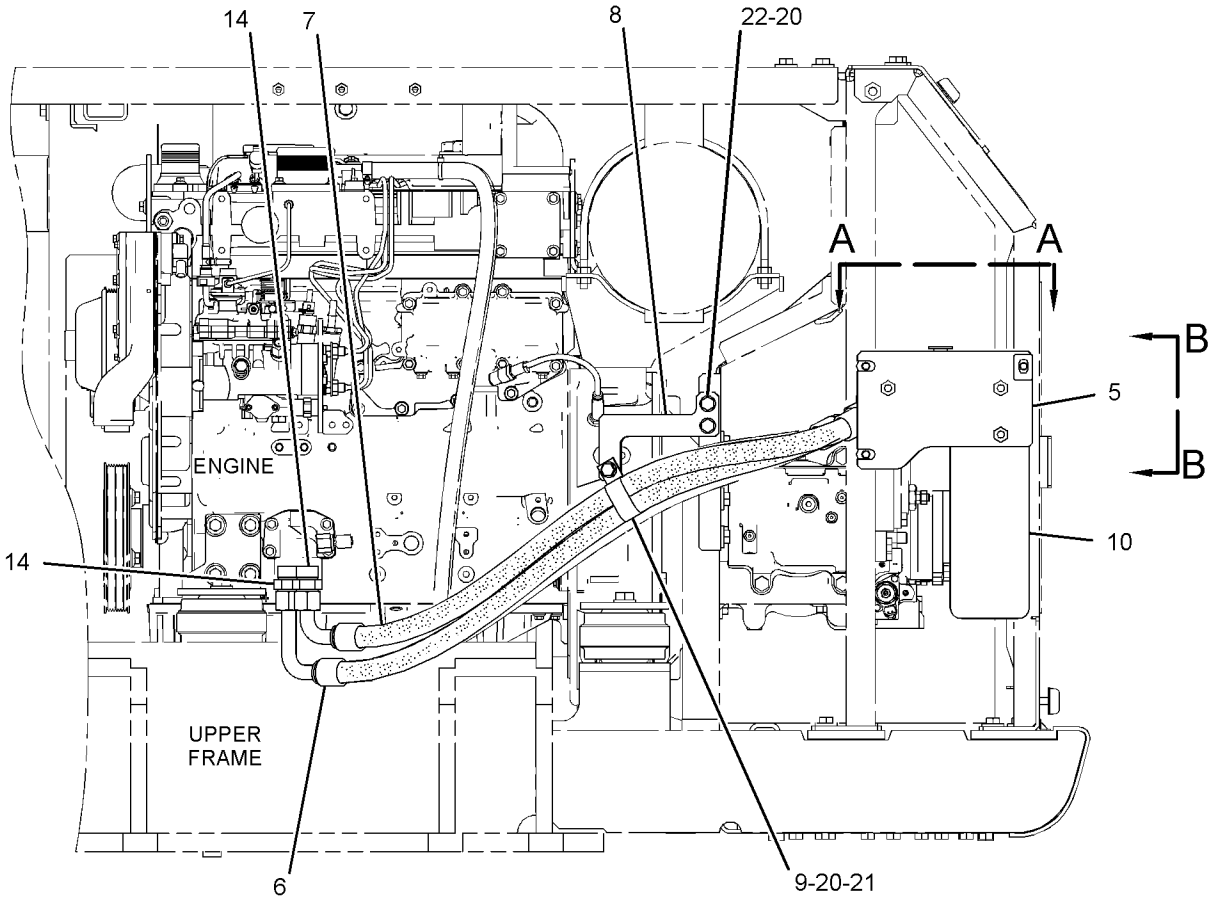

REAR VIEW

GRAPHIC #1 **<END>** g03128696

387-2614 FUMES DISPOSAL GP

S/N: XAH1-UP

PART OF 387-2619 INSTALLATION AR-ENGINE

SMCS-1317 **i05401653**

NOTE	REF NO	GRAPHIC REF	PART NUMBER	QTY	PART NAME 1 2 3 4 5 6 (PRODUCT LEVEL)	SEE PAGE
	1	1	**394-8706**	1	PLATE AS	
	2	1	**394-8709**	1	PLATE	
	3	1	**394-8711**	1	HOSE-FUMES DISPOSAL	
	4	1	**067-3045**	1	CLIP	
	5	1	**206-1345**	1	STRAP-CABLE	
M	6	1	**5C-9553**	2	BOLT (M6X1X16-MM)	
	7	1	**5P-4115**	2	WASHER-HARD (7.2X19X2-MM THK)	
	8	1	**5V-9155**	1	CLAMP-HOSE	
	9	1	**8T-4121**	1	WASHER-HARD (11X21X2.5-MM THK)	
M	10	1	**8T-4137**	1	BOLT (M10X1.5X20-MM)	
M	11	1	**8T-4189**	2	BOLT (M8X1.25X20-MM)	
	12	1	**8T-4224**	2	WASHER-HARD (8.8X16X2-MM THK)	

M - METRIC PART

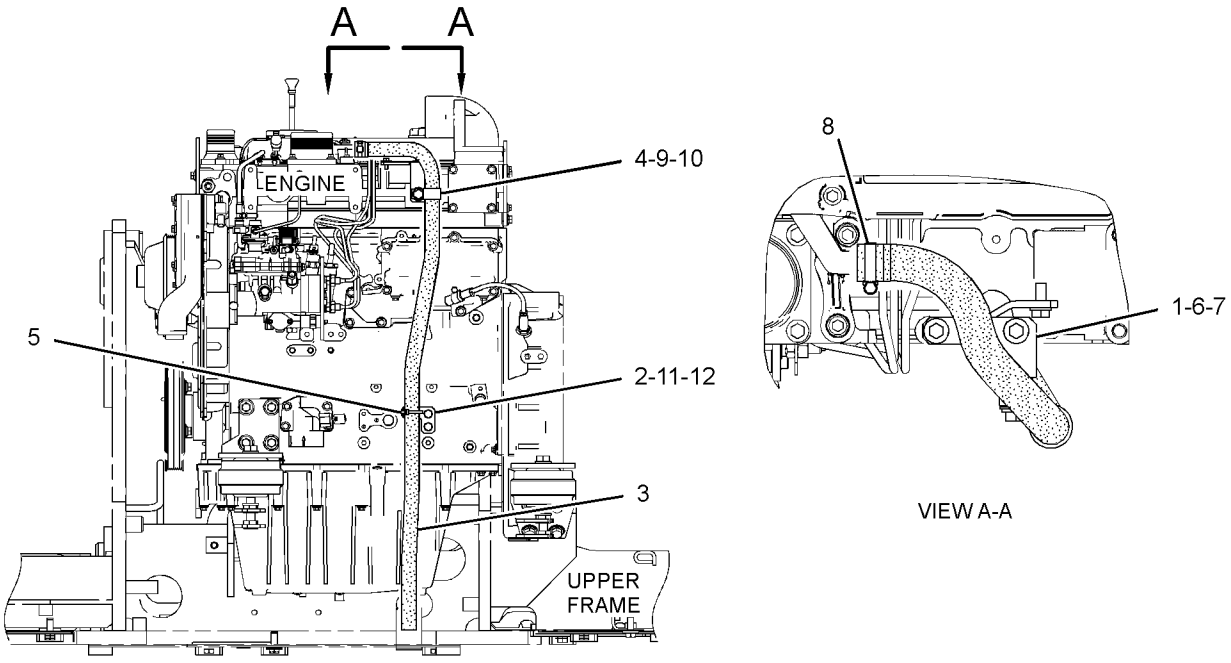

REAR VIEW

GRAPHIC #1 **<END>** g03122696

230-7578 PUMP GP-ENGINE OIL

S/N: G4D1-UP

PART OF 456-1375, 470-9228 ENGINE AR-PRIMARY

SMCS-1304, 1315

i02052081

NOTE	REF NO	GRAPHIC REF	PART NUMBER	QTY	PART NAME 1 2 3 4 5 6 (PRODUCT LEVEL)	SEE PAGE
M	1	1	**100-4461**	5	BOLT (M10X1.50X50-MM)	
	2	1	**225-8329**	1	PUMP AS-ENGINE OIL	

M - METRIC PART

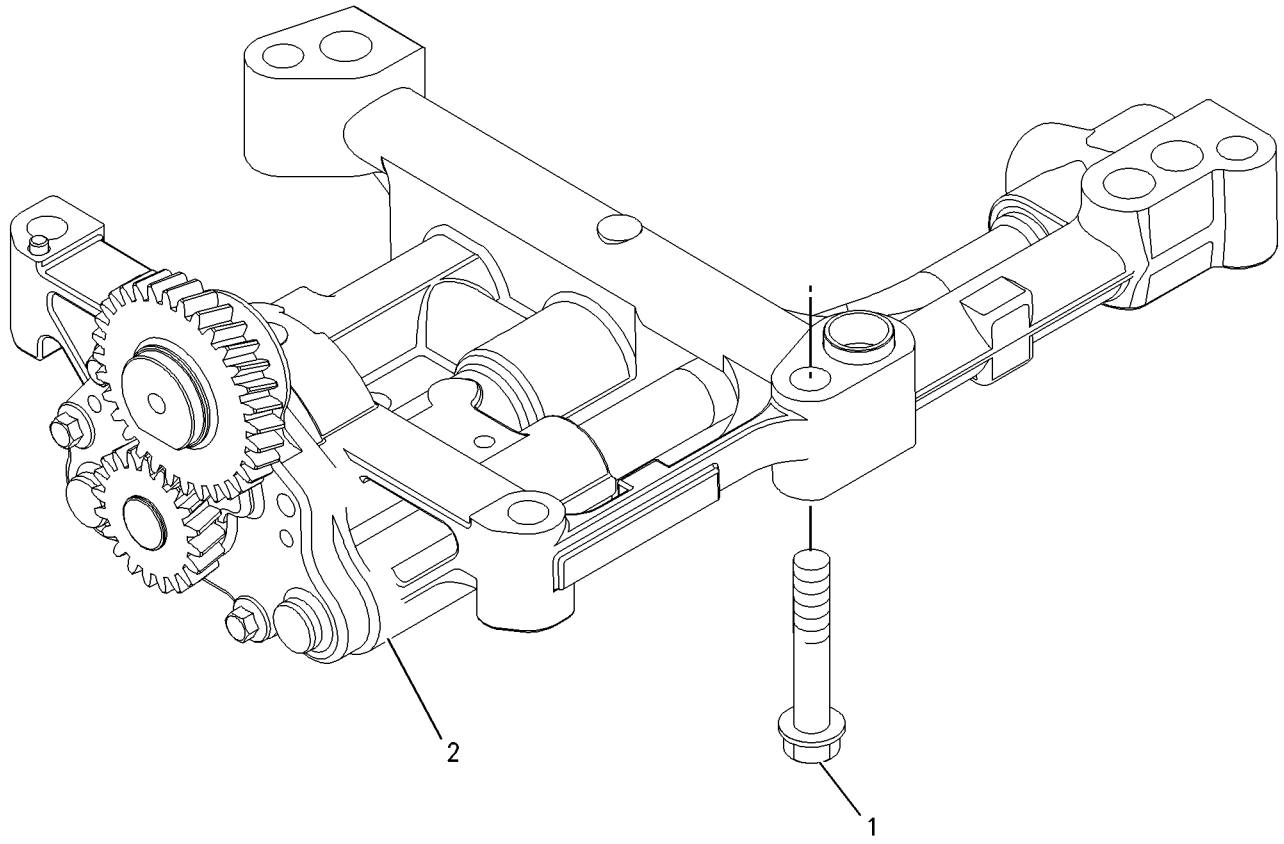

GRAPHIC #1 **<END>** g00911993

231-0033 CONNECTION GP-WATER

S/N: G4D1-UP

PART OF 456-1375, 470-9228 ENGINE AR-PRIMARY

SMCS-1380 **i05987418**

NOTE	REF NO	GRAPHIC REF	PART NUMBER	QTY	PART NAME 1 2 3 4 5 6 (PRODUCT LEVEL)	SEE PAGE
M	1	1	**6I-0260**	2	BOLT (M8X1.25X25-MM)	
	2	1	**254-2267**	1	REGULATOR GP-TEMPERATURE (INCLUDES CONNECTOR)	
	2A	1	**254-2270**	1	SEAL-O-RING (WATER TEMPERATURE REGULATOR)	

M - METRIC PART

231-0033 **CONNECTION GP-WATER (*contd.*)** **i05987418**

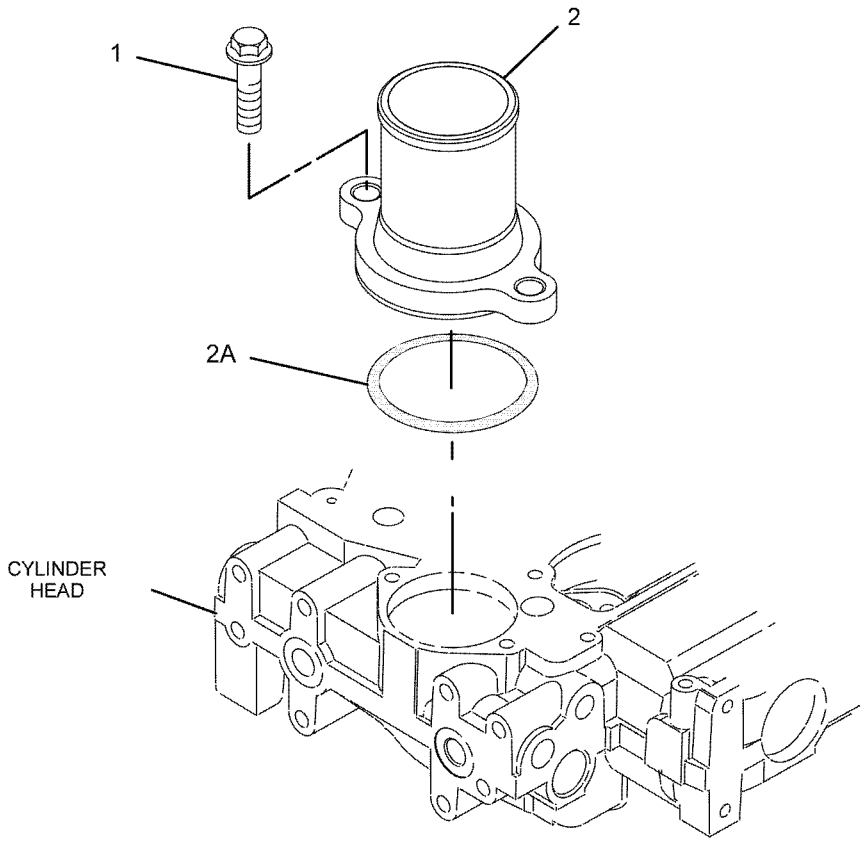

GRAPHIC #1 **<END>** g01081626

354-1274 COOLER GP-ENGINE OIL

S/N: G4D1-UP

PART OF 421-7107 COOLER GP-ENGINE OIL, 460-0525 COOLER GP-FLTR BASE & ENG OIL

SMCS-1378 **i05513634**

NOTE	REF NO	GRAPHIC REF	PART NUMBER	QTY	PART NAME 1 2 3 4 5 6 (PRODUCT LEVEL)	SEE PAGE
M	1	1	**6I-0260**	10	BOLT (M8X1.25X25-MM)	
	2	1	**6I-4374**	3	BOLT (M8X1.25X60-MM)	
M	3	1	**101-3895**	4	BOLT (M8X1.25X35-MM)	
	4	1	**225-6817**	1	COOLER-OIL	
J	5	1	**225-6818**	2	SEAL	
	6	1	**272-2265**	1	SEAL	
					AVAILABLE REPAIR KIT(S):	
J			**416-8777**	1	KIT-SEALING (ENGINE OIL COOLER)	
					(INCLUDES SEALS & LEAFLET)	

J - KIT MARKED J SERVICES PART(S) MARKED J
M - METRIC PART

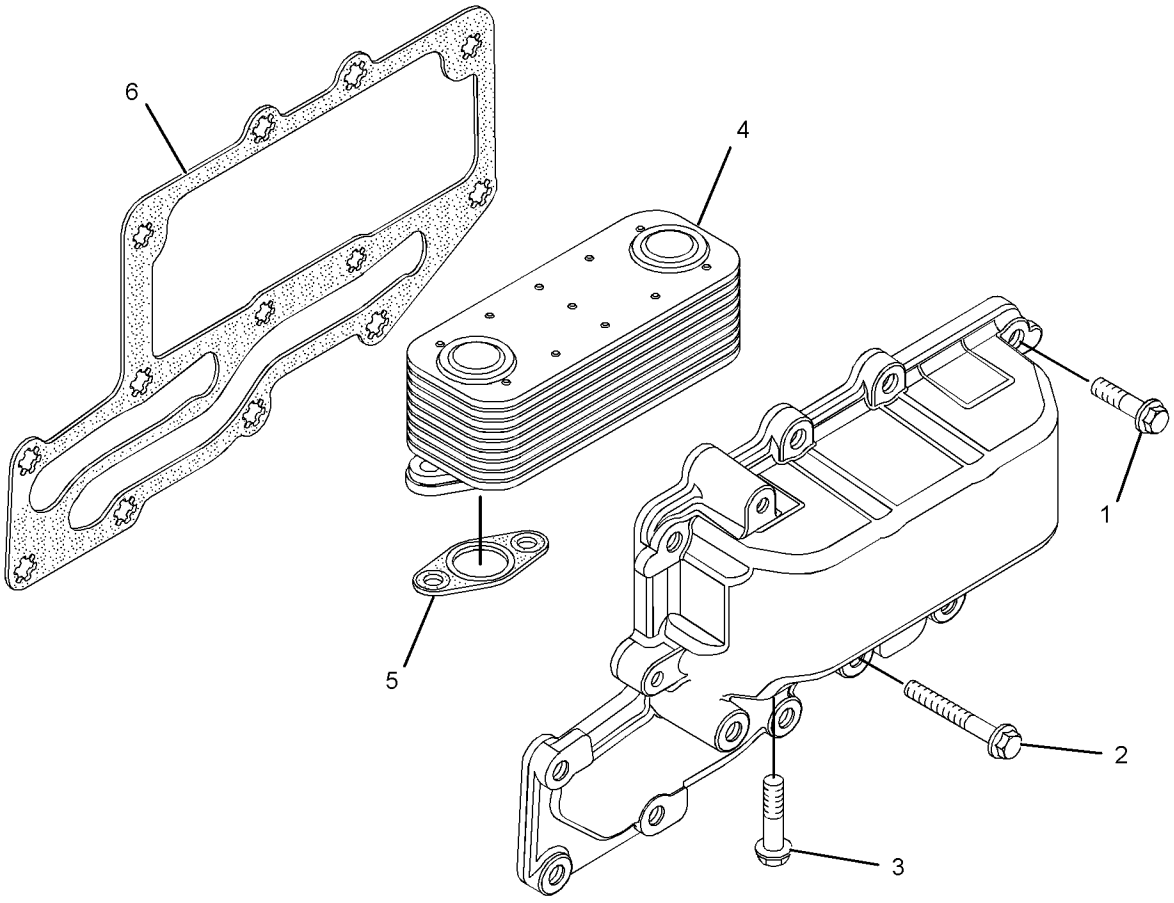

GRAPHIC #1 **<END>** g02140458

421-7107 COOLER GP-ENGINE OIL

S/N: G4D1-UP

PART OF 456-1375 ENGINE AR-PRIMARY

SMCS-1378 **i05413862**

NOTE	REF NO	GRAPHIC REF	PART NUMBER	QTY	PART NAME 1 2 3 4 5 6 (PRODUCT LEVEL)	SEE PAGE
	1	1	**6I-0572**	4	BOLT (M8X1.25X20-MM)	
M	2	1	**6I-0645**	4	BOLT (M8X1.25X25-MM)	
	3	1	**199-9267**	1	SEAL-O-RING	
	4	1	**225-7944**	2	GASKET	
	5	1	**232-3751**	1	PLATE	
	6	1	**232-3861**	1	PLUG (BLANKING)	
	7	1	**242-8660**	1	HEAD AS	
Y	8	1	**354-1274**	1	COOLER GP-ENGINE OIL	48

M - METRIC PART
Y - SEPARATE ILLUSTRATION

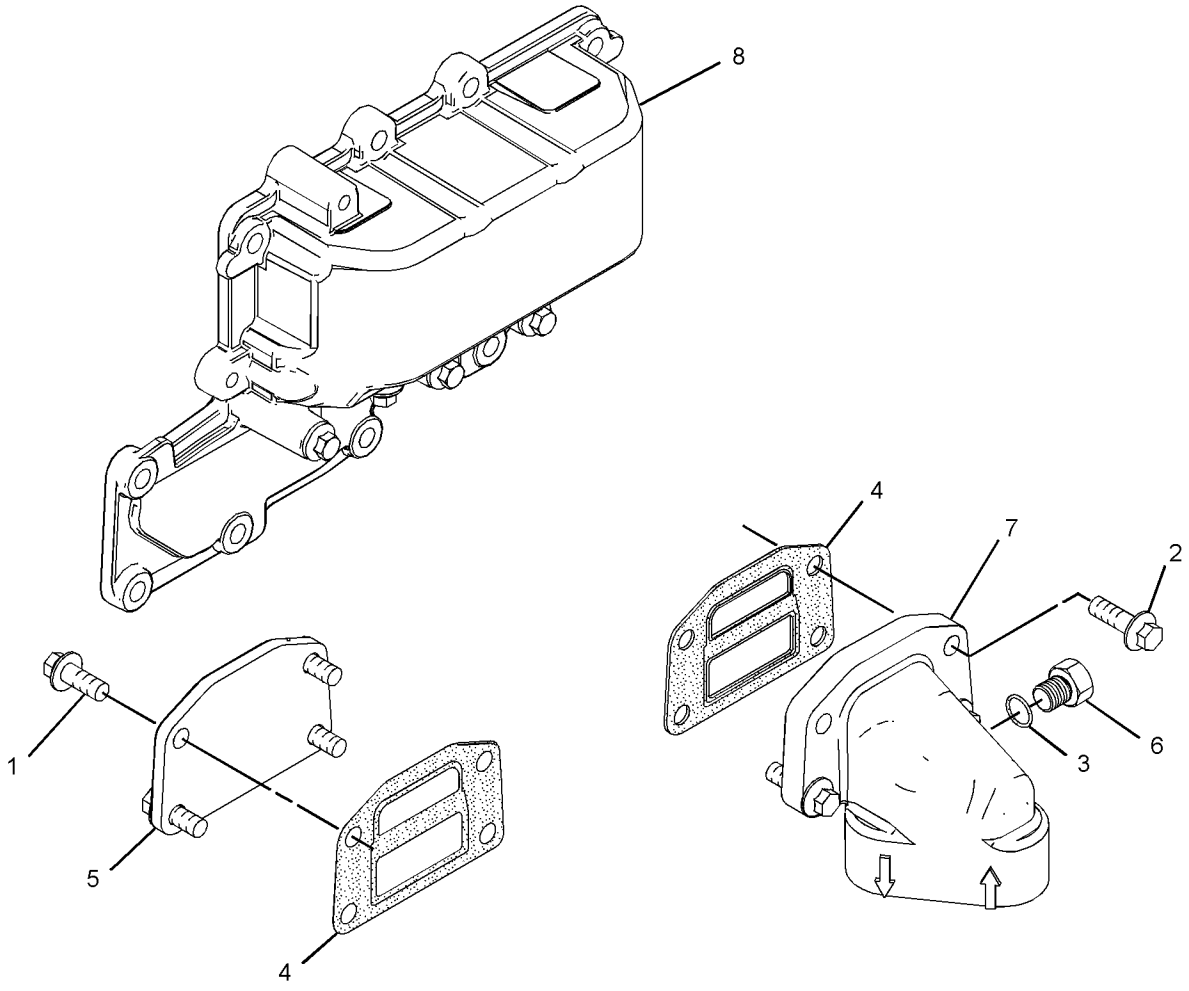

GRAPHIC #1 **<END>** g03157259

460-0525 COOLER GP-FLTR BASE & ENG OIL

S/N: G4D1-UP

PART OF 470-9228 ENGINE AR-PRIMARY

SMCS-1306, 1378 **i05962766**

NOTE	REF NO	GRAPHIC REF	PART NUMBER	QTY	PART NAME 1 2 3 4 5 6 (PRODUCT LEVEL)	SEE PAGE
M	1	1	**6I-0572**	4	BOLT (M8X1.25X20-MM)	
M	2	1	**6I-0645**	4	BOLT (M8X1.25X25-MM)	
	3	1	**199-9267**	1	SEAL-O-RING	
	4	1	**225-7944**	2	GASKET	
	5	1	**232-3751**	1	PLATE	
	6	1	**232-3861**	1	PLUG (BLANKING)	
	7	1	**242-8660**	1	HEAD AS	
Y	8	1	**354-1274**	1	COOLER GP-ENGINE OIL	48

M - METRIC PART
Y - SEPARATE ILLUSTRATION

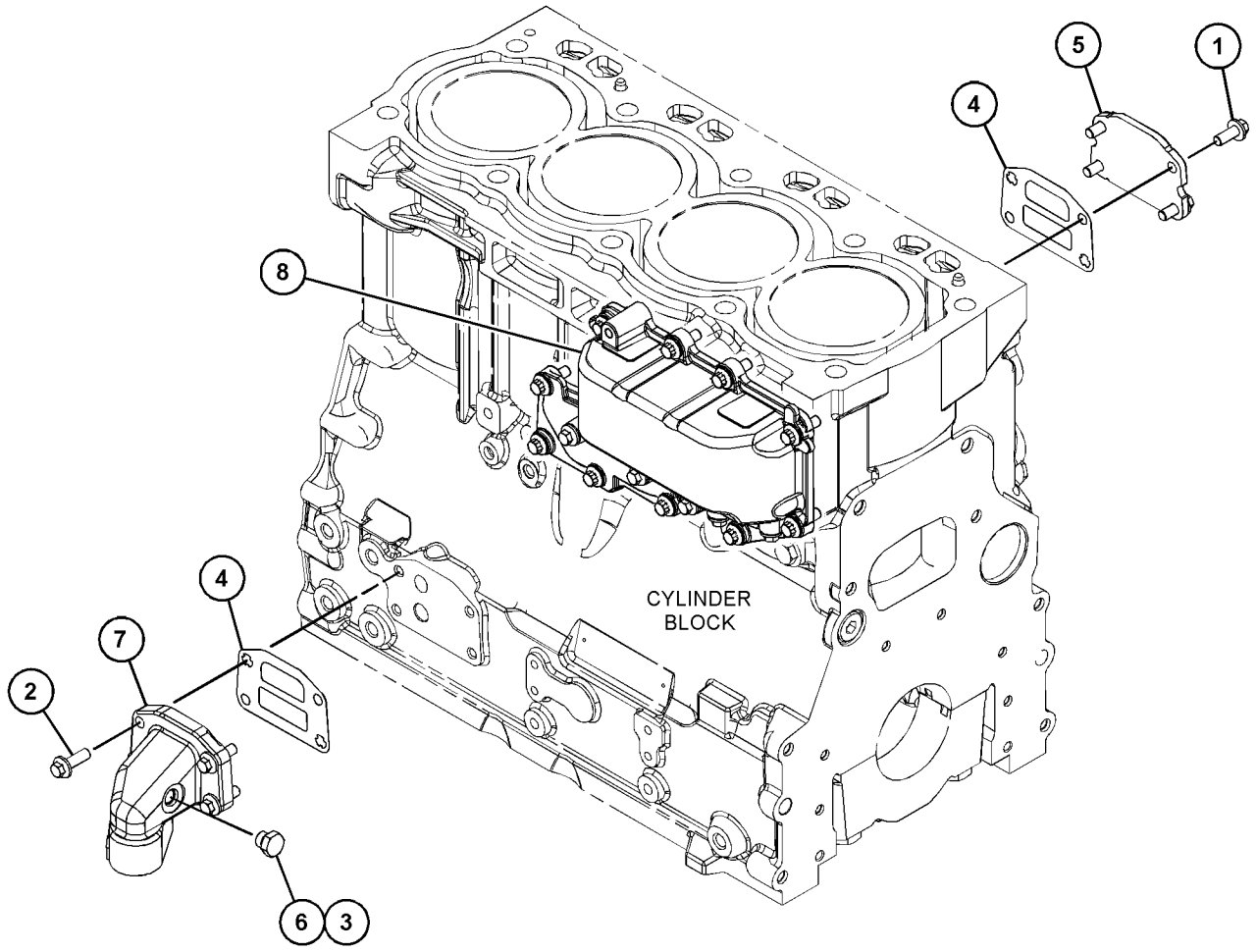

GRAPHIC #1 **<END>** g03703164

390-8835 FAN AR-SUCTION

S/N: XAH1-UP

PART OF 455-1948 ENGINE AR-COMPLETE

SMCS-1356 **i05775057**

NOTE	PART NUMBER	QTY	PART NAME 1 2 3 4 5 6 (PRODUCT LEVEL)	SEE PAGE
Y	*390-8836*	1	FAN GP-SUCTION	52
Y	*387-2628*	1	PULLEY GP-FAN	38

Y - SEPARATE ILLUSTRATION

<END>

390-8836 FAN GP-SUCTION—DIRECT DRIVE

S/N: XAH1-UP

PART OF 390-8835 FAN AR-SUCTION

SMCS-1356 **i05917858**

NOTE	REF NO	GRAPHIC REF	PART NUMBER	QTY	PART NAME 1 2 3 4 5 6 (PRODUCT LEVEL)	SEE PAGE
	1	1	**433-4624**	1	SPACER-FAN	
	2	1	**423-4010**	1	SPIDER AS-FAN	
	3	1	**453-3452**	4	WASHER-HARD (8.8X20.5X2-MM THK)	
	4	1	**453-3439**	4	BOLT	

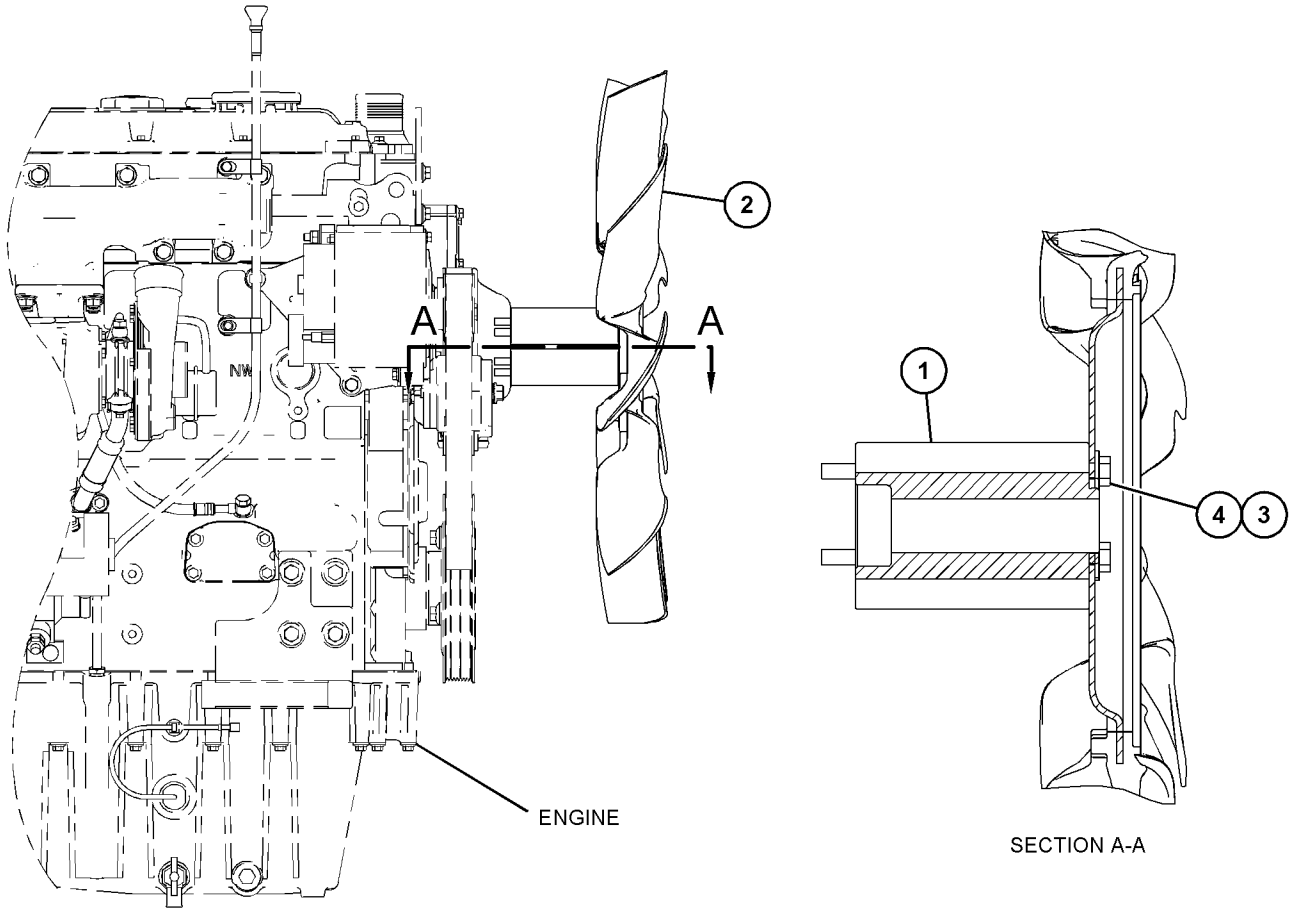

FRONT VIEW

GRAPHIC #1 **<END>** g03676769

390-8838 LINES GP-COOLING

S/N: XAH1-UP

PART OF 387-2619 INSTALLATION AR-ENGINE

SMCS-1380, 5057 **i05776580**

NOTE	REF NO	GRAPHIC REF	PART NUMBER	QTY	PART NAME 1 2 3 4 5 6 (PRODUCT LEVEL)	SEE PAGE
	1	1	**369-2263**	1	HOSE	
	2	1	**369-2264**	1	HOSE	
	3	1	**391-3199**	1	HOSE (AFTERCOOLER)	
	4	1	**391-3253**	1	HOSE (LOW TEMPERATURE AFTERCOOLER)	
	5	1	**391-3712**	1	PIPE AS	
	6	1	**391-3714**	1	PIPE AS	
	7	1	**144-0367**	8	CLAMP-HOSE	
	8	1	**7X-7729**	7	WASHER (11X25X3-MM THK)	
M	9	1	**8T-4136**	3	BOLT (M10X1.5X25-MM)	
M	10	1	**8T-4137**	4	BOLT (M10X1.5X20-MM)	
	11	1	**8T-4985**	1	CLAMP-HOSE	
	12	1	**8T-6703**	1	CLAMP-HOSE	

M - METRIC PART

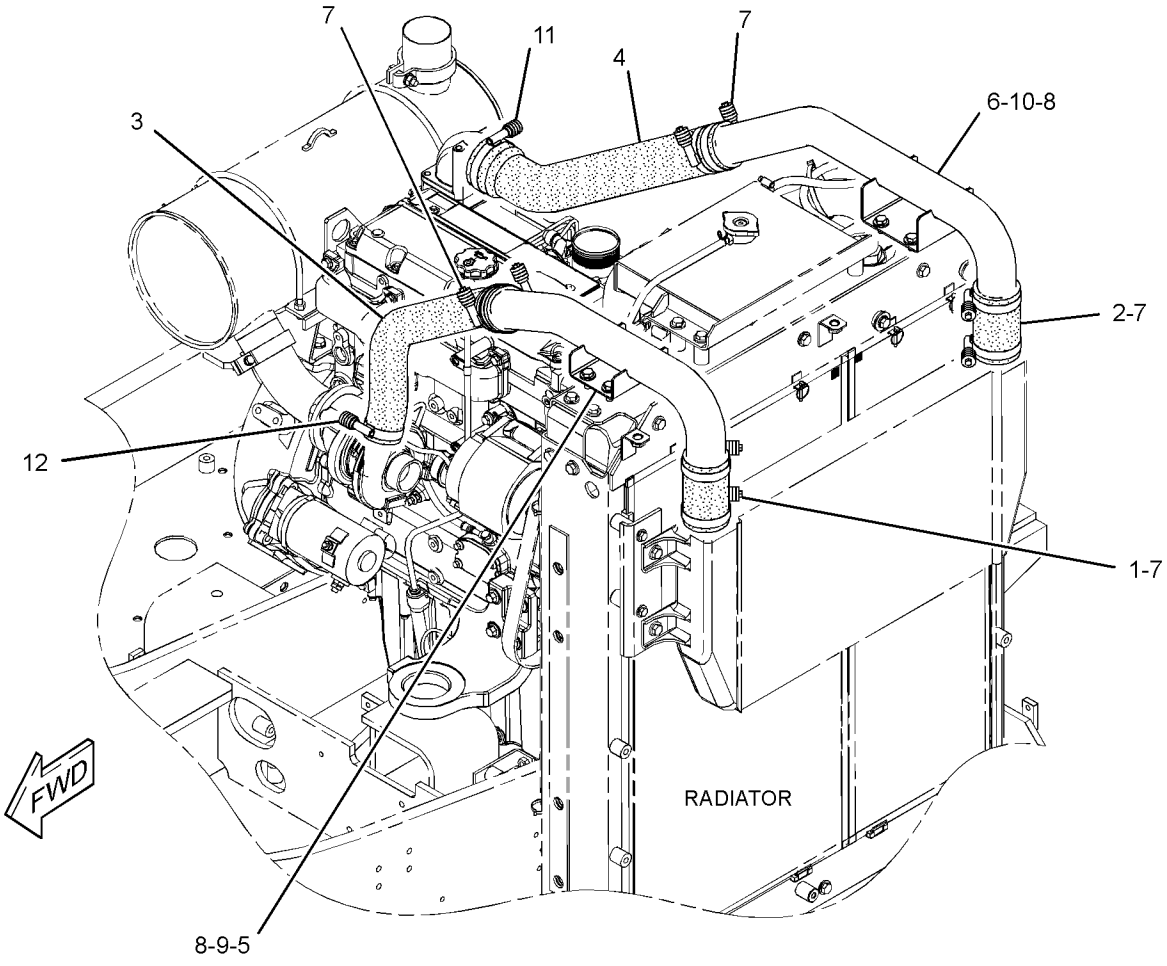

GRAPHIC #1 **<END>** g03133244

230-7355 PUMP GP-WATER

S/N: G4D1-UP

PART OF 456-1375, 470-9228 ENGINE AR-PRIMARY

SMCS-1361 **i05907287**

NOTE	REF NO	GRAPHIC REF	PART NUMBER	QTY	PART NAME 1 2 3 4 5 6 (PRODUCT LEVEL)	SEE PAGE
M	1	1	**6I-0217**	2	BOLT (M8X1.25X20-MM)	
M	2	1	**6I-0254**	2	BOLT (M8X1.25X30-MM)	
M	3	1	**100-3751**	5	BOLT (M8X1.25X65-MM)	
	4	1	**113-8129**	2	BOLT (M8X1.25X75-MM)	
	5	1	**225-7741**	1	CONNECTION AS	
	5A	1	**225-7738**	1	SEAL-O-RING	
	5B	1	**225-7739**	1	SEAL-O-RING	
C	6	1	**354-1672**	1	PUMP GP-WATER	
	6A	1	**225-8019**	1	GASKET	
					AVAILABLE REPAIR KIT(S):	
			247-0144	1	KIT-GASKET (WATER PUMP)	
					(INCLUDES PUMP HOUSING GASKET & COVER GASKET)	

C - CHANGE FROM PREVIOUS TYPE
M - METRIC PART

230-7355 **PUMP GP-WATER (*contd.*)** **i05907287**

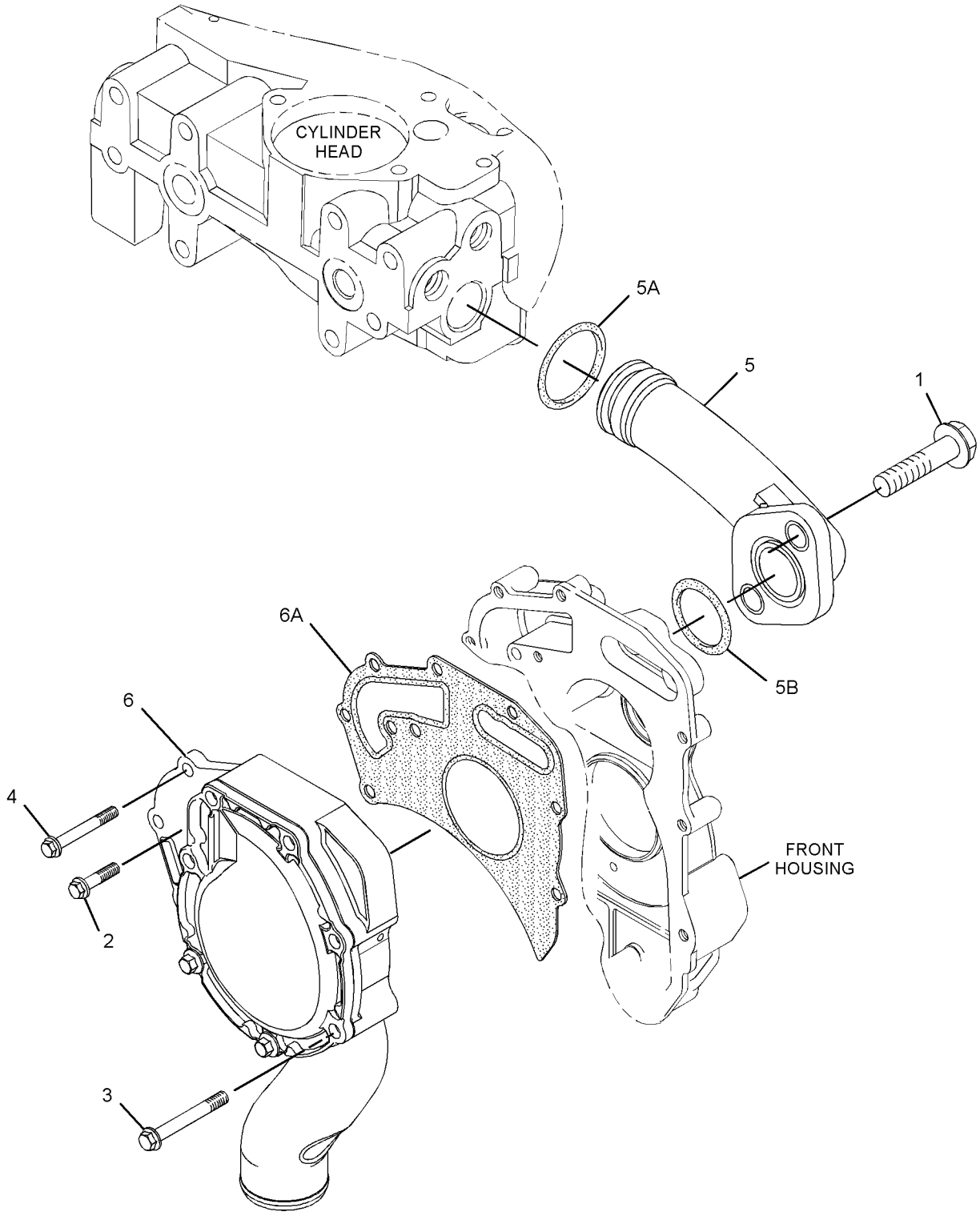

GRAPHIC #1 **<END>** g02137998

377-7808 RADIATOR & HYD OIL COOLER GP

S/N: XAH1-UP

PART OF 390-8837 RADIATOR & HYD OIL COOLER GP

SMCS-1351 **i05776422**

NOTE	REF NO	GRAPHIC REF	PART NUMBER	QTY	PART NAME 1 2 3 4 5 6 (PRODUCT LEVEL)	SEE PAGE
	1	1	**385-7933**	1	CORE AS-RADIATOR	
		1	**332-4191**	1	PLUG	
		1	**332-4192**	1	SEAL-O-RING	
	2	1	**5D-8159**	4	PIN AS	
	3	1	**313-3762**	2	CUSHION-RUBBER	
	4	1	**313-3763**	2	SCREEN AS (RADIATOR)	
	5	1	**313-3766**	2	SLEEVE	
	6	1	**313-3769**	2	CUSHION-RUBBER	
	7	1	**314-6506**	2	CUSHION-RUBBER	
	8	1	**314-6510**	2	PIN	
	9	1	**352-7775**	2	SEAL	
	10	1	**360-9262**	1	CORE AS-OIL COOLER (HYDRAULIC)	
	11	1	**365-6882**	1	BRACKET AS	
	12	1	**365-6883**	1	SEAL-AIR	
	13	1	**365-6884**	1	SEAL-AIR	
	14	1	**365-6886**	2	SEAL-AIR	
	15	1	**365-6887**	2	SEAL-AIR	
	16	1	**365-6888**	2	SEAL-AIR	
	17	1	**365-6889**	2	SEAL-AIR	
	18	1	**365-6890**	1	SEAL-AIR	
	19	1	**378-6179**	1	AFTERCOOLER AS	
	20	1	**385-7931**	1	FRAME AS	
	21	1	**385-7935**	2	BRACKET AS	
	22	1	**385-7943**	1	PLATE AS	
	23	1	**385-7944**	2	SEAL-AIR	
	24	1	**385-7945**	1	SHROUD AS	
	25	1	**385-7948**	1	BRACKET AS	
	26	1	**416-0965**	1	CAP-RADIATOR	
	27	1	**096-4035**	3	CLIP	
	28	1	**134-3196**	2	WASHER (10.2X39.6X2.3-MM THK)	
	29	1	**5P-4116**	8	WASHER-HARD (8.8X20.5X2-MM THK)	
	30	1	**7X-7729**	23	WASHER (11X25X3-MM THK)	
M	31	1	**8T-4136**	13	BOLT (M10X1.5X25-MM)	
M	32	1	**8T-4182**	2	BOLT (M10X1.5X45-MM)	
M	33	1	**8T-4185**	4	BOLT (M10X1.5X50-MM)	
M	34	1	**8T-4195**	8	BOLT (M10X1.5X30-MM)	
M	35	1	**8T-4200**	8	BOLT (M8X1.25X16-MM)	
E	36	1	**7Y-1976**		HOSE-WATER (95-CM)	
E	36A	1	**7Y-1976**		HOSE-WATER (8-CM)	

E - ORDER BY THE CENTIMETER
M - METRIC PART

377-7808 **RADIATOR & HYD OIL COOLER GP (*contd.*)** **i05776422**

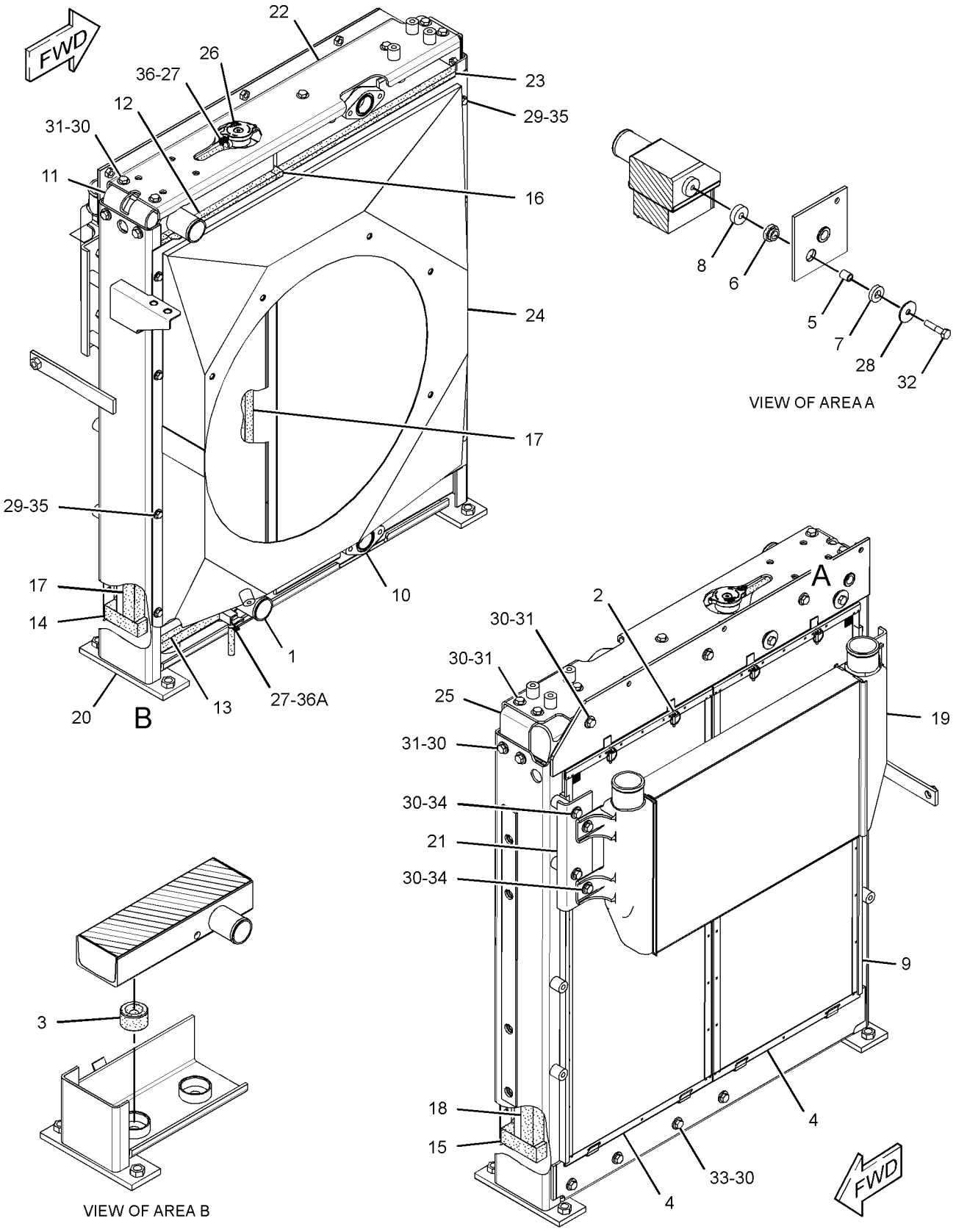

GRAPHIC #1

<END>

g03145180

390-8837 RADIATOR & HYD OIL COOLER GP

S/N: XAH1-UP

PART OF 387-2619 INSTALLATION AR-ENGINE

SMCS-1351 **i05776464**

NOTE	REF NO	GRAPHIC REF	PART NUMBER	QTY	PART NAME 1 2 3 4 5 6 (PRODUCT LEVEL)	SEE PAGE
	1	1	**096-4035**	1	CLIP	
	2	1	**096-5819**	1	TANK AS-COOLANT (RECOVERY)	
		1	**171-3369**	1	CAP AS (COOLANT RECOVERY)	
	3	1	**099-6607**	1	BAND	
	4	1	**265-3623**	1	PLATE	
	5	1	**281-3492**	1	SEAL	
Y	6	1	**377-7808**	1	RADIATOR & HYD OIL COOLER GP	56
	7	1	**391-3704**	1	HOSE-RADIATOR (UPPER)	
	8	1	**398-0782**	1	GUARD AS-FAN	
	9	1	**399-2541**	1	HOSE-RADIATOR (LOWER)	
	10	1	**178-6450**	4	SPACER (17X35X30-MM THK)	
	11	1	**3P-9847**	1	CLIP	
	12	1	**3S-2093**	1	STRAP-CABLE	
	13	1	**5P-1076**	3	WASHER-HARD (13.5X30X4-MM THK)	
	14	1	**7K-1181**	1	STRAP-CABLE	
M	15	1	**453-2838**	4	BOLT (M16X2X70-MM)	
	16	1	**7X-7729**	5	WASHER (11X25X3-MM THK)	
	17	1	**8T-4121**	1	WASHER-HARD (11X21X2.5-MM THK)	
M	18	1	**8T-4137**	6	BOLT (M10X1.5X20-MM)	
M	19	1	**8T-4139**	3	BOLT (M12X1.75X30-MM)	
M	20	1	**8T-4200**	2	BOLT (M8X1.25X16-MM)	
	21	1	**8T-4224**	2	WASHER-HARD (8.8X16X2-MM THK)	
	22	1	**8T-6703**	4	CLAMP-HOSE	
E	23	1	**7Y-1976**		HOSE-WATER (88-CM)	
D	24	1	**5P-9909**		SEAL (0.2-M)	
D	24A	1	**5P-9909**		SEAL (0.8-M)	

D - ORDER BY THE METER
E - ORDER BY THE CENTIMETER
M - METRIC PART
Y - SEPARATE ILLUSTRATION

390-8837 **RADIATOR & HYD OIL COOLER GP (*contd.*)** **i05776464**

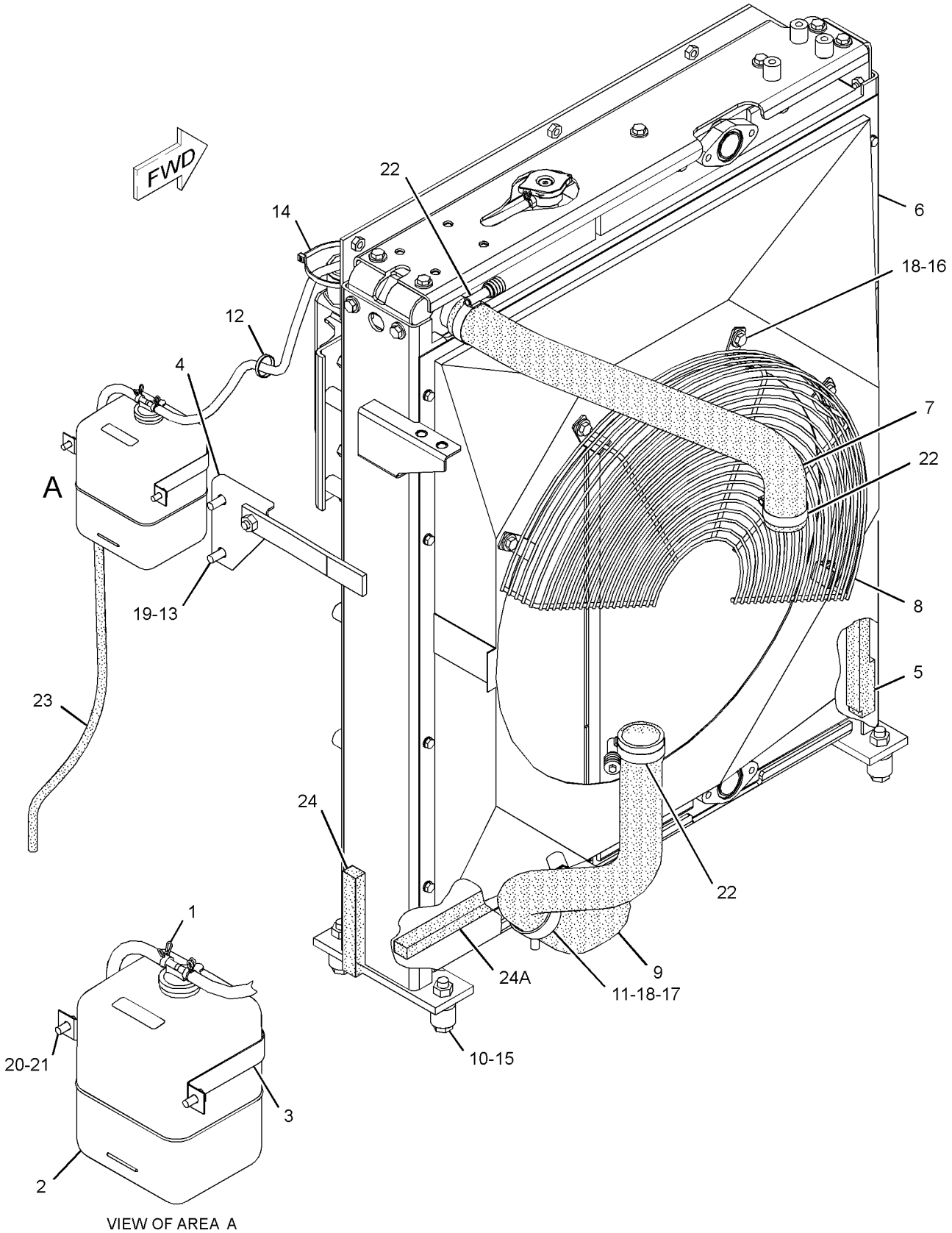

GRAPHIC #1 **<END>** g03133478

396-0293 VALVE GP-COOLANT SAMPLING

S/N: XAH1-UP

PART OF 387-2619 INSTALLATION AR-ENGINE

SMCS-1380, 1395, 7542 **i05401666**

NOTE	REF NO	GRAPHIC REF	PART NUMBER	QTY	PART NAME 1 2 3 4 5 6 (PRODUCT LEVEL)	SEE PAGE
	1	1	**154-9024**	1	VALVE GP-FLUID SAMPLING (COOLANT)	
	2	1	**157-0670**	1	CAP-DUST	
	3	1	**3B-7255**	1	BUSHING-REDUCER	

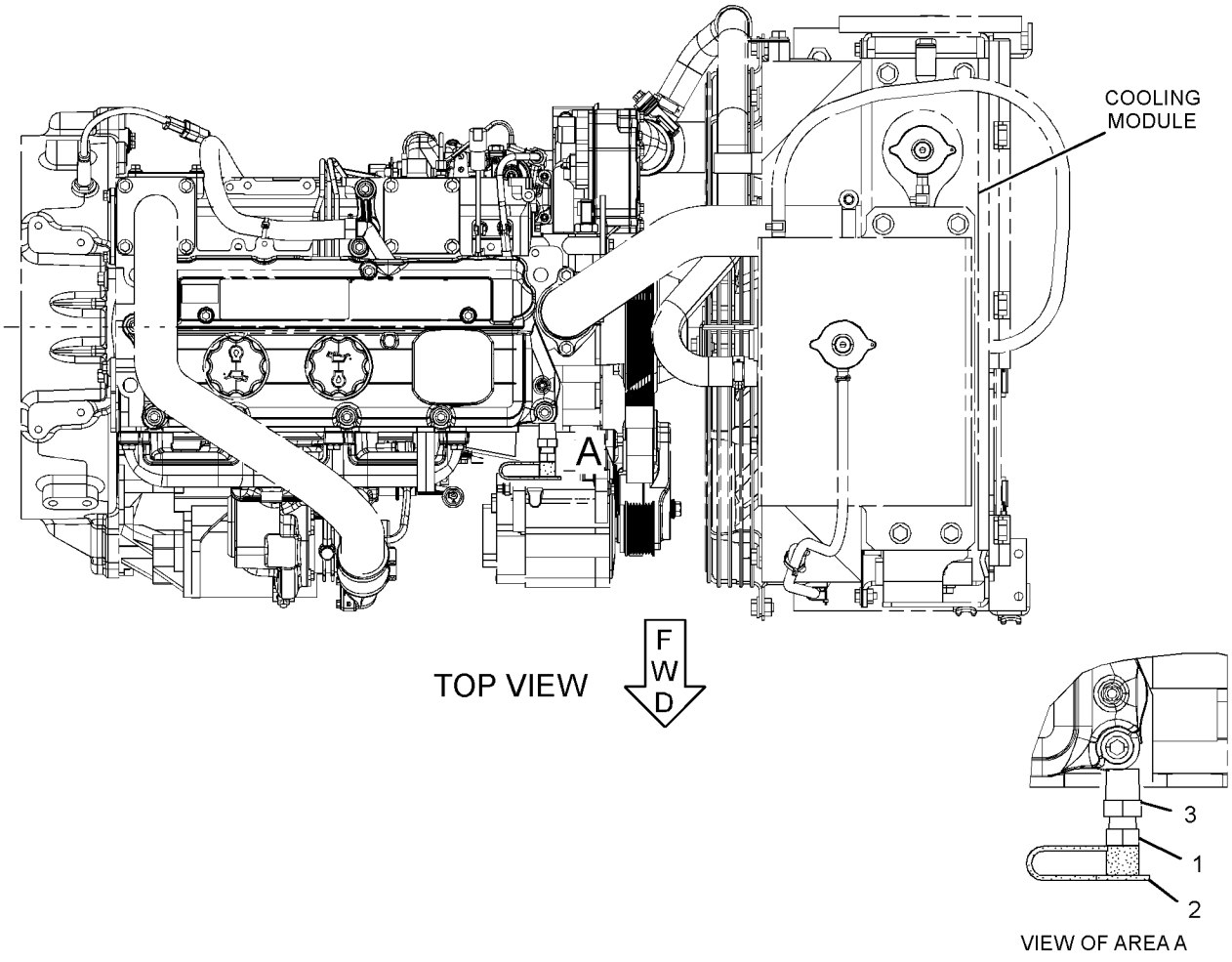

GRAPHIC #1 **<END>** g03120461

AIR INLET AND EXHAUST SYSTEM

387-2620 AIR CLEANER & MOUNTING GP

S/N: XAH1-UP

PART OF 387-2619 INSTALLATION AR-ENGINE

SMCS-1051, 1054, 7452 **i05775960**

NOTE	REF NO	GRAPHIC REF	PART NUMBER	QTY	PART NAME 1 2 3 4 5 6 (PRODUCT LEVEL)	SEE PAGE
Y	1	1	**396-2185**	1	AIR CLEANER GP	62
M	2	1	**7X-2537**	2	BOLT (M8X1.25X35-MM)	
	3	1	**8T-4224**	2	WASHER-HARD (8.8X16X2-MM THK)	

M - METRIC PART
Y - SEPARATE ILLUSTRATION

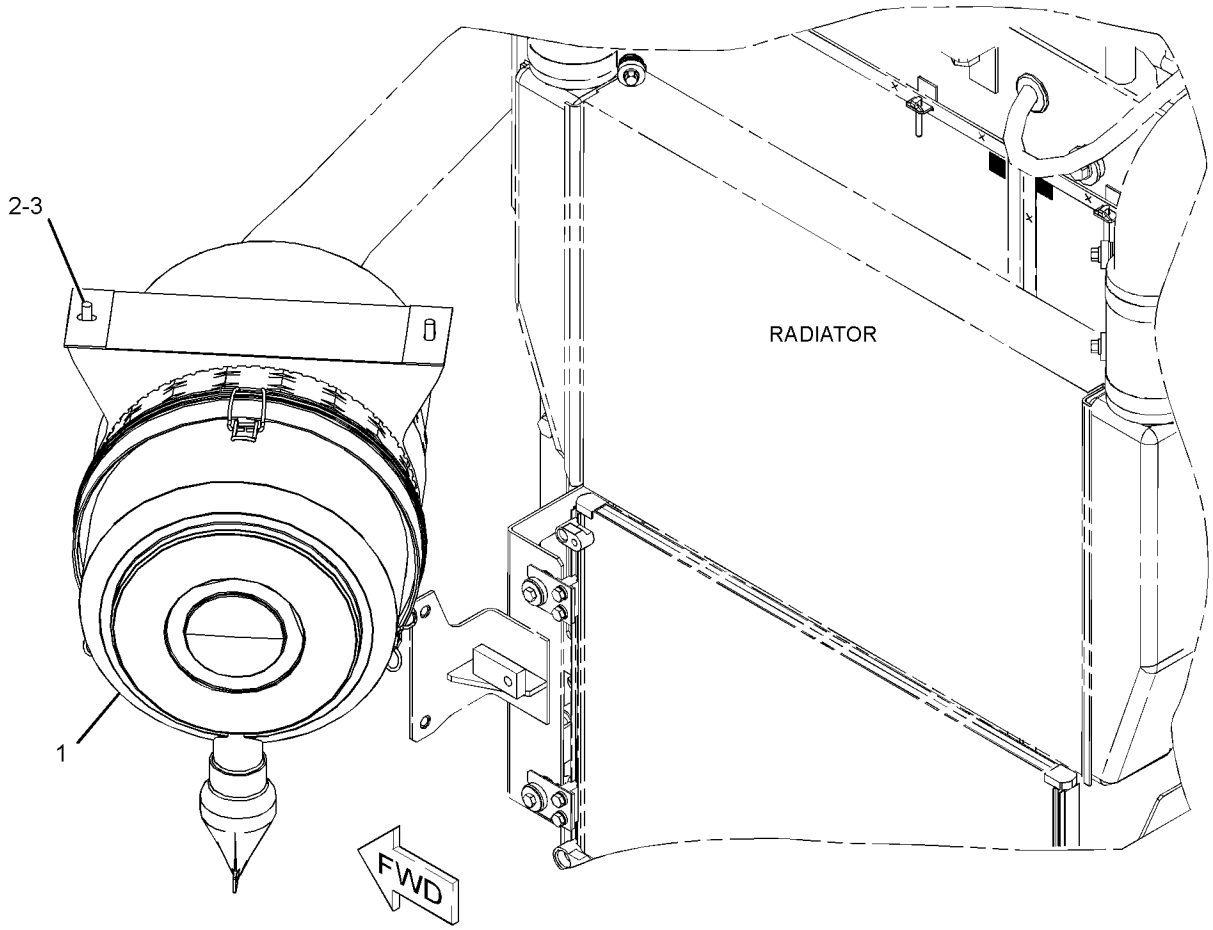

GRAPHIC #1 **<END>** g03133336

396-2185 AIR CLEANER GP

S/N: XAH1-UP

PART OF 387-2620 AIR CLEANER & MOUNTING GP

SMCS-1051, 1054

i05775975

NOTE	REF NO	GRAPHIC REF	PART NUMBER	QTY	PART NAME 1 2 3 4 5 6 (PRODUCT LEVEL)	SEE PAGE
	1	1	**222-9020**	1	FILTER ELEMENT AS-AIR (PRIMARY)	
	2	1	**222-9021**	1	FILTER ELEMENT AS-AIR (SECONDARY)	
	3	1	**224-2263**	1	VALVE AS-AIR (DUST)	
	4	1	**243-5054**	1	BRACKET	
	5	1	**282-8856**	1	COVER AS	

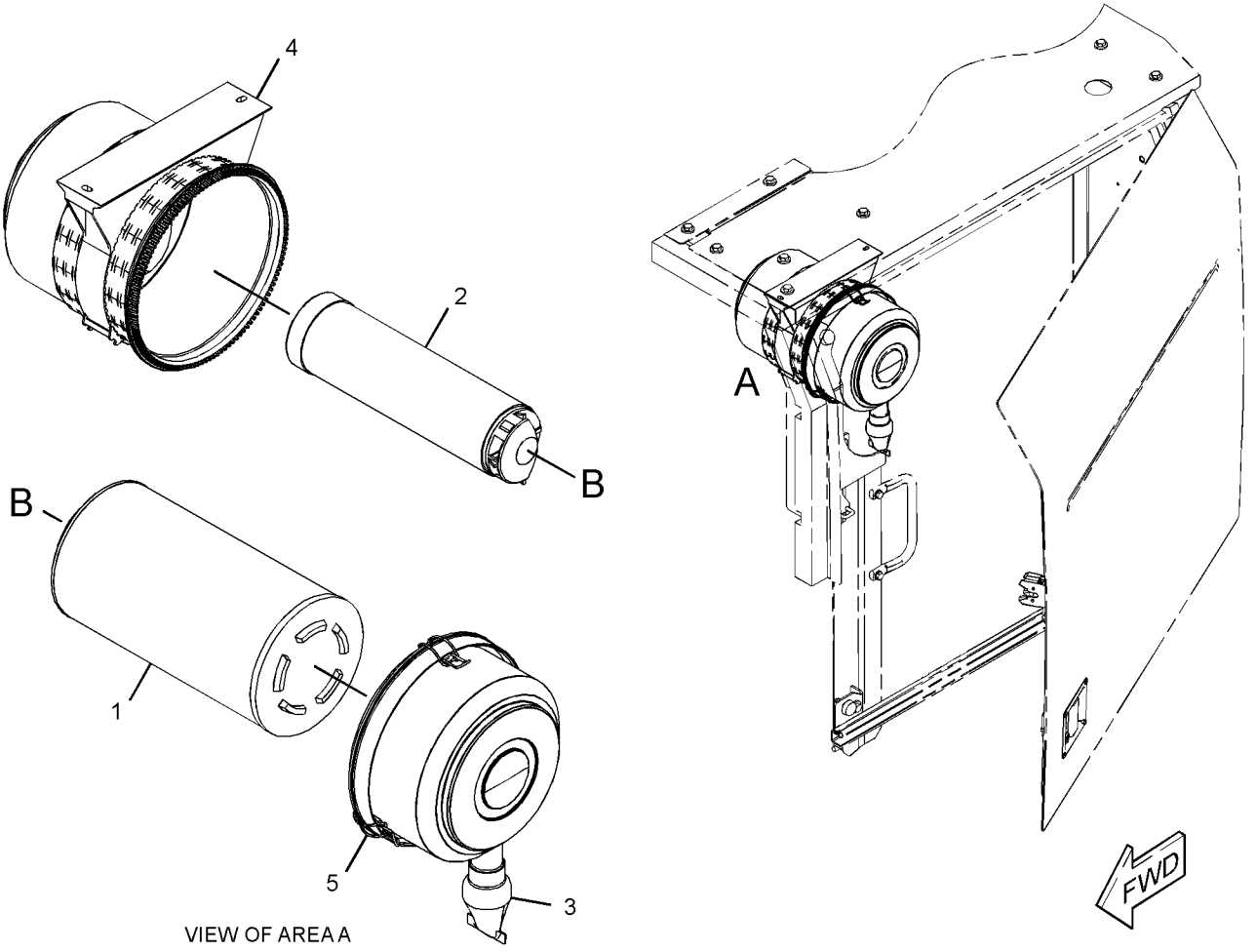

GRAPHIC #1

<END>

g02730452

256-4440 ELBOW GP-AIR INLET

S/N: G4D1-UP

PART OF 456-1375, 470-9228 ENGINE AR-PRIMARY

SMCS-1058 **i05793964**

NOTE	REF NO	GRAPHIC REF	PART NUMBER	QTY	PART NAME 1 2 3 4 5 6 (PRODUCT LEVEL)	SEE PAGE
	1	1	**111-8222**	12	BOLT (M8X16-MM)	
M	2	1	**100-8451**	2	BOLT (M8X1.25X130-MM)	
	3	1	**114-2579**	4	GASKET	
	4	1	**185-6627**	3	PLATE	
	5	1	**256-4447**	1	ELBOW AS-AIR INLET	
	5A	1	**238-8288**	1	GASKET-INLET	
	6	1	**235-2451**	2	BOLT (M6X1X35-MM)	
	7	1	**261-6700**	1	SPACER	

M - METRIC PART

256-4440 **ELBOW GP-AIR INLET (*contd.*)** **i05793964**

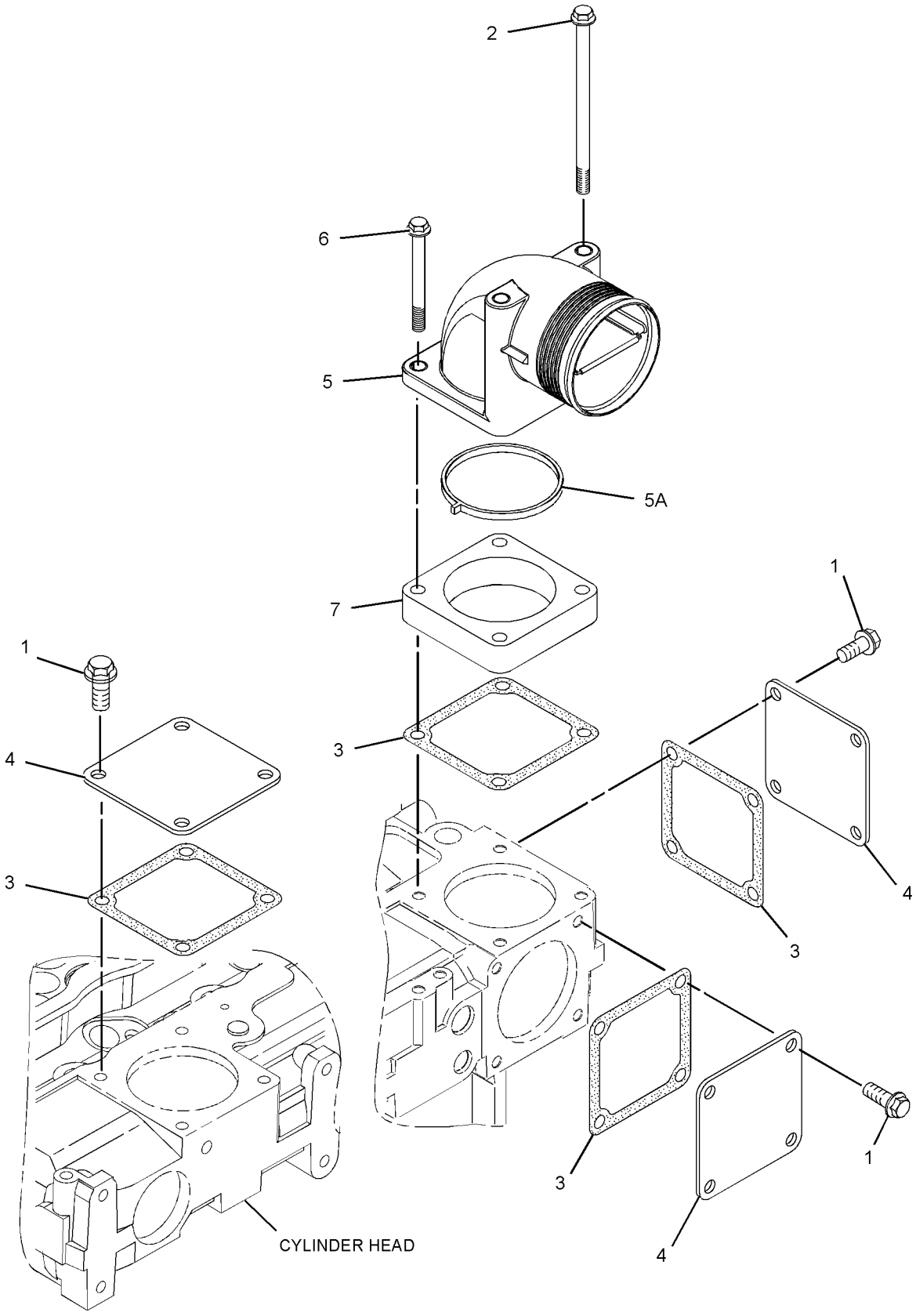

GRAPHIC #1 **<END>** g02099654

387-2623 LINES GP-AIR

S/N: XAH1-UP

PART OF 387-2619 INSTALLATION AR-ENGINE

SMCS-1071 **i05776081**

NOTE	REF NO	GRAPHIC REF	PART NUMBER	QTY	PART NAME 1 2 3 4 5 6 (PRODUCT LEVEL)	SEE PAGE
	1	1	**9X-2201**	1	CLAMP-HOSE	
	2	1	**144-0367**	3	CLAMP-HOSE	
	3	1	**320-3063**	1	SENSOR GP-PRESSURE (AIR INLET)	
	4	1	**391-5297**	1	HOSE-AIR	
	5	1	**391-5298**	1	HOSE-AIR	
	6	1	**393-0822**	1	PIPE AS	
	7	1	**228-7100**	1	SEAL-O-RING	
	8	1	**8T-4121**	2	WASHER-HARD (11X21X2.5-MM THK)	
M	9	1	**8T-4195**	2	BOLT (M10X1.5X30-MM)	

M - METRIC PART

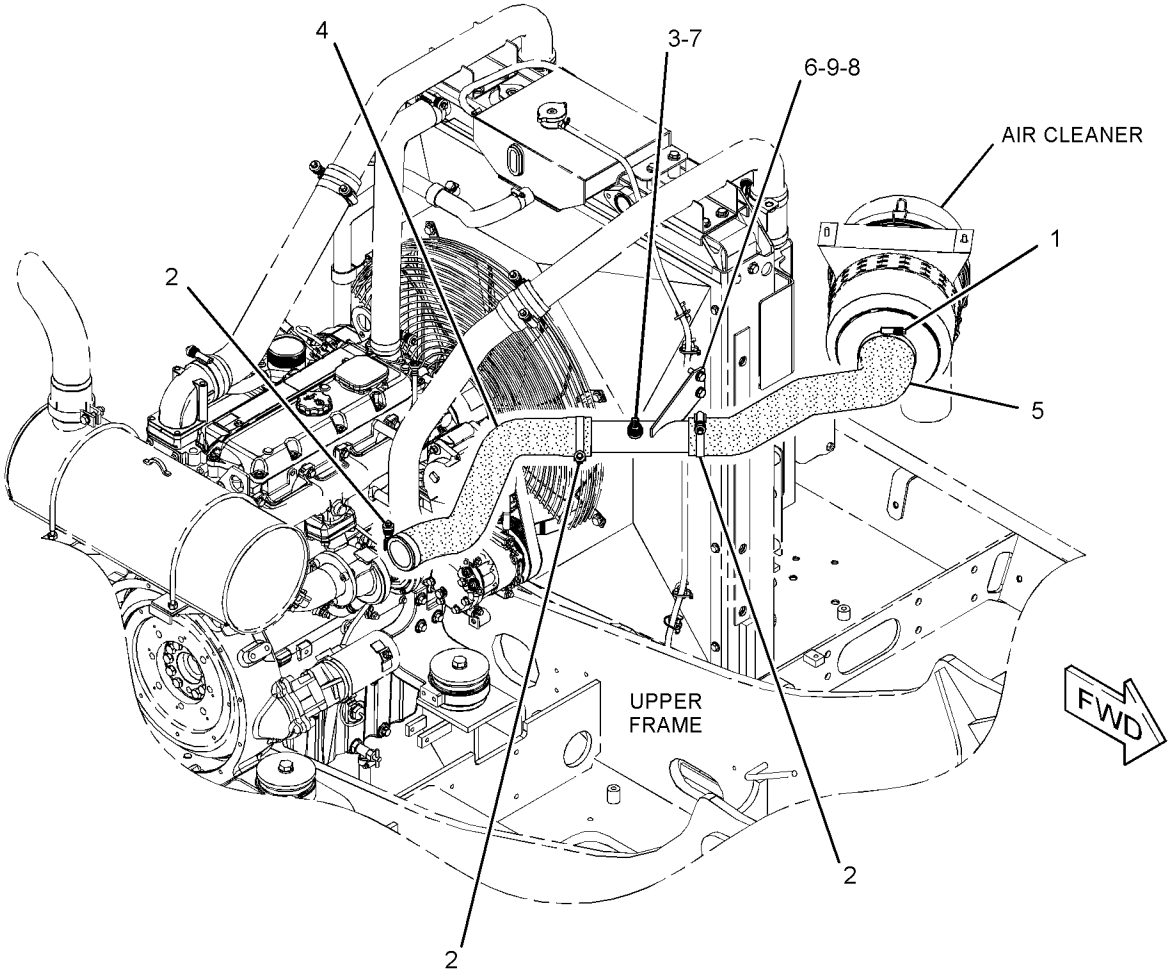

GRAPHIC #1 **<END>** g03131238

387-2646 MUFFLER GP

S/N: XAH1-UP

PART OF 455-1948 ENGINE AR-COMPLETE

SMCS-1062 **i05465792**

NOTE	REF NO	GRAPHIC REF	PART NUMBER	QTY	PART NAME 1 2 3 4 5 6 (PRODUCT LEVEL)	SEE PAGE
	1	1	**241-7688**	1	CLAMP	
	2	1	**392-0245**	1	MUFFLER AS	
	3	1	**392-0250**	1	PIPE AS	
	4	1	**398-7021**	1	SUPPORT AS	
	5	1	**398-7027**	2	U-BOLT	
	6	1	**399-4202**	1	PIPE-TAIL	
	7	1	**5S-0580**	1	CLAMP	
M	8	1	**6V-3938**	3	BOLT (M10X1.5X20-MM)	
M	9	1	**6V-9189**	1	LOCKNUT (M8X1.25-THD)	
M	10	1	**7X-0818**	1	BOLT (M8X1.25X45-MM)	
	11	1	**8T-4121**	8	WASHER-HARD (11X21X2.5-MM THK)	
M	12	1	**8T-4133**	9	NUT (M10X1.5-THD)	
M	13	1	**8T-4136**	6	BOLT (M10X1.5X25-MM)	
M	14	1	**8T-4185**	1	BOLT (M10X1.5X50-MM)	
					—OR—	
M		1	**8T-6466**	1	BOLT (M10X1.5X60-MM)	
	15	1	**8T-4224**	2	WASHER-HARD (8.8X16X2-MM THK)	

M - METRIC PART

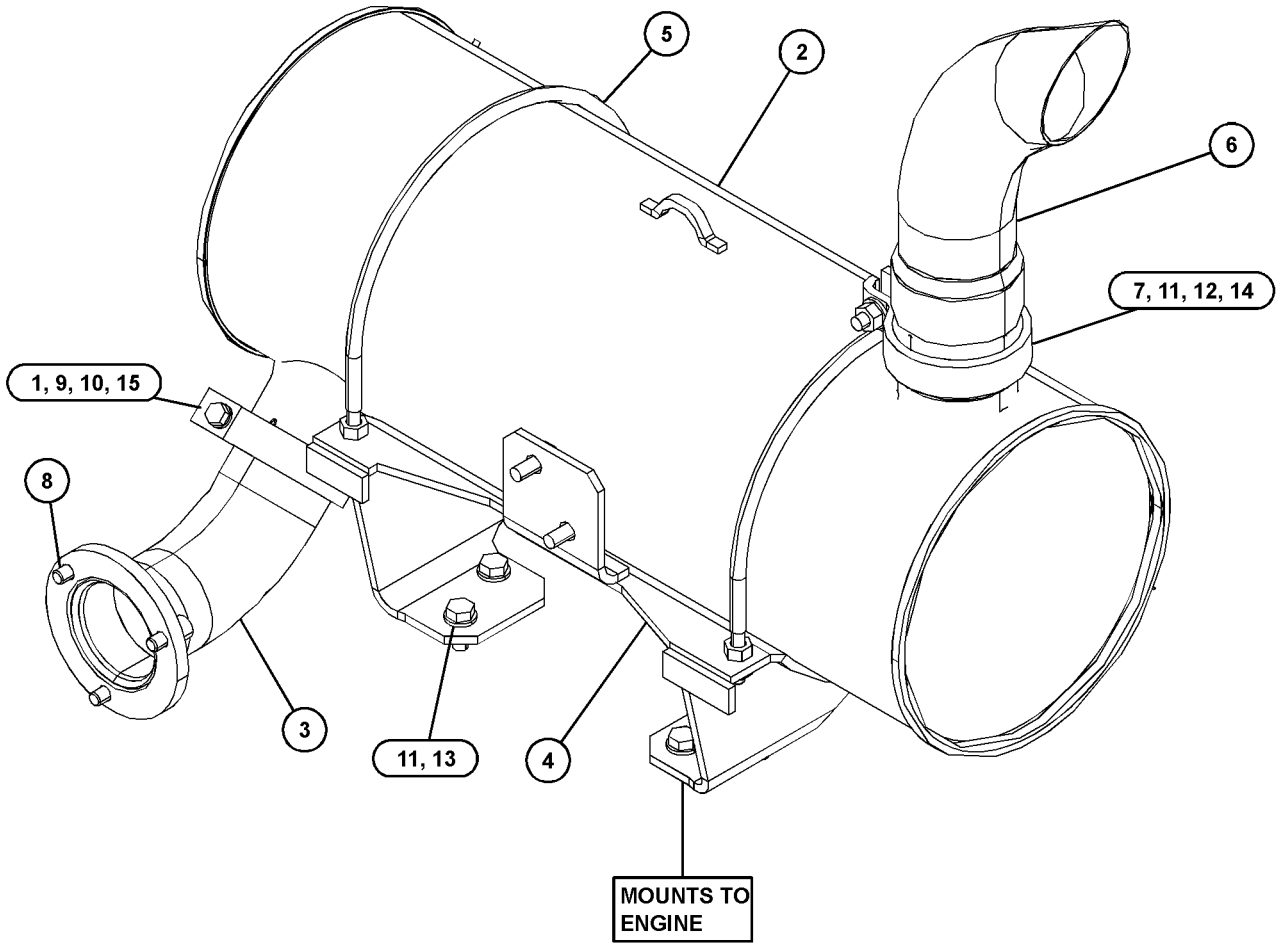

GRAPHIC #1 **<END>** g03125239

234-3465 TURBOCHARGER GP

S/N: G4D1-UP

PART OF 456-1375, 470-9228 ENGINE AR-PRIMARY

SMCS-1052, 1053

i05793967

NOTE	REF NO	GRAPHIC REF	PART NUMBER	QTY	PART NAME 1 2 3 4 5 6 (PRODUCT LEVEL)	SEE PAGE
M	1	1	**6I-0217**	1	BOLT (M8X1.25X20-MM)	
M	2	1	**6I-0563**	4	NUT (M10X1.5-THD)	
	3	1	**149-4236**	4	STUD (M10X1.5X37-MM)	
	4	1	**174-9638**	8	BOLT	
	5	1	**194-5390**	1	GASKET-MANIFOLD	
	7	1	**353-3477**	1	GASKET-TURBOCHARGER	
	8	1	**353-3478**	1	GASKET-TURBOCHARGER	
	9	1	**225-8536**	1	GASKET	
R	10	1	**226-8771**	1	TURBOCHARGER GP	
M	11	1	**106-8916**	1	BOLT (M6X16-MM)	
	12	1	**233-9536**	1	TUBE AS	
	12A	1	**225-8524**	3	BOLT-SPECIAL (BANJO)	
	12B	1	**225-8526**	7	WASHER (10.4X13.75X1.37-MM THK)	
	13	1	**233-9537**	1	TUBE AS	
	14	1	**371-6116**	1	MANIFOLD-EXHAUST	

M - METRIC PART
R - REMFG PART MAY BE AVAILABLE

234-3465 **TURBOCHARGER GP (*contd.*)** **i05793967**

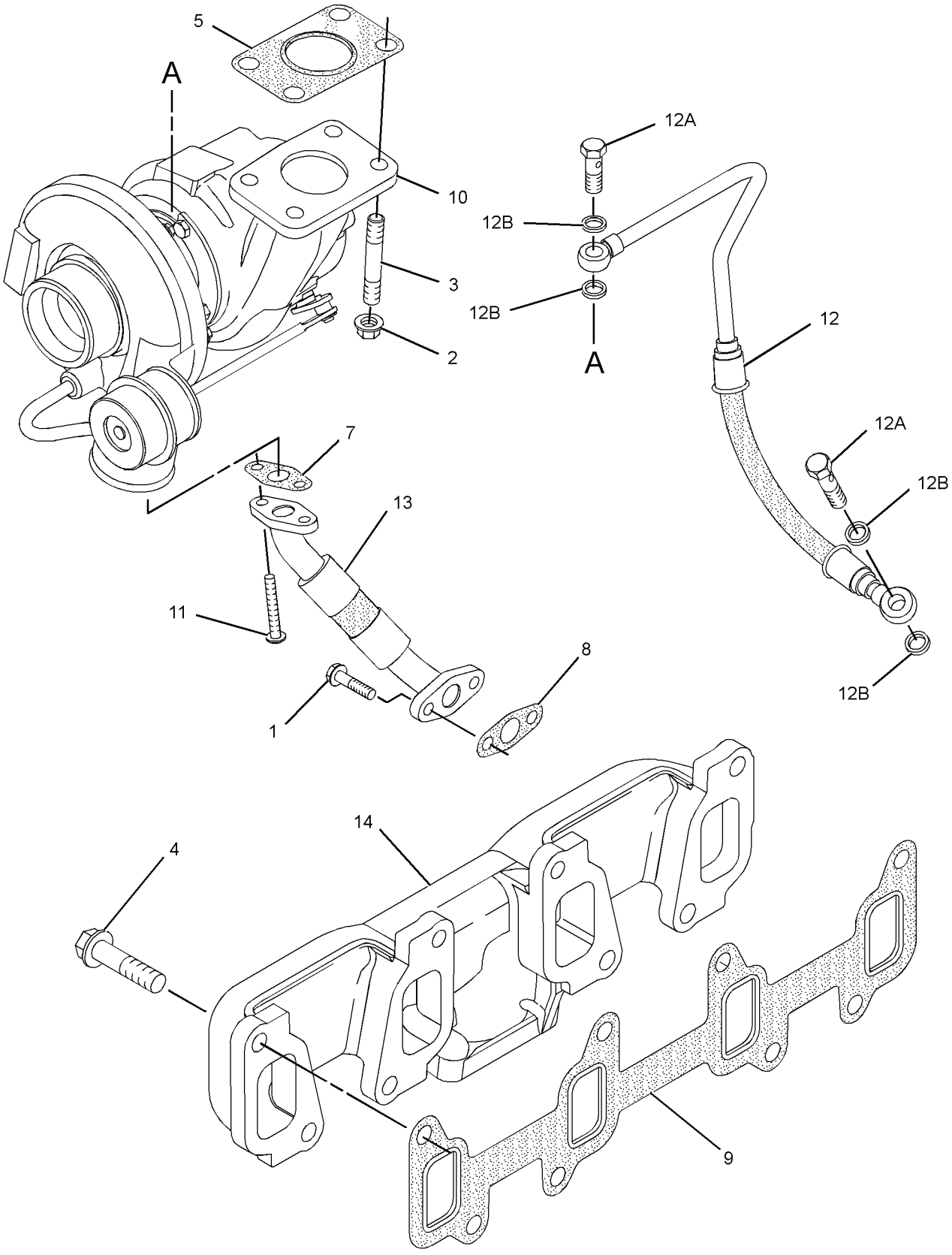

GRAPHIC #1 **<END>** g01424374

388-6703 CONTROL GP-GOVERNOR

S/N: XAH1-UP

PART OF 454-5583 CHASSIS AR

SMCS-1265, 1276 **i05859417**

NOTE	REF NO	GRAPHIC REF	PART NUMBER	QTY	PART NAME 1 2 3 4 5 6 (PRODUCT LEVEL)	SEE PAGE
	1	1	**386-3435**	1	MOTOR AS-GOVERNOR	
		1	**8T-8737**	1	PLUG-SEAL	
		1	**9X-3401**	7	PIN-CONNECTOR (16-GA TO 18-GA)	
					—OR—	
		1	**126-1767**	7	PIN-CONNECTOR (14-GA TO 16-GA)	
		1	**157-3184**	1	JOINT	
		1	**243-4509**	1	RECEPTACLE AS-CONNECTOR (8-PIN)	
	2	1	**388-6793**	1	BRACKET AS	
	3	1	**388-6794**	1	BRACKET AS	
		1	**121-1029**	1	CLIP	
	4	1	**388-6797**	1	BRACKET AS	
	5	1	**399-0966**	1	PLATE	
	6	1	**441-8511**	1	BRACKET AS	
M	7	1	**105-3481**	1	BOLT-SOCKET HEAD (M8X1.25X20-MM)	
M	8	1	**5C-2890**	1	NUT (M6X1-THD)	
	9	1	**6V-3265**	2	CLIP	
M	10	1	**7X-2537**	2	BOLT (M8X1.25X35-MM)	
	11	1	**7X-3392**	2	WASHER-HARD (13.5X22.5X3-MM THK)	
M	12	1	**105-3487**	3	BOLT-SOCKET HEAD (M6X1X20-MM)	
M	13	1	**8T-4139**	2	BOLT (M12X1.75X30-MM)	
M	14	1	**8T-4189**	7	BOLT (M8X1.25X20-MM)	
	15	1	**8T-4224**	10	WASHER-HARD (8.8X16X2-MM THK)	
M	16	1	**8T-4970**	2	BOLT (M6X1X14-MM)	
	17	1	**9X-8256**	6	WASHER (6.6X12X2-MM THK)	

M - METRIC PART

388-6703 **CONTROL GP-GOVERNOR (*contd.*)** **i05859417**

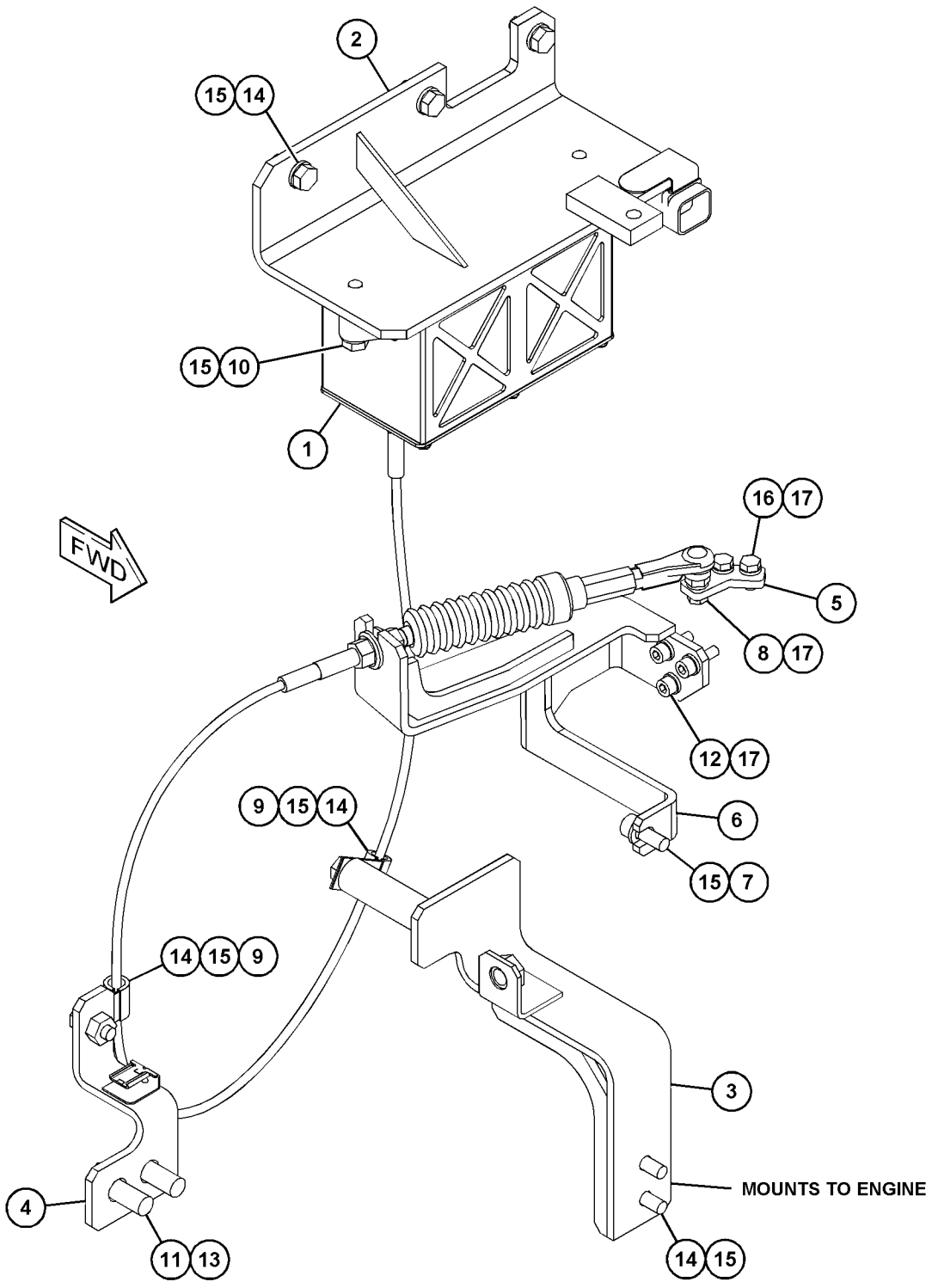

GRAPHIC #1 **<END>** g03415560

446-1895 FILTER GP-FUEL

S/N: XAH1-UP
24-VOLT
PART OF 387-2625 LINES GP-FUEL

SMCS-1261 **i05979703**

NOTE	REF NO	GRAPHIC REF	PART NUMBER	QTY	PART NAME 1 2 3 4 5 6 (PRODUCT LEVEL)	SEE PAGE
	1	1	**395-3439**	1	BOWL AS (FUEL FILTER)	
	2	1	**1R-1804**	1	FILTER ELEMENT-WTR SEP & FUEL	
	3	1	**387-6403**	1	STRAINER (FUEL FILTER)	
	4	1	**395-3437**	1	VALVE AS-DRAIN (FUEL FILTER)	
					PARTS SHOWN IN GRAPHIC(S) WITHOUT A REFERENCE NUMBER ARE NOT SERVICED SEPARATELY	

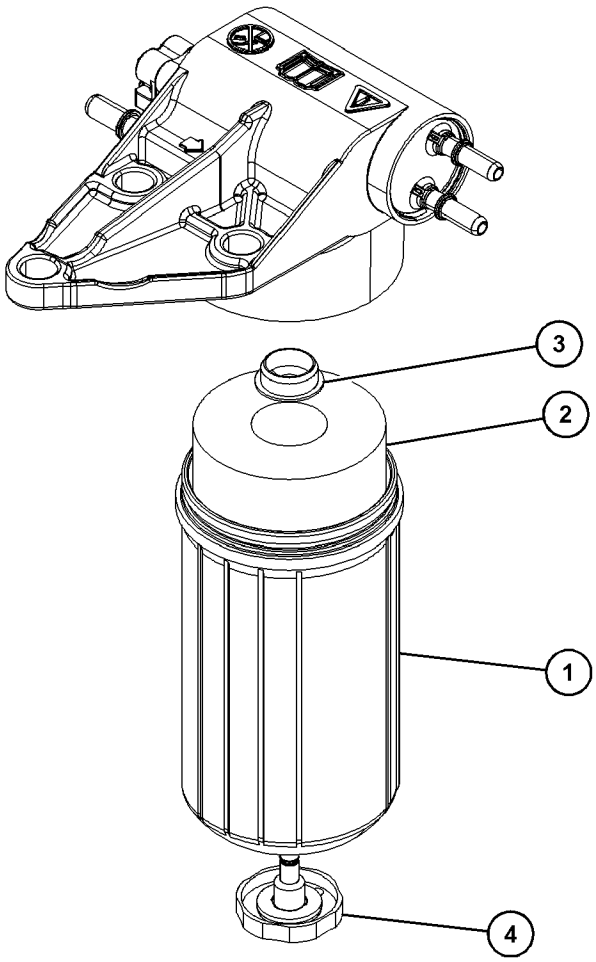

GRAPHIC #1 **<END>** g03741712

387-2625 LINES GP-FUEL

S/N: XAH1-UP

PART OF 454-5583 CHASSIS AR

SMCS-1274 **i05959513**

NOTE	REF NO	GRAPHIC REF	PART NUMBER	QTY	PART NAME 1 2 3 4 5 6 (PRODUCT LEVEL)	SEE PAGE
	1	2	**3S-2093**	3	STRAP-CABLE	
	2	1,2	**4I-0379**	2	VALVE-MANUAL (FUEL SHUTOFF)	
	3	1	**8D-0482**	1	GROMMET	
	4	2	**9X-9896**	6	MOUNT (ISOLATION)	
	5	1	**141-6526**	1	GROMMET	
	6	1	*164-5562*	1	CONNECTOR AS	
		1	**3J-1907**	1	SEAL-O-RING	
		1	**5P-1046**	1	CONNECTOR	
	7	2	*165-7951*	2	CONNECTOR AS	
					(EACH INCLUDES)	
		2	**3J-1907**	1	SEAL-O-RING	
		2	**157-1669**	1	CONNECTOR	
	8	1	**175-7060**	1	BASE AS	
	9	2	*216-1304*	1	TEE AS	
		2	**3J-7354**	1	SEAL-O-RING	
		2	**216-1302**	1	TEE	
	10	2	**260-9244**	1	ELBOW	
	11	1	*268-1517*	1	CONNECTOR AS	
		1	**3K-0360**	1	SEAL-O-RING	
		1	**149-8142**	1	CONNECTOR	
Y	12	2	**446-1895**	1	FILTER GP-FUEL (24-VOLT, LONG BOWL)	71
	14	2	**305-6873**	1	SENSOR GP-PRESSURE (FUEL)	
	15	2	**307-8125**	1	GROMMET	
	16	2	**342-8584**	2	CONNECTOR	
	17	1	**343-3917**	2	CONNECTION	
	18	1	**343-7352**	1	CONNECTOR-FUEL	
	19	2	*351-0289*	1	ELBOW AS	
		2	**2M-9780**	1	SEAL-O-RING	
		2	**6V-9208**	1	ELBOW	
	20	1	**354-6246**	3	CONNECTOR	
	21	2	**355-0632**	1	CONNECTOR-SPECIAL	
Y	22	2	**423-6434**	1	SENSOR GP-LIQUID LEVEL (WATER IN FUEL)	120
	23	2	**381-9064**	1	INDICATOR-FUEL FILTER CHANGE	
	24	1	**438-5386**	1	FILTER AS-WATER SEP & FUEL (ULTRA HIGH EFFICIENCY)	
	25	1	**387-2637**	1	ADAPTER-TEE	
	26	2	**387-2642**	2	CLIP	
	27	1	**387-2650**	1	HOSE	
	28	1	**387-2651**	1	HOSE	
	29	1	**387-2652**	1	HOSE	
	30	1	**387-2660**	2	CLIP	
	31	1	**387-2665**	1	HOSE	
	32	1	**387-2666**	1	HOSE	
	33	1	**437-0436**	1	HOSE	
	34	2	**387-2668**	1	HOSE	
	35	1	**387-2669**	1	HOSE	
	36	2	**438-1304**	1	PLATE AS	
	37	1	**398-7981**	1	PLATE AS	
	38	2	**399-2641**	1	PLATE AS	
	39	1	**093-2068**	1	GROMMET	
	40	2	**132-5789**	2	CLIP	
M	41	2	**135-8573**	6	BOLT AS	
	42	1	*260-9144*	1	CONNECTOR AS	
		1	**3K-0360**	1	SEAL-O-RING	
		1	**168-8806**	1	CONNECTOR	
	43	2	**268-1562**	1	TEE	
	44	2	**2M-9780**	2	SEAL-O-RING	
	45	1	**309-5146**	1	ADAPTER	
	46	2	**337-6501**	1	FITTING	

387-2625 **LINES GP-FUEL (*contd.*)** **i05959513**

NOTE	REF NO	GRAPHIC REF	PART NUMBER	QTY	PART NAME 1 2 3 4 5 6 (PRODUCT LEVEL)	SEE PAGE
	47	1,2	**344-5360**	15	CLIP	
	48	1,2	**347-4416**	3	ADAPTER	
	49	1	**351-4089**	4	GROMMET	
	50	1,2	**351-4318**	12	CLIP	
	51	1,2	**351-4321**	2	CLIP	
	52	1	**5I-8307**	1	GROMMET	
	53	1,2	**5V-9155**	4	CLAMP-HOSE	
	54	1,2	**6S-8620**	17	CLAMP-HOSE	
	55	1	**6V-9028**	2	SEAL-O-RING	
	56	2	**8C-5608**	3	SPACER (6.5X9.5X25.4-MM THK)	
	57	1,2	**8T-1889**	4	CLIP (SLOT)	
	58	1	**8T-1890**	4	CLIP (TAB)	
	59	1,2	**8T-4121**	39	WASHER-HARD (11X21X2.5-MM THK)	
M	60	1,2	**8T-4136**	3	BOLT (M10X1.5X25-MM)	
M	61	1,2	**8T-4137**	30	BOLT (M10X1.5X20-MM)	
M	62	2	**8T-4191**	2	BOLT (M10X1.5X16-MM)	
M	63	1	**8T-4195**	3	BOLT (M10X1.5X30-MM)	
M	64	1	**8T-4196**	1	BOLT (M10X1.5X35-MM)	
	67	2	**9M-5501**	1	ELBOW-STREET	
M	68	2	**9X-2480**	3	BOLT (M6X1X45-MM)	
	69	2	**9X-6165**	6	WASHER (6.5X22X2.5-MM THK)	
E	70	2	**5P-0743**		HOSE (35-CM)	
E	71	1	**5P-1442**		HOSE (28.5-CM)	
E	71A	2	**5P-1442**		HOSE (59.5-CM)	
	72	1	**7I-2673**	1	STRAP-CABLE	
	73	2	**432-8577**	1	HARNESS AS-CHASSIS (FUEL)	
		2	**102-8803**	1	KIT-RECEPTACLE (3-PIN)	
					(INCLUDES RECEPTACLE AS & WEDGE)	
		2	**9W-0852**	2	PIN-CONNECTOR (14-GA TO 16-GA)	
		2	**8T-8737**	1	PLUG-SEAL	
		2	**9W-0844**	2	SOCKET-CONNECTOR (14-GA TO 16-GA)	
		2	**155-2270**	1	KIT-CONNECTING PLUG (2-PIN)	
					(INCLUDES PLUG AS,WEDGE & INTERFACE SEAL)	

E - ORDER BY THE CENTIMETER
M - METRIC PART
Y - SEPARATE ILLUSTRATION

387-2625 **LINES GP-FUEL (*contd.*)** **i05959513**

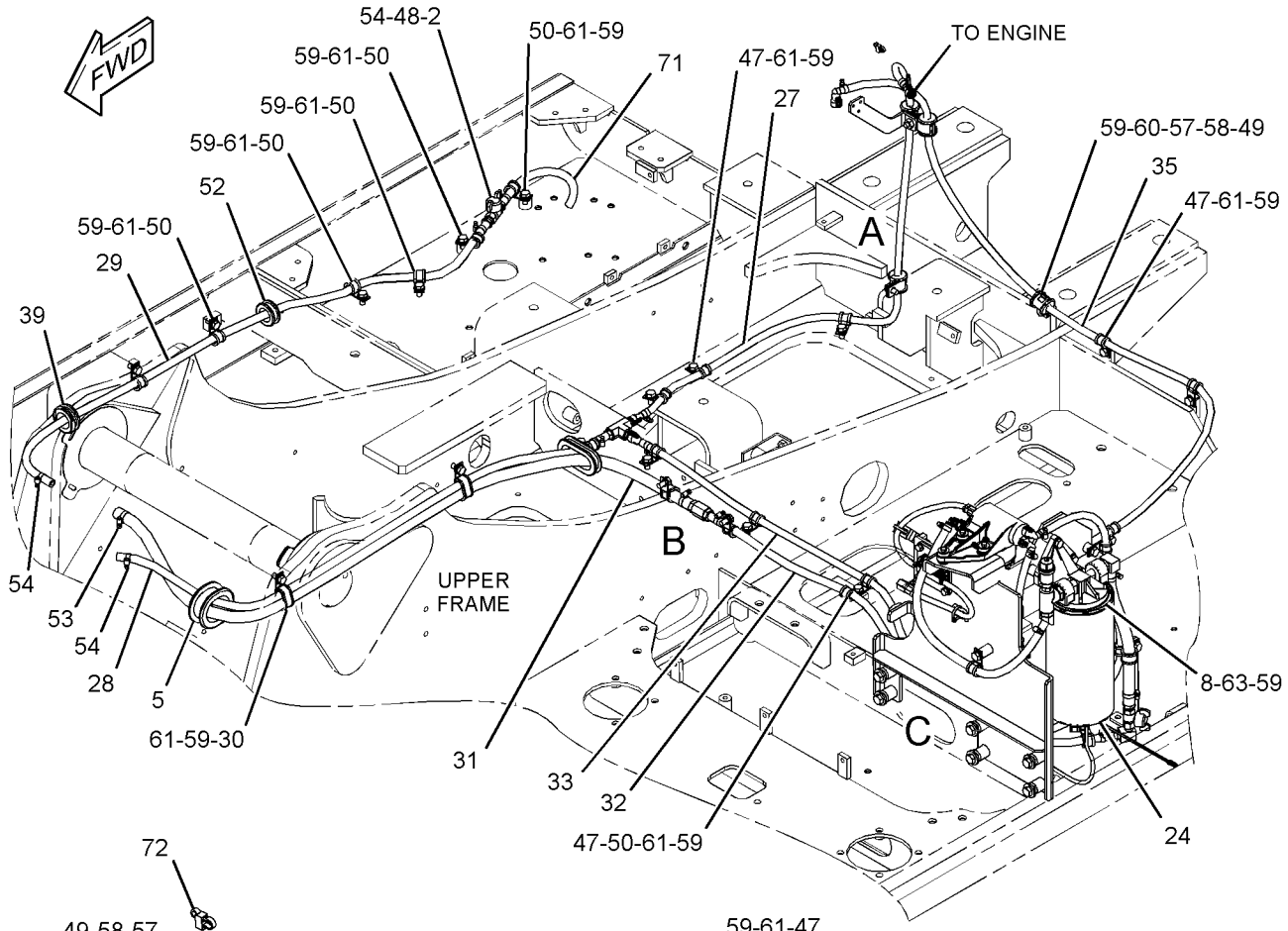

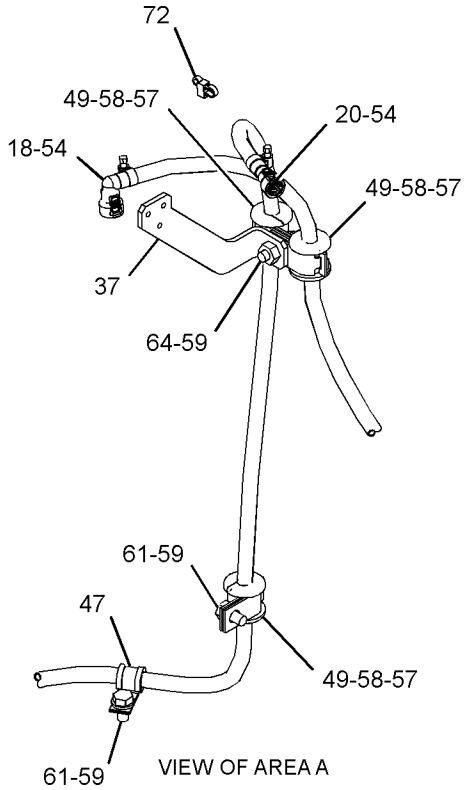

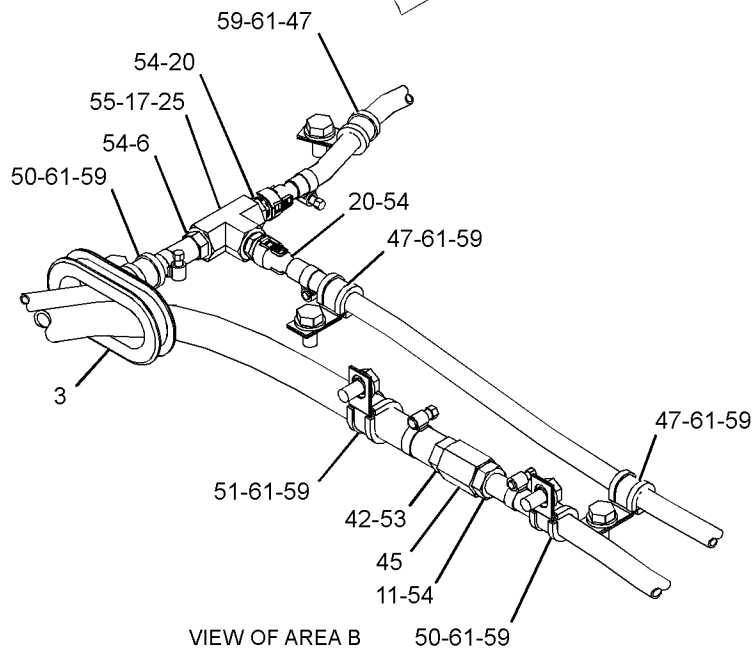

REFER TO ALL ILLUSTRATIONS OF THIS GROUP FOR AUXILIARY VIEWS

GRAPHIC #1

g03730245

387-2625 **LINES GP-FUEL (*contd.*)** **i05959513**

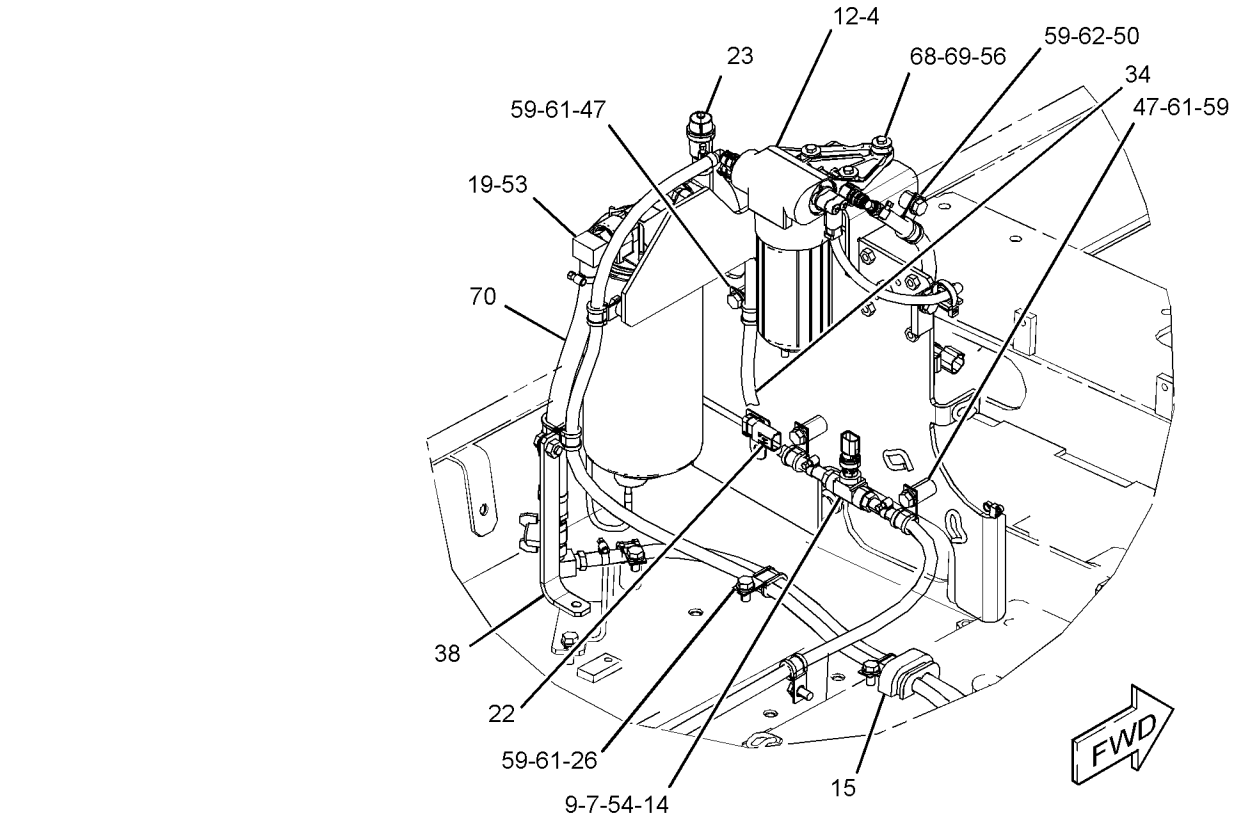

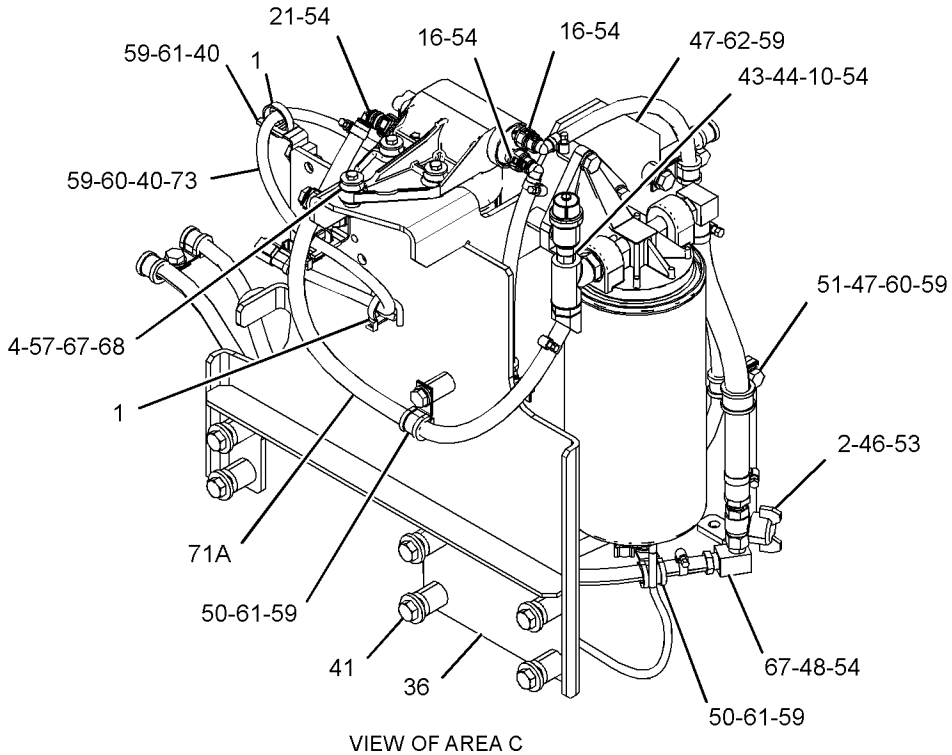

VIEW OF AREA C

GRAPHIC #2 **<END>** g03741716

460-0656 LINES GP-FUEL

S/N: G4D1-UP

PART OF 456-1375, 470-9228 ENGINE AR-PRIMARY

SMCS-1274 **i05955459**

NOTE	REF NO	GRAPHIC REF	PART NUMBER	QTY	PART NAME 1 2 3 4 5 6 (PRODUCT LEVEL)	SEE PAGE
	1	1	**232-3126**	1	CLIP	
	2	1	**247-4884**	1	TUBE AS	

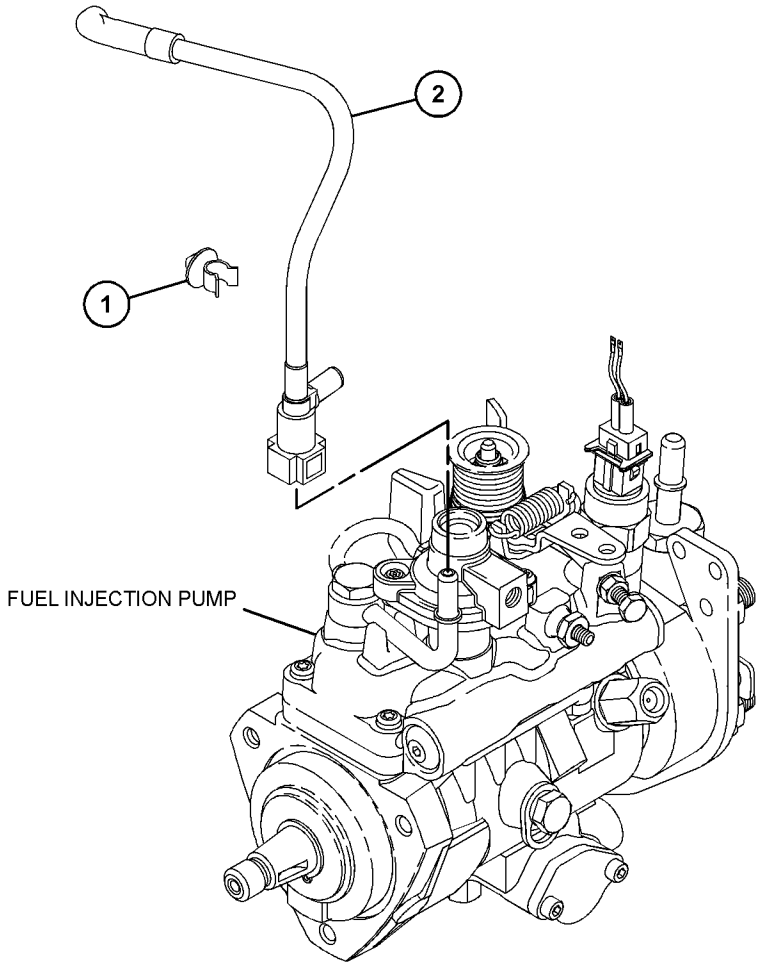

GRAPHIC #1 **<END>** g03703210

284-4999 PUMP GP-FUEL INJECTION

S/N: G4D1-UP

FIELD REPLACEMENT ORDER 284-5000—PAGE: 78

PART OF 421-7744 PUMP GP-FUEL INJECTION

SMCS-1251, 1290

i02742688

NOTE	REF NO	GRAPHIC REF	PART NUMBER	QTY	PART NAME 1 2 3 4 5 6 (PRODUCT LEVEL)	SEE PAGE
	1	1	**152-3968**	1	SEAL-O-RING	
	2	1	**147-2645**	1	VALVE GP-SOLENOID (24-VOLT) (FUEL SHUTOFF)	

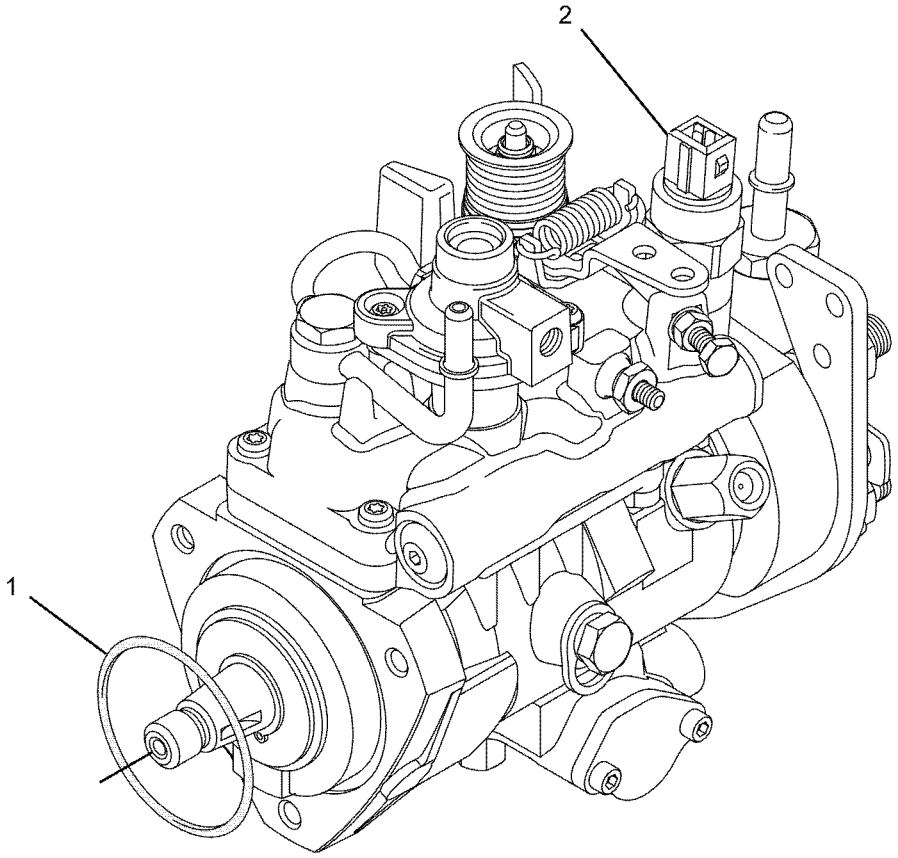

GRAPHIC #1

<END>

g01085467

284-5000 PUMP GP-FUEL INJECTION

S/N: G4D1-UP

FIELD REPLACEMENT FOR 284-4999—PAGE: 77

FOR USE WITH 2200 RPM ENGINES

SMCS-1251, 1290

i02747221

NOTE	PART NUMBER	QTY	PART NAME 1 2 3 4 5 6 (PRODUCT LEVEL)	SEE PAGE
			(NO SERVICED PARTS)	

<END>

421-7744 PUMP GP-FUEL INJECTION

S/N: G4D1-UP

PART OF 470-9228 ENGINE AR-PRIMARY

SMCS-1251, 1290 **i05979722**

NOTE	REF NO	GRAPHIC REF	PART NUMBER	QTY	PART NAME 1 2 3 4 5 6 (PRODUCT LEVEL)	SEE PAGE
M	1	1	**6I-0217**	1	BOLT (M8X1.25X20-MM)	
M	2	1	**6I-0260**	3	BOLT (M8X1.25X25-MM)	
M	3	1	**6I-0291**	1	NUT (M8X1.25-THD)	
	4	1	**035-8017**	1	UNION	
	5	1	**067-6265**	1	FITTING-BRASS	
M	6	1	**100-4830**	1	BOLT (M10X1.5X20-MM)	
M	7	1	**124-3815**	1	BOLT (M8X1.25X16-MM)	
	8	1	**140-8714**	1	CLIP	
	9	1	**230-8989**	1	GEAR-FUEL PUMP (68-TEETH)	
	10	1	**230-8995**	1	TUBE AS (CYL NO. 1)	
	11	1	**230-8996**	1	TUBE AS (CYL NO. 2)	
	12	1	**230-8997**	1	TUBE AS (CYL NO. 3)	
	13	1	**230-8998**	1	TUBE AS (CYL NO. 4)	
	14	1	**232-1328**	1	CAP	
	15	2	**232-1793**	1	CABLE	
	16	1	**232-1794**	3	HOSE	
	17	1	**232-2725**	2	CLIP	
	18	1	**232-2726**	1	CLIP	
	19	1	**232-3149**	3	WASHER (8.35X16.85X1.55-MM THK)	
	20	1	**232-3157**	1	BRACKET	
	21	1	**232-3274**	4	BOLT (M8X1.25X48.1-MM)	
	22	2	**235-1790**	1	SWITCH-TEMPERATURE (FUEL)	
R	23	1	**230-8999**	4	INJECTOR AS-FUEL	
					(EACH INCLUDES)	
	23A	1	**140-8718**	1	WASHER	
	23B	1	**232-2724**	1	NOZZLE	
	23C	1	**275-1038**	1	SEAL-O-RING	
	24	1	**236-2144**	1	TUBE AS	
	24A	1	**067-6999**	1	FERRULE	
	25	1	**238-8671**	4	CLAMP-INJECTOR	
	26	1	**240-5571**	1	BRACKET	
Y	27	1	**284-4999**	1	PUMP GP-FUEL INJECTION	77
	28	1	**318-2365**	1	CLIP	
	29	1	**365-3308**	1	NUT-COMPRESSION	

M - METRIC PART
R - REMFG PART MAY BE AVAILABLE
Y - SEPARATE ILLUSTRATION

421-7744 **PUMP GP-FUEL INJECTION (*contd.*)** **i05979722**

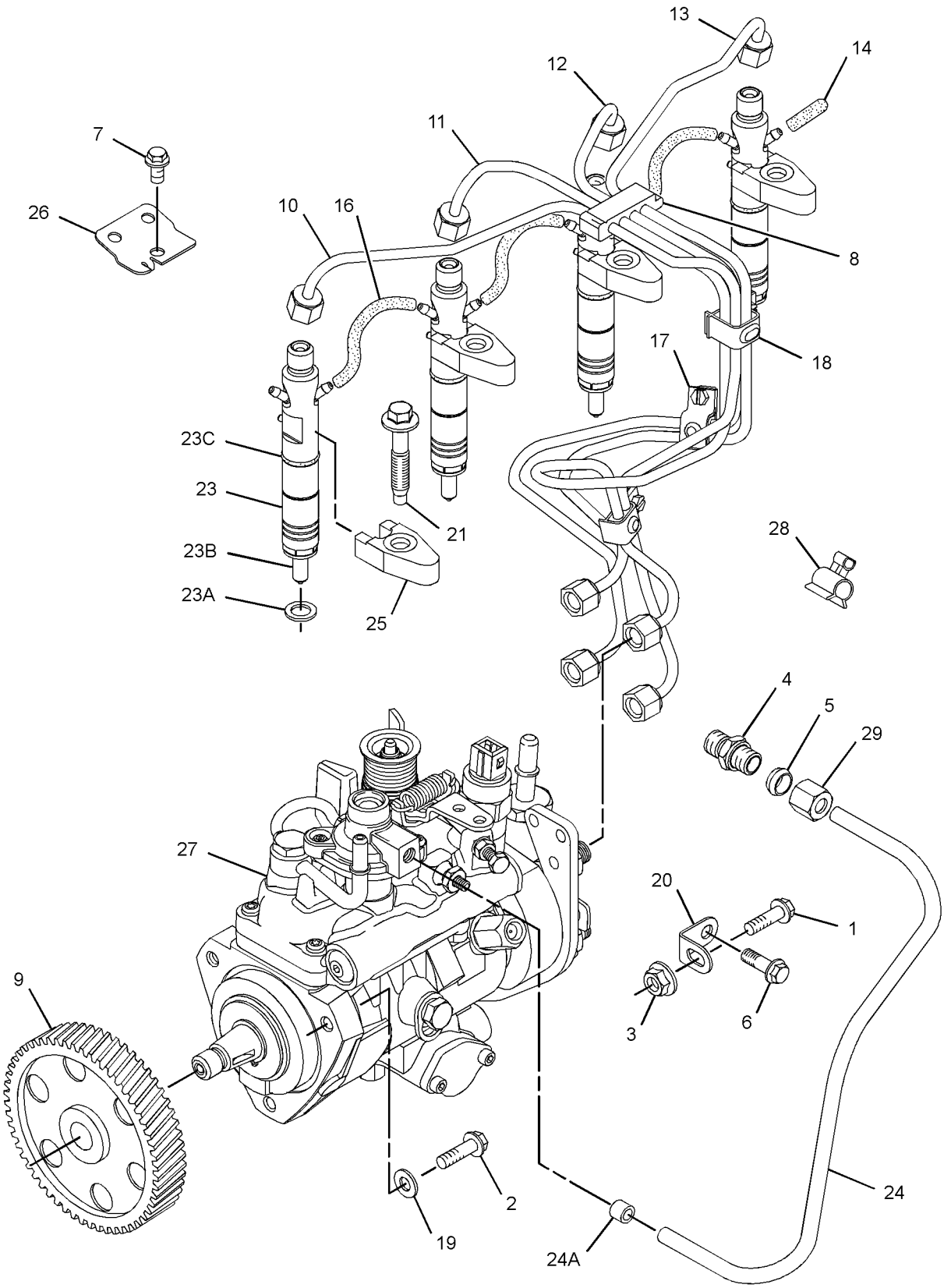

GRAPHIC #1 g03159236

421-7744 **PUMP GP-FUEL INJECTION (*contd.*)** **i05979722**

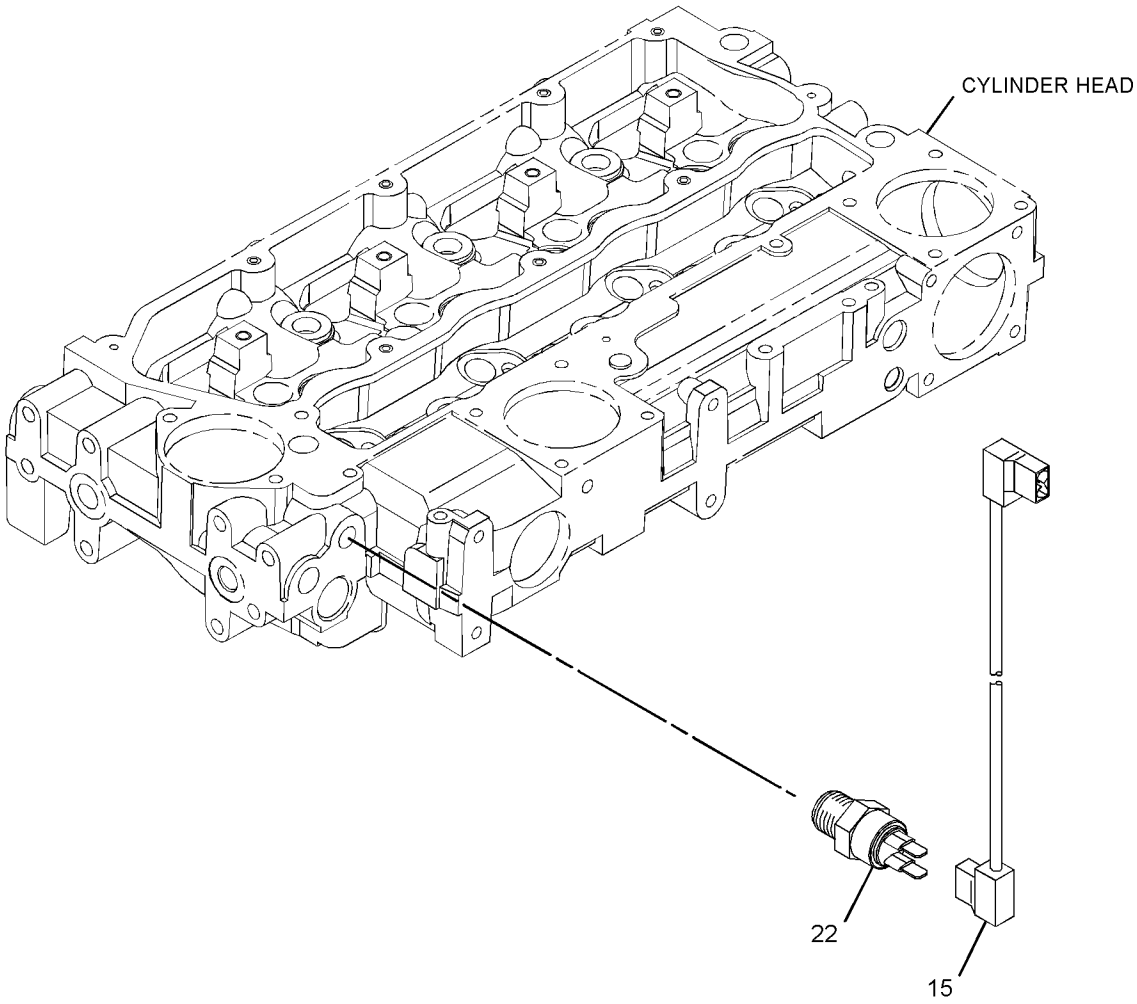

GRAPHIC #2 **<END>** g03159336

462-8135 PUMP GP-FUEL INJECTION

S/N: G4D1-UP

PART OF 456-1375 ENGINE AR-PRIMARY

SMCS-1251, 1290 **i05955477**

NOTE	REF NO	GRAPHIC REF	PART NUMBER	QTY	PART NAME 1 2 3 4 5 6 (PRODUCT LEVEL)	SEE PAGE
M	1	1	**6I-0217**	1	BOLT (M8X1.25X20-MM)	
M	2	1	**6I-0260**	3	BOLT (M8X1.25X25-MM)	
M	3	1	**178-3336**	1	NUT-HEX FLANGE (M8X1.25-THD)	
	4	1	**035-8017**	1	UNION	
	5	1	**067-6265**	1	FITTING-BRASS	
M	6	1	**100-4830**	1	BOLT (M10X1.5X20-MM)	
M	7	1	**124-3815**	1	BOLT (M8X1.25X16-MM)	
	8	1	**140-8714**	1	CLIP	
	9	1	**230-8989**	1	GEAR-FUEL PUMP (68-TEETH)	
	10	1	**230-8995**	1	TUBE AS (CYL NO. 1)	
	11	1	**230-8996**	1	TUBE AS (CYL NO. 2)	
	12	1	**230-8997**	1	TUBE AS (CYL NO. 3)	
	13	1	**230-8998**	1	TUBE AS (CYL NO. 4)	
R	14	1	**230-8999**	4	INJECTOR AS-FUEL	
					(EACH INCLUDES)	
		1	**140-8718**	1	WASHER	
		1	**232-2724**	1	NOZZLE	
		1	**275-1038**	1	SEAL-O-RING	
	15	1	**232-1328**	1	CAP	
	16	1	**232-1793**	1	CABLE	
	17	1	**232-1794**	3	HOSE	
	18	1	**232-2725**	1	CLIP	
	19	1	**232-2726**	1	CLIP	
	20	1	**232-3126**	1	CLIP	
	21	1	**232-3149**	3	WASHER (8.35X16.85X1.55-MM THK)	
	22	1	**232-3157**	1	BRACKET	
	23	1	**232-3274**	4	BOLT (M8X1.25X48.1-MM)	
	24	1	**235-1790**	1	SWITCH-TEMPERATURE (FUEL)	
	25	1	**236-2144**	1	TUBE AS	
	26	1	**238-8671**	4	CLAMP-INJECTOR	
	27	1	**240-5571**	1	BRACKET	
	28	1	**318-2365**	1	CLIP	
	29	1	**365-3308**	1	NUT-COMPRESSION	
	30	1	**462-8111**	1	PUMP AS-FUEL INJECTION	
M		1	**111-3422**	1	NUT (M14X1.5-THD)	
		1	**111-3423**	1	WASHER	
		1	**147-2645**	1	VALVE GP-SOLENOID (24-VOLT)	
		1	**152-3968**	1	SEAL-O-RING	
					PARTS SHOWN IN GRAPHIC(S) WITHOUT A REFERENCE NUMBER ARE NOT SERVICED SEPARATELY	

M - METRIC PART
R - REMFG PART MAY BE AVAILABLE

462-8135 **PUMP GP-FUEL INJECTION (*contd.*)** **i05955477**

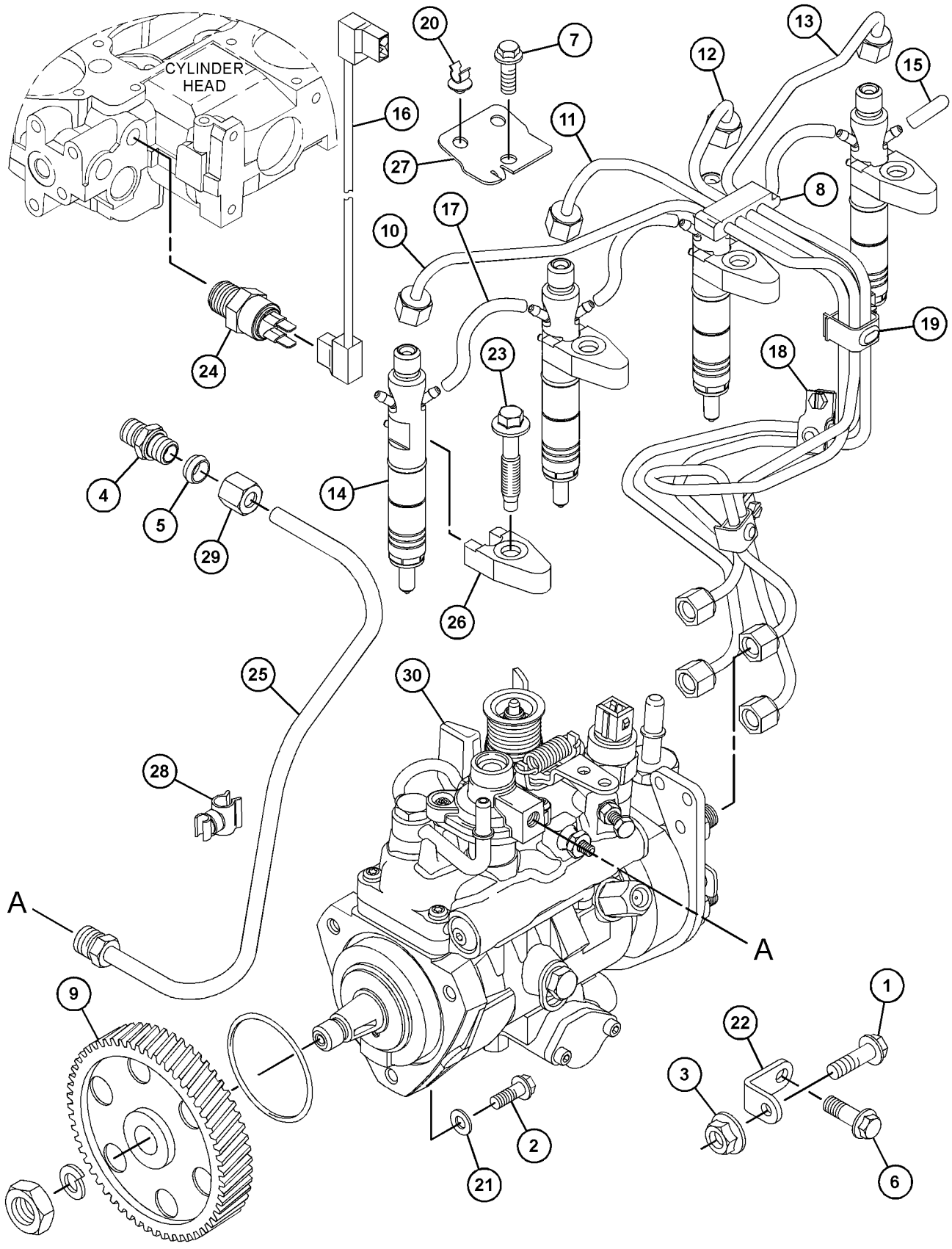

GRAPHIC #1 **<END>** g03743601

391-4295 TANK & MTG GP-FUEL

S/N: XAH1-UP

PART OF 454-5583 CHASSIS AR

SMCS-1273 **i05778235**

NOTE	REF NO	GRAPHIC REF	PART NUMBER	QTY	PART NAME 1 2 3 4 5 6 (PRODUCT LEVEL)	SEE PAGE
	1	1	**246-2641**	1	PADLOCK GP	
		1	**5P-8500**	1	KEY	
Y	2	1	*391-4305*	1	TANK GP-FUEL	85
	3	1	**085-9310**	4	SPACER (16.6X32X26-MM THK)	
M	4	1	**447-1707**	4	BOLT (M16X2X60-MM)	

M - METRIC PART
Y - SEPARATE ILLUSTRATION

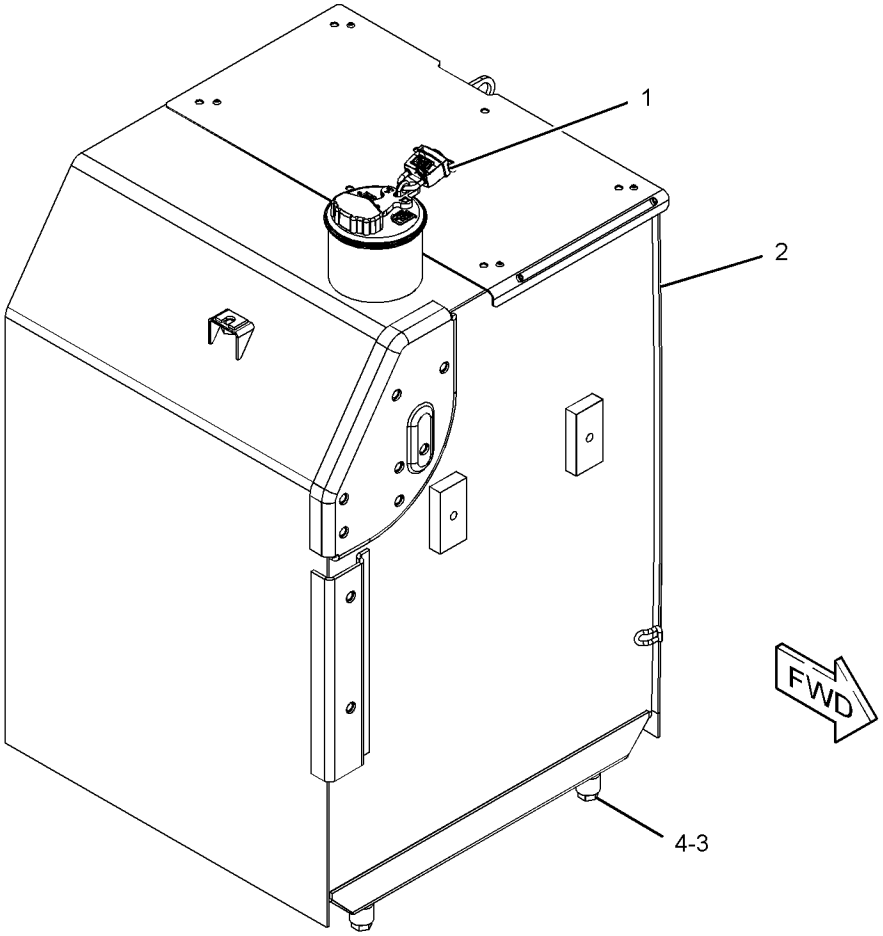

GRAPHIC #1 **<END>** g03129596

391-4305 TANK GP-FUEL

S/N: XAH1-UP
300-L (79.3-US GAL)
PART OF 391-4295 TANK & MTG GP-FUEL

SMCS-1273 **i05987419**

NOTE	REF NO	GRAPHIC REF	PART NUMBER	QTY	PART NAME 1 2 3 4 5 6 (PRODUCT LEVEL)	SEE PAGE
	1	1	**4I-0378**	1	GASKET-RUBBER	
	2	1	*217-8185*	1	ELBOW AS	
		1	**3K-0360**	1	SEAL-O-RING	
		1	**9X-3982**	1	ELBOW	
J	3	1	**303-9933**	1	STRAINER AS-FUEL (FLOAT GAUGE)	
	4	1	**341-1842**	1	SENDER AS-FUEL LEVEL	
		1	**8T-8729**	2	PIN-CONNECTOR (16-GA TO 18-GA)	
		1	**102-8802**	1	KIT-RECEPTACLE (2-PIN)	
					(INCLUDES RECEPTACLE AS & WEDGE)	
	5	1	**349-7059**	1	CAP AS-FUEL (LOCKABLE, VENTED)	
		1	**9X-8600**	1	SEAL-O-RING	
		1	**350-7735**	1	KIT-CAP FILTER (FUEL TANK)	
					(INCLUDES BODY, GASKET, SCREWS & WASHERS)	
	6	1	**8T-0328**	5	WASHER-HARD (5.5X10X1-MM THK)	
M	7	1	**095-0736**	5	SCREW-MACHINE (M5X0.8X10-MM)	
	8	1	*150-3024*	1	ELBOW AS	
		1	**3J-1907**	1	SEAL-O-RING	
		1	**5P-4924**	1	ELBOW	
	9	1	*170-0967*	1	ELBOW AS	
		1	**3K-0360**	1	SEAL-O-RING	
		1	**5P-4906**	1	ELBOW	
					AVAILABLE REPAIR KIT(S):	
J			**303-9937**	1	KIT-GAUGE (FUEL STRAINER)	

J - KIT MARKED J SERVICES PART(S) MARKED J
M - METRIC PART

391-4305 **TANK GP-FUEL (*contd.*)** **i05987419**

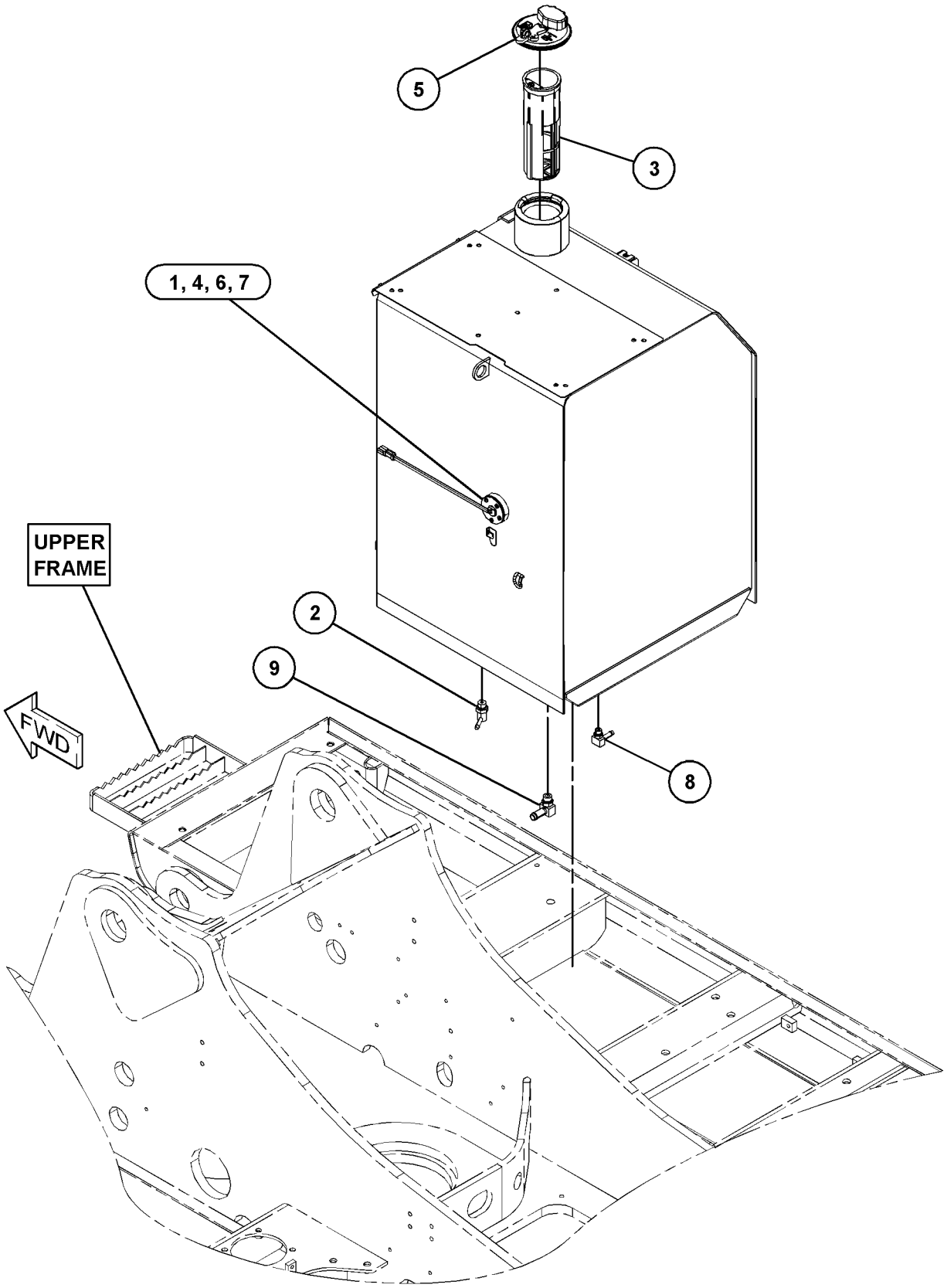

GRAPHIC #1 **<END>** g03128916

132-1829 ALARM GP

S/N: XAH1-UP
24-VOLT
PART OF 398-7003 WIRING GP-CAB
ALSO AN ATTACHMENT

SMCS-7400, 7402, 7407

i03601165

NOTE	REF NO	GRAPHIC REF	PART NUMBER	QTY	PART NAME 1 2 3 4 5 6 (PRODUCT LEVEL)	SEE PAGE
	1	1	**102-8802**	1	KIT-RECEPTACLE (2-PIN)	
					(INCLUDES RECEPTACLE AS & WEDGE)	
	2	1	**186-3735**	2	PIN-CONNECTOR (16-GA TO 18-GA)	

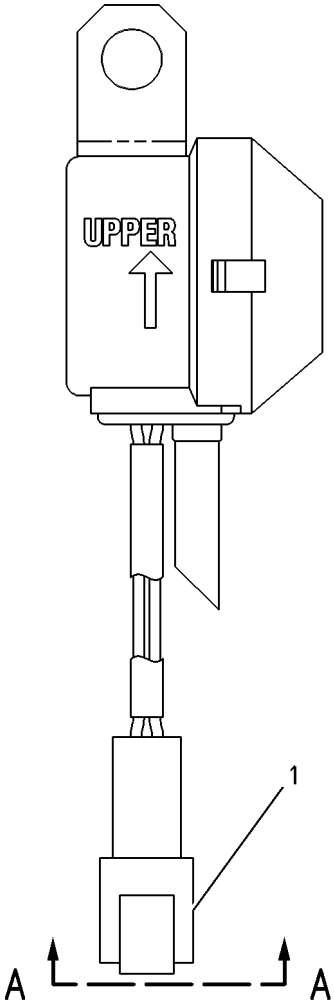

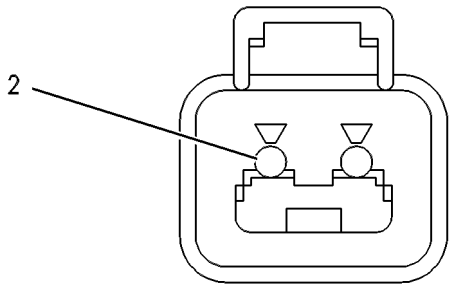

VIEW A-A

GRAPHIC #1

<END>

g00272185

231-1771 ALARM GP-TRAVEL–BACKUP

S/N: XAH1-UP
PART OF 397-4688 OPTION AR-REGIONAL
AN ATTACHMENT

SMCS-7429 **i05518254**

NOTE	REF NO	GRAPHIC REF	PART NUMBER	QTY	PART NAME 1 2 3 4 5 6 (PRODUCT LEVEL)	SEE PAGE
	1	1	**213-9100**	1	ALARM AS	
		1	**102-8802**	1	KIT-RECEPTACLE (2-PIN)	
					(INCLUDES RECEPTACLE AS & WEDGE)	
		1	**186-3735**	1	PIN-CONNECTOR (16-GA TO 18-GA)	
E		1	**9X-1813**		SLEEVE (29-CM)	
M	2	1	**8T-4189**	2	BOLT (M8X1.25X20-MM)	
	3	1	**5P-4116**	2	WASHER-HARD (8.8X20.5X2-MM THK)	

E - ORDER BY THE CENTIMETER
M - METRIC PART

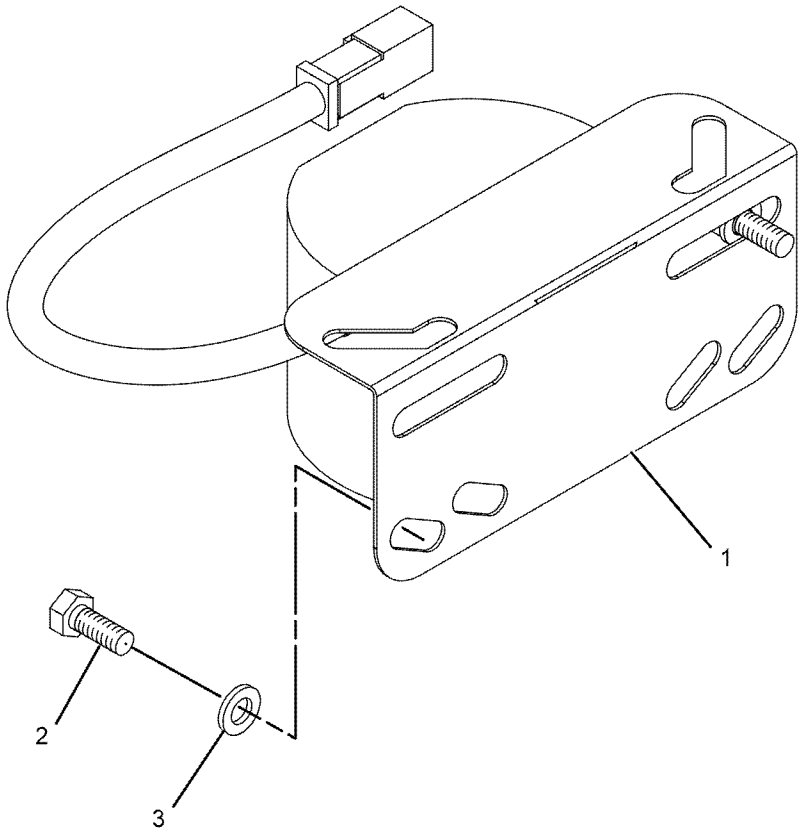

GRAPHIC #1 **<END>** g01071794

421-7109 ALTERNATOR GP-CHARGING

S/N: G4D1-UP

PART OF 456-1375, 470-9228 ENGINE AR-PRIMARY

SMCS-1405 **i05440286**

NOTE	REF NO	GRAPHIC REF	PART NUMBER	QTY	PART NAME 1 2 3 4 5 6 (PRODUCT LEVEL)	SEE PAGE
M	1	1	**6I-0260**	1	BOLT (M8X1.25X25-MM)	
M	2	1	**6I-0593**	3	BOLT (M10X1.5X30-MM)	
M	3	1	**6I-0650**	1	BOLT (M10X1.5X65-MM)	
	4	1	**113-6349**	1	NUT (M8X1.25-THD)	
M	5	1	**140-8783**	2	BOLT (M10X1.5X45-MM)	
	6	1	**261-0428**	1	PULLEY AS-IDLER	
M	6A	1	**307-2242**	1	BOLT (M10X1.5X45-MM)	
	7	1	**284-3425**	1	PULLEY-ALTERNATOR	
	8	1	**305-7881**	1	BRACKET AS-ALTERNATOR	
	8A	1	**161-9820**	2	PIN	
	9	1	**424-6821**	1	ALTERNATOR	
	10	1	**348-8149**	1	PLATE-MOUNTING	
	11	1	**359-9666**	1	BOLT-FLANGE HEAD	
	12	1	**377-9082**	1	BELT TENSIONER	

M - METRIC PART

421-7109 **ALTERNATOR GP-CHARGING (*contd.*)** **i05440286**

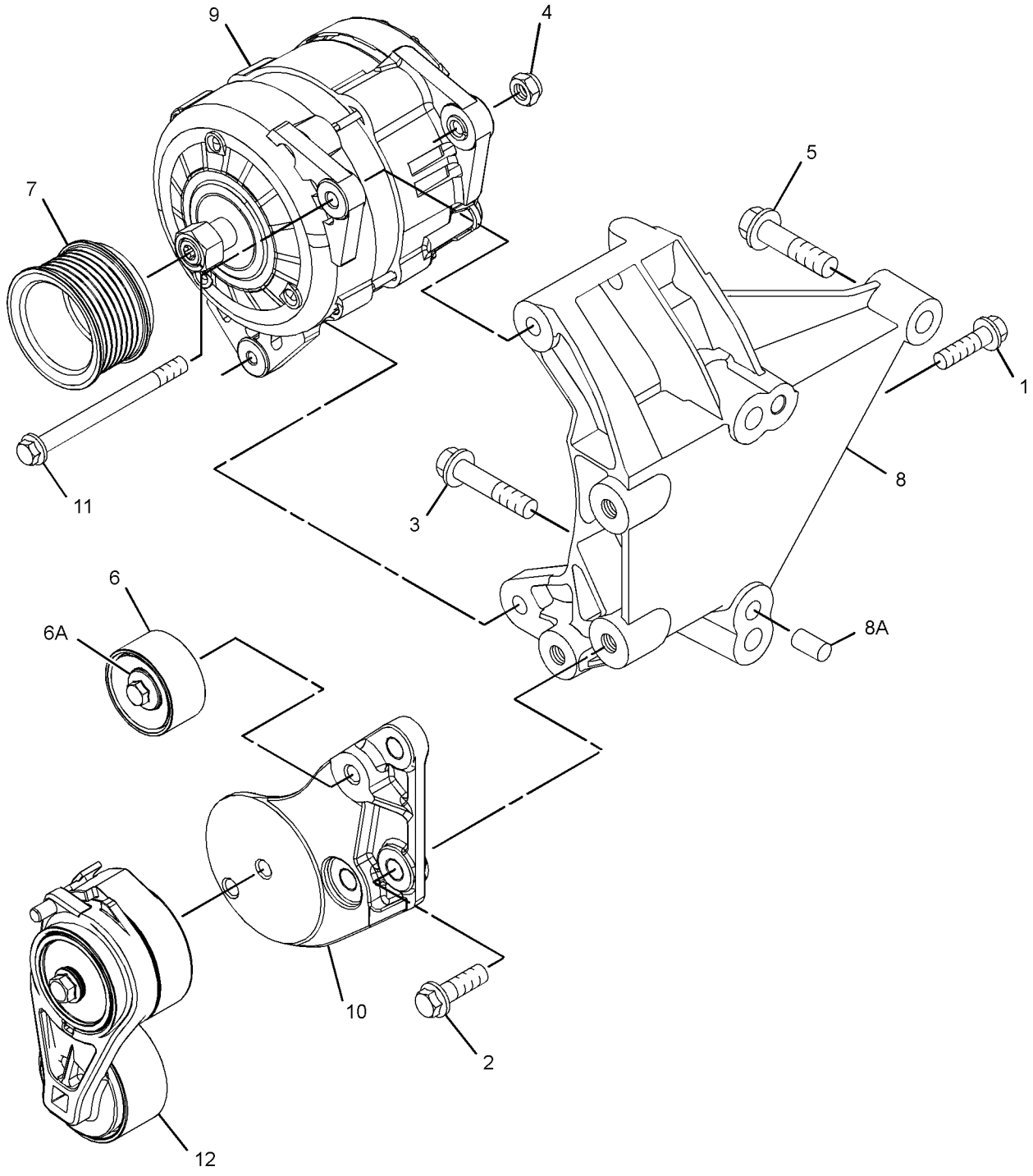

GRAPHIC #1 **<END>** g03465639

440-6914 BATTERY & WIRING GP

S/N: XAH1-UP

PART OF 454-5583 CHASSIS AR

SMCS-1401, 1402, 1408 **i05780281**

NOTE	REF NO	GRAPHIC REF	PART NUMBER	QTY	PART NAME 1 2 3 4 5 6 (PRODUCT LEVEL)	SEE PAGE
	1	3	**2G-8767**	1	WASHER (10.5X60X3-MM THK)	
	2	2,3	**3S-2093**	34	STRAP-CABLE	
	3	3	**3T-5760**	2	BATTERY GP (12-VOLT, 750-CCA)	
		3	**123-1373**	6	CAP AS-FILLER (BATTERY)	
	4	2	**4I-7889**	1	SPACER (11X25X45-MM THK)	
	5	3	**5I-8270**	1	COVER-BATTERY	
	6	3	**6G-2256**	1	CLAMP	
	7	3	**6W-6005**	1	HOLD-DOWN-BATTERY	
	8	2	**7I-2673**	2	STRAP-CABLE	
	9	2,3	**7K-1181**	22	STRAP-CABLE	
	10	3	**7Y-5456**	2	GROMMET	
	11	3	**087-4587**	1	GROMMET	
	12	2	**091-9035**	2	SPACER (11X25X20-MM THK)	
	13	1,2	**111-4836**	13	CLIP	
	14	2,3	**111-4837**	12	CLIP	
	15	2,3	**111-4838**	9	CLIP	
	16	2,3	**111-4839**	9	STRAP	
	17	1,2,3	**116-0118**	8	CLIP	
	18	2,3	**132-1805**	2	STRAP AS-GROUND	
	19	1,3	**134-3299**	2	GROMMET	
	20	1	**141-6526**	1	GROMMET	
	21	2	**145-0603**	1	GROMMET	
	22	1	**170-6929**	1	CABLE AS (JUMPER)	
	23	3	**204-1673**	2	STRAP-CABLE	
	24	2	**228-8146**	1	SPACER (11X25X12.5-MM THK)	
	25	3	**238-2501**	1	KNOB	
	26	3	**238-2528**	1	ROD	
	27	3	**259-5301**	1	BRACKET AS	
	28	2	**259-5303**	1	BRACKET AS	
	29	3	**267-7586**	1	BRACKET AS	
	30	2	**299-2901**	1	GROMMET	
	31	2,3	**306-8526**	3	GROMMET	
	32	2	**306-8531**	1	BRACKET AS	
Y	33	2	**318-1181**	1	SENSOR GP-SPEED (MAGNETIC)	122
	34	3	**319-1252**	1	CABLE AS (JUNCTION BLOCK)	
		3	**030-1706**	1	TERMINAL-RING (00-GA, 1/4-IN SCREW)	
		3	**159-8049**		CABLE (00-GA, RED) (116-CM)	
		3	**1S-7251**	1	TERMINAL-CABLE (00-GA, 1/2-IN SCREW)	
		3	**301-0091**	1	COVER-TERMINAL (RED)	
		3	**8N-0869**	1	COVER-TERMINAL (RED)	
	35	3	**319-1253**	1	BRACKET AS	
	36	3	**319-1277**	1	CABLE AS (DISCONNECT SWITCH)	
		3	**159-8050**		CABLE (00-GA, BLACK) (111-CM)	
		3	**1S-7252**	1	TERMINAL-CABLE (00-GA, 3/8-IN SCREW)	
		3	**7N-5274**	1	COVER AS-TERMINAL (BLACK)	
		3	**9G-8909**	1	COVER-TERMINAL (BLACK)	
		3	**3S-6050**	1	TERMINAL AS-BATTERY (NEGATIVE)	
		3	**1M-6119**	1	BOLT (5/16-18X1.375-IN)	
		3	**1M-6120**	1	NUT (5/16-18-THD)	
	37	2	**328-0181**	1	STRAP AS-GROUND	
	38	3	**328-0385**	1	CABLE AS (REAR)	
		3	**159-8049**		CABLE (00-GA, RED) (71-CM)	
		3	**1S-7251**	1	TERMINAL-CABLE (00-GA, 1/2-IN SCREW)	
		3	**301-0091**	1	COVER-TERMINAL (RED)	
		3	**8N-1725**	1	COVER AS-TERMINAL (RED)	
		3	**3S-6049**	1	TERMINAL AS-BATTERY (POSITIVE)	
		3	**1M-6119**	1	BOLT (5/16-18X1.375-IN)	

440-6914 **BATTERY & WIRING GP (*contd.*)** **i05780281**

NOTE	REF NO	GRAPHIC REF	PART NUMBER	QTY	PART NAME 1 2 3 4 5 6 (PRODUCT LEVEL)	SEE PAGE
		3	**1M-6120**	1	NUT (5/16-18-THD)	
	39	2	**388-6769**	1	BRACKET AS	
	40	2	**388-6771**	1	PLATE AS (ALTERNATOR)	
	41	2	**388-6801**	1	BRACKET AS	
	42	1	**440-6917**	1	HARNESS AS-CHASSIS (CAB BULKHEAD)	
		1	**102-8802**	7	KIT-RECEPTACLE (2-PIN)	
		1	**102-8803**	2	KIT-RECEPTACLE (3-PIN)	
					(EACH KIT INCLUDES RECEPTACLE AS & WEDGE)	
		1	**8T-8729**	12	PIN-CONNECTOR (16-GA TO 18-GA)	
		1	**8T-8730**	45	SOCKET-CONNECTOR (16-GA TO 18-GA)	
		1	**3S-2093**	17	STRAP-CABLE	
		1	**9X-0196**	1	TERMINAL AS	
		1	**8T-8737**	66	PLUG-SEAL	
		1	**8T-8799**	1	BOOT (RED)	
		1	**100-3320**	1	PLUG AS-CONNECTOR (2-PIN)	
		1	**126-5011**	1	SEAL-CONNECTOR	
E		1	**103-2529**		HOSE (70-CM)	
		1	**9W-0852**	10	PIN-CONNECTOR (14-GA TO 16-GA)	
		1	**9W-0844**	13	SOCKET-CONNECTOR (14-GA TO 16-GA)	
		1	**305-5362**	2	TERMINAL AS (18-GA)	
E		1	**119-3662**		TUBE-HEAT SHRINK (10.85-MM DIA) (20-CM)	
E		1	**125-7874**		TUBE-HEAT SHRINK (5.72-MM DIA) (70-CM)	
E		1	**125-7875**		TUBE-HEAT SHRINK (7.44-MM DIA) (50-CM)	
		1	**9X-3402**	74	SOCKET-CONNECTOR (16-GA TO 18-GA)	
					—OR—	
		1	**126-1768**	74	SOCKET-CONNECTOR (14-GA TO 16-GA)	
		1	**2L-8049**	1	TERMINAL-RING (6-GA, NO. 10 SCREW)	
					—OR—	
		1	**2L-8057**	1	TERMINAL-RING (8-GA, NO. 10 SCREW)	
		1	**2L-8050**	4	TERMINAL-RING (6-GA, 1/4-IN SCREW)	
					—OR—	
		1	**2L-8058**	4	TERMINAL-RING (8-GA, 1/4-IN SCREW)	
		1	**2L-8069**	6	TERMINAL-RING (2-GA TO 10-GA, 3/8-IN SCREW)	
		1	**2L-8075**	4	TERMINAL-RING (14-GA TO 16-GA, NO. 8 SCREW)	
		1	**2L-8076**	1	TERMINAL-RING (14-GA TO 16-GA, NO. 10 SCREW)	
		1	**2L-8078**	1	TERMINAL-RING (14-GA TO 16-GA, 5/16-IN SCREW)	
		1	**176-9299**	1	KIT-RECEPTACLE (3-PIN)	
					(INCLUDES RECEPTACLE AS & WEDGE)	
		1	**9X-3401**	34	PIN-CONNECTOR (16-GA TO 18-GA)	
					—OR—	
		1	**126-1767**	34	PIN-CONNECTOR (14-GA TO 16-GA)	
		1	**155-2260**	1	KIT-CONNECTING PLUG (3-PIN)	
		1	**155-2270**	13	KIT-CONNECTING PLUG (2-PIN)	
					(EACH KIT INCLUDES RECEPTACLE AS, WEDGE & INTERFACE SEAL)	
		1	**160-7689**	1	PLUG AS-CONNECTOR (70-PIN)	
		1	**159-9322**		SEAL-O-RING	
		1	**163-6637**	1	RECEPTACLE AS-CONNECTOR (54-PIN, BLACK)	
		1	**174-3016**	2	PLUG AS-CONNECTOR (3-PIN)	
		1	**197-4385**	1	DIODE	
		1	**204-6195**	1	SOCKET-CONNECTOR (10-GA)	
		1	**221-9804**	1	PLUG-CONNECTOR (8-GA TO 10-GA)	
		1	**230-4009**	1	PLUG AS-CONNECTOR (12-PIN)	
		1	**455-0709**	1	SEAL-CONNECTOR	
		1	**230-4011**	6	PLUG AS-CONNECTOR (2-PIN)	
					(EACH INCLUDES)	
		1	**455-0704**	1	SEAL-CONNECTOR	
		1	**281-8803**	3	PLUG AS-CONNECTOR (3-PIN)	
		1	**281-8804**	1	PLUG AS-CONNECTOR (3-PIN)	
		1	**230-4013**	5	PLUG AS-CONNECTOR (3-PIN)	

440-6914 **BATTERY & WIRING GP (*contd.*)** **i05780281**

NOTE	REF NO	GRAPHIC REF	PART NUMBER	QTY	PART NAME 1 2 3 4 5 6 (PRODUCT LEVEL)	SEE PAGE
					(EACH PLUG AS INCLUDES)	
		1	**455-0705**		SEAL-CONNECTOR	
		1	**230-5010**	1	PLUG AS-CONNECTOR (6-PIN)	
		1	**455-0707**	1	SEAL-CONNECTOR	
		1	**231-2295**	1	PLUG AS-CONNECTOR (8-PIN)	
		1	**455-0708**	1	SEAL-CONNECTOR	
		1	**243-4505**	1	RECEPTACLE AS-CONNECTOR (2-PIN)	
		1	**243-4510**	1	RECEPTACLE AS-CONNECTOR (12-PIN)	
		1	**342-2972**	1	CAP-CONNECTOR (2-PIN)	
		1	**342-2973**	3	CAP-CONNECTOR (3-PIN)	
		1	**342-2974**	1	CAP-CONNECTOR (6-PIN)	
		1	**342-2976**	1	CAP-CONNECTOR (12-PIN)	
		1	**349-5084**	1	TERMINAL-BLADE	
		1	**349-5085**	1	RECEPTACLE AS-CONNECTOR	
	43	1	**441-8612**	1	CABLE AS-STARTER	
		1	**8N-0869**	1	COVER-TERMINAL (RED)	
E		1	**159-8049**		CABLE (00-GA, RED) (263-CM)	
		1	**1S-7251**	1	TERMINAL-CABLE (00-GA, 1/2-IN SCREW)	
		1	**1S-7252**	1	TERMINAL-CABLE (00-GA, 3/8-IN SCREW)	
D		1	**6V-2722**		TUBE-HEAT SHRINK (25.4-MM DIA) (1-M)	
		1	**8C-5064**		CONDUIT-FLEXIBLE (17.75-MM ID, SPLIT) (123-CM)	
M	44	2	**099-6418**	1	NUT (M6X1-THD)	
Y	45	3	**124-5814**	1	BLOCK GP-JUNCTION	97
M	46	2	**199-1187**	1	NUT (M5X0.8-THD)	
	47	1	**1R-6072**	1	GROMMET	
	48	2	**1S-0994**	1	CLIP	
	49	2	**269-7680**	1	CLIP	
	50	2	**4P-7429**	1	CLIP	
	51	2,3	**4P-7581**	10	CLIP	
	52	2	**4P-8134**	1	CLIP	
M	53	3	**5C-7261**	1	NUT (M8X1.25-THD)	
M	54	3	**5C-7883**	4	BOLT-SOCKET HEAD (M6X1X16-MM)	
	55	2	**5P-4116**	1	WASHER-HARD (8.8X20.5X2-MM THK)	
	56	3	**6D-3479**	4	CLIP	
	57	2	**6D-4246**	4	CLIP	
	58	2,3	**6G-2263**	5	SPACER (10.5X19X28.5-MM THK)	
M	59	1,2,3	**7X-2621**	9	BOLT (M10X1.5X12-MM)	
	60	2,3	**8T-1889**	3	CLIP (SLOT)	
	61	2,3	**8T-1890**	3	CLIP (TAB)	
	62	1,2,3	**8T-4121**	73	WASHER-HARD (11X21X2.5-MM THK)	
M	63	3	**8T-4133**	1	NUT (M10X1.5-THD)	
M	64	2,3	**8T-4136**	8	BOLT (M10X1.5X25-MM)	
M	65	1,2,3	**8T-4137**	40	BOLT (M10X1.5X20-MM)	
M	66	2	**8T-4179**	2	BOLT (M12X1.75X20-MM)	
M	67	2	**8T-4182**	1	BOLT (M10X1.5X45-MM)	
M	68	2,3	**8T-4185**	4	BOLT (M10X1.5X50-MM)	
M	69	2	**8T-4186**	2	BOLT (M10X1.5X40-MM)	
M	70	2,3	**8T-4191**	4	BOLT (M10X1.5X16-MM)	
M	71	2,3	**8T-4195**	4	BOLT (M10X1.5X30-MM)	
M	72	2	**8T-4196**	1	BOLT (M10X1.5X35-MM)	
M	73	2	**8T-4200**	2	BOLT (M8X1.25X16-MM)	
	74	2	**8T-4223**	2	WASHER-HARD (13.5X25.5X3-MM THK)	
	75	2	**8T-4224**	2	WASHER-HARD (8.8X16X2-MM THK)	
	76	3	**8T-4226**	1	WASHER-PLATED (10.5X45X3-MM THK)	
M	77	2	**8T-5005**	1	BOLT (M10X1.5X70-MM)	
M	78	2	**8T-6912**	1	BOLT (M8X1.25X50-MM)	
	79	3	**9X-8256**	4	WASHER (6.6X12X2-MM THK)	

D - ORDER BY THE METER
E - ORDER BY THE CENTIMETER
M - METRIC PART
Y - SEPARATE ILLUSTRATION

440-6914 **BATTERY & WIRING GP (*contd.*)** **i05780281**

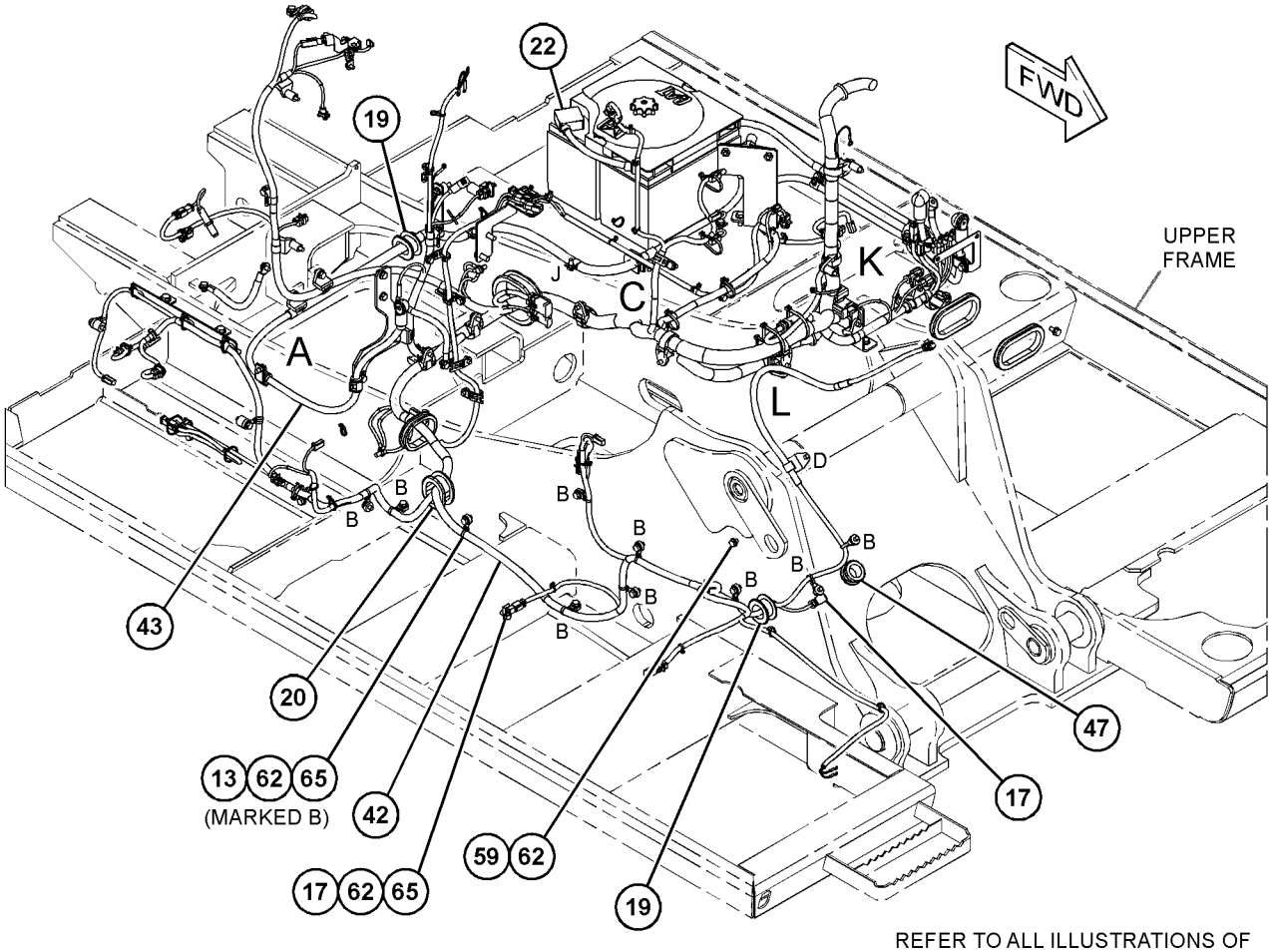

REFER TO ALL ILLUSTRATIONS OF
THIS GROUP FOR AUXILIARY VIEWS

GRAPHIC #1 g03688564

440-6914 **BATTERY & WIRING GP (*contd.*)** **i05780281**

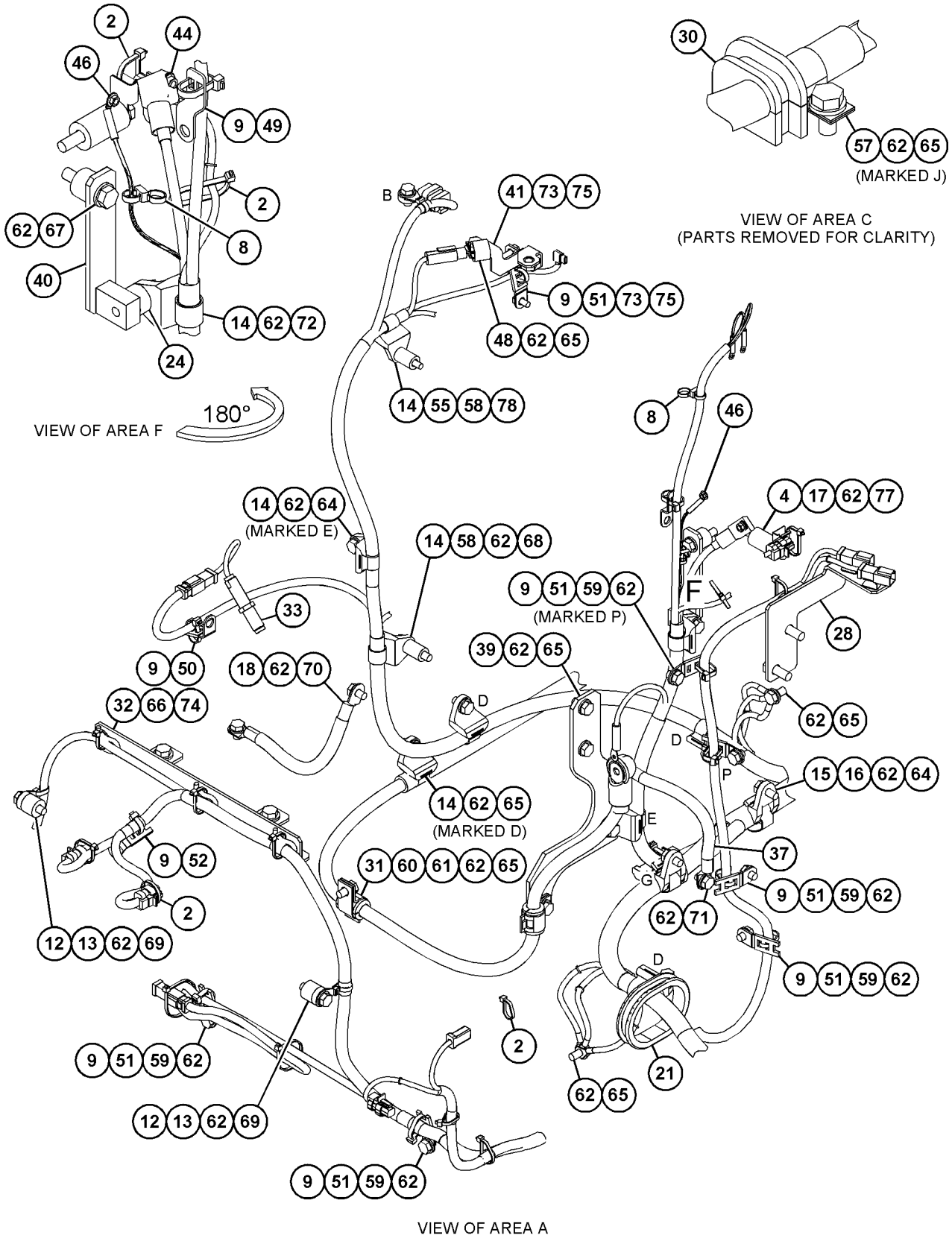

GRAPHIC #2 g03688565

440-6914 **BATTERY & WIRING GP (*contd.*)** **i05780281**

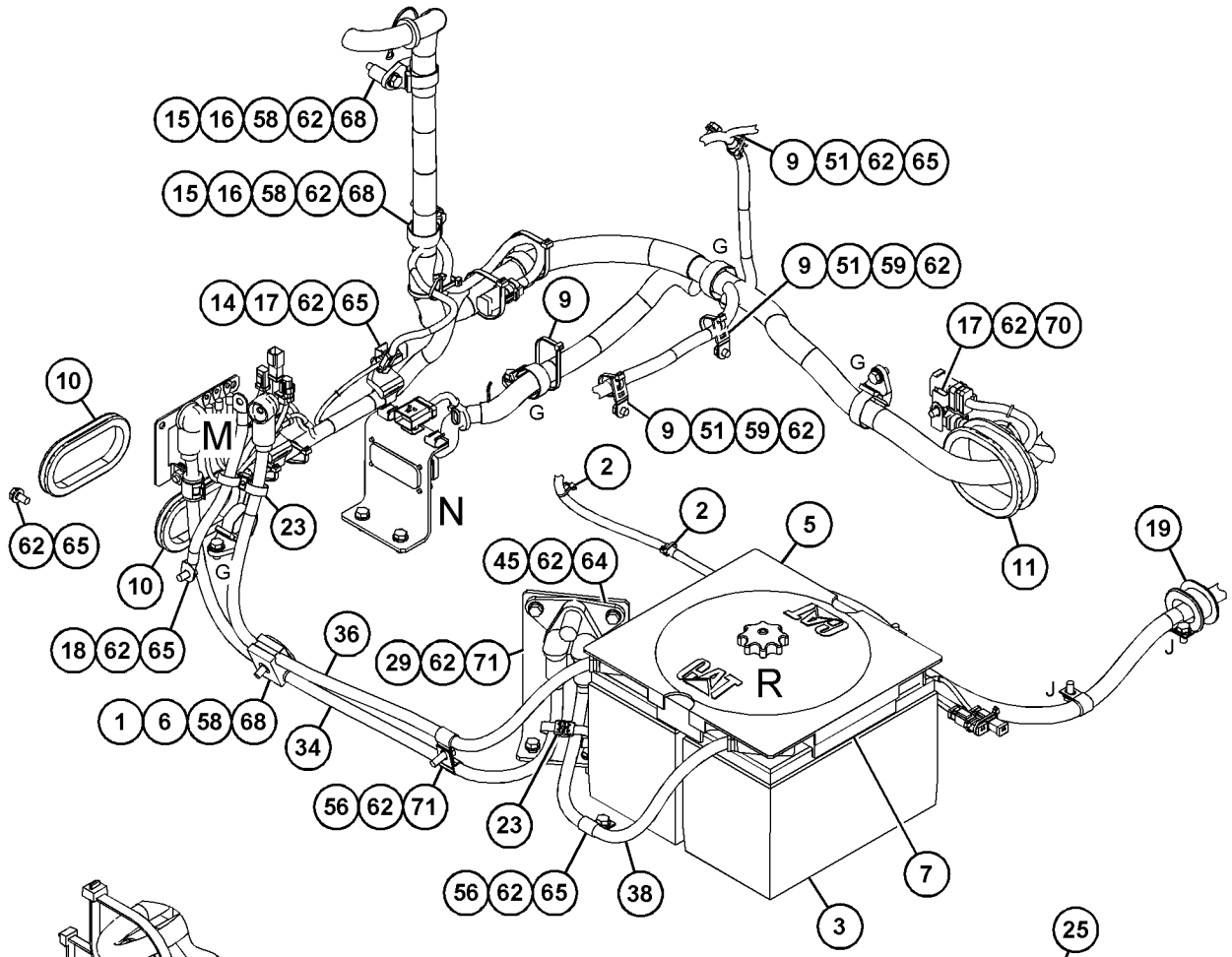

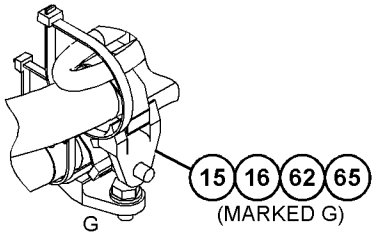

VIEW OF AREA L
(PARTS REMOVED FOR CLARITY)

VIEW OF AREA K



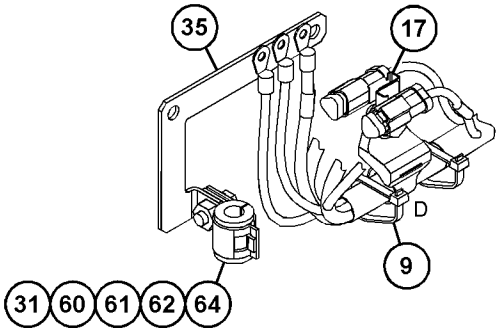

VIEW OF AREA M
(PARTS REMOVED FOR CLARITY)

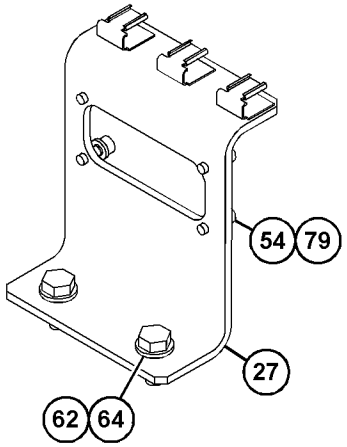

VIEW OF AREA N

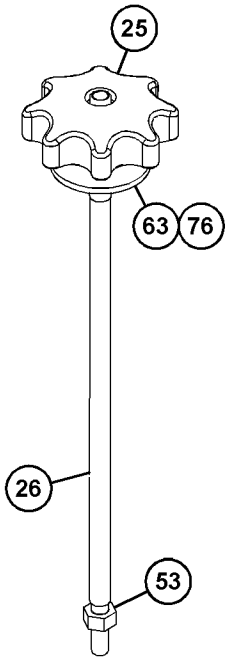

VIEW OF AREA R
(PARTS REMOVED FOR CLARITY)

GRAPHIC #3 **<END>** g03688566

124-5814 BLOCK GP-JUNCTION

S/N: XAH1-UP

PART OF 440-6914 BATTERY & WIRING GP

SMCS-7426 **i05523515**

NOTE	REF NO	GRAPHIC REF	PART NUMBER	QTY	PART NAME 1 2 3 4 5 6 (PRODUCT LEVEL)	SEE PAGE
	1	1	**435-2848**	1	COVER-TERMINAL	
	2	1	**7F-0560**	6	WASHER (0.516X0.938X0.101-IN THK)	
	3	1	**8T-3518**	6	NUT-FULL (1/2-13-THD)	
	4	1	**8C-6358**	1	BLOCK AS-JUNCTION (BATTERY)	

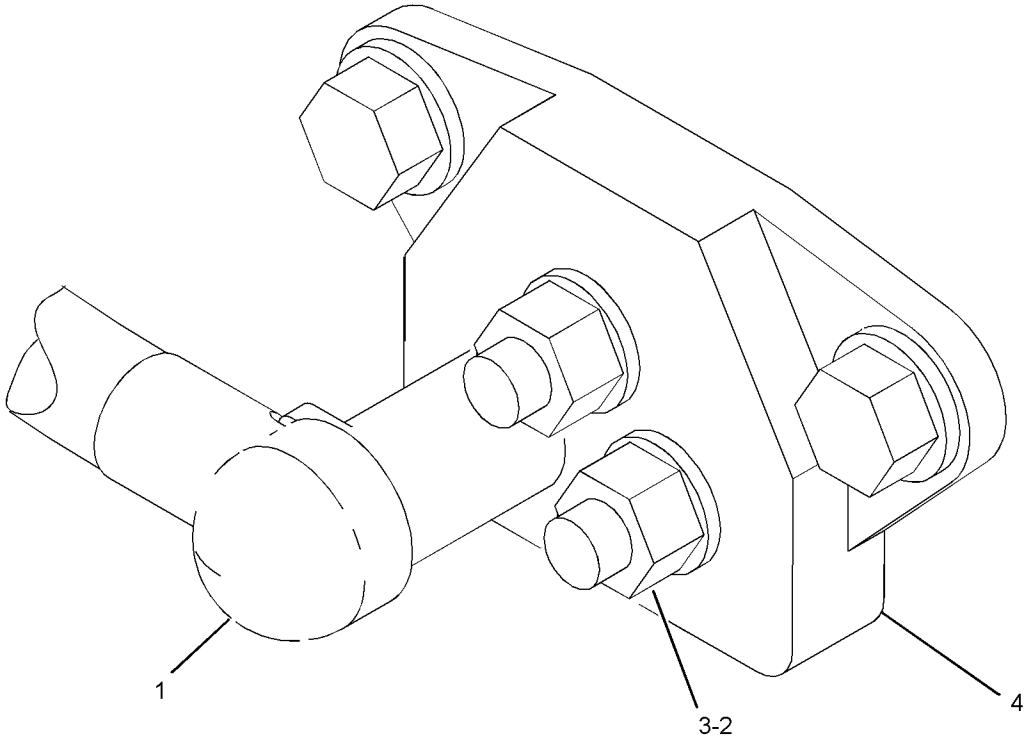

GRAPHIC #1 **<END>** g03490479

319-4258 CONTROL & MTG GP-COMMUNICATION—PRODUCT LINK

121SR

S/N: XAH1-UP

PART OF 451-7464 INSTALLATION AR-COMMUNICATION

AN ATTACHMENT

SMCS-7606 **i05956392**

NOTE	REF NO	GRAPHIC REF	PART NUMBER	QTY	PART NAME 1 2 3 4 5 6 (PRODUCT LEVEL)	SEE PAGE
	1	1	**3S-2093**	4	STRAP-CABLE	
	2	1	**7K-1181**	4	STRAP-CABLE	
Y	3	1	**263-9088**	1	RADIO GP-COMMUNICATION (PRODUCT LINK 121SR)	119
M	4	1	**8T-4138**	4	BOLT (M6X1X20-MM)	
	5	1	**9X-8256**	4	WASHER (6.6X12X2-MM THK)	
	6	1	**230-1340**	1	FILM-WARNING (PRODUCT LINK RADIO, U.S.)	
					—OR—	
		1	**230-1341**	1	FILM-WARNING (PRODUCT LINK RADIO, INTL)	
	7	1	**307-0047**	1	FILM-INFORMATION (PRODUCT LINK, READ OMM)	
	8	1	**095-0910**	1	CLIP	
M	9	1	**143-9397**	1	SCREW-PAN HEAD (M4X0.7X12-MM)	
	10	1	**161-6987**	1	WASHER-HARD (5.2X16X1.5-MM THK)	

M - METRIC PART
Y - SEPARATE ILLUSTRATION

319-4258 **CONTROL & MTG GP-COMMUNICATION (*contd.*)** **i05956392**

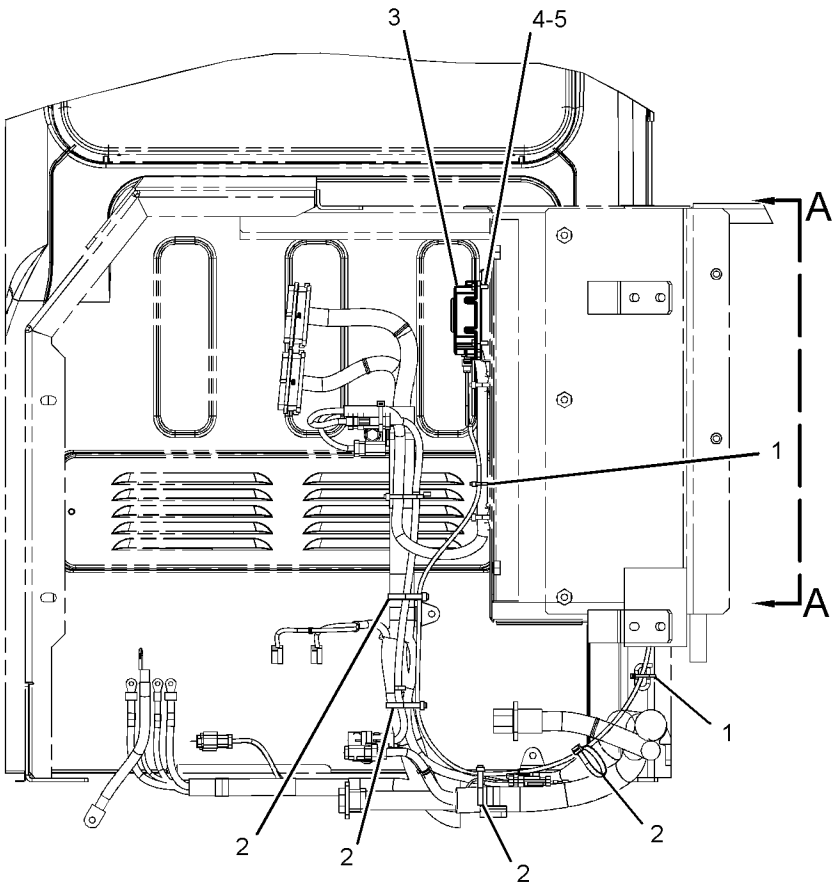

REAR VIEW
(CAB)

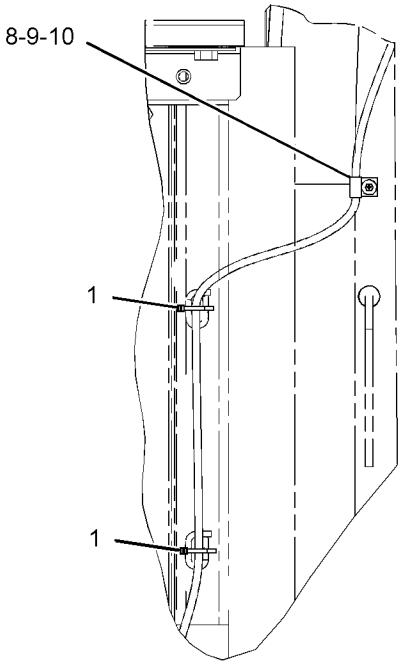

VIEW A-A

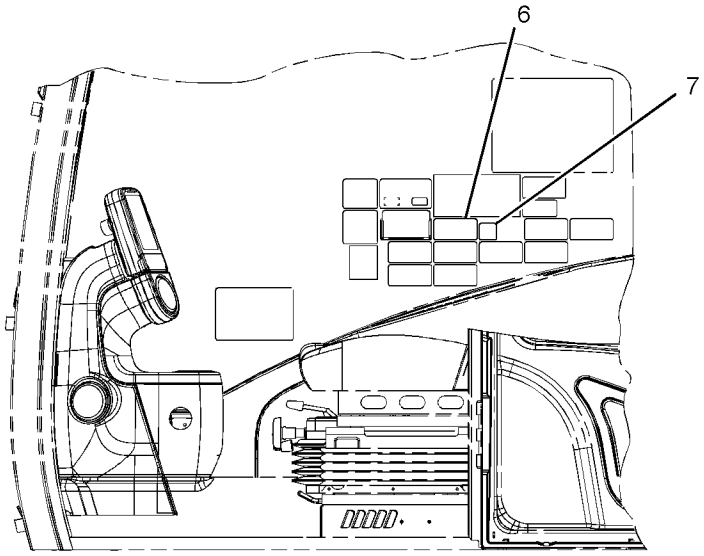

LEFT SIDE VIEW
(CAB)

GRAPHIC #1 **<END>** g03739280

418-1084 CONTROL & MTG GP-COMMUNICATION–PRODUCT LINK

321SR

S/N: XAH1-UP

PART OF 451-7464 INSTALLATION AR-COMMUNICATION

AN ATTACHMENT

SMCS-7606 **i05438943**

NOTE	REF NO	GRAPHIC REF	PART NUMBER	QTY	PART NAME 1 2 3 4 5 6 (PRODUCT LEVEL)	SEE PAGE
	1	1	**8C-5608**	4	SPACER (6.5X9.5X25.4-MM THK)	
	2	1	**9X-9896**	8	MOUNT (ISOLATION)	
Y	3	1	*428-7937*	1	ELECTRONICS GP-COMMUNICATION (PRODUCT LINK, VIMS)	102
M	4	1	**8C-8451**	4	BOLT (M6X1X40-MM)	
	5	1	**9X-6165**	4	WASHER (6.5X22X2.5-MM THK)	

M - METRIC PART
Y - SEPARATE ILLUSTRATION

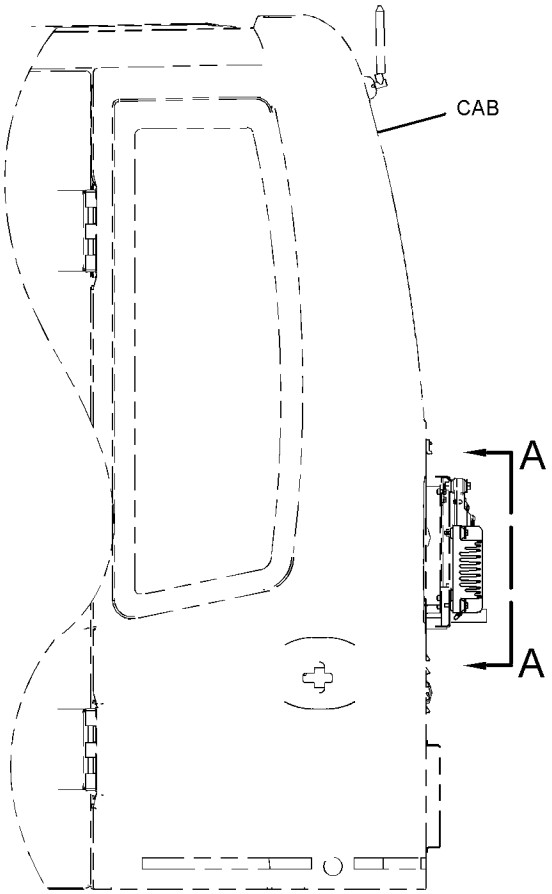

LEFT SIDE VIEW

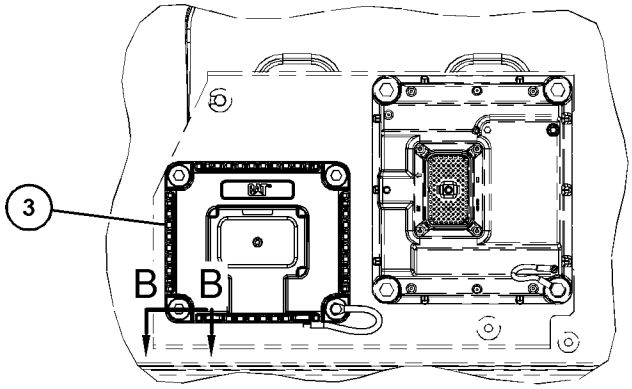

VIEW A-A

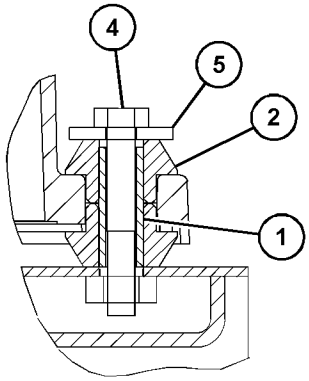

SECTION B-B

GRAPHIC #1 **<END>** g03444237

399-2618 CONTROL & MTG GP-ELECTRONIC

S/N: XAH1-UP

PART OF 451-3987 OPERATOR AR

SMCS-1901, 3168, 7490, 7610 **i05460590**

NOTE	REF NO	GRAPHIC REF	PART NUMBER	QTY	PART NAME 1 2 3 4 5 6 (PRODUCT LEVEL)	SEE PAGE
	1	1	**155-0576**	8	MOUNT-ISOLATION	
	2	1	**386-3444**	1	CONTROL GP-UNPROGRAMMED	
	3	1	**421-5857**	1	BRACKET AS	
	4	1	**6I-1418**	4	SPACER (8.2X12.7X28.7-MM THK)	
M	5	1	**7X-0818**	4	BOLT (M8X1.25X45-MM)	
	6	1	**8T-4224**	1	WASHER-HARD (8.8X16X2-MM THK)	
M	7	1	**8T-4970**	4	BOLT (M6X1X14-MM)	
	8	1	**9N-0869**	8	WASHER-HARD (8.8X25.5X2-MM THK)	
	9	1	**9X-8256**	4	WASHER (6.6X12X2-MM THK)	

M - METRIC PART

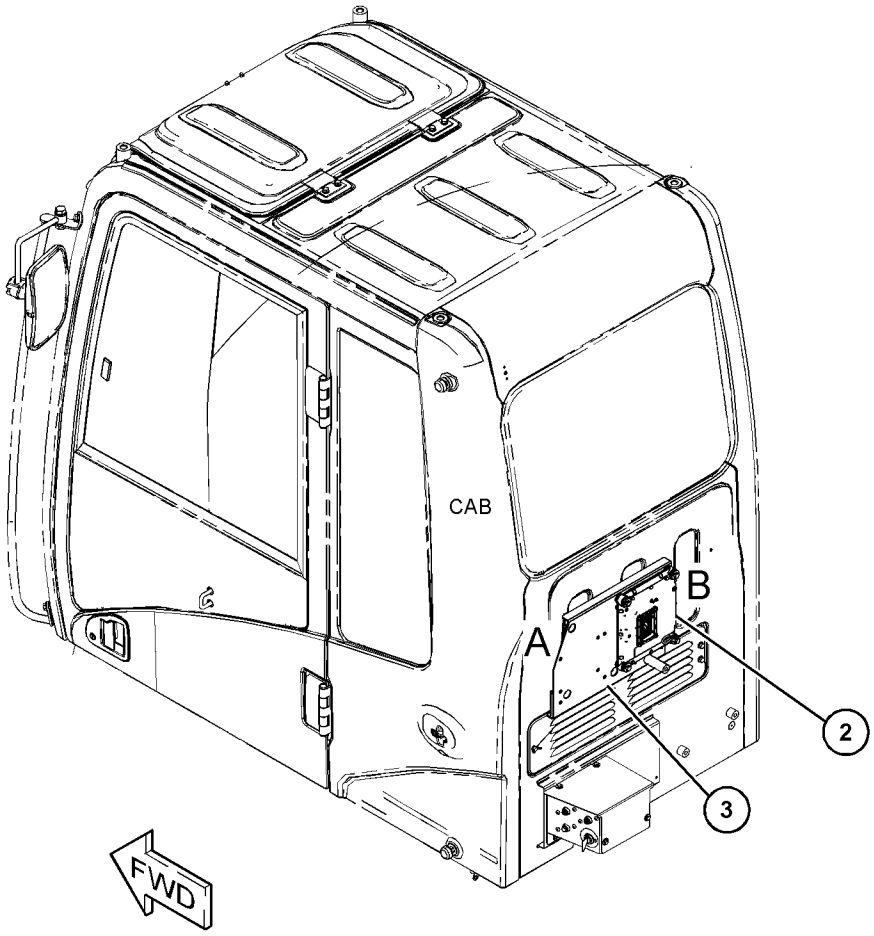

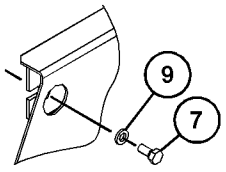

VIEW OF AREA A

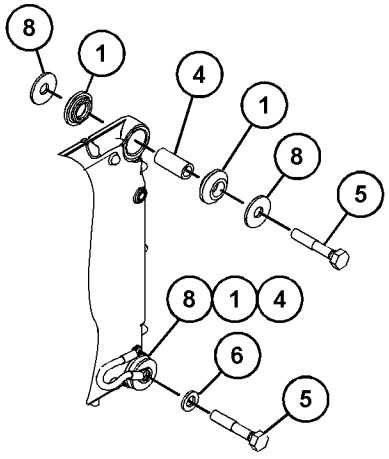

VIEW OF AREA B

GRAPHIC #1 **<END>** g03457163

428-7937 ELECTRONICS GP-COMMUNICATION

S/N: XAH1-UP
PART OF 418-1084 CONTROL & MTG GP-COMMUNICATION
AN ATTACHMENT

SMCS-7606, 7610, 7620 **i05619272**

NOTE	PART NUMBER	QTY	PART NAME 1 2 3 4 5 6 (PRODUCT LEVEL)	SEE PAGE
	285-1142	1	CONTROL GP-UNPROGRAMMED	
	7X-6315	1	STRAP AS-GROUND	
	101-0852	1	SCREW-PAN HEAD (8-32X0.375-IN)	
	134-4126	1	WASHER (4.52X8.28X0.76-MM THK)	
	439-7520	1	SOFTWARE GP-MONITOR (VIMS MAIN, PROGRAM)	

<END>

436-1866 ELECTRONICS GP-MACHINE

S/N: XAH1-UP
PART OF 454-5582 GENERAL AR

SMCS-7610, 7620 **i05959402**

NOTE	PART NUMBER	QTY	PART NAME 1 2 3 4 5 6 (PRODUCT LEVEL)	SEE PAGE
	436-1867	1	SOFTWARE GP-MACHINE	

<END>

233-9834 GLOW PLUG GP

S/N: G4D1-UP

PART OF 456-1375, 470-9228 ENGINE AR-PRIMARY

SMCS-1412 **i04948460**

NOTE	REF NO	GRAPHIC REF	PART NUMBER	QTY	PART NAME 1 2 3 4 5 6 (PRODUCT LEVEL)	SEE PAGE
	1	1	**368-3151**	1	BUS BAR GP	
	1A	1	**369-2472**	1	SPACER	
	2	1	**226-8770**	4	GLOW PLUG (24-VOLT)	
	3	1	**232-3126**	1	CLIP	

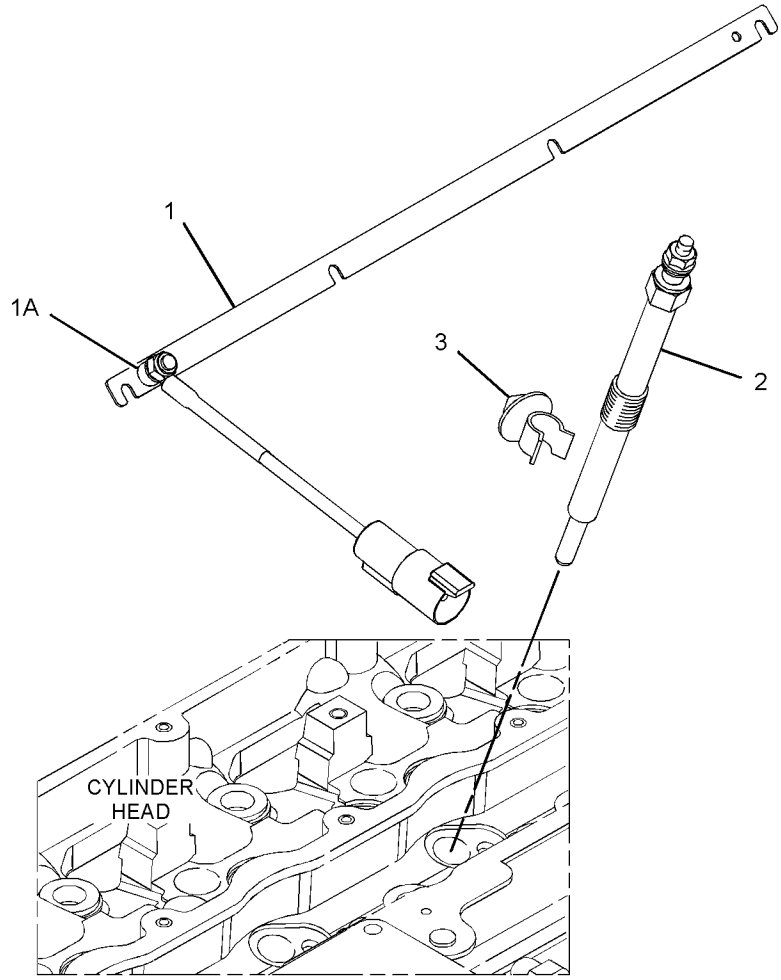

GRAPHIC #1 **<END>** g03139739

451-7464 INSTALLATION AR-COMMUNICATION—PRODUCT LINK

321SR

S/N: XAH1-UP

AN ATTACHMENT

SMCS-7606 **i05956409**

NOTE	PART NUMBER	QTY	PART NAME 1 2 3 4 5 6 (PRODUCT LEVEL)	SEE PAGE
Y	*319-4258*	1	CONTROL & MTG GP-COMMUNICATION (PRODUCT LINK 121SR)	98
Y	*418-1084*	1	CONTROL & MTG GP-COMMUNICATION (PRODUCT LINK 321SR)	100
Y	*319-4255*	1	MOUNTING GP-ANTENNA (PRODUCT LINK)	399
Y	*440-6916*	1	WIRING GP-COMMUNICATION	135

Y - SEPARATE ILLUSTRATION

<END>

153-2521 LAMP GP-FLOOD

S/N: XAH1-UP
24-VOLT
PART OF 259-5163, 291-7730 LIGHTING GP-FLOOD
AN ATTACHMENT

SMCS-1434 **i05856234**

NOTE	REF NO	GRAPHIC REF	PART NUMBER	QTY	PART NAME 1 2 3 4 5 6 (PRODUCT LEVEL)	SEE PAGE
M	1	1	**6V-5210**	2	SCREW-MACHINE (M4X0.7X10-MM)	
	2	1	**3B-4501**	2	LOCKWASHER	
	3	1	**351-9918**	1	LAMP-HALOGEN (24-VOLT, 70-WATT)	
	4	1	**8T-4223**	1	WASHER-HARD (13.5X25.5X3-MM THK)	
M	5	1	**8T-4244**	1	NUT (M12X1.75-THD)	
M	6	1	**174-7791**	1	SCREW-TAPPING	
	7	1	**9B-0453**	1	LOCKWASHER	
	8	1	**170-6993**	1	COVER	
M	9	1	**180-3861**	4	SCREW-TAPPING	
	10	1	**170-9417**	1	LENS AS	
	11	1	**170-9418**	1	BAND	

M - METRIC PART

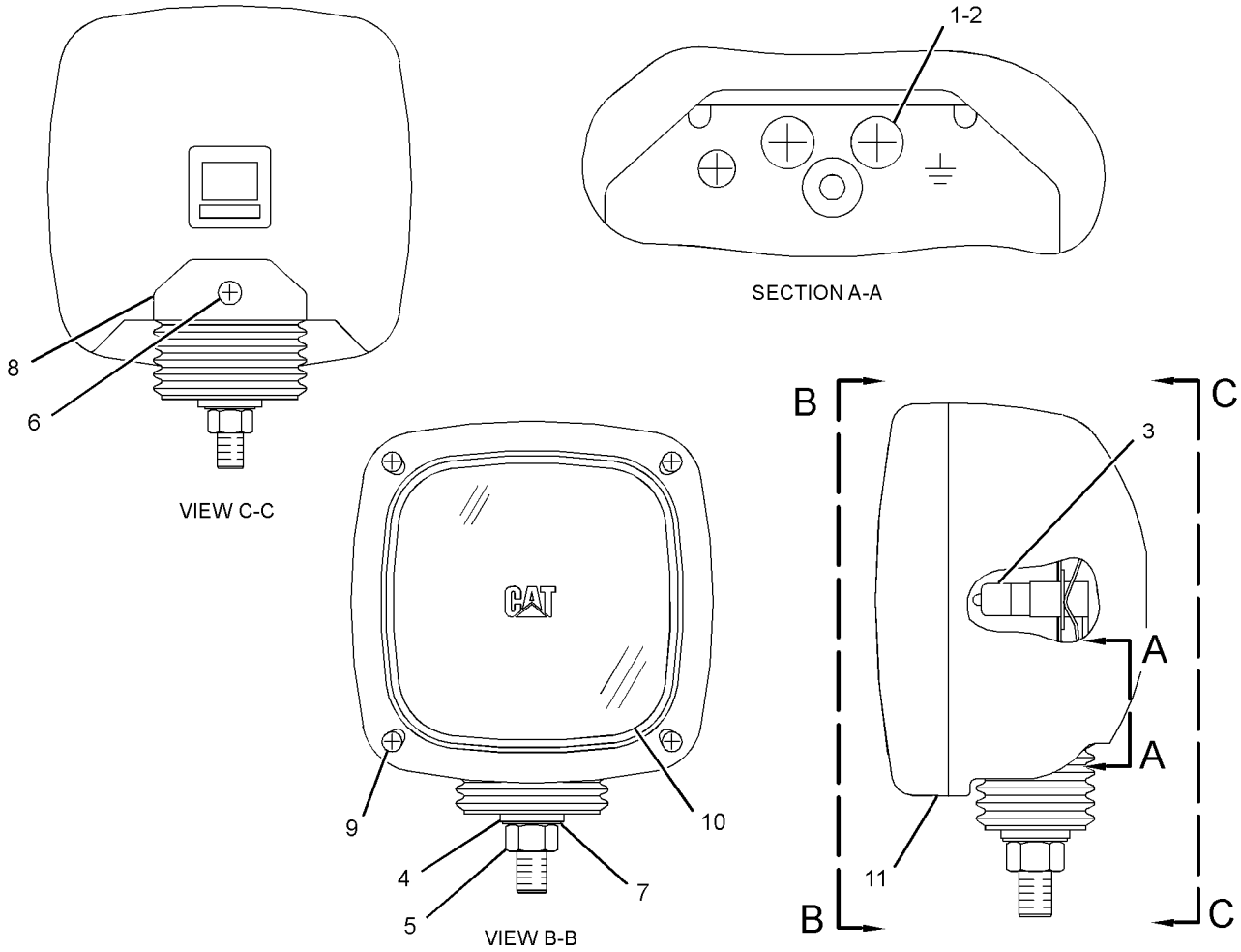

GRAPHIC #1 **<END>** g01528526

153-2523 LAMP GP-FLOOD

S/N: XAH1-UP
24-VOLT
PART OF 4I-5409 LIGHTING GP-FLOOD

SMCS-1434 **i05785821**

NOTE	REF NO	GRAPHIC REF	PART NUMBER	QTY	PART NAME 1 2 3 4 5 6 (PRODUCT LEVEL)	SEE PAGE
M	1	1	**6V-5210**	2	SCREW-MACHINE (M4X0.7X10-MM)	
	2	1	**3B-4501**	2	LOCKWASHER	
	3	1	**9X-3463**	1	LAMP-HALOGEN (24-VOLT, 70-WATT)	
	4	1	**8T-4223**	1	WASHER-HARD (13.5X25.5X3-MM THK)	
M	5	1	**8T-4244**	1	NUT (M12X1.75-THD)	
M	6	1	**174-7791**	1	SCREW-TAPPING	
	7	1	**5C-2889**	1	LOCKWASHER	
	8	1	**170-6993**	1	COVER	
	9	1	**170-9417**	1	LENS AS	
M	10	1	**180-3861**	4	SCREW-TAPPING	
	11	1	**170-9418**	1	BAND	

M - METRIC PART

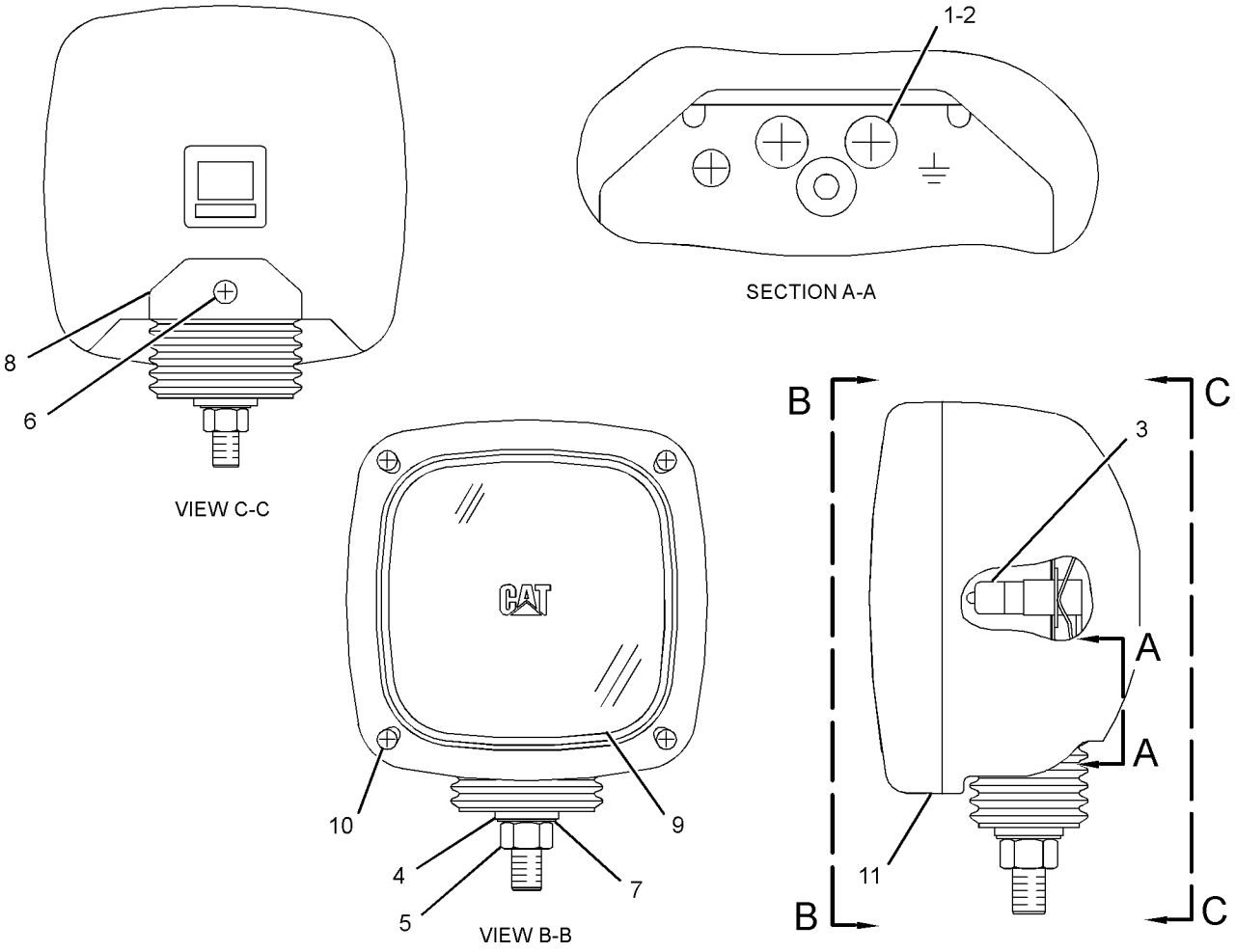

GRAPHIC #1 **<END>** g01528558

325-4471 LAMP GP-FLOOD

S/N: XAH1-UP
24-VOLT, 35-WATT
PART OF 454-8704 LIGHTING GP-FLOOD
AN ATTACHMENT

SMCS-1434 **i05324822**

NOTE	REF NO	GRAPHIC REF	PART NUMBER	QTY	PART NAME 1 2 3 4 5 6 (PRODUCT LEVEL)	SEE PAGE
	1	1	**175-4291**	1	BRACKET AS	
	2	1	**9X-4244**	2	SCREW-SPECIAL (M4X1.79X25-MM)	
	3	1	**351-9918**	1	LAMP-HALOGEN (24-VOLT, 70-WATT) (FLOODLIGHT)	
	4	1	**8T-4224**	1	WASHER-HARD (8.8X16X2-MM THK)	
M	5	1	**8T-7547**	1	BOLT (M8X1.25X30-MM)	
M	6	1	**5C-7261**	1	NUT (M8X1.25-THD)	

M - METRIC PART

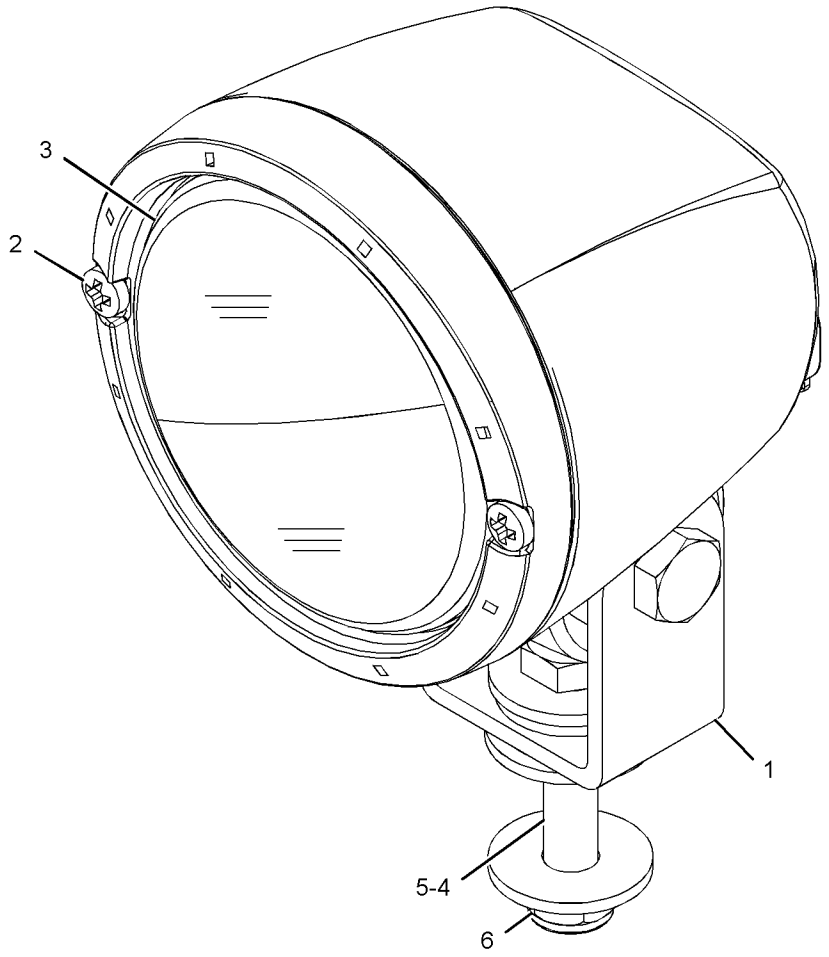

GRAPHIC #1 **<END>** g02097194

4I-5409 LIGHTING GP-FLOOD–CHASSIS

S/N: XAH1-UP

PART OF 454-5583 CHASSIS AR

SMCS-1434 **i05440551**

NOTE	REF NO	GRAPHIC REF	PART NUMBER	QTY	PART NAME 1 2 3 4 5 6 (PRODUCT LEVEL)	SEE PAGE
Y	1	1	**153-2523**	1	LAMP GP-FLOOD (24-VOLT)	106

Y - SEPARATE ILLUSTRATION

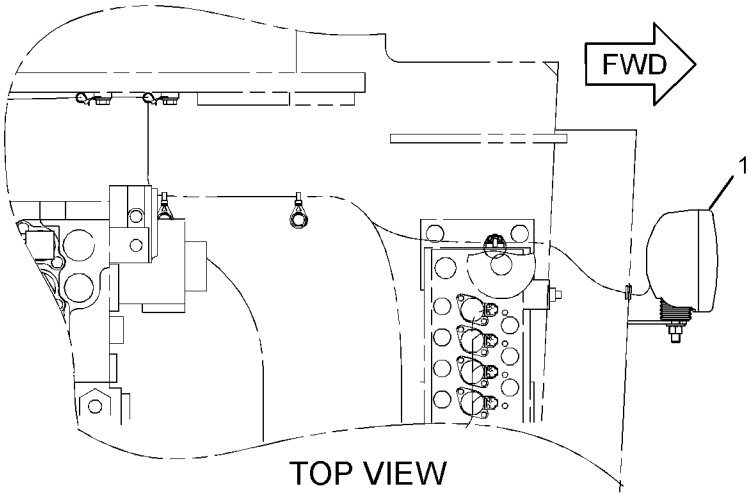

TOP VIEW

(FOR COMPACT RADIUS MACHINES)

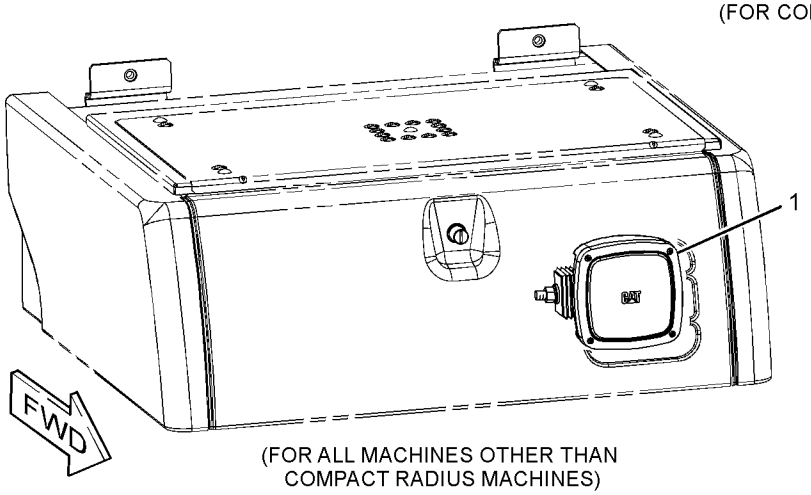

(FOR ALL MACHINES OTHER THAN COMPACT RADIUS MACHINES)

GRAPHIC #1 **<END>** g01620476

259-5163 LIGHTING GP-FLOOD–BOOM, LH

S/N: XAH1-UP
PART OF 283-9001 BOOM AR-1 PIECE LONG
AN ATTACHMENT

SMCS-1434 **i05787035**

NOTE	REF NO	GRAPHIC REF	PART NUMBER	QTY	PART NAME 1 2 3 4 5 6 (PRODUCT LEVEL)	SEE PAGE
	1	1	**7I-2673**	3	STRAP-CABLE	
	2	1	**111-4836**	4	CLIP	
	3	1	**116-0118**	1	CLIP	
	4	1	**134-3284**	1	BRACKET	
Y	5	1	**153-2521**	1	LAMP GP-FLOOD (24-VOLT)	105
	6	1	**291-7746**	1	HARNESS AS-LIGHTING (BOOM, LH)	
	7	1	**111-4837**	1	CLIP	
	8	1	**7N-3718**	2	CLIP	
	9	1	**8T-4121**	5	WASHER-HARD (11X21X2.5-MM THK)	
M	10	1	**8T-4133**	5	NUT (M10X1.5-THD)	
M	11	1	**7X-2552**	1	BOLT (M16X2X30-MM)	
	12	1	**9X-8257**	1	WASHER (17.5X30X3.5-MM THK)	

M - METRIC PART
Y - SEPARATE ILLUSTRATION

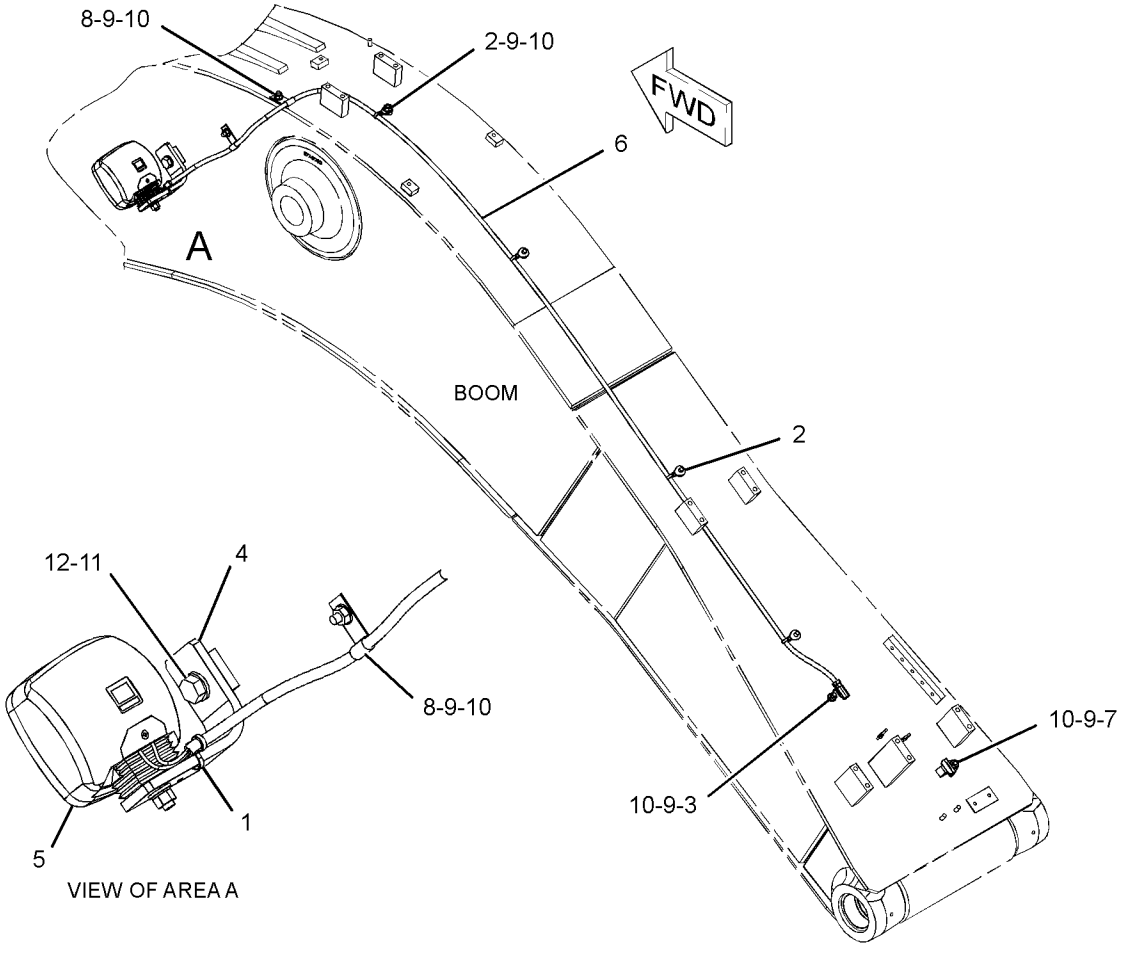

GRAPHIC #1 **<END>** g01378409

291-7730 LIGHTING GP-FLOOD–BOOM, RH

S/N: XAH1-UP

AN ATTACHMENT

SMCS-1434 **i05949301**

NOTE	REF NO	GRAPHIC REF	PART NUMBER	QTY	PART NAME 1 2 3 4 5 6 (PRODUCT LEVEL)	SEE PAGE
	1	1	**7I-2673**	2	STRAP-CABLE	
	2	1	**111-4836**	2	CLIP	
	3	1	**134-3284**	1	BRACKET	
Y	4	1	**153-2521**	1	LAMP GP-FLOOD (24-VOLT)	105
	5	1	**291-7731**	1	HARNESS AS-LIGHTING (BOOM, RH)	
	6	1	**5P-9297**	2	CLIP	
	7	1	**8T-4121**	2	WASHER-HARD (11X21X2.5-MM THK)	
M	8	1	**8T-4133**	2	NUT (M10X1.5-THD)	
M	9	1	**453-2834**	1	BOLT (M16X2X30-MM)	
	10	1	**451-2175**	1	WASHER-HARD (17.5X30X3.5-MM THK)	

M - METRIC PART
Y - SEPARATE ILLUSTRATION

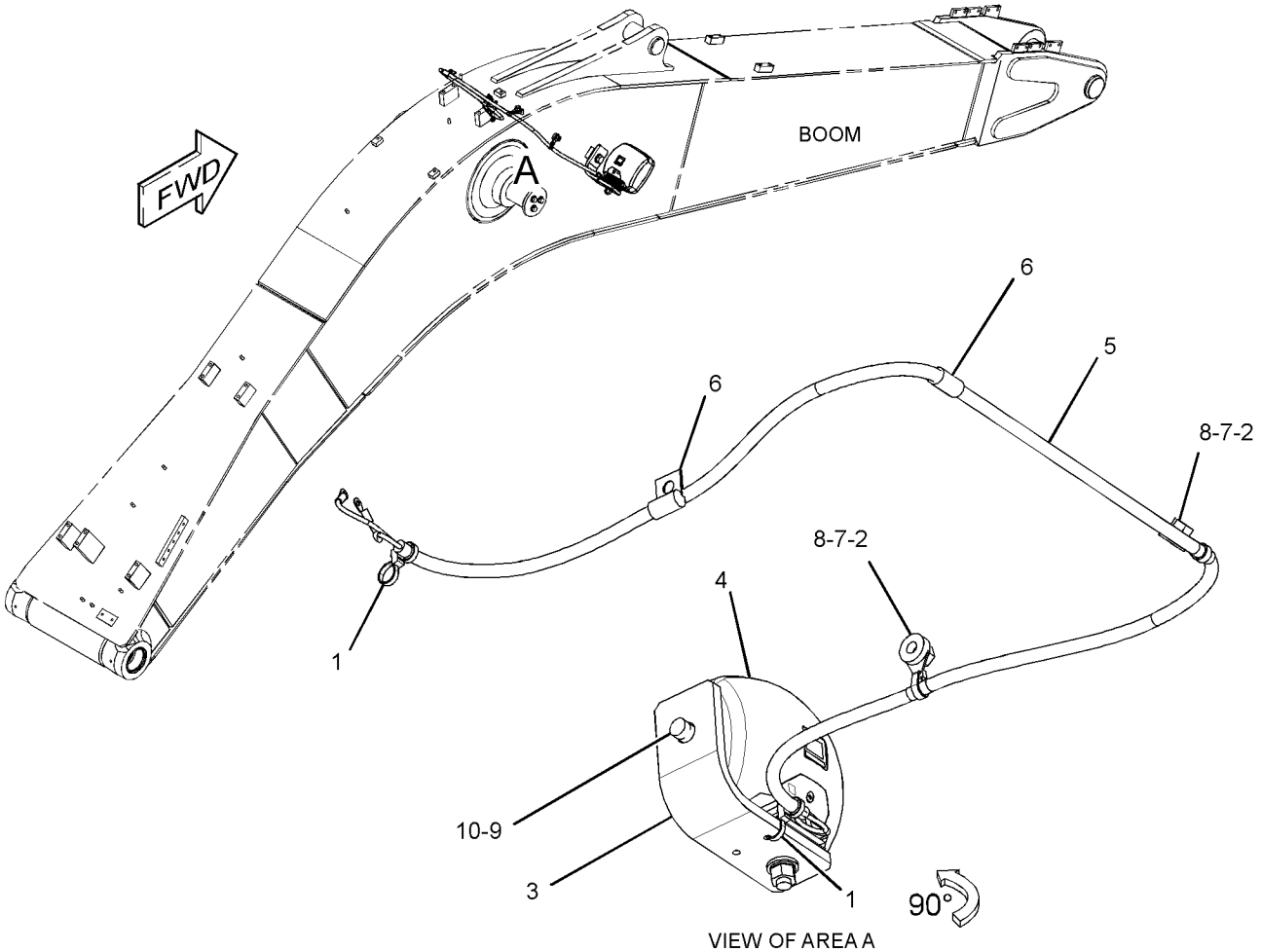

VIEW OF AREA A

GRAPHIC #1 **<END>** g01379758

454-8704 LIGHTING GP-FLOOD

S/N: XAH1-UP
PART OF 456-6742 CAB GP
AN ATTACHMENT

SMCS-1434 **i05959072**

NOTE	REF NO	GRAPHIC REF	PART NUMBER	QTY	PART NAME 1 2 3 4 5 6 (PRODUCT LEVEL)	SEE PAGE
	1	1	**3S-2093**	1	STRAP-CABLE	
	2	1	**163-6704**	1	TIMER AS (TIME DELAY LIGHTING)	
		1	**8T-8729**	5	PIN-CONNECTOR (16-GA TO 18-GA)	
		1	**102-8802**	1	KIT-RECEPTACLE (2-PIN)	
		1	**102-8803**	1	KIT-RECEPTACLE (3-PIN)	
					(EACH RECEPTACLE KIT INCLUDES RECEPTACLE AS & WEDGE)	
	3	1	**238-2326**	1	PLATE AS	
Y	4	1	**325-4471**	1	LAMP GP-FLOOD (24-VOLT, 35-WATT) (CAB FRONT, LH)	107
Y	4A	1	**325-4471**	1	LAMP GP-FLOOD (24-VOLT, 35-WATT) (CAB FRONT, RH)	107
	5	1	**441-6376**	2	HARNESS AS-LIGHTING (CAB LIGHT)	
					(EACH INCLUDES)	
		1	**7Y-3962**	1	TERMINAL-BULLET (MALE)	
		1	**7Y-3964**	1	TUBE (CONNECTOR TERMINAL)	
		1	**7Y-3963**	1	TERMINAL-BULLET (FEMALE)	
		1	**7Y-3965**	1	TUBE (RECEPTACLE TERMINAL)	
		1	**9X-3402**	2	SOCKET-CONNECTOR (16-GA TO 18-GA)	
					—OR—	
		1	**126-1768**	2	SOCKET-CONNECTOR (14-GA TO 16-GA)	
		1	**155-2270**	1	KIT-CONNECTING PLUG (2-PIN)	
					(INCLUDES PLUG AS,WEDGE & INTERFACE SEAL)	
	6	1	**441-6377**	1	BRACKET-LIGHT (CAB FRONT, RH)	
	7	1	**441-6379**	1	BRACKET-LIGHT (CAB FRONT, LH)	
	8	1	**163-6795**	2	STRAP-CABLE	
M	9	1	**8T-4200**	2	BOLT (M8X1.25X16-MM)	
	10	1	**8T-4224**	2	WASHER-HARD (8.8X16X2-MM THK)	
M	11	1	**9X-2042**	2	SCREW-TRUSS HEAD (M6X1X12-MM)	
M	12	1	**9X-2043**	2	SCREW-TRUSS HEAD (M6X1X14-MM)	

M - METRIC PART
Y - SEPARATE ILLUSTRATION

454-8704 **LIGHTING GP-FLOOD (*contd.*)** **i05959072**

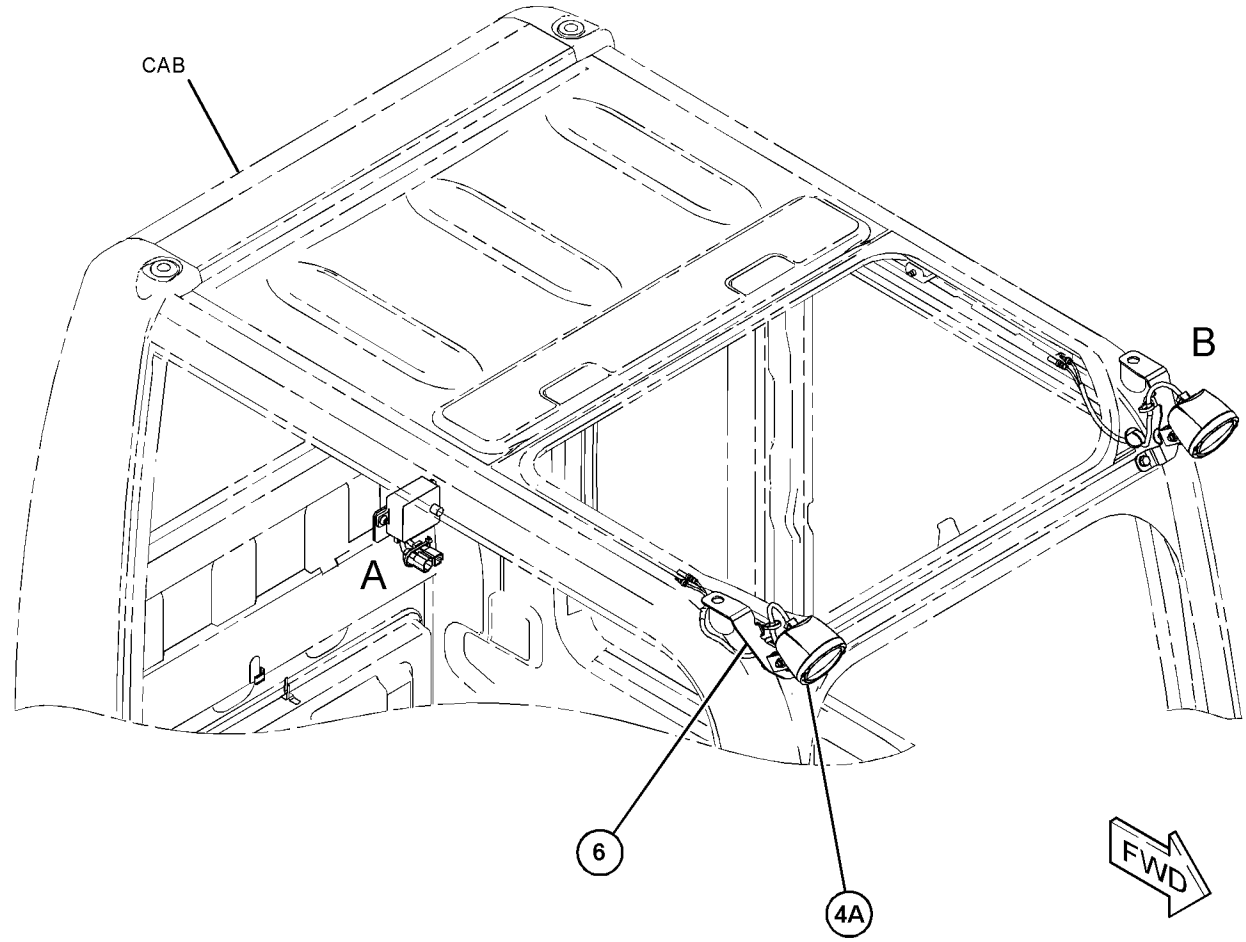

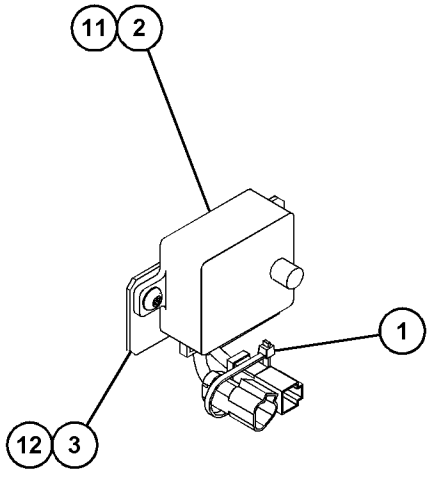

VIEW OF AREA A

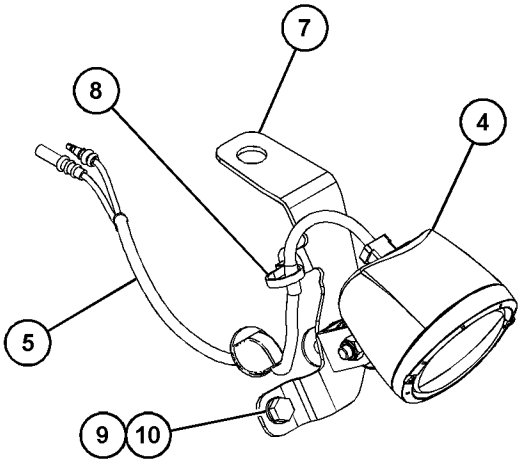

VIEW OF AREA B

GRAPHIC #1 **<END>** g03704991

388-6701 PANEL & MTG GP-CIRCUIT BREAKER

S/N: XAH1-UP

PART OF 451-3987 OPERATOR AR

SMCS-1417, 1420 **i05409491**

NOTE	REF NO	GRAPHIC REF	PART NUMBER	QTY	PART NAME 1 2 3 4 5 6 (PRODUCT LEVEL)	SEE PAGE
Y	1	1	*388-6702*	1	PANEL GP-CIRCUIT BREAKER	114
	2	1	**8T-4121**	4	WASHER-HARD (11X21X2.5-MM THK)	
M	3	1	**8T-4137**	4	BOLT (M10X1.5X20-MM)	

M - METRIC PART
Y - SEPARATE ILLUSTRATION

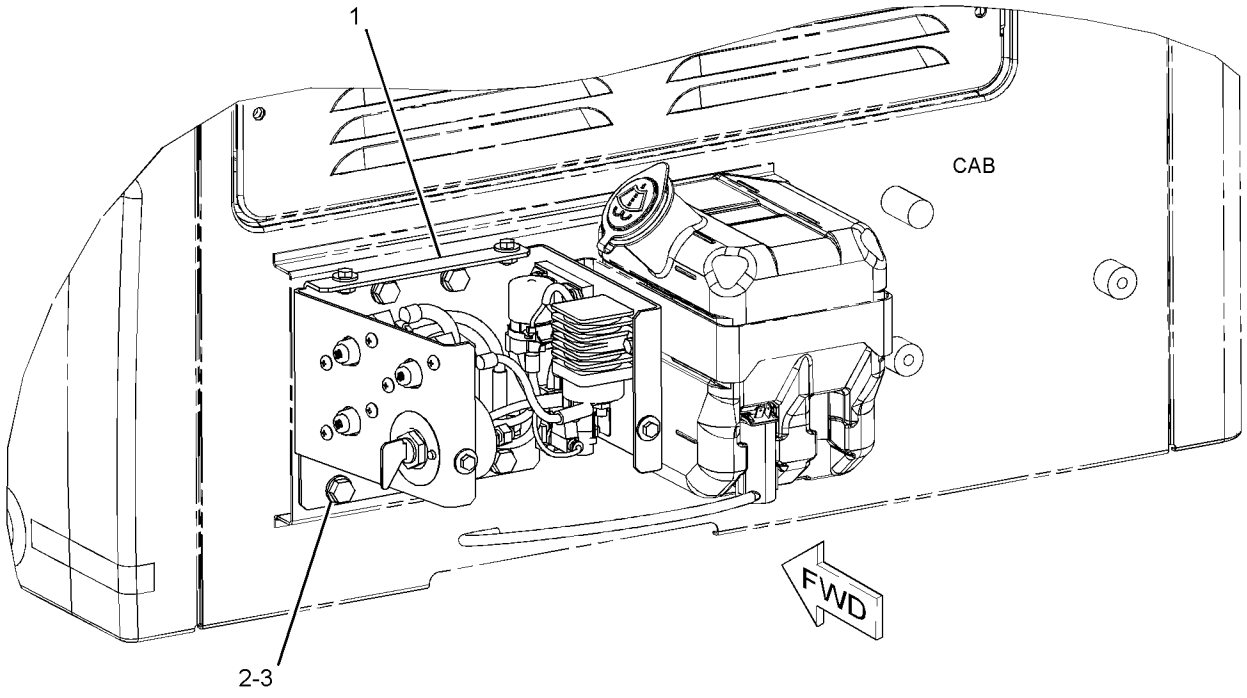

GRAPHIC #1 **<END>** g03124197

388-6702 PANEL GP-CIRCUIT BREAKER

S/N: XAH1-UP

PART OF 388-6701 PANEL & MTG GP-CIRCUIT BREAKER

SMCS-1417 **i05409510**

NOTE	REF NO	GRAPHIC REF	PART NUMBER	QTY	PART NAME 1 2 3 4 5 6 (PRODUCT LEVEL)	SEE PAGE
	1	1	**3E-8320**	1	PLATE-INSTRUCTION (BATTERY)	
	2	1	**3S-2093**	1	STRAP-CABLE	
Y	3	1	**7N-0718**	1	SWITCH GP-DISCONNECT (BATTERY)	125
	4	1	**7Y-5499**	1	BLOCK AS-TERMINAL	
	5	1	**9G-8451**	1	BLOCK AS	
		1	**1H-3244**	1	LOCKWASHER	
		1	**4B-4276**	2	WASHER (7X16X1.6-MM THK)	
		1	**4L-7124**	1	BOLT (1/4-20X1.25-IN)	
		1	**6V-8185**	2	NUT (1/4-20-THD)	
Y	6	1	**125-1302**	1	SWITCH GP-MAGNETIC (24-VOLT) (START RELAY)	127
	7	1	**141-2759**	1	FUSE (5-AMPERE)	
	8	1	**171-2205**	1	CIRCUIT BREAKER AS (40-AMPERE) (GLOW PLUG)	
		1	**4E-5724**	2	WASHER (7X12X1-MM THK)	
		1	**8T-0122**	2	NUT-FULL (1/4-28-THD)	
		1	**253-2111**	2	LOCKWASHER	
	9	1	**171-2208**	1	CIRCUIT BREAKER AS (60-AMPERE) (ALTERNATOR)	
		1	**4E-5724**	2	WASHER (7X12X1-MM THK)	
		1	**8T-0122**	2	NUT-FULL (1/4-28-THD)	
		1	**253-2111**	2	LOCKWASHER	
	10	1	**171-2210**	1	CIRCUIT BREAKER AS (80-AMPERE) (MAIN)	
		1	**4E-5724**	2	WASHER (7X12X1-MM THK)	
		1	**8T-0122**	2	NUT-FULL (1/4-28-THD)	
		1	**253-2111**	2	LOCKWASHER	
	11	1	**238-1506**	1	COVER	
	12	1	**238-2279**	1	BAR-BUS	
	13	1	**238-2280**	1	WIRE AS	
	14	1	**241-8368**	1	SWITCH GP-MAGNETIC (24-VOLT) (GLOW PLUG RELAY)	
		1	**4F-2294**	2	NUT-JAM (5/16-24-THD)	
		1	**8T-8730**	2	SOCKET-CONNECTOR (16-GA TO 18-GA)	
		1	**155-2270**	1	KIT-CONNECTING PLUG (2-PIN)	
					(INCLUDES PLUG AS, WEDGE & INTERFACE SEAL)	
	15	1	**251-0303**	1	CABLE AS	
D		1	**6V-2369**		CABLE (4-GA, BLACK) (0.2-M)	
		1	**9G-4343**	2	TERMINAL-RING (4-GA, 1/4-IN SCREW)	
	16	1	**251-0304**	1	CABLE AS	
D		1	**6V-2369**		CABLE (4-GA, BLACK) (0.2-M)	
		1	**9G-4343**	2	TERMINAL-RING (4-GA, 1/4-IN SCREW)	
	17	1	**266-7379**	1	STRAP-CABLE	
	18	1	**324-5804**	1	WIRE AS	
	19	1	**324-5805**	1	WIRE AS	
	20	1	**324-5808**	1	HOLDER AS-FUSE	
		1	**8T-8737**	1	PLUG-SEAL	
		1	**9W-0852**	1	PIN-CONNECTOR (14-GA TO 16-GA)	
		1	**2L-8078**	1	TERMINAL-RING (14-GA TO 16-GA, 5/16-IN SCREW)	
		1	**243-4505**	1	RECEPTACLE AS-CONNECTOR (2-PIN)	
	21	1	**388-6773**	1	BRACKET AS-PANEL	
M		1	**6V-9632**	10	NUT-WELD (M6X1-THD)	
	22	1	**388-6775**	1	WIRE AS	
	23	1	**388-6776**	1	WIRE AS	
M	24	1	**5C-9553**	2	BOLT (M6X1X16-MM)	
	25	1	**5P-4115**	4	WASHER-HARD (7.2X19X2-MM THK)	
	26	1	**6V-5645**	6	SCREW-MACHINE (10-32X0.87-IN)	
	27	1	**8T-0328**	6	WASHER-HARD (5.5X10X1-MM THK)	
M	28	1	**8T-4171**	4	BOLT (M6X1X12-MM)	
M	29	1	**8T-4970**	10	BOLT (M6X1X14-MM)	
	30	1	**9X-8256**	12	WASHER (6.6X12X2-MM THK)	

388-6702 **PANEL GP-CIRCUIT BREAKER (*contd.*)** **i05409510**

NOTE	REF NO	GRAPHIC REF	PART NUMBER	QTY	PART NAME 1 2 3 4 5 6 (PRODUCT LEVEL)	SEE PAGE

D - ORDER BY THE METER
M - METRIC PART
Y - SEPARATE ILLUSTRATION

388-6702 **PANEL GP-CIRCUIT BREAKER (*contd.*)** **i05409510**

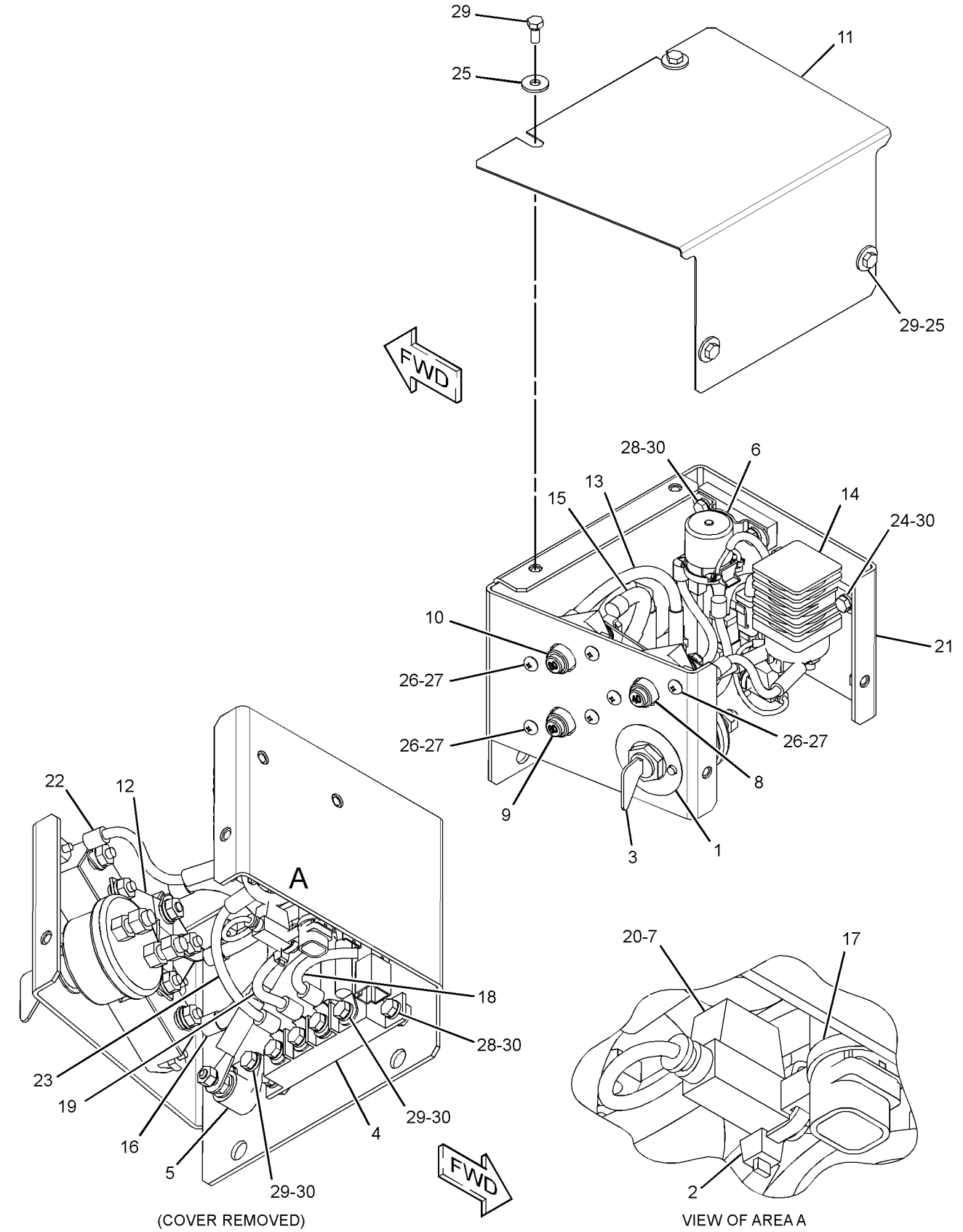

(COVER REMOVED)

VIEW OF AREA A

GRAPHIC #1

<END>

g03125002

398-7007 PANEL GP-SWITCH—CONSOLE

S/N: XAH1-UP
PART OF 456-6742 CAB GP
AN ATTACHMENT

SMCS-1408, 1429, 7332, 7451 **i05432319**

NOTE	REF NO	GRAPHIC REF	PART NUMBER	QTY	PART NAME 1 2 3 4 5 6 (PRODUCT LEVEL)	SEE PAGE
	1	1	**3S-2093**	4	STRAP-CABLE	
	2	1	**170-9324**	1	LAMP AS (24-VOLT, 3-WATT)	
	3	1	**234-1158**	1	COVER	
Y	4	1	**255-2751**	1	SWITCH GP-START (ENGINE, KEY)	128
	5	1	**267-7976**	1	PANEL	
	6	1	**398-7013**	1	HARNESS AS-PANEL	
		1	**102-8802**	1	KIT-RECEPTACLE (2-PIN)	
					(INCLUDES RECEPTACLE AS AND WEDGE)	
		1	**3S-2093**	3	STRAP-CABLE	
		1	**7Y-3951**	2	TERMINAL-BLADE (14-GA)	
		1	**7Y-3952**	1	PLUG-CONNECTOR (2-PIN)	
		1	*7Y-3966*	1	TERMINAL AS	
		1	**7Y-3962**	1	TERMINAL-BULLET (MALE)	
		1	**7Y-3964**	1	TUBE (CONNECTOR TERMINAL)	
		1	*7Y-3967*	1	TERMINAL AS	
		1	**7Y-3963**	1	TERMINAL-BULLET (FEMALE)	
		1	**7Y-3965**	1	TUBE (RECEPTACLE TERMINAL)	
		1	**8T-8737**	2	PLUG-SEAL	
		1	**121-1168**	1	CONNECTOR-RECEPTACLE	
		1	**121-1173**	14	TERMINAL (MALE)	
		1	**9X-3402**	2	SOCKET-CONNECTOR (16-GA TO 18-GA)	
		1	**2L-8075**	4	TERMINAL-RING (14-GA TO 16-GA, NO. 8 SCREW)	
		1	**153-2540**	10	TERMINAL (FEMALE)	
		1	**153-2541**	1	PLUG-CONNECTOR (10-PIN)	
		1	**155-2270**	1	KIT-CONNECTING PLUG (2-PIN)	
					(INCLUDES PLUG AS, WEDGE & INTERFACE SEAL)	
		1	**238-2366**	2	TERMINAL (MALE)	
	7	1	**398-8931**	1	COVER	
	8	1	**096-6166**	4	WASHER-HARD (4.5X9X1-MM THK)	
	9	1	**119-5026**	4	SCREW-PAN HEAD (10-16X0.63-IN)	
M	10	1	**6V-9491**	4	SCREW-MACHINE (M4X0.7X20-MM)	

M - METRIC PART
Y - SEPARATE ILLUSTRATION

398-7007 **PANEL GP-SWITCH (*contd.*)** **i05432319**

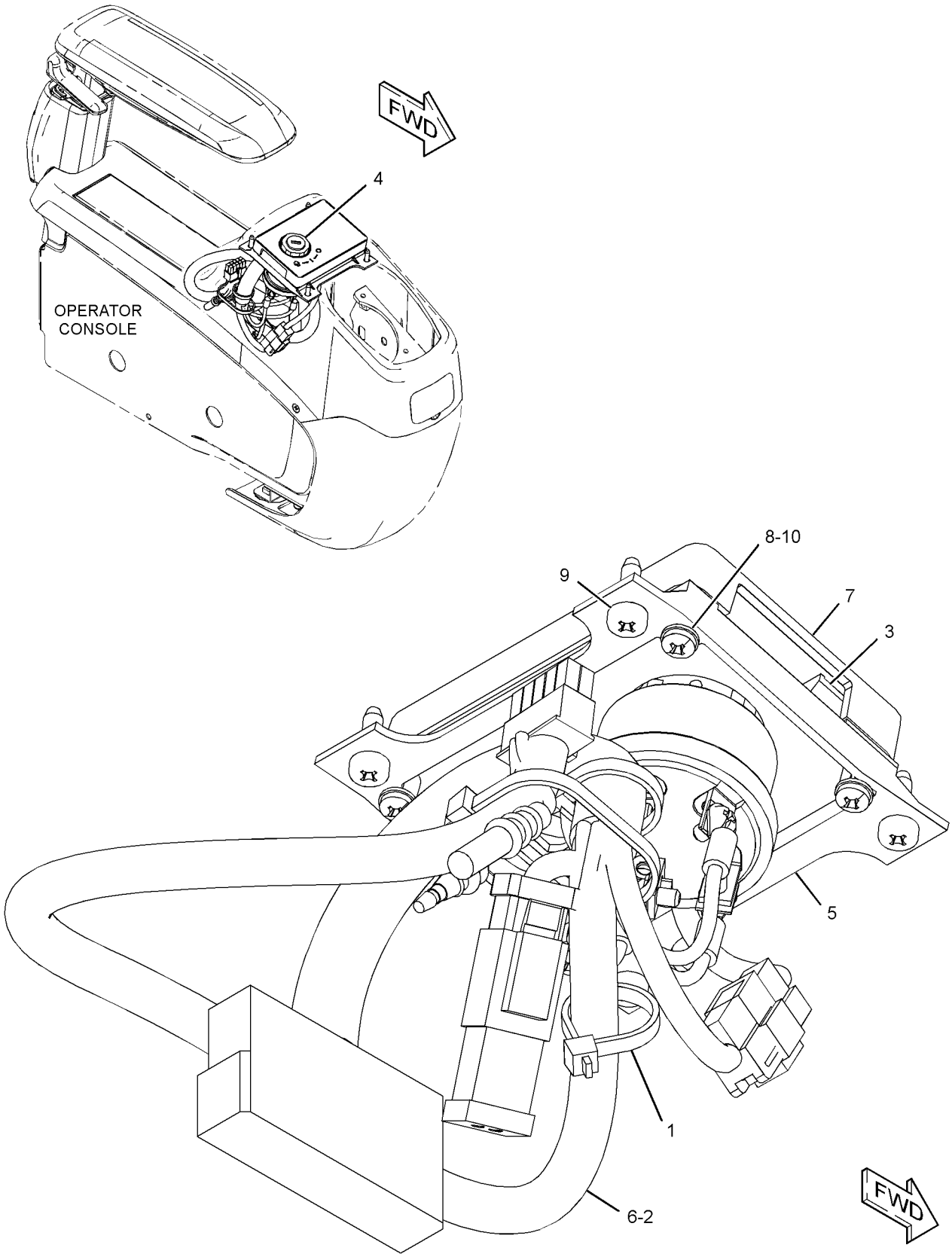

GRAPHIC #1 **<END>** g03445597

263-9088 RADIO GP-COMMUNICATION–PRODUCT LINK 121SR

S/N: XAH1-UP

PART OF 319-4258 CONTROL & MTG GP-COMMUNICATION

AN ATTACHMENT

SMCS-733T **i03954672**

NOTE	PART NUMBER	QTY	PART NAME 1 2 3 4 5 6 (PRODUCT LEVEL)	SEE PAGE
	336-3566	1	SOFTWARE GP-COMMUNICATION (PRODUCT LINK 121SR)	

<END>

423-6434 SENSOR GP-LIQUID LEVEL

S/N: XAH1-UP
WATER IN FUEL
PART OF 387-2625 LINES GP-FUEL

SMCS-7422 **i05649052**

NOTE	REF NO	GRAPHIC REF	PART NUMBER	QTY	PART NAME 1 2 3 4 5 6 (PRODUCT LEVEL)	SEE PAGE
	1	1	**214-7568**	1	SEAL-O-RING	
	2	1	**281-8805**	1	RECEPTACLE AS-CONNECTOR	
	3	1	**9X-3401**	3	PIN-CONNECTOR (16-GA TO 18-GA)	

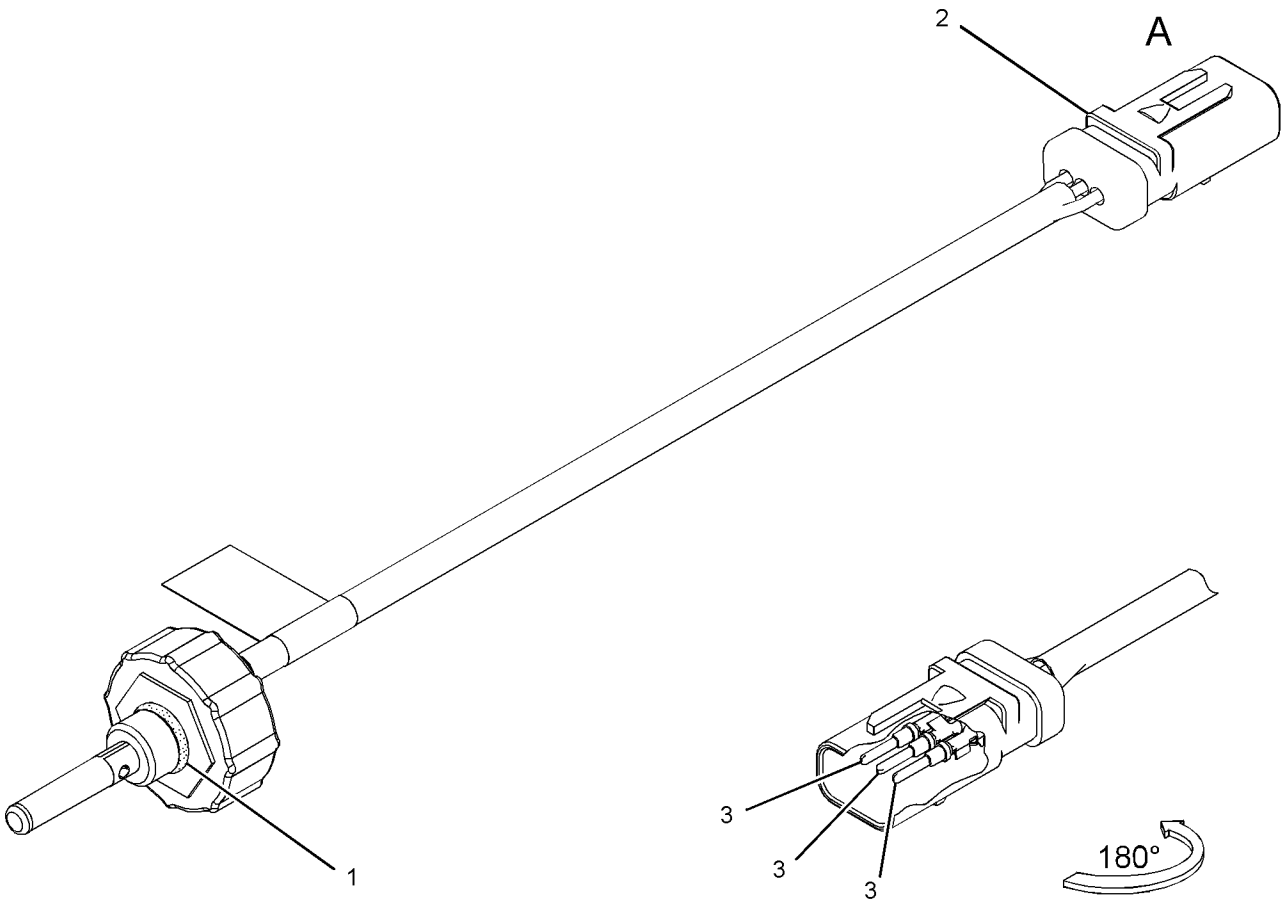

VIEW OF AREA A

GRAPHIC #1 **<END>** g02423836

325-8634 SENSOR GP-PRESSURE

S/N: XAH1-UP

PART OF 392-3904 SENSOR GP-TEMP & PRESS

SMCS-1439, 1916, 1917, 1923, 1924 **i04407512**

NOTE	REF NO	GRAPHIC REF	PART NUMBER	QTY	PART NAME 1 2 3 4 5 6 (PRODUCT LEVEL)	SEE PAGE
	1	1	**320-3060**	1	SENSOR GP-PRESSURE (FUEL)	
	2	1	**228-7100**	1	SEAL-O-RING	

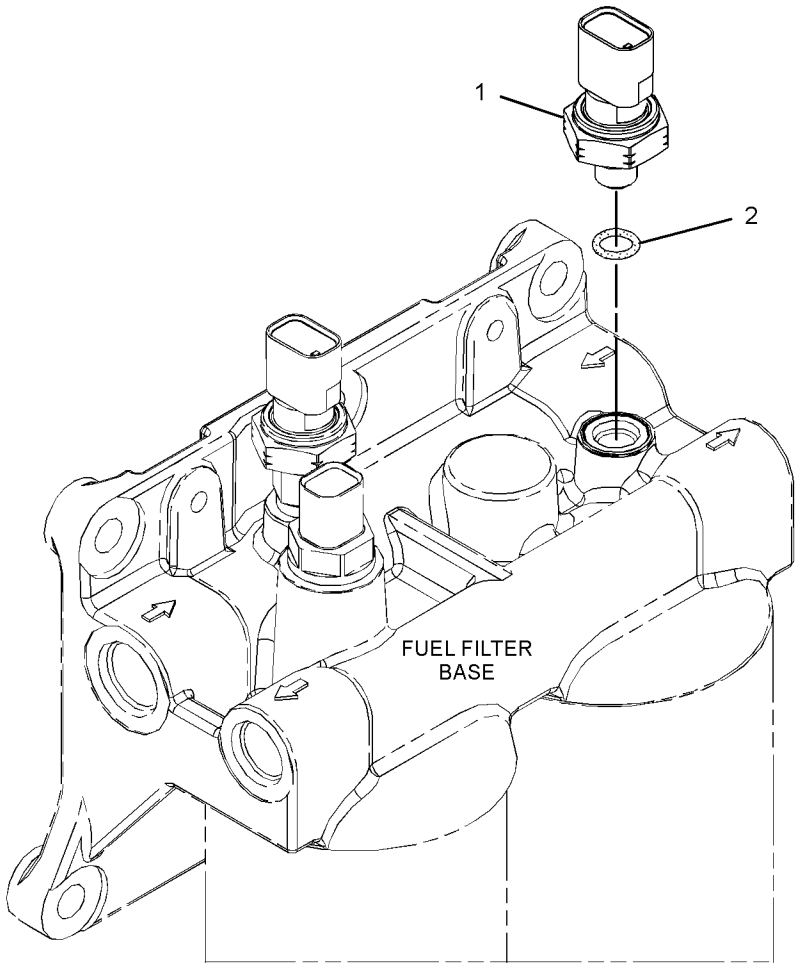

GRAPHIC #1 **<END>** g02080674

318-1181 SENSOR GP-SPEED

S/N: XAH1-UP

PART OF 440-6914 BATTERY & WIRING GP

SMCS-1907, 1912, 4803, 7493 **i05338159**

NOTE	REF NO	GRAPHIC REF	PART NUMBER	QTY	PART NAME 1 2 3 4 5 6 (PRODUCT LEVEL)	SEE PAGE
	1	1	**171-5349**	1	STRAP-MARKER	
	2	1	**102-8802**	1	KIT-RECEPTACLE (2-PIN)	
					(INCLUDES RECEPTACLE AS & WEDGE)	
	3	1	**9X-3401**	2	PIN-CONNECTOR (16-GA TO 18-GA)	
					–OR–	
		1	**126-1767**	2	PIN-CONNECTOR (14-GA TO 16-GA)	
E	4	1	**9X-1386**		SLEEVE (14-CM)	

E - ORDER BY THE CENTIMETER

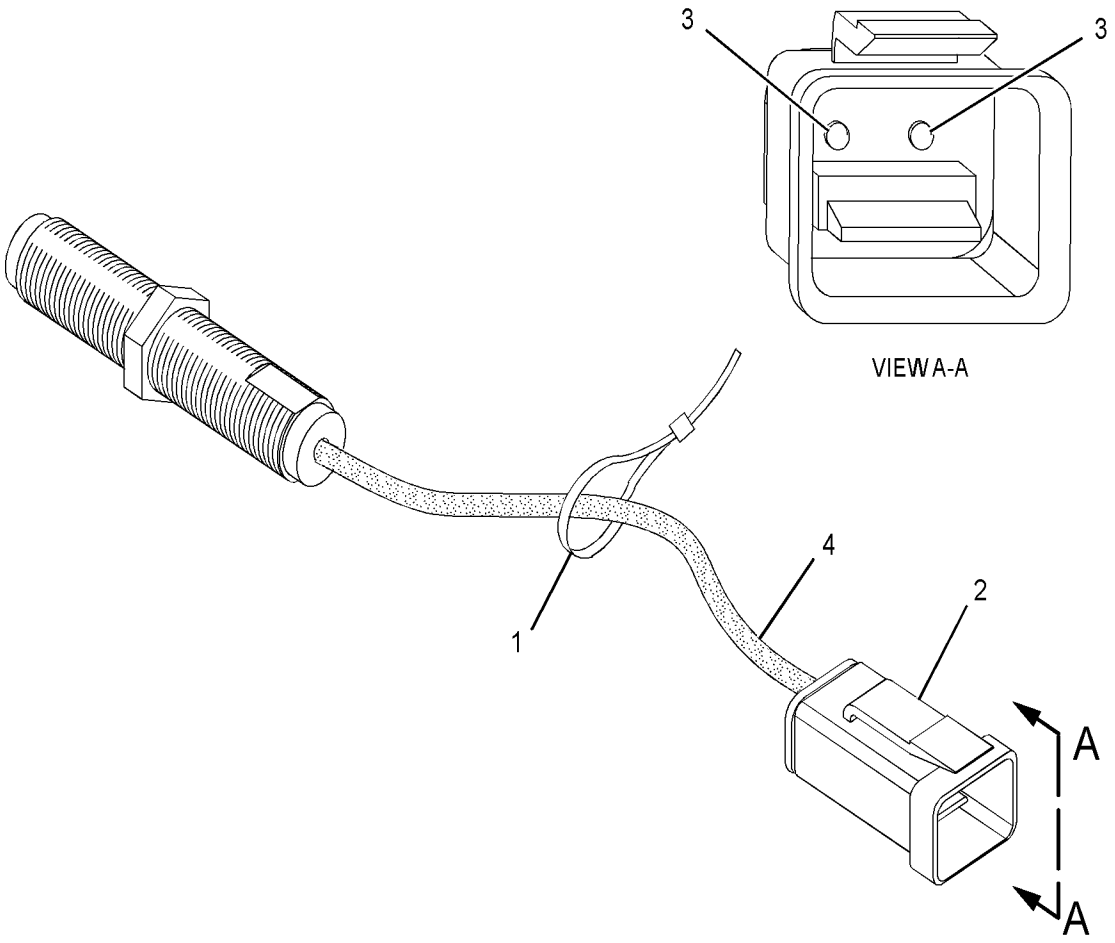

GRAPHIC #1 **<END>** g03381476

392-3904 SENSOR GP-TEMP & PRESS

S/N: XAH1-UP

PART OF 387-2619 INSTALLATION AR-ENGINE

SMCS-1408, 1435, 1439, 1906, 1924, 7400 **i05401663**

NOTE	REF NO	GRAPHIC REF	PART NUMBER	QTY	PART NAME 1 2 3 4 5 6 (PRODUCT LEVEL)	SEE PAGE
Y	1	1	*325-8634*	1	SENSOR GP-PRESSURE (FUEL)	121
	2	1	**394-4837**	1	SENDER GP-TEMPERATURE (COOLANT)	
		1	**1H-4393**	2	LOCKWASHER	
M		1	**095-7930**	2	SCREW-MACHINE (M4X0.7X6-MM)	
	3	1	**199-9751**	1	SEAL-O-RING	

M - METRIC PART
Y - SEPARATE ILLUSTRATION

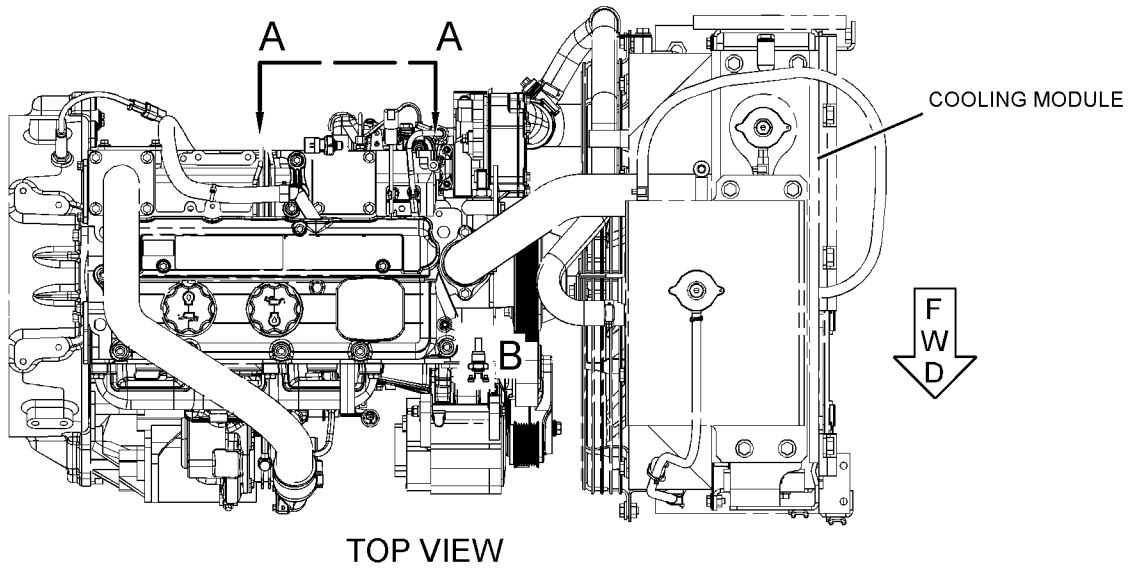

TOP VIEW

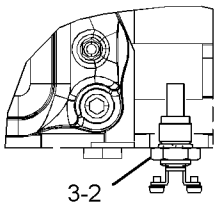

VIEW OF AREA B

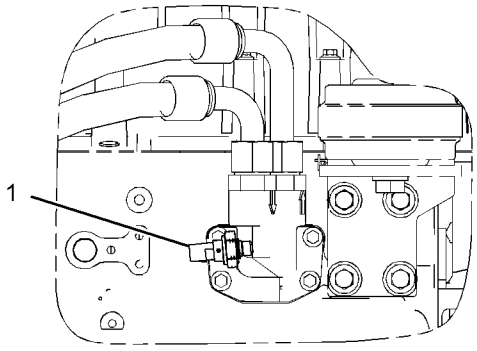

VIEW A-A

GRAPHIC #1 **<END>** g03119637

460-0440 STARTING MOTOR GP-ELECTRIC

S/N: G4D1-UP

PART OF 456-1375, 470-9228 ENGINE AR-PRIMARY

SMCS-1453 **i05955463**

NOTE	REF NO	GRAPHIC REF	PART NUMBER	QTY	PART NAME 1 2 3 4 5 6 (PRODUCT LEVEL)	SEE PAGE
M	1	1	**6I-0364**	3	STUD (M10X1.5X45-MM)	
M	2	1	**6I-0594**	3	NUT (M10X1.5-THD)	
	3	1	**357-5205**	1	MOTOR-STARTING	

M - METRIC PART

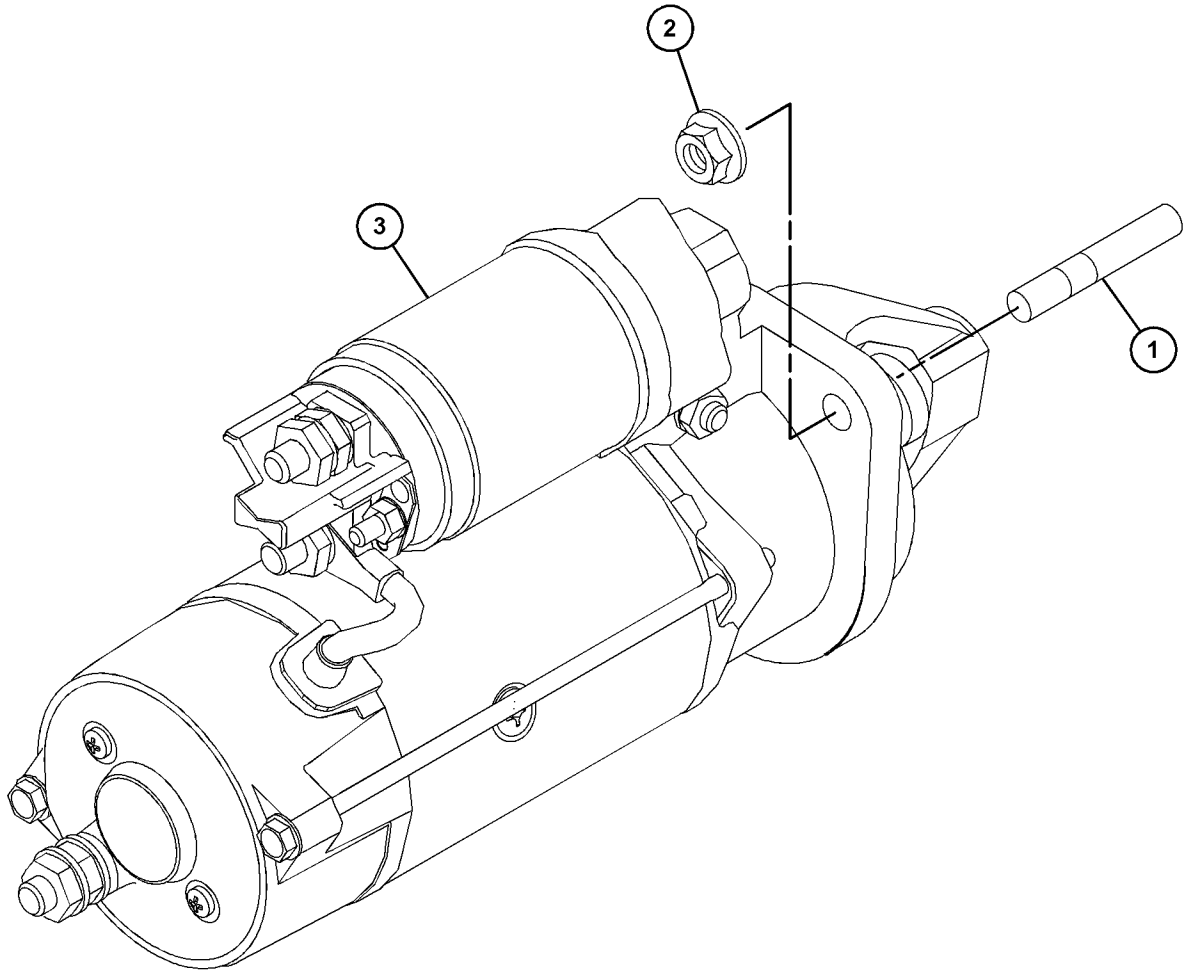

GRAPHIC #1 **<END>** g03702211

7N-0718 SWITCH GP-DISCONNECT–BATTERY

S/N: XAH1-UP

12-VOLT

PART OF 388-6702 PANEL GP-CIRCUIT BREAKER

SMCS-1411 **i02587657**

NOTE	REF NO	GRAPHIC REF	PART NUMBER	QTY	PART NAME 1 2 3 4 5 6 (PRODUCT LEVEL)	SEE PAGE
	1	1	**8H-5306**	1	KEY (BATTERY DISCONNECT)	
	2	1	**8H-5303**	1	NUT (3/4-16-THD)	
	3	1	**2H-3922**	2	LOCKWASHER	
	4	1	**9F-5644**	2	LOCKWASHER	
	5	1	**6F-7045**	2	NUT-FULL (3/8-24-THD)	

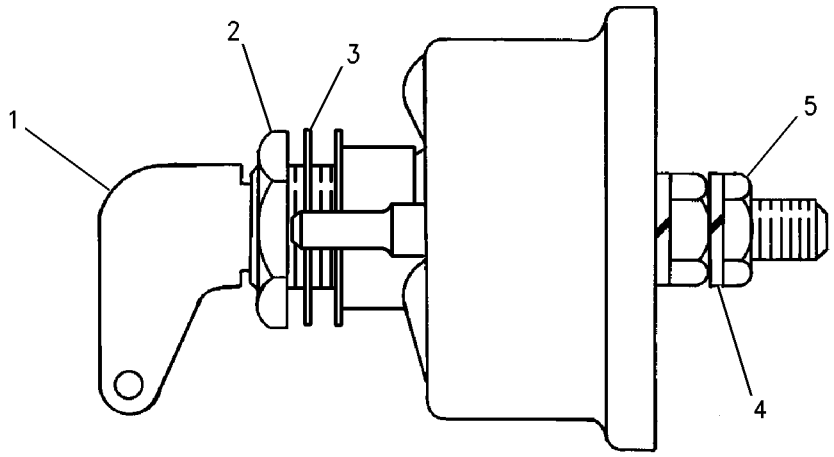

GRAPHIC #1 **<END>** g00715584

234-6613 SWITCH GP-LIMIT—HYDRAULIC LOCKOUT

S/N: XAH1-UP
PART OF 421-1434 CONSOLE GP-OPERATOR
ALSO AN ATTACHMENT

SMCS-1435 **i03903701**

NOTE	REF NO	GRAPHIC REF	PART NUMBER	QTY	PART NAME 1 2 3 4 5 6 (PRODUCT LEVEL)	SEE PAGE
	1	1	**3S-2093**	1	STRAP-CABLE	
	2	1	**4I-3038**	2	WASHER (3.3X8X0.5-MM THK)	
	3	1	**111-4799**	1	SWITCH AS-LIMIT (HYDRAULIC LOCKOUT)	
		1	**102-8803**	1	KIT-RECEPTACLE (3-PIN)	
					(INCLUDES RECEPTACLE AS & WEDGE)	
		1	**8T-8729**	3	PIN-CONNECTOR (16-GA TO 18-GA)	
D		1	**5P-5998**		TUBE (0.3-M)	
M	4	1	**185-8286**	2	SCREW-MACHINE (M4X0.7X8-MM)	
	5	1	**234-6615**	1	KNOB	
	6	1	**087-4683**	2	LOCKWASHER	
M	7	1	**120-9027**	2	SCREW-PAN HEAD (M3X0.5X16-MM)	

D - ORDER BY THE METER
M - METRIC PART

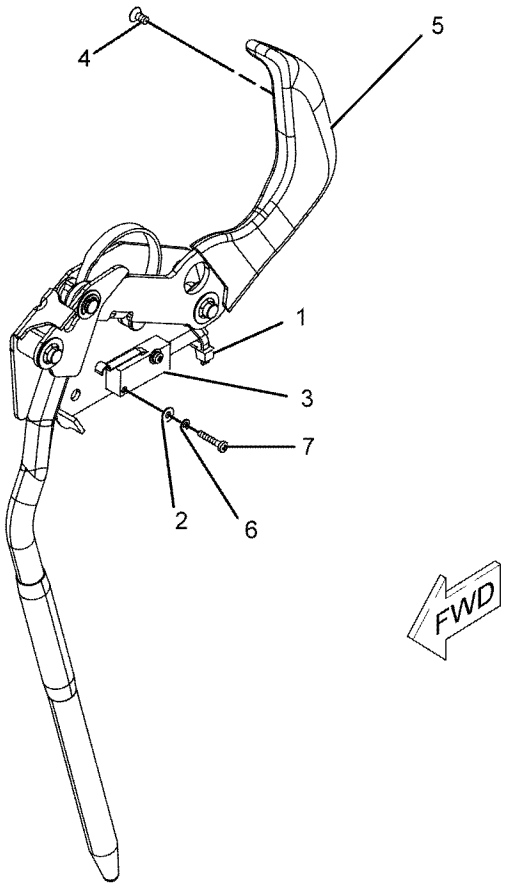

GRAPHIC #1 **<END>** g01096293

125-1302 SWITCH GP-MAGNETIC

S/N: XAH1-UP
24-VOLT
PART OF 388-6702 PANEL GP-CIRCUIT BREAKER

SMCS-7499 **i03546076**

NOTE	REF NO	GRAPHIC REF	PART NUMBER	QTY	PART NAME 1 2 3 4 5 6 (PRODUCT LEVEL)	SEE PAGE
	1	1	**102-8802**	1	KIT-RECEPTACLE (2-PIN)	
					(INCLUDES RECEPTACLE AS & WEDGE)	
	2	1	**186-3735**	2	PIN-CONNECTOR (16-GA TO 18-GA)	
	3	1	**1H-3338**	2	LOCKWASHER (EXTERNAL TOOTH)	
	4	1	**012-0380**	2	LOCKWASHER (SPLIT)	
M	5	1	**5C-2890**	2	NUT (M6X1-THD)	
BE	6	1	**9X-1813**		SLEEVE	

B - USE AS REQUIRED
E - ORDER BY THE CENTIMETER
M - METRIC PART

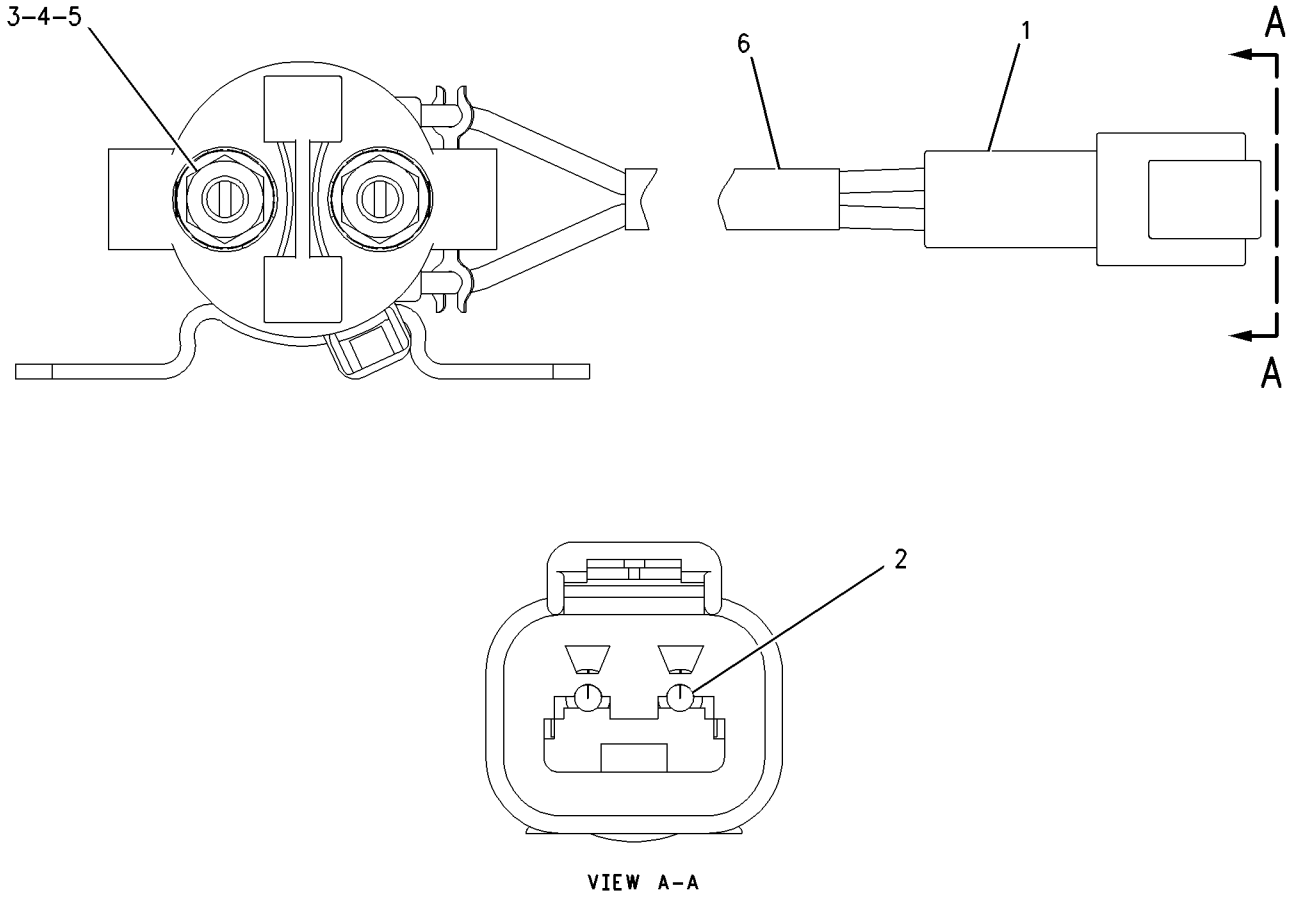

GRAPHIC #1 **<END>** g00987986

255-2751 SWITCH GP-START–ENGINE, KEY

S/N: XAH1-UP
PART OF 398-7007 PANEL GP-SWITCH
AN ATTACHMENT

SMCS-1416 **i04574543**

NOTE	REF NO	GRAPHIC REF	PART NUMBER	QTY	PART NAME 1 2 3 4 5 6 (PRODUCT LEVEL)	SEE PAGE
	1	1	**6V-8362**	4	SCREW-MACHINE (8-32X0.31-IN)	
	2	1	**9B-7233**	4	LOCKWASHER	
	3	1	**7T-6799**	1	NUT-MOUNTING (1-32-THD)	
AF			**5P-8500**	1	KEY (IGNITION)	

A - NOT PART OF THIS GROUP
F - NOT SHOWN

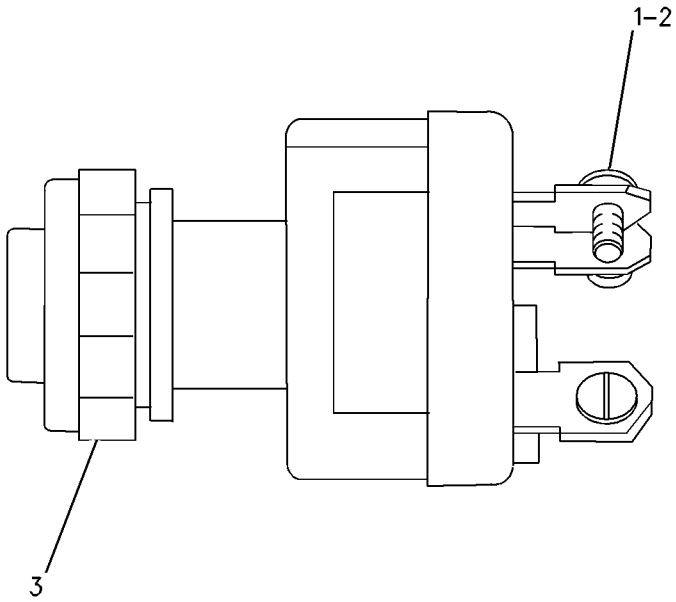

GRAPHIC #1 **<END>** g00699802

398-7003 WIRING GP-CAB

S/N: XAH1-UP
PART OF 456-6742 CAB GP, 451-3987 OPERATOR AR
ALSO AN ATTACHMENT

SMCS-1408, 7301 **i05649309**

NOTE	REF NO	GRAPHIC REF	PART NUMBER	QTY	PART NAME 1 2 3 4 5 6 (PRODUCT LEVEL)	SEE PAGE
	1	2,3	**7K-1181**	7	STRAP-CABLE	
	2	2	**7Y-5505**	2	SPEAKER AS	
		2	**7Y-3951**	2	TERMINAL-BLADE (14-GA)	
		2	**7Y-3954**	1	CONNECTOR-PLUG (3-PIN)	
J	3	2	**9W-0335**	1	LIGHTER AS-CIGAR (24-VOLT)	
M	4	2	**099-7127**	8	SCREW-MACHINE (M4X0.7X12-MM)	
	5	3	**113-8490**	20	FUSE (10-AMPERE)	
	6	3	**113-8491**	6	FUSE (15-AMPERE)	
	7	3	**113-8492**	2	FUSE (20-AMPERE)	
	8	3	**113-8493**	2	FUSE (25-AMPERE)	
	9	2	**116-0210**	4	BRACKET AS	
	10	3	**124-3548**	2	FUSE (30-AMPERE)	
Y	11	2	**132-1829**	1	ALARM GP (24-VOLT) (FAULT)	87
	12	3	**141-2759**	8	FUSE (5-AMPERE)	
	13	3	**161-3128**	1	RELAY (24-VOLT) (BOOM FLOODLIGHT)	
	13A	3	**161-3128**	1	RELAY (24-VOLT) (CHASSIS LIGHT)	
	13B	3	**161-3128**	1	RELAY (24-VOLT) (CAB LIGHT)	
	13C	3	**161-3128**	1	RELAY (24-VOLT) (HORN)	
	13D	3	**161-3128**	1	RELAY (24-VOLT) (NEUTRAL START)	
	13E	3	**161-3128**	1	RELAY (24-VOLT) (ETHER START)	
	13F	3	**161-3128**	1	RELAY (24-VOLT) (ELECTRIC PRIMING)	
	13G	3	**161-3128**	1	RELAY (24-VOLT) (PUMP)	
	14	2	**163-6795**	15	STRAP-CABLE	
	15	2	**167-3593**	1	STRAP	
	16	3	**170-6888**	1	PULLER-FUSE	
	17	3	**213-0772**	1	SWITCH AS-MAGNETIC (24-VOLT) (MAIN RELAY)	
	18	2	**234-1097**	1	BRACKET	
H	20	2	**238-2318**	1	LIGHTER AS-CIGAR (24-VOLT)	
	21	3	**238-2390**	1	CABLE AS (RED)	
	22	3	**238-2391**	1	CABLE AS (PURPLE)	
					(EACH CABLE AS INCLUDES)	
		3	**9G-4343**	2	TERMINAL-RING (4-GA, 1/4-IN SCREW)	
E		3	**125-7876**		TUBE-HEAT SHRINK (17.78-MM DIA) (4-CM)	
	23	2	**245-7760**	8	INSULATION	
	24	2	**251-0637**	1	INSULATION	
	25	1	**259-4883**	1	ANTENNA AS	
		1	**259-5081**	1	ROD	
		1	**259-5082**	1	CABLE AS	
	26	2	**327-7538**	1	PANEL AS-SWITCH	
		2	**356-7732**	1	KNOB (SWITCH PANEL)	
	27	2	**366-0367**	1	METER GP-SERVICE	
		2	**304-5303**	1	NUT-SPECIAL (SERVICE METER)	
		2	**366-4622**	1	KIT-SERVICE METER	
					(INCLUDES FILM & METER GP)	
	28	2	**450-3501**	1	HARNESS AS-CAB	
		2	**102-8803**	2	KIT-RECEPTACLE (3-PIN)	
					(INCLUDES RECEPTACLE AS & WEDGE)	
		2	**8T-8730**	5	SOCKET-CONNECTOR (16-GA TO 18-GA)	
		2	**3S-2093**	109	STRAP-CABLE	
		2	**7Y-3950**	4	TERMINAL-BLADE (14-GA TO 20-GA)	
		2	**7Y-3951**	11	TERMINAL-BLADE (14-GA)	
		2	**7Y-3952**	3	PLUG-CONNECTOR (2-PIN)	
		2	**7Y-3955**	2	CONNECTOR-RECEPTACLE	
		2	**7Y-3958**	1	CONNECTOR-PLUG (6-PIN)	
		2	*7Y-3966*	2	TERMINAL AS	
					(EACH INCLUDES)	

398-7003 **WIRING GP-CAB (*contd.*)** **i05649309**

NOTE	REF NO	GRAPHIC REF	PART NUMBER	QTY	PART NAME 1 2 3 4 5 6 (PRODUCT LEVEL)	SEE PAGE
		2	**7Y-3962**	1	TERMINAL-BULLET (MALE)	
		2	**7Y-3964**	1	TUBE (CONNECTOR TERMINAL)	
		2	*7Y-3967*	7	TERMINAL AS	
					(EACH INCLUDES)	
		2	**7Y-3963**	1	TERMINAL-BULLET (FEMALE)	
		2	**7Y-3965**	1	TUBE (RECEPTACLE TERMINAL)	
		2	**8C-6354**	1	CAP-RECEPTACLE (ET CONNECTOR)	
		2	**8T-8737**	8	PLUG-SEAL	
		2	**5P-6271**	1	CONNECTOR AS	
		2	**9W-1951**	1	RECEPTACLE-CONNECTOR (9-PIN)	
		2	**102-7964**	2	PLUG-CONNECTOR (16-PIN)	
		2	**102-7965**	82	TERMINAL (FEMALE)	
		2	**9W-0844**	2	SOCKET-CONNECTOR (14-GA TO 16-GA)	
		2	**111-4816**	1	PLUG-CONNECTOR (13-PIN)	
		2	**116-0255**	1	TERMINAL-BLADE (10-GA TO 20-GA)	
E		2	**119-3662**		TUBE-HEAT SHRINK (10.85-MM DIA) (26-CM)	
		2	**121-1022**	1	DIODE	
		2	**121-1168**	1	CONNECTOR-RECEPTACLE	
		2	**121-1173**	19	TERMINAL (MALE)	
		2	**125-4784**	1	PLUG-CONNECTOR (12-PIN)	
		2	**125-4785**	37	TERMINAL (FEMALE)	
		2	**125-4840**	1	WEDGE-PLUG LOCK (13-PIN)	
		2	**125-4841**	2	WEDGE-PLUG LOCK (21-PIN)	
E		2	**125-7874**		TUBE-HEAT SHRINK (5.72-MM DIA) (55-CM)	
E		2	**125-7875**		TUBE-HEAT SHRINK (7.44-MM DIA) (45-CM)	
		2	**9X-3402**	6	SOCKET-CONNECTOR (16-GA TO 18-GA)	
					—OR—	
		2	**126-1768**	6	SOCKET-CONNECTOR (14-GA TO 16-GA)	
		2	**2L-8065**	3	TERMINAL-RING (10-GA TO 12-GA, NO. 8 SCREW)	
		2	**2L-8066**	2	TERMINAL-RING (10-GA TO 12-GA, NO. 10 SCREW)	
		2	**2L-8067**	6	TERMINAL-RING (10-GA TO 12-GA, 1/4-IN SCREW)	
		2	**2L-8075**	3	TERMINAL-RING (14-GA TO 16-GA, NO. 8 SCREW)	
		2	**2L-8076**	2	TERMINAL-RING (14-GA TO 16-GA, NO. 10 SCREW)	
		2	**128-8950**	1	CONNECTOR-RECEPTACLE	
		2	**5P-2321**	1	TERMINAL-FORK (14-GA TO 16-GA, NO. 6 SCREW)	
		2	**176-9299**	2	KIT-RECEPTACLE (3-PIN)	
					(INCLUDES RECEPTACLE AS & WEDGES)	
		2	**134-3296**	1	HOUSING-PLUG	
		2	**134-3297**	1	SEAL	
		2	**138-5184**	1	PLUG-CONNECTOR (20-PIN)	
		2	**9X-3401**	12	PIN-CONNECTOR (16-GA TO 18-GA)	
					—OR—	
		2	**126-1767**	12	PIN-CONNECTOR (14-GA TO 16-GA)	
		2	**149-5069**	9	TERMINAL-BLADE (14-GA TO 20-GA)	
		2	**149-5070**	18	TERMINAL-BLADE (16-GA TO 20-GA)	
		2	**149-5071**	9	TERMINAL-BLADE (12-GA TO 14-GA)	
		2	**153-2602**	3	RECEPTACLE-CONNECTOR (1-PIN)	
		2	**153-2631**	3	TERMINAL (FEMALE)	
		2	**155-2270**	1	KIT-CONNECTING PLUG (2-PIN)	
					(INCLUDES PLUG AS, WEDGE & INTERFACE SEAL)	
		2	**163-6803**	8	PLUG-CONNECTOR (5-PIN)	
		2	**167-3487**	8	WEDGE-PLUG LOCK (5-PIN)	
		2	**167-3630**	1	CONNECTOR-PLUG	
		2	**167-3631**	2	TERMINAL (FEMALE)	
		2	**170-6890**	6	TERMINAL-BLADE (14-GA)	
		2	**170-6891**	25	TERMINAL-BLADE (16-GA TO 18-GA)	
		2	**174-3016**	2	PLUG AS-CONNECTOR (3-PIN)	
		2	**230-4009**	1	PLUG AS-CONNECTOR (12-PIN)	
		2	**455-0709**	1	SEAL-CONNECTOR	
		2	**230-4011**	1	PLUG AS-CONNECTOR (2-PIN)	

398-7003 **WIRING GP-CAB (*contd.*)** **i05649309**

NOTE	REF NO	GRAPHIC REF	PART NUMBER	QTY	PART NAME 1 2 3 4 5 6 (PRODUCT LEVEL)	SEE PAGE
		2	**455-0704**	1	SEAL-CONNECTOR	
		2	**238-2319**	1	BASE AS (FUSE, RELAY PANEL)	
		2	**9X-8256**	2	WASHER (6.6X12X2-MM THK)	
M		2	**095-0742**	2	SCREW-MACHINE (M6X1X16-MM)	
		2	**170-9394**	40	TERMINAL	
		2	**238-2363**	6	TERMINAL (FEMALE)	
		2	**238-2366**	13	TERMINAL (MALE)	
		2	**243-4505**	1	RECEPTACLE AS-CONNECTOR (2-PIN)	
		2	**342-2972**	1	CAP-CONNECTOR (2-PIN)	
		2	**349-5084**	3	TERMINAL-BLADE	
		2	**349-5085**	3	RECEPTACLE AS-CONNECTOR	
M	29	2	**095-0723**	3	SCREW-SPECIAL (M3X0.5X10-MM)	
	30	2	**096-5962**	3	WASHER-HARD (3.4X7X0.8-MM THK)	
	31	1,2	**096-6166**	6	WASHER-HARD (4.5X9X1-MM THK)	
	32	2,3	**132-5789**	6	CLIP	
	33	2	**3S-2093**	1	STRAP-CABLE	
	34	3	**4P-7581**	1	CLIP	
M	35	2	**5C-2890**	3	NUT (M6X1-THD)	
M	36	2	**6V-5210**	12	SCREW-MACHINE (M4X0.7X10-MM)	
M	37	1	**6V-9672**	2	SCREW-MACHINE (M4X0.7X16-MM)	
	38	2,3	**8T-0328**	3	WASHER-HARD (5.5X10X1-MM THK)	
M	39	3	**8T-4127**	2	SCREW-MACHINE (M5X0.8X20-MM)	
M	40	2	**8T-6693**	1	SCREW-MACHINE (M5X0.8X16-MM)	
M	41	2,3	**9X-2042**	8	SCREW-TRUSS HEAD (M6X1X12-MM)	
M	42	3	**9X-2044**	5	SCREW-TRUSS HEAD (M6X1X16-MM)	
	43	2	**9X-8256**	3	WASHER (6.6X12X2-MM THK)	
E	44	2	**101-2846**		GUARD (28-CM)	

E - ORDER BY THE CENTIMETER
H - FOR AKASHI PLANT
J - FOR OTHER THAN AKASHI PLANT
M - METRIC PART
Y - SEPARATE ILLUSTRATION

398-7003 **WIRING GP-CAB (*contd.*)** **i05649309**

REFER TO ALL ILLUSTRATIONS OF
THIS GROUP FOR AUXILIARY VIEWS

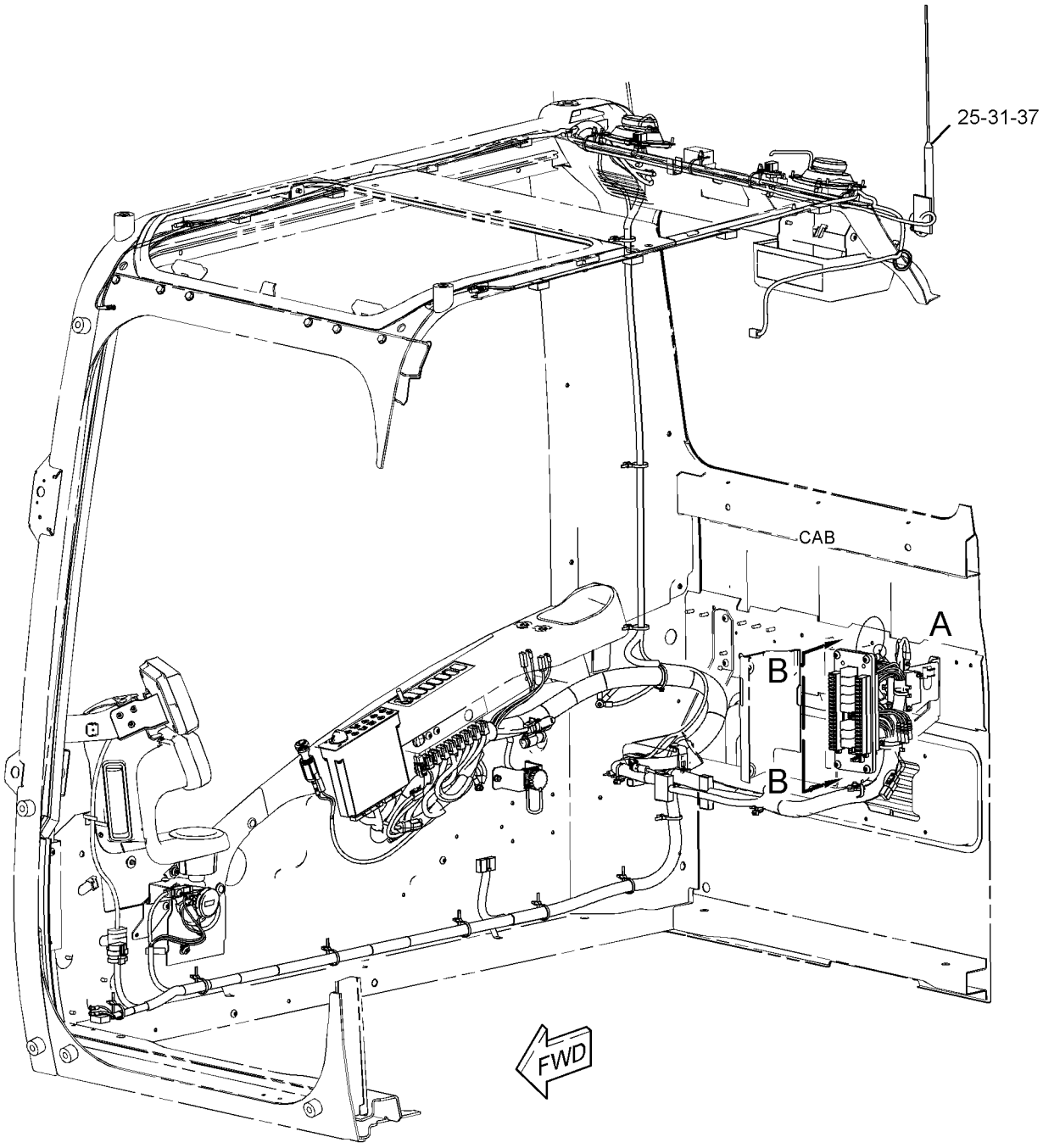

GRAPHIC #1 g03745787

398-7003 **WIRING GP-CAB (*contd.*)** **i05649309**

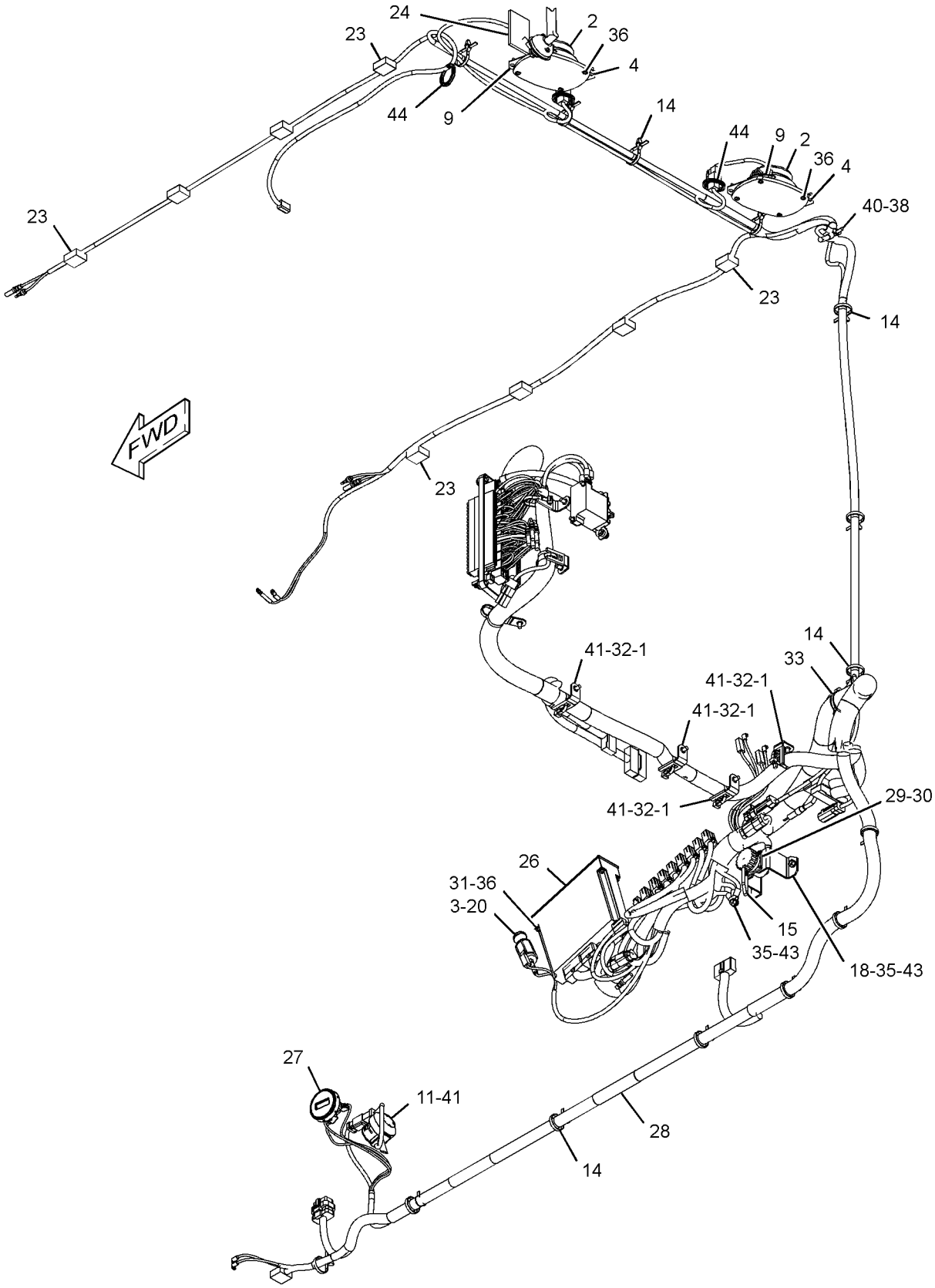

GRAPHIC #2 g03745755

398-7003 **WIRING GP-CAB (*contd.*)** **i05649309**

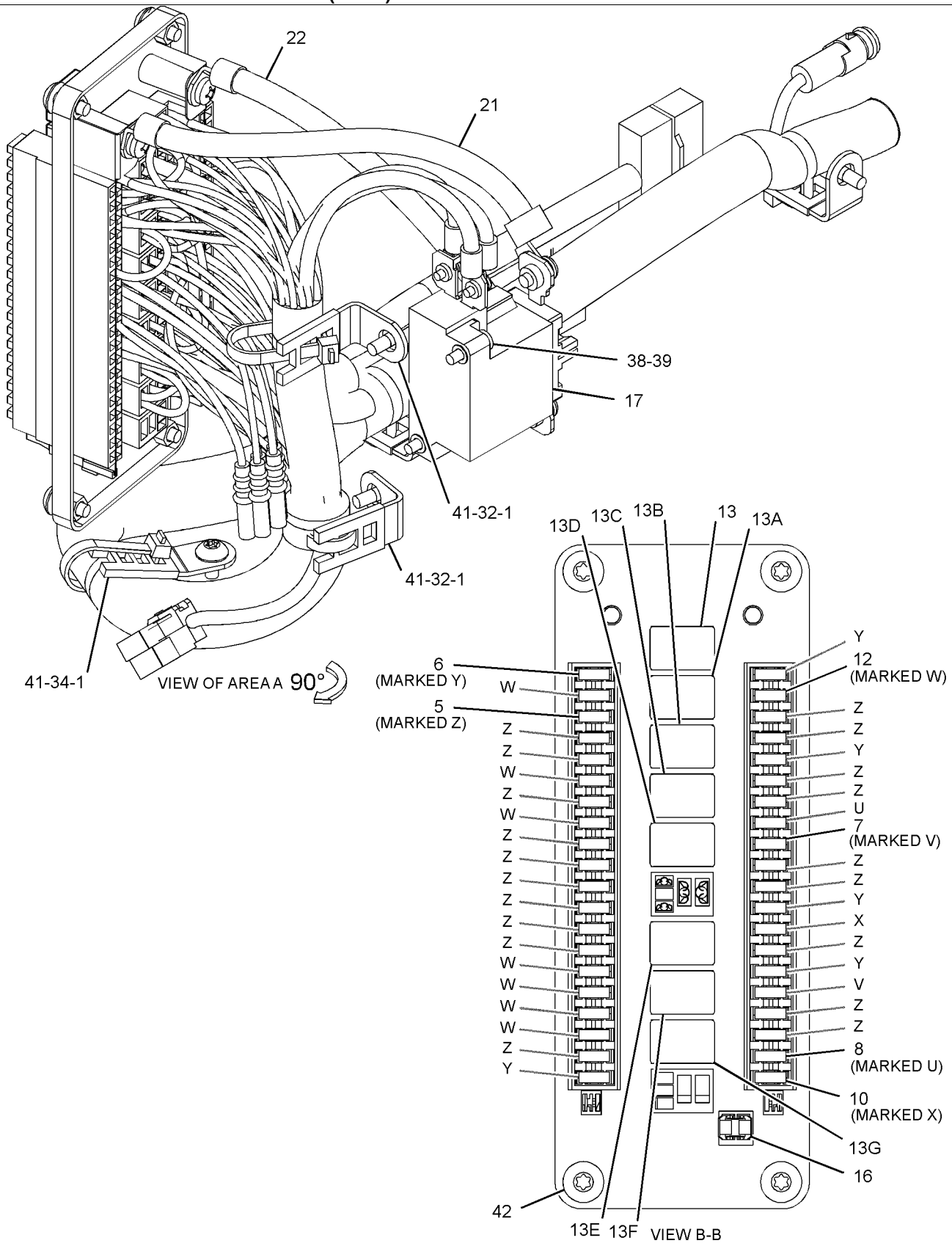

GRAPHIC #3 **<END>** g03431212

440-6916 WIRING GP-COMMUNICATION–PRODUCT LINK 321SR

S/N: XAH1-UP

PART OF 451-7464 INSTALLATION AR-COMMUNICATION

AN ATTACHMENT

SMCS-1408 **i05987421**

NOTE	REF NO	GRAPHIC REF	PART NUMBER	QTY	PART NAME 1 2 3 4 5 6 (PRODUCT LEVEL)	SEE PAGE
	1	1	**3S-2093**	1	STRAP-CABLE	
	2	1	**7K-1181**	5	STRAP-CABLE	
	3	1	**116-0118**	1	CLIP	
	4	1	**440-6919**	1	HARNESS AS-CONTROL (PRODUCT LINK 321SR, ISO)	
		1	**102-8803**	1	KIT-RECEPTACLE (3-PIN)	
					(INCLUDES RECEPTACLE AS & WEDGE)	
		1	**8T-8729**	1	PIN-CONNECTOR (16-GA TO 18-GA)	
		1	**3S-2093**	3	STRAP-CABLE	
		1	**8T-8737**	62	PLUG-SEAL	
		1	**9W-0852**	1	PIN-CONNECTOR (14-GA TO 16-GA)	
E		1	**125-7874**		TUBE-HEAT SHRINK (5.72-MM DIA) (20-CM)	
E		1	**125-7875**		TUBE-HEAT SHRINK (7.44-MM DIA) (10-CM)	
		1	**9X-3402**	24	SOCKET-CONNECTOR (16-GA TO 18-GA)	
					–OR–	
		1	**126-1768**	24	SOCKET-CONNECTOR (14-GA TO 16-GA)	
		1	**126-1774**	1	COVER-CONNECTOR	
		1	**2L-8077**	1	TERMINAL-RING (14-GA TO 16-GA, 1/4-IN SCREW)	
		1	**9X-3401**	6	PIN-CONNECTOR (16-GA TO 18-GA)	
					–OR–	
		1	**126-1767**	6	PIN-CONNECTOR (14-GA TO 16-GA)	
		1	**155-2255**	1	KIT-CONNECTING PLUG (12-PIN)	
					(INCLUDES PLUG AS, WEDGE & INTERFACE SEAL)	
		1	**155-2260**	1	KIT-CONNECTING PLUG (3-PIN)	
					(INCLUDES PLUG AS, WEDGES & INTERFACE SEAL)	
		1	**160-7690**	1	PLUG AS-CONNECTOR (70-PIN)	
		1	**159-9322**	1	SEAL-O-RING	
		1	**243-4508**	1	RECEPTACLE AS-CONNECTOR (6-PIN)	
	5	1	**8T-4121**	1	WASHER-HARD (11X21X2.5-MM THK)	
M	6	1	**8T-4191**	1	BOLT (M10X1.5X16-MM)	

E - ORDER BY THE CENTIMETER
M - METRIC PART

440-6916 **WIRING GP-COMMUNICATION (*contd.*)** **i05987421**

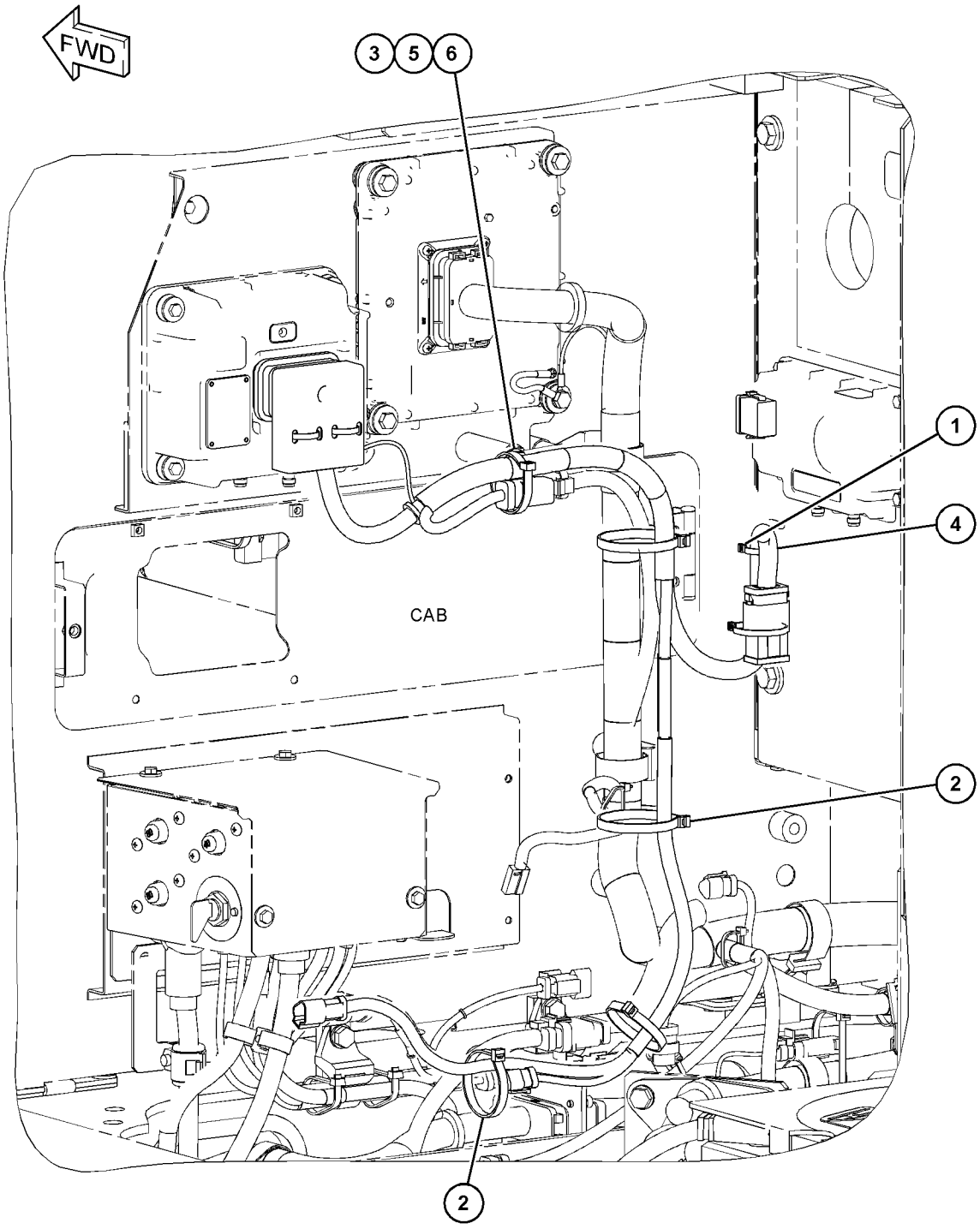

GRAPHIC #1 **<END>** g03739470

231-1836 WIRING GP-CONSOLE–LH

S/N: XAH1-UP
PART OF 398-7005 WIRING GP-CONSOLE
ALSO AN ATTACHMENT

SMCS-1408 **i04913382**

NOTE	REF NO	GRAPHIC REF	PART NUMBER	QTY	PART NAME 1 2 3 4 5 6 (PRODUCT LEVEL)	SEE PAGE
	1	1	**3S-2093**	2	STRAP-CABLE	
	2	1	**7K-1181**	1	STRAP-CABLE	
	3	1	**163-6795**	2	STRAP-CABLE	
	4	1	**251-0580**	1	HARNESS AS-CONSOLE	
		1	**8T-8729**	4	PIN-CONNECTOR (16-GA TO 18-GA)	
		1	**8T-8730**	3	SOCKET-CONNECTOR (16-GA TO 18-GA)	
		1	**3S-2093**	9	STRAP-CABLE	
D		1	**5P-5995**		TUBE (0.3-M)	
		1	**7Y-3963**	2	TERMINAL-BULLET (FEMALE)	
		1	**7Y-3965**	2	TUBE (RECEPTACLE TERMINAL)	
		1	**8T-8737**	9	PLUG-SEAL	
		1	**9W-0852**	2	PIN-CONNECTOR (14-GA TO 16-GA)	
		1	**9W-0844**	2	SOCKET-CONNECTOR (14-GA TO 16-GA)	
E		1	**125-7874**		TUBE-HEAT SHRINK (5.72-MM DIA) (5-CM)	
E		1	**125-7875**		TUBE-HEAT SHRINK (7.44-MM DIA) (5-CM)	
		1	**9X-3402**	11	SOCKET-CONNECTOR (16-GA TO 18-GA)	
					–OR–	
		1	**126-1768**	11	SOCKET-CONNECTOR (14-GA TO 16-GA)	
		1	**155-2260**	1	KIT-CONNECTING PLUG (3-PIN)	
					(INCLUDES PLUG AS, WEDGE & INTERFACE SEAL)	
		1	**230-4011**	1	PLUG AS-CONNECTOR (2-PIN)	
		1	**264-7029**	1	SEAL-CONNECTOR	
		1	**230-5010**	1	PLUG AS-CONNECTOR (6-PIN)	
		1	**264-7032**	1	SEAL-CONNECTOR	
		1	**239-7352**	1	PLUG AS-CONNECTOR (6-PIN)	
		1	**264-7032**	1	SEAL-CONNECTOR	
		1	**243-4505**	1	RECEPTACLE AS-CONNECTOR (2-PIN)	
		1	**243-4508**	1	RECEPTACLE AS-CONNECTOR (6-PIN)	
		1	**247-2693**	1	RECEPTACLE AS-CONNECTOR (6-PIN)	

D - ORDER BY THE METER
E - ORDER BY THE CENTIMETER

231-1836 **WIRING GP-CONSOLE (*contd.*)** **i04913382**

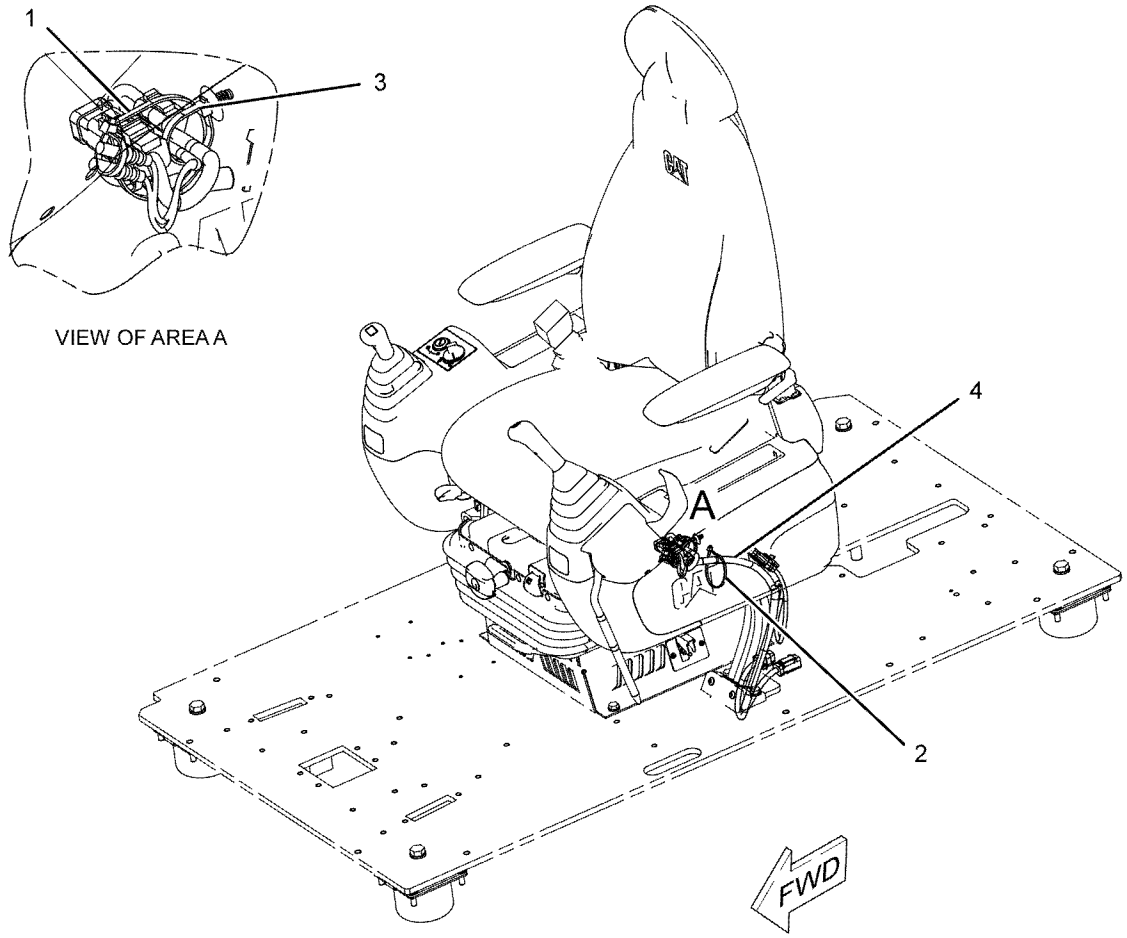

GRAPHIC #1 **<END>** g01150799

398-7005 WIRING GP-CONSOLE

S/N: XAH1-UP

PART OF 456-6742 CAB GP, 451-3987 OPERATOR AR

ALSO AN ATTACHMENT

SMCS-1408 **i05432265**

NOTE	PART NUMBER	QTY	PART NAME 1 2 3 4 5 6 (PRODUCT LEVEL)	SEE PAGE
Y	*231-1836*	1	WIRING GP-CONSOLE (LH)	137
Y	*398-7006*	1	WIRING GP-CONSOLE (RH)	140

Y - SEPARATE ILLUSTRATION

<END>

398-7006 WIRING GP-CONSOLE—RH

S/N: XAH1-UP

PART OF 398-7005 WIRING GP-CONSOLE

ALSO AN ATTACHMENT

SMCS-1408 **i05432267**

NOTE	REF NO	GRAPHIC REF	PART NUMBER	QTY	PART NAME 1 2 3 4 5 6 (PRODUCT LEVEL)	SEE PAGE
	1	1	**3S-2093**	4	STRAP-CABLE	
	2	1	**7K-1181**	2	STRAP-CABLE	
	3	1	**163-6795**	1	STRAP-CABLE	
	4	1	**398-7012**	1	HARNESS AS-CONSOLE	
		1	**102-8806**	1	KIT-RECEPTACLE (8-PIN)	
					(INCLUDES RECEPTACLE AS AND WEDGE)	
		1	**8T-8730**	9	SOCKET-CONNECTOR (16-GA TO 18-GA)	
		1	**3S-2093**	10	STRAP-CABLE	
		1	*7Y-3967*	2	TERMINAL AS	
					(EACH INCLUDES)	
		1	**7Y-3963**	1	TERMINAL-BULLET (FEMALE)	
		1	**7Y-3965**	1	TUBE (RECEPTACLE TERMINAL)	
		1	**8T-8737**	17	PLUG-SEAL	
		1	**102-7964**	1	PLUG-CONNECTOR (16-PIN)	
		1	**102-7965**	14	TERMINAL (FEMALE)	
		1	**9W-0844**	8	SOCKET-CONNECTOR (14-GA TO 16-GA)	
		1	**125-4841**	1	WEDGE-PLUG LOCK (21-PIN)	
E		1	**125-7875**		TUBE-HEAT SHRINK (7.44-MM DIA) (15-CM)	
		1	**9X-3402**	20	SOCKET-CONNECTOR (16-GA TO 18-GA)	
		1	**155-2259**	1	WEDGE-PLUG LOCK (8-PIN)	
		1	**155-2265**	1	KIT-CONNECTING PLUG (8-PIN)	
					(EACH PLUG KIT INCLUDES PLUG AS, WEDGE & INTERFACE SEAL)	
		1	**230-4009**	1	PLUG AS-CONNECTOR (12-PIN)	
		1	**264-7034**	1	SEAL-CONNECTOR	
		1	**230-4011**	1	PLUG AS-CONNECTOR (2-PIN)	
		1	**264-7029**	1	SEAL-CONNECTOR	
		1	**230-5008**	1	PLUG AS-CONNECTOR (4-PIN)	
		1	**264-7031**	1	SEAL-CONNECTOR	
		1	**230-5010**	1	PLUG AS-CONNECTOR (6-PIN)	
		1	**264-7032**	1	SEAL-CONNECTOR	
		1	**231-2295**	1	PLUG AS-CONNECTOR (8-PIN)	
		1	**264-7033**	1	SEAL-CONNECTOR	
		1	**238-2363**	2	TERMINAL (FEMALE)	
		1	**239-7352**	1	PLUG AS-CONNECTOR (6-PIN)	
		1	**264-7032**	1	SEAL-CONNECTOR	
		1	*251-0579*	1	HOSE	
		1	**342-2972**	1	CAP-CONNECTOR (2-PIN)	
		1	**342-2974**	1	CAP-CONNECTOR (6-PIN)	
	5	1	**3E-9375**		CONDUIT (10-CM)	

E - ORDER BY THE CENTIMETER

398-7006 **WIRING GP-CONSOLE (*contd.*)** **i05432267**

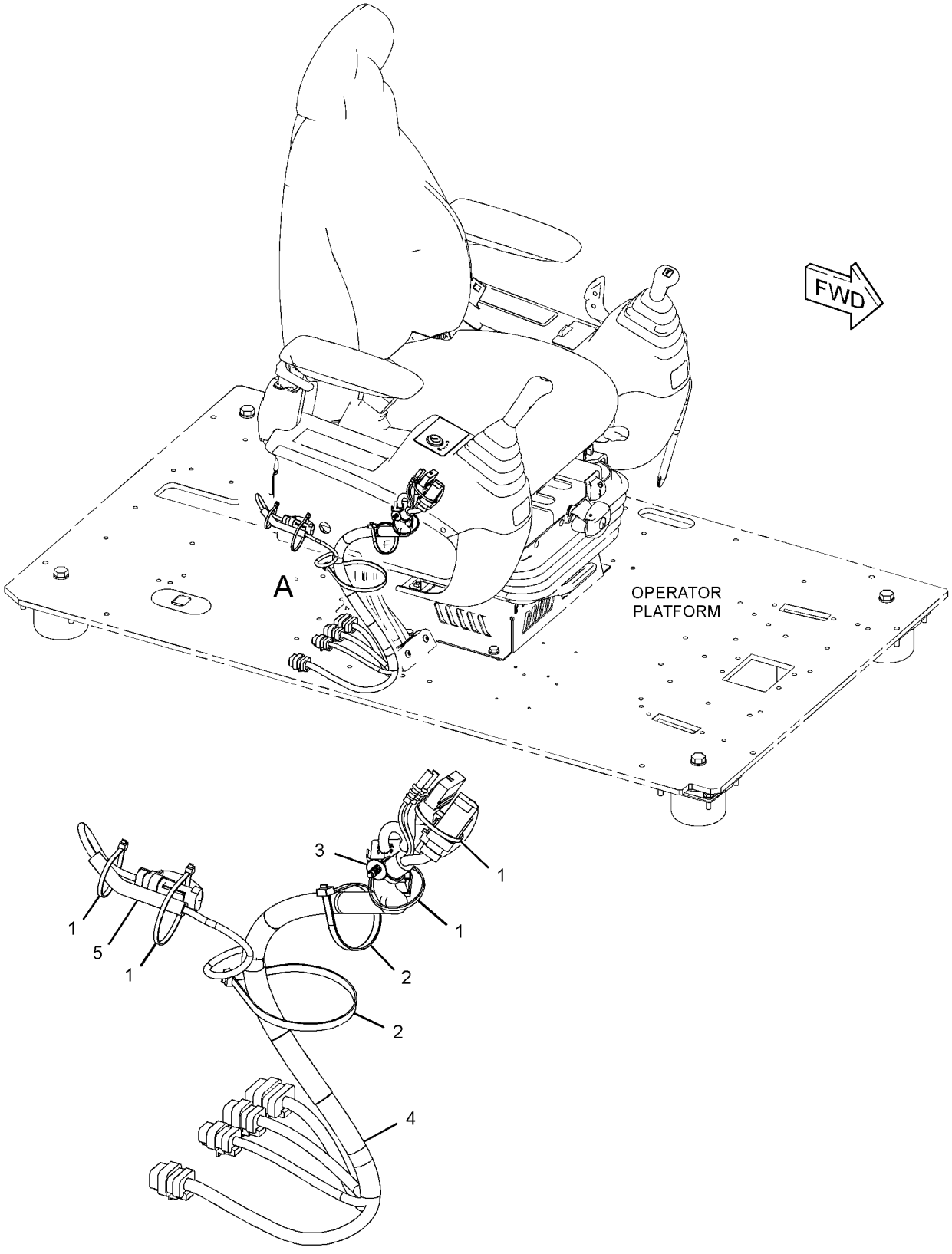

VIEW OF AREA A

GRAPHIC #1 **<END>** g03431459

350-8254 WIRING GP-CONVERTER

S/N: XAH1-UP
12-VOLT, 10-AMPERE
PART OF 454-5645 OPTION AR-CAB
AN ATTACHMENT

SMCS-1421 **i05411962**

NOTE	REF NO	GRAPHIC REF	PART NUMBER	QTY	PART NAME 1 2 3 4 5 6 (PRODUCT LEVEL)	SEE PAGE
	1	1	**275-7048**	1	BRACKET	
	2	1	**324-5770**	1	CONVERTER-POWER (24-VOLT TO 12-VOLT)	
	3	1	**324-5771**	2	SOCKET-AUXILIARY POWER (12-VOLT)	
	4	1	**8T-4121**	2	WASHER-HARD (11X21X2.5-MM THK)	
M	5	1	**8T-4136**	2	BOLT (M10X1.5X25-MM)	
M	6	1	**8T-4171**	4	BOLT (M6X1X12-MM)	
	7	1	**9X-8256**	4	WASHER (6.6X12X2-MM THK)	

M - METRIC PART

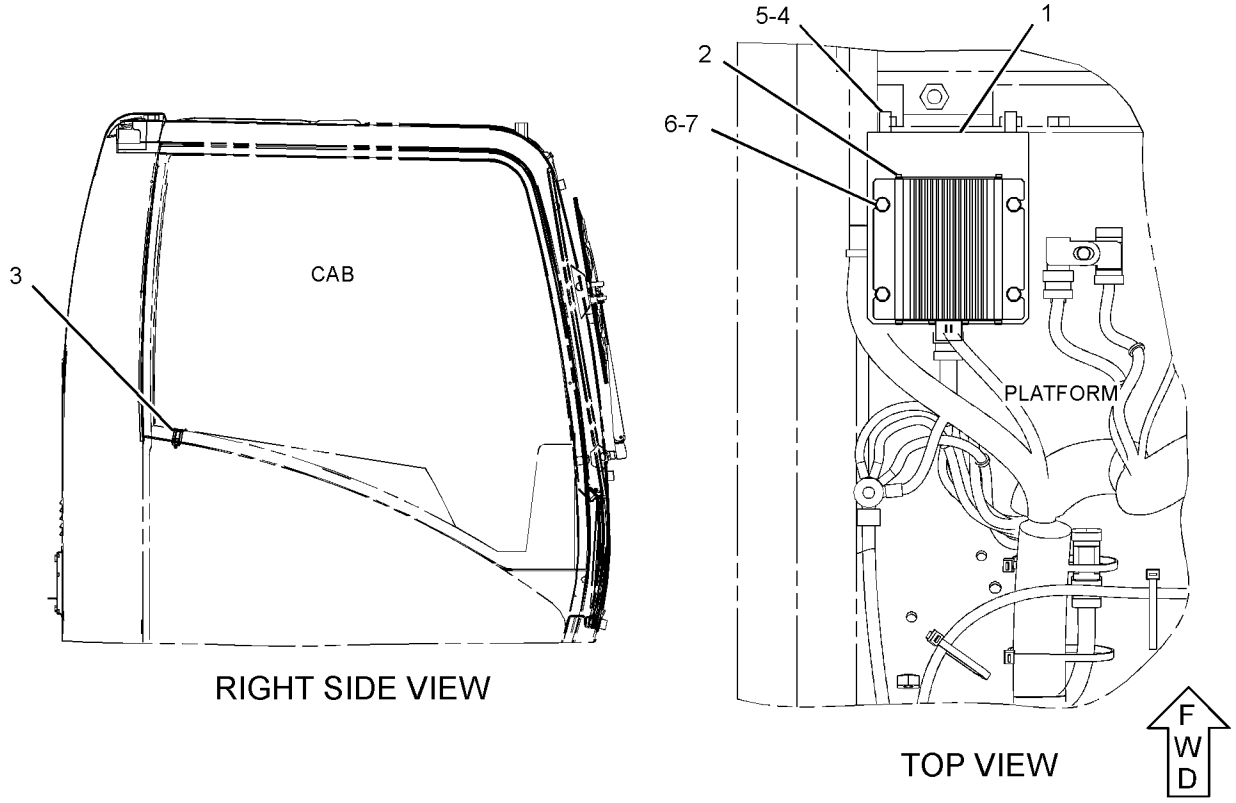

RIGHT SIDE VIEW

TOP VIEW

GRAPHIC #1 **<END>** g02149428

440-6915 WIRING GP-PLATFORM

S/N: XAH1-UP
PART OF 456-6742 CAB GP, 451-3987 OPERATOR AR
ALSO AN ATTACHMENT

SMCS-1408 **i05781129**

NOTE	REF NO	GRAPHIC REF	PART NUMBER	QTY	PART NAME 1 2 3 4 5 6 (PRODUCT LEVEL)	SEE PAGE
	1	1	**3E-5169**	1	GUARD-SWITCH	
	2	1	**3S-2093**	4	STRAP-CABLE	
	3	1	**7G-1060**	1	STRAP AS-GROUND	
	4	1	**7K-1181**	12	STRAP-CABLE	
	5	1	**111-4836**	4	CLIP	
	6	1	**111-4839**	2	STRAP	
	7	1	**116-0118**	8	CLIP	
	8	1	**234-1122**	1	COVER	
	9	1	**275-6810**	1	RECEPTACLE AS	
		1	**134-3297**	1	SEAL	
		1	**163-6773**	1	PLUG-SEAL	
	10	1	**301-2981**	1	SWITCH AS-TOGGLE (SECONDARY SHUTDOWN)	
	11	1	**440-6918**	1	HARNESS AS-PLATFORM (BEACON)	
		1	**102-8802**	2	KIT-RECEPTACLE (2-PIN)	
					(EACH INCLUDES RECEPTACLE AS & WEDGE)	
		1	**8T-8729**	8	PIN-CONNECTOR (16-GA TO 18-GA)	
		1	**8T-8730**	14	SOCKET-CONNECTOR (16-GA TO 18-GA)	
		1	**3S-2093**	17	STRAP-CABLE	
		1	**8T-8737**	45	PLUG-SEAL	
		1	**102-7964**	1	PLUG-CONNECTOR (16-PIN)	
		1	**102-7965**	8	TERMINAL (FEMALE)	
		1	**9W-0852**	6	PIN-CONNECTOR (14-GA TO 16-GA)	
		1	**9W-0844**	22	SOCKET-CONNECTOR (14-GA TO 16-GA)	
E		1	**119-3662**		TUBE-HEAT SHRINK (10.85-MM DIA) (7-CM)	
		1	**121-1168**	2	CONNECTOR-RECEPTACLE	
		1	**121-1173**	28	TERMINAL (MALE)	
		1	**125-4766**	1	PLUG-CONNECTOR (17-PIN)	
		1	**125-4841**	1	WEDGE-PLUG LOCK (21-PIN)	
E		1	**125-7874**		TUBE-HEAT SHRINK (5.72-MM DIA) (5-CM)	
E		1	**125-7875**		TUBE-HEAT SHRINK (7.44-MM DIA) (20-CM)	
		1	**9X-3402**	35	SOCKET-CONNECTOR (16-GA TO 18-GA)	
					—OR—	
		1	**126-1768**	35	SOCKET-CONNECTOR (14-GA TO 16-GA)	
		1	**2L-8050**	2	TERMINAL-RING (6-GA, 1/4-IN SCREW)	
					—OR—	
		1	**2L-8058**	2	TERMINAL-RING (8-GA, 1/4-IN SCREW)	
		1	**2L-8069**	4	TERMINAL-RING (2-GA TO 10-GA, 3/8-IN SCREW)	
		1	**9X-3401**	11	PIN-CONNECTOR (16-GA TO 18-GA)	
					—OR—	
		1	**126-1767**	11	PIN-CONNECTOR (14-GA TO 16-GA)	
		1	**153-2620**	1	PLUG AS-CONNECTOR (54-PIN, BLACK)	
		1	**163-6759**	1	SEAL	
		1	**155-2270**	2	KIT-CONNECTING PLUG (2-PIN)	
		1	**155-2260**	1	KIT-CONNECTING PLUG (3-PIN)	
					(EACH PLUG KIT INCLUDES PLUG AS,WEDGE & INTERFACE SEAL)	
		1	**230-4009**	2	PLUG AS-CONNECTOR (12-PIN)	
					(EACH INCLUDES)	
		1	**455-0709**	1	SEAL-CONNECTOR	
		1	**230-4011**	2	PLUG AS-CONNECTOR (2-PIN)	
					(EACH INCLUDES)	
		1	**455-0704**	1	SEAL-CONNECTOR	
		1	**230-5010**	2	PLUG AS-CONNECTOR (6-PIN)	
					(EACH INCLUDES)	
		1	**455-0707**	1	SEAL-CONNECTOR	
		1	**238-2363**	11	TERMINAL (FEMALE)	

440-6915 **WIRING GP-PLATFORM (*contd.*)** **i05781129**

NOTE	REF NO	GRAPHIC REF	PART NUMBER	QTY	PART NAME 1 2 3 4 5 6 (PRODUCT LEVEL)	SEE PAGE
		1	**238-2366**	5	TERMINAL (MALE)	
		1	**243-4507**	1	RECEPTACLE AS-CONNECTOR (4-PIN)	
		1	**243-4508**	2	RECEPTACLE AS-CONNECTOR (6-PIN)	
		1	**243-4509**	1	RECEPTACLE AS-CONNECTOR (8-PIN)	
		1	**243-4510**	1	RECEPTACLE AS-CONNECTOR (12-PIN)	
		1	**342-2972**	1	CAP-CONNECTOR (2-PIN)	
		1	**342-2974**	1	CAP-CONNECTOR (6-PIN)	
	12	1	**096-6166**	2	WASHER-HARD (4.5X9X1-MM THK)	
	13	1	**111-4838**	2	CLIP	
M	14	1	**7X-2621**	5	BOLT (M10X1.5X12-MM)	
M	15	1	**8T-0337**	2	SCREW-MACHINE (M4X0.7X12-MM)	
	16	1	**8T-4121**	12	WASHER-HARD (11X21X2.5-MM THK)	
M	17	1	**8T-4137**	7	BOLT (M10X1.5X20-MM)	

E - ORDER BY THE CENTIMETER
M - METRIC PART

440-6915 **WIRING GP-PLATFORM (*contd.*)** **i05781129**

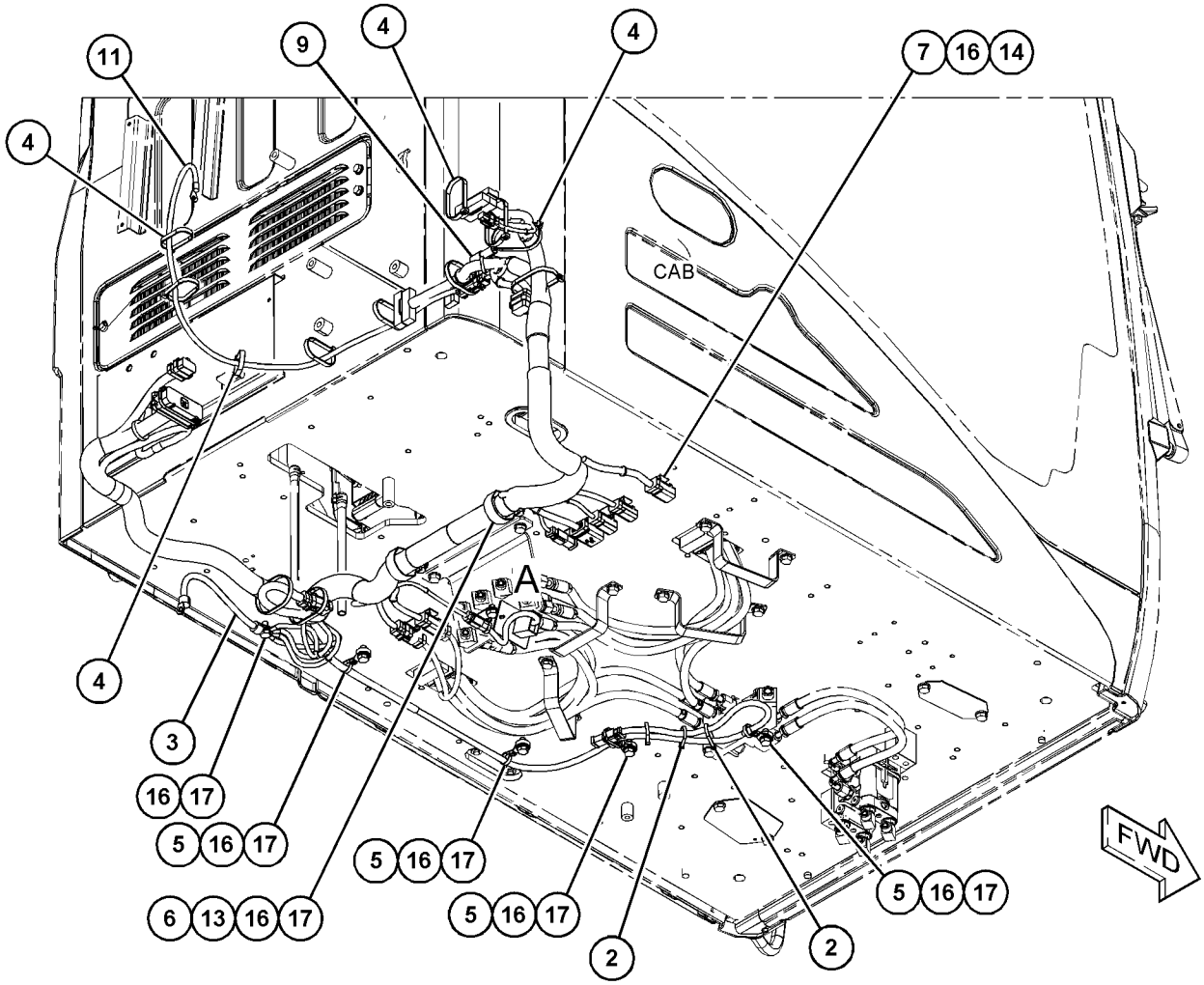

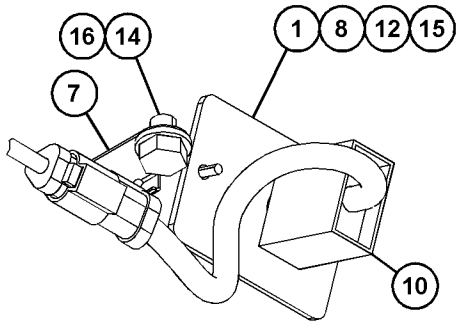

VIEW OF AREA A

GRAPHIC #1 **<END>** g03687928

350-0450 DRIVE GP-FINAL—WITH MOTOR

S/N: XAH1-UP

PART OF 353-0586 DRIVE GP-FINAL

SMCS-4050 **i05772844**

NOTE	REF NO	GRAPHIC REF	PART NUMBER	QTY	PART NAME 1 2 3 4 5 6 (PRODUCT LEVEL)	SEE PAGE
Y	1	1	*185-6952*	1	MOTOR & MTG GP-TRAVEL	268
Y	2	1	**350-0452**	1	DRIVE GP-FINAL (WITHOUT MOTOR)	147

Y - SEPARATE ILLUSTRATION

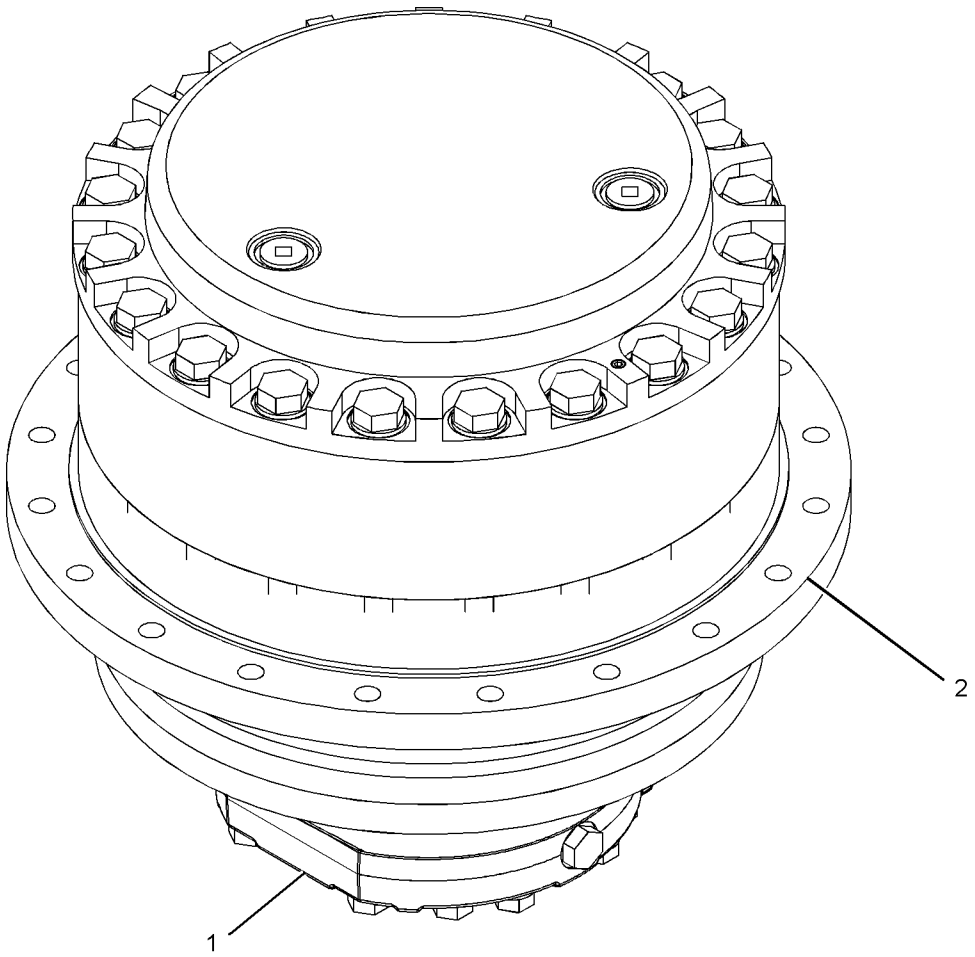

GRAPHIC #1 **<END>** g01099096

350-0452 DRIVE GP-FINAL—WITHOUT MOTOR

S/N: XAH1-UP

PART OF 350-0450 DRIVE GP-FINAL

SMCS-4050 **i05884815**

NOTE	REF NO	GRAPHIC REF	PART NUMBER	QTY	PART NAME 1 2 3 4 5 6 (PRODUCT LEVEL)	SEE PAGE
	1	1	**165-5785**	1	SPACER (40X60.9X1-MM THK)	
B	2	1	**096-1773**	1	SHIM (0.15-MM THK)	
B		1	**096-1774**	1	SHIM (0.3-MM THK)	
B		1	**096-1775**	1	SHIM (0.4-MM THK)	
B		1	**096-1776**	1	SHIM (0.5-MM THK)	
B		1	**096-1777**	1	SHIM (0.6-MM THK)	
B		1	**096-1778**	1	SHIM (0.7-MM THK)	
B		1	**096-1779**	1	SHIM (0.8-MM THK)	
B		1	**096-1780**	1	SHIM (1-MM THK)	
B		1	**096-1781**	1	SHIM (1.6-MM THK)	
	11	1	**227-6034**	16	BOLT-FLANGE HEAD (M16X2X60-MM)	
	12	1	**165-5786**	3	SHAFT	
	13	1	**296-6269**	6	BEARING-ROLLER	
	14	1	**165-5787**	3	GEAR-PLANETARY (26-TEETH)	
M	15	1	**094-1528**	6	WASHER (53X84X1-MM THK)	
	16	1	**095-0891**	6	PIN-SPRING	
	17	1	**165-5788**	3	GEAR-PLANETARY (29-TEETH)	
	18	1	**296-6268**	3	BEARING AS-ROLLER	
	19	1	**3E-2338**	2	PLUG-PIPE (FINAL DRIVE, OIL DRAIN, FILL)	
	20	1	**7M-8485**	2	SEAL-O-RING	
	21	1	**165-5790**	1	COVER	
	22	1	**7Y-0225**	3	SHAFT-PLANETARY	
	23	1	**094-0611**	6	WASHER (47.3X76X1-MM THK)	
	24	1	**094-0580**	1	PLATE (10-MM THK)	
	25	1	**165-5792**	1	GEAR-SUN (14-TEETH)	
	26	1	**165-5793**	1	GEAR-SUN (17-TEETH)	
	27	1	**165-5794**	1	SPACER (72X101X7-MM THK)	
	28	1	**165-5795**	1	CARRIER	
M	29	1	**8T-7929**	16	BOLT (M12X1.75X180-MM)	
	30	1	**8T-4223**	16	WASHER-HARD (13.5X25.5X3-MM THK)	
	31	1	**095-1299**	3	DOWEL	
	32	1	**165-3892**	1	GEAR-RING (73-TEETH)	
	33	1	**165-5796**	1	CARRIER	
	34	1	**165-5797**	1	GEAR (51-TEETH)	
	35	1	**165-5800**	1	WASHER (241X282X3-MM THK)	
	36	1	**210-3530**	1	HOUSING	
	37	1	**114-1539**	4	PIN-DOWEL	
	38	1	**296-6220**	2	BALL BEARING	
	39	1	**210-3531**	1	HOUSING-MOTOR	
	40	1	**174-4874**	1	SEAL GP-DUO-CONE	
BF			**1U-8846**		SEALANT-GASKET	

B - USE AS REQUIRED
F - NOT SHOWN
M - METRIC PART

350-0452 **DRIVE GP-FINAL (*contd.*)** **i05884815**

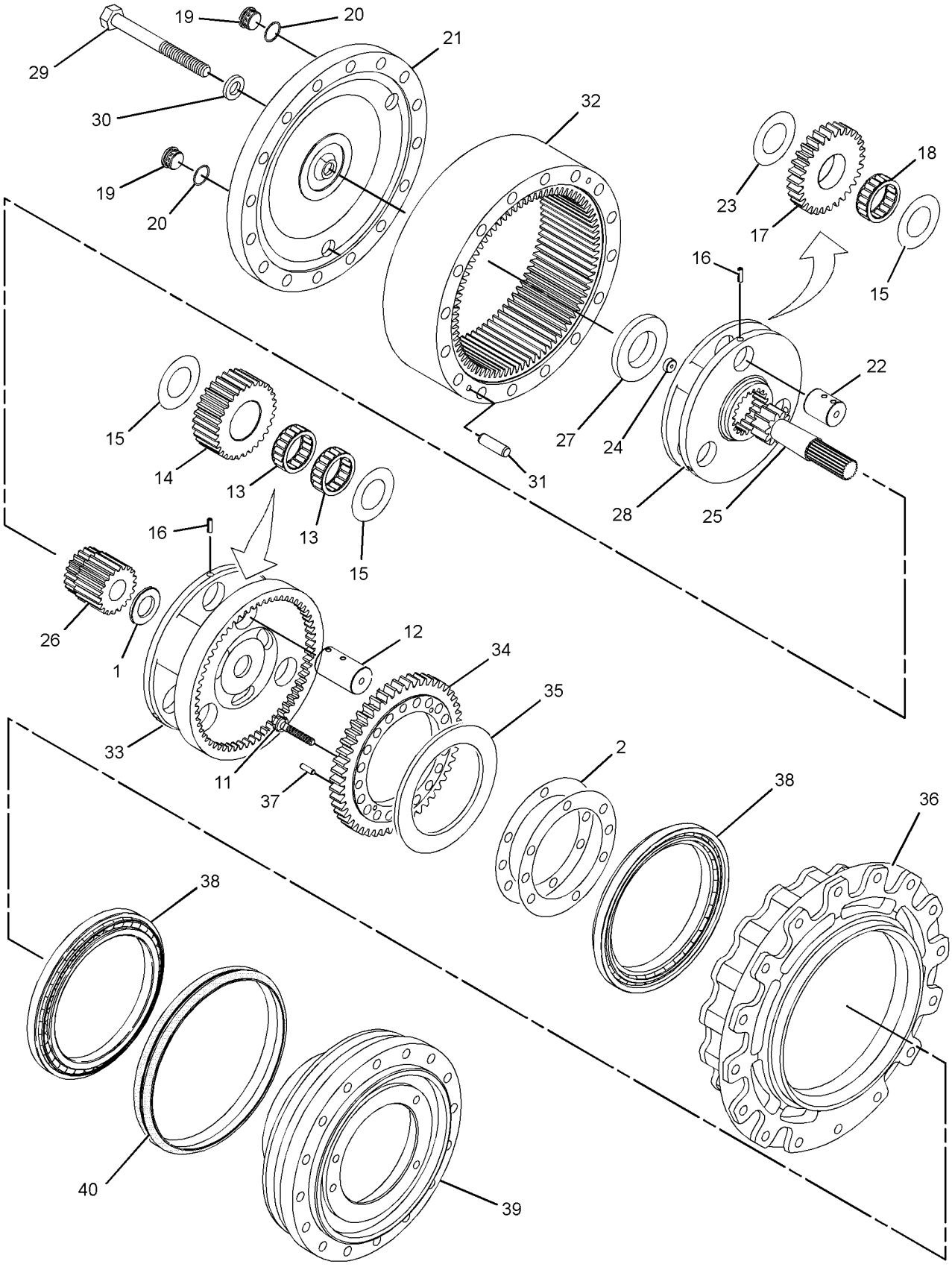

GRAPHIC #1 **<END>** g03710449

353-0586 DRIVE GP-FINAL—WITH MOTOR, SPROCKET

S/N: XAH1-UP

PART OF 267-6738 POWER TRAIN AR

SMCS-4050 **i05772837**

NOTE	REF NO	GRAPHIC REF	PART NUMBER	QTY	PART NAME 1 2 3 4 5 6 (PRODUCT LEVEL)	SEE PAGE
Y	1	1	*145-3042*	1	SPROCKET GP	151
Y	2	1	*350-0450*	1	DRIVE GP-FINAL (WITH MOTOR)	146

Y - SEPARATE ILLUSTRATION

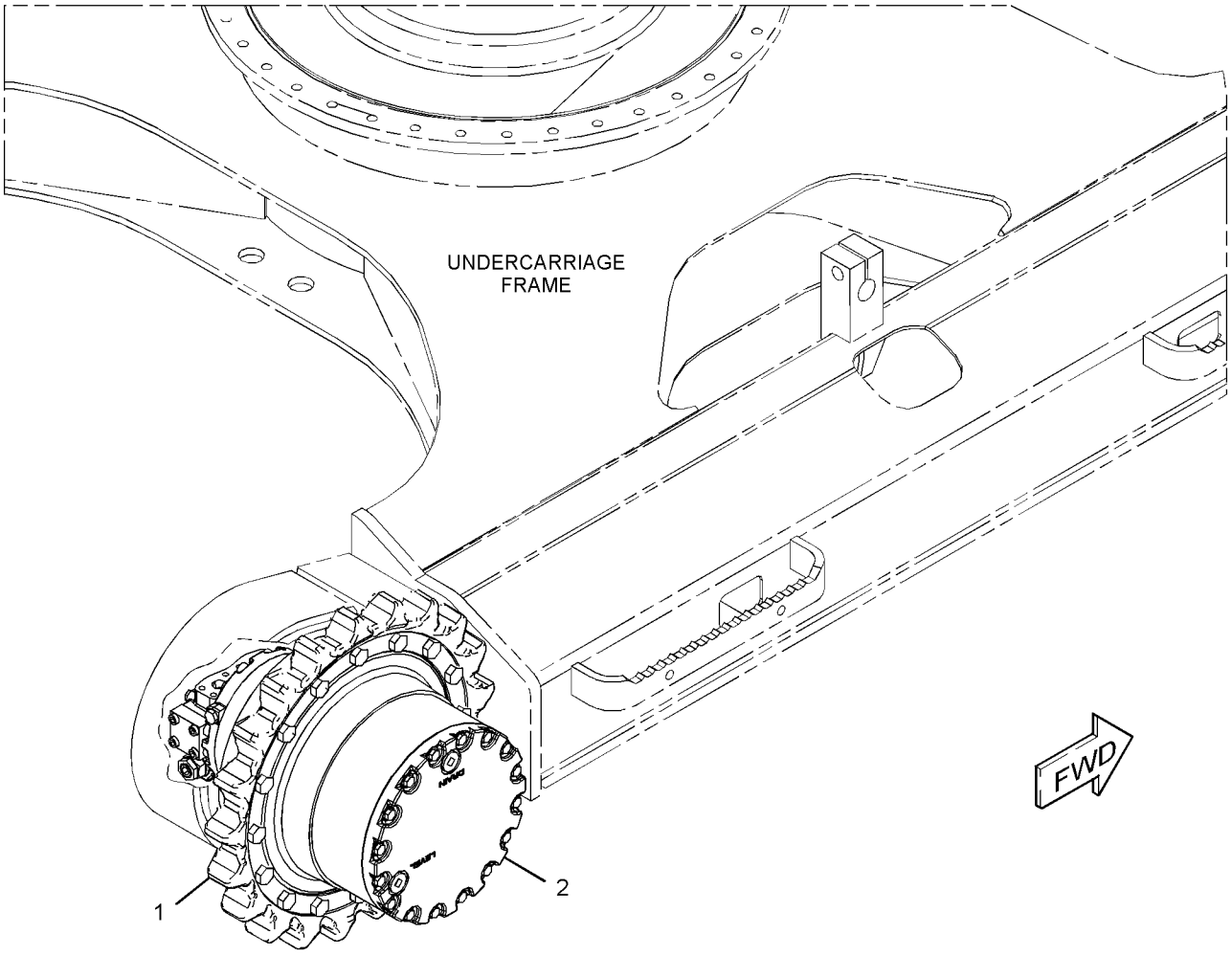

GRAPHIC #1 **<END>** g02731114

267-6738 POWER TRAIN AR

S/N: XAH1-UP

PART OF 454-5582 GENERAL AR

SMCS-3000, 4000 **i05984883**

NOTE	PART NUMBER	QTY	PART NAME 1 2 3 4 5 6 (PRODUCT LEVEL)	SEE PAGE
Y	*353-0586*	2	DRIVE GP-FINAL (WITH MOTOR, SPROCKET)	149
Y	*367-8338*	1	DRIVE GP-SWING (WITH MOTOR)	214
Y	*227-6229*	1	FASTENER GP-SWING & FINAL DR	216

Y - SEPARATE ILLUSTRATION

<END>

145-3042 SPROCKET GP

S/N: XAH1-UP

PART OF 353-0586 DRIVE GP-FINAL

SMCS-4164 **i05656842**

NOTE	REF NO	GRAPHIC REF	PART NUMBER	QTY	PART NAME 1 2 3 4 5 6 (PRODUCT LEVEL)	SEE PAGE
	1	1	**8E-9805**	1	SPROCKET-TRACK (21-TEETH)	
M	2	1	**447-1717**	16	BOLT (M20X2.5X45-MM)	

M - METRIC PART

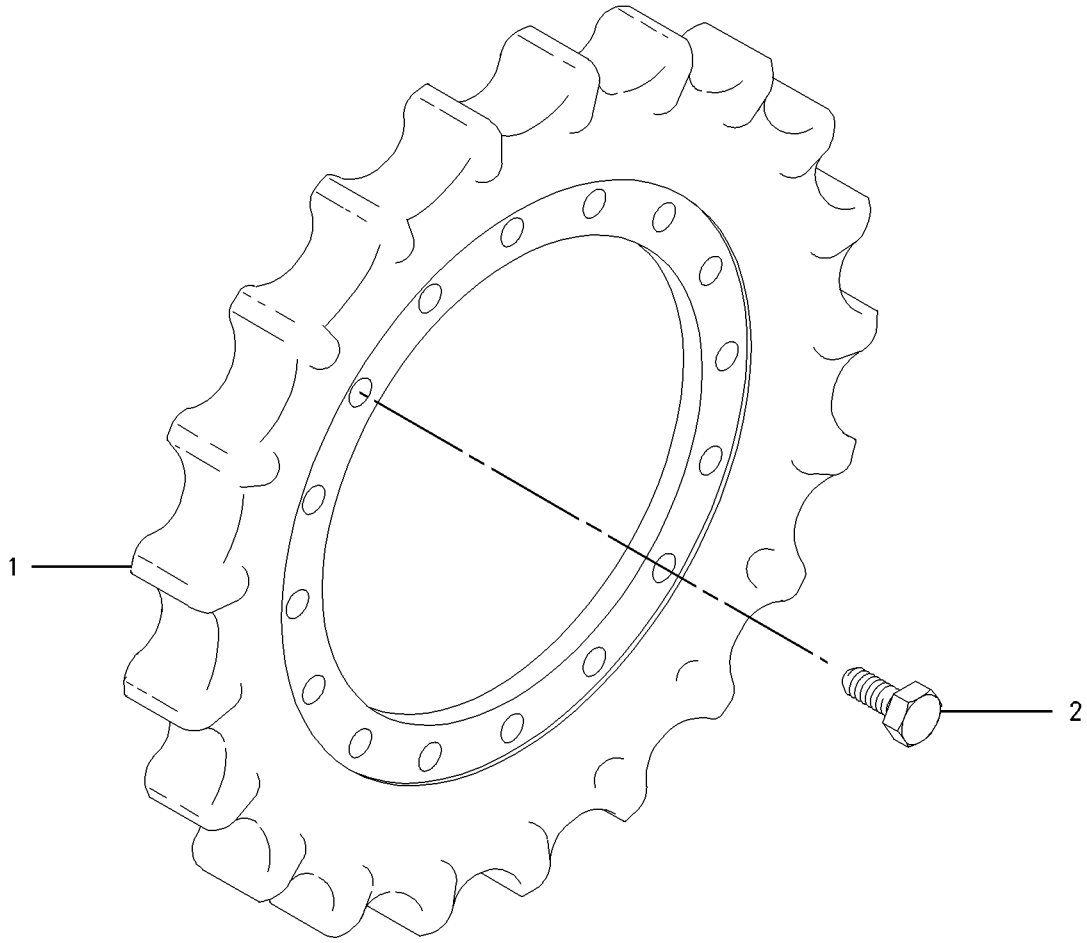

GRAPHIC #1 **<END>** g00935714

393-8574 BOX & MTG GP-STORAGE

S/N: XAH1-UP

PART OF 454-5583 CHASSIS AR

SMCS-7268 **i05407278**

NOTE	REF NO	GRAPHIC REF	PART NUMBER	QTY	PART NAME 1 2 3 4 5 6 (PRODUCT LEVEL)	SEE PAGE
Y	1	1	**393-8575**	1	BOX GP-STORAGE	153
M	2	1	**135-8577**	4	BOLT AS	

M - METRIC PART
Y - SEPARATE ILLUSTRATION

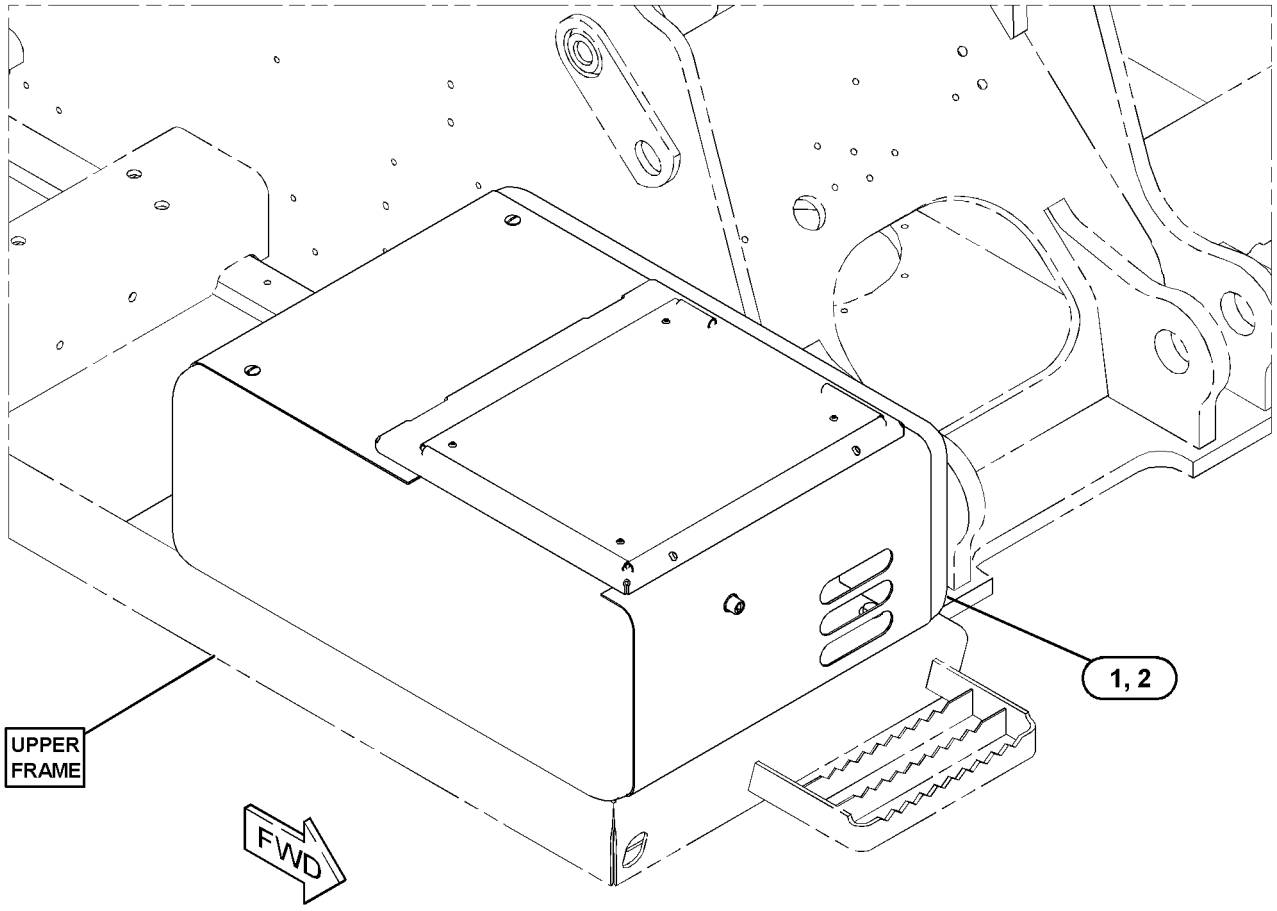

GRAPHIC #1 **<END>** g03120637

393-8575 BOX GP-STORAGE

S/N: XAH1-UP

PART OF 393-8574 BOX & MTG GP-STORAGE

SMCS-7268 **i05987420**

NOTE	REF NO	GRAPHIC REF	PART NUMBER	QTY	PART NAME 1 2 3 4 5 6 (PRODUCT LEVEL)	SEE PAGE
	1	1	**439-3322**	1	SUPPORT AS	
		1	**4B-4278**	1	WASHER (10.2X20.5X1.6-MM THK)	
	2	1	**170-2755**	1	HOOK AS	
B	3	1	**184-8850**	2	SHIM (0.5-MM THK)	
	4	1	**214-6197**	2	PLUG	
L	6	1	**320-5737**	1	LOCK AS	
	7	1	*393-8576*	1	BOX AS	
J		1	**348-5409**		SEAL (15-DM)	
	8	1	**393-8586**	1	DOOR AS-ACCESS	
	8A	1	**3D-9143**	2	HINGE-BUTT	
	9	1	**095-0843**	1	PIN-COTTER	
	10	1	**096-3780**	1	PIN-CLEVIS	
M	11	1	**105-3487**	4	BOLT-SOCKET HEAD (M6X1X20-MM)	
	12	1	**170-2983**	1	SEAL	
	13	1	**170-9360**	1	GROMMET	
M	14	1	**5C-9553**	2	BOLT (M6X1X16-MM)	
C	15	1	**4B-4278**	4	WASHER (10.2X20.5X1.6-MM THK)	
	16	1	**5P-4116**	1	WASHER-HARD (8.8X20.5X2-MM THK)	
C	17	1	**293-1501**	4	NUT (M10X1.5-THD)	
	18	1	**9X-8256**	6	WASHER (6.6X12X2-MM THK)	

B - USE AS REQUIRED
C - CHANGE FROM PREVIOUS TYPE
J - ORDER BY THE DECIMETER
L - REQUIRES CORPORATE KEY
M - METRIC PART

393-8575 **BOX GP-STORAGE (*contd.*)** **i05987420**

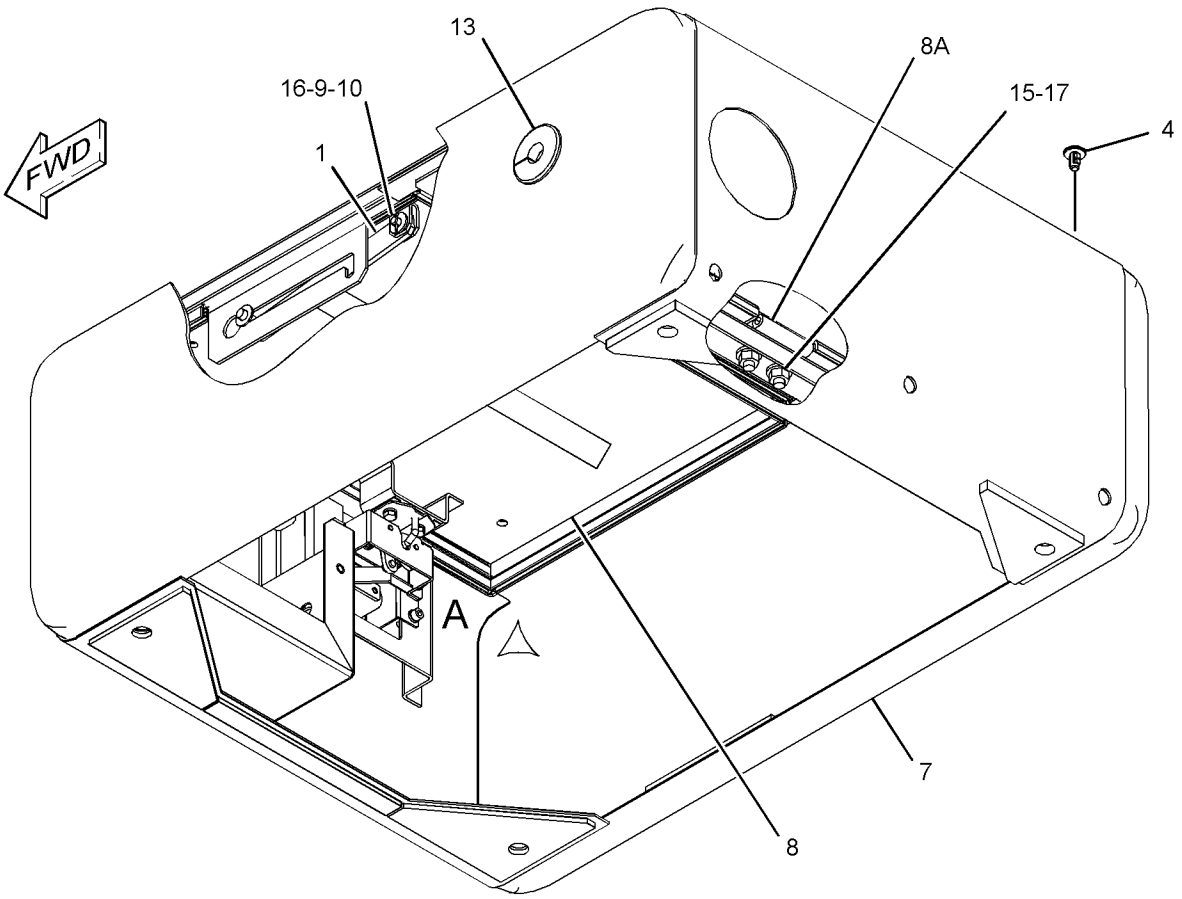

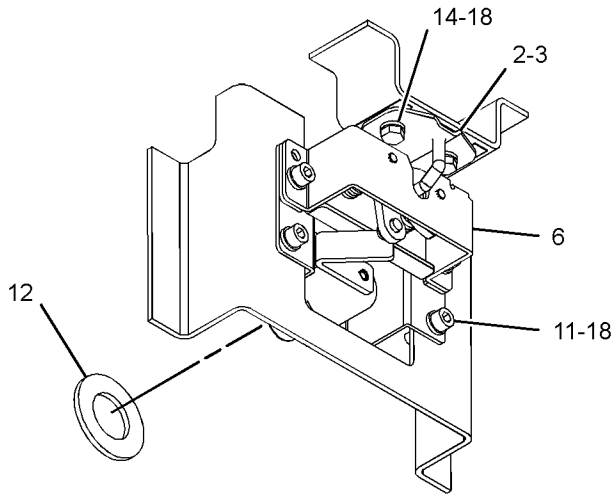

VIEW OF AREA A

GRAPHIC #1 **<END>** g03431030

394-6854 COUNTERWEIGHT & MOUNTING GP

S/N: XAH1-UP
AN ATTACHMENT

SMCS-7056 **i05909713**

NOTE	REF NO	GRAPHIC REF	PART NUMBER	QTY	PART NAME 1 2 3 4 5 6 (PRODUCT LEVEL)	SEE PAGE
M	1	1	**447-1733**	4	BOLT (M30X3.5X120-MM)	
	2	1	**136-0139**	2	CAP	
	3	1	**244-8194**	4	SPACER (32X65X30-MM THK)	
Y	4	1	*394-6855*	1	COUNTERWEIGHT GP	156

M - METRIC PART
Y - SEPARATE ILLUSTRATION

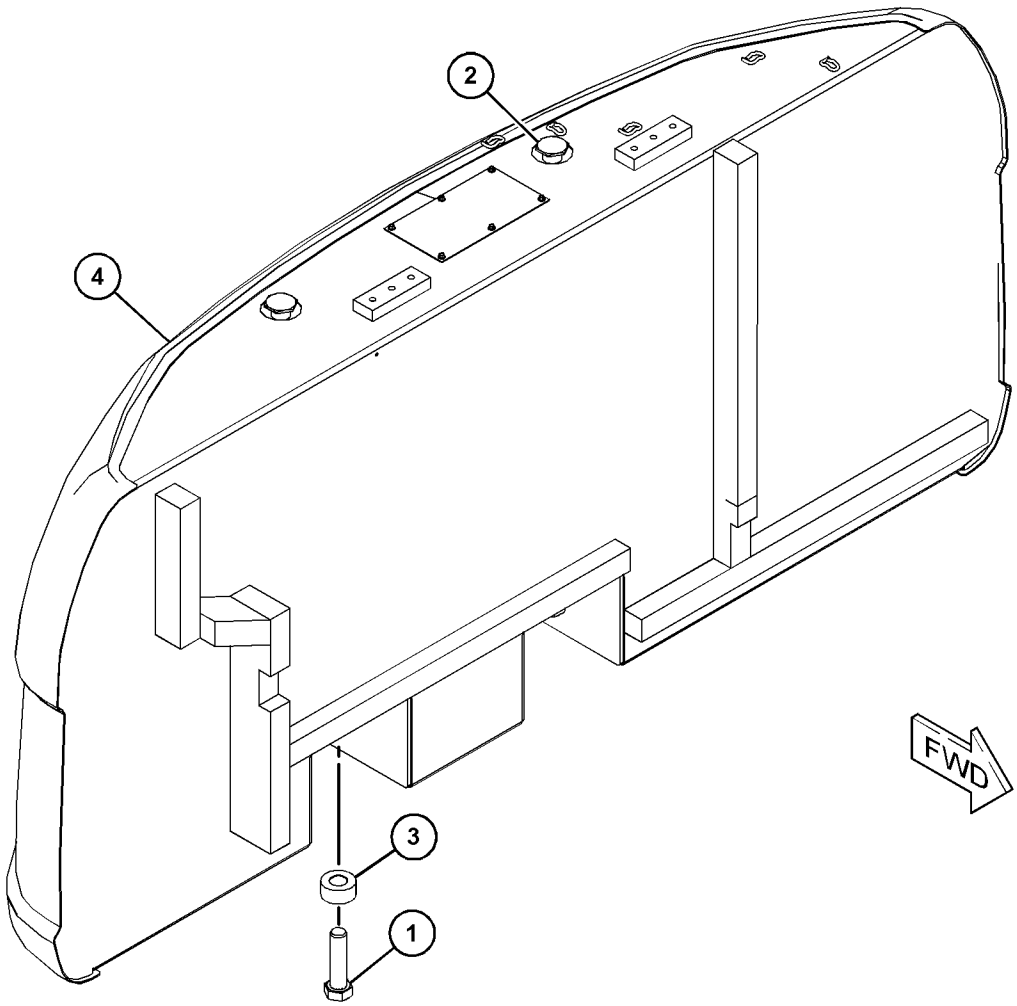

GRAPHIC #1 **<END>** g03711638

394-6855 COUNTERWEIGHT GP

S/N: XAH1-UP
3170-KG (6989-LB)
PART OF 394-6854 COUNTERWEIGHT & MOUNTING GP
AN ATTACHMENT

SMCS-7056 **i05785676**

NOTE	REF NO	GRAPHIC REF	PART NUMBER	QTY	PART NAME 1 2 3 4 5 6 (PRODUCT LEVEL)	SEE PAGE
	1	1	**270-9833**	1	LINER	
	2	1	**391-9675**	1	LINER	
	3	1	**394-6856**	1	COUNTERWEIGHT AS	
	3A	1	**165-3120**	1	SHEET	
M	3B	1	**192-3039**	6	SCREW-HEX FLANGE (6.3X1.8X19-MM)	
	4	1	**419-3328**	1	LINER	
	5	1	**419-3329**	1	LINER	
	6	1	**419-3330**	1	LINER	
	7	1	**419-5161**	1	LINER	

M - METRIC PART

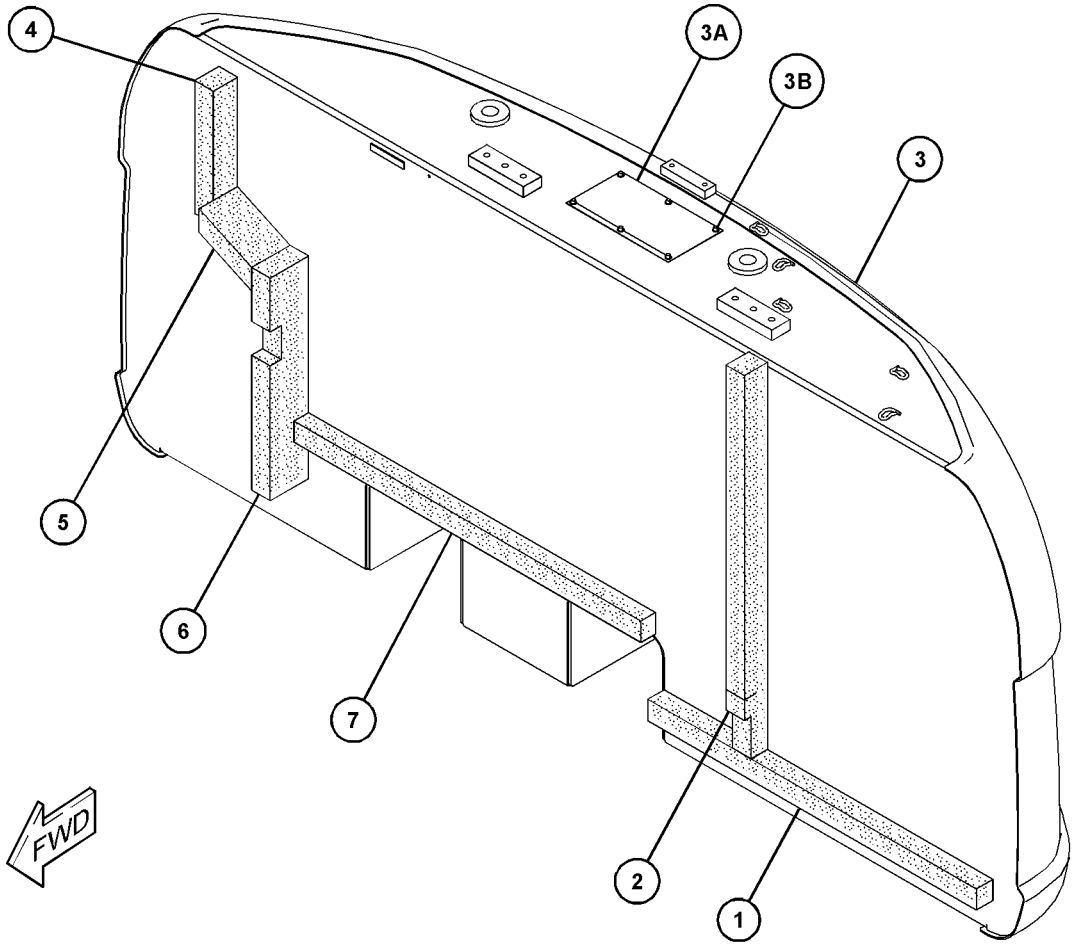

GRAPHIC #1 **<END>** g03147749

384-9089 COVER AS-SOUND SUPPRESSION

S/N: XAH1-UP

PART OF 390-3675 HOOD & GUARD GP

SMCS-7253, 7263, 7276, 795C

i05777466

NOTE	REF NO	GRAPHIC REF	PART NUMBER	QTY	PART NAME 1 2 3 4 5 6 (PRODUCT LEVEL)	SEE PAGE
	1	1	**236-9567**	2	SHEET-RUBBER	
	2	1	**268-0693**	2	LINER	
	3	1	**268-0694**	1	LINER	
	4	1	**268-0695**	1	LINER	
	5	1	**268-0696**	1	LINER	

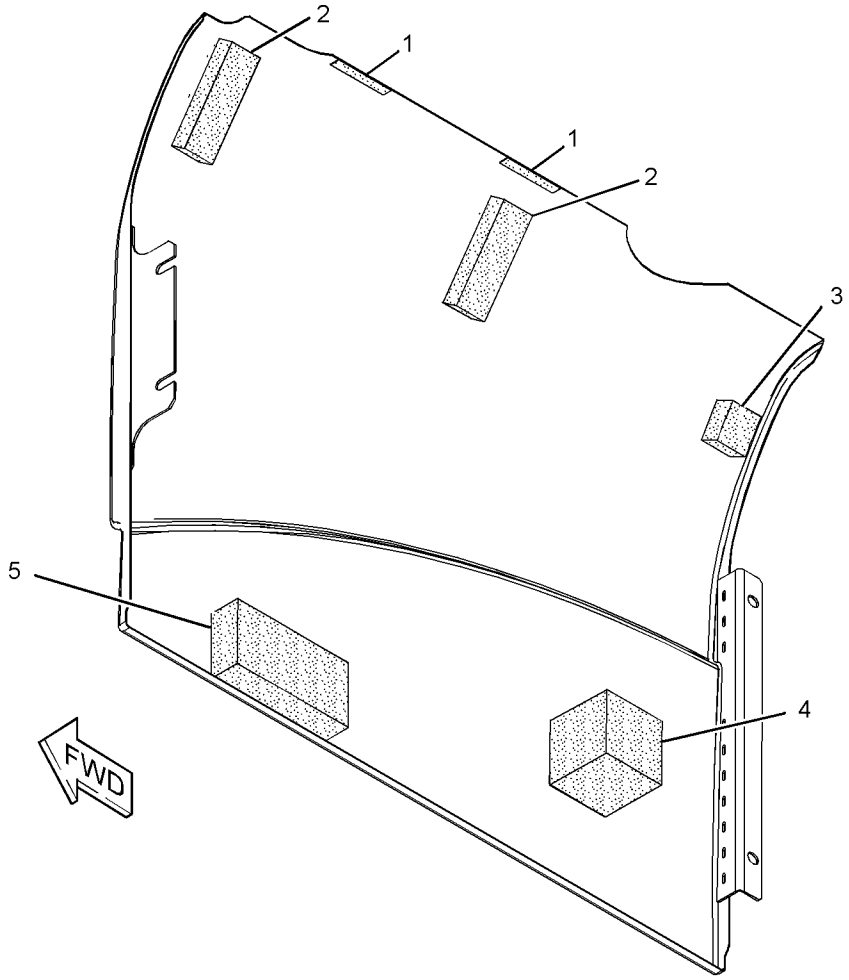

GRAPHIC #1

<END>

g03129096

387-3488 FRAME GP-UPPER

S/N: XAH1-UP

PART OF 454-5583 CHASSIS AR

SMCS-7051 **i05777372**

NOTE	REF NO	GRAPHIC REF	PART NUMBER	QTY	PART NAME 1 2 3 4 5 6 (PRODUCT LEVEL)	SEE PAGE
B	1	1	**093-0086**	4	SHIM (1-MM THK)	
B	2	1	**093-0118**	2	SHIM (2-MM THK)	
	3	1	**093-0349**	3	WASHER (22X60X6-MM THK)	
	4	1	**107-9739**	2	PIN AS	
	5	1	**118-5982**	2	SPACER (73X105X14-MM THK)	
B	6	1	**133-2424**	2	SHIM (0.5-MM THK)	
	7	1	**212-2838**	2	SHIM (2-MM THK)	
	8	1	**267-0061**	1	PIN AS	
B	9	1	**308-8775**	1	SHIM (0.5-MM THK)	
B	10	1	**308-8776**	2	SHIM (1-MM THK)	
B	11	1	**308-8777**	1	SHIM (2-MM THK)	
	12	1	**387-3489**	1	FRAME AS-UPPER	
	12A	1	**186-5639**	1	STEP AS	
M	13	1	**453-2844**	3	BOLT (M20X2.5X30-MM)	
					THE FOLLOWING REPAIR PART IS AVAILABLE FOR REPAIR OF DAMAGED SKIRTS	
F			**180-7614**	1	PLATE-SKIRT (1100-MM)	

B - USE AS REQUIRED
F - NOT SHOWN
M - METRIC PART

387-3488 **FRAME GP-UPPER (*contd.*)** **i05777372**

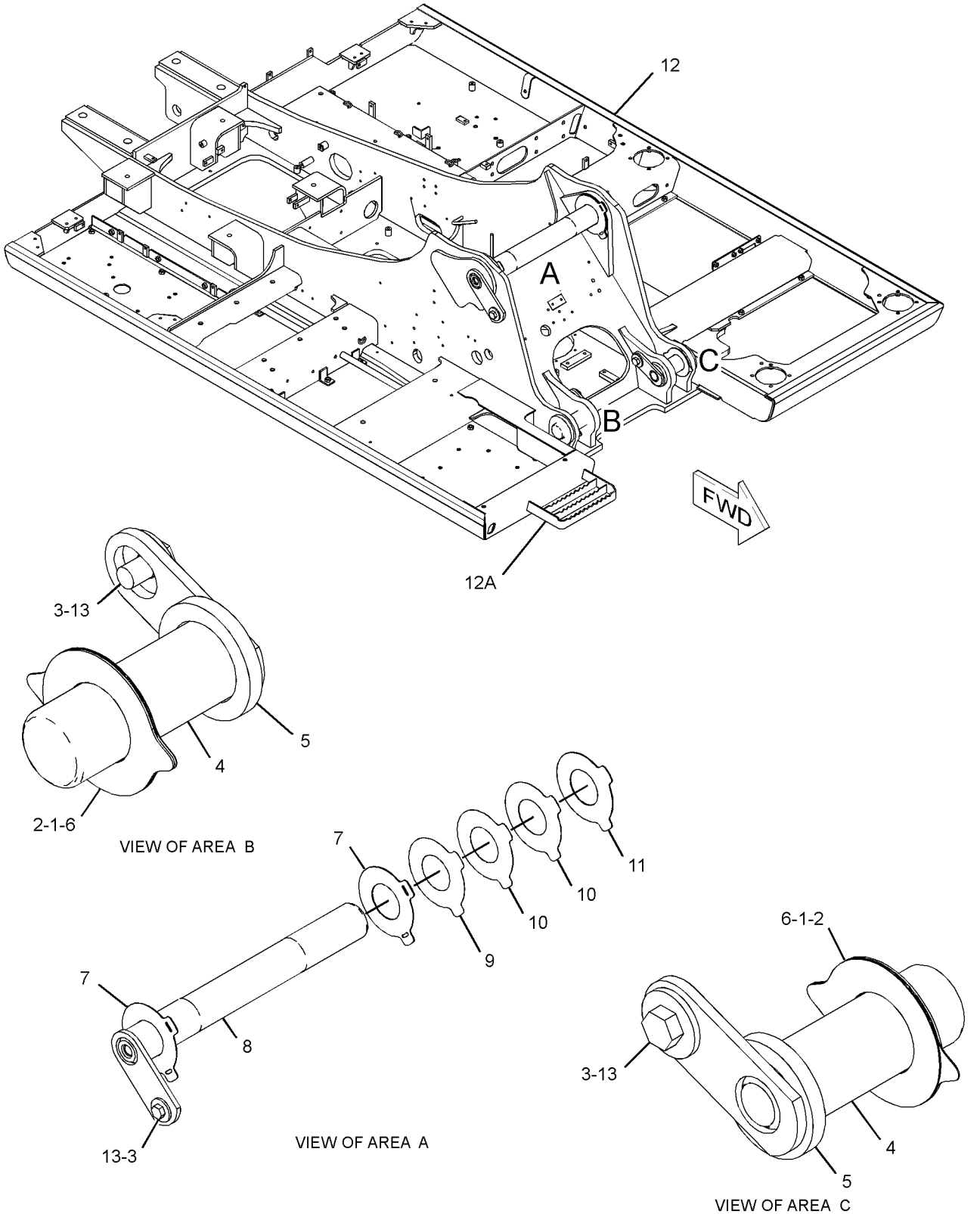

GRAPHIC #1 **<END>** g03129203

378-9608 GEAR & BEARING GP-SWING

S/N: XAH1-UP

PART OF 436-2841 GEAR & BEARING GP-SWING

SMCS-7063 **i05772742**

NOTE	REF NO	GRAPHIC REF	PART NUMBER	QTY	PART NAME 1 2 3 4 5 6 (PRODUCT LEVEL)	SEE PAGE
	1	1	**229-1081**	1	SEAL-DUST	
	2	1	**3B-8489**	2	FITTING-GREASE	
E	3	1	**148-4685**		SEAL (335-CM)	

E - ORDER BY THE CENTIMETER

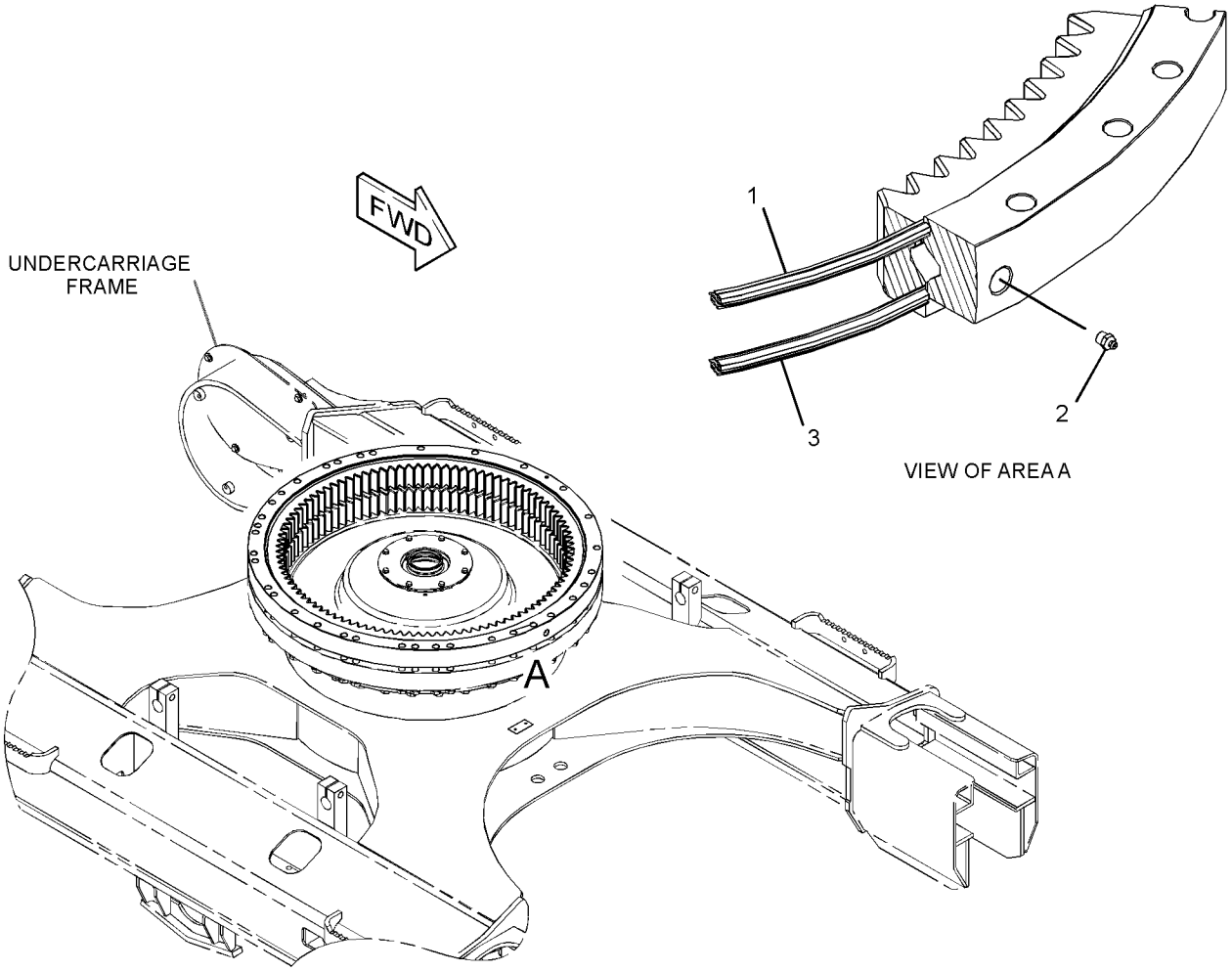

GRAPHIC #1 **<END>** g03146837

436-2841 GEAR & BEARING GP-SWING

S/N: XAH1-UP

PART OF 260-6975 FRAME AR-UNDERCARRIAGE

SMCS-7063 **i05772730**

NOTE	REF NO	GRAPHIC REF	PART NUMBER	QTY	PART NAME 1 2 3 4 5 6 (PRODUCT LEVEL)	SEE PAGE
	1	1	**2Y-5503**	1	CORK	
	2	1	**4I-7444**	1	BOOT	
	3	1	**4I-7446**	1	GASKET	
	4	1	**434-5320**	1	PLATE AS	
	5	1	**171-9464**	68	SPACER (20.6X38X6-MM THK)	
Y	6	1	**378-9608**	1	GEAR & BEARING GP-SWING	160
	7	1	**095-7993**	1	DOWEL	
	8	1	**148-4703**	1	COVER	
	9	1	**148-4704**	1	GASKET	
	10	1	**4I-7326**	1	STRIP	
	11	1	**4I-7512**	1	CLAMP-HOSE	
M	12	1	**6V-3532**	36	BOLT (M20X2.5X60-MM)	
M	13	1	**8T-0362**	32	BOLT (M20X2.5X110-MM)	
	14	1	**8T-4121**	14	WASHER-HARD (11X21X2.5-MM THK)	
M	15	1	**8T-4136**	12	BOLT (M10X1.5X25-MM)	
M	16	1	**8T-4137**	2	BOLT (M10X1.5X20-MM)	
BF			**1U-8846**	1	SEALANT-GASKET	

B - USE AS REQUIRED
F - NOT SHOWN
M - METRIC PART
Y - SEPARATE ILLUSTRATION

436-2841 **GEAR & BEARING GP-SWING (*contd.*)** **i05772730**

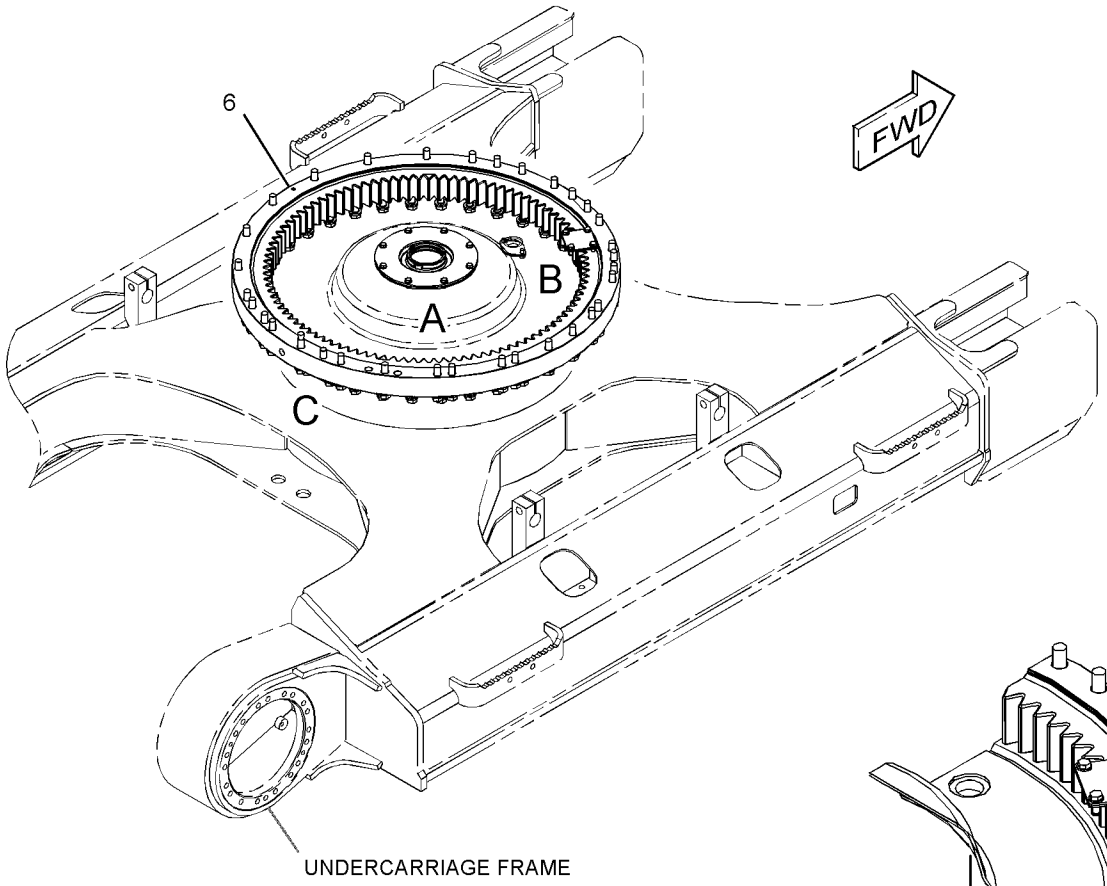

UNDERCARRIAGE FRAME

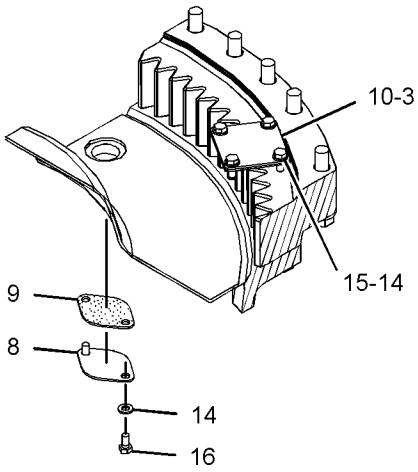

VIEW OF AREA B

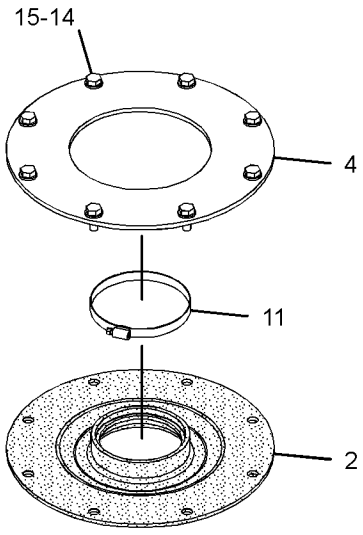

VIEW OF AREA A

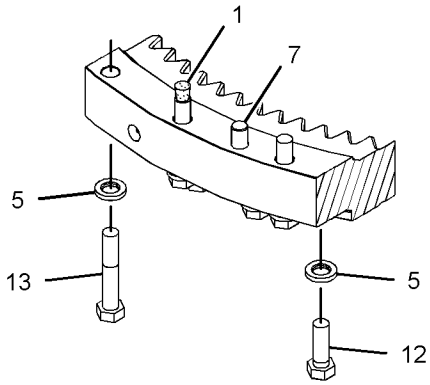

VIEW OF AREA C

GRAPHIC #1 **<END>** g03128944

390-3677 GUARD GP-BOTTOM

S/N: XAH1-UP

AN ATTACHMENT

SMCS-7153 **i05781255**

NOTE	REF NO	GRAPHIC REF	PART NUMBER	QTY	PART NAME 1 2 3 4 5 6 (PRODUCT LEVEL)	SEE PAGE
	1	1	**268-0581**	1	SHEET	
	2	1	**268-0582**	1	SHEET	
	3	1	**313-8080**	1	SHEET	
	4	1	**391-9681**	1	SHEET	
	5	1	**391-9683**	1	SHEET	
	6	1	**392-2673**	1	SHEET AS	
M	7	1	**135-8576**	28	BOLT AS-LOCKING	

M - METRIC PART

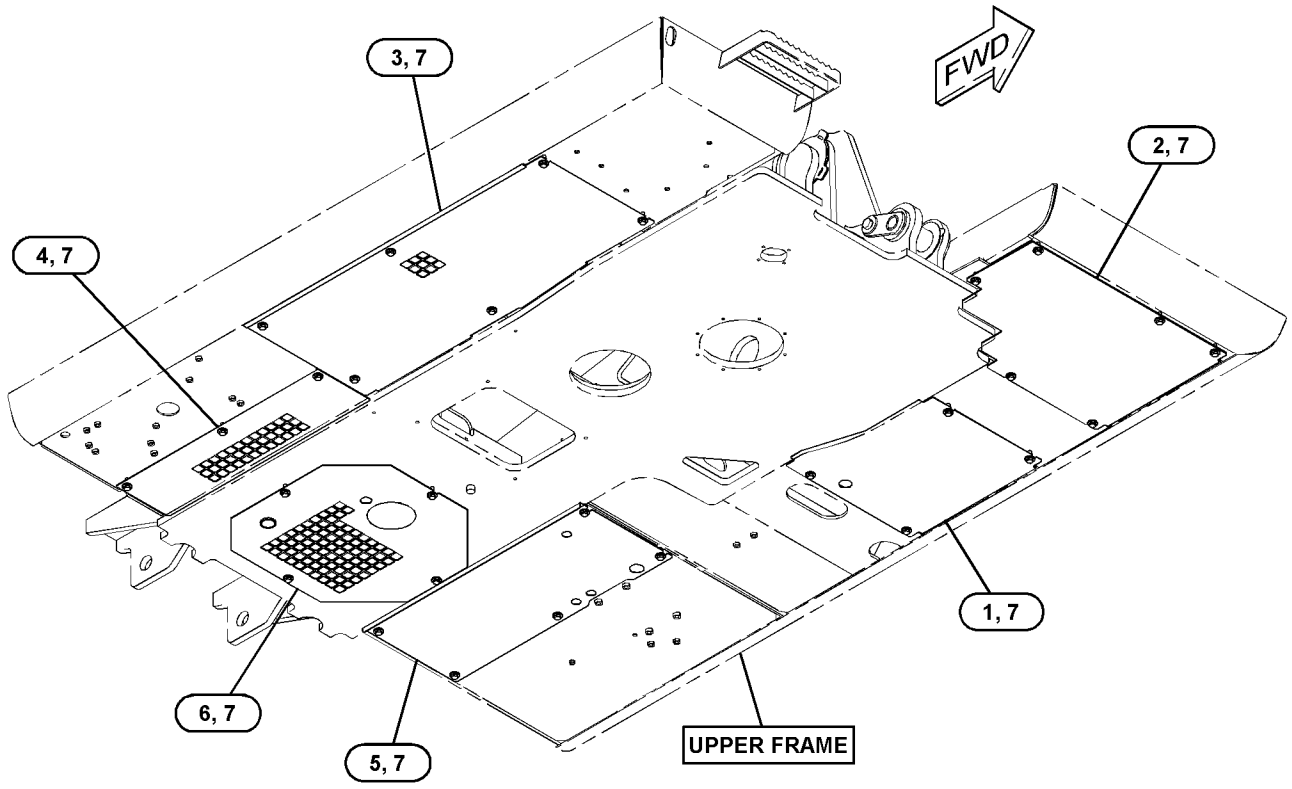

GRAPHIC #1 **<END>** g03128776

170-2602 HANDRAIL GP–FRONT, RH

S/N: XAH1-UP

PART OF 454-5583 CHASSIS AR

SMCS-7256 **i05407425**

NOTE	REF NO	GRAPHIC REF	PART NUMBER	QTY	PART NAME 1 2 3 4 5 6 (PRODUCT LEVEL)	SEE PAGE
	1	1	**193-9712**	1	HANDRAIL AS	
	2	1	**177-5880**	2	SLEEVE	
	3	1	**177-5879**	1	CLAMP	
M	4	1	**135-8578**	3	BOLT AS	
M	5	1	**135-8573**	2	BOLT AS	

M - METRIC PART

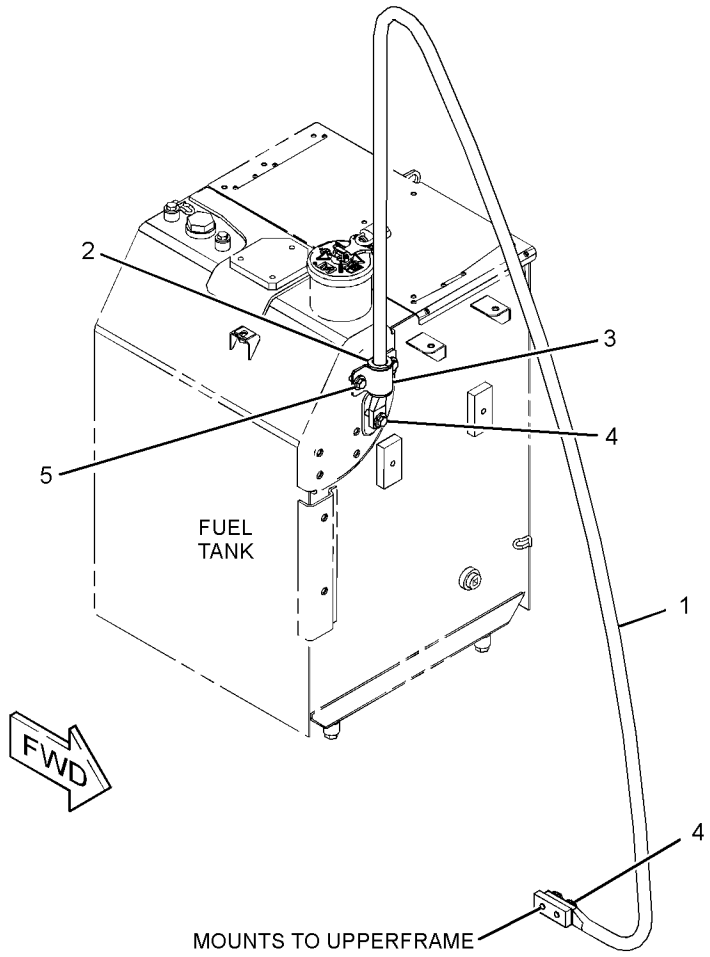

GRAPHIC #1 **<END>** g02351108

FRAME AND BODY

390-3675 HOOD & GUARD GP

S/N: XAH1-UP

PART OF 454-5583 CHASSIS AR

SMCS-7251, 7276 **i05962478**

NOTE	REF NO	GRAPHIC REF	PART NUMBER	QTY	PART NAME 1 2 3 4 5 6 (PRODUCT LEVEL)	SEE PAGE
	1	2	**4I-0118**	2	HOOK AS	
	2	2	**4I-0232**	2	STRIKER	
	3	2	**087-3908**	2	SHIM (1-MM THK)	
	4	2	**087-3909**	2	SHIM (2-MM THK)	
	5	2	**122-4120**	2	ROD	
	6	2	**268-0651**	1	SUPPORT AS	
	7	1	**436-2812**	1	DOOR GP-ACCESS	
M		1	**099-6418**	4	NUT (M6X1-THD)	
		1	**358-0880**	1	LATCH AS	
H		1	**385-3458**	1	LOCK AS	
		1	**184-8898**	2	HINGE	
	8	1	**436-2813**	1	DOOR GP-ACCESS	
M		1	**099-6418**	4	NUT (M6X1-THD)	
		1	**184-8862**	1	COVER	
		1	**358-0921**	1	LATCH AS	
H		1	**385-3458**	1	LOCK AS	
		1	**184-8898**	2	HINGE	
Y	9	1	**384-9089**	1	COVER AS-SOUND SUPPRESSION	157
	10	2	**392-1170**	1	SHEET AS	
	11	2	**392-1172**	1	SUPPORT AS	
	12	2	**392-1177**	1	SUPPORT AS	
	13	2	**392-1179**	1	SUPPORT AS	
Y	14	2	**392-1182**	1	SUPPORT AS-SOUND SUPPRESSION	174
	15	2	**392-1185**	1	SUPPORT AS	
Y	16	2	**392-1191**	1	SHEET AS-SOUND SUPPRESSION	169
Y	17	2	**392-1195**	1	SHEET AS-SOUND SUPPRESSION	170
	18	2	**392-1199**	1	SHEET AS	
	19	2	**392-1202**	1	SHEET AS	
Y	20	2	**392-1204**	1	SHEET AS-SOUND SUPPRESSION	171
Y	21	2	**392-1208**	1	SUPPORT AS-SOUND SUPPRESSION	175
	22	2	**392-1216**	1	SUPPORT AS	
Y	23	1	**392-1218**	1	SHEET AS-SOUND SUPPRESSION	172
	24	1	**392-1245**	1	SHEET AS	
	25	1	**392-1249**	1	SHEET AS	
Y	26	1	**392-1250**	1	HOOD GP-ENGINE	168
	27	2	**392-1262**	1	SPRING AS-GAS (ENGINE HOOD)	
	28	2	**392-1263**	1	SHEET AS	
	29	2	**392-1276**	1	SUPPORT AS	
Y	30	2	**392-2678**	1	SUPPORT AS-SOUND SUPPRESSION	176
	31	1	**392-2688**	1	COVER AS-HOOD	
	32	2	**392-2689**	1	SUPPORT AS	
	33	1	**396-8008**	1	SHEET AS	
	34	1	**396-8009**	1	SHEET AS-SOUND SUPPRESSION	
J		1	**348-5409**		SEAL (9-DM)	
		1	**392-1281**	2	LINER	
	35	2	**114-6285**	2	BAR	
M	36	1,2	**135-8573**	41	BOLT AS	
M	37	1,2	**135-8575**	55	BOLT AS	
M	38	2	**135-8577**	2	BOLT AS	
M	39	2	**135-8578**	6	BOLT AS	
	40	2	**3B-4618**	3	PIN-COTTER	
	41	2	**4I-1205**	4	BUMPER	
M	42	2	**5C-7261**	1	NUT (M8X1.25-THD)	
	43	2	**5P-4115**	4	WASHER-HARD (7.2X19X2-MM THK)	
	44	2	**7F-3708**	1	PIN	
	45	1,2	**8T-4121**	9	WASHER-HARD (11X21X2.5-MM THK)	
M	46	2	**8T-4133**	4	NUT (M10X1.5-THD)	
M	47	1	**8T-4136**	3	BOLT (M10X1.5X25-MM)	
M	48	1	**8T-4137**	2	BOLT (M10X1.5X20-MM)	

390-3675 **HOOD & GUARD GP (*contd.*)** **i05962478**

NOTE	REF NO	GRAPHIC REF	PART NUMBER	QTY	PART NAME 1 2 3 4 5 6 (PRODUCT LEVEL)	SEE PAGE
M	49	2	**6V-7357**	4	BOLT (M6X1X25-MM)	
	50	2	**8T-4224**	5	WASHER-HARD (8.8X16X2-MM THK)	
M	51	2	**8T-4908**	4	BOLT (M8X1.25X25-MM)	

H - REQUIRES CORPORATE KEY
J - ORDER BY THE DECIMETER
M - METRIC PART
Y - SEPARATE ILLUSTRATION

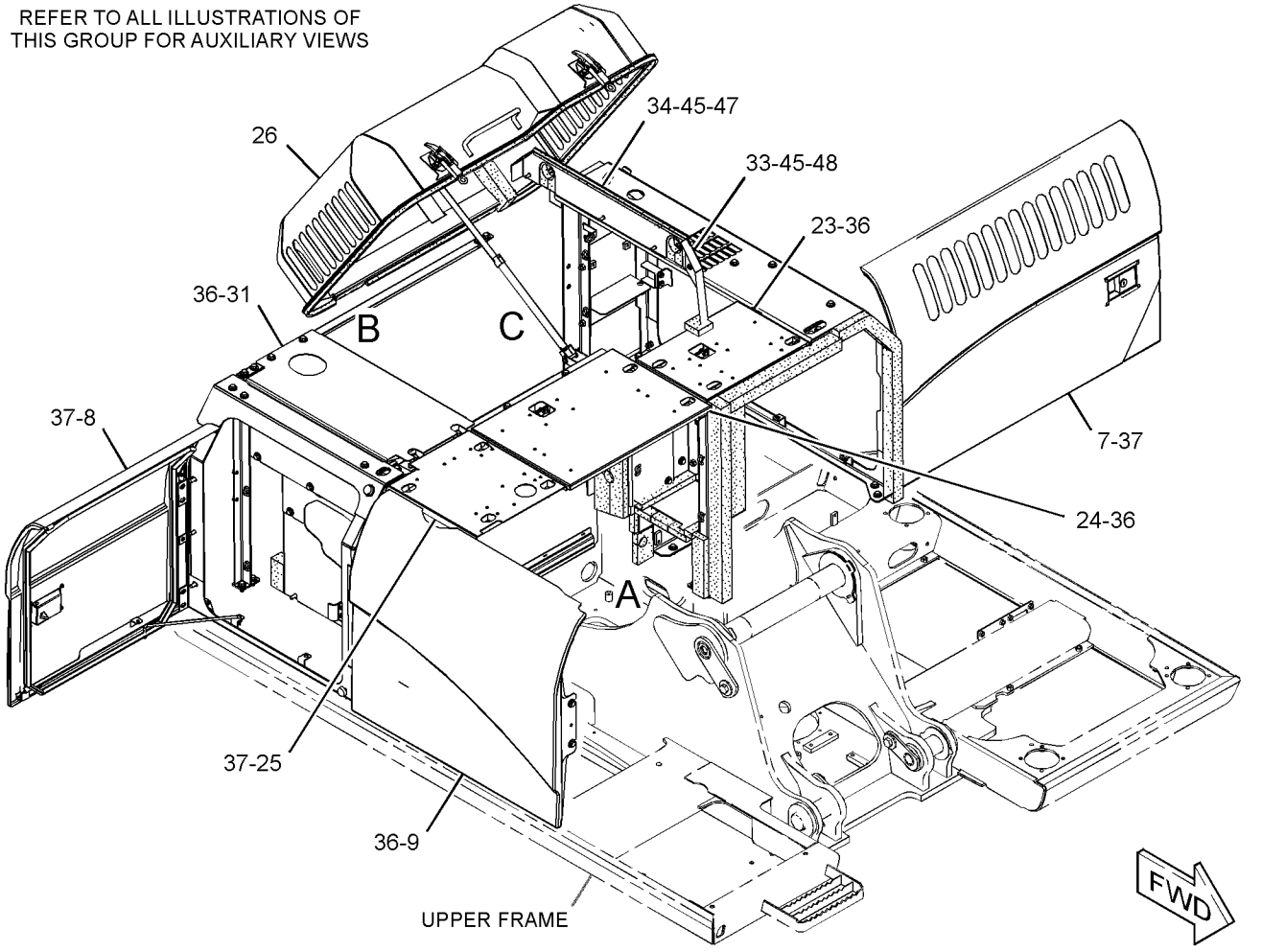

GRAPHIC #1 g03142236

390-3675 **HOOD & GUARD GP (*contd.*)** **i05962478**

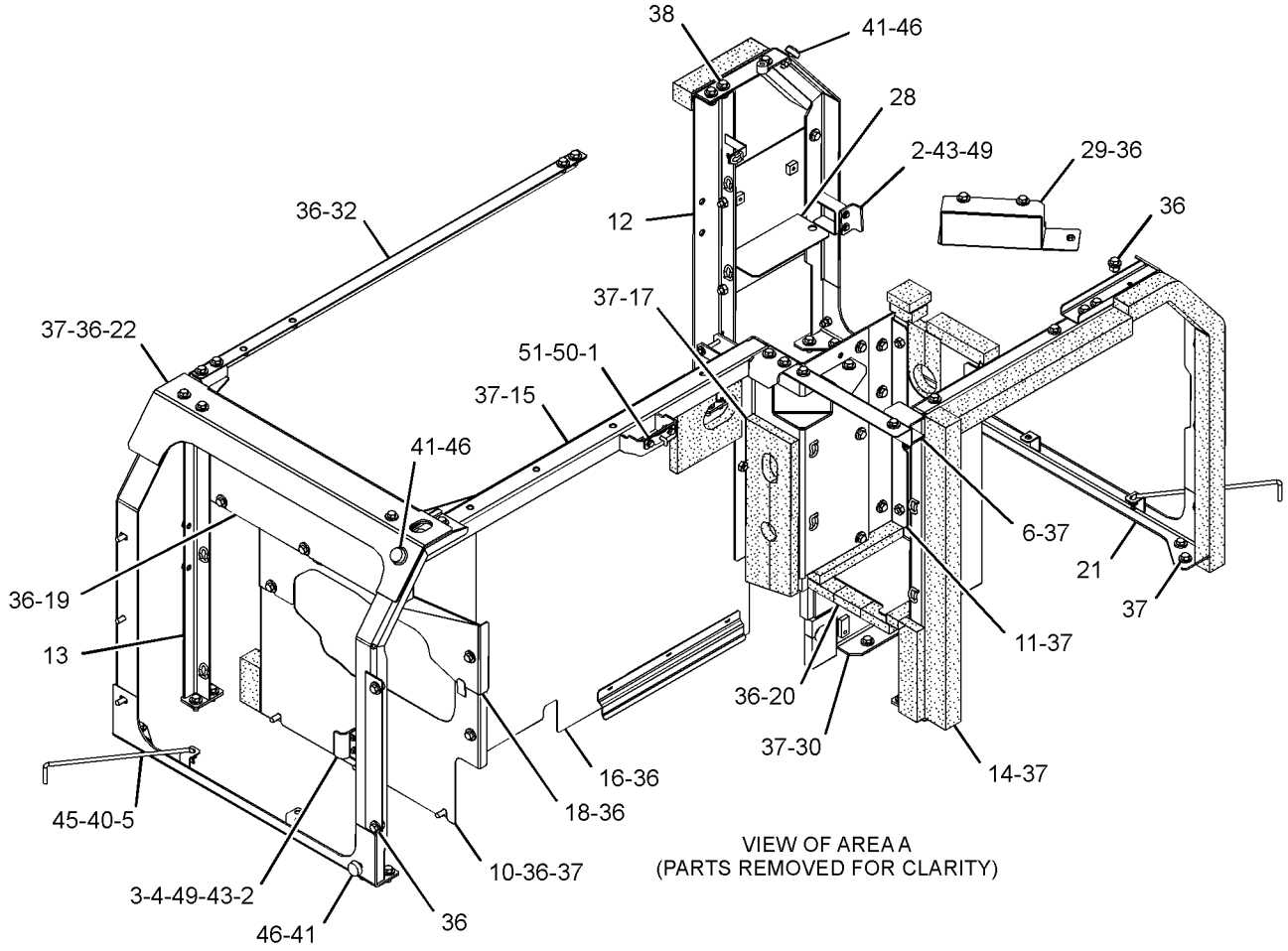

VIEW OF AREA A
(PARTS REMOVED FOR CLARITY)

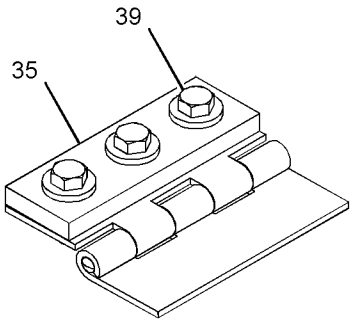

VIEW OF AREA B

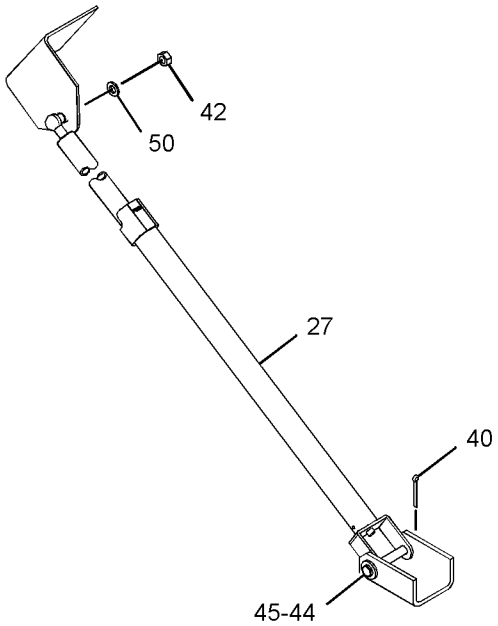

VIEW OF AREA C

GRAPHIC #2 **<END>** g03142237

392-1250 HOOD GP-ENGINE

S/N: XAH1-UP

PART OF 390-3675 HOOD & GUARD GP

SMCS-7251 **i05777998**

NOTE	REF NO	GRAPHIC REF	PART NUMBER	QTY	PART NAME 1 2 3 4 5 6 (PRODUCT LEVEL)	SEE PAGE
	1	1	**096-4129**	2	CUSHION	
J	2	1	**375-8749**	1	LATCH AS	
	3	1	**375-8750**	1	LATCH AS	
	4	1	*392-1251*	1	HOOD AS	
	4A	1	**114-6289**	2	HINGE	
	4B	1	**268-0720**	1	HANDLE	
	5	1	**392-1260**	1	LINER	
	6	1	**392-1261**	1	LINER	
	7	1	**8T-0328**	4	WASHER-HARD (5.5X10X1-MM THK)	
	8	1	**8T-4224**	4	WASHER-HARD (8.8X16X2-MM THK)	
M	9	1	**8T-4908**	4	BOLT (M8X1.25X25-MM)	
M	10	1	**8T-6693**	4	SCREW-MACHINE (M5X0.8X16-MM)	
D	11	1	**101-9848**	1	SEAL (0.52-M)	
D	11A	1	**101-9848**	1	SEAL (3.7-M)	

D - ORDER BY THE METER
J - REQUIRES CORPORATE KEY
M - METRIC PART

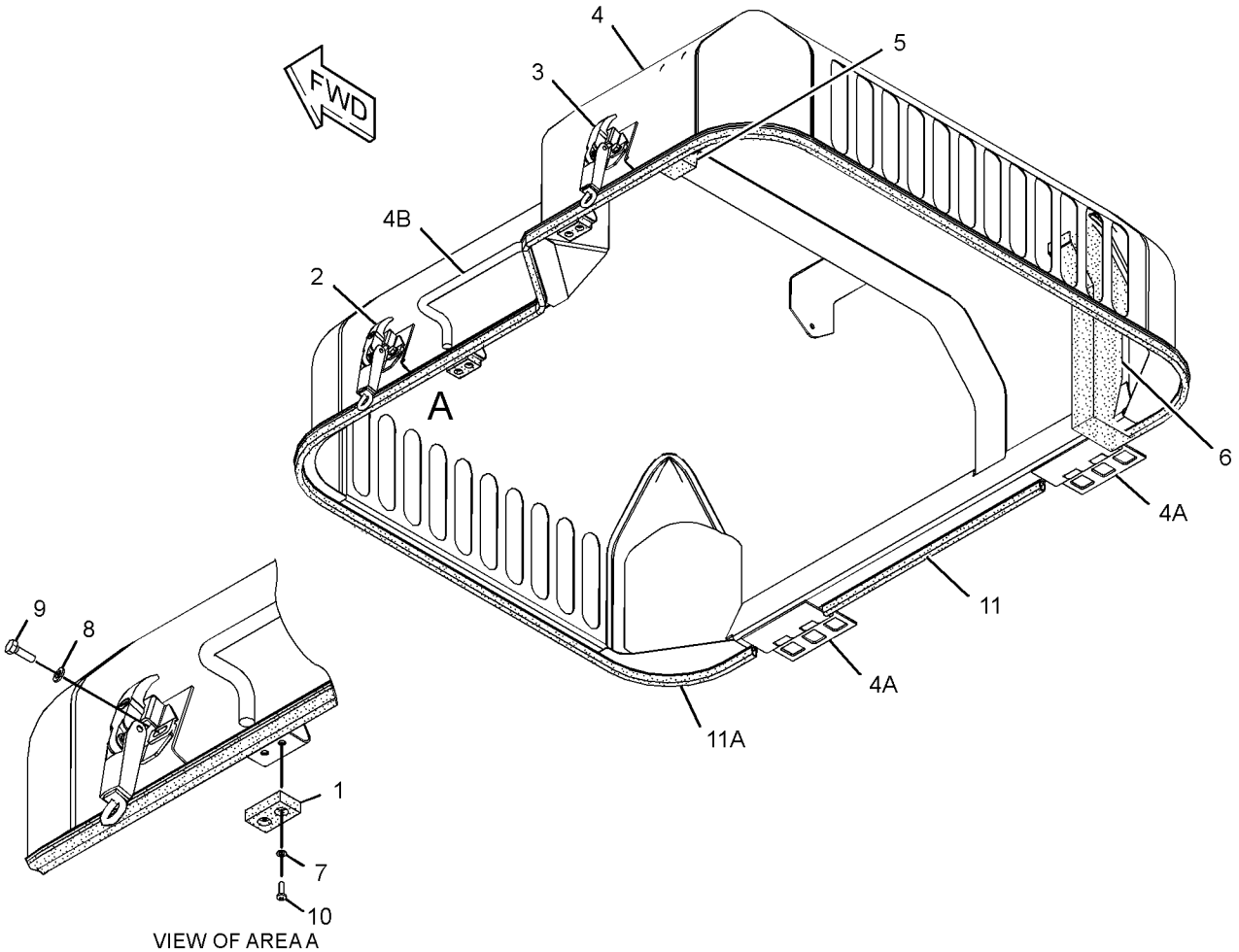

VIEW OF AREA A

GRAPHIC #1 **<END>** g03137197

392-1191 SHEET AS-SOUND SUPPRESSION

S/N: XAH1-UP

PART OF 390-3675 HOOD & GUARD GP

SMCS-1801, 7076, 7251, 7267

i05777487

NOTE	REF NO	GRAPHIC REF	PART NUMBER	QTY	PART NAME 1 2 3 4 5 6 (PRODUCT LEVEL)	SEE PAGE
	1	1	**268-0495**	1	LINER	
	2	1	**392-1194**	1	LINER	

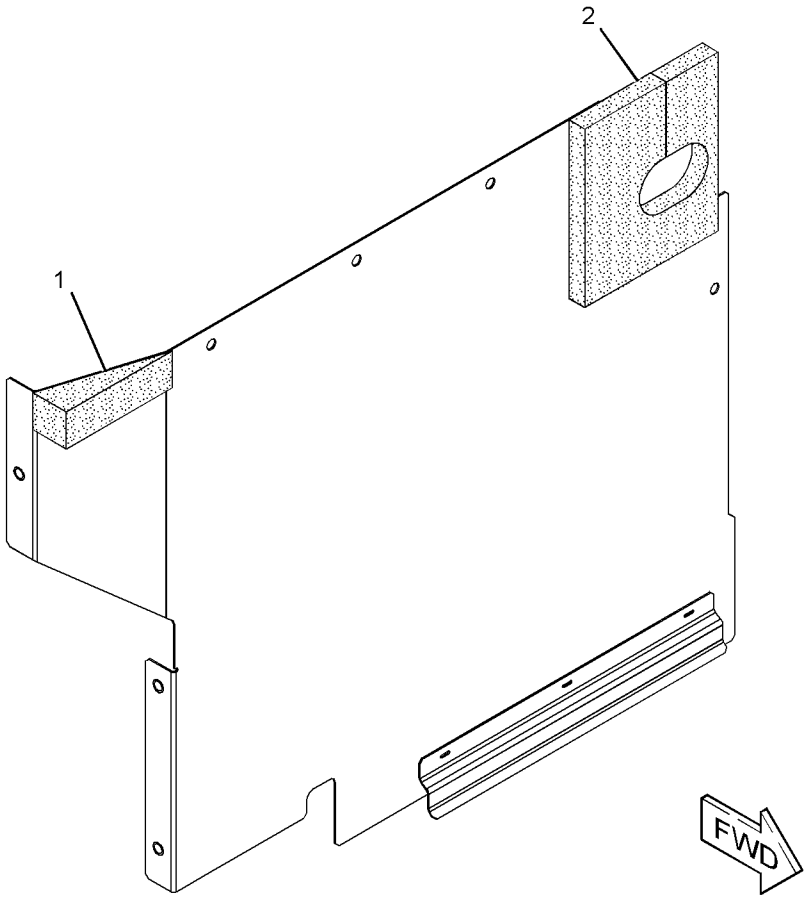

GRAPHIC #1

<END>

g03135597

392-1195 SHEET AS-SOUND SUPPRESSION

S/N: XAH1-UP

PART OF 390-3675 HOOD & GUARD GP

SMCS-1801, 7076, 7251, 7267

i05777494

NOTE	REF NO	GRAPHIC REF	PART NUMBER	QTY	PART NAME 1 2 3 4 5 6 (PRODUCT LEVEL)	SEE PAGE
	1	1	**268-0497**	1	LINER	
	2	1	**391-9690**	1	LINER	

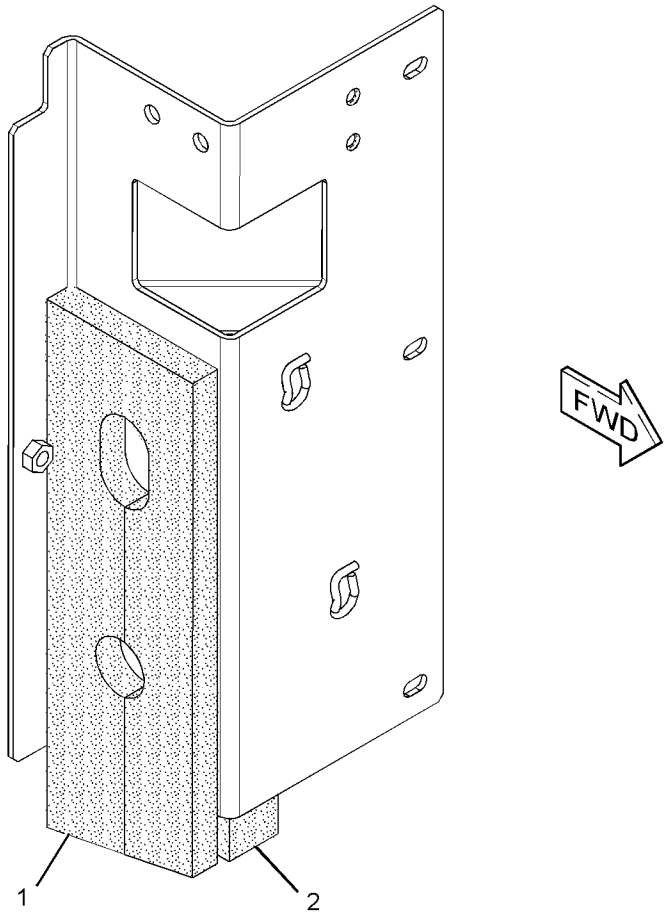

GRAPHIC #1

<END>

g03135580

392-1204 SHEET AS-SOUND SUPPRESSION

S/N: XAH1-UP

PART OF 390-3675 HOOD & GUARD GP

SMCS-1801, 7076, 7251, 7267 **i05777498**

NOTE	REF NO	GRAPHIC REF	PART NUMBER	QTY	PART NAME 1 2 3 4 5 6 (PRODUCT LEVEL)	SEE PAGE
	1	1	**268-0714**	1	LINER	
	2	1	**268-0715**	2	LINER	
	3	1	**268-0716**	1	LINER	
	4	1	**392-1207**	1	LINER	

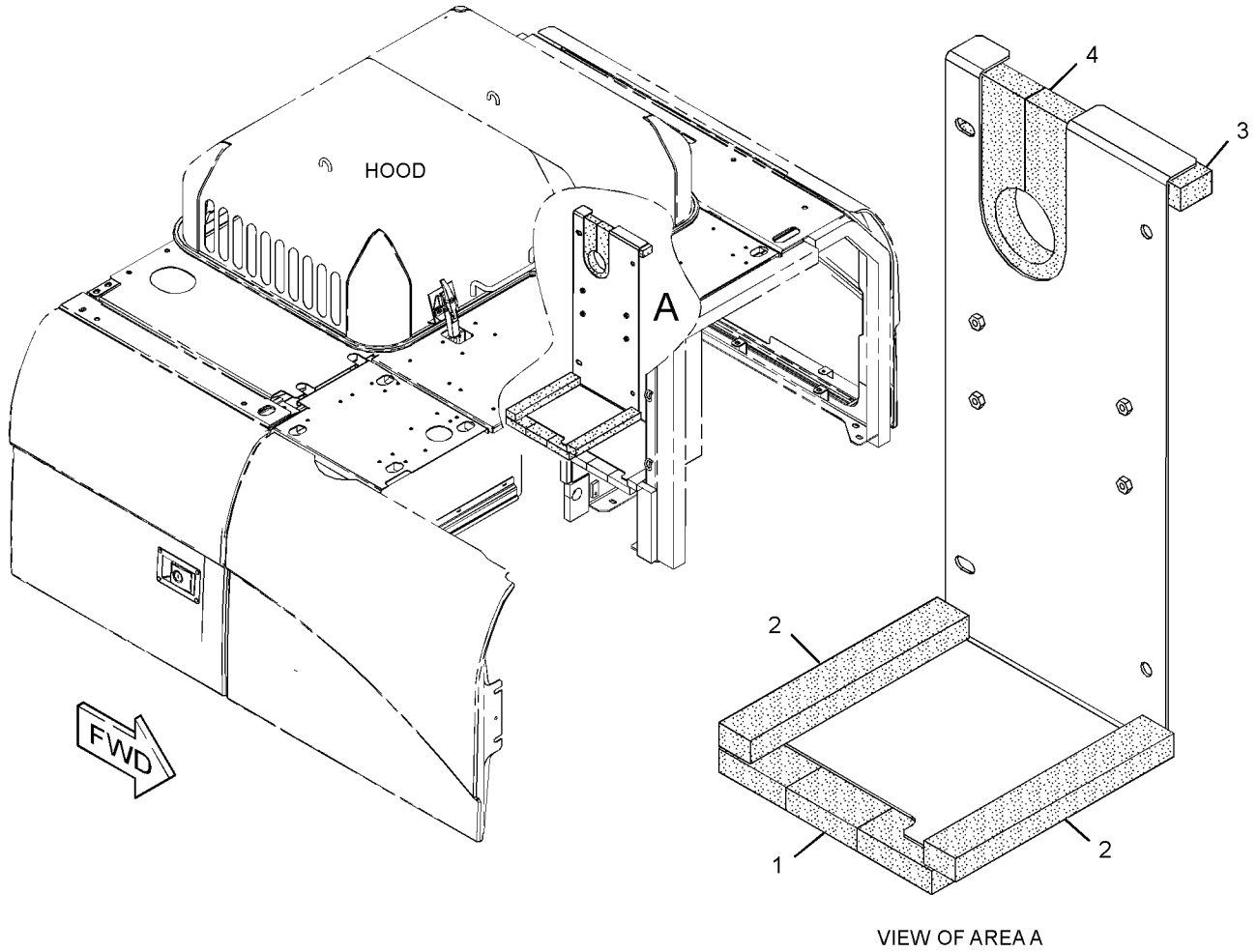

VIEW OF AREA A

GRAPHIC #1 **<END>** g03135657

392-1218 SHEET AS-SOUND SUPPRESSION

S/N: XAH1-UP

PART OF 390-3675 HOOD & GUARD GP

SMCS-1801, 7076, 7251, 7267 **i05777516**

NOTE	REF NO	GRAPHIC REF	PART NUMBER	QTY	PART NAME 1 2 3 4 5 6 (PRODUCT LEVEL)	SEE PAGE
	1	1	**268-0717**	1	LINER	
	2	1	**391-1926**	1	LINER	
	3	1	**391-1927**	1	LINER	

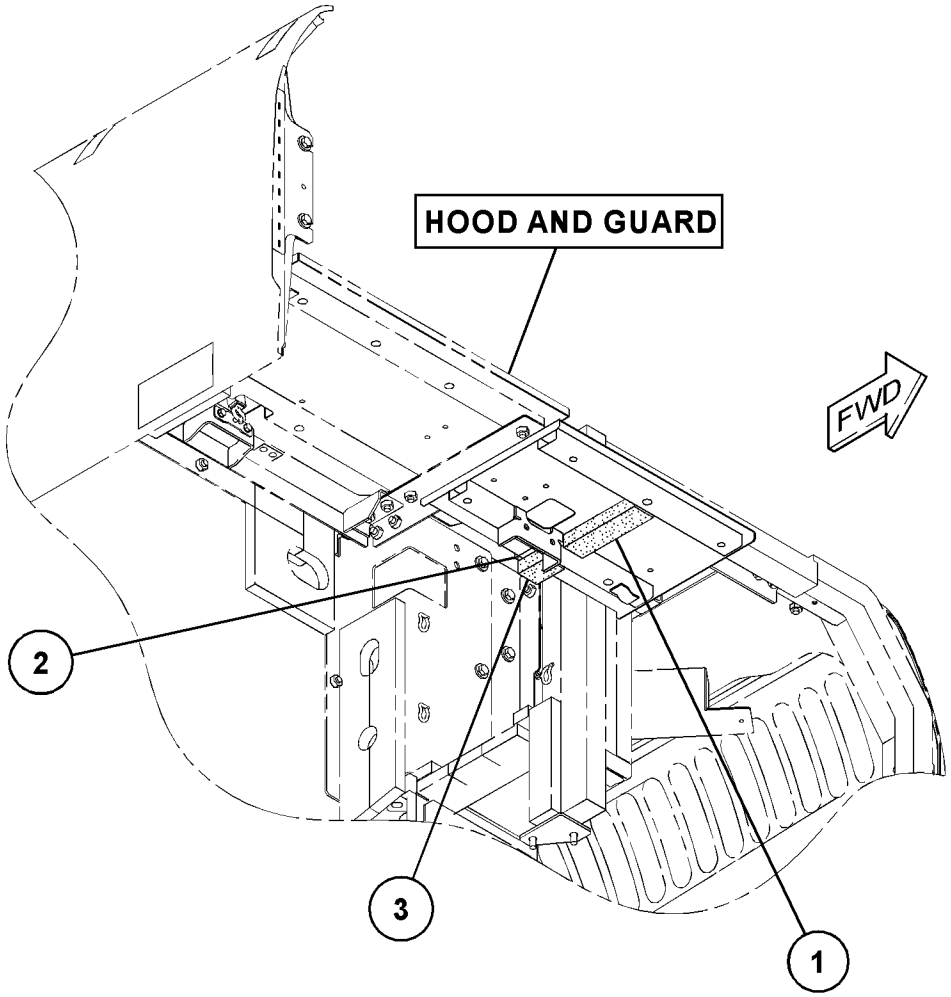

GRAPHIC #1 **<END>** g03130827

384-9014 STEP GP

S/N: XAH1-UP

PART OF 454-5583 CHASSIS AR

SMCS-7254 **i05409886**

NOTE	REF NO	GRAPHIC REF	PART NUMBER	QTY	PART NAME 1 2 3 4 5 6 (PRODUCT LEVEL)	SEE PAGE
M	1	1	**135-8573**	2	BOLT AS	
	2	1	**384-9076**	1	STEP AS	

M - METRIC PART

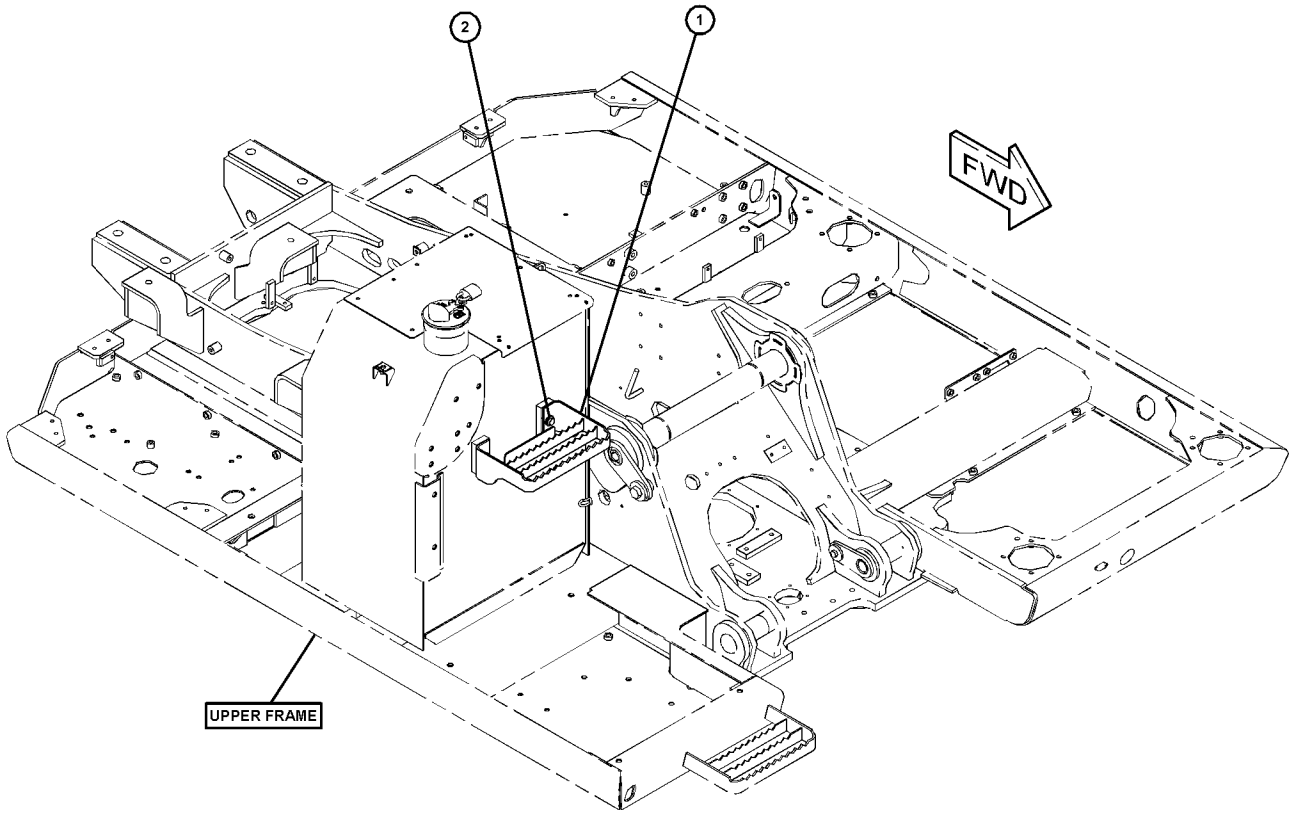

GRAPHIC #1 **<END>** g03123020

392-1182 SUPPORT AS-SOUND SUPPRESSION

S/N: XAH1-UP

PART OF 390-3675 HOOD & GUARD GP

SMCS-7276 **i05777481**

NOTE	REF NO	GRAPHIC REF	PART NUMBER	QTY	PART NAME 1 2 3 4 5 6 (PRODUCT LEVEL)	SEE PAGE
	1	1	**268-0705**	1	LINER	
	2	1	**268-0706**	1	LINER	
	3	1	**268-0719**	1	LINER	

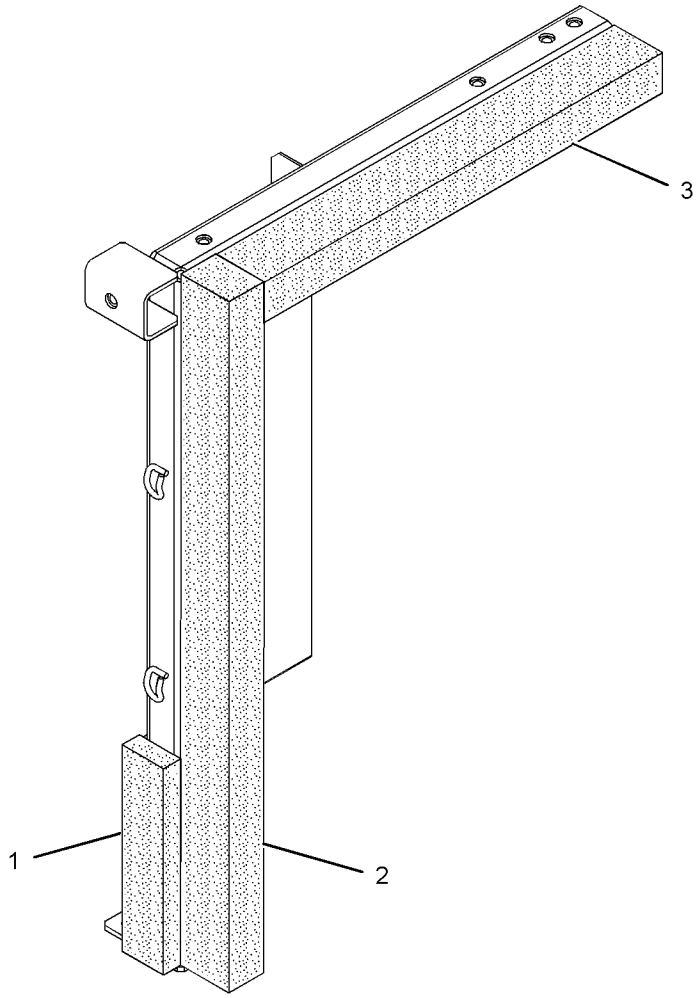

GRAPHIC #1 **<END>** g01408947

392-1208 SUPPORT AS-SOUND SUPPRESSION

S/N: XAH1-UP

PART OF 390-3675 HOOD & GUARD GP

SMCS-7276 **i05777499**

NOTE	REF NO	GRAPHIC REF	PART NUMBER	QTY	PART NAME 1 2 3 4 5 6 (PRODUCT LEVEL)	SEE PAGE
	1	1	**268-0733**	1	INSULATION	
	2	1	**273-8075**	1	LINER	

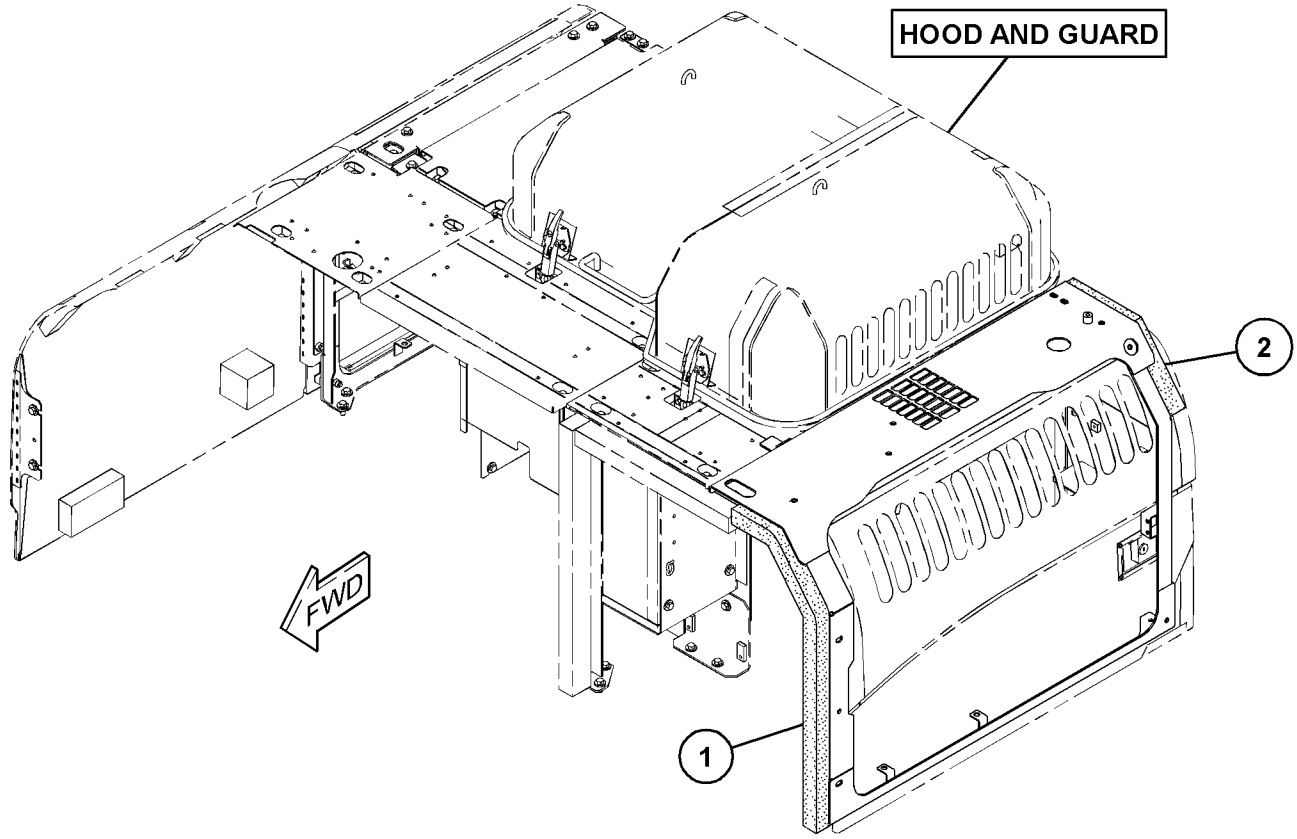

GRAPHIC #1 **<END>** g03131076

392-2678 SUPPORT AS-SOUND SUPPRESSION

S/N: XAH1-UP

PART OF 390-3675 HOOD & GUARD GP

SMCS-7276 **i05778060**

NOTE	REF NO	GRAPHIC REF	PART NUMBER	QTY	PART NAME 1 2 3 4 5 6 (PRODUCT LEVEL)	SEE PAGE
	1	1	**391-9686**	1	LINER	
	2	1	**392-1285**	1	LINER	

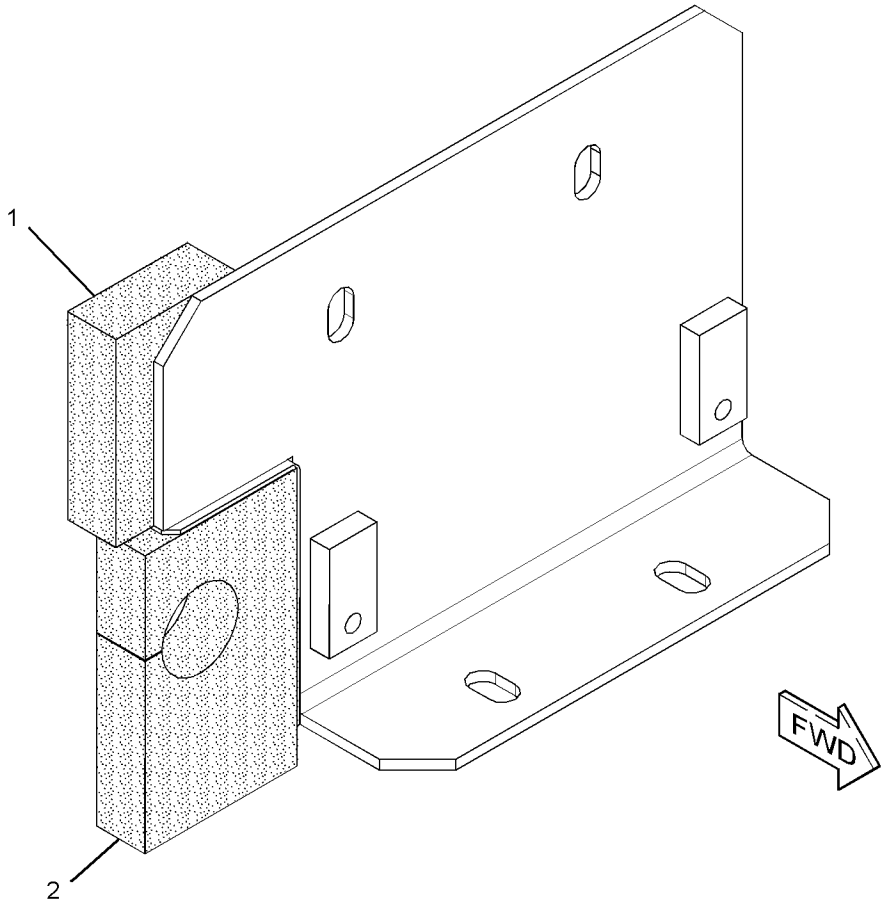

GRAPHIC #1 **<END>** g03136985

260-6975 FRAME AR-UNDERCARRIAGE

S/N: XAH1-UP

PART OF 454-5582 GENERAL AR

SMCS-4151 **i05771358**

NOTE	PART NUMBER	QTY	PART NAME 1 2 3 4 5 6 (PRODUCT LEVEL)	SEE PAGE
Y	**254-2979**	1	FRAME AS-UNDERCARRIAGE	178
Y	*436-2841*	1	GEAR & BEARING GP-SWING	161
Y	*087-5908*	2	GUARD GP-TRACK GUIDE (CENTER)	179
Y	*163-3754*	1	GUARD GP-TRAVEL MOTOR	180
Y	*248-7132*	1	IDLER GP-FRONT	181
Y	*357-7534*	1	ROLLER AR-TRACK & CARRIER	186

Y - SEPARATE ILLUSTRATION

<END>

254-2979 FRAME AS-UNDERCARRIAGE

S/N: XAH1-UP

PART OF 260-6975 FRAME AR-UNDERCARRIAGE

SMCS-4150, 7062

i05772575

NOTE	REF NO	GRAPHIC REF	PART NUMBER	QTY	PART NAME 1 2 3 4 5 6 (PRODUCT LEVEL)	SEE PAGE
	1	1	*359-5687*	1	FRAME AS-TRACK ROLLER	
	1A	1	**117-5540**	2	BRACKET	
	1B	1	**264-1581**	2	STEP	
	2	1	*359-5688*	1	FRAME AS-TRACK ROLLER	
	2A	1	**117-5540**	2	BRACKET	
	2B	1	**264-1581**	2	STEP	

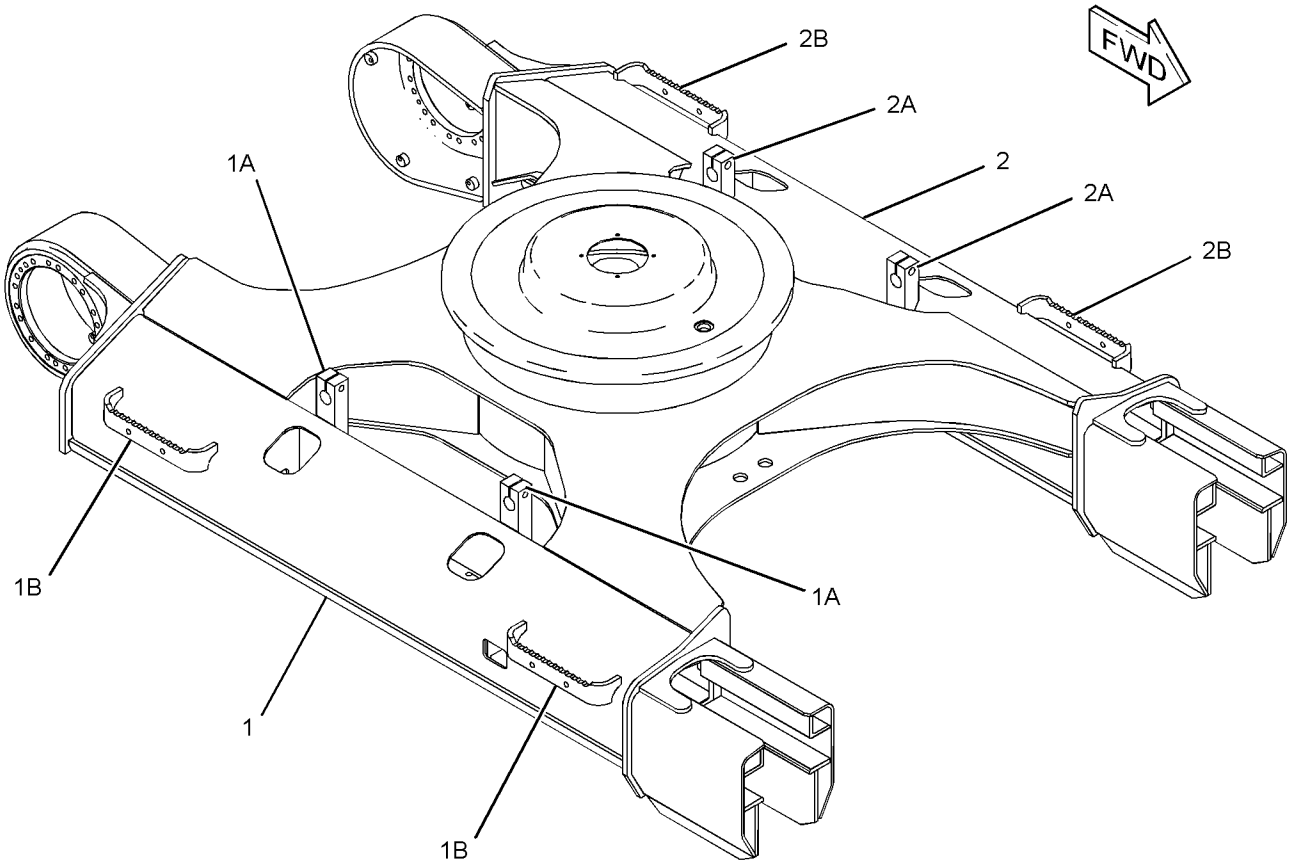

GRAPHIC #1

<END>

g01408175

087-5908 GUARD GP-TRACK GUIDE–CENTER

S/N: XAH1-UP

PART OF 260-6975 FRAME AR-UNDERCARRIAGE

SMCS-4177 **i05771368**

NOTE	REF NO	GRAPHIC REF	PART NUMBER	QTY	PART NAME 1 2 3 4 5 6 (PRODUCT LEVEL)	SEE PAGE
	1	1	**240-2988**	1	GUARD AS-TRACK GUIDE	
M	2	1	**453-2845**	4	BOLT (M20X2.5X40-MM)	
	3	1	**451-2176**	4	WASHER-HARD (22X35X3.5-MM THK)	

M - METRIC PART

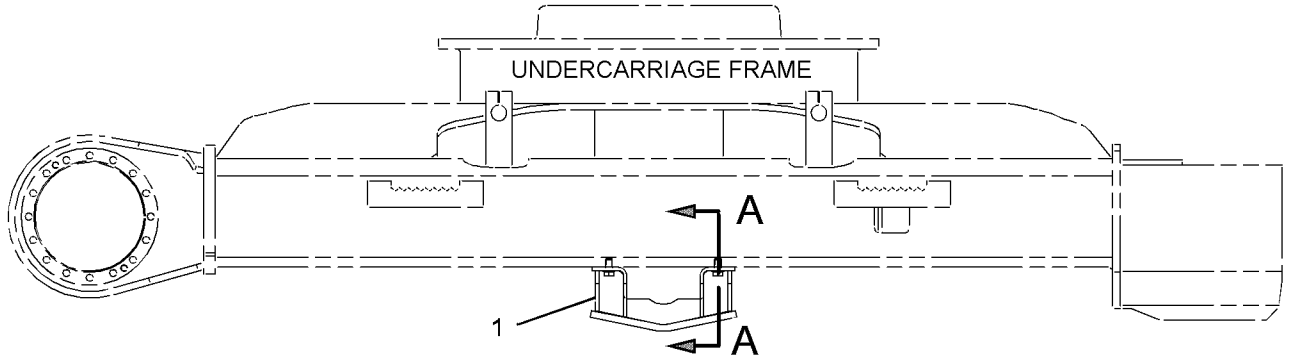

RIGHT SIDE VIEW

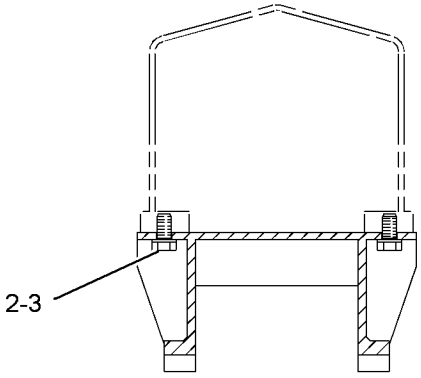

SECTION A-A

GRAPHIC #1 **<END>** g02758637

163-3754 GUARD GP-TRAVEL MOTOR

S/N: XAH1-UP

PART OF 260-6975 FRAME AR-UNDERCARRIAGE

SMCS-7163 **i05771395**

NOTE	REF NO	GRAPHIC REF	PART NUMBER	QTY	PART NAME 1 2 3 4 5 6 (PRODUCT LEVEL)	SEE PAGE
	1	1	**453-8030**	8	BOLT AS	
	2	1	**163-3755**	2	COVER	

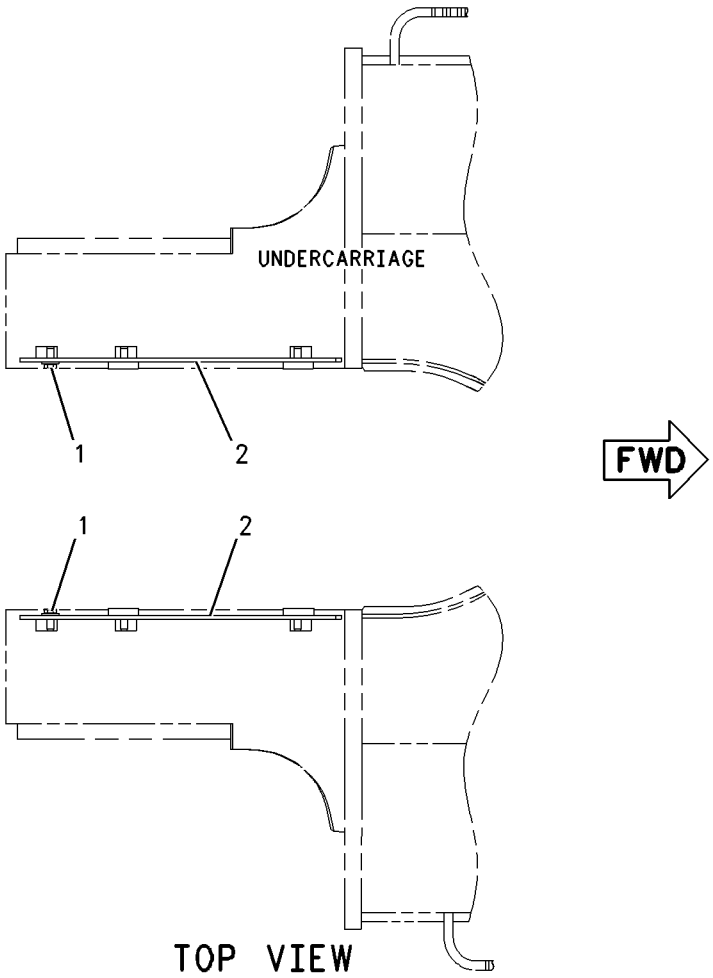

GRAPHIC #1 **<END>** g00678898

248-7132 IDLER GP-FRONT

S/N: XAH1-UP

PART OF 260-6975 FRAME AR-UNDERCARRIAGE

SMCS-4159 **i05771781**

NOTE	REF NO	GRAPHIC REF	PART NUMBER	QTY	PART NAME 1 2 3 4 5 6 (PRODUCT LEVEL)	SEE PAGE
Y	1	1	*297-9185*	1	IDLER GP-FRONT (RH)	183
Y	2	1	*297-9186*	1	IDLER GP-FRONT (LH)	184

Y - SEPARATE ILLUSTRATION

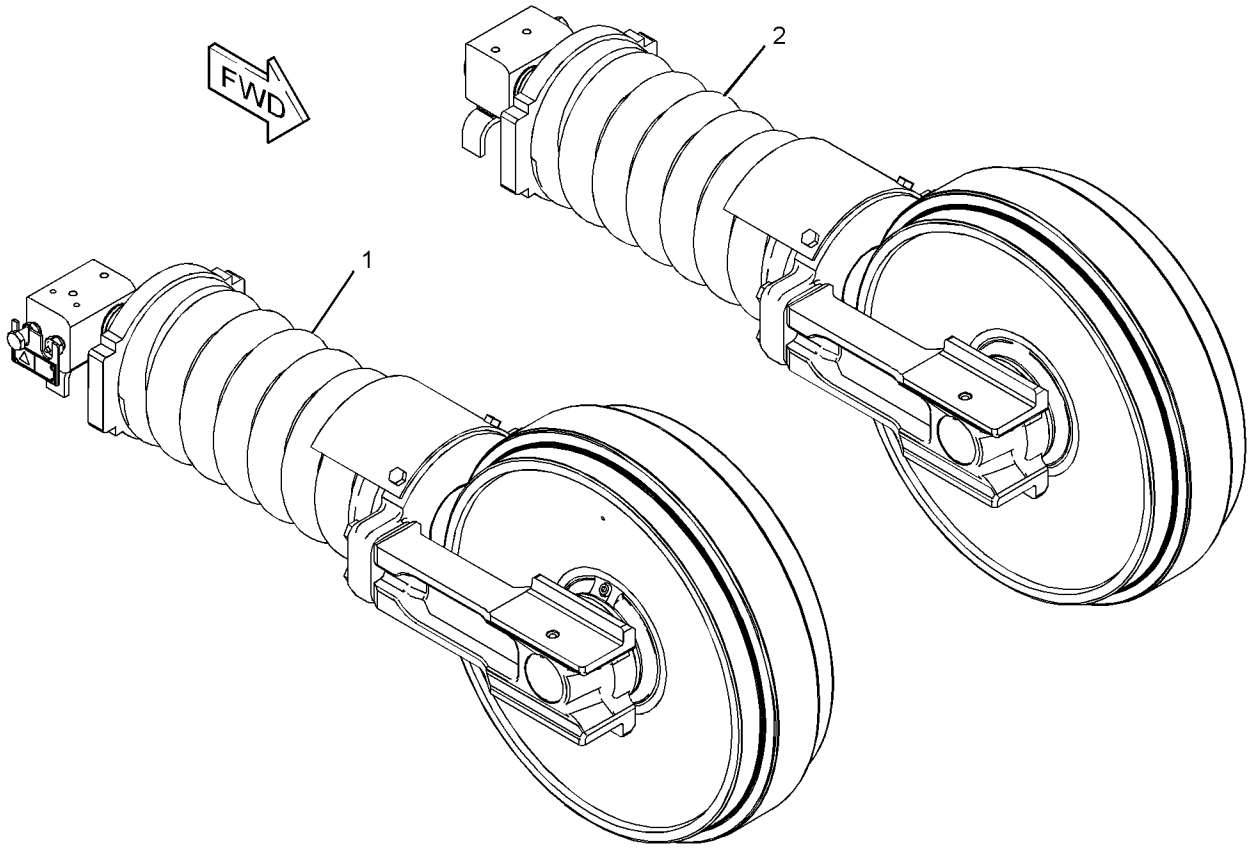

GRAPHIC #1 **<END>** g01455992

248-7143 IDLER GP-FRONT

S/N: XAH1-UP

PART OF 297-9185, 297-9186 IDLER GP-FRONT

SMCS-4159 **i02402541**

NOTE	REF NO	GRAPHIC REF	PART NUMBER	QTY	PART NAME 1 2 3 4 5 6 (PRODUCT LEVEL)	SEE PAGE
	1	1	**9W-2201**	2	SEAL GP-DUO-CONE	
					(EACH INCLUDES)	
		1	**096-4255**	2	RING	
	2	1	**239-4362**	2	BEARING (FRONT IDLER)	
	3	1	**246-5425**	1	SHAFT	
	4	1	**262-4781**	1	IDLER & BEARING AS	
		1	**8E-4359**	2	BEARING	
	5	1	**6V-7658**	2	SEAL-O-RING	
	6	1	**7H-3171**	1	PLUG-PIPE	
	7	1	**9W-9455**	2	PIN	

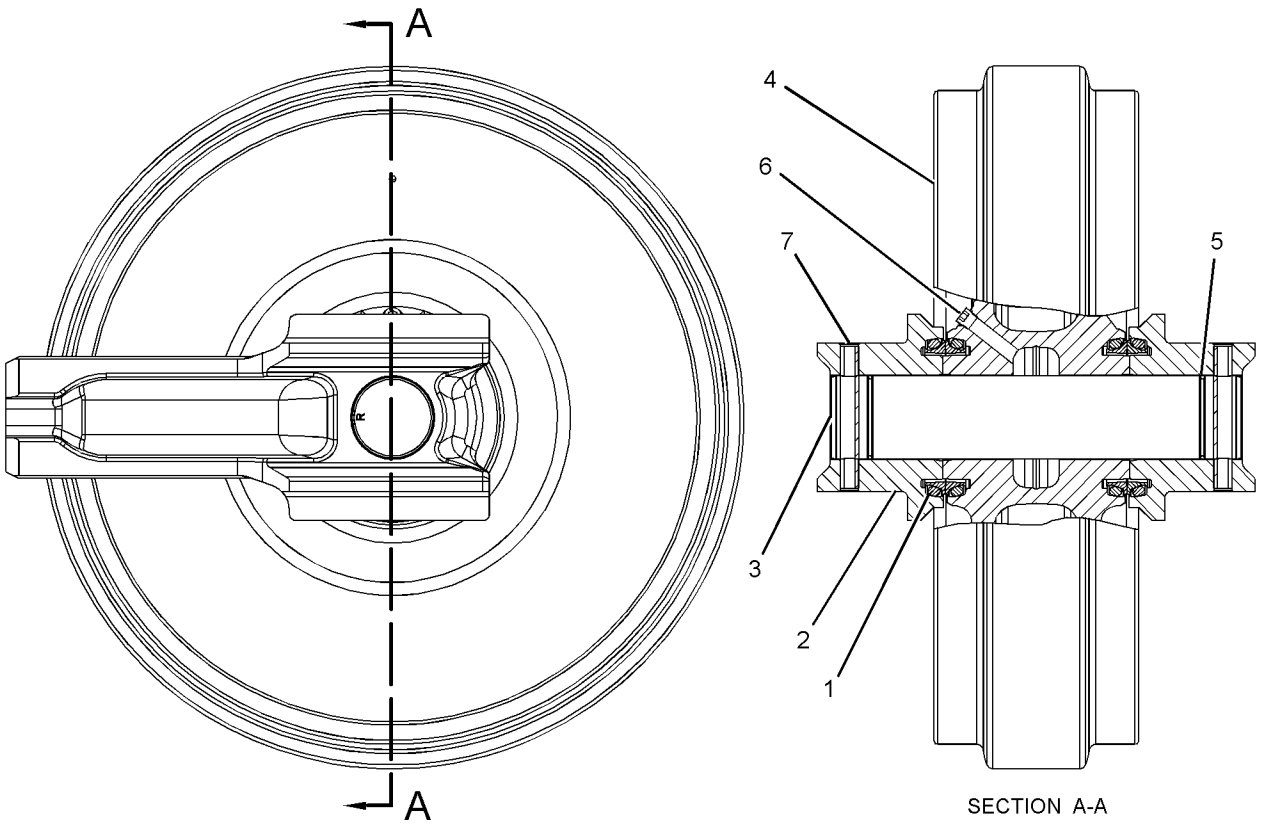

SECTION A-A

GRAPHIC #1 **<END>** g01206925

297-9185 IDLER GP-FRONT–RH

S/N: XAH1-UP

PART OF 248-7132 IDLER GP-FRONT

SMCS-4159 **i05771791**

NOTE	REF NO	GRAPHIC REF	PART NUMBER	QTY	PART NAME 1 2 3 4 5 6 (PRODUCT LEVEL)	SEE PAGE
Y	1	1	**248-7143**	1	IDLER GP-FRONT	182
Y	2	1	*297-9187*	1	TRACK ADJUSTER & RECOIL GP	191
M	3	1	**8T-4140**	4	BOLT (M16X2X60-MM)	

M - METRIC PART
Y - SEPARATE ILLUSTRATION

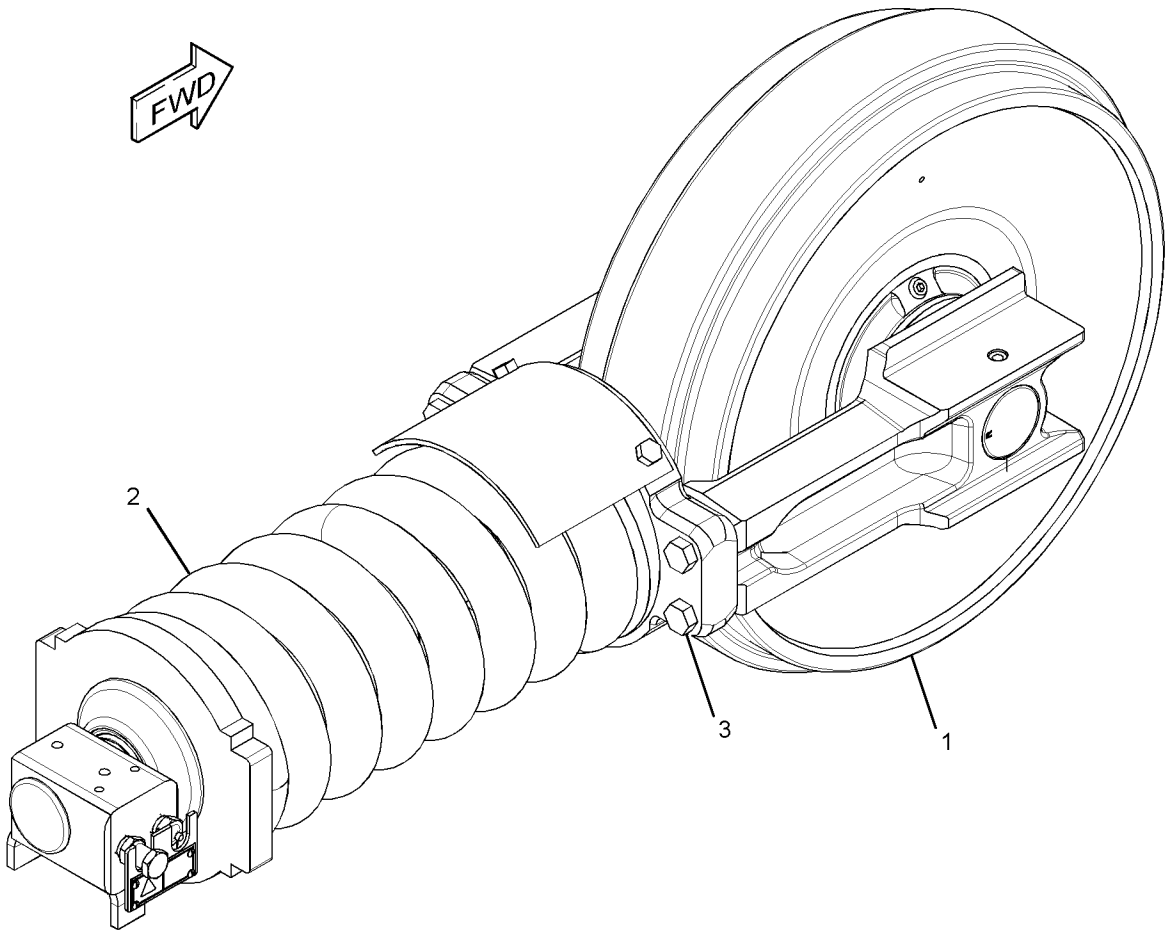

GRAPHIC #1 **<END>** g01456197

297-9186 IDLER GP-FRONT–LH

S/N: XAH1-UP

PART OF 248-7132 IDLER GP-FRONT

SMCS-4159 **i05809781**

NOTE	REF NO	GRAPHIC REF	PART NUMBER	QTY	PART NAME 1 2 3 4 5 6 (PRODUCT LEVEL)	SEE PAGE
Y	1	1	**248-7143**	1	IDLER GP-FRONT	182
Y	2	1	*297-9188*	1	TRACK ADJUSTER & RECOIL GP	192
M	3	1	**447-1707**	4	BOLT (M16X2X60-MM)	

M - METRIC PART
Y - SEPARATE ILLUSTRATION

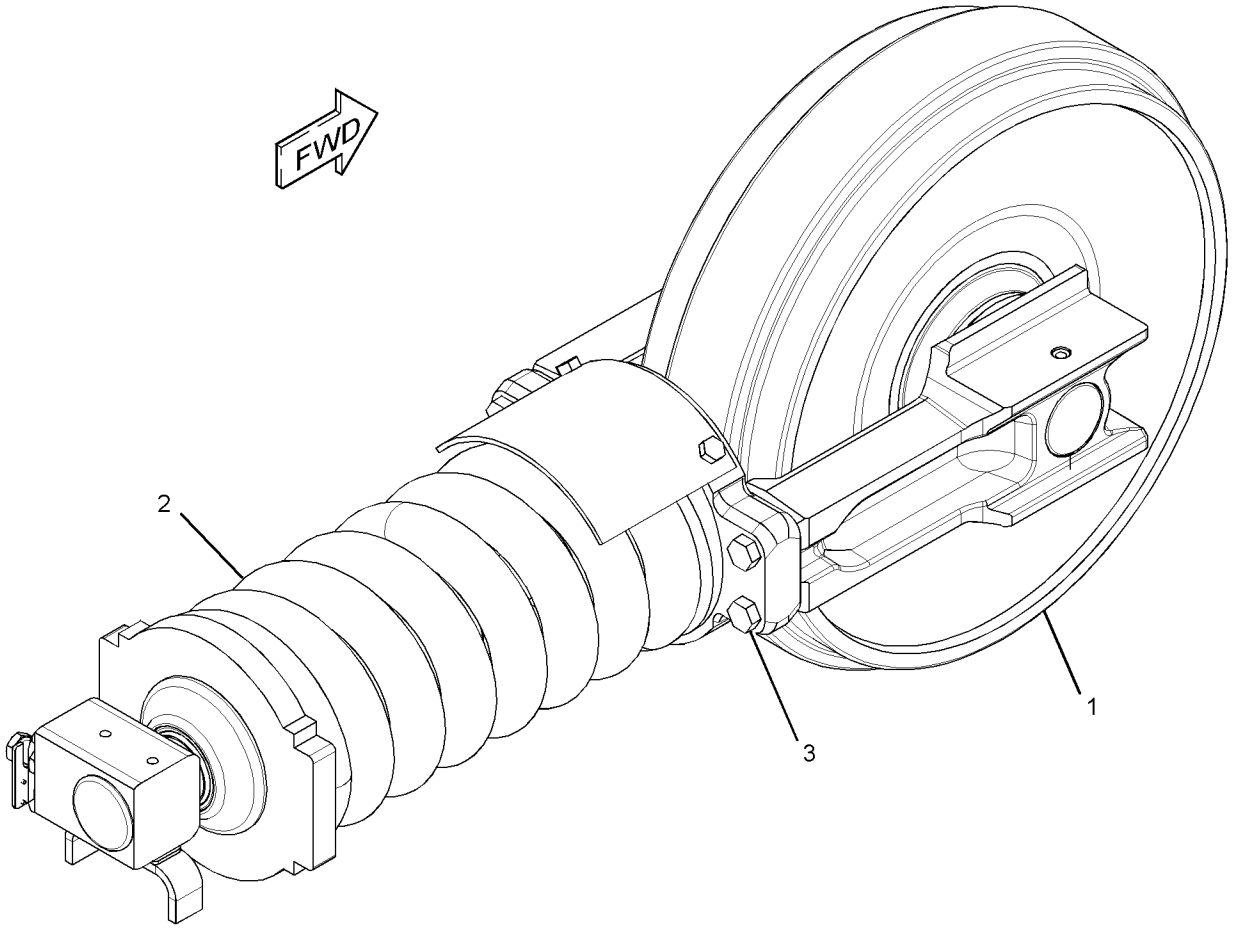

GRAPHIC #1 **<END>** g01456169

194-1134 LINK AS-TRACK

S/N: XAH1-UP
PART OF 176-4852 TRACK GP
AN ATTACHMENT

SMCS-4169, 4171

i05787224

NOTE	REF NO	GRAPHIC REF	PART NUMBER	QTY	PART NAME 1 2 3 4 5 6 (PRODUCT LEVEL)	SEE PAGE
	1	1	**9W-3138**	43	LINK-TRACK (LH)	
	2	1	**095-0863**	1	PIN-COTTER	
	3	1	**8E-8586**	1	LINK-MASTER (LH)	
	4	1	**190-3523**	43	BUSHING-TRACK	
	5	1	**8E-8585**	1	LINK-MASTER (RH)	
	6	1	**188-3064**	1	PIN-TRACK MASTER	
	7	1	**158-4381**	2	SEAL-TRACK MASTER	
	8	1	**9W-3137**	43	LINK-TRACK (RH)	
	9	1	**6Y-8186**	43	PIN-TRACK	
	10	1	**158-4380**	86	SEAL-TRACK	
	11	1	**190-3524**	1	BUSHING-TRACK MASTER	

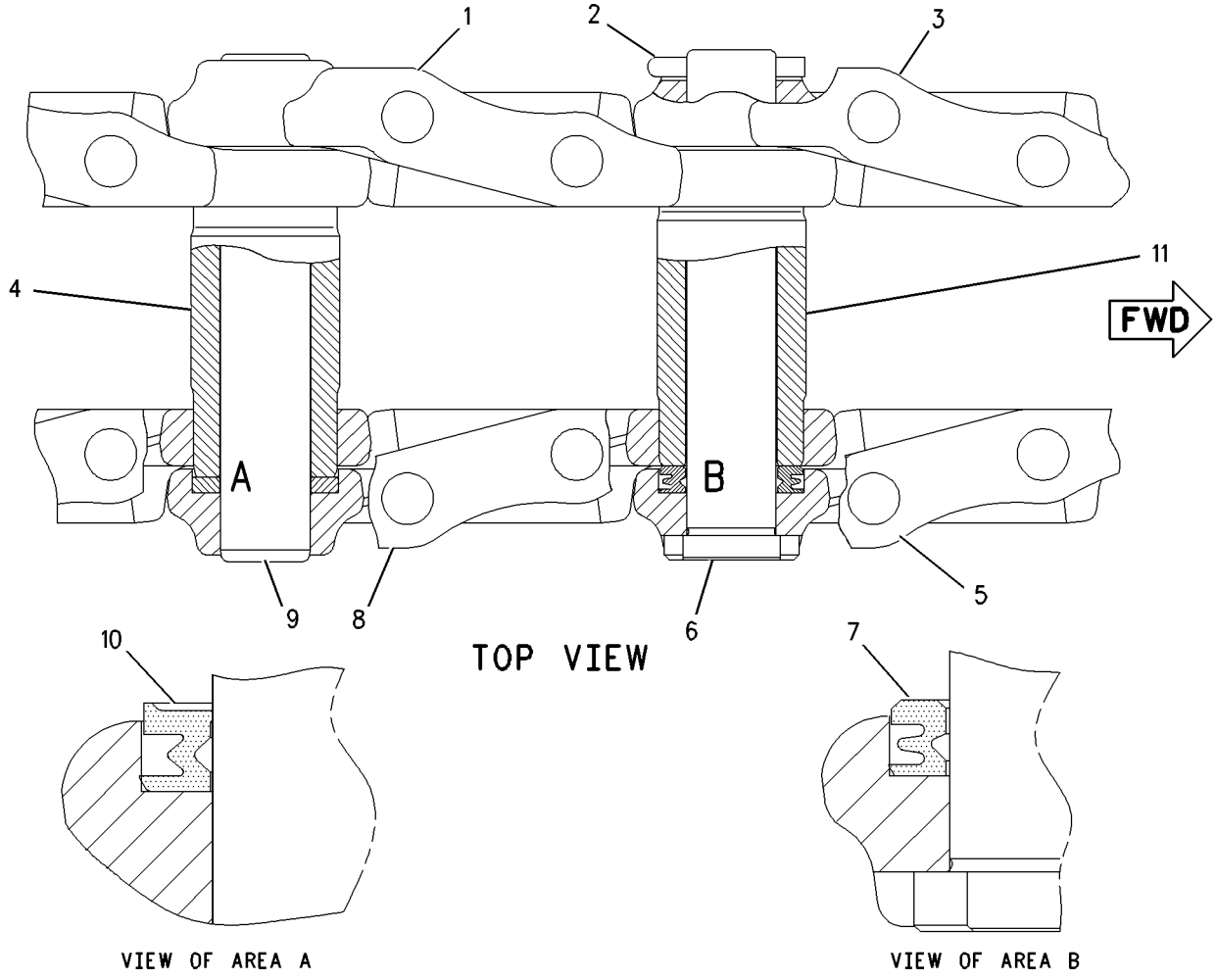

GRAPHIC #1

<END>

g00770657

357-7534 ROLLER AR-TRACK & CARRIER

S/N: XAH1-UP

PART OF 260-6975 FRAME AR-UNDERCARRIAGE

SMCS-4154, 4180

i05772635

NOTE	REF NO	GRAPHIC REF	PART NUMBER	QTY	PART NAME 1 2 3 4 5 6 (PRODUCT LEVEL)	SEE PAGE
M	1	1	**447-1725**	4	BOLT (M24X3X80-MM)	
Y	2	1	**8E-5600**	4	ROLLER GP-TRACK CARRIER	187
Y	3	1	**348-1867**	14	ROLLER GP-TRACK-SINGLE FLANGE	188
M	4	1	**447-1731**	56	BOLT (M20X2.5X100-MM)	
	5	1	**451-2176**	56	WASHER-HARD (22X35X3.5-MM THK)	

M - METRIC PART
Y - SEPARATE ILLUSTRATION
QUANTITIES SHOWN ARE THOSE REQUIRED FOR BOTH LH AND RH SIDES

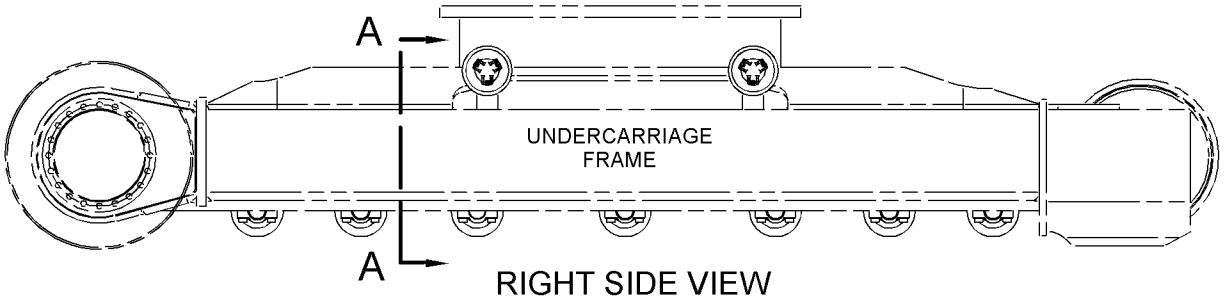

RIGHT SIDE VIEW

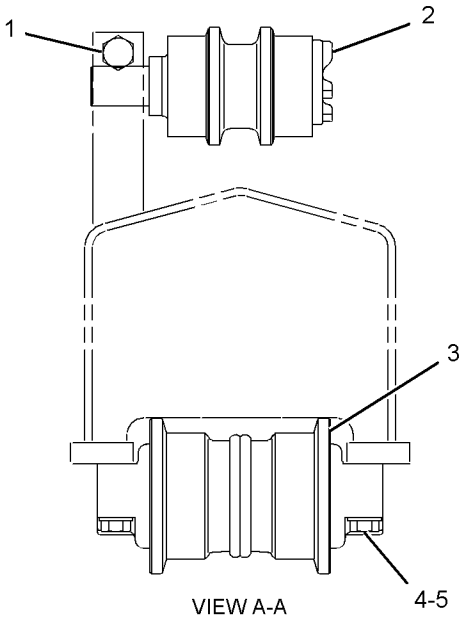

VIEW A-A

GRAPHIC #1

<END>

g02731447

8E-5600 ROLLER GP-TRACK CARRIER

S/N: XAH1-UP

PART OF 357-7534 ROLLER AR-TRACK & CARRIER

SMCS-4154 **i02752189**

NOTE	REF NO	GRAPHIC REF	PART NUMBER	QTY	PART NAME 1 2 3 4 5 6 (PRODUCT LEVEL)	SEE PAGE
	1	1	**8E-5601**	1	SHAFT AS-TRACK ROLLER	
		1	**8E-5604**	1	COLLAR-ROLLER END	
		1	**8E-5607**	1	SHAFT-TRACK ROLLER	
	2	1	**8E-5608**	1	SEAL GP-DUO-CONE	
	3	1	**8E-5602**	1	ROLLER & BEARING AS	
	3A	1	**8E-6792**	1	BEARING-TRACK ROLLER	
	3B	1	**8E-6793**	1	BEARING-TRACK ROLLER	
	4	1	**8E-5606**	1	RETAINER	
	5	1	**6V-7661**	1	SEAL-O-RING	
M	6	1	**8T-1159**	5	BOLT-SOCKET HEAD (M10X1.5X25-MM)	
	7	1	**8E-5605**	1	COVER-CARRIER ROLLER	
	8	1	**7H-3171**	1	PLUG-PIPE	

M - METRIC PART

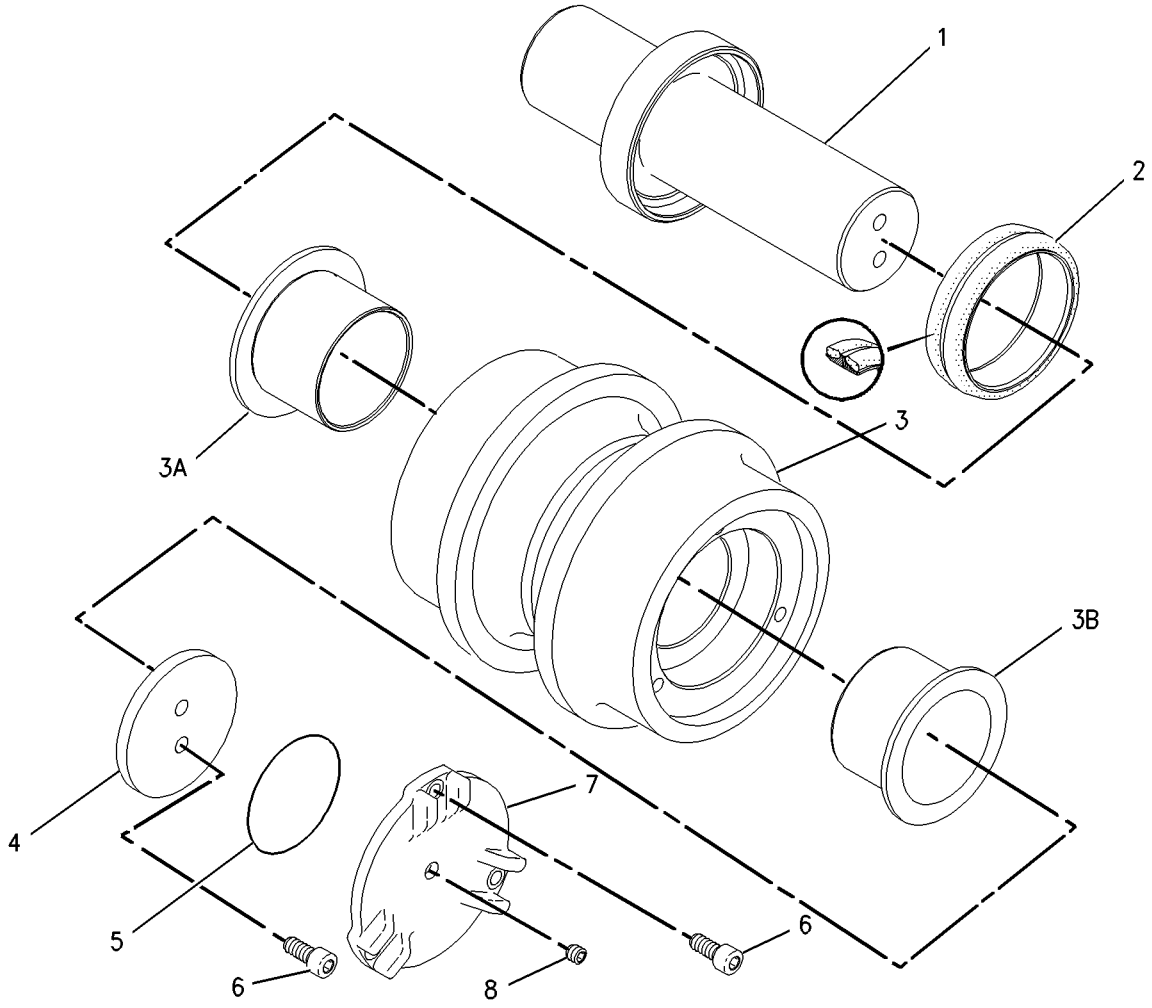

GRAPHIC #1 **<END>** g00715793

348-1867 ROLLER GP-TRACK-SINGLE FLANGE

S/N: XAH1-UP

PART OF 357-7534 ROLLER AR-TRACK & CARRIER

SMCS-4180 **i05344698**

NOTE	PART NUMBER	QTY	PART NAME 1 2 3 4 5 6 (PRODUCT LEVEL)	SEE PAGE
Y	*360-5863*	1	ROLLER GP-TRACK-SINGLE FLANGE	189
			(OIL HOLE IN RIM)	
			—OR—	
Y	*360-5864*	1	ROLLER GP-TRACK-SINGLE FLANGE	190
			(OIL HOLE IN COLLAR)	

Y - SEPARATE ILLUSTRATION

<END>

360-5863 ROLLER GP-TRACK-SINGLE FLANGE

S/N: XAH1-UP

PART OF 348-1867 ROLLER GP-TRACK-SINGLE FLANGE

SMCS-4180 **i04598669**

NOTE	REF NO	GRAPHIC REF	PART NUMBER	QTY	PART NAME 1 2 3 4 5 6 (PRODUCT LEVEL)	SEE PAGE
	1	1	**8E-5037**	2	COLLAR-TRACK ROLLER	
	2	1	**9W-2142**	2	SEAL GP-DUO-CONE	
					(EACH INCLUDES)	
		1	**096-4295**	2	RING-SEALING	
	3	1	**9W-2146**	1	PLUG	
	4	1	*360-5865*	1	ROLLER & BEARING AS	
	4A	1	**8E-5599**	2	BEARING-TRACK ROLLER	
	5	1	**7F-8268**	2	SEAL-O-RING	
	6	1	**3E-3217**	2	DOWEL	

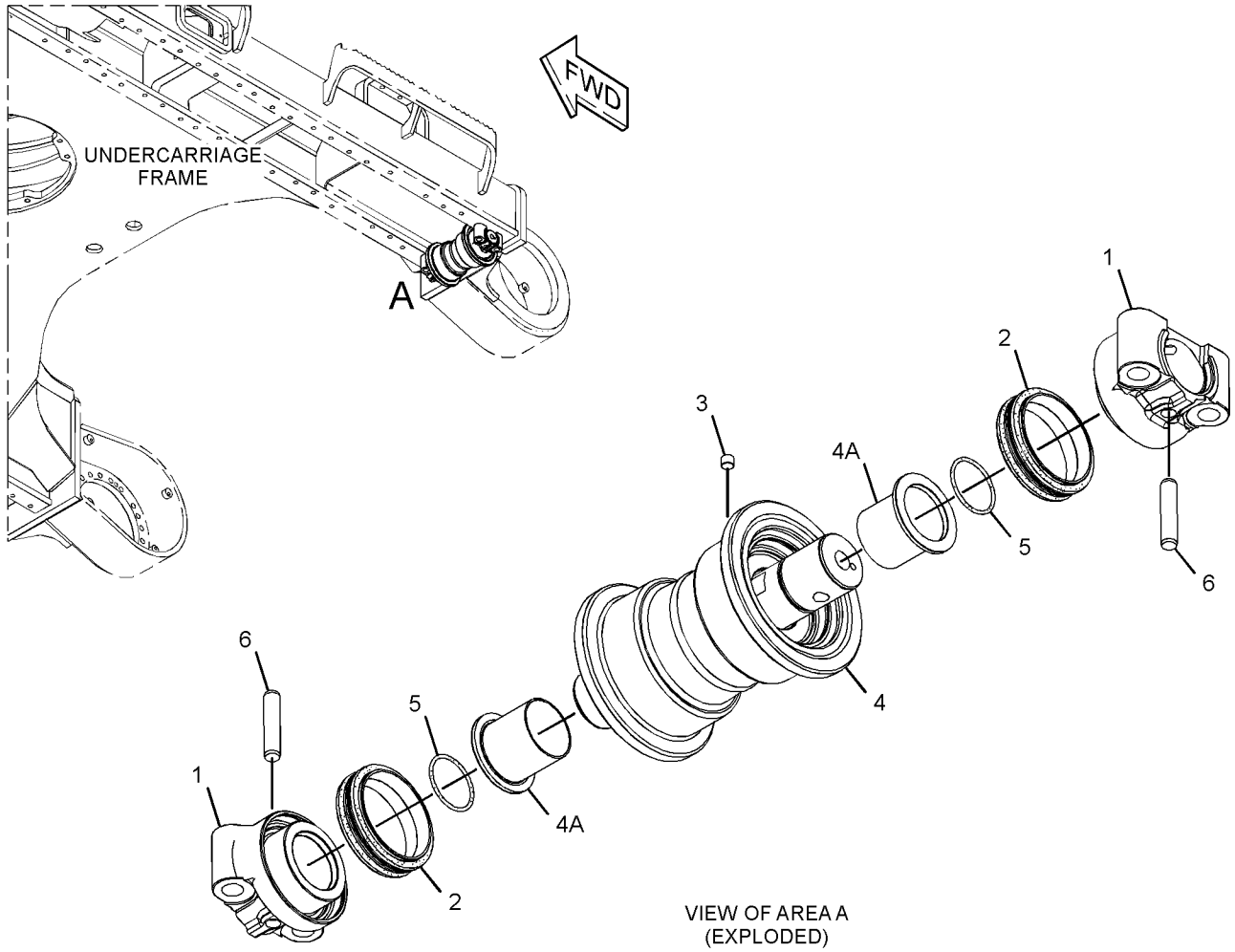

VIEW OF AREA A
(EXPLODED)

GRAPHIC #1 **<END>** g02723063

360-5864 ROLLER GP-TRACK-SINGLE FLANGE

S/N: XAH1-UP

PART OF 348-1867 ROLLER GP-TRACK-SINGLE FLANGE

SMCS-4180 **i04598730**

NOTE	REF NO	GRAPHIC REF	PART NUMBER	QTY	PART NAME 1 2 3 4 5 6 (PRODUCT LEVEL)	SEE PAGE
	1	1	**8E-5032**	1	ROLLER & BEARING AS	
	1A	1	**8E-5599**	2	BEARING-TRACK ROLLER	
	2	1	**9W-2142**	2	SEAL GP-DUO-CONE	
					(EACH INCLUDES)	
		1	**096-4295**	2	RING-SEALING	
	3	1	**348-1869**	1	COLLAR-TRACK ROLLER	
	4	1	**348-1870**	1	COLLAR-TRACK ROLLER	
	5	1	**348-1871**	1	SHAFT	
	6	1	**3E-3217**	2	DOWEL	
	7	1	**7F-8268**	2	SEAL-O-RING	
	8	1	**7H-3171**	1	PLUG-PIPE	

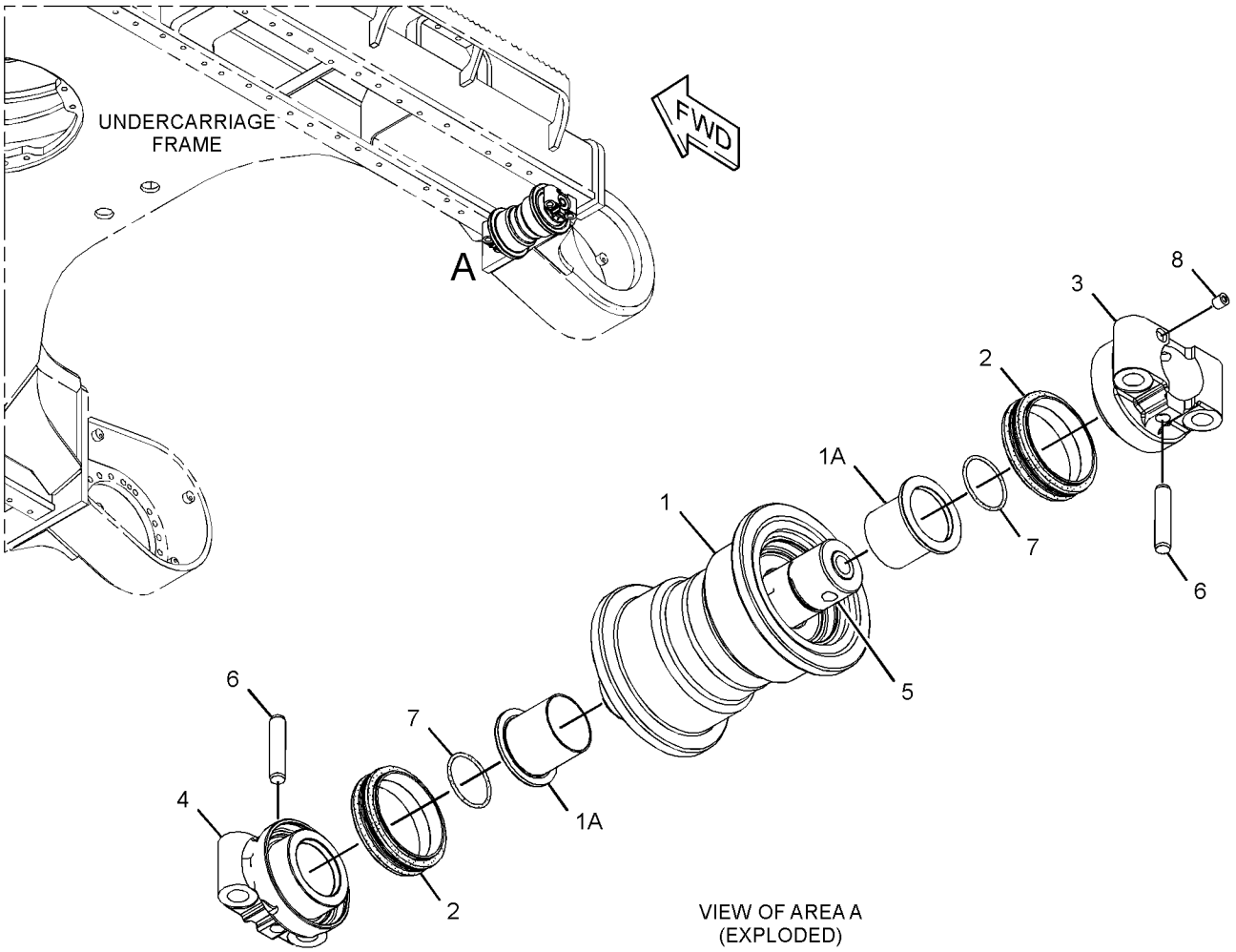

VIEW OF AREA A (EXPLODED)

GRAPHIC #1 **<END>** g02723066

297-9187 TRACK ADJUSTER & RECOIL GP–RH

S/N: XAH1-UP

PART OF 297-9185 IDLER GP-FRONT

SMCS-4157, 4158 **i05771830**

NOTE	REF NO	GRAPHIC REF	PART NUMBER	QTY	PART NAME 1 2 3 4 5 6 (PRODUCT LEVEL)	SEE PAGE
	1	1	**7Y-1746**	1	PLATE	
	2	1	**168-6761**	1	PLATE AS	
		1	**4B-4158**	4	SCREW-DRIVE (NO 4X0.25-IN)	
		1	**253-1346**	1	PLATE-WARNING (HIGH PRESSURE CYLINDER)	
Y	3	1	*297-9189*	1	TRACK ADJUSTER & RECOIL GP	193
M	4	1	**8T-4137**	2	BOLT (M10X1.5X20-MM)	

M - METRIC PART
Y - SEPARATE ILLUSTRATION

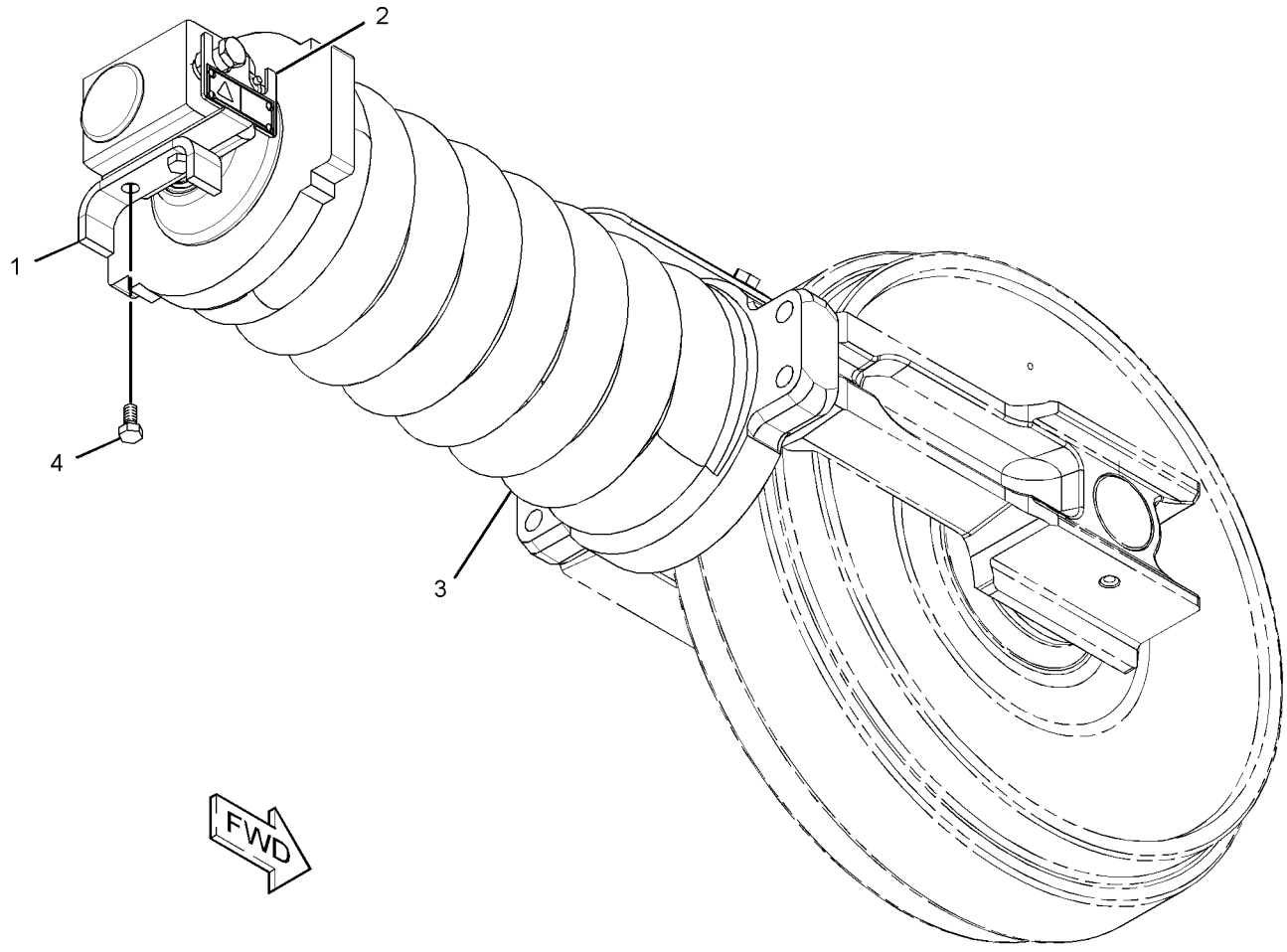

GRAPHIC #1 **<END>** g01456182

297-9188 TRACK ADJUSTER & RECOIL GP–LH

S/N: XAH1-UP

PART OF 297-9186 IDLER GP-FRONT

SMCS-4157, 4158 **i05771834**

NOTE	REF NO	GRAPHIC REF	PART NUMBER	QTY	PART NAME 1 2 3 4 5 6 (PRODUCT LEVEL)	SEE PAGE
	1	1	**7Y-1746**	1	PLATE	
	2	1	**168-6761**	1	PLATE AS	
		1	**4B-4158**	4	SCREW-DRIVE (NO 4X0.25-IN)	
		1	**253-1346**	1	PLATE-WARNING (HIGH PRESSURE CYLINDER)	
Y	3	1	*297-9189*	1	TRACK ADJUSTER & RECOIL GP	193
M	4	1	**8T-4137**	2	BOLT (M10X1.5X20-MM)	

M - METRIC PART
Y - SEPARATE ILLUSTRATION

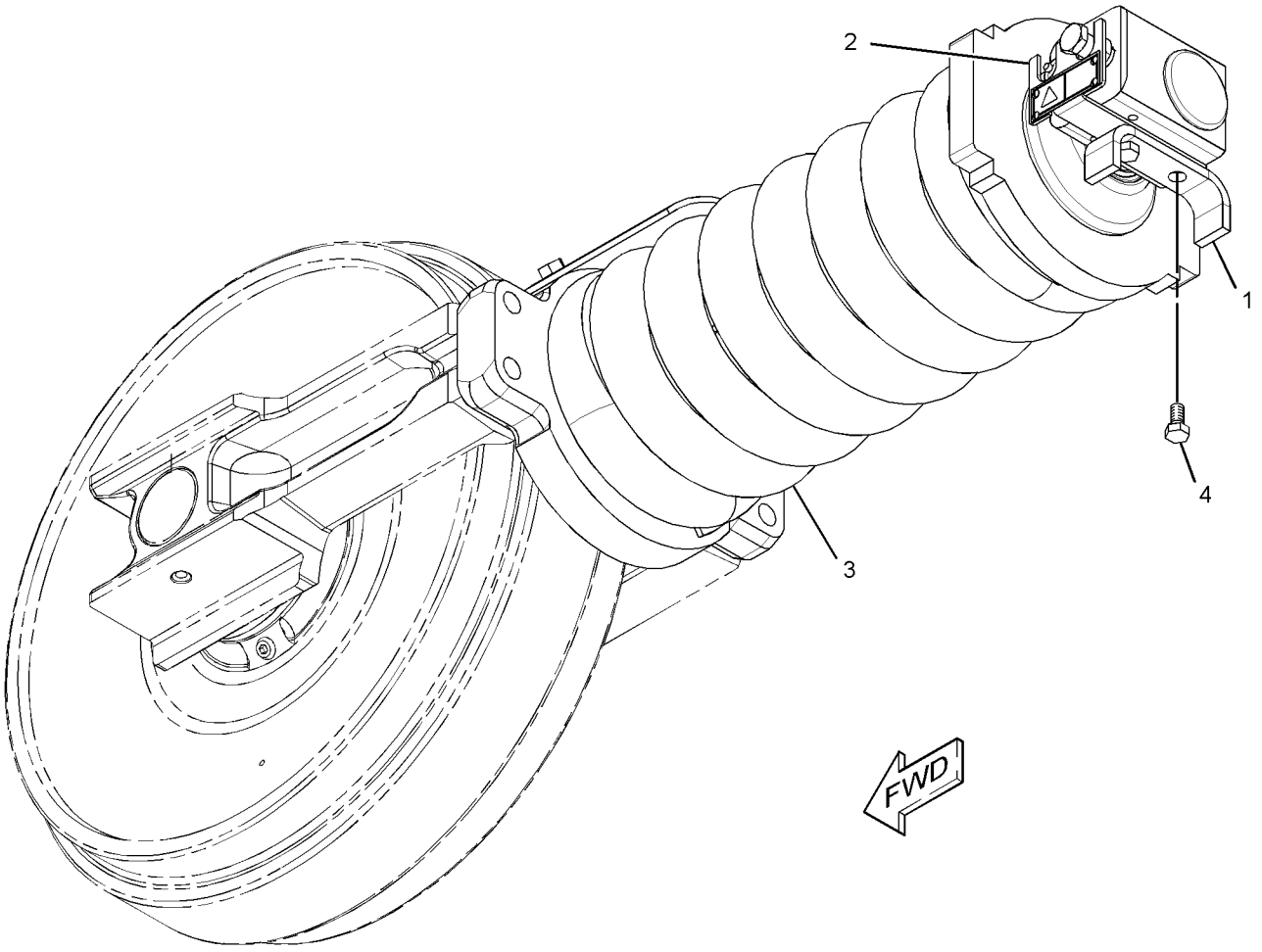

GRAPHIC #1 **<END>** g01456190

297-9189 TRACK ADJUSTER & RECOIL GP

S/N: XAH1-UP

PART OF 297-9187, 297-9188 TRACK ADJUSTER & RECOIL GP

SMCS-4157, 4158 **i05774198**

NOTE	REF NO	GRAPHIC REF	PART NUMBER	QTY	PART NAME 1 2 3 4 5 6 (PRODUCT LEVEL)	SEE PAGE
	1	1	**7I-7733**	1	WASHER (44X68X8-MM THK)	
	2	1	**7Y-1781**	1	COVER	
	3	1	**7Y-1883**	1	PLATE	
	4	1	**122-5253**	1	STRIP	
	5	1	**248-7138**	1	SPRING	
	6	1	**297-9190**	1	SUPPORT	
Y	7	1	*297-9191*	1	TRACK ADJUSTER & RECOIL GP	194
	8	1	**297-9192**	1	SPACER	
M	9	1	**3E-8024**	1	NUT-HEX (M42X4.5-THD)	
M	10	1	**7X-2536**	2	BOLT (M8X1.25X14-MM)	
M	11	1	**8T-4179**	2	BOLT (M12X1.75X20-MM)	

M - METRIC PART
Y - SEPARATE ILLUSTRATION

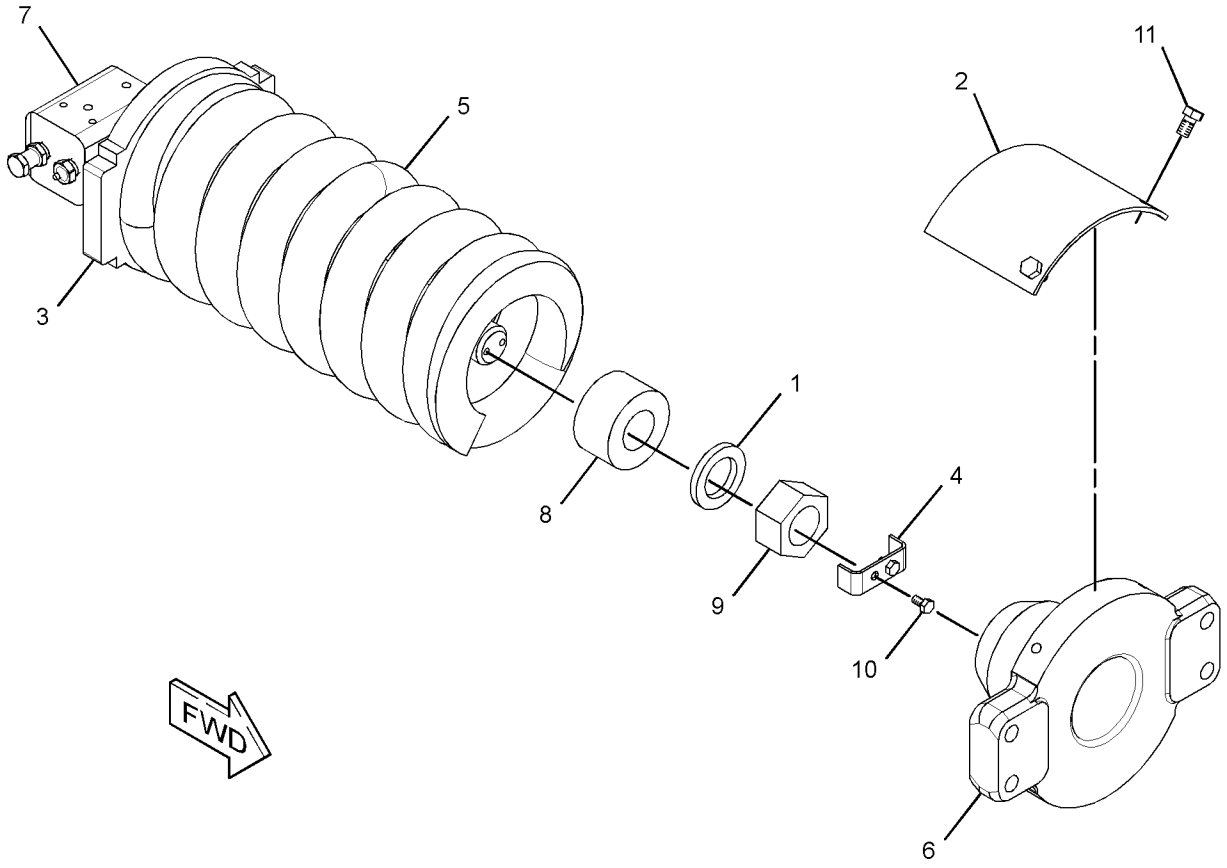

GRAPHIC #1 **<END>** g01456208

297-9191 TRACK ADJUSTER & RECOIL GP

S/N: XAH1-UP

PART OF 297-9189 TRACK ADJUSTER & RECOIL GP

SMCS-4157, 4158 **i05772105**

NOTE	REF NO	GRAPHIC REF	PART NUMBER	QTY	PART NAME 1 2 3 4 5 6 (PRODUCT LEVEL)	SEE PAGE
	1	1	**2S-5926**	1	VALVE-RELIEF	
	2	1	**7I-7734**	1	RING-BACKUP	
	3	1	**093-1435**	1	SEAL-LIP TYPE	
	4	1	**357-7540**	1	VALVE-FILL	
	5	1	**248-7173**	2	SEAL-O-RING	
	6	1	**297-9184**	1	ROD	
	7	1	**297-9193**	1	CYLINDER	
	8	1	**093-1515**	2	RING	
	9	1	**095-1703**	1	SEAL-O-RING	
	10	1	**096-4275**	2	RING	
	11	1	**136-2369**	1	PISTON AS	

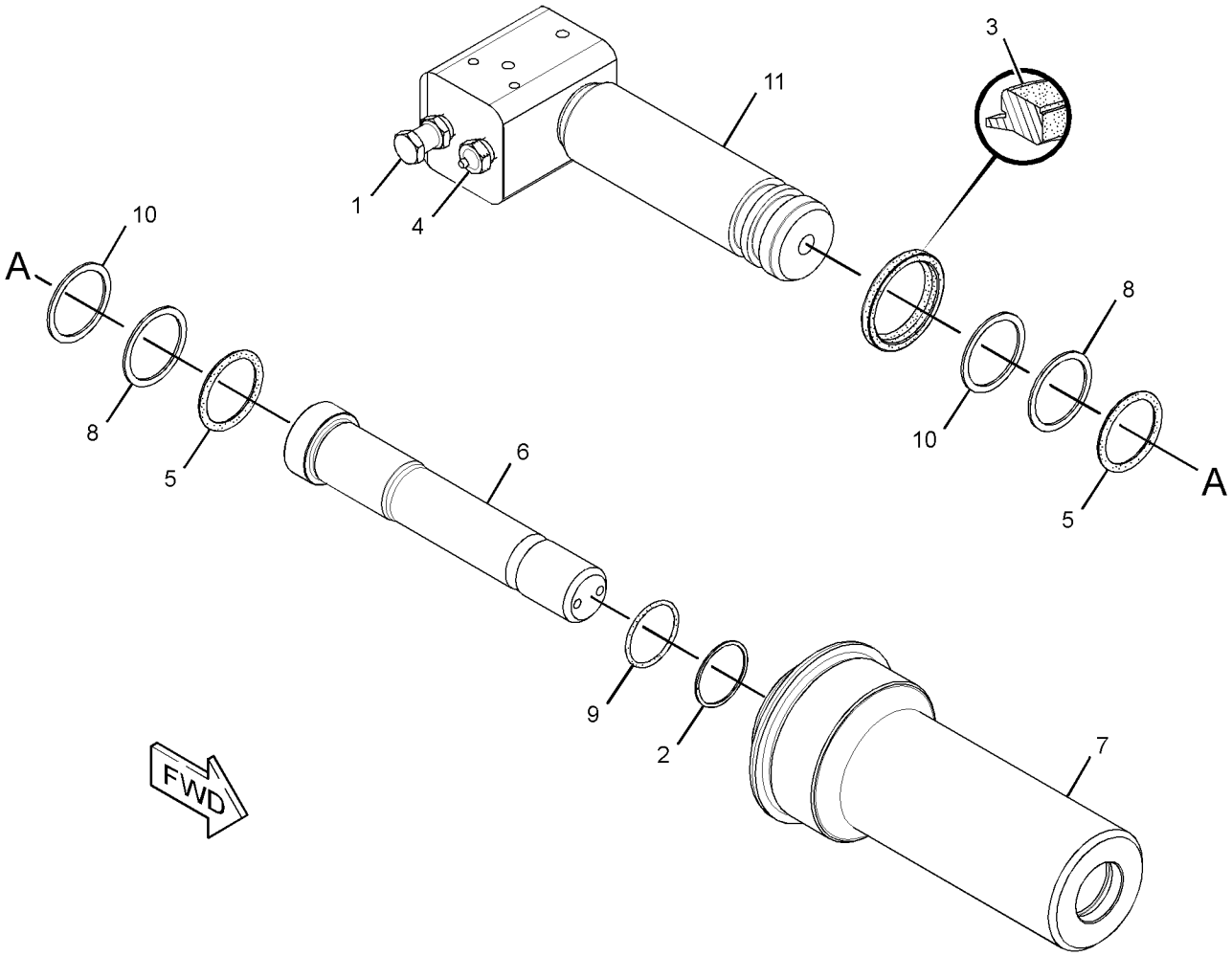

GRAPHIC #1 **<END>** g01456253

176-4852 TRACK GP–2-REQUIRED

S/N: XAH1-UP
600-MM (23.6-IN) TRIPLE GROUSER SHOE
AN ATTACHMENT

SMCS-4170 **i05787213**

NOTE	PART NUMBER	QTY	PART NAME 1 2 3 4 5 6 (PRODUCT LEVEL)	SEE PAGE
Y	**194-1134**	1	LINK AS-TRACK	185
M	**9W-3619**	176	BOLT-TRACK (M20X1.5X55-MM)	
M	**9W-3361**	176	NUT-TRACK (M20X1.5-THD)	
	126-5062	44	SHOE-TRACK	

M - METRIC PART
Y - SEPARATE ILLUSTRATION

<END>

4I-1536 ACCUMULATOR GP-HYDRAULIC—CHARGED

S/N: XAH1-UP

PART OF 087-4456 ACCUMULATOR GP-HYDRAULIC

SMCS-5077 **i00823582**

NOTE	REF NO	GRAPHIC REF	PART NUMBER	QTY	PART NAME 1 2 3 4 5 6 (PRODUCT LEVEL)	SEE PAGE
	1	1	**4I-5862**	1	CAP	
	2	1	**4I-1539**	1	CORE	

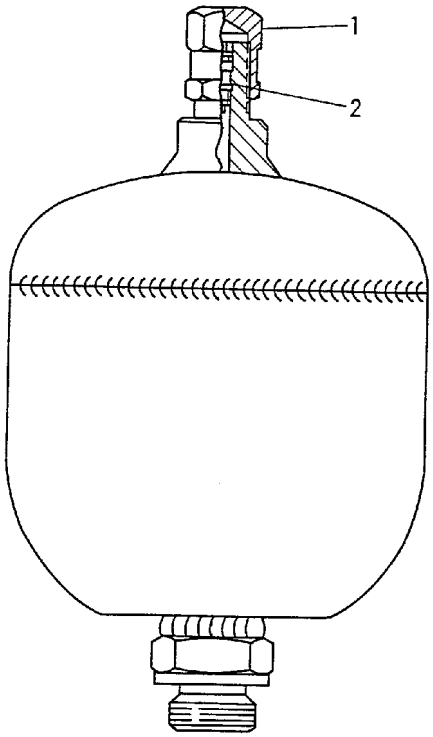

GRAPHIC #1 **<END>** g00222004

5I-8416 ACCUMULATOR GP-HYDRAULIC–CHARGED

S/N: XAH1-UP

PART OF 087-4456 ACCUMULATOR GP-HYDRAULIC

SMCS-5077 **i00823584**

NOTE	REF NO	GRAPHIC REF	PART NUMBER	QTY	PART NAME 1 2 3 4 5 6 (PRODUCT LEVEL)	SEE PAGE
	1	1	**4I-8267**	1	CAP	
Y	2	1	*087-4454*	1	ACCUMULATOR GP-HYDRAULIC (CHARGED)	198

Y - SEPARATE ILLUSTRATION

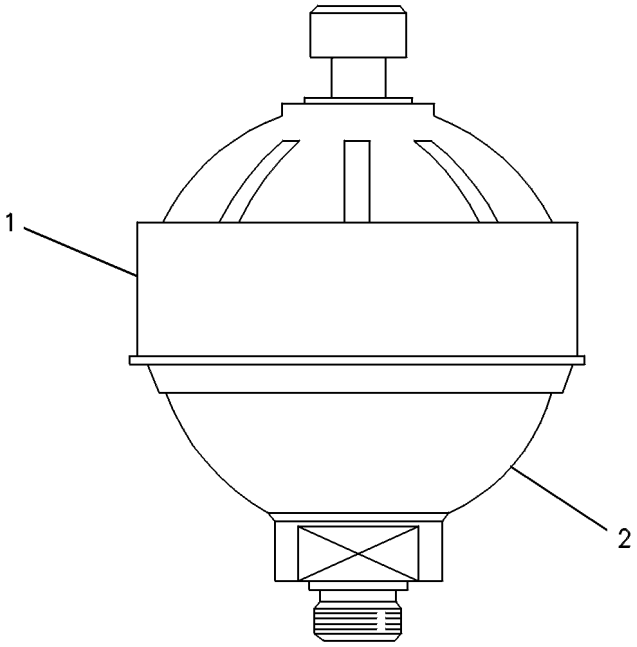

GRAPHIC #1 **<END>** g00237219

087-4454 ACCUMULATOR GP-HYDRAULIC—CHARGED

S/N: XAH1-UP

PART OF 5I-8416 ACCUMULATOR GP-HYDRAULIC

SMCS-5077 **i00827965**

NOTE	REF NO	GRAPHIC REF	PART NUMBER	QTY	PART NAME 1 2 3 4 5 6 (PRODUCT LEVEL)	SEE PAGE
	1	1	**087-4577**	1	SEAL	
	2	1	**087-4576**	1	CAP	
	3	1	**087-4575**	1	CORE	

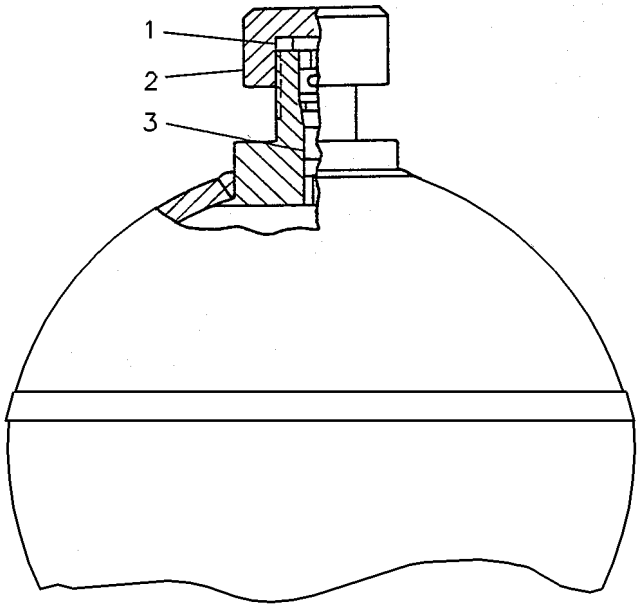

GRAPHIC #1 **<END>** g00221492

087-4456 ACCUMULATOR GP-HYDRAULIC—CHARGED

S/N: XAH1-UP

FIELD REPLACEMENT ORDER 227-8807—PAGE: 202

PART OF 164-6981 ACCUMULATOR GP-HYDRAULIC

SMCS-5077 **i02837812**

NOTE	PART NUMBER	QTY	PART NAME 1 2 3 4 5 6 (PRODUCT LEVEL)	SEE PAGE
Y	*4I-1536*	1	ACCUMULATOR GP-HYDRAULIC (CHARGED)	196
			-OR-	
Y	*5I-8416*	1	ACCUMULATOR GP-HYDRAULIC (CHARGED)	197
			-OR-	
Y	*145-5106*	1	ACCUMULATOR GP-HYDRAULIC (CHARGED)	200

Y - SEPARATE ILLUSTRATION

<END>

145-5106 ACCUMULATOR GP-HYDRAULIC–CHARGED

S/N: XAH1-UP

PART OF 087-4456 ACCUMULATOR GP-HYDRAULIC

SMCS-5077 **i02837951**

NOTE	REF NO	GRAPHIC REF	PART NUMBER	QTY	PART NAME 1 2 3 4 5 6 (PRODUCT LEVEL)	SEE PAGE
	1	1	**159-4700**	1	FILM-WARNING (HIGH PRESSURE CYLINDER)	

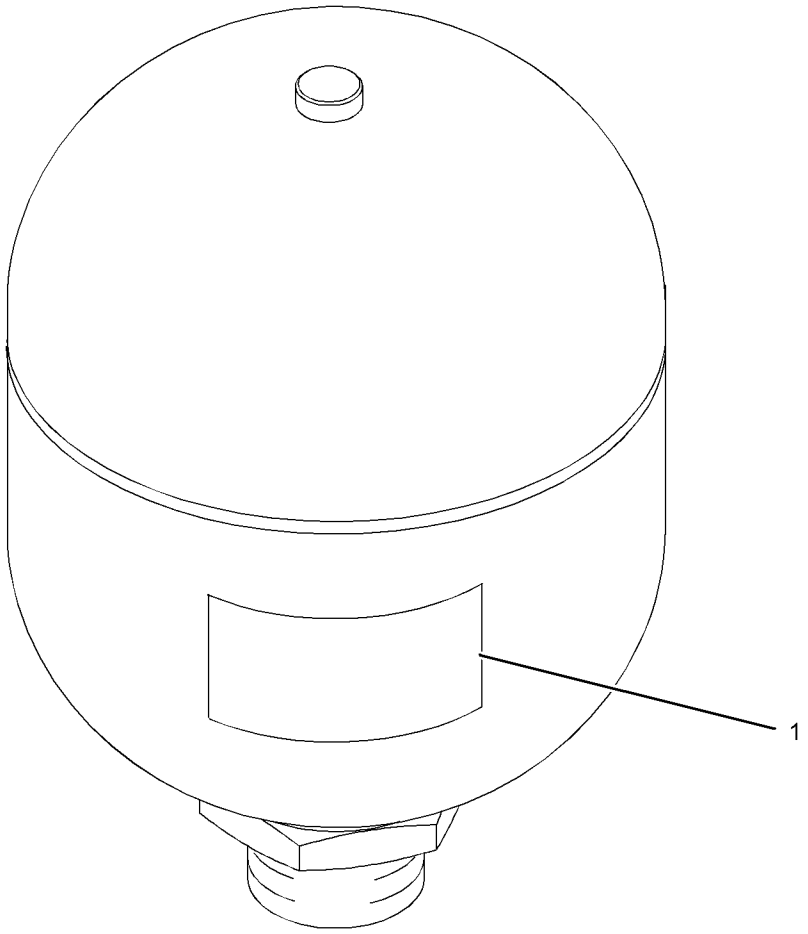

GRAPHIC #1 **<END>** g01288209

164-6981 ACCUMULATOR GP-HYDRAULIC—CHARGED

S/N: XAH1-UP

PART OF 391-7835 LINES GP-PILOT

SMCS-5077 **i03440920**

NOTE	PART NUMBER	QTY	PART NAME 1 2 3 4 5 6 (PRODUCT LEVEL)	SEE PAGE
Y	**087-4456**	1	ACCUMULATOR GP-HYDRAULIC (CHARGED)	199
	3K-0360	1	SEAL-O-RING	

Y - SEPARATE ILLUSTRATION

<END>

227-8807 ACCUMULATOR GP-HYDRAULIC—UNCHARGED

S/N: XAH1-UP

FIELD REPLACEMENT FOR 087-4456—PAGE: 199, 145-5106—PAGE: 200

SMCS-5077 **i04154209**

NOTE	REF NO	GRAPHIC REF	PART NUMBER	QTY	PART NAME 1 2 3 4 5 6 (PRODUCT LEVEL)	SEE PAGE
					(NO SERVICED PARTS)	

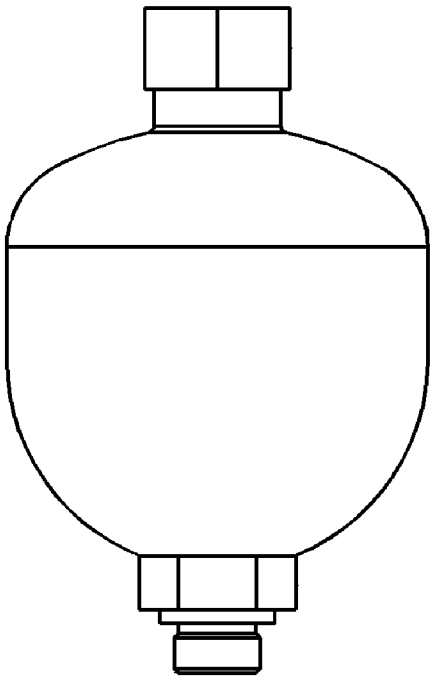

GRAPHIC #1 **<END>** g01423820

351-3869 COUPLING GP-FLEXIBLE

S/N: XAH1-UP

PART OF 344-0688 COUPLING GP-PUMP

SMCS-3252 **i05417409**

NOTE	REF NO	GRAPHIC REF	PART NUMBER	QTY	PART NAME 1 2 3 4 5 6 (PRODUCT LEVEL)	SEE PAGE
	1	1	**351-4126**	4	INSERT-COUPLING	
	2	1	**7Y-1901**	1	ELEMENT-COUPLING	
	3	1	**7Y-1902**	4	INSERT-COUPLING	
M	4	1	**7Y-1904**	4	BOLT-SOCKET HEAD (M16X2X50-MM)	
	5	1	**248-7284**	1	HUB	
M	6	1	**7Y-0466**	2	SETSCREW-SOCKET (M16X2X22-MM)	
	7	1	**7Y-0468**	8	PIN-SPRING	

M - METRIC PART

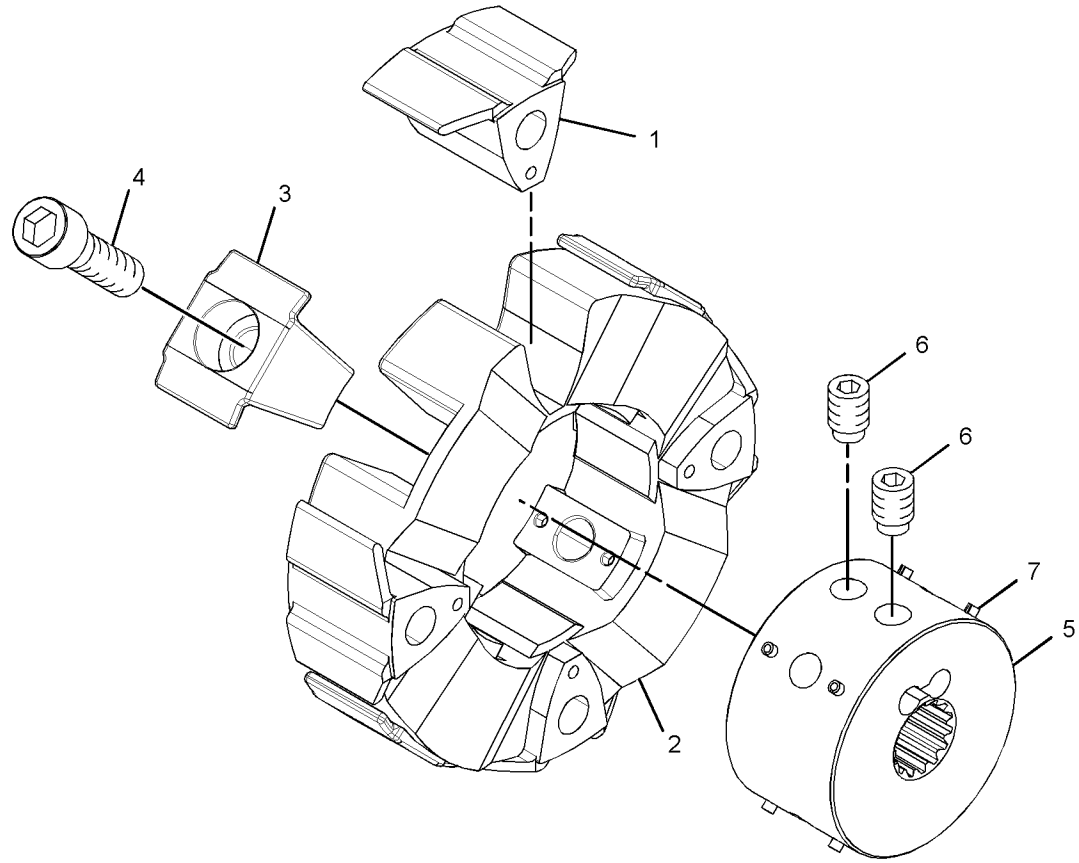

GRAPHIC #1 **<END>** g02620243

344-0688 COUPLING GP-PUMP

S/N: XAH1-UP

PART OF 387-2618 PUMP & MTG GP-MAIN HYDRAULIC

SMCS-5062 **i05402619**

NOTE	REF NO	GRAPHIC REF	PART NUMBER	QTY	PART NAME 1 2 3 4 5 6 (PRODUCT LEVEL)	SEE PAGE
Y	1	1	**351-3869**	1	COUPLING GP-FLEXIBLE	203
M	2	1	**324-4118**	4	BOLT-SOCKET HEAD (M16X2X55-MM)	
	3	1	**7Y-0468**	4	PIN-SPRING	

M - METRIC PART
Y - SEPARATE ILLUSTRATION

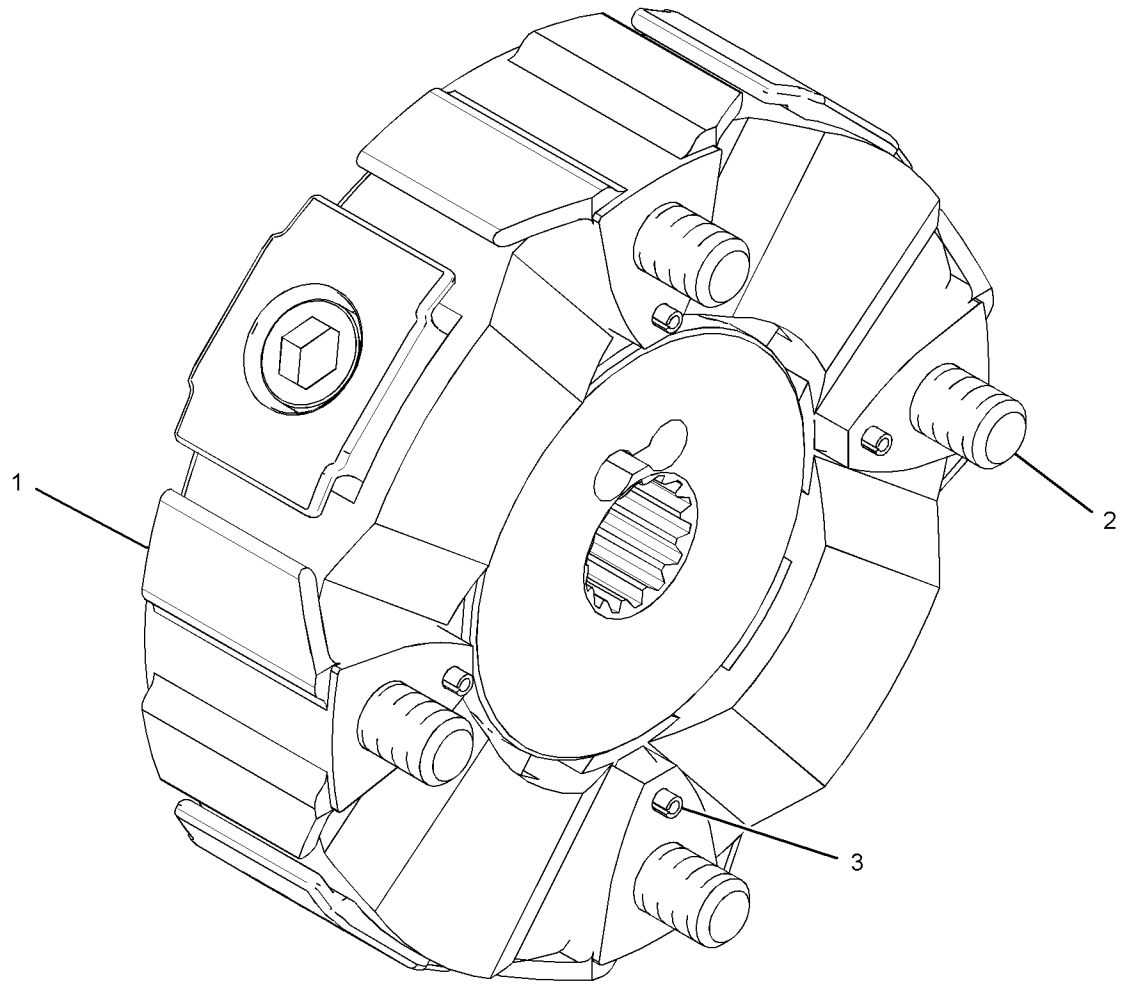

GRAPHIC #1 **<END>** g01891883

381-8968 CYLINDER & LINES GP-BOOM–LH

S/N: XAH1-UP
PART OF 283-9001 BOOM AR-1 PIECE LONG
AN ATTACHMENT

SMCS-5456, 7562 **i05896804**

NOTE	PART NUMBER	QTY	PART NAME 1 2 3 4 5 6 (PRODUCT LEVEL)	SEE PAGE
Y	*385-2913*	1	CYLINDER & SEAL GP-BOOM	206
Y	*385-2911*	1	LINES GP-BOOM CYLINDER (LH)	228

Y - SEPARATE ILLUSTRATION

<END>

381-8969 CYLINDER & LINES GP-BOOM–RH

S/N: XAH1-UP
PART OF 283-9001 BOOM AR-1 PIECE LONG
AN ATTACHMENT

SMCS-5456, 7562 **i05787040**

NOTE	PART NUMBER	QTY	PART NAME 1 2 3 4 5 6 (PRODUCT LEVEL)	SEE PAGE
Y	*385-2913*	1	CYLINDER & SEAL GP-BOOM	206
Y	*385-2912*	1	LINES GP-BOOM CYLINDER (RH)	229

Y - SEPARATE ILLUSTRATION

<END>

381-8971 CYLINDER & LINES GP-BUCKET

S/N: XAH1-UP
PART OF 283-9011 LINKAGE AR-BUCKET
AN ATTACHMENT

SMCS-5457 **i05786656**

NOTE	PART NUMBER	QTY	PART NAME 1 2 3 4 5 6 (PRODUCT LEVEL)	SEE PAGE
Y	**385-2917**	1	CYLINDER & SEAL GP-BUCKET	208
Y	*385-2916*	1	LINES GP-BUCKET CYLINDER	230

Y - SEPARATE ILLUSTRATION

<END>

381-8970 CYLINDER & LINES GP-STICK

S/N: XAH1-UP
PART OF 283-9001 BOOM AR-1 PIECE LONG
AN ATTACHMENT

SMCS-5458 **i05787032**

NOTE	PART NUMBER	QTY	PART NAME 1 2 3 4 5 6 (PRODUCT LEVEL)	SEE PAGE
Y	**385-2915**	1	CYLINDER & SEAL GP-STICK	210
Y	*385-2914*	1	LINES GP-STICK CYLINDER	262

Y - SEPARATE ILLUSTRATION

<END>

385-2913 CYLINDER & SEAL GP-BOOM

S/N: XAH1-UP
110-MM (4.3-IN) BORE X 1193-MM (46.7-IN) STROKE
PART OF 381-8968, 381-8969 CYLINDER & LINES GP-BOOM
AN ATTACHMENT

SMCS-5456 **i05787153**

NOTE	REF NO	GRAPHIC REF	PART NUMBER	QTY	PART NAME 1 2 3 4 5 6 (PRODUCT LEVEL)	SEE PAGE
	1	1	**385-2860**	1	CYLINDER AS-BOOM	
	1A	1	**228-5614**	1	BUSHING	
	2	1	**385-2861**	1	ROD AS	
	2A	1	**240-2913**	1	BUSHING	
	3	1	**385-2895**	1	HEAD	
	4	1	**385-2899**	1	RING-RETAINING	
	5	1	**385-2900**	1	BUSHING	
	6	1	**422-9140**	1	STOP	
	7	1	**385-2889**	1	PISTON	
	8	1	**385-2905**	1	RING-SNAP	
C	9	1	**385-2922**	1	BALL	
C	10	1	**422-9120**	1	SETSCREW-HEX SOCKET	
M	11	1	**095-0703**	12	BOLT-SOCKET HEAD (M16X2X75-MM)	
	12	1	**235-7679**	2	SEAL-LIP TYPE	
	13	1	**385-2888**	1	WASHER	
	14	1	**166-1494**	2	SEAL-LIP TYPE	
	15	1	**385-2901**	1	LOCKNUT-SPECIAL	
	16	1	**3B-8489**	1	FITTING-GREASE	
CJ	17	1	**416-1284**	1	SEAL-WIPER	
CJ	18	1	**416-1285**	1	SEAL-U-CUP	
CJ	19	1	**416-1287**	1	SEAL-BUFFER	
CJ	20	1	**416-1286**	1	RING-BACKUP	
CJ	21	1	**416-1277**	1	SEAL-O-RING	
CJ	22		**416-1278**	1	RING-BACKUP	
CJ	23	1	**416-1280**	1	SEAL AS	
CJ	24	1	**416-1279**	2	RING-WEAR	
CJ	25	1	**416-1282**	2	RING-WEAR	
CJ	26	1	**416-1293**	1	RING-SEAL	
					AVAILABLE REPAIR KIT(S):	
CJ			**385-2908**	1	KIT-SEAL (BOOM CYLINDER)	

C - CHANGE FROM PREVIOUS TYPE
J - KIT J SERVICES PART(S) MARKED J
M - METRIC PART

385-2913 **CYLINDER & SEAL GP-BOOM (*contd.*)** **i05787153**

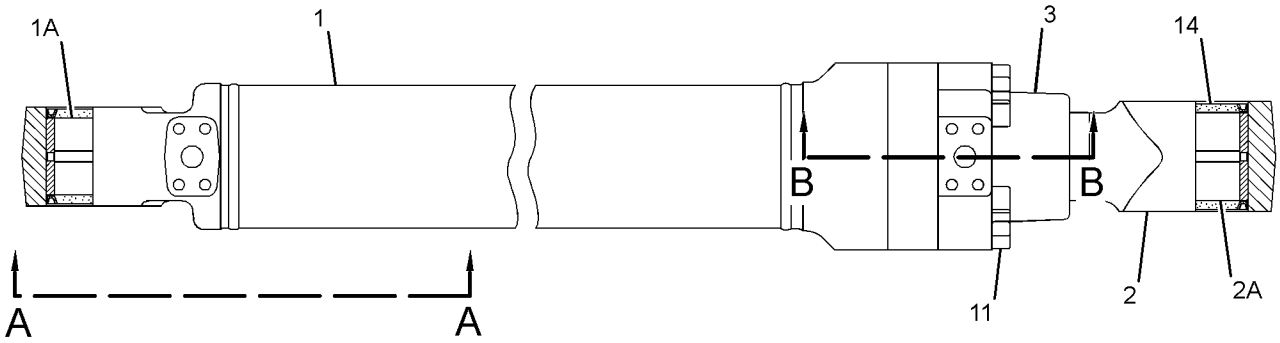

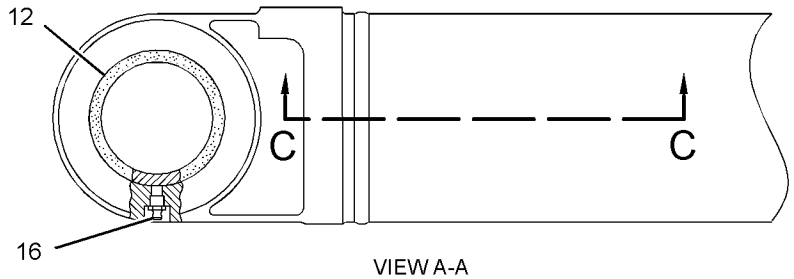

VIEW A-A

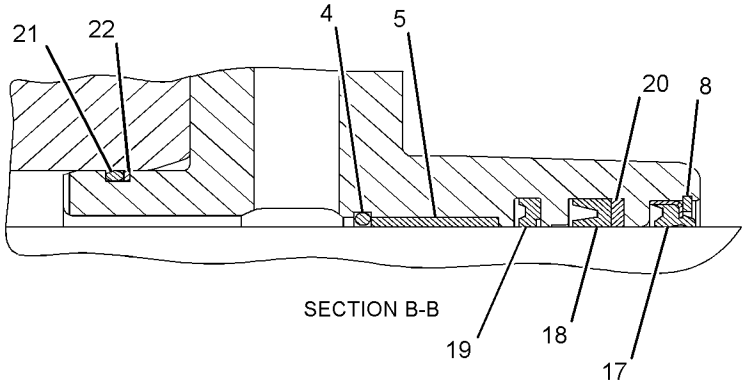

SECTION B-B

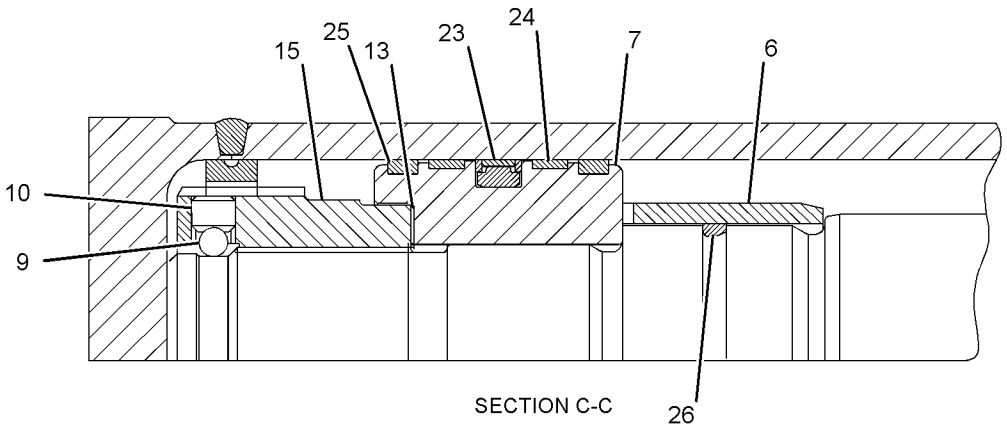

SECTION C-C

GRAPHIC #1 **<END>** g03410849

385-2917 CYLINDER & SEAL GP-BUCKET

S/N: XAH1-UP

PART OF 381-8971 CYLINDER & LINES GP-BUCKET

AN ATTACHMENT

SMCS-5457 **i05786759**

NOTE	REF NO	GRAPHIC REF	PART NUMBER	QTY	PART NAME 1 2 3 4 5 6 (PRODUCT LEVEL)	SEE PAGE
	1	1	**385-2864**	1	CYLINDER AS-BOOM	
	1A	1	**248-7857**	1	BUSHING	
	2	1	**385-2865**	1	ROD AS	
	2A	1	**240-2912**	1	BUSHING	
	3	1	**399-5122**	1	HEAD	
	4	1	**385-2900**	1	BUSHING	
	5	1	**385-2899**	1	RING-RETAINING	
	6	1	**385-2905**	1	RING-SNAP	
	7	1	**385-2945**	1	PISTON	
C	8	1	**422-9120**	1	SETSCREW-HEX SOCKET	
C	9	1	**385-2922**	1	BALL	
M	10	1	**095-0703**	12	BOLT-SOCKET HEAD (M16X2X75-MM)	
	11	1	**235-7679**	2	SEAL-LIP TYPE	
	12	1	**166-1494**	2	SEAL-LIP TYPE	
	13	1	**385-2944**	1	WASHER	
	14	1	**385-2943**	1	NUT-LOCKING	
	15	1	**3B-8489**	2	FITTING-GREASE	
CJ	16	1	**416-1284**	1	SEAL-WIPER	
CJ	17	1	**416-1285**	1	SEAL-U-CUP	
CJ	18	1	**416-1287**	1	SEAL-BUFFER	
CJ	19	1	**416-1286**	1	RING-BACKUP	
CJ	20	1	**416-1277**	1	SEAL-O-RING	
CJ	21	1	**416-1278**	1	RING-BACKUP	
CJ	22	1	**416-1280**	1	SEAL AS	
CJ	23	1	**416-1279**	2	RING-WEAR	
CJ	24	1	**416-1282**	2	RING-WEAR	
					AVAILABLE REPAIR KIT(S):	
J			**385-2946**		KIT-SEAL (BUCKET CYLINDER)	

C - CHANGE FROM PREVIOUS TYPE
J - KIT MARKED J SERVICES PART(S) MARKED J
M - METRIC PART

385-2917 **CYLINDER & SEAL GP-BUCKET (*contd.*)** **i05786759**

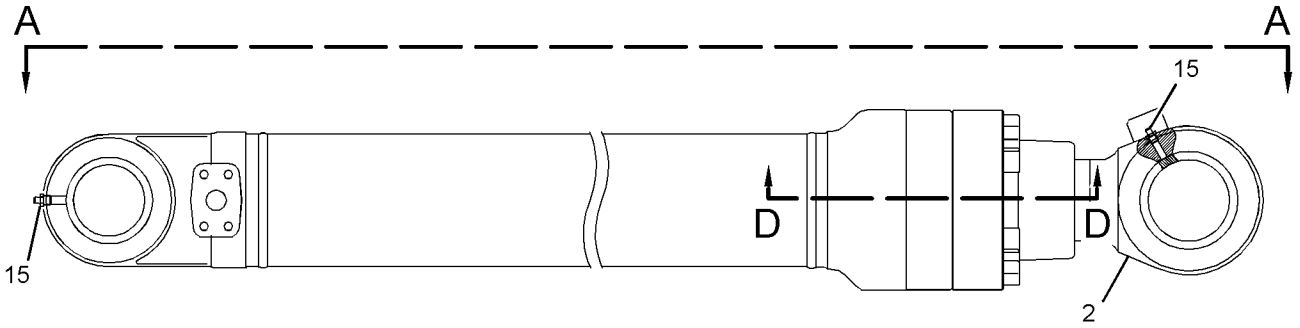

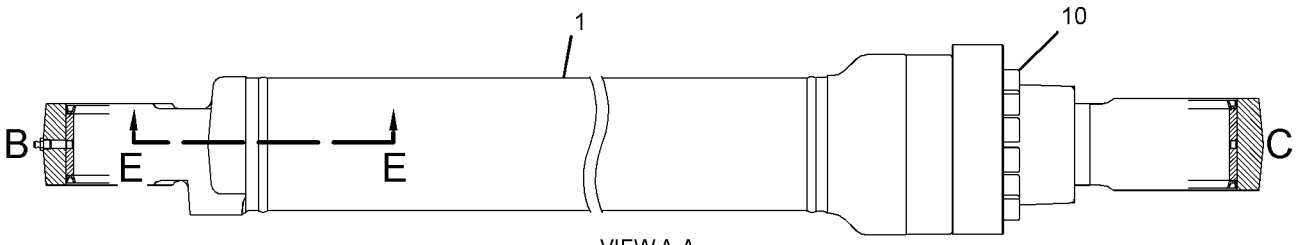

VIEW A-A

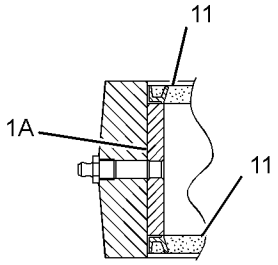

VIEW OF AREA B

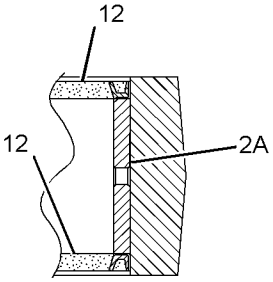

VIEW OF AREA C

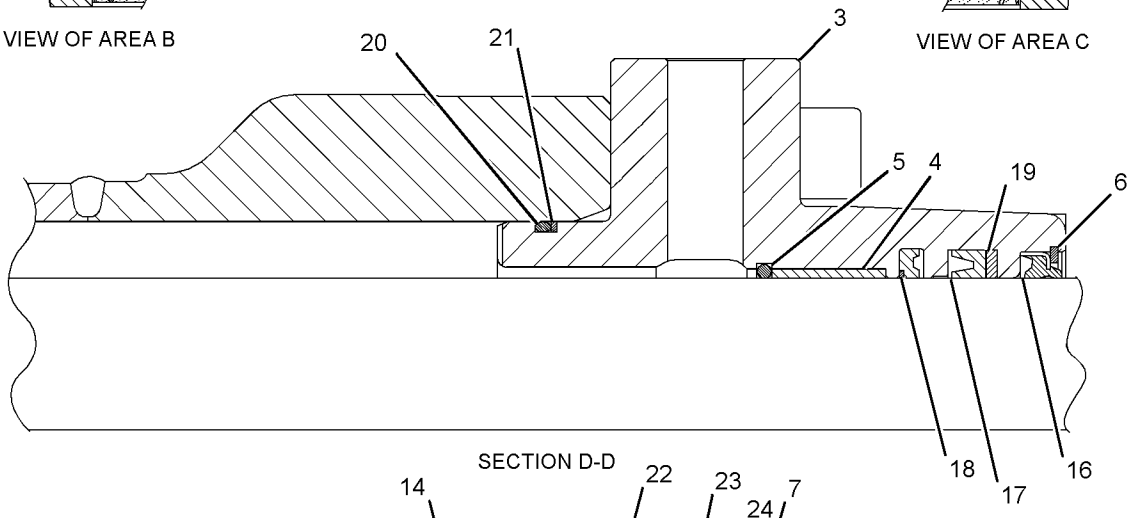

SECTION D-D

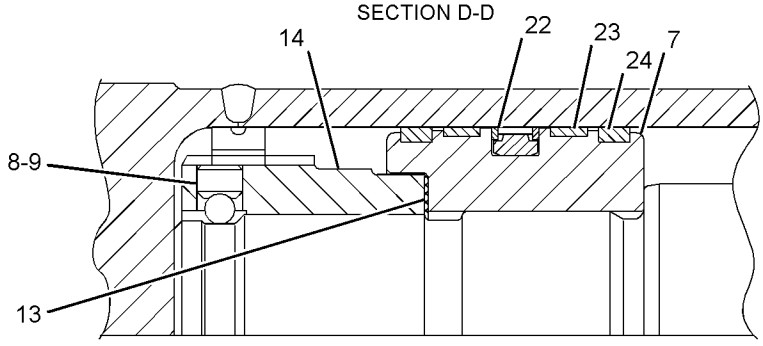

SECTION E-E

GRAPHIC #1

<END>

g03344180

385-2915 CYLINDER & SEAL GP-STICK

S/N: XAH1-UP
120-MM (4.7-IN) BORE X 1331-MM (52.4-IN) STROKE
PART OF 381-8970 CYLINDER & LINES GP-STICK
AN ATTACHMENT

SMCS-5458 **i05791022**

NOTE	REF NO	GRAPHIC REF	PART NUMBER	QTY	PART NAME 1 2 3 4 5 6 (PRODUCT LEVEL)	SEE PAGE
	1	1	**385-2862**	1	CYLINDER AS-STICK	
	1A	1	**241-7231**	1	BUSHING	
	2	1	**385-2863**	1	ROD AS	
	2A	1	**241-7231**	1	BUSHING	
	3	1	**385-2929**	1	HEAD	
	4	1	**385-2934**	1	BUSHING	
	5	1	**385-2933**	1	RING-RETAINING	
	6	1	**385-2927**	1	STOP	
	7	1	**385-2923**	1	PISTON	
	8	1	**385-2939**	1	RING-SNAP	
	9	1	**422-9122**	1	BALL	
	10	1	**385-2891**	1	SETSCREW-SOCKET	
	11	1	**385-2910**	1	RING-RETAINING	
	12	1	**385-2920**	1	RING-RETAINING	
	13	1	**385-2909**	1	STOP	
M	14	1	**095-9806**	12	BOLT-SOCKET HEAD (M16X2X80-MM)	
	15	1	**235-7679**	4	SEAL-LIP TYPE	
	16	1	**8T-6763**	1	PLUG-PIPE (1/4-18-THD)	
	17	1	**3B-8489**	1	FITTING-GREASE	
J	18	1	**416-1312**	1	SEAL-WIPER	
J	19	1	**416-1313**	1	SEAL-U-CUP	
J	20	1	**416-1315**	1	SEAL-BUFFER	
J	21	1	**416-1314**	1	RING-BACKUP	
J	22	1	**416-1288**	1	SEAL-O-RING	
J	23	1	**416-1289**	1	RING-BACKUP	
J	24	1	**416-1291**	1	SEAL AS	
J	25	1	**416-1290**	2	RING-WEAR	
J	26	1	**416-1292**	2	RING-WEAR	
J	27	1	**416-1316**	1	RING-SEAL	
J	28	1	**416-1294**	1	RING-SEAL	
					AVAILABLE REPAIR KIT(S):	
J			**385-2942**	1	KIT-SEAL (STICK CYLINDER)	

J - KIT MARKED J SERVICES PART(S) MARKED J
M - METRIC PART

385-2915 **CYLINDER & SEAL GP-STICK (*contd.*)** **i05791022**



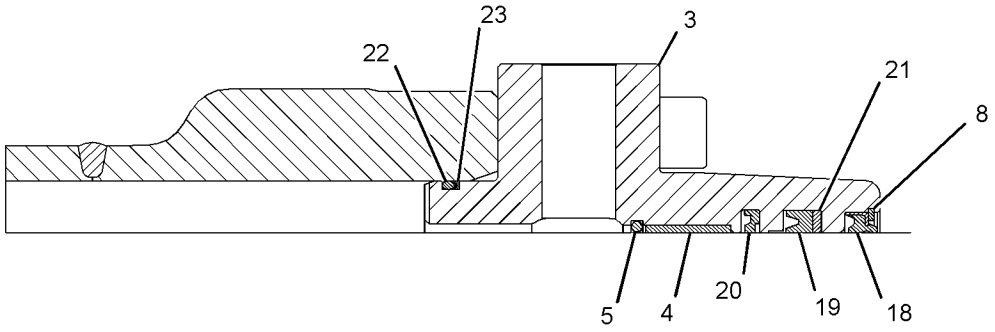

SECTION A-A

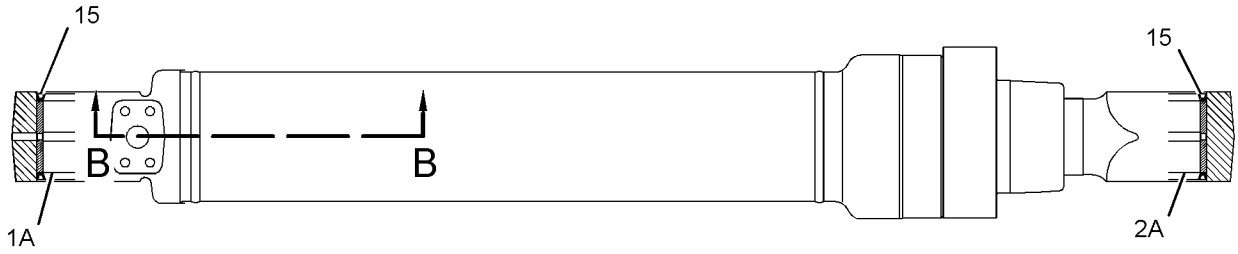

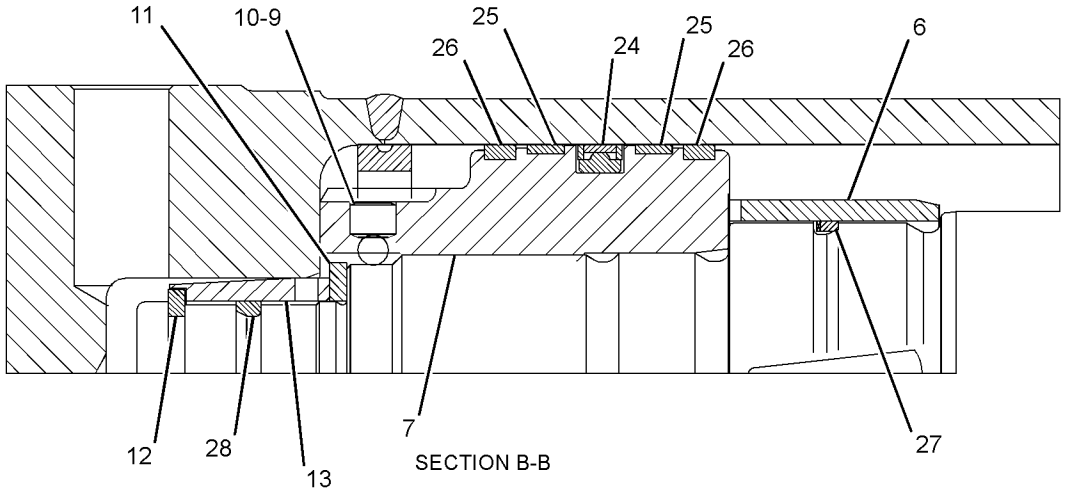

SECTION B-B

GRAPHIC #1 **<END>** g03371878

333-3015 DRIVE GP-SWING—WITHOUT MOTOR

S/N: XAH1-UP

PART OF 367-8339 DRIVE GP-SWING

SMCS-5459 **i05772963**

NOTE	REF NO	GRAPHIC REF	PART NUMBER	QTY	PART NAME 1 2 3 4 5 6 (PRODUCT LEVEL)	SEE PAGE
	1	1	**333-3043**	1	BEARING	
	2	1	**333-3042**	1	BEARING	
	3	1	**333-3057**	1	CASE	
	4	1	**333-3047**	1	COLLAR	
	5	1	**333-3064**	1	RING	
M	6	1	**7X-2619**	6	BOLT (M6X1X10-MM)	
	7	1	**333-3062**	2	PLATE	
	8	1	**333-3061**	1	SEAL	
	9	1	**333-3060**	1	SEAL	
	10	1	**333-3056**	1	PINION	
	11	1	**093-6089**	2	DOWEL	
	12	1	**199-4631**	1	GEAR-RING	
	13	1	**333-3055**	1	GEAR-SUN	
	14	1	**199-4629**	1	GEAR-SUN	
	15	1	**8C-3347**	3	PIN-ROLL	
	16	1	**199-4628**	3	SHAFT-PLANETARY	
	17	1	**199-4627**	12	WASHER	
	18	1	**199-4626**	3	BEARING	
	19	1	**199-4625**	3	GEAR-PLANETARY	
	20	1	**333-3053**	1	CARRIER	
	21	1	**333-3059**	3	RING-RETAINING	
	22	1	**333-3058**	3	WASHER-THRUST (30X47X2-MM THK)	
	23	1	**191-2605**	1	WASHER (30X75X3-MM THK)	
	24	1	**095-0879**	3	PIN-SPRING	
	25	1	**333-3051**	3	SHAFT	
	26	1	**333-3050**	3	BEARING	
	27	1	**333-3049**	3	GEAR-PLANETARY	
	28	1	**333-3048**	1	CARRIER	

M - METRIC PART

333-3015 **DRIVE GP-SWING (*contd.*)** **i05772963**

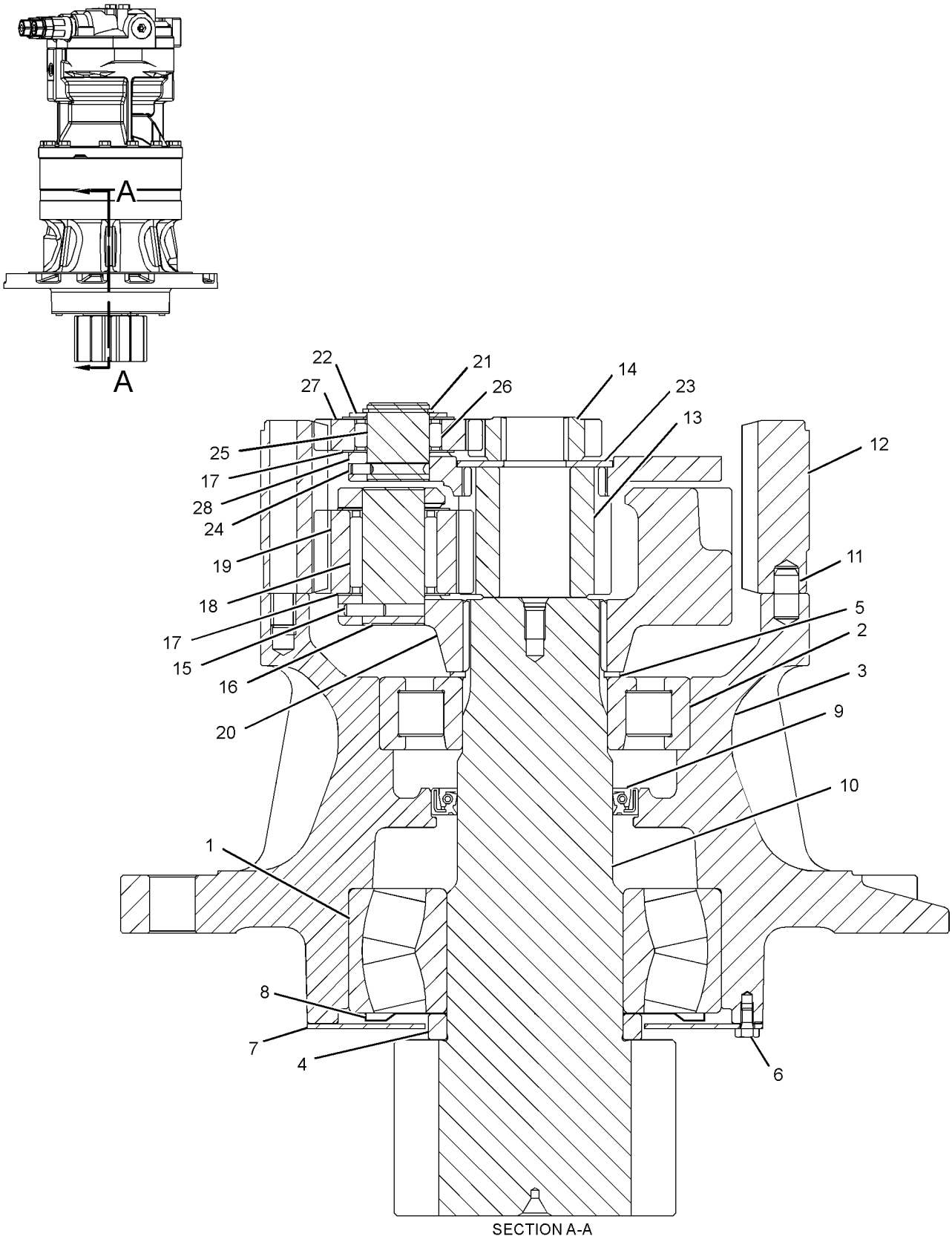

SECTION A-A

GRAPHIC #1 **<END>** g02714858

367-8338 DRIVE GP-SWING—WITH MOTOR

S/N: XAH1-UP

PART OF 267-6738 POWER TRAIN AR

SMCS-5459 **i05772890**

NOTE	REF NO	GRAPHIC REF	PART NUMBER	QTY	PART NAME 1 2 3 4 5 6 (PRODUCT LEVEL)	SEE PAGE
	1	1	**6V-7238**	1	VALVE-SHUTOFF (SWING DRIVE)	
	2	1	**267-6744**	1	BREATHER AS (SWING DRIVE)	
		1	**4H-6112**	1	BREATHER (SWING DRIVE)	
		1	**227-6227**	1	BOSS	
		1	**267-6786**	1	FITTING	
Y	3	1	*367-8339*	1	DRIVE GP-SWING (WITH MOTOR)	215
	4	1	**367-8355**	1	GAUGE-OIL LEVEL	
	5	1	**378-9521**	1	PIPE-GAUGE	
	6	1	**3K-0360**	1	SEAL-O-RING	

Y - SEPARATE ILLUSTRATION

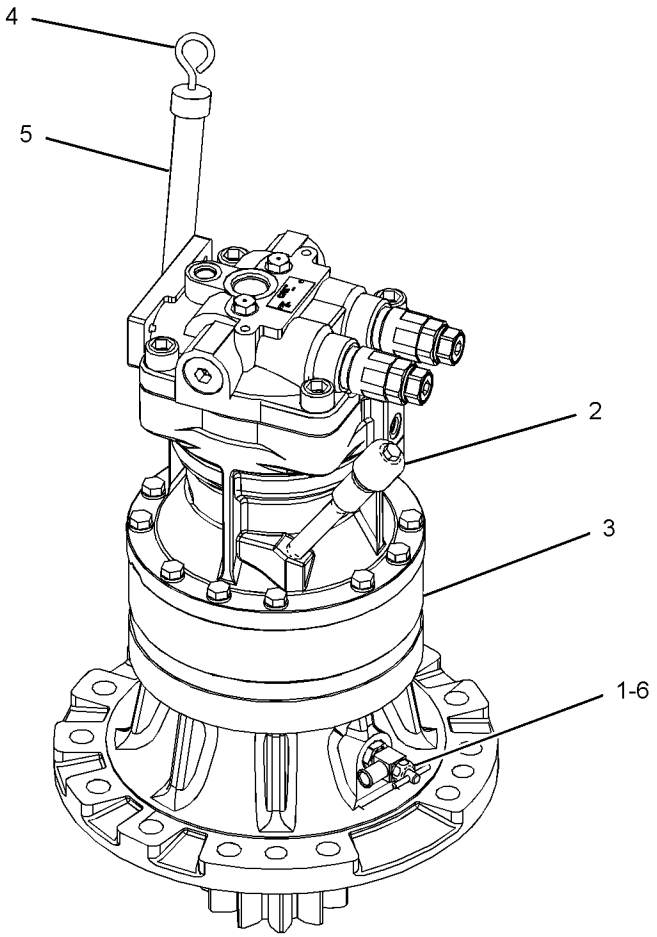

GRAPHIC #1 **<END>** g02726192

367-8339 DRIVE GP-SWING—WITH MOTOR

S/N: XAH1-UP

PART OF 367-8338 DRIVE GP-SWING

SMCS-5459 **i05772895**

NOTE	REF NO	GRAPHIC REF	PART NUMBER	QTY	PART NAME 1 2 3 4 5 6 (PRODUCT LEVEL)	SEE PAGE
	1	1	**095-0817**	12	LOCKWASHER	
Y	2	1	**333-3015**	1	DRIVE GP-SWING (WITHOUT MOTOR)	212
Y	3	1	**369-9604**	1	MOTOR GP-SWING	271
	4	1	**6V-7644**	1	RING-RETAINING	
M	5	1	**8T-5041**	12	BOLT (M12X1.75X120-MM)	

M - METRIC PART
Y - SEPARATE ILLUSTRATION

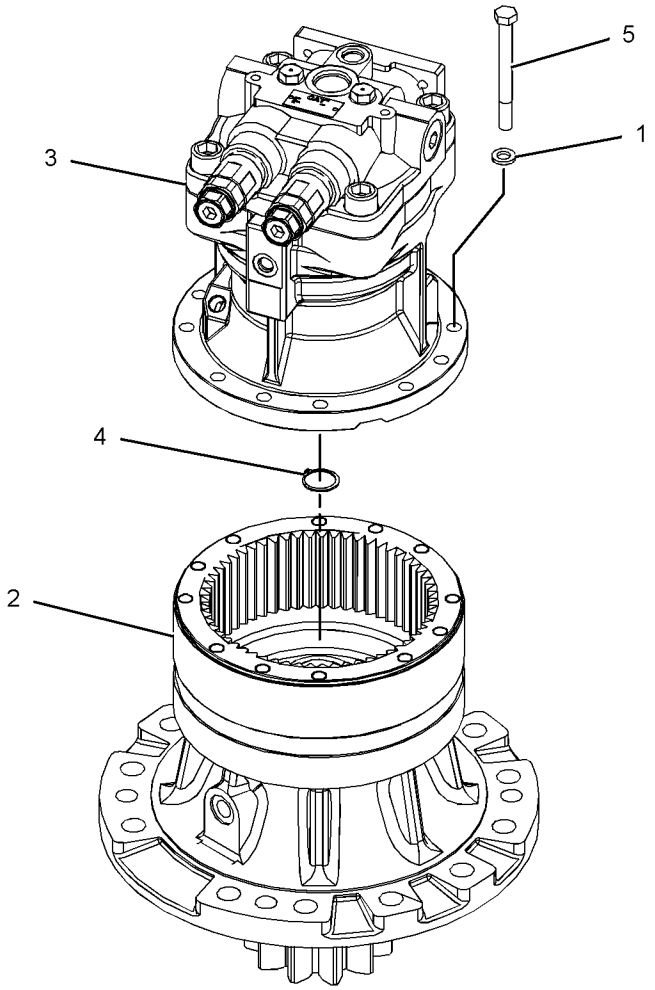

GRAPHIC #1 **<END>** g02726201

227-6229 FASTENER GP-SWING & FINAL DR

S/N: XAH1-UP

PART OF 267-6738 POWER TRAIN AR

SMCS-4050, 5459 **i05772911**

NOTE	REF NO	GRAPHIC REF	PART NUMBER	QTY	PART NAME 1 2 3 4 5 6 (PRODUCT LEVEL)	SEE PAGE
	1	1	**2Y-5503**	2	CORK	
	2	1	**5D-1026**	1	CLAMP-BAND	
	3	1	**191-2580**	1	PIN	
M	4	1	**447-1719**	13	BOLT (M20X2.5X60-MM)	
	5	1	**451-2176**	13	WASHER-HARD (22X35X3.5-MM THK)	
M	6	1	**447-1707**	40	BOLT (M16X2X60-MM)	
	7	1	**451-2175**	40	WASHER-HARD (17.5X30X3.5-MM THK)	
E	8	1	**5P-0767**		HOSE (90-CM)	
	9	1	**352-7063**	2	CAP	
BF			**1U-8846**		SEALANT-GASKET	

B - USE AS REQUIRED
E - ORDER BY THE CENTIMETER
F - NOT SHOWN
M - METRIC PART

227-6229 **FASTENER GP-SWING & FINAL DR (*contd.*)** **i05772911**

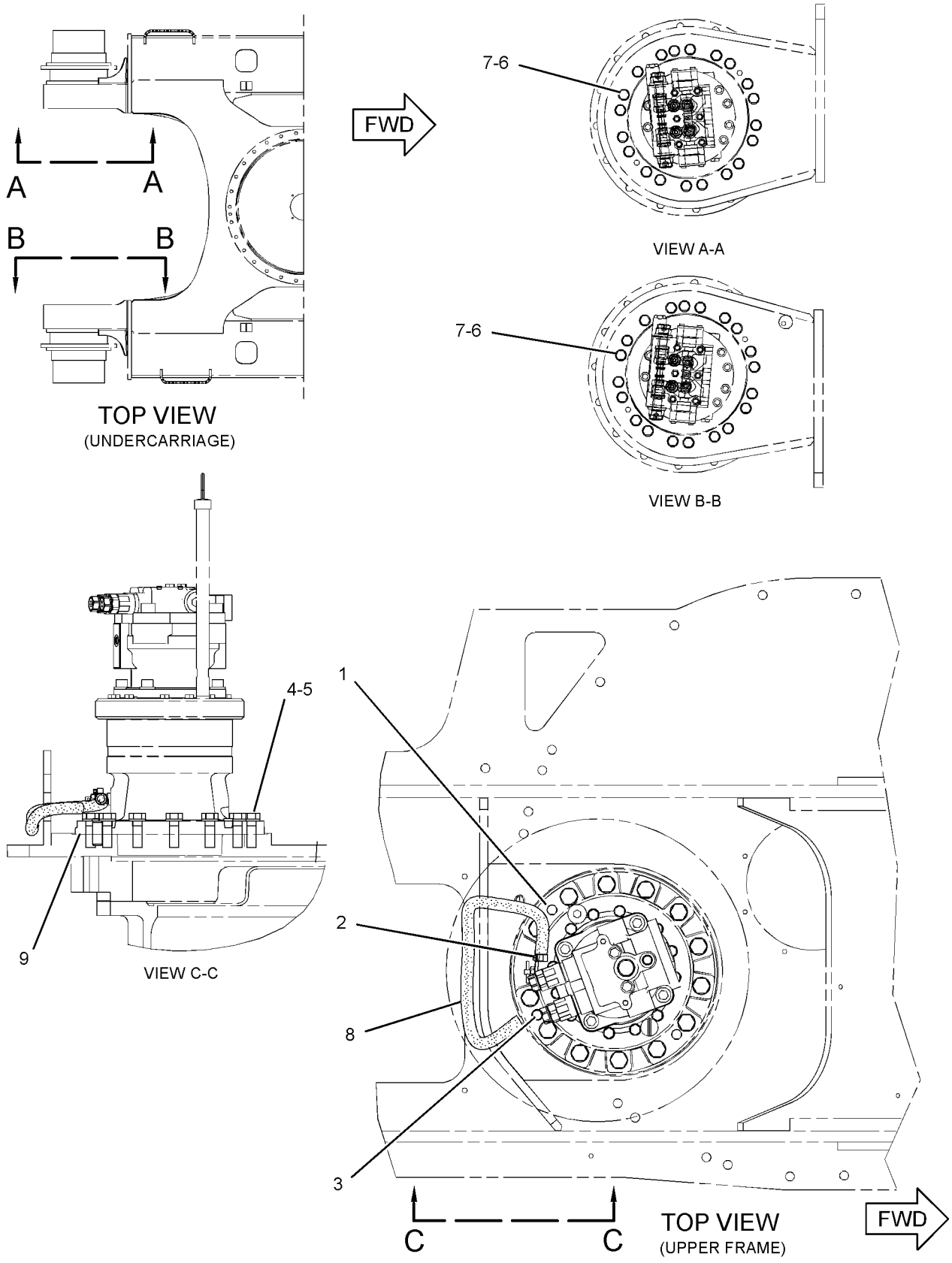

GRAPHIC #1

<END>

g03684698

158-8987 FILTER & VALVE GP-PILOT–HYDRAULIC OIL

S/N: XAH1-UP

PART OF 454-7359 TANK & FILTER GP-HYDRAULIC

SMCS-5072, 5092 **i05495730**

NOTE	REF NO	GRAPHIC REF	PART NUMBER	QTY	PART NAME 1 2 3 4 5 6 (PRODUCT LEVEL)	SEE PAGE
	1	1	**5I-8670**	1	FILTER-OIL (ADVANCED EFFICIENCY) (HYDRAULIC, PILOT)	
	2	1	**215-4909**	1	VALVE GP-PILOT RELIEF (HYDRAULIC FILTER)	
	2A	1	**095-1584**	1	SEAL-O-RING	
	2B	1	**095-1590**	1	SEAL-O-RING	
	2C	1	**095-1596**	1	SEAL-O-RING	

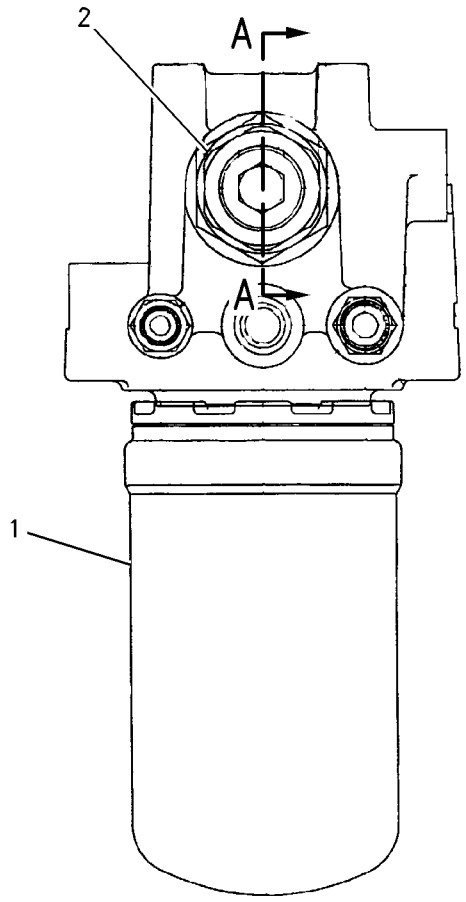

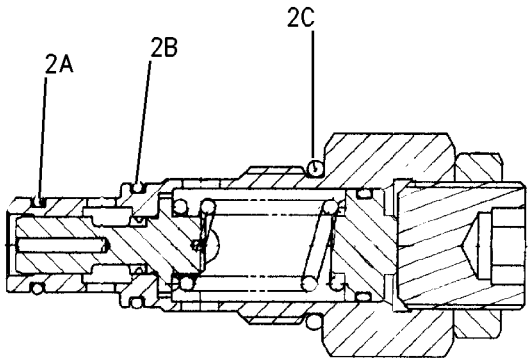

SECTION A–A

GRAPHIC #1 **<END>** g00842119

289-8194 FILTER GP-OIL—HYDRAULIC, CASE DRAIN

S/N: XAH1-UP

PART OF 454-7359 TANK & FILTER GP-HYDRAULIC

SMCS-3004, 4295, 431F, 5068, 5091, 5092

i03626800

NOTE	REF NO	GRAPHIC REF	PART NUMBER	QTY	PART NAME 1 2 3 4 5 6 (PRODUCT LEVEL)	SEE PAGE
	1	1	**093-7521**	1	FILTER-OIL (ADVANCED EFFICIENCY) (HYDRAULIC, CASE DRAIN)	
	2	1	**289-8195**	1	HEAD AS-FILTER	

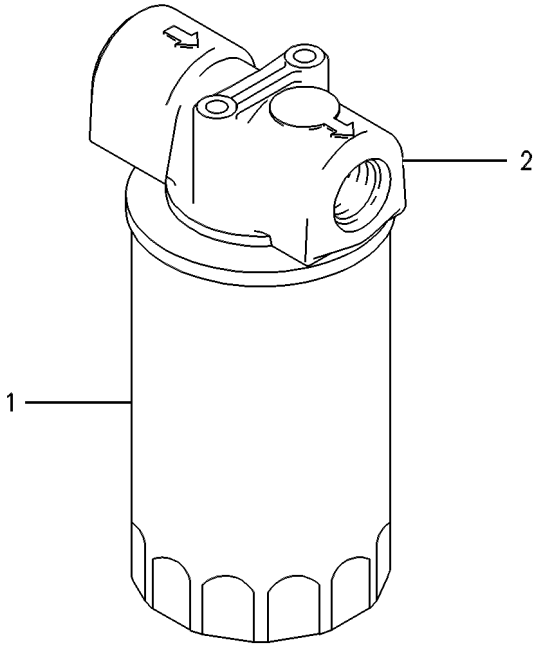

GRAPHIC #1

<END>

g00258224

392-2876 FILTER GP-OIL–HYDRAULIC, MAIN RETURN

S/N: XAH1-UP

PART OF 454-7359 TANK & FILTER GP-HYDRAULIC

SMCS-3004, 4295, 431F, 5068, 5091, 5092 **i05401757**

NOTE	REF NO	GRAPHIC REF	PART NUMBER	QTY	PART NAME 1 2 3 4 5 6 (PRODUCT LEVEL)	SEE PAGE
	1	1	**283-6090**	1	SEAL-O-RING	
	2	1	**398-7170**	1	HOUSING AS	
	3	1	**398-7171**	1	ELEMENT (HYDRAULIC RETURN FILTER)	
	4	1	**398-7172**	1	VALVE AS	
	5	1	**398-7173**	1	SPRING	
	6	1	**398-7174**	1	COVER	
M	7	1	**8T-4184**	4	BOLT (M12X1.75X45-MM)	
	8	1	**8T-4223**	4	WASHER-HARD (13.5X25.5X3-MM THK)	

M - METRIC PART

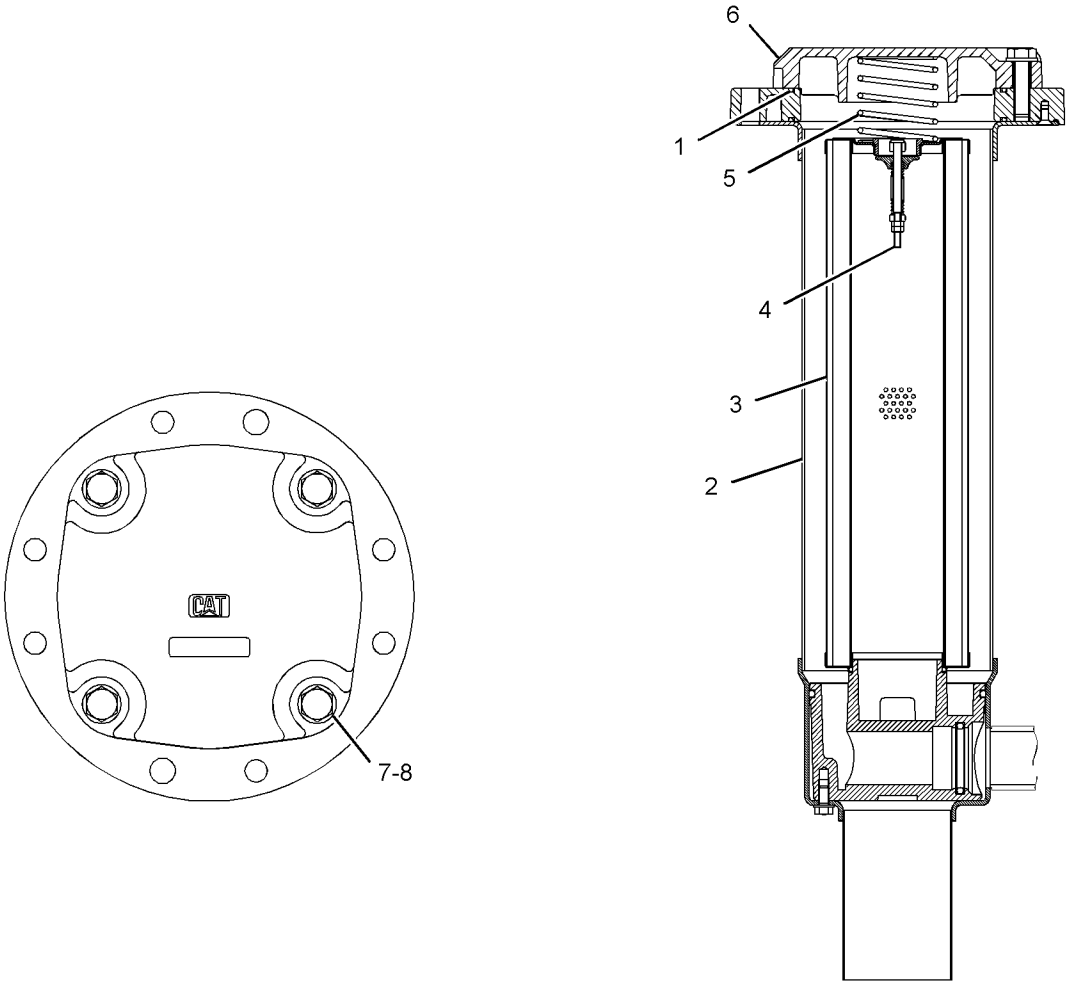

GRAPHIC #1 **<END>** g03139580

221-5069 FITTING GP-HYDRAULIC

S/N: XAH1-UP

PART OF 260-8204 LINES GP-HYDRAULIC

SMCS-5057, 7553

i05401781

NOTE	PART NUMBER	QTY	PART NAME 1 2 3 4 5 6 (PRODUCT LEVEL)	SEE PAGE
	221-5070	1	TEE AS (TEE,REDUCER & NUT)	
	6V-8556	1	NUT (1-3/16-12-THD)	
	6V-8398	1	SEAL-O-RING	
	6V-8942	1	REDUCER-O-RING	
	3D-2824	1	SEAL-O-RING	
	6V-8784	1	TEE-FACE SEAL	
	6V-9746	2	SEAL-O-RING	
			-OR-	
	221-5071	1	TEE AS (FABRICATED TEE)	
	3D-2824	1	SEAL-O-RING	
	6V-8398	1	SEAL-O-RING	
	6V-9746	1	SEAL-O-RING	

<END>

347-6081 GAUGE GP-SIGHT—HYDRAULIC OIL LEVEL

S/N: XAH1-UP

PART OF 454-7359 TANK & FILTER GP-HYDRAULIC

SMCS-7479 **i04281574**

NOTE	REF NO	GRAPHIC REF	PART NUMBER	QTY	PART NAME 1 2 3 4 5 6 (PRODUCT LEVEL)	SEE PAGE
	1	1	**236-3257**	1	PIPE	
M	2	1	**236-3259**	2	BOLT-SPECIAL	
	3	1	**347-6082**	2	BLOCK	
	4	1	**6F-6672**	4	SEAL-O-RING	
	5	1	**6F-4855**	4	SEAL-O-RING	

M - METRIC PART

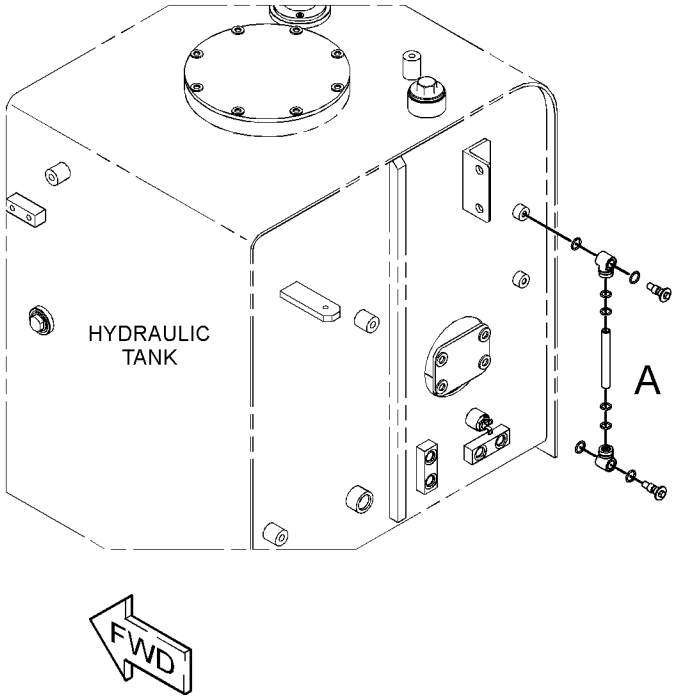

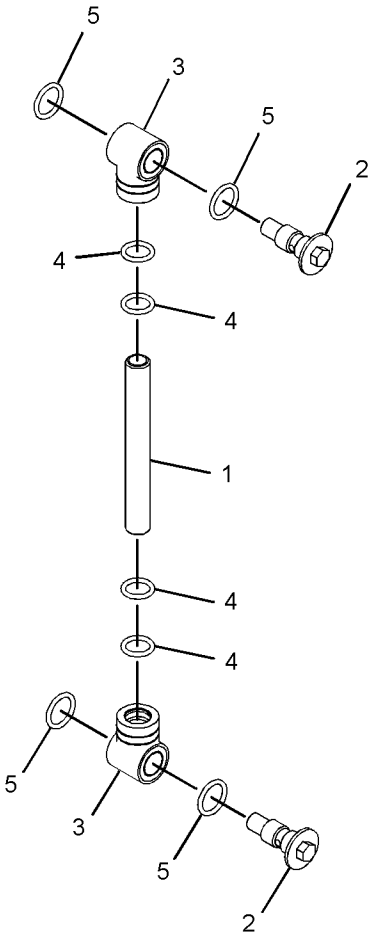

VIEW OF AREA A

GRAPHIC #1 **<END>** g02303838

267-1624 HEAD GP-PUMP

S/N: XAH1-UP

PART OF 391-9452 PUMP GP-PISTON

SMCS-3222, 5070, 5086 **i05774319**

NOTE	REF NO	GRAPHIC REF	PART NUMBER	QTY	PART NAME 1 2 3 4 5 6 (PRODUCT LEVEL)	SEE PAGE
B	1	1	**099-3669**	2	SHIM (1-MM THK)	
B		1	**099-6109**	2	SHIM (1.05-MM THK)	
B		1	**099-6110**	2	SHIM (1.1-MM THK)	
B		1	**099-6111**	2	SHIM (1.15-MM THK)	
B		1	**099-6112**	2	SHIM (1.2-MM THK)	
B		1	**099-6113**	2	SHIM (1.25-MM THK)	
B		1	**099-6115**	2	SHIM (1.3-MM THK)	
	8	1	**173-1170**	1	SPRING	
	9	1	**173-3389**	2	STOPPER	
	10	1	**174-7220**	2	COVER	
	11	1	**174-7221**	1	COVER	
	12	1	**174-7222**	1	COVER	
	14	1	**192-2376**	1	PIN AS	
		1	**192-0573**	1	PIN-DOWEL	
	15	1	**200-3247**	1	SPRING	
M	16	1	**225-0224**	1	SETSCREW (M16X2X55-MM)	
M	17	1	**225-0225**	1	SETSCREW (M16X2X45-MM)	
	18	1	**267-1626**	1	SPOOL AS	
	19	1	**268-4201**	1	LEVER AS	
		1	**094-1875**	1	DOWEL	
	20	1	**268-4203**	1	PIN	
	21	1	**273-8316**	1	SEAL-O-RING	
	22	1	**273-8317**	1	SEAL-O-RING	
	23	1	**273-8318**	1	SEAL-O-RING	
	24	1	**281-6847**	1	PISTON	
	26	1	**301-6874**	1	RETAINER	
	27	1	**301-8294**	1	ADJUSTER	
	28	1	**094-1881**	1	PLATE-SLIDE	
	29	1	**095-1788**	2	RING-BACKUP	
	30	1	**099-3671**	1	SPRING	
	31	1	**185-0169**	1	GUIDE	
	32	1	**189-9763**	3	SEAL-O-RING	
	33	1	**190-7674**	2	SEAL-O-RING	
M	34	1	**200-3255**	1	NUT (M20X1.5-THD)	
	35	1	**267-1625**	1	SPRING	
	36	1	**2H-9247**	1	SEAL-O-RING	
	37	1	**3D-2891**	1	BALL	
	38	1	**3J-1907**	1	SEAL-O-RING	
	39	1	**4J-7533**	9	SEAL-O-RING	
	40	1	**6V-5391**	1	SEAL-O-RING	
M	41	1	**8T-4132**	2	NUT (M16X2-THD)	
M	42	1	**8T-4133**	1	NUT (M10X1.5-THD)	
M	43	1	**8T-4183**	8	BOLT (M12X1.75X40-MM)	
M	44	1	**8T-4192**	2	BOLT (M12X1.75X25-MM)	
	45	1	**9S-8001**	9	PLUG-O-RING	

B - USE AS REQUIRED
M - METRIC PART

267-1624 **HEAD GP-PUMP (*contd.*)** **i05774319**

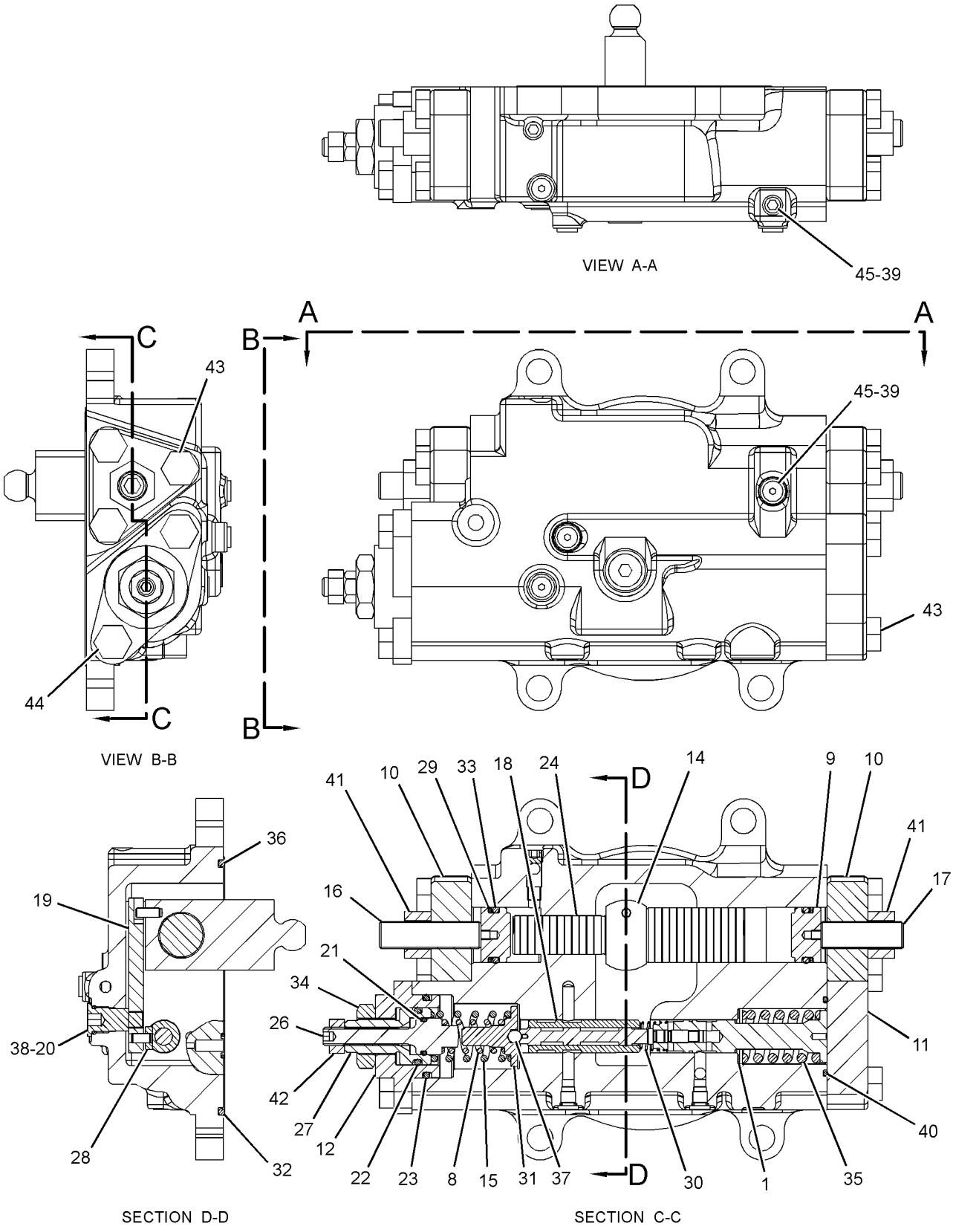

GRAPHIC #1 **<END>** g01611833

HYDRAULIC SYSTEM

455-7664 HYDRAULIC AR

S/N: XAH1-UP

PART OF 454-5582 GENERAL AR

SMCS-5050 **i05962503**

NOTE	PART NUMBER	QTY	PART NAME 1 2 3 4 5 6 (PRODUCT LEVEL)	SEE PAGE
Y	*435-8395*	1	LINES GP-CYLINDER	231
Y	*366-8650*	1	LINES GP-FRONT	235
Y	*391-7830*	1	LINES GP-HYDRAULIC OIL COOLER	240
Y	*260-8217*	1	LINES GP-PILOT (MAIN CONTROL VALVE)	241
Y	*275-1715*	1	LINES GP-PILOT (PILOT CONTROL)	245
Y	*387-3716*	1	LINES GP-PILOT (FILTER, PILOT PUMP)	248
Y	*391-7835*	1	LINES GP-PILOT (MAIN CONTROL VALVE)	251
Y	*391-7825*	1	LINES GP-PUMP (OUTPUT, HYD OIL CLR BYPASS)	257
Y	*391-7836*	1	LINES GP-PUMP (SUPPLY, MAIN PUMP)	259
Y	*260-8212*	1	LINES GP-TRAVEL MOTOR (LONG CARRIAGE)	263
Y	*302-3225*	1	MOUNTING GP-MAIN CONTROL VALVE	275
Y	*387-2618*	1	PUMP & MTG GP-MAIN HYDRAULIC	276
Y	*455-4106*	1	TANK & MTG GP-HYDRAULIC	298
Y	**420-2243**	1	VALVE GP-MAIN CONTROL	300

Y - SEPARATE ILLUSTRATION

<END>

260-8220 LINES GP-BOOM

S/N: XAH1-UP
PART OF 283-9001 BOOM AR-1 PIECE LONG
AN ATTACHMENT

SMCS-5057 **i05787031**

NOTE	REF NO	GRAPHIC REF	PART NUMBER	QTY	PART NAME 1 2 3 4 5 6 (PRODUCT LEVEL)	SEE PAGE
	1	1	**4I-1674**	2	CLIP	
	2	1	**4I-1676**	8	CLIP	
	3	1	**7Y-4868**	8	CLIP	
	4	1	**108-7550**	2	CLIP	
CM	5	1	**8T-4139**	20	BOLT (M12X1.75X30-MM)	
I	6	1	**260-8316**	1	HOSE AS	
M	7	1	**8T-4184**	16	BOLT (M12X1.75X45-MM)	
	8	1	**8T-4223**	36	WASHER-HARD (13.5X25.5X3-MM THK)	
	9	1	**266-1188**	1	TUBE AS	
	10	1	**266-1189**	1	TUBE AS	
	11	1	**266-1190**	1	TUBE AS	
	12	1	**266-1191**	1	TUBE AS	
	13	1	**266-1192**	1	TUBE AS	
	14	1	**266-1193**	1	TUBE AS	
I	15	1	**266-1210**	1	HOSE AS	
	16	1	**1P-3703**	4	SEAL-RECTANGULAR	
	17	1	**6V-0400**	8	FLANGE-HALF	
	18	1	**6V-9746**	6	SEAL-O-RING	

C - CHANGE FROM PREVIOUS TYPE
I - REFER TO HYDRAULIC INFORMATION SYSTEM
M - METRIC PART

260-8220 **LINES GP-BOOM (*contd.*)** **i05787031**

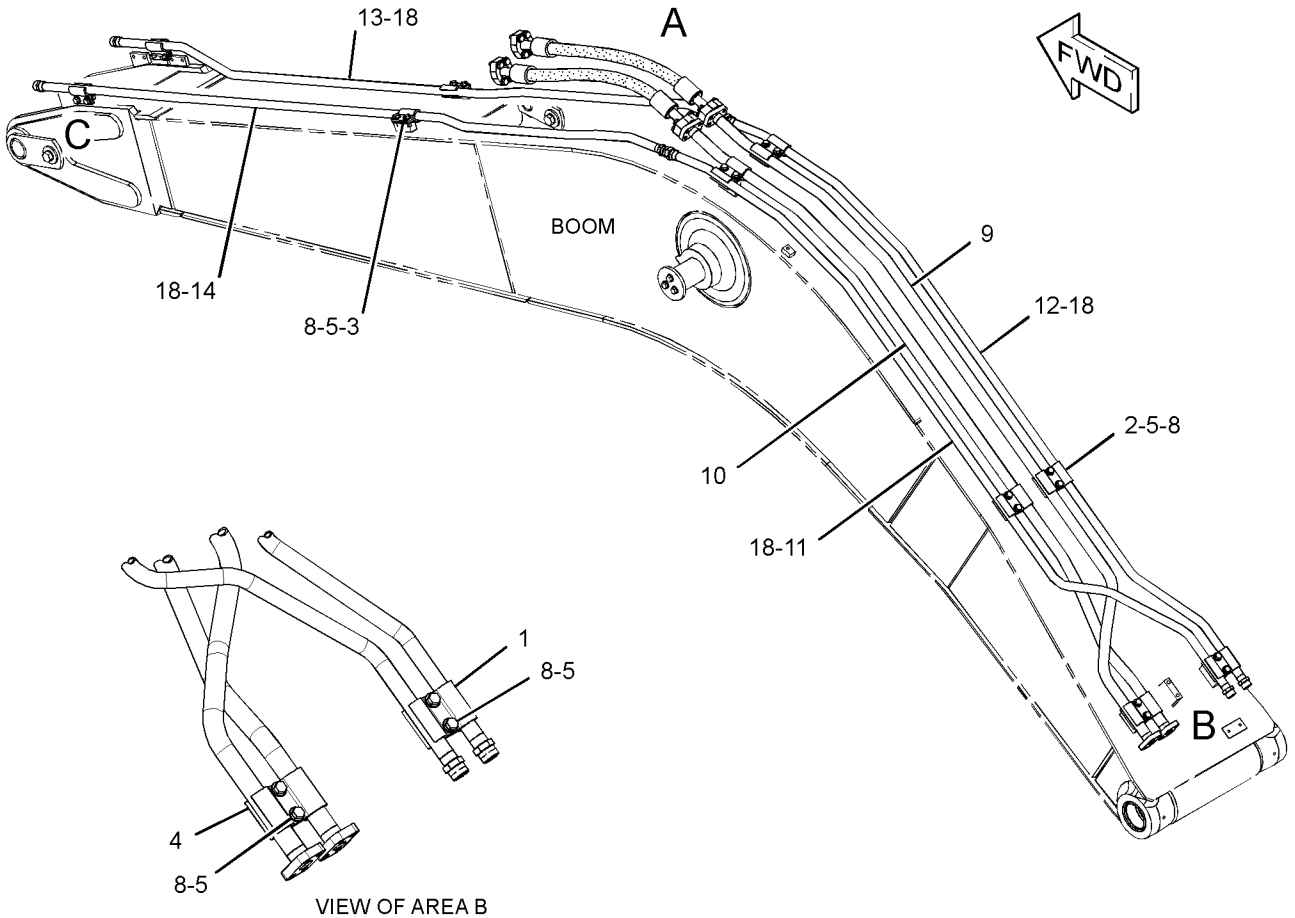

VIEW OF AREA B

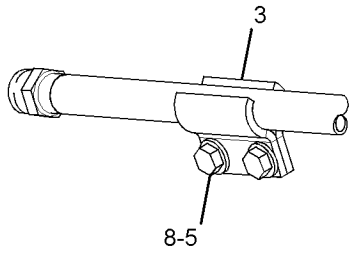

VIEW OF AREA C

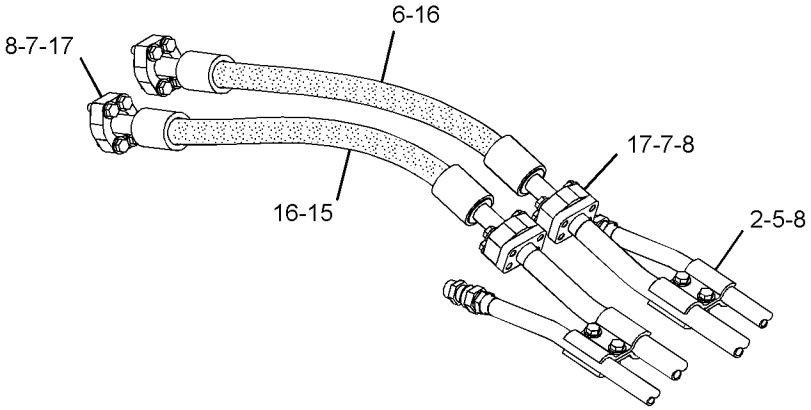

VIEW OF AREA A

GRAPHIC #1 **<END>** g02920057

385-2911 LINES GP-BOOM CYLINDER—LH

S/N: XAH1-UP

PART OF 381-8968 CYLINDER & LINES GP-BOOM

AN ATTACHMENT

SMCS-5057, 5456

i05793018

NOTE	REF NO	GRAPHIC REF	PART NUMBER	QTY	PART NAME 1 2 3 4 5 6 (PRODUCT LEVEL)	SEE PAGE
	1	1	**390-4135**	1	TUBE AS	
	2	1	**390-4136**	1	TUBE AS	
	3	1	**6V-0357**	2	SEAL-O-RING	
M	4	1	**8T-0271**	8	BOLT-SOCKET HEAD (M10X1.5X35-MM)	
	5	1	**422-9135**	1	SUPPORT AS	
M		1	**096-4876**	1	NUT (M14X2-THD)	
		1	**424-8398**	2	NUT-WELD (M10X1.5-THD)	
M	7	1	**6V-5842**	2	BOLT (M10X1.5X40-MM)	
	8	1	**7X-0796**	2	LOCKWASHER	
M	9	1	**269-5224**	1	BOLT (M14X2X80-MM)	
	10	1	**3B-4509**	1	LOCKWASHER	
	11	1	**390-4242**	2	CLAMP	
	13	1	**6V-9831**	2	CAP AS	
	14	1	**7J-9108**	2	SEAL-O-RING	

M - METRIC PART

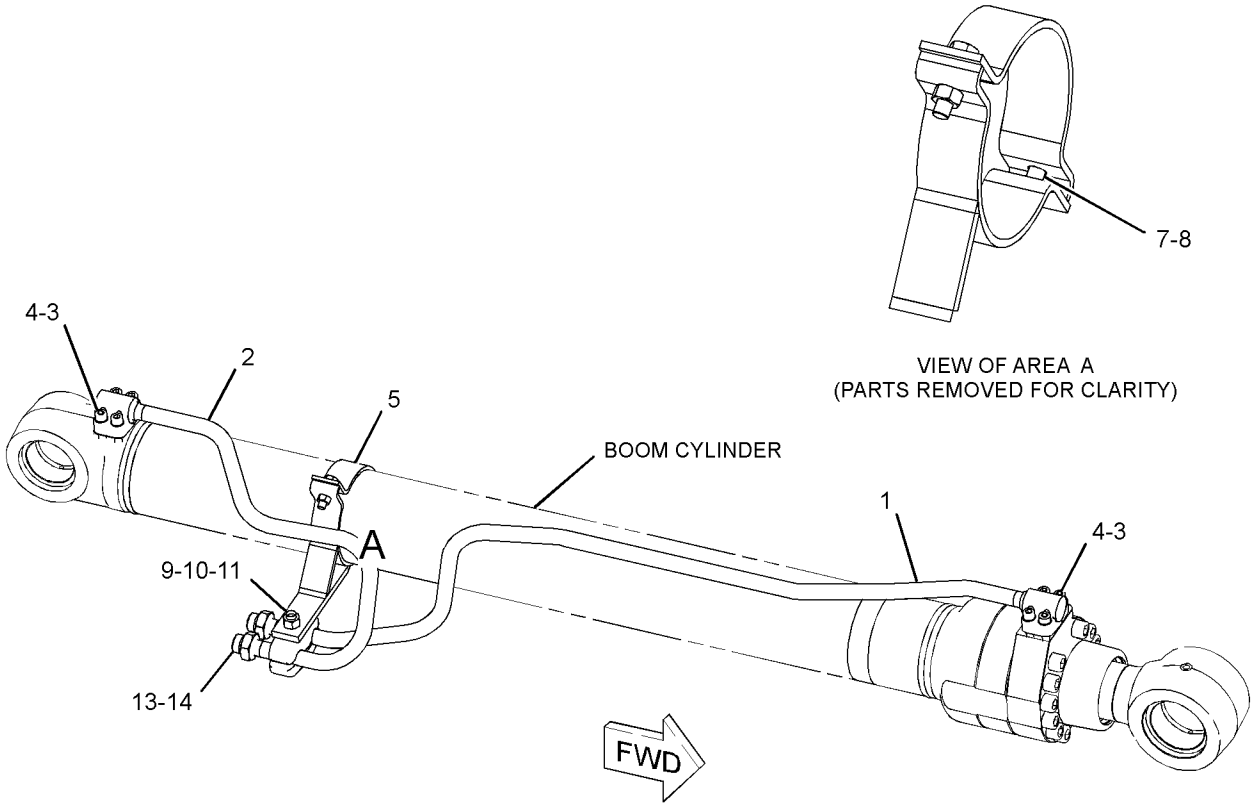

GRAPHIC #1

<END>

g03346797

385-2912 LINES GP-BOOM CYLINDER—RH

S/N: XAH1-UP
PART OF 381-8969 CYLINDER & LINES GP-BOOM
AN ATTACHMENT

SMCS-5057, 5456

i05790984

NOTE	REF NO	GRAPHIC REF	PART NUMBER	QTY	PART NAME 1 2 3 4 5 6 (PRODUCT LEVEL)	SEE PAGE
	1	1	**6V-0357**	2	SEAL-O-RING	
M	2	1	**8T-0271**	8	BOLT-SOCKET HEAD (M10X1.5X35-MM)	
	3	1	**390-4149**	1	TUBE AS	
	4	1	**390-4150**	1	TUBE AS	
	5	1	**390-4242**	2	CLAMP	
M	6	1	**269-5224**	1	BOLT (M14X2X80-MM)	
	7	1	**3B-4509**	1	LOCKWASHER	
M	8	1	**6V-5842**	2	BOLT (M10X1.5X40-MM)	
	9	1	**7X-0796**	2	LOCKWASHER	
	10	1	**6V-9831**	2	CAP AS	
C	11	1	**422-9135**	1	SUPPORT AS	
M		1	**096-4876**	1	NUT (M14X2-THD)	
		1	**424-8398**	2	NUT-WELD (M10X1.5-THD)	
	12	1	**7J-9108**	2	SEAL-O-RING	

C - CHANGE FROM PREVIOUS TYPE
M - METRIC PART

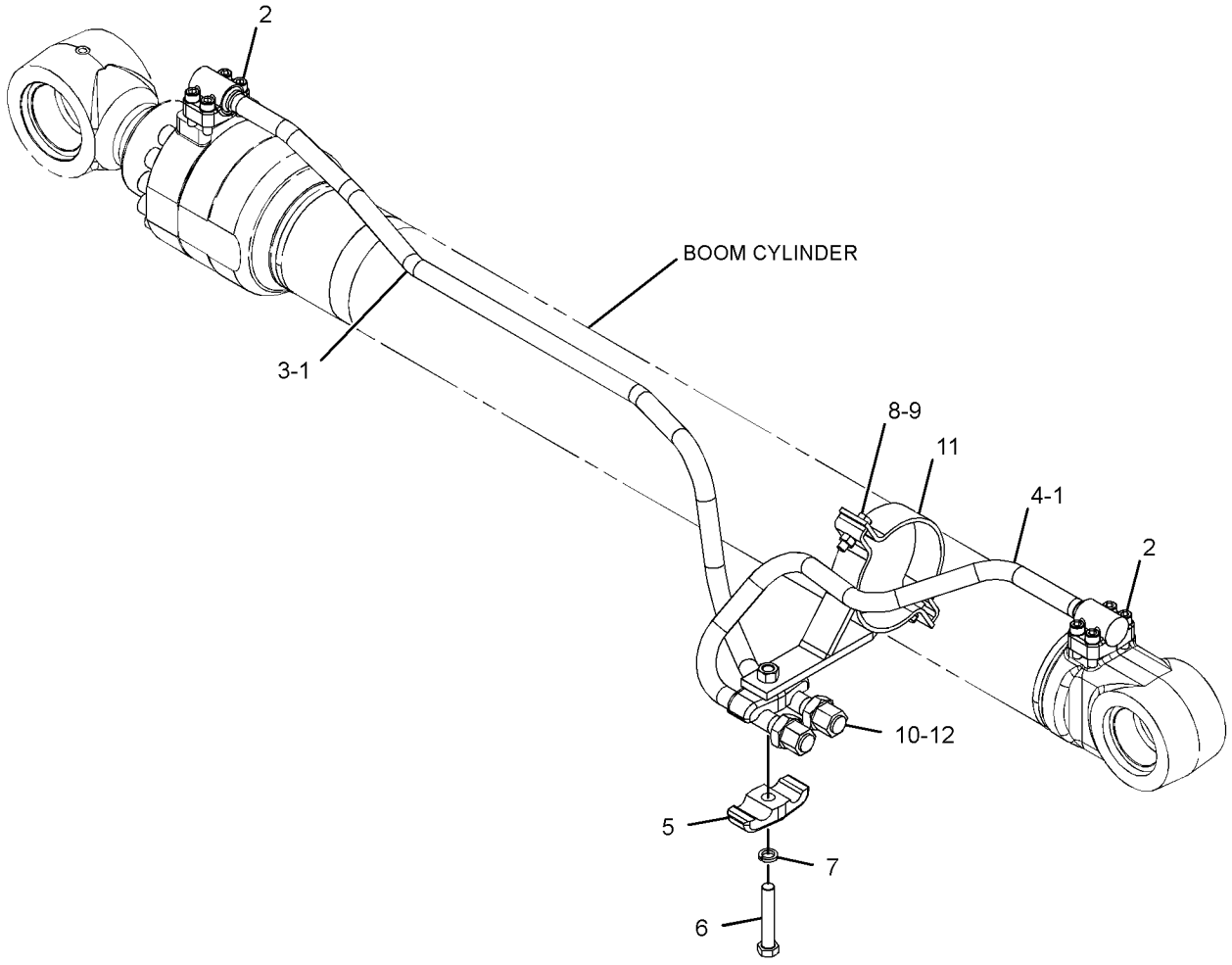

GRAPHIC #1

<END>

g03344204

385-2916 LINES GP-BUCKET CYLINDER

S/N: XAH1-UP

PART OF 381-8971 CYLINDER & LINES GP-BUCKET

AN ATTACHMENT

SMCS-5457 **i05786733**

NOTE	REF NO	GRAPHIC REF	PART NUMBER	QTY	PART NAME 1 2 3 4 5 6 (PRODUCT LEVEL)	SEE PAGE
M	1	1	**8T-0271**	4	BOLT-SOCKET HEAD (M10X1.5X35-MM)	
	2	1	**6V-0357**	1	SEAL-O-RING	
	3	1	**390-4173**	1	TUBE AS	
M	4	1	**6V-4249**	1	BOLT (M10X1.5X50-MM)	
M	5	1	**6V-5842**	2	BOLT (M10X1.5X40-MM)	
	6	1	**7X-0796**	3	LOCKWASHER	
	7	1	**422-9136**	1	SUPPORT AS	
		1	**424-8398**	2	NUT-WELD (M10X1.5-THD)	
	8	1	**385-2967**	1	CLAMP	

M - METRIC PART

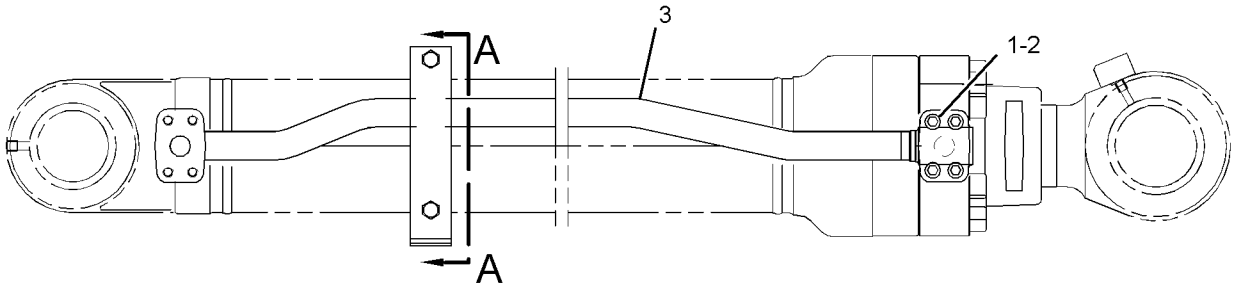

RIGHT SIDE VIEW

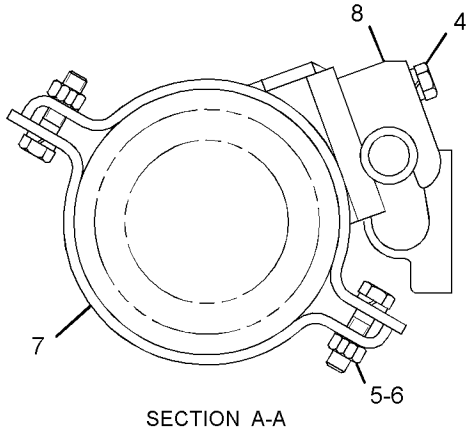

SECTION A-A

GRAPHIC #1 **<END>** g03345174

435-8395 LINES GP-CYLINDER–BOOM

S/N: XAH1-UP

PART OF 455-7664 HYDRAULIC AR

SMCS-5057 **i05774975**

NOTE	REF NO	GRAPHIC REF	PART NUMBER	QTY	PART NAME 1 2 3 4 5 6 (PRODUCT LEVEL)	SEE PAGE
	1	1	**9F-2167**	1	SCREW-PURGE (3/8-24X1.164-IN)	
	2	1	**093-1296**	1	CLAMP	
	3	1	**099-5408**	1	CLAMP	
I	4	1	**184-9543**	4	HOSE AS	
	5	1	**187-5873**	1	TUBE AS	
	6	1	**266-7940**	1	ROD AS	
		1	**225-4539**	1	WASHER-SPECIAL (17X30X6-MM THK)	
	7	1	*268-5145*	1	ELBOW AS	
		1	**3D-2824**	1	SEAL-O-RING	
		1	**6V-9746**	1	SEAL-O-RING	
		1	**194-9041**	1	ELBOW	
	8	1	**269-9799**	1	SUPPORT AS	
I	9	1	**368-9376**	1	HOSE AS	
	10	1	**368-9379**	1	TUBE AS	
Y	11	1	**369-9628**	1	VALVE GP-SWING CUSHION (CROSSOVER RELIEF)	321
	12	1	*106-8715*	2	ELBOW AS	
					(EACH INCLUDES)	
		1	**3D-2824**	1	SEAL-O-RING	
		1	**6V-9746**	1	SEAL-O-RING	
		1	**8C-8400**	1	ELBOW	
	13	1	*148-8327*	1	CONNECTOR AS	
		1	**3D-2824**	1	SEAL-O-RING	
		1	**6V-8637**	1	CONNECTOR	
		1	**6V-9746**	1	SEAL-O-RING	
	14	1	*148-8336*	1	CONNECTOR AS	
		1	**3J-1907**	1	SEAL-O-RING	
		1	**6V-8397**	1	SEAL-O-RING	
		1	**6V-8636**	1	CONNECTOR	
	15	1	*148-8340*	2	CONNECTOR AS	
					(EACH INCLUDES)	
		1	**3K-0360**	1	SEAL-O-RING	
		1	**6V-8398**	1	SEAL-O-RING	
		1	**6V-8639**	1	CONNECTOR	
	16	1	*148-8347*	1	ELBOW AS	
		1	**3D-2824**	1	SEAL-O-RING	
		1	**6V-9007**	1	ELBOW	
		1	**6V-9746**	1	SEAL-O-RING	
	17	1	*148-8357*	1	ELBOW AS	
		1	**5K-9090**	1	SEAL-O-RING	
		1	**6V-9008**	1	ELBOW	
		1	**7M-8485**	1	SEAL-O-RING	
	18	1	*148-8378*	1	ELBOW AS	
		1	**3J-1907**	1	SEAL-O-RING	
		1	**6V-8397**	1	SEAL-O-RING	
		1	**6V-8724**	1	ELBOW	
	19	1	*148-8444*	1	TEE AS-SWIVEL	
		1	**6V-8398**	2	SEAL-O-RING	
		1	**6V-9837**	1	TEE-SWIVEL	
	20	1	*153-6237*	1	ELBOW AS	
		1	**3D-2824**	1	SEAL-O-RING	
		1	**6V-9004**	1	ELBOW	
		1	**6V-9746**	1	SEAL-O-RING	
	21	1	**6H-3615**	1	PLUG-PROTECTION	
	22	1	**7J-9108**	4	SEAL-O-RING	
M	23	1	**8T-4178**	6	BOLT (M10X1.5X90-MM)	
M	24	1	**8T-4192**	2	BOLT (M12X1.75X25-MM)	
	25	1	**8T-4223**	4	WASHER-HARD (13.5X25.5X3-MM THK)	
M	26	1	**8T-4648**	1	BOLT (M12X1.75X70-MM)	
M	27	1	**8T-4910**	1	BOLT (M12X1.75X60-MM)	

435-8395 **LINES GP-CYLINDER (*contd.*)** **i05774975**

NOTE	REF NO	GRAPHIC REF	PART NUMBER	QTY	PART NAME 1 2 3 4 5 6 (PRODUCT LEVEL)	SEE PAGE

I - REFER TO HYDRAULIC INFORMATION SYSTEM
M - METRIC PART
Y - SEPARATE ILLUSTRATION

435-8395 **LINES GP-CYLINDER (*contd.*)** **i05774975**

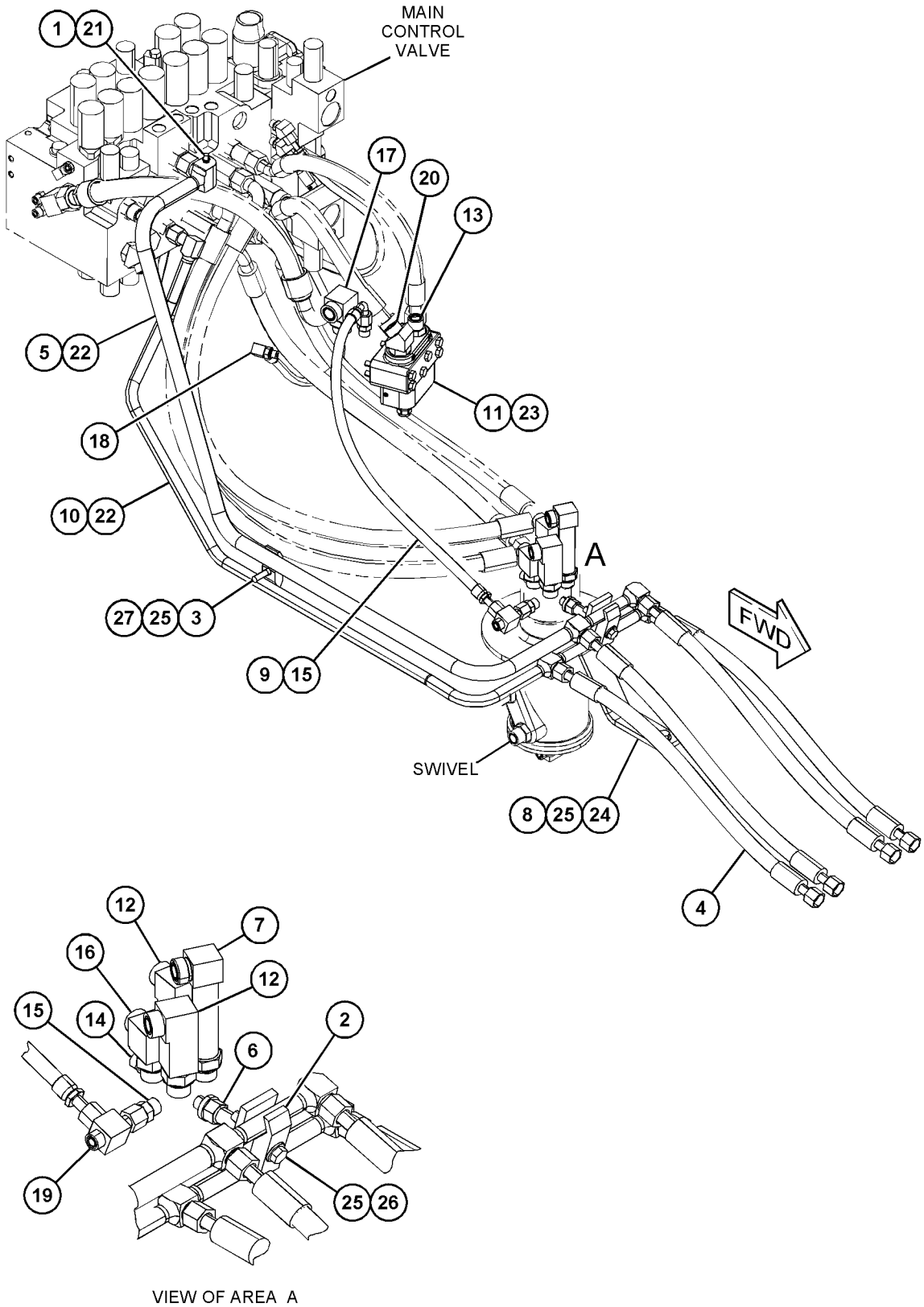

VIEW OF AREA A

GRAPHIC #1 **<END>** g03676536

395-3380 LINES GP-DRAIN

S/N: XAH1-UP

PART OF 387-2619 INSTALLATION AR-ENGINE

SMCS-5057 **i05776754**

NOTE	REF NO	GRAPHIC REF	PART NUMBER	QTY	PART NAME 1 2 3 4 5 6 (PRODUCT LEVEL)	SEE PAGE
	1	1	**095-1388**	1	CLAMP-HOSE	
E	2	1	**5P-0743**		HOSE (18-CM)	

E - ORDER BY THE CENTIMETER

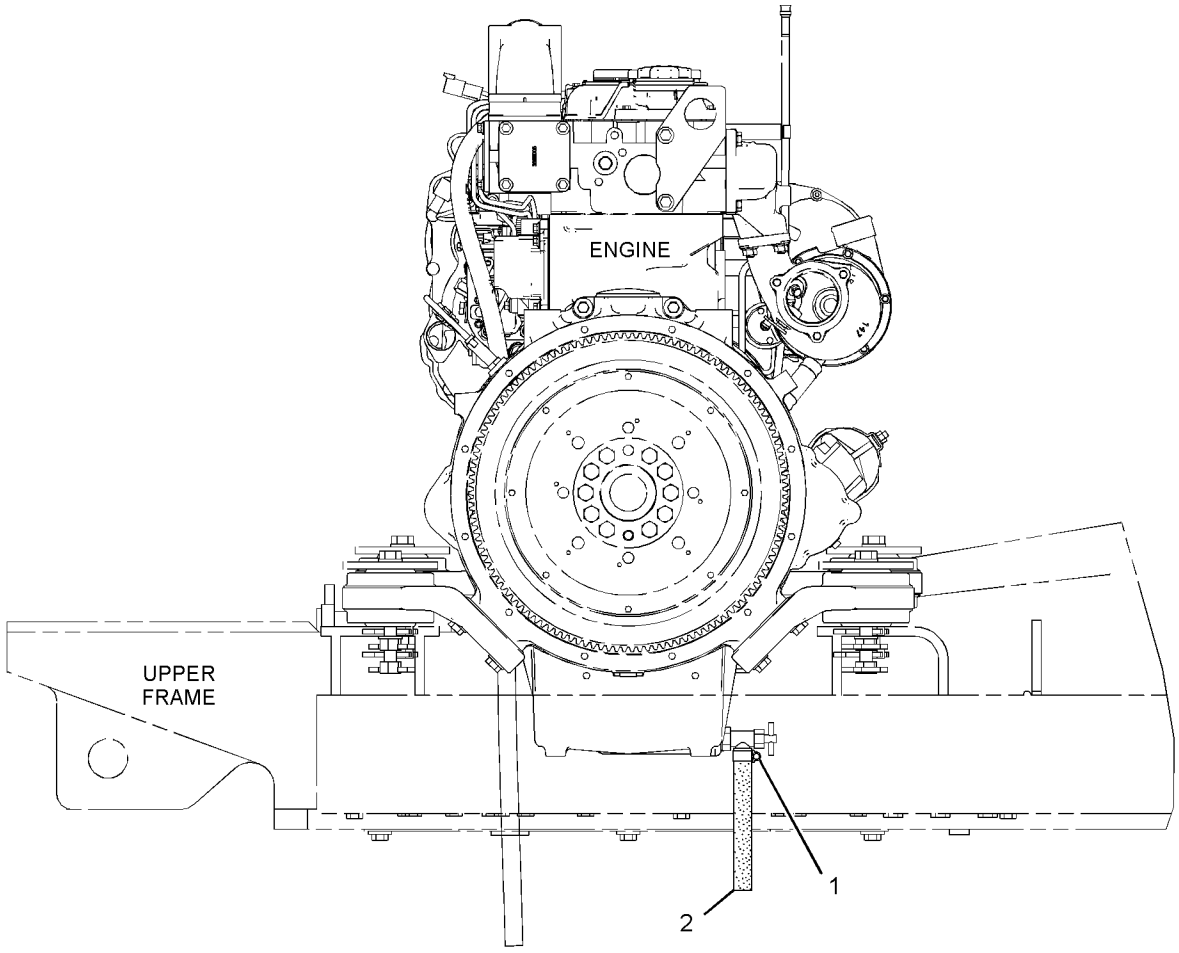

RIGHT SIDE VIEW

GRAPHIC #1 **<END>** g03128478

366-8650 LINES GP-FRONT

S/N: XAH1-UP

PART OF 455-7664 HYDRAULIC AR

SMCS-5057 **i05774270**

NOTE	REF NO	GRAPHIC REF	PART NUMBER	QTY	PART NAME 1 2 3 4 5 6 (PRODUCT LEVEL)	SEE PAGE
I	1	1	**269-9573**	1	HOSE AS	
I	2	1	**269-9577**	1	HOSE AS	
I	3	1	**269-9585**	2	HOSE AS	
I	4	1	**269-9589**	1	HOSE AS	
I	5	1	**269-9593**	1	HOSE AS	
I	6	1	**269-9920**	1	HOSE AS	
I	7	1	**275-1582**	1	HOSE AS	
	8	1	*278-6505*	1	CONNECTOR AS	
		1	**6V-9746**	1	SEAL-O-RING	
		1	**7M-8485**	1	SEAL-O-RING	
		1	**278-6506**	1	CONNECTOR	
	9	1	*286-6499*	2	CONNECTOR AS	
					(EACH INCLUDES)	
		1	**6V-9746**	1	SEAL-O-RING	
		1	**7M-8485**	1	SEAL-O-RING	
		1	**184-9330**	1	CONNECTOR	
I	10	1	**368-9380**	1	HOSE AS	
I	11	1	**375-6625**	1	HOSE AS	
I	12	1	**375-6628**	1	HOSE AS	
	13	1	*148-8327*	1	CONNECTOR AS	
		1	**3D-2824**	1	SEAL-O-RING	
		1	**6V-8637**	1	CONNECTOR	
		1	**6V-9746**	1	SEAL-O-RING	
	14	1	*148-8339*	1	CONNECTOR AS	
		1	**6V-8716**	1	CONNECTOR (STRAIGHT)	
		1	**6V-9746**	1	SEAL-O-RING	
		1	**7M-8485**	1	SEAL-O-RING	
	15	1	*148-8341*	1	CONNECTOR AS	
		1	**3D-2824**	1	SEAL-O-RING	
		1	**6V-8713**	1	CONNECTOR	
		1	**7J-9108**	1	SEAL-O-RING	
	16	1	*148-8344*	2	CONNECTOR AS	
					(EACH INCLUDES)	
		1	**3D-2824**	1	SEAL-O-RING	
		1	**6V-9162**	1	CONNECTOR	
		1	**6V-9746**	1	SEAL-O-RING	
	17	1	*148-8362*	1	ELBOW AS	
		1	**3D-2824**	1	SEAL-O-RING	
		1	**5K-9090**	1	SEAL-O-RING	
		1	**8T-6684**	1	ELBOW	
	18	1	*153-6237*	1	ELBOW AS	
		1	**3D-2824**	1	SEAL-O-RING	
		1	**6V-9004**	1	ELBOW	
		1	**6V-9746**	1	SEAL-O-RING	
	19	1	*153-6242*	1	CONNECTOR AS	
		1	**6V-9746**	1	SEAL-O-RING	
		1	**7M-8485**	1	SEAL-O-RING	
		1	**8T-0197**	1	CONNECTOR	
	20	1	*155-2027*	2	CONNECTOR AS	
					(EACH INCLUDES)	
		1	**5K-9090**	1	SEAL-O-RING	
		1	**7M-8485**	1	SEAL-O-RING	
		1	**8T-8898**	1	CONNECTOR	
	21	1	*164-4180*	2	PLUG AS	
					(EACH INCLUDES)	
		1	**7M-8485**	1	SEAL-O-RING	
		1	**9S-4181**	1	PLUG-O-RING	
	22	1	**1P-3703**	2	SEAL-RECTANGULAR	
	23	1	**6V-0400**	4	FLANGE-HALF	

366-8650 **LINES GP-FRONT (*contd.*)** **i05774270**

NOTE	REF NO	GRAPHIC REF	PART NUMBER	QTY	PART NAME 1 2 3 4 5 6 (PRODUCT LEVEL)	SEE PAGE
M	24	1	**8T-4184**	8	BOLT (M12X1.75X45-MM)	
	25	1	**8T-4223**	8	WASHER-HARD (13.5X25.5X3-MM THK)	

I - REFER TO HYDRAULIC INFORMATION SYSTEM
M - METRIC PART

366-8650 **LINES GP-FRONT (*contd.*)** **i05774270**

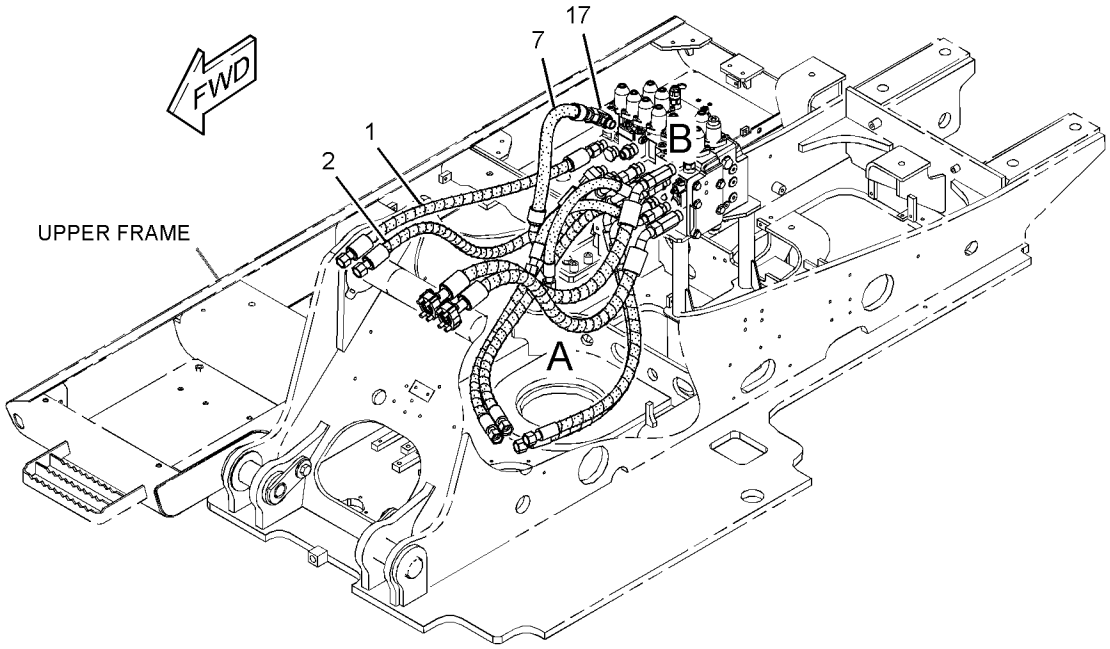

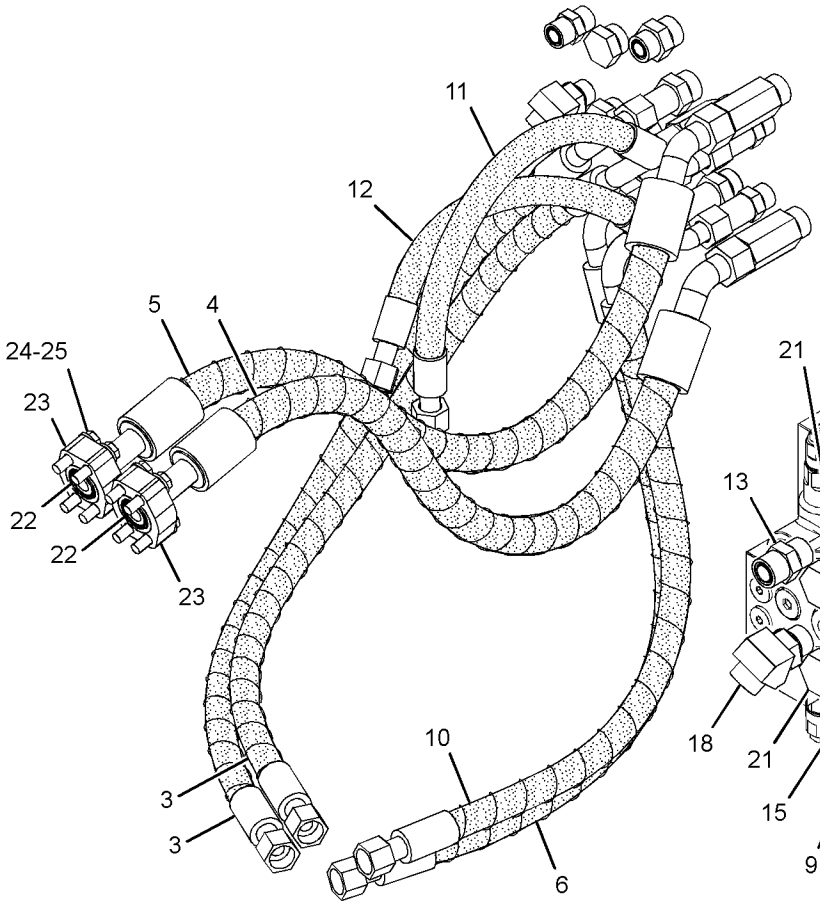

VIEW OF AREA A
(PARTS REMOVED FOR CLARITY)

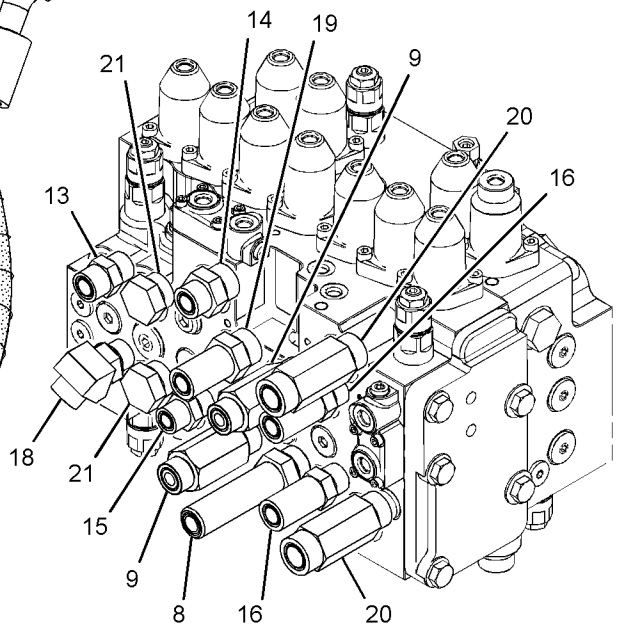

VIEW OF AREA B
(PARTS REMOVED FOR CLARITY)

GRAPHIC #1 **<END>** g02798790

260-8204 LINES GP-HYDRAULIC—HYDRAULIC TANK, FILTER

S/N: XAH1-UP

PART OF 455-4106 TANK & MTG GP-HYDRAULIC

SMCS-5057 **i05774937**

NOTE	REF NO	GRAPHIC REF	PART NUMBER	QTY	PART NAME 1 2 3 4 5 6 (PRODUCT LEVEL)	SEE PAGE
	1	1	**4I-9527**	2	BAND-MARKER (GREEN, R3)	
	2	1	**7K-1181**	4	STRAP-CABLE	
	3	1	*164-6874*	1	FITTING AS-ELBOW (QUICK DISCONNECT, MALE)	
		1	**3J-1907**	1	SEAL-O-RING	
		1	**085-7356**	1	FITTING	
Y	4	1	**221-5069**	1	FITTING GP-HYDRAULIC (TEE)	221
I	5	1	**269-9714**	1	HOSE AS	
	6	1	**269-9721**	1	TUBE AS	
CI	7	1	**255-1929**	1	HOSE AS	
I	8	1	**115-8631**	1	HOSE AS	
	9	1	*148-8340*	2	CONNECTOR AS	
					(EACH INCLUDES)	
		1	**3K-0360**	1	SEAL-O-RING	
		1	**6V-8398**	1	SEAL-O-RING	
		1	**6V-8639**	1	CONNECTOR	
	10	1	*148-8345*	1	CONNECTOR AS	
		1	**2M-9780**	1	SEAL-O-RING	
		1	**6V-8398**	1	SEAL-O-RING	
		1	**6V-8638**	1	CONNECTOR	
	11	1	*148-8347*	1	ELBOW AS	
		1	**3D-2824**	1	SEAL-O-RING	
		1	**6V-9007**	1	ELBOW	
		1	**6V-9746**	1	SEAL-O-RING	
	12	1	*148-8359*	1	ELBOW AS	
		1	**3K-0360**	1	SEAL-O-RING	
		1	**6V-9746**	1	SEAL-O-RING	
		1	**6V-9877**	1	ELBOW	
	13	1	*148-8372*	1	ELBOW AS	
		1	**2M-9780**	1	SEAL-O-RING	
		1	**6V-8398**	1	SEAL-O-RING	
		1	**6V-8721**	1	ELBOW	
	14	1	*148-8407*	1	PLUG AS	
		1	**3J-1907**	1	SEAL-O-RING	
		1	**9S-4191**	1	PLUG	
	15	1	*150-4043*	1	CONNECTOR AS	
		1	**3J-1907**	1	SEAL-O-RING	
		1	**6V-8398**	1	SEAL-O-RING	
		1	**6V-9873**	1	CONNECTOR	
C	16	1	*148-8354*	1	ELBOW AS	
		1	**3K-0360**	1	SEAL-O-RING	
		1	**6V-8398**	1	SEAL-O-RING	
		1	**6V-9002**	1	ELBOW	
	17	1	**4J-0527**	1	SEAL-O-RING	
	18	1	**6D-1641**	1	CLIP	
	19	1	**8T-4121**	1	WASHER-HARD (11X21X2.5-MM THK)	
M	20	1	**8T-4137**	1	BOLT (M10X1.5X20-MM)	
	21	1	**8T-4223**	4	WASHER-HARD (13.5X25.5X3-MM THK)	
M	22	1	**8T-6868**	4	BOLT (M12X1.75X80-MM)	

C - CHANGE FROM PREVIOUS TYPE
I - REFER TO HYDRAULIC INFORMATION SYSTEM
M - METRIC PART
Y - SEPARATE ILLUSTRATION

260-8204 **LINES GP-HYDRAULIC (*contd.*)** **i05774937**

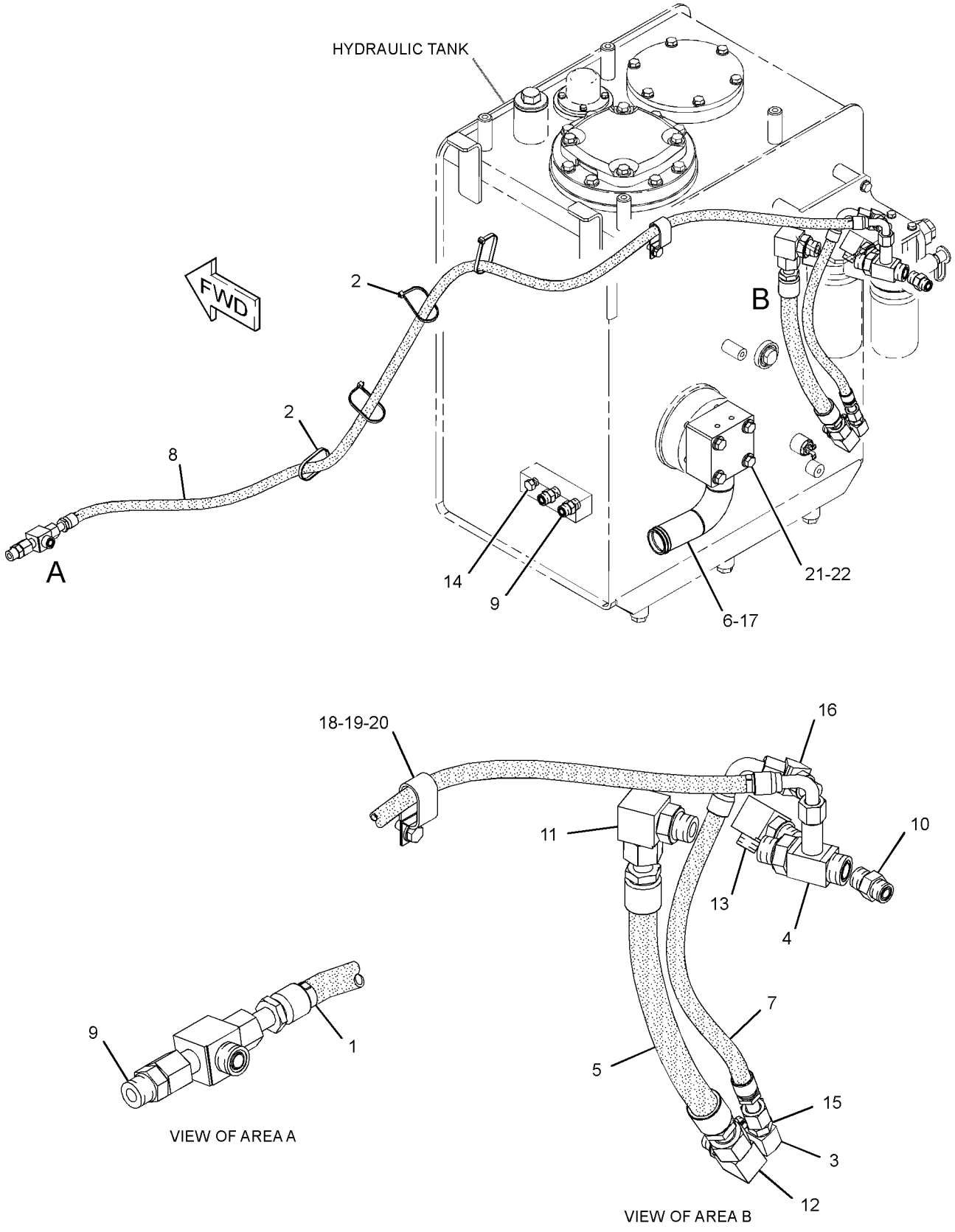

GRAPHIC #1 **<END>** g01620517

391-7830 LINES GP-HYDRAULIC OIL COOLER

S/N: XAH1-UP

PART OF 455-7664 HYDRAULIC AR

SMCS-1374 **i05774425**

NOTE	REF NO	GRAPHIC REF	PART NUMBER	QTY	PART NAME 1 2 3 4 5 6 (PRODUCT LEVEL)	SEE PAGE
	1	1	**392-6726**	1	PIPE AS	
	2	1	**269-9886**	1	TUBE AS	
M	3	1	**096-4883**	4	LOCKNUT (M10X1.5-THD)	
	4	1	**4J-0523**	2	SEAL-O-RING	
M	5	1	**7Y-5237**	2	U-BOLT	
	6	1	**8T-4121**	4	WASHER-HARD (11X21X2.5-MM THK)	
	7	1	**8T-4223**	4	WASHER-HARD (13.5X25.5X3-MM THK)	
M	8	1	**8T-4956**	4	BOLT (M12X1.75X35-MM)	

M - METRIC PART

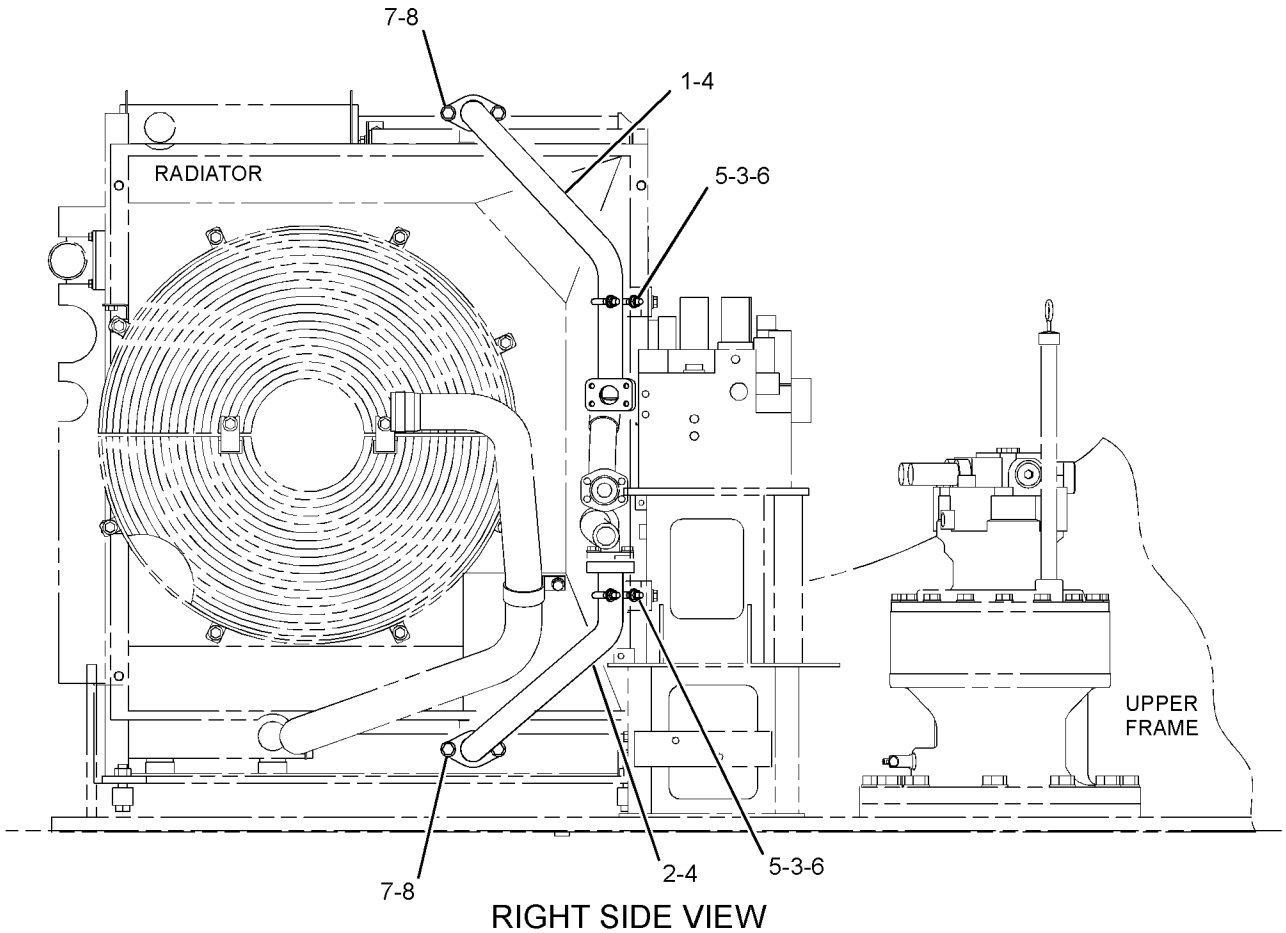

RIGHT SIDE VIEW

GRAPHIC #1 **<END>** g01621853

260-8217 LINES GP-PILOT—MAIN CONTROL VALVE

S/N: XAH1-UP

PART OF 455-7664 HYDRAULIC AR

SMCS-5057, 5059 **i05774112**

NOTE	REF NO	GRAPHIC REF	PART NUMBER	QTY	PART NAME 1 2 3 4 5 6 (PRODUCT LEVEL)	SEE PAGE
I	1	2	**4I-0836**	1	HOSE AS	
	2	2	**4I-3941**	2	FITTING AS	
	3	1	**4I-3953**	2	GROMMET	
I	4	2	**4I-3988**	1	HOSE AS	
I	5	2	**4I-3994**	1	HOSE AS	
	6	2	**4I-9521**	6	BAND-MARKER (RED, L1)	
	7	2	**4I-9522**	6	BAND-MARKER (YELLOW, L2)	
	8	2	**4I-9523**	2	BAND-MARKER (BLUE, L3)	
	9	2	**4I-9524**	2	BAND-MARKER (BROWN, L4)	
	10	2	**4I-9525**	6	BAND-MARKER (ORANGE, R1)	
	11	2	**4I-9526**	6	BAND-MARKER (WHITE, R2)	
	12	2	**4I-9527**	2	BAND-MARKER (GREEN, R3)	
	13	2	**4I-9528**	2	BAND-MARKER (PURPLE, R4)	
I	14	2	**320-0150**	2	HOSE AS	
	15	1,2	**7K-1181**	14	STRAP-CABLE	
I	16	2	**7Y-4199**	1	HOSE AS	
	17	1	**087-4587**	2	GROMMET	
I	18	2	**104-8771**	2	HOSE AS	
I	19	2	**104-8774**	1	HOSE AS	
I	20	2	**104-8973**	1	HOSE AS	
I	21	2	**104-8976**	1	HOSE AS	
I	22	2	**111-6752**	1	HOSE AS	
	23	2	**133-5813**	2	BAND-MARKER (GRAY, P)	
	24	2	**309-5768**	2	SWITCH AS-PRESSURE (IMPLEMENT)	
					(EACH INCLUDES)	
		2	**9X-3402**	2	SOCKET-CONNECTOR (16-GA TO 18-GA)	
					—OR—	
		2	**126-1768**	2	SOCKET-CONNECTOR (14-GA TO 16-GA)	
		2	**155-2270**	1	KIT-CONNECTING PLUG (2-PIN)	
					(INCLUDES PLUG AS, WEDGE & INTERFACE SEAL)	
I	25	2	**221-4807**	1	HOSE AS	
	26	1,2	**115-8645**	5	GUARD	
	27	2	*148-8336*	4	CONNECTOR AS	
					(EACH INCLUDES)	
		2	**3J-1907**	1	SEAL-O-RING	
		2	**6V-8397**	1	SEAL-O-RING	
		2	**6V-8636**	1	CONNECTOR	
	29	2	*148-8378*	2	ELBOW AS	
					(EACH INCLUDES)	
		2	**3J-1907**	1	SEAL-O-RING	
		2	**6V-8397**	1	SEAL-O-RING	
		2	**6V-8724**	1	ELBOW	
	30	2	*148-8407*	2	PLUG AS	
					(EACH INCLUDES)	
		2	**3J-1907**	1	SEAL-O-RING	
		2	**9S-4191**	1	PLUG	
	31	2	*148-8435*	4	TEE AS	
					(EACH INCLUDES)	
		2	**3J-1907**	1	SEAL-O-RING	
		2	**6V-8397**	2	SEAL-O-RING	
		2	**6V-8781**	1	TEE	
	32	2	*150-3036*	3	ELBOW AS	
					(EACH INCLUDES)	
		2	**3J-1907**	1	SEAL-O-RING	
		2	**6V-8397**	1	SEAL-O-RING	
		2	**8T-1905**	1	ELBOW	
	33	2	*148-8338*	1	CONNECTOR AS	
		2	**3J-1907**	1	SEAL-O-RING	

260-8217 **LINES GP-PILOT (*contd.*)** **i05774112**

NOTE	REF NO	GRAPHIC REF	PART NUMBER	QTY	PART NAME 1 2 3 4 5 6 (PRODUCT LEVEL)	SEE PAGE
		2	**6V-8397**	1	SEAL-O-RING	
		2	**8T-0075**	1	CONNECTOR	

I - REFER TO HYDRAULIC INFORMATION SYSTEM

260-8217 **LINES GP-PILOT (*contd.*)** **i05774112**

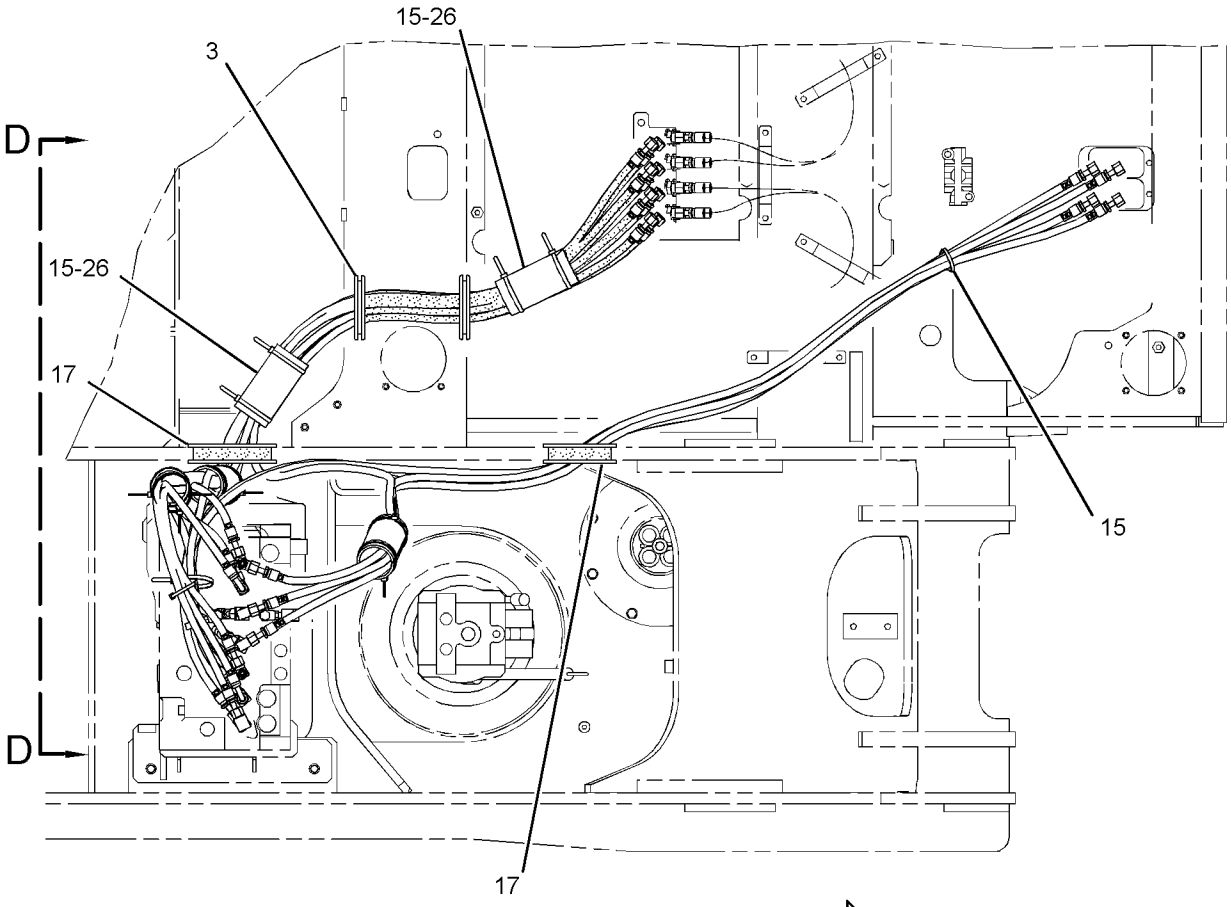

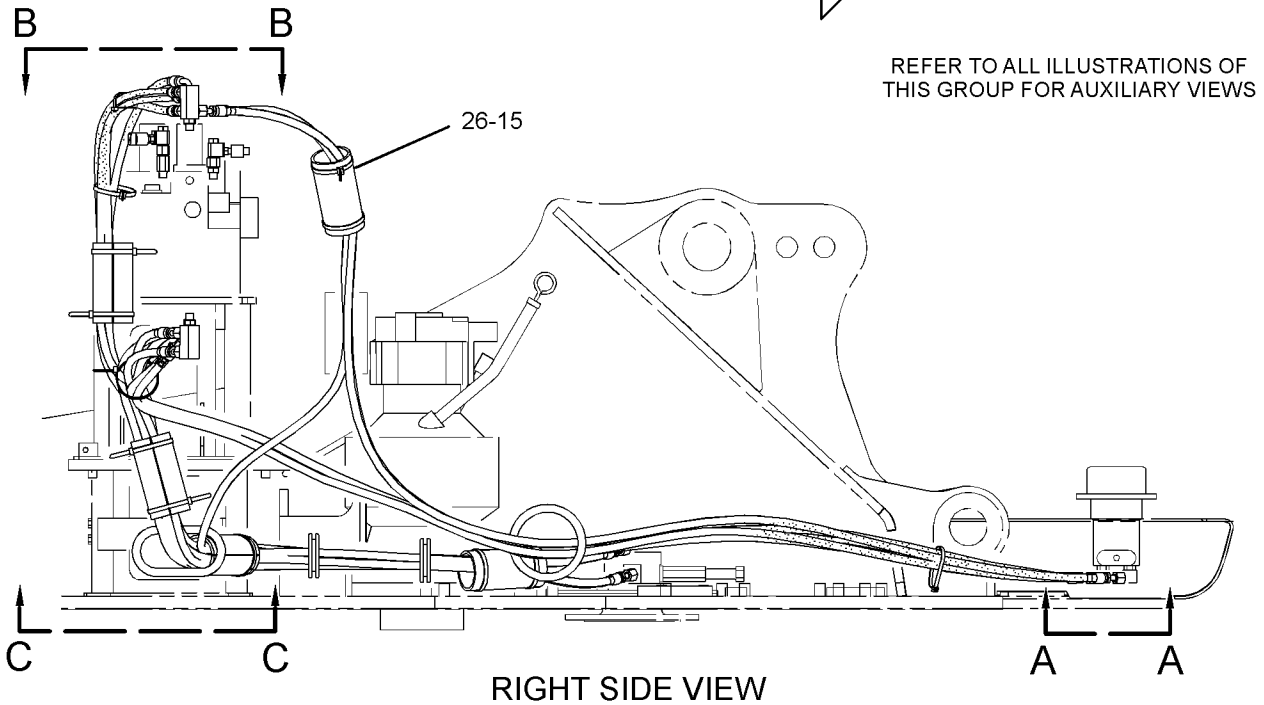

GRAPHIC #1 g01578693

260-8217 **LINES GP-PILOT (*contd.*)** **i05774112**

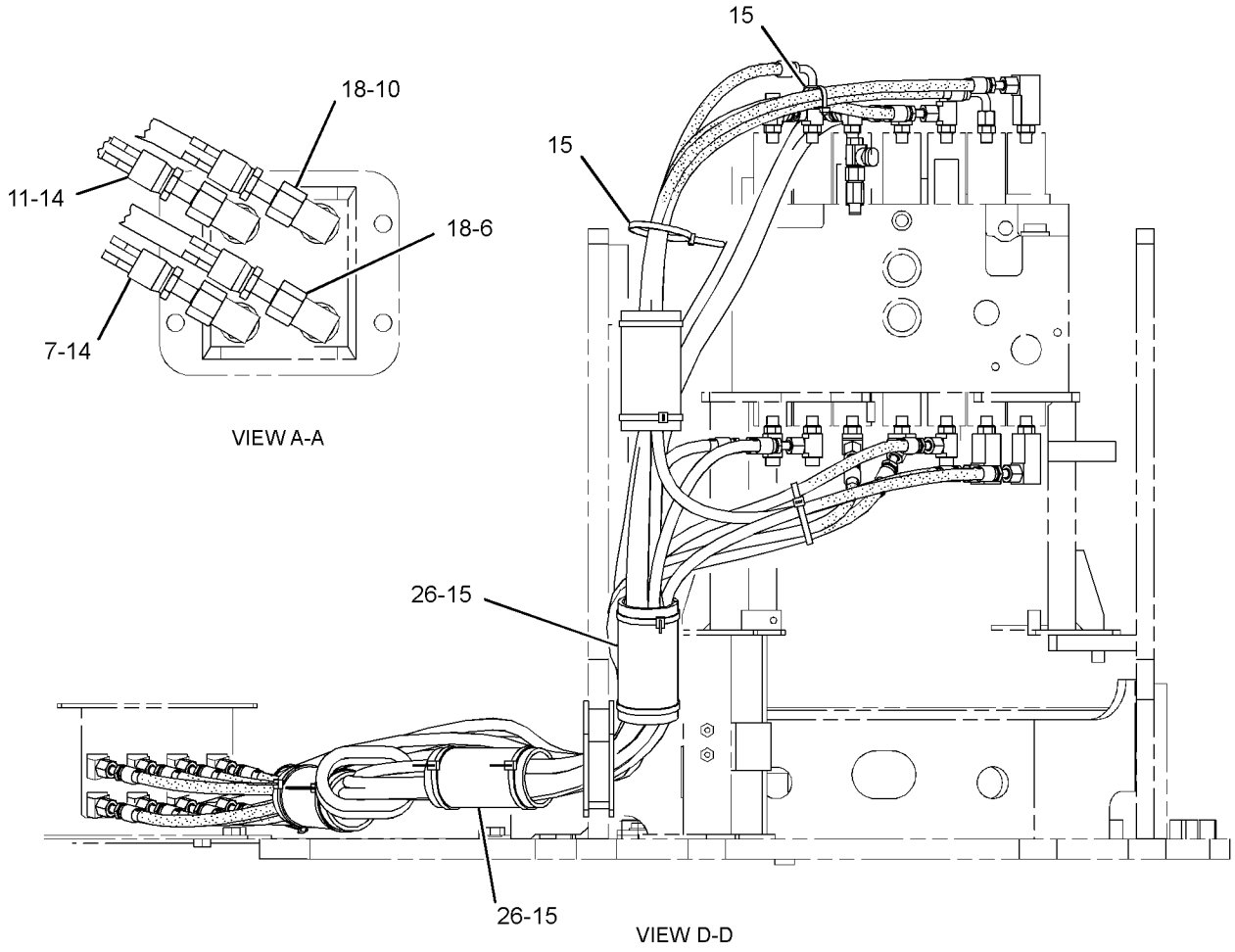

GRAPHIC #2 **<END>** g01588013

275-1715 LINES GP-PILOT—PILOT CONTROL

S/N: XAH1-UP
PART OF 456-6742 CAB GP, 455-7664 HYDRAULIC AR
ALSO AN ATTACHMENT

SMCS-5057, 5059 **i05774130**

NOTE	REF NO	GRAPHIC REF	PART NUMBER	QTY	PART NAME 1 2 3 4 5 6 (PRODUCT LEVEL)	SEE PAGE
	1	1	**4I-9521**	2	BAND-MARKER (RED, L1)	
	2	1	**4I-9522**	2	BAND-MARKER (YELLOW, L2)	
	3	1	**4I-9523**	2	BAND-MARKER (BLUE, L3)	
	4	1	**4I-9524**	2	BAND-MARKER (BROWN, L4)	
	5	1	**4I-9525**	2	BAND-MARKER (ORANGE, R1)	
	6	1	**4I-9526**	2	BAND-MARKER (WHITE, R2)	
	7	1	**4I-9527**	2	BAND-MARKER (GREEN, R3)	
	8	1	**4I-9528**	2	BAND-MARKER (PURPLE, R4)	
	9	1	**7K-1181**	2	STRAP-CABLE	
I	10	1	**087-4402**	2	HOSE AS	
	11	1	**133-5813**	4	BAND-MARKER (GRAY, P)	
CY	12	1	**369-8503**	1	VALVE GP-PILOT (WITHOUT SHUTTLE)	308
	13	1	**168-9759**	1	BLOCK	
	14	1	**392-2185**	4	SUPPORT	
	15	1	**236-2838**	1	PLATE	
	16	1	**236-2843**	4	HOSE AS	
	17	1	**236-2844**	4	HOSE AS	
	18	1	**236-2848**	1	HOSE AS	
	19	1	**245-5079**	1	HOSE AS	
	20	1	**255-1665**	1	HOSE AS	
	21	1	**255-1666**	1	HOSE AS	
	22	1	**099-7241**	8	WASHER-HARD (19X34X3-MM THK)	
	23	1	*148-8336*	15	CONNECTOR AS	
					(EACH INCLUDES)	
		1	**3J-1907**	1	SEAL-O-RING	
		1	**6V-8397**	1	SEAL-O-RING	
		1	**6V-8636**	1	CONNECTOR	
	24	1	*148-8354*	2	ELBOW AS	
					(EACH INCLUDES)	
		1	**3K-0360**	1	SEAL-O-RING	
		1	**6V-8398**	1	SEAL-O-RING	
		1	**6V-9002**	1	ELBOW	
	25	1	*148-8366*	8	ELBOW AS	
					(EACH INCLUDES)	
		1	**6V-8397**	2	SEAL-O-RING	
		1	**6V-8987**	1	ELBOW	
	26	1	*148-8378*	6	ELBOW AS	
					(EACH INCLUDES)	
		1	**3J-1907**	1	SEAL-O-RING	
		1	**6V-8397**	1	SEAL-O-RING	
		1	**6V-8724**	1	ELBOW	
	27	1	*148-8407*	4	PLUG AS	
					(EACH INCLUDES)	
		1	**3J-1907**	1	SEAL-O-RING	
		1	**9S-4191**	1	PLUG	
	28	1	*164-5628*	3	CONNECTOR AS	
					(EACH INCLUDES)	
		1	**3J-1907**	1	SEAL-O-RING	
		1	**6V-8397**	1	SEAL-O-RING	
		1	**107-6631**	1	CONNECTOR-FILTER	
	29	1	**6V-9168**	8	NUT (11/16-16-THD)	
	30	1	**8T-4121**	16	WASHER-HARD (11X21X2.5-MM THK)	
CM	32	1	**8T-4137**	4	BOLT (M10X1.5X20-MM)	
M	33	1	**8T-4191**	10	BOLT (M10X1.5X16-MM)	
M	34	1	**8T-4198**	2	BOLT (M10X1.5X100-MM)	

275-1715 **LINES GP-PILOT (*contd.*)** **i05774130**

NOTE	REF NO	GRAPHIC REF	PART NUMBER	QTY	PART NAME 1 2 3 4 5 6 (PRODUCT LEVEL)	SEE PAGE

C - CHANGE FROM PREVIOUS TYPE
I - REFER TO HYDRAULIC INFORMATION SYSTEM
M - METRIC PART
Y - SEPARATE ILLUSTRATION

275-1715 **LINES GP-PILOT (*contd.*)** **i05774130**

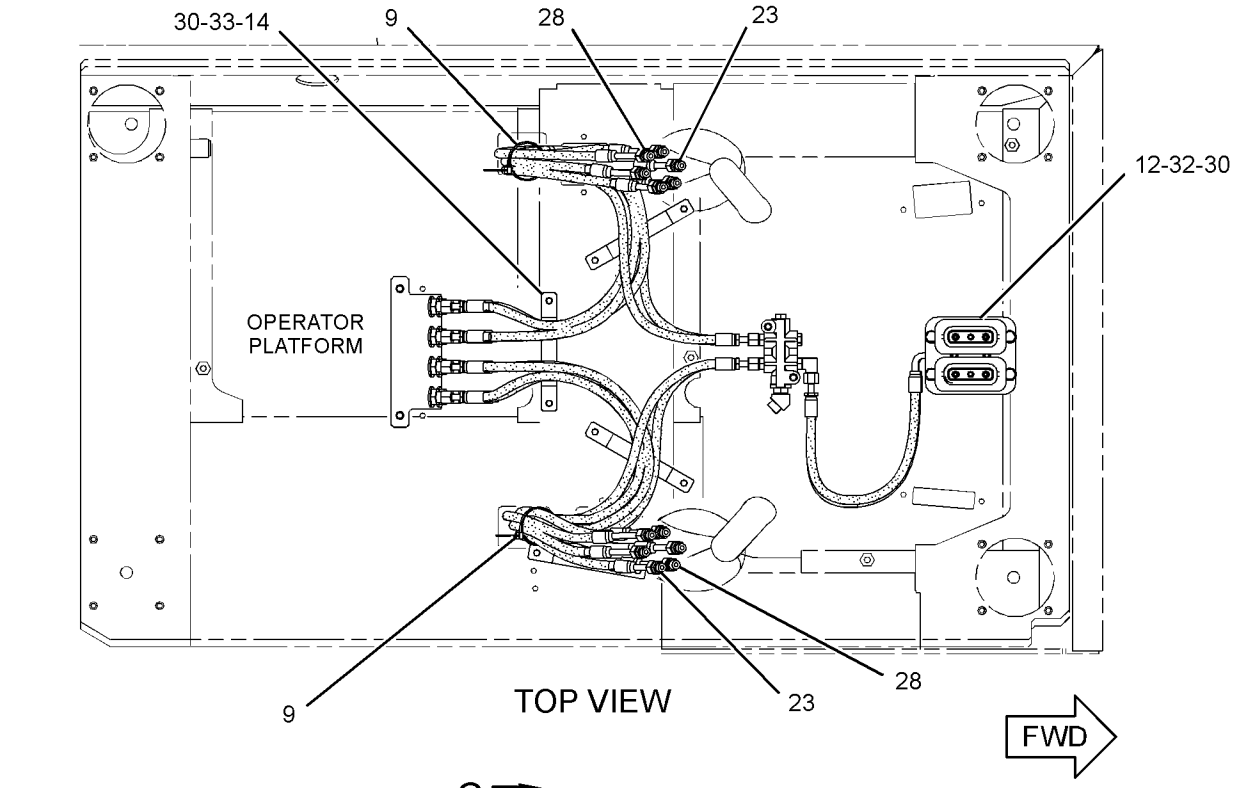

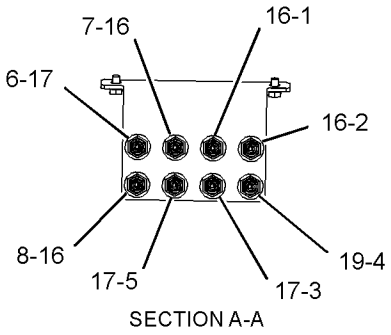

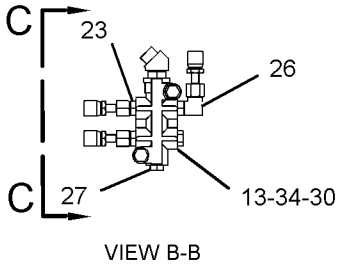

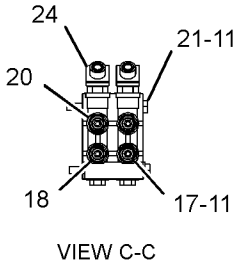

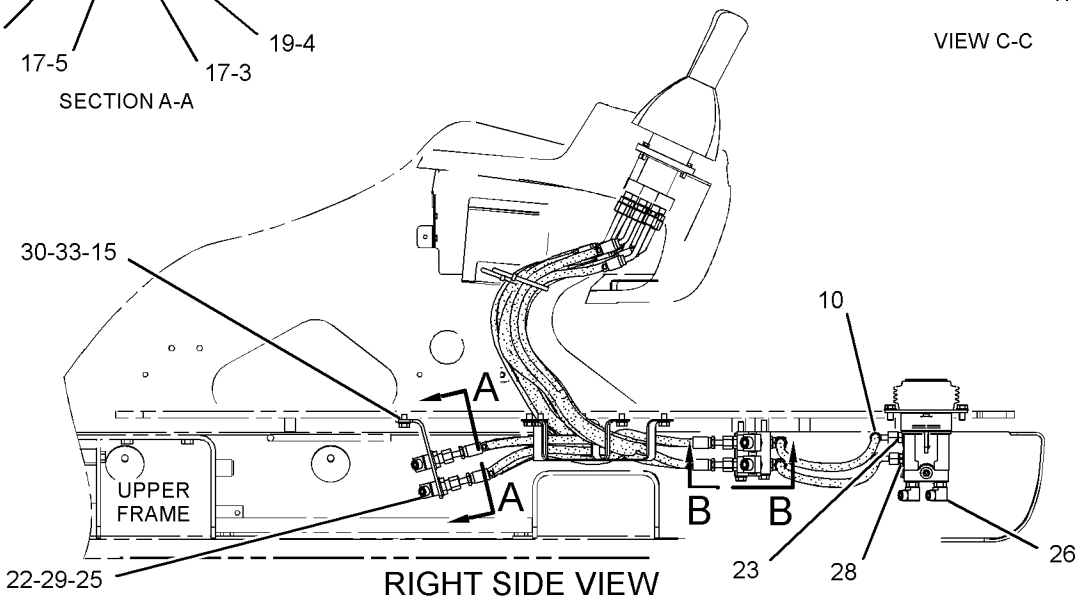

GRAPHIC #1

<END>

g03015826

387-3716 LINES GP-PILOT–FILTER, PILOT PUMP

S/N: XAH1-UP

PART OF 455-7664 HYDRAULIC AR

SMCS-5057, 5059 **i05962881**

NOTE	REF NO	GRAPHIC REF	PART NUMBER	QTY	PART NAME 1 2 3 4 5 6 (PRODUCT LEVEL)	SEE PAGE
	1	1	**6V-0852**	4	CAP-DUST	
I	2	1	**7I-1377**	1	HOSE AS	
	3	1	**7K-1181**	4	STRAP-CABLE	
	4	1	**221-8912**	2	FLANGE	
	5	1	**260-2180**	2	SENSOR AS-PRESSURE (MAIN HYDRAULIC PUMP)	
					(EACH INCLUDES)	
		1	**095-1777**	1	RING-BACKUP	
		1	**260-2191**	1	SEAL-O-RING	
I	6	1	**285-2564**	1	HOSE AS	
I	7	1	**272-4606**	1	HOSE AS	
I	8	1	**381-5989**	1	HOSE AS	
	9	1	**387-3601**	1	HOSE AS	
	10	1	*148-8327*	1	CONNECTOR AS	
		1	**3D-2824**	1	SEAL-O-RING	
		1	**6V-8637**	1	CONNECTOR	
		1	**6V-9746**	1	SEAL-O-RING	
	11	1	*148-8340*	1	CONNECTOR AS	
		1	**3K-0360**	1	SEAL-O-RING	
		1	**6V-8398**	1	SEAL-O-RING	
		1	**6V-8639**	1	CONNECTOR	
	12	1	*148-8347*	1	ELBOW AS	
		1	**3D-2824**	1	SEAL-O-RING	
		1	**6V-9007**	1	ELBOW	
		1	**6V-9746**	1	SEAL-O-RING	
	13	1	*148-8367*	1	ELBOW AS	
		1	**6V-8397**	1	SEAL-O-RING	
		1	**6V-9850**	1	ELBOW	
	14	1	*148-8378*	1	ELBOW AS	
		1	**3J-1907**	1	SEAL-O-RING	
		1	**6V-8397**	1	SEAL-O-RING	
		1	**6V-8724**	1	ELBOW	
	15	1	*148-8444*	1	TEE AS-SWIVEL	
		1	**6V-8398**	2	SEAL-O-RING	
		1	**6V-9837**	1	TEE-SWIVEL	
	16	1	*150-3036*	2	ELBOW AS	
					(EACH INCLUDES)	
		1	**3J-1907**	1	SEAL-O-RING	
		1	**6V-8397**	1	SEAL-O-RING	
		1	**8T-1905**	1	ELBOW	
	17	1	*150-4043*	1	CONNECTOR AS	
		1	**3J-1907**	1	SEAL-O-RING	
		1	**6V-8398**	1	SEAL-O-RING	
		1	**6V-9873**	1	CONNECTOR	
	18	1	*153-6237*	1	ELBOW AS	
		1	**3D-2824**	1	SEAL-O-RING	
		1	**6V-9004**	1	ELBOW	
		1	**6V-9746**	1	SEAL-O-RING	
	19	1	*164-5567*	4	COUPLER AS-QUICK DISCONNECT (MALE)	
					(EACH INCLUDES)	
		1	**6V-3965**	1	FITTING (QUICK DISCONNECT)	
		1	**214-7568**	1	SEAL-O-RING	
	20	1	*164-6874*	1	FITTING AS-ELBOW (QUICK DISCONNECT, MALE)	
		1	**3J-1907**	1	SEAL-O-RING	
		1	**085-7356**	1	FITTING	
	21	1	*168-1968*	1	TEE AS	
		1	**3J-1907**	1	SEAL-O-RING	
		1	**6V-8397**	1	SEAL-O-RING	
		1	**126-6872**	1	TEE	

387-3716 **LINES GP-PILOT (*contd.*)** **i05962881**

NOTE	REF NO	GRAPHIC REF	PART NUMBER	QTY	PART NAME 1 2 3 4 5 6 (PRODUCT LEVEL)	SEE PAGE
M	22	1	**8T-4189**	4	BOLT (M8X1.25X20-MM)	
	23	1	**8T-4224**	4	WASHER-HARD (8.8X16X2-MM THK)	

I - REFER TO HYDRAULIC INFORMATION SYSTEM
M - METRIC PART

387-3716 **LINES GP-PILOT (*contd.*)** **i05962881**

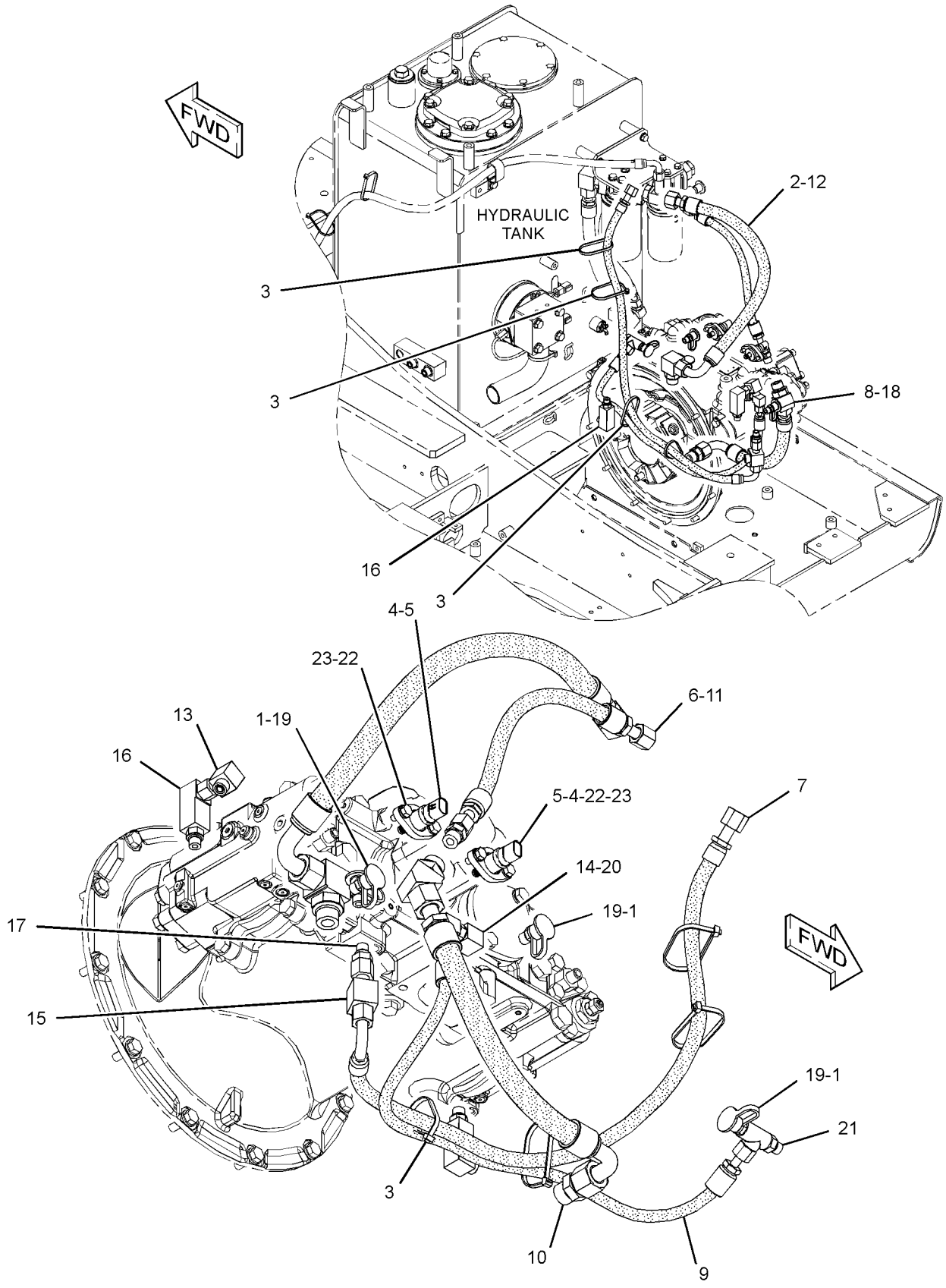

GRAPHIC #1 **<END>** g03133677

391-7835 LINES GP-PILOT—CONTROL VALVE

S/N: XAH1-UP

PART OF 455-7664 HYDRAULIC AR

SMCS-5057, 5059 **i05962916**

NOTE	REF NO	GRAPHIC REF	PART NUMBER	QTY	PART NAME 1 2 3 4 5 6 (PRODUCT LEVEL)	SEE PAGE
I	1	4	**4I-0800**	1	HOSE AS	
I	2	2,4	**4I-0821**	2	HOSE AS	
I	3	4	**4I-1760**	1	HOSE AS	
I	4	4	**4I-1783**	1	HOSE AS	
I	5	4	**4I-5795**	1	HOSE AS	
I	6	4	**4I-6248**	1	HOSE AS	
I	7	4	**4I-6391**	1	HOSE AS	
	8	4	**4I-9521**	6	BAND-MARKER (RED, L1)	
	9	4	**4I-9522**	2	BAND-MARKER (YELLOW, L2)	
	10	2,4	**4I-9523**	8	BAND-MARKER (BLUE, L3)	
	11	4	**4I-9524**	2	BAND-MARKER (BROWN, L4)	
	12	4	**4I-9525**	4	BAND-MARKER (ORANGE, R1)	
	13	2,4	**4I-9527**	6	BAND-MARKER (GREEN, R3)	
	14	3	**4I-9528**	4	BAND-MARKER (PURPLE, R4)	
	15	2,4	**7K-1181**	14	STRAP-CABLE	
I	16	4	**7Y-8379**	1	HOSE AS	
I	17	4	**087-5771**	1	HOSE AS	
I	18	4	**087-5772**	1	HOSE AS	
I	19	4	**087-5773**	1	HOSE AS	
I	20	3	**087-5783**	1	HOSE AS	
I	21	2	**087-6582**	1	HOSE AS	
	22	4	**115-8645**	1	GUARD	
	23	4	**133-5813**	2	BAND-MARKER (GRAY, P)	
	24	4	*164-5628*	1	CONNECTOR AS	
		4	**3J-1907**	1	SEAL-O-RING	
		4	**6V-8397**	1	SEAL-O-RING	
		4	**107-6631**	1	CONNECTOR-FILTER	
Y	25	2	**164-6979**	1	VALVE GP-SHUTTLE (PILOT OIL SUPPLY)	318
Y	26	3	*164-6981*	1	ACCUMULATOR GP-HYDRAULIC (CHARGED)	201
I	27	4	**176-4471**	1	HOSE AS	
Y	28	3	**215-5037**	1	MANIFOLD GP-CONTROL (PILOT OIL SUPPLY)	265
I	29	4	**224-1914**	1	HOSE AS	
	30	3	**269-9553**	1	PLATE	
I	31	4	**275-1624**	1	HOSE AS	
	32	2	**278-6613**	1	SUPPORT AS	
I	33	2	**278-6623**	1	HOSE AS	
	34	3	**278-6905**	2	HOSE AS	
Y	35	2	**285-1613**	1	VALVE GP-PRESSURE REDUCING (BOOM PRIORITY)	312
	36	2	**458-6746**	1	HOSE AS	
I	37	2	**292-7446**	1	HOSE AS	
I	38	2	**296-7278**	1	HOSE AS	
I	39	2	**325-8876**	1	HOSE AS	
	40	3	**329-2840**	1	BLOCK	
I	41	3	**329-2843**	1	HOSE AS	
I	42	4	**356-9229**	1	HOSE AS	
	43	3	*363-6139*	1	ADAPTER AS	
		3	**3K-0360**	1	SEAL-O-RING	
		3	**6V-8398**	1	SEAL-O-RING	
		3	**363-6122**	1	ADAPTER-FILTER	
	44	2	**383-9558**	1	HOSE AS	
	45	2	**275-1442**	2	CLIP (TAB)	
		2	**275-1443**	2	CLIP (SLOT)	
J		2	**275-1444**	2	GROMMET (19-MM ID)	
					—OR—	
		2	**275-1442**	2	CLIP (TAB)	
		2	**275-1443**	2	CLIP (SLOT)	
J		2	**333-4609**	2	GROMMET (21-MM ID)	
	46	2	**5P-7462**	1	CLIP (SLOT) (USE WITH 30-MM OD GROMMET)	

391-7835 **LINES GP-PILOT (*contd.*)** **i05962916**

NOTE	REF NO	GRAPHIC REF	PART NUMBER	QTY	PART NAME 1 2 3 4 5 6 (PRODUCT LEVEL)	SEE PAGE
		2	**5P-7463**	1	CLIP (TAB) (USE WITH 30-MM OD GROMMET)	
J		2	**6V-0683**	1	GROMMET (19-MM ID) (30-MM OD)	
					—OR—	
		2	**5P-7464**	1	CLIP (SLOT) (USE WITH 37-MM OD GROMMET)	
		2	**5P-7465**	1	CLIP (TAB) (USE WITH 37-MM OD GROMMET)	
J		2	**6V-1249**	1	GROMMET (22-MM ID) (37-MM OD)	
M	47	2	**099-3649**	2	BOLT (M8X1.25X40-MM)	
	48	2,3,4	*148-8336*	11	CONNECTOR AS	
					(EACH INCLUDES)	
		2,3,4	**3J-1907**	1	SEAL-O-RING	
		2,3,4	**6V-8397**	1	SEAL-O-RING	
		2,3,4	**6V-8636**	1	CONNECTOR	
	49	3	*148-8340*	2	CONNECTOR AS	
					(EACH INCLUDES)	
		3	**3K-0360**	1	SEAL-O-RING	
		3	**6V-8398**	1	SEAL-O-RING	
		3	**6V-8639**	1	CONNECTOR	
	50	2,4	*148-8353*	3	ELBOW AS	
					(EACH INCLUDES)	
		2,4	**3J-1907**	1	SEAL-O-RING	
		2,4	**6V-8397**	1	SEAL-O-RING	
		2,4	**6V-9001**	1	ELBOW	
	51	2	*148-8367*	1	ELBOW AS	
		2	**6V-8397**	1	SEAL-O-RING	
		2	**6V-9850**	1	ELBOW	
	52	2,3,4	*148-8378*	9	ELBOW AS	
					(EACH INCLUDES)	
		2,3,4	**3J-1907**	1	SEAL-O-RING	
		2,3,4	**6V-8397**	1	SEAL-O-RING	
		2,3,4	**6V-8724**	1	ELBOW	
	53	3,4	*148-8407*	10	PLUG AS	
					(EACH INCLUDES)	
		3,4	**3J-1907**	1	SEAL-O-RING	
		3,4	**9S-4191**	1	PLUG	
	54	3	*148-8411*	1	PLUG AS	
		3	**3K-0360**	1	SEAL-O-RING	
		3	**9S-4185**	1	PLUG-O-RING	
	55	2,4	*148-8433*	2	TEE AS	
					(EACH INCLUDES)	
		2,4	**6V-8397**	2	SEAL-O-RING	
		2,4	**6V-9836**	1	TEE-SWIVEL	
	56	2,4	*148-8435*	2	TEE AS	
					(EACH INCLUDES)	
		2,4	**3J-1907**	1	SEAL-O-RING	
		2,4	**6V-8397**	2	SEAL-O-RING	
		2,4	**6V-8781**	1	TEE	
	57	3	*148-8436*	1	TEE AS	
		3	**3K-0360**	1	SEAL-O-RING	
		3	**6V-8398**	2	SEAL-O-RING	
		3	**6V-8775**	1	TEE-FACE SEAL	
	58	3	*148-8439*	1	TEE AS	
		3	**3J-1907**	1	SEAL-O-RING	
		3	**6V-8397**	2	SEAL-O-RING	
		3	**6V-8774**	1	TEE	
	59	2	*150-3036*	1	ELBOW AS	
		2	**3J-1907**	1	SEAL-O-RING	
		2	**6V-8397**	1	SEAL-O-RING	
		2	**8T-1905**	1	ELBOW	
	60	2	**5P-2369**	1	CLIP	
	61	3	**6V-9829**	1	CAP AS	
	62	2	**8T-4121**	6	WASHER-HARD (11X21X2.5-MM THK)	
M	63	2	**8T-4136**	5	BOLT (M10X1.5X25-MM)	

391-7835 **LINES GP-PILOT (*contd.*)** **i05962916**

NOTE	REF NO	GRAPHIC REF	PART NUMBER	QTY	PART NAME 1 2 3 4 5 6 (PRODUCT LEVEL)	SEE PAGE
M	64	2	**8T-4137**	1	BOLT (M10X1.5X20-MM)	
M	65	3	**8T-4183**	4	BOLT (M12X1.75X40-MM)	
M	66	2	**8T-4189**	2	BOLT (M8X1.25X20-MM)	
	67	3	**8T-4223**	6	WASHER-HARD (13.5X25.5X3-MM THK)	
	68	2	**8T-4224**	2	WASHER-HARD (8.8X16X2-MM THK)	
M	69	3	**8T-4956**	2	BOLT (M12X1.75X35-MM)	
M	70	3	**8T-6869**	2	BOLT (M8X1.25X60-MM)	

I - REFER TO HYDRAULIC INFORMATION SYSTEM
J - SELECT CORRECT GROMMET SIZE TO MATCH HOSE OD
M - METRIC PART
Y - SEPARATE ILLUSTRATION

REFER TO ALL ILLUSTRATIONS OF
THIS GROUP FOR AUXILIARY VIEWS

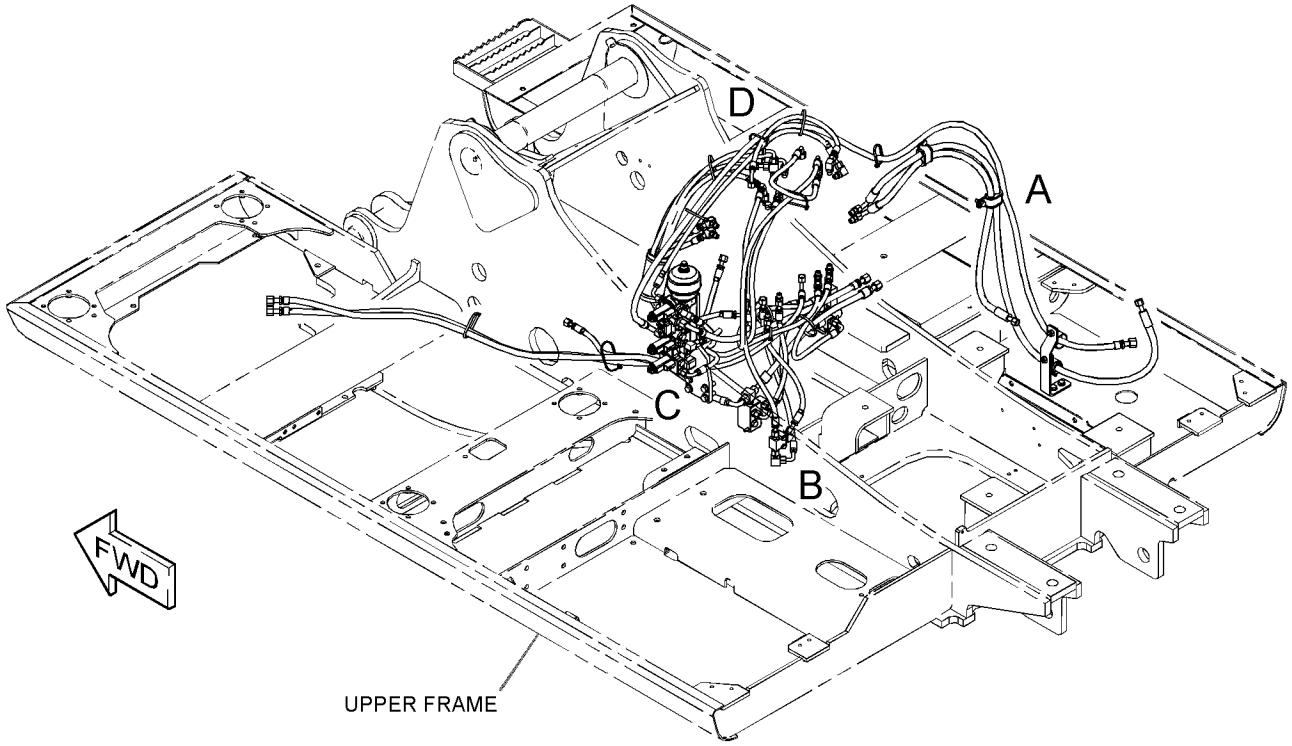

GRAPHIC #1 g03137252

391-7835 **LINES GP-PILOT (*contd.*)** **i05962916**

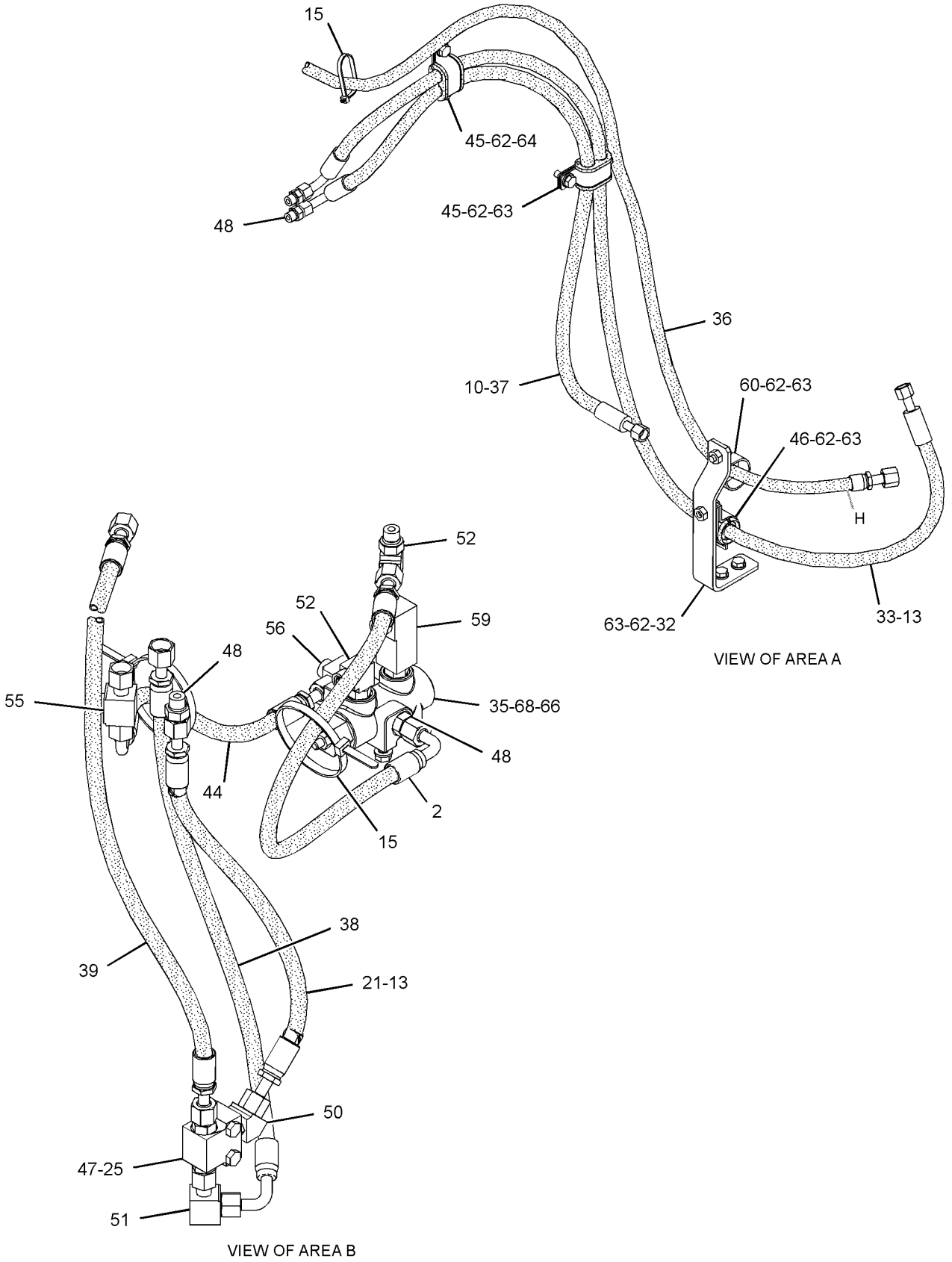

GRAPHIC #2 g03305619

391-7835 **LINES GP-PILOT (*contd.*)** **i05962916**

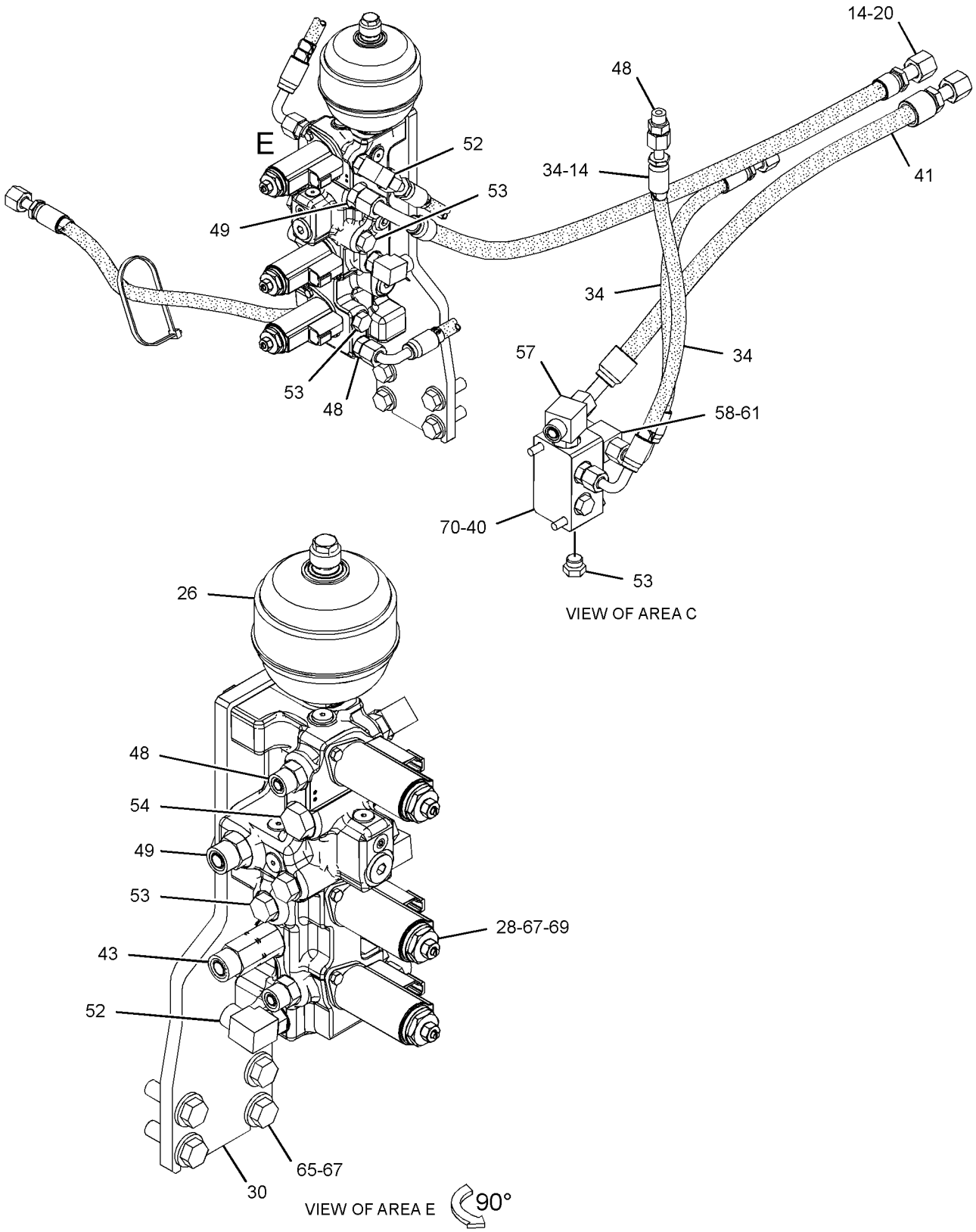

GRAPHIC #3 g03137249

391-7835 **LINES GP-PILOT (*contd.*)** **i05962916**

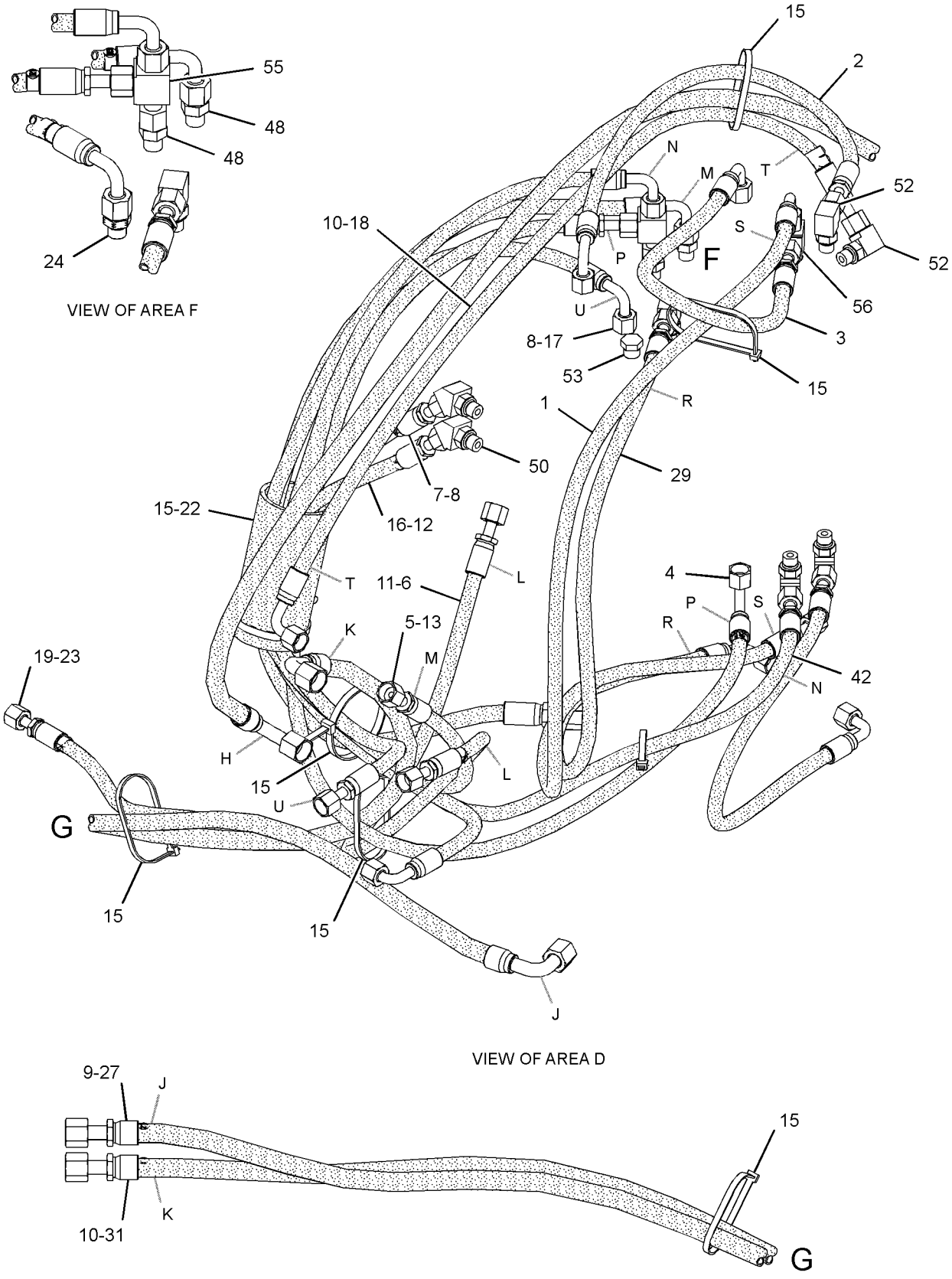

GRAPHIC #4 **<END>** g03137251

391-7825 LINES GP-PUMP–REAR

S/N: XAH1-UP

PART OF 455-7664 HYDRAULIC AR

SMCS-5057 **i05774372**

NOTE	REF NO	GRAPHIC REF	PART NUMBER	QTY	PART NAME 1 2 3 4 5 6 (PRODUCT LEVEL)	SEE PAGE
Y	1	1	**171-0002**	1	VALVE GP-CHECK (OIL COOLER BYPASS)	299
I	2	1	**230-0185**	1	HOSE AS	
	3	1	**236-6336**	1	HOSE	
I	4	1	**269-9901**	1	HOSE AS	
I	5	1	**269-9904**	1	HOSE AS	
I	6	1	**269-9911**	1	HOSE AS	
	7	1	**269-9915**	1	SUPPORT	
	8	1	**354-3757**	1	PIPE AS	
M	9	1	**101-7404**	4	BOLT-SOCKET HEAD (M10X1.5X30-MM)	
	10	1	*148-8335*	2	CONNECTOR AS	
					(EACH INCLUDES)	
		1	**5K-9090**	1	SEAL-O-RING	
		1	**6V-8635**	1	CONNECTOR	
		1	**7M-8485**	1	SEAL-O-RING	
	11	1	*164-4180*	2	PLUG AS	
					(EACH INCLUDES)	
		1	**7M-8485**	1	SEAL-O-RING	
		1	**9S-4181**	1	PLUG-O-RING	
	12	1	**1P-4578**	8	FLANGE-HALF	
	13	1	**4J-0522**	4	SEAL-O-RING	
	14	1	**4J-0527**	2	SEAL-O-RING	
	15	1	**7G-5984**	1	CLIP (TAB)	
	16	1	**7G-5985**	1	CLIP (SLOT)	
	17	1	**278-6469**	1	GROMMET	
	18	1	**8T-4121**	20	WASHER-HARD (11X21X2.5-MM THK)	
M	19	1	**8T-4139**	4	BOLT (M12X1.75X30-MM)	
M	20	1	**8T-4183**	4	BOLT (M12X1.75X40-MM)	
M	21	1	**8T-4196**	16	BOLT (M10X1.5X35-MM)	
	22	1	**8T-4223**	8	WASHER-HARD (13.5X25.5X3-MM THK)	
	23	1	**8T-6703**	2	CLAMP-HOSE	

I - REFER TO HYDRAULIC INFORMATION SYSTEM
M - METRIC PART
Y - SEPARATE ILLUSTRATION

391-7825 **LINES GP-PUMP (*contd.*)** **i05774372**

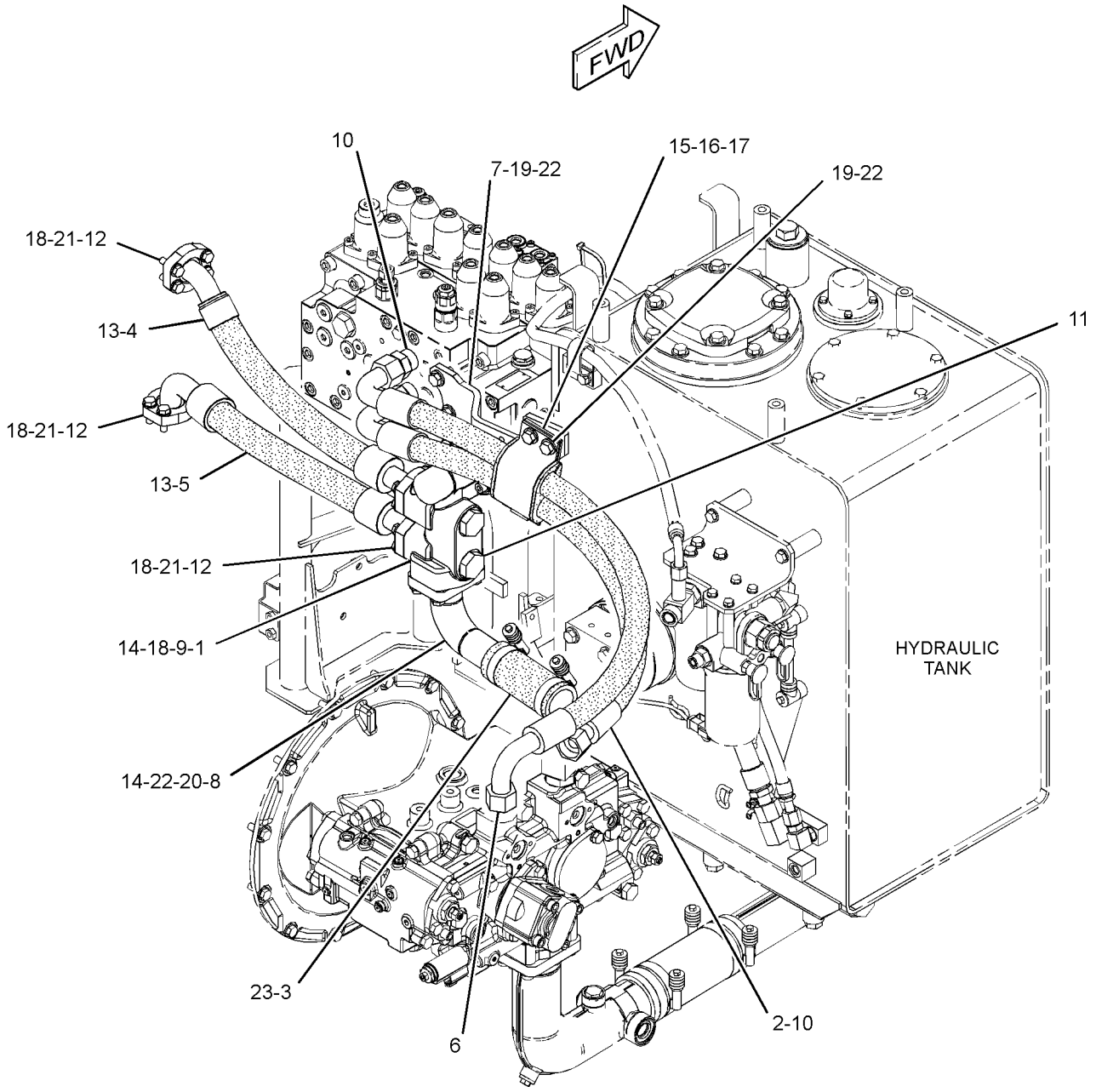

GRAPHIC #1 **<END>** g03134106

391-7836 LINES GP-PUMP

S/N: XAH1-UP

PART OF 455-7664 HYDRAULIC AR

SMCS-5057 **i05774497**

NOTE	REF NO	GRAPHIC REF	PART NUMBER	QTY	PART NAME 1 2 3 4 5 6 (PRODUCT LEVEL)	SEE PAGE
	1	1	**399-7625**	1	PIPE AS	
	2	1	**399-7619**	1	PIPE AS	
	3	1	**392-6728**	1	HOSE	
M	4	1	**108-1781**	4	BOLT-SOCKET HEAD (M12X1.75X35-MM)	
	5	1	**144-0367**	4	CLAMP-HOSE	
	6	1	*148-8335*	1	CONNECTOR AS	
		1	**5K-9090**	1	SEAL-O-RING	
		1	**6V-8635**	1	CONNECTOR	
		1	**7M-8485**	1	SEAL-O-RING	
	7	1	*148-8357*	1	ELBOW AS	
		1	**5K-9090**	1	SEAL-O-RING	
		1	**6V-9008**	1	ELBOW	
		1	**7M-8485**	1	SEAL-O-RING	
	8	1	*148-8411*	2	PLUG AS	
					(EACH INCLUDES)	
		1	**3K-0360**	1	SEAL-O-RING	
		1	**9S-4185**	1	PLUG-O-RING	
	9	1	*155-3624*	1	PLUG AS	
		1	**3J-7354**	1	SEAL-O-RING	
		1	**9S-4182**	1	PLUG	
	10	1	*164-4180*	1	PLUG AS	
		1	**7M-8485**	1	SEAL-O-RING	
		1	**9S-4181**	1	PLUG-O-RING	
	11	1	**5H-8624**	1	SEAL-O-RING	
	12	1	**6J-2680**	1	SEAL-O-RING	
M	13	1	**447-1711**	4	BOLT (M16X2X50-MM)	
	14	1	**451-2175**	4	WASHER-HARD (17.5X30X3.5-MM THK)	
	15	1	**8T-4223**	4	WASHER-HARD (13.5X25.5X3-MM THK)	

M - METRIC PART

391-7836 **LINES GP-PUMP (*contd.*)** **i05774497**

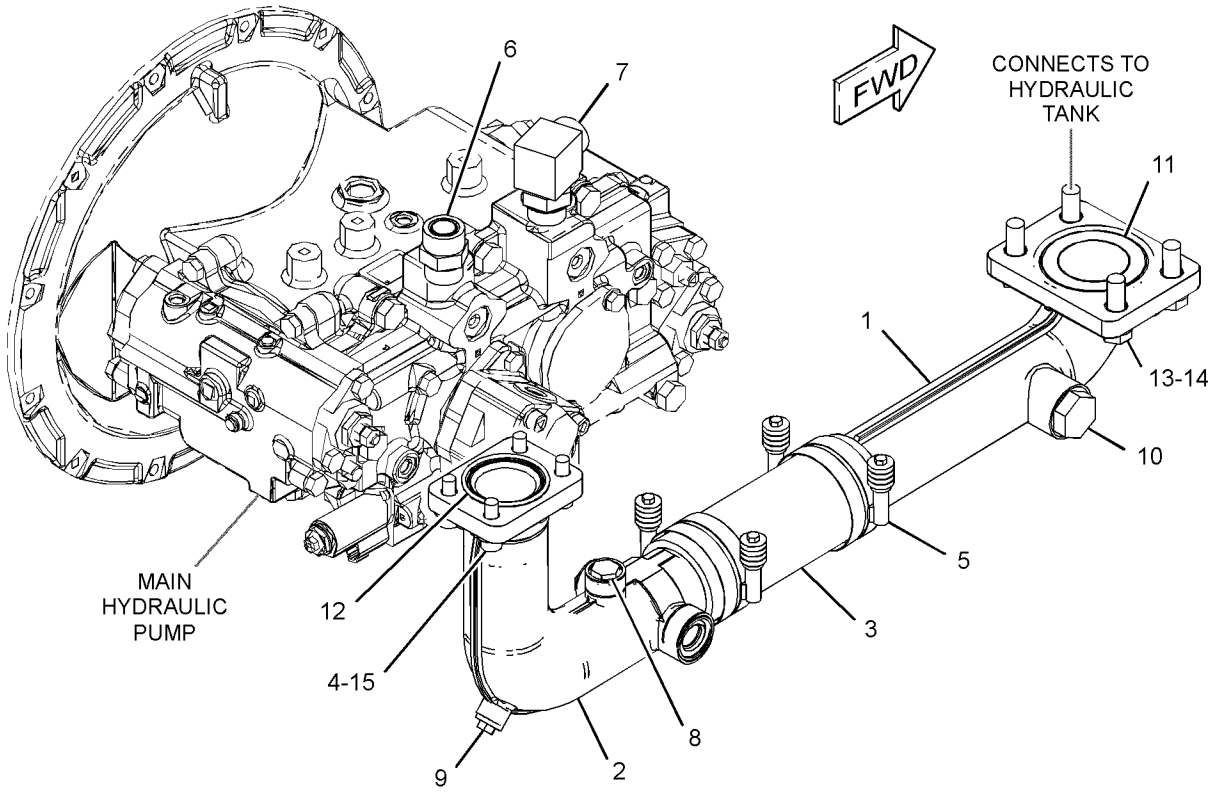

GRAPHIC #1 **<END>** g03339350

131-9962 LINES GP-STICK

S/N: XAH1-UP
PART OF 283-9004 STICK AR-HOE
AN ATTACHMENT

SMCS-5057, 5458

i05786977

NOTE	REF NO	GRAPHIC REF	PART NUMBER	QTY	PART NAME 1 2 3 4 5 6 (PRODUCT LEVEL)	SEE PAGE
I	1	1	**4I-8785**	2	HOSE AS	
	2	1	**1P-3702**	3	SEAL-RECTANGULAR	
M	3	1	**8T-4182**	4	BOLT (M10X1.5X45-MM)	
	4	1	**8T-9403**	4	FLANGE-HALF	
	5	1	**131-9943**	1	BLOCK	
	6	1	**8T-4121**	8	WASHER-HARD (11X21X2.5-MM THK)	
M	7	1	**8T-4198**	4	BOLT (M10X1.5X100-MM)	

I - REFER TO HYDRAULIC INFORMATION SYSTEM
M - METRIC PART

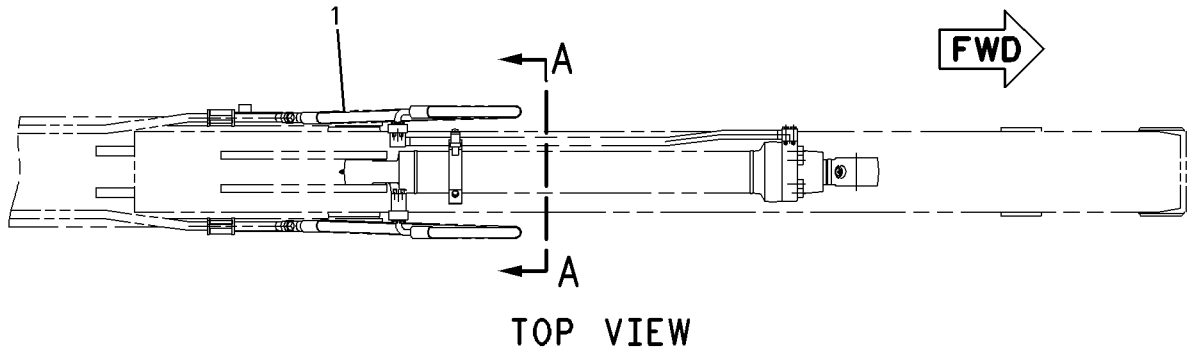

TOP VIEW

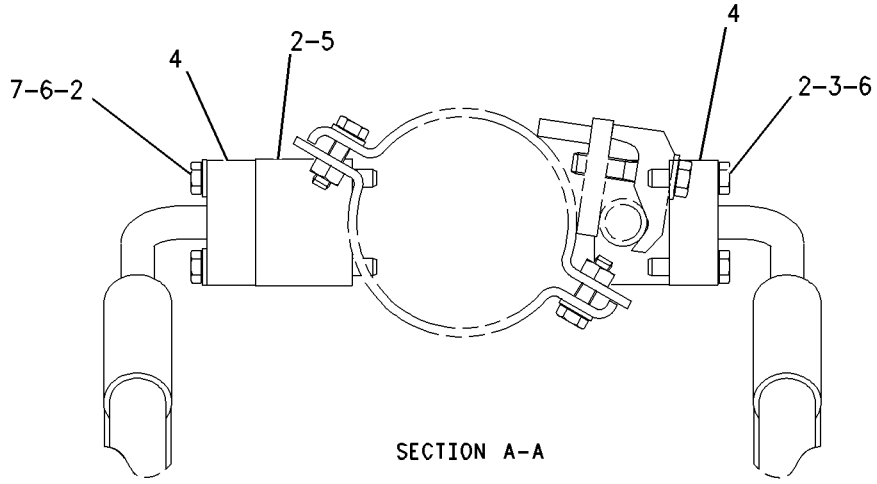

SECTION A-A

GRAPHIC #1

<END>

g00756004

385-2914 LINES GP-STICK CYLINDER

S/N: XAH1-UP

PART OF 381-8970 CYLINDER & LINES GP-STICK

AN ATTACHMENT

SMCS-5458 **i05799594**

NOTE	REF NO	GRAPHIC REF	PART NUMBER	QTY	PART NAME 1 2 3 4 5 6 (PRODUCT LEVEL)	SEE PAGE
	1	1	**390-4165**	1	CLAMP	
	2	1	**422-9137**	1	SUPPORT AS	
		1	**424-8398**	2	NUT-WELD (M10X1.5-THD)	
M	3	1	**8T-0273**	4	BOLT-SOCKET HEAD (M12X1.75X40-MM)	
	4	1	**390-4163**	1	TUBE AS	
	5	1	**4J-0520**	1	SEAL-O-RING	
	6	1	**7X-0796**	2	LOCKWASHER	
M	7	1	**6V-5842**	2	BOLT (M10X1.5X40-MM)	
	8	1	**3B-4508**	1	LOCKWASHER	
M	9	1	**6V-3823**	1	BOLT (M12X1.75X60-MM)	

M - METRIC PART

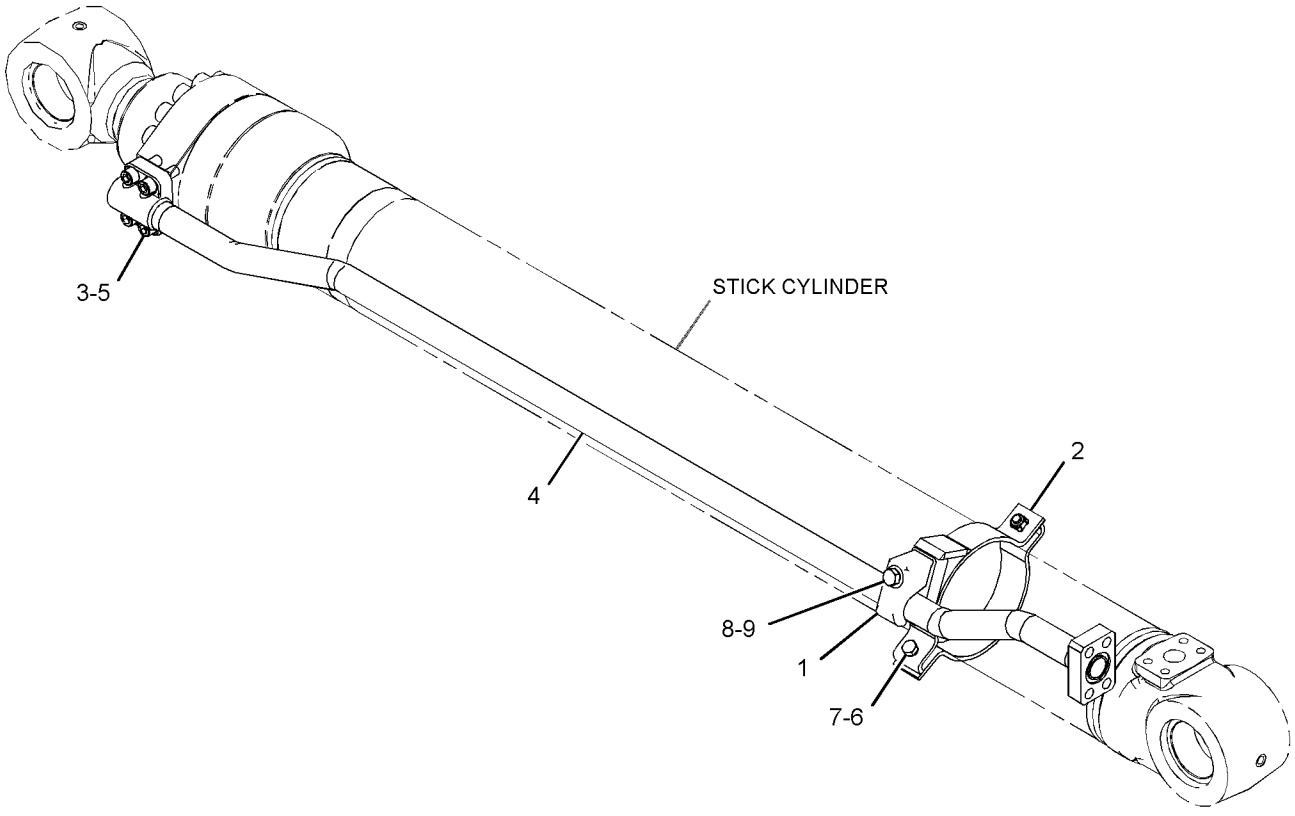

GRAPHIC #1 **<END>** g03343273

260-8212 LINES GP-TRAVEL MOTOR—LONG CARRIAGE

S/N: XAH1-UP

PART OF 455-7664 HYDRAULIC AR

SMCS-5057, 5058 **i05774075**

NOTE	REF NO	GRAPHIC REF	PART NUMBER	QTY	PART NAME 1 2 3 4 5 6 (PRODUCT LEVEL)	SEE PAGE
	1	1	**108-7304**	2	GROMMET	
	2	1	**124-0986**	2	GROMMET	
Y	3	1	**162-4696**	1	SWIVEL GP	293
	4	1	**187-5915**	2	HOSE AS	
CI	5	1	**7I-8249**	2	HOSE AS	
I	6	1	**196-0800**	4	HOSE AS	
	7	1	*148-8325*	2	CONNECTOR AS	
					(EACH INCLUDES)	
		1	**3J-1907**	1	SEAL-O-RING	
		1	**4J-5477**	1	SEAL-O-RING	
		1	**6V-8641**	1	CONNECTOR	
	8	1	*148-8327*	4	CONNECTOR AS	
					(EACH INCLUDES)	
		1	**3D-2824**	1	SEAL-O-RING	
		1	**6V-8637**	1	CONNECTOR	
		1	**6V-9746**	1	SEAL-O-RING	
C	9	1	*148-8364*	2	ELBOW AS	
					(EACH INCLUDES)	
		1	**3K-0360**	1	SEAL-O-RING	
		1	**6V-8398**	1	SEAL-O-RING	
		1	**6V-8625**	1	ELBOW	
	10	1	*148-8368*	2	ELBOW AS	
					(EACH INCLUDES)	
		1	**3J-1907**	1	SEAL-O-RING	
		1	**4J-5477**	1	SEAL-O-RING	
		1	**6V-8627**	1	ELBOW	
	11	1	*148-8436*	1	TEE AS	
		1	**3K-0360**	1	SEAL-O-RING	
		1	**6V-8398**	2	SEAL-O-RING	
		1	**6V-8775**	1	TEE-FACE SEAL	
	12	1	**1P-3703**	4	SEAL-RECTANGULAR	
	13	1	**6V-0400**	8	FLANGE-HALF	
	14	1	**7K-1181**	4	STRAP-CABLE	
	15	1	**8T-4121**	4	WASHER-HARD (11X21X2.5-MM THK)	
M	16	1	**8T-4137**	4	BOLT (M10X1.5X20-MM)	
M	17	1	**8T-4184**	16	BOLT (M12X1.75X45-MM)	
	18	1	**8T-4223**	16	WASHER-HARD (13.5X25.5X3-MM THK)	
B	19	1	**1U-8846**		SEALANT-GASKET	

B - USE AS REQUIRED
C - CHANGE FROM PREVIOUS TYPE
I - REFER TO HYDRAULIC INFORMATION SYSTEM
M - METRIC PART
Y - SEPARATE ILLUSTRATION

260-8212 **LINES GP-TRAVEL MOTOR (*contd.*)** **i05774075**

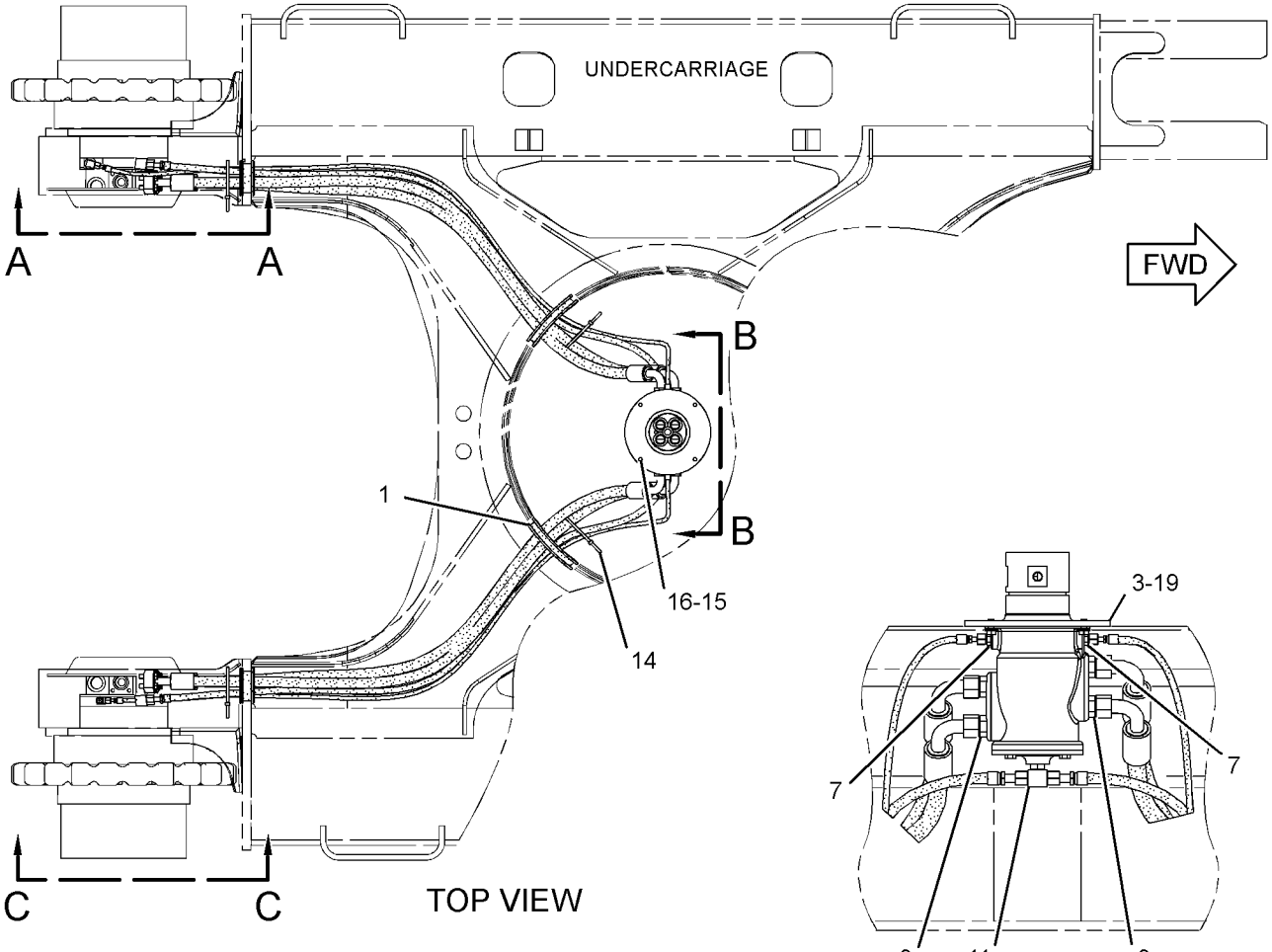

VIEW B-B

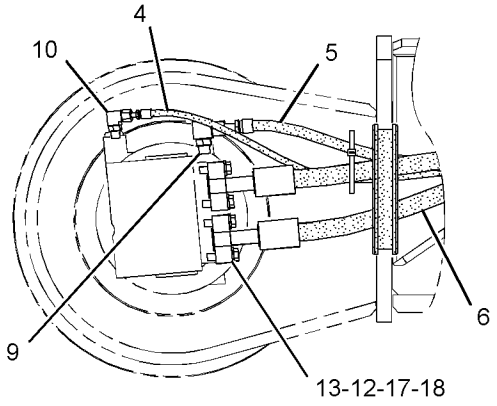

VIEW A-A

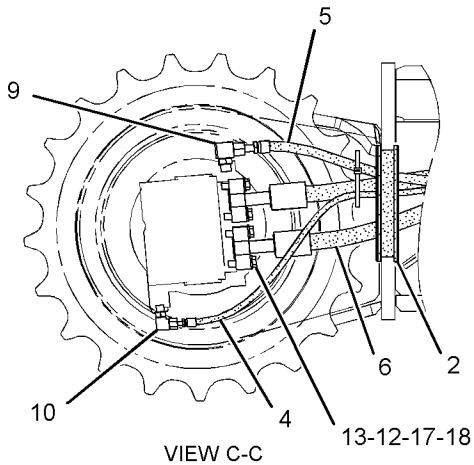

VIEW C-C

GRAPHIC #1 **<END>** g01617114

215-5037 MANIFOLD GP-CONTROL—PILOT OIL SUPPLY

S/N: XAH1-UP

PART OF 391-7835 LINES GP-PILOT

SMCS-5264 **i02571595**

NOTE	PART NUMBER	QTY	PART NAME 1 2 3 4 5 6 (PRODUCT LEVEL)	SEE PAGE
Y	*239-8998*	1	MANIFOLD GP-CONTROL (PILOT OIL SUPPLY) (STEEL BODY)	267
			-OR-	
Y	*239-8697*	1	MANIFOLD GP-CONTROL (PILOT OIL SUPPLY) (ALUMINUM BODY)	266

Y - SEPARATE ILLUSTRATION

<END>

239-8697 MANIFOLD GP-CONTROL—PILOT OIL SUPPLY

S/N: XAH1-UP
ALUMINUM BODY
PART OF 215-5037 MANIFOLD GP-CONTROL

SMCS-5264 **i03902794**

NOTE	REF NO	GRAPHIC REF	PART NUMBER	QTY	PART NAME 1 2 3 4 5 6 (PRODUCT LEVEL)	SEE PAGE
Y	1	1	**121-1491**	1	VALVE GP-SOLENOID (SWING BRAKE RELEASE)	320
Y	2	1	**121-1491**	1	VALVE GP-SOLENOID (HYDRAULIC LOCKOUT)	320
Y	3	1	**121-1491**	1	VALVE GP-SOLENOID (TRAVEL SPEED)	320
	4	1	**197-0196**	1	VALVE-CHECK	
	5	1	**197-0199**	1	SPRING	
	6	1	**197-0273**	1	SPRING	
	7	1	**9S-8005**	4	PLUG-O-RING	
	8	1	**3J-1907**	1	SEAL-O-RING	
	9	1	**3K-0360**	4	SEAL-O-RING	
	10	1	**4J-7533**	6	SEAL-O-RING	
M	11	1	**7I-2272**	6	BOLT (M5X0.8X12-MM)	
	12	1	**9S-8001**	6	PLUG	
	13	1	**9S-8004**	1	PLUG	

M - METRIC PART
Y - SEPARATE ILLUSTRATION

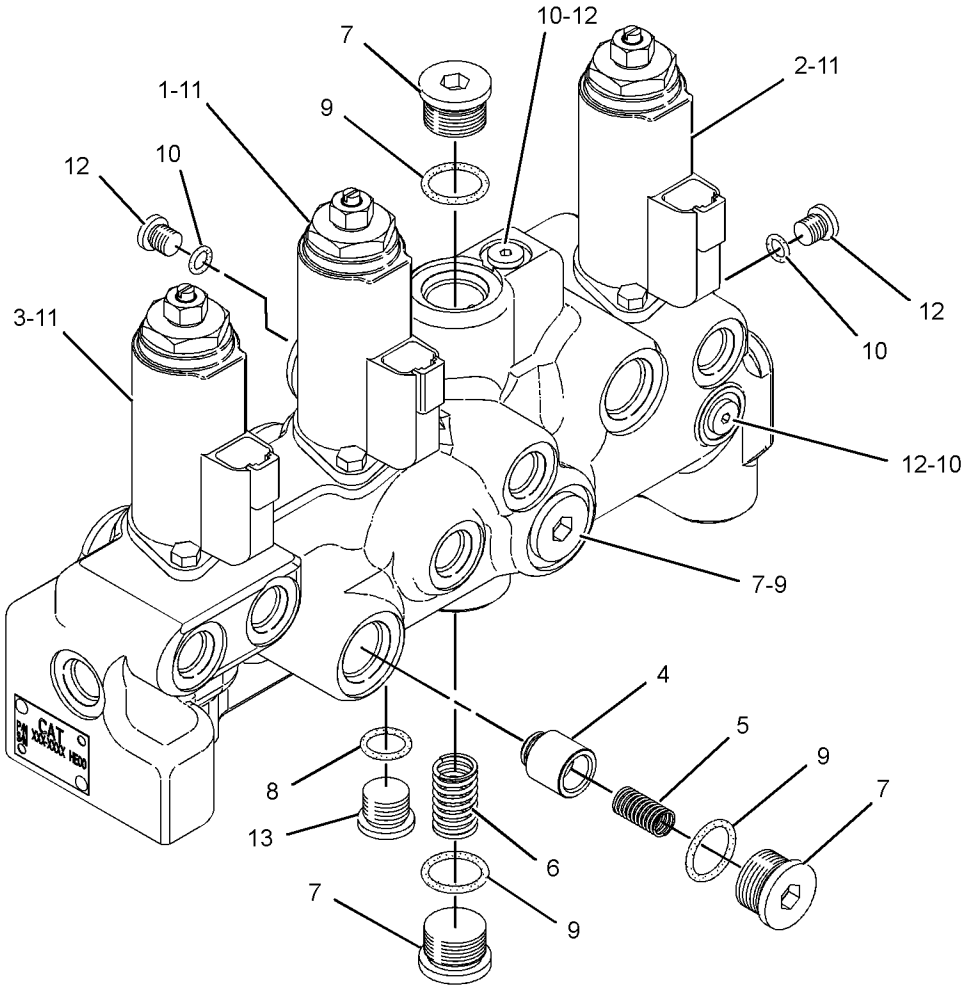

GRAPHIC #1 **<END>** g02145061

239-8998 MANIFOLD GP-CONTROL—PILOT OIL SUPPLY

S/N: XAH1-UP
STEEL BODY
PART OF 215-5037 MANIFOLD GP-CONTROL

SMCS-5264 **i04922917**

NOTE	REF NO	GRAPHIC REF	PART NUMBER	QTY	PART NAME 1 2 3 4 5 6 (PRODUCT LEVEL)	SEE PAGE
Y	1	1	**121-1491**	1	VALVE GP-SOLENOID (SWING BRAKE RELEASE)	320
Y	1A	1	**121-1491**	1	VALVE GP-SOLENOID (HYDRAULIC LOCKOUT)	320
Y	1B	1	**121-1491**	1	VALVE GP-SOLENOID (TRAVEL SPEED)	320
	2	1	**7M-7410**	2	PLUG-PIPE	
	3	1	**8T-6759**	6	PLUG-PIPE	
	4	1	**197-0196**	1	VALVE-CHECK	
	5	1	**9S-8005**	3	PLUG-O-RING	
	6	1	**197-0199**	1	SPRING	
	7	1	**197-0273**	1	SPRING	
	8	1	**3K-0360**	3	SEAL-O-RING	
M	9	1	**7I-2272**	6	BOLT (M5X0.8X12-MM)	

M - METRIC PART
Y - SEPARATE ILLUSTRATION

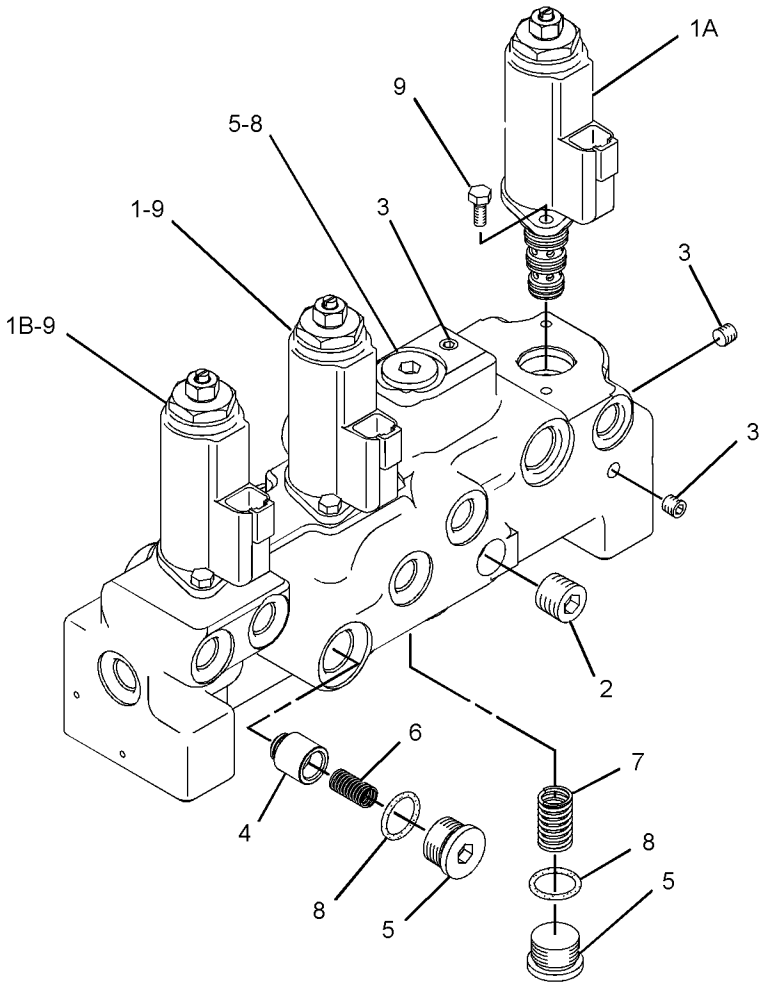

GRAPHIC #1 **<END>** g03089517

185-6952 MOTOR & MTG GP-TRAVEL

S/N: XAH1-UP

PART OF 350-0450 DRIVE GP-FINAL

SMCS-4351 **i05772864**

NOTE	REF NO	GRAPHIC REF	PART NUMBER	QTY	PART NAME 1 2 3 4 5 6 (PRODUCT LEVEL)	SEE PAGE
Y	1	1	**185-6953**	1	MOTOR GP-TRAVEL	272
Y	2	1	**199-0504**	1	VALVE GP-TRAVEL COUNTERBALANCE	322
M	3	1	**8T-4176**	6	BOLT (M12X1.75X90-MM)	
M	4	1	**095-0707**	3	BOLT (M16X2X120-MM)	
	5	1	**095-1685**	1	SEAL-O-RING	

M - METRIC PART
Y - SEPARATE ILLUSTRATION

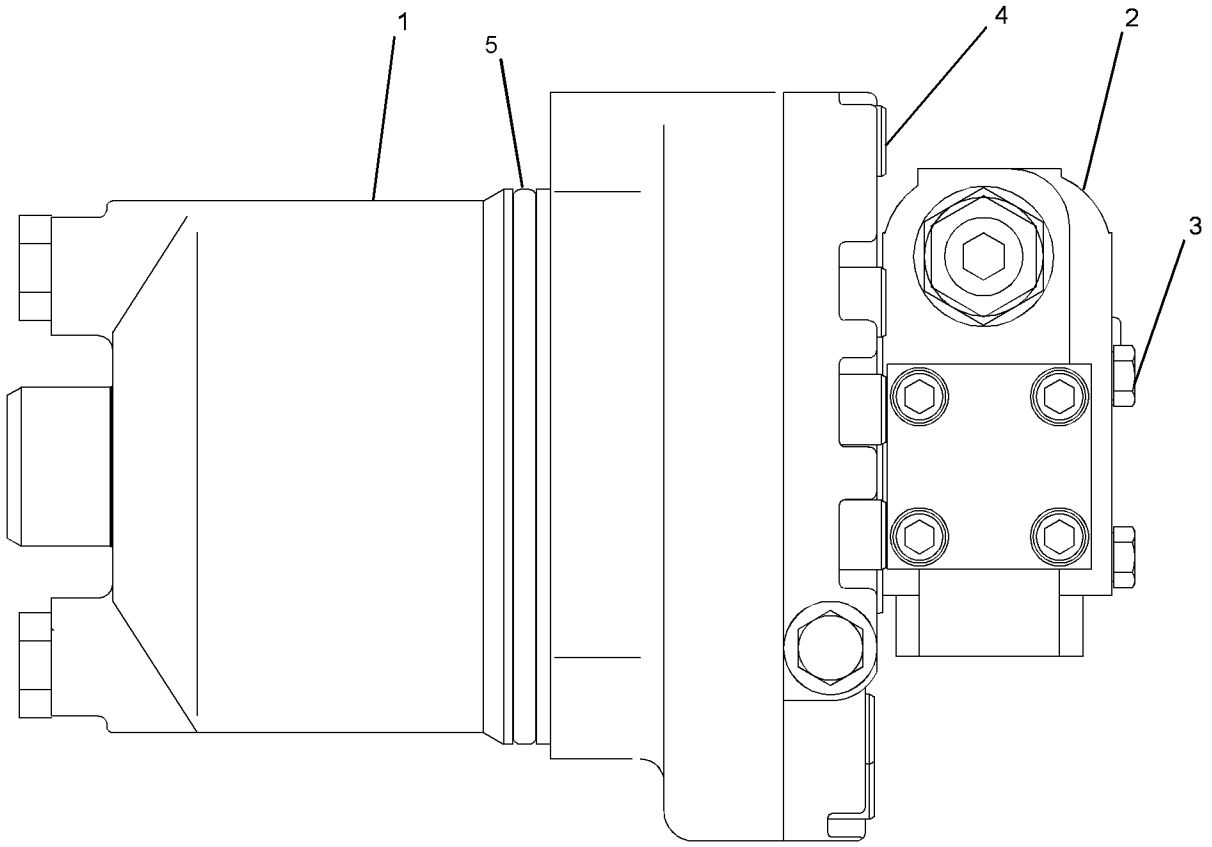

GRAPHIC #1 **<END>** g01953516

369-9624 MOTOR GP-PISTON

S/N: XAH1-UP

PART OF 369-9604 MOTOR GP-SWING

SMCS-5058 **i05772999**

NOTE	REF NO	GRAPHIC REF	PART NUMBER	QTY	PART NAME 1 2 3 4 5 6 (PRODUCT LEVEL)	SEE PAGE
	1	1	**173-3444**	1	PLATE	
	2	1	**173-3443**	1	PLATE	
	3	1	**334-9981**	1	PISTON AS-PUMP	
	4	1	**173-3441**	1	BARREL	
J	5	1	**5I-8426**	1	SEAL-O-RING	
J	6	1	**5I-8417**	1	SEAL-O-RING	
	7	1	**177-2584**	1	PISTON-BRAKE	
J	8	1	**5I-8623**	1	SEAL-O-RING	
	9	1	**126-2055**	14	SPRING	
	10	1	**173-3439**	1	HEAD GP-MOTOR	
		1	**095-0882**	2	PIN-SPRING	
	11	1	**110-5525**	2	PLUG	
J	12	1	**3J-1907**	2	SEAL-O-RING	
	13	1	**5I-8625**	1	BEARING	
	14	1	**173-3445**	1	PLATE-VALVE	
	15	1	**173-3451**	4	PLATE-SEPARATOR	
	16	1	**173-3450**	3	PLATE-FRICTION	
	17	1	**173-3442**	1	SPRING	
	18	1	**369-9625**	1	BODY	
	19	1	**364-0979**	1	SHAFT	
J	20	1	**173-3447**	1	SEAL-OIL	
	21	1	**122-5318**	1	BEARING	
	22	1	**094-1900**	2	PLUG	
J	23	1	**095-1595**	2	SEAL-O-RING	
	24	1	**7Y-4268**	2	SPRING	
	25	1	**7Y-4267**	2	VALVE	
M	26	1	**7Y-5221**	4	BOLT-SOCKET HEAD (M20X2.5X45-MM)	
					AVAILABLE REPAIR KIT(S):	
J			**173-3454**	1	KIT-SEAL (SWING MOTOR)	

J - KIT MARKED J SERVICES PARTS MARKED J
M - METRIC PART

369-9624 **MOTOR GP-PISTON (*contd.*)** **i05772999**

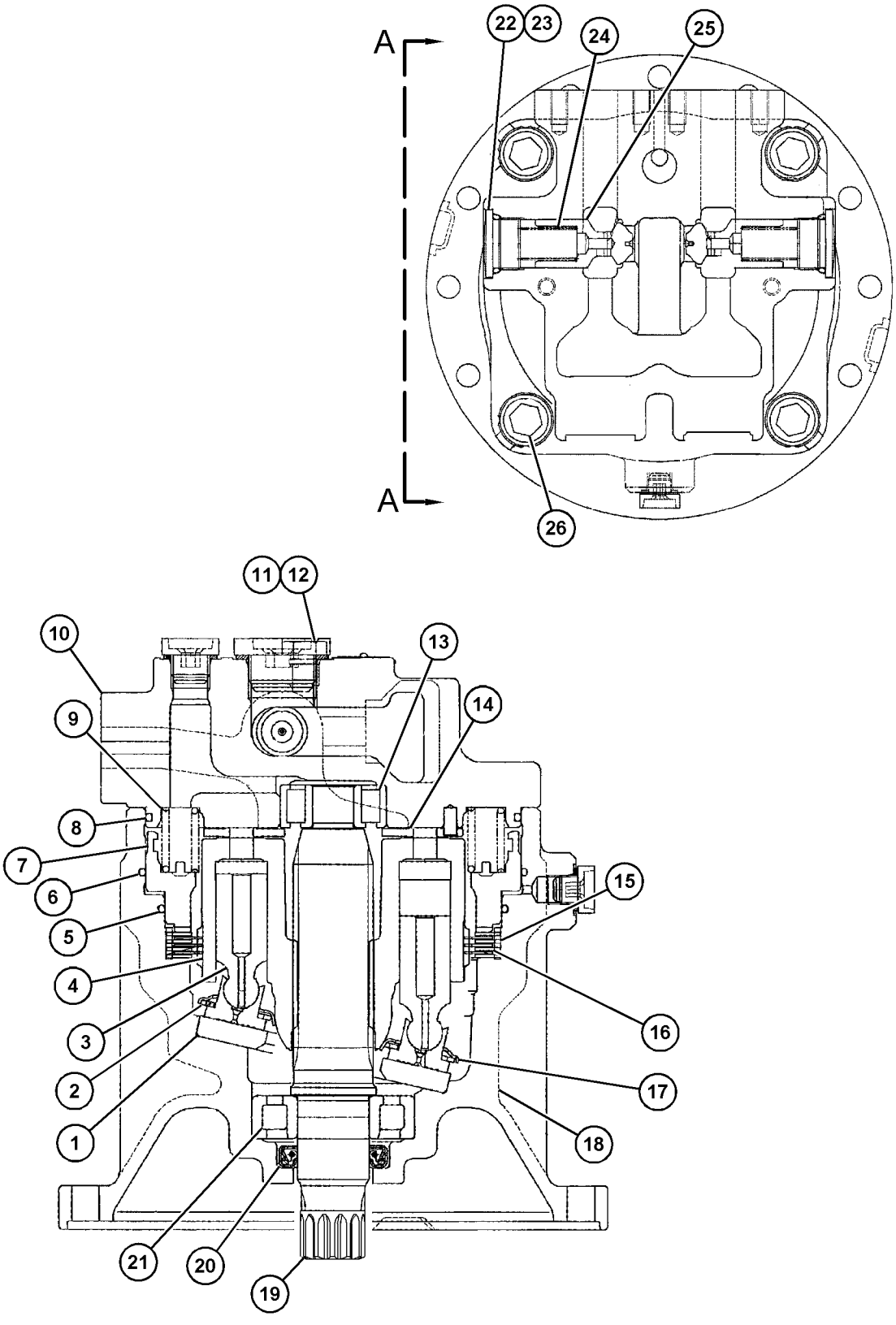

VIEW A-A

GRAPHIC #1 **<END>** g03676713

369-9604 MOTOR GP-SWING

S/N: XAH1-UP

PART OF 367-8339 DRIVE GP-SWING

SMCS-5058 **i05772966**

NOTE	REF NO	GRAPHIC REF	PART NUMBER	QTY	PART NAME 1 2 3 4 5 6 (PRODUCT LEVEL)	SEE PAGE
Y	1	1	**369-9624**	1	MOTOR GP-PISTON	269
Y	2	1	**364-0981**	2	VALVE GP-RELIEF (DIRECT OPERATED)	317
	3	1	**095-1698**	2	SEAL-O-RING	

Y - SEPARATE ILLUSTRATION

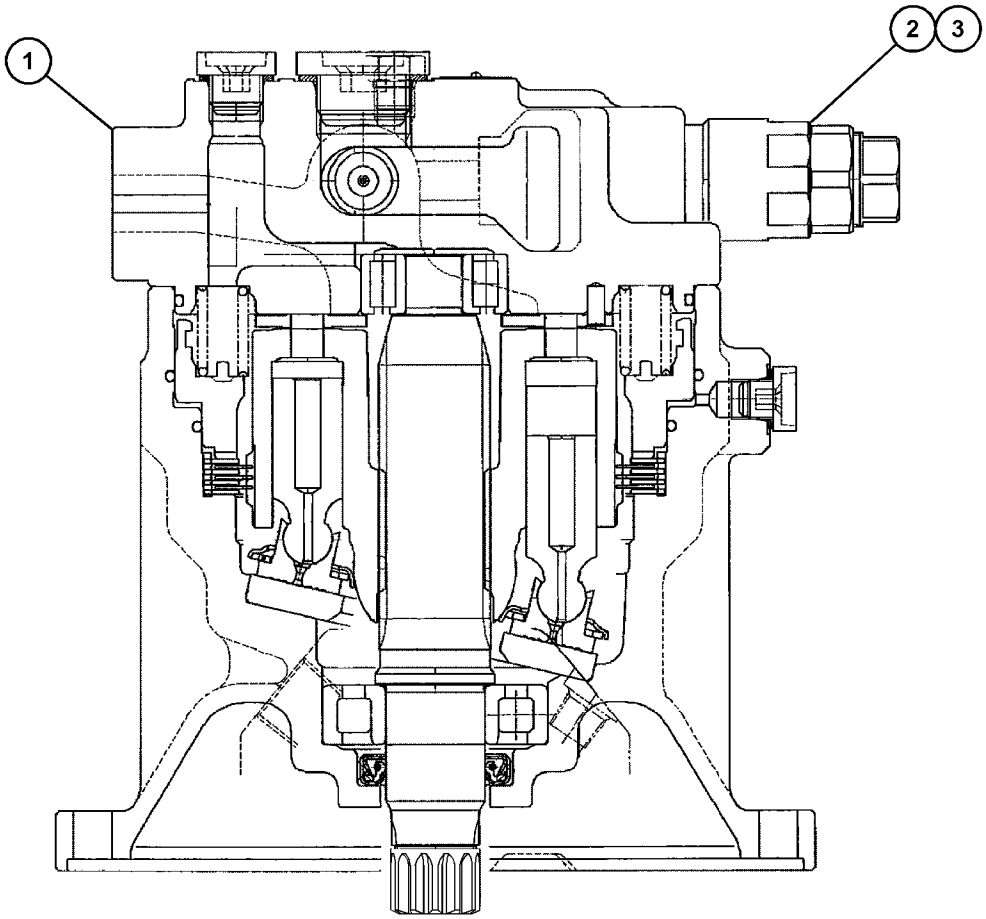

GRAPHIC #1 **<END>** g03676743

185-6953 MOTOR GP-TRAVEL

S/N: XAH1-UP

PART OF 185-6952 MOTOR & MTG GP-TRAVEL

SMCS-4351, 5058 **i05966956**

NOTE	REF NO	GRAPHIC REF	PART NUMBER	QTY	PART NAME 1 2 3 4 5 6 (PRODUCT LEVEL)	SEE PAGE
	1	1	**209-5894**	1	SHAFT	
	2	1	**087-4743**	2	STOP	
	3	1	**094-1399**	1	RING-RETAINING	
	4	1	**7Y-4212**	1	BEARING	
	5	1	**087-4757**	2	PISTON	
	6	1	**107-6969**	1	BODY	
	7	1	**122-5114**	1	GUIDE-BALL	
	8	1	**184-4535**	1	PLATE-CAM	
	9	1	**147-5860**	1	PISTON AS	
	10	1	**133-6777**	1	BARREL AS	
	11	1	**107-6954**	4	PLATE-FRICTION	
	12	1	**107-6955**	5	PLATE-SEPARATOR	
	13	1	**096-1523**	1	GUIDE-PISTON	
	14	1	**7Y-4213**	1	PISTON-BRAKE	
	15	1	**7Y-4202**	1	HEAD	
M	16	1	**8T-4944**	10	BOLT-SOCKET HEAD (M16X2X40-MM)	
B	17	1	**096-1521**	1	SHIM (1-MM THK)	
B	18	1	**096-3785**	1	SHIM (1.2-MM THK)	
B	19	1	**096-3787**	1	SHIM (1.6-MM THK)	
B	20	1	**096-3786**	1	SHIM (1.4-MM THK)	
B	21	1	**096-1522**	1	SHIM (2-MM THK)	
B	22	1	**096-3788**	1	SHIM (1.8-MM THK)	
	23	1	**096-5916**	2	SEAT	
	24	1	**2D-6642**	2	BALL	
J	25	1	**095-1572**	2	SEAL-O-RING	
J	26	1	**096-5919**	2	RING-BACKUP	
	27	1	**096-5915**	2	RETAINER	
	28	1	**096-4003**	1	SET-BEARING	
J	29	1	**095-1585**	1	SEAL-O-RING	
	30	1	**087-4742**	1	VALVE	
	31	1	**096-1519**	1	SEAT	
	32	1	**095-7380**	1	SPRING	
	33	1	**095-7382**	1	RETAINER	
	34	1	**094-1875**	1	DOWEL	
	35	1	**095-7378**	1	WASHER SET	
	36	1	**094-1882**	11	PLUG	
J	37	1	**095-1575**	3	SEAL-O-RING	
J	38	1	**096-4378**	1	RING-BACKUP	
J	39	1	**096-4377**	2	SEAL-O-RING	
J	40	1	**095-7384**	1	SEAL-O-RING	
J	41	1	**095-7383**	1	SEAL-O-RING	
J	42	1	**095-7386**	1	RING-BACKUP	
J	43	1	**095-7387**	1	RING	
J	44	1	**095-1685**	1	SEAL-O-RING	
	45	1	**118-4057**	9	SPRING	
	46	1	**7Y-4215**	1	SPACER	
J	47	1	**095-1586**	2	SEAL-O-RING	
J	48	1	**7Y-4217**	2	RING-BACKUP	
J	49	1	**096-4376**	1	SEAL-LIP TYPE	
	50	1	**123-2008**	2	KEY	
	52	1	**121-1558**	2	PIN	
J	53	1	**3K-0360**	1	SEAL-O-RING	
	54	1	**9S-4185**	1	PLUG-O-RING	
J	55	1	**095-1700**	2	SEAL-O-RING	
	56	1	**7Y-4224**	2	ORIFICE	
	57	1	**096-3978**	1	SPRING	
	58	1	**7Y-4216**	1	SPOOL	
J	59	1	**2M-9780**	1	SEAL-O-RING	
	60	1	**087-4786**	1	ADAPTER	

185-6953 **MOTOR GP-TRAVEL (*contd.*)** **i05966956**

NOTE	REF NO	GRAPHIC REF	PART NUMBER	QTY	PART NAME 1 2 3 4 5 6 (PRODUCT LEVEL)	SEE PAGE
					AVAILABLE REPAIR KIT(S):	
J			**7Y-4222**	1	KIT-SEAL (TRAVEL MOTOR)	

B - USE AS REQUIRED
J - KIT MARKED J SERVICES PARTS MARKED J
M - METRIC PART

185-6953 **MOTOR GP-TRAVEL (*contd.*)** **i05966956**

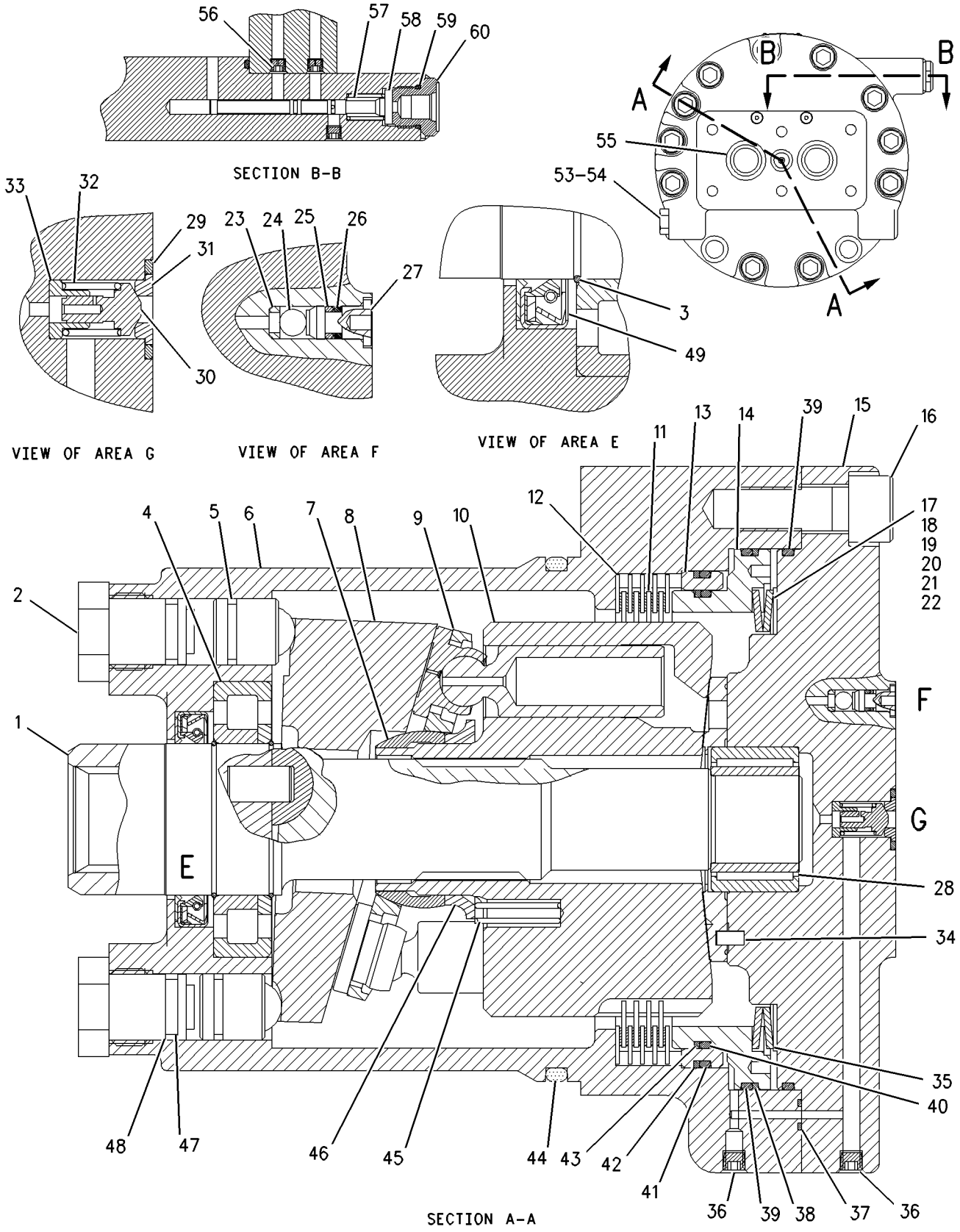

GRAPHIC #1 **<END>** g00935725

302-3225 MOUNTING GP-MAIN CONTROL VALVE

S/N: XAH1-UP

PART OF 455-7664 HYDRAULIC AR

SMCS-5051 **i05774241**

NOTE	REF NO	GRAPHIC REF	PART NUMBER	QTY	PART NAME 1 2 3 4 5 6 (PRODUCT LEVEL)	SEE PAGE
	1	1	**178-6450**	4	SPACER (17X35X30-MM THK)	
	2	1	**387-3739**	1	SUPPORT AS	
	3	1	**387-3738**	1	SUPPORT AS	
M	4	1	**453-2834**	3	BOLT (M16X2X30-MM)	
M	5	1	**447-1707**	4	BOLT (M16X2X60-MM)	
	6	1	**451-2175**	3	WASHER-HARD (17.5X30X3.5-MM THK)	

M - METRIC PART

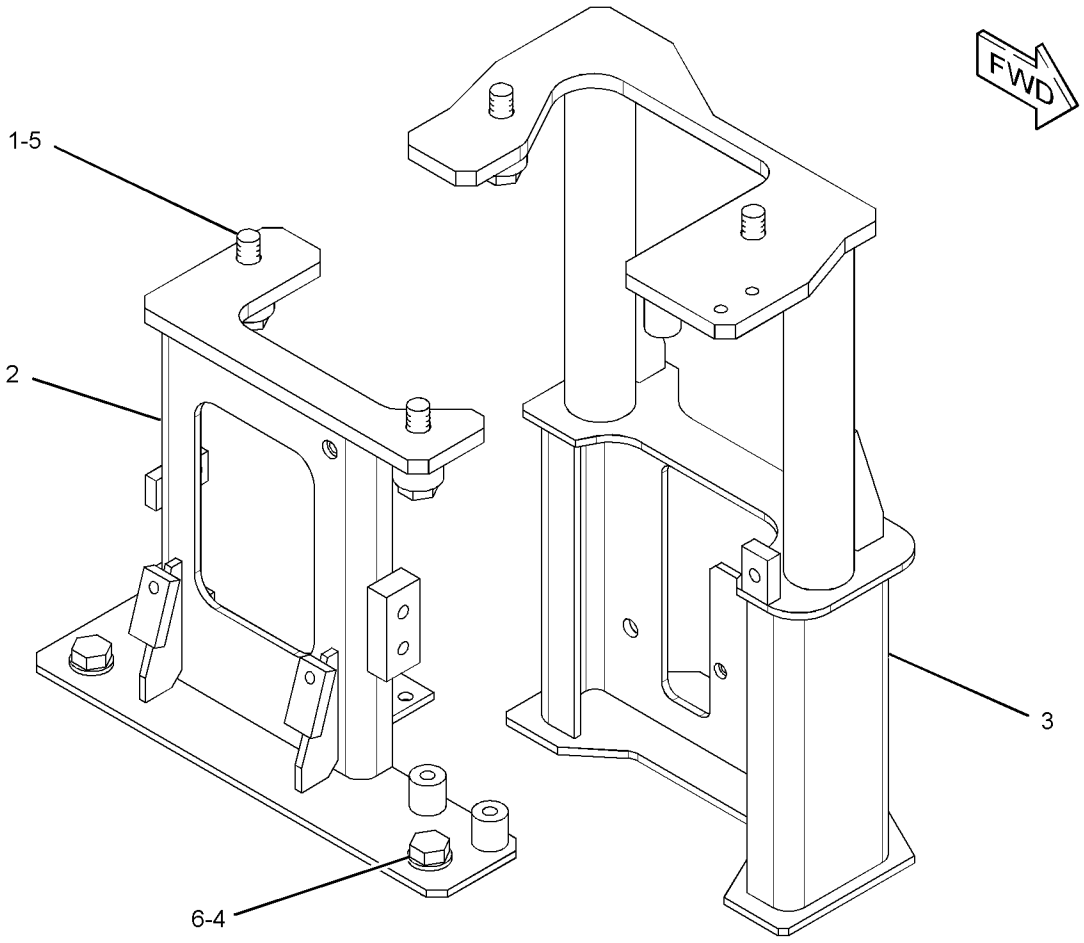

GRAPHIC #1 **<END>** g01848213

387-2618 PUMP & MTG GP-MAIN HYDRAULIC

S/N: XAH1-UP

PART OF 455-7664 HYDRAULIC AR

SMCS-5070 **i05774290**

NOTE	REF NO	GRAPHIC REF	PART NUMBER	QTY	PART NAME 1 2 3 4 5 6 (PRODUCT LEVEL)	SEE PAGE
Y	1	1	*344-0688*	1	COUPLING GP-PUMP	204
Y	2	1	**391-9452**	1	PUMP GP-PISTON (DOUBLE PISTON)	278
	3	1	**8T-4121**	12	WASHER-HARD (11X21X2.5-MM THK)	
M	4	1	**8T-4195**	12	BOLT (M10X1.5X30-MM)	

M - METRIC PART
Y - SEPARATE ILLUSTRATION

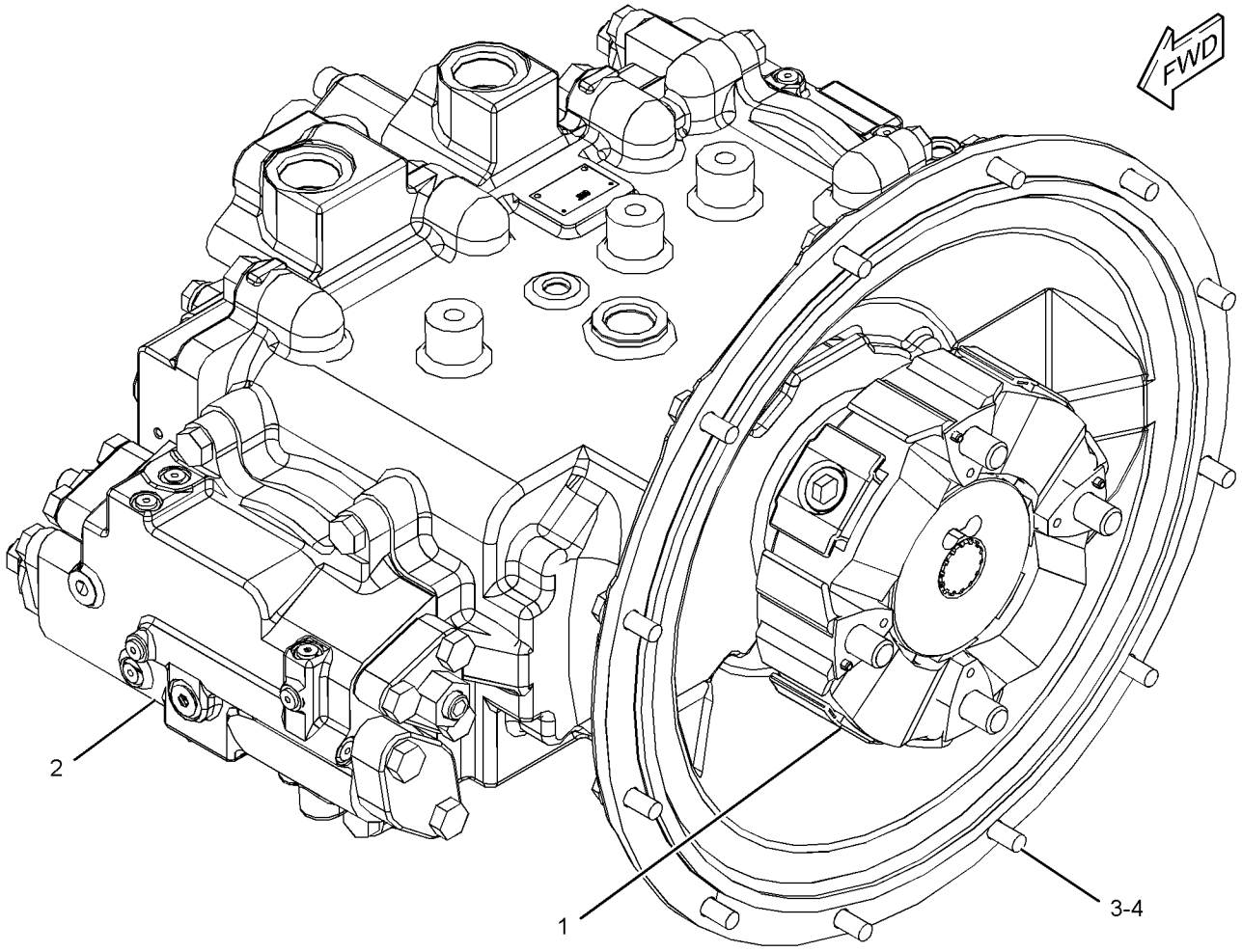

GRAPHIC #1 **<END>** g03135395

341-2860 PUMP GP-GEAR

S/N: XAH1-UP

PART OF 391-9452 PUMP GP-PISTON

SMCS-5073 **i05263929**

NOTE	REF NO	GRAPHIC REF	PART NUMBER	QTY	PART NAME 1 2 3 4 5 6 (PRODUCT LEVEL)	SEE PAGE
					AVAILABLE REPAIR KIT(S):	
			327-8740	1	KIT-SEAL (GEAR PUMP)	
					(KIT INCLUDES GASKETS, LIP TYPE SEAL, SEAL & RETAINING RING)	

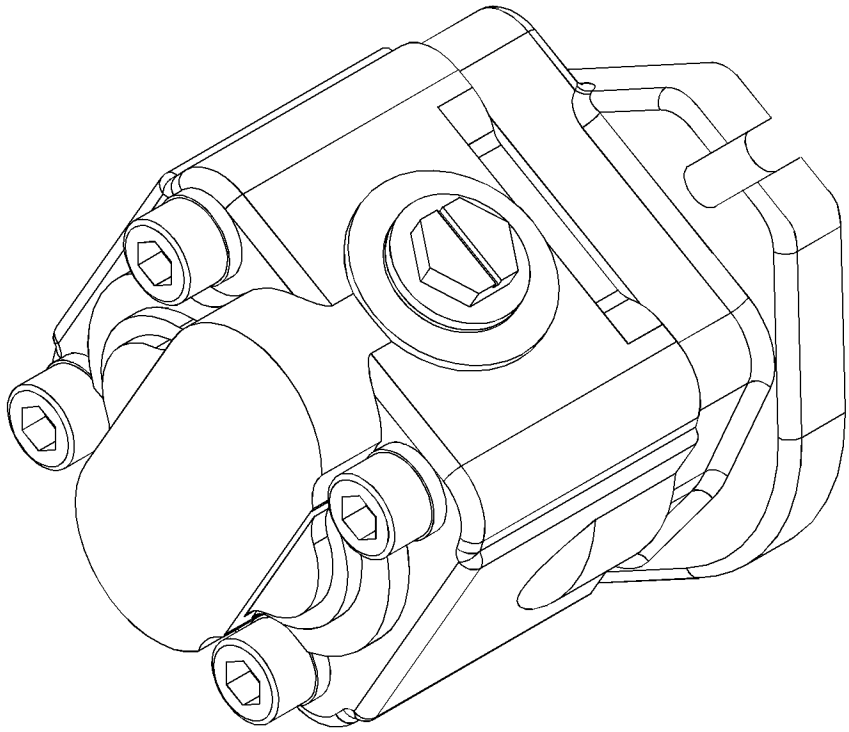

GRAPHIC #1 **<END>** g02484156

391-9452 PUMP GP-PISTON—DOUBLE PISTON

S/N: XAH1-UP

PART OF 387-2618 PUMP & MTG GP-MAIN HYDRAULIC

SMCS-5070 **i05774308**

NOTE	REF NO	GRAPHIC REF	PART NUMBER	QTY	PART NAME 1 2 3 4 5 6 (PRODUCT LEVEL)	SEE PAGE
Y	1	1	**111-9916**	1	VALVE GP-SOLENOID (PRESSURE REDUCING) (PUMP CONTROL)	319
	2	2	**165-2799**	12	SPRING	
	3	2	**165-2801**	2	BEARING-ROLLER	
	4	1	**165-2804**	1	FLANGE	
	5	2	**165-2805**	2	BLOCK	
	6	2	**165-3838**	1	BARREL AS	
	7	2	**165-3839**	1	BARREL AS	
	8	2	**165-3853**	1	COVER	
	9	2	**176-8131**	2	SPACER-SPECIAL	
	10	2	**176-8132**	2	BEARING	
	11	1	**190-4896**	2	PLUG	
	12	2	**192-0573**	4	PIN-DOWEL	
	13	2	**199-0518**	2	SEAL-O-RING	
	14	1	**207-2985**	2	ORIFICE	
	15	1	**225-6216**	1	GASKET	
Y	16	1	**267-1624**	2	HEAD GP-PUMP	223
	17	2	**267-8084**	2	BEARING-NEEDLE	
	18	2	**268-6263**	2	CAM	
	19	2	**269-2433**	4	BEARING-CRADLE	
	20	1	**273-8315**	1	SEAL-O-RING	
	21	1	**282-9192**	1	CASE-FLANGE	
Y	22	1	**341-2860**	1	PUMP GP-GEAR	277
	23	2	**353-5829**	2	GUIDE-BALL	
	24	2	**353-5837**	1	SEAL-LIP TYPE	
	25	2	**368-9994**	1	PLATE	
	26	2	**368-9995**	2	GEAR (47-TEETH)	
	27	2	**368-9996**	1	SHAFT-DRIVE	
	28	2	**368-9997**	1	SHAFT-DRIVEN	
	29	2	**379-3002**	2	PISTON AS	
					(EACH INCLUDES)	
		2	**165-3847**	9	PISTON AS	
		2	**353-5825**	1	RETAINER	
	30	1	**391-9438**	1	BLOCK-PORT	
	32	1	**094-1875**	6	DOWEL	
	33	1	**094-1882**	13	PLUG	
	35	2	**189-9763**	4	SEAL-O-RING	
	36	2	**1H-7339**	1	SEAL-O-RING	
	37	2	**1J-6472**	2	RING-RETAINING	
	38	2	**5P-2545**	1	SEAL-O-RING	
	39	1,2	**3J-1907**	2	SEAL-O-RING	
	40	2	**388-8368**	2	RING-RETAINING	
	41	2	**6V-8757**	2	RING-RETAINING	
M	42	1	**7I-2272**	2	BOLT (M5X0.8X12-MM)	
M	43	1	**7X-2553**	5	BOLT (M16X2X40-MM)	
M	44	1	**7X-2556**	1	BOLT (M16X2X100-MM)	
	45	1,2	**2Y-5578**	4	PIN	
	46	1	**8T-4121**	2	WASHER-HARD (11X21X2.5-MM THK)	
M	47	1	**8T-4136**	4	BOLT (M10X1.5X25-MM)	
M	48	1	**8T-4139**	8	BOLT (M12X1.75X30-MM)	
M	49	1	**8T-4140**	2	BOLT (M16X2X60-MM)	
M	50	2	**8T-4185**	4	BOLT (M10X1.5X50-MM)	
M	51	2	**8T-7547**	4	BOLT (M8X1.25X30-MM)	
	52	2	**8T-9599**	1	RING-RETAINING	
	53	1,2	**9S-4191**	2	PLUG	

M - METRIC PART
Y - SEPARATE ILLUSTRATION

391-9452 **PUMP GP-PISTON (*contd.*)** **i05774308**

REFER TO ALL ILLUSTRATIONS OF
THIS GROUP FOR AUXILIARY VIEWS

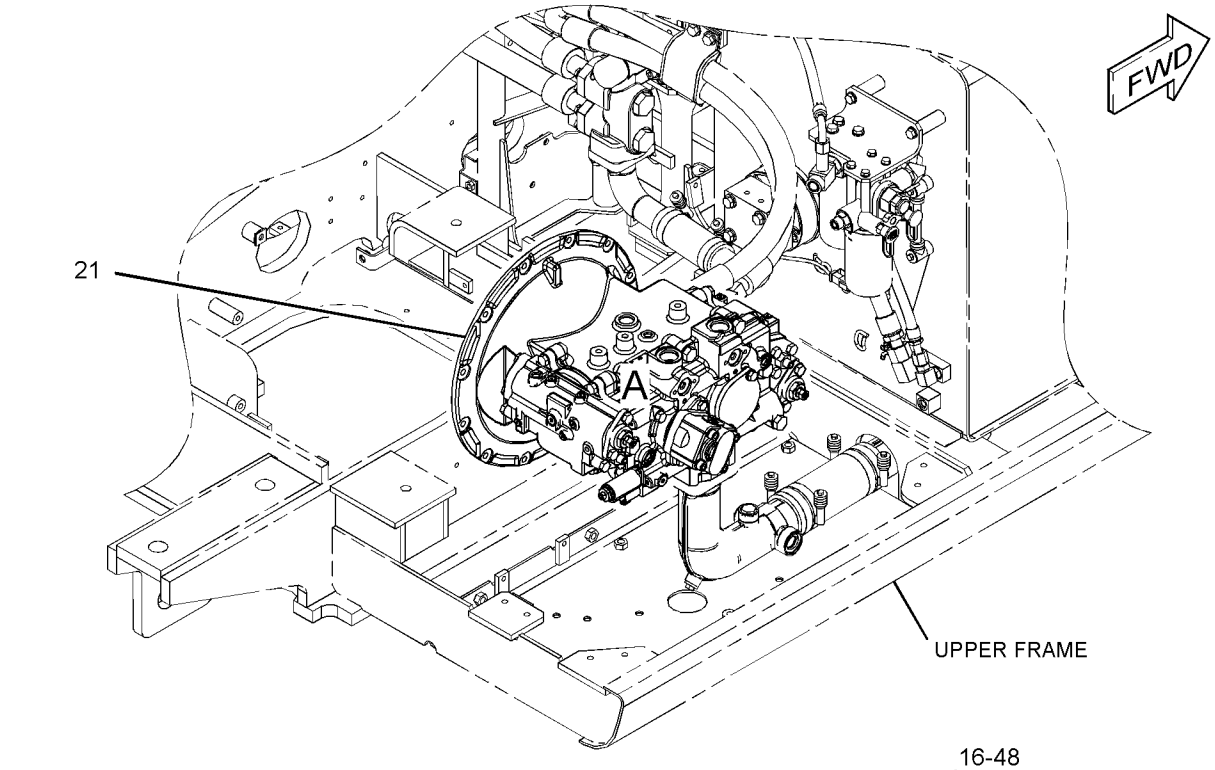

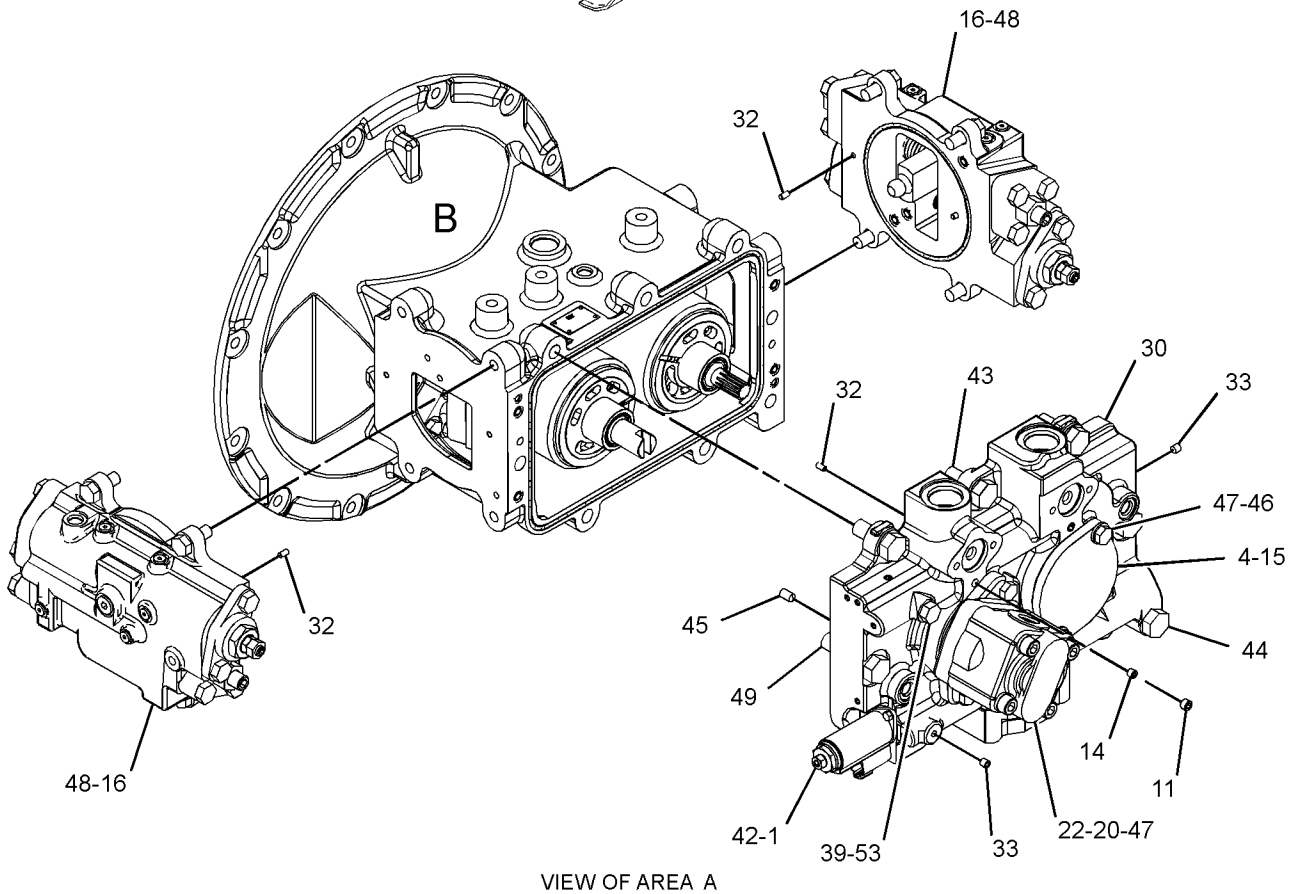

VIEW OF AREA A

GRAPHIC #1 g03682388

391-9452 **PUMP GP-PISTON (*contd.*)** **i05774308**

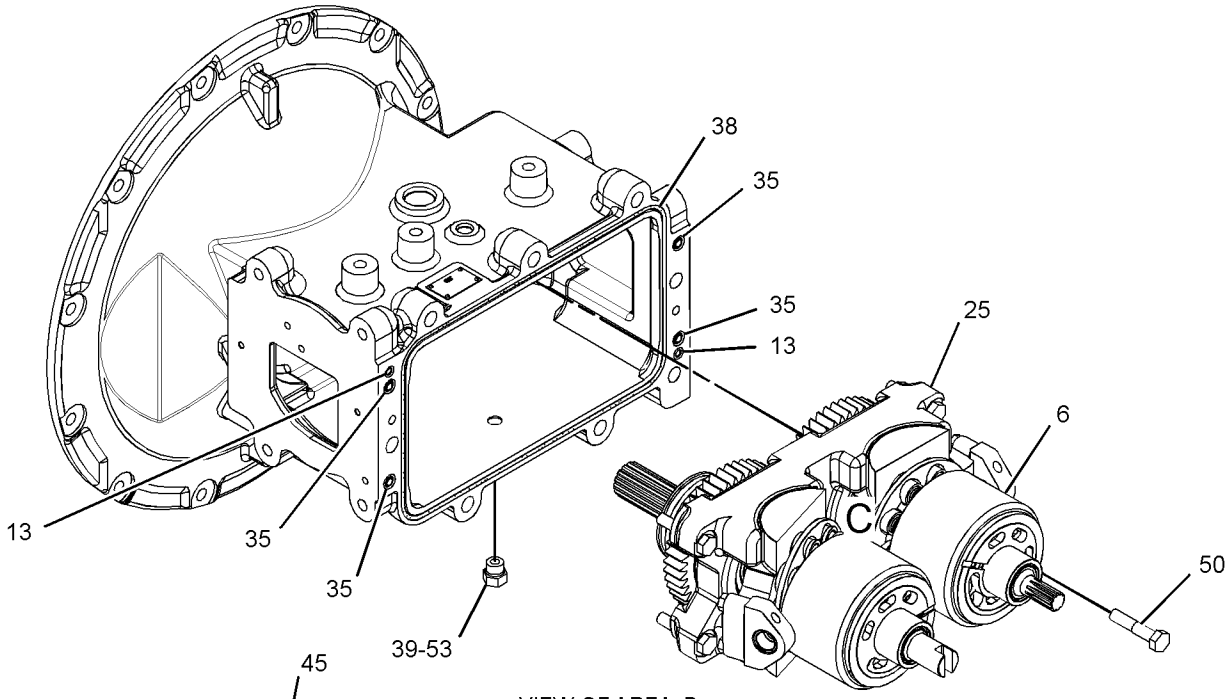

VIEW OF AREA B

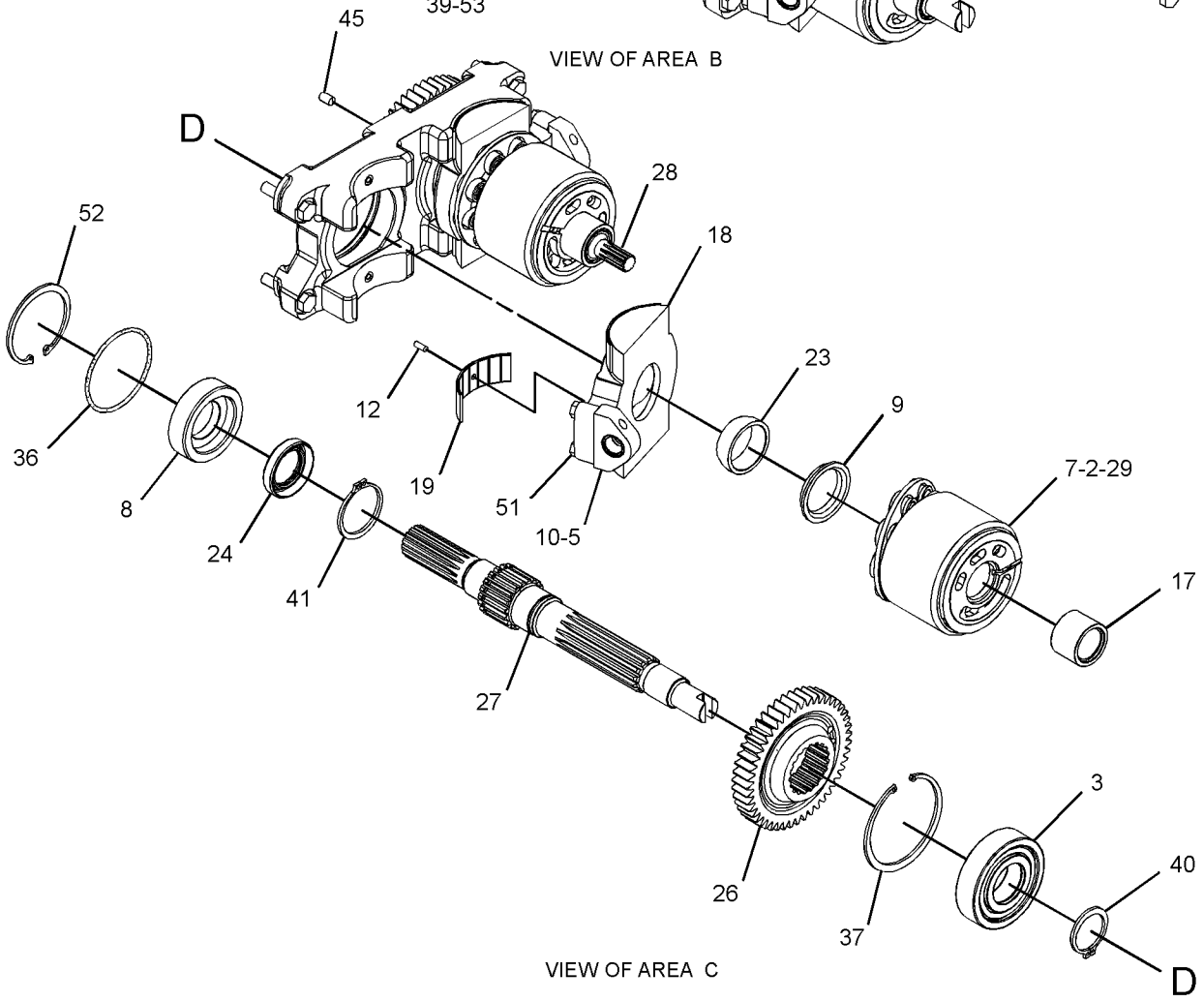

VIEW OF AREA C

GRAPHIC #2 **<END>** g03135405

274-2726 SCREEN GP-HYDRAULIC–TANK

S/N: XAH1-UP

PART OF 454-7359 TANK & FILTER GP-HYDRAULIC

SMCS-5068 **i05774946**

NOTE	REF NO	GRAPHIC REF	PART NUMBER	QTY	PART NAME 1 2 3 4 5 6 (PRODUCT LEVEL)	SEE PAGE
	1	1	**087-5317**	1	ROD	
	2	1	**209-6002**	1	SCREEN AS (HYDRAULIC TANK)	
	3	1	**259-0918**	1	GUIDE	
	4	1	**095-1552**	1	SEAL-O-RING	
	5	1	**095-6639**	1	SPRING	
M	6	1	**8T-4133**	2	NUT (M10X1.5-THD)	

M - METRIC PART

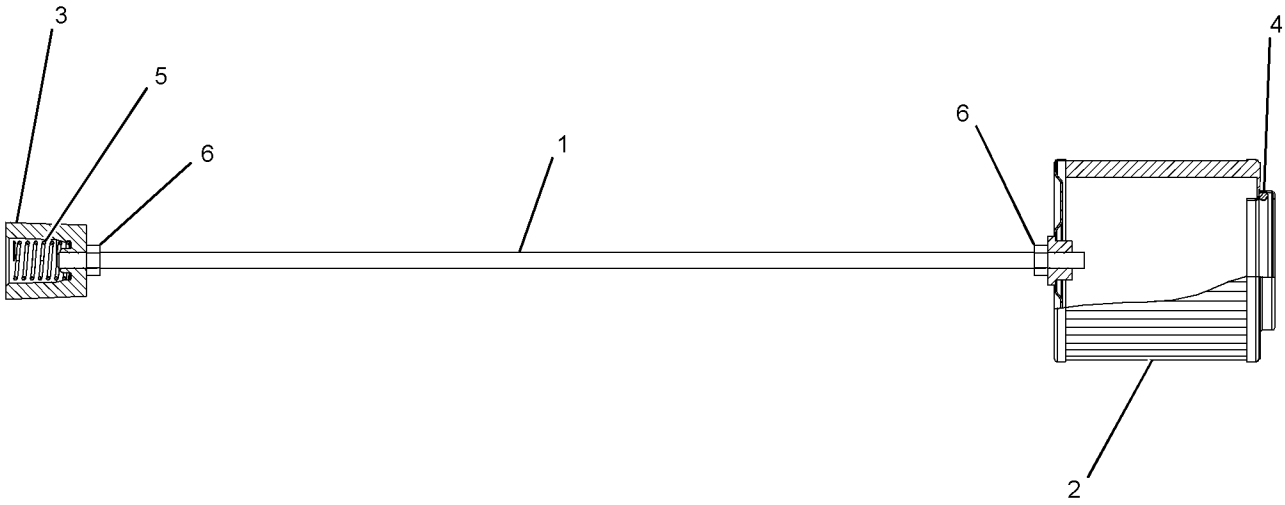

GRAPHIC #1 **<END>** g01311910

197-0173 SPOOL GP-CONTROL VALVE–WORK TOOL

S/N: XAH1-UP

PART OF 420-2243 VALVE GP-MAIN CONTROL

SMCS-5051, 5464 **i05439773**

NOTE	REF NO	GRAPHIC REF	PART NUMBER	QTY	PART NAME 1 2 3 4 5 6 (PRODUCT LEVEL)	SEE PAGE
M	1	1	**197-0148**	1	BOLT-SPECIAL	
	2	1	**7I-7203**	2	SEAT	
	3	1	**197-0151**	1	SPRING	
	4	1	**197-0150**	1	SPRING	
	5	1	**197-0149**	1	STOP	
	6	1	**197-0156**	1	SPOOL	

M - METRIC PART

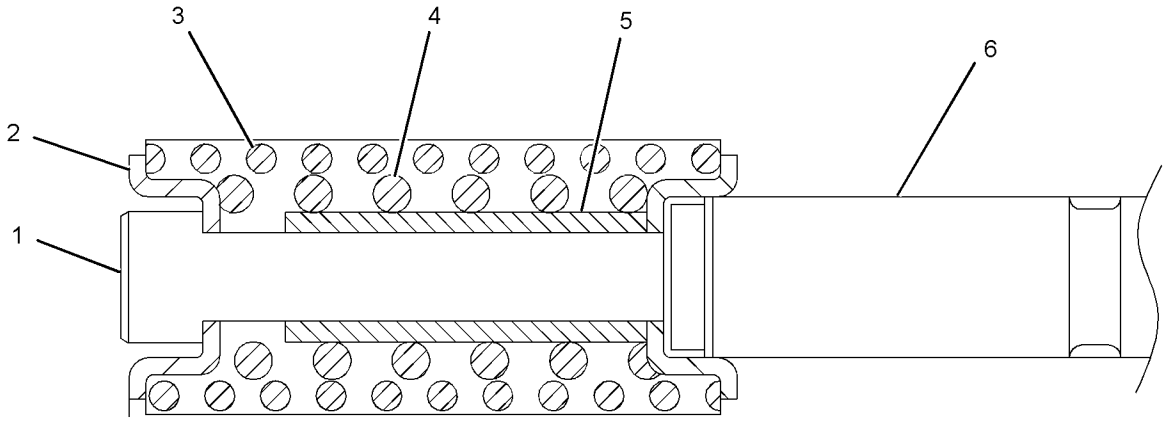

GRAPHIC #1 **<END>** g03433056

197-0219 SPOOL GP-CONTROL VALVE

S/N: XAH1-UP

PART OF 420-2243 VALVE GP-MAIN CONTROL

SMCS-5051, 5464 **i05774646**

NOTE	REF NO	GRAPHIC REF	PART NUMBER	QTY	PART NAME 1 2 3 4 5 6 (PRODUCT LEVEL)	SEE PAGE
M	1	1	**197-0148**	1	BOLT-SHOULDER (M8X1.25X56.1-MM)	
	2	1	**7I-7203**	2	SEAT	
	3	1	**197-0151**	1	SPRING	
	4	1	**197-0150**	1	SPRING	
	5	1	**197-0149**	1	STOP	
	6	1	**197-0220**	1	SPOOL	

M - METRIC PART

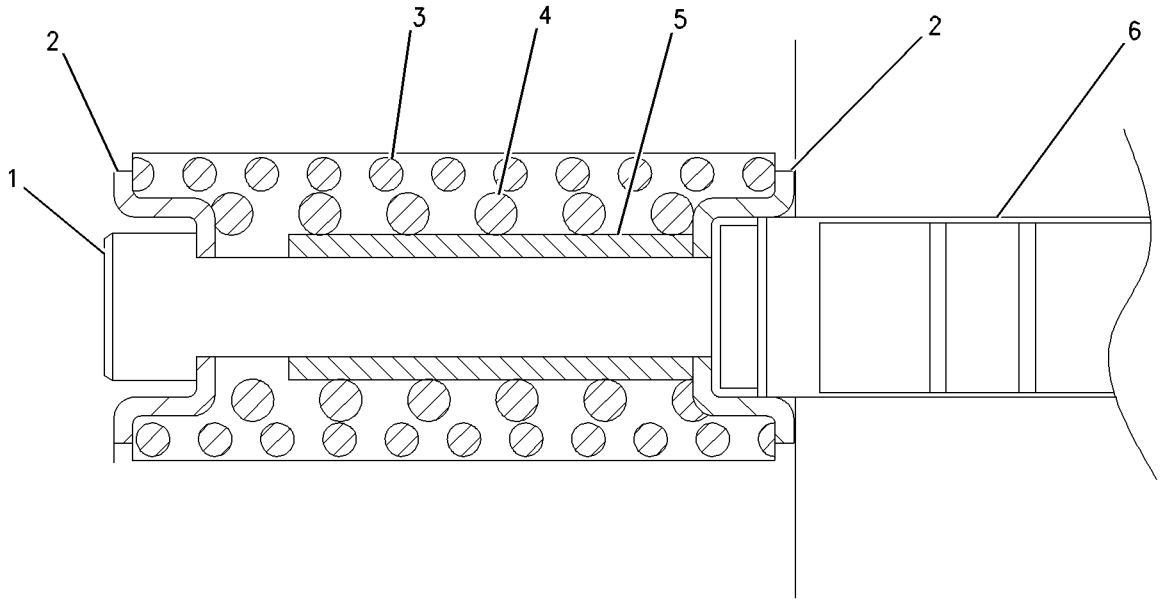

GRAPHIC #1 **<END>** g00766482

229-1085 SPOOL GP-CONTROL VALVE–SWING

S/N: XAH1-UP

PART OF 420-2243 VALVE GP-MAIN CONTROL

SMCS-5051, 5464 **i05774595**

NOTE	REF NO	GRAPHIC REF	PART NUMBER	QTY	PART NAME 1 2 3 4 5 6 (PRODUCT LEVEL)	SEE PAGE
M	1	1	**197-0148**	1	BOLT-SHOULDER (M8X1.25X56.1-MM)	
	2	1	**7I-7203**	2	SEAT	
	3	1	**197-0151**	1	SPRING	
	4	1	**197-0150**	1	SPRING	
	5	1	**197-0149**	1	STOP	
	6	1	**229-1086**	1	SPOOL	

M - METRIC PART

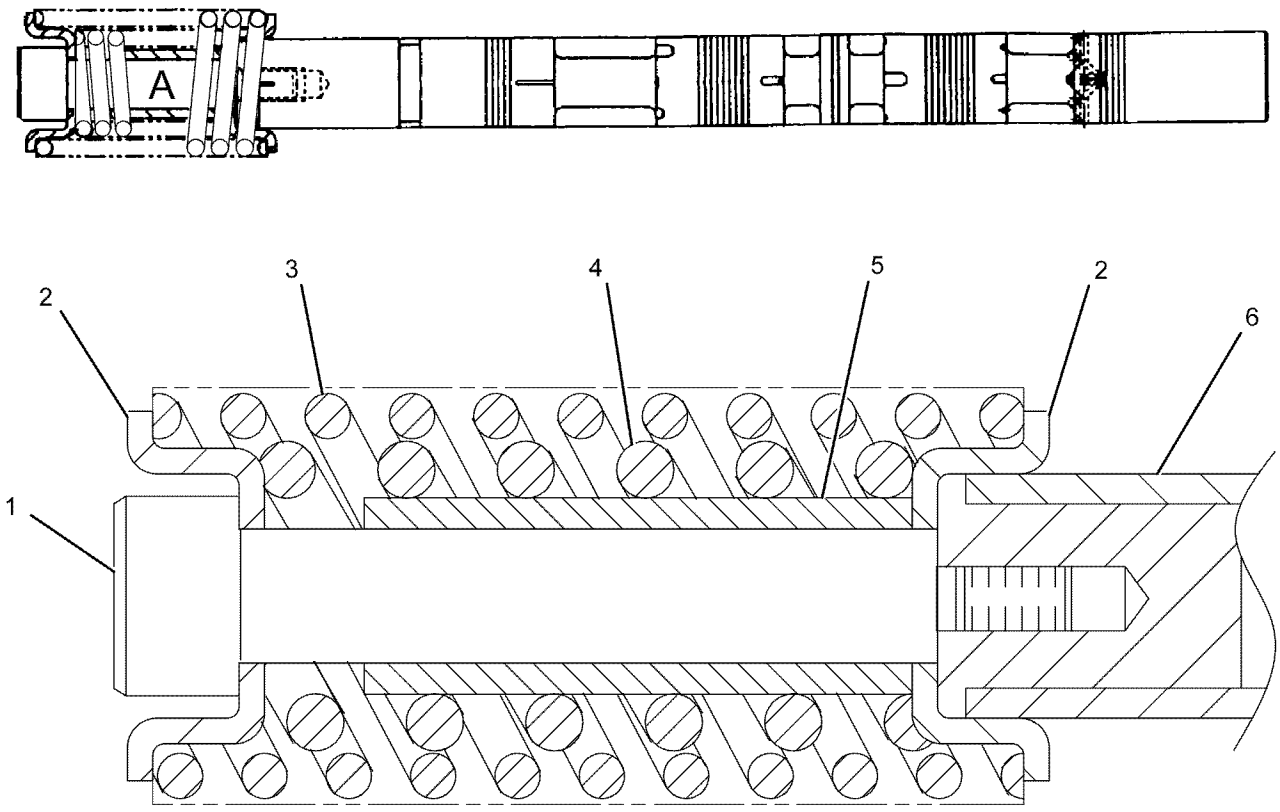

VIEW OF AREA A

GRAPHIC #1 **<END>** g01098051

285-1504 SPOOL GP-CONTROL VALVE–COMBINED FLOW

S/N: XAH1-UP

PART OF 420-2243 VALVE GP-MAIN CONTROL

SMCS-5051, 5464 **i05407078**

NOTE	REF NO	GRAPHIC REF	PART NUMBER	QTY	PART NAME 1 2 3 4 5 6 (PRODUCT LEVEL)	SEE PAGE
	1	1	**297-0366**	1	STOP	
M	2	1	**197-0148**	1	BOLT-SPECIAL	
	3	1	**7I-7203**	2	SEAT	
	4	1	**197-0151**	1	SPRING	
	5	1	**197-0150**	1	SPRING	

M - METRIC PART

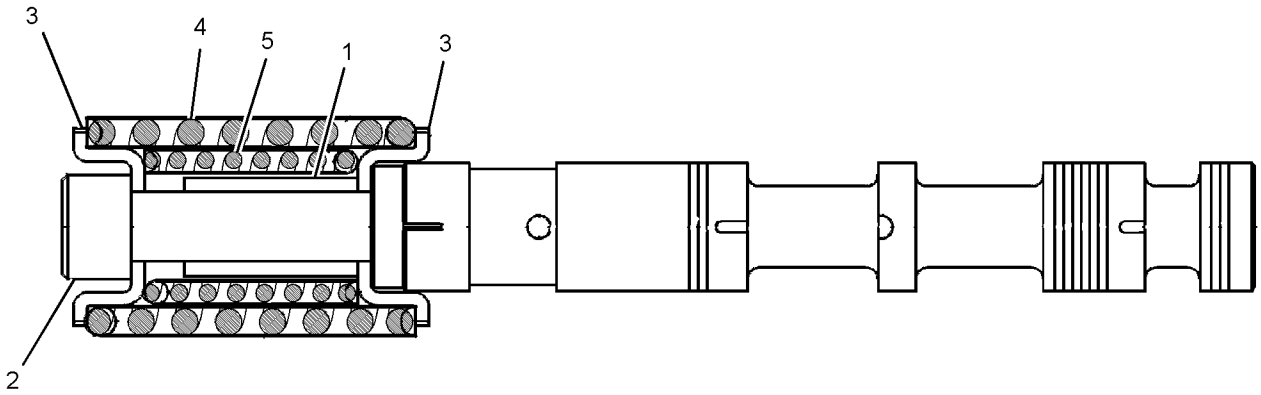

GRAPHIC #1 **<END>** g01424755

285-1505 SPOOL GP-CONTROL VALVE–SWING PRIORITY

S/N: XAH1-UP

PART OF 420-2243 VALVE GP-MAIN CONTROL

SMCS-5051, 5464 **i05407080**

NOTE	REF NO	GRAPHIC REF	PART NUMBER	QTY	PART NAME 1 2 3 4 5 6 (PRODUCT LEVEL)	SEE PAGE
	1	1	**197-0149**	1	STOP	
M	2	1	**197-0148**	1	BOLT-SPECIAL	
	3	1	**7I-7203**	2	SEAT	
	4	1	**197-0151**	1	SPRING	
	5	1	**197-0150**	1	SPRING	

M - METRIC PART

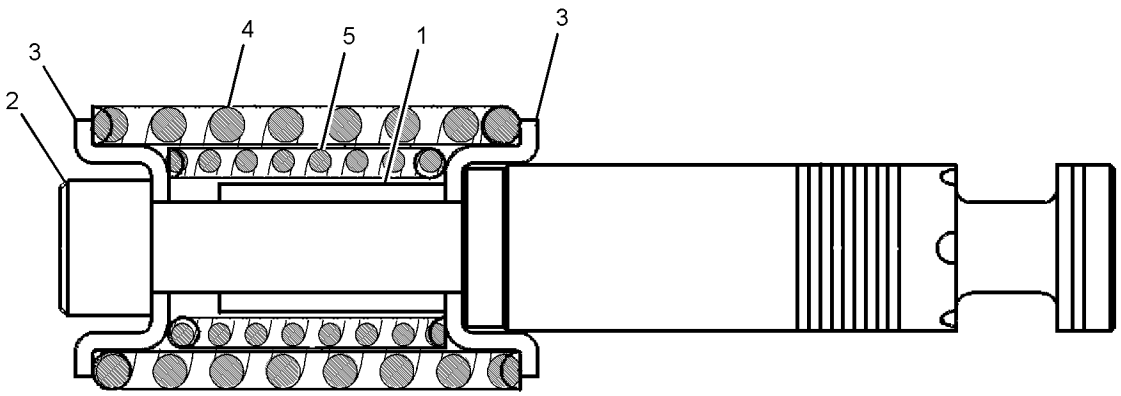

GRAPHIC #1 **<END>** g01682819

352-7282 SPOOL GP-CONTROL VALVE–BOOM 2

S/N: XAH1-UP

PART OF 420-2243 VALVE GP-MAIN CONTROL

SMCS-5051, 5464 **i05774658**

NOTE	REF NO	GRAPHIC REF	PART NUMBER	QTY	PART NAME 1 2 3 4 5 6 (PRODUCT LEVEL)	SEE PAGE
	1	1	**197-0153**	1	SPRING	
	2	1	**7I-7203**	2	SEAT	
M	3	1	**197-0148**	1	BOLT-SPECIAL	
	4	1	**197-0149**	1	STOP	
	5	1	**197-0150**	1	SPRING	

M - METRIC PART

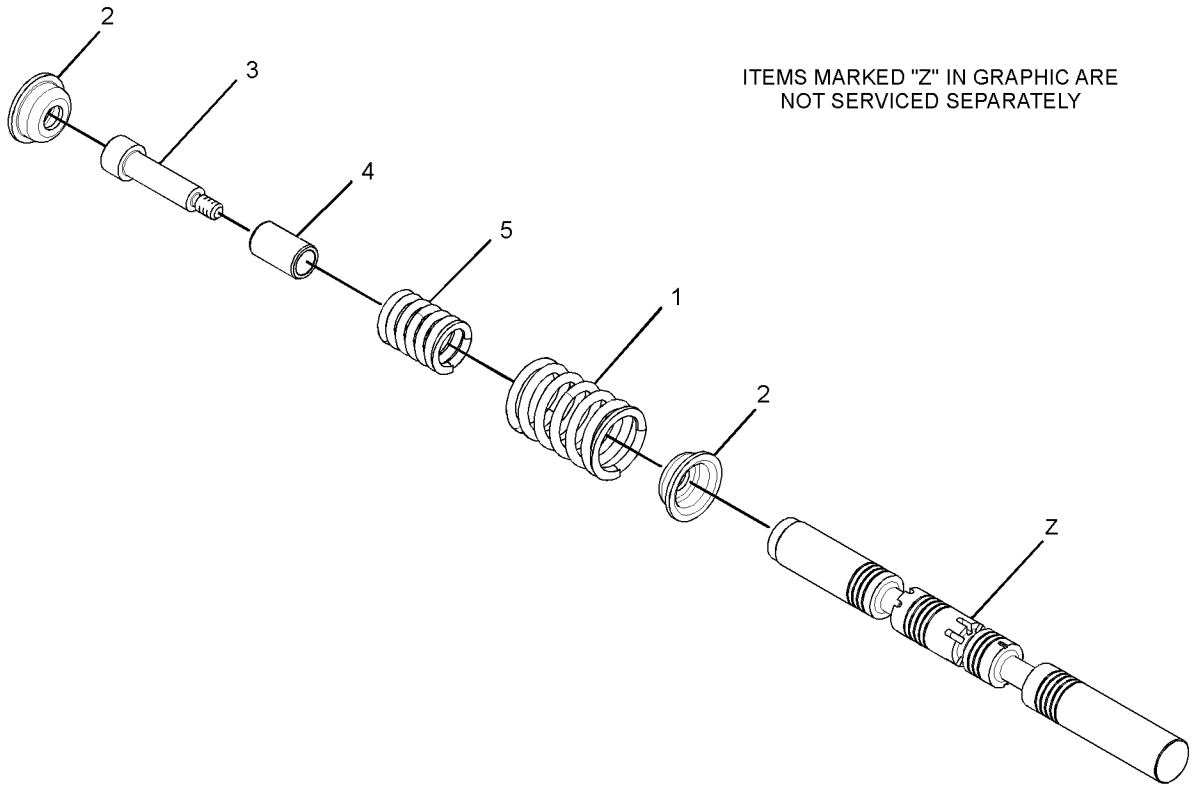

ITEMS MARKED "Z" IN GRAPHIC ARE NOT SERVICED SEPARATELY

GRAPHIC #1 **<END>** g01801813

352-7283 SPOOL GP-CONTROL VALVE–STICK 1

S/N: XAH1-UP

PART OF 420-2243 VALVE GP-MAIN CONTROL

SMCS-5051, 5464 **i05774607**

NOTE	REF NO	GRAPHIC REF	PART NUMBER	QTY	PART NAME 1 2 3 4 5 6 (PRODUCT LEVEL)	SEE PAGE
	1	1	**7I-7203**	2	SEAT	
M	2	1	**197-0148**	1	BOLT-SPECIAL	
	3	1	**197-0149**	1	STOP	
	4	1	**197-0150**	1	SPRING	
	5	1	**197-0151**	1	SPRING	

M - METRIC PART

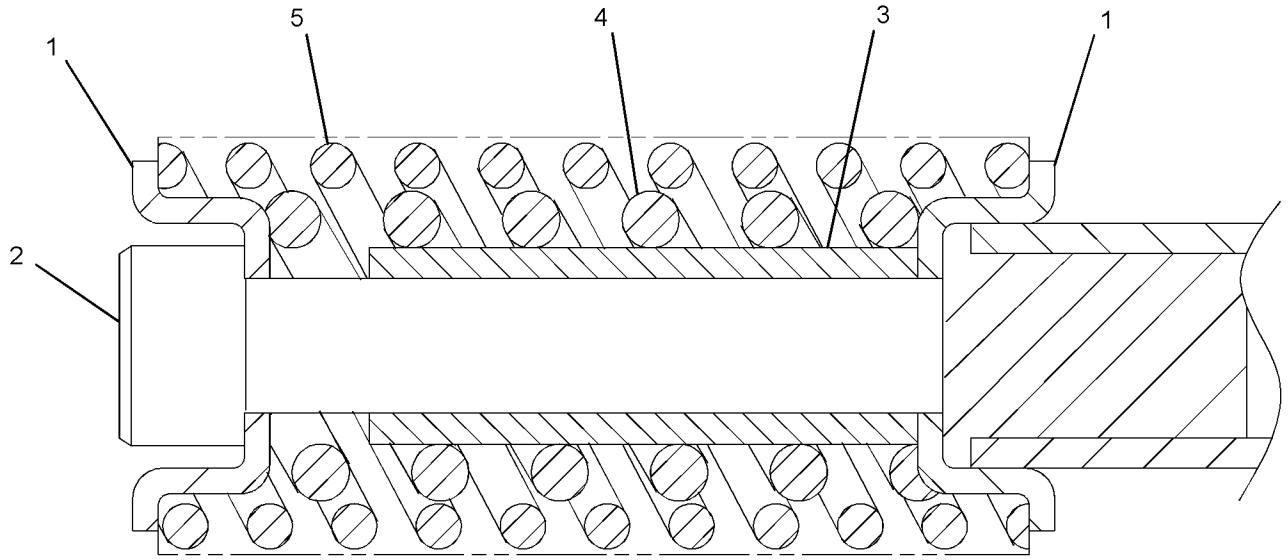

GRAPHIC #1 **<END>** g02641976

352-7284 SPOOL GP-CONTROL VALVE–STICK 2

S/N: XAH1-UP

PART OF 420-2243 VALVE GP-MAIN CONTROL

SMCS-5051, 5464 **i05774660**

NOTE	REF NO	GRAPHIC REF	PART NUMBER	QTY	PART NAME 1 2 3 4 5 6 (PRODUCT LEVEL)	SEE PAGE
	1	1	**7I-7203**	2	SEAT	
M	2	1	**197-0148**	1	BOLT-SPECIAL	
	3	1	**197-0149**	1	STOP	
	4	1	**197-0150**	1	SPRING	
	5	1	**197-0153**	1	SPRING	

M - METRIC PART

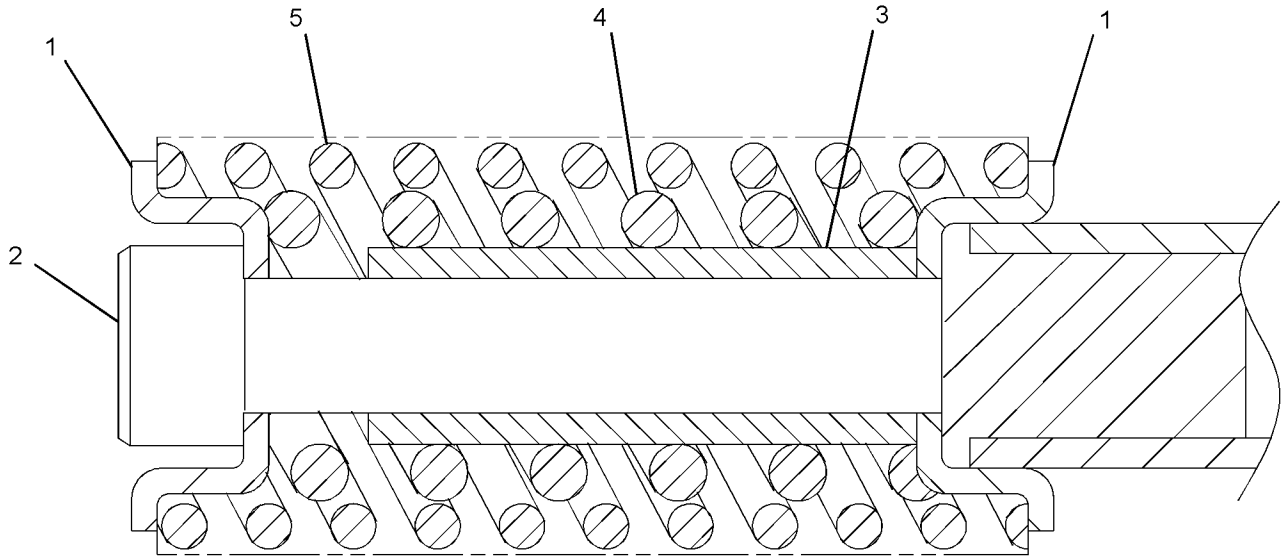

GRAPHIC #1 **<END>** g02641976

352-7285 SPOOL GP-CONTROL VALVE–STICK REGENERATION

S/N: XAH1-UP

PART OF 420-2243 VALVE GP-MAIN CONTROL

SMCS-5051, 5464 **i05774615**

NOTE	REF NO	GRAPHIC REF	PART NUMBER	QTY	PART NAME 1 2 3 4 5 6 (PRODUCT LEVEL)	SEE PAGE
	1	1	**7I-7203**	2	SEAT	
M	2	1	**197-0148**	1	BOLT-SPECIAL	
	3	1	**197-0149**	1	STOP	
	4	1	**197-0150**	1	SPRING	
	5	1	**197-0151**	1	SPRING	

M - METRIC PART

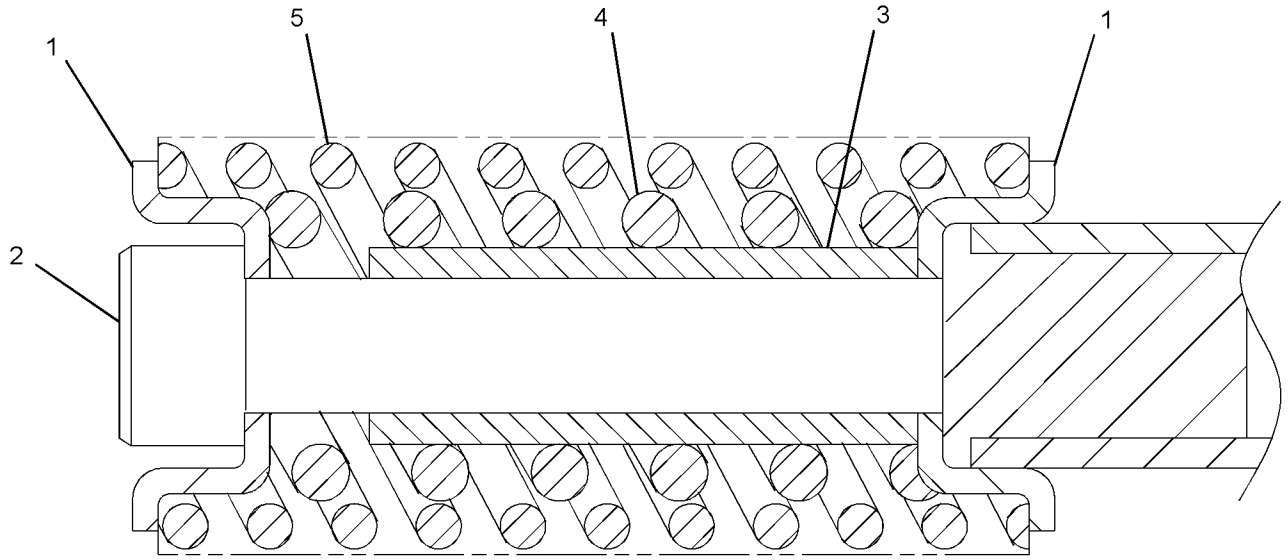

GRAPHIC #1 **<END>** g02641976

352-7286 SPOOL GP-CONTROL VALVE–BUCKET

S/N: XAH1-UP

PART OF 420-2243 VALVE GP-MAIN CONTROL

SMCS-5051, 5464 **i05774662**

NOTE	REF NO	GRAPHIC REF	PART NUMBER	QTY	PART NAME 1 2 3 4 5 6 (PRODUCT LEVEL)	SEE PAGE
	1	1	**7I-7203**	2	SEAT	
M	2	1	**197-0148**	1	BOLT-SPECIAL	
	3	1	**197-0149**	1	STOP	
	4	1	**197-0150**	1	SPRING	
	5	1	**197-0152**	1	SPRING	

M - METRIC PART

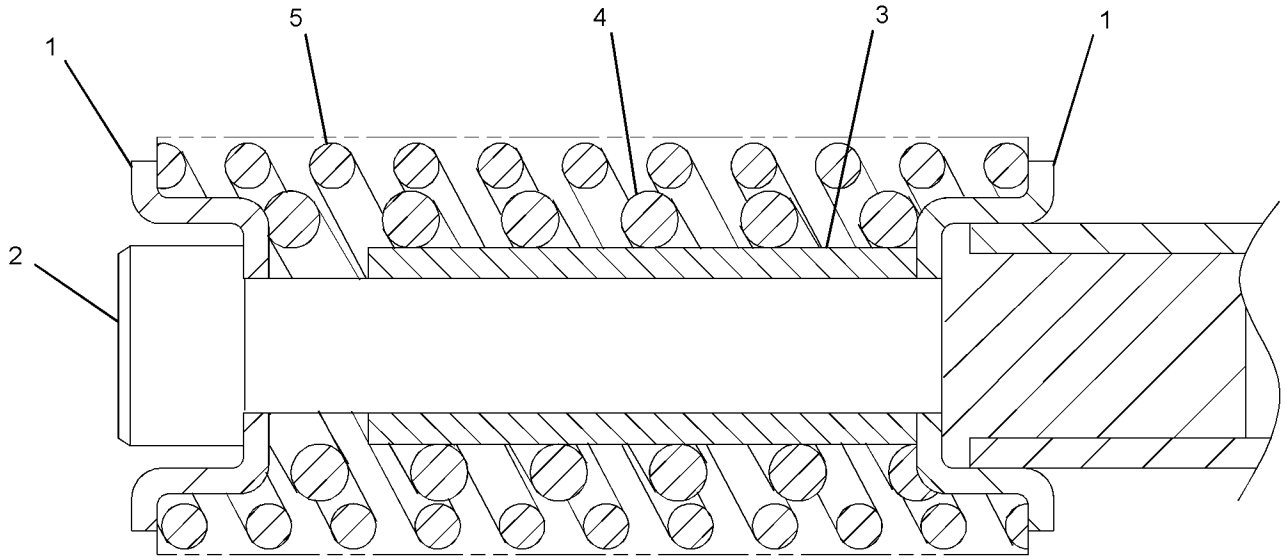

GRAPHIC #1 **<END>** g02641976

369-8335 SPOOL GP-CONTROL VALVE–BOOM 1

S/N: XAH1-UP

PART OF 420-2243 VALVE GP-MAIN CONTROL

SMCS-5051, 5464 **i05774645**

NOTE	REF NO	GRAPHIC REF	PART NUMBER	QTY	PART NAME 1 2 3 4 5 6 (PRODUCT LEVEL)	SEE PAGE
	1	1	**7I-7203**	2	SEAT	
M	2	1	**197-0148**	1	BOLT-SPECIAL	
	3	1	**197-0149**	1	STOP	
	4	1	**197-0150**	1	SPRING	
	5	1	**197-0151**	1	SPRING	

M - METRIC PART

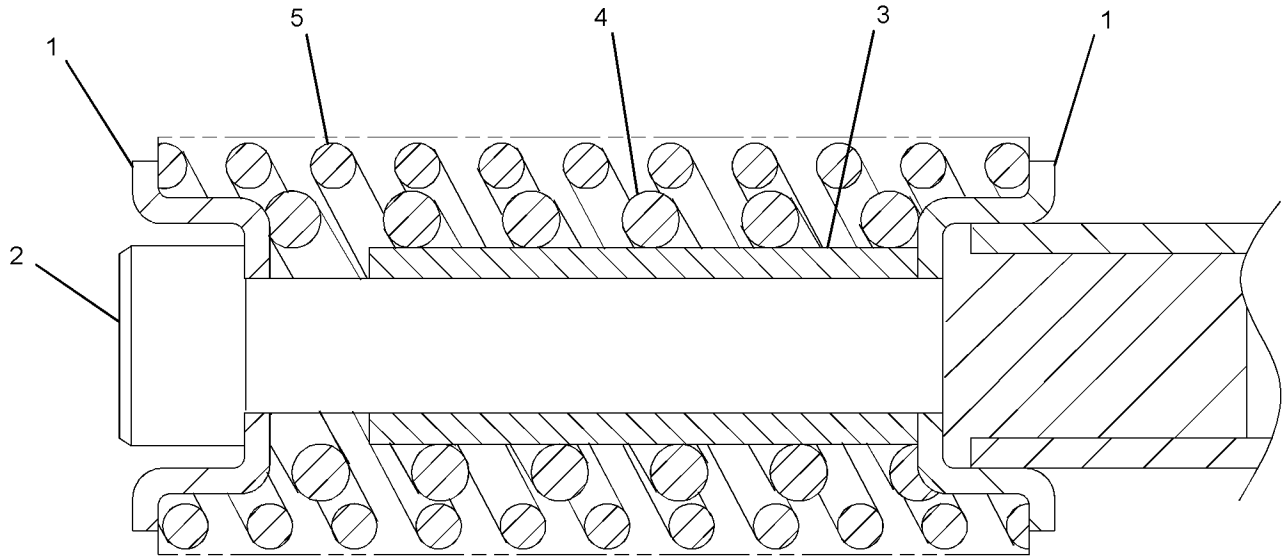

GRAPHIC #1 **<END>** g02641976

162-4696 SWIVEL GP

S/N: XAH1-UP

PART OF 260-8212 LINES GP-TRAVEL MOTOR

SMCS-5060 **i05774246**

NOTE	REF NO	GRAPHIC REF	PART NUMBER	QTY	PART NAME 1 2 3 4 5 6 (PRODUCT LEVEL)	SEE PAGE
M	1	1	**8T-4136**	6	BOLT (M10X1.5X25-MM)	
	2	1	**8T-4121**	2	WASHER-HARD (11X21X2.5-MM THK)	
	3	1	**5I-4363**	1	COVER	
	4	1	**095-1716**	1	SEAL-O-RING	
	5	1	**7I-7321**	1	RETAINER	
	6	1	**4I-7604**	1	HOUSING	
	7	1	**159-7782**	5	SEAL	
	8	1	**095-1625**	3	SEAL-O-RING	
	9	1	**4I-7605**	1	ROTOR	
	10	1	**8T-6759**	1	PLUG-PIPE	

M - METRIC PART

162-4696 **SWIVEL GP (*contd.*)** **i05774246**

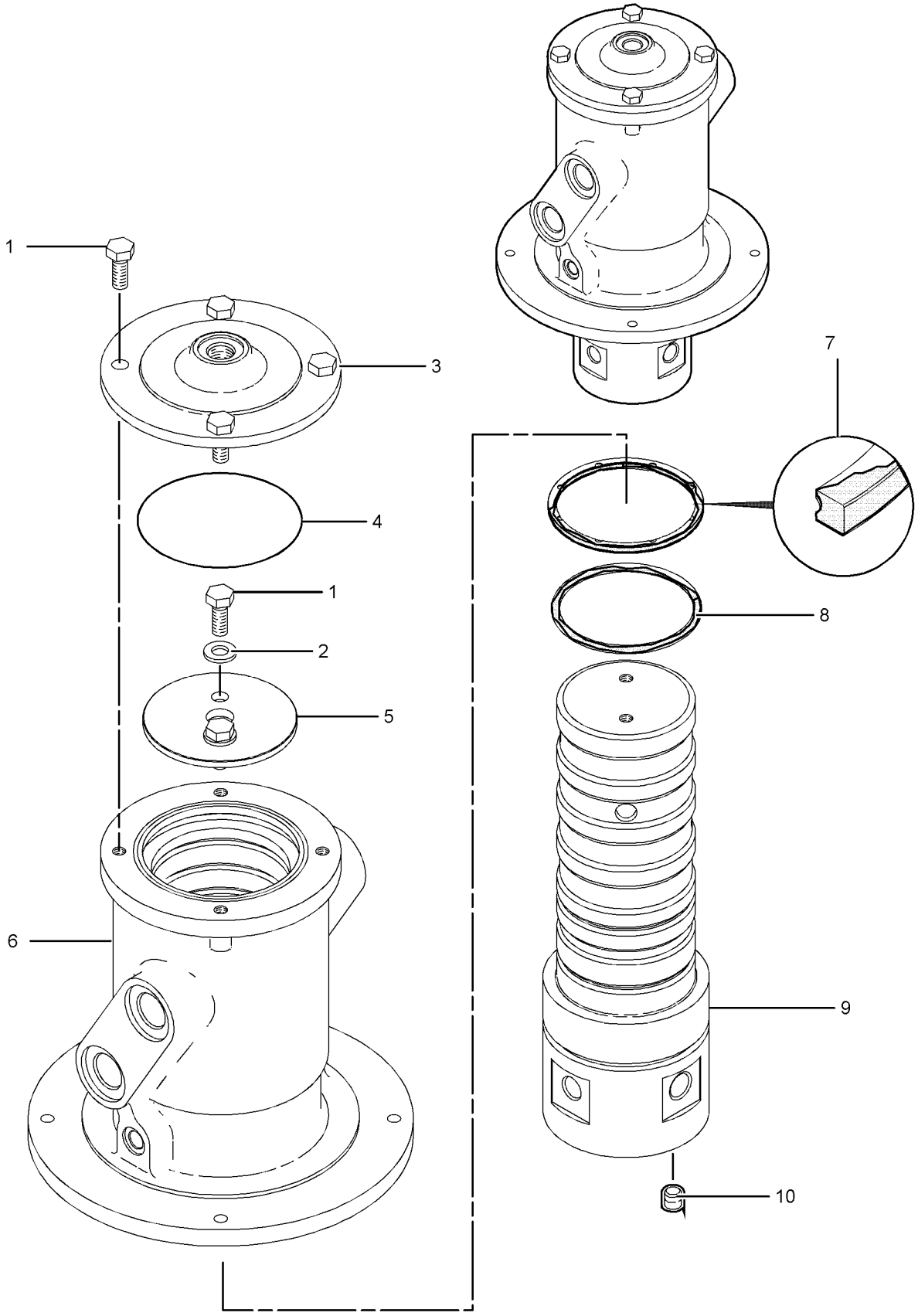

GRAPHIC #1

<END>

g03684437

454-7359 TANK & FILTER GP-HYDRAULIC

S/N: XAH1-UP
185-L (48.87-U.S. GAL)
PART OF 455-4106 TANK & MTG GP-HYDRAULIC

SMCS-5056, 5068 **i05963121**

NOTE	REF NO	GRAPHIC REF	PART NUMBER	QTY	PART NAME 1 2 3 4 5 6 (PRODUCT LEVEL)	SEE PAGE
	1	2	**1U-2827**	1	GUIDE-VALVE	
	2	1	**7K-1181**	2	STRAP-CABLE	
	3	2	**8J-8782**	1	BODY-DRAIN VALVE	
	4	2	**8J-8783**	1	VALVE-DRAIN	
	5	2	**9J-7031**	1	PLUG-DRAIN (HYDRAULIC OIL)	
Y	6	2	**158-8987**	1	FILTER & VALVE GP-PILOT (HYDRAULIC OIL)	218
	7	2	**179-7541**	1	PIPE AS	
	8	1	**207-6403**	1	PLUG	
	9	1	**227-0590**	1	BREATHER (HYDRAULIC TANK)	
	10	1	**269-9853**	1	COVER AS	
		1	**095-1608**	1	SEAL-O-RING	
		1	**207-6403**	1	PLUG	
		1	**207-6404**	1	WASHER (49.5X60.5X1.5-MM THK)	
	11	1	**269-9858**	1	PIPE	
Y	12	2	**274-2726**	1	SCREEN GP-HYDRAULIC (TANK)	281
Y	13	2	**289-8194**	1	FILTER GP-OIL (HYDRAULIC, CASE DRAIN)	219
	14	2	**292-7461**	1	SUPPORT	
	15	1	**315-4441**	1	SWITCH AS-PRESSURE (HYDRAULIC OIL)	
Y	16	1	**347-6081**	1	GAUGE GP-SIGHT (HYDRAULIC OIL LEVEL)	222
	17	1	**361-8998**	1	FLANGE AS	
		1	**283-6089**	1	SEAL-O-RING	
Y	18	1	**392-2876**	1	FILTER GP-OIL (HYDRAULIC, MAIN RETURN)	220
	20	1	**432-6291**	1	SENSOR-TEMPERATURE (HYDRAULIC OIL)	
	21	1	**095-1608**	1	SEAL-O-RING	
	22	1	**095-1725**	1	SEAL-O-RING	
	23	1	**129-3400**	1	GUARD	
	24	2	*164-5567*	1	COUPLER AS-QUICK DISCONNECT (MALE)	
		2	**6V-3965**	1	FITTING (QUICK DISCONNECT)	
		2	**214-7568**	1	SEAL-O-RING	
	25	2	*164-5590*	1	VALVE GP-FLUID SAMPLING	
		2	**3J-7354**	1	SEAL-O-RING	
		2	**8C-3446**	1	VALVE-SAMPLING	
M	26	1	**170-8553**	4	BOLT-SOCKET HEAD (M12X1.75X40-MM)	
M	27	2	**191-8920**	2	BOLT-SOCKET HEAD (M6X1X12-MM)	
	28	2	**1J-2859**	1	SEAL-O-RING	
	29	1	**207-6404**	1	WASHER (49.5X60.5X1.5-MM THK)	
	30	1	**2H-3934**	1	SEAL-O-RING	
	31	1	**3K-0360**	1	SEAL-O-RING	
	32	1	**4J-0527**	1	SEAL-O-RING	
M	33	1	**5C-9553**	4	BOLT (M6X1X16-MM)	
	34	2	**5M-2057**	1	SEAL-O-RING	
	35	2	**6V-0852**	1	CAP-DUST	
	36	2	**7B-3039**	1	SPRING	
	37	2	**8C-3451**	1	CAP-DUST	
	38	2	**8T-3298**	1	SEAL-RECTANGULAR	
	39	1,2	**8T-4121**	13	WASHER-HARD (11X21X2.5-MM THK)	
M	40	1,2	**8T-4136**	11	BOLT (M10X1.5X25-MM)	
M	41	1	**8T-4184**	8	BOLT (M12X1.75X45-MM)	
M	42	2	**8T-4196**	2	BOLT (M10X1.5X35-MM)	
	43	1	**8T-4223**	8	WASHER-HARD (13.5X25.5X3-MM THK)	
	44	2	**8T-4224**	4	WASHER-HARD (8.8X16X2-MM THK)	
M	45	2	**8T-4908**	4	BOLT (M8X1.25X25-MM)	
	46	1	**9F-1399**	1	SEAL-O-RING	
	47	1	**9X-8256**	4	WASHER (6.6X12X2-MM THK)	

M - METRIC PART
Y - SEPARATE ILLUSTRATION

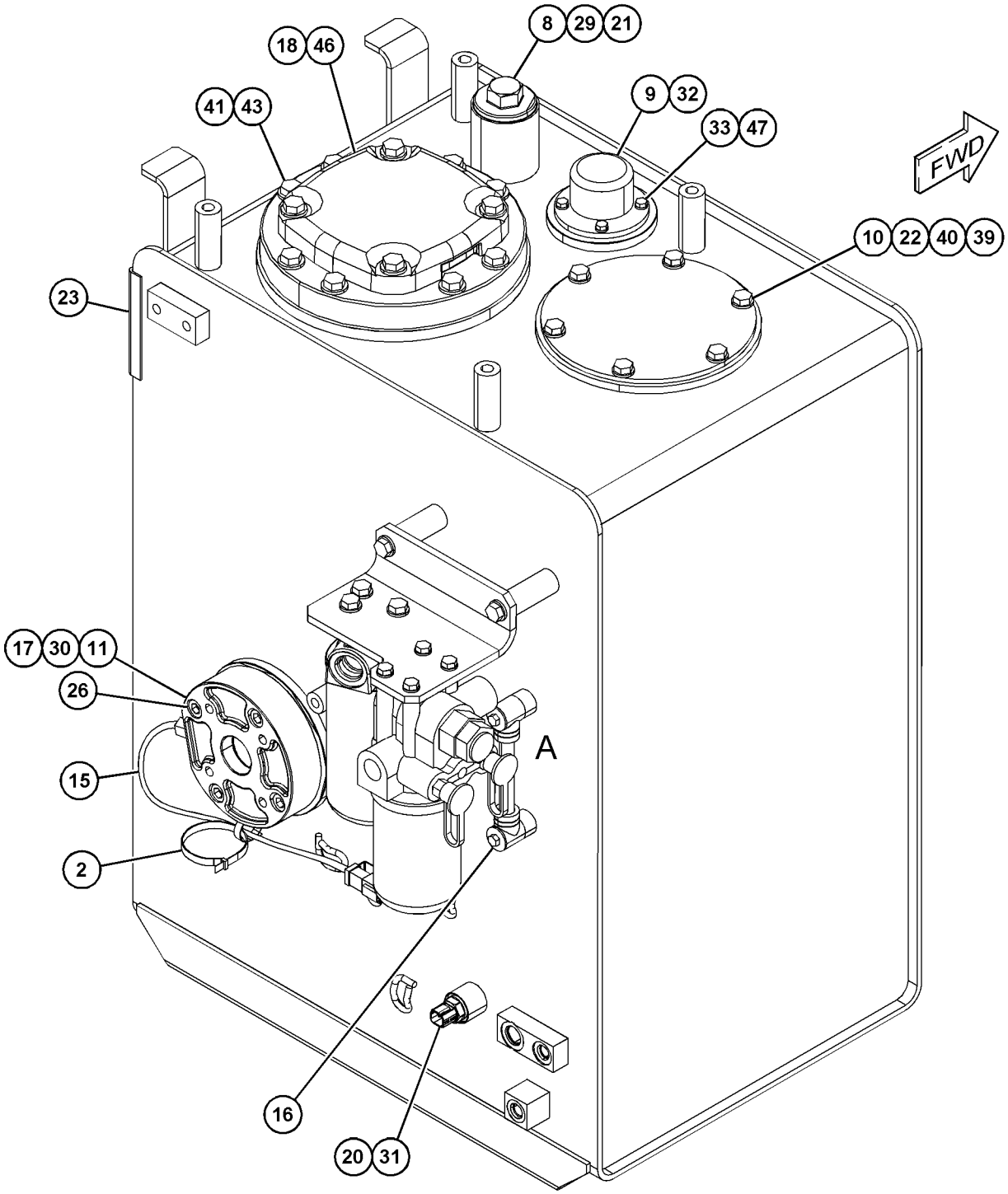

REFER TO ALL ILLUSTRATIONS OF
THIS GROUP FOR AUXILIARY VIEWS

GRAPHIC #1

g03741000

454-7359 **TANK & FILTER GP-HYDRAULIC (*contd.*)** **i05963121**

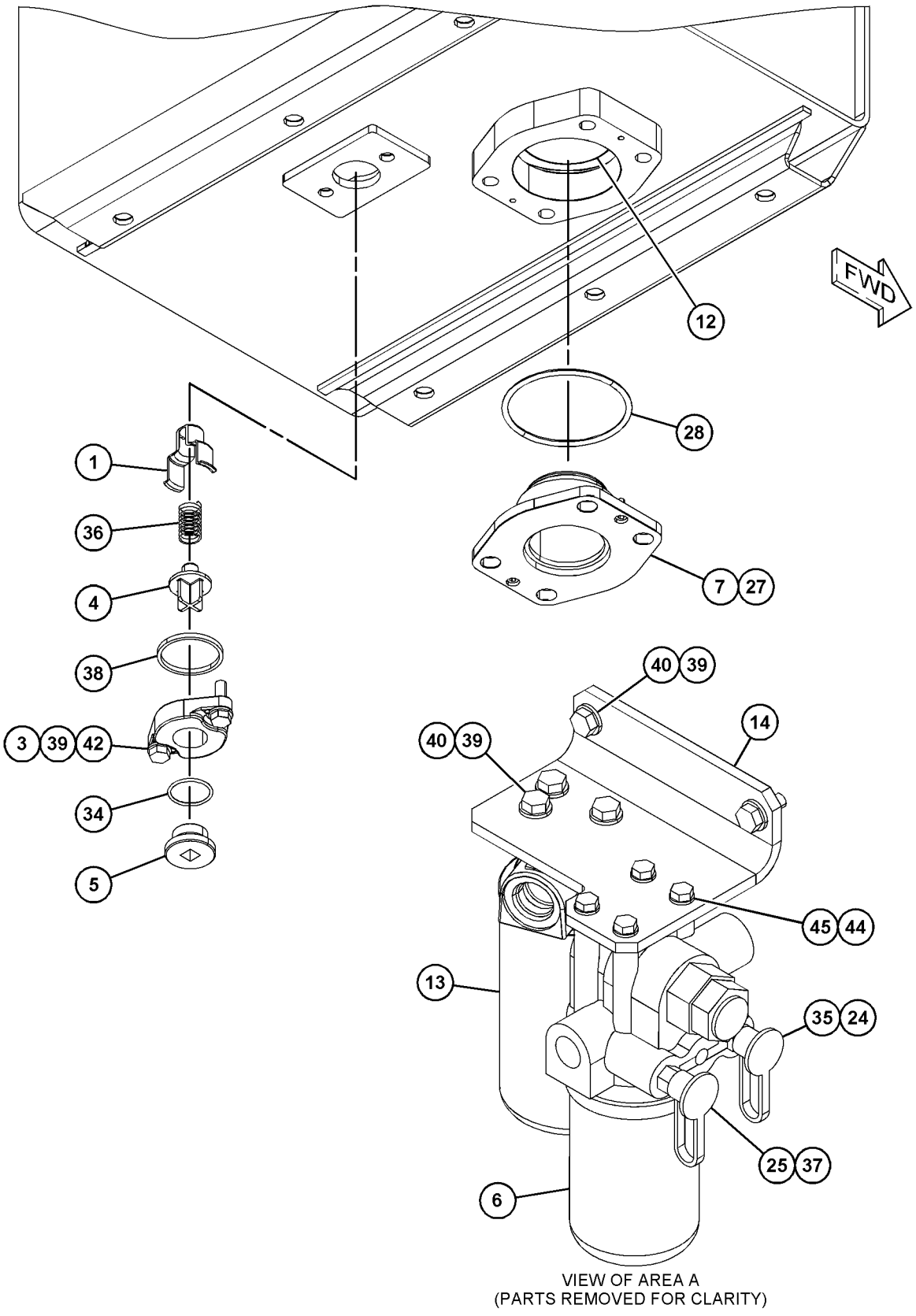

VIEW OF AREA A
(PARTS REMOVED FOR CLARITY)

GRAPHIC #2 **<END>** g03741001

455-4106 TANK & MTG GP-HYDRAULIC

S/N: XAH1-UP

PART OF 455-7664 HYDRAULIC AR

SMCS-5056 **i05963122**

NOTE	REF NO	GRAPHIC REF	PART NUMBER	QTY	PART NAME 1 2 3 4 5 6 (PRODUCT LEVEL)	SEE PAGE
Y	1	1	*260-8204*	1	LINES GP-HYDRAULIC (HYDRAULIC TANK, FILTER)	238
M	2	1	**447-1707**	6	BOLT (M16X2X60-MM)	
Y	3	1	**454-7359**	1	TANK & FILTER GP-HYDRAULIC	295
	4	1	**085-9310**	6	SPACER (16.6X32X26-MM THK)	

M - METRIC PART
Y - SEPARATE ILLUSTRATION

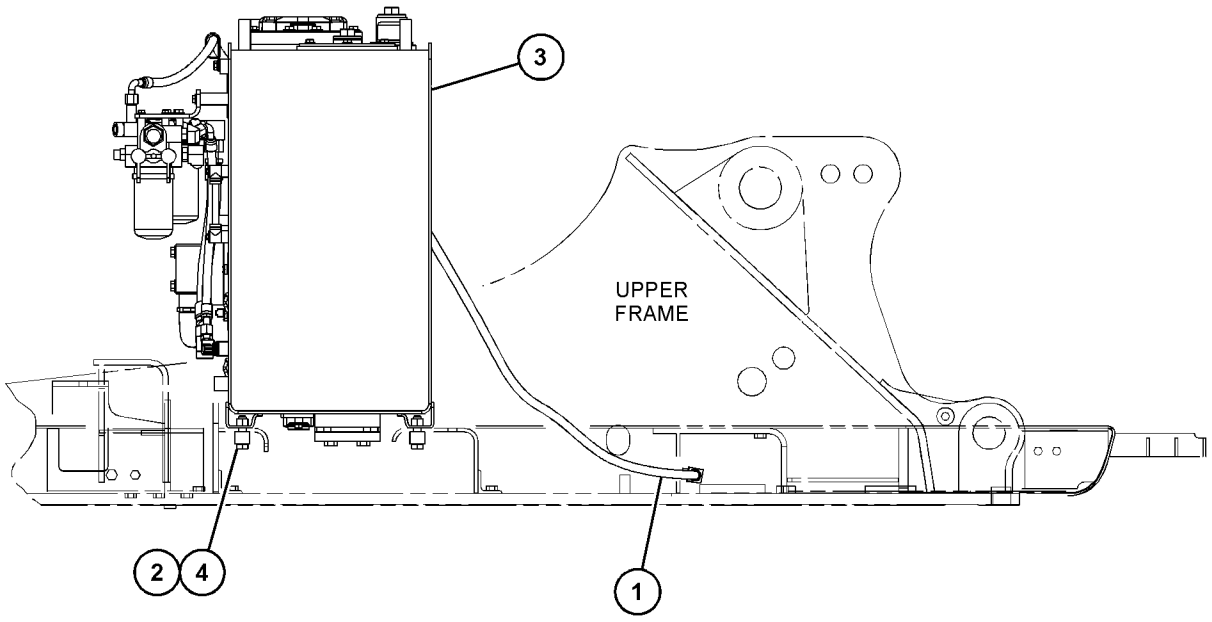

RIGHT SIDE VIEW

GRAPHIC #1 **<END>** g03703843

171-0002 VALVE GP-CHECK–COOLER BYPASS

S/N: XAH1-UP

PART OF 391-7825 LINES GP-PUMP

SMCS-5067 **i05406347**

NOTE	REF NO	GRAPHIC REF	PART NUMBER	QTY	PART NAME 1 2 3 4 5 6 (PRODUCT LEVEL)	SEE PAGE
	1	1	**177-2706**	1	VALVE AS	
	2	1	**190-7875**	1	VALVE AS	
	3	1	**184-3841**	1	RING	

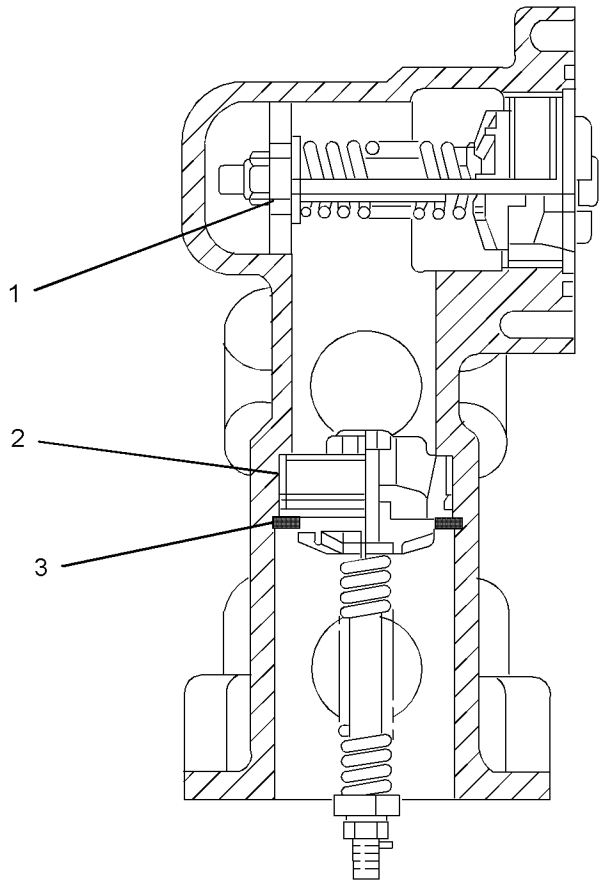

GRAPHIC #1 **<END>** g03023758

420-2243 VALVE GP-MAIN CONTROL

S/N: XAH1-UP

PART OF 455-7664 HYDRAULIC AR

SMCS-5051 **i05774556**

NOTE	REF NO	GRAPHIC REF	PART NUMBER	QTY	PART NAME 1 2 3 4 5 6 (PRODUCT LEVEL)	SEE PAGE
	1	4	**9S-4191**	1	PLUG	
	2	4	**7I-7192**	2	PLUG	
	3	4,5	**7I-7204**	12	SEAL	
	4	1,4,5	**7I-7206**	13	PLUG	
	5	1,4,5	**7I-7207**	13	SPRING	
	6	1,4,5	**7I-7208**	10	VALVE-LOAD CHECK	
	7	4	**7I-7235**	2	PLUG	
	8	5	**7I-7241**	2	ORIFICE	
	9	5	**352-7288**	1	VALVE	
	10	4,5	**7I-8084**	6	PLUG	
M	11	3	**085-9768**	5	BOLT (M14X2X40-MM)	
	12	5	**095-0965**	2	PLUG	
	13	4	**103-8411**	1	SPRING	
	14	4	**103-8412**	1	SPRING	
	15	4	**103-8413**	1	ROD	
	16	4,5	**105-7405**	2	SPRING	
	17	4,5	**131-5767**	2	PLUG	
	18	4,5	**131-5768**	2	VALVE-LOAD CHECK	
	19	2	**170-9997**	1	PLUG	
M	20	2	**197-0143**	3	BOLT (M14X2X95-MM)	
M	21	2	**197-0144**	13	BOLT (M14X2X130-MM)	
	22	1,2,3,4,5	**197-0145**	13	PLUG	
	23	1	**197-0146**	1	SPRING	
	24	1	**197-0147**	1	VALVE	
M	25	2	**197-0165**	20	BOLT (M8X1.25X20-MM)	
	26	4	**197-0166**	1	PLUG	
	27	3	**197-0167**	1	PLATE	
	28	4,5	**197-0168**	10	COVER	
	29	1	**197-0169**	1	VALVE AS (STICK DRIFT REDUCTION)	
	29A	5	**197-0169**	1	VALVE AS (BOOM DRIFT REDUCTION)	
	30	4,5	**197-0170**	10	COVER	
Y	31	4	**197-0173**	1	SPOOL GP-CONTROL VALVE (WORK TOOL)	282
Y	32	4	**197-0219**	1	SPOOL GP-CONTROL VALVE (TRAVEL, RH)	283
Y	32A	5	**197-0219**	1	SPOOL GP-CONTROL VALVE (TRAVEL, LH)	283
	33	4	**197-0225**	2	PLUG AS	
	34	2,3,4,5	**197-0272**	8	PLUG	
	35	4	**215-4855**	2	VALVE AS-CHECK (MAKEUP)	
	36	5	**215-4872**	2	VALVE	
Y	37	5	**229-1085**	1	SPOOL GP-CONTROL VALVE (SWING)	284
Y	38	4	**352-7286**	1	SPOOL GP-CONTROL VALVE (BUCKET)	291
Y	39	5	**270-5979**	1	VALVE GP-RELIEF (MAIN)	315
	40	5	**285-1503**	2	COVER	
Y	41	5	**285-1504**	1	SPOOL GP-CONTROL VALVE (COMBINED FLOW)	285
Y	42	5	**285-1505**	1	SPOOL GP-CONTROL VALVE (SWING PRIORITY)	286
	43	4	**285-1506**	1	VALVE	
	44	4	**285-1507**	1	SPRING	
Y	45	4	**352-7284**	1	SPOOL GP-CONTROL VALVE (STICK 2)	289
Y	46	5	**352-7285**	1	SPOOL GP-CONTROL VALVE (STICK REGENERATION)	290
	47	4	**309-9960**	1	SPOOL AS	
Y	48	4	**309-9974**	1	VALVE GP-PILOT RELIEF	310
Y	49	1,4,5	**309-9977**	4	VALVE GP-RELIEF (LINE) (STICK)	316
Y	50	5	**352-7283**	1	SPOOL GP-CONTROL VALVE (STICK 1)	288
Y	51	4	**335-0210**	1	VALVE GP-PILOT RELIEF (LINE)	311
Y	52	4	**369-8335**	1	SPOOL GP-CONTROL VALVE (BOOM 1)	292
Y	53	4	**352-7282**	1	SPOOL GP-CONTROL VALVE (BOOM 2)	287
	54	3	**095-1578**	12	SEAL-O-RING	
	55	2	**095-1579**	1	SEAL-O-RING	

420-2243 **VALVE GP-MAIN CONTROL (*contd.*)** **i05774556**

NOTE	REF NO	GRAPHIC REF	PART NUMBER	QTY	PART NAME 1 2 3 4 5 6 (PRODUCT LEVEL)	SEE PAGE
	56	1,2,3,4,5	**095-1582**	13	SEAL-O-RING	
	57	2,3,4,5	**095-1585**	11	SEAL-O-RING	
	58	1,4,5	**095-1586**	15	SEAL-O-RING	
	59	4	**095-1592**	2	SEAL-O-RING	
	60	3,4	**095-1696**	8	SEAL-O-RING	
	61	3	**095-1698**	18	SEAL-O-RING	
	62	4,5	**095-1700**	10	SEAL-O-RING	
	63	2	**3D-2824**	1	SEAL-O-RING	
	64	4	**3J-1907**	1	SEAL-O-RING	
M	65	2,3	**5A-3604**	24	BOLT-SOCKET HEAD (M8X1.25X25-MM)	
	67	2	**9S-4183**	1	PLUG	

M - METRIC PART
Y - SEPARATE ILLUSTRATION

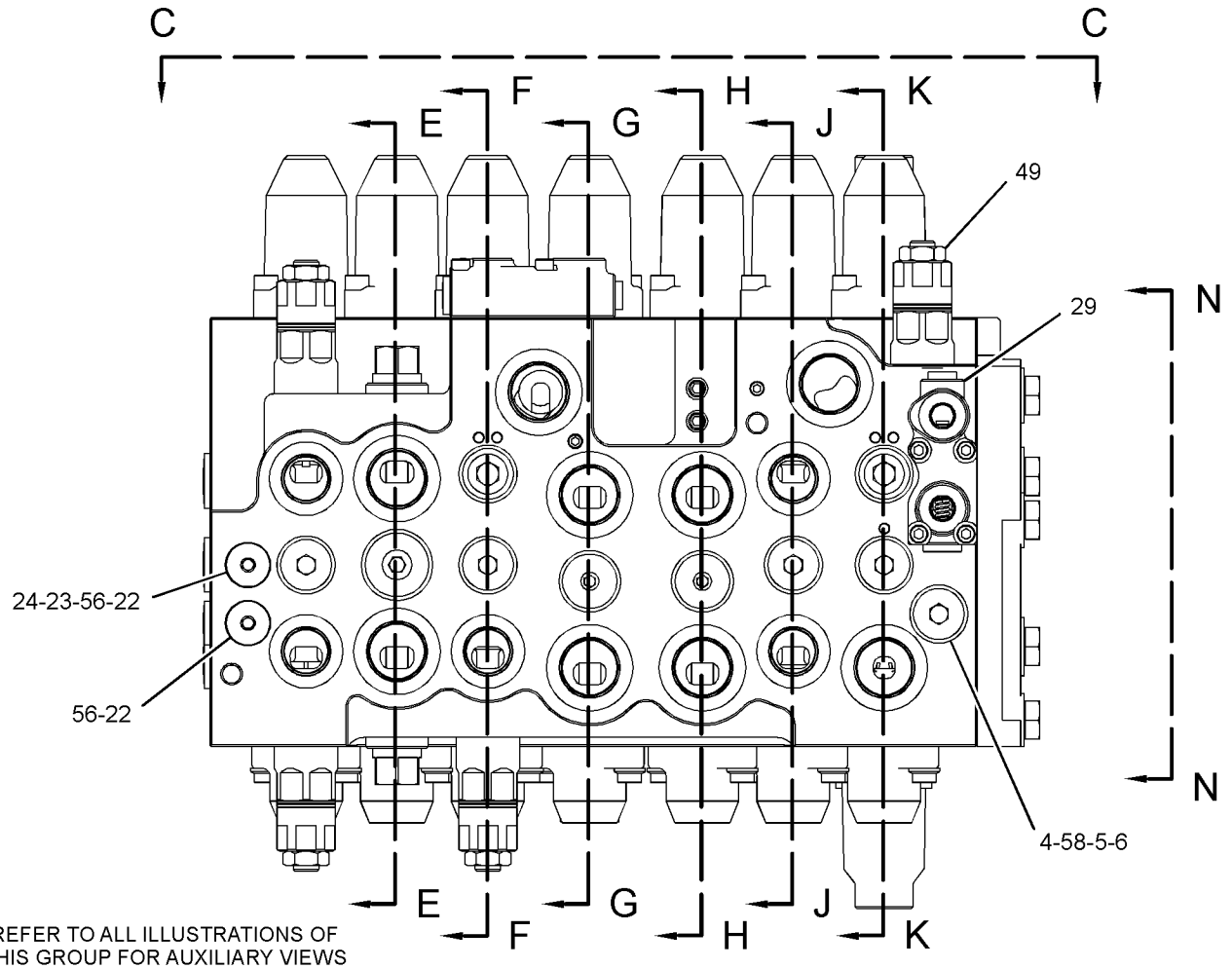

REFER TO ALL ILLUSTRATIONS OF THIS GROUP FOR AUXILIARY VIEWS

GRAPHIC #1 g02361977

420-2243 **VALVE GP-MAIN CONTROL (*contd.*)** **i05774556**

REFER TO ALL ILLUSTRATIONS OF
THIS GROUP FOR AUXILIARY VIEWS

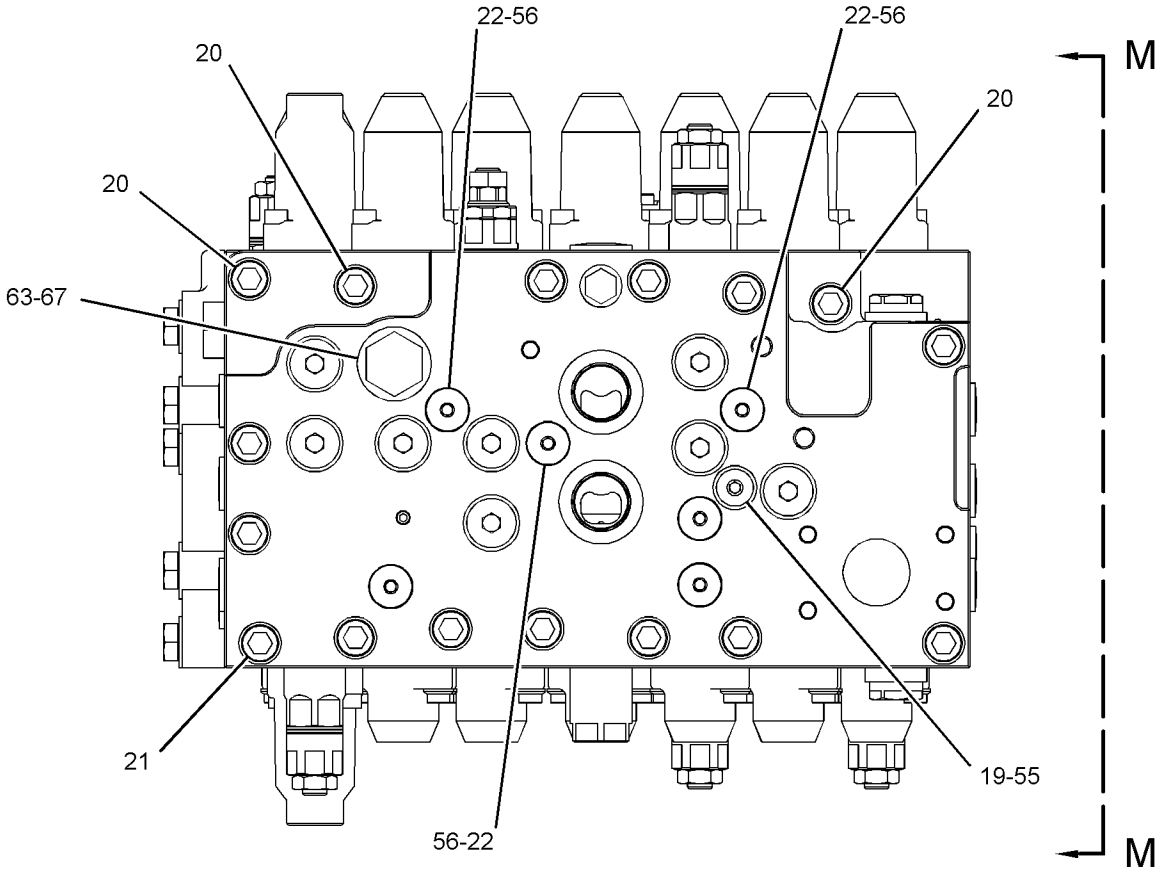

VIEW A-A

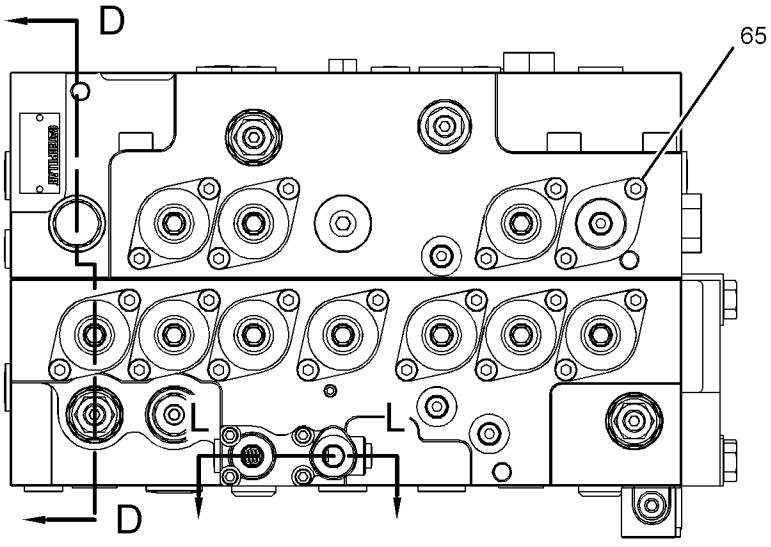

VIEW C-C

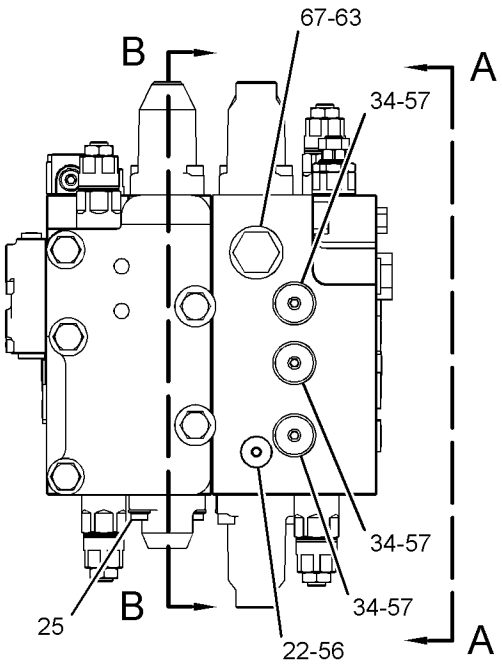

VIEW N-N

GRAPHIC #2 g02361996

420-2243 **VALVE GP-MAIN CONTROL (*contd.*)** **i05774556**

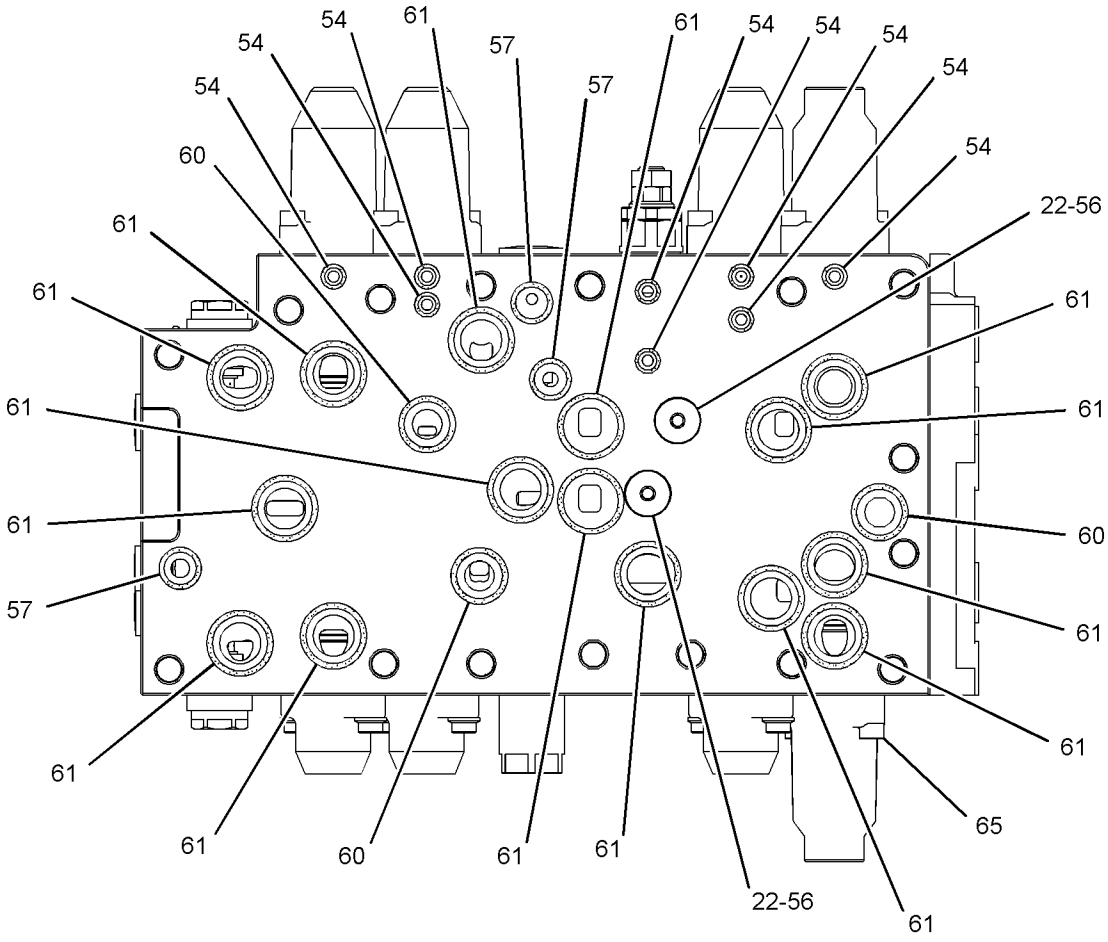

SECTION P-P

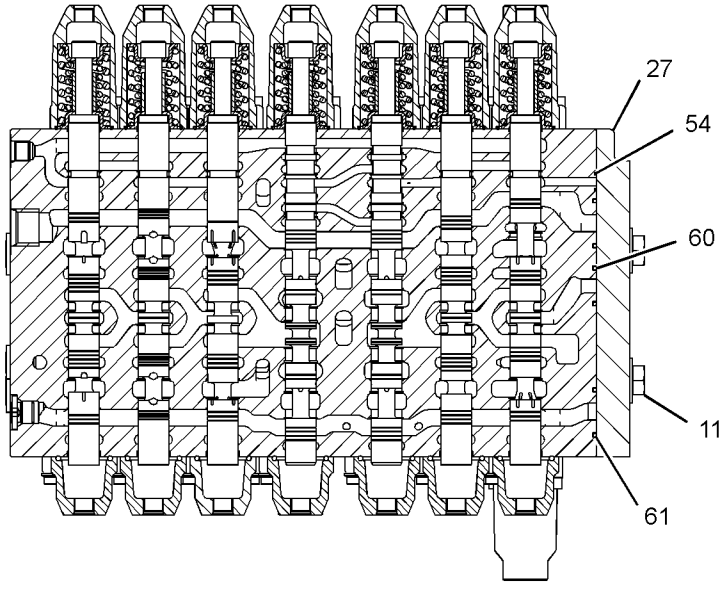

SECTION B-B

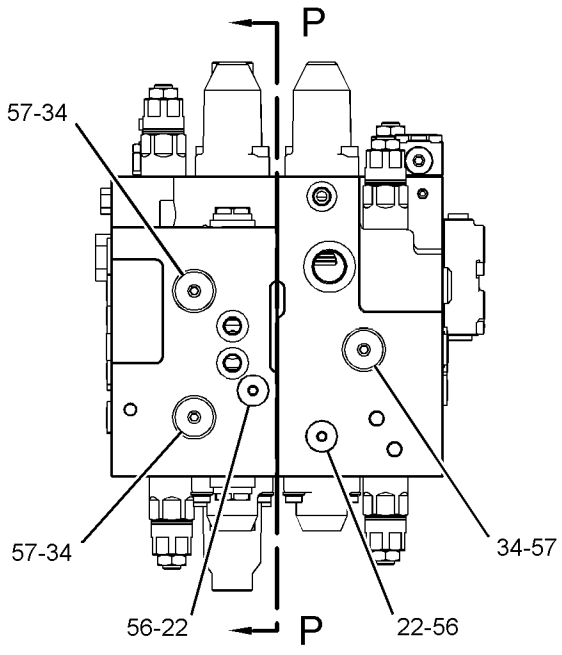

VIEW M-M

GRAPHIC #3 g02361997

420-2243 **VALVE GP-MAIN CONTROL (*contd.*)** **i05774556**

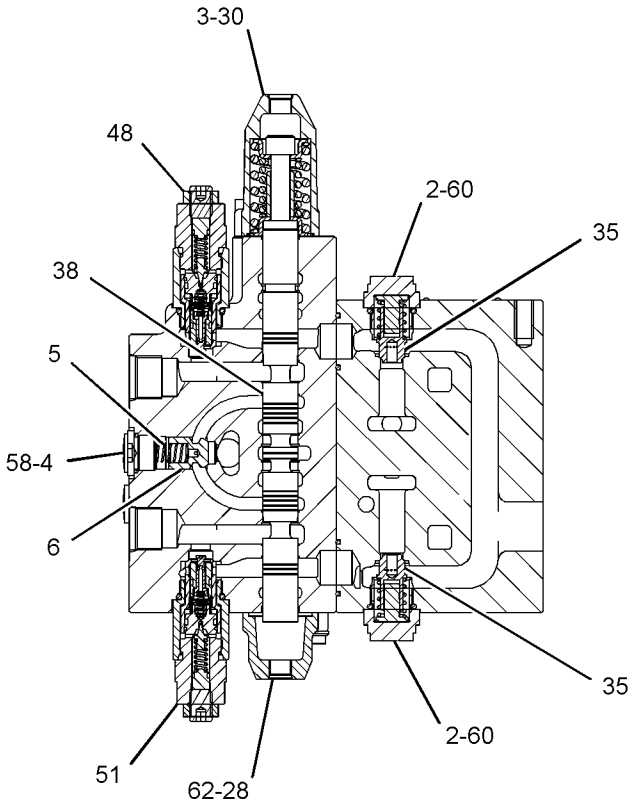

SECTION D-D

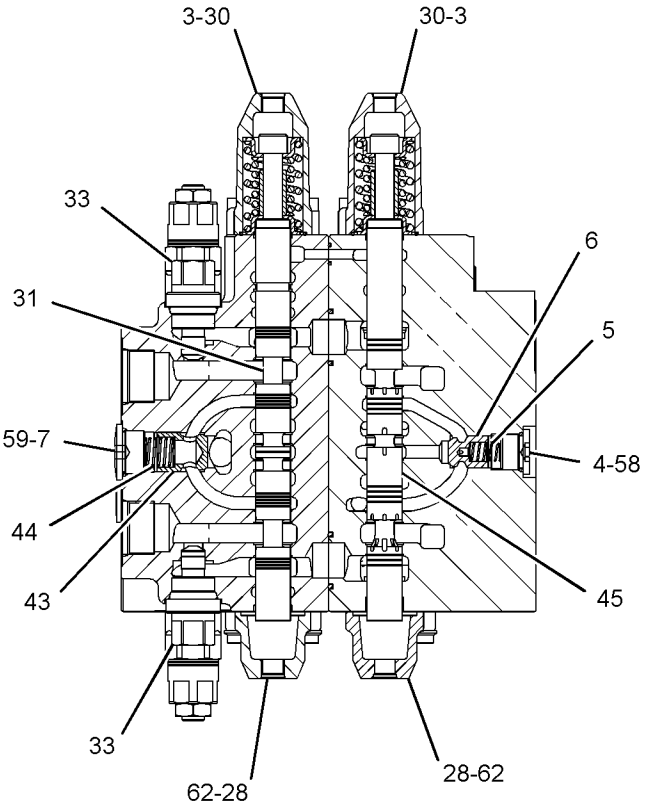

SECTION E-E

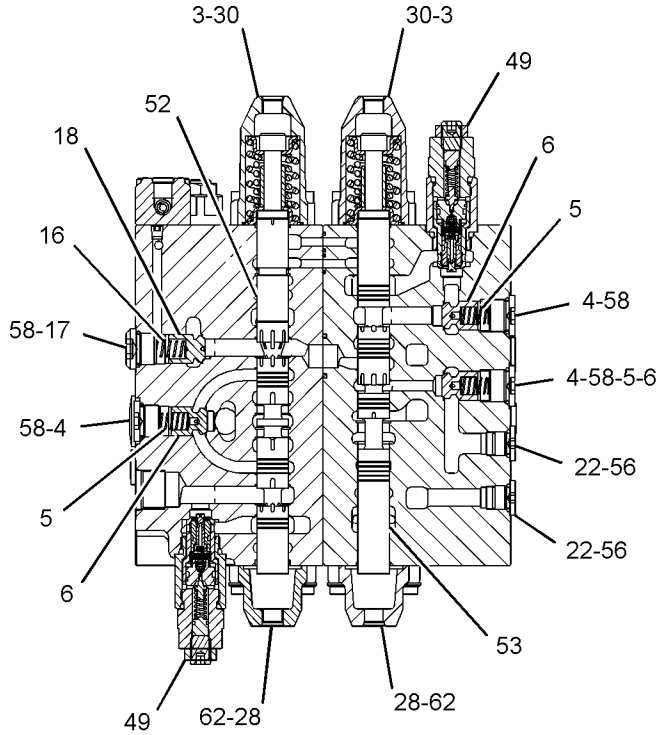

SECTION F-F

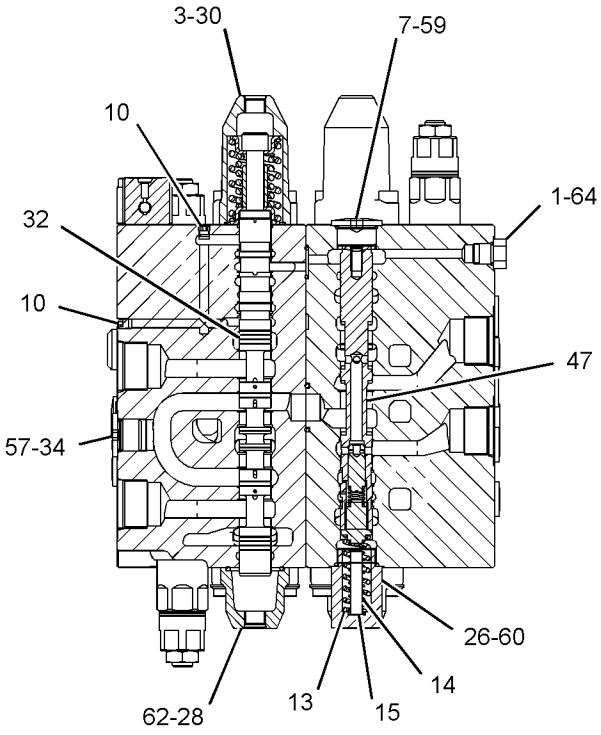

SECTION G-G

GRAPHIC #4

g02361998

420-2243 **VALVE GP-MAIN CONTROL (*contd.*)** **i05774556**

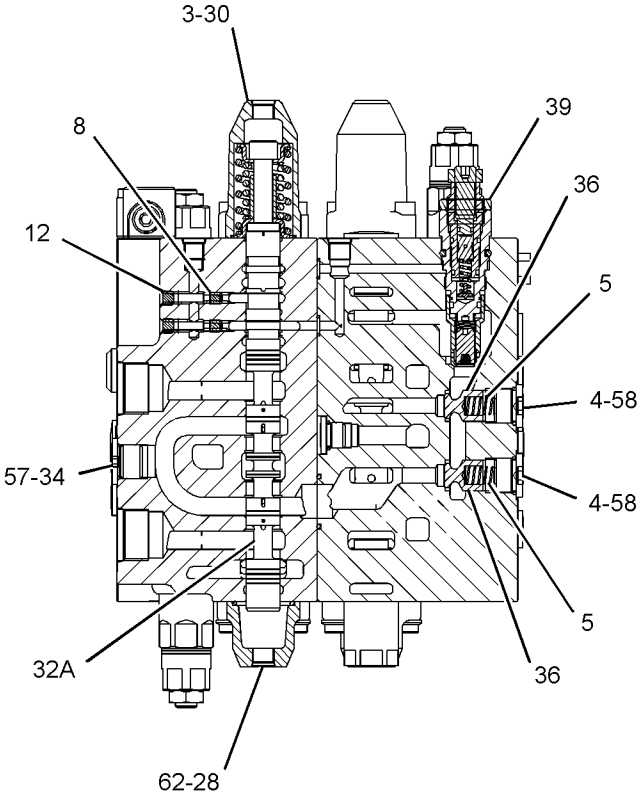

SECTION H-H

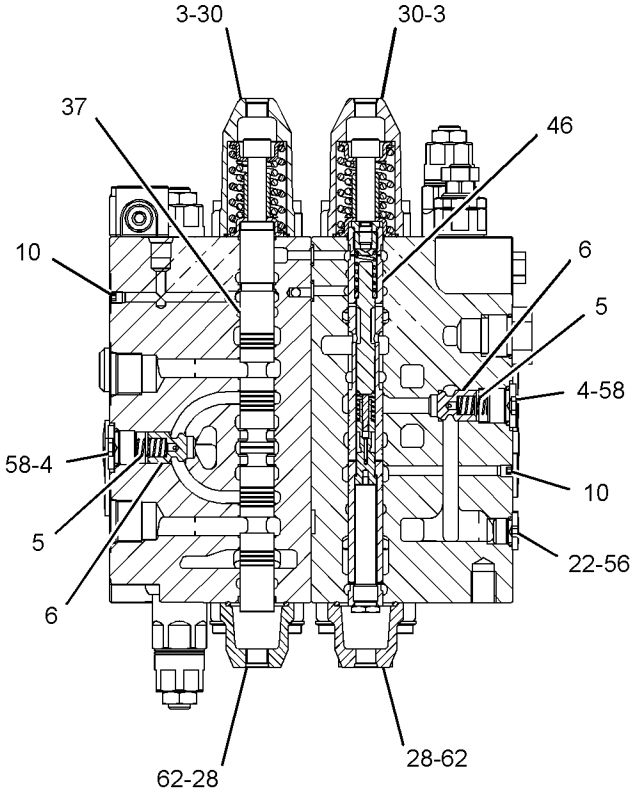

SECTION J-J

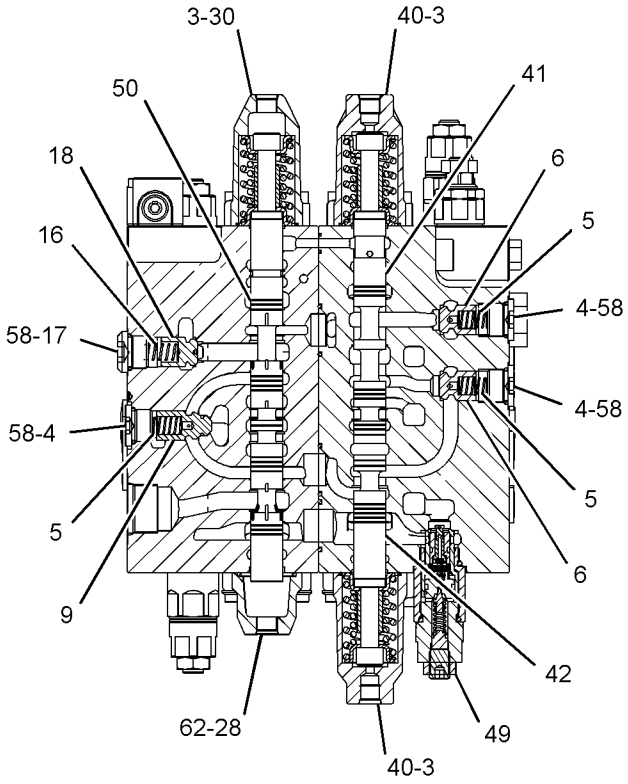

SECTION K-K

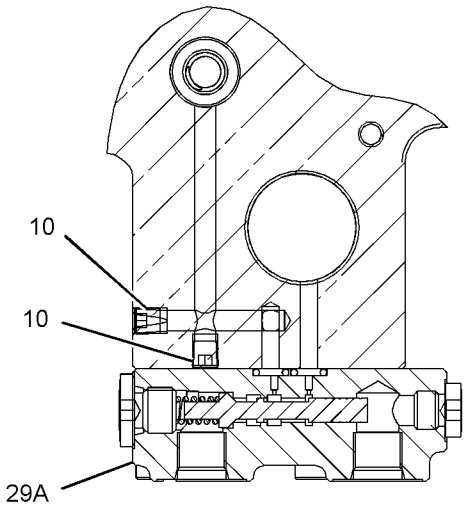

SECTION L-L

GRAPHIC #5 **<END>** g02990598

297-0529 VALVE GP-PILOT–JOYSTICK

S/N: XAH1-UP

PART OF 297-0532, 297-0533 CONTROL GP-JOYSTICK

AN ATTACHMENT

SMCS-5059 **i03257559**

NOTE	REF NO	GRAPHIC REF	PART NUMBER	QTY	PART NAME 1 2 3 4 5 6 (PRODUCT LEVEL)	SEE PAGE
	1	1	**270-5953**	4	SPRING	
	2	1	**095-1586**	4	SEAL-O-RING	
	3	1	**4I-6365**	1	JOINT	
	4	1	**094-0876**	4	SEAL	
	5	1	**096-1628**	4	PLUG	
B	6	1	**099-6137**	4	WASHER (6.1X9X0.2-MM THK)	
	7	1	**118-4086**	4	ROD	
	8	1	**118-4087**	4	SPRING	
M	9	1	**131-5915**	1	NUT-SPECIAL	
	10	1	**165-9431**	1	PLATE	
	11	1	**165-9435**	2	SEAT	
	12	1	**165-9436**	2	SEAT	
	13	1	**165-9438**	1	PLATE	
	14	1	**165-9442**	2	SPRING	
	15	1	**165-9443**	2	SEAT-SPRING	
	16	1	**165-9444**	2	SEAT-SPRING	
	17	1	**165-9460**	2	SPRING	
	18	1	**171-0087**	1	BELLOWS	

PARTS SHOWN IN GRAPHIC(S) WITHOUT A REFERENCE NUMBER ARE NOT SERVICED SEPARATELY

B - USE AS REQUIRED
M - METRIC PART

297-0529 **VALVE GP-PILOT (*contd.*)** **i03257559**

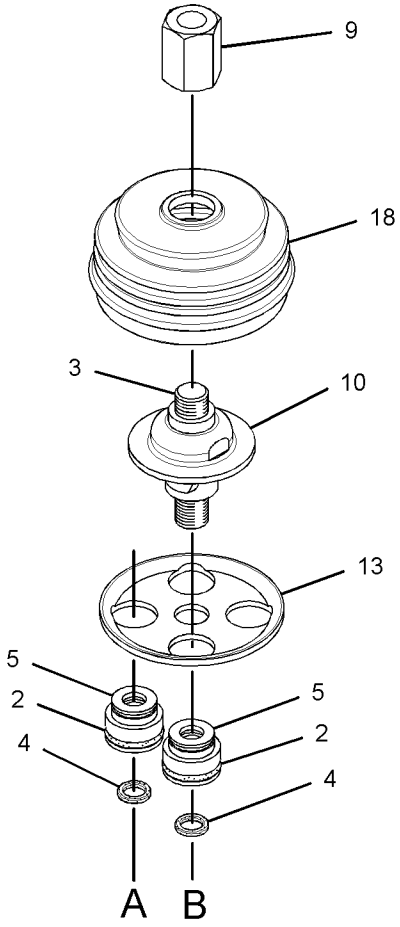

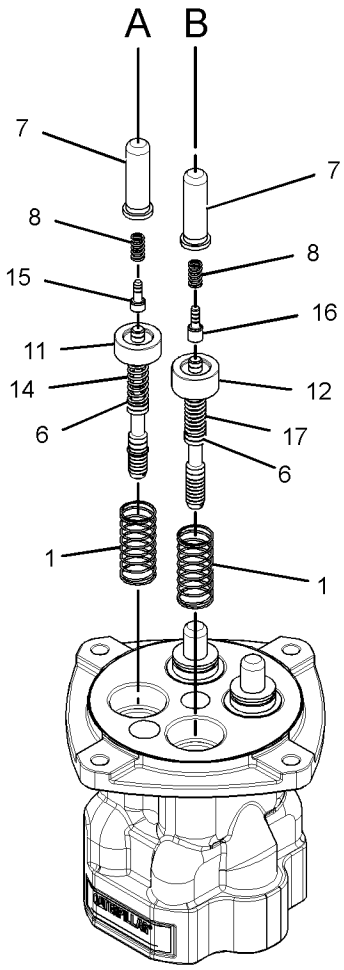

GRAPHIC #1 **<END>** g01528724

369-8503 VALVE GP-PILOT—WITHOUT SHUTTLE

S/N: XAH1-UP

PART OF 275-1715 LINES GP-PILOT

ALSO AN ATTACHMENT

SMCS-5059 **i05401712**

NOTE	REF NO	GRAPHIC REF	PART NUMBER	QTY	PART NAME 1 2 3 4 5 6 (PRODUCT LEVEL)	SEE PAGE
	1	1	**087-5708**	2	PEDAL	
	2	1	**099-6137**	4	WASHER (6.1X9X0.2-MM THK)	
	3	1	**099-6141**	4	WASHER (6.1X11X1.5-MM THK)	
	4	1	**099-6144**	4	BUSHING-TERMINAL	
	5	1	**099-6145**	2	CAMSHAFT	
	6	1	**119-5388**	4	CAP	
	7	1	**119-5389**	4	PACKING	
	8	1	**119-5391**	4	SEAT	
	9	1	**126-1865**	4	SPRING	
	10	1	**126-1866**	4	SPRING	
	11	1	**131-5818**	4	SPRING	
	12	1	**153-5223**	12	BALL	
	13	1	**165-9552**	4	PUSHROD	
	14	1	**165-9554**	4	PLUG	
	15	1	**270-5949**	4	PISTON	
	16	1	**270-5950**	4	SPRING	
	17	1	**310-0419**	4	SEAT	
	18	1	**310-0420**	4	SEAL-O-RING	
	19	1	**369-8509**	2	COVER	
	20	1	**369-8510**	1	COVER	
	21	1	**369-8568**	2	BOLT-SOCKET HEAD (M10X1.5X65-MM)	
	22	1	**369-8569**	2	BELLOWS	
M	23	1	**087-4710**	4	SETSCREW (M10X21-MM)	
M	24	1	**095-1260**	2	SETSCREW-SOCKET (M6X1X6-MM)	
	25	1	**095-1575**	2	SEAL-O-RING	
M	26	1	**6V-8202**	2	BOLT-SOCKET HEAD (M8X1.25X16-MM)	
	27	1	**6V-8400**	4	SEAL-O-RING	
M	28	1	**8C-6965**	2	BOLT-SOCKET HEAD (M6X1X45-MM)	
M	29	1	**8T-4133**	4	NUT (M10X1.5-THD)	
	30	1	**8T-6759**	1	PLUG-PIPE	

M - METRIC PART

369-8503 **VALVE GP-PILOT (*contd.*)** **i05401712**

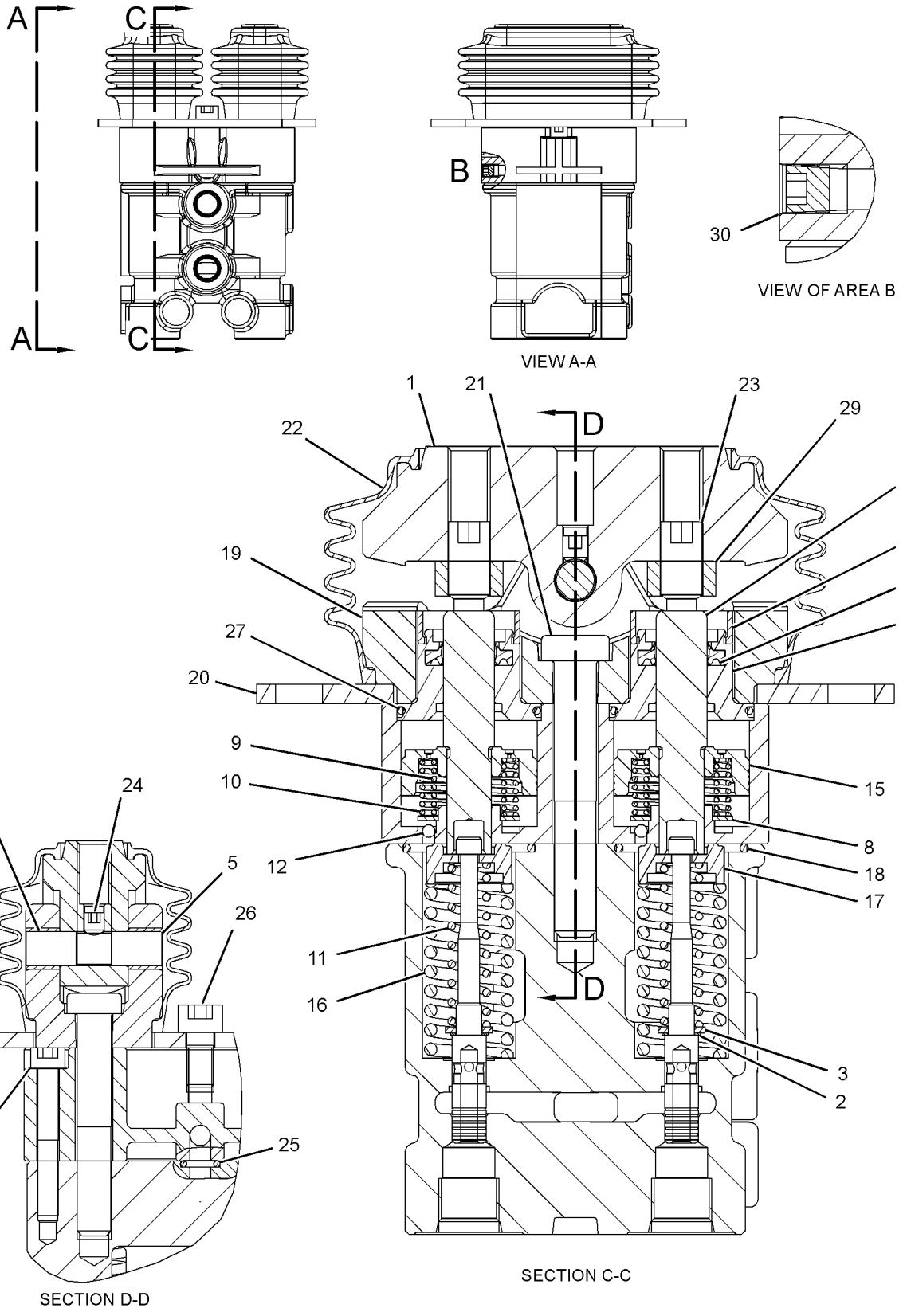

GRAPHIC #1 **<END>** g02930556

309-9974 VALVE GP-PILOT RELIEF

S/N: XAH1-UP

PART OF 420-2243 VALVE GP-MAIN CONTROL

SMCS-5072 **i05774600**

NOTE	REF NO	GRAPHIC REF	PART NUMBER	QTY	PART NAME 1 2 3 4 5 6 (PRODUCT LEVEL)	SEE PAGE
	1	1	**095-1514**	1	SEAL-O-RING	
	2	1	**095-1519**	1	SEAL-O-RING	
	3	1	**095-1575**	1	SEAL-O-RING	
	4	1	**095-1591**	1	SEAL-O-RING	
	5	1	**095-1592**	1	SEAL-O-RING	
	6	1	**095-1783**	1	RING-BACKUP	
	7	1	**095-8024**	1	RING-BACKUP	

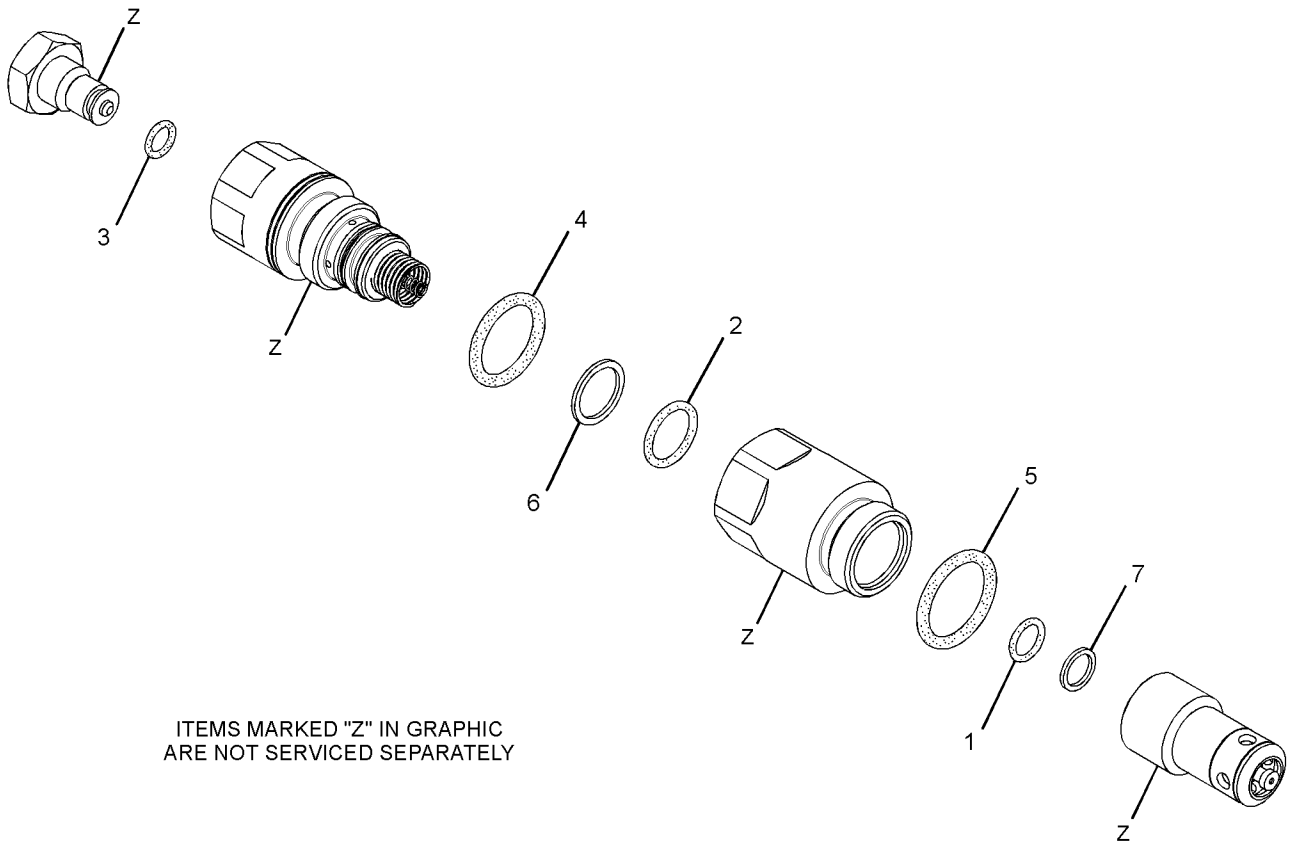

ITEMS MARKED "Z" IN GRAPHIC
ARE NOT SERVICED SEPARATELY

GRAPHIC #1 **<END>** g01445060

335-0210 VALVE GP-PILOT RELIEF–LINE

S/N: XAH1-UP

PART OF 420-2243 VALVE GP-MAIN CONTROL

SMCS-5072 **i05774605**

NOTE	REF NO	GRAPHIC REF	PART NUMBER	QTY	PART NAME 1 2 3 4 5 6 (PRODUCT LEVEL)	SEE PAGE
	1	1	**095-1514**	1	SEAL-O-RING	
	2	1	**095-1519**	1	SEAL-O-RING	
	3	1	**095-1575**	1	SEAL-O-RING	
	4	1	**095-1591**	1	SEAL-O-RING	
	5	1	**095-1592**	1	SEAL-O-RING	
	6	1	**095-1783**	1	RING-BACKUP	
	7	1	**095-8024**	1	RING-BACKUP	

ITEMS MARKED "Z" IN GRAPHIC ARE NOT SERVICED SEPARATELY

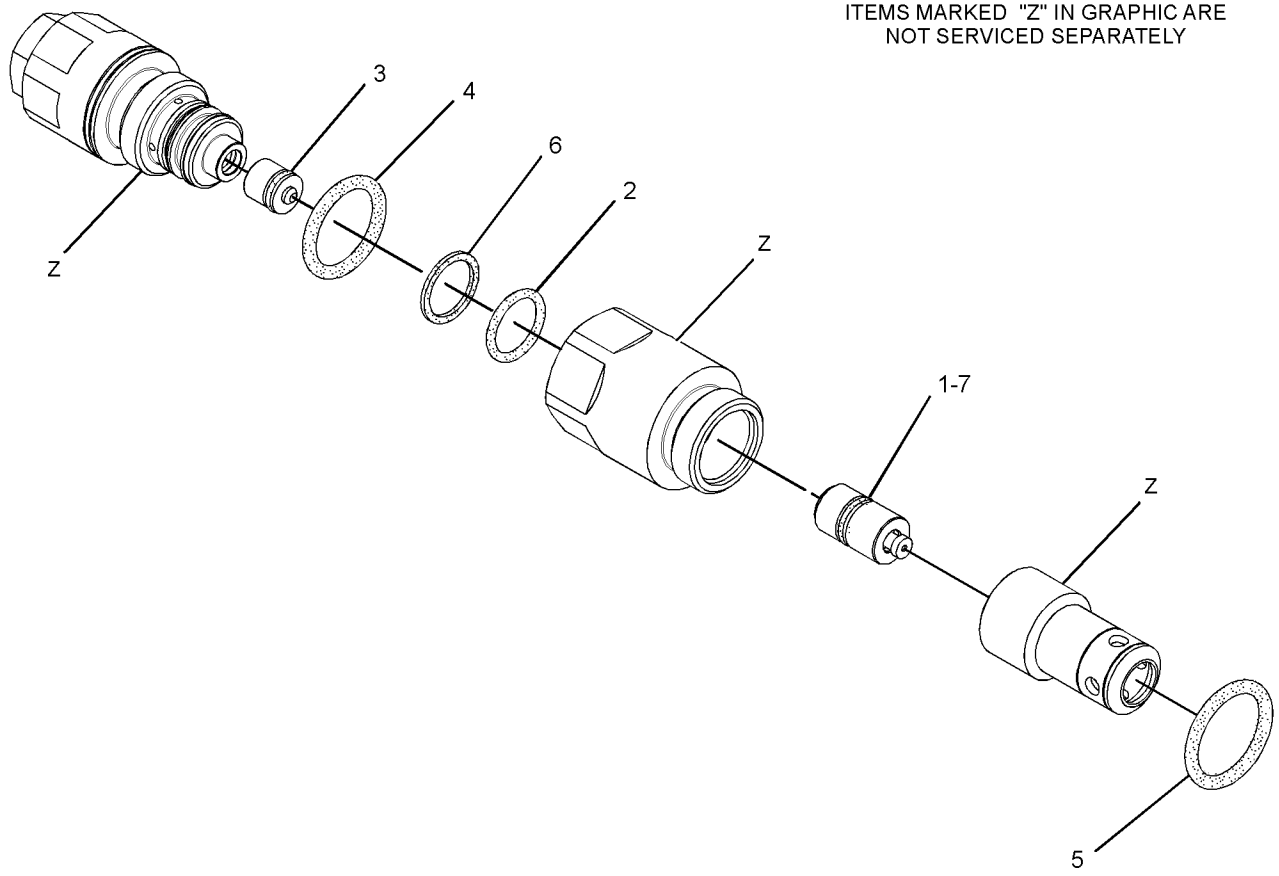

GRAPHIC #1 **<END>** g01807059

285-1613 VALVE GP-PRESSURE REDUCING—BOOM PRIORITY

S/N: XAH1-UP

PART OF 391-7835 LINES GP-PILOT

SMCS-5117 **i05774472**

NOTE	REF NO	GRAPHIC REF	PART NUMBER	QTY	PART NAME 1 2 3 4 5 6 (PRODUCT LEVEL)	SEE PAGE
	1	1	**171-0123**	1	PLUG	
M	2	1	**171-0124**	1	SETSCREW (M8X1.25X18-MM)	
	3	1	**185-0423**	1	STOP	
	4	1	**095-1582**	1	SEAL-O-RING	
	5	1	**111-9998**	1	PLUG	
	6	1	**171-0127**	1	SEAT-SPRING	
	7	1	**171-0128**	1	SPRING	
	8	1	**171-0126**	1	SEAT-SPRING	
	9	1	**095-1590**	1	SEAL-O-RING	
	10	1	**095-1580**	1	SEAL-O-RING	
M	11	1	**5C-7261**	1	NUT (M8X1.25-THD)	

M - METRIC PART

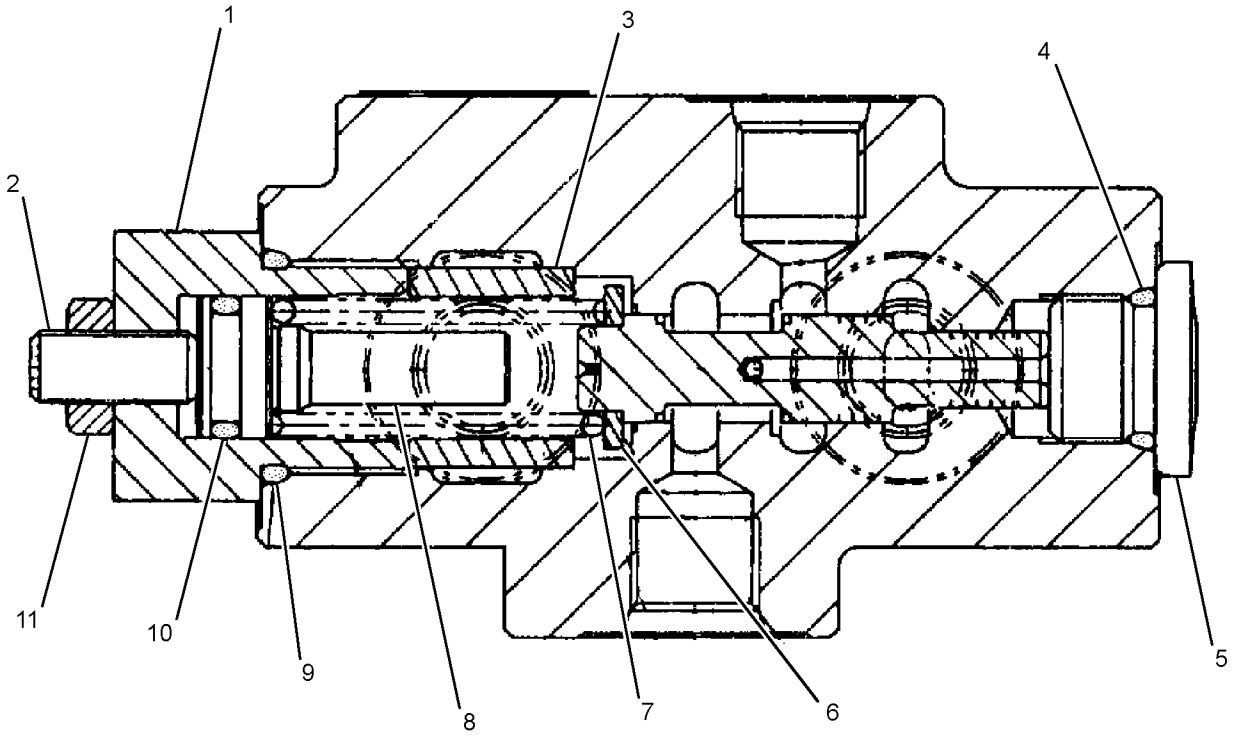

GRAPHIC #1 **<END>** g01363363

129-8030 VALVE GP-RELIEF

S/N: XAH1-UP

PART OF 199-0504 VALVE GP-TRAVEL COUNTERBALANCE

SMCS-5069, 5117 **i00823796**

NOTE	REF NO	GRAPHIC REF	PART NUMBER	QTY	PART NAME 1 2 3 4 5 6 (PRODUCT LEVEL)	SEE PAGE
	1	1	**114-0515**	1	SEAT	
	2	1	**095-1785**	3	RING-BACKUP	
	3	1	**095-1586**	3	SEAL-O-RING	
	4	1	**114-0516**	1	SPRING	
	5	1	**114-0519**	1	STOP	
M	6	1	**7Y-8436**	1	SETSCREW (M27X2X27-MM)	
M	7	1	**7Y-8437**	1	NUT (M27X2-THD)	
	8	1	**114-0518**	1	BODY	
	9	1	**095-1601**	1	SEAL-O-RING	
	10	1	**121-1459**	2	RING-BACKUP	
	11	1	**114-0517**	1	PISTON	
	12	1	**114-0514**	1	SPRING	
	13	1	**129-8031**	1	VALVE GP-RELIEF	

M - METRIC PART

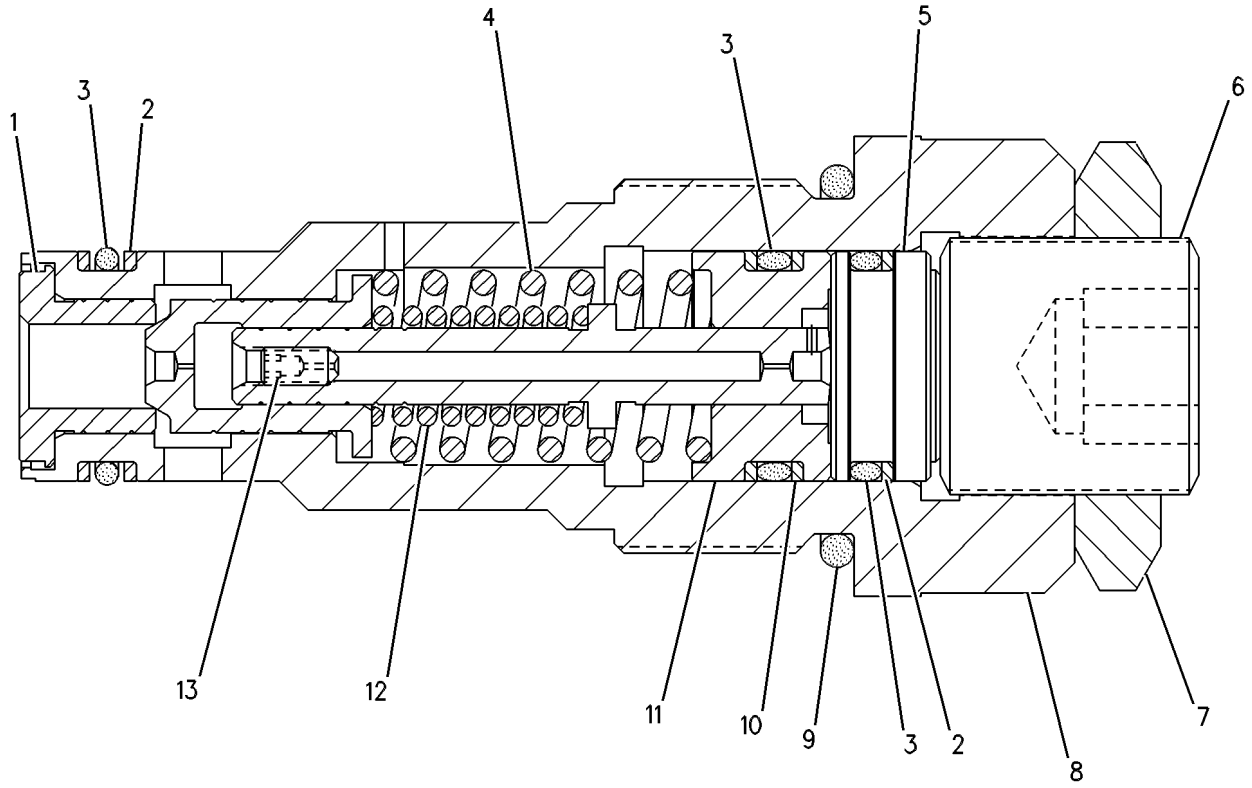

GRAPHIC #1 **<END>** g00258401

173-3536 VALVE GP-RELIEF

S/N: XAH1-UP

PART OF 369-9628 VALVE GP-SWING CUSHION

SMCS-5069, 5117 **i02444489**

NOTE	REF NO	GRAPHIC REF	PART NUMBER	QTY	PART NAME 1 2 3 4 5 6 (PRODUCT LEVEL)	SEE PAGE
	1	1	**095-1785**	1	RING-BACKUP	
	2	1	**095-1586**	1	SEAL-O-RING	

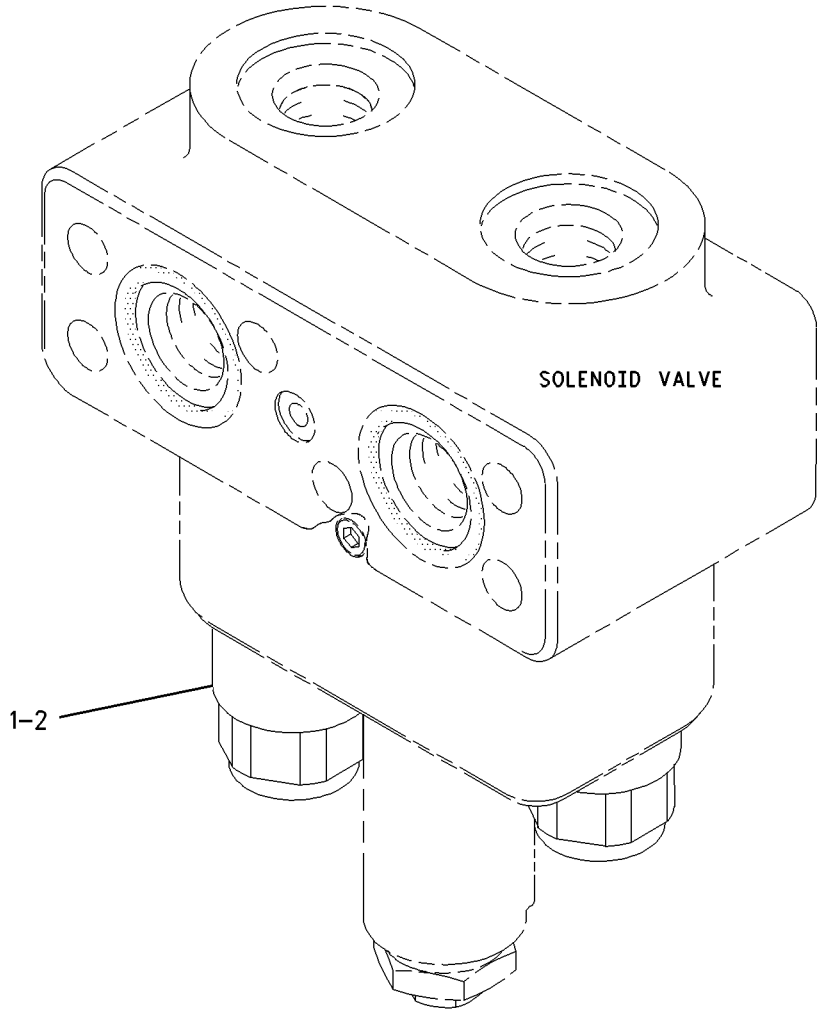

GRAPHIC #1 **<END>** g00672771

270-5979 VALVE GP-RELIEF

S/N: XAH1-UP

PART OF 420-2243 VALVE GP-MAIN CONTROL

SMCS-5069, 5117 **i05774649**

NOTE	REF NO	GRAPHIC REF	PART NUMBER	QTY	PART NAME 1 2 3 4 5 6 (PRODUCT LEVEL)	SEE PAGE
	1	1	**095-1519**	1	SEAL-O-RING	
	2	1	**095-1575**	1	SEAL-O-RING	
	3	1	**095-1582**	1	SEAL-O-RING	
	4	1	**095-1584**	1	SEAL-O-RING	
	5	1	**095-1593**	1	SEAL-O-RING	
	6	1	**095-1783**	1	RING-BACKUP	

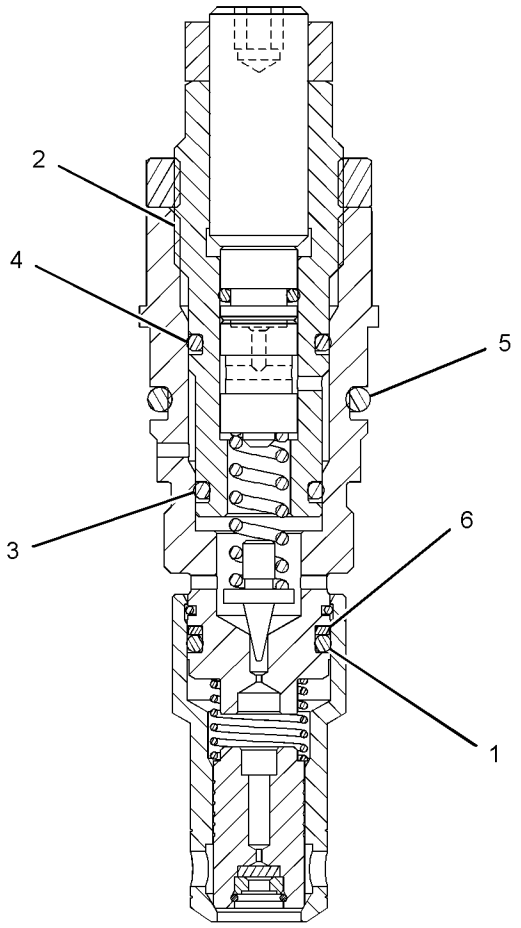

GRAPHIC #1 **<END>** g01891833

309-9977 VALVE GP-RELIEF–LINE

S/N: XAH1-UP

PART OF 420-2243 VALVE GP-MAIN CONTROL

SMCS-5069, 5117 **i05774657**

NOTE	REF NO	GRAPHIC REF	PART NUMBER	QTY	PART NAME 1 2 3 4 5 6 (PRODUCT LEVEL)	SEE PAGE
	1	1	**095-1514**	1	SEAL-O-RING	
	2	1	**095-1519**	1	SEAL-O-RING	
	3	1	**095-1575**	1	SEAL-O-RING	
	4	1	**095-1591**	1	SEAL-O-RING	
	5	1	**095-1592**	1	SEAL-O-RING	
	6	1	**095-1783**	1	RING-BACKUP	
	7	1	**095-8024**	1	RING-BACKUP	

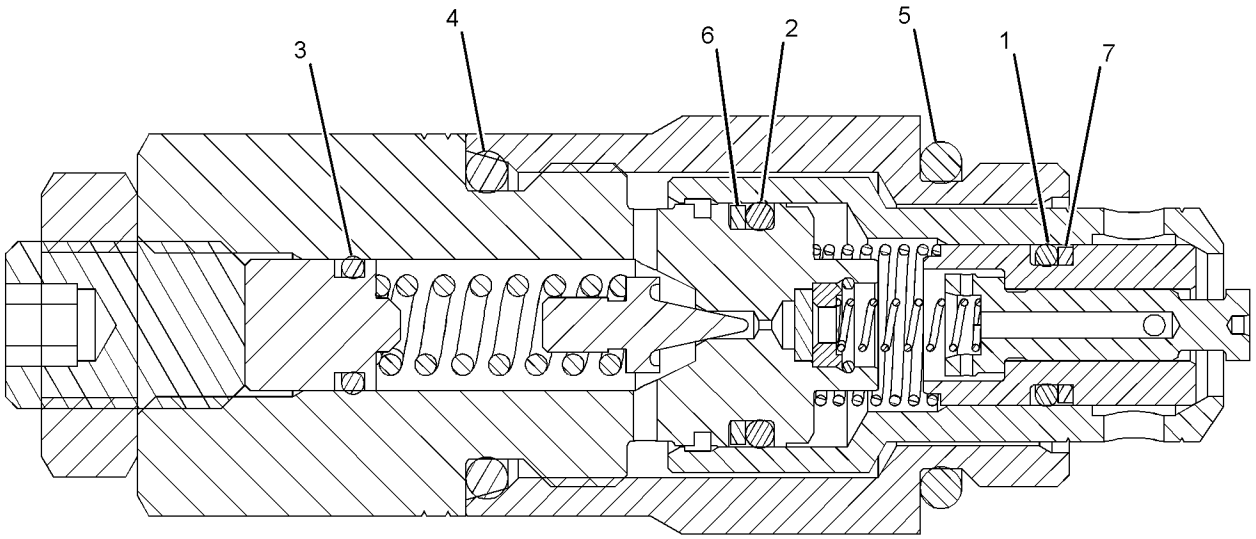

GRAPHIC #1 **<END>** g01426401

364-0981 VALVE GP-RELIEF–DIRECT OPERATED

S/N: XAH1-UP

PART OF 369-9604 MOTOR GP-SWING

SMCS-5069, 5117

i05772985

NOTE	REF NO	GRAPHIC REF	PART NUMBER	QTY	PART NAME 1 2 3 4 5 6 (PRODUCT LEVEL)	SEE PAGE
	1	1	**168-0765**	1	RING-BACKUP	
	2	1	**7J-9933**	1	SEAL-O-RING	
	3	1	**7I-0966**	1	RING-BACKUP	
	4	1	**6V-5556**	1	SEAL-O-RING	
	5	1	**095-1698**	1	SEAL-O-RING	

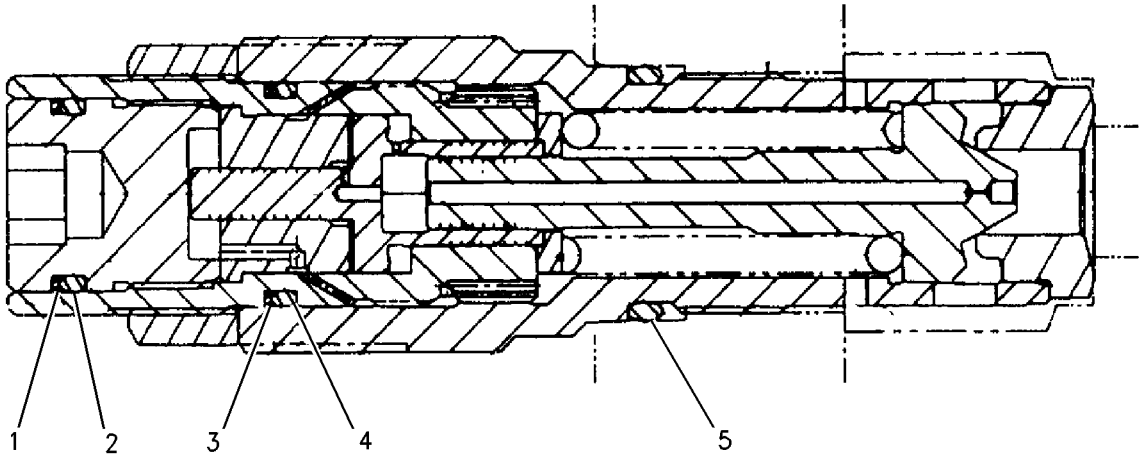

GRAPHIC #1

<END>

g00671043

164-6979 VALVE GP-SHUTTLE

S/N: XAH1-UP

PART OF 391-7835 LINES GP-PILOT

SMCS-5079 **i03815390**

NOTE	REF NO	GRAPHIC REF	PART NUMBER	QTY	PART NAME 1 2 3 4 5 6 (PRODUCT LEVEL)	SEE PAGE
	1	1	**123-2431**	1	BODY-VALVE	
	2	1	**4B-9783**	1	BALL	
	3	1	*175-4430*	2	CONNECTOR AS	
					(EACH INCLUDES)	
		1	**3J-1907**	1	SEAL-O-RING	
		1	**6V-8397**	1	SEAL-O-RING	
		1	**123-2552**	1	CONNECTOR	

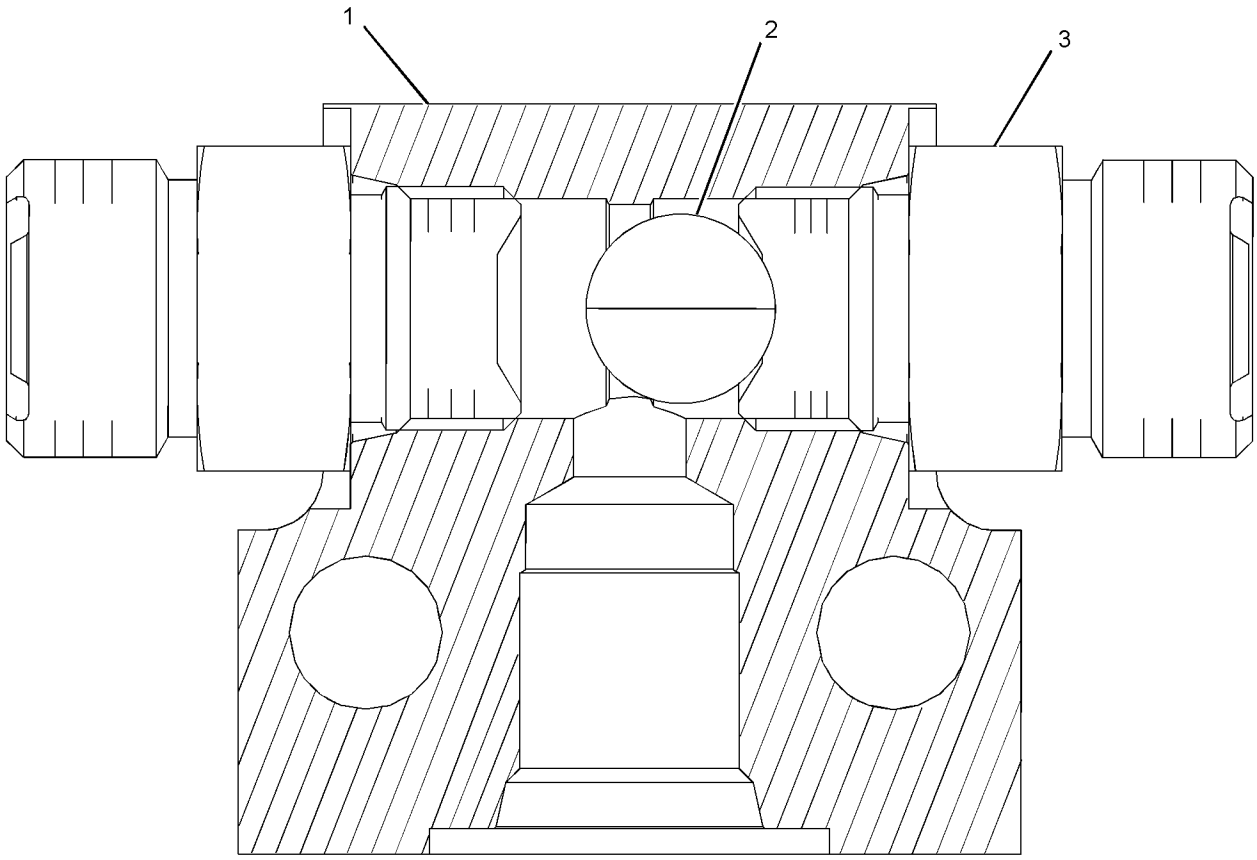

GRAPHIC #1 **<END>** g01955237

111-9916 VALVE GP-SOLENOID

S/N: XAH1-UP

PART OF 391-9452 PUMP GP-PISTON

SMCS-5479 **i05606711**

NOTE	REF NO	GRAPHIC REF	PART NUMBER	QTY	PART NAME 1 2 3 4 5 6 (PRODUCT LEVEL)	SEE PAGE
	1	1	**095-1750**	1	SEAL-O-RING	
	2	1	**6V-8398**	1	SEAL-O-RING	
	3	1	**095-1751**	1	SEAL-O-RING	
	4	1	**095-1586**	1	SEAL-O-RING	
M	5	1	**114-0623**	1	NUT AS (M6X1-THD)	

M - METRIC PART

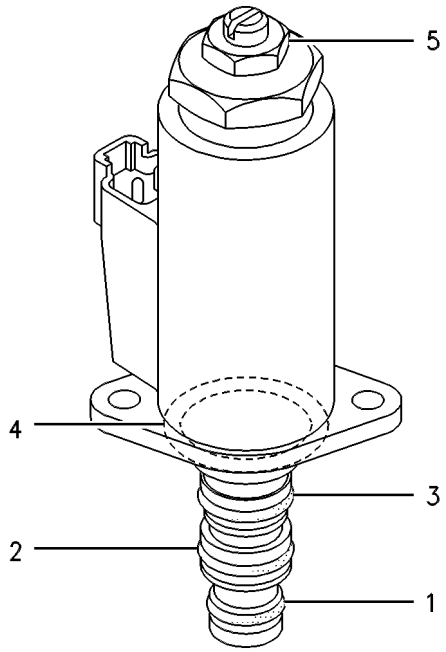

GRAPHIC #1 **<END>** g00258219

121-1491 VALVE GP-SOLENOID

S/N: XAH1-UP

PART OF 239-8697, 239-8998 MANIFOLD GP-CONTROL

SMCS-5479 **i02198057**

NOTE	REF NO	GRAPHIC REF	PART NUMBER	QTY	PART NAME 1 2 3 4 5 6 (PRODUCT LEVEL)	SEE PAGE
	1	1	**095-1750**	1	SEAL-O-RING	
	2	1	**6V-8398**	1	SEAL-O-RING	
	3	1	**095-1751**	1	SEAL-O-RING	
	4	1	**095-1586**	1	SEAL-O-RING	
M	5	1	**114-0623**	1	NUT AS (M6X1-THD)	

M - METRIC PART

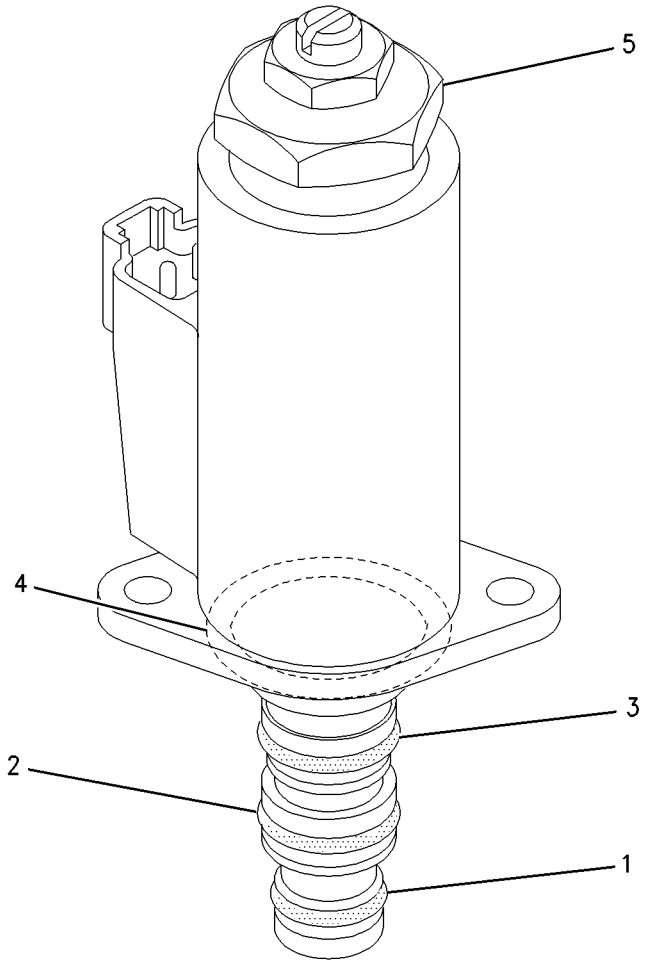

GRAPHIC #1 **<END>** g00928680

369-9628 VALVE GP-SWING CUSHION–CROSSOVER RELIEF

S/N: XAH1-UP

PART OF 435-8395 LINES GP-CYLINDER

SMCS-5480 **i05774988**

NOTE	REF NO	GRAPHIC REF	PART NUMBER	QTY	PART NAME 1 2 3 4 5 6 (PRODUCT LEVEL)	SEE PAGE
	1	1	**8T-6759**	4	PLUG-PIPE	
	2	1	**095-1576**	1	SEAL-O-RING	
Y	3	1	**173-3536**	2	VALVE GP-RELIEF	314
	4	1	**095-1698**	2	SEAL-O-RING	

Y - SEPARATE ILLUSTRATION

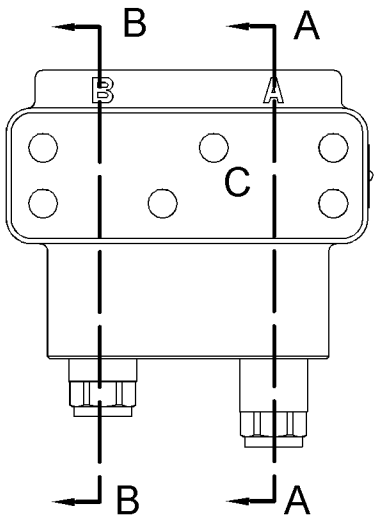

FRONT VIEW

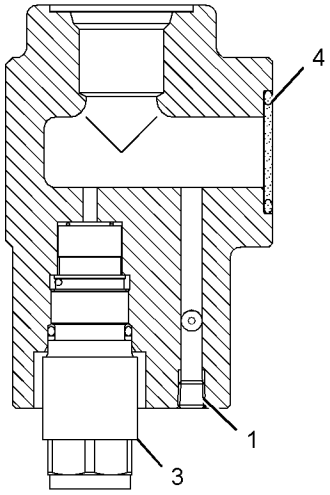

SECTION B-B

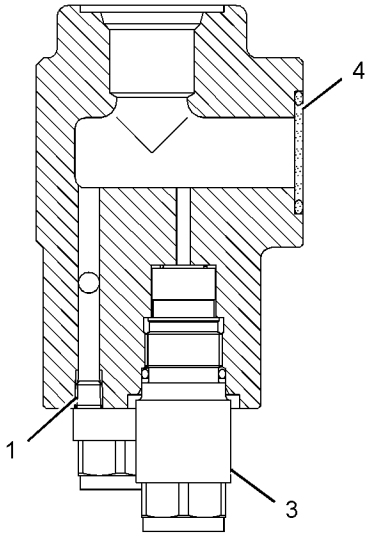

SECTION A-A

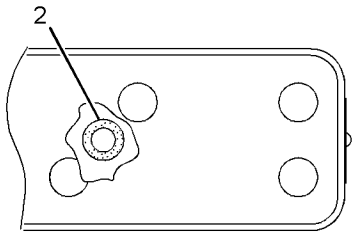

VIEW OF AREA C

GRAPHIC #1 **<END>** g02712577

199-0504 VALVE GP-TRAVEL COUNTERBALANCE

S/N: XAH1-UP

PART OF 185-6952 MOTOR & MTG GP-TRAVEL

SMCS-5811 **i05966951**

NOTE	REF NO	GRAPHIC REF	PART NUMBER	QTY	PART NAME 1 2 3 4 5 6 (PRODUCT LEVEL)	SEE PAGE
	1	1	**119-5365**	2	VALVE	
M	2	1	**6V-8200**	8	BOLT-SOCKET HEAD (M12X1.75X35-MM)	
	3	1	**9S-8004**	2	PLUG-O-RING	
	4	1	**3J-1907**	2	SEAL-O-RING	
	5	1	**129-7932**	2	GUIDE	
	6	1	**199-0508**	2	SPRING	
	7	1	**095-1701**	2	SEAL-O-RING	
	8	1	**119-5360**	2	COVER	
Y	9	1	**129-8030**	2	VALVE GP-RELIEF	313
	10	1	**2M-9780**	2	SEAL-O-RING	
	11	1	**119-5364**	2	PLUG	
	12	1	**119-5362**	2	SPRING	

M - METRIC PART
Y - SEPARATE ILLUSTRATION

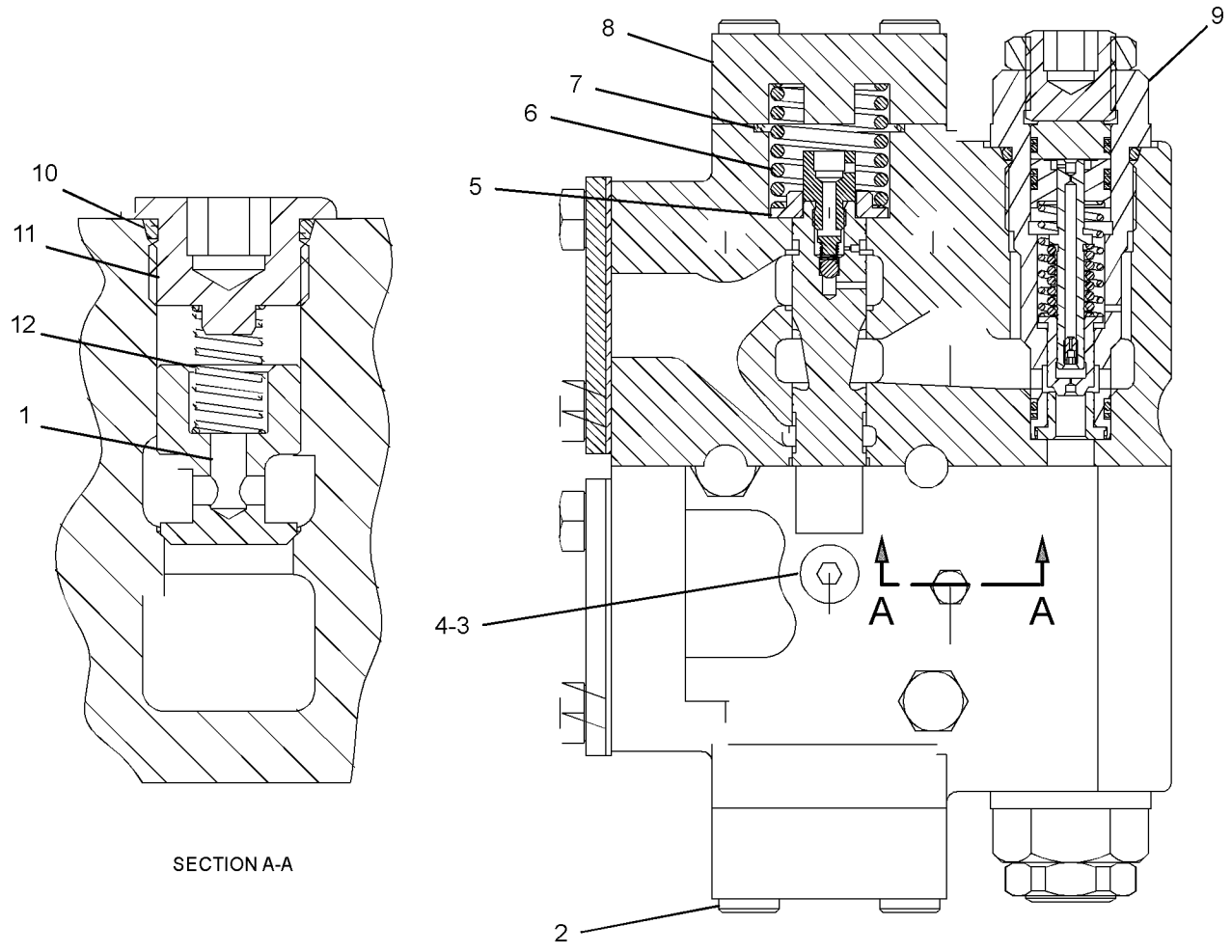

SECTION A-A

GRAPHIC #1 **<END>** g03430151

283-9001 BOOM AR-1 PIECE LONG

S/N: XAH1-UP

AN ATTACHMENT

SMCS-6501 **i05787004**

NOTE	PART NUMBER	QTY	PART NAME 1 2 3 4 5 6 (PRODUCT LEVEL)	SEE PAGE
Y	*290-9321*	1	BOOM GP	324
Y	*381-8968*	1	CYLINDER & LINES GP-BOOM (LH)	205
Y	*381-8969*	1	CYLINDER & LINES GP-BOOM (RH)	205
Y	*381-8970*	1	CYLINDER & LINES GP-STICK	205
Y	*259-5163*	1	LIGHTING GP-FLOOD (BOOM, LH)	109
Y	*260-8220*	1	LINES GP-BOOM	226
Y	*174-8529*	1	LINES GP-GREASE (REACH BOOM)	326

Y - SEPARATE ILLUSTRATION

<END>

290-9321 BOOM GP

S/N: XAH1-UP
5.1-M (16.7-FT)
PART OF 283-9001 BOOM AR-1 PIECE LONG
AN ATTACHMENT

SMCS-6301, 6302, 6460, 6501, 6516, 6521, 6535, 6536 **i05875792**

NOTE	REF NO	GRAPHIC REF	PART NUMBER	QTY	PART NAME 1 2 3 4 5 6 (PRODUCT LEVEL)	SEE PAGE
	1	1	**4I-3308**	2	PLATE	
	2	1	**4I-3309**	2	SPACER (82X110X3-MM THK)	
	3	1	**4I-4811**	1	PIN AS	
B	4	1	**093-0084**	1	SHIM (1-MM THK)	
	5	1	**093-0349**	2	WASHER (22X60X6-MM THK)	
B	6	1	**113-2127**	2	SHIM (0.5-MM THK)	
	7	1	**118-5982**	1	SPACER (73X105X14-MM THK)	
	8	1	**166-1486**	2	SHIM (2-MM THK)	
	9	1	**166-1495**	2	SEAL-LIP TYPE	
	10	1	**180-7755**	1	PIN	
	11	1	**267-0060**	1	PIN AS	
	12	1	**290-9322**	1	BOOM & BEARING AS	
	12A	1	**228-5615**	2	BUSHING	
	12B	1	**244-4277**	2	BUSHING	
	13	1	**093-0366**	1	SPACER (93X130X12-MM THK)	
	14	1	**166-1487**	2	SHIM (2-MM THK)	
	15	1	**451-2176**	2	WASHER-HARD (22X35X3.5-MM THK)	
	16	1	**8T-4223**	6	WASHER-HARD (13.5X25.5X3-MM THK)	
M	17	1	**453-2844**	2	BOLT (M20X2.5X30-MM)	
M	18	1	**8T-4956**	6	BOLT (M12X1.75X35-MM)	

B - USE AS REQUIRED
M - METRIC PART

290-9321 **BOOM GP (*contd.*)** **i05875792**

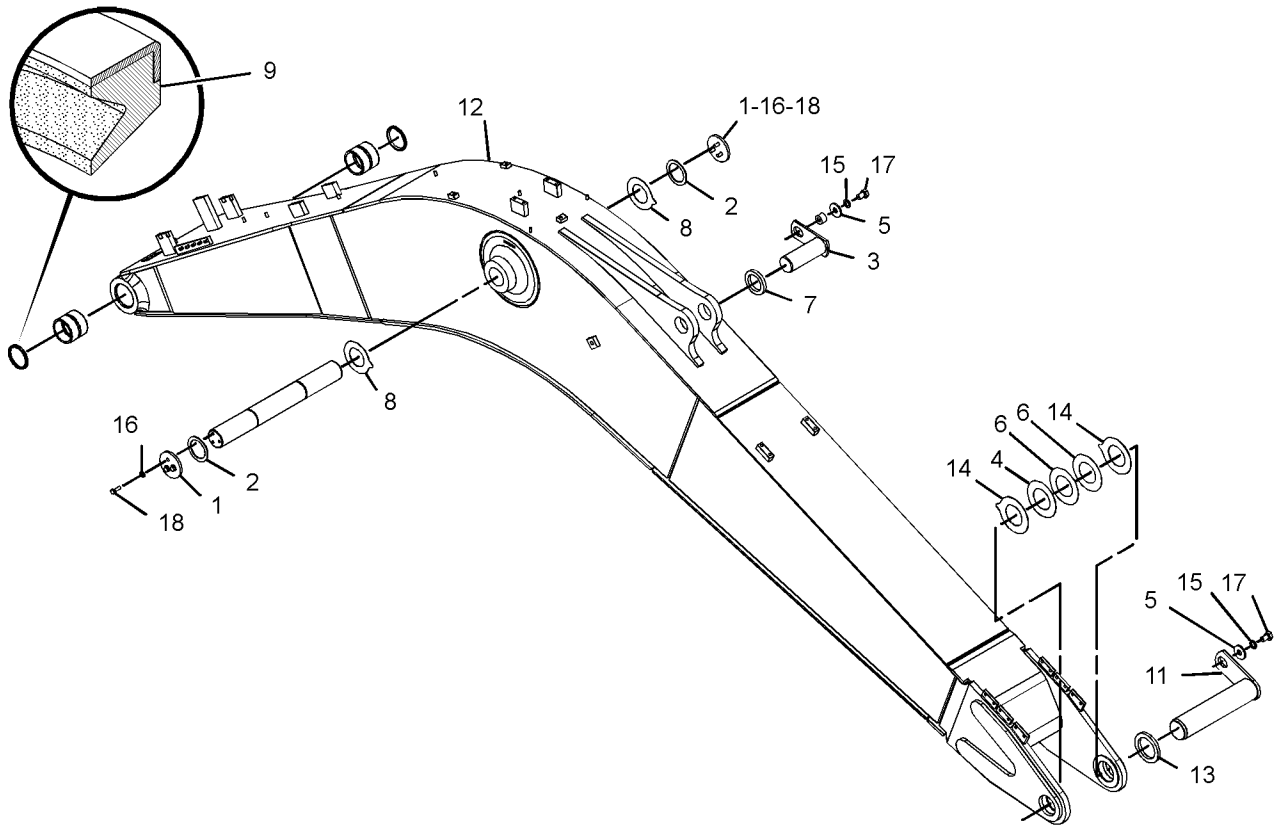

GRAPHIC #1 **<END>** g01398610

174-8529 LINES GP-GREASE

S/N: XAH1-UP
FOR USE WITH 5.1-M (16.7-FT) BOOM
PART OF 283-9001 BOOM AR-1 PIECE LONG
AN ATTACHMENT

SMCS-7510 **i05787030**

NOTE	REF NO	GRAPHIC REF	PART NUMBER	QTY	PART NAME 1 2 3 4 5 6 (PRODUCT LEVEL)	SEE PAGE
	1	1	**8M-2772**	2	CLIP	
M	2	1	**8T-4133**	5	NUT (M10X1.5-THD)	
	3	1	**8T-4121**	8	WASHER-HARD (11X21X2.5-MM THK)	
	4	1	**166-1579**	3	CLIP	
	5	1	**033-8248**	3	CLIP	
M	6	1	**8T-4191**	3	BOLT (M10X1.5X16-MM)	
	7	1	**123-5349**	1	HOSE AS	
	8	1	**134-9137**	1	HOSE AS	
					(EACH HOSE AS INCLUDES)	
		1	**105-6431**	1	CONNECTOR	
	9	1	**3B-8489**	5	FITTING-GREASE	
	10	1	**6L-3616**	2	CONNECTOR	
	11	1	**5K-9243**	2	ELBOW-FLARED	
	12	1	**107-9742**	1	TUBE AS	
	13	1	**107-9743**	1	TUBE AS	
	14	1	**120-7225**	1	HOSE AS	
		1	**105-6431**	1	CONNECTOR	

M - METRIC PART

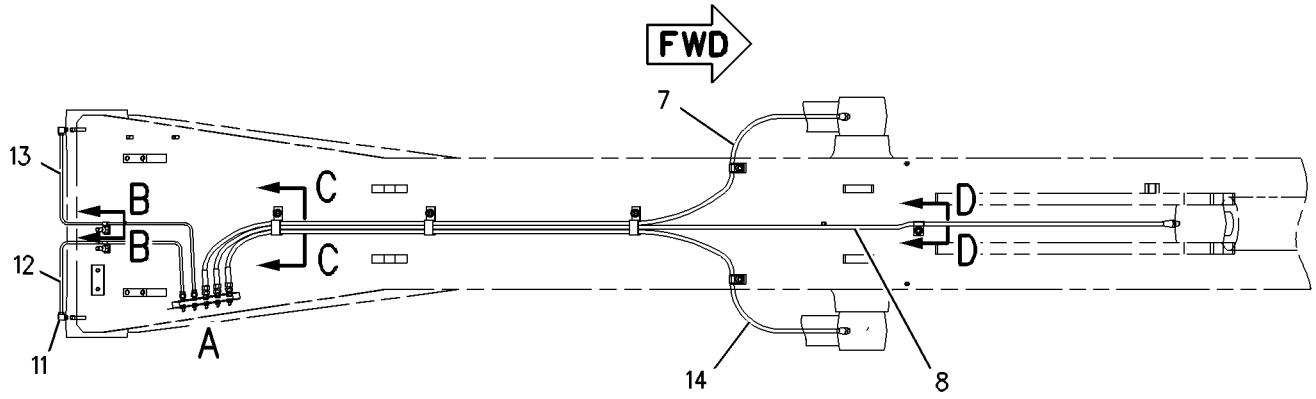

TOP VIEW

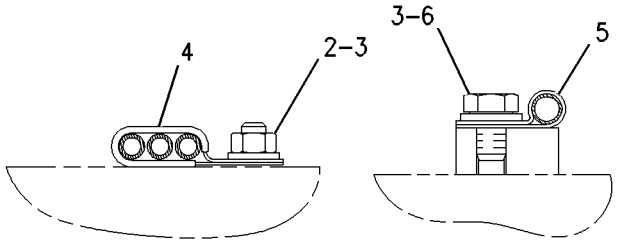

SECTION C-C SECTION D-D

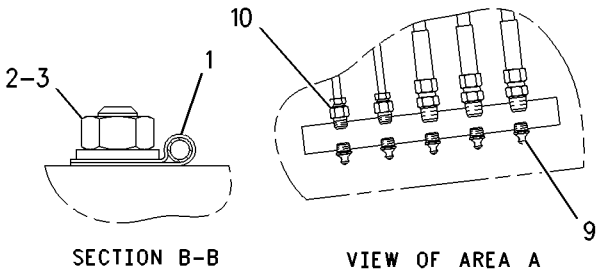

SECTION B-B VIEW OF AREA A

GRAPHIC #1 **<END>** g00862357

283-9011 LINKAGE AR-BUCKET—WITH LIFTING EYE

S/N: XAH1-UP

AN ATTACHMENT

SMCS-6513 **i05984979**

NOTE	PART NUMBER	QTY	PART NAME 1 2 3 4 5 6 (PRODUCT LEVEL)	SEE PAGE
Y	*381-8971*	1	CYLINDER & LINES GP-BUCKET	205
Y	*264-1603*	1	LINKAGE GP-BUCKET (WITH LIFTING EYE)	328

Y - SEPARATE ILLUSTRATION

<END>

264-1603 LINKAGE GP-BUCKET—WITH LIFTING EYE

S/N: XAH1-UP

PART OF 283-9011 LINKAGE AR-BUCKET

AN ATTACHMENT

SMCS-6513 **i05786650**

NOTE	REF NO	GRAPHIC REF	PART NUMBER	QTY	PART NAME 1 2 3 4 5 6 (PRODUCT LEVEL)	SEE PAGE
	1	1	**3B-8489**	5	FITTING-GREASE	
	2	1	**087-5802**	1	LINK AS (RH)	
	3	1	**087-5803**	1	LINK AS	
	4	1	**106-6876**	1	PIN	
	5	1	**106-6877**	1	PIN	
	6	1	**106-6878**	2	PIN	
	7	1	**367-8466**	4	SEAL-O-RING	
	8	1	**166-1486**	2	SHIM (2-MM THK)	
M	9	1	**236-6365**	2	BOLT (M16X2X150-MM)	
	10	1	**235-7679**	2	SEAL-LIP TYPE	
	11	1	**267-0055**	1	LINK & BEARING AS	
	11A	1	**244-4360**	2	BUSHING	
	11B	1	**228-5614**	2	BUSHING	
	12	1	**166-1494**	4	SEAL-LIP TYPE	
M	13	1	**8T-4132**	8	NUT (M16X2-THD)	
M	14	1	**8T-6385**	2	BOLT (M16X2X180-MM)	

M - METRIC PART

264-1603 **LINKAGE GP-BUCKET (*contd.*)** **i05786650**

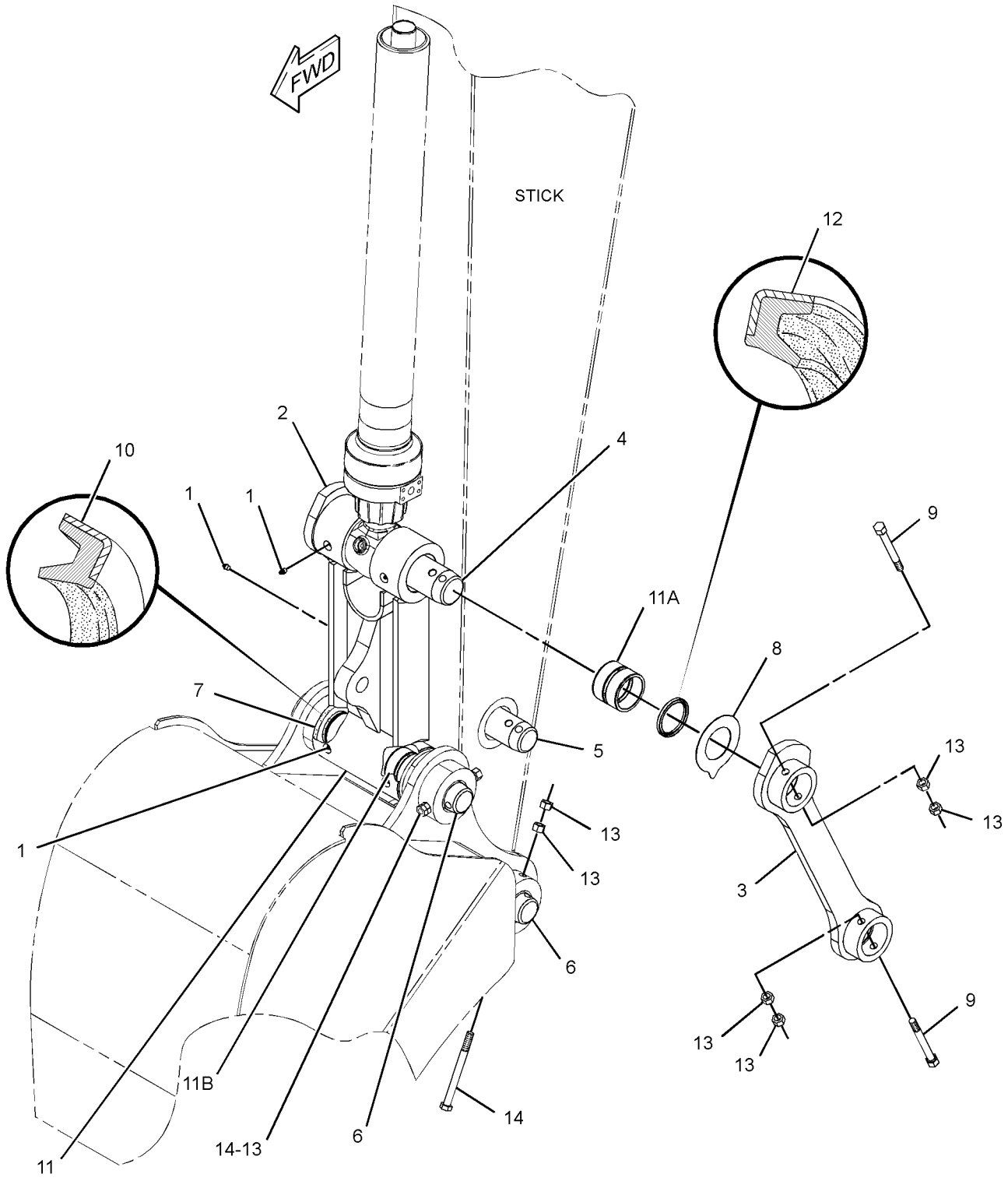

GRAPHIC #1 **<END>** g02505737

283-9004 STICK AR-HOE–REACH

S/N: XAH1-UP
2.6-M (8.53-FT)
AN ATTACHMENT

SMCS-6502 **i05786972**

NOTE	PART NUMBER	QTY	PART NAME 1 2 3 4 5 6 (PRODUCT LEVEL)	SEE PAGE
Y	*131-9962*	1	LINES GP-STICK	261
Y	*290-9327*	1	STICK GP-HOE	331

Y - SEPARATE ILLUSTRATION

<END>

290-9327 STICK GP-HOE

S/N: XAH1-UP
2.6-M (8.5-FT)
PART OF 283-9004 STICK AR-HOE
AN ATTACHMENT

SMCS-6502 **i05786983**

NOTE	REF NO	GRAPHIC REF	PART NUMBER	QTY	PART NAME 1 2 3 4 5 6 (PRODUCT LEVEL)	SEE PAGE
	1	1	**3B-8489**	3	FITTING-GREASE	
	2	1	**4I-4811**	1	PIN AS	
	3	1	**093-0349**	2	WASHER (22X60X6-MM THK)	
	4	1	**107-9852**	1	PIN AS	
	5	1	**118-5982**	2	SPACER (73X105X14-MM THK)	
	6	1	**166-1482**	2	SHIM (2-MM THK)	
	7	1	**166-1495**	2	SEAL-LIP TYPE	
	8	1	**235-7679**	4	SEAL-LIP TYPE	
	9	1	**290-9328**	1	STICK & BEARING AS	
	9A	1	**228-5614**	2	BUSHING	
	9B	1	**229-1096**	2	BUSHING	
	9C	1	**244-4277**	2	BUSHING	
	10	1	**451-2176**	2	WASHER-HARD (22X35X3.5-MM THK)	
M	11	1	**453-2844**	2	BOLT (M20X2.5X30-MM)	

M - METRIC PART

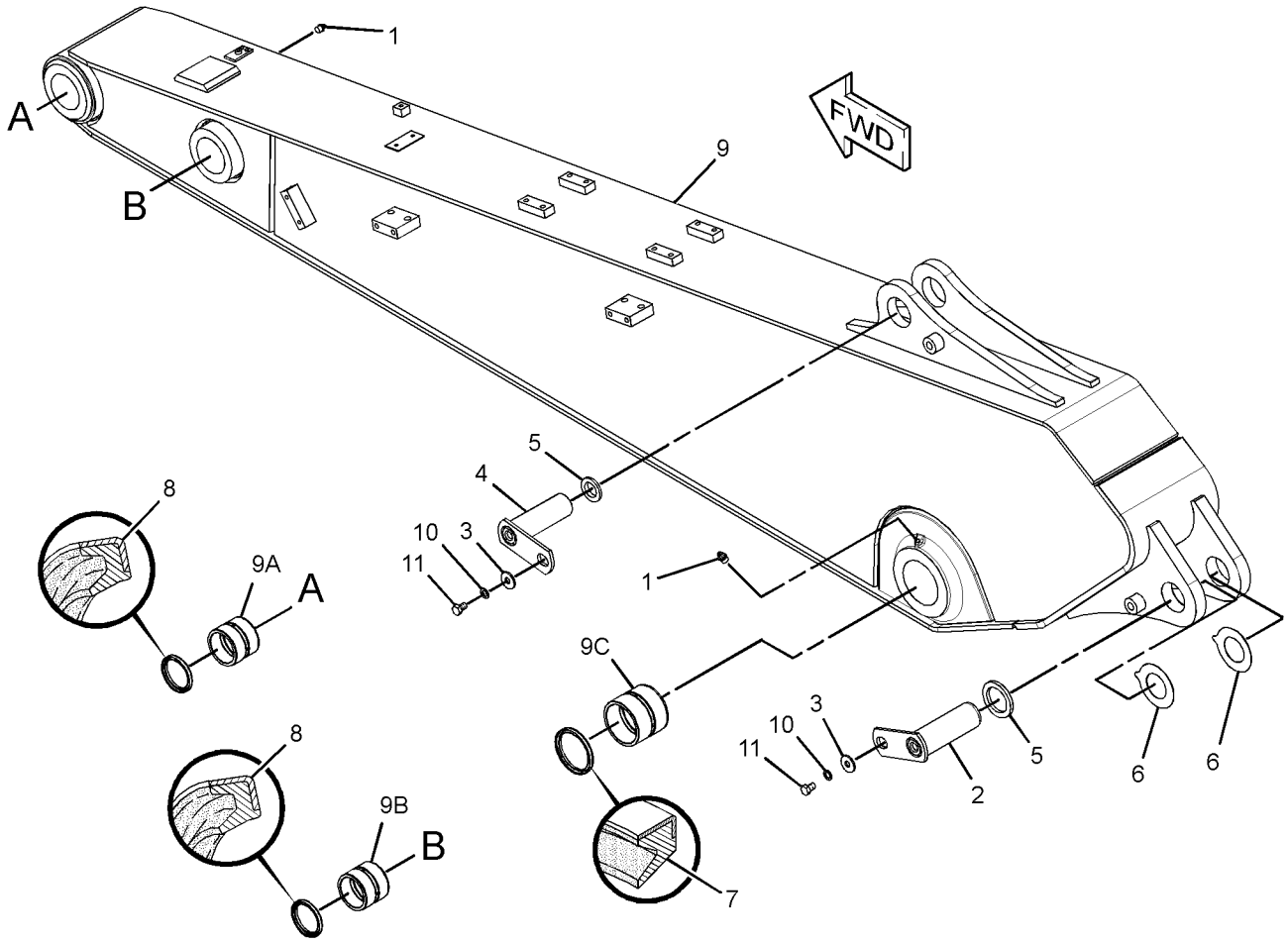

GRAPHIC #1 **<END>** g01379567

106-6757 ADJUSTER GP-BUCKET

S/N: XAH1-UP

PART OF 353-1579, 353-1590 BUCKET & ADJUSTER GP

AN ATTACHMENT

SMCS-6513, 6700 **i05786124**

NOTE	REF NO	GRAPHIC REF	PART NUMBER	QTY	PART NAME 1 2 3 4 5 6 (PRODUCT LEVEL)	SEE PAGE
B	1	1	**107-9965**	6	SHIM (1-MM THK)	
B	2	1	**107-9966**	4	SHIM (0.5-MM THK)	
	3	1	**193-5014**	1	PIN	
	4	1	**107-9967**	1	PLATE	
M	5	1	**8T-4193**	4	BOLT (M16X2X50-MM)	
	6	1	**9X-8257**	4	WASHER (17.5X30X3.5-MM THK)	
	7	1	**193-5013**	1	FLANGE	

B - USE AS REQUIRED
M - METRIC PART

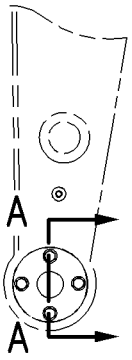

SIDE VIEW

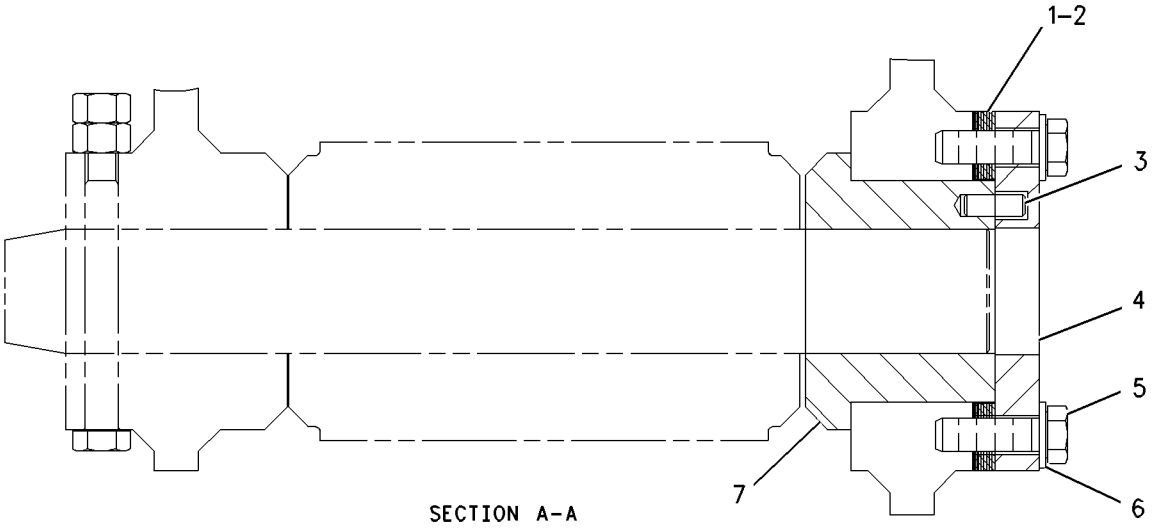

SECTION A-A

GRAPHIC #1 **<END>** g00682498

353-1579 BUCKET & ADJUSTER GP—GENERAL PURPOSE

S/N: XAH1-UP

1200-MM (48-IN) WIDE X 0.9-CU M (1.2-CU YD) CAPACITY. K-80 ADAPTERS, QTY OF 6 AN ATTACHMENT

SMCS-6503, 6513 **i05786139**

NOTE	PART NUMBER	QTY	PART NAME 1 2 3 4 5 6 (PRODUCT LEVEL)	SEE PAGE
Y	**106-6757**	1	ADJUSTER GP-BUCKET	332
Y	*353-1584*	1	BUCKET AS-GENERAL PURPOSE	334
	2C-9259	1	PLATE-IDENTIFICATION (CAT)	
			(ON LH SIDE OF BUCKET)	
	312-5694	1	SETSCREW (1/4-20X0.25-IN)	
			(USE TO MOUNT BUCKET INFORMATION PLATE)	
Y - SEPARATE ILLUSTRATION				

<END>

353-1590 BUCKET & ADJUSTER GP—SEVERE SERVICE ROCK

S/N: XAH1-UP

1200-MM (48-IN) WIDE X 0.91-CU M (1.2-CU YD) CAPACITY. K-90 ADAPTERS, QTY OF 6 AN ATTACHMENT

SMCS-6503, 6513 **i05786091**

NOTE	PART NUMBER	QTY	PART NAME 1 2 3 4 5 6 (PRODUCT LEVEL)	SEE PAGE
Y	**106-6757**	1	ADJUSTER GP-BUCKET	332
Y	*353-1596*	1	BUCKET AS-SEVERE SERVICE ROCK	335
	2C-9259	1	PLATE-IDENTIFICATION (CAT)	
			(ON LH SIDE OF BUCKET)	
	312-5694	1	SETSCREW (1/4-20X0.25-IN)	
			(USE TO MOUNT BUCKET INFORMATION PLATE)	
Y - SEPARATE ILLUSTRATION				

<END>

353-1584 BUCKET AS-GENERAL PURPOSE

S/N: XAH1-UP
1200-MM (48-IN) WIDE X 0.9-CU M (1.2-CU YD) CAPACITY. K-80 ADAPTERS, QTY OF 6
PART OF 353-1579 BUCKET & ADJUSTER GP
AN ATTACHMENT

SMCS-6101 **i05786310**

NOTE	REF NO	GRAPHIC REF	PART NUMBER	QTY	PART NAME 1 2 3 4 5 6 (PRODUCT LEVEL)	SEE PAGE
	1	1	**298-0110**	1	EDGE AS	
	1A	1	**8P-9770**	1	PLATE	
	1B	1	**220-9084**	4	ADAPTER-TIP (K-80, 2-STRAP, CENTER)	
	1C	1	**232-2085**	1	ADAPTER-TIP (K-80, 2-STRAP, RH)	
	1D	1	**232-2086**	1	ADAPTER-TIP (K-80, 2-STRAP, LH)	
	2	1	**353-1601**	2	PLATE-WEAR	
	3	1	**353-1607**	1	PLATE (LH)	
	4	1	**353-2811**	1	PLATE (RH)	
	5	1	**358-8605**	1	PLATE-WEAR	
	6	1	**358-8606**	3	PLATE-WEAR	
	7	1	**361-0522**	1	PLATE AS-HINGE	

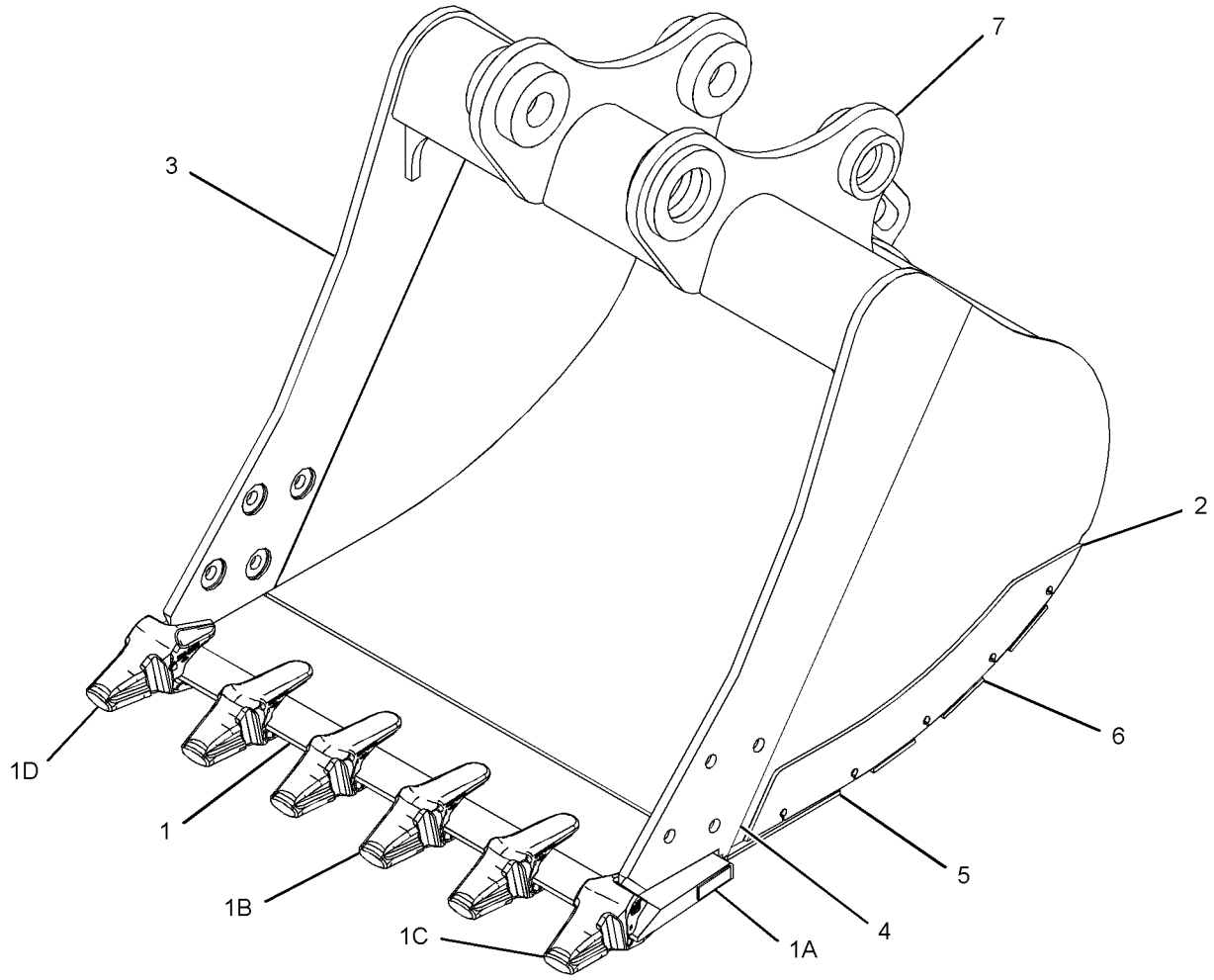

GRAPHIC #1 **<END>** g02750909

353-1596 BUCKET AS-SEVERE SERVICE ROCK

S/N: XAH1-UP
1200-MM (48-IN) WIDE X 0.91-CU M (1.2-CU YD) CAPACITY. K-90 ADAPTERS, QTY OF 6
PART OF 353-1590 BUCKET & ADJUSTER GP
AN ATTACHMENT

SMCS-6001 **i05786129**

NOTE	REF NO	GRAPHIC REF	PART NUMBER	QTY	PART NAME 1 2 3 4 5 6 (PRODUCT LEVEL)	SEE PAGE
	1	1	**293-7844**	1	EDGE AS	
	1A	1	**232-2096**	1	ADAPTER-TIP (K-90, 2-STRAP, LH)	
	1B	1	**220-9094**	4	ADAPTER-TIP (K-90, 2-STRAP, CENTER)	
	1C	1	**232-2095**	1	ADAPTER-TIP (K-90, 2-STRAP, RH)	
	1D	1	**8P-9770**	1	PLATE	
	2	1	**361-4483**	1	PLATE-WEAR	
	3	1	**262-3844**	3	PLATE-WEAR	
	4	1	**349-8500**	2	PLATE-WEAR	
	5	1	**262-3848**	2	PLATE-WEAR	
	6	1	**361-0522**	1	PLATE AS-HINGE	

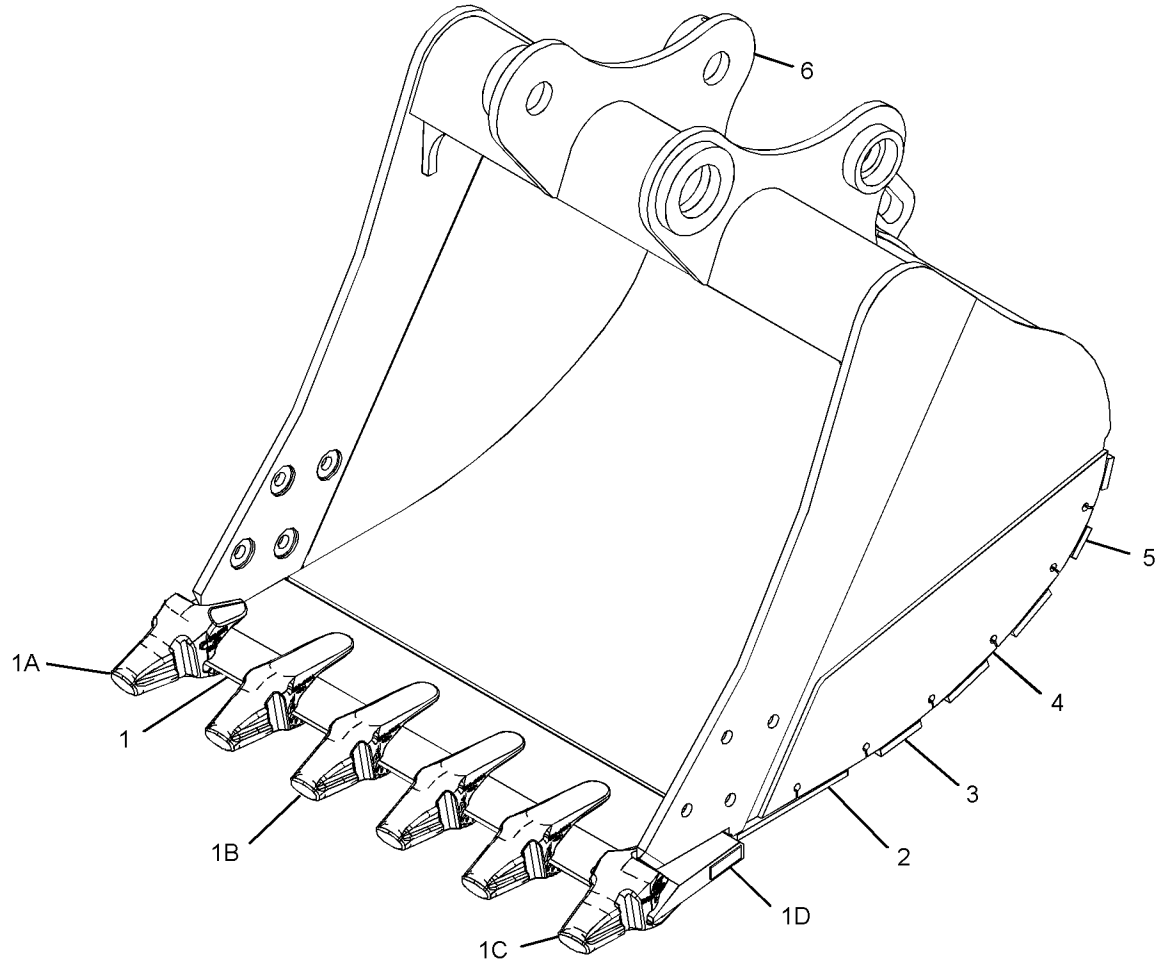

GRAPHIC #1 **<END>** g02176264

380-1204 SIDECUTTER GP

S/N: XAH1-UP

AN ATTACHMENT

SMCS-6813 **i05785684**

NOTE	REF NO	GRAPHIC REF	PART NUMBER	QTY	PART NAME 1 2 3 4 5 6 (PRODUCT LEVEL)	SEE PAGE
	1	1	**357-2713**	1	SIDECUTTER (LH)	
	2	1	**357-2714**	1	SIDECUTTER (RH)	
M	3	1	**7X-0851**	8	NUT (M24X3-THD)	
M	4	1	**8T-0380**	8	BOLT (M24X3X60-MM)	

M - METRIC PART

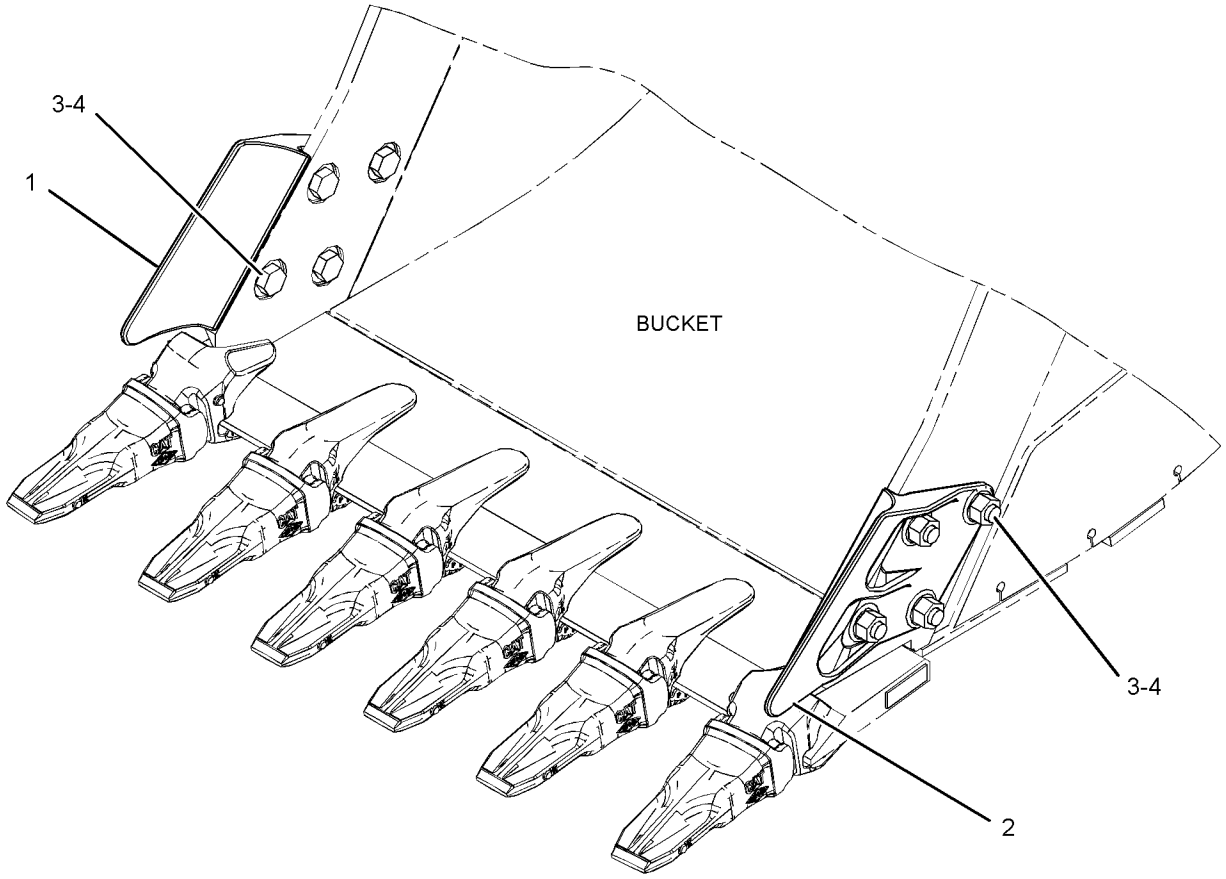

GRAPHIC #1 **<END>** g02719648

217-4893 TIP GP-PENETRATION PLUS

S/N: XAH1-UP
K-90
AN ATTACHMENT

SMCS-6805 **i05311693**

NOTE	REF NO	GRAPHIC REF	PART NUMBER	QTY	PART NAME 1 2 3 4 5 6 (PRODUCT LEVEL)	SEE PAGE
	1	1	**220-9090**	1	RETAINER-G.E.T. (K-80, K-90, K-100)	
	2	1	**220-9093**	1	TIP-PENETRATION PLUS (K-90)	

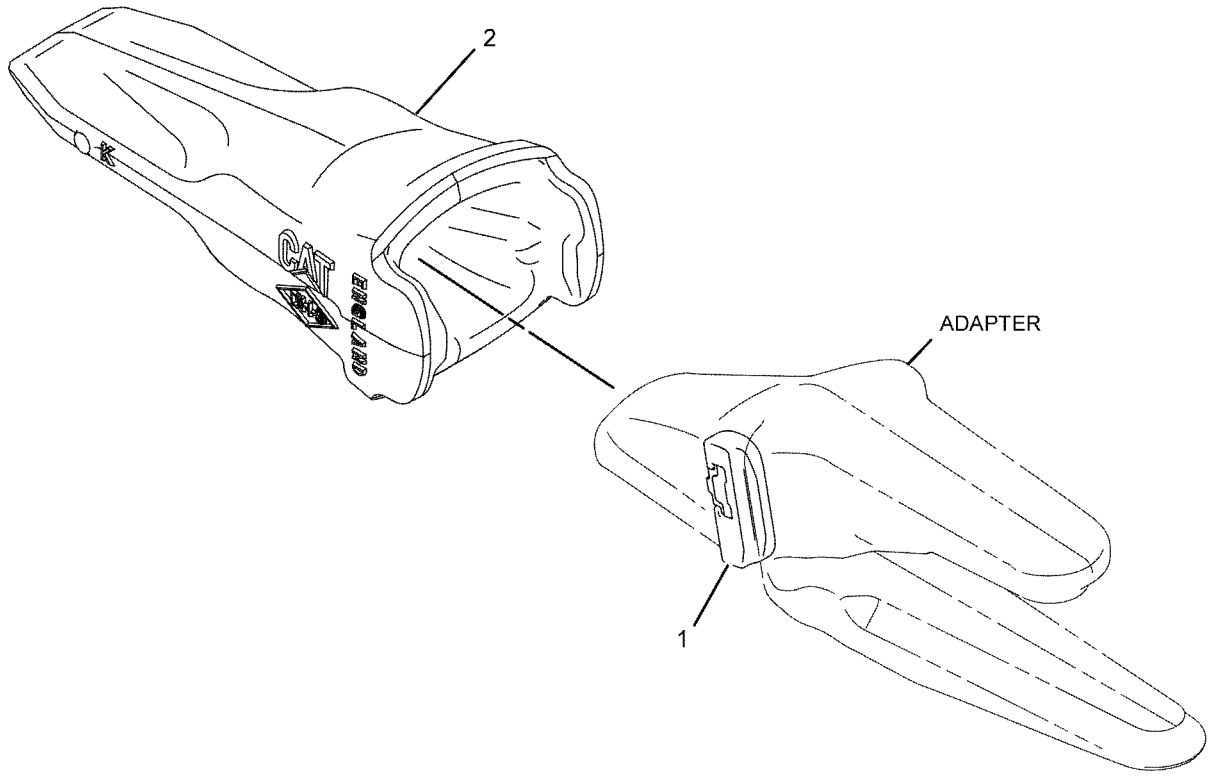

GRAPHIC #1 **<END>** g01074401

229-6966 TIP GP-PENETRATION PLUS

S/N: XAH1-UP

AN ATTACHMENT

SMCS-6805 **i02437625**

NOTE	PART NUMBER	QTY	PART NAME 1 2 3 4 5 6 (PRODUCT LEVEL)	SEE PAGE
	220-9090	1	RETAINER-G.E.T. (K-80, K-90, K-100)	
	220-9083	1	TIP-BUCKET (K-80)	

<END>

416-1798 AIR CONDITIONER & MOUNTING GP

S/N: XAH1-UP

PART OF 418-9897 AIR CONDITIONER AR, 456-6742 CAB GP

AN ATTACHMENT

SMCS-7320 **i05333179**

NOTE	REF NO	GRAPHIC REF	PART NUMBER	QTY	PART NAME 1 2 3 4 5 6 (PRODUCT LEVEL)	SEE PAGE
	1	1	**111-4836**	3	CLIP	
	2	1	**235-8874**	1	SENSOR-TEMPERATURE (AMBIENT AIR)	
	3	1	**235-8875**	1	BRACKET	
	4	1	**235-9005**	1	HARNESS AS-HEATER & AIR COND (LOW SIDE)	
Y	5	1	**316-8916**	1	AIR CONDITIONER GP	342
	6	1	**396-6895**	1	PANEL AS-CONTROL	
	7	1	**416-1802**	1	HARNESS AS-HEATER & AIR COND (HIGH SIDE)	
	8	1	**119-5026**	4	SCREW-PAN HEAD (10-16X0.63-IN)	
	9	1	**3S-2093**	1	STRAP-CABLE	
	10	1	**4P-7581**	1	CLIP	
M	11	1	**5C-9553**	1	BOLT (M6X1X16-MM)	
	12	1	**7X-7729**	7	WASHER (11X25X3-MM THK)	
	13	1	**8T-4121**	3	WASHER-HARD (11X21X2.5-MM THK)	
M	14	1	**8T-4136**	7	BOLT (M10X1.5X25-MM)	
M	15	1	**8T-4137**	3	BOLT (M10X1.5X20-MM)	
	16	1	**9X-8256**	1	WASHER (6.6X12X2-MM THK)	

M - METRIC PART
Y - SEPARATE ILLUSTRATION

416-1798 **AIR CONDITIONER & MOUNTING GP (*contd.*)** **i05333179**

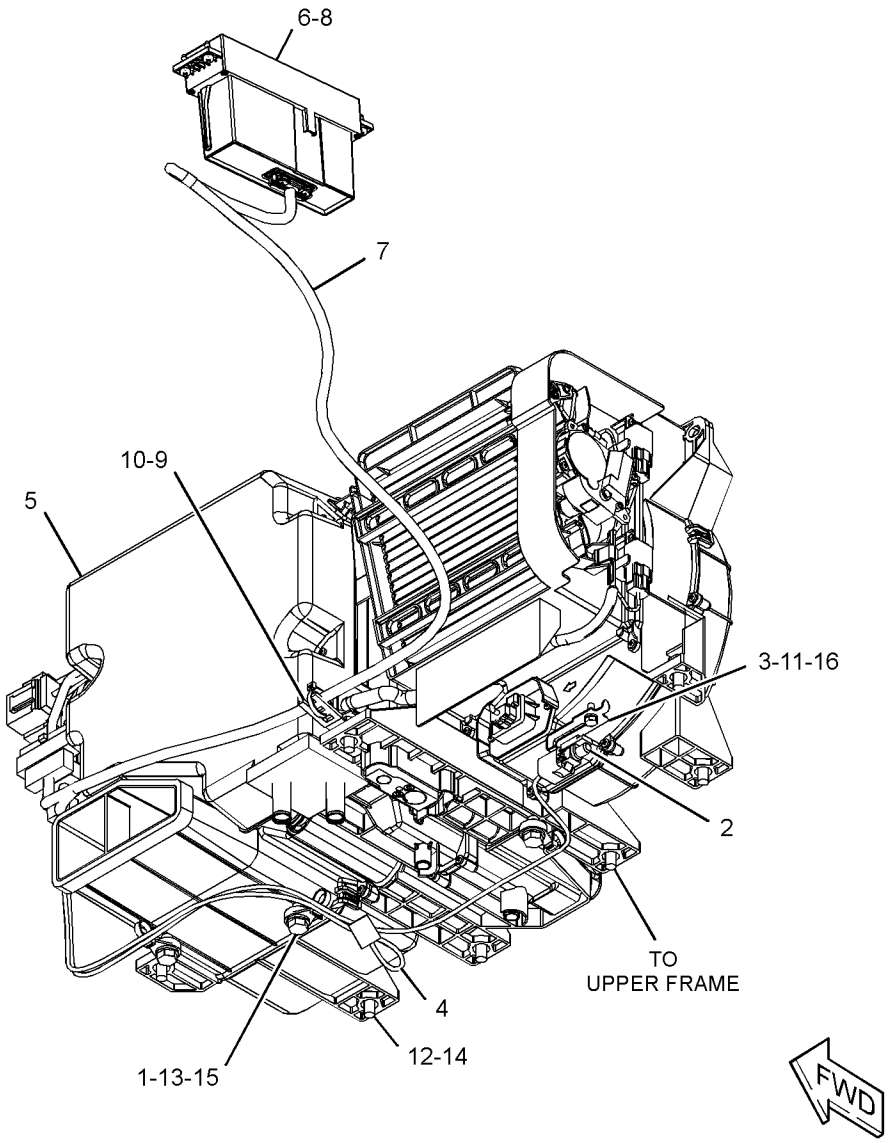

GRAPHIC #1 **<END>** g03312776

418-9897 AIR CONDITIONER AR

S/N: XAH1-UP
PART OF 454-5645 OPTION AR-CAB
AN ATTACHMENT

SMCS-7320 **i05335337**

NOTE	PART NUMBER	QTY	PART NAME 1 2 3 4 5 6 (PRODUCT LEVEL)	SEE PAGE
Y	*416-1798*	1	AIR CONDITIONER & MOUNTING GP	339
Y	*229-9082*	1	DUCT GP-CAB AIR	384
	185-8284	1	COVER	
	235-8590	2	COVER GP-ACCESS	
			(LOCATED ON RH CAB CONSOLE SWITCH PANEL)	

Y - SEPARATE ILLUSTRATION

<END>

316-8916 AIR CONDITIONER GP

S/N: XAH1-UP

PART OF 416-1798 AIR CONDITIONER & MOUNTING GP

AN ATTACHMENT

SMCS-7320 **i03423324**

NOTE	REF NO	GRAPHIC REF	PART NUMBER	QTY	PART NAME 1 2 3 4 5 6 (PRODUCT LEVEL)	SEE PAGE
	1	1	**185-8300**	35	SCREW-TAPPING	
	2	1	**185-8302**	3	SCREW AS-TAPPING	
	3	1	**245-7817**	2	MOTOR AS	
	4	1	**245-7818**	3	CLIP	
	5	1	**245-7819**	2	CLIP	
	6	1	**245-7820**	1	COVER-FRONT	
	7	1	**245-7825**	1	INSULATOR	
	8	1	**245-7826**	1	INSULATOR	
	9	1	**245-7827**	1	INSULATOR	
	10	1	**245-7828**	1	INSULATOR	
	11	1	**245-7829**	1	PACKING	
	12	1	**245-7830**	1	CLIP	
	13	1	**245-7831**	1	SENSOR AS-TEMPERATURE (COOLANT)	
	14	1	**245-7832**	1	CONTROL AS	
	15	1	**245-7833**	1	CORE AS-HEATER	
	16	1	**245-7834**	1	DAMPER AS	
	17	1	**245-7835**	1	SENSOR AS-TEMPERATURE (AMBIENT AIR TEMP)	
Y	18	1	**245-7836**	1	COIL GP-EVAPORATOR	356
	19	1	**245-7838**	1	PACKING	
	20	1	**245-7839**	1	MOTOR AS (WITH FAN)	
Y	21	1	**245-7846**	1	CONTROL GP-HEAT & AIR COND (AIR INLET)	372
	22	1	**245-7847**	1	HARNESS AS-HEATER & AIR COND	
	23	1	**245-7856**	3	SCREW AS-TAPPING	
	24	1	**293-1137**	1	FILTER GP-AIR (AIR CONDITIONER)	
		1	**245-7823**	1	FILTER ELEMENT-CAB AIR	
		1	**245-7824**	1	PACKING	
	25	1	**316-8846**	1	PLATE	
	26	1	**316-8847**	2	ROD	
	27	1	**316-8849**	1	ROD	
	28	1	**316-8918**	1	PLATE	
	29	1	**316-8920**	1	ROD	
	30	1	**316-8921**	1	ROD	

Y - SEPARATE ILLUSTRATION

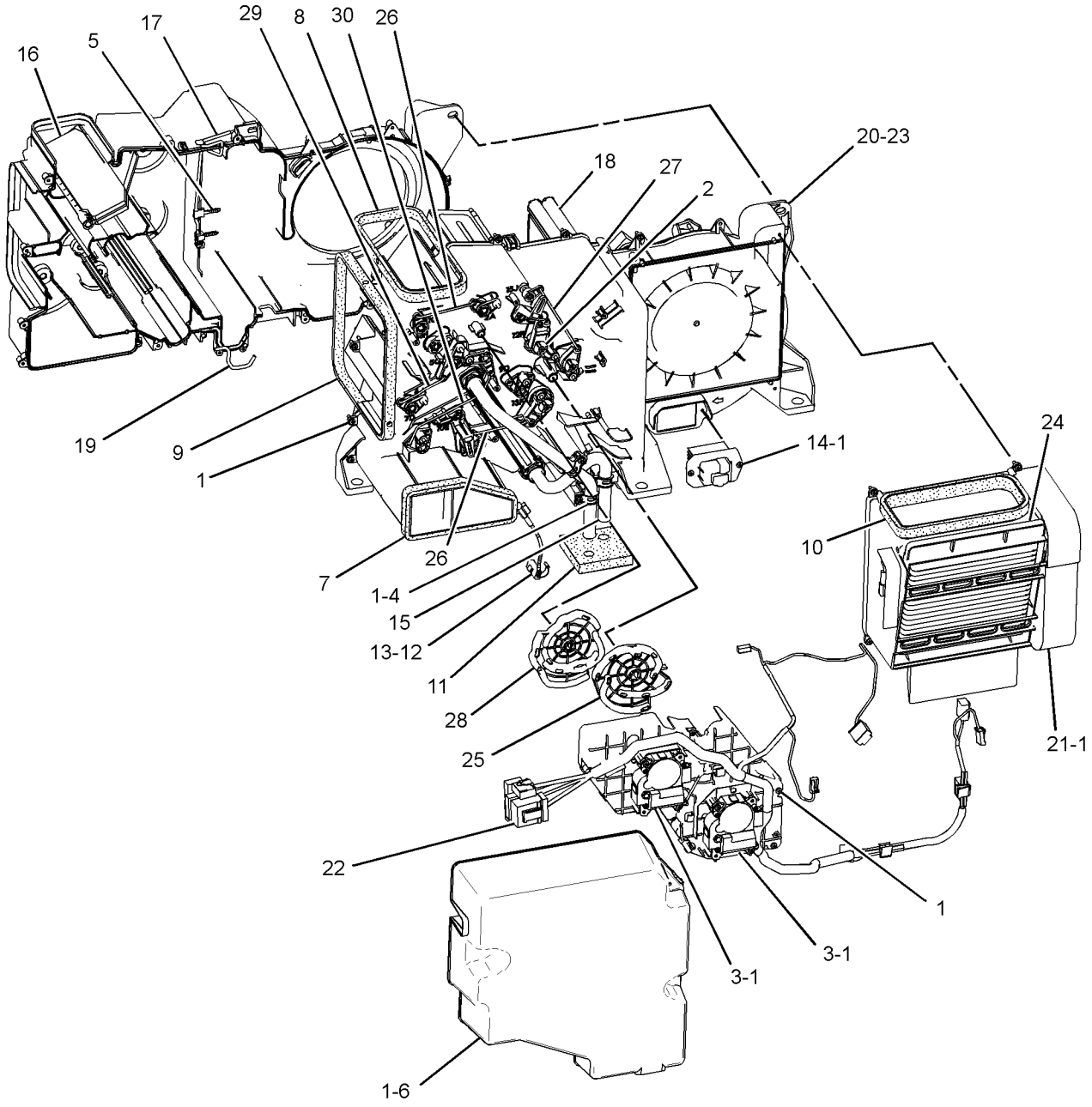

FRONT VIEW
(UPPER RIGHT)

GRAPHIC #1 **<END>** g01684274

259-7346 ARMREST GP–RH

S/N: XAH1-UP
PART OF 259-7348 CONSOLE GP-OPERATOR
ALSO AN ATTACHMENT

SMCS-7307 **i05509636**

NOTE	REF NO	GRAPHIC REF	PART NUMBER	QTY	PART NAME 1 2 3 4 5 6 (PRODUCT LEVEL)	SEE PAGE
M	1	1	**171-7325**	3	SCREW-TAPPING (M5X0.8-THD)	
M	2	1	**185-8286**	2	SCREW-MACHINE (M4X0.7X8-MM)	
	3	1	**235-8951**	1	SUPPORT AS	
	4	1	**235-8996**	1	COVER	
	5	1	**235-8997**	1	KNOB	
	6	1	**259-7345**	1	CUSHION	

M - METRIC PART

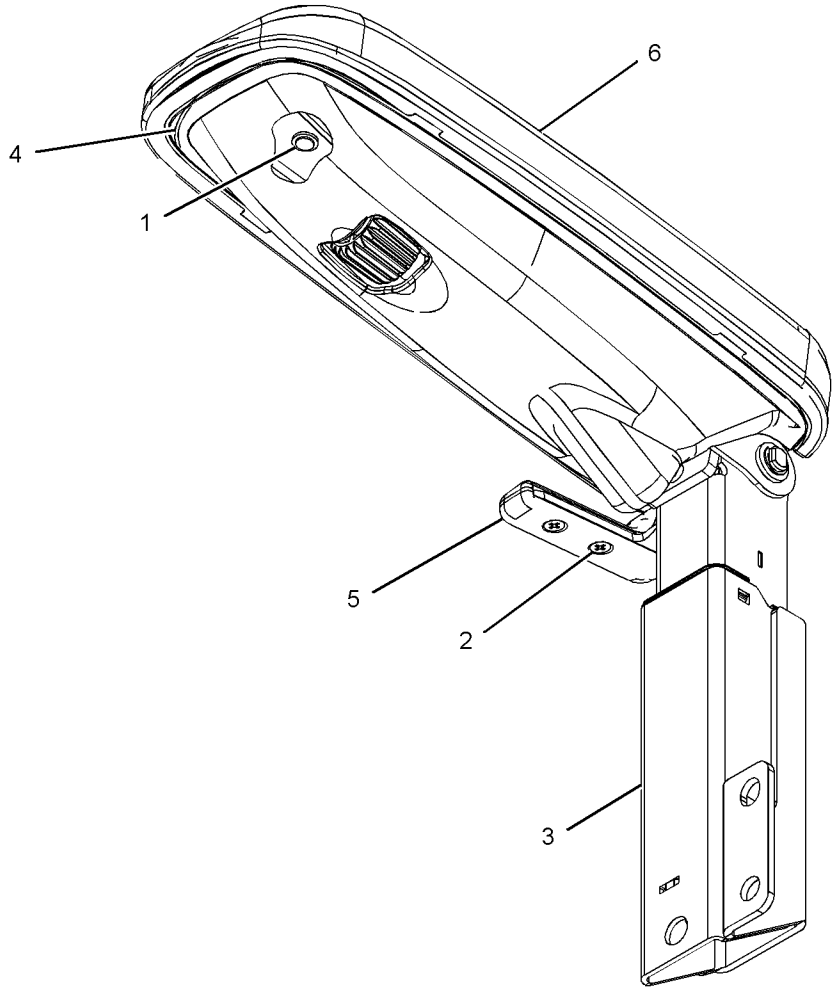

GRAPHIC #1 **<END>** g03482800

259-7347 ARMREST GP–LH

S/N: XAH1-UP
PART OF 421-1434 CONSOLE GP-OPERATOR
ALSO AN ATTACHMENT

SMCS-7307 **i02604406**

NOTE	REF NO	GRAPHIC REF	PART NUMBER	QTY	PART NAME 1 2 3 4 5 6 (PRODUCT LEVEL)	SEE PAGE
M	1	1	**171-7325**	3	SCREW-TAPPING (M5X0.8-THD)	
M	2	1	**185-8286**	2	SCREW-MACHINE (M4X0.7X8-MM)	
	3	1	**235-8952**	1	SUPPORT AS	
	4	1	**235-8996**	1	COVER	
	5	1	**235-8998**	1	KNOB	
	6	1	**259-7345**	1	CUSHION	

M - METRIC PART

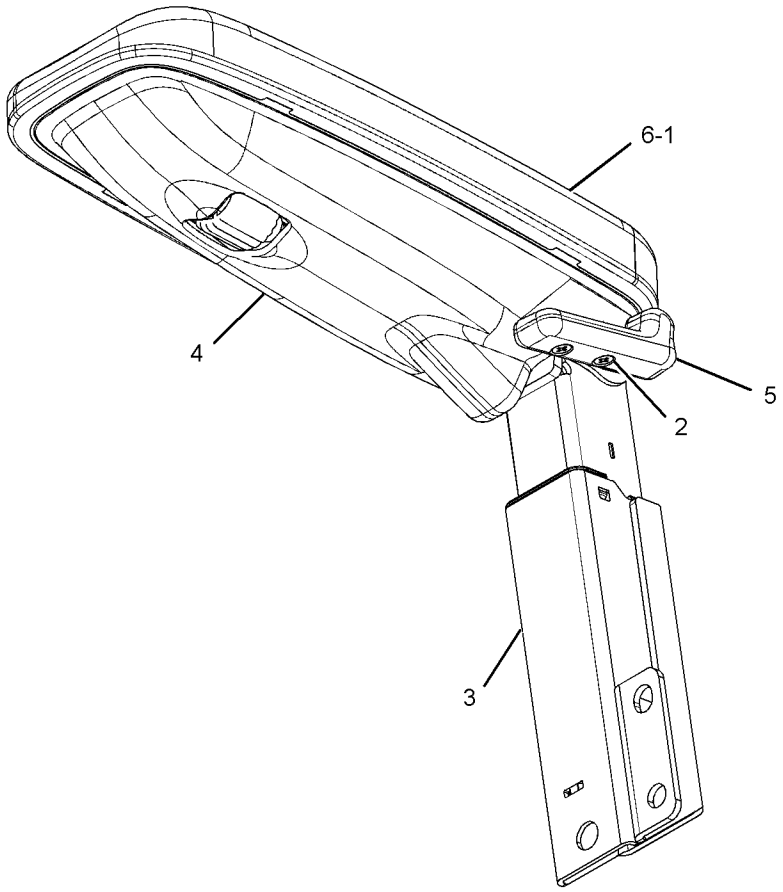

GRAPHIC #1 **<END>** g01210886

OPERATOR STATION

388-9102 CAB GP–EXTERIOR

S/N: XAH1-UP
PART OF 416-9607 CAB GP
AN ATTACHMENT

SMCS-7301, 7325 **i05873383**

NOTE	REF NO	GRAPHIC REF	PART NUMBER	QTY	PART NAME 1 2 3 4 5 6 (PRODUCT LEVEL)	SEE PAGE
	1	1	**139-7126**	1	HOLDER	
	2	1	**139-7127**	1	HOLDER	
	3	1	**156-6599**	1	STRIKER	
	4	1	**161-3685**	1	ROD	
	5	1	**161-3697**	1	GUARD	
	6	1	**164-0523**	1	LEVER AS	
	7	1	**164-0527**	1	ROD	
Y	8	1	*164-0528*	1	LEVER GP-CAB DOOR	389
	9	1	**167-7018**	1	COVER AS	
	10	1	**167-7042**	2	SEAL	
	11	1	**171-7426**	1	CABLE AS	
	12	1	*176-1939*	1	LEVER AS	
M		1	**9X-2044**	1	SCREW-TRUSS HEAD (M6X1X16-MM)	
		1	**176-1937**	1	BRACKET AS	
		1	**176-1938**	1	LEVER	
	13	1	**178-5570**	2	GROMMET	
	14	1	**185-8196**	1	GROMMET	
	15	1	**189-2704**	1	SEAL	
M	16	1	**189-2864**	2	SCREW-FLAT HEAD (M8X1.25X30-MM)	
	17	1	**4B-4278**	3	WASHER (10.2X20.5X1.6-MM THK)	
	18	1	**201-4530**	1	BRACKET AS	
	19	1	**205-6295**	1	LATCH AS	
	20	1	**210-5808**	1	SEAL	
	21	1	**235-8912**	1	HANDLE AS	
	22	1	**235-8933**	1	HANDLE AS	
M	23	1	**284-4426**	1	BOLT-WING (M8X1.25X15-MM)	
	24	1	**315-5313**	1	COVER	
Y	25	1	**327-6550**	1	MIRROR GP-REAR VIEW	395
	26	1	**156-6618**	1	SUPPORT AS	
	27	1	**9X-8257**	1	WASHER (17.5X30X3.5-MM THK)	
M	28	1	**099-0823**	3	SCREW-MACHINE (M6X1X6-MM)	
	29	1	**3B-4510**	1	LOCKWASHER	
M	30	1	**105-2169**	2	BOLT AS (M8X1.25X16-MM)	
M	31	1	**127-0580**	2	SCREW-FLAT HEAD (M8X1.25X20-MM)	
	32	1	**133-8016**	1	PACKING	
	33	1	**176-1986**	1	LAMP AS-DOME	
		1	**201-4417**	1	LAMP (24-VOLT, 10-WATT)	
	34	1	**1R-5998**	4	LOCKWASHER	
M	35	1	**3E-8020**	6	SCREW-TRUSS HEAD (M6X1X25-MM)	
M	36	1	**095-0755**	2	SCREW-MACHINE (M4X0.7X12-MM)	
	37	1	**4I-1205**	2	BUMPER	
	38	1	**4I-1206**	2	GUIDE	
	39	1	**4I-3063**	1	SPRING	
	40	1	**4I-3090**	4	SEAL	
M	41	1	**6V-6317**	2	BOLT (M10X1.5X20-MM)	
	42	1	**5P-1075**	2	WASHER-HARD (10.2X22.5X3-MM THK)	
	43	1	**4I-4270**	1	HOLDER-GLASS	
	44	1	**4I-4392**	3	CLIP	
	45	1	**5C-7793**	1	HOOK-COAT	
	46	1	**6V-7636**	4	PIN AS-SPRING	
	47	1	**7X-0578**	2	WASHER-HARD (10.2X32X2.5-MM THK)	
M	48	1	**8T-4133**	5	NUT (M10X1.5-THD)	
M	49	1	**8T-4193**	1	BOLT (M16X2X50-MM)	
M	50	1	**9X-2041**	3	SCREW-TRUSS HEAD (M10X1.5X20-MM)	
M	51	1	**9X-2042**	5	SCREW-TRUSS HEAD (M6X1X12-MM)	
M	52	1	**9X-2044**	5	SCREW-TRUSS HEAD (M6X1X16-MM)	

388-9102 **CAB GP (*contd.*)** **i05873383**

NOTE	REF NO	GRAPHIC REF	PART NUMBER	QTY	PART NAME 1 2 3 4 5 6 (PRODUCT LEVEL)	SEE PAGE
M	53	1	**9X-2045**	2	SCREW-TRUSS HEAD (M6X1X20-MM)	
E	54	1	**6I-5470**		SEAL (150-CM)	

E - ORDER BY THE CENTIMETER
M - METRIC PART
Y - SEPARATE ILLUSTRATION

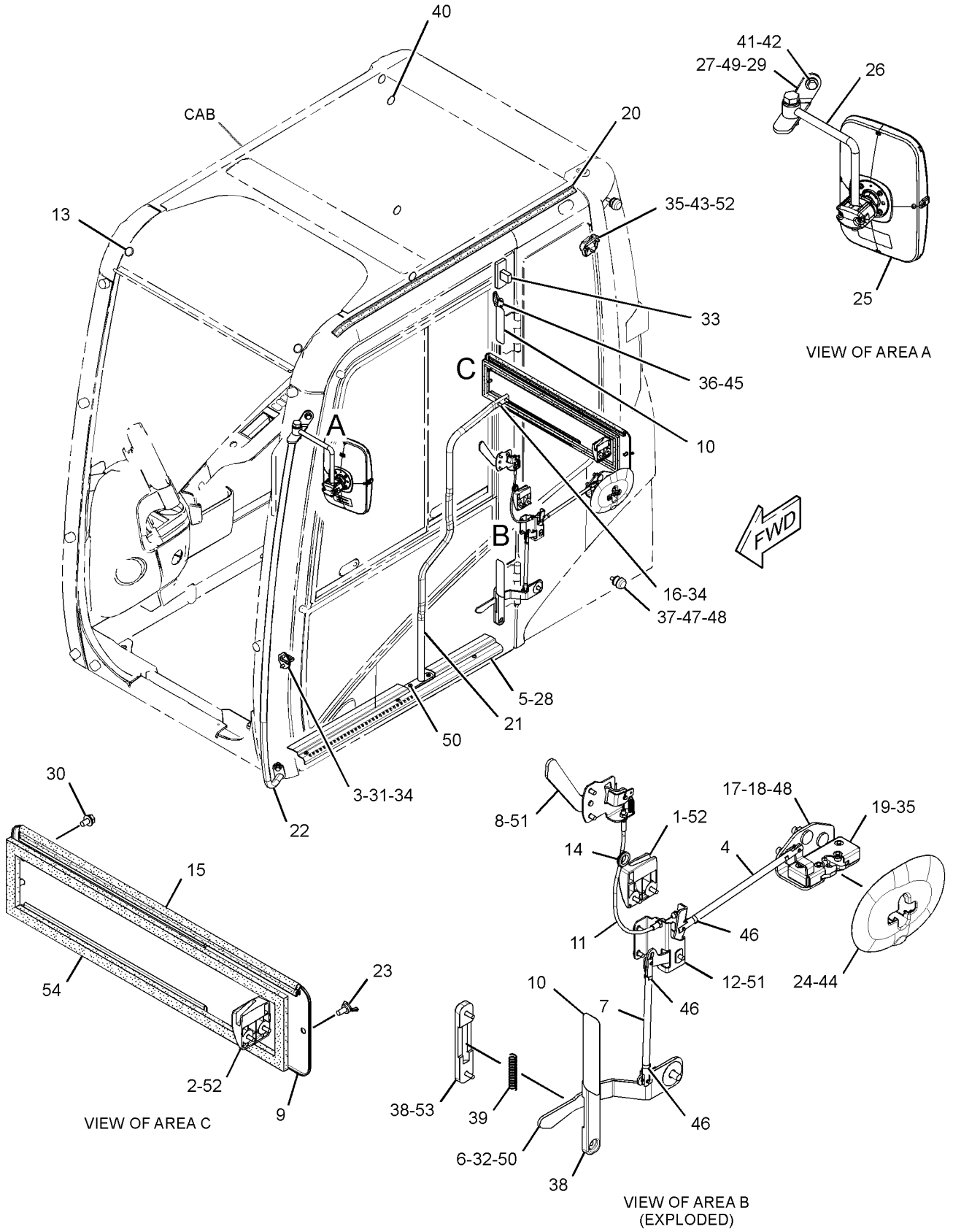

GRAPHIC #1 **<END>** g03179316

416-9606 CAB GP

S/N: XAH1-UP
PART OF 454-5645 OPTION AR-CAB
AN ATTACHMENT

SMCS-7301, 7325

i05432891

NOTE	REF NO	GRAPHIC REF	PART NUMBER	QTY	PART NAME 1 2 3 4 5 6 (PRODUCT LEVEL)	SEE PAGE
M	1	1	**128-2135**	5	SCREW-TRUSS HEAD (M6X1X13-MM)	
	2	1	**164-8474**	2	LOUVER AS-VENT	
Y	3	1	*416-9607*	1	CAB GP	351
Y	4	1	**234-6501**	1	COVER GP-CAB (REAR)	376
	5	1	**235-9001**	1	SUPPORT	
M	6	1	**8T-4179**	5	BOLT (M12X1.75X20-MM)	
M	7	1	**8T-4190**	4	BOLT (M16X2X25-MM)	
	8	1	**8T-4223**	13	WASHER-HARD (13.5X25.5X3-MM THK)	
M	9	1	**8T-4910**	6	BOLT (M12X1.75X60-MM)	
M	10	1	**8T-6868**	2	BOLT (M12X1.75X80-MM)	
	11	1	**8Y-6967**	2	LOUVER AS-VENT	
	12	1	**9X-8257**	6	WASHER (17.5X30X3.5-MM THK)	

M - METRIC PART
Y - SEPARATE ILLUSTRATION

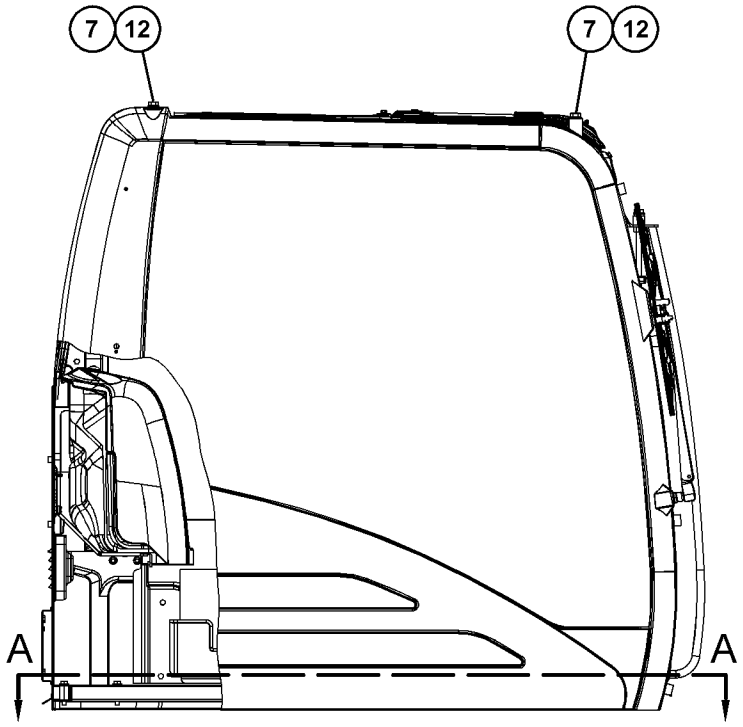

RIGHT SIDE VIEW

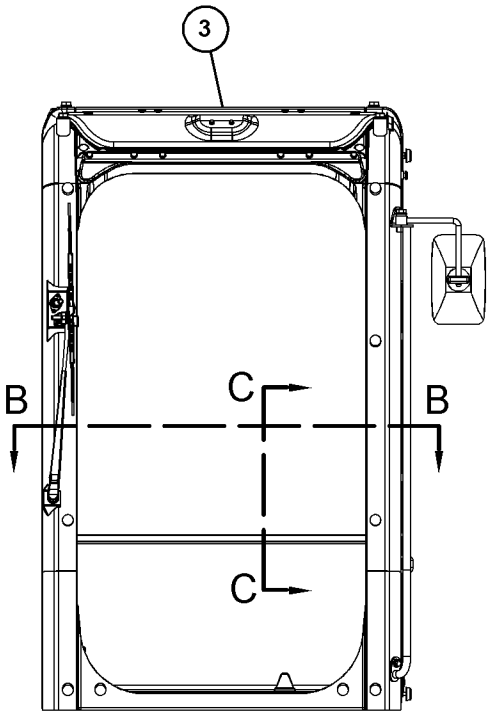

FRONT VIEW

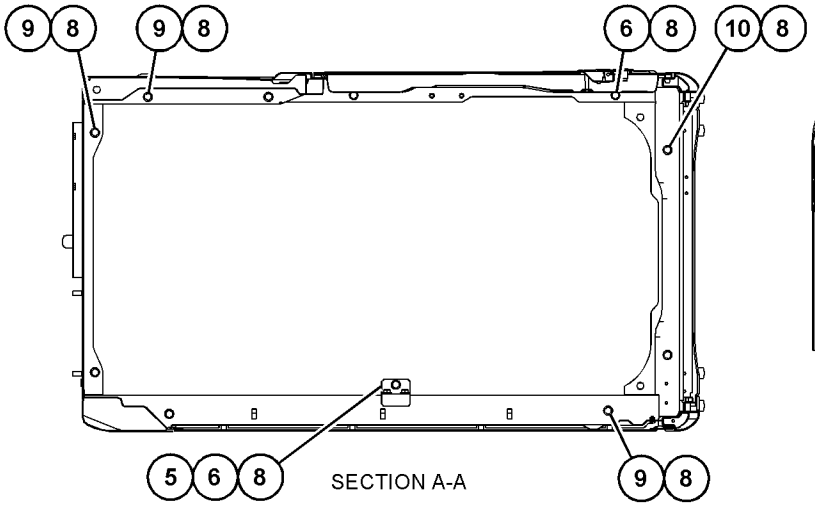

SECTION A-A

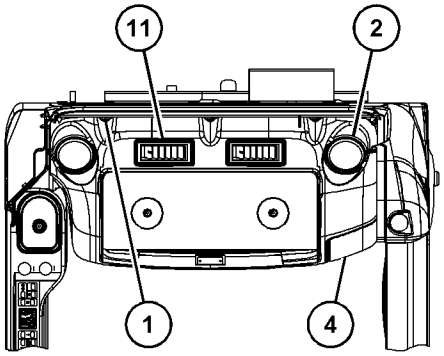

VIEW B-B

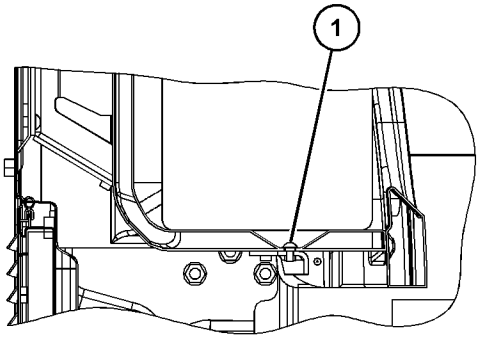

SECTION C-C

GRAPHIC #1 **<END>** g03431201

416-9607 CAB GP

S/N: XAH1-UP
PART OF 416-9606, 456-6742 CAB GP
AN ATTACHMENT

SMCS-7301, 7325

i05987427

NOTE	REF NO	GRAPHIC REF	PART NUMBER	QTY	PART NAME 1 2 3 4 5 6 (PRODUCT LEVEL)	SEE PAGE
	1	1	*235-8916*	1	CAB AS	
	1A	1	**436-1901**	2	HINGE	
M		1	**185-8182**	6	BOLT (M10X1.5X20-MM)	
		1	**5P-1075**	6	WASHER-HARD (10.2X22.5X3-MM THK)	
Y	2	1	*388-9102*	1	CAB GP (EXTERIOR)	346
Y	3	1	*416-9608*	1	CAB GP (INTERIOR)	353
Y	4	1	*388-9107*	1	WINDOW GP-CAB (SIDE, REAR)	412
Y	5	1	*234-6594*	1	WIPER GP-WINDOW (FRONT, UPPER)	425
HY	6	1	*388-9105*	1	DOOR GP-CAB (INTERIOR)	382
JY	7	1	*388-9109*	1	WINDOW GP-CAB (FRONT, UPPER)	415
Y	8	1	*388-9108*	1	WINDOW GP-CAB (FRONT, LOWER)	413
Y	9	1	*259-7350*	1	HATCH GP-ROOF	386
FHY			*388-9115*	1	DOOR & MTG GP-CAB	378
FJY			*388-9116*	1	WINDOW GP-CAB (FRONT, UPPER)	418
FJY			*388-9117*	1	WINDOW GP-CAB (FRONT, UPPER)	420

F - NOT SHOWN
H - PART MARKED H AVAILABLE FOR FIELD REPLACEMENT OF DOOR GP MARKED H
J - ITEMS MARKED J AVAILABLE FOR SERVICE REPAIR OF WINDOW GP MARKED J
M - METRIC PART
Y - SEPARATE ILLUSTRATION

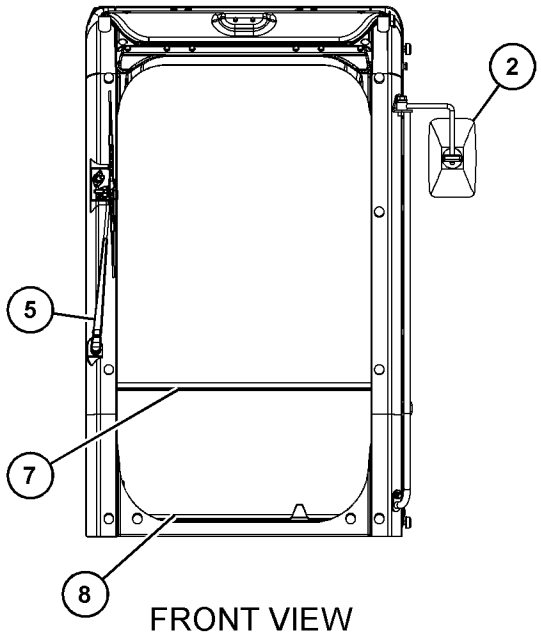

FRONT VIEW

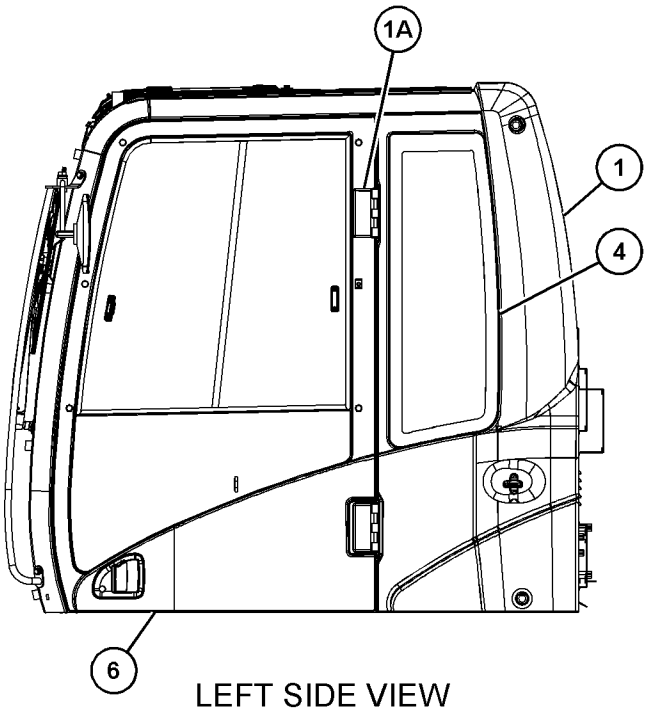

LEFT SIDE VIEW

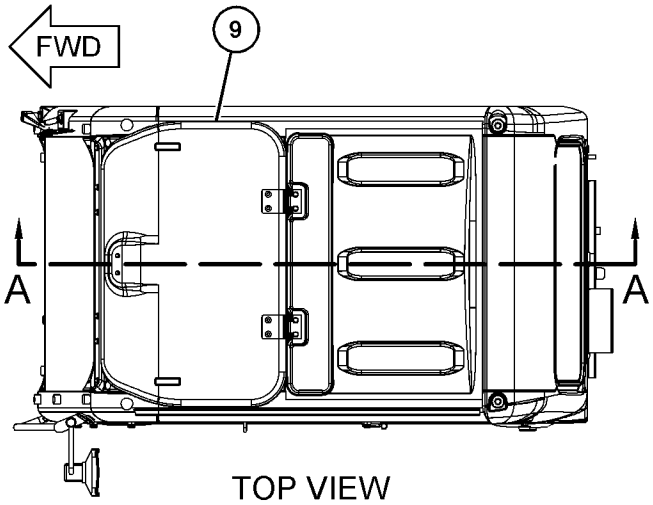

TOP VIEW

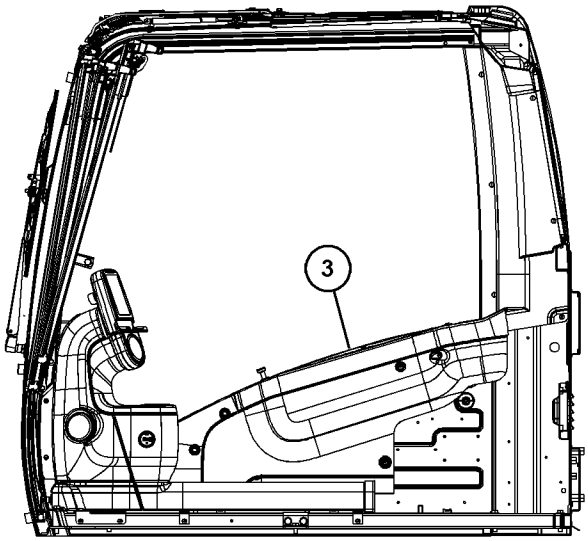

SECTION A-A

GRAPHIC #1 **<END>** g03431203

416-9608 CAB GP–INTERIOR

S/N: XAH1-UP
PART OF 416-9607 CAB GP
AN ATTACHMENT

SMCS-7301, 7325 **i05432483**

NOTE	REF NO	GRAPHIC REF	PART NUMBER	QTY	PART NAME 1 2 3 4 5 6 (PRODUCT LEVEL)	SEE PAGE
	1	1	**164-0646**	1	CUP	
	2	1	**164-0655**	1	PANEL-SWITCH	
	3	1	**170-9724**	5	CLIP	
	4	1	**171-7420**	6	CLIP	
	5	1	**176-1972**	1	COVER	
	6	1	**185-8205**	7	CLIP	
	7	1	**189-2678**	3	SPACER	
	8	1	**189-2853**	1	COVER	
	9	1	**189-2854**	1	COVER	
	10	1	**234-6468**	1	COVER AS	
		1	**259-7353**	4	CLIP	
	11	1	**234-6470**	1	COVER-MONITOR	
	12	1	**234-6471**	1	COVER-DUCT	
	13	1	**234-6472**	1	COVER	
	14	1	**234-6473**	1	COVER-FRONT (UPPER, RH)	
	15	1	**234-6476**	1	DUCT	
	16	1	**234-6477**	1	BRACKET AS	
	17	1	**234-6483**	1	BRACKET AS	
	18	1	**234-6485**	1	BRACKET AS	
	19	1	**234-6490**	1	CUP	
	20	1	**234-6491**	1	COVER	
	21	1	**234-6497**	1	COVER	
	22	1	**234-6498**	3	RIVET	
	23	1	**234-6579**	2	NUT-SPEED	
	24	1	**235-8923**	2	CAP	
	25	1	**235-8930**	1	LINER	
	26	1	**235-8950**	12	CLIP	
	27	1	**245-7790**	2	SCREW-TAPPING	
	28	1	**305-0330**	1	COVER (LOWER, RH)	
	29	1	**383-5767**	1	COVER	
	30	1	**388-9091**	1	COVER	
	31	1	**388-9094**	1	COVER	
	32	1	**388-9095**	1	COVER	
	33	1	**396-2351**	1	LOUVER AS	
	34	1	**396-2352**	2	LOUVER AS	
	35	1	**399-0061**	1	BRACKET AS	
	36	1	**399-0062**	1	COVER	
	37	1	**399-0065**	1	BRACKET	
M	38	1	**128-2135**	10	SCREW-TRUSS HEAD (M6X1X13-MM)	
M	39	1	**128-2136**	1	SCREW-TRUSS HEAD (M6X1X16-MM)	
	40	1	**234-6469**	1	COVER	
M	41	1	**9X-2042**	11	SCREW-TRUSS HEAD (M6X1X12-MM)	

M - METRIC PART

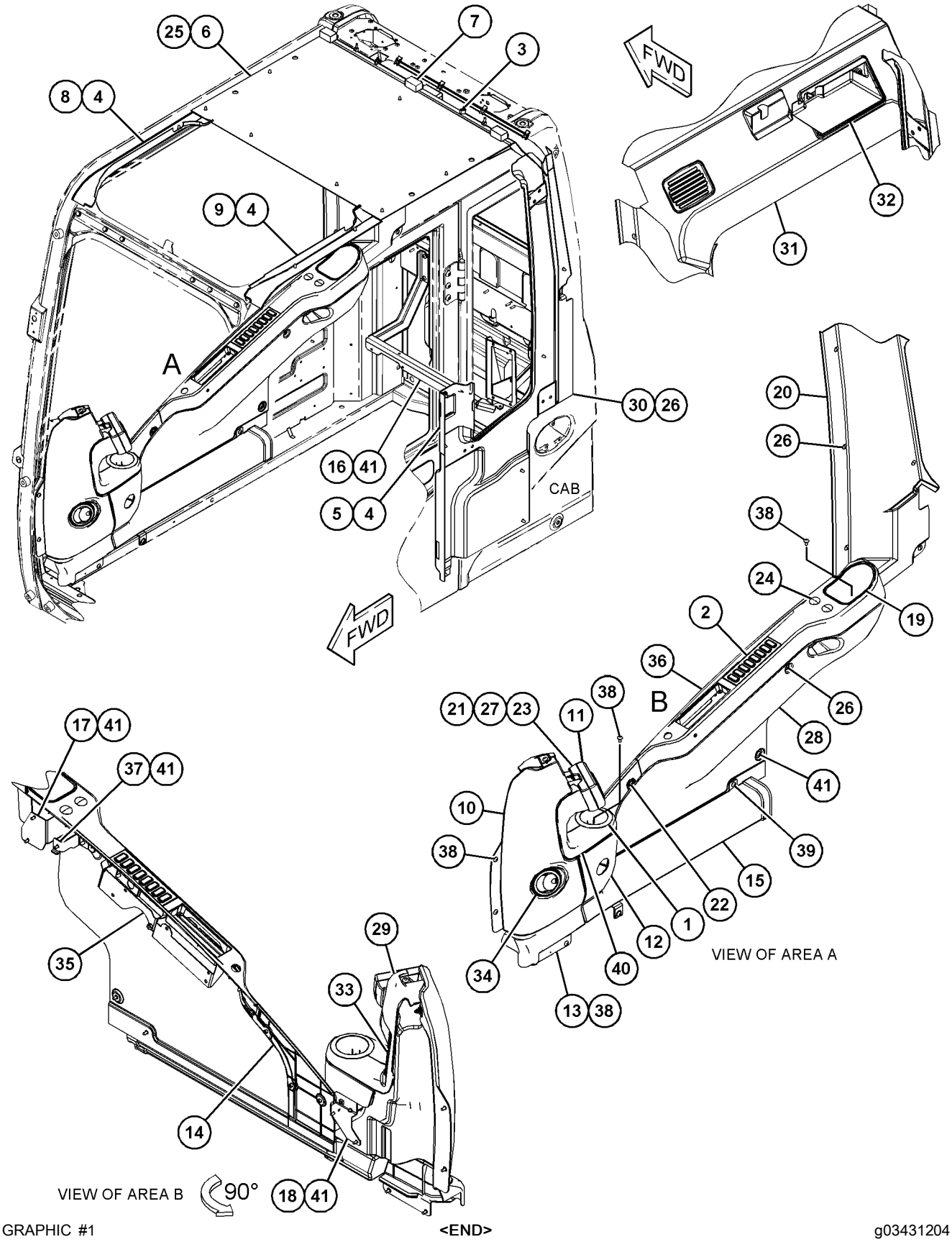

GRAPHIC #1 **<END>** g03431204

OPERATOR STATION

456-6742 CAB GP

S/N: XAH1-UP
PART OF 454-5645 OPTION AR-CAB
AN ATTACHMENT

SMCS-7301, 7325 **i05957240**

NOTE	PART NUMBER	QTY	PART NAME 1 2 3 4 5 6 (PRODUCT LEVEL)	SEE PAGE
Y	*416-1798*	1	AIR CONDITIONER & MOUNTING GP	339
Y	**416-9607**	1	CAB GP	351
Y	*421-1431*	1	CONSOLE GP-OPERATOR	365
Y	*310-0078*	1	CONTROL & MTG GP-JOYSTICK	369
Y	*170-9497*	1	CONTROL GP-PILOT OPERATED HYD (TRAVEL)	375
Y	*454-8704*	1	LIGHTING GP-FLOOD	111
Y	*275-1715*	1	LINES GP-PILOT (PILOT CONTROL)	245
Y	*399-2620*	1	MONITOR & MTG GP-OPERATOR	396
Y	*398-7007*	1	PANEL GP-SWITCH	117
Y	*327-6501*	1	SEAT & MOUNTING GP (HIGH BACK, TILT)	405
Y	*305-0467*	1	SEAT BELT GP (RETRACTABLE)	406
Y	*327-6523*	1	SUPPORT GP-SEAT	409
Y	*398-7003*	1	WIRING GP-CAB	129
Y	*398-7005*	1	WIRING GP-CONSOLE	139
Y	*440-6915*	1	WIRING GP-PLATFORM	143
M	**8T-4179**	5	BOLT (M12X1.75X20-MM)	
M	**8T-4190**	4	BOLT (M16X2X25-MM)	
M	**8T-4191**	4	BOLT (M10X1.5X16-MM)	
M	**8T-4910**	6	BOLT (M12X1.75X60-MM)	
M	**8T-6868**	2	BOLT (M12X1.75X80-MM)	
	122-9657	2	CLAMP	
	235-8879	1	DUCT AS (FLOOR)	
	245-7873	1	INSULATOR	
	293-1183	1	FILTER GP-CAB AIR	
	293-1184	1	FILTER ELEMENT-CAB AIR	
	135-8965	1	GROMMET	
	135-8966	1	GROMMET	
	293-1238	2	HOSE-DRAIN	
	245-7916	1	PLATFORM AS	
	324-5771	2	SOCKET-AUXILIARY POWER (12-VOLT)	
	4I-3266	1	STRIP	
	161-3717	1	STRIP	
	235-9001	1	SUPPORT	
	9X-8257	6	WASHER (17.5X30X3.5-MM THK)	
	8T-4121	4	WASHER-HARD (11X21X2.5-MM THK)	
	8T-4223	13	WASHER-HARD (13.5X25.5X3-MM THK)	

M - METRIC PART
Y - SEPARATE ILLUSTRATION

<END>

245-7836 COIL GP-EVAPORATOR

S/N: XAH1-UP

PART OF 316-8916 AIR CONDITIONER GP

AN ATTACHMENT

SMCS-7343 **i05412515**

NOTE	REF NO	GRAPHIC REF	PART NUMBER	QTY	PART NAME 1 2 3 4 5 6 (PRODUCT LEVEL)	SEE PAGE
	1	1	**245-7837**	1	VALVE AS-EXPANSION	
	2	1	**245-7905**	1	INSULATOR	
	3	1	**281-0791**	2	BOLT-SOCKET HEAD (M5X0.8X40-MM)	
	4	1	**121-7136**	1	SEAL-O-RING	
	5	1	**121-7137**	1	SEAL-O-RING	

245-7836 **COIL GP-EVAPORATOR (*contd.*)** **i05412515**

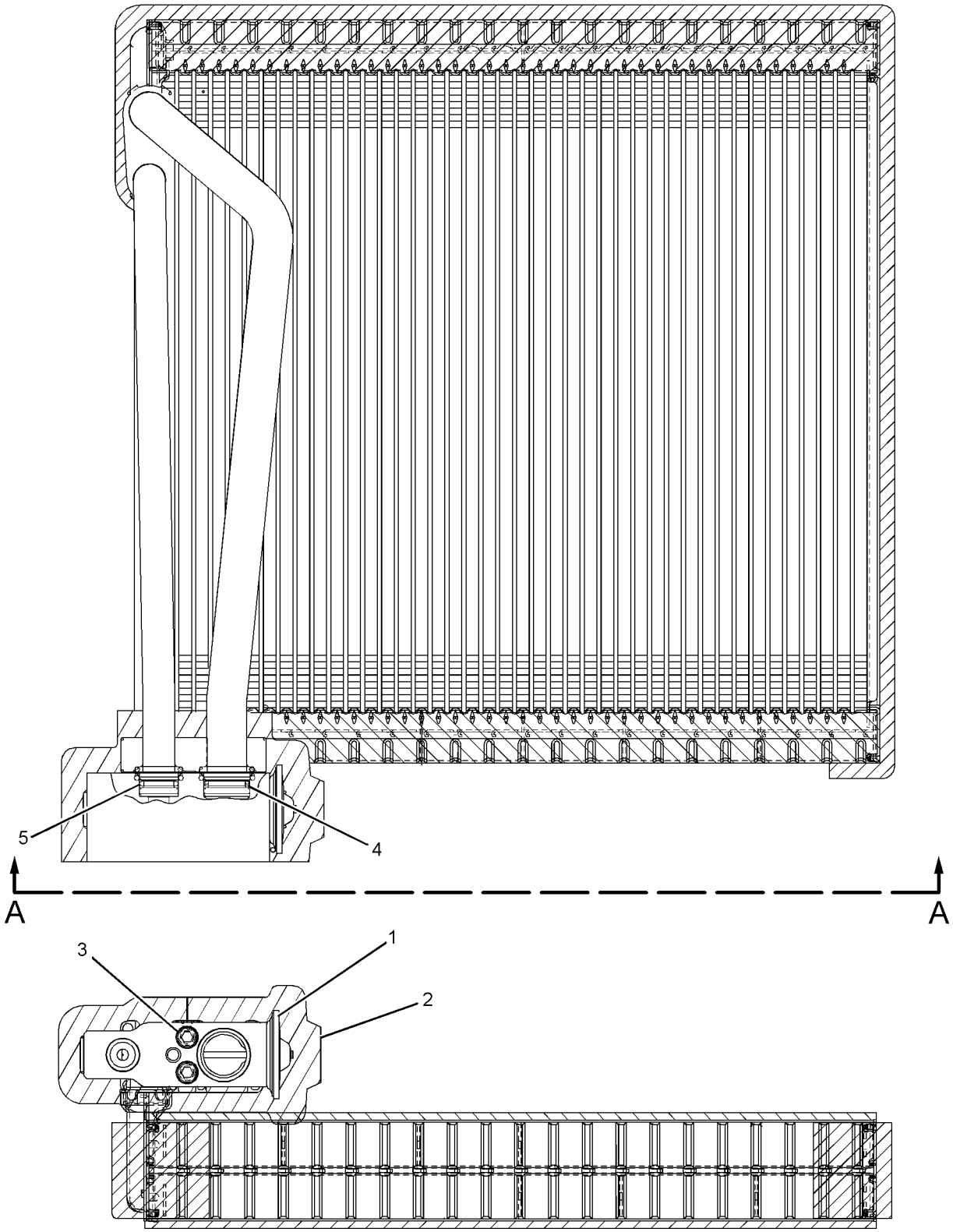

VIEW A-A

GRAPHIC #1 **<END>** g01134658

387-2610 COMPRESSOR & MTG GP-REFRIG

S/N: XAH1-UP

PART OF 387-2619 INSTALLATION AR-ENGINE

SMCS-1802 **i05871786**

NOTE	REF NO	GRAPHIC REF	PART NUMBER	QTY	PART NAME 1 2 3 4 5 6 (PRODUCT LEVEL)	SEE PAGE
Y	1	1	**372-9493**	1	COMPRESSOR GP-REFRIGERANT (24-VOLT)	359
	2	1	**392-1165**	1	BRACKET AS	
M		1	**8T-3490**	2	NUT-WELD (M10X1.5-THD)	
	3	1	**393-8618**	1	BRACKET	
	4	1	**364-1614**	4	BOLT-FLANGE HEAD (M8X1.25X95-MM)	
M	5	1	**453-1259**	2	BOLT (M16X2X40-MM)	
	6	1	**8T-4121**	2	WASHER-HARD (11X21X2.5-MM THK)	
M	7	1	**8T-4136**	1	BOLT (M10X1.5X25-MM)	
M	8	1	**8T-4137**	1	BOLT (M10X1.5X20-MM)	
	9	1	**451-2175**	2	WASHER-HARD (17.5X30X3.5-MM THK)	

M - METRIC PART
Y - SEPARATE ILLUSTRATION

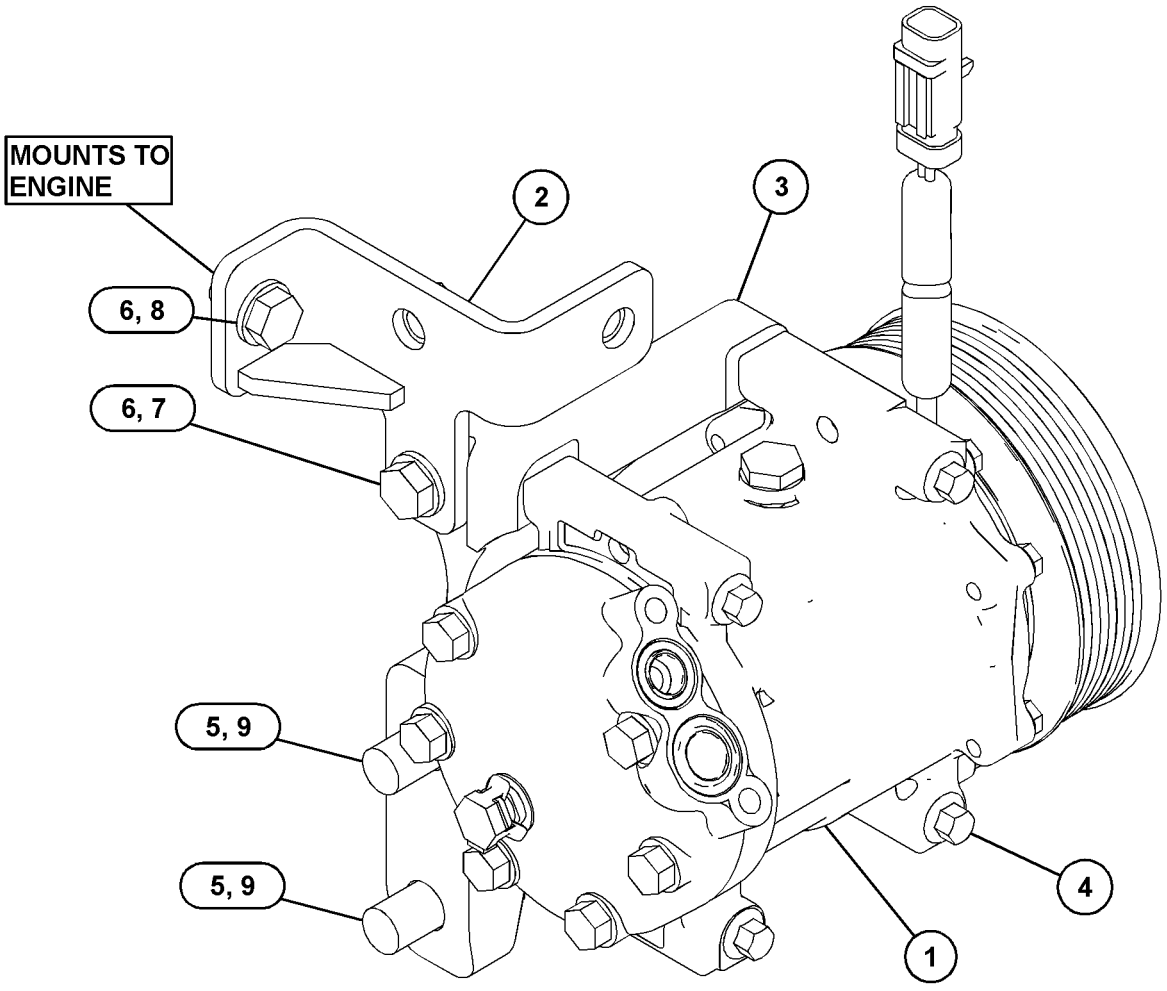

GRAPHIC #1 **<END>** g03122396

372-9493 COMPRESSOR GP-REFRIGERANT

S/N: XAH1-UP
24-VOLT
PART OF 387-2610 COMPRESSOR & MTG GP-REFRIG

SMCS-1802 **i05440258**

NOTE	REF NO	GRAPHIC REF	PART NUMBER	QTY	PART NAME 1 2 3 4 5 6 (PRODUCT LEVEL)	SEE PAGE
	1	1	**9W-0852**	2	PIN-CONNECTOR (14-GA TO 16-GA)	
	2	1	**327-6593**	1	SEAL-O-RING	
	3	1	**327-6594**	1	SEAL-O-RING	
	4	1	**243-4505**	1	RECEPTACLE AS-CONNECTOR (2-PIN)	

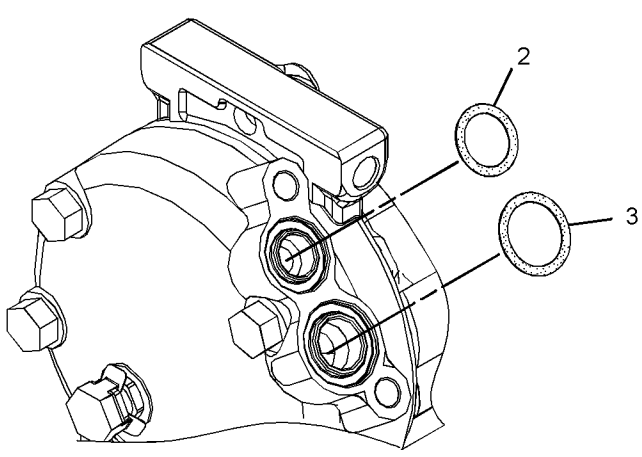

VIEW OF AREA A

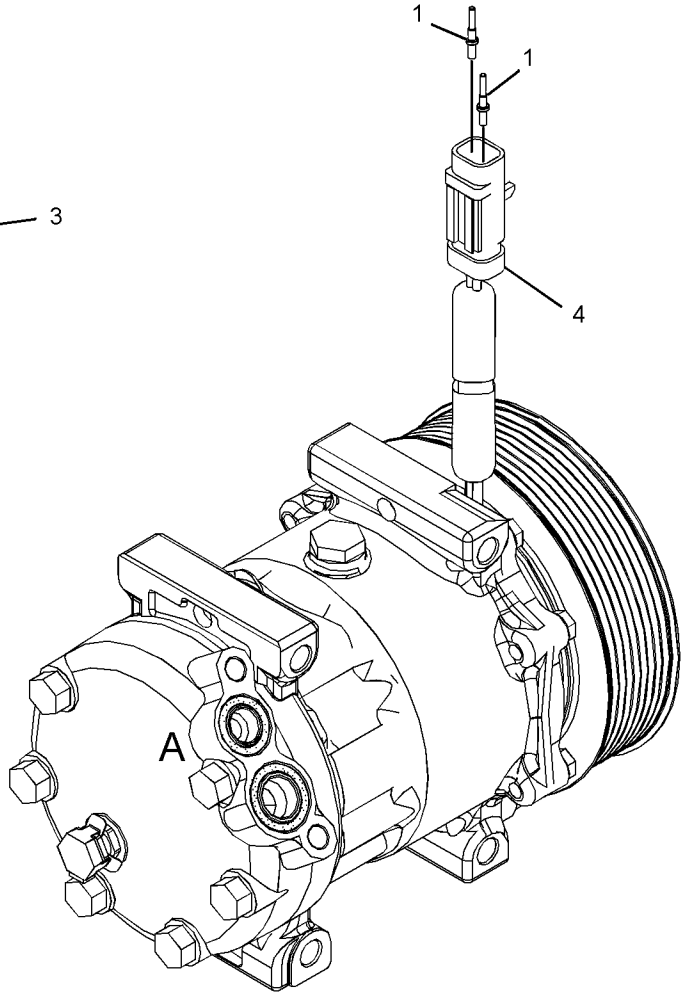

GRAPHIC #1 **<END>** g03433060

383-5675 CONDENSER & MTG GP-REFRIGERANT

S/N: XAH1-UP

PART OF 387-2619 INSTALLATION AR-ENGINE

SMCS-1805 **i05775952**

NOTE	REF NO	GRAPHIC REF	PART NUMBER	QTY	PART NAME 1 2 3 4 5 6 (PRODUCT LEVEL)	SEE PAGE
Y	1	1	**245-7749**	1	CONDENSER GP-REFRIGERANT	362
	2	1	**383-5700**	1	BRACKET AS	
M		1	**6V-9632**	2	NUT-WELD (M6X1-THD)	
	3	1	**383-5702**	1	BRACKET AS	
M		1	**6V-9632**	2	NUT-WELD (M6X1-THD)	
M		1	**8T-3612**	2	NUT-WELD (M8X1.25-THD)	
	4	1	**117-8929**	4	WASHER (6.6X22X2-MM THK)	
	5	1	**8T-4121**	4	WASHER-HARD (11X21X2.5-MM THK)	
M	6	1	**8T-4137**	4	BOLT (M10X1.5X20-MM)	
M	7	1	**8T-4971**	4	BOLT (M6X1X30-MM)	

M - METRIC PART
Y - SEPARATE ILLUSTRATION

383-5675 **CONDENSER & MTG GP-REFRIGERANT (*contd.*)** **i05775952**

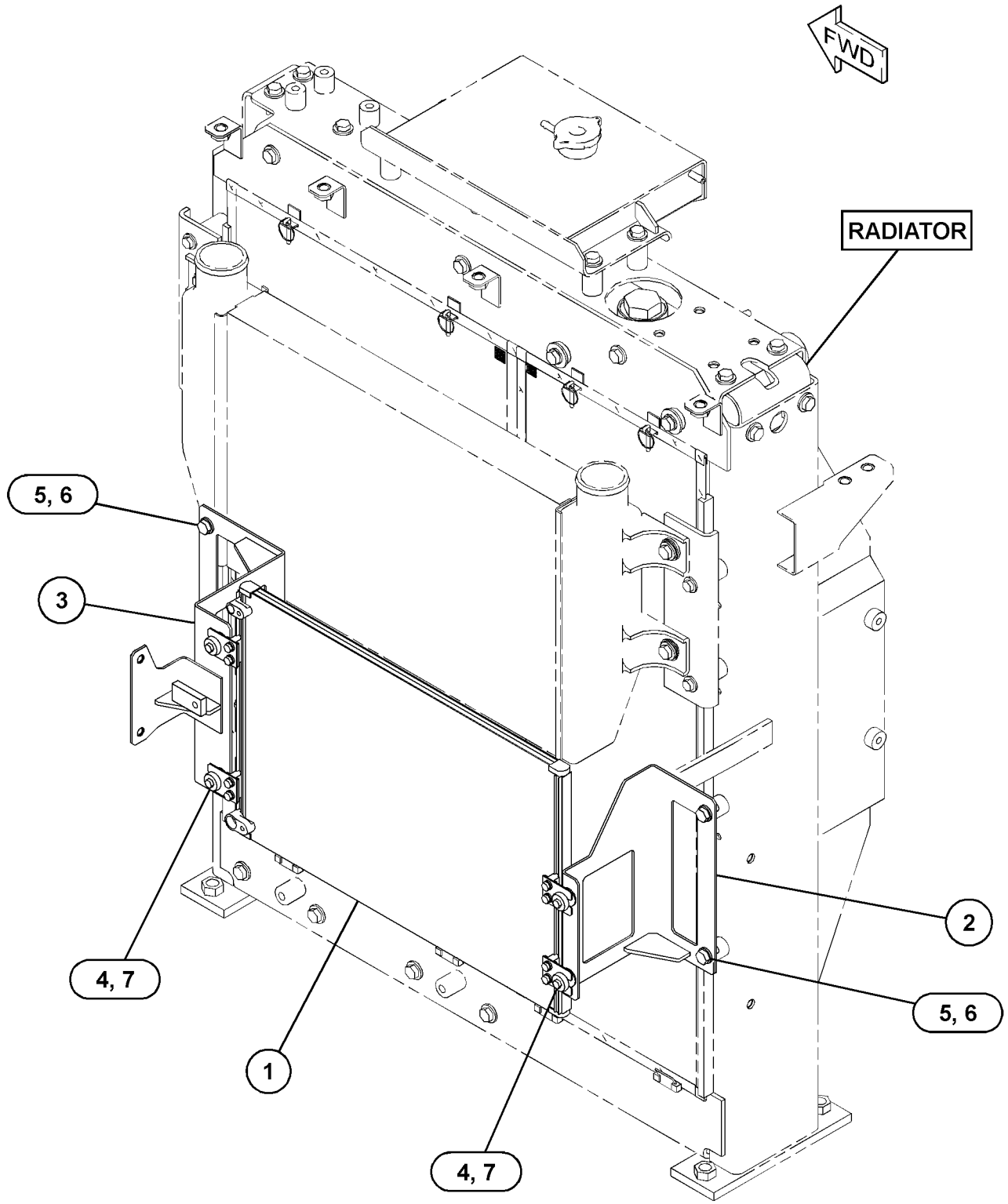

GRAPHIC #1 **<END>** g03128857

245-7749 CONDENSER GP-REFRIGERANT

S/N: XAH1-UP

PART OF 383-5675 CONDENSER & MTG GP-REFRIGERANT

SMCS-1805 **i02778309**

NOTE	REF NO	GRAPHIC REF	PART NUMBER	QTY	PART NAME 1 2 3 4 5 6 (PRODUCT LEVEL)	SEE PAGE
	1	1	**235-8880**	1	CONDENSER AS	
	2	1	**245-7750**	4	BUSHING-RUBBER	
	3	1	**245-7751**	4	BRACKET	
	4	1	**095-0827**	8	LOCKWASHER	
M	5	1	**8T-4171**	8	BOLT (M6X1X12-MM)	
	6	1	**9X-8256**	8	WASHER (6.6X12X2-MM THK)	

M - METRIC PART

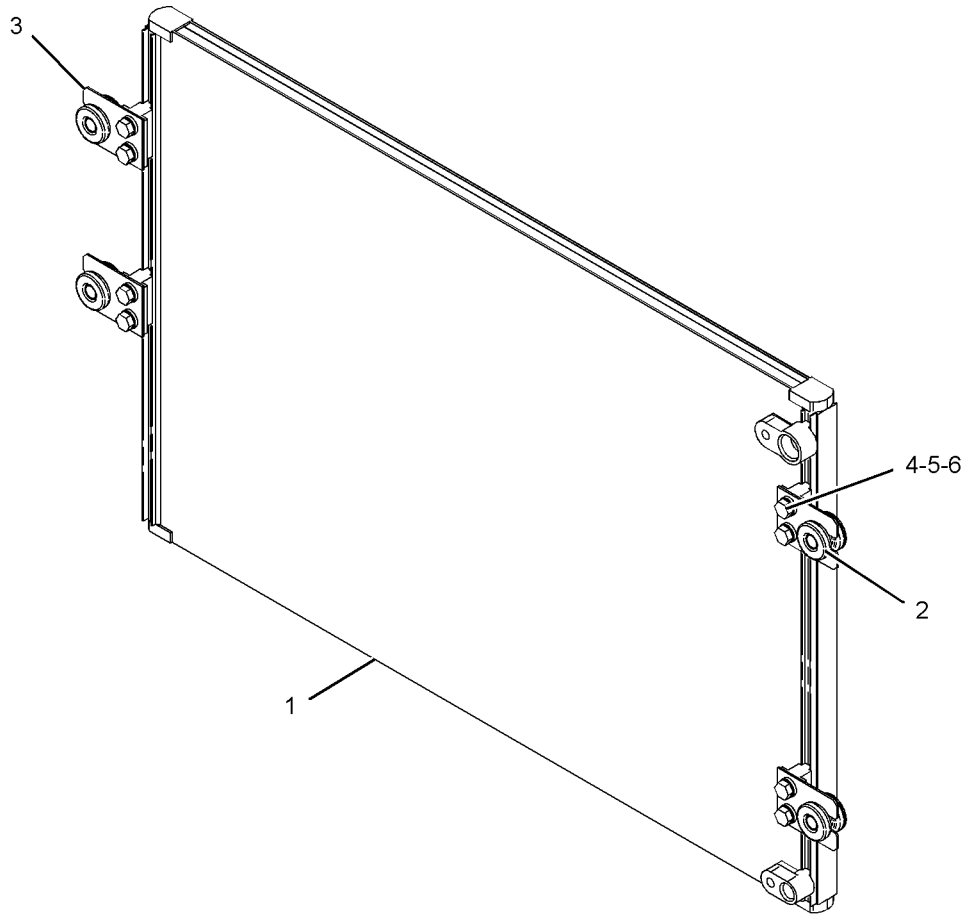

GRAPHIC #1 **<END>** g01086695

259-7348 CONSOLE GP-OPERATOR–RH

S/N: XAH1-UP
PART OF 421-1431 CONSOLE GP-OPERATOR
ALSO AN ATTACHMENT

SMCS-5258 **i02604394**

NOTE	REF NO	GRAPHIC REF	PART NUMBER	QTY	PART NAME 1 2 3 4 5 6 (PRODUCT LEVEL)	SEE PAGE
M	1	1	**128-2135**	4	SCREW-TRUSS HEAD (M6X1X13-MM)	
	2	1	**185-8284**	1	COVER	
	3	1	**234-6579**	2	NUT-SPEED	
	4	1	**234-6580**	2	CAP	
	5	1	**234-6602**	1	COVER	
	6	1	**234-6604**	1	COVER	
	7	1	**234-6608**	1	COVER	
	8	1	**234-6609**	1	COVER	
	9	1	**234-6610**	1	COVER	
	10	1	**235-8914**	4	NUT-SPEED	
	11	1	**235-8966**	2	BASE-MOUNTING	
	12	1	**245-7790**	2	SCREW-TAPPING	
	13	1	**245-7926**	1	SUPPORT AS	
	14	1	**245-7948**	4	SCREW-TAPPING	
Y	15	1	**259-7346**	1	ARMREST GP (RH)	344
M	16	1	**9X-2041**	3	SCREW-TRUSS HEAD (M10X1.5X20-MM)	

M - METRIC PART
Y - SEPARATE ILLUSTRATION

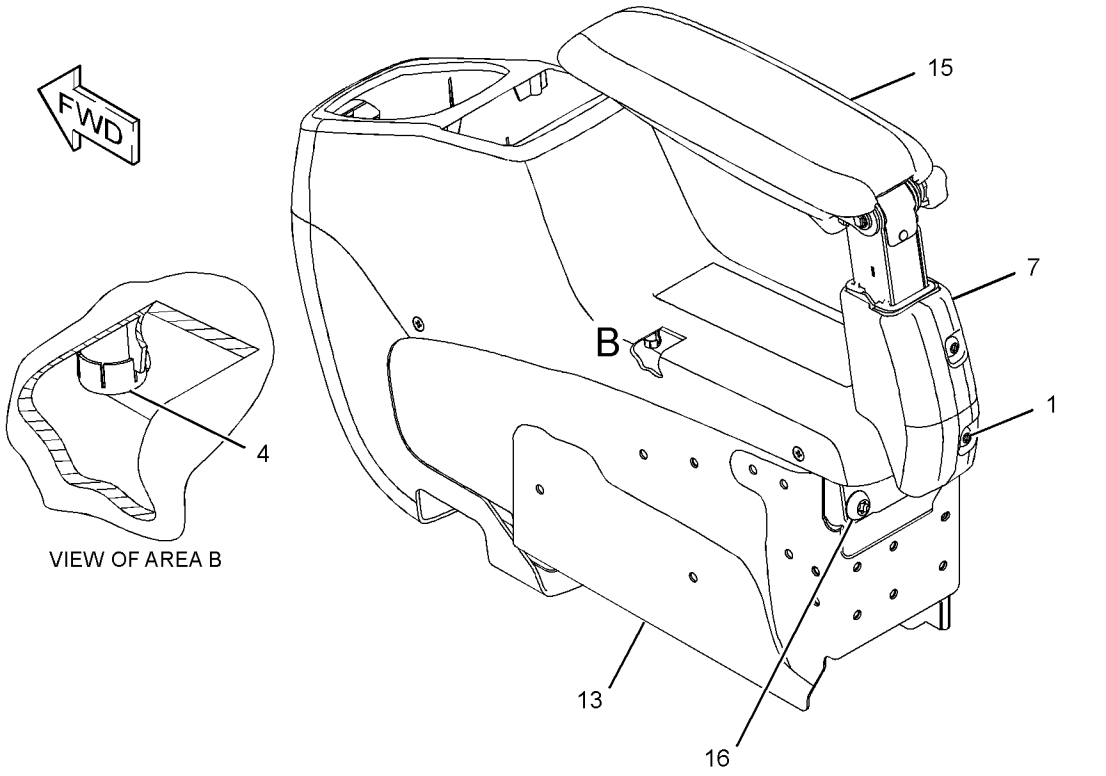

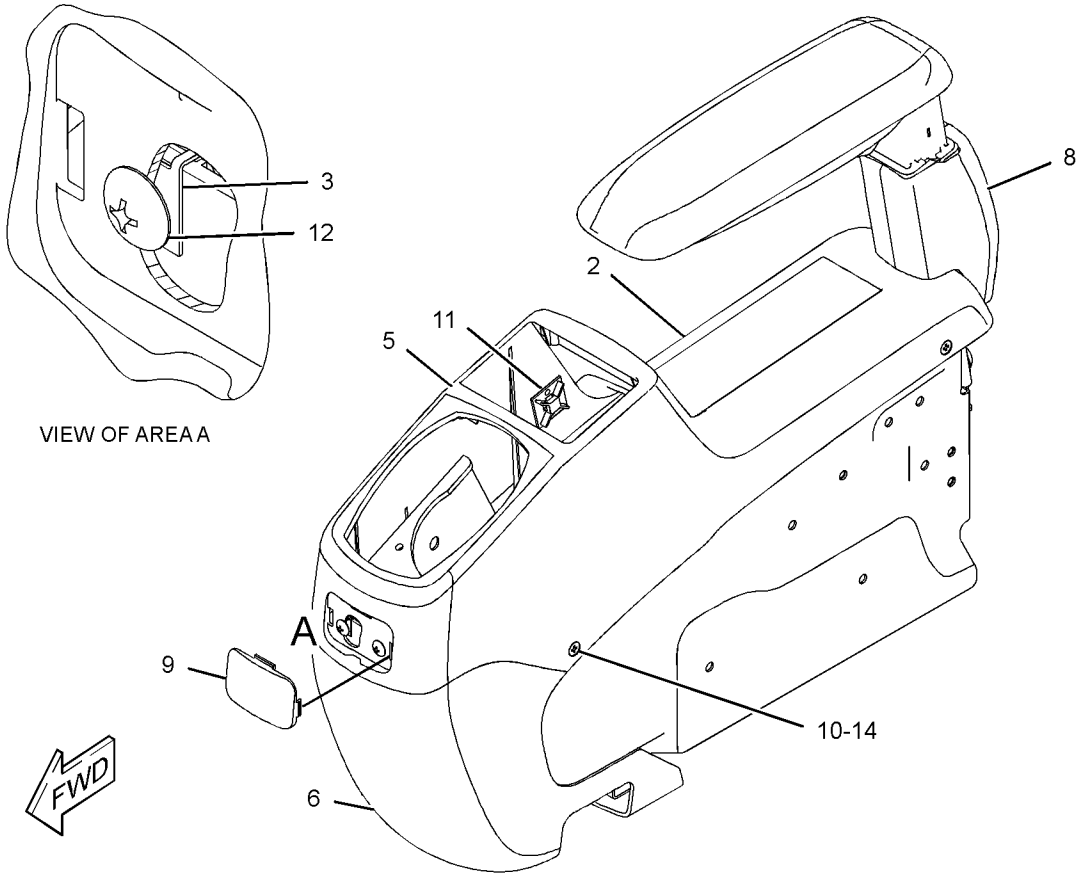

GRAPHIC #1 **<END>** g01217107

421-1431 CONSOLE GP-OPERATOR

S/N: XAH1-UP
PART OF 456-6742 CAB GP, 451-3987 OPERATOR AR
ALSO AN ATTACHMENT

SMCS-5258 **i05432102**

NOTE	REF NO	GRAPHIC REF	PART NUMBER	QTY	PART NAME 1 2 3 4 5 6 (PRODUCT LEVEL)	SEE PAGE
	1	1	**176-1916**	2	GROMMET	
	2	1	**178-5422**	2	GROMMET	
	3	1	**178-5423**	2	GROMMET	
	4	1	**185-8161**	2	INSULATOR	
	5	1	**235-8893**	2	SUPPORT	
	6	1	**235-8894**	2	SUPPORT	
Y	7	1	*421-1434*	1	CONSOLE GP-OPERATOR (LH)	367
Y	8	1	*259-7348*	1	CONSOLE GP-OPERATOR (RH)	363
	9	1	**8T-4121**	4	WASHER-HARD (11X21X2.5-MM THK)	
M	10	1	**8T-4195**	4	BOLT (M10X1.5X30-MM)	
M	11	1	**9X-2046**	8	SCREW-TRUSS HEAD (M6X1X35-MM)	
M	12	1	**9X-2045**	12	SCREW-TRUSS HEAD (M6X1X20-MM)	
	13	1	**7K-1181**	4	STRAP-CABLE	
	14	1	**122-9617**	2	GUARD	

M - METRIC PART
Y - SEPARATE ILLUSTRATION

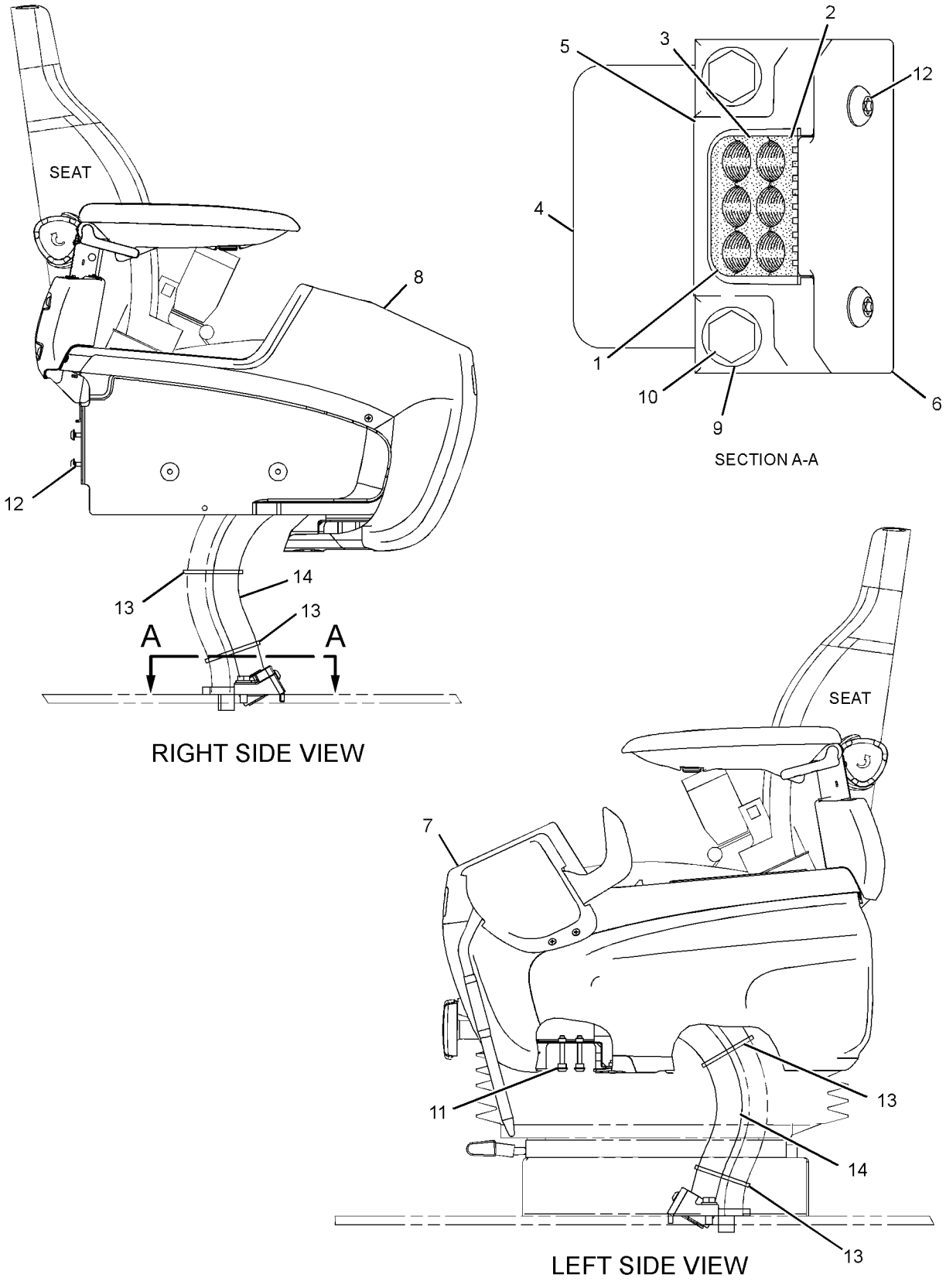

GRAPHIC #1 **<END>** g01844714

421-1434 CONSOLE GP-OPERATOR–LH

S/N: XAH1-UP
PART OF 421-1431 CONSOLE GP-OPERATOR
ALSO AN ATTACHMENT

SMCS-5258 **i05432119**

NOTE	REF NO	GRAPHIC REF	PART NUMBER	QTY	PART NAME 1 2 3 4 5 6 (PRODUCT LEVEL)	SEE PAGE
M	1	1	**128-2135**	5	SCREW-TRUSS HEAD (M6X1X13-MM)	
M	2	1	**171-7325**	3	SCREW-TAPPING (M5X0.8-THD)	
	3	1	**234-6579**	6	NUT-SPEED	
	4	1	**234-6580**	4	CAP	
	5	1	**234-6603**	1	COVER	
	6	1	**234-6605**	1	COVER	
	7	1	**234-6608**	1	COVER	
	8	1	**234-6609**	1	COVER	
	9	1	**234-6610**	1	COVER	
	11	1	**234-6612**	1	COVER	
Y	12	1	**234-6613**	1	SWITCH GP-LIMIT (HYDRAULIC LOCKOUT)	126
	13	1	**234-6614**	1	COVER	
	14	1	**235-8914**	4	NUT-SPEED	
	15	1	**235-8965**	1	GUARD	
	16	1	**245-7790**	3	SCREW-TAPPING	
	17	1	**245-7925**	1	SUPPORT AS	
	18	1	**245-7948**	7	SCREW-TAPPING	
	19	1	**259-7202**	1	ASHTRAY	
Y	20	1	**259-7347**	1	ARMREST GP (LH)	345
M	21	1	**9X-2041**	3	SCREW-TRUSS HEAD (M10X1.5X20-MM)	
M	22	1	**9X-2042**	2	SCREW-TRUSS HEAD (M6X1X12-MM)	

M - METRIC PART
Y - SEPARATE ILLUSTRATION

421-1434 **CONSOLE GP-OPERATOR (*contd.*)** **i05432119**

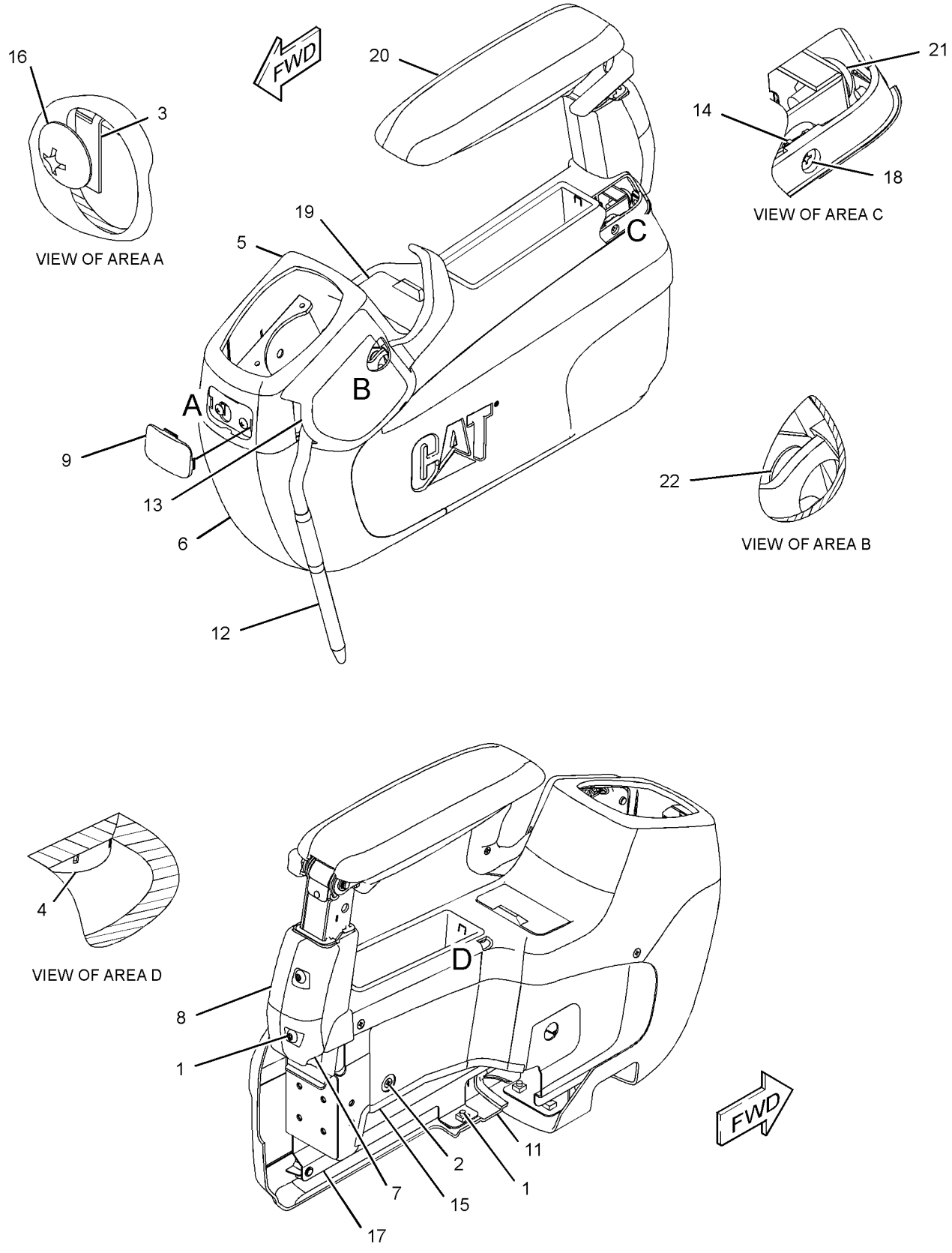

GRAPHIC #1 **<END>** g03401396

310-0078 CONTROL & MTG GP-JOYSTICK

S/N: XAH1-UP
PART OF 456-6742 CAB GP
AN ATTACHMENT

SMCS-5063, 5705 **i03247145**

NOTE	REF NO	GRAPHIC REF	PART NUMBER	QTY	PART NAME 1 2 3 4 5 6 (PRODUCT LEVEL)	SEE PAGE
Y	1	1	**297-0532**	1	CONTROL GP-JOYSTICK (RH)	373
Y	2	1	**297-0533**	1	CONTROL GP-JOYSTICK (LH)	374
M	3	1	**6V-7357**	6	BOLT (M6X1X25-MM)	
	4	1	**9X-8256**	6	WASHER (6.6X12X2-MM THK)	

M - METRIC PART
Y - SEPARATE ILLUSTRATION

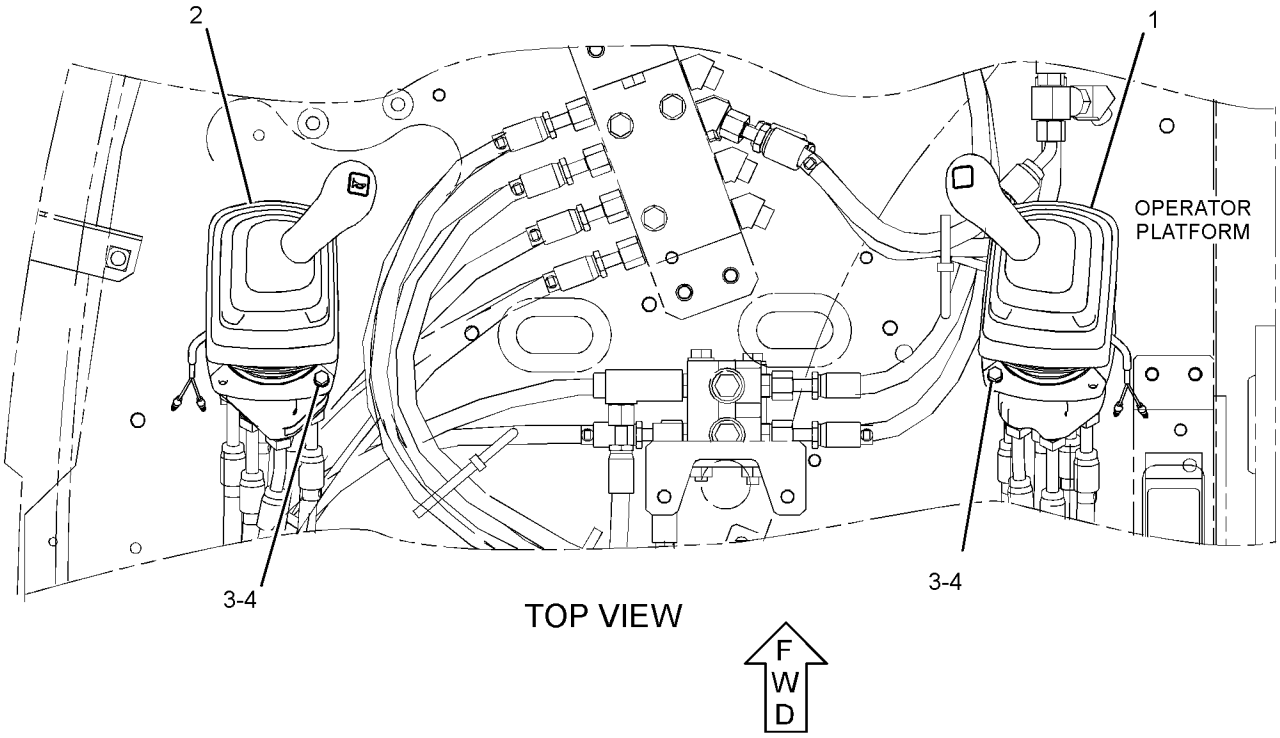

GRAPHIC #1 **<END>** g01442248

235-8969 CONTROL GP-HANDLE–JOYSTICK, LH

S/N: XAH1-UP
PART OF 297-0533 CONTROL GP-JOYSTICK
AN ATTACHMENT

SMCS-5705 **i02924513**

NOTE	REF NO	GRAPHIC REF	PART NUMBER	QTY	PART NAME 1 2 3 4 5 6 (PRODUCT LEVEL)	SEE PAGE
	1	1	**124-4010**	1	LEVER	
	2	1	**235-8971**	1	BOOT	
	3	1	**245-7842**	1	KNOB AS	
M		1	**6I-5298**	1	SCREW-TAPPING	
		1	**124-4009**	1	SHAFT	
		1	**222-0225**	1	SWITCH AS-PUSH BUTTON (HORN)	
M	4	1	**096-2617**	2	SCREW-MACHINE (M5X0.8X6-MM)	

M - METRIC PART

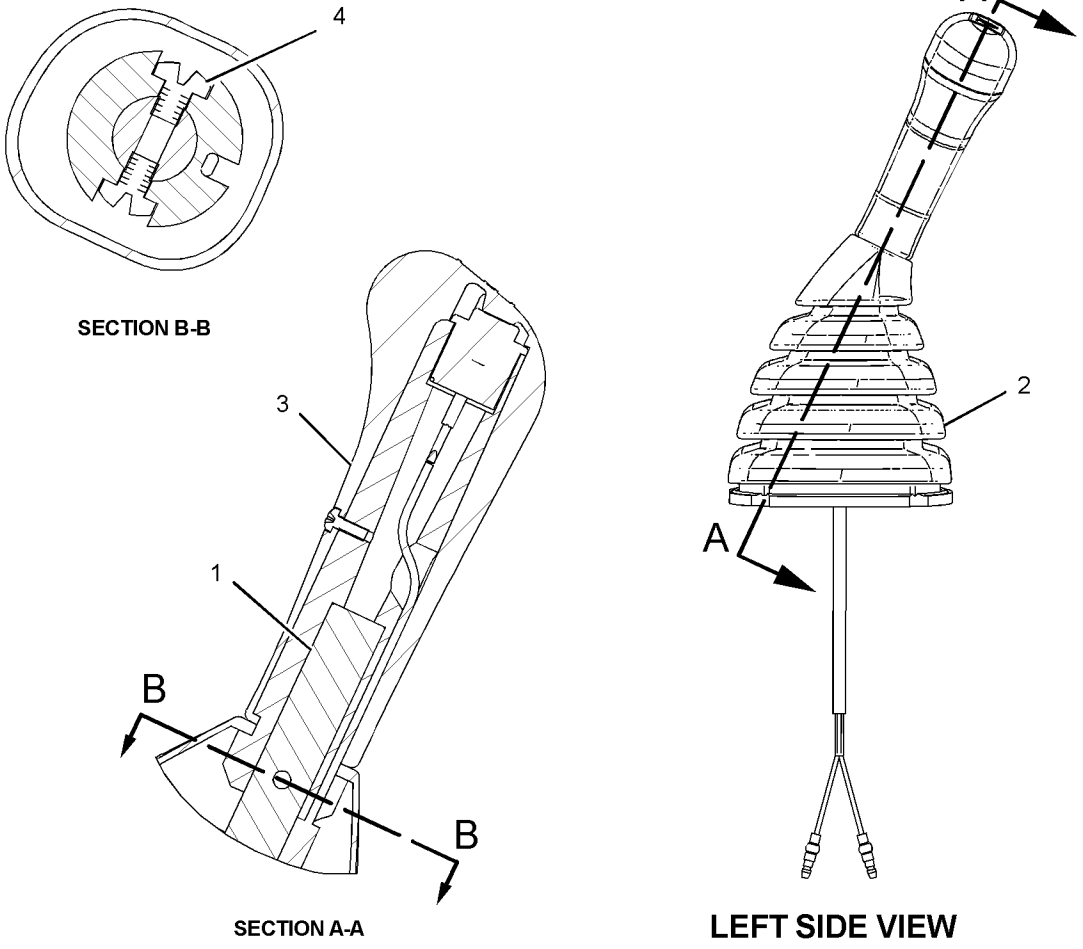

GRAPHIC #1 **<END>** g01253539

235-8970 CONTROL GP-HANDLE–JOYSTICK, RH

S/N: XAH1-UP

PART OF 297-0532 CONTROL GP-JOYSTICK

AN ATTACHMENT

SMCS-5705 **i02923994**

NOTE	REF NO	GRAPHIC REF	PART NUMBER	QTY	PART NAME 1 2 3 4 5 6 (PRODUCT LEVEL)	SEE PAGE
	1	1	**124-4010**	1	LEVER	
	2	1	**235-8972**	1	BOOT	
	3	1	**245-7844**	1	KNOB AS	
M		1	**6I-5298**	1	SCREW-TAPPING	
		1	**124-4009**	1	SHAFT	
		1	**222-0225**	1	SWITCH AS-PUSH BUTTON (MANUAL LOW IDLE)	
M	4	1	**096-2617**	2	SCREW-MACHINE (M5X0.8X6-MM)	

M - METRIC PART

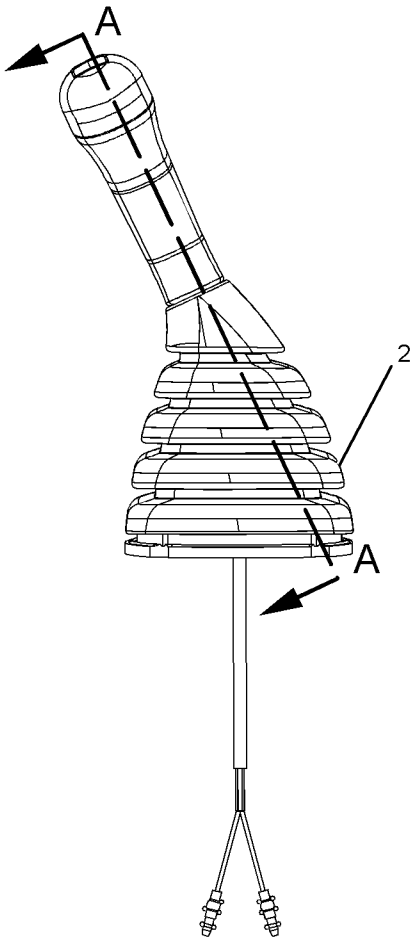

RIGHT SIDE VIEW

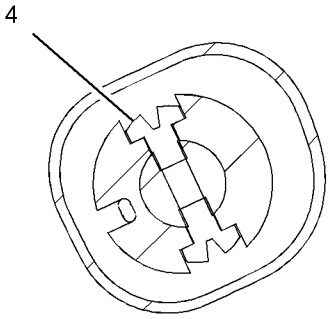

SECTION B-B

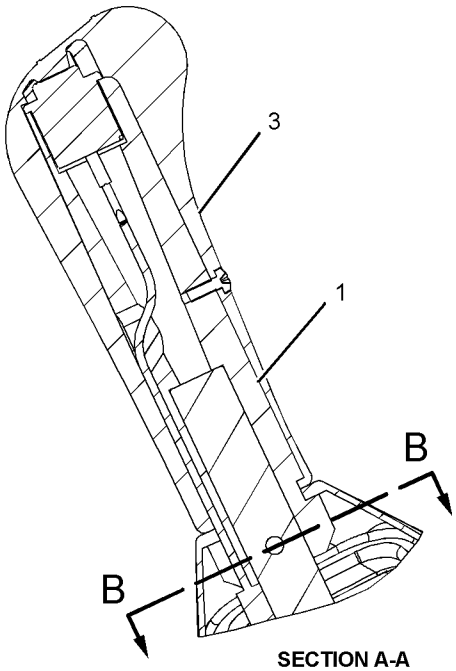

SECTION A-A

GRAPHIC #1 **<END>** g01082427

245-7846 CONTROL GP-HEAT & AIR COND–AIR INLET

S/N: XAH1-UP
PART OF 316-8916 AIR CONDITIONER GP
AN ATTACHMENT

SMCS-7309 **i05343327**

NOTE	REF NO	GRAPHIC REF	PART NUMBER	QTY	PART NAME 1 2 3 4 5 6 (PRODUCT LEVEL)	SEE PAGE
	1	1	**185-8300**	4	SCREW-TAPPING	
	2	1	**196-1666**	1	RELAY (COMPRESSOR CLUTCH)	
	2A	1	**196-1666**	1	RELAY (BLOWER)	
	3	1	**245-7813**	1	MOTOR AS	
	4	1	**245-7814**	1	BRACKET	
	5	1	**245-7815**	1	SENSOR AS-TEMPERATURE (AIR)	
	6	1	**245-7816**	1	DAMPER AS	

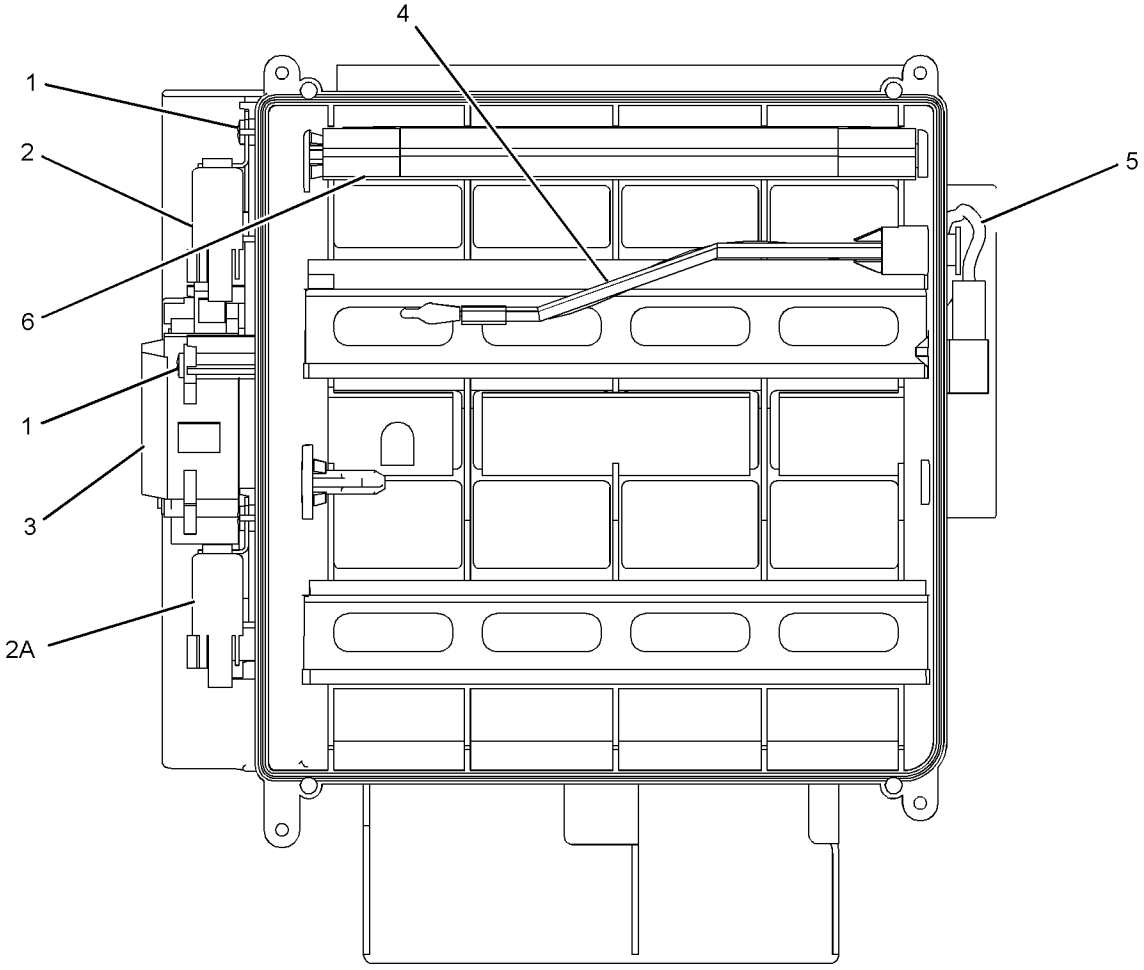

GRAPHIC #1 **<END>** g01245591

297-0532 CONTROL GP-JOYSTICK–RH

S/N: XAH1-UP
PART OF 310-0078 CONTROL & MTG GP-JOYSTICK
AN ATTACHMENT

SMCS-5705 **i05349608**

NOTE	REF NO	GRAPHIC REF	PART NUMBER	QTY	PART NAME 1 2 3 4 5 6 (PRODUCT LEVEL)	SEE PAGE
M	1	1	**271-7843**	1	NUT (M14X2-THD)	
Y	2	1	**235-8970**	1	CONTROL GP-HANDLE (JOYSTICK, RH)	371
Y	3	1	**297-0529**	1	VALVE GP-PILOT (JOYSTICK)	306
	4	1	**6K-0806**	1	STRAP-CABLE	

M - METRIC PART
Y - SEPARATE ILLUSTRATION

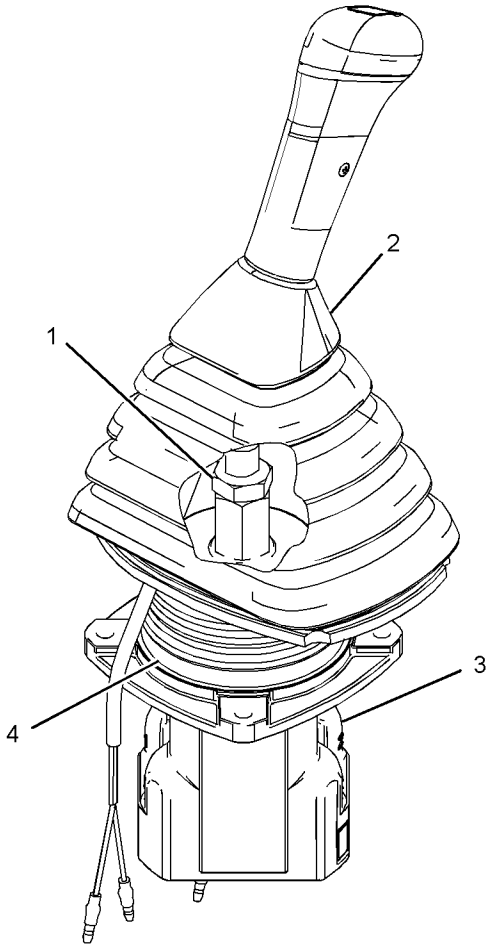

GRAPHIC #1 **<END>** g03057522

297-0533 CONTROL GP-JOYSTICK–LH

S/N: XAH1-UP

PART OF 310-0078 CONTROL & MTG GP-JOYSTICK

AN ATTACHMENT

SMCS-5705 **i05349639**

NOTE	REF NO	GRAPHIC REF	PART NUMBER	QTY	PART NAME 1 2 3 4 5 6 (PRODUCT LEVEL)	SEE PAGE
M	1	1	**271-7843**	1	NUT (M14X2-THD)	
Y	2	1	**235-8969**	1	CONTROL GP-HANDLE (JOYSTICK, LH)	370
Y	3	1	**297-0529**	1	VALVE GP-PILOT (JOYSTICK)	306
	4	1	**6K-0806**	1	STRAP-CABLE	

M - METRIC PART
Y - SEPARATE ILLUSTRATION

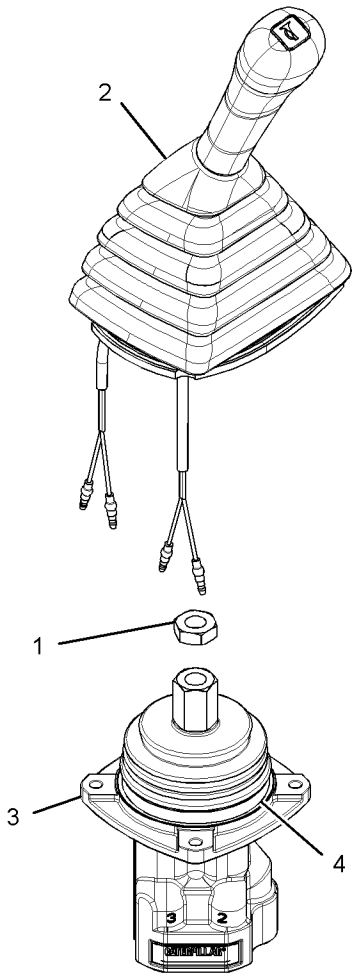

GRAPHIC #1 **<END>** g03057536

170-9497 CONTROL GP-PILOT OPERATED HYD–TRAVEL

S/N: XAH1-UP
PART OF 456-6742 CAB GP, 451-3987 OPERATOR AR
ALSO AN ATTACHMENT

SMCS-5059 **i01364060**

NOTE	REF NO	GRAPHIC REF	PART NUMBER	QTY	PART NAME 1 2 3 4 5 6 (PRODUCT LEVEL)	SEE PAGE
	1	1	**096-6166**	1	WASHER-HARD (4.5X9X1-MM THK)	
M	2	1	**095-0728**	2	SCREW-MACHINE (M4X0.7X12-MM)	
	3	1	**8T-4121**	12	WASHER-HARD (11X21X2.5-MM THK)	
M	4	1	**8T-4136**	4	BOLT (M10X1.5X25-MM)	
M	5	1	**8T-4191**	8	BOLT (M10X1.5X16-MM)	
	6	1	**142-5546**	2	KNOB	
	7	1	**117-6356**	2	STEP AS	
	8	1	**122-9610**	2	STEP	
	9	1	**170-9499**	1	LEVER AS (LH)	
	10	1	**170-9498**	1	LEVER AS (RH)	
	11	1	**122-9608**	1	PEDAL-RUBBER (RH)	
	12	1	**117-6350**	1	PEDAL AS (RH)	
M		1	**8T-3490**	2	NUT-WELD (M10X1.5-THD)	
	13	1	**122-9609**	1	PEDAL-RUBBER (LH)	
	14	1	**117-6349**	1	PEDAL AS (LH)	
M		1	**8T-3490**	2	NUT-WELD (M10X1.5-THD)	

M - METRIC PART

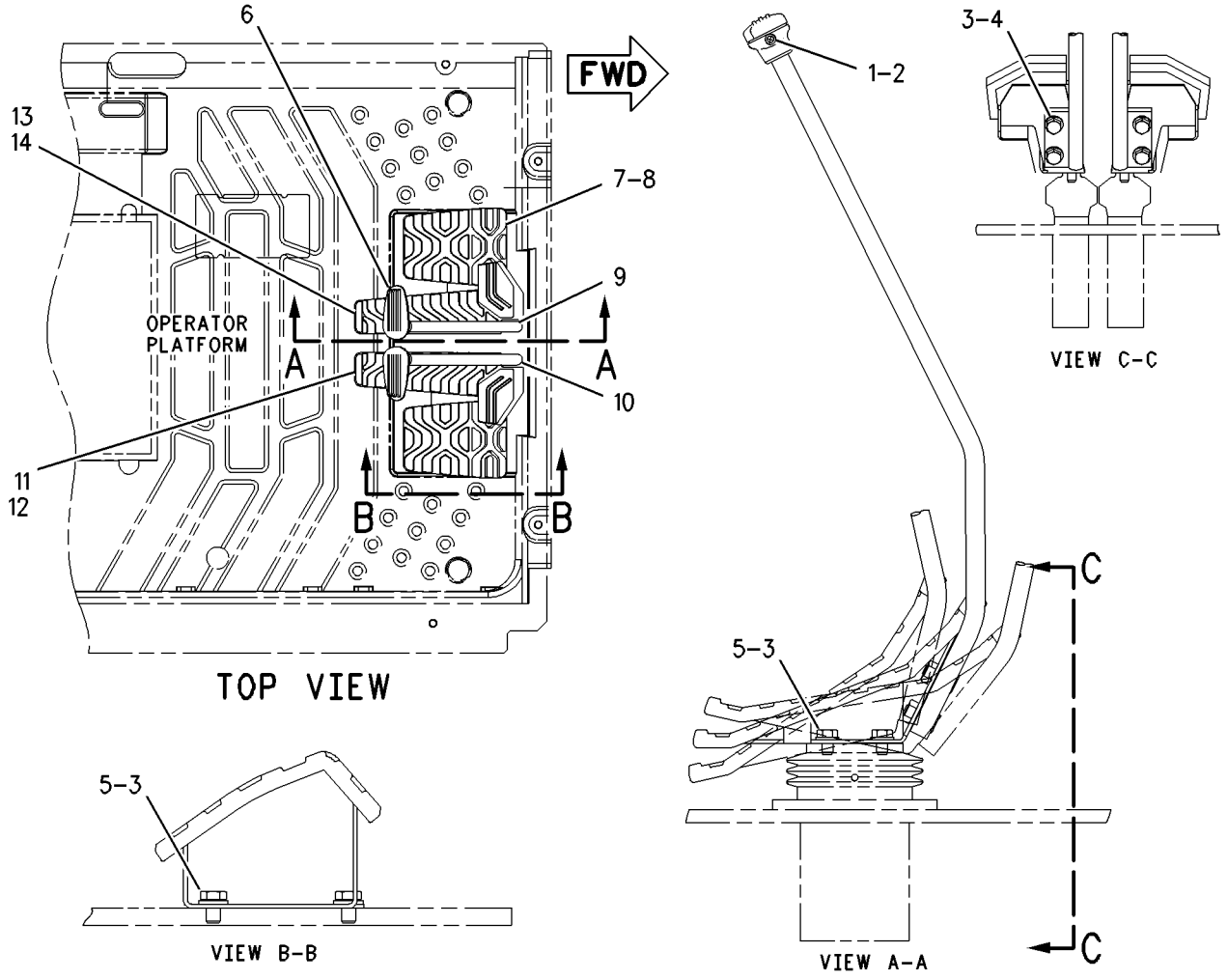

GRAPHIC #1 **<END>** g00672963

234-6501 COVER GP-CAB—REAR

S/N: XAH1-UP
PART OF 416-9606 CAB GP
AN ATTACHMENT

SMCS-7301, 7308 **i05349676**

NOTE	REF NO	GRAPHIC REF	PART NUMBER	QTY	PART NAME 1 2 3 4 5 6 (PRODUCT LEVEL)	SEE PAGE
	1	1	**234-6499**	1	COVER AS	
	2	1	**234-6502**	1	COVER-ACCESS (FUSE-REAR PANEL)	
	3	1	**234-6593**	2	FASTENER	
					USE WITH COVER WITH A 9-MM DIAMETER UPPER MOUNTING HOLE	
					—OR—	
		1	**245-7929**	2	CLIP	
					USE WITH COVER WITH A 7.6-MM DIAMETER UPPER MOUNTING HOLE	

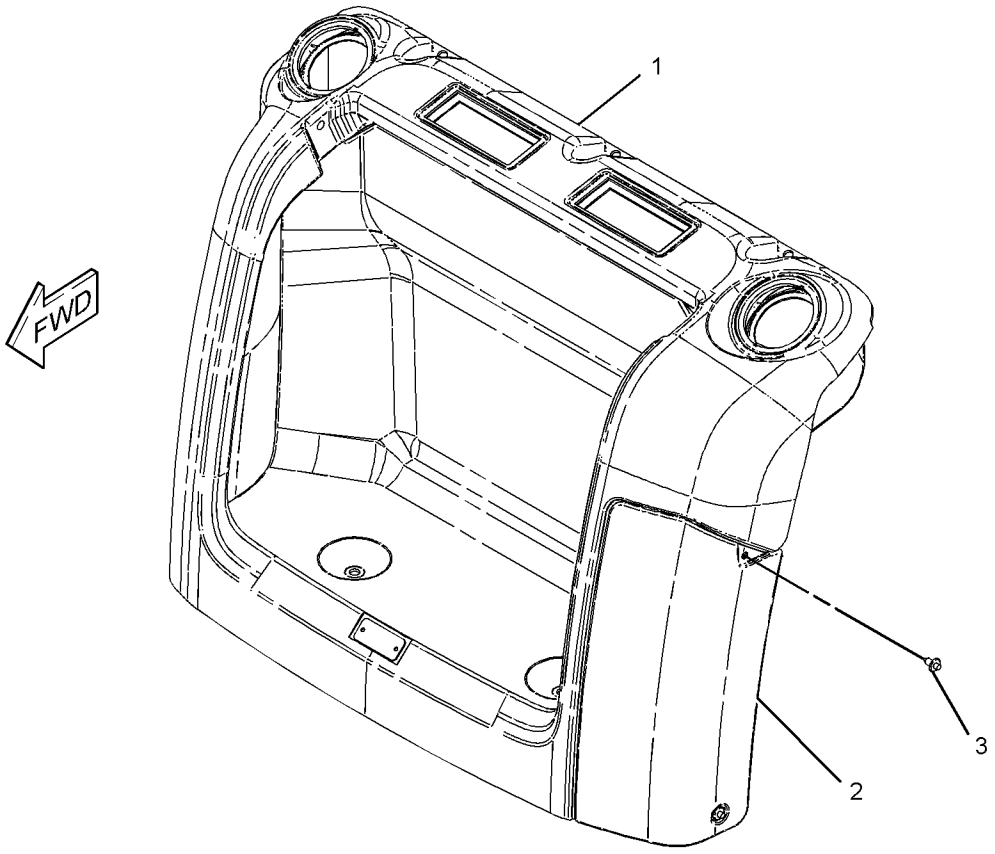

GRAPHIC #1 **<END>** g03389225

316-6166 DOOR & MTG GP-CAB

S/N: XAH1-UP
PART OF 388-9115 DOOR & MTG GP-CAB
AN ATTACHMENT

SMCS-7308 **i05917580**

NOTE	REF NO	GRAPHIC REF	PART NUMBER	QTY	PART NAME 1 2 3 4 5 6 (PRODUCT LEVEL)	SEE PAGE
Y	1	1	*307-1818*	1	DOOR GP-CAB	380
	2	1	*151-6767*	1	DOOR AS	
M		1	**9X-2041**	6	SCREW-TRUSS HEAD (M10X1.5X20-MM)	
		1	**151-6777**	2	HINGE	

M - METRIC PART
Y - SEPARATE ILLUSTRATION

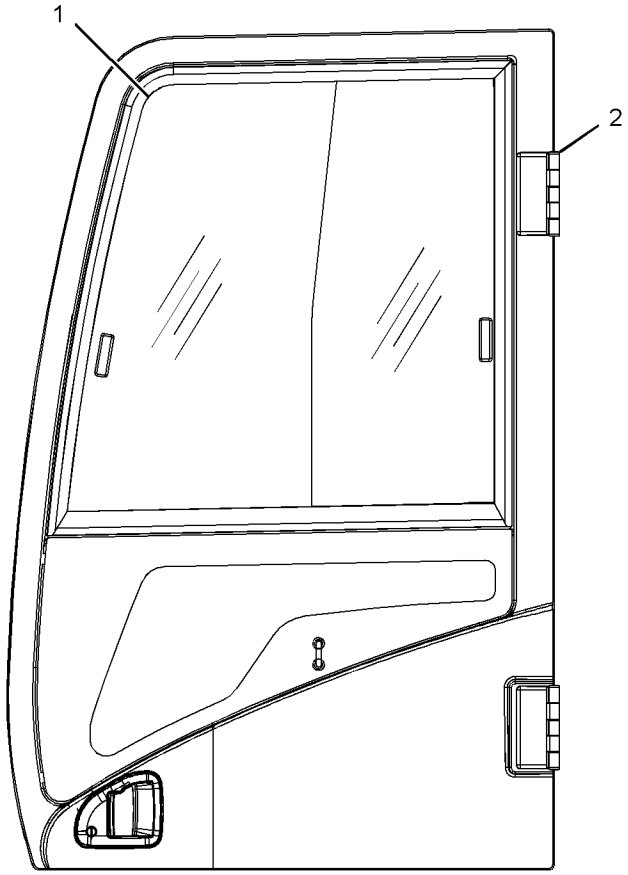

LEFT SIDE VIEW

GRAPHIC #1 **<END>** g01889494

388-9115 DOOR & MTG GP-CAB

S/N: XAH1-UP
PART OF 416-9607 CAB GP
AN ATTACHMENT

SMCS-7308 **i05432374**

NOTE	REF NO	GRAPHIC REF	PART NUMBER	QTY	PART NAME 1 2 3 4 5 6 (PRODUCT LEVEL)	SEE PAGE
Y	1	1	**316-6166**	1	DOOR & MTG GP-CAB	377
Y	2	1	*420-3151*	1	DOOR & MTG GP-CAB	379

Y - SEPARATE ILLUSTRATION

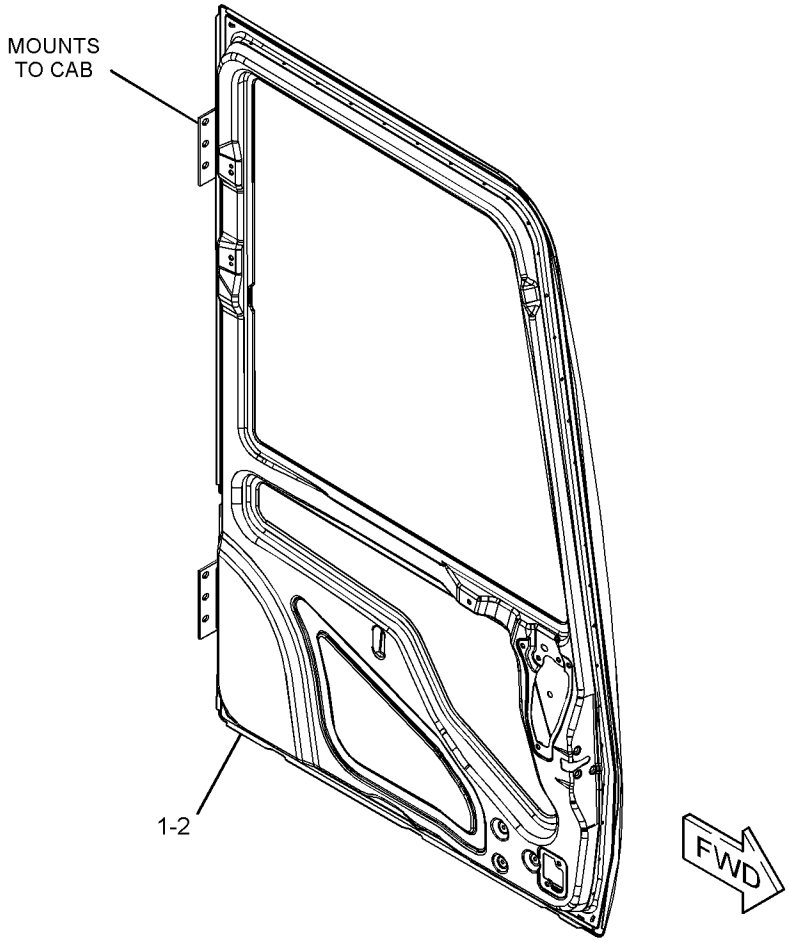

GRAPHIC #1 **<END>** g03440825

420-3151 DOOR & MTG GP-CAB

S/N: XAH1-UP
PART OF 388-9115 DOOR & MTG GP-CAB
AN ATTACHMENT

SMCS-7308 **i05432401**

NOTE	REF NO	GRAPHIC REF	PART NUMBER	QTY	PART NAME 1 2 3 4 5 6 (PRODUCT LEVEL)	SEE PAGE
	1	1	**436-1901**	2	HINGE	
	2	1	**425-7079**	1	PANEL AS-DOOR	
M	3	1	**9X-2041**	6	SCREW-TRUSS HEAD (M10X1.5X20-MM)	

M - METRIC PART

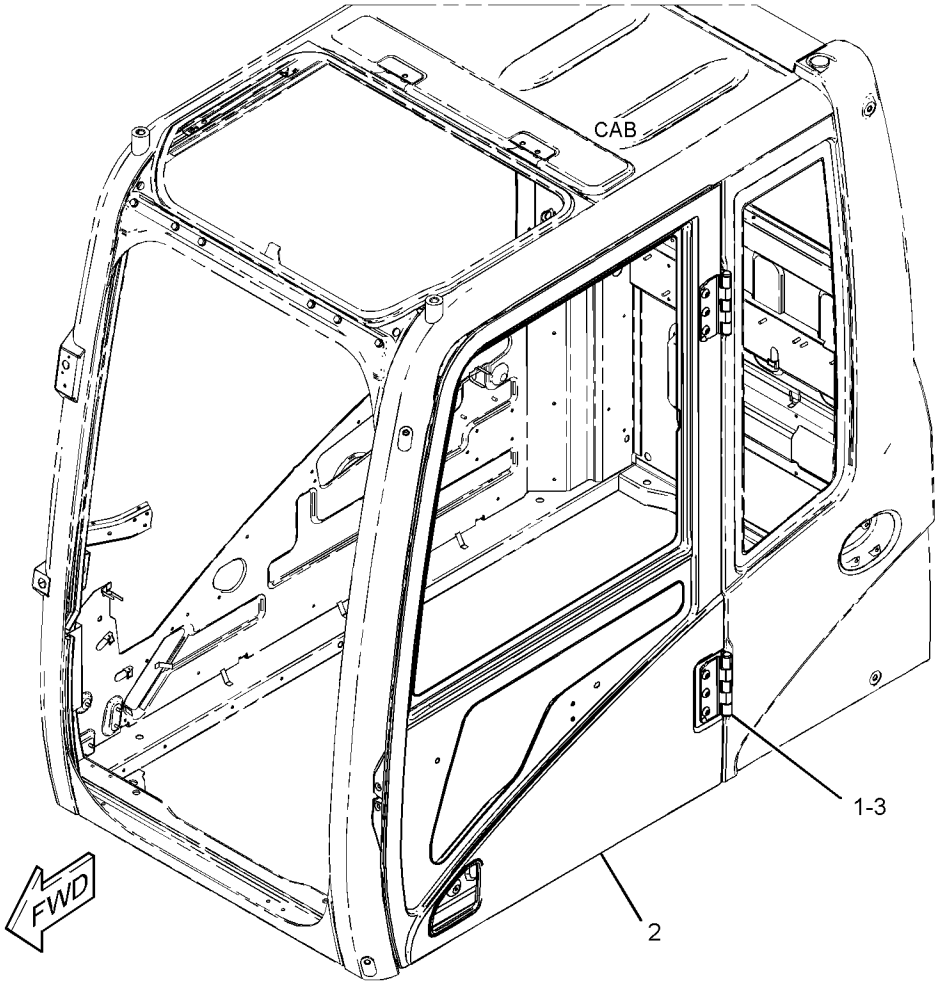

GRAPHIC #1 **<END>** g03440163

307-1818 DOOR GP-CAB

S/N: XAH1-UP
PART OF 316-6166 DOOR & MTG GP-CAB
AN ATTACHMENT

SMCS-7308 **i05343740**

NOTE	REF NO	GRAPHIC REF	PART NUMBER	QTY	PART NAME 1 2 3 4 5 6 (PRODUCT LEVEL)	SEE PAGE
	1	1	**151-6703**	1	HANDLE-PULL	
	2	1	**151-6704**	2	CAP	
Y	3	1	**151-6792**	1	WINDOW GP-DOOR	421
	4	1	**156-6471**	1	GLASS	
	5	1	**156-6598**	1	HOOK	
	6	1	**156-6600**	1	LOCK AS	
		1	**164-0514**	1	CLIP	
	6A	1	**164-0519**	1	CLIP	
	7	1	**156-6643**	2	COVER	
	8	1	**156-6645**	1	HANDLE AS	
		1	**201-4391**	1	CLIP	
	9	1	**161-3639**	1	HANDLE AS	
	10	1	**161-3650**	1	COVER AS	
	11	1	**161-3663**	1	SEAL AS	
		1	**151-9497**	45	CLIP	
	12	1	**161-3665**	1	SEAL	
	13	1	**164-0515**	1	JOINT	
	14	1	**167-7039**	1	GROMMET	
M	15	1	**185-8180**	3	SCREW (M6X1X16-MM)	
	16	1	**8T-4224**	2	WASHER-HARD (8.8X16X2-MM THK)	
	17	1	**259-7354**	1	COVER	
M	18	1	**096-2622**	2	SCREW-MACHINE (M4X0.7X8-MM)	
M	19	1	**096-3884**	2	NUT-SPRING (M8X1.25-THD)	
M	20	1	**101-8899**	2	SCREW AS (M6X1.0X16-MM)	
M	21	1	**101-8900**	2	SCREW AS (M6X1X20-MM)	
	22	1	**151-9461**	4	SPACER	
	23	1	**178-5573**	4	SPACER	
	24	1	**178-5574**	2	SPACER	
	25	1	**189-2690**	1	HANDLE	
	26	1	**4I-4286**	1	KNOB	
M	27	1	**9X-2042**	8	SCREW-TRUSS HEAD (M6X1X12-MM)	

M - METRIC PART
Y - SEPARATE ILLUSTRATION

307-1818 **DOOR GP-CAB (*contd.*)** **i05343740**

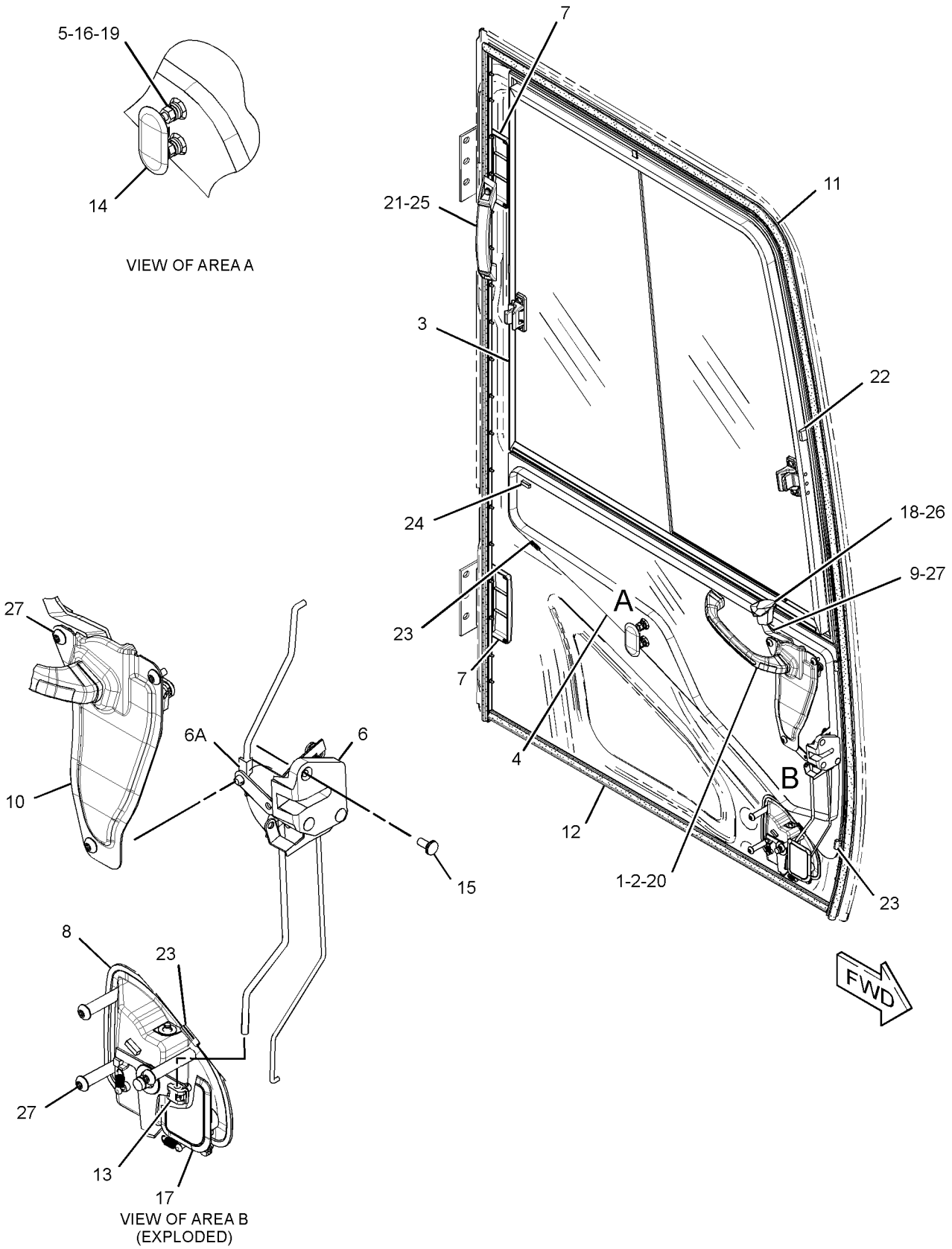

GRAPHIC #1 **<END>** g02178270

OPERATOR STATION

388-9105 DOOR GP-CAB

S/N: XAH1-UP
PART OF 416-9607 CAB GP
AN ATTACHMENT

SMCS-7308 **i05437230**

NOTE	REF NO	GRAPHIC REF	PART NUMBER	QTY	PART NAME 1 2 3 4 5 6 (PRODUCT LEVEL)	SEE PAGE
	1	1	**151-6703**	1	HANDLE-PULL	
	2	1	**151-6704**	2	CAP	
Y	3	1	**384-6533**	1	WINDOW GP-DOOR	423
	4	1	**383-6933**	1	GLASS	
	5	1	**156-6598**	1	HOOK	
	6	1	**398-7107**	1	LOCK AS	
	6A	1	**398-7105**	1	CLIP	
		1	**398-7105**	1	CLIP	
	7	1	**156-6643**	2	COVER	
	8	1	**398-7111**	1	HANDLE AS	
		1	**398-7106**	1	CLIP	
	9	1	**161-3639**	1	HANDLE AS	
	10	1	**161-3650**	1	COVER AS	
	11	1	**161-3663**	1	SEAL AS	
		1	**151-9497**	45	CLIP	
	12	1	**161-3665**	1	SEAL	
	13	1	**164-0515**	1	JOINT	
	14	1	**167-7039**	1	GROMMET	
M	15	1	**185-8180**	3	SCREW (M6X1X16-MM)	
	16	1	**8T-4224**	2	WASHER-HARD (8.8X16X2-MM THK)	
	17	1	**259-7354**	1	COVER	
M	18	1	**096-2622**	2	SCREW-MACHINE (M4X0.7X8-MM)	
M	19	1	**096-3884**	2	NUT-SPRING (M8X1.25-THD)	
M	20	1	**101-8899**	2	SCREW AS (M6X1.0X16-MM)	
M	21	1	**101-8900**	2	SCREW AS (M6X1X20-MM)	
	22	1	**151-9461**	4	SPACER	
	23	1	**178-5573**	4	SPACER	
	24	1	**178-5574**	3	SPACER	
	25	1	**189-2690**	1	HANDLE	
	26	1	**4I-4286**	1	KNOB (HANDLE)	
M	27	1	**9X-2042**	8	SCREW-TRUSS HEAD (M6X1X12-MM)	

M - METRIC PART
Y - SEPARATE ILLUSTRATION

388-9105 **DOOR GP-CAB (*contd.*)** **i05437230**

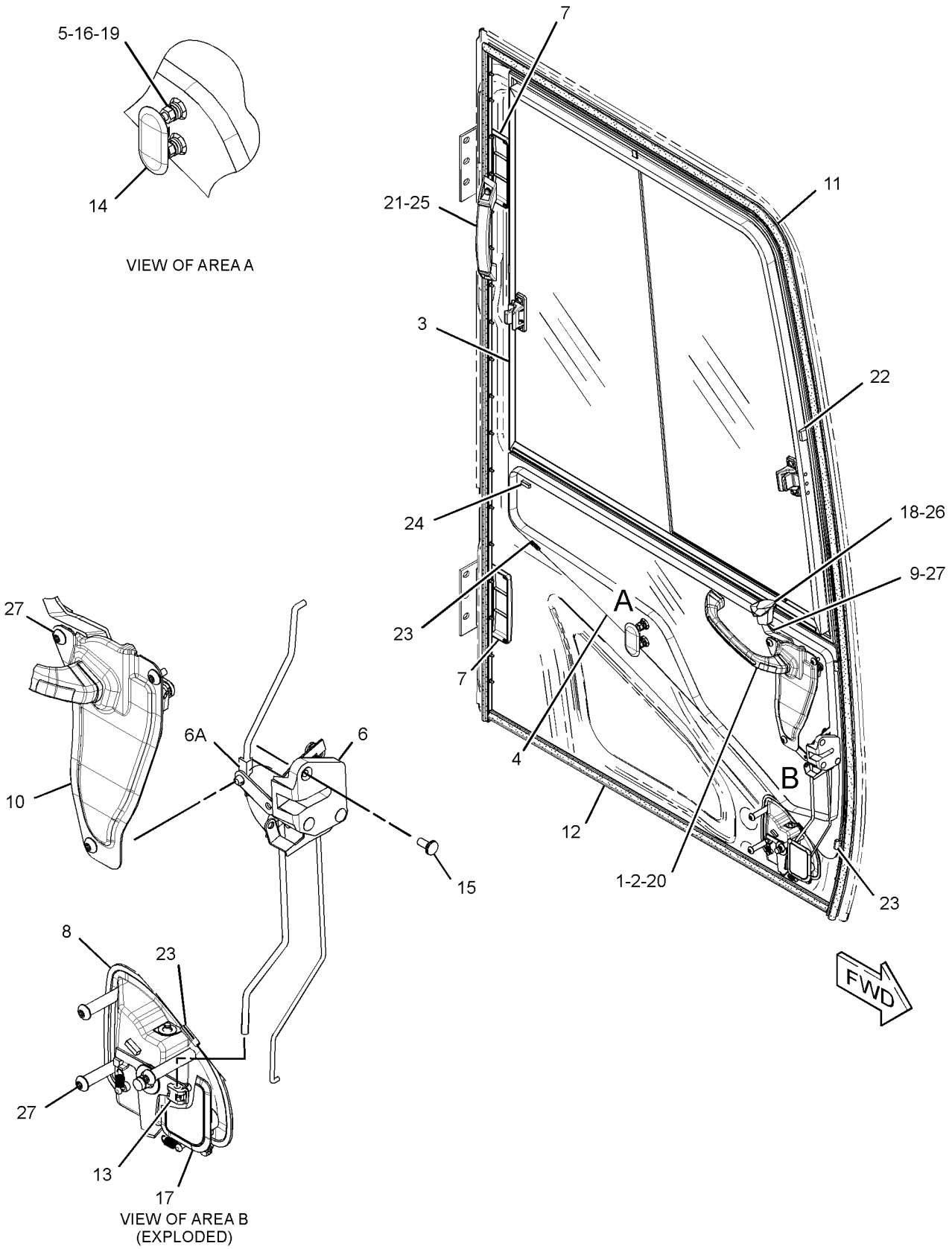

GRAPHIC #1 **<END>** g02178270

229-9082 DUCT GP-CAB AIR

S/N: XAH1-UP
PART OF 418-9897 AIR CONDITIONER AR
AN ATTACHMENT

SMCS-734D **i04823037**

NOTE	REF NO	GRAPHIC REF	PART NUMBER	QTY	PART NAME 1 2 3 4 5 6 (PRODUCT LEVEL)	SEE PAGE
	1	1	**293-1183**	1	FILTER GP-CAB AIR	
		1	**293-1184**	1	FILTER ELEMENT-CAB AIR	
	2	1	**235-8876**	1	DUCT AS (FRESH AIR, UPPER)	
		1	**245-7872**	1	INSULATOR	
	3	1	**235-8877**	1	DUCT AS (VENT, REAR)	
		1	**245-7792**	1	INSULATOR	
	4	1	**235-8878**	1	DUCT AS (VENT, FRONT)	
		1	**245-7793**	1	INSULATOR	
	5	1	**235-8879**	1	DUCT AS (FLOOR)	
		1	**245-7873**	1	INSULATOR	
	6	1	**240-5074**	1	DUCT AS (FRESH AIR, LOWER)	
		1	**245-7791**	1	INSULATOR	
M	7	1	**101-8899**	2	SCREW AS (M6X1.0X16-MM)	
	8	1	**176-1996**	5	CLIP	

M - METRIC PART

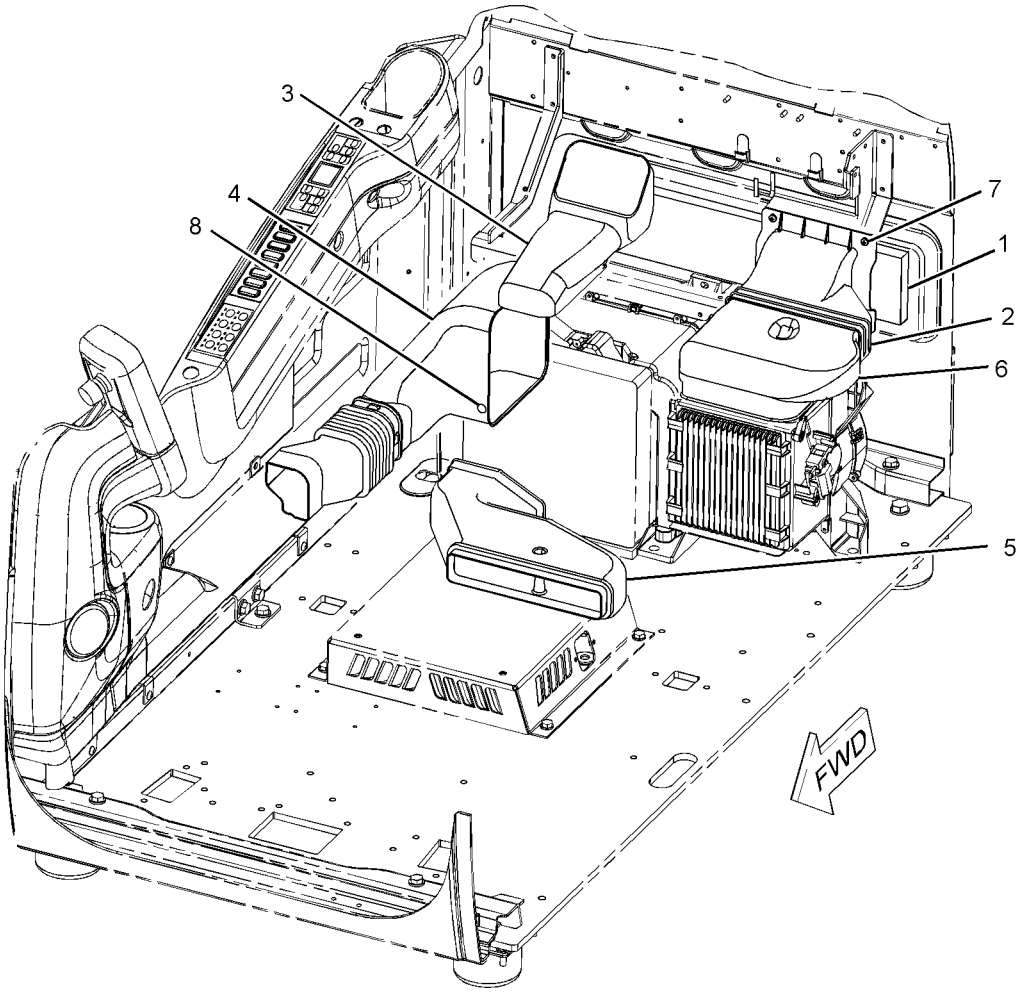

GRAPHIC #1 **<END>** g01126665

OPERATOR STATION

284-4376 FLOOR MAT

S/N: XAH1-UP

AN ATTACHMENT

SMCS-726M **i05411700**

NOTE	REF NO	GRAPHIC REF	PART NUMBER	QTY	PART NAME 1 2 3 4 5 6 (PRODUCT LEVEL)	SEE PAGE
					(NO SERVICED PARTS)	

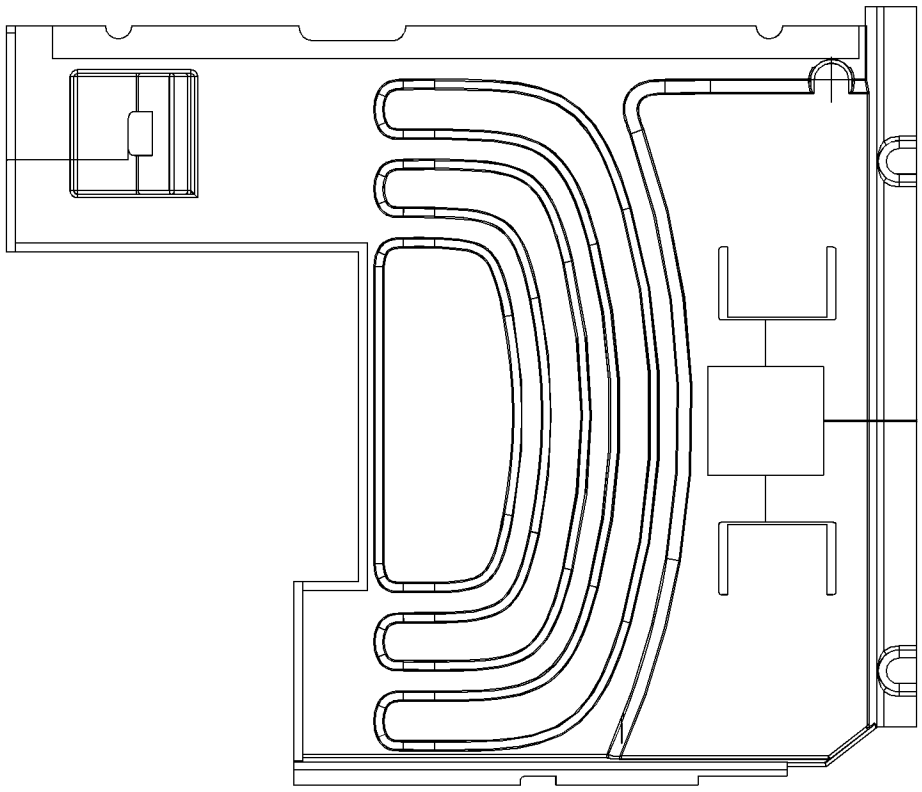

GRAPHIC #1 **<END>** g01420854

OPERATOR STATION

259-7350 HATCH GP-ROOF

S/N: XAH1-UP
PART OF 416-9607 CAB GP
AN ATTACHMENT

SMCS-7303 **i05425653**

NOTE	REF NO	GRAPHIC REF	PART NUMBER	QTY	PART NAME 1 2 3 4 5 6 (PRODUCT LEVEL)	SEE PAGE
	1	1	**259-7352**	1	CATCH	
	2	1	**189-2847**	1	SEAL	
	3	1	**259-7351**	1	HATCH AS	
	3A	1	**176-1949**	2	BRACKET AS	
	3B	1	**189-2717**	2	HINGE AS	
	4	1	**099-3506**	2	SPRING AS-GAS (HATCH)	
M	5	1	**105-2169**	4	BOLT AS (M8X1.25X16-MM)	
	6	1	**5D-4822**	4	RING-RETAINING	
M	7	1	**9X-2042**	2	SCREW-TRUSS HEAD (M6X1X12-MM)	

M - METRIC PART

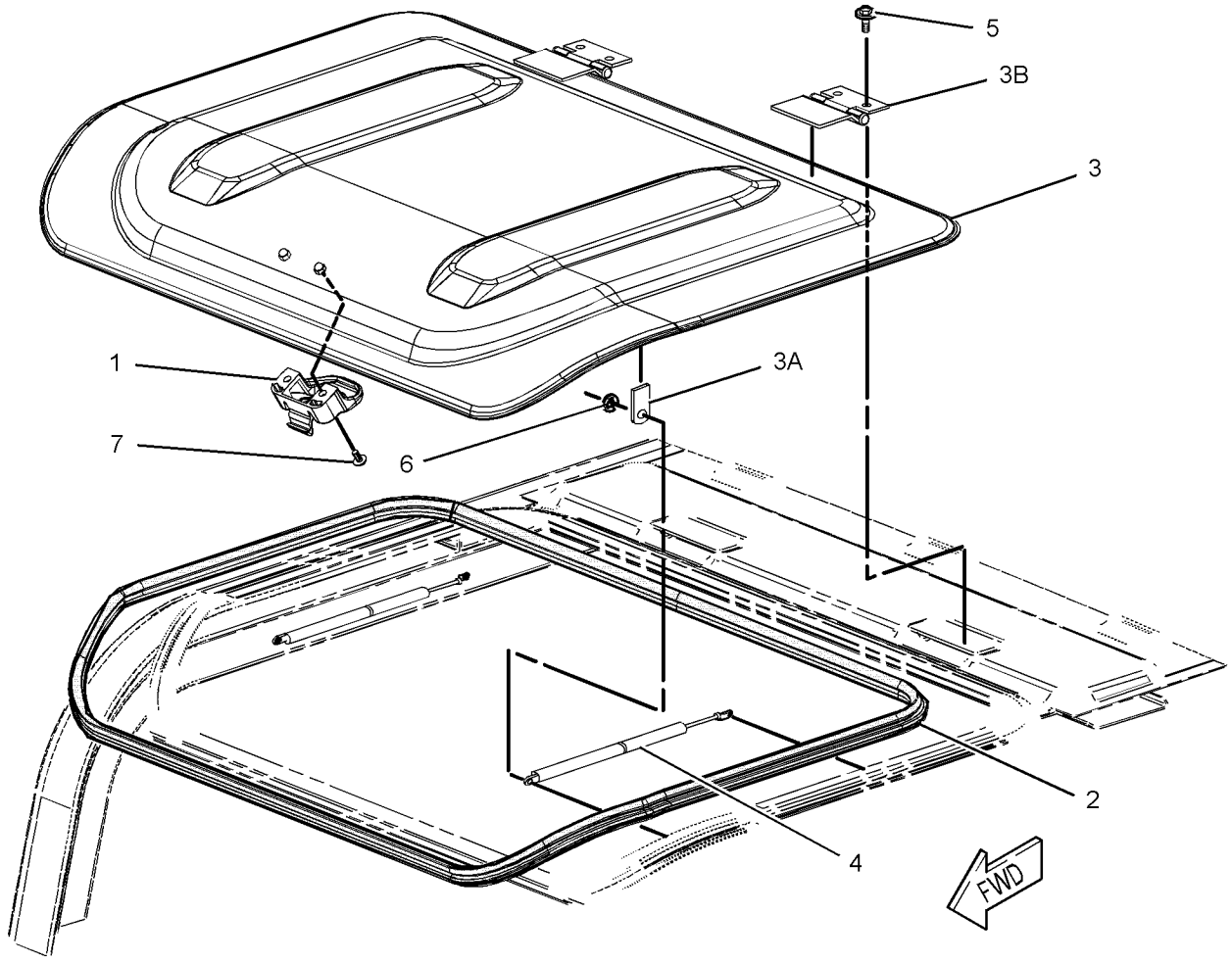

GRAPHIC #1 **<END>** g01242907

OPERATOR STATION

275-6874 HORN GP-ELECTRIC

S/N: XAH1-UP

PART OF 454-5583 CHASSIS AR

SMCS-7402 **i05408880**

NOTE	REF NO	GRAPHIC REF	PART NUMBER	QTY	PART NAME 1 2 3 4 5 6 (PRODUCT LEVEL)	SEE PAGE
Y	1	1	*275-6875*	1	HORN GP-ELECTRIC	388
	2	1	**8T-4121**	2	WASHER-HARD (11X21X2.5-MM THK)	
M	3	1	**8T-4137**	2	BOLT (M10X1.5X20-MM)	

M - METRIC PART
Y - SEPARATE ILLUSTRATION

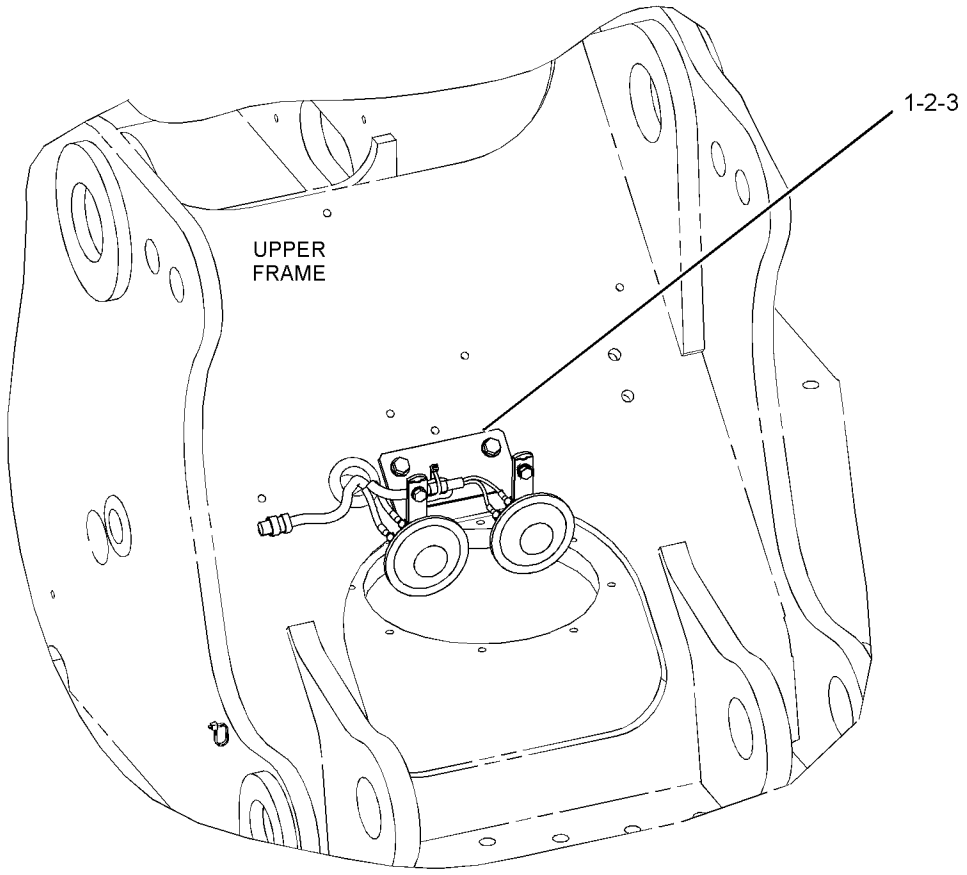

FRONT VIEW
(UPPER RIGHT)

GRAPHIC #1 **<END>** g01304388

275-6875 HORN GP-ELECTRIC

S/N: XAH1-UP

PART OF 275-6874 HORN GP-ELECTRIC

SMCS-7402 **i05408900**

NOTE	REF NO	GRAPHIC REF	PART NUMBER	QTY	PART NAME 1 2 3 4 5 6 (PRODUCT LEVEL)	SEE PAGE
	1	1	**3S-2093**	1	STRAP-CABLE	
	2	1	**7Y-3919**	1	HORN AS (24-VOLT, LOW TONE)	
		1	**095-0826**	2	LOCKWASHER	
M		1	**095-7930**	2	SCREW-MACHINE (M4X0.7X6-MM)	
	3	1	**7Y-3920**	1	HORN AS (24-VOLT, HIGH TONE)	
		1	**095-0826**	2	LOCKWASHER	
M		1	**095-7930**	2	SCREW-MACHINE (M4X0.7X6-MM)	
	4	1	**170-6941**	1	BRACKET AS	
	5	1	**275-6876**	1	HARNESS AS-WIRING (HORN)	
		1	**3S-2093**	2	STRAP-CABLE	
		1	**230-4011**	1	PLUG AS-CONNECTOR (2-PIN)	
M	6	1	**8T-4200**	2	BOLT (M8X1.25X16-MM)	
	7	1	**8T-4224**	2	WASHER-HARD (8.8X16X2-MM THK)	

M - METRIC PART

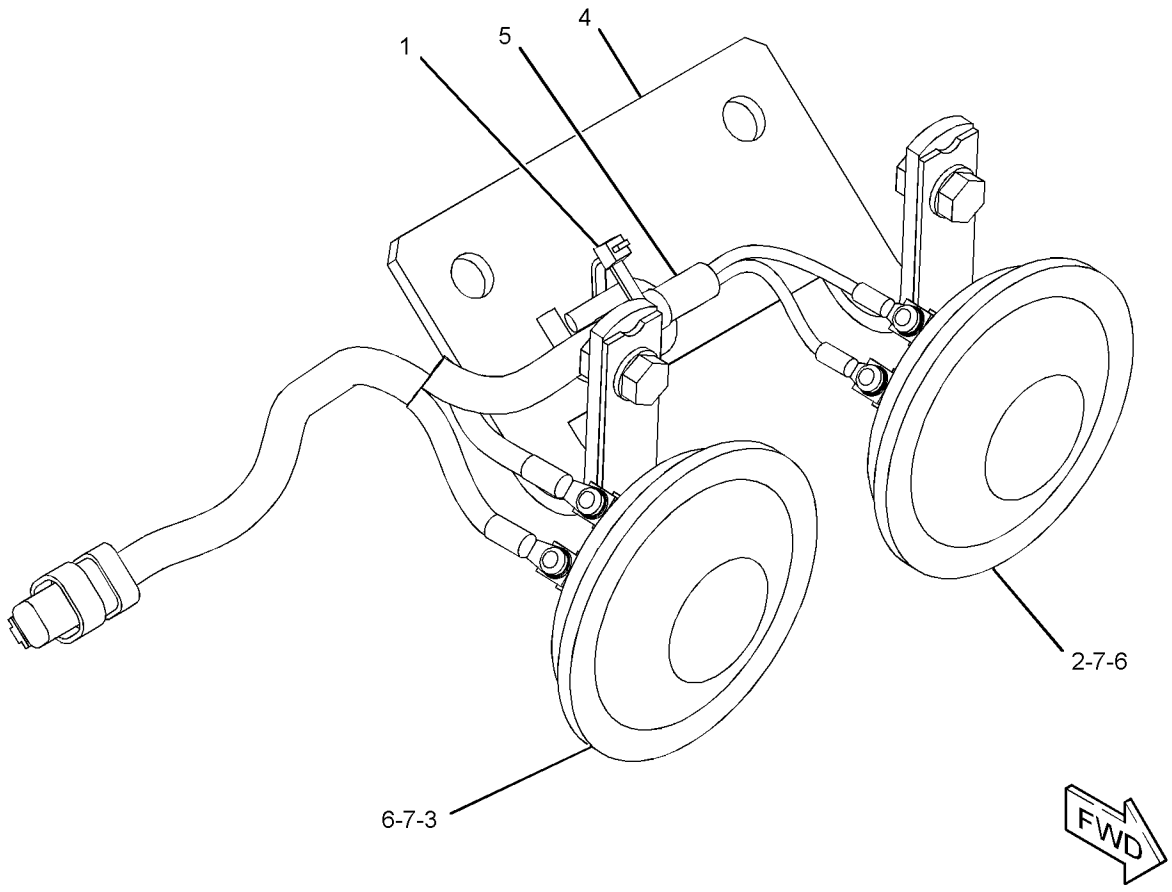

GRAPHIC #1 **<END>** g01304939

164-0528 LEVER GP-CAB DOOR

S/N: XAH1-UP
PART OF 388-9102 CAB GP
AN ATTACHMENT

SMCS-7308 **i03990635**

NOTE	REF NO	GRAPHIC REF	PART NUMBER	QTY	PART NAME 1 2 3 4 5 6 (PRODUCT LEVEL)	SEE PAGE
	1	1	**156-6642**	1	LEVER AS	
	2	1	**164-0664**	1	BRACKET	
	3	1	**176-1941**	1	PIN	
	4	1	**185-8280**	1	WASHER-WAVE (10.5X15X0.3-MM THK)	
	5	1	**185-8281**	1	SPRING	

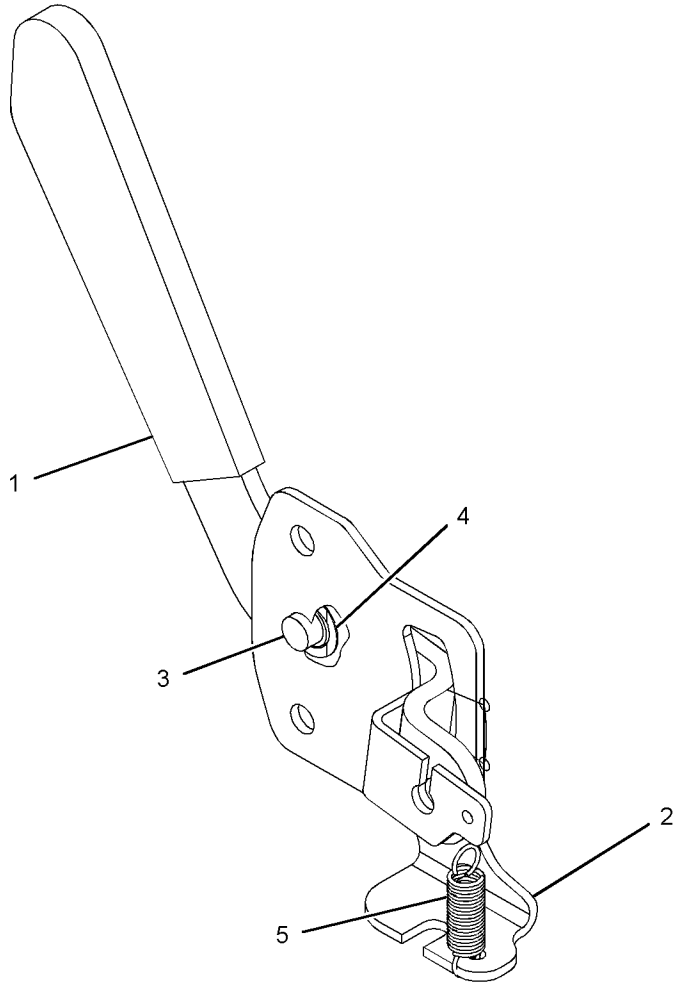

GRAPHIC #1 **<END>** g01217036

383-5676 LINES GP-AIR CONDITIONER

S/N: XAH1-UP

PART OF 454-5583 CHASSIS AR

SMCS-1808 **i05776842**

NOTE	REF NO	GRAPHIC REF	PART NUMBER	QTY	PART NAME 1 2 3 4 5 6 (PRODUCT LEVEL)	SEE PAGE
	1	2	**7Y-8168**	2	GROMMET	
	2	1	**122-9605**	2	TUBE	
	3	1	**122-9657**	2	CLAMP	
	4	1	**133-8011**	1	FITTING AS	
		1	**121-7138**	1	SEAL-O-RING	
	5	1	**176-1902**	1	DRYER-REFRIGERANT (RECEIVER)	
	6	1	**204-1611**	1	STRAP (DUAL)	
	7	1	**235-8891**	1	PLATE	
	8	1,2	**235-9014**	8	CLAMP-SPRING	
	9	1	**235-9015**	2	HOSE	
	10	1	**284-4500**	1	TUBE AS	
		1	**121-7137**	1	SEAL-O-RING	
	11	1	**284-4501**	1	TUBE AS	
		1	**121-7138**	1	SEAL-O-RING	
	12	2	**284-4502**	1	HOSE AS	
	13	1	**293-1238**	2	HOSE-DRAIN	
	14	2	**305-0441**	2	BAND-MARKER (HS)	
	15	2	**305-0442**	2	BAND-MARKER (HR)	
	16	2	**383-5687**	1	BRACKET AS	
	17	2	**383-5707**	1	HOSE AS	
	18	2	**383-5708**	1	HOSE AS	
	19	1	**121-7098**	1	BRACKET AS	
	20	1	**132-5789**	1	CLIP	
	21	2	**4S-1962**	2	CLIP	
	22	1,2	**5K-3294**	2	CLIP	
	23	2	**5K-5338**	1	CLIP	
	24	2	**5P-4325**	1	CLIP	
	25	2	**6D-1641**	5	CLIP	
	26	1,2	**6D-3479**	2	CLIP	
	27	1	**6V-3265**	1	CLIP	
M	28	1	**6V-7357**	4	BOLT (M6X1X25-MM)	
	29	1,2	**7K-1181**	3	STRAP-CABLE	
	30	1,2	**8T-4121**	12	WASHER-HARD (11X21X2.5-MM THK)	
M	31	1,2	**8T-4136**	3	BOLT (M10X1.5X25-MM)	
M	32	2	**8T-4137**	7	BOLT (M10X1.5X20-MM)	
M	33	2	**8T-4189**	2	BOLT (M8X1.25X20-MM)	
M	34	1	**8T-4191**	2	BOLT (M10X1.5X16-MM)	
M	35	1	**8T-4200**	2	BOLT (M8X1.25X16-MM)	
	36	1,2	**8T-4224**	6	WASHER-HARD (8.8X16X2-MM THK)	
M	37	2	**8T-4908**	2	BOLT (M8X1.25X25-MM)	
M	38	1	**8T-4971**	1	BOLT (M6X1X30-MM)	
	39	1	**9X-8256**	5	WASHER (6.6X12X2-MM THK)	
E	40	2	**225-5714**		GUARD (15-CM EACH)	
E	41	2	**225-5707**		GUARD (66-CM)	
E	41A	2	**225-5707**		GUARD (43-CM)	
E	41B	2	**225-5707**		GUARD (12-CM)	
E	42	2	**5P-0767**		HOSE (326-CM)	
E	42A	2	**5P-0767**		HOSE (305-CM)	

E - ORDER BY THE CENTIMETER
M - METRIC PART

383-5676 **LINES GP-AIR CONDITIONER (*contd.*)** **i05776842**

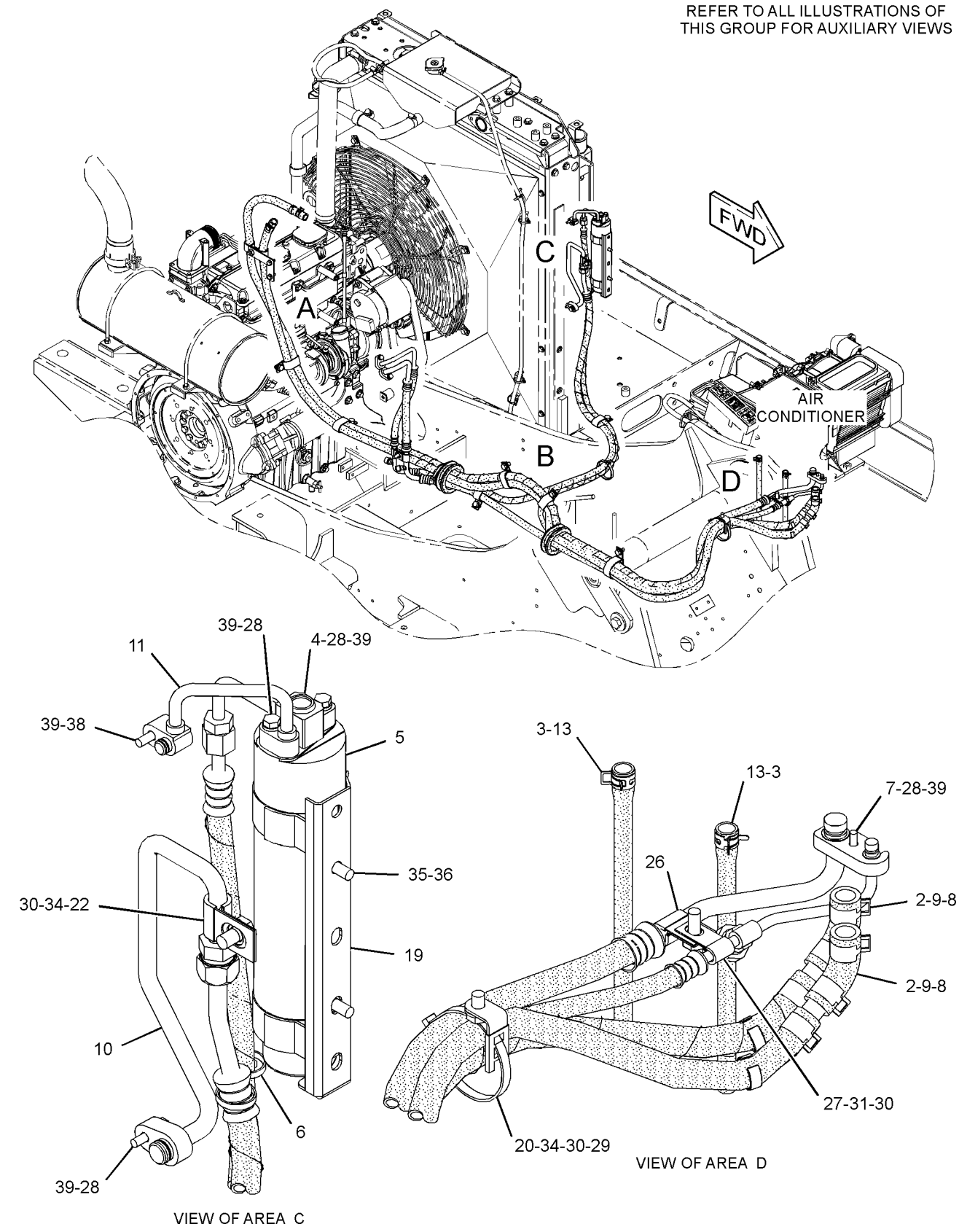

GRAPHIC #1 g03128941

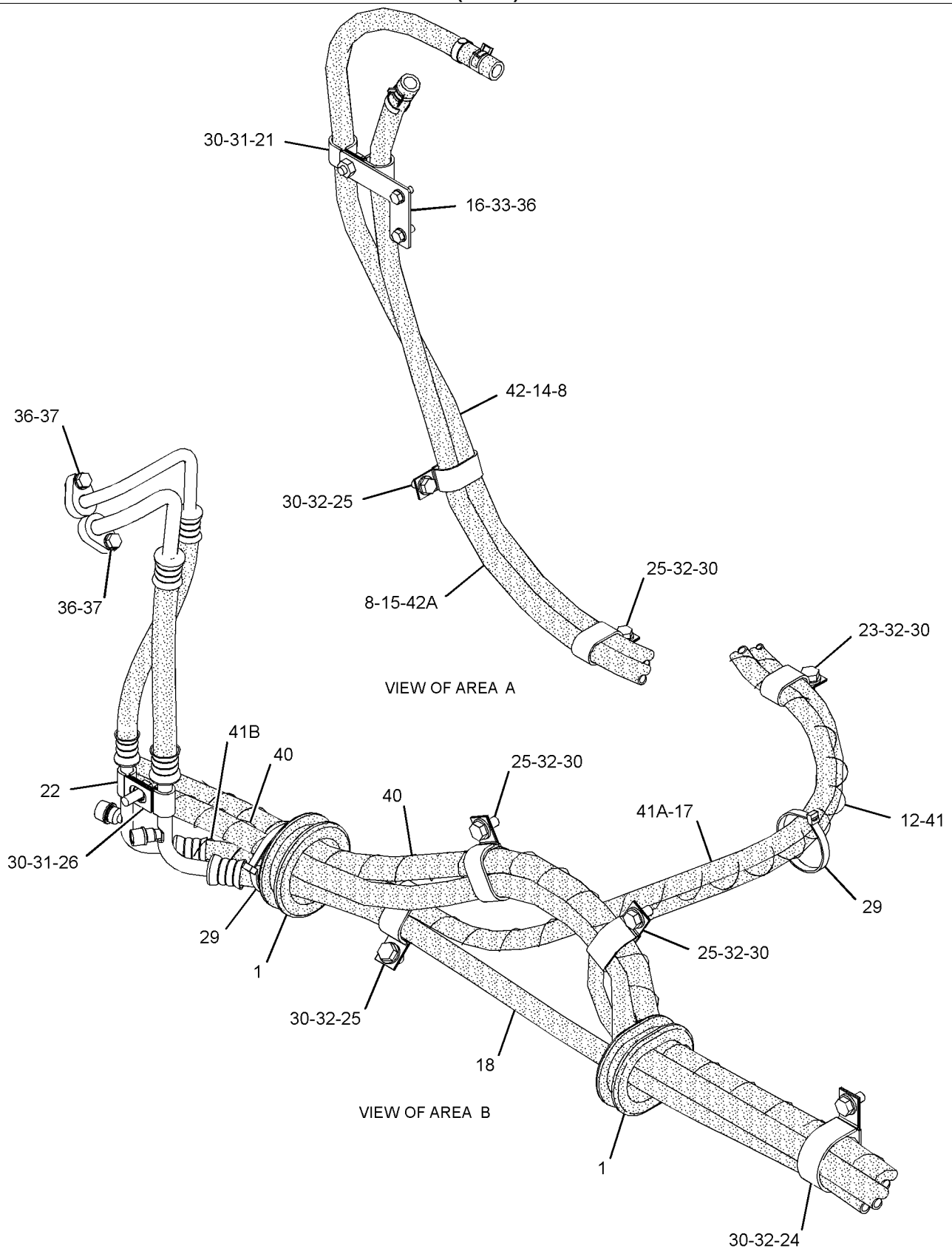

GRAPHIC #2 **<END>** g03128942

7Y-0059 LITERATURE GP

S/N: XAH1-UP

PART OF 454-5583 CHASSIS AR

SMCS-7300 **i00831590**

NOTE	PART NUMBER	QTY	PART NAME 1 2 3 4 5 6 (PRODUCT LEVEL)	SEE PAGE
	099-3645	1	CABLE-LANYARD	
	5P-8500	2	KEY	
	5P-7958	2	SLEEVE-CABLE SPLICE	

<END>

OPERATOR STATION

142-3836 MIRROR GP-REAR VIEW

S/N: XAH1-UP

PART OF 454-5583 CHASSIS AR

SMCS-7319 **i05253855**

NOTE	REF NO	GRAPHIC REF	PART NUMBER	QTY	PART NAME 1 2 3 4 5 6 (PRODUCT LEVEL)	SEE PAGE
	1	1	**8T-7971**	4	WASHER-HARD (13.5X25.5X5-MM THK)	
	2	1	**137-2270**	1	MIRROR	
	3	1	**165-3065**	1	BRACKET-MIRROR	
M	4	1	**8T-4192**	4	BOLT (M12X1.75X25-MM)	

M - METRIC PART

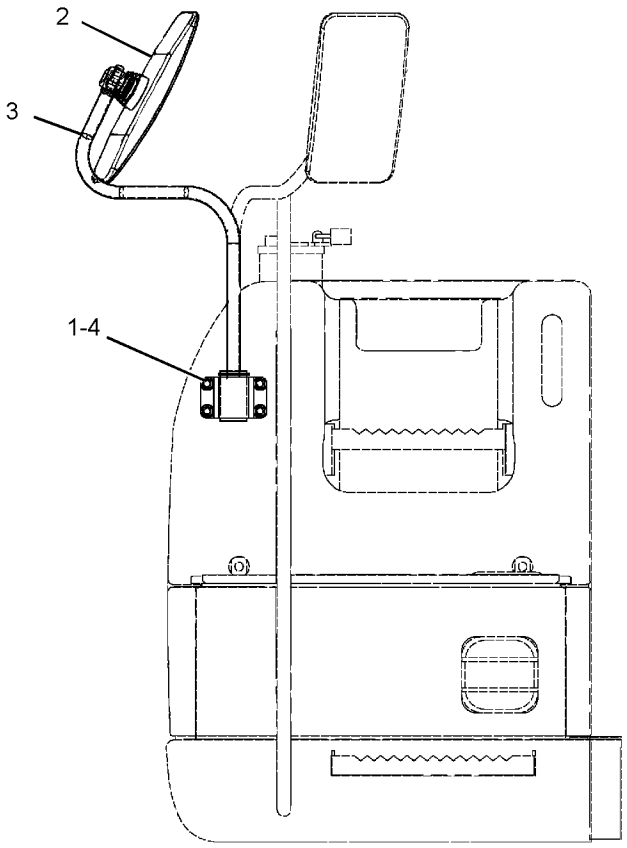

FRONT VIEW

GRAPHIC #1 **<END>** g02089313

327-6550 MIRROR GP-REAR VIEW

S/N: XAH1-UP
PART OF 388-9102 CAB GP
AN ATTACHMENT

SMCS-7319 **i05719329**

NOTE	REF NO	GRAPHIC REF	PART NUMBER	QTY	PART NAME 1 2 3 4 5 6 (PRODUCT LEVEL)	SEE PAGE
M	1	1	**105-3487**	2	BOLT-SOCKET HEAD (M6X1X20-MM)	
	2	1	**9X-8256**	2	WASHER (6.6X12X2-MM THK)	

M - METRIC PART

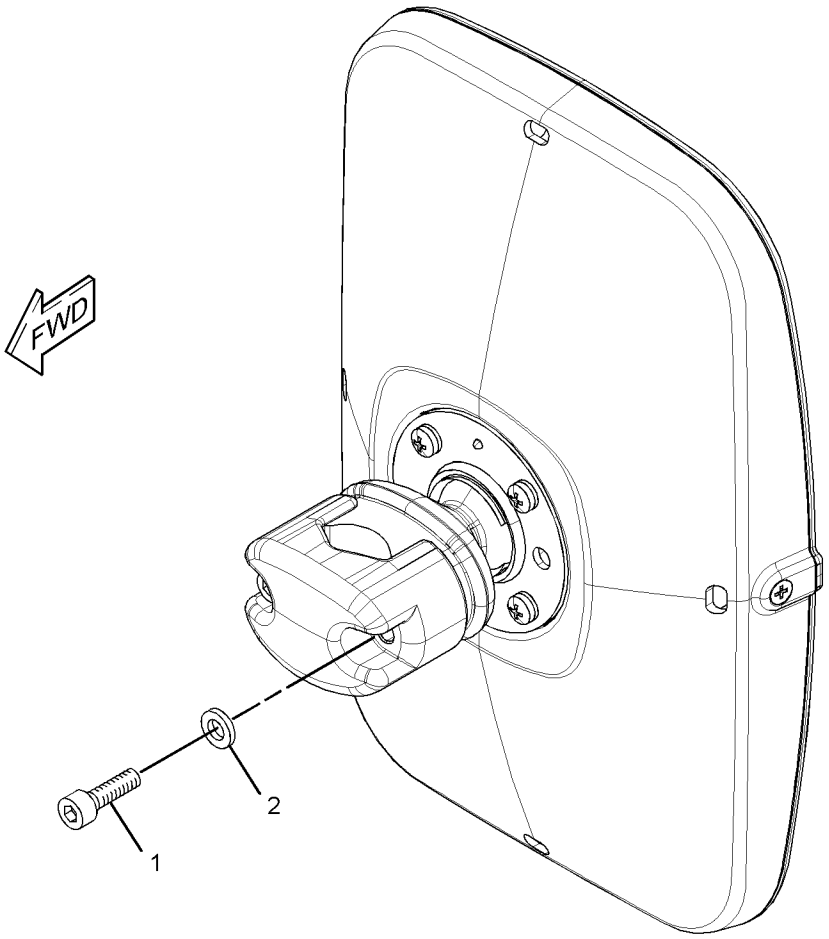

GRAPHIC #1 **<END>** g01615528

399-2620 MONITOR & MTG GP-OPERATOR

S/N: XAH1-UP

PART OF 456-6742 CAB GP, 451-3987 OPERATOR AR

ALSO AN ATTACHMENT

SMCS-7490 **i05959197**

NOTE	REF NO	GRAPHIC REF	PART NUMBER	QTY	PART NAME 1 2 3 4 5 6 (PRODUCT LEVEL)	SEE PAGE
Y	1	1	**466-3567**	1	MONITOR GP-OPERATOR (MOUNTING)	397
	2	1	**399-5313**	1	BRACKET AS	
	3	1	**421-1370**	1	HARNESS AS-CAB (MONITOR)	
		1	**8T-8729**	3	PIN-CONNECTOR (16-GA TO 18-GA)	
		1	**3S-2093**	2	STRAP-CABLE	
D		1	**5P-5998**		TUBE (0.5-M)	
		1	**8T-8737**	13	PLUG-SEAL	
		1	**9X-3401**	8	PIN-CONNECTOR (16-GA TO 18-GA)	
		1	**230-5010**	1	PLUG AS-CONNECTOR (6-PIN)	
		1	**264-7032**	1	SEAL-CONNECTOR	
		1	**243-4508**	1	RECEPTACLE AS-CONNECTOR (6-PIN)	
		1	**243-4510**	1	RECEPTACLE AS-CONNECTOR (12-PIN)	
		1	**340-2567**	11	WIRE AS (18-GA)	
		1	**340-2566**	23	PLUG-SEAL	
		1	**379-0830**	1	PLUG AS-CONNECTOR (34-PIN)	
M	4	1	**9X-2042**	7	SCREW-TRUSS HEAD (M6X1X12-MM)	

D - ORDER BY THE METER
M - METRIC PART
Y - SEPARATE ILLUSTRATION

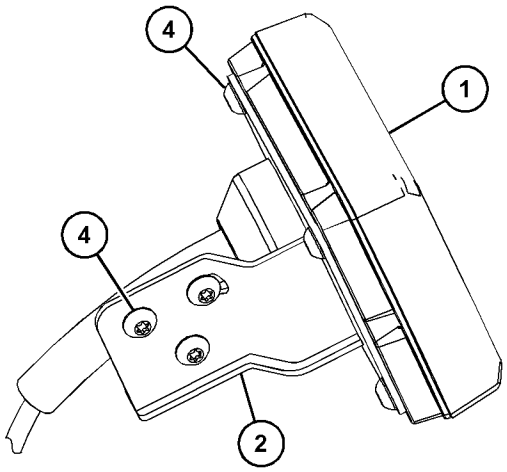

VIEW OF AREA A

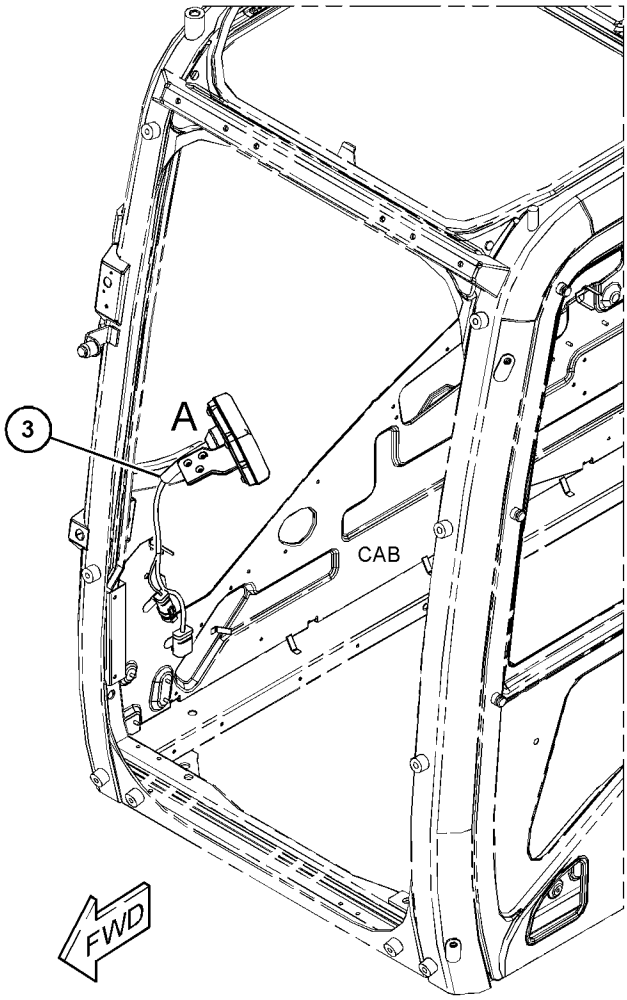

GRAPHIC #1 **<END>** g03682387

466-3567 MONITOR GP-OPERATOR

S/N: XAH1-UP

PART OF 399-2620 MONITOR & MTG GP-OPERATOR

ALSO AN ATTACHMENT

SMCS-7490 **i05959193**

NOTE	REF NO	GRAPHIC REF	PART NUMBER	QTY	PART NAME 1 2 3 4 5 6 (PRODUCT LEVEL)	SEE PAGE
	1	1	**466-3569**	1	SOFTWARE GP-MONITOR	
Y	2	1	*466-3570*	1	MONITOR GP-OPERATOR (CONTROL)	398

Y - SEPARATE ILLUSTRATION

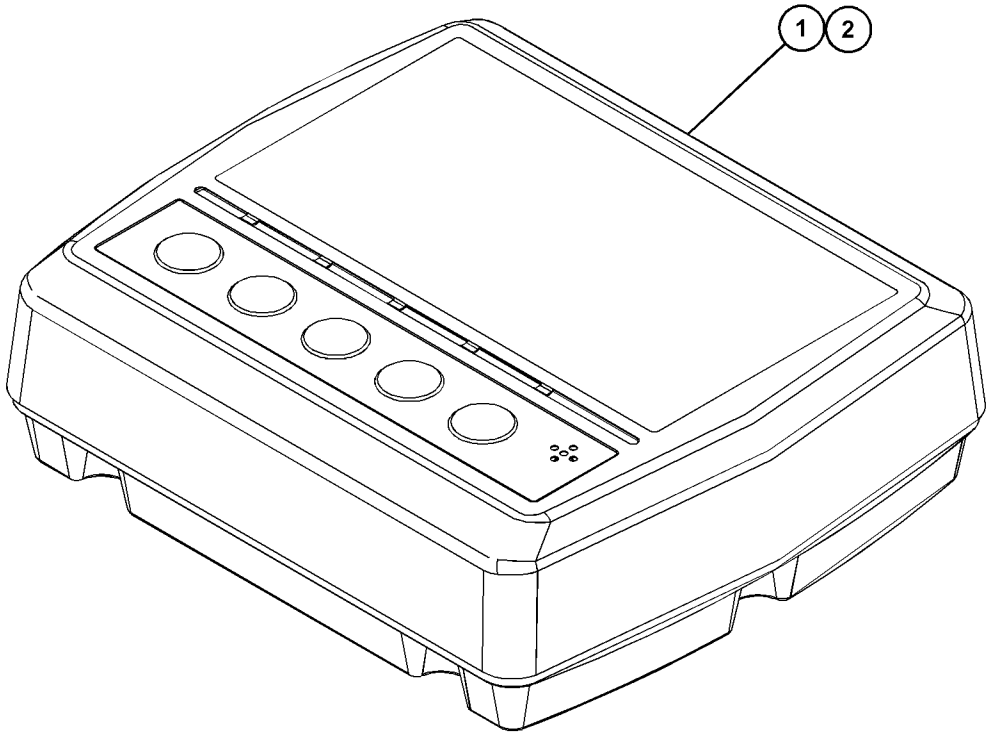

GRAPHIC #1 **<END>** g03745583

466-3570 MONITOR GP-OPERATOR

S/N: XAH1-UP

PART OF 466-3567 MONITOR GP-OPERATOR

ALSO AN ATTACHMENT

SMCS-7490 **i05971169**

NOTE	REF NO	GRAPHIC REF	PART NUMBER	QTY	PART NAME 1 2 3 4 5 6 (PRODUCT LEVEL)	SEE PAGE
	1	1	**444-5471**	1	MONITOR GP-OPERATOR	
	2	1	**466-3572**	1	SOFTWARE GP-MONITOR	

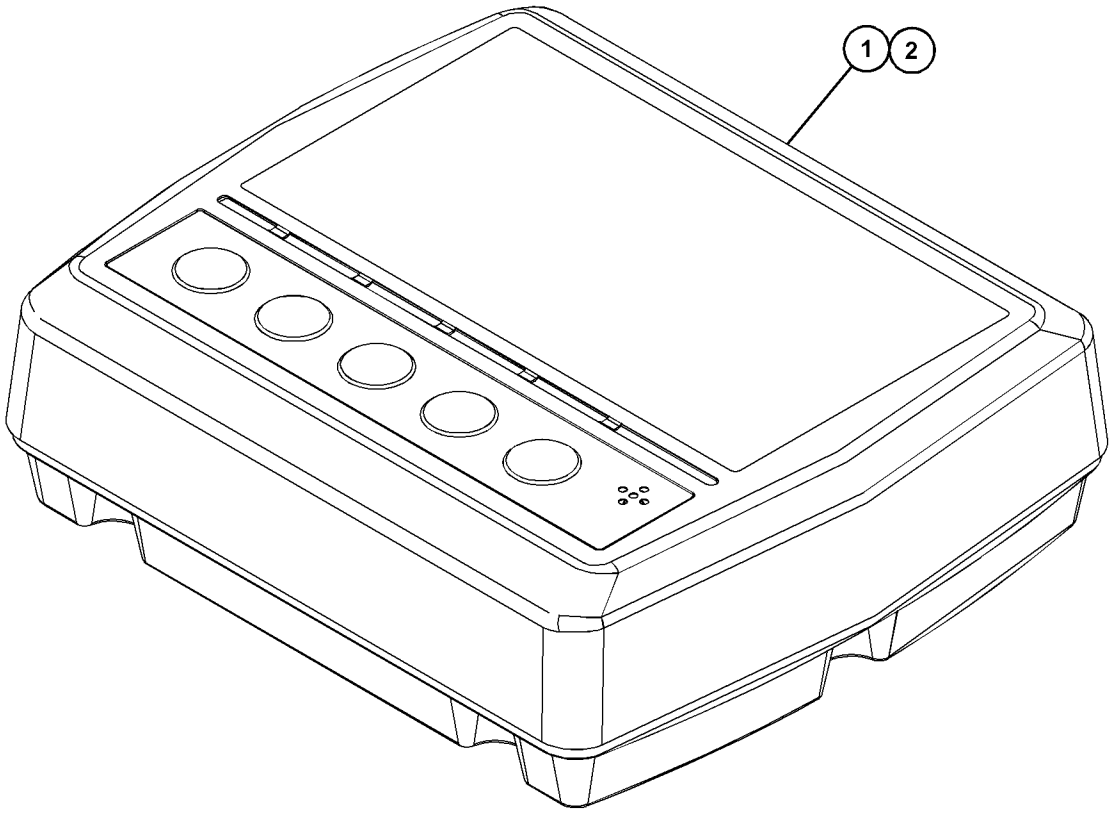

GRAPHIC #1 **<END>** g03745570

319-4255 MOUNTING GP-ANTENNA–PRODUCT LINK

S/N: XAH1-UP
PART OF 451-7464 INSTALLATION AR-COMMUNICATION
AN ATTACHMENT

SMCS-7338, 7606 **i05956408**

NOTE	REF NO	GRAPHIC REF	PART NUMBER	QTY	PART NAME 1 2 3 4 5 6 (PRODUCT LEVEL)	SEE PAGE
	1	1	**284-8532**	1	ANTENNA AS	
		1	**301-0589**	1	ANTENNA (FLEXIBLE)	
		1	**355-0598**	1	NUT-SPECIAL	
	2	1	**349-5413**	1	BRACKET	
	3	1	**349-5414**	1	BRACKET AS	
M	4	1	**447-1730**	1	BOLT (M16X2X25-MM)	
	5	1	**095-0910**	3	CLIP	
	6	1	**114-6658**	1	WASHER (6.5X17X1-MM THK)	
	7	1	**120-5737**	1	WASHER (17.5X40X4-MM THK)	
	8	1	**141-6519**	1	SPACER (6.6X19X10-MM THK)	
M	9	1	**143-9397**	2	SCREW-PAN HEAD (M4X0.7X12-MM)	
	10	1	**161-6987**	2	WASHER-HARD (5.2X16X1.5-MM THK)	
M	11	1	**6V-7357**	1	BOLT (M6X1X25-MM)	
	12	1	**8T-4121**	2	WASHER-HARD (11X21X2.5-MM THK)	
M	13	1	**8T-4137**	2	BOLT (M10X1.5X20-MM)	
	14	1	**9X-6165**	1	WASHER (6.5X22X2.5-MM THK)	

M - METRIC PART

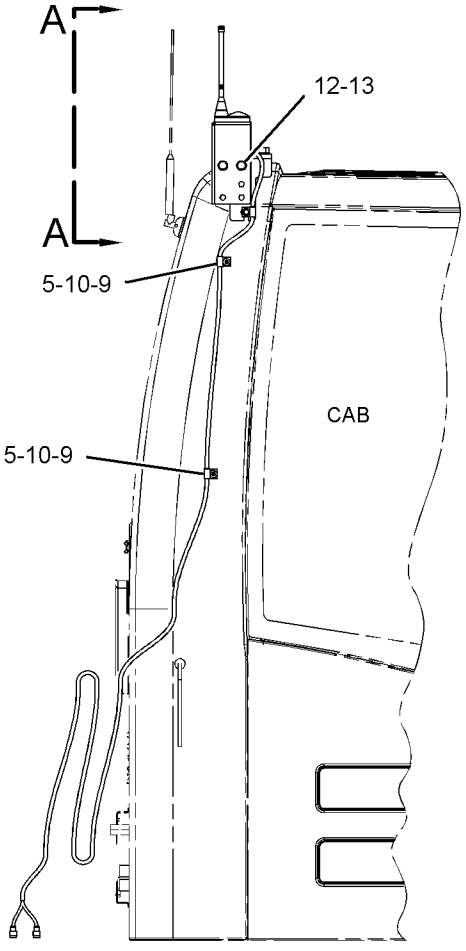

RIGHT SIDE VIEW

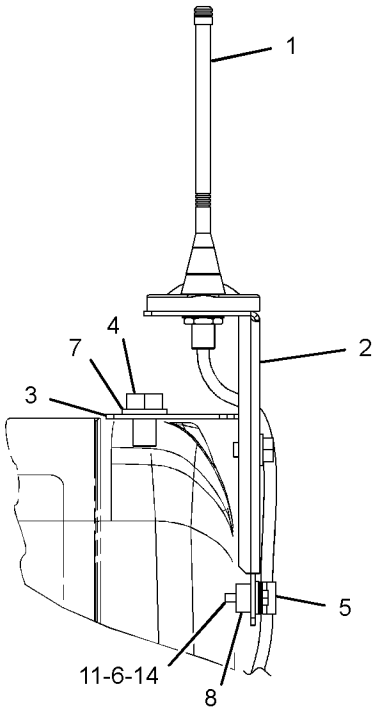

VIEW A-A

GRAPHIC #1 **<END>** g03739516

OPERATOR STATION

245-7811 MOUNTING GP-PLATFORM

S/N: XAH1-UP

PART OF 454-5583 CHASSIS AR

SMCS-7253 **i02495888**

NOTE	REF NO	GRAPHIC REF	PART NUMBER	QTY	PART NAME 1 2 3 4 5 6 (PRODUCT LEVEL)	SEE PAGE
	1	1	**235-8862**	4	MOUNT AS	
	2	1	**8T-4121**	16	WASHER-HARD (11X21X2.5-MM THK)	
M	3	1	**8T-4195**	16	BOLT (M10X1.5X30-MM)	

M - METRIC PART

245-7811 **MOUNTING GP-PLATFORM (*contd.*)** **i02495888**

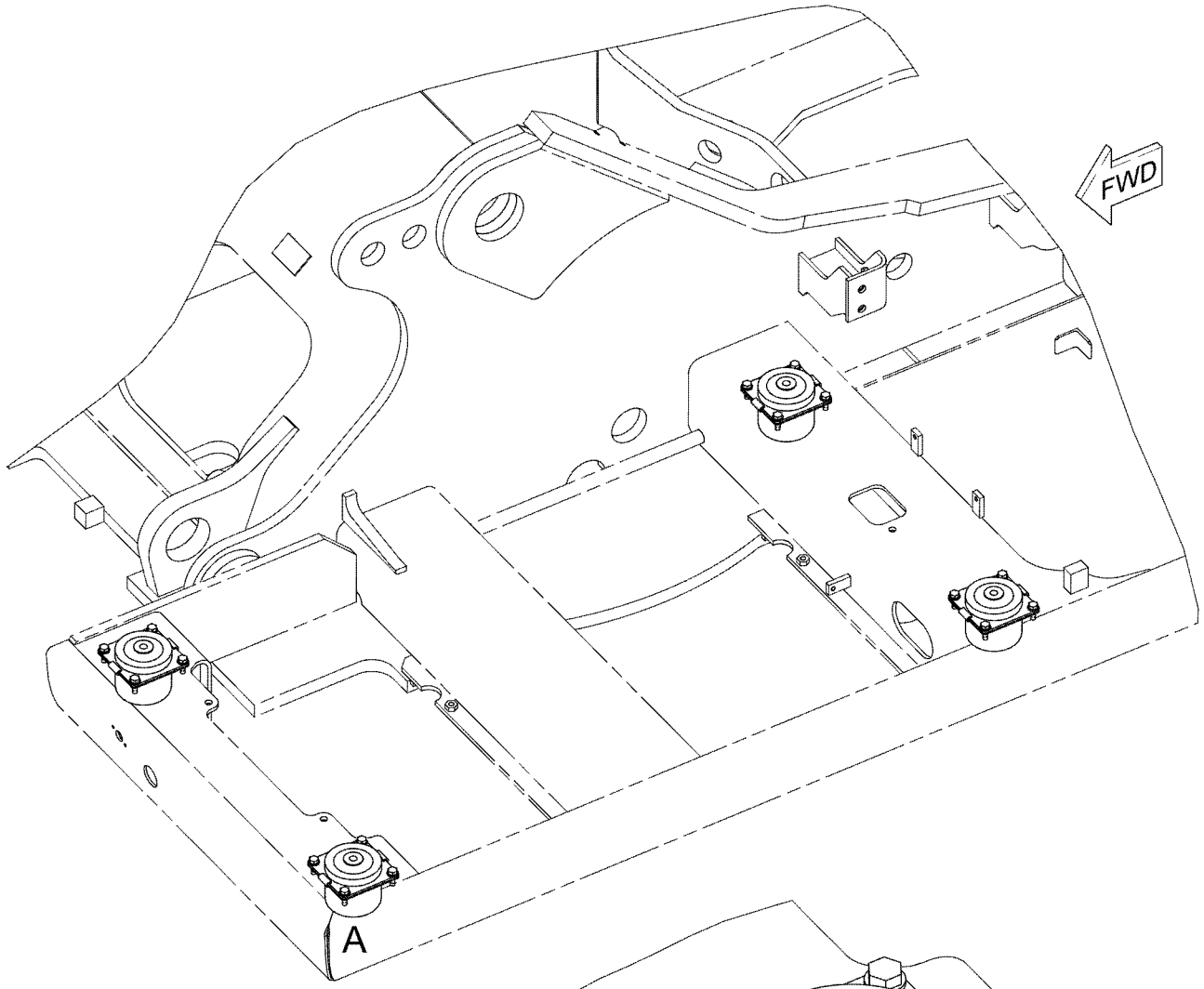

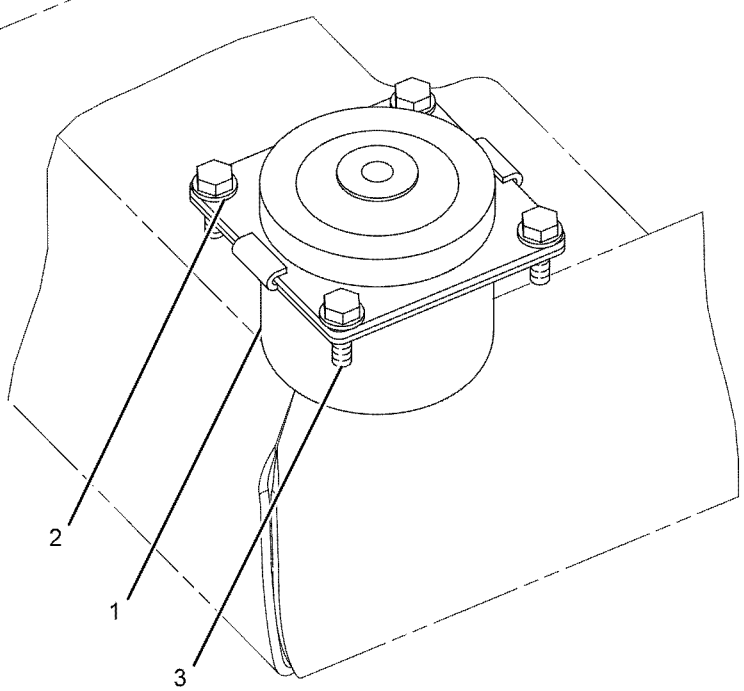

VIEW OF AREA A

GRAPHIC #1 **<END>** g01101486

OPERATOR STATION

451-3987 OPERATOR AR

S/N: XAH1-UP

PART OF 454-5583 CHASSIS AR

SMCS-7301 **i05780318**

NOTE	PART NUMBER	QTY	PART NAME 1 2 3 4 5 6 (PRODUCT LEVEL)	SEE PAGE
Y	*421-1431*	1	CONSOLE GP-OPERATOR	365
Y	*399-2618*	1	CONTROL & MTG GP-ELECTRONIC	101
Y	*170-9497*	1	CONTROL GP-PILOT OPERATED HYD (TRAVEL)	375
Y	*399-2620*	1	MONITOR & MTG GP-OPERATOR	396
Y	*388-6701*	1	PANEL & MTG GP-CIRCUIT BREAKER	113
Y	*229-9078*	1	PLATFORM GP-OPERATOR	403
Y	*327-6523*	1	SUPPORT GP-SEAT	409
Y	*398-7003*	1	WIRING GP-CAB	129
Y	*398-7005*	1	WIRING GP-CONSOLE	139
Y	*440-6915*	1	WIRING GP-PLATFORM	143

Y - SEPARATE ILLUSTRATION

<END>

229-9078 PLATFORM GP-OPERATOR

S/N: XAH1-UP

PART OF 451-3987 OPERATOR AR

SMCS-7253 **i05637013**

NOTE	REF NO	GRAPHIC REF	PART NUMBER	QTY	PART NAME 1 2 3 4 5 6 (PRODUCT LEVEL)	SEE PAGE
	1	1	**135-8965**	1	GROMMET	
	2	1	**135-8966**	1	GROMMET	
	3	1	**245-7916**	1	PLATFORM AS	
	4	1	**161-3717**	1	STRIP	
	5	1	**4I-3266**	1	STRIP	
M	6	1	**453-1259**	4	BOLT (M16X2X40-MM)	
	7	1	**8T-4121**	4	WASHER-HARD (11X21X2.5-MM THK)	
M	8	1	**8T-4191**	4	BOLT (M10X1.5X16-MM)	
	9	1	**451-2175**	4	WASHER-HARD (17.5X30X3.5-MM THK)	

M - METRIC PART

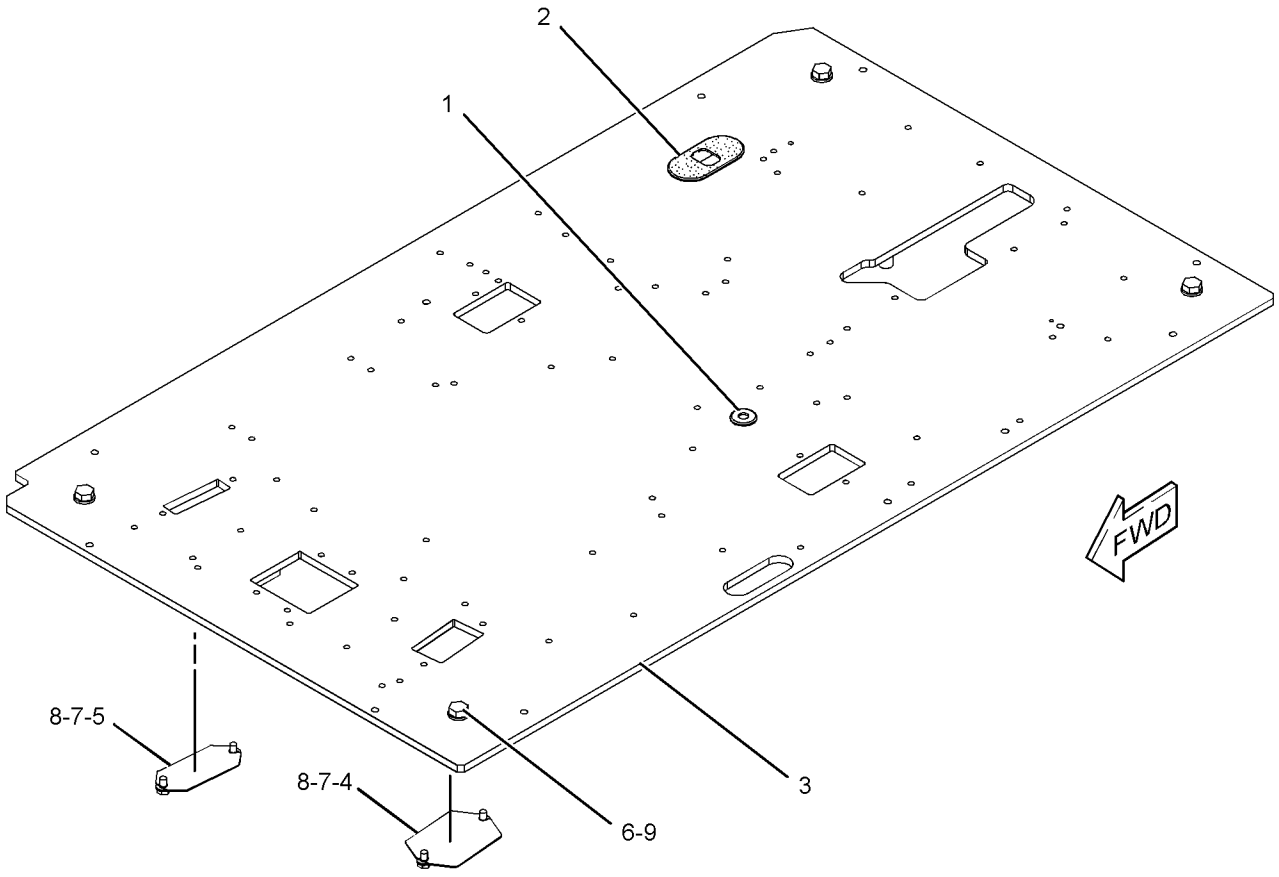

GRAPHIC #1 **<END>** g01188224

245-7881 SCREEN GP-SUN

S/N: XAH1-UP

AN ATTACHMENT

SMCS-7165 **i04083250**

NOTE	REF NO	GRAPHIC REF	PART NUMBER	QTY	PART NAME 1 2 3 4 5 6 (PRODUCT LEVEL)	SEE PAGE
	1	1	**255-4410**	1	SCREEN AS (CAB)	
	2	1	**259-7214**	3	HOOK-RETAINER	
	3	1	**259-7215**	3	HOOK-RETAINER	
M	4	1	**153-3568**	6	BOLT-SOCKET HEAD (M5X0.8X10-MM)	

M - METRIC PART

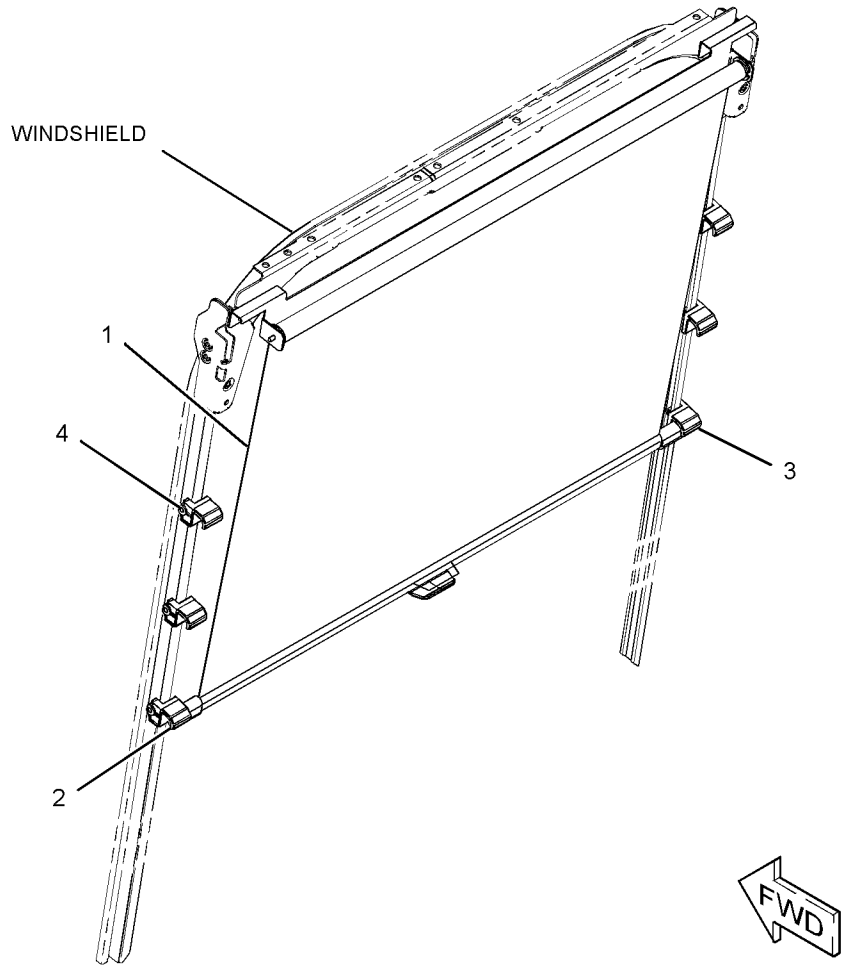

GRAPHIC #1 **<END>** g01177458

327-6501 SEAT & MOUNTING GP–HIGH BACK, TILT

S/N: XAH1-UP
CLOTH
PART OF 456-6742 CAB GP
AN ATTACHMENT

SMCS-7312 **i03485870**

NOTE	REF NO	GRAPHIC REF	PART NUMBER	QTY	PART NAME 1 2 3 4 5 6 (PRODUCT LEVEL)	SEE PAGE
Y	1	1	*327-6507*	1	SEAT GP-SUSPENSION (HIGH BACK, TILT)	408
M	2	1	**6V-8202**	4	BOLT-SOCKET HEAD (M8X1.25X16-MM)	

M - METRIC PART
Y - SEPARATE ILLUSTRATION

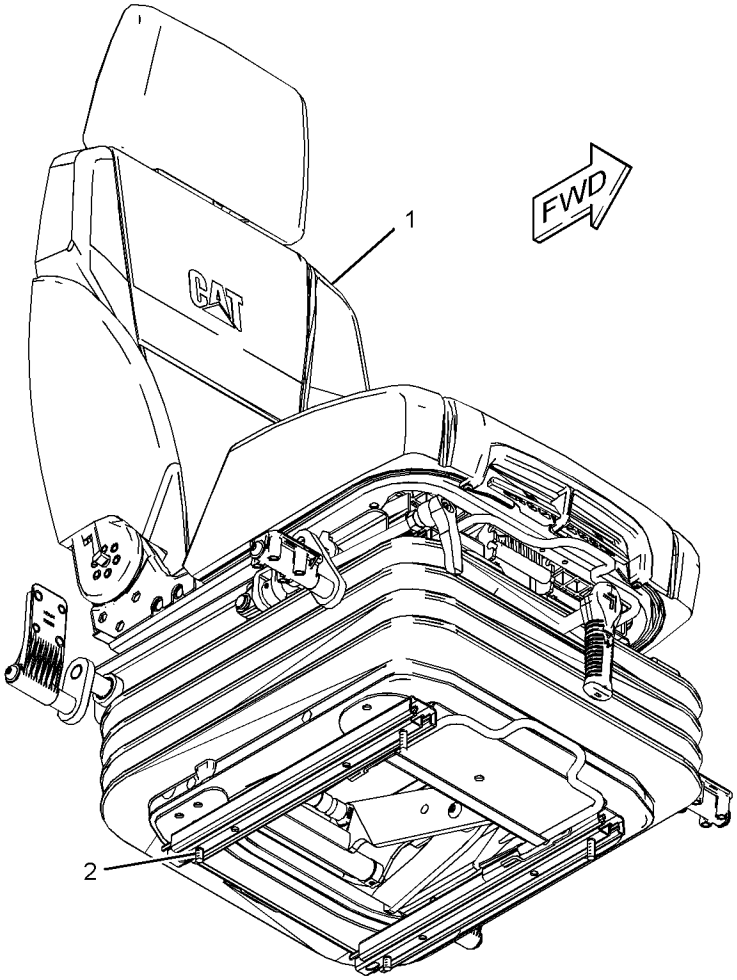

GRAPHIC #1 **<END>** g01803395

305-0467 SEAT BELT GP–RETRACTABLE

S/N: XAH1-UP
PART OF 456-6742 CAB GP
AN ATTACHMENT

SMCS-7327 **i05518832**

NOTE	REF NO	GRAPHIC REF	PART NUMBER	QTY	PART NAME 1 2 3 4 5 6 (PRODUCT LEVEL)	SEE PAGE
C	1	1	**327-6541**	1	SEAT BELT GP (RETRACTABLE, 51-MM (2-IN))	

C - CHANGE FROM PREVIOUS TYPE

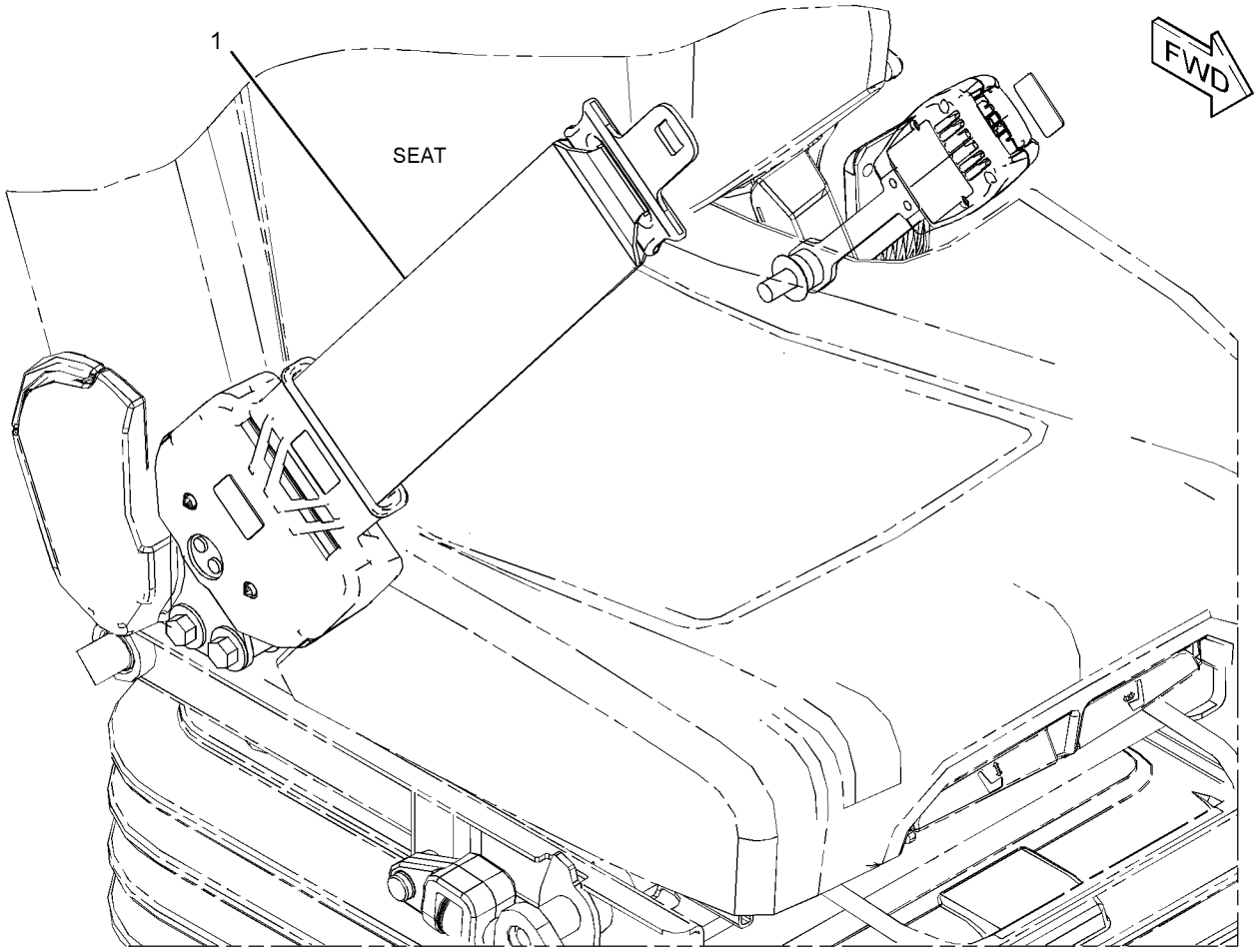

GRAPHIC #1 **<END>** g03442416

327-6512 SEAT GP—HIGH BACK, TILT

S/N: XAH1-UP
PART OF 327-6507 SEAT GP-SUSPENSION
AN ATTACHMENT

SMCS-7312 **i05832601**

NOTE	REF NO	GRAPHIC REF	PART NUMBER	QTY	PART NAME 1 2 3 4 5 6 (PRODUCT LEVEL)	SEE PAGE
	1	1	**178-5659**	1	HANDLE (LUMBAR SUPPORT ADJUSTER)	
	2	1	**316-8987**	2	BRACKET	
	3	1	**327-6515**	1	HEADREST AS-SEAT (CLOTH)	
	4	1	**327-6640**	1	KIT-HANDLE (RECLINER)	
	5	1	**327-6642**	1	KIT-SEAT TILT (ADJUSTER)	
	6	1	**327-6643**	1	KIT-ADJUSTER (CUSHION POSITIONING)	
	7	1	**333-4160**	1	KIT-SEAT (HIGH BACK, MANUAL)	
		1	**332-0195**	1	CLIP	
		1	**383-5647**	1	SPRING	
		1	**440-5584**	1	LEVER	
		1	**440-5585**	1	PIN	
	8	1	**333-4179**	2	BOLT-SPECIAL	
M	9	1	**9X-2616**	4	SCREW-SOCKET (M8X1.25X16-MM)	

M - METRIC PART

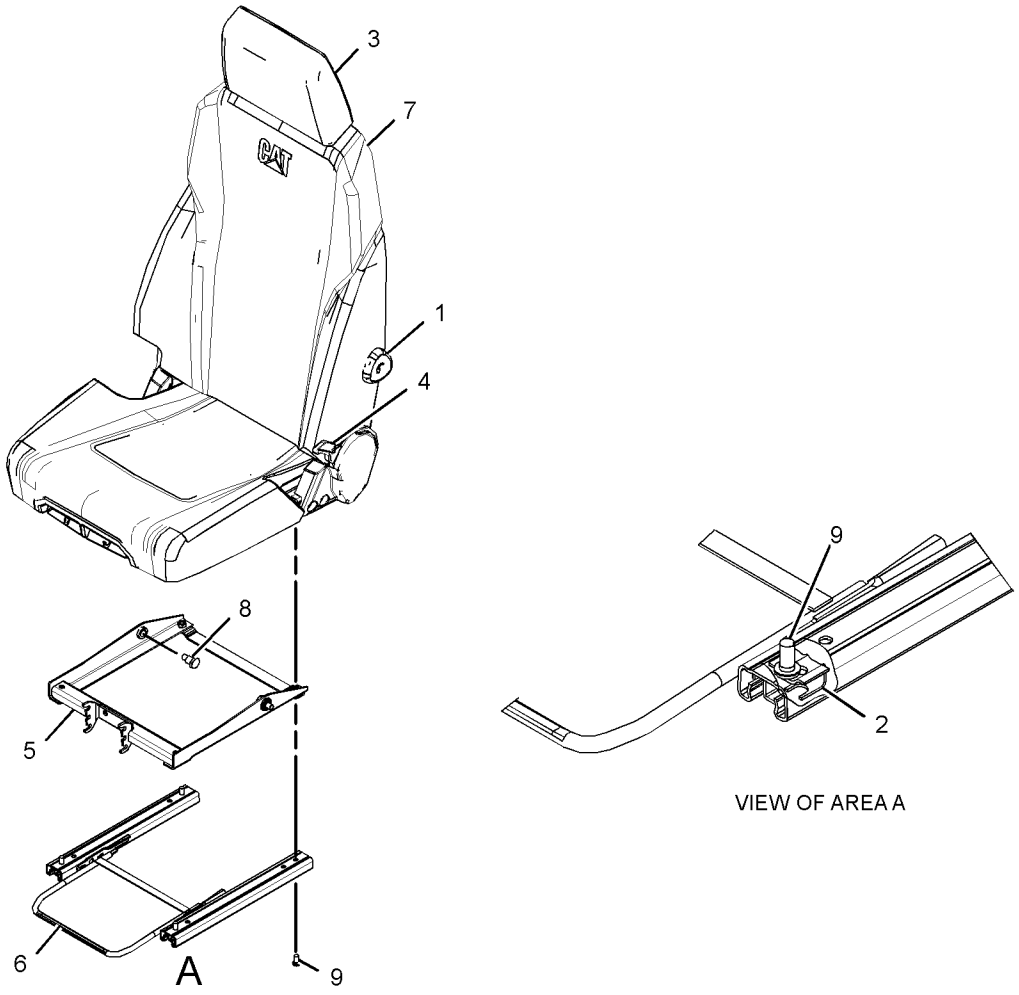

VIEW OF AREA A

GRAPHIC #1 **<END>** g03058636

327-6507 SEAT GP-SUSPENSION—HIGH BACK, TILT

S/N: XAH1-UP

PART OF 327-6501 SEAT & MOUNTING GP

AN ATTACHMENT

SMCS-7324, 7336

i05439945

NOTE	REF NO	GRAPHIC REF	PART NUMBER	QTY	PART NAME 1 2 3 4 5 6 (PRODUCT LEVEL)	SEE PAGE
	1	1	**316-8987**	2	BRACKET	
Y	2	1	**327-6512**	1	SEAT GP (HIGH BACK, TILT)	407
Y	3	1	**327-6520**	1	SUSPENSION GP-SEAT (MECHANICAL)	410
M	4	1	**5A-3604**	4	BOLT-SOCKET HEAD (M8X1.25X25-MM)	

M - METRIC PART
Y - SEPARATE ILLUSTRATION

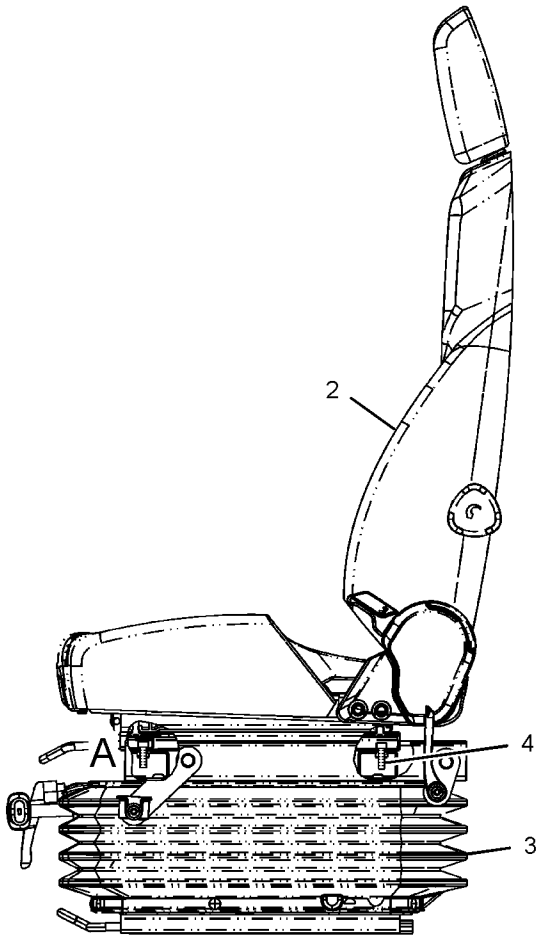

LEFT SIDE VIEW

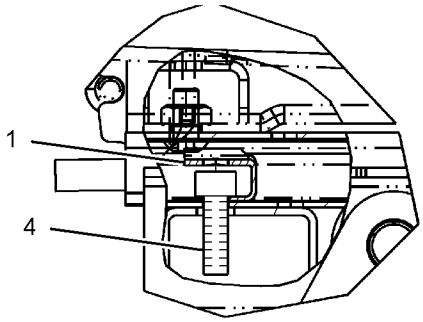

VIEW OF AREA A

GRAPHIC #1

<END>

g01794435

327-6523 SUPPORT GP-SEAT

S/N: XAH1-UP
PART OF 456-6742 CAB GP, 451-3987 OPERATOR AR
ALSO AN ATTACHMENT

SMCS-7321 **i03722760**

NOTE	REF NO	GRAPHIC REF	PART NUMBER	QTY	PART NAME 1 2 3 4 5 6 (PRODUCT LEVEL)	SEE PAGE
	1	1	**327-6538**	1	SUPPORT AS-SEAT	
	2	1	**8T-4121**	4	WASHER-HARD (11X21X2.5-MM THK)	
M	3	1	**8T-4191**	4	BOLT (M10X1.5X16-MM)	

M - METRIC PART

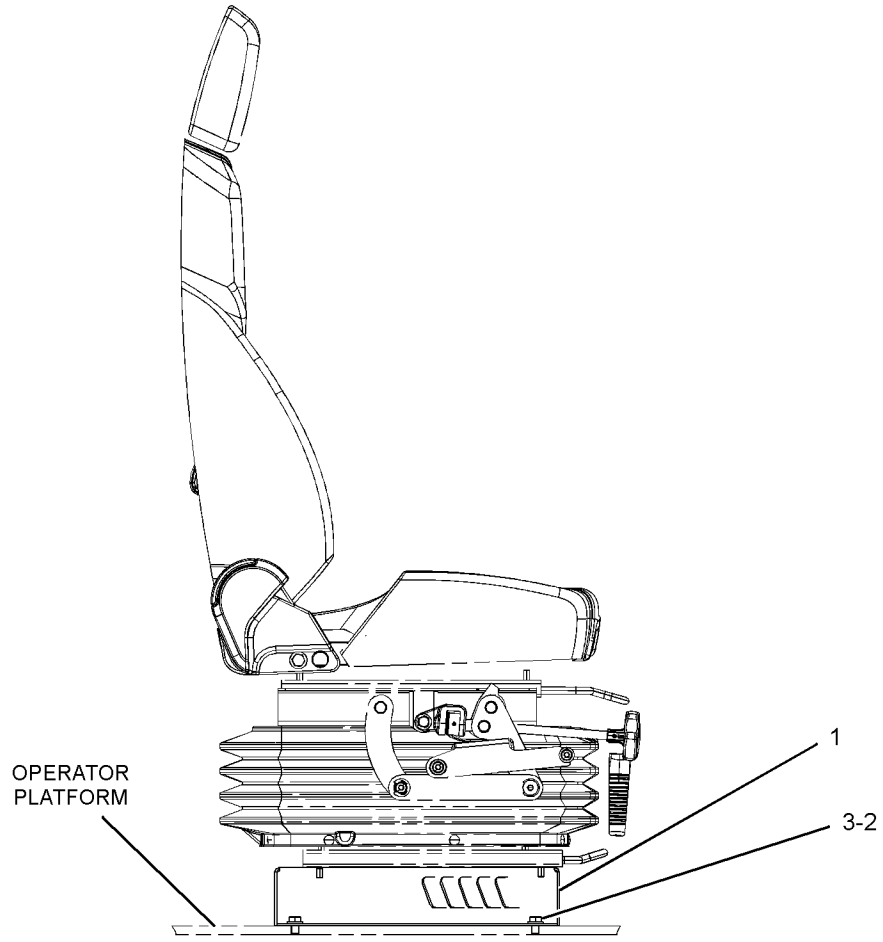

RIGHT SIDE VIEW

GRAPHIC #1 **<END>** g01809475

327-6520 SUSPENSION GP-SEAT—MECHANICAL

S/N: XAH1-UP

PART OF 327-6507 SEAT GP-SUSPENSION

AN ATTACHMENT

SMCS-7324 **i05439962**

NOTE	REF NO	GRAPHIC REF	PART NUMBER	QTY	PART NAME 1 2 3 4 5 6 (PRODUCT LEVEL)	SEE PAGE
	1	1	**327-6644**	1	KIT-BRACKET (CONSOLE RAISE, LOWER)	
	1A	1	**372-9306**	16	SPACER (16.5X28.5X0.1-MM THK)	
	2	1	**327-6645**	1	KIT-SEAT SUSPENSION (MECHANICAL)	
	3	1	**327-6648**	1	KIT-ADJUSTER (SEAT POSITION)	
M	4	1	**198-3899**	4	SCREW-BUTTON HEAD (M8X1.25X20-MM)	
	5	1	**245-7895**	1	KIT-CLIP (SEAT)	
					(INCLUDES 28 CLIPS)	
	6	1	**327-6646**	1	KIT-CYLINDER (DAMPENER)	
	7	1	**327-6647**	1	KIT-COVER (SUSPENSION)	
	8	1	**333-4180**	6	SCREW-BUTTON HEAD (M8X1.25X20-MM)	
	9	1	**333-4181**	1	KIT-HANDLE (SEAT HEIGHT) (SEAT HEIGHT)	

M - METRIC PART

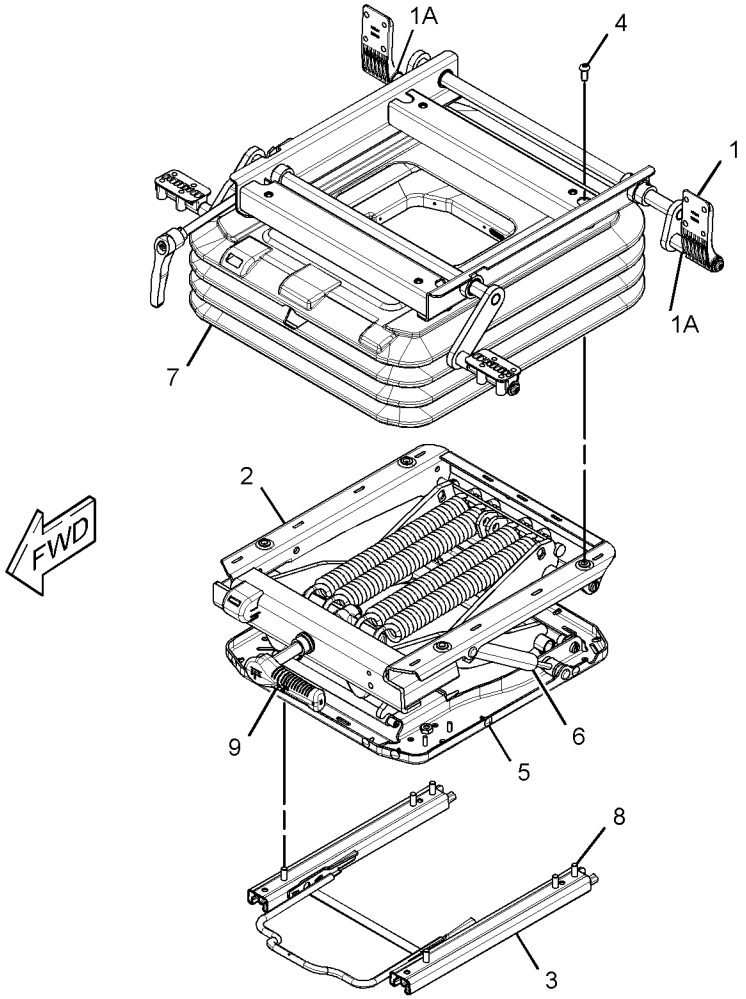

GRAPHIC #1 **<END>** g02809057

229-9070 WASHER GP-WINDOW

S/N: XAH1-UP
PART OF 454-5645 OPTION AR-CAB
AN ATTACHMENT

SMCS-7306 **i02593861**

NOTE	REF NO	GRAPHIC REF	PART NUMBER	QTY	PART NAME 1 2 3 4 5 6 (PRODUCT LEVEL)	SEE PAGE
	1	1	**7Y-3474**	1	VALVE AS-CHECK (WINDOW WASHER)	
	2	1	**163-6795**	2	STRAP-CABLE	
	3	1	**176-1931**	1	TANK AS-WINDOW WASHER	
		1	**5C-8138**	1	GROMMET	
		1	**7T-8890**	1	PUMP AS-WASHER (24-VOLT)	
		1	**178-5431**	1	CAP AS (WINDOW WASHER)	
		1	**3W-6399**		PACKING	
	4	1	**235-9012**	1	SUPPORT AS	
M	5	1	**8T-4970**	2	BOLT (M6X1X14-MM)	
	6	1	**9X-8256**	2	WASHER (6.6X12X2-MM THK)	
CE	7	1	**144-0195**		HOSE (13-CM)	
	8	1	**3S-2093**	1	STRAP-CABLE	

C - CHANGE FROM PREVIOUS TYPE
E - ORDER BY THE CENTIMETER
M - METRIC PART

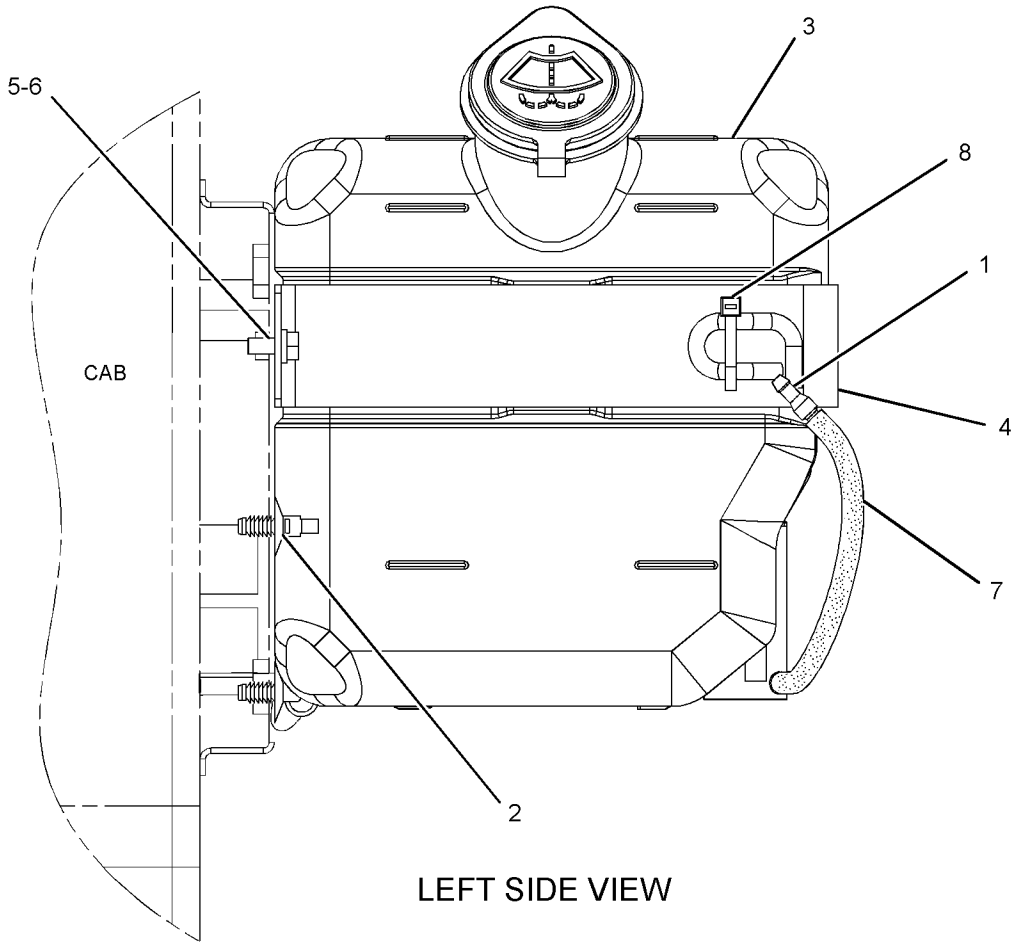

LEFT SIDE VIEW

GRAPHIC #1 **<END>** g01307642

388-9107 WINDOW GP-CAB—SIDE, REAR

S/N: XAH1-UP
PART OF 416-9607 CAB GP
AN ATTACHMENT

SMCS-7310 **i05503869**

NOTE	REF NO	GRAPHIC REF	PART NUMBER	QTY	PART NAME 1 2 3 4 5 6 (PRODUCT LEVEL)	SEE PAGE
	1	1	**383-6931**	1	GLASS (LH)	
	2	1	**383-6929**	1	GLASS (REAR)	
	3	1	**164-0666**	1	SEAL	
	4	1	**178-5572**	4	SPACER-SPECIAL (WINDOW)	
	5	1	**383-6932**	1	GLASS (RH)	
	6	1	**099-3629**	1	RING-KEY	
	7	1	**178-5573**	4	SPACER	
	8	1	**178-5574**	10	SPACER	

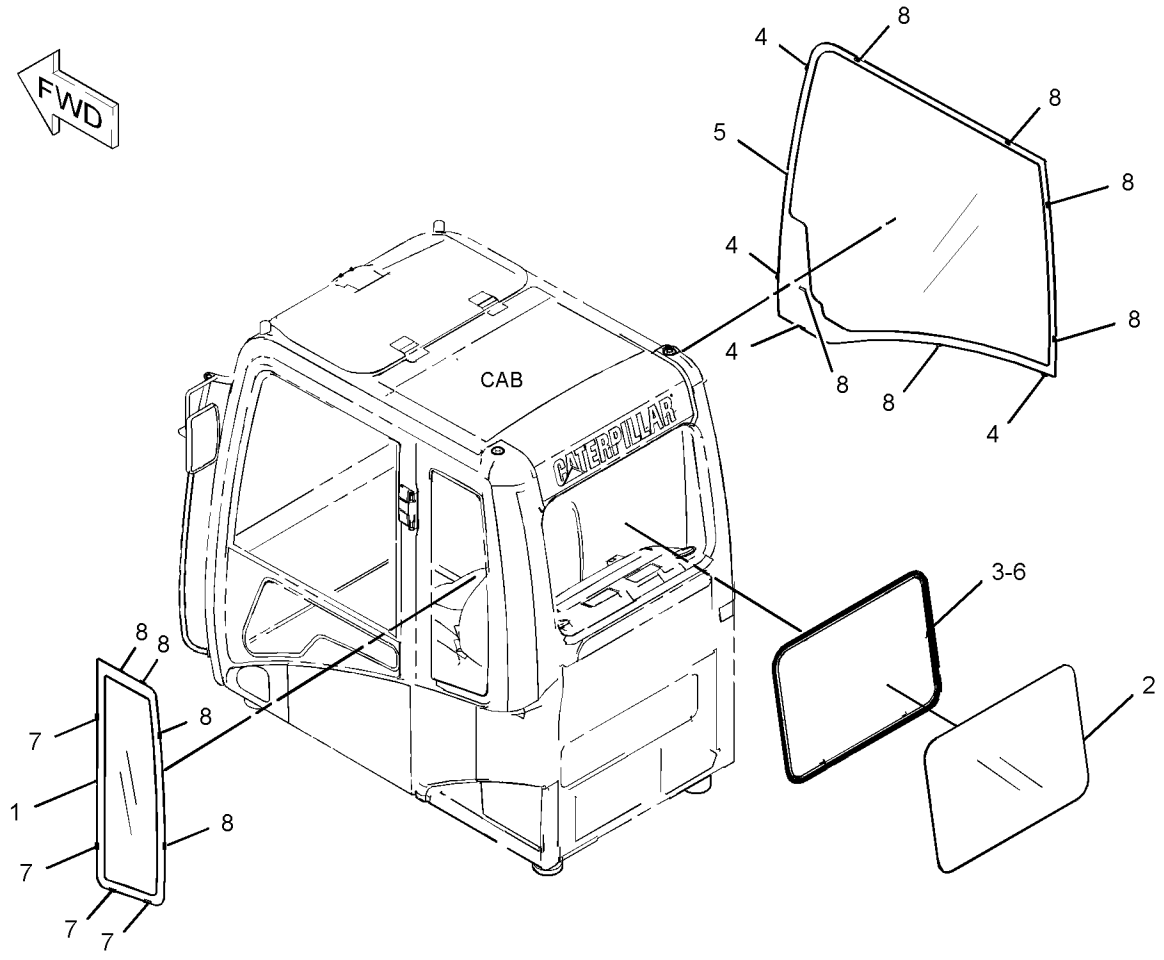

GRAPHIC #1 **<END>** g03499618

388-9108 WINDOW GP-CAB—FRONT, LOWER

S/N: XAH1-UP
PART OF 416-9607 CAB GP
AN ATTACHMENT

SMCS-7310 **i05208414**

NOTE	REF NO	GRAPHIC REF	PART NUMBER	QTY	PART NAME 1 2 3 4 5 6 (PRODUCT LEVEL)	SEE PAGE
	1	1	**383-6930**	1	GLASS (FRONT, LOWER)	
	2	1	**156-6631**	2	STOP	
	3	1	**305-0361**	1	SEAL	
	4	1	**178-5569**	2	SEAL	
	5	1	**189-2702**	2	SEAL	
	6	1	**139-7119**	2	PLUG	

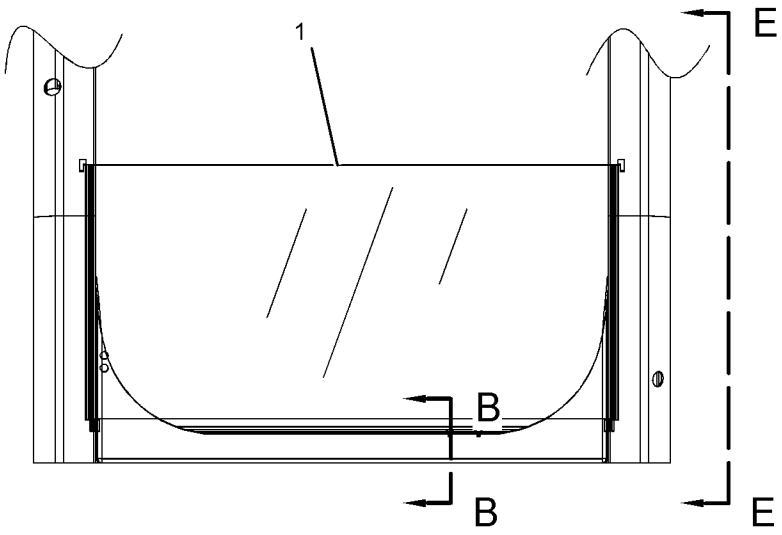

FRONT VIEW

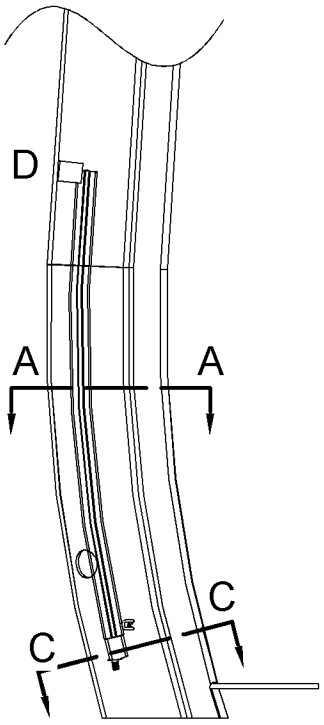

VIEW E-E

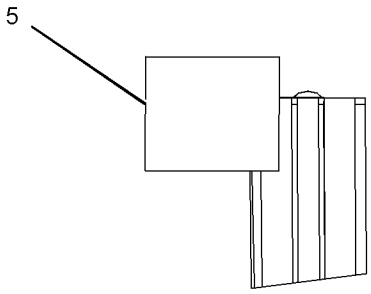

VIEW OF AREA D

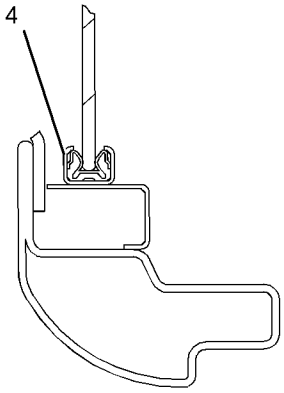

SECTION A-A

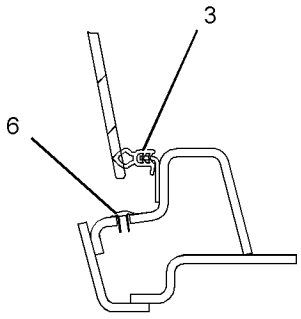

SECTION B-B

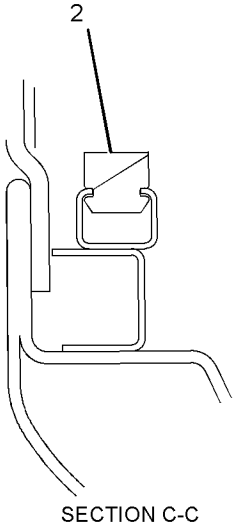

SECTION C-C

GRAPHIC #1 **<END>** g01398601

388-9109 WINDOW GP-CAB—FRONT, UPPER

S/N: XAH1-UP
PART OF 416-9607 CAB GP
AN ATTACHMENT

SMCS-7310 **i05437801**

NOTE	REF NO	GRAPHIC REF	PART NUMBER	QTY	PART NAME 1 2 3 4 5 6 (PRODUCT LEVEL)	SEE PAGE
	1	2	**170-9722**	1	CUSHION	
	2	1	**151-6703**	1	HANDLE-PULL	
	3	1	**151-6704**	2	CAP	
	4	2	**151-6778**	1	FRAME AS	
	4A	2	**156-6470**	1	HANDLE	
	5	1	**417-1143**	1	BRACKET AS	
	6	1	**151-6813**	1	BRACKET AS	
	7	1	**151-6815**	1	BRACKET AS	
	8	1	**273-5345**	1	LINK AS	
	9	1	**273-5346**	1	LINK AS	
	10	1	**398-7109**	1	LOCK AS	
	11	1	**151-6832**	1	LEVER AS	
	12	2	**388-9097**	1	COVER	
	13	1	**151-9557**	2	STOP-RUBBER	
	14	2	**383-8541**	1	GLASS	
	15	2	**156-6554**	1	CABLE AS	
	16	1	**398-7110**	1	STRIKER AS	
	17	2	**156-6562**	1	BRACKET	
	18	2	**156-6563**	1	CATCH AS	
					(TWO JAW)	
					—OR—	
			273-5274	1	CATCH AS	
					(ONE JAW)	
	19	2	**156-6579**	1	STOP	
	20	2	**418-8379**	1	SEAL AS	
	21	2	**156-6627**	1	STOP AS	
	22	1	**161-3684**	2	STOP	
	23	1	**161-3698**	1	SEAL	
	24	2	**164-0648**	1	BRACKET AS	
	25	1	**178-5576**	1	STOP	
M	26	2	**138-8454**	2	SCREW-TRUSS HEAD (M4X0.7X10-MM)	
M	27	2	**185-8182**	4	BOLT (M10X1.5X20-MM)	
M	28	2	**5C-8312**	1	NUT (M4X0.7-THD)	
	29	1	**5P-1075**	4	WASHER-HARD (10.2X22.5X3-MM THK)	
M	30	1	**142-0485**	1	NUT (M10X1.5-THD)	
	31	1	**185-8221**	1	STOP	
M	32	1	**099-0823**	2	SCREW-MACHINE (M6X1X6-MM)	
M	33	1	**101-8900**	2	SCREW AS (M6X1X20-MM)	
	34	1	**117-6306**	1	SWITCH (WINDOW LOWER LIMIT)	
	35	1	**151-9576**	4	ROLLER	
	36	1	**4I-0420**	1	STRIP	
	37	1	**7X-0578**	1	WASHER-HARD (10.2X32X2.5-MM THK)	
M	38	2	**9X-2042**	20	SCREW-TRUSS HEAD (M6X1X12-MM)	
M	39	1,2	**9X-2044**	5	SCREW-TRUSS HEAD (M6X1X16-MM)	
M	40	2	**9X-2045**	3	SCREW-TRUSS HEAD (M6X1X20-MM)	
	41	2	**9X-8256**	2	WASHER (6.6X12X2-MM THK)	

M - METRIC PART

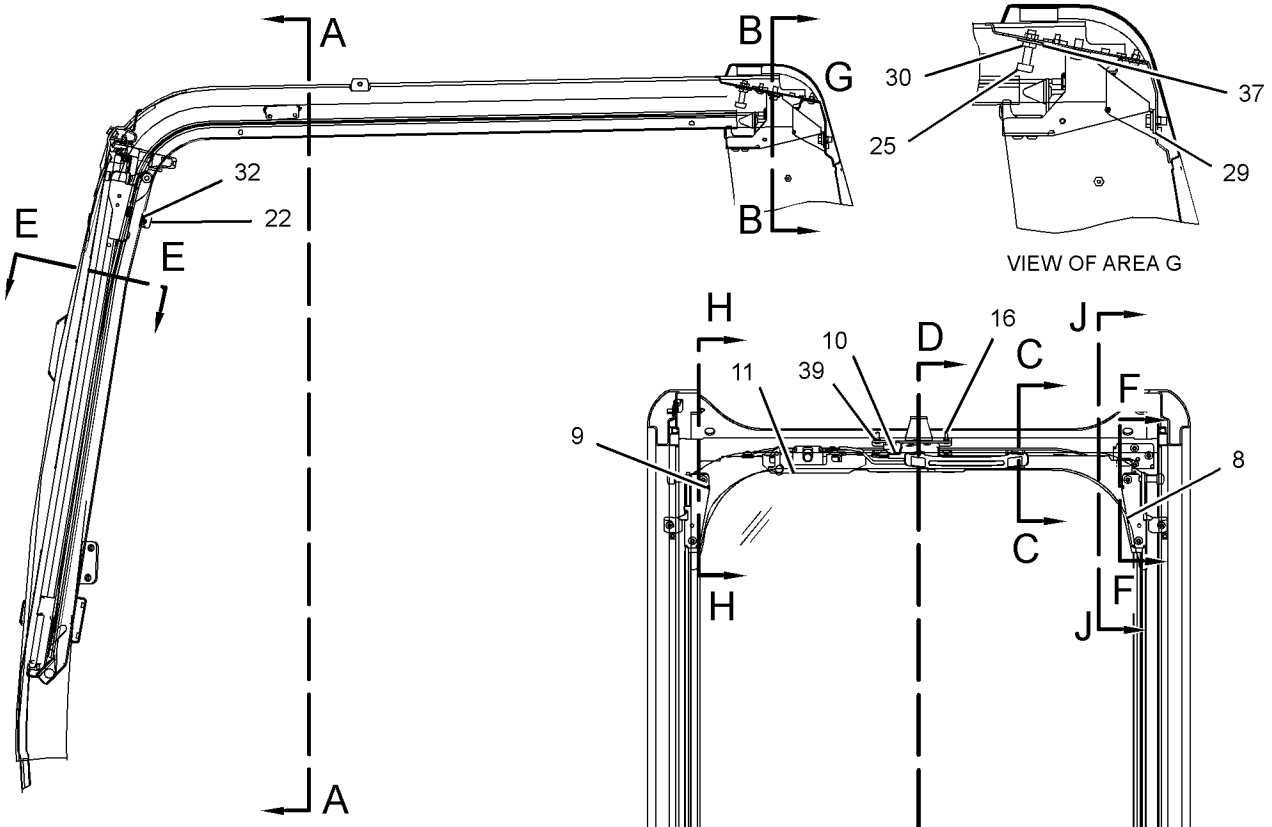

LEFT SIDE VIEW

REFER TO ALL ILLUSTRATIONS OF THIS GROUP FOR AUXILIARY VIEWS

SECTION A-A

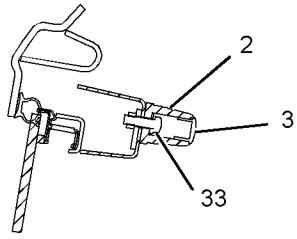

SECTION C-C

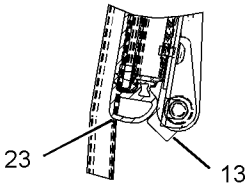

SECTION D-D

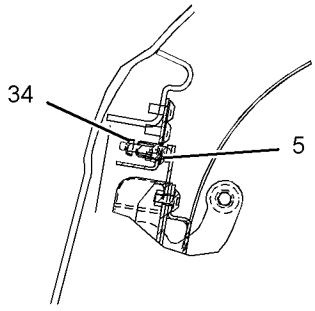

SECTION F-F

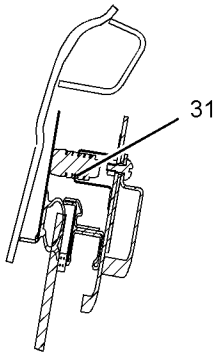

SECTION H-H

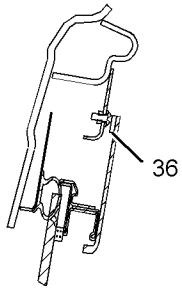

SECTION J-J

GRAPHIC #1 g03445379

388-9109 **WINDOW GP-CAB (*contd.*)** **i05437801**

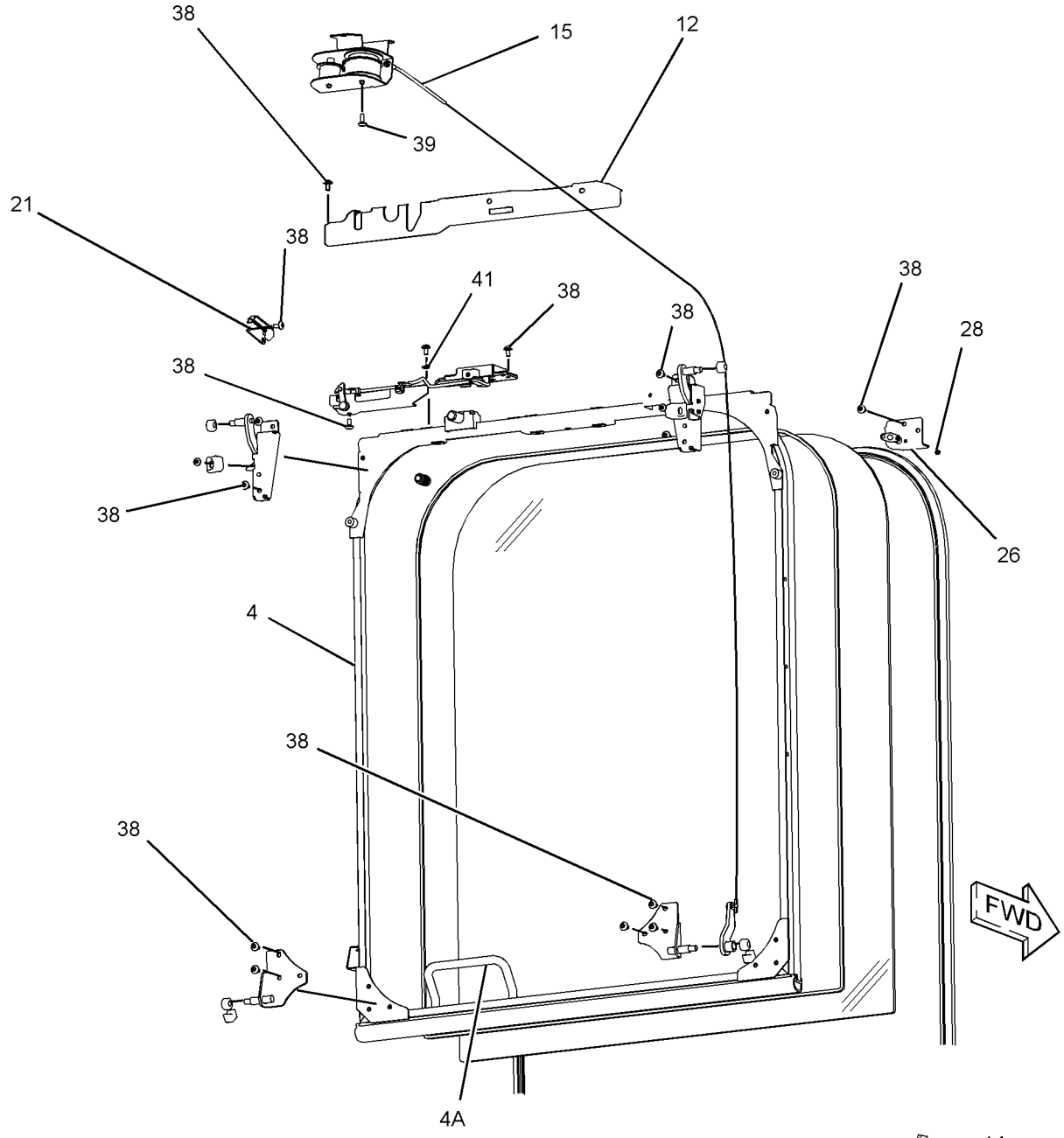

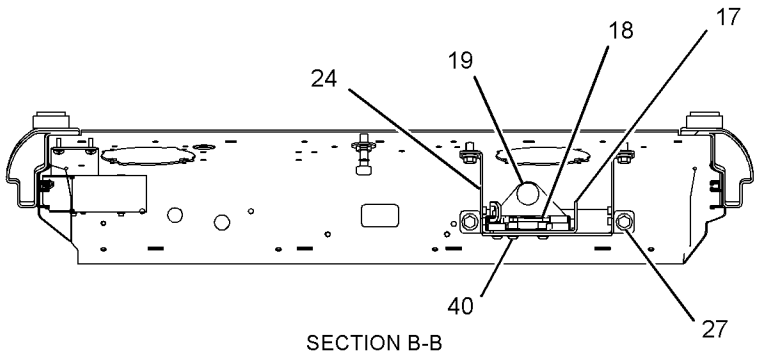

SECTION B-B

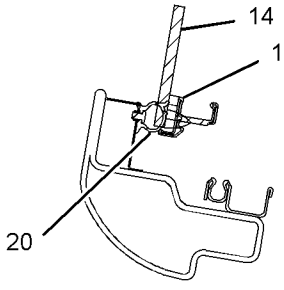

SECTION E-E

GRAPHIC #2 **<END>** g03445380

388-9116 WINDOW GP-CAB—FRONT, UPPER

S/N: XAH1-UP
PART OF 416-9607 CAB GP
AN ATTACHMENT

SMCS-7310 **i05917586**

NOTE	REF NO	GRAPHIC REF	PART NUMBER	QTY	PART NAME 1 2 3 4 5 6 (PRODUCT LEVEL)	SEE PAGE
	1	1	**161-3698**	1	SEAL	
M	2	1	**101-8900**	2	SCREW AS (M6X1X20-MM)	
	3	1	**151-6703**	1	HANDLE-PULL	
	4	1	**151-6704**	2	CAP	
	5	1	**151-6778**	1	FRAME AS	
	5A	1	**156-6470**	1	HANDLE	
	6	1	**151-6813**	1	BRACKET AS	
	7	1	**151-6815**	1	BRACKET AS	
	8	1	**273-5345**	1	LINK AS	
	9	1	**273-5346**	1	LINK AS	
	10	1	**151-6831**	1	LOCK AS	
	11	1	**151-6832**	1	LEVER AS	
	12	1	**383-8541**	1	GLASS	
	13	1	**170-9722**	1	CUSHION	
	14	1	**151-9576**	4	ROLLER	
M	15	1	**9X-2042**	15	SCREW-TRUSS HEAD (M6X1X12-MM)	

M - METRIC PART

388-9116 **WINDOW GP-CAB (*contd.*)** **i05917586**

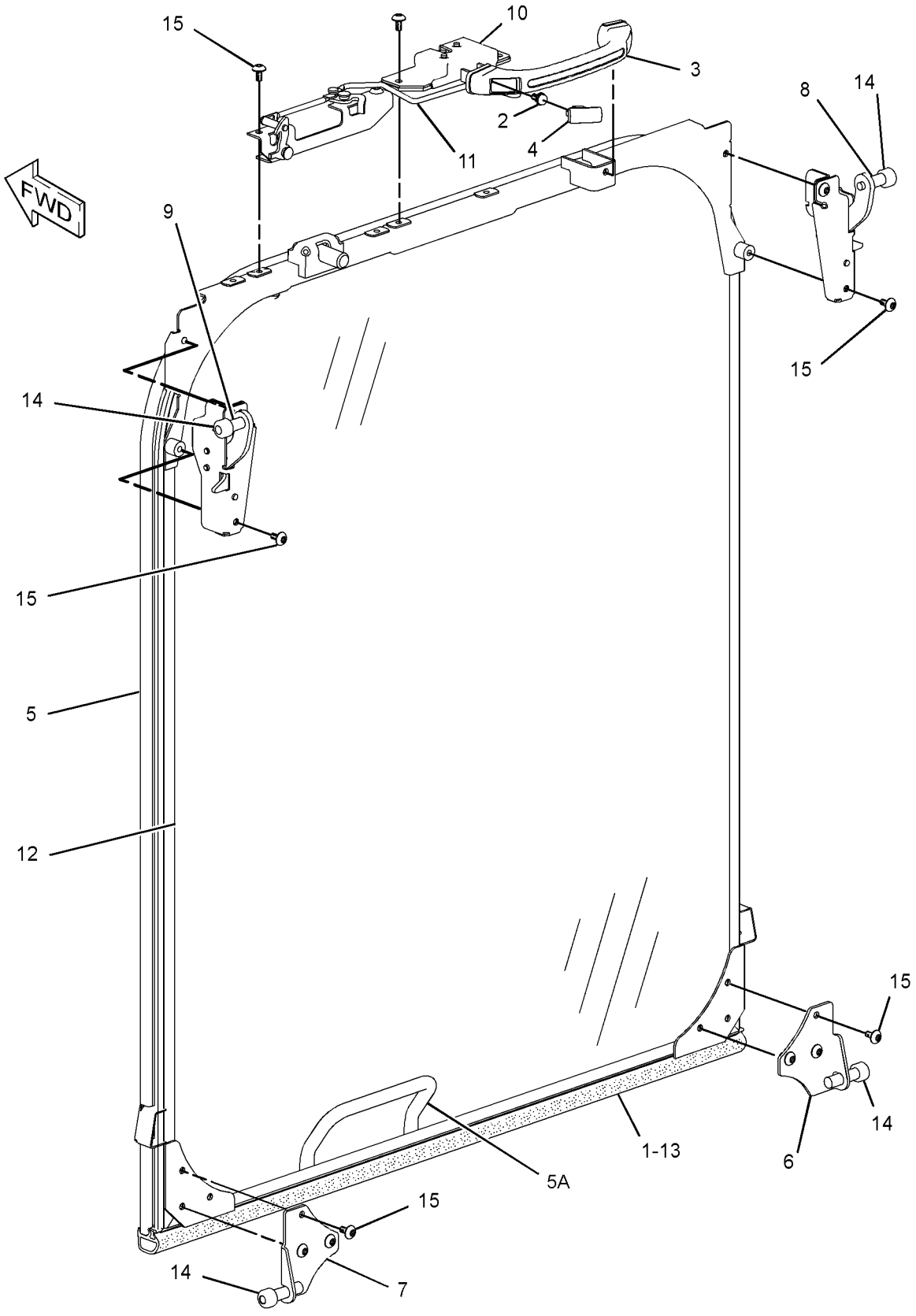

GRAPHIC #1 **<END>** g01935199

388-9117 WINDOW GP-CAB—FRONT, UPPER

S/N: XAH1-UP
PART OF 416-9607 CAB GP
AN ATTACHMENT

SMCS-7310 **i05458912**

NOTE	REF NO	GRAPHIC REF	PART NUMBER	QTY	PART NAME 1 2 3 4 5 6 (PRODUCT LEVEL)	SEE PAGE
	1	1	**170-9722**	1	CUSHION	
	2	1	**151-6778**	1	FRAME AS	
	2A	1	**156-6470**	1	HANDLE	
	3	1	**161-3698**	1	SEAL	
	4	1	**383-8541**	1	GLASS	
	5	1	**4I-0420**	1	STRIP	

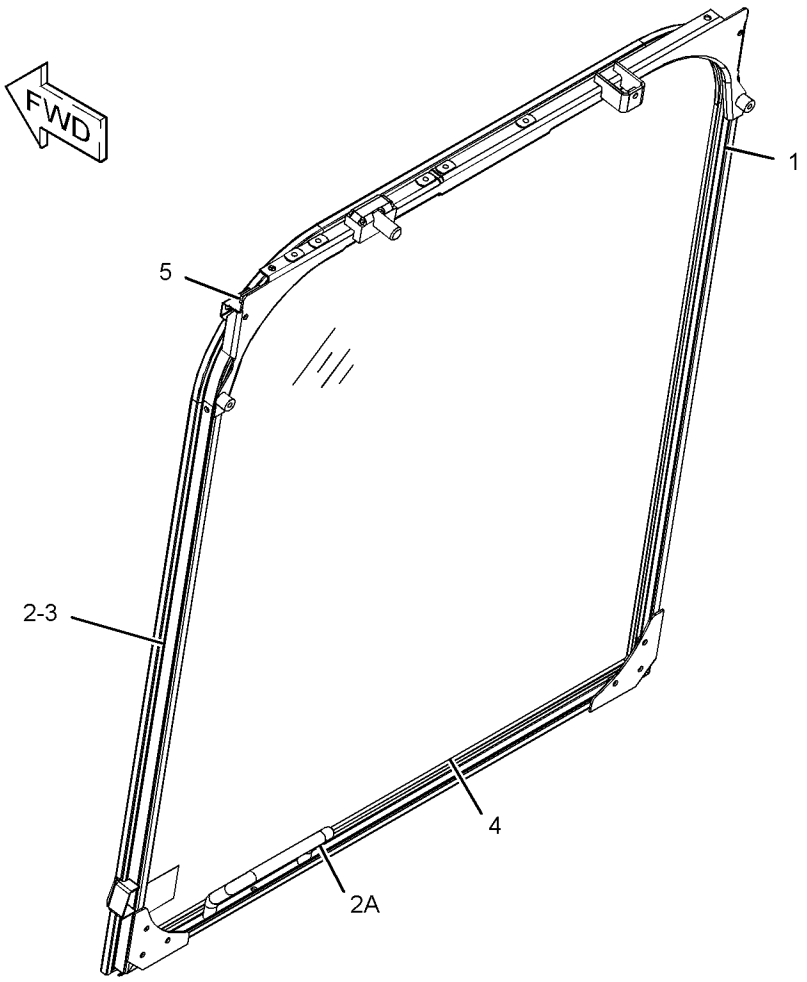

GRAPHIC #1 **<END>** g03443317

151-6792 WINDOW GP-DOOR

S/N: XAH1-UP
PART OF 307-1818 DOOR GP-CAB
AN ATTACHMENT

SMCS-7308, 7310

i03632584

NOTE	REF NO	GRAPHIC REF	PART NUMBER	QTY	PART NAME 1 2 3 4 5 6 (PRODUCT LEVEL)	SEE PAGE
	1	1	**085-6444**	2	LATCH GP-WINDOW	
					(EACH INCLUDES)	
		1	**085-6447**	1	RETAINER	
M		1	**085-6448**	2	SCREW-TAPPING	
		1	**085-6449**	1	PACKING	
	2	1	**151-6793**	1	FRAME AS	
		1	**4I-4298**	1	STOPPER	
		1	**4I-4300**	1	CATCH	
		1	**099-0139**	3	RIVET	
	3	1	**151-6841**	1	SEAL	
	4	1	**156-6474**	1	GLASS	
	5	1	**156-6475**	1	GLASS	
	6	1	**161-3695**	1	SEAL	
	7	1	**161-3705**	1	SEAL	
	8	1	**164-0516**	1	RUBBER	
	9	1	**164-0517**	1	RUBBER	
	10	1	**164-0518**	1	RUBBER	
	11	1	**171-7413**	1	SPACER	
	12	1	**171-7414**	1	SPACER	
	13	1	**176-1951**	1	SPACER	
	14	1	**176-1952**	1	SPACER	
	15	1	**176-1953**	1	STOP	
	16	1	**176-1954**	1	SEAL	
	17	1	**176-1955**	1	SEAL	
	18	1	**176-1956**	1	SEAL	
	19	1	**176-1957**	1	SEAL	

M - METRIC PART

151-6792 **WINDOW GP-DOOR (*contd.*)** **i03632584**

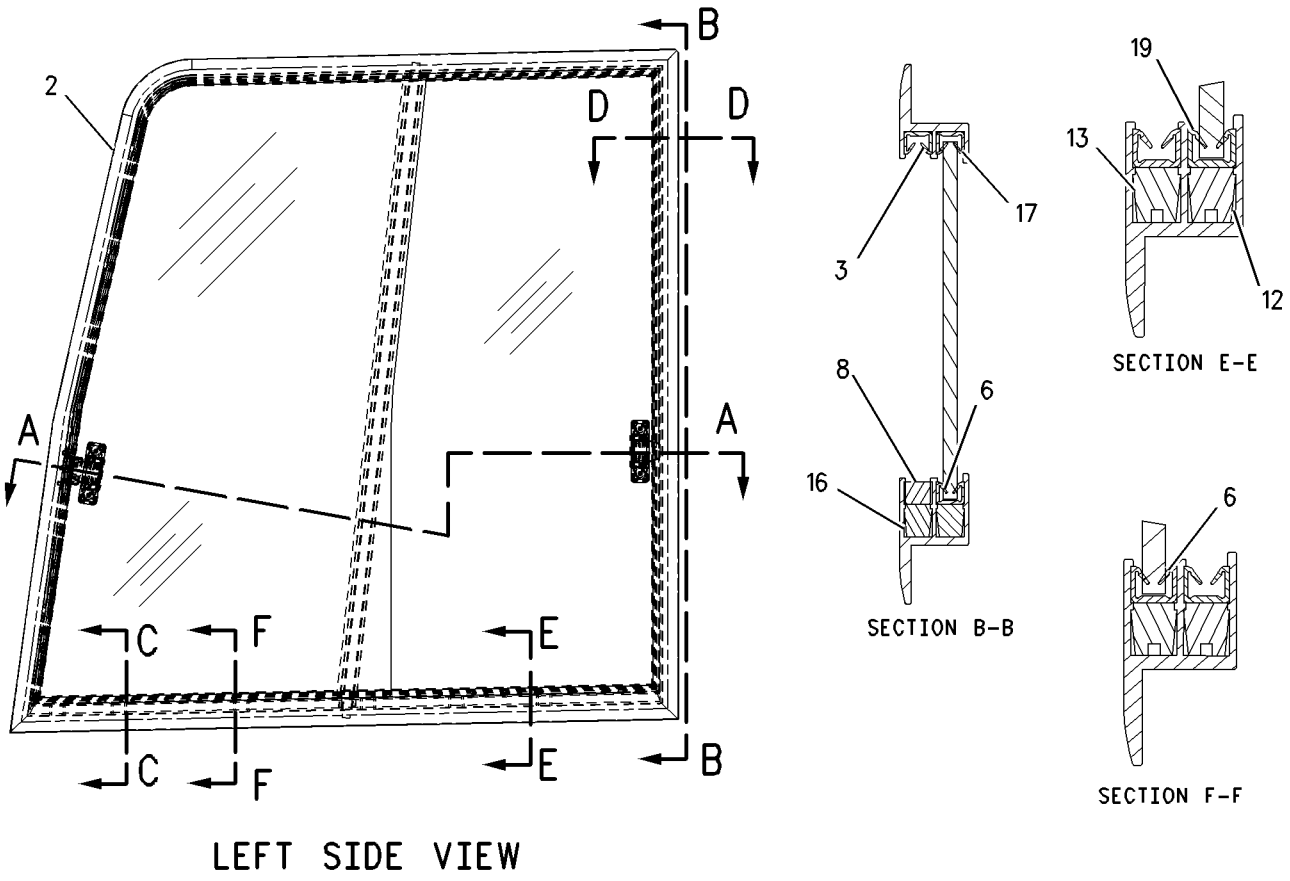

GRAPHIC #1 **<END>** g00722948

384-6533 WINDOW GP-DOOR

S/N: XAH1-UP
PART OF 388-9105 DOOR GP-CAB
AN ATTACHMENT

SMCS-7308, 7310

i05440251

NOTE	REF NO	GRAPHIC REF	PART NUMBER	QTY	PART NAME 1 2 3 4 5 6 (PRODUCT LEVEL)	SEE PAGE
	1	1	**385-8757**	2	CATCH AS	
	2	1	**387-2846**	1	GLASS	
	3	1	**387-2847**	1	GLASS	
	4	1	**387-2848**	1	PILLAR	
	5	1	**387-2849**	1	HOOK	
	6	1	**438-4951**	1	SEAL	
	7	1	**438-4952**	1	SEAL	
	8	1	**438-4953**	1	SEAL	
	9	1	**438-4954**	1	SEAL	
	10	1	**438-4955**	1	SEAL	
	11	1	**438-4956**	1	SEAL	
	12	1	**438-4957**	1	SEAL	
	13	1	**438-4958**	1	SEAL	
E	14	1	**430-4119**		RUBBER (10-CM)	
E	14A	1	**430-4119**		RUBBER (5.2-CM EACH)	

E - ORDER BY THE CENTIMETER

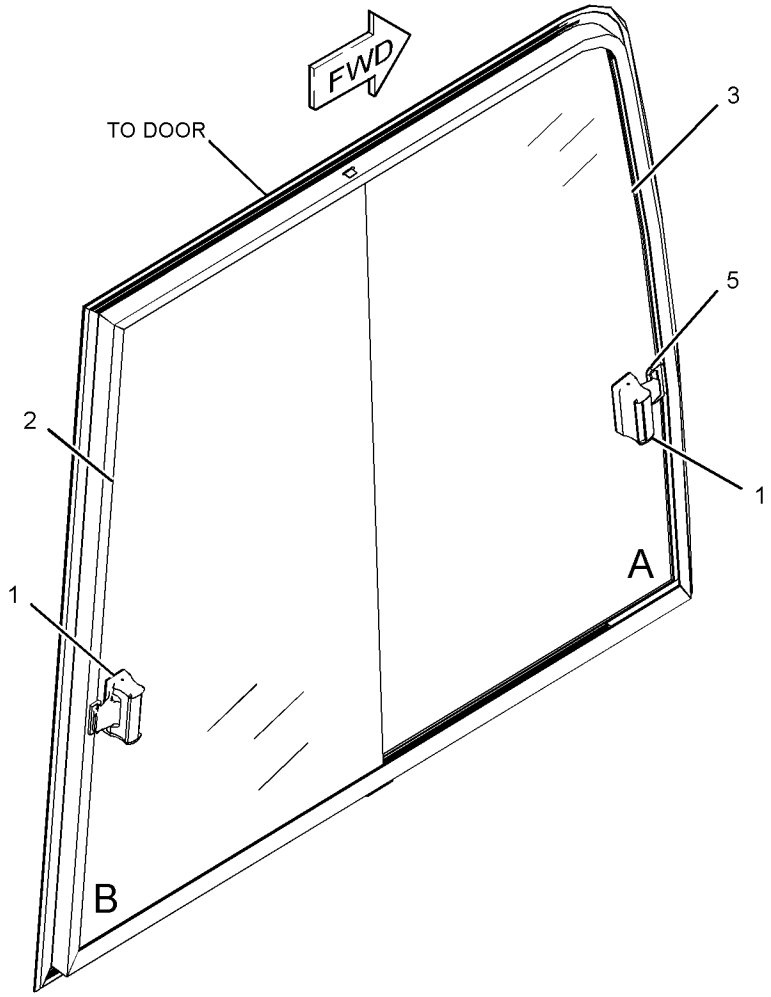

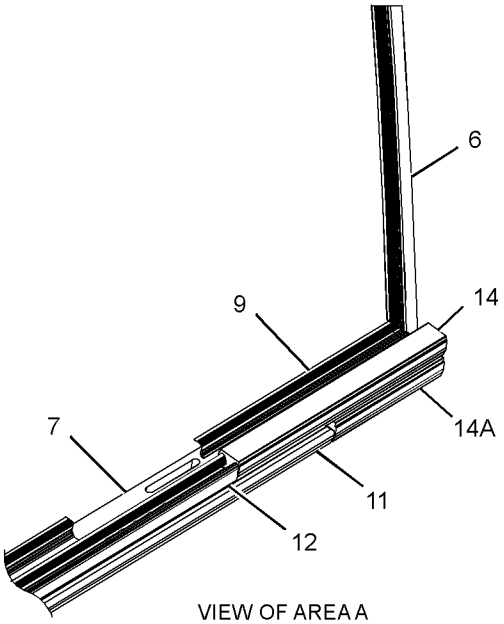

VIEW OF AREA A
(PARTS REMOVED FOR CLARITY)

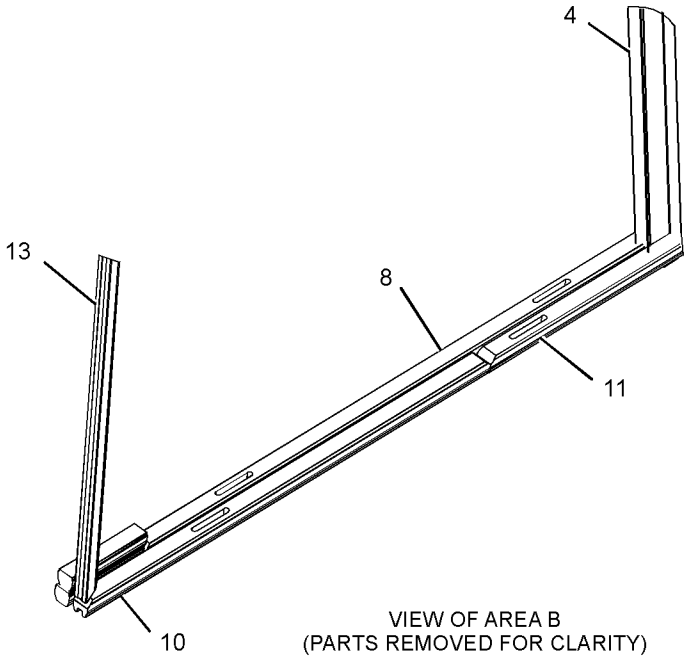

VIEW OF AREA B
(PARTS REMOVED FOR CLARITY)

GRAPHIC #1 **<END>** g03405579

234-6594 WIPER GP-WINDOW—FRONT, UPPER

S/N: XAH1-UP
PART OF 416-9607 CAB GP
AN ATTACHMENT

SMCS-7305 **i05412542**

NOTE	REF NO	GRAPHIC REF	PART NUMBER	QTY	PART NAME 1 2 3 4 5 6 (PRODUCT LEVEL)	SEE PAGE
	1	1	**161-3677**	1	HOLDER	
	2	1	**245-7931**	1	MOTOR AS-WINDOW WIPER	
M		1	**6V-8231**	1	NUT (M10X1.25-THD)	
M		1	**7Y-3470**	1	NUT (M20X1-THD)	
		1	**7Y-3472**	1	CAP	
		1	**124-3953**	1	WASHER (20.5X30X2-MM THK)	
	3	1	**235-8932**	1	NOZZLE AS	
	4	1	**155-7042**	1	RELAY AS (WIPER)	
	5	1	**372-9334**	1	ARM GP-WINDOW WIPER	
		1	**161-3669**	1	GUIDE	
		1	**161-3670**	1	BLADE AS-WIPER (600-MM)	
		1	**185-8290**	1	SCREW AS (M3.5X0.6X9-MM)	
		1	**372-9285**	1	ARM AS-WIPER	
	6	1	**163-6795**	1	STRAP-CABLE	
M	7	1	**3E-9872**	2	SCREW AS (M4X0.7X12-MM)	
	8	1	**4I-3090**	1	SEAL	
	9	1	**7Y-7364**	1	GROMMET	
M	10	1	**5C-2890**	4	NUT (M6X1-THD)	
M	11	1	**9X-2042**	2	SCREW-TRUSS HEAD (M6X1X12-MM)	
M	12	1	**9X-2044**	3	SCREW-TRUSS HEAD (M6X1X16-MM)	

M - METRIC PART

234-6594 **WIPER GP-WINDOW (*contd.*)** **i05412542**

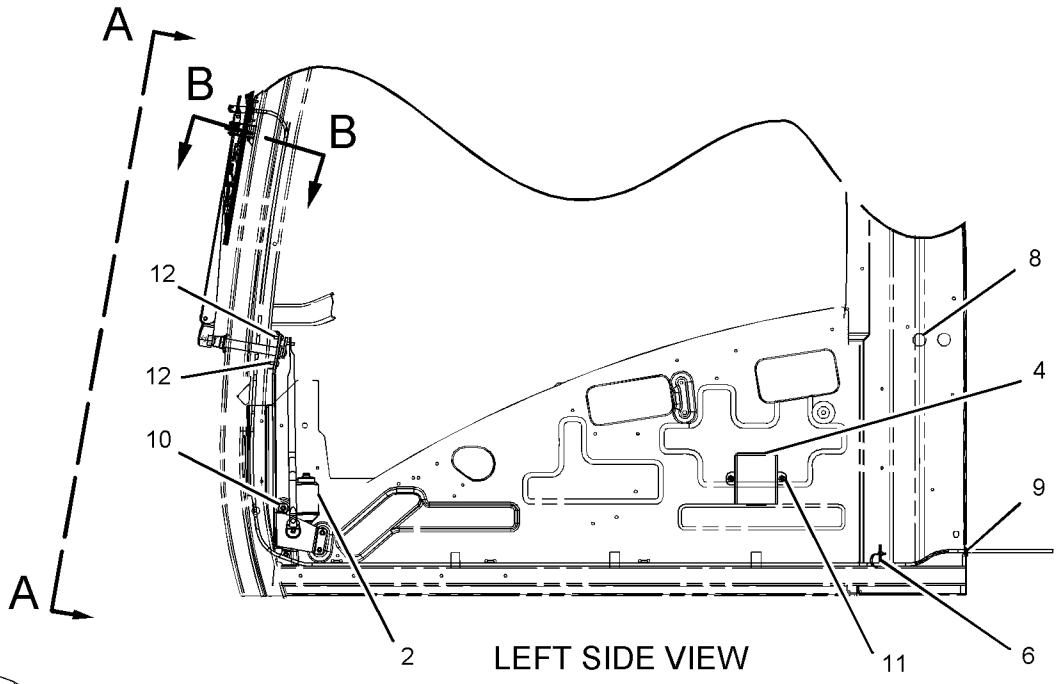

LEFT SIDE VIEW

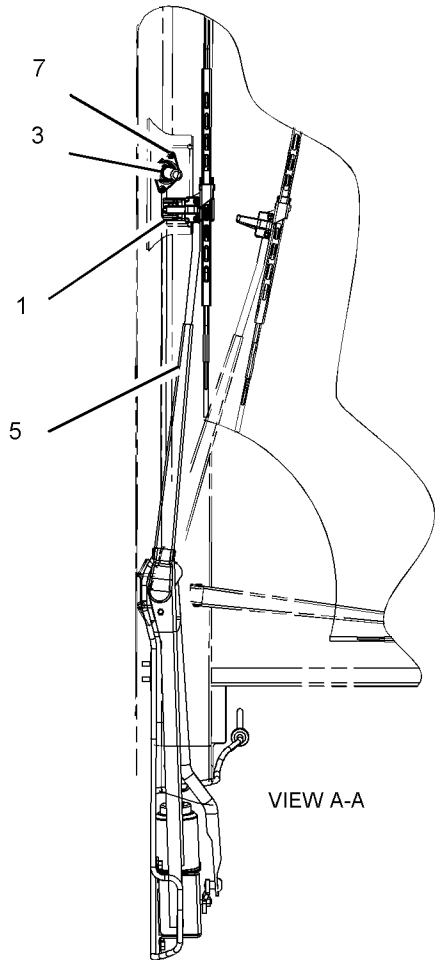

VIEW A-A

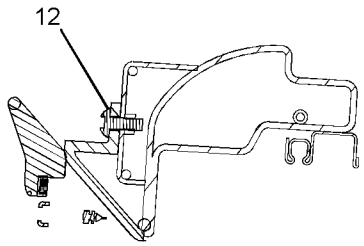

SECTION B-B

GRAPHIC #1 **<END>** g01098021

420-5793 FILM GP–BRAZIL

S/N: XAH1-UP

AN ATTACHMENT

SMCS-7405, 7557 **i05262186**

NOTE	REF NO	GRAPHIC REF	PART NUMBER	QTY	PART NAME 1 2 3 4 5 6 (PRODUCT LEVEL)	SEE PAGE
	1	1	**202-9824**	1	FILM-INFORMATION (BRAZIL)	

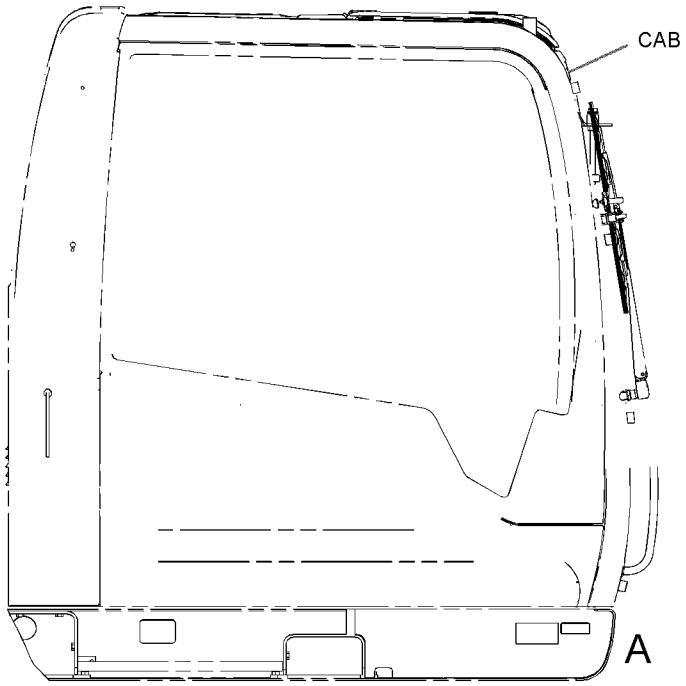

RIGHT SIDE VIEW

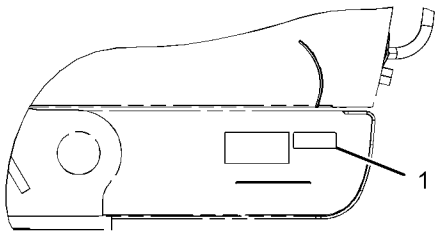

VIEW OF AREA A

GRAPHIC #1 **<END>** g03350586

471-2096 PLATE & FILM GP

S/N: XAH1-UP

PART OF 454-5583 CHASSIS AR

SMCS-7405, 7557 **i05963153**

NOTE	REF NO	GRAPHIC REF	PART NUMBER	QTY	PART NAME 1 2 3 4 5 6 (PRODUCT LEVEL)	SEE PAGE
	1	1,2	**1P-2807**	4	FILM-IDENTIFICATION (LIFT EYE LOCATION)	
	2	3	**4I-8472**	1	FILM-INSTRUCTION (OPERATOR CONTROLS)	
	3	1,2	**7X-7644**	4	FILM-IDENTIFICATION (TIE-DOWN)	
	4	2	**8T-6842**	1	FILM-INSTRUCTION (PULL RING, ALTERNATE EXIT)	
	5	3	**110-6393**	1	PLATE-INSTRUCTION (AIR CONDITIONER)	
	6	1	**134-7258**	1	FILM-INFORMATION (EXTENDED LIFE COOLANT)	
	7	2	**144-9126**	1	FILM-INSTRUCTION (OIL)	
	8	2	**146-6747**	1	FILM-INFORMATION (24-VOLT)	
	9	1,2	**167-7270**	2	FILM-INSTRUCTION (NO STEP)	
	10	2	**187-0661**	1	FILM-INSTRUCTION (ALTERNATE EXIT)	
	11	2	**190-5386**	2	FILM-IDENTIFICATION (ROUND RED REFLECTIVE)	
	12	3	**214-7915**	1	FILM-INSTRUCTION (ENGINE SHUTOFF)	
	13	3	**221-8045**	1	FILM-WARNING (SEAT BELT, INTERNATIONAL)	
	14	1	**223-9818**	1	FILM-INSTRUCTION (WINDOW CLEANING, READ OMM)	
	15	3	**224-0554**	1	FILM-WARNING (UNIVERSAL, READ OMM)	
	16	1	**224-8946**	1	FILM-WARNING (NO ETHER SPRAY/AIR INTK, INTL)	
	17	2	**225-0312**	1	FILM-WARNING (JUMP START, READ OMM, INTL)	
	18	1	**225-4257**	2	FILM-WARNING (HOT FLUID UNDER PRESS)	
	19	1,2	**228-2781**	2	FILM-WARNING (MACHINE SWING, CRUSHING, INTL)	
	20	1	**228-7316**	2	FILM-WARNING (HOT SURFACE, HANDS CLEAR, INTL)	
	21	3	**228-9254**	1	FILM-WARNING (ELEC HAZARD, READ OMM, INTL)	
	22	1	**229-0887**	1	FILM-INFORMATION (AIR CLEANER)	
	23	1	**239-6986**	1	PLATE-SERIAL NUMBER (MACHINE)	
	24	1	**242-1510**	1	FILM-INSTRUCTION (HYDRAULIC OIL CHECK)	
	25	3	**242-1588**	1	FILM-WARNING (FRONT WINDOW, READ OMM, INTL)	
	26	1	**242-6092**	1	FILM-WARNING (ACCUMULATOR PRESSURE)	
	27	2	**247-7436**	1	FILM-IDENTIFICATION (CAT)	
	28	2	**247-7437**	1	FILM-IDENTIFICATION (BATTERY CIRCUIT BREAKER)	
	29	2	**247-7438**	1	FILM-IDENTIFICATION (ELECTRICAL CIRCUIT BREAKER)	
	30	3	**266-5431**	1	FILM-WARNING (CRUSH HAZARD, READ OMM, INTL)	
	31	1,2	**290-1729**	2	FILM-IDENTIFICATION (CAT)	
	32	1,2	**298-4282**	2	FILM-WARNING (CRUSH HAZARD, STAY BACK, INTL)	
BJ	33	1	**334-4603**	1	FILM-INFORMATION (HYDO ADVANCED 10)	
	34	2	**358-6390**	1	FILM-STRIPE (LH) (LH)	
	35	1	**362-3642**	1	FILM-IDENTIFICATION (CAT, RH)	
	36	2	**362-3643**	1	FILM-IDENTIFICATION (CAT, LH)	
	37	1	**367-0844**	1	FILM-INSTRUCTION (FUEL, READ OMM)	
	38	2	**370-7639**	1	FILM-INFORMATION (BELT ROUTING)	
	39	3	**381-1372**	1	FILM-IDENTIFICATION (FUSE, RELAY PANEL)	
	40	2	**381-1373**	1	FILM-IDENTIFICATION (CIRCUIT BREAKER)	
	41	1,2	**381-1419**	2	FILM-IDENTIFICATION (318D2 L)	
	42	1	**385-4093**	1	FILM-STRIPE (RH) (RH)	

B - USE AS REQUIRED
J - REQUIRED ONLY WHEN HYDRAULIC TANK IS FILLED WITH HYDO ADVANCED 10 OIL

471-2096 **PLATE & FILM GP (*contd.*)** **i05963153**

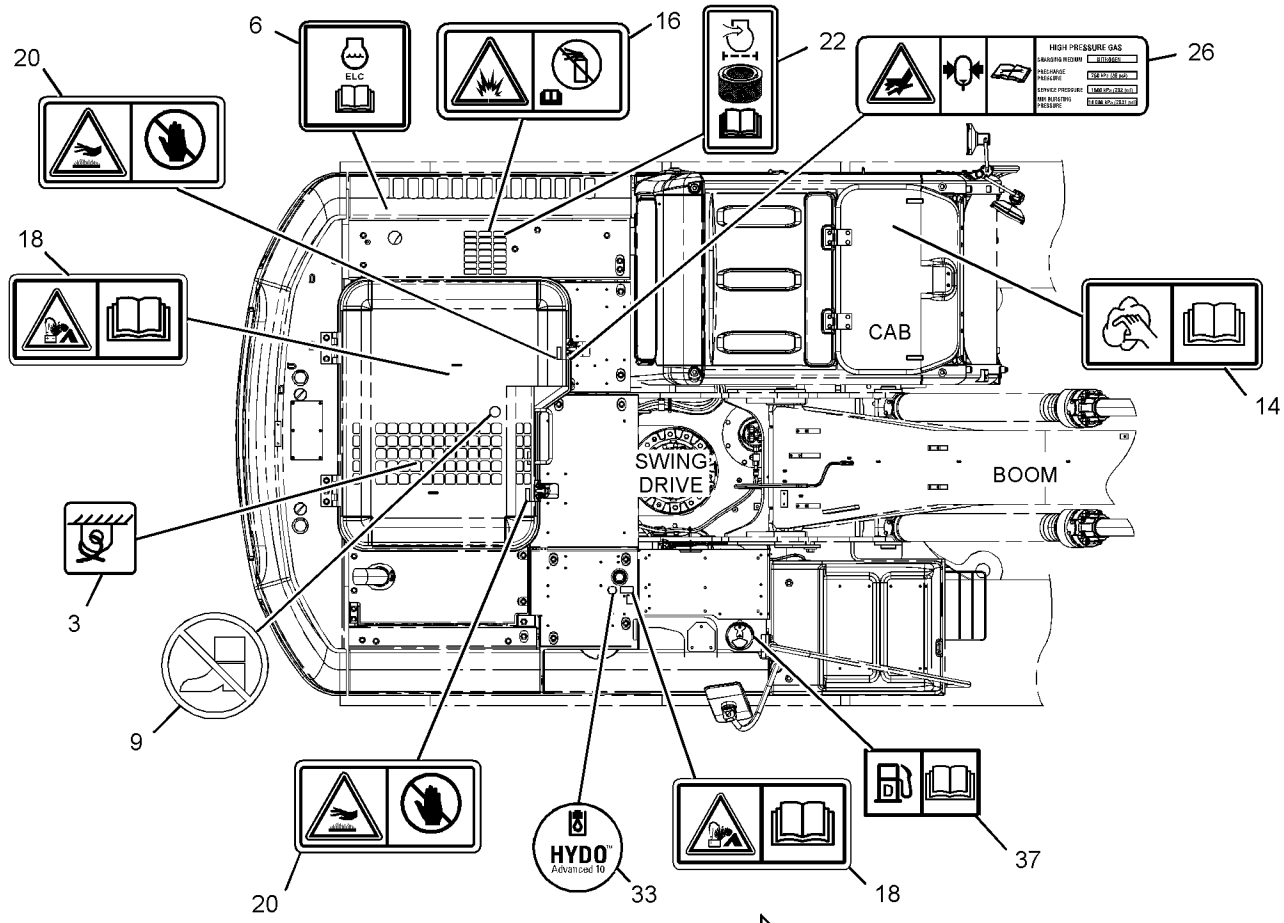

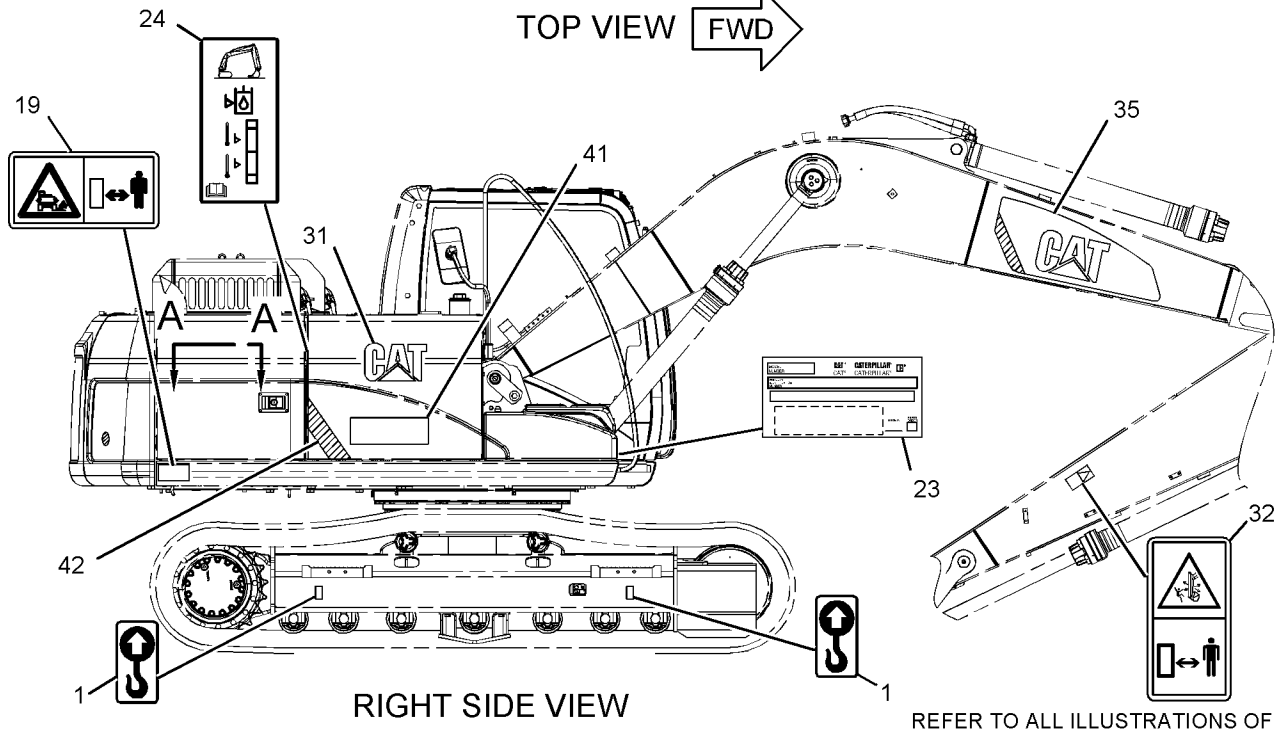

REFER TO ALL ILLUSTRATIONS OF THIS GROUP FOR AUXILIARY VIEWS.

GRAPHIC #1 g03141398

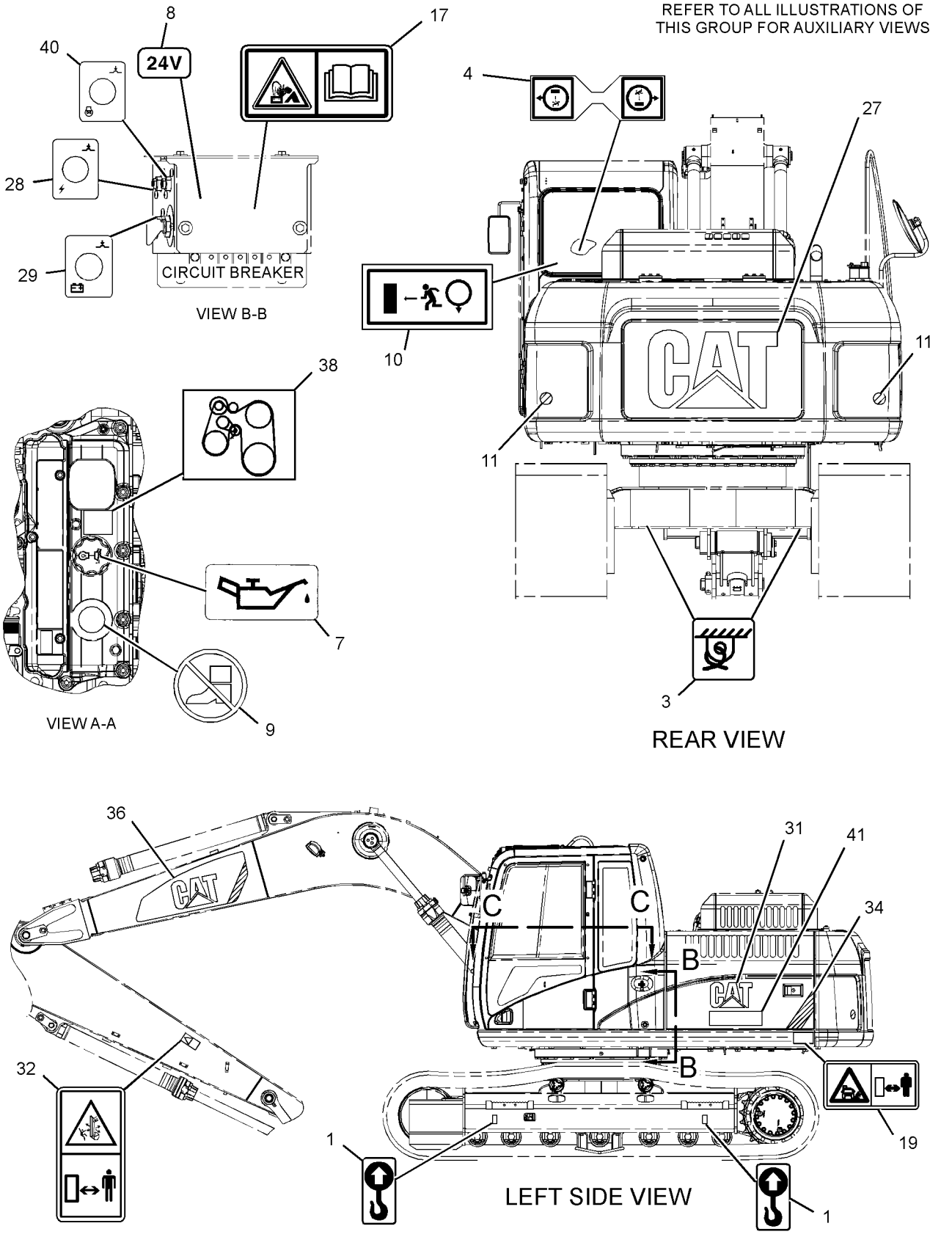

GRAPHIC #2 g03141399

471-2096 **PLATE & FILM GP (*contd.*)** **i05963153**

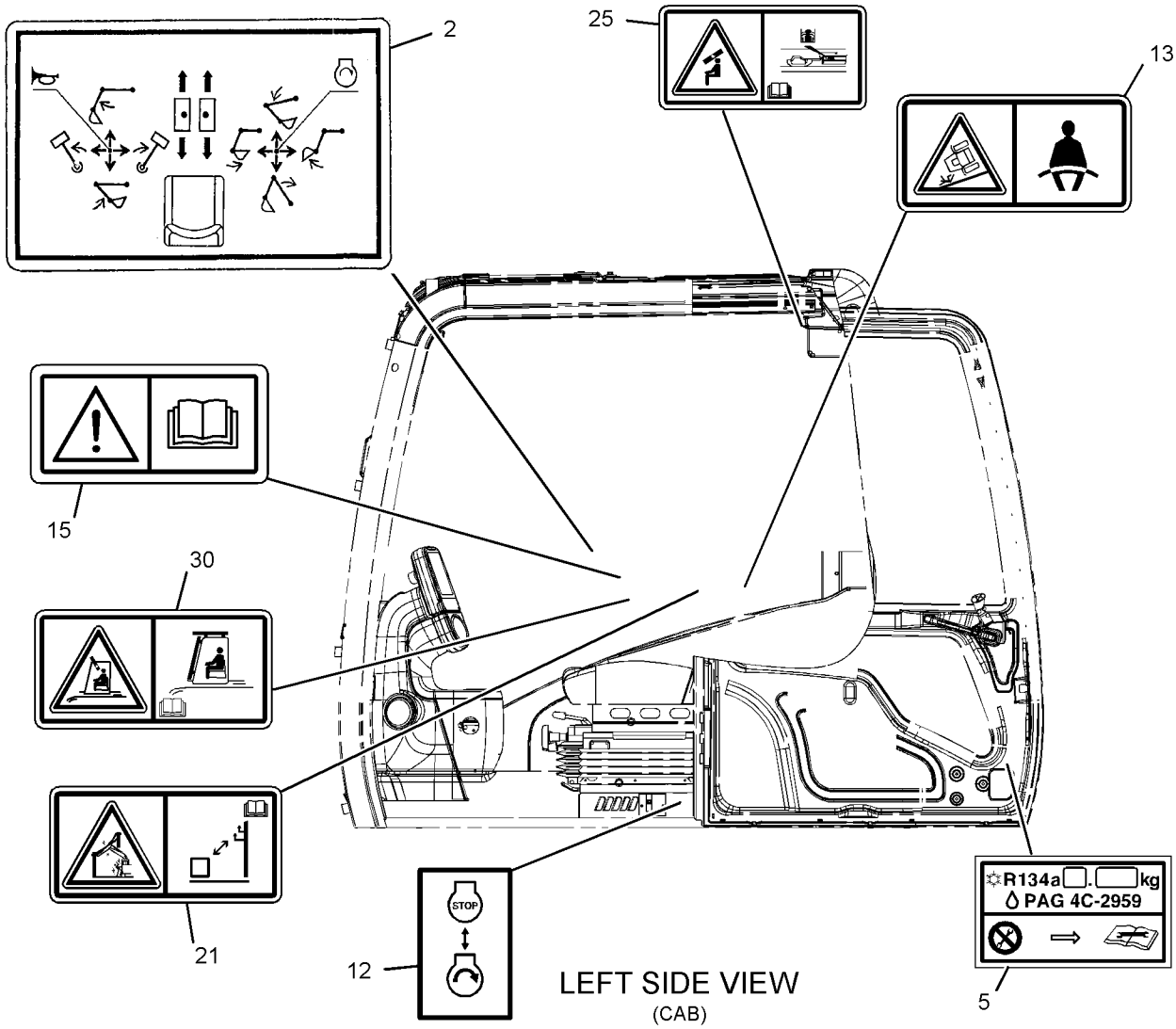

LEFT SIDE VIEW
(CAB)

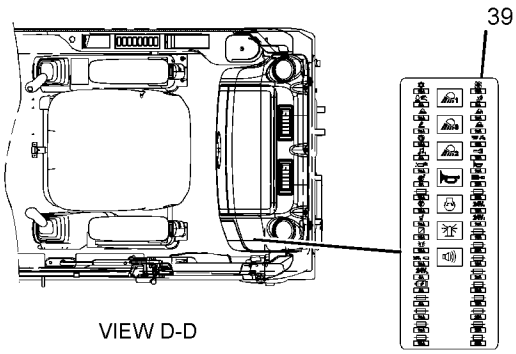

VIEW D-D

GRAPHIC #3 **<END>** g03141400

PART NUMBER INDEX

Part	Page
0	
0S-1603	20
1	
1B-8736	7
1H-3244	114
1H-3338	127
1H-4393	123
1H-7339	278
1J-2859	295
1J-6472	278
1M-6119	91
1M-6120	91
	92
1P-2807	428
1P-3702	261
1P-3703	226
	235
	263
1P-4578	257
1R-1804	71
1R-1807	42
1R-5998	346
1R-6072	93
1S-0994	93
1S-7251	91
	93
1S-7252	91
	93
1U-2827	295
1U-8846	147
	161
	216
	263
2	
2B-0858	16
	36
2C-9259	333
2D-6642	272
2G-8767	91
2H-3922	125
2H-3934	295
2H-9247	223
2L-8049	92
2L-8050	92
	143
2L-8057	92
2L-8058	92
	143
2L-8065	130
2L-8066	130
2L-8067	130
2L-8069	92
	143
2L-8075	92
	117
	130
2L-8076	92
	130
2L-8077	135
2L-8078	92
	114
2M-9780	72
	238
	272
	322
2P-2537	42
2S-5926	194
2T-2991	42
2Y-5503	161
	216
2Y-5578	278
3	
3B-4501	105
	106
3B-4508	262
3B-4509	228
	229
3B-4510	346
3B-4618	165
3B-7255	60
3B-8489	160
	206
	208
	210
	326
	328
	331
3D-2824	221
	231
	235
	238
	248
	263
	301
3D-2891	223
3D-9143	153
3E-2338	147
3E-3217	189
	190
3E-5169	143
3E-8020	346
3E-8024	193
3E-8320	114
3E-9375	140
3E-9872	425
3J-1907	72
	85
	223
	231
	238
	241
	245
	248
	251
	252
	263
	266
	269
	278
	301
	318
	322
3J-7354	72
	259
	295
3K-0360	28
	72
	85
	201
	214
	231
	238
	245
	248
	251
	252
	259
	263
	266
	267
	272
	295
3P-9847	58
3S-2093	58
	72
	91
	92
	98
	111
	114
	117
	126
	129
	131
	135
	137
	140
	143
	339
	388
	396
	411
3S-6049	91
3S-6050	91
3T-5760	91
3W-6399	411
4	
4B-4158	191
	192
4B-4276	114
4B-4278	153
	346
4B-9783	318
4E-5724	114
4F-2294	114
4H-6112	214
4I-0118	165
4I-0232	165
4I-0378	85
4I-0379	72
4I-0420	415
	420
4I-0800	251
4I-0821	251
4I-0836	241
4I-1205	165
	346
4I-1206	346
4I-1536	▶196
	199
4I-1539	196
4I-1674	226
4I-1676	226
4I-1760	251
4I-1783	251
4I-3038	126
4I-3063	346
4I-3090	346
	425
4I-3266	355
	403
4I-3308	324
4I-3309	324
4I-3941	241
4I-3953	241
4I-3988	241
4I-3994	241
4I-4270	346
4I-4286	380
	382
4I-4298	421
4I-4300	421
4I-4392	346
4I-4811	324
	331
4I-5409	1
	108
4I-5795	251
4I-5862	196
4I-6248	251
4I-6365	306
4I-6391	251
4I-7326	161
4I-7444	161
4I-7446	161
4I-7512	161
4I-7604	293
4I-7605	293
4I-7889	91
4I-8267	197
4I-8472	428
4I-8785	261
4I-9521	241
	245
	251
4I-9522	241
	245
	251
4I-9523	241
	245
	251
4I-9524	241
	245
	251
4I-9525	241
	245
	251
4I-9526	241
	245
4I-9527	238
	241
	245
	251
4I-9528	241
	245
	251
4J-0520	262
4J-0522	257
4J-0523	240
4J-0527	238
	257
	295
4J-5477	263
4J-7533	223
	266
4L-7124	114
4P-7429	93
4P-7581	93
	131
	339
4P-8134	93
4S-1962	390
5	
5A-3604	301
	408

► **PRIMARY REFERENCE**

PART NUMBER INDEX

Part	Page
5B-9079	39
5C-2889	106
5C-2890	69
	127
	131
	425
5C-7261	93
	107
	165
	312
5C-7793	346
5C-7883	93
5C-8138	411
5C-8312	415
5C-9553	44
	114
	153
	295
	339
5D-1026	216
5D-4822	386
5D-8159	56
5H-8624	259
5I-4363	293
5I-8270	91
5I-8307	73
5I-8416	▶197
	199
5I-8417	269
5I-8426	269
5I-8623	269
5I-8625	269
5I-8670	218
5K-3294	390
5K-5338	390
5K-9090	231
	235
	257
	259
5K-9243	326
5M-2057	295
5P-0743	73
	234
5P-0767	216
	390
5P-1046	72
5P-1075	346
	351
	415
5P-1076	58
5P-1442	73
5P-2321	130
5P-2369	252
5P-2545	278
5P-4115	44
	114
	165
5P-4116	56
	88
	93
	153
5P-4325	390
5P-4906	85
5P-4924	85
5P-5995	137
5P-5998	126
	396
5P-6271	130
5P-7462	251
5P-7463	252
5P-7464	252
5P-7465	252
5P-7958	393
5P-8196	42
5P-8500	84
	128
	393
5P-9297	110
5P-9617	42
5P-9909	58
5S-0580	66
5V-9155	44
	73

6

Part	Page
6D-1641	238
	390
6D-3479	93
	390
6D-4246	93
6F-4855	222
6F-6672	222
6F-7045	125
6G-2256	91
6G-2263	93
6H-3615	231
6I-0217	22
	24
	54
	67
	79
	82
6I-0254	54
6I-0260	28
	46
	48
	79
	82
	89
6I-0289	28
6I-0291	79
6I-0363	28
6I-0364	124
6I-0423	21
6I-0563	67
6I-0572	13
	49
	50
6I-0593	89
6I-0594	124
6I-0645	22
	24
	28
	49
	50
6I-0646	13
6I-0650	22
	24
	89
6I-0846	9
6I-0917	21
6I-1418	101
6I-4374	48
6I-5298	370
	371
6I-5470	347
6J-2680	259
6K-0806	373
	374
6L-3616	326
6S-8620	73
6V-0357	228
	229
	230
6V-0400	226
	235
	263
6V-0683	252
6V-0852	248
	295
6V-1249	252
6V-2369	114
6V-2722	93
6V-3265	69
	390
6V-3532	161
6V-3823	262
6V-3938	66
6V-3965	248
	295
6V-4249	230
6V-5210	105
	106
	131
6V-5391	223
6V-5556	317
6V-5645	114
6V-5842	228
	229
	230
	262
6V-6317	346
6V-7238	28
	214
6V-7357	166
	369
	390
	399
6V-7636	346
6V-7644	215
6V-7658	182
6V-7661	187
6V-8185	114
6V-8200	322
6V-8202	308
	405
6V-8231	425
6V-8362	128
6V-8397	231
	241
	242
	245
	248
	251
	252
	318
6V-8398	221
	231
	238
	245
	248
	251
	252
	263
	319
	320
6V-8400	308
6V-8556	221
6V-8625	263
6V-8627	263
6V-8635	257
	259
6V-8636	231
	241
	245
	252
6V-8637	42
	231
	235
	248
	263
6V-8638	238
6V-8639	231
	238
	248
	252
6V-8641	263
6V-8713	235
6V-8716	235
6V-8721	238
6V-8724	231
	241
	245
	248
	252
6V-8757	278
6V-8774	252
6V-8775	252
	263
6V-8781	241
	252
6V-8784	221
6V-8942	221
6V-8987	245
6V-9001	252
6V-9002	238
	245
6V-9004	231
	235
	248
6V-9007	231
	238
	248
6V-9008	231
	259
6V-9028	73
6V-9162	235
6V-9168	245
6V-9189	66
6V-9208	72
6V-9491	117
6V-9632	114
	360
6V-9672	131
6V-9746	221
	226
	231
	235
	238
	248
	263
6V-9829	252
6V-9831	228
	229
6V-9836	252
6V-9837	231
	248
6V-9850	248
	252
6V-9873	238
	248
6V-9877	238
6W-6005	91
6Y-8186	185

7

Part	Page
7B-3039	295
7C-0351	28
7C-1493	42
7C-4616	22

PART NUMBER INDEX

Part	Page
	24
7F-0560	97
7F-3708	165
7F-8268	189
	190
7G-1060	143
7G-5984	257
7G-5985	257
7H-3171	182
	187
	190
7I-0966	317
7I-1377	248
7I-2272	266
	267
	278
7I-2673	73
	91
	109
	110
7I-7192	300
7I-7203	282
	283
	284
	285
	286
	287
	288
	289
	290
	291
	292
7I-7204	300
7I-7206	300
7I-7207	300
7I-7208	300
7I-7235	300
7I-7241	300
7I-7321	293
7I-7733	193
7I-7734	194
7I-8084	300
7I-8249	263
7J-9108	228
	229
	231
	235
7J-9933	317
7K-1181	58
	91
	98
	129
	135
	137
	140
	143
	238
	241
	245
	248
	251
	263
	295
	365
	390
7M-7410	267
7M-8485	147
	231
	235
	257
	259
7N-0718	114
	125
7N-3718	109
7N-5274	91
7T-6799	128
7T-8890	411
7W-4642	21
7W-4669	36
7W-9028	42
7X-0578	346
	415
7X-0796	228
	229
	230
	262
7X-0818	66
	101
7X-0851	336
7X-2536	193
7X-2537	61
	69
7X-2552	109
7X-2553	278
7X-2556	278
7X-2619	212
7X-2621	93
	144
7X-3392	69
7X-6315	102
7X-7644	428
7X-7729	42
	53
	56
	58
	339
7Y-0059	1
	393
7Y-0225	147
7Y-0466	203
7Y-0468	203
	204
7Y-1746	191
	192
7Y-1781	193
7Y-1883	193
7Y-1901	203
7Y-1902	203
7Y-1904	203
7Y-1976	56
	58
7Y-3470	425
7Y-3472	425
7Y-3474	411
7Y-3919	388
7Y-3920	388
7Y-3950	129
7Y-3951	117
	129
7Y-3952	117
	129
7Y-3954	129
7Y-3955	129
7Y-3958	129
7Y-3962	111
	117
	130
7Y-3963	111
	117
	130
	137
	140
7Y-3964	111
	117
	130
7Y-3965	111
	117
	130
	137
	140
7Y-3966	117
	129
7Y-3967	117
	130
	140
7Y-4199	241
7Y-4202	272
7Y-4212	272
7Y-4213	272
7Y-4215	272
7Y-4216	272
7Y-4217	272
7Y-4222	273
7Y-4224	272
7Y-4267	269
7Y-4268	269
7Y-4868	226
7Y-5221	269
7Y-5237	240
7Y-5456	91
7Y-5499	114
7Y-5505	129
7Y-7364	425
7Y-8168	390
7Y-8379	251
7Y-8436	313
7Y-8437	313
8	
8C-3347	212
8C-3445	42
8C-3446	42
	295
8C-3451	295
8C-5064	93
8C-5608	73
	100
8C-6354	130
8C-6358	97
8C-6965	308
8C-8400	231
8C-8451	100
8D-0482	72
8E-4359	182
8E-5032	190
8E-5037	189
8E-5599	189
	190
8E-5600	186
	187
8E-5601	187
8E-5602	187
8E-5604	187
8E-5605	187
8E-5606	187
8E-5607	187
8E-5608	187
8E-6792	187
8E-6793	187
8E-8585	185
8E-8586	185
8E-9805	151
8H-5303	125
8H-5306	125
8J-8782	295
8J-8783	295
8M-2772	326
8N-0869	91
	93
8N-1725	91
8P-9770	334
	335
8T-0075	242
8T-0122	114
8T-0197	235
8T-0271	228
	229
	230
8T-0273	262
8T-0328	85
	114
	131
	168
8T-0337	144
8T-0362	161
8T-0380	336
8T-1159	187
8T-1889	73
	93
8T-1890	73
	93
8T-1905	241
	248
	252
8T-3298	295
8T-3490	42
	358
	375
8T-3518	97
8T-3612	360
8T-4121	42
	44
	58
	65
	66
	73
	93
	109
	110
	113
	135
	142
	144
	161
	165
	238
	240
	245
	252
	257
	261
	263
	276
	278
	293
	295
	326
	339
	355
	358
	360
	365
	375
	387
	390
	399
	400
	403
	409
8T-4127	131
8T-4132	223
	328
8T-4133	66

► **PRIMARY REFERENCE**

PART NUMBER INDEX

Part	Page
	93
	109
	110
	165
	223
	281
	308
	326
	346
8T-4136	42
	53
	56
	66
	73
	93
	142
	161
	165
	252
	278
	293
	295
	339
	358
	375
	390
8T-4137	42
	44
	53
	58
	73
	93
	113
	144
	161
	165
	191
	192
	238
	245
	253
	263
	339
	358
	360
	387
	390
	399
8T-4138	98
8T-4139	58
	69
	226
	257
	278
8T-4140	183
	278
8T-4171	114
	142
	362
8T-4176	268
8T-4178	231
8T-4179	93
	193
	349
	355
8T-4182	56
	93
	261
8T-4183	223
	253
	257
8T-4184	220
	226
	236
	263
	295
8T-4185	56
	66
	93
	278
8T-4186	93
8T-4189	44
	69
	88
	249
	253
	390
8T-4190	349
	355
8T-4191	73
	93
	135
	245
	326
	355
	375
	390
	403
	409
8T-4192	223
	231
	394
8T-4193	332
	346
8T-4195	42
	56
	65
	73
	93
	276
	365
	400
8T-4196	42
	73
	93
	257
	295
8T-4197	42
8T-4198	245
	261
8T-4200	56
	58
	93
	111
	388
	390
8T-4223	93
	105
	106
	147
	220
	226
	231
	236
	238
	240
	253
	257
	259
	263
	295
	324
	349
	355
8T-4224	42
	44
	58
	61
	66
	69
	93
	101
	107
	111
	166
	168
	249
	253
	295
	380
	382
	388
	390
8T-4226	93
8T-4244	105
	106
8T-4648	231
8T-4908	166
	168
	295
	390
8T-4910	231
	349
	355
8T-4944	272
8T-4956	240
	253
	324
8T-4970	69
	101
	114
	411
8T-4971	360
	390
8T-4985	53
8T-5005	93
8T-5041	215
8T-6385	328
8T-6466	66
8T-6684	235
8T-6693	131
	168
8T-6703	53
	58
	257
8T-6759	267
	293
	308
	321
8T-6763	210
8T-6842	428
8T-6868	238
	349
	355
8T-6869	253
8T-6912	93
8T-7547	42
	107
	278
8T-7929	147
8T-7971	394
8T-8729	85
	92
	111
	126
	135
	137
	143
	396
8T-8730	92
	114
	129
	137
	140
	143
8T-8737	69
	73
	92
	114
	117
	130
	135
	137
	140
	143
	396
8T-8799	92
8T-8898	235
8T-8899	42
8T-9403	261
8T-9599	278
8Y-6967	349

9

Part	Page
9B-0453	105
9B-7233	128
9F-1399	295
9F-2167	231
9F-5644	125
9G-4343	114
	129
9G-8451	114
9G-8909	91
9J-7031	295
9L-9188	42
9M-5501	73
9N-0869	101
9S-4181	235
	257
	259
9S-4182	259
9S-4183	301
9S-4185	252
	259
	272
9S-4188	42
9S-4191	238
	241
	245
	252
	278
	300
9S-8001	223
	266
9S-8004	266
	322
9S-8005	266
	267
9W-0335	129
9W-0844	73
	92
	130
	137
	140
	143
9W-0852	73
	92
	114
	135
	137
	143
	359
9W-1951	130

PART NUMBER INDEX

Part	Page
9W-2142	189
	190
9W-2146	189
9W-2201	182
9W-3137	185
9W-3138	185
9W-3361	195
9W-3619	195
9W-9455	182
9X-0196	92
9X-1386	122
9X-1813	88
	127
9X-2041	346
	363
	367
	377
	379
9X-2042	111
	131
	346
	353
	367
	380
	382
	386
	396
	415
	418
	425
9X-2043	111
9X-2044	131
	346
	415
	425
9X-2045	347
	365
	415
9X-2046	365
9X-2201	65
9X-2480	73
9X-2616	407
9X-3401	28
	69
	92
	120
	122
	130
	135
	143
	396
9X-3402	92
	111
	117
	130
	135
	137
	140
	143
	241
9X-3463	106
9X-3982	85
9X-4244	107
9X-6165	73
	100
	399
9X-8256	69
	93
	98
	101
	114
	131
	142
	153
	295
	339
	362
	369
	390
	395
	411
	415
9X-8257	109
	332
	346
	349
	355
9X-8600	85
9X-9896	72
	100
9Y-5015	16

0

Part	Page
012-0380	127
030-1706	91
032-9090	10
032-9091	10
033-7687	20
033-8248	326
035-8017	79
	82
035-8063	13
	34
067-3045	44
067-6006	16
067-6095	6
	7
067-6135	6
	11
	12
067-6179	22
	24
067-6213	28
067-6265	79
	82
067-6873	10
067-6874	10
067-6999	79
085-6444	421
085-6447	421
085-6448	421
085-6449	421
085-7356	238
	248
085-9310	84
	298
085-9768	300
087-3908	165
087-3909	165
087-4402	245
087-4454	197
	▶198
087-4456	▶199
	201
087-4575	198
087-4576	198
087-4577	198
087-4587	91
	241
087-4683	126
087-4710	308
087-4742	272
087-4743	272
087-4757	272
087-4786	272
087-5317	281
087-5708	308
087-5771	251
087-5772	251
087-5773	251
087-5783	251
087-5802	328
087-5803	328
087-5908	177
	▶179
087-6582	251
091-9035	91
093-0084	324
093-0086	158
093-0118	158
093-0349	158
	324
	331
093-0366	324
093-1296	231
093-1435	194
093-1515	194
093-2068	72
093-6089	212
093-7521	219
094-0580	147
094-0611	147
094-0876	306
094-1399	272
094-1528	147
094-1875	223
	272
	278
094-1881	223
094-1882	272
	278
094-1900	269
095-0703	206
	208
095-0707	268
095-0723	131
095-0728	375
095-0736	85
095-0742	131
095-0755	346
095-0817	215
095-0826	388
095-0827	362
095-0843	153
095-0863	185
095-0879	212
095-0882	269
095-0891	147
095-0910	98
	399
095-0965	300
095-1260	308
095-1299	147
095-1388	234
095-1514	310
	311
	316
095-1519	310
	311
	315
	316
095-1552	281
095-1572	272
095-1575	272
	308
	310
	311
	315
	316
095-1576	321
095-1578	300
095-1579	300
095-1580	312
095-1582	301
	312
	315
095-1584	218
	315
095-1585	272
	301
095-1586	272
	301
	306
	313
	314
	319
	320
095-1590	218
	312
095-1591	310
	311
	316
095-1592	301
	310
	311
	316
095-1593	315
095-1595	269
095-1596	218
095-1601	313
095-1608	295
095-1625	293
095-1685	268
	272
095-1696	301
095-1698	271
	301
	317
	321
095-1700	272
	301
095-1701	322
095-1703	194
095-1716	293
095-1725	295
095-1750	319
	320
095-1751	319
	320
095-1777	248
095-1783	310
	311
	315
	316
095-1785	313
	314
095-1788	223
095-6639	281
095-7378	272
095-7380	272
095-7382	272
095-7383	272
095-7384	272
095-7386	272
095-7387	272
095-7930	123
	388
095-7993	161
095-8024	310
	311
	316
095-9806	210
096-1519	272

▶ **PRIMARY REFERENCE**

PART NUMBER INDEX

Part	Page
096-1521	272
096-1522	272
096-1523	272
096-1628	306
096-1773	147
096-1774	147
096-1775	147
096-1776	147
096-1777	147
096-1778	147
096-1779	147
096-1780	147
096-1781	147
096-2617	370
	371
096-2622	380
	382
096-3780	153
096-3785	272
096-3786	272
096-3787	272
096-3788	272
096-3884	380
	382
096-3978	272
096-4003	272
096-4035	56
	58
096-4129	168
096-4255	182
096-4275	194
096-4295	189
	190
096-4376	272
096-4377	272
096-4378	272
096-4876	228
	229
096-4883	240
096-5819	58
096-5915	272
096-5916	272
096-5919	272
096-5962	131
096-6166	117
	131
	144
	375
099-0139	421
099-0823	346
	415
099-3506	386
099-3629	412
099-3645	393
099-3649	252
099-3669	223
099-3671	223
099-5408	231
099-6109	223
099-6110	223
099-6111	223
099-6112	223
099-6113	223
099-6115	223
099-6137	306
	308
099-6141	308
099-6144	308
099-6145	308
099-6418	93
	165
099-6607	58
099-7127	129
099-7241	245

1

Part	Page
100-3320	92
100-3751	22
	24
	54
100-4461	45
100-4830	25
	79
	82
100-4838	9
100-4841	13
100-8451	63
101-0852	102
101-2846	131
101-3805	28
101-3895	22
	24
	48
101-7404	257
101-8899	380
	382
	384
101-8900	380
	382
	415
	418
101-9848	168
102-7964	130
	140
	143
102-7965	130
	140
	143
102-8802	28
	85
	87
	88
	92
	111
	117
	122
	127
	143
102-8803	73
	92
	111
	126
	129
	135
102-8806	140
102-9941	37
103-2529	92
103-5687	28
103-8411	300
103-8412	300
103-8413	300
104-8771	241
104-8774	241
104-8973	241
104-8976	241
105-2169	346
	386
105-3481	69
105-3487	69
	153
	395
105-6431	326
105-7405	300
106-6757	▶332
	333
106-6876	328
106-6877	328
106-6878	328

Part	Page
106-8715	231
106-8916	67
107-6631	245
	251
107-6954	272
107-6955	272
107-6969	272
107-9739	158
107-9742	326
107-9743	326
107-9852	331
107-9965	332
107-9966	332
107-9967	332
108-1781	259
108-7304	263
108-7550	226
110-5525	269
110-6393	428
111-0859	19
111-3422	82
111-3423	82
111-4799	126
111-4816	130
111-4836	91
	109
	110
	143
	339
111-4837	91
	109
111-4838	91
	144
111-4839	91
	143
111-6752	241
111-8222	63
111-9916	278
	▶319
111-9998	312
113-2127	324
113-6349	89
113-8129	54
113-8490	129
113-8491	129
113-8492	129
113-8493	129
114-0514	313
114-0515	313
114-0516	313
114-0517	313
114-0518	313
114-0519	313
114-0623	319
	320
114-1539	147
114-2579	63
114-6285	165
114-6289	168
114-6658	399
115-8631	238
115-8645	241
	251
116-0118	91
	109
	135
	143
116-0210	129
116-0255	130
117-5540	178
117-6306	415
117-6349	375
117-6350	375
117-6356	375

Part	Page
117-8929	360
118-4057	272
118-4086	306
118-4087	306
118-5982	158
	324
	331
118-9941	26
119-3662	92
	130
	143
119-5026	117
	339
119-5360	322
119-5362	322
119-5364	322
119-5365	322
119-5388	308
119-5389	308
119-5391	308
120-5737	399
120-7225	326
120-9027	126
121-0307	42
121-0883	21
121-1022	130
121-1029	69
121-1168	117
	130
	143
121-1173	117
	130
	143
121-1459	313
121-1491	266
	267
	▶320
121-1558	272
121-7098	390
121-7136	356
121-7137	356
	390
121-7138	390
122-4120	165
122-5114	272
122-5253	193
122-5318	269
122-9605	390
122-9608	375
122-9609	375
122-9610	375
122-9617	365
122-9657	355
	390
123-1373	91
123-2008	272
123-2431	318
123-2552	318
123-5349	326
124-0506	8
124-0986	263
124-3536	30
124-3548	129
124-3815	22
	24
	79
	82
124-3953	425
124-4009	370
	371
124-4010	370
	371
124-5814	93
	▶97

PART NUMBER INDEX

Part	Page
125-1302	114
	▶127
125-4766	143
125-4784	130
125-4785	130
125-4840	130
125-4841	130
	140
	143
125-7874	92
	130
	135
	137
	143
125-7875	92
	130
	135
	137
	140
	143
125-7876	129
126-1767	28
	69
	92
	122
	130
	135
	143
126-1768	92
	111
	130
	135
	137
	143
	241
126-1774	135
126-1865	308
126-1866	308
126-2055	269
126-5011	92
126-5062	195
126-6872	248
127-0580	346
128-2135	349
	353
	363
	367
128-2136	353
128-8950	130
129-3400	295
129-7932	322
129-8030	▶313
	322
129-8031	313
130-9984	42
131-5767	300
131-5768	300
131-5818	308
131-5915	306
131-9943	261
131-9962	▶261
	330
132-1805	91
132-1829	▶87
	129
132-5789	72
	131
	390
133-1011	22
	24
133-2424	158
133-5813	241
	245
	251
133-6777	272
133-8011	390
133-8016	346
134-3196	56
134-3284	109
	110
134-3296	130
134-3297	130
	143
134-3299	91
134-3856	36
134-4126	102
134-7258	428
134-9137	326
135-8573	72
	164
	165
	173
135-8575	165
135-8576	163
135-8577	152
	165
135-8578	164
	165
135-8965	355
	403
135-8966	355
	403
136-0139	155
136-2369	194
136-3608	8
137-2270	394
138-2053	6
	7
138-5184	130
138-8454	415
139-7119	413
139-7126	346
139-7127	346
140-8714	79
	82
140-8718	79
	82
140-8783	89
141-2759	114
	129
141-6519	399
141-6526	72
	91
142-0485	415
142-3836	1
	▶394
142-5546	375
143-9397	98
	399
144-0195	411
144-0367	53
	65
	259
144-9126	428
145-0603	91
145-3042	149
	▶151
145-4911	20
145-5106	199
	▶200
146-6747	428
147-1979	16
147-2645	77
	82
147-5860	272
148-4685	160
148-4703	161
148-4704	161
148-8325	263
148-8327	231
	235
	248
	263
148-8335	257
	259
148-8336	231
	241
	245
	252
148-8338	241
148-8339	235
148-8340	231
	238
	248
	252
148-8341	235
148-8344	235
148-8345	238
148-8347	231
	238
	248
148-8353	252
148-8354	238
	245
148-8357	231
	259
148-8359	238
148-8362	235
148-8364	263
148-8366	245
148-8367	248
	252
148-8368	263
148-8372	238
148-8378	231
	241
	245
	248
	252
148-8407	238
	241
	245
	252
148-8411	252
	259
148-8433	252
148-8435	241
	252
148-8436	252
	263
148-8439	252
148-8444	231
	248
149-4236	67
149-5069	130
149-5070	130
149-5071	130
149-8142	72
150-3024	85
150-3036	241
	248
	252
150-4043	238
	248
150-7732	9
151-6703	380
	382
	415
	418
151-6704	380
	382
	415
	418
151-6767	377
151-6777	377
151-6778	415
	418
	420
151-6792	380
	▶421
151-6793	421
151-6813	415
	418
151-6815	415
	418
151-6831	418
151-6832	415
	418
151-6841	421
151-9461	380
	382
151-9497	380
	382
151-9557	415
151-9576	415
	418
152-3968	77
	82
153-2521	▶105
	109
	110
153-2523	▶106
	108
153-2540	117
153-2541	117
153-2602	130
153-2620	143
153-2631	130
153-3568	404
153-5223	308
153-6237	231
	235
	248
153-6242	235
154-9024	60
155-0576	101
155-2027	235
155-2255	135
155-2259	140
155-2260	92
	135
	137
	143
155-2265	140
155-2270	73
	92
	111
	114
	117
	130
	143
	241
155-3624	259
155-7042	425
156-6470	415
	418
	420
156-6471	380
156-6474	421
156-6475	421
156-6554	415
156-6562	415
156-6563	415
156-6579	415
156-6598	380
	382

▶ **PRIMARY REFERENCE**

PART NUMBER INDEX

Part	Page
156-6599	346
156-6600	380
156-6618	346
156-6627	415
156-6631	413
156-6642	389
156-6643	380
	382
156-6645	380
157-0670	60
157-1669	72
157-3184	69
158-4380	185
158-4381	185
158-8987	▶218
	295
159-4700	200
159-7782	293
159-8049	91
	93
159-8050	91
159-9322	92
	135
160-7689	92
160-7690	135
161-3128	129
161-3639	380
	382
161-3650	380
	382
161-3663	380
	382
161-3665	380
	382
161-3669	425
161-3670	425
161-3677	425
161-3684	415
161-3685	346
161-3695	421
161-3697	346
161-3698	415
	418
	420
161-3705	421
161-3717	355
	403
161-6987	98
	399
161-9820	89
162-4696	263
	▶293
163-3754	177
	▶180
163-3755	180
163-6637	92
163-6704	111
163-6759	143
163-6773	143
163-6795	111
	129
	137
	140
	411
	425
163-6803	130
164-0514	380
164-0515	380
	382
164-0516	421
164-0517	421
164-0518	421
164-0519	380
164-0523	346
164-0527	346
164-0528	346
	▶389
164-0646	353
164-0648	415
164-0655	353
164-0664	389
164-0666	412
164-4180	235
	257
	259
164-5562	72
164-5567	248
	295
164-5590	295
164-5628	245
	251
164-6874	238
	248
164-6979	251
	▶318
164-6981	▶201
	251
164-8474	349
165-2799	278
165-2801	278
165-2804	278
165-2805	278
165-3065	394
165-3120	156
165-3838	278
165-3839	278
165-3847	278
165-3853	278
165-3892	147
165-5785	147
165-5786	147
165-5787	147
165-5788	147
165-5790	147
165-5792	147
165-5793	147
165-5794	147
165-5795	147
165-5796	147
165-5797	147
165-5800	147
165-7951	72
165-9431	306
165-9435	306
165-9436	306
165-9438	306
165-9442	306
165-9443	306
165-9444	306
165-9460	306
165-9552	308
165-9554	308
166-1482	331
166-1486	324
	328
166-1487	324
166-1494	206
	208
	328
166-1495	324
	331
166-1579	326
167-3487	130
167-3593	129
167-3630	130
167-3631	130
167-7018	346
167-7039	380
	382
167-7042	346
167-7270	428
168-0765	317
168-1968	248
168-6761	191
	192
168-8806	72
168-9759	245
170-0967	85
170-2602	1
	▶164
170-2755	153
170-2983	153
170-6888	129
170-6890	130
170-6891	130
170-6929	91
170-6941	388
170-6993	105
	106
170-8553	295
170-9324	117
170-9360	153
170-9394	131
170-9417	105
	106
170-9418	105
	106
170-9497	355
	▶375
	402
170-9498	375
170-9499	375
170-9722	415
	418
	420
170-9724	353
170-9997	300
171-0002	257
	▶299
171-0087	306
171-0123	312
171-0124	312
171-0126	312
171-0127	312
171-0128	312
171-2205	114
171-2208	114
171-2210	114
171-3369	58
171-5349	122
171-7325	344
	345
	367
171-7413	421
171-7414	421
171-7420	353
171-7426	346
171-9464	161
173-1170	223
173-3389	223
173-3439	269
173-3441	269
173-3442	269
173-3443	269
173-3444	269
173-3445	269
173-3447	269
173-3450	269
173-3451	269
173-3454	269
173-3536	▶314
	321
174-3016	92
	130
174-4874	147
174-7220	223
174-7221	223
174-7222	223
174-7791	105
	106
174-8529	323
	▶326
174-9638	67
175-4291	107
175-4430	318
175-7060	72
176-1902	390
176-1916	365
176-1931	411
176-1937	346
176-1938	346
176-1939	346
176-1941	389
176-1949	386
176-1951	421
176-1952	421
176-1953	421
176-1954	421
176-1955	421
176-1956	421
176-1957	421
176-1972	353
176-1986	346
176-1996	384
176-4471	251
176-4852	▶195
176-8131	278
176-8132	278
176-9299	92
	130
177-2584	269
177-2706	299
177-5879	164
177-5880	164
178-3336	82
178-5422	365
178-5423	365
178-5431	411
178-5569	413
178-5570	346
178-5572	412
178-5573	380
	382
	412
178-5574	380
	382
	412
178-5576	415
178-5659	407
178-6450	58
	275
179-7541	295
180-3861	105
	106
180-7614	158
180-7755	324
184-3841	299
184-4535	272
184-8850	153
184-8862	165
184-8898	165
184-9330	235
184-9543	231
185-0169	223
185-0423	312
185-0882	16

PART NUMBER INDEX

Part	Page
185-1546	39
185-6627	63
185-6952	146
	▶268
185-6953	268
	▶272
185-8161	365
185-8180	380
	382
185-8182	351
	415
185-8196	346
185-8205	353
185-8221	415
185-8280	389
185-8281	389
185-8284	341
	363
185-8286	126
	344
	345
185-8290	425
185-8300	342
	372
185-8302	342
186-3735	87
	88
	127
186-5639	158
187-0661	428
187-5873	231
187-5915	263
188-3064	185
189-2678	353
189-2690	380
	382
189-2702	413
189-2704	346
189-2717	386
189-2847	386
189-2853	353
189-2854	353
189-2864	346
189-9377	28
189-9763	223
	278
190-3523	185
190-3524	185
190-4896	278
190-5386	428
190-7674	223
190-7875	299
191-2580	216
191-2605	212
191-8920	295
192-0573	223
	278
192-2376	223
192-3039	156
193-5013	332
193-5014	332
193-9712	164
194-1134	▶185
	195
194-5390	67
194-9041	231
196-0800	263
196-1666	372
197-0143	300
197-0144	300
197-0145	300
197-0146	300
197-0147	300
197-0148	282
	283
	284
	285
	286
	287
	288
	289
	290
	291
	292
197-0149	282
	283
	284
	286
	287
	288
	289
	290
	291
	292
197-0150	282
	283
	284
	285
	286
	287
	288
	289
	290
	291
	292
197-0151	282
	283
	284
	285
	286
	288
	290
	292
197-0152	291
197-0153	287
	289
197-0156	282
197-0165	300
197-0166	300
197-0167	300
197-0168	300
197-0169	300
197-0170	300
197-0173	▶282
	300
197-0196	266
	267
197-0199	266
	267
197-0219	▶283
	300
197-0220	283
197-0225	300
197-0272	300
197-0273	266
	267
197-4385	92
198-3899	410
199-0504	268
	▶322
199-0508	322
199-0518	278
199-1187	93
199-4625	212
199-4626	212
199-4627	212
199-4628	212
199-4629	212
199-4631	212
199-9267	49
	50
199-9751	16
	35
	123

2

Part	Page
200-3247	223
200-3255	223
201-4391	380
201-4417	346
201-4530	346
202-9824	427
204-1611	390
204-1673	91
204-6195	92
205-6295	346
206-1345	44
207-2985	278
207-6403	295
207-6404	295
209-5894	272
209-6002	281
209-9219	14
	15
210-3530	147
210-3531	147
210-5808	346
212-2838	158
213-0677	28
213-0772	129
213-9100	88
214-3203	13
214-6197	153
214-7566	42
214-7568	42
	120
	248
	295
214-7915	428
215-4855	300
215-4872	300
215-4909	218
215-5037	251
	▶265
216-1302	72
216-1304	72
216-8314	11
	12
216-8634	22
	24
217-4893	▶337
217-8185	85
220-9083	338
220-9084	334
220-9090	337
	338
220-9093	337
220-9094	335
221-4807	241
221-5069	▶221
	238
221-5070	221
221-5071	221
221-8045	428
221-8912	248
221-9804	92
222-0225	370
	371
222-9020	62
222-9021	62
223-9818	428
224-0554	428
224-1914	251
224-2263	62
224-8946	428
225-0224	223
225-0225	223
225-0312	428
225-4257	428
225-4539	231
225-5436	30
225-5437	30
225-5438	30
	32
225-5495	16
225-5496	16
225-5498	16
225-5499	16
225-5501	17
	18
225-5502	17
	18
225-5625	39
225-5629	39
225-5634	39
225-5638	39
225-5640	39
225-5707	390
225-5714	390
225-5959	39
225-5960	39
225-5961	39
225-5962	39
225-5963	▶39
	40
	41
225-6005	28
225-6216	278
225-6451	8
225-6478	8
225-6522	9
225-6524	9
225-6817	48
225-6818	48
225-7738	54
225-7739	54
225-7741	54
225-7944	13
	49
	50
225-8019	54
225-8287	22
	24
225-8329	45
225-8524	67
225-8526	67
225-8536	67
225-8848	25
226-8770	103
226-8771	67
227-0590	295
227-6034	147
227-6227	214
227-6229	150
	▶216
227-8807	▶202
228-2781	428
228-5614	206
	328
	331
228-5615	324
228-7089	28
228-7092	42

▶ **PRIMARY REFERENCE**

PART NUMBER INDEX

Part	Page
228-7100	65
	121
228-7316	428
228-8146	91
228-9254	428
229-0887	428
229-1081	160
229-1085	▶284
	300
229-1086	284
229-1096	331
229-6966	▶338
229-9070	1
	▶411
229-9078	402
	▶403
229-9082	341
	▶384
230-0185	257
230-1340	98
230-1341	98
230-4009	92
	130
	140
	143
230-4011	92
	130
	137
	140
	143
	388
230-4013	92
230-5008	140
230-5010	93
	137
	140
	143
	396
230-7355	3
	4
	▶54
230-7569	3
	4
	▶33
230-7578	3
	4
	▶45
230-8094	28
230-8989	79
	82
230-8995	79
	82
230-8996	79
	82
230-8997	79
	82
230-8998	79
	82
230-8999	79
	82
230-9127	9
231-0033	3
	4
	▶46
231-0046	33
231-1771	2
	▶88
231-1836	▶137
	139
231-2295	93
	140
232-1322	16
	35
232-1328	79
	82
232-1793	79
	82
232-1794	79
	82
232-2085	334
232-2086	334
232-2095	335
232-2096	335
232-2724	79
	82
232-2725	79
	82
232-2726	79
	82
232-3126	76
	82
	103
232-3149	79
	82
232-3157	79
	82
232-3274	79
	82
232-3657	22
	24
232-3666	22
	24
232-3713	3
	4
	▶25
232-3716	3
	4
	▶34
232-3751	13
	49
	50
232-3861	49
	50
232-6204	3
	4
	▶35
232-7449	14
	15
232-7519	▶16
	17
	18
232-7600	13
232-7603	13
233-3786	10
233-9536	67
233-9537	67
233-9834	3
	4
	▶103
234-1097	129
234-1122	143
234-1158	117
234-3465	3
	4
	▶67
234-4215	3
	4
	▶36
234-6468	353
234-6469	353
234-6470	353
234-6471	353
234-6472	353
234-6473	353
234-6476	353
234-6477	353
234-6483	353
234-6485	353
234-6490	353
234-6491	353
234-6497	353
234-6498	353
234-6499	376
234-6501	349
	▶376
234-6502	376
234-6579	353
	363
	367
234-6580	363
	367
234-6593	376
234-6594	351
	▶425
234-6602	363
234-6603	367
234-6604	363
234-6605	367
234-6608	363
	367
234-6609	363
	367
234-6610	363
	367
234-6612	367
234-6613	▶126
	367
234-6614	367
234-6615	126
235-1790	79
	82
235-2435	28
235-2451	63
235-7679	206
	208
	210
	328
	331
235-8590	341
235-8862	400
235-8874	339
235-8875	339
235-8876	384
235-8877	384
235-8878	384
235-8879	355
	384
235-8880	362
235-8891	390
235-8893	365
235-8894	365
235-8912	346
235-8914	363
	367
235-8916	351
235-8923	353
235-8930	353
235-8932	425
235-8933	346
235-8950	353
235-8951	344
235-8952	345
235-8965	367
235-8966	363
235-8969	▶370
	374
235-8970	▶371
	373
235-8971	370
235-8972	371
235-8996	344
	345
235-8997	344
235-8998	345
235-9001	349
	355
235-9005	339
235-9012	411
235-9014	390
235-9015	390
236-2144	79
	82
236-2838	245
236-2843	245
236-2844	245
236-2848	245
236-3257	222
236-3259	222
236-6336	257
236-6365	328
236-9567	157
238-1506	114
238-2279	114
238-2280	114
238-2318	129
238-2319	131
238-2326	111
238-2363	131
	140
	143
238-2366	117
	131
	144
238-2390	129
238-2391	129
238-2501	91
238-2528	91
238-5081	42
238-5082	42
238-5083	42
238-8288	63
238-8671	79
	82
239-4362	182
239-6986	428
239-7352	137
	140
239-8697	265
	▶266
239-8998	265
	▶267
240-2912	208
240-2913	206
240-2988	179
240-5074	384
240-5571	79
	82
241-7231	210
241-7688	66
241-8368	114
242-1510	428
242-1588	428
242-6092	428
242-8660	49
	50
243-4505	93
	114
	131
	137
	359
243-4507	144
243-4508	135
	137
	144
	396
243-4509	69

PART NUMBER INDEX

Part	Page
	144
243-4510	93
	144
	396
243-5054	62
244-4277	324
	331
244-4360	328
244-8194	155
245-5079	245
245-7749	360
	▶362
245-7750	362
245-7751	362
245-7760	129
245-7790	353
	363
	367
245-7791	384
245-7792	384
245-7793	384
245-7811	1
	▶400
245-7813	372
245-7814	372
245-7815	372
245-7816	372
245-7817	342
245-7818	342
245-7819	342
245-7820	342
245-7823	342
245-7824	342
245-7825	342
245-7826	342
245-7827	342
245-7828	342
245-7829	342
245-7830	342
245-7831	342
245-7832	342
245-7833	342
245-7834	342
245-7835	342
245-7836	342
	▶356
245-7837	356
245-7838	342
245-7839	342
245-7842	370
245-7844	371
245-7846	342
	▶372
245-7847	342
245-7856	342
245-7872	384
245-7873	355
	384
245-7881	▶404
245-7895	410
245-7905	356
245-7916	355
	403
245-7925	367
245-7926	363
245-7929	376
245-7931	425
245-7948	363
	367
246-2641	84
246-5425	182
247-0144	54
247-2693	137
247-4884	76
247-7436	428
247-7437	428
247-7438	428
248-7132	177
	▶181
248-7138	193
248-7143	▶182
	183
	184
248-7173	194
248-7284	203
248-7857	208
251-0303	114
251-0304	114
251-0579	140
251-0580	137
251-0637	129
251-4336	22
252-6438	16
253-1346	191
	192
253-2111	114
254-2267	46
254-2270	46
254-2979	177
	▶178
254-3954	16
255-1665	245
255-1666	245
255-1929	238
255-2751	117
	▶128
255-4410	404
256-4440	3
	4
	▶63
256-4447	63
258-4946	17
	18
259-0918	281
259-4883	129
259-5081	129
259-5082	129
259-5163	▶109
	323
259-5301	91
259-5303	91
259-7202	367
259-7214	404
259-7215	404
259-7345	344
	345
259-7346	▶344
	363
259-7347	▶345
	367
259-7348	▶363
	365
259-7350	351
	▶386
259-7351	386
259-7352	386
259-7353	353
259-7354	380
	382
260-2180	248
260-2191	248
260-6975	1
	▶177
260-8204	▶238
	298
260-8212	225
	▶263
260-8217	225
	▶241
260-8220	▶226
	323
260-8316	226
260-9144	72
260-9244	72
261-0428	89
261-6700	63
262-3844	335
262-3848	335
262-4781	182
263-9088	98
	▶119
264-1581	178
264-1603	327
	▶328
264-7029	137
	140
264-7031	140
264-7032	137
	140
	396
264-7033	140
264-7034	140
265-3623	58
266-1188	226
266-1189	226
266-1190	226
266-1191	226
266-1192	226
266-1193	226
266-1210	226
266-5431	428
266-7379	114
266-7940	231
267-0055	328
267-0060	324
267-0061	158
267-1624	▶223
	278
267-1625	223
267-1626	223
267-6738	1
	▶150
267-6744	214
267-6786	214
267-7586	91
267-7976	117
267-8084	278
268-0495	169
268-0497	170
268-0581	163
268-0582	163
268-0651	165
268-0693	157
268-0694	157
268-0695	157
268-0696	157
268-0705	174
268-0706	174
268-0714	171
268-0715	171
268-0716	171
268-0717	172
268-0719	174
268-0720	168
268-0733	175
268-1517	72
268-1562	72
268-4201	223
268-4203	223
268-5145	231
268-6263	278
269-2433	278
269-5224	228
	229
269-7680	93
269-9553	251
269-9573	235
269-9577	235
269-9585	235
269-9589	235
269-9593	235
269-9714	238
269-9721	238
269-9799	231
269-9853	295
269-9858	295
269-9886	240
269-9901	257
269-9904	257
269-9911	257
269-9915	257
269-9920	235
270-5949	308
270-5950	308
270-5953	306
270-5979	300
	▶315
270-9833	156
271-7843	373
	374
272-2265	48
272-4606	248
273-5274	415
273-5345	415
	418
273-5346	415
	418
273-8075	175
273-8315	278
273-8316	223
273-8317	223
273-8318	223
274-2726	▶281
	295
274-6609	28
275-1038	79
	82
275-1442	251
275-1443	251
275-1444	251
275-1582	235
275-1624	251
275-1715	225
	▶245
	355
275-2452	25
275-6810	143
275-6874	1
	▶387
275-6875	387
	▶388
275-6876	388
275-7048	142
275-9891	28
276-5605	13
277-0121	21
277-3012	22
	24
278-6469	257
278-6505	235
278-6506	235
278-6613	251
278-6623	251
278-6905	251
281-0791	356
281-3492	58

▶ **PRIMARY REFERENCE**

PART NUMBER INDEX

Part	Page
281-5972	42
281-6847	223
281-8803	92
281-8804	92
281-8805	120
282-8856	62
282-9192	278
283-6089	295
283-6090	220
283-9001	▶323
283-9004	▶330
283-9011	▶327
284-1026	19
	38
284-3425	89
284-4376	▶385
284-4426	346
284-4500	390
284-4501	390
284-4502	390
284-4999	▶77
	79
284-5000	▶78
284-8532	399
285-1142	102
285-1503	300
285-1504	▶285
	300
285-1505	▶286
	300
285-1506	300
285-1507	300
285-1613	251
	▶312
285-2564	248
286-3030	9
286-6499	235
286-7848	37
287-0212	42
287-8573	9
287-8597	21
288-0422	22
	24
288-1394	30
288-1395	30
289-8194	▶219
	295
289-8195	219
289-8336	19
290-1729	428
290-9321	323
	▶324
290-9322	324
290-9327	330
	▶331
290-9328	331
291-7730	▶110
291-7731	110
291-7746	109
292-7446	251
292-7461	295
293-1137	342
293-1183	355
	384
293-1184	355
	384
293-1238	355
	390
293-1501	153
293-7844	335
294-0288	22
	24
295-1711	22
296-6220	147
296-6268	147
296-6269	147
296-7278	251
297-0366	285
297-0529	▶306
	373
	374
297-0532	369
	▶373
297-0533	369
	▶374
297-9184	194
297-9185	181
	▶183
297-9186	181
	▶184
297-9187	183
	▶191
297-9188	184
	▶192
297-9189	191
	192
	▶193
297-9190	193
297-9191	193
	▶194
297-9192	193
297-9193	194
298-0110	334
298-4282	428
298-5872	38
299-2901	91
3	
301-0091	91
301-0589	399
301-2981	143
301-6874	223
301-8294	223
302-3225	225
	▶275
303-9933	85
303-9937	85
304-5303	129
305-0330	353
305-0361	413
305-0441	390
305-0442	390
305-0467	355
	▶406
305-5362	92
305-6873	72
305-7881	89
306-8526	91
306-8531	91
307-0047	98
307-1818	377
	▶380
307-2242	89
307-8125	72
308-8775	158
308-8776	158
308-8777	158
309-5146	72
309-5768	241
309-9960	300
309-9974	300
	▶310
309-9977	300
	▶316
310-0078	355
	▶369
310-0419	308
310-0420	308
312-5694	333
313-1380	3
	▶22
313-3762	56
313-3763	56
313-3766	56
313-3769	56
313-8080	163
314-6506	56
314-6510	56
315-4441	295
315-5313	346
316-6166	▶377
	378
316-8846	342
316-8847	342
316-8849	342
316-8916	339
	▶342
316-8918	342
316-8920	342
316-8921	342
316-8987	407
	408
318-1181	91
	▶122
318-2365	79
	82
319-1252	91
319-1253	91
319-1277	91
319-4255	104
	▶399
319-4258	▶98
	104
319-6208	42
320-0150	241
320-3060	121
320-3063	65
320-5737	153
321-8647	42
321-8648	42
321-8649	42
322-9663	16
323-9312	30
	32
324-0444	22
	24
324-4118	204
324-5770	142
324-5771	142
	355
324-5804	114
324-5805	114
324-5808	114
325-4471	▶107
	111
325-8634	▶121
	123
325-8876	251
326-0319	42
327-6501	355
	▶405
327-6507	405
	▶408
327-6512	▶407
	408
327-6515	407
327-6520	408
	▶410
327-6523	355
	402
	▶409
327-6538	409
327-6541	406
327-6550	346
	▶395
327-6593	359
327-6594	359
327-6640	407
327-6642	407
327-6643	407
327-6644	410
327-6645	410
327-6646	410
327-6647	410
327-6648	410
327-7538	129
327-8740	277
328-0181	91
328-0385	91
329-2840	251
329-2843	251
329-5528	42
329-6655	16
332-0195	407
332-4191	56
332-4192	56
333-3015	▶212
	215
333-3042	212
333-3043	212
333-3047	212
333-3048	212
333-3049	212
333-3050	212
333-3051	212
333-3053	212
333-3055	212
333-3056	212
333-3057	212
333-3058	212
333-3059	212
333-3060	212
333-3061	212
333-3062	212
333-3064	212
333-4160	407
333-4179	407
333-4180	410
333-4181	410
333-4609	251
334-2318	30
334-2319	30
334-4603	428
334-9334	37
334-9981	269
335-0210	300
	▶311
335-2092	21
335-7585	28
336-3566	119
337-6501	72
339-7143	27
339-7144	27
339-7145	26
340-2566	396
340-2567	396
341-1842	85
341-2860	▶277
	278
341-7597	28
342-2972	93
	131
	140

PART NUMBER INDEX

Part	Page
	144
342-2973	93
342-2974	93
	140
	144
342-2976	93
342-8584	72
343-3917	72
343-7352	72
344-0688	▶204
	276
344-5360	73
346-0407	24
346-0408	24
347-4416	73
347-6081	▶222
	295
347-6082	222
348-1867	186
	▶188
348-1869	190
348-1870	190
348-1871	190
348-5409	153
	165
348-8149	89
349-2746	8
349-5084	93
	131
349-5085	93
	131
349-5413	399
349-5414	399
349-7059	85
349-8500	335
350-0450	▶146
	149
350-0452	146
	▶147
350-2374	6
	7
350-7735	85
350-8254	1
	▶142
350-9492	28
351-0289	72
351-3869	▶203
	204
351-3928	26
351-4089	73
351-4126	203
351-4318	73
351-4321	73
351-9918	105
	107
352-7063	216
352-7282	▶287
	300
352-7283	▶288
	300
352-7284	▶289
	300
352-7285	▶290
	300
352-7286	▶291
	300
352-7288	300
352-7775	56
353-0586	▶149
	150
353-1579	▶333
353-1584	333
	▶334
353-1590	▶333
353-1596	333
	▶335
353-1601	334
353-1607	334
353-2811	334
353-3477	67
353-3478	67
353-5825	278
353-5829	278
353-5837	278
353-7423	10
353-7424	10
353-7425	10
353-7426	10
354-1274	▶48
	49
	50
354-1672	54
354-3757	257
354-6246	72
355-0598	399
355-0632	72
356-7732	129
356-9229	251
357-2713	336
357-2714	336
357-5205	124
357-7534	177
	▶186
357-7540	194
358-0880	165
358-0921	165
358-6390	428
358-8605	334
358-8606	334
359-0715	▶10
	11
	12
359-0719	30
	32
359-0720	30
	32
359-0721	30
	32
359-0722	30
	32
359-0723	30
	32
359-0724	30
	32
359-0734	3
	4
359-0750	37
359-5687	178
359-5688	178
359-9666	89
360-3986	10
360-5863	188
	▶189
360-5864	188
	▶190
360-5865	189
360-7354	3
	4
	▶37
360-9262	56
361-0522	334
	335
361-4483	335
361-8998	295
362-2190	▶13
	14
	15
362-3642	428
362-3643	428
363-6122	251
363-6139	251
364-0979	269
364-0981	271
	▶317
364-1614	358
365-3308	79
	82
365-6882	56
365-6883	56
365-6884	56
365-6886	56
365-6887	56
365-6888	56
365-6889	56
365-6890	56
366-0367	129
366-4622	129
366-8650	225
	▶235
367-0844	428
367-3326	20
367-8338	150
	▶214
367-8339	214
	▶215
367-8355	214
367-8466	328
368-3151	103
368-6660	26
368-9376	231
368-9379	231
368-9380	235
368-9994	278
368-9995	278
368-9996	278
368-9997	278
369-2263	53
369-2264	53
369-2472	103
369-8335	▶292
	300
369-8503	245
	▶308
369-8509	308
369-8510	308
369-8568	308
369-8569	308
369-9604	215
	▶271
369-9624	▶269
	271
369-9625	269
369-9628	231
	▶321
370-7639	428
371-6116	67
372-9285	425
372-9306	410
372-9334	425
372-9493	358
	▶359
375-6625	235
375-6628	235
375-8749	168
375-8750	168
377-7808	▶56
	58
377-9082	89
378-6179	56
378-9521	214
378-9608	▶160
	161
379-0830	396
379-3002	278
380-1204	▶336
381-1372	428
381-1373	428
381-1419	428
381-5989	248
381-8968	▶205
	323
381-8969	▶205
	323
381-8970	▶205
	323
381-8971	▶205
	327
381-9064	72
382-5080	27
383-5647	407
383-5675	5
	▶360
383-5676	1
	▶390
383-5687	390
383-5700	360
383-5702	360
383-5707	390
383-5708	390
383-5767	353
383-6627	27
383-6929	412
383-6930	413
383-6931	412
383-6932	412
383-6933	382
383-8104	27
383-8541	415
	418
	420
383-9558	251
384-6533	382
	▶423
384-9014	1
	▶173
384-9076	173
384-9089	▶157
	165
385-2860	206
385-2861	206
385-2862	210
385-2863	210
385-2864	208
385-2865	208
385-2888	206
385-2889	206
385-2891	210
385-2895	206
385-2899	206
	208
385-2900	206
	208
385-2901	206
385-2905	206
	208
385-2908	206
385-2909	210
385-2910	210
385-2911	205
	▶228
385-2912	205
	▶229
385-2913	205
	▶206
385-2914	205
	▶262

▶ **PRIMARY REFERENCE**

PART NUMBER INDEX

Part	Page
385-2915	205
	▶210
385-2916	205
	▶230
385-2917	205
	▶208
385-2920	210
385-2922	206
	208
385-2923	210
385-2927	210
385-2929	210
385-2933	210
385-2934	210
385-2939	210
385-2942	210
385-2943	208
385-2944	208
385-2945	208
385-2946	208
385-2967	230
385-3458	165
385-4093	428
385-7931	56
385-7933	56
385-7935	56
385-7943	56
385-7944	56
385-7945	56
385-7948	56
385-8757	423
386-3435	69
386-3444	101
387-2610	5
	▶358
387-2614	5
	▶44
387-2615	5
	▶26
387-2618	225
	▶276
387-2619	1
	▶5
387-2620	5
	▶61
387-2622	5
	▶42
387-2623	5
	▶65
387-2625	1
	▶72
387-2628	▶38
	51
387-2637	72
387-2642	72
387-2646	3
	▶66
387-2650	72
387-2651	72
387-2652	72
387-2653	42
387-2654	42
387-2660	72
387-2665	72
387-2666	72
387-2668	72
387-2669	72
387-2846	423
387-2847	423
387-2848	423
387-2849	423
387-3488	1
	▶158
387-3489	158
387-3601	248
387-3716	225
	▶248
387-3738	275
387-3739	275
387-6403	71
388-6701	▶113
	402
388-6702	113
	▶114
388-6703	1
	▶69
388-6769	92
388-6771	92
388-6773	114
388-6775	114
388-6776	114
388-6793	69
388-6794	69
388-6797	69
388-6801	92
388-8368	278
388-9091	353
388-9094	353
388-9095	353
388-9097	415
388-9102	▶346
	351
388-9105	351
	▶382
388-9107	351
	▶412
388-9108	351
	▶413
388-9109	351
	▶415
388-9115	351
	▶378
388-9116	351
	▶418
388-9117	351
	▶420
390-3675	1
	▶165
390-3677	▶163
390-4135	228
390-4136	228
390-4149	229
390-4150	229
390-4163	262
390-4165	262
390-4173	230
390-4242	228
	229
390-8835	3
	▶51
390-8836	51
	▶52
390-8837	5
	▶58
390-8838	5
	▶53
391-1926	172
391-1927	172
391-3199	53
391-3253	53
391-3704	58
391-3712	53
391-3714	53
391-4295	1
	▶84
391-4305	84
	▶85
391-5297	65
391-5298	65
391-7825	225
	▶257
391-7830	225
	▶240
391-7835	225
	▶251
391-7836	225
	▶259
391-9438	278
391-9452	276
	▶278
391-9675	156
391-9681	163
391-9683	163
391-9686	176
391-9690	170
392-0245	66
392-0250	66
392-0265	21
392-1165	358
392-1170	165
392-1172	165
392-1177	165
392-1179	165
392-1182	165
	▶174
392-1185	165
392-1191	165
	▶169
392-1194	169
392-1195	165
	▶170
392-1199	165
392-1202	165
392-1204	165
	▶171
392-1207	171
392-1208	165
	▶175
392-1216	165
392-1218	165
	▶172
392-1245	165
392-1249	165
392-1250	165
	▶168
392-1251	168
392-1260	168
392-1261	168
392-1262	165
392-1263	165
392-1276	165
392-1281	165
392-1285	176
392-2053	26
392-2185	245
392-2673	163
392-2678	165
	▶176
392-2688	165
392-2689	165
392-2876	▶220
	295
392-3904	5
	▶123
392-6726	240
392-6728	259
393-0807	28
393-0822	65
393-0826	42
393-5867	28
393-8574	1
	▶152
393-8575	152
	▶153
393-8576	153
393-8586	153
393-8618	358
394-4837	123
394-6854	▶155
394-6855	155
	▶156
394-6856	156
394-8706	44
394-8709	44
394-8711	44
395-3380	5
	▶234
395-3437	71
395-3439	71
396-0293	5
	▶60
396-2185	61
	▶62
396-2351	353
396-2352	353
396-6895	339
396-8008	165
396-8009	165
397-4688	▶2
398-0782	58
398-7003	▶129
	355
	402
398-7005	▶139
	355
	402
398-7006	139
	▶140
398-7007	▶117
	355
398-7012	140
398-7013	117
398-7021	66
398-7027	66
398-7105	382
398-7106	382
398-7107	382
398-7109	415
398-7110	415
398-7111	382
398-7170	220
398-7171	220
398-7172	220
398-7173	220
398-7174	220
398-7981	72
398-8931	117
399-0061	353
399-0062	353
399-0065	353
399-0966	69
399-2541	58
399-2618	▶101
	402
399-2620	355
	▶396
	402
399-2641	72
399-4202	66
399-5122	208
399-5313	396
399-7619	259
399-7625	259

PART NUMBER INDEX

Part	Page
4	
416-0965	56
416-1277	206
	208
416-1278	206
	208
416-1279	206
	208
416-1280	206
	208
416-1282	206
	208
416-1284	206
	208
416-1285	206
	208
416-1286	206
	208
416-1287	206
	208
416-1288	210
416-1289	210
416-1290	210
416-1291	210
416-1292	210
416-1293	206
416-1294	210
416-1312	210
416-1313	210
416-1314	210
416-1315	210
416-1316	210
416-1798	►339
	341
	355
416-1802	339
416-8777	48
416-9606	1
	►349
416-9607	349
	►351
	355
416-9608	351
	►353
417-1143	415
418-1084	►100
	104
418-8379	415
418-9897	1
	►341
419-3328	156
419-3329	156
419-3330	156
419-5161	156
420-2243	225
	►300
420-3151	378
	►379
420-5793	►427
421-1370	396
421-1431	355
	►365
	402
421-1434	365
	►367
421-5857	101
421-7101	3
	4
	►21
421-7102	3
	4
	►20
421-7104	3
	4
	►19
421-7105	3
	4
	►28
421-7107	3
	►49
421-7109	3
	4
	►89
421-7111	3
	4
	►27
421-7744	4
	►79
422-9120	206
	208
422-9122	210
422-9135	228
	229
422-9136	230
422-9137	262
422-9140	206
423-4010	52
423-6434	72
	►120
424-6821	89
424-8398	228
	229
	230
	262
425-7079	379
428-7937	100
	►102
430-4119	423
431-1704	8
432-6291	295
432-8577	73
433-4624	52
434-5320	161
435-2848	97
435-8395	225
	►231
436-1866	1
	►102
436-1867	102
436-1901	351
	379
436-2812	165
436-2813	165
436-2841	►161
	177
437-0436	72
438-1304	72
438-4951	423
438-4952	423
438-4953	423
438-4954	423
438-4955	423
438-4956	423
438-4957	423
438-4958	423
438-5386	72
439-3322	153
439-7520	102
440-5584	407
440-5585	407
440-6914	1
	►91
440-6915	►143
	355
	402
440-6916	104
	►135
440-6917	92
440-6918	143
440-6919	135
441-4671	3
	►14
441-4672	3
	►11
441-4673	3
	►30
441-4674	3
	►17
441-4675	3
	►40
441-4677	3
	►6
441-6376	111
441-6377	111
441-6379	111
441-8511	69
441-8612	93
444-5471	398
446-1895	►71
	72
446-9163	►8
	9
447-1706	26
447-1707	84
	184
	216
	275
	298
447-1711	259
447-1717	151
447-1719	216
447-1725	186
447-1730	399
447-1731	186
447-1733	155
450-3501	129
451-2175	26
	110
	216
	259
	275
	358
	403
451-2176	179
	186
	216
	324
	331
451-2182	26
451-3987	1
	►402
451-7464	►104
453-1259	358
	403
453-2834	110
	275
453-2838	58
453-2844	158
	324
	331
453-2845	179
453-3439	52
453-3449	26
453-3452	52
453-8030	180
454-5582	►1
454-5583	►1
454-5645	►1
454-7359	►295
	298
454-8704	►111
	355
455-0704	92
	131
	143
455-0705	93
455-0707	93
	143
455-0708	93
455-0709	92
	130
	143
455-1948	1
	►3
455-4106	225
	►298
455-7664	1
	►225
456-1375	►3
456-6742	1
	►355
458-3300	4
	►15
458-3301	4
	►12
458-3302	4
	►32
458-3303	4
	►18
458-3304	4
	►41
458-3306	4
	►7
458-6746	251
458-7586	32
460-0440	3
	4
	►124
460-0449	3
	4
	►9
460-0525	4
	►50
460-0596	4
	►24
460-0656	3
	4
	►76
462-8111	82
462-8135	3
	►82
466-3567	396
	►397
466-3569	397
466-3570	397
	►398
466-3572	398
470-9228	►4
471-2096	1
	►428

► **PRIMARY REFERENCE**

MEMORANDA



©2014 Caterpillar
All Rights Reserved

CAT, CATERPILLAR, their respective logos, “Caterpillar Yellow”, and the POWER EDGE trade dress as well as corporate and product identity used herein, are trademarks of Caterpillar and may not be used without permission.