M0090829-04 (en-us)
August 2018

RUTHZIL TRATOR COMERCIAL DE PEÇAS LTDA 11 97083-6812 ROLANDO

Parts Manual

320 Excavator

BR61-UP (Machine)
4501-UP (Engine)
E7A1-UP (Engine)

Powered By C7.1 Engine

Product and Dealer Information

Note: For product identification plate locations, see the section “Product Identification Information” in the Operation and Maintenance Manual.

Delivery Date: _____

Product Information

Model: _____

Product Identification Number: _____

Engine Serial Number: _____

Transmission Serial Number: _____

Generator Serial Number: _____

Attachment Serial Numbers: _____

Attachment Information: _____

Customer Equipment Number: _____

Dealer Equipment Number: _____

Dealer Information

Name: _____ Branch: _____

Address: _____

_____

_____

	Dealer Contact	Phone Number	Hours
Sales:	_____	_____	_____
Parts:	_____	_____	_____
Service:	_____	_____	_____

MEMORANDA

TABLE OF CONTENTS

NAME PAGE

GENERAL INFORMATION. A5

REPAIR ALTERNATIVES. A8

SUPPLEMENTAL COOLANT ADDITIVES. A9

MAINTENANCE PARTS A10

INDEX A12

MACHINE ARRANGEMENT 1
- COMMON AR 1
- DISTRIBUTION AR 2
- EXCAVATOR AR 5
- OPTION AR-HYDRAULIC. 6

ENGINE ARRANGEMENT 7
- ENGINE AR. 7
- ENGINE AR-COMPLETE 7
- ENGINE AR-PRIMARY 8
- INSTALLATION AR-ENGINE 13

BASIC ENGINE 15
- BELT TENSIONER GP. 15
- BRACKET GP-MOUNTING 16
- CAMSHAFT GP 18
- COVER GP-SOUND SUPPRESSION 19
- COVER GP-VALVE MECHANISM 21
- CRANKSHAFT GP. 22
- CYLINDER BLOCK AS. 24
- CYLINDER BLOCK GP 25
- CYLINDER HEAD AS 26
- CYLINDER HEAD GP. 27
- DRAIN GP-ENGINE OIL. 28
- DRIVE GP-FAN. 30
- FASTENER GP-DAMPER & PULLEY 31
- FLYWHEEL GP. 32
- HOUSING GP-FLYWHEEL. 33
- HOUSING GP-FRONT 34
- JET GP-PISTON COOLING 36
- LIFTING GP-ENGINE 37
- MOUNTING GP-ALTERNATOR 38
- MOUNTING GP-ENGINE 39
- MOUNTING GP-STARTING MOTOR 41
- PAN GP-OIL 42
- PISTON & ROD GP 43
- PLUG GP-CYLINDER BLOCK 47
- PLUG GP-OIL PAN 48
- PULLEY GP-CRANKSHAFT 49
- ROCKER ARM GP 50

LUBRICATION SYSTEM 53
- FILLER GP-ENGINE OIL 53
- FILTER & MTG GP-ENGINE OIL 54
- FILTER GP-ENGINE OIL 56
- FUMES DISPOSAL GP 57
- GAUGE GP-OIL LEVEL (DIPSTICK) 58
- LINES GP-ENGINE OIL DRAIN 63
- LINES GP-TURBOCHARGER OIL. 65
- OIL CHANGE AR-HIGH SPEED 66
- PUMP GP-ENGINE OIL 67

COOLING SYSTEM. 68
- CONNECTION GP-HEATER 68
- CONNECTION GP-WATER 69
- COOLER GP-ENGINE OIL 70
- COOLING GP 73
- FAN GP-SUCTION. 77
- LINES GP-COOLING. 78
- LINES GP-OIL COOLER 79
- PUMP GP-WATER. 81
- RADIATOR & HYD OIL COOLER GP 82
- SCREEN GP-RADIATOR 85

AIR INLET AND EXHAUST SYSTEM 86
- AIR CLEANER GP. 86
- LINES GP-AIR. 88
- LINES GP-TURBOCHARGER AIR. 90
- MANIFOLD GP-EXHAUST 91
- MANIFOLD GP-INLET. 92
- MUFFLER GP 93
- TURBOCHARGER GP 94

FUEL SYSTEM. 96
- CONNECTION GP-FUEL 96
- FILTER & LINES GP-FUEL. 97
- FILTER GP-FUEL. 99
- FILTER GP-WATER SEP & FUEL 101
- INJECTOR GP-FUEL. 103
- LINES GP-FUEL. 105
- LINES GP-FUEL INJECTION 114
- PUMP GP-FUEL INJECTION 116
- PUMP GP-FUEL PRIMING 118
- PUMP GP-FUEL PRM & PRIM FILTER 119
- RAIL GP-FUEL 120
- TANK & MTG GP-FUEL 121
- TANK GP-FUEL 125

ELECTRICAL AND STARTING SYSTEM 129
- ALARM GP-TRAVEL 129
- ALTERNATOR GP-CHARGING 131
- ANTENNA & MOUNTING GP. 132
- BATTERY & MTG GP-COLD WEATHER 133
- BRACKET GP-MOUNTING 134
- CABLE GP-GROUND 135
- CAMERA & MOUNTING GP. 139
- CAMERA AR 144
- CONTROL & MTG GP-COMMUNICATION 145

TABLE OF CONTENTS

NAME	PAGE
CONTROL & MTG GP-ELECTRONIC	147
CONTROL & MTG GP-MACHINE	148
CONTROL GP-ENGINE ELECTRONIC	149
CONTROL GP-UNPROGRAMMED	150
CONVERTER & MOUNTING GP-POWER	151
ELECTRICAL AR	152
ELECTRONICS GP-MACHINE	152
ELECTRONICS GP-MONITOR	153
FASTENER GP-WIRING HARNESS	156
GRADE CONTROL AR	157
HARNESS AS-CAB	159
HARNESS AS-CHASSIS	160
HARNESS AS-CONSOLE	171
HARNESS AS-CONTROL	173
HARNESS AS-ENGINE	175
HARNESS AS-FRONT	177
HARNESS AS-LIGHTING	178
HARNESS AS-MONITOR	180
HARNESS AS-PANEL	181
HARNESS AS-PLATFORM	182
HARNESS AS-SENSOR	182
HARNESS AS-SOLENOID	184
HARNESS AS-VALVE	185
HARNESS AS-WIRING	186
HOLDER AS-FUSE	187
INSTALLATION AR-COMMUNICATION	188
INSTL AR-MACHINE SECURITY SYS	189
INSTL GP-MACHINE SECURITY SYS	190
KIT-LIGHTING	191
KIT-WIRING	191
LAMP GP-DOME	193
LIGHTING AR-FLOOD	194
LIGHTING GP-CAB	195
LIGHTING GP-FLOOD	196
MODULE GP-CAB WIRING	204
MOUNTING GP-CONTROL	205
MOUNTING GP-ELECTRONIC CONTROL	206
MOUNTING GP-WIRING	207
PANEL GP-SWITCH	209
RECEIVER GP-LASER	210
SENSOR & MTG GP-POSITION	211
SENSOR GP-ENGINE	216
SENSOR GP-LIQUID LEVEL	217
SENSOR GP-PRESSURE	218
SENSOR-TEMPERATURE	220
STARTING AID GP	221
STARTING MOTOR GP-ELECTRIC	222
SWITCH AS-PUSH BUTTON	224
SWITCH GP-DISCONNECT	225
SWITCH GP-MAGNETIC	226
SWITCH GP-ROCKER	227
WIRING & MTG GP- MAIN CONT V	229
WIRING GP-CAB	230
WIRING GP-CHASSIS	239
WIRING GP-CONSOLE	257
WIRING GP-ELECTRONIC CONTROL	261
WIRING GP-ENGINE	262
WIRING GP-FAN	265
WIRING GP-FRONT	266
WIRING GP-PLATFORM	271
WIRING GP-SENSOR	273
WIRING GP-VALVE	275
POWER TRAIN	280
DRIVE GP-FINAL	280
FINAL DRIVE & MOUNTING GP	298
SPROCKET GP	300
FRAME AND BODY	301
BOX & MOUNTING GP	301
BOX GP-STORAGE	302
BUMPER GP-FRONT	304
COUNTERWEIGHT AS	305
COVER AS-SOUND SUPPRESSION	306
COVER GP-HOOD	308
COVER GP-SOUND SUPPRESSION	309
DOOR & MTG GP-ACCESS	310
DOOR GP-ACCESS	312
ENCLOSURE AR	319
FRAME GP-UPPER	320
GEAR & BEARING GP-SWING	323
GUARD GP-BOTTOM	326
GUARD GP-SWIVEL	328
HANDHOLD GP	329
HANDRAIL GP	330
HOOD & GUARD GP	331
HOOD GP-ENGINE	341
INSTALLATION AR	342
KIT-BUMPER	342
KIT-GUARD	342
LINER GP-SOUND SUPPRESSION	345
MOUNTING GP-COUNTERWEIGHT	346
PLATE GP	347
SHEET AS-SOUND SUPPRESSION	348
STEP GP	353
UNDERCARRIAGE	354
FRAME AS-UNDERCARRIAGE	354
GUARD GP-TRACK GUIDE	356
GUARD GP-TRAVEL MOTOR	358
IDLER GP-FRONT	360
LINK AS-TRACK	364
ROLLER AR-TRACK & CARRIER	365
ROLLER GP-TRACK CARRIER	367

TABLE OF CONTENTS

NAME	PAGE
ROLLER GP-TRACK-SINGLE FLANGE	368
TRACK ADJUSTER & RECOIL GP	370
TRACK AR	374
TRACK GP	374
UNDERCARRIAGE AR	377
HYDRAULIC SYSTEM	378
ACCUMULATOR GP-HYDRAULIC	378
CONTROL AR-AUXILIARY	380
CONTROL AS-PISTON PUMP	381
COUPLING GP-FLEXIBLE	382
COUPLING GP-PUMP	383
COVER GP-PUMP	384
COVER GP-VALVE END	385
CYLINDER & LINES GP-BOOM	387
CYLINDER & LINES GP-BUCKET	390
CYLINDER & LINES GP-STICK	393
CYLINDER & SEAL GP-BOOM	396
CYLINDER & SEAL GP-BUCKET	398
CYLINDER & SEAL GP-STICK	402
CYLINDER AR-BOOM	409
CYLINDER GP-COUPLER	410
DRIVE & MTG GP-SWING	411
DRIVE GP-SWING	412
FILTER GP-OIL	415
GAUGE GP-SIGHT	417
HYDRAULIC AR	418
KIT-SEAL	418
LINES AR-BOOM	418
LINES GP-AUXILIARY HYDRAULIC	420
LINES GP-BOOM	424
LINES GP-BOOM CYLINDER	428
LINES GP-BUCKET CYLINDER	437
LINES GP-COUPLER	441
LINES GP-CYLINDER	446
LINES GP-DRAIN	448
LINES GP-FRONT	449
LINES GP-HYDRAULIC	464
LINES GP-HYDRAULIC OIL COOLER	466
LINES GP-OIL	468
LINES GP-PILOT	469
LINES GP-PUMP	479
LINES GP-STICK	483
LINES GP-STICK CYLINDER	484
LINES GP-TRAVEL MOTOR	486
MOTOR & MTG GP-SWING	490
MOTOR & MTG GP-TRAVEL	491
MOTOR GP-SWING	493
MOTOR GP-TRAVEL	496
MOUNTING GP-MAIN CONTROL VALVE	501
PLUG GP-CONTROL VALVE	502
PUMP & MTG GP-MAIN HYDRAULIC	503
PUMP GP-MAIN HYDRAULIC	504
ROTATING GP-PUMP	506
SHAFT & CPLG GP-PISTON PUMP	508
SWASHPLATE GP	509
SWIVEL & MOUNTING GP	511
SWIVEL GP	512
TANK & FILTER GP-HYDRAULIC	513
TANK & MTG GP-HYDRAULIC	515
TANK GP-HYDRAULIC	516
VALVE & MTG GP-MAIN CONTROL	517
VALVE & MTG GP-SOLENOID	519
VALVE AR-MAIN CONTROL	522
VALVE GP-CHECK	523
VALVE GP-CONTROL	524
VALVE GP-LOAD CONTROL	527
VALVE GP-MAIN CONTROL	528
VALVE GP-MANUAL	533
VALVE GP-PUMP CONTROL	534
VALVE GP-RELIEF	537
VALVE GP-SOLENOID & MANIFOLD	541
VALVE GP-TRAVEL COUNTERBALANCE	544
IMPLEMENTS	547
BOOM AR	547
BOOM AR-REACH	547
BOOM GP	548
LINES GP-GREASE	552
LINKAGE GP-BUCKET	556
LOCK GP-TRANSPORT	558
PIN GP	559
PIN GP-EXCAVATOR	560
STICK AR	562
STICK AR-HOE	562
STICK GP-HOE	563
WORK TOOLS	567
ADJUSTER GP-BUCKET	567
BUCKET & ADJUSTER GP	568
BUCKET AR-DITCH CLEANING	569
BUCKET AR-HEAVY DUTY	569
BUCKET AS-HEAVY DUTY	571
BUCKET AS-HEAVY DUTY SPADE	573
BUCKET GP-DITCH CLEANING	574
CONTROL AR-QUICK COUPLER	575
COUPLER AR-QUICK	575
COUPLER GP-QUICK	576
EDGE GP-CUTTING	578
SIDECUTTER GP	579
TIP GP-PENETRATION PLUS	580
OPERATOR STATION	581
AIR CONDITIONER & MOUNTING GP	581
AIR CONDITIONER GP	583
ARMREST GP	585

TABLE OF CONTENTS

NAME	PAGE
BRACKET & MTG GP-CAB	587
BRACKET GP-MOUNTING	588
CAB GP	589
COMPRESSOR & MTG GP-REFRIG	596
CONDENSER & MTG GP-REFRIGERANT	597
CONDENSER GP-REFRIGERANT	599
CONSOLE GP	600
CONSOLE GP-OPERATOR	602
CONTROL & MTG GP-PEDAL	610
COVER GP-CAB	612
COVER GP-CONSOLE	619
DOOR GP-CAB	620
DUCT GP-CAB AIR	622
FLOOR MAT GP	624
GROMMET & MTG GP-WINDOW WASHER	625
GUARD & MTG GP-CAB	626
HATCH GP-ROOF	627
HOLDER GP-CUP	630
HORN GP-ELECTRIC	631
INSTALLATION AR-RADIO	632
INSTL AR-BUMPER & WASHER LINES	632
KIT-LIGHTING COVER	632
KIT-PEDAL	633
KIT-ROOF HATCH	634
KIT-WINDOW	634
KIT-WINDOW WIPER	635
LINES GP-AIR CONDITIONER	636
LINES GP-WASHER	642
LITERATURE GP	643
MIRROR AR	643
MIRROR GP	644
MIRROR GP-REAR VIEW	645
MODULE GP-DISPLAY	646
MONITOR & MTG GP-OPERATOR	648
MONITOR AR	653
MOUNTING GP-CAB	654
MOUNTING GP-ROPS	655
OPERATOR AR	656
OPERATOR AR-ENCLOSED ROPS	656
PLATFORM GP-OPERATOR	658
RADIO GP	659
SCREEN GP-SUN	660
SEAT BELT GP	661
SEAT GP	662
SUPPORT GP-SEAT	666
SUSPENSION GP-SEAT	667
VISOR GP-PROTECTION	669
WASHER GP-WINDOW	670
WINDOW GP-CAB	671
WIPER GP-WINDOW	677
SERVICE EQUIPMENT AND SUPPLIES	678
FILM GP	678
PLATE & FILM GP	691
PLATE GP-SERIAL NUMBER	701
PART NUMBER INDEX	B1

1. MACHINE IDENTIFICATION

Cat machines are identified by Product Identification Numbers (PIN). Some components included in a machine may be identified by Serial Numbers (S/N). Typical components that will be serialized include engines, transmissions, bulldozers, and rippers. The machine and engine are further identified by arrangement numbers and in some cases modification numbers. These numbers are shown on the product identification plate(s) and on the master plate in the operator's compartment.

Cat dealers need all of these numbers to determine accurate parts identification.

Effective First Quarter 2001 the Cat Product Identification Number (PIN) changed from 8 to 17 characters. In an effort to provide uniform equipment identification, Caterpillar and other construction equipment manufacturers are moving to comply with the latest version of the product identification numbering standard. Non-road machine PINs are defined by ISO 10261. The new PIN format will apply to all Cat machines and generator sets. The PIN plates and frame marking will display the 17 character PIN. The new format will look like the following:

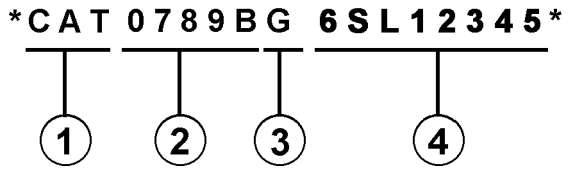

Where:

1. Caterpillar's World Manufacturing Code (characters 1-3)

2. Machine Descriptor (characters 4-8)

3. Check Character (character 9)

4. Machine Indicator Section (MIS) or Product Sequence Number (characters 10-17). These were previously referred to as the Serial Number.

Machines and generator sets produced before First Quarter 2001 will maintain their 8 character PIN format.

Components such as engines, transmissions, axles, etc. and work tools will continue to use an 8 character Serial Number (S/N).

2. ORDERING PARTS

⚠ WARNING

When replacement parts are required for this product Caterpillar recommends using Caterpillar replacement parts or parts with equivalent specifications including, but not limited to, physical dimensions, type, strength and material.

Failure to heed this warning can lead to premature failures, product damage, personal injury or death.

Quality Cat replacement parts are available from Cat dealers throughout the world. Their parts inventories are up to date and include all parts normally required to protect your investment in Cat machines. Dealers may offer repair kits or remanufactured parts to allow selection of the most effective repair alternative for a particular situation. When ordering parts, your order should specify the quantity, part number, part name, and the serial number/product identification number of the machine for which the parts are needed.

3. PARTS MANUAL ORGANIZATION

Product information in this manual is presented as "information elements" that represent all of the components for the specific model. Engine Arrangement and Seat Group are examples of information elements. The information elements are organized alphabetically by part name and secondarily by part number within each major section of the manual.

4. TABLE OF CONTENTS

A table of contents (TOC) is found at the beginning of the manual. The TOC lists each section of the manual with a complete list of all information elements organized as they appear in the manual. Page numbers are provided for quick reference to detailed parts identification illustrations and serviceable consist lists.

5. MAINTENANCE PARTS INDEX

The Maintenance Parts Index, located near the beginning of the manual, references most frequently used maintenance part numbers, providing description, quantity, usage and page number. This information is organized alphabetically by part description.

6. INDEX

The index located near the front of the manual is an alphabetical listing of all information elements included in the manual. Page numbers are provided for quick reference to detailed parts identification illustrations and serviceable consist lists.

7. PART NUMBER INDEX

A numerical index listing all part numbers and the corresponding page number(s) appears at the back of the manual.

8. CAPTIONS

Captions located at the beginning of each information element identify the part number and part name along with additional descriptive information. PIN and S/N information found in each caption should be used to select correct information for a specific machine. Field replacement options, identification of optional attachment components, and where used ("part of") information is also provided.

The first line of a caption is shown in larger type font to indicate the beginning of an information element. Captions for additional pages that may be required to illustrate an information element will be shown in standard type font and will include the term (contd.).

9. NON-SERVICED PARTS

In some instances it is necessary to display non-serviced parts that are a link to a lower level serviceable consist lists. These non-serviced part numbers are shown in italic type indicating that they are not available.

10. PARTS LIST REFERENCE NUMBERS

Numbers shown in the Ref No column correspond to numbers used in the associated graphic(s). An alphabetic suffix may be added to a reference number to identify lower level consist items. Numbers shown in the Graphic Ref column refer to the graphic number identifier displayed in the lower left corner of each illustration. The Graphic Ref number may be used in combination with the item Ref No to determine the correct part number. There may be intentional omission of a Ref No in a consist list as information is updated to reflect the latest serviceable part numbers.

11. INDENTED PART NAMES

When a part name is indented in a parts list, it is part of (included in) the group or assembly under which it is indented.

12. ILLUSTRATION REFERENCE LETTERS

When necessary, illustrations contain reference letters (A, B, C etc.) that are intended to track lines and harnesses from one point to another. They are also used to show where to reconnect illustrations that have been separated.

13. ABBREVIATIONS AND SYMBOLS

O.D. – Outside Diameter
I.D. – Inside Diameter
A – Not Part Of This Group
B – Use As Required
C – Change From Previous Type
D – Order By The Meter
E – Order By The Centimeter
F – Not Shown
G – Order By The Inch
I – Refer To Hydraulic Information System
M – Metric Part
R – Remfg Part May Be Available
Y – Separate Illustration
Z – Not Serviced Separately

14. DESCRIPTION OF TYPE CHANGES

Type - A type is defined as any configuration change that requires an additional Information Element for an Arrangement, Group, or Assembly. If serial number breaks for types are not available, a type # (Type 1, Type 2, etc.) will be displayed in the caption. These "type" changes are identified with a "C" note (change from previous type) in the Parts List. Only the "types" that apply to this Parts Manual will be included. Additional types may exist causing "C" notes to appear on an Information Element when no other types are shown.

15.<END>

This symbol indicates the end of an information element.

NOTE:

Continuing improvement and advancement of product design may cause changes to your machine which may not be included in this publication. Whenever a question arises regarding your Cat product or this publication, please consult your Cat dealer for the latest available information.

FRAME AND BODY

8E-3299 PLATFORM GP-CAB

PIN 38K1-99999

SMCS-7283 100090751

NOTE	REF NO	GRAPHIC REF	PART NUMBER	QTY	PART NAME (1 2 3 4 5 6 PRODUCT LEVEL)	SEE PAGE
	1	1	3T-3963	1	PLATE AS	
	2	1	5H-3962	25	BOLT (3/8-16X.750IN)	
	3	1	6P-1078	41	WASHER-HARD (9MM THK)	
	4	1	9P-1444	2	SUPPORT AS-FOOT	
	5	1	5P-2229	19	BOLT (1/2-13X1IN)	
		1	9z-	19	WASHER-HARD (14MM THK)	
	6	1	9E-8134		COVER AS-LH	
		1	9F-2979	6	NUT-WELD (3/8-16 THD)	
		1	1F-9189	1	CLIP	
	7	1	7S-2411	4	COVER	
	8		5J-0468	19	SCREW-HEAD (3/8-16X.87SIN)	
	9	1	9E-0974	1	COVER	
		1	9E-8975		GASKET	
	10	1	9E-3248	1		
		1	9E-3250	1	GASKET	
	11	1	3T-3930	1	HANDHOLD	
	12	1	9E-8978	1	COVER AS	
		1	9F-2979	6	NUT-WELD (3/8-16 THD)	
		1	9E-8979	1	GASKET	
	13	1	7T-0131	1	FLOORPLATE AS	
		1	1F-0748	4	NUT-WELD (1/2-13 THD)	
	14	1	7V-8067	1	PLUG-BUTTON	
	15	1	7T-0136	1	PLATE AS	
		1	9F-2979	5	NUT-WELD (3/8-16 THD)	
	16	1	7T-8066	1	COVER	
		1	7T-0779	1	GASKET	
	17	1	3T-3951	1	PLATE AS	
	18	1	9T-9364	4	BOLT (1/4-20X.62SIN)	
M		1	9T-4286	4	WASHER-HARD (2MM THK)	
	19	1	6I-8464	1	FLOOR MAT	
	20	1	9E-8946	1	MODULE AS-OPERATOR	
	21	1	3T-3934	1	HANDHOLD	
	22	1	9P-8571	2	PLUG	
	23	2	9T-9364	4	BOLT (1/4-20X.62SIN)	
M		2	9T-4286	4	WASHER-HARD (2MM THK)	
	24	2	5H-3962	17	BOLT (3/8-16X.750IN)	
	25	2	6P-1078	21	WASHER-HARD (9MM THK)	
	26	2	7T-0136	1	SEAL	
	27	2	7X-0378	2	BOLT (3/4-10X5IN)	
		2	7X-0682	2	WASHER-HARD (6MM THK)	
	28	2	3T-3482	2	PLATE	
	29	2	3T-8290	1	PLATE AS	
		2	7S-4828	6	SPACER	
	30	2	3T-8281	1	SEAL	
	31	2	7S-8017	1	GASKET	
	32	2	7S-8016	1	COVER AS	
		2	2R-2376	2	WASHER	
		2	6P-8626	2	SCREW-KNURLED	
	33	2	9W-3429	1	COVER	
	34	2	8E-9697	1	COVER	
	35	2	9D-3091	8	SCREW-SOCKET HEAD	
	36	2	9W-3142	8	MOUNTING	
	37	2	9W-9527	2	PLATE	
	38	2	7X-0390	2	BOLT (7/8-9X6IN)	
		2	7X-0672	2	WASHER-HARD	
	39	2	4L-8454	4	BOLT (3/8-16X1.0IN)	
	40	2	3T-4788	1	COVER	

FRAME AND BODY

8E-3299 PLATFORM GP-CAB (contd.)

100090751

NOTE	REF NO	GRAPHIC REF	PART NUMBER	QTY	PART NAME (1 2 3 4 5 6 PRODUCT LEVEL)	SEE PAGE
	41	2	6E-2515	1	COVER	
	42	2	7T-0134	1	PLATE	
	43	2	7T-0128	1	GASKET	
	44	2	7S-8724	1	GASKET	
	45	2	7S-8723	1	COVER	
	46	2	6V-1960	2	PLUG-BUTTON	

M-METRIC PART

FRAME AND BODY

8E-3299 PLATFORM GP-CAB (contd.)

100090751

TOP VIEW

GRAPHIC #1 g00036729

FRAME AND BODY

8E-3299 PLATFORM GP-CAB (contd.)

100090751

SECTION A-A

VIEW D-D

SECTION G-G

SECTION B-B

VIEW E-E

SECTION H-H

SECTION C-C

SECTION F-F

SECTION J-J

GRAPHIC #2 g00105874

REMANUFACTURED COMPONENTS

As an option when making repairs consider Cat Remanufactured Components. Components that are available through the Cat Remanufactured Program are identified three ways in the parts book:

- with the letter R in the note field of the parts list
- with an R* at the beginning of the first line of the caption
- with an *R at the end of the first line of the caption

Typical components included in the Remanufacturing Program include:

ALTERNATORS
CONNECTING RODS
CRANKSHAFTS - UNDERSIZE
CRANKSHAFTS - UPGRADE TO NEW
CYLINDER HEADS
ELECTRONIC CONTROL MODULES (ECM)
ELECTRONIC SENSORS
FUEL INJECTORS
FUEL NOZZLES
FUEL PUMPS
GOVERNORS
OIL PUMPS
PISTONS
SHORT BLOCKS
STARTERS
TURBOCHARGERS - COMPLETE
TURBOCHARGER CARTRIDGES
WATER PUMPS

Cat Remanufactured engines for many engine arrangements are also available.

SUPPLEMENTAL COOLANT ADDITIVES

CUSTOMER BENEFITS:

Protects against cavitation, foam, erosion, corrosion, and scale buildup in cooling systems.

- Provides measured coolant conditioner.

DESCRIPTION:

Additives deplete from the coolant with normal operation. For this reason, Supplemental Coolant Additives (SCA) must be added to all heavy duty coolants at regular intervals. In addition, when not using a fully formulated, pre-charged antifreeze, like Cat DEAC, an initial charge of SCA must be added to the cooling system. The amount of SCA added to the system is dependent on the capacity of the system.

The SCA for initial fill is provided as a liquid. SCA's for maintenance intervals are available in liquid form and as a spin-on element. (No Spin-on available for 3600 Family of Engines)

NOTE:

The amount of SCA added at initial fill is not the same as the amount added at maintenance intervals.

The coolant additive elements can be used with any ethylene or propylene glycol type antifreeze which meets ASTM D4985 or ASTM D5345 Specifications.

NOTE:

For use with standard heavy duty coolant only, not for use with Extended Life Coolant.

PARTS NEEDED:

Cooling System Capacity		Liquid SCA at Initial Fill	Liquid SCA at Maintenance*	Spin-on SCA Maintenance Element*
Liters	Gallons			
22-30	(6-8)	3P-2044 (1)	6V-3542 (1)	111-2370 (1)
30-38	(8-10)	3P-2044 (1) 6V-3542 (1)	111-2372 (1)	111-2369 (1)
38-49	(10-13)	3P-2044 (1) 8T-1589 (1)	111-2372 (1)	111-2369 (1)
49-64	(13-17)	3P-2044 (2)	8T-1589 (1)	9N-3368 (1)
64-83	(17-22)	3P-2044 (2) 8T-1589 (1)	111-2372 (1) 6V-3542 (1)	111-2371 (1)
83-114	(22-30)	3P-2044 (3) 8T-1589 (1)	3P-2044 (1)	9N-3718 (1)
114-163	(30-43)	3P-2044 (5)	3P-2044 (1) 6V-3542 (1)	111-2371 (2)
163-242	(43-64)	3P-2044 (8)	3P-2044 (2)	9N-3718 (2)

* Normal maintenance period is 250 hrs. See your Operation and Maintenance Manual for complete coolant maintenance instructions.

( ) Indicates quantity required.

MAINTENANCE PARTS

DESCRIPTION	PART NUMBER	QTY	WHERE USED	PAGE
AIR INLET AND EXHAUST SYSTEM				
ELEMENT (PRIMARY)	479-8989	1	AIR CLEANER GP	86
ELEMENT (SECONDARY)	479-8991	1	AIR CLEANER GP	86
BASIC ENGINE				
GASKET (VALVE COVER)	388-0536	1	COVER GP-VALVE MECHANISM	21
COOLING SYSTEM				
CAP AS-COOLANT TANK	251-3227	1	COOLING GP	73
		1	COOLING GP	75
CONNECTION AS (INCLUDES TEMPERATURE REGULATOR)	367-1817	1	CONNECTION GP-WATER	69
GASKET-WATER REGULATOR	281-8744	1	CONNECTION GP-WATER	69
PLUG-DRAIN (RADIATOR)	355-0468	1	RADIATOR & HYD OIL COOLER GP	82
SCREEN AS-RADIATOR	508-6299	1	SCREEN GP-RADIATOR	85
	508-6300	2	SCREEN GP-RADIATOR	85
ELECTRICAL AND STARTING SYSTEM				
BATTERY (12-VOLT, MAINTENANCE FREE)	263-9574	2	BATTERY & MTG GP-COLD WEATHER	133
BELT-SERPENTINE	350-8742	1	ALTERNATOR GP-CHARGING	131
CAP AS-FILLER (7/8-9-THD)	123-1373	6	BATTERY & MTG GP-COLD WEATHER	133
FUSE (10-AMPERE)	113-8490	10	WIRING GP-CAB	237
FUSE (100-AMPERE)	378-1012	2	HOLDER AS-FUSE	187
FUSE (125-AMPERE)	425-9809	2	HOLDER AS-FUSE	187
FUSE (15-AMPERE)	113-8491	13	WIRING GP-CAB	237
FUSE (150-AMPERE)	510-8931	2	HOLDER AS-FUSE	187
FUSE (20-AMPERE)	113-8492	2	WIRING GP-CAB	237
FUSE (25-AMPERE)	113-8493	4	WIRING GP-CAB	237
FUSE (30-AMPERE)	124-3548	2	WIRING GP-CAB	237
FUSE (30-AMPERE) (KEEP ALIVE)	124-3548	1	WIRING GP-CAB	230
FUSE (5-AMPERE)	141-2759	9	WIRING GP-CAB	237
FUSE (70-AMPERE)	455-2302	2	HOLDER AS-FUSE	187
FUSE AS (KEEP ALIVE)	484-9066	1	WIRING GP-CAB	230
GLOW PLUG (24-VOLT)	462-2235	6	STARTING AID GP	221
KEY (BATTERY DISCONNECT)	8H-5306	1	SWITCH GP-DISCONNECT	225
LAMP AS-FLOOD (9-32-VOLT)	524-8522	2	KIT-LIGHTING	191
	526-4905	3	KIT-LIGHTING	191
LAMP AS-INDICATOR (12-VOLT, 24-VOLT)	456-0632	1	LIGHTING GP-CAB	195
FUEL SYSTEM				
CAP AS-FUEL (LOCKABLE, VENTED)	349-7059	1	TANK GP-FUEL	125
		1	TANK GP-FUEL	127
ELEMENT-WATER SEPARATOR	523-4987	1	FILTER GP-WATER SEP & FUEL	101
FILTER AS-WATER SEP & FUEL (ULTRA HIGH EFFICIENCY)	438-5386	1	PUMP GP-FUEL PRM & PRIM FILTER	119

MAINTENANCE PARTS

DESCRIPTION	PART NUMBER	QTY	WHERE USED	PAGE
FILTER ELEMENT-FUEL	360-8960	1	FILTER GP-FUEL	99
FILTER ELEMENT-FUEL (SECONDARY)	509-5694	1	FILTER GP-WATER SEP & FUEL	101
GASKET	363-4122	1	TANK GP-FUEL	125
		1	TANK GP-FUEL	127
STRAINER AS-FUEL (FLOAT GAUGE)	303-9933	1	TANK GP-FUEL	125
		1	TANK GP-FUEL	127
HYDRAULIC SYSTEM				
BREATHER	4H-6112	1	DRIVE GP-SWING	414
BREATHER AS (SWING DRIVE)	227-6221	1	DRIVE GP-SWING	414
FILTER ELEMENT AS-OIL (HYDRAULIC)	216-6676	1	FILTER GP-OIL	415
FILTER ELEMENT-OIL (HYDRAULIC RETURN) (HYDRAULIC RETURN)	491-5241	1	FILTER GP-OIL	416
FILTER GP-OIL (HYDRAULIC CASE DRAIN)	491-6075	1	TANK & FILTER GP-HYDRAULIC	513
KEY	123-2008	2	MOTOR GP-TRAVEL	497
PLUG-DRAIN	9J-7031	1	TANK & FILTER GP-HYDRAULIC	513
SCREEN-FILTER	119-5398	1	VALVE GP-RELIEF	538
LUBRICATION SYSTEM				
CAP AS-ENGINE OIL FILLER	369-3869	1	GAUGE GP-OIL LEVEL (DIPSTICK)	58
		1	GAUGE GP-OIL LEVEL (DIPSTICK)	61
FILTER ELEMENT-ENGINE OIL	322-3155	1	FILTER GP-ENGINE OIL	56
OPERATOR STATION				
BLADE AS-WIPER	488-6509	1	WIPER GP-WINDOW	677
CAP AS-FILLER (WINDOW WASHER)	178-5431	1	WASHER GP-WINDOW	670
DRYER AS-REFRIGERANT (RECEIVER)	176-1902	1	LINES GP-AIR CONDITIONER	636
		1	LINES GP-AIR CONDITIONER	639
FILTER AS-AIR	488-6446	1	DUCT GP-CAB AIR	622
RELAY (AIR CONDITIONER, HEATER)	420-2380	2	AIR CONDITIONER GP	583
SEAT BELT GP (RETRACTABLE, 2-IN)	526-8600	1	SEAT GP	662
		1	SEAT GP	663

INDEX

NAME PAGE

A

ACCUMULATOR GP-HYDRAULIC–CHARGED. . . 378
379
ADJUSTER GP-BUCKET–B-FAMILY. 567
AIR CLEANER GP 86
87
AIR CONDITIONER & MOUNTING GP. 581
AIR CONDITIONER GP 583
ALARM GP-TRAVEL 129
ALARM GP-TRAVEL–INSTALLATION. 130
ALTERNATOR GP-CHARGING 131
ALTERNATOR GP-CHARGING (24-VOLT, 145-AMPERE) 131
ANTENNA & MOUNTING GP–PRODUCT LINK 631 SATELLITE. 132
ARMREST GP 585
586

B

BATTERY (12-VOLT, MAINTENANCE FREE) . . . 133
BATTERY & MTG GP-COLD WEATHER 133
BELT TENSIONER GP. 15
BELT-SERPENTINE. 131
BLADE AS-WIPER. 677
BOOM AR 547
BOOM AR-REACH–HEAVY DUTY 547
BOOM GP 548
BOOM GP–SUPER LONG REACH. 550
BOX & MOUNTING GP 301
BOX GP-STORAGE. 302
BRACKET & MTG GP-CAB–GRADE CONTROL 587
BRACKET GP-MOUNTING 16
17
134
588
BRACKET GP-SUPPORT 121
123
BREATHER 414
BREATHER AS (SWING DRIVE) 414
BRIDGE GP-VALVE 52
BUCKET & ADJUSTER GP–HEAVY-DUTY SPADE, B-FAMILY 568
BUCKET & ADJUSTER GP–HEAVY-DUTY, B-FAMILY 568
BUCKET AR-DITCH CLEANING–A-FAMILY 569
BUCKET AR-HEAVY DUTY–B-FAMILY 569
570
BUCKET AS-HEAVY DUTY SPADE–B-FAMILY 573
BUCKET AS-HEAVY DUTY–B-FAMILY 571
572
BUCKET GP-DITCH CLEANING–A-FAMILY 574
BUMPER GP-FRONT 304

NAME PAGE

C

CAB GP 589
591
592
593
594
595
CAB GP–INTERIOR. 592
CABLE GP-GROUND–ELECTRICAL. 135
CAMERA & MOUNTING GP–FRONT. 142
CAMERA & MOUNTING GP–FRONT GUARD . . 143
CAMERA & MOUNTING GP–LEFT SIDE 141
CAMERA & MOUNTING GP–REAR VIEW. 139
CAMERA & MOUNTING GP–RIGHT SIDE VIEW 140
CAMERA AR–360 VISIBILITY. 144
CAMERA GP. 142
143
CAMERA GP (12-VOLT) 139
140
141
CAMSHAFT GP 18
CAP AS-COOLANT TANK. 73
75
CAP AS-ENGINE OIL FILLER 58
61
CAP AS-FILLER (7/8-9-THD) 133
CAP AS-FILLER (WINDOW WASHER) 670
CAP AS-FUEL (LOCKABLE, VENTED) 125
127
COMMON AR 1
COMPRESSOR & MTG GP-REFRIG. 596
CONDENSER & MTG GP-REFRIGERANT. 597
598
CONDENSER GP-REFRIGERANT 599
CONNECTING ROD GP 43
45
CONNECTION AS (INCLUDES TEMPERATURE REGULATOR) 69
CONNECTION GP-AIR. 92
CONNECTION GP-FUEL 96
CONNECTION GP-HEATER 68
CONNECTION GP-WATER 69
CONSOLE GP 600
CONSOLE GP-OPERATOR. 602
604
605
607
CONSOLE GP-OPERATOR–LH 608
CONTROL & MTG GP-COMMUNICATION–PRODUCT LINK. 145
CONTROL & MTG GP-COMMUNICATION–PRODUCT LINK 631 SATELLITE 146
CONTROL & MTG GP-ELECTRONIC 147
CONTROL & MTG GP-MACHINE. 148
CONTROL & MTG GP-PEDAL 610
CONTROL AR-AUXILIARY–2-WAY FLOW, 1-PUMP, ELEC CONT 380
CONTROL AR-AUXILIARY–JOYSTICK, SLIDERS. 380

INDEX

NAME PAGE

CONTROL AR-QUICK COUPLER 575
CONTROL AS-PISTON PUMP 381
CONTROL GP-COMMUNICATION (ELECTRONIC) 145
CONTROL GP-ELECTRONIC 148
CONTROL GP-ENGINE ELECTRONIC 149
CONTROL GP-PEDAL 633
CONTROL GP-UNPROGRAMMED 147
149
CONTROL GP-UNPROGRAMMED–PRODUCT LINK ELITE 631 SATELLITE 150
CONVERTER & MOUNTING GP-POWER 151
COOLER GP-ENGINE OIL 70
72
COOLING GP 73
75
CORE AS-AFTERCOOLER 82
CORE AS-FUEL COOLER 82
CORE AS-OIL COOLER 82
CORE AS-RADIATOR 82
COUNTERWEIGHT AS 305
COUPLER AR-QUICK–B-LINKAGE 575
COUPLER GP-QUICK–B-LINKAGE 576
COUPLING GP-FLEXIBLE 382
COUPLING GP-PUMP 383
COVER AS-SOUND SUPPRESSION 306
307
COVER GP-ACCESS (PILOT) 529
COVER GP-CAB 612
614
616
617
618
COVER GP-CONSOLE 619
COVER GP-HOOD 308
COVER GP-PUMP 384
COVER GP-SOUND SUPPRESSION 19
20
309
COVER GP-VALVE END–LH 385
COVER GP-VALVE END–RH 386
COVER GP-VALVE MECHANISM 21
CRANKSHAFT GP 22
CYLINDER & LINES GP-BOOM–LH 387
CYLINDER & LINES GP-BOOM–RH 388
389
CYLINDER & LINES GP-BUCKET 390
391
CYLINDER & LINES GP-STICK 393
394
CYLINDER & LINES GP-STICK–SUPER LONG REACH 395
CYLINDER & SEAL GP-BOOM 396
CYLINDER & SEAL GP-BUCKET 398
400
CYLINDER & SEAL GP-STICK 402
405
407
CYLINDER AR-BOOM 409
CYLINDER BLOCK AS 24
CYLINDER BLOCK GP 25
CYLINDER GP-COUPLER 410
CYLINDER HEAD AS 26
CYLINDER HEAD GP 27

D

DISTRIBUTION AR 2
3
4
5
DOOR & MTG GP-ACCESS–AIR CLEANER, BATTERY 311
DOOR & MTG GP-ACCESS–DOOR WITHOUT CAMERA 310
DOOR GP-ACCESS 313
314
DOOR GP-ACCESS–AIR CLEANER, BATTERY 316
DOOR GP-ACCESS–BATTERY 315
DOOR GP-ACCESS–PUMP COMPARTMENT . . . 318
DOOR GP-ACCESS–RADIATOR 312
317
DOOR GP-CAB 620
DRAIN GP-ENGINE OIL 28
29
DRIVE & MTG GP-SWING 411
DRIVE GP-FAN 30
DRIVE GP-FINAL–WITH MOTOR, LH 281
288
DRIVE GP-FINAL–WITH MOTOR, RH 285
292
DRIVE GP-FINAL–WITH MOTOR, SPROCKET, LH 280
296
DRIVE GP-FINAL–WITH MOTOR, SPROCKET, RH 284
297
DRIVE GP-FINAL–WITHOUT MOTOR, LH 282
289
DRIVE GP-FINAL–WITHOUT MOTOR, RH 286
293
DRIVE GP-SWING 412
414
DRYER AS-REFRIGERANT (RECEIVER) 636
639
DUCT GP-CAB AIR 622
623

E

EDGE GP-CUTTING 578
ELECTRICAL AR 152
ELECTRONICS GP-MACHINE 153
ELECTRONICS GP-MACHINE–CONTROL 153
ELECTRONICS GP-MACHINE–GRADE CONTROL 153
ELECTRONICS GP-MACHINE–PRIMARY 152
ELECTRONICS GP-MACHINE–SECONDARY . . . 152

NAME PAGE

ELECTRONICS GP-MACHINE–SECURITY SYSTEM . . . 153
ELECTRONICS GP-MONITOR . . . 153, 154
ELECTRONICS GP-MONITOR–PRODUCT LINK . . . 154, 155
ELECTRONICS GP-MONITOR–TELEMATICS . . . 155
ELECTRONICS GP-MONITOR–TELEMATICS SATELLITE . . . 154
ELEMENT (PRIMARY) . . . 86
ELEMENT (SECONDARY) . . . 86
ELEMENT-WATER SEPARATOR . . . 101
ENCLOSURE AR . . . 319
ENGINE AR . . . 7
ENGINE AR-COMPLETE . . . 7
ENGINE AR-PRIMARY . . . 8, 9, 10, 12, 13
EXCAVATOR AR . . . 5

F

FAN GP-SUCTION . . . 77
FASTENER GP-DAMPER & PULLEY . . . 31
FASTENER GP-WIRING HARNESS . . . 156
FILLER GP-ENGINE OIL . . . 53
FILM GP . . . 679, 683, 689, 690
FILM GP–CAB . . . 681, 687
FILM GP–ENGINE . . . 678
FILM GP–GRADE CONTROL DISPLAY . . . 686
FILM GP–INTERNATIONAL . . . 680
FILM GP–JOYSTICK . . . 688
FILM GP–REACH BOOM DECAL . . . 685
FILM-IDENTIFICATION (CAT 320, LH) . . . 683
FILM-IDENTIFICATION (CAT 320, RH) . . . 683
FILM-IDENTIFICATION (CAT) . . . 693, 697
FILM-IDENTIFICATION (FUSE, RELAY PANEL) . . . 683
FILM-IDENTIFICATION (HYDRAULIC OIL SYSTEM) . . . 693, 697
FILM-IDENTIFICATION (LIFT EYE LOCATION) . . . 693, 697
FILM-IDENTIFICATION (LUBRICATION CHART, READ OMM) . . . 697
FILM-IDENTIFICATION (OIL FILL, READ OMM) . . . 58, 61, 683
FILM-IDENTIFICATION (OPERATOR CONTROL PEDALS) . . . 633
FILM-IDENTIFICATION (REFLECTIVE, RED, LH) . . . 693, 697
FILM-IDENTIFICATION (REFLECTIVE, RED, RH) . . . 693, 697
FILM-IDENTIFICATION (RH) . . . 693, 697
FILM-IDENTIFICATION (TIE-DOWN) . . . 693, 697
FILM-INFORMATION (BRAZIL) . . . 690
FILM-INFORMATION (LUBRICATION CHART, READ OMM) . . . 693
FILM-INFORMATION (PRODUCT LINK, READ OMM) . . . 681
FILM-INFORMATION (READ OMM) . . . 689
FILM-INSTRUCTION (ALTERNATE EXIT) . . . 681
FILM-INSTRUCTION (ENGINE SHUTOFF) . . . 681
FILM-INSTRUCTION (FUEL, READ OMM) . . . 683
FILM-INSTRUCTION (NO STEP) . . . 693, 697
FILM-INSTRUCTION (PULL RING, ALTERNATE EXIT) . . . 681
FILM-NOTICE (SHIPPING) . . . 697
FILM-WARNING (ACCUMULATOR PRESSURE) . . . 693, 697
FILM-WARNING (CRUSH HAZARD, READ OMM, INTL) . . . 681
FILM-WARNING (CRUSH HAZARD, STAY BACK, INTL) . . . 693, 697
FILM-WARNING (DO NOT OPERATE, READ OMM) . . . 681
FILM-WARNING (DO NOT SPRAY, READ OMM) . . . 678, 691
FILM-WARNING (FRONT GUARD) . . . 343
FILM-WARNING (FRONT WINDOW, READ OMM, INTL) . . . 681
FILM-WARNING (HIGH PRESSURE, READ OMM) . . . 331, 336
FILM-WARNING (HOT FLUID UNDER PRESS) . . . 693, 697
FILM-WARNING (HOT SURFACE, HANDS CLEAR, INTL) . . . 693, 697
FILM-WARNING (JUMP START, READ OMM, INTL) . . . 693, 697
FILM-WARNING (LIFTING EYE, READ OMM) . . . 693, 697
FILM-WARNING (MACHINE SWING, CRUSHING) . . . 693, 697
FILM-WARNING (NO ETHER SPRAY/AIR INTK, INTL) . . . 693, 697

INDEX

NAME PAGE

FILM-WARNING (NO WELD, NO DRILL, READ OMM). 681
FILM-WARNING (PRODUCT LINK RADIO, INTL) 681
FILM-WARNING (READ OMM) 576
FILM-WARNING (ROPS, READ OMM) 681
FILM-WARNING (TOP GUARD). 343
FILM-WARNING (UNIVERSAL WARNING) 678 691
FILTER & LINES GP-FUEL 97
FILTER & MTG GP-ENGINE OIL 54
FILTER AS-AIR. 622
FILTER AS-WATER SEP & FUEL (ULTRA HIGH EFFICIENCY). 119
FILTER ELEMENT AS-OIL (HYDRAULIC) 415
FILTER ELEMENT-ENGINE OIL 56
FILTER ELEMENT-FUEL 99
FILTER ELEMENT-FUEL (SECONDARY) 101
FILTER ELEMENT-OIL (HYDRAULIC RETURN) (HYDRAULIC RETURN) 416
FILTER GP-ENGINE OIL. 56
FILTER GP-FUEL. 99 100
FILTER GP-OIL (HYDRAULIC CASE DRAIN) . . . 513
FILTER GP-OIL–HYDRAULIC 415
FILTER GP-OIL–HYDRAULIC RETURN. 416
FILTER GP-WATER SEP & FUEL 101
FINAL DRIVE & MOUNTING GP 298 299
FLOOR MAT 624
FLOOR MAT GP 624
FLYWHEEL GP 32
FRAME AS-UNDERCARRIAGE 355
FRAME AS-UNDERCARRIAGE–LONG. 354
FRAME GP-UPPER. 320 321 322
FUMES DISPOSAL GP 57
FUSE (10-AMPERE) 237
FUSE (100-AMPERE) 187
FUSE (125-AMPERE) 187
FUSE (15-AMPERE) 237
FUSE (150-AMPERE) 187
FUSE (20-AMPERE) 237
FUSE (25-AMPERE) 237
FUSE (30-AMPERE) 237
FUSE (30-AMPERE) (KEEP ALIVE). 230
FUSE (5-AMPERE) 237
FUSE (70-AMPERE) 187
FUSE AS (KEEP ALIVE). 230

G

GASKET 125 127
GASKET (VALVE COVER) 21
GASKET-WATER REGULATOR. 69
GAUGE AS-OIL LEVEL (DIPSTICK). 58 60 61
GAUGE GP-OIL LEVEL (DIPSTICK) 60
GAUGE GP-OIL LEVEL (DIPSTICK)–FILLER. 58 61
GAUGE GP-SIGHT–HYDRAULIC OIL LEVEL . . . 417
GAUGE-OIL LEVEL (SWING DRIVE). 414
GEAR & BEARING GP-SWING. 323 324
GLOW PLUG (24-VOLT) 221
GRADE CONTROL AR 157
GRADE CONTROL AR–BOOM 157
GRADE CONTROL AR–INSTALLATION 157
GRADE CONTROL AR–LASER RECEIVER. 158
GRADE CONTROL AR–REACH 157
GRADE CONTROL AR–STICK. 158
GROMMET & MTG GP-WINDOW WASHER. . . . 625
GUARD & MTG GP-CAB 626
GUARD GP-BOTTOM. 326
GUARD GP-BOTTOM–HEAVY-DUTY 327
GUARD GP-SWIVEL. 328
GUARD GP-TRACK GUIDE–FULL LENGTH 356
GUARD GP-TRACK GUIDE–SEGMENTED. 357
GUARD GP-TRAVEL MOTOR 358
GUARD GP-TRAVEL MOTOR–HEAVY DUTY . . . 359

H

HANDHOLD GP–MOUNTING 329
HANDLE GP-DOOR (LH). 674
HANDLE GP-DOOR (RH) 674
HANDRAIL GP 330
HARNESS AS-BOX. 143
HARNESS AS-CAB 236
HARNESS AS-CAB (RH). 202
HARNESS AS-CAB (RH) (RH). 200
HARNESS AS-CAB–FLOODLIGHTS 160
HARNESS AS-CAB–GRADE CONTROL DISPLAY. 159
HARNESS AS-CAB–LH 159
HARNESS AS-CHASSIS 148 160 161 162 163 166 167 168
HARNESS AS-CHASSIS–FUEL FILTER 170
HARNESS AS-CHASSIS–GRADE CONTROL . . . 165
HARNESS AS-CONSOLE 171 172 173
HARNESS AS-CONTROL 174
HARNESS AS-CONTROL (LASER RECEIVER) 269 270
HARNESS AS-CONTROL–FAN 173
HARNESS AS-CONTROL–GRADE CONTROL . . 174
HARNESS AS-ENGINE 175 176
HARNESS AS-FRONT–GRADE CONTROL 177

INDEX

NAME PAGE

HARNESS AS-HEATER & AIR COND 583
HARNESS AS-LIGHTING 178
179
195
HARNESS AS-MONITOR 143
180
181
243
HARNESS AS-MONITOR–GRADE CONTROL . . . 180
HARNESS AS-PANEL 181
HARNESS AS-PLATFORM 182
HARNESS AS-SENSOR 175
182
184
HARNESS AS-SENSOR–GRADE CONTROL 183
HARNESS AS-SENSOR–STICK 183
HARNESS AS-SOLENOID 184
HARNESS AS-STARTING AID 221
HARNESS AS-VALVE 185
HARNESS AS-WIRING 175
HARNESS AS-WIRING–ENGINE 186
HATCH GP-ROOF 627
628
629
HOLDER AS-FUSE–BLOCK 187
HOLDER GP-CUP 630
HOOD & GUARD GP 331
335
336
HOOD GP-ENGINE 341
HORN GP-ELECTRIC 631
HOUSING GP-FLYWHEEL 33
HOUSING GP-FRONT 34
HYDRAULIC AR 418

I

IDLER GP-FRONT 360
361
IDLER GP-FRONT–LH 362
IDLER GP-FRONT–RH 363
INDICATOR AS-AIR FILTER CHANGE 87
INJECTOR GP-FUEL 103
104
INSTALLATION AR-COMMUNICATION 188
INSTALLATION AR-COMMUNICATION–PRODUCT LINK 188
INSTALLATION AR-COMMUNICATION–PRODUCT LINK 631 188
INSTALLATION AR-ENGINE 13
14
INSTALLATION AR-RADIO–INSTALLATION 632
INSTALLATION AR–CAMERA 342
INSTL AR-BUMPER & WASHER LINES 632
INSTL AR-MACHINE SECURITY SYS–SECURITY SYSTEM 189
INSTL GP-MACHINE SECURITY SYS–MOUNTING 190

NAME PAGE

J

JET GP-PISTON COOLING 36

K

KEY 497
KEY (BATTERY DISCONNECT) 225
KIT-BUMPER 342
KIT-GUARD 343
344
KIT-GUARD–SWIVEL 342
KIT-LIGHTING 191
KIT-LIGHTING COVER 632
KIT-PEDAL 633
KIT-ROOF HATCH 634
KIT-SEAL 418
KIT-WINDOW 634
KIT-WINDOW WIPER 635
KIT-WIRING 191
192

L

LAMP AS-FLOOD (9-32-VOLT) 191
LAMP AS-INDICATOR (12-VOLT, 24-VOLT) 195
LAMP GP-DOME 193
LAMP GP-DOME (12/24-VOLT) 230
LIFTING GP-ENGINE 37
LIGHTING AR-FLOOD 194
LIGHTING AR-FLOOD–REACH BOOM 194
LIGHTING GP-CAB 195
LIGHTING GP-FLOOD–CAB 202
LIGHTING GP-FLOOD–CAB, LED 199
200
LIGHTING GP-FLOOD–CHASSIS 196
LIGHTING GP-FLOOD–REACH BOOM, LH 197
LIGHTING GP-FLOOD–REACH BOOM, RH 198
LINER GP-SOUND SUPPRESSION 345
LINES AR-BOOM–TUBE 418
419
LINES GP-AIR 88
LINES GP-AIR CONDITIONER 636
639
LINES GP-AUXILIARY HYDRAULIC–REACH BOOM, HIGH PRESSURE 422
LINES GP-AUXILIARY HYDRAULIC–STICK, HIGH PRESSURE 420
LINES GP-BOOM CYLINDER 428
430
LINES GP-BOOM CYLINDER–LH 432
LINES GP-BOOM CYLINDER–RH 434
436
LINES GP-BOOM–REACH 424
LINES GP-BOOM–SUPER LONG REACH 426
LINES GP-BUCKET CYLINDER 437
438
439
440

INDEX

NAME PAGE

LINES GP-COOLING. 78
LINES GP-COUPLER–B-LINKAGE 443
LINES GP-COUPLER–REACH BOOM 444
LINES GP-COUPLER–STICK 441
442
LINES GP-CYLINDER–BOOM. 446
LINES GP-DRAIN–HYDRAULIC OIL. 448
LINES GP-ENGINE OIL DRAIN–ENGINE OIL SUMP 63
LINES GP-FRONT 449
451
452
460
LINES GP-FRONT–2-WAY FLOW, 1-PUMP, ELEC CONT 455
461
LINES GP-FRONT–QUICK COUPLER 458
LINES GP-FRONT–TOOL 454
LINES GP-FUEL. 105
106
107
112
LINES GP-FUEL INJECTION 114
115
LINES GP-GREASE 553
LINES GP-GREASE–STICK. 552
LINES GP-GREASE–SUPER LONG REACH 555
LINES GP-HYDRAULIC 464
LINES GP-HYDRAULIC OIL COOLER–REAR . . . 466
LINES GP-OIL COOLER 79
LINES GP-OIL COOLER–TOOL CONTROL SYSTEM 80
LINES GP-OIL–TOOL CONTROL SYSTEM 468
LINES GP-PILOT 471
473
LINES GP-PILOT–CONTROL VALVE 469
LINES GP-PILOT–HEAVY LIFT 475
LINES GP-PILOT–LIFT MODE, TOOL 477
LINES GP-PUMP 479
481
LINES GP-STICK 483
LINES GP-STICK CYLINDER. 484
485
LINES GP-TRAVEL MOTOR–LONG UNDERCARRIAGE. 486
488
LINES GP-TURBOCHARGER AIR 90
LINES GP-TURBOCHARGER OIL. 65
LINES GP-WASHER 642
LINES GP-WINDOW WASHER 677
LINK AS-TRACK. 364
LINKAGE GP-BUCKET–B1-FAMILY, WITH LIFTING EYE 556
LINKAGE GP-BUCKET–WITH LIFTING EYE 557
LITERATURE GP 643
LOCK GP-TRANSPORT 558

M

MANIFOLD GP-EXHAUST 91
MANIFOLD GP-INLET. 92
MIRROR AR 643
MIRROR GP 589
644
MIRROR GP-REAR VIEW. 645
MODULE GP-CAB WIRING 204
MODULE GP-DISPLAY. 647
MODULE GP-DISPLAY–8-IN TOUCH SCREEN. 646
MONITOR & MTG GP-OPERATOR 648
651
MONITOR & MTG GP-OPERATOR–10 INCH TOUCHSCREEN. 649
MONITOR & MTG GP-OPERATOR–8-IN, GRADE CONTROL 650
MONITOR & MTG GP-OPERATOR–GRADE CONTROL 652
MONITOR AR 653
MONITOR AR–10 INCH, GRADE CONTROL . . . 653
MOTOR & MTG GP-SWING. 490
MOTOR & MTG GP-TRAVEL. 491
492
MOTOR GP-SWING 493
494
MOTOR GP-TRAVEL 496
499
MOUNTING GP-ALTERNATOR 38
MOUNTING GP-CAB–PLATFORM. 654
MOUNTING GP-CONTROL 205
MOUNTING GP-COUNTERWEIGHT 346
MOUNTING GP-ELECTRONIC CONTROL 206
MOUNTING GP-ENGINE 39
40
MOUNTING GP-MAIN CONTROL VALVE 501
MOUNTING GP-ROPS 655
MOUNTING GP-STARTING MOTOR 41
MOUNTING GP-WIRING 207
MOUNTING GP-WIRING–HAMMER RETURN FILTER 208
MUFFLER GP 93

O

OIL CHANGE AR-HIGH SPEED 66
OPERATOR AR 656
OPERATOR AR-ENCLOSED ROPS. 656
657
OPTION AR-HYDRAULIC 6

P

PADLOCK GP. 121
123
PAN GP-OIL 42
PANEL GP-SWITCH 209
PIN GP-EXCAVATOR 560
PIN GP–COUPLER 559
PISTON & ROD GP 43
45

NAME PAGE

PISTON GP 43
PLATE & FILM GP 691
PLATE & FILM GP–EXTERIOR, INTERNATIONAL 697
PLATE & FILM GP–OUTSIDE 693
PLATE GP 347
PLATE GP (SERIAL NUMBER) 10
PLATE GP-SERIAL NUMBER 701
PLATFORM GP-OPERATOR 658
PLUG GP-CONNECTOR (64-PIN) 175
PLUG GP-CONTROL VALVE–MOUNTING 502
PLUG GP-CYLINDER BLOCK 47
PLUG GP-OIL PAN 48
PLUG-DRAIN 513
PLUG-DRAIN (RADIATOR) 82
PULLER-FUSE 236
PULLEY GP-CRANKSHAFT 49
PUMP & MTG GP-MAIN HYDRAULIC 503
PUMP GP-ENGINE OIL 67
PUMP GP-FUEL INJECTION 116 117
PUMP GP-FUEL PRIMING 118
PUMP GP-FUEL PRM & PRIM FILTER 119
PUMP GP-MAIN HYDRAULIC–DOUBLE PISTON 504
PUMP GP-WATER 81

R

RADIATOR & HYD OIL COOLER GP 82
RADIO GP 659
RADIO GP–MOUNTING 659
RAIL GP-FUEL 120
RECEIVER GP-LASER–GRADE CONTROL 210
RELAY (24-VOLT) 635
RELAY (24-VOLT) (BOOM LIGHTS) 237
RELAY (24-VOLT) (CAB LIFT PUMP) 237
RELAY (24-VOLT) (CHASSIS LIGHTS) 237
RELAY (24-VOLT) (DEF PUMP) 230
RELAY (24-VOLT) (ETHER) 230
RELAY (24-VOLT) (FUEL PUMP) 230
RELAY (24-VOLT) (HORN) 237
RELAY (24-VOLT) (KEEP ALIVE) 230
RELAY (24-VOLT) (KEY) 230
RELAY (24-VOLT) (MAIN POWER) 230
RELAY (24-VOLT) (POWER) 237
RELAY (24-VOLT) (PRIMING PUMP) 230
RELAY (70-AMPERE) (MAIN) 230
RELAY (AIR CONDITIONER, HEATER) 583
RELAY AS (24-VOLT) (GRADE CONTROL) 249
ROCKER ARM GP 50 52
ROLLER AR-TRACK & CARRIER 365 366
ROLLER GP-TRACK CARRIER 367
ROLLER GP-TRACK-SINGLE FLANGE 368 369
ROTATING GP-MOTOR 499
ROTATING GP-PUMP 506 507

S

SCREEN AS-RADIATOR 85
SCREEN GP-RADIATOR 85
SCREEN GP-SUN 660
SCREEN-FILTER 538
SEAL GP-DUO-CONE 368
SEAT BELT GP 661
SEAT BELT GP (RETRACTABLE, 2-IN) 662 663
SEAT GP 662 663
SEAT GP–DELUXE 664
SENDER AS-FUEL LEVEL 125 127
SENSOR (FUEL RAIL PRESSURE) 120
SENSOR & MTG GP-POSITION–BODY TILT . . . 211 215
SENSOR & MTG GP-POSITION–BUCKET 214
SENSOR & MTG GP-POSITION–GRADE CONTROL, BOOM 212
SENSOR & MTG GP-POSITION–GRADE CONTROL, STICK 213
SENSOR AS-POSITION (INERTIAL MEASUREMENT UNIT) 211 212 213
SENSOR AS-POSITION (INTERNAL MEASUREMENT UNIT) 215
SENSOR AS-PRESSURE 101
SENSOR GP-ENGINE 8 10 12 216
SENSOR GP-LIQUID LEVEL 217
SENSOR GP-LIQUID LEVEL (WATER IN FUEL) 101
SENSOR GP-LIQUID LEVEL (WATER IN FUEL) 108
SENSOR GP-POSITION (BUCKET) 214
SENSOR GP-POSITION (SWING) 512
SENSOR GP-PRESSURE 218
SENSOR GP-PRESSURE (ENGINE OIL) 216
SENSOR GP-PRESSURE (FUEL FILTER INLET) 100 101
SENSOR GP-PRESSURE (FUEL FILTER OUTLET) 101
SENSOR GP-PRESSURE (FUEL PRIMING PUMP) 107
SENSOR GP-PRESSURE (HYDRAULIC OIL) . . . 219 428 430 455 462
SENSOR GP-PRESSURE (HYDRAULIC OIL) (1-PUMP, 2-PUMP) 469
SENSOR GP-PRESSURE (HYDRAULIC OIL) (HYDRAULIC PUMP) 458
SENSOR GP-PRESSURE (HYDRAULIC OIL) (STICK CYLINDER, HEAD END) 469

INDEX

NAME PAGE

SENSOR GP-PRESSURE (INLET MANIFOLD AIR) 216
SENSOR GP-PRESSURE–MOUNTING 219
SENSOR GP-SPEED (ENGINE) 216
SENSOR GP-TEMPERATURE (AIR INLET) 87
SENSOR GP-TEMPERATURE (ENGINE COOLANT) 100
SENSOR GP-TEMPERATURE (FUEL) 101
SENSOR-POSITION 512
SENSOR-TEMPERATURE 220
SENSOR-TEMPERATURE (2-PIN) 513
SENSOR-TEMPERATURE (2-PIN) (AIR INLET MANIFOLD) 216
SENSOR-TEMPERATURE (2-PIN) (COOLANT) 216
SHAFT & CPLG GP-PISTON PUMP–MAIN HYDRAULIC 508
SHEET AS-SOUND SUPPRESSION 348
349
350
351
352
SIDECUTTER GP 579
SOFTWARE GP-MACHINE 152
153
SOFTWARE GP-MONITOR 152
153
154
210
646
648
SOFTWARE GP-MONITOR (CONFIGURATION) 155
SOFTWARE GP-MONITOR (SATELLITE RADIO) 150
154
155
SOLENOID 92
SPRING AS-GAS 302
336
343
344
SPRING AS-GAS (ENGINE HOOD) 331
SPRING AS-GAS (HATCH) 627
628
SPROCKET GP 300
STARTING AID GP 221
STARTING MOTOR GP-ELECTRIC 222
223
STEP GP 353
STICK AR-HOE–B1-FAMILY, GRADE CONTROL 562
STICK AR-HOE–REACH 562
STICK AR–SUPER LONG REACH 562
STICK GP-HOE 565
STICK GP-HOE–B1-FAMILY 564
STICK GP-HOE–REACH 563
STRAINER AS-FUEL (FLOAT GAUGE) 125
127
SUPPORT GP-LINES 97
SUPPORT GP-SEAT 666

NAME PAGE

SUSPENSION GP-SEAT–AIR 667
SWASHPLATE GP 509
510
SWITCH AS (HYDRAULIC FILTER BYPASS) . . . 415
SWITCH AS-CONTROL 671
SWITCH AS-CONTROL (CAB) 620
SWITCH AS-DIFF PRESSURE (RETURN FILTER) 513
SWITCH AS-LIMIT 600
SWITCH AS-LIMIT (HYDRAULIC LOCK) 608
SWITCH AS-PRESSURE (REFRIGERANT) 636
639
SWITCH AS-PUSH BUTTON 207
224
SWITCH AS-RELAY (STARTER) 222
SWITCH AS-ROCKER (QUICK COUPLER) 227
SWITCH AS-TOGGLE (SECONDARY SHUTDOWN) 271
SWITCH GP-DISCONNECT–BATTERY 225
SWITCH GP-MAGNETIC–GLOW PLUG RELAY 226
SWITCH GP-POSITION (HYDRAULIC LOCK) . . . 608
SWITCH GP-ROCKER–COUPLER 227
SWITCH GP-ROCKER–TRAVEL ALARM CANCEL 228
SWIVEL & MOUNTING GP 511
SWIVEL GP 512

T

TANK & FILTER GP-HYDRAULIC 513
TANK & MTG GP-FUEL 121
123
TANK & MTG GP-HYDRAULIC 515
TANK GP-COOLANT 75
TANK GP-FUEL 125
127
TANK GP-HYDRAULIC 516
TIP GP-PENETRATION PLUS–K-90 580
TRACK ADJUSTER & RECOIL GP 372
373
TRACK ADJUSTER & RECOIL GP–LH 371
TRACK ADJUSTER & RECOIL GP–RH 370
TRACK AR 374
TRACK GP–2 REQUIRED 376
TRACK GP–2-REQUIRED 374
375
TURBOCHARGER GP 94
95

U

UNDERCARRIAGE AR 377
UNDERCARRIAGE AR–LONG 377

NAME PAGE

V

VALVE & MTG GP-MAIN CONTROL–AUXILIARY 517
VALVE & MTG GP-SOLENOID (CONTROL VALVE) 475, 477
VALVE & MTG GP-SOLENOID (CONTROL VALVE) (BOOSTED AUXILIARY HYDRAULIC FLOW) 458
VALVE & MTG GP-SOLENOID–LOWER 520
VALVE & MTG GP-SOLENOID–ON/OFF 521
VALVE & MTG GP-SOLENOID–UPPER 519
VALVE AR-MAIN CONTROL–AUXILIARY 522
VALVE AR-MAIN CONTROL–HEAVY LIFT 522
VALVE AS-CHECK 458
VALVE AS-RELIEF 494, 499, 525, 530
VALVE GP-CHECK–RETURN 523
VALVE GP-CONTROL 525
VALVE GP-CONTROL–MAIN CONTROL 524
VALVE GP-LOAD CONTROL–DRIFT REDUCTION 527
VALVE GP-MAIN CONTROL–HEAVY LIFT 528, 529
VALVE GP-MANUAL–AUXILIARY, SHUTOFF . . . 533
VALVE GP-PUMP CONTROL 534, 535
VALVE GP-RELIEF 537, 540
VALVE GP-RELIEF–PILOT OPERATED 538
VALVE GP-SOLENOID (12-VOLT) 519, 520, 541, 543
VALVE GP-SOLENOID (24-VOLT) 521, 541, 543
VALVE GP-SOLENOID & MANIFOLD 541, 543
VALVE GP-SOLENOID & MANIFOLD (UPPER) 529
VALVE GP-SOLENOID & PRESS REDC (QUICK COUPLER) 458
VALVE GP-TRAVEL COUNTERBALANCE 544
VISOR GP-PROTECTION 669

W

WASHER GP-WINDOW 670
WINDOW GP-CAB 671, 673, 674, 676
WIPER GP-WINDOW 677
WIRING & MTG GP- MAIN CONT V 229
WIRING GP-CAB 230, 236
WIRING GP-CAB–GRADE CONTROL 235
WIRING GP-CAB–GRADE CONTROL DISPLAY 234
WIRING GP-CHASSIS 239, 244, 245, 252, 254
WIRING GP-CHASSIS–2-WAY FLOW, 1-PUMP, ELEC CONT 251
WIRING GP-CHASSIS–CAMERA 242, 243
WIRING GP-CHASSIS–GRADE CONTROL 249
WIRING GP-CHASSIS–PRODUCT LINK 631, 641 . . . . . 246, 247
WIRING GP-CHASSIS–REAR VIEW CAMERA 241
WIRING GP-CONSOLE 257, 258, 259, 260
WIRING GP-ELECTRONIC CONTROL–JOYSTICK 261
WIRING GP-ENGINE 262, 263
WIRING GP-FAN 265
WIRING GP-FRONT–BOOM 266
WIRING GP-FRONT–GRADE CONTROL 268, 269
WIRING GP-FRONT–GRADE CONTROL, STICK 267, 270
WIRING GP-PLATFORM 271
WIRING GP-SENSOR 273
WIRING GP-SENSOR–VALVE 274
WIRING GP-VALVE 275, 277
WIRING GP-VALVE–COUPLER 278
WIRING GP-VALVE–HEAVY LIFT 279

MACHINE ARRANGEMENT

510-7419 COMMON AR

S/N: BR61-UP

SMCS-7000 **i07434271**

NOTE	PART NUMBER	QTY	PART NAME 1 2 3 4 5 6 (PRODUCT LEVEL)	SEE PAGE
Y	*488-3074*	1	DRIVE & MTG GP-SWING	411
Y	*511-4805*	1	ELECTRICAL AR	152
Y	*490-7871*	1	ELECTRONICS GP-MACHINE	153
Y	*505-7175*	1	ENCLOSURE AR	319
			S/N: BR61-10000	
Y	*556-6467*	1	ENCLOSURE AR	319
			S/N: BR610001-UP	
Y	*514-4877*	1	HYDRAULIC AR	418
Y	*511-4775*	1	INSTALLATION AR-ENGINE	13
			S/N: BR61-10000	
Y	*558-7709*	1	INSTALLATION AR-ENGINE	14
			S/N: BR610001-UP	
Y	*359-2563*	1	LITERATURE GP	643
Y	*520-8301*	1	OPERATOR AR-ENCLOSED ROPS	656
			S/N: BR61-10000	
Y	*549-4726*	1	OPERATOR AR-ENCLOSED ROPS	657
			S/N: BR610001-UP	
Y	*339-4055*	1	PIN GP-EXCAVATOR	560

Y - SEPARATE ILLUSTRATION

<END>

MACHINE ARRANGEMENT

532-9515 DISTRIBUTION AR

S/N: BR61-UP

SMCS-7000 **i07372033**

NOTE	PART NUMBER	QTY	PART NAME 1 2 3 4 5 6 (PRODUCT LEVEL)	SEE PAGE
Y	*490-7671*	1	BOOM AR-REACH (HEAVY DUTY)	547
Y	*488-6816*	1	CONTROL & MTG GP-MACHINE	148
Y	**486-7093**	1	COUNTERWEIGHT AS	305
Y	*490-4179*	1	CYLINDER & LINES GP-BUCKET	391
Y	*490-4143*	1	CYLINDER & LINES GP-STICK	394
Y	*494-4985*	1	CYLINDER AR-BOOM	409
Y	*490-7663*	1	EXCAVATOR AR	5
Y	*521-1034*	1	FILM GP (CAB)	681
Y	*441-3007*	1	FINAL DRIVE & MOUNTING GP	298
Y	*461-7608*	1	FRAME GP-UPPER	320
Y	*489-3466*	1	GEAR & BEARING GP-SWING	324
Y	*516-9880*	1	GRADE CONTROL AR (BOOM)	157
Y	*524-8272*	1	INSTL AR-MACHINE SECURITY SYS	189
Y	*484-8021*	1	INSTL AR-BUMPER & WASHER LINES	632
Y	*513-3210*	1	LINES AR-BOOM (TUBE)	419
Y	*489-2950*	1	LINES GP-FRONT	451
Y	*489-2952*	1	LINES GP-PUMP	481
Y	*521-1038*	1	PLATE & FILM GP (OUTSIDE)	693
Y	*502-7166*	1	INSTALLATION AR-RADIO	632
Y	*529-3052*	1	UNDERCARRIAGE AR	377
Y	*513-3214*	1	WIRING & MTG GP- MAIN CONT V	229

Y - SEPARATE ILLUSTRATION

<END>

532-9518 DISTRIBUTION AR

S/N: BR61-UP

SMCS-7000 **i07474887**

NOTE	PART NUMBER	QTY	PART NAME 1 2 3 4 5 6 (PRODUCT LEVEL)	SEE PAGE
Y	*490-7669*	1	BOOM AR (SUPER LONG REACH)	547
Y	*488-6816*	1	CONTROL & MTG GP-MACHINE	148
Y	**489-3797**	1	COUNTERWEIGHT AS	305
Y	*418-9085*	1	CYLINDER & LINES GP-BUCKET	390
Y	*535-7983*	1	CYLINDER & LINES GP-STICK	395
Y	*494-4985*	1	CYLINDER AR-BOOM	409
Y	*490-7663*	1	EXCAVATOR AR	5
Y	*521-1034*	1	FILM GP (CAB)	681
Y	*441-3007*	1	FINAL DRIVE & MOUNTING GP	298
Y	*507-4836*	1	FRAME GP-UPPER	322
Y	*489-3466*	1	GEAR & BEARING GP-SWING	324
Y	*502-7166*	1	INSTALLATION AR-RADIO (CAN MODULE)	632
Y	*484-8021*	1	INSTL AR-BUMPER & WASHER LINES (CAB WITHOUT LOWER WIPER)	632
Y	*524-8272*	1	INSTL AR-MACHINE SECURITY SYS	189
Y	*513-3208*	1	LINES AR-BOOM (TUBE)	418
Y	*489-2950*	1	LINES GP-FRONT	451
Y	*489-2952*	1	LINES GP-PUMP	481
Y	*521-1038*	1	PLATE & FILM GP (OUTSIDE)	693
Y	*529-3052*	1	UNDERCARRIAGE AR (LONG)	377
Y	*513-3214*	1	WIRING & MTG GP- MAIN CONT V (MOUNTING)	229

Y - SEPARATE ILLUSTRATION

<END>

MACHINE ARRANGEMENT

556-2899 DISTRIBUTION AR

S/N: BR61-UP

SMCS-7000 **i07362517**

NOTE	PART NUMBER	QTY	PART NAME 1 2 3 4 5 6 (PRODUCT LEVEL)	SEE PAGE
Y	*490-7671*	1	BOOM AR-REACH (HEAVY DUTY)	547
Y	*488-6816*	1	CONTROL & MTG GP-MACHINE	148
Y	**486-7093**	1	COUNTERWEIGHT AS	305
Y	*490-4179*	1	CYLINDER & LINES GP-BUCKET	391
Y	*490-4143*	1	CYLINDER & LINES GP-STICK	394
Y	*494-4985*	1	CYLINDER AR-BOOM	409
Y	*490-7663*	1	EXCAVATOR AR	5
Y	*521-1034*	1	FILM GP (CAB)	681
Y	*461-7608*	1	FRAME GP-UPPER	320
Y	*489-3466*	1	GEAR & BEARING GP-SWING	324
Y	*516-9880*	1	GRADE CONTROL AR (BOOM)	157
Y	*524-8272*	1	INSTL AR-MACHINE SECURITY SYS	189
Y	*484-8021*	1	INSTL AR-BUMPER & WASHER LINES	632
Y	*513-3210*	1	LINES AR-BOOM (TUBE)	419
Y	*489-2950*	1	LINES GP-FRONT	451
Y	*489-2952*	1	LINES GP-PUMP	481
Y	*521-1038*	1	PLATE & FILM GP (OUTSIDE)	693
Y	*502-7166*	1	INSTALLATION AR-RADIO	632
Y	*550-3471*	1	UNDERCARRIAGE AR	377
Y	*513-3214*	1	WIRING & MTG GP- MAIN CONT V	229

Y - SEPARATE ILLUSTRATION

<END>

556-2902 DISTRIBUTION AR

S/N: BR61-UP

SMCS-7000 **i07372075**

NOTE	PART NUMBER	QTY	PART NAME 1 2 3 4 5 6 (PRODUCT LEVEL)	SEE PAGE
Y	*490-7669*	1	BOOM AR	547
Y	*488-6816*	1	CONTROL & MTG GP-MACHINE	148
Y	**489-3797**	1	COUNTERWEIGHT AS	305
Y	*418-9085*	1	CYLINDER & LINES GP-BUCKET	390
Y	*268-7256*	1	CYLINDER & LINES GP-STICK	393
Y	*494-4985*	1	CYLINDER AR-BOOM	409
Y	*490-7663*	1	EXCAVATOR AR	5
Y	*521-1034*	1	FILM GP (CAB)	681
Y	*507-4836*	1	FRAME GP-UPPER	322
Y	*489-3466*	1	GEAR & BEARING GP-SWING	324
Y	*524-8272*	1	INSTL AR-MACHINE SECURITY SYS	189
Y	*484-8021*	1	INSTL AR-BUMPER & WASHER LINES	632
Y	*513-3208*	1	LINES AR-BOOM (TUBE)	418
Y	*489-2950*	1	LINES GP-FRONT	451
Y	*489-2952*	1	LINES GP-PUMP	481
Y	*521-1038*	1	PLATE & FILM GP (OUTSIDE)	693
Y	*512-6143*	1	PLUG GP-CONTROL VALVE	502
Y	*502-7166*	1	INSTALLATION AR-RADIO	632
Y	*550-3471*	1	UNDERCARRIAGE AR	377

Y - SEPARATE ILLUSTRATION

<END>

490-7663 EXCAVATOR AR

S/N: BR61-UP

PART OF 532-9515, 532-9518, 556-2899, 556-2902 DISTRIBUTION AR

SMCS-7000 **i07436933**

NOTE	PART NUMBER	QTY	PART NAME 1 2 3 4 5 6 (PRODUCT LEVEL)	SEE PAGE
Y	*490-2680*	1	ELECTRICAL AR	152
			S/N: BR61-10000	
Y	*558-1230*	1	ELECTRICAL AR	152
			S/N: BR610001-UP	
Y	*490-4803*	1	ENGINE AR	7
			S/N: BR61-10000	
Y	*559-2577*	1	ENGINE AR-COMPLETE	7
			S/N: BR610001-UP	
Y	*521-1520*	1	FILM GP	683
Y	*486-7089*	1	HOOD & GUARD GP	331
			S/N: BR61-10000	
Y	*556-6464*	1	HOOD & GUARD GP	336
			S/N: BR610001-UP	
Y	*490-4811*	1	INSTALLATION AR-ENGINE	13
			S/N: BR61-10000	
Y	*558-1933*	1	INSTALLATION AR-ENGINE	14
			S/N: BR610001-UP	

Y - SEPARATE ILLUSTRATION

<END>

532-9539 OPTION AR-HYDRAULIC

S/N: BR61-UP

SMCS-7000 **i07374718**

NOTE	PART NUMBER	QTY	PART NAME 1 2 3 4 5 6 (PRODUCT LEVEL)	SEE PAGE
Y	*528-6835*	1	CONTROL AR-AUXILIARY (JOYSTICK, SLIDERS)	380
Y	*492-0412*	1	LINES GP-FRONT	452
Y	*491-6991*	1	LINES GP-OIL COOLER	79
Y	*490-3948*	1	VALVE AR-MAIN CONTROL (HEAVY LIFT)	522

Y - SEPARATE ILLUSTRATION

<END>

537-5861 OPTION AR-HYDRAULIC

S/N: BR61-UP

SMCS-7000 **i07361974**

NOTE	PART NUMBER	QTY	PART NAME 1 2 3 4 5 6 (PRODUCT LEVEL)	SEE PAGE
Y	*528-6835*	1	CONTROL AR-AUXILIARY (JOYSTICK, SLIDERS)	380
Y	*528-6841*	1	CONTROL AR-AUXILIARY	380
Y	*492-2066*	1	LINES GP-FRONT (TOOL)	454
Y	*491-6992*	1	LINES GP-OIL (TOOL CONTROL SYSTEM)	468
Y	*490-3949*	1	VALVE AR-MAIN CONTROL (AUXILIARY)	522

Y - SEPARATE ILLUSTRATION

<END>

490-4803 ENGINE AR

S/N: BR61-10000

PART OF 490-7663 EXCAVATOR AR

SMCS-1000 **i07366396**

NOTE	PART NUMBER	QTY	PART NAME 1 2 3 4 5 6 (PRODUCT LEVEL)	SEE PAGE
Y	*502-9408*	1	COMPRESSOR & MTG GP-REFRIG	596
Y	*542-5532*	1	ENGINE AR-PRIMARY	9

Y - SEPARATE ILLUSTRATION

<END>

559-2577 ENGINE AR-COMPLETE

S/N: BR610001-UP

PART OF 490-7663 EXCAVATOR AR

SMCS-1000 **i07433246**

NOTE	PART NUMBER	QTY	PART NAME 1 2 3 4 5 6 (PRODUCT LEVEL)	SEE PAGE
Y	*502-9408*	1	COMPRESSOR & MTG GP-REFRIG	596
Y	*559-2588*	1	ENGINE AR-PRIMARY	13

Y - SEPARATE ILLUSTRATION

<END>

530-2686 ENGINE AR-PRIMARY

S/N: 4501-UP
118 BRAKE KW (158 BHP) AT 1800 RPM
PART OF 542-5532 ENGINE AR-PRIMARY

SMCS-1000 **i07270802**

NOTE	PART NUMBER	QTY	PART NAME 1 2 3 4 5 6 (PRODUCT LEVEL)	SEE PAGE
Y	*376-1108*	1	BELT TENSIONER GP	15
Y	*392-0634*	1	BRACKET GP-MOUNTING	17
Y	*379-6637*	1	BRACKET GP-MOUNTING	16
Y	*376-6871*	1	CAMSHAFT GP	18
Y	*346-2911*	1	CONNECTION GP-HEATER	68
Y	*373-3606*	1	CONNECTION GP-WATER	69
Y	*371-2537*	1	CONTROL GP-ENGINE ELECTRONIC	149
Y	*371-2553*	1	COOLER GP-ENGINE OIL	72
Y	*389-3346*	1	COVER GP-VALVE MECHANISM	21
Y	*374-6300*	1	CRANKSHAFT GP	22
Y	*390-0854*	1	CYLINDER BLOCK GP	25
Y	*385-2572*	1	CYLINDER HEAD GP	27
Y	*371-2742*	1	DRAIN GP-ENGINE OIL	28
Y	*375-3937*	1	DRIVE GP-FAN	30
Y	*375-0098*	1	FASTENER GP-DAMPER & PULLEY	31
Y	*503-8040*	1	FILLER GP-ENGINE OIL	53
Y	*498-1841*	1	FILTER & LINES GP-FUEL	97
Y	*371-2539*	1	FLYWHEEL GP	32
Y	*371-2538*	1	HOUSING GP-FLYWHEEL	33
Y	*371-2716*	1	HOUSING GP-FRONT	34
Y	*371-2483*	1	INJECTOR GP-FUEL	103
Y	*371-2478*	1	JET GP-PISTON COOLING	36
Y	*371-2740*	1	LIFTING GP-ENGINE	37
Y	*393-7694*	1	MANIFOLD GP-EXHAUST	91
Y	*378-8582*	1	MANIFOLD GP-INLET	92
Y	*371-2558*	1	MOUNTING GP-ALTERNATOR	38
Y	*395-0112*	1	MOUNTING GP-ELECTRONIC CONTROL	206
Y	*515-2711*	1	MOUNTING GP-ENGINE	40
Y	*488-6692*	1	MOUNTING GP-STARTING MOTOR	41
Y	*378-0594*	1	PAN GP-OIL	42
Y	*486-3208*	1	PISTON & ROD GP	45
Y	*468-7361*	1	PLATE & FILM GP	691
Y	*374-9295*	1	PLUG GP-CYLINDER BLOCK	47
Y	*458-9768*	1	PLUG GP-OIL PAN	48
Y	*371-2554*	1	PULLEY GP-CRANKSHAFT	49
Y	*462-6685*	1	PUMP GP-ENGINE OIL	67
Y	*391-4811*	1	PUMP GP-FUEL INJECTION	117
Y	*372-2297*	1	PUMP GP-WATER	81
Y	*394-9639*	1	RAIL GP-FUEL	120
Y	*371-2480*	1	ROCKER ARM GP	52
Y	*395-0110*	1	SENSOR GP-ENGINE	216
Y	*395-0114*	1	STARTING AID GP	221
Y	*374-0432*	1	TURBOCHARGER GP	95
Y	*395-0113*	1	WIRING GP-ENGINE	262
	507-1069	1	ELECTRONICS GP-ENGINE	
	478-6398	1	PLATE GP-SERIAL NUMBER	

530-2686 **ENGINE AR-PRIMARY (**contd.**)** **i07270802**

NOTE	PART NUMBER	QTY	PART NAME 1 2 3 4 5 6 (PRODUCT LEVEL)	SEE PAGE
	332-0905	2	RIVET-DRIVE	
	475-6787	1	PLATE-SERIAL NUMBER	

Y - SEPARATE ILLUSTRATION

<END>

542-5532 ENGINE AR-PRIMARY

S/N: BR61-10000

PART OF 490-4803 ENGINE AR

SMCS-1000 **i07366397**

NOTE	PART NUMBER	QTY	PART NAME 1 2 3 4 5 6 (PRODUCT LEVEL)	SEE PAGE
Y	**530-2686**	1	ENGINE AR-PRIMARY	8

Y - SEPARATE ILLUSTRATION

<END>

555-5560 ENGINE AR-PRIMARY

S/N: E7A1-UP
118 BRAKE KW (158 BHP) AT 1800 RPM
PART OF 559-2588 ENGINE AR-PRIMARY

SMCS-1000 **i07461668**

NOTE	PART NUMBER	QTY	PART NAME 1 2 3 4 5 6 (PRODUCT LEVEL)	SEE PAGE
Y	*376-1108*	1	BELT TENSIONER GP	15
Y	*379-6637*	1	BRACKET GP-MOUNTING	16
Y	*392-0634*	1	BRACKET GP-MOUNTING	17
Y	*376-6871*	1	CAMSHAFT GP	18
Y	*346-2911*	1	CONNECTION GP-HEATER	68
Y	*373-3606*	1	CONNECTION GP-WATER	69
Y	*371-2537*	1	CONTROL GP-ENGINE ELECTRONIC	149
Y	*371-2553*	1	COOLER GP-ENGINE OIL	72
Y	*389-3346*	1	COVER GP-VALVE MECHANISM	21
Y	*374-6300*	1	CRANKSHAFT GP	22
Y	*390-0854*	1	CYLINDER BLOCK GP	25
Y	*385-2572*	1	CYLINDER HEAD GP	27
Y	*371-2742*	1	DRAIN GP-ENGINE OIL	28
Y	*375-3937*	1	DRIVE GP-FAN	30
Y	*375-0098*	1	FASTENER GP-DAMPER & PULLEY	31
Y	*503-8040*	1	FILLER GP-ENGINE OIL	53
Y	*393-0367*	1	FILM GP	678
Y	*498-1841*	1	FILTER & LINES GP-FUEL	97
Y	*371-2539*	1	FLYWHEEL GP	32
Y	*371-2538*	1	HOUSING GP-FLYWHEEL	33
Y	*371-2716*	1	HOUSING GP-FRONT	34
Y	*371-2483*	1	INJECTOR GP-FUEL	103
Y	*371-2478*	1	JET GP-PISTON COOLING	36
Y	*371-2740*	1	LIFTING GP-ENGINE	37
Y	*393-7694*	1	MANIFOLD GP-EXHAUST	91
Y	*378-8582*	1	MANIFOLD GP-INLET	92
Y	*371-2558*	1	MOUNTING GP-ALTERNATOR	38
Y	*395-0112*	1	MOUNTING GP-ELECTRONIC CONTROL	206
Y	*515-2711*	1	MOUNTING GP-ENGINE	40
Y	*488-6692*	1	MOUNTING GP-STARTING MOTOR	41
Y	*378-0594*	1	PAN GP-OIL	42
Y	*374-6301*	1	PISTON & ROD GP	43
Y	*376-6464*	1	PLATE GP (SERIAL NUMBER)	347
Y	*374-9295*	1	PLUG GP-CYLINDER BLOCK	47
Y	*458-9768*	1	PLUG GP-OIL PAN	48
Y	*371-2554*	1	PULLEY GP-CRANKSHAFT	49
Y	*462-6685*	1	PUMP GP-ENGINE OIL	67
Y	*391-4811*	1	PUMP GP-FUEL INJECTION	117
Y	*372-2297*	1	PUMP GP-WATER	81
Y	*394-9639*	1	RAIL GP-FUEL	120
Y	*371-2480*	1	ROCKER ARM GP	52
Y	*395-0110*	1	SENSOR GP-ENGINE	216
Y	*395-0114*	1	STARTING AID GP	221
Y	*374-0432*	1	TURBOCHARGER GP	95
Y	*395-0113*	1	WIRING GP-ENGINE	262
	507-1069	1	ELECTRONICS GP-ENGINE	

555-5560 **ENGINE AR-PRIMARY (**contd.**)** **i07461668**

NOTE	PART NUMBER	QTY	PART NAME 1 2 3 4 5 6 (PRODUCT LEVEL)	SEE PAGE
Y - SEPARATE ILLUSTRATION				

<END>

555-7255 ENGINE AR-PRIMARY

S/N: E7A1-UP
118 BRAKE KW (158 BHP) AT 1800 RPM
PART OF 559-2588 ENGINE AR-PRIMARY

SMCS-1000 **i07461482**

NOTE	PART NUMBER	QTY	PART NAME 1 2 3 4 5 6 (PRODUCT LEVEL)	SEE PAGE
Y	*376-1108*	1	BELT TENSIONER GP	15
Y	*379-6637*	1	BRACKET GP-MOUNTING	16
Y	*392-0634*	1	BRACKET GP-MOUNTING	17
Y	*376-6871*	1	CAMSHAFT GP	18
Y	*346-2911*	1	CONNECTION GP-HEATER	68
Y	*373-3606*	1	CONNECTION GP-WATER	69
Y	*371-2537*	1	CONTROL GP-ENGINE ELECTRONIC	149
Y	*371-2553*	1	COOLER GP-ENGINE OIL	72
Y	*389-3346*	1	COVER GP-VALVE MECHANISM	21
Y	*374-6300*	1	CRANKSHAFT GP	22
Y	*390-0854*	1	CYLINDER BLOCK GP	25
Y	*385-2572*	1	CYLINDER HEAD GP	27
Y	*371-2742*	1	DRAIN GP-ENGINE OIL	28
Y	*375-3937*	1	DRIVE GP-FAN	30
Y	*375-0098*	1	FASTENER GP-DAMPER & PULLEY	31
Y	*503-8040*	1	FILLER GP-ENGINE OIL	53
Y	*498-1841*	1	FILTER & LINES GP-FUEL	97
Y	*371-2539*	1	FLYWHEEL GP	32
Y	*371-2538*	1	HOUSING GP-FLYWHEEL	33
Y	*371-2716*	1	HOUSING GP-FRONT	34
Y	*371-2483*	1	INJECTOR GP-FUEL	103
Y	*371-2478*	1	JET GP-PISTON COOLING	36
Y	*371-2740*	1	LIFTING GP-ENGINE	37
Y	*393-7694*	1	MANIFOLD GP-EXHAUST	91
Y	*378-8582*	1	MANIFOLD GP-INLET	92
Y	*371-2558*	1	MOUNTING GP-ALTERNATOR	38
Y	*395-0112*	1	MOUNTING GP-ELECTRONIC CONTROL	206
Y	*515-2711*	1	MOUNTING GP-ENGINE	40
Y	*488-6692*	1	MOUNTING GP-STARTING MOTOR	41
Y	*378-0594*	1	PAN GP-OIL	42
Y	*486-3208*	1	PISTON & ROD GP	45
Y	*468-7361*	1	PLATE & FILM GP	691
Y	*478-6398*	1	PLATE GP-SERIAL NUMBER	701
Y	*374-9295*	1	PLUG GP-CYLINDER BLOCK	47
Y	*458-9768*	1	PLUG GP-OIL PAN	48
Y	*371-2554*	1	PULLEY GP-CRANKSHAFT	49
Y	*462-6685*	1	PUMP GP-ENGINE OIL	67
Y	*391-4811*	1	PUMP GP-FUEL INJECTION	117
Y	*372-2297*	1	PUMP GP-WATER	81
Y	*394-9639*	1	RAIL GP-FUEL	120
Y	*371-2480*	1	ROCKER ARM GP	52
Y	*395-0110*	1	SENSOR GP-ENGINE	216
Y	*395-0114*	1	STARTING AID GP	221
Y	*374-0432*	1	TURBOCHARGER GP	95
Y	*395-0113*	1	WIRING GP-ENGINE	262
	507-1069	1	ELECTRONICS GP-ENGINE	

555-7255 **ENGINE AR-PRIMARY (**contd.**)** **i07461482**

NOTE	PART NUMBER	QTY	PART NAME 1 2 3 4 5 6 (PRODUCT LEVEL)	SEE PAGE
Y - SEPARATE ILLUSTRATION				

<END>

559-2588 ENGINE AR-PRIMARY

S/N: BR610001-UP

PART OF 559-2577 ENGINE AR-COMPLETE

SMCS-1000 **i07462473**

NOTE	PART NUMBER	QTY	PART NAME 1 2 3 4 5 6 (PRODUCT LEVEL)	SEE PAGE
Y	**555-5560**	1	ENGINE AR-PRIMARY	10
			—OR—	
Y	**555-7255**	1	ENGINE AR-PRIMARY	12
Y - SEPARATE ILLUSTRATION				

<END>

490-4811 INSTALLATION AR-ENGINE

S/N: BR61-10000

PART OF 490-7663 EXCAVATOR AR

SMCS-1000 **i07366375**

NOTE	PART NUMBER	QTY	PART NAME 1 2 3 4 5 6 (PRODUCT LEVEL)	SEE PAGE
Y	*490-4830*	1	DRAIN GP-ENGINE OIL	29
Y	*490-4821*	1	FILTER & MTG GP-ENGINE OIL	54
Y	*490-4818*	1	FUMES DISPOSAL GP	57
Y	*490-4841*	1	GAUGE GP-OIL LEVEL (DIPSTICK)	58
Y	*512-5353*	1	GAUGE GP-OIL LEVEL (DIPSTICK)	60
Y	*490-4826*	1	LINES GP-AIR	88
Y	*489-8909*	1	LINES GP-COOLING	78
Y	*523-5673*	1	LINES GP-FUEL	107
Y	*490-4835*	1	MOUNTING GP-ENGINE	39
Y	*490-4857*	1	MUFFLER GP	93
Y	*490-4846*	1	STARTING MOTOR GP-ELECTRIC	223
Y - SEPARATE ILLUSTRATION				

<END>

511-4775 INSTALLATION AR-ENGINE

S/N: BR61-10000

PART OF 510-7419 COMMON AR

SMCS-1000 **i07360802**

NOTE	PART NUMBER	QTY	PART NAME 1 2 3 4 5 6 (PRODUCT LEVEL)	SEE PAGE
Y	*490-4839*	1	AIR CLEANER GP	87
Y	*489-8911*	1	COOLING GP	73
Y	*341-5368*	1	COUPLING GP-PUMP	383
Y	*489-8980*	1	FAN GP-SUCTION	77
Y - SEPARATE ILLUSTRATION				

<END>

558-1933 INSTALLATION AR-ENGINE

S/N: BR610001-UP

PART OF 490-7663 EXCAVATOR AR

SMCS-1000 **i07436366**

NOTE	PART NUMBER	QTY	PART NAME 1 2 3 4 5 6 (PRODUCT LEVEL)	SEE PAGE
Y	*490-4830*	1	DRAIN GP-ENGINE OIL	29
Y	*490-4821*	1	FILTER & MTG GP-ENGINE OIL	54
Y	*490-4818*	1	FUMES DISPOSAL GP	57
Y	*561-6441*	1	GAUGE GP-OIL LEVEL (DIPSTICK) (FILLER)	61
Y	*512-5353*	1	GAUGE GP-OIL LEVEL (DIPSTICK)	60
Y	*490-4826*	1	LINES GP-AIR	88
Y	*489-8909*	1	LINES GP-COOLING	78
Y	*557-8798*	1	LINES GP-FUEL	112
Y	*490-4835*	1	MOUNTING GP-ENGINE	39
Y	*490-4857*	1	MUFFLER GP	93
Y	*490-4846*	1	STARTING MOTOR GP-ELECTRIC	223

Y - SEPARATE ILLUSTRATION

<END>

558-7709 INSTALLATION AR-ENGINE

S/N: BR610001-UP

PART OF 510-7419 COMMON AR

SMCS-1000 **i07432886**

NOTE	PART NUMBER	QTY	PART NAME 1 2 3 4 5 6 (PRODUCT LEVEL)	SEE PAGE
Y	*490-4839*	1	AIR CLEANER GP	87
Y	*558-7629*	1	COOLING GP	75
Y	*341-5368*	1	COUPLING GP-PUMP	383
Y	*489-8980*	1	FAN GP-SUCTION	77

Y - SEPARATE ILLUSTRATION

<END>

376-1108 BELT TENSIONER GP

S/N: 4501-UP; E7A1-UP

PART OF 530-2686, 555-5560, 555-7255 ENGINE AR-PRIMARY

SMCS-1357, 1358, 1397

i05330735

NOTE	REF NO	GRAPHIC REF	PART NUMBER	QTY	PART NAME 1 2 3 4 5 6 (PRODUCT LEVEL)	SEE PAGE
	1	1	**369-1255**	1	TENSIONER	

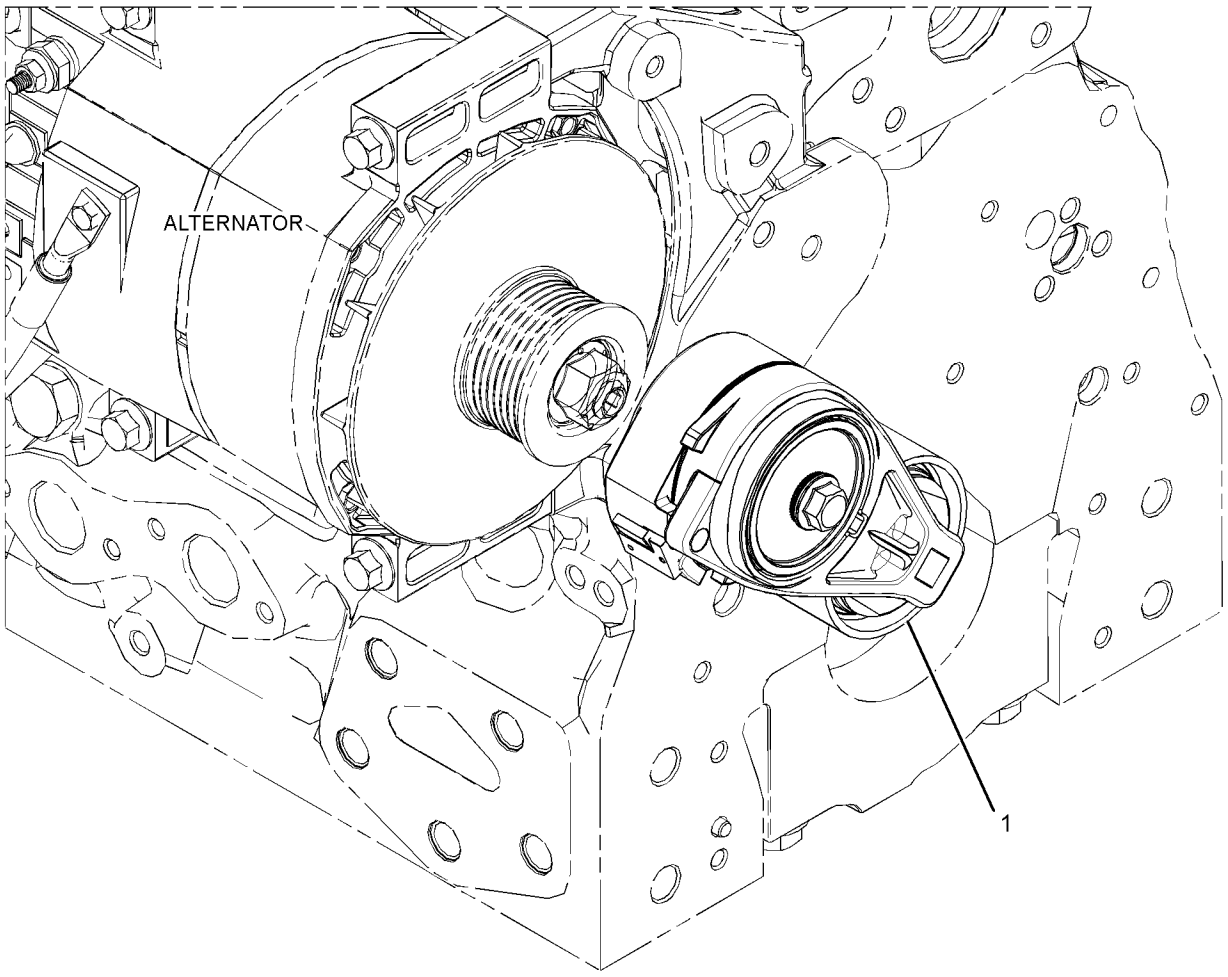

GRAPHIC #1

<END>

g02514017

379-6637 BRACKET GP-MOUNTING

S/N: 4501-UP; E7A1-UP

PART OF 530-2686, 555-5560, 555-7255 ENGINE AR-PRIMARY

SMCS-0635, 1153, 1317

i07158221

NOTE	REF NO	GRAPHIC REF	PART NUMBER	QTY	PART NAME 1 2 3 4 5 6 (PRODUCT LEVEL)	SEE PAGE
M	1	1	**101-7178**	3	BOLT (M10X1.5X55-MM)	
	2	1	**330-1725**	1	BRACKET AS	
	2A	1	**161-9820**	2	PIN	

M - METRIC PART

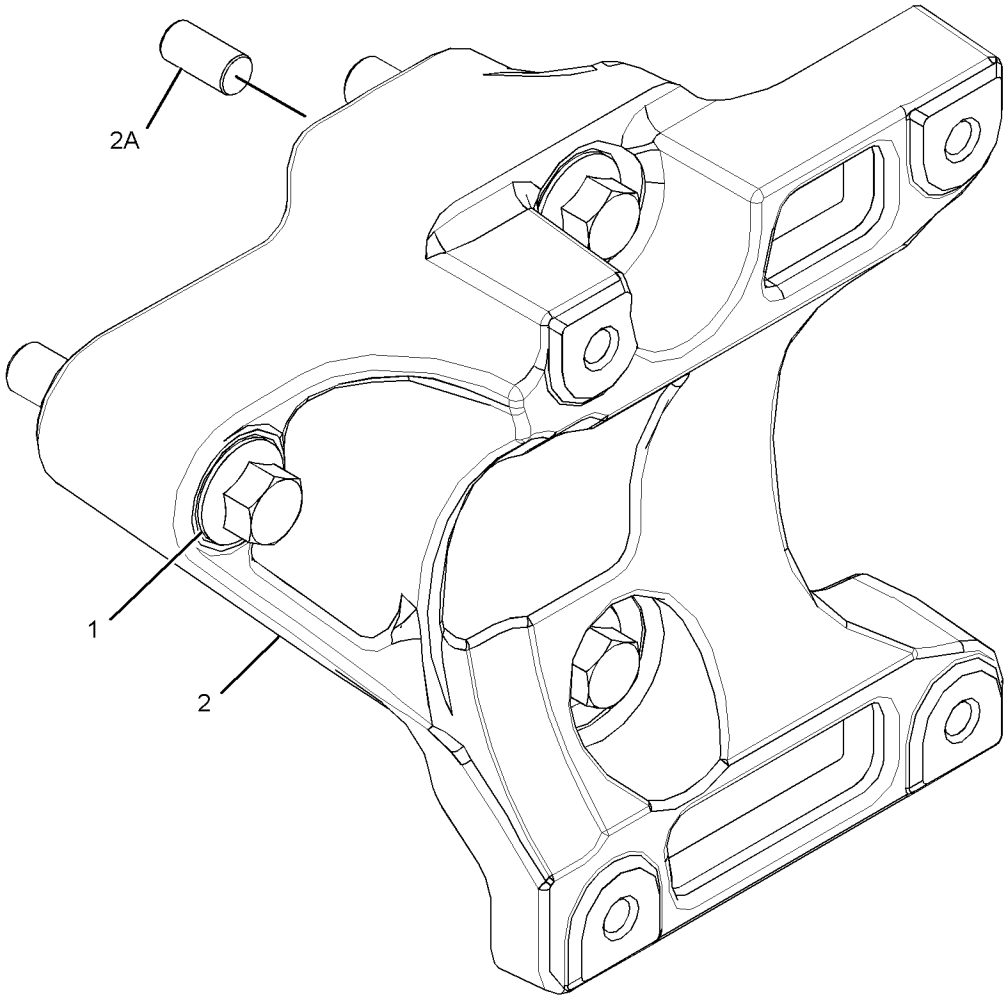

GRAPHIC #1 <END> g02392976

392-0634 BRACKET GP-MOUNTING

S/N: 4501-UP; E7A1-UP

PART OF 530-2686, 555-5560, 555-7255 ENGINE AR-PRIMARY

SMCS-0635, 1153, 1317

i05489718

NOTE	REF NO	GRAPHIC REF	PART NUMBER	QTY	PART NAME 1 2 3 4 5 6 (PRODUCT LEVEL)	SEE PAGE
M	1	1	**105-2740**	3	BOLT (M8X1.25X40-MM)	
M	2	1	**124-3815**	3	BOLT (M8X1.25X16-MM)	
	3	1	**389-1995**	1	BRACKET AS	

M - METRIC PART

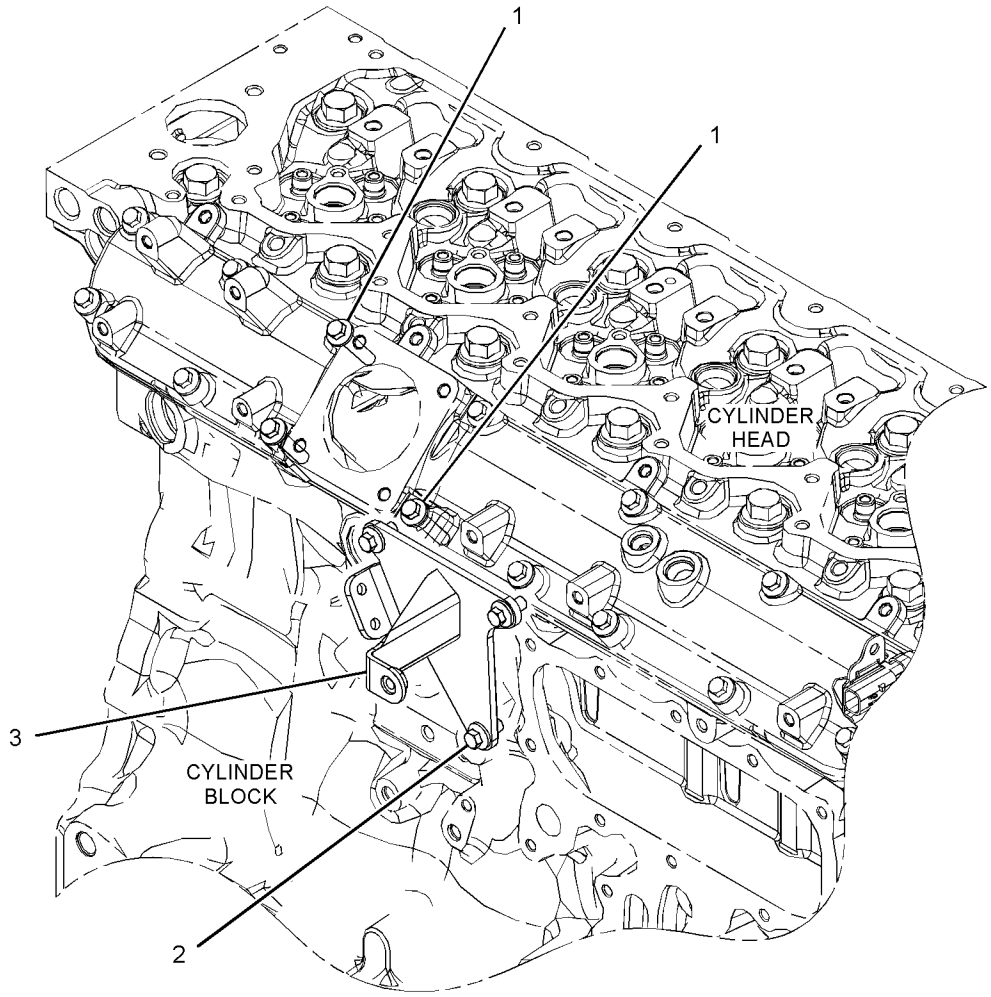

GRAPHIC #1

<END>

g03479957

376-6871 CAMSHAFT GP

S/N: 4501-UP; E7A1-UP

PART OF 530-2686, 555-5560, 555-7255 ENGINE AR-PRIMARY

SMCS-1210 **i05496261**

NOTE	REF NO	GRAPHIC REF	PART NUMBER	QTY	PART NAME 1 2 3 4 5 6 (PRODUCT LEVEL)	SEE PAGE
	1	1	**278-5125**	12	TAPPET	
	2	1	*375-2013*	1	CAMSHAFT GP	
	2A	1	**067-6135**	1	KEY-WOODRUFF (CAMSHAFT)	
	3	1	**319-8426**	12	PUSHROD	

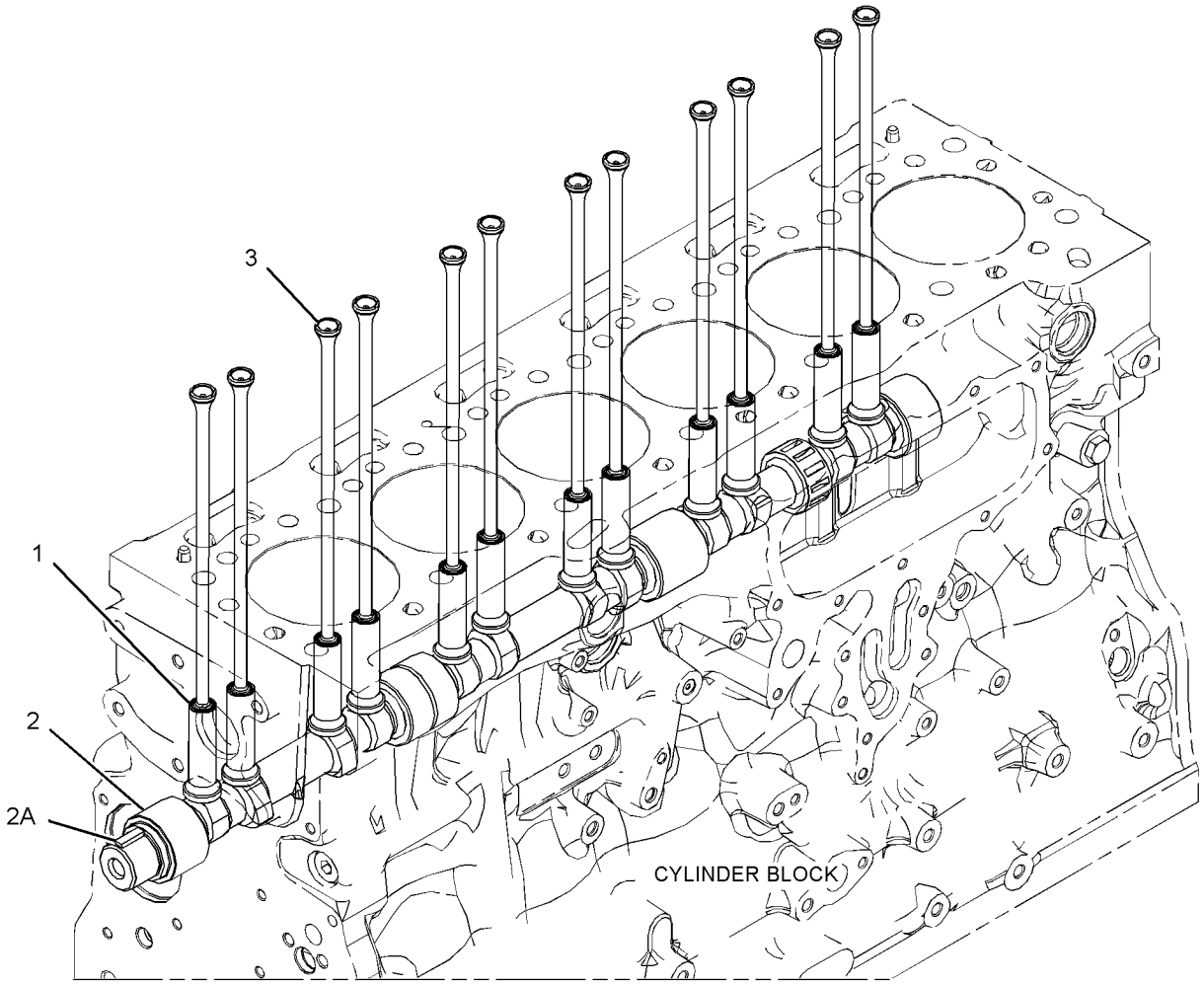

GRAPHIC #1 <END> g03109078

527-1423 COVER GP-SOUND SUPPRESSION

S/N: BR61-UP

PART OF 512-4549 MIRROR AR

SMCS-1801 **i07352885**

NOTE	REF NO	GRAPHIC REF	PART NUMBER	QTY	PART NAME 1 2 3 4 5 6 (PRODUCT LEVEL)	SEE PAGE
	1	1	**135-8573**	2	BOLT AS	
	2	1	**135-8575**	1	BOLT AS	
	3	1	*527-1414*	1	COVER GP-SOUND SUPPRESSION	
D		1	**101-9848**		SEAL (0.9-M)	
		1	**516-7551**	1	LINER	
		1	**527-1415**	1	COVER AS	
M		1	**8T-3597**	2	NUT-WELD (M12X1.75-THD)	

D - ORDER BY THE METER
M - METRIC PART

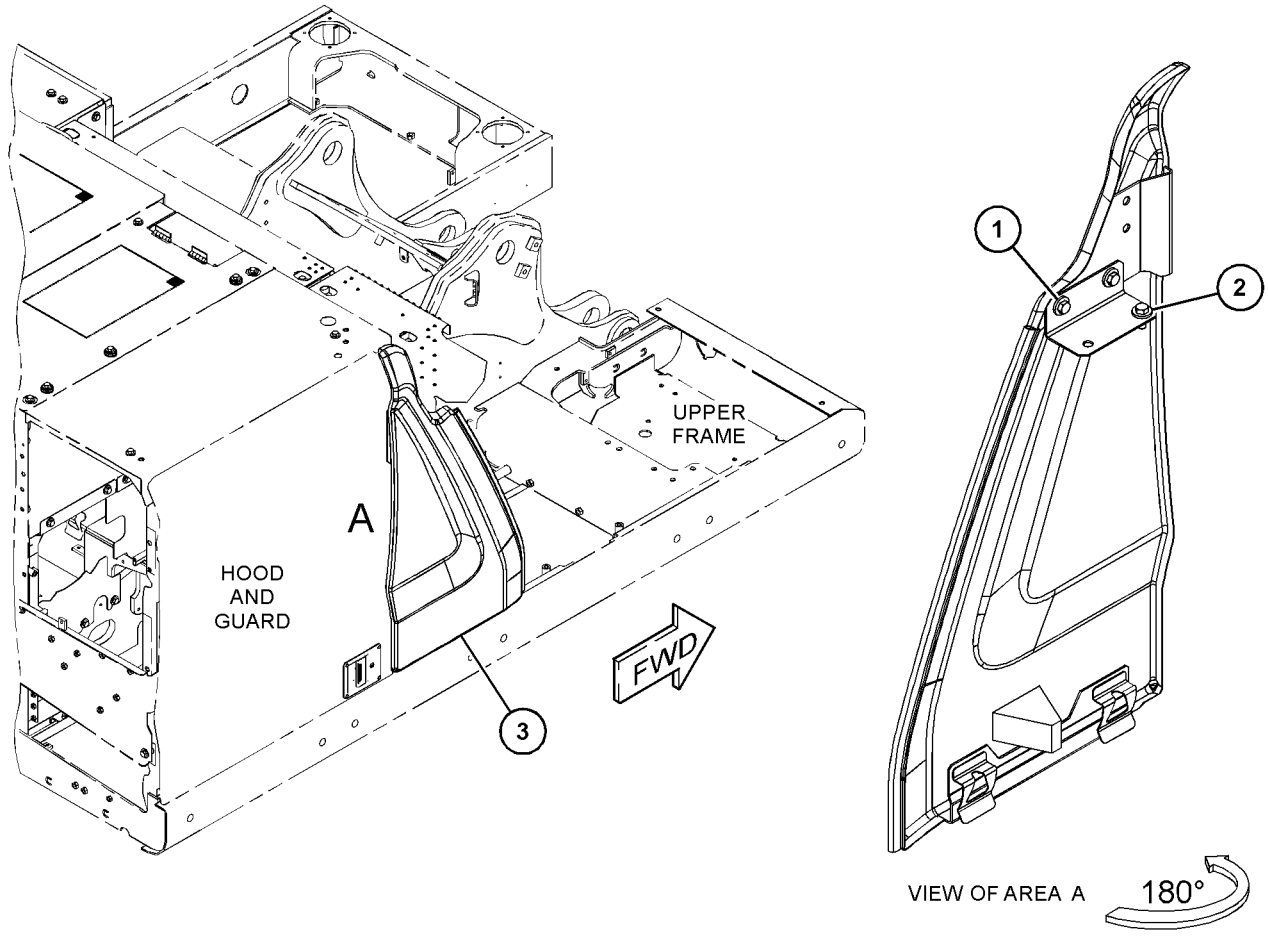

GRAPHIC #1 <END> g06232375

527-1424 COVER GP-SOUND SUPPRESSION

S/N: BR61-UP

PART OF 559-0034 CAMERA AR, 490-7697 INSTALLATION AR

SMCS-1801 **i07366558**

NOTE	REF NO	GRAPHIC REF	PART NUMBER	QTY	PART NAME 1 2 3 4 5 6 (PRODUCT LEVEL)	SEE PAGE
	1	1	**135-8573**	2	BOLT AS	
	2	1	**135-8575**	1	BOLT AS	
	3	1	*527-1419*	1	COVER AS-SOUND SUPPRESSION	
D		1	**101-9848**		SEAL (1.3-M)	
		1	**516-7551**	1	LINER	
		1	**527-1420**	1	COVER AS	
	4	1	**528-3491**	1	SHEET AS	
J		1	**348-5409**		SEAL (1-DM)	

D - ORDER BY THE METER
J - ORDER BY THE DECIMETER

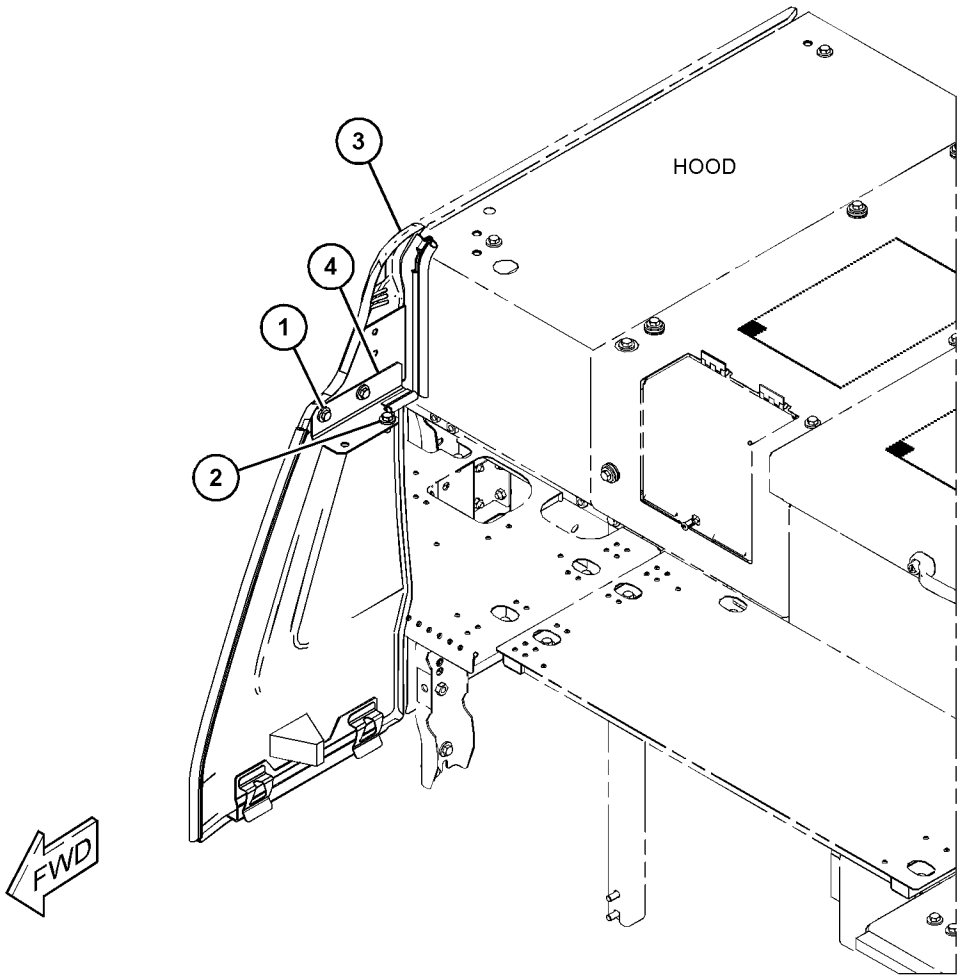

GRAPHIC #1 <END> g06229370

389-3346 COVER GP-VALVE MECHANISM

S/N: 4501-UP; E7A1-UP

PART OF 530-2686, 555-5560, 555-7255 ENGINE AR-PRIMARY

SMCS-1107 **i07317994**

NOTE	REF NO	GRAPHIC REF	PART NUMBER	QTY	PART NAME 1 2 3 4 5 6 (PRODUCT LEVEL)	SEE PAGE
M	1	1	**101-3895**	9	BOLT (M8X1.25X35-MM)	
M	2	1	**103-5705**	6	BOLT (M8X1.25X110-MM)	
C	3	1	**527-1637**	1	COVER GP-VALVE MECHANISM	
M	3A	1	**195-9245**	3	SCREW (M4X0.7X10-MM)	
	3B	1	**527-1641**	1	SEAL	
	3C	1	**380-9615**	1	BREATHER	
	3D	1	**326-7289**	1	SEAL-O-RING	
	4	1	**388-0536**	1	GASKET (VALVE COVER)	
	5	1	**383-1388**	1	COVER-BASE	
M	6	1	**6I-0217**	14	BOLT (M8X1.25X20-MM)	

C - CHANGE FROM PREVIOUS TYPE
M - METRIC PART

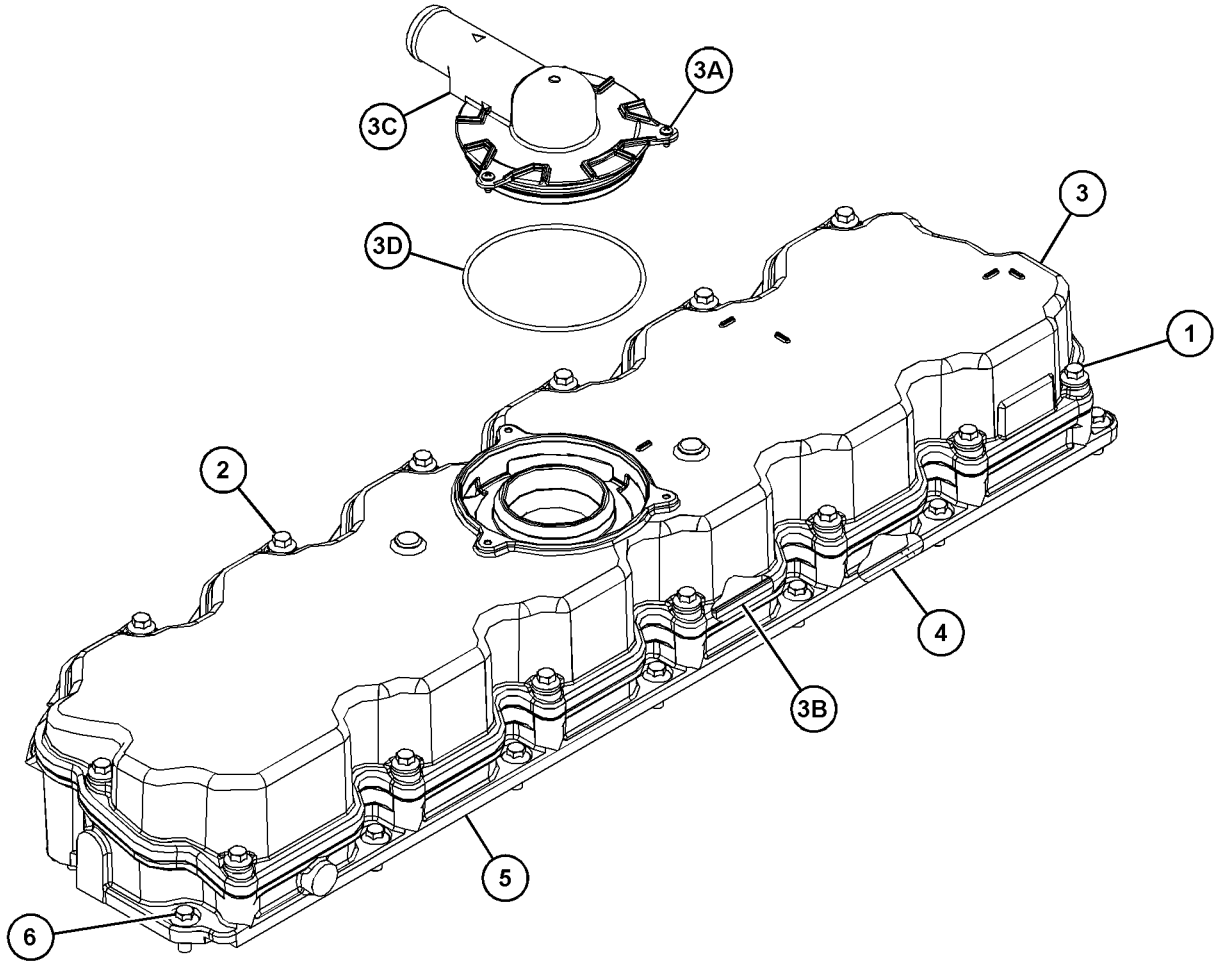

GRAPHIC #1 <END> g06281521

374-6300 CRANKSHAFT GP

S/N: 4501-UP; E7A1-UP

PART OF 530-2686, 555-5560, 555-7255 ENGINE AR-PRIMARY

SMCS-1202 **i06990996**

NOTE	REF NO	GRAPHIC REF	PART NUMBER	QTY	PART NAME 1 2 3 4 5 6 (PRODUCT LEVEL)	SEE PAGE
	1	1	**067-6135**	1	KEY-WOODRUFF	
	2	1	**276-7391**	1	GEAR (34-TEETH)	
M	3	1	**276-7394**	3	SCREW (M6X1XX12-MM)	
	4	1	**339-8780**	1	DOWEL	
J	5	1	*363-0559*	2	WASHER-THRUST	
	6	1	**376-4074**	1	CRANKSHAFT	
	7	1	**376-4078**	1	DISC-TIMING	
CP	8	1	*470-8101*	7	BEARING-CRANKSHAFT (STANDARD-UPPER)	
CP	9	1	*470-8171*	7	BEARING-CRANKSHAFT (STANDARD-LOWER)	
					AVAILABLE REPAIR KIT(S):	
P			**448-4217**	1	KIT-BEARING (STANDARD)	
					(INCLUDES BEARINGS)	
AB			**448-4218**		KIT-BEARING (0.254-MM US)	
					(INCLUDES BEARINGS)	
AB			**448-4220**		KIT-BEARING (0.508-MM US)	
					(INCLUDES BEARINGS)	
AB			**448-4222**		KIT-BEARING (0.762-MM US)	
					(INCLUDES BEARINGS)	
J			**364-5145**	1	KIT-WASHER (STANDARD)	
					(INCLUDES WASHERS)	
AB			**448-4227**		KIT-WASHER (0.20-MM US)	
					(INCLUDES WASHERS)	

A - NOT PART OF THIS GROUP
B - USE AS REQUIRED
C - CHANGE FROM PREVIOUS TYPE
J - KIT MARKED J SERVICES PART(S) MARKED J
M - METRIC PART
P - KIT MARKED P SERVICES PART(S) MARKED P

374-6300 **CRANKSHAFT GP (**contd.**)** **i06990996**

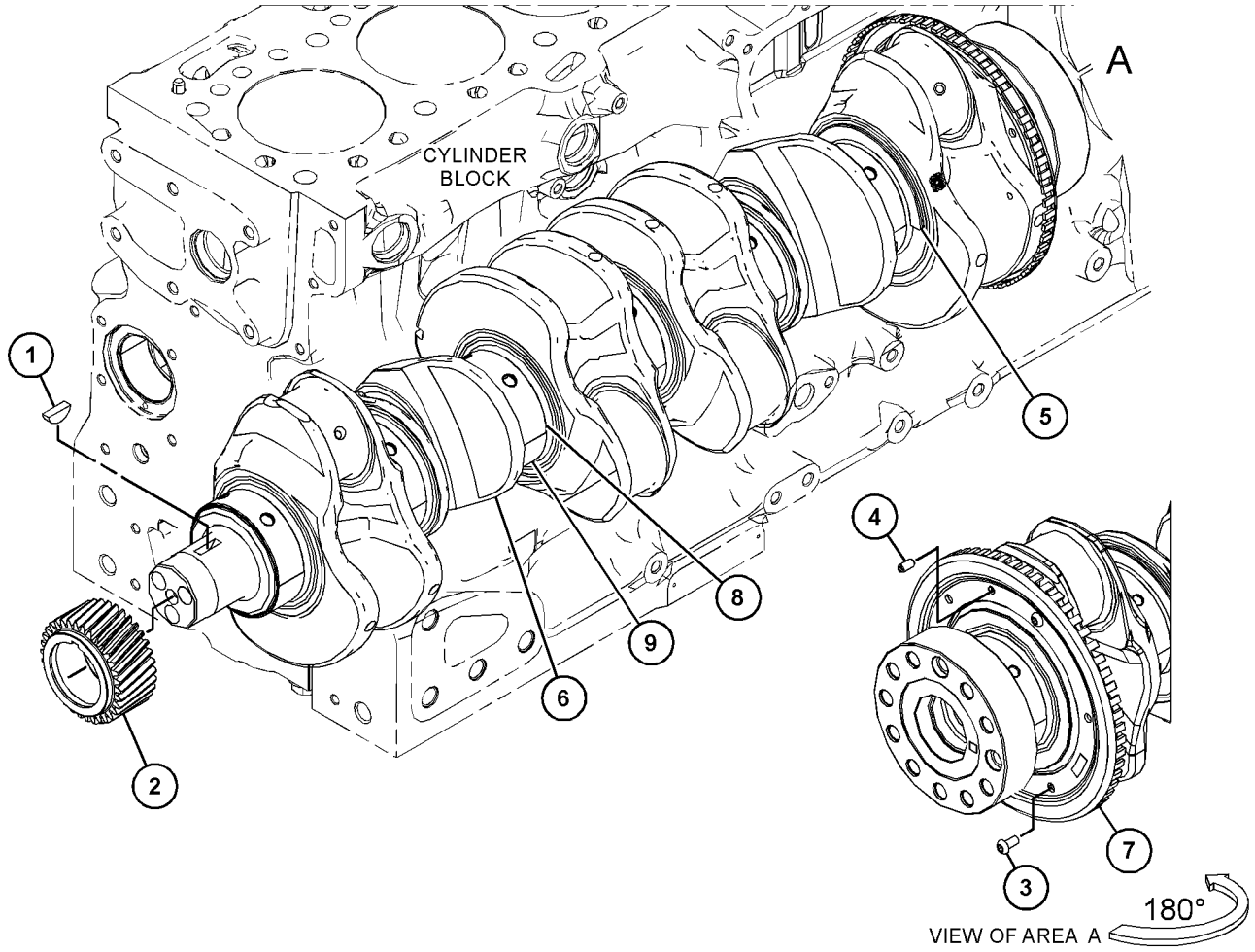

GRAPHIC #1 <END> g06188935

383-3581 CYLINDER BLOCK AS

S/N: 4501-UP; E7A1-UP

PART OF 390-0854 CYLINDER BLOCK GP

SMCS-1201 **i07383704**

NOTE	REF NO	GRAPHIC REF	PART NUMBER	QTY	PART NAME 1 2 3 4 5 6 (PRODUCT LEVEL)	SEE PAGE
	1	1	**232-7597**	2	PLUG	
	2	1	**276-5602**	2	PLUG-CORE	
	3	1	**232-7596**	1	PLUG	
	4	1	**067-6043**	7	PLUG-SIDE	
	5	1	**067-6823**	1	PLUG	
	6	1	**185-0884**	2	DOWEL	
	7	1	**225-8858**	2	PLUG	
	8	1	**232-7599**	2	PLUG	
	9	1	**276-5600**	14	BOLT-SPECIAL (BEARING CAP)	
	10	1	**331-6835**	2	PLUG-SEAL	
F			**370-6545**	1	BUSHING-CAMSHAFT	

F - NOT SHOWN

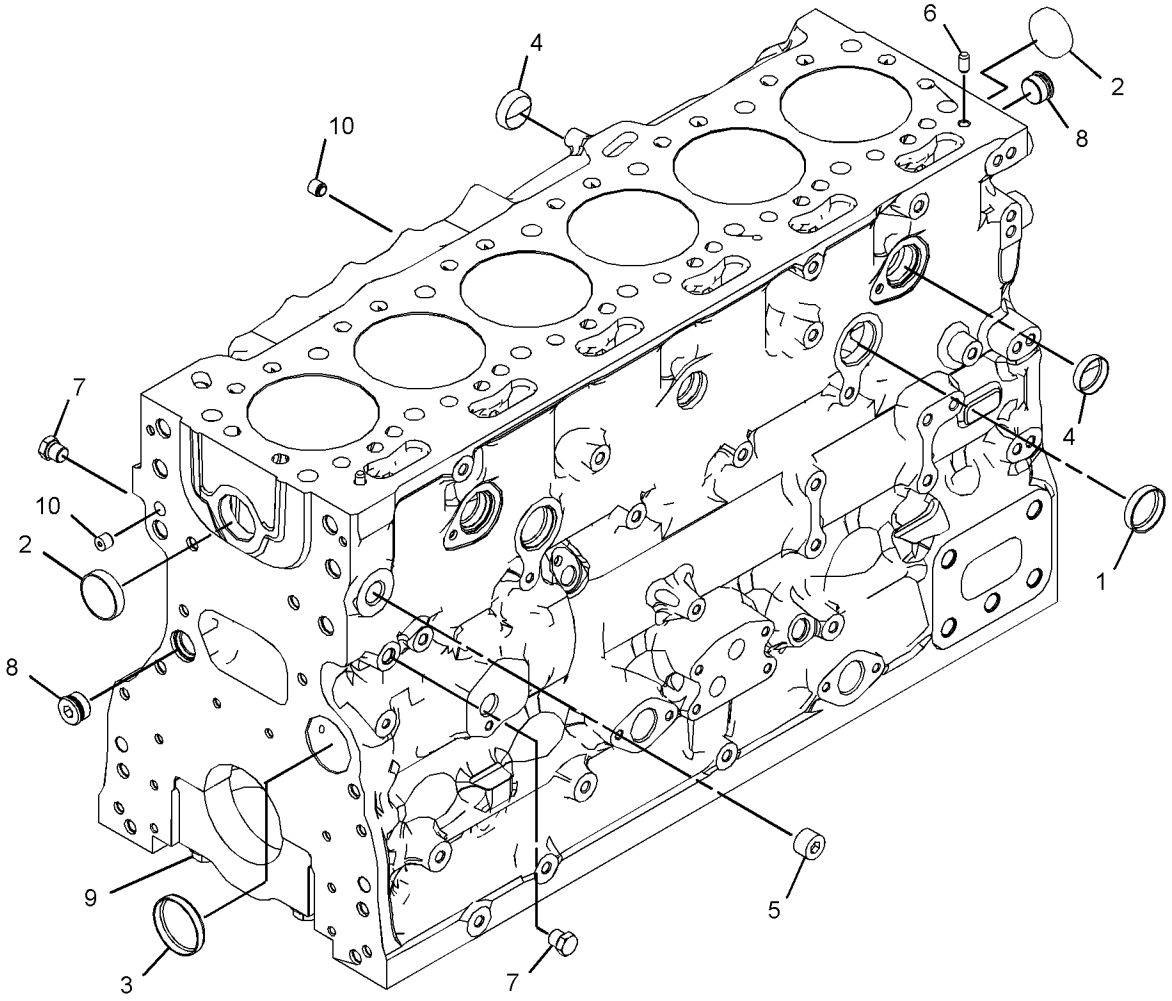

GRAPHIC #1 <END> g03351937

390-0854 CYLINDER BLOCK GP

S/N: 4501-UP; E7A1-UP

PART OF 530-2686, 555-5560, 555-7255 ENGINE AR-PRIMARY

SMCS-1201 **i06547930**

NOTE	REF NO	GRAPHIC REF	PART NUMBER	QTY	PART NAME 1 2 3 4 5 6 (PRODUCT LEVEL)	SEE PAGE
	1	1	**276-5603**	1	SEAL-O-RING	
Y	2	1	*383-3581*	1	CYLINDER BLOCK AS	24
M	3	1	**209-9219**	10	BOLT (M8X1.25X16-MM)	
	4	1	**232-7449**	1	HOUSING AS	
	5	1	**232-1322**	1	PLUG	

M - METRIC PART
Y - SEPARATE ILLUSTRATION

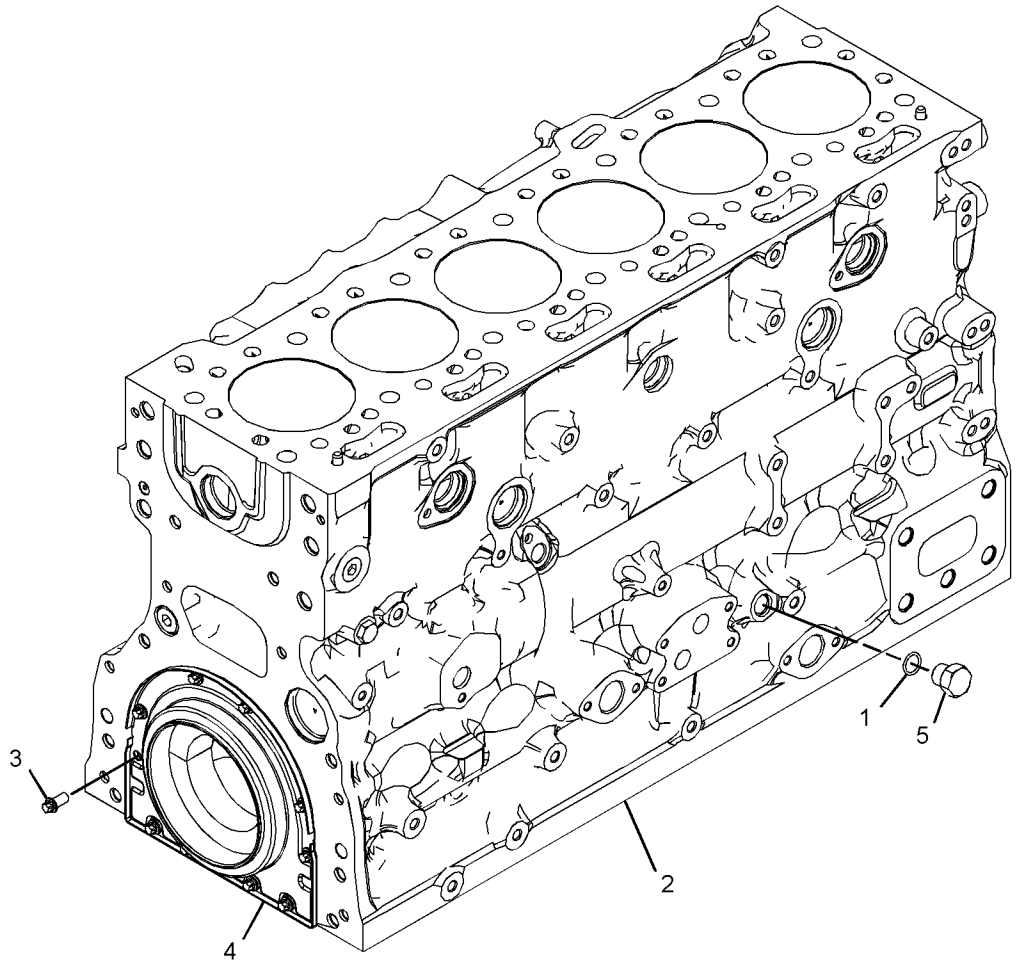

GRAPHIC #1 <END> g03384924

384-5313 CYLINDER HEAD AS

S/N: 4501-UP; E7A1-UP

PART OF 385-2572 CYLINDER HEAD GP

SMCS-1100 **i05330860**

NOTE	REF NO	GRAPHIC REF	PART NUMBER	QTY	PART NAME 1 2 3 4 5 6 (PRODUCT LEVEL)	SEE PAGE
	1	1	**276-8116**	6	PLUG-CORE	
	2	1	**377-0400**	12	INSERT-VALVE SEAT (EXHAUST)	
	3	1	**377-0399**	12	INSERT-VALVE SEAT (INTAKE)	
	4	1	**276-8117**	13	PLUG-CORE	

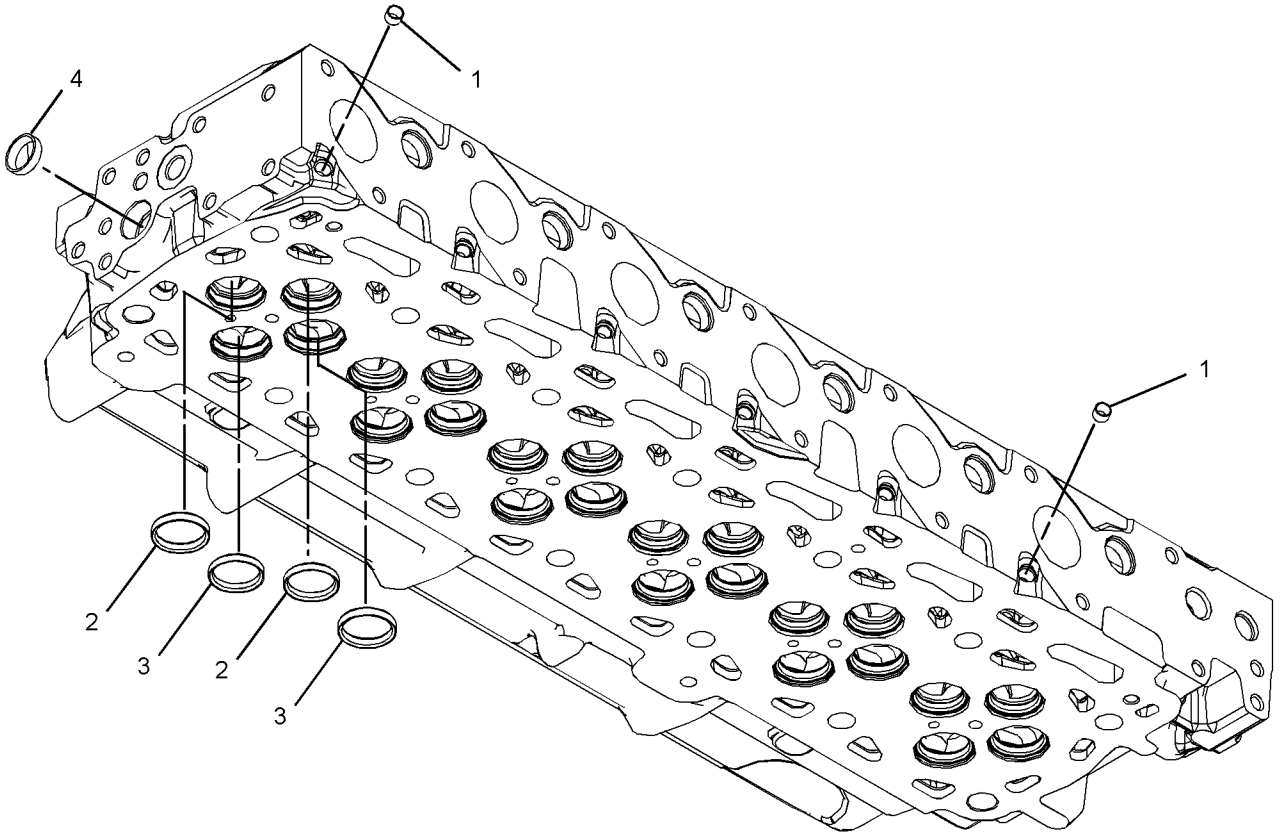

GRAPHIC #1 <END> g03379426

385-2572 CYLINDER HEAD GP

S/N: 4501-UP; E7A1-UP

PART OF 530-2686, 555-5560, 555-7255 ENGINE AR-PRIMARY

SMCS-1100 **i05330848**

NOTE	REF NO	GRAPHIC REF	PART NUMBER	QTY	PART NAME 1 2 3 4 5 6 (PRODUCT LEVEL)	SEE PAGE
	1	1	**199-9751**	1	SEAL-O-RING	
Y	2	1	**384-5313**	1	CYLINDER HEAD AS	26
	3	1	**388-4707**	1	GASKET-CYLINDER HEAD	
	4	1	**232-1322**	1	PLUG	
	5	1	**276-8134**	14	BOLT-SPECIAL (CYLINDER HEAD)	
	6	1	**277-4302**	2	DOWEL	
	7	1	**295-6661**	1	PLUG	

Y - SEPARATE ILLUSTRATION

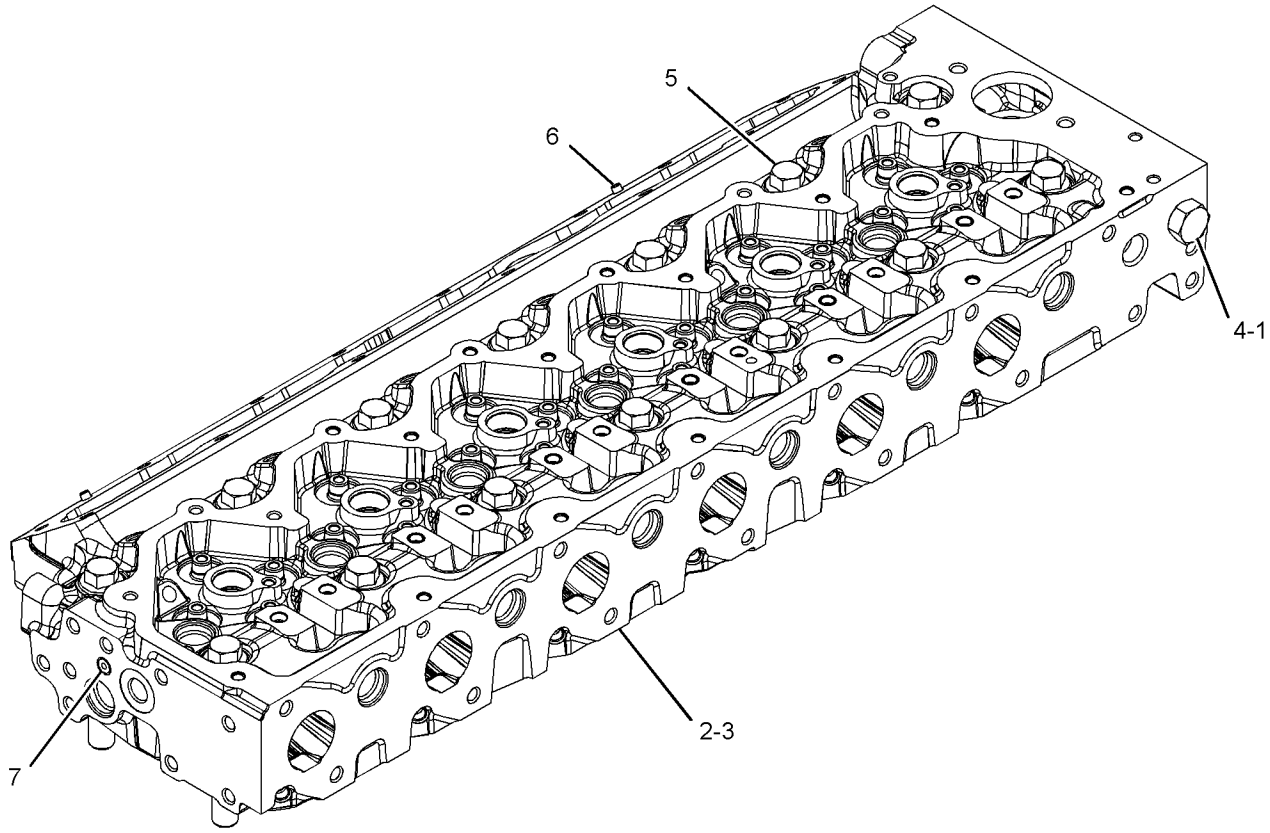

GRAPHIC #1 <END> g03379427

371-2742 DRAIN GP-ENGINE OIL

S/N: 4501-UP; E7A1-UP

PART OF 530-2686, 555-5560, 555-7255 ENGINE AR-PRIMARY

SMCS-1302 **i05909860**

NOTE	REF NO	GRAPHIC REF	PART NUMBER	QTY	PART NAME 1 2 3 4 5 6 (PRODUCT LEVEL)	SEE PAGE
	1	1	**3K-0360**	1	SEAL-O-RING	
	2	1	**6V-7238**	1	VALVE-SHUTOFF (ENGINE OIL DRAIN)	

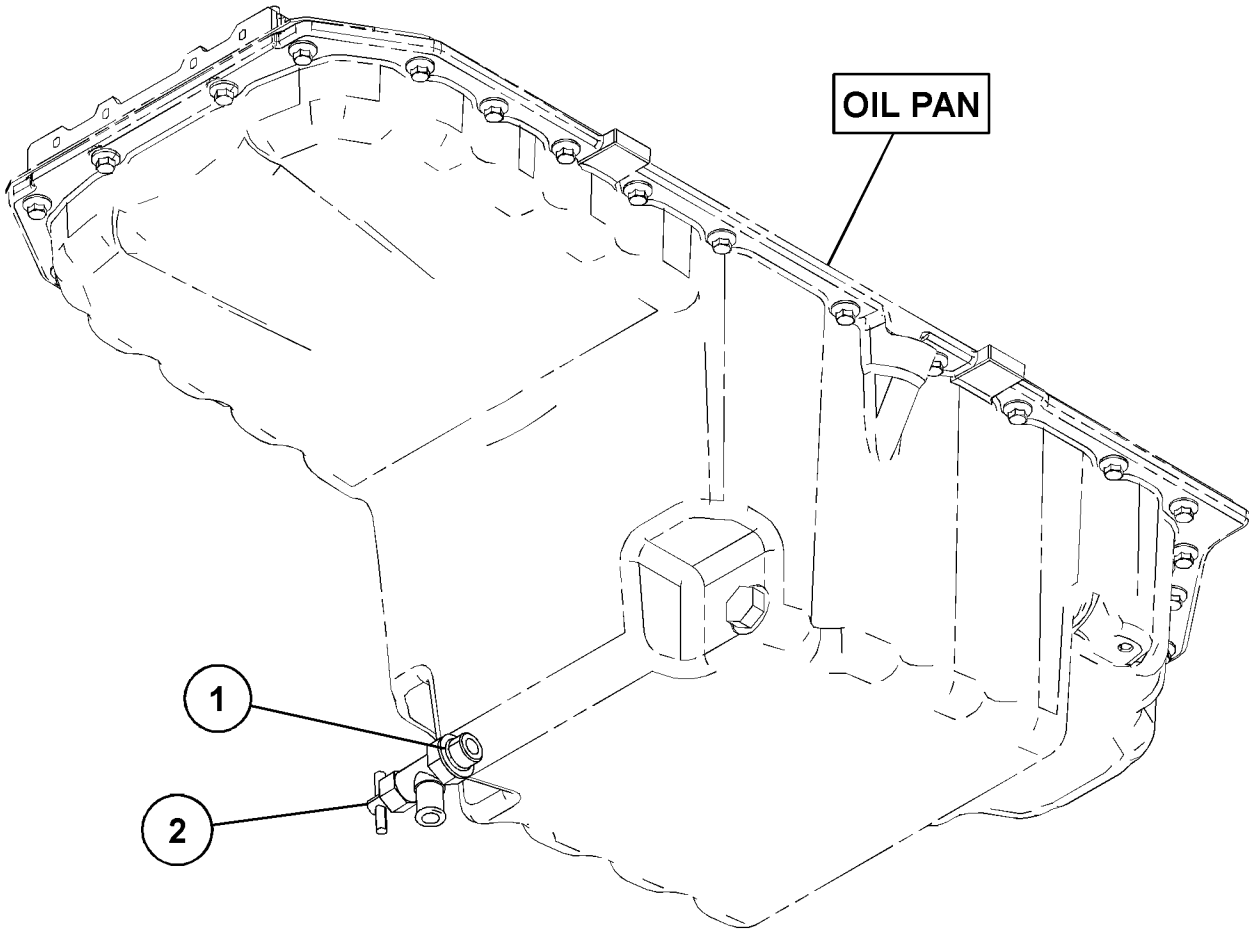

GRAPHIC #1 <END> g03171685

490-4830 DRAIN GP-ENGINE OIL

S/N: BR61-UP

PART OF 490-4811, 558-1933 INSTALLATION AR-ENGINE

SMCS-1302 **i07366378**

NOTE	REF NO	GRAPHIC REF	PART NUMBER	QTY	PART NAME 1 2 3 4 5 6 (PRODUCT LEVEL)	SEE PAGE
	1	1	**095-1388**	1	CLAMP-HOSE	
G	2	1	**423-1984**		HOSE (12.3-IN)	

G - ORDER BY THE INCH

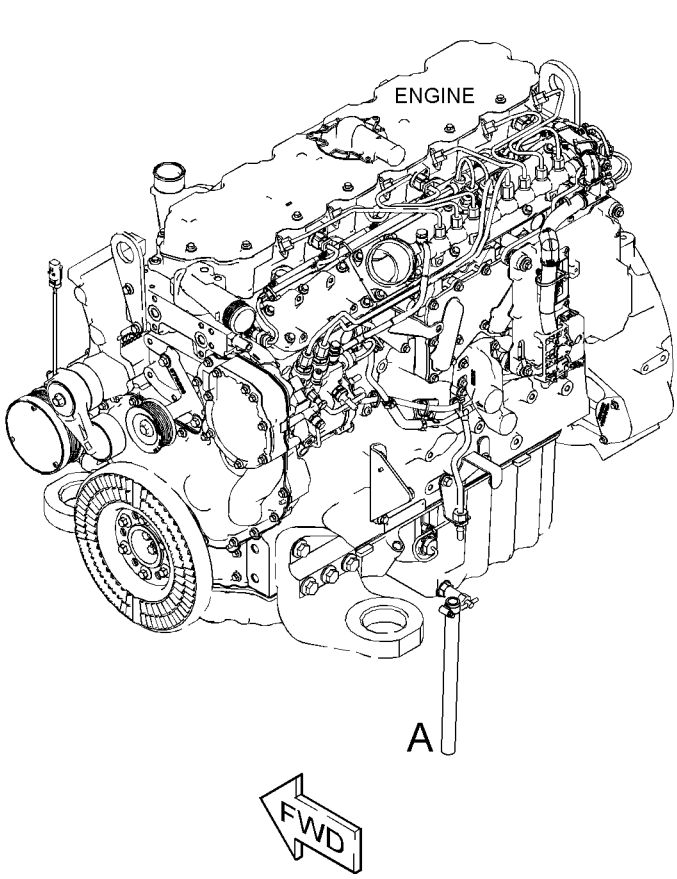

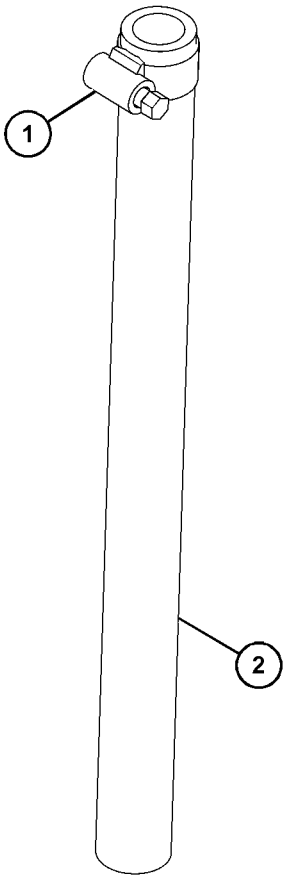

VIEW OF AREA A

GRAPHIC #1 <END> g06225702

375-3937 DRIVE GP-FAN

S/N: 4501-UP; E7A1-UP

PART OF 530-2686, 555-5560, 555-7255 ENGINE AR-PRIMARY

SMCS-1359 **i07382388**

NOTE	REF NO	GRAPHIC REF	PART NUMBER	QTY	PART NAME 1 2 3 4 5 6 (PRODUCT LEVEL)	SEE PAGE
	1	1	**371-8298**	1	BRACKET	
	2	1	**377-9255**	1	PULLEY AS (8-GROOVE)	
M		1	**423-7576**	1	BOLT (M10X1.5X50-MM)	
M	3	1	**111-0859**	2	BOLT (M10X1.5X35-MM)	

M - METRIC PART

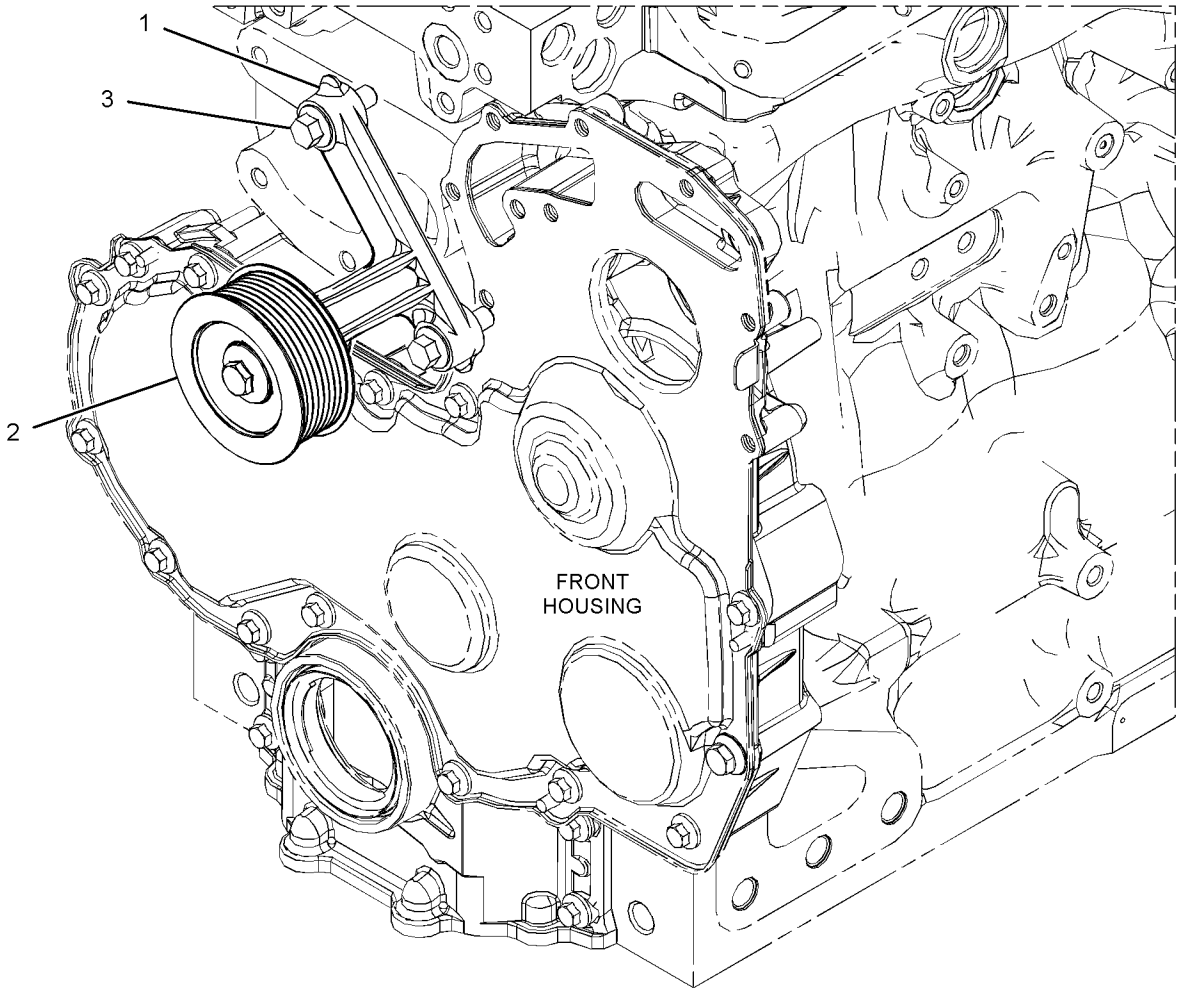

GRAPHIC #1 <END> g03108922

375-0098 FASTENER GP-DAMPER & PULLEY

S/N: 4501-UP; E7A1-UP

PART OF 530-2686, 555-5560, 555-7255 ENGINE AR-PRIMARY

SMCS-1205, 7553

i05332368

NOTE	REF NO	GRAPHIC REF	PART NUMBER	QTY	PART NAME 1 2 3 4 5 6 (PRODUCT LEVEL)	SEE PAGE
M	1	1	**274-1935**	6	BOLT (M12X1.75X30-MM)	

M - METRIC PART

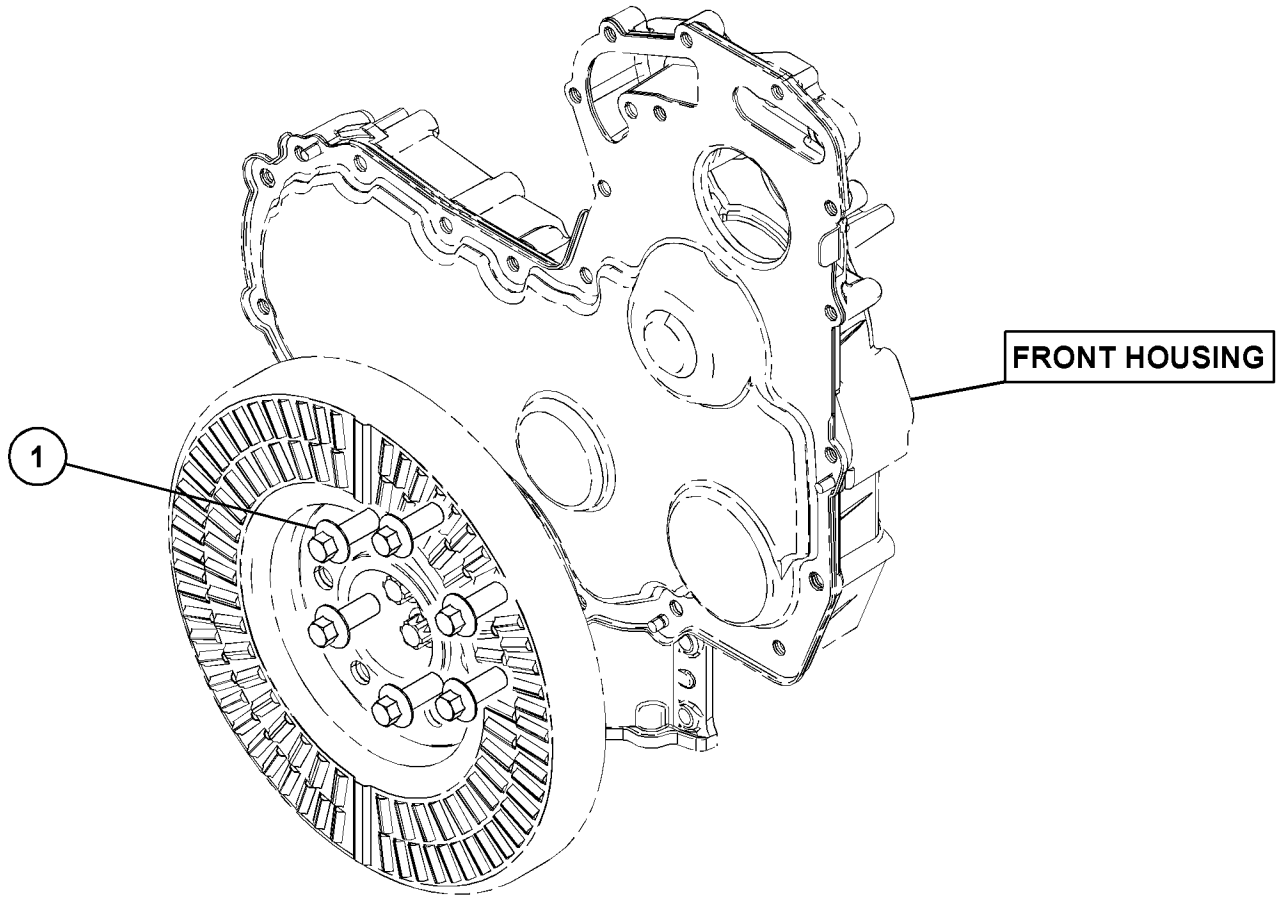

GRAPHIC #1 <END> g03172177

371-2539 FLYWHEEL GP

S/N: 4501-UP; E7A1-UP

PART OF 530-2686, 555-5560, 555-7255 ENGINE AR-PRIMARY

SMCS-1156 **i05281719**

NOTE	REF NO	GRAPHIC REF	PART NUMBER	QTY	PART NAME 1 2 3 4 5 6 (PRODUCT LEVEL)	SEE PAGE
	1	1	**145-4911**	12	WASHER	
	2	1	**378-4739**	1	FLYWHEEL AS	
		1	**277-0588**	1	GEAR-STARTING MOTOR RING (134-TEETH)	
	3	1	**0S-1603**	12	BOLT (1/2-20X1.5-IN)	

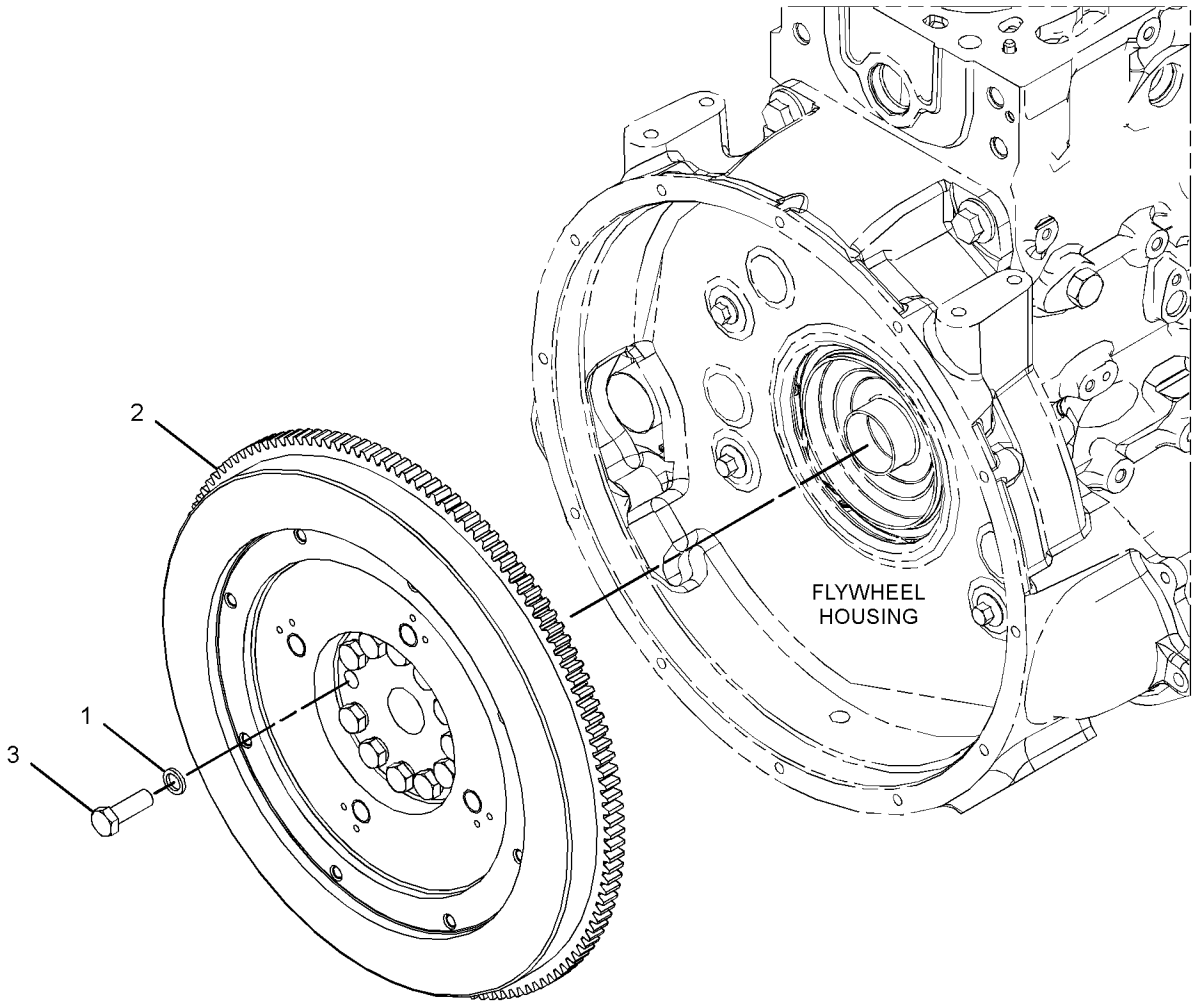

GRAPHIC #1 <END> g02629056

371-2538 HOUSING GP-FLYWHEEL

S/N: 4501-UP; E7A1-UP

PART OF 530-2686, 555-5560, 555-7255 ENGINE AR-PRIMARY

SMCS-1157 **i06133528**

NOTE	REF NO	GRAPHIC REF	PART NUMBER	QTY	PART NAME 1 2 3 4 5 6 (PRODUCT LEVEL)	SEE PAGE
M	1	1	**6I-0917**	2	BOLT (M6X1X25-MM)	
	2	1	**354-8322**	1	PLUG	
	3	1	**283-4662**	2	BOLT-FLANGE HEAD	
	4	1	**287-8597**	2	DOWEL	
	5	1	**288-6974**	4	BOLT	
M	6	1	**288-6975**	2	BOLT (M16X2X40-MM)	
	7	1	**335-2092**	1	COVER-FLYWHEEL	
	8	1	**393-4006**	1	GASKET	
	9	1	**415-1418**	1	HOUSING-FLYWHEEL	

M - METRIC PART

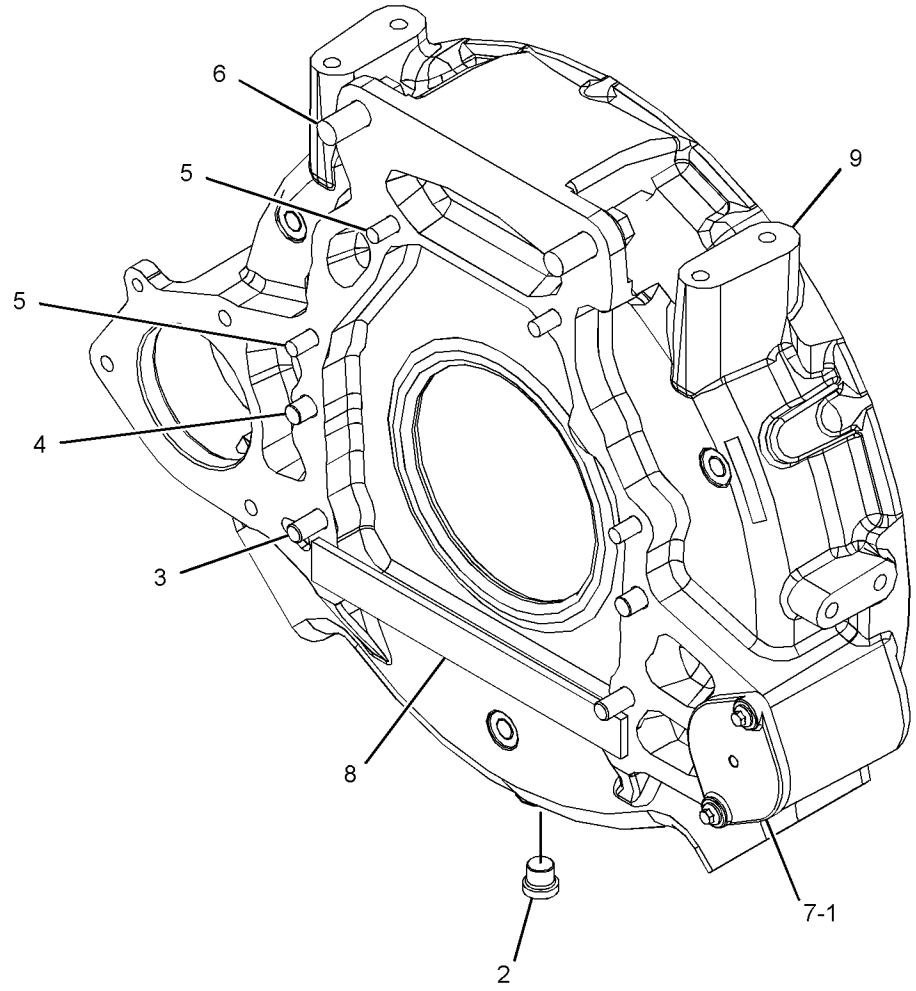

GRAPHIC #1 <END> g03482077

371-2716 HOUSING GP-FRONT

S/N: 4501-UP; E7A1-UP

PART OF 530-2686, 555-5560, 555-7255 ENGINE AR-PRIMARY

SMCS-1151, 1162, 1206

i06909393

NOTE	REF NO	GRAPHIC REF	PART NUMBER	QTY	PART NAME 1 2 3 4 5 6 (PRODUCT LEVEL)	SEE PAGE
M	1	1	**6I-0217**	6	BOLT (M8X1.25X20-MM)	
M	2	1	**6I-0645**	4	BOLT (M8X1.25X25-MM)	
M	3	1	**6I-0650**	3	BOLT (M10X1.5X65-MM)	
M	4	1	**7C-4616**	1	BOLT (M12X1.75X45-MM)	
	5	1	**067-6179**	1	DOWEL	
M	6	1	**100-3751**	5	BOLT (M8X1.25X65-MM)	
M	7	1	**101-3895**	2	BOLT (M8X1.25X35-MM)	
M	8	1	**124-3815**	10	BOLT (M8X1.25X16-MM)	
	9	1	**133-1011**	1	WASHER	
	10	1	**425-7103**	1	GEAR (68-TEETH)	
	11	1	**232-3657**	1	COVER AS-FRONT	
	11A	1	**225-8287**	1	GASKET	
	12	1	**232-3666**	1	WASHER-THRUST	
	13	1	**277-3012**	1	GASKET-COVER	
	14	1	**277-3013**	1	SEAL	
	15	1	**324-0444**	1	HUB-IDLER GEAR	
	16	1	**346-0407**	1	GEAR-IDLER	
	17	1	**346-0408**	1	PLATE	
	18	1	**386-2112**	1	CASE-GEAR	

M - METRIC PART

371-2716 **HOUSING GP-FRONT (**contd.**)** **i06909393**

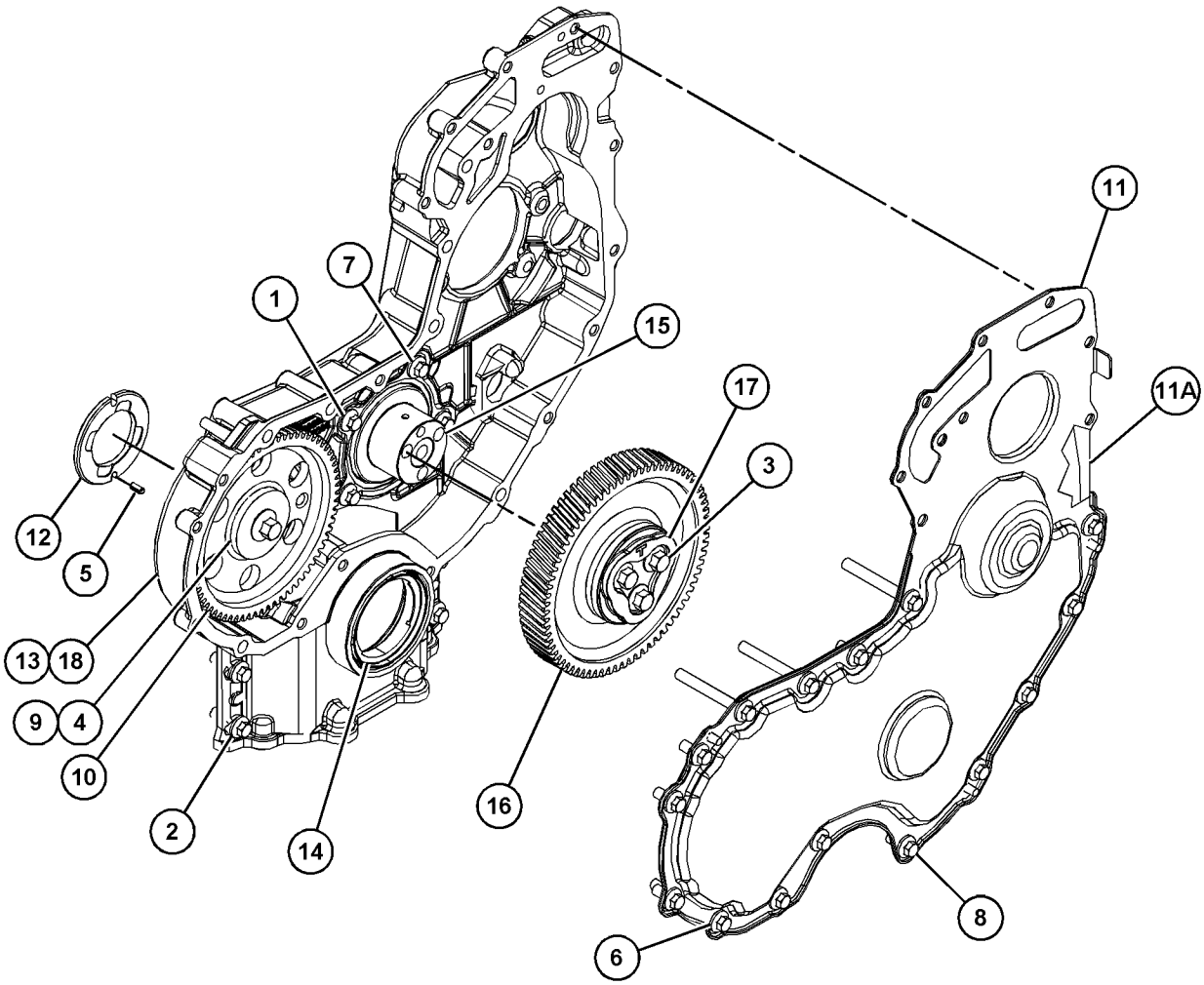

GRAPHIC #1 <END> g03483004

371-2478 JET GP-PISTON COOLING

S/N: 4501-UP; E7A1-UP

PART OF 530-2686, 555-5560, 555-7255 ENGINE AR-PRIMARY

SMCS-1331 **i05331889**

NOTE	REF NO	GRAPHIC REF	PART NUMBER	QTY	PART NAME 1 2 3 4 5 6 (PRODUCT LEVEL)	SEE PAGE
M	1	1	**100-4841**	6	BOLT (M6X1X10-MM)	
	2	1	**329-3796**	6	TUBE AS-OIL JET	

M - METRIC PART

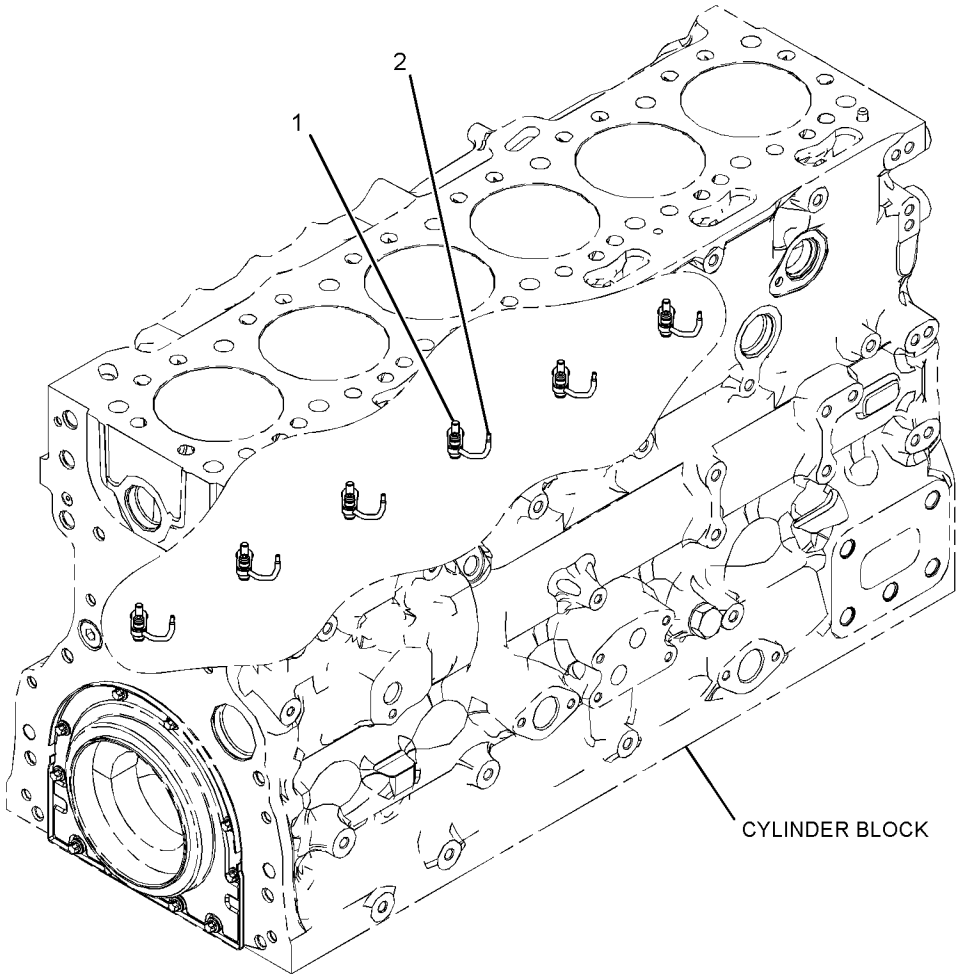

GRAPHIC #1 <END> g03378569

371-2740 LIFTING GP-ENGINE

S/N: 4501-UP; E7A1-UP

PART OF 530-2686, 555-5560, 555-7255 ENGINE AR-PRIMARY

SMCS-1122 **i05496035**

NOTE	REF NO	GRAPHIC REF	PART NUMBER	QTY	PART NAME 1 2 3 4 5 6 (PRODUCT LEVEL)	SEE PAGE
	1	1	**279-9651**	1	PLATE-LIFTING	
	2	1	**304-5062**	1	BRACKET	
M	3	1	**6I-0654**	2	BOLT (M10X1.5X25-MM)	
M	4	1	**123-2899**	4	BOLT (M10X1.5X40-MM)	
	5	1	**415-1604**	1	BRACKET-LIFTING	

M - METRIC PART

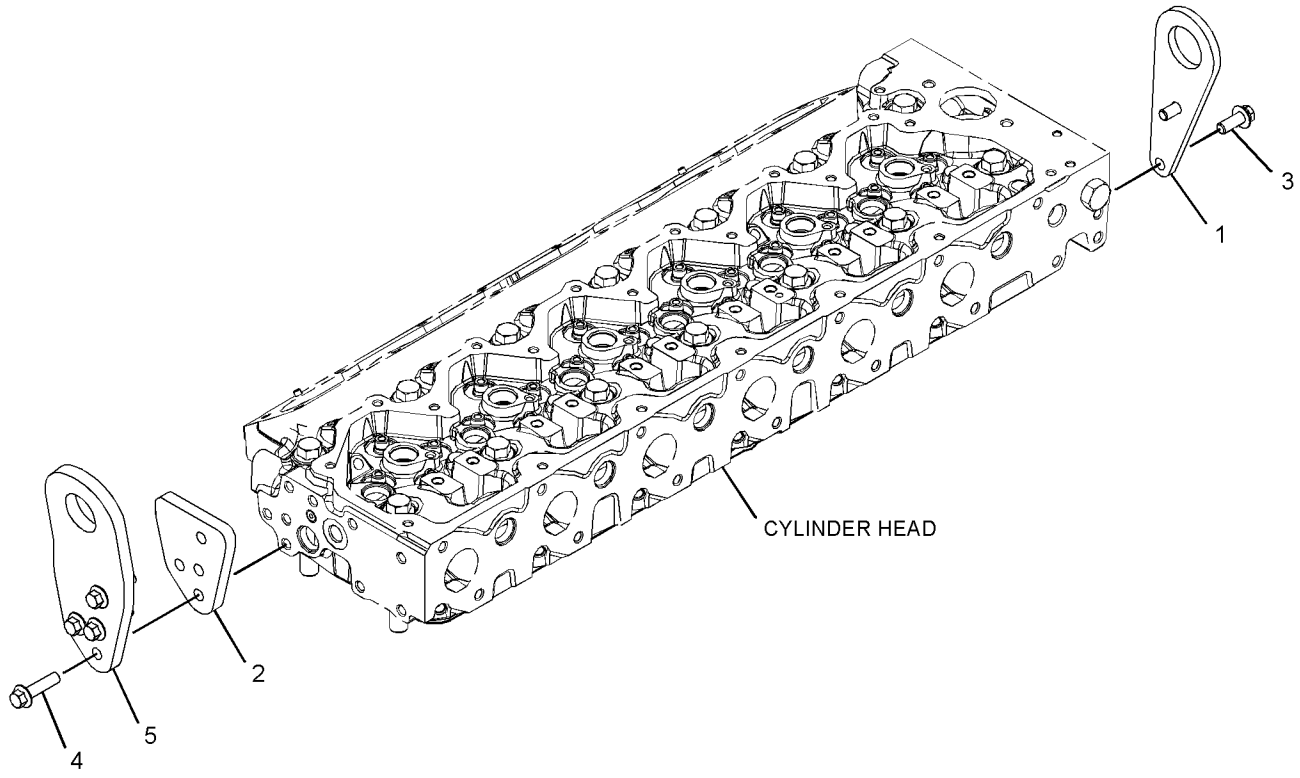

GRAPHIC #1 <END> g03456846

371-2558 MOUNTING GP-ALTERNATOR

S/N: 4501-UP; E7A1-UP

PART OF 530-2686, 555-5560, 555-7255 ENGINE AR-PRIMARY

SMCS-1405 **i05331892**

NOTE	REF NO	GRAPHIC REF	PART NUMBER	QTY	PART NAME 1 2 3 4 5 6 (PRODUCT LEVEL)	SEE PAGE
M	1	1	**111-0859**	4	BOLT (M10X1.5X35-MM)	
	2	1	**394-4451**	1	BRACKET AS	
		1	**161-9820**	2	PIN	

M - METRIC PART

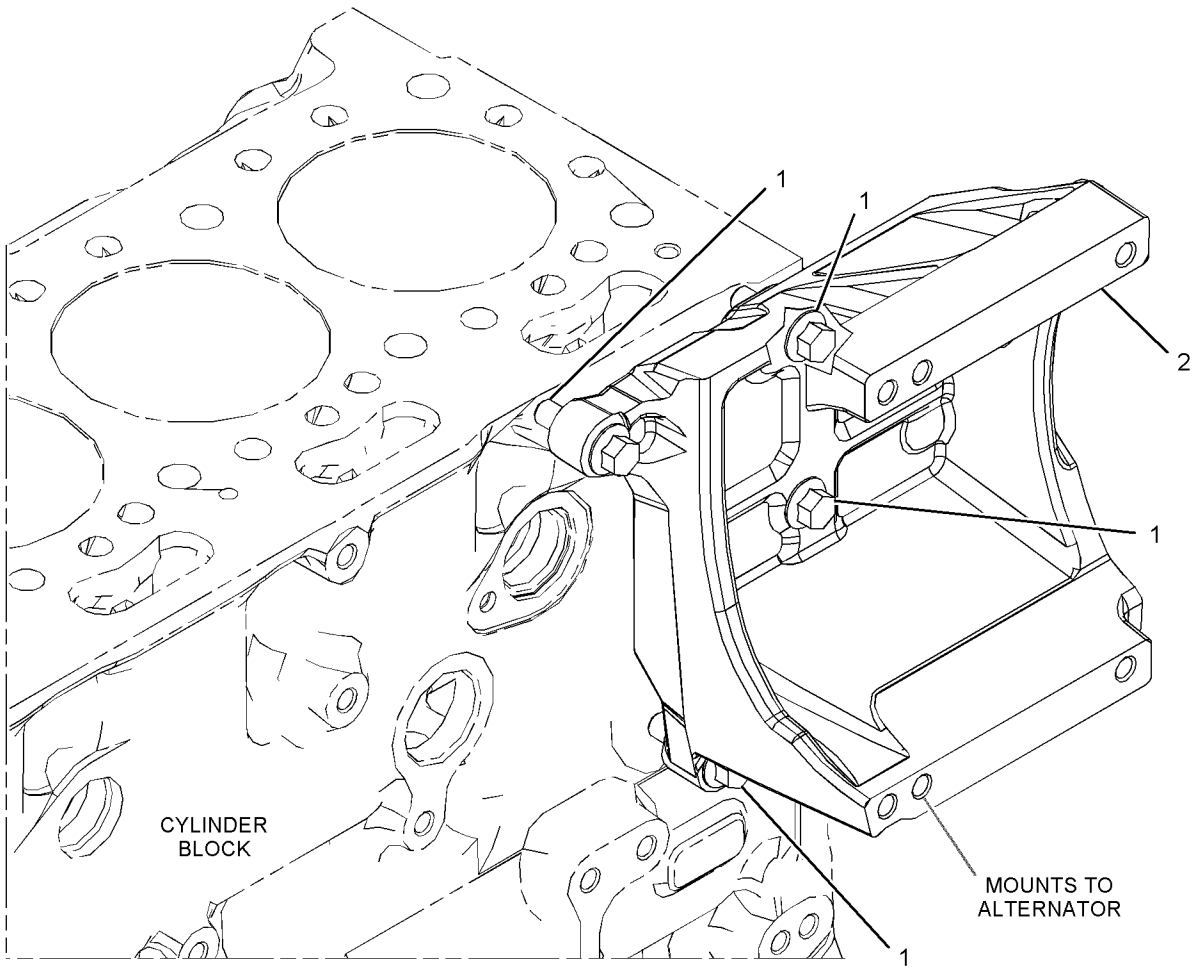

GRAPHIC #1 <END> g03378855

490-4835 MOUNTING GP-ENGINE

S/N: BR61-UP

PART OF 490-4811, 558-1933 INSTALLATION AR-ENGINE

SMCS-1152 **i07366389**

NOTE	REF NO	GRAPHIC REF	PART NUMBER	QTY	PART NAME 1 2 3 4 5 6 (PRODUCT LEVEL)	SEE PAGE
	1	1	**118-9930**	3	SUPPORT AS	
M	2	1	**447-1715**	4	BOLT (M20X2.5X120-MM)	
	3	1	**451-2176**	7	WASHER-HARD (22X35X3.5-MM THK)	
	4	1	**451-2182**	8	WASHER-HARD (13.5X25.5X3-MM THK)	
M	5	1	**453-3450**	8	BOLT (M12X1.75X60-MM)	
	6	1	**503-0946**	2	BRACKET-REAR	
	7	1	**503-0947**	1	SUPPORT AS	
	8	1	**507-9360**	4	MOUNT-RUBBER	
	9	1	**507-9361**	4	MOUNT-RUBBER	
	10	1	**109-9329**	3	WASHER (21.5X120X8-MM THK)	

M - METRIC PART

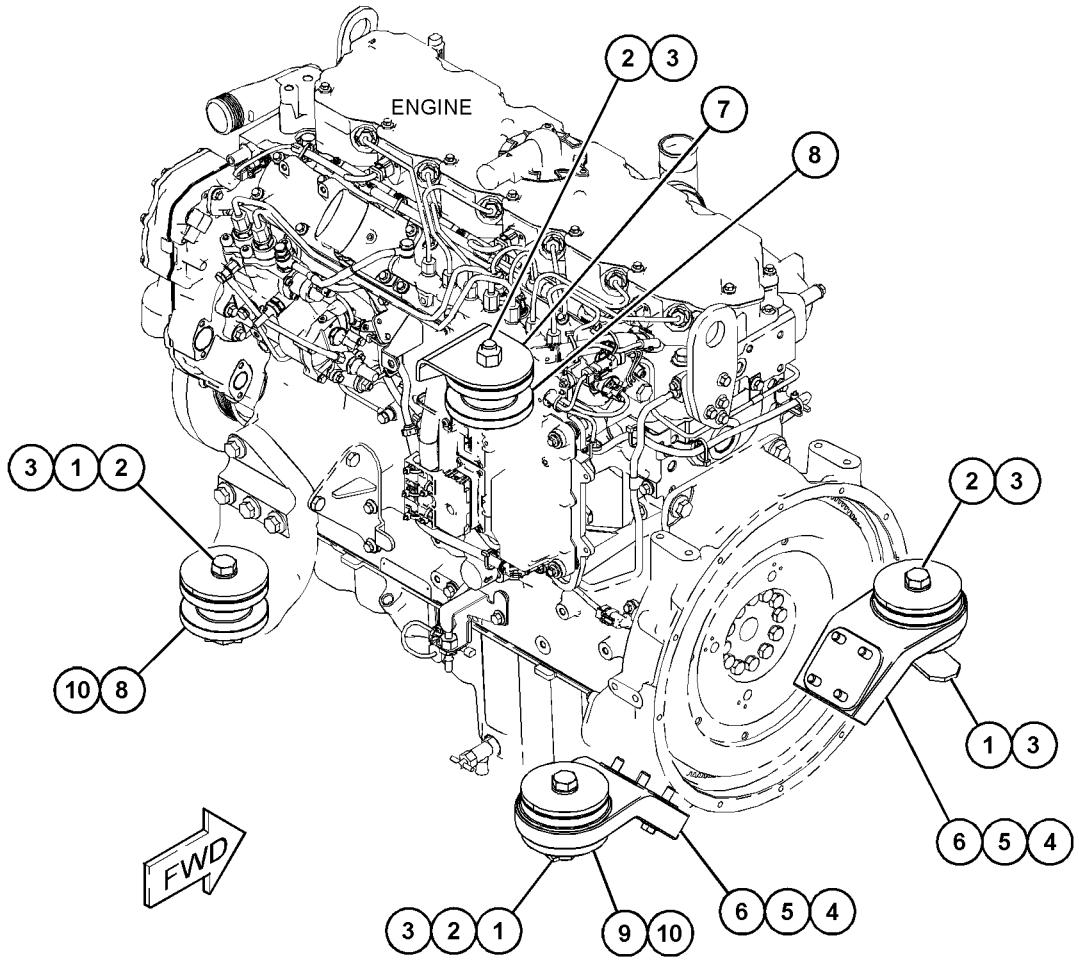

GRAPHIC #1 <END> g06224389

515-2711 MOUNTING GP-ENGINE

S/N: 4501-UP; E7A1-UP

PART OF 530-2686, 555-5560, 555-7255 ENGINE AR-PRIMARY

SMCS-1152 **i07158227**

NOTE	REF NO	GRAPHIC REF	PART NUMBER	QTY	PART NAME 1 2 3 4 5 6 (PRODUCT LEVEL)	SEE PAGE
M	1	1	**283-8301**	2	BOLT (M16X2X60-MM)	
M	2	1	**283-8302**	6	BOLT (M16X2X80-MM)	
	3	1	**515-1893**	2	BRACKET-FRONT	

M - METRIC PART

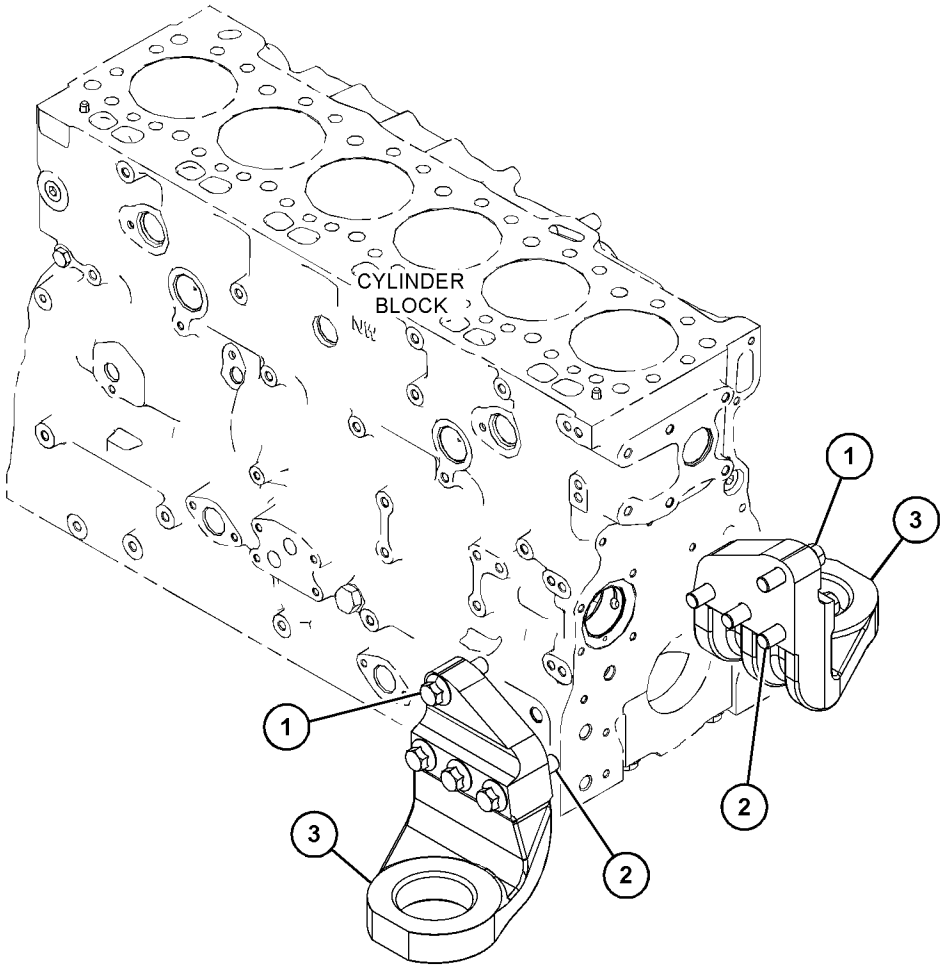

GRAPHIC #1 <END> g06229432

488-6692 MOUNTING GP-STARTING MOTOR

S/N: 4501-UP; E7A1-UP

PART OF 530-2686, 555-5560, 555-7255 ENGINE AR-PRIMARY

SMCS-1453 **i07158228**

NOTE	REF NO	GRAPHIC REF	PART NUMBER	QTY	PART NAME 1 2 3 4 5 6 (PRODUCT LEVEL)	SEE PAGE
	1	1	**183-1343**	3	STUD	

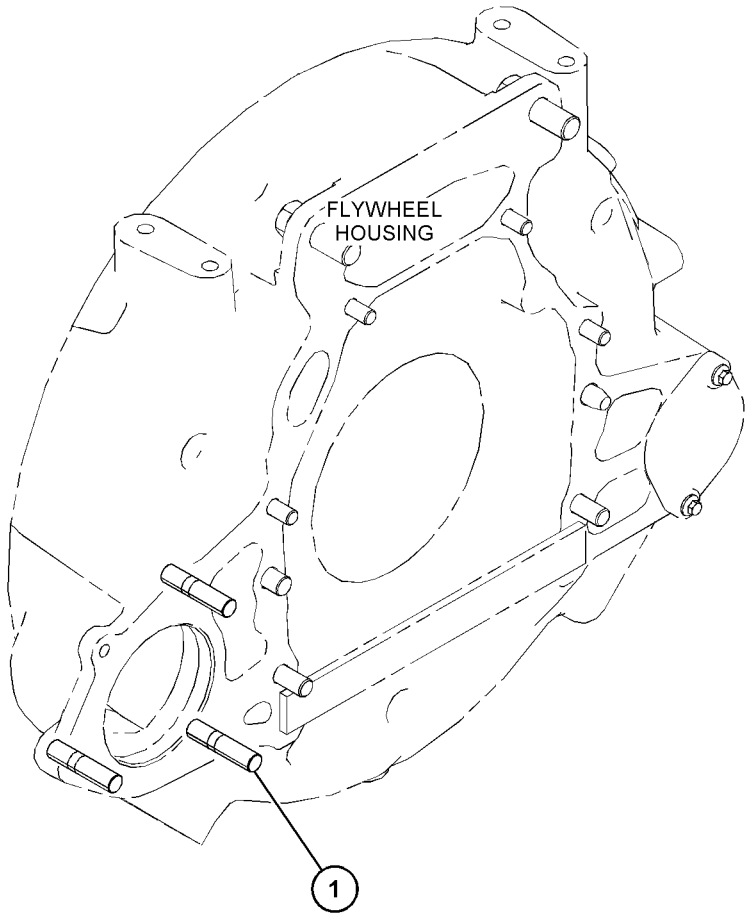

GRAPHIC #1 <END> g06229413

378-0594 PAN GP-OIL

S/N: 4501-UP; E7A1-UP
WITHOUT OIL LEVEL SENSOR
PART OF 530-2686, 555-5560, 555-7255 ENGINE AR-PRIMARY

SMCS-1302 **i07270809**

NOTE	REF NO	GRAPHIC REF	PART NUMBER	QTY	PART NAME 1 2 3 4 5 6 (PRODUCT LEVEL)	SEE PAGE
M	1	1	**8T-0269**	2	BOLT-SOCKET HEAD (M6X1X20-MM)	
M	2	1	**6I-0654**	1	BOLT (M10X1.5X25-MM)	
	3	1	**230-8094**	1	BRIDGE	
	4	1	**351-4749**	1	GASKET-OIL PAN	
	5	1	**539-7274**	1	PAN GP-OIL	
	5A	1	**8L-2786**	2	SEAL-O-RING	
	5B	1	**9S-4185**	2	PLUG (3/4-16-THD)	
M	6	1	**6I-0217**	28	BOLT (M8X1.25X20-MM)	
M	7	1	**6I-0260**	2	BOLT (M8X1.25X25-MM)	
M	8	1	**6I-0572**	3	BOLT (M8X1.25X20-MM)	
	9	1	**275-9897**	1	BRACKET	
	10	1	**285-2991**	1	TUBE AS-OIL SUCTION	
		1	**236-5511**	1	CLIP-PIPE	
	11	1	**6I-4681**	1	GASKET	

M - METRIC PART

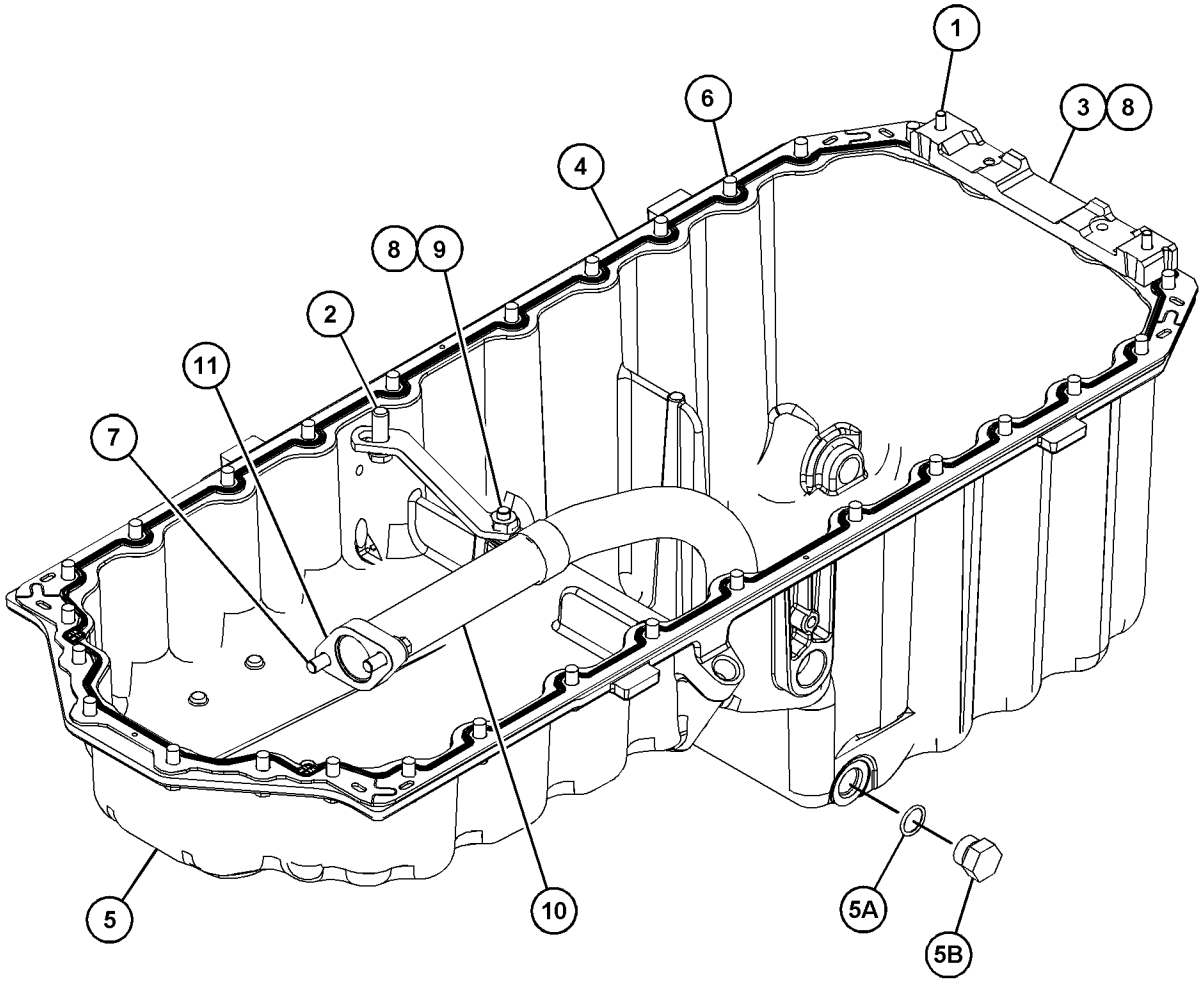

GRAPHIC #1 <END> g03650954

374-6301 PISTON & ROD GP

S/N: E7A1-UP

PART OF 555-5560 ENGINE AR-PRIMARY

SMCS-1225 **i07383519**

NOTE	REF NO	GRAPHIC REF	PART NUMBER	QTY	PART NAME 1 2 3 4 5 6 (PRODUCT LEVEL)	SEE PAGE
	1	1	**331-0290**	6	CONNECTING ROD GP	
					(EACH INCLUDES)	
	1A	1	**276-7478**	1	BUSHING	
M	1B	1	**323-9312**	2	BOLT (M10X1X50-MM)	
J	2	1	*450-5996*	6	PISTON GP	
AB		1	**391-3732**		PISTON GP (0.5-MM OS)	
AB		1	**391-3735**		PISTON GP (1-MM OS)	
P	3	1	*317-5482*	6	BEARING	
P	4	1	*470-8038*	6	BEARING (LOWER)	
J	5	1	**124-3536**	12	RING-RETAINING	
					AVAILABLE REPAIR KIT(S):	
BC			**276-7476**	1	KIT-PISTON RING (STANDARD)	
					(INCLUDES RINGS)	
AB			**380-2065**		KIT-PISTON RING (0.5-MM OS)	
					(INCLUDES RINGS)	
AB			**466-4849**		KIT-PISTON RING (1-MM OS)	
					(INCLUDES RINGS)	
P			**436-7781**	1	KIT-BEARING (CONNECTING ROD) (STANDARD)	
					(INCLUDES BEARINGS)	
AB			**480-4489**		KIT-BEARING (0.254-MM US)	
					(INCLUDES BEARINGS)	
AB			**480-4490**		KIT-BEARING (0.51-MM US)	
					(INCLUDES BEARINGS)	
AB			**480-4491**		KIT-BEARING (0.762-MM US)	
					(INCLUDES BEARINGS)	
J			**444-2190**	1	KIT-PISTON	
					(INCLUDES PIN, PISTON RINGS, RETAINING RINGS & PISTON)	

A - NOT PART OF THIS GROUP
B - USE AS REQUIRED
C - CHANGE FROM PREVIOUS TYPE
J - KIT MARKED J SERVICES PART(S) MARKED J
M - METRIC PART
P - KIT MARKED P SERVICES PART(S) MARKED P

374-6301 **PISTON & ROD GP (**contd.**)** **i07383519**

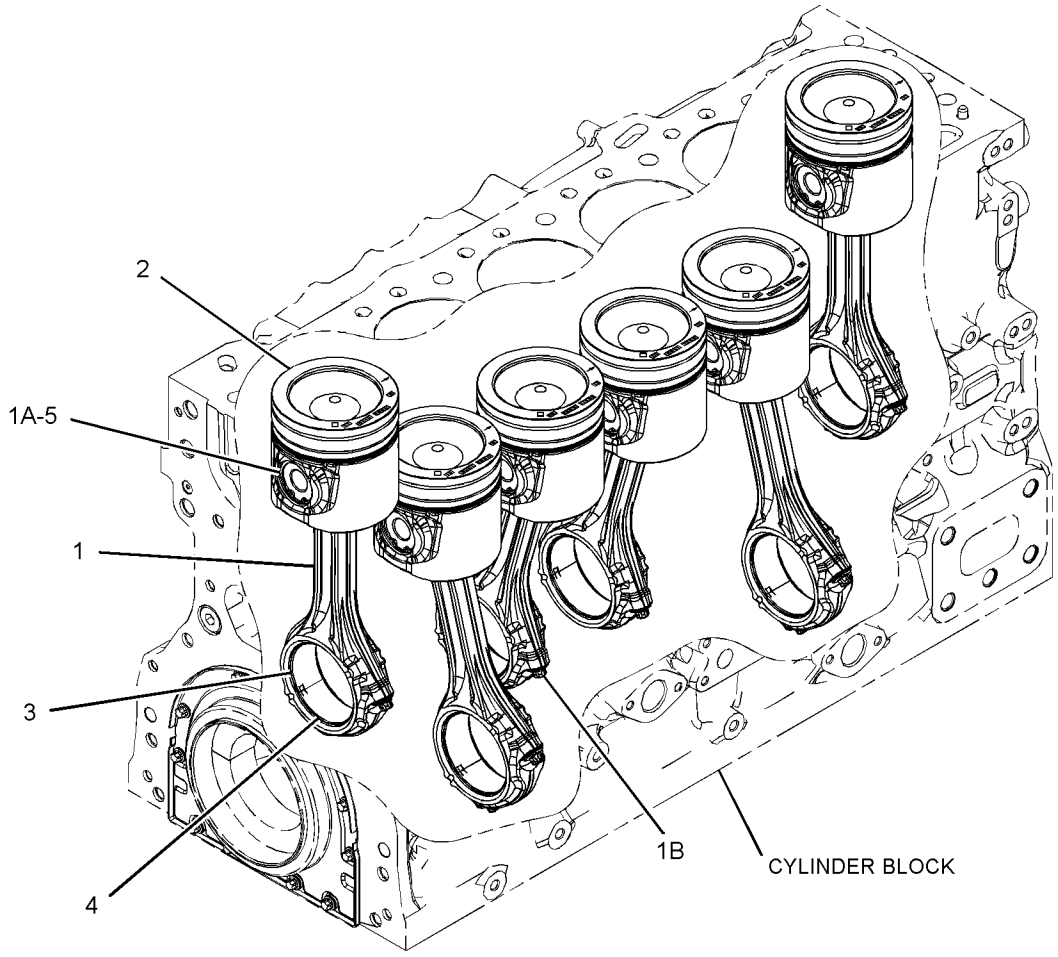

GRAPHIC #1 <END> g06158534

486-3208 PISTON & ROD GP

S/N: 4501-UP; E7A1-UP

PART OF 530-2686, 555-7255 ENGINE AR-PRIMARY

SMCS-1225 **i06945068**

NOTE	REF NO	GRAPHIC REF	PART NUMBER	QTY	PART NAME 1 2 3 4 5 6 (PRODUCT LEVEL)	SEE PAGE
L	1	1	**124-3536**	12	RING-RETAINING	
J	2	1	*317-5482*	6	BEARING	
	3	1	**331-0290**	6	CONNECTING ROD GP	
					(EACH INCLUDES)	
	3A	1	**276-7478**	1	BUSHING	
M	3B	1	**323-9312**	2	BOLT (M10X1X50-MM)	
L	4	1	*473-1373*	6	PISTON GP	
AB		1	**391-3732**		PISTON GP (0.5-MM OS)	
AB		1	**391-3735**		PISTON GP (1-MM OS)	
CT	5	1	*470-8038*	6	BEARING	
					PARTS SHOWN IN GRAPHIC(S) WITHOUT A REFERENCE NUMBER ARE NOT SERVICED SEPARATELY	
					AVAILABLE REPAIR KIT(S):	
J			**360-1564**	1	KIT-BEARING (CONNECTING ROD)	
					(INCLUDES BEARINGS)	
AB			**458-7918**		KIT-BEARING (0.25-MM US)	
					(INCLUDES BEARINGS)	
AB			**458-7939**		KIT-BEARING (0.50-MM US)	
					(INCLUDES BEARINGS)	
AB			**458-7940**		KIT-BEARING (0.75-MM US)	
					(INCLUDES BEARINGS)	
T			**436-7781**	1	KIT-BEARING (CONNECTING ROD)	
					(INCLUDES BEARINGS)	
AB			**480-4489**		KIT-BEARING (0.254-MM US)	
					(INCLUDES BEARINGS)	
AB			**480-4490**		KIT-BEARING (0.51-MM US)	
					(INCLUDES BEARINGS)	
AB			**480-4491**		KIT-BEARING (0.762-MM US)	
					(INCLUDES BEARINGS)	
L			**443-9543**	1	KIT-RING (STANDARD)	
					(INCLUDES PISTON RINGS)	
AB			**380-2065**		KIT-PISTON RING (0.5-MM OS)	
					(INCLUDES PISTON RINGS)	
AB			**466-4849**		KIT-PISTON RING (1-MM OS)	
					(INCLUDES PISTON RINGS)	
L			**444-2190**	1	KIT-PISTON	
					(INCLUDES PISTON RINGS, RETAINING RINGS, PISTON & PIN)	

A - NOT PART OF THIS GROUP
B - USE AS REQUIRED
C - CHANGE FROM PREVIOUS TYPE
J - KIT MARKED J SERVICES PART(S) MARKED J
L - KIT MARKED L SERVICES PART(S) MARKED L
M - METRIC PART
T - KIT MARKED T SERVICES PART(S) MARKED T

486-3208 **PISTON & ROD GP (**contd.**)** **i06945068**

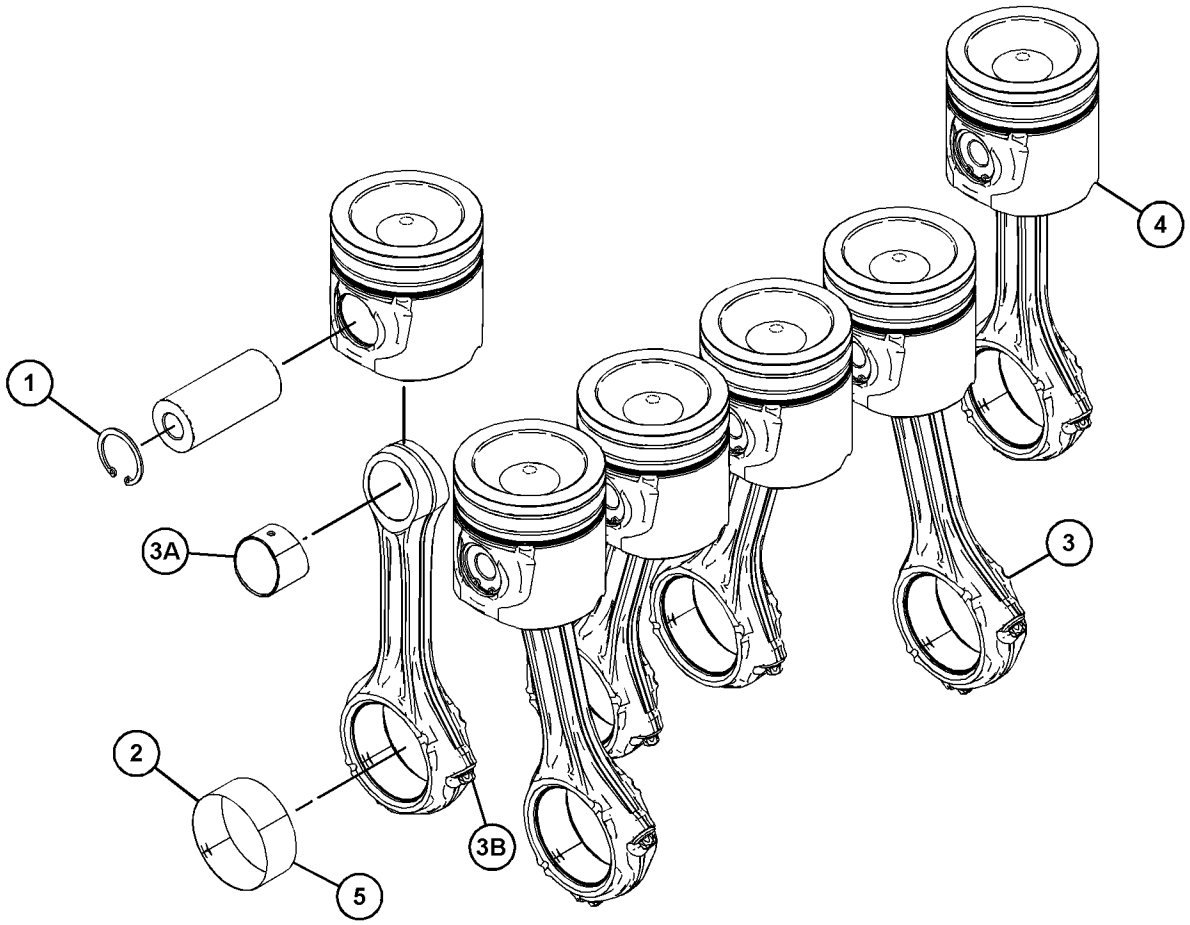

GRAPHIC #1 <END> g06160700

374-9295 PLUG GP-CYLINDER BLOCK

S/N: 4501-UP; E7A1-UP

PART OF 530-2686, 555-5560, 555-7255 ENGINE AR-PRIMARY

SMCS-1201 **i05498259**

NOTE	REF NO	GRAPHIC REF	PART NUMBER	QTY	PART NAME 1 2 3 4 5 6 (PRODUCT LEVEL)	SEE PAGE
	1	1	**277-4223**	1	PLUG	

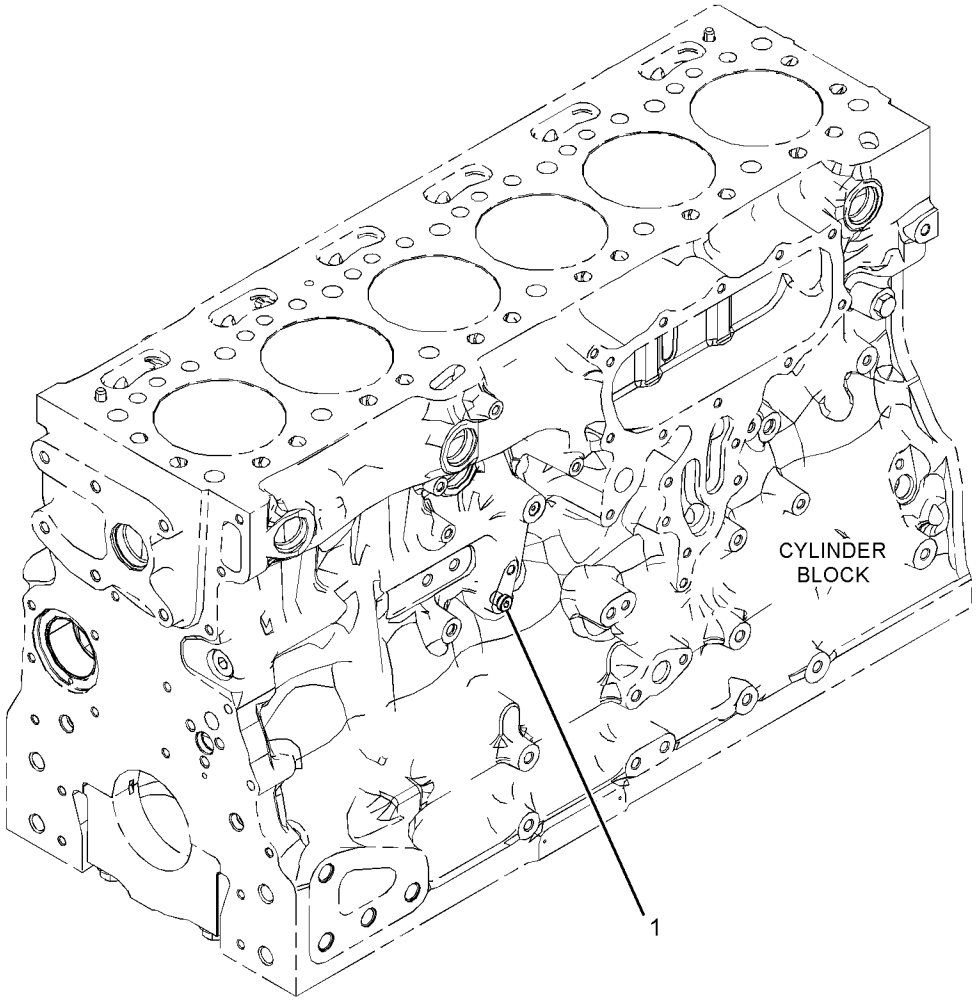

GRAPHIC #1 <END> g03483538

458-9768 PLUG GP-OIL PAN

S/N: 4501-UP; E7A1-UP

PART OF 530-2686, 555-5560, 555-7255 ENGINE AR-PRIMARY

SMCS-1302 **i07158230**

NOTE	REF NO	GRAPHIC REF	PART NUMBER	QTY	PART NAME 1 2 3 4 5 6 (PRODUCT LEVEL)	SEE PAGE
	1	1	**354-8322**	2	PLUG	

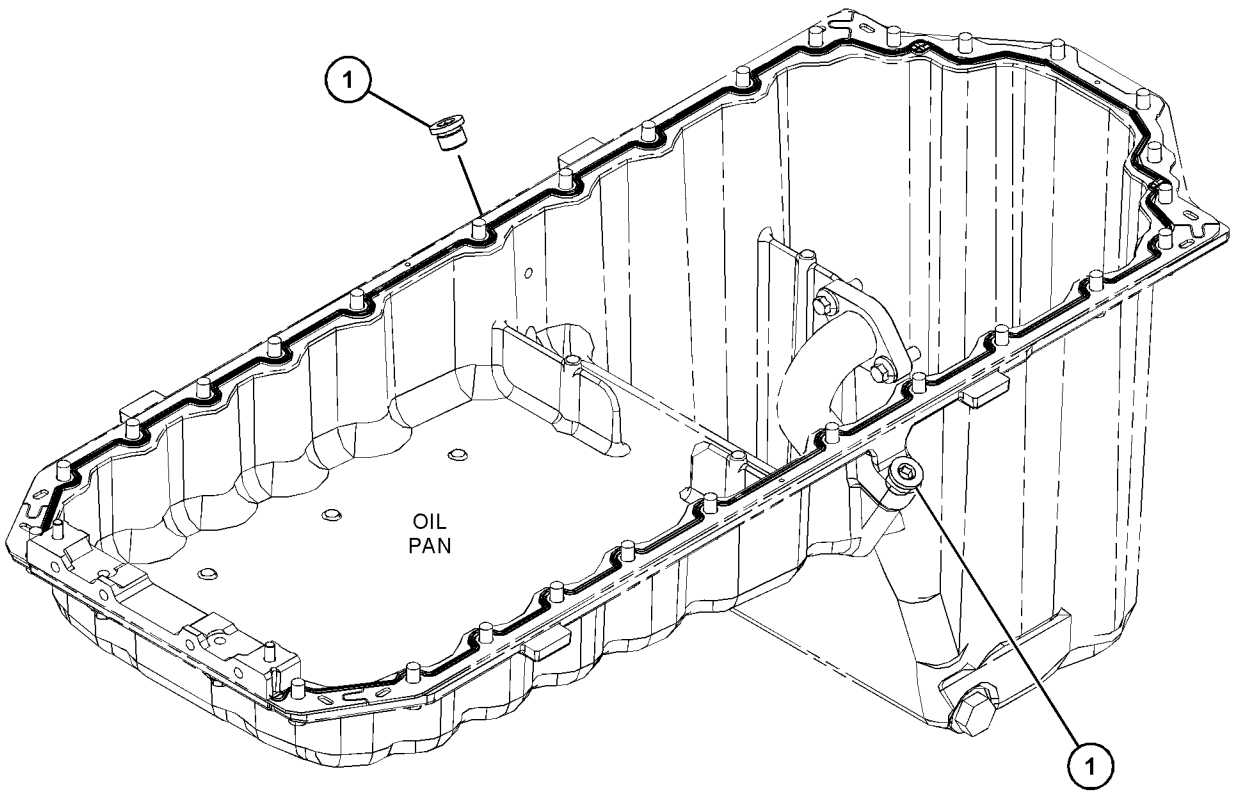

GRAPHIC #1 <END> g03696638

371-2554 PULLEY GP-CRANKSHAFT

S/N: 4501-UP; E7A1-UP

PART OF 530-2686, 555-5560, 555-7255 ENGINE AR-PRIMARY

SMCS-1205 **i05332376**

NOTE	REF NO	GRAPHIC REF	PART NUMBER	QTY	PART NAME 1 2 3 4 5 6 (PRODUCT LEVEL)	SEE PAGE
	1	1	**274-1931**	1	PULLEY (8-GROOVE)	
	2	1	**342-6502**	1	ADAPTER	
M	3	1	**342-6510**	3	BOLT-TORX (M14X1.5X70-MM)	
	4	1	**351-1724**	1	DAMPER	

M - METRIC PART

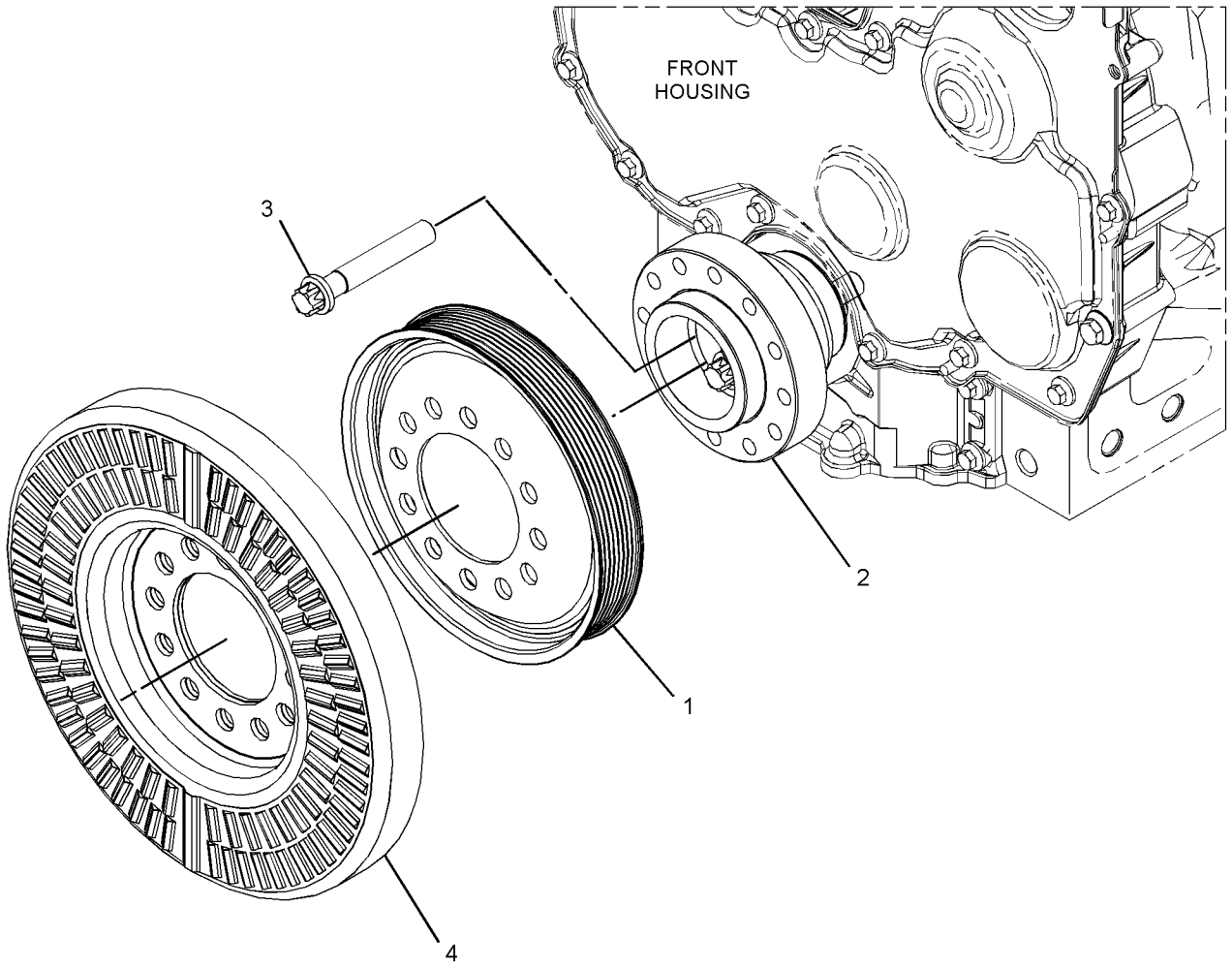

GRAPHIC #1 <END> g03110077

280-1911 ROCKER ARM GP

S/N: 4501-UP; E7A1-UP

PART OF 371-2480 ROCKER ARM GP

SMCS-1123 **i02752423**

NOTE	REF NO	GRAPHIC REF	PART NUMBER	QTY	PART NAME 1 2 3 4 5 6 (PRODUCT LEVEL)	SEE PAGE
	1	1	**276-9201**	1	CLIP	
	2	1	**276-9206**	5	SPRING-SHAFT	
	3	1	**276-9207**	1	SPRING-SHAFT	
	4	1	**277-5307**	1	SHAFT AS-ROCKER ARM	
	4A	1	**276-9200**	1	PLUG-SHAFT END	
	5	1	**278-5111**	6	ROCKER ARM AS	
					(EACH INCLUDES)	
	5A	1	**276-9230**	1	NUT	
	5B	1	**278-5113**	1	SCREW-ADJUSTING (TORX)	
	6	1	**278-5112**	6	ROCKER ARM AS	
					(EACH INCLUDES)	
	6A	1	**276-9230**	1	NUT	
	6B	1	**278-5113**	1	SCREW-ADJUSTING (TORX)	
	7	1	**280-1912**	6	BRACKET	
	8	1	**280-1913**	6	RETAINER	
	9	1	**280-1914**	12	BOLT (M8X1.25X55-MM)	

280-1911 **ROCKER ARM GP (**contd.**)** **i02752423**

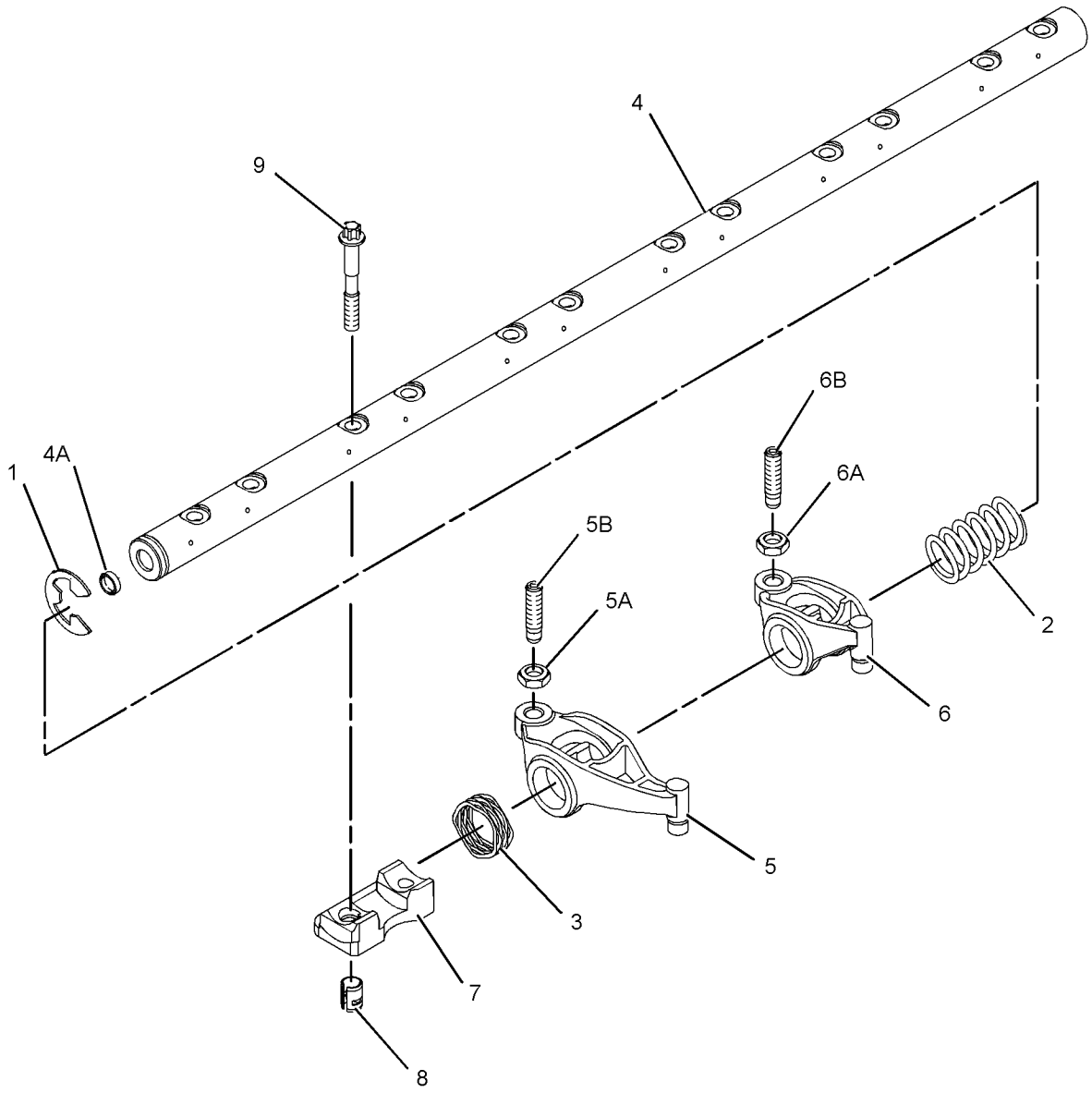

GRAPHIC #1 <END> g01235750

371-2480 ROCKER ARM GP

S/N: 4501-UP; E7A1-UP

PART OF 530-2686, 555-5560, 555-7255 ENGINE AR-PRIMARY

SMCS-1123 **i05773127**

NOTE	REF NO	GRAPHIC REF	PART NUMBER	QTY	PART NAME 1 2 3 4 5 6 (PRODUCT LEVEL)	SEE PAGE
	1	1	**436-0521**	24	SPRING-VALVE	
	2	1	**346-4709**	12	BRIDGE GP-VALVE	
	3	1	**276-8123**	48	COTTER-CAP	
	4	1	**276-8133**	24	CAP-VALVE	
Y	5	1	**280-1911**	1	ROCKER ARM GP	50
	6	1	**299-5511**	24	SEAL-VALVE STEM	
	7	1	**309-6678**	12	VALVE-INLET	
	8	1	**339-9637**	12	VALVE-EXHAUST	

Y - SEPARATE ILLUSTRATION

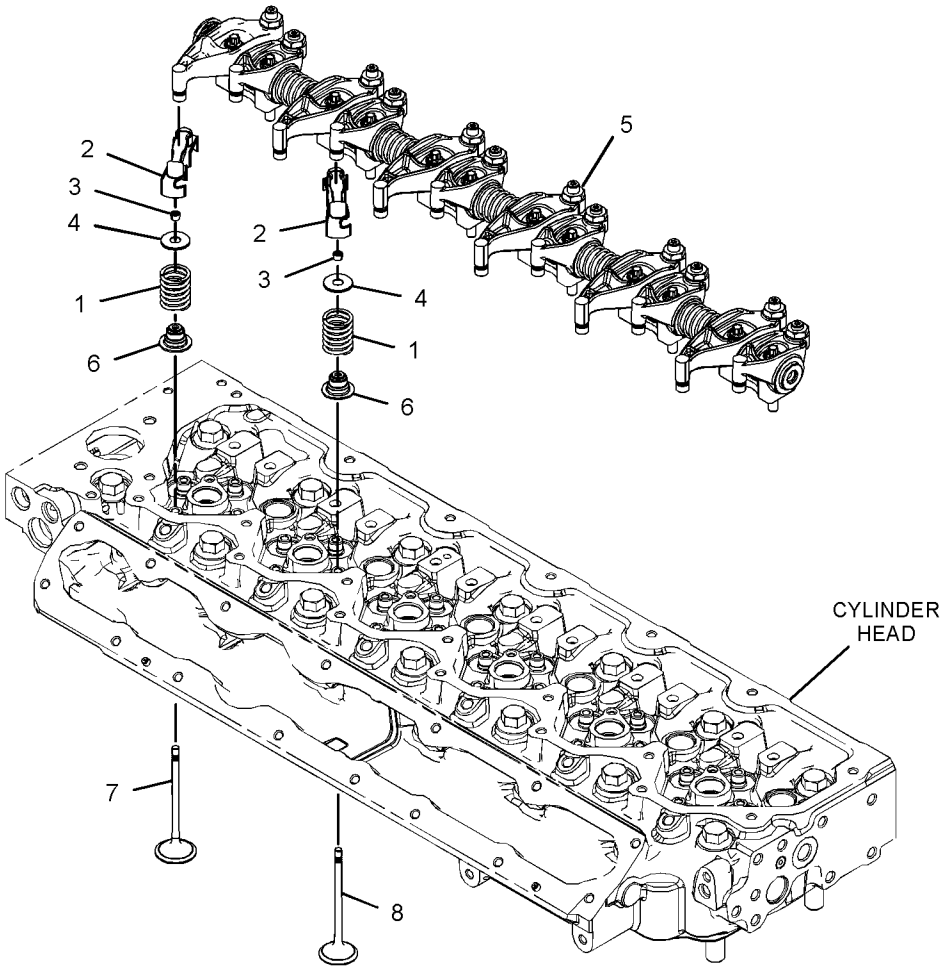

GRAPHIC #1 <END> g03103178

503-8040 FILLER GP-ENGINE OIL

S/N: 4501-UP; E7A1-UP

PART OF 530-2686, 555-5560, 555-7255 ENGINE AR-PRIMARY

SMCS-1316 **i07158224**

NOTE	REF NO	GRAPHIC REF	PART NUMBER	QTY	PART NAME 1 2 3 4 5 6 (PRODUCT LEVEL)	SEE PAGE
	1	1	**225-6522**	1	PLUG-CUP	
	2	1	**225-6524**	1	PLUG-CUP	
	3	1	**234-6171**	1	SEAL-O-RING	
	4	1	**500-9282**	1	FILLER AS-OIL	
M	5	1	**6I-0260**	2	BOLT (M8X1.25X25-MM)	

M - METRIC PART

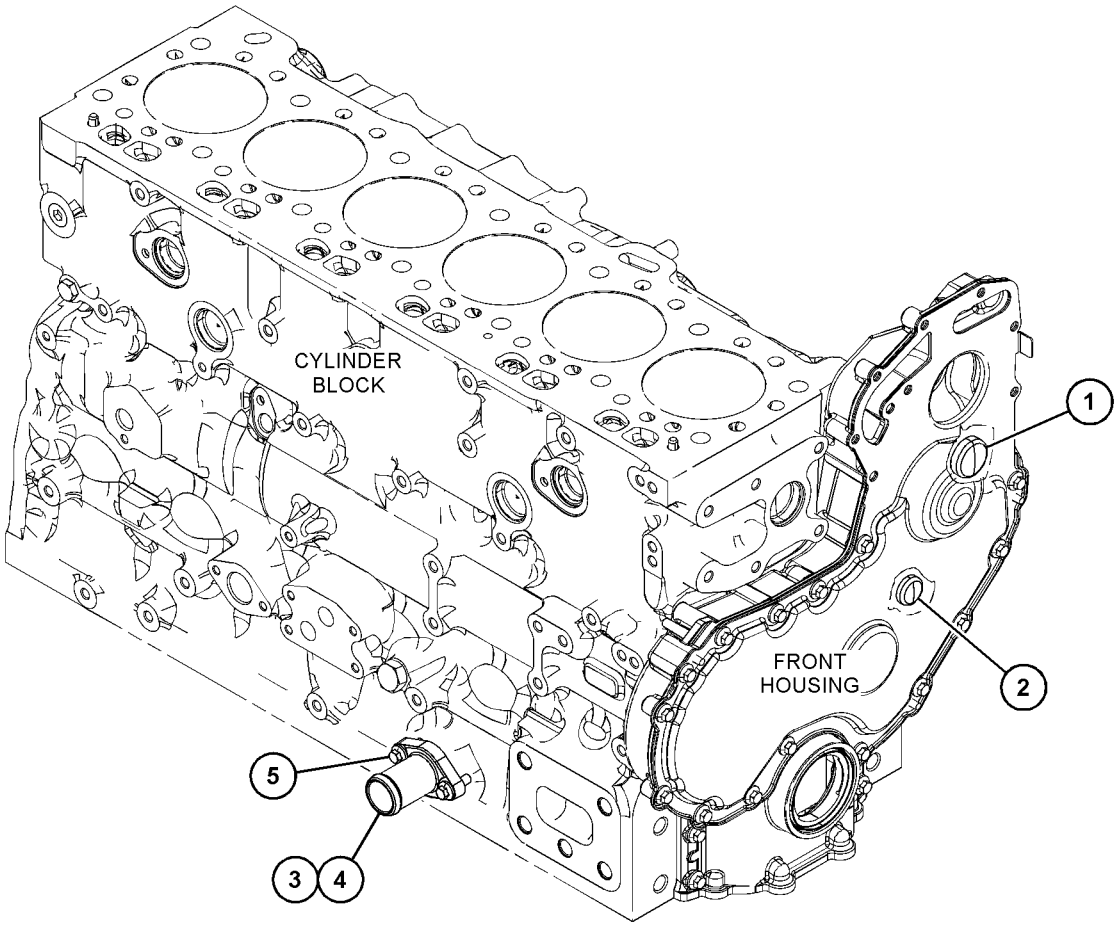

GRAPHIC #1 <END> g06229463

490-4821 FILTER & MTG GP-ENGINE OIL

S/N: BR61-UP

PART OF 490-4811, 558-1933 INSTALLATION AR-ENGINE

SMCS-1306, 1308 **i07366380**

NOTE	REF NO	GRAPHIC REF	PART NUMBER	QTY	PART NAME 1 2 3 4 5 6 (PRODUCT LEVEL)	SEE PAGE
M	1	1	**8T-4192**	2	BOLT (M12X1.75X25-MM)	
	2	1	**8T-4223**	2	WASHER-HARD (13.5X25.5X3-MM THK)	
	3	1	**141-6518**	2	SPACER (13.5X30X10-MM THK)	
	4	1	*309-5133*	1	PLUG AS	
		1	**9S-4181**	1	PLUG (1-5/16-12-THD)	
		1	**238-5084**	1	SEAL-O-RING	
	5	1	*309-5137*	1	CONNECTOR AS	
		1	**6V-8635**	1	CONNECTOR	
		1	**228-7093**	1	SEAL-O-RING	
		1	**238-5084**	1	SEAL-O-RING	
	6	1	*319-6212*	1	CONNECTOR AS	
		1	**6V-8714**	1	CONNECTOR	
		1	**228-7093**	1	SEAL-O-RING	
		1	**238-5082**	1	SEAL-O-RING	
	7	1	*319-6220*	1	ELBOW AS	
		1	**6V-9008**	1	ELBOW	
		1	**228-7093**	1	SEAL-O-RING	
		1	**238-5084**	1	SEAL-O-RING	
Y	8	1	**322-3154**	1	FILTER GP-ENGINE OIL	56
	9	1	**346-3229**	1	BASE AS-FILTER	
		1	**232-7599**	1	PLUG	
	10	1	*377-9576*	1	CONNECTOR AS	
		1	**8T-6453**	1	CONNECTOR	
		1	**228-7093**	1	SEAL-O-RING	
		1	**238-5083**	1	SEAL-O-RING	
	11	1	**451-2182**	2	WASHER-HARD (13.5X25.5X3-MM THK)	
M	12	1	**453-3448**	2	BOLT (M12X1.75X45-MM)	
	13	1	**453-3451**	4	WASHER-HARD (8.8X16X2-MM THK)	
	14	1	**477-9886**	1	CLIP (LOOP)	
	15	1	**524-4347**	1	PLATE AS	
I	16	1	**524-4349**	1	HOSE AS	
I	17	1	**524-4350**	1	HOSE AS	
	18	1	**533-2365**	1	PLATE AS	
		1	**7Y-6215**	1	PLATE	
M		1	**8T-3612**	4	NUT-WELD (M8X1.25-THD)	
	19	1	*309-5130*	1	PLUG AS	
		1	**9S-4182**	1	PLUG (7/16-20-THD)	
		1	**214-7566**	1	SEAL-O-RING	
	20	1	*321-8649*	1	VALVE AS-FLUID SAMPLING	
		1	**8C-3446**	1	VALVE-SAMPLING	
		1	**214-7566**	1	SEAL-O-RING	
	21	1	**8C-3445**	1	CAP-DUST	
M	22	1	**8T-4197**	4	BOLT (M8X1.25X40-MM)	

I - REFER TO HYDRAULIC INFORMATION SYSTEM
M - METRIC PART
Y - SEPARATE ILLUSTRATION

490-4821 **FILTER & MTG GP-ENGINE OIL** (contd.) **i07366380**

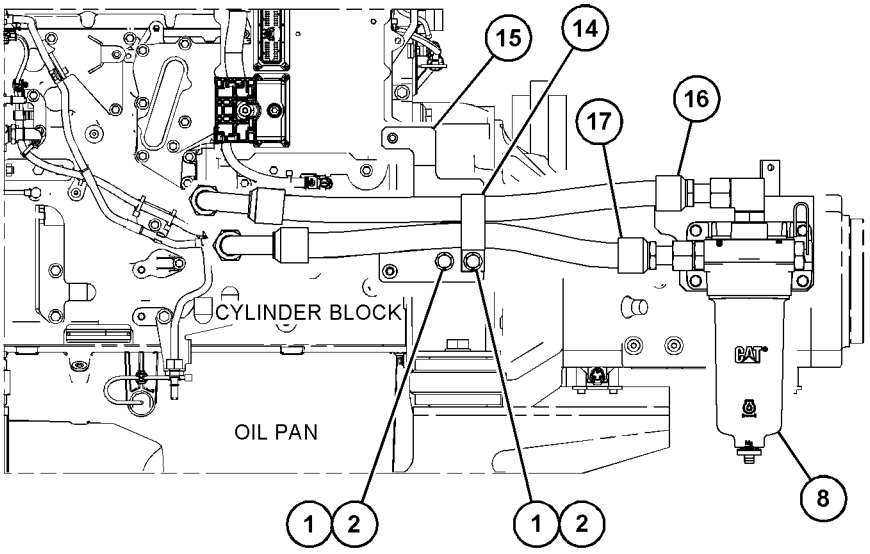

LEFT SIDE VIEW OF ENGINE

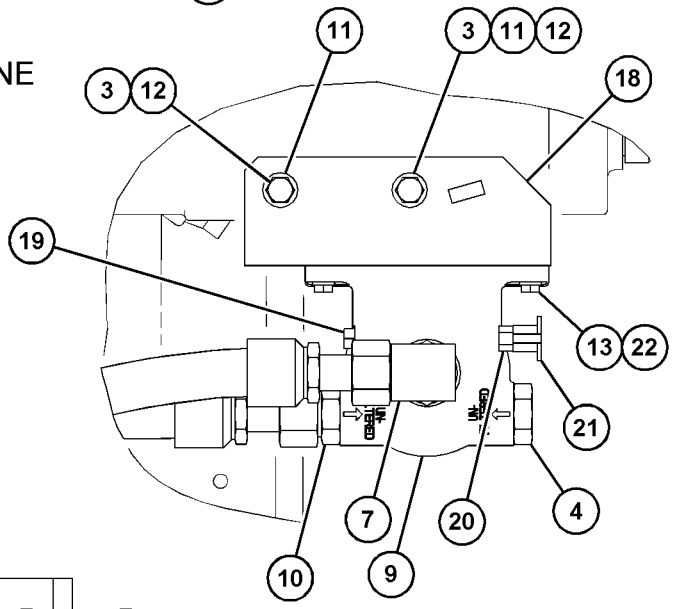

VIEW OF AREA A

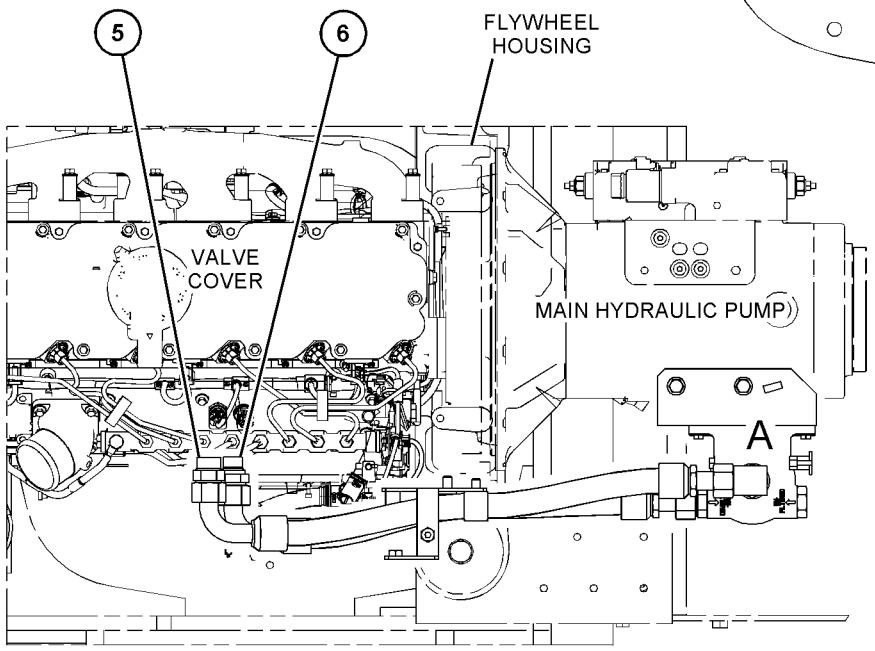

TOP VIEW OF ENGINE

GRAPHIC #1 <END> g06226520

322-3154 FILTER GP-ENGINE OIL

S/N: BR61-UP

PART OF 490-4821 FILTER & MTG GP-ENGINE OIL

SMCS-1308 **i06921584**

NOTE	REF NO	GRAPHIC REF	PART NUMBER	QTY	PART NAME 1 2 3 4 5 6 (PRODUCT LEVEL)	SEE PAGE
	1	1	**322-3155**	1	FILTER ELEMENT-ENGINE OIL	
	2	1	**354-5833**	1	KIT-DRAIN	
					(INCLUDES DRAIN, KNOB & SEAL)	

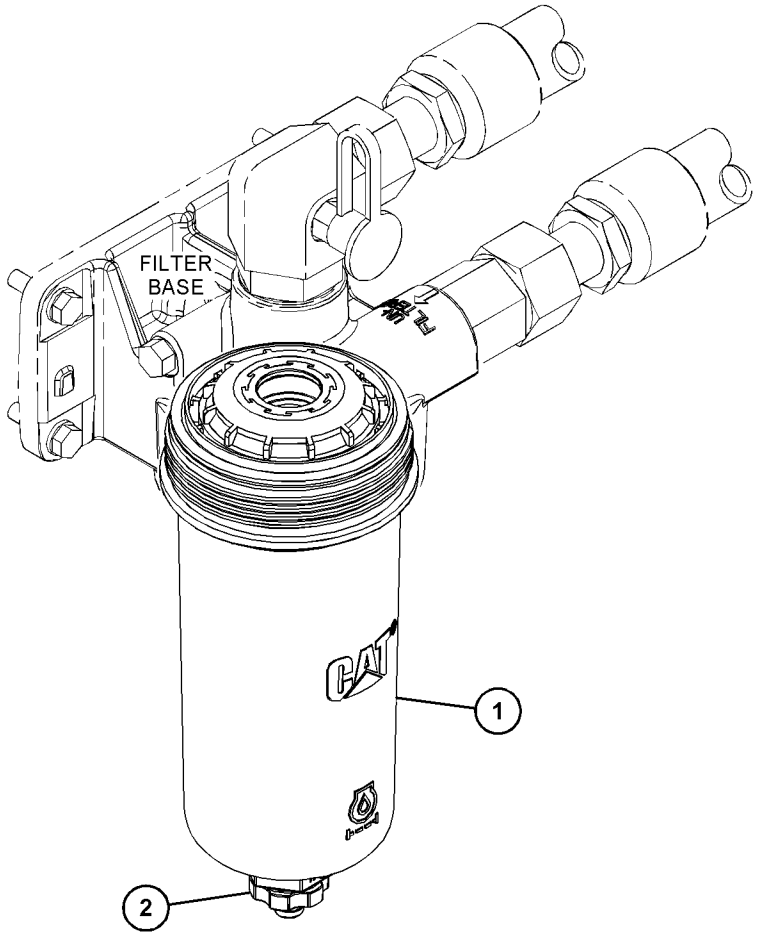

GRAPHIC #1 <END> g03449839

490-4818 FUMES DISPOSAL GP

S/N: BR61-UP

PART OF 490-4811, 558-1933 INSTALLATION AR-ENGINE

SMCS-1317 **i07366381**

NOTE	REF NO	GRAPHIC REF	PART NUMBER	QTY	PART NAME 1 2 3 4 5 6 (PRODUCT LEVEL)	SEE PAGE
	1	1	**483-7800**	1	SPACER (11X20X20-MM THK)	
	2	1	**499-8489**	1	HOSE	
	3	1	**095-9785**	1	CLAMP-HOSE	
	4	1	**206-1345**	1	STRAP-CABLE	
	5	1	**4D-7388**	1	CLIP	
	6	1	**8T-4121**	2	WASHER-HARD (11X21X2.5-MM THK)	
M	7	1	**8T-4182**	1	BOLT (M10X1.5X45-MM)	

M - METRIC PART

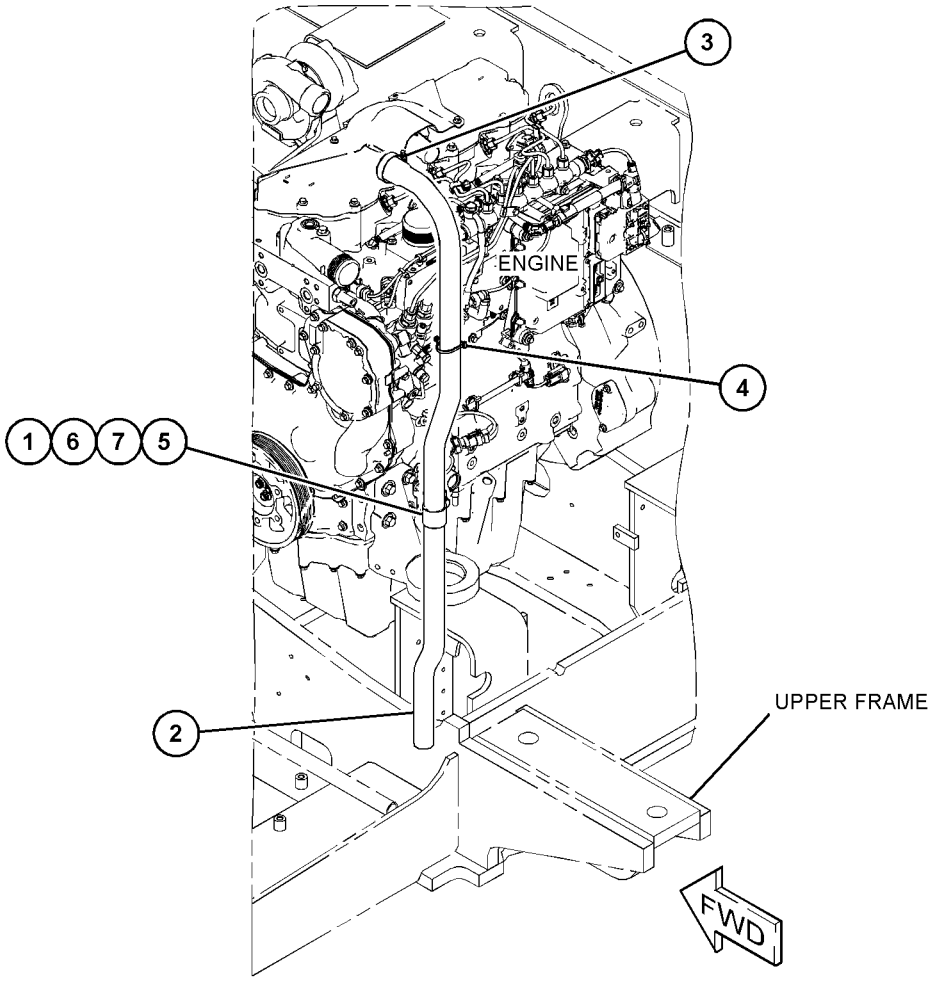

GRAPHIC #1 <END> g06224719

490-4841 GAUGE GP-OIL LEVEL (DIPSTICK)—FILLER

S/N: BR61-10000

PART OF 490-4811 INSTALLATION AR-ENGINE

SMCS-1326 **i07366382**

NOTE	REF NO	GRAPHIC REF	PART NUMBER	QTY	PART NAME 1 2 3 4 5 6 (PRODUCT LEVEL)	SEE PAGE
M	1	1	**8T-4136**	6	BOLT (M10X1.5X25-MM)	
	2	1	**8T-4121**	6	WASHER-HARD (11X21X2.5-MM THK)	
M	3	1	**8T-4138**	2	BOLT (M6X1X20-MM)	
	4	1	**9M-0164**	1	CLAMP-HOSE	
	5	1	**9M-2904**	1	CLAMP-HOSE	
	6	1	**9X-8256**	2	WASHER (6.6X12X2-MM THK)	
	7	1	**130-6001**	1	BODY AS	
	8	1	**369-3869**	1	CAP AS-ENGINE OIL FILLER	
		1	**357-0147**	1	FILM-IDENTIFICATION (OIL FILL, READ OMM)	
		1	**124-0506**	1	SEAL	
	9	1	**492-0459**	1	PLATE AS	
	10	1	**492-0460**	1	PLATE AS	
	11	1	**502-3514**	1	HOSE	
	12	1	**512-6107**	1	GAUGE AS-OIL LEVEL (DIPSTICK)	
		1	**6I-1497**	1	SEAL	
		1	**228-7089**	1	SEAL-O-RING	
		1	**292-2491**	2	CLIP	
	13	1	**7D-1553**	1	CLIP	

M - METRIC PART

490-4841 **GAUGE GP-OIL LEVEL (DIPSTICK)** (contd.) **i07366382**

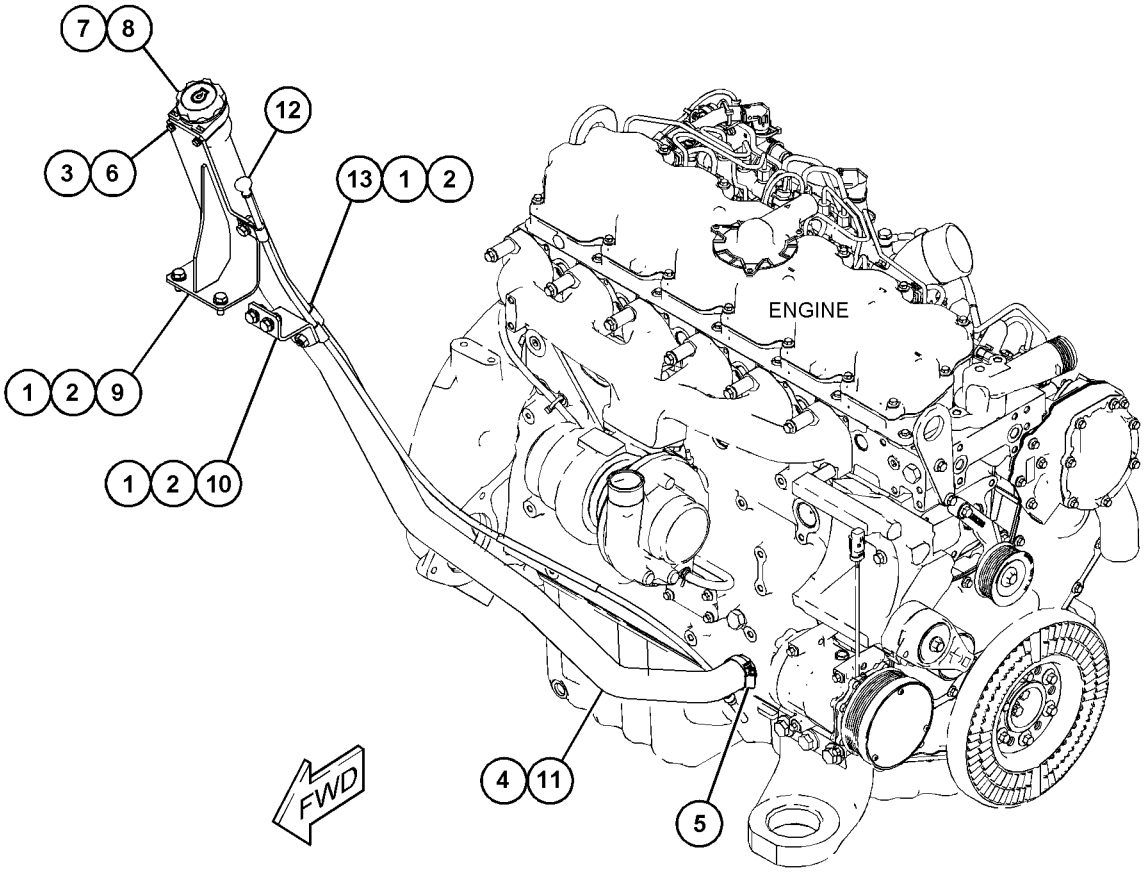

GRAPHIC #1 <END> g06224816

512-5353 GAUGE GP-OIL LEVEL (DIPSTICK)

S/N: BR61-UP

PART OF 490-4811, 558-1933 INSTALLATION AR-ENGINE

SMCS-1326 **i07366385**

NOTE	REF NO	GRAPHIC REF	PART NUMBER	QTY	PART NAME 1 2 3 4 5 6 (PRODUCT LEVEL)	SEE PAGE
M	1	1	**8T-4136**	1	BOLT (M10X1.5X25-MM)	
M	2	1	**8T-4196**	1	BOLT (M10X1.5X35-MM)	
	3	1	**8T-4121**	2	WASHER-HARD (11X21X2.5-MM THK)	
	4	1	**118-9901**	1	SPACER (12X20X10-MM THK)	
	5	1	**512-6108**	1	GAUGE AS-OIL LEVEL (DIPSTICK)	
		1	**6I-1497**	1	SEAL	
		1	**228-7089**	1	SEAL-O-RING	
		1	**292-2491**	2	CLIP	

M - METRIC PART

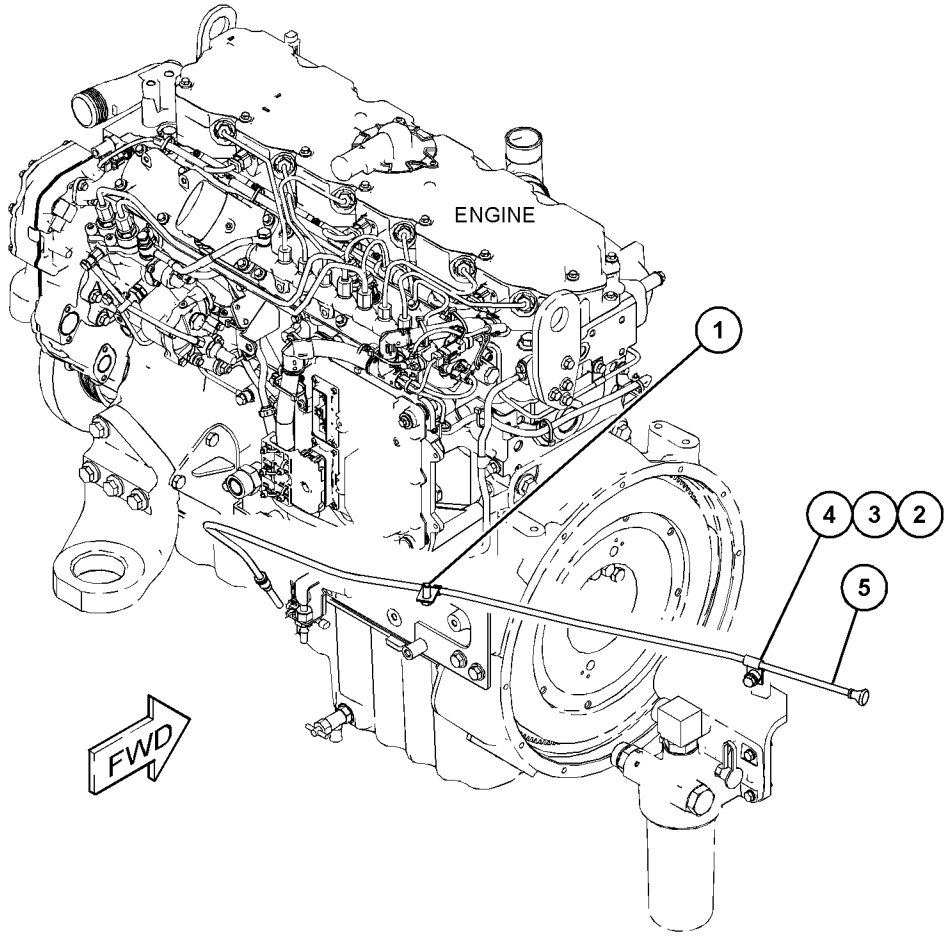

GRAPHIC #1 <END> g06224873

561-6441 GAUGE GP-OIL LEVEL (DIPSTICK)—FILLER

S/N: BR610001-UP

PART OF 558-1933 INSTALLATION AR-ENGINE

SMCS-1326 **i07451451**

NOTE	REF NO	GRAPHIC REF	PART NUMBER	QTY	PART NAME 1 2 3 4 5 6 (PRODUCT LEVEL)	SEE PAGE
	1	1	**130-6001**	1	BODY AS	
M		1	**5C-2890**	2	NUT (M6X1-THD)	
	2	1	**369-3869**	1	CAP AS-ENGINE OIL FILLER	
		1	**357-0147**	1	FILM-IDENTIFICATION (OIL FILL, READ OMM)	
	3	1	**502-3514**	1	HOSE	
	4	1	**512-6107**	1	GAUGE AS-OIL LEVEL (DIPSTICK)	
		1	**6I-1497**	1	SEAL	
		1	**228-7089**	1	SEAL-O-RING	
		1	**292-2491**	2	CLIP	
	5	1	**561-6443**	1	PLATE AS	
	6	1	**562-2944**	1	PLATE AS	
	7	1	**7D-1553**	1	CLIP	
	8	1	**8T-4121**	6	WASHER-HARD (11X21X2.5-MM THK)	
M	9	1	**8T-4136**	6	BOLT (M10X1.5X25-MM)	
M	10	1	**8T-4138**	2	BOLT (M6X1X20-MM)	
	11	1	**9M-0164**	1	CLAMP-HOSE	
	12	1	**9M-2904**	1	CLAMP-HOSE	
	13	1	**9X-8256**	2	WASHER (6.6X12X2-MM THK)	

M - METRIC PART

561-6441 **GAUGE GP-OIL LEVEL (DIPSTICK)** (contd.) **i07451451**

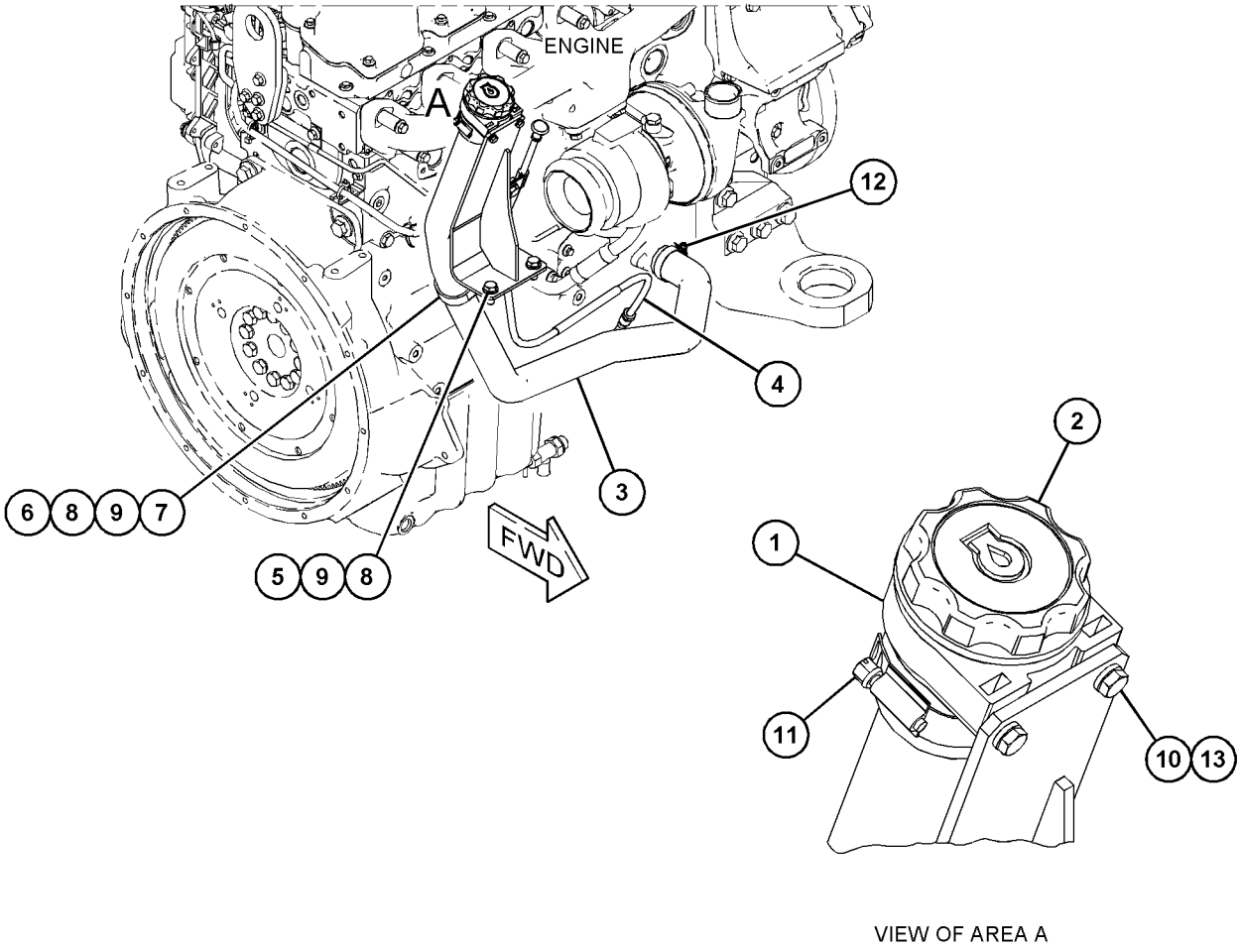

VIEW OF AREA A

GRAPHIC #1 <END> g06323623

532-7268 LINES GP-ENGINE OIL DRAIN—ENGINE OIL SUMP

S/N: BR61-UP

PART OF 511-7397 OIL CHANGE AR-HIGH SPEED

SMCS-1307 **i07369214**

NOTE	REF NO	GRAPHIC REF	PART NUMBER	QTY	PART NAME 1 2 3 4 5 6 (PRODUCT LEVEL)	SEE PAGE
M	1	1	**8T-4136**	2	BOLT (M10X1.5X25-MM)	
	2	1	**3S-2093**	1	STRAP-CABLE	
	3	1	**8T-4121**	3	WASHER-HARD (11X21X2.5-MM THK)	
M	4	1	**8T-4137**	1	BOLT (M10X1.5X20-MM)	
M	5	1	**8T-4139**	2	BOLT (M12X1.75X30-MM)	
	6	1	**8T-4223**	2	WASHER-HARD (13.5X25.5X3-MM THK)	
	7	1	**156-9791**	1	CONNECTOR-SPECIAL	
	8	1	**238-5080**	1	SEAL-O-RING	
	9	1	**266-7379**	1	STRAP-CABLE	
	10	1	*319-6216*	1	CONNECTOR AS	
		1	**6V-8716**	1	CONNECTOR (STRAIGHT)	
		1	**228-7092**	1	SEAL-O-RING	
		1	**238-5084**	1	SEAL-O-RING	
	11	1	**518-4763**	1	PLATE AS	
I	12	1	**525-3622**	1	HOSE AS	
	13	1	**528-7323**	1	PLATE AS	
	14	1	**110-8827**	1	FITTING (QUICK DISCONNECT, MALE)	
	15	1	**228-7091**	1	SEAL-O-RING	
	16	1	**2V-2043**	1	NUT-BULKHEAD (1-5/8-12-THD)	
	17	1	**4S-1962**	1	CLIP (LOOP)	

I - REFER TO HYDRAULIC INFORMATION SYSTEM
M - METRIC PART

532-7268 **LINES GP-ENGINE OIL DRAIN (**contd.**)** **i07369214**

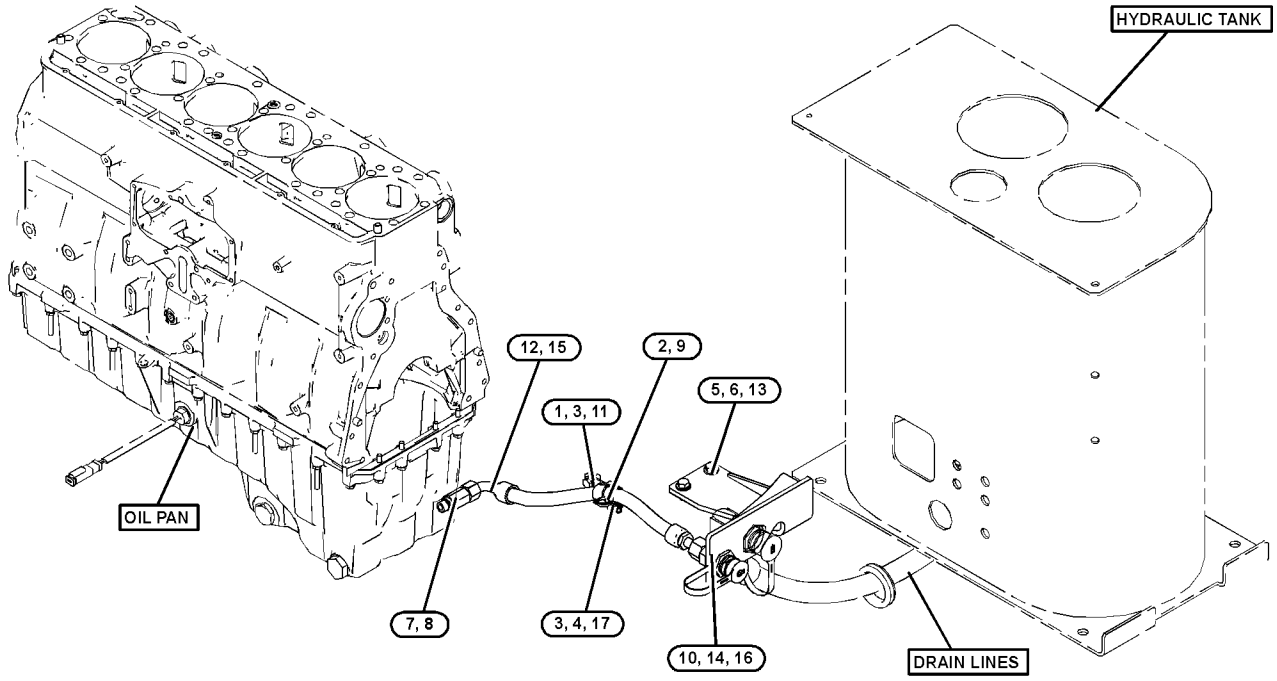

GRAPHIC #1 <END> g06237449

368-8559 LINES GP-TURBOCHARGER OIL

S/N: 4501-UP; E7A1-UP

PART OF 374-0432 TURBOCHARGER GP

SMCS-1052 **i04838031**

NOTE	REF NO	GRAPHIC REF	PART NUMBER	QTY	PART NAME 1 2 3 4 5 6 (PRODUCT LEVEL)	SEE PAGE
	1	1	**277-9938**	1	BOLT-SPECIAL (BANJO)	
	2	1	**277-9940**	1	SEAL-O-RING	
	3	1	**365-5823**	2	WASHER	

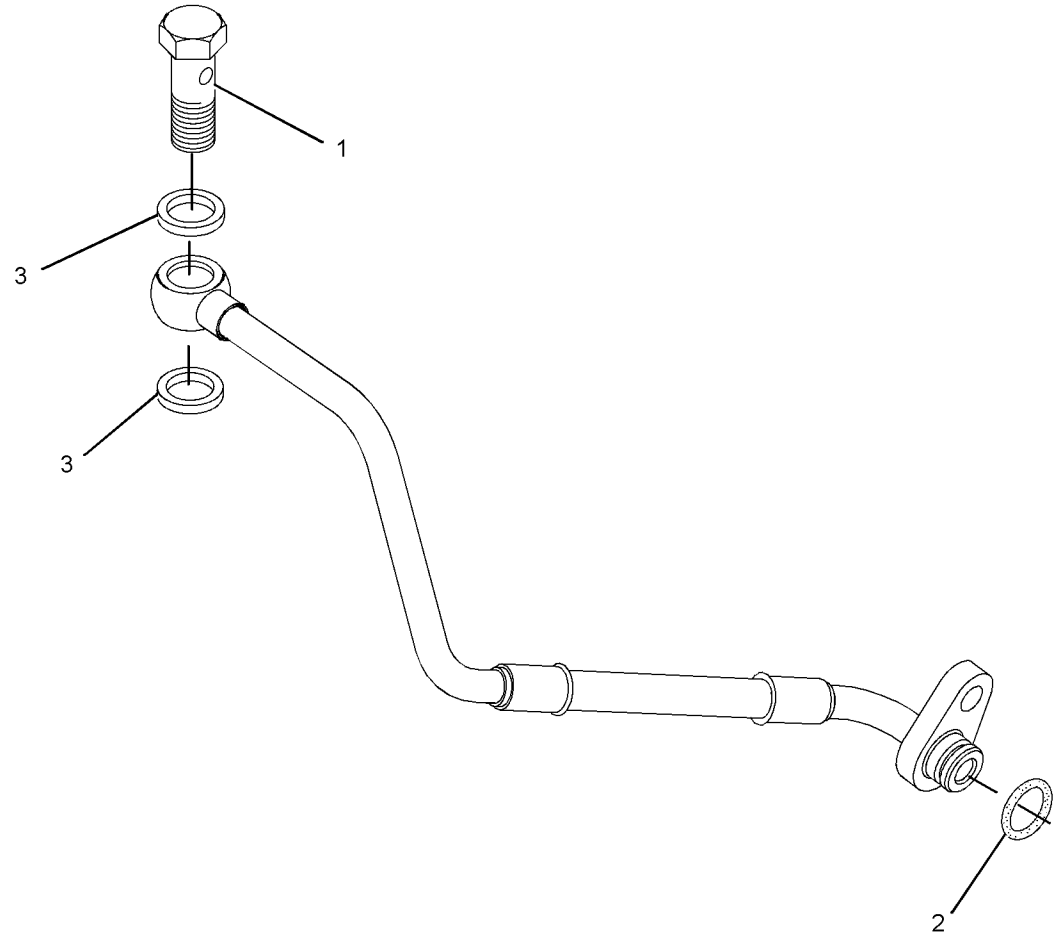

GRAPHIC #1 <END> g02400339

511-7397 OIL CHANGE AR-HIGH SPEED

S/N: BR61-UP

SMCS-1325 **i07369206**

NOTE	PART NUMBER	QTY	PART NAME 1 2 3 4 5 6 (PRODUCT LEVEL)	SEE PAGE
Y	*547-9124*	1	FILM GP (READ OMM)	689
Y	*528-6060*	1	LINES GP-DRAIN (HYDRAULIC OIL)	448
Y	*532-7268*	1	LINES GP-ENGINE OIL DRAIN (ENGINE OIL SUMP)	63

Y - SEPARATE ILLUSTRATION

<END>

462-6685 PUMP GP-ENGINE OIL

S/N: 4501-UP; E7A1-UP

PART OF 530-2686, 555-5560, 555-7255 ENGINE AR-PRIMARY

SMCS-1304, 1315

i07025307

NOTE	REF NO	GRAPHIC REF	PART NUMBER	QTY	PART NAME 1 2 3 4 5 6 (PRODUCT LEVEL)	SEE PAGE
	1	1	**420-0454**	1	PUMP AS-OIL	
M	2	1	**6I-1090**	4	BOLT (M8X1.25X40-MM)	

M - METRIC PART

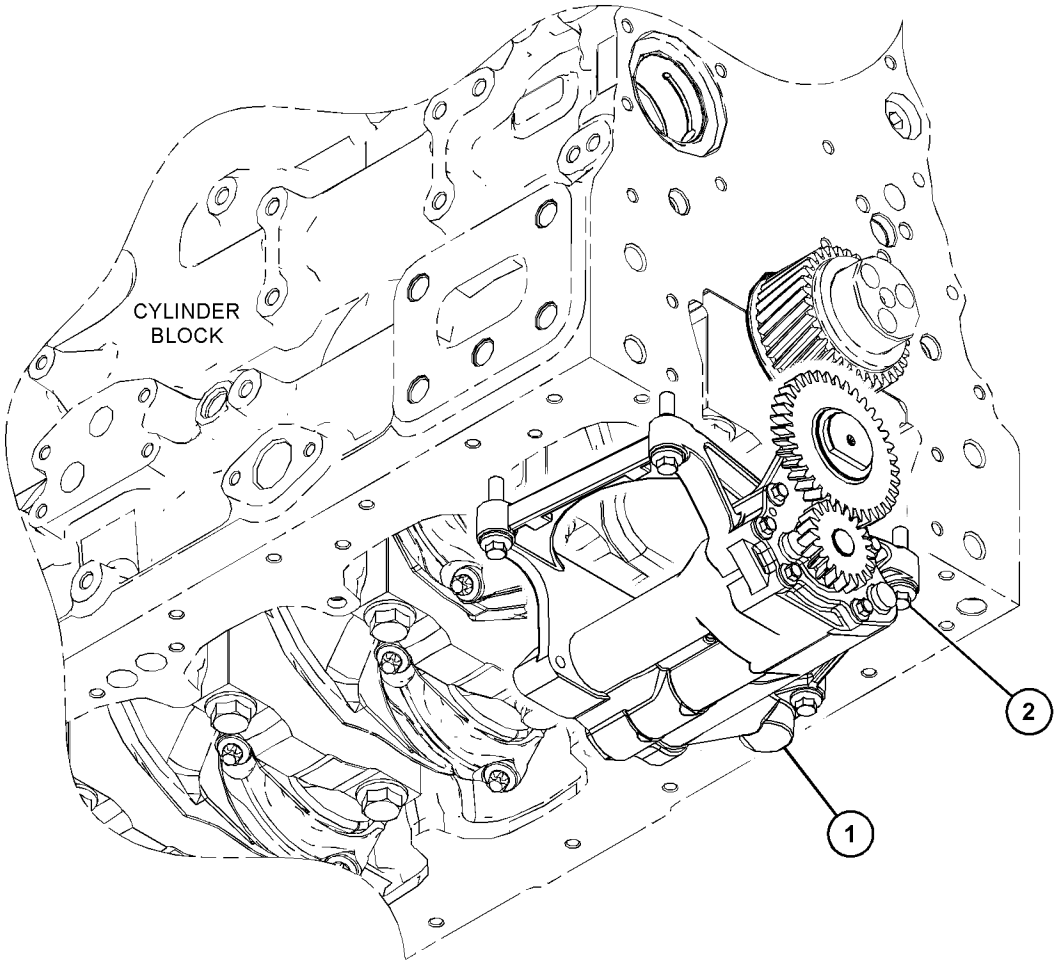

GRAPHIC #1 <END> g03797853

346-2911 CONNECTION GP-HEATER

S/N: 4501-UP; E7A1-UP
FOR USE WITH OPTIONAL CUSTOMER CONNECTION FOR CAB HEATER
PART OF 530-2686, 555-5560, 555-7255 ENGINE AR-PRIMARY

SMCS-1380, 1383 **i05303153**

NOTE	REF NO	GRAPHIC REF	PART NUMBER	QTY	PART NAME 1 2 3 4 5 6 (PRODUCT LEVEL)	SEE PAGE
	1	1	**067-6823**	1	PLUG	
	2	1	**9X-3959**	1	ELBOW	
	3	1	**7W-4669**	1	ADAPTER	

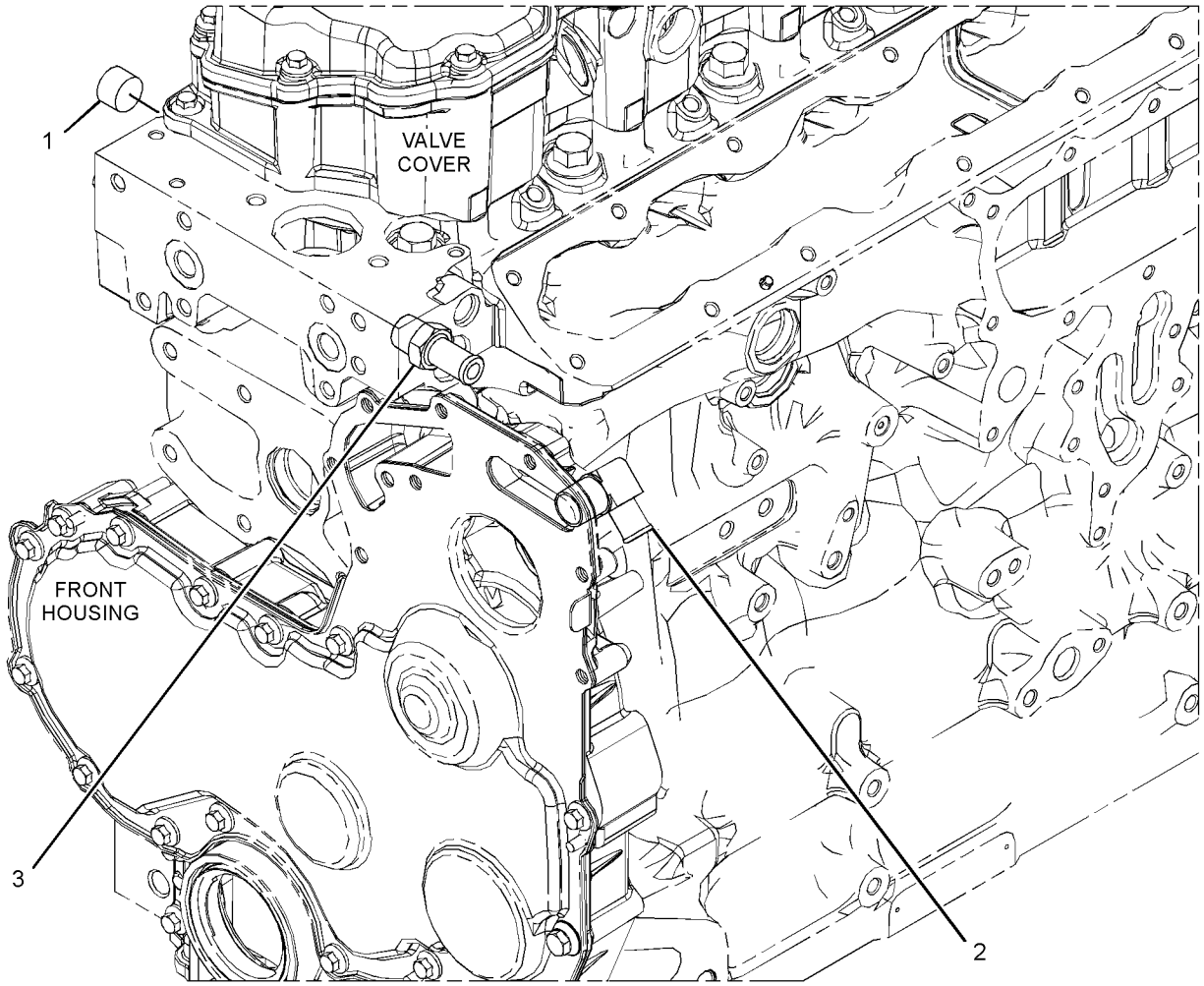

GRAPHIC #1 <END> g03105759

373-3606 CONNECTION GP-WATER

S/N: 4501-UP; E7A1-UP

PART OF 530-2686, 555-5560, 555-7255 ENGINE AR-PRIMARY

SMCS-1380 **i05536523**

NOTE	REF NO	GRAPHIC REF	PART NUMBER	QTY	PART NAME 1 2 3 4 5 6 (PRODUCT LEVEL)	SEE PAGE
M	1	1	**123-2899**	1	BOLT (M10X1.5X40-MM)	
	2	1	**367-1817**	1	CONNECTION AS (INCLUDES TEMPERATURE REGULATOR)	
	2A	1	**367-8509**	1	SEAL-BONDED	
	2B	1	**367-8512**	1	PLUG	
M	3	1	**103-5687**	1	BOLT (M10X1.5X85-MM)	
	4	1	**281-8744**	1	GASKET-WATER REGULATOR	

M - METRIC PART

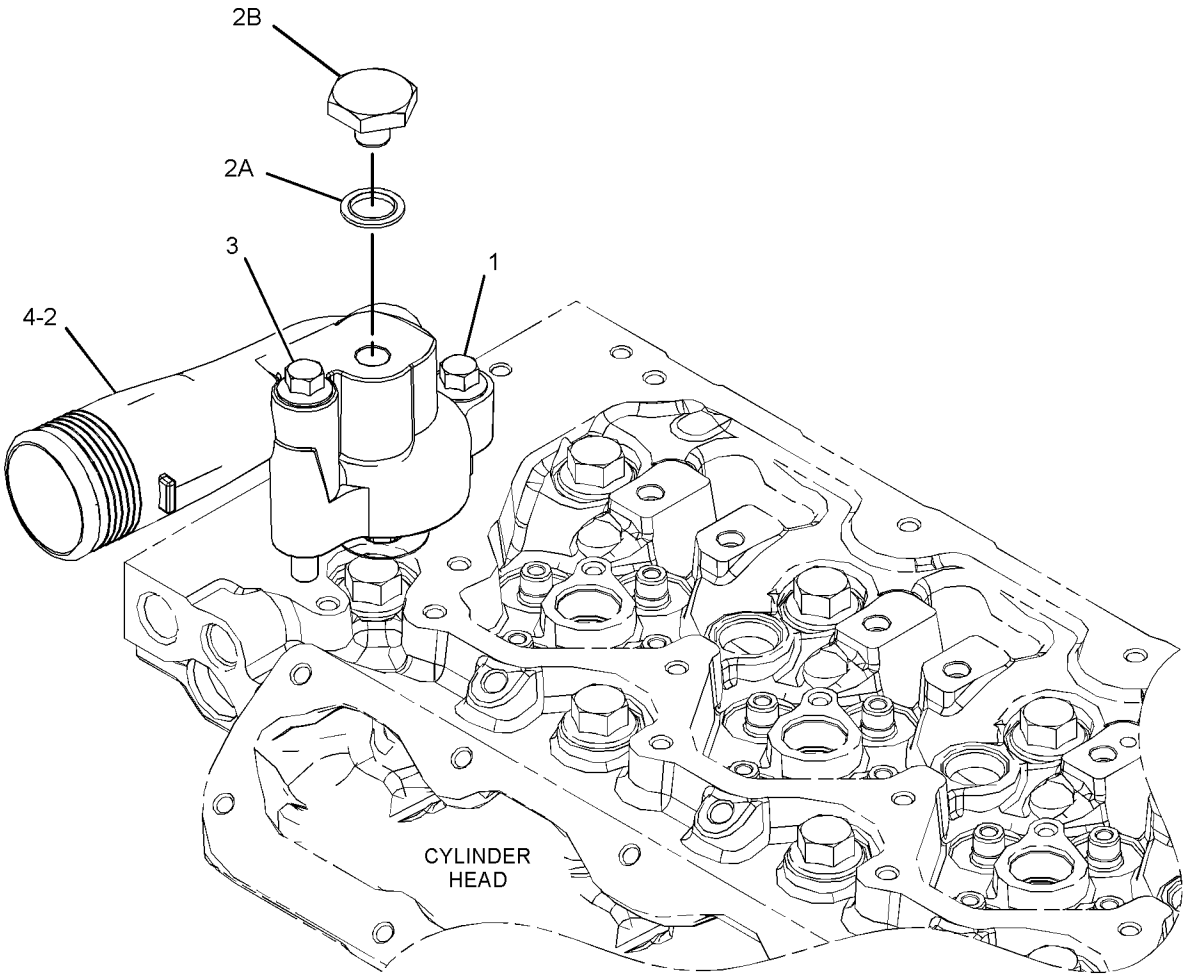

GRAPHIC #1 <END> g03483203

326-7401 COOLER GP-ENGINE OIL

S/N: 4501-UP; E7A1-UP

PART OF 371-2553 COOLER GP-ENGINE OIL

SMCS-1378 **i03246403**

NOTE	REF NO	GRAPHIC REF	PART NUMBER	QTY	PART NAME 1 2 3 4 5 6 (PRODUCT LEVEL)	SEE PAGE
M	1	1	**6I-0260**	1	BOLT (M8X1.25X25-MM)	
M	2	1	**6I-4793**	6	BOLT (M8X1.25X50-MM)	
	3	1	**277-2500**	1	GASKET	
	4	1	**281-7039**	1	COOLER-OIL	
	5	1	**281-7040**	1	GASKET	

M - METRIC PART

326-7401 **COOLER GP-ENGINE OIL (**contd.**)** **i03246403**

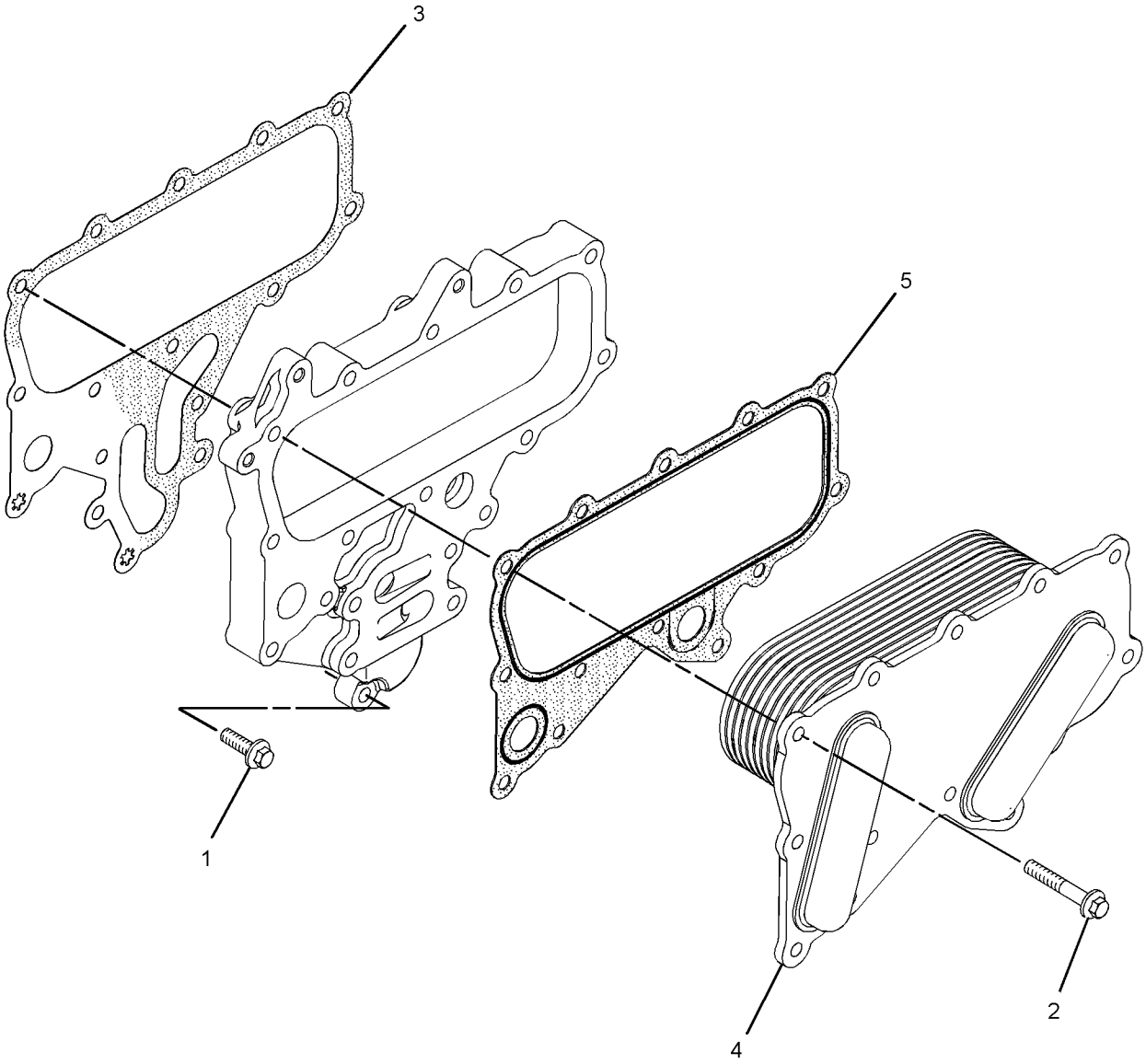

GRAPHIC #1 <END> g01508024

371-2553 COOLER GP-ENGINE OIL

S/N: 4501-UP; E7A1-UP

PART OF 530-2686, 555-5560, 555-7255 ENGINE AR-PRIMARY

SMCS-1378 **i05917974**

NOTE	REF NO	GRAPHIC REF	PART NUMBER	QTY	PART NAME 1 2 3 4 5 6 (PRODUCT LEVEL)	SEE PAGE
	1	1	**225-7944**	2	GASKET	
	2	1	**232-3751**	1	PLATE	
	3	1	**277-2537**	1	PLATE	
M	4	1	**6I-4793**	7	BOLT (M8X1.25X50-MM)	
Y	5	1	**326-7401**	1	COOLER GP-ENGINE OIL	70
	6	1	**340-4212**	1	ADAPTER	
	7	1	**424-6858**	1	PLUG	
	8	1	**424-6859**	1	PLUG	
M	9	1	**6I-0455**	4	BOLT (M8X1.25X55-MM)	
M	10	1	**6I-0217**	6	BOLT (M8X1.25X20-MM)	

M - METRIC PART
Y - SEPARATE ILLUSTRATION

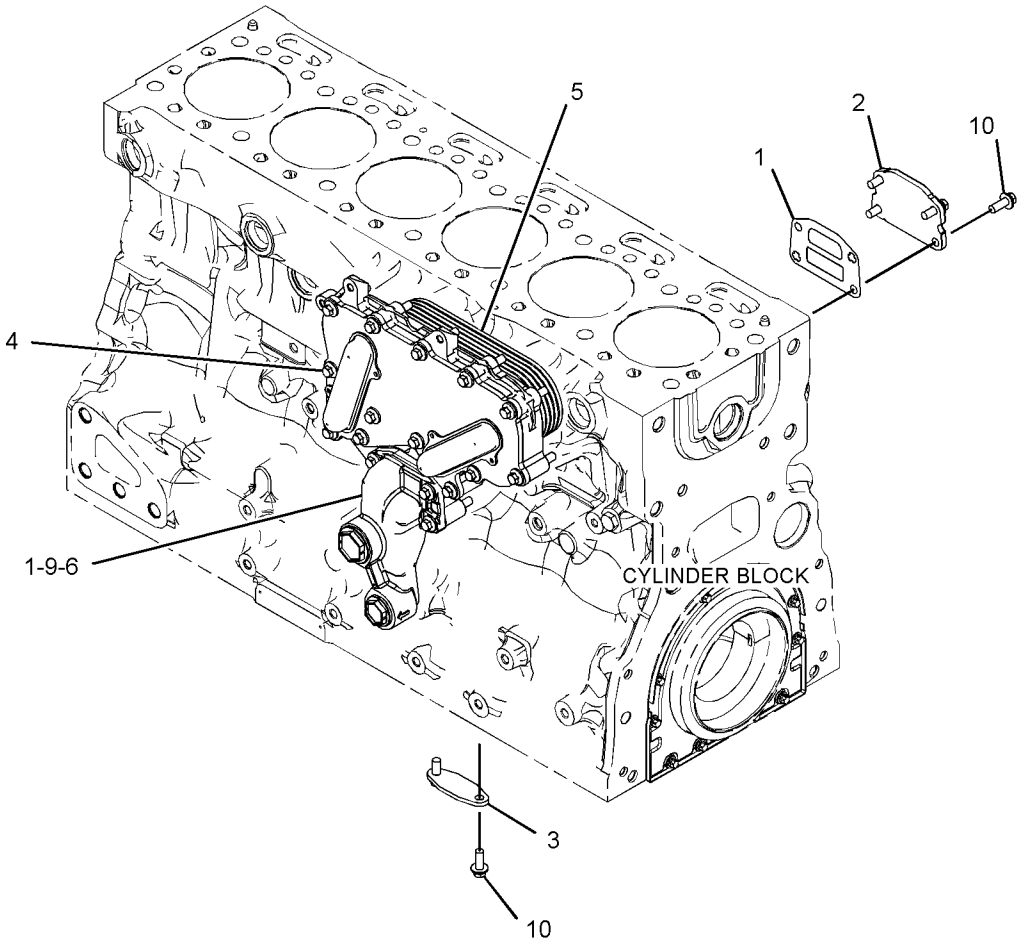

GRAPHIC #1 <END> g03731645

489-8911 COOLING GP

S/N: BR61-10000

PART OF 511-4775 INSTALLATION AR-ENGINE

SMCS-1350 **i07360823**

NOTE	REF NO	GRAPHIC REF	PART NUMBER	QTY	PART NAME 1 2 3 4 5 6 (PRODUCT LEVEL)	SEE PAGE
M	1	1	**8T-6466**	2	BOLT (M10X1.5X60-MM)	
M	2	1	**7X-2554**	4	BOLT (M16X2X70-MM)	
	3	1	**1P-4278**	2	CLAMP-HOSE	
	4	1	**7K-1181**	2	STRAP-CABLE	
	5	1	**8T-4121**	10	WASHER-HARD (11X21X2.5-MM THK)	
M	6	1	**8T-4133**	2	NUT (M10X1.5-THD)	
M	7	1	**8T-4137**	6	BOLT (M10X1.5X20-MM)	
	8	1	**096-4035**	1	CLIP	
	9	1	**119-7934**	2	CLAMP-HOSE	
	10	1	**178-6450**	4	SPACER (17X35X30-MM THK)	
	11	1	**242-6099**	2	CLIP	
	12	1	**483-7802**	2	SPACER (11X20X40-MM THK)	
	13	1	**488-5700**	1	LINER	
	14	1	**493-2770**	1	LINER	
	15	1	**505-6018**	1	HOSE-WATER	
Y	16	1	**508-6285**	1	RADIATOR & HYD OIL COOLER GP	82
	17	1	**511-0264**	1	TANK GP-COOLANT	
		1	**251-3227**	1	CAP AS-COOLANT TANK	
	18	1	**518-3672**	1	PLATE AS	
	19	1	**6D-3479**	1	CLIP	
	20	1	**8M-2770**	2	CLIP (LOOP)	
G	21	1	**423-1981**		HOSE (26-IN)	
E	22	1	**7Y-1976**		HOSE-WATER (154-CM)	
D	23	1	**5P-5930**		SEAL (0.9-M)	

D - ORDER BY THE METER
E - ORDER BY THE CENTIMETER
G - ORDER BY THE INCH
M - METRIC PART
Y - SEPARATE ILLUSTRATION

489-8911 **COOLING GP (**contd.**)** **i07360823**

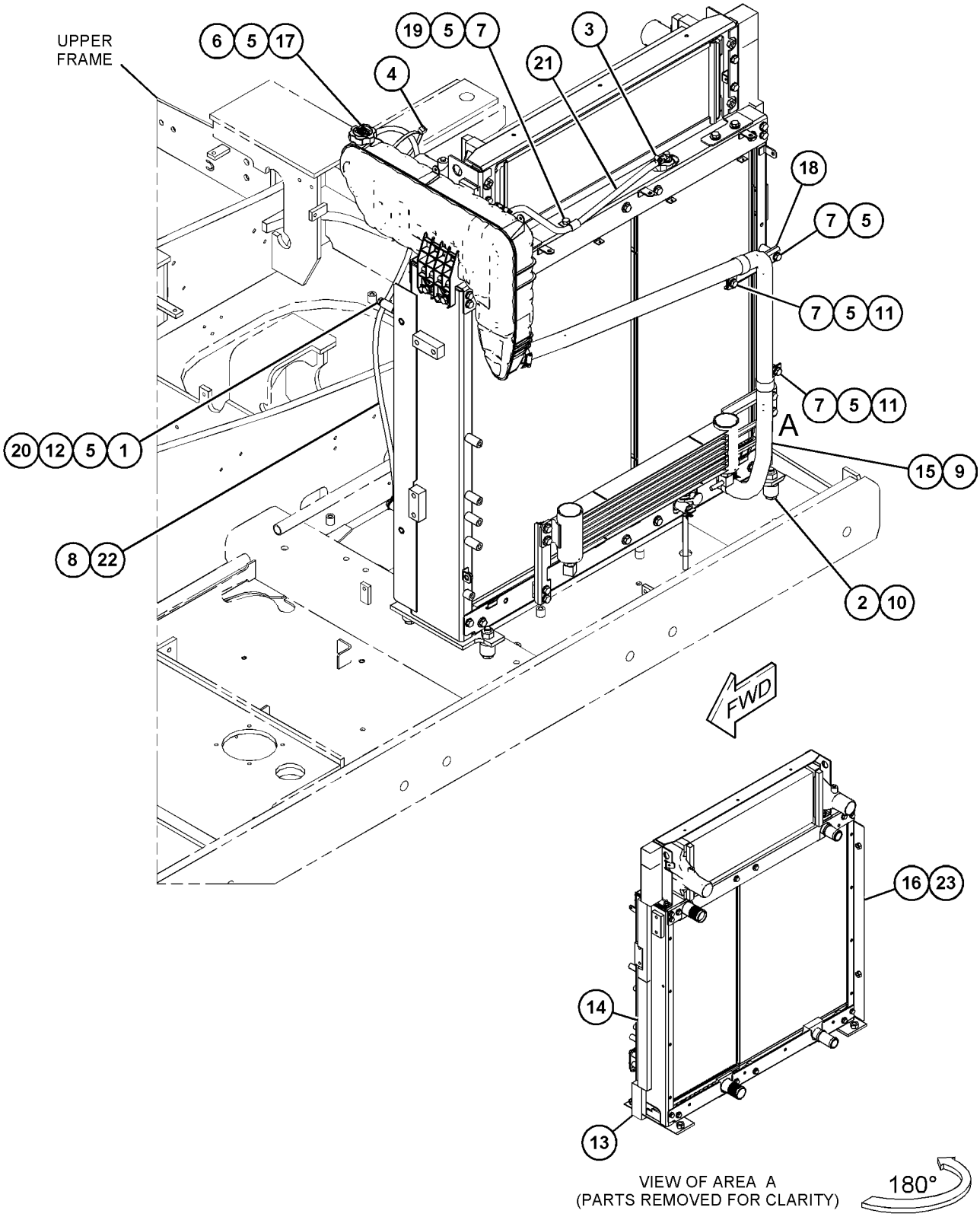

GRAPHIC #1 <END> g06230673

558-7629 COOLING GP

S/N: BR610001-UP

PART OF 558-7709 INSTALLATION AR-ENGINE

SMCS-1350 **i07432895**

NOTE	REF NO	GRAPHIC REF	PART NUMBER	QTY	PART NAME 1 2 3 4 5 6 (PRODUCT LEVEL)	SEE PAGE
M	1	1	**8T-6466**	2	BOLT (M10X1.5X60-MM)	
M	2	1	**7X-2554**	4	BOLT (M16X2X70-MM)	
	3	1	**1P-4278**	2	CLAMP-HOSE	
	4	1	**178-6450**	4	SPACER (17X35X30-MM THK)	
	5	1	**8T-4121**	9	WASHER-HARD (11X21X2.5-MM THK)	
M	6	1	**8T-4133**	2	NUT (M10X1.5-THD)	
M	7	1	**8T-4137**	5	BOLT (M10X1.5X20-MM)	
	8	1	**096-4035**	1	CLIP	
	9	1	**119-7934**	2	CLAMP-HOSE	
	10	1	**554-9412**	1	TANK GP-COOLANT	
		1	**251-3227**	1	CAP AS-COOLANT TANK	
	11	1	**242-6099**	2	CLIP (LOOP)	
	12	1	**483-7802**	2	SPACER (11X20X40-MM THK)	
	13	1	**488-5700**	1	LINER	
	14	1	**493-2770**	1	LINER	
	15	1	**558-9275**	1	HOSE-WATER	
Y	16	1	**508-6285**	1	RADIATOR & HYD OIL COOLER GP	82
	17	1	**6D-3479**	1	CLIP	
	18	1	**7K-1181**	2	STRAP-CABLE	
	19	1	**8M-2770**	2	CLIP (LOOP)	
G	20	1	**423-1981**		HOSE (26-IN)	
E	21	1	**7Y-1976**		HOSE-WATER (154-CM)	
H	22	1	**5P-5930**		SEAL (9-DM)	

E - ORDER BY THE CENTIMETER
G - ORDER BY THE INCH
H - ORDER BY THE DECIMETER
M - METRIC PART
Y - SEPARATE ILLUSTRATION

558-7629 **COOLING GP** (contd.) **i07432895**

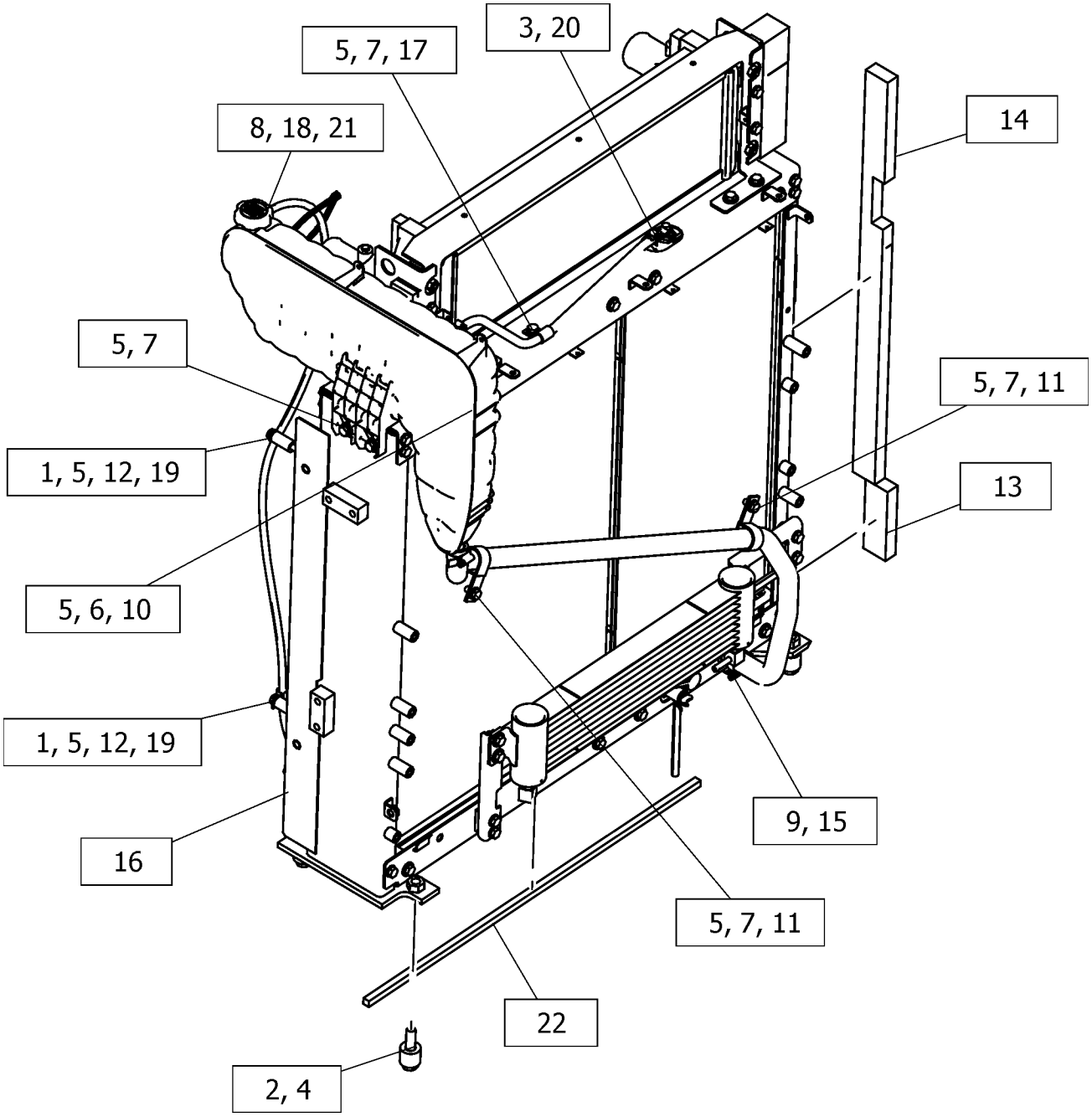

GRAPHIC #1 <END> g06324004

489-8980 FAN GP-SUCTION

S/N: BR61-UP

PART OF 511-4775, 558-7709 INSTALLATION AR-ENGINE

SMCS-1356 **i07376591**

NOTE	REF NO	GRAPHIC REF	PART NUMBER	QTY	PART NAME 1 2 3 4 5 6 (PRODUCT LEVEL)	SEE PAGE
	1	1	**510-8095**	5	FAN AS-SUCTION (24-VOLT)	
	2	1	*508-6301*	1	SHROUD AS	
M		1	**8T-3490**	11	NUT-WELD (M10X1.5-THD)	
M		1	**8T-3612**	31	NUT-WELD (M8X1.25-THD)	
	3	1	*508-6302*	1	SHROUD AS	
M		1	**8T-3490**	2	NUT-WELD (M10X1.5-THD)	
M		1	**8T-3612**	6	NUT-WELD (M8X1.25-THD)	
	4	1	**5P-4116**	42	WASHER-HARD (8.8X20.5X2-MM THK)	
M	5	1	**8T-4189**	22	BOLT (M8X1.25X20-MM)	
M	6	1	**8T-7547**	20	BOLT (M8X1.25X30-MM)	

M - METRIC PART

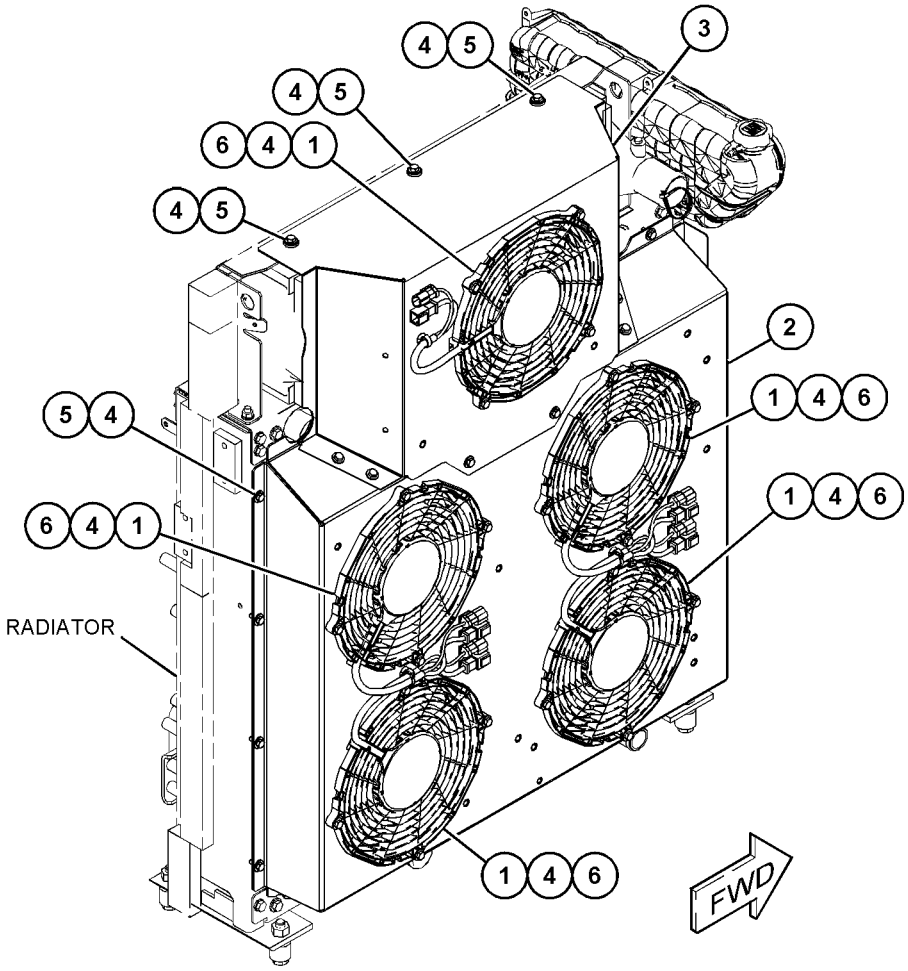

GRAPHIC #1 <END> g06293508

489-8909 LINES GP-COOLING

S/N: BR61-UP

PART OF 490-4811, 558-1933 INSTALLATION AR-ENGINE

SMCS-1380, 5057 **i07405019**

NOTE	REF NO	GRAPHIC REF	PART NUMBER	QTY	PART NAME 1 2 3 4 5 6 (PRODUCT LEVEL)	SEE PAGE
	1	1	**502-4189**	1	HOSE-AFTERCOOLER (HIGH TEMPERATURE)	
	2	1	**502-4190**	1	HOSE-AFTERCOOLER (LOW TEMPERATURE)	
	3	1	**563-5012**	1	HOSE-LOWER RADIATOR	
	4	1	**563-5013**	1	HOSE-LOWER RADIATOR	
	5	1	**144-0367**	2	CLAMP-HOSE	
	6	1	**8T-4984**	1	CLAMP-HOSE	
	7	1	**8T-6703**	5	CLAMP-HOSE	

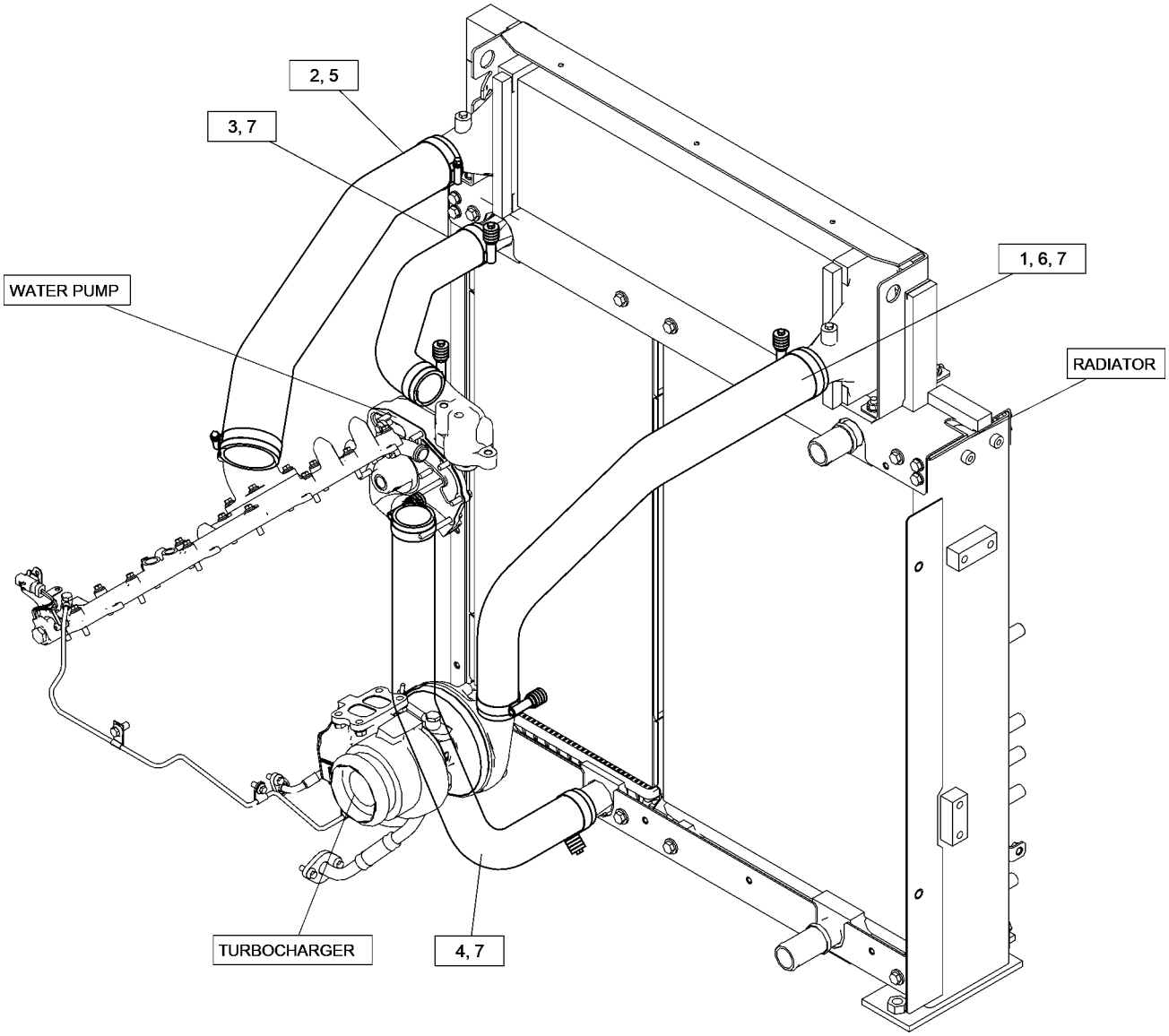

GRAPHIC #1 <END> g06312322

491-6991 LINES GP-OIL COOLER

S/N: BR61-UP

PART OF 532-9539 OPTION AR-HYDRAULIC

SMCS-1378 **i07351351**

NOTE	REF NO	GRAPHIC REF	PART NUMBER	QTY	PART NAME 1 2 3 4 5 6 (PRODUCT LEVEL)	SEE PAGE
	1	1	**8T-4223**	4	WASHER-HARD (13.5X25.5X3-MM THK)	
	2	1	**227-0265**	1	HOSE	
	3	1	**490-7854**	1	PIPE AS	
M	4	1	**113-2004**	4	BOLT-SOCKET HEAD (M12X1.75X45-MM)	
	5	1	**4J-0528**	1	SEAL-O-RING	
	6	1	**8T-6703**	3	CLAMP-HOSE	

M - METRIC PART

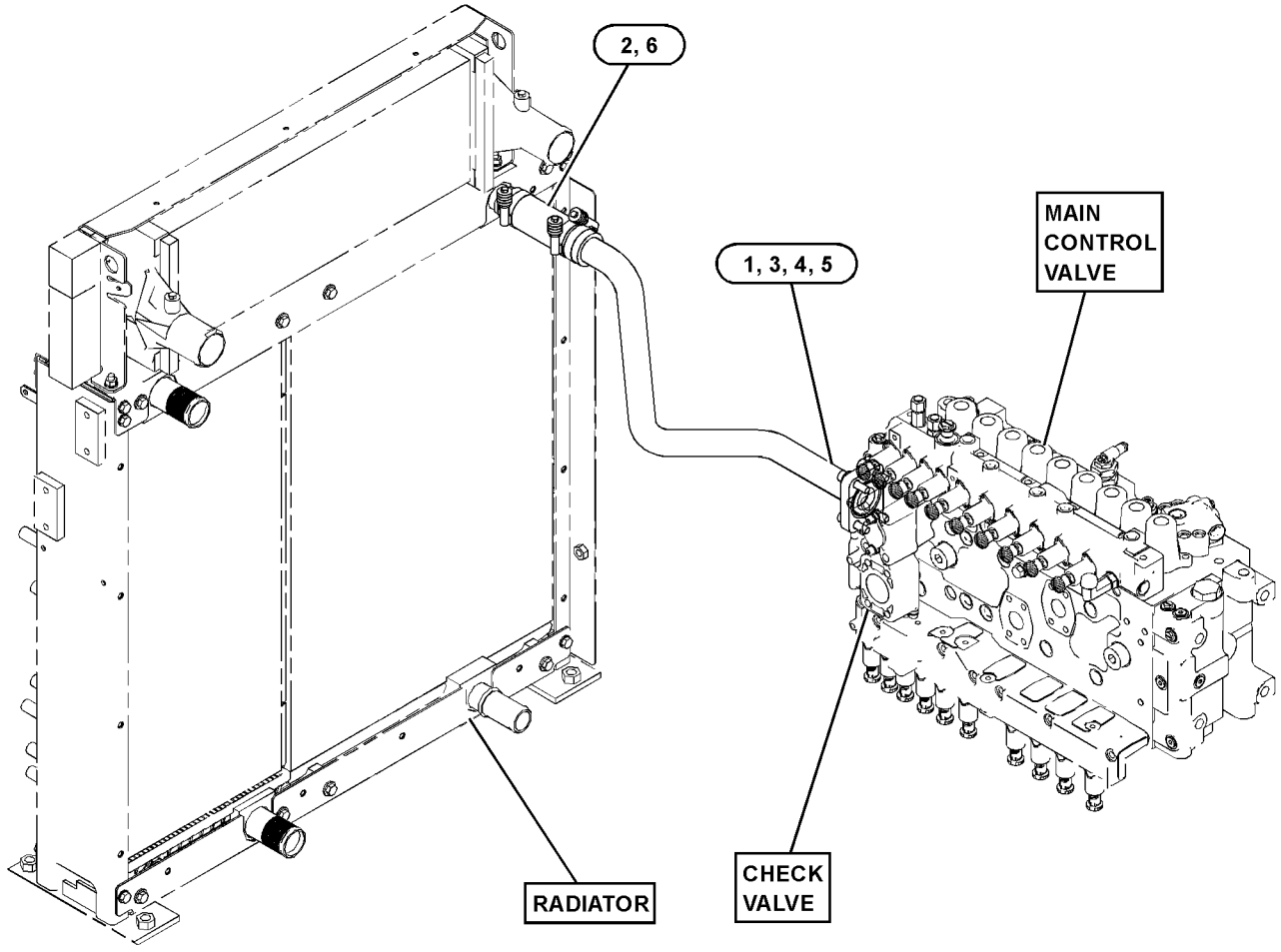

GRAPHIC #1 <END> g06232603

561-2355 LINES GP-OIL COOLER–TOOL CONTROL SYSTEM

S/N: E7A10001-UP

SMCS-1378 **i07451499**

NOTE	REF NO	GRAPHIC REF	PART NUMBER	QTY	PART NAME 1 2 3 4 5 6 (PRODUCT LEVEL)	SEE PAGE
	1	1	**4J-0528**	1	SEAL-O-RING	
	2	1	**227-0265**	1	HOSE	
M	3	1	**113-2004**	4	BOLT-SOCKET HEAD (M12X1.75X45-MM)	
B	4	1	*164-4180*	1	PLUG AS	
		1	**7M-8485**	1	SEAL-O-RING	
		1	**9S-4181**	1	PLUG (1-5/16-12-THD)	
	5	1	**491-6082**	1	PIPE AS	
	6	1	**8T-4223**	4	WASHER-HARD (13.5X25.5X3-MM THK)	
	7	1	**8T-6703**	3	CLAMP-HOSE	

B - USE AS REQUIRED
M - METRIC PART

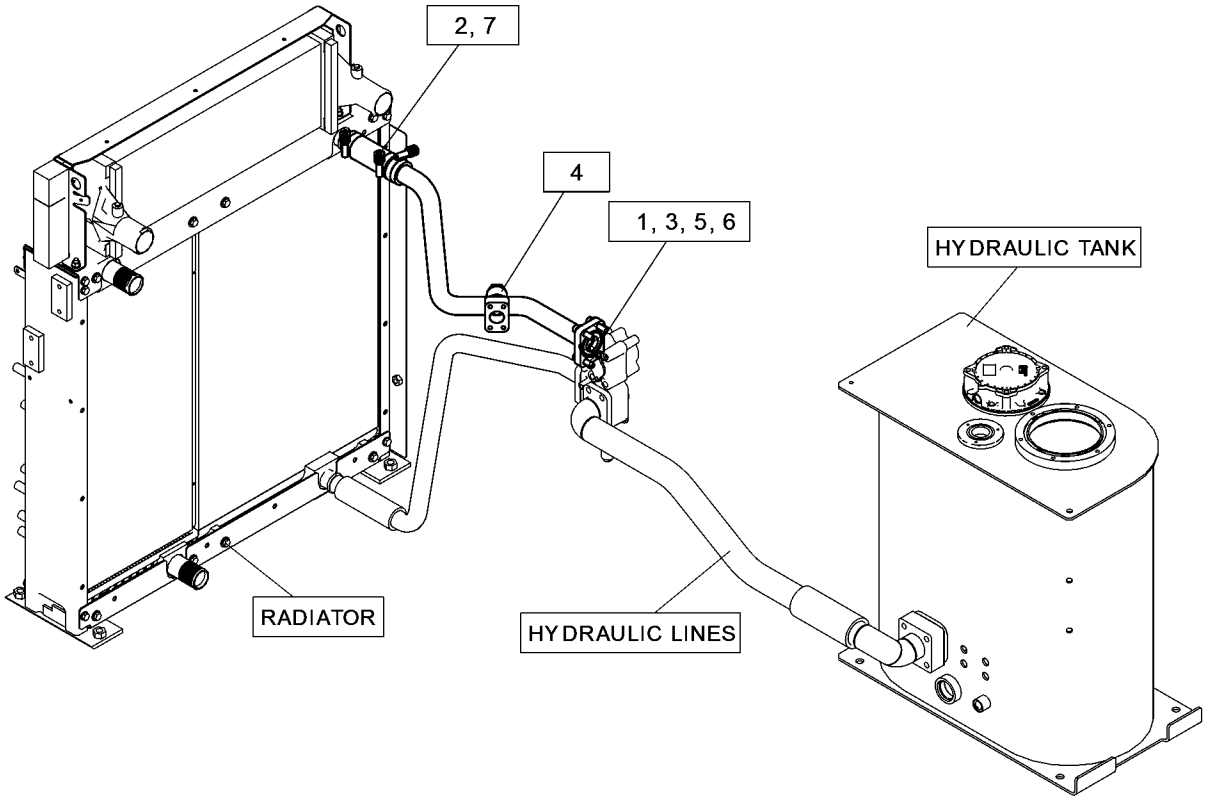

GRAPHIC #1 <END> g06323423

372-2297 PUMP GP-WATER

S/N: 4501-UP; E7A1-UP

PART OF 530-2686, 555-5560, 555-7255 ENGINE AR-PRIMARY

SMCS-1361 **i06928393**

NOTE	REF NO	GRAPHIC REF	PART NUMBER	QTY	PART NAME 1 2 3 4 5 6 (PRODUCT LEVEL)	SEE PAGE
M	1	1	**6I-0217**	2	BOLT (M8X1.25X20-MM)	
J	2	1	*485-4894*	1	PUMP GP-WATER	
	2A	1	**278-3242**	3	BOLT-FLANGE HEAD (M8X1.25X18-MM)	
	2B	1	**374-4419**	1	GASKET	
M	3	1	**113-8129**	2	BOLT (M8X1.25X75-MM)	
	4	1	**225-8019**	1	GASKET	
	5	1	**277-2925**	1	CONNECTION AS	
	5A	1	**225-7738**	1	SEAL-O-RING	
	5B	1	**277-2923**	1	GASKET	
M	6	1	**6I-0254**	2	BOLT (M8X1.25X30-MM)	
M	7	1	**6I-0839**	5	BOLT (M8X1.25X70-MM)	
FJ			**485-4895**	1	PUMP GP-WATER	

F - NOT SHOWN
J - PART MARKED J SERVICES 485-4894
M - METRIC PART

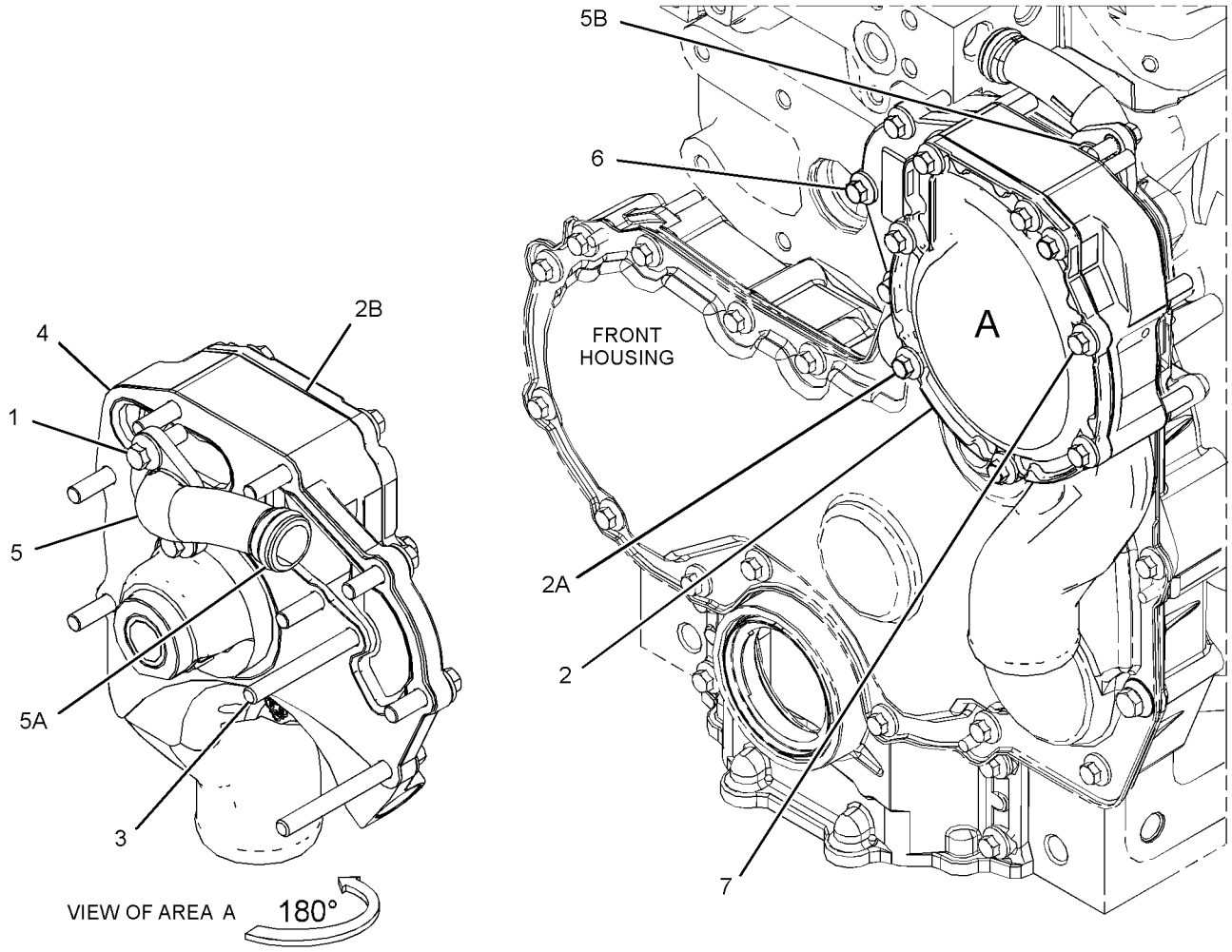

GRAPHIC #1 <END> g06129592

508-6285 RADIATOR & HYD OIL COOLER GP

S/N: BR61-UP

PART OF 489-8911, 558-7629 COOLING GP

SMCS-1351, 1374 **i07376607**

NOTE	REF NO	GRAPHIC REF	PART NUMBER	QTY	PART NAME 1 2 3 4 5 6 (PRODUCT LEVEL)	SEE PAGE
	1	1	**096-4035**	1	CLIP	
	2	2	**369-9793**	4	SEAL-AIR	
	3	2	**385-7922**	2	SEAL-AIR	
	4	2	**387-6068**	2	SEAL-AIR	
	5	1	**423-4030**	1	CORE AS-FUEL COOLER	
	6	1	**446-8478**	1	SEAL-AIR	
	7	1	**508-6286**	1	FRAME AS-RADIATOR	
	8	2	**508-6287**	1	FRAME AS-RADIATOR	
	9	1	**508-6288**	1	FRAME AS	
	10	1	**508-6289**	1	FRAME AS-RADIATOR	
	11	1	**508-6290**	1	CORE AS-RADIATOR	
	11A	1	**547-6150**	1	DRAIN AS	
		1	**355-0468**	1	PLUG-DRAIN (RADIATOR)	
		1	**332-4192**	1	SEAL-O-RING	
	12	1	**508-6291**	1	CORE AS-OIL COOLER	
	13	1	**508-6292**	1	CORE AS-AFTERCOOLER	
		1	**5M-6214**	2	PLUG (1/8-27 PTF)	
	14	1	**508-6293**	1	BRACKET AS	
	15	1,2	**508-6294**	8	PIN	
	16	1,2	**508-6295**	8	PIN	
	17	2	**508-6303**	2	SEAL-AIR	
	18	2	**508-6304**	2	SEAL-AIR	
	19	1	**508-6305**	1	SEAL-AIR	
	20	2	**508-6306**	2	SEAL-AIR	
	21	2	**508-6307**	2	SEAL-AIR	
	22	2	**508-6308**	2	SEAL-AIR	
	23	1	**508-6309**	1	PLATE AS	
	24	1	**508-6310**	1	PLATE AS	
	25	2	**508-6315**	1	SEAL-AIR	
	26	2	**521-5214**	1	SEAL-AIR	
	27	1	**154-9023**	1	VALVE-SAMPLING	
	28	1	**157-0670**	1	CAP-DUST	
	29	1	**6V-9027**	1	SEAL-O-RING	
	30	1,2	**7X-7729**	26	WASHER (11X25X3-MM THK)	
	31	1,2	**8T-4121**	23	WASHER-HARD (11X21X2.5-MM THK)	
M	32	2	**8T-4133**	7	NUT (M10X1.5-THD)	
M	33	1	**8T-4136**	10	BOLT (M10X1.5X25-MM)	
M	34	1	**8T-4137**	16	BOLT (M10X1.5X20-MM)	
M	35	1,2	**8T-4195**	10	BOLT (M10X1.5X30-MM)	
M	36	1,2	**8T-5005**	8	BOLT (M10X1.5X70-MM)	
E	37	1	**7Y-1976**		HOSE-WATER (16-CM)	
	38	1	*439-1887*	2	ELBOW AS	
					(EACH INCLUDES)	
		1	**184-9114**	1	ELBOW	
		1	**238-5081**	1	SEAL-O-RING	

E - ORDER BY THE CENTIMETER
M - METRIC PART

508-6285 **RADIATOR & HYD OIL COOLER GP (**contd.**)** **i07376607**

REFER TO ALL ILLUSTRATIONS OF
THIS GROUP FOR AUXILIARY VIEWS

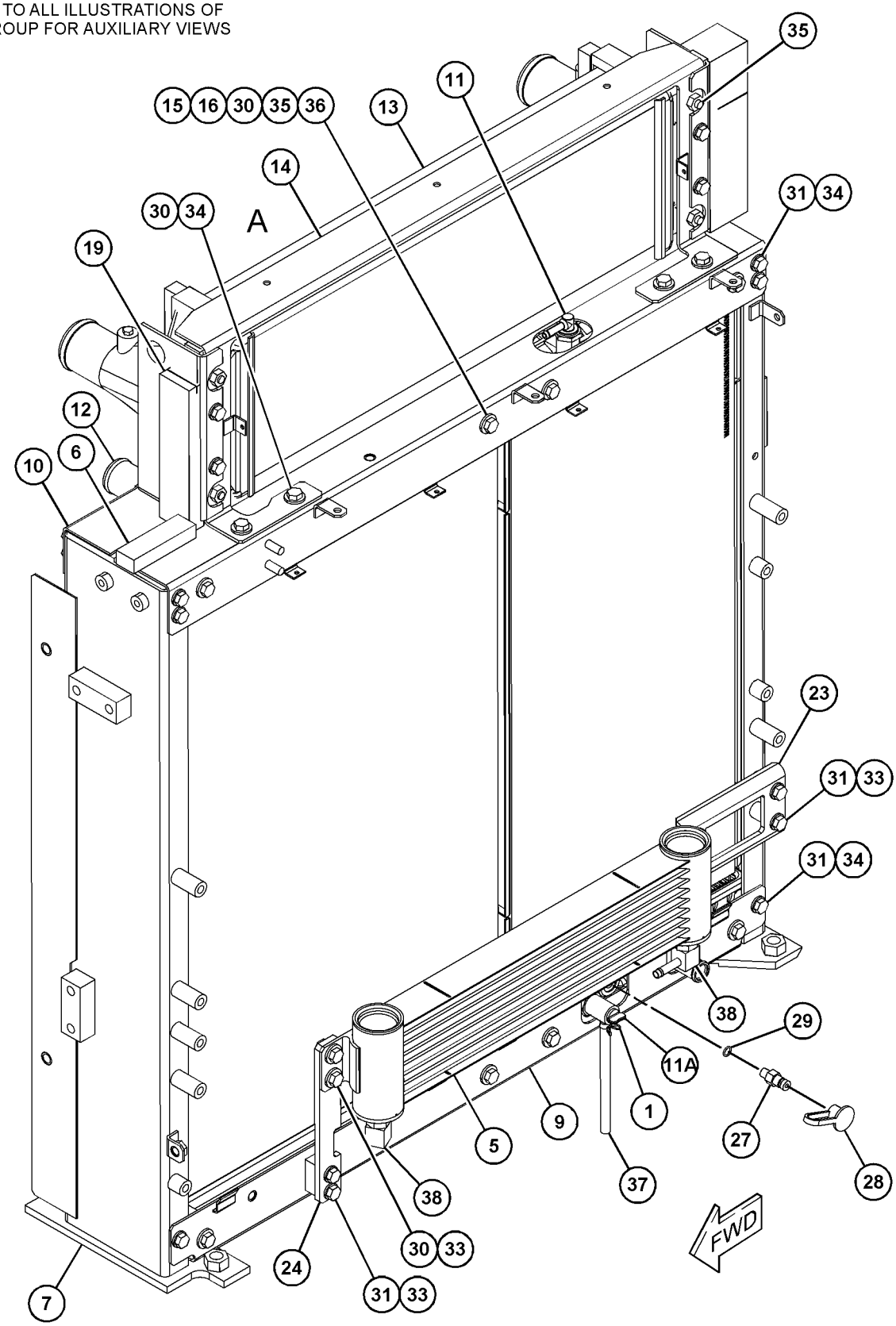

GRAPHIC #1 g06298638

508-6285 **RADIATOR & HYD OIL COOLER GP (**contd.**)** **i07376607**

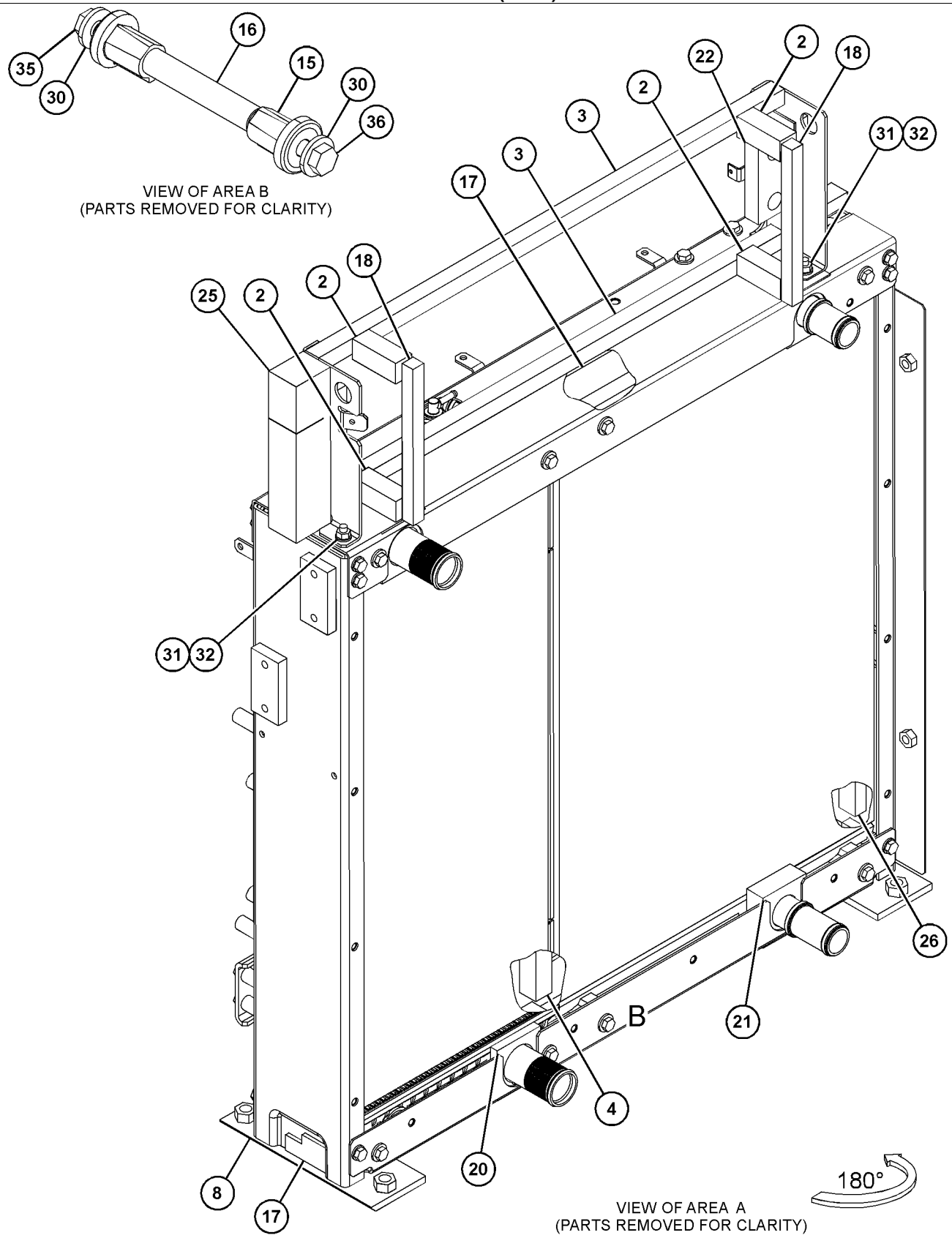

GRAPHIC #2 <END> g06230789

491-8272 SCREEN GP-RADIATOR

S/N: BR61-UP

SMCS-7272 **i07351358**

NOTE	REF NO	GRAPHIC REF	PART NUMBER	QTY	PART NAME 1 2 3 4 5 6 (PRODUCT LEVEL)	SEE PAGE
	1	1	**5D-8159**	6	PIN AS	
	2	1	**508-6299**	1	SCREEN AS-RADIATOR	
	3	1	**508-6300**	2	SCREEN AS-RADIATOR	

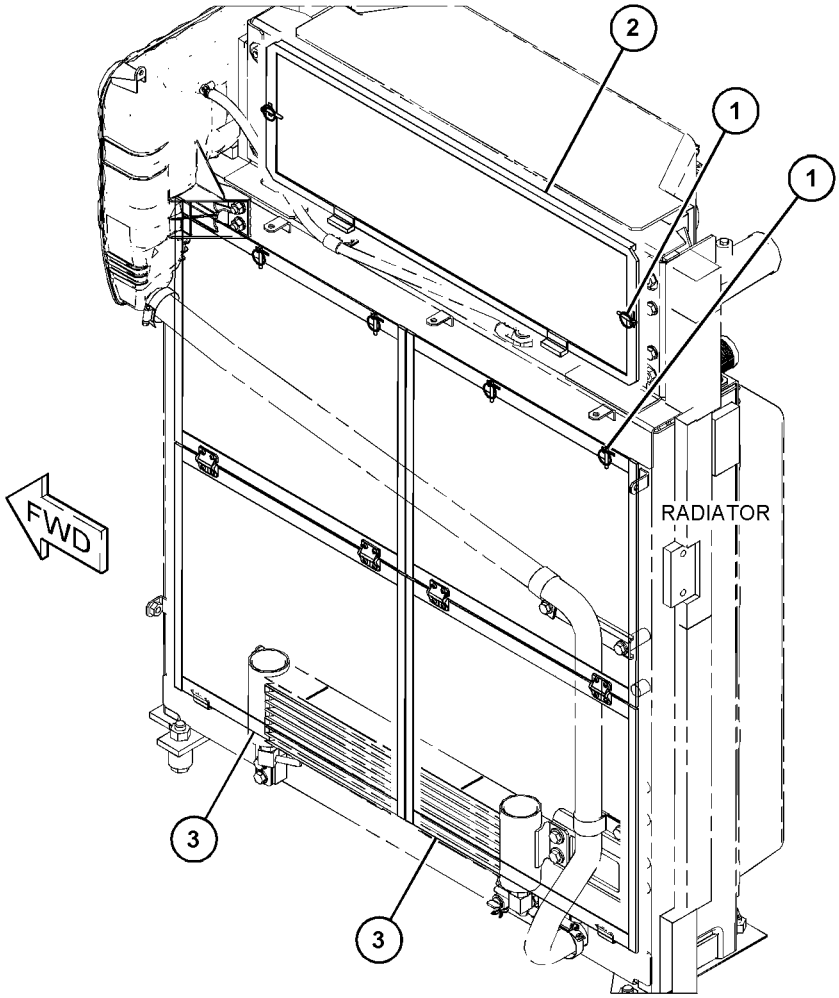

GRAPHIC #1 <END> g06229334

479-8987 AIR CLEANER GP

S/N: BR61-UP

PART OF 490-4839 AIR CLEANER GP

SMCS-1051, 1054 **i07360816**

NOTE	REF NO	GRAPHIC REF	PART NUMBER	QTY	PART NAME 1 2 3 4 5 6 (PRODUCT LEVEL)	SEE PAGE
	1	1	**479-8989**	1	ELEMENT (PRIMARY)	
	2	1	**479-8991**	1	ELEMENT (SECONDARY)	
	3	1	**479-8993**	1	COVER AS-AIR CLEANER	
		1	**479-8995**	2	COVER-LATCH	
		1	**505-3564**	1	SEAL	

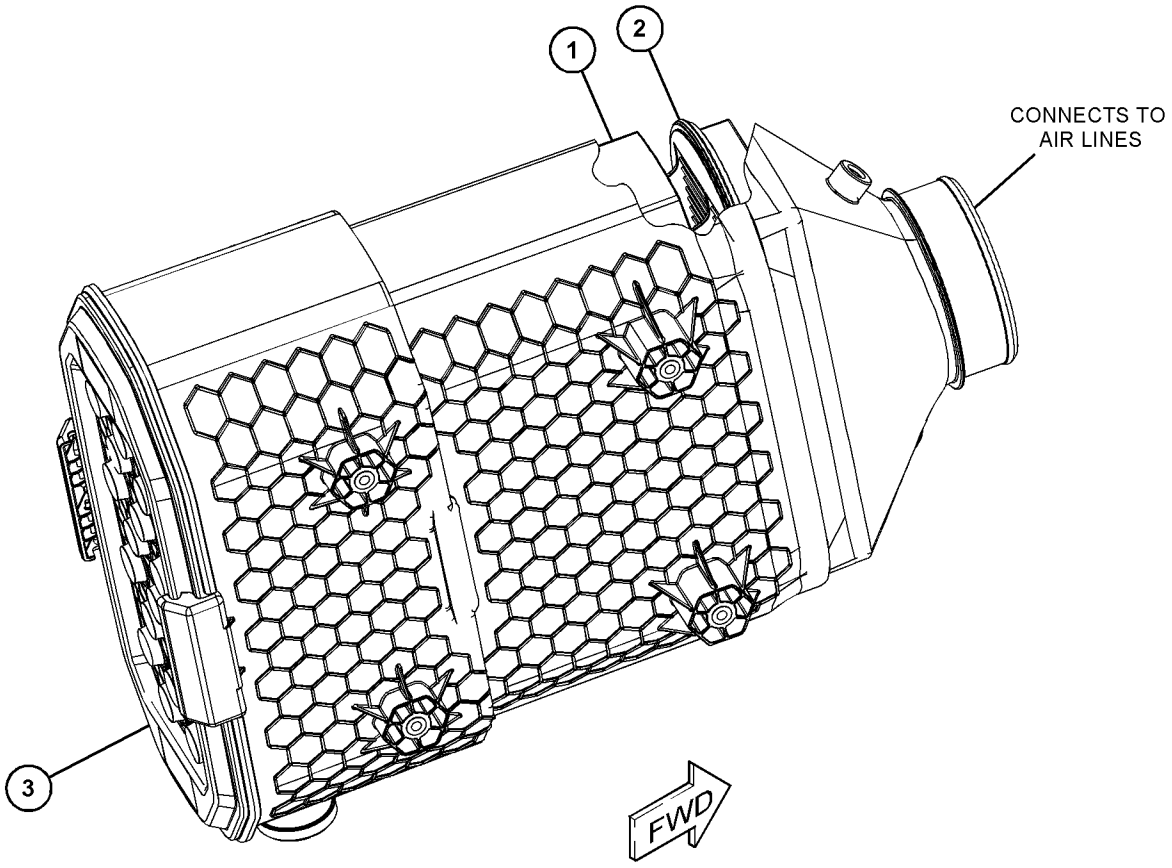

GRAPHIC #1 <END> g06233615

490-4839 AIR CLEANER GP

S/N: BR61-UP

PART OF 511-4775, 558-7709 INSTALLATION AR-ENGINE

SMCS-1051, 1054 **i07360806**

NOTE	REF NO	GRAPHIC REF	PART NUMBER	QTY	PART NAME 1 2 3 4 5 6 (PRODUCT LEVEL)	SEE PAGE
	1	1	**131-8829**	1	VALVE-DUST (AIR CLEANER)	
	2	1	**238-0112**	1	SENSOR GP-TEMPERATURE (AIR INLET)	
	3	1	**296-2735**	1	INDICATOR AS-AIR FILTER CHANGE	
Y	4	1	**479-8987**	1	AIR CLEANER GP	86
	5	1	**492-8275**	1	ADAPTER AS	
		1	**6V-9028**	1	SEAL-O-RING	
		1	**8T-7876**	1	SEAL-O-RING	
	6	1	**228-7100**	1	SEAL-O-RING	
M	7	1	**8T-4200**	4	BOLT (M8X1.25X16-MM)	
	8	1	**8T-4224**	4	WASHER-HARD (8.8X16X2-MM THK)	

M - METRIC PART
Y - SEPARATE ILLUSTRATION

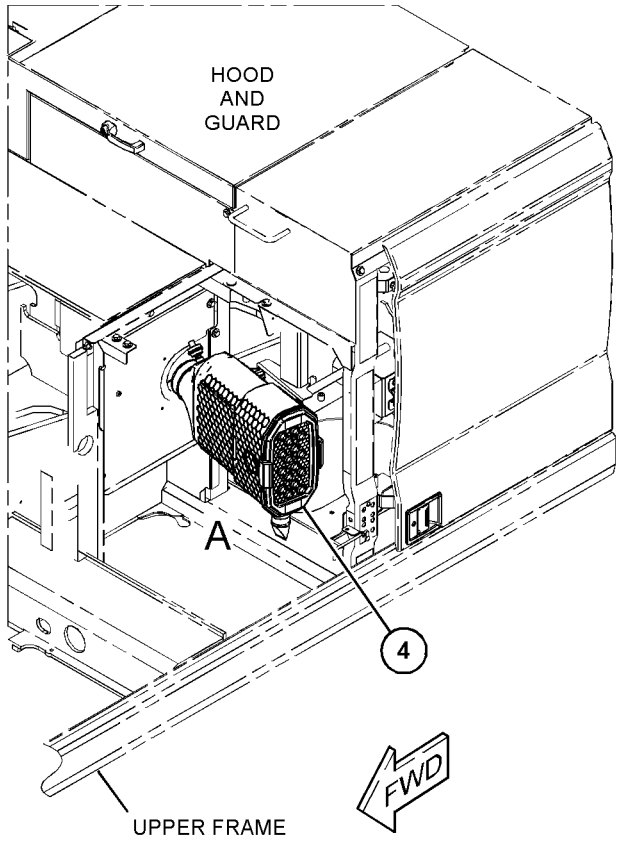

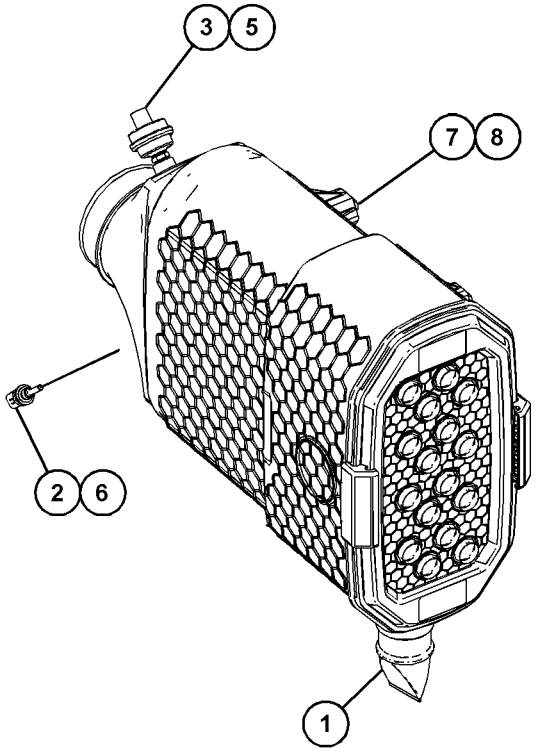

VIEW OF AREA A

GRAPHIC #1 <END> g06267900

490-4826 LINES GP-AIR

S/N: BR61-UP

PART OF 490-4811, 558-1933 INSTALLATION AR-ENGINE

SMCS-1071 **i07366386**

NOTE	REF NO	GRAPHIC REF	PART NUMBER	QTY	PART NAME 1 2 3 4 5 6 (PRODUCT LEVEL)	SEE PAGE
	1	1	**500-3061**	1	HOSE	
	2	1	**8T-4987**	1	CLAMP-HOSE	
	3	1	**9X-2201**	1	CLAMP-HOSE	

490-4826 **LINES GP-AIR (**contd.**)** **i07366386**

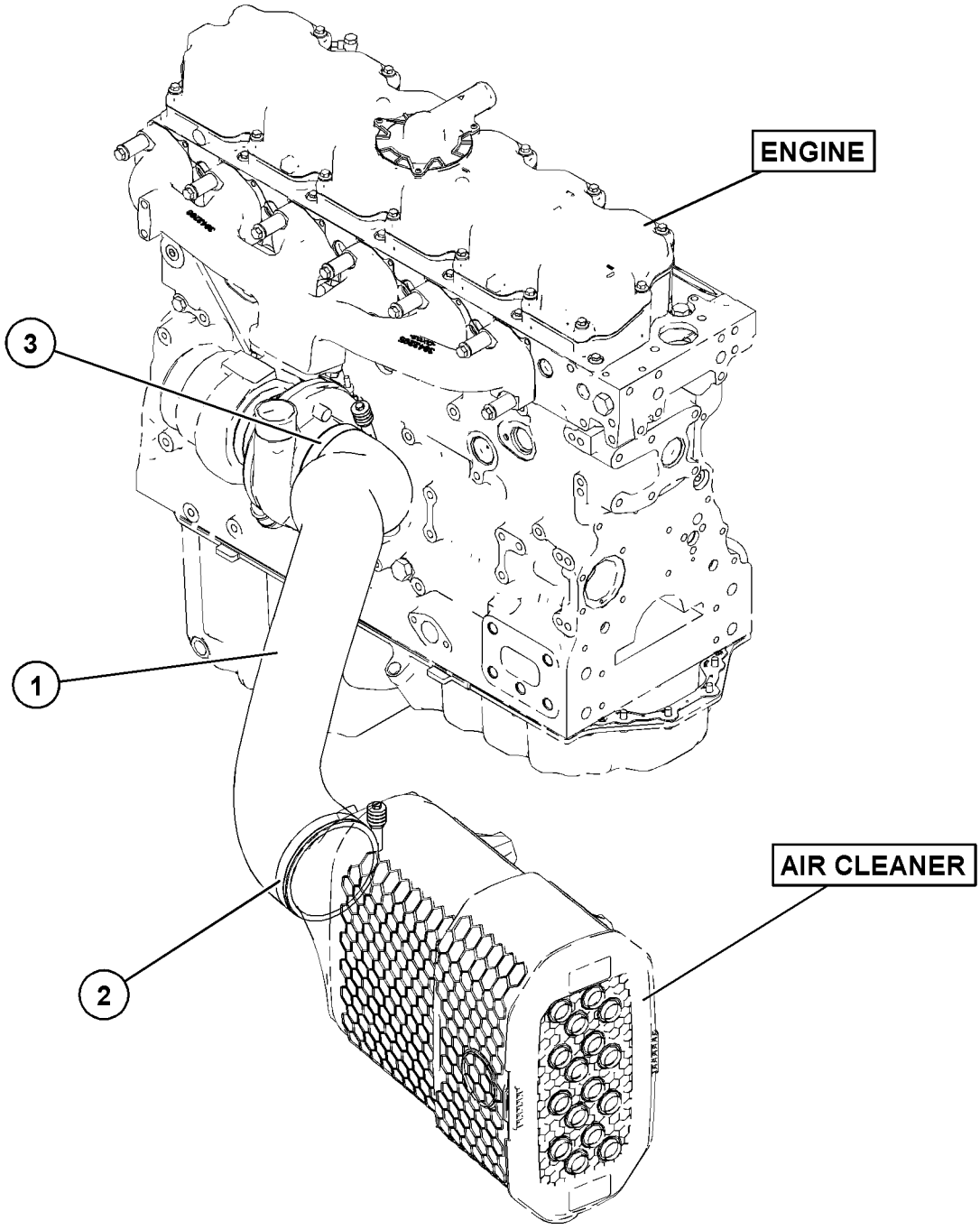

GRAPHIC #1 <END> g06224685

377-2877 LINES GP-TURBOCHARGER AIR

S/N: 4501-UP; E7A1-UP

PART OF 374-0432 TURBOCHARGER GP

SMCS-1052, 1071 **i05333394**

NOTE	REF NO	GRAPHIC REF	PART NUMBER	QTY	PART NAME 1 2 3 4 5 6 (PRODUCT LEVEL)	SEE PAGE
	1	1	**225-8526**	2	WASHER (10.4X13.75X1.37-MM THK)	
	2	1	**133-9469**	1	CLIP	
	3	1	**225-8524**	1	BOLT-SPECIAL	
	4	1	**335-8611**	2	CLIP	
	5	1	**377-2876**	1	TUBE AS	
	6	1	**422-7715**	1	HOSE-TURBOCHARGER	
	7	1	**107-2348**	2	CLIP	

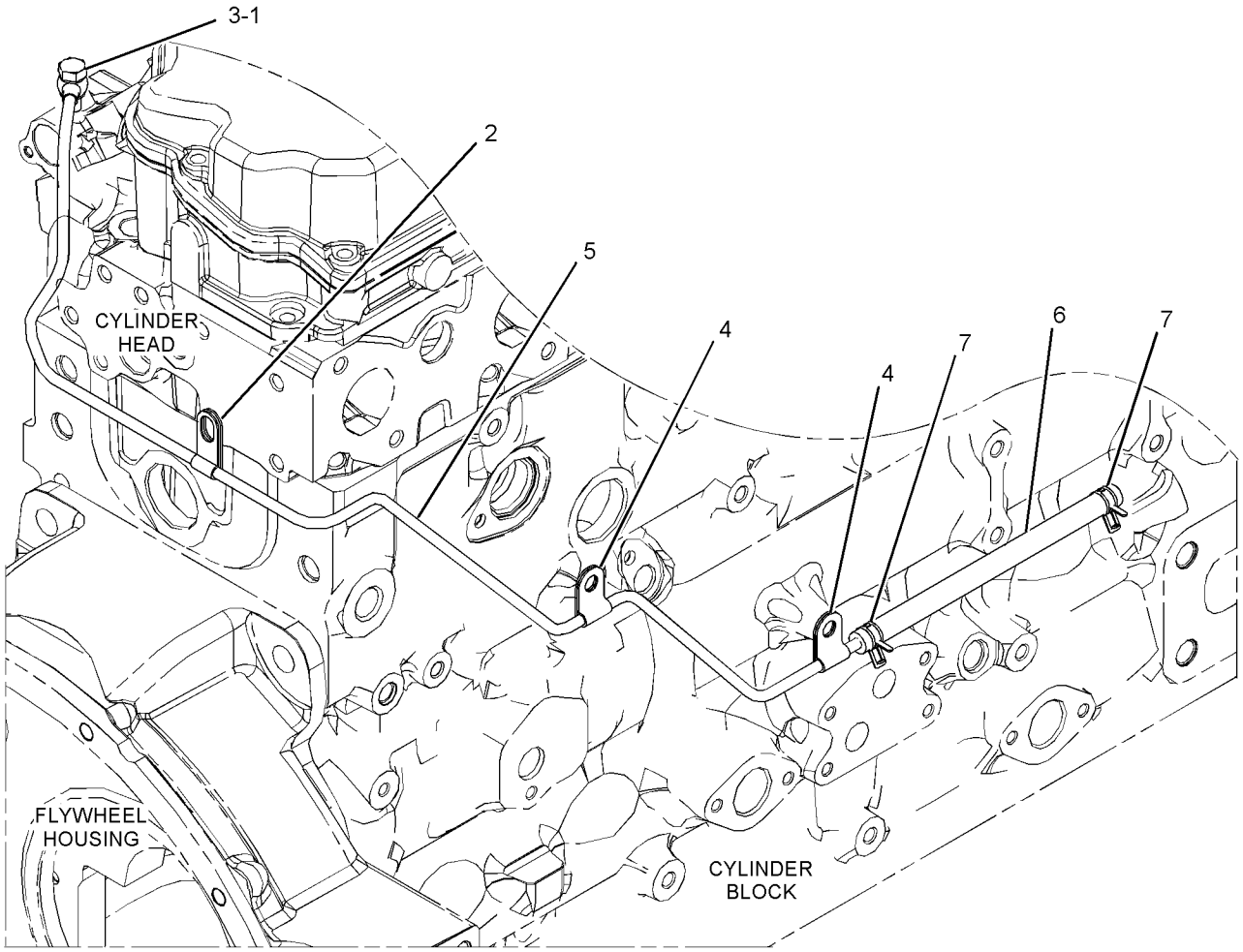

GRAPHIC #1 <END> g03380817

393-7694 MANIFOLD GP-EXHAUST

S/N: 4501-UP; E7A1-UP

PART OF 530-2686, 555-5560, 555-7255 ENGINE AR-PRIMARY

SMCS-1059 **i05331885**

NOTE	REF NO	GRAPHIC REF	PART NUMBER	QTY	PART NAME 1 2 3 4 5 6 (PRODUCT LEVEL)	SEE PAGE
	1	1	**238-8292**	12	BOLT-FLANGE HEAD	
	2	1	**286-7851**	12	SPACER	
	3	1	**367-3340**	4	STUD	
	4	1	**384-2286**	1	MANIFOLD	
	5	1	**416-7727**	2	GASKET	

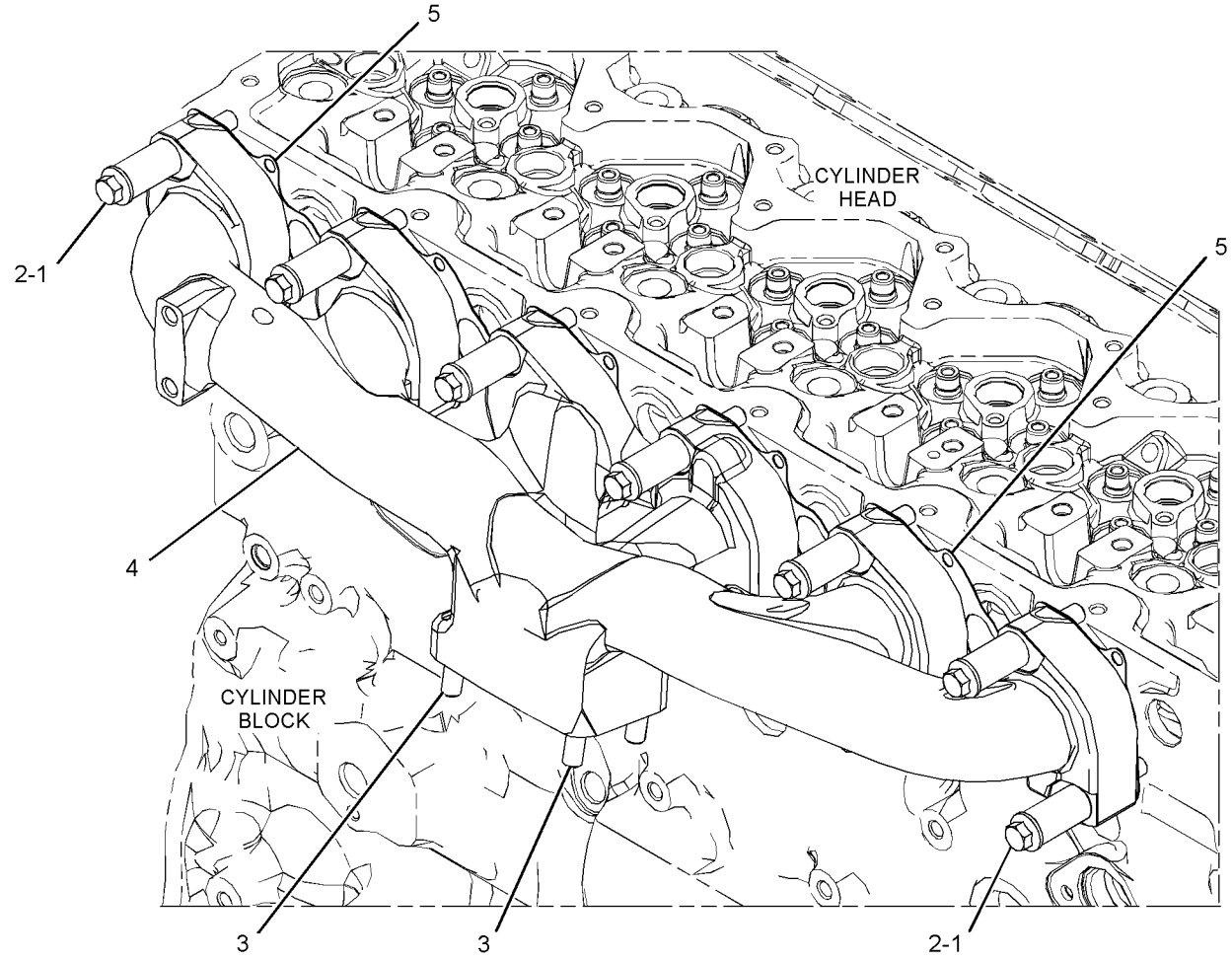

GRAPHIC #1 <END> g03379009

378-8582 MANIFOLD GP-INLET

S/N: 4501-UP; E7A1-UP

PART OF 530-2686, 555-5560, 555-7255 ENGINE AR-PRIMARY

SMCS-1058, 1090 **i07158226**

NOTE	REF NO	GRAPHIC REF	PART NUMBER	QTY	PART NAME 1 2 3 4 5 6 (PRODUCT LEVEL)	SEE PAGE
M	1	1	**6I-0917**	2	BOLT (M6X1X25-MM)	
M	2	1	**105-2740**	12	BOLT (M8X1.25X40-MM)	
	3	1	**369-1658**	1	SOLENOID	
	4	1	**452-9704**	1	COVER (CYLINDER HEAD)	
M	5	1	**6I-0260**	4	BOLT (M8X1.25X25-MM)	
	6	1	**390-7626**	1	CONNECTION GP-AIR	
	6A	1	**238-8288**	1	GASKET-INLET	
	6B	1	**292-3462**	1	PLUG-PIPE	

M - METRIC PART

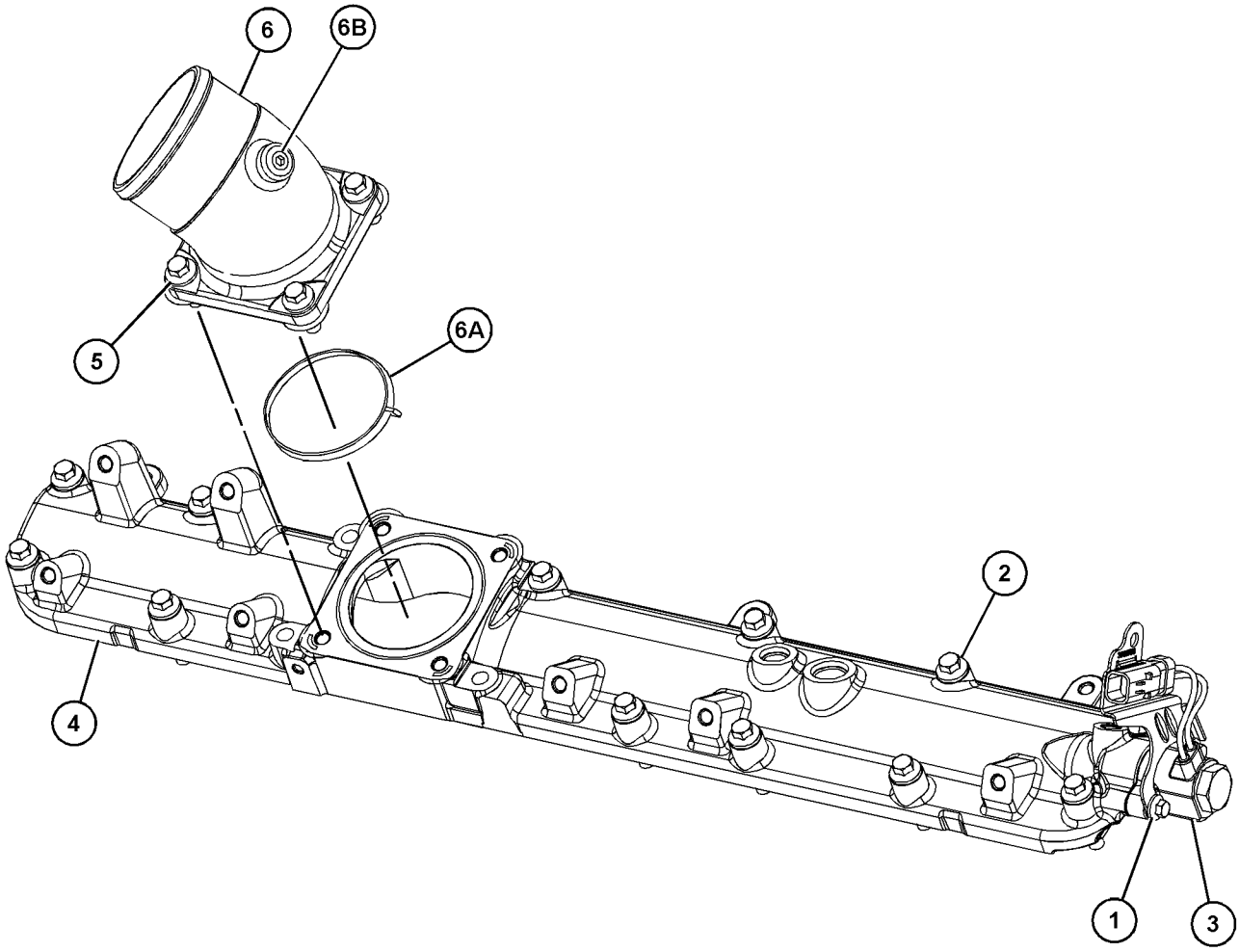

GRAPHIC #1 <END> g03651405

490-4857 MUFFLER GP

S/N: BR61-UP

PART OF 490-4811, 558-1933 INSTALLATION AR-ENGINE

SMCS-1062 **i07366390**

NOTE	REF NO	GRAPHIC REF	PART NUMBER	QTY	PART NAME 1 2 3 4 5 6 (PRODUCT LEVEL)	SEE PAGE
	1	1	**241-9264**	1	CLAMP-MUFFLER	
	2	1	**277-9463**	1	CLAMP	
	3	1	**374-5981**	1	PIPE AS-EXHAUST	
	4	1	**374-6013**	1	SUPPORT AS	
		1	**7Y-6215**	1	PLATE	
		1	**379-4381**	1	SUPPORT	
		1	**379-4382**	1	PLATE	
		1	**379-4384**	1	SUPPORT	
	5	1	**374-6038**	2	U-BOLT	
M	6	1	**451-2181**	4	BOLT (M12X1.75X30-MM)	
	7	1	**453-3454**	2	WASHER-HARD (11X21X2.5-MM THK)	
	8	1	**453-8033**	4	WASHER-HARD (13.5X30X4-MM THK)	
M	9	1	**455-3798**	2	BOLT (M10X1.5X25-MM)	
	10	1	**467-4842**	1	MUFFLER AS	
	11	1	**502-3425**	1	PIPE-TAIL	
	12	1	**388-7014**	1	CLAMP-BENT BOLT	
M	13	1	**8T-4133**	8	NUT (M10X1.5-THD)	

M - METRIC PART

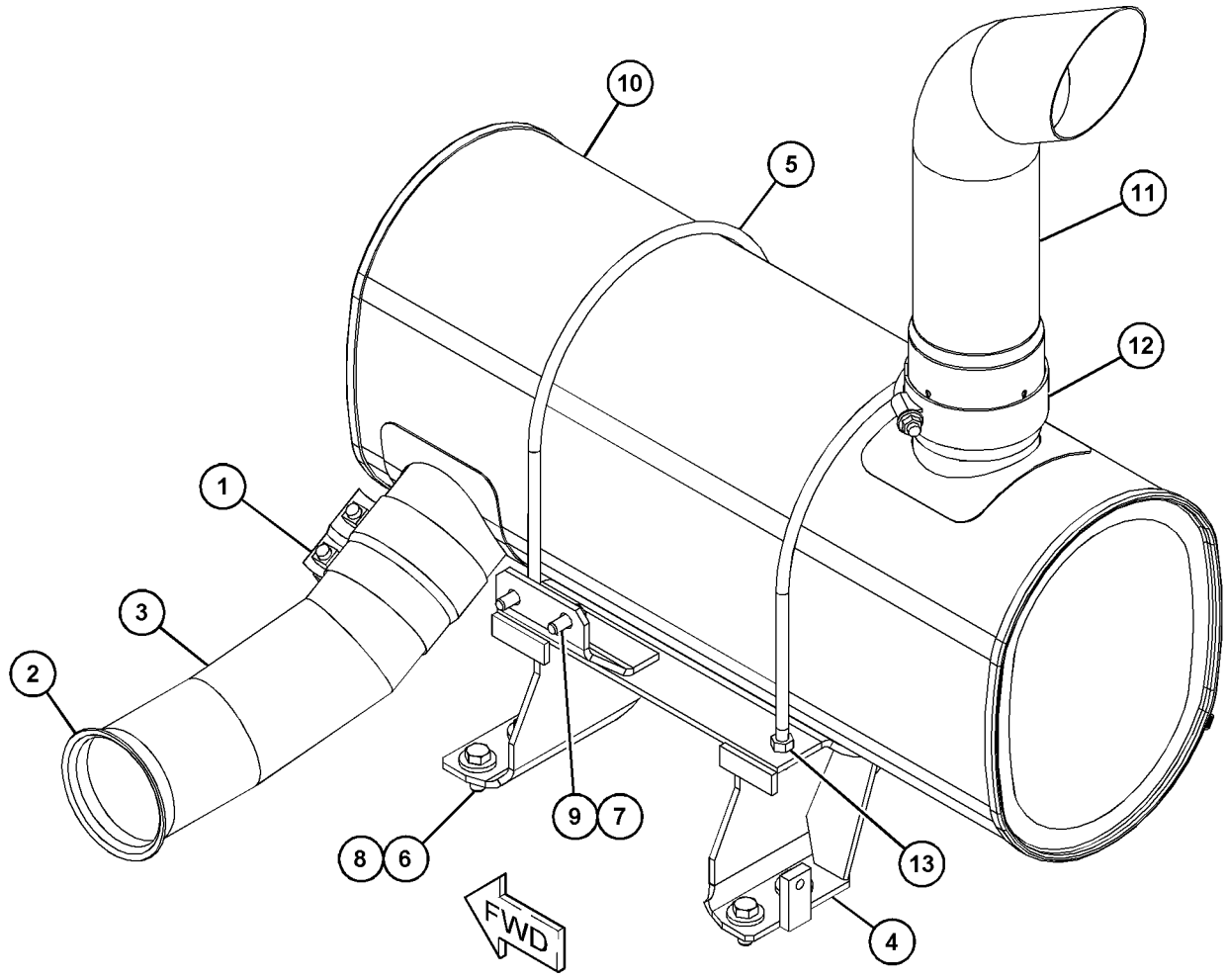

GRAPHIC #1 <END> g06224768

374-0432 TURBOCHARGER GP

S/N: 4501-UP; E7A1-UP

PART OF 530-2686, 555-5560, 555-7255 ENGINE AR-PRIMARY

SMCS-1052, 1053 **i07449880**

NOTE	REF NO	GRAPHIC REF	PART NUMBER	QTY	PART NAME 1 2 3 4 5 6 (PRODUCT LEVEL)	SEE PAGE
M	1	1	**6I-0563**	4	NUT (M10X1.5-THD)	
M	2	1	**6I-0217**	5	BOLT (M8X1.25X20-MM)	
M	3	1	**100-4830**	1	BOLT (M10X1.5X20-MM)	
M	4	1	**124-3815**	2	BOLT (M8X1.25X16-MM)	
	5	1	**420-2371**	1	LINE AS	
	6	1	**437-4170**	1	GASKET	
	7	1	**278-0017**	1	GASKET	
C	8	1	**458-8357**	1	TURBOCHARGER AS	
		1	**560-7640**	1	ACTUATOR AS	
Y	9	1	**368-8559**	1	LINES GP-TURBOCHARGER OIL	65
Y	10	1	**377-2877**	1	LINES GP-TURBOCHARGER AIR	90

C - CHANGE FROM PREVIOUS TYPE
M - METRIC PART
Y - SEPARATE ILLUSTRATION

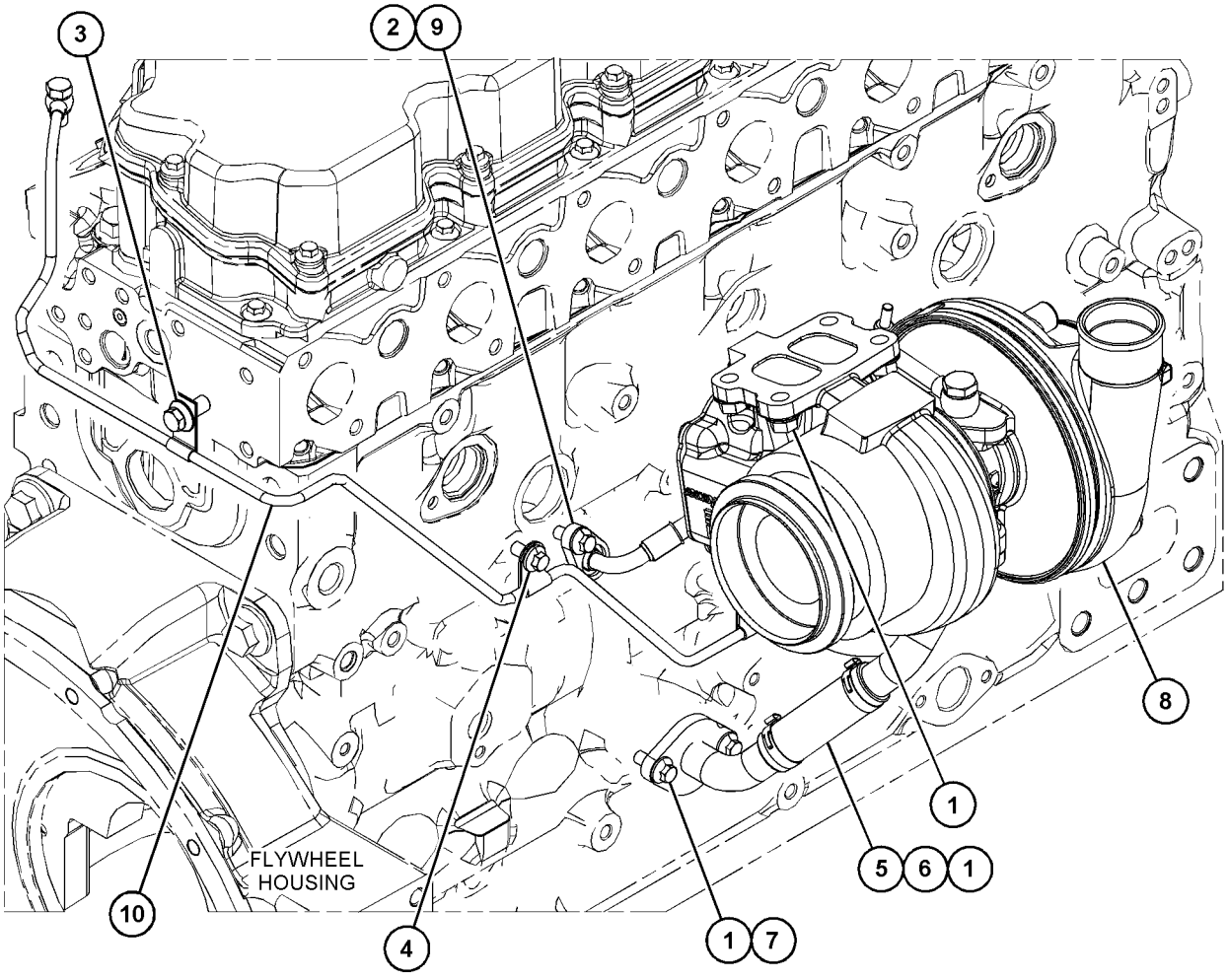

GRAPHIC #1 <END> g06327802

374-0432 TURBOCHARGER GP

S/N: 4501-UP

PART OF 530-2686 ENGINE AR-PRIMARY

SMCS-1052, 1053 **i05742218**

NOTE	REF NO	GRAPHIC REF	PART NUMBER	QTY	PART NAME 1 2 3 4 5 6 (PRODUCT LEVEL)	SEE PAGE
M	1	1	**6I-0563**	4	NUT (M10X1.5-THD)	
M	2	1	**6I-0217**	5	BOLT (M8X1.25X20-MM)	
M	3	1	**100-4830**	1	BOLT (M10X1.5X20-MM)	
M	4	1	**124-3815**	2	BOLT (M8X1.25X16-MM)	
	5	1	**420-2371**	1	LINE AS	
	6	1	**437-4170**	1	GASKET	
	7	1	**278-0017**	1	GASKET	
R	8	1	**315-9810**	1	TURBOCHARGER GP	
	8A	1	**277-9602**	1	CLAMP	
	8B	1	**277-9603**	1	CLAMP	
Y	9	1	**368-8559**	1	LINES GP-TURBOCHARGER OIL	65
Y	10	1	**377-2877**	1	LINES GP-TURBOCHARGER AIR	90

M - METRIC PART
R - REMANUFACTURED PART MAY BE AVAILABLE
Y - SEPARATE ILLUSTRATION

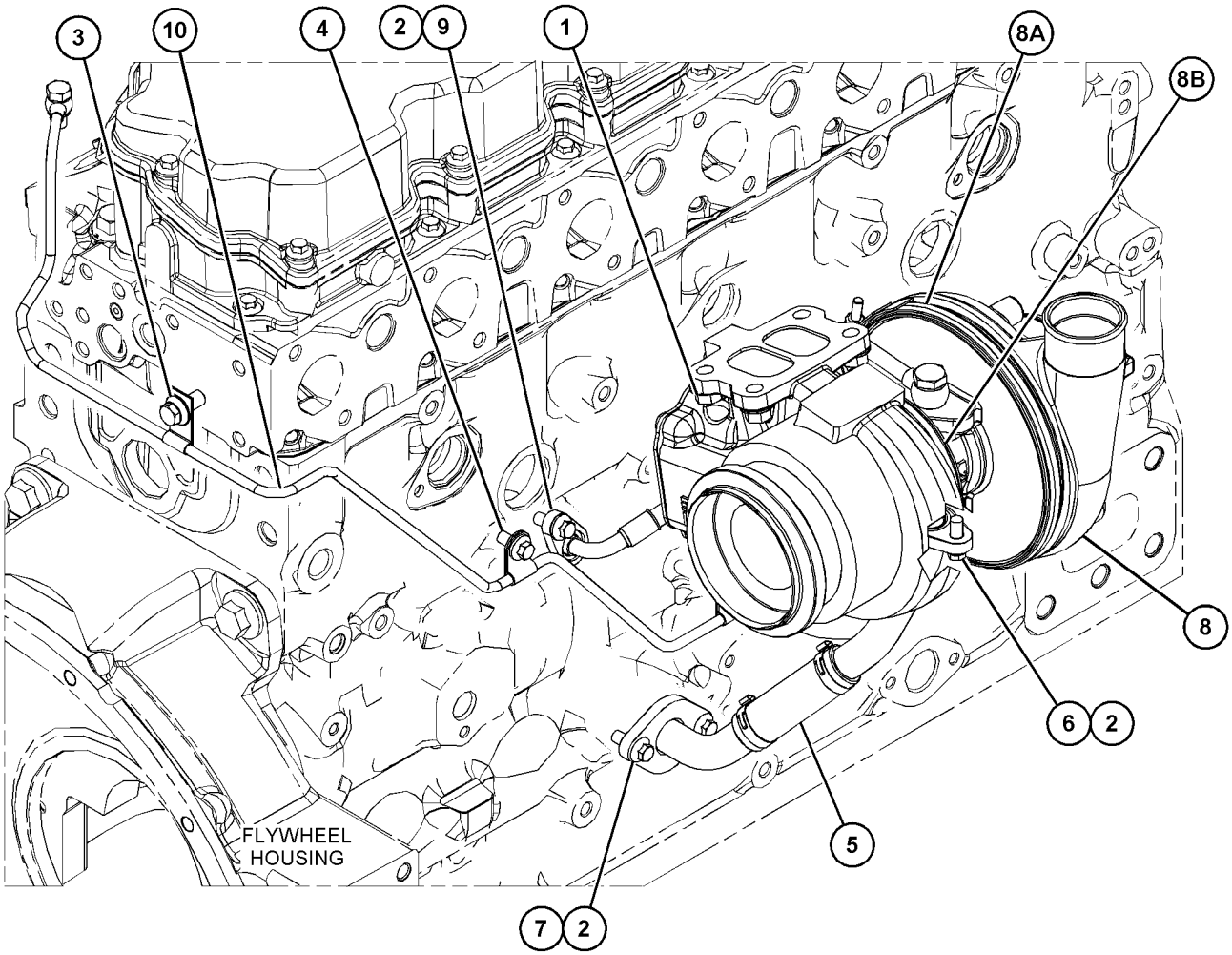

GRAPHIC #1 <END> g03659589

361-7347 CONNECTION GP-FUEL

S/N: BR610001-UP
9.49 SAE, M16
PART OF 511-5053 FILTER GP-WATER SEP & FUEL

SMCS-1274 **i05804998**

NOTE	REF NO	GRAPHIC REF	PART NUMBER	QTY	PART NAME 1 2 3 4 5 6 (PRODUCT LEVEL)	SEE PAGE
	1	1	**361-7346**	1	CONNECTION	
	2	1	**228-7102**	1	SEAL-O-RING	

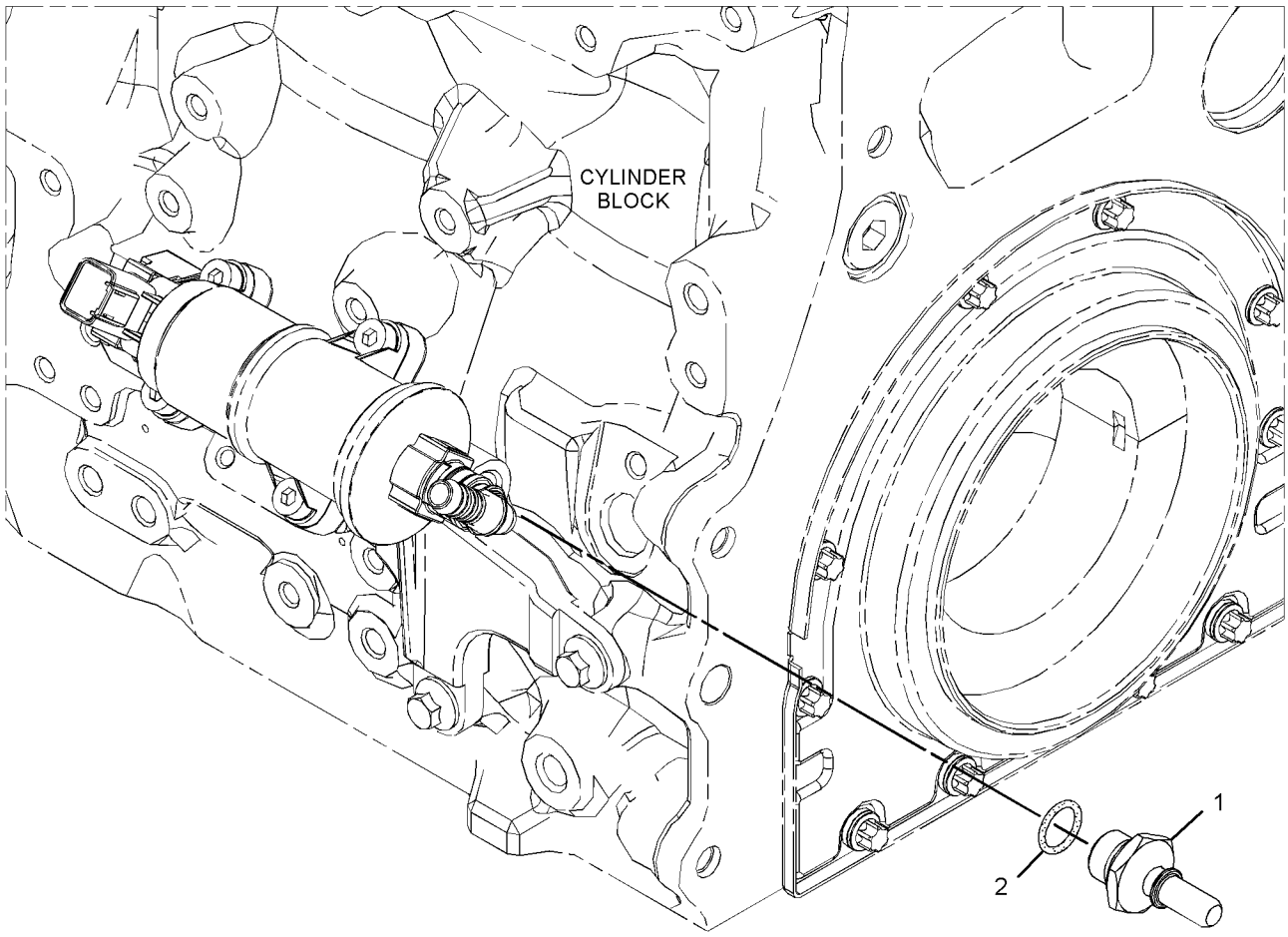

GRAPHIC #1 <END> g02716582

498-1841 FILTER & LINES GP-FUEL

S/N: 4501-UP; E7A1-UP

PART OF 530-2686, 555-5560, 555-7255 ENGINE AR-PRIMARY

SMCS-1261, 1274 **i07201415**

NOTE	REF NO	GRAPHIC REF	PART NUMBER	QTY	PART NAME 1 2 3 4 5 6 (PRODUCT LEVEL)	SEE PAGE
M	1	1	**6I-4200**	3	BOLT (M10X1.5X16-MM)	
M	2	1	**100-4458**	1	BOLT (M8X1.25X14-MM)	
M	3	1	**100-4830**	2	BOLT (M10X1.5X20-MM)	
M	4	1	**124-3815**	1	BOLT (M8X1.25X16-MM)	
	5	1	**247-4928**	1	WASHER (16.5X20.5X1.6-MM THK)	
	6	1	**348-0495**	1	WASHER	
	7	1	**376-9967**	1	CONNECTION-FUEL	
	8	1	**385-2538**	1	BRACKET AS (LINES)	
	9	1	**389-5775**	1	BRACKET	
	10	1	**390-8738**	1	SUPPORT GP-LINES	
	11	1	**391-1817**	1	SUPPORT GP-LINES	
	12	1	**391-2492**	1	BRACKET AS	
	13	1	**391-2493**	1	CONNECTION-FUEL	
Y	14	1	**433-1316**	1	LINES GP-FUEL	105
Y	15	1	**464-7899**	1	LINES GP-FUEL	106
	16	1	**521-6827**	1	LINE AS-FUEL	
M	17	1	**6I-0217**	1	BOLT (M8X1.25X20-MM)	
M	18	1	**6I-0260**	1	BOLT (M8X1.25X25-MM)	

M - METRIC PART
Y - SEPARATE ILLUSTRATION

498-1841 **FILTER & LINES GP-FUEL (**contd.**)** **i07201415**

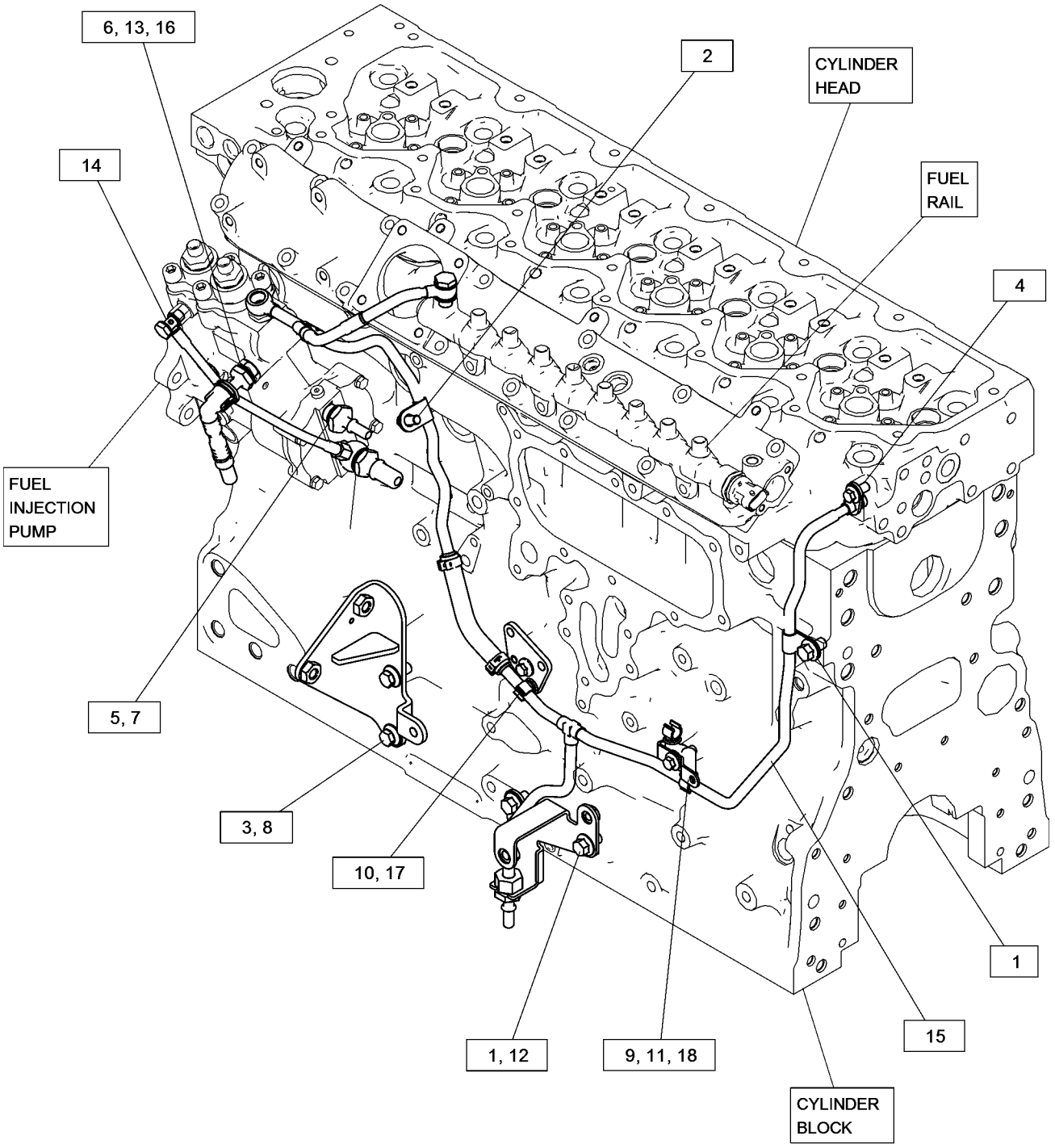

GRAPHIC #1 <END> g06258718

360-8958 FILTER GP-FUEL

S/N: BR61-UP

PART OF 523-9010 FILTER GP-FUEL

SMCS-1261 **i06791520**

NOTE	REF NO	GRAPHIC REF	PART NUMBER	QTY	PART NAME 1 2 3 4 5 6 (PRODUCT LEVEL)	SEE PAGE
	1	1	**360-8960**	1	FILTER ELEMENT-FUEL	
					AVAILABLE REPAIR KIT(S):	
			362-5412	1	KIT-DRAIN (FUEL FILTER)	
					(INCLUDES DRAIN, KNOB, & SEALS)	
			370-8376	1	KIT-FUEL SYSTEM PARTS	

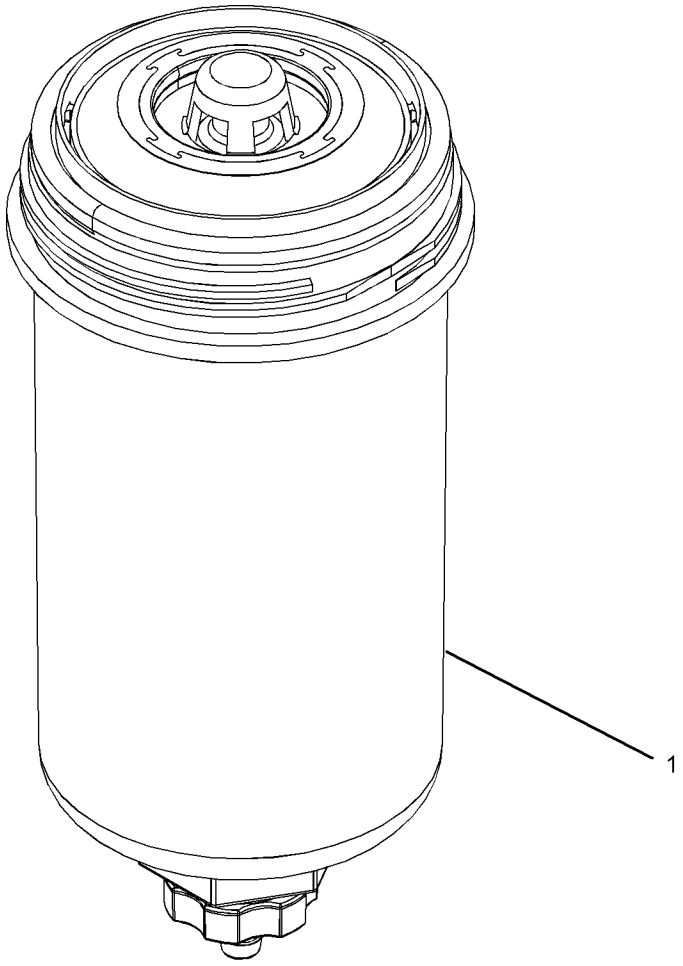

GRAPHIC #1 <END> g03173178

523-9010 FILTER GP-FUEL

S/N: BR61-UP

PART OF 523-5673 LINES GP-FUEL

SMCS-1261 **i07330978**

NOTE	REF NO	GRAPHIC REF	PART NUMBER	QTY	PART NAME 1 2 3 4 5 6 (PRODUCT LEVEL)	SEE PAGE
	1	1	**228-7100**	3	SEAL-O-RING	
	2	1	**238-0112**	1	SENSOR GP-TEMPERATURE (ENGINE COOLANT)	
	3	1	**320-3060**	2	SENSOR GP-PRESSURE (FUEL FILTER INLET)	
Y	4	1	**360-8958**	2	FILTER GP-FUEL	99
	5	1	**362-9689**	2	SCREW-SPECIAL	

Y - SEPARATE ILLUSTRATION

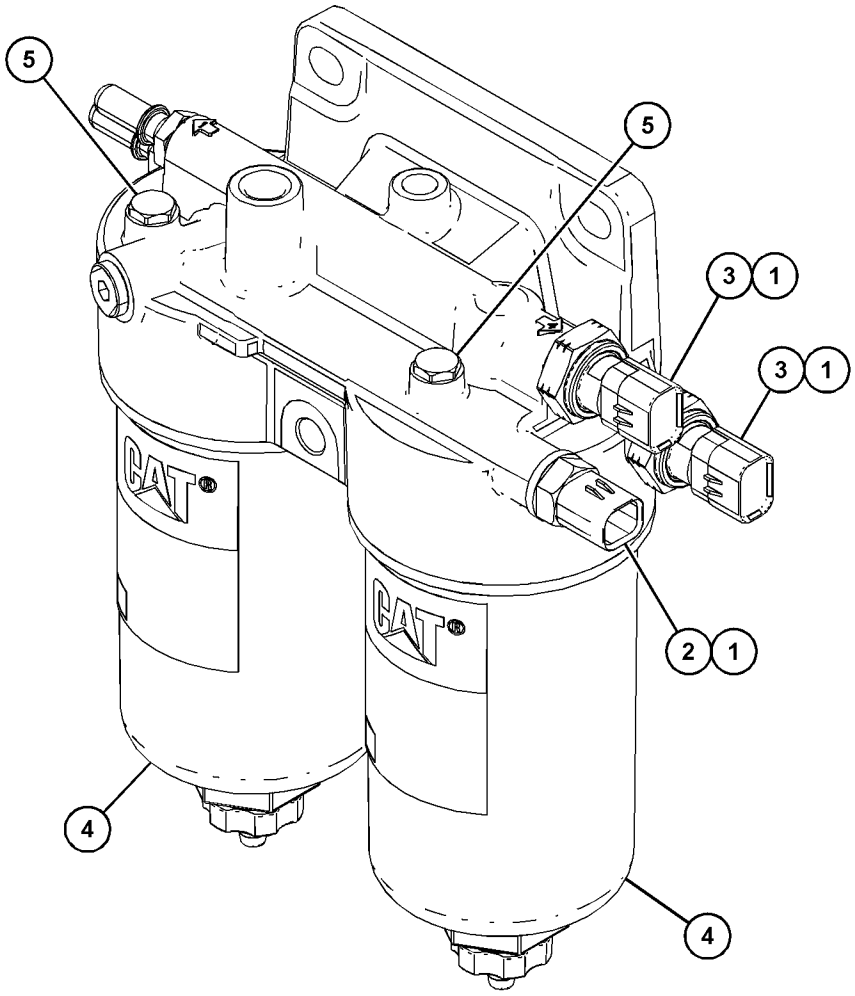

GRAPHIC #1 <END> g06236902

511-5053 FILTER GP-WATER SEP & FUEL

S/N: BR610001-UP

PART OF 557-8798 LINES GP-FUEL

SMCS-1261, 1263 **i07451445**

NOTE	REF NO	GRAPHIC REF	PART NUMBER	QTY	PART NAME 1 2 3 4 5 6 (PRODUCT LEVEL)	SEE PAGE
	1	1	**199-7560**	1	RING-RETAINING	
	2	1	**228-7102**	1	SEAL-O-RING	
	3	1	**238-0112**	1	SENSOR GP-TEMPERATURE (FUEL)	
Y	4	1	**361-7347**	2	CONNECTION GP-FUEL	96
	5	1	**433-4841**	1	ADAPTER	
	6	1	**439-5039**	1	SENSOR GP-LIQUID LEVEL (WATER IN FUEL)	
	7	1	**277-4993**	5	SEAL-O-RING	
	8	1	**320-3060**	1	SENSOR GP-PRESSURE (FUEL FILTER OUTLET)	
	8A	1	**320-3060**	1	SENSOR GP-PRESSURE (FUEL FILTER INLET)	
	9	1	**356-3986**	1	CONNECTOR AS	
		1	**277-4993**	1	SEAL-O-RING	
	10	1	*492-9114*	1	NIPPLE AS	
		1	**228-7102**	1	SEAL-O-RING	
		1	**492-9113**	1	FITTING	
	11	1	**511-4810**	1	SPRING-WAVE	
	12	1	**511-4823**	1	SEAL-O-RING	
	13	1	**511-4824**	1	SEAL-O-RING	
	14	1	**511-6154**	1	SPACER	
	15	1	**515-6467**	1	CONNECTION	
	16	1	**523-4986**	1	HOUSING AS (FUEL, WATER SEPARATOR)	
		1	**460-5302**	1	KIT-DRAIN (FUEL FILTER, WATER SEPARATOR)	
					(INCLUDES DRAIN, KNOB & SEAL)	
		1	**523-4987**	1	ELEMENT-WATER SEPARATOR	
	17	1	**523-4988**	1	HOUSING AS-FUEL (SECONDARY)	
		1	**354-5833**	1	KIT-DRAIN (FUEL FILTER)	
		1	**489-7503**	1	HOUSING-FUEL FILTER	
		1	**509-5694**	1	FILTER ELEMENT-FUEL (SECONDARY)	
	18	1	**525-9580**	1	BASE-FUEL FILTER	
	19	1	**526-2037**	1	PUMP AS-FUEL	
	20	1	**533-2245**	1	SENSOR AS-PRESSURE	
	21	1	**539-7999**	1	VALVE AS-CHECK	
	22	1	**6V-7723**	1	RING-RETAINING	

Y - SEPARATE ILLUSTRATION

511-5053 **FILTER GP-WATER SEP & FUEL** (contd.) **i07451445**

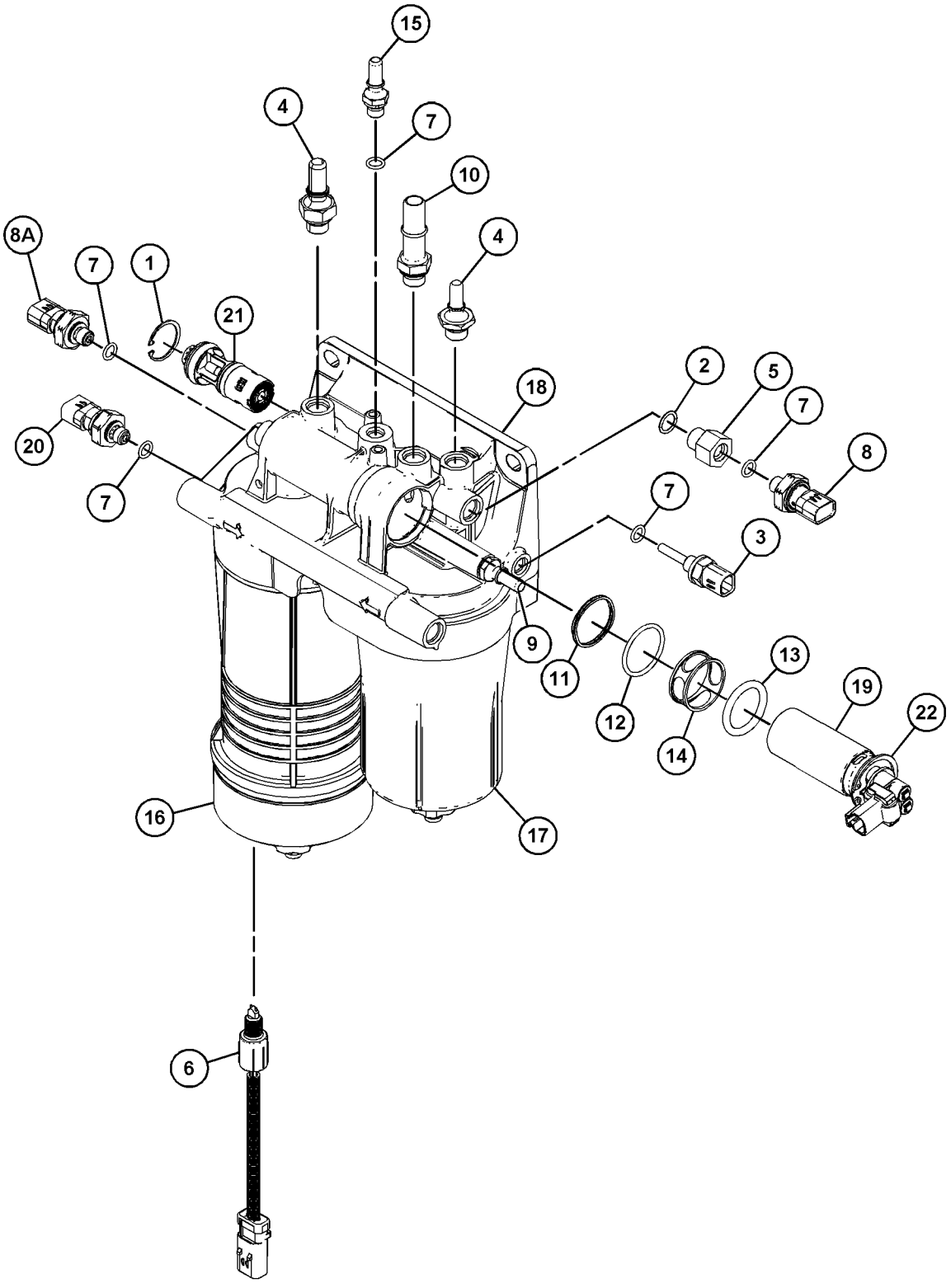

GRAPHIC #1 <END> g06307128

371-2483 INJECTOR GP-FUEL

S/N: 4501-UP; E7A1-UP

PART OF 530-2686, 555-5560, 555-7255 ENGINE AR-PRIMARY

SMCS-1251, 1254, 1290, 1713 **i06928408**

NOTE	REF NO	GRAPHIC REF	PART NUMBER	QTY	PART NAME 1 2 3 4 5 6 (PRODUCT LEVEL)	SEE PAGE
	1	1	**278-5170**	6	BOLT	
	2	1	**369-7799**	6	CLAMP-INJECTOR	
YR	3	1	**371-3974**	6	INJECTOR GP-FUEL	104
	4	1	**517-8243**	6	SLEEVE-INJECTOR	

R - REMANUFACTURED PART MAY BE AVAILABLE
Y - SEPARATE ILLUSTRATION

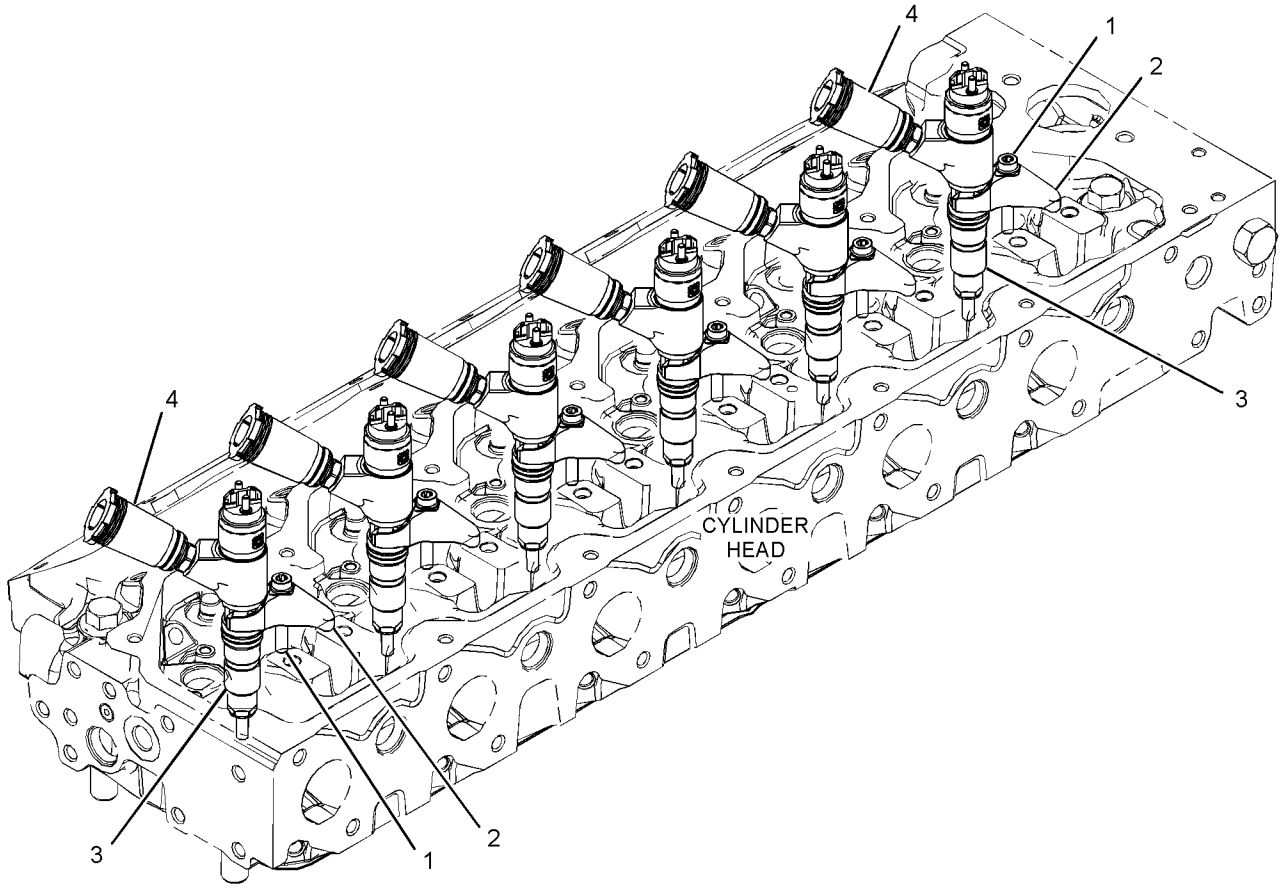

GRAPHIC #1 <END> g03378802

371-3974 INJECTOR GP-FUEL*R

S/N: 4501-UP; E7A1-UP

PART OF 371-2483 INJECTOR GP-FUEL

SMCS-1251, 1254, 1290, 1713

i07426454

NOTE	REF NO	GRAPHIC REF	PART NUMBER	QTY	PART NAME 1 2 3 4 5 6 (PRODUCT LEVEL)	SEE PAGE
	1	1	**376-6403**	1	WASHER-SEALING	
	2	1	**376-6405**	1	SEAL-O-RING	

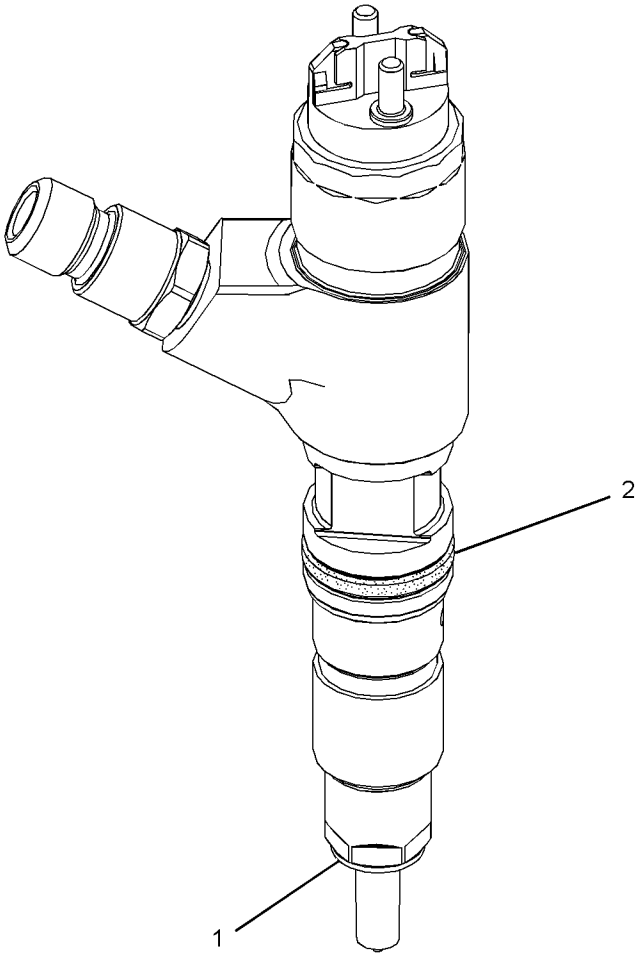

GRAPHIC #1 <END> g03110876

433-1316 LINES GP-FUEL

S/N: 4501-UP; E7A1-UP

PART OF 498-1841 FILTER & LINES GP-FUEL

SMCS-1274 **i07163829**

NOTE	REF NO	GRAPHIC REF	PART NUMBER	QTY	PART NAME 1 2 3 4 5 6 (PRODUCT LEVEL)	SEE PAGE
	1	1	**246-4361**	2	WASHER (10.5X14X1.5-MM THK)	
	2	1	**385-1398**	1	CONNECTION-FUEL	
	3	1	**386-1864**	1	BOLT-BANJO	
	4	1	**247-4928**	2	WASHER (16.5X20.5X1.6-MM THK)	
	5	1	**433-0190**	1	LINE AS-FUEL	

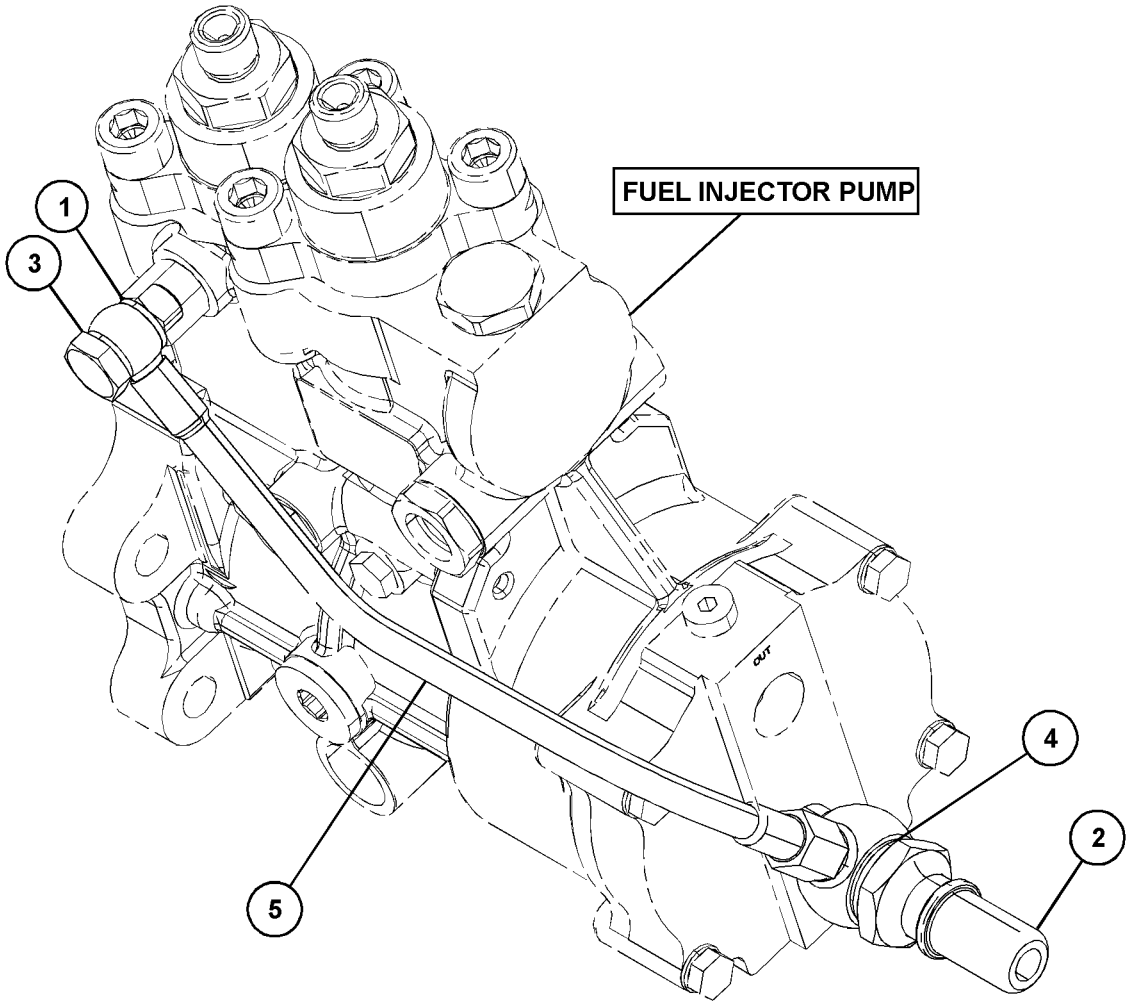

GRAPHIC #1 <END> g06240340

464-7899 LINES GP-FUEL

S/N: 4501-UP; E7A1-UP

PART OF 498-1841 FILTER & LINES GP-FUEL

SMCS-1274 **i06022311**

NOTE	REF NO	GRAPHIC REF	PART NUMBER	QTY	PART NAME 1 2 3 4 5 6 (PRODUCT LEVEL)	SEE PAGE
	1	1	**349-6847**	2	CLIP	
	2	1	**377-5988**	1	BOLT	
	3	1	**286-2890**	2	WASHER	
M	4	1	**161-7614**	1	NUT (M16X1.5-THD)	
	5	1	**277-4993**	1	SEAL-O-RING	

M - METRIC PART

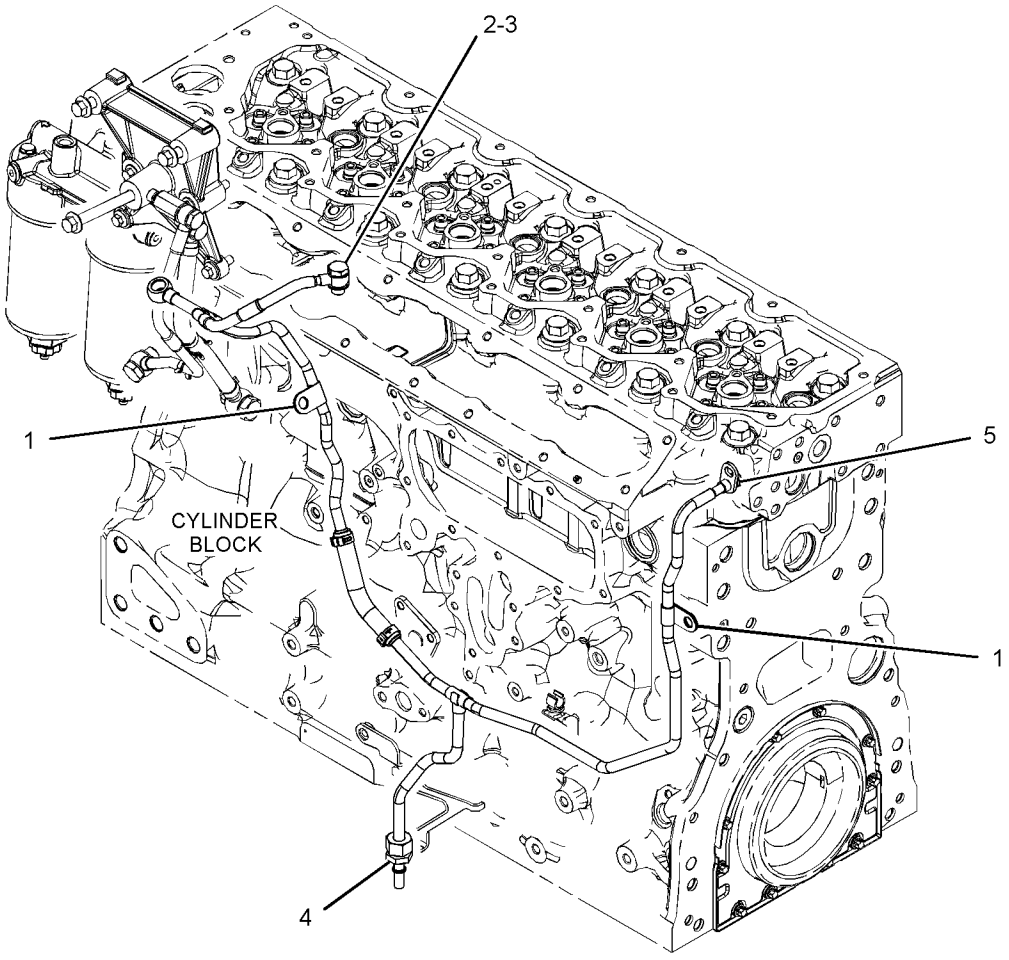

GRAPHIC #1 <END> g03384683

523-5673 LINES GP-FUEL

S/N: BR61-10000

PART OF 490-4811 INSTALLATION AR-ENGINE

SMCS-1274 **i07366388**

NOTE	REF NO	GRAPHIC REF	PART NUMBER	QTY	PART NAME 1 2 3 4 5 6 (PRODUCT LEVEL)	SEE PAGE
M	1	1,2,3	**8T-4136**	19	BOLT (M10X1.5X25-MM)	
M	2	2	**8T-4182**	1	BOLT (M10X1.5X45-MM)	
M	3	2	**8T-4196**	4	BOLT (M10X1.5X35-MM)	
M	4	3	**7X-2539**	2	BOLT (M8X1.25X110-MM)	
M	5	2	**8T-4198**	1	BOLT (M10X1.5X100-MM)	
	7	1	**4I-0379**	1	VALVE-MANUAL (FUEL SHUTOFF)	
	8	2	**5G-3676**	2	GROMMET	
	9	3	**5V-9155**	1	CLAMP-HOSE	
	10	1,2,3	**6S-8620**	11	CLAMP-HOSE	
	11	1	**7I-2673**	3	STRAP-CABLE	
	12	2	**7V-6571**	1	GROMMET	
	13	3	**7X-0579**	3	WASHER-HARD (8.8X25.5X2-MM THK)	
	14	1	**7Y-3195**	3	GROMMET	
	15	2	**8T-1889**	3	CLIP (SLOT)	
	16	2	**8T-1890**	3	CLIP (TAB)	
	17	1,2,3	**8T-4121**	31	WASHER-HARD (11X21X2.5-MM THK)	
M	18	2,3	**8T-4137**	6	BOLT (M10X1.5X20-MM)	
M	19	3	**8T-6869**	1	BOLT (M8X1.25X60-MM)	
	20	3	**8T-9655**	6	MOUNT-ISOLATION	
	21	3	**169-9763**	1	CONNECTOR	
	22	3	**191-1782**	1	SPACER (8.5X12.7X38.2-MM THK)	
	23	3	**191-1783**	2	SPACER (8.5X12.7X87.3-MM THK)	
	24	1,3	**214-7568**	5	SEAL-O-RING	
	25	3	**228-7089**	1	SEAL-O-RING	
	26	2	**275-1442**	2	CLIP (TAB)	
	27	2	**275-1443**	2	CLIP (SLOT)	
	28	1	**297-7964**	2	CONNECTOR	
	29	3	**305-6873**	1	SENSOR GP-PRESSURE (FUEL PRIMING PUMP)	
	30	3	*313-3492*	1	PLUG AS	
		3	**9S-4190**	1	PLUG-O-RING (7/8-14-THD)	
		3	**238-5081**	1	SEAL-O-RING	
	31	3	*321-8657*	1	ELBOW AS	
		3	**6V-8076**	1	ELBOW	
		3	**214-7568**	1	SEAL-O-RING	
	32	3	*329-5459*	2	ADAPTER AS	
					(EACH INCLUDES)	
		3	**5P-1404**	1	ADAPTER	
		3	**238-5081**	1	SEAL-O-RING	
	33	1	**347-4416**	2	ADAPTER	
	34	2	**351-4319**	9	CLIP (LOOP)	
	35	3	*353-5142*	1	ADAPTER AS	
		3	**219-8136**	1	ADAPTER	
		3	**238-5081**	1	SEAL-O-RING	
	36	3	*353-5143*	1	ADAPTER AS	
		3	**6V-5653**	1	ELBOW (7/8-14-THD)	
		3	**238-5081**	1	SEAL-O-RING	
	37	1	**368-6658**	1	VALVE	
	38	3	**379-4369**	1	ADAPTER	

523-5673 **LINES GP-FUEL (**contd.**)** **i07366388**

NOTE	REF NO	GRAPHIC REF	PART NUMBER	QTY	PART NAME 1 2 3 4 5 6 (PRODUCT LEVEL)	SEE PAGE
	39	2	**385-3821**	2	GROMMET	
Y	40	3	*390-6840*	1	PUMP GP-FUEL PRM & PRIM FILTER	119
Y	41	3	**423-6434**	1	SENSOR GP-LIQUID LEVEL (WATER IN FUEL)	217
	42	3	**464-8596**	1	ADAPTER-TEE	
	43	2	**483-7801**	1	SPACER (11X20X15-MM THK)	
	44	3	*501-7449*	1	ADAPTER AS	
		3	**214-7568**	1	SEAL-O-RING	
		3	**504-2756**	1	ADAPTER	
	45	2	**517-3178**	1	HOSE AS	
		2	**355-0632**	1	CONNECTOR-SPECIAL	
Y	46	2	**523-9010**	1	FILTER GP-FUEL	100
	47	3	**524-5076**	1	HOSE AS	
	48	2	**524-5077**	1	HOSE AS	
		2	**5V-9155**	1	CLAMP-HOSE	
		2	**264-3518**	1	CONNECTOR-RECEPTACLE	
	49	2	**524-5078**	1	HOSE AS	
		2	**6S-8620**	2	CLAMP-HOSE	
		2	**355-0632**	2	CONNECTOR-SPECIAL	
	50	2	**524-5079**	1	HOSE AS	
		2	**6S-8620**	2	CLAMP-HOSE	
		2	**355-0632**	2	CONNECTOR-SPECIAL	
	53	3	**524-5085**	1	PLATE AS	
M		3	**9R-2672**	2	BOSS-THREADED (M10X1.5X120-MM)	
	54	3	**524-5086**	1	PLATE AS	
	57	3	**233-9821**	1	VALVE AS-CHECK	
		3	**033-6042**	1	SEAL-O-RING	
	58	2	**343-2387**	3	CLIP	
	59	1	**351-4315**	2	CLIP	
	60	1,2,3	**351-4318**	8	CLIP	
	61	1	**351-4320**	4	CLIP	
	62	3	*353-5112*	1	ADAPTER AS	
		3	**9X-0262**	1	ADAPTER	
		3	**214-7566**	2	SEAL-O-RING	
	63	1	**437-2150**	2	CLIP	
E	64	1	**7I-1024**		GUARD-HOSE (59-CM)	
E	65	1	**347-8645**		HOSE (38-CM)	
E	65A	2	**347-8645**		HOSE (273-CM)	
E	65B	1	**347-8645**		HOSE (147-CM)	
E	66	1	**347-8646**		HOSE (71-CM)	
E	66A	1	**347-8646**		HOSE (211-CM)	
E	66B	1	**347-8646**		HOSE (139-CM)	
E	67	3	**7I-7439**		GUARD-HOSE (40-CM)	
E	67A	1	**7I-7439**		GUARD-HOSE (18-CM)	
	68	1	**095-1386**	2	CLAMP-HOSE	

E - ORDER BY THE CENTIMETER
M - METRIC PART
Y - SEPARATE ILLUSTRATION

523-5673 **LINES GP-FUEL (**contd.**)** **i07366388**

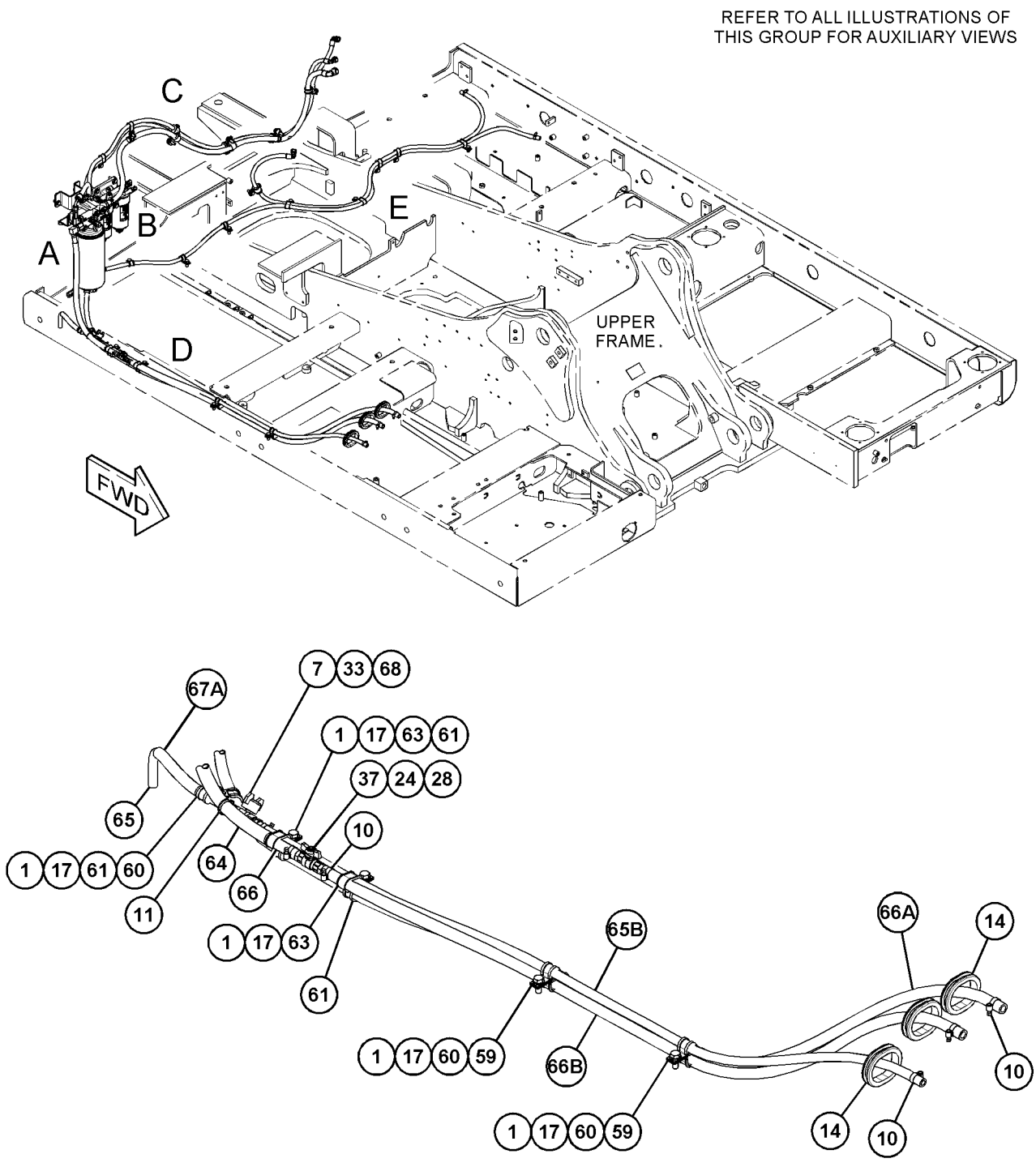

VIEW OF AREA D

GRAPHIC #1 g06288020

523-5673 **LINES GP-FUEL (**contd.**)** **i07366388**

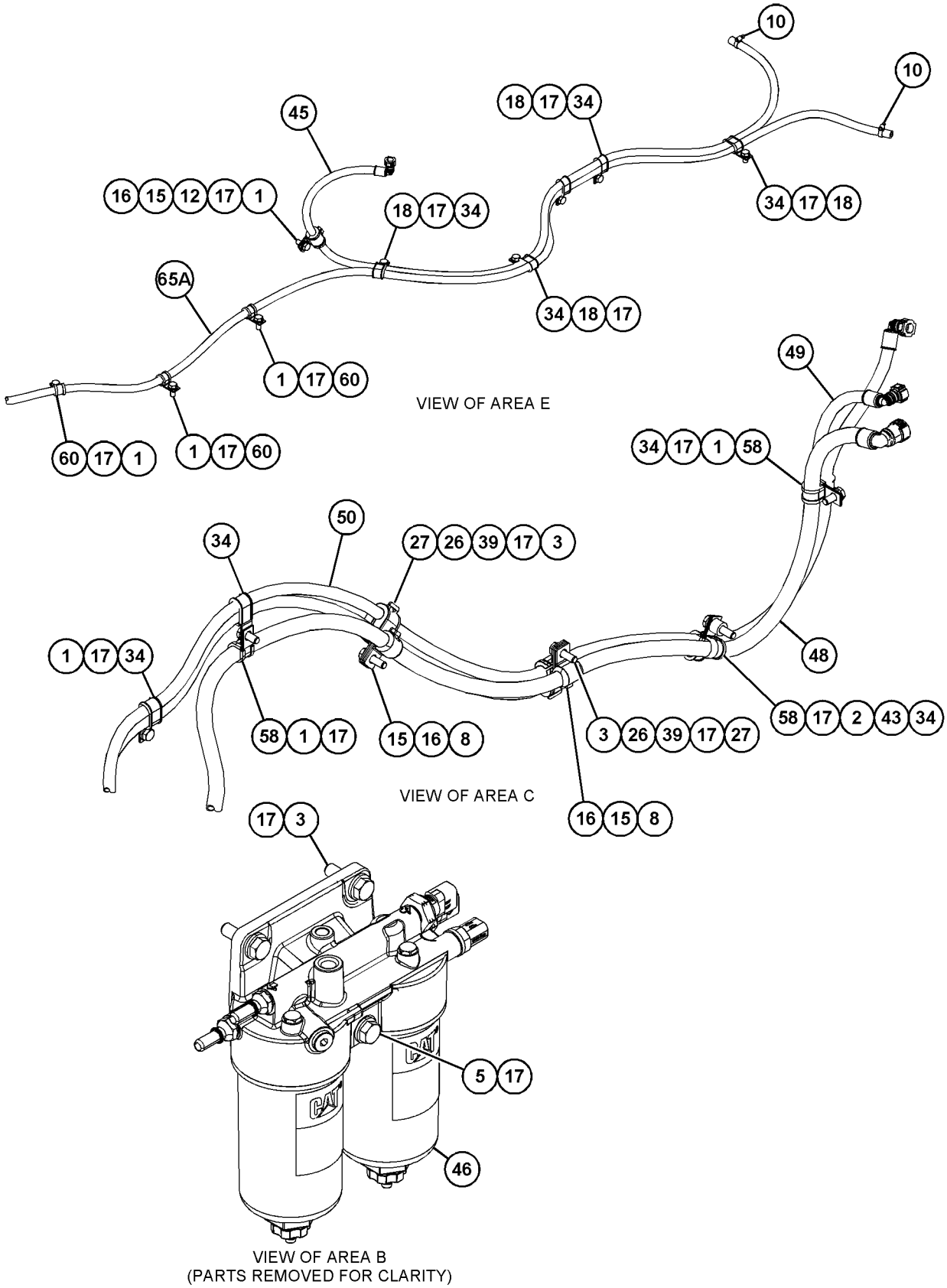

GRAPHIC #2 g06273887

523-5673 **LINES GP-FUEL (**contd.**)** **i07366388**

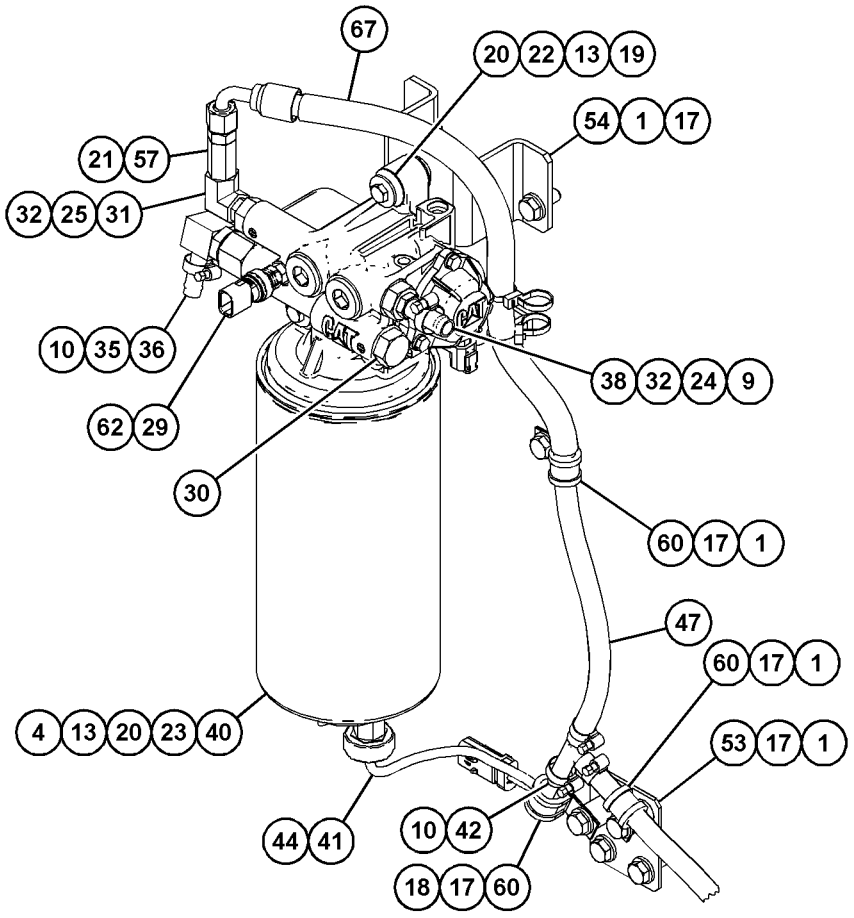

GRAPHIC #3 <END> g06225983

557-8798 LINES GP-FUEL

S/N: BR610001-UP

PART OF 558-1933 INSTALLATION AR-ENGINE

SMCS-1274 **i07451441**

NOTE	REF NO	GRAPHIC REF	PART NUMBER	QTY	PART NAME 1 2 3 4 5 6 (PRODUCT LEVEL)	SEE PAGE
M	1	1	**8T-4196**	4	BOLT (M10X1.5X35-MM)	
M	2	1	**8T-6466**	1	BOLT (M10X1.5X60-MM)	
M	3	1	**7X-2543**	1	BOLT (M10X1.5X120-MM)	
	4	1	**4I-0379**	1	VALVE-MANUAL (DRAIN, FUEL TANK)	
	5	1	**5G-3676**	2	GROMMET	
	6	1	**7I-2673**	2	STRAP-CABLE	
	7	1	**7V-6571**	1	GROMMET	
	8	1	**8T-1890**	3	CLIP (TAB)	
M	9	1	**8T-4178**	1	BOLT (M10X1.5X90-MM)	
	10	1	**095-1386**	2	CLAMP-HOSE	
	11	1	**275-1443**	2	CLIP (SLOT)	
	12	1	*330-9724*	1	PLUG AS-CONNECTOR	
		1	**228-7102**	1	SEAL-O-RING	
		1	**241-6158**	1	PLUG	
	13	1	**347-4416**	2	ADAPTER	
	14	1	**385-3821**	2	GROMMET	
	15	1	**483-7803**	1	SPACER (11X20X30-MM THK)	
	16	1	**483-7805**	1	SPACER (11X20X65-MM THK)	
	17	1	**215-9509**	1	FITTING (QUICK DISCONNECT, MALE)	
	18	1	**275-1442**	2	CLIP (TAB)	
	19	1	**343-2387**	3	CLIP (LOOP)	
	20	1	**351-4318**	12	CLIP (LOOP)	
	21	1	**351-4319**	10	CLIP (LOOP)	
	22	1	**351-4320**	3	CLIP (LOOP)	
	23	1	**3S-2093**	1	STRAP-CABLE	
	24	1	**437-2150**	1	CLIP (LOOP)	
Y	25	1	**511-5053**	1	FILTER GP-WATER SEP & FUEL	101
	26	1	**513-8034**	1	VALVE AS-BALL (FUEL SUPPLY)	
		1	**228-7102**	1	SEAL-O-RING	
	27	1	**513-8035**	1	ADAPTER AS	
		1	**519-8103**	1	SEAL-O-RING	
	28	1	**517-3178**	1	HOSE AS	
E	29	1	**347-8645**		HOSE (147-CM)	
E	29A	1	**347-8645**		HOSE (39-CM)	
	30	1	**549-5229**	1	PLATE AS	
	31	1	*550-0027*	1	PLATE AS	
M		1	**8T-3490**	3	NUT-WELD (M10X1.5-THD)	
	32	1	**550-0031**	1	HOSE AS	
E	33	1	**347-8646**		HOSE (209-CM)	
	34	1	**558-0362**	1	HOSE AS	
	35	1	**558-0363**	1	HOSE AS	
	36	1	**558-0369**	1	PLATE AS	
	37	1	**558-0371**	1	PLATE AS	
	38	1	**558-2713**	1	HOSE AS	
	39	1	**558-2716**	1	HOSE AS	
	40	1	**558-2717**	1	HOSE AS	
	41	1	**6S-8620**	7	CLAMP-HOSE	

557-8798 **LINES GP-FUEL (**contd.**)** **i07451441**

NOTE	REF NO	GRAPHIC REF	PART NUMBER	QTY	PART NAME 1 2 3 4 5 6 (PRODUCT LEVEL)	SEE PAGE
	42	1	**7Y-3195**	3	GROMMET	
	43	1	**8T-1889**	3	CLIP (SLOT)	
	44	1	**8T-4121**	35	WASHER-HARD (11X21X2.5-MM THK)	
M	45	1	**8T-4136**	24	BOLT (M10X1.5X25-MM)	
M	46	1	**8T-4137**	4	BOLT (M10X1.5X20-MM)	
E	47	1	**7I-7439**		GUARD-HOSE (19-CM)	
E	48	1	**5P-1518**		HOSE (29-CM)	

E - ORDER BY THE CENTIMETER
M - METRIC PART
Y - SEPARATE ILLUSTRATION

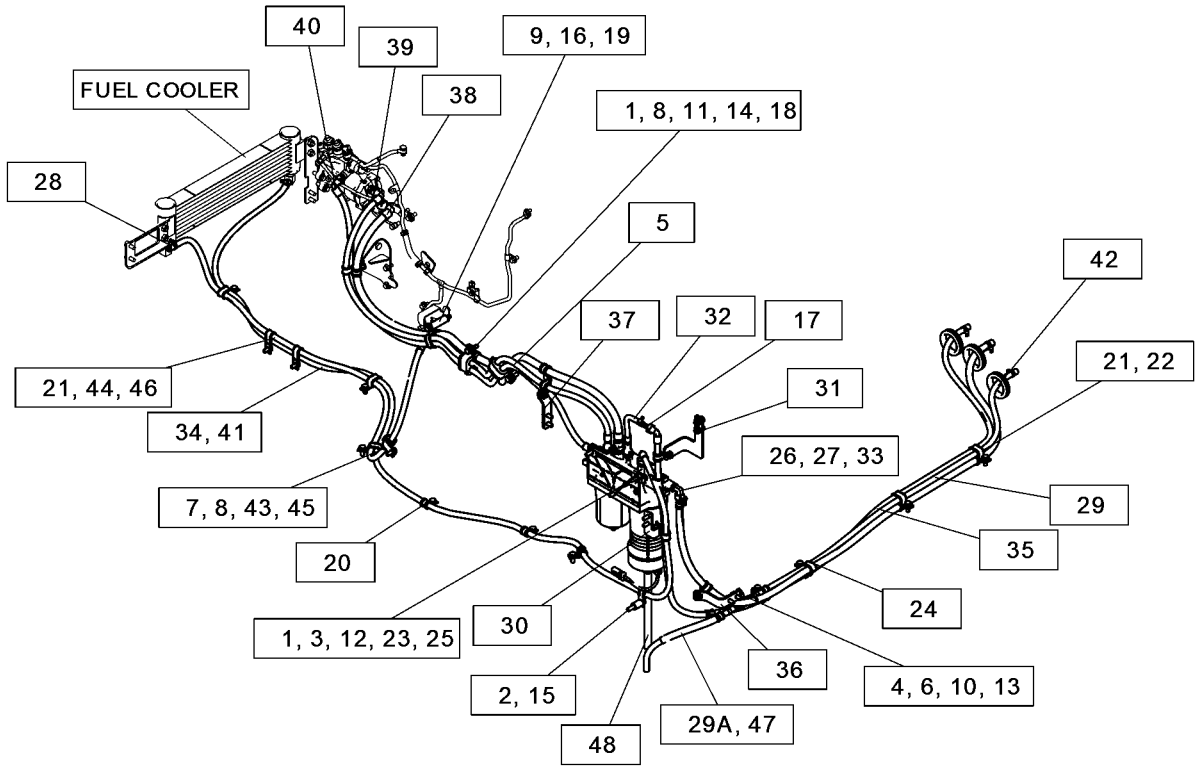

GRAPHIC #1 <END> g06324602

370-5520 LINES GP-FUEL INJECTION

S/N: 4501-UP; E7A1-UP

PART OF 394-9639 RAIL GP-FUEL

SMCS-1252, 1254 **i07175141**

NOTE	REF NO	GRAPHIC REF	PART NUMBER	QTY	PART NAME 1 2 3 4 5 6 (PRODUCT LEVEL)	SEE PAGE
	1	1	**395-1633**	1	BRACKET AS	
M		1	**6I-0631**	1	BOLT (M6X1X12-MM)	
	2	1	**370-5516**	1	LINE AS-FUEL INJECTION	
	3	1	**370-5517**	1	LINE AS-FUEL INJECTION	
	4	1	**370-5518**	1	LINE AS-FUEL INJECTION	

M - METRIC PART

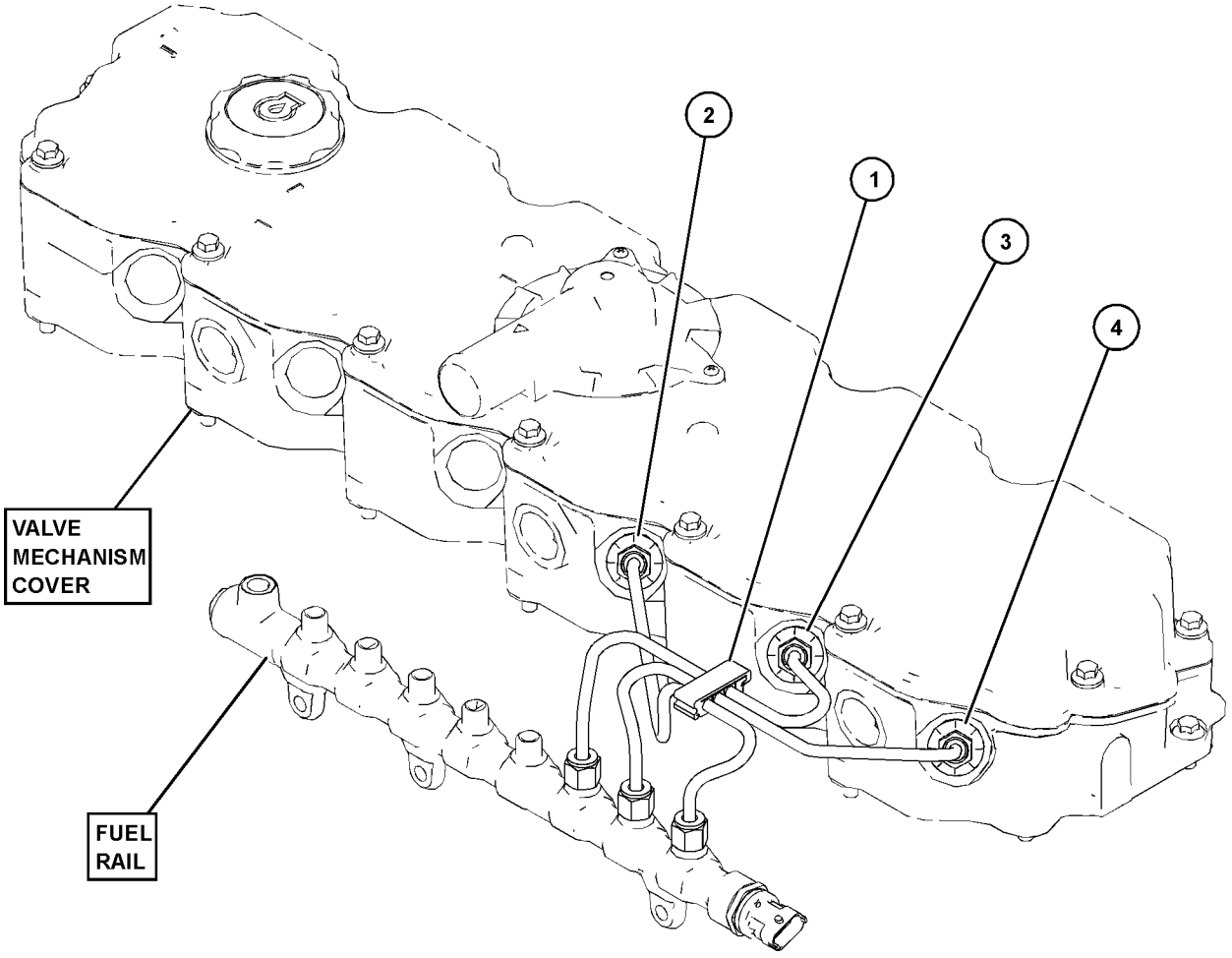

GRAPHIC #1 <END> g06238838

394-0525 LINES GP-FUEL INJECTION

S/N: 4501-UP; E7A1-UP

PART OF 394-9639 RAIL GP-FUEL

SMCS-1252, 1254

i07107179

NOTE	REF NO	GRAPHIC REF	PART NUMBER	QTY	PART NAME 1 2 3 4 5 6 (PRODUCT LEVEL)	SEE PAGE
	1	1	**395-1633**	1	BRACKET AS	
M	1A	1	**6I-0631**	1	BOLT (M6X1X12-MM)	
	2	1	**370-5513**	1	LINE AS-FUEL	
	3	1	**393-5467**	1	LINE AS-FUEL	
	4	1	**393-5468**	1	LINE AS-FUEL	

M - METRIC PART

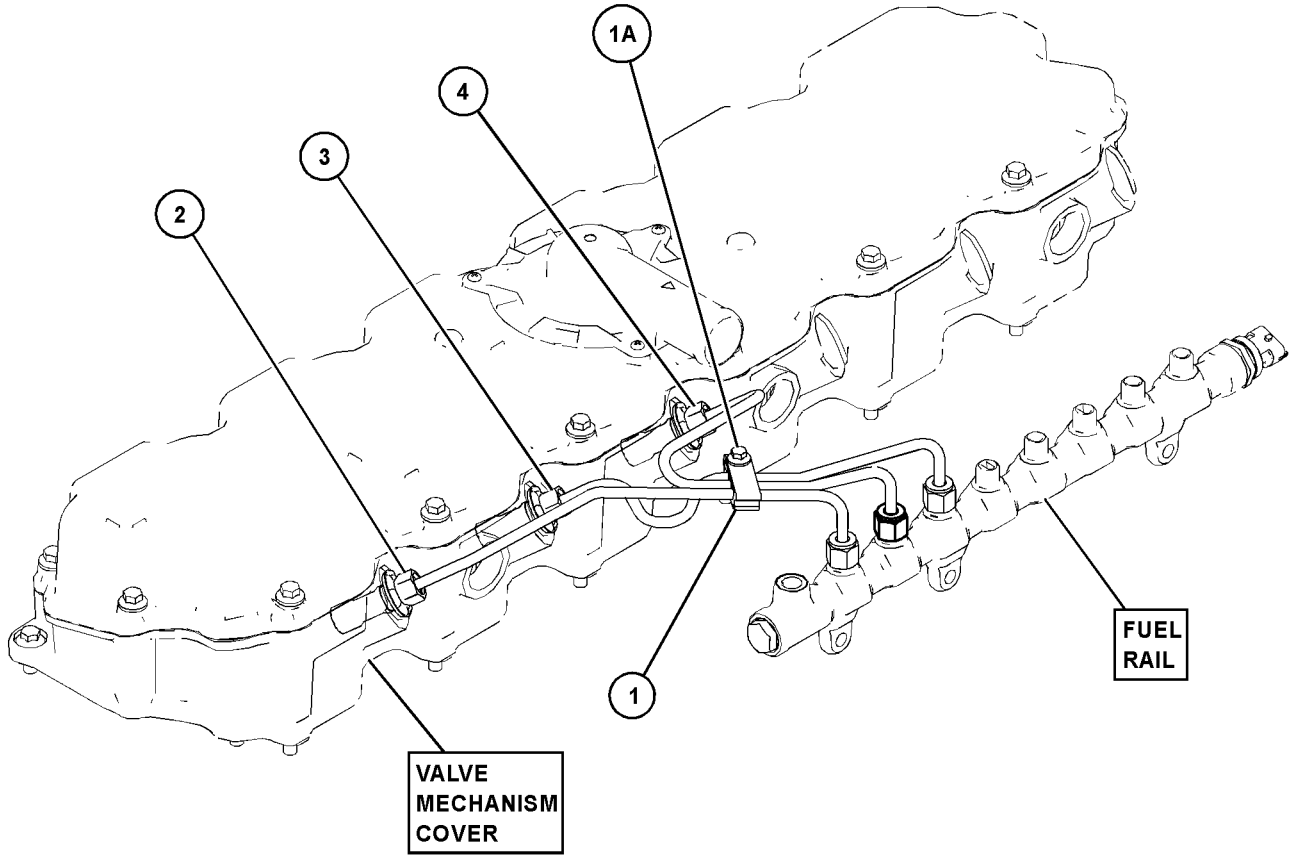

GRAPHIC #1 <END> g06241117

375-2647 PUMP GP-FUEL INJECTION*R

S/N: 4501-UP; E7A1-UP

PART OF 391-4811 PUMP GP-FUEL INJECTION

SMCS-1251, 1290 **i07351531**

NOTE	REF NO	GRAPHIC REF	PART NUMBER	QTY	PART NAME 1 2 3 4 5 6 (PRODUCT LEVEL)	SEE PAGE
	1	1	**386-3819**	1	KEY-SHAFT	
	2	1	**375-8254**	1	VALVE	
	3	1	**376-6409**	1	SEAL	
	4	1	**376-6410**	1	RETAINER-WASHER	
	5	1	**376-6411**	1	NUT-SHAFT	
	6	1	**386-2971**	2	WASHER	
	7	1	**386-2976**	2	WASHER	
	8	1	**453-0790**	3	BOLT	
	9	1	**454-5109**	1	BOLT-BANJO	

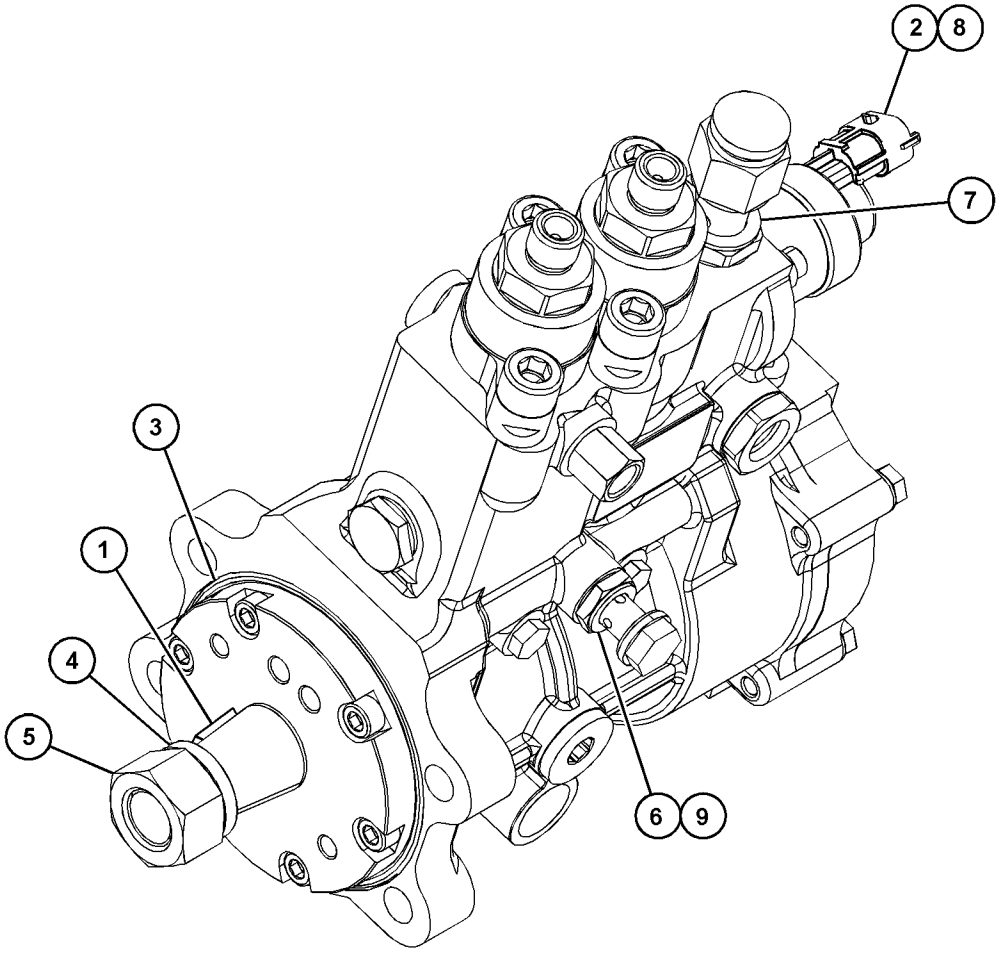

GRAPHIC #1 <END> g06182840

391-4811 PUMP GP-FUEL INJECTION

S/N: 4501-UP; E7A1-UP

PART OF 530-2686, 555-5560, 555-7255 ENGINE AR-PRIMARY

SMCS-1251, 1290 **i07377581**

NOTE	REF NO	GRAPHIC REF	PART NUMBER	QTY	PART NAME 1 2 3 4 5 6 (PRODUCT LEVEL)	SEE PAGE
M	1	1	**286-0123**	4	BOLT (M10X1.5X35-MM THK)	
M	2	1	**6I-0654**	3	BOLT (M10X1.5X25-MM)	
	3	1	**371-2684**	1	BRACKET	
	4	1	**371-2691**	1	BRACKET	
	5	1	**371-7263**	1	LINE AS-FUEL	
YR	6	1	**375-2647**	1	PUMP GP-FUEL INJECTION	116
	7	1	**476-2947**	1	GEAR-FUEL PUMP (68-TEETH)	
M	8	1	**6I-0217**	2	BOLT (M8X1.25X20-MM)	
	9	1	**346-0006**	1	BOLT-SPECIAL	
	10	1	**346-0007**	2	WASHER	
M	11	1	**6I-0594**	1	NUT (M10X1.5-THD)	

M - METRIC PART
R - REMANUFACTURED PART MAY BE AVAILABLE
Y - SEPARATE ILLUSTRATION

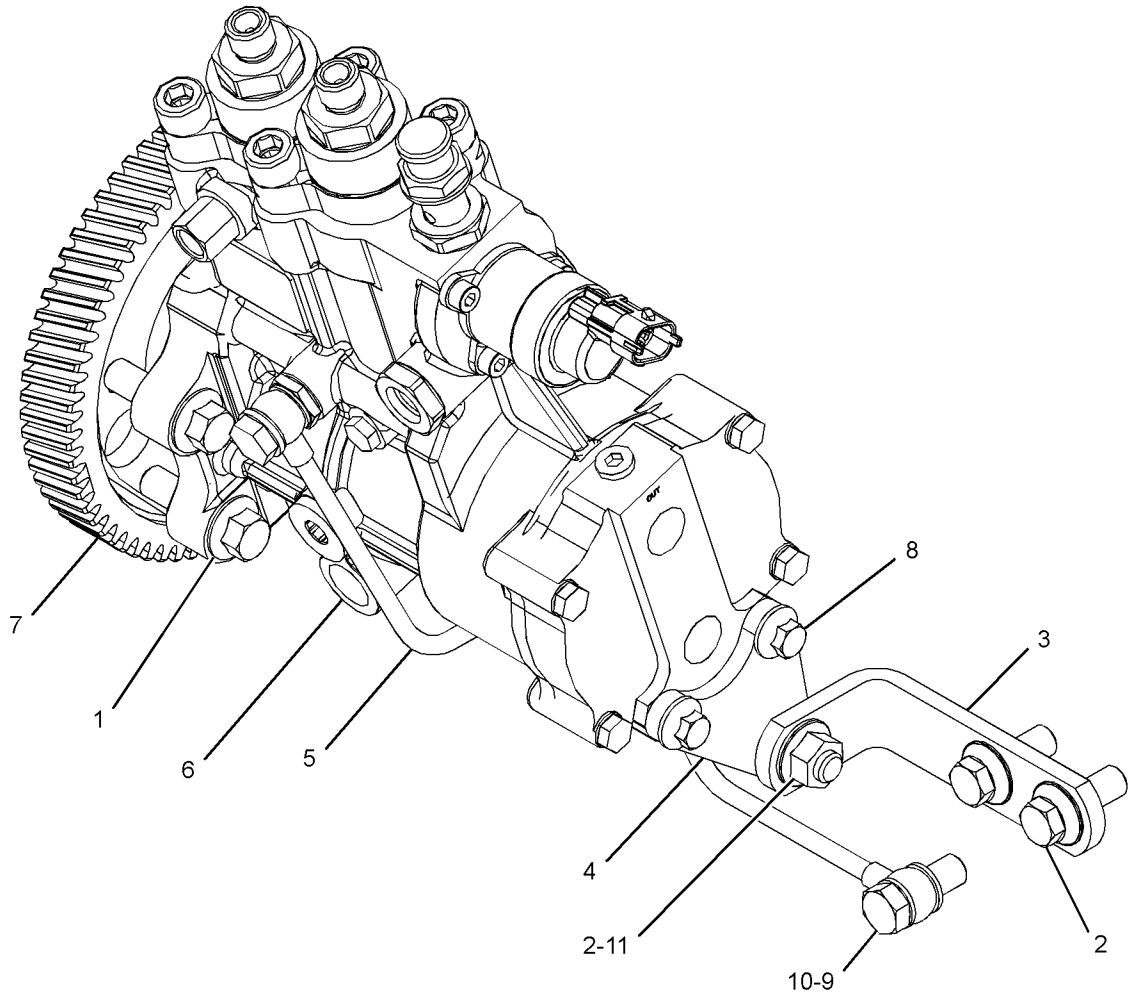

GRAPHIC #1 <END> g03378913

390-4679 PUMP GP-FUEL PRIMING

S/N: BR61-UP

PART OF 390-6840 PUMP GP-FUEL PRM & PRIM FILTER

SMCS-1258 **i06268474**

NOTE	REF NO	GRAPHIC REF	PART NUMBER	QTY	PART NAME 1 2 3 4 5 6 (PRODUCT LEVEL)	SEE PAGE
	1	1	**436-8983**	2	VALVE-CHECK	
	2	1	**162-2222**	2	SPRING	
	3	1	**9X-8267**	3	WASHER (6.6X12X2-MM THK)	
	4	1	**9S-8002**	1	PLUG (7/16-20-THD)	
M	5	1	**8T-4138**	3	BOLT (M6X1X20-MM)	
	6	1	**447-7206**	1	SEAL-O-RING	
	7	1	**6D-5801**	2	LOCKNUT (8-32-THD)	
	8	1	**236-6717**	2	SEAL-O-RING	
	9	1	**188-7541**	1	SEAL	
	10	1	**188-7536**	1	SEAL	
	11	1	**173-1016**	2	RING-BACKUP	
	12	1	**179-7400**	2	SEAL	

PARTS SHOWN IN GRAPHIC(S) WITHOUT A REFERENCE NUMBER ARE NOT SERVICED SEPARATELY

M - METRIC PART

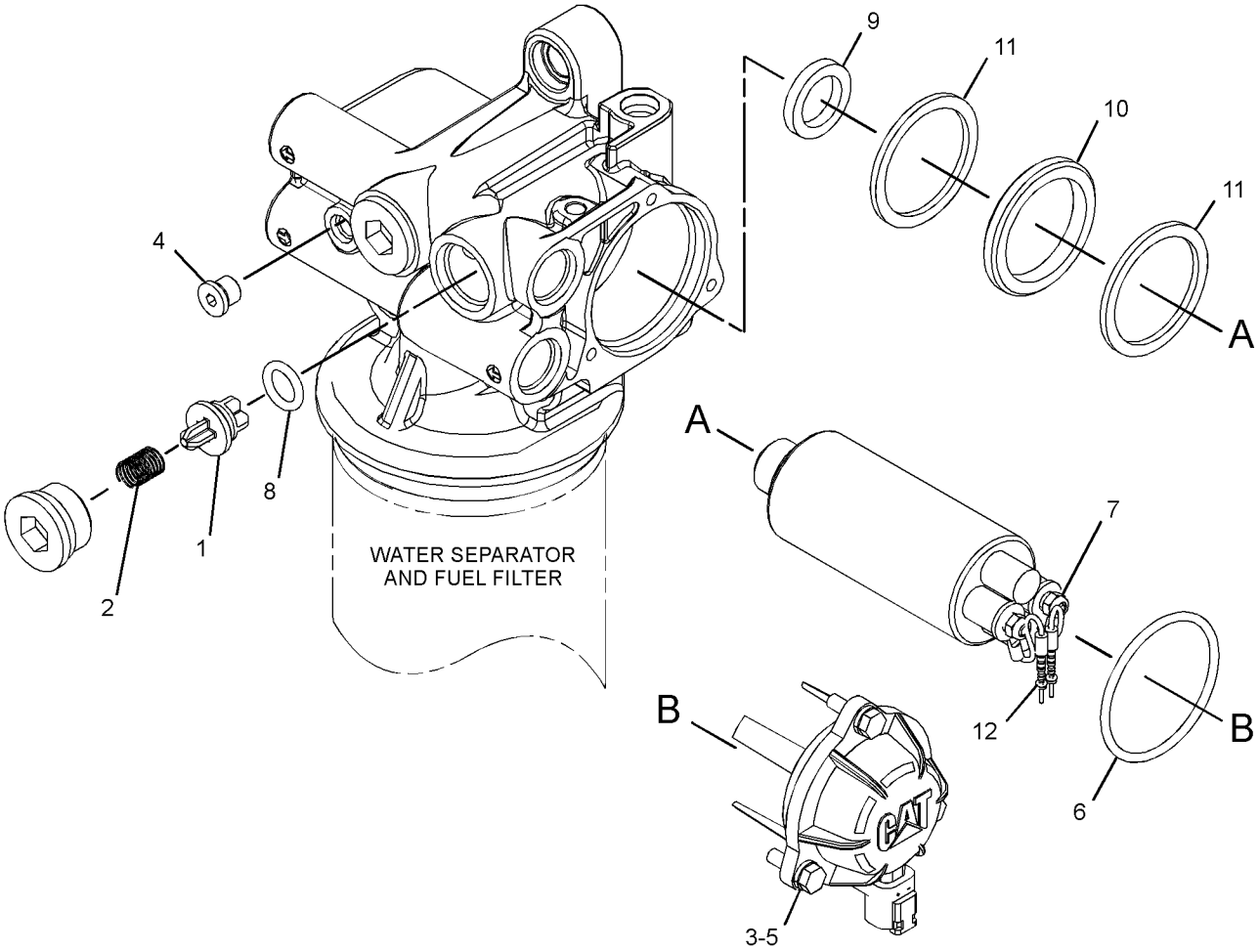

GRAPHIC #1 <END> g03878100

390-6840 PUMP GP-FUEL PRM & PRIM FILTER

S/N: BR61-UP

PART OF 523-5673 LINES GP-FUEL

SMCS-1258 **i05457974**

NOTE	REF NO	GRAPHIC REF	PART NUMBER	QTY	PART NAME 1 2 3 4 5 6 (PRODUCT LEVEL)	SEE PAGE
Y	1	1	**390-4679**	1	PUMP GP-FUEL PRIMING	118
	2	1	**438-5386**	1	FILTER AS-WATER SEP & FUEL (ULTRA HIGH EFFICIENCY)	

Y - SEPARATE ILLUSTRATION

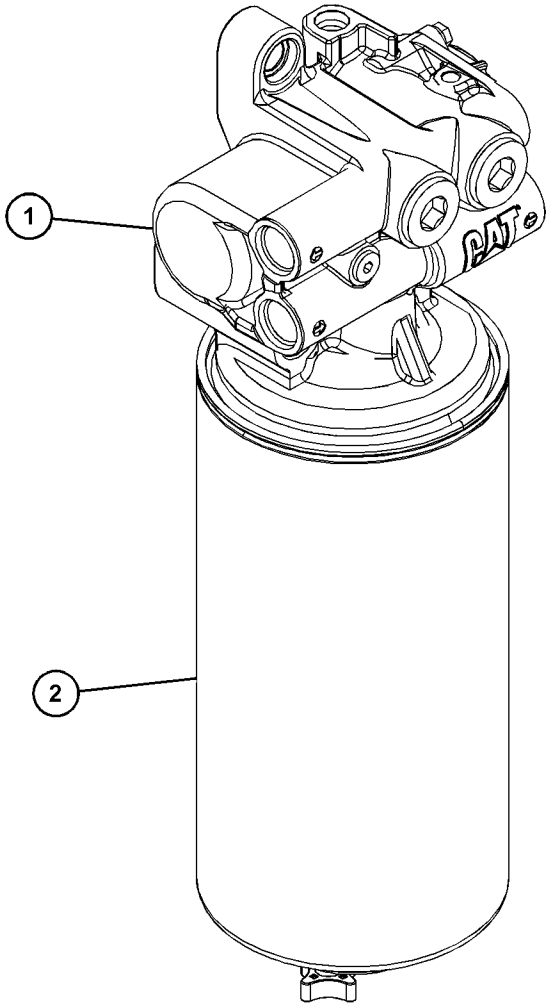

GRAPHIC #1 <END> g03454786

394-9639 RAIL GP-FUEL

S/N: 4501-UP; E7A1-UP

PART OF 530-2686, 555-5560, 555-7255 ENGINE AR-PRIMARY

SMCS-1288 **i05489964**

NOTE	REF NO	GRAPHIC REF	PART NUMBER	QTY	PART NAME 1 2 3 4 5 6 (PRODUCT LEVEL)	SEE PAGE
M	1	1	**6I-0260**	3	BOLT (M8X1.25X25-MM)	
M	2	1	**099-6418**	1	NUT (M6X1-THD)	
	3	1	**206-1826**	2	BOLT	
Y	4	1	*370-5520*	1	LINES GP-FUEL INJECTION	114
	5	1	**375-0482**	4	CLAMP-PIPE	
	6	1	**375-0483**	2	INSERT-CLAMP	
	7	1	**375-2649**	1	RAIL GP-FUEL	
		1	**375-6988**	1	SENSOR (FUEL RAIL PRESSURE)	
		1	**398-6226**	1	VALVE (FUEL RAIL PRESSURE)	
	8	1	**393-2034**	1	LINE AS-FUEL	
	9	1	**393-2035**	1	LINE AS-FUEL	
Y	10	1	**394-0525**	1	LINES GP-FUEL INJECTION	115

M - METRIC PART
Y - SEPARATE ILLUSTRATION

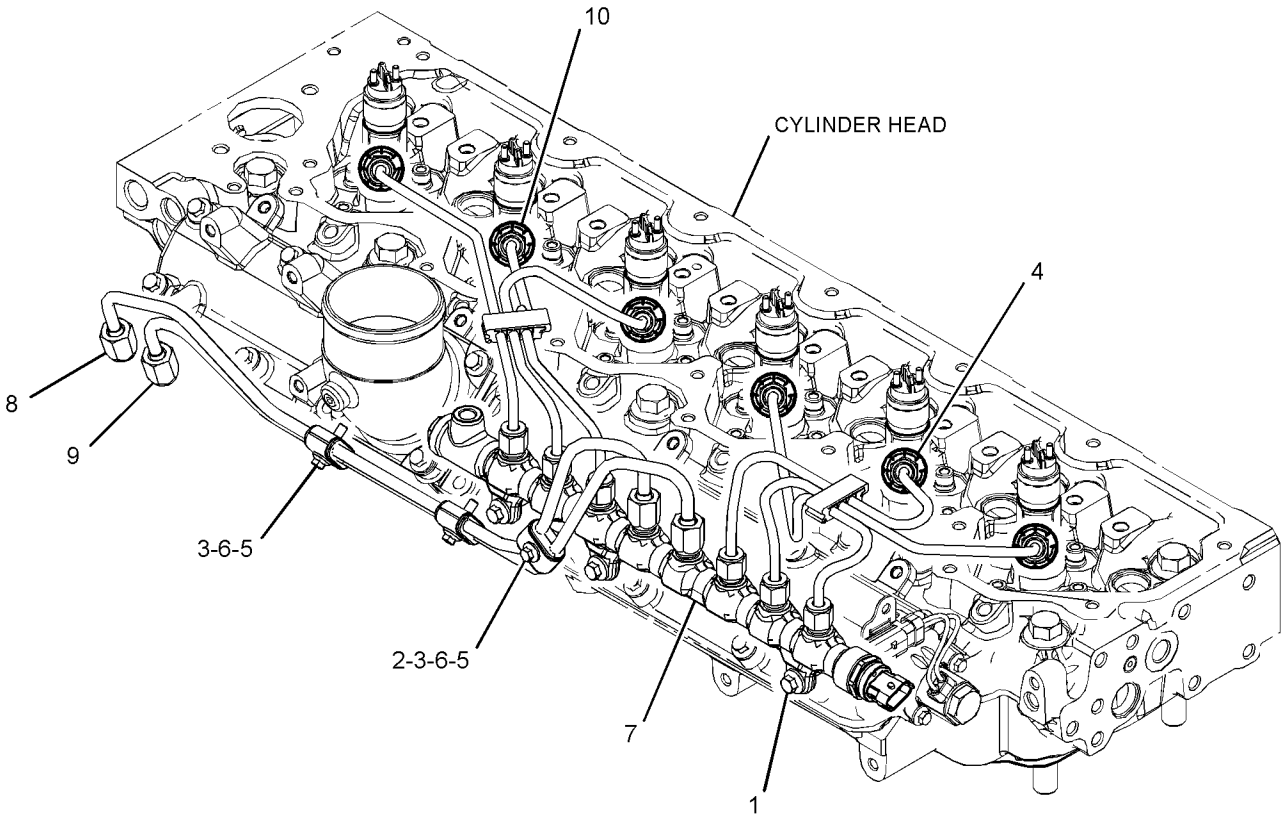

GRAPHIC #1 <END> g03380177

498-7479 TANK & MTG GP-FUEL

S/N: BR61-10000

PART OF 505-7175 ENCLOSURE AR

SMCS-1273 **i07360401**

NOTE	REF NO	GRAPHIC REF	PART NUMBER	QTY	PART NAME 1 2 3 4 5 6 (PRODUCT LEVEL)	SEE PAGE
	1	1	**246-2641**	1	PADLOCK GP	
		1	**5P-8500**	1	KEY	
	2	1	**135-8573**	8	BOLT AS	
	3	1	**135-8575**	7	BOLT AS	
	4	1	**135-8577**	2	BOLT AS	
	5	1	*503-0863*	1	BRACKET GP-SUPPORT	
		1	**503-0874**	1	RUBBER	
		1	**505-7087**	1	PLATE AS	
	6	1	**503-0883**	1	SHEET	
	7	1	**503-0887**	1	RUBBER	
	8	1	**503-0888**	1	BAR	
	9	1	**505-7088**	1	PLATE AS	
	10	1	**505-7089**	1	PLATE AS	
	11	1	**513-4057**	1	STEP AS	
	12	1	**516-7484**	2	STRIP	
	13	1	**522-8642**	1	SHEET AS	
Y	14	1	**525-7638**	1	TANK GP-FUEL	125
M	15	1	**5C-9553**	2	BOLT (M6X1X16-MM)	
	16	1	**8T-4223**	2	WASHER-HARD (13.5X25.5X3-MM THK)	
M	17	1	**8T-5092**	2	BOLT (M12X1.75X150-MM)	
	18	1	**9X-2038**	2	WASHER (7X19X2-MM THK)	

M - METRIC PART
Y - SEPARATE ILLUSTRATION

498-7479 **TANK & MTG GP-FUEL (**contd.**)** **i07360401**

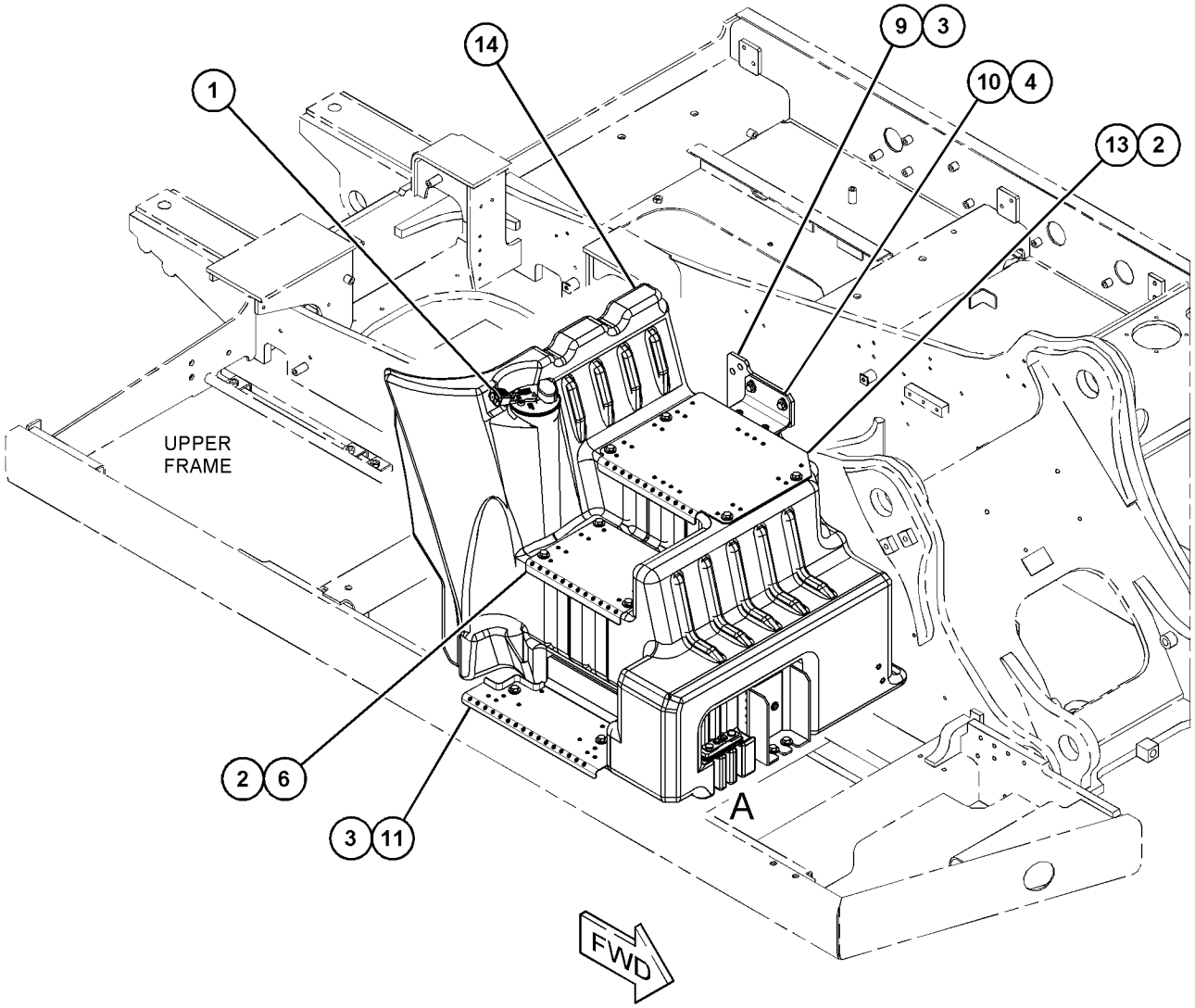

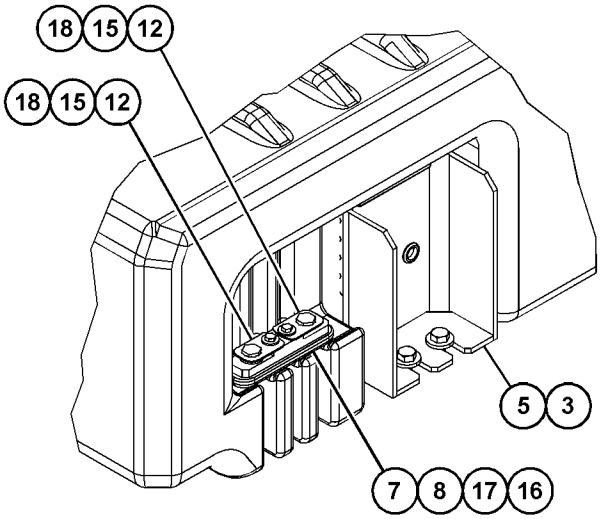

VIEW OF AREA A

GRAPHIC #1 <END> g06232218

556-6468 TANK & MTG GP-FUEL

S/N: BR610001-UP
345-L (91-US GAL)
PART OF 556-6467 ENCLOSURE AR

SMCS-1273 **i07432870**

NOTE	REF NO	GRAPHIC REF	PART NUMBER	QTY	PART NAME 1 2 3 4 5 6 (PRODUCT LEVEL)	SEE PAGE
M	1	1	**5C-9553**	2	BOLT (M6X1X16-MM)	
M	2	1	**8T-5092**	2	BOLT (M12X1.75X150-MM)	
	3	1	**246-2641**	1	PADLOCK GP	
		1	**5P-8500**	1	KEY	
	4	1	**9X-2038**	2	WASHER (7X19X2-MM THK)	
	5	1	**135-8573**	8	BOLT AS	
	6	1	**135-8577**	2	BOLT AS	
	7	1	*503-0863*	1	BRACKET GP-SUPPORT	
		1	**503-0874**	1	RUBBER	
		1	**505-7087**	1	PLATE AS	
	8	1	**503-0883**	1	SHEET	
	9	1	**503-0887**	1	RUBBER	
	10	1	**503-0888**	1	BAR	
	11	1	**505-7088**	1	PLATE AS	
	12	1	**505-7089**	1	PLATE AS	
	13	1	**513-4057**	1	STEP AS	
	14	1	**516-7484**	2	STRIP	
	15	1	**522-8642**	1	SHEET AS	
	16	1	**135-8575**	7	BOLT AS	
Y	17	1	*556-6469*	1	TANK GP-FUEL	127
	18	1	**8T-4223**	2	WASHER-HARD (13.5X25.5X3-MM THK)	

M - METRIC PART
Y - SEPARATE ILLUSTRATION

556-6468 **TANK & MTG GP-FUEL (**contd.**)** **i07432870**

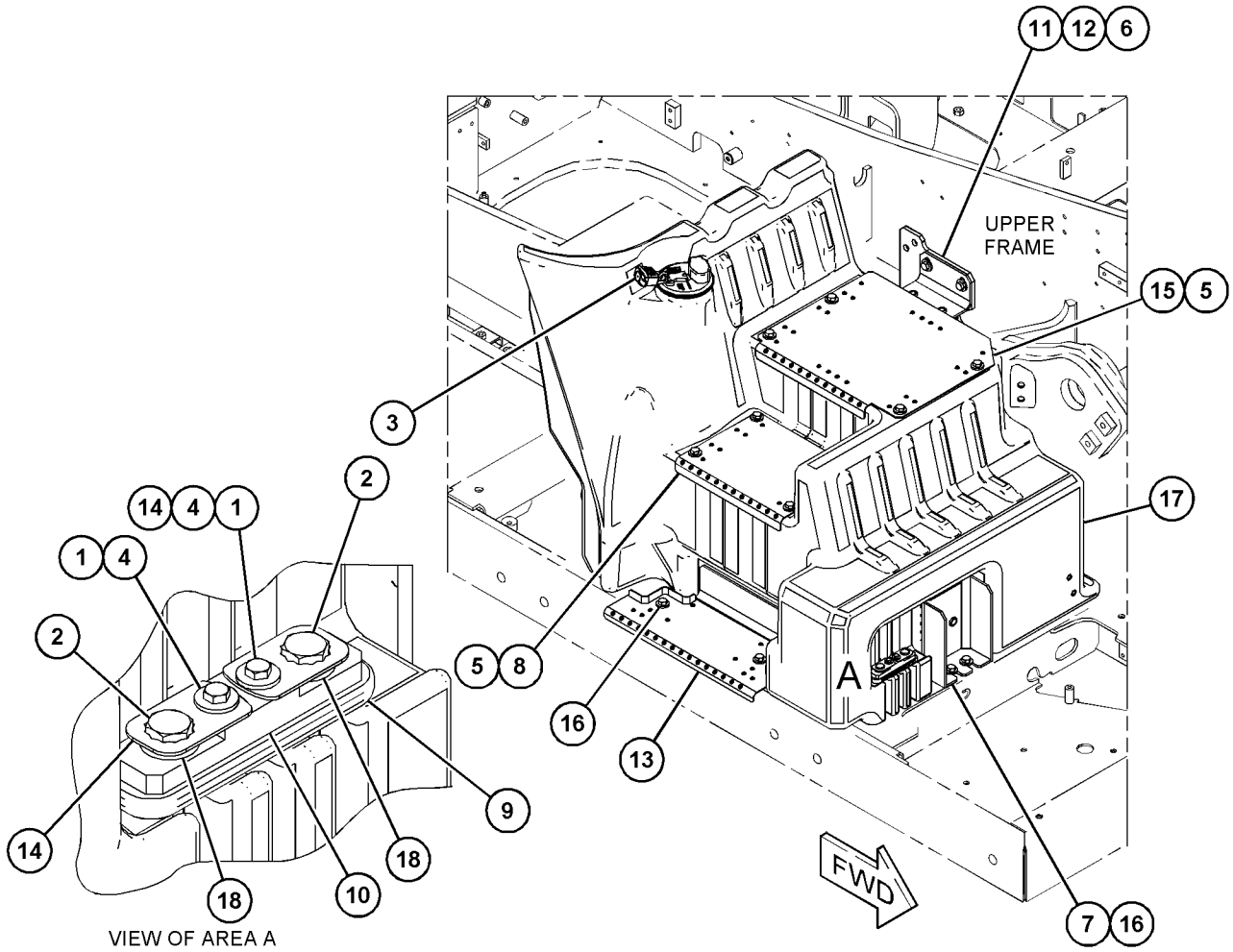

GRAPHIC #1 <END> g06323269

525-7638 TANK GP-FUEL

S/N: BR61-10000

PART OF 498-7479 TANK & MTG GP-FUEL

SMCS-1273 **i07423141**

NOTE	REF NO	GRAPHIC REF	PART NUMBER	QTY	PART NAME 1 2 3 4 5 6 (PRODUCT LEVEL)	SEE PAGE
J	1	1	**303-9933**	1	STRAINER AS-FUEL (FLOAT GAUGE)	
L	2	1	**349-7059**	1	CAP AS-FUEL (LOCKABLE, VENTED)	
	3	1	**363-4122**	1	GASKET	
	4	1	**513-9097**	1	SENDER AS-FUEL LEVEL	
		1	**9X-3401**	2	PIN-CONNECTOR (16-GA TO 18-GA)	
		1	**102-8802**	1	KIT-RECEPTACLE (2-PIN)	
					(INCLUDES RECEPTACLE AS & WEDGE)	
	5	1	**516-7392**	1	CONNECTOR AS	
	6	1	**516-7525**	3	SEAL	
	7	1	**516-7526**	1	CONNECTOR	
	8	1	**516-7527**	1	SEAL	
	9	1	**516-7528**	1	PLUG	
M	10	1	**8T-4127**	6	SCREW-MACHINE (M5X0.8X20-MM)	
	11	1	**525-9160**	1	CONNECTOR	
	12	1	**8T-0328**	6	WASHER-HARD (5.5X10X1-MM THK)	
	13	1	**548-5473**	1	ADAPTER-STRAINER	
					AVAILABLE REPAIR KIT(S):	
J			**303-9937**	1	KIT-GAUGE (FUEL STRAINER)	
					(INCLUDES STOPPER & GAUGE)	
L			**350-7735**	1	KIT-CAP FILTER (FUEL TANK)	
					(INCLUDES BODY, GASKET, SCREWS & WASHERS)	

J - KIT MARKED J SERVICES PART(S) MARKED J
L - KIT MARKED L SERVICES PART(S) MARKED L
M - METRIC PART

525-7638 **TANK GP-FUEL (**contd.**)** **i07423141**

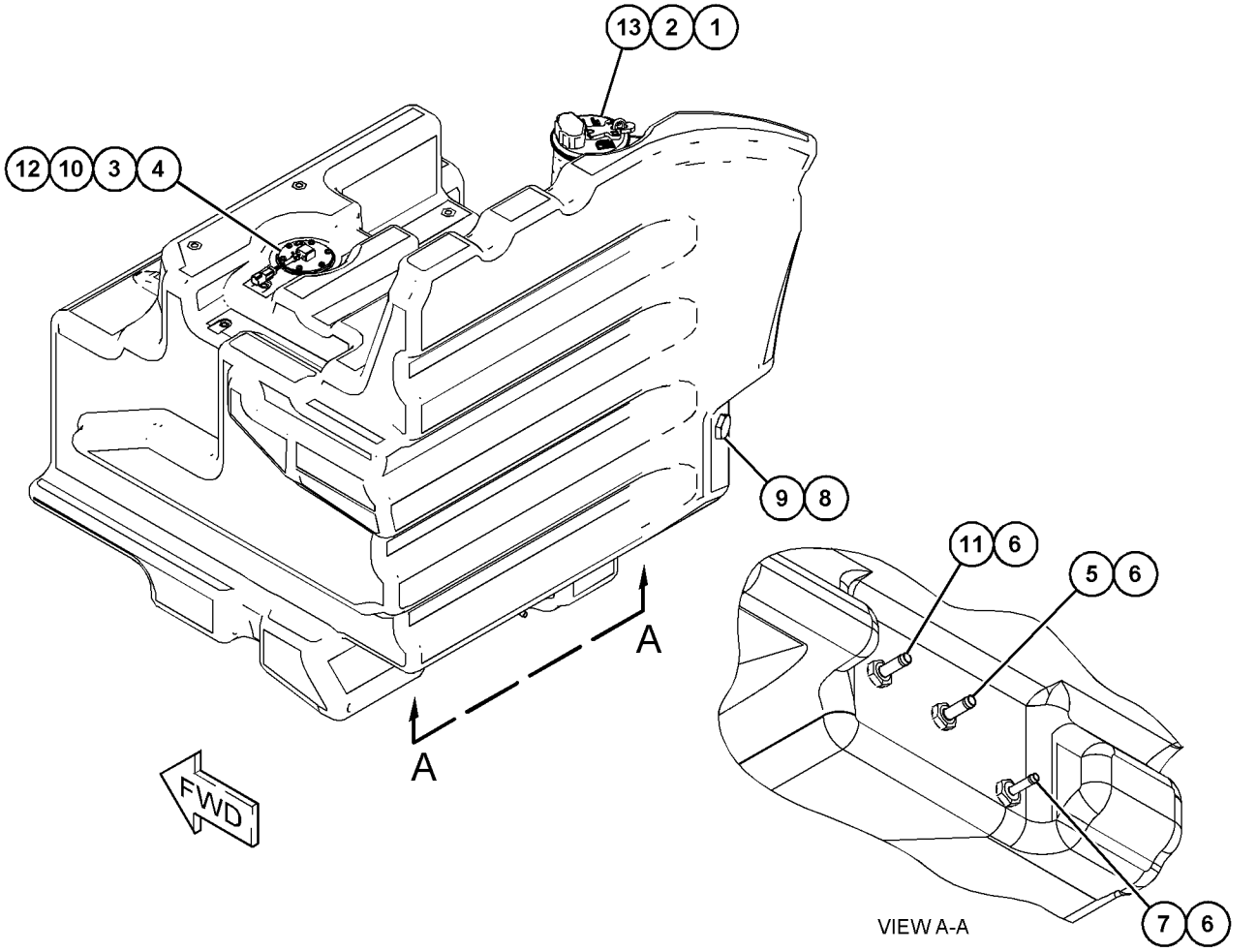

GRAPHIC #1 <END> g06317644

556-6469 TANK GP-FUEL

S/N: BR610001-UP
345-L (91-US GAL)
PART OF 556-6468 TANK & MTG GP-FUEL

SMCS-1273 **i07433089**

NOTE	REF NO	GRAPHIC REF	PART NUMBER	QTY	PART NAME 1 2 3 4 5 6 (PRODUCT LEVEL)	SEE PAGE
	1	1	**8T-0328**	6	WASHER-HARD (5.5X10X1-MM THK)	
M	2	1	**8T-4127**	6	SCREW-MACHINE (M5X0.8X20-MM)	
J	3	1	**303-9933**	1	STRAINER AS-FUEL (FLOAT GAUGE)	
L	4	1	**349-7059**	1	CAP AS-FUEL (LOCKABLE, VENTED)	
	5	1	**363-4122**	1	GASKET	
	6	1	**513-9097**	1	SENDER AS-FUEL LEVEL	
		1	**9X-3401**	2	PIN-CONNECTOR (16-GA TO 18-GA)	
		1	**102-8802**	1	KIT-RECEPTACLE (2-PIN)	
					(INCLUDES RECEPTACLE AS & WEDGE)	
	7	1	**516-7392**	1	CONNECTOR AS	
	8	1	**516-7525**	3	SEAL	
	9	1	**516-7527**	1	SEAL	
	10	1	**516-7528**	1	PLUG	
	11	1	**516-7526**	2	CONNECTOR	
	12	1	**548-5473**	1	ADAPTER-STRAINER	

J - KIT MARKED J SERVICES PART(S) MARKED J
L - KIT MARKED L SERVICES PART(S) MARKED L
M - METRIC PART

556-6469 **TANK GP-FUEL (**contd.**)** **i07433089**

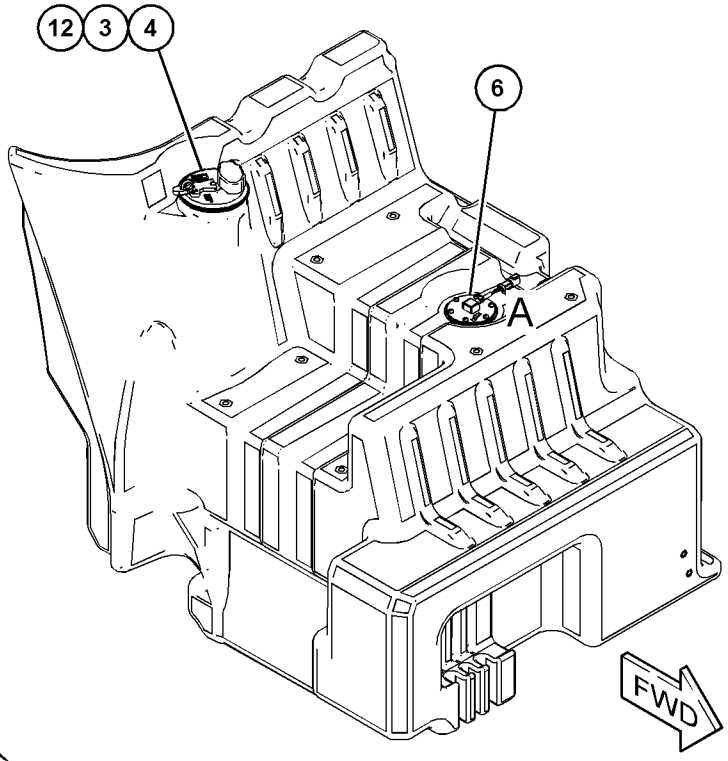

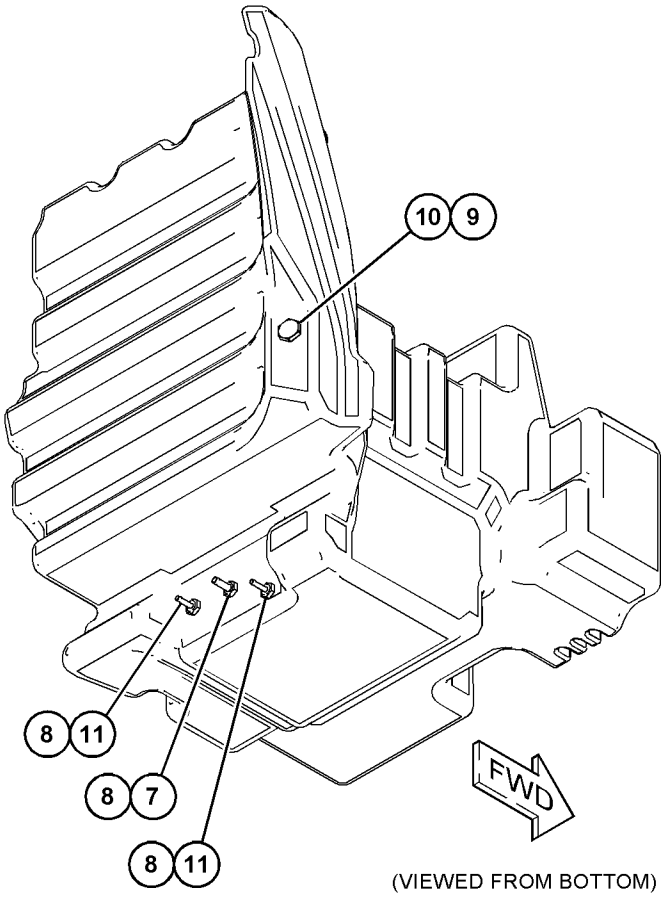

(VIEWED FROM BOTTOM)

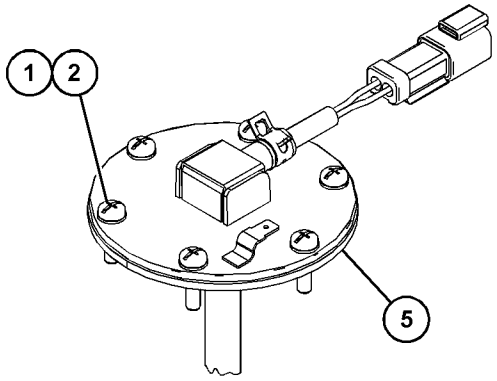

VIEW OF AREA A
(PARTS REMOVED FOR CLARITY)

GRAPHIC #1 <END> g06323242

504-3565 ALARM GP-TRAVEL

S/N: BR61-UP

PART OF 516-2545 ALARM GP-TRAVEL

SMCS-7429 **i07356336**

NOTE	REF NO	GRAPHIC REF	PART NUMBER	QTY	PART NAME 1 2 3 4 5 6 (PRODUCT LEVEL)	SEE PAGE
	1	1	**3S-2093**	1	STRAP-CABLE	
	2	1	**213-9100**	1	ALARM AS (BACKUP)	
BD		1	**5P-5623**		WIRE-ELECTRICAL (16-GA, BLACK)	
		1	**102-8802**	1	KIT-RECEPTACLE (2-PIN)	
					(INCLUDES RECEPTACLE AS & WEDGE)	
		1	**8T-8729**	2	PIN-CONNECTOR (16-GA TO 18-GA)	
E		1	**9X-1813**		SLEEVE (29-CM)	
	3	1	**266-7379**	1	STRAP-CABLE	
	4	1	**484-1454**	1	CLIP	
	5	1	**504-3566**	1	BRACKET AS	
	6	1	**5P-4116**	2	WASHER-HARD (8.8X20.5X2-MM THK)	
	7	1	**8T-4121**	2	WASHER-HARD (11X21X2.5-MM THK)	
M	8	1	**8T-4136**	2	BOLT (M10X1.5X25-MM)	
M	9	1	**8T-4189**	2	BOLT (M8X1.25X20-MM)	

B - USE AS REQUIRED
D - ORDER BY THE METER
E - ORDER BY THE CENTIMETER
M - METRIC PART

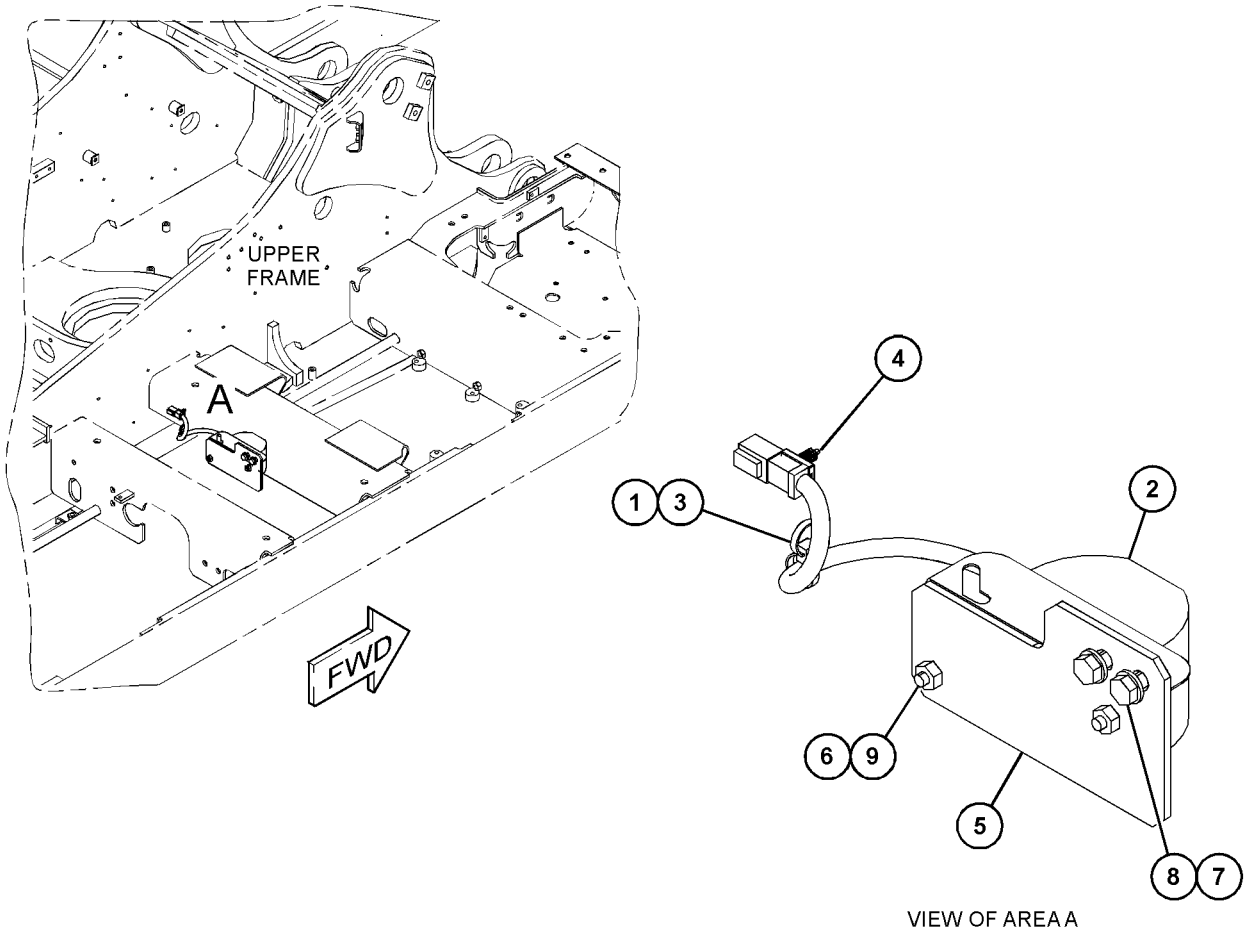

VIEW OF AREA A

GRAPHIC #1 <END> g06230021

516-2545 ALARM GP-TRAVEL–INSTALLATION

S/N: BR61-UP

SMCS-7429 **i07356332**

NOTE	PART NUMBER	QTY	PART NAME 1 2 3 4 5 6 (PRODUCT LEVEL)	SEE PAGE
Y	*504-3565*	1	ALARM GP-TRAVEL	129
Y	*516-2546*	1	SWITCH GP-ROCKER	228

Y - SEPARATE ILLUSTRATION

<END>

502-7150 ALTERNATOR GP-CHARGING

S/N: BR61-UP

SMCS-1405 **i07374693**

NOTE	REF NO	GRAPHIC REF	PART NUMBER	QTY	PART NAME 1 2 3 4 5 6 (PRODUCT LEVEL)	SEE PAGE
	1	1	**337-6324**	1	PULLEY (8-GROOVE)	
	2	1	**350-8742**	1	BELT-SERPENTINE	
R	3	1	**352-4700**	1	ALTERNATOR GP-CHARGING (24-VOLT, 145-AMPERE)	
M	4	1	**103-0050**	4	BOLT (M10X1.5X100-MM)	

M - METRIC PART
R - REMANUFACTURED PART MAY BE AVAILABLE

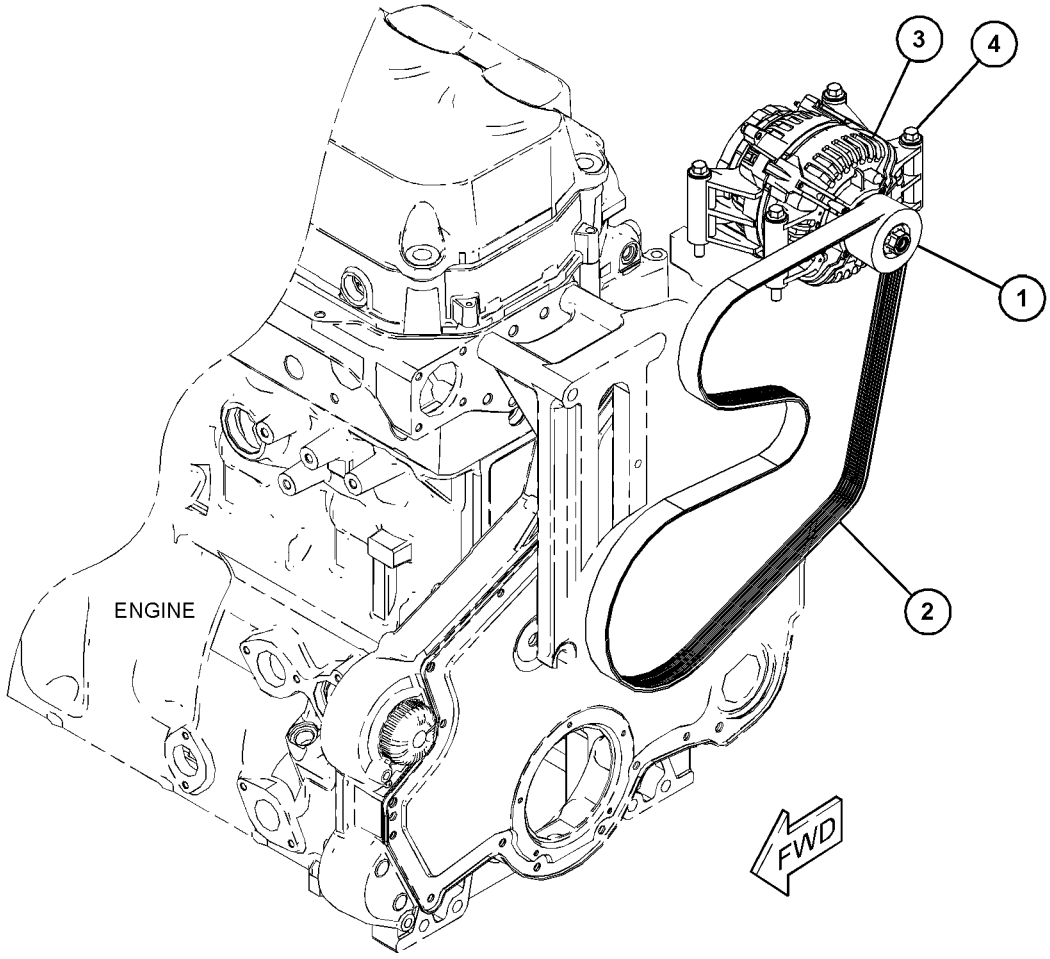

GRAPHIC #1 <END> g06233306

488-6821 ANTENNA & MOUNTING GP–PRODUCT LINK 631 SATELLITE

S/N: BR61-UP

PART OF 492-2913, 506-7022, 555-7258 INSTALLATION AR-COMMUNICATION

SMCS-7338, 733T

i07352462

NOTE	REF NO	GRAPHIC REF	PART NUMBER	QTY	PART NAME 1 2 3 4 5 6 (PRODUCT LEVEL)	SEE PAGE
	1	1	**3S-2093**	2	STRAP-CABLE	
	2	1	**443-8462**	1	ANTENNA AS (CELLULAR)	
		1	**361-1045**	1	NUT-SPECIAL (5/8-18-THD)	
		1	**385-8201**	1	CAP AS-CONNECTOR	
	3	1	**491-7831**	1	BASE	

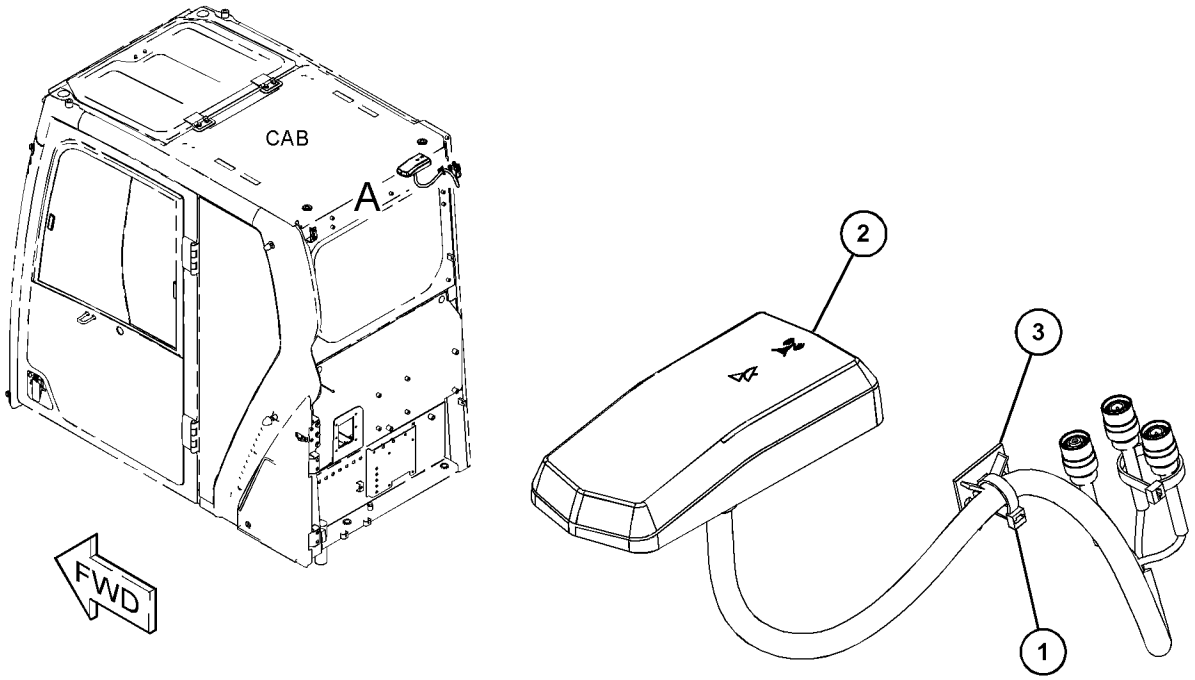

VIEW OF AREA A

GRAPHIC #1 <END> g06234118

506-5013 BATTERY & MTG GP-COLD WEATHER

S/N: BR61-UP

SMCS-1401 **i07352434**

NOTE	REF NO	GRAPHIC REF	PART NUMBER	QTY	PART NAME 1 2 3 4 5 6 (PRODUCT LEVEL)	SEE PAGE
	1	1	**6W-6005**	1	HOLD-DOWN-BATTERY	
	2	1	**263-9574**	2	BATTERY (12-VOLT, MAINTENANCE FREE)	
					(EACH INCLUDES)	
		1	**123-1373**	6	CAP AS-FILLER (7/8-9-THD)	
	3	1	**520-2491**	1	ROD	
M	4	1	**344-5675**	1	NUT (M10X1.5-THD)	
M	5	1	**5C-7261**	1	NUT (M8X1.25-THD)	
	6	1	**8T-4226**	1	WASHER-PLATED (10.5X45X3-MM THK)	

M - METRIC PART

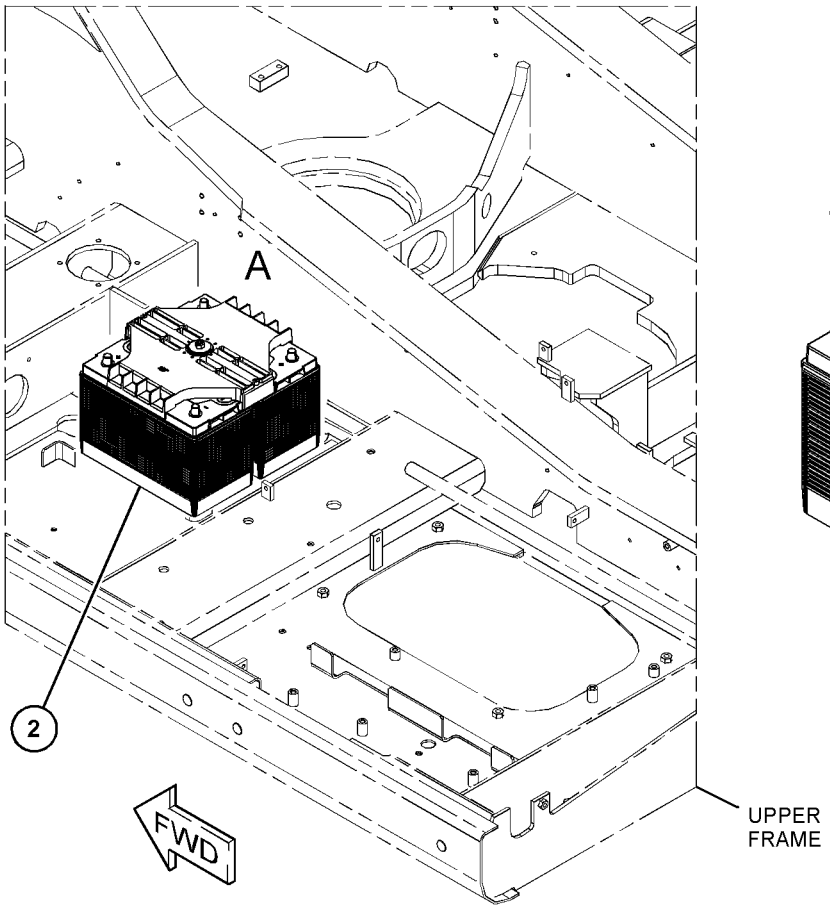

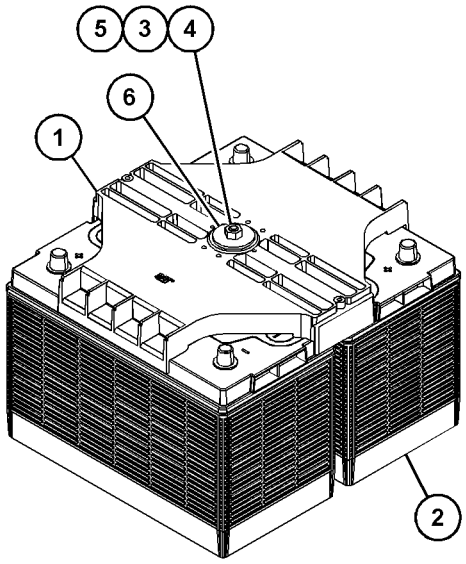

VIEW OF AREA A

GRAPHIC #1 <END> g06229373

498-7714 BRACKET GP-MOUNTING

S/N: BR61-UP

PART OF 525-1535 WIRING GP-CAB

SMCS-0635, 1408, 7010, 7631 **i07367864**

NOTE	REF NO	GRAPHIC REF	PART NUMBER	QTY	PART NAME 1 2 3 4 5 6 (PRODUCT LEVEL)	SEE PAGE
	1	1	**500-0898**	1	BRACKET	
	2	1	**500-0927**	1	BRACKET AS	
	3	1	**511-5988**	1	PIPE AS	
	4	1	**516-4929**	1	CLAMP	
M	5	1	**9X-2042**	3	SCREW-TRUSS HEAD (M6X1X12-MM)	

M - METRIC PART

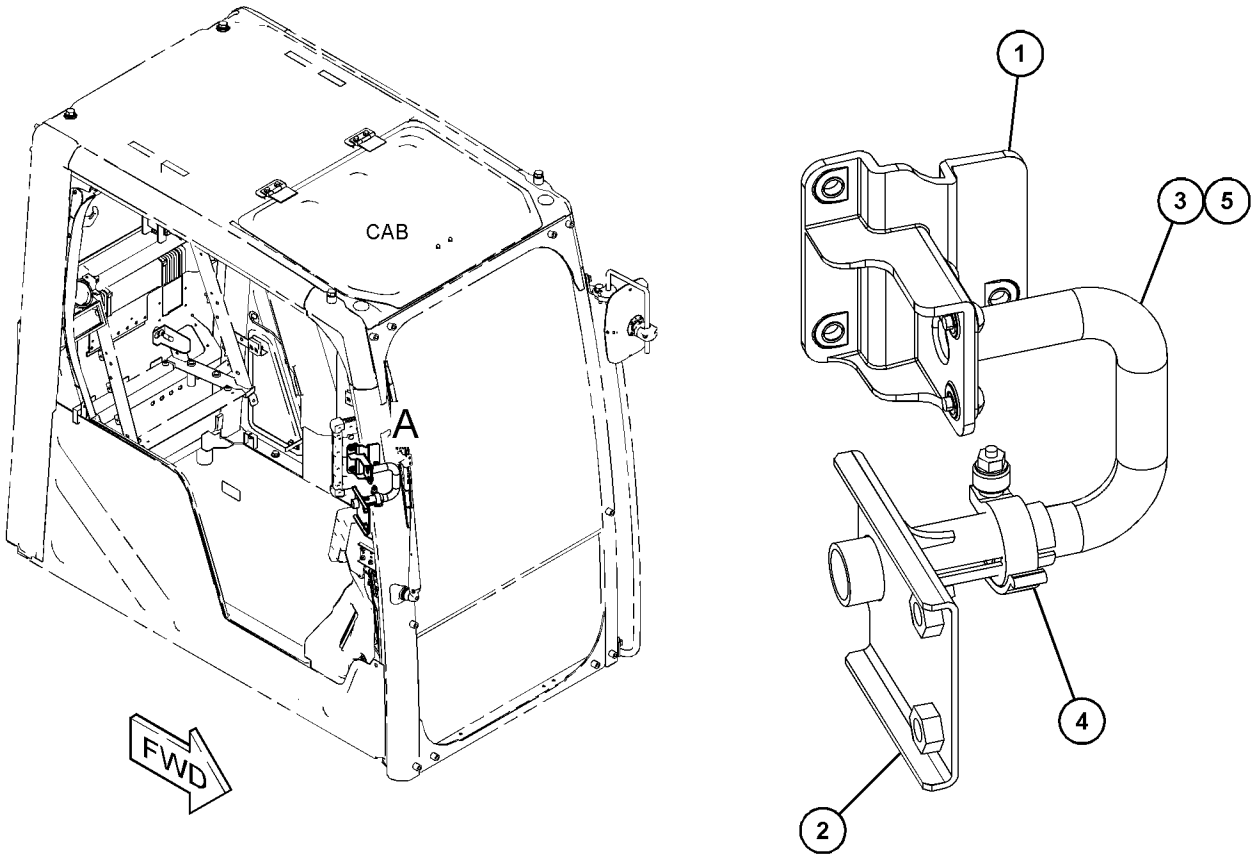

VIEW OF AREA A

GRAPHIC #1 <END> g06231316

490-2691 CABLE GP-GROUND—ELECTRICAL

S/N: BR61-UP

PART OF 511-4805 ELECTRICAL AR

SMCS-4459, 7423 **i07369306**

NOTE	REF NO	GRAPHIC REF	PART NUMBER	QTY	PART NAME 1 2 3 4 5 6 (PRODUCT LEVEL)	SEE PAGE
	1	2	**6G-2256**	6	CLAMP	
	2	2	**132-1805**	1	STRAP AS-GROUND	
	3	2	**328-0132**	1	CABLE AS (JUMPER)	
		2	**9G-0002**	1	COVER AS-TERMINAL (RED)	
		2	**9G-0005**	1	COVER AS-TERMINAL (BLACK)	
					(EACH COVER AS INCLUDES)	
		2	**8L-8413**	1	STRAP-CABLE (WHITE)	
		2	**8C-5918**	1	TERMINAL AS-BATTERY (NEGATIVE)	
		2	**8T-9756**	1	TERMINAL AS-BATTERY (POSITIVE)	
					(EACH TERMINAL AS INCLUDES)	
		2	**1M-6119**	1	BOLT (5/16-18X1.375-IN)	
		2	**1M-6120**	1	NUT (5/16-18-THD)	
E		2	**159-8049**		CABLE (00-GA, RED) (31-CM)	
	4	2	**483-7801**	1	SPACER (11X20X15-MM THK)	
	5	2	**483-7805**	1	SPACER (11X20X65-MM THK)	
	6	2	**483-7806**	2	SPACER (11X20X56-MM THK)	
	7	2	**484-1451**	3	CLIP	
	8	2	**504-3579**	1	BRACKET AS	
	9	2	**504-3583**	1	CABLE AS	
D		2	**6V-2722**		TUBE-HEAT SHRINK (25.4-MM DIA) (0.1-M)	
		2	**9G-0002**	1	COVER AS-TERMINAL (RED)	
		2	**8L-8413**	1	STRAP-CABLE (WHITE)	
		2	**8T-9756**	1	TERMINAL AS-BATTERY (POSITIVE)	
		2	**1M-6119**	1	BOLT (5/16-18X1.375-IN)	
		2	**1M-6120**	1	NUT (5/16-18-THD)	
		2	**030-1705**	1	TERMINAL-CABLE (00-GA, 5/16-IN SCREW)	
E		2	**159-8049**		CABLE (00-GA, RED) (89-CM)	
		2	**204-2281**	1	STRAP-CABLE	
		2	**484-1452**	1	CLIP	
	10	2	**504-3589**	1	CABLE AS-STARTER	
		2	**1S-7252**	1	TERMINAL-CABLE (00-GA, 3/8-IN SCREW)	
D		2	**6V-2722**		TUBE-HEAT SHRINK (25.4-MM DIA) (0.1-M)	
		2	**8N-0869**	1	COVER-TERMINAL (RED)	
		2	**030-1705**	1	TERMINAL-CABLE (00-GA, 5/16-IN SCREW)	
E		2	**159-8049**		CABLE (00-GA, RED) (203-CM)	
	11	2	**504-3590**	1	CABLE AS	
		2	**8T-8827**	1	BOOT (RED)	
		2	**030-1708**	2	TERMINAL-RING (0-GA)	
E		2	**159-8047**		CABLE-ELECTRICAL (0-GA, RED) (221-CM)	
Y	12	2	**510-9072**	1	HOLDER AS-FUSE	187
	13	2	**517-7927**	1	CABLE AS-GROUND	
		2	**1S-7252**	2	TERMINAL-CABLE (00-GA, 3/8-IN SCREW)	
D		2	**6V-2722**		TUBE-HEAT SHRINK (25.4-MM DIA) (0.1-M)	
E		2	**159-8050**		CABLE (00-GA, BLACK) (28-CM)	
	14	2	**521-6648**	1	CABLE AS	
		2	**1S-7252**	1	TERMINAL-CABLE (00-GA, 3/8-IN SCREW)	
		2	**6T-0465**	1	COVER-TERMINAL (BLACK)	
		2	**9G-0005**	1	COVER AS-TERMINAL (BLACK)	

490-2691 **CABLE GP-GROUND (**contd.**)** **i07369306**

NOTE	REF NO	GRAPHIC REF	PART NUMBER	QTY	PART NAME 1 2 3 4 5 6 (PRODUCT LEVEL)	SEE PAGE
		2	**8L-8413**	1	STRAP-CABLE (WHITE)	
		2	**8C-5918**	1	TERMINAL AS-BATTERY (NEGATIVE)	
		2	**1M-6119**	1	BOLT (5/16-18X1.375-IN)	
		2	**1M-6120**	1	NUT (5/16-18-THD)	
E		2	**159-8050**		CABLE (00-GA, BLACK) (113-CM)	
		2	**204-2281**	2	STRAP-CABLE	
		2	**484-1452**	2	CLIP	
	15	2	**521-6649**	1	CABLE AS	
		2	**030-1707**	1	TERMINAL-RING (0-GA, 3/8-IN SCREW)	
		2	**030-1709**	1	TERMINAL-RING (0-GA, 1/4-IN SCREW)	
E		2	**159-8048**		CABLE-ELECTRICAL (0-GA, BLACK) (99-CM)	
	16	2	**177-2215**	2	STRAP-DUAL CLAMP	
	17	2	**2G-8767**	10	WASHER (10.5X60X3-MM THK)	
	18	2	**306-8526**	2	GROMMET	
M	19	2	**5C-7261**	1	NUT (M8X1.25-THD)	
	20	2	**6G-2263**	6	SPACER (10.5X19X28.5-MM THK)	
M	21	2	**7X-2543**	1	BOLT (M10X1.5X120-MM)	
	22	2	**8T-1889**	2	CLIP (SLOT)	
	23	2	**8T-1890**	2	CLIP (TAB)	
	24	2	**8T-4121**	11	WASHER-HARD (11X21X2.5-MM THK)	
M	25	2	**8T-4137**	8	BOLT (M10X1.5X20-MM)	
M	26	2	**8T-4178**	2	BOLT (M10X1.5X90-MM)	
M	27	2	**8T-4182**	2	BOLT (M10X1.5X45-MM)	
M	28	2	**8T-4196**	1	BOLT (M10X1.5X35-MM)	
	29	2	**8T-4224**	3	WASHER-HARD (8.8X16X2-MM THK)	
M	30	2	**8T-4908**	3	BOLT (M8X1.25X25-MM)	
M	31	2	**8T-6466**	3	BOLT (M10X1.5X60-MM)	

D - ORDER BY THE METER
E - ORDER BY THE CENTIMETER
M - METRIC PART
Y - SEPARATE ILLUSTRATION

490-2691 **CABLE GP-GROUND (**contd.**)** **i07369306**

REFER TO ALL ILLUSTRATIONS OF
THIS GROUP FOR AUXILIARY VIEWS

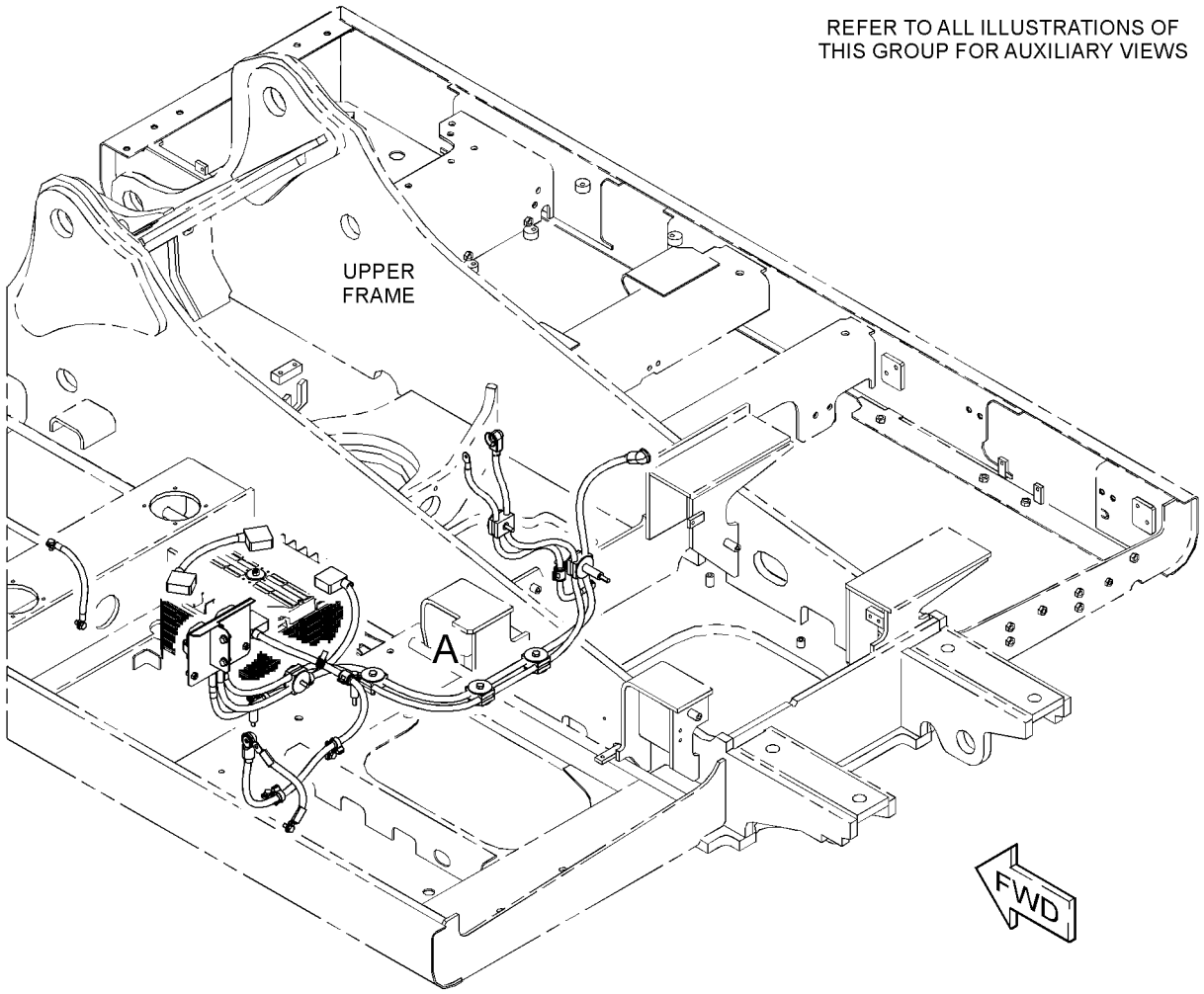

GRAPHIC #1 g06232745

490-2691 **CABLE GP-GROUND** (contd.) **i07369306**

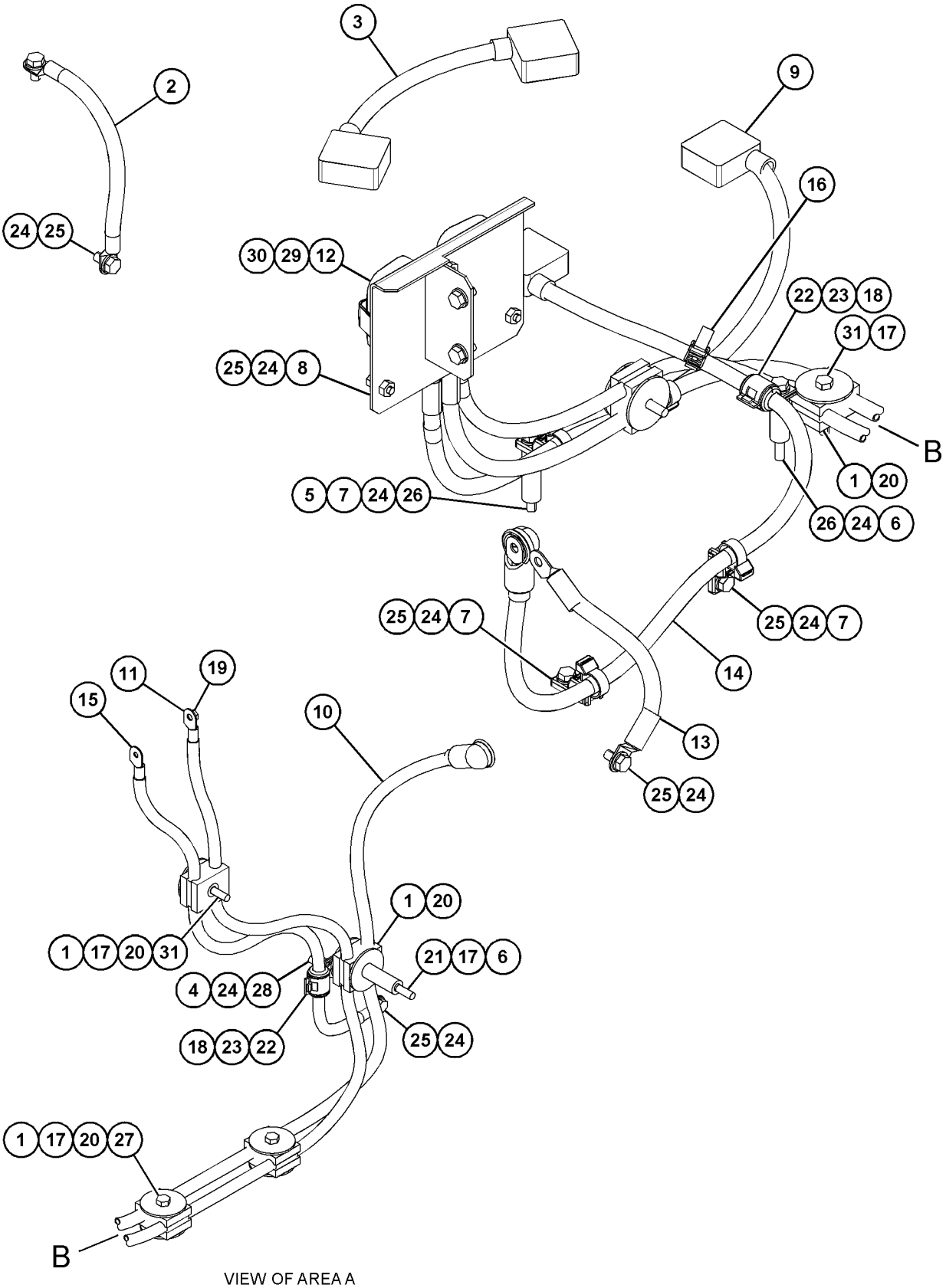

VIEW OF AREA A

GRAPHIC #2 <END> g06232746

502-7171 CAMERA & MOUNTING GP–REAR VIEW

S/N: BR61-UP

PART OF 559-0034 CAMERA AR, 490-7697 INSTALLATION AR, 512-4549 MIRROR AR

SMCS-7348 **i07352873**

NOTE	REF NO	GRAPHIC REF	PART NUMBER	QTY	PART NAME 1 2 3 4 5 6 (PRODUCT LEVEL)	SEE PAGE
	1	1	**488-5838**	2	WASHER-HARD (4.5X9X1-MM THK)	
	2	1	**488-9163**	1	CAMERA GP (12-VOLT)	
		1	**490-0582**	1	RECEPTACLE AS	
		1	**490-0572**	1	RECEPTACLE AS	
	3	1	**498-4574**	1	COVER AS	
M	4	1	**3E-4313**	2	SCREW-BUTTON HEAD (M4X0.7X8-MM)	
M	5	1	**9X-2043**	4	SCREW-TRUSS HEAD (M6X1X14-MM)	

M - METRIC PART

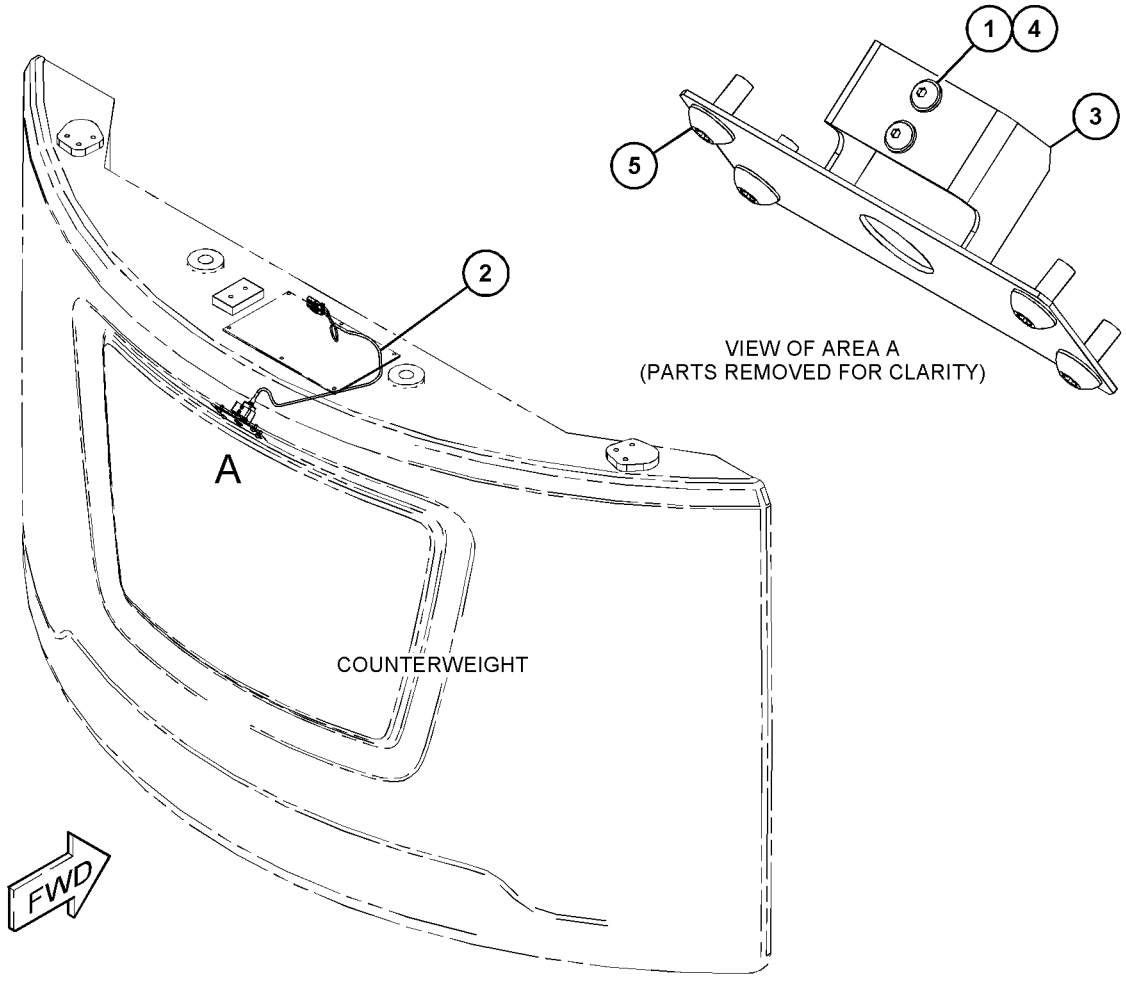

GRAPHIC #1 <END> g06229448

502-7172 CAMERA & MOUNTING GP—RIGHT SIDE VIEW

S/N: BR61-UP

PART OF 559-0034 CAMERA AR, 490-7697 INSTALLATION AR

SMCS-7348 **i07366548**

NOTE	REF NO	GRAPHIC REF	PART NUMBER	QTY	PART NAME 1 2 3 4 5 6 (PRODUCT LEVEL)	SEE PAGE
	1	1	**421-0290**	1	GROMMET	
	2	1	**488-5838**	6	WASHER-HARD (4.5X9X1-MM THK)	
	3	1	**488-9163**	1	CAMERA GP (12-VOLT)	
		1	**490-0572**	1	RECEPTACLE AS	
		1	**490-0582**	1	RECEPTACLE AS	
	4	1	**529-7071**	1	COVER	
	5	1	**529-7072**	1	COVER	
	6	1	**529-7074**	1	BRACKET AS	
J		1	**5P-9205**		SEAL (0.1-M)	
M	7	1	**150-4086**	2	SCREW (M4X0.7X16-MM)	
M	8	1	**3E-4313**	4	SCREW-BUTTON HEAD (M4X0.7X8-MM)	
	9	1	**8T-4121**	2	WASHER-HARD (11X21X2.5-MM THK)	
M	10	1	**8T-4136**	2	BOLT (M10X1.5X25-MM)	

J - ORDER BY THE DECIMETER
M - METRIC PART

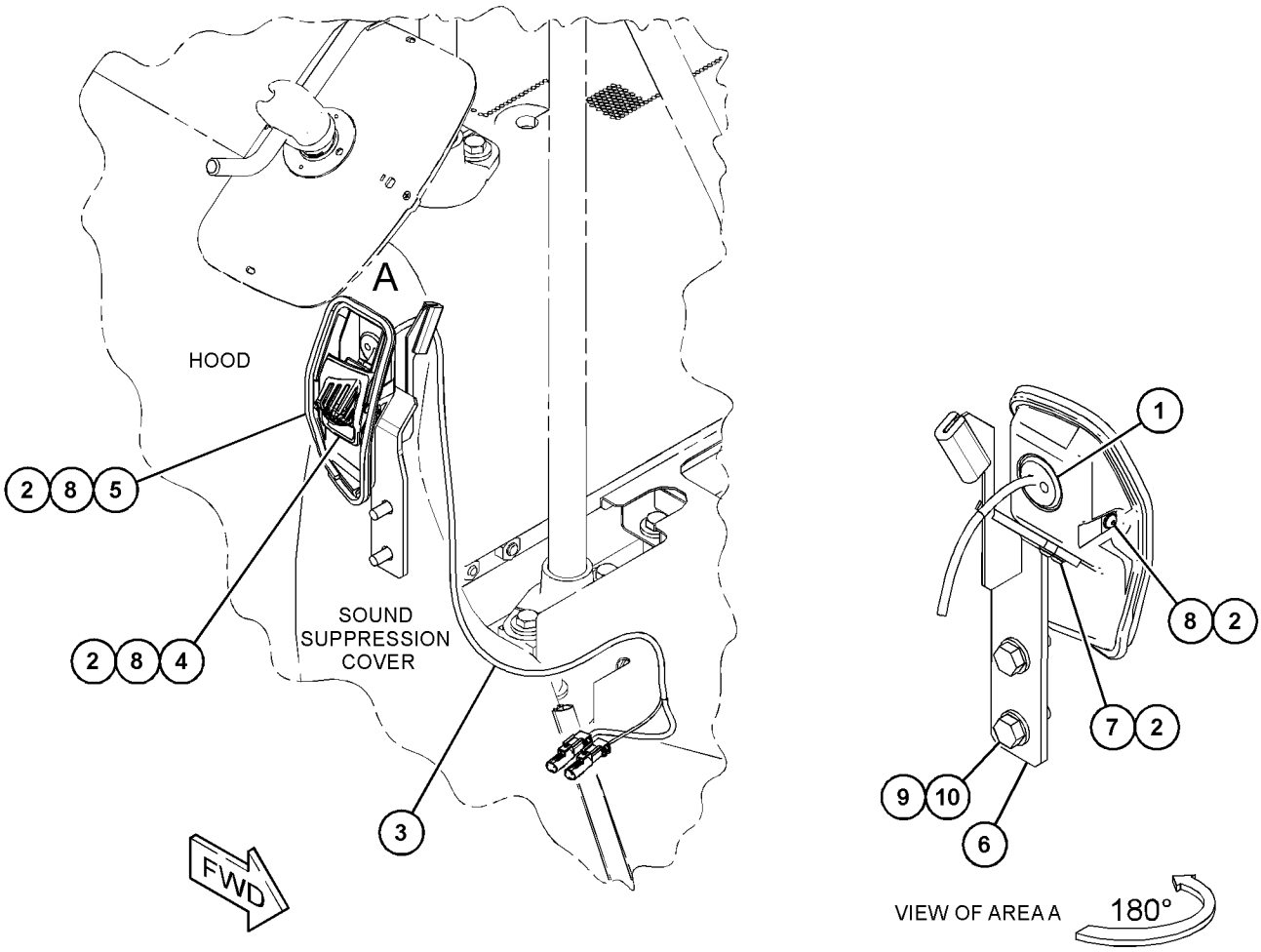

GRAPHIC #1 <END> g06229884

502-7173 CAMERA & MOUNTING GP–LEFT SIDE

S/N: BR61-UP

PART OF 559-0034 CAMERA AR, 490-7697 INSTALLATION AR

SMCS-7348 **i07376589**

NOTE	REF NO	GRAPHIC REF	PART NUMBER	QTY	PART NAME 1 2 3 4 5 6 (PRODUCT LEVEL)	SEE PAGE
	1	1	**135-8575**	3	BOLT AS	
	2	1	**488-5838**	4	WASHER-HARD (4.5X9X1-MM THK)	
	3	1	**488-9163**	1	CAMERA GP (12-VOLT)	
		1	**490-0572**	1	RECEPTACLE AS	
		1	**490-0582**	1	RECEPTACLE AS	
	4	1	*529-7070*	1	COVER AS	
J		1	**348-5409**		SEAL (3-DM)	
		1	**533-5661**	1	COVER AS	
	5	1	**529-7073**	1	COVER	
M	6	1	**3E-4313**	4	SCREW-BUTTON HEAD (M4X0.7X8-MM)	

J - ORDER BY THE DECIMETER
M - METRIC PART

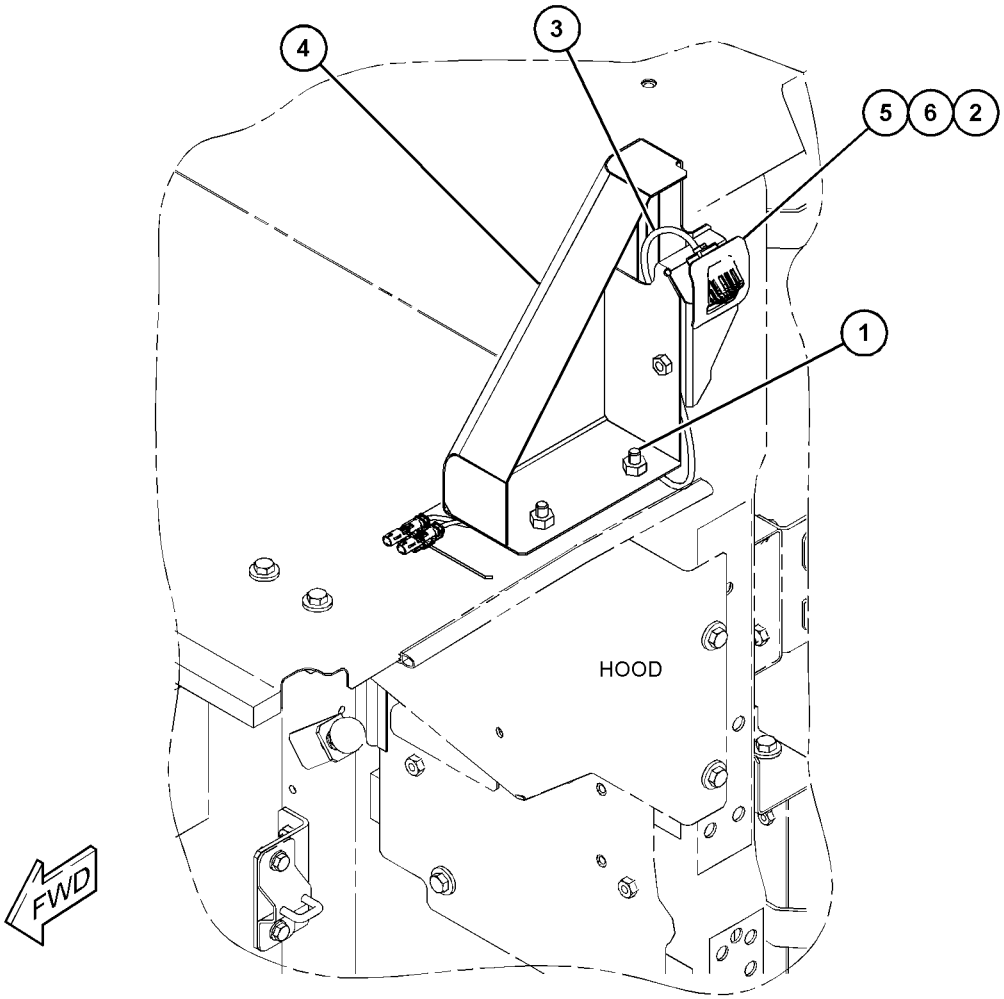

GRAPHIC #1 <END> g06232637

502-7174 CAMERA & MOUNTING GP–FRONT

S/N: BR61-UP

PART OF 490-7697 INSTALLATION AR

SMCS-7348 **i07358874**

NOTE	REF NO	GRAPHIC REF	PART NUMBER	QTY	PART NAME 1 2 3 4 5 6 (PRODUCT LEVEL)	SEE PAGE
	1	1	**533-2344**	1	BRACKET (CAMERA)	
	2	1	**488-5838**	2	WASHER-HARD (4.5X9X1-MM THK)	
	3	1	**512-6385**	1	CAMERA GP	
		1	**490-0572**	1	RECEPTACLE AS	
		1	**490-0582**	1	RECEPTACLE AS	
M	4	1	**101-7401**	2	BOLT-SOCKET HEAD (M10X1.5X20-MM)	
M	5	1	**3E-4313**	2	SCREW-BUTTON HEAD (M4X0.7X8-MM)	
	6	1	**8T-4121**	2	WASHER-HARD (11X21X2.5-MM THK)	

M - METRIC PART

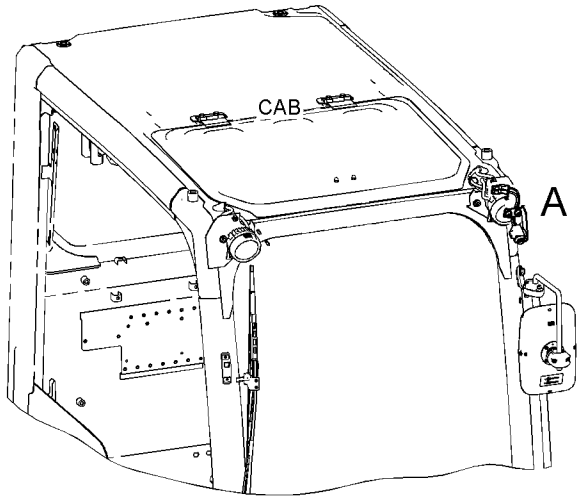

FRONT VIEW
(UPPER RIGHT)

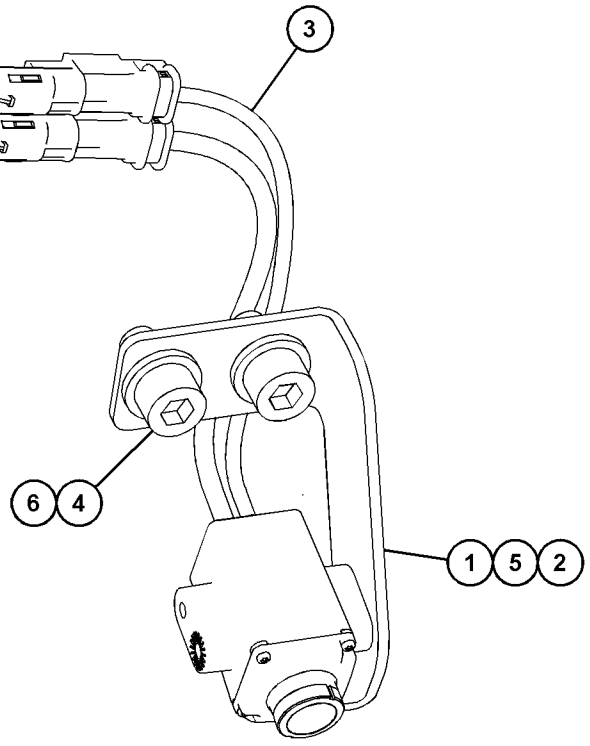

VIEW OF AREA A

GRAPHIC #1 <END> g06231110

554-3616 CAMERA & MOUNTING GP–FRONT GUARD

S/N: BR610001-UP

PART OF 559-0034 CAMERA AR

SMCS-7348 **i07434649**

NOTE	REF NO	GRAPHIC REF	PART NUMBER	QTY	PART NAME 1 2 3 4 5 6 (PRODUCT LEVEL)	SEE PAGE
M	1	1	**3E-4313**	2	SCREW-BUTTON HEAD (M4X0.7X8-MM)	
	2	1	**488-5838**	2	WASHER-HARD (4.5X9X1-MM THK)	
	3	1	**484-1456**	2	STRAP-CABLE	
	4	1	**512-6385**	1	CAMERA GP	
		1	**490-0572**	1	RECEPTACLE AS	
		1	**490-0582**	1	RECEPTACLE AS	
	5	1	**539-2833**	1	HARNESS AS-BOX	
		1	**490-0571**	1	PLUG AS-CONNECTOR (2-PIN)	
		1	**490-0572**	1	RECEPTACLE AS	
	6	1	**539-2834**	1	HARNESS AS-MONITOR	
E		1	**196-8876**		BRAID (BLACK, ONE GOLD STRAND) (33-CM)	
		1	**490-0578**	1	PLUG AS-CONNECTOR (2-PIN)	
		1	**490-0582**	1	RECEPTACLE AS	
	7	1	**539-2835**	1	BRACKET	
	8	1	**8T-4121**	1	WASHER-HARD (11X21X2.5-MM THK)	
M	9	1	**8T-4137**	1	BOLT (M10X1.5X20-MM)	

E - ORDER BY THE CENTIMETER
M - METRIC PART

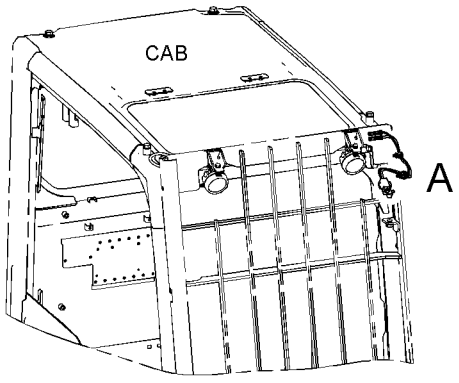

FRONT VIEW
(UPPER RIGHT)

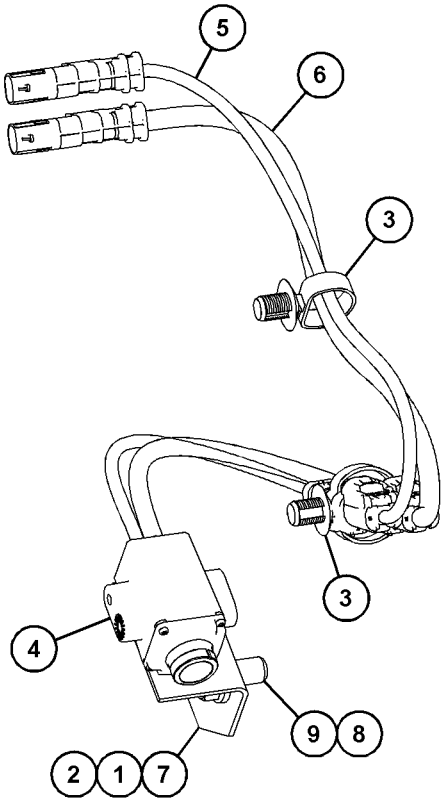

VIEW OF AREA A

GRAPHIC #1 <END> g06293129

559-0034 CAMERA AR–360 VISIBILITY

S/N: BR610001-UP

SMCS-7348 **i07432747**

NOTE	PART NUMBER	QTY	PART NAME 1 2 3 4 5 6 (PRODUCT LEVEL)	SEE PAGE
Y	*502-7171*	1	CAMERA & MOUNTING GP (REAR VIEW)	139
Y	*502-7172*	1	CAMERA & MOUNTING GP (RIGHT SIDE)	140
Y	*502-7173*	1	CAMERA & MOUNTING GP (LEFT SIDE)	141
Y	*554-3616*	1	CAMERA & MOUNTING GP (LED, FRONT GUARD)	143
Y	*527-1424*	1	COVER GP-SOUND SUPPRESSION (HYDRAULIC TANK)	20
Y	*548-8356*	1	DOOR & MTG GP-ACCESS (AIR CLEANER, BATTERY)	311
Y	*490-2699*	1	WIRING GP-CHASSIS (REAR VIEW, CAMERA)	241
Y	*490-2700*	1	WIRING GP-CHASSIS (CAMERA, LH)	242
Y	*502-7170*	1	WIRING GP-CHASSIS (RIGHT SIDE)	243

Y - SEPARATE ILLUSTRATION

<END>

488-6819 CONTROL & MTG GP-COMMUNICATION–PRODUCT LINK

S/N: BR61-UP

PART OF 492-2913, 555-7287 INSTALLATION AR-COMMUNICATION

SMCS-7606 **i07368152**

NOTE	REF NO	GRAPHIC REF	PART NUMBER	QTY	PART NAME 1 2 3 4 5 6 (PRODUCT LEVEL)	SEE PAGE
	1	1	**8C-5607**	8	MOUNT-ISOLATION	
	2	1	**494-6472**	1	CONTROL GP-COMMUNICATION (ELECTRONIC)	
		1	**7X-6315**	1	STRAP AS-GROUND	
D		1	**5P-6006**		TUBE-HEAT SHRINK (9.52-MM DIA) (0.1-M)	
		1	**2L-8078**	1	TERMINAL-RING (14-GA TO 16-GA, 5/16-IN SCREW)	
		1	**2L-8075**	1	TERMINAL-RING (14-GA TO 16-GA, NO. 8 SCREW)	
	3	1	**8C-5608**	4	SPACER (6.5X9.5X25.4-MM THK)	
M	4	1	**8C-8451**	4	BOLT (M6X1X40-MM)	
	5	1	**9X-6165**	4	WASHER (6.5X22X2.5-MM THK)	

D - ORDER BY THE METER
M - METRIC PART

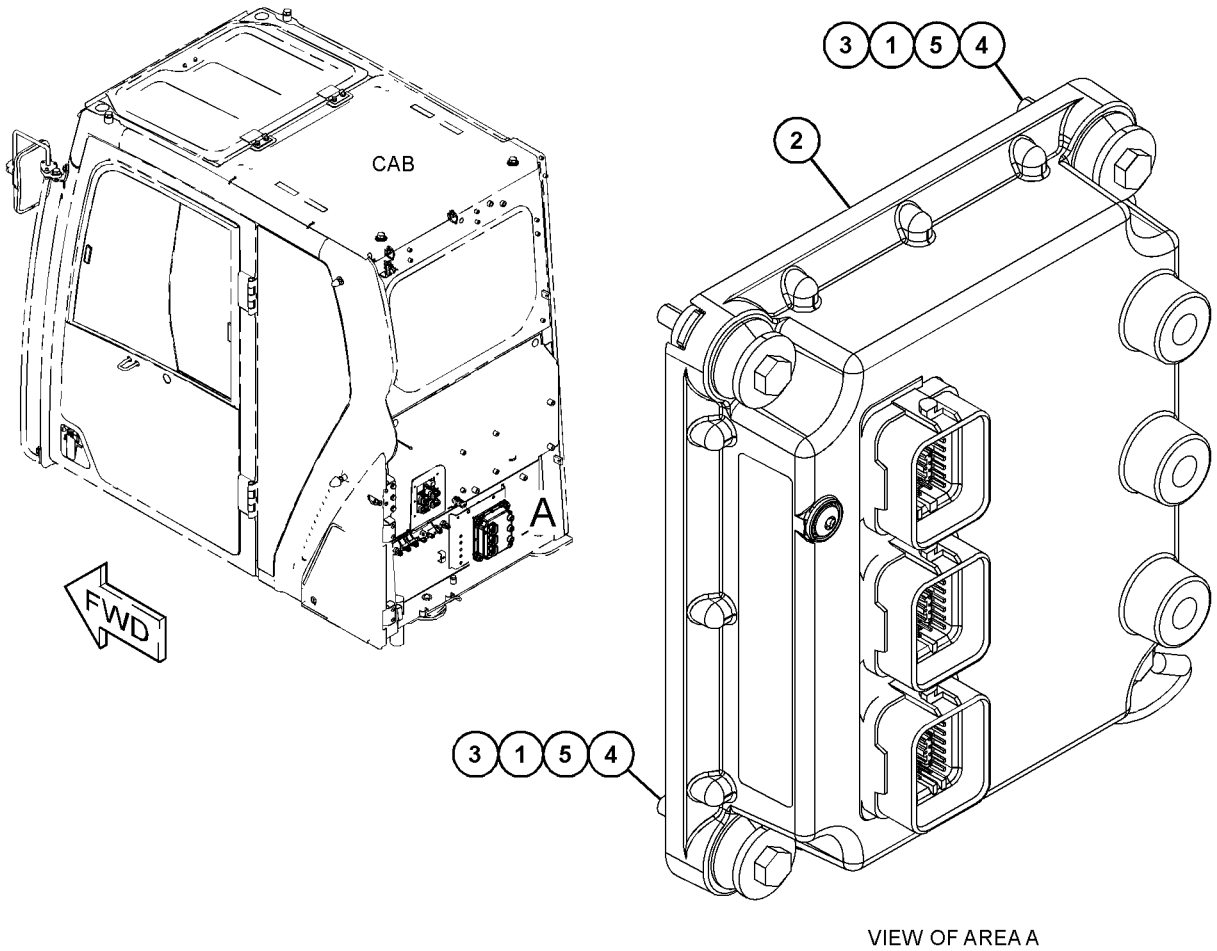

VIEW OF AREA A

GRAPHIC #1 <END> g06228988

488-6822 CONTROL & MTG GP-COMMUNICATION—PRODUCT LINK

631 SATELLITE

S/N: BR61-UP

PART OF 492-2913, 506-7022, 555-7258 INSTALLATION AR-COMMUNICATION

SMCS-7606 **i07352466**

NOTE	REF NO	GRAPHIC REF	PART NUMBER	QTY	PART NAME 1 2 3 4 5 6 (PRODUCT LEVEL)	SEE PAGE
YR	1	1	**442-7199**	1	CONTROL GP-UNPROGRAMMED (PRODUCT LINK ELITE 631 SATELLITE)	150
	2	1	**495-9813**	1	BRACKET AS	
M	3	1	**7X-2621**	2	BOLT (M10X1.5X12-MM)	
	4	1	**8T-4121**	2	WASHER-HARD (11X21X2.5-MM THK)	
M	5	1	**8T-4138**	4	BOLT (M6X1X20-MM)	
	6	1	**9X-8256**	4	WASHER (6.6X12X2-MM THK)	

M - METRIC PART
R - REMANUFACTURED PART MAY BE AVAILABLE
Y - SEPARATE ILLUSTRATION

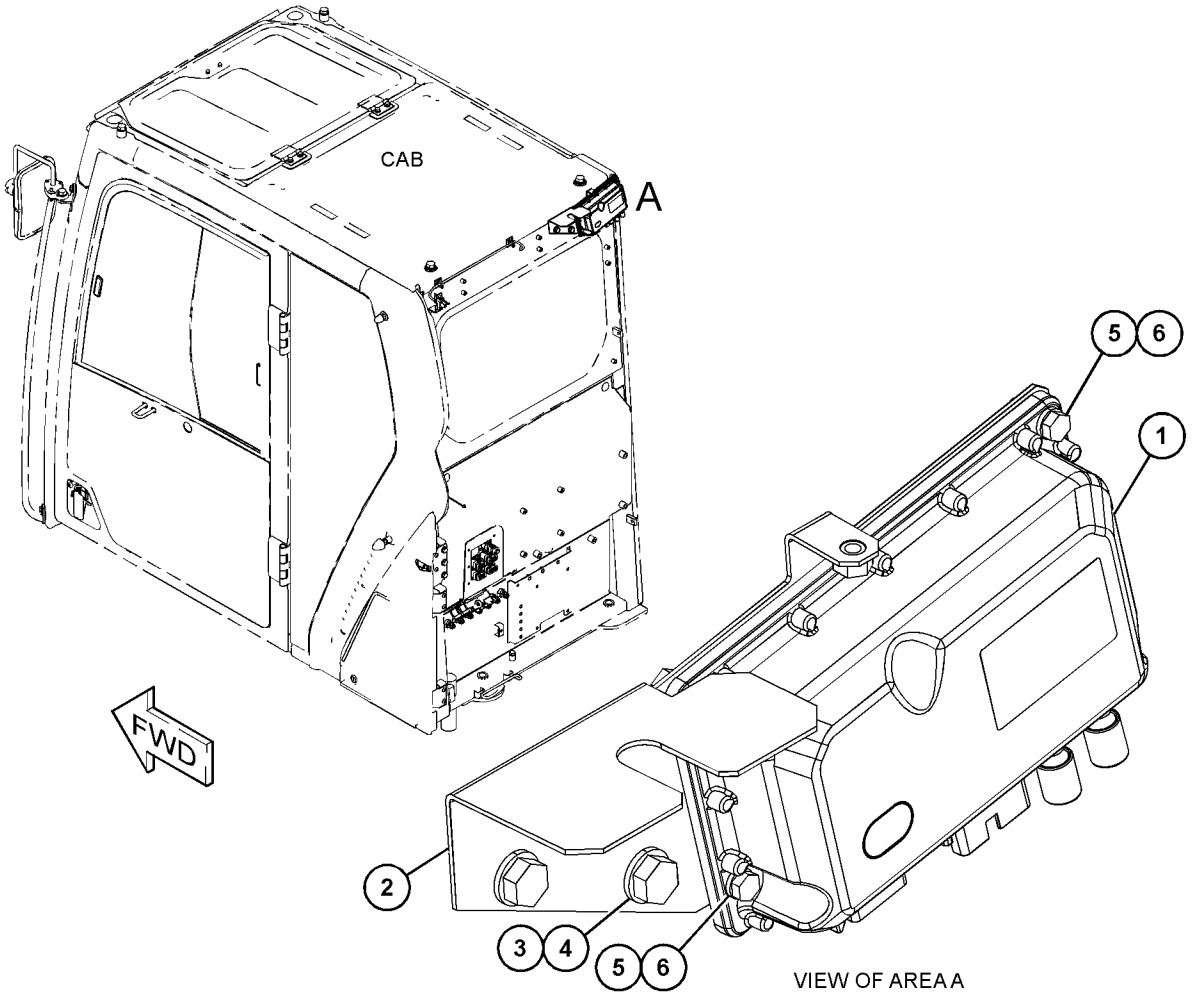

VIEW OF AREA A

GRAPHIC #1 <END> g06234130

502-7159 CONTROL & MTG GP-ELECTRONIC

S/N: BR61-UP

PART OF 489-7847 MODULE GP-CAB WIRING

SMCS-1901, 3168, 7490, 7610 **i07348767**

NOTE	REF NO	GRAPHIC REF	PART NUMBER	QTY	PART NAME 1 2 3 4 5 6 (PRODUCT LEVEL)	SEE PAGE
	1	1	**489-7907**	1	CONTROL GP-UNPROGRAMMED	
	2	1	**114-6658**	4	WASHER (6.5X17X1-MM THK)	
M	3	1	**7X-2534**	4	BOLT (M6X1X50-MM)	

M - METRIC PART

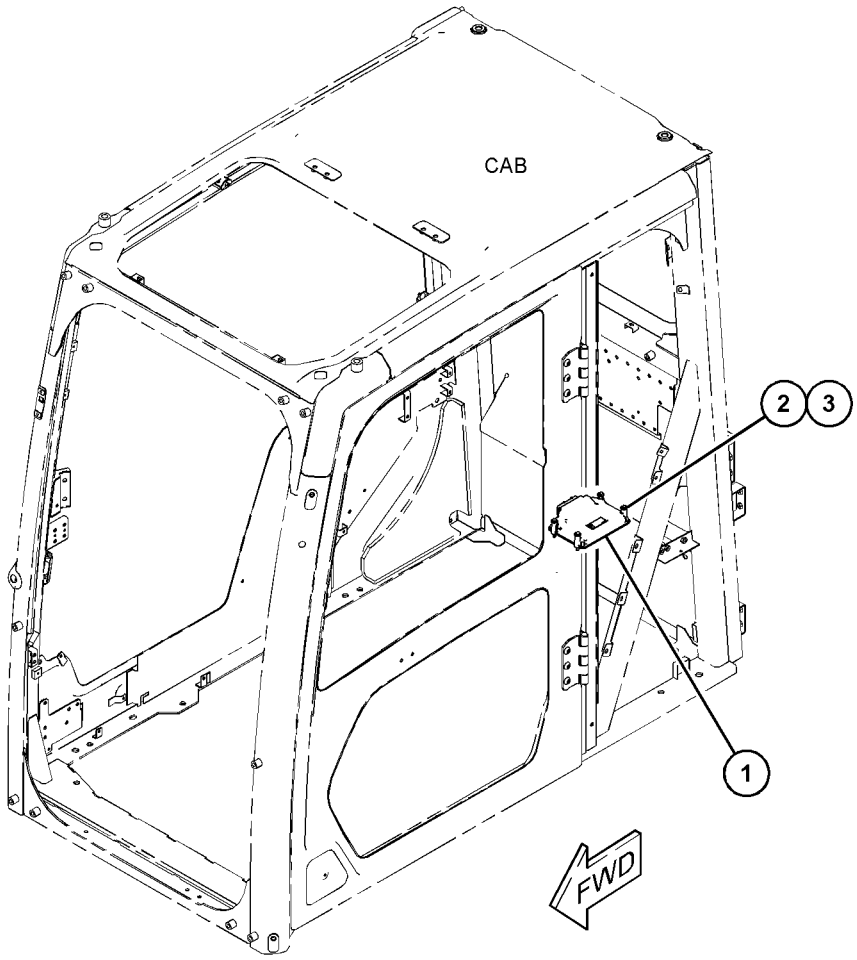

GRAPHIC #1 <END> g06233616

488-6816 CONTROL & MTG GP-MACHINE

S/N: BR61-UP

PART OF 532-9515, 532-9518, 556-2899, 556-2902 DISTRIBUTION AR

SMCS-1931, 7600 **i07350399**

NOTE	REF NO	GRAPHIC REF	PART NUMBER	QTY	PART NAME 1 2 3 4 5 6 (PRODUCT LEVEL)	SEE PAGE
R	1	1	**430-7160**	2	CONTROL GP-ELECTRONIC	
					(EACH INCLUDES)	
		1	**467-6039**	1	CAP-CONNECTOR	
		1	**467-6040**	1	CAP-CONNECTOR	
		1	**479-8364**	2	CLIP-CONNECTOR	
	2	1	**516-4870**	4	COLLAR	
	3	1	**523-7667**	1	HARNESS AS-CHASSIS	
		1	**9W-0844**	2	SOCKET-CONNECTOR (14-GA TO 16-GA)	
		1	**2L-8077**	2	TERMINAL-RING (14-GA TO 16-GA, 1/4-IN SCREW)	
		1	**230-4011**	1	PLUG AS-CONNECTOR (2-PIN)	
		1	**455-0704**	1	SEAL-CONNECTOR	
	4	1	**114-6658**	4	WASHER (6.5X17X1-MM THK)	
M	5	1	**7X-7888**	4	BOLT (M6X1X90-MM)	

M - METRIC PART
R - REMANUFACTURED PART MAY BE AVAILABLE

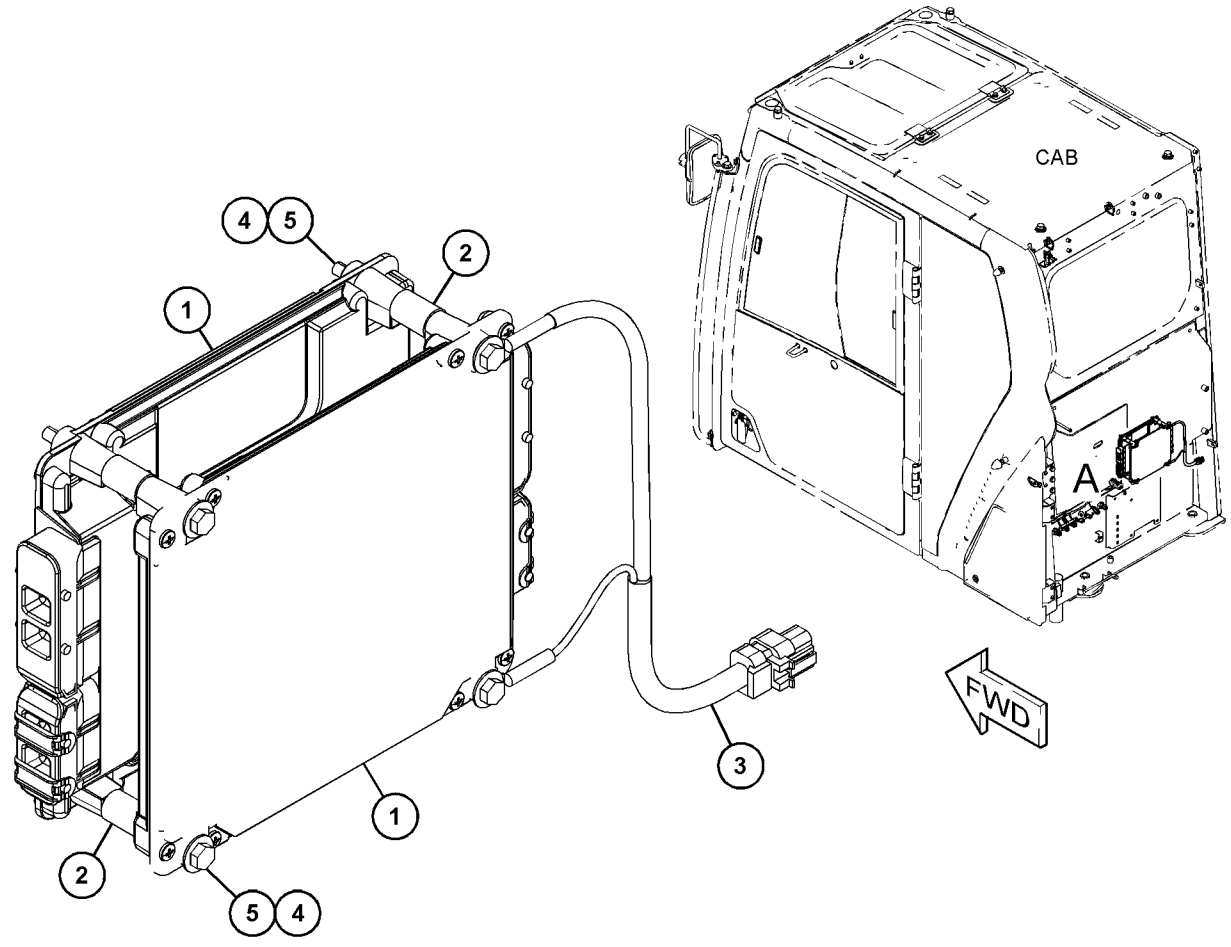

VIEW OF AREA A

GRAPHIC #1 <END> g06229476

371-2537 CONTROL GP-ENGINE ELECTRONIC

S/N: 4501-UP; E7A1-UP

PART OF 530-2686, 555-5560, 555-7255 ENGINE AR-PRIMARY

SMCS-1901 **i05936675**

NOTE	REF NO	GRAPHIC REF	PART NUMBER	QTY	PART NAME 1 2 3 4 5 6 (PRODUCT LEVEL)	SEE PAGE
	1	1	**7W-2632**	1	WASHER (8.5X16.8X1.6-MM THK)	
	2	1	**217-0099**	4	SPACER (8.2X25X2-MM THK)	
	3	1	**278-5203**	4	SPACER	
	4	1	**155-0576**	8	MOUNT-ISOLATION	
M	5	1	**6I-0456**	4	BOLT (M8X1.25X45-MM)	
R	6	1	**374-2640**	1	CONTROL GP-UNPROGRAMMED	

M - METRIC PART
R - REMANUFACTURED PART MAY BE AVAILABLE

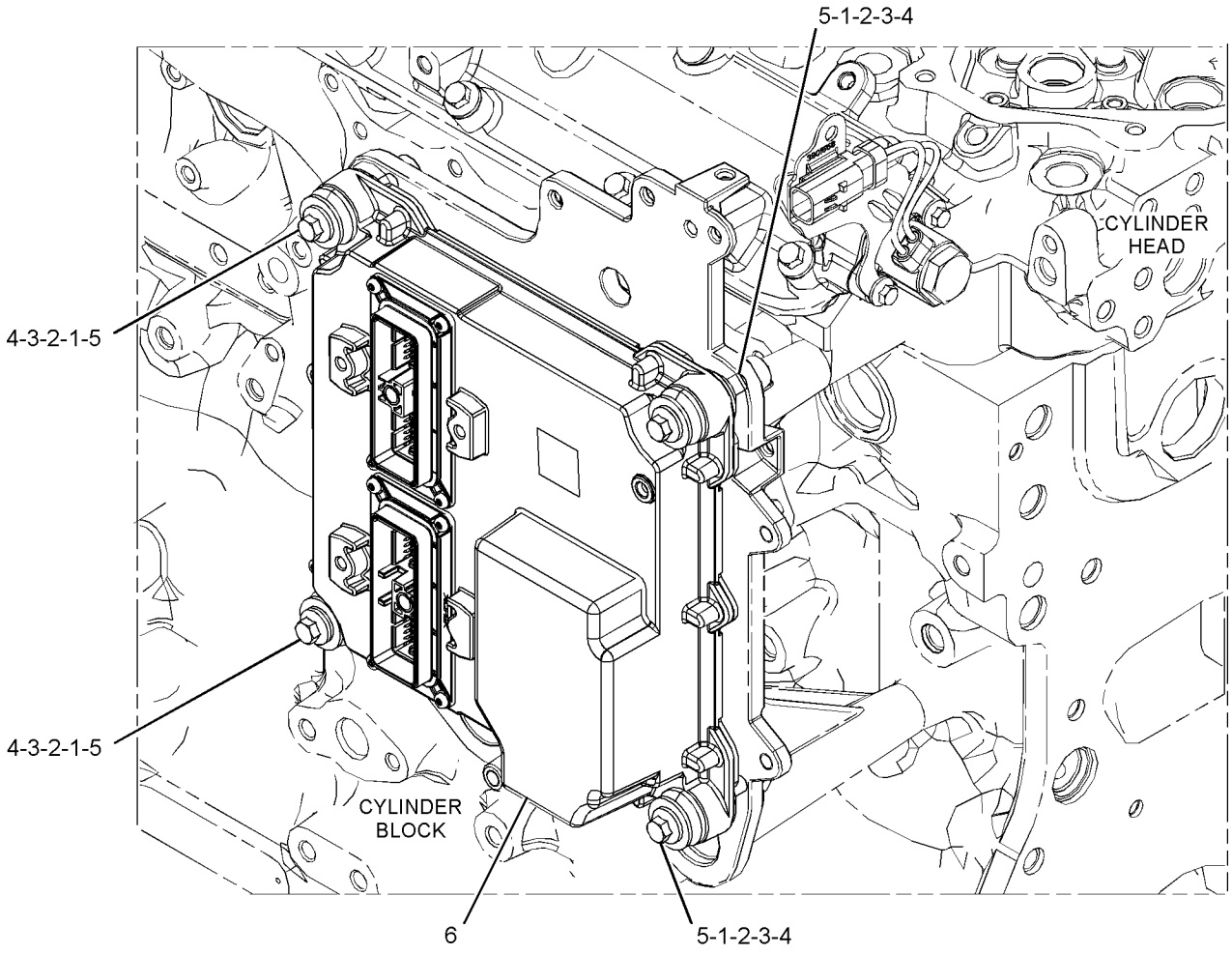

GRAPHIC #1 <END> g03644945

442-7199 CONTROL GP-UNPROGRAMMED–PRODUCT LINK ELITE 631

SATELLITE*R

S/N: BR61-UP

PART OF 488-6822 CONTROL & MTG GP-COMMUNICATION

SMCS-7610 **i07416692**

NOTE	REF NO	GRAPHIC REF	PART NUMBER	QTY	PART NAME 1 2 3 4 5 6 (PRODUCT LEVEL)	SEE PAGE
F			**559-9492**	1	SOFTWARE GP-MONITOR (SATELLITE RADIO)	

F - NOT SHOWN

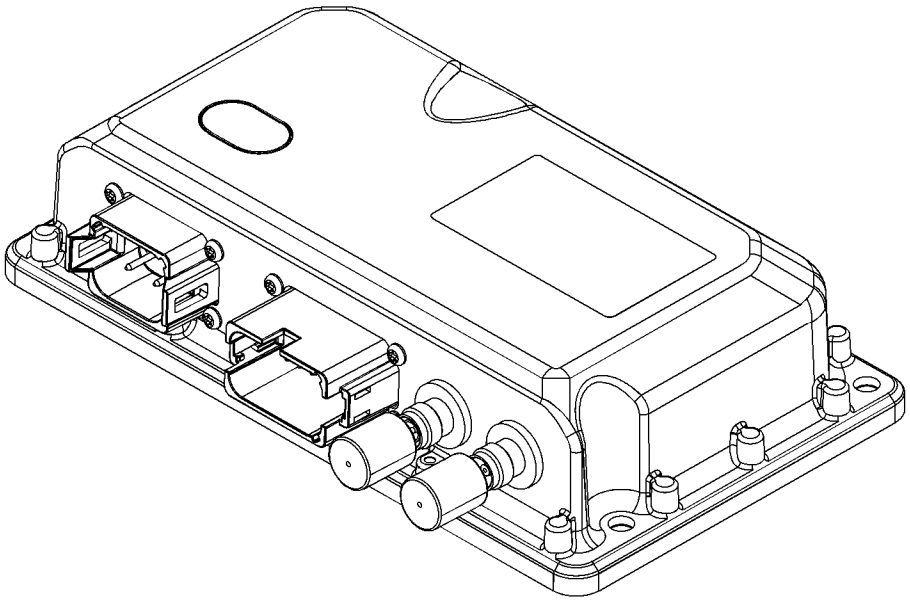

GRAPHIC #1 <END> g06131298

503-2027 CONVERTER & MOUNTING GP-POWER

S/N: BR61-UP

PART OF 489-7847 MODULE GP-CAB WIRING

SMCS-1421 **i07348772**

NOTE	REF NO	GRAPHIC REF	PART NUMBER	QTY	PART NAME 1 2 3 4 5 6 (PRODUCT LEVEL)	SEE PAGE
	1	1	**508-8884**	1	CONVERTER-POWER (24-VOLT TO 12-VOLT)	
M	2	1	**9X-2042**	2	SCREW-TRUSS HEAD (M6X1X12-MM)	

M - METRIC PART

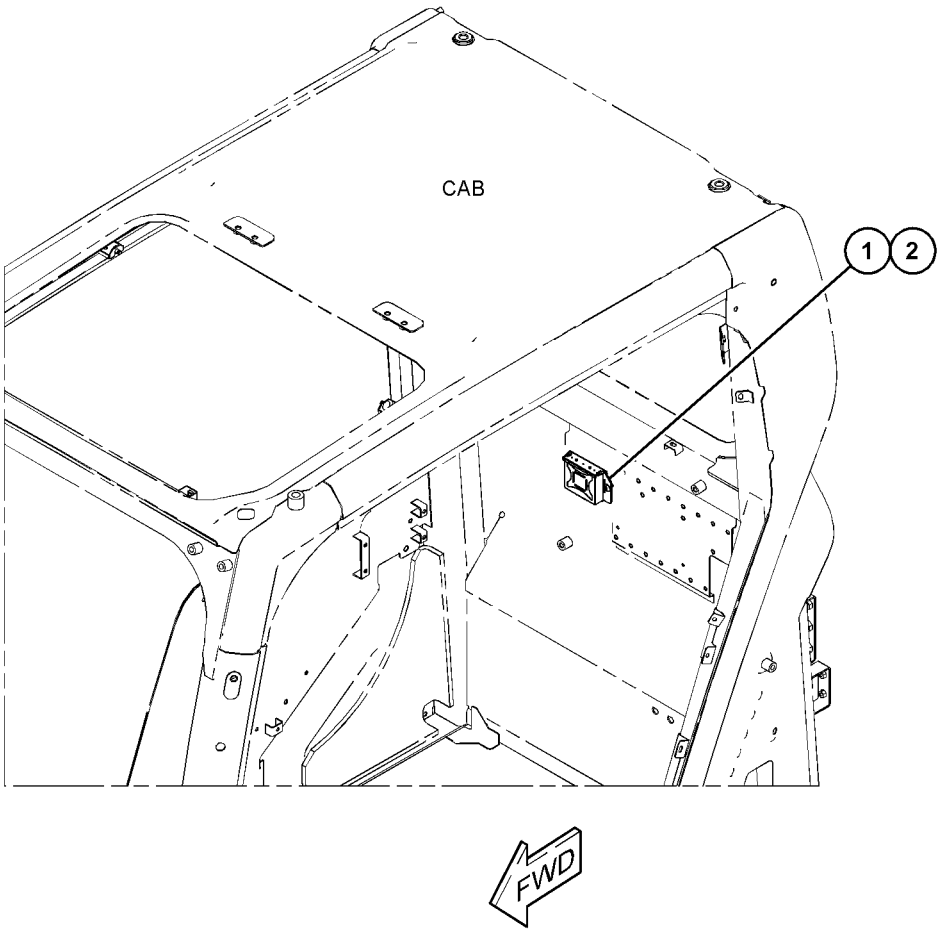

GRAPHIC #1 <END> g06233614

490-2680 ELECTRICAL AR

S/N: BR61-10000

PART OF 490-7663 EXCAVATOR AR

SMCS-1408 **i07366327**

NOTE	PART NUMBER	QTY	PART NAME 1 2 3 4 5 6 (PRODUCT LEVEL)	SEE PAGE
Y	*490-2684*	1	WIRING GP-CHASSIS	239
Y	*502-7163*	1	WIRING GP-ENGINE	263

Y - SEPARATE ILLUSTRATION

<END>

511-4805 ELECTRICAL AR

S/N: BR61-UP

PART OF 510-7419 COMMON AR

SMCS-1408 **i07369298**

NOTE	PART NUMBER	QTY	PART NAME 1 2 3 4 5 6 (PRODUCT LEVEL)	SEE PAGE
Y	*490-2691*	1	CABLE GP-GROUND	135
Y	*490-2682*	1	HORN GP-ELECTRIC	631
Y	*502-7160*	1	WIRING GP-FAN	265
Y	*490-2693*	1	WIRING GP-VALVE	275

Y - SEPARATE ILLUSTRATION

<END>

558-1230 ELECTRICAL AR

S/N: BR610001-UP

PART OF 490-7663 EXCAVATOR AR

SMCS-1408 **i07436342**

NOTE	PART NUMBER	QTY	PART NAME 1 2 3 4 5 6 (PRODUCT LEVEL)	SEE PAGE
Y	*556-9810*	1	WIRING GP-CHASSIS	254
Y	*502-7163*	1	WIRING GP-ENGINE	263

Y - SEPARATE ILLUSTRATION

<END>

489-3449 ELECTRONICS GP-MACHINE—PRIMARY

S/N: BR61-UP

PART OF 490-7871 ELECTRONICS GP-MACHINE

SMCS-7610, 7620 **i07360185**

NOTE	PART NUMBER	QTY	PART NAME 1 2 3 4 5 6 (PRODUCT LEVEL)	SEE PAGE
	557-7808	1	SOFTWARE GP-MACHINE	

<END>

489-3451 ELECTRONICS GP-MACHINE—SECONDARY

S/N: BR61-UP

PART OF 490-7871 ELECTRONICS GP-MACHINE

SMCS-7610, 7620 **i07360172**

NOTE	PART NUMBER	QTY	PART NAME 1 2 3 4 5 6 (PRODUCT LEVEL)	SEE PAGE
	557-7809	1	SOFTWARE GP-MONITOR	

<END>

490-7871 ELECTRONICS GP-MACHINE

S/N: BR61-UP

PART OF 510-7419 COMMON AR

SMCS-7610, 7620 **i07360164**

NOTE	PART NUMBER	QTY	PART NAME 1 2 3 4 5 6 (PRODUCT LEVEL)	SEE PAGE
Y	*489-3451*	1	ELECTRONICS GP-MACHINE (SECONDARY)	152
Y	*489-3449*	1	ELECTRONICS GP-MACHINE (PRIMARY)	152

Y - SEPARATE ILLUSTRATION

<END>

504-4980 ELECTRONICS GP-MACHINE–CONTROL

S/N: BR61-UP

PART OF 490-4919 INSTL GP-MACHINE SECURITY SYS

SMCS-7610, 7620 **i07427489**

NOTE	PART NUMBER	QTY	PART NAME 1 2 3 4 5 6 (PRODUCT LEVEL)	SEE PAGE
	545-7942	1	SOFTWARE GP-MACHINE	

<END>

517-0824 ELECTRONICS GP-MACHINE–SECURITY SYSTEM

S/N: BR61-UP

PART OF 524-8272 INSTL AR-MACHINE SECURITY SYS

SMCS-7610, 7620 **i07367958**

NOTE	PART NUMBER	QTY	PART NAME 1 2 3 4 5 6 (PRODUCT LEVEL)	SEE PAGE
	545-7942	1	SOFTWARE GP-MACHINE	

<END>

521-5338 ELECTRONICS GP-MACHINE–GRADE CONTROL

S/N: BR61-UP

PART OF 516-0551 GRADE CONTROL AR

SMCS-7610, 7620 **i07368974**

NOTE	PART NUMBER	QTY	PART NAME 1 2 3 4 5 6 (PRODUCT LEVEL)	SEE PAGE
	522-1083	1	SOFTWARE GP-MACHINE	
	522-1741	1	SOFTWARE GP-MACHINE	
	528-5783	1	SOFTWARE GP-MONITOR	

<END>

489-3460 ELECTRONICS GP-MONITOR

S/N: BR61-UP

8-IN

PART OF 511-9427, 511-9429 MONITOR AR

SMCS-7490, 7601, 7610, 7620 **i07465982**

NOTE	PART NUMBER	QTY	PART NAME 1 2 3 4 5 6 (PRODUCT LEVEL)	SEE PAGE
	559-2492	1	SOFTWARE GP-MONITOR	

<END>

489-3461 ELECTRONICS GP-MONITOR

S/N: BR61-UP
10-IN
PART OF 511-9428, 511-9431 MONITOR AR

SMCS-7490, 7601, 7610, 7620 **i07465983**

NOTE	PART NUMBER	QTY	PART NAME 1 2 3 4 5 6 (PRODUCT LEVEL)	SEE PAGE
	559-2492	1	SOFTWARE GP-MONITOR	

<END>

519-6936 ELECTRONICS GP-MONITOR—TELEMATICS SATELLITE

S/N: BR61-UP
PART OF 506-7022 INSTALLATION AR-COMMUNICATION

SMCS-7490, 7601, 7610, 7620 **i07352471**

NOTE	PART NUMBER	QTY	PART NAME 1 2 3 4 5 6 (PRODUCT LEVEL)	SEE PAGE
	512-8658	1	SOFTWARE GP-MONITOR (SATELLITE RADIO)	

<END>

519-6970 ELECTRONICS GP-MONITOR

S/N: BR61-UP
PART OF 490-5874 MODULE GP-DISPLAY

SMCS-7490, 7601, 7610, 7620 **i07420887**

NOTE	PART NUMBER	QTY	PART NAME 1 2 3 4 5 6 (PRODUCT LEVEL)	SEE PAGE
	557-3629	1	SOFTWARE GP-MONITOR	

<END>

543-9531 ELECTRONICS GP-MONITOR—PRODUCT LINK

S/N: BR61-UP
ELITE TELEMATICS
PART OF 492-2913 INSTALLATION AR-COMMUNICATION

SMCS-7490, 7601, 7610, 7620 **i07439960**

NOTE	PART NUMBER	QTY	PART NAME 1 2 3 4 5 6 (PRODUCT LEVEL)	SEE PAGE
	543-9536	1	SOFTWARE GP-MONITOR (CONFIGURATION)	
	547-9280	1	SOFTWARE GP-MONITOR	

<END>

543-9532 ELECTRONICS GP-MONITOR—TELEMATICS SATELLITE

S/N: BR61-UP
PART OF 492-2913 INSTALLATION AR-COMMUNICATION

SMCS-7490, 7601, 7610, 7620 **i07368934**

NOTE	PART NUMBER	QTY	PART NAME 1 2 3 4 5 6 (PRODUCT LEVEL)	SEE PAGE
	544-1117	1	SOFTWARE GP-MONITOR (SATELLITE RADIO)	

<END>

555-8043 ELECTRONICS GP-MONITOR—TELEMATICS

S/N: BR610001-UP
SATELLITE
PART OF 555-7258 INSTALLATION AR-COMMUNICATION

SMCS-7490, 7601, 7610, 7620 **i07475011**

NOTE	PART NUMBER	QTY	PART NAME 1 2 3 4 5 6 (PRODUCT LEVEL)	SEE PAGE
	559-9492	1	SOFTWARE GP-MONITOR (SATELLITE RADIO)	

<END>

555-8045 ELECTRONICS GP-MONITOR—PRODUCT LINK

S/N: BR610001-UP
ELITE-TELEMATICS
PART OF 555-7287 INSTALLATION AR-COMMUNICATION

SMCS-7490, 7601, 7610, 7620 **i07434529**

NOTE	PART NUMBER	QTY	PART NAME 1 2 3 4 5 6 (PRODUCT LEVEL)	SEE PAGE
	550-8903	1	SOFTWARE GP-MONITOR (CONFIGURATION)	

<END>

511-9442 FASTENER GP-WIRING HARNESS

S/N: BR61-UP

PART OF 513-3210 LINES AR-BOOM

SMCS-1408, 7553 **i07367987**

NOTE	REF NO	GRAPHIC REF	PART NUMBER	QTY	PART NAME 1 2 3 4 5 6 (PRODUCT LEVEL)	SEE PAGE
	1	1	**3S-2093**	2	STRAP-CABLE	

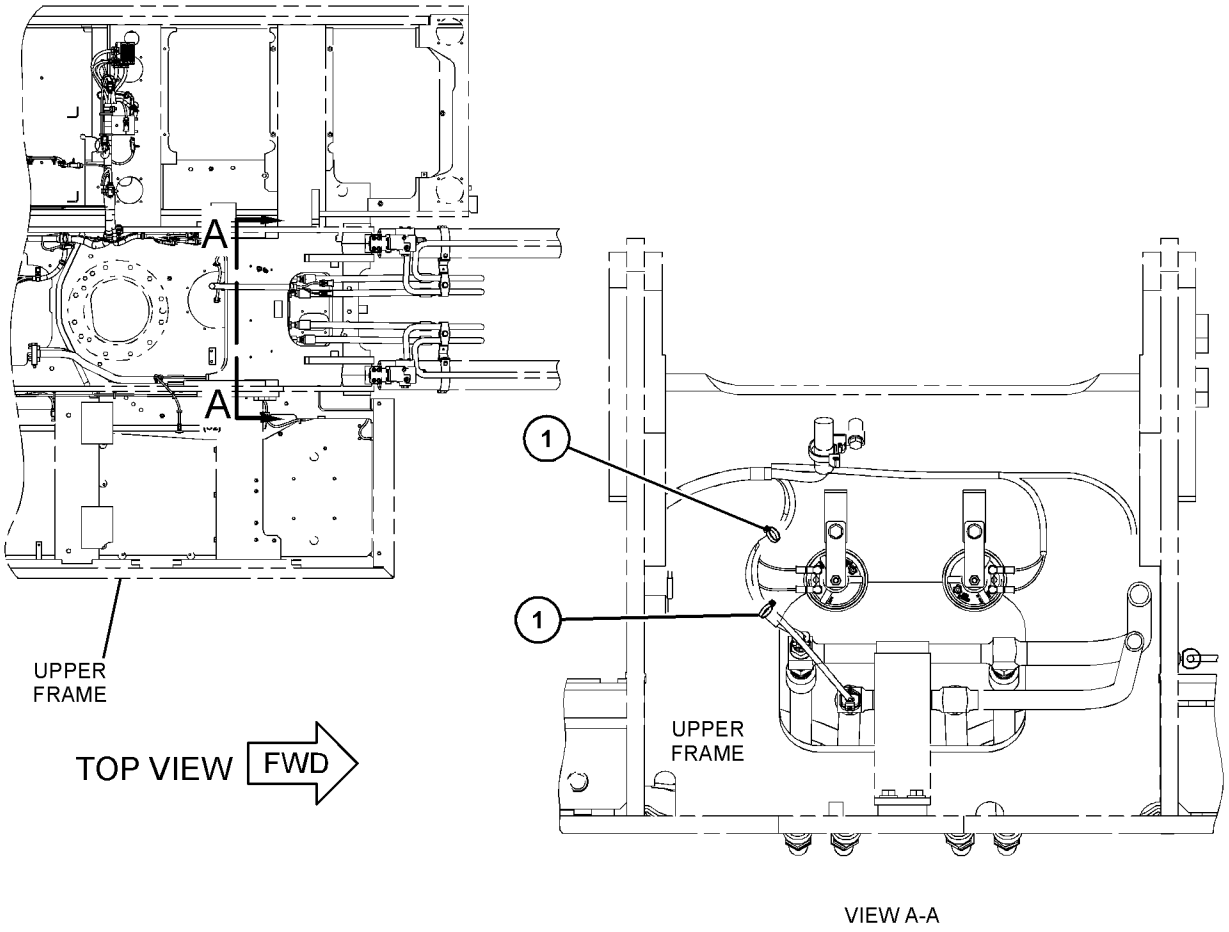

GRAPHIC #1 <END> g06230968

516-0550 GRADE CONTROL AR

S/N: BR61-UP

SMCS-7220 **i07368936**

NOTE	PART NUMBER	QTY	PART NAME 1 2 3 4 5 6 (PRODUCT LEVEL)	SEE PAGE
Y	*490-2767*	1	SENSOR & MTG GP-POSITION	211

Y - SEPARATE ILLUSTRATION

<END>

516-0551 GRADE CONTROL AR—INSTALLATION

S/N: BR61-UP

SMCS-7220 **i07368962**

NOTE	PART NUMBER	QTY	PART NAME 1 2 3 4 5 6 (PRODUCT LEVEL)	SEE PAGE
Y	*511-9454*	1	BRACKET & MTG GP-CAB (GRADE CONTROL)	587
Y	*521-5338*	1	ELECTRONICS GP-MACHINE	153
Y	*511-9451*	1	SENSOR & MTG GP-POSITION (BODY TILT)	215
Y	*511-9452*	1	WIRING GP-CAB (GRADE CONTROL DISPLAY)	234
Y	*511-9448*	1	WIRING GP-CHASSIS	249

Y - SEPARATE ILLUSTRATION

<END>

516-9880 GRADE CONTROL AR—BOOM

S/N: BR61-UP

PART OF 532-9515, 556-2899 DISTRIBUTION AR

SMCS-7220 **i07369382**

NOTE	PART NUMBER	QTY	PART NAME 1 2 3 4 5 6 (PRODUCT LEVEL)	SEE PAGE
Y	*490-2768*	1	SENSOR & MTG GP-POSITION (BOOM)	212
Y	*490-2771*	1	WIRING GP-FRONT	266

Y - SEPARATE ILLUSTRATION

<END>

516-9883 GRADE CONTROL AR—REACH

S/N: BR61-UP

2.9-M (9.5-FT)

SMCS-7220 **i07369422**

NOTE	PART NUMBER	QTY	PART NAME 1 2 3 4 5 6 (PRODUCT LEVEL)	SEE PAGE
Y	*490-2769*	1	SENSOR & MTG GP-POSITION (GRADE CONTROL, STICK)	213
Y	*490-2770*	1	SENSOR & MTG GP-POSITION	214
Y	*516-8663*	1	WIRING GP-FRONT (GRADE CONTROL, STICK)	267

Y - SEPARATE ILLUSTRATION

<END>

516-9884 GRADE CONTROL AR—STICK

S/N: BR61-UP
2.5-M (8.2-FT) REACH

SMCS-7220 **i07369480**

NOTE	PART NUMBER	QTY	PART NAME 1 2 3 4 5 6 (PRODUCT LEVEL)	SEE PAGE
Y	*490-2769*	1	SENSOR & MTG GP-POSITION (GRADE CONTROL, STICK) (STICK)	213
Y	*490-2770*	1	SENSOR & MTG GP-POSITION (BUCKET)	214
Y	*516-8664*	1	WIRING GP-FRONT	268

Y - SEPARATE ILLUSTRATION

<END>

560-5685 GRADE CONTROL AR—LASER RECEIVER

S/N: BR610001-UP

SMCS-7220 **i07436873**

NOTE	PART NUMBER	QTY	PART NAME 1 2 3 4 5 6 (PRODUCT LEVEL)	SEE PAGE
Y	*560-5551*	1	RECEIVER GP-LASER (GRADE CONTROL)	210
Y	*560-5559*	1	WIRING GP-FRONT (GRADE CONTROL)	269

Y - SEPARATE ILLUSTRATION

<END>

560-5689 GRADE CONTROL AR—LASER RECEIVER

S/N: BR610001-UP

SMCS-7220 **i07436404**

NOTE	PART NUMBER	QTY	PART NAME 1 2 3 4 5 6 (PRODUCT LEVEL)	SEE PAGE
Y	*560-5551*	1	RECEIVER GP-LASER (GRADE CONTROL)	210
Y	*560-5562*	1	WIRING GP-FRONT (GRADE CONTROL, STICK)	270

Y - SEPARATE ILLUSTRATION

<END>

530-1948 HARNESS AS-CAB—LH

S/N: BR61-UP
WITH COVER
PART OF 527-5711, 554-3615 LIGHTING GP-FLOOD

SMCS-1408 **i07434608**

NOTE	PART NUMBER	QTY	PART NAME 1 2 3 4 5 6 (PRODUCT LEVEL)	SEE PAGE
	538-9804	1	HARNESS AS-CAB	
	505-7637	1	PLUG AS-CONNECTOR	
	490-0571	1	PLUG AS-CONNECTOR (2-PIN)	
	169-0705	2	SEAL	
	490-0572	2	RECEPTACLE AS	
	538-9805	1	HARNESS AS-CAB	
	505-7638	1	PLUG AS-CONNECTOR	
	490-0578	1	PLUG AS-CONNECTOR (2-PIN)	
	169-0705	2	SEAL	
	490-0582	2	RECEPTACLE AS	
	155-2270	1	KIT-CONNECTING PLUG (2-PIN)	
			(INCLUDES PLUG AS, WEDGE, & INTERFACE SEAL)	
	490-0571	2	PLUG AS-CONNECTOR (2-PIN)	
	490-0578	2	PLUG AS-CONNECTOR (2-PIN)	
	9W-0844	2	SOCKET-CONNECTOR (14-GA TO 16-GA)	
	7Y-3966	1	TERMINAL AS	
	7Y-3962	1	TERMINAL-BULLET (MALE)	
	7Y-3964	1	TUBE (CONNECTOR TERMINAL)	
	7Y-3967	1	TERMINAL AS	
	7Y-3963	1	TERMINAL-BULLET (FEMALE)	
	7Y-3965	1	TUBE (RECEPTACLE TERMINAL)	

<END>

530-1953 HARNESS AS-CAB—GRADE CONTROL DISPLAY

S/N: BR61-UP
PART OF 511-9452 WIRING GP-CAB

SMCS-1408 **i07369144**

NOTE	PART NUMBER	QTY	PART NAME 1 2 3 4 5 6 (PRODUCT LEVEL)	SEE PAGE
	102-8806	1	KIT-RECEPTACLE (8-PIN)	
			(INCLUDES RECEPTACLE AS & WEDGE)	
	8T-8729	6	PIN-CONNECTOR (16-GA TO 18-GA)	
	281-3395	1	PLUG AS-CONNECTOR (12-PIN)	
	455-0709	1	SEAL-CONNECTOR	
	8T-8737	12	PLUG-SEAL	
	243-4507	1	RECEPTACLE AS-CONNECTOR (4-PIN)	
	273-3288	1	RECEPTACLE AS-CONNECTOR	
	8T-8730	16	SOCKET-CONNECTOR (16-GA TO 18-GA)	
	3S-2093	3	STRAP-CABLE	
E	**125-7874**		TUBE-HEAT SHRINK (5.72-MM DIA) (10-CM)	
	155-2259	1	WEDGE-PLUG LOCK (8-PIN)	

E - ORDER BY THE CENTIMETER

<END>

539-2832 HARNESS AS-CAB–FLOODLIGHTS

S/N: BR61-UP

PART OF 554-3615 LIGHTING GP-FLOOD

SMCS-1408 **i07434626**

NOTE	PART NUMBER	QTY	PART NAME 1 2 3 4 5 6 (PRODUCT LEVEL)	SEE PAGE
	155-2270	1	KIT-CONNECTING PLUG (2-PIN)	
			(INCLUDES PLUG AS, WEDGE, & INTERFACE SEAL)	
	102-8802	1	KIT-RECEPTACLE (2-PIN)	
			(INCLUDES RECEPTACLE AS & WEDGE)	
	8T-8729	2	PIN-CONNECTOR (16-GA TO 18-GA)	
	9W-0844	2	SOCKET-CONNECTOR (14-GA TO 16-GA)	
			<END>	

490-6963 HARNESS AS-CHASSIS

S/N: BR61-UP

PART OF 490-2684 WIRING GP-CHASSIS

SMCS-1408 **i07329701**

NOTE	PART NUMBER	QTY	PART NAME 1 2 3 4 5 6 (PRODUCT LEVEL)	SEE PAGE
	8T-8729	4	PIN-CONNECTOR (16-GA TO 18-GA)	
	230-4011	2	PLUG AS-CONNECTOR (2-PIN)	
			(EACH INCLUDES)	
	455-0704	1	SEAL-CONNECTOR	
	230-5009	1	RECEPTACLE AS-CONNECTOR (4-PIN)	
	8T-8730	4	SOCKET-CONNECTOR (16-GA TO 18-GA)	
			<END>	

495-7716 HARNESS AS-CHASSIS

S/N: BR61-UP

PART OF 528-0174 WIRING GP-CHASSIS

SMCS-1408 **i07358131**

NOTE	PART NUMBER	QTY	PART NAME 1 2 3 4 5 6 (PRODUCT LEVEL)	SEE PAGE
	283-0056	4	ADAPTER-CONNECTOR	
	342-2972	2	CAP-CONNECTOR (2-PIN)	
	342-2973	2	CAP-CONNECTOR (3-PIN)	
	342-2976	2	CAP-CONNECTOR (12-PIN)	
	155-2270	1	KIT-CONNECTING PLUG (2-PIN)	
			(INCLUDES PLUG AS, WEDGE, & INTERFACE SEAL)	
	102-8802	1	KIT-RECEPTACLE (2-PIN)	
			(INCLUDES RECEPTACLE AS & WEDGE)	
	8T-8729	25	PIN-CONNECTOR (16-GA TO 18-GA)	
	239-7356	1	PLUG AS-CONNECTOR (12-PIN)	
	230-4009	1	PLUG AS-CONNECTOR (12-PIN)	
			(EACH PLUG AS INCLUDES)	
	455-0709	1	SEAL-CONNECTOR	
	230-4011	2	PLUG AS-CONNECTOR (2-PIN)	
			(EACH INCLUDES)	
	455-0704	1	SEAL-CONNECTOR	
	230-4013	2	PLUG AS-CONNECTOR (3-PIN)	
			(EACH INCLUDES)	
	455-0705	1	SEAL-CONNECTOR	
	8T-8737	24	PLUG-SEAL	
	243-4508	1	RECEPTACLE AS-CONNECTOR (6-PIN)	
	243-4510	1	RECEPTACLE AS-CONNECTOR (12-PIN)	
	272-5000	1	RECEPTACLE AS-CONNECTOR (12-PIN)	
	8T-8730	19	SOCKET-CONNECTOR (16-GA TO 18-GA)	
	3S-2093	1	STRAP-CABLE	
E	**125-7874**		TUBE-HEAT SHRINK (5.72-MM DIA) (20-CM)	

E - ORDER BY THE CENTIMETER

<END>

524-1450 HARNESS AS-CHASSIS

S/N: BR61-10000

PART OF 506-7031 WIRING GP-CHASSIS

SMCS-1408 **i07352487**

NOTE	PART NUMBER	QTY	PART NAME 1 2 3 4 5 6 (PRODUCT LEVEL)	SEE PAGE
	484-1454	1	CLIP	
	155-2256	1	KIT-CONNECTING PLUG (12-PIN)	
			(INCLUDES PLUG AS, WEDGE, & INTERFACE SEAL)	
	8T-8729	9	PIN-CONNECTOR (16-GA TO 18-GA)	
	9W-0852	2	PIN-CONNECTOR (14-GA TO 16-GA)	
	8T-8737	4	PLUG-SEAL	
	335-8849	1	RECEPTACLE AS	
	243-4509	1	RECEPTACLE AS-CONNECTOR (8-PIN)	
	8T-8730	9	SOCKET-CONNECTOR (16-GA TO 18-GA)	
	9X-0196	1	TERMINAL AS (16-GA)	
	155-2258	1	WEDGE-PLUG LOCK (12-PIN)	

<END>

524-4341 HARNESS AS-CHASSIS

S/N: BR61-UP

PART OF 490-2684 WIRING GP-CHASSIS

SMCS-1408 **i07329726**

NOTE	PART NUMBER	QTY	PART NAME 1 2 3 4 5 6 (PRODUCT LEVEL)	SEE PAGE
	283-0056	2	ADAPTER-CONNECTOR	
	484-1454	1	CLIP	
	155-2270	1	KIT-CONNECTING PLUG (2-PIN)	
			(INCLUDES PLUG AS, WEDGE, & INTERFACE SEAL)	
	8T-8729	7	PIN-CONNECTOR (16-GA TO 18-GA)	
	9W-0852	2	PIN-CONNECTOR (14-GA TO 16-GA)	
	230-4011	1	PLUG AS-CONNECTOR (2-PIN)	
	455-0704	1	SEAL-CONNECTOR	
	281-8803	1	PLUG AS-CONNECTOR (3-PIN)	
	281-8804	2	PLUG AS-CONNECTOR (3-PIN)	
			(EACH PLUG AS INCLUDES)	
	455-0705	1	SEAL-CONNECTOR	
	8T-8737	3	PLUG-SEAL	
	243-4510	1	RECEPTACLE AS-CONNECTOR (12-PIN)	
	8T-8730	11	SOCKET-CONNECTOR (16-GA TO 18-GA)	
	9W-0844	2	SOCKET-CONNECTOR (14-GA TO 16-GA)	
	3S-2093	2	STRAP-CABLE	
E	**125-7875**		TUBE-HEAT SHRINK (7.44-MM DIA) (10-CM)	

E - ORDER BY THE CENTIMETER

<END>

529-8095 HARNESS AS-CHASSIS

S/N: BR61-UP

PART OF 490-2684 WIRING GP-CHASSIS

SMCS-1408 **i07329742**

NOTE	PART NUMBER	QTY	PART NAME 1 2 3 4 5 6 (PRODUCT LEVEL)	SEE PAGE
	102-8802	1	KIT-RECEPTACLE (2-PIN)	
			(INCLUDES RECEPTACLE AS & WEDGE)	
	8T-8729	48	PIN-CONNECTOR (16-GA TO 18-GA)	
	8T-8730	152	SOCKET-CONNECTOR (16-GA TO 18-GA)	
	3S-2093	35	STRAP-CABLE	
	7K-1181	3	STRAP-CABLE	
	8T-8737	63	PLUG-SEAL	
	8T-8799	1	BOOT (RED)	
	9W-0852	9	PIN-CONNECTOR (14-GA TO 16-GA)	
	9W-0844	31	SOCKET-CONNECTOR (14-GA TO 16-GA)	
	107-3136	4	PLUG-SEAL	
E	**119-3662**		TUBE-HEAT SHRINK (10.85-MM DIA) (20-CM)	
E	**125-7874**		TUBE-HEAT SHRINK (5.72-MM DIA) (250-CM)	
E	**125-7875**		TUBE-HEAT SHRINK (7.44-MM DIA) (45-CM)	
	5P-3454	1	TERMINAL-RING (4-GA, 5/16-IN SCREW)	
	2L-8051	2	TERMINAL-RING (6-GA, 5/16-IN SCREW)	
			—OR—	
	5P-3455	2	TERMINAL-RING (8-GA, 5/16-IN SCREW)	
	2L-8069	10	TERMINAL-RING (2-GA TO 10-GA, 3/8-IN SCREW)	
	2L-8079	1	TERMINAL-RING (14-GA TO 16-GA, 3/8-IN SCREW)	
	153-2602	4	RECEPTACLE-CONNECTOR (1-PIN)	
	153-2631	4	TERMINAL (FEMALE)	
	155-2270	5	KIT-CONNECTING PLUG (2-PIN)	
	331-4226	3	KIT-CONNECTING PLUG (2-PIN)	
			(EACH PLUG KIT INCLUDES PLUG AS, WEDGE, & INTERFACE SEAL)	
	185-1861	6	SEAL-WIRE	
	202-5397	15	PLUG	
	202-5400	50	PLUG	
	204-2281	20	STRAP-CABLE	
	230-4009	4	PLUG AS-CONNECTOR (12-PIN)	
	241-8834	1	PLUG AS-CONNECTOR (12-PIN)	
	281-3395	4	PLUG AS-CONNECTOR (12-PIN)	
	281-3396	2	PLUG AS-CONNECTOR (12-PIN)	
			(EACH PLUG AS INCLUDES)	
	455-0709	1	SEAL-CONNECTOR	
	230-4011	4	PLUG AS-CONNECTOR (2-PIN)	
	238-8245	3	PLUG AS-CONNECTOR (2-PIN)	
	240-7874	3	PLUG AS-CONNECTOR (2-PIN)	
			(EACH PLUG AS INCLUDES)	
	455-0704	1	SEAL-CONNECTOR	
	324-5678	6	RESISTOR AS (120-OHM)	
			(EACH INCLUDES)	
	455-0704	1	SEAL-CONNECTOR	
	230-5008	2	PLUG AS-CONNECTOR (4-PIN)	
	261-0524	4	PLUG AS-CONNECTOR (4-PIN)	
			(EACH PLUG AS INCLUDES)	
	455-0706	1	SEAL-CONNECTOR	
	230-5010	1	PLUG AS-CONNECTOR (6-PIN)	

529-8095 **HARNESS AS-CHASSIS (**contd.**)** **i07329742**

NOTE	PART NUMBER	QTY	PART NAME 1 2 3 4 5 6 (PRODUCT LEVEL)	SEE PAGE
	281-3132	1	PLUG AS-CONNECTOR (6-PIN)	
			(EACH PLUG AS INCLUDES)	
	455-0707	1	SEAL-CONNECTOR	
	231-2295	2	PLUG AS-CONNECTOR (8-PIN)	
			(EACH INCLUDES)	
	455-0708	1	SEAL-CONNECTOR	
	240-7878	3	PLUG AS-CONNECTOR (3-PIN)	
	281-3119	1	PLUG AS-CONNECTOR (3-PIN)	
	281-8803	1	PLUG AS-CONNECTOR (3-PIN)	
			(EACH PLUG AS INCLUDES)	
	455-0705	1	SEAL-CONNECTOR	
	243-4505	5	RECEPTACLE AS-CONNECTOR (2-PIN)	
	243-4507	2	RECEPTACLE AS-CONNECTOR (4-PIN)	
	243-4510	2	RECEPTACLE AS-CONNECTOR (12-PIN)	
E	**262-8088**		HOSE (71-CM)	
	272-5000	1	RECEPTACLE AS-CONNECTOR (12-PIN)	
	279-5772	62	SEAL	
	283-0055	4	ADAPTER-CONNECTOR	
	283-0056	8	ADAPTER-CONNECTOR	
	311-8729	1	ADAPTER-CONNECTOR	
	311-8732	1	ADAPTER-CONNECTOR	
	324-5824	1	PLUG AS-CONNECTOR (1-PIN)	
	324-5825	1	SOCKET-CONNECTOR (4-GA)	
	342-2972	4	CAP-CONNECTOR (2-PIN)	
	342-2973	3	CAP-CONNECTOR (3-PIN)	
	342-2974	2	CAP-CONNECTOR (6-PIN)	
	342-2975	1	CAP-CONNECTOR (8-PIN)	
	342-2976	2	CAP-CONNECTOR (12-PIN)	
	342-2978	3	CAP-CONNECTOR (4-PIN)	
	342-8419	6	TERMINAL (14-GA TO 16-GA)	
	368-4833	62	SOCKET-CONNECTOR (16GA TO 18GA)	
	431-2103	17	SOCKET-CONNECTOR (14-GA TO 18-GA)	
	442-7945	2	PLUG AS-CONNECTOR	
	442-7946	2	PLUG AS-CONNECTOR	
	484-1452	20	CLIP	
	484-1453	3	CLIP (RETAINER)	
	484-1454	9	CLIP	
	506-2794	2	PLUG AS-CONNECTOR	
	506-5909	1	PLUG AS-CONNECTOR	
	506-5913	4	SOCKET-CONNECTOR (16-GA TO 22-GA)	

E - ORDER BY THE CENTIMETER

<END>

529-8759 HARNESS AS-CHASSIS—GRADE CONTROL

S/N: BR61-UP

PART OF 511-9448 WIRING GP-CHASSIS

SMCS-1408 **i07450803**

NOTE	PART NUMBER	QTY	PART NAME 1 2 3 4 5 6 (PRODUCT LEVEL)	SEE PAGE
	311-8748	2	ADAPTER-CONNECTOR	
	484-1452	5	CLIP	
	324-5679	1	DIODE	
	155-2255	2	KIT-CONNECTING PLUG (12-PIN)	
	155-2271	2	KIT-CONNECTING PLUG (4-PIN)	
	176-2947	1	KIT-CONNECTING PLUG (4-PIN)	
	237-0166	1	KIT-CONNECTING PLUG (12-PIN)	
			(EACH PLUG KIT INCLUDES PLUG AS, WEDGE, & INTERFACE SEAL)	
	102-8804	2	KIT-RECEPTACLE (4-PIN)	
	102-8801	2	KIT-RECEPTACLE (12-PIN)	
			(EACH RECEPTACLE KIT INCLUDES RECEPTACLE AS & WEDGE)	
	8T-8729	20	PIN-CONNECTOR (16-GA TO 18-GA)	
	253-8110	1	PLUG (12-PIN)	
	253-8111	1	PLUG (12-PIN)	
	9X-1054	1	PLUG AS-CONNECTOR (4-PIN)	
	230-4009	1	PLUG AS-CONNECTOR (12-PIN)	
	455-0709	1	SEAL-CONNECTOR	
	230-4011	1	PLUG AS-CONNECTOR (2-PIN)	
	455-0704	1	SEAL-CONNECTOR	
	8T-8737	53	PLUG-SEAL	
	243-4505	5	RECEPTACLE AS-CONNECTOR (2-PIN)	
	328-0076	1	RECEPTACLE AS-CONNECTOR (12-PIN)	
	324-5678	5	RESISTOR AS (120-OHM)	
			(EACH INCLUDES)	
	455-0704	1	SEAL-CONNECTOR	
	169-0705	2	SEAL	
	8T-8730	36	SOCKET-CONNECTOR (16-GA TO 18-GA)	
	9W-0844	3	SOCKET-CONNECTOR (14-GA TO 16-GA)	
	240-4590	22	SOCKET-CONNECTOR (16-GA TO 20-GA)	
	3S-2093	1	STRAP-CABLE	
	204-2281	5	STRAP-CABLE	
	9X-1055	2	TERMINAL-RECEPTACLE (12-GA)	
	100-5041	2	TERMINAL-RECEPTACLE (18-GA TO 20-GA)	
E	**119-3662**		TUBE-HEAT SHRINK (10.85-MM DIA) (13-CM)	
E	**125-7874**		TUBE-HEAT SHRINK (5.72-MM DIA) (85-CM)	
E	**125-7875**		TUBE-HEAT SHRINK (7.44-MM DIA) (20-CM)	
E	**135-5010**		TUBE-HEAT SHRINK (52-MM DIA) (8-CM)	
	253-8113	2	WEDGE (12-PIN)	
	155-2258	3	WEDGE-PLUG LOCK (12-PIN)	

E - ORDER BY THE CENTIMETER

<END>

529-8762 HARNESS AS-CHASSIS

S/N: BR61-UP

PART OF 506-7032 WIRING GP-CHASSIS

SMCS-1408 **i07368954**

NOTE	PART NUMBER	QTY	PART NAME 1 2 3 4 5 6 (PRODUCT LEVEL)	SEE PAGE
	484-1454	1	CLIP	
	483-2777	2	COVER-CONNECTOR	
	155-2256	1	KIT-CONNECTING PLUG (12-PIN)	
	237-0166	1	KIT-CONNECTING PLUG (12-PIN)	
			(EACH PLUG KIT INCLUDES PLUG AS, WEDGE, & INTERFACE SEAL)	
	102-8801	1	KIT-RECEPTACLE (12-PIN)	
	370-4059	1	KIT-RECEPTACLE (12-PIN)	
			(EACH RECEPTACLE KIT INCLUDES RECEPTACLE AS & WEDGE)	
	8T-8729	13	PIN-CONNECTOR (16-GA TO 18-GA)	
	9W-0852	2	PIN-CONNECTOR (14-GA TO 16-GA)	
	483-2762	1	PLUG AS-CONNECTOR	
	483-2763	1	PLUG AS-CONNECTOR	
	505-7637	1	PLUG AS-CONNECTOR	
	169-0705	2	SEAL	
	490-0571	1	PLUG AS-CONNECTOR (2-PIN)	
	8T-8737	25	PLUG-SEAL	
	483-2768	68	PLUG-SEAL	
	335-8849	1	RECEPTACLE AS	
	490-0572	1	RECEPTACLE AS	
	243-4509	1	RECEPTACLE AS-CONNECTOR (8-PIN)	
	8T-8730	8	SOCKET-CONNECTOR (16-GA TO 18-GA)	
	3S-2093	1	STRAP-CABLE	
	9X-0196	1	TERMINAL AS (16-GA)	
	483-2765	2	TERMINAL AS	
	483-2767	18	TERMINAL AS	
	2L-8077	1	TERMINAL-RING (14-GA TO 16-GA, 1/4-IN SCREW)	
E	**125-7874**		TUBE-HEAT SHRINK (5.72-MM DIA) (10-CM)	
E	**125-7875**		TUBE-HEAT SHRINK (7.44-MM DIA) (5-CM)	
	155-2258	1	WEDGE-PLUG LOCK (12-PIN)	

E - ORDER BY THE CENTIMETER

<END>

551-0330 HARNESS AS-CHASSIS

S/N: BR61-UP
PRODUCT LINK 732, 742
PART OF 506-7032 WIRING GP-CHASSIS

SMCS-1408 **i07468690**

NOTE	PART NUMBER	QTY	PART NAME 1 2 3 4 5 6 (PRODUCT LEVEL)	SEE PAGE
	484-1454	1	CLIP (RETAINER)	
	123-7615	1	CONNECTOR (1-PIN)	
	483-2777	2	COVER-CONNECTOR	
	155-2255	1	KIT-CONNECTING PLUG (12-PIN)	
	331-4222	1	KIT-CONNECTING PLUG (12-PIN)	
			(EACH PLUG KIT INCLUDES PLUG AS, WEDGE, & INTERFACE SEAL)	
	102-8801	1	KIT-RECEPTACLE (12-PIN)	
			(INCLUDES RECEPTACLE AS & WEDGE)	
	8T-8729	15	PIN-CONNECTOR (16-GA TO 18-GA)	
			—OR—	
	126-1767	15	PIN-CONNECTOR (14-GA TO 16-GA)	
	483-2762	1	PLUG AS-CONNECTOR	
	483-2763	1	PLUG AS-CONNECTOR	
	505-7637	1	PLUG AS-CONNECTOR	
	169-0705	2	SEAL	
	490-0571	1	PLUG AS-CONNECTOR (2-PIN)	
	8T-8737	25	PLUG-SEAL	
	483-2768	68	PLUG-SEAL	
	335-8849	1	RECEPTACLE AS	
	490-0572	1	RECEPTACLE AS	
	325-9571	1	RECEPTACLE AS-CONNECTOR (8-PIN)	
	8T-8730	8	SOCKET-CONNECTOR (16-GA TO 18-GA)	
	3S-2093	2	STRAP-CABLE	
	483-2765	2	TERMINAL AS	
	483-2767	18	TERMINAL AS	
	091-2436	2	TERMINAL-BLADE (18-GA TO 22-GA)	
	2L-8077	1	TERMINAL-RING (14-GA TO 16-GA, 1/4-IN SCREW)	
E	**125-7874**		TUBE-HEAT SHRINK (5.72-MM DIA) (10-CM)	
E	**125-7875**		TUBE-HEAT SHRINK (7.44-MM DIA) (5-CM)	

E - ORDER BY THE CENTIMETER

<END>

558-1493 HARNESS AS-CHASSIS

S/N: BR610001-UP

PART OF 556-9810 WIRING GP-CHASSIS

SMCS-1408 **i07452189**

NOTE	PART NUMBER	QTY	PART NAME 1 2 3 4 5 6 (PRODUCT LEVEL)	SEE PAGE
	283-0055	4	ADAPTER-CONNECTOR	
	283-0056	8	ADAPTER-CONNECTOR	
	311-8729	1	ADAPTER-CONNECTOR	
	311-8732	1	ADAPTER-CONNECTOR	
	8T-8799	1	BOOT (RED)	
	342-2972	4	CAP-CONNECTOR (2-PIN)	
	342-2973	3	CAP-CONNECTOR (3-PIN)	
	342-2974	2	CAP-CONNECTOR (6-PIN)	
	342-2975	1	CAP-CONNECTOR (8-PIN)	
	342-2976	2	CAP-CONNECTOR (12-PIN)	
	342-2978	3	CAP-CONNECTOR (4-PIN)	
	484-1452	20	CLIP	
	484-1453	3	CLIP (RETAINER)	
	484-1454	9	CLIP (RETAINER)	
	368-4837	2	COVER-CONNECTOR	
G	**423-1985**		HOSE (27.6-IN)	
	155-2270	5	KIT-CONNECTING PLUG (2-PIN)	
	331-4226	3	KIT-CONNECTING PLUG (2-PIN)	
			(EACH PLUG KIT INCLUDES PLUG AS, WEDGE, & INTERFACE SEAL)	
	102-8802	1	KIT-RECEPTACLE (2-PIN)	
			(INCLUDES RECEPTACLE AS & WEDGE)	
	8T-8729	56	PIN-CONNECTOR (16-GA TO 18-GA)	
			—OR—	
	126-1767	56	PIN-CONNECTOR (14-GA TO 16-GA)	
	202-5397	15	PLUG	
	202-5400	50	PLUG	
	261-0524	4	PLUG AS-CONNECTOR (4-PIN)	
	230-5008	2	PLUG AS-CONNECTOR (4-PIN)	
			(EACH PLUG AS INCLUDES)	
	455-0706	1	SEAL-CONNECTOR	
	281-3132	1	PLUG AS-CONNECTOR (6-PIN)	
	230-5010	1	PLUG AS-CONNECTOR (6-PIN)	
			(EACH PLUG AS INCLUDES)	
	455-0707	1	SEAL-CONNECTOR	
	231-2295	2	PLUG AS-CONNECTOR (8-PIN)	
	455-0708	1	SEAL-CONNECTOR	
	230-4011	4	PLUG AS-CONNECTOR (2-PIN)	
	238-8245	3	PLUG AS-CONNECTOR (2-PIN)	
	240-7874	3	PLUG AS-CONNECTOR (2-PIN)	
			(EACH PLUG AS INCLUDES)	
	455-0704	1	SEAL-CONNECTOR	
	230-4013	1	PLUG AS-CONNECTOR (3-PIN)	
	281-3119	1	PLUG AS-CONNECTOR (3-PIN)	
	240-7878	3	PLUG AS-CONNECTOR (3-PIN)	
			(EACH PLUG AS INCLUDES)	
	455-0705	1	SEAL-CONNECTOR	
	230-4009	4	PLUG AS-CONNECTOR (12-PIN)	
	241-8834	1	PLUG AS-CONNECTOR (12-PIN)	

558-1493 **HARNESS AS-CHASSIS (**contd.**)** **i07452189**

NOTE	PART NUMBER	QTY	PART NAME 1 2 3 4 5 6 (PRODUCT LEVEL)	SEE PAGE
	281-3395	4	PLUG AS-CONNECTOR (12-PIN)	
	281-3396	2	PLUG AS-CONNECTOR (12-PIN)	
			(EACH PLUG AS INCLUDES)	
	455-0709	1	SEAL-CONNECTOR	
	324-5824	1	PLUG AS-CONNECTOR (1-PIN)	
	368-4832	1	PLUG AS-CONNECTOR	
	442-7945	2	PLUG AS-CONNECTOR	
	442-7946	2	PLUG AS-CONNECTOR	
	506-2794	2	PLUG AS-CONNECTOR	
	506-5909	1	PLUG AS-CONNECTOR	
	8T-8737	64	PLUG-SEAL	
	107-3136	4	PLUG-SEAL	
	453-7871	85	PLUG-SEAL	
	243-4505	5	RECEPTACLE AS-CONNECTOR (2-PIN)	
	243-4507	2	RECEPTACLE AS-CONNECTOR (4-PIN)	
	243-4510	2	RECEPTACLE AS-CONNECTOR (12-PIN)	
	272-5000	1	RECEPTACLE AS-CONNECTOR (12-PIN)	
	153-2602	5	RECEPTACLE-CONNECTOR (1-PIN)	
	324-5678	6	RESISTOR AS (120-OHM)	
			(EACH INCLUDES)	
	455-0704	1	SEAL-CONNECTOR	
	279-5772	62	SEAL	
	185-1861	6	SEAL-WIRE	
	8T-8730	183	SOCKET-CONNECTOR (16-GA TO 18-GA)	
	324-5825	1	SOCKET-CONNECTOR (4-GA)	
	368-4833	62	SOCKET-CONNECTOR (16GA TO 18GA)	
	431-2102	17	SOCKET-CONNECTOR	
	506-5913	4	SOCKET-CONNECTOR (16-GA TO 22-GA)	
	3S-2093	35	STRAP-CABLE	
	7K-1181	3	STRAP-CABLE	
	204-2281	20	STRAP-CABLE	
	153-2631	5	TERMINAL (FEMALE)	
	342-8419	6	TERMINAL (14-GA TO 16-GA)	
	456-0574	131	TERMINAL AS	
	5P-3454	1	TERMINAL-RING (4-GA, 5/16-IN SCREW)	
	2L-8051	2	TERMINAL-RING (6-GA, 5/16-IN SCREW)	
			—OR—	
	5P-3455	2	TERMINAL-RING (8-GA, 5/16-IN SCREW)	
	2L-8069	10	TERMINAL-RING (2-GA TO 10-GA, 3/8-IN SCREW)	
	2L-8079	1	TERMINAL-RING (14-GA TO 16-GA, 3/8-IN SCREW)	
E	**119-3662**		TUBE-HEAT SHRINK (10.85-MM DIA) (20-CM)	
E	**125-7874**		TUBE-HEAT SHRINK (5.72-MM DIA) (245-CM)	
E	**125-7875**		TUBE-HEAT SHRINK (7.44-MM DIA) (45-CM)	

E - ORDER BY THE CENTIMETER
G - ORDER BY THE INCH

<END>

558-1494 HARNESS AS-CHASSIS—FUEL FILTER

S/N: BR610001-UP

PART OF 556-9810 WIRING GP-CHASSIS

SMCS-1408 **i07452224**

NOTE	PART NUMBER	QTY	PART NAME 1 2 3 4 5 6 (PRODUCT LEVEL)	SEE PAGE
	283-0056	4	ADAPTER-CONNECTOR	
	484-1454	1	CLIP (RETAINER)	
	155-2270	1	KIT-CONNECTING PLUG (2-PIN)	
			(INCLUDES PLUG AS, WEDGE, & INTERFACE SEAL)	
	8T-8729	9	PIN-CONNECTOR (16-GA TO 18-GA)	
			—OR—	
	126-1767	9	PIN-CONNECTOR (14-GA TO 16-GA)	
	230-4011	1	PLUG AS-CONNECTOR (2-PIN)	
	455-0704	1	SEAL-CONNECTOR	
	281-8803	1	PLUG AS-CONNECTOR (3-PIN)	
	281-8804	2	PLUG AS-CONNECTOR (3-PIN)	
			(EACH PLUG AS INCLUDES)	
	455-0705	1	SEAL-CONNECTOR	
	8T-8737	3	PLUG-SEAL	
	243-4510	1	RECEPTACLE AS-CONNECTOR (12-PIN)	
	8T-8730	13	SOCKET-CONNECTOR (16-GA TO 18-GA)	
	3S-2093	4	STRAP-CABLE	
E	**125-7874**		TUBE-HEAT SHRINK (5.72-MM DIA) (10-CM)	

E - ORDER BY THE CENTIMETER

<END>

530-1943 HARNESS AS-CONSOLE

S/N: BR61-UP

PART OF 488-6765 WIRING GP-CONSOLE

SMCS-1408 **i07349120**

NOTE	PART NUMBER	QTY	PART NAME 1 2 3 4 5 6 (PRODUCT LEVEL)	SEE PAGE
	484-1452	1	CLIP	
	484-1453	1	CLIP (RETAINER)	
	484-1454	2	CLIP	
	163-6699	1	CONNECTOR-PLUG (18-PIN)	
	490-6690	3	CONNECTOR-PLUG	
	155-2255	1	KIT-CONNECTING PLUG (12-PIN)	
	155-2265	1	KIT-CONNECTING PLUG (8-PIN)	
			(EACH PLUG KIT INCLUDES PLUG AS, WEDGE, & INTERFACE SEAL)	
	155-2260	1	KIT-CONNECTING PLUG (3-PIN)	
			(INCLUDES PLUG AS, WEDGES & INTERFACE SEAL)	
	102-8802	1	KIT-RECEPTACLE (2-PIN)	
	102-8805	1	KIT-RECEPTACLE (6-PIN)	
	102-8806	1	KIT-RECEPTACLE (8-PIN)	
	102-8801	1	KIT-RECEPTACLE (12-PIN)	
			(EACH RECEPTACLE KIT INCLUDES RECEPTACLE AS & WEDGE)	
	8T-8729	20	PIN-CONNECTOR (16-GA TO 18-GA)	
	281-3132	1	PLUG AS-CONNECTOR (6-PIN)	
	455-0707	1	SEAL-CONNECTOR	
	8T-8737	23	PLUG-SEAL	
	8T-8730	14	SOCKET-CONNECTOR (16-GA TO 18-GA)	
	3S-2093	8	STRAP-CABLE	
	204-2281	1	STRAP-CABLE	
	125-4785	18	TERMINAL (FEMALE)	
	153-2631	15	TERMINAL (FEMALE)	
	170-6827	18	TERMINAL (MALE)	
E	**125-7874**		TUBE-HEAT SHRINK (5.72-MM DIA) (5-CM)	
E	**125-7875**		TUBE-HEAT SHRINK (7.44-MM DIA) (25-CM)	
	155-2259	1	WEDGE-PLUG LOCK (8-PIN)	
	3E-3383	1	WEDGE-RECEPTACLE LOCK (6-PIN)	

E - ORDER BY THE CENTIMETER

<END>

530-1944 HARNESS AS-CONSOLE

S/N: BR61-UP

PART OF 488-6766 WIRING GP-CONSOLE

SMCS-1408 **i07349202**

NOTE	PART NUMBER	QTY	PART NAME 1 2 3 4 5 6 (PRODUCT LEVEL)	SEE PAGE
	342-2972	2	CAP-CONNECTOR (2-PIN)	
	342-2973	1	CAP-CONNECTOR (3-PIN)	
	342-2978	1	CAP-CONNECTOR (4-PIN)	
	484-1452	1	CLIP	
	484-1454	4	CLIP	
	163-6659	1	CONNECTOR-PLUG (12-PIN)	
	163-6699	1	CONNECTOR-PLUG (18-PIN)	
	163-6800	1	CONNECTOR-RECEPTACLE	
	483-9066	1	CONNECTOR-RECEPTACLE	
	491-8349	2	CONNECTOR-RECEPTACLE	
	155-2255	1	KIT-CONNECTING PLUG (12-PIN)	
	155-2274	1	KIT-CONNECTING PLUG (6-PIN)	
			(EACH PLUG KIT INCLUDES PLUG AS, WEDGE, & INTERFACE SEAL)	
	102-8805	1	KIT-RECEPTACLE (6-PIN)	
	102-8801	1	KIT-RECEPTACLE (12-PIN)	
			(EACH RECEPTACLE KIT INCLUDES RECEPTACLE AS & WEDGE)	
	8T-8729	18	PIN-CONNECTOR (16-GA TO 18-GA)	
	240-7874	1	PLUG AS-CONNECTOR (2-PIN)	
	240-7876	1	PLUG AS-CONNECTOR (2-PIN)	
			(EACH PLUG AS INCLUDES)	
	455-0704	1	SEAL-CONNECTOR	
	240-7878	1	PLUG AS-CONNECTOR (3-PIN)	
	455-0705	1	SEAL-CONNECTOR	
	261-0524	1	PLUG AS-CONNECTOR (4-PIN)	
	455-0706	1	SEAL-CONNECTOR	
	281-3132	1	PLUG AS-CONNECTOR (6-PIN)	
	455-0707	1	SEAL-CONNECTOR	
	7Y-3952	1	PLUG-CONNECTOR (2-PIN)	
	8T-8737	13	PLUG-SEAL	
	8T-8730	20	SOCKET-CONNECTOR (16-GA TO 18-GA)	
	9W-0844	2	SOCKET-CONNECTOR (14-GA TO 16-GA)	
	3S-2093	22	STRAP-CABLE	
	204-2281	1	STRAP-CABLE	
	125-4785	27	TERMINAL (FEMALE)	
	170-6827	106	TERMINAL (MALE)	
	7Y-3951	2	TERMINAL-BLADE (14-GA)	
E	**119-3662**		TUBE-HEAT SHRINK (10.85-MM DIA) (5-CM)	
E	**125-7874**		TUBE-HEAT SHRINK (5.72-MM DIA) (50-CM)	
E	**125-7875**		TUBE-HEAT SHRINK (7.44-MM DIA) (30-CM)	
	3E-3383	1	WEDGE-RECEPTACLE LOCK (6-PIN)	

E - ORDER BY THE CENTIMETER

<END>

530-1945 HARNESS AS-CONSOLE

S/N: BR61-UP

PART OF 488-6767 WIRING GP-CONSOLE

SMCS-1408 **i07349273**

NOTE	PART NUMBER	QTY	PART NAME 1 2 3 4 5 6 (PRODUCT LEVEL)	SEE PAGE
	163-6659	1	CONNECTOR-PLUG (12-PIN)	
	490-6690	1	CONNECTOR-PLUG	
	487-8430	2	PLUG AS-CONNECTOR	
	369-3774	8	SEAL-CONNECTOR	
	3S-2093	3	STRAP-CABLE	
	125-4785	10	TERMINAL (FEMALE)	
	153-2631	4	TERMINAL (FEMALE)	
E	**125-7874**		TUBE-HEAT SHRINK (5.72-MM DIA) (10-CM)	
E - ORDER BY THE CENTIMETER				

<END>

529-8754 HARNESS AS-CONTROL–FAN

S/N: BR61-UP

PART OF 502-7160 WIRING GP-FAN

SMCS-1408 **i07360213**

NOTE	PART NUMBER	QTY	PART NAME 1 2 3 4 5 6 (PRODUCT LEVEL)	SEE PAGE
	342-2974	1	CAP-CONNECTOR (6-PIN)	
	484-1452	9	CLIP	
	484-1454	2	CLIP	
	155-2270	1	KIT-CONNECTING PLUG (2-PIN)	
			(INCLUDES PLUG AS, WEDGE, & INTERFACE SEAL)	
	155-2260	5	KIT-CONNECTING PLUG (3-PIN)	
			(EACH INCLUDES PLUG AS, WEDGES & INTERFACE SEAL)	
	177-9648	5	KIT-CONNECTING PLUG (2-PIN)	
			(EACH INCLUDES PLUG AS & WEDGE)	
	102-8802	1	KIT-RECEPTACLE (2-PIN)	
			(INCLUDES RECEPTACLE AS & WEDGE)	
	8T-8729	10	PIN-CONNECTOR (16-GA TO 18-GA)	
	281-8811	1	PLUG AS-CONNECTOR (6-PIN)	
	455-0707	1	SEAL-CONNECTOR	
	8T-8737	11	PLUG-SEAL	
	243-4510	1	RECEPTACLE AS-CONNECTOR (12-PIN)	
	8T-8730	16	SOCKET-CONNECTOR (16-GA TO 18-GA)	
	7T-0094	10	SOCKET-CONNECTOR (12-GA TO 14-GA)	
	3S-2093	6	STRAP-CABLE	
	204-2281	9	STRAP-CABLE	
	311-6185	1	TERMINAL AS	
E	**125-7876**		TUBE-HEAT SHRINK (17.78-MM DIA) (4-CM)	
	311-6184	1	TERMINAL-RING (2-GA, 3/8-IN SCREW)	
	6T-5598	1	TERMINAL-RING (1-GA TO 2-GA, 5/16-IN SCREW)	
E	**119-3662**		TUBE-HEAT SHRINK (10.85-MM DIA) (26-CM)	
E	**125-7874**		TUBE-HEAT SHRINK (5.72-MM DIA) (10-CM)	
E	**125-7875**		TUBE-HEAT SHRINK (7.44-MM DIA) (5-CM)	
E	**125-7876**		TUBE-HEAT SHRINK (17.78-MM DIA) (13-CM)	
E - ORDER BY THE CENTIMETER				

<END>

536-5436 HARNESS AS-CONTROL—GRADE CONTROL

S/N: BR61-UP

PART OF 516-8663 WIRING GP-FRONT

SMCS-1408 **i07369465**

NOTE	PART NUMBER	QTY	PART NAME 1 2 3 4 5 6 (PRODUCT LEVEL)	SEE PAGE
	342-2974	1	CAP-CONNECTOR (6-PIN)	
E	**262-8088**		HOSE (126-CM)	
	8T-8729	12	PIN-CONNECTOR (16-GA TO 18-GA)	
	9W-0852	2	PIN-CONNECTOR (14-GA TO 16-GA)	
	230-4009	1	PLUG AS-CONNECTOR (12-PIN)	
	455-0709	1	SEAL-CONNECTOR	
	230-5010	2	PLUG AS-CONNECTOR (6-PIN)	
			(EACH INCLUDES)	
	455-0707	1	SEAL-CONNECTOR	
	8T-8737	14	PLUG-SEAL	
	230-5011	1	RECEPTACLE AS-CONNECTOR (6-PIN)	
	243-4510	1	RECEPTACLE AS-CONNECTOR (12-PIN)	
	8T-8730	12	SOCKET-CONNECTOR (16-GA TO 18-GA)	
	9W-0844	2	SOCKET-CONNECTOR (14-GA TO 16-GA)	

E - ORDER BY THE CENTIMETER

<END>

552-4919 HARNESS AS-CONTROL

S/N: BR61-UP

PL631/PL641

PART OF 506-7031, 555-7283 WIRING GP-CHASSIS

SMCS-1408 **i07434537**

NOTE	PART NUMBER	QTY	PART NAME 1 2 3 4 5 6 (PRODUCT LEVEL)	SEE PAGE
E	**196-8876**		BRAID (BLACK, ONE GOLD STRAND) (125-CM)	
	484-1454	1	CLIP	
	331-4222	1	KIT-CONNECTING PLUG (12-PIN)	
			(INCLUDES PLUG AS, WEDGE, & INTERFACE SEAL)	
	3E-3390	9	PIN-CONNECTOR	
	9W-0852	2	PIN-CONNECTOR (14-GA TO 16-GA)	
	8T-8737	4	PLUG-SEAL	
	335-8849	1	RECEPTACLE AS	
	243-4509	1	RECEPTACLE AS-CONNECTOR (8-PIN)	
	8T-8730	9	SOCKET-CONNECTOR (16-GA TO 18-GA)	
	9X-0196	1	TERMINAL AS (16-GA)	
BD	**5P-5623**		WIRE-ELECTRICAL (16-GA, BLACK)	
	155-2258	1	WEDGE-PLUG LOCK (12-PIN)	

B - USE AS REQUIRED
D - ORDER BY THE METER
E - ORDER BY THE CENTIMETER

<END>

385-5997 HARNESS AS-ENGINE

S/N: 4501-UP; E7A1-UP

PART OF 395-0113 WIRING GP-ENGINE

SMCS-1408 **i07383493**

NOTE	PART NUMBER	QTY	PART NAME 1 2 3 4 5 6 (PRODUCT LEVEL)	SEE PAGE
	377-6932	1	COVER	
E	**292-2896**		CONDUIT (45-CM)	
	155-2271	3	KIT-CONNECTING PLUG (4-PIN)	
			(EACH INCLUDES PLUG AS, WEDGE, & INTERFACE SEAL)	
	245-1044	2	LOCK-CONNECTOR	
	316-9351	7	MOUNTING-CABLE TIE	
	230-4011	2	PLUG AS-CONNECTOR (2-PIN)	
			(EACH INCLUDES)	
	264-7029	1	SEAL-CONNECTOR	
	238-8245	1	PLUG AS-CONNECTOR (2-PIN)	
	455-0704	1	SEAL-CONNECTOR	
	238-8247	2	PLUG AS-CONNECTOR (2-PIN)	
			(EACH INCLUDES)	
	455-0704	1	SEAL-CONNECTOR	
	245-1043	1	PLUG GP-CONNECTOR (64-PIN)	
	267-7208	1	RING-RETAINING	
	274-4990	1	SEAL	
M	**267-7207**	1	BOLT-SPECIAL (M6X1-THD)	
	281-8804	2	PLUG AS-CONNECTOR (3-PIN)	
			(EACH INCLUDES)	
	455-0705	1	SEAL-CONNECTOR	
	536-7946	1	HARNESS AS-SENSOR	
	444-7604	2	SOCKET-CONNECTOR	
	536-7945	1	HARNESS AS-WIRING	
	444-7604	3	SOCKET-CONNECTOR	
	245-1048	33	PLUG-CONNECTOR (1-PIN)	
	185-1860	5	SEAL-WIRE	
	267-9572	31	SOCKET-CONNECTION (18-GA)	
	9X-3402	16	SOCKET-CONNECTOR (16-GA TO 18-GA)	
			—OR—	
	126-1768	16	SOCKET-CONNECTOR (14-GA TO 16-GA)	
	217-9039	6	STRAP-CABLE	
	356-1219	1	STRAP-CABLE	
	206-1345	14	STRAP-CABLE	
E	**125-7874**		TUBE-HEAT SHRINK (5.72-MM DIA) (10-CM)	
	194-5226	12	WIRE AS (16-GA)	
			—OR—	
	194-5227	12	WIRE AS (14-GA)	

E - ORDER BY THE CENTIMETER
M - METRIC PART

<END>

529-8751 HARNESS AS-ENGINE

S/N: BR61-UP

PART OF 502-7163 WIRING GP-ENGINE

SMCS-1408 **i07366334**

NOTE	PART NUMBER	QTY	PART NAME 1 2 3 4 5 6 (PRODUCT LEVEL)	SEE PAGE
	484-1452	2	CLIP	
	245-1045	1	COVER	
	245-1044	2	LOCK-CONNECTOR	
	230-4009	1	PLUG AS-CONNECTOR (12-PIN)	
	239-7356	1	PLUG AS-CONNECTOR (12-PIN)	
	241-8834	1	PLUG AS-CONNECTOR (12-PIN)	
			(EACH PLUG AS INCLUDES)	
	455-0709	1	SEAL-CONNECTOR	
	245-1042	1	PLUG AS-CONNECTOR (64-PIN)	
M	**267-7207**	1	BOLT-SPECIAL (M6X1-THD)	
	245-1048	34	PLUG-CONNECTOR (1-PIN)	
	8T-8737	13	PLUG-SEAL	
	267-9572	30	SOCKET-CONNECTION (18-GA)	
	8T-8730	21	SOCKET-CONNECTOR (16-GA TO 18-GA)	
	9W-0844	2	SOCKET-CONNECTOR (14-GA TO 16-GA)	
	3S-2093	4	STRAP-CABLE	
	204-2281	2	STRAP-CABLE	
E	**119-3662**		TUBE-HEAT SHRINK (10.85-MM DIA) (13-CM)	
E	**125-7874**		TUBE-HEAT SHRINK (5.72-MM DIA) (5-CM)	
E	**125-7875**		TUBE-HEAT SHRINK (7.44-MM DIA) (5-CM)	

E - ORDER BY THE CENTIMETER
M - METRIC PART

<END>

530-2661 HARNESS AS-ENGINE

S/N: BR61-UP

PART OF 502-7163 WIRING GP-ENGINE

SMCS-1408 **i07366337**

NOTE	PART NUMBER	QTY	PART NAME 1 2 3 4 5 6 (PRODUCT LEVEL)	SEE PAGE
	484-1452	2	CLIP	
	230-4011	2	PLUG AS-CONNECTOR (2-PIN)	
			(EACH INCLUDES)	
	455-0704	1	SEAL-CONNECTOR	
	230-5008	1	PLUG AS-CONNECTOR (4-PIN)	
	455-0706	1	SEAL-CONNECTOR	
	8T-8730	8	SOCKET-CONNECTOR (16-GA TO 18-GA)	
	204-2281	2	STRAP-CABLE	

<END>

530-1954 HARNESS AS-FRONT—GRADE CONTROL

S/N: BR61-UP

PART OF 516-8664 WIRING GP-FRONT

SMCS-1408 **i07369502**

NOTE	PART NUMBER	QTY	PART NAME 1 2 3 4 5 6 (PRODUCT LEVEL)	SEE PAGE
	283-0056	2	ADAPTER-CONNECTOR	
	311-8732	1	ADAPTER-CONNECTOR	
	176-2947	1	KIT-CONNECTING PLUG (4-PIN)	
	155-2271	1	KIT-CONNECTING PLUG (4-PIN)	
			(EACH PLUG KIT INCLUDES PLUG AS, WEDGE, & INTERFACE SEAL)	
	174-0503	1	KIT-CONNECTING PLUG (3-PIN)	
			(INCLUDES PLUG AS, WEDGES, & INTERFACE SEAL)	
	151-9274	1	KIT-RECEPTACLE (4-PIN)	
			(INCLUDES RECEPTACLE AS & WEDGE)	
	8T-8729	6	PIN-CONNECTOR (16-GA TO 18-GA)	
	9W-0852	2	PIN-CONNECTOR (14-GA TO 16-GA)	
	230-4013	1	PLUG AS-CONNECTOR (3-PIN)	
	455-0705	1	SEAL-CONNECTOR	
	230-5010	1	PLUG AS-CONNECTOR (6-PIN)	
	455-0707	1	SEAL-CONNECTOR	
	8T-8737	9	PLUG-SEAL	
	243-4510	1	RECEPTACLE AS-CONNECTOR (12-PIN)	
	134-2540	1	RESISTOR AS-CONNECTION (3-PIN)	
	8T-8730	12	SOCKET-CONNECTOR (16-GA TO 18-GA)	
	9W-0844	3	SOCKET-CONNECTOR (14-GA TO 16-GA)	
E	**125-7874**		TUBE-HEAT SHRINK (5.72-MM DIA) (20-CM)	
E	**125-7875**		TUBE-HEAT SHRINK (7.44-MM DIA) (10-CM)	

E - ORDER BY THE CENTIMETER

<END>

536-5437 HARNESS AS-FRONT—GRADE CONTROL

S/N: BR61-UP

PART OF 516-8664 WIRING GP-FRONT

SMCS-1408 **i07376905**

NOTE	PART NUMBER	QTY	PART NAME 1 2 3 4 5 6 (PRODUCT LEVEL)	SEE PAGE
G	**423-1983**		HOSE (63-IN)	
	9W-0852	2	PIN-CONNECTOR (14-GA TO 16-GA)	
	3E-3390	6	PIN-CONNECTOR	
	230-4009	1	PLUG AS-CONNECTOR (12-PIN)	
	455-0709	1	SEAL-CONNECTOR	
	8T-8737	8	PLUG-SEAL	
	243-4510	1	RECEPTACLE AS-CONNECTOR (12-PIN)	
	8T-8730	6	SOCKET-CONNECTOR (16-GA TO 18-GA)	
	9W-0844	2	SOCKET-CONNECTOR (14-GA TO 16-GA)	

G - ORDER BY THE INCH

<END>

491-8344 HARNESS AS-LIGHTING

S/N: BR61-UP

PART OF 490-2704 LIGHTING GP-FLOOD

SMCS-1408 **i07351541**

NOTE	PART NUMBER	QTY	PART NAME 1 2 3 4 5 6 (PRODUCT LEVEL)	SEE PAGE
	342-2972	1	CAP-CONNECTOR (2-PIN)	
	155-2270	1	KIT-CONNECTING PLUG (2-PIN)	
			(INCLUDES PLUG AS, WEDGE, & INTERFACE SEAL)	
	9W-0852	2	PIN-CONNECTOR (14-GA TO 16-GA)	
	230-4011	1	PLUG AS-CONNECTOR (2-PIN)	
	455-0704	1	SEAL-CONNECTOR	
	243-4505	1	RECEPTACLE AS-CONNECTOR (2-PIN)	
	9W-0844	4	SOCKET-CONNECTOR (14-GA TO 16-GA)	
E	**125-7875**		TUBE-HEAT SHRINK (7.44-MM DIA) (10-CM)	

E - ORDER BY THE CENTIMETER

<END>

491-8345 HARNESS AS-LIGHTING

S/N: BR61-UP

PART OF 490-2762 LIGHTING GP-FLOOD

SMCS-1408 **i07351543**

NOTE	PART NUMBER	QTY	PART NAME 1 2 3 4 5 6 (PRODUCT LEVEL)	SEE PAGE
	155-2270	1	KIT-CONNECTING PLUG (2-PIN)	
			(INCLUDES PLUG AS, WEDGE, & INTERFACE SEAL)	
	9W-0852	2	PIN-CONNECTOR (14-GA TO 16-GA)	
	243-4505	1	RECEPTACLE AS-CONNECTOR (2-PIN)	
	9W-0844	2	SOCKET-CONNECTOR (14-GA TO 16-GA)	

<END>

506-9947 HARNESS AS-LIGHTING

S/N: BR61-UP

PART OF 489-7848 WIRING GP-CAB

SMCS-1408 **i07348792**

NOTE	PART NUMBER	QTY	PART NAME 1 2 3 4 5 6 (PRODUCT LEVEL)	SEE PAGE
	3S-2093	18	STRAP-CABLE	
	170-6827	4	TERMINAL (MALE)	
	7Y-3966	2	TERMINAL AS	
			(EACH INCLUDES)	
	7Y-3962	1	TERMINAL-BULLET (MALE)	
	7Y-3964	1	TUBE (CONNECTOR TERMINAL)	
	7Y-3967	2	TERMINAL AS	
			(EACH INCLUDES)	
	7Y-3963	1	TERMINAL-BULLET (FEMALE)	
	7Y-3965	1	TUBE (RECEPTACLE TERMINAL)	
	266-2905	3	TERMINAL AS	
			(EACH INCLUDES)	
	6V-2689	1	TUBE-HEAT SHRINK (6.35-MM DIA)	
E	**119-3662**		TUBE-HEAT SHRINK (10.85-MM DIA) (7-CM)	
E	**125-7875**		TUBE-HEAT SHRINK (7.44-MM DIA) (5-CM)	

E - ORDER BY THE CENTIMETER

<END>

526-4014 HARNESS AS-LIGHTING

S/N: BR61-UP

PART OF 524-8314 LIGHTING GP-FLOOD

SMCS-1408 **i07351548**

NOTE	PART NUMBER	QTY	PART NAME 1 2 3 4 5 6 (PRODUCT LEVEL)	SEE PAGE
	155-2270	1	KIT-CONNECTING PLUG (2-PIN)	
			(INCLUDES PLUG AS, WEDGE, & INTERFACE SEAL)	
	9W-0844	2	SOCKET-CONNECTOR (14-GA TO 16-GA)	
	7Y-3966	1	TERMINAL AS	
	7Y-3962	1	TERMINAL-BULLET (MALE)	
	7Y-3964	1	TUBE (CONNECTOR TERMINAL)	
	7Y-3967	1	TERMINAL AS	
	7Y-3963	1	TERMINAL-BULLET (FEMALE)	
	7Y-3965	1	TUBE (RECEPTACLE TERMINAL)	

<END>

515-9533 HARNESS AS-MONITOR

S/N: BR61-UP

PART OF 489-7848 WIRING GP-CAB

SMCS-1408, 7490 **i07348794**

NOTE	PART NUMBER	QTY	PART NAME 1 2 3 4 5 6 (PRODUCT LEVEL)	SEE PAGE
	8T-8729	2	PIN-CONNECTOR (16-GA TO 18-GA)	
	490-0578	1	PLUG AS-CONNECTOR (2-PIN)	
	490-0572	1	RECEPTACLE AS	
	490-0582	1	RECEPTACLE AS	
	273-3288	1	RECEPTACLE AS-CONNECTOR	
	3S-2093	9	STRAP-CABLE	

<END>

526-7690 HARNESS AS-MONITOR—GRADE CONTROL

S/N: BR61-UP

PART OF 525-1535 WIRING GP-CAB

SMCS-1408, 7490 **i07367952**

NOTE	PART NUMBER	QTY	PART NAME 1 2 3 4 5 6 (PRODUCT LEVEL)	SEE PAGE
	317-8734	1	PLUG AS-CONNECTOR	
	8T-8730	6	SOCKET-CONNECTOR (16-GA TO 18-GA)	
	3S-2093	2	STRAP-CABLE	

<END>

529-8755 HARNESS AS-MONITOR

S/N: BR61-UP

PART OF 490-2699 WIRING GP-CHASSIS

SMCS-1408, 7490 **i07352956**

NOTE	PART NUMBER	QTY	PART NAME 1 2 3 4 5 6 (PRODUCT LEVEL)	SEE PAGE
	8T-8729	2	PIN-CONNECTOR (16-GA TO 18-GA)	
	240-7874	2	PLUG AS-CONNECTOR (2-PIN)	
			(EACH INCLUDES)	
	455-0704	1	SEAL-CONNECTOR	
	490-0571	2	PLUG AS-CONNECTOR (2-PIN)	
	490-0578	1	PLUG AS-CONNECTOR (2-PIN)	
	8T-8737	2	PLUG-SEAL	
	8T-8730	2	SOCKET-CONNECTOR (16-GA TO 18-GA)	
	3S-2093	12	STRAP-CABLE	
E	**125-7874**		TUBE-HEAT SHRINK (5.72-MM DIA) (10-CM)	

E - ORDER BY THE CENTIMETER

<END>

529-8756 HARNESS AS-MONITOR

S/N: BR61-UP

PART OF 490-2699 WIRING GP-CHASSIS

SMCS-1408, 7490 **i07352987**

NOTE	PART NUMBER	QTY	PART NAME 1 2 3 4 5 6 (PRODUCT LEVEL)	SEE PAGE
	8T-8729	2	PIN-CONNECTOR (16-GA TO 18-GA)	
	490-0576	2	PIN-CONNECTOR (18-GA TO 20-GA)	
	490-0571	1	PLUG AS-CONNECTOR (2-PIN)	
	490-0578	1	PLUG AS-CONNECTOR (2-PIN)	
	490-0572	1	RECEPTACLE AS	
	3S-2093	5	STRAP-CABLE	
			<END>	

529-8758 HARNESS AS-MONITOR

S/N: BR61-UP

PART OF 490-2700 WIRING GP-CHASSIS

SMCS-1408, 7490 **i07366577**

NOTE	PART NUMBER	QTY	PART NAME 1 2 3 4 5 6 (PRODUCT LEVEL)	SEE PAGE
	240-7874	1	PLUG AS-CONNECTOR (2-PIN)	
	455-0704	1	SEAL-CONNECTOR	
	490-0571	2	PLUG AS-CONNECTOR (2-PIN)	
	490-0578	1	PLUG AS-CONNECTOR (2-PIN)	
	8T-8730	2	SOCKET-CONNECTOR (16-GA TO 18-GA)	
	3S-2093	3	STRAP-CABLE	
			<END>	

520-4558 HARNESS AS-PANEL

S/N: BR61-UP

PART OF 490-8083 PANEL GP-SWITCH

SMCS-1408, 7451 **i07329717**

NOTE	PART NUMBER	QTY	PART NAME 1 2 3 4 5 6 (PRODUCT LEVEL)	SEE PAGE
	484-1454	2	CLIP	
	102-8802	1	KIT-RECEPTACLE (2-PIN)	
			(INCLUDES RECEPTACLE AS & WEDGE)	
	8T-8729	4	PIN-CONNECTOR (16-GA TO 18-GA)	
	243-4505	1	RECEPTACLE AS-CONNECTOR (2-PIN)	
			<END>	

530-1947 HARNESS AS-PLATFORM

S/N: BR61-UP

PART OF 488-6768 WIRING GP-PLATFORM

SMCS-1408 **i07349308**

NOTE	PART NUMBER	QTY	PART NAME 1 2 3 4 5 6 (PRODUCT LEVEL)	SEE PAGE
	342-2974	1	CAP-CONNECTOR (6-PIN)	
	342-2978	1	CAP-CONNECTOR (4-PIN)	
	484-1452	4	CLIP	
	155-2271	2	KIT-CONNECTING PLUG (4-PIN)	
	155-2274	1	KIT-CONNECTING PLUG (6-PIN)	
	155-2270	1	KIT-CONNECTING PLUG (2-PIN)	
			(EACH PLUG KIT INCLUDES PLUG AS, WEDGE, & INTERFACE SEAL)	
	155-2260	1	KIT-CONNECTING PLUG (3-PIN)	
			(INCLUDES PLUG AS, WEDGES & INTERFACE SEAL)	
	102-8802	1	KIT-RECEPTACLE (2-PIN)	
	102-8804	2	KIT-RECEPTACLE (4-PIN)	
			(EACH RECEPTACLE KIT INCLUDES RECEPTACLE AS & WEDGE)	
	8T-8729	22	PIN-CONNECTOR (16-GA TO 18-GA)	
	9W-0852	5	PIN-CONNECTOR (14-GA TO 16-GA)	
	230-5008	1	PLUG AS-CONNECTOR (4-PIN)	
	455-0706	1	SEAL-CONNECTOR	
	230-5010	1	PLUG AS-CONNECTOR (6-PIN)	
	455-0707	1	SEAL-CONNECTOR	
	8T-8737	22	PLUG-SEAL	
	328-0076	3	RECEPTACLE AS-CONNECTOR (12-PIN)	
	8T-8730	20	SOCKET-CONNECTOR (16-GA TO 18-GA)	
	9W-0844	6	SOCKET-CONNECTOR (14-GA TO 16-GA)	
	3S-2093	4	STRAP-CABLE	
	204-2281	4	STRAP-CABLE	
E	**125-7874**		TUBE-HEAT SHRINK (5.72-MM DIA) (10-CM)	
E	**125-7875**		TUBE-HEAT SHRINK (7.44-MM DIA) (5-CM)	

E - ORDER BY THE CENTIMETER

<END>

525-3740 HARNESS AS-SENSOR

S/N: BR61-UP

PART OF 514-7718 WIRING GP-SENSOR

SMCS-1408 **i07356326**

NOTE	PART NUMBER	QTY	PART NAME 1 2 3 4 5 6 (PRODUCT LEVEL)	SEE PAGE
	283-0056	4	ADAPTER-CONNECTOR	
	8T-8729	4	PIN-CONNECTOR (16-GA TO 18-GA)	
	230-4013	2	PLUG AS-CONNECTOR (3-PIN)	
			(EACH INCLUDES)	
	455-0705	1	SEAL-CONNECTOR	
	243-4507	1	RECEPTACLE AS-CONNECTOR (4-PIN)	
	8T-8730	6	SOCKET-CONNECTOR (16-GA TO 18-GA)	
E	**125-7874**		TUBE-HEAT SHRINK (5.72-MM DIA) (10-CM)	

E - ORDER BY THE CENTIMETER

<END>

525-4108 HARNESS AS-SENSOR—GRADE CONTROL

S/N: BR61-UP

PART OF 490-2771 WIRING GP-FRONT

SMCS-1408 **i07369400**

NOTE	PART NUMBER	QTY	PART NAME 1 2 3 4 5 6 (PRODUCT LEVEL)	SEE PAGE
	311-8732	1	ADAPTER-CONNECTOR	
	8T-8729	6	PIN-CONNECTOR (16-GA TO 18-GA)	
	9W-0852	2	PIN-CONNECTOR (14-GA TO 16-GA)	
	230-4009	1	PLUG AS-CONNECTOR (12-PIN)	
	455-0709	1	SEAL-CONNECTOR	
	230-5010	1	PLUG AS-CONNECTOR (6-PIN)	
	455-0707	1	SEAL-CONNECTOR	
	8T-8737	4	PLUG-SEAL	
	243-4509	1	RECEPTACLE AS-CONNECTOR (8-PIN)	
	8T-8730	9	SOCKET-CONNECTOR (16-GA TO 18-GA)	
	9W-0844	5	SOCKET-CONNECTOR (14-GA TO 16-GA)	
E	**125-7874**		TUBE-HEAT SHRINK (5.72-MM DIA) (15-CM)	
E	**125-7875**		TUBE-HEAT SHRINK (7.44-MM DIA) (15-CM)	

E - ORDER BY THE CENTIMETER

<END>

529-0428 HARNESS AS-SENSOR—STICK

S/N: BR61-UP

PART OF 516-8663 WIRING GP-FRONT

SMCS-1408 **i07369449**

NOTE	PART NUMBER	QTY	PART NAME 1 2 3 4 5 6 (PRODUCT LEVEL)	SEE PAGE
	283-0056	2	ADAPTER-CONNECTOR	
	311-8732	1	ADAPTER-CONNECTOR	
	174-0503	1	KIT-CONNECTING PLUG (3-PIN)	
			(INCLUDES PLUG AS, WEDGES, & INTERFACE SEAL)	
	176-2947	1	KIT-CONNECTING PLUG (4-PIN)	
			(INCLUDES PLUG AS & WEDGE)	
	155-2271	1	KIT-CONNECTING PLUG (4-PIN)	
			(INCLUDES PLUG AS, WEDGE, & INTERFACE SEAL)	
	102-8804	1	KIT-RECEPTACLE (4-PIN)	
			(INCLUDES RECEPTACLE AS & WEDGE)	
	8T-8729	6	PIN-CONNECTOR (16-GA TO 18-GA)	
	9W-0852	2	PIN-CONNECTOR (14-GA TO 16-GA)	
	230-4013	1	PLUG AS-CONNECTOR (3-PIN)	
	455-0705	1	SEAL-CONNECTOR	
	230-5010	1	PLUG AS-CONNECTOR (6-PIN)	
	455-0707	1	SEAL-CONNECTOR	
	8T-8737	9	PLUG-SEAL	
	243-4510	1	RECEPTACLE AS-CONNECTOR (12-PIN)	
	134-2540	1	RESISTOR AS-CONNECTION (3-PIN)	
	8T-8730	12	SOCKET-CONNECTOR (16-GA TO 18-GA)	
	9W-0844	3	SOCKET-CONNECTOR (14-GA TO 16-GA)	
E	**125-7874**		TUBE-HEAT SHRINK (5.72-MM DIA) (30-CM)	

E - ORDER BY THE CENTIMETER

<END>

550-1970 HARNESS AS-SENSOR

S/N: BR610001-UP
AIR CLEANER
PART OF 556-9810 WIRING GP-CHASSIS

SMCS-1408 **i07473325**

NOTE	PART NUMBER	QTY	PART NAME 1 2 3 4 5 6 (PRODUCT LEVEL)	SEE PAGE
	3E-3390	4	PIN-CONNECTOR	
	230-4011	2	PLUG AS-CONNECTOR (2-PIN)	
			(EACH INCLUDES)	
	455-0704	1	SEAL-CONNECTOR	
	230-5009	1	RECEPTACLE AS-CONNECTOR (4-PIN)	
	8T-8730	4	SOCKET-CONNECTOR (16-GA TO 18-GA)	
			<END>	

525-2621 HARNESS AS-SOLENOID

S/N: BR61-UP
PART OF 524-8376 WIRING GP-VALVE

SMCS-1408, 1467 **i07361047**

NOTE	PART NUMBER	QTY	PART NAME 1 2 3 4 5 6 (PRODUCT LEVEL)	SEE PAGE
	155-2270	1	KIT-CONNECTING PLUG (2-PIN)	
			(INCLUDES PLUG AS, WEDGE, & INTERFACE SEAL)	
	102-8802	1	KIT-RECEPTACLE (2-PIN)	
			(INCLUDES RECEPTACLE AS & WEDGE)	
	8T-8729	2	PIN-CONNECTOR (16-GA TO 18-GA)	
	8T-8730	2	SOCKET-CONNECTOR (16-GA TO 18-GA)	
			<END>	

525-3041 HARNESS AS-SOLENOID

S/N: BR61-UP
PART OF 511-9446 WIRING GP-VALVE

SMCS-1408, 1467 **i07356685**

NOTE	PART NUMBER	QTY	PART NAME 1 2 3 4 5 6 (PRODUCT LEVEL)	SEE PAGE
	155-2270	3	KIT-CONNECTING PLUG (2-PIN)	
			(EACH INCLUDES PLUG AS, WEDGE, & INTERFACE SEAL)	
	8T-8729	6	PIN-CONNECTOR (16-GA TO 18-GA)	
	243-4508	1	RECEPTACLE AS-CONNECTOR (6-PIN)	
	8T-8730	6	SOCKET-CONNECTOR (16-GA TO 18-GA)	
	3S-2093	2	STRAP-CABLE	
			<END>	

527-1870 HARNESS AS-VALVE

S/N: BR61-UP

PART OF 490-2714 WIRING GP-VALVE

SMCS-1408 **i07360995**

NOTE	PART NUMBER	QTY	PART NAME 1 2 3 4 5 6 (PRODUCT LEVEL)	SEE PAGE
	155-2270	4	KIT-CONNECTING PLUG (2-PIN)	
			(EACH INCLUDES PLUG AS, WEDGE, & INTERFACE SEAL)	
	102-8802	2	KIT-RECEPTACLE (2-PIN)	
			(EACH INCLUDES RECEPTACLE AS & WEDGE)	
	230-5010	1	PLUG AS-CONNECTOR (6-PIN)	
	455-0707	1	SEAL-CONNECTOR	
	8T-8737	5	PLUG-SEAL	
	8T-8730	13	SOCKET-CONNECTOR (16-GA TO 18-GA)	
E	**125-7874**		TUBE-HEAT SHRINK (5.72-MM DIA) (5-CM)	
E	**125-7875**		TUBE-HEAT SHRINK (7.44-MM DIA) (5-CM)	

E - ORDER BY THE CENTIMETER

<END>

549-9283 HARNESS AS-VALVE

S/N: BR61-UP

PART OF 490-2693 WIRING GP-VALVE

SMCS-1408 **i07360220**

NOTE	PART NUMBER	QTY	PART NAME 1 2 3 4 5 6 (PRODUCT LEVEL)	SEE PAGE
	484-1452	3	CLIP	
	484-1454	4	CLIP	
	155-2270	21	KIT-CONNECTING PLUG (2-PIN)	
			(EACH INCLUDES PLUG AS, WEDGE, & INTERFACE SEAL)	
	102-8802	1	KIT-RECEPTACLE (2-PIN)	
			(INCLUDES RECEPTACLE AS & WEDGE)	
	8T-8729	37	PIN-CONNECTOR (16-GA TO 18-GA)	
	230-4013	3	PLUG AS-CONNECTOR (3-PIN)	
			(EACH INCLUDES)	
	455-0705	1	SEAL-CONNECTOR	
	8T-8737	3	PLUG-SEAL	
	243-4505	1	RECEPTACLE AS-CONNECTOR (2-PIN)	
	243-4510	1	RECEPTACLE AS-CONNECTOR (12-PIN)	
	272-5000	1	RECEPTACLE AS-CONNECTOR (12-PIN)	
	8T-8730	51	SOCKET-CONNECTOR (16-GA TO 18-GA)	
	3S-2093	13	STRAP-CABLE	
	204-2281	3	STRAP-CABLE	
E	**125-7874**		TUBE-HEAT SHRINK (5.72-MM DIA) (25-CM)	
E	**125-7875**		TUBE-HEAT SHRINK (7.44-MM DIA) (15-CM)	

E - ORDER BY THE CENTIMETER

<END>

375-8407 HARNESS AS-WIRING—ENGINE

S/N: 4501-UP; E7A1-UP

PART OF 395-0113 WIRING GP-ENGINE

SMCS-1408 **i05333790**

NOTE	PART NUMBER	QTY	PART NAME 1 2 3 4 5 6 (PRODUCT LEVEL)	SEE PAGE
	102-8804	1	KIT-RECEPTACLE (4-PIN)	
			(INCLUDES RECEPTACLE AS & WEDGE)	
	113-4630	1	RECEPTACLE AS-CONNECTOR (4-PIN)	
	9X-3401	4	PIN-CONNECTOR (16-GA TO 18-GA)	
			—OR—	
	126-1767	4	PIN-CONNECTOR (14-GA TO 16-GA)	
	332-7865	1	TIE-CABLE	
			<END>	

510-9072 HOLDER AS-FUSE–BLOCK

S/N: BR61-UP

PART OF 490-2691 CABLE GP-GROUND

SMCS-1408, 1417 **i07369319**

NOTE	REF NO	GRAPHIC REF	PART NUMBER	QTY	PART NAME 1 2 3 4 5 6 (PRODUCT LEVEL)	SEE PAGE
	1	1	**425-9809**	2	FUSE (125-AMPERE)	
	2	1	**510-8931**	2	FUSE (150-AMPERE)	
	3	1	**455-2302**	2	FUSE (70-AMPERE)	
	4	1	**378-1012**	2	FUSE (100-AMPERE)	
	5	1	**510-9073**	1	COVER	
	6	1	**425-9879**	2	SEAL-COVER	
M	7	1	**5C-2874**	8	NUT (M5X0.8-THD)	
	8	1	**204-6101**	8	WASHER-HARD (5.3X10X1-MM THK)	
	9	1	**096-0192**	8	LOCKWASHER (EXTERNAL TOOTH)	
M	10	1	**5C-7261**	7	NUT (M8X1.25-THD)	
	11	1	**7H-3937**	7	LOCKWASHER (EXTERNAL TOOTH)	
	12	1	**8T-4224**	7	WASHER-HARD (8.8X16X2-MM THK)	

M - METRIC PART

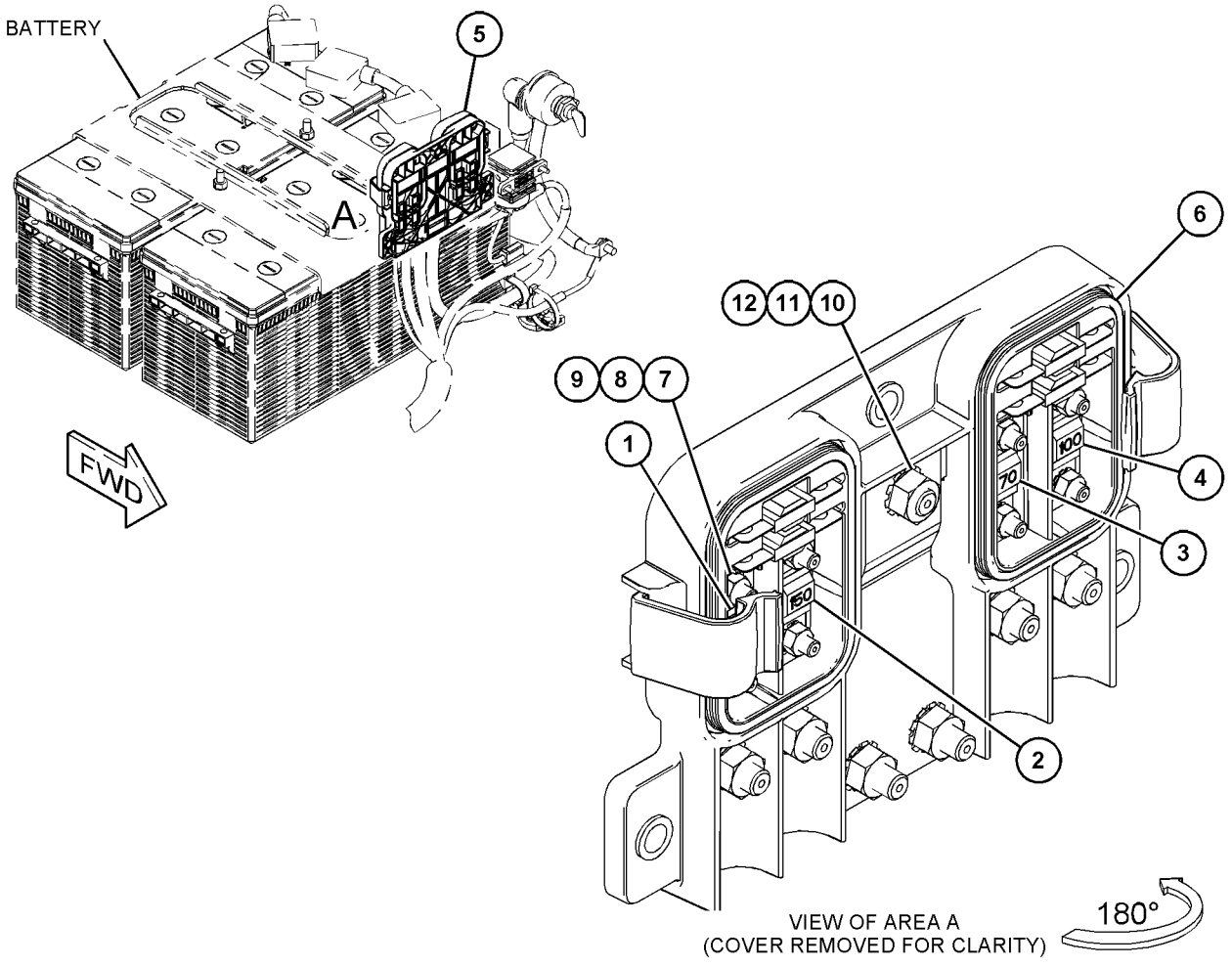

GRAPHIC #1 <END> g06232763

492-2913 INSTALLATION AR-COMMUNICATION

S/N: BR61-UP

SMCS-7606 **i07452019**

NOTE	PART NUMBER	QTY	PART NAME 1 2 3 4 5 6 (PRODUCT LEVEL)	SEE PAGE
Y	*488-6821*	1	ANTENNA & MOUNTING GP (PRODUCT LINK 631 SATELLITE)	132
Y	*488-6819*	1	CONTROL & MTG GP-COMMUNICATION (PRODUCT LINK)	145
Y	*488-6822*	1	CONTROL & MTG GP-COMMUNICATION (PRODUCT LINK 631 SATELLITE)	146
Y	*543-9531*	1	ELECTRONICS GP-MONITOR (PRODUCT LINK)	154
Y	*543-9532*	1	ELECTRONICS GP-MONITOR (TELEMATICS)	154
Y	*506-7032*	1	WIRING GP-CHASSIS (PRODUCT LINK 631, 641)	246

Y - SEPARATE ILLUSTRATION

<END>

506-7022 INSTALLATION AR-COMMUNICATION—PRODUCT LINK 631

S/N: BR61-UP

SMCS-7606 **i07352444**

NOTE	PART NUMBER	QTY	PART NAME 1 2 3 4 5 6 (PRODUCT LEVEL)	SEE PAGE
Y	*488-6821*	1	ANTENNA & MOUNTING GP	132
Y	*488-6822*	1	CONTROL & MTG GP-COMMUNICATION (PRODUCT LINK 631 SATELLITE)	146
Y	*519-6936*	1	ELECTRONICS GP-MONITOR (TELEMATICS)	154
Y	*506-7031*	1	WIRING GP-CHASSIS (PRODUCT LINK 631, 641)	244

Y - SEPARATE ILLUSTRATION

<END>

555-7258 INSTALLATION AR-COMMUNICATION—PRODUCT LINK 631

S/N: BR610001-UP

SMCS-7606 **i07434521**

NOTE	PART NUMBER	QTY	PART NAME 1 2 3 4 5 6 (PRODUCT LEVEL)	SEE PAGE
Y	*488-6821*	1	ANTENNA & MOUNTING GP	132
Y	*488-6822*	1	CONTROL & MTG GP-COMMUNICATION (PRODUCT LINK 631 SATELLITE)	146
Y	*555-8043*	1	ELECTRONICS GP-MONITOR (SATELLITE) (TELEMATICS)	155

Y - SEPARATE ILLUSTRATION

<END>

555-7287 INSTALLATION AR-COMMUNICATION—PRODUCT LINK

S/N: BR610001-UP

SMCS-7606 **i07434546**

NOTE	PART NUMBER	QTY	PART NAME 1 2 3 4 5 6 (PRODUCT LEVEL)	SEE PAGE
Y	*488-6819*	1	CONTROL & MTG GP-COMMUNICATION (PRODUCT LINK)	145
Y	*555-8045*	1	ELECTRONICS GP-MONITOR (PRODUCT LINK)	155

Y - SEPARATE ILLUSTRATION

<END>

524-8272 INSTL AR-MACHINE SECURITY SYS–SECURITY SYSTEM

S/N: BR61-UP

PART OF 532-9515, 532-9518, 556-2899, 556-2902 DISTRIBUTION AR

SMCS-7631 **i07367959**

NOTE	PART NUMBER	QTY	PART NAME 1 2 3 4 5 6 (PRODUCT LEVEL)	SEE PAGE
Y	*517-0824*	1	ELECTRONICS GP-MACHINE (SECURITY SYSTEM)	153
Y	*490-4919*	1	INSTL GP-MACHINE SECURITY SYS	190

Y - SEPARATE ILLUSTRATION

<END>

490-4919 INSTL GP-MACHINE SECURITY SYS—MOUNTING

S/N: BR61-UP

PART OF 524-8272 INSTL AR-MACHINE SECURITY SYS

SMCS-7631 **i07367947**

NOTE	REF NO	GRAPHIC REF	PART NUMBER	QTY	PART NAME 1 2 3 4 5 6 (PRODUCT LEVEL)	SEE PAGE
	1	1	**3S-2093**	2	STRAP-CABLE	
M	2	1	**5C-2890**	2	NUT (M6X1-THD)	
	3	1	**8C-5607**	4	MOUNT-ISOLATION	
	4	1	**9X-8256**	2	WASHER (6.6X12X2-MM THK)	
Y	5	1	**504-4980**	1	ELECTRONICS GP-MACHINE	153
	6	1	**526-8586**	1	COVER	
	7	1	**527-9502**	1	BRACKET	
	8	1	**427-9771**	1	TIE	
	9	1	**8C-5608**	2	SPACER (6.5X9.5X25.4-MM THK)	
M	10	1	**8C-8451**	2	BOLT (M6X1X40-MM)	
M	11	1	**9X-2042**	2	SCREW-TRUSS HEAD (M6X1X12-MM)	
	12	1	**9X-6165**	2	WASHER (6.5X22X2.5-MM THK)	

M - METRIC PART
Y - SEPARATE ILLUSTRATION

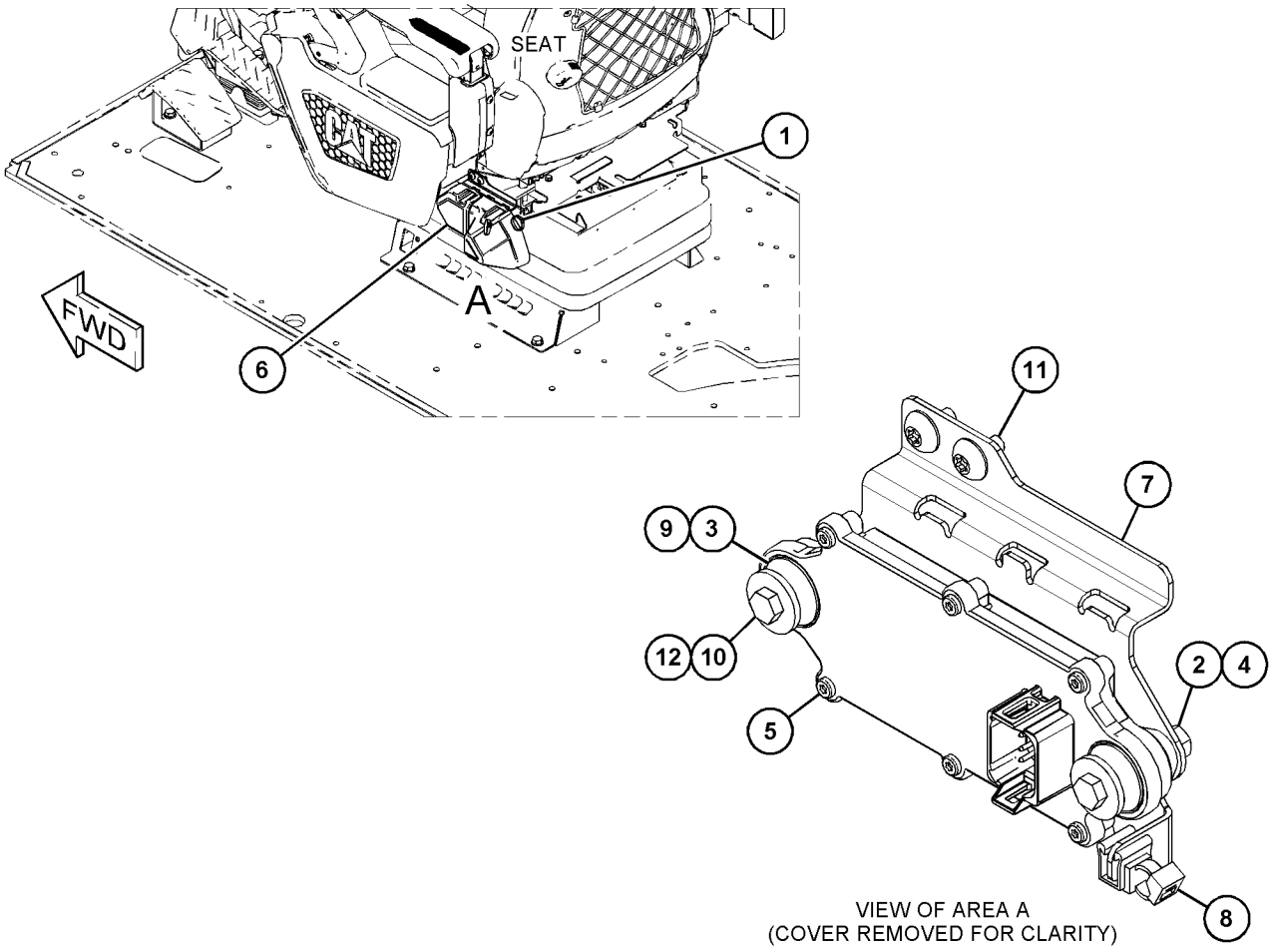

GRAPHIC #1 <END> g06230417

528-3288 KIT-LIGHTING

S/N: BR61-UP
LIGHTING KIT

SMCS-1429, 1431, 1434 **i07199070**

NOTE	PART NUMBER	QTY	PART NAME 1 2 3 4 5 6 (PRODUCT LEVEL)	SEE PAGE
M	**8T-4137**	2	BOLT (M10X1.5X20-MM)	
M	**9R-2672**	6	BOSS-THREADED (M10X1.5X120-MM)	
	533-5066	3	BRACKET	
	170-9360	1	GROMMET	
	530-3299	3	HARNESS AS-CHASSIS	
	524-8522	2	LAMP AS-FLOOD (9-32-VOLT)	
	526-4904	3	LAMP GP-FLOOD (850 LUMENS)	
	526-4905	3	LAMP AS-FLOOD (9-32-VOLT)	
M	**8T-4133**	2	NUT (M10X1.5-THD)	
	204-1611	1	STRAP (DUAL)	
	3S-2093	28	STRAP-CABLE	
	7I-2673	2	STRAP-CABLE	
	266-7379	1	STRAP-CABLE	
	484-1456	16	STRAP-CABLE	
	8T-4121	4	WASHER-HARD (11X21X2.5-MM THK)	

M - METRIC PART

<END>

528-3286 KIT-WIRING

S/N: BR61-UP
JUMP START WIRING KIT

SMCS-1408 **i07198912**

NOTE	PART NUMBER	QTY	PART NAME 1 2 3 4 5 6 (PRODUCT LEVEL)	SEE PAGE
M	**8T-4136**	1	BOLT (M10X1.5X25-MM)	
M	**8T-4137**	1	BOLT (M10X1.5X20-MM)	
M	**8T-4182**	2	BOLT (M10X1.5X45-MM)	
M	**8T-4189**	1	BOLT (M8X1.25X20-MM)	
M	**8T-4908**	4	BOLT (M8X1.25X25-MM)	
	517-6076	1	BRACKET AS	
	517-7928	1	BUS BAR (JUMP START)	
	328-0132	1	CABLE AS (JUMPER)	
	504-3594	1	CABLE AS	
	504-3595	1	CABLE AS (COLD WEATHER)	
	510-5674	1	CABLE AS (JUMP START)	
	484-1451	3	CLIP	
	8S-2634	1	COVER AS	
	342-9671	1	RECEPTACLE AS-AUXILIARY START	
	483-7800	2	SPACER (11X20X20-MM THK)	
	177-2215	1	STRAP-DUAL CLAMP	
	8T-4121	4	WASHER-HARD (11X21X2.5-MM THK)	
	8T-4224	5	WASHER-HARD (8.8X16X2-MM THK)	

M - METRIC PART

<END>

528-3287 KIT-WIRING

S/N: BR61-UP

JUMP START WIRING KIT

SMCS-1408 **i07199014**

NOTE	PART NUMBER	QTY	PART NAME 1 2 3 4 5 6 (PRODUCT LEVEL)	SEE PAGE
M	**8T-4137**	1	BOLT (M10X1.5X20-MM)	
M	**8T-4189**	1	BOLT (M8X1.25X20-MM)	
M	**8T-4908**	4	BOLT (M8X1.25X25-MM)	
M	**8T-6466**	1	BOLT (M10X1.5X60-MM)	
	517-6076	1	BRACKET AS	
	517-7928	1	BUS BAR (JUMP START)	
	328-0132	1	CABLE AS (JUMPER)	
	504-3595	1	CABLE AS (COLD WEATHER)	
	517-6078	1	CABLE AS (JUMP START)	
	517-7332	1	CABLE AS (COLD WEATHER)	
	484-1451	1	CLIP	
	8S-2634	1	COVER AS	
	342-9671	1	RECEPTACLE AS-AUXILIARY START	
	483-7800	1	SPACER (11X20X20-MM THK)	
	177-2215	1	STRAP-DUAL CLAMP	
	8T-4121	2	WASHER-HARD (11X21X2.5-MM THK)	
	8T-4224	5	WASHER-HARD (8.8X16X2-MM THK)	

M - METRIC PART

<END>

431-9515 LAMP GP-DOME

S/N: BR61-UP

PART OF 489-7848 WIRING GP-CAB

SMCS-1433 **i07074478**

NOTE	REF NO	GRAPHIC REF	PART NUMBER	QTY	PART NAME 1 2 3 4 5 6 (PRODUCT LEVEL)	SEE PAGE
					(NO SERVICED PARTS)	

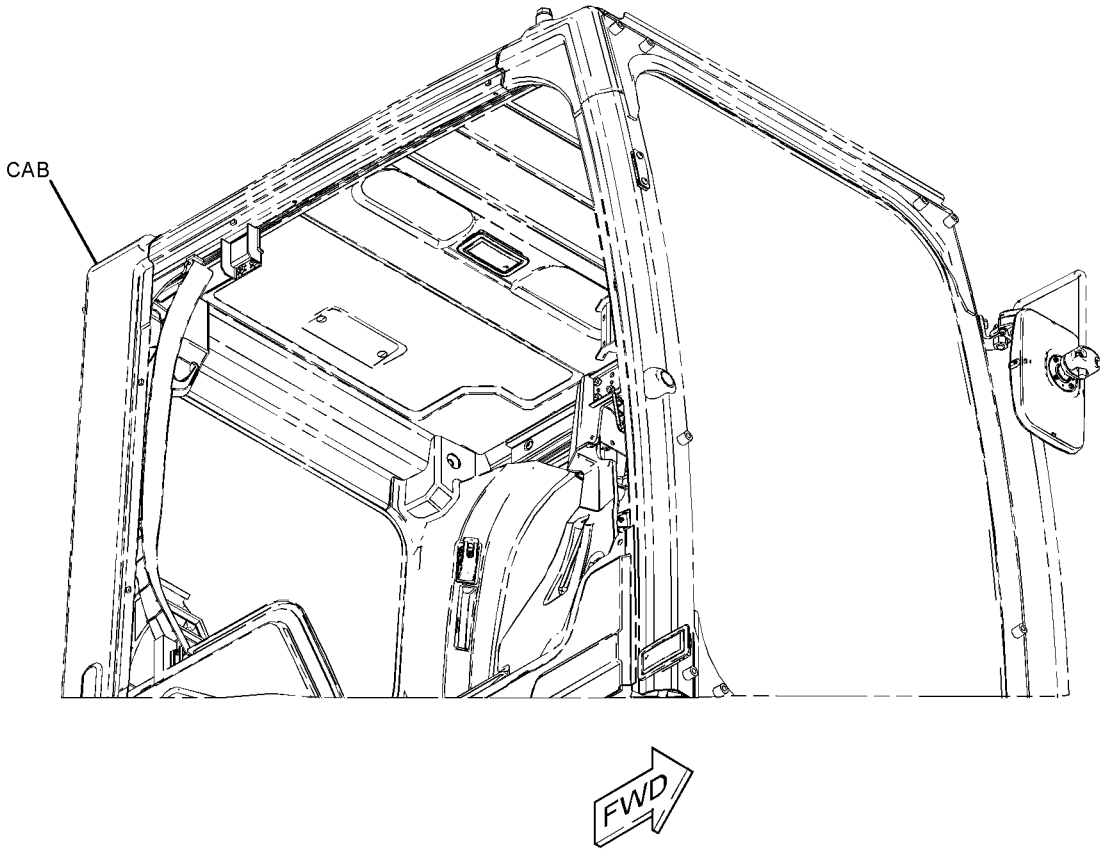

(VIEWED FROM BOTTOM)

GRAPHIC #1 <END> g06210018

525-1734 LIGHTING AR-FLOOD

S/N: BR61-UP

SMCS-1434 **i07351515**

NOTE	PART NUMBER	QTY	PART NAME 1 2 3 4 5 6 (PRODUCT LEVEL)	SEE PAGE
Y	*490-2704*	1	LIGHTING GP-FLOOD (REACH BOOM, LH)	197
Y	*490-2762*	1	LIGHTING GP-FLOOD (REACH BOOM, RH)	198
Y	*524-8314*	1	LIGHTING GP-FLOOD (CAB, LED)	199
Y	*490-2683*	1	LIGHTING GP-FLOOD (CHASSIS)	196

Y - SEPARATE ILLUSTRATION

<END>

525-1735 LIGHTING AR-FLOOD—REACH BOOM

S/N: BR61-UP

SMCS-1434 **i07367989**

NOTE	PART NUMBER	QTY	PART NAME 1 2 3 4 5 6 (PRODUCT LEVEL)	SEE PAGE
Y	*490-2683*	1	LIGHTING GP-FLOOD (CHASSIS)	196
Y	*490-2704*	1	LIGHTING GP-FLOOD (REACH BOOM, LH) (REACH BOOM, LH)	197
Y	*490-2762*	1	LIGHTING GP-FLOOD (REACH BOOM, RH)	198
Y	*527-5711*	1	LIGHTING GP-FLOOD (CAB, LED)	200
Y	*541-3433*	1	VISOR GP-PROTECTION	669

Y - SEPARATE ILLUSTRATION

<END>

528-0022 LIGHTING GP-CAB

S/N: BR61-UP

PART OF 488-6764 WIRING GP-CONSOLE

SMCS-1433 **i07349033**

NOTE	REF NO	GRAPHIC REF	PART NUMBER	QTY	PART NAME 1 2 3 4 5 6 (PRODUCT LEVEL)	SEE PAGE
	1	1	**3S-2093**	4	STRAP-CABLE	
	2	1	**456-0632**	1	LAMP AS-INDICATOR (12-VOLT, 24-VOLT)	
		1	**8T-8729**	2	PIN-CONNECTOR (16-GA TO 18-GA)	
		1	**102-8802**	1	KIT-RECEPTACLE (2-PIN)	
					(INCLUDES RECEPTACLE AS & WEDGE)	
	3	1	**530-1946**	1	HARNESS AS-LIGHTING	
		1	**155-2270**	2	KIT-CONNECTING PLUG (2-PIN)	
					(EACH INCLUDES PLUG AS, WEDGE, & INTERFACE SEAL)	
		1	**8T-8730**	4	SOCKET-CONNECTOR (16-GA TO 18-GA)	
		1	**3S-2093**	2	STRAP-CABLE	
	4	1	**533-2342**	1	BRACKET	
	5	1	**533-4958**	1	BRACKET AS	
M	6	1	**9X-2042**	2	SCREW-TRUSS HEAD (M6X1X12-MM)	

M - METRIC PART

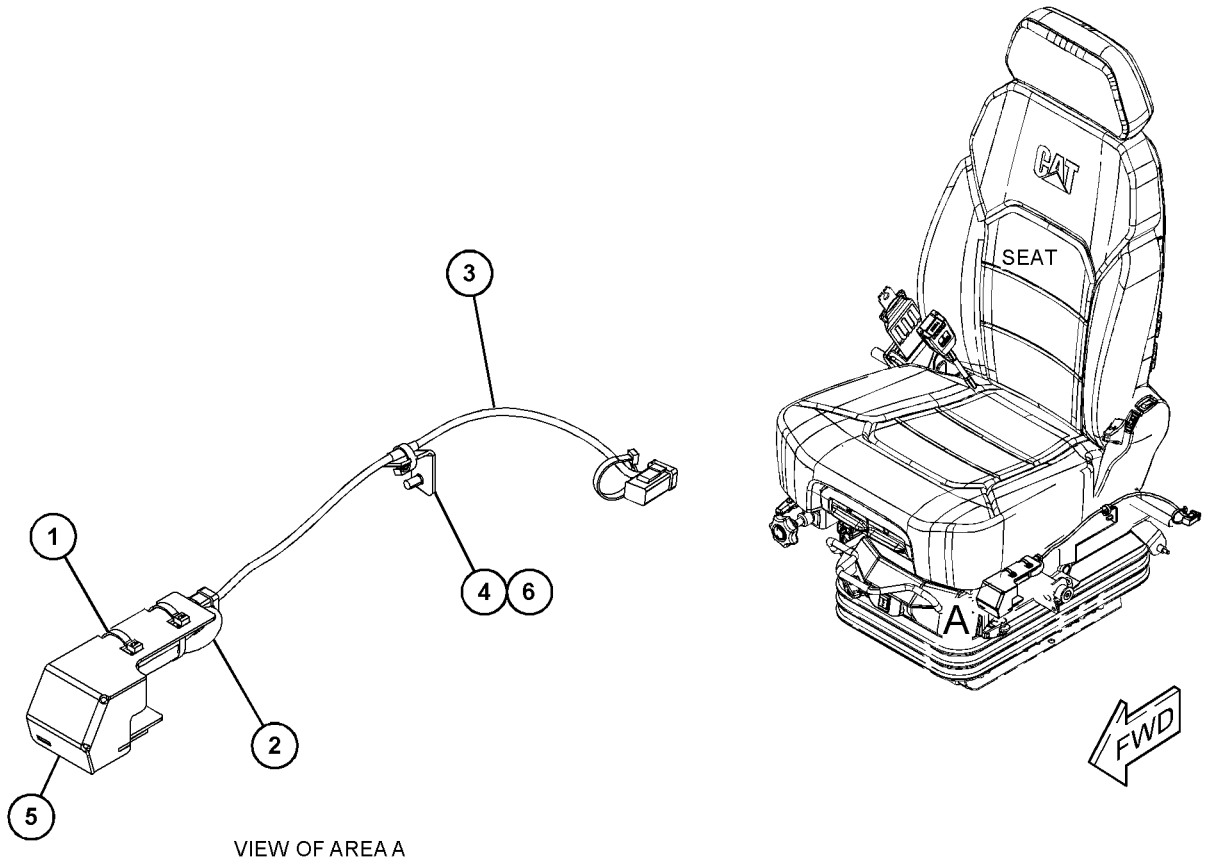

VIEW OF AREA A

GRAPHIC #1 <END> g06227891

490-2683 LIGHTING GP-FLOOD—CHASSIS

S/N: BR61-UP

PART OF 525-1734, 525-1735 LIGHTING AR-FLOOD

SMCS-1434 **i07351550**

NOTE	REF NO	GRAPHIC REF	PART NUMBER	QTY	PART NAME 1 2 3 4 5 6 (PRODUCT LEVEL)	SEE PAGE
	1	1	**524-4342**	1	BRACKET	
	2	1	**519-1664**	1	COVER	
	3	1	**526-4904**	1	LAMP GP-FLOOD (850 LUMENS)	
M		1	**3T-0852**	2	LOCKNUT (M8X1.25-THD)	
		1	**5P-4116**	1	WASHER-HARD (8.8X20.5X2-MM THK)	
M		1	**8T-6912**	1	BOLT (M8X1.25X50-MM)	
	4	1	**8T-4121**	2	WASHER-HARD (11X21X2.5-MM THK)	
M	5	1	**8T-4136**	2	BOLT (M10X1.5X25-MM)	

M - METRIC PART

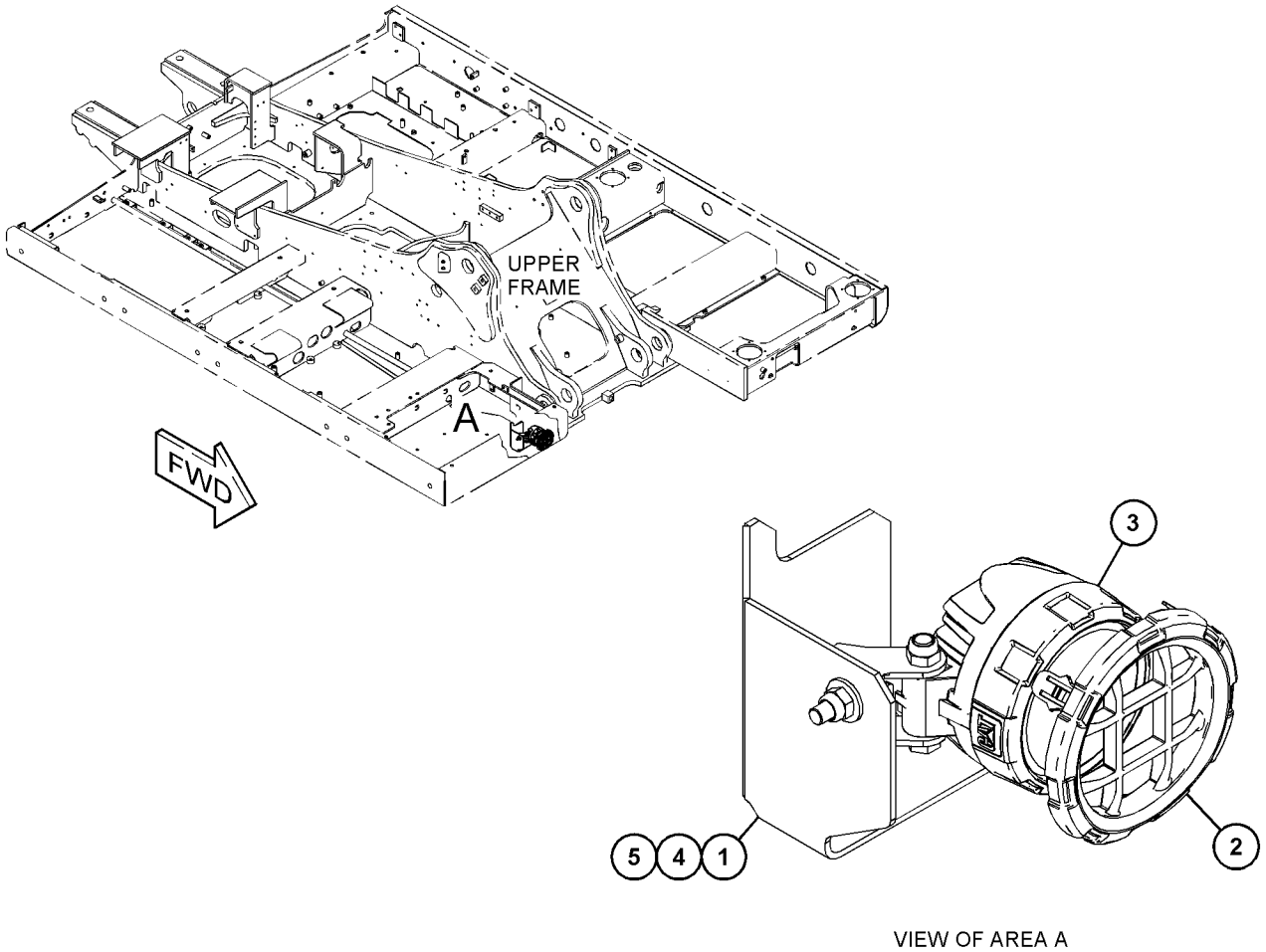

VIEW OF AREA A

GRAPHIC #1 <END> g06228090

490-2704 LIGHTING GP-FLOOD—REACH BOOM, LH

S/N: BR61-UP

PART OF 525-1734, 525-1735 LIGHTING AR-FLOOD

SMCS-1434 **i07351540**

NOTE	REF NO	GRAPHIC REF	PART NUMBER	QTY	PART NAME 1 2 3 4 5 6 (PRODUCT LEVEL)	SEE PAGE
	1	1	**3S-2093**	5	STRAP-CABLE	
	2	1	**116-0118**	2	CLIP	
	3	1	**484-1451**	1	CLIP	
	4	1	**484-1453**	1	CLIP (RETAINER)	
	5	1	**484-1456**	1	STRAP-CABLE	
	6	1	**491-8343**	1	BRACKET	
Y	7	1	**491-8344**	1	HARNESS AS-LIGHTING (REACH BOOM, LH)	178
	8	1	**526-4904**	1	LAMP GP-FLOOD (850 LUMENS)	
M		1	**3T-0852**	2	LOCKNUT (M8X1.25-THD)	
		1	**5P-4116**	1	WASHER-HARD (8.8X20.5X2-MM THK)	
M		1	**8T-6912**	1	BOLT (M8X1.25X50-MM)	
	9	1	**204-1611**	7	STRAP (DUAL)	
	10	1	**7I-2673**	1	STRAP-CABLE	
	11	1	**8T-4121**	4	WASHER-HARD (11X21X2.5-MM THK)	
M	12	1	**8T-4133**	2	NUT (M10X1.5-THD)	
M	13	1	**8T-4136**	2	BOLT (M10X1.5X25-MM)	

M - METRIC PART
Y - SEPARATE ILLUSTRATION

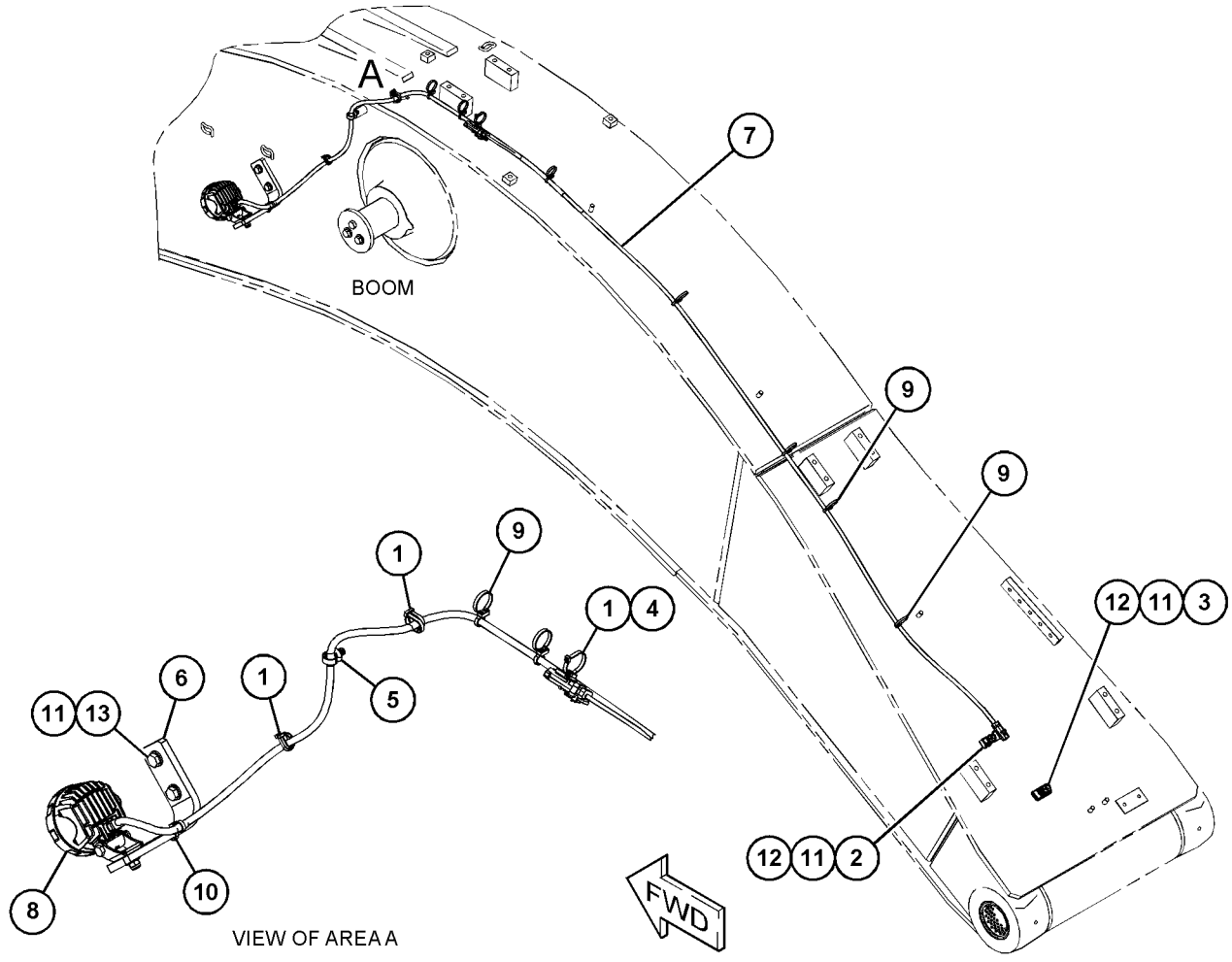

GRAPHIC #1 <END> g06228033

490-2762 LIGHTING GP-FLOOD—REACH BOOM, RH

S/N: BR61-UP

PART OF 525-1734, 525-1735 LIGHTING AR-FLOOD

SMCS-1434 **i07351542**

NOTE	REF NO	GRAPHIC REF	PART NUMBER	QTY	PART NAME 1 2 3 4 5 6 (PRODUCT LEVEL)	SEE PAGE
	1	1	**3S-2093**	5	STRAP-CABLE	
	2	1	**491-8343**	1	BRACKET	
Y	3	1	**491-8345**	1	HARNESS AS-LIGHTING (REACH BOOM, RH)	178
	4	1	**526-4904**	1	LAMP GP-FLOOD (850 LUMENS)	
M		1	**3T-0852**	2	LOCKNUT (M8X1.25-THD)	
		1	**5P-4116**	1	WASHER-HARD (8.8X20.5X2-MM THK)	
M		1	**8T-6912**	1	BOLT (M8X1.25X50-MM)	
	5	1	**484-1456**	1	STRAP-CABLE	
	6	1	**7I-2673**	1	STRAP-CABLE	
	7	1	**8T-4121**	2	WASHER-HARD (11X21X2.5-MM THK)	
M	8	1	**8T-4136**	2	BOLT (M10X1.5X25-MM)	

M - METRIC PART
Y - SEPARATE ILLUSTRATION

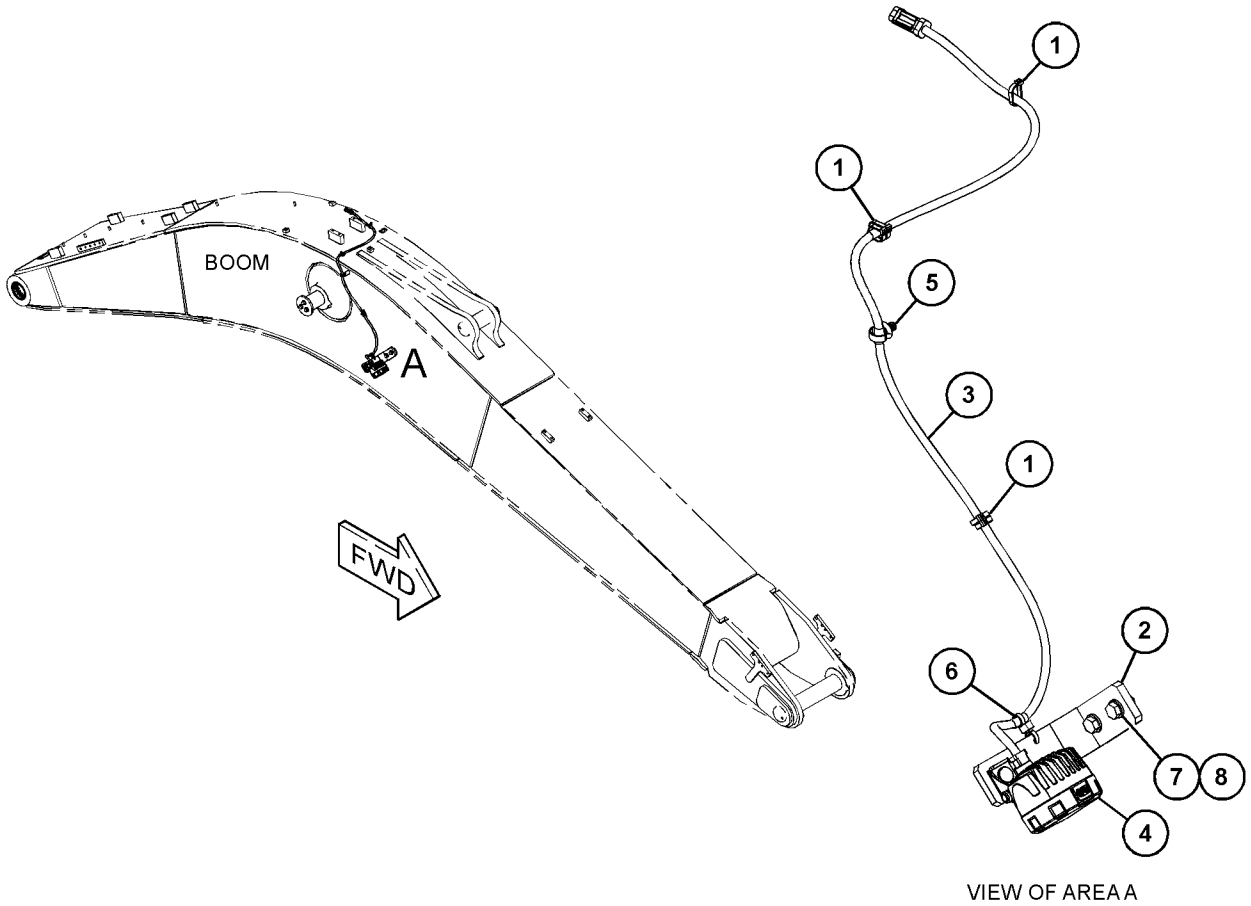

VIEW OF AREA A

GRAPHIC #1 <END> g06228001

524-8314 LIGHTING GP-FLOOD—CAB, LED

S/N: BR61-UP

PART OF 525-1734 LIGHTING AR-FLOOD

SMCS-1434 **i07351544**

NOTE	REF NO	GRAPHIC REF	PART NUMBER	QTY	PART NAME 1 2 3 4 5 6 (PRODUCT LEVEL)	SEE PAGE
	1	1	**524-8521**	2	LAMP GP-FLOOD (850 LUMENS)	
					(EACH INCLUDES)	
M		1	**3T-0852**	1	LOCKNUT (M8X1.25-THD)	
M		1	**8T-6912**	1	BOLT (M8X1.25X50-MM)	
Y	2	1	**526-4014**	2	HARNESS AS-LIGHTING (CAB)	179
	3	1	**8T-4121**	2	WASHER-HARD (11X21X2.5-MM THK)	
M	4	1	**8T-4137**	2	BOLT (M10X1.5X20-MM)	

M - METRIC PART
Y - SEPARATE ILLUSTRATION

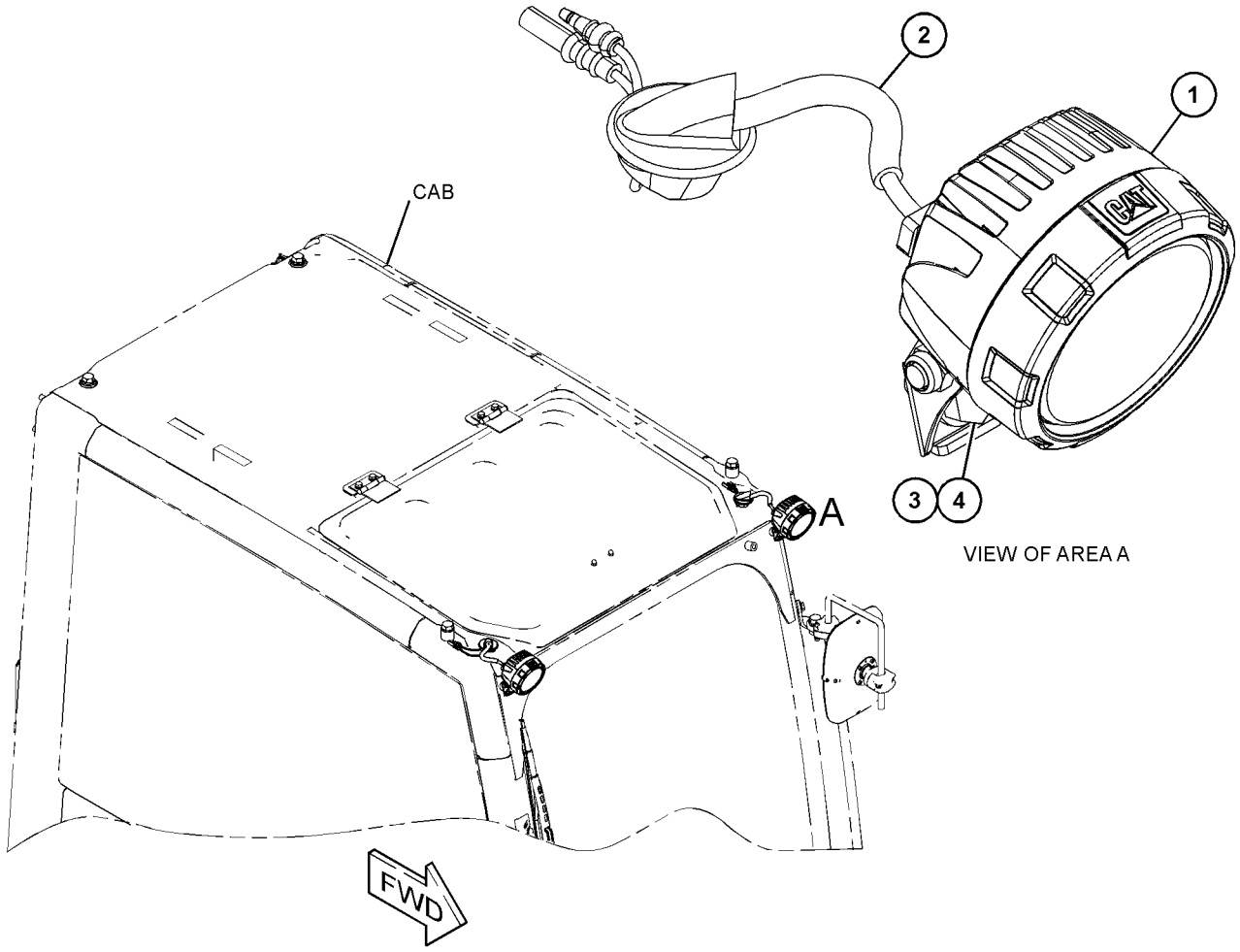

GRAPHIC #1 <END> g06227948

527-5711 LIGHTING GP-FLOOD—CAB, LED

S/N: BR61-UP

PART OF 525-1735 LIGHTING AR-FLOOD

SMCS-1434 **i07434610**

NOTE	REF NO	GRAPHIC REF	PART NUMBER	QTY	PART NAME 1 2 3 4 5 6 (PRODUCT LEVEL)	SEE PAGE
	1	1	**3S-2093**	3	STRAP-CABLE	
	2	1	**524-8521**	2	LAMP GP-FLOOD (850 LUMENS) (WIDE)	
					(EACH INCLUDES)	
M		1	**3T-0852**	1	LOCKNUT (M8X1.25-THD)	
M		1	**8T-6912**	1	BOLT (M8X1.25X50-MM)	
Y	3	1	**530-1948**	1	HARNESS AS-CAB (LH) (LH)	159
	4	1	**532-7317**	1	COVER AS (FRONT)	
	5	1	**532-7318**	1	COVER AS (REAR)	
	6	1	**533-2343**	1	HARNESS AS-CAB (RH) (RH)	
		1	*7Y-3966*	1	TERMINAL AS	
		1	**7Y-3962**	1	TERMINAL-BULLET (MALE)	
		1	**7Y-3964**	1	TUBE (CONNECTOR TERMINAL)	
		1	*7Y-3967*	1	TERMINAL AS	
		1	**7Y-3963**	1	TERMINAL-BULLET (FEMALE)	
		1	**7Y-3965**	1	TUBE (RECEPTACLE TERMINAL)	
		1	**9W-0844**	2	SOCKET-CONNECTOR (14-GA TO 16-GA)	
		1	**155-2270**	1	KIT-CONNECTING PLUG (2-PIN)	
					(INCLUDES PLUG AS, WEDGE, & INTERFACE SEAL)	
M	7	1	**101-7401**	6	BOLT-SOCKET HEAD (M10X1.5X20-MM)	
	8	1	**163-6795**	2	STRAP-CABLE	
	9	1	**8T-4121**	6	WASHER-HARD (11X21X2.5-MM THK)	
J	10	1	**348-5410**		SEAL (1.2-DM EACH)	

J - ORDER BY THE DECIMETER
M - METRIC PART
Y - SEPARATE ILLUSTRATION

527-5711 **LIGHTING GP-FLOOD (**contd.**)** **i07434610**

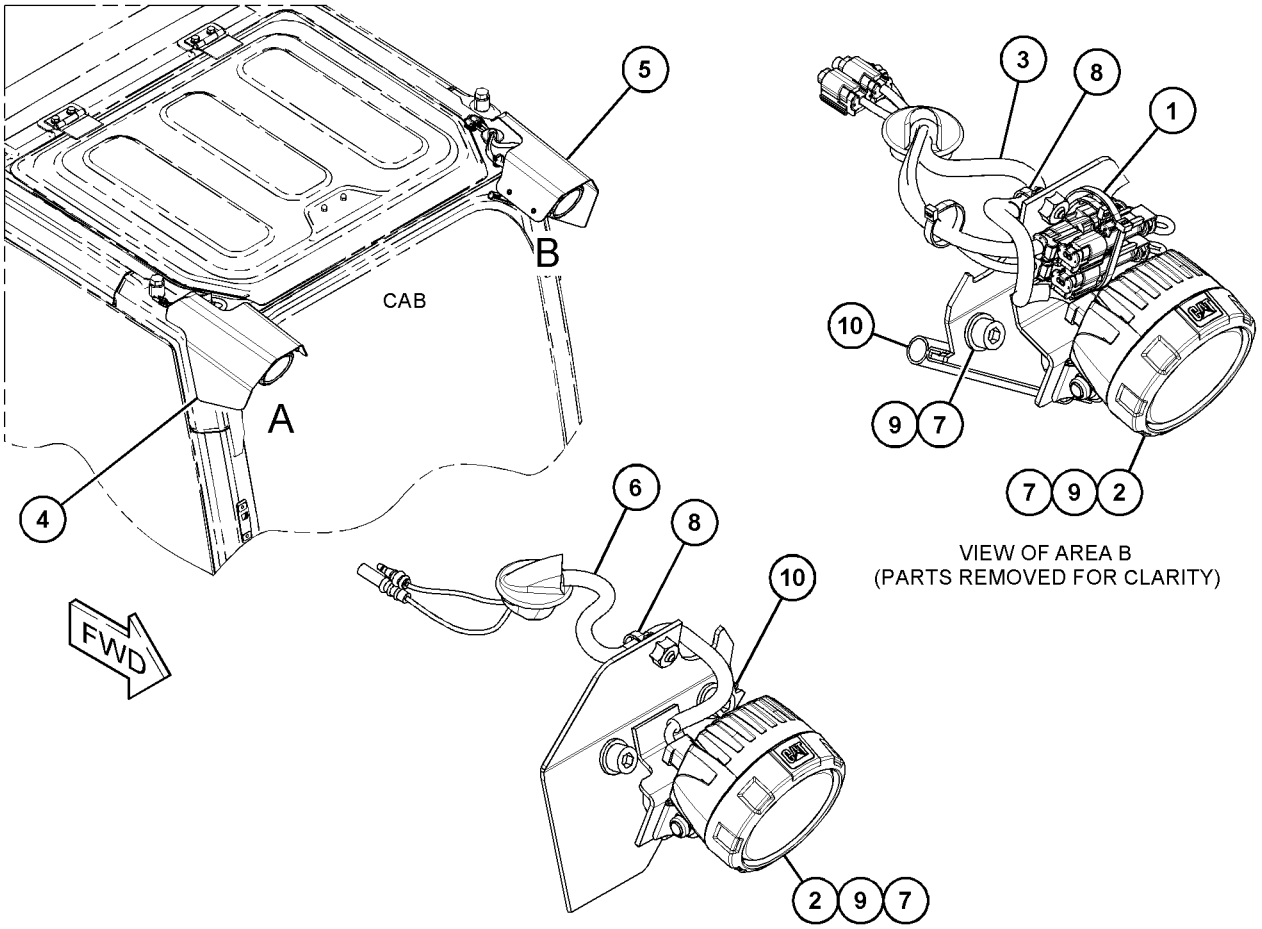

VIEW OF AREA B
(PARTS REMOVED FOR CLARITY)

VIEW OF AREA A
(PARTS REMOVED FOR CLARITY)

GRAPHIC #1 <END> g06234739

554-3615 LIGHTING GP-FLOOD–CAB

S/N: BR61-UP

FRONT WINDOW GUARD

SMCS-1434 **i07434617**

NOTE	REF NO	GRAPHIC REF	PART NUMBER	QTY	PART NAME 1 2 3 4 5 6 (PRODUCT LEVEL)	SEE PAGE
	1	1	**7K-1181**	1	STRAP-CABLE	
	2	1	**484-1453**	1	CLIP (RETAINER)	
	3	1	**484-1456**	2	STRAP-CABLE	
	4	1	**524-8521**	2	LAMP GP-FLOOD (850 LUMENS)	
					(EACH INCLUDES)	
M		1	**3T-0852**	1	LOCKNUT (M8X1.25-THD)	
M		1	**8T-6912**	1	BOLT (M8X1.25X50-MM)	
Y	5	1	**530-1948**	1	HARNESS AS-CAB (LH)	159
	6	1	**533-2343**	1	HARNESS AS-CAB (RH)	
		1	**155-2270**	1	KIT-CONNECTING PLUG (2-PIN)	
					(INCLUDES PLUG AS, WEDGE, & INTERFACE SEAL)	
		1	**9W-0844**	2	SOCKET-CONNECTOR (14-GA TO 16-GA)	
		1	*7Y-3966*	1	TERMINAL AS	
		1	**7Y-3962**	1	TERMINAL-BULLET (MALE)	
		1	**7Y-3964**	1	TUBE (CONNECTOR TERMINAL)	
		1	*7Y-3967*	1	TERMINAL AS	
		1	**7Y-3963**	1	TERMINAL-BULLET (FEMALE)	
		1	**7Y-3965**	1	TUBE (RECEPTACLE TERMINAL)	
Y	7	1	**539-2832**	2	HARNESS AS-CAB (FLOODLIGHTS)	160
	8	1	**8T-4121**	2	WASHER-HARD (11X21X2.5-MM THK)	
M	9	1	**8T-4133**	2	NUT (M10X1.5-THD)	
M	10	1	**8T-4137**	2	BOLT (M10X1.5X20-MM)	

M - METRIC PART
Y - SEPARATE ILLUSTRATION

554-3615 **LIGHTING GP-FLOOD (**contd.**)** **i07434617**

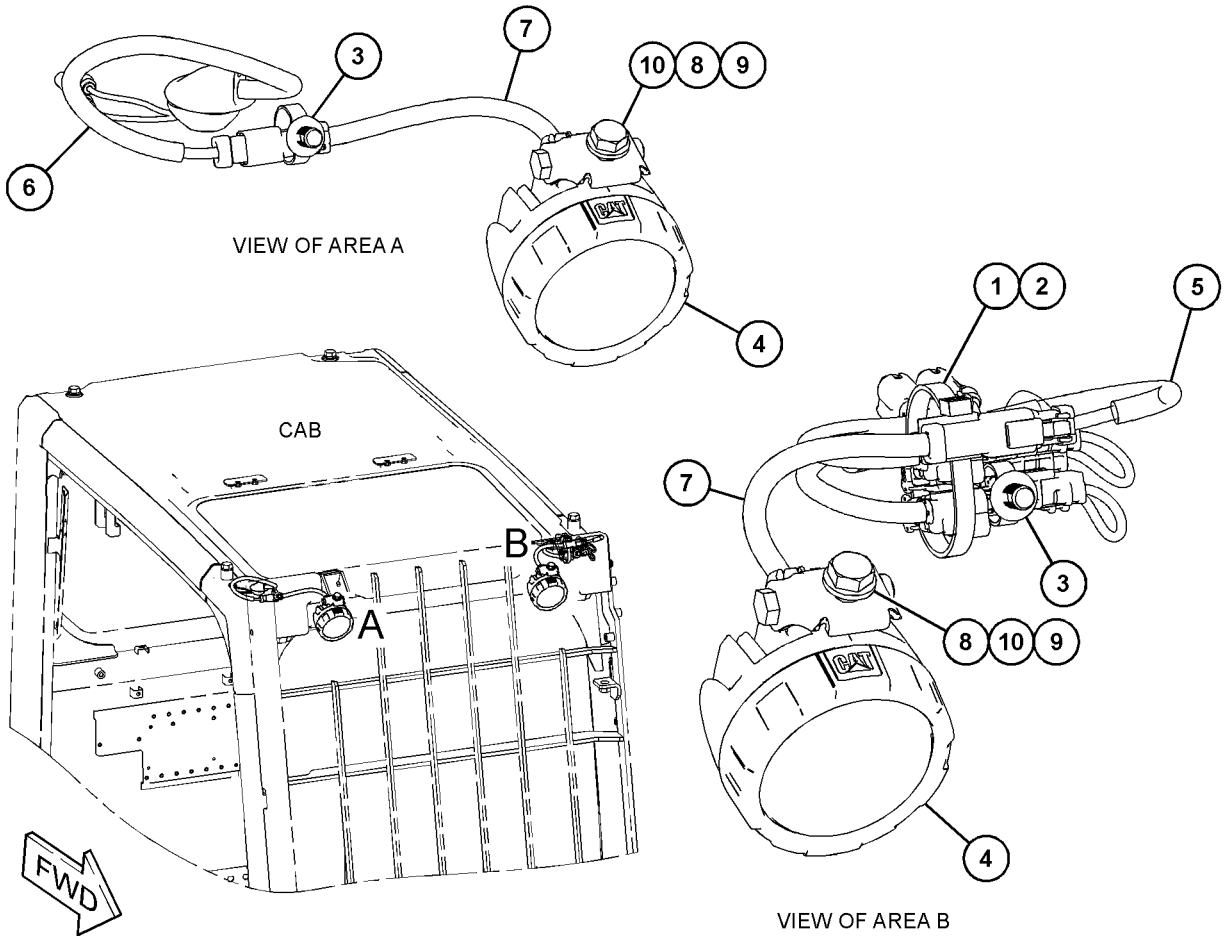

GRAPHIC #1 <END> g06274369

489-7847 MODULE GP-CAB WIRING

S/N: BR61-UP

PART OF 487-7000, 487-7001 OPERATOR AR

SMCS-1408, 1421, 7610, 7620

i07348761

NOTE	PART NUMBER	QTY	PART NAME 1 2 3 4 5 6 (PRODUCT LEVEL)	SEE PAGE
Y	*502-7159*	1	CONTROL & MTG GP-ELECTRONIC (BODY)	147
Y	*503-2027*	1	CONVERTER & MOUNTING GP-POWER (24-VOLT TO 12-VOLT)	151
Y	*489-7848*	1	WIRING GP-CAB	230
Y	*488-6764*	1	WIRING GP-CONSOLE	257
Y	*488-6768*	1	WIRING GP-PLATFORM	271

Y - SEPARATE ILLUSTRATION

<END>

529-7141 MOUNTING GP-CONTROL

S/N: BR61-UP
4-PUSH BUTTON VERTICAL
PART OF 528-6835 CONTROL AR-AUXILIARY

SMCS-1901 **i07356803**

NOTE	REF NO	GRAPHIC REF	PART NUMBER	QTY	PART NAME 1 2 3 4 5 6 (PRODUCT LEVEL)	SEE PAGE
	1	1	**495-6053**	2	LEVER	
	2	1	**512-1247**	1	GRIP AS	
	3	1	**512-1248**	1	GRIP AS	
	4	1	**527-1848**	1	BOOT (LH)	
	5	1	**527-1849**	1	BOOT (RH)	
M	6	1	**095-1207**	2	NUT (M12X1.75-THD)	
	7	1	**282-3735**	2	SCREW-SPECIAL	

M - METRIC PART

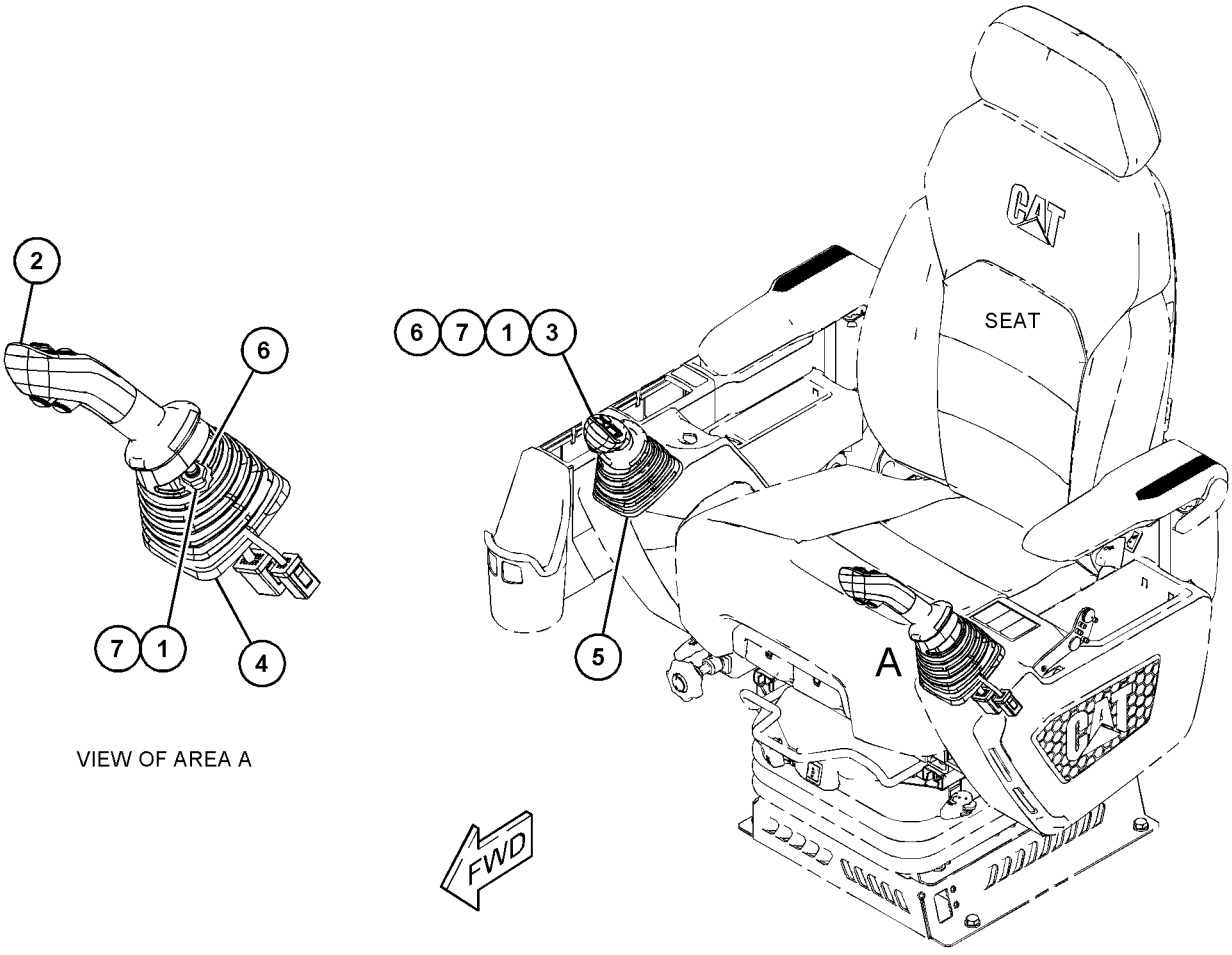

GRAPHIC #1 <END> g06229588

395-0112 MOUNTING GP-ELECTRONIC CONTROL

S/N: 4501-UP; E7A1-UP

PART OF 530-2686, 555-5560, 555-7255 ENGINE AR-PRIMARY

SMCS-1901 **i06554274**

NOTE	REF NO	GRAPHIC REF	PART NUMBER	QTY	PART NAME 1 2 3 4 5 6 (PRODUCT LEVEL)	SEE PAGE
	1	1	**446-1268**	1	BRACKET AS	
M	2	1	**6I-0292**	2	BOLT (M8X1.25X140-MM)	
M	3	1	**6I-0293**	2	BOLT (M8X1.25X80-MM)	

M - METRIC PART

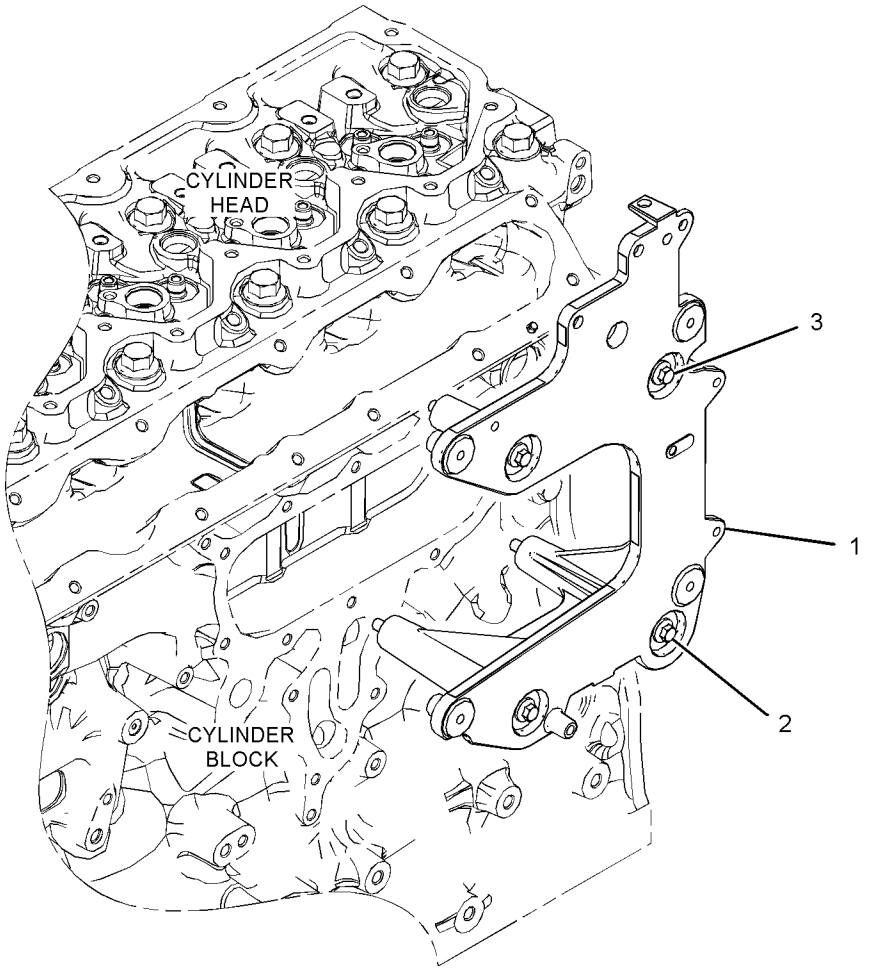

GRAPHIC #1 <END> g06032947

502-7168 MOUNTING GP-WIRING

S/N: BR61-UP

PART OF 488-6764 WIRING GP-CONSOLE

SMCS-1408 **i07349043**

NOTE	REF NO	GRAPHIC REF	PART NUMBER	QTY	PART NAME 1 2 3 4 5 6 (PRODUCT LEVEL)	SEE PAGE
	1	1	**7K-1181**	1	STRAP-CABLE	
	2	1	**526-5708**	1	SWITCH AS-PUSH BUTTON	
		1	**8T-8729**	6	PIN-CONNECTOR (16-GA TO 18-GA)	
		1	**102-8805**	1	KIT-RECEPTACLE (6-PIN)	
					(INCLUDES RECEPTACLE AS & WEDGE)	

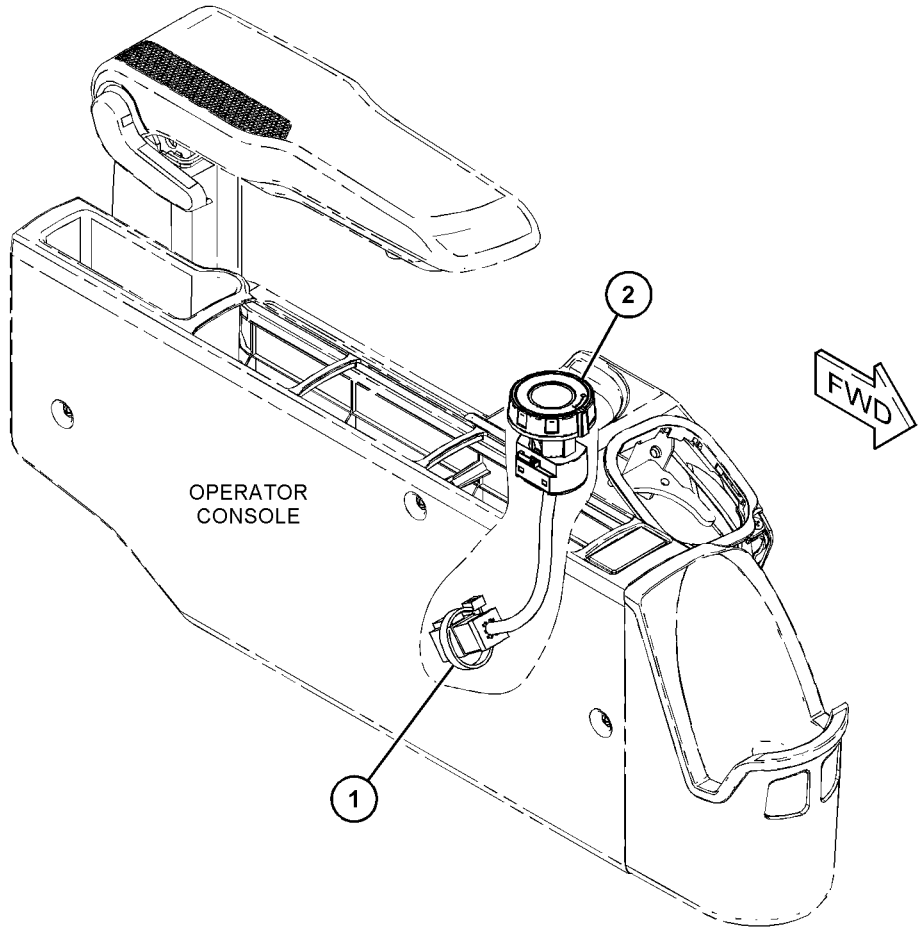

GRAPHIC #1 <END> g06227438

524-4392 MOUNTING GP-WIRING—HAMMER RETURN FILTER

S/N: BR61-UP

PART OF 528-6841, 558-3528 CONTROL AR-AUXILIARY

SMCS-1408 **i07358127**

NOTE	REF NO	GRAPHIC REF	PART NUMBER	QTY	PART NAME 1 2 3 4 5 6 (PRODUCT LEVEL)	SEE PAGE
	1	1	**484-1454**	1	CLIP	
	2	1	**484-1456**	1	STRAP-CABLE	
	3	1	**7I-2673**	1	STRAP-CABLE	
	4	1	**3S-2093**	4	STRAP-CABLE	
	5	1	**7K-1181**	1	STRAP-CABLE	

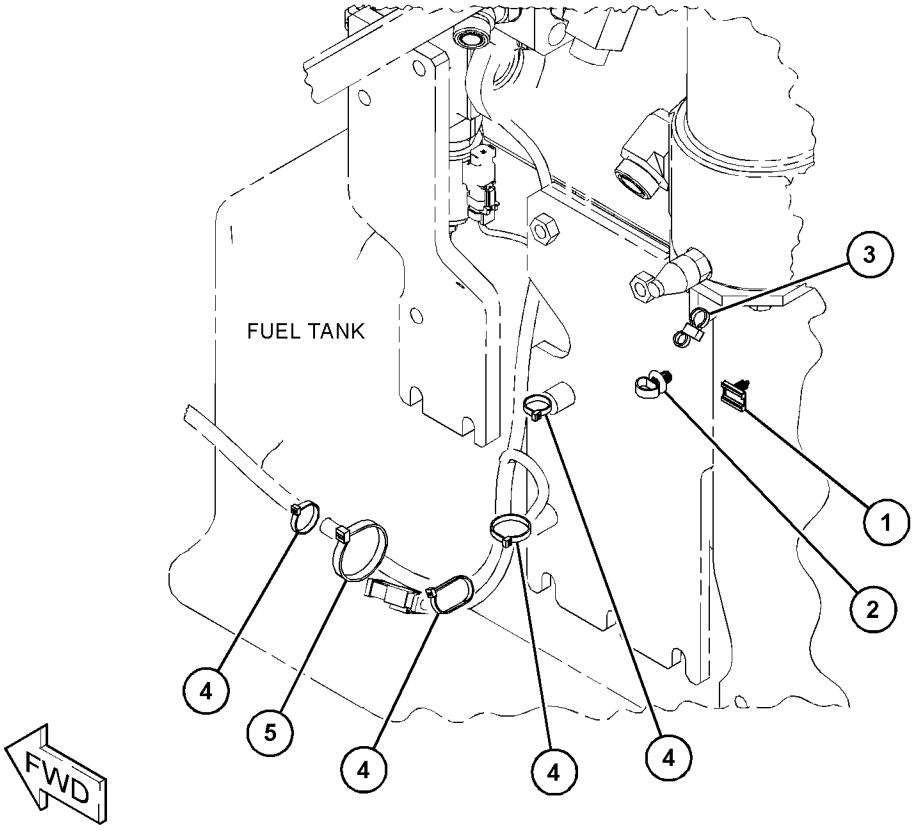

GRAPHIC #1 <END> g06229885

490-8083 PANEL GP-SWITCH

S/N: BR61-UP

PART OF 490-2684, 556-9810 WIRING GP-CHASSIS

SMCS-1408, 1429, 7332, 7451 **i07329706**

NOTE	REF NO	GRAPHIC REF	PART NUMBER	QTY	PART NAME 1 2 3 4 5 6 (PRODUCT LEVEL)	SEE PAGE
	1	1	**3E-8320**	1	PLATE-INSTRUCTION (BATTERY)	
Y	2	1	**7N-0719**	1	SWITCH GP-DISCONNECT (BATTERY)	225
Y	3	1	**241-8368**	1	SWITCH GP-MAGNETIC (24-VOLT) (GLOW PLUG)	226
	4	1	**484-1456**	1	STRAP-CABLE	
Y	5	1	**520-4558**	1	HARNESS AS-PANEL	181
	6	1	**530-1753**	1	BRACKET AS-PANEL	
	7	1	**4I-3090**	1	SEAL	
	8	1	**8T-4121**	2	WASHER-HARD (11X21X2.5-MM THK)	
M	9	1	**8T-4136**	2	BOLT (M10X1.5X25-MM)	
M	10	1	**8T-4138**	2	BOLT (M6X1X20-MM)	
	11	1	**8T-4224**	2	WASHER-HARD (8.8X16X2-MM THK)	
	12	1	**9X-8256**	2	WASHER (6.6X12X2-MM THK)	

M - METRIC PART
Y - SEPARATE ILLUSTRATION

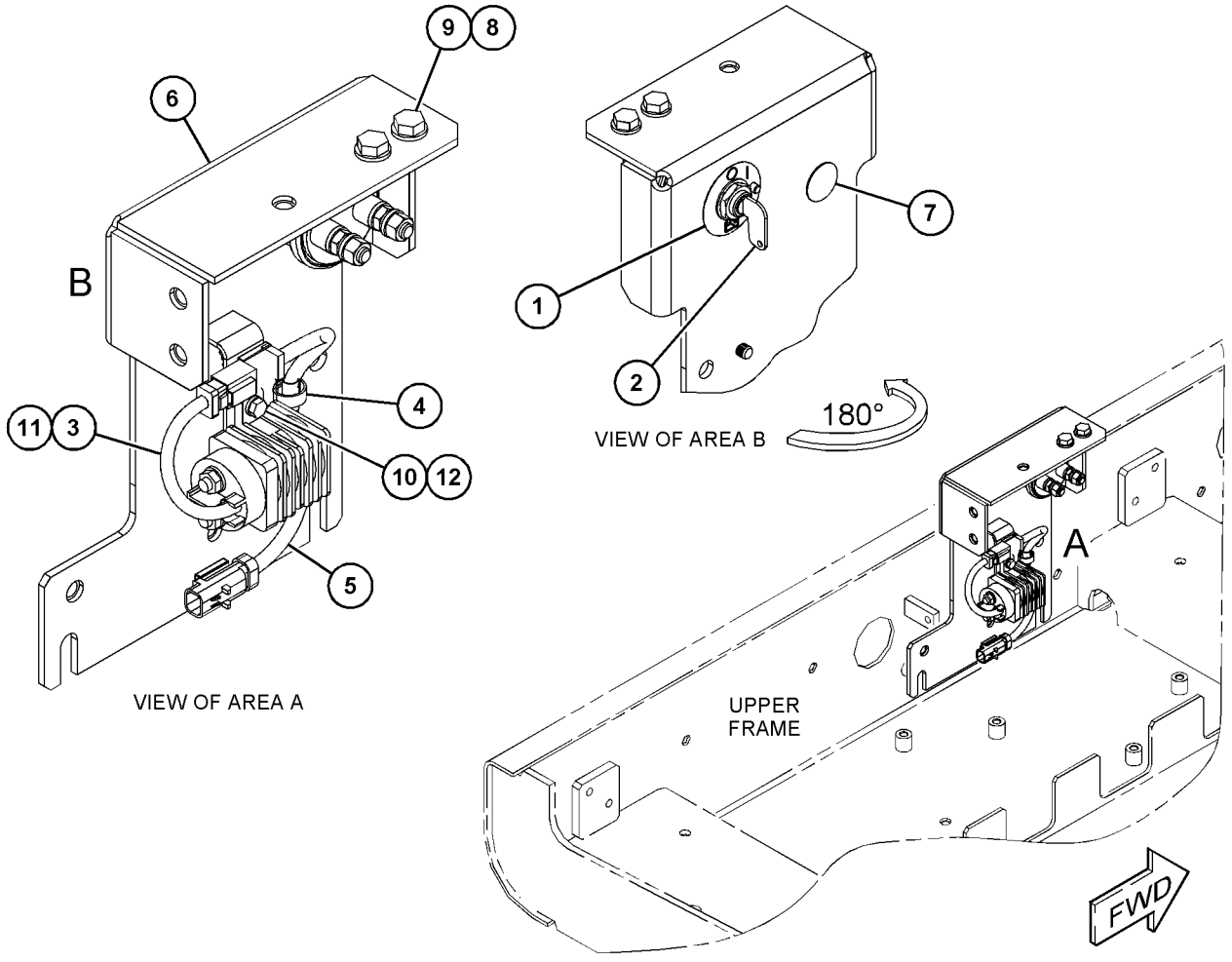

GRAPHIC #1 <END> g06224878

560-5551 RECEIVER GP-LASER—GRADE CONTROL

S/N: BR610001-UP

PART OF 560-5685, 560-5689 GRADE CONTROL AR

SMCS-7009 **i07451523**

NOTE	REF NO	GRAPHIC REF	PART NUMBER	QTY	PART NAME 1 2 3 4 5 6 (PRODUCT LEVEL)	SEE PAGE
M	1	1	**8T-4182**	1	BOLT (M10X1.5X45-MM)	
M	2	1	**8T-4908**	4	BOLT (M8X1.25X25-MM)	
	3	1	**7X-7729**	2	WASHER (11X25X3-MM THK)	
	4	1	**8T-4121**	2	WASHER-HARD (11X21X2.5-MM THK)	
M	5	1	**8T-4133**	1	NUT (M10X1.5-THD)	
M	6	1	**8T-4137**	2	BOLT (M10X1.5X20-MM)	
	7	1	**8T-4224**	4	WASHER-HARD (8.8X16X2-MM THK)	
	8	1	**369-1562**	1	RECEIVER AS-LASER	
		1	**493-6780**	1	SOFTWARE GP-MONITOR	
	9	1	**560-6484**	1	BRACKET AS	
M		1	**8T-3612**	4	NUT-WELD (M8X1.25-THD)	

M - METRIC PART

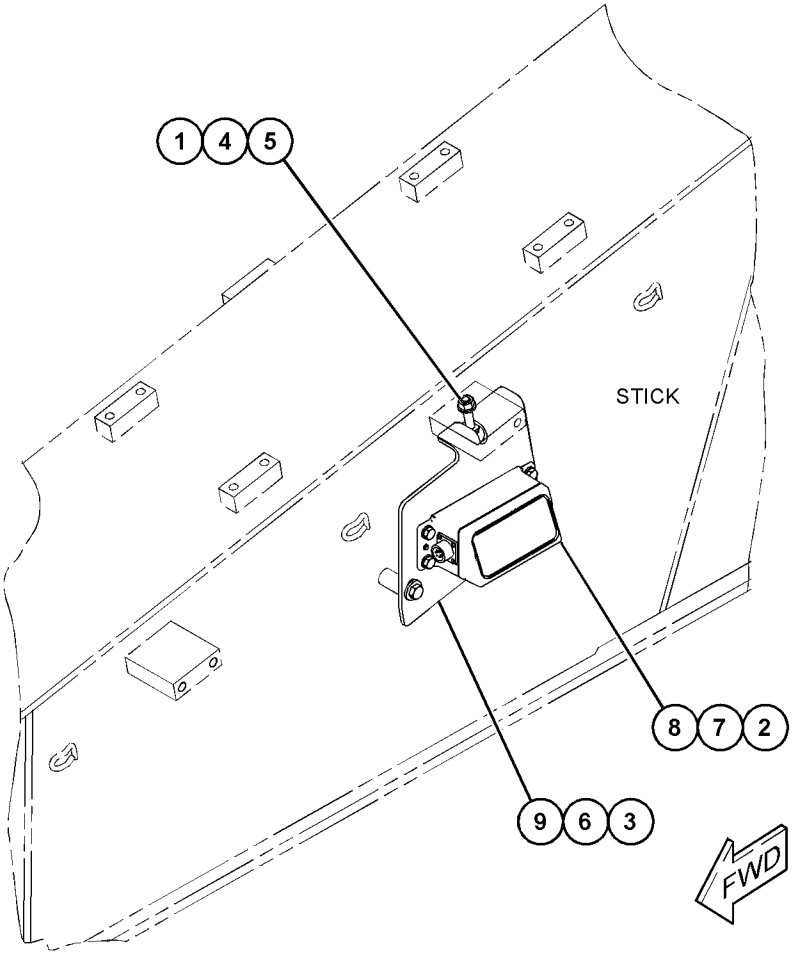

GRAPHIC #1 <END> g06325276

490-2767 SENSOR & MTG GP-POSITION—BODY TILT

S/N: BR61-UP

PART OF 516-0550 GRADE CONTROL AR

SMCS-5736 **i07368947**

NOTE	REF NO	GRAPHIC REF	PART NUMBER	QTY	PART NAME 1 2 3 4 5 6 (PRODUCT LEVEL)	SEE PAGE
	1	1	**150-5785**	2	DOWEL	
	2	1	**501-1450**	1	SENSOR AS-POSITION (INERTIAL MEASUREMENT UNIT)	
	3	1	**525-6177**	1	BRACKET-SENSOR	
	4	1	**8T-4121**	2	WASHER-HARD (11X21X2.5-MM THK)	
M	5	1	**8T-4136**	2	BOLT (M10X1.5X25-MM)	
	6	1	**8T-4224**	3	WASHER-HARD (8.8X16X2-MM THK)	
M	7	1	**8T-7547**	3	BOLT (M8X1.25X30-MM)	

M - METRIC PART

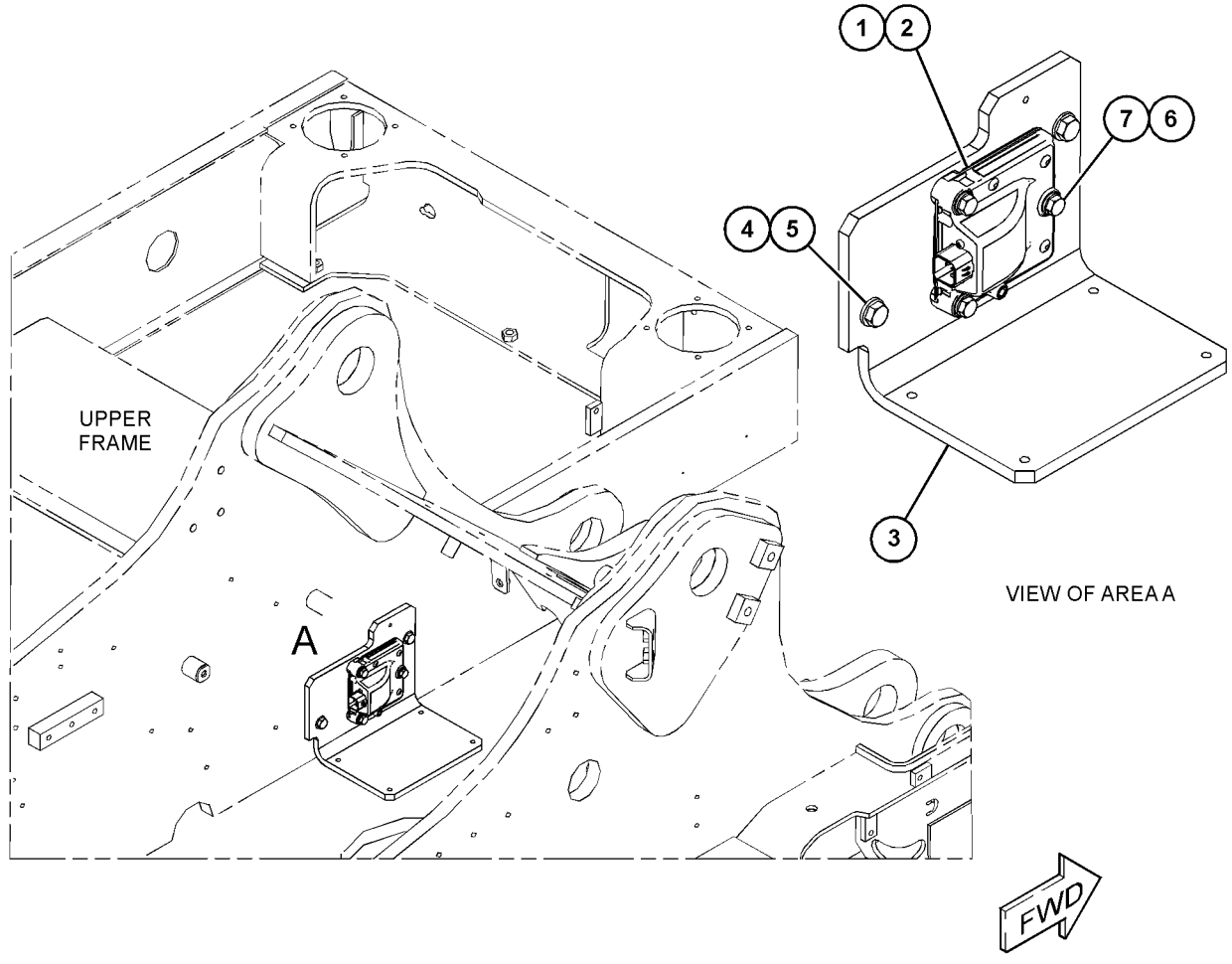

GRAPHIC #1 <END> g06230485

490-2768 SENSOR & MTG GP-POSITION—GRADE CONTROL, BOOM

S/N: BR61-UP

PART OF 516-9880 GRADE CONTROL AR

SMCS-5736 **i07369388**

NOTE	REF NO	GRAPHIC REF	PART NUMBER	QTY	PART NAME 1 2 3 4 5 6 (PRODUCT LEVEL)	SEE PAGE
	1	1	**150-5785**	2	DOWEL	
	2	1	**501-1450**	1	SENSOR AS-POSITION (INERTIAL MEASUREMENT UNIT)	
	3	1	**8T-4224**	3	WASHER-HARD (8.8X16X2-MM THK)	
M	4	1	**8T-7547**	3	BOLT (M8X1.25X30-MM)	

M - METRIC PART

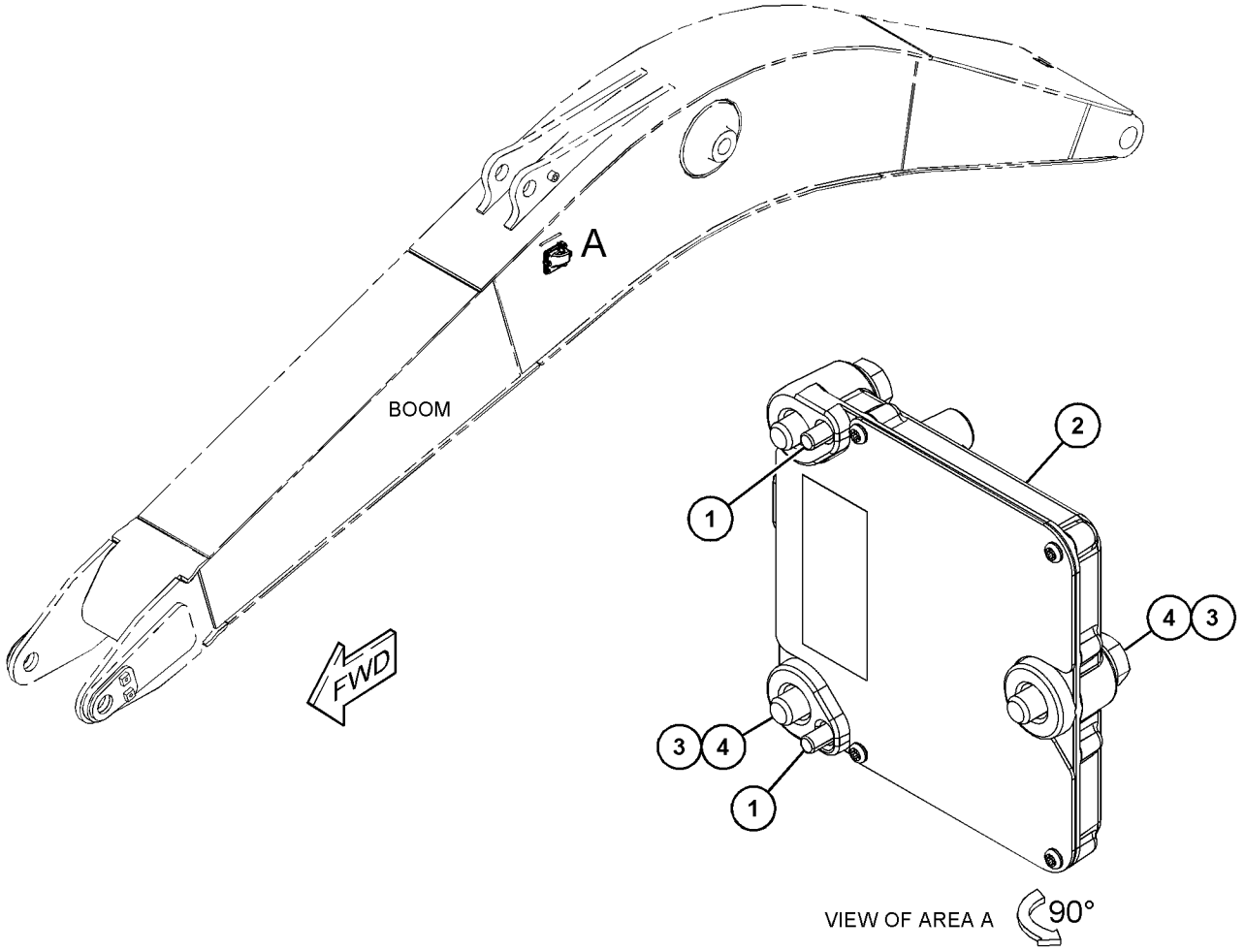

GRAPHIC #1 <END> g06230573

490-2769 SENSOR & MTG GP-POSITION—GRADE CONTROL, STICK

S/N: BR61-UP

PART OF 516-9883, 516-9884 GRADE CONTROL AR

SMCS-5736 **i07369429**

NOTE	REF NO	GRAPHIC REF	PART NUMBER	QTY	PART NAME 1 2 3 4 5 6 (PRODUCT LEVEL)	SEE PAGE
	1	1	**150-5785**	2	DOWEL	
	2	1	**501-1450**	1	SENSOR AS-POSITION (INERTIAL MEASUREMENT UNIT)	
	3	1	**8T-4224**	3	WASHER-HARD (8.8X16X2-MM THK)	
M	4	1	**8T-7547**	3	BOLT (M8X1.25X30-MM)	

M - METRIC PART

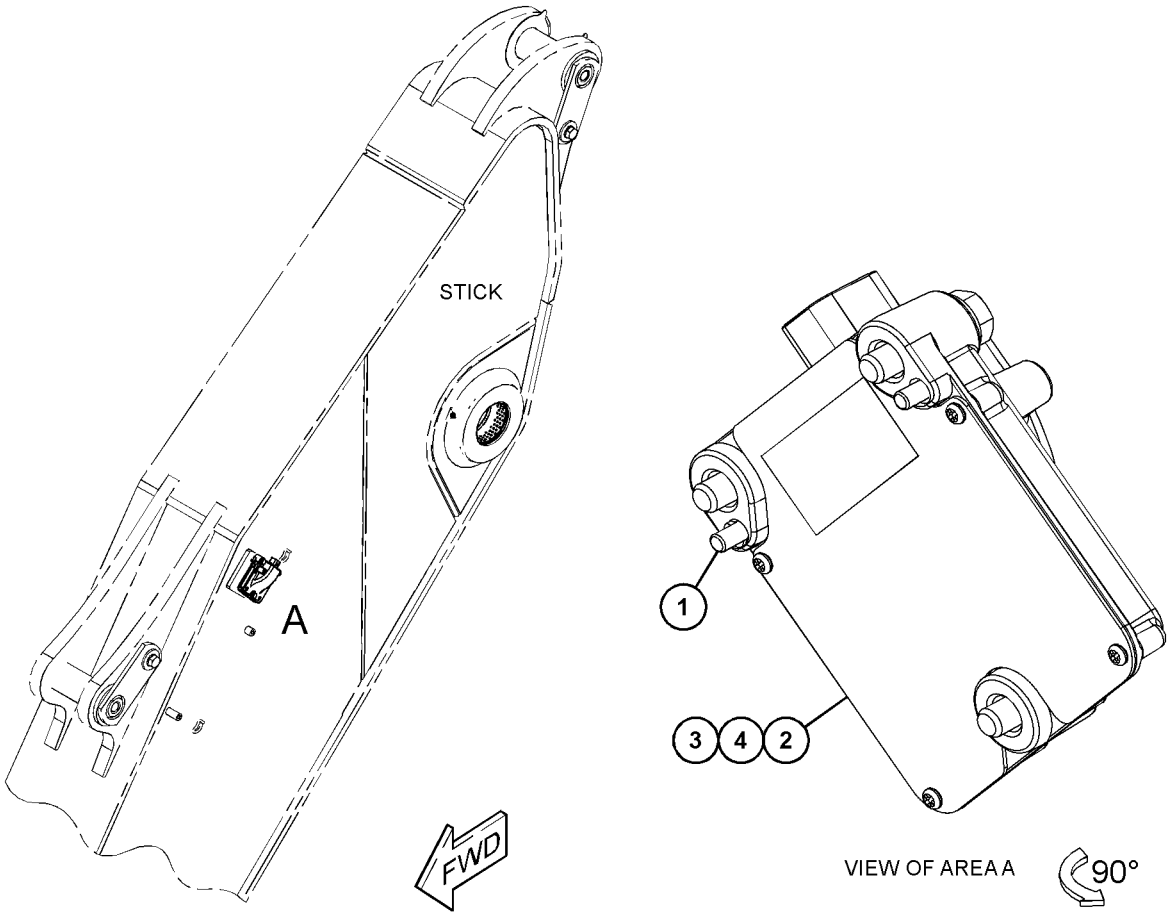

GRAPHIC #1 <END> g06230932

490-2770 SENSOR & MTG GP-POSITION—BUCKET

S/N: BR61-UP
GRADE CONTROL
PART OF 516-9883, 516-9884 GRADE CONTROL AR

SMCS-5736 **i07369434**

NOTE	REF NO	GRAPHIC REF	PART NUMBER	QTY	PART NAME 1 2 3 4 5 6 (PRODUCT LEVEL)	SEE PAGE
	1	1	**3S-2093**	18	STRAP-CABLE	
	2	1	**478-4872**	1	TARGET	
	3	1	**478-4875**	1	SENSOR GP-POSITION (BUCKET)	
		1	**230-4014**	1	RECEPTACLE AS-CONNECTOR (3-PIN)	
	4	1	**493-9732**	1	COVER AS	
M	5	1	**295-4155**	4	BOLT-SOCKET HEAD (M5X0.8X35-MM)	
	6	1	**8T-0328**	4	WASHER-HARD (5.5X10X1-MM THK)	
	7	1	**8T-4121**	4	WASHER-HARD (11X21X2.5-MM THK)	
M	8	1	**8T-4137**	3	BOLT (M10X1.5X20-MM)	
M	9	1	**8T-4138**	3	BOLT (M6X1X20-MM)	
M	10	1	**8T-4196**	1	BOLT (M10X1.5X35-MM)	
	11	1	**8T-4222**	4	WASHER-PLATED (11X32X2.5-MM THK)	
	12	1	**9X-8256**	3	WASHER (6.6X12X2-MM THK)	
E	13	1	**3E-6600**		SEAL (1.5-CM EACH)	

E - ORDER BY THE CENTIMETER
M - METRIC PART

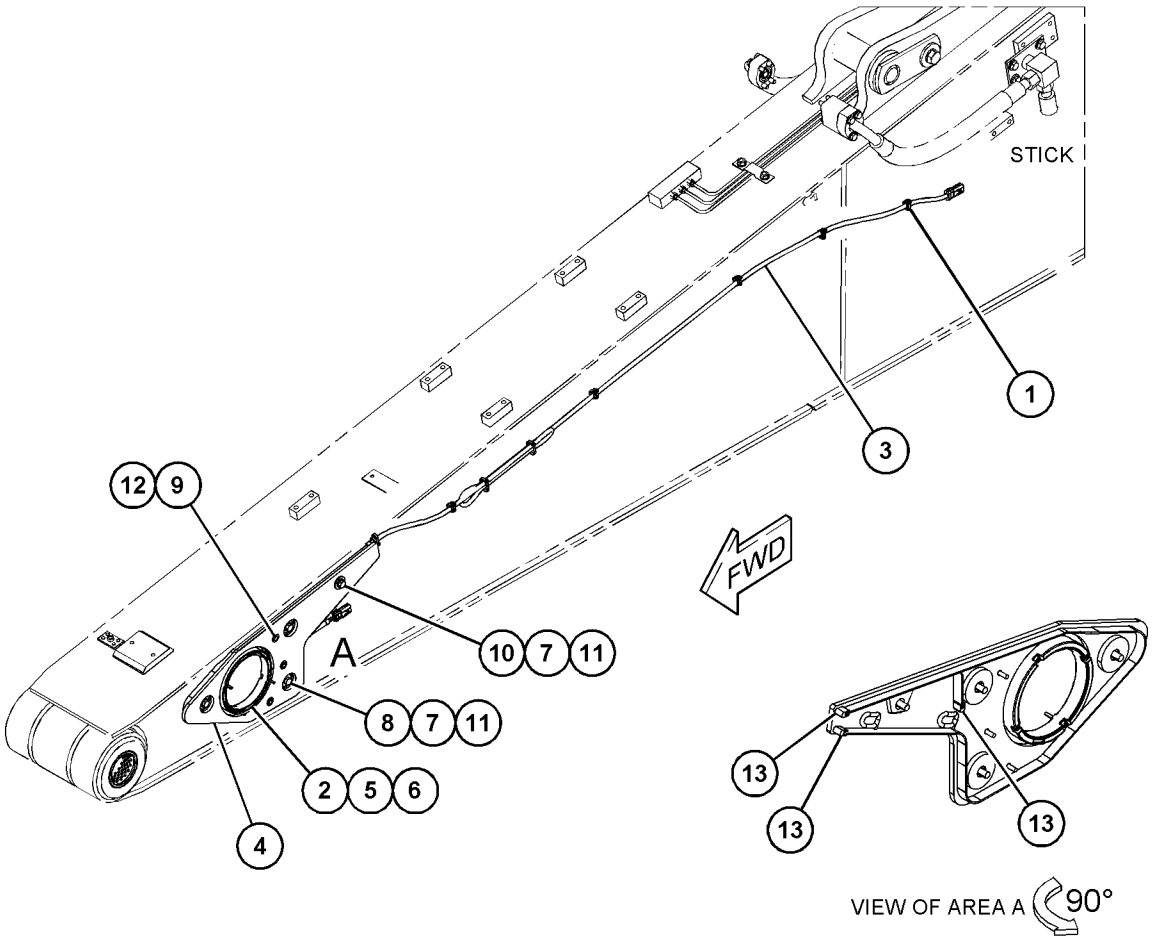

GRAPHIC #1 <END> g06230902

511-9451 SENSOR & MTG GP-POSITION—BODY TILT

S/N: BR61-UP

PART OF 516-0551 GRADE CONTROL AR

SMCS-5736 **i07451537**

NOTE	REF NO	GRAPHIC REF	PART NUMBER	QTY	PART NAME 1 2 3 4 5 6 (PRODUCT LEVEL)	SEE PAGE
	1	1	**150-5785**	2	DOWEL	
	2	1	**470-0191**	1	CONTROL-ELECTRONIC	
	3	1	**563-0598**	1	SENSOR AS-POSITION (INTERNAL MEASUREMENT UNIT)	
	4	1	**525-6177**	1	BRACKET-SENSOR	
M	5	1	**6V-8202**	4	BOLT-SOCKET HEAD (M8X1.25X16-MM)	
	6	1	**8T-4121**	2	WASHER-HARD (11X21X2.5-MM THK)	
M	7	1	**8T-4136**	2	BOLT (M10X1.5X25-MM)	
	8	1	**8T-4224**	7	WASHER-HARD (8.8X16X2-MM THK)	
M	9	1	**8T-7547**	3	BOLT (M8X1.25X30-MM)	

M - METRIC PART

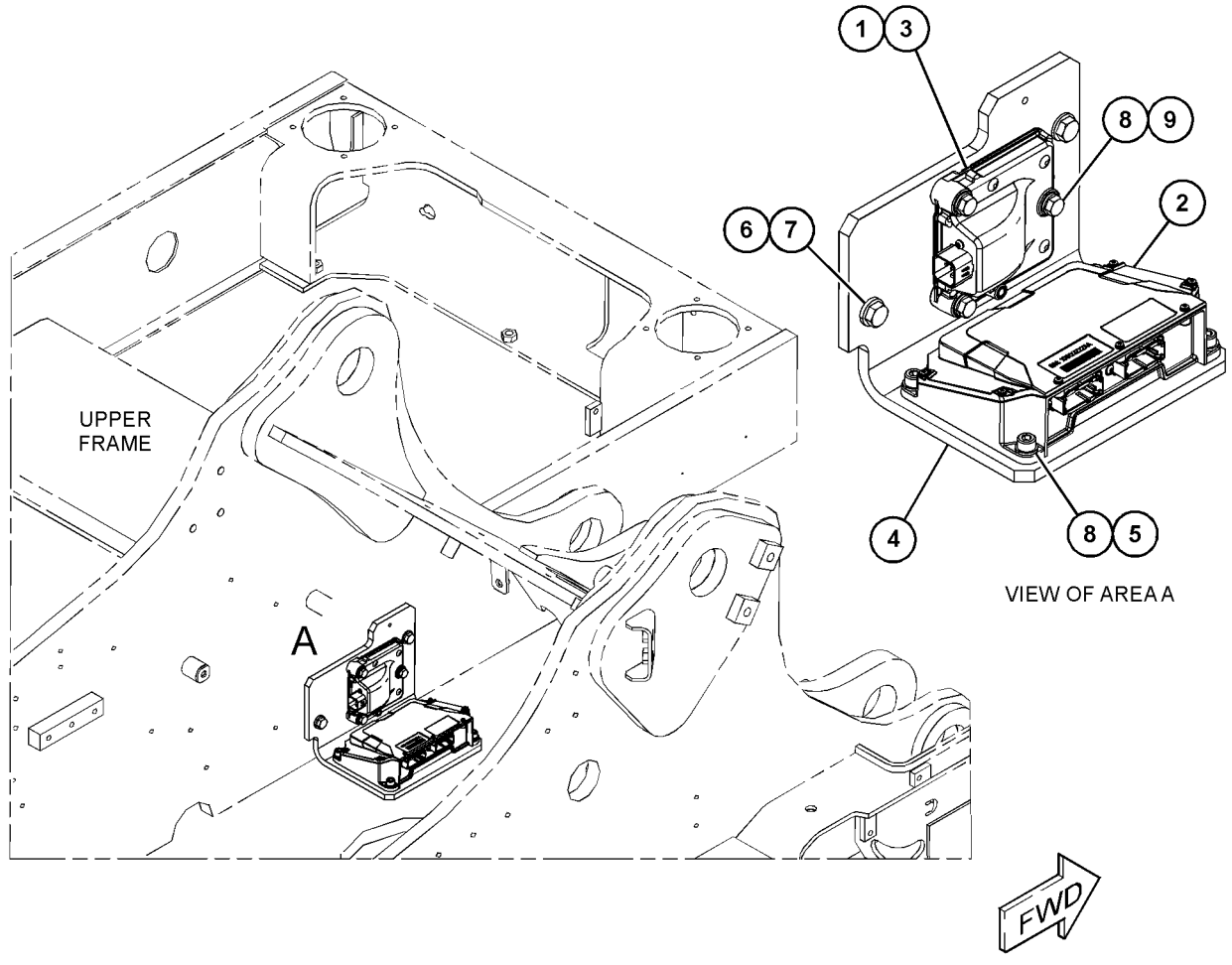

GRAPHIC #1 <END> g06230502

395-0110 SENSOR GP-ENGINE

S/N: 4501-UP; E7A1-UP

PART OF 530-2686, 555-5560, 555-7255 ENGINE AR-PRIMARY

SMCS-1000, 1906, 1907, 1924, 7422 **i06828458**

NOTE	REF NO	GRAPHIC REF	PART NUMBER	QTY	PART NAME 1 2 3 4 5 6 (PRODUCT LEVEL)	SEE PAGE
M	1	1	**124-3815**	2	BOLT (M8X1.25X16-MM)	
	2	1	**199-9252**	1	SEAL-O-RING	
	3	1	**199-9267**	1	SEAL-O-RING	
	4	1	**199-9751**	1	SEAL-O-RING	
	5	1	**384-3888**	2	SENSOR GP-SPEED (ENGINE)	
	6	1	**256-6454**	1	SENSOR-TEMPERATURE (2-PIN) (AIR INLET MANIFOLD)	
	6A	1	**256-6454**	1	SENSOR-TEMPERATURE (2-PIN) (COOLANT)	
	7	1	**276-5603**	1	SEAL-O-RING	
	8	1	**320-3060**	1	SENSOR GP-PRESSURE (ENGINE OIL)	
	9	1	**320-3062**	1	SENSOR GP-PRESSURE (INLET MANIFOLD AIR)	
	10	1	**228-4947**	2	SEAL-O-RING	

M - METRIC PART

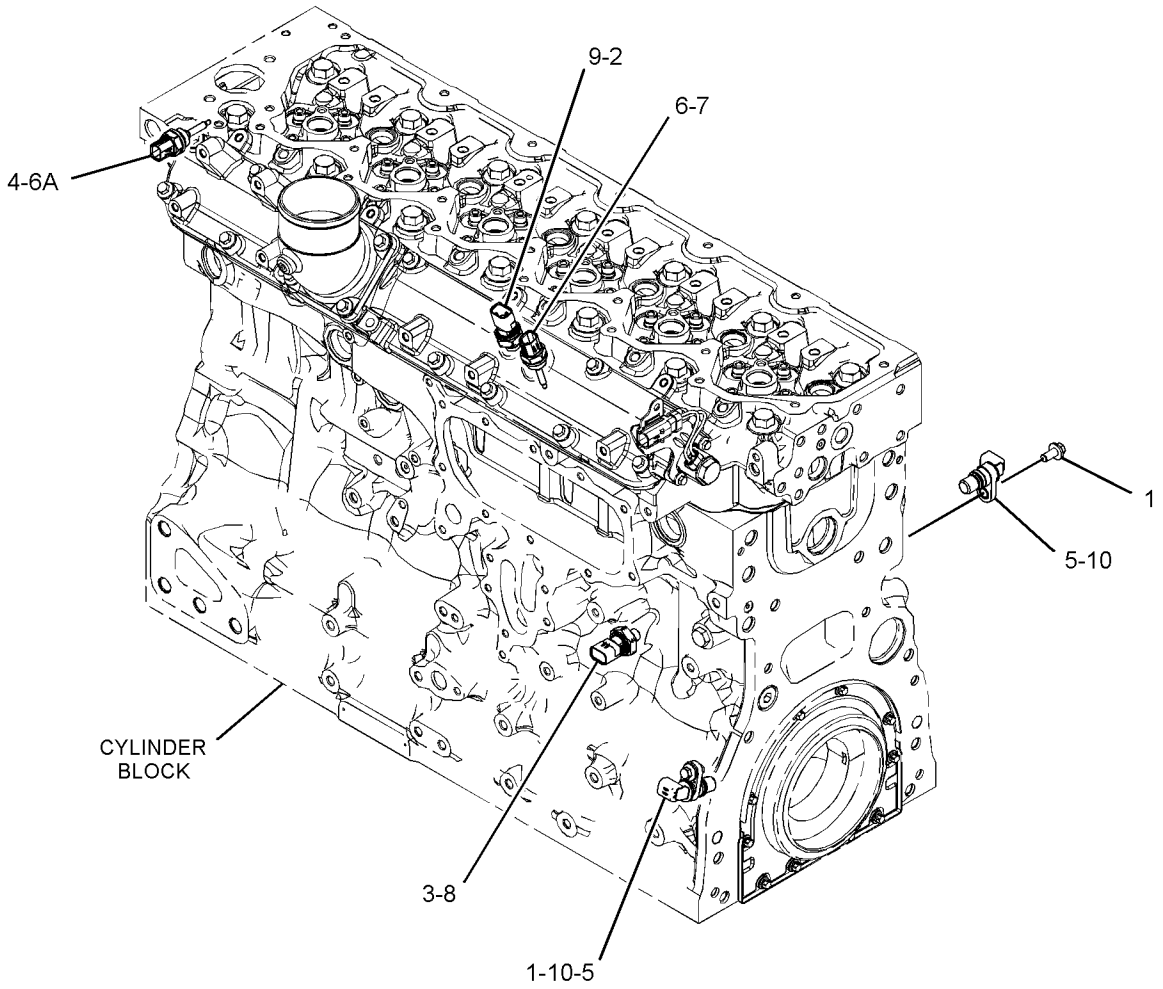

GRAPHIC #1 <END> g03380662

423-6434 SENSOR GP-LIQUID LEVEL

S/N: BR61-UP
WATER IN FUEL
PART OF 523-5673 LINES GP-FUEL

SMCS-7422 **i05649052**

NOTE	REF NO	GRAPHIC REF	PART NUMBER	QTY	PART NAME 1 2 3 4 5 6 (PRODUCT LEVEL)	SEE PAGE
	1	1	**214-7568**	1	SEAL-O-RING	
	2	1	**281-8805**	1	RECEPTACLE AS-CONNECTOR	
	3	1	**9X-3401**	3	PIN-CONNECTOR (16-GA TO 18-GA)	

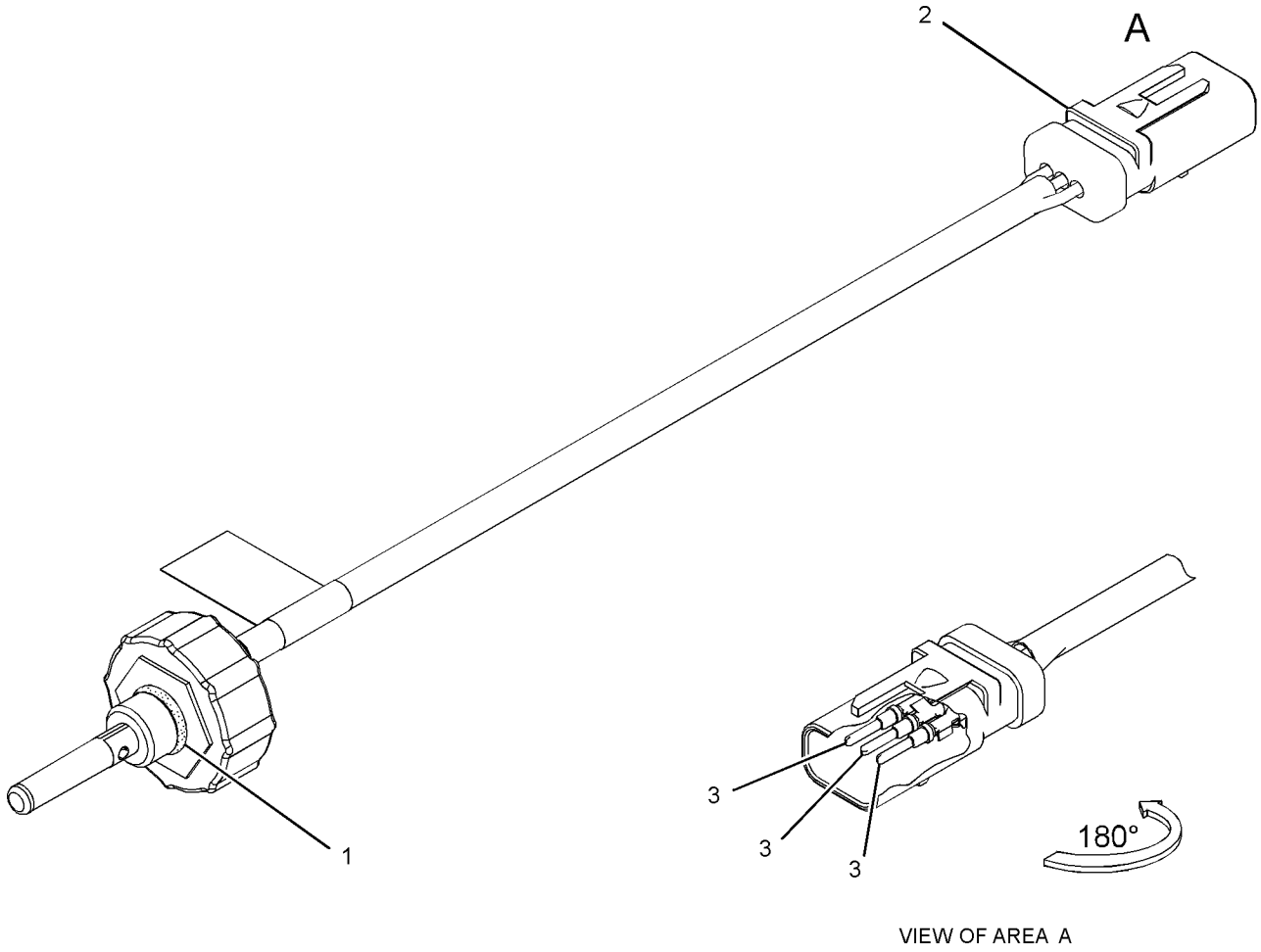

VIEW OF AREA A

GRAPHIC #1 <END> g02423836

338-6971 SENSOR GP-PRESSURE

S/N: BR61-UP

PART OF 489-2947, 492-2065 LINES GP-BOOM CYLINDER, 531-3323, 549-7938, 558-1390 LINES GP-FRONT, 489-2935 LINES GP-PILOT, 512-6145 SENSOR GP-PRESSURE

SMCS-1439, 1916, 1917, 1923, 1924 **i06125695**

NOTE	REF NO	GRAPHIC REF	PART NUMBER	QTY	PART NAME 1 2 3 4 5 6 (PRODUCT LEVEL)	SEE PAGE
	1	1	**344-7392**	1	SENSOR GP-PRESSURE	
	2	1	**3J-1907**	1	SEAL-O-RING	

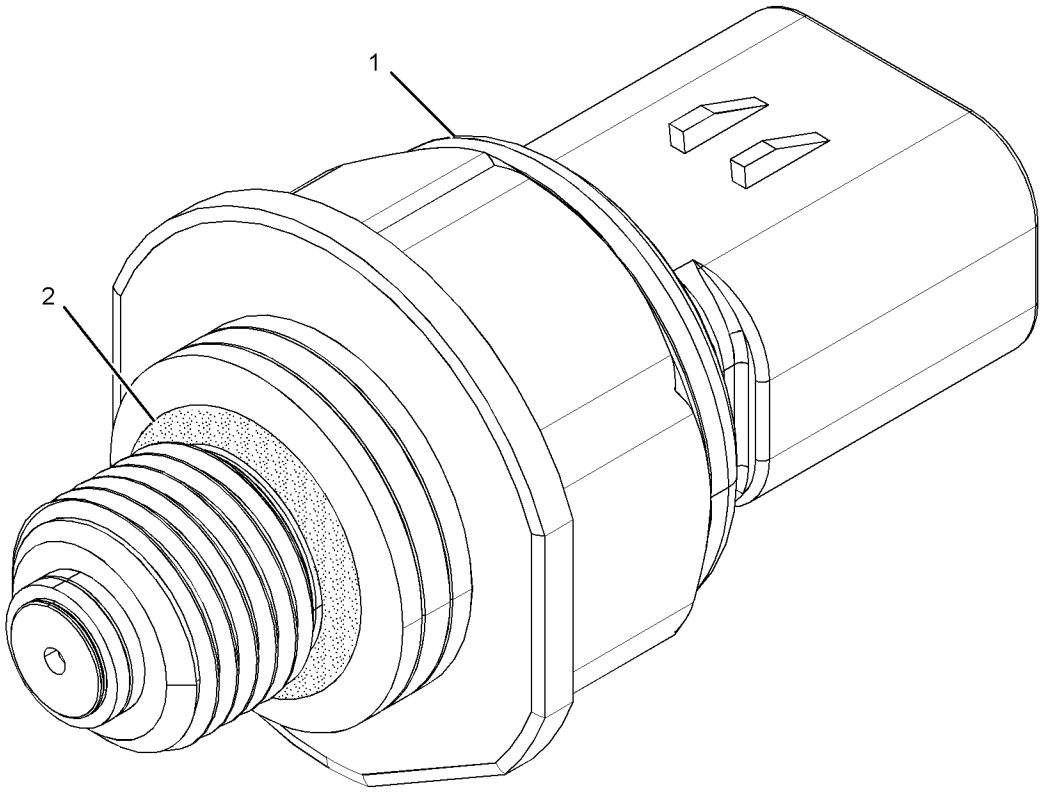

GRAPHIC #1 <END> g02262995

512-6145 SENSOR GP-PRESSURE—MOUNTING

S/N: BR61-UP

PART OF 513-3214 WIRING & MTG GP- MAIN CONT V

SMCS-1439, 1916, 1917, 1923, 1924 **i07368020**

NOTE	REF NO	GRAPHIC REF	PART NUMBER	QTY	PART NAME 1 2 3 4 5 6 (PRODUCT LEVEL)	SEE PAGE
	1	1	*164-6874*	2	FITTING AS-ELBOW (QUICK DISCONNECT, MALE)	
					(EACH INCLUDES)	
		1	**3J-1907**	1	SEAL-O-RING	
		1	**085-7356**	1	FITTING	
Y	2	1	*338-6971*	3	SENSOR GP-PRESSURE (HYDRAULIC OIL)	218

Y - SEPARATE ILLUSTRATION

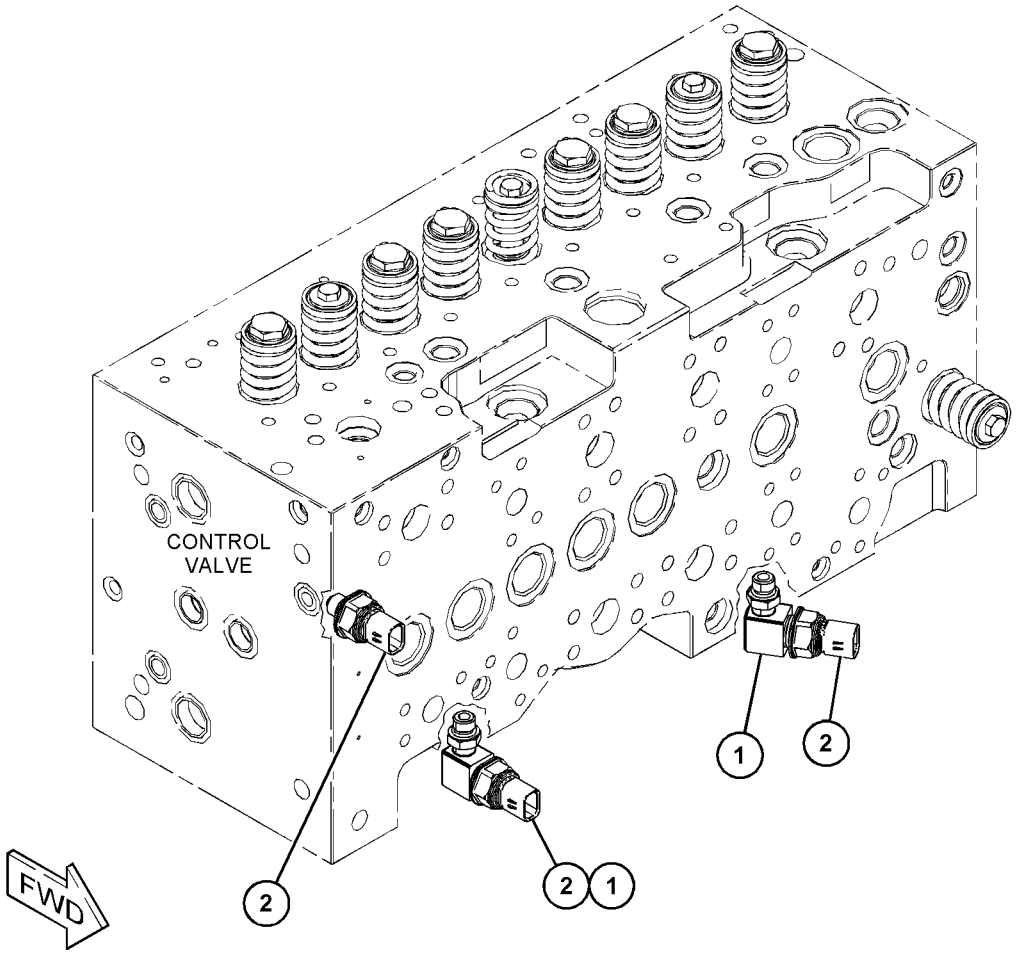

GRAPHIC #1 <END> g06229976

256-6453 SENSOR-TEMPERATURE

S/N: BR61-UP

PART OF 489-2942 TANK & FILTER GP-HYDRAULIC

SMCS-7400 **i07203557**

NOTE	REF NO	GRAPHIC REF	PART NUMBER	QTY	PART NAME 1 2 3 4 5 6 (PRODUCT LEVEL)	SEE PAGE

(NO SERVICED PARTS)

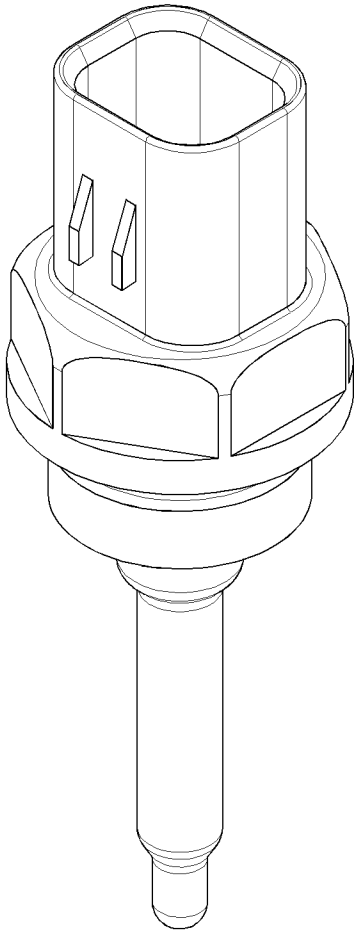

GRAPHIC #1 <END> g02888818

395-0114 STARTING AID GP

S/N: 4501-UP; E7A1-UP

PART OF 530-2686, 555-5560, 555-7255 ENGINE AR-PRIMARY

SMCS-1090 **i07383456**

NOTE	REF NO	GRAPHIC REF	PART NUMBER	QTY	PART NAME 1 2 3 4 5 6 (PRODUCT LEVEL)	SEE PAGE
M	1	1	**112-7704**	1	BOLT (M6X1X30-MM)	
M	2	1	**5C-2890**	2	NUT (M6X1-THD)	
	3	1	**217-9039**	1	STRAP-CABLE	
	4	1	**462-2235**	6	GLOW PLUG (24-VOLT)	
	5	1	**368-3145**	1	BUS BAR AS	
	6	1	**384-7567**	1	HARNESS AS-STARTING AID	
E		1	**292-2893**		CONDUIT (10.1-MM ID) (4-CM)	
		1	**2L-8050**	2	TERMINAL-RING (6-GA, 1/4-IN SCREW)	
					—OR—	
		1	**2L-8058**	2	TERMINAL-RING (8-GA, 1/4-IN SCREW)	
		1	**427-9771**	1	TIE	
M	7	1	**208-8469**	1	LOCKNUT (M6X1-THD)	
	8	1	**275-2428**	1	INSULATOR	
	9	1	**277-4409**	1	CAP	
	10	1	**067-6070**	1	WASHER	
	11	1	**275-2431**	1	WASHER	

E - ORDER BY THE CENTIMETER
M - METRIC PART

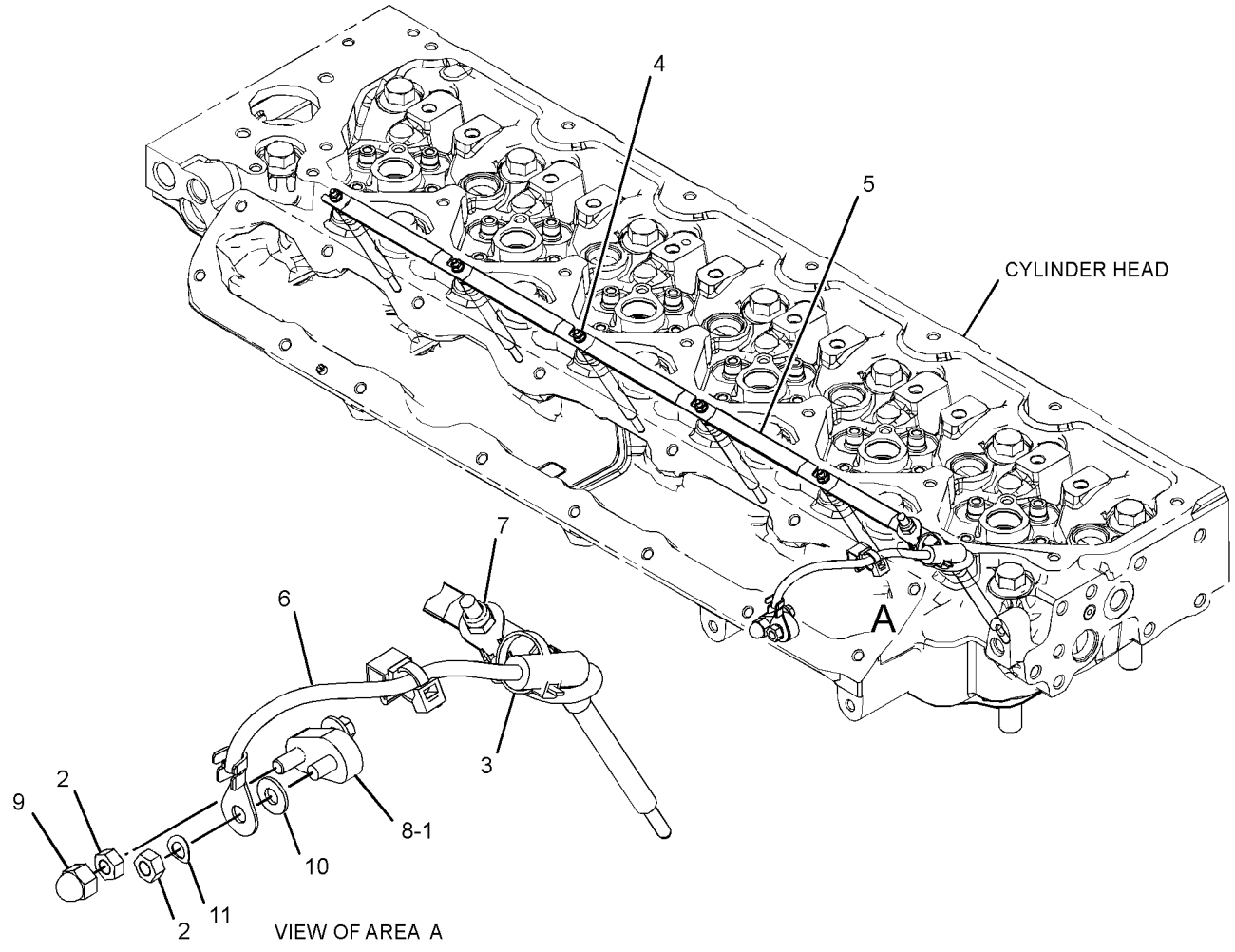

GRAPHIC #1 <END> g06032380

488-2807 STARTING MOTOR GP-ELECTRIC

S/N: BR61-UP

PART OF 490-4846 STARTING MOTOR GP-ELECTRIC

SMCS-1453 **i07366392**

NOTE	REF NO	GRAPHIC REF	PART NUMBER	QTY	PART NAME 1 2 3 4 5 6 (PRODUCT LEVEL)	SEE PAGE
	1	1	**230-4012**	1	RECEPTACLE AS-CONNECTOR (2-PIN)	
	2	1	**488-3790**	1	SWITCH AS-RELAY (STARTER)	
					AVAILABLE REPAIR KIT(S):	
			488-3798	1	KIT-PINION (STARTING MOTOR)	
					(INCLUDES NUT-PINION STOP, PINION STARTER, SNAP RETAINER & STARTER DRIVE END SPRING)	
			488-3799	1	KIT-HARDWARE (STARTING MOTOR)	
					(STARTER BOLTS, NUTS, STARTER SCREWS & SPRING WASHERS)	

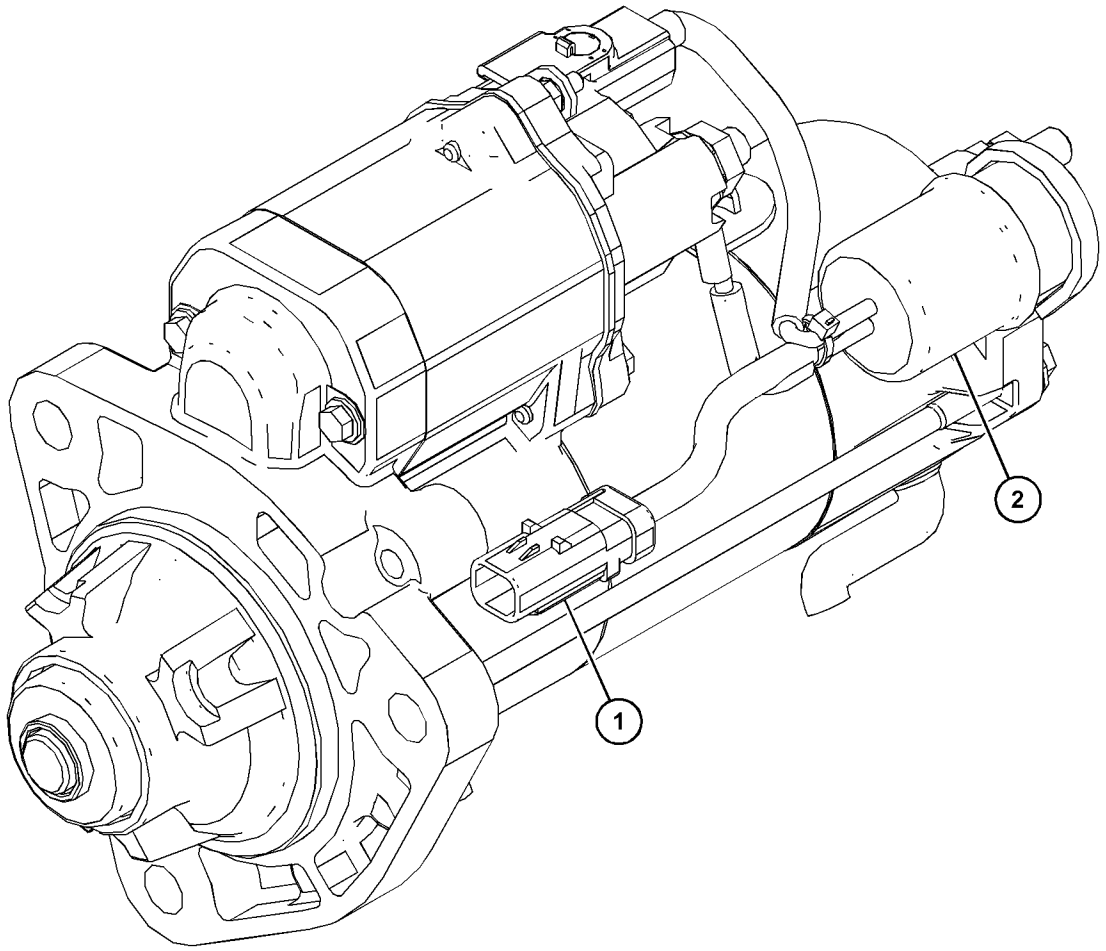

GRAPHIC #1 <END> g06224406

490-4846 STARTING MOTOR GP-ELECTRIC

S/N: BR61-UP

PART OF 490-4811, 558-1933 INSTALLATION AR-ENGINE

SMCS-1453 **i07366391**

NOTE	REF NO	GRAPHIC REF	PART NUMBER	QTY	PART NAME 1 2 3 4 5 6 (PRODUCT LEVEL)	SEE PAGE
	1	1	**487-2948**	2	STRAP-CABLE	
Y	2	1	**488-2807**	1	STARTING MOTOR GP-ELECTRIC	222
M	3	1	**184-0983**	3	NUT-HEX FLANGE (M12X1.75-THD)	

M - METRIC PART
Y - SEPARATE ILLUSTRATION

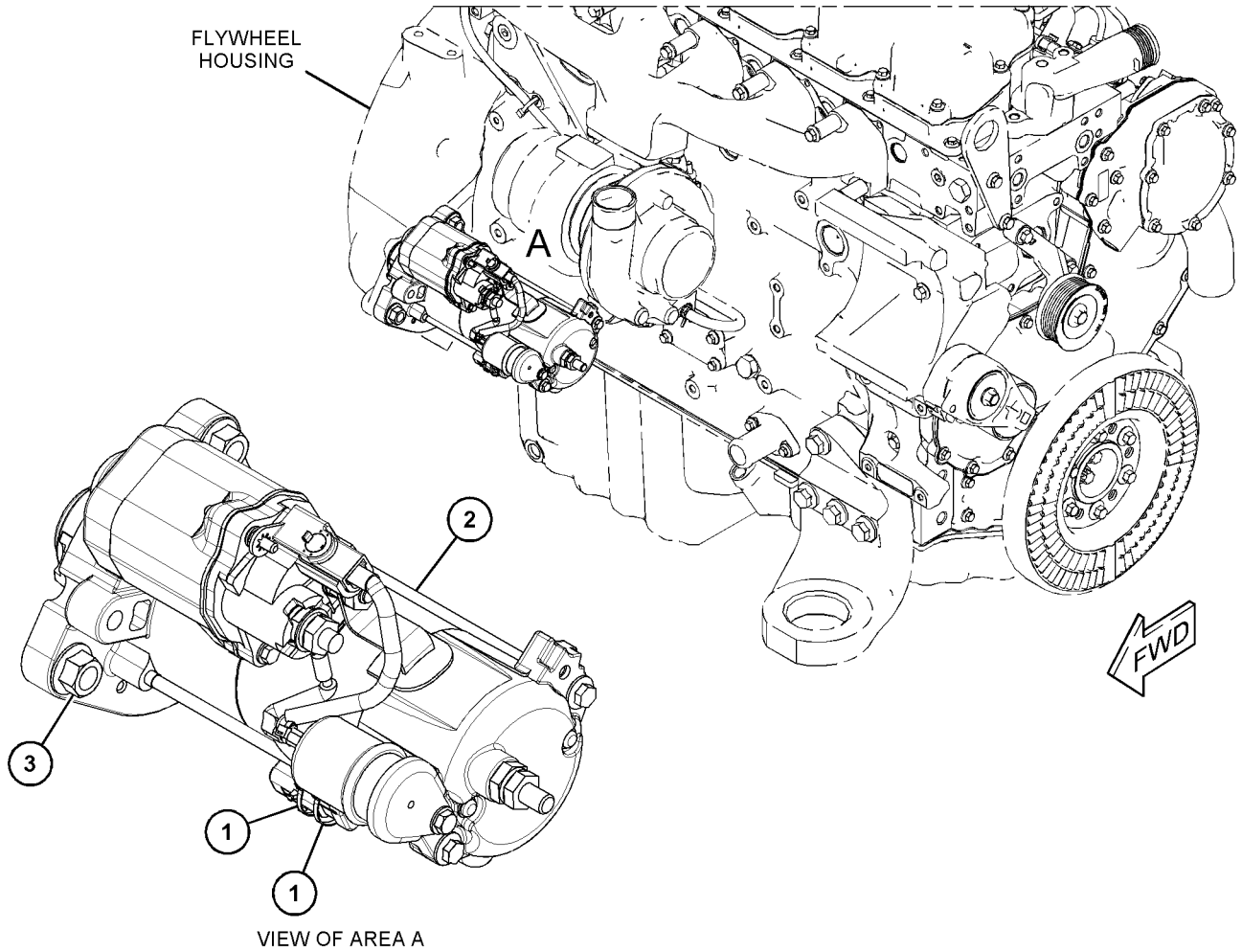

VIEW OF AREA A

GRAPHIC #1 <END> g06224438

502-7165 SWITCH AS-PUSH BUTTON

S/N: BR61-UP

PART OF 488-6764 WIRING GP-CONSOLE

SMCS-1416, 7332 **i07349050**

NOTE	REF NO	GRAPHIC REF	PART NUMBER	QTY	PART NAME 1 2 3 4 5 6 (PRODUCT LEVEL)	SEE PAGE
	1	1	**7K-1181**	1	STRAP-CABLE	
	2	1	**526-5708**	1	SWITCH AS-PUSH BUTTON	
		1	**8T-8729**	6	PIN-CONNECTOR (16-GA TO 18-GA)	
		1	**102-8805**	1	KIT-RECEPTACLE (6-PIN)	
					(INCLUDES RECEPTACLE AS & WEDGE)	

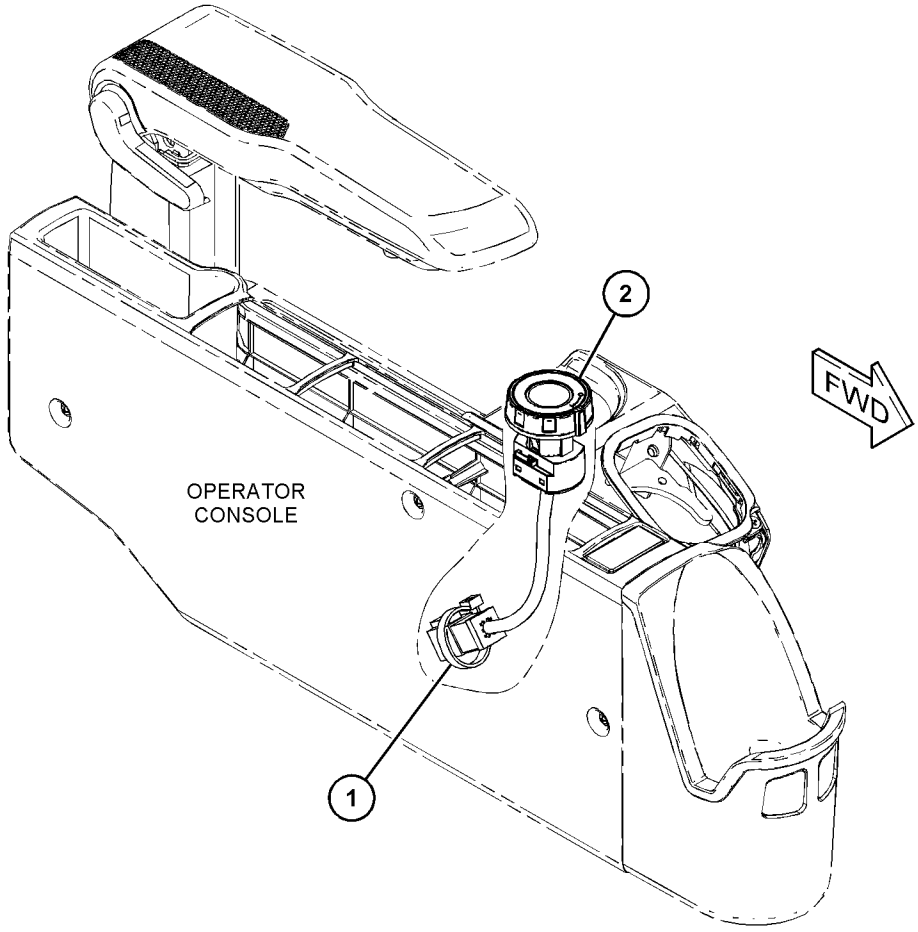

GRAPHIC #1 <END> g06227438

7N-0719 SWITCH GP-DISCONNECT–BATTERY

S/N: BR61-UP

PART OF 490-8083 PANEL GP-SWITCH

SMCS-1411 **i07376863**

NOTE	REF NO	GRAPHIC REF	PART NUMBER	QTY	PART NAME 1 2 3 4 5 6 (PRODUCT LEVEL)	SEE PAGE
	1	1	**2H-3922**	2	LOCKWASHER	
	2	1	**8H-5303**	1	NUT (3/4-16-THD)	
	3	1	**264-3617**	2	LOCKWASHER	
	4	1	**6F-7045**	2	NUT-FULL (3/8-24-THD)	
	5	1	**8H-5306**	1	KEY (BATTERY DISCONNECT)	

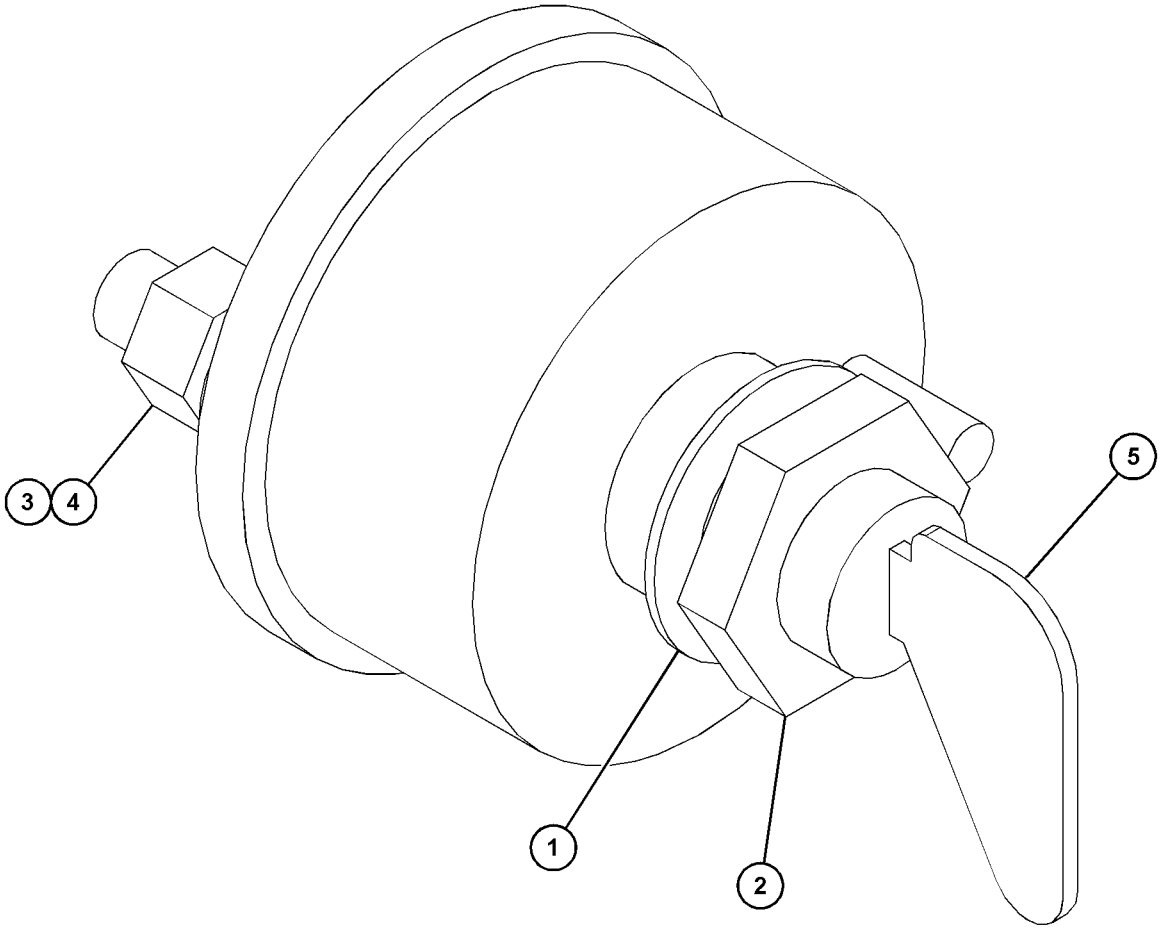

GRAPHIC #1 <END> g06307177

241-8368 SWITCH GP-MAGNETIC—GLOW PLUG RELAY

S/N: BR61-UP
24-VOLT
PART OF 490-8083 PANEL GP-SWITCH

SMCS-7499 **i07246406**

NOTE	REF NO	GRAPHIC REF	PART NUMBER	QTY	PART NAME 1 2 3 4 5 6 (PRODUCT LEVEL)	SEE PAGE
	1	1	**155-2270**	1	KIT-CONNECTING PLUG (2-PIN)	
					(INCLUDES PLUG AS, WEDGE & INTERFACE SEAL)	
	2	1	**4F-2294**	2	NUT-JAM (5/16-24-THD)	
	3	1	**8T-8730**	2	SOCKET-CONNECTOR (16-GA TO 18-GA)	

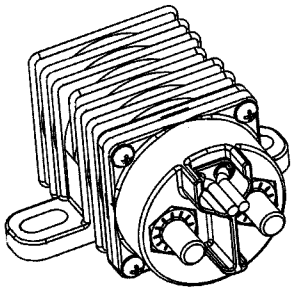

ISOMETRIC VIEW

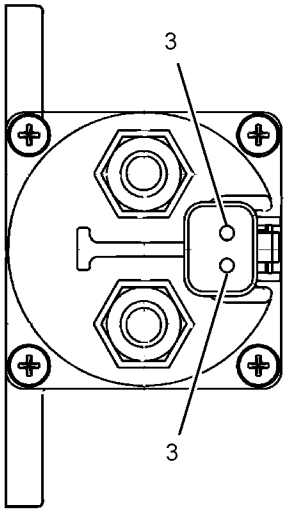

VIEW A-A

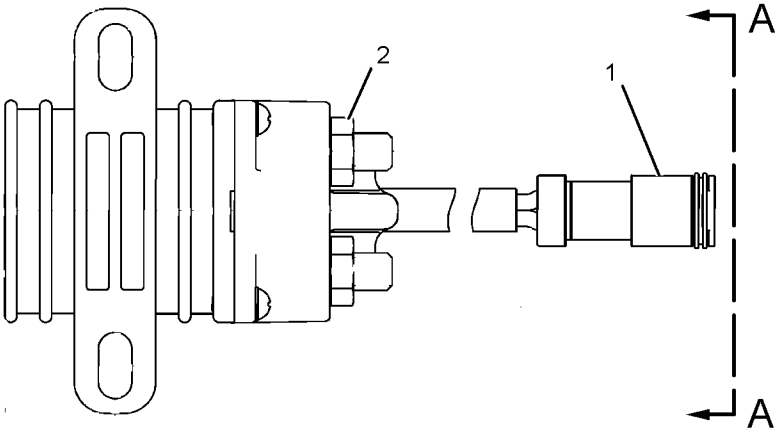

GRAPHIC #1 <END> g01077362

488-6825 SWITCH GP-ROCKER–COUPLER

S/N: BR61-UP

PART OF 517-4758 CONTROL AR-QUICK COUPLER

SMCS-1435 **i07376582**

NOTE	REF NO	GRAPHIC REF	PART NUMBER	QTY	PART NAME 1 2 3 4 5 6 (PRODUCT LEVEL)	SEE PAGE
	1	1	**498-9091**	1	SWITCH AS-ROCKER (QUICK COUPLER)	
	2	1	**3S-2093**	1	STRAP-CABLE	

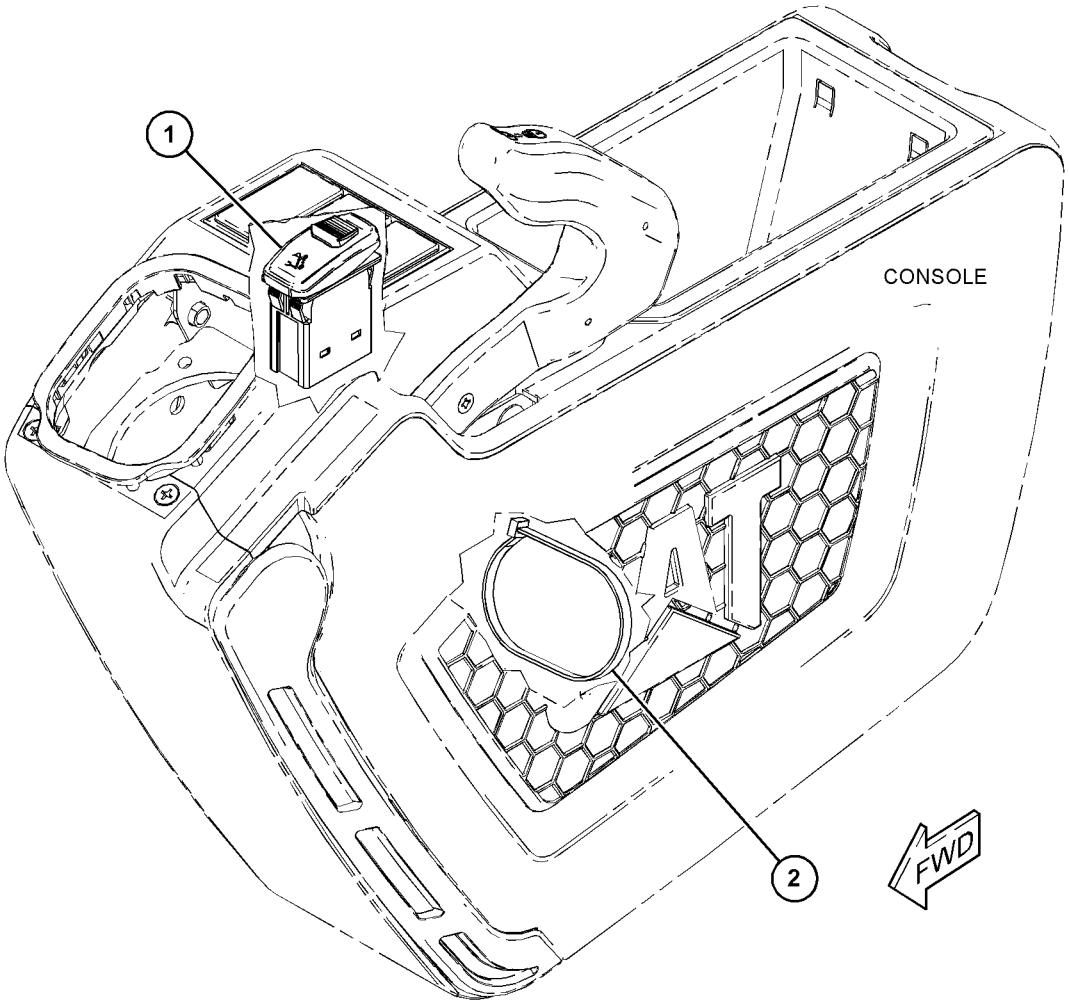

GRAPHIC #1 <END> g06228999

516-2546 SWITCH GP-ROCKER—TRAVEL ALARM CANCEL

S/N: BR61-UP

PART OF 516-2545 ALARM GP-TRAVEL

SMCS-1435 **i07356340**

NOTE	REF NO	GRAPHIC REF	PART NUMBER	QTY	PART NAME 1 2 3 4 5 6 (PRODUCT LEVEL)	SEE PAGE
	1	1	**516-3432**	1	SWITCH AS-ROCKER (TRAVEL ALARM CANCEL)	

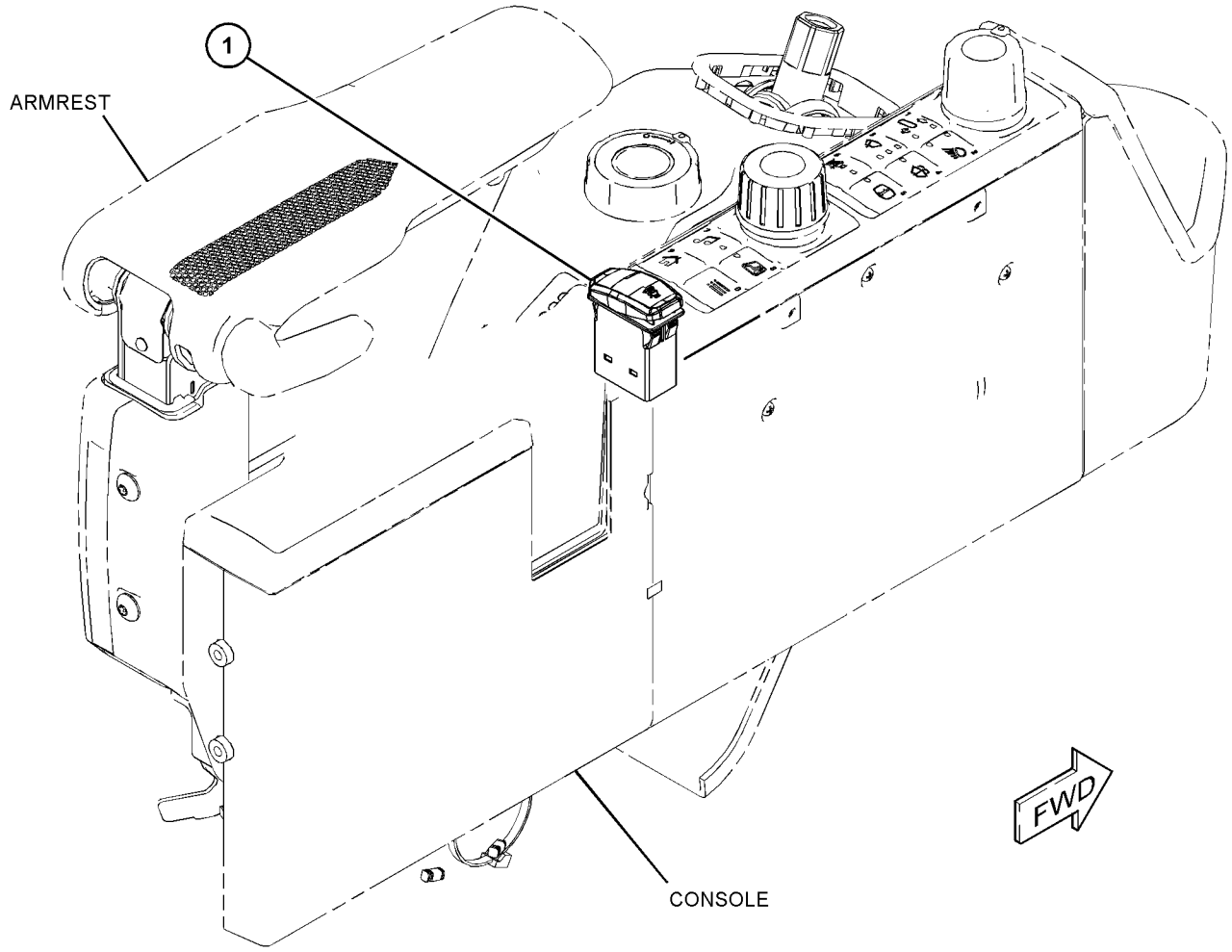

GRAPHIC #1 <END> g06229224

513-3214 WIRING & MTG GP- MAIN CONT V

S/N: BR61-UP

PART OF 532-9515, 532-9518, 556-2899 DISTRIBUTION AR

SMCS-1408 **i07368001**

NOTE	PART NUMBER	QTY	PART NAME 1 2 3 4 5 6 (PRODUCT LEVEL)	SEE PAGE
Y	*512-6145*	1	SENSOR GP-PRESSURE (MOUNTING)	219
Y	*514-7718*	1	WIRING GP-SENSOR (VALVE)	274

Y - SEPARATE ILLUSTRATION

<END>

489-7848 WIRING GP-CAB

S/N: BR61-UP

PART OF 489-7847 MODULE GP-CAB WIRING

SMCS-1408, 7301 **i07348778**

NOTE	REF NO	GRAPHIC REF	PART NUMBER	QTY	PART NAME 1 2 3 4 5 6 (PRODUCT LEVEL)	SEE PAGE
	1	1	**3S-2093**	34	STRAP-CABLE	
	2	1	**7K-1181**	8	STRAP-CABLE	
	3	2	**149-5050**	1	RELAY (24-VOLT) (MAIN POWER)	
	3A	2	**149-5050**	1	RELAY (24-VOLT) (DEF PUMP)	
	3B	2	**149-5050**	1	RELAY (24-VOLT) (PRIMING PUMP)	
	3C	2	**149-5050**	1	RELAY (24-VOLT) (FUEL PUMP)	
	3D	2	**149-5050**	1	RELAY (24-VOLT) (ETHER)	
	3E	2	**149-5050**	2	RELAY (24-VOLT) (KEEP ALIVE)	
	3F	2	**149-5050**	1	RELAY (24-VOLT) (KEY)	
	4	2	**167-3593**	1	STRAP	
	5	1	**251-0637**	18	INSULATION	
	6	2	**270-2679**	1	LOCKWASHER	
	7	2	**272-5841**	1	RELAY (70-AMPERE) (MAIN)	
	8	2	**324-5682**	1	PANEL AS	
		2	**324-5683**	1	SEAL	
	9	2	**327-9955**	1	CAP (1-PIN CONNECTOR)	
	10	2	**335-5365**	1	SOCKET-AUXILIARY POWER (12-VOLT)	
Y	11	1	**431-9515**	1	LAMP GP-DOME (12/24-VOLT)	193
	12	1	**484-1456**	1	STRAP-CABLE	
	13	2	**484-9066**	1	FUSE AS (KEEP ALIVE)	
		2	**7Y-3952**	2	PLUG-CONNECTOR (2-PIN)	
		2	**7Y-3993**	2	TERMINAL-BLADE (12-GA)	
		2	**124-3548**	1	FUSE (30-AMPERE) (KEEP ALIVE)	
	14	2	**490-0579**	4	ADAPTER AS	
	15	2	**490-0585**	3	ADAPTER AS	
	16	2	**490-0588**	7	NUT (PANEL)	
	17	2	**490-3875**	1	CABLE AS	
		2	**328-0111**	1	PIN-CONNECTOR	
		2	**324-5685**	1	RECEPTACLE AS-CONNECTOR (1-PIN)	
		2	**9G-4343**	1	TERMINAL-RING (4-GA, 1/4-IN SCREW)	
D		2	**6V-2369**		CABLE (4-GA, BLACK) (0.4-M)	
	18	1	**491-7831**	17	BASE	
	19	1	**492-2012**	3	TIE	
	20	1	**494-0022**	1	BASE AS	
	21	2	**505-7637**	4	PLUG AS-CONNECTOR	
					(EACH INCLUDES)	
		2	**169-0705**	2	SEAL	
		2	**490-0571**	1	PLUG AS-CONNECTOR (2-PIN)	
	22	2	**505-7638**	3	PLUG AS-CONNECTOR	
					(EACH INCLUDES)	
		2	**490-0578**	1	PLUG AS-CONNECTOR (2-PIN)	
		2	**169-0705**	2	SEAL	
Y	23	1	**506-9947**	1	HARNESS AS-LIGHTING (ROOF)	179
	24	2	**515-7178**	1	BRACKET	
Y	25	1	**515-9533**	1	HARNESS AS-MONITOR (CAMERA, FRONT)	180
	26	2	**524-8403**	1	BRACKET AS	
	27	2	**524-8405**	1	BRACKET AS	
	28	2	**524-8408**	1	BRACKET AS	

489-7848 **WIRING GP-CAB (**contd.**)** **i07348778**

NOTE	REF NO	GRAPHIC REF	PART NUMBER	QTY	PART NAME 1 2 3 4 5 6 (PRODUCT LEVEL)	SEE PAGE
	29	2	**528-1514**	2	SPEAKER AS	
					(EACH INCLUDES)	
		2	**7Y-3951**	2	TERMINAL-BLADE (14-GA)	
		2	**7Y-3954**	1	CONNECTOR-PLUG (3-PIN)	
Y	30	1	**530-1939**	1	WIRING GP-CAB	236
	31	2	**096-5962**	1	WASHER-HARD (3.4X7X0.8-MM THK)	
	32	1	**096-6166**	2	WASHER-HARD (4.5X9X1-MM THK)	
	33	2	**163-6795**	1	STRAP-CABLE	
	34	2	**203-9007**	1	NUT (1-1/2-18-THD)	
	35	2	**204-2281**	3	STRAP-CABLE	
M	36	2	**3C-6969**	1	NUT (M3X0.5-THD)	
	37	2	**427-9771**	3	TIE	
M	38	1	**6V-9491**	2	SCREW-MACHINE (M4X0.7X20-MM)	
M	39	2	**6V-9669**	1	SCREW-MACHINE (M3X0.5X8-MM)	
M	40	2	**7I-2272**	1	BOLT (M5X0.8X12-MM)	
	41	2	**8T-0328**	1	WASHER-HARD (5.5X10X1-MM THK)	
M	42	2	**8T-0337**	8	SCREW-MACHINE (M4X0.7X12-MM)	
	43	2	**8T-4121**	3	WASHER-HARD (11X21X2.5-MM THK)	
M	44	2	**8T-4198**	3	BOLT (M10X1.5X100-MM)	
M	45	2	**9X-2042**	27	SCREW-TRUSS HEAD (M6X1X12-MM)	
M	46	2	**9X-2043**	2	SCREW-TRUSS HEAD (M6X1X14-MM)	

D - ORDER BY THE METER
M - METRIC PART
Y - SEPARATE ILLUSTRATION

489-7848 **WIRING GP-CAB (**contd.**)** **i07348778**

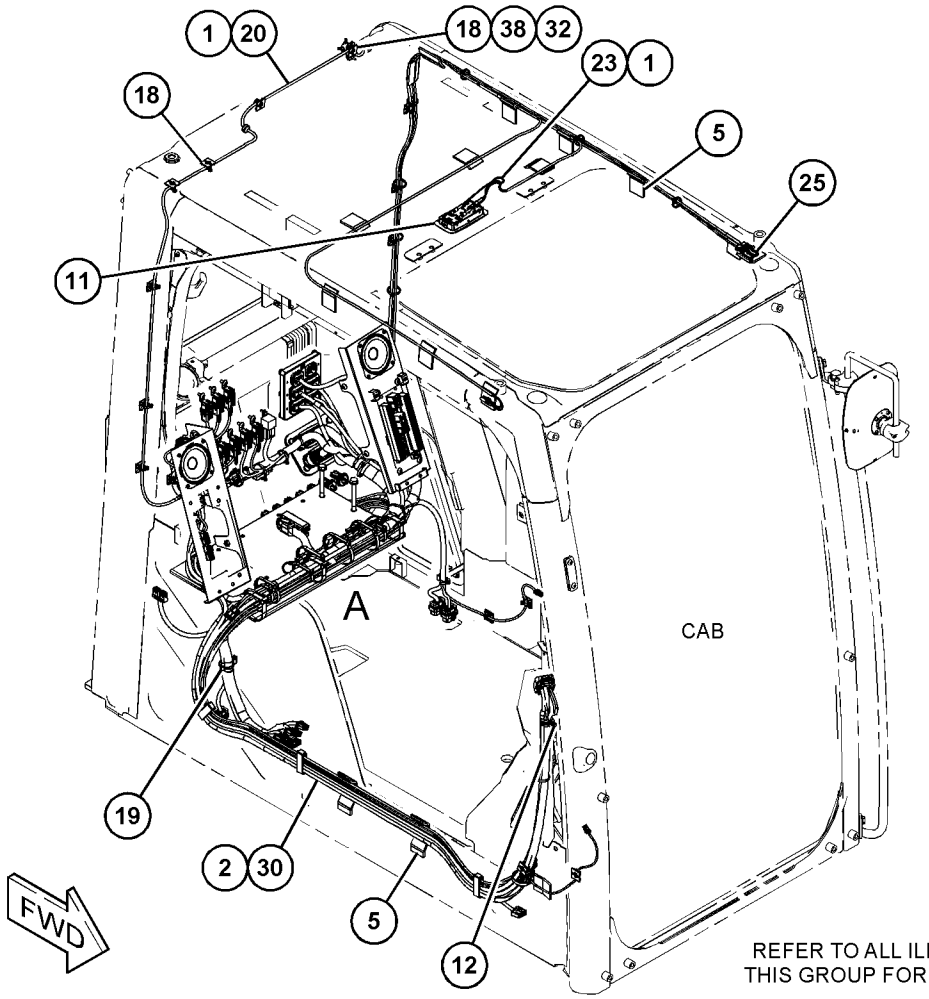

REFER TO ALL ILLUSTRATIONS OF
THIS GROUP FOR AUXILIARY VIEWS

GRAPHIC #1 g06229374

489-7848 **WIRING GP-CAB (**contd.**)** **i07348778**

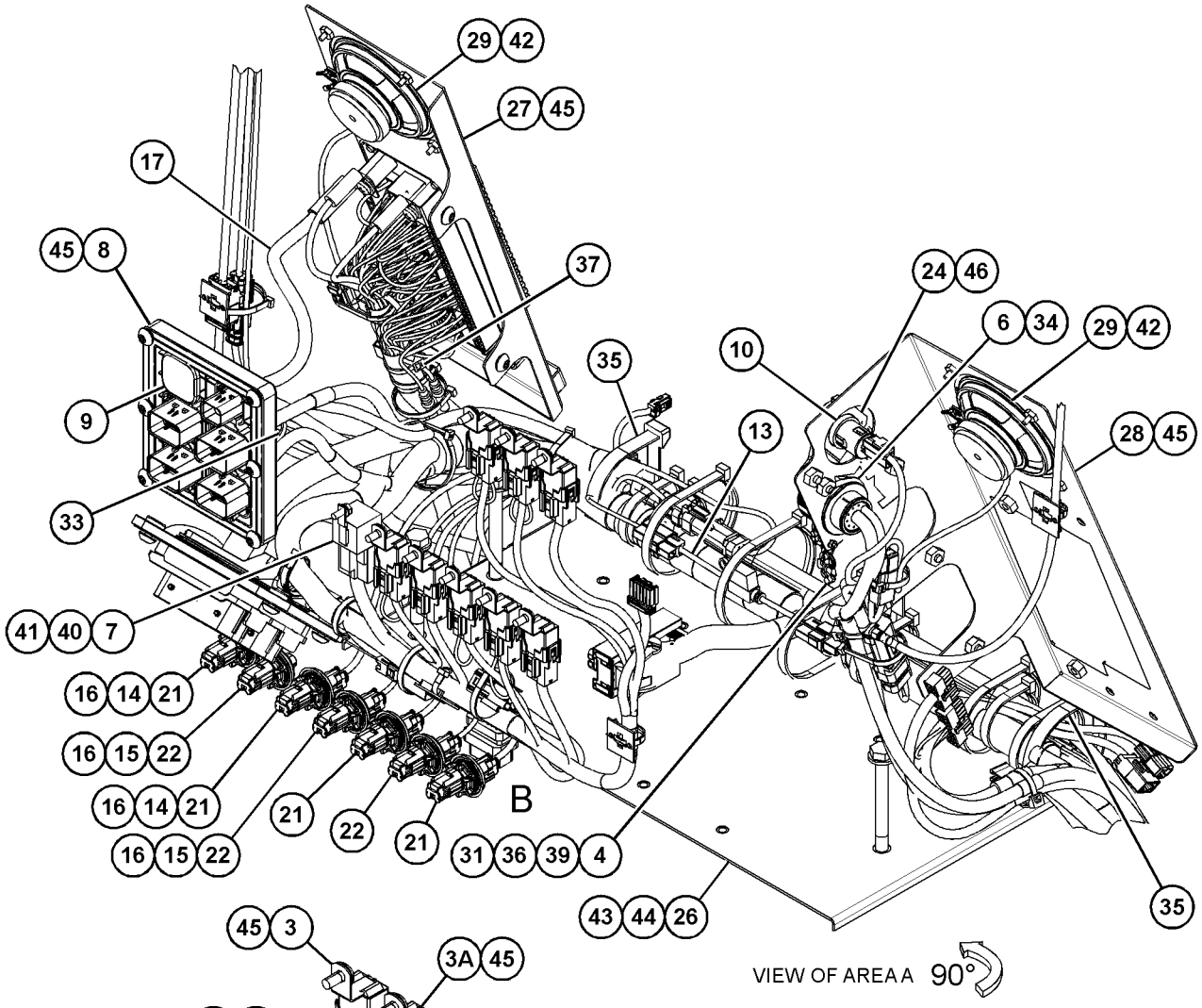

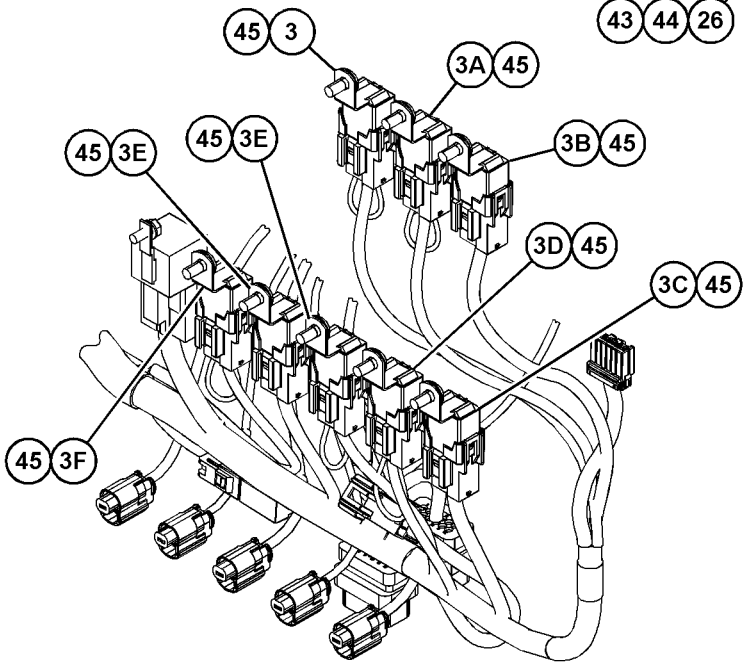

VIEW OF AREA B
(PARTS REMOVED FOR CLARITY)

GRAPHIC #2 <END> g06229378

511-9452 WIRING GP-CAB—GRADE CONTROL DISPLAY

S/N: BR61-UP

PART OF 516-0551 GRADE CONTROL AR

SMCS-1408, 7301

i07369109

NOTE	REF NO	GRAPHIC REF	PART NUMBER	QTY	PART NAME 1 2 3 4 5 6 (PRODUCT LEVEL)	SEE PAGE
	1	1	**3S-2093**	2	STRAP-CABLE	
	2	1	**7K-1181**	2	STRAP-CABLE	
	3	1	**448-1297**	2	TIE	
	4	1	**484-1456**	3	STRAP-CABLE	
Y	5	1	**530-1953**	1	HARNESS AS-CAB (GRADE CONTROL DISPLAY)	159

Y - SEPARATE ILLUSTRATION

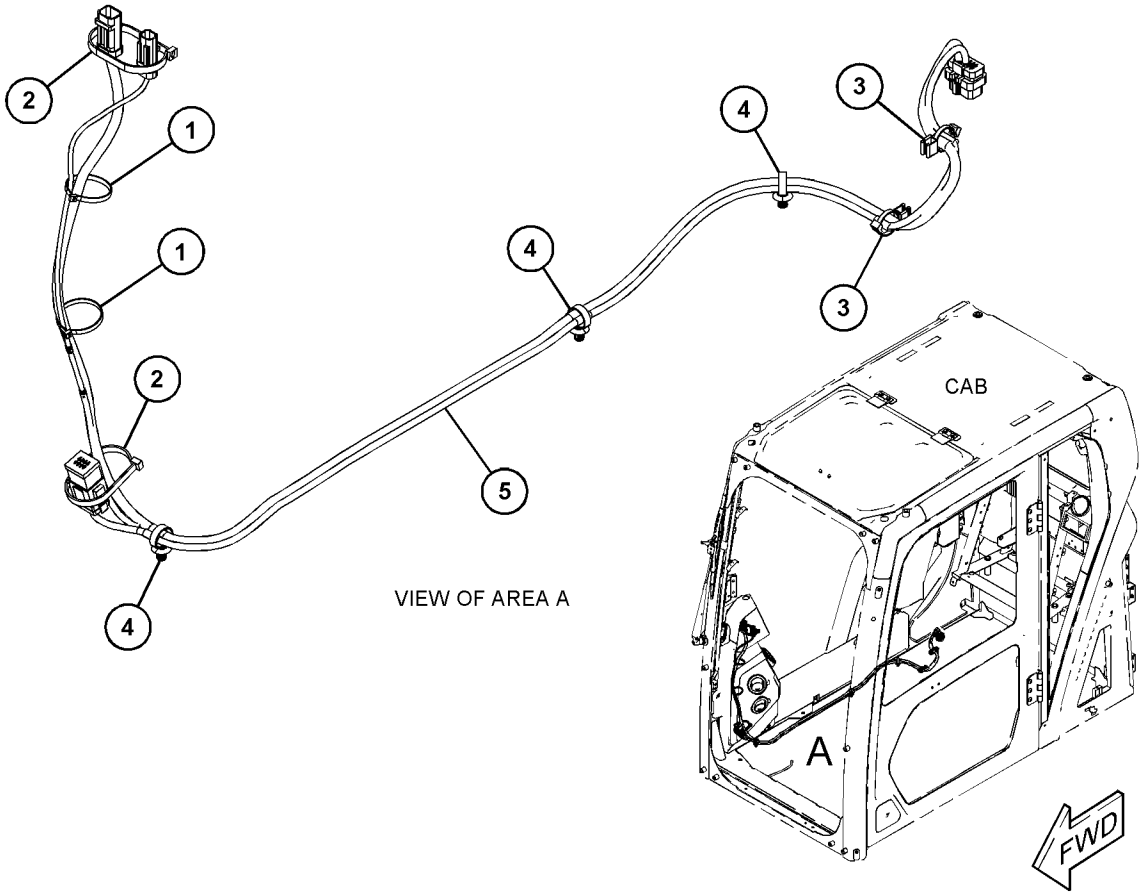

GRAPHIC #1 <END> g06230929

525-1535 WIRING GP-CAB–GRADE CONTROL

S/N: BR61-UP

PART OF 511-9430, 511-9432, 554-3627 MONITOR & MTG GP-OPERATOR

SMCS-1408, 7301 **i07366599**

NOTE	REF NO	GRAPHIC REF	PART NUMBER	QTY	PART NAME 1 2 3 4 5 6 (PRODUCT LEVEL)	SEE PAGE
	1	1	**448-1297**	1	TIE	
Y	2	1	*498-7714*	1	BRACKET GP-MOUNTING	134
Y	3	1	**526-7690**	1	HARNESS AS-MONITOR (GRADE CONTROL)	180
	4	1	**230-5008**	1	PLUG AS-CONNECTOR (4-PIN)	
		1	**455-0706**	1	SEAL-CONNECTOR	
	5	1	**240-7874**	1	PLUG AS-CONNECTOR (2-PIN)	
		1	**455-0704**	1	SEAL-CONNECTOR	

Y - SEPARATE ILLUSTRATION

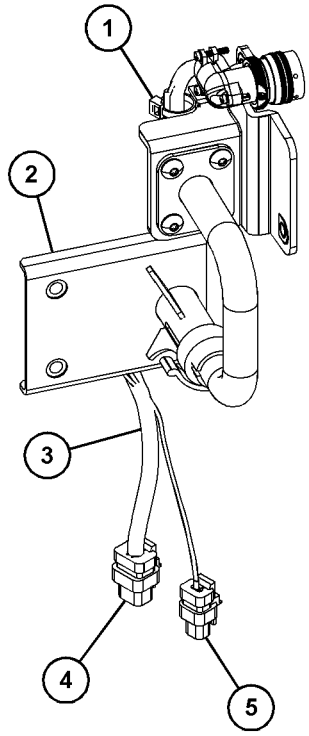

VIEW OF AREA A

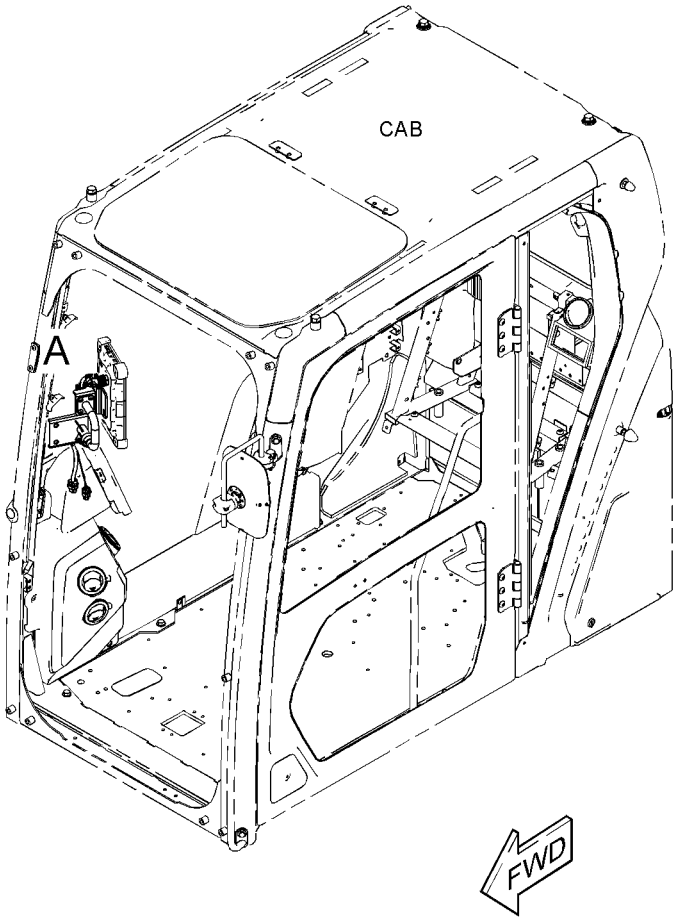

GRAPHIC #1 <END> g06232392

530-1939 WIRING GP-CAB

S/N: BR61-UP

PART OF 489-7848 WIRING GP-CAB

SMCS-1408, 7301 **i07426360**

NOTE	REF NO	GRAPHIC REF	PART NUMBER	QTY	PART NAME 1 2 3 4 5 6 (PRODUCT LEVEL)	SEE PAGE
	1	1	**3S-2093**	1	STRAP-CABLE	
	2	1	**7K-1181**	2	STRAP-CABLE	
	3	1	**492-2011**	3	CLIP	
	4	1	*530-1940*	1	HARNESS AS-CAB	
		1	**8T-8729**	27	PIN-CONNECTOR (16-GA TO 18-GA)	
		1	**8T-8730**	22	SOCKET-CONNECTOR (16-GA TO 18-GA)	
		1	**3S-2093**	64	STRAP-CABLE	
D		1	**5P-5999**		TUBE (0.3-M)	
		1	**7Y-3950**	6	TERMINAL-BLADE (14-GA TO 20-GA)	
		1	**7Y-3951**	9	TERMINAL-BLADE (14-GA)	
		1	**7Y-3952**	2	PLUG-CONNECTOR (2-PIN)	
		1	**7Y-3953**	2	CONNECTOR-RECEPTACLE	
		1	**7Y-3955**	2	CONNECTOR-RECEPTACLE	
		1	**7Y-3958**	1	CONNECTOR-PLUG (6-PIN)	
		1	*7Y-3967*	3	TERMINAL AS	
					(EACH INCLUDES)	
		1	**7Y-3963**	1	TERMINAL-BULLET (FEMALE)	
		1	**7Y-3965**	1	TUBE (RECEPTACLE TERMINAL)	
		1	**8T-8737**	33	PLUG-SEAL	
		1	**102-7965**	12	TERMINAL (FEMALE)	
		1	**9W-0852**	18	PIN-CONNECTOR (14-GA TO 16-GA)	
		1	**9W-0844**	7	SOCKET-CONNECTOR (14-GA TO 16-GA)	
		1	**111-4816**	1	PLUG-CONNECTOR (13-PIN)	
E		1	**119-3662**		TUBE-HEAT SHRINK (10.85-MM DIA) (44-CM)	
		1	**121-1022**	1	DIODE	
		1	**125-4785**	87	TERMINAL (FEMALE)	
		1	**125-4840**	1	WEDGE-PLUG LOCK (13-PIN)	
E		1	**125-7874**		TUBE-HEAT SHRINK (5.72-MM DIA) (170-CM)	
E		1	**125-7875**		TUBE-HEAT SHRINK (7.44-MM DIA) (40-CM)	
		1	**2L-8067**	2	TERMINAL-RING (10-GA TO 12-GA, 1/4-IN SCREW)	
		1	**149-5051**	9	CONNECTOR-RECEPTACLE	
		1	**149-5069**	30	TERMINAL-BLADE (14-GA TO 20-GA)	
		1	**149-5070**	40	TERMINAL-BLADE (16-GA TO 20-GA)	
		1	**149-5071**	7	TERMINAL-BLADE (12-GA TO 14-GA)	
		1	**153-2540**	22	TERMINAL (FEMALE)	
		1	**163-6659**	1	CONNECTOR-PLUG (12-PIN)	
		1	**163-6699**	1	CONNECTOR-PLUG (18-PIN)	
		1	**170-6827**	4	TERMINAL (MALE)	
		1	**170-6888**	1	PULLER-FUSE	
		1	**170-6890**	16	TERMINAL-BLADE (14-GA)	
		1	**170-6891**	20	TERMINAL-BLADE (16-GA TO 18-GA)	
		1	**185-1861**	12	SEAL-WIRE	
		1	**202-5400**	17	PLUG	
		1	**281-3395**	2	PLUG AS-CONNECTOR (12-PIN)	
		1	**230-4009**	1	PLUG AS-CONNECTOR (12-PIN)	
					(EACH PLUG AS INCLUDES)	
		1	**455-0709**	1	SEAL-CONNECTOR	
		1	**240-7874**	1	PLUG AS-CONNECTOR (2-PIN)	

530-1939 **WIRING GP-CAB (**contd.**)** **i07426360**

NOTE	REF NO	GRAPHIC REF	PART NUMBER	QTY	PART NAME 1 2 3 4 5 6 (PRODUCT LEVEL)	SEE PAGE
		1	**455-0704**	1	SEAL-CONNECTOR	
		1	**240-7878**	1	PLUG AS-CONNECTOR (3-PIN)	
		1	**455-0705**	1	SEAL-CONNECTOR	
		1	**267-9973**	1	CONNECTOR (4-PIN)	
		1	**279-5772**	95	SEAL	
		1	**324-5678**	2	RESISTOR AS (120-OHM)	
					(EACH INCLUDES)	
		1	**455-0704**	1	SEAL-CONNECTOR	
		1	**324-5684**	4	RECEPTACLE AS-CONNECTOR (12-PIN)	
		1	**342-2973**	1	CAP-CONNECTOR (3-PIN)	
		1	**363-9173**	2	TERMINAL (14-GA TO 18-GA)	
		1	**424-4322**	1	COVER-CONNECTOR	
		1	**431-2103**	5	SOCKET-CONNECTOR (14-GA TO 18-GA)	
		1	**442-7945**	1	PLUG AS-CONNECTOR	
		1	**444-7595**	1	PLUG AS-CONNECTOR	
		1	**451-8019**	1	RECEPTACLE AS-CONNECTOR (14-PIN)	
		1	**483-2762**	1	PLUG AS-CONNECTOR	
		1	**483-2765**	13	TERMINAL AS	
		1	**483-2767**	15	TERMINAL AS	
		1	**483-2768**	16	PLUG-SEAL	
		1	**490-0571**	2	PLUG AS-CONNECTOR (2-PIN)	
		1	**490-0578**	2	PLUG AS-CONNECTOR (2-PIN)	
		1	**491-4402**	12	TERMINAL	
		1	**491-4409**	95	TERMINAL	
		1	**492-2010**	1	PANEL AS	
		1	**506-5910**	1	RECEPTACLE AS-CONNECTOR	
		1	**506-5911**	2	LOCK-CONNECTOR	
		1	**506-5915**	2	CONNECTOR-PLUG	
		1	**506-5916**	4	TERMINAL	
		1	**506-5917**	1	CONNECTOR-RECEPTACLE	
		1	**506-5918**	2	TERMINAL	
		1	**507-1383**	1	PLUG AS-CONNECTOR	
		1	**507-1384**	1	PLUG AS-CONNECTOR	
	4A	1	**161-3128**	1	RELAY (24-VOLT) (HORN)	
	4B	1	**161-3128**	1	RELAY (24-VOLT) (POWER)	
	4C	1	**161-3128**	1	RELAY (24-VOLT) (CAB LIFT PUMP)	
	4D	1	**161-3128**	1	RELAY (24-VOLT) (BOOM LIGHTS)	
	4E	1	**161-3128**	1	RELAY (24-VOLT) (CHASSIS LIGHTS)	
	4F	1	**113-8490**	10	FUSE (10-AMPERE)	
	4G	1	**113-8491**	13	FUSE (15-AMPERE)	
	4H	1	**113-8492**	2	FUSE (20-AMPERE)	
	4J	1	**113-8493**	4	FUSE (25-AMPERE)	
	4K	1	**124-3548**	2	FUSE (30-AMPERE)	
	4L	1	**141-2759**	9	FUSE (5-AMPERE)	
	4M	1	**238-2319**	1	BASE AS (FUSE, RELAY PANEL)	
		1	**9X-8256**	2	WASHER (6.6X12X2-MM THK)	
M		1	**095-0742**	2	SCREW-MACHINE (M6X1X16-MM)	
		1	**170-9394**	40	TERMINAL	
	5	1	*530-1941*	1	CABLE AS (ETHERNET)	
		1	**483-2765**	2	TERMINAL AS	
					(EACH INCLUDES)	

530-1939 **WIRING GP-CAB (**contd.**)** **i07426360**

NOTE	REF NO	GRAPHIC REF	PART NUMBER	QTY	PART NAME 1 2 3 4 5 6 (PRODUCT LEVEL)	SEE PAGE
N		1	**340-9272**		WIRE (20-GA, BLACK) (2-DM)	
		1	**490-0571**	1	PLUG AS-CONNECTOR (2-PIN)	
	6	1	*530-1942*	1	CABLE AS (ETHERNET)	
		1	**483-2765**	2	TERMINAL AS	
					(EACH INCLUDES)	
N		1	**340-9272**		WIRE (20-GA, BLACK) (2-DM)	
		1	**490-0582**	1	RECEPTACLE AS	

D - ORDER BY THE METER
E - ORDER BY THE CENTIMETER
M - METRIC PART
N - ORDER BY THE DECIMETER

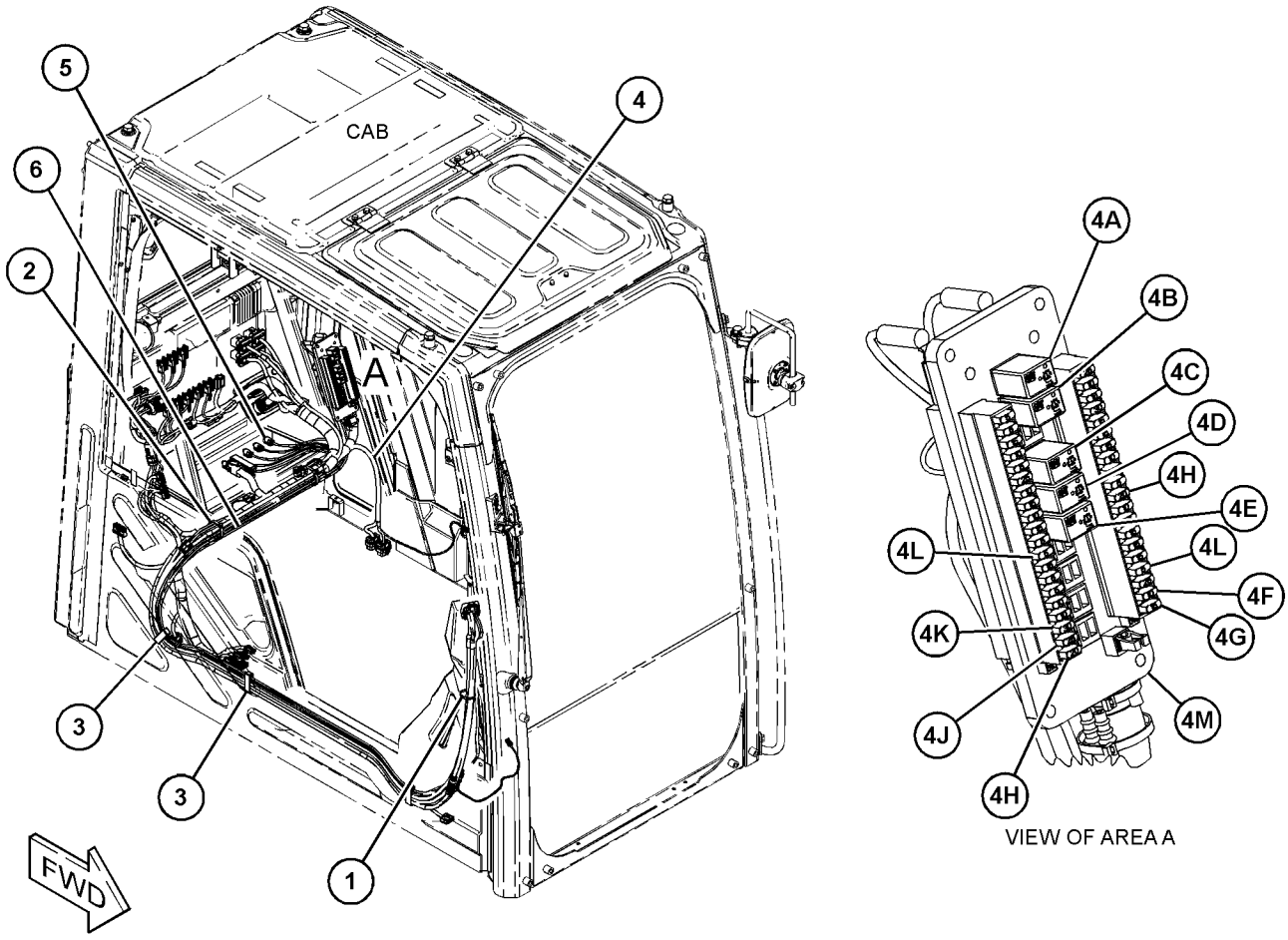

GRAPHIC #1 <END> g06286114

490-2684 WIRING GP-CHASSIS

S/N: BR61-10000

PART OF 490-2680 ELECTRICAL AR

SMCS-1408 **i07329657**

NOTE	REF NO	GRAPHIC REF	PART NUMBER	QTY	PART NAME 1 2 3 4 5 6 (PRODUCT LEVEL)	SEE PAGE
	1	1	**3S-2093**	19	STRAP-CABLE	
	2	1	**7K-1181**	14	STRAP-CABLE	
	3	1	**202-4004**	1	GROMMET	
	4	1	**266-7379**	3	STRAP-CABLE	
	5	1	**483-7805**	1	SPACER (11X20X65-MM THK)	
	6	1	**483-7806**	1	SPACER (11X20X56-MM THK)	
	7	1	**484-1451**	20	CLIP	
	8	1	**484-1452**	2	CLIP	
	9	1	**484-1453**	10	CLIP (RETAINER)	
	10	1	**484-1454**	7	CLIP	
	11	1	**484-1456**	42	STRAP-CABLE	
Y	12	1	**490-6963**	1	HARNESS AS-CHASSIS (AIR CLEANER)	160
	13	1	**490-6965**	1	BRACKET AS	
Y	14	1	*490-8083*	1	PANEL GP-SWITCH (DISCONNECT)	209
	15	1	**508-0556**	1	BRACKET AS	
	16	1	**508-0558**	1	BRACKET AS	
Y	17	1	**524-4341**	1	HARNESS AS-CHASSIS (FUEL FILTER)	162
Y	18	1	**529-8095**	1	HARNESS AS-CHASSIS (MAIN)	163
	19	1	**204-1611**	3	STRAP (DUAL)	
	20	1	**204-2281**	2	STRAP-CABLE	
	21	1	**8T-4121**	35	WASHER-HARD (11X21X2.5-MM THK)	
M	22	1	**8T-4136**	4	BOLT (M10X1.5X25-MM)	
M	23	1	**8T-4137**	28	BOLT (M10X1.5X20-MM)	
M	24	1	**8T-4172**	1	BOLT (M10X1.5X80-MM)	
M	25	1	**8T-4196**	1	BOLT (M10X1.5X35-MM)	
M	26	1	**8T-4198**	1	BOLT (M10X1.5X100-MM)	
	27	1	**9G-2673**	1	GROMMET	

M - METRIC PART
Y - SEPARATE ILLUSTRATION

490-2684 **WIRING GP-CHASSIS (**contd.**)** **i07329657**

NO GRAPHIC AVAILABLE AT TIME OF PUBLICATION

GRAPHIC #1 <END> g01269539

490-2699 WIRING GP-CHASSIS–REAR VIEW CAMERA

S/N: BR61-UP

PART OF 559-0034 CAMERA AR, 490-7697 INSTALLATION AR, 512-4549 MIRROR AR

SMCS-1408 **i07352949**

NOTE	REF NO	GRAPHIC REF	PART NUMBER	QTY	PART NAME 1 2 3 4 5 6 (PRODUCT LEVEL)	SEE PAGE
	1	1	**3S-2093**	18	STRAP-CABLE	
	2	1	**7K-1181**	13	STRAP-CABLE	
	3	1	**484-1453**	1	CLIP (RETAINER)	
	4	1	**484-1456**	7	STRAP-CABLE	
Y	5	1	**529-8755**	1	HARNESS AS-MONITOR (CHASSIS, REAR)	180
Y	6	1	**529-8756**	1	HARNESS AS-MONITOR (COUNTERWEIGHT)	181

Y - SEPARATE ILLUSTRATION

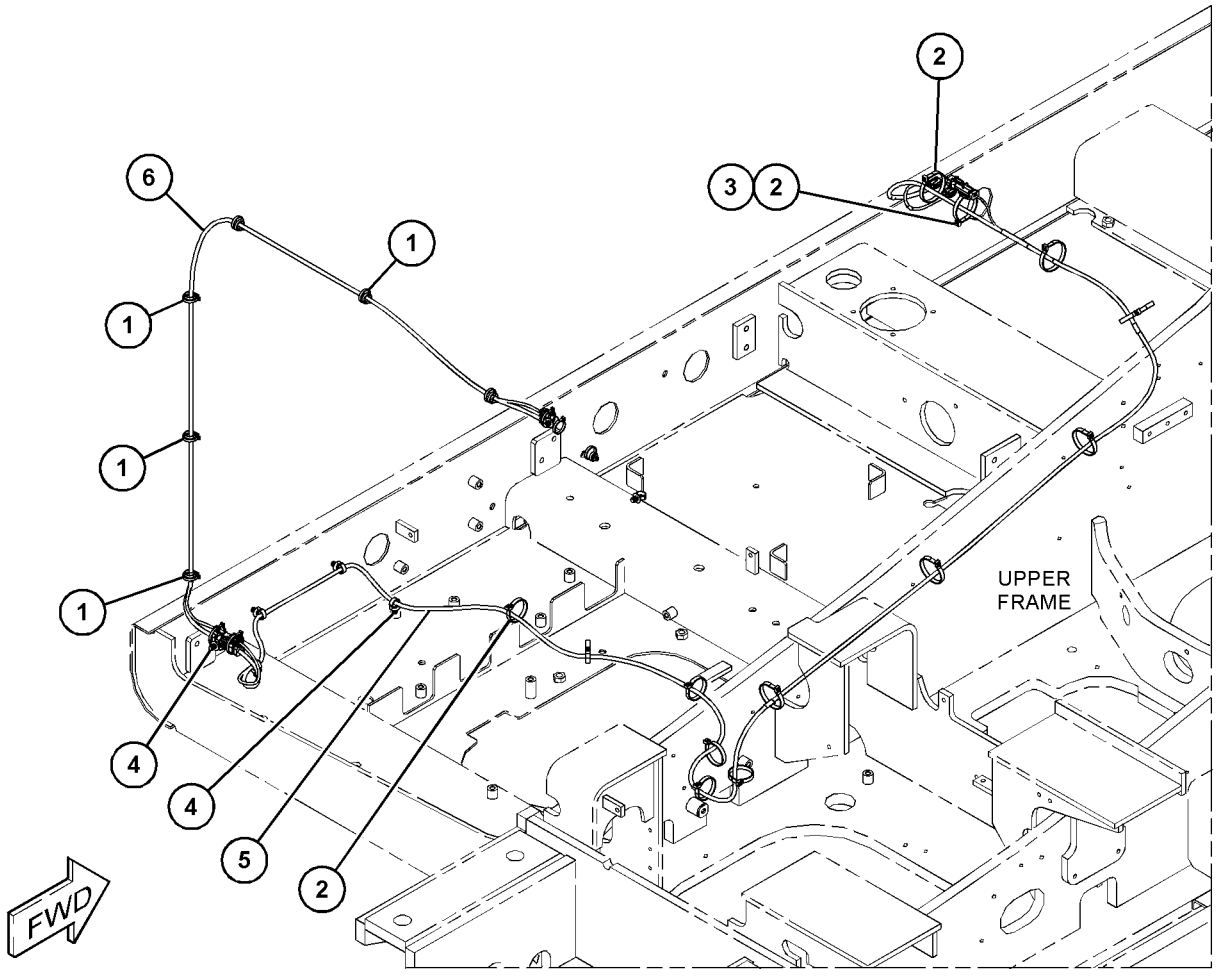

GRAPHIC #1 <END> g06227356

490-2700 WIRING GP-CHASSIS–CAMERA

S/N: BR61-UP
LEFT SIDE
PART OF 559-0034 CAMERA AR, 490-7697 INSTALLATION AR

SMCS-1408 **i07366573**

NOTE	REF NO	GRAPHIC REF	PART NUMBER	QTY	PART NAME 1 2 3 4 5 6 (PRODUCT LEVEL)	SEE PAGE
	1	1	**3S-2093**	5	STRAP-CABLE	
	2	1	**266-7379**	1	STRAP-CABLE	
	3	1	**484-1456**	6	STRAP-CABLE	
Y	4	1	**529-8758**	1	HARNESS AS-MONITOR (CAMERA, LH)	181

Y - SEPARATE ILLUSTRATION

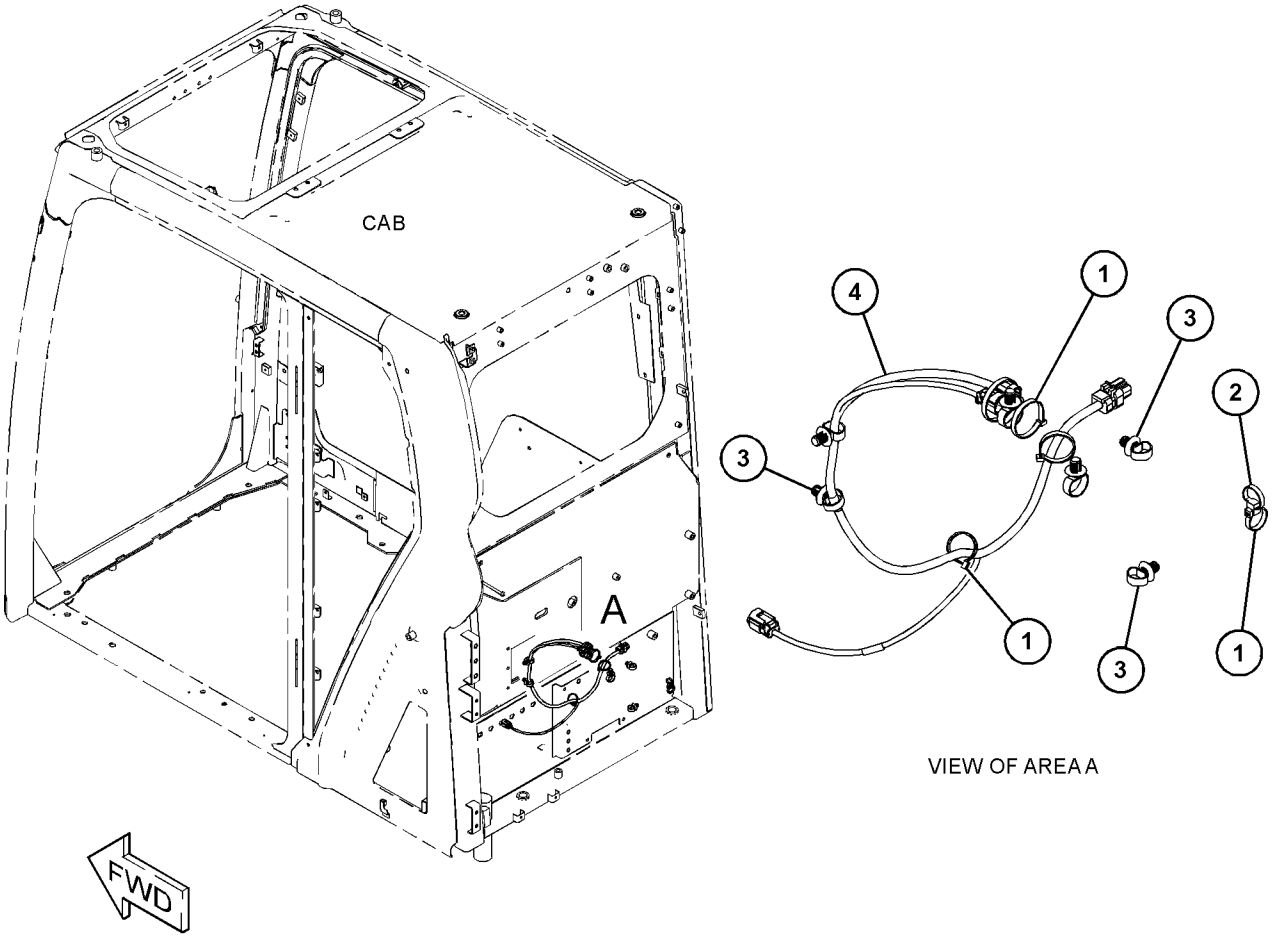

GRAPHIC #1 <END> g06230915

502-7170 WIRING GP-CHASSIS–CAMERA

S/N: BR61-UP
RIGHT SIDE
PART OF 559-0034 CAMERA AR, 490-7697 INSTALLATION AR

SMCS-1408 **i07366588**

NOTE	REF NO	GRAPHIC REF	PART NUMBER	QTY	PART NAME 1 2 3 4 5 6 (PRODUCT LEVEL)	SEE PAGE
	1	1	**3S-2093**	10	STRAP-CABLE	
	2	1	**7K-1181**	11	STRAP-CABLE	
	3	1	**484-1456**	3	STRAP-CABLE	
	4	1	**529-8757**	1	HARNESS AS-MONITOR	
		1	**3S-2093**	11	STRAP-CABLE	
		1	**490-0571**	2	PLUG AS-CONNECTOR (2-PIN)	
		1	**490-0578**	2	PLUG AS-CONNECTOR (2-PIN)	
	5	1	**532-9006**	1	LINER	
	6	1	**7I-2673**	1	STRAP-CABLE	

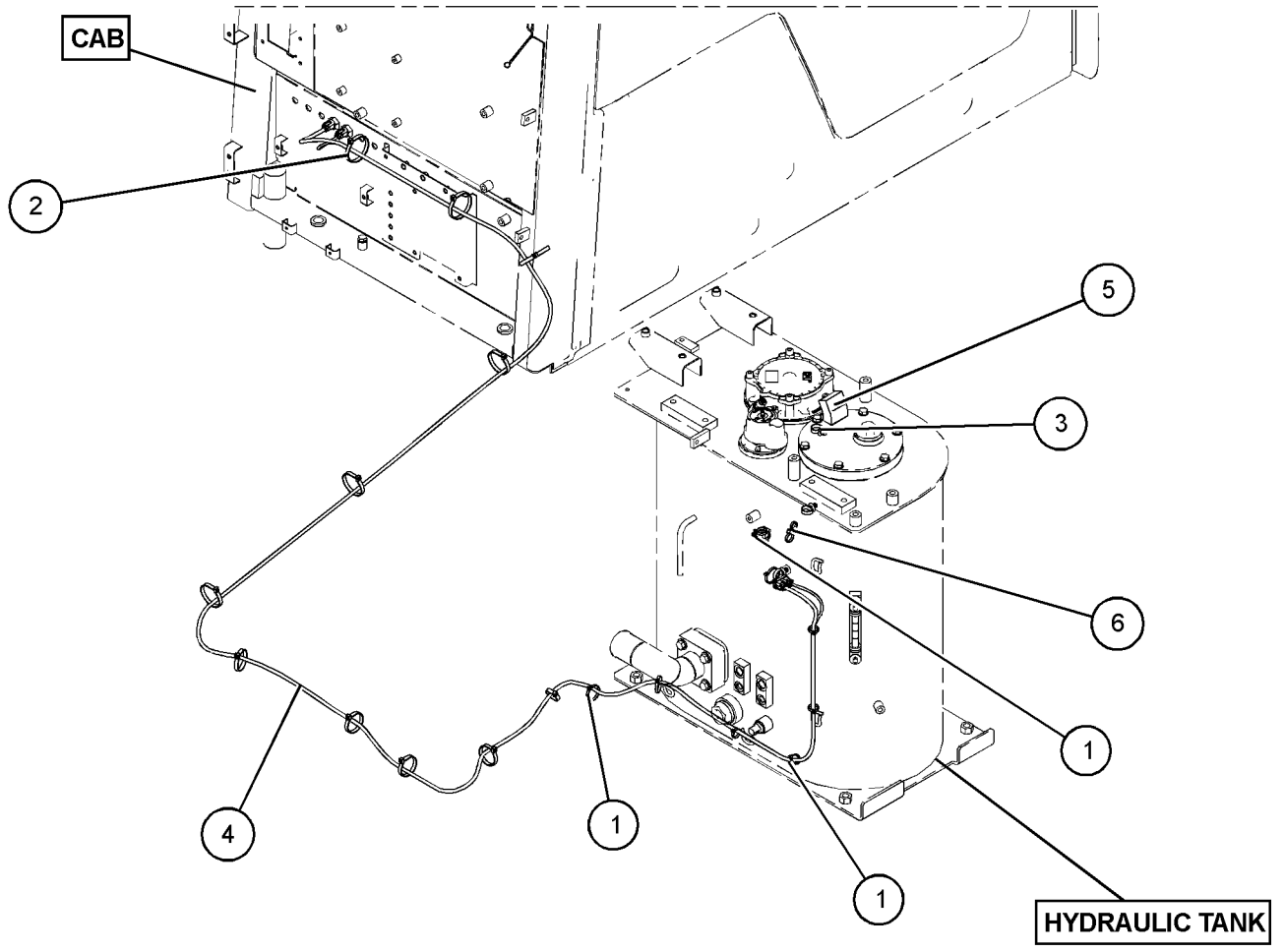

GRAPHIC #1 <END> g06233995

506-7031 WIRING GP-CHASSIS

S/N: BR61-10000

PART OF 506-7022 INSTALLATION AR-COMMUNICATION

SMCS-1408 **i07352479**

NOTE	REF NO	GRAPHIC REF	PART NUMBER	QTY	PART NAME 1 2 3 4 5 6 (PRODUCT LEVEL)	SEE PAGE
	1	1	**3S-2093**	2	STRAP-CABLE	
	2	1	**7K-1181**	1	STRAP-CABLE	
	3	1	**9R-7941**	1	SOCKET AS	
		1	**9R-7980**	1	COVER	
	4	1	**484-1456**	3	STRAP-CABLE	
Y	5	1	**524-1450**	1	HARNESS AS-CHASSIS	161
	6	1	**524-4506**	1	BRACKET AS	
M		1	**6V-9632**	2	NUT-WELD (M6X1-THD)	
M		1	**8T-3490**	1	NUT-WELD (M10X1.5-THD)	
M	7	1	**9X-2042**	2	SCREW-TRUSS HEAD (M6X1X12-MM)	

M - METRIC PART
Y - SEPARATE ILLUSTRATION

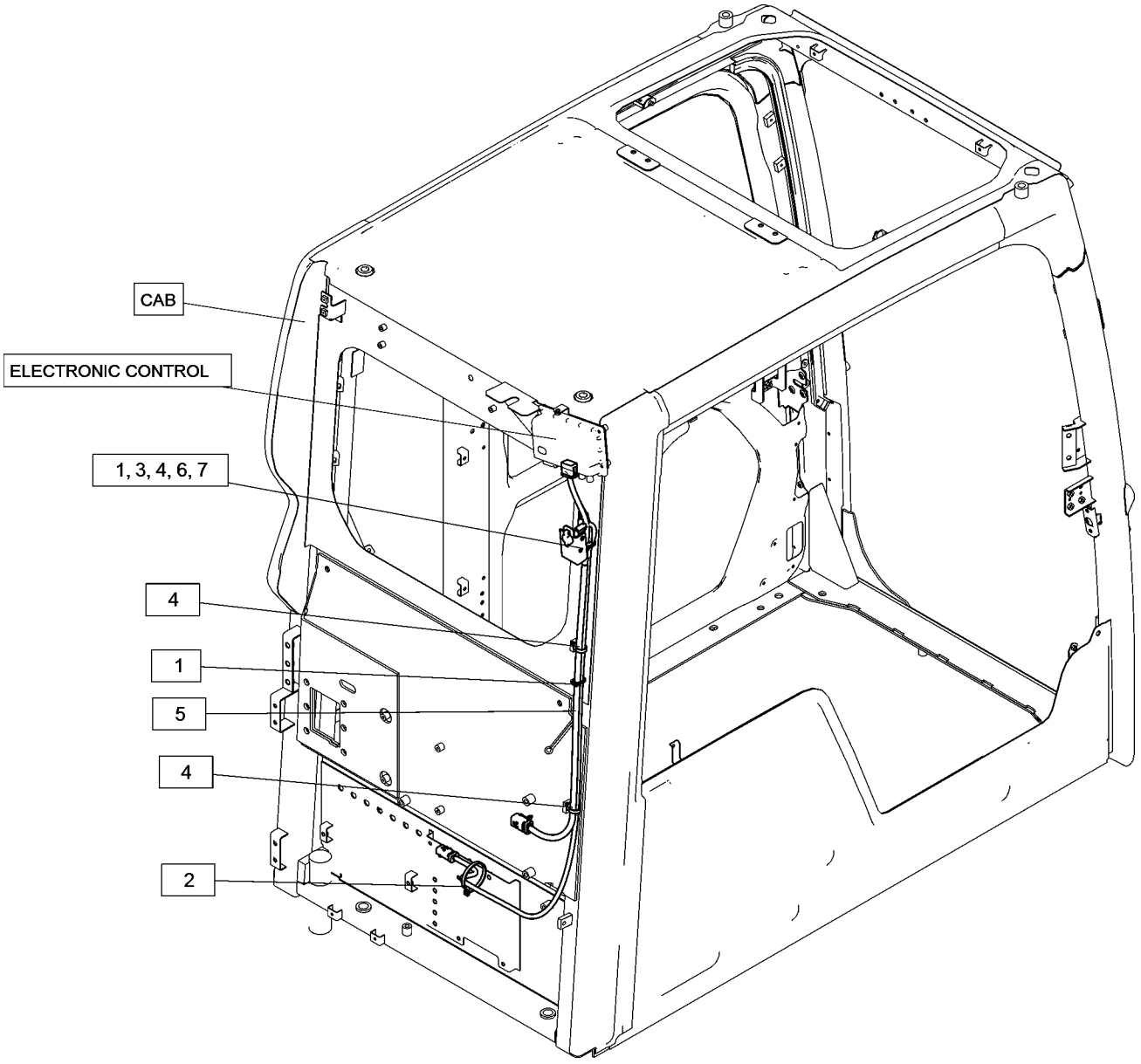

GRAPHIC #1 <END> g06268093

506-7031 WIRING GP-CHASSIS

S/N: BR610001-UP

PART OF 506-7022 INSTALLATION AR-COMMUNICATION

SMCS-1408 **i07434531**

NOTE	REF NO	GRAPHIC REF	PART NUMBER	QTY	PART NAME 1 2 3 4 5 6 (PRODUCT LEVEL)	SEE PAGE
	1	1	**3S-2093**	2	STRAP-CABLE	
	2	1	**7K-1181**	1	STRAP-CABLE	
	3	1	**9R-7941**	1	SOCKET AS	
		1	**9R-7980**	1	COVER	
	4	1	**484-1456**	3	STRAP-CABLE	
CY	5	1	**552-4919**	1	HARNESS AS-CONTROL (CHASSIS)	174
	6	1	**524-4506**	1	BRACKET AS	
M		1	**6V-9632**	2	NUT-WELD (M6X1-THD)	
M		1	**8T-3490**	1	NUT-WELD (M10X1.5-THD)	
M	7	1	**9X-2042**	2	SCREW-TRUSS HEAD (M6X1X12-MM)	

C - CHANGE FROM PREVIOUS TYPE
M - METRIC PART
Y - SEPARATE ILLUSTRATION

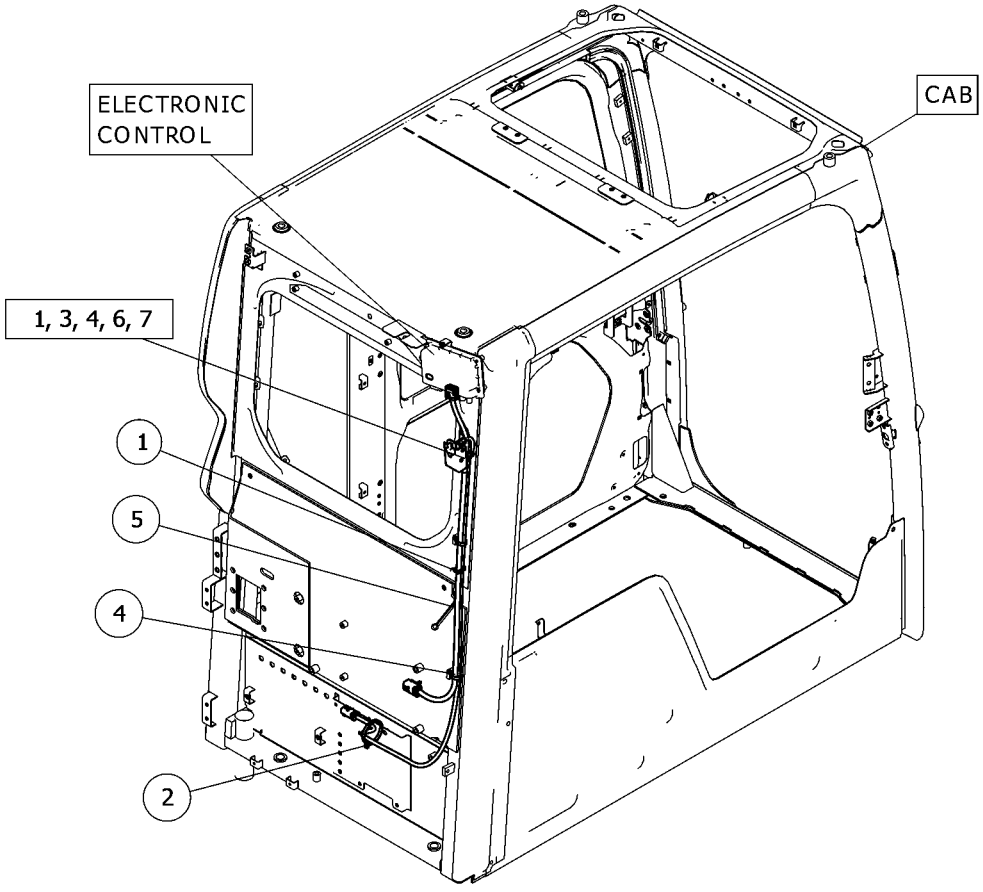

GRAPHIC #1 <END> g06323475

506-7032 WIRING GP-CHASSIS—PRODUCT LINK 631, 641

S/N: BR61-UP

PART OF 492-2913 INSTALLATION AR-COMMUNICATION

TYPE 1

SMCS-1408 **i07368940**

NOTE	REF NO	GRAPHIC REF	PART NUMBER	QTY	PART NAME 1 2 3 4 5 6 (PRODUCT LEVEL)	SEE PAGE
	1	1	**3S-2093**	1	STRAP-CABLE	
	2	1	**7K-1181**	4	STRAP-CABLE	
	3	1	**9R-7941**	1	SOCKET AS	
		1	**9R-7980**	1	COVER	
	4	1	**483-2777**	1	COVER-CONNECTOR	
	5	1	**484-1454**	1	CLIP	
	6	1	**484-1456**	7	STRAP-CABLE	
	7	1	**524-4506**	1	BRACKET AS	
M		1	**6V-9632**	2	NUT-WELD (M6X1-THD)	
M		1	**8T-3490**	1	NUT-WELD (M10X1.5-THD)	
	8	1	**526-1028**	1	PLUG AS-CONNECTOR	
		1	**483-2761**	1	PLUG AS-CONNECTOR	
		1	**483-2768**	44	PLUG-SEAL	
Y	9	1	**529-8762**	1	HARNESS AS-CHASSIS	166
M	10	1	**9X-2042**	2	SCREW-TRUSS HEAD (M6X1X12-MM)	

M - METRIC PART
Y - SEPARATE ILLUSTRATION

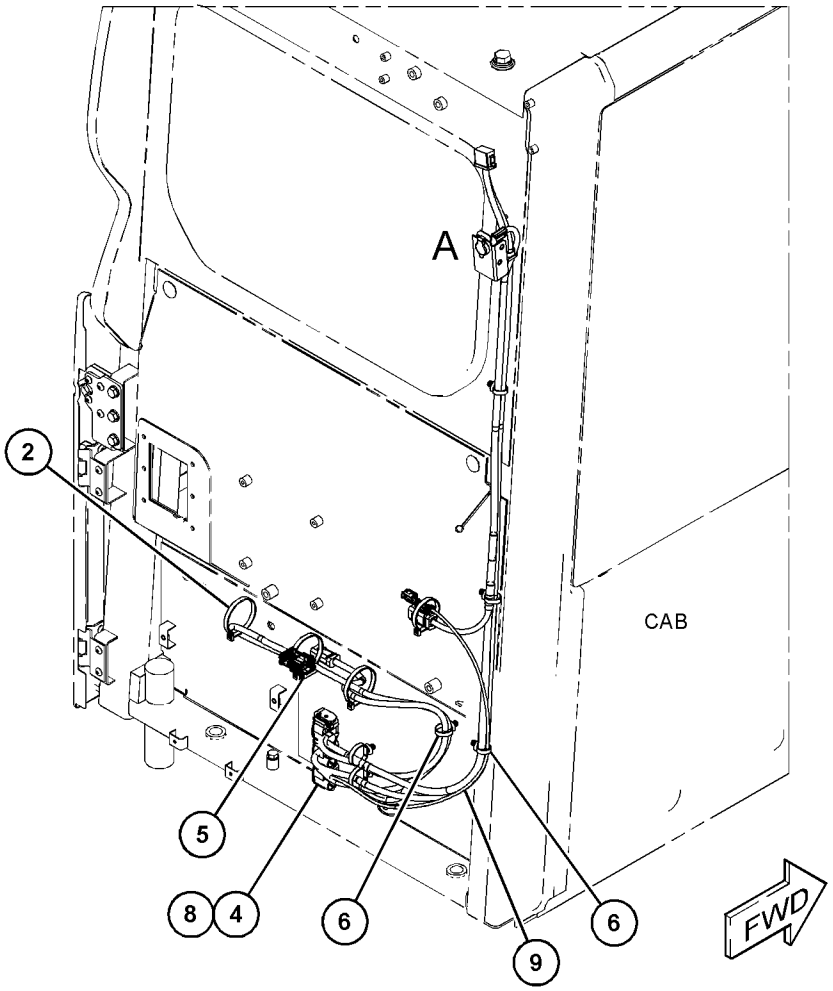

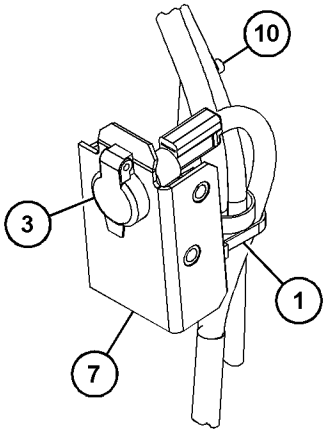

VIEW OF AREA A

GRAPHIC #1 <END> g06229666

506-7032 WIRING GP-CHASSIS—PRODUCT LINK 631, 641

S/N: BR61-UP

PART OF 492-2913 INSTALLATION AR-COMMUNICATION

TYPE 2

SMCS-1408 **i07466145**

NOTE	REF NO	GRAPHIC REF	PART NUMBER	QTY	PART NAME 1 2 3 4 5 6 (PRODUCT LEVEL)	SEE PAGE
C	1	1	**3S-2093**	2	STRAP-CABLE	
C	2	1	**7K-1181**	5	STRAP-CABLE	
	3	1	**9R-7941**	1	SOCKET AS	
		1	**9R-7980**	1	COVER	
C	4	1	**9X-8256**	1	WASHER (6.6X12X2-MM THK)	
	5	1	**484-1454**	1	CLIP	
	6	1	**484-1456**	7	STRAP-CABLE	
	7	1	**524-4506**	1	BRACKET AS	
M		1	**6V-9632**	2	NUT-WELD (M6X1-THD)	
M		1	**8T-3490**	1	NUT-WELD (M10X1.5-THD)	
M	8	1	**9X-2042**	2	SCREW-TRUSS HEAD (M6X1X12-MM)	
CY	9	1	**551-0330**	1	HARNESS AS-CHASSIS (PRODUCT LINK 732, 742)	167

C - CHANGE FROM PREVIOUS TYPE
M - METRIC PART
Y - SEPARATE ILLUSTRATION

506-7032 **WIRING GP-CHASSIS (**contd.**)** **i07466145**

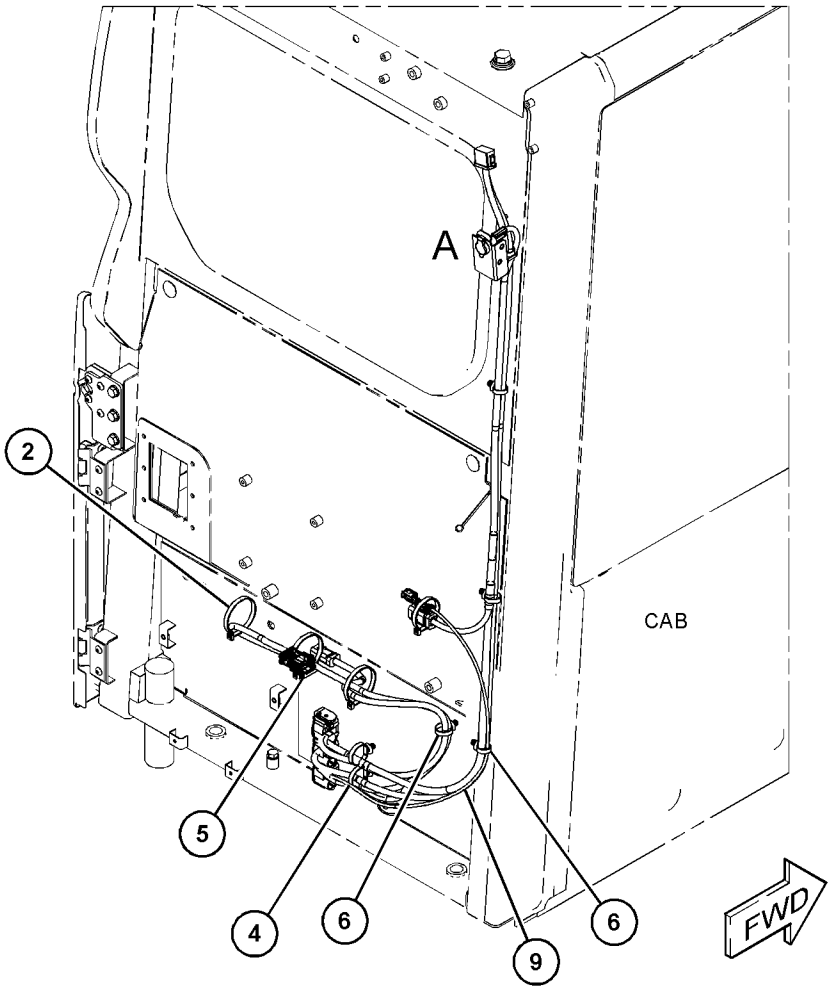

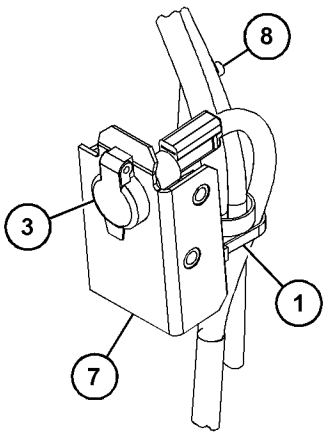

VIEW OF AREA A

GRAPHIC #1 <END> g06330114

511-9448 WIRING GP-CHASSIS–GRADE CONTROL

S/N: BR61-UP

PART OF 516-0551 GRADE CONTROL AR

SMCS-1408 **i07369152**

NOTE	REF NO	GRAPHIC REF	PART NUMBER	QTY	PART NAME 1 2 3 4 5 6 (PRODUCT LEVEL)	SEE PAGE
	1	1	**3E-5239**	1	RELAY AS (24-VOLT) (GRADE CONTROL)	
	2	1	**3S-2093**	29	STRAP-CABLE	
	3	1	**7K-1181**	18	STRAP-CABLE	
	4	1	**141-6526**	1	GROMMET	
	5	1	**145-0603**	2	GROMMET	
	6	1	**266-7379**	1	STRAP-CABLE	
	7	1	**483-7800**	1	SPACER (11X20X20-MM THK)	
	8	1	**483-7802**	1	SPACER (11X20X40-MM THK)	
	9	1	**483-7805**	2	SPACER (11X20X65-MM THK)	
	10	1	**484-1451**	5	CLIP	
	11	1	**484-1453**	10	CLIP (RETAINER)	
	12	1	**484-1456**	1	STRAP-CABLE	
	13	1	**518-4286**	1	BRACKET AS	
	14	1	**528-6515**	1	BRACKET AS	
Y	15	1	**529-8759**	1	HARNESS AS-CHASSIS (GRADE CONTROL)	165
M	16	1	**5C-9553**	1	BOLT (M6X1X16-MM)	
	17	1	**5P-4116**	1	WASHER-HARD (8.8X20.5X2-MM THK)	
	18	1	**8T-4121**	5	WASHER-HARD (11X21X2.5-MM THK)	
M	19	1	**8T-4137**	2	BOLT (M10X1.5X20-MM)	
M	20	1	**8T-4177**	1	BOLT (M8X1.25X90-MM)	
M	21	1	**8T-4178**	1	BOLT (M10X1.5X90-MM)	
M	22	1	**8T-4182**	1	BOLT (M10X1.5X45-MM)	
M	23	1	**8T-6466**	1	BOLT (M10X1.5X60-MM)	
	24	1	**9X-8256**	1	WASHER (6.6X12X2-MM THK)	

M - METRIC PART
Y - SEPARATE ILLUSTRATION

511-9448 **WIRING GP-CHASSIS (**contd.**)** **i07369152**

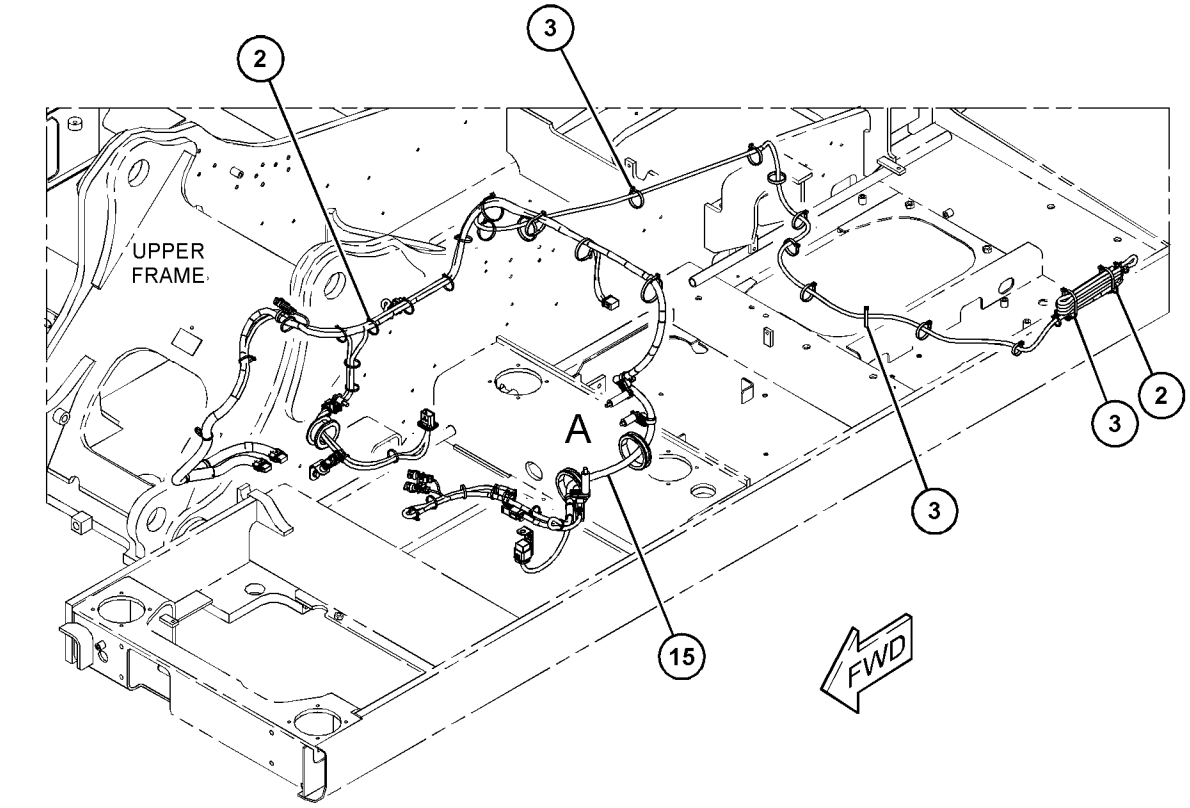

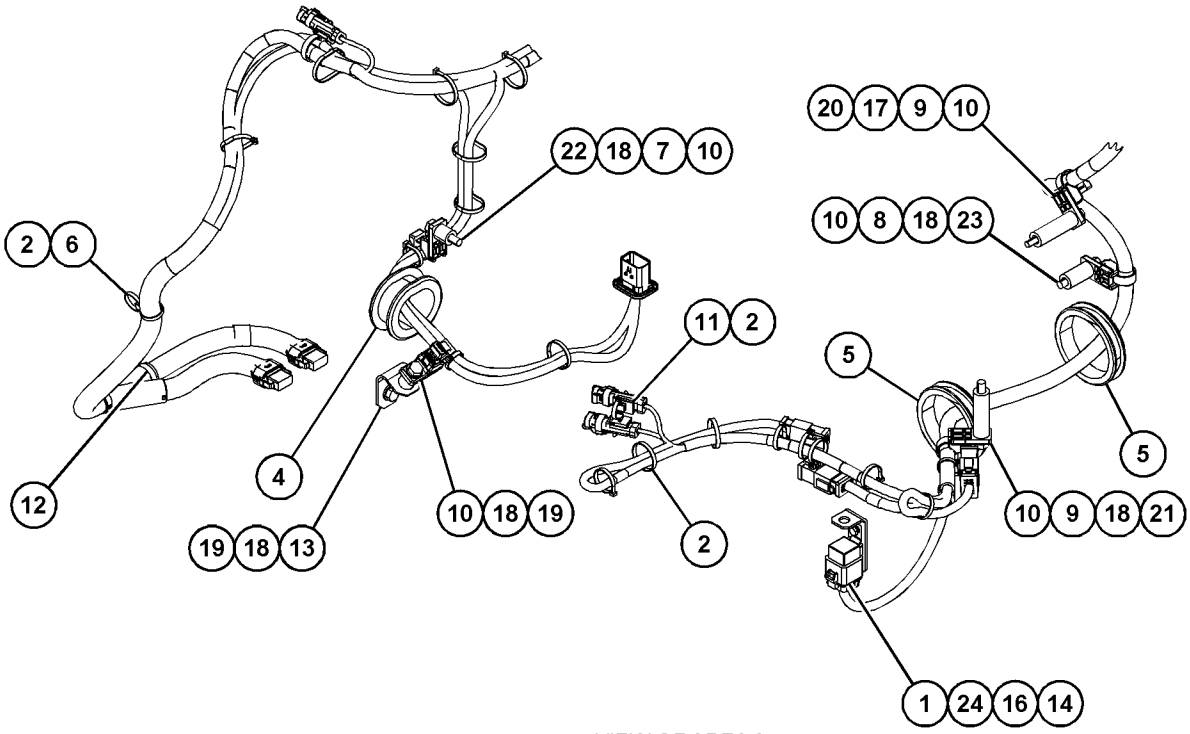

VIEW OF AREA A

GRAPHIC #1 <END> g06232925

528-0174 WIRING GP-CHASSIS–2-WAY FLOW, 1-PUMP, ELEC CONT

S/N: BR61-UP

PART OF 528-6841, 558-3528 CONTROL AR-AUXILIARY

SMCS-1408 **i07476229**

NOTE	REF NO	GRAPHIC REF	PART NUMBER	QTY	PART NAME 1 2 3 4 5 6 (PRODUCT LEVEL)	SEE PAGE
	1	1	**3S-2093**	11	STRAP-CABLE	
	2	1	**7K-1181**	7	STRAP-CABLE	
	3	1	**484-1453**	5	CLIP (RETAINER)	
	4	1	**484-1454**	1	CLIP	
	5	1	**484-1456**	4	STRAP-CABLE	
Y	6	1	**495-7716**	1	HARNESS AS-CHASSIS	161

Y - SEPARATE ILLUSTRATION

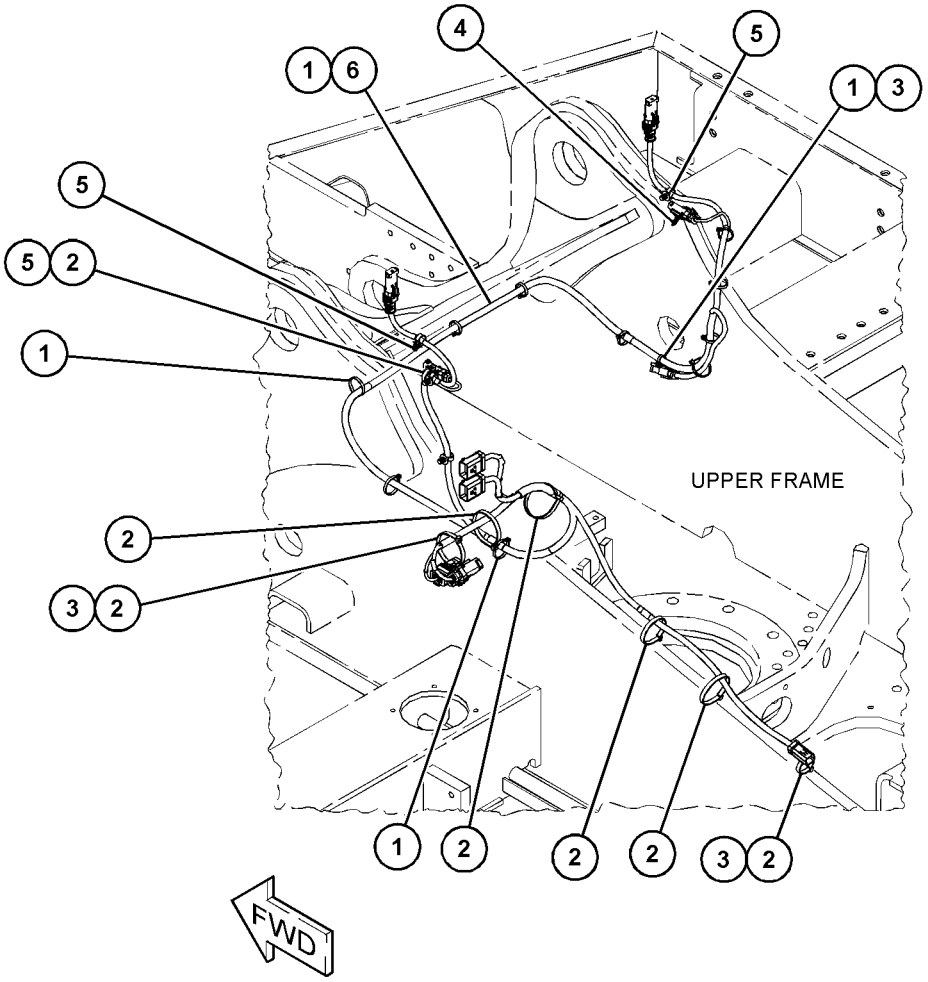

GRAPHIC #1 <END> g06229679

555-7283 WIRING GP-CHASSIS

S/N: BR61-UP
PRODUCT LINK 631, 641

SMCS-1408 **i07435034**

NOTE	REF NO	GRAPHIC REF	PART NUMBER	QTY	PART NAME 1 2 3 4 5 6 (PRODUCT LEVEL)	SEE PAGE
	1	1	**3S-2093**	2	STRAP-CABLE	
	2	1	**7K-1181**	2	STRAP-CABLE	
	3	1	**9R-7941**	1	SOCKET AS	
		1	**9R-7980**	1	COVER	
	4	1	*421-2868*	1	RECEPTACLE AS	
		1	**102-8801**	1	KIT-RECEPTACLE (12-PIN)	
					(INCLUDES RECEPTACLE AS & WEDGE)	
		1	**8T-8737**	12	PLUG-SEAL	
	5	1	**484-1456**	3	STRAP-CABLE	
	6	1	**484-1453**	1	CLIP (RETAINER)	
	7	1	**524-4506**	1	BRACKET AS	
M		1	**6V-9632**	2	NUT-WELD (M6X1-THD)	
M		1	**8T-3490**	1	NUT-WELD (M10X1.5-THD)	
Y	8	1	**552-4919**	1	HARNESS AS-CONTROL (CHASSIS) (CHASSIS)	174
M	9	1	**9X-2042**	2	SCREW-TRUSS HEAD (M6X1X12-MM)	

M - METRIC PART
Y - SEPARATE ILLUSTRATION

555-7283 **WIRING GP-CHASSIS (**contd.**)** **i07435034**

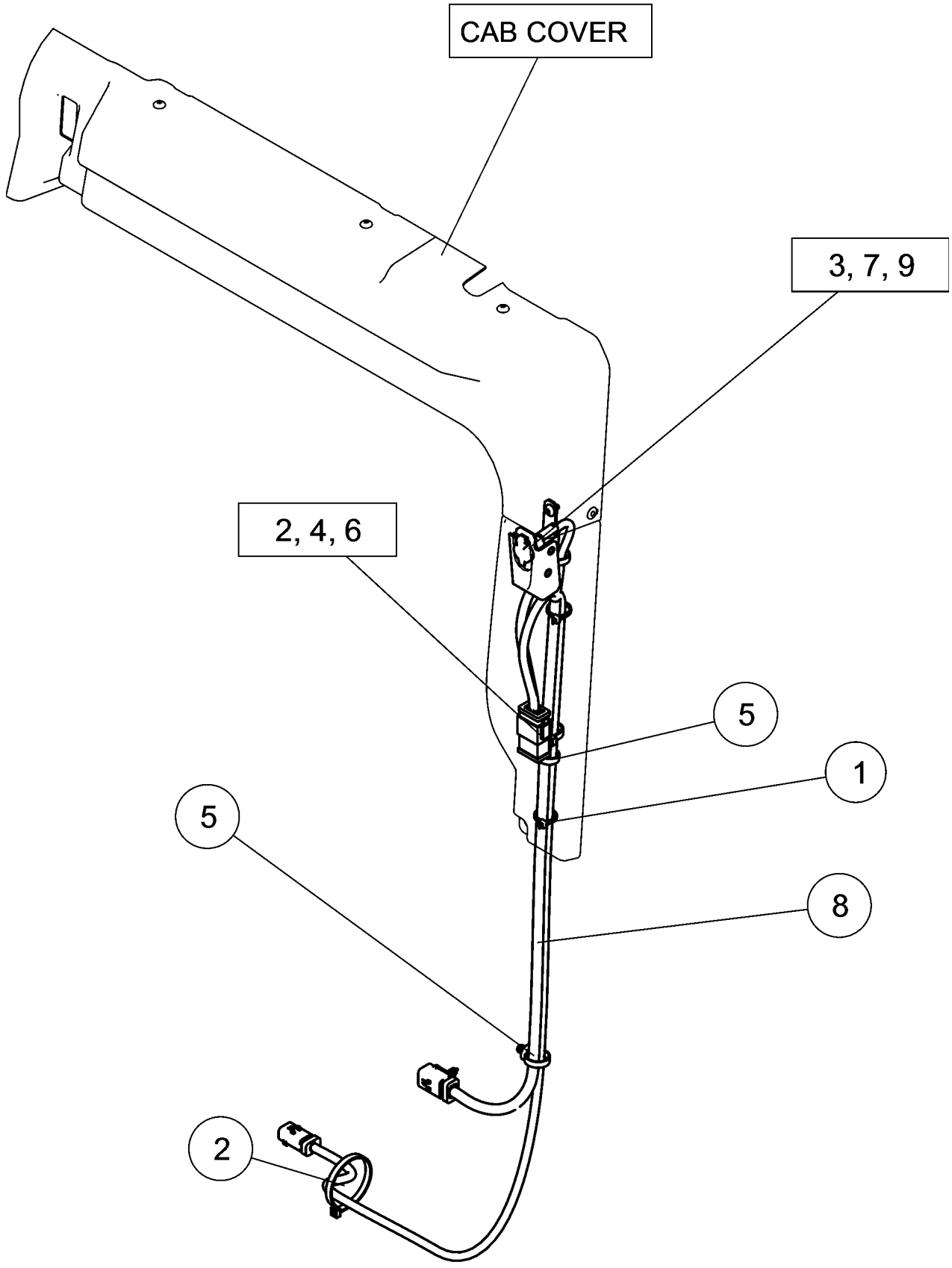

GRAPHIC #1 <END> g06287535

556-9810 WIRING GP-CHASSIS

S/N: BR610001-UP

PART OF 558-1230 ELECTRICAL AR

SMCS-1408 **i07469645**

NOTE	REF NO	GRAPHIC REF	PART NUMBER	QTY	PART NAME 1 2 3 4 5 6 (PRODUCT LEVEL)	SEE PAGE
M	1	1	**8T-4196**	1	BOLT (M10X1.5X35-MM)	
	2	1	**204-2281**	2	STRAP-CABLE	
M	3	2	**8T-4172**	1	BOLT (M10X1.5X80-MM)	
M	4	2	**8T-4198**	1	BOLT (M10X1.5X100-MM)	
	5	1,2	**3S-2093**	20	STRAP-CABLE	
	6	2	**5F-9757**	1	GROMMET	
	7	2	**7K-1181**	14	STRAP-CABLE	
	8	1,2	**8T-4121**	39	WASHER-HARD (11X21X2.5-MM THK)	
M	9	1,2	**8T-4136**	6	BOLT (M10X1.5X25-MM)	
M	10	1,2	**8T-4137**	30	BOLT (M10X1.5X20-MM)	
	11	2	**202-4004**	1	GROMMET	
	12	2	**266-7379**	3	STRAP-CABLE	
	13	2	**343-2410**	1	BRACKET AS	
	14	2	**483-7805**	1	SPACER (11X20X65-MM THK)	
	15	2	**483-7806**	1	SPACER (11X20X56-MM THK)	
	16	1,2	**484-1451**	20	CLIP	
	17	1	**484-1452**	2	CLIP	
	18	2	**484-1453**	10	CLIP (RETAINER)	
	19	2	**484-1454**	7	CLIP	
	20	1,2	**484-1456**	45	STRAP-CABLE	
	21	1	**490-6965**	1	BRACKET AS	
Y	22	1	*490-8083*	1	PANEL GP-SWITCH (DISCONNECT)	209
	23	2	**508-0556**	1	BRACKET AS	
	24	2	**508-0558**	1	BRACKET AS	
	25	2	**204-1611**	1	STRAP (DUAL)	
	26	2	**542-9618**	1	BRACKET AS	
Y	27	2	**550-1970**	1	HARNESS AS-SENSOR (AIR CLEANER)	184
Y	28	1	**558-1493**	1	HARNESS AS-CHASSIS (MAIN)	168
Y	29	1	**558-1494**	1	HARNESS AS-CHASSIS (FUEL FILTER)	170

M - METRIC PART
Y - SEPARATE ILLUSTRATION

556-9810 **WIRING GP-CHASSIS (**contd.**)** **i07469645**

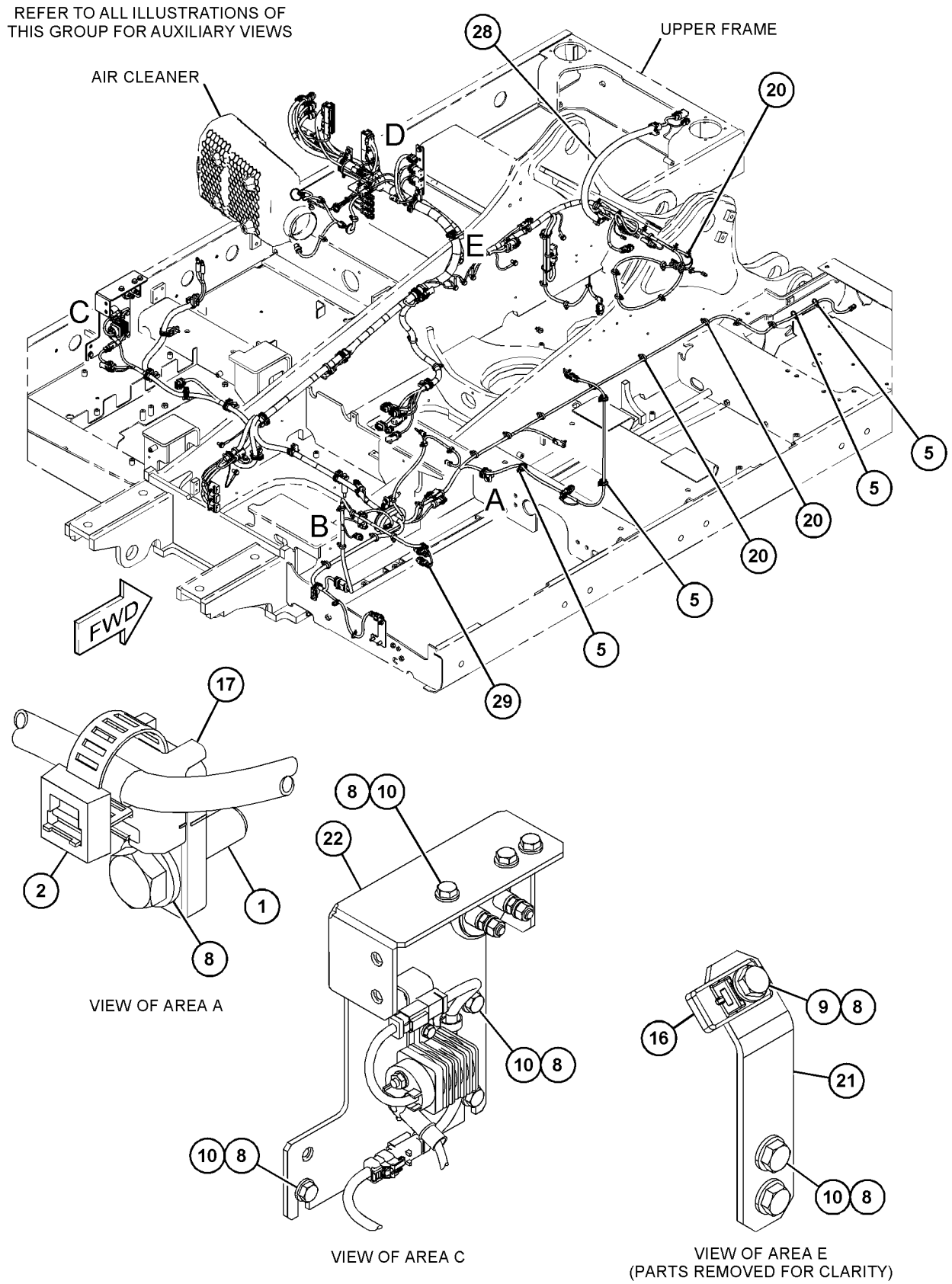

GRAPHIC #1 g06330770

556-9810 **WIRING GP-CHASSIS (**contd.**)** **i07469645**

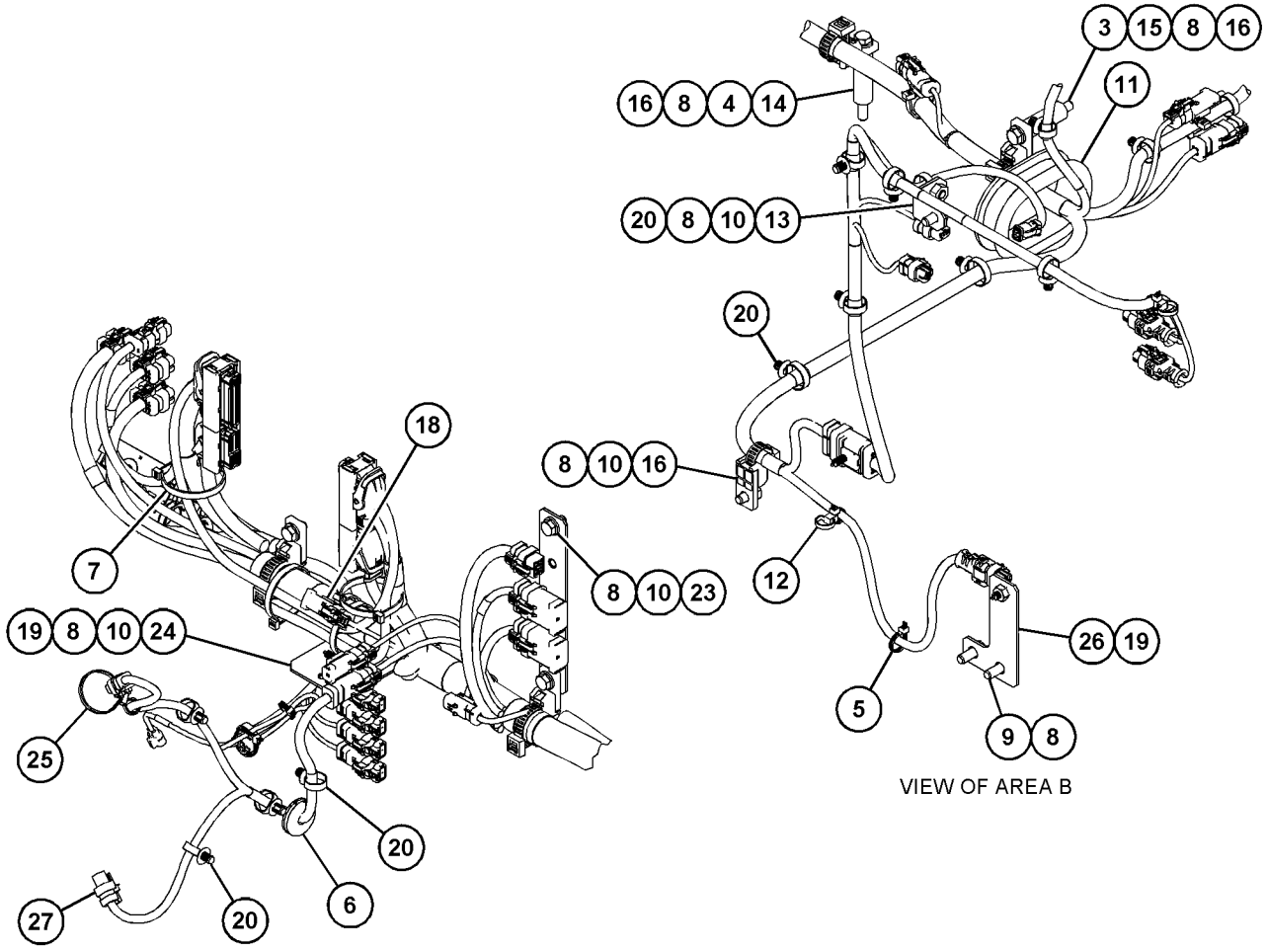

GRAPHIC #2 <END> g06330771

488-6764 WIRING GP-CONSOLE

S/N: BR61-UP

PART OF 489-7847 MODULE GP-CAB WIRING

SMCS-1408 **i07348806**

NOTE	PART NUMBER	QTY	PART NAME 1 2 3 4 5 6 (PRODUCT LEVEL)	SEE PAGE
Y	*528-0022*	1	LIGHTING GP-CAB	195
Y	*502-7168*	1	MOUNTING GP-WIRING	207
Y	*502-7165*	1	SWITCH AS-PUSH BUTTON (MOUNTING)	224
Y	*488-6765*	1	WIRING GP-CONSOLE (LH)	258
Y	*488-6766*	1	WIRING GP-CONSOLE (RH)	259
Y	*488-6767*	1	WIRING GP-CONSOLE (SECONDARY ECM)	260

Y - SEPARATE ILLUSTRATION

<END>

488-6765 WIRING GP-CONSOLE

S/N: BR61-UP

PART OF 488-6764 WIRING GP-CONSOLE

SMCS-1408 **i07349055**

NOTE	REF NO	GRAPHIC REF	PART NUMBER	QTY	PART NAME 1 2 3 4 5 6 (PRODUCT LEVEL)	SEE PAGE
	1	1	**3S-2093**	6	STRAP-CABLE	
	2	1	**7K-1181**	4	STRAP-CABLE	
	3	1	**484-1451**	1	CLIP	
Y	4	1	**530-1943**	1	HARNESS AS-CONSOLE (LH)	171
M	5	1	**128-2136**	1	SCREW-TRUSS HEAD (M6X1X16-MM)	

M - METRIC PART
Y - SEPARATE ILLUSTRATION

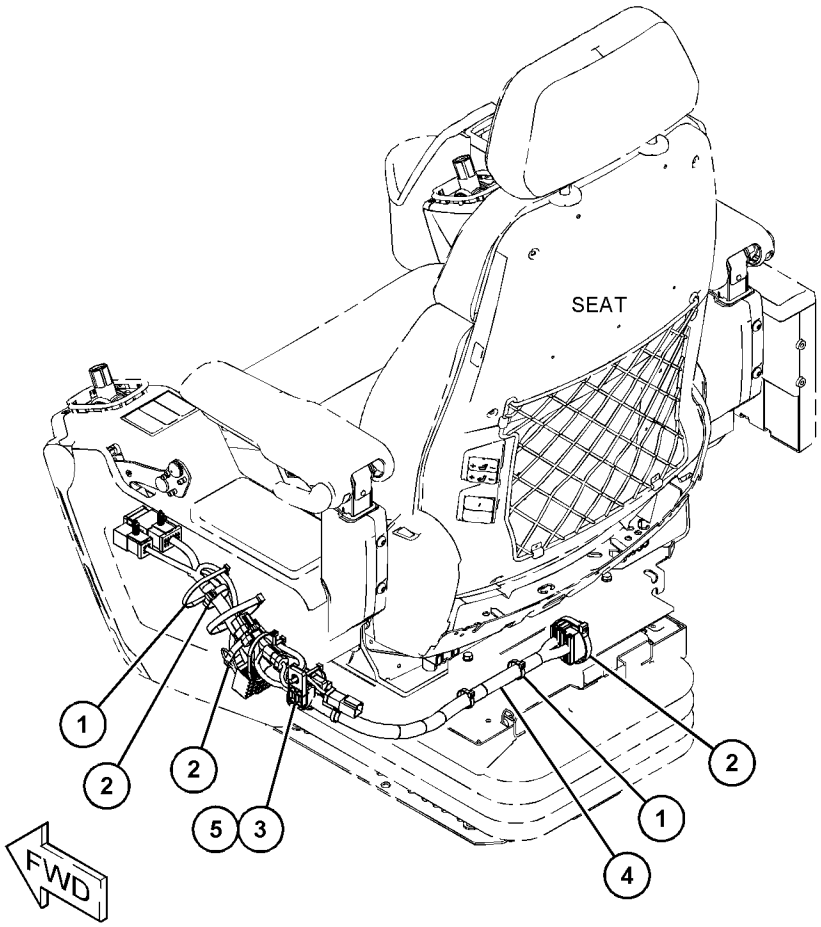

GRAPHIC #1 <END> g06226980

488-6766 WIRING GP-CONSOLE

S/N: BR61-UP

PART OF 488-6764 WIRING GP-CONSOLE

SMCS-1408 **i07349170**

NOTE	REF NO	GRAPHIC REF	PART NUMBER	QTY	PART NAME 1 2 3 4 5 6 (PRODUCT LEVEL)	SEE PAGE
	1	1	**3S-2093**	4	STRAP-CABLE	
	2	1	**7K-1181**	3	STRAP-CABLE	
	3	1	**335-5365**	1	SOCKET-AUXILIARY POWER (12-VOLT)	
	4	1	**448-1297**	1	TIE	
	5	1	**484-1451**	1	CLIP	
	6	1	**484-1453**	1	CLIP (RETAINER)	
	7	1	**484-1456**	2	STRAP-CABLE	
	8	1	**491-7831**	1	BASE	
Y	9	1	**530-1944**	1	HARNESS AS-CONSOLE (RH)	172
	10	1	**533-5685**	1	SUPPORT AS	
M	11	1	**128-2136**	1	SCREW-TRUSS HEAD (M6X1X16-MM)	
	12	1	**427-9771**	3	TIE	
M	13	1	**9X-2042**	2	SCREW-TRUSS HEAD (M6X1X12-MM)	

M - METRIC PART
Y - SEPARATE ILLUSTRATION

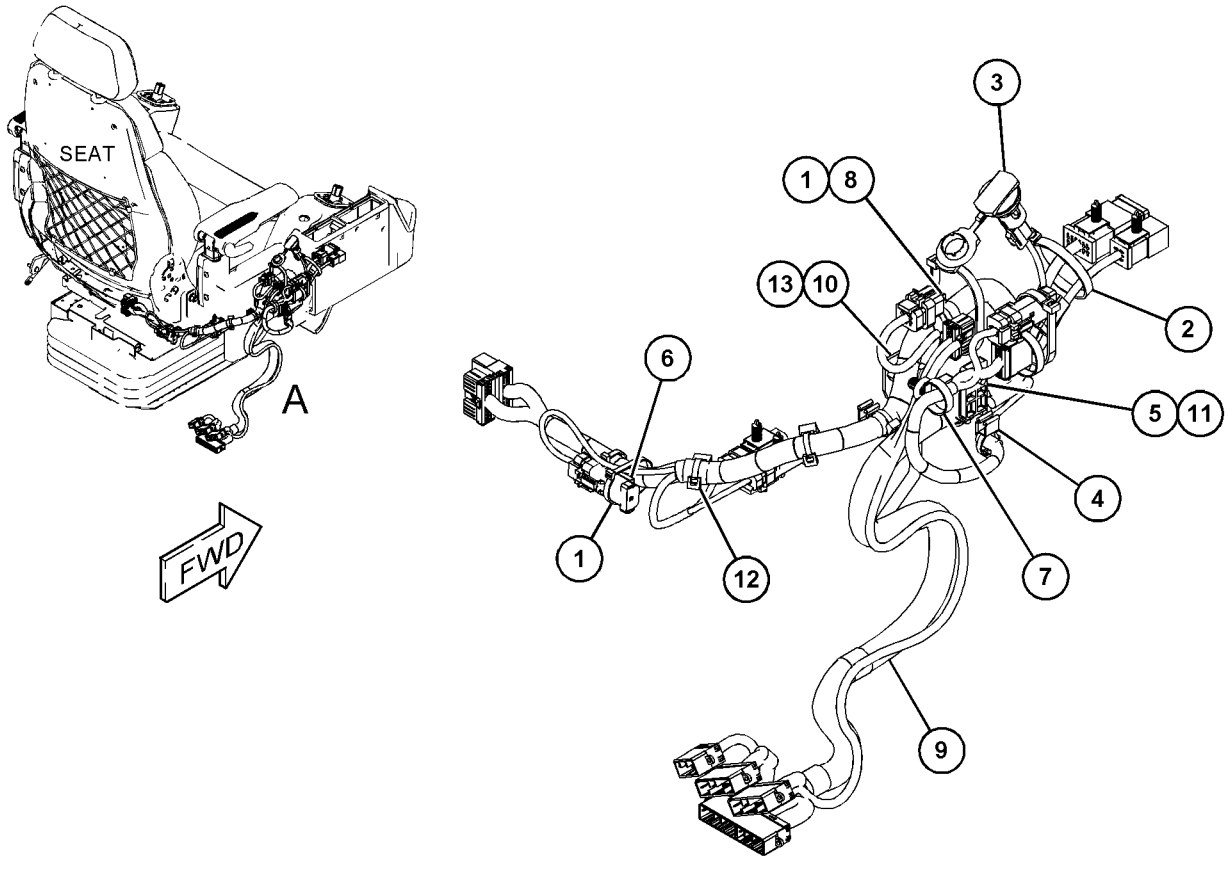

VIEW OF AREA A

GRAPHIC #1 <END> g06227022

488-6767 WIRING GP-CONSOLE

S/N: BR61-UP

PART OF 488-6764 WIRING GP-CONSOLE

SMCS-1408 **i07349265**

NOTE	REF NO	GRAPHIC REF	PART NUMBER	QTY	PART NAME 1 2 3 4 5 6 (PRODUCT LEVEL)	SEE PAGE
	1	1	**3S-2093**	1	STRAP-CABLE	
	2	1	**448-1297**	1	TIE	
	3	1	**478-8975**	1	MODULE GP-KEYPAD (JOG DIAL)	
	4	1	**478-8977**	1	MODULE GP-KEYPAD (ROTARY DIAL)	
Y	5	1	**530-1945**	1	HARNESS AS-CONSOLE	173
	6	1	**427-9771**	1	TIE	
M	7	1	**9X-2044**	8	SCREW-TRUSS HEAD (M6X1X16-MM)	

M - METRIC PART
Y - SEPARATE ILLUSTRATION

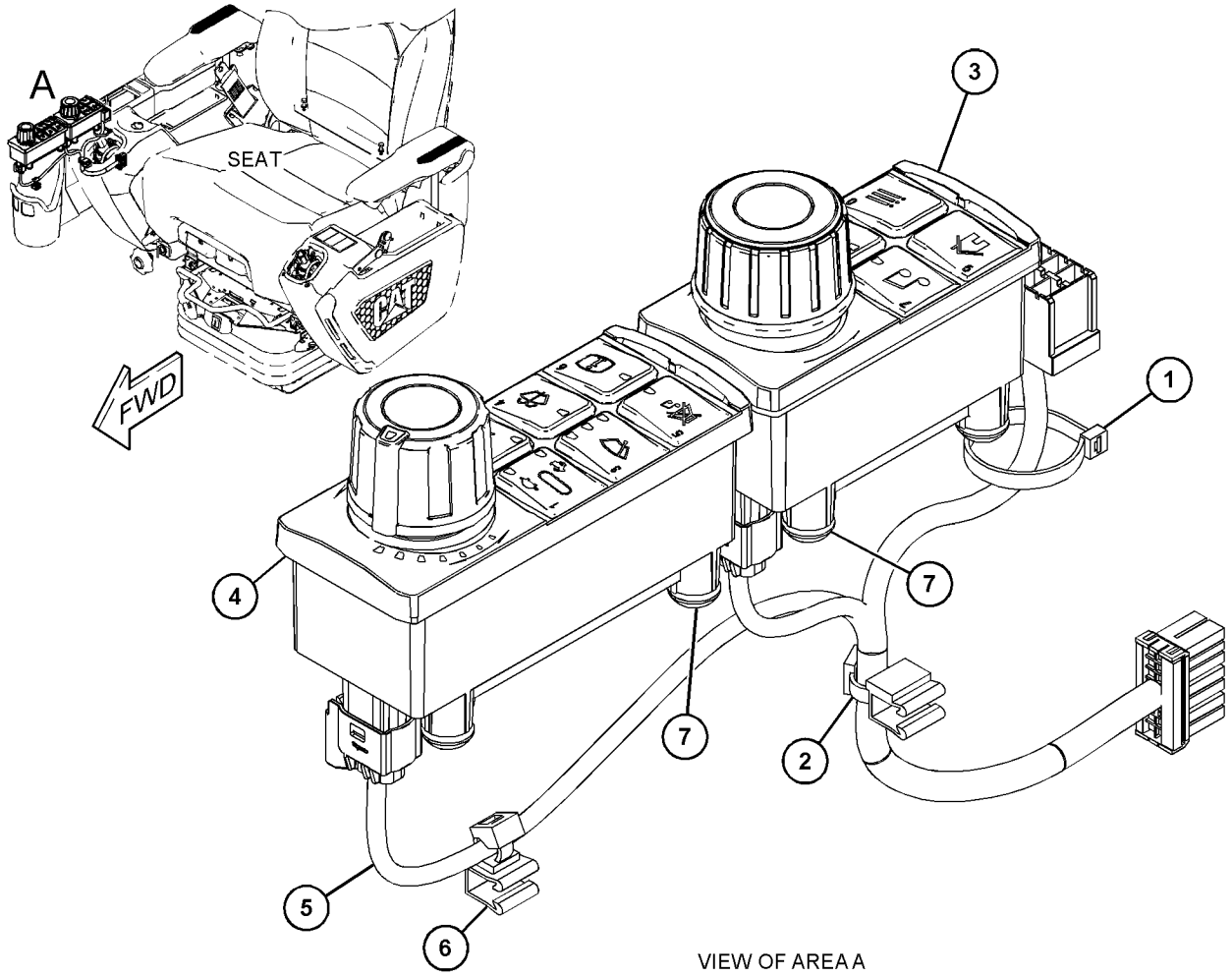

VIEW OF AREA A

GRAPHIC #1 <END> g06227094

493-0982 WIRING GP-ELECTRONIC CONTROL–JOYSTICK

S/N: BR61-UP

PART OF 528-6835 CONTROL AR-AUXILIARY

SMCS-1408 **i07352319**

NOTE	REF NO	GRAPHIC REF	PART NUMBER	QTY	PART NAME 1 2 3 4 5 6 (PRODUCT LEVEL)	SEE PAGE
	1	1	**3S-2093**	4	STRAP-CABLE	
	2	1	**448-1297**	2	TIE	
	3	1	**491-7831**	4	BASE	

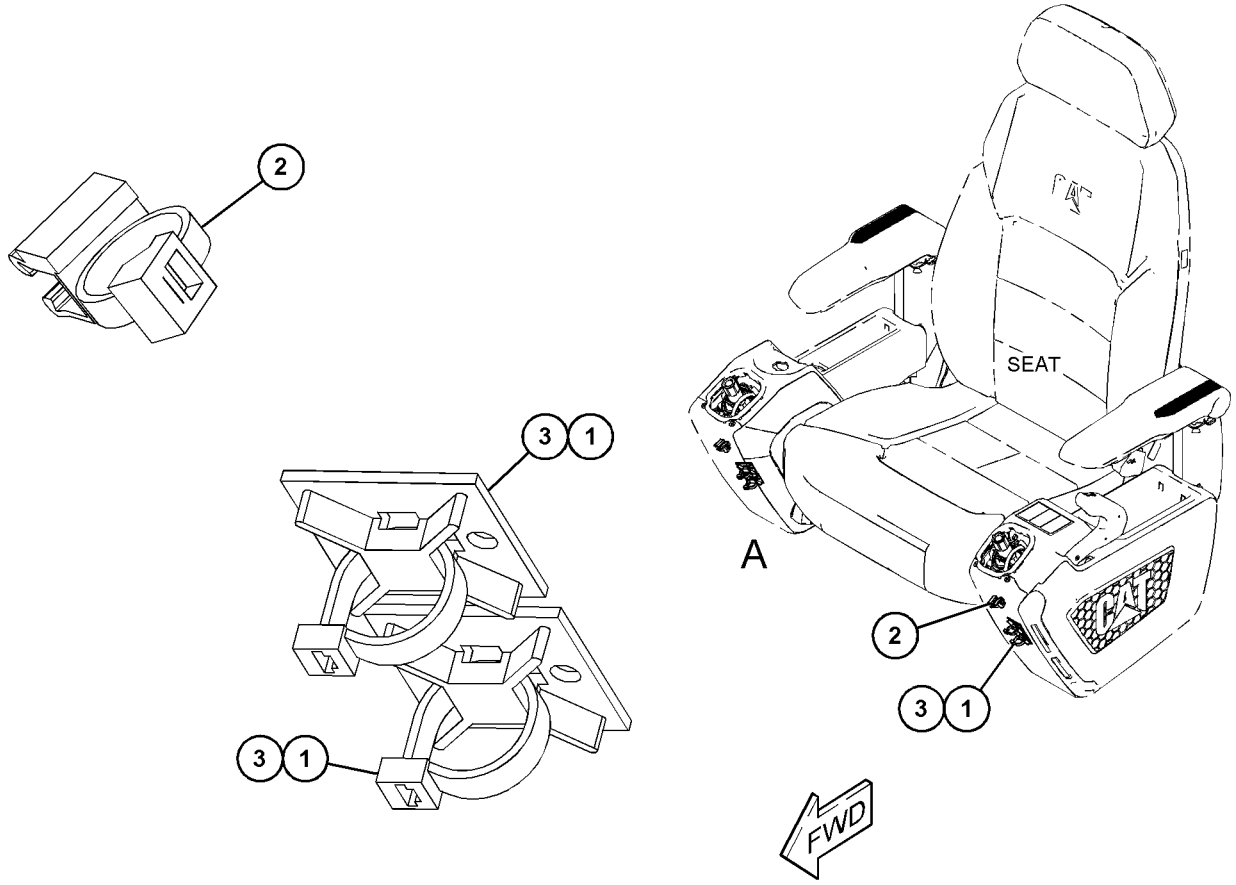

VIEW OF AREA A

GRAPHIC #1 <END> g06229129

395-0113 WIRING GP-ENGINE

S/N: 4501-UP; E7A1-UP

PART OF 530-2686, 555-5560, 555-7255 ENGINE AR-PRIMARY

SMCS-1408 **i06997746**

NOTE	REF NO	GRAPHIC REF	PART NUMBER	QTY	PART NAME 1 2 3 4 5 6 (PRODUCT LEVEL)	SEE PAGE
C	1	1	**033-6034**	3	SEAL-O-RING	
C	2	1	**277-5065**	3	CLIP	
M	3	1	**124-3815**	4	BOLT (M8X1.25X16-MM)	
	4	1	**217-9039**	1	STRAP-CABLE	
	5	1	**348-4637**	1	BOLT	
CY	6	1	**375-8407**	3	HARNESS AS-WIRING (INJECTOR)	186
	7	1	**377-1293**	1	BRACKET	
Y	8	1	**385-5997**	1	HARNESS AS-ENGINE	175
	9	1	**389-3863**	1	BRACKET	
	10	1	**392-2780**	1	BRACKET	
	11	1	**132-5789**	1	CLIP (LADDER)	
M	12	1	**232-1693**	1	BOLT-FLANGE HEAD (M6X1X35-MM)	

C - CHANGE FROM PREVIOUS TYPE
M - METRIC PART
Y - SEPARATE ILLUSTRATION

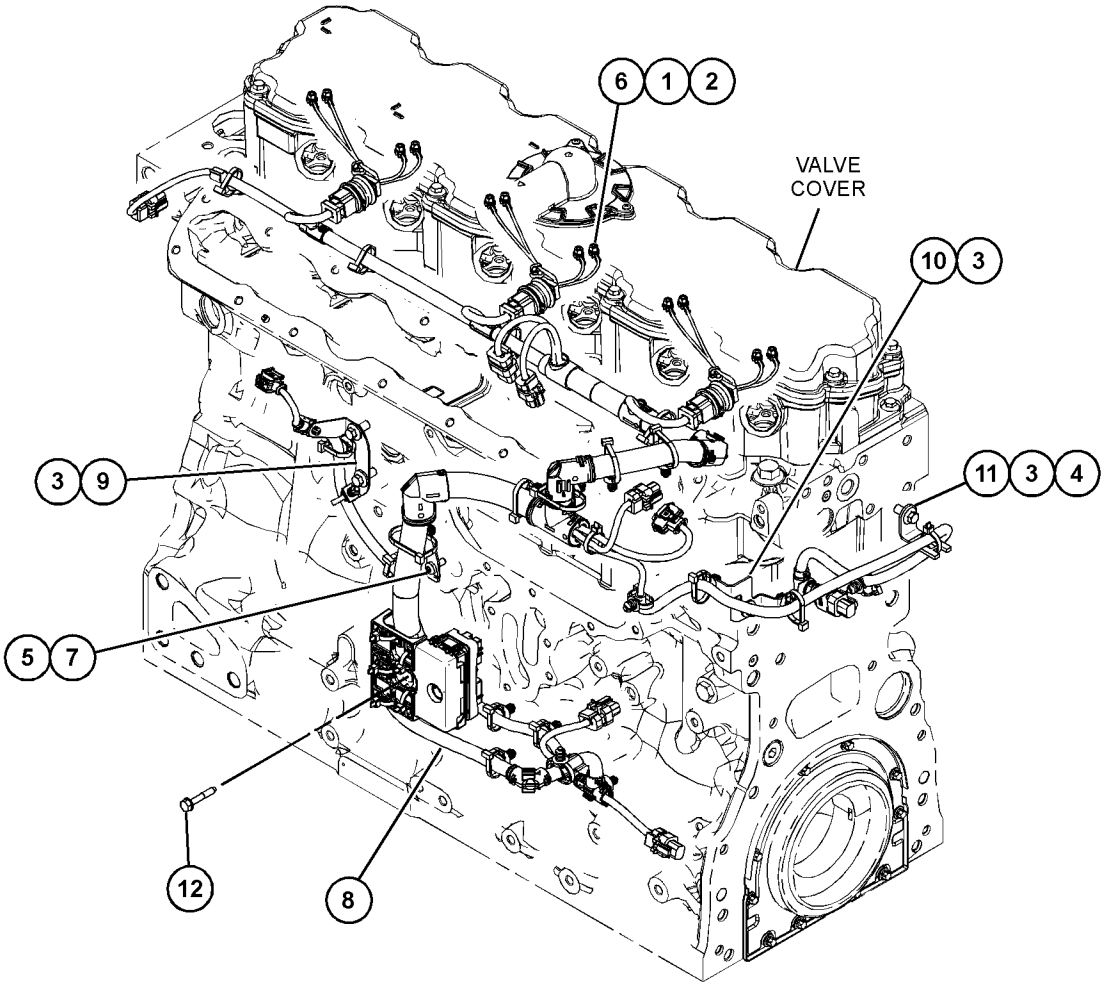

GRAPHIC #1 <END> g06177895

502-7163 WIRING GP-ENGINE

S/N: BR61-UP

PART OF 490-2680, 558-1230 ELECTRICAL AR

SMCS-1408 **i07366329**

NOTE	REF NO	GRAPHIC REF	PART NUMBER	QTY	PART NAME 1 2 3 4 5 6 (PRODUCT LEVEL)	SEE PAGE
	1	1	**3S-2093**	3	STRAP-CABLE	
	2	1	**7K-1181**	10	STRAP-CABLE	
	3	1	**132-1806**	1	STRAP AS-GROUND	
	4	1	**140-0860**	1	STRAP AS-GROUND	
	5	1	**266-7379**	1	STRAP-CABLE	
	6	1	**483-7800**	1	SPACER (11X20X20-MM THK)	
	7	1	**483-7802**	2	SPACER (11X20X40-MM THK)	
	8	1	**484-1451**	5	CLIP	
	9	1	**484-1454**	1	CLIP	
	10	1	**504-3568**	1	BRACKET AS	
	11	1	**504-3577**	1	BRACKET AS	
	12	1	**505-7395**	1	WIRE AS (GLOW PLUG)	
	13	1	**505-7400**	1	BRACKET AS	
	14	1	**505-7402**	1	PLATE AS	
	15	1	**505-7404**	1	BRACKET AS	
	16	1	**505-7406**	1	BRACKET AS	
Y	17	1	**529-8751**	1	HARNESS AS-ENGINE (REAR)	176
Y	18	1	**530-2661**	1	HARNESS AS-ENGINE (FRONT)	176
	19	1	**177-2215**	3	STRAP-DUAL CLAMP	
	20	1	**8T-4121**	15	WASHER-HARD (11X21X2.5-MM THK)	
M	21	1	**8T-4136**	2	BOLT (M10X1.5X25-MM)	
M	22	1	**8T-4137**	9	BOLT (M10X1.5X20-MM)	
M	23	1	**8T-4182**	1	BOLT (M10X1.5X45-MM)	
M	24	1	**8T-4196**	1	BOLT (M10X1.5X35-MM)	
M	25	1	**8T-6466**	2	BOLT (M10X1.5X60-MM)	

M - METRIC PART
Y - SEPARATE ILLUSTRATION

502-7163 **WIRING GP-ENGINE (**contd.**)** **i07366329**

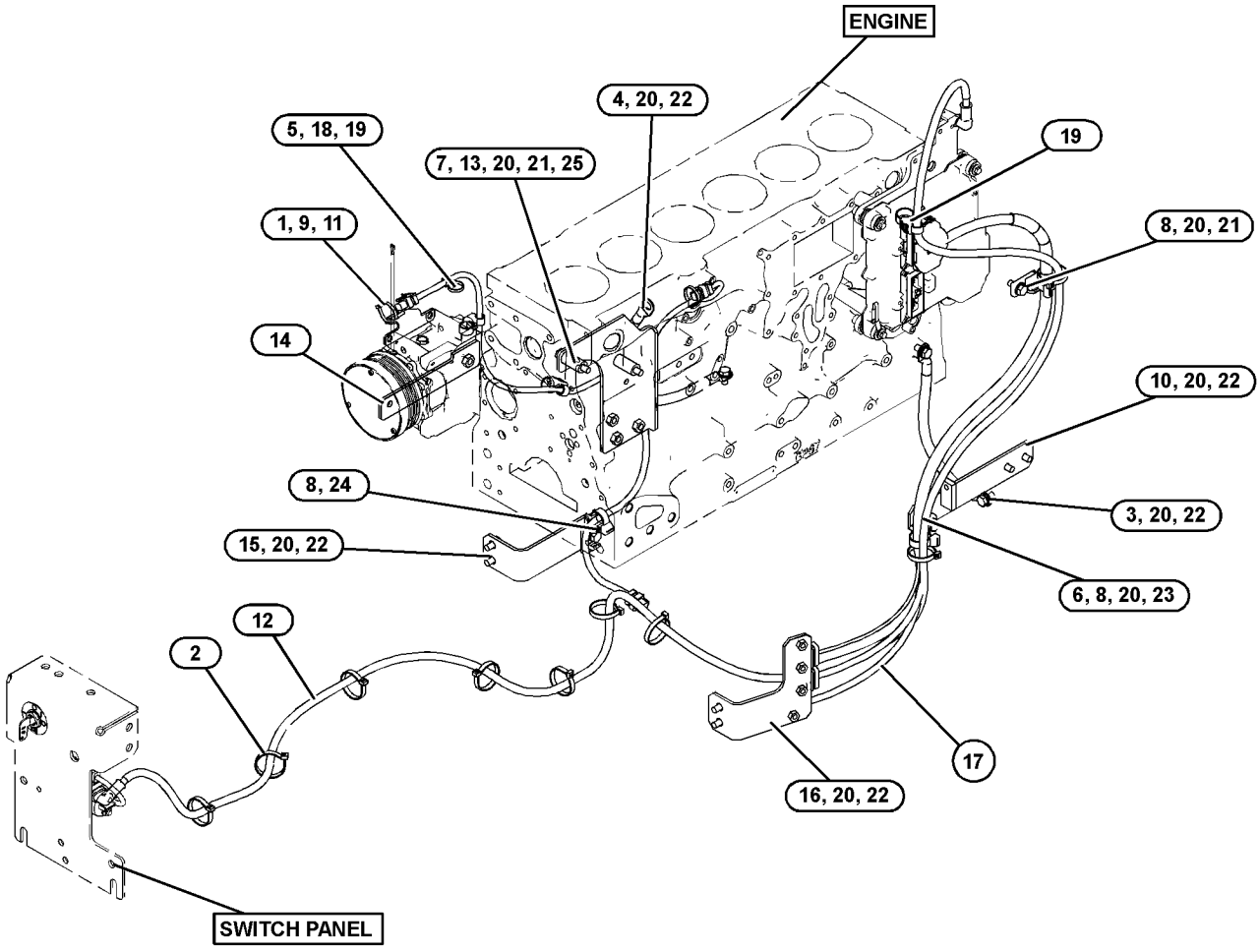

GRAPHIC #1 <END> g06230200

502-7160 WIRING GP-FAN

S/N: BR61-UP

PART OF 511-4805 ELECTRICAL AR

SMCS-1408 **i07360208**

NOTE	REF NO	GRAPHIC REF	PART NUMBER	QTY	PART NAME 1 2 3 4 5 6 (PRODUCT LEVEL)	SEE PAGE
	1	1	**3S-2093**	3	STRAP-CABLE	
	2	1	**484-1451**	9	CLIP	
	3	1	**484-1454**	11	CLIP	
	4	1	**484-1456**	9	STRAP-CABLE	
	5	1	**516-5064**	1	STRIP-FAN	
Y	6	1	**529-8754**	1	HARNESS AS-CONTROL (FAN)	173
	7	1	**8T-4121**	11	WASHER-HARD (11X21X2.5-MM THK)	
M	8	1	**8T-4136**	9	BOLT (M10X1.5X25-MM)	
M	9	1	**8T-4137**	2	BOLT (M10X1.5X20-MM)	

M - METRIC PART
Y - SEPARATE ILLUSTRATION

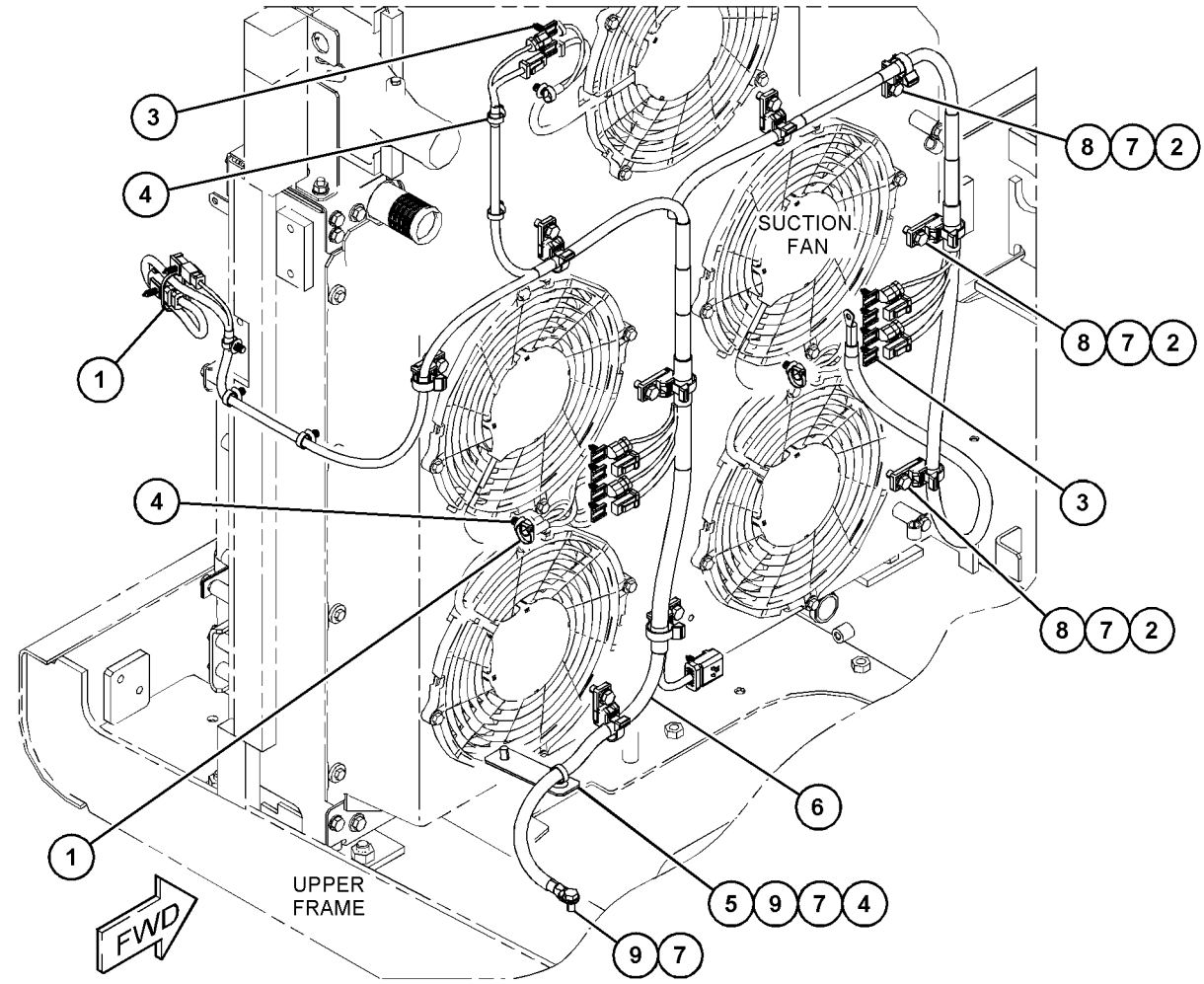

GRAPHIC #1 <END> g06231318

490-2771 WIRING GP-FRONT–BOOM

S/N: BR61-UP

PART OF 516-9880 GRADE CONTROL AR

SMCS-1408, 5734 **i07369396**

NOTE	REF NO	GRAPHIC REF	PART NUMBER	QTY	PART NAME 1 2 3 4 5 6 (PRODUCT LEVEL)	SEE PAGE
	1	1	**3S-2093**	16	STRAP-CABLE	
	2	1	**484-1456**	1	STRAP-CABLE	
Y	3	1	**525-4108**	1	HARNESS AS-SENSOR (BOOM)	183
	4	1	**204-1611**	13	STRAP (DUAL)	

Y - SEPARATE ILLUSTRATION

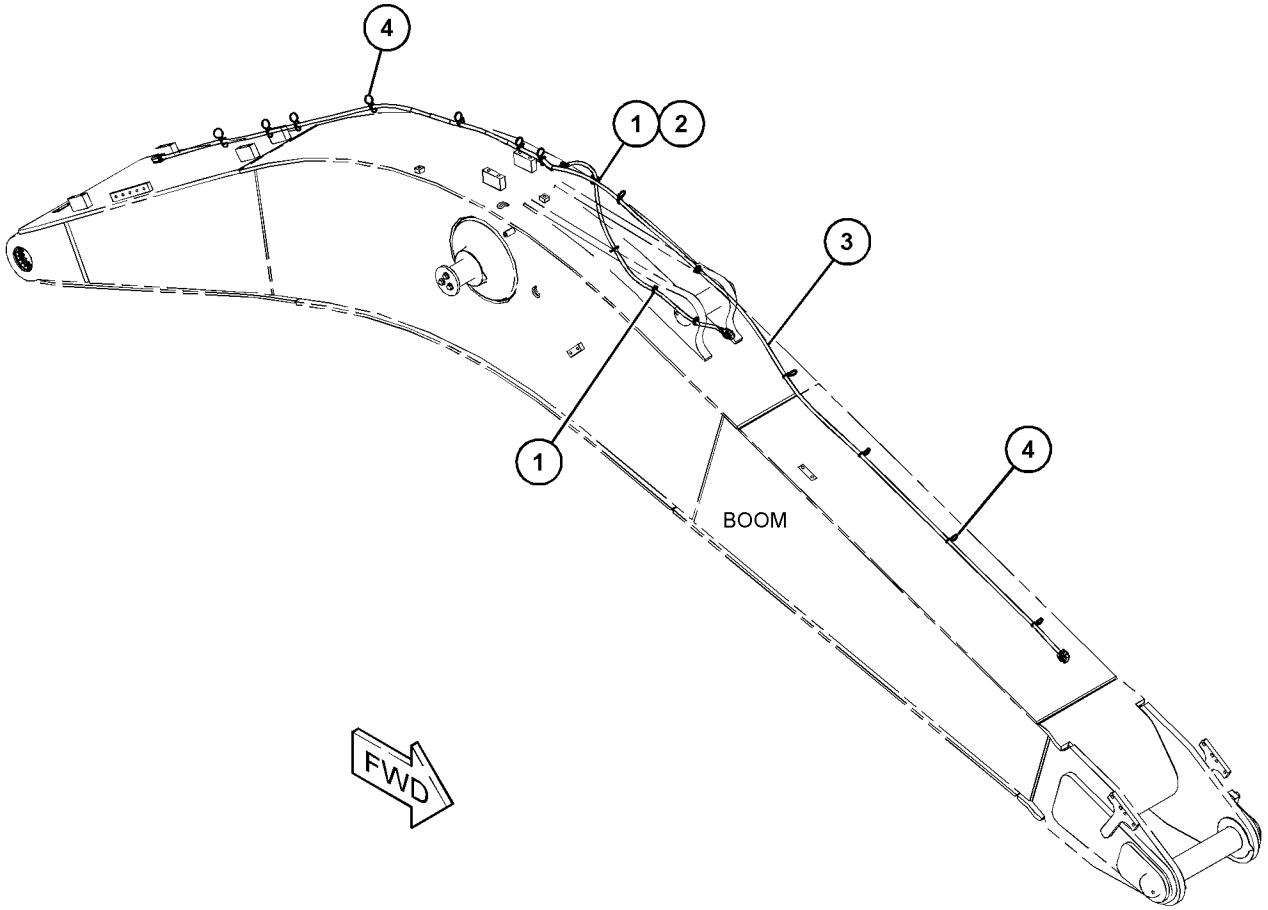

GRAPHIC #1 <END> g06230542

516-8663 WIRING GP-FRONT—GRADE CONTROL, STICK

S/N: BR61-UP

PART OF 516-9883 GRADE CONTROL AR

SMCS-1408, 5734 **i07369438**

NOTE	REF NO	GRAPHIC REF	PART NUMBER	QTY	PART NAME 1 2 3 4 5 6 (PRODUCT LEVEL)	SEE PAGE
	1	1	**3S-2093**	6	STRAP-CABLE	
	2	1	**7K-1181**	1	STRAP-CABLE	
	3	1	**116-0118**	1	CLIP	
	4	1	**178-3620**	4	STRAP-DUAL CLAMP	
	5	1	**347-4734**	1	CLIP	
	6	1	**484-1453**	3	CLIP (RETAINER)	
	7	1	**484-1456**	1	STRAP-CABLE	
Y	8	1	**529-0428**	1	HARNESS AS-SENSOR (GRADE CONTROL)	183
Y	9	1	**536-5436**	1	HARNESS AS-CONTROL (GRADE CONTROL)	174
	10	1	**204-1611**	6	STRAP (DUAL)	
	11	1	**8T-4121**	1	WASHER-HARD (11X21X2.5-MM THK)	
M	12	1	**8T-4137**	1	BOLT (M10X1.5X20-MM)	

M - METRIC PART
Y - SEPARATE ILLUSTRATION

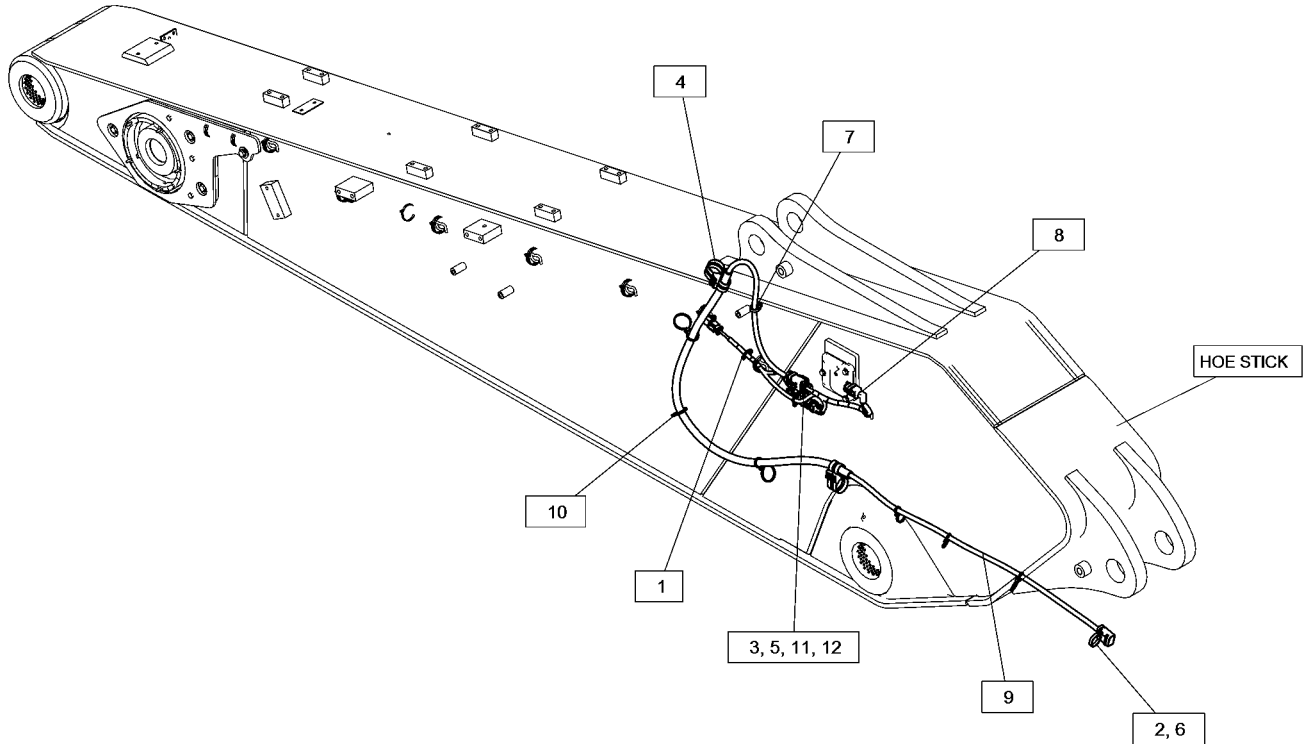

GRAPHIC #1 <END> g06268603

516-8664 WIRING GP-FRONT—GRADE CONTROL

S/N: BR61-UP
2.5-M (8.2-FT) REACH
PART OF 516-9884 GRADE CONTROL AR

SMCS-1408, 5734

i07369492

NOTE	REF NO	GRAPHIC REF	PART NUMBER	QTY	PART NAME 1 2 3 4 5 6 (PRODUCT LEVEL)	SEE PAGE
	1	1	**3S-2093**	11	STRAP-CABLE	
	2	1	**7K-1181**	3	STRAP-CABLE	
	3	1	**116-0118**	1	CLIP	
	4	1	**178-3620**	4	STRAP-DUAL CLAMP	
	5	1	**347-4734**	1	CLIP	
	6	1	**484-1453**	3	CLIP (RETAINER)	
	7	1	**484-1456**	1	STRAP-CABLE	
Y	8	1	**530-1954**	1	HARNESS AS-FRONT (STICK)	177
Y	9	1	**536-5437**	1	HARNESS AS-FRONT (GRADE CONTROL) (BOOM)	177
	10	1	**204-1611**	6	STRAP (DUAL)	
	11	1	**8T-4121**	1	WASHER-HARD (11X21X2.5-MM THK)	
M	12	1	**8T-4137**	1	BOLT (M10X1.5X20-MM)	

M - METRIC PART
Y - SEPARATE ILLUSTRATION

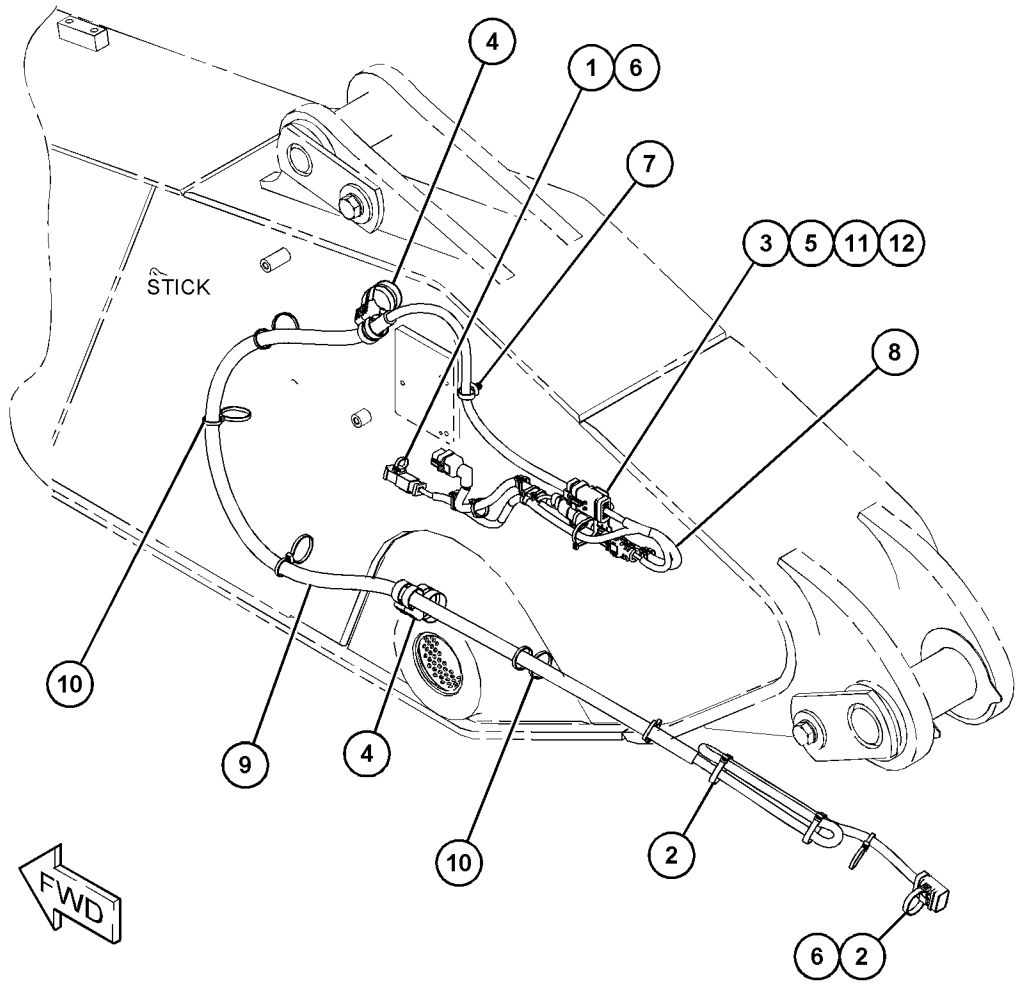

GRAPHIC #1 <END> g06232642

560-5559 WIRING GP-FRONT–GRADE CONTROL

S/N: BR610001-UP
FOR USE WITH 2.9-M (9.5-FT) STICK
PART OF 560-5685 GRADE CONTROL AR

SMCS-1408, 5734

i07452132

NOTE	REF NO	GRAPHIC REF	PART NUMBER	QTY	PART NAME 1 2 3 4 5 6 (PRODUCT LEVEL)	SEE PAGE
	1	1	**3S-2093**	3	STRAP-CABLE	
	2	1	**560-6489**	1	HARNESS AS-CONTROL (LASER RECEIVER)	
		1	**8T-8729**	4	PIN-CONNECTOR (16-GA TO 18-GA)	
		1	**253-2695**	1	PLUG AS-CONNECTOR	
		1	**151-9274**	1	KIT-RECEPTACLE (4-PIN)	
					(INCLUDES RECEPTACLE AS & WEDGE)	
		1	**3E-3377**	1	WEDGE-RECEPTACLE LOCK (4-PIN)	

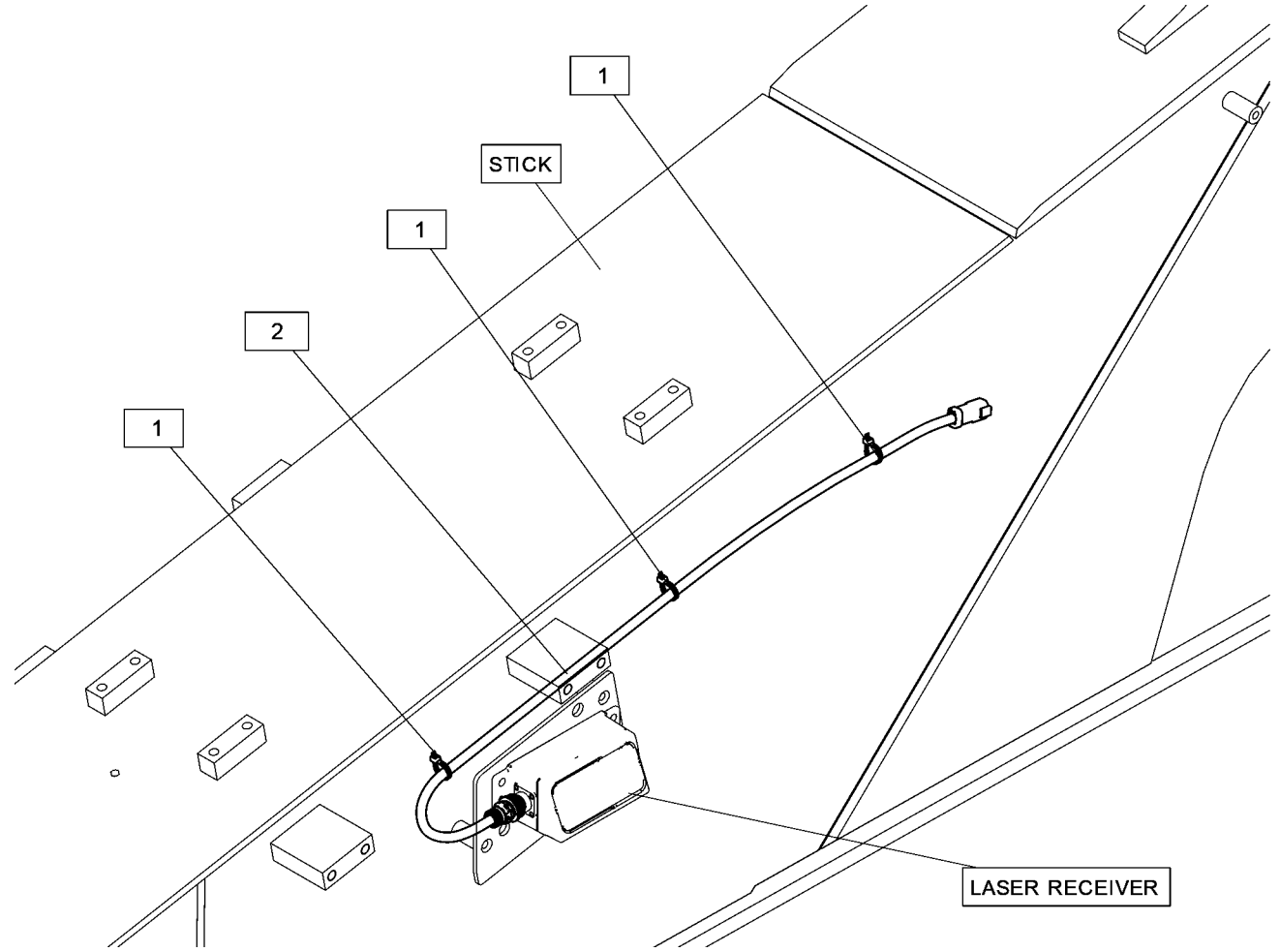

GRAPHIC #1 <END> g06325967

560-5562 WIRING GP-FRONT–GRADE CONTROL, STICK

S/N: BR610001-UP
FOR USE WITH 2.8-M (9.2-FT) STICK
PART OF 560-5689 GRADE CONTROL AR

SMCS-1408, 5734

i07451520

NOTE	REF NO	GRAPHIC REF	PART NUMBER	QTY	PART NAME 1 2 3 4 5 6 (PRODUCT LEVEL)	SEE PAGE
	1	1	**3S-2093**	4	STRAP-CABLE	
	2	1	**560-6490**	1	HARNESS AS-CONTROL (LASER RECEIVER)	
		1	**8T-8729**	4	PIN-CONNECTOR (16-GA TO 18-GA)	
		1	**253-2695**	1	PLUG AS-CONNECTOR	
		1	**151-9274**	1	KIT-RECEPTACLE (4-PIN)	
					(INCLUDES RECEPTACLE AS & WEDGE)	
		1	**3E-3377**	1	WEDGE-RECEPTACLE LOCK (4-PIN)	

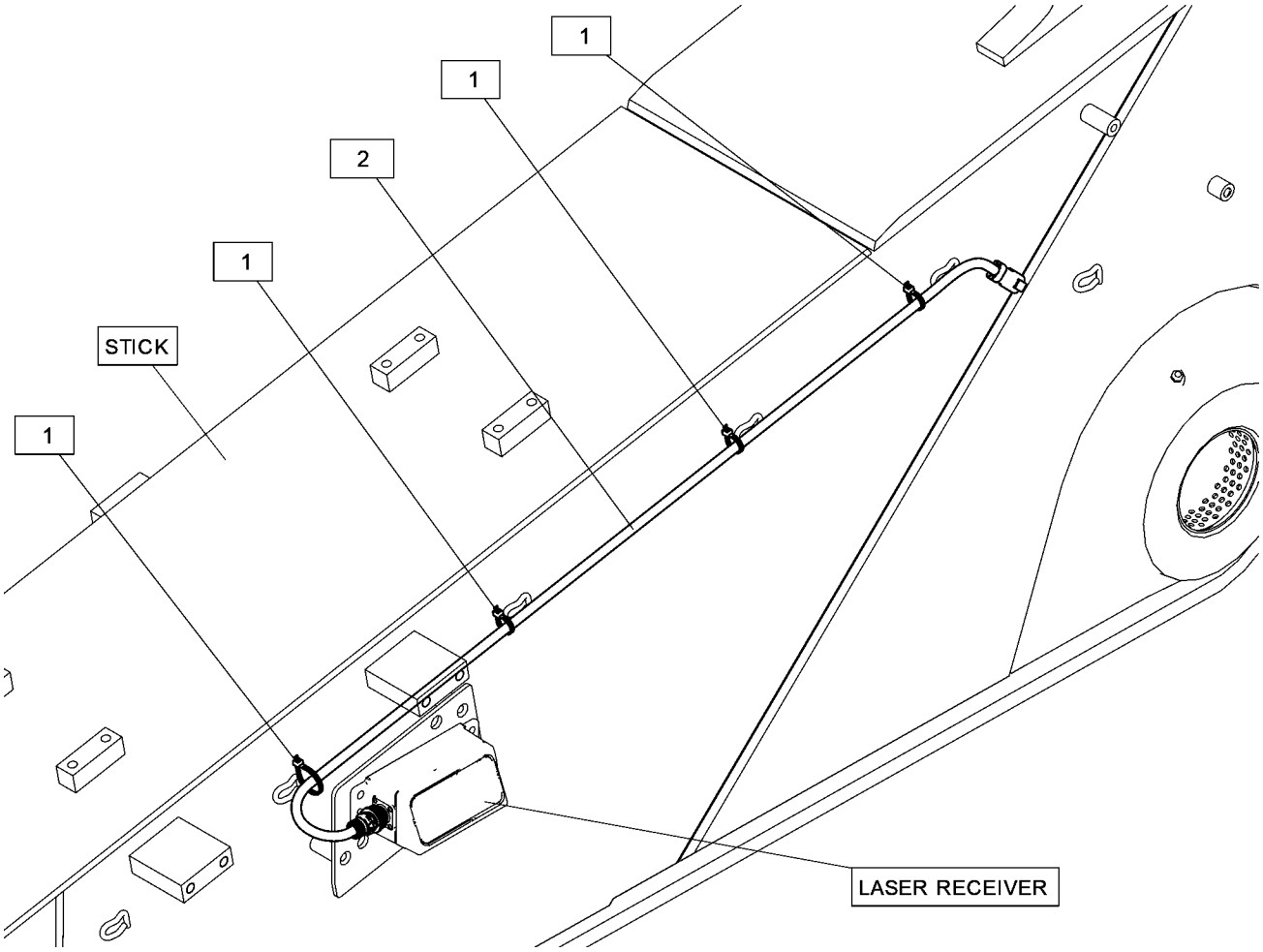

GRAPHIC #1

<END>

g06325972

488-6768 WIRING GP-PLATFORM

S/N: BR61-UP

PART OF 489-7847 MODULE GP-CAB WIRING

SMCS-1408 **i07349284**

NOTE	REF NO	GRAPHIC REF	PART NUMBER	QTY	PART NAME 1 2 3 4 5 6 (PRODUCT LEVEL)	SEE PAGE
	1	1	**3E-5169**	1	GUARD-SWITCH (SECONDARY SHUTDOWN)	
	2	1	**3S-2093**	4	STRAP-CABLE	
	3	1	**6S-4039**	1	GROMMET	
	4	1	**116-0118**	7	CLIP	
	5	1	**301-2981**	1	SWITCH AS-TOGGLE (SECONDARY SHUTDOWN)	
		1	**102-8803**	1	KIT-RECEPTACLE (3-PIN)	
					(INCLUDES RECEPTACLE AS & WEDGE)	
		1	**3E-3371**	1	WEDGE-RECEPTACLE LOCK (3-PIN)	
		1	**8T-8729**	3	PIN-CONNECTOR (16-GA TO 18-GA)	
	6	1	**319-1260**	2	PANEL	
	7	1	**328-0077**	1	CAP	
	8	1	**484-1451**	6	CLIP	
	9	1	**484-1452**	2	CLIP	
	10	1	**484-1456**	2	STRAP-CABLE	
	11	1	**503-8899**	1	PLATE	
	12	1	**516-4987**	1	BRACKET AS	
Y	13	1	**530-1947**	1	HARNESS AS-PLATFORM	182
	14	1	**533-2339**	1	BRACKET AS	
	15	1	**204-2281**	2	STRAP-CABLE	
M	16	1	**6V-9671**	8	SCREW-MACHINE (M3X0.5X12-MM)	
M	17	1	**7X-2621**	5	BOLT (M10X1.5X12-MM)	
	18	1	**8T-4121**	18	WASHER-HARD (11X21X2.5-MM THK)	
M	19	1	**8T-4136**	4	BOLT (M10X1.5X25-MM)	
M	20	1	**8T-4137**	9	BOLT (M10X1.5X20-MM)	
M	21	1	**9X-2042**	2	SCREW-TRUSS HEAD (M6X1X12-MM)	

M - METRIC PART
Y - SEPARATE ILLUSTRATION

488-6768 **WIRING GP-PLATFORM (**contd.**)** **i07349284**

NO GRAPHIC AVAILABLE AT TIME OF PUBLICATION

GRAPHIC #1 <END> g01269539

511-9440 WIRING GP-SENSOR

S/N: BR61-UP

PART OF 513-3208 LINES AR-BOOM

SMCS-1408 **i07356281**

NOTE	REF NO	GRAPHIC REF	PART NUMBER	QTY	PART NAME 1 2 3 4 5 6 (PRODUCT LEVEL)	SEE PAGE
	1	1	**3S-2093**	1	STRAP-CABLE	
	2	1	**7K-1181**	1	STRAP-CABLE	
	3	1	**484-1453**	1	CLIP (RETAINER)	

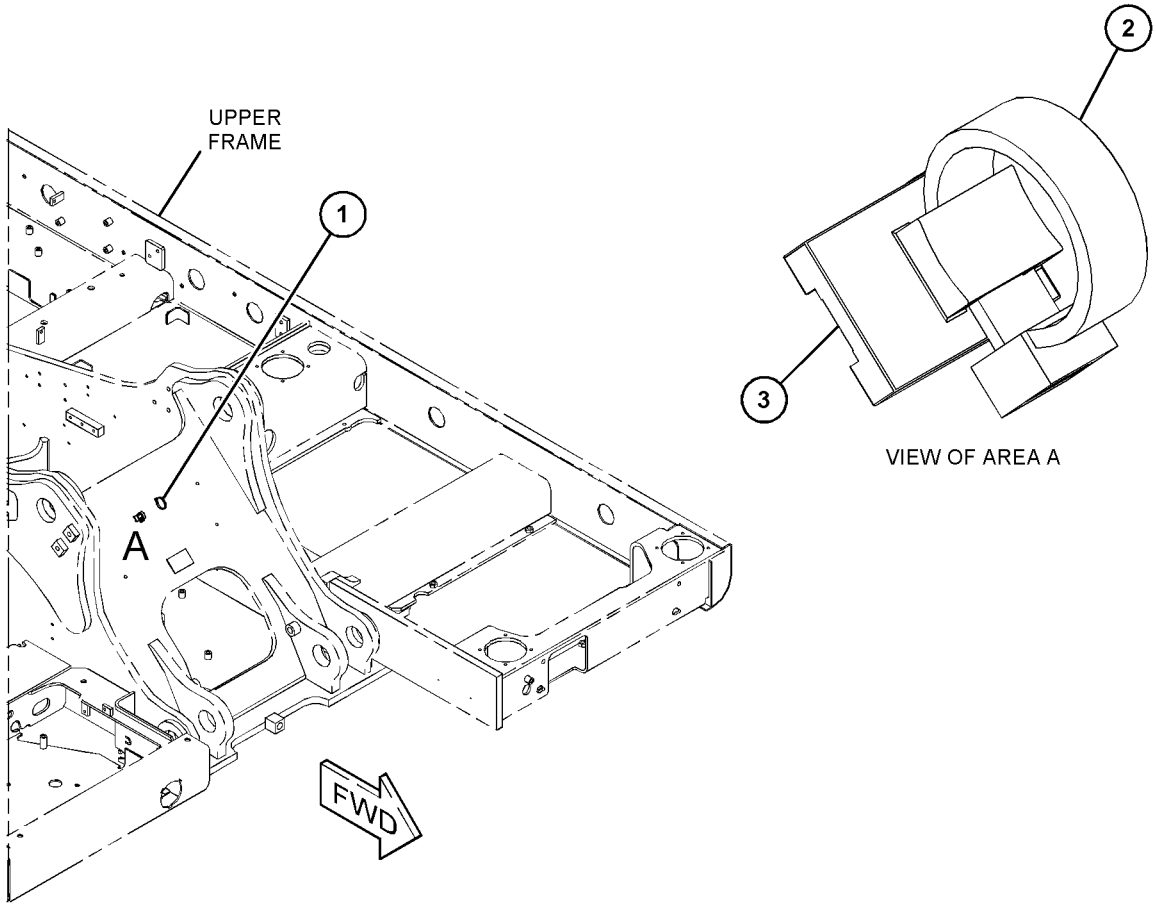

GRAPHIC #1 <END> g06227037

514-7718 WIRING GP-SENSOR–VALVE

S/N: BR61-UP

PART OF 513-3214 WIRING & MTG GP- MAIN CONT V

SMCS-1408 **i07368034**

NOTE	REF NO	GRAPHIC REF	PART NUMBER	QTY	PART NAME 1 2 3 4 5 6 (PRODUCT LEVEL)	SEE PAGE
	1	1	**3S-2093**	8	STRAP-CABLE	
	2	1	**266-7379**	4	STRAP-CABLE	
Y	3	1	**525-3740**	1	HARNESS AS-SENSOR (QUICK COUPLER)	182

Y - SEPARATE ILLUSTRATION

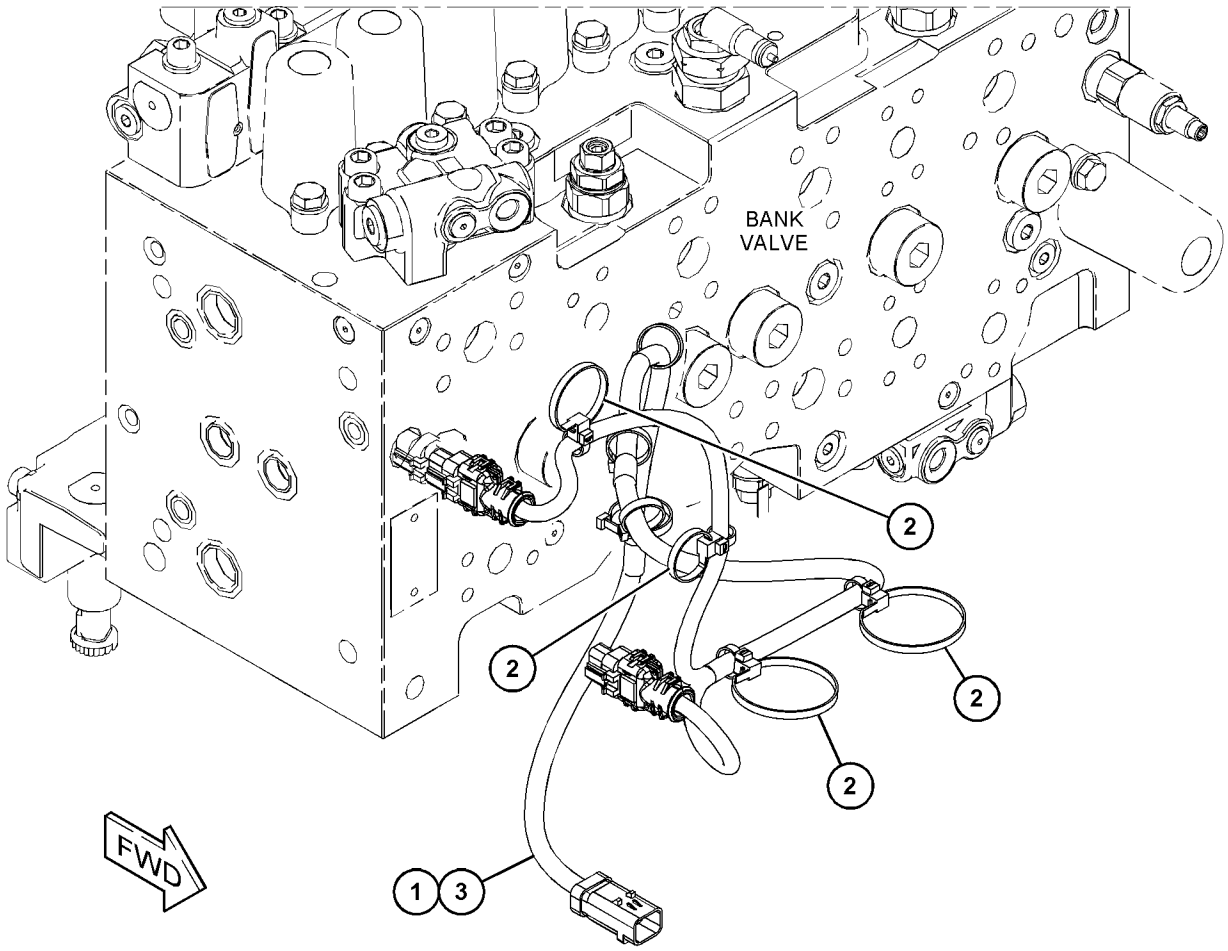

GRAPHIC #1 <END> g06230459

490-2693 WIRING GP-VALVE

S/N: BR61-UP

PART OF 511-4805 ELECTRICAL AR

SMCS-1408, 5734

i07360216

NOTE	REF NO	GRAPHIC REF	PART NUMBER	QTY	PART NAME 1 2 3 4 5 6 (PRODUCT LEVEL)	SEE PAGE
	1	1	**3S-2093**	13	STRAP-CABLE	
	2	1	**266-7379**	12	STRAP-CABLE	
	3	1	**483-7803**	2	SPACER (11X20X30-MM THK)	
	4	1	**484-1451**	3	CLIP	
	5	1	**484-1453**	1	CLIP (RETAINER)	
	6	1	**484-1454**	2	CLIP	
	7	1	**484-1456**	2	STRAP-CABLE	
	8	1	**506-7016**	1	BRACKET AS-VALVE	
	9	1	**506-7018**	1	BRACKET AS-VALVE	
Y	10	1	**549-9283**	1	HARNESS AS-VALVE	185
	11	1	**8T-4121**	6	WASHER-HARD (11X21X2.5-MM THK)	
M	12	1	**8T-4136**	1	BOLT (M10X1.5X25-MM)	
M	13	1	**8T-4137**	3	BOLT (M10X1.5X20-MM)	
M	14	1	**8T-4185**	1	BOLT (M10X1.5X50-MM)	
M	15	1	**8T-6466**	1	BOLT (M10X1.5X60-MM)	

M - METRIC PART
Y - SEPARATE ILLUSTRATION

490-2693 **WIRING GP-VALVE (**contd.**)** **i07360216**

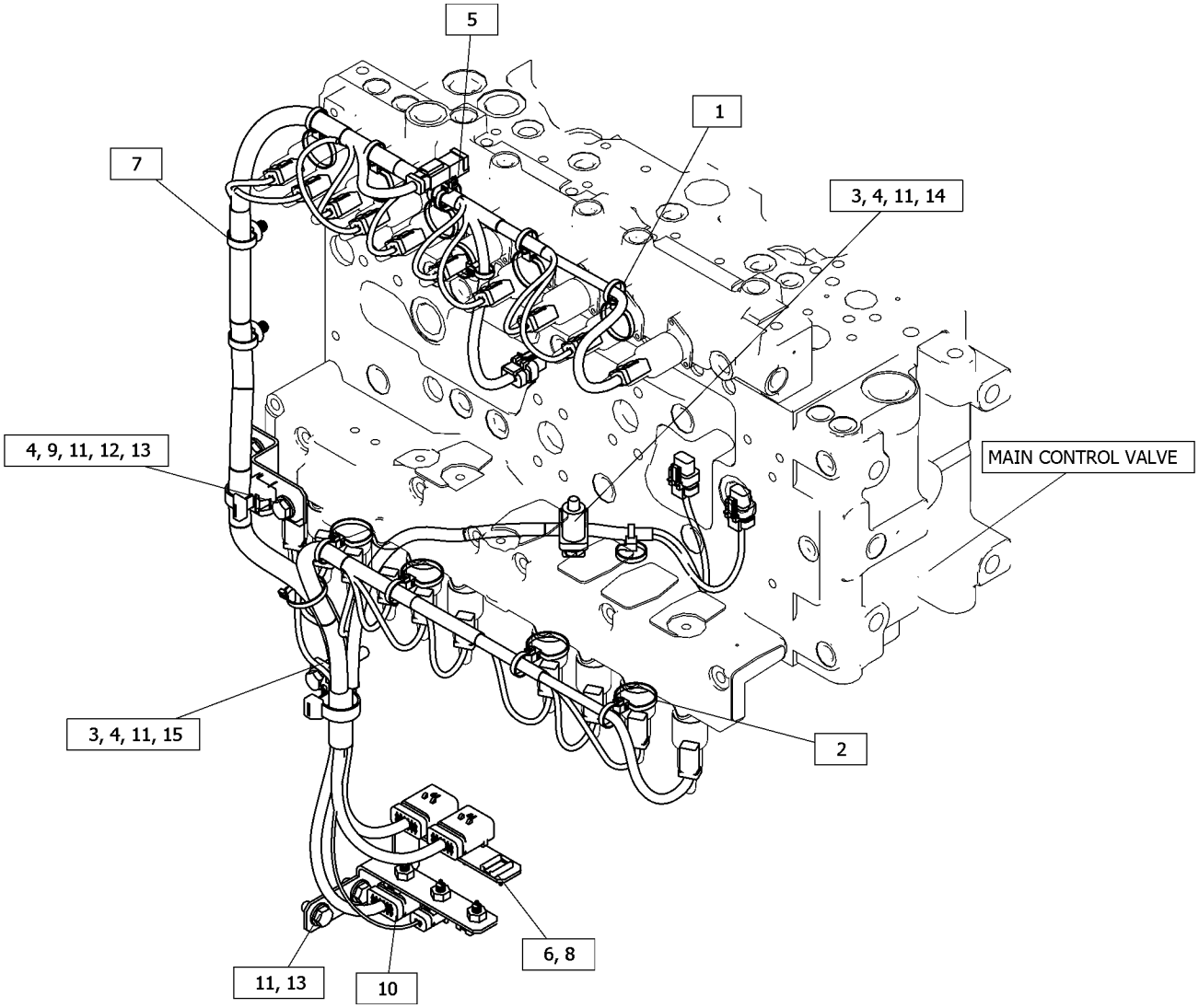

GRAPHIC #1 <END> g06289688

490-2714 WIRING GP-VALVE

S/N: BR61-UP

PART OF 528-6841, 558-3528 CONTROL AR-AUXILIARY

SMCS-1408, 5734 **i07360260**

NOTE	REF NO	GRAPHIC REF	PART NUMBER	QTY	PART NAME 1 2 3 4 5 6 (PRODUCT LEVEL)	SEE PAGE
	1	1	**3S-2093**	12	STRAP-CABLE	
	2	1	**266-7379**	2	STRAP-CABLE	
Y	3	1	**527-1870**	1	HARNESS AS-VALVE	185

Y - SEPARATE ILLUSTRATION

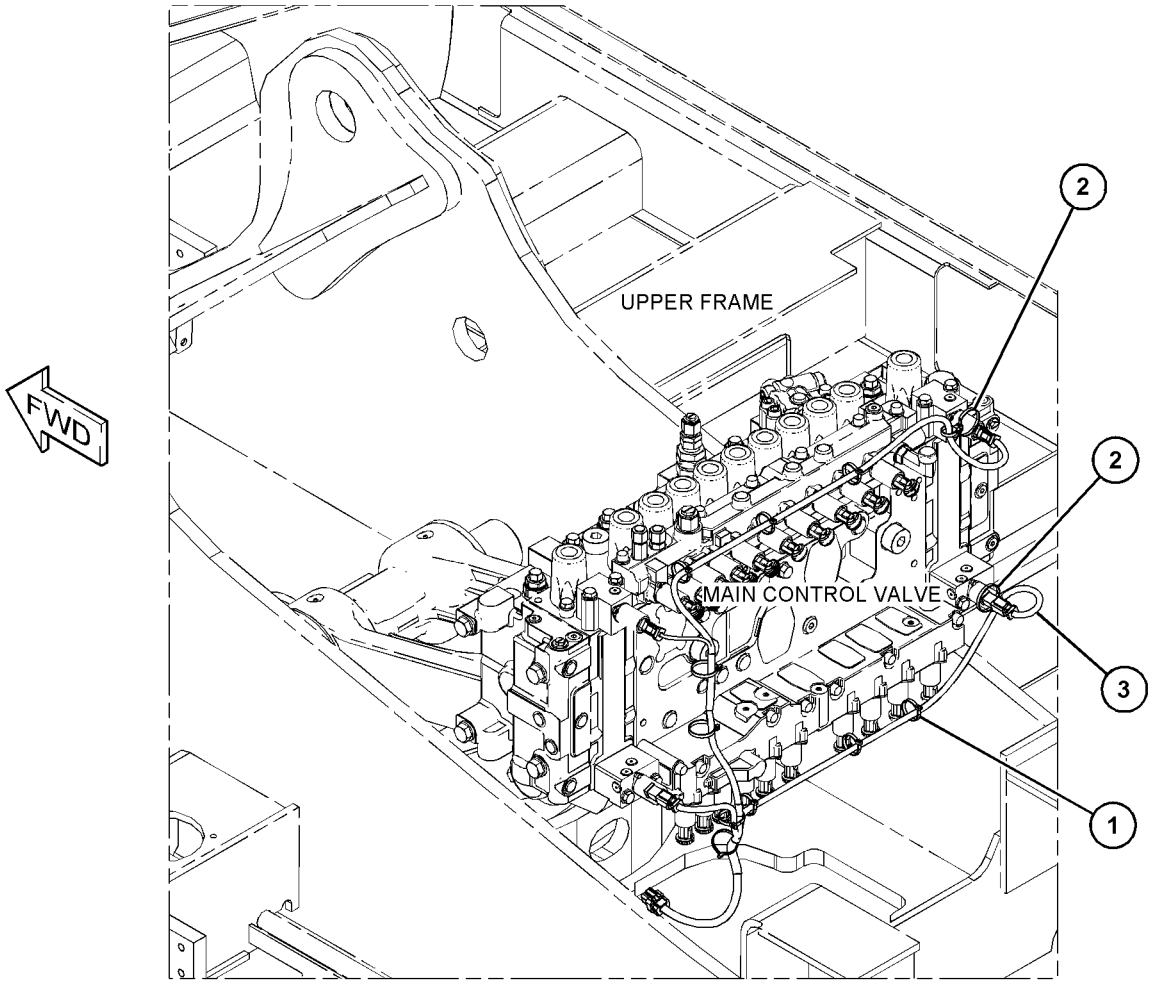

GRAPHIC #1 <END> g06229336

511-9446 WIRING GP-VALVE–COUPLER

S/N: BR61-UP

PART OF 517-4758 CONTROL AR-QUICK COUPLER

SMCS-1408, 5734 **i07356684**

NOTE	REF NO	GRAPHIC REF	PART NUMBER	QTY	PART NAME 1 2 3 4 5 6 (PRODUCT LEVEL)	SEE PAGE
	1	1	**484-1456**	1	STRAP-CABLE	
	2	1	**494-0773**	1	BRACKET	
Y	3	1	**525-3041**	1	HARNESS AS-SOLENOID (QUICK COUPLER)	184
	4	1	**204-1611**	2	STRAP (DUAL)	
	5	1	**8T-4121**	1	WASHER-HARD (11X21X2.5-MM THK)	
M	6	1	**8T-4137**	1	BOLT (M10X1.5X20-MM)	

M - METRIC PART
Y - SEPARATE ILLUSTRATION

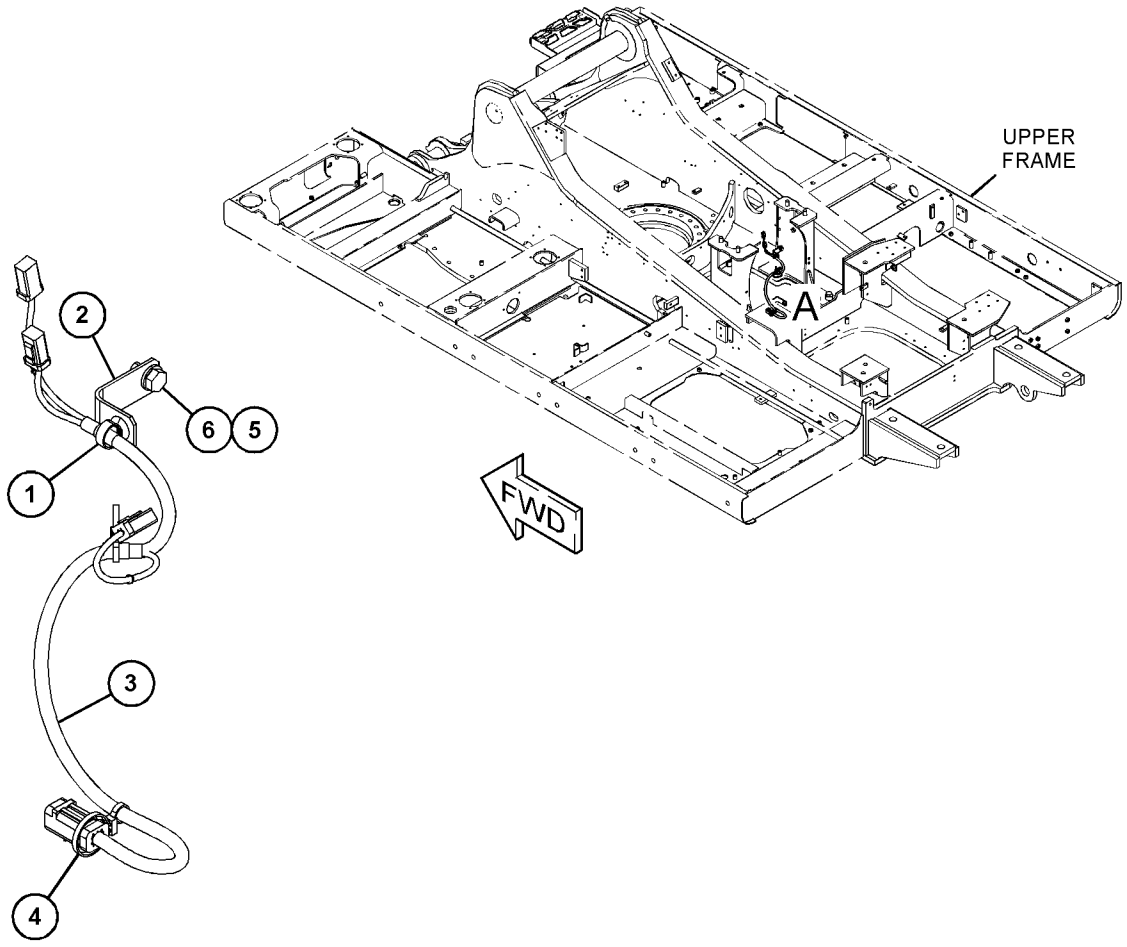

VIEW OF AREA A

GRAPHIC #1 <END> g06229144

524-8376 WIRING GP-VALVE–HEAVY LIFT

S/N: BR61-UP

PART OF 490-3948, 490-3949 VALVE AR-MAIN CONTROL

SMCS-1408, 5734 **i07361046**

NOTE	REF NO	GRAPHIC REF	PART NUMBER	QTY	PART NAME 1 2 3 4 5 6 (PRODUCT LEVEL)	SEE PAGE
Y	1	1	**525-2621**	1	HARNESS AS-SOLENOID (HEAVY LIFT)	184
	2	1	**204-1611**	1	STRAP (DUAL)	

Y - SEPARATE ILLUSTRATION

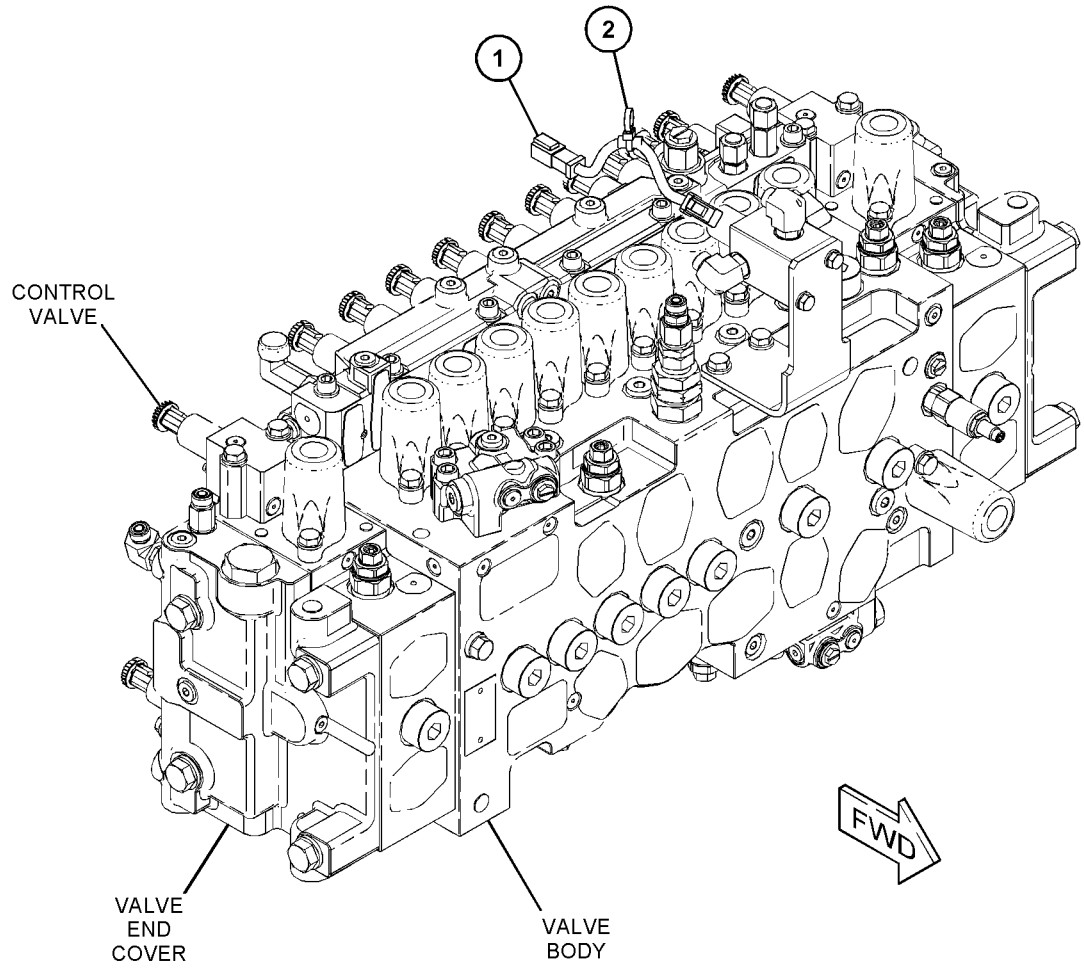

GRAPHIC #1 <END> g06229653

507-6557 DRIVE GP-FINAL—WITH MOTOR, SPROCKET, LH

S/N: BR61-UP

PART OF 441-3007 FINAL DRIVE & MOUNTING GP

SMCS-4050 **i07358458**

NOTE	REF NO	GRAPHIC REF	PART NUMBER	QTY	PART NAME 1 2 3 4 5 6 (PRODUCT LEVEL)	SEE PAGE
Y	1	1	*145-3042*	1	SPROCKET GP (NON-SEGMENTED)	300
Y	2	1	*507-6558*	1	DRIVE GP-FINAL (WITH MOTOR, LH)	281

Y - SEPARATE ILLUSTRATION

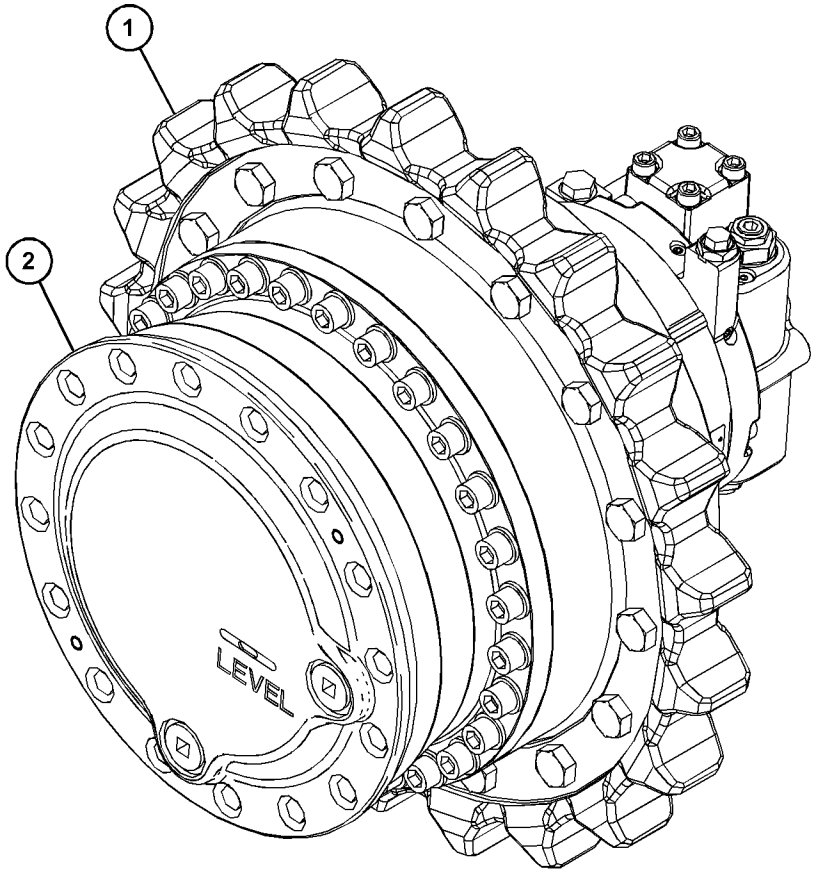

GRAPHIC #1 <END> g06118875

507-6558 DRIVE GP-FINAL—WITH MOTOR, LH

S/N: BR61-UP

PART OF 507-6557 DRIVE GP-FINAL

SMCS-4050 **i07358463**

NOTE	REF NO	GRAPHIC REF	PART NUMBER	QTY	PART NAME 1 2 3 4 5 6 (PRODUCT LEVEL)	SEE PAGE
Y	1	1	*334-9986*	1	MOTOR & MTG GP-TRAVEL	491
Y	2	1	**507-6559**	1	DRIVE GP-FINAL (WITHOUT MOTOR, LH)	282
M	3	1	**095-1269**	1	SETSCREW-SOCKET (M10X1.5-THD)	

M - METRIC PART
Y - SEPARATE ILLUSTRATION

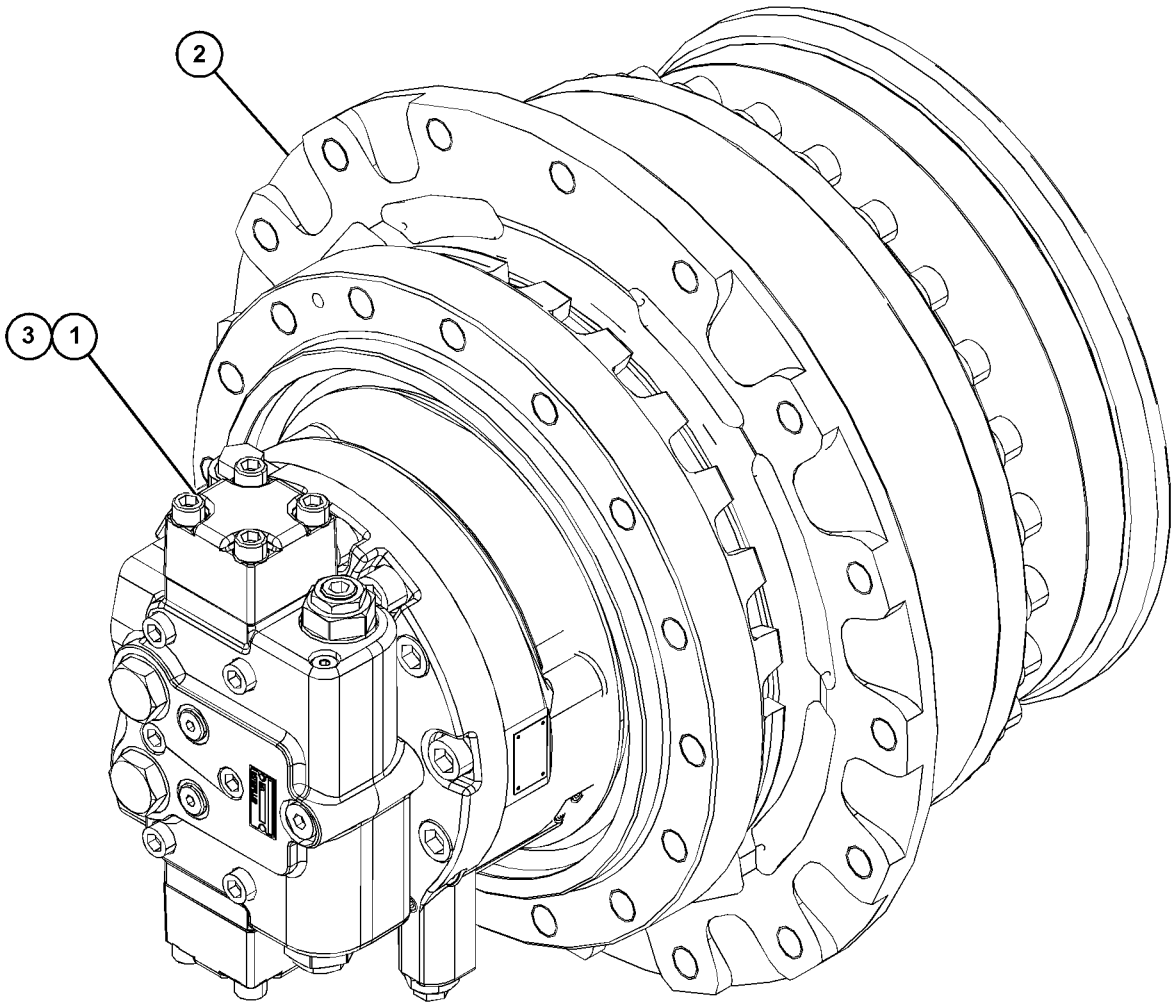

GRAPHIC #1 <END> g06158495

507-6559 DRIVE GP-FINAL—WITHOUT MOTOR, LH

S/N: BR61-UP

PART OF 507-6558 DRIVE GP-FINAL

SMCS-4050 **i07358468**

NOTE	REF NO	GRAPHIC REF	PART NUMBER	QTY	PART NAME 1 2 3 4 5 6 (PRODUCT LEVEL)	SEE PAGE
	1	1	**094-0580**	1	PLATE (10-MM THK)	
	2	1	**094-0611**	6	WASHER (47.3X76X1-MM THK)	
B	3	1	**096-1773**	1	SHIM (0.15-MM THK)	
B		1	**096-1774**	1	SHIM (0.3-MM THK)	
B		1	**096-1775**	1	SHIM (0.4-MM THK)	
B		1	**096-1776**	1	SHIM (0.5-MM THK)	
B		1	**096-1777**	1	SHIM (0.6-MM THK)	
B		1	**096-1778**	1	SHIM (0.7-MM THK)	
B		1	**096-1779**	1	SHIM (0.8-MM THK)	
B		1	**096-1780**	1	SHIM (1-MM THK)	
B		1	**096-1781**	1	SHIM (1.6-MM THK)	
	4	1	**3E-2338**	2	PLUG-PIPE	
	5	1	**5P-8245**	16	WASHER-HARD (13.5X25.5X3-MM THK)	
	6	1	**6D-0692**	1	SEAL-O-RING	
	7	1	**7M-8485**	2	SEAL-O-RING	
	8	1	**7Y-1558**	1	SPACER (90X119.6X7.5-MM THK)	
M	9	1	**8T-0348**	28	BOLT-SOCKET HEAD (M16X2X50-MM)	
	10	1	**9X-8268**	28	WASHER (17.5X30X3.5-MM THK)	
	11	1	**346-5215**	3	BEARING AS	
	12	1	**114-1539**	6	PIN-DOWEL	
	13	1	**148-4715**	1	GEAR-COUPLING (55-TEETH)	
	14	1	**174-4874**	1	SEAL GP-DUO-CONE	
	15	1	**333-2989**	1	GEAR-SUN (12-TEETH)	
	16	1	**333-2990**	1	GEAR-SUN (18-TEETH)	
	17	1	**333-2991**	3	GEAR-PLANETARY (38-TEETH)	
	18	1	**333-2992**	3	GEAR-PLANETARY (35-TEETH)	
	19	1	**333-2993**	3	SHAFT	
	20	1	**333-2994**	3	SHAFT	
	21	1	**333-2995**	1	CARRIER-PLANETARY	
	22	1	**333-2996**	1	CARRIER-PLANETARY	
	23	1	**333-2998**	1	HOUSING	
	24	1	**455-4087**	1	HOUSING-MOTOR (LH)	
	25	1	**457-7977**	1	GEAR-RING (90-TEETH)	
	26	1	**480-6771**	1	COVER	
	27	1	**498-9005**	1	GASKET	
	28	1	**094-0584**	6	WASHER (40.3X72X1-MM THK)	
	29	1	**095-0891**	6	PIN-SPRING	
M	30	1	**096-3216**	2	SETSCREW-SOCKET (M12X1.75X12-MM)	
M	31	1	**143-0811**	16	BOLT (12X1.75X35-MM)	
	32	1	**165-5785**	1	SPACER (40X60.9X1-MM THK)	
M	33	1	**227-6034**	14	BOLT-FLANGE HEAD (M16X2X60-MM)	
	34	1	**296-6220**	2	BALL BEARING	
	35	1	**296-6268**	6	BEARING AS-ROLLER	

B - USE AS REQUIRED
M - METRIC PART

507-6559 **DRIVE GP-FINAL (**contd.**)** **i07358468**

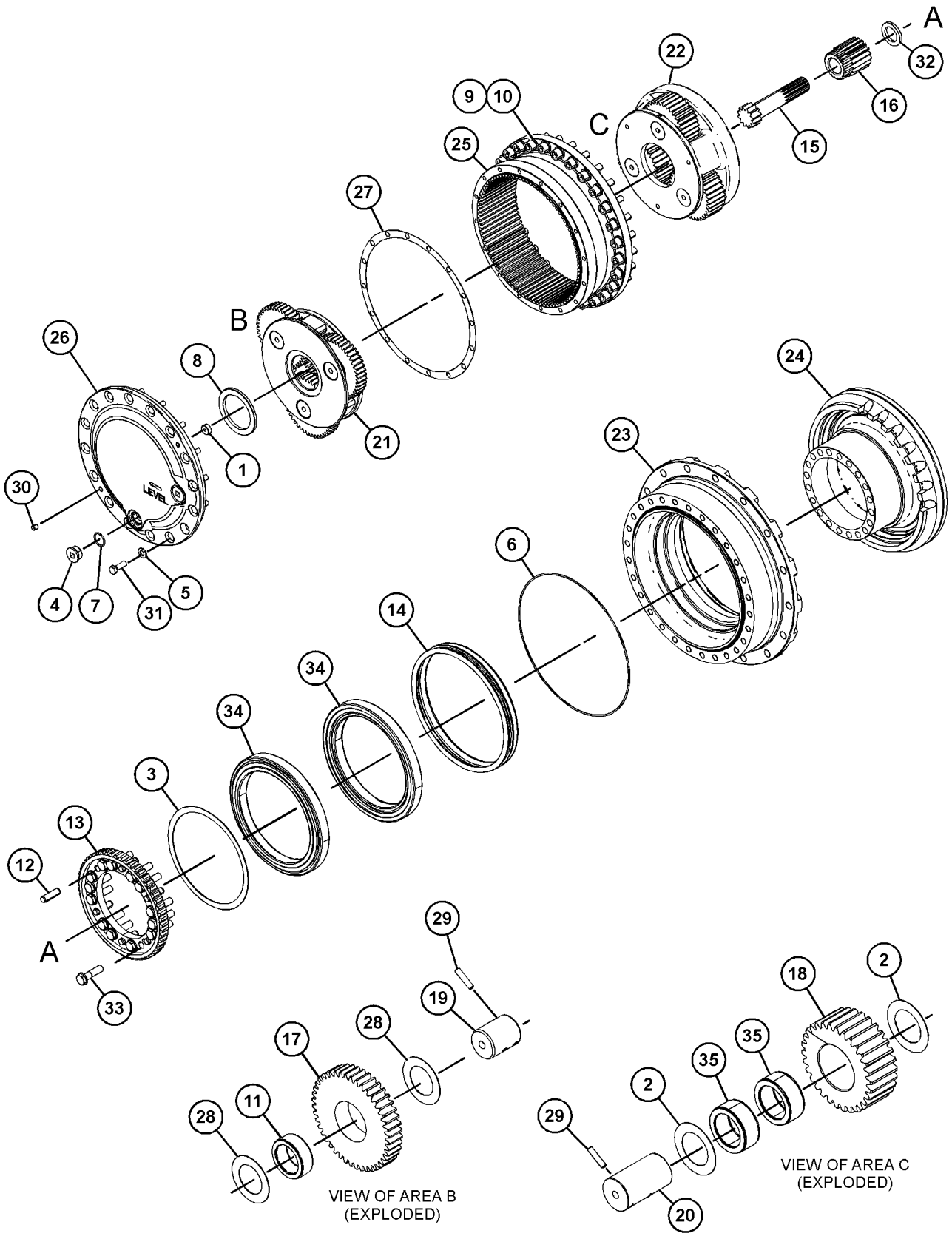

GRAPHIC #1 <END> g06115773

507-6560 DRIVE GP-FINAL—WITH MOTOR, SPROCKET, RH

S/N: BR61-UP

PART OF 441-3007 FINAL DRIVE & MOUNTING GP

SMCS-4050 **i07358477**

NOTE	REF NO	GRAPHIC REF	PART NUMBER	QTY	PART NAME 1 2 3 4 5 6 (PRODUCT LEVEL)	SEE PAGE
Y	1	1	*145-3042*	1	SPROCKET GP (NON-SEGMENTED)	300
Y	2	1	*507-6561*	1	DRIVE GP-FINAL (WITH MOTOR, RH)	285

Y - SEPARATE ILLUSTRATION

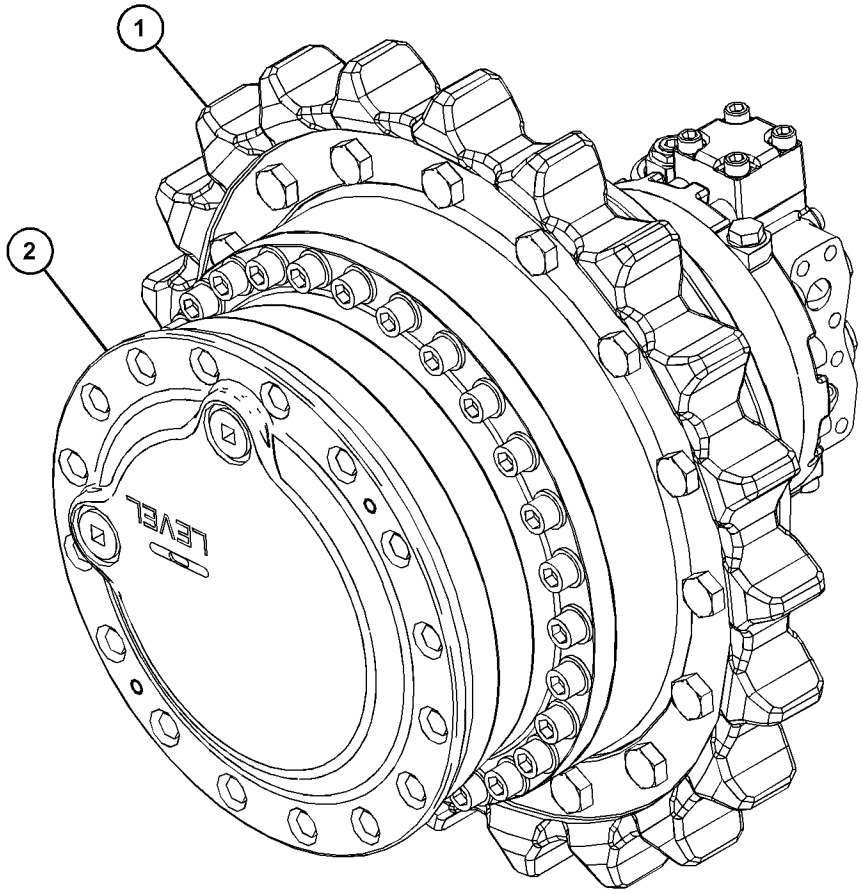

GRAPHIC #1 <END> g06118897

507-6561 DRIVE GP-FINAL—WITH MOTOR, RH

S/N: BR61-UP

PART OF 507-6560 DRIVE GP-FINAL

SMCS-4050 **i07358479**

NOTE	REF NO	GRAPHIC REF	PART NUMBER	QTY	PART NAME 1 2 3 4 5 6 (PRODUCT LEVEL)	SEE PAGE
Y	1	1	*334-9986*	1	MOTOR & MTG GP-TRAVEL	491
Y	2	1	**507-6562**	1	DRIVE GP-FINAL (WITHOUT MOTOR, RH)	286
M	3	1	**095-1269**	1	SETSCREW-SOCKET (M10X1.5-THD)	

M - METRIC PART
Y - SEPARATE ILLUSTRATION

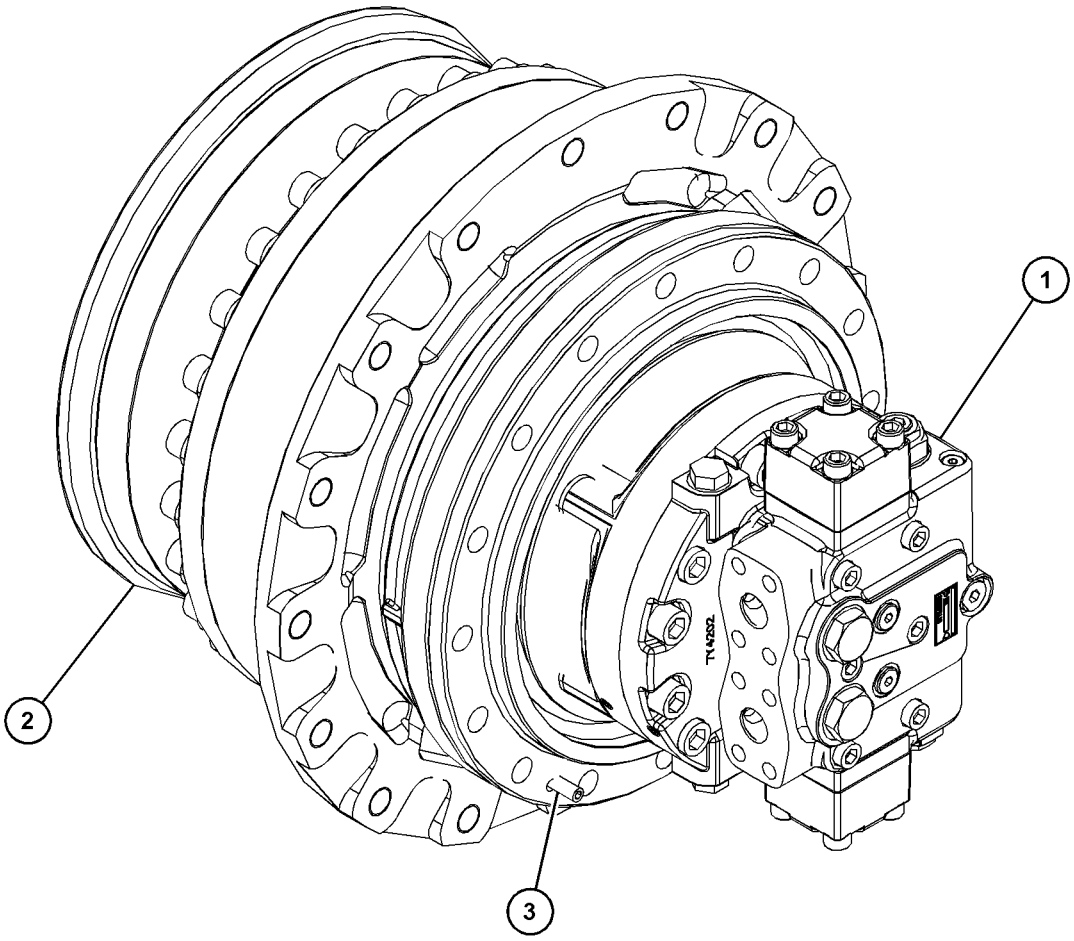

GRAPHIC #1 <END> g06143681

507-6562 DRIVE GP-FINAL—WITHOUT MOTOR, RH

S/N: BR61-UP

PART OF 507-6561 DRIVE GP-FINAL

SMCS-4050 **i07358484**

NOTE	REF NO	GRAPHIC REF	PART NUMBER	QTY	PART NAME 1 2 3 4 5 6 (PRODUCT LEVEL)	SEE PAGE
	1	1	**094-0580**	1	PLATE (10-MM THK)	
	2	1	**094-0611**	6	WASHER (47.3X76X1-MM THK)	
B	3	1	**096-1773**	1	SHIM (0.15-MM THK)	
B		1	**096-1774**	1	SHIM (0.3-MM THK)	
B		1	**096-1775**	1	SHIM (0.4-MM THK)	
B		1	**096-1776**	1	SHIM (0.5-MM THK)	
B		1	**096-1777**	1	SHIM (0.6-MM THK)	
B		1	**096-1778**	1	SHIM (0.7-MM THK)	
B		1	**096-1779**	1	SHIM (0.8-MM THK)	
B		1	**096-1780**	1	SHIM (1-MM THK)	
B		1	**096-1781**	1	SHIM (1.6-MM THK)	
	4	1	**3E-2338**	2	PLUG-PIPE	
	5	1	**5P-8245**	16	WASHER-HARD (13.5X25.5X3-MM THK)	
	6	1	**6D-0692**	1	SEAL-O-RING	
	7	1	**7M-8485**	2	SEAL-O-RING	
	8	1	**7Y-1558**	1	SPACER (90X119.6X7.5-MM THK)	
M	9	1	**8T-0348**	28	BOLT-SOCKET HEAD (M16X2X50-MM)	
	10	1	**9X-8268**	28	WASHER (17.5X30X3.5-MM THK)	
	11	1	**346-5215**	3	BEARING AS	
	12	1	**114-1539**	6	PIN-DOWEL	
	13	1	**148-4715**	1	GEAR-COUPLING (55-TEETH)	
	14	1	**174-4874**	1	SEAL GP-DUO-CONE	
	15	1	**333-2989**	1	GEAR-SUN (12-TEETH)	
	16	1	**333-2990**	1	GEAR-SUN (18-TEETH)	
	17	1	**333-2991**	3	GEAR-PLANETARY (38-TEETH)	
	18	1	**333-2992**	3	GEAR-PLANETARY (35-TEETH)	
	19	1	**333-2993**	3	SHAFT	
	20	1	**333-2994**	3	SHAFT	
	21	1	**333-2995**	1	CARRIER-PLANETARY	
	22	1	**333-2996**	1	CARRIER-PLANETARY	
	23	1	**333-2998**	1	HOUSING	
	24	1	**455-4089**	1	HOUSING-MOTOR	
	25	1	**457-7977**	1	GEAR-RING (90-TEETH)	
	26	1	**480-6771**	1	COVER	
	27	1	**498-9005**	1	GASKET	
	28	1	**094-0584**	6	WASHER (40.3X72X1-MM THK)	
	29	1	**095-0891**	6	PIN-SPRING	
M	30	1	**096-3216**	2	SETSCREW-SOCKET (M12X1.75X12-MM)	
M	31	1	**143-0811**	16	BOLT (12X1.75X35-MM)	
	32	1	**165-5785**	1	SPACER (40X60.9X1-MM THK)	
M	33	1	**227-6034**	14	BOLT-FLANGE HEAD (M16X2X60-MM)	
	34	1	**296-6220**	2	BALL BEARING	
	35	1	**296-6268**	6	BEARING AS-ROLLER	

B - USE AS REQUIRED
M - METRIC PART

507-6562 **DRIVE GP-FINAL (**contd.**)** **i07358484**

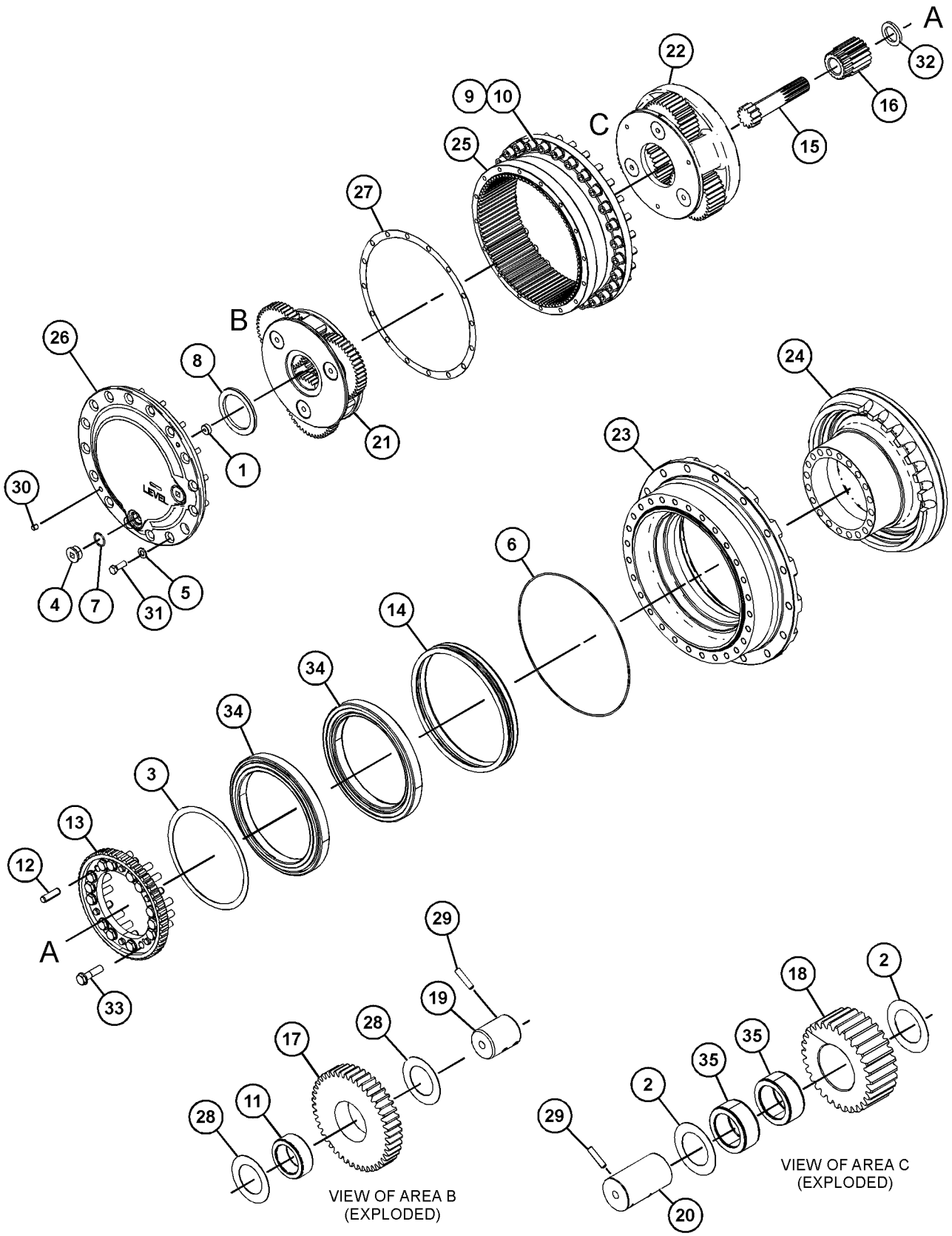

GRAPHIC #1 <END> g06115773

511-6006 DRIVE GP-FINAL–WITH MOTOR, LH

S/N: BR61-UP

PART OF 527-7077 DRIVE GP-FINAL

SMCS-4050 **i07357306**

NOTE	REF NO	GRAPHIC REF	PART NUMBER	QTY	PART NAME 1 2 3 4 5 6 (PRODUCT LEVEL)	SEE PAGE
Y	1	1	**511-6007**	1	DRIVE GP-FINAL (WITHOUT MOTOR, LH)	289
Y	2	1	*519-2478*	1	MOTOR & MTG GP-TRAVEL	492
M	3	1	**095-1269**	1	SETSCREW-SOCKET (M10X1.5-THD)	

M - METRIC PART
Y - SEPARATE ILLUSTRATION

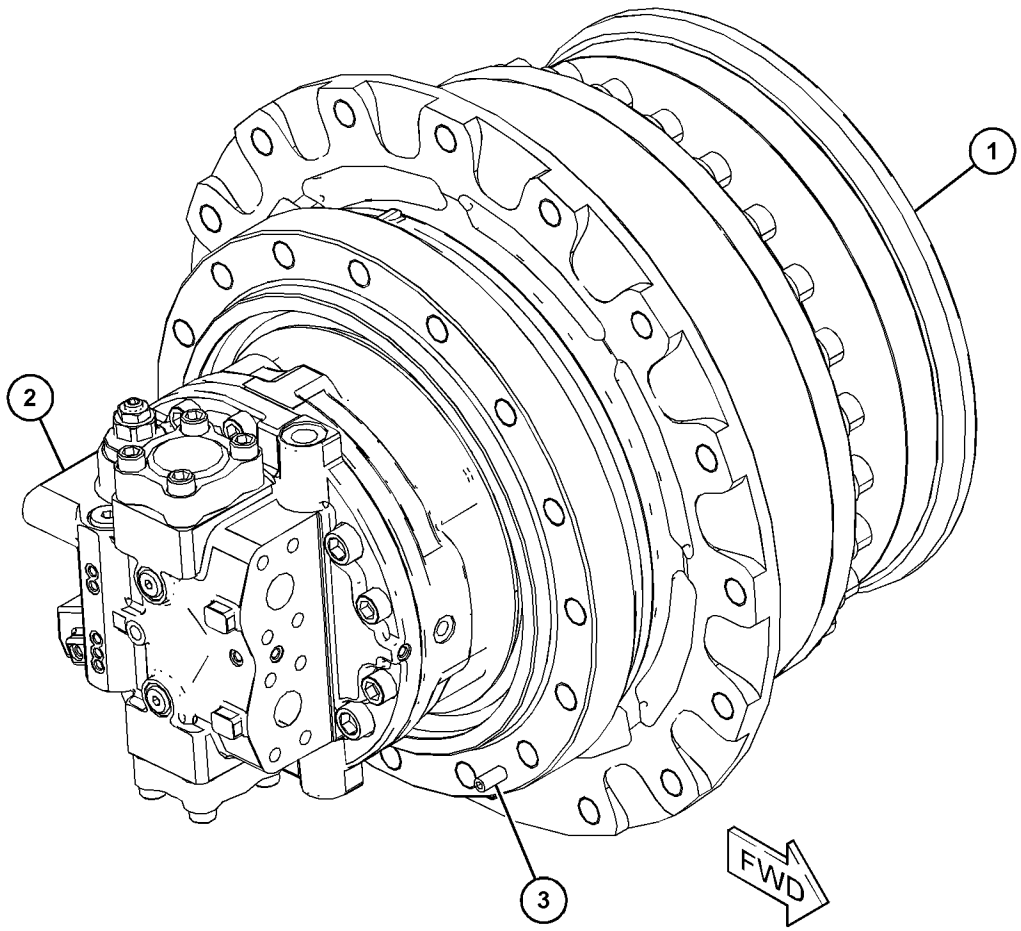

GRAPHIC #1 <END> g06240658

511-6007 DRIVE GP-FINAL—WITHOUT MOTOR, LH

S/N: BR61-UP

PART OF 511-6006 DRIVE GP-FINAL

SMCS-4050 **i07357336**

NOTE	REF NO	GRAPHIC REF	PART NUMBER	QTY	PART NAME 1 2 3 4 5 6 (PRODUCT LEVEL)	SEE PAGE
	1	1	**8C-8840**	1	RING-RETAINING	
	2	1	**094-0580**	1	PLATE (10-MM THK)	
	3	2	**094-0611**	6	WASHER (47.3X76X1-MM THK)	
B	4	1	**096-1773**	1	SHIM (0.15-MM THK)	
B		1	**096-1774**	1	SHIM (0.3-MM THK)	
B		1	**096-1775**	1	SHIM (0.4-MM THK)	
B		1	**096-1776**	1	SHIM (0.5-MM THK)	
B		1	**096-1777**	1	SHIM (0.6-MM THK)	
B		1	**096-1778**	1	SHIM (0.7-MM THK)	
B		1	**096-1779**	1	SHIM (0.8-MM THK)	
B		1	**096-1780**	1	SHIM (1-MM THK)	
B		1	**096-1781**	1	SHIM (1.6-MM THK)	
	13	1	**114-1539**	6	PIN-DOWEL	
	14	1	**148-4715**	1	GEAR-COUPLING (55-TEETH)	
	15	1	**174-4874**	1	SEAL GP-DUO-CONE	
M	16	1	**227-6034**	14	BOLT-FLANGE HEAD (M16X2X60-MM)	
	17	2	**296-6268**	6	BEARING AS-ROLLER	
	18	1	**333-2990**	1	GEAR-SUN (18-TEETH)	
	19	2	**333-2991**	3	GEAR-PLANETARY (38-TEETH)	
	20	2	**333-2992**	3	GEAR-PLANETARY (35-TEETH)	
	21	2	**333-2993**	3	SHAFT	
	22	2	**333-2994**	3	SHAFT	
	23	1	**333-2998**	1	HOUSING	
	24	1	**455-4087**	1	HOUSING-MOTOR (LH)	
	25	1	**333-2995**	1	CARRIER-PLANETARY	
	26	1	**333-2996**	1	CARRIER-PLANETARY	
	27	2	**346-5215**	3	BEARING AS	
	28	1	**457-7977**	1	GEAR-RING (90-TEETH)	
	29	1	**480-6771**	1	COVER	
	30	1	**498-9005**	1	GASKET	
	31	1	**509-1886**	1	COUPLING	
	32	1	**510-3173**	1	GEAR-SUN	
	33	2	**094-0584**	6	WASHER (40.3X72X1-MM THK)	
	34	2	**095-0891**	6	PIN-SPRING	
M	35	1	**096-3216**	2	SETSCREW-SOCKET (M12X1.75X12-MM)	
	36	1	**296-6220**	2	BALL BEARING	
M	37	1	**143-0811**	16	BOLT (12X1.75X35-MM)	
	38	1	**165-5785**	1	SPACER (40X60.9X1-MM THK)	
	39	1	**3E-2338**	2	PLUG-PIPE	
	40	1	**5P-8245**	16	WASHER-HARD (13.5X25.5X3-MM THK)	
	41	1	**6D-0692**	1	SEAL-O-RING	
	42	1	**7M-8485**	2	SEAL-O-RING	
	43	1	**7Y-1558**	1	SPACER (90X119.6X7.5-MM THK)	
M	44	1	**8T-0348**	28	BOLT-SOCKET HEAD (M16X2X50-MM)	
	45	1	**9X-8268**	28	WASHER (17.5X30X3.5-MM THK)	

B - USE AS REQUIRED
M - METRIC PART

511-6007 **DRIVE GP-FINAL (**contd.**)** **i07357336**

REFER TO ALL ILLUSTRATIONS OF
THIS GROUP FOR AUXILIARY VIEWS

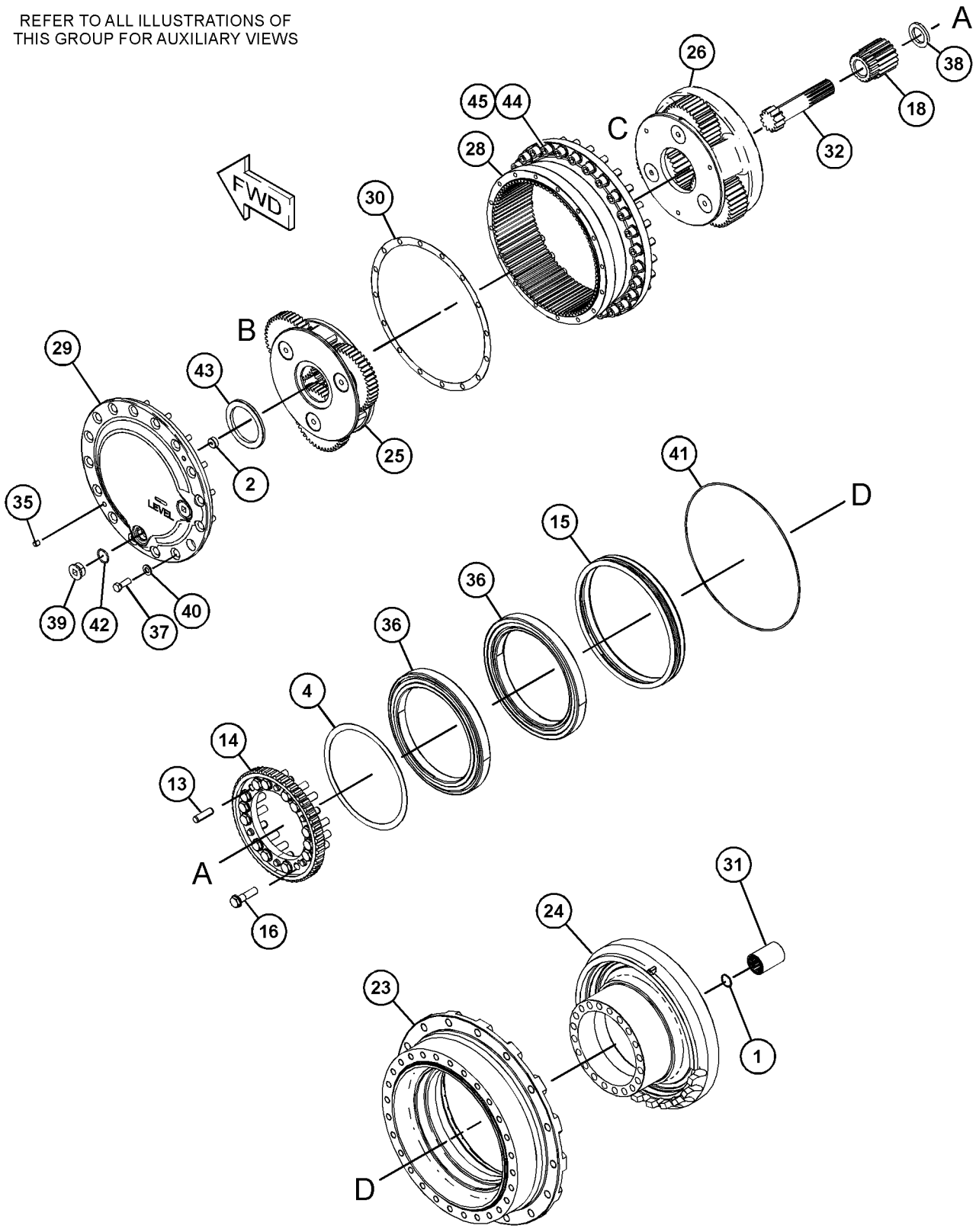

GRAPHIC #1 g06245124

511-6007 **DRIVE GP-FINAL (**contd.**)** **i07357336**

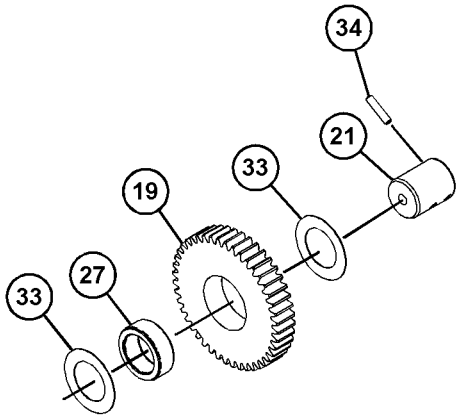

VIEW OF AREA B
(PARTS REMOVED FOR CLARITY)

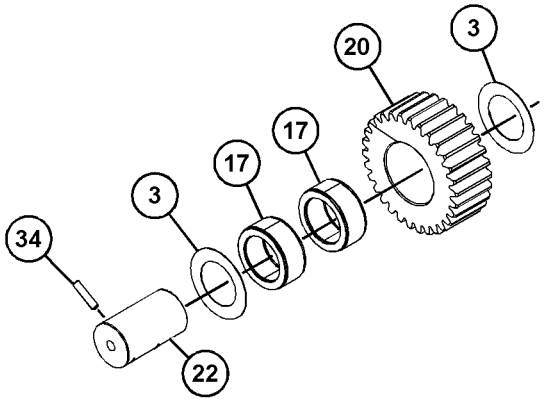

VIEW OF AREA C
(PARTS REMOVED FOR CLARITY)

GRAPHIC #2 <END> g06245125

511-6008 DRIVE GP-FINAL—WITH MOTOR, RH

S/N: BR61-UP

PART OF 527-7078 DRIVE GP-FINAL

SMCS-4050 **i07357908**

NOTE	REF NO	GRAPHIC REF	PART NUMBER	QTY	PART NAME 1 2 3 4 5 6 (PRODUCT LEVEL)	SEE PAGE
Y	1	1	**511-6009**	1	DRIVE GP-FINAL (WITHOUT MOTOR, RH)	293
Y	2	1	*519-2478*	1	MOTOR & MTG GP-TRAVEL	492
M	3	1	**095-1269**	1	SETSCREW-SOCKET (M10X1.5-THD)	

M - METRIC PART
Y - SEPARATE ILLUSTRATION

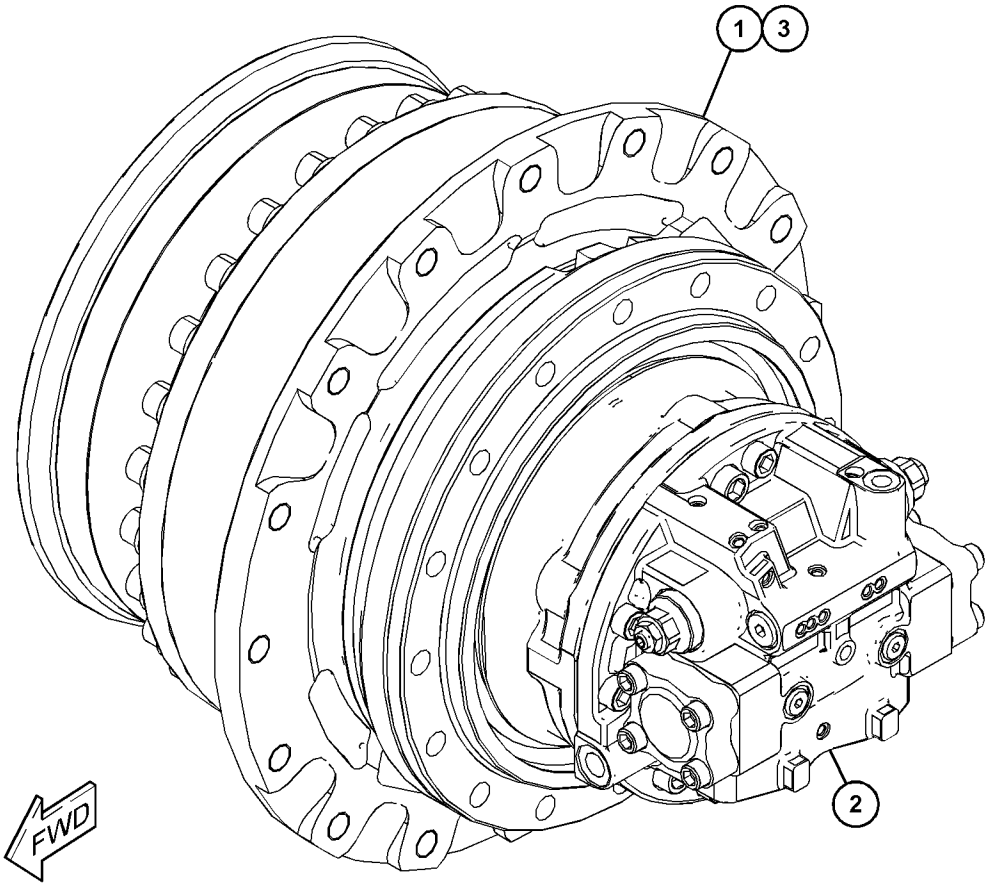

GRAPHIC #1 <END> g06240803

511-6009 DRIVE GP-FINAL—WITHOUT MOTOR, RH

S/N: BR61-UP

PART OF 511-6008 DRIVE GP-FINAL

SMCS-4050 **i07358071**

NOTE	REF NO	GRAPHIC REF	PART NUMBER	QTY	PART NAME 1 2 3 4 5 6 (PRODUCT LEVEL)	SEE PAGE
	1	1	**8C-8840**	1	RING-RETAINING	
	2	1	**094-0580**	1	PLATE (10-MM THK)	
	3	2	**094-0611**	6	WASHER (47.3X76X1-MM THK)	
B	4	1	**096-1773**	1	SHIM (0.15-MM THK)	
B		1	**096-1774**	1	SHIM (0.3-MM THK)	
B		1	**096-1775**	1	SHIM (0.4-MM THK)	
B		1	**096-1776**	1	SHIM (0.5-MM THK)	
B		1	**096-1777**	1	SHIM (0.6-MM THK)	
B		1	**096-1778**	1	SHIM (0.7-MM THK)	
B		1	**096-1779**	1	SHIM (0.8-MM THK)	
B		1	**096-1780**	1	SHIM (1-MM THK)	
B		1	**096-1781**	1	SHIM (1.6-MM THK)	
	13	1	**114-1539**	6	PIN-DOWEL	
	14	1	**148-4715**	1	GEAR-COUPLING (55-TEETH)	
	15	1	**174-4874**	1	SEAL GP-DUO-CONE	
M	16	1	**227-6034**	14	BOLT-FLANGE HEAD (M16X2X60-MM)	
	17	2	**296-6268**	6	BEARING AS-ROLLER	
	18	1	**333-2990**	1	GEAR-SUN (18-TEETH)	
	19	2	**333-2991**	3	GEAR-PLANETARY (38-TEETH)	
	20	2	**333-2992**	3	GEAR-PLANETARY (35-TEETH)	
	21	2	**333-2993**	3	SHAFT	
	22	2	**333-2994**	3	SHAFT	
	23	1	**333-2998**	1	HOUSING	
	24	1	**455-4089**	1	HOUSING-MOTOR	
	25	1	**333-2995**	1	CARRIER-PLANETARY	
	26	1	**333-2996**	1	CARRIER-PLANETARY	
	27	2	**346-5215**	3	BEARING AS	
	28	1	**457-7977**	1	GEAR-RING (90-TEETH)	
	29	1	**480-6771**	1	COVER	
	30	1	**498-9005**	1	GASKET	
	31	1	**509-1886**	1	COUPLING	
	32	1	**510-3173**	1	GEAR-SUN	
	33	2	**094-0584**	6	WASHER (40.3X72X1-MM THK)	
	34	2	**095-0891**	6	PIN-SPRING	
M	35	1	**096-3216**	2	SETSCREW-SOCKET (M12X1.75X12-MM)	
	36	1	**296-6220**	2	BALL BEARING	
M	37	1	**143-0811**	16	BOLT (12X1.75X35-MM)	
	38	1	**165-5785**	1	SPACER (40X60.9X1-MM THK)	
	39	1	**3E-2338**	2	PLUG-PIPE	
	40	1	**5P-8245**	16	WASHER-HARD (13.5X25.5X3-MM THK)	
	41	1	**6D-0692**	1	SEAL-O-RING	
	42	1	**7M-8485**	2	SEAL-O-RING	
	43	1	**7Y-1558**	1	SPACER (90X119.6X7.5-MM THK)	
M	44	1	**8T-0348**	28	BOLT-SOCKET HEAD (M16X2X50-MM)	
	45	1	**9X-8268**	28	WASHER (17.5X30X3.5-MM THK)	

B - USE AS REQUIRED
M - METRIC PART

511-6009 **DRIVE GP-FINAL (**contd.**)** **i07358071**

REFER TO ALL ILLUSTRATIONS OF
THIS GROUP FOR AUXILIARY VIEWS

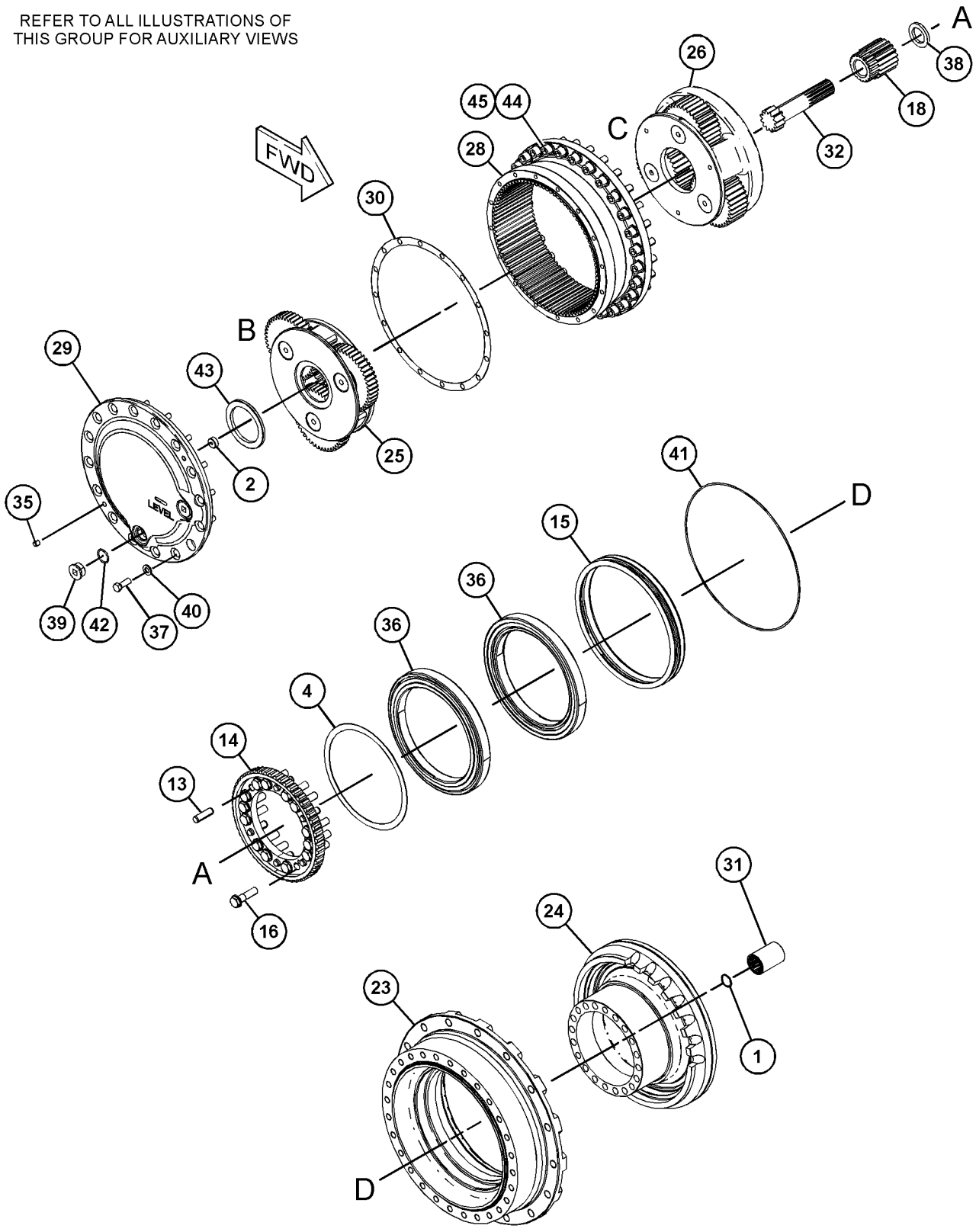

GRAPHIC #1 g06245110

511-6009 **DRIVE GP-FINAL (**contd.**)** **i07358071**

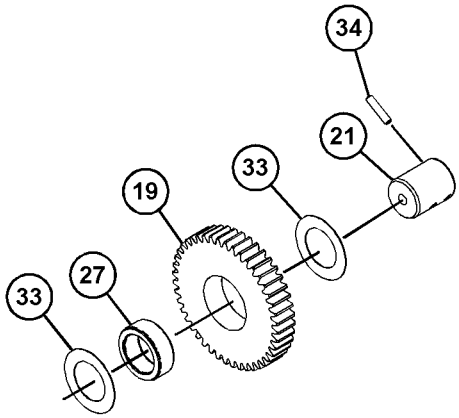

VIEW OF AREA B
(PARTS REMOVED FOR CLARITY)

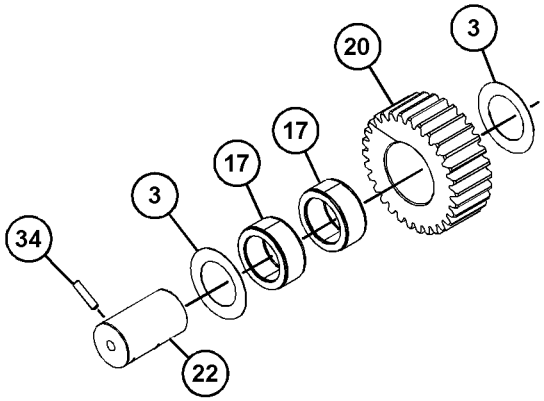

VIEW OF AREA C
(PARTS REMOVED FOR CLARITY)

GRAPHIC #2 <END> g06245111

527-7077 DRIVE GP-FINAL—WITH MOTOR, SPROCKET, LH

S/N: BR61-UP

PART OF 535-6243 FINAL DRIVE & MOUNTING GP

SMCS-4050 **i07357303**

NOTE	REF NO	GRAPHIC REF	PART NUMBER	QTY	PART NAME 1 2 3 4 5 6 (PRODUCT LEVEL)	SEE PAGE
Y	1	1	*145-3042*	1	SPROCKET GP (NON-SEGMENTED)	300
Y	2	1	*511-6006*	1	DRIVE GP-FINAL (WITH MOTOR, LH)	288

Y - SEPARATE ILLUSTRATION

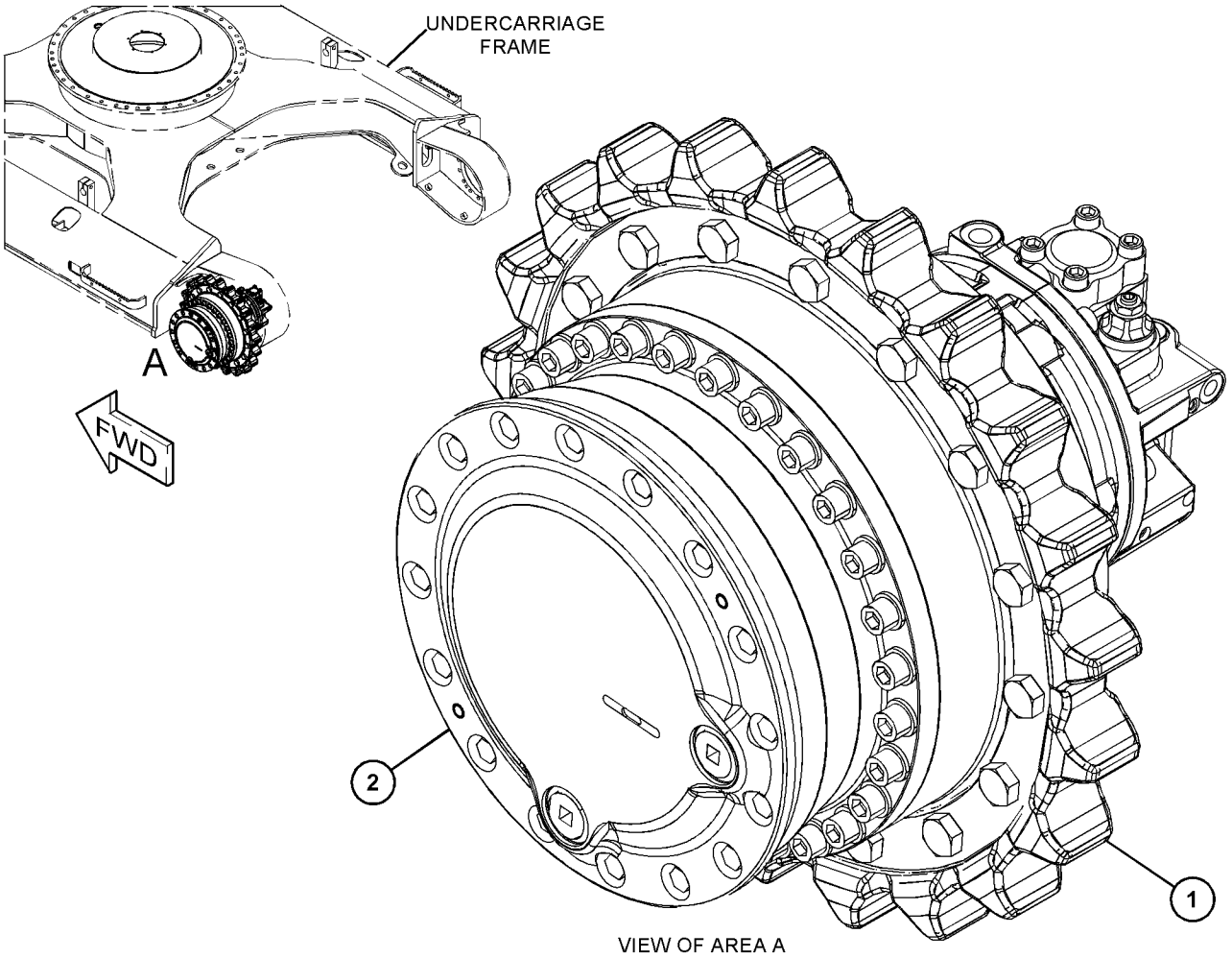

VIEW OF AREA A

GRAPHIC #1 <END> g06238676

527-7078 DRIVE GP-FINAL—WITH MOTOR, SPROCKET, RH

S/N: BR61-UP

PART OF 535-6243 FINAL DRIVE & MOUNTING GP

SMCS-4050 **i07357794**

NOTE	REF NO	GRAPHIC REF	PART NUMBER	QTY	PART NAME 1 2 3 4 5 6 (PRODUCT LEVEL)	SEE PAGE
Y	1	1	*145-3042*	1	SPROCKET GP (NON-SEGMENTED)	300
Y	2	1	*511-6008*	1	DRIVE GP-FINAL (WITH MOTOR, RH)	292

Y - SEPARATE ILLUSTRATION

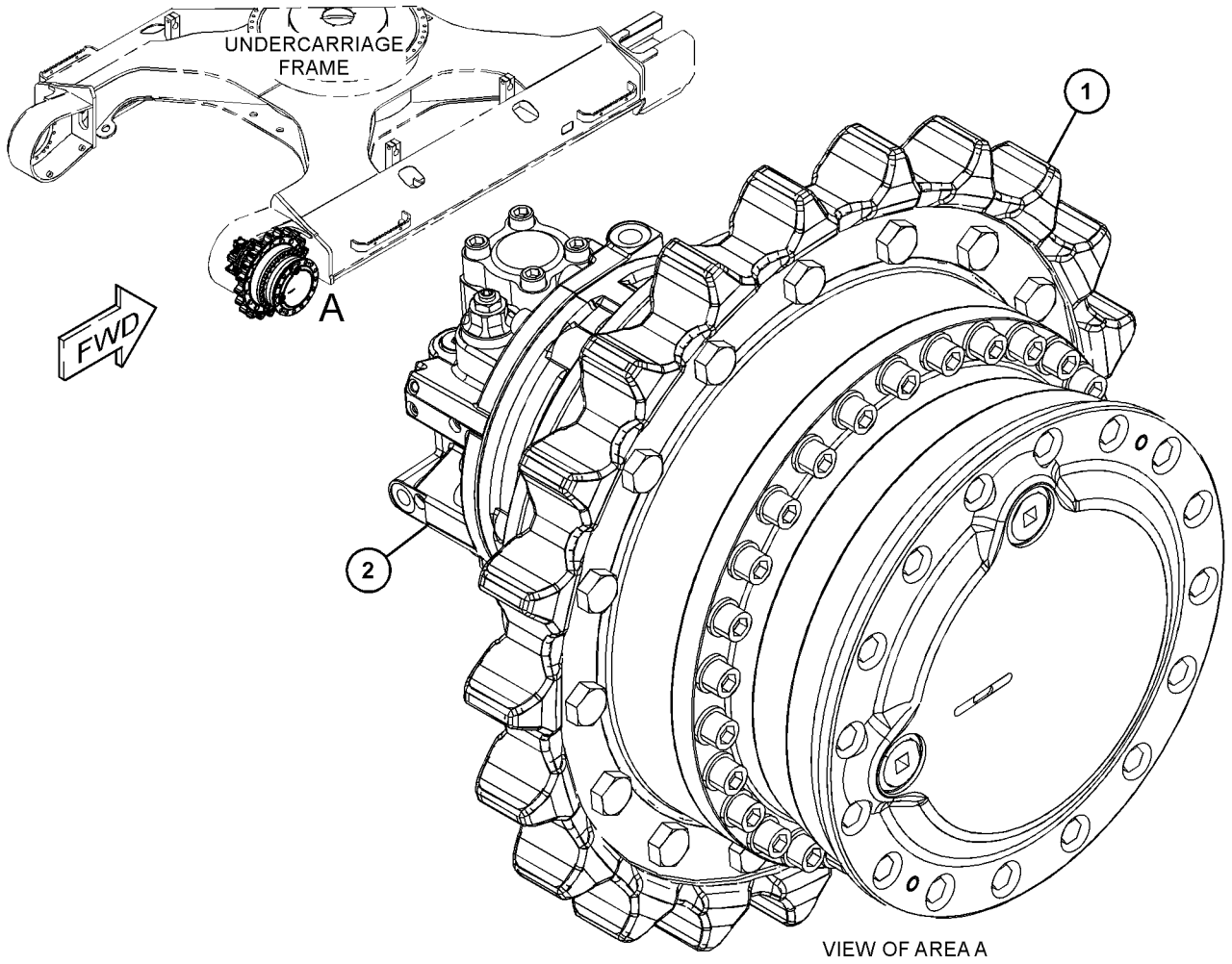

GRAPHIC #1 <END> g06238755

441-3007 FINAL DRIVE & MOUNTING GP

S/N: BR61-UP

PART OF 532-9515, 532-9518 DISTRIBUTION AR

SMCS-4050 **i07358449**

NOTE	REF NO	GRAPHIC REF	PART NUMBER	QTY	PART NAME 1 2 3 4 5 6 (PRODUCT LEVEL)	SEE PAGE
Y	1	1	*507-6557*	1	DRIVE GP-FINAL (WITH MOTOR, SPROCKET, LH)	280
M	2	1	**287-3585**	32	BOLT (M20X2.5X60-MM)	
	3	1	**8T-3282**	32	WASHER-HARD (22X35X3.5-MM THK)	
Y	4	1	*507-6560*	1	DRIVE GP-FINAL (WITH MOTOR, SPROCKET, RH)	284

M - METRIC PART
Y - SEPARATE ILLUSTRATION

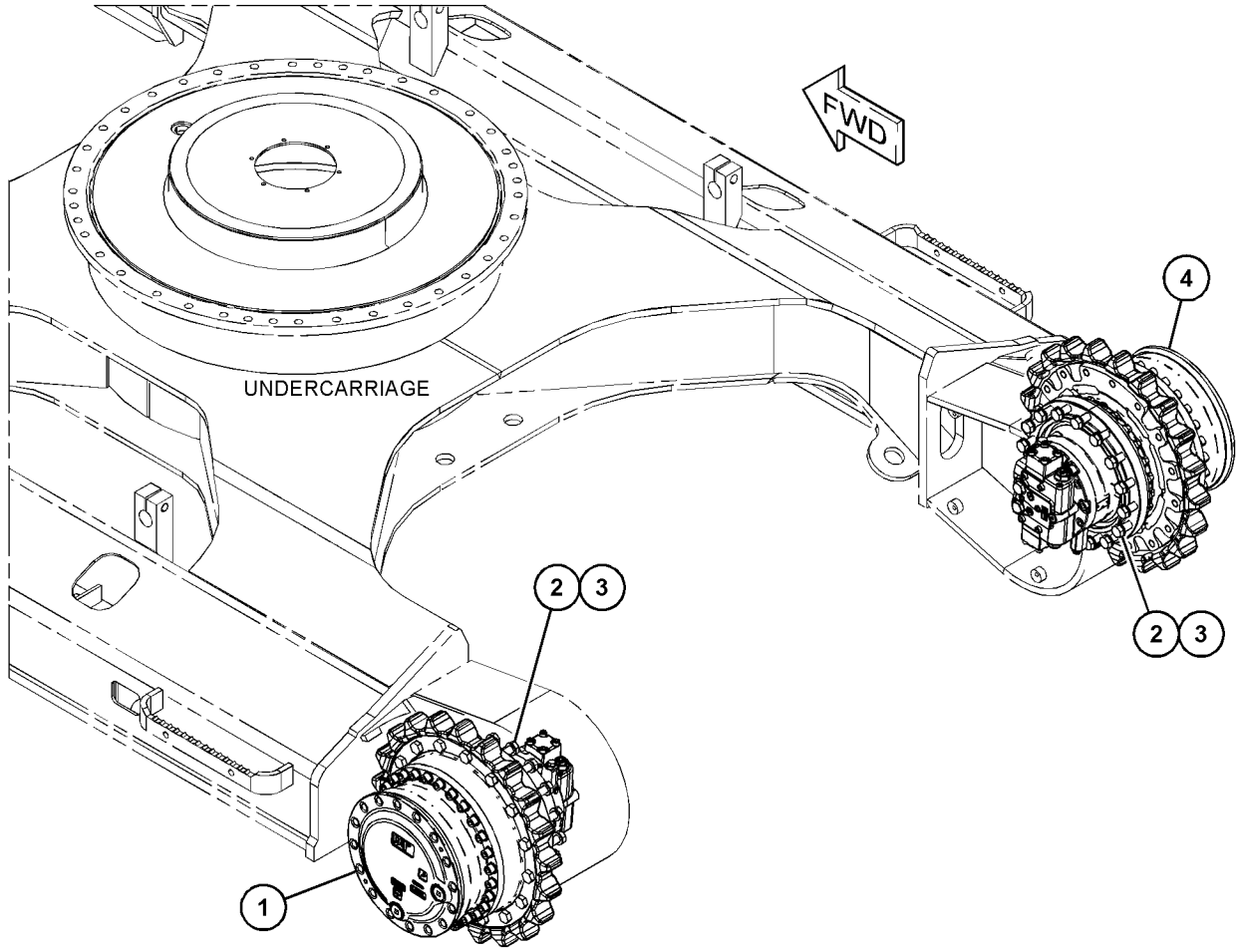

GRAPHIC #1 <END> g06157993

535-6243 FINAL DRIVE & MOUNTING GP

S/N: BR61-UP

PART OF 550-3471 UNDERCARRIAGE AR

SMCS-4050 **i07357296**

NOTE	REF NO	GRAPHIC REF	PART NUMBER	QTY	PART NAME 1 2 3 4 5 6 (PRODUCT LEVEL)	SEE PAGE
M	1	1	**287-3585**	32	BOLT (M20X2.5X60-MM)	
Y	2	1	*527-7077*	1	DRIVE GP-FINAL (WITH MOTOR, SPROCKET, LH)	296
Y	3	1	*527-7078*	1	DRIVE GP-FINAL (WITH MOTOR, SPROCKET, RH)	297
	4	1	**8T-3282**	32	WASHER-HARD (22X35X3.5-MM THK)	

M - METRIC PART
Y - SEPARATE ILLUSTRATION

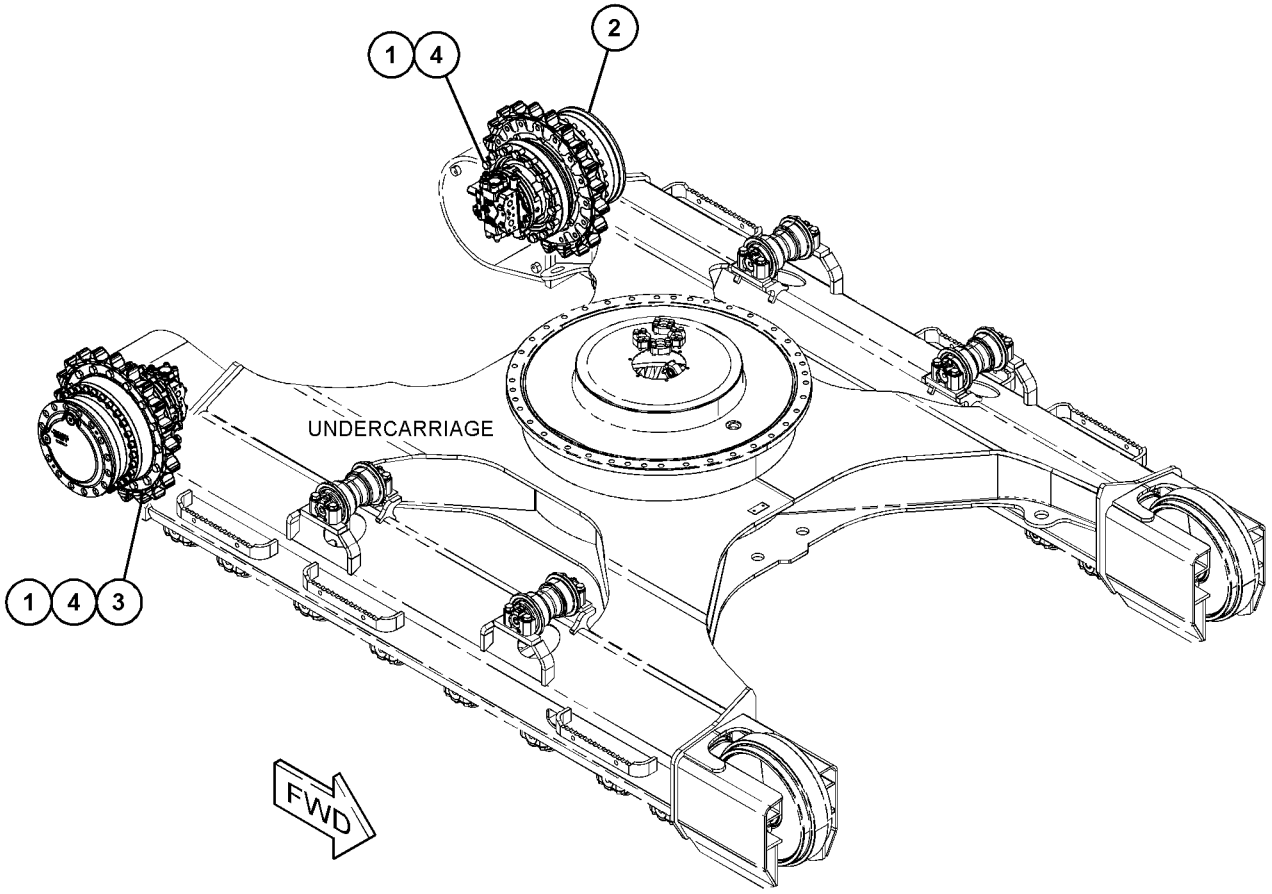

GRAPHIC #1 <END> g06242912

145-3042 SPROCKET GP

S/N: BR61-UP

PART OF 507-6557, 507-6560, 527-7077, 527-7078 DRIVE GP-FINAL

SMCS-4164 **i06882597**

NOTE	REF NO	GRAPHIC REF	PART NUMBER	QTY	PART NAME 1 2 3 4 5 6 (PRODUCT LEVEL)	SEE PAGE
	1	1	**8E-9805**	1	SPROCKET-TRACK (21-TEETH)	
	2	1	**461-3876**	16	BOLT (M20X2.5X45-MM)	

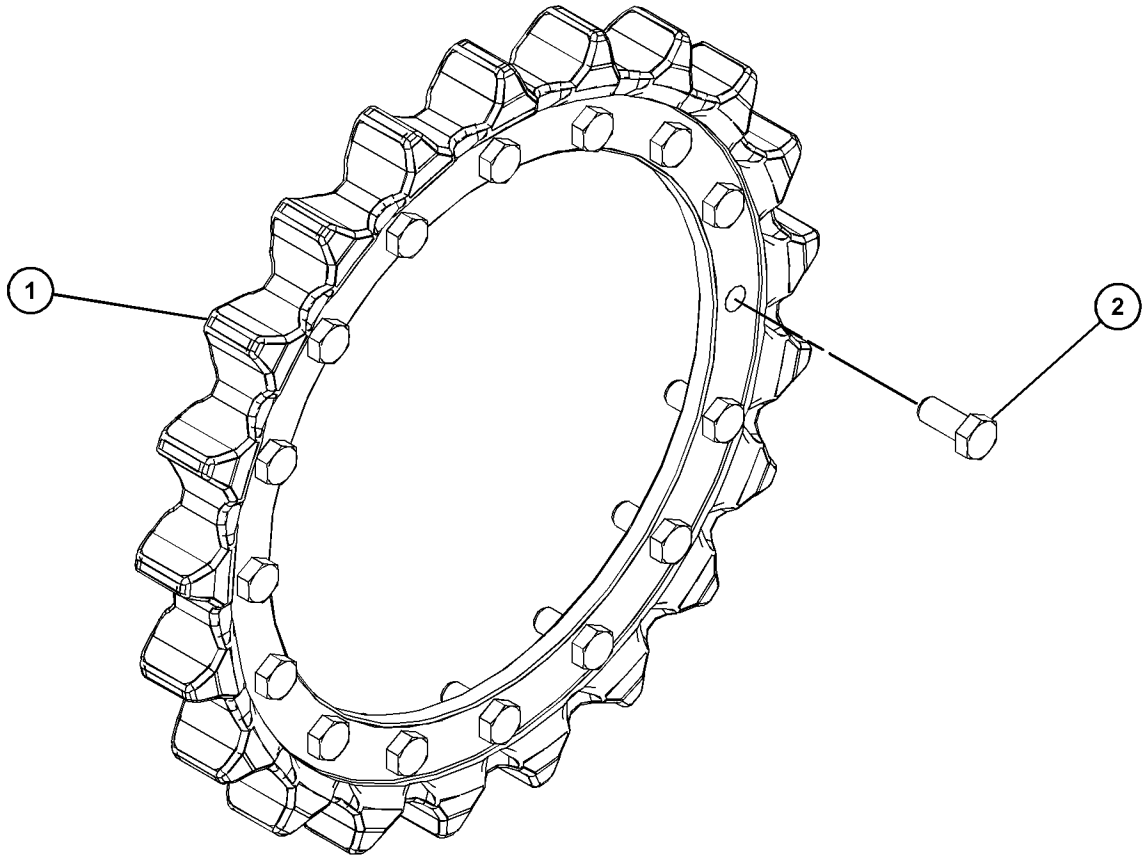

GRAPHIC #1 <END> g06101236

498-7482 BOX & MOUNTING GP

S/N: BR61-UP

PART OF 505-7175, 556-6467 ENCLOSURE AR

SMCS-7268 **i07360350**

NOTE	REF NO	GRAPHIC REF	PART NUMBER	QTY	PART NAME 1 2 3 4 5 6 (PRODUCT LEVEL)	SEE PAGE
	1	1	**135-8577**	4	BOLT AS	
Y	2	1	**498-7483**	1	BOX GP-STORAGE	302

Y - SEPARATE ILLUSTRATION

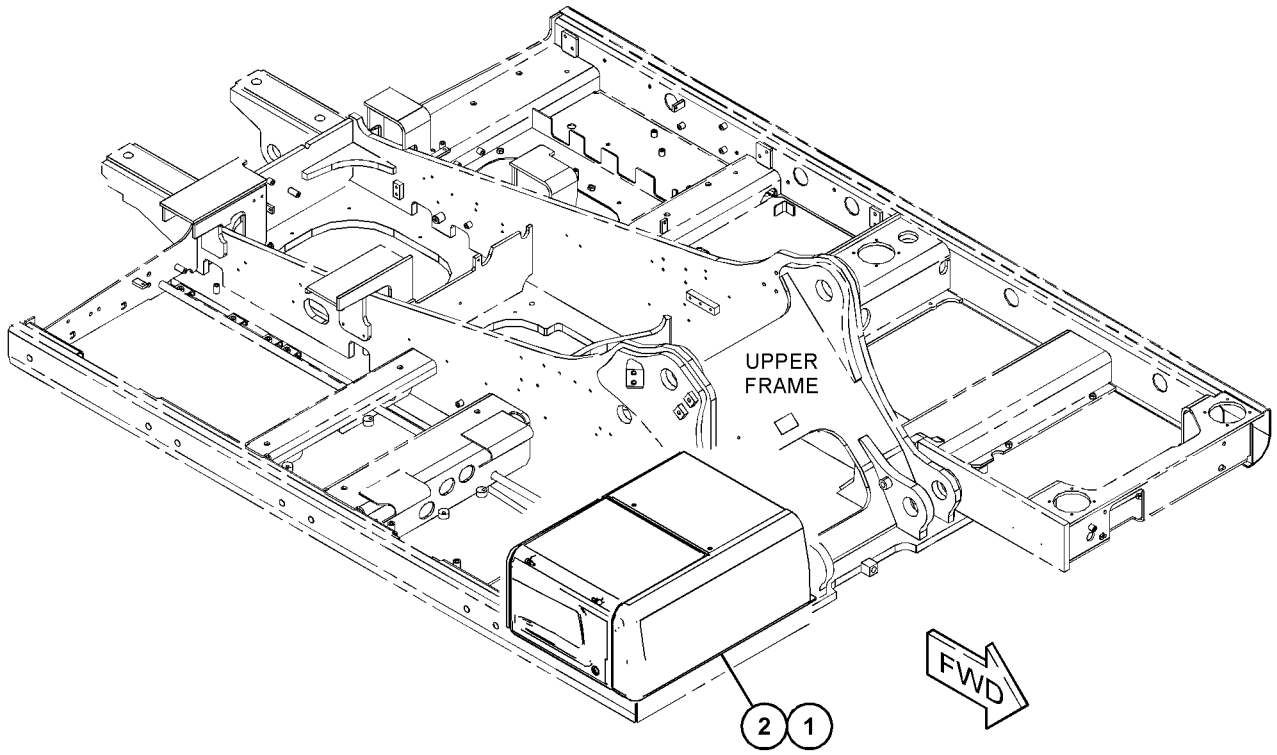

GRAPHIC #1 <END> g06230003

498-7483 BOX GP-STORAGE

S/N: BR61-UP

PART OF 498-7482 BOX & MOUNTING GP

SMCS-7268 **i07360356**

NOTE	REF NO	GRAPHIC REF	PART NUMBER	QTY	PART NAME 1 2 3 4 5 6 (PRODUCT LEVEL)	SEE PAGE
	1	1	**178-5576**	2	STOP	
J	2	1	**510-3135**	1	LOCK AS	
	3	1	**516-7395**	2	SPRING AS-GAS	
	4	1	**526-5998**	1	BOX AS-STORAGE	
D		1	**101-9848**		SEAL (0.7-M)	
	5	1	**526-6000**	1	COVER AS-BOX	
D		1	**101-9848**		SEAL (0.8-M)	
	6	1	**527-7671**	1	STRIKER AS	
B	7	1	**527-7673**	4	SHIM (0.5-MM THK)	
B	8	1	**527-7674**	2	SHIM (1-MM THK)	
M	9	1	**5C-7261**	4	NUT (M8X1.25-THD)	
M	10	1	**8T-4138**	3	BOLT (M6X1X20-MM)	
	11	1	**5P-4116**	4	WASHER-HARD (8.8X20.5X2-MM THK)	
	12	1	**8T-4121**	4	WASHER-HARD (11X21X2.5-MM THK)	
M	13	1	**8T-4133**	4	NUT (M10X1.5-THD)	
M	14	1	**8T-4189**	2	BOLT (M8X1.25X20-MM)	
	15	1	**8T-4224**	5	WASHER-HARD (8.8X16X2-MM THK)	
	16	1	**9X-8256**	3	WASHER (6.6X12X2-MM THK)	

B - USE AS REQUIRED
D - ORDER BY THE METER
J - REQUIRES CORPORATE KEY
M - METRIC PART

498-7483 **BOX GP-STORAGE** (contd.) **i07360356**

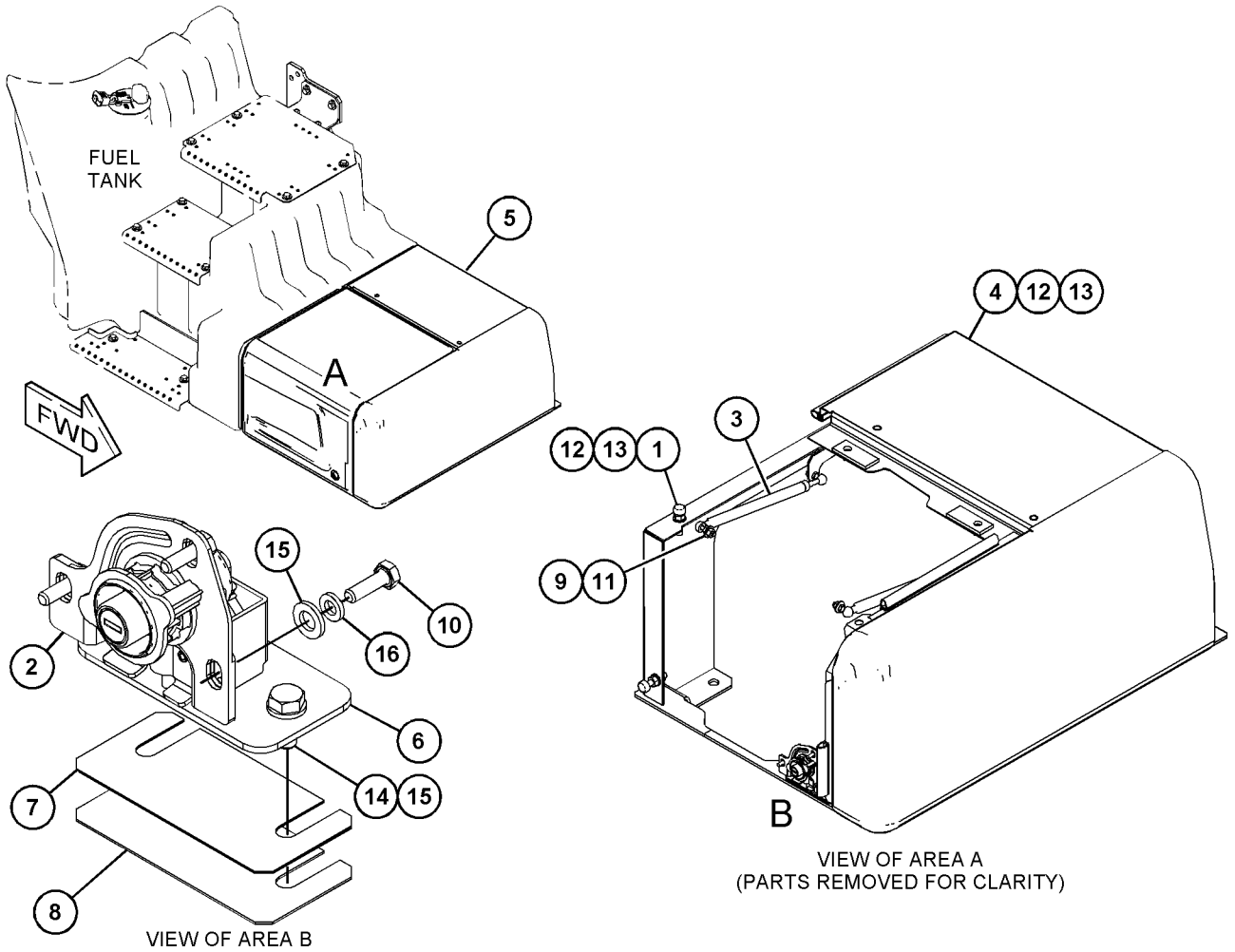

GRAPHIC #1 <END> g06266643

487-6760 BUMPER GP-FRONT

S/N: BR61-UP

PART OF 484-8021 INSTL AR-BUMPER & WASHER LINES

SMCS-7156 **i07344690**

NOTE	REF NO	GRAPHIC REF	PART NUMBER	QTY	PART NAME 1 2 3 4 5 6 (PRODUCT LEVEL)	SEE PAGE
	1	1	**487-6761**	1	BUMPER AS	
M		1	**8T-3490**	4	NUT-WELD (M10X1.5-THD)	
M	2	1	**172-5291**	4	SCREW (M10X1.5X30-MM)	
E	3	1	**201-4441**		SEAL (12-CM)	

E - ORDER BY THE CENTIMETER
M - METRIC PART

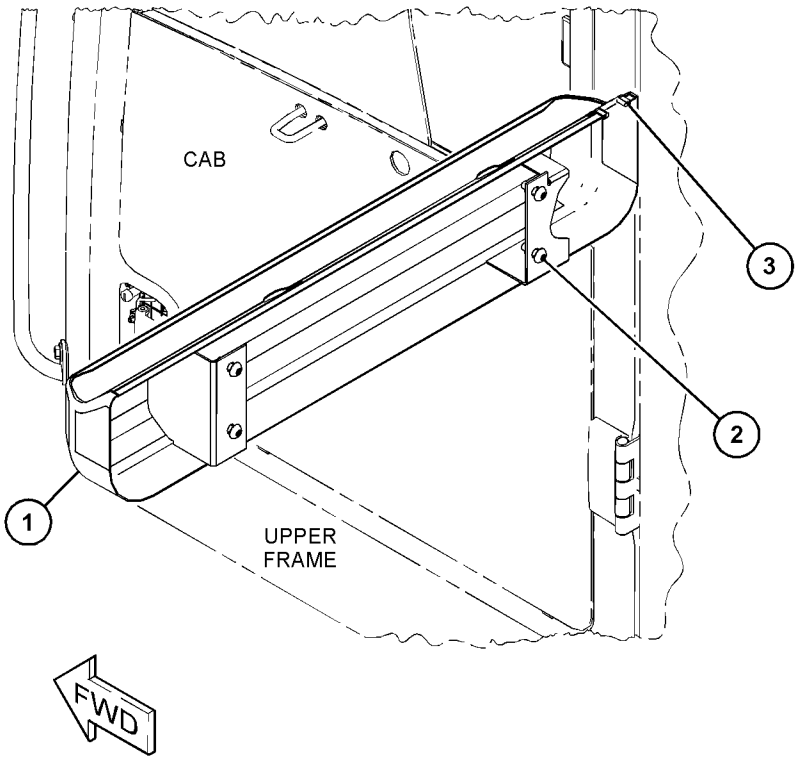

GRAPHIC #1 <END> g06229449

486-7093 COUNTERWEIGHT AS

S/N: BR61-UP

PART OF 532-9515, 556-2899 DISTRIBUTION AR

SMCS-7056 **i07352383**

NOTE	PART NUMBER	QTY	PART NAME 1 2 3 4 5 6 (PRODUCT LEVEL)	SEE PAGE
			(INDIVIDUAL PARTS NOT SERVICED SEPARATELY)	
			<END>	

489-3797 COUNTERWEIGHT AS

S/N: BR61-UP

4700-KG (10362-LB)

PART OF 532-9518, 556-2902 DISTRIBUTION AR

SMCS-7056 **i07362977**

NOTE	PART NUMBER	QTY	PART NAME 1 2 3 4 5 6 (PRODUCT LEVEL)	SEE PAGE
			(INDIVIDUAL PARTS NOT SERVICED SEPARATELY)	
			<END>	

526-2620 COVER AS-SOUND SUPPRESSION

S/N: BR61-UP

PART OF 486-7089, 556-6464 HOOD & GUARD GP

SMCS-7253, 7263, 7276, 795C

i07330220

NOTE	REF NO	GRAPHIC REF	PART NUMBER	QTY	PART NAME 1 2 3 4 5 6 (PRODUCT LEVEL)	SEE PAGE
	1	1	**485-3070**	1	LINER	
	2	1	**508-9716**	1	LINER	
D	3	1	**101-9848**		SEAL (0.5-M)	

D - ORDER BY THE METER

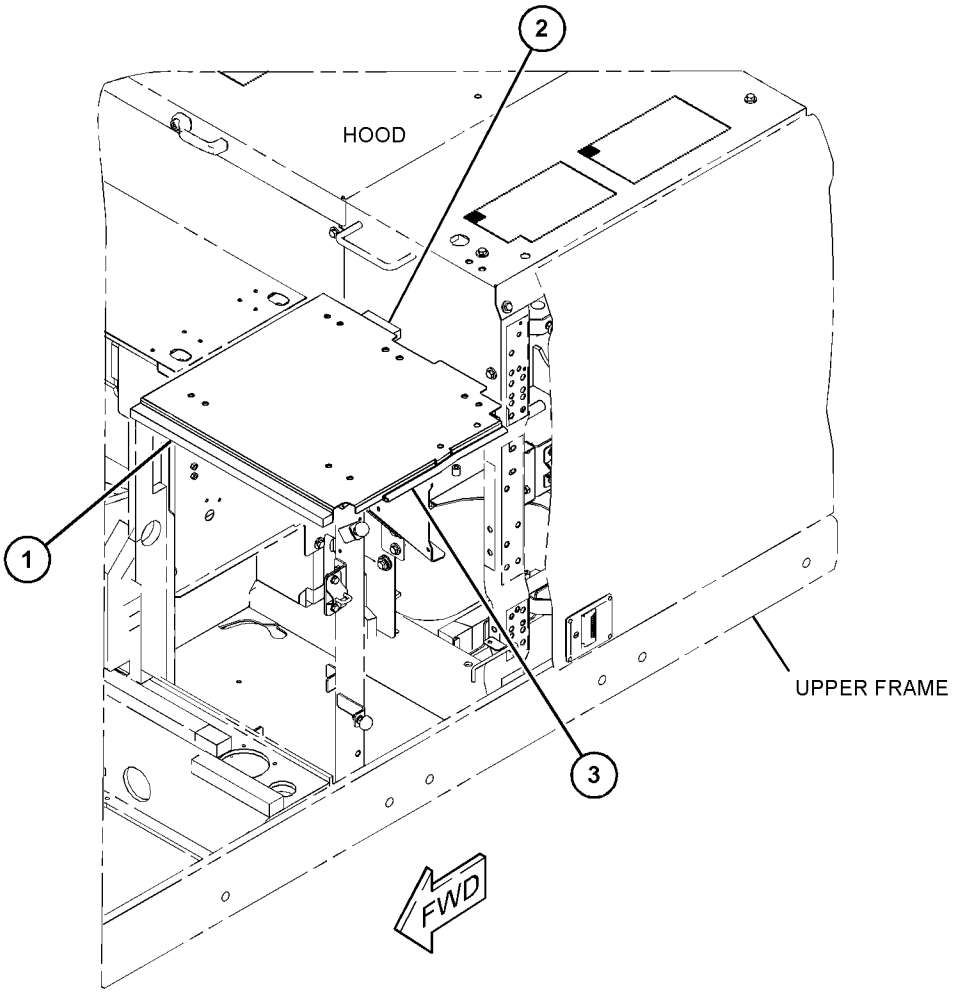

GRAPHIC #1

<END>

g06227295

541-9809 COVER AS-SOUND SUPPRESSION

S/N: BR61-UP

PART OF 486-7089, 556-6464 HOOD & GUARD GP

SMCS-7253, 7263, 7276, 795C

i07366363

NOTE	REF NO	GRAPHIC REF	PART NUMBER	QTY	PART NAME 1 2 3 4 5 6 (PRODUCT LEVEL)	SEE PAGE
	1	1	**505-7193**	2	SHEET-RUBBER	
	2	1	**505-7194**	2	SHEET-RUBBER	
	3	1	**521-3281**	1	SHEET-RUBBER	

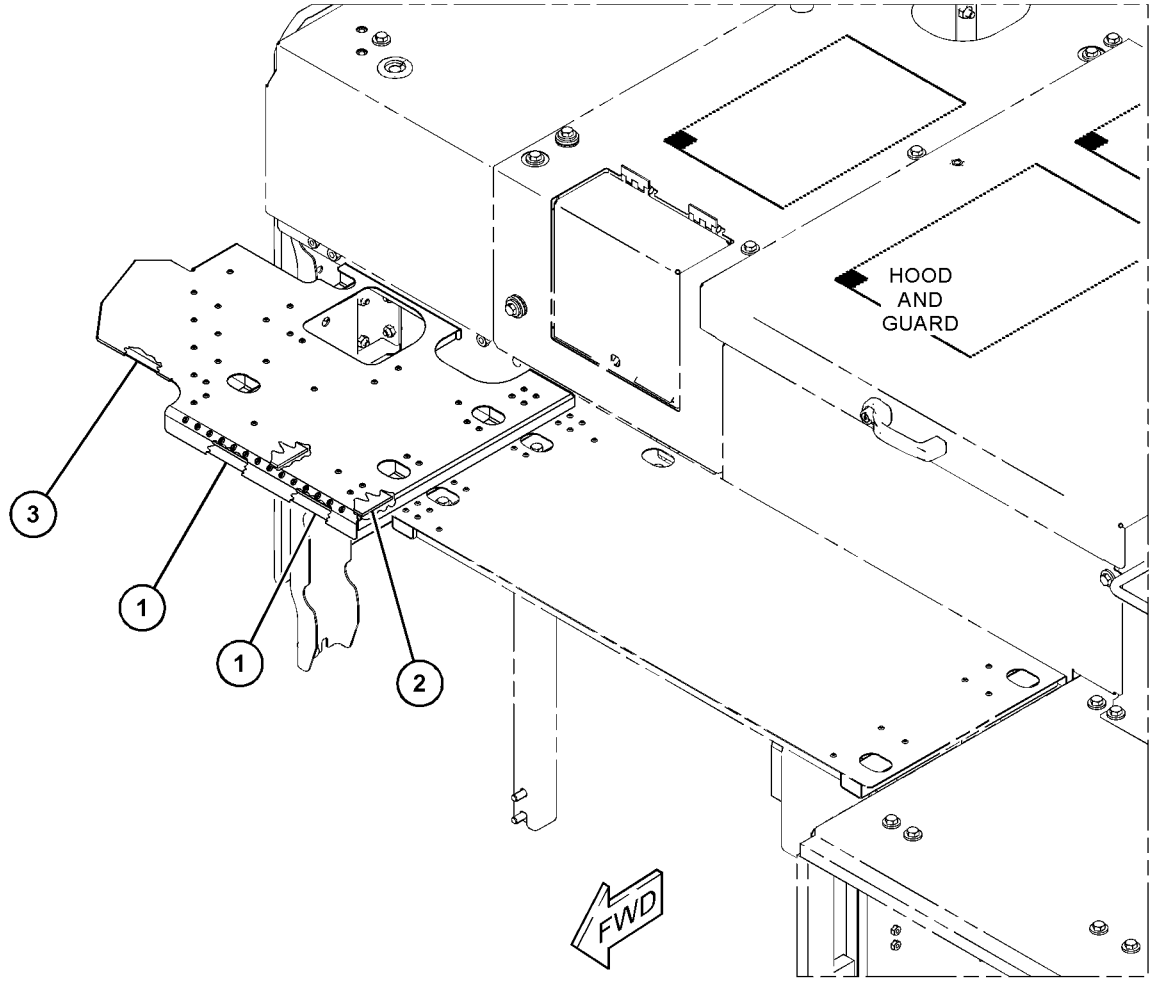

GRAPHIC #1

<END>

g06279809

528-3453 COVER GP-HOOD

S/N: BR61-UP

PART OF 486-7089, 556-6464 HOOD & GUARD GP

SMCS-7251 **i07366361**

NOTE	REF NO	GRAPHIC REF	PART NUMBER	QTY	PART NAME 1 2 3 4 5 6 (PRODUCT LEVEL)	SEE PAGE
	1	1	**275-0571**	1	CAM-LATCH	
J	2	1	**484-2732**	1	HANDLE AS	
	3	1	**489-3764**	1	SUPPORT AS	
		1	**4B-4278**	1	WASHER (10.2X20.5X1.6-MM THK)	
	4	1	**505-7112**	1	COVER AS-ACCESS	
	5	1	**528-3454**	1	COVER AS	
D		1	**101-9848**		SEAL (1-M)	
P		1	**353-6757**		SEAL (2-DM)	
	6	1	**095-0843**	1	PIN-COTTER	
	7	1	**096-3780**	1	PIN-CLEVIS	
	8	1	**5P-4116**	1	WASHER-HARD (8.8X20.5X2-MM THK)	
	9	1	**8T-4121**	2	WASHER-HARD (11X21X2.5-MM THK)	
M	10	1	**8T-4133**	2	NUT (M10X1.5-THD)	

D - ORDER BY THE METER
J - REQUIRES CORPORATE KEY
M - METRIC PART
P - ORDER BY THE DECIMETER

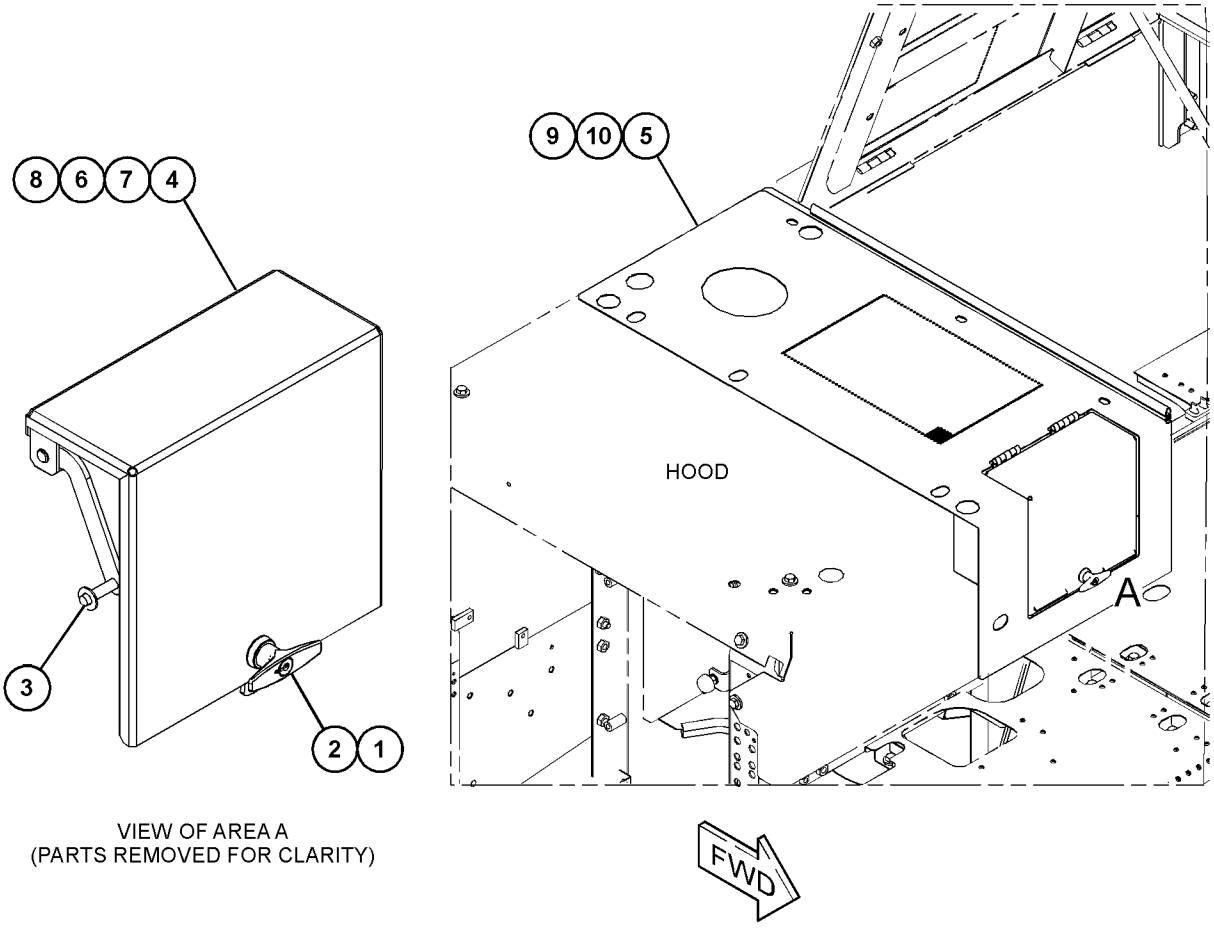

VIEW OF AREA A
(PARTS REMOVED FOR CLARITY)

GRAPHIC #1 <END> g06229396

551-1662 COVER GP-SOUND SUPPRESSION

S/N: BR61-UP

PART OF 486-7089, 556-6464 HOOD & GUARD GP

SMCS-7251 **i07366367**

NOTE	REF NO	GRAPHIC REF	PART NUMBER	QTY	PART NAME 1 2 3 4 5 6 (PRODUCT LEVEL)	SEE PAGE
	1	1	**505-7209**	1	LINER	
	2	1	**505-7210**	1	LINER	
	3	1	**505-7211**	1	LINER	
	4	1	**505-7212**	1	LINER	
	5	1	**551-1663**	1	COVER AS-SOUND SUPPRESSION	
	5A	1	**437-1588**	1	HANDLE	
M		1	**8T-3597**	1	NUT-WELD (M12X1.75-THD)	
D	6	1	**101-9848**		SEAL (1-M)	

D - ORDER BY THE METER
M - METRIC PART

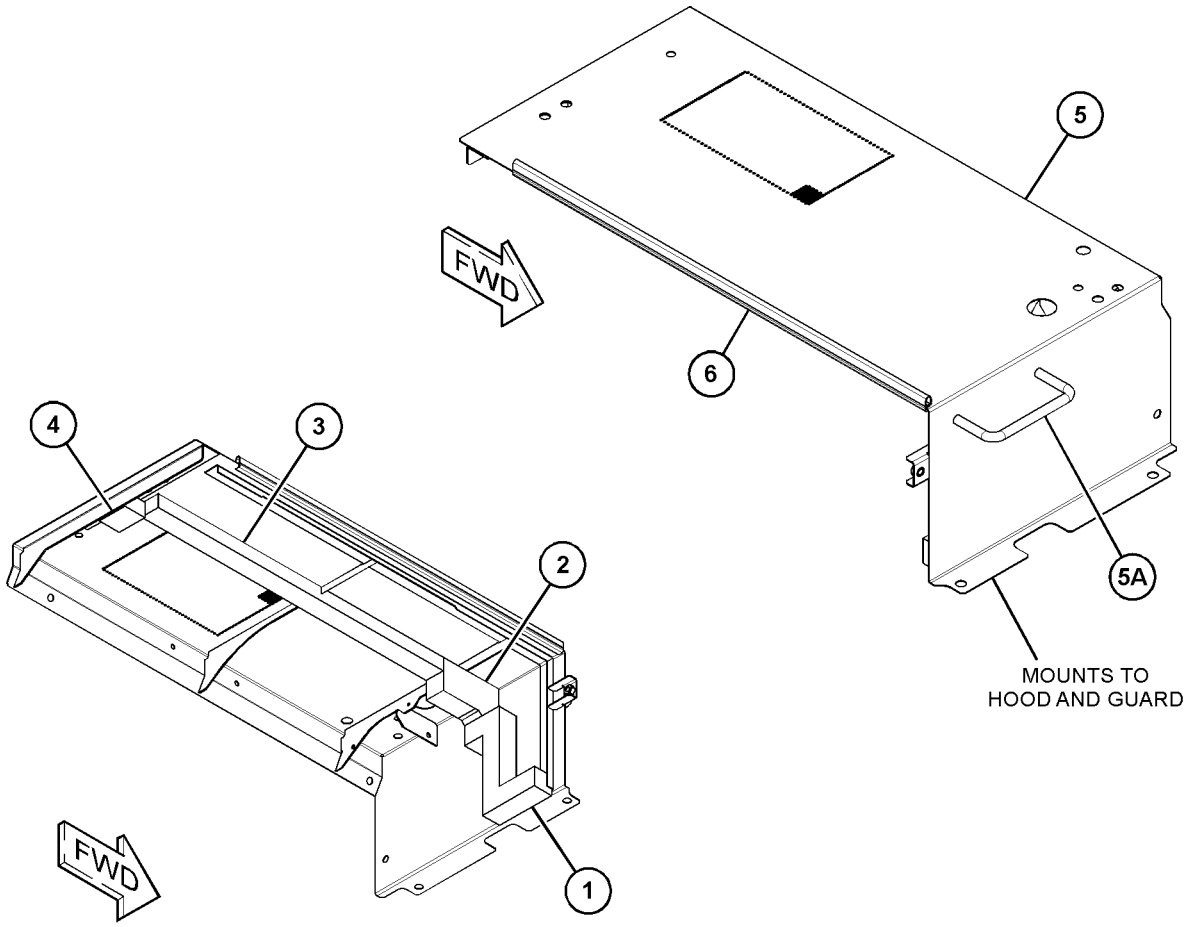

(VIEWED FROM BOTTOM)

GRAPHIC #1 <END> g06281127

527-1411 DOOR & MTG GP-ACCESS—DOOR WITHOUT CAMERA

S/N: BR61-UP

PART OF 512-4549 MIRROR AR

SMCS-7273 **i07352886**

NOTE	REF NO	GRAPHIC REF	PART NUMBER	QTY	PART NAME 1 2 3 4 5 6 (PRODUCT LEVEL)	SEE PAGE
Y	1	1	*527-1412*	1	DOOR GP-ACCESS (BATTERY COMPARTMENT)	314
	2	1	**135-8575**	4	BOLT AS	

Y - SEPARATE ILLUSTRATION

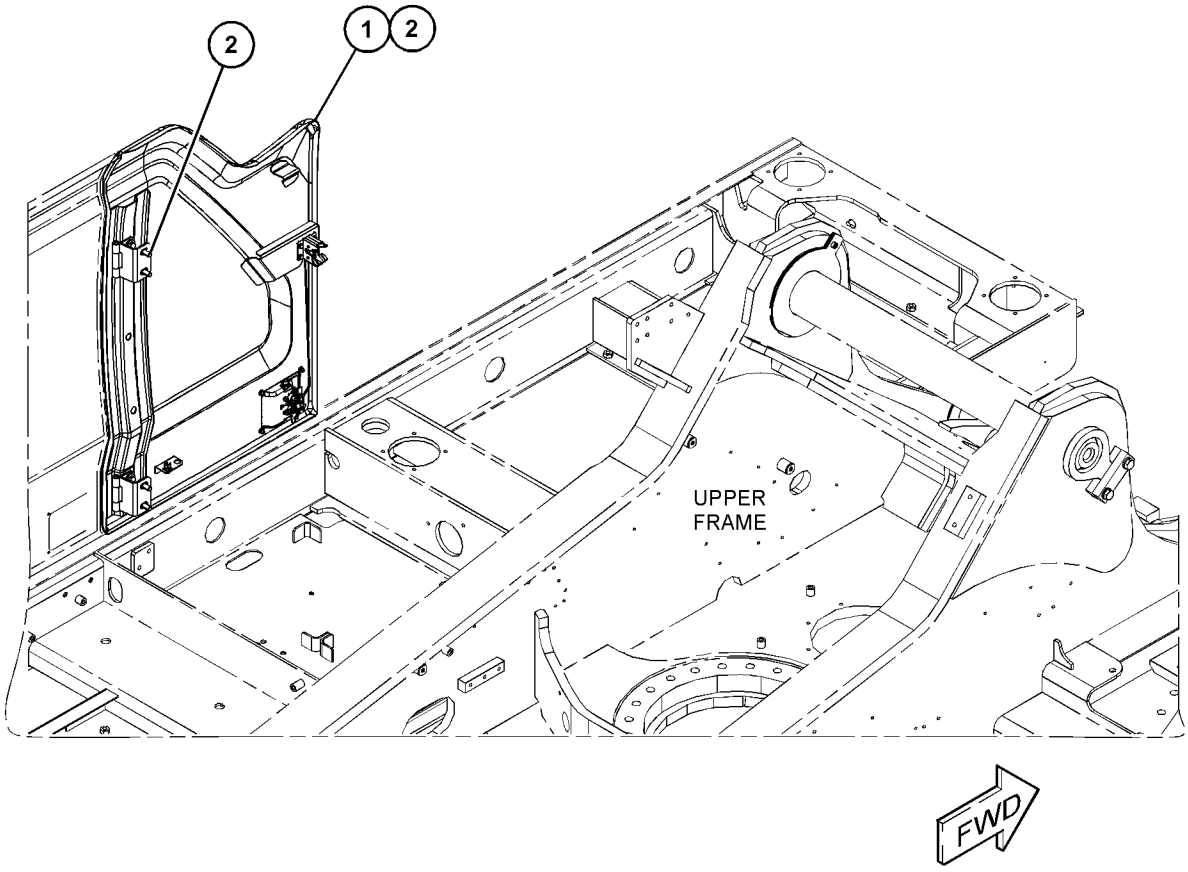

GRAPHIC #1 <END> g06227310

548-8356 DOOR & MTG GP-ACCESS—AIR CLEANER, BATTERY

S/N: BR610001-UP
WITH CAMERA
PART OF 559-0034 CAMERA AR

SMCS-7273 **i07432892**

NOTE	REF NO	GRAPHIC REF	PART NUMBER	QTY	PART NAME 1 2 3 4 5 6 (PRODUCT LEVEL)	SEE PAGE
Y	1	1	*547-7515*	1	DOOR GP-ACCESS (AIR CLEANER, BATTERY)	316
	2	1	**135-8575**	4	BOLT AS	

Y - SEPARATE ILLUSTRATION

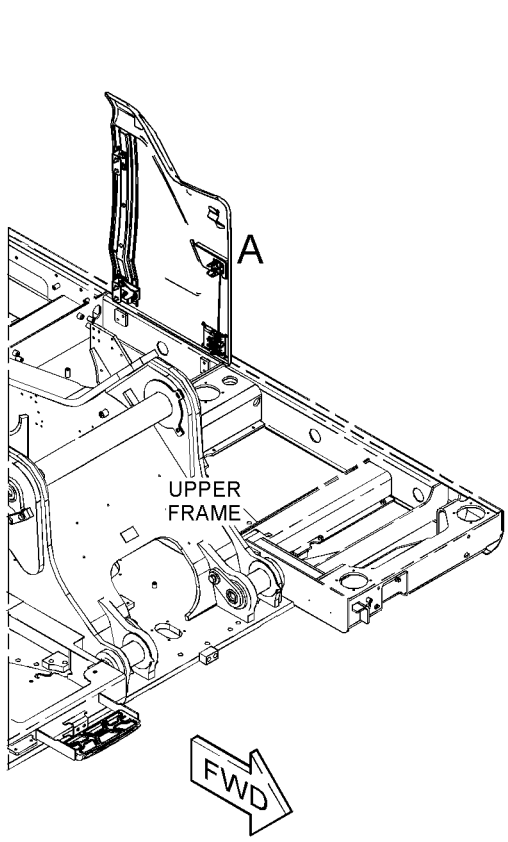

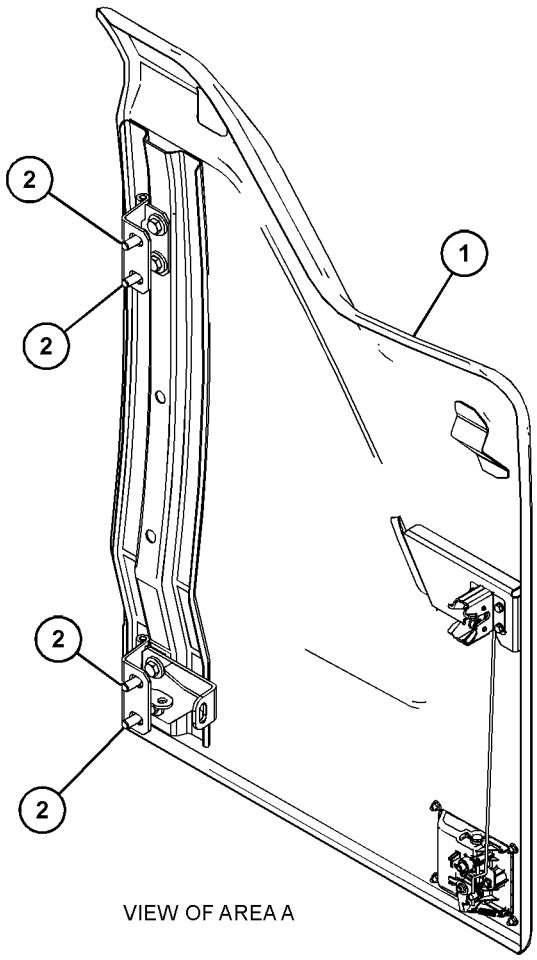

VIEW OF AREA A

GRAPHIC #1 <END> g06274290

525-0749 DOOR GP-ACCESS–RADIATOR

S/N: BR61-UP

PART OF 486-7089 HOOD & GUARD GP

SMCS-7273 **i07366351**

NOTE	REF NO	GRAPHIC REF	PART NUMBER	QTY	PART NAME 1 2 3 4 5 6 (PRODUCT LEVEL)	SEE PAGE
	1	1	**135-8573**	4	BOLT AS	
	2	1	**135-8575**	4	BOLT AS	
	3	1	**508-9591**	2	HINGE	
J	4	1	**508-9603**	1	HANDLE AS	
	5	1	**508-9604**	1	LOCK AS	
	6	1	**508-9730**	1	CLIP	
	7	1	**9X-8256**	4	WASHER (6.6X12X2-MM THK)	
	8	1	**527-1421**	1	SHEET AS	
M	9	1	**099-6418**	4	NUT (M6X1-THD)	
M	10	1	**5C-9553**	8	BOLT (M6X1X16-MM)	

J - REQUIRES CORPORATE KEY
M - METRIC PART

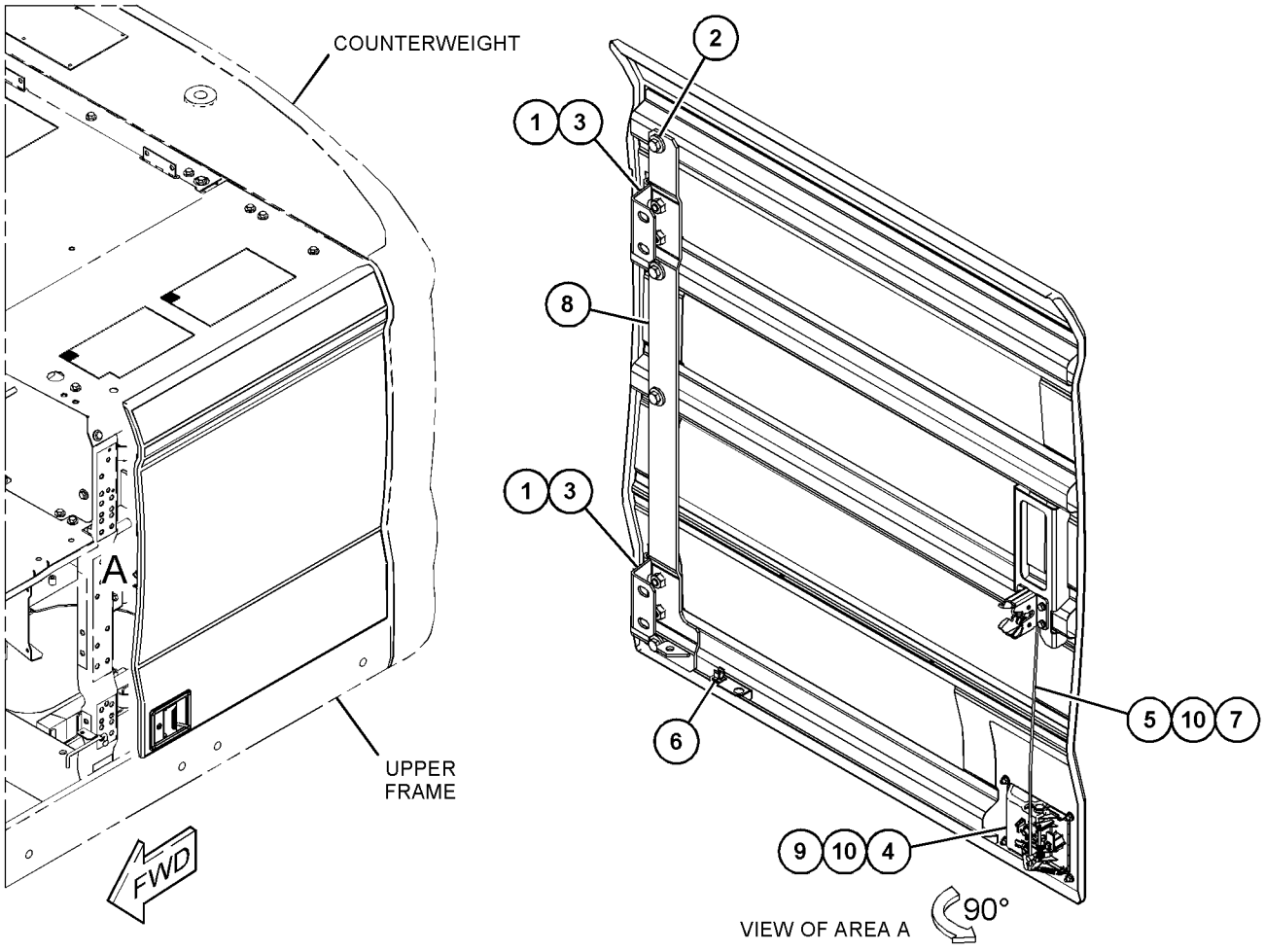

GRAPHIC #1 <END> g06234801

525-0751 DOOR GP-ACCESS

S/N: BR61-UP

PART OF 486-7089 HOOD & GUARD GP

SMCS-7273 **i07330218**

NOTE	REF NO	GRAPHIC REF	PART NUMBER	QTY	PART NAME 1 2 3 4 5 6 (PRODUCT LEVEL)	SEE PAGE
	1	1	**135-8573**	4	BOLT AS	
	2	1	**135-8575**	4	BOLT AS	
	3	1	**508-9591**	2	HINGE	
	4	1	**508-9604**	1	LOCK AS	
J	5	1	**508-9607**	1	HANDLE AS	
	6	1	**508-9730**	1	CLIP	
	7	1	**9X-8256**	4	WASHER (6.6X12X2-MM THK)	
	8	1	**527-1422**	1	SHEET AS	
M	9	1	**099-6418**	4	NUT (M6X1-THD)	
M	10	1	**5C-9553**	8	BOLT (M6X1X16-MM)	

J - REQUIRES CORPORATE KEY
M - METRIC PART

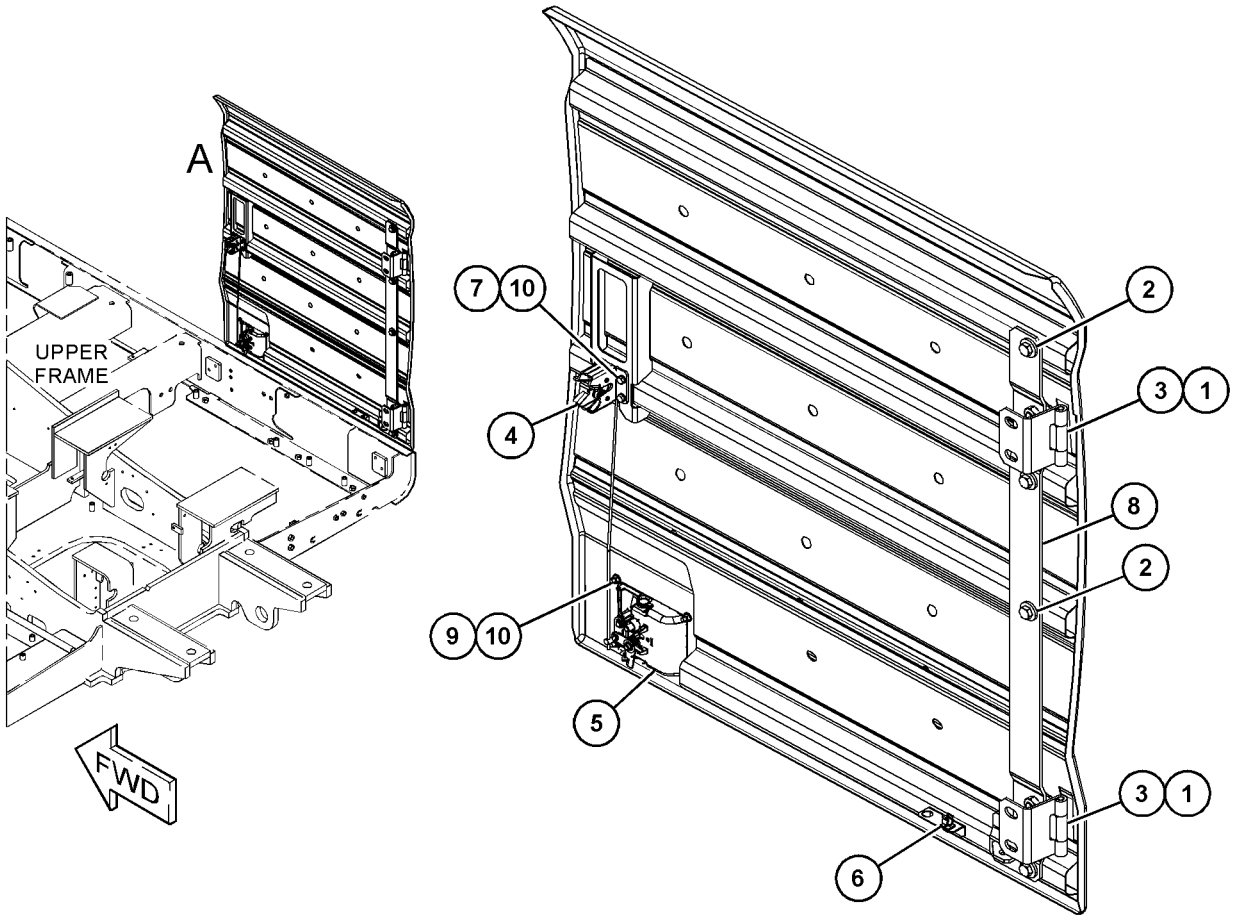

VIEW OF AREA A

GRAPHIC #1 <END> g06229879

527-1412 DOOR GP-ACCESS

S/N: BR61-UP

PART OF 527-1411 DOOR & MTG GP-ACCESS

SMCS-7273 **i07352934**

NOTE	REF NO	GRAPHIC REF	PART NUMBER	QTY	PART NAME 1 2 3 4 5 6 (PRODUCT LEVEL)	SEE PAGE
	1	1	**508-9591**	1	HINGE	
	2	1	**508-9592**	1	HINGE AS	
J	3	1	**508-9603**	1	HANDLE AS	
	4	1	**508-9608**	1	LOCK AS	
	5	1	**508-9730**	1	CLIP	
	6	1	*527-1413*	1	DOOR AS	
M		1	**6V-9632**	4	NUT-WELD (M6X1-THD)	
M		1	**8T-3597**	4	NUT-WELD (M12X1.75-THD)	
M	7	1	**099-6418**	4	NUT (M6X1-THD)	
	8	1	**135-8573**	4	BOLT AS	
M	9	1	**5C-9553**	8	BOLT (M6X1X16-MM)	
	10	1	**9X-8256**	4	WASHER (6.6X12X2-MM THK)	

J - REQUIRES CORPORATE KEY
M - METRIC PART

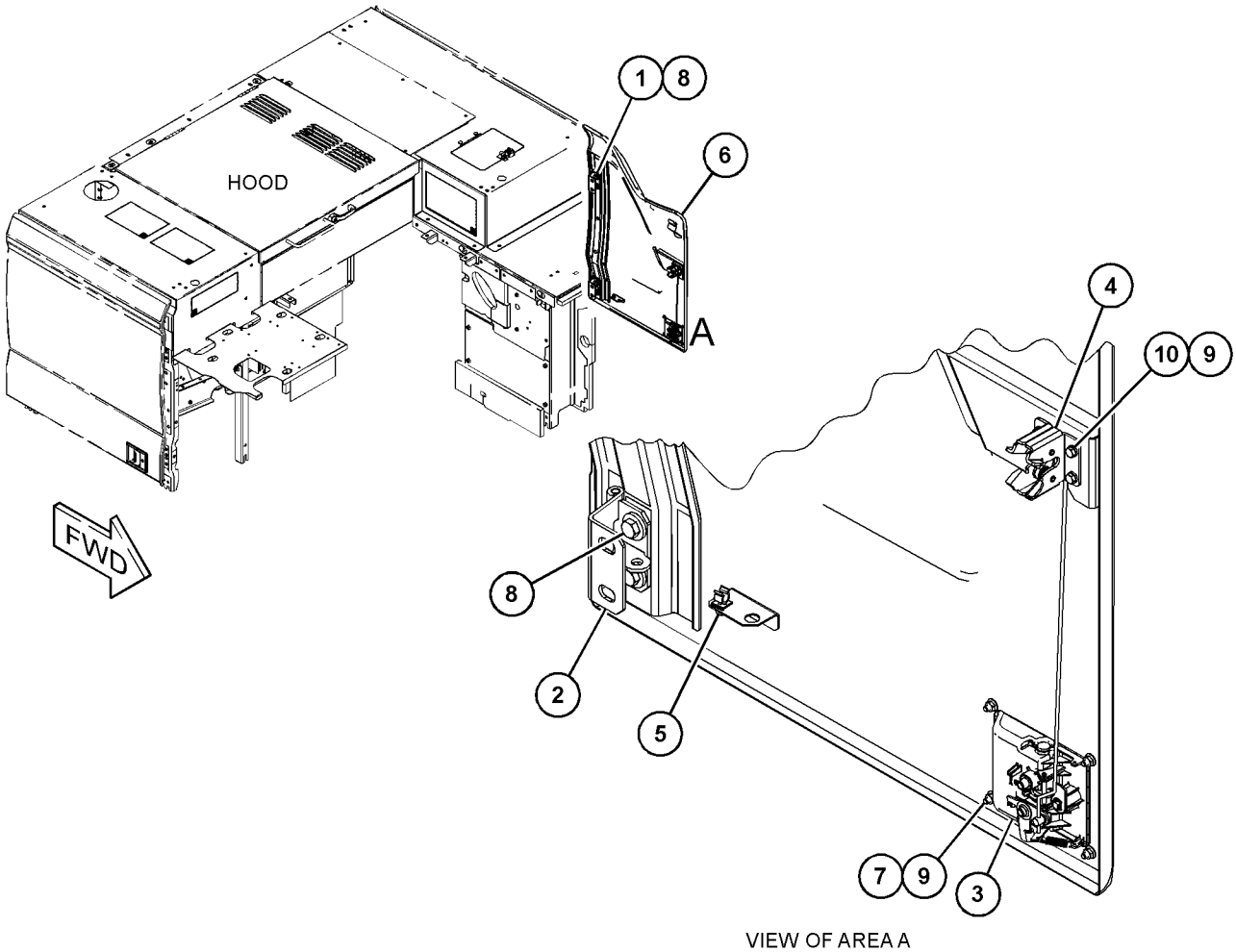

VIEW OF AREA A

GRAPHIC #1 <END> g06229192

527-1417 DOOR GP-ACCESS–BATTERY

S/N: BR61-UP

PART OF 527-1416 HOOD & GUARD GP

SMCS-7273 **i07366570**

NOTE	REF NO	GRAPHIC REF	PART NUMBER	QTY	PART NAME 1 2 3 4 5 6 (PRODUCT LEVEL)	SEE PAGE
	1	1	**508-9591**	1	HINGE	
	2	1	**508-9592**	1	HINGE AS	
	3	1	**508-9603**	1	HANDLE AS	
	4	1	**508-9608**	1	LOCK AS	
	5	1	**508-9730**	1	CLIP	
	6	1	*527-1418*	1	DOOR AS-HOOD	
M		1	**6V-9632**	4	NUT-WELD (M6X1-THD)	
M		1	**8T-3597**	4	NUT-WELD (M12X1.75-THD)	
M	7	1	**099-6418**	4	NUT (M6X1-THD)	
	8	1	**135-8573**	4	BOLT AS	
M	9	1	**5C-9553**	8	BOLT (M6X1X16-MM)	
	10	1	**9X-8256**	4	WASHER (6.6X12X2-MM THK)	

M - METRIC PART

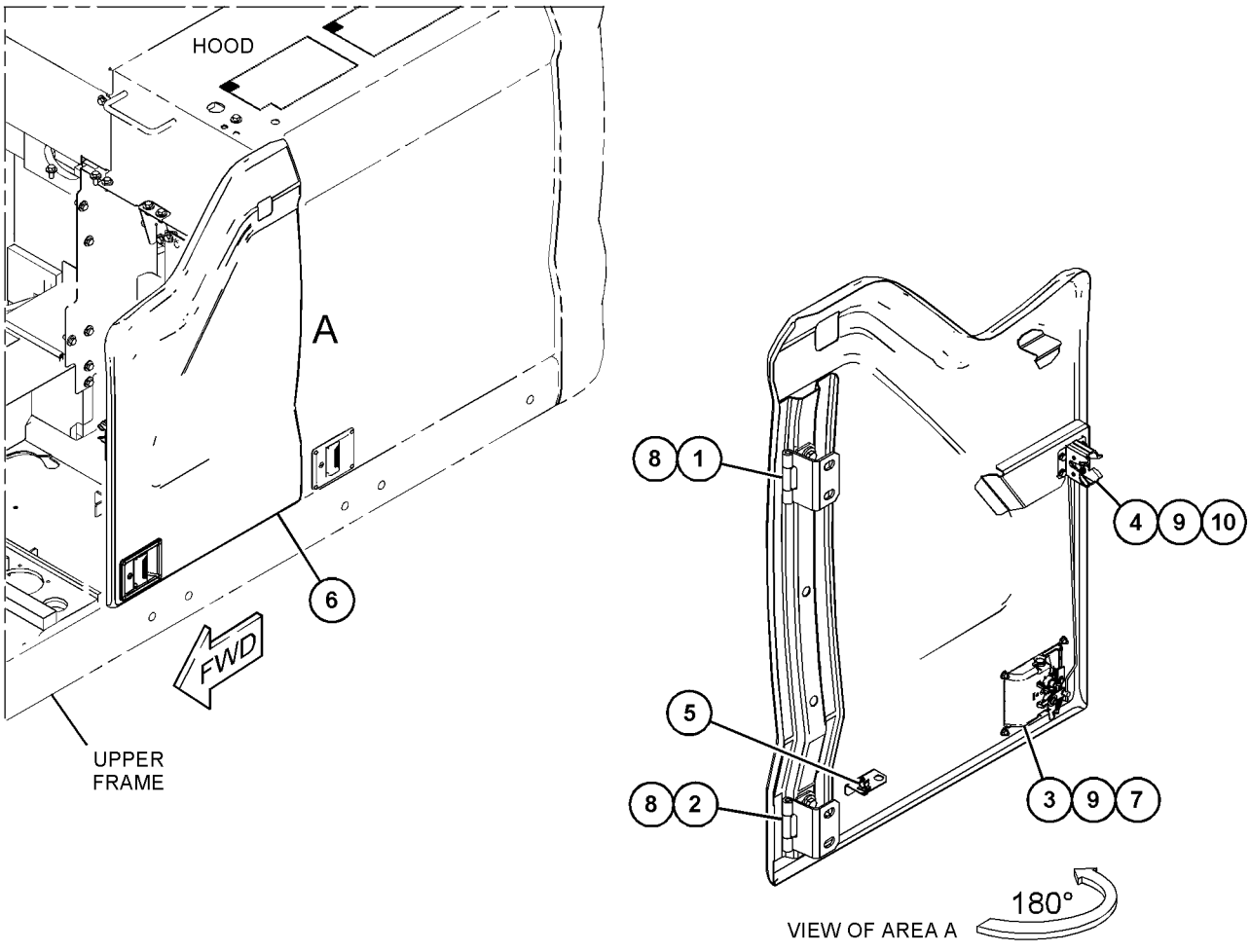

GRAPHIC #1 <END> g06230996

547-7515 DOOR GP-ACCESS—AIR CLEANER, BATTERY

S/N: BR610001-UP

PART OF 548-8356 DOOR & MTG GP-ACCESS

SMCS-7273 **i07432894**

NOTE	REF NO	GRAPHIC REF	PART NUMBER	QTY	PART NAME 1 2 3 4 5 6 (PRODUCT LEVEL)	SEE PAGE
	1	1	**508-9591**	1	HINGE	
	2	1	**547-2608**	1	HINGE AS	
M	3	1	**5C-9553**	8	BOLT (M6X1X16-MM)	
	4	1	**9X-8256**	4	WASHER (6.6X12X2-MM THK)	
M	5	1	**099-6418**	4	NUT (M6X1-THD)	
	6	1	**135-8573**	2	BOLT AS	
	7	1	**135-8575**	2	BOLT AS	
	8	1	**508-9603**	1	HANDLE AS	
	9	1	**508-9608**	1	LOCK AS	
	10	1	**546-4980**	1	BRACKET AS	
	11	1	*547-8271*	1	DOOR AS-ACCESS	
M		1	**6V-9632**	4	NUT-WELD (M6X1-THD)	
M		1	**8T-3597**	4	NUT-WELD (M12X1.75-THD)	

M - METRIC PART

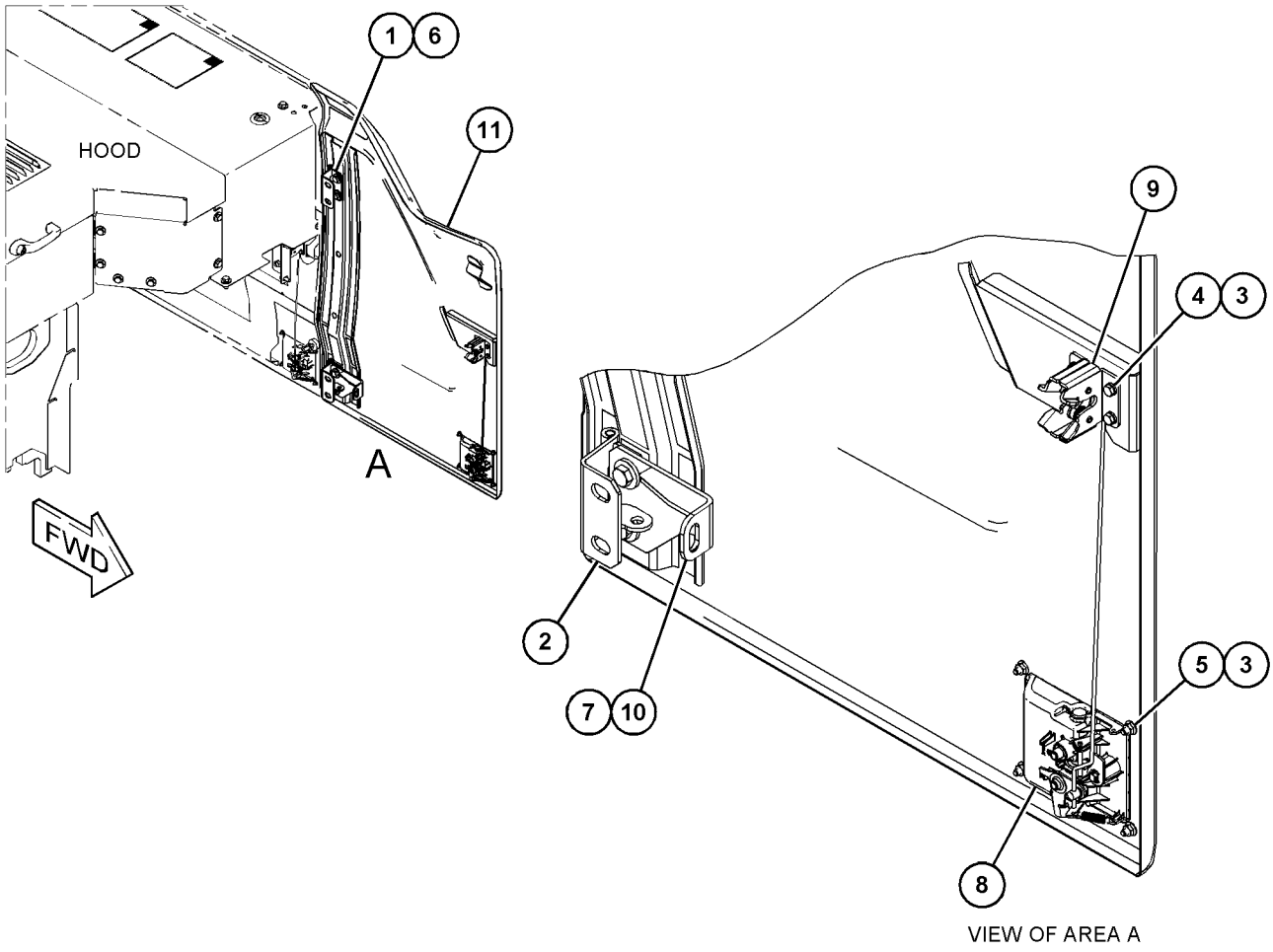

VIEW OF AREA A

GRAPHIC #1 <END> g06274780

556-6475 DOOR GP-ACCESS—RADIATOR

S/N: BR610001-UP

PART OF 556-6464 HOOD & GUARD GP

SMCS-7273 **i07451565**

NOTE	REF NO	GRAPHIC REF	PART NUMBER	QTY	PART NAME 1 2 3 4 5 6 (PRODUCT LEVEL)	SEE PAGE
M	1	1	**5C-9553**	8	BOLT (M6X1X16-MM)	
	2	1	**8T-4121**	2	WASHER-HARD (11X21X2.5-MM THK)	
M	3	1	**8T-4136**	2	BOLT (M10X1.5X25-MM)	
	4	1	**9X-8256**	4	WASHER (6.6X12X2-MM THK)	
M	5	1	**099-6418**	4	NUT (M6X1-THD)	
	6	1	**135-8573**	4	BOLT AS	
	7	1	**135-8575**	4	BOLT AS	
	8	1	**508-9591**	1	HINGE	
J	9	1	**508-9603**	1	HANDLE AS	
	10	1	**508-9604**	1	LOCK AS	
	11	1	**546-4983**	1	SHEET	
	12	1	**547-7511**	1	SHEET AS	
	13	1	**547-2608**	1	HINGE AS	

J - REQUIRES CORPORATE KEY
M - METRIC PART

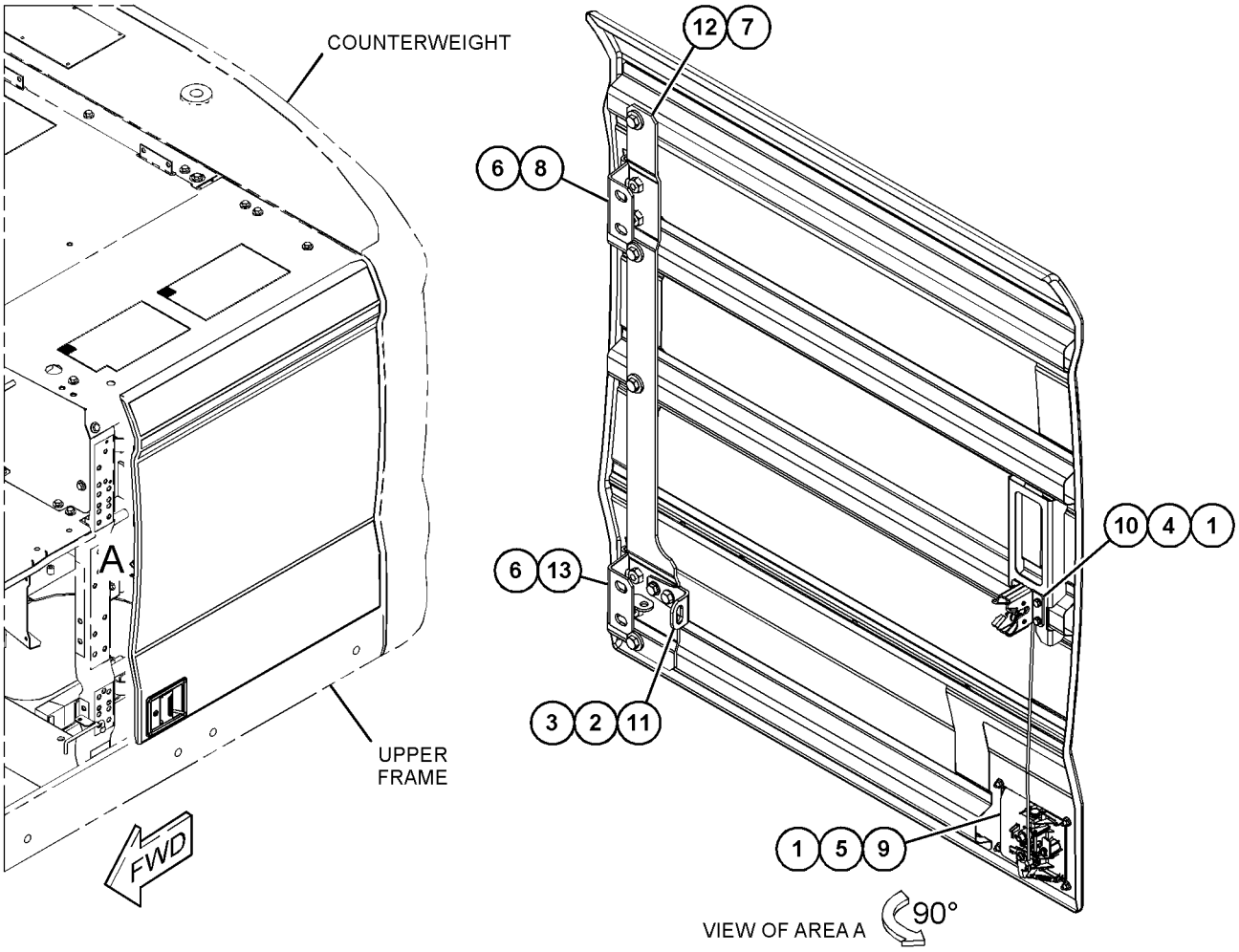

GRAPHIC #1 <END> g06324719

556-6477 DOOR GP-ACCESS—PUMP COMPARTMENT

S/N: BR610001-UP

PART OF 556-6464 HOOD & GUARD GP

SMCS-7273 **i07451541**

NOTE	REF NO	GRAPHIC REF	PART NUMBER	QTY	PART NAME 1 2 3 4 5 6 (PRODUCT LEVEL)	SEE PAGE
M	1	1	**5C-9553**	8	BOLT (M6X1X16-MM)	
	2	1	**8T-4121**	2	WASHER-HARD (11X21X2.5-MM THK)	
M	3	1	**8T-4136**	2	BOLT (M10X1.5X25-MM)	
	4	1	**9X-8256**	4	WASHER (6.6X12X2-MM THK)	
M	5	1	**099-6418**	4	NUT (M6X1-THD)	
	6	1	**135-8573**	4	BOLT AS	
	7	1	**135-8575**	4	BOLT AS	
	8	1	**508-9591**	1	HINGE	
	9	1	**508-9604**	1	LOCK AS	
J	10	1	**508-9607**	1	HANDLE AS	
	11	1	**546-4983**	1	SHEET	
	12	1	**547-7510**	1	SHEET AS	
	13	1	**547-2608**	1	HINGE AS	

J - REQUIRES CORPORATE KEY
M - METRIC PART

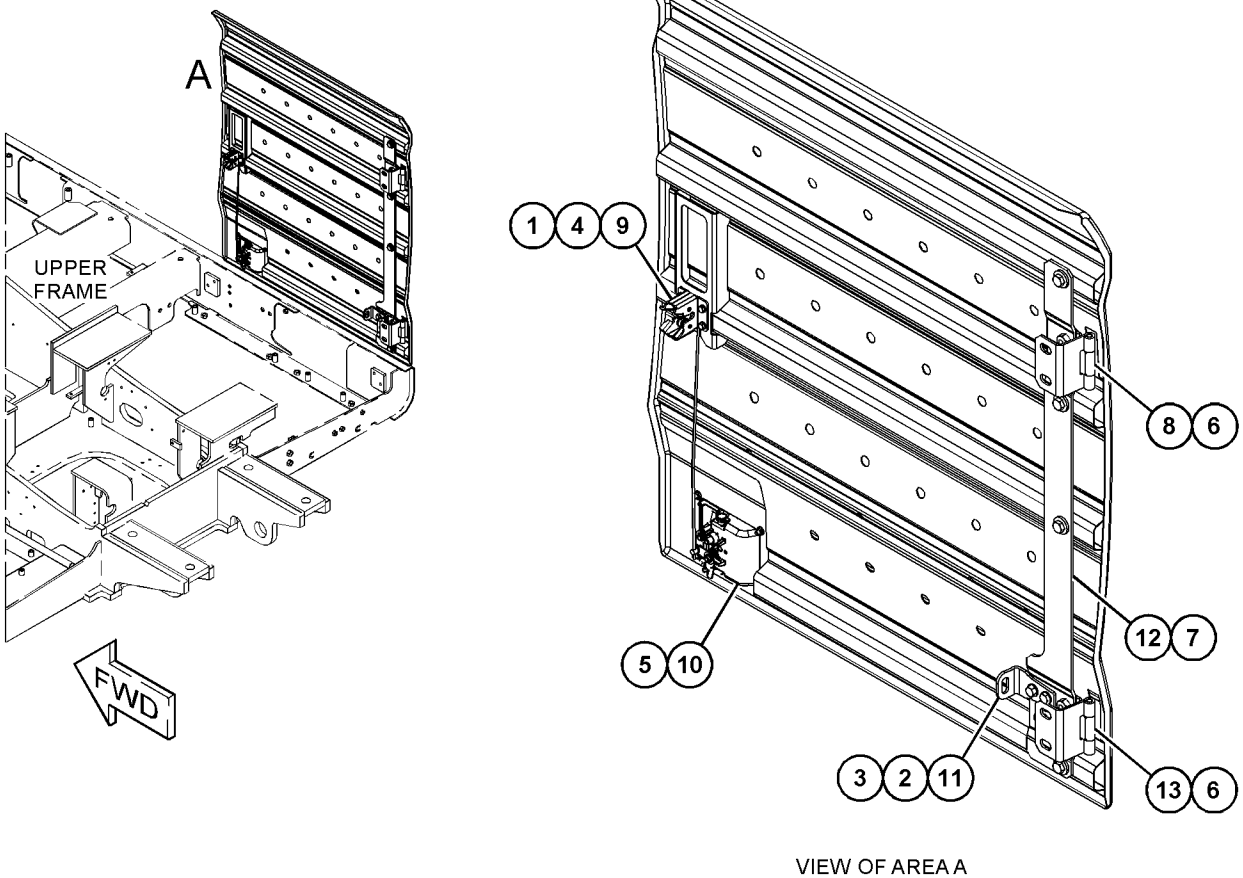

VIEW OF AREA A

GRAPHIC #1 <END> g06324734

505-7175 ENCLOSURE AR

S/N: BR61-10000

PART OF 510-7419 COMMON AR

SMCS-7251, 7263 **i07360344**

NOTE	PART NUMBER	QTY	PART NAME 1 2 3 4 5 6 (PRODUCT LEVEL)	SEE PAGE
Y	*498-7482*	1	BOX & MOUNTING GP	301
Y	*486-7085*	1	HANDRAIL GP	330
Y	*486-7082*	1	LINER GP-SOUND SUPPRESSION	345
Y	*486-7084*	1	MOUNTING GP-COUNTERWEIGHT	346
Y	*498-7479*	1	TANK & MTG GP-FUEL	121

Y - SEPARATE ILLUSTRATION

<END>

556-6467 ENCLOSURE AR

S/N: BR610001-UP

PART OF 510-7419 COMMON AR

SMCS-7251, 7263 **i07432864**

NOTE	PART NUMBER	QTY	PART NAME 1 2 3 4 5 6 (PRODUCT LEVEL)	SEE PAGE
Y	*498-7482*	1	BOX & MOUNTING GP	301
Y	*486-7085*	1	HANDRAIL GP	330
Y	*486-7082*	1	LINER GP-SOUND SUPPRESSION	345
Y	*486-7084*	1	MOUNTING GP-COUNTERWEIGHT	346
Y	*556-6468*	1	TANK & MTG GP-FUEL	123

Y - SEPARATE ILLUSTRATION

<END>

461-7608 FRAME GP-UPPER

S/N: BR61-UP

PART OF 532-9515, 556-2899 DISTRIBUTION AR

SMCS-7051 **i07362611**

NOTE	REF NO	GRAPHIC REF	PART NUMBER	QTY	PART NAME 1 2 3 4 5 6 (PRODUCT LEVEL)	SEE PAGE
	1	1	**177-6315**	14	PLUG	
	2	1	**352-7064**	6	CAP	
Y	3	1	**461-7609**	1	FRAME GP-UPPER	321

Y - SEPARATE ILLUSTRATION

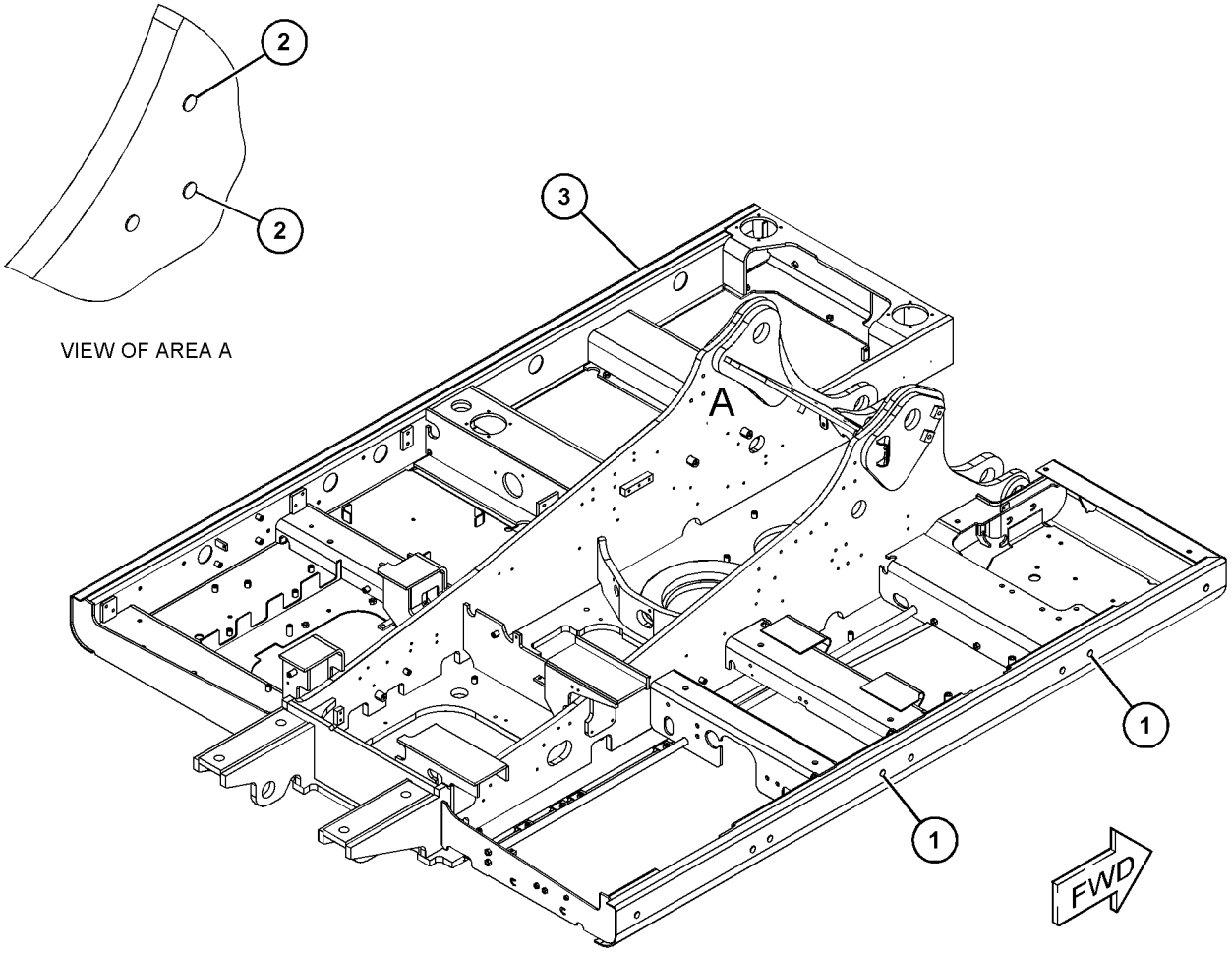

GRAPHIC #1 <END> g06232538

461-7609 FRAME GP-UPPER

S/N: BR61-UP

PART OF 461-7608 FRAME GP-UPPER

SMCS-7051 **i07362613**

NOTE	REF NO	GRAPHIC REF	PART NUMBER	QTY	PART NAME 1 2 3 4 5 6 (PRODUCT LEVEL)	SEE PAGE
	1	1	**7Y-0633**	1	BOSS	

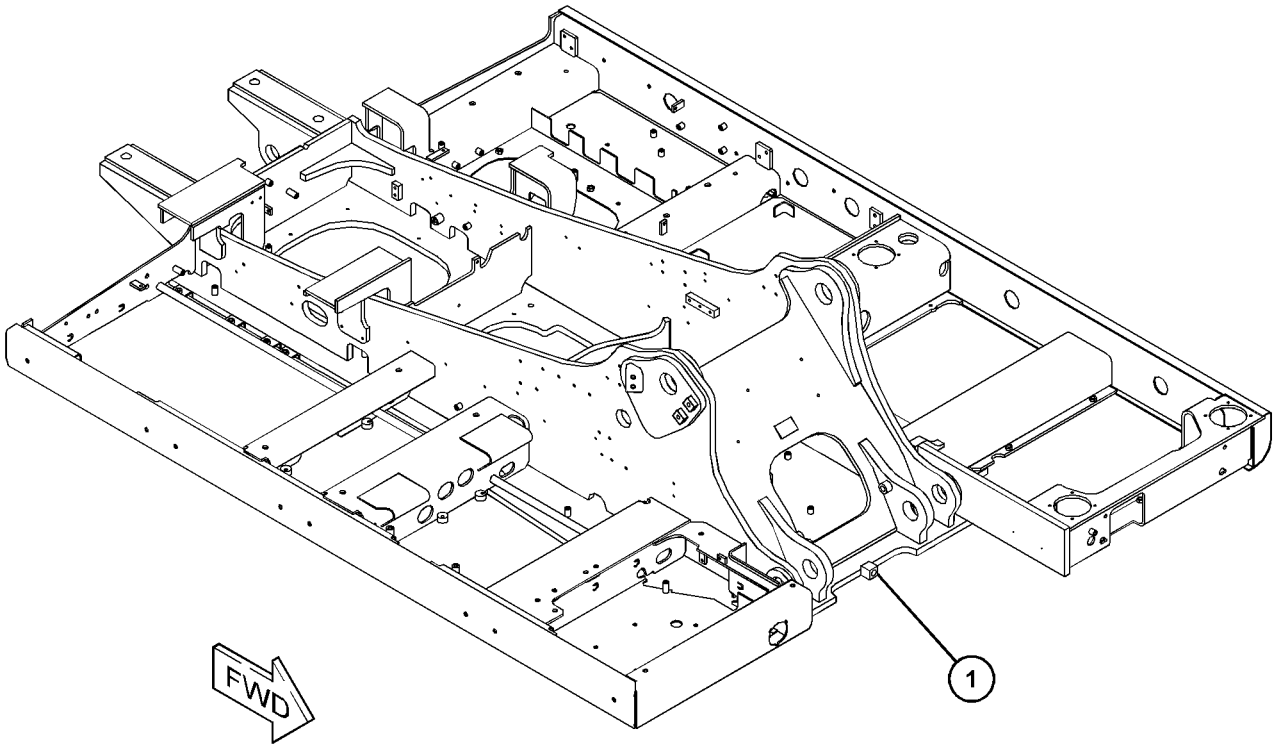

GRAPHIC #1 <END> g06237842

507-4836 FRAME GP-UPPER

S/N: BR61-UP

PART OF 532-9518, 556-2902 DISTRIBUTION AR

SMCS-7051 **i07369191**

NOTE	REF NO	GRAPHIC REF	PART NUMBER	QTY	PART NAME 1 2 3 4 5 6 (PRODUCT LEVEL)	SEE PAGE
	1	1	**177-6315**	14	PLUG	
	2	1	**352-7064**	6	CAP	
	3	1	**507-4837**	1	FRAME AS-UPPER	

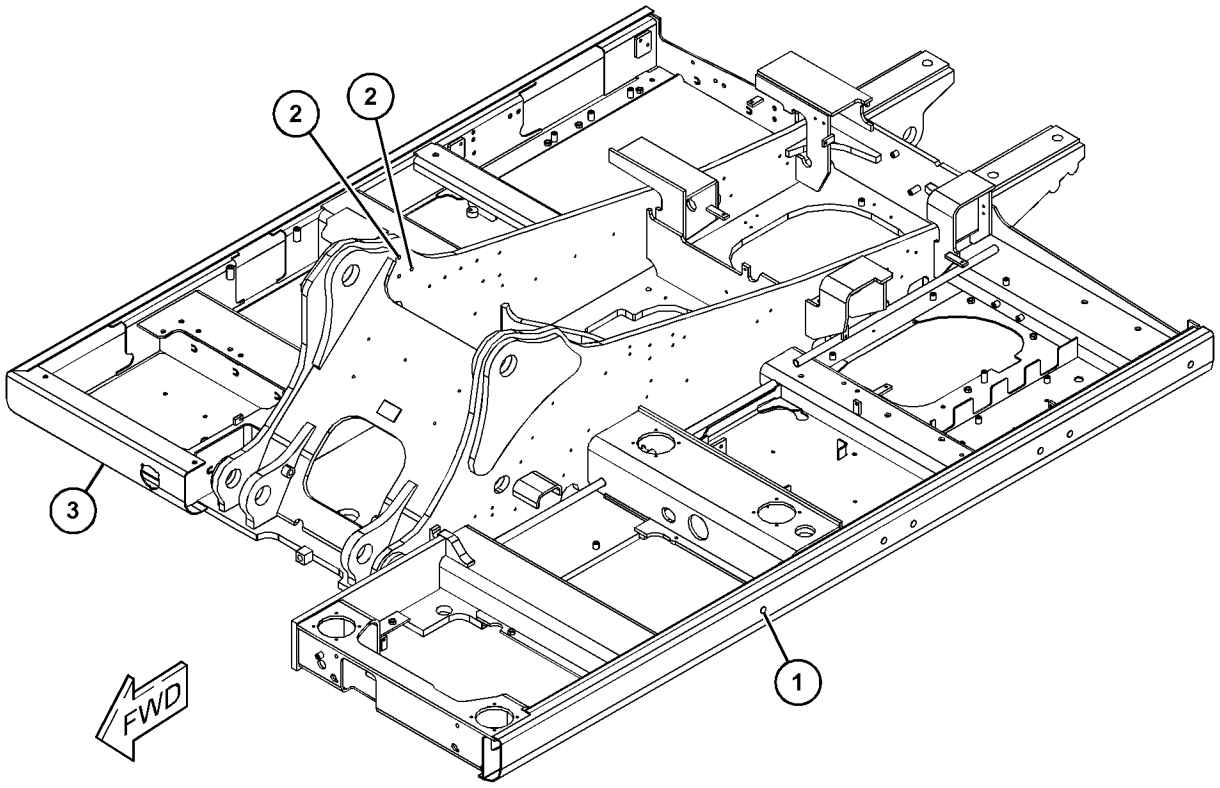

GRAPHIC #1 <END> g06230961

486-7405 GEAR & BEARING GP-SWING

S/N: BR61-UP

PART OF 489-3466 GEAR & BEARING GP-SWING

SMCS-7063 **i07362551**

NOTE	REF NO	GRAPHIC REF	PART NUMBER	QTY	PART NAME 1 2 3 4 5 6 (PRODUCT LEVEL)	SEE PAGE
	1	1	**3B-8489**	1	FITTING-GREASE (1/8-27 PTF)	
	2	1	**352-7064**	1	CAP	
	3	1	**227-6071**	1	SEAL-DUST	
E	4	1	**148-4685**		SEAL (368-CM)	

E - ORDER BY THE CENTIMETER

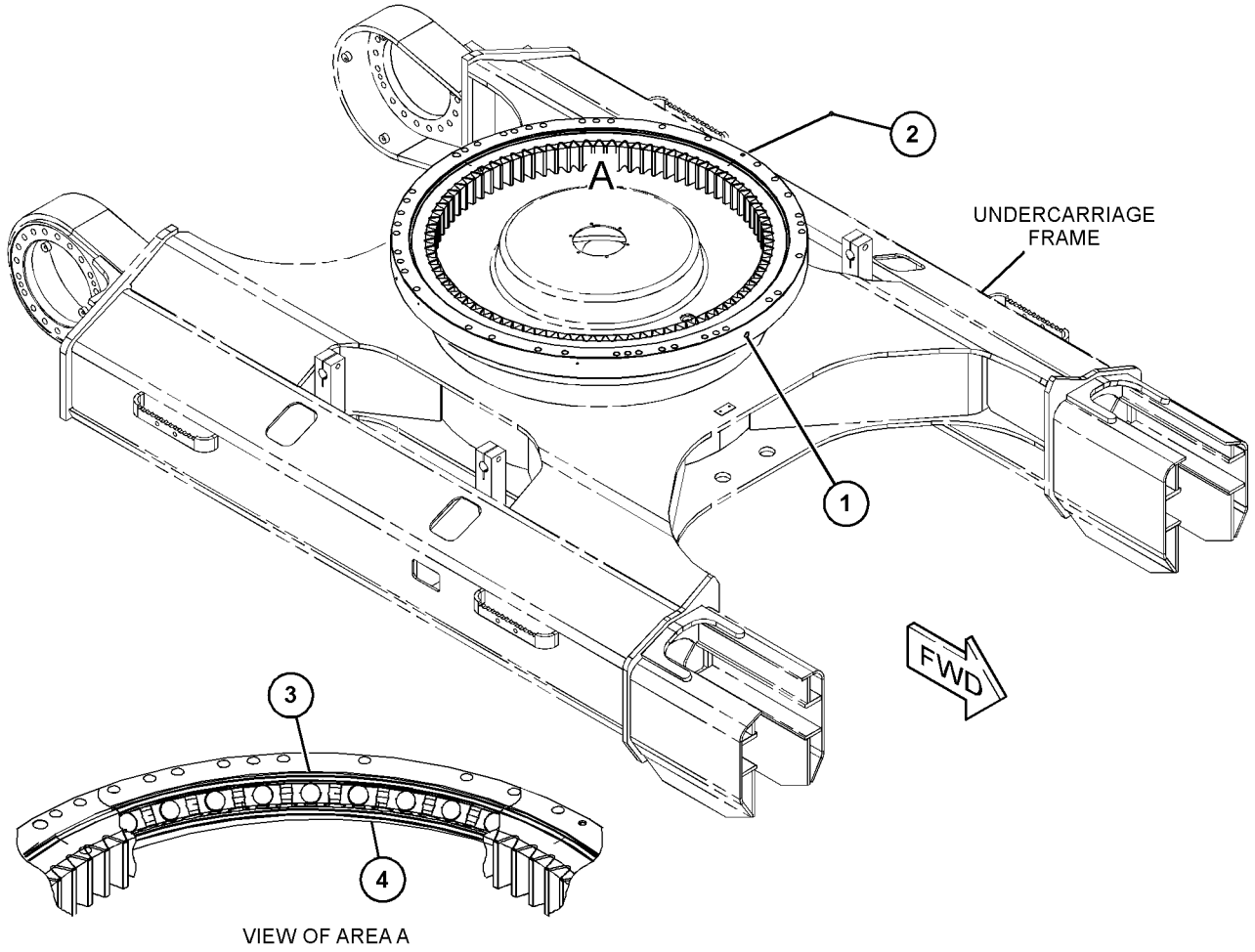

GRAPHIC #1 <END> g06229108

489-3466 GEAR & BEARING GP-SWING

S/N: BR61-UP

PART OF 532-9515, 532-9518, 556-2899, 556-2902 DISTRIBUTION AR

SMCS-7063 **i07350537**

NOTE	REF NO	GRAPHIC REF	PART NUMBER	QTY	PART NAME 1 2 3 4 5 6 (PRODUCT LEVEL)	SEE PAGE
	1	1	**3B-8489**	1	FITTING-GREASE (1/8-27 PTF)	
	2	1	**5K-9243**	2	ELBOW-FLARED	
	3	1	**7Y-1647**	1	GASKET	
	4	1	**148-4689**	1	TUBE AS	
	5	1	**227-6105**	1	BOOT	
M	6	1	**145-9278**	40	BOLT (M20X2.5X90-MM)	
Y	7	1	**486-7405**	1	GEAR & BEARING GP-SWING	323
M	8	1	**5Q-3560**	37	BOLT (M20X2.5X110-MM)	
	9	1	**468-5306**	40	SPACER (20.5X38X34-MM THK)	
	10	1	**492-2153**	1	PLATE AS	
	11	1	**096-4902**	1	DOWEL	
	12	1	**148-4703**	1	COVER	
	13	1	**148-4704**	1	GASKET	
	14	1	**171-9464**	37	SPACER (20.6X38X6-MM THK)	
	15	1	**4N-9170**	2	CLIP	
	16	1	**7Y-1648**	1	STRIP	
	17	1	**7Y-1650**	1	CLAMP-HOSE	
	18	1	**8T-4121**	14	WASHER-HARD (11X21X2.5-MM THK)	
M	19	1	**8T-4136**	12	BOLT (M10X1.5X25-MM)	
M	20	1	**8T-4137**	2	BOLT (M10X1.5X20-MM)	
M	21	1	**8T-4199**	2	BOLT (M8X1.25X12-MM)	
BF		1	**1U-8846**		SEALANT-GASKET	

B - USE AS REQUIRED
F - NOT SHOWN
M - METRIC PART
Y - SEPARATE ILLUSTRATION

489-3466 **GEAR & BEARING GP-SWING** (contd.) **i07350537**

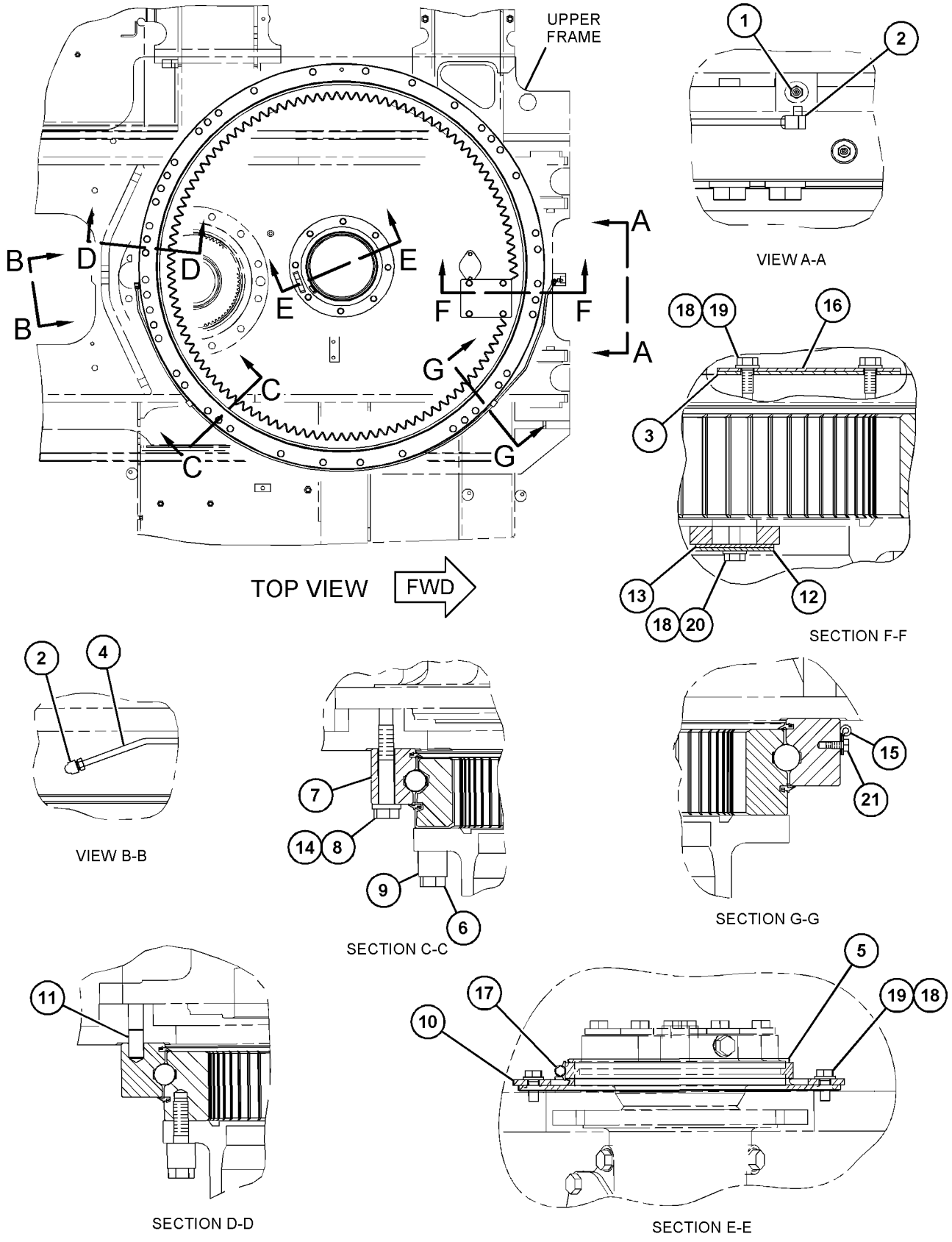

GRAPHIC #1 <END> g06228020

489-3802 GUARD GP-BOTTOM

S/N: BR61-UP

SMCS-7153 **i07365658**

NOTE	REF NO	GRAPHIC REF	PART NUMBER	QTY	PART NAME 1 2 3 4 5 6 (PRODUCT LEVEL)	SEE PAGE
	1	1	**453-8030**	42	BOLT AS	
	2	1	**490-9452**	1	SHEET	
	3	1	**490-9453**	1	SHEET	
	4	1	**490-9455**	1	PLATE	
	5	1	**503-0849**	1	PLATE AS	
	6	1	**505-7156**	1	SHEET AS	
	7	1	**508-9726**	1	SHEET	
	8	1	**510-3417**	1	SHEET	
	9	1	**538-8472**	1	PLATE AS	
	10	1	**538-8473**	1	PLATE	

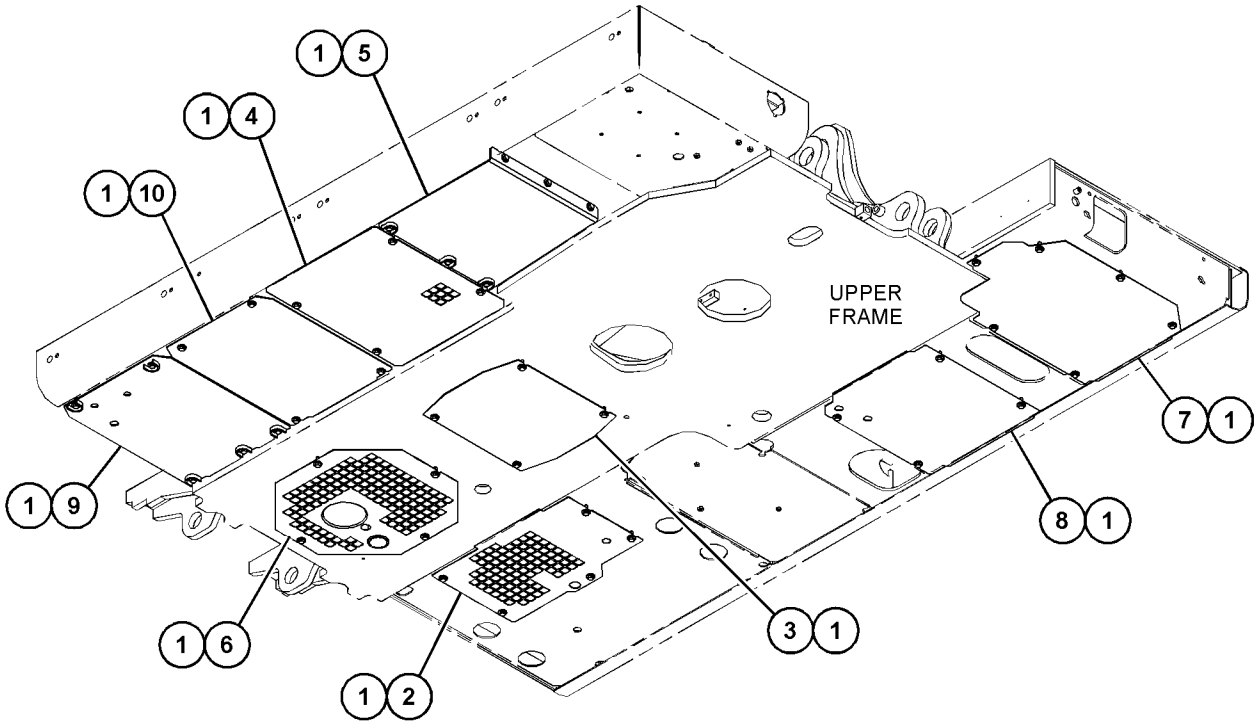

(VIEWED FROM BOTTOM)

GRAPHIC #1 <END> g06232953

489-3803 GUARD GP-BOTTOM–HEAVY-DUTY

S/N: BR61-UP

SMCS-7153 **i07363222**

NOTE	REF NO	GRAPHIC REF	PART NUMBER	QTY	PART NAME 1 2 3 4 5 6 (PRODUCT LEVEL)	SEE PAGE
	1	1	**453-8030**	42	BOLT AS	
	2	1	**486-7064**	1	PLATE AS	
	3	1	**503-0847**	1	PLATE AS	
	4	1	**503-0848**	1	PLATE AS	
	5	1	**503-0849**	1	PLATE AS	
	6	1	**503-0850**	1	PLATE AS	
	7	1	**505-7157**	1	PLATE AS	
	8	1	**508-9619**	1	PLATE AS	
	9	1	**538-8471**	1	PLATE AS	
	10	1	**538-8472**	1	PLATE AS	

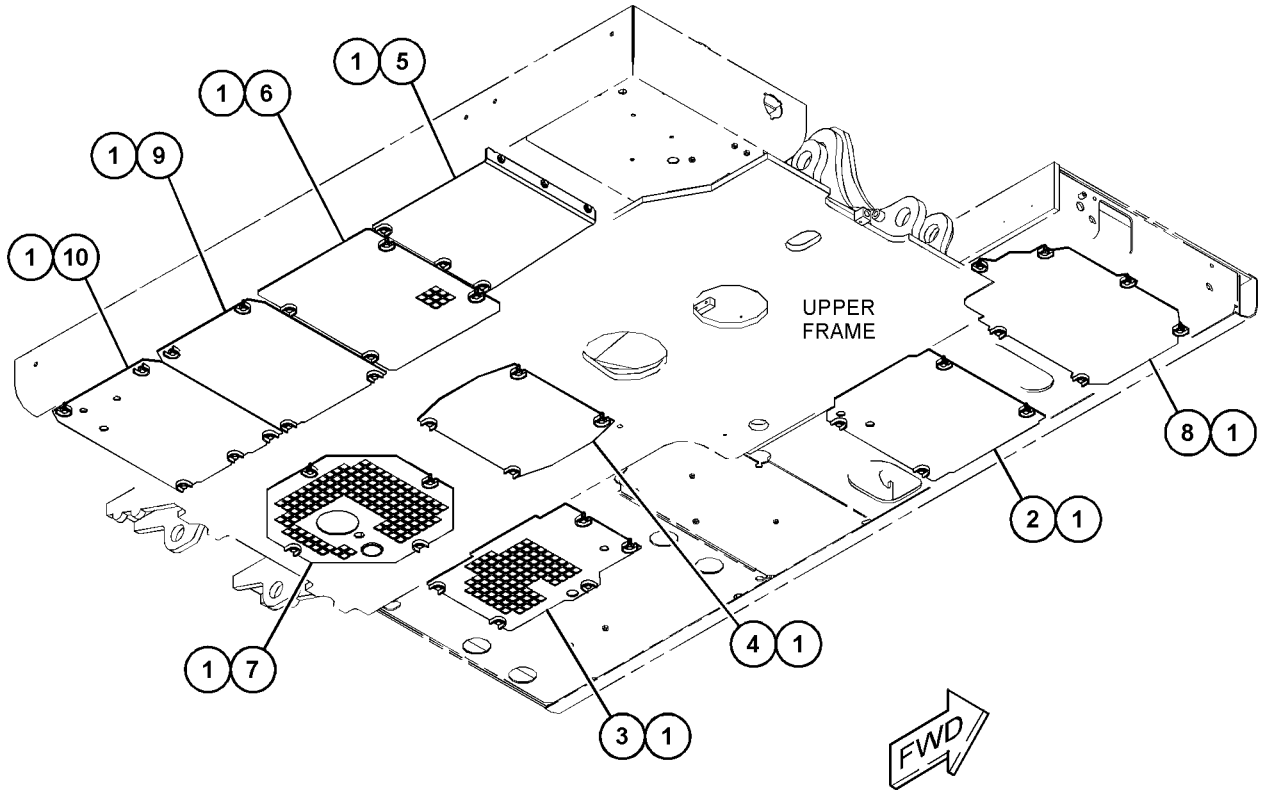

(VIEWED FROM BOTTOM)

GRAPHIC #1 <END> g06234053

134-8875 GUARD GP-SWIVEL

S/N: BR61-UP

SMCS-7183 **i06917015**

NOTE	REF NO	GRAPHIC REF	PART NUMBER	QTY	PART NAME 1 2 3 4 5 6 (PRODUCT LEVEL)	SEE PAGE
	1	1	**134-8876**	1	PLATE AS	
	2	1	**134-8878**	1	PLATE AS	
M	3	1	**8C-8992**	5	BOLT-LOCKING (M12X1.75X30-MM)	
	4	1	**5P-1076**	5	WASHER-HARD (13.5X30X4-MM THK)	

M - METRIC PART

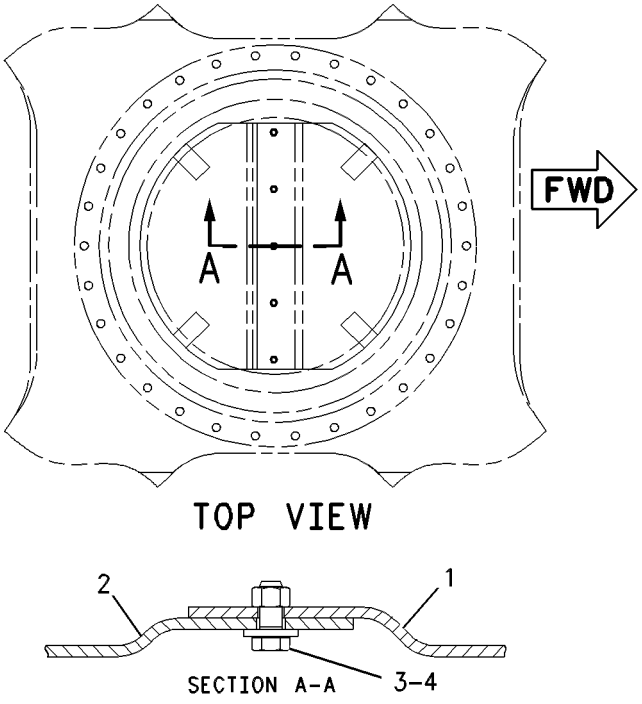

GRAPHIC #1 <END> g00390432

508-9617 HANDHOLD GP–MOUNTING

S/N: BR61-UP

SMCS-7256 **i07352507**

NOTE	REF NO	GRAPHIC REF	PART NUMBER	QTY	PART NAME 1 2 3 4 5 6 (PRODUCT LEVEL)	SEE PAGE
	1	1	**135-8575**	3	BOLT AS	
	2	1	**508-9620**	1	HANDLE AS	
M		1	**8T-3490**	2	NUT-WELD (M10X1.5-THD)	
	3	1	**527-0090**	1	HANDLE AS	
	4	1	**8T-4121**	2	WASHER-HARD (11X21X2.5-MM THK)	
M	5	1	**8T-4136**	2	BOLT (M10X1.5X25-MM)	

M - METRIC PART

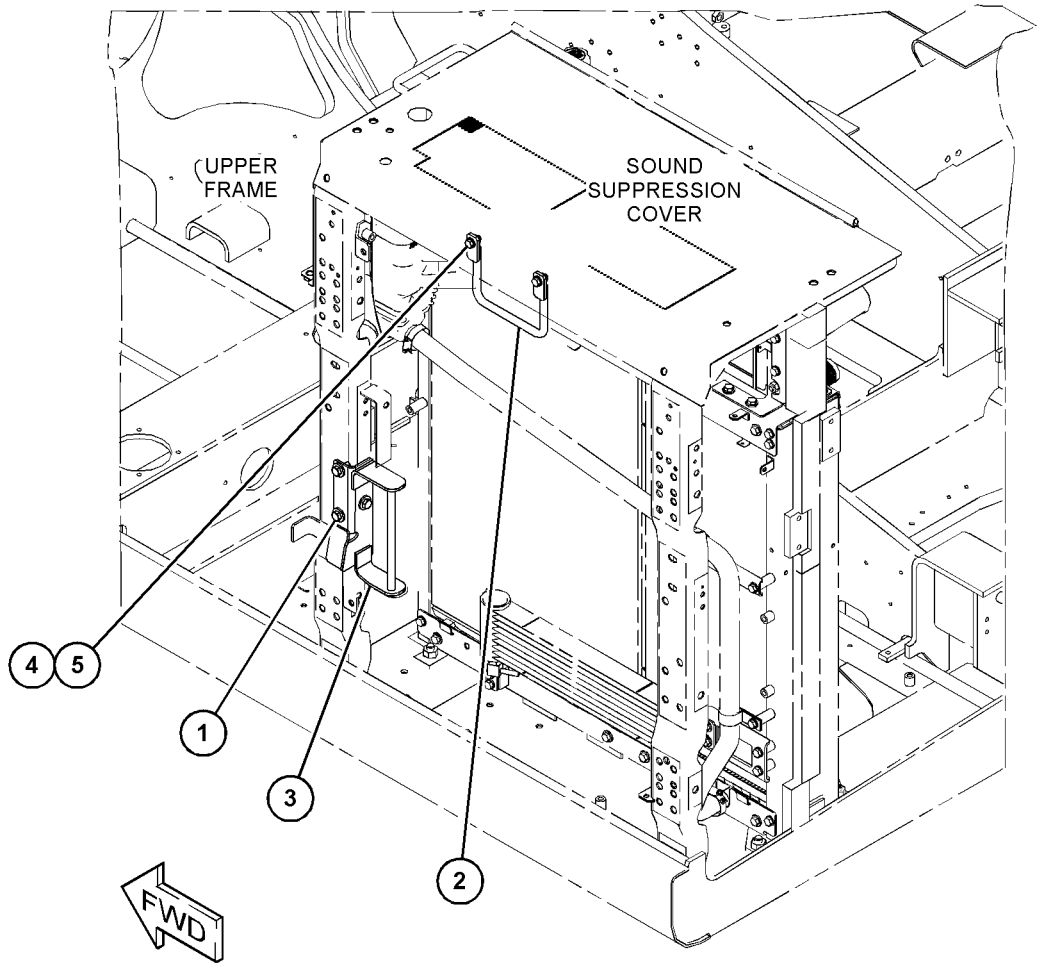

GRAPHIC #1 <END> g06229909

486-7085 HANDRAIL GP

S/N: BR61-UP

PART OF 505-7175, 556-6467 ENCLOSURE AR

SMCS-7256 **i07360357**

NOTE	REF NO	GRAPHIC REF	PART NUMBER	QTY	PART NAME 1 2 3 4 5 6 (PRODUCT LEVEL)	SEE PAGE
	1	1	**135-8575**	4	BOLT AS	
	2	1	**135-8578**	2	BOLT AS	
	3	1	**356-9301**	2	SPACER (13.8X30X60-MM THK)	
	4	1	**503-0853**	1	HANDRAIL AS	
	5	1	**503-0854**	1	HANDRAIL AS	
	6	1	**356-9305**	4	SPACER (13.5X30X40-MM THK)	
	7	1	**8T-4223**	6	WASHER-HARD (13.5X25.5X3-MM THK)	
M	8	1	**8T-5041**	2	BOLT (M12X1.75X120-MM)	
M	9	1	**8T-6868**	4	BOLT (M12X1.75X80-MM)	

M - METRIC PART

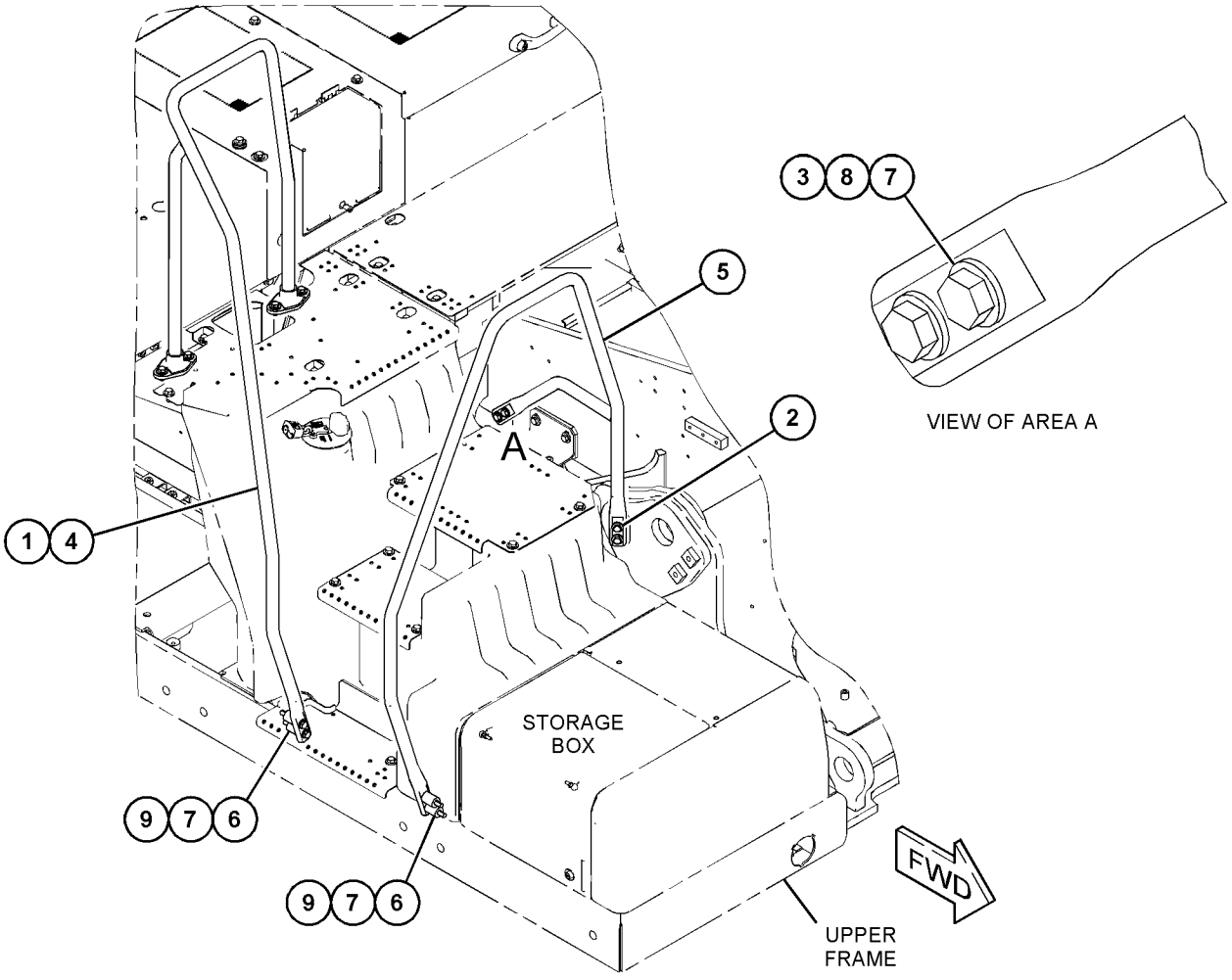

GRAPHIC #1 <END> g06230507

486-7089 HOOD & GUARD GP

S/N: BR61-10000

PART OF 490-7663 EXCAVATOR AR

SMCS-7251, 7276 **i07366344**

NOTE	REF NO	GRAPHIC REF	PART NUMBER	QTY	PART NAME 1 2 3 4 5 6 (PRODUCT LEVEL)	SEE PAGE
M	1	1	**5C-7261**	2	NUT (M8X1.25-THD)	
	2	1	**5P-1076**	1	WASHER-HARD (13.5X30X4-MM THK)	
	3	1	**5P-4116**	2	WASHER-HARD (8.8X20.5X2-MM THK)	
	4	1,2	**7Y-2853**	8	SPACER (13X38X5-MM THK)	
	5	1,2	**7Y-2854**	6	SPACER (24X38X3-MM THK)	
	6	2	**7Y-8990**	2	SPACER (24X38X1.5-MM THK)	
	7	1,2	**8T-4121**	20	WASHER-HARD (11X21X2.5-MM THK)	
M	8	1	**8T-4133**	6	NUT (M10X1.5-THD)	
M	9	1,2	**8T-4136**	14	BOLT (M10X1.5X25-MM)	
M	10	1	**8T-4184**	1	BOLT (M12X1.75X45-MM)	
	11	1	**135-8573**	4	BOLT AS	
	12	1,2	**135-8575**	119	BOLT AS	
	13	1,2	**135-8577**	8	BOLT AS	
	14	1	**170-3016**	8	SPACER (19X32X2-MM THK)	
	15	1	**170-9360**	2	GROMMET	
	16	1,2	**327-2886**	4	STRIKER AS	
	17	1	**343-2465**	6	BUMPER	
	18	1	**498-4576**	1	SPRING AS-GAS (ENGINE HOOD)	
		1	**265-8463**	2	STUD-BALL (M8X1.25X16-MM)	
		1	**549-4357**	1	FILM-WARNING (HIGH PRESSURE, READ OMM)	
	19	2	**505-7110**	1	SUPPORT AS	
	20	2	**505-7116**	1	SUPPORT AS	
	21	2	**505-7118**	1	SUPPORT AS	
	22	2	**505-7119**	1	SUPPORT AS	
	23	2	**505-7125**	1	SUPPORT AS	
Y	24	2	**505-7126**	1	SHEET AS-SOUND SUPPRESSION	348
Y	25	2	**505-7131**	1	SHEET AS-SOUND SUPPRESSION	349
	26	1	**505-7180**	1	SHEET AS	
	27	1	**505-7183**	1	SHEET AS	
D		1	**101-9848**		SEAL (0.3-M)	
	28	1	**505-7185**	1	SUPPORT AS	
	29	2	**505-7186**	1	SUPPORT AS	
	30	2	**505-7187**	1	SUPPORT AS	
		2	**508-9686**	1	LINER	
	31	2	**508-9554**	1	SUPPORT AS	
	32	2	**508-9555**	1	SHEET AS	
		2	**508-9692**	1	LINER	
Y	33	2	**508-9560**	1	SHEET AS-SOUND SUPPRESSION	350
	34	1	**508-9583**	2	BRACKET AS	
	35	2	**508-9584**	1	BRACKET AS	
	36	2	**508-9683**	1	BRACKET	
	37	2	**508-9685**	1	LINER	
	38	2	**508-9728**	3	ROD	
	39	1	**516-7545**	1	LINER	
	40	1	**516-7546**	1	LINER	
	41	2	**524-7408**	3	CLIP	
Y	42	1	**525-0749**	1	DOOR GP-ACCESS (RADIATOR)	312
Y	43	1	**525-0751**	1	DOOR GP-ACCESS (PUMP COMPARTMENT)	313

486-7089 **HOOD & GUARD GP** (contd.) **i07366344**

NOTE	REF NO	GRAPHIC REF	PART NUMBER	QTY	PART NAME 1 2 3 4 5 6 (PRODUCT LEVEL)	SEE PAGE
Y	44	1	**526-2620**	1	COVER AS-SOUND SUPPRESSION	306
Y	45	2	**526-3220**	1	SHEET AS-SOUND SUPPRESSION	351
	46	2	**526-3222**	1	SHEET AS	
		2	**508-9701**	1	LINER	
	47	1	**526-3244**	1	COVER AS	
	48	2	**526-3983**	1	SUPPORT AS	
	49	2	**526-3984**	1	SUPPORT AS	
	50	1	**526-3985**	1	SUPPORT AS	
	51	1	**526-3986**	1	SUPPORT AS	
	52	1	**526-3990**	1	SUPPORT AS	
	53	1	**526-5208**	1	SUPPORT AS-HOOD	
	54	1	**526-9415**	1	SHEET	
	55	2	**527-0507**	1	SUPPORT AS	
	56	1	**527-0545**	1	COVER AS	
	57	1	**527-0639**	1	SHEET AS	
		1	**527-9199**	1	LINER	
D		1	**101-9848**		SEAL (0.2-M)	
	58	1	**527-1760**	1	COVER AS	
	59	2	**527-6534**	1	LINER	
B	60	1	**527-7804**	2	SHIM (1-MM THK)	
B	61	1	**527-7805**	2	SHIM (2-MM THK)	
Y	62	1	**528-3453**	1	COVER GP-HOOD	308
	63	2	**538-4073**	1	SHEET AS	
D		2	**101-9848**		SEAL (0.5-M)	
Y	64	1	**541-9809**	1	COVER AS-SOUND SUPPRESSION	307
Y	65	1	**541-9810**	1	HOOD GP-ENGINE (HINGED)	341
Y	66	1	**551-1662**	1	COVER GP-SOUND SUPPRESSION	309

B - USE AS REQUIRED
D - ORDER BY THE METER
M - METRIC PART
Y - SEPARATE ILLUSTRATION

486-7089 **HOOD & GUARD GP (**contd.**)** **i07366344**

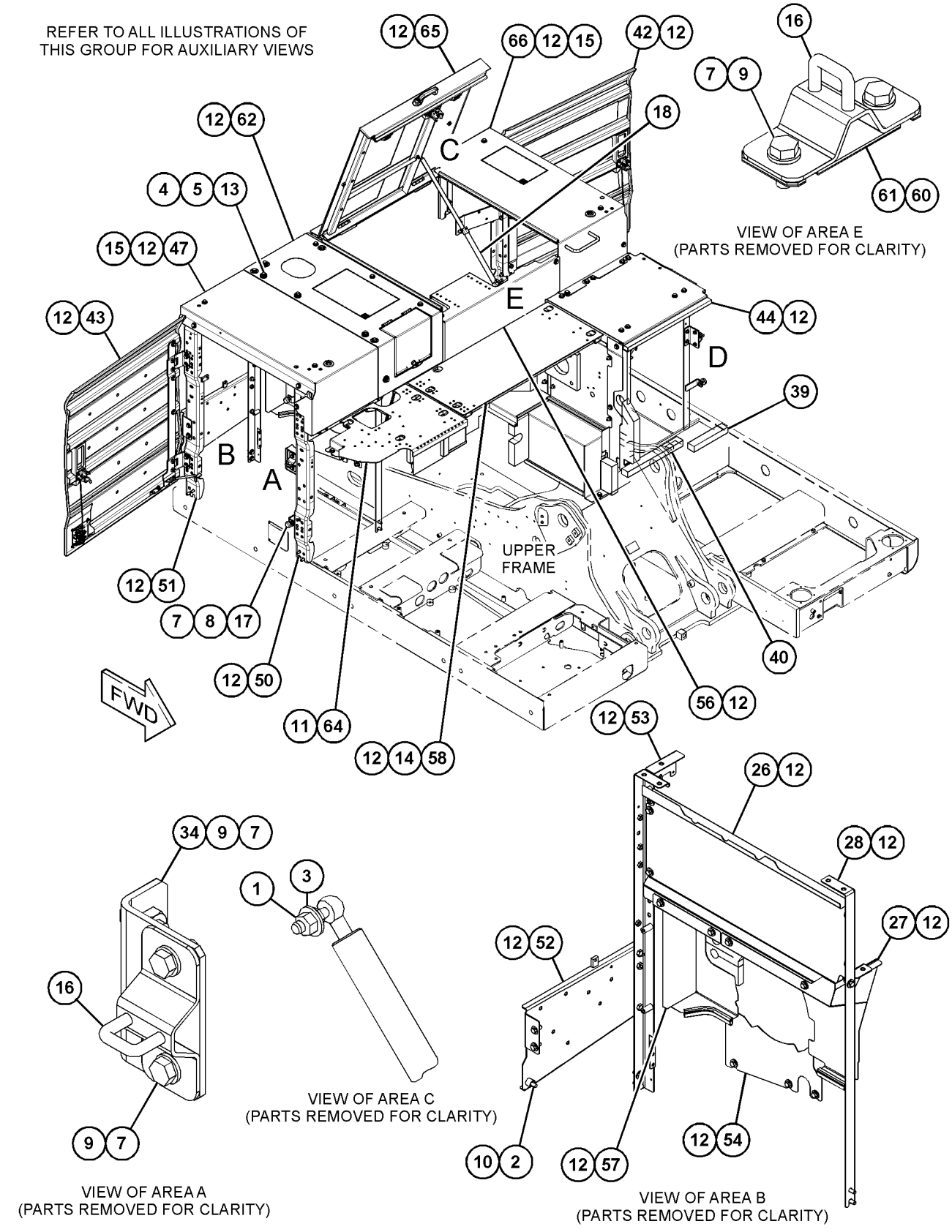

GRAPHIC #1 g06281827

486-7089 **HOOD & GUARD GP** (contd.) **i07366344**

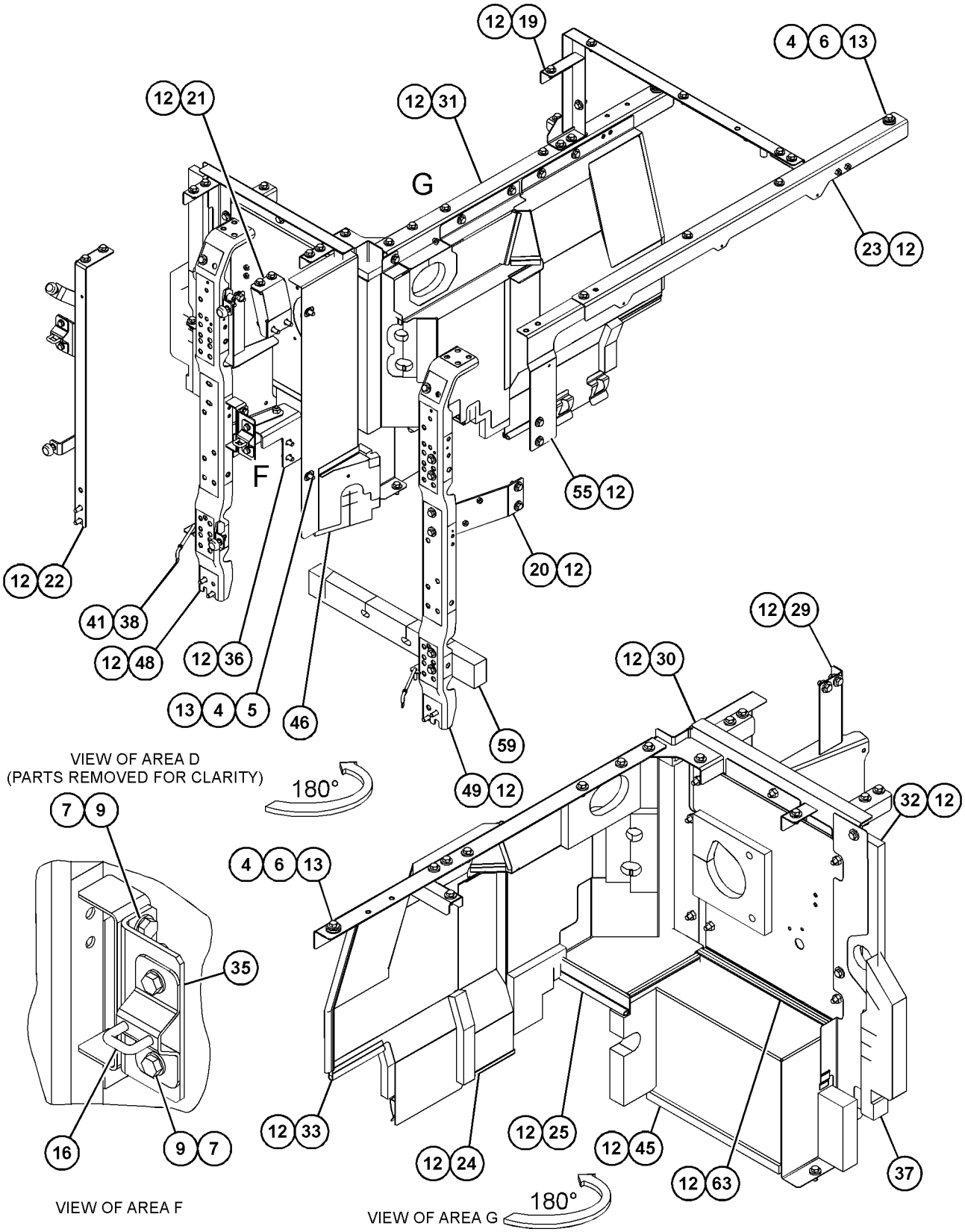

GRAPHIC #2 <END> g06281828

527-1416 HOOD & GUARD GP

S/N: BR61-UP

PART OF 490-7697 INSTALLATION AR

SMCS-7251, 7276 **i07366560**

NOTE	REF NO	GRAPHIC REF	PART NUMBER	QTY	PART NAME 1 2 3 4 5 6 (PRODUCT LEVEL)	SEE PAGE
Y	1	1	**527-1417**	1	DOOR GP-ACCESS	315
	2	1	**135-8575**	4	BOLT AS	

Y - SEPARATE ILLUSTRATION

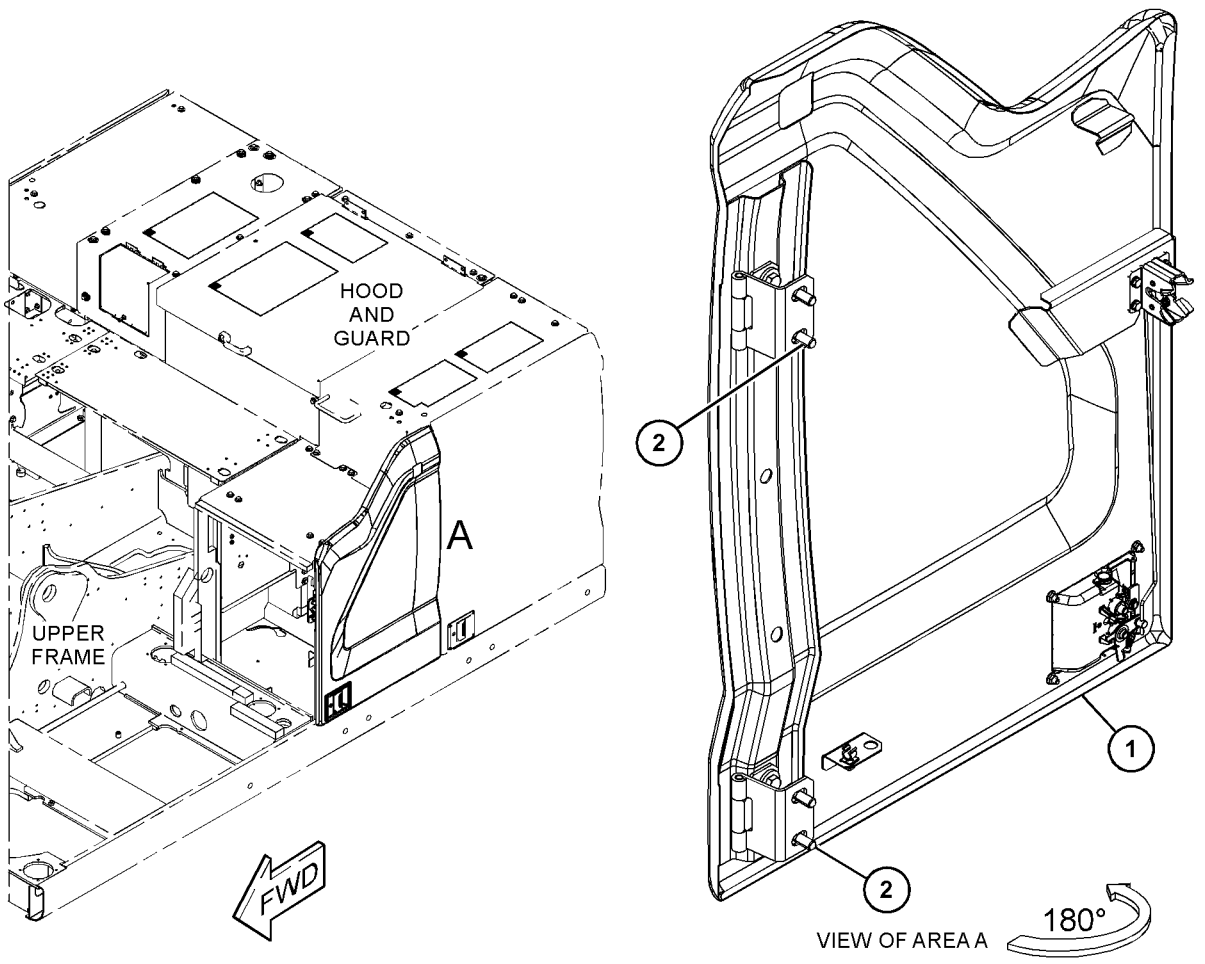

GRAPHIC #1 <END> g06231277

556-6464 HOOD & GUARD GP

S/N: BR610001-UP

PART OF 490-7663 EXCAVATOR AR

SMCS-7251, 7276 **i07460442**

NOTE	REF NO	GRAPHIC REF	PART NUMBER	QTY	PART NAME 1 2 3 4 5 6 (PRODUCT LEVEL)	SEE PAGE
	1	2	**5P-4116**	2	WASHER-HARD (8.8X20.5X2-MM THK)	
	2	1,2	**7Y-2853**	8	SPACER (13X38X5-MM THK)	
	3	1,2	**7Y-2854**	6	SPACER (24X38X3-MM THK)	
	4	2	**7Y-8990**	2	SPACER (24X38X1.5-MM THK)	
	5	1	**170-3016**	8	SPACER (19X32X2-MM THK)	
	6	1	**170-9360**	2	GROMMET	
	7	2,3	**343-2465**	6	BUMPER	
	8	1	**135-8573**	4	BOLT AS	
	9	1,2,3	**135-8575**	120	BOLT AS	
	10	1,2	**135-8577**	8	BOLT AS	
	11	2,3	**327-2886**	4	STRIKER AS	
	12	2,3	**3B-4618**	3	PIN-COTTER	
	13	2	**498-4576**	1	SPRING AS-GAS	
		2	**265-8463**	2	STUD-BALL (M8X1.25X16-MM)	
		2	**549-4357**	1	FILM-WARNING (HIGH PRESSURE, READ OMM)	
	14	2	**505-7110**	1	SUPPORT AS	
	15	2	**505-7116**	1	SUPPORT AS	
	16	2	**505-7118**	1	SUPPORT AS	
	17	2	**505-7119**	1	SUPPORT AS	
	18	2	**505-7125**	1	SUPPORT AS	
Y	19	3	**505-7126**	1	SHEET AS-SOUND SUPPRESSION	348
Y	20	3	**505-7131**	1	SHEET AS-SOUND SUPPRESSION	349
	21	2	**505-7180**	1	SHEET AS	
	22	3	**505-7183**	1	SHEET AS	
D		3	**101-9848**	3	SEAL (0.3-M)	
	23	2	**505-7185**	1	SUPPORT AS	
	24	2	**505-7186**	1	SUPPORT AS	
	25	2	**505-7187**	1	SUPPORT AS	
		2	**508-9686**	1	LINER	
	26	2	**508-9555**	1	SHEET AS	
		2	**508-9692**	1	LINER	
	27	2,3	**508-9583**	2	BRACKET AS	
	28	2	**508-9584**	1	BRACKET AS	
	29	2	**508-9683**	1	BRACKET	
	30	2	**508-9685**	1	LINER	
	31	2	**516-7545**	1	LINER	
	32	2	**516-7546**	1	LINER	
Y	33	1	**526-2620**	1	COVER AS-SOUND SUPPRESSION	306
Y	34	3	**526-3220**	1	SHEET AS-SOUND SUPPRESSION	351
	35	2	**526-3222**	1	SHEET AS	
		2	**508-9701**	1	LINER	
	36	1	**526-3244**	1	COVER AS	
	37	2	**526-3984**	1	SUPPORT AS	
	38	2	**526-3985**	1	SUPPORT AS	
	39	2	**526-3986**	1	SUPPORT AS	
	40	3	**526-9415**	1	SHEET	
	41	2	**527-0507**	1	SUPPORT AS	

556-6464 **HOOD & GUARD GP (**contd.**)** **i07460442**

NOTE	REF NO	GRAPHIC REF	PART NUMBER	QTY	PART NAME 1 2 3 4 5 6 (PRODUCT LEVEL)	SEE PAGE
	42	2	**527-0545**	1	COVER AS	
B	43	2	**527-7804**	2	SHIM (1-MM THK)	
B	44	2	**527-7805**	2	SHIM (2-MM THK)	
Y	45	1	**528-3453**	1	COVER GP-HOOD	308
	46	3	**538-4073**	1	SHEET AS	
D		3	**101-9848**		SEAL (0.05-M)	
		3	**508-9694**	1	LINER	
Y	47	1	**541-9809**	1	COVER AS-SOUND SUPPRESSION	307
Y	48	1	*541-9810*	1	HOOD GP-ENGINE (HINGED)	341
	49	2,3	**546-4979**	3	ROD AS	
					(EACH INCLUDES)	
		2,3	**4B-4278**	1	WASHER (10.2X20.5X1.6-MM THK)	
	50	2	**548-8354**	1	SUPPORT AS	
Y	51	1	**551-1662**	1	COVER GP-SOUND SUPPRESSION	309
	52	2	**555-5728**	1	LINER	
Y	53	1	**556-6475**	1	DOOR GP-ACCESS (RADIATOR)	317
Y	54	2	**556-6477**	1	DOOR GP-ACCESS (PUMP COMPARTMENT)	318
	55	2	**558-4976**	1	SUPPORT AS	
	56	3	**558-4977**	1	SUPPORT AS	
	57	2	**558-4978**	1	SUPPORT AS	
Y	58	3	**558-4979**	1	SHEET AS-SOUND SUPPRESSION	352
	59	3	**558-4981**	1	SHEET AS-SOUND SUPPRESSION	
D		3	**101-9848**		SEAL (0.2-M)	
		3	**527-9199**	1	LINER	
	60	1	**558-4985**	1	COVER AS	
M	61	2	**5C-7261**	2	NUT (M8X1.25-THD)	
	62	2,3	**8T-4121**	23	WASHER-HARD (11X21X2.5-MM THK)	
M	63	2,3	**8T-4133**	6	NUT (M10X1.5-THD)	
M	64	2,3	**8T-4136**	14	BOLT (M10X1.5X25-MM)	

B - USE AS REQUIRED
D - ORDER BY THE METER
M - METRIC PART
Y - SEPARATE ILLUSTRATION

556-6464 **HOOD & GUARD GP** (contd.) **i07460442**

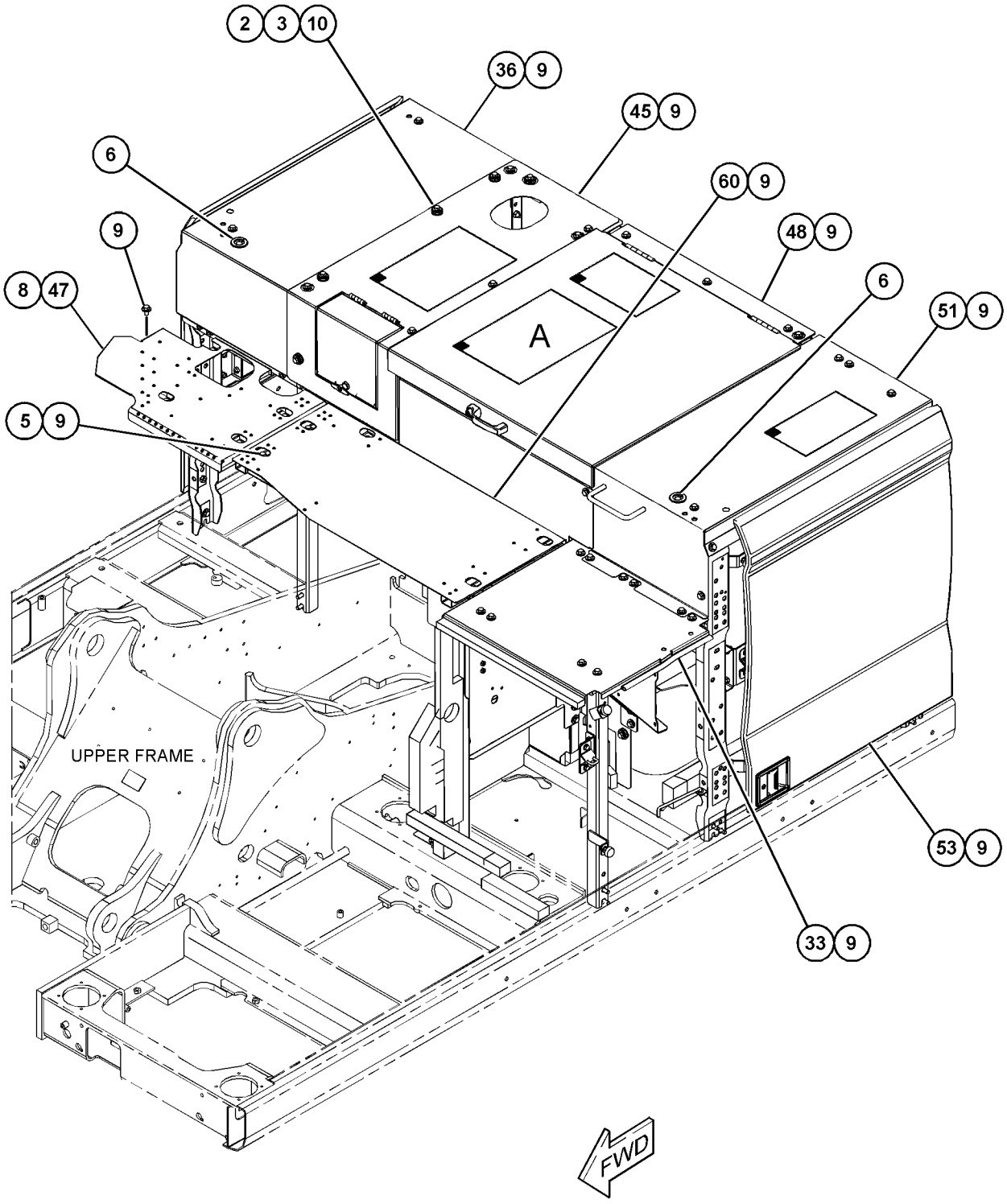

REFER TO ALL ILLUSTRATIONS OF
THIS GROUP FOR AUXILIARY VIEWS

GRAPHIC #1 g06328971

556-6464 **HOOD & GUARD GP (**contd.**)** **i07460442**

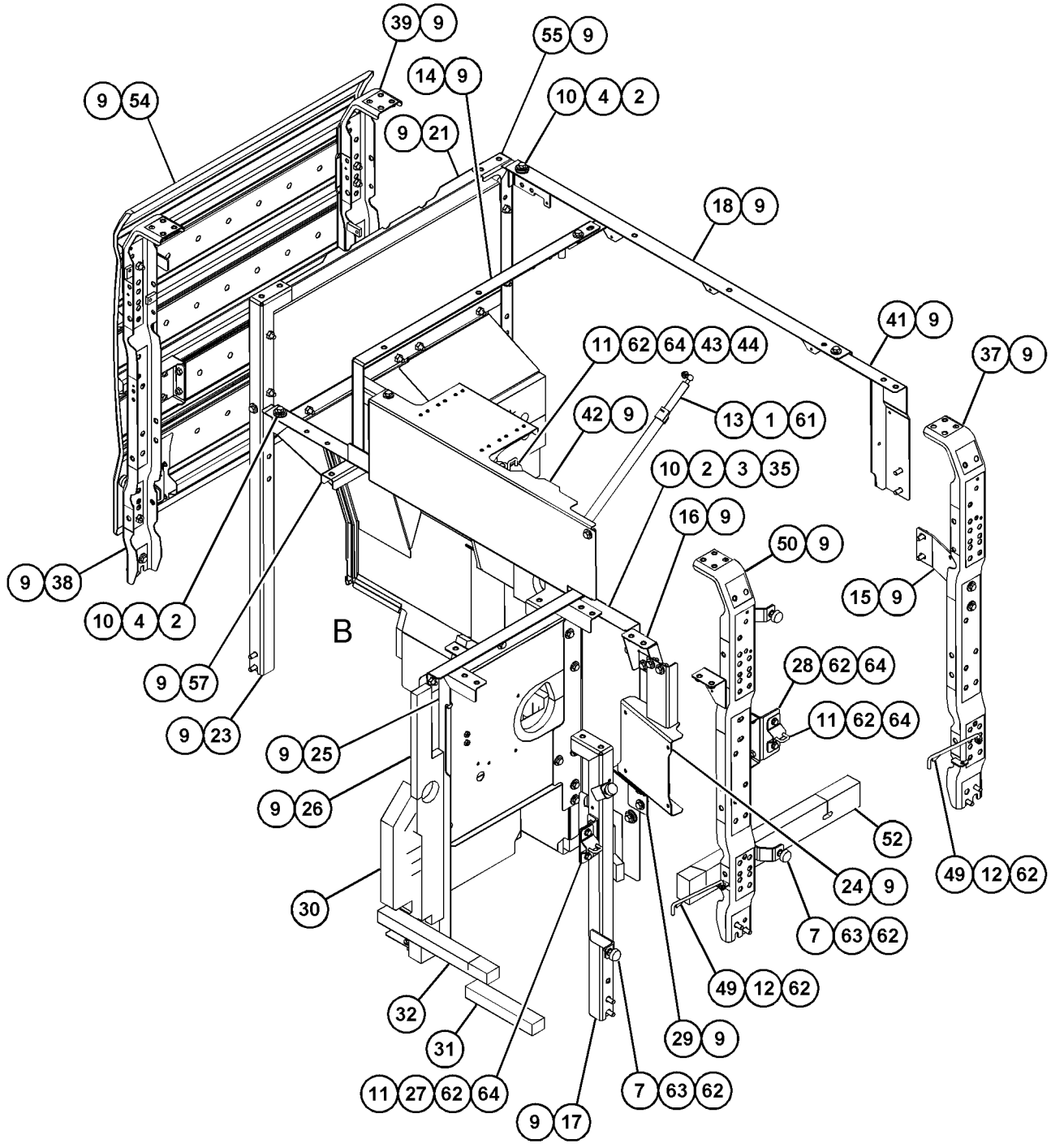

REFER TO ALL ILLUSTRATIONS OF THIS GROUP FOR AUXILIARY VIEWS

VIEW OF AREA A
(PARTS REMOVED FOR CLARITY)

GRAPHIC #2

g06329117

556-6464 **HOOD & GUARD GP (**contd.**)** **i07460442**

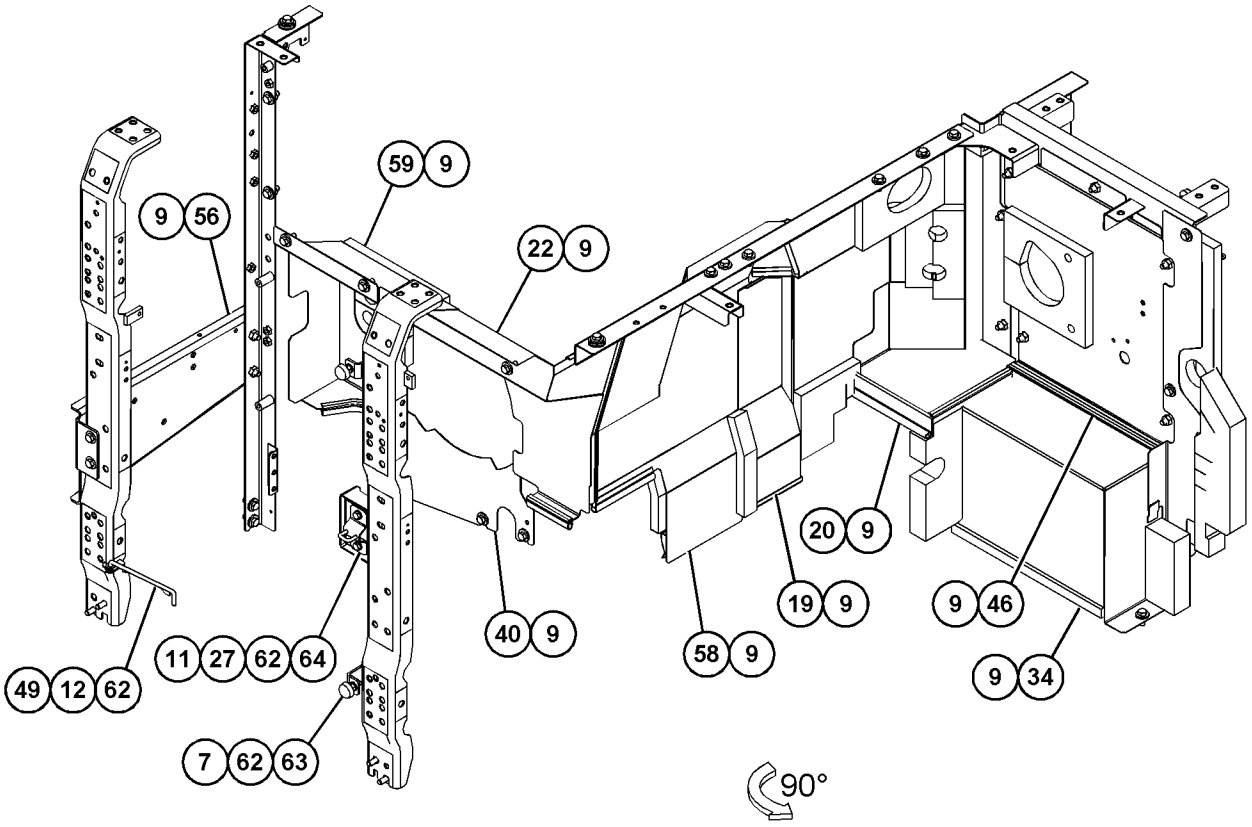

VIEW OF AREA B
(PARTS REMOVED FOR CLARITY)

GRAPHIC #3 <END> g06329245

541-9810 HOOD GP-ENGINE

S/N: BR61-UP

PART OF 486-7089, 556-6464 HOOD & GUARD GP

SMCS-7251 **i07366364**

NOTE	REF NO	GRAPHIC REF	PART NUMBER	QTY	PART NAME 1 2 3 4 5 6 (PRODUCT LEVEL)	SEE PAGE
	1	1	*542-3136*	1	HOOD AS	
	1A	1	**099-7857**	2	HINGE	
	2	1	**489-3697**	2	BUMPER	
	3	1	**525-9735**	1	HANDLE AS	
	4	1	**527-7802**	1	LOCK AS	
M	5	1	**5C-9553**	4	BOLT (M6X1X16-MM)	
M	6	1	**8T-4200**	1	BOLT (M8X1.25X16-MM)	
	7	1	**8T-4224**	1	WASHER-HARD (8.8X16X2-MM THK)	
	8	1	**9X-8256**	4	WASHER (6.6X12X2-MM THK)	
D	9	1	**101-9848**		SEAL (1-M)	

D - ORDER BY THE METER
M - METRIC PART

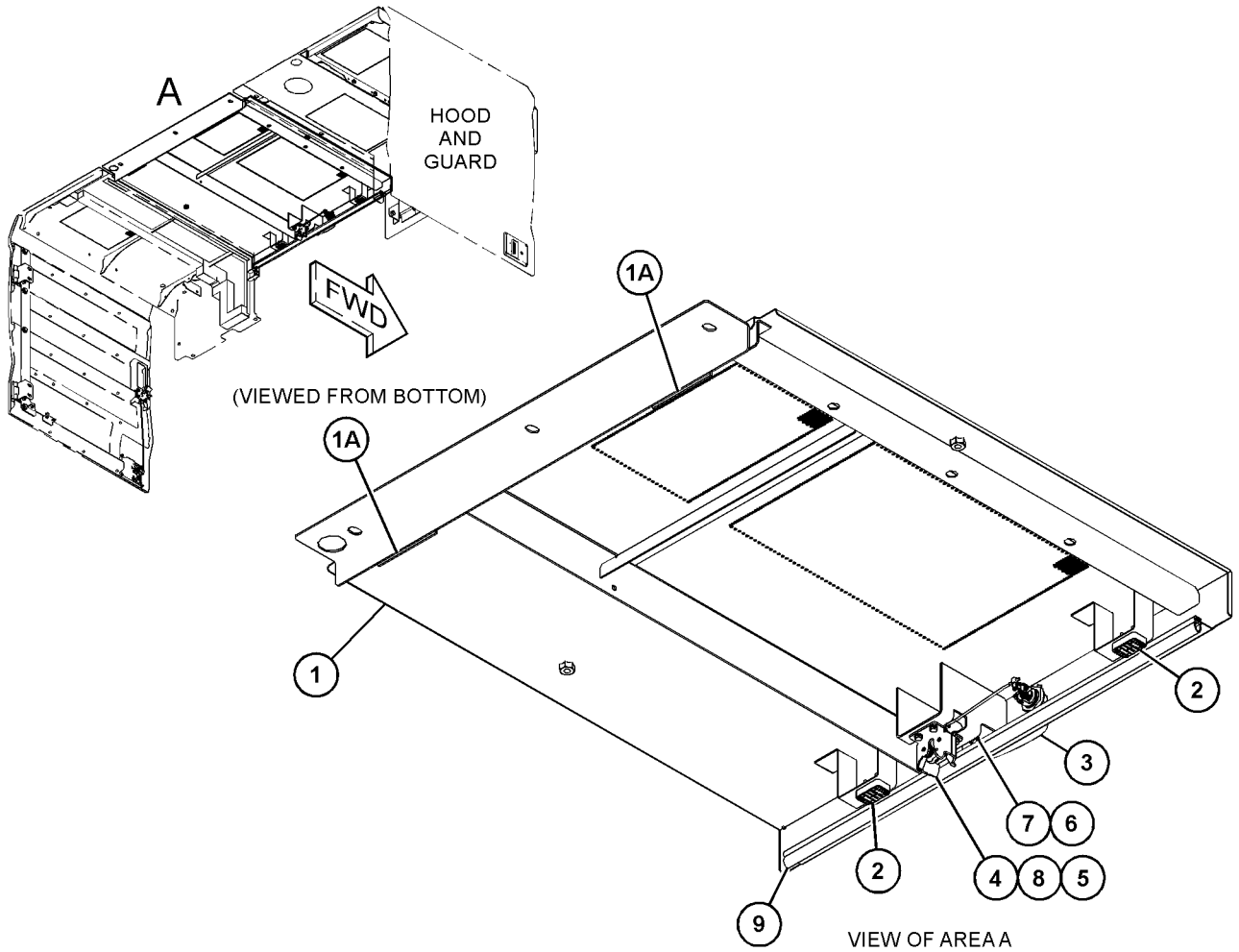

GRAPHIC #1 <END> g06272639

490-7697 INSTALLATION AR—CAMERA

S/N: BR61-UP
360 VISIBILITY

SMCS-7056, 7256, 7348 **i07366534**

NOTE	PART NUMBER	QTY	PART NAME 1 2 3 4 5 6 (PRODUCT LEVEL)	SEE PAGE
Y	*502-7171*	1	CAMERA & MOUNTING GP (REAR VIEW)	139
Y	*502-7172*	1	CAMERA & MOUNTING GP (RIGHT SIDE) (RIGHT SIDE)	140
Y	*502-7173*	1	CAMERA & MOUNTING GP (LEFT SIDE) (LEFT SIDE)	141
Y	*502-7174*	1	CAMERA & MOUNTING GP (FRONT) (FRONT)	142
Y	*527-1424*	1	COVER GP-SOUND SUPPRESSION (HYDRAULIC TANK)	20
Y	*527-1416*	1	HOOD & GUARD GP	335
Y	*490-2699*	1	WIRING GP-CHASSIS (REAR VIEW, CAMERA) (REAR)	241
Y	*490-2700*	1	WIRING GP-CHASSIS (CAMERA, LH)	242
Y	*502-7170*	1	WIRING GP-CHASSIS (RIGHT SIDE) (RIGHT SIDE)	243

Y - SEPARATE ILLUSTRATION

<END>

528-3290 KIT-BUMPER

S/N: BR61-UP
SIDE BUMPER KIT

SMCS-7156 **i07212653**

NOTE	PART NUMBER	QTY	PART NAME 1 2 3 4 5 6 (PRODUCT LEVEL)	SEE PAGE
M	**170-8553**	14	BOLT-SOCKET HEAD (M12X1.75X40-MM)	
	461-7721	2	BUMPER	
	461-7723	2	BUMPER	
	461-7725	1	BUMPER	
	461-7727	1	BUMPER	
	461-7729	1	BUMPER	
M	**455-1179**	14	INSERT-THREADED (M12X1.75-THD)	
	8T-4223	14	WASHER-HARD (13.5X25.5X3-MM THK)	

M - METRIC PART

<END>

471-1985 KIT-GUARD—SWIVEL

S/N: BR61-UP
PROVIDES A STANDARD SWIVEL GUARD UPGRADE
FOR USE WITH REHS8139

SMCS-7153 **i06620788**

NOTE	PART NUMBER	QTY	PART NAME 1 2 3 4 5 6 (PRODUCT LEVEL)	SEE PAGE
M	**8C-8992**	5	BOLT-LOCKING (M12X1.75X30-MM)	
	134-8876	1	PLATE AS	
M	**8T-3597**	5	NUT-WELD (M12X1.75-THD)	
	134-8878	1	PLATE AS	
	5P-1076	5	WASHER-HARD (13.5X30X4-MM THK)	

M - METRIC PART

<END>

528-3291 KIT-GUARD

S/N: BR61-UP

FALLING OBJECTS GUARD SYSTEM KIT

SMCS-7153 **i07199220**

NOTE	PART NUMBER	QTY	PART NAME 1 2 3 4 5 6 (PRODUCT LEVEL)	SEE PAGE
M	**6V-7357**	6	BOLT (M6X1X25-MM)	
M	**8T-4136**	1	BOLT (M10X1.5X25-MM)	
M	**8T-4908**	6	BOLT (M8X1.25X25-MM)	
M	**201-4534**	1	BOLT (M16X2X26-MM)	
M	**447-1706**	2	BOLT (M16X2X130-MM)	
M	**453-2840**	2	BOLT (M16X2X140-MM)	
	493-1088	1	BRACKET AS	
	493-1091	1	BRACKET AS	
	532-7291	1	BRACKET AS	
	127-3947	2	BUMPER	
	543-5303	1	FILM-WARNING (TOP GUARD)	
	543-5304	1	FILM-WARNING (FRONT GUARD)	
	492-0451	1	GUARD AS	
	493-1075	1	GUARD AS	
	4E-1487	2	KNOB	
	8Y-5745	2	LATCH AS	
M	**7Y-0623**	2	LOCKNUT (M16X2-THD)	
M	**096-6331**	4	NUT (M12X1.75-THD)	
	5D-4822	2	RING-RETAINING	
M	**172-5291**	8	SCREW (M10X1.5X30-MM)	
	493-1087	1	SHAFT	
	532-7310	2	SPRING AS-GAS	
	507-4784	2	STRIKER AS	
	493-1072	2	SUPPORT AS	
	9X-8256	6	WASHER (6.6X12X2-MM THK)	
	7X-0515	4	WASHER-HARD (17X35X5-MM THK)	
	8T-4121	9	WASHER-HARD (11X21X2.5-MM THK)	
	8T-4223	4	WASHER-HARD (13.5X25.5X3-MM THK)	
	8T-4224	6	WASHER-HARD (8.8X16X2-MM THK)	
	451-2175	2	WASHER-HARD (17.5X30X3.5-MM THK)	

M - METRIC PART

<END>

528-3292 KIT-GUARD

S/N: BR61-UP

FULL FRONT MESH GUARD KIT

SMCS-7153 **i07199368**

NOTE	PART NUMBER	QTY	PART NAME 1 2 3 4 5 6 (PRODUCT LEVEL)	SEE PAGE
M	**6V-7357**	6	BOLT (M6X1X25-MM)	
M	**8T-4136**	1	BOLT (M10X1.5X25-MM)	
M	**8T-4908**	6	BOLT (M8X1.25X25-MM)	
M	**201-4534**	1	BOLT (M16X2X26-MM)	
	493-1088	1	BRACKET AS	
	493-1091	1	BRACKET AS	
	532-7291	1	BRACKET AS	
	127-3947	2	BUMPER	
	535-6240	1	GUARD AS	
	4E-1487	2	KNOB	
	8Y-5745	2	LATCH AS	
M	**7Y-0623**	2	LOCKNUT (M16X2-THD)	
M	**096-6331**	4	NUT (M12X1.75-THD)	
	5D-4822	2	RING-RETAINING	
M	**172-5291**	8	SCREW (M10X1.5X30-MM)	
	493-1087	1	SHAFT	
	532-7310	1	SPRING AS-GAS	
	507-4784	2	STRIKER AS	
	493-1072	2	SUPPORT AS	
	9X-8256	6	WASHER (6.6X12X2-MM THK)	
	8T-4121	9	WASHER-HARD (11X21X2.5-MM THK)	
	8T-4223	4	WASHER-HARD (13.5X25.5X3-MM THK)	
	8T-4224	6	WASHER-HARD (8.8X16X2-MM THK)	
	451-2175	2	WASHER-HARD (17.5X30X3.5-MM THK)	

M - METRIC PART

<END>

528-3293 KIT-GUARD

S/N: BR61-UP

FRONT HALF MESH GUARD KIT

SMCS-7153 **i07198869**

NOTE	PART NUMBER	QTY	PART NAME 1 2 3 4 5 6 (PRODUCT LEVEL)	SEE PAGE
M	**8T-4136**	4	BOLT (M10X1.5X25-MM)	
	535-6265	1	GUARD AS	
	8T-4121	4	WASHER-HARD (11X21X2.5-MM THK)	

M - METRIC PART

<END>

486-7082 LINER GP-SOUND SUPPRESSION

S/N: BR61-UP

PART OF 505-7175, 556-6467 ENCLOSURE AR

SMCS-1801, 7056 **i07360358**

NOTE	REF NO	GRAPHIC REF	PART NUMBER	QTY	PART NAME 1 2 3 4 5 6 (PRODUCT LEVEL)	SEE PAGE
	1	1	**489-3709**	1	LINER	
	2	1	**526-2268**	1	LINER	

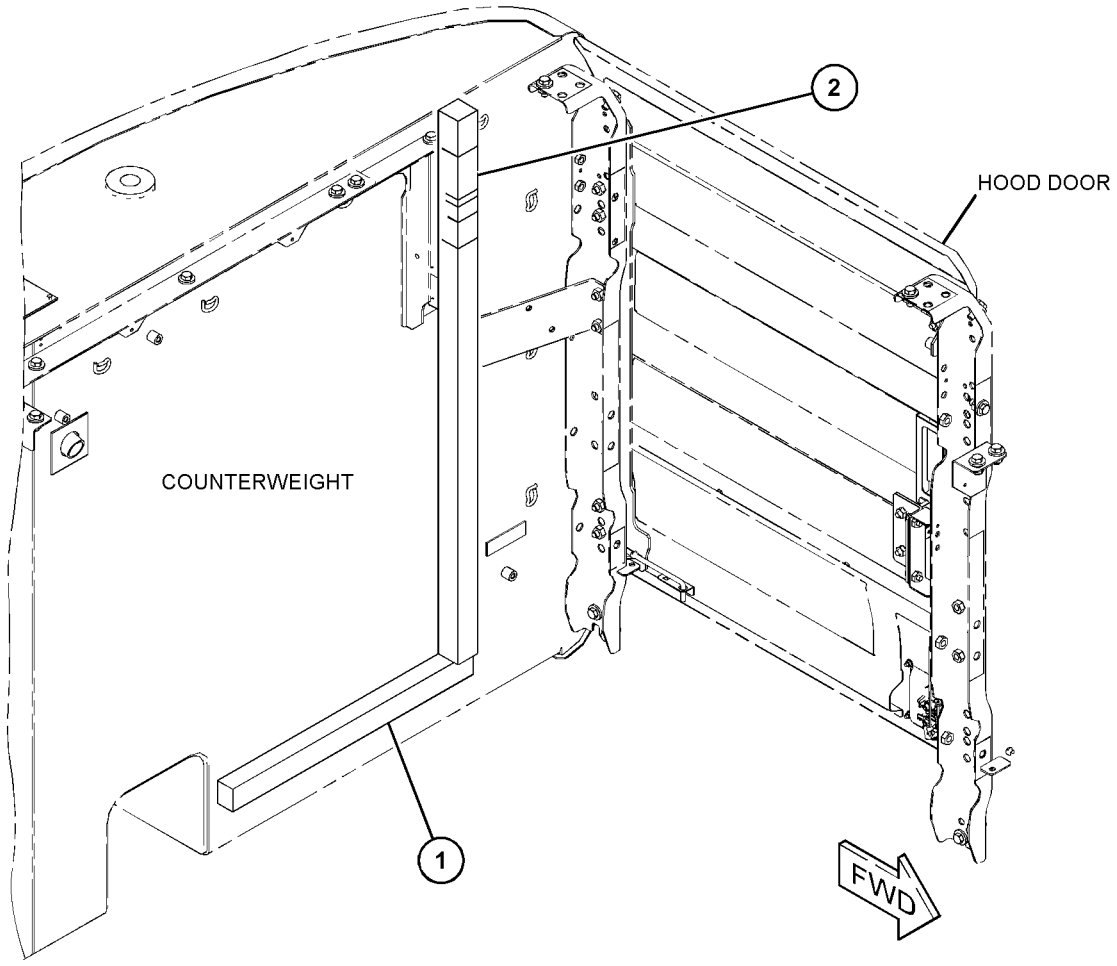

GRAPHIC #1 <END> g06230051

486-7084 MOUNTING GP-COUNTERWEIGHT

S/N: BR61-UP

PART OF 505-7175, 556-6467 ENCLOSURE AR

SMCS-7055 **i07360359**

NOTE	REF NO	GRAPHIC REF	PART NUMBER	QTY	PART NAME 1 2 3 4 5 6 (PRODUCT LEVEL)	SEE PAGE
	1	1	**6I-6646**	4	SPACER (32X65X75-MM THK)	
M	2	1	**447-2461**	4	BOLT (M30X3.5X160-MM)	
	3	1	**503-0890**	2	PLUG	
	4	1	**540-6968**	2	PACKING	

M - METRIC PART

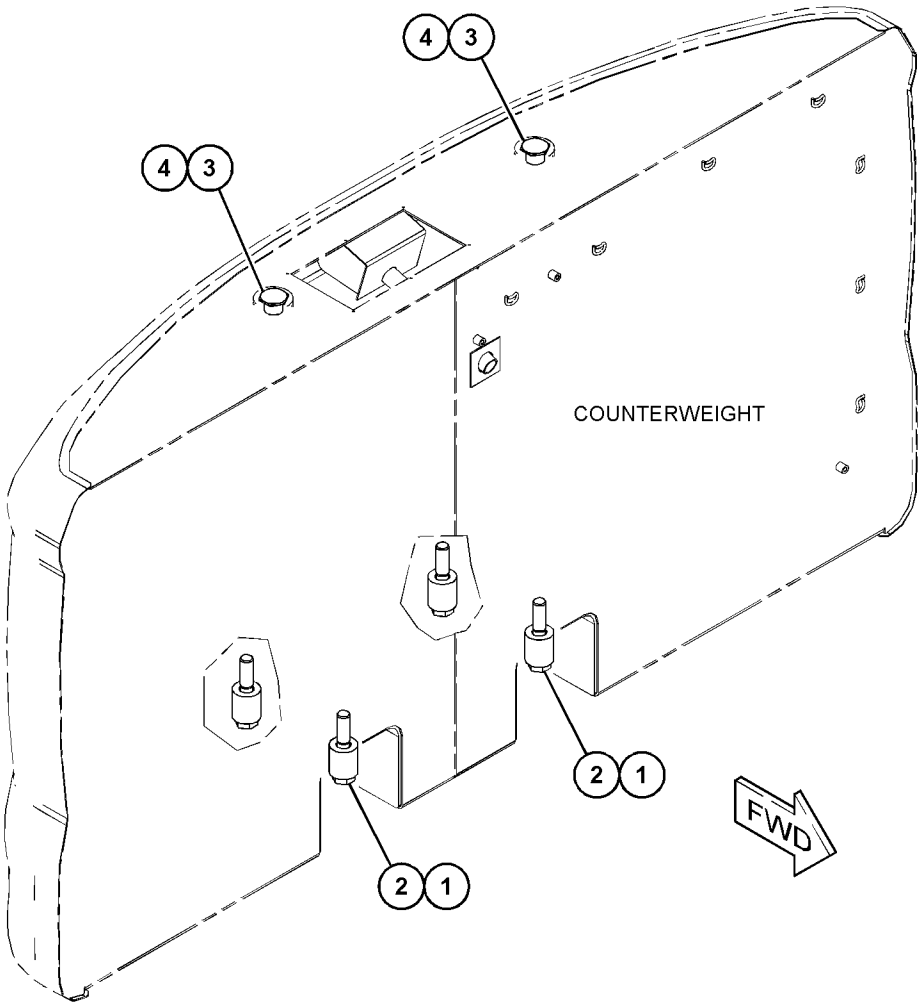

GRAPHIC #1 <END> g06259879

376-6464 PLATE GP

S/N: E7A1-UP

PART OF 555-5560 ENGINE AR-PRIMARY

SMCS-7267, 726A

i07461860

NOTE	REF NO	GRAPHIC REF	PART NUMBER	QTY	PART NAME 1 2 3 4 5 6 (PRODUCT LEVEL)	SEE PAGE
	1	1	**332-0905**	2	RIVET-DRIVE	
	2	1	**350-8958**	1	PLATE-SERIAL NUMBER (ENGINE)	

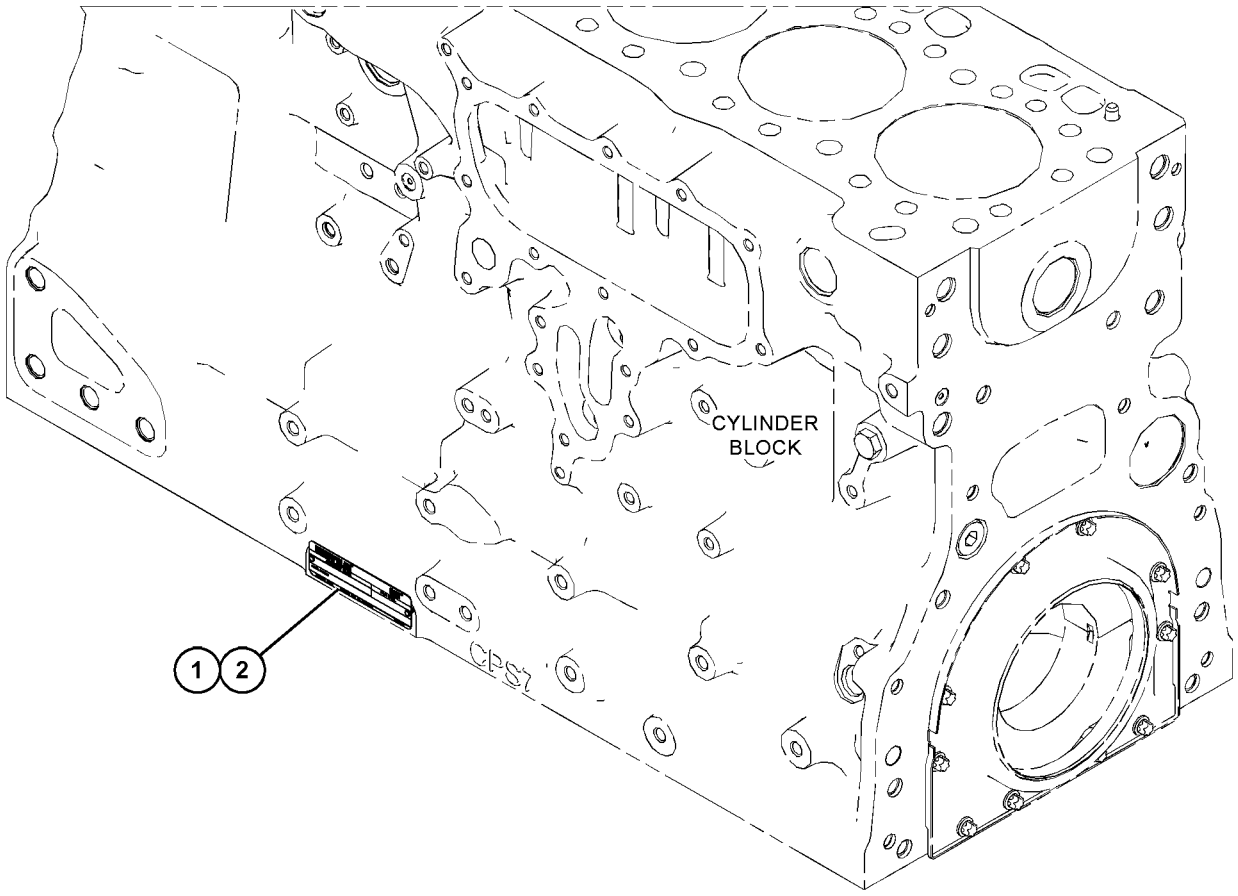

GRAPHIC #1 <END> g06330807

505-7126 SHEET AS-SOUND SUPPRESSION

S/N: BR61-UP

PART OF 486-7089, 556-6464 HOOD & GUARD GP

SMCS-1801, 7076, 7251, 7267 **i07330205**

NOTE	REF NO	GRAPHIC REF	PART NUMBER	QTY	PART NAME 1 2 3 4 5 6 (PRODUCT LEVEL)	SEE PAGE
D	1	1	**101-9848**		SEAL (0.2-M)	
	2	1	**505-7215**	1	LINER	
	3	1	**505-7216**	1	LINER	
	4	1	**505-7217**	1	LINER	

D - ORDER BY THE METER

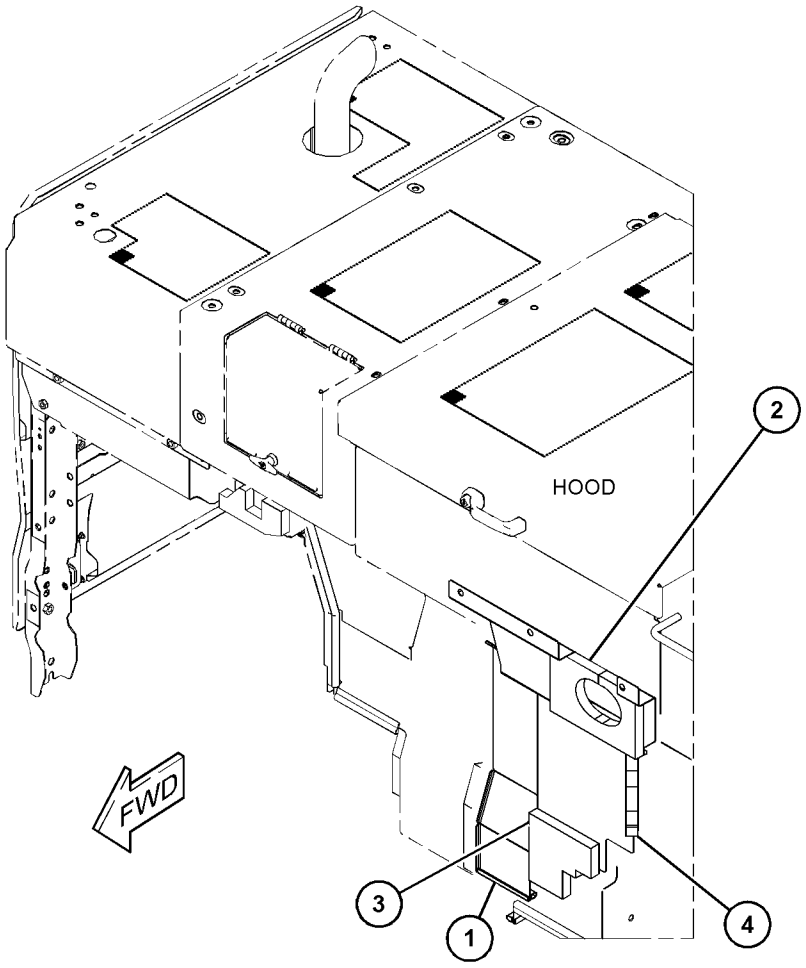

GRAPHIC #1 <END> g06227015

505-7131 SHEET AS-SOUND SUPPRESSION

S/N: BR61-UP

PART OF 486-7089, 556-6464 HOOD & GUARD GP

SMCS-1801, 7076, 7251, 7267 **i07330209**

NOTE	REF NO	GRAPHIC REF	PART NUMBER	QTY	PART NAME 1 2 3 4 5 6 (PRODUCT LEVEL)	SEE PAGE
	1	1	*505-7132*	1	SHEET AS	
M		1	**8T-3597**	2	NUT-WELD (M12X1.75-THD)	
	2	1	**505-7222**	1	LINER	
	3	1	**505-7223**	1	LINER	
D	4	1	**101-9848**		SEAL (0.3-M EACH)	

D - ORDER BY THE METER
M - METRIC PART

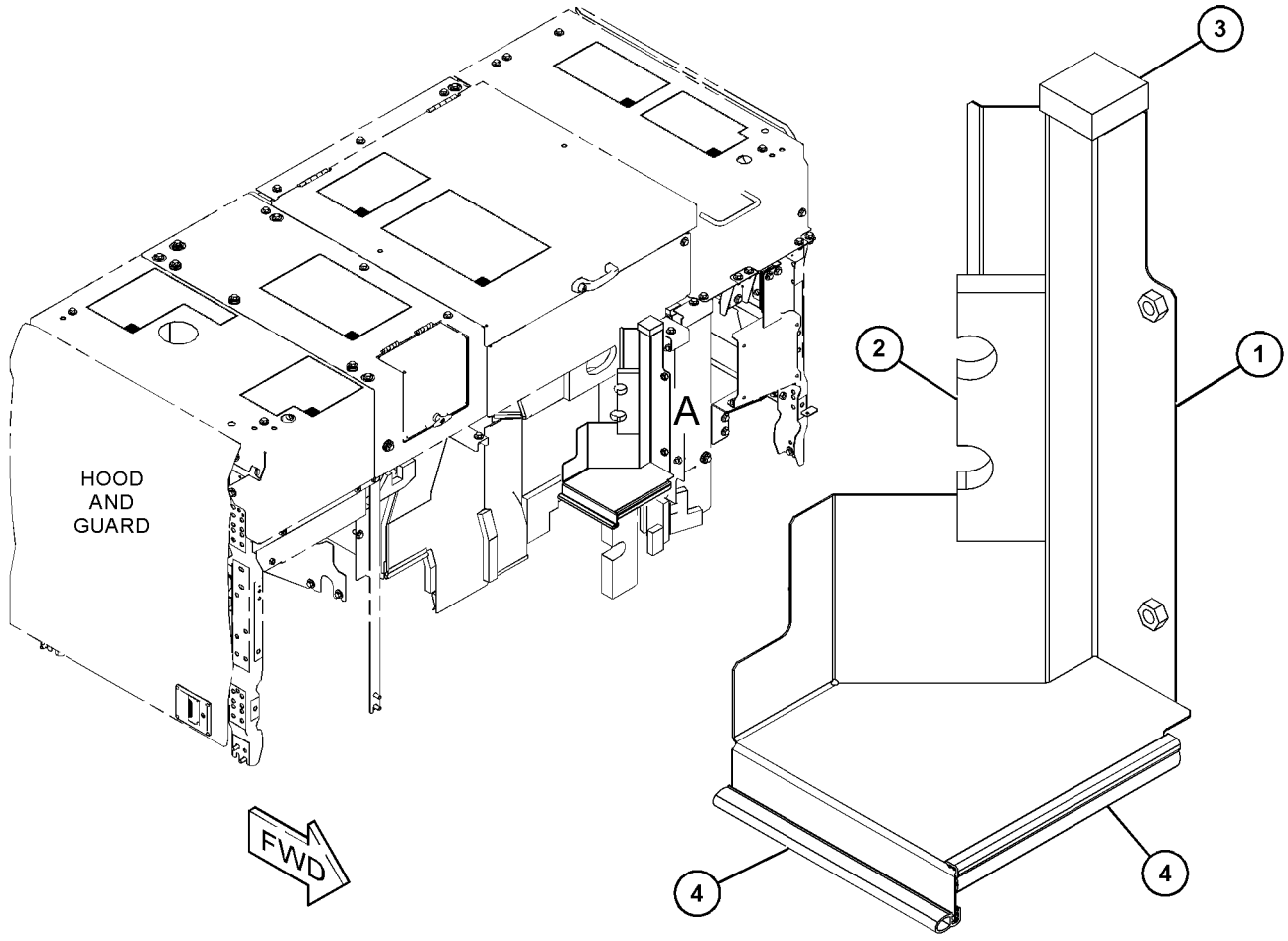

VIEW OF AREA A

GRAPHIC #1 <END> g06223175

508-9560 SHEET AS-SOUND SUPPRESSION

S/N: BR61-UP

PART OF 486-7089 HOOD & GUARD GP

SMCS-1801, 7076, 7251, 7267 **i07330211**

NOTE	REF NO	GRAPHIC REF	PART NUMBER	QTY	PART NAME 1 2 3 4 5 6 (PRODUCT LEVEL)	SEE PAGE
D	1	1	**101-9848**		SEAL (0.6-M)	
	2	1	**489-3626**	1	LINER	
	3	1	**489-3675**	1	LINER	
J	4	1	**348-5409**		SEAL (1.8-DM)	
J	4A	1	**348-5409**		SEAL (0.9-DM)	
J	4B	1	**348-5409**		SEAL (1.9-DM)	

D - ORDER BY THE METER
J - ORDER BY THE DECIMETER

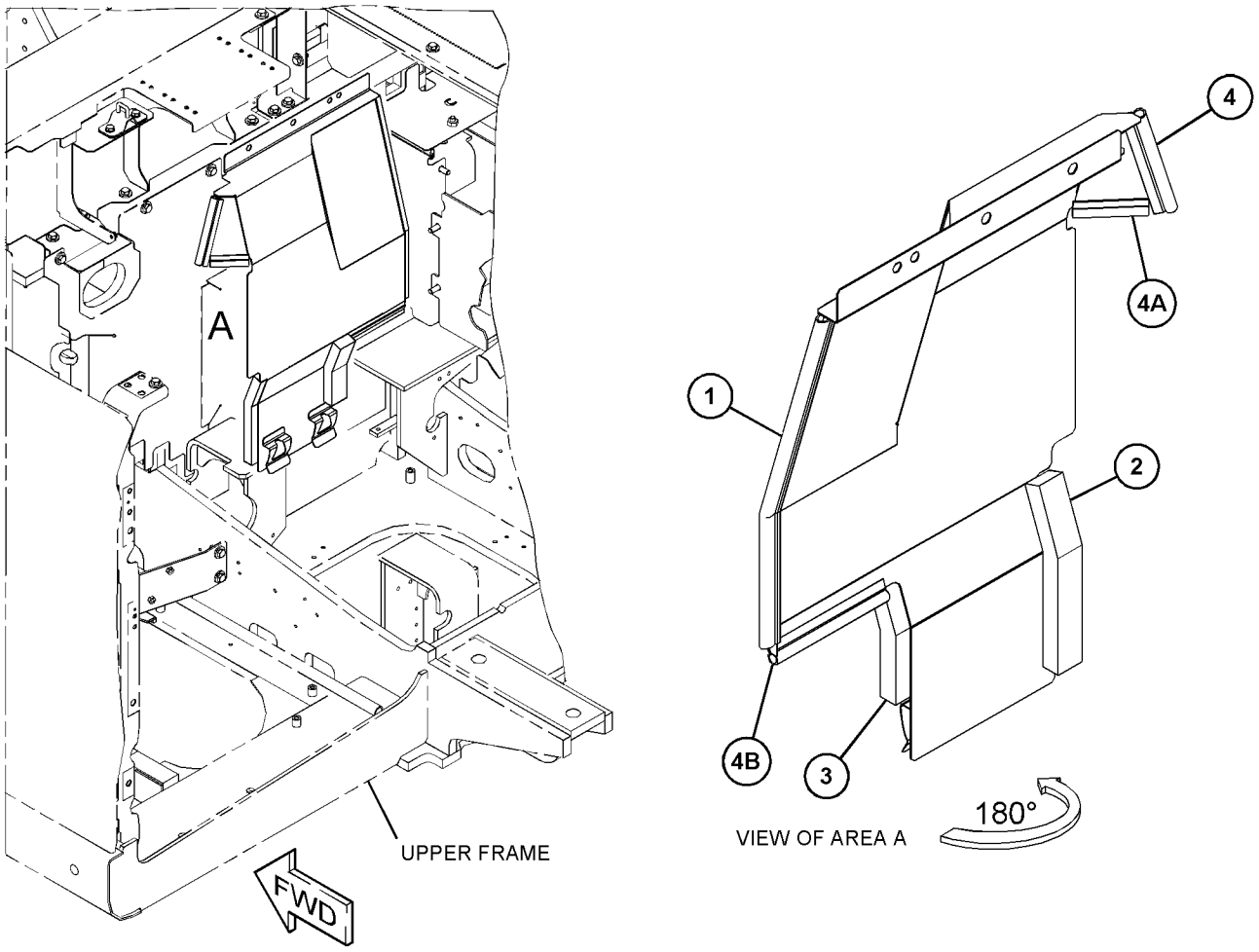

GRAPHIC #1 <END> g06224715

526-3220 SHEET AS-SOUND SUPPRESSION

S/N: BR61-UP

PART OF 486-7089, 556-6464 HOOD & GUARD GP

SMCS-1801, 7076, 7251, 7267 **i07330225**

NOTE	REF NO	GRAPHIC REF	PART NUMBER	QTY	PART NAME 1 2 3 4 5 6 (PRODUCT LEVEL)	SEE PAGE
	1	1	**508-9698**	1	LINER	
	2	1	**508-9700**	1	LINER	
	3	1	**526-3995**	1	LINER	
	4	1	**526-3225**	1	LINER	
	5	1	**526-3226**	1	LINER	

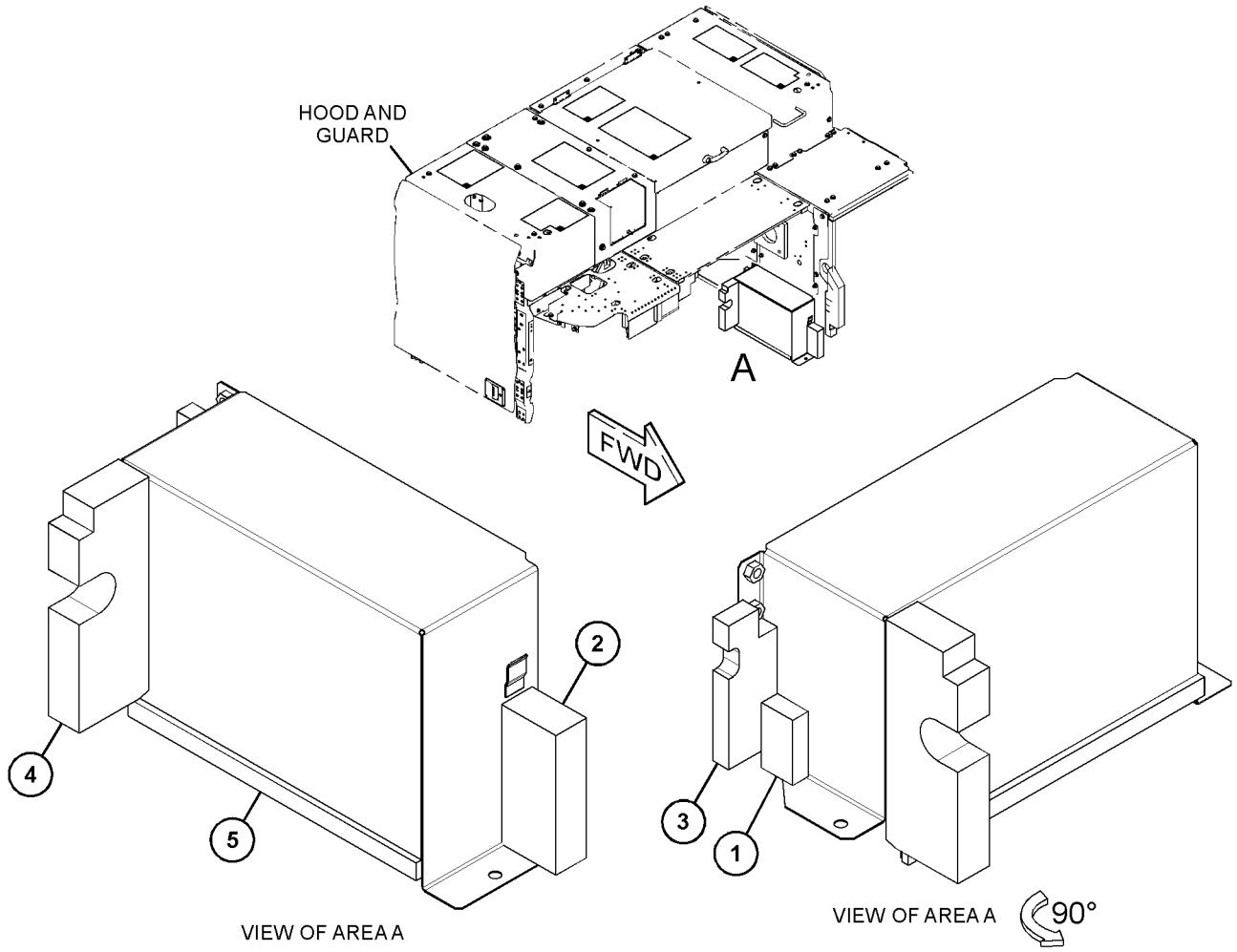

GRAPHIC #1 <END> g06229910

558-4979 SHEET AS-SOUND SUPPRESSION

S/N: BR610001-UP

PART OF 556-6464 HOOD & GUARD GP

SMCS-1801, 7076, 7251, 7267 **i07460448**

NOTE	REF NO	GRAPHIC REF	PART NUMBER	QTY	PART NAME 1 2 3 4 5 6 (PRODUCT LEVEL)	SEE PAGE
D	1	1	**101-9848**		SEAL (0.6-M)	
	2	1	**489-3626**	1	LINER	
	3	1	**489-3675**	1	LINER	
H	4	1	**348-5409**		SEAL (1.7-DM)	
H	4A	1	**348-5409**		SEAL (0.9-DM)	
H	4B	1	**348-5409**		SEAL (1.9-DM)	

D - ORDER BY THE METER
H - ORDER BY THE DECIMETER

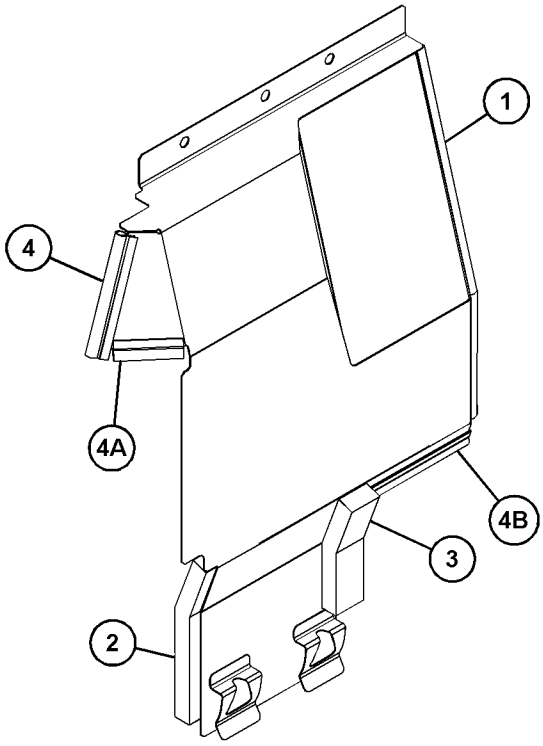

VIEW OF AREA A

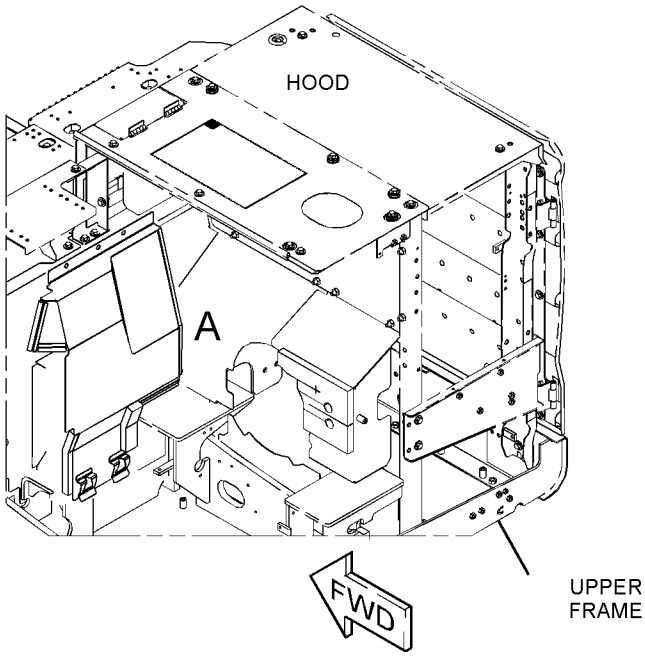

GRAPHIC #1 <END> g06323593

488-9289 STEP GP

S/N: BR61-UP

PART OF 521-3306 TRACK AR

SMCS-7254 **i07351556**

NOTE	REF NO	GRAPHIC REF	PART NUMBER	QTY	PART NAME 1 2 3 4 5 6 (PRODUCT LEVEL)	SEE PAGE
M	1	1	**447-1709**	12	BOLT (M16X2X45-MM)	
	2	1	**451-2175**	12	WASHER-HARD (17.5X30X3.5-MM THK)	
	3	1	**488-9307**	6	STEP	

M - METRIC PART

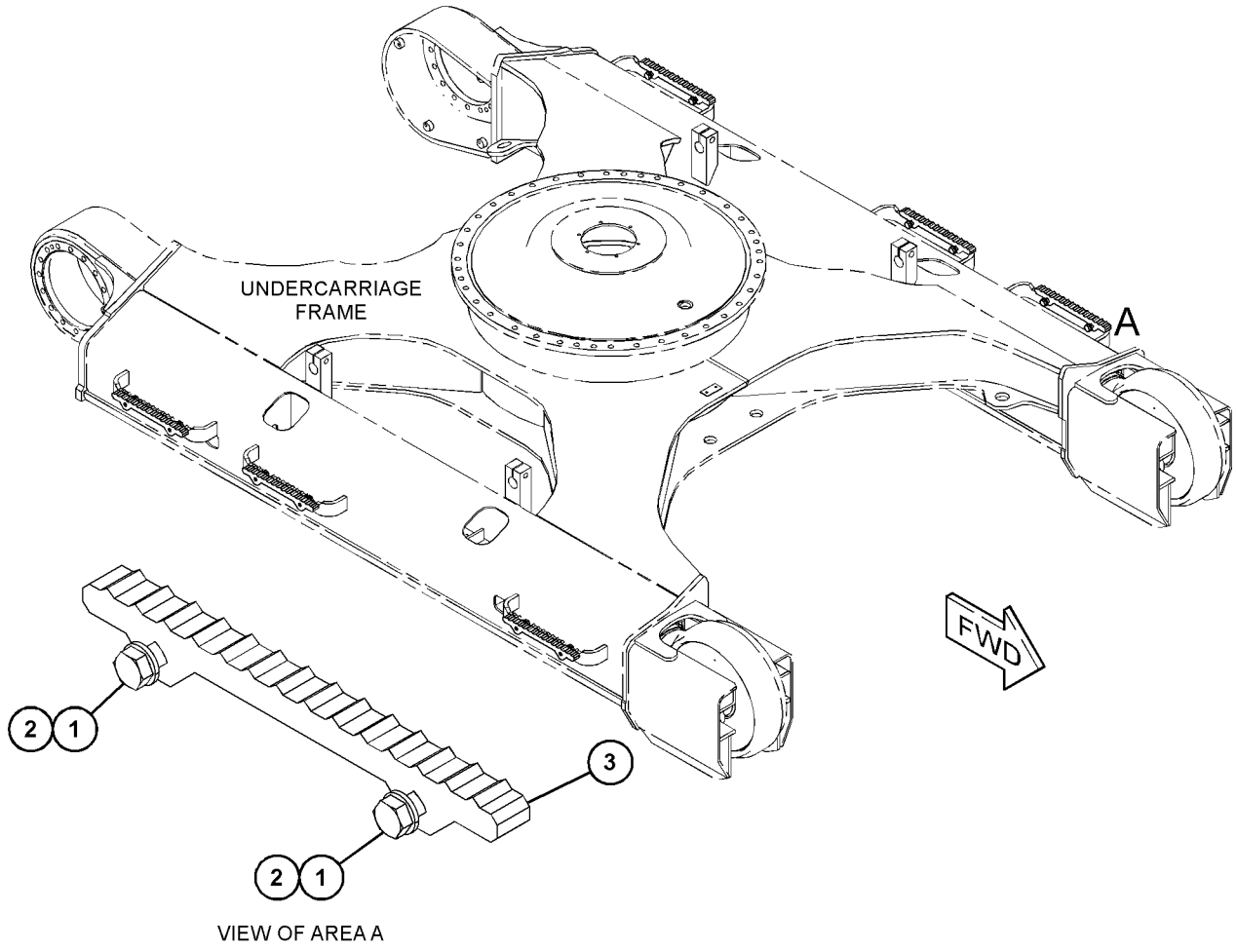

VIEW OF AREA A

GRAPHIC #1 <END> g06231263

488-9284 FRAME AS-UNDERCARRIAGE–LONG

S/N: BR61-UP

PART OF 529-3052, 550-3471 UNDERCARRIAGE AR

SMCS-4150, 7062 **i07362382**

NOTE	REF NO	GRAPHIC REF	PART NUMBER	QTY	PART NAME 1 2 3 4 5 6 (PRODUCT LEVEL)	SEE PAGE
	1	1	**236-8360**	1	COVER AS	
	2	1	*527-1696*	1	FRAME AS-TRACK (RH)	
	2A	1	**117-5540**	2	BRACKET	
	2B	1	**488-9303**	3	STEP	
	3	1	*527-1697*	1	FRAME AS-TRACK (LH)	
	3A	1	**117-5540**	2	BRACKET	
	3B	1	**488-9303**	3	STEP	
B	4	1	**8P-9770**	1	PLATE	

B - USE AS REQUIRED

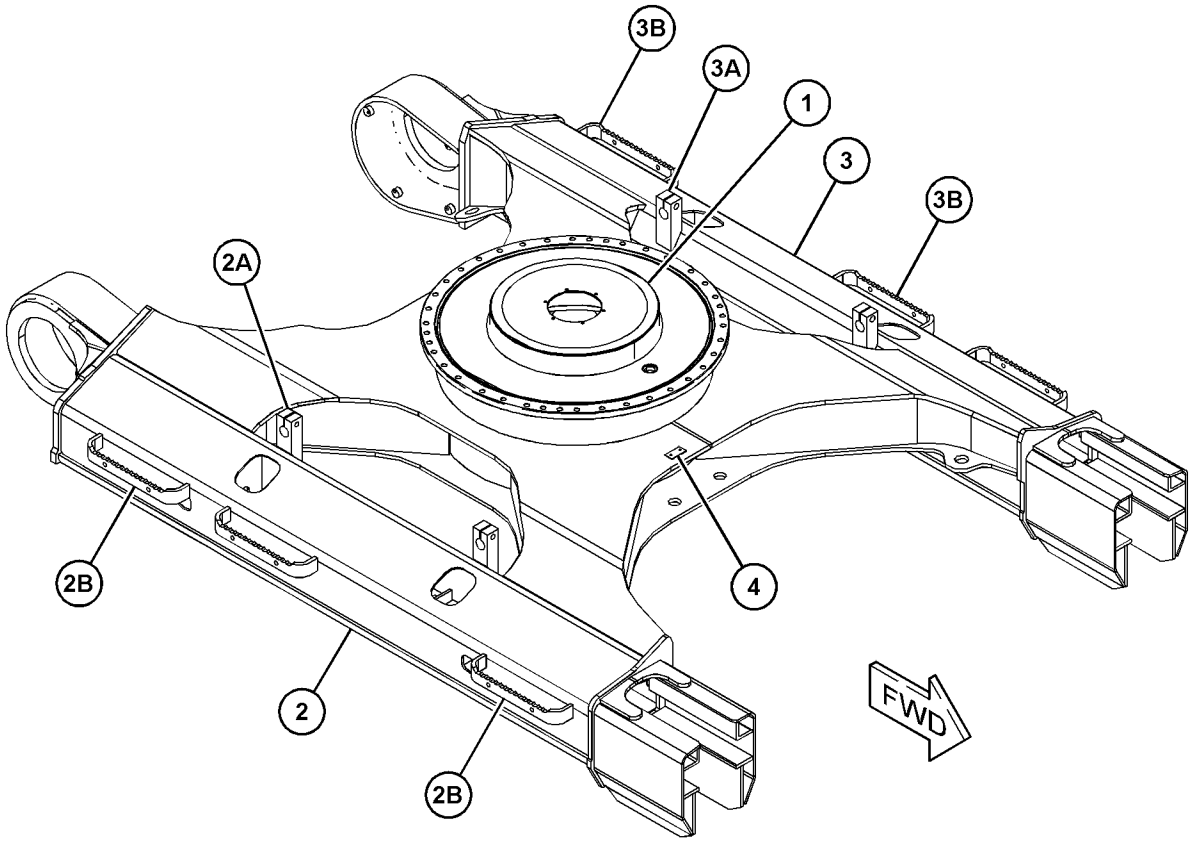

GRAPHIC #1 <END> g06233256

490-3896 FRAME AS-UNDERCARRIAGE

S/N: BR61-UP

PART OF 489-1591 UNDERCARRIAGE AR

SMCS-4150, 7062 **i07362417**

NOTE	REF NO	GRAPHIC REF	PART NUMBER	QTY	PART NAME 1 2 3 4 5 6 (PRODUCT LEVEL)	SEE PAGE
	1	1	**236-8360**	1	COVER AS	
B	2	1	**8P-9770**	1	PLATE	
	3	1	**527-1696**	1	FRAME AS-TRACK (RH)	
	3A	1	**488-9303**	3	STEP	
	3B	1	**117-5540**	2	BRACKET	
	4	1	**527-1697**	1	FRAME AS-TRACK (LH)	
	4A	1	**488-9303**	3	STEP	
	4B	1	**117-5540**	2	BRACKET	

B - USE AS REQUIRED

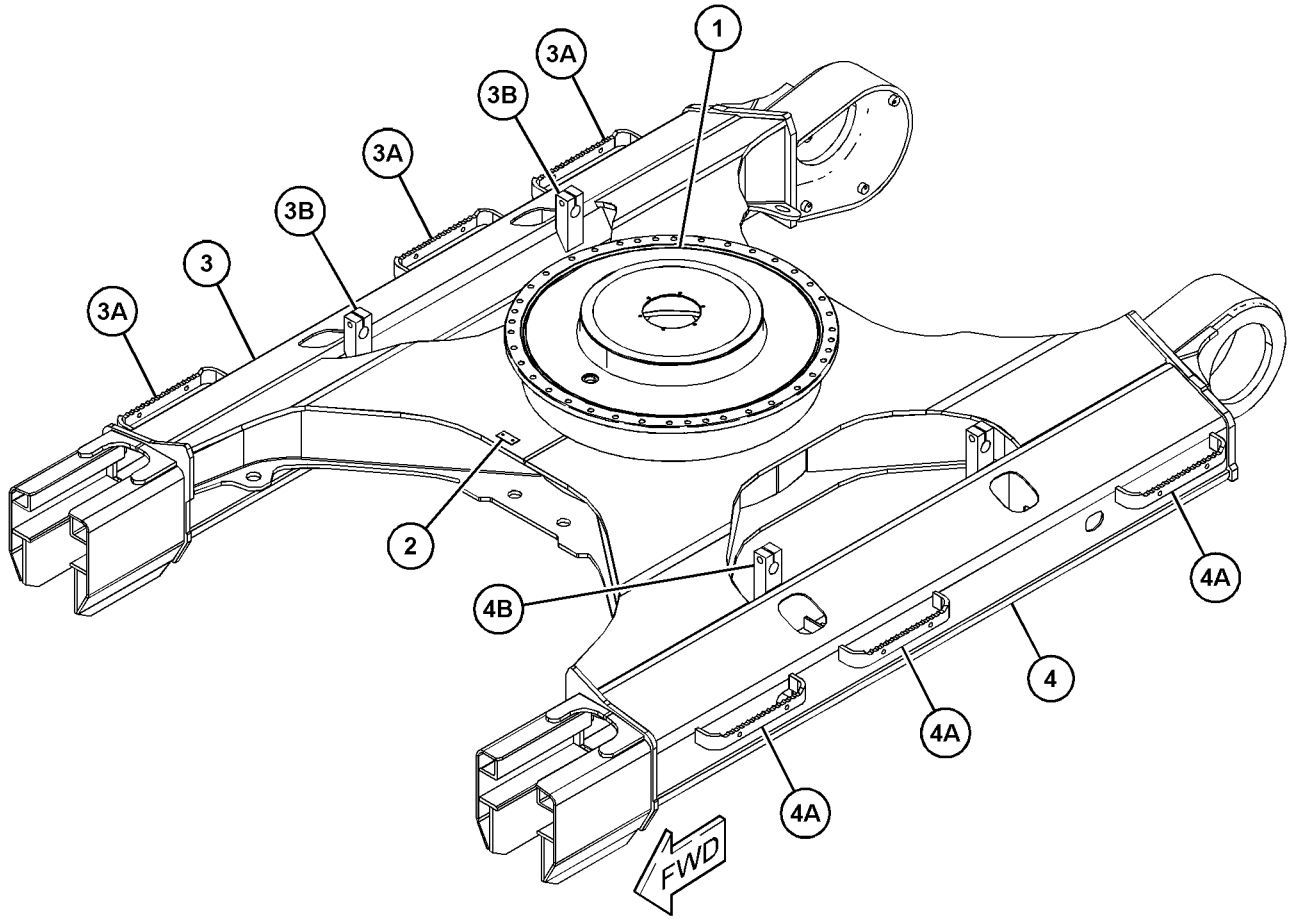

GRAPHIC #1 <END> g06232820

346-7146 GUARD GP-TRACK GUIDE—FULL LENGTH

S/N: BR61-UP

SMCS-4177 **i07362598**

NOTE	REF NO	GRAPHIC REF	PART NUMBER	QTY	PART NAME 1 2 3 4 5 6 (PRODUCT LEVEL)	SEE PAGE
	1	1	**219-8469**	4	GUARD AS-TRACK GUIDE	
M	2	1	**453-2845**	32	BOLT (M20X2.5X40-MM)	
	3	1	**451-2176**	32	WASHER-HARD (22X35X3.5-MM THK)	
					QUANTITIES SHOWN ARE THOSE REQUIRED FOR BOTH LH & RH SIDES	

M - METRIC PART

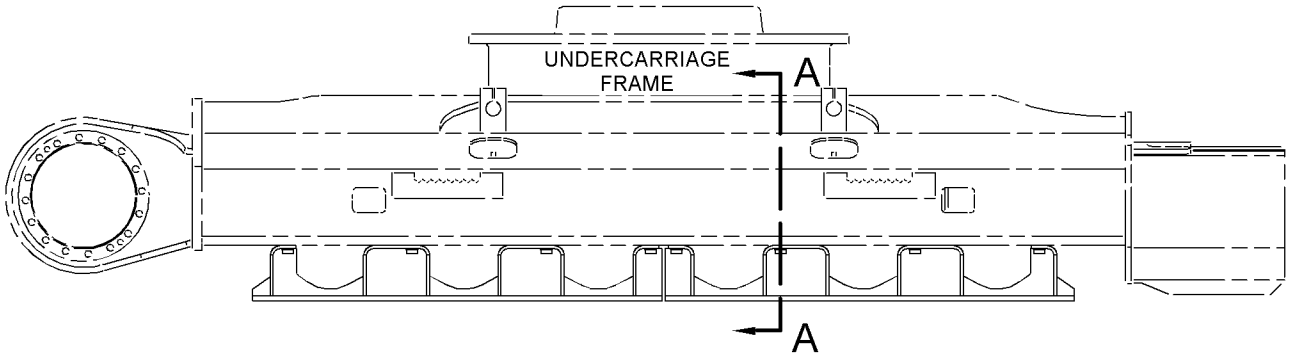

RIGHT SIDE VIEW

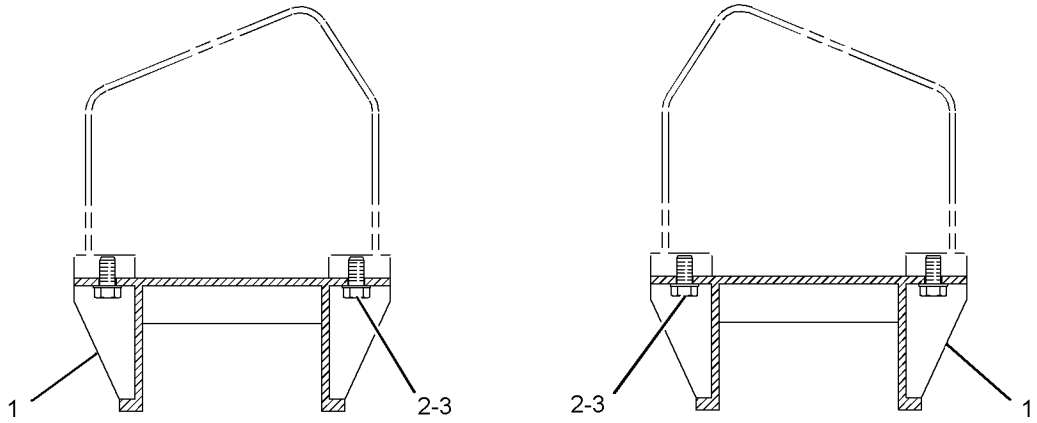

SECTION A-A

GRAPHIC #1 <END> g02722954

346-7148 GUARD GP-TRACK GUIDE—SEGMENTED

S/N: BR61-UP

SMCS-4177 **i07362605**

NOTE	REF NO	GRAPHIC REF	PART NUMBER	QTY	PART NAME 1 2 3 4 5 6 (PRODUCT LEVEL)	SEE PAGE
	1	1	**240-2988**	4	GUARD AS-TRACK GUIDE	
	2	1	**451-2176**	16	WASHER-HARD (22X35X3.5-MM THK)	
M	3	1	**453-2845**	16	BOLT (M20X2.5X40-MM)	
					QUANTITIES SHOWN ARE THOSE REQUIRED FOR BOTH LH & RH SIDES	

M - METRIC PART

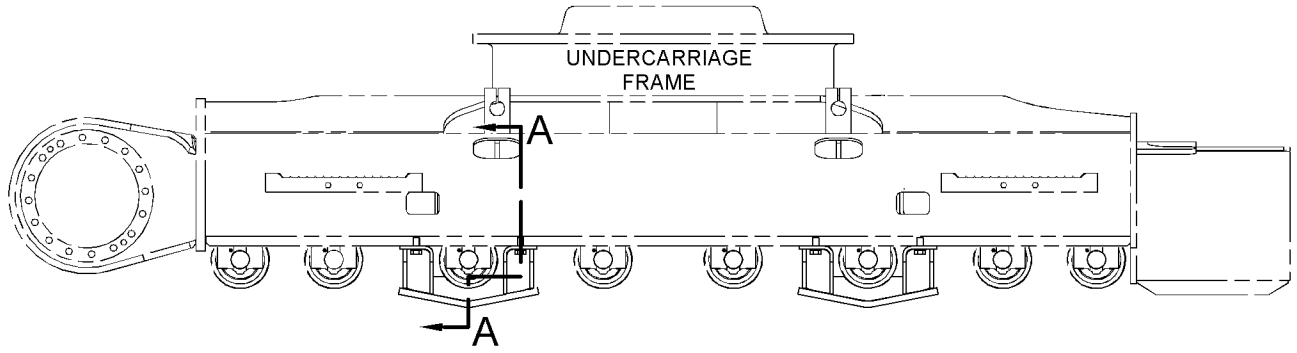

RIGHT SIDE VIEW

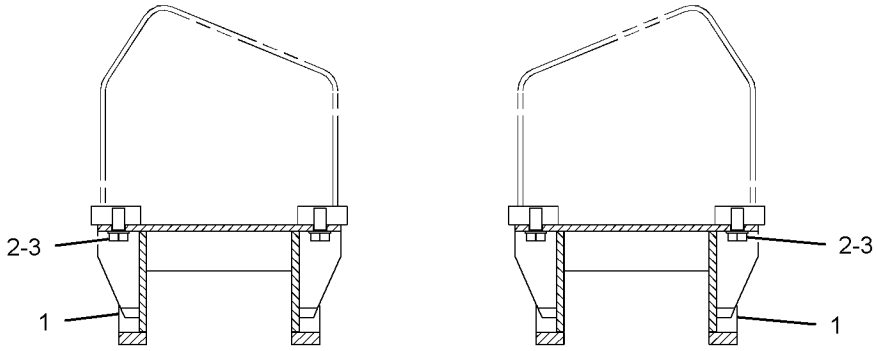

SECTION A-A

GRAPHIC #1 <END> g02761004

488-9287 GUARD GP-TRAVEL MOTOR

S/N: BR61-UP

SMCS-7163 **i07350425**

NOTE	REF NO	GRAPHIC REF	PART NUMBER	QTY	PART NAME 1 2 3 4 5 6 (PRODUCT LEVEL)	SEE PAGE
	1	1	**453-8030**	8	BOLT AS	
	2	1	**488-9305**	1	COVER (RH)	
	3	1	**488-9306**	1	COVER (LH)	

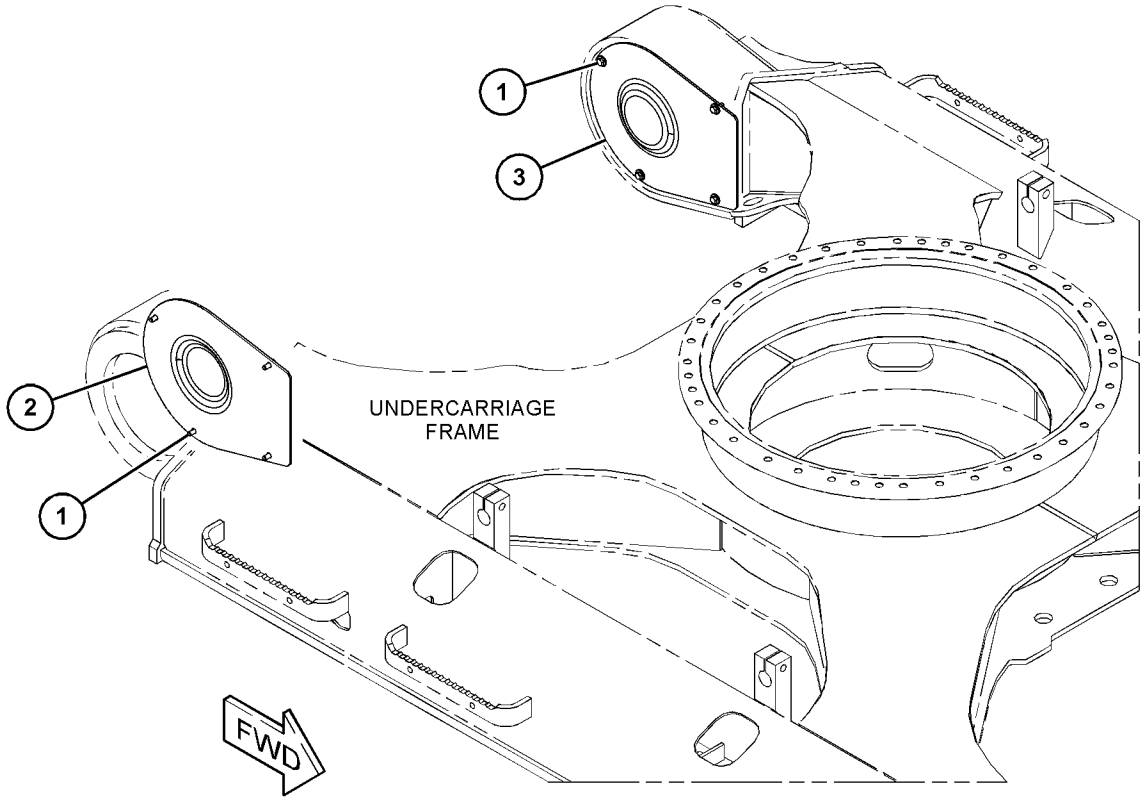

GRAPHIC #1 <END> g06229678

488-9288 GUARD GP-TRAVEL MOTOR–HEAVY DUTY

S/N: BR61-UP

SMCS-7163 **i07362944**

NOTE	REF NO	GRAPHIC REF	PART NUMBER	QTY	PART NAME 1 2 3 4 5 6 (PRODUCT LEVEL)	SEE PAGE
	1	1	**453-8030**	8	BOLT AS	
	2	1	**490-3894**	1	COVER AS-GUARD	
	3	1	**490-3895**	1	COVER AS-GUARD	

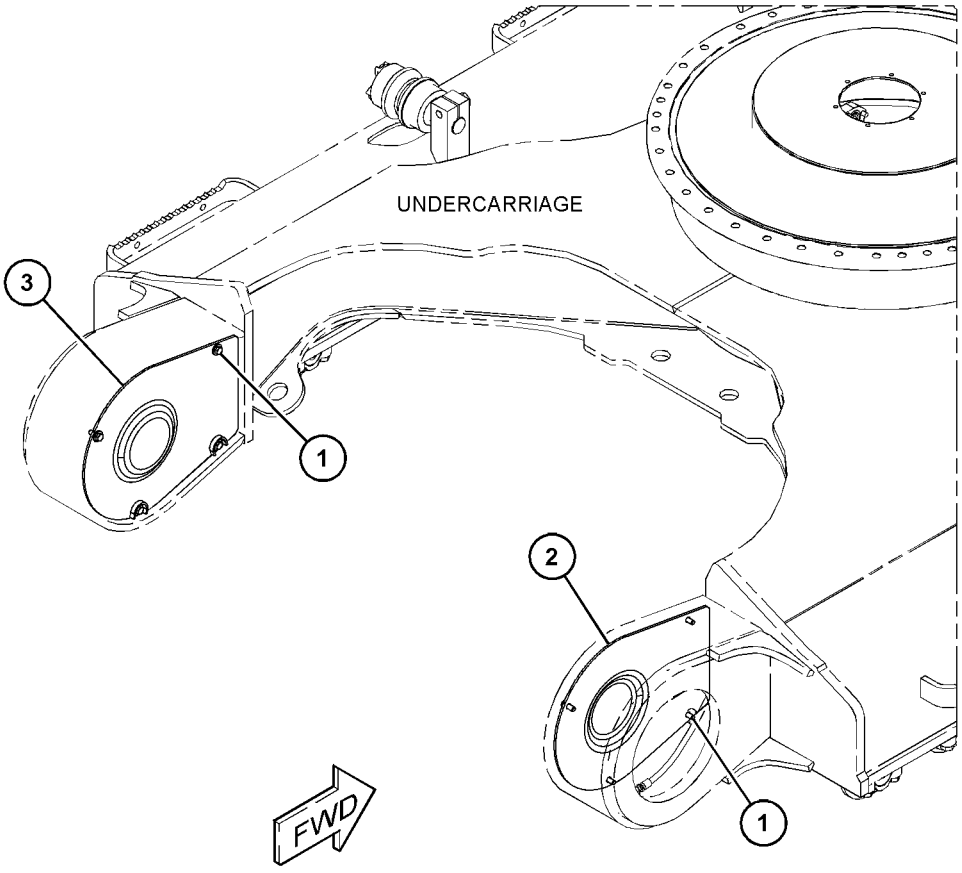

GRAPHIC #1 <END> g06229932

248-7143 IDLER GP-FRONT

S/N: BR61-UP

PART OF 489-1618, 489-1619 IDLER GP-FRONT

SMCS-4159 **i02402541**

NOTE	REF NO	GRAPHIC REF	PART NUMBER	QTY	PART NAME 1 2 3 4 5 6 (PRODUCT LEVEL)	SEE PAGE
	1	1	**9W-2201**	2	SEAL GP-DUO-CONE	
					(EACH INCLUDES)	
		1	**096-4255**	2	RING	
	2	1	**239-4362**	2	BEARING (FRONT IDLER)	
	3	1	**246-5425**	1	SHAFT	
	4	1	**262-4781**	1	IDLER & BEARING AS	
		1	**8E-4359**	2	BEARING	
	5	1	**6V-7658**	2	SEAL-O-RING	
	6	1	**7H-3171**	1	PLUG-PIPE	
	7	1	**9W-9455**	2	PIN	

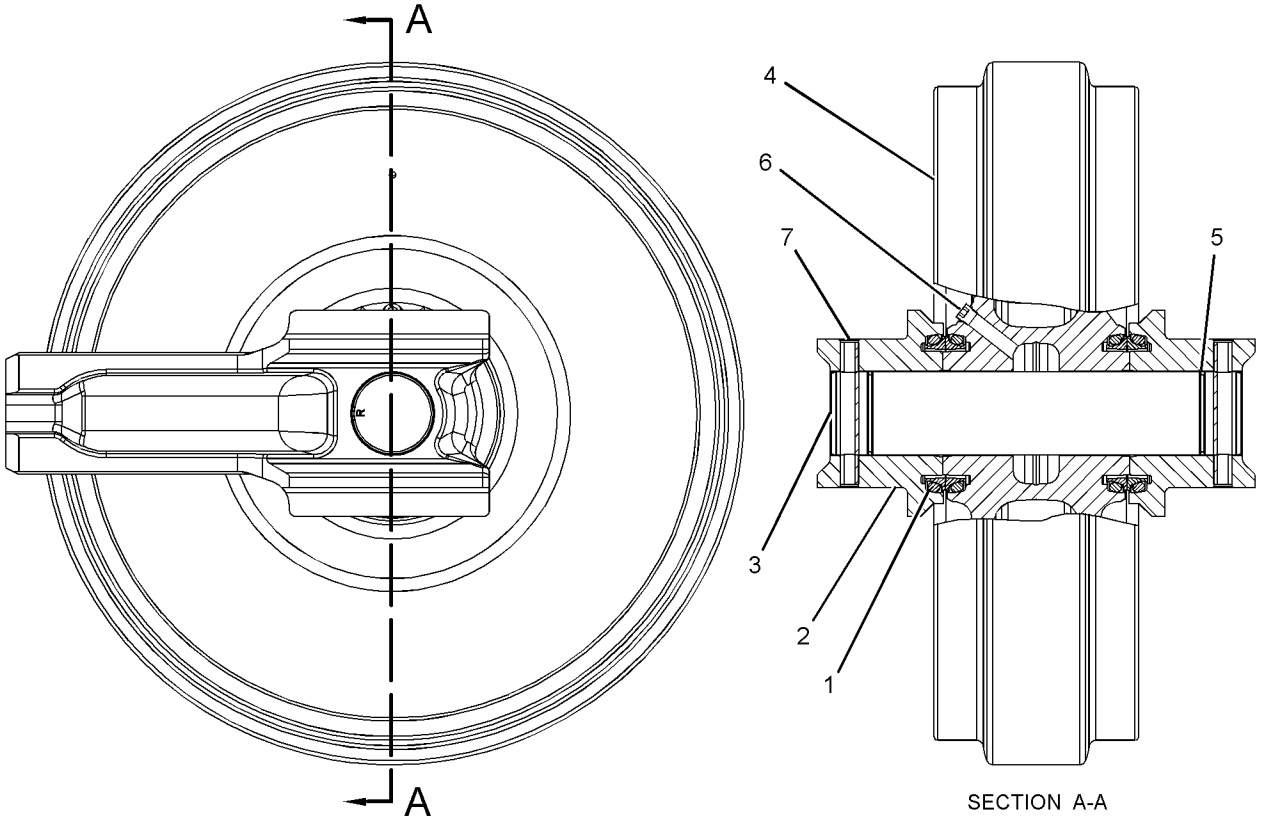

SECTION A-A

GRAPHIC #1 <END> g01206925

489-1594 IDLER GP-FRONT

S/N: BR61-UP

PART OF 489-1591, 529-3052, 550-3471 UNDERCARRIAGE AR

SMCS-4159 **i07356853**

NOTE	REF NO	GRAPHIC REF	PART NUMBER	QTY	PART NAME 1 2 3 4 5 6 (PRODUCT LEVEL)	SEE PAGE
Y	1	1	*489-1618*	1	IDLER GP-FRONT (LH)	362
Y	2	1	*489-1619*	1	IDLER GP-FRONT (RH)	363

Y - SEPARATE ILLUSTRATION

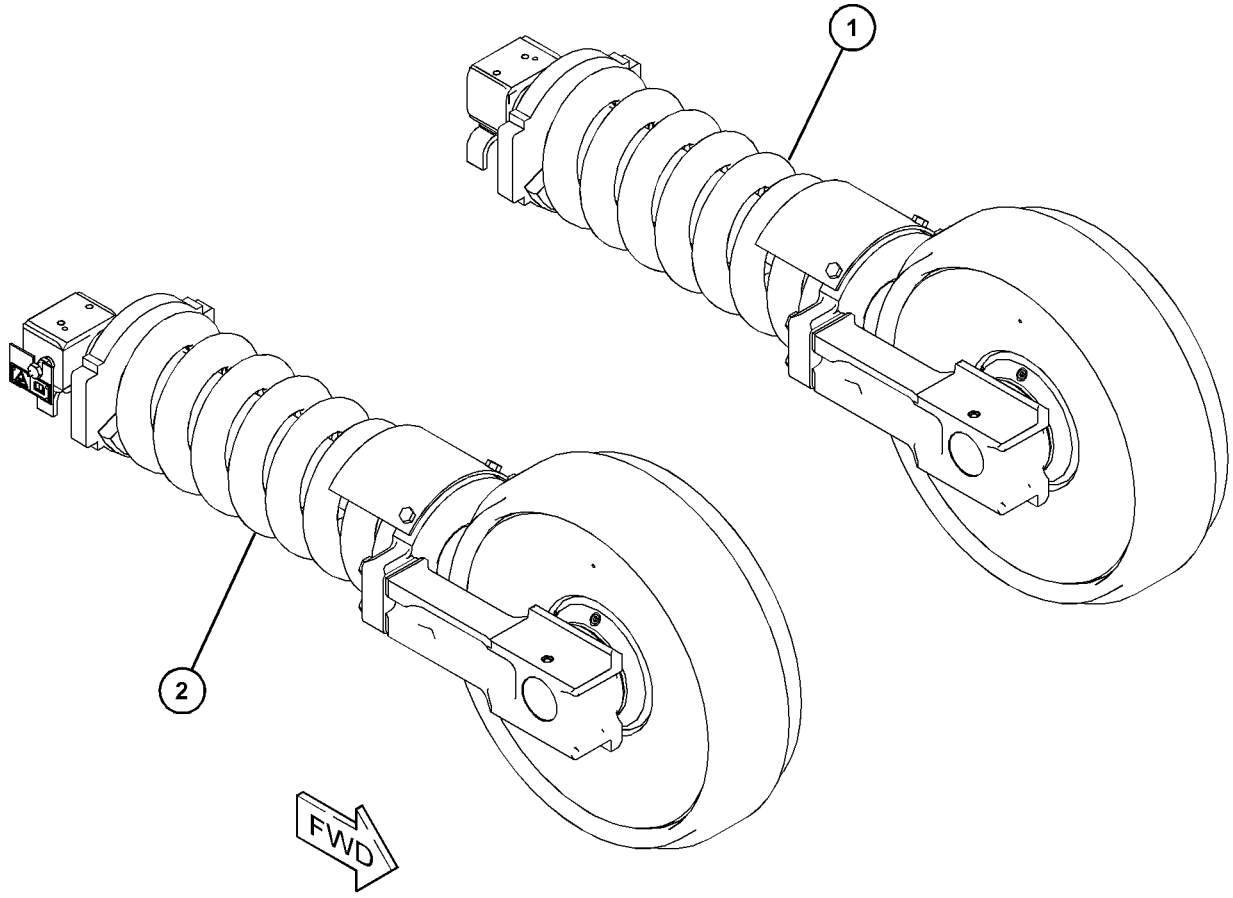

GRAPHIC #1 <END> g06207546

489-1618 IDLER GP-FRONT–LH

S/N: BR61-UP

PART OF 489-1594 IDLER GP-FRONT

SMCS-4159 **i07356858**

NOTE	REF NO	GRAPHIC REF	PART NUMBER	QTY	PART NAME 1 2 3 4 5 6 (PRODUCT LEVEL)	SEE PAGE
Y	1	1	*489-1621*	1	TRACK ADJUSTER & RECOIL GP (LH)	371
Y	2	1	**248-7143**	1	IDLER GP-FRONT	360
M	3	1	**447-1707**	4	BOLT (M16X2X60-MM)	

M - METRIC PART
Y - SEPARATE ILLUSTRATION

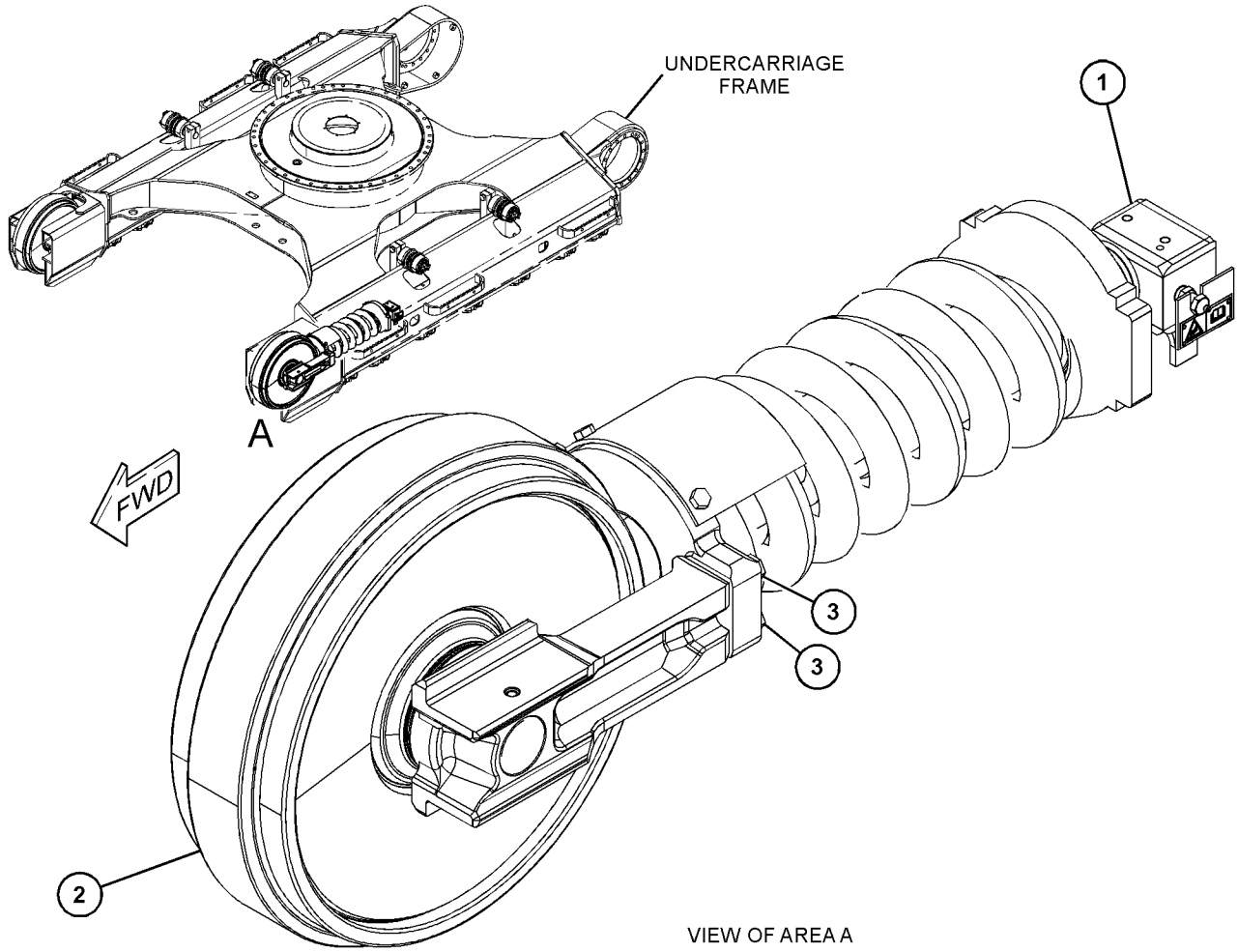

GRAPHIC #1 <END> g06207539

489-1619 IDLER GP-FRONT—RH

S/N: BR61-UP

PART OF 489-1594 IDLER GP-FRONT

SMCS-4159 **i07356900**

NOTE	REF NO	GRAPHIC REF	PART NUMBER	QTY	PART NAME 1 2 3 4 5 6 (PRODUCT LEVEL)	SEE PAGE
Y	1	1	*489-1620*	1	TRACK ADJUSTER & RECOIL GP (RH)	370
Y	2	1	**248-7143**	1	IDLER GP-FRONT	360
M	3	1	**447-1707**	4	BOLT (M16X2X60-MM)	

M - METRIC PART
Y - SEPARATE ILLUSTRATION

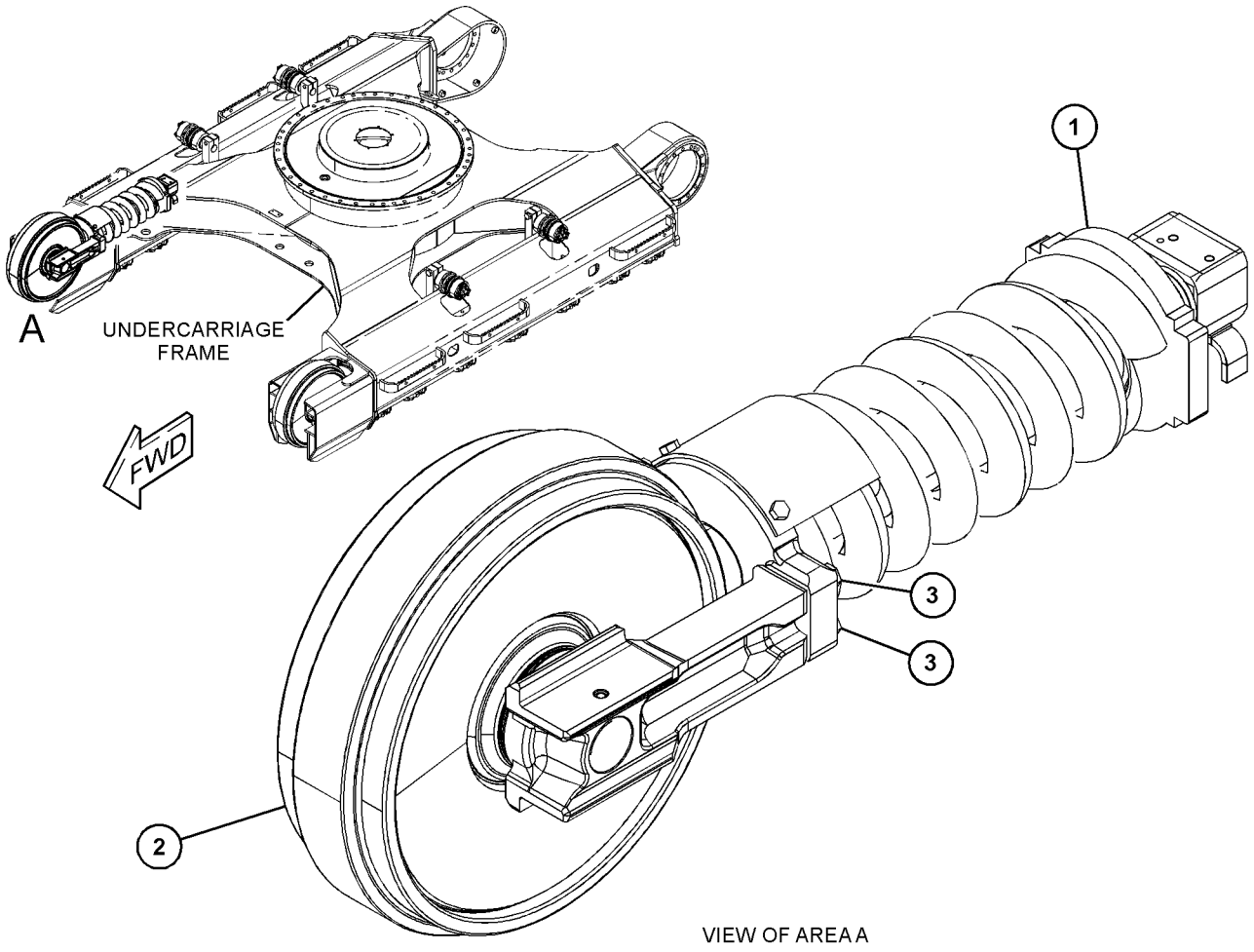

VIEW OF AREA A

GRAPHIC #1 <END> g06207531

341-6797 LINK AS-TRACK

S/N: BR61-UP
GREASE LUBRICATED TRACK
PART OF 359-3119, 415-5237, 469-0667 TRACK GP

SMCS-4169, 4171 **i06620799**

NOTE	REF NO	GRAPHIC REF	PART NUMBER	QTY	PART NAME 1 2 3 4 5 6 (PRODUCT LEVEL)	SEE PAGE
	1	1	**190-3524**	1	BUSHING-TRACK MASTER	
	2	1	**190-3523**	48	BUSHING-TRACK	
	3	1	**9W-3137**	49	LINK-TRACK (RH)	
	4	1	**9W-3138**	49	LINK-TRACK (LH)	
	5	1	**6Y-8185**	1	PIN-TRACK MASTER	
	6	1	**6Y-8186**	48	PIN-TRACK	
	7	1	**158-4381**	2	SEAL-TRACK MASTER	
	8	1	**158-4380**	96	SEAL-TRACK	

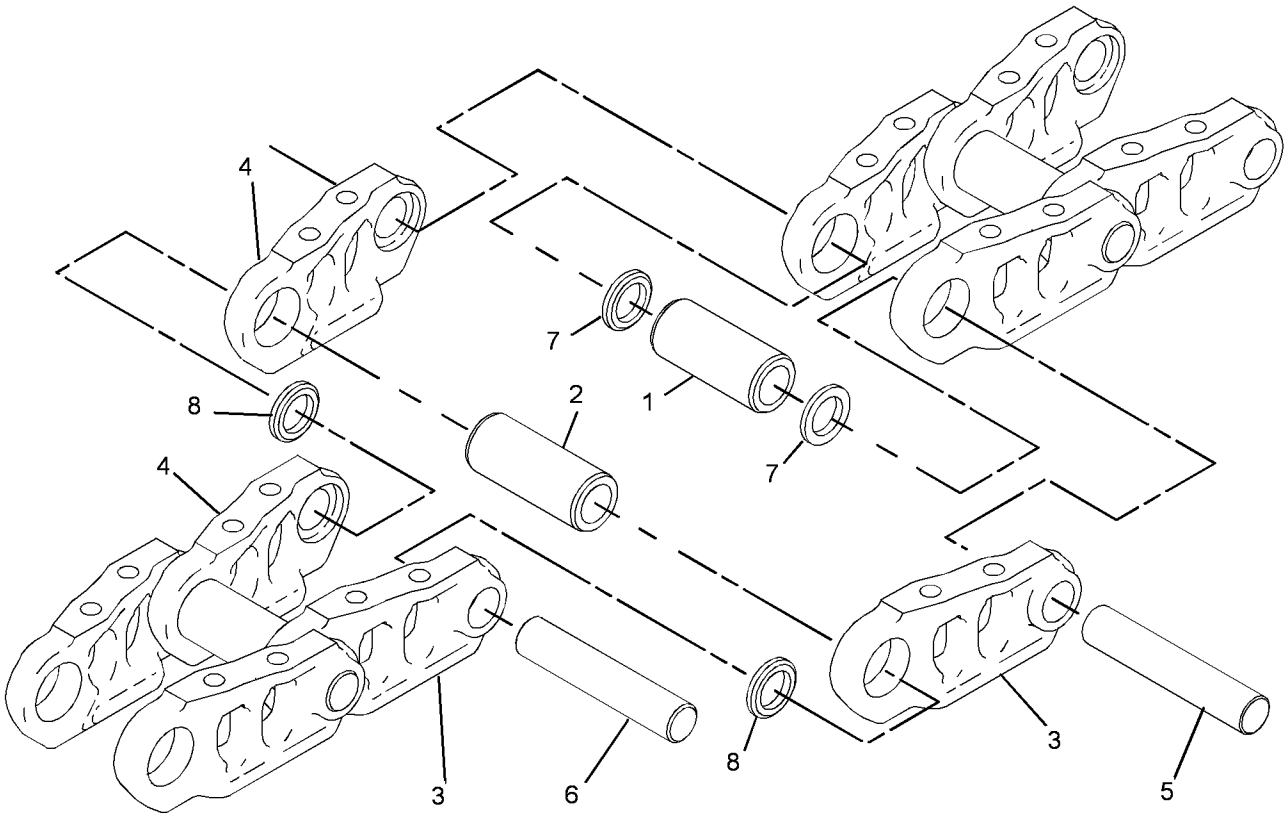

GRAPHIC #1 <END> g02687036

489-1630 ROLLER AR-TRACK & CARRIER

S/N: BR61-UP

PART OF 529-3052, 550-3471 UNDERCARRIAGE AR

SMCS-4154, 4180 **i07362158**

NOTE	REF NO	GRAPHIC REF	PART NUMBER	QTY	PART NAME 1 2 3 4 5 6 (PRODUCT LEVEL)	SEE PAGE
M	1	1	**447-1725**	4	BOLT (M24X3X80-MM)	
M	2	1	**447-1731**	64	BOLT (M20X2.5X100-MM)	
	3	1	**451-2176**	64	WASHER-HARD (22X35X3.5-MM THK)	
Y	4	1	**461-7752**	16	ROLLER GP-TRACK-SINGLE FLANGE	368
Y	5	1	**8E-5600**	4	ROLLER GP-TRACK CARRIER	367

M - METRIC PART
Y - SEPARATE ILLUSTRATION

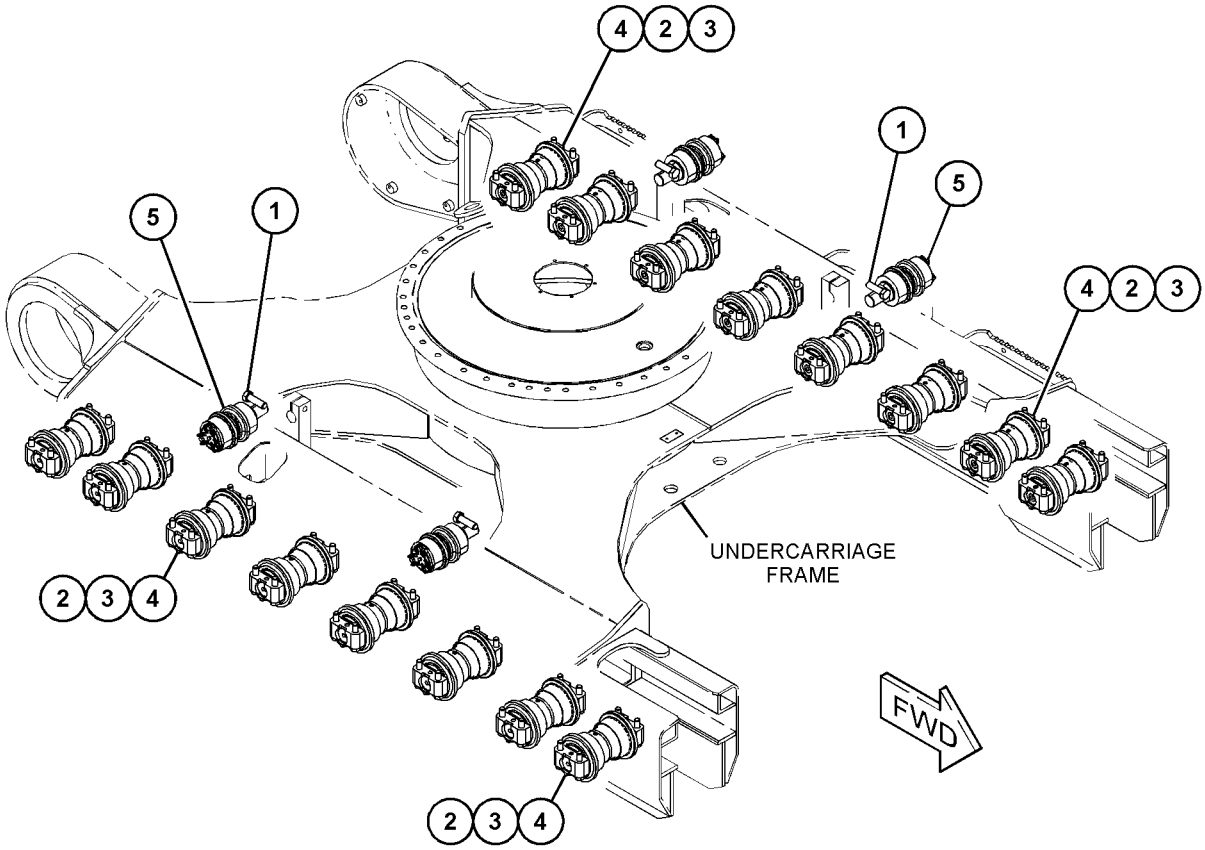

GRAPHIC #1 <END> g06230315

489-1631 ROLLER AR-TRACK & CARRIER

S/N: BR61-UP

PART OF 489-1591 UNDERCARRIAGE AR

SMCS-4154, 4180 **i07364890**

NOTE	REF NO	GRAPHIC REF	PART NUMBER	QTY	PART NAME 1 2 3 4 5 6 (PRODUCT LEVEL)	SEE PAGE
M	1	1	**447-1725**	4	BOLT (M24X3X80-MM)	
M	2	1	**447-1731**	64	BOLT (M20X2.5X100-MM)	
	3	1	**451-2176**	64	WASHER-HARD (22X35X3.5-MM THK)	
Y	4	1	**481-4789**	16	ROLLER GP-TRACK-SINGLE FLANGE	369
Y	5	1	**8E-5600**	4	ROLLER GP-TRACK CARRIER	367
					(QUANTITIES SHOWN ARE THOSE REQUIRED FOR BOTH LH & RH SIDES)	

M - METRIC PART
Y - SEPARATE ILLUSTRATION

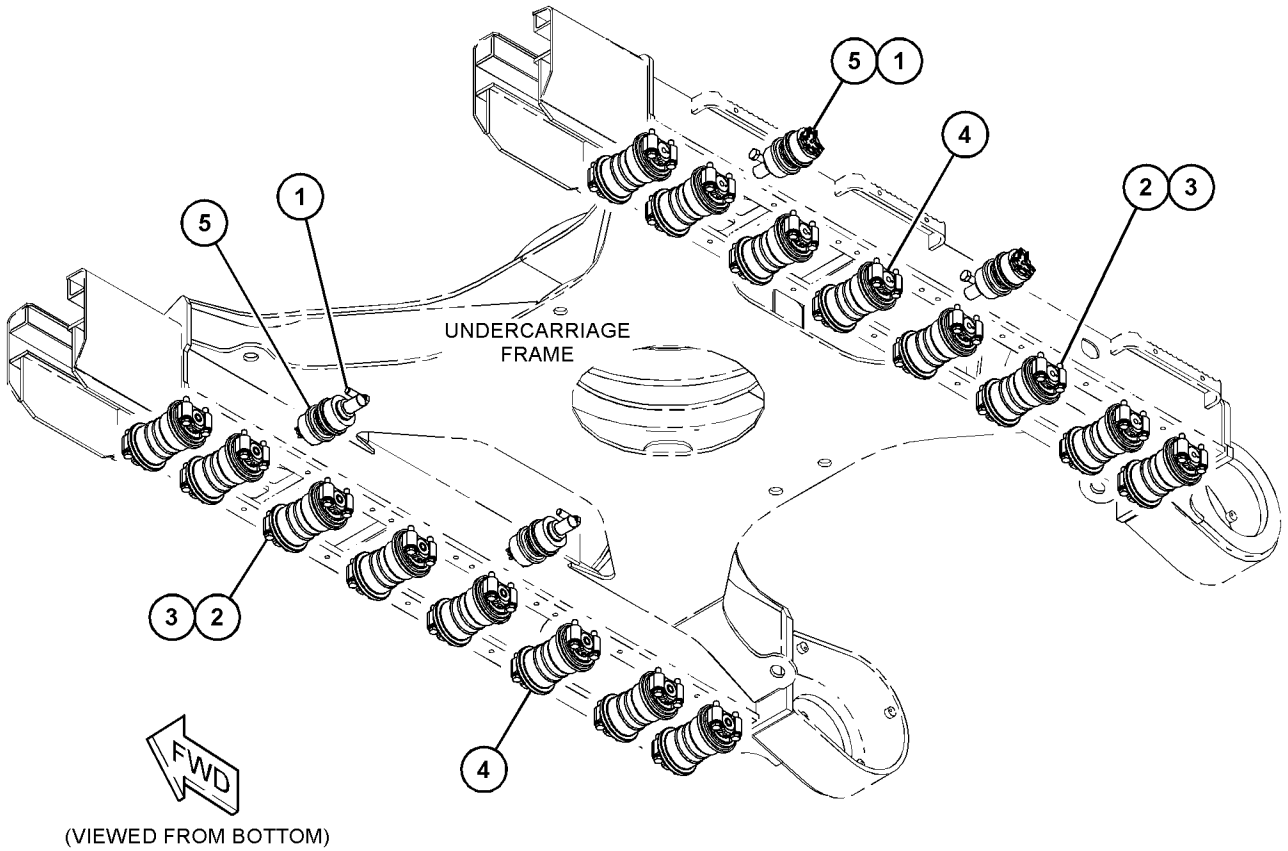

(VIEWED FROM BOTTOM)

GRAPHIC #1 <END> g06139870

8E-5600 ROLLER GP-TRACK CARRIER

S/N: BR61-UP

PART OF 489-1630, 489-1631 ROLLER AR-TRACK & CARRIER

SMCS-4154 **i02752189**

NOTE	REF NO	GRAPHIC REF	PART NUMBER	QTY	PART NAME 1 2 3 4 5 6 (PRODUCT LEVEL)	SEE PAGE
	1	1	**8E-5601**	1	SHAFT AS-TRACK ROLLER	
		1	**8E-5604**	1	COLLAR-ROLLER END	
		1	**8E-5607**	1	SHAFT-TRACK ROLLER	
	2	1	**8E-5608**	1	SEAL GP-DUO-CONE	
	3	1	**8E-5602**	1	ROLLER & BEARING AS	
	3A	1	**8E-6792**	1	BEARING-TRACK ROLLER	
	3B	1	**8E-6793**	1	BEARING-TRACK ROLLER	
	4	1	**8E-5606**	1	RETAINER	
	5	1	**6V-7661**	1	SEAL-O-RING	
M	6	1	**8T-1159**	5	BOLT-SOCKET HEAD (M10X1.5X25-MM)	
	7	1	**8E-5605**	1	COVER-CARRIER ROLLER	
	8	1	**7H-3171**	1	PLUG-PIPE	

M - METRIC PART

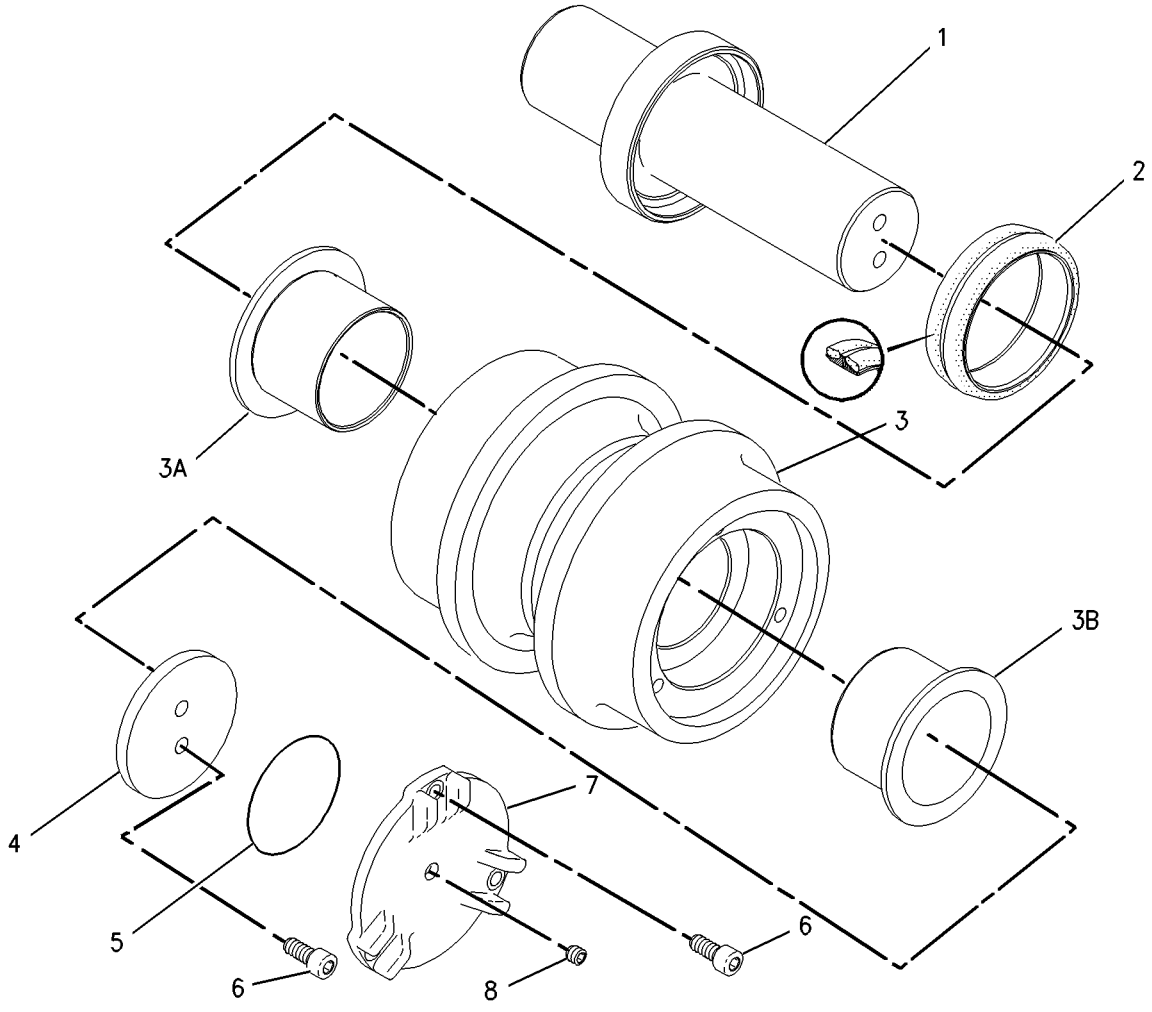

GRAPHIC #1 <END> g00715793

461-7752 ROLLER GP-TRACK-SINGLE FLANGE

S/N: BR61-UP

PART OF 489-1630 ROLLER AR-TRACK & CARRIER

SMCS-4180 **i07362166**

NOTE	REF NO	GRAPHIC REF	PART NUMBER	QTY	PART NAME 1 2 3 4 5 6 (PRODUCT LEVEL)	SEE PAGE
	1	1	**9W-2146**	1	PLUG	
	2	1	**7F-8268**	2	SEAL-O-RING	
	3	1	**3E-3217**	2	DOWEL	
	4	1	**206-9211**	2	SEAL GP-DUO-CONE	

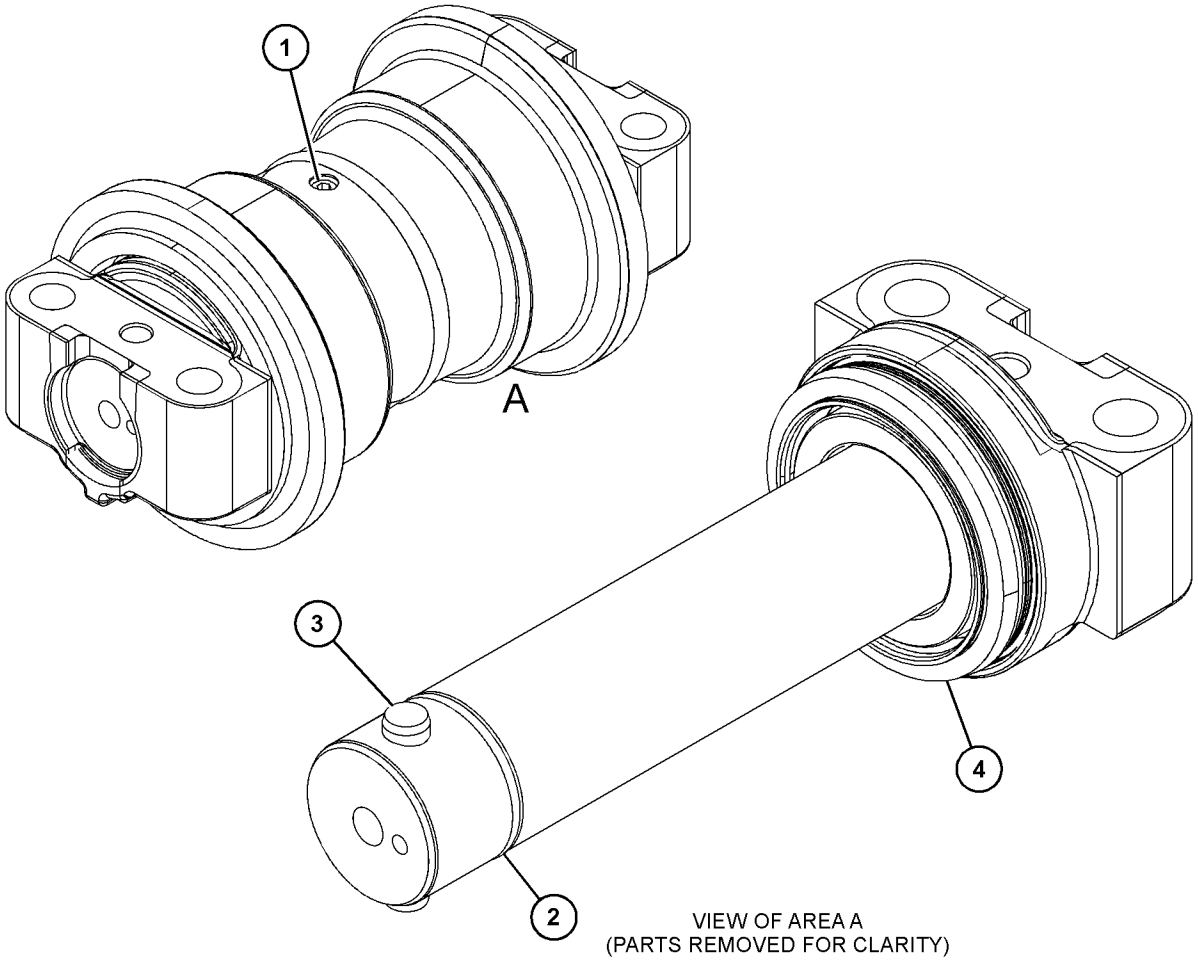

VIEW OF AREA A
(PARTS REMOVED FOR CLARITY)

GRAPHIC #1 <END> g06234891

481-4789 ROLLER GP-TRACK-SINGLE FLANGE

S/N: BR61-UP

PART OF 489-1631 ROLLER AR-TRACK & CARRIER

SMCS-4180 **i07364981**

NOTE	REF NO	GRAPHIC REF	PART NUMBER	QTY	PART NAME 1 2 3 4 5 6 (PRODUCT LEVEL)	SEE PAGE
	1	1	**9W-2146**	1	PLUG	
	2	1	**206-9212**	2	SEAL GP-DUO-CONE (TRACK ROLLER)	
					(EACH SEAL GP INCLUDES)	
		1	**171-5713**	2	RING-TORIC	
	3	1	*481-4790*	1	ROLLER & BEARING AS	
	3A	1	**6I-9399**	2	BEARING-FLANGED	
	4	1	**8F-6711**	2	SEAL-O-RING	
	5	1	**159-9526**	2	DOWEL	

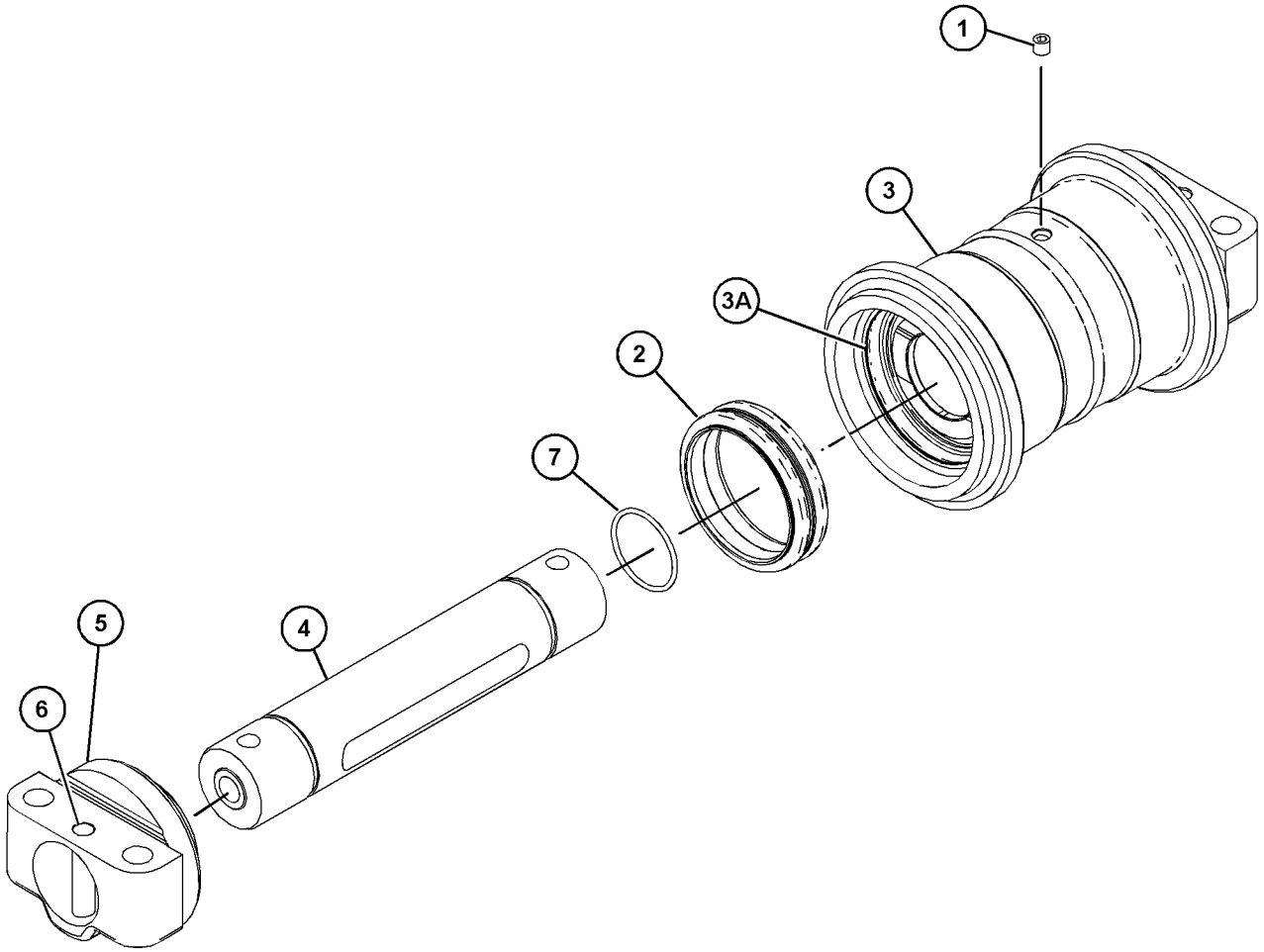

GRAPHIC #1 <END> g06143280

489-1620 TRACK ADJUSTER & RECOIL GP–RH

S/N: BR61-UP

PART OF 489-1619 IDLER GP-FRONT

SMCS-4157, 4158 **i07356905**

NOTE	REF NO	GRAPHIC REF	PART NUMBER	QTY	PART NAME 1 2 3 4 5 6 (PRODUCT LEVEL)	SEE PAGE
Y	1	1	*489-7195*	1	TRACK ADJUSTER & RECOIL GP	372
	2	1	**7Y-1746**	1	PLATE	
	3	1	**489-7191**	1	PLATE AS (RH)	
		1	**4B-4158**	4	SCREW-DRIVE (NO 4X0.25-IN)	
		1	**253-1346**	1	PLATE-WARNING (HIGH PRESSURE CYLINDER)	
M	4	1	**8T-4137**	2	BOLT (M10X1.5X20-MM)	

M - METRIC PART
Y - SEPARATE ILLUSTRATION

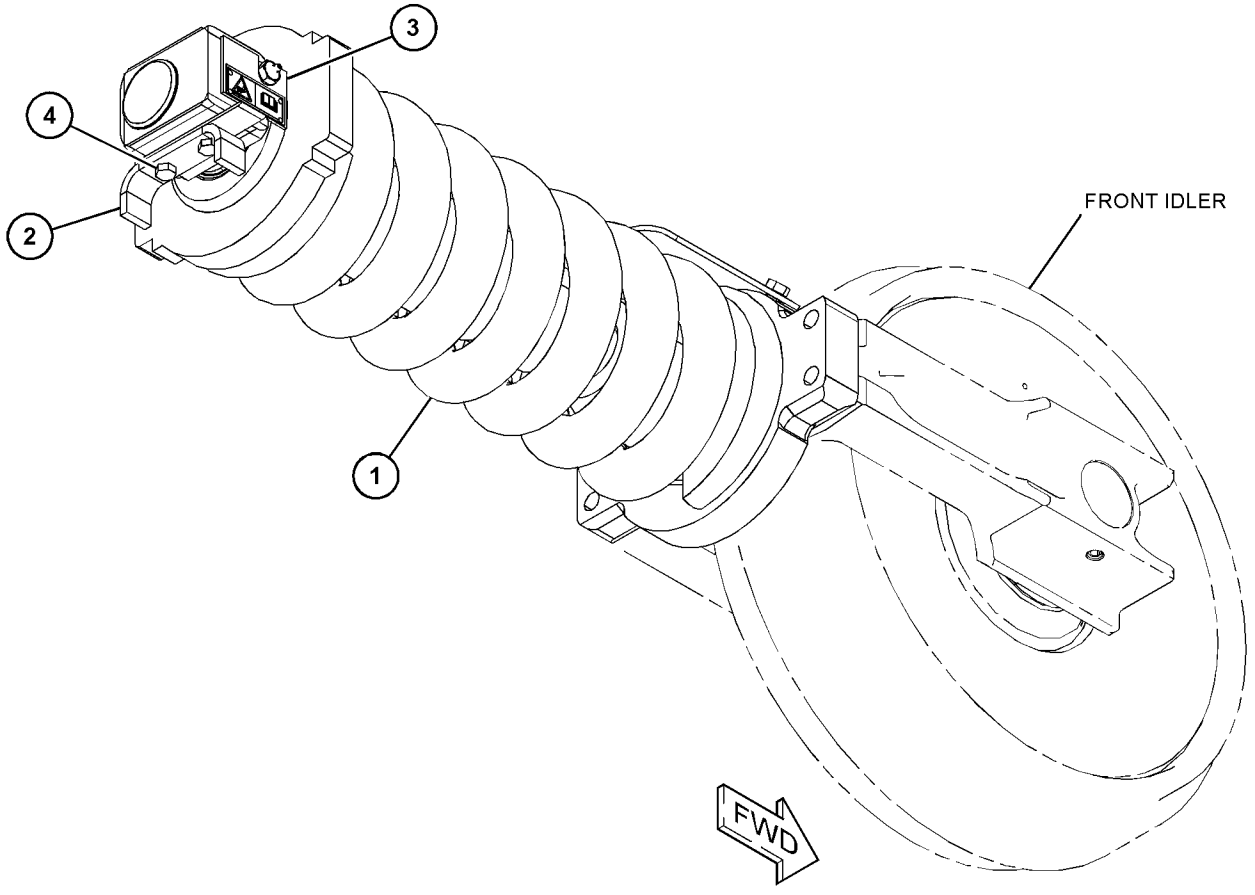

(VIEWED FROM BOTTOM)

GRAPHIC #1 <END> g06206566

489-1621 TRACK ADJUSTER & RECOIL GP–LH

S/N: BR61-UP

PART OF 489-1618 IDLER GP-FRONT

SMCS-4157, 4158 **i07356867**

NOTE	REF NO	GRAPHIC REF	PART NUMBER	QTY	PART NAME 1 2 3 4 5 6 (PRODUCT LEVEL)	SEE PAGE
Y	1	1	*489-7195*	1	TRACK ADJUSTER & RECOIL GP	372
	2	1	**7Y-1746**	1	PLATE	
	3	1	**489-7192**	1	PLATE AS (LH)	
		1	**4B-4158**	4	SCREW-DRIVE (NO 4X0.25-IN)	
		1	**253-1346**	1	PLATE-WARNING (HIGH PRESSURE CYLINDER)	
M	4	1	**8T-4137**	2	BOLT (M10X1.5X20-MM)	

M - METRIC PART
Y - SEPARATE ILLUSTRATION

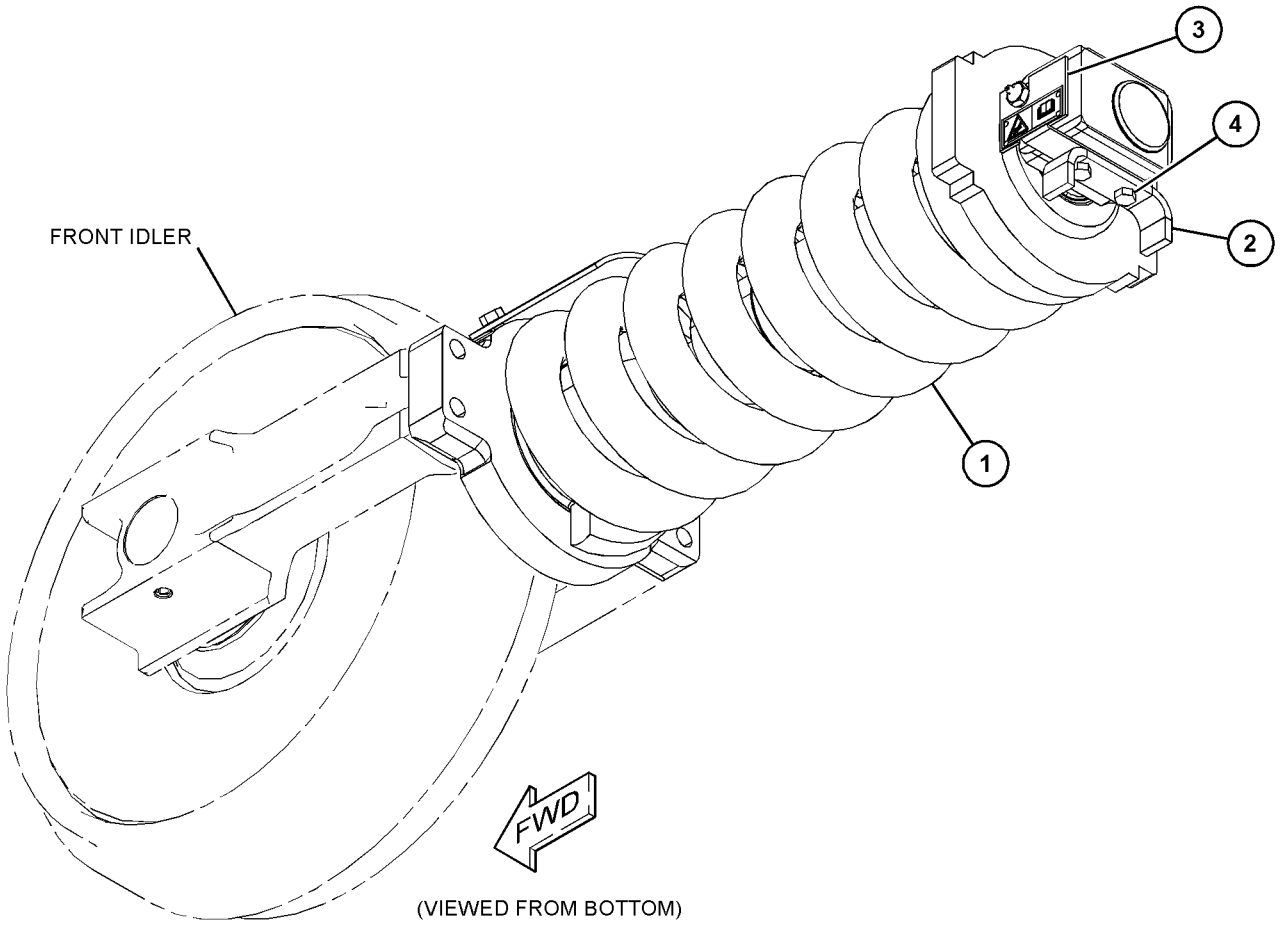

(VIEWED FROM BOTTOM)

GRAPHIC #1 <END> g06206567

489-7195 TRACK ADJUSTER & RECOIL GP

S/N: BR61-UP

PART OF 489-1620, 489-1621 TRACK ADJUSTER & RECOIL GP

SMCS-4157, 4158 **i07356876**

NOTE	REF NO	GRAPHIC REF	PART NUMBER	QTY	PART NAME 1 2 3 4 5 6 (PRODUCT LEVEL)	SEE PAGE
Y	1	1	**489-7197**	1	TRACK ADJUSTER & RECOIL GP	373
	2	1	**7Y-1781**	1	COVER	
	3	1	**145-3035**	1	PLATE	
	4	1	**239-4378**	1	SUPPORT	
	5	1	**239-4382**	1	NUT (M48X5-THD)	
	6	1	**239-4383**	1	STRIP	
	7	1	**239-4384**	1	SPACER (49X95X72-MM THK)	
	8	1	**239-4393**	1	WASHER (50X78X8-MM THK)	
	9	1	**523-9235**	1	SPRING	
M	10	1	**7X-2536**	2	BOLT (M8X1.25X14-MM)	
M	11	1	**8T-4179**	2	BOLT (M12X1.75X20-MM)	

M - METRIC PART
Y - SEPARATE ILLUSTRATION

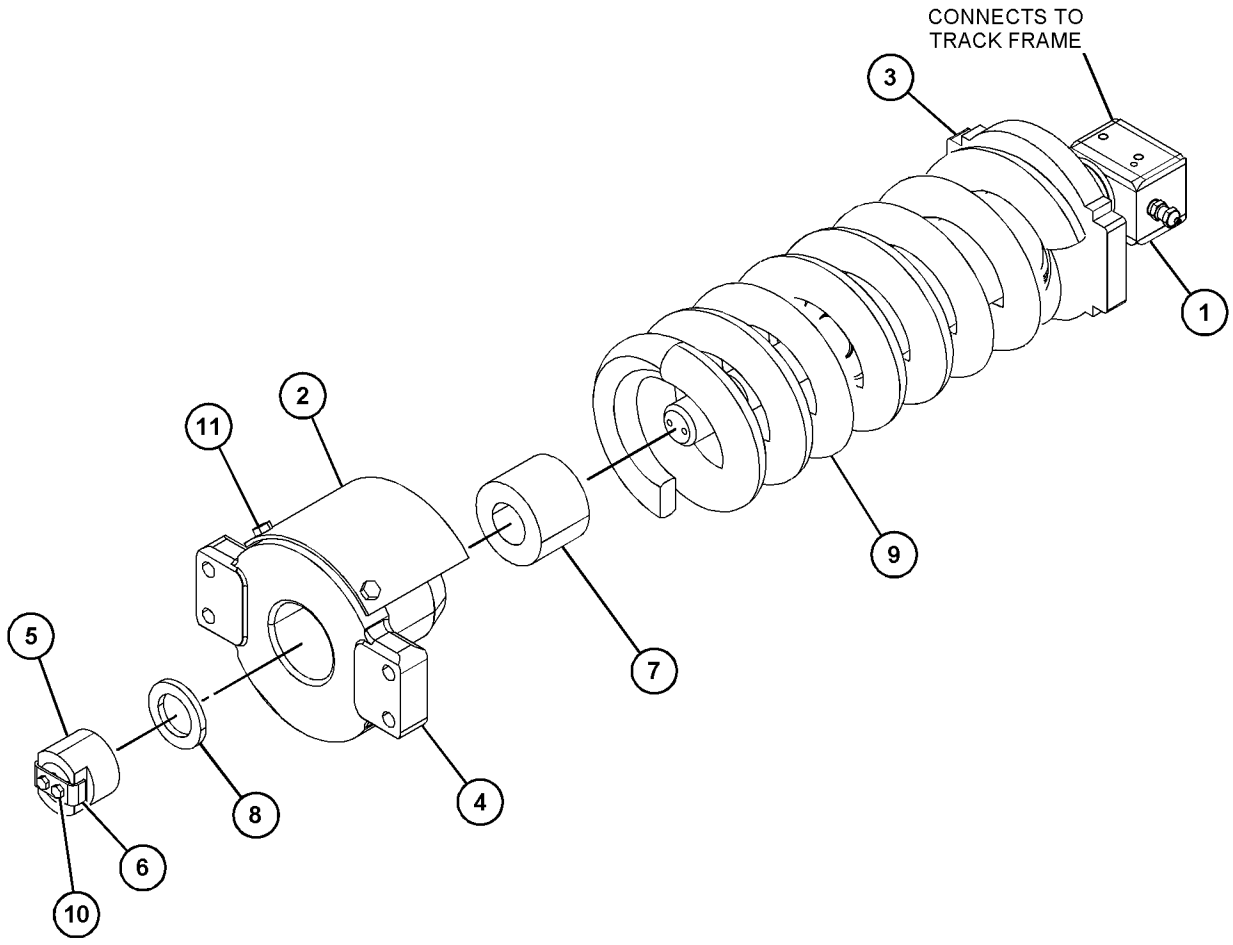

GRAPHIC #1 <END> g06207524

489-7197 TRACK ADJUSTER & RECOIL GP

S/N: BR61-UP

PART OF 489-7195 TRACK ADJUSTER & RECOIL GP

SMCS-4157, 4158 **i07356890**

NOTE	REF NO	GRAPHIC REF	PART NUMBER	QTY	PART NAME 1 2 3 4 5 6 (PRODUCT LEVEL)	SEE PAGE
	1	1	**7Y-0682**	2	RING	
	2	1	**093-1436**	1	SEAL-LIP TYPE	
	3	1	**093-1512**	2	RING	
	4	1	**239-4391**	1	ROD	
	5	1	**239-4392**	1	CYLINDER	
	6	1	**239-4394**	1	RING-BACKUP	
	7	1	**248-7174**	2	SEAL-O-RING	
	8	1	**489-7198**	1	PISTON AS	
	9	1	**489-7202**	1	VALVE-FILL	
	10	1	**095-1704**	1	SEAL-O-RING	

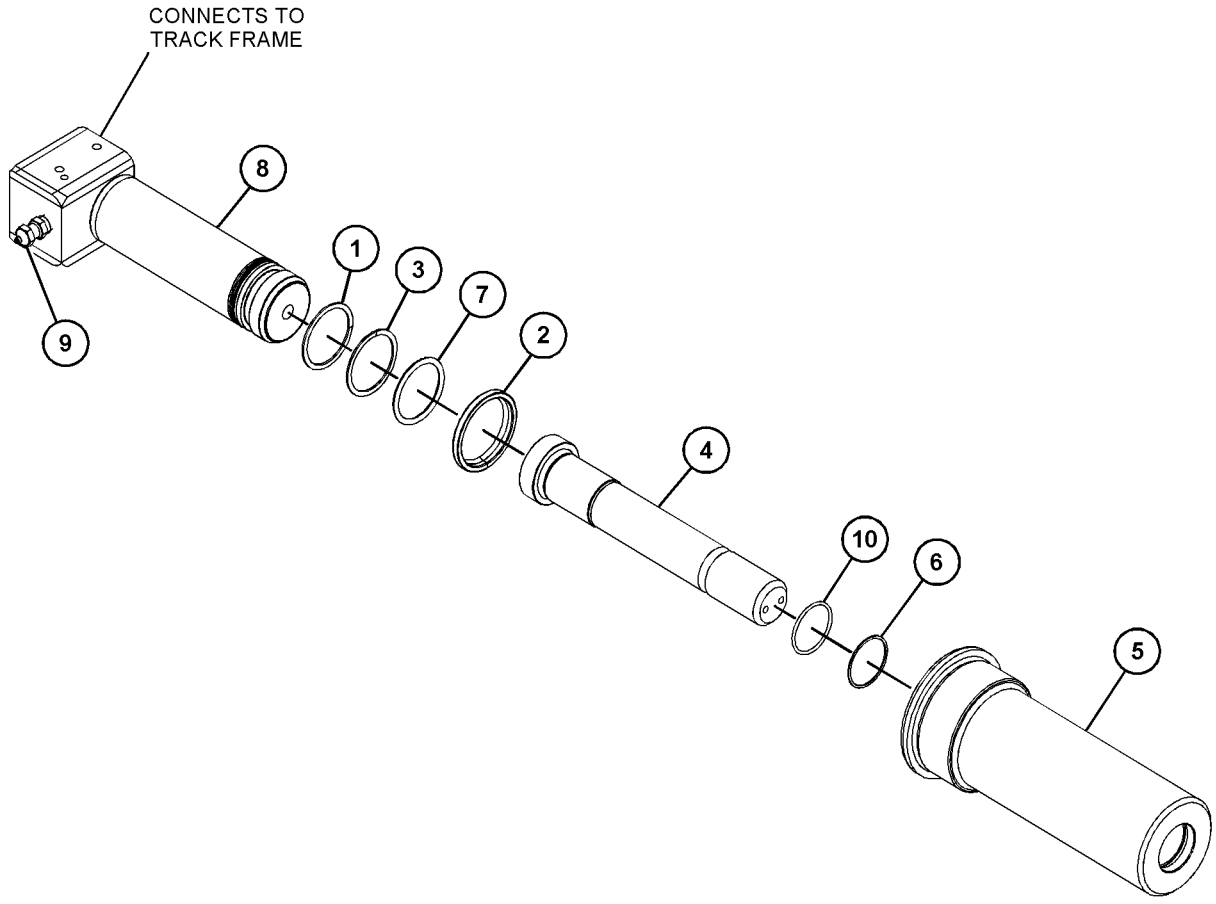

GRAPHIC #1 <END> g06207620

469-1034 TRACK AR

S/N: BR61-UP

600-MM (23.6-IN) TRIPLE GROUSER. GREASE LUBRICATED TRACK

SMCS-4170 **i07375840**

NOTE	PART NUMBER	QTY	PART NAME 1 2 3 4 5 6 (PRODUCT LEVEL)	SEE PAGE
Y	*469-0667*	2	TRACK GP	376

Y - SEPARATE ILLUSTRATION

<END>

510-9328 TRACK AR

S/N: BR61-UP

700-MM (27.5-IN) TRIPLE GROUSER SHOE. GREASE LUBRICATED TRACK

SMCS-4170 **i07375846**

NOTE	PART NUMBER	QTY	PART NAME 1 2 3 4 5 6 (PRODUCT LEVEL)	SEE PAGE
Y	*415-5237*	2	TRACK GP	375

Y - SEPARATE ILLUSTRATION

<END>

521-3306 TRACK AR

S/N: BR61-UP

790-MM (31.1-IN). TRIPLE GROUSER SHOE. GREASE LUBRICATED TRACK

SMCS-4170 **i07375861**

NOTE	PART NUMBER	QTY	PART NAME 1 2 3 4 5 6 (PRODUCT LEVEL)	SEE PAGE
Y	*488-9289*	1	STEP GP	353
Y	*359-3119*	2	TRACK GP	374

Y - SEPARATE ILLUSTRATION

<END>

359-3119 TRACK GP–2-REQUIRED

S/N: BR61-UP

790-MM (31.1-IN) TRIPLE GROUSER SHOE. GREASE LUBRICATED TRACK

PART OF 521-3306 TRACK AR

SMCS-4170 **i05432627**

NOTE	PART NUMBER	QTY	PART NAME 1 2 3 4 5 6 (PRODUCT LEVEL)	SEE PAGE
Y	**341-6797**	1	LINK AS-TRACK	364
M	**9W-3619**	196	BOLT-TRACK (M20X1.5X55-MM)	
M	**9W-3361**	196	NUT-TRACK (M20X1.5-THD)	
	332-8903	49	SHOE-TRACK	

M - METRIC PART
Y - SEPARATE ILLUSTRATION

<END>

415-5237 TRACK GP—2-REQUIRED

S/N: BR61-UP

700-MM (27.6-IN) TRIPLE GROUSER SHOE. GREASE LUBRICATED TRACK

PART OF 510-9328 TRACK AR

SMCS-4170 **i04905541**

NOTE	PART NUMBER	QTY	PART NAME 1 2 3 4 5 6 (PRODUCT LEVEL)	SEE PAGE
Y	**341-6797**	1	LINK AS-TRACK	364
M	**9W-3619**	196	BOLT-TRACK (M20X1.5X55-MM)	
M	**9W-3361**	196	NUT-TRACK (M20X1.5-THD)	
	6I-9454	49	SHOE-TRACK	

M - METRIC PART
Y - SEPARATE ILLUSTRATION

<END>

469-0667 TRACK GP–2 REQUIRED

S/N: BR61-UP

600-MM (23.6-IN) TRIPLE GROUSER. GREASE LUBRICATED TRACK

PART OF 469-1034 TRACK AR

SMCS-4170 **i07362616**

NOTE	REF NO	GRAPHIC REF	PART NUMBER	QTY	PART NAME 1 2 3 4 5 6 (PRODUCT LEVEL)	SEE PAGE
Y	1	1	**341-6797**	1	LINK AS-TRACK	364
	2	1	**6I-9453**	49	SHOE-TRACK	
M	3	1	**9W-3361**	196	NUT-TRACK (M20X1.5-THD)	
M	4	1	**9W-3619**	196	BOLT-TRACK (M20X1.5X55-MM)	

M - METRIC PART
Y - SEPARATE ILLUSTRATION

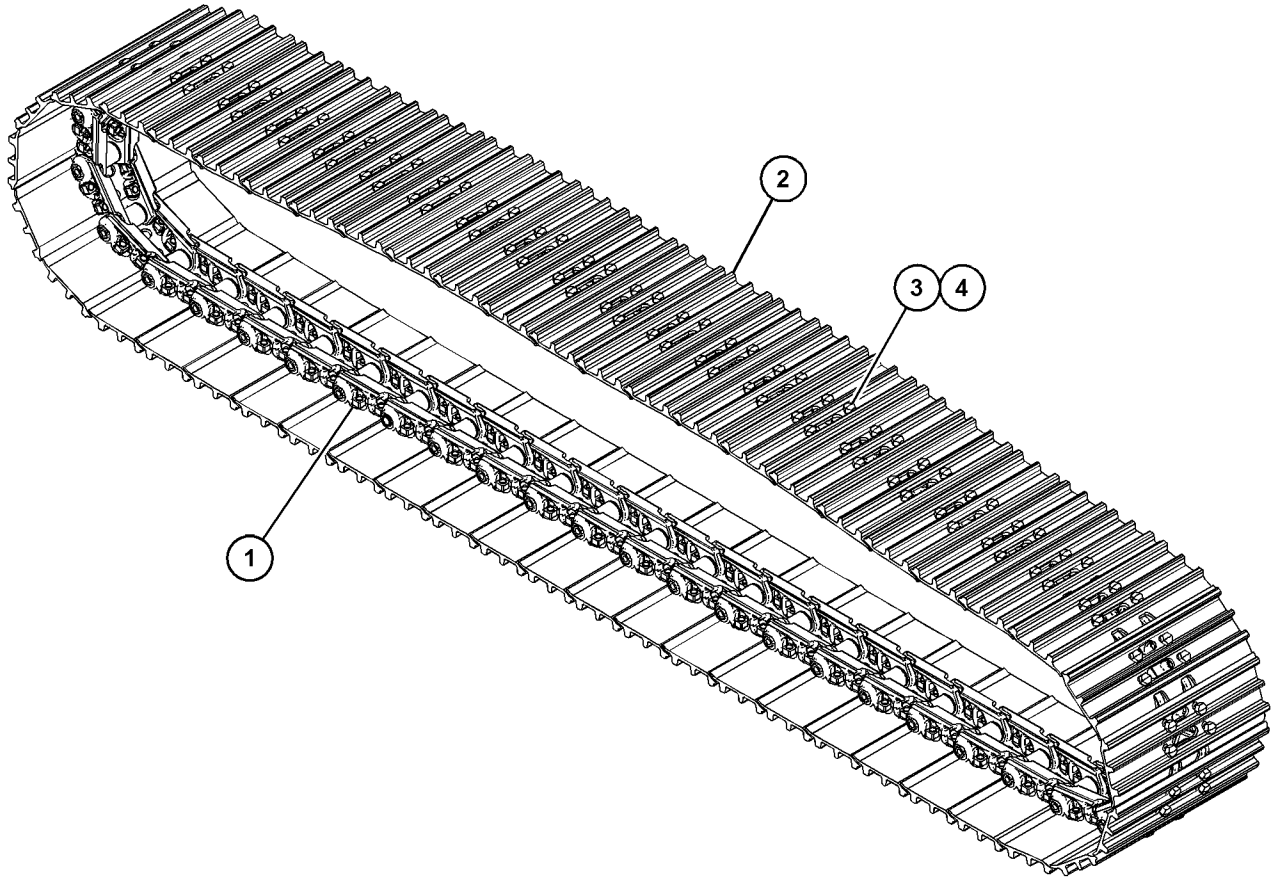

GRAPHIC #1 <END> g03889803

489-1591 UNDERCARRIAGE AR

S/N: BR61-UP

SMCS-4150 **i07374729**

NOTE	PART NUMBER	QTY	PART NAME 1 2 3 4 5 6 (PRODUCT LEVEL)	SEE PAGE
Y	**490-3896**	1	FRAME AS-UNDERCARRIAGE (HEAVY DUTY) (LONG)	355
Y	*489-1594*	1	IDLER GP-FRONT	361
Y	*489-3062*	1	LINES GP-TRAVEL MOTOR	486
Y	*489-1631*	1	ROLLER AR-TRACK & CARRIER	366

Y - SEPARATE ILLUSTRATION

<END>

529-3052 UNDERCARRIAGE AR—LONG

S/N: BR61-UP

HEAVY DUTY

PART OF 532-9515, 532-9518 DISTRIBUTION AR

SMCS-4150 **i07374735**

NOTE	PART NUMBER	QTY	PART NAME 1 2 3 4 5 6 (PRODUCT LEVEL)	SEE PAGE
Y	**488-9284**	1	FRAME AS-UNDERCARRIAGE (LONG)	354
Y	*489-1594*	1	IDLER GP-FRONT	361
Y	*489-3062*	1	LINES GP-TRAVEL MOTOR	486
Y	*489-1630*	1	ROLLER AR-TRACK & CARRIER	365

Y - SEPARATE ILLUSTRATION

<END>

550-3471 UNDERCARRIAGE AR

S/N: BR61-UP

PART OF 556-2899, 556-2902 DISTRIBUTION AR

SMCS-4150 **i07375835**

NOTE	PART NUMBER	QTY	PART NAME 1 2 3 4 5 6 (PRODUCT LEVEL)	SEE PAGE
Y	*535-6243*	1	FINAL DRIVE & MOUNTING GP	299
Y	**488-9284**	1	FRAME AS-UNDERCARRIAGE (LONG)	354
Y	*489-1594*	1	IDLER GP-FRONT	361
Y	*529-6948*	1	LINES GP-TRAVEL MOTOR (LONG UNDERCARRIAGE)	488
Y	*489-1630*	1	ROLLER AR-TRACK & CARRIER	365

Y - SEPARATE ILLUSTRATION

<END>

351-9674 ACCUMULATOR GP-HYDRAULIC—CHARGED

S/N: BR61-UP

PART OF 352-6860 ACCUMULATOR GP-HYDRAULIC

SMCS-5077 **i07358893**

NOTE	REF NO	GRAPHIC REF	PART NUMBER	QTY	PART NAME 1 2 3 4 5 6 (PRODUCT LEVEL)	SEE PAGE
					(NO SERVICED PARTS)	

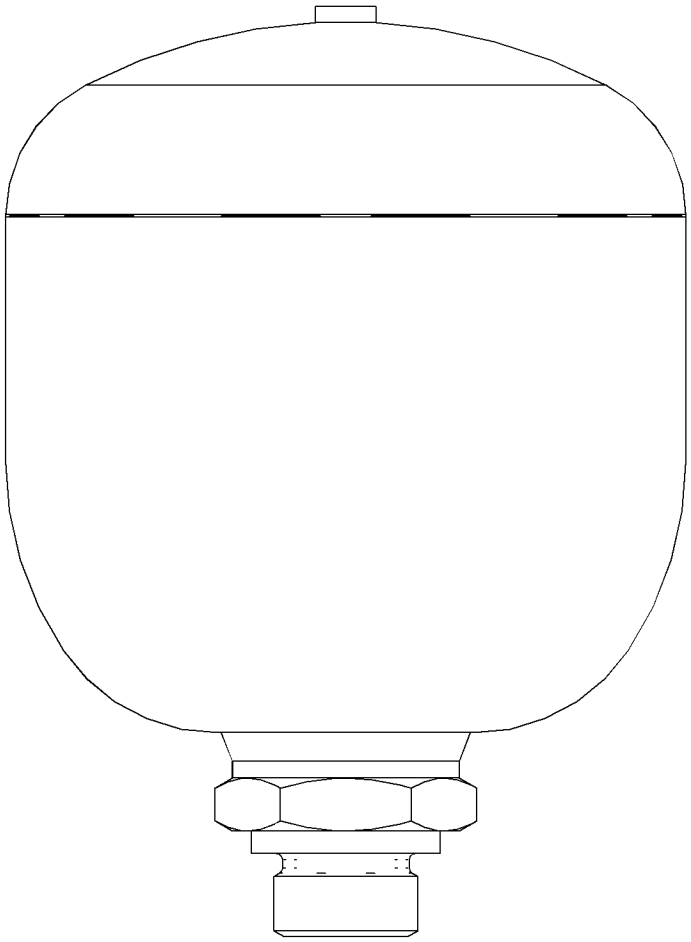

GRAPHIC #1 <END> g03851713

352-6860 ACCUMULATOR GP-HYDRAULIC—CHARGED

S/N: BR61-UP

PART OF 489-2935 LINES GP-PILOT

SMCS-5077 **i07358865**

NOTE	REF NO	GRAPHIC REF	PART NUMBER	QTY	PART NAME 1 2 3 4 5 6 (PRODUCT LEVEL)	SEE PAGE
Y	1	1	**351-9674**	1	ACCUMULATOR GP-HYDRAULIC (CHARGED)	378
	2	1	**3K-0360**	1	SEAL-O-RING	

Y - SEPARATE ILLUSTRATION

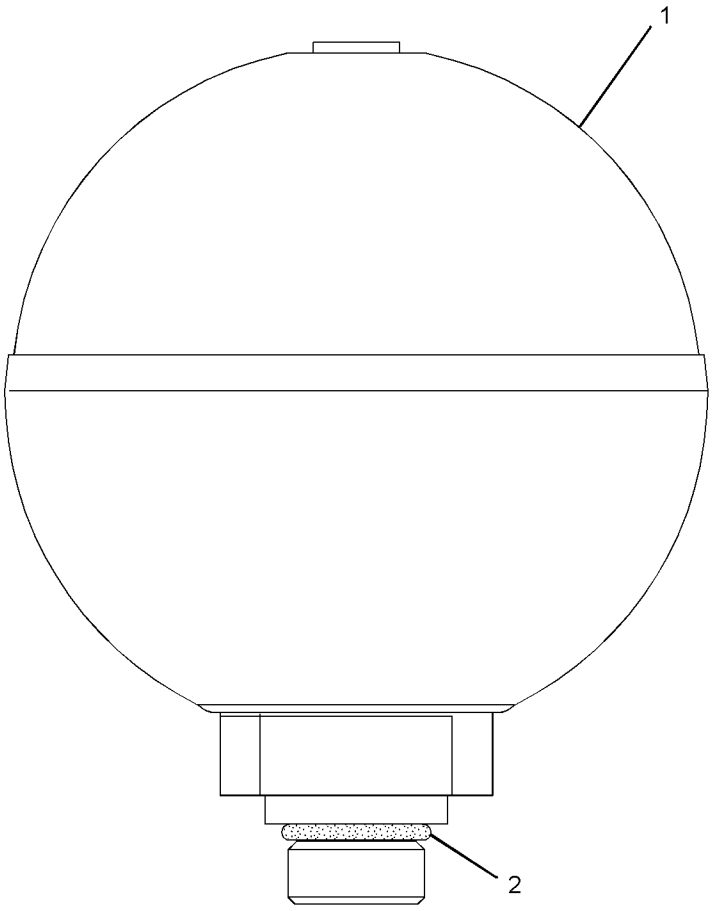

GRAPHIC #1 <END> g02996439

528-6835 CONTROL AR-AUXILIARY—JOYSTICK, SLIDERS

S/N: BR61-UP

PART OF 532-9539, 537-5861 OPTION AR-HYDRAULIC

SMCS-5051 **i07420718**

NOTE	PART NUMBER	QTY	PART NAME 1 2 3 4 5 6 (PRODUCT LEVEL)	SEE PAGE
Y	*538-2111*	1	FILM GP	688
Y	*529-7141*	1	MOUNTING GP-CONTROL	205
Y	*493-0982*	1	WIRING GP-ELECTRONIC CONTROL (JOYSTICK)	261

Y - SEPARATE ILLUSTRATION

<END>

528-6841 CONTROL AR-AUXILIARY—2-WAY FLOW, 1-PUMP, ELEC CONT

S/N: BR61-UP

WITH HAMMER FILTER

PART OF 537-5861 OPTION AR-HYDRAULIC

SMCS-5051 **i07410287**

NOTE	PART NUMBER	QTY	PART NAME 1 2 3 4 5 6 (PRODUCT LEVEL)	SEE PAGE
Y	*520-9420*	1	FILM GP (INTERNATIONAL)	680
Y	*531-3323*	1	LINES GP-FRONT	455
Y	*524-4392*	1	MOUNTING GP-WIRING (RETURN FILTER, HAMMER)	208
Y	*528-0174*	1	WIRING GP-CHASSIS (2-WAY FLOW, 1-PUMP, ELEC CONT)	251
Y	*490-2714*	1	WIRING GP-VALVE	277

Y - SEPARATE ILLUSTRATION

<END>

558-3528 CONTROL AR-AUXILIARY—2-WAY FLOW, 1-PUMP, ELEC CONT

S/N: BR610001-UP

WITH HAMMER RETURN FILTER

SMCS-5051 **i07434623**

NOTE	PART NUMBER	QTY	PART NAME 1 2 3 4 5 6 (PRODUCT LEVEL)	SEE PAGE
Y	*520-9420*	1	FILM GP (INTERNATIONAL)	680
Y	*558-1390*	1	LINES GP-FRONT (2-WAY FLOW, 1-PUMP, ELEC CONT)	461
Y	*524-4392*	1	MOUNTING GP-WIRING (RETURN FILTER, HAMMER)	208
Y	*528-0174*	1	WIRING GP-CHASSIS (2-WAY FLOW, 1-PUMP, ELEC CONT)	251
Y	*490-2714*	1	WIRING GP-VALVE	277

Y - SEPARATE ILLUSTRATION

<END>

543-3692 CONTROL AS-PISTON PUMP

S/N: BR61-UP

PART OF 531-9886 PUMP GP-MAIN HYDRAULIC

SMCS-5070 **i07359570**

NOTE	REF NO	GRAPHIC REF	PART NUMBER	QTY	PART NAME 1 2 3 4 5 6 (PRODUCT LEVEL)	SEE PAGE
	1	1	**543-3724**	1	PISTON AS	
		1	**543-3725**	1	RING	
	2	1	**524-6339**	1	CAP AS	
	3	1	**543-3722**	1	PISTON AS	
		1	**543-3723**	1	SEAL AS	

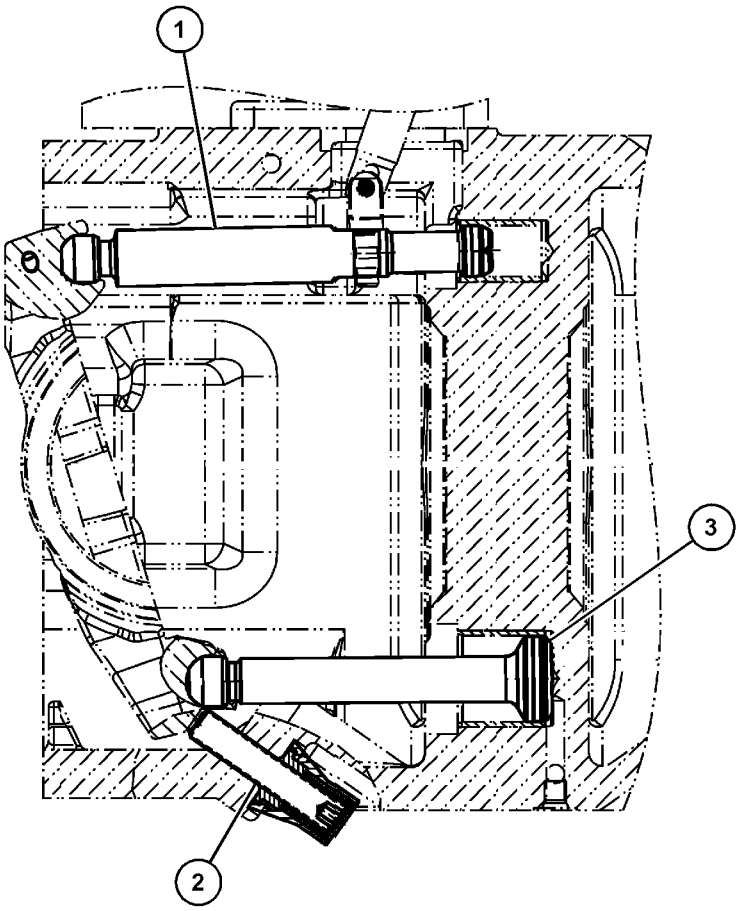

GRAPHIC #1 <END> g06287186

339-6951 COUPLING GP-FLEXIBLE

S/N: BR61-UP

PART OF 341-5368 COUPLING GP-PUMP

SMCS-3252 **i05453709**

NOTE	REF NO	GRAPHIC REF	PART NUMBER	QTY	PART NAME 1 2 3 4 5 6 (PRODUCT LEVEL)	SEE PAGE
M	1	1	**7Y-0466**	2	SETSCREW-SOCKET (M16X2X22-MM)	
M	2	1	**7Y-0467**	4	BOLT-SOCKET HEAD (M18X2.5X55-MM)	
	3	1	**339-6952**	1	HUB	
	4	1	**339-6953**	4	INSERT-COUPLING	
	5	1	**339-6954**	4	INSERT-COUPLING	
	6	1	**339-6955**	1	ELEMENT-COUPLING	
	7	1	**7Y-0468**	8	PIN-SPRING	

M - METRIC PART

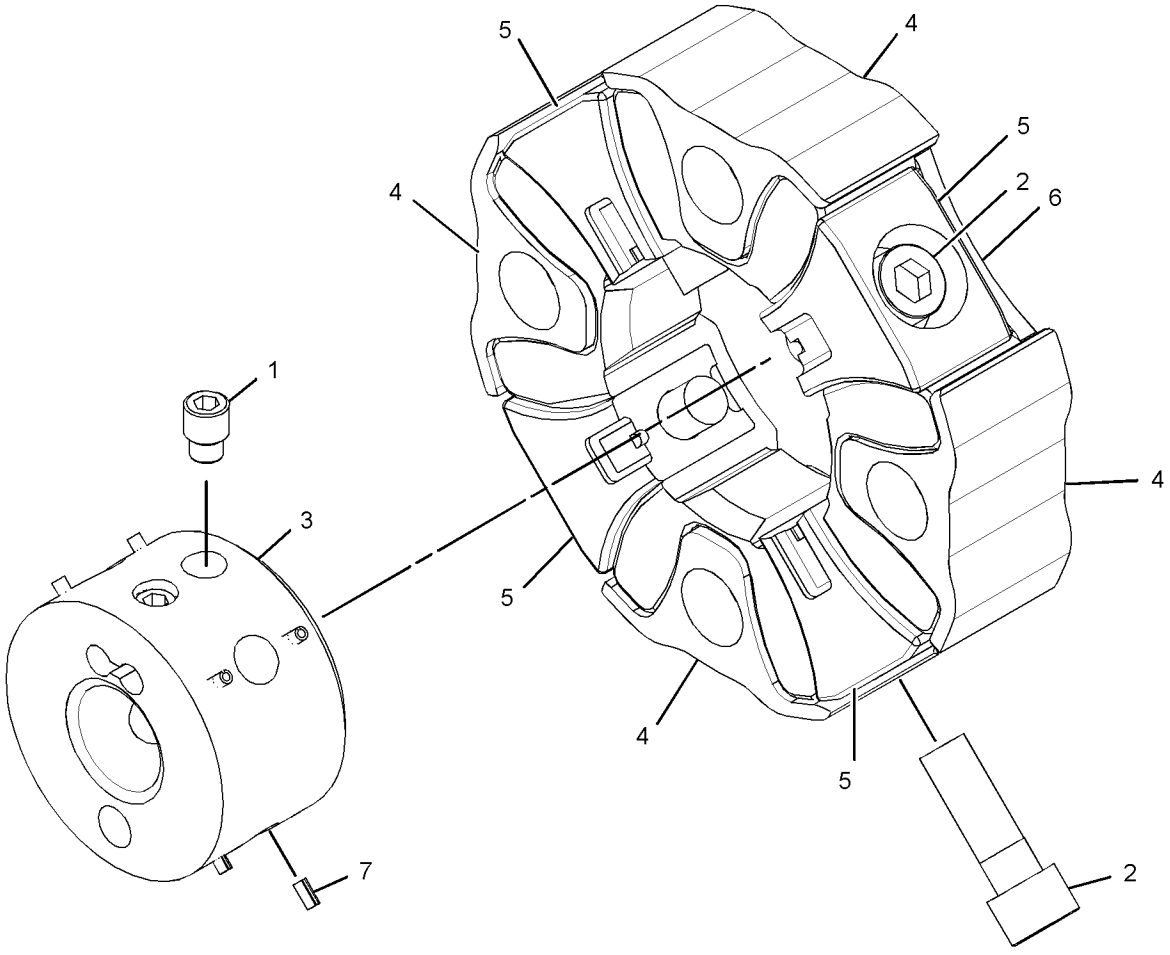

GRAPHIC #1 <END> g02635658

341-5368 COUPLING GP-PUMP

S/N: BR61-UP

PART OF 511-4775, 558-7709 INSTALLATION AR-ENGINE

SMCS-5062 **i05896777**

NOTE	REF NO	GRAPHIC REF	PART NUMBER	QTY	PART NAME 1 2 3 4 5 6 (PRODUCT LEVEL)	SEE PAGE
M	1	1	**458-8848**	4	BOLT-SOCKET HEAD (M18X2.5X60-MM)	
Y	2	1	**339-6951**	1	COUPLING GP-FLEXIBLE	382
	3	1	**7Y-0468**	4	PIN-SPRING	

M - METRIC PART
Y - SEPARATE ILLUSTRATION

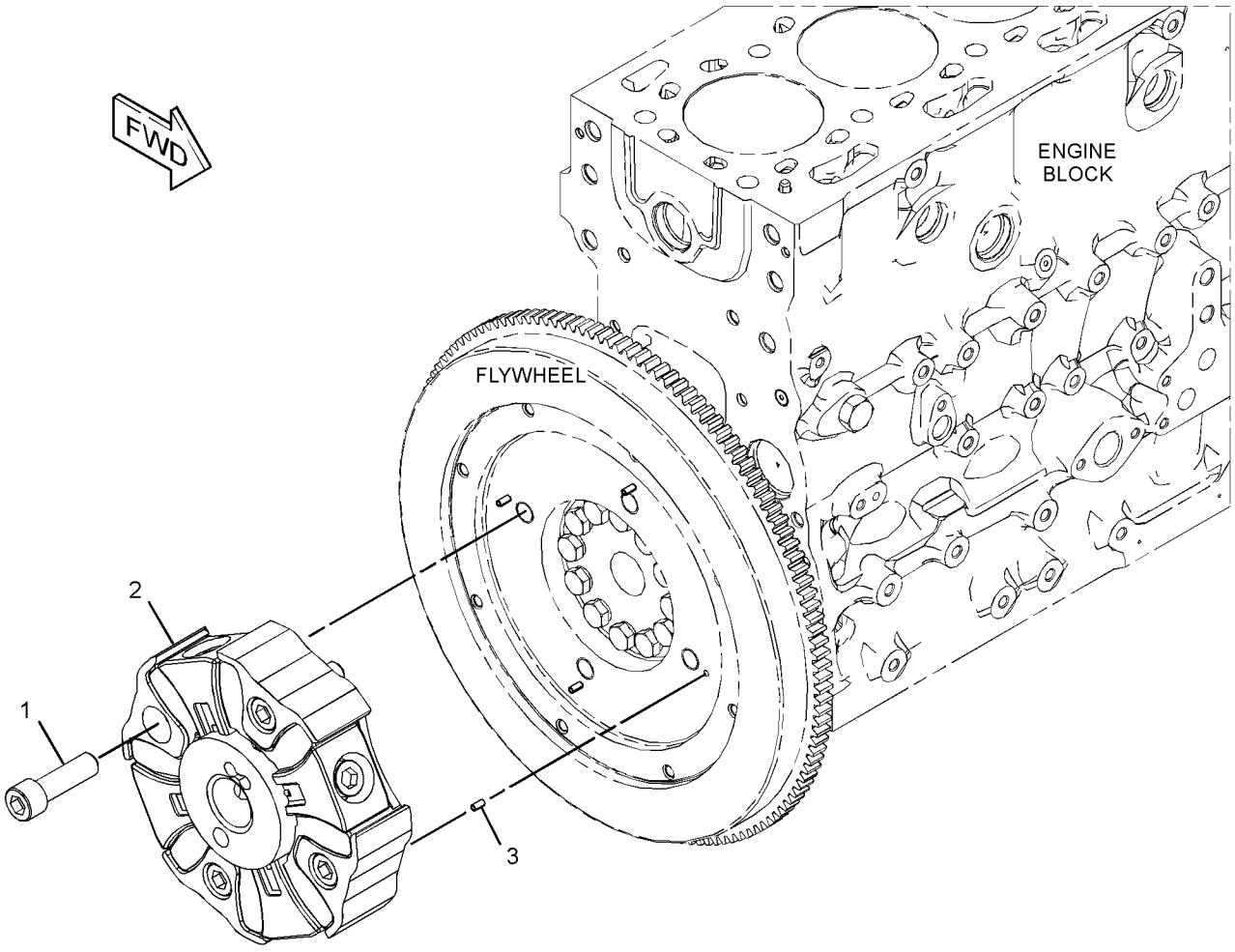

GRAPHIC #1 <END> g02601676

543-3693 COVER GP-PUMP

S/N: BR61-UP

PART OF 531-9886 PUMP GP-MAIN HYDRAULIC

SMCS-5070 **i07359741**

NOTE	REF NO	GRAPHIC REF	PART NUMBER	QTY	PART NAME 1 2 3 4 5 6 (PRODUCT LEVEL)	SEE PAGE
	1	1	**543-3726**	1	COVER	
M	2	1	**8T-3957**	4	BOLT-SOCKET HEAD (M12X1.75X30-MM)	
	3	1	**9M-9729**	1	SEAL-O-RING	

M - METRIC PART

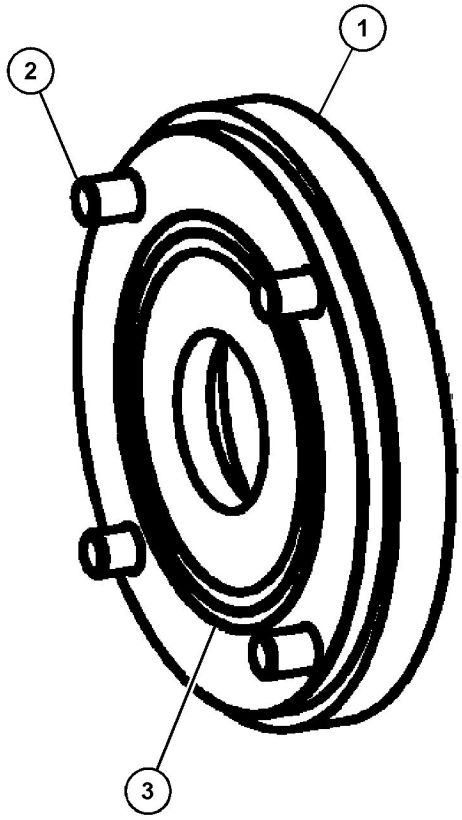

GRAPHIC #1 <END> g06287048

487-5869 COVER GP-VALVE END–LH

S/N: BR61-UP
MAIN CONTROL
PART OF 516-8626 VALVE & MTG GP-MAIN CONTROL, 516-8625 VALVE GP-MAIN CONTROL

SMCS-5051, 5137 **i07356662**

NOTE	REF NO	GRAPHIC REF	PART NUMBER	QTY	PART NAME 1 2 3 4 5 6 (PRODUCT LEVEL)	SEE PAGE
	1	1	**3J-7354**	1	SEAL-O-RING	
	2	1	*162-0177*	5	PLUG AS	
					(EACH INCLUDES)	
		1	**3J-1907**	1	SEAL-O-RING	
		1	**9S-8004**	1	PLUG (9/16-18-THD)	
	3	1	*225-4818*	1	PLUG AS	
		1	**4J-7533**	1	SEAL-O-RING	
		1	**225-4804**	1	PLUG	
	4	1	*225-4820*	1	PLUG AS	
		1	**3J-7354**	1	SEAL-O-RING	
		1	**225-4821**	1	PLUG	
	5	1	**520-3179**	1	PLUG-ORIFICE	

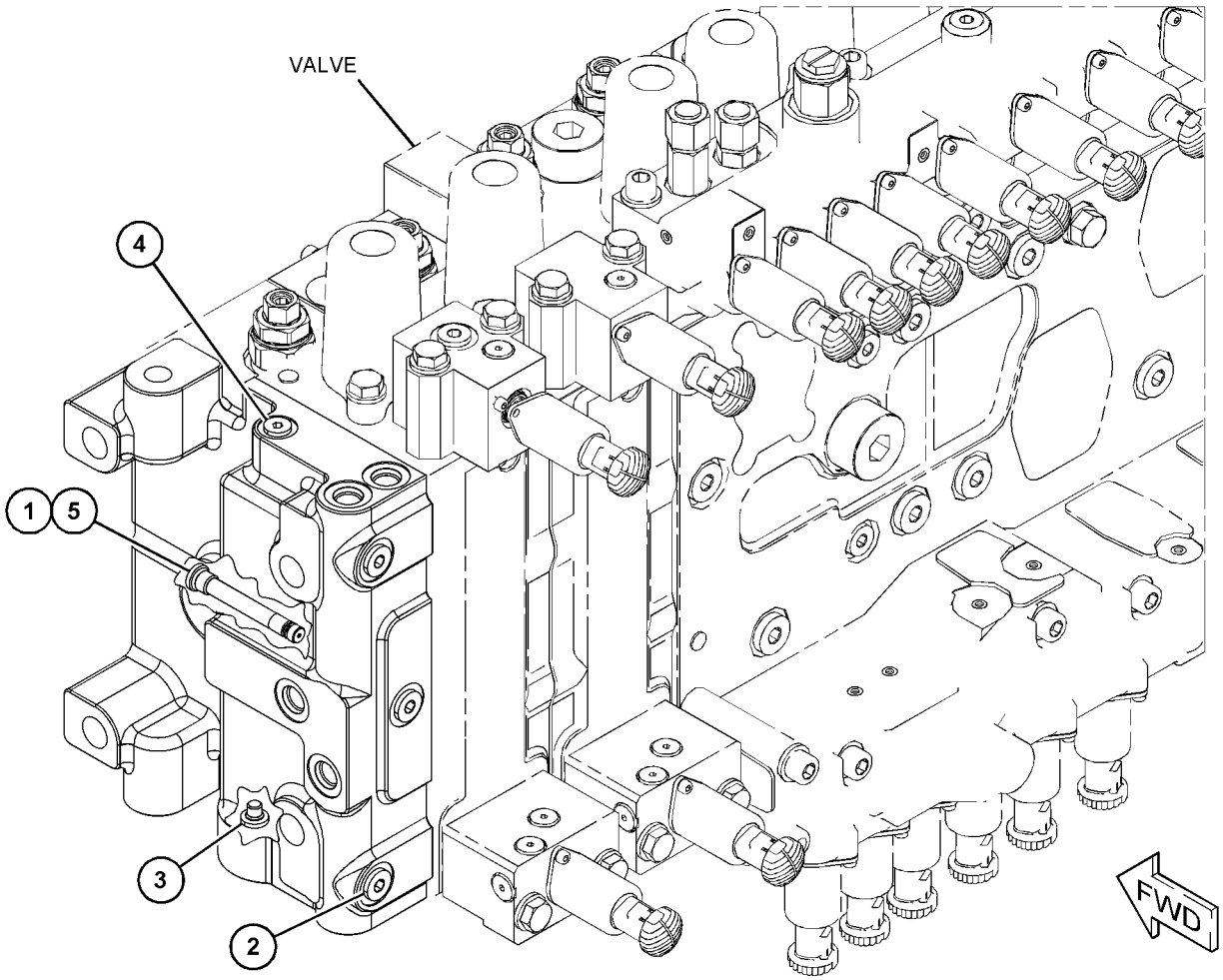

GRAPHIC #1 <END> g06229175

488-7773 COVER GP-VALVE END—RH

S/N: BR61-UP
MAIN CONTROL
PART OF 516-8626 VALVE & MTG GP-MAIN CONTROL, 516-8625 VALVE GP-MAIN CONTROL

SMCS-5051, 5137 **i07356478**

NOTE	REF NO	GRAPHIC REF	PART NUMBER	QTY	PART NAME 1 2 3 4 5 6 (PRODUCT LEVEL)	SEE PAGE
	1	1	**3J-7354**	1	SEAL-O-RING	
	2	1	*162-0177*	2	PLUG AS	
					(EACH INCLUDES)	
		1	**3J-1907**	1	SEAL-O-RING	
		1	**9S-8004**	1	PLUG (9/16-18-THD)	
	3	1	**520-3179**	1	PLUG-ORIFICE	

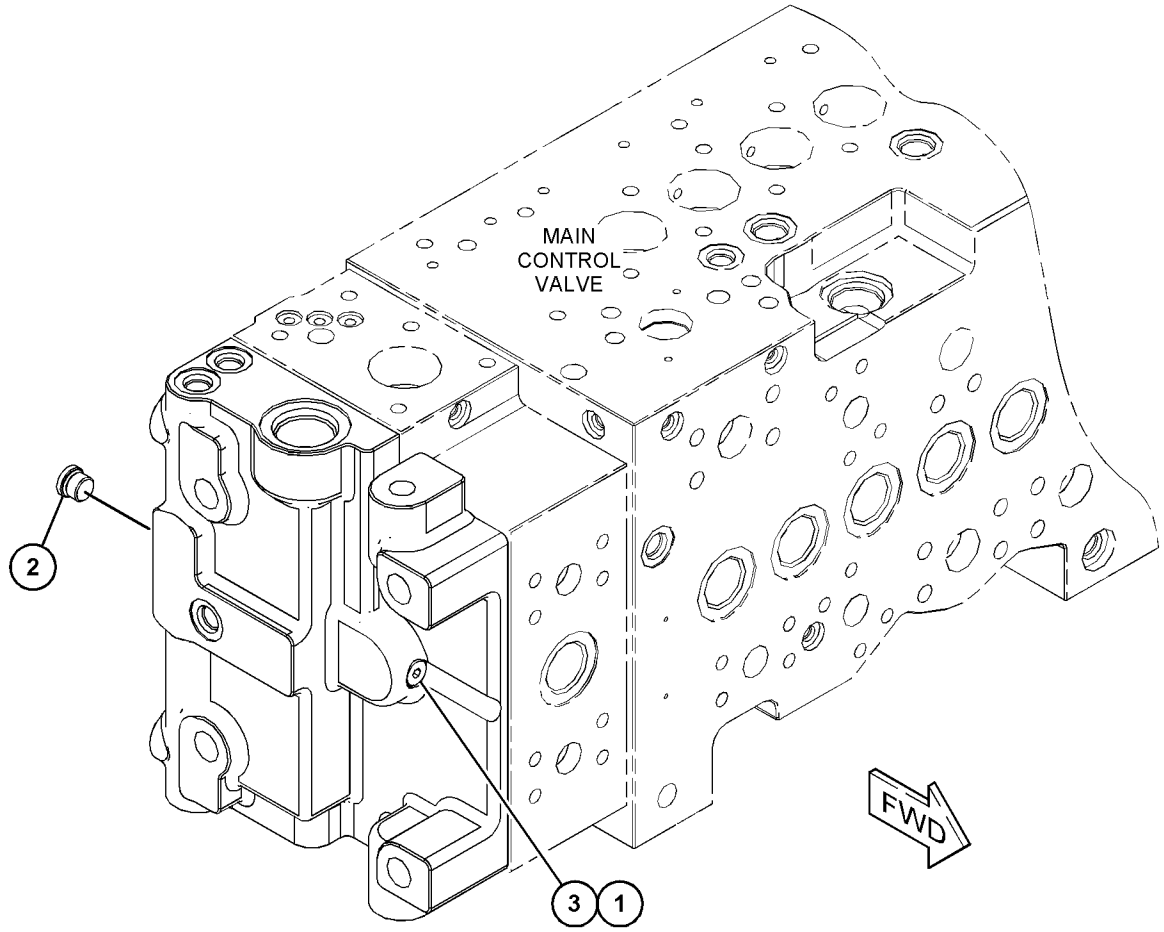

GRAPHIC #1 <END> g06230836

494-4966 CYLINDER & LINES GP-BOOM—LH

S/N: BR61-UP

PART OF 494-4985 CYLINDER AR-BOOM

SMCS-5456, 7562

i07352340

NOTE	REF NO	GRAPHIC REF	PART NUMBER	QTY	PART NAME 1 2 3 4 5 6 (PRODUCT LEVEL)	SEE PAGE
Y	1	1	*494-4971*	1	LINES GP-BOOM CYLINDER	432
Y	2	1	**510-9212**	1	CYLINDER & SEAL GP-BOOM	396

Y - SEPARATE ILLUSTRATION

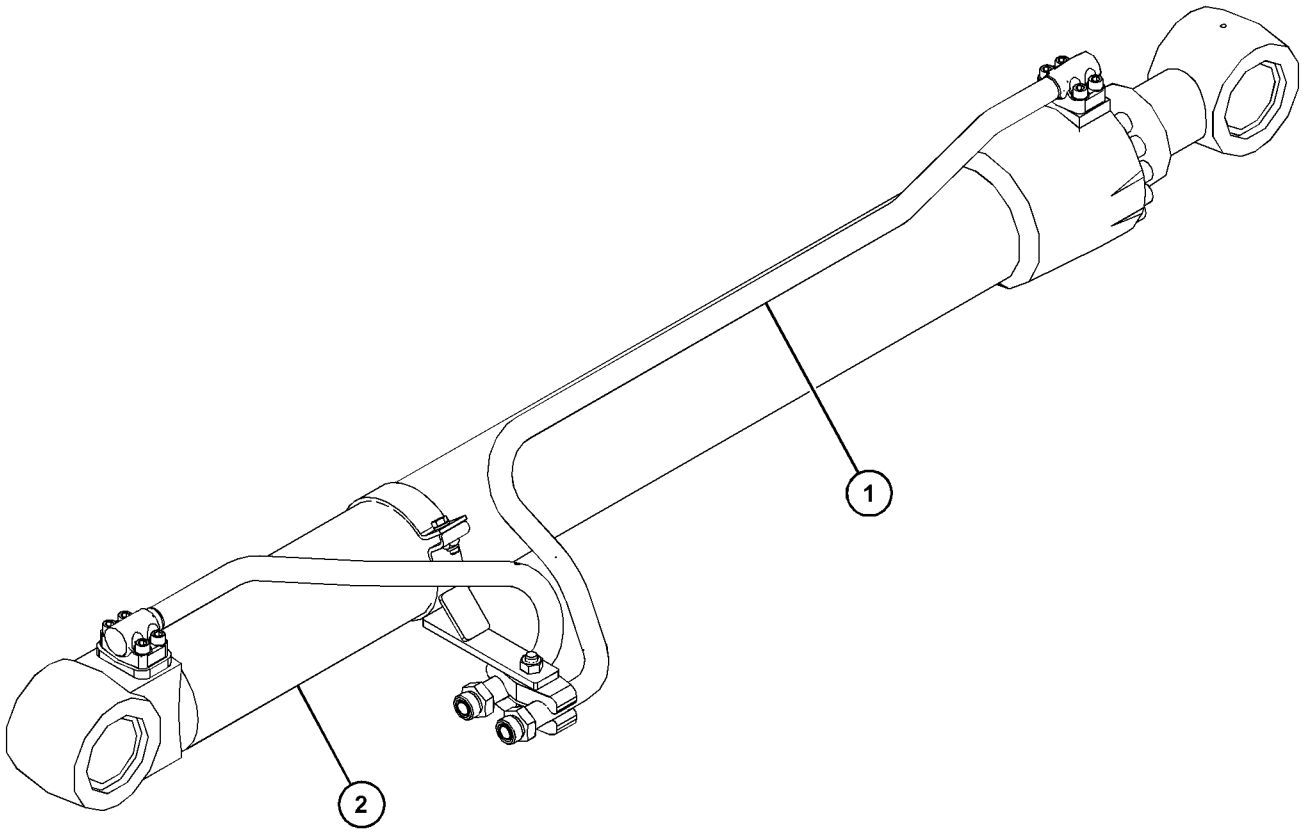

GRAPHIC #1 <END> g06227330

494-4967 CYLINDER & LINES GP-BOOM–RH

S/N: BR61-UP

PART OF 494-4985 CYLINDER AR-BOOM

TYPE 1

SMCS-5456, 7562 **i07352386**

NOTE	REF NO	GRAPHIC REF	PART NUMBER	QTY	PART NAME 1 2 3 4 5 6 (PRODUCT LEVEL)	SEE PAGE
Y	1	1	*494-4972*	1	LINES GP-BOOM CYLINDER (RH)	434
Y	2	1	**510-9212**	1	CYLINDER & SEAL GP-BOOM	396

Y - SEPARATE ILLUSTRATION

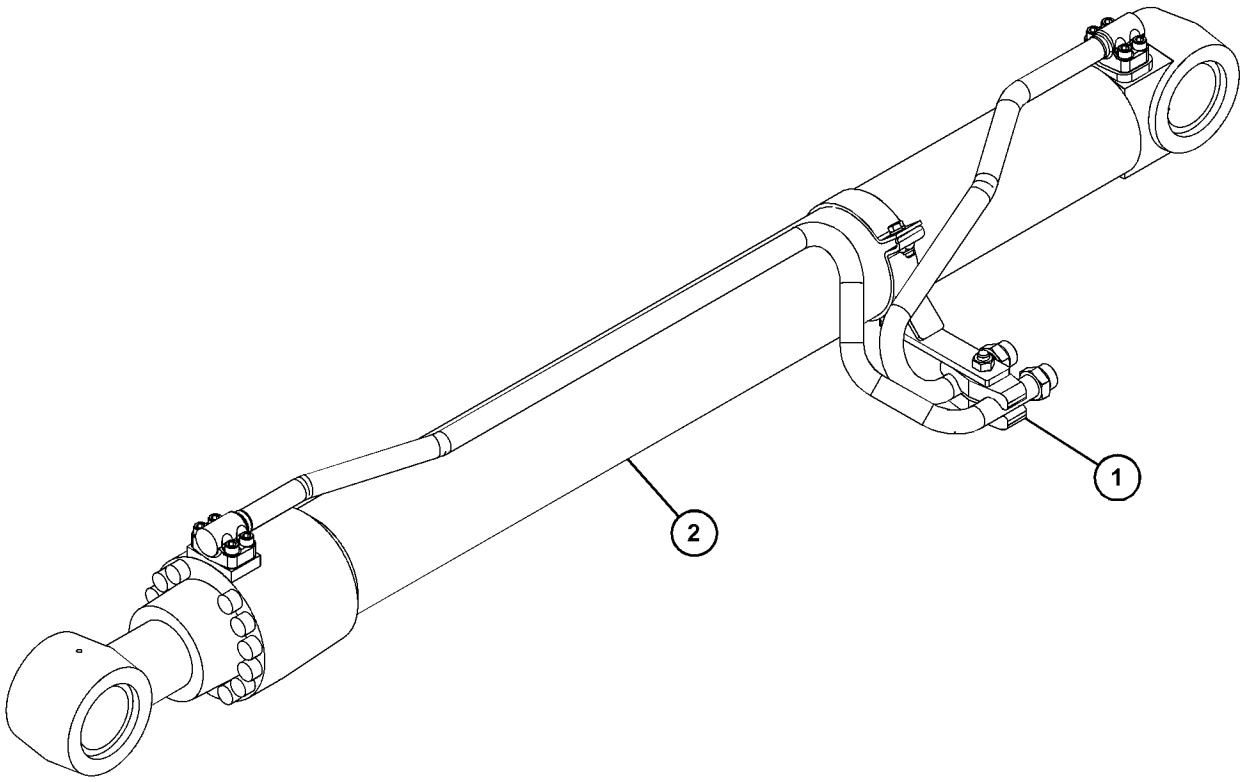

GRAPHIC #1 <END> g06227527

494-4967 CYLINDER & LINES GP-BOOM–RH

S/N: BR61-UP
PART OF 494-4985 CYLINDER AR-BOOM
TYPE 2

SMCS-5456, 7562 **i07466163**

NOTE	REF NO	GRAPHIC REF	PART NUMBER	QTY	PART NAME 1 2 3 4 5 6 (PRODUCT LEVEL)	SEE PAGE
CY	1	1	*561-5804*	1	LINES GP-BOOM CYLINDER (RH)	436
Y	2	1	**510-9212**	1	CYLINDER & SEAL GP-BOOM	396

C - CHANGE FROM PREVIOUS TYPE
Y - SEPARATE ILLUSTRATION

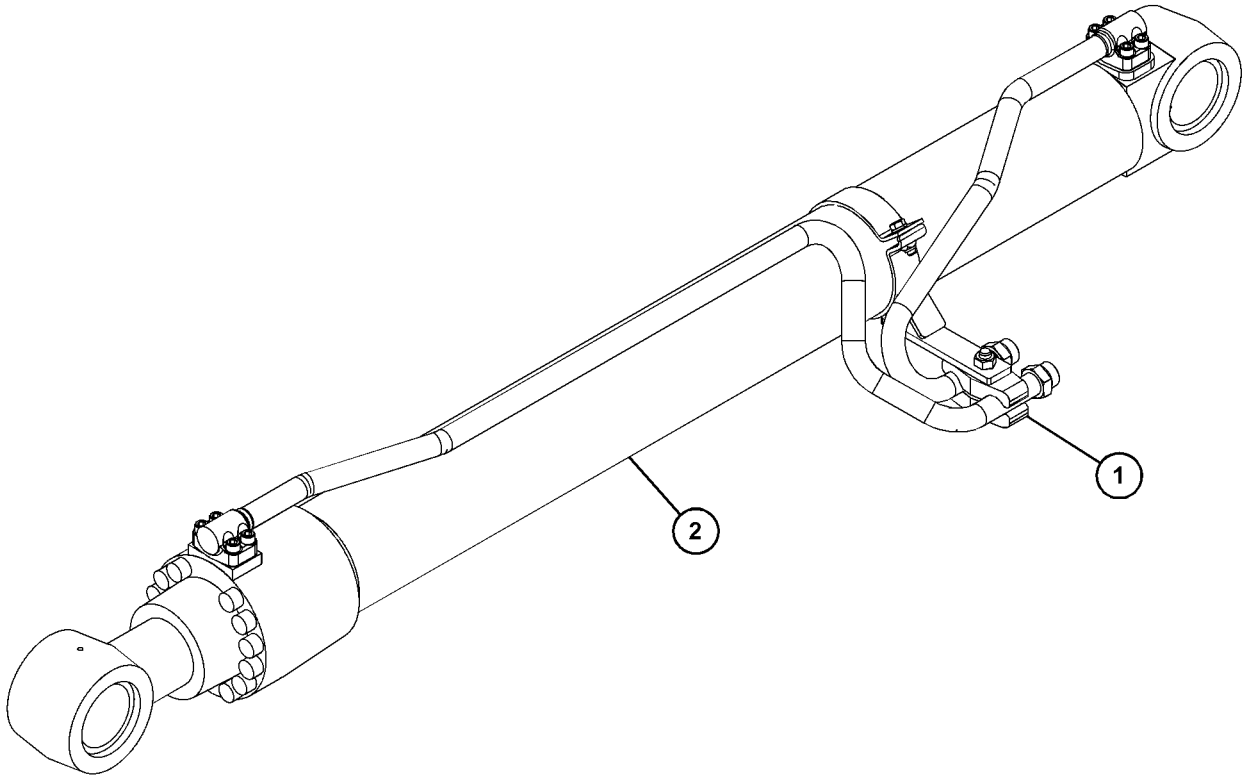

GRAPHIC #1 <END> g06227527

418-9085 CYLINDER & LINES GP-BUCKET

S/N: BR61-UP

PART OF 532-9518, 556-2902 DISTRIBUTION AR

SMCS-5457 **i06756593**

NOTE	PART NUMBER	QTY	PART NAME 1 2 3 4 5 6 (PRODUCT LEVEL)	SEE PAGE
Y	**385-2834**	1	CYLINDER & SEAL GP-BUCKET	398
Y	**418-9086**	1	LINES GP-BUCKET CYLINDER	439

Y - SEPARATE ILLUSTRATION

<END>

490-4179 CYLINDER & LINES GP-BUCKET

S/N: BR61-UP

PART OF 532-9515, 556-2899 DISTRIBUTION AR

SMCS-5457 **i07365796**

NOTE	REF NO	GRAPHIC REF	PART NUMBER	QTY	PART NAME 1 2 3 4 5 6 (PRODUCT LEVEL)	SEE PAGE
Y	1	1	*369-9677*	1	LINES GP-BUCKET CYLINDER	438
Y	2	1	**490-4180**	1	CYLINDER & SEAL GP-BUCKET	400

Y - SEPARATE ILLUSTRATION

490-4179 **CYLINDER & LINES GP-BUCKET (**contd.**)** **i07365796**

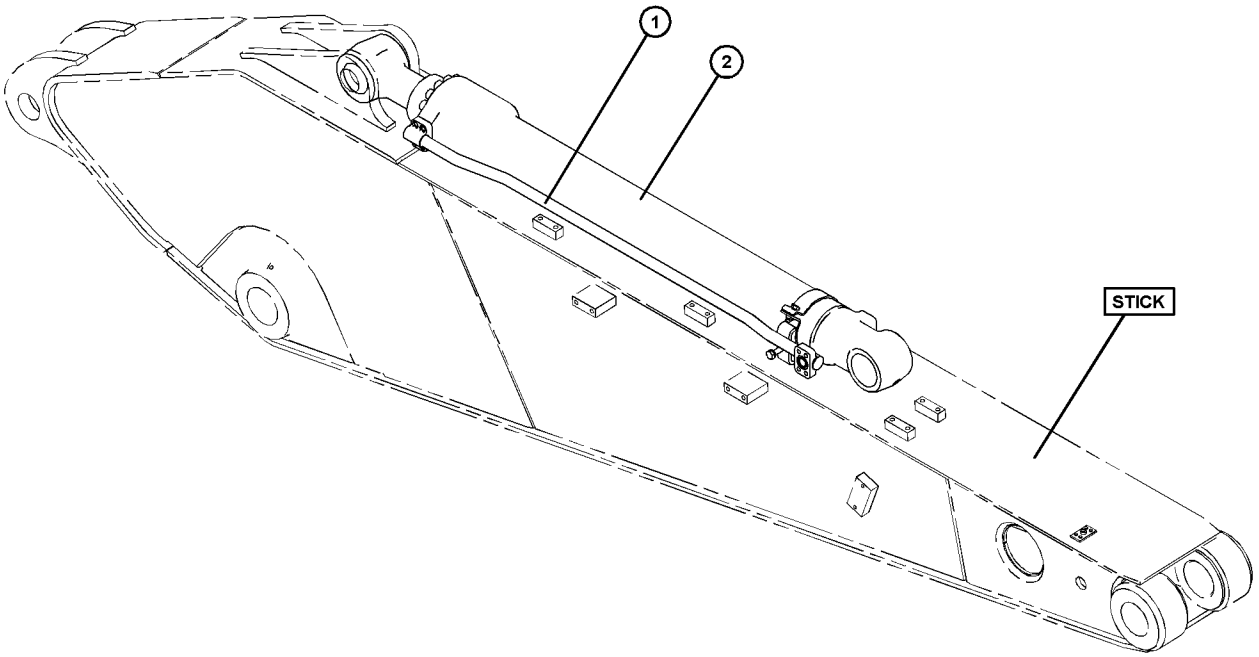

GRAPHIC #1 <END> g06233324

268-7256 CYLINDER & LINES GP-STICK

S/N: BR61-UP

PART OF 556-2902 DISTRIBUTION AR

SMCS-5458 **i06756618**

NOTE	PART NUMBER	QTY	PART NAME 1 2 3 4 5 6 (PRODUCT LEVEL)	SEE PAGE
Y	**341-2177**	1	CYLINDER & SEAL GP-STICK	402
Y	*369-9673*	1	LINES GP-STICK CYLINDER	485

Y - SEPARATE ILLUSTRATION

<END>

490-4143 CYLINDER & LINES GP-STICK

S/N: BR61-UP

PART OF 532-9515, 556-2899 DISTRIBUTION AR

SMCS-5458 **i07376604**

NOTE	REF NO	GRAPHIC REF	PART NUMBER	QTY	PART NAME 1 2 3 4 5 6 (PRODUCT LEVEL)	SEE PAGE
Y	1	1	*242-6735*	1	LINES GP-STICK CYLINDER	484
Y	2	1	**490-4144**	1	CYLINDER & SEAL GP-STICK	405

Y - SEPARATE ILLUSTRATION

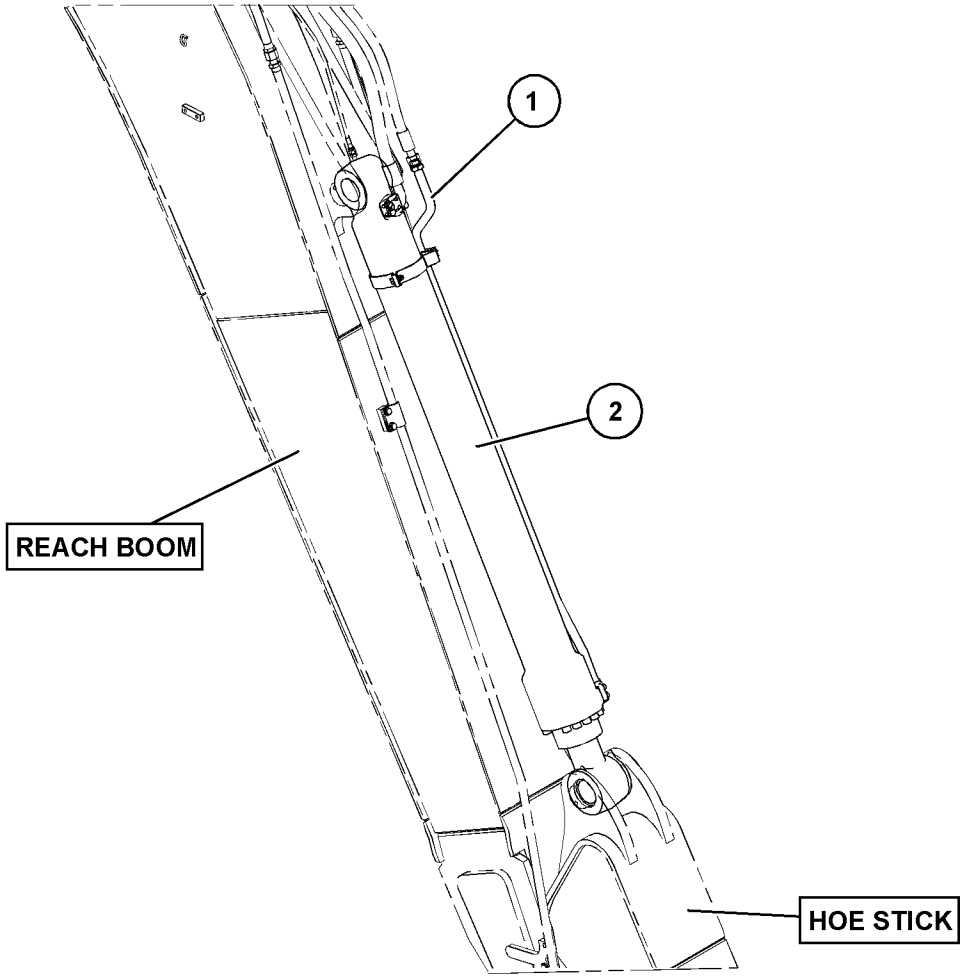

GRAPHIC #1 <END> g06230214

535-7983 CYLINDER & LINES GP-STICK–SUPER LONG REACH

S/N: BR61-UP

PART OF 532-9518 DISTRIBUTION AR

SMCS-5458 **i07361943**

NOTE	PART NUMBER	QTY	PART NAME 1 2 3 4 5 6 (PRODUCT LEVEL)	SEE PAGE
Y	**516-5834**	1	CYLINDER & SEAL GP-STICK	407
Y	*369-9673*	1	LINES GP-STICK CYLINDER	485

Y - SEPARATE ILLUSTRATION

<END>

510-9212 CYLINDER & SEAL GP-BOOM

S/N: BR61-UP

120-MM (4.7-IN) BORE X 1260-MM (49.6-IN) STROKE

PART OF 494-4966, 494-4967 CYLINDER & LINES GP-BOOM

SMCS-5456 **i07352376**

NOTE	REF NO	GRAPHIC REF	PART NUMBER	QTY	PART NAME 1 2 3 4 5 6 (PRODUCT LEVEL)	SEE PAGE
	1	1	**510-9213**	1	CYLINDER AS-STICK	
	1A	1	**489-3021**	1	BEARING-SLEEVE	
	2	1	**510-9214**	1	ROD AS	
	2A	1	**240-2913**	1	BUSHING	
	3	1	**177-2611**	1	HEAD	
P	4	1	**095-1717**	1	SEAL-O-RING	
P	5	1	**096-3964**	1	RING-BACKUP	
	6	1	**094-0747**	1	RING-RETAINING	
	7	1	**096-4402**	1	BUSHING	
P	8	1	**350-0952**	1	SEAL-BUFFER	
P	9	1	**350-0957**	1	SEAL-U-CUP	
P	10	1	**096-1568**	1	RING-BACKUP	
P	11	1	**456-0192**	1	SEAL-LIP TYPE	
P	12	1	**126-1935**	1	RING-SEAL	
	13	1	**4I-8864**	1	STOP	
	14	1	**247-8864**	1	PISTON	
P	15	1	**086-0255**	2	RING	
P	16	1	**247-8865**	2	RING	
P	17	1	**096-7803**	1	SEAL AS	
P	18	1	**4I-3615**	2	RING-BACKUP	
	19	1	**3D-2891**	1	BALL	
M	20	1	**096-3216**	1	SETSCREW-SOCKET (M12X1.75X12-MM)	
M	21	1	**8T-1447**	12	BOLT-SOCKET HEAD (M16X2X70-MM)	
	22	1	**166-1494**	4	SEAL-LIP TYPE	
	23	1	**3B-8489**	1	FITTING-GREASE (1/8-27 PTF)	
					AVAILABLE REPAIR KIT(S):	
P			**456-0197**	1	KIT-SEAL (BOOM CYLINDER)	

M - METRIC PART
P - KIT MARKED P SERVICES PART(S) MARKED P

510-9212 **CYLINDER & SEAL GP-BOOM (**contd.**)** **i07352376**

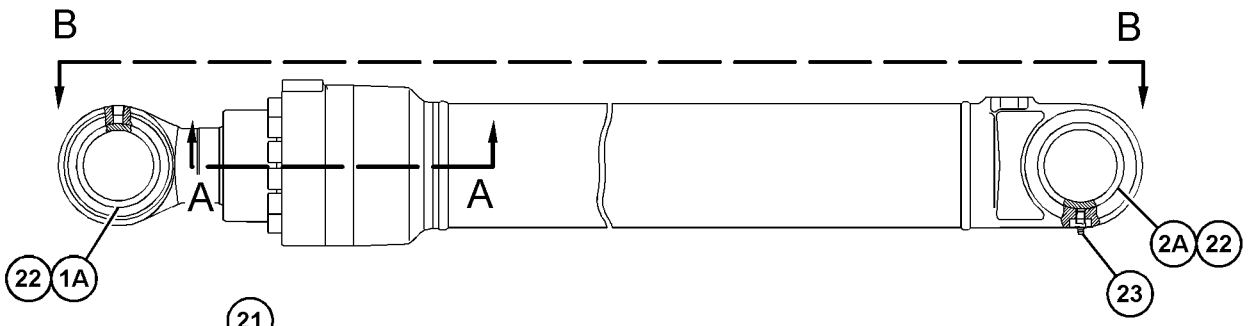

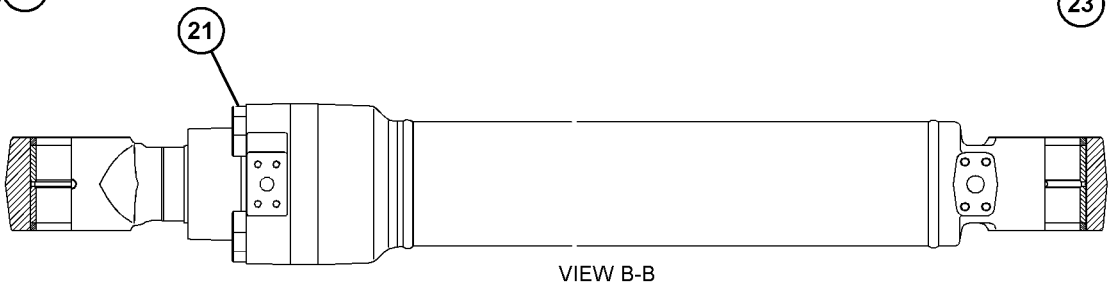

VIEW B-B

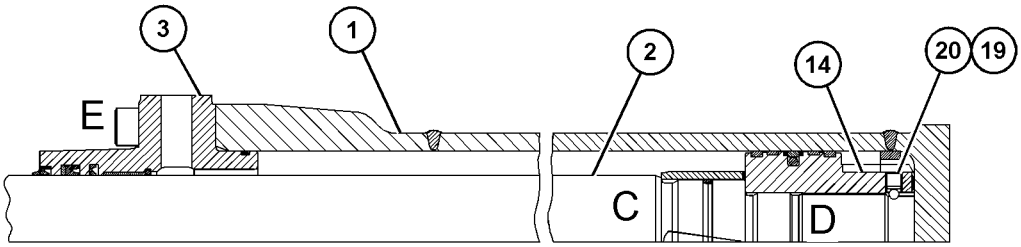

SECTION A-A

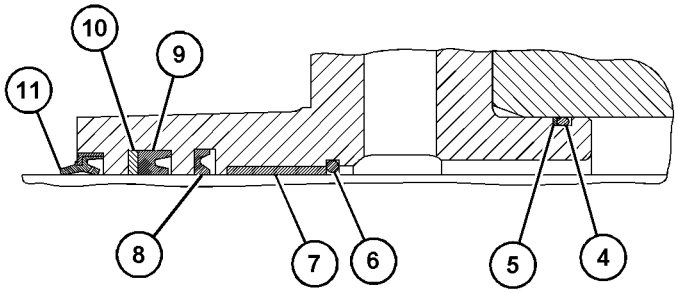

VIEW OF AREA E

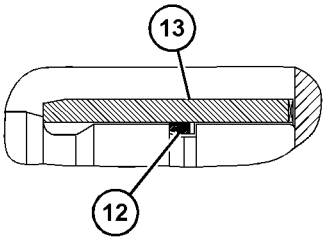

VIEW OF AREA C

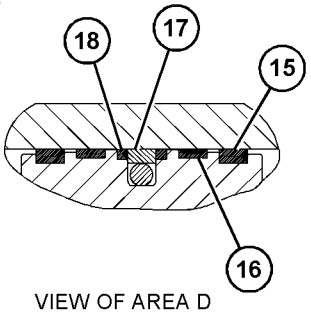

VIEW OF AREA D

GRAPHIC #1 <END> g06229466

385-2834 CYLINDER & SEAL GP-BUCKET

S/N: BR61-UP
100-MM (3.9-IN) BORE X 939-MM (36.9-IN) STROKE
PART OF 418-9085 CYLINDER & LINES GP-BUCKET

SMCS-5457 **i05411677**

NOTE	REF NO	GRAPHIC REF	PART NUMBER	QTY	PART NAME 1 2 3 4 5 6 (PRODUCT LEVEL)	SEE PAGE
	1	1	**390-4219**	1	CYLINDER AS	
	1A	1	**229-1095**	1	BUSHING	
	2	1	**390-4220**	1	ROD AS	
	2A	1	**248-7857**	1	BUSHING	
	3	1	**390-4221**	1	HEAD	
	4	1	**390-4158**	1	BUSHING	
	5	1	**390-4157**	1	RING-RETAINING	
	6	1	**390-4159**	1	RING-SNAP	
	7	1	**390-4225**	1	PISTON	
	8	1	**390-4226**	1	SETSCREW-SOCKET (M10X1.5X10-MM)	
	9	1	**385-2890**	1	BALL	
M	10	1	**3E-6910**	15	BOLT-SOCKET HEAD (M12X1.75X70-MM)	
	11	1	**166-1492**	2	SEAL-LIP TYPE	
	12	1	**235-7679**	2	SEAL-LIP TYPE	
	13	1	**3B-8489**	2	FITTING-GREASE (1/8-27 PTF)	
J	14	1	**416-1295**	1	SEAL-WIPER	
J	15	1	**416-1296**	1	SEAL-U-CUP	
J	16	1	**416-1298**	1	SEAL-BUFFER	
J	17	1	**416-1297**	1	RING-BACKUP	
J	18	1	**416-1299**	1	SEAL-O-RING	
J	19	1	**416-1300**	1	RING-BACKUP	
J	20	1	**416-1302**	1	SEAL AS-PISTON	
J	21	1	**416-1301**	2	RING-WEAR	
J	22	1	**416-1303**	2	RING-WEAR	
					AVAILABLE REPAIR KIT(S):	
J			**390-4227**	1	KIT-SEAL (BUCKET CYLINDER)	

J - KIT MARKED J SERVICES PART(S) MARKED J
M - METRIC PART

385-2834 **CYLINDER & SEAL GP-BUCKET (**contd.**)** **i05411677**

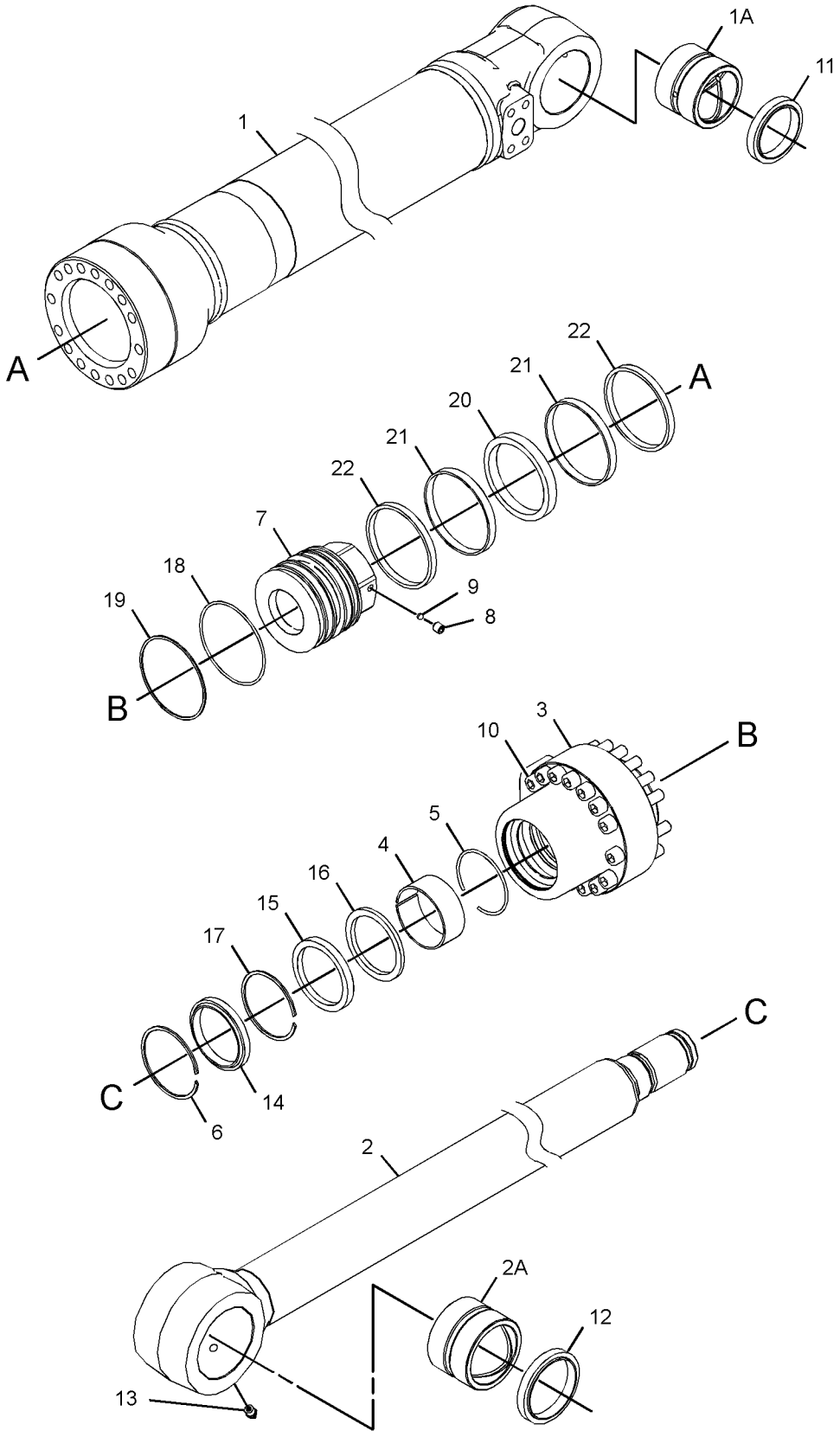

GRAPHIC #1 <END> g03319746

490-4180 CYLINDER & SEAL GP-BUCKET

S/N: BR61-UP
120-MM (4.7-IN) BORE X 1104-MM (43.5-IN) STROKE
PART OF 490-4179 CYLINDER & LINES GP-BUCKET

SMCS-5457 **i07366069**

NOTE	REF NO	GRAPHIC REF	PART NUMBER	QTY	PART NAME 1 2 3 4 5 6 (PRODUCT LEVEL)	SEE PAGE
	1	1	**495-1191**	1	CYLINDER AS	
	1A	1	**357-5712**	1	BUSHING	
	2	1	**495-1192**	1	ROD AS	
	2A	1	**489-3019**	1	BEARING-SLEEVE	
	3	1	**177-2611**	1	HEAD	
J	4	1	**095-1717**	1	SEAL-O-RING	
J	5	1	**096-3964**	1	RING-BACKUP	
	6	1	**096-4402**	1	BUSHING	
	7	1	**094-0747**	1	RING-RETAINING	
J	8	1	**350-0952**	1	SEAL-BUFFER	
J	9	1	**350-0957**	1	SEAL-U-CUP	
J	10	1	**096-1568**	1	RING-BACKUP	
J	11	1	**456-0192**	1	SEAL-LIP TYPE	
	12	1	**247-8885**	1	PISTON	
J	13	1	**086-0255**	2	RING	
J	14	1	**247-8865**	2	RING	
J	15	1	**096-7803**	1	SEAL AS	
J	16	1	**4I-3615**	2	RING-BACKUP	
M	17	1	**096-3216**	1	SETSCREW-SOCKET (M12X1.75X12-MM)	
	18	1	**3D-2891**	1	BALL	
M	19	1	**8T-1447**	12	BOLT-SOCKET HEAD (M16X2X70-MM)	
	20	1	**166-1494**	2	SEAL-LIP TYPE	
	21	1	**235-7679**	2	SEAL-LIP TYPE	
	22	1	**3B-8489**	2	FITTING-GREASE (1/8-27 PTF)	
					AVAILABLE REPAIR KIT(S):	
J			**456-0207**	1	KIT-SEAL (BUCKET)	

J - KIT MARKED J SERVICES PART(S) MARKED J
M - METRIC PART

490-4180 **CYLINDER & SEAL GP-BUCKET** (contd.) **i07366069**

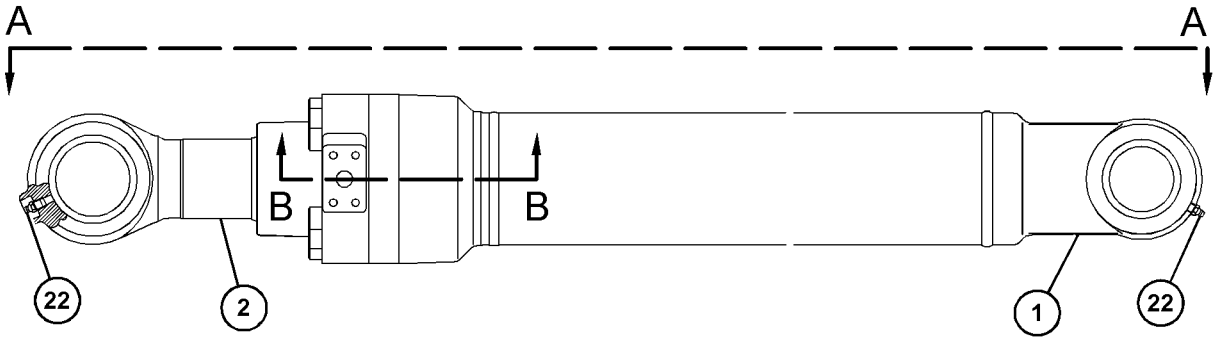

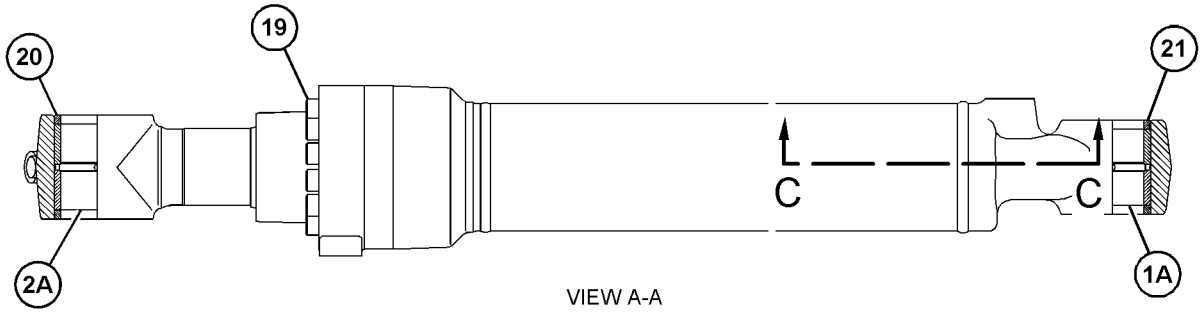

VIEW A-A

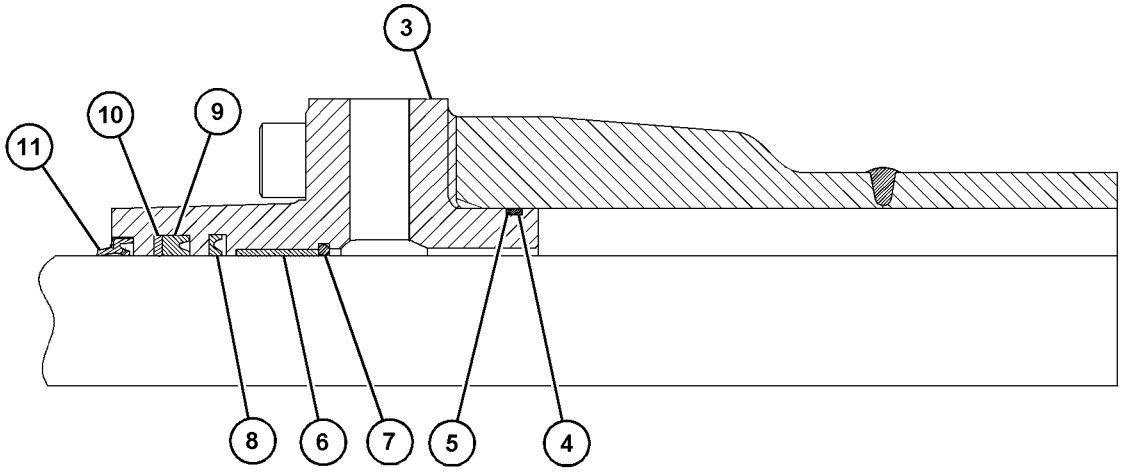

SECTION B-B

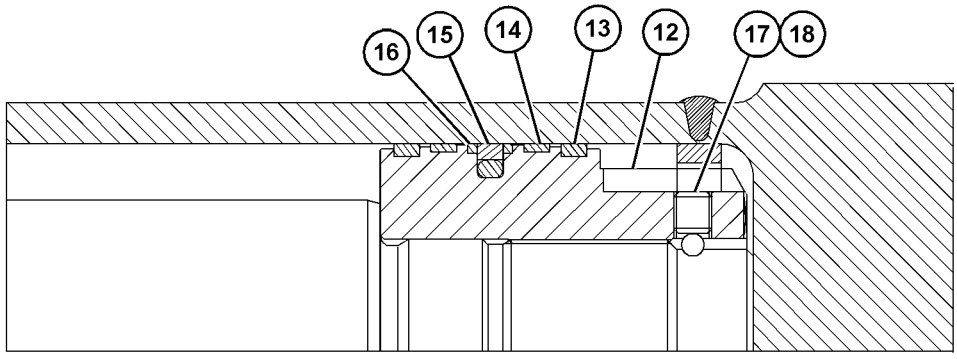

SECTION C-C

GRAPHIC #1 <END> g06230195

341-2177 CYLINDER & SEAL GP-STICK

S/N: BR61-UP
150-MM (6-IN) BORE X 1646-MM (64.8-IN) STROKE
PART OF 268-7256 CYLINDER & LINES GP-STICK

SMCS-5458 **i06756631**

NOTE	REF NO	GRAPHIC REF	PART NUMBER	QTY	PART NAME 1 2 3 4 5 6 (PRODUCT LEVEL)	SEE PAGE
J	1	2	**456-0196**	1	SEAL-LIP TYPE	
J	2	2	**194-8355**	1	RING-BACKUP	
J	3	2	**350-0961**	1	SEAL-U-CUP	
J	4	2	**350-0956**	1	SEAL-BUFFER	
	5	2	**099-5572**	1	BUSHING	
	6	2	**099-5573**	1	RING-RETAINING	
	7	2	**194-8353**	1	HEAD	
M	8	1	**9X-2404**	12	BOLT-SOCKET HEAD (M20X2.5X90-MM)	
J	9	2	**095-1723**	1	SEAL-O-RING	
J	10	2	**114-0706**	1	RING-BACKUP	
	11	2	**350-9344**	1	ROD AS	
	11A	1	**290-9180**	1	BUSHING	
	12	1	**486-0797**	1	CYLINDER AS	
	12A	1	**290-9180**	1	BUSHING	
	13	2	**121-1548**	1	STOP	
J	14	2	**231-6805**	1	RING-SEAL	
J	15	2	**114-0711**	2	RING-BACKUP	
J	16	2	**114-0710**	1	SEAL AS	
J	17	2	**234-4574**	2	RING	
J	18	2	**114-0713**	2	RING	
	19	2	**234-4573**	1	PISTON	
M	20	2	**096-6210**	1	SETSCREW-SOCKET (M14X2X14-MM)	
	21	2	**4B-9880**	1	BALL	
	22	2	**085-8605**	1	RING-RETAINING	
J	23	2	**194-8359**	1	RING-SEAL	
	24	2	**121-1549**	1	STOP	
	25	2	**085-8604**	2	RING-RETAINING	
	26	1	**166-1494**	4	SEAL-LIP TYPE	
	27	1	**3B-8489**	1	FITTING-GREASE (1/8-27 PTF)	
					AVAILABLE REPAIR KIT(S):	
J			**456-0205**	1	KIT-SEAL (STICK CYLINDER)	

J - KIT MARKED J SERVICES PART(S) MARKED J
M - METRIC PART

341-2177 **CYLINDER & SEAL GP-STICK** (contd.) **i06756631**

REFER TO ALL ILLUSTRATIONS OF
THIS GROUP FOR AUXILIARY VIEWS

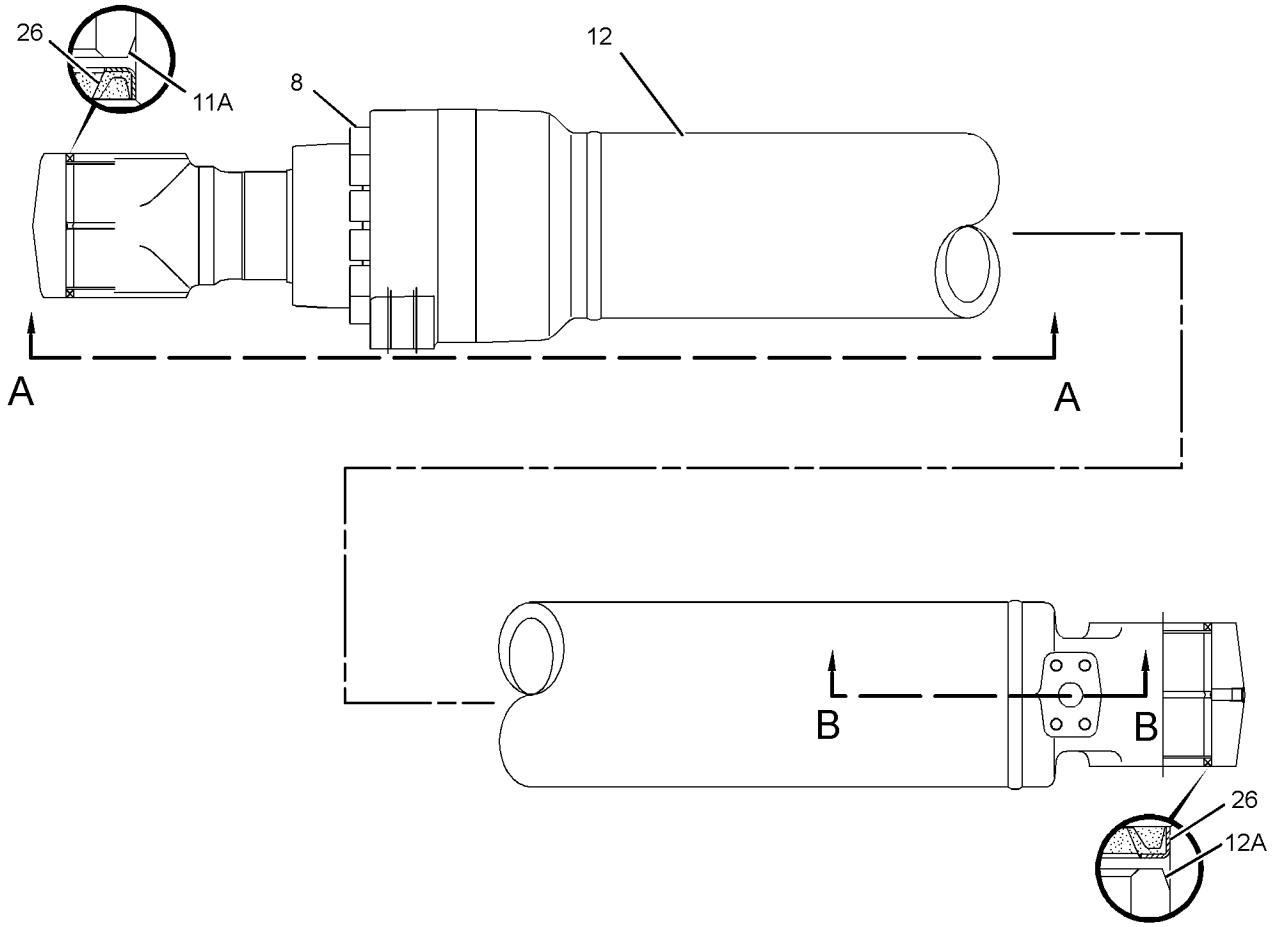

VIEW A-A

GRAPHIC #1 g03341032

341-2177 **CYLINDER & SEAL GP-STICK (**contd.**)** **i06756631**

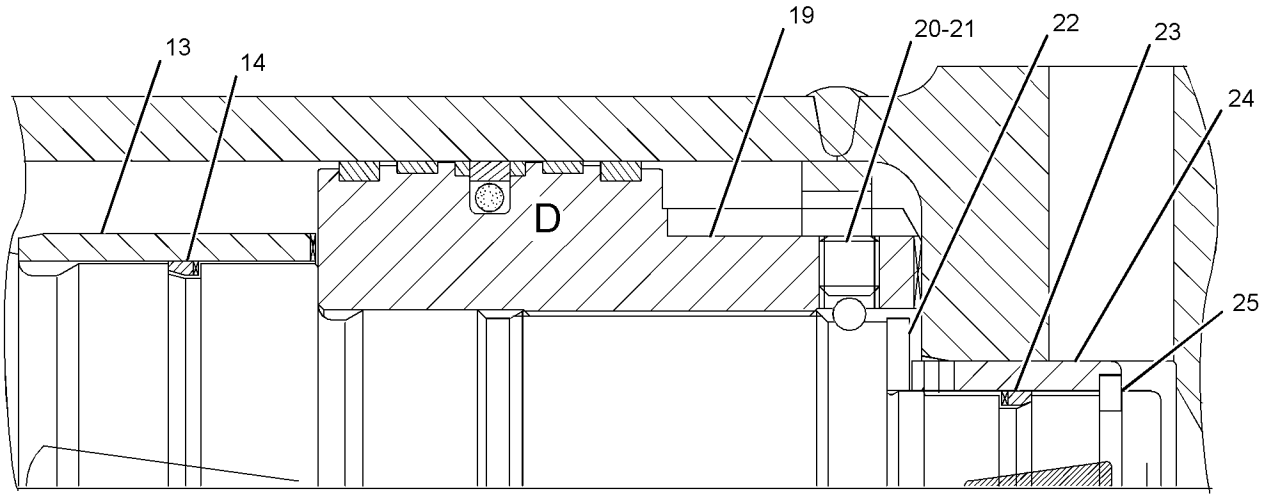

SECTION B-B

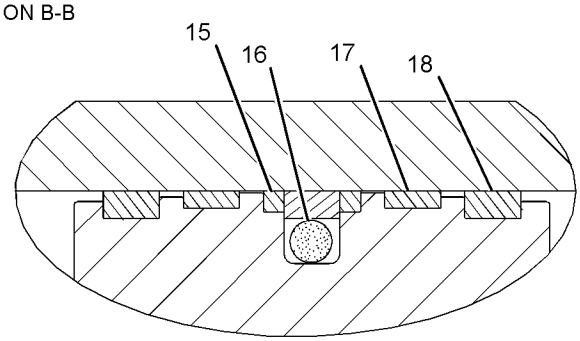

VIEW OF AREA D

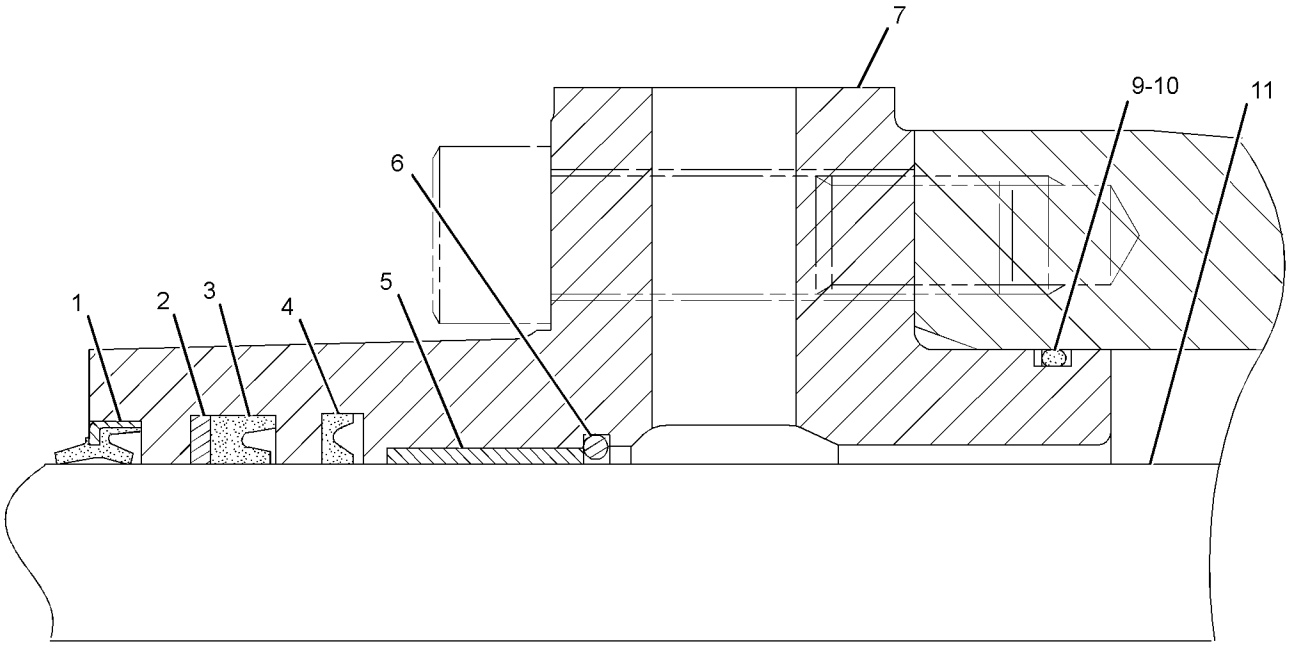

SECTION C-C

GRAPHIC #2 <END> g03388990

490-4144 CYLINDER & SEAL GP-STICK

S/N: BR61-UP
140-MM (5.5-IN) BORE X 1504-MM (59.2-IN) STROKE
PART OF 490-4143 CYLINDER & LINES GP-STICK

SMCS-5458 **i07365758**

NOTE	REF NO	GRAPHIC REF	PART NUMBER	QTY	PART NAME 1 2 3 4 5 6 (PRODUCT LEVEL)	SEE PAGE
	1	1	**526-8033**	1	CYLINDER AS-STICK	
	1A	1	**357-5711**	2	BUSHING	
	2	1	**495-1188**	1	ROD AS	
	2A	1	**240-2914**	1	BUSHING	
	3	1	**522-1194**	1	HEAD	
J	4	1	**095-1721**	1	SEAL-O-RING	
J	5	1	**4I-3627**	1	RING-BACKUP	
	6	1	**096-5625**	1	BUSHING	
	7	1	**094-1931**	1	RING-RETAINING	
J	8	1	**350-0955**	1	SEAL-BUFFER	
J	9	1	**350-0960**	1	SEAL-U-CUP	
J	10	1	**121-1372**	1	RING-BACKUP	
J	11	1	**456-0195**	1	SEAL-LIP TYPE	
J	12	1	**526-1961**	1	RING-SEAL	
	13	1	**526-1957**	1	STOP	
	14	1	**247-8873**	1	PISTON	
J	15	1	**096-1571**	2	RING	
J	16	1	**247-8874**	2	RING	
J	17	1	**096-1570**	1	SEAL AS	
J	18	1	**4I-3631**	2	RING-BACKUP	
	19	1	**4B-9880**	1	BALL	
M	20	1	**096-6210**	1	SETSCREW-SOCKET (M14X2X14-MM)	
	21	1	**085-8605**	1	RING-RETAINING	
J	22	1	**526-1960**	1	RING-SEAL	
	23	1	**085-8604**	2	RING-RETAINING	
	24	1	**526-1956**	1	STOP	
M	25	1	**4I-3628**	12	BOLT-SOCKET HEAD (M18X2.5X80-MM)	
	26	1	**166-1494**	4	SEAL-LIP TYPE	
	27	1	**3B-8489**	1	FITTING-GREASE (1/8-27 PTF)	
					AVAILABLE REPAIR KIT(S):	
J			**526-1958**	1	KIT-SEAL	

J - KIT MARKED J SERVICES PART(S) MARKED J
M - METRIC PART

490-4144 **CYLINDER & SEAL GP-STICK (**contd.**)** **i07365758**

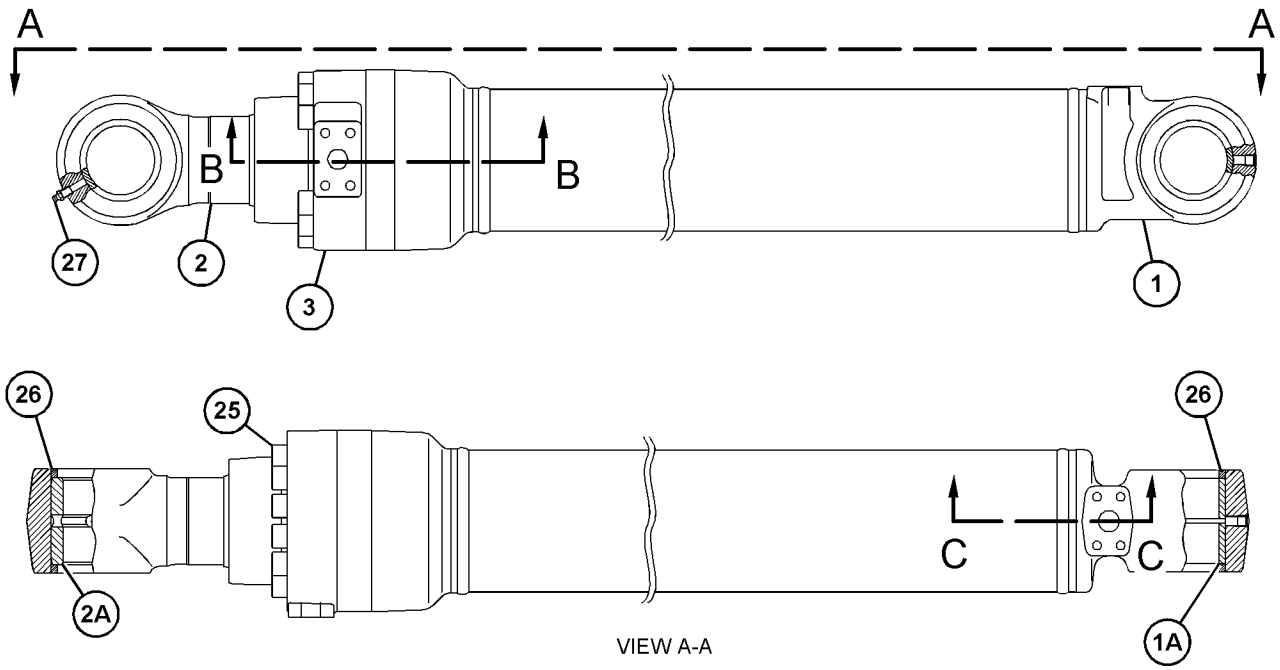

VIEW A-A

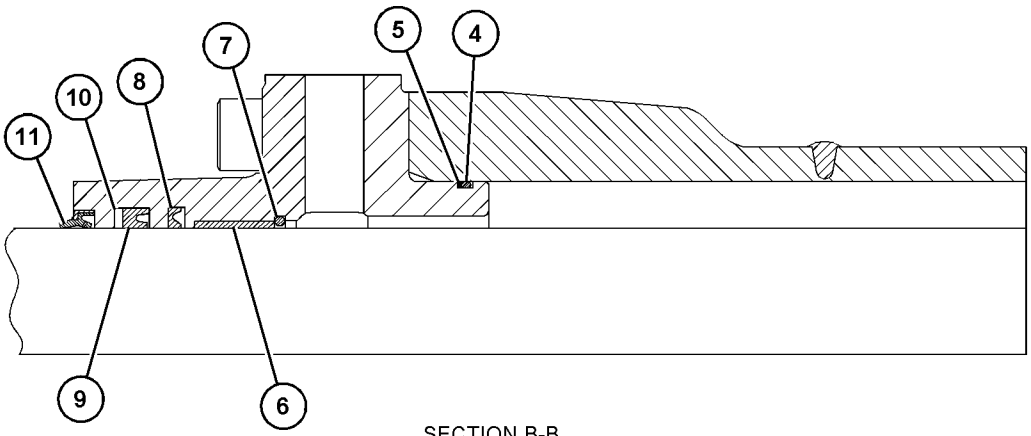

SECTION B-B

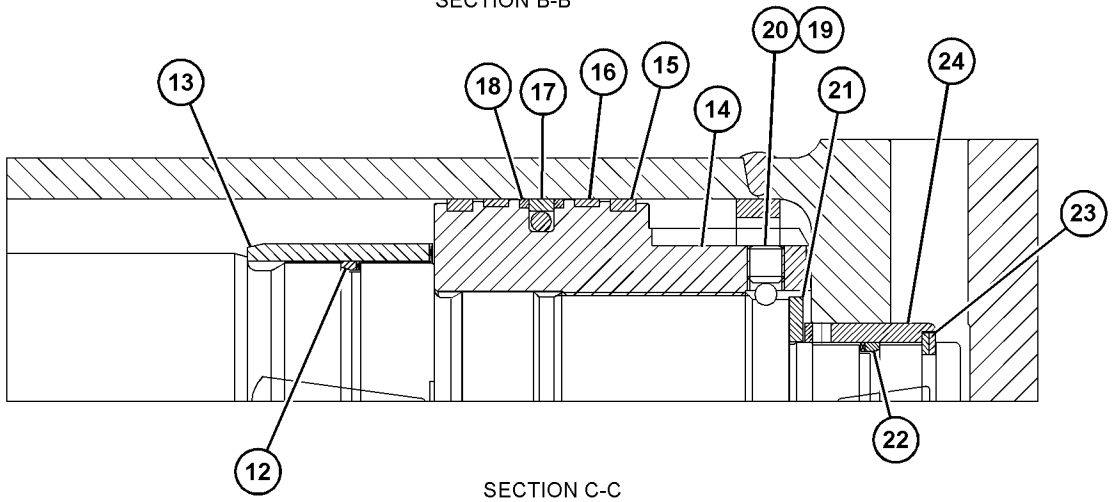

SECTION C-C

GRAPHIC #1 <END> g06230162

516-5834 CYLINDER & SEAL GP-STICK

S/N: BR61-UP
150-MM (5.9-IN) BORE X 1646-MM (64.8-IN) STROKE
PART OF 535-7983 CYLINDER & LINES GP-STICK

SMCS-5458 **i07361951**

NOTE	REF NO	GRAPHIC REF	PART NUMBER	QTY	PART NAME 1 2 3 4 5 6 (PRODUCT LEVEL)	SEE PAGE
	1	1	**516-5835**	1	CYLINDER AS	
	1A	1	**504-7638**	2	BEARING-SLEEVE	
	2	1	**516-5836**	1	ROD AS	
	2A	1	**504-7638**	2	BEARING-SLEEVE	
	3	1	**528-4253**	1	STOP	
	4	1	**085-8604**	2	RING-RETAINING	
J	5	1	**526-1960**	1	RING-SEAL	
	6	1	**085-8605**	1	RING-RETAINING	
M	7	1	**096-6210**	1	SETSCREW-SOCKET (M14X2X14-MM)	
	8	1	**4B-9880**	1	BALL	
	9	1	**234-4573**	1	PISTON	
J	10	1	**234-4574**	2	RING	
J	11	1	**114-0713**	2	RING	
J	12	1	**114-0711**	2	RING-BACKUP	
J	13	1	**114-0710**	1	SEAL AS	
	14	1	**528-4254**	1	STOP	
J	15	1	**528-4257**	1	RING-SEAL	
	16	1	**528-4255**	1	HEAD	
M	17	1	**9X-2404**	12	BOLT-SOCKET HEAD (M20X2.5X90-MM)	
J	18	1	**095-1723**	1	SEAL-O-RING	
J	19	1	**114-0706**	1	RING-BACKUP	
	20	1	**099-5573**	1	RING-RETAINING	
	21	1	**099-5572**	1	BUSHING	
J	22	1	**350-0956**	1	SEAL-BUFFER	
J	23	1	**350-0961**	1	SEAL-U-CUP	
J	24	1	**194-8355**	1	RING-BACKUP	
J	25	1	**456-0196**	1	SEAL-LIP TYPE	
	26	1	**166-1494**	4	SEAL-LIP TYPE	
	27	1	**3B-8489**	1	FITTING-GREASE (1/8-27 PTF)	
					AVAILABLE REPAIR KIT(S):	
JY			**528-4258**	1	KIT-SEAL (STICK CYLINDER)	418

J - KIT MARKED J SERVICES PART(S) MARKED J
M - METRIC PART
Y - SEPARATE ILLUSTRATION

516-5834 **CYLINDER & SEAL GP-STICK (**contd.**)** **i07361951**

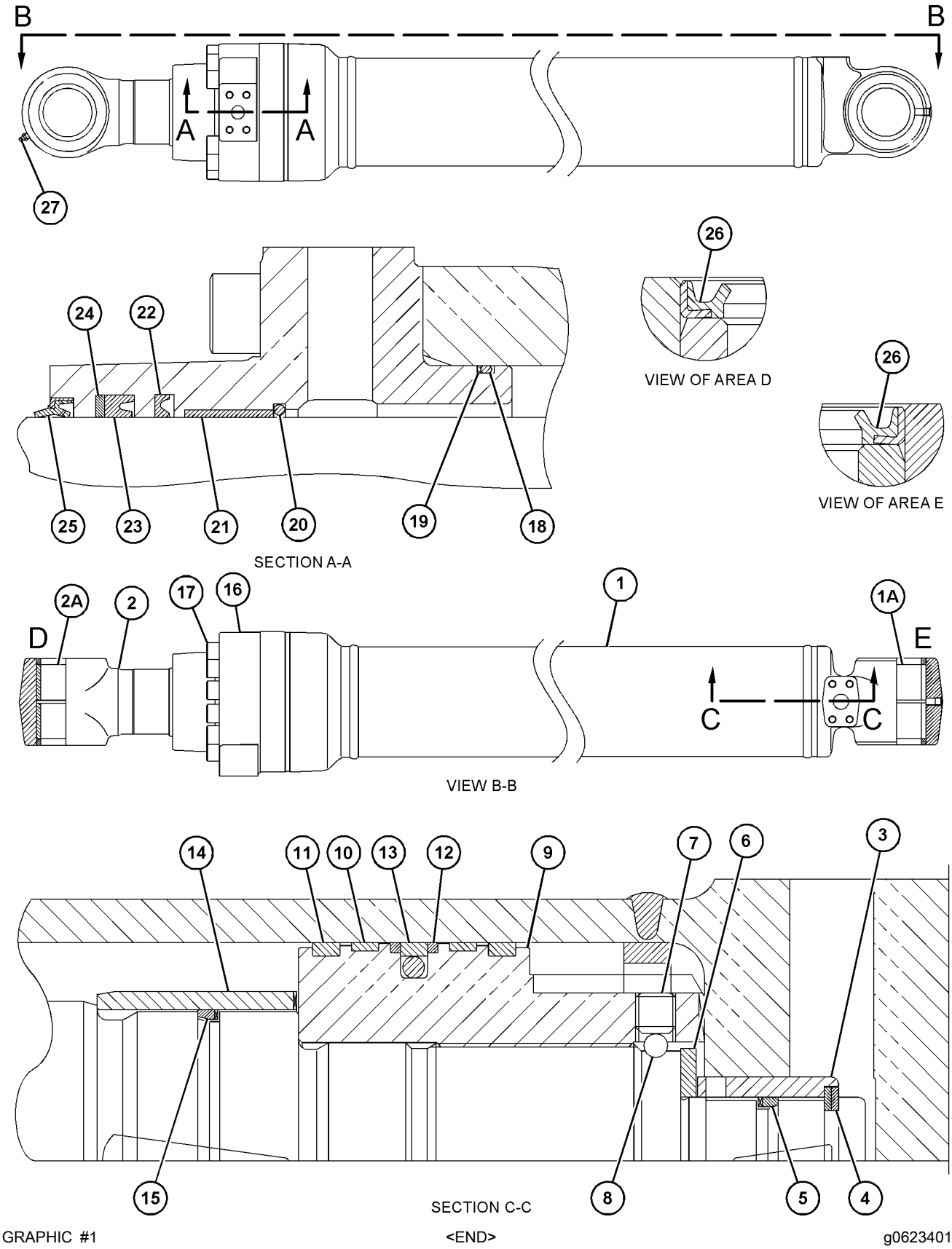

GRAPHIC #1

<END>

g06234011

494-4985 CYLINDER AR-BOOM

S/N: BR61-UP

PART OF 532-9515, 532-9518, 556-2899, 556-2902 DISTRIBUTION AR

SMCS-5456 **i07352331**

NOTE	PART NUMBER	QTY	PART NAME 1 2 3 4 5 6 (PRODUCT LEVEL)	SEE PAGE
Y	*494-4966*	1	CYLINDER & LINES GP-BOOM (LH)	387
Y	*494-4967*	1	CYLINDER & LINES GP-BOOM (RH)	388

Y - SEPARATE ILLUSTRATION

<END>

390-9505 CYLINDER GP-COUPLER

S/N: BR61-UP

63.5-MM (2.5-IN) BORE X 116.8-MM(4.6-IN) STROKE

PART OF 388-0067 COUPLER GP-QUICK

SMCS-5133 **i06939375**

NOTE	REF NO	GRAPHIC REF	PART NUMBER	QTY	PART NAME 1 2 3 4 5 6 (PRODUCT LEVEL)	SEE PAGE
J	1	1	**237-0947**	1	VALVE GP-CHECK (PILOT OPERATED)	
	2	1	**3J-1907**	1	SEAL-O-RING	
	3	1	**3J-7354**	1	SEAL-O-RING	
	4	1	**9S-8002**	1	PLUG (7/16-20-THD)	
	5	1	**9S-8004**	1	PLUG (9/16-18-THD)	
	6	1	**9F-2167**	1	SCREW-PURGE (3/8-24X1.164-IN)	
					AVAILABLE REPAIR KIT(S):	
J			**213-8433**	1	KIT-SEAL (CHECK VALVE)	
			453-6523	1	KIT-PACKING (COUPLER CYLINDER)	
					(INCLUDES O-RINGS, BACK-UP RINGS, DUST SEAL, BP SEAL & POLYPAK SEAL)	

J - KIT MARKED J SERVICES PART(S) MARKED J

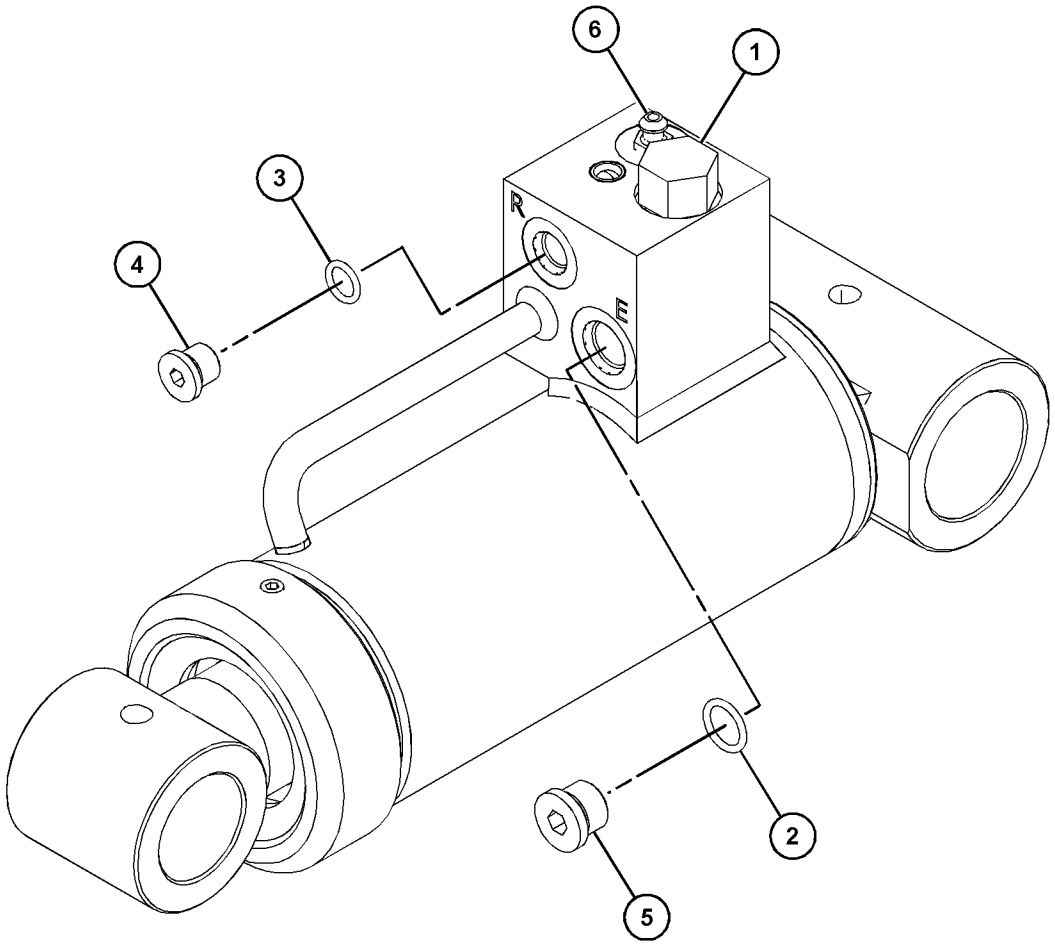

GRAPHIC #1 <END> g03711887

488-3074 DRIVE & MTG GP-SWING

S/N: BR61-UP

PART OF 510-7419 COMMON AR

SMCS-5459 **i07358582**

NOTE	REF NO	GRAPHIC REF	PART NUMBER	QTY	PART NAME 1 2 3 4 5 6 (PRODUCT LEVEL)	SEE PAGE
	1	1	**2Y-5503**	2	CORK	
M	2	1	**201-7949**	12	BOLT (M24X3X70-MM)	
Y	3	1	**488-3075**	1	DRIVE GP-SWING	414
	4	1	**096-4755**	1	PIN	
	5	1	**5D-1026**	1	CLAMP-BAND	
	6	1	**6V-8237**	12	WASHER (26X44X4-MM THK)	
E	7	1	**5P-0767**		HOSE (90-CM)	

E - ORDER BY THE CENTIMETER
M - METRIC PART
Y - SEPARATE ILLUSTRATION

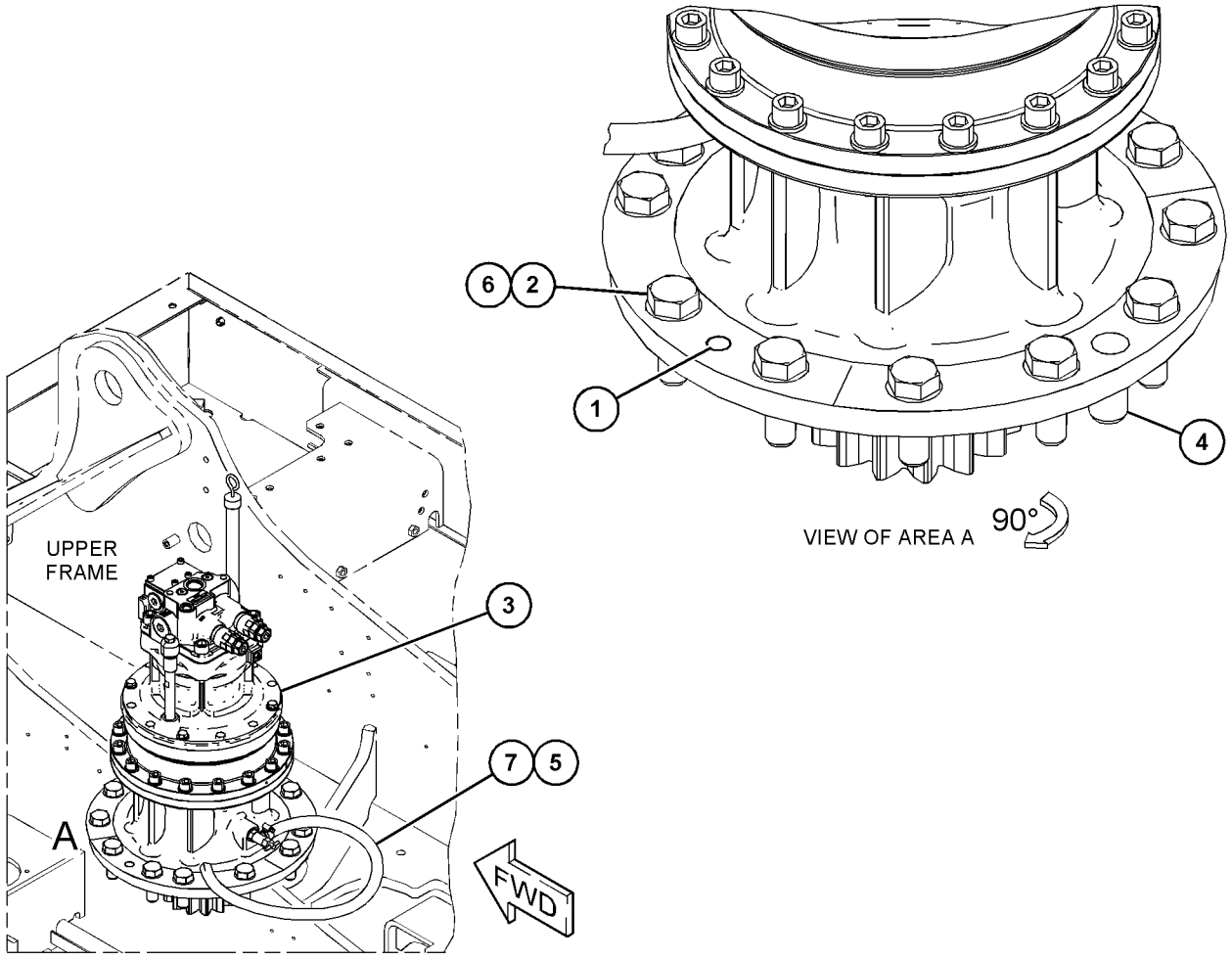

GRAPHIC #1 <END> g06231260

378-9517 DRIVE GP-SWING

S/N: BR61-UP

PART OF 488-3075 DRIVE GP-SWING

SMCS-5459 **i06937723**

NOTE	REF NO	GRAPHIC REF	PART NUMBER	QTY	PART NAME 1 2 3 4 5 6 (PRODUCT LEVEL)	SEE PAGE
	1	1	**6V-7238**	1	VALVE-SHUTOFF	
	2	1	**094-0611**	6	WASHER (47.3X76X1-MM THK)	
	3	1	**148-4636**	1	SHAFT-PINION	
	4	1	**148-4640**	1	RING-RETAINING	
	5	1	**171-9383**	1	SPACER	
	6	1	**199-4561**	2	SEAL-LIP TYPE	
	7	1	**227-6228**	1	CAGE	
	8	1	**367-8364**	1	GEAR-SUN (20-TEETH)	
	9	1	**367-8365**	3	GEAR-PLANETARY (26-TEETH)	
	10	1	**367-8367**	2	RING-RETAINING	
	11	1	**367-8368**	1	GEAR-SUN (23-TEETH)	
	12	1	**367-8369**	3	GEAR-PLANETARY (25-TEETH)	
	13	1	**378-9513**	3	SHAFT	
	14	1	**378-9514**	1	CARRIER-PLANETARY	
	15	1	**378-9515**	1	GEAR-RING (73-TEETH)	
	16	1	**378-9516**	1	HOUSING	
	17	1	**378-9609**	1	CARRIER AS	
	18	1	**451-2182**	6	WASHER-HARD (13.5X25.5X3-MM THK)	
M	19	1	**453-3447**	6	BOLT (M12X1.75X40-MM)	
	20	1	**094-0584**	6	WASHER (40.3X72X1-MM THK)	
	21	1	**509-6676**	3	PIN-SPRING	
	22	1	**095-1022**	1	BEARING-ROLLER	
	23	1	**148-4642**	1	SEAL-O-RING	
	24	1	**148-4643**	1	BEARING	
	25	1	**296-6268**	6	BEARING AS-ROLLER	
	26	1	**346-5215**	3	BEARING AS	
	27	1	**3K-0360**	1	SEAL-O-RING	
	28	1	**7I-7623**	1	SPACER (52X69.5X6-MM THK)	
	29	1	**7Y-1434**	1	SPACER (40X69.5X6-MM THK)	
M	30	1	**8T-0348**	16	BOLT-SOCKET HEAD (M16X2X50-MM)	
	31	1	**8T-4240**	3	RING-RETAINING	
	32	1	**9X-8268**	16	WASHER (17.5X30X3.5-MM THK)	
BF			**1U-8846**		SEALANT-GASKET	

B - USE AS REQUIRED
F - NOT SHOWN
M - METRIC PART

378-9517 **DRIVE GP-SWING (**contd.**)** **i06937723**

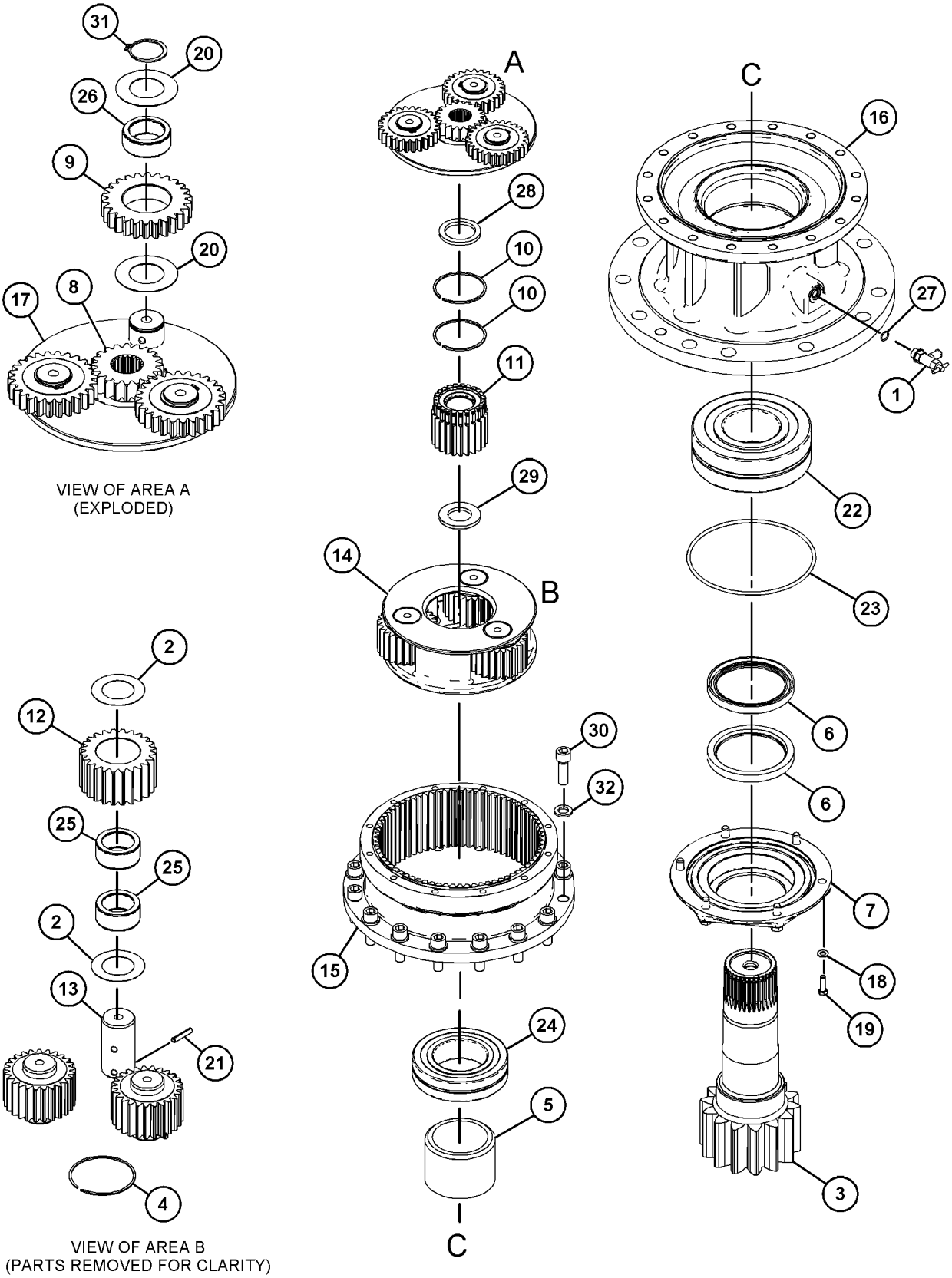

VIEW OF AREA A
(EXPLODED)

VIEW OF AREA B
(PARTS REMOVED FOR CLARITY)

GRAPHIC #1 <END> g03856396

488-3075 DRIVE GP-SWING

S/N: BR61-UP

PART OF 488-3074 DRIVE & MTG GP-SWING

SMCS-5459 **i07362552**

NOTE	REF NO	GRAPHIC REF	PART NUMBER	QTY	PART NAME 1 2 3 4 5 6 (PRODUCT LEVEL)	SEE PAGE
	1	1	**114-1398**	1	GAUGE-OIL LEVEL (SWING DRIVE)	
	2	1	**114-1399**	1	PIPE-GAUGE	
	3	1	**227-6221**	1	BREATHER AS (SWING DRIVE)	
		1	**227-6215**	1	BOSS (1/4-18-THD)	
		1	**267-6785**	1	PIPE	
		1	**4H-6112**	1	BREATHER	
Y	4	1	**378-9517**	1	DRIVE GP-SWING (WITHOUT MOTOR)	412
Y	5	1	*489-3486*	1	MOTOR & MTG GP-SWING	490
BF		1	**1U-8846**		SEALANT-GASKET	

B - USE AS REQUIRED
F - NOT SHOWN
Y - SEPARATE ILLUSTRATION

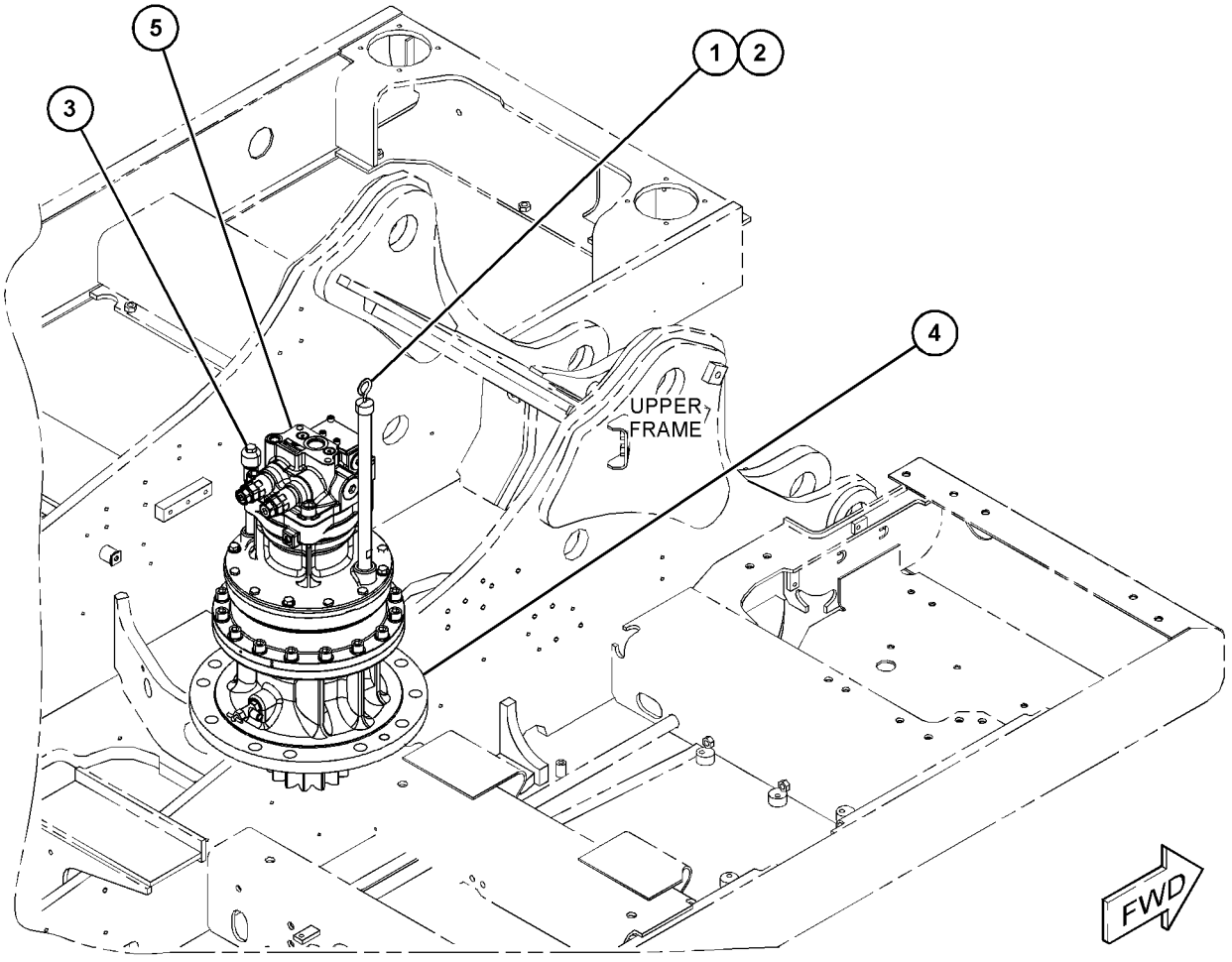

GRAPHIC #1 <END> g06231288

224-1687 FILTER GP-OIL–HYDRAULIC

S/N: BR61-UP

PART OF 531-3323, 558-1390 LINES GP-FRONT

SMCS-3004, 4295, 431F, 5068, 5091, 5092 **i02790945**

NOTE	REF NO	GRAPHIC REF	PART NUMBER	QTY	PART NAME 1 2 3 4 5 6 (PRODUCT LEVEL)	SEE PAGE
	1	1	**224-1685**	1	SWITCH AS (HYDRAULIC FILTER BYPASS)	
	2	1	**096-6073**	1	PLUG	
	3	1	**095-1582**	1	SEAL-O-RING	
	4	1	**216-6678**	1	CASE	
	5	1	**216-6676**	1	FILTER ELEMENT AS-OIL (HYDRAULIC)	
	6	1	**216-6677**	1	HEAD AS	
	7	1	**095-1717**	1	SEAL-O-RING	

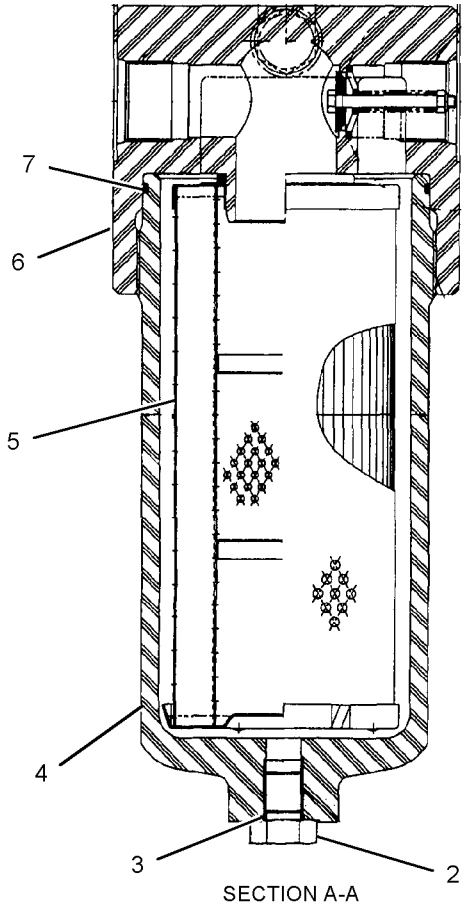

SECTION A-A

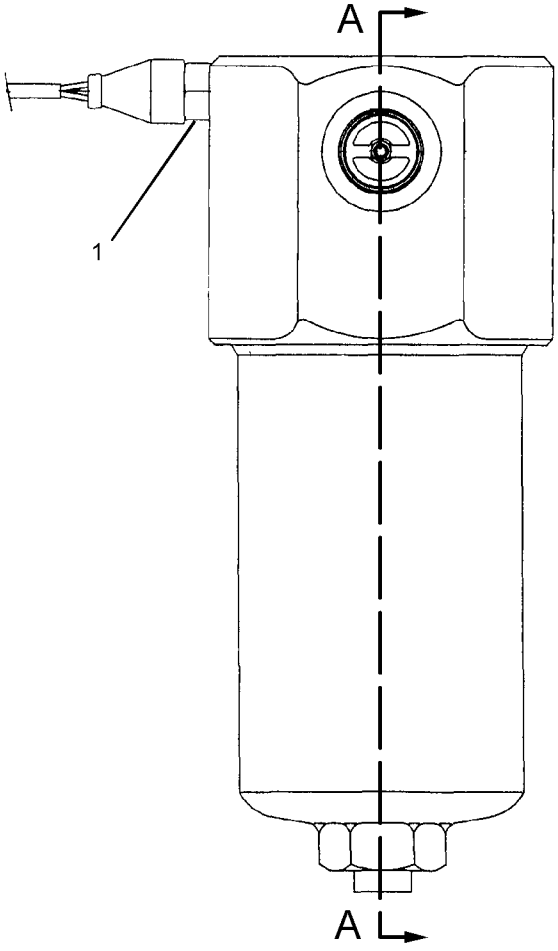

GRAPHIC #1

<END>

g01029603

488-8581 FILTER GP-OIL—HYDRAULIC RETURN

S/N: BR61-UP

PART OF 489-2942 TANK & FILTER GP-HYDRAULIC

SMCS-3004, 4295, 431F, 5068, 5091, 5092 **i07375570**

NOTE	REF NO	GRAPHIC REF	PART NUMBER	QTY	PART NAME 1 2 3 4 5 6 (PRODUCT LEVEL)	SEE PAGE
	1	1	**145-3576**	1	SEAL-O-RING	
	2	1	**175-6176**	1	SEAL-O-RING	
	3	1	**491-5241**	1	FILTER ELEMENT-OIL (HYDRAULIC RETURN) (HYDRAULIC RETURN)	
	4	1	**512-5573**	1	COVER AS	
M	5	1	**8T-1159**	4	BOLT-SOCKET HEAD (M10X1.5X25-MM)	
					PARTS SHOWN IN GRAPHIC(S) WITHOUT A REFERENCE NUMBER ARE NOT SERVICED SEPARATELY	

M - METRIC PART

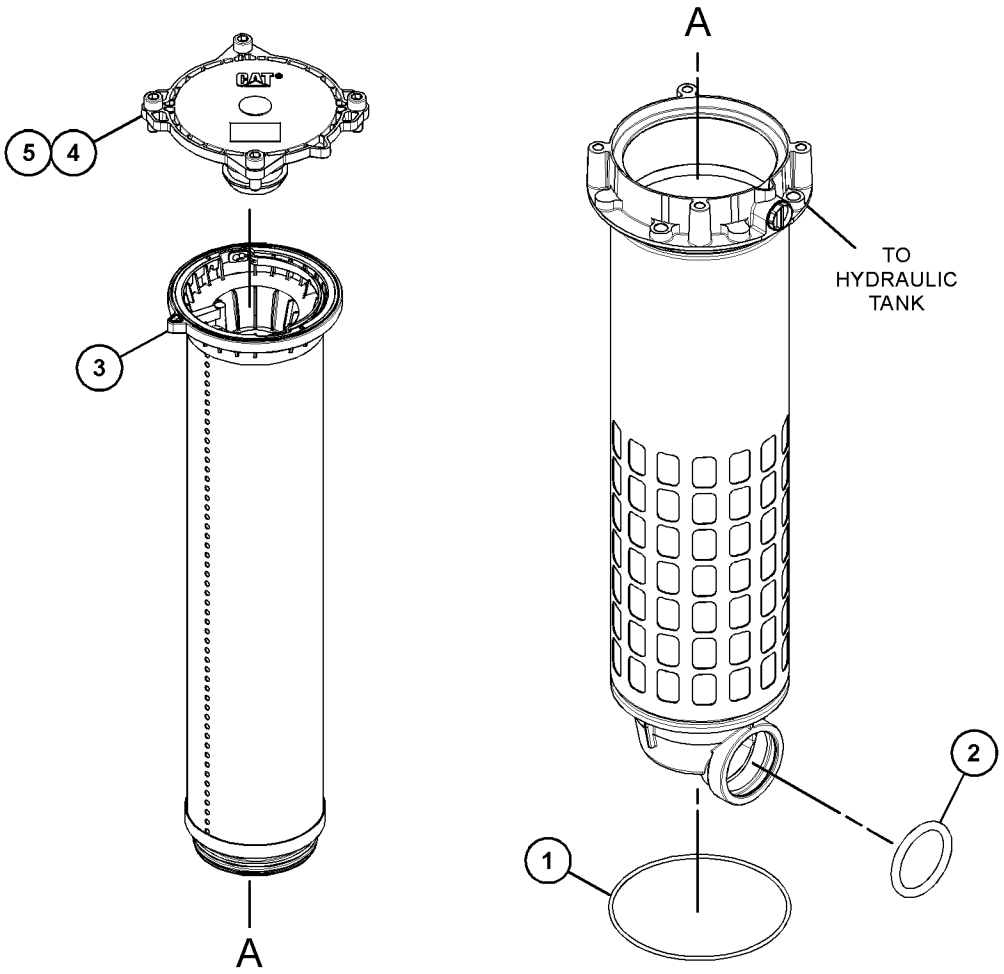

GRAPHIC #1 <END> g06232864

347-6081 GAUGE GP-SIGHT—HYDRAULIC OIL LEVEL

S/N: BR61-UP

PART OF 489-2942 TANK & FILTER GP-HYDRAULIC

SMCS-7479 **i04281574**

NOTE	REF NO	GRAPHIC REF	PART NUMBER	QTY	PART NAME 1 2 3 4 5 6 (PRODUCT LEVEL)	SEE PAGE
	1	1	**236-3257**	1	PIPE	
M	2	1	**236-3259**	2	BOLT-SPECIAL	
	3	1	**347-6082**	2	BLOCK	
	4	1	**6F-6672**	4	SEAL-O-RING	
	5	1	**6F-4855**	4	SEAL-O-RING	

M - METRIC PART

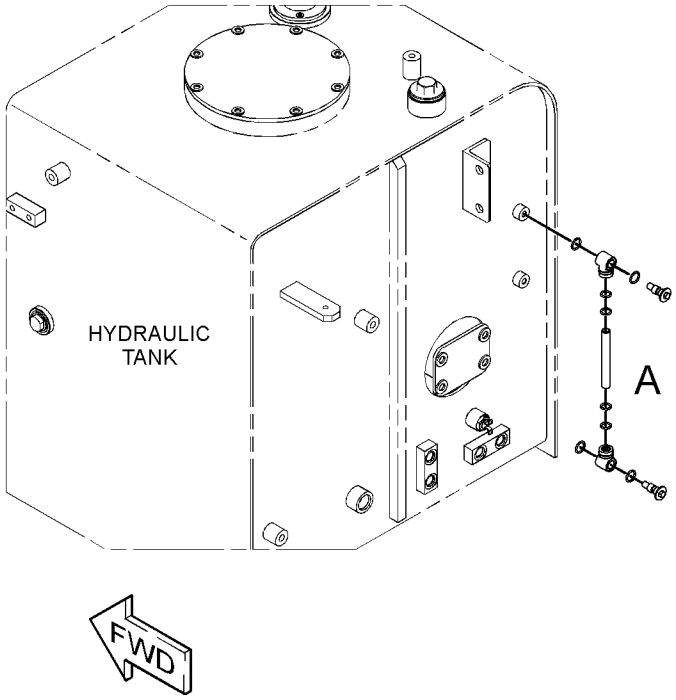

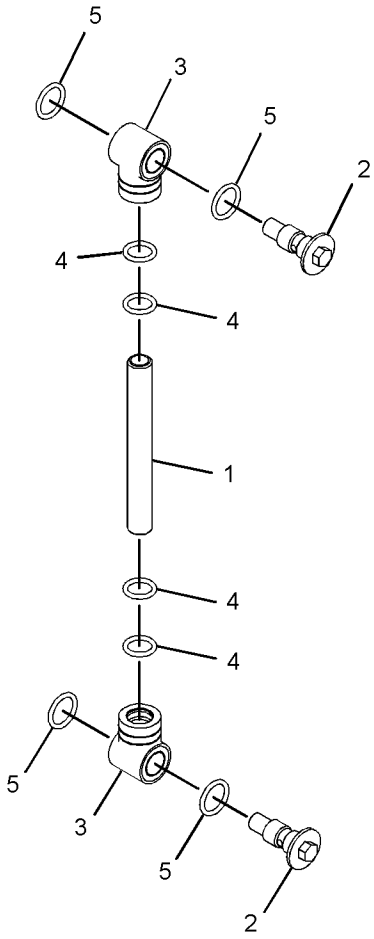

VIEW OF AREA A

GRAPHIC #1 <END> g02303838

514-4877 HYDRAULIC AR

S/N: BR61-UP

PART OF 510-7419 COMMON AR

SMCS-5050 **i07369346**

NOTE	PART NUMBER	QTY	PART NAME 1 2 3 4 5 6 (PRODUCT LEVEL)	SEE PAGE
Y	*489-2931*	1	LINES GP-CYLINDER	446
Y	*489-2933*	1	LINES GP-FRONT	449
Y	*489-2930*	1	LINES GP-HYDRAULIC OIL COOLER	466
Y	*489-2935*	1	LINES GP-PILOT	469
Y	*489-2936*	1	LINES GP-PILOT	471
Y	*489-2934*	1	LINES GP-PUMP	479
Y	*489-2939*	1	MOUNTING GP-MAIN CONTROL VALVE	501
Y	*489-3484*	1	PUMP & MTG GP-MAIN HYDRAULIC	503
Y	*488-8576*	1	SWIVEL & MOUNTING GP	511
Y	*489-2940*	1	TANK & MTG GP-HYDRAULIC	515

Y - SEPARATE ILLUSTRATION

<END>

528-4258 KIT-SEAL

S/N: BR61-UP

PART OF 516-5834 CYLINDER & SEAL GP-STICK

SMCS-5050 **i07199395**

NOTE	PART NUMBER	QTY	PART NAME 1 2 3 4 5 6 (PRODUCT LEVEL)	SEE PAGE
	114-0713	2	RING	
	234-4574	2	RING	
	114-0706	1	RING-BACKUP	
	114-0711	2	RING-BACKUP	
	194-8355	1	RING-BACKUP	
	526-1960	1	RING-SEAL	
	528-4257	1	RING-SEAL	
	114-0710	1	SEAL AS	
	350-0956	1	SEAL-BUFFER	
	456-0196	1	SEAL-LIP TYPE	
	095-1723	1	SEAL-O-RING	
	350-0961	1	SEAL-U-CUP	

<END>

513-3208 LINES AR-BOOM—TUBE

S/N: BR61-UP

PART OF 532-9518, 556-2902 DISTRIBUTION AR

SMCS-5057 **i07356249**

NOTE	PART NUMBER	QTY	PART NAME 1 2 3 4 5 6 (PRODUCT LEVEL)	SEE PAGE
Y	*489-2947*	1	LINES GP-BOOM CYLINDER	428
Y	*511-9440*	1	WIRING GP-SENSOR	273

Y - SEPARATE ILLUSTRATION

<END>

513-3210 LINES AR-BOOM–TUBE

S/N: BR61-UP

EASE OF USE

PART OF 532-9515, 556-2899 DISTRIBUTION AR

SMCS-5057 **i07367970**

NOTE	PART NUMBER	QTY	PART NAME 1 2 3 4 5 6 (PRODUCT LEVEL)	SEE PAGE
Y	*511-9442*	1	FASTENER GP-WIRING HARNESS	156
Y	*492-2065*	1	LINES GP-BOOM CYLINDER	430

Y - SEPARATE ILLUSTRATION

<END>

356-8117 LINES GP-AUXILIARY HYDRAULIC—STICK, HIGH PRESSURE

S/N: BR61-UP
2.92-M (9.6-FT) STICK

SMCS-5057 **i07331639**

NOTE	REF NO	GRAPHIC REF	PART NUMBER	QTY	PART NAME 1 2 3 4 5 6 (PRODUCT LEVEL)	SEE PAGE
I	1	1	**253-6445**	1	HOSE AS	
	2	1	**253-6453**	1	TUBE AS	
	3	1	**253-6454**	1	TUBE AS	
I	4	1	**5I-8510**	1	HOSE AS	
Y	5	1	**389-2407**	2	VALVE GP-MANUAL (AUXILIARY, SHUTOFF, 2-WAY FLOW)	533
	6	1	**173-7916**	4	CLAMP-HALF	
	7	1	**1P-3703**	3	SEAL-RECTANGULAR	
C	8	1	**1P-3704**	5	SEAL-RECTANGULAR	
C	9	1	**1P-5767**	8	FLANGE-HALF	
C	10	1	**5P-0048**	2	COVER	
	11	1	**6V-0400**	4	FLANGE-HALF	
	12	1	**7Y-4538**	4	CLAMP-HALF	
	13	1	**8T-4121**	4	WASHER-HARD (11X21X2.5-MM THK)	
M	14	1	**8T-4139**	12	BOLT (M12X1.75X30-MM)	
M	15	1	**8T-4184**	16	BOLT (M12X1.75X45-MM)	
CM	16	1	**8T-4194**	8	BOLT (M12X1.75X50-MM)	
C	17	1	**8T-4223**	32	WASHER-HARD (13.5X25.5X3-MM THK)	
M	18	1	**8T-4956**	4	BOLT (M12X1.75X35-MM)	
M	19	1	**8T-6685**	4	BOLT (M10X1.5X110-MM)	

C - CHANGE FROM PREVIOUS TYPE
I - REFER TO HYDRAULIC INFORMATION SYSTEM
M - METRIC PART
Y - SEPARATE ILLUSTRATION

356-8117 **LINES GP-AUXILIARY HYDRAULIC (**contd.**)** **i07331639**

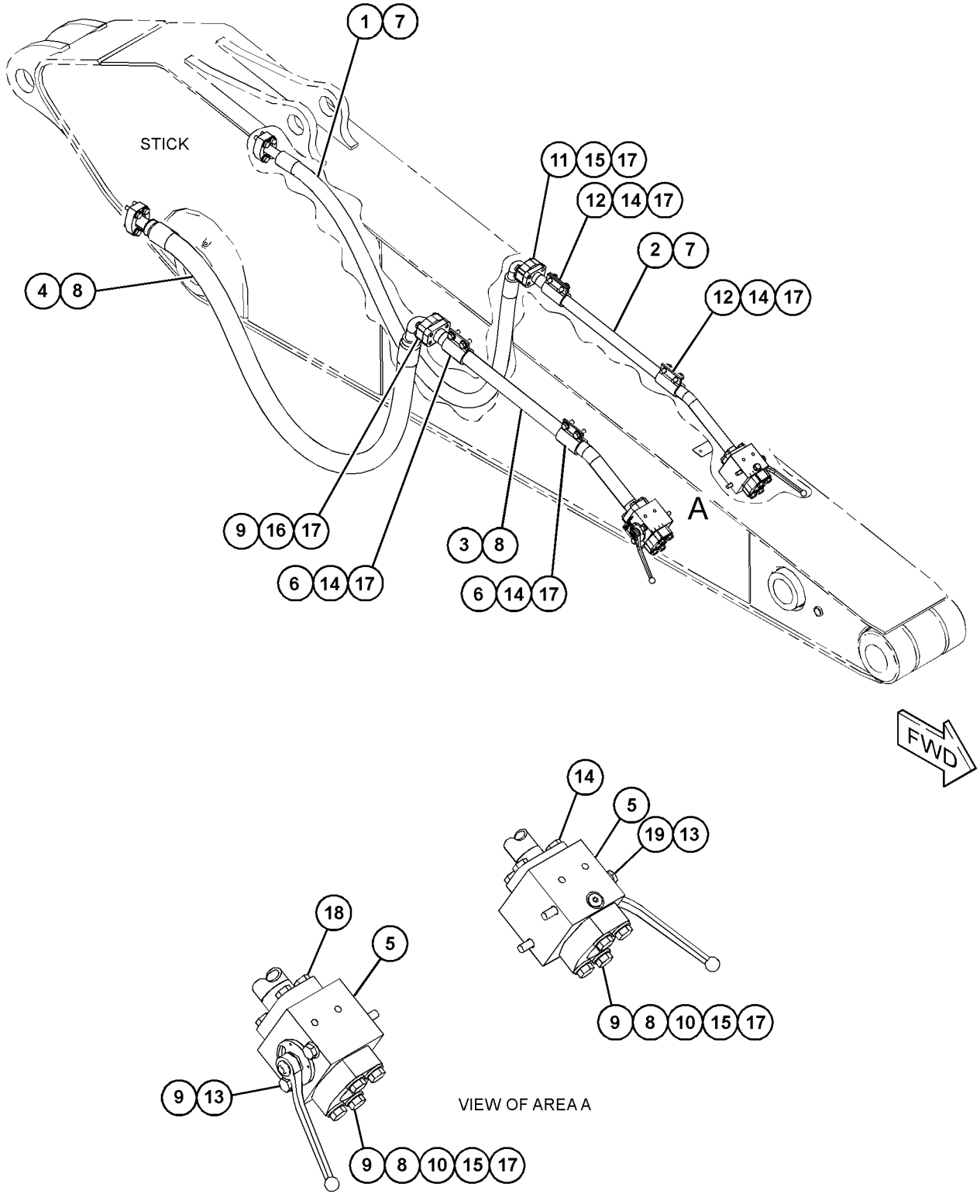

GRAPHIC #1 <END> g06120662

489-2981 LINES GP-AUXILIARY HYDRAULIC—REACH BOOM, HIGH PRESSURE

S/N: BR61-UP

SMCS-5057 **i07350501**

NOTE	REF NO	GRAPHIC REF	PART NUMBER	QTY	PART NAME 1 2 3 4 5 6 (PRODUCT LEVEL)	SEE PAGE
	1	1	**8T-4223**	44	WASHER-HARD (13.5X25.5X3-MM THK)	
	2	1	**153-8798**	2	PLATE	
	3	1	**153-8800**	2	PLATE	
	4	1	**173-7995**	1	PLATE	
	5	1	**193-6606**	2	PLATE	
I	6	1	**216-6589**	1	HOSE AS	
I	7	1	**288-7502**	1	HOSE AS	
	8	1	**495-8338**	1	PLATE	
	9	1	**495-8341**	1	PLATE	
	10	1	**513-3071**	1	LINES GP-BOOM (LH)	
	11	1	**521-4624**	1	LINES GP-BOOM (RH)	
	12	1	**173-7916**	8	CLAMP-HALF	
	13	1	**1P-3703**	2	SEAL-RECTANGULAR	
	14	1	**1P-3704**	2	SEAL-RECTANGULAR	
	15	1	**1P-5767**	4	FLANGE-HALF	
	16	1	**6V-0400**	4	FLANGE-HALF	
	17	1	**7Y-4538**	8	CLAMP-HALF	
M	18	1	**8T-4139**	12	BOLT (M12X1.75X30-MM)	
M	19	1	**8T-4184**	14	BOLT (M12X1.75X45-MM)	
M	20	1	**8T-4194**	10	BOLT (M12X1.75X50-MM)	
M	21	1	**8T-4648**	4	BOLT (M12X1.75X70-MM)	
M	22	1	**8T-6868**	4	BOLT (M12X1.75X80-MM)	

I - REFER TO HYDRAULIC INFORMATION SYSTEM
M - METRIC PART

489-2981 **LINES GP-AUXILIARY HYDRAULIC (**contd.**)** **i07350501**

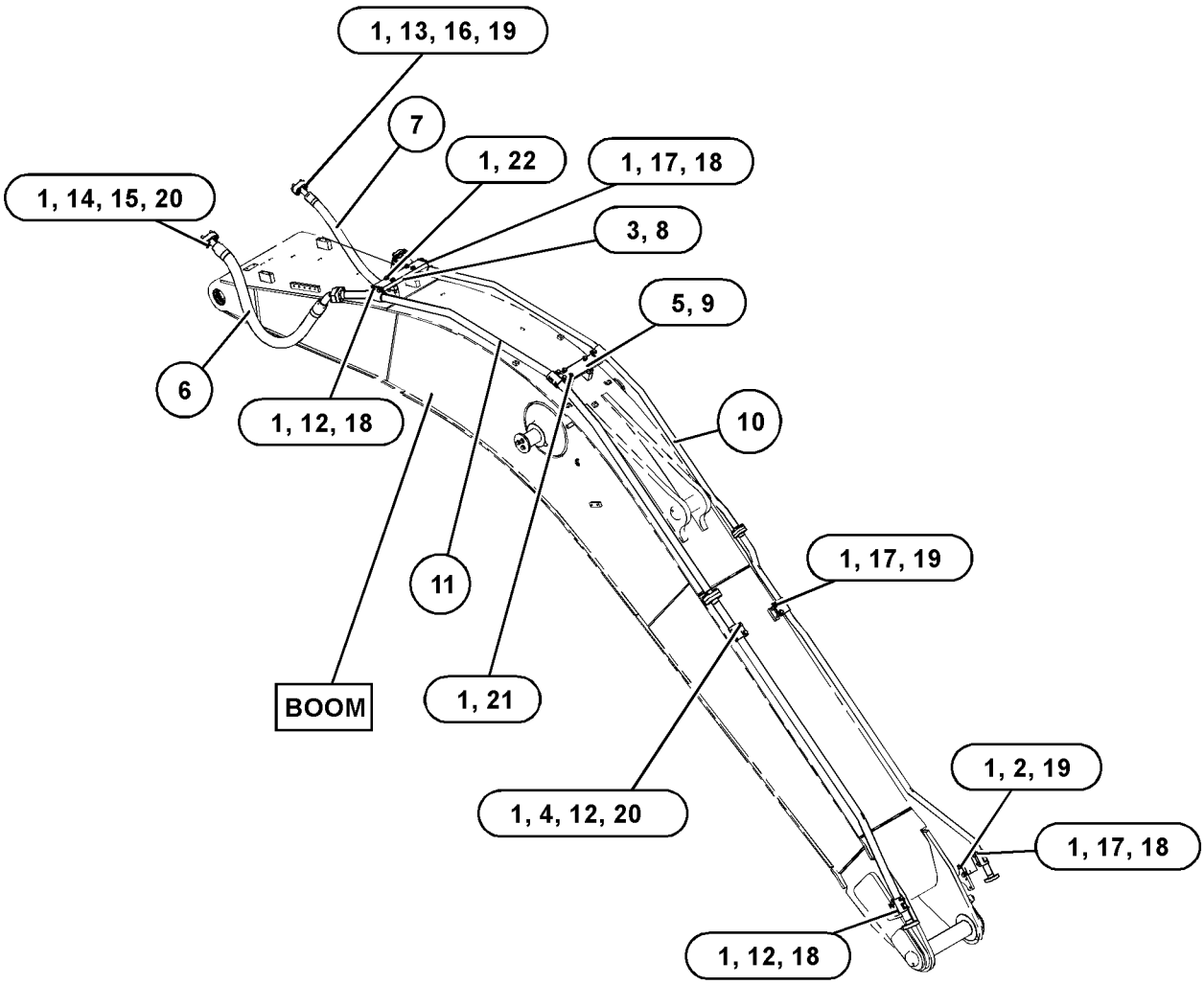

GRAPHIC #1 <END> g06230151

489-2964 LINES GP-BOOM–REACH

S/N: BR61-UP

PART OF 490-7671 BOOM AR-REACH

SMCS-5057 **i07376970**

NOTE	REF NO	GRAPHIC REF	PART NUMBER	QTY	PART NAME 1 2 3 4 5 6 (PRODUCT LEVEL)	SEE PAGE
I	1	1	**202-6996**	1	HOSE AS	
I	2	1	**260-8316**	1	HOSE AS	
	3	1	**513-3065**	1	TUBE AS	
	4	1	**513-3066**	1	TUBE AS	
	5	1	**513-3067**	1	TUBE AS	
	6	1	**513-3068**	1	TUBE AS	
	7	1	**513-3069**	1	TUBE AS	
	8	1	**521-4640**	1	TUBE AS	
	9	1	**1P-3703**	2	SEAL-RECTANGULAR	
	10	1	**4I-1674**	6	CLIP	
	11	1	**4I-1676**	6	CLIP	
	12	1	**6V-0400**	4	FLANGE-HALF	
	13	1	**6V-9746**	9	SEAL-O-RING	
	14	1	**7Y-4868**	8	CLIP	
M	15	1	**8T-4139**	20	BOLT (M12X1.75X30-MM)	
M	16	1	**8T-4184**	8	BOLT (M12X1.75X45-MM)	
	17	1	**8T-4223**	28	WASHER-HARD (13.5X25.5X3-MM THK)	

I - REFER TO HYDRAULIC INFORMATION SYSTEM
M - METRIC PART

489-2964 **LINES GP-BOOM (**contd.**)** **i07376970**

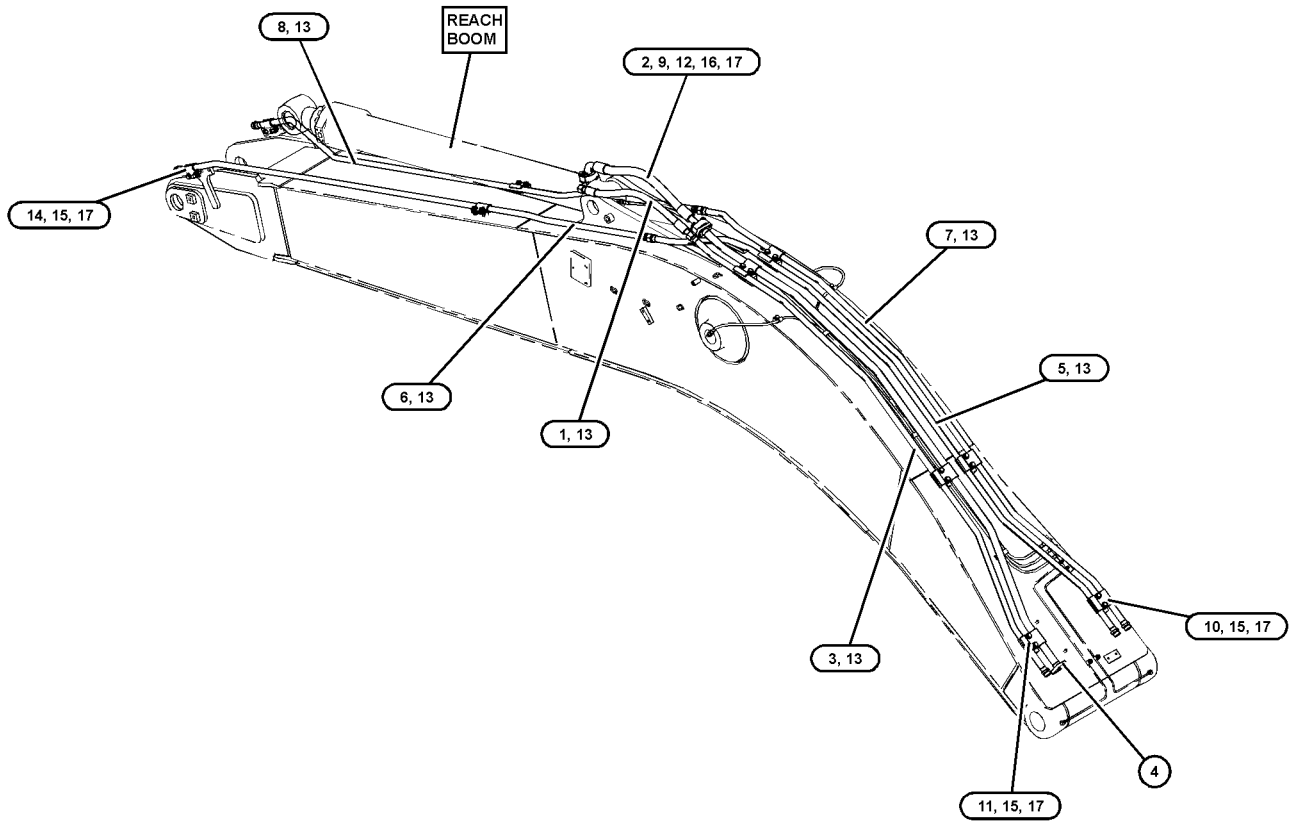

GRAPHIC #1 <END> g06228819

525-6162 LINES GP-BOOM—SUPER LONG REACH

S/N: BR61-UP
15.5-M (51-FT)
PART OF 490-7669 BOOM AR

SMCS-5057 **i07366402**

NOTE	REF NO	GRAPHIC REF	PART NUMBER	QTY	PART NAME 1 2 3 4 5 6 (PRODUCT LEVEL)	SEE PAGE
M	1	1	**8T-4139**	38	BOLT (M12X1.75X30-MM)	
M	2	1	**8T-4184**	8	BOLT (M12X1.75X45-MM)	
	3	1	**1P-3703**	2	SEAL-RECTANGULAR	
	4	1	**4I-1674**	12	CLIP	
	5	1	**4I-8789**	1	VALVE-CHECK	
	6	1	**5K-9090**	2	SEAL-O-RING	
	7	1	**6V-0400**	4	FLANGE-HALF	
	8	1	**6V-9746**	7	SEAL-O-RING	
	9	1	**7M-8485**	1	SEAL-O-RING	
	10	1	**7Y-4868**	12	CLIP	
	11	1	**8T-4223**	46	WASHER-HARD (13.5X25.5X3-MM THK)	
	12	1	*148-8335*	1	CONNECTOR AS	
		1	**5K-9090**	1	SEAL-O-RING	
		1	**6V-8635**	1	CONNECTOR	
		1	**7M-8485**	1	SEAL-O-RING	
	13	1	**268-7047**	1	TUBE AS	
	14	1	**268-7048**	1	TUBE AS	
	15	1	**268-7238**	2	TUBE AS	
I	16	1	**359-8784**	1	HOSE AS	
I	17	1	**371-3069**	1	HOSE AS	
	18	1	**526-1763**	1	TUBE AS	
	19	1	**526-1764**	1	TUBE AS	
	20	1	**526-1765**	1	TUBE AS	
	21	1	**4I-1676**	14	CLIP	

I - REFER TO HYDRAULIC INFORMATION SYSTEM
M - METRIC PART

525-6162 **LINES GP-BOOM (**contd.**)** **i07366402**

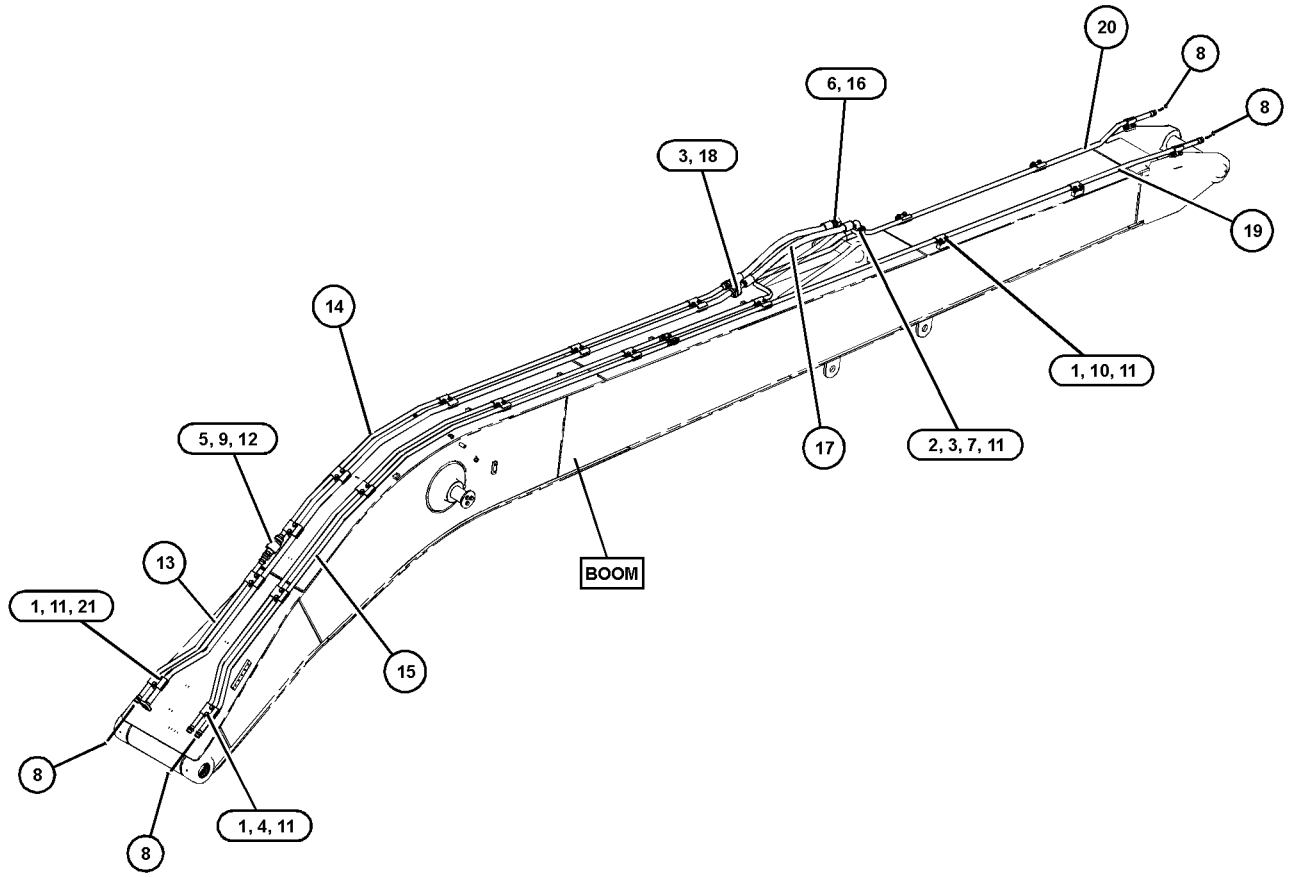

GRAPHIC #1 <END> g06231655

489-2947 LINES GP-BOOM CYLINDER

S/N: BR61-UP

PART OF 513-3208 LINES AR-BOOM

SMCS-5057, 5456 **i07356253**

NOTE	REF NO	GRAPHIC REF	PART NUMBER	QTY	PART NAME 1 2 3 4 5 6 (PRODUCT LEVEL)	SEE PAGE
M	1	1	**8T-4139**	2	BOLT (M12X1.75X30-MM)	
M	2	1	**8T-4192**	2	BOLT (M12X1.75X25-MM)	
M	3	1	**8T-4194**	2	BOLT (M12X1.75X50-MM)	
	4	1	**1P-3703**	2	SEAL-RECTANGULAR	
	5	1	**4I-1674**	2	CLIP	
	6	1	**9F-2167**	1	SCREW-PURGE (3/8-24X1.164-IN)	
M	7	1	**101-7404**	4	BOLT-SOCKET HEAD (M10X1.5X30-MM)	
	8	1	**124-1062**	1	SUPPORT AS	
	9	1	**124-1063**	1	SUPPORT AS	
M	10	1	**170-8553**	4	BOLT-SOCKET HEAD (M12X1.75X40-MM)	
Y	11	1	*338-6971*	1	SENSOR GP-PRESSURE (HYDRAULIC OIL)	218
	12	1	**490-4924**	1	TUBE AS	
	13	1	**490-4925**	1	TUBE AS	
	14	1	**4I-1676**	1	CLIP	
	15	1	**6H-3615**	1	PLUG-PROTECTION	
	16	1	**6V-9746**	4	SEAL-O-RING	
	17	1	**8T-4223**	6	WASHER-HARD (13.5X25.5X3-MM THK)	

M - METRIC PART
Y - SEPARATE ILLUSTRATION

489-2947 **LINES GP-BOOM CYLINDER (**contd.**)** **i07356253**

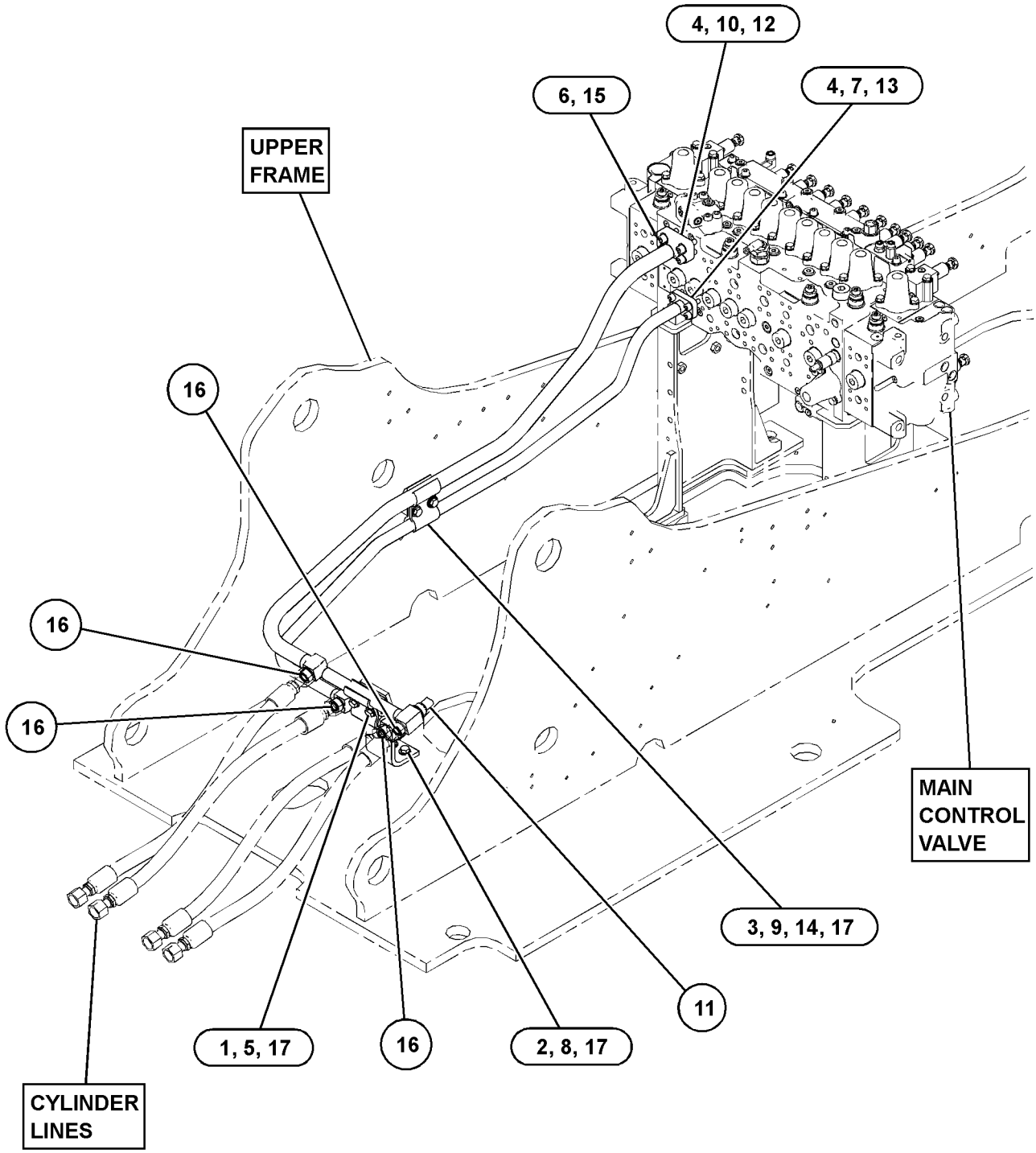

GRAPHIC #1 <END> g06230223

492-2065 LINES GP-BOOM CYLINDER

S/N: BR61-UP

PART OF 513-3210 LINES AR-BOOM

SMCS-5057, 5456 **i07367974**

NOTE	REF NO	GRAPHIC REF	PART NUMBER	QTY	PART NAME 1 2 3 4 5 6 (PRODUCT LEVEL)	SEE PAGE
M	1	1	**8T-4139**	2	BOLT (M12X1.75X30-MM)	
M	2	1	**8T-4192**	2	BOLT (M12X1.75X25-MM)	
M	3	1	**8T-4194**	2	BOLT (M12X1.75X50-MM)	
	4	1	**1P-3703**	2	SEAL-RECTANGULAR	
	5	1	**4I-1674**	2	CLIP	
	6	1	**9F-2167**	1	SCREW-PURGE (3/8-24X1.164-IN)	
M	7	1	**101-7404**	4	BOLT-SOCKET HEAD (M10X1.5X30-MM)	
	8	1	**124-1062**	1	SUPPORT AS	
	9	1	**124-1063**	1	SUPPORT AS	
		1	**4I-1676**	1	CLIP	
		1	**5I-4353**	1	BAR	
M	10	1	**170-8553**	4	BOLT-SOCKET HEAD (M12X1.75X40-MM)	
Y	11	1	*338-6971*	2	SENSOR GP-PRESSURE (HYDRAULIC OIL)	218
	12	1	**490-4924**	1	TUBE AS	
	13	1	**492-8407**	1	TUBE AS	
	14	1	**4I-1676**	1	CLIP	
	15	1	**6H-3615**	1	PLUG-PROTECTION	
	16	1	**6V-9746**	4	SEAL-O-RING	
	17	1	**8T-4223**	6	WASHER-HARD (13.5X25.5X3-MM THK)	

M - METRIC PART
Y - SEPARATE ILLUSTRATION

492-2065 **LINES GP-BOOM CYLINDER (**contd.**)** **i07367974**

NO GRAPHIC AVAILABLE AT TIME OF PUBLICATION

GRAPHIC #1 <END> g01269539

494-4971 LINES GP-BOOM CYLINDER–LH

S/N: BR61-UP

PART OF 494-4966 CYLINDER & LINES GP-BOOM

SMCS-5057, 5456 **i07352345**

NOTE	REF NO	GRAPHIC REF	PART NUMBER	QTY	PART NAME 1 2 3 4 5 6 (PRODUCT LEVEL)	SEE PAGE
M	1	1	**8T-4196**	2	BOLT (M10X1.5X35-MM)	
M	2	1	**8T-3653**	1	BOLT (M14X2X80-MM)	
	3	1	**4I-3621**	1	SUPPORT	
	4	1	**8T-4896**	2	WASHER-HARD (10.2X18.5X2.5-MM THK)	
M	5	1	**101-7404**	8	BOLT-SOCKET HEAD (M10X1.5X30-MM)	
	6	1	**094-1920**	2	CLAMP	
	7	1	**095-1597**	2	SEAL-O-RING	
	8	1	**498-0801**	1	SUPPORT AS	
	9	1	**498-0802**	1	TUBE AS	
	10	1	**498-0803**	1	TUBE AS	
	11	1	**3B-4509**	1	LOCKWASHER	

M - METRIC PART

494-4971 **LINES GP-BOOM CYLINDER (**contd.**)** **i07352345**

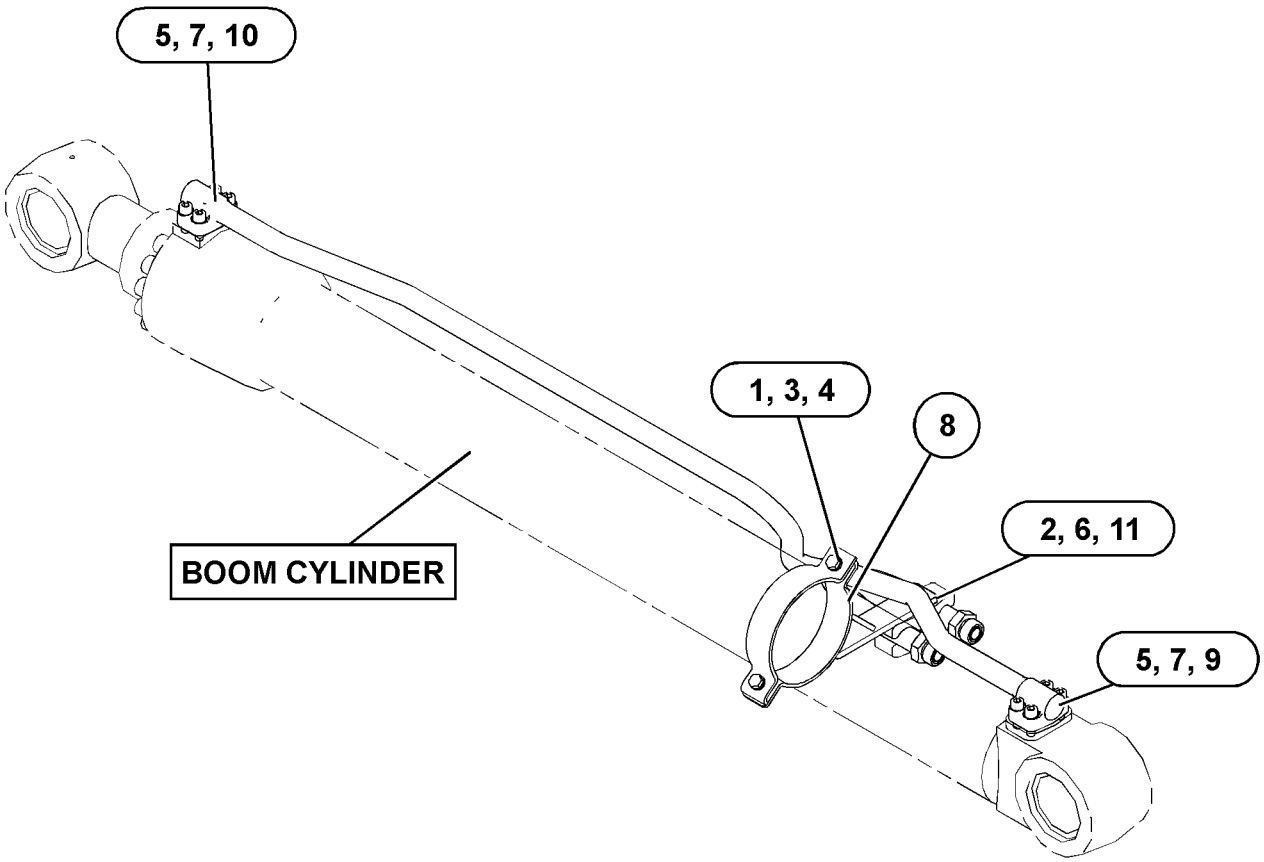

GRAPHIC #1 <END> g06230959

494-4972 LINES GP-BOOM CYLINDER–RH

S/N: BR61-UP

PART OF 494-4967 CYLINDER & LINES GP-BOOM

SMCS-5057, 5456

i07352394

NOTE	REF NO	GRAPHIC REF	PART NUMBER	QTY	PART NAME 1 2 3 4 5 6 (PRODUCT LEVEL)	SEE PAGE
M	1	1	**8T-4196**	2	BOLT (M10X1.5X35-MM)	
M	2	1	**8T-3653**	1	BOLT (M14X2X80-MM)	
	3	1	**4I-3621**	1	SUPPORT	
	4	1	**8T-4896**	2	WASHER-HARD (10.2X18.5X2.5-MM THK)	
M	5	1	**101-7404**	8	BOLT-SOCKET HEAD (M10X1.5X30-MM)	
	6	1	**094-1920**	2	CLAMP	
	7	1	**095-1597**	2	SEAL-O-RING	
	8	1	**498-0799**	1	TUBE AS	
	9	1	**498-0800**	1	TUBE AS	
	10	1	**498-0801**	1	SUPPORT AS	
	11	1	**3B-4509**	1	LOCKWASHER	

M - METRIC PART

494-4972 **LINES GP-BOOM CYLINDER (**contd.**)** **i07352394**

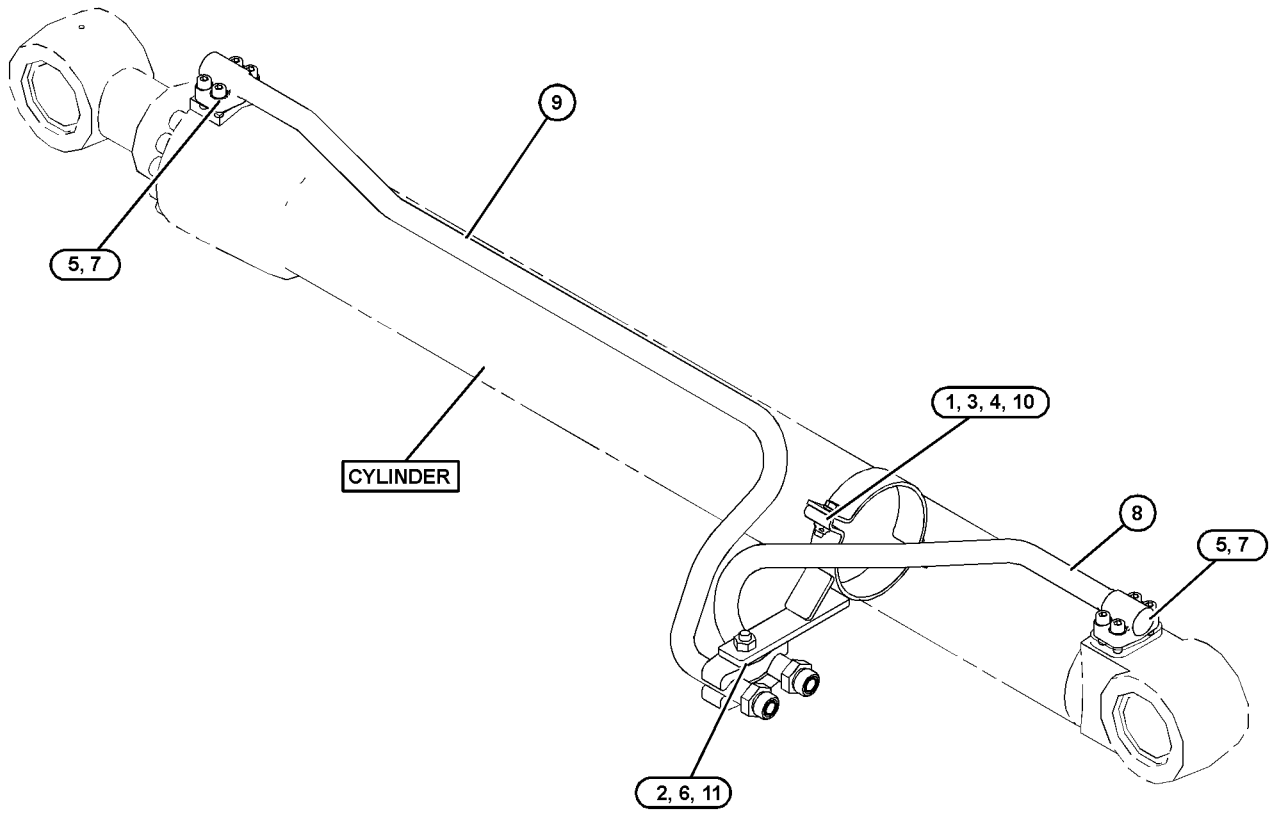

GRAPHIC #1 <END> g06229575

561-5804 LINES GP-BOOM CYLINDER–RH

S/N: BR61-UP

PART OF 494-4967 CYLINDER & LINES GP-BOOM

SMCS-5057, 5456 **i07466159**

NOTE	REF NO	GRAPHIC REF	PART NUMBER	QTY	PART NAME 1 2 3 4 5 6 (PRODUCT LEVEL)	SEE PAGE
M	1	1	**8T-4196**	2	BOLT (M10X1.5X35-MM)	
M	2	1	**8T-3653**	1	BOLT (M14X2X80-MM)	
	3	1	**8T-4896**	2	WASHER-HARD (10.2X18.5X2.5-MM THK)	
	4	1	**094-1920**	2	CLAMP	
	5	1	**095-1597**	2	SEAL-O-RING	
M	6	1	**101-7404**	8	BOLT-SOCKET HEAD (M10X1.5X30-MM)	
	7	1	**165-0142**	1	WASHER-HARD (14.8X27X3-MM THK)	
	8	1	**498-0799**	1	TUBE AS	
	9	1	**498-0801**	1	SUPPORT AS	
	10	1	**4I-3621**	1	SUPPORT	
	11	1	**561-5807**	1	TUBE AS	

M - METRIC PART

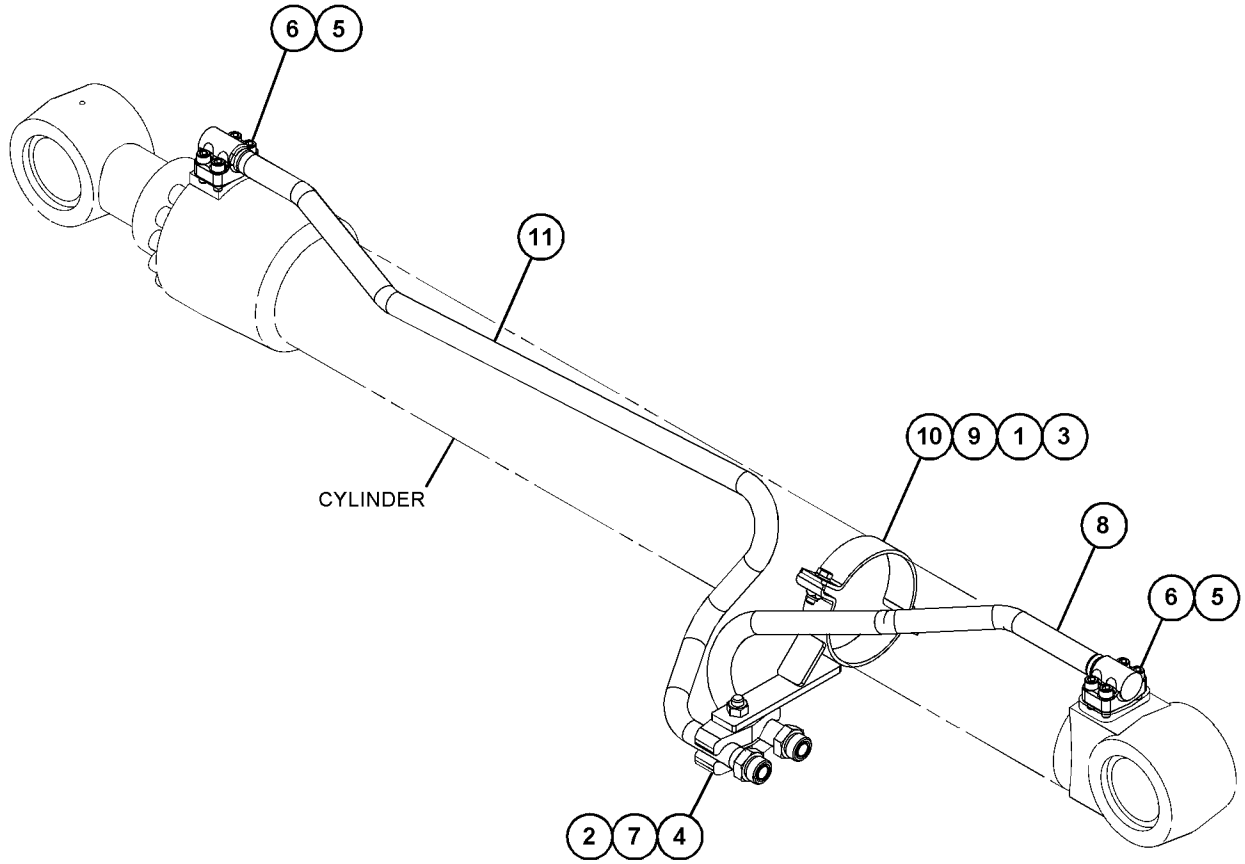

GRAPHIC #1 <END> g06329950

187-5693 LINES GP-BUCKET CYLINDER

S/N: BR61-UP
FOR USE WITH 2.9-M (9.5-FT) STICK
PART OF 490-7677 STICK AR-HOE

SMCS-5457 **i06888777**

NOTE	REF NO	GRAPHIC REF	PART NUMBER	QTY	PART NAME 1 2 3 4 5 6 (PRODUCT LEVEL)	SEE PAGE
I	1	1	**4I-8785**	2	HOSE AS	
	2	1	**5I-4174**	1	BLOCK	
	3	1	**8T-9403**	4	FLANGE-HALF	
M	4	1	**8T-4198**	4	BOLT (M10X1.5X100-MM)	
	5	1	**8T-4121**	8	WASHER-HARD (11X21X2.5-MM THK)	
	6	1	**1P-3702**	2	SEAL-RECTANGULAR	
	7	1	**1P-3703**	1	SEAL-RECTANGULAR	
M	8	1	**8T-4182**	4	BOLT (M10X1.5X45-MM)	

I - REFER TO HYDRAULIC INFORMATION SYSTEM
M - METRIC PART

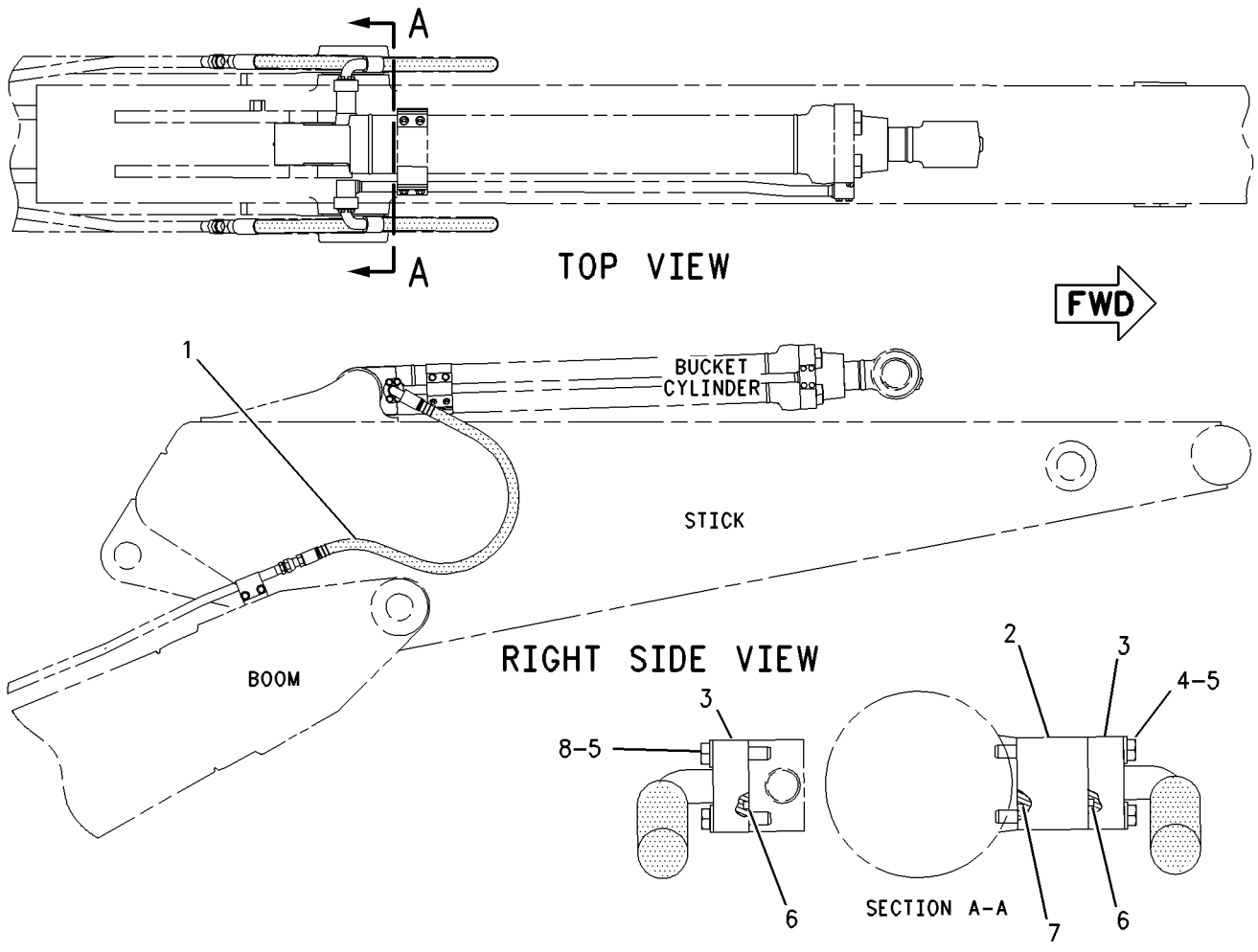

GRAPHIC #1 <END> g00708137

369-9677 LINES GP-BUCKET CYLINDER

S/N: BR61-UP

PART OF 490-4179 CYLINDER & LINES GP-BUCKET

SMCS-5457 **i06541664**

NOTE	REF NO	GRAPHIC REF	PART NUMBER	QTY	PART NAME 1 2 3 4 5 6 (PRODUCT LEVEL)	SEE PAGE
M	1	1	**9X-6032**	4	BOLT-SOCKET HEAD (M10X1.5X30-MM)	
	2	1	**095-1597**	1	SEAL-O-RING	
	3	1	**472-0688**	1	TUBE AS	
	4	1	**096-4412**	1	SUPPORT	
M	5	1	**8T-4196**	2	BOLT (M10X1.5X35-MM)	
	6	1	**8T-4896**	2	WASHER-HARD (10.2X18.5X2.5-MM THK)	
	7	1	**369-9678**	1	SUPPORT AS	
	8	1	**096-4480**	1	CLAMP	
M	9	1	**8T-4910**	1	BOLT (M12X1.75X60-MM)	
	10	1	**8T-4223**	1	WASHER-HARD (13.5X25.5X3-MM THK)	

M - METRIC PART

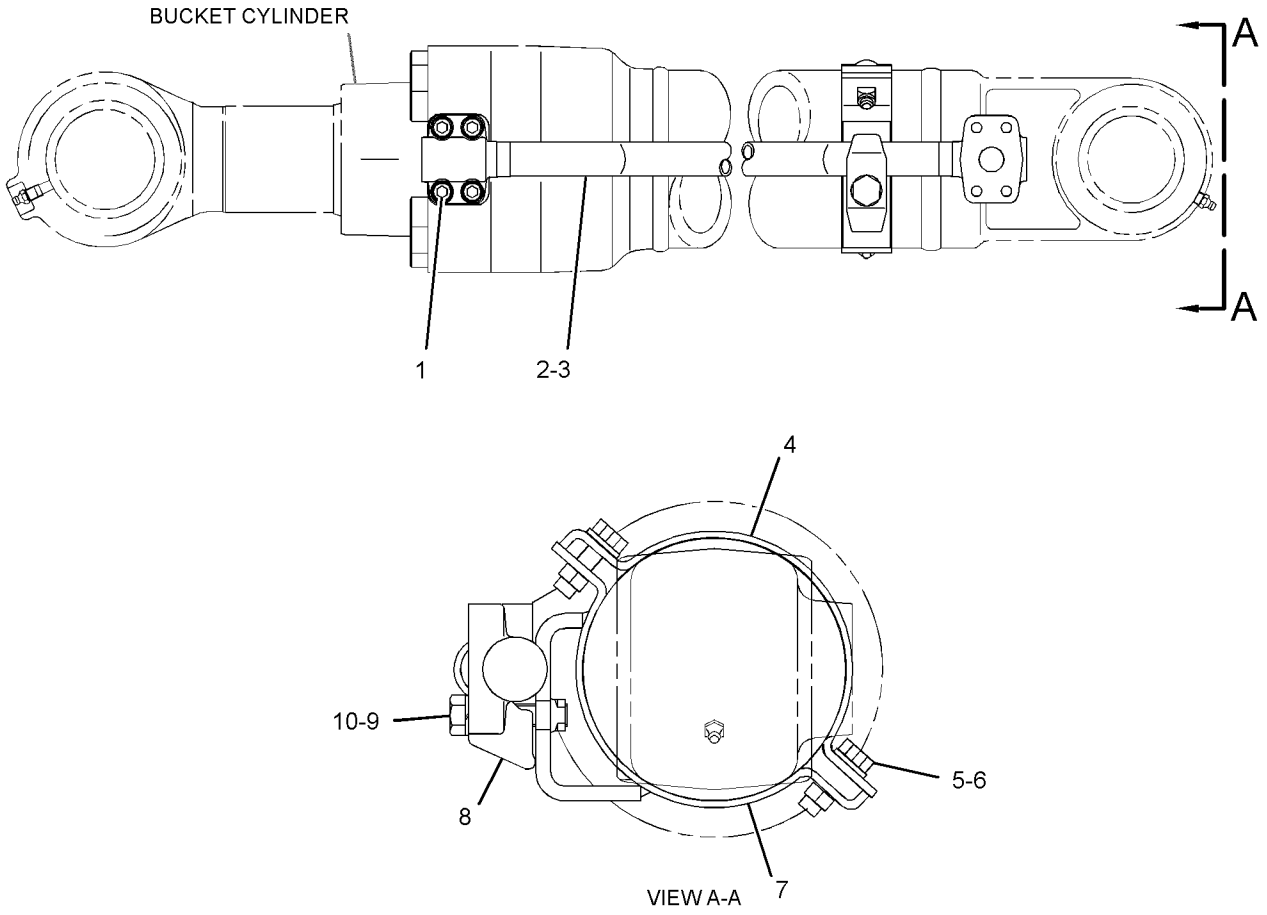

GRAPHIC #1 <END> g03338811

418-9086 LINES GP-BUCKET CYLINDER

S/N: BR61-UP

PART OF 418-9085 CYLINDER & LINES GP-BUCKET

SMCS-5457 **i06756598**

NOTE	REF NO	GRAPHIC REF	PART NUMBER	QTY	PART NAME 1 2 3 4 5 6 (PRODUCT LEVEL)	SEE PAGE
M	1	1	**8T-0271**	4	BOLT-SOCKET HEAD (M10X1.5X35-MM)	
	2	1	**6V-0357**	2	SEAL-O-RING	
	3	1	**422-9111**	1	TUBE AS	
	4	1	**424-8398**	2	NUT-WELD (M10X1.5-THD)	
M	5	1	**6V-5842**	2	BOLT (M10X1.5X40-MM)	
	6	1	**7X-0796**	3	LOCKWASHER (10.2X18.4X2.5-MM THK)	
	7	1	**422-9113**	1	SUPPORT AS	
	8	1	**385-2967**	1	CLAMP	
M	9	1	**6V-4249**	1	BOLT (M10X1.5X50-MM)	
	10	1	**422-9112**	1	TUBE AS	
M	11	1	**101-7404**	4	BOLT-SOCKET HEAD (M10X1.5X30-MM)	
	12	1	**6V-9832**	2	CAP	

M - METRIC PART

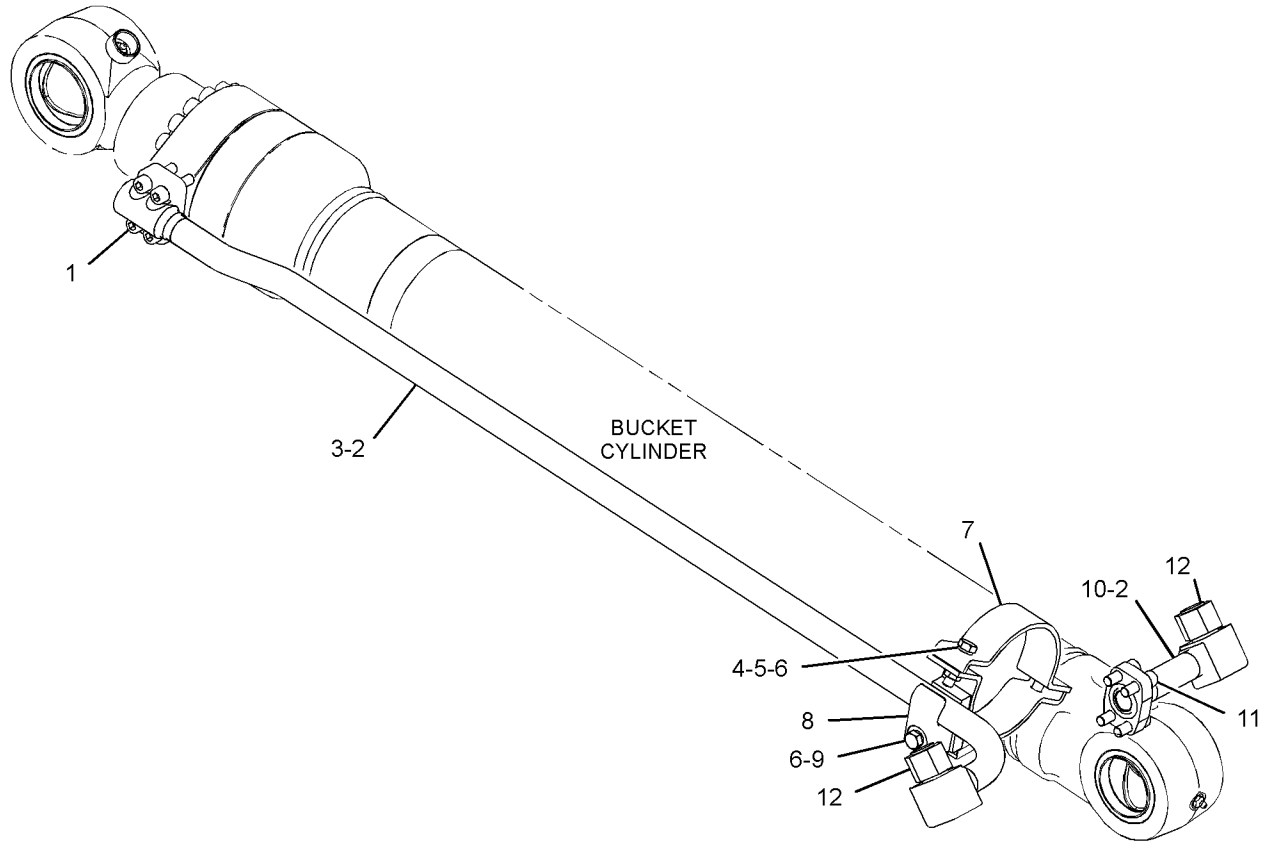

GRAPHIC #1 <END> g03329030

525-6163 LINES GP-BUCKET CYLINDER

S/N: BR61-UP

PART OF 531-3494 STICK AR

SMCS-5457 **i07368015**

NOTE	REF NO	GRAPHIC REF	PART NUMBER	QTY	PART NAME 1 2 3 4 5 6 (PRODUCT LEVEL)	SEE PAGE
M	1	1	**8T-4139**	16	BOLT (M12X1.75X30-MM)	
	2	1	**6V-9746**	4	SEAL-O-RING	
	3	1	**7Y-4868**	16	CLIP	
I	4	1	**7Y-7904**	2	HOSE AS	
	5	1	**8T-4223**	16	WASHER-HARD (13.5X25.5X3-MM THK)	
I	6	1	**526-0467**	2	HOSE AS	
	7	1	**526-1768**	1	TUBE AS	
	8	1	**526-1769**	1	TUBE AS	

I - REFER TO HYDRAULIC INFORMATION SYSTEM
M - METRIC PART

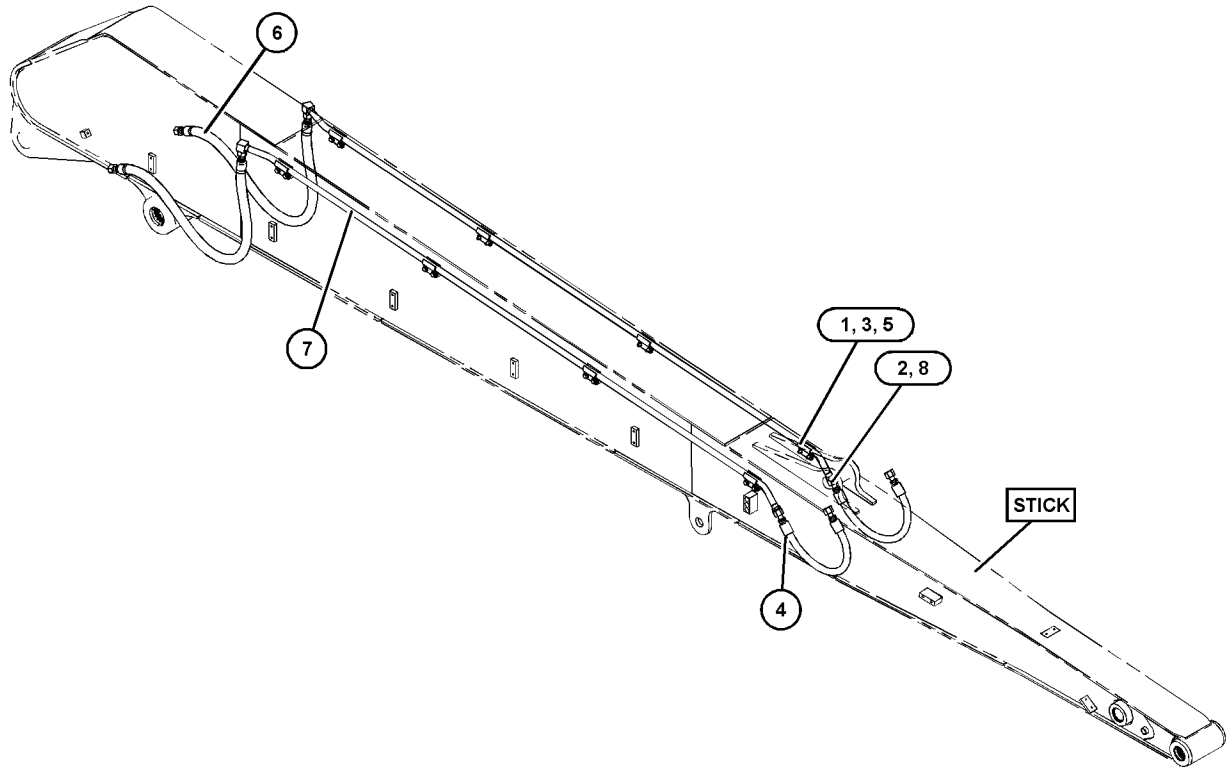

GRAPHIC #1 <END> g06233436

242-6490 LINES GP-COUPLER–STICK

S/N: BR61-UP

FOR USE WITH 2.9-M (9.5-FT) STICK

SMCS-5057, 5133

i06919115

NOTE	REF NO	GRAPHIC REF	PART NUMBER	QTY	PART NAME 1 2 3 4 5 6 (PRODUCT LEVEL)	SEE PAGE
	1	1	**9X-6582**	1	NUT (13/16-16-THD)	
	2	1	**253-6548**	1	TUBE AS	
	3	1	**253-6551**	1	TUBE AS	
I	4	1	**262-3390**	2	HOSE AS	
	5	1	*148-8415*	1	REDUCER AS	
		1	**6V-8397**	1	SEAL-O-RING	
		1	**6V-8936**	1	REDUCER	
	6	1	*148-8419*	1	REDUCER AS	
		1	**4J-5477**	1	SEAL-O-RING	
		1	**6V-8935**	1	REDUCER	
	7	1	**5Q-4212**	12	CLIP	
	8	1	**6V-8398**	4	SEAL-O-RING	
	9	1	**8T-4223**	12	WASHER-HARD (13.5X25.5X3-MM THK)	
M	10	1	**8T-4956**	12	BOLT (M12X1.75X35-MM)	

I - REFER TO HYDRAULIC INFORMATION SYSTEM
M - METRIC PART

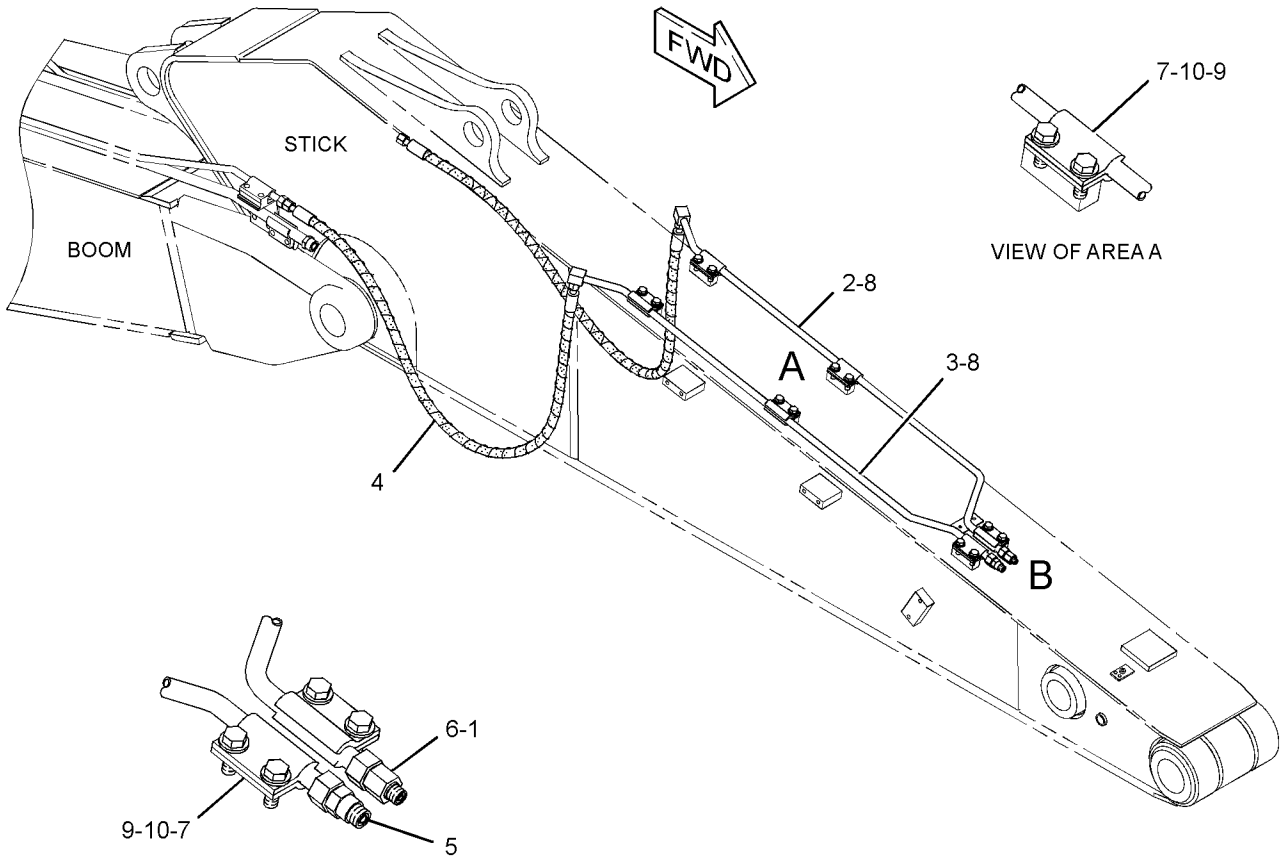

GRAPHIC #1

<END>

g01217350

242-6494 LINES GP-COUPLER—STICK

S/N: BR61-UP

FOR USE WITH 2.4 TO 2.5-M (7.9 TO 8.2-FT) STICK

SMCS-5057, 5133

i06920805

NOTE	REF NO	GRAPHIC REF	PART NUMBER	QTY	PART NAME 1 2 3 4 5 6 (PRODUCT LEVEL)	SEE PAGE
	1	1	**9X-6582**	1	NUT (13/16-16-THD)	
I	2	1	**210-9966**	2	HOSE AS	
	3	1	**253-6688**	1	TUBE AS	
	4	1	**253-6691**	1	TUBE AS	
	5	1	*148-8415*	1	REDUCER AS	
		1	**6V-8397**	1	SEAL-O-RING	
		1	**6V-8936**	1	REDUCER	
	6	1	*148-8419*	1	REDUCER AS	
		1	**4J-5477**	1	SEAL-O-RING	
		1	**6V-8935**	1	REDUCER	
	7	1	**5Q-4212**	12	CLIP	
	8	1	**6V-8398**	4	SEAL-O-RING	
	9	1	**8T-4223**	12	WASHER-HARD (13.5X25.5X3-MM THK)	
M	10	1	**8T-4956**	12	BOLT (M12X1.75X35-MM)	

I - REFER TO HYDRAULIC INFORMATION SYSTEM
M - METRIC PART

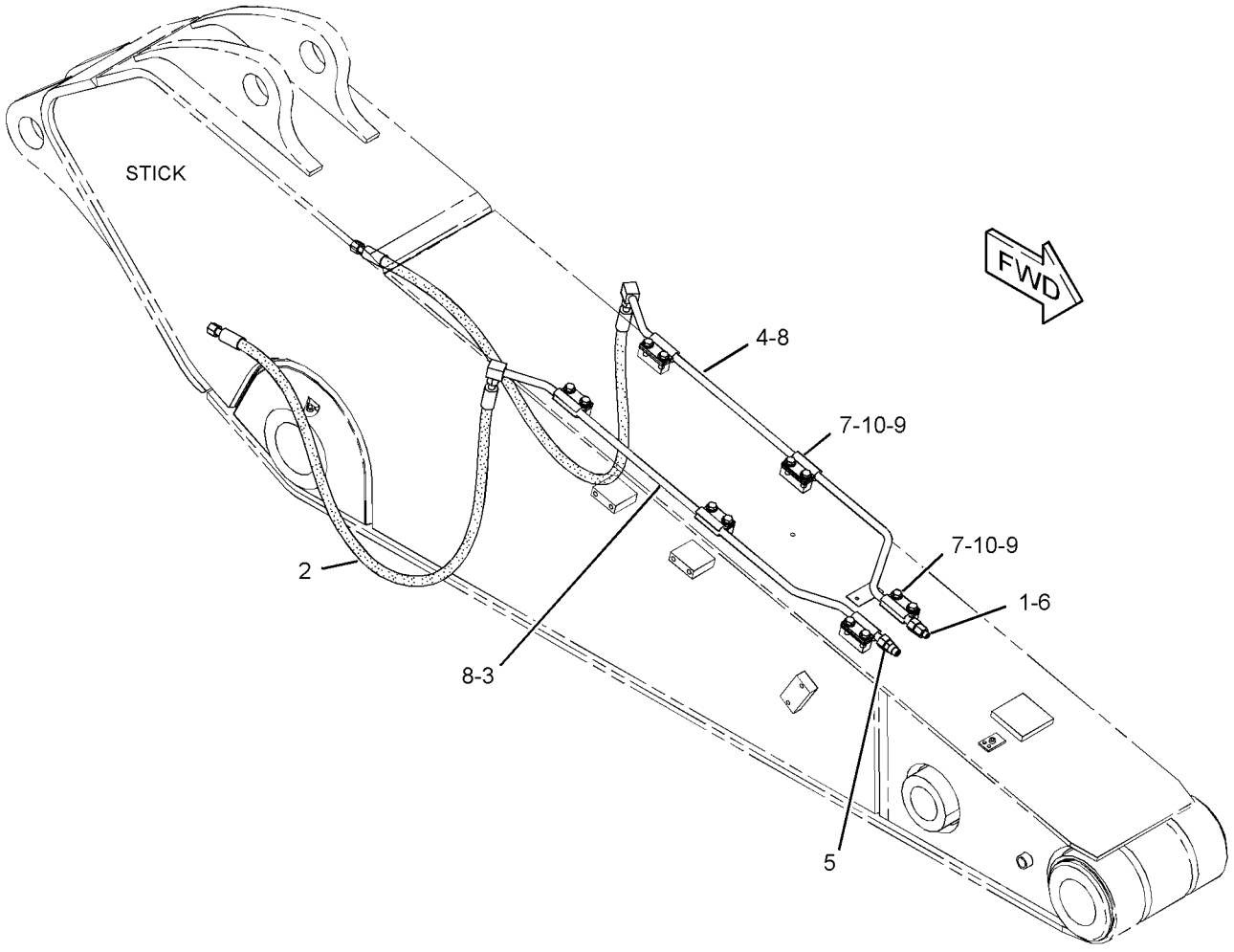

GRAPHIC #1 <END> g01236506

449-1136 LINES GP-COUPLER—B-LINKAGE

S/N: BR61-UP

FOR USE WITH 388-0067—PAGE: 576

PART OF 455-3910 COUPLER AR-QUICK

SMCS-5057, 5133

i06755898

NOTE	REF NO	GRAPHIC REF	PART NUMBER	QTY	PART NAME 1 2 3 4 5 6 (PRODUCT LEVEL)	SEE PAGE
	1	1	**345-4467**	1	BRACKET AS	
I	2	1	**346-3046**	1	HOSE AS	
I	3	1	**346-3047**	1	HOSE AS	
I	4	1	**448-4180**	1	HOSE AS	
I	5	1	**448-4181**	1	HOSE AS	
	6	1	*148-8384*	1	ELBOW AS	
		1	**4J-5477**	2	SEAL-O-RING	
		1	**6V-8979**	1	ELBOW	
	7	1	**2P-1279**	1	LOCKNUT (9/16-18-THD)	
	8	1	**6V-8397**	2	SEAL-O-RING	
	9	1	**6V-8980**	1	ELBOW	
	10	1	**6V-9168**	1	NUT (11/16-16-THD)	
	11	1	**7K-1181**	5	STRAP-CABLE	
	12	1	**8T-4121**	2	WASHER-HARD (11X21X2.5-MM THK)	
M	13	1	**8T-4137**	2	BOLT (M10X1.5X20-MM)	

I - REFER TO HYDRAULIC INFORMATION SYSTEM
M - METRIC PART

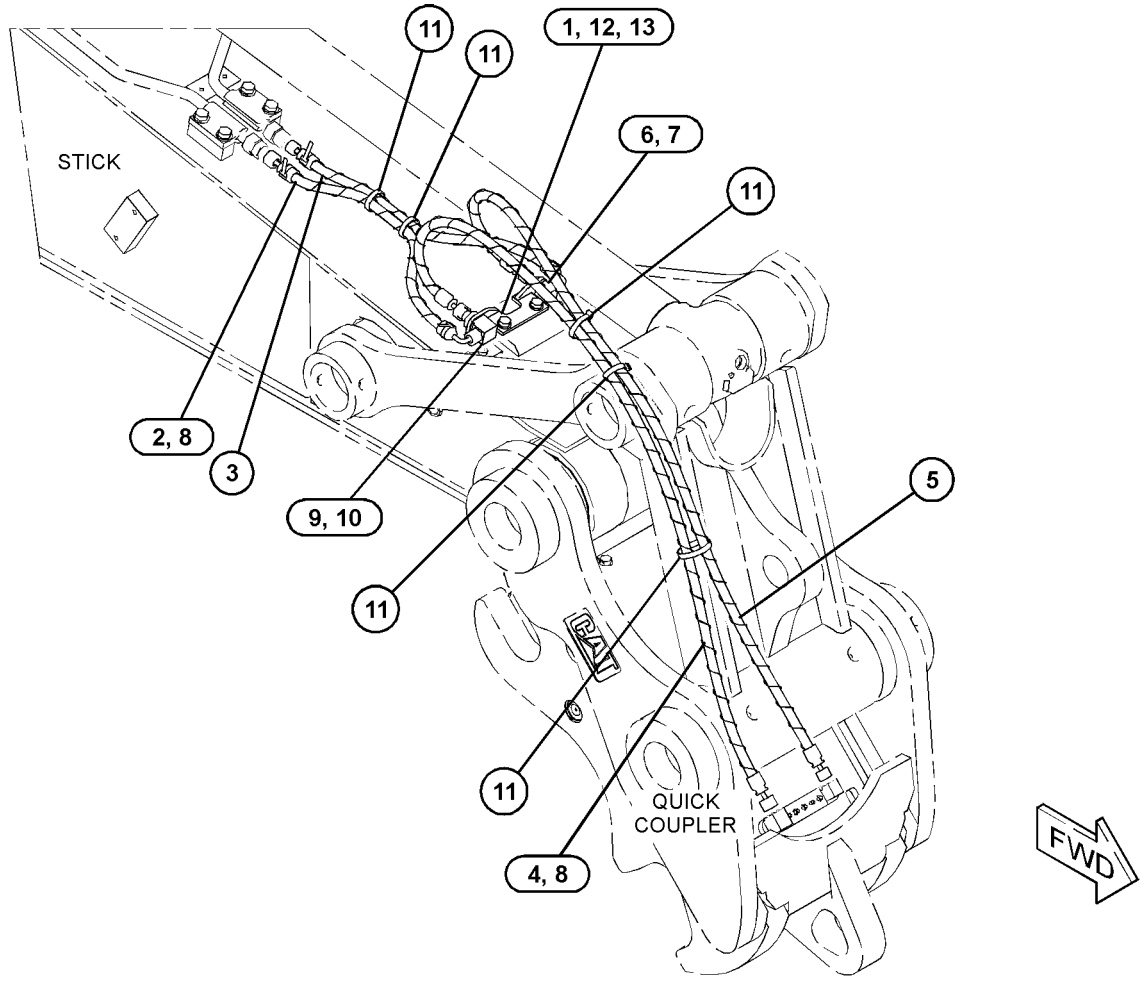

GRAPHIC #1 <END> g03708907

489-2983 LINES GP-COUPLER—REACH BOOM

S/N: BR61-UP

SMCS-5057, 5133 **i07350514**

NOTE	REF NO	GRAPHIC REF	PART NUMBER	QTY	PART NAME 1 2 3 4 5 6 (PRODUCT LEVEL)	SEE PAGE
	1	1	**3V-9744**	1	SPACER	
	2	1	**247-9294**	2	SUPPORT AS	
	3	1	**282-5741**	2	CLAMP AS-LOWER	
	4	1	**352-6772**	6	CLIP AS	
	5	1	**513-3085**	1	TUBE AS	
	6	1	**513-3086**	1	TUBE AS	
	7	1	**538-9696**	1	TUBE AS	
	8	1	**513-3088**	1	TUBE AS	
	9	1	**521-4630**	1	TUBE AS	
	10	1	**135-3980**	2	CLIP	
	11	1	**179-5235**	2	CLIP	
	12	1	**5Q-4212**	4	CLIP	
	13	1	**5Q-4213**	6	CLIP	
	14	1	**6V-8397**	2	SEAL-O-RING	
	15	1	**6V-8398**	5	SEAL-O-RING	
M	16	1	**8T-4139**	20	BOLT (M12X1.75X30-MM)	
M	17	1	**8T-4184**	4	BOLT (M12X1.75X45-MM)	
	18	1	**8T-4223**	26	WASHER-HARD (13.5X25.5X3-MM THK)	
M	19	1	**8T-4244**	4	NUT (M12X1.75-THD)	
M	20	1	**8T-6868**	2	BOLT (M12X1.75X80-MM)	

M - METRIC PART

489-2983 **LINES GP-COUPLER (**contd.**)** **i07350514**

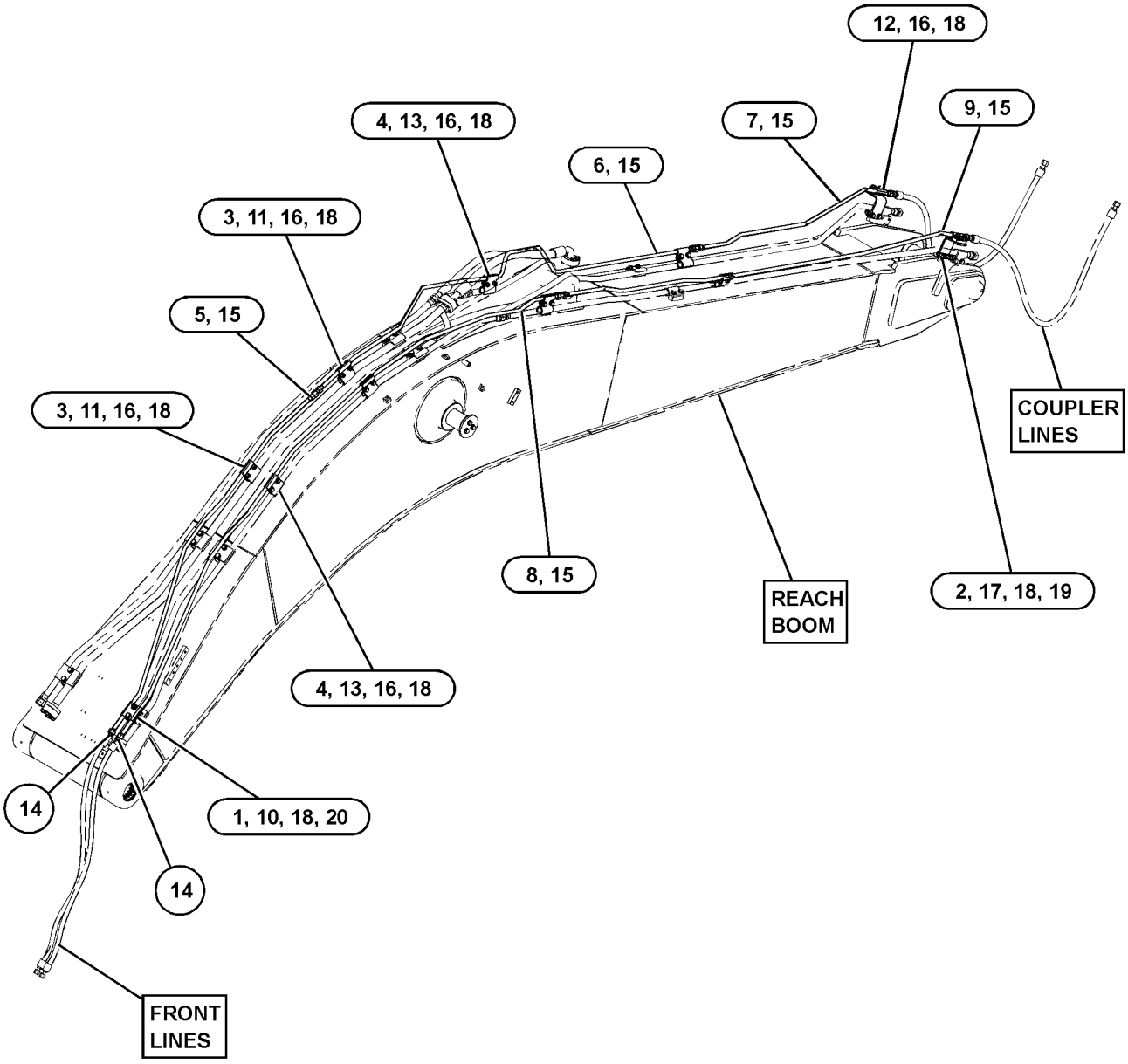

GRAPHIC #1 <END> g06231070

489-2931 LINES GP-CYLINDER–BOOM

S/N: BR61-UP

PART OF 514-4877 HYDRAULIC AR

SMCS-5057 **i07358823**

NOTE	REF NO	GRAPHIC REF	PART NUMBER	QTY	PART NAME 1 2 3 4 5 6 (PRODUCT LEVEL)	SEE PAGE
	1	1	*150-4037*	1	TEE AS	
		1	**6V-8398**	2	SEAL-O-RING	
		1	**6V-9844**	1	TEE-SWIVEL	
I	2	1	**124-1047**	4	HOSE AS	
	3	1	*164-5552*	1	CONNECTOR AS	
		1	**3D-2824**	1	SEAL-O-RING	
		1	**4I-7745**	1	CONNECTOR	
		1	**6V-8398**	1	SEAL-O-RING	
	4	1	**510-9513**	1	HOSE AS	
	5	1	*148-8347*	2	ELBOW AS	
					(EACH INCLUDES)	
		1	**3D-2824**	1	SEAL-O-RING	
		1	**6V-9007**	1	ELBOW	
		1	**6V-9746**	1	SEAL-O-RING	
	6	1	*148-8353*	1	ELBOW AS	
		1	**3J-1907**	1	SEAL-O-RING	
		1	**6V-8397**	1	SEAL-O-RING	
		1	**6V-9001**	1	ELBOW	
	7	1	*148-8364*	1	ELBOW AS	
		1	**3K-0360**	1	SEAL-O-RING	
		1	**6V-8398**	1	SEAL-O-RING	
		1	**6V-8625**	1	ELBOW	
	8	1	*148-8378*	1	ELBOW AS	
		1	**3J-1907**	1	SEAL-O-RING	
		1	**6V-8397**	1	SEAL-O-RING	
		1	**6V-8724**	1	ELBOW	
	9	1	**6V-9746**	4	SEAL-O-RING	

I - REFER TO HYDRAULIC INFORMATION SYSTEM

489-2931 **LINES GP-CYLINDER (**contd.**)** **i07358823**

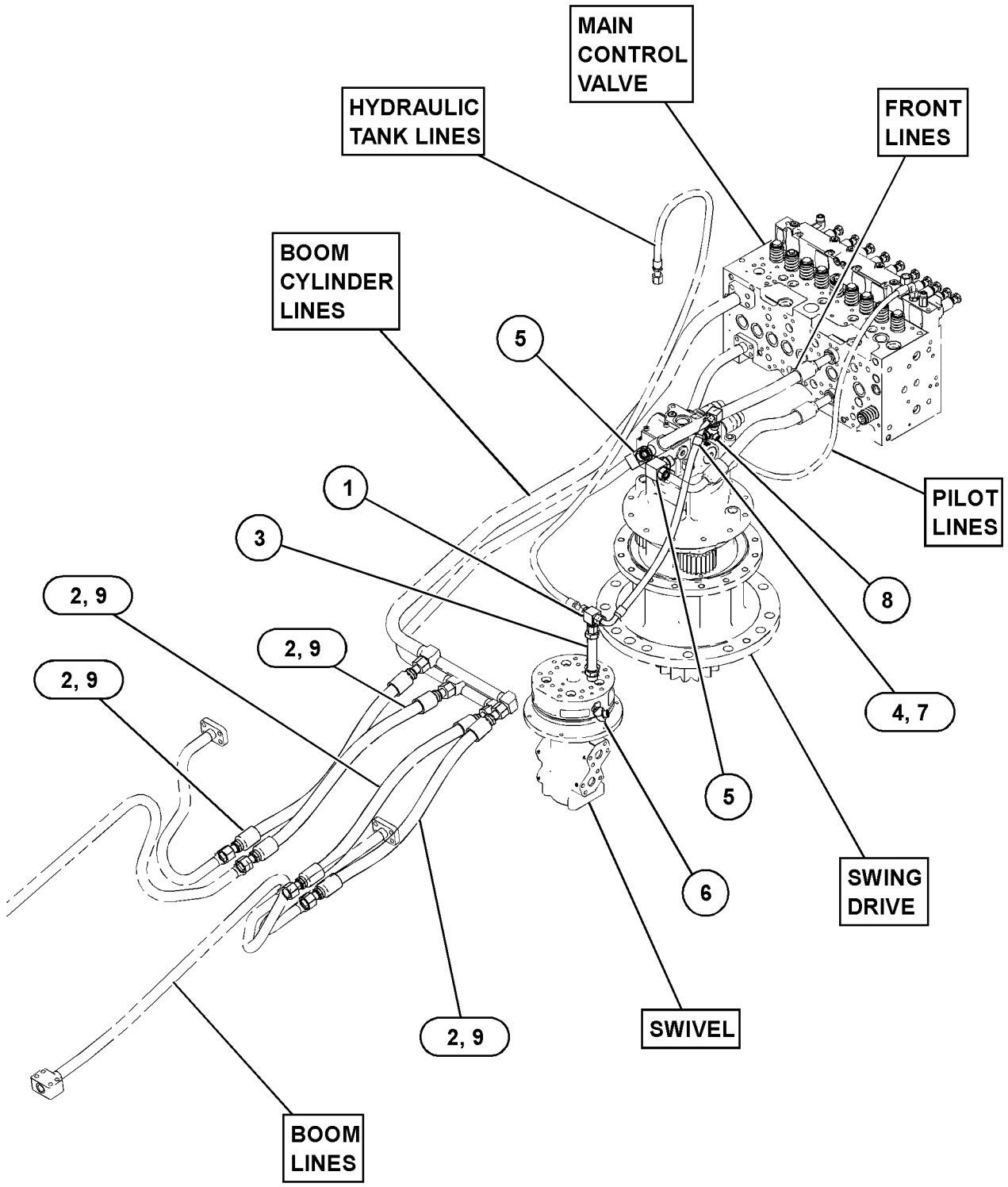

GRAPHIC #1 <END> g06230738

528-6060 LINES GP-DRAIN—HYDRAULIC OIL

S/N: BR61-UP

PART OF 511-7397 OIL CHANGE AR-HIGH SPEED

SMCS-5057 **i07369213**

NOTE	REF NO	GRAPHIC REF	PART NUMBER	QTY	PART NAME 1 2 3 4 5 6 (PRODUCT LEVEL)	SEE PAGE
	1	1	**7Y-3195**	1	GROMMET	
	2	1	**8T-4121**	2	WASHER-HARD (11X21X2.5-MM THK)	
	3	1	**118-0166**	1	FITTING (QUICK DISCONNECT, MALE)	
	4	1	*148-8357*	1	ELBOW AS	
		1	**5K-9090**	1	SEAL-O-RING	
		1	**6V-9008**	1	ELBOW	
		1	**7M-8485**	1	SEAL-O-RING	
	5	1	*148-8391*	1	ELBOW AS	
		1	**2S-4078**	1	SEAL-O-RING	
		1	**5K-9090**	1	SEAL-O-RING	
		1	**8T-8987**	1	ELBOW	
	6	1	**449-5735**	1	BLOCK	
I	7	1	**532-6348**	1	HOSE AS	
	8	1	**117-8568**	1	NUT-BULKHEAD (1-7/8-12-THD)	
	9	1	**4J-0525**	1	SEAL-O-RING	
M	10	1	**7X-2543**	2	BOLT (M10X1.5X120-MM)	

I - REFER TO HYDRAULIC INFORMATION SYSTEM
M - METRIC PART

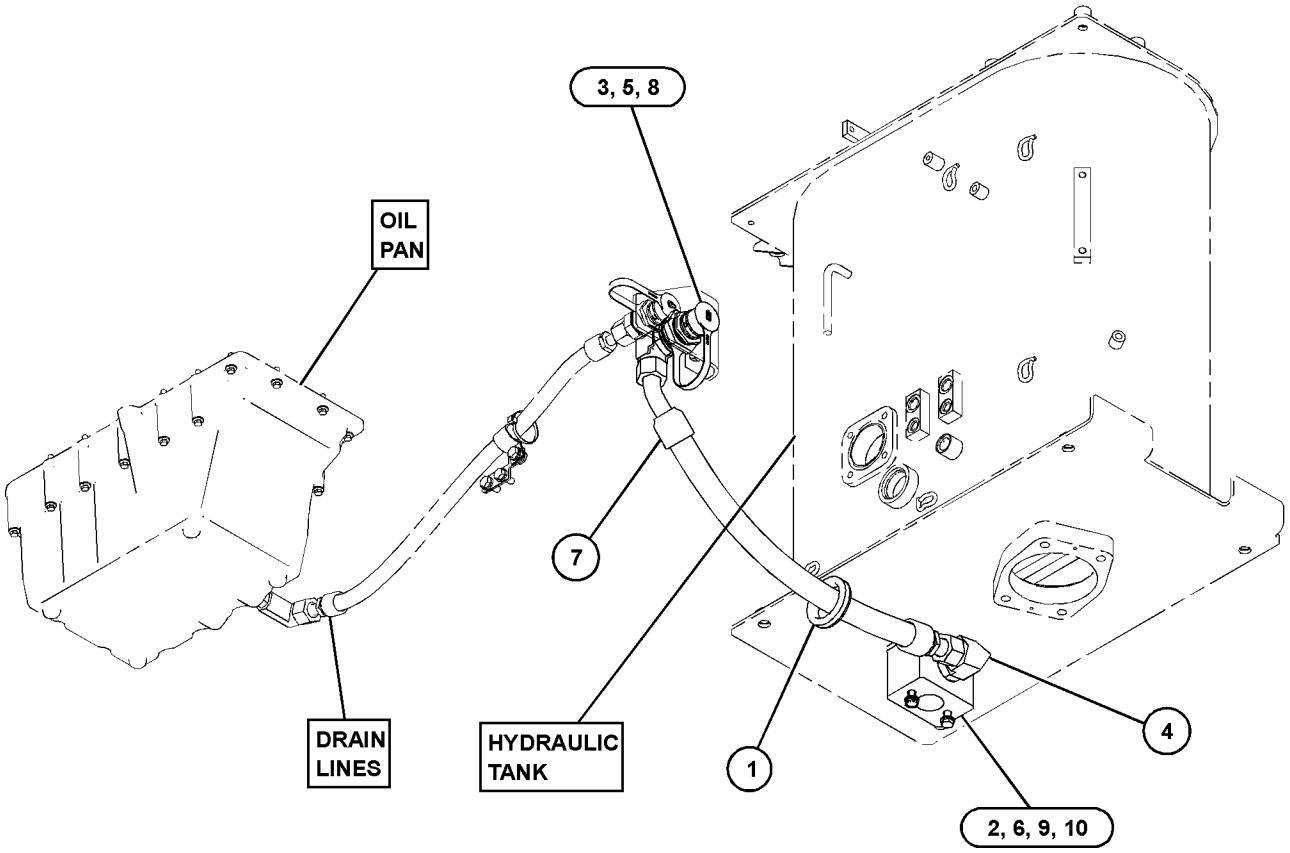

GRAPHIC #1 <END> g06232495

489-2933 LINES GP-FRONT

S/N: BR61-UP

PART OF 514-4877 HYDRAULIC AR

SMCS-5057 **i07358831**

NOTE	REF NO	GRAPHIC REF	PART NUMBER	QTY	PART NAME 1 2 3 4 5 6 (PRODUCT LEVEL)	SEE PAGE
I	1	1	**489-6594**	1	HOSE AS	
I	2	1	**489-7819**	1	HOSE AS	
I	3	1	**490-7747**	1	HOSE AS	
I	4	1	**510-9514**	1	HOSE AS	
I	5	1	**514-7102**	1	HOSE AS	
I	6	1	**518-3529**	1	HOSE AS	
I	7	1	**518-3532**	1	HOSE AS	
I	8	1	**518-3535**	1	HOSE AS	
I	9	1	**518-3538**	1	HOSE AS	
	10	1	**1P-3702**	4	SEAL-RECTANGULAR	
	11	1	**1P-3703**	10	SEAL-RECTANGULAR	
	12	1	**6V-0400**	12	FLANGE-HALF	
	13	1	**8T-4121**	16	WASHER-HARD (11X21X2.5-MM THK)	
M	14	1	**8T-4182**	16	BOLT (M10X1.5X45-MM)	
M	15	1	**8T-4184**	24	BOLT (M12X1.75X45-MM)	
	16	1	**8T-4223**	24	WASHER-HARD (13.5X25.5X3-MM THK)	
	17	1	**8T-9403**	8	FLANGE-HALF	

I - REFER TO HYDRAULIC INFORMATION SYSTEM
M - METRIC PART

489-2933 **LINES GP-FRONT (**contd.**)** **i07358831**

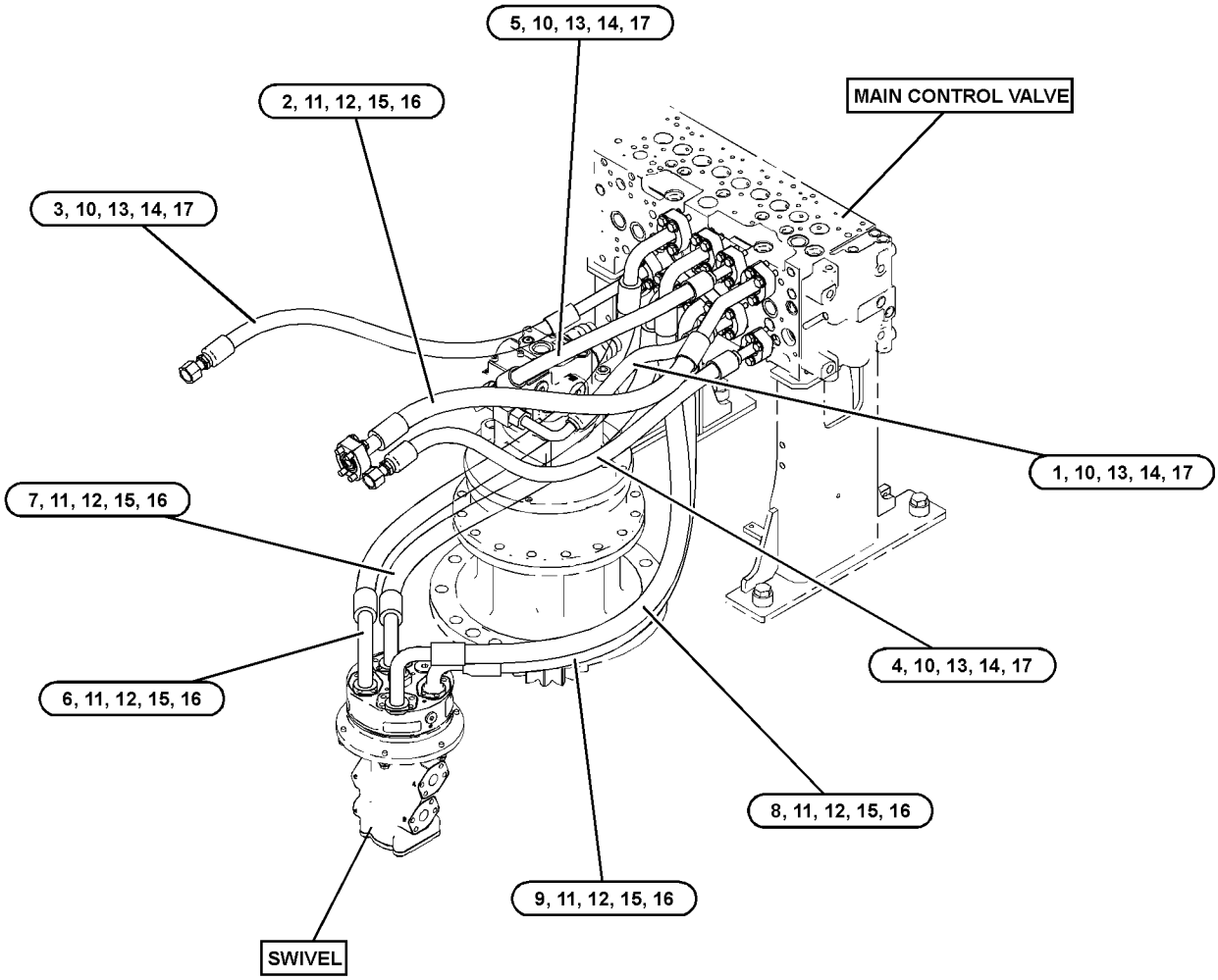

GRAPHIC #1 <END> g06231241

489-2950 LINES GP-FRONT

S/N: BR61-UP

PART OF 532-9515, 532-9518, 556-2899, 556-2902 DISTRIBUTION AR

SMCS-5057 **i07350442**

NOTE	REF NO	GRAPHIC REF	PART NUMBER	QTY	PART NAME 1 2 3 4 5 6 (PRODUCT LEVEL)	SEE PAGE
I	1	1	**490-7745**	1	HOSE AS	
	2	1	**1P-3702**	1	SEAL-RECTANGULAR	
	3	1	**8T-4121**	4	WASHER-HARD (11X21X2.5-MM THK)	
M	4	1	**8T-4182**	4	BOLT (M10X1.5X45-MM)	
	5	1	**8T-9403**	2	FLANGE-HALF	

I - REFER TO HYDRAULIC INFORMATION SYSTEM
M - METRIC PART

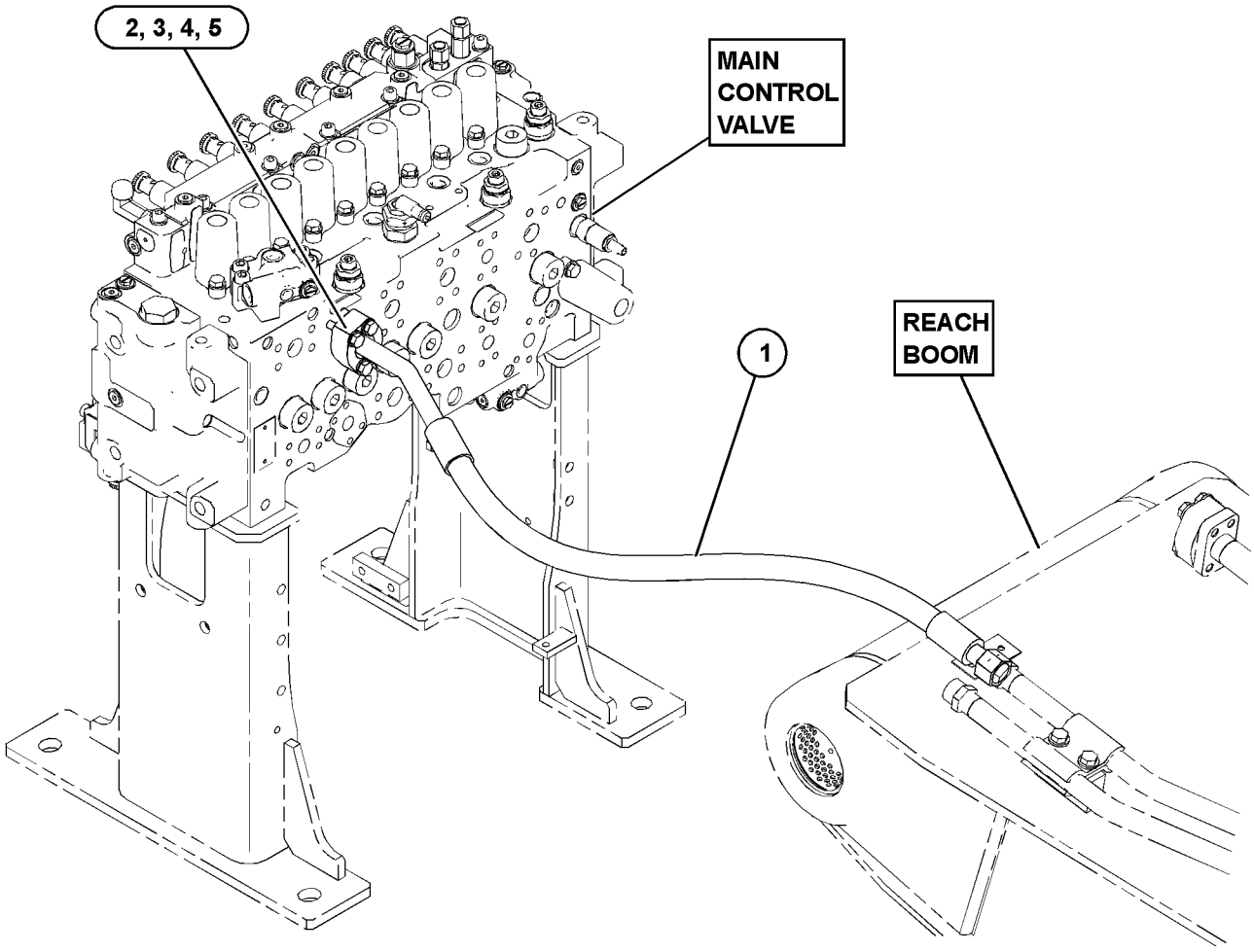

GRAPHIC #1 <END> g06232058

492-0412 LINES GP-FRONT

S/N: BR61-UP

PART OF 532-9539 OPTION AR-HYDRAULIC

SMCS-5057 **i07376581**

NOTE	REF NO	GRAPHIC REF	PART NUMBER	QTY	PART NAME 1 2 3 4 5 6 (PRODUCT LEVEL)	SEE PAGE
I	1	1	**506-9965**	1	HOSE AS	
	2	1	*148-8335*	2	CONNECTOR AS	
					(EACH INCLUDES)	
		1	**5K-9090**	1	SEAL-O-RING	
		1	**6V-8635**	1	CONNECTOR	
		1	**7M-8485**	1	SEAL-O-RING	

I - REFER TO HYDRAULIC INFORMATION SYSTEM

492-0412 **LINES GP-FRONT (**contd.**)** **i07376581**

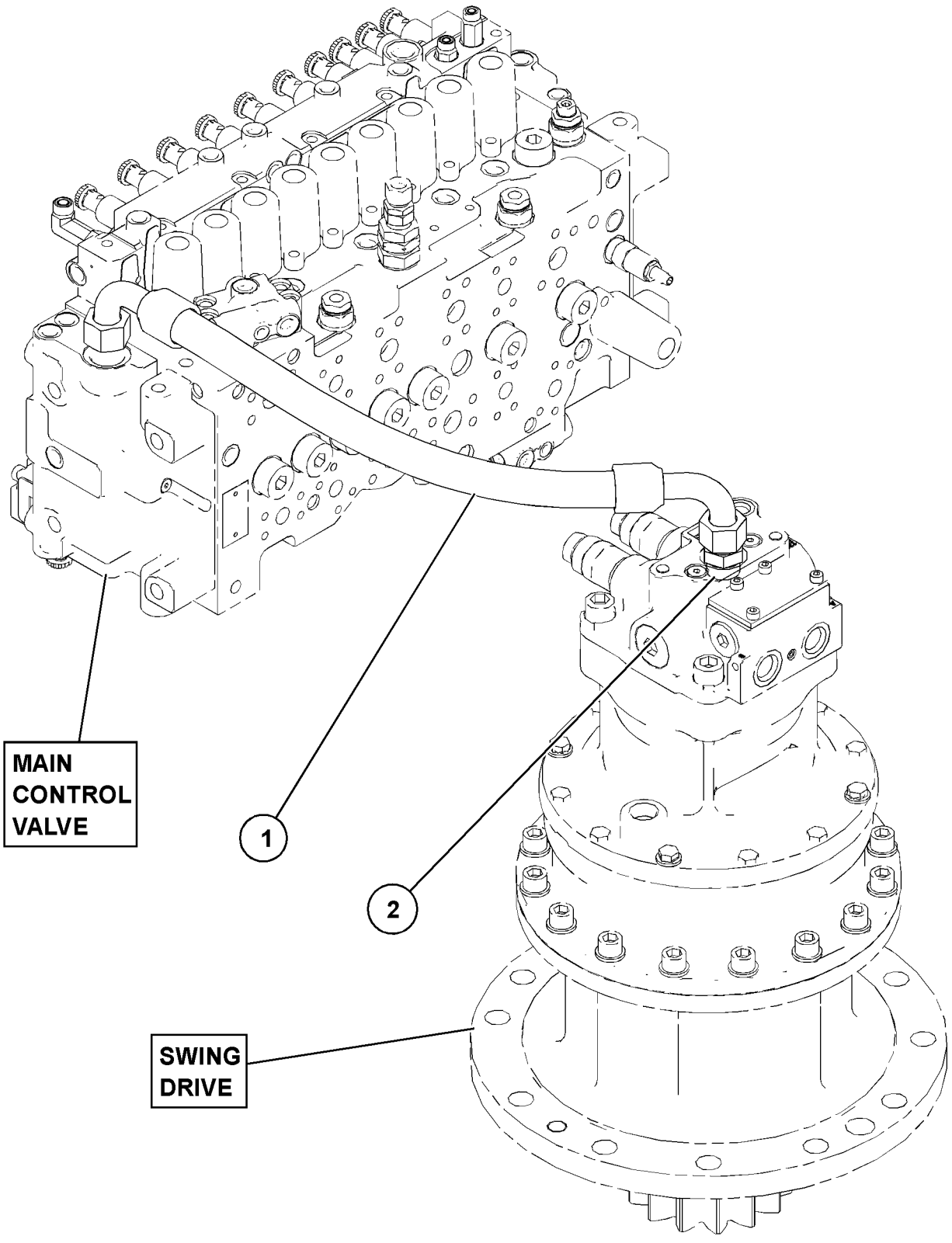

GRAPHIC #1 <END> g06232419

492-2066 LINES GP-FRONT–TOOL

S/N: BR61-UP

PART OF 537-5861 OPTION AR-HYDRAULIC

SMCS-5057 **i07352258**

NOTE	REF NO	GRAPHIC REF	PART NUMBER	QTY	PART NAME 1 2 3 4 5 6 (PRODUCT LEVEL)	SEE PAGE
I	1	1	**506-9968**	1	HOSE AS	
	2	1	*148-8335*	2	CONNECTOR AS	
					(EACH INCLUDES)	
		1	**5K-9090**	1	SEAL-O-RING	
		1	**6V-8635**	1	CONNECTOR	
		1	**7M-8485**	1	SEAL-O-RING	

I - REFER TO HYDRAULIC INFORMATION SYSTEM

NO GRAPHIC AVAILABLE AT TIME OF PUBLICATION

GRAPHIC #1 <END> g01269539

531-3323 LINES GP-FRONT—2-WAY FLOW, 1-PUMP, ELEC CONT

S/N: BR61-UP

PART OF 528-6841 CONTROL AR-AUXILIARY

SMCS-5057 **i07384365**

NOTE	REF NO	GRAPHIC REF	PART NUMBER	QTY	PART NAME 1 2 3 4 5 6 (PRODUCT LEVEL)	SEE PAGE
	1	1	**492-2021**	1	SUPPORT	
	2	1	**512-7854**	1	SUPPORT	
	3	1	**1P-3702**	4	SEAL-RECTANGULAR	
	4	1	**1P-4578**	2	FLANGE-HALF	
	5	1	**4J-0522**	2	SEAL-O-RING	
	6	1	**7Y-5237**	1	U-BOLT	
	7	1	**8T-4121**	28	WASHER-HARD (11X21X2.5-MM THK)	
	8	1	**8T-4223**	38	WASHER-HARD (13.5X25.5X3-MM THK)	
	9	1	**8T-9403**	8	FLANGE-HALF	
	10	1	*148-8335*	2	CONNECTOR AS	
					(EACH INCLUDES)	
		1	**5K-9090**	1	SEAL-O-RING	
		1	**6V-8635**	1	CONNECTOR	
		1	**7M-8485**	1	SEAL-O-RING	
	11	1	*148-8357*	2	ELBOW AS	
					(EACH INCLUDES)	
		1	**5K-9090**	1	SEAL-O-RING	
		1	**6V-9008**	1	ELBOW	
		1	**7M-8485**	1	SEAL-O-RING	
	12	1	*148-8442*	1	TEE AS	
		1	**6V-9746**	2	SEAL-O-RING	
		1	**7M-8485**	1	SEAL-O-RING	
		1	**8T-1685**	1	TEE	
	13	1	*150-4049*	1	ELBOW AS	
		1	**6V-9746**	1	SEAL-O-RING	
		1	**7M-8485**	1	SEAL-O-RING	
		1	**8T-4149**	1	ELBOW	
I	14	1	**187-7051**	1	HOSE AS	
Y	15	1	**224-1687**	1	FILTER GP-OIL (HYDRAULIC)	415
	16	1	*241-6215*	1	ELBOW AS	
		1	**3J-1907**	1	SEAL-O-RING	
		1	**6V-8076**	1	ELBOW	
I	17	1	**179-7701**	1	HOSE AS	
	18	1	*285-2663*	1	FITTING AS (QUICK DISCONNECT, MALE)	
		1	**3J-1907**	1	SEAL-O-RING	
		1	**285-2664**	1	FITTING	
	19	1	*296-7058*	1	ELBOW AS	
		1	**6V-9746**	1	SEAL-O-RING	
		1	**7M-8485**	1	SEAL-O-RING	
		1	**195-0036**	1	ELBOW	
Y	20	1	*338-6971*	2	SENSOR GP-PRESSURE (HYDRAULIC OIL)	218
Y	21	1	**389-2407**	1	VALVE GP-MANUAL (AUXILIARY, SHUTOFF, 2-WAY FLOW)	533
	22	1	*389-3710*	1	ELBOW AS	
		1	**5E-9684**	1	FITTING	
		1	**5K-9090**	1	SEAL-O-RING	
		1	**7M-8485**	1	SEAL-O-RING	
	23	1	**492-2037**	1	SUPPORT AS	
I	24	1	**513-3181**	1	HOSE AS	

531-3323 **LINES GP-FRONT (**contd.**)** **i07384365**

NOTE	REF NO	GRAPHIC REF	PART NUMBER	QTY	PART NAME 1 2 3 4 5 6 (PRODUCT LEVEL)	SEE PAGE
	25	1	**519-8289**	1	PIPE AS	
I	26	1	**520-8689**	1	HOSE AS	
I	27	1	**520-8692**	1	HOSE AS	
	28	1	**530-2706**	1	BLOCK	
	29	1	**530-2708**	1	BLOCK	
	30	1	**530-2709**	1	BLOCK	
	31	1	**530-2710**	1	SUPPORT AS	
	32	1	**530-2712**	1	SUPPORT	
	33	1	**530-2713**	1	BLOCK	
I	34	1	**530-2714**	1	HOSE AS	
	35	1	**532-9773**	1	BLOCK	
I	36	1	**541-0307**	1	HOSE AS	
M	37	1	**096-4883**	2	LOCKNUT (M10X1.5-THD)	
M	38	1	**101-7404**	4	BOLT-SOCKET HEAD (M10X1.5X30-MM)	
	39	1	**1P-3704**	3	SEAL-RECTANGULAR	
	40	1	**6V-3922**	1	SEAL-O-RING	
M	41	1	**8T-4136**	6	BOLT (M10X1.5X25-MM)	
M	42	1	**8T-4139**	4	BOLT (M12X1.75X30-MM)	
M	43	1	**8T-4182**	16	BOLT (M10X1.5X45-MM)	
M	44	1	**8T-4196**	4	BOLT (M10X1.5X35-MM)	
M	45	1	**8T-4956**	18	BOLT (M12X1.75X35-MM)	
M	46	1	**8T-5041**	8	BOLT (M12X1.75X120-MM)	
M	47	1	**8T-6868**	8	BOLT (M12X1.75X80-MM)	

I - REFER TO HYDRAULIC INFORMATION SYSTEM
M - METRIC PART
Y - SEPARATE ILLUSTRATION

531-3323 **LINES GP-FRONT (**contd.**)** **i07384365**

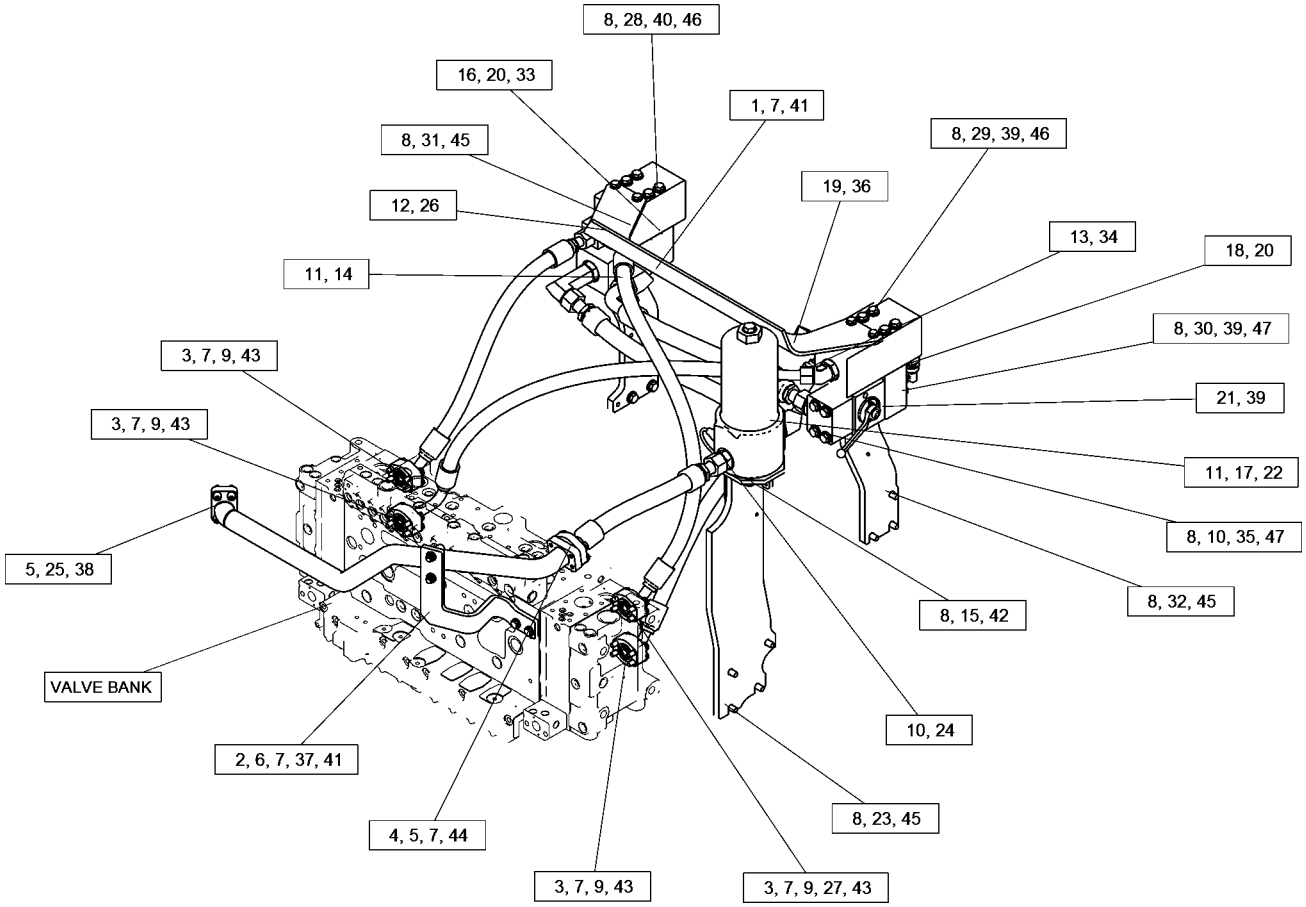

GRAPHIC #1 <END> g06296879

549-7938 LINES GP-FRONT—QUICK COUPLER

S/N: BR61-UP

PIN GRABBER

PART OF 549-8149 LINES GP-FRONT

SMCS-5057 **i07442948**

NOTE	REF NO	GRAPHIC REF	PART NUMBER	QTY	PART NAME 1 2 3 4 5 6 (PRODUCT LEVEL)	SEE PAGE
M	1	1	**8T-4196**	4	BOLT (M10X1.5X35-MM)	
M	2	1	**8T-4189**	2	BOLT (M8X1.25X20-MM)	
	3	1	**3J-1907**	1	SEAL-O-RING	
	4	1	**4I-9521**	4	BAND-MARKER (RED, L1)	
	5	1	**4I-9522**	8	BAND-MARKER (YELLOW, L2)	
I	6	1	**5I-4387**	1	HOSE AS	
	7	1	**7K-1181**	4	STRAP-CABLE	
	8	1	**8T-4121**	6	WASHER-HARD (11X21X2.5-MM THK)	
M	9	1	**8T-4137**	2	BOLT (M10X1.5X20-MM)	
	10	1	**8T-4224**	2	WASHER-HARD (8.8X16X2-MM THK)	
	11	1	**123-4750**	1	VALVE AS-CHECK	
		1	**3J-1907**	1	SEAL-O-RING	
		1	**6V-8397**	1	SEAL-O-RING	
	12	1	*148-8336*	3	CONNECTOR AS	
					(EACH INCLUDES)	
		1	**3J-1907**	1	SEAL-O-RING	
		1	**6V-8397**	1	SEAL-O-RING	
		1	**6V-8636**	1	CONNECTOR	
	13	1	*148-8378*	5	ELBOW AS	
					(EACH INCLUDES)	
		1	**3J-1907**	1	SEAL-O-RING	
		1	**6V-8397**	1	SEAL-O-RING	
		1	**6V-8724**	1	ELBOW	
	14	1	*153-6249*	1	CONNECTOR AS	
		1	**3J-1907**	1	SEAL-O-RING	
		1	**6V-8397**	1	SEAL-O-RING	
		1	**8T-8887**	1	CONNECTOR	
	15	1	*164-5546*	1	TEE AS	
		1	**3E-7410**	1	TEE	
		1	**3J-1907**	1	SEAL-O-RING	
	16	1	**203-3470**	1	CONNECTOR	
I	17	1	**223-7048**	1	HOSE AS	
I	18	1	**317-4767**	1	HOSE AS	
Y	19	1	**338-6971**	1	SENSOR GP-PRESSURE (HYDRAULIC OIL) (HYDRAULIC PUMP)	218
	20	1	**423-2148**	1	HOSE AS	
I	21	1	**516-8475**	1	HOSE AS	
I	22	1	**517-8382**	1	HOSE AS	
	23	1	**517-8385**	1	SUPPORT AS	
Y	24	1	**524-0912**	1	VALVE & MTG GP-SOLENOID (CONTROL VALVE) (BOOSTED AUXILIARY HYDRAULIC FLOW)	521
	25	1	**525-2970**	1	SUPPORT AS	
	26	1	**525-3637**	1	HOSE AS	
	27	1	**549-7972**	1	VALVE GP-SOLENOID & PRESS REDC (QUICK COUPLER)	

I - REFER TO HYDRAULIC INFORMATION SYSTEM
M - METRIC PART
Y - SEPARATE ILLUSTRATION

549-7938 **LINES GP-FRONT (**contd.**)** **i07442948**

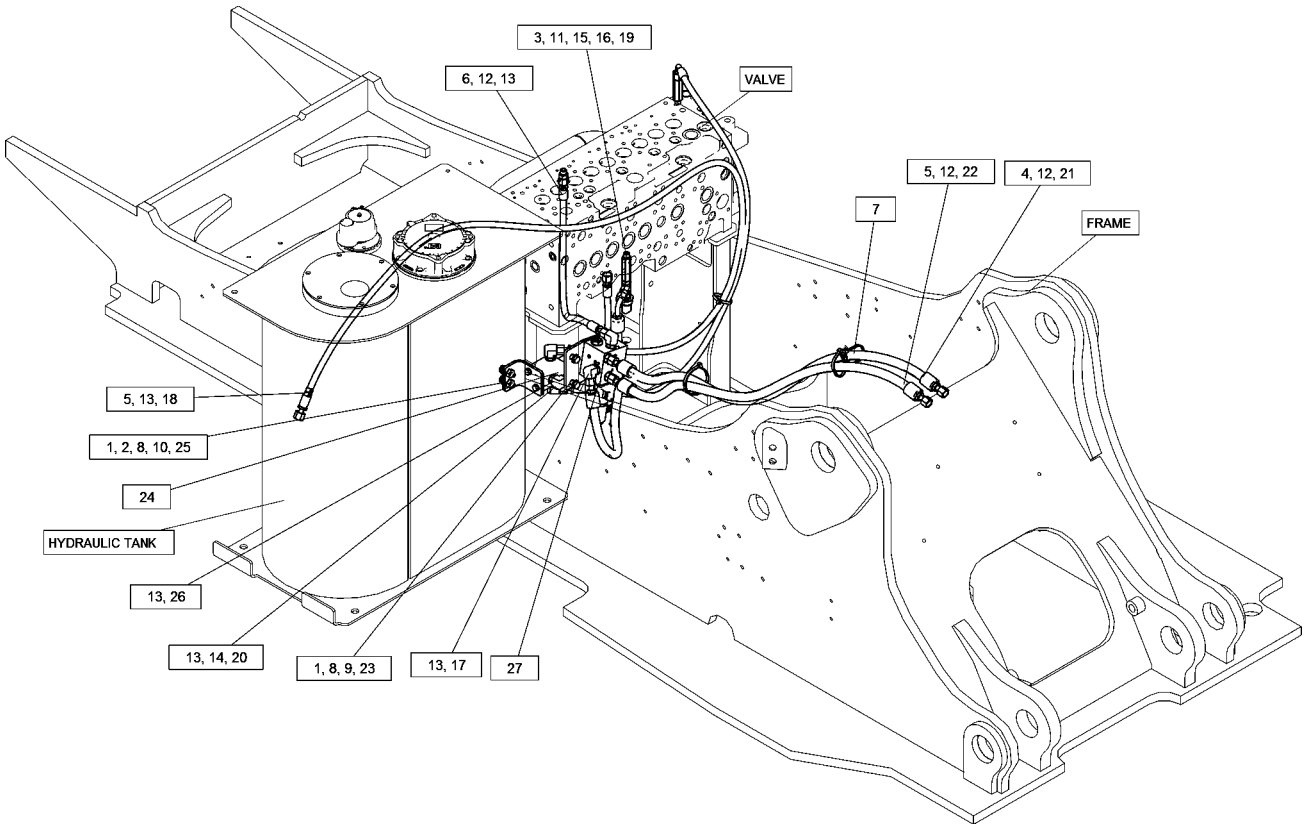

GRAPHIC #1 <END> g06257996

549-8149 LINES GP-FRONT

S/N: BR61-UP

SMCS-5057 **i07356812**

NOTE	PART NUMBER	QTY	PART NAME 1 2 3 4 5 6 (PRODUCT LEVEL)	SEE PAGE
Y	*532-7907*	1	FILM GP (CAB)	687
Y	*549-7938*	1	LINES GP-FRONT	458

Y - SEPARATE ILLUSTRATION

<END>

558-1390 LINES GP-FRONT—2-WAY FLOW, 1-PUMP, ELEC CONT

S/N: BR610001-UP
WITH HAMMER FILTER
PART OF 558-3528 CONTROL AR-AUXILIARY

SMCS-5057 **i07452114**

NOTE	REF NO	GRAPHIC REF	PART NUMBER	QTY	PART NAME 1 2 3 4 5 6 (PRODUCT LEVEL)	SEE PAGE
M	1	1	**8T-4182**	16	BOLT (M10X1.5X45-MM)	
M	2	1	**8T-4196**	4	BOLT (M10X1.5X35-MM)	
	3	1	**1P-3704**	3	SEAL-RECTANGULAR	
	4	1	**492-2021**	1	SUPPORT	
	5	1	**512-7854**	1	SUPPORT	
M	6	1	**8T-6868**	8	BOLT (M12X1.75X80-MM)	
M	7	1	**8T-5041**	8	BOLT (M12X1.75X120-MM)	
	8	1	**1P-3702**	4	SEAL-RECTANGULAR	
	9	1	**1P-4578**	2	FLANGE-HALF	
	10	1	**6V-3922**	1	SEAL-O-RING	
	11	1	**7Y-5237**	1	U-BOLT	
	12	1	**8T-9403**	8	FLANGE-HALF	
M	13	1	**096-4883**	2	LOCKNUT (M10X1.5-THD)	
M	14	1	**101-7404**	4	BOLT-SOCKET HEAD (M10X1.5X30-MM)	
	15	1	*148-8357*	2	ELBOW AS	
					(EACH INCLUDES)	
		1	**5K-9090**	1	SEAL-O-RING	
		1	**6V-9008**	1	ELBOW	
		1	**7M-8485**	1	SEAL-O-RING	
	16	1	*148-8360*	1	ELBOW AS	
		1	**6V-9182**	1	ELBOW	
		1	**6V-9746**	1	SEAL-O-RING	
		1	**7M-8485**	1	SEAL-O-RING	
	17	1	*148-8442*	1	TEE AS	
		1	**6V-9746**	2	SEAL-O-RING	
		1	**7M-8485**	1	SEAL-O-RING	
		1	**8T-1685**	1	TEE	
	18	1	*389-3710*	1	ELBOW AS	
		1	**5E-9684**	1	FITTING	
		1	**5K-9090**	1	SEAL-O-RING	
		1	**7M-8485**	1	SEAL-O-RING	
	19	1	*148-8335*	2	CONNECTOR AS	
					(EACH INCLUDES)	
		1	**5K-9090**	1	SEAL-O-RING	
		1	**6V-8635**	1	CONNECTOR	
		1	**7M-8485**	1	SEAL-O-RING	
I	20	1	**179-7701**	1	HOSE AS	
I	21	1	**187-7051**	1	HOSE AS	
Y	22	1	**224-1687**	1	FILTER GP-OIL (HYDRAULIC)	415
	23	1	*241-6215*	1	ELBOW AS	
		1	**3J-1907**	1	SEAL-O-RING	
		1	**6V-8076**	1	ELBOW	
	24	1	*285-2663*	1	FITTING AS (QUICK DISCONNECT, MALE)	
		1	**3J-1907**	1	SEAL-O-RING	
		1	**285-2664**	1	FITTING	
	25	1	*296-7058*	1	ELBOW AS	
		1	**6V-9746**	1	SEAL-O-RING	

558-1390 **LINES GP-FRONT (**contd.**)** **i07452114**

NOTE	REF NO	GRAPHIC REF	PART NUMBER	QTY	PART NAME 1 2 3 4 5 6 (PRODUCT LEVEL)	SEE PAGE
		1	**7M-8485**	1	SEAL-O-RING	
		1	**195-0036**	1	ELBOW	
Y	26	1	*338-6971*	2	SENSOR GP-PRESSURE (HYDRAULIC OIL)	218
	27	1	**352-7063**	2	CAP	
Y	28	1	**389-2407**	1	VALVE GP-MANUAL (AUXILIARY, SHUTOFF, 2-WAY FLOW)	533
	29	1	**492-2037**	1	SUPPORT AS	
	30	1	**4J-0522**	2	SEAL-O-RING	
I	31	1	**513-3181**	1	HOSE AS	
	32	1	**519-8289**	1	PIPE AS	
	33	1	**530-2706**	1	BLOCK	
	34	1	**530-2708**	1	BLOCK	
	35	1	**530-2709**	1	BLOCK	
	36	1	**530-2710**	1	SUPPORT AS	
	37	1	**530-2712**	1	SUPPORT	
	38	1	**530-2713**	1	BLOCK	
	39	1	**532-9773**	1	BLOCK	
I	40	1	**541-0307**	1	HOSE AS	
I	41	1	**558-0334**	1	HOSE AS	
I	42	1	**558-0337**	1	HOSE AS	
I	43	1	**558-0341**	1	HOSE AS	
	44	1	**8T-4121**	28	WASHER-HARD (11X21X2.5-MM THK)	
M	45	1	**8T-4136**	6	BOLT (M10X1.5X25-MM)	
M	46	1	**8T-4139**	4	BOLT (M12X1.75X30-MM)	
	47	1	**8T-4223**	38	WASHER-HARD (13.5X25.5X3-MM THK)	
M	48	1	**8T-4956**	18	BOLT (M12X1.75X35-MM)	

I - REFER TO HYDRAULIC INFORMATION SYSTEM
M - METRIC PART
Y - SEPARATE ILLUSTRATION

558-1390 **LINES GP-FRONT** (contd.) **i07452114**

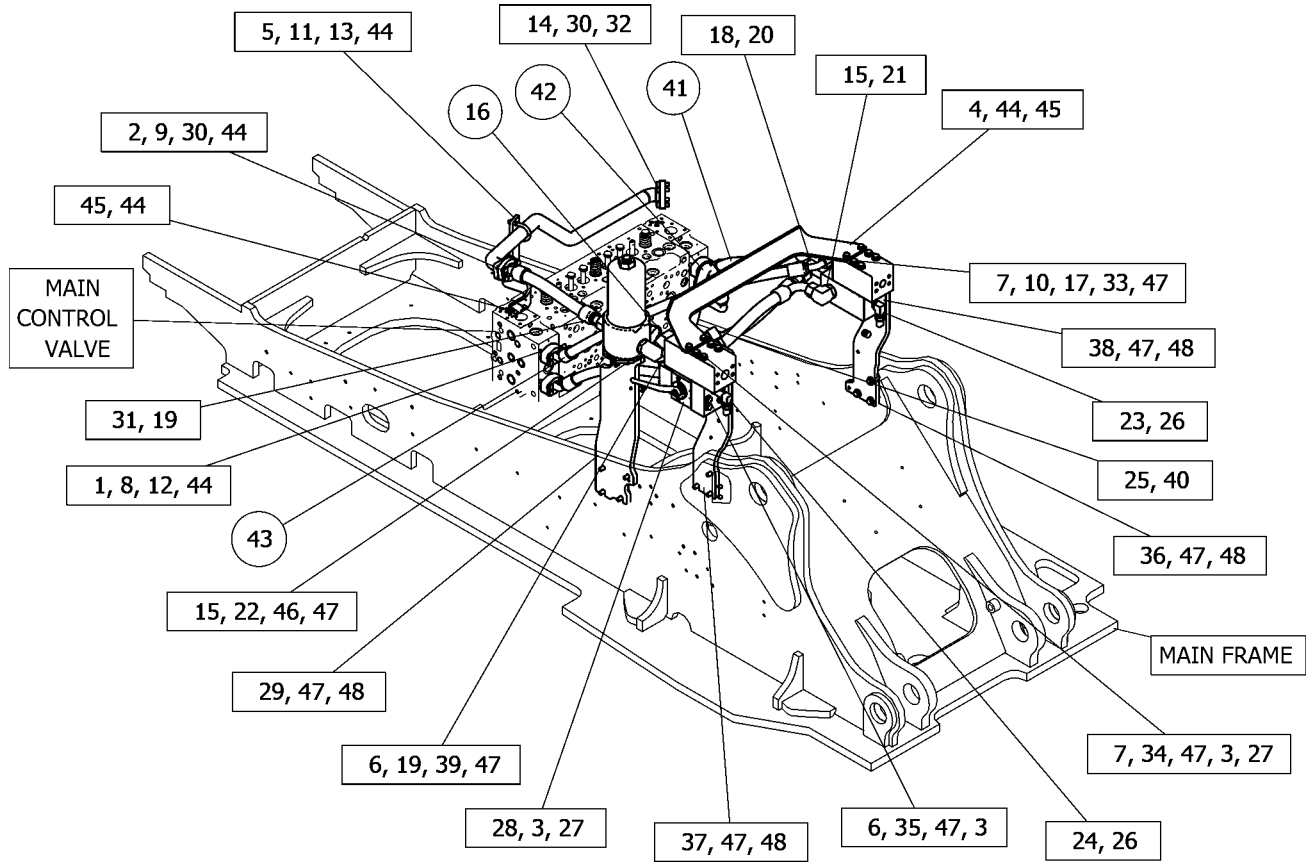

GRAPHIC #1 <END> g06323975

489-2943 LINES GP-HYDRAULIC

S/N: BR61-UP

PART OF 489-2941 TANK GP-HYDRAULIC

SMCS-5057 **i07359964**

NOTE	REF NO	GRAPHIC REF	PART NUMBER	QTY	PART NAME 1 2 3 4 5 6 (PRODUCT LEVEL)	SEE PAGE
	1	1	*164-5578*	1	TEE AS	
		1	**3D-2824**	1	SEAL-O-RING	
		1	**6V-9175**	1	TEE (FACE SEAL)	
		1	**6V-9746**	1	SEAL-O-RING	
		1	**7J-9108**	1	SEAL-O-RING	
	2	1	**7K-1181**	4	STRAP-CABLE	
	3	1	**9X-6581**	1	NUT-O-RING SEAL (1-14-THD)	
	4	1	**518-3528**	1	HOSE AS	
	5	1	*148-8364*	1	ELBOW AS	
		1	**3K-0360**	1	SEAL-O-RING	
		1	**6V-8398**	1	SEAL-O-RING	
		1	**6V-8625**	1	ELBOW	
	6	1	*148-8374*	1	ELBOW AS	
		1	**3K-0360**	1	SEAL-O-RING	
		1	**6V-8397**	1	SEAL-O-RING	
		1	**6V-8723**	1	ELBOW	
	7	1	*148-8407*	2	PLUG AS	
					(EACH INCLUDES)	
		1	**3J-1907**	1	SEAL-O-RING	
		1	**9S-4191**	1	PLUG (9/16-18-THD)	
	8	1	*148-8416*	1	REDUCER AS	
		1	**6V-8398**	1	SEAL-O-RING	
		1	**6V-8939**	1	REDUCER-O-RING	

489-2943 **LINES GP-HYDRAULIC (**contd.**)** **i07359964**

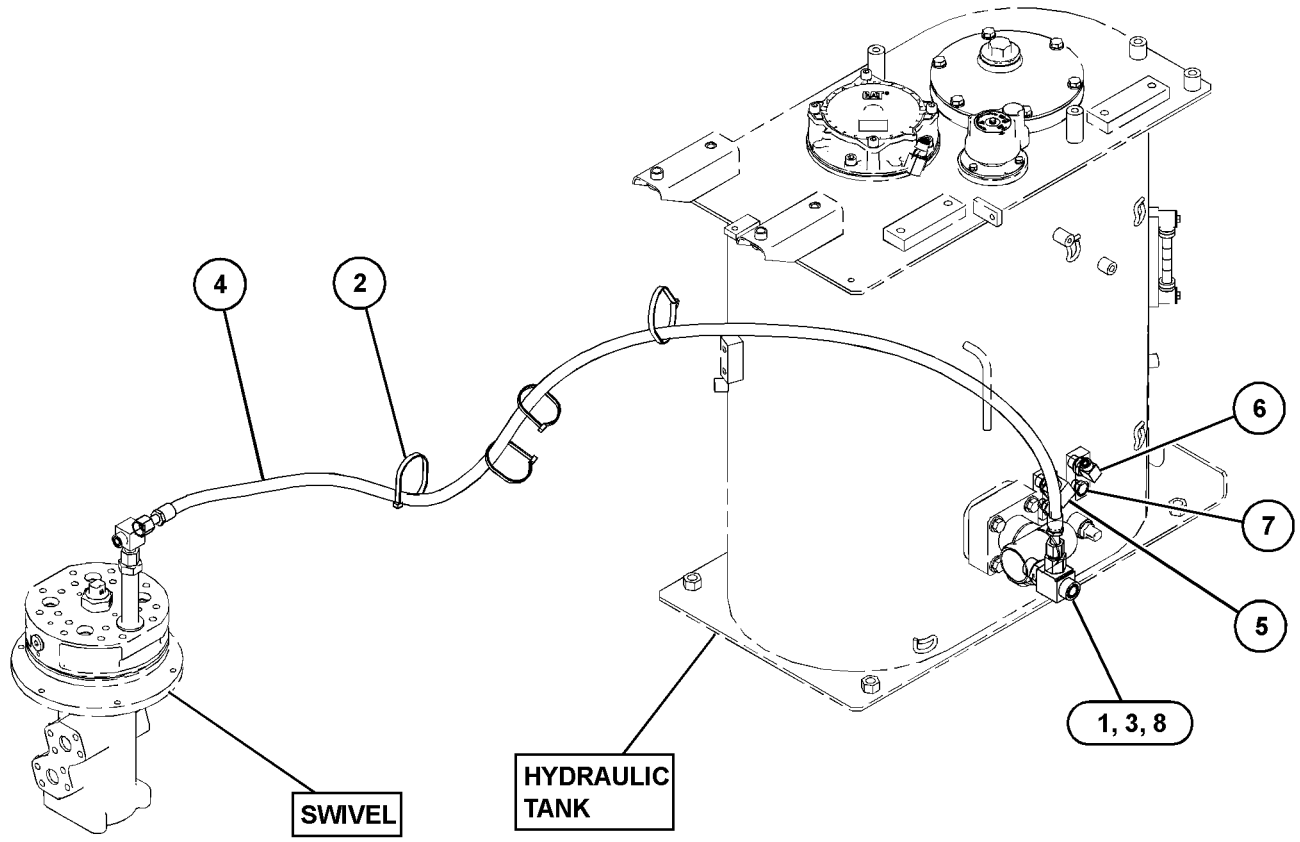

GRAPHIC #1 <END> g06232111

489-2930 LINES GP-HYDRAULIC OIL COOLER–REAR

S/N: BR61-UP

PART OF 514-4877 HYDRAULIC AR

SMCS-1374 **i07358840**

NOTE	REF NO	GRAPHIC REF	PART NUMBER	QTY	PART NAME 1 2 3 4 5 6 (PRODUCT LEVEL)	SEE PAGE
M	1	1	**8T-4194**	8	BOLT (M12X1.75X50-MM)	
	2	1	**541-4823**	1	SUPPORT	
	3	1	**1P-3703**	2	SEAL-RECTANGULAR	
	4	1	**1P-3704**	2	SEAL-RECTANGULAR	
	5	1	**1P-5767**	4	FLANGE-HALF	
M	6	1	**7Y-5247**	1	U-BOLT (M10X1.5-THD)	
	7	1	**8T-4121**	2	WASHER-HARD (11X21X2.5-MM THK)	
M	8	1	**096-4883**	2	LOCKNUT (M10X1.5-THD)	
	9	1	**144-0367**	2	CLAMP-HOSE	
	10	1	*148-8407*	1	PLUG AS	
		1	**3J-1907**	1	SEAL-O-RING	
		1	**9S-4191**	1	PLUG (9/16-18-THD)	
M	11	1	**113-2004**	4	BOLT-SOCKET HEAD (M12X1.75X45-MM)	
	12	1	**227-0265**	1	HOSE	
	13	1	**227-0581**	1	HOSE	
Y	14	1	**490-3958**	1	VALVE GP-CHECK	523
	15	1	**490-7851**	1	PIPE AS	
	16	1	**490-7856**	1	PIPE AS	
I	17	1	**490-7859**	1	HOSE AS	
I	18	1	**490-7863**	1	HOSE AS	
M	19	1	**170-8553**	4	BOLT-SOCKET HEAD (M12X1.75X40-MM)	
	20	1	**4J-0524**	1	SEAL-O-RING	
	21	1	**4J-0527**	1	SEAL-O-RING	
	22	1	**4J-0528**	1	SEAL-O-RING	
	23	1	**8T-4223**	18	WASHER-HARD (13.5X25.5X3-MM THK)	
M	24	1	**8T-4956**	2	BOLT (M12X1.75X35-MM)	
	25	1	**8T-6703**	3	CLAMP-HOSE	
	26	1	**480-3465**	4	WASHER-HARD (13.5X20.5X3-MM THK)	
M	27	1	**8T-5041**	4	BOLT (M12X1.75X120-MM)	

I - REFER TO HYDRAULIC INFORMATION SYSTEM
M - METRIC PART
Y - SEPARATE ILLUSTRATION

489-2930 **LINES GP-HYDRAULIC OIL COOLER (**contd.**)** **i07358840**

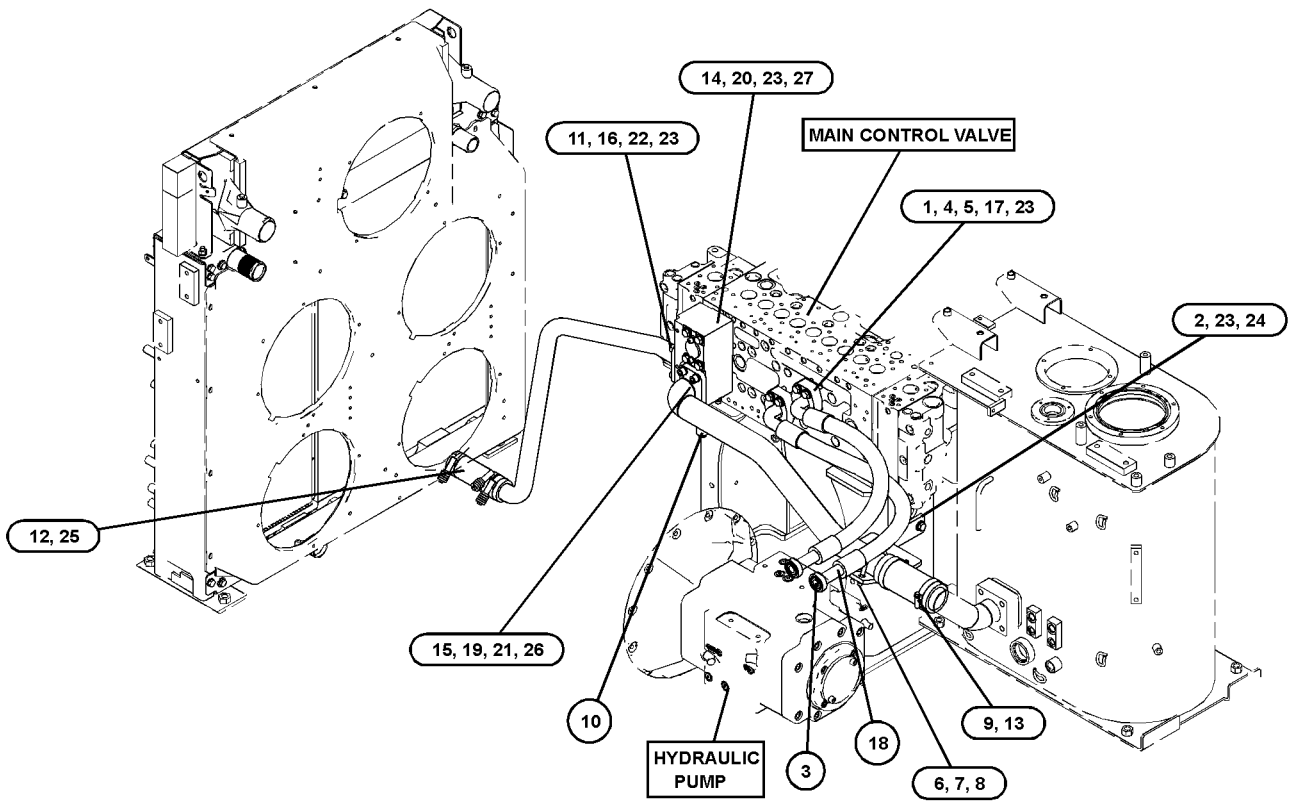

GRAPHIC #1 <END> g06230804

491-6992 LINES GP-OIL–TOOL CONTROL SYSTEM

S/N: BR61-UP

PART OF 537-5861 OPTION AR-HYDRAULIC

SMCS-5057 **i07434429**

NOTE	REF NO	GRAPHIC REF	PART NUMBER	QTY	PART NAME 1 2 3 4 5 6 (PRODUCT LEVEL)	SEE PAGE
	1	1	**114-0741**	1	COVER	
	2	1	**227-0265**	1	HOSE	
	3	1	**491-6082**	1	PIPE AS	
M	4	1	**113-2004**	4	BOLT-SOCKET HEAD (M12X1.75X45-MM)	
B	5	1	*164-4180*	1	PLUG AS	
		1	**7M-8485**	1	SEAL-O-RING	
		1	**9S-4181**	1	PLUG (1-5/16-12-THD)	
	6	1	**4J-0522**	1	SEAL-O-RING	
	7	1	**4J-0528**	1	SEAL-O-RING	
	8	1	**8T-4121**	4	WASHER-HARD (11X21X2.5-MM THK)	
M	9	1	**8T-4136**	4	BOLT (M10X1.5X25-MM)	
	10	1	**8T-4223**	4	WASHER-HARD (13.5X25.5X3-MM THK)	
	11	1	**8T-6703**	3	CLAMP-HOSE	

B - USE AS REQUIRED
M - METRIC PART

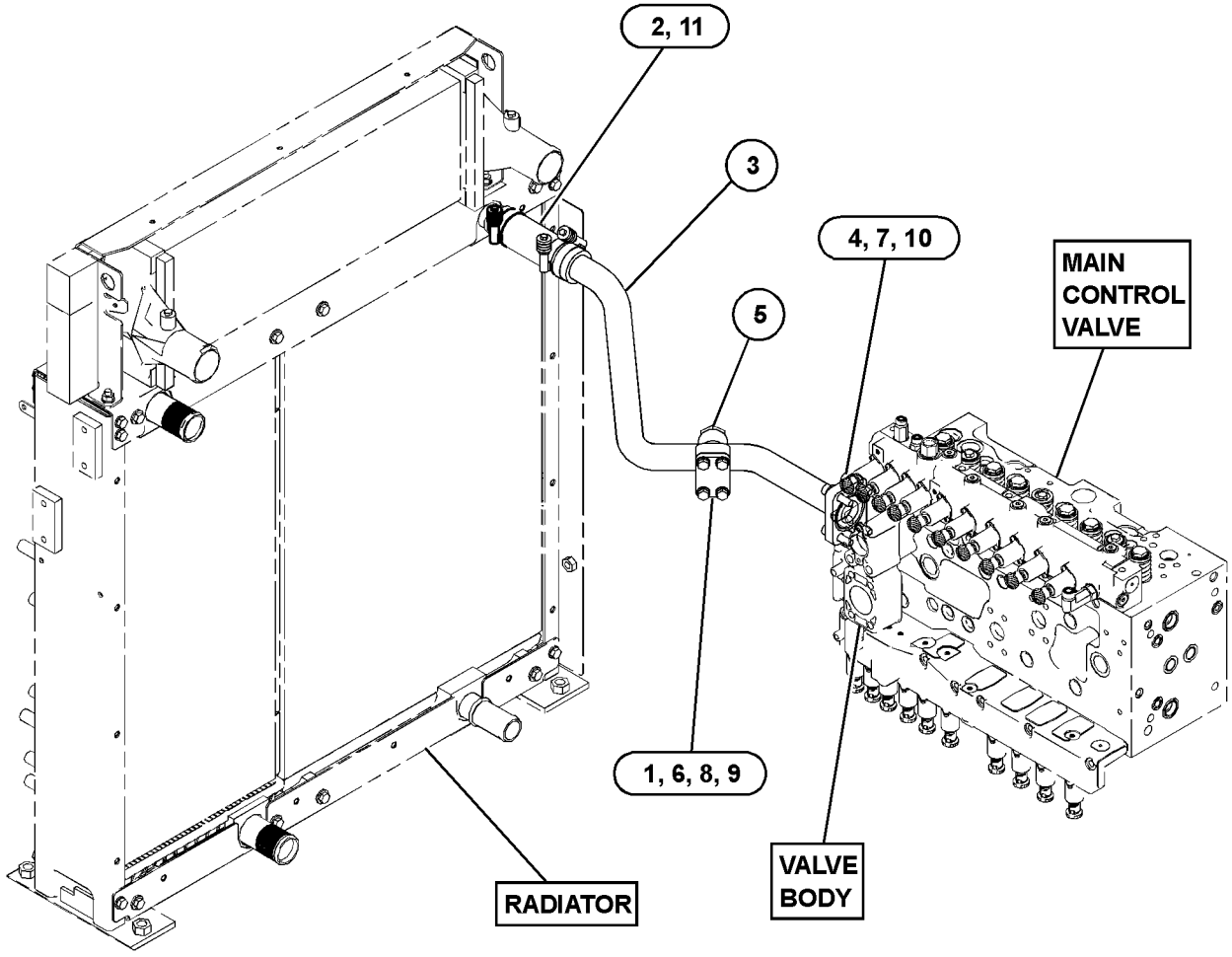

GRAPHIC #1 <END> g06230103

489-2935 LINES GP-PILOT—CONTROL VALVE

S/N: BR61-UP

PART OF 514-4877 HYDRAULIC AR

SMCS-5057, 5059 **i07369119**

NOTE	REF NO	GRAPHIC REF	PART NUMBER	QTY	PART NAME 1 2 3 4 5 6 (PRODUCT LEVEL)	SEE PAGE
	1	1	**4I-9524**	2	BAND-MARKER (BROWN, L4)	
	2	1	**7K-1181**	5	STRAP-CABLE	
	3	1	**206-2423**	2	SADDLE-MOUNTING	
I	4	1	**278-6796**	1	HOSE AS	
Y	5	1	**338-6971**	1	SENSOR GP-PRESSURE (HYDRAULIC OIL) (STICK CYLINDER, HEAD END)	218
Y	5A	1	**338-6971**	2	SENSOR GP-PRESSURE (HYDRAULIC OIL) (1-PUMP, 2-PUMP)	218
Y	6	1	*352-6860*	1	ACCUMULATOR GP-HYDRAULIC (CHARGED)	379
	7	1	**416-5716**	1	HOSE AS	
	8	1	**505-7070**	1	HOSE AS	
	9	1	*148-8407*	11	PLUG AS	
					(EACH INCLUDES)	
		1	**3J-1907**	1	SEAL-O-RING	
		1	**9S-4191**	1	PLUG (9/16-18-THD)	
	10	1	*164-5567*	1	COUPLER AS-QUICK DISCONNECT (MALE)	
		1	**6V-3965**	1	FITTING (QUICK DISCONNECT)	
		1	**214-7568**	1	SEAL-O-RING	
	11	1	*164-5590*	1	VALVE AS-FLUID SAMPLING	
		1	**3J-7354**	1	SEAL-O-RING	
		1	**8C-3446**	1	VALVE-SAMPLING	
	12	1	**204-2281**	2	STRAP-CABLE	
	13	1	**204-8000**	2	MOUNTING-CABLE TIE	
	14	1	**6V-0852**	4	CAP-DUST	
	15	1	**8C-3451**	1	CAP-DUST (HYDRAULIC OIL)	
	16	1	**8T-4121**	2	WASHER-HARD (11X21X2.5-MM THK)	
M	17	1	**8T-4136**	2	BOLT (M10X1.5X25-MM)	

I - REFER TO HYDRAULIC INFORMATION SYSTEM
M - METRIC PART
Y - SEPARATE ILLUSTRATION

489-2935 **LINES GP-PILOT (**contd.**)** **i07369119**

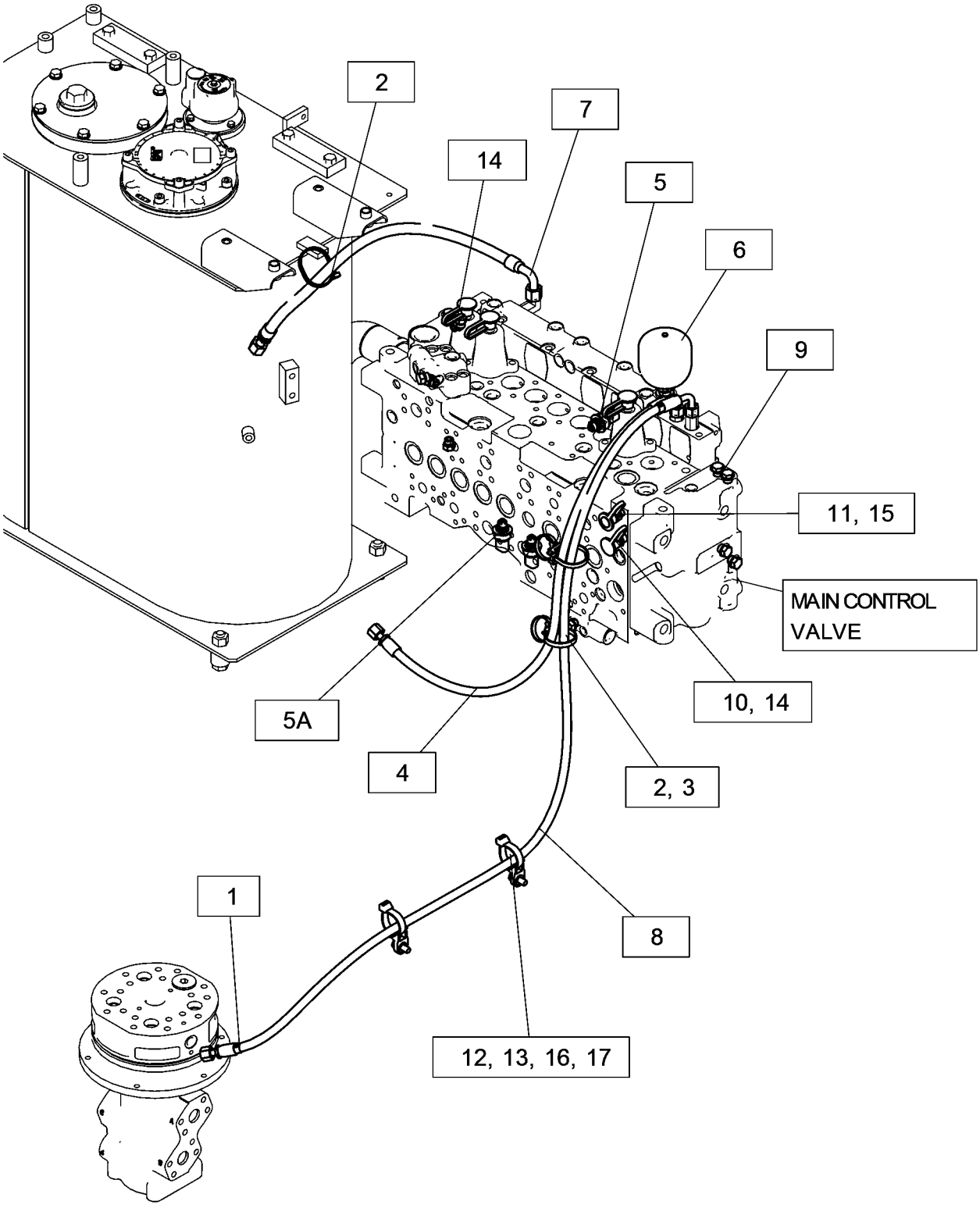

GRAPHIC #1 <END> g06271971

489-2936 LINES GP-PILOT

S/N: BR61-UP

PART OF 514-4877 HYDRAULIC AR

SMCS-5057, 5059 **i07358906**

NOTE	REF NO	GRAPHIC REF	PART NUMBER	QTY	PART NAME 1 2 3 4 5 6 (PRODUCT LEVEL)	SEE PAGE
I	1	1	**499-4939**	1	HOSE AS	
	2	1	*153-6237*	1	ELBOW AS	
		1	**3D-2824**	1	SEAL-O-RING	
		1	**6V-9004**	1	ELBOW	
		1	**6V-9746**	1	SEAL-O-RING	
	3	1	*164-5567*	3	COUPLER AS-QUICK DISCONNECT (MALE)	
					(EACH INCLUDES)	
		1	**6V-3965**	1	FITTING (QUICK DISCONNECT)	
		1	**214-7568**	1	SEAL-O-RING	
	4	1	**6V-0852**	3	CAP-DUST	

I - REFER TO HYDRAULIC INFORMATION SYSTEM

489-2936 **LINES GP-PILOT (**contd.**)** **i07358906**

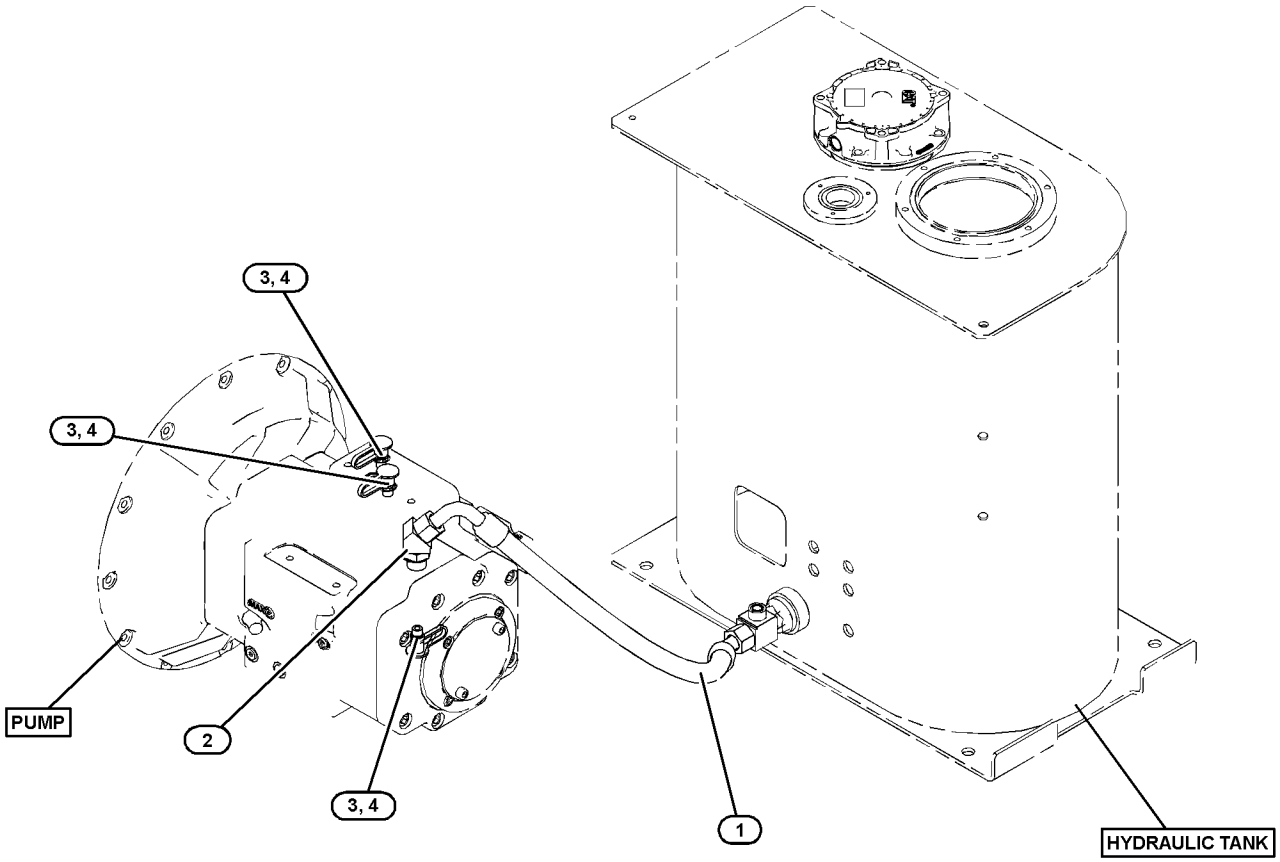

GRAPHIC #1 <END> g06230088

493-4907 LINES GP-PILOT

S/N: BR61-UP

SMCS-5057, 5059

i07352273

NOTE	REF NO	GRAPHIC REF	PART NUMBER	QTY	PART NAME 1 2 3 4 5 6 (PRODUCT LEVEL)	SEE PAGE
	1	1	**7K-1181**	1	STRAP-CABLE	
	2	1	**541-8045**	1	HOSE AS	

493-4907 **LINES GP-PILOT (**contd.**)** **i07352273**

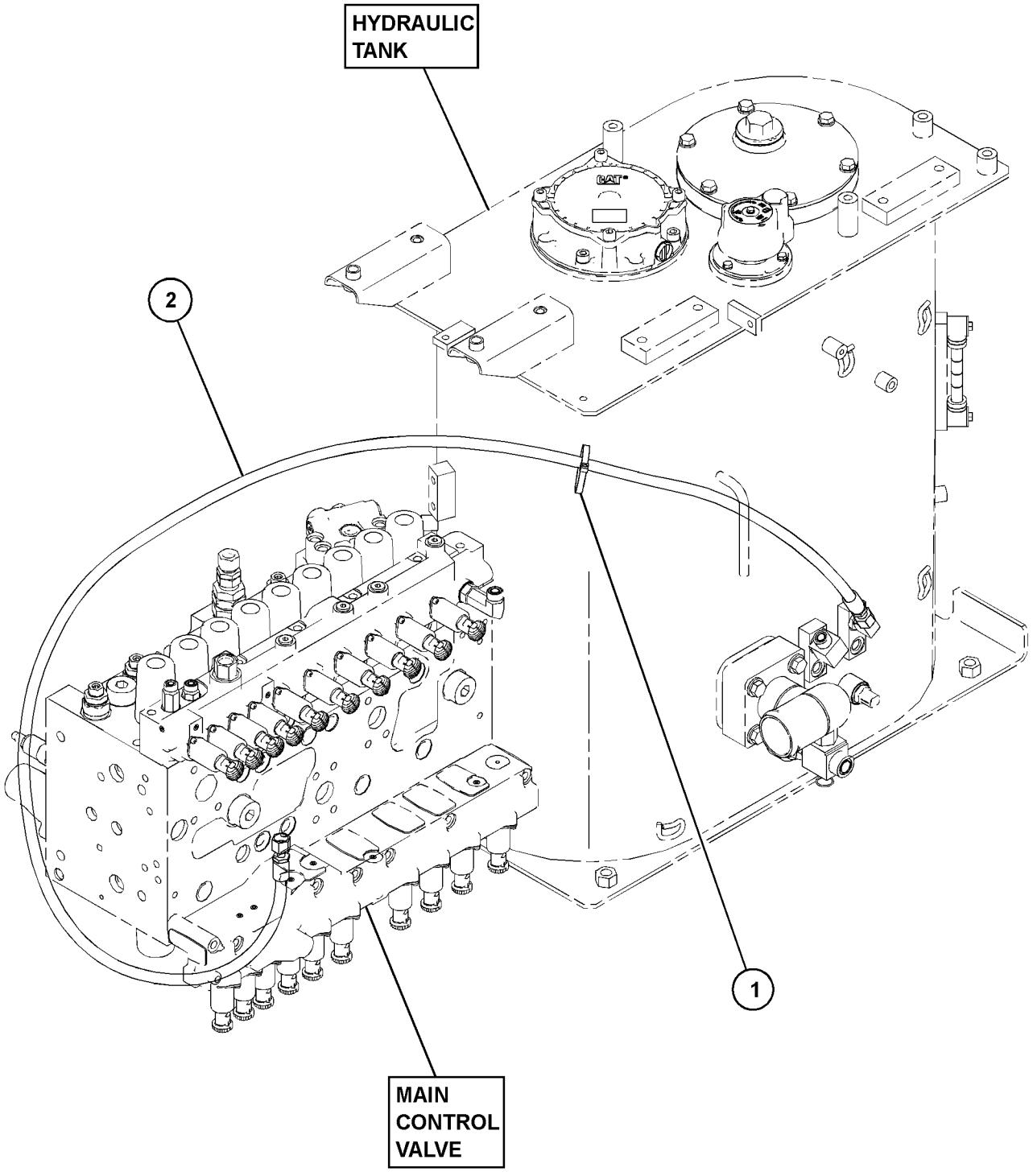

GRAPHIC #1 <END> g06231220

523-6215 LINES GP-PILOT—HEAVY LIFT

S/N: BR61-UP

PART OF 490-3948 VALVE AR-MAIN CONTROL

SMCS-5057, 5059 **i07361039**

NOTE	REF NO	GRAPHIC REF	PART NUMBER	QTY	PART NAME 1 2 3 4 5 6 (PRODUCT LEVEL)	SEE PAGE
M	1	1	**8T-4136**	2	BOLT (M10X1.5X25-MM)	
M	2	1	**8T-4189**	2	BOLT (M8X1.25X20-MM)	
	3	1	**7K-1181**	1	STRAP-CABLE	
	4	1	**8T-4121**	2	WASHER-HARD (11X21X2.5-MM THK)	
	5	1	**8T-4224**	2	WASHER-HARD (8.8X16X2-MM THK)	
I	6	1	**087-4441**	1	HOSE AS	
	7	1	*148-8336*	1	CONNECTOR AS	
		1	**3J-1907**	1	SEAL-O-RING	
		1	**6V-8397**	1	SEAL-O-RING	
		1	**6V-8636**	1	CONNECTOR	
	8	1	*148-8378*	4	ELBOW AS	
					(EACH INCLUDES)	
		1	**3J-1907**	1	SEAL-O-RING	
		1	**6V-8397**	1	SEAL-O-RING	
		1	**6V-8724**	1	ELBOW	
	9	1	*150-4044*	1	CONNECTOR AS	
		1	**3J-1907**	1	SEAL-O-RING	
		1	**6V-8397**	1	SEAL-O-RING	
		1	**8T-1779**	1	CONNECTOR	
I	10	1	**314-8102**	1	HOSE AS	
	11	1	**383-7908**	1	HOSE AS	
Y	12	1	**524-0912**	1	VALVE & MTG GP-SOLENOID (CONTROL VALVE)	521
	13	1	**525-2974**	1	SUPPORT	

I - REFER TO HYDRAULIC INFORMATION SYSTEM
M - METRIC PART
Y - SEPARATE ILLUSTRATION

523-6215 **LINES GP-PILOT (**contd.**)** **i07361039**

NO GRAPHIC AVAILABLE AT TIME OF PUBLICATION

GRAPHIC #1 <END> g01269539

523-6216 LINES GP-PILOT—LIFT MODE, TOOL

S/N: BR61-UP

PART OF 490-3949 VALVE AR-MAIN CONTROL

SMCS-5057, 5059 **i07362126**

NOTE	REF NO	GRAPHIC REF	PART NUMBER	QTY	PART NAME 1 2 3 4 5 6 (PRODUCT LEVEL)	SEE PAGE
M	1	1	**8T-4136**	2	BOLT (M10X1.5X25-MM)	
M	2	1	**8T-4189**	2	BOLT (M8X1.25X20-MM)	
	3	1	**7K-1181**	1	STRAP-CABLE	
	4	1	**8T-4121**	2	WASHER-HARD (11X21X2.5-MM THK)	
	5	1	**8T-4224**	2	WASHER-HARD (8.8X16X2-MM THK)	
I	6	1	**087-4441**	1	HOSE AS	
	7	1	*148-8336*	1	CONNECTOR AS	
		1	**3J-1907**	1	SEAL-O-RING	
		1	**6V-8397**	1	SEAL-O-RING	
		1	**6V-8636**	1	CONNECTOR	
	8	1	*148-8378*	4	ELBOW AS	
					(EACH INCLUDES)	
		1	**3J-1907**	1	SEAL-O-RING	
		1	**6V-8397**	1	SEAL-O-RING	
		1	**6V-8724**	1	ELBOW	
	9	1	*150-4044*	1	CONNECTOR AS	
		1	**3J-1907**	1	SEAL-O-RING	
		1	**6V-8397**	1	SEAL-O-RING	
		1	**8T-1779**	1	CONNECTOR	
Y	10	1	**524-0912**	1	VALVE & MTG GP-SOLENOID (CONTROL VALVE)	521
	11	1	**525-2974**	1	SUPPORT	
I	12	1	**525-3638**	1	HOSE AS	
I	13	1	**525-3639**	1	HOSE AS	

I - REFER TO HYDRAULIC INFORMATION SYSTEM
M - METRIC PART
Y - SEPARATE ILLUSTRATION

523-6216 **LINES GP-PILOT (**contd.**)** **i07362126**

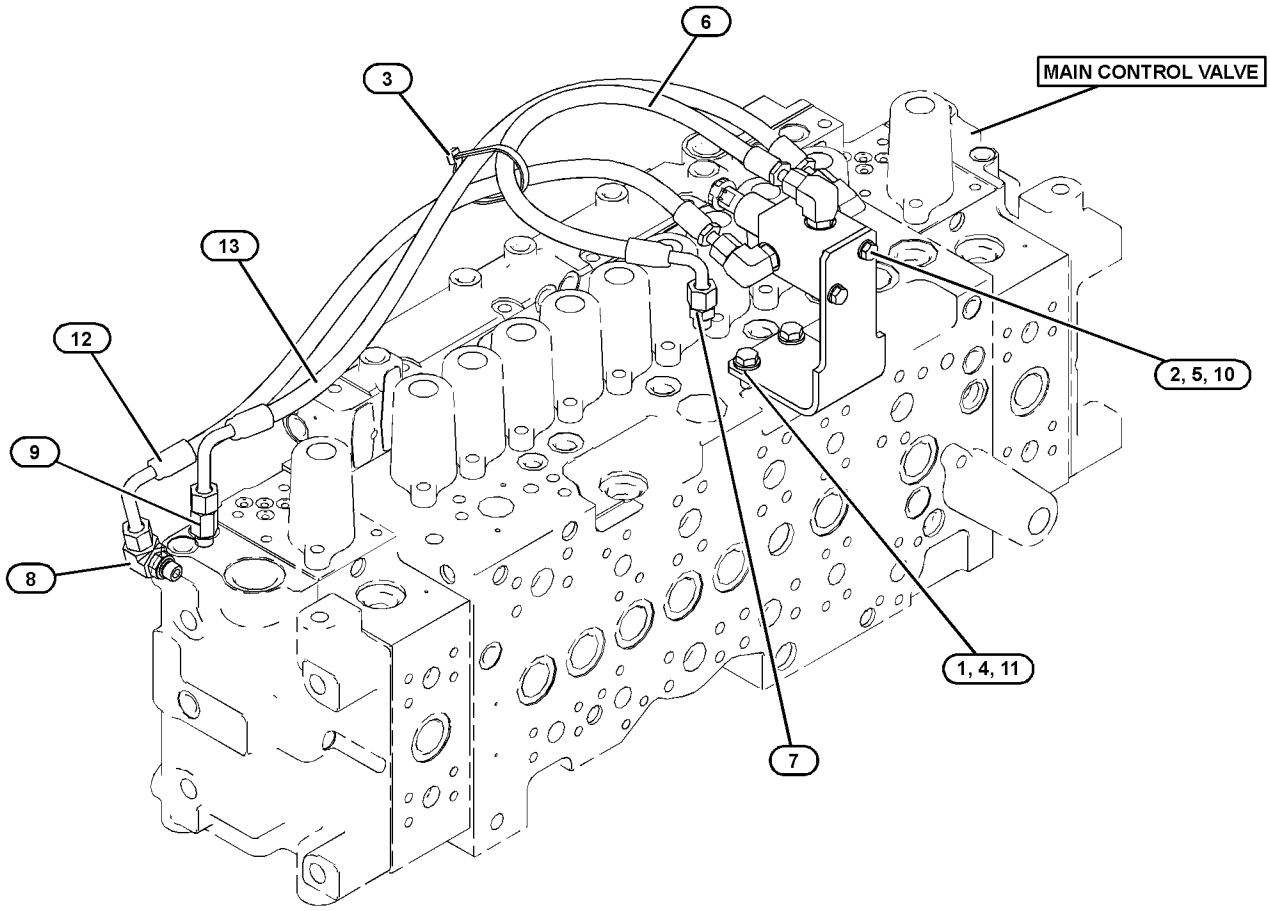

GRAPHIC #1 <END> g06230460

489-2934 LINES GP-PUMP

S/N: BR61-UP

PART OF 514-4877 HYDRAULIC AR

SMCS-5057 **i07358916**

NOTE	REF NO	GRAPHIC REF	PART NUMBER	QTY	PART NAME 1 2 3 4 5 6 (PRODUCT LEVEL)	SEE PAGE
M	1	1	**447-1709**	4	BOLT (M16X2X45-MM)	
	2	1	**451-2175**	4	WASHER-HARD (17.5X30X3.5-MM THK)	
	3	1	**506-3832**	1	PIPE AS	
	4	1	*155-3624*	1	PLUG AS	
		1	**3J-7354**	1	SEAL-O-RING	
		1	**9S-4182**	1	PLUG (7/16-20-THD)	
	5	1	**1J-2859**	1	SEAL-O-RING	
	6	1	**6V-0400**	4	FLANGE-HALF	
M	7	1	**8T-4184**	8	BOLT (M12X1.75X45-MM)	
	8	1	**8T-4223**	8	WASHER-HARD (13.5X25.5X3-MM THK)	

M - METRIC PART

489-2934 **LINES GP-PUMP (**contd.**)** **i07358916**

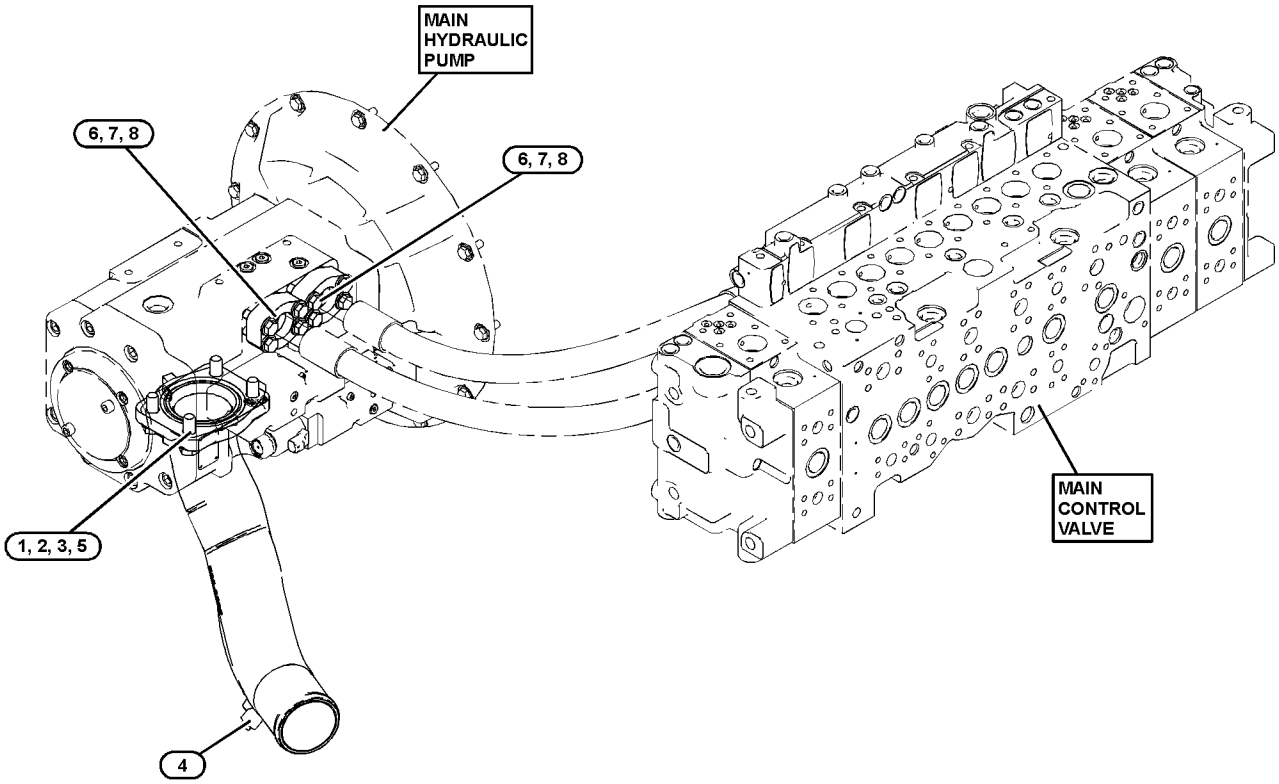

GRAPHIC #1 <END> g06231390

489-2952 LINES GP-PUMP

S/N: BR61-UP

PART OF 532-9515, 532-9518, 556-2899, 556-2902 DISTRIBUTION AR

SMCS-5057 **i07350490**

NOTE	REF NO	GRAPHIC REF	PART NUMBER	QTY	PART NAME 1 2 3 4 5 6 (PRODUCT LEVEL)	SEE PAGE
	1	1	**113-6416**	1	HOSE	
	2	1	**451-2175**	4	WASHER-HARD (17.5X30X3.5-MM THK)	
	3	1	**493-0182**	1	PIPE AS	
	4	1	**6D-9157**	1	SEAL-O-RING	
	5	1	**9X-2201**	4	CLAMP-HOSE	
M	6	1	**447-1709**	4	BOLT (M16X2X45-MM)	
M	7	1	**453-1259**	4	BOLT (M16X2X40-MM)	

M - METRIC PART

489-2952 **LINES GP-PUMP (**contd.**)** **i07350490**

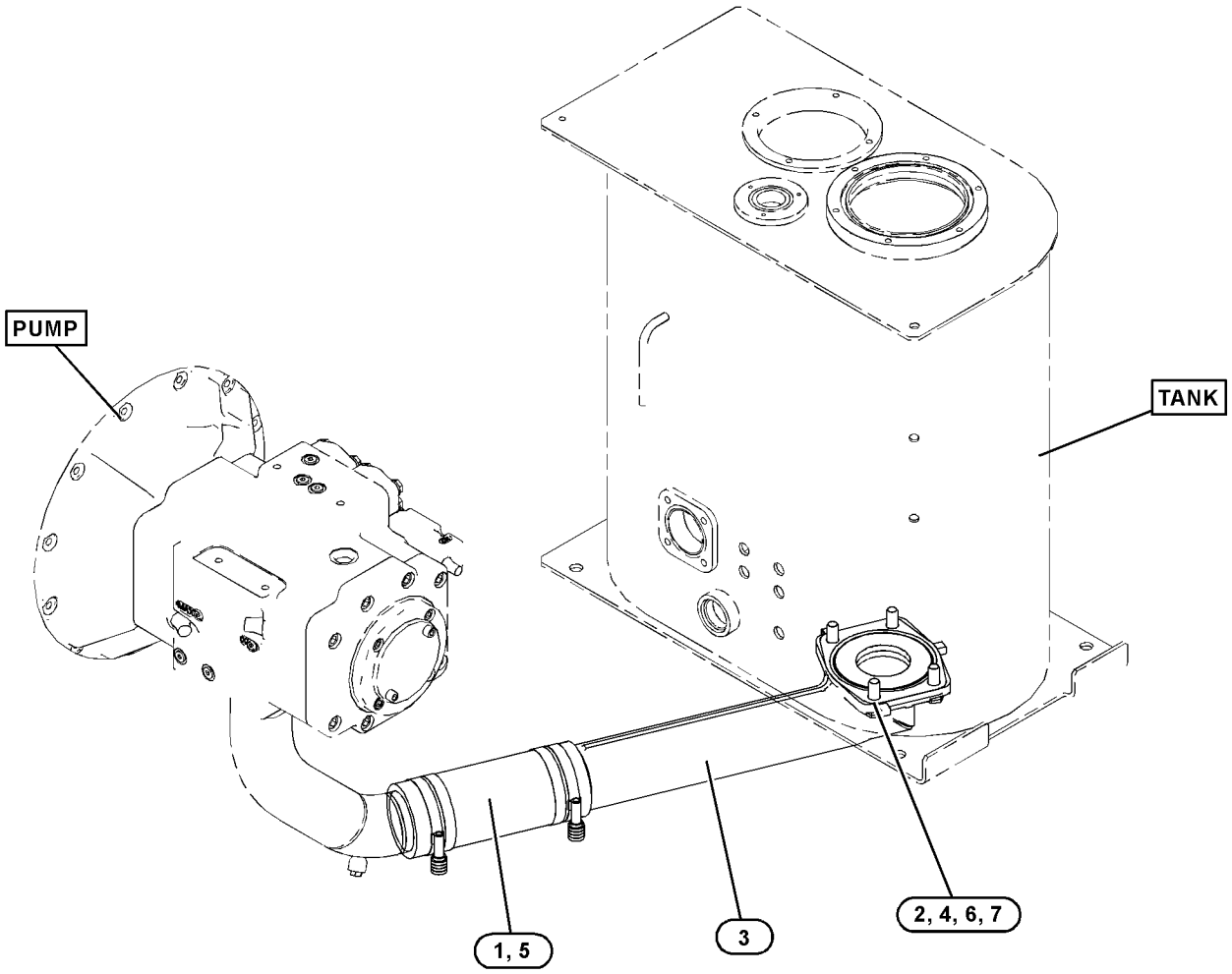

GRAPHIC #1 <END> g06229303

260-8011 LINES GP-STICK

S/N: BR61-UP
FOR USE WITH 2.5-M (8.2-FT) STICK
PART OF 490-7678 STICK AR-HOE

SMCS-5057, 5458

i05342929

NOTE	REF NO	GRAPHIC REF	PART NUMBER	QTY	PART NAME 1 2 3 4 5 6 (PRODUCT LEVEL)	SEE PAGE
	1	1	**5I-4174**	1	BLOCK	
I	2	1	**187-6058**	2	HOSE AS	
	3	1	**1P-3702**	2	SEAL-RECTANGULAR	
	4	1	**1P-3703**	1	SEAL-RECTANGULAR	
	5	1	**8T-4121**	8	WASHER-HARD (11X21X2.5-MM THK)	
M	6	1	**8T-4182**	4	BOLT (M10X1.5X45-MM)	
M	7	1	**8T-4198**	4	BOLT (M10X1.5X100-MM)	
	8	1	**8T-9403**	4	FLANGE-HALF	

I - REFER TO HYDRAULIC INFORMATION SYSTEM
M - METRIC PART

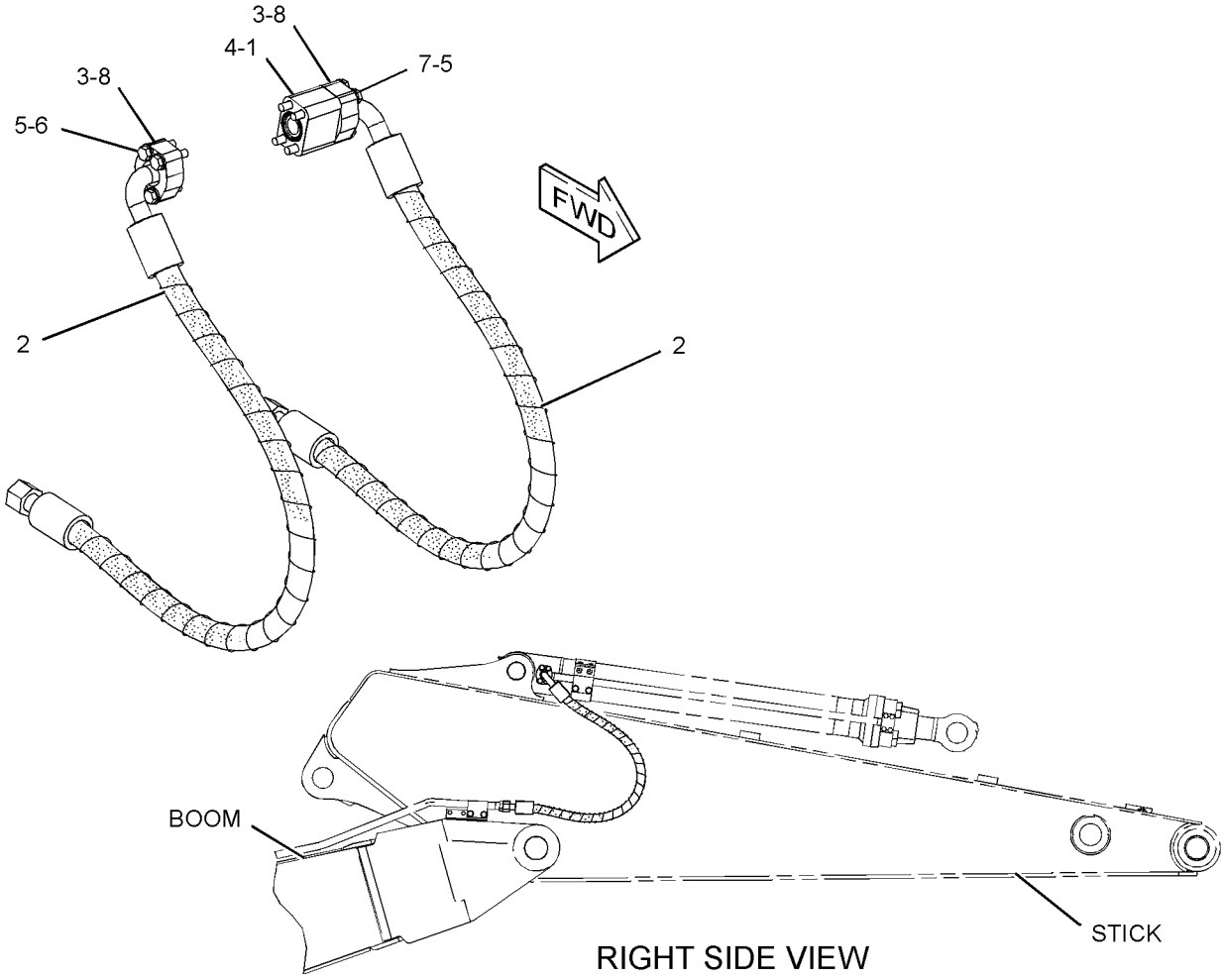

GRAPHIC #1 <END> g01224077

242-6735 LINES GP-STICK CYLINDER

S/N: BR61-UP

PART OF 490-4143 CYLINDER & LINES GP-STICK

SMCS-5458 **i02793759**

NOTE	REF NO	GRAPHIC REF	PART NUMBER	QTY	PART NAME 1 2 3 4 5 6 (PRODUCT LEVEL)	SEE PAGE
M	1	1	**6V-8200**	4	BOLT-SOCKET HEAD (M12X1.75X35-MM)	
	2	1	**095-1600**	1	SEAL-O-RING	
	3	1	**247-8883**	1	TUBE AS	
M	4	1	**8T-4196**	2	BOLT (M10X1.5X35-MM)	
	5	1	**8T-4896**	2	WASHER-HARD (10.2X18.5X2.5-MM THK)	
	6	1	**124-1020**	1	SUPPORT	
	7	1	**124-1019**	1	SUPPORT AS	
	8	1	**096-4480**	1	CLAMP	
M	9	1	**8T-4910**	1	BOLT (M12X1.75X60-MM)	
	10	1	**8T-4223**	1	WASHER-HARD (13.5X25.5X3-MM THK)	

M - METRIC PART

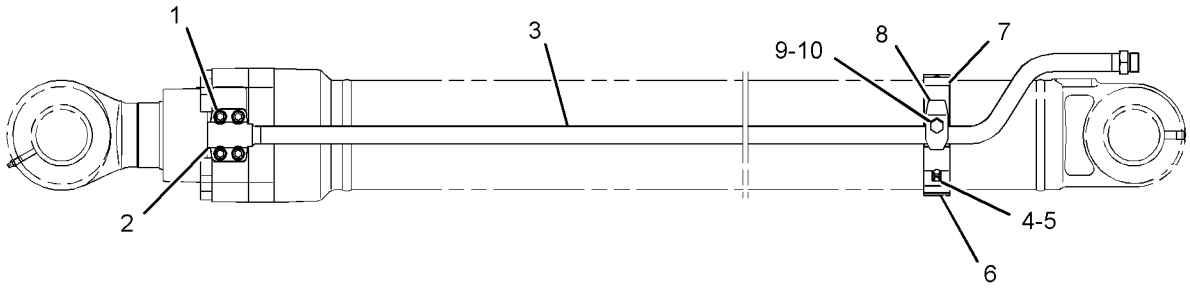

GRAPHIC #1 <END> g01220097

369-9673 LINES GP-STICK CYLINDER

S/N: BR61-UP

PART OF 268-7256, 535-7983 CYLINDER & LINES GP-STICK

SMCS-5458 **i06756635**

NOTE	REF NO	GRAPHIC REF	PART NUMBER	QTY	PART NAME 1 2 3 4 5 6 (PRODUCT LEVEL)	SEE PAGE
	1	1	**096-4447**	1	CLAMP	
	2	1	**099-6025**	1	SUPPORT	
	3	1	**369-9620**	1	SUPPORT AS	
	4	1	**227-6884**	1	TUBE AS	
	5	1	**095-1600**	1	SEAL-O-RING	
M	6	1	**6V-8200**	4	BOLT-SOCKET HEAD (M12X1.75X35-MM)	
M	7	1	**8T-4196**	2	BOLT (M10X1.5X35-MM)	
	8	1	**8T-4223**	1	WASHER-HARD (13.5X25.5X3-MM THK)	
	9	1	**8T-4896**	2	WASHER-HARD (10.2X18.5X2.5-MM THK)	
M	10	1	**172-9966**	1	BOLT (M12X1.75X65-MM)	

M - METRIC PART

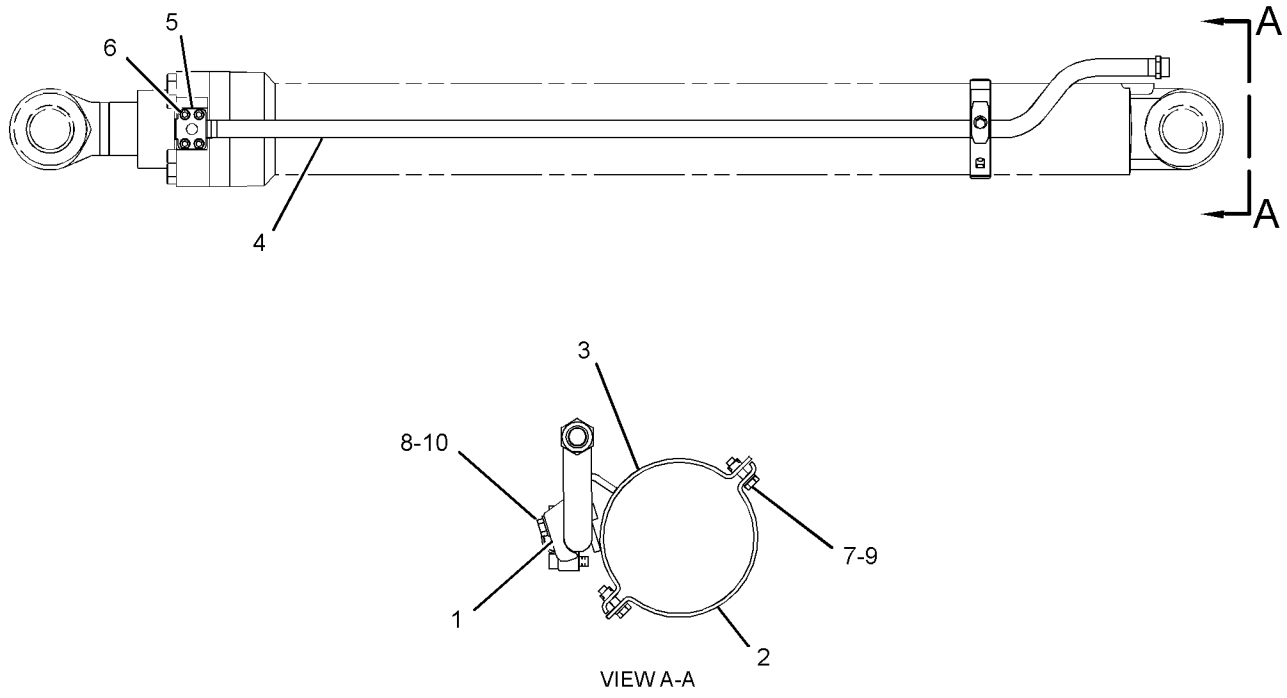

GRAPHIC #1 <END> g01228951

489-3062 LINES GP-TRAVEL MOTOR—LONG UNDERCARRIAGE

S/N: BR61-UP

PART OF 489-1591, 529-3052 UNDERCARRIAGE AR

SMCS-5057, 5058 **i07364120**

NOTE	REF NO	GRAPHIC REF	PART NUMBER	QTY	PART NAME 1 2 3 4 5 6 (PRODUCT LEVEL)	SEE PAGE
	1	1	*148-8428*	1	TEE AS	
		1	**3K-0360**	1	SEAL-O-RING	
		1	**6V-8398**	2	SEAL-O-RING	
		1	**6V-8782**	1	TEE	
	2	1	*148-8439*	1	TEE AS	
		1	**3J-1907**	1	SEAL-O-RING	
		1	**6V-8397**	2	SEAL-O-RING	
		1	**6V-8774**	1	TEE	
I	3	1	**4I-6054**	2	HOSE AS	
	4	1	**7K-1181**	4	STRAP-CABLE	
	5	1	**108-7118**	4	GROMMET	
I	6	1	**113-6761**	1	HOSE AS	
I	7	1	**245-5416**	4	HOSE AS	
	8	1	*250-1439*	1	ADAPTER AS	
		1	**3D-2824**	1	SEAL-O-RING	
		1	**6V-1722**	1	ADAPTER	
	9	1	**512-7813**	1	HOSE AS	
	10	1	*148-8364*	2	ELBOW AS	
					(EACH INCLUDES)	
		1	**3K-0360**	1	SEAL-O-RING	
		1	**6V-8398**	1	SEAL-O-RING	
		1	**6V-8625**	1	ELBOW	
	11	1	*148-8378*	2	ELBOW AS	
					(EACH INCLUDES)	
		1	**3J-1907**	1	SEAL-O-RING	
		1	**6V-8397**	1	SEAL-O-RING	
		1	**6V-8724**	1	ELBOW	
	12	1	**1P-3703**	8	SEAL-RECTANGULAR	
	13	1	**6V-0400**	24	FLANGE-HALF	
M	14	1	**8T-4184**	48	BOLT (M12X1.75X45-MM)	
	15	1	**8T-4223**	48	WASHER-HARD (13.5X25.5X3-MM THK)	

I - REFER TO HYDRAULIC INFORMATION SYSTEM
M - METRIC PART

489-3062 **LINES GP-TRAVEL MOTOR (**contd.**)** **i07364120**

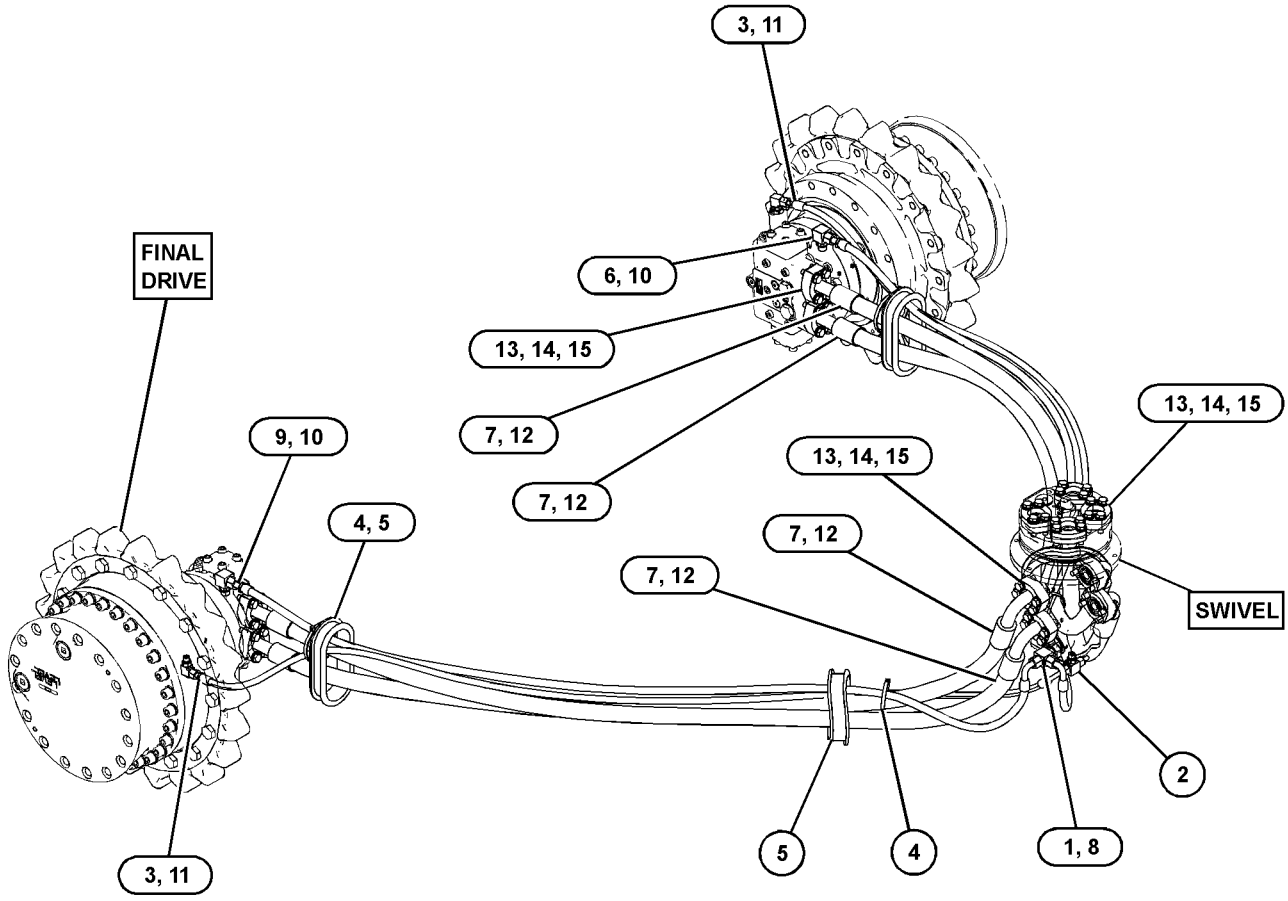

GRAPHIC #1 <END> g06230499

529-6948 LINES GP-TRAVEL MOTOR—LONG UNDERCARRIAGE

S/N: BR61-UP

PART OF 550-3471 UNDERCARRIAGE AR

SMCS-5057, 5058 **i07383676**

NOTE	REF NO	GRAPHIC REF	PART NUMBER	QTY	PART NAME 1 2 3 4 5 6 (PRODUCT LEVEL)	SEE PAGE
M	1	1	**8T-4184**	48	BOLT (M12X1.75X45-MM)	
	2	1	**1P-3703**	8	SEAL-RECTANGULAR	
	3	1	**6V-0400**	24	FLANGE-HALF	
	4	1	**7K-1181**	6	STRAP-CABLE	
	5	1	**8T-4223**	48	WASHER-HARD (13.5X25.5X3-MM THK)	
	6	1	**108-7118**	4	GROMMET	
I	7	1	**108-7206**	1	HOSE AS	
	8	1	*148-8364*	2	ELBOW AS	
					(EACH INCLUDES)	
		1	**3K-0360**	1	SEAL-O-RING	
		1	**6V-8398**	1	SEAL-O-RING	
		1	**6V-8625**	1	ELBOW	
	9	1	*148-8428*	1	TEE AS	
		1	**3K-0360**	1	SEAL-O-RING	
		1	**6V-8398**	2	SEAL-O-RING	
		1	**6V-8782**	1	TEE	
	10	1	*148-8439*	1	TEE AS	
		1	**3J-1907**	1	SEAL-O-RING	
		1	**6V-8397**	2	SEAL-O-RING	
		1	**6V-8774**	1	TEE	
	11	1	*150-3036*	2	ELBOW AS	
					(EACH INCLUDES)	
		1	**3J-1907**	1	SEAL-O-RING	
		1	**6V-8397**	1	SEAL-O-RING	
		1	**8T-1905**	1	ELBOW	
I	12	1	**245-5416**	4	HOSE AS	
	13	1	**416-7547**	1	HOSE AS	
	14	1	**451-9333**	1	HOSE AS	
	15	1	**536-5043**	1	HOSE AS	
	16	1	*155-7321*	1	ADAPTER AS	
		1	**3D-2824**	1	SEAL-O-RING	
		1	**6V-1722**	1	ADAPTER	

I - REFER TO HYDRAULIC INFORMATION SYSTEM
M - METRIC PART

529-6948 **LINES GP-TRAVEL MOTOR (**contd.**)** **i07383676**

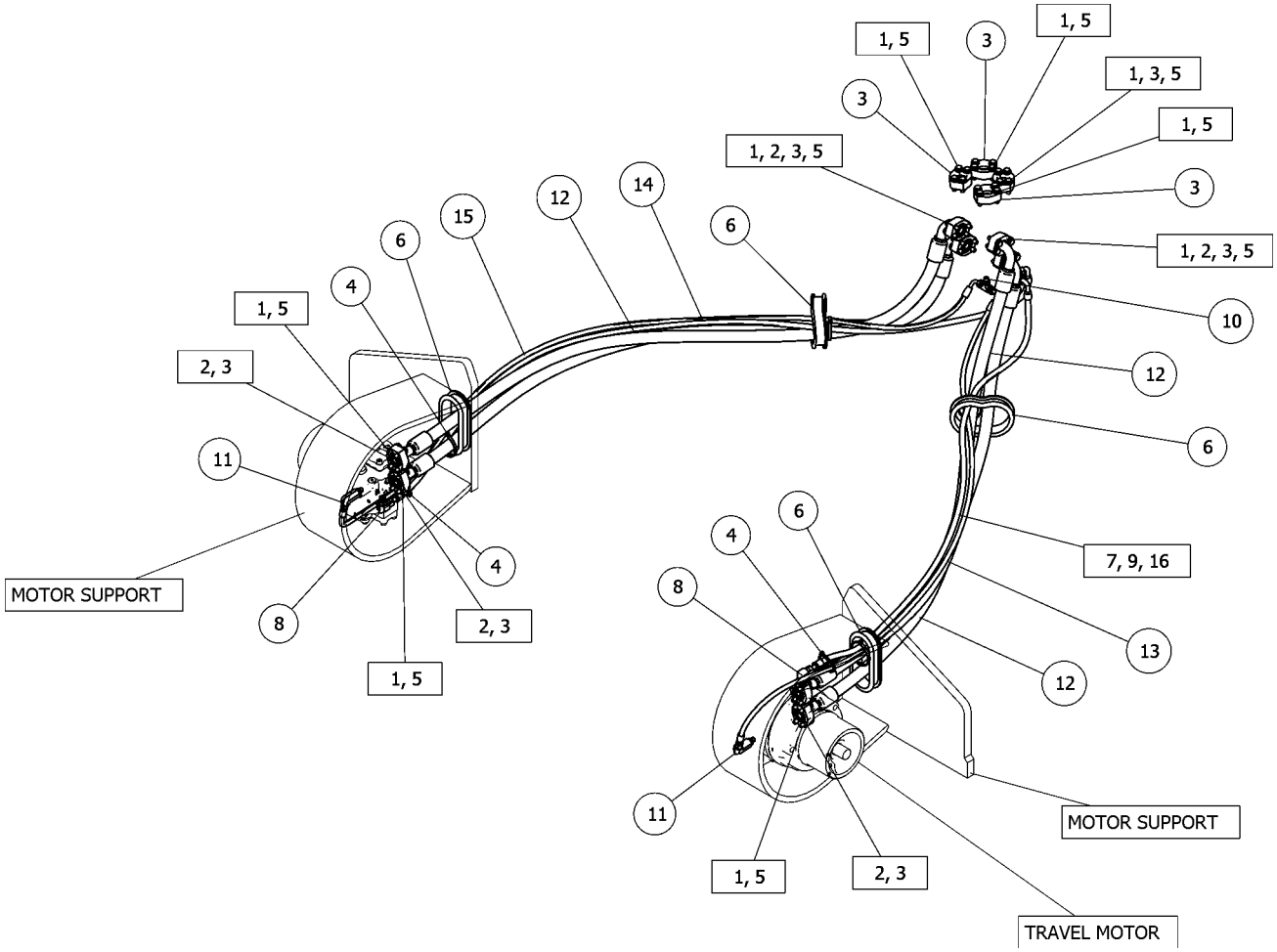

GRAPHIC #1 <END> g06303886

489-3486 MOTOR & MTG GP-SWING

S/N: BR61-UP

PART OF 488-3075 DRIVE GP-SWING

SMCS-5058 **i07358589**

NOTE	REF NO	GRAPHIC REF	PART NUMBER	QTY	PART NAME 1 2 3 4 5 6 (PRODUCT LEVEL)	SEE PAGE
	1	1	**6V-5200**	1	RING-RETAINING	
	2	1	**352-7064**	2	CAP	
	3	1	**451-2182**	12	WASHER-HARD (13.5X25.5X3-MM THK)	
M	4	1	**453-3446**	12	BOLT (M12X1.75X35-MM)	
Y	5	1	**489-3487**	1	MOTOR GP-SWING	493

M - METRIC PART
Y - SEPARATE ILLUSTRATION

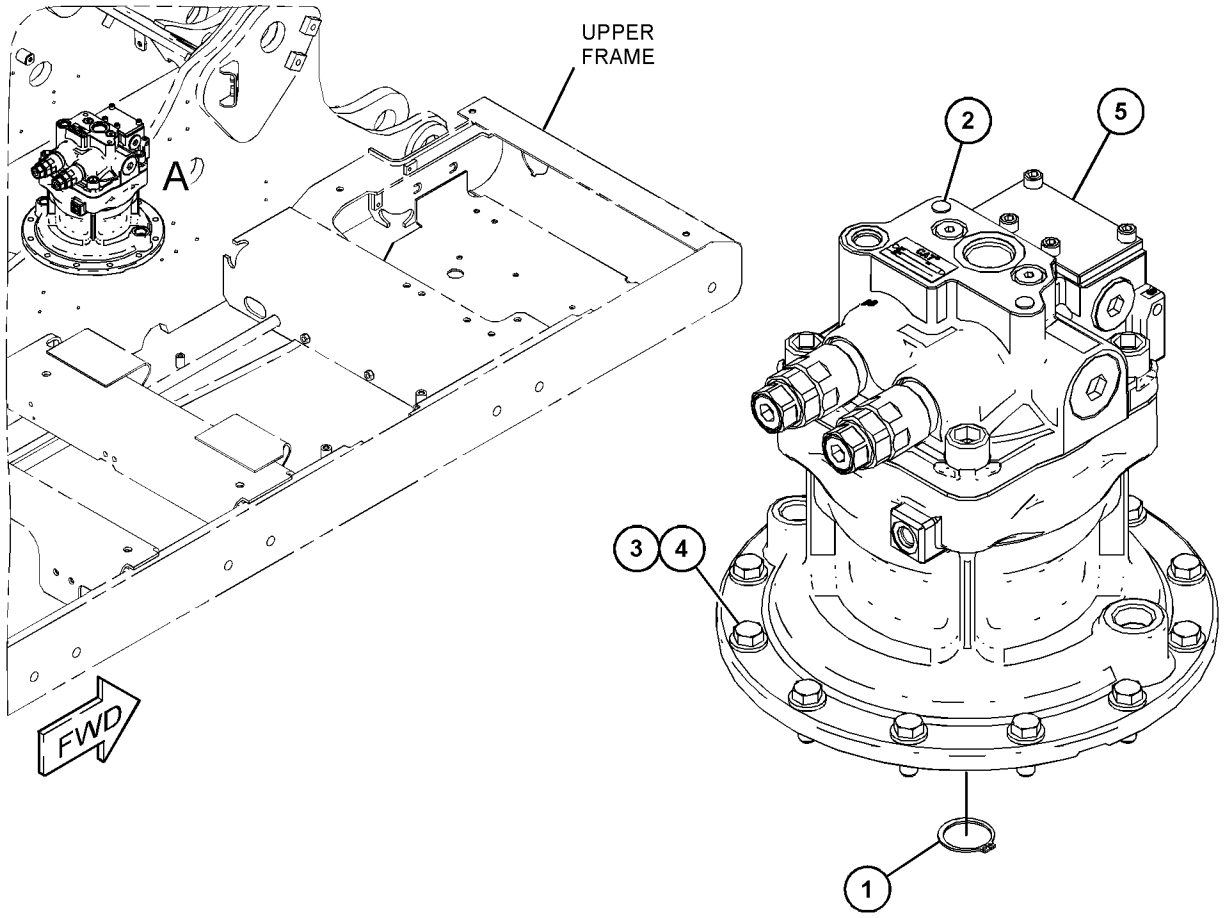

VIEW OF AREA A

GRAPHIC #1 <END> g06232932

334-9986 MOTOR & MTG GP-TRAVEL

S/N: BR61-UP

PART OF 507-6558, 507-6561 DRIVE GP-FINAL

SMCS-4351 **i04854850**

NOTE	REF NO	GRAPHIC REF	PART NUMBER	QTY	PART NAME 1 2 3 4 5 6 (PRODUCT LEVEL)	SEE PAGE
YR	1	1	**209-5992**	1	MOTOR GP-TRAVEL	496
Y	2	1	**322-8714**	1	VALVE GP-TRAVEL COUNTERBALANCE	544
M	3	1	**095-0707**	3	BOLT (M16X2X120-MM)	
	4	1	**095-1685**	1	SEAL-O-RING	
M	5	1	**8C-8729**	6	BOLT-SOCKET HEAD (M12X1.75X80-MM)	

M - METRIC PART
R - REMANUFACTURED PART MAY BE AVAILABLE
Y - SEPARATE ILLUSTRATION

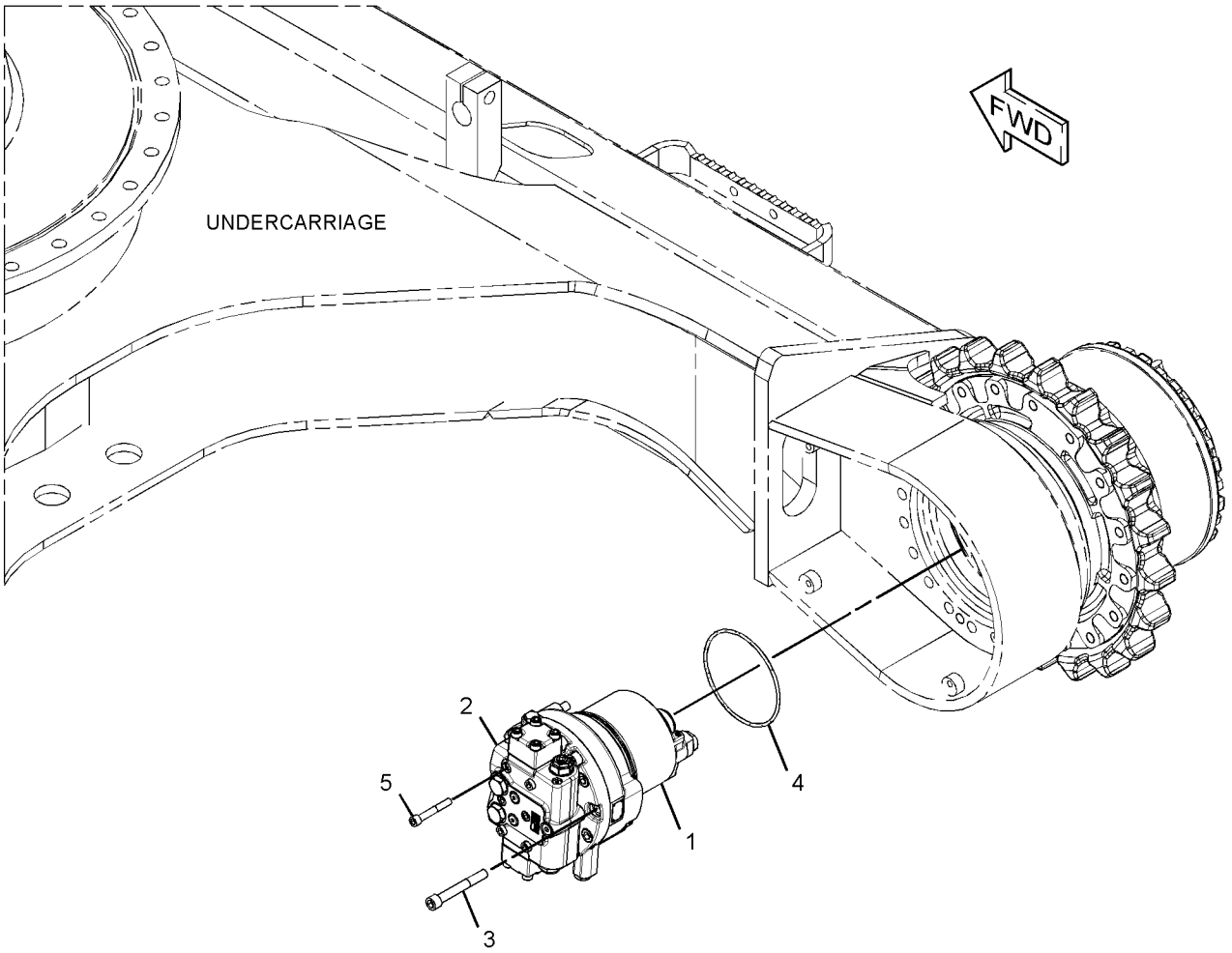

GRAPHIC #1 <END> g02466056

519-2478 MOTOR & MTG GP-TRAVEL

S/N: BR61-UP

PART OF 511-6006, 511-6008 DRIVE GP-FINAL

SMCS-4351 **i07357362**

NOTE	REF NO	GRAPHIC REF	PART NUMBER	QTY	PART NAME 1 2 3 4 5 6 (PRODUCT LEVEL)	SEE PAGE
M	1	1	**095-0707**	3	BOLT (M16X2X120-MM)	
Y	2	1	*511-0313*	1	MOTOR GP-TRAVEL	499
	3	1	**095-1685**	1	SEAL-O-RING	

M - METRIC PART
Y - SEPARATE ILLUSTRATION

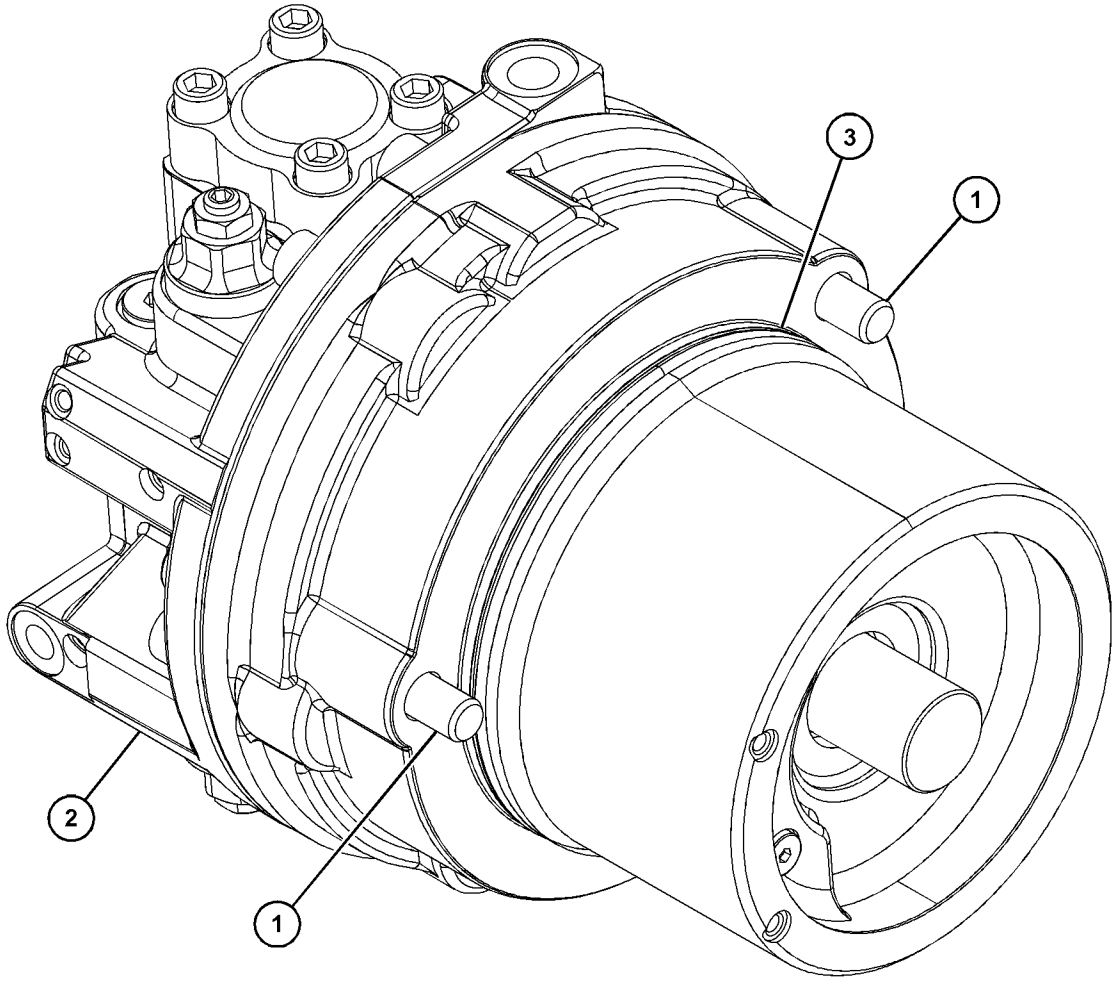

GRAPHIC #1 <END> g06246691

489-3487 MOTOR GP-SWING

S/N: BR61-UP

PART OF 489-3486 MOTOR & MTG GP-SWING

SMCS-5058 **i07358599**

NOTE	REF NO	GRAPHIC REF	PART NUMBER	QTY	PART NAME 1 2 3 4 5 6 (PRODUCT LEVEL)	SEE PAGE
Y	1	1	**515-6105**	1	MOTOR GP-SWING	494
Y	2	1	**173-3452**	2	VALVE GP-RELIEF (DIRECT OPERATED)	537

Y - SEPARATE ILLUSTRATION

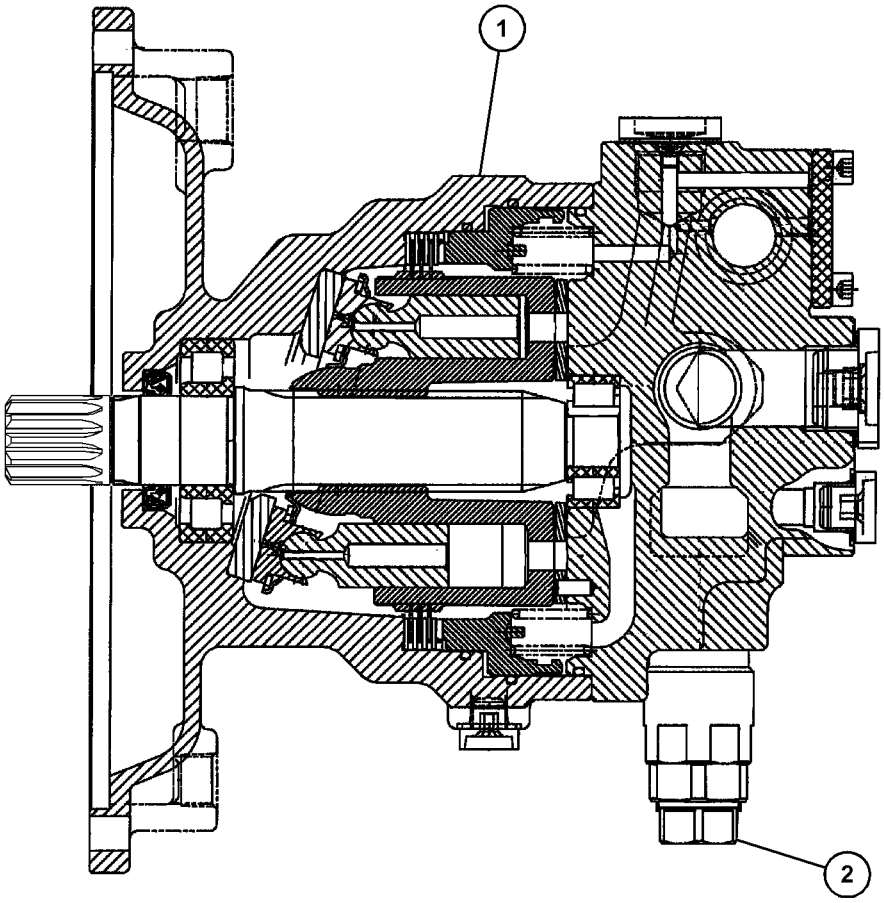

GRAPHIC #1 <END> g06270687

515-6105 MOTOR GP-SWING

S/N: BR61-UP

PART OF 489-3487 MOTOR GP-SWING

SMCS-5058 **i07358603**

NOTE	REF NO	GRAPHIC REF	PART NUMBER	QTY	PART NAME 1 2 3 4 5 6 (PRODUCT LEVEL)	SEE PAGE
	1	1	**122-5318**	1	BEARING	
	2	1	**173-3444**	1	PLATE	
	3	1	**334-9981**	1	PISTON AS-PUMP	
	4	1	**173-3443**	1	PLATE	
	5	1	**173-3441**	1	BARREL	
	6	1	**5I-8426**	1	SEAL-O-RING	
	7	1	**5I-8417**	1	SEAL-O-RING	
	8	1	**177-2584**	1	PISTON-BRAKE	
	9	1	**5I-8623**	1	SEAL-O-RING	
	10	1	**126-2055**	20	SPRING	
	11	1	**371-7201**	1	PLUG	
	12	1	**515-6103**	1	HEAD GP-MOTOR	
M	13	1	**8T-1158**	4	BOLT-SOCKET HEAD (M8X1.25X20-MM)	
	14	1	**493-3209**	1	COVER	
	15	1	**095-1578**	3	SEAL-O-RING	
	16	1	**173-3445**	1	PLATE-VALVE	
	17	1	**5I-8625**	1	BEARING	
	18	1	**173-3451**	4	PLATE-SEPARATOR	
	19	1	**173-3450**	3	PLATE-FRICTION	
	20	1	**173-3442**	1	SPRING	
	21	1	**465-5181**	1	BODY	
	22	1	**173-3440**	1	SHAFT	
	23	1	**173-3447**	1	SEAL-OIL	
	24	1	**170-9996**	2	PLUG	
	25	1	**095-1600**	2	SEAL-O-RING	
	26	1	**170-9986**	2	SPRING	
	27	1	**170-9985**	2	VALVE-PISTON	
	28	1	**515-6104**	1	VALVE AS-RELIEF	
M	29	1	**7Y-5221**	4	BOLT-SOCKET HEAD (M20X2.5X45-MM)	
	30	1	**446-7230**	2	PLUG	
	31	1	**3J-1907**	2	SEAL-O-RING	

M - METRIC PART

515-6105 **MOTOR GP-SWING (**contd.**)** **i07358603**

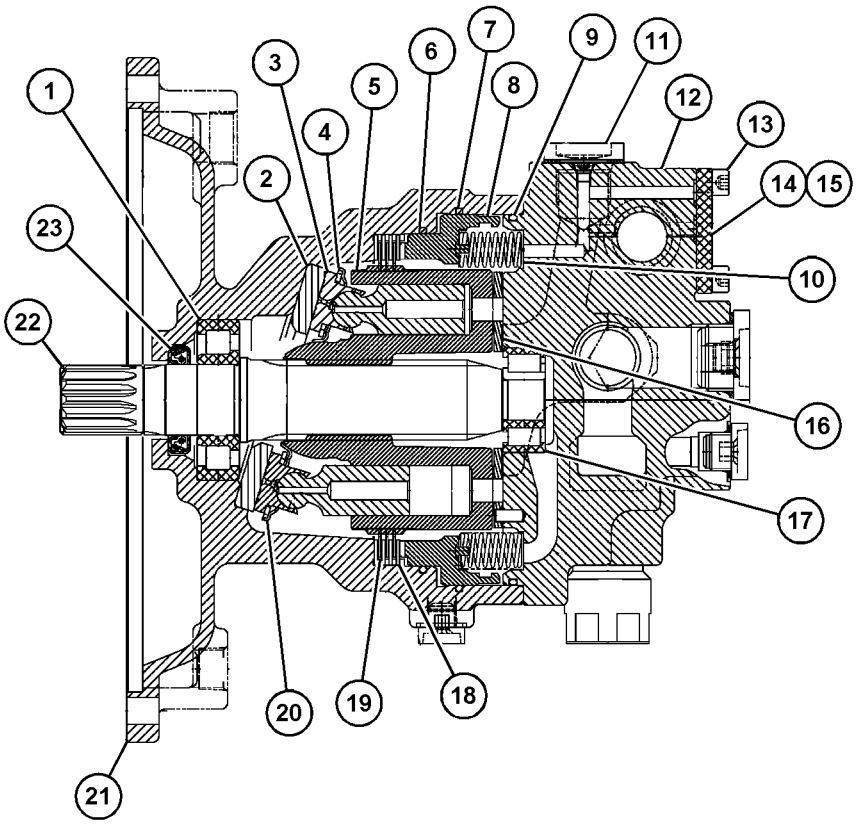

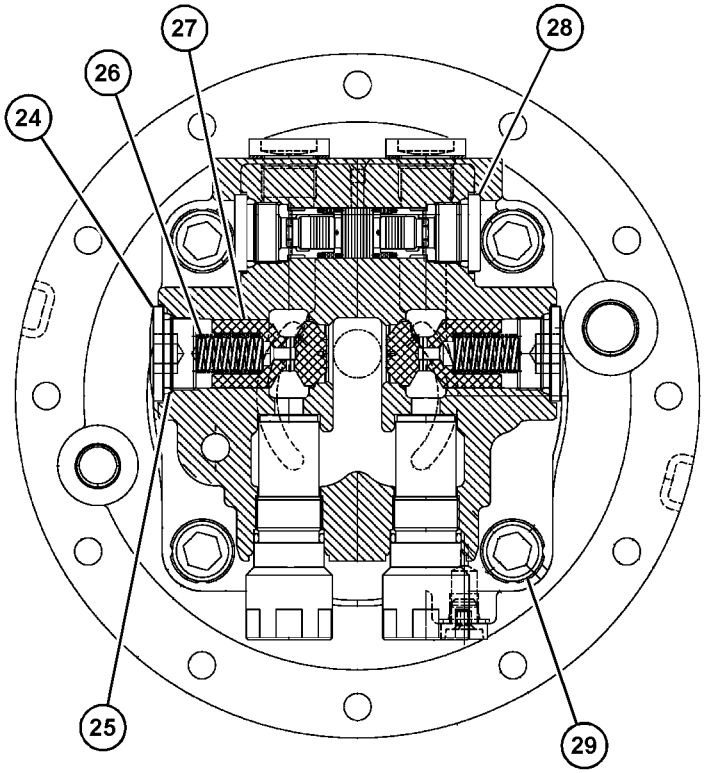

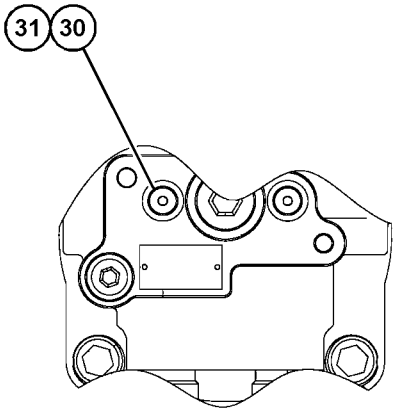

GRAPHIC #1 <END> g06273404

209-5992 MOTOR GP-TRAVEL*R

S/N: BR61-UP

PART OF 334-9986 MOTOR & MTG GP-TRAVEL

SMCS-4351, 5058 **i04303450**

NOTE	REF NO	GRAPHIC REF	PART NUMBER	QTY	PART NAME 1 2 3 4 5 6 (PRODUCT LEVEL)	SEE PAGE
	1	1	**209-5894**	1	SHAFT	
	2	1	**087-4743**	2	STOP	
	3	1	**094-1399**	1	RING-RETAINING	
	4	1	**7Y-4212**	1	BEARING	
	5	1	**087-4757**	2	PISTON	
	6	1	**107-6969**	1	BODY	
	7	1	**122-5114**	1	GUIDE-BALL	
	8	1	**209-5909**	1	PLATE-CAM	
	9	1	**147-5860**	1	PISTON AS	
	10	1	**133-6777**	1	BARREL AS	
	11	1	**107-6954**	4	PLATE-FRICTION	
	12	1	**107-6955**	5	PLATE-SEPARATOR	
	13	1	**096-1523**	1	GUIDE-PISTON	
	14	1	**7Y-4213**	1	PISTON-BRAKE	
	15	1	**7Y-4202**	1	HEAD	
M	16	1	**8T-4944**	10	BOLT-SOCKET HEAD (M16X2X40-MM)	
B	17	1	**096-1521**	1	SHIM (1-MM THK)	
B	18	1	**096-3785**	1	SHIM (1.2-MM THK)	
B	19	1	**096-3786**	1	SHIM (1.4-MM THK)	
B	20	1	**096-3787**	1	SHIM (1.6-MM THK)	
B	21	1	**096-1522**	1	SHIM (2-MM THK)	
B	22	1	**096-3788**	1	SHIM (1.8-MM THK)	
	23	1	**096-5916**	2	SEAT	
	24	1	**2D-6642**	2	BALL	
J	25	1	**095-1572**	2	SEAL-O-RING	
J	26	1	**096-5919**	2	RING-BACKUP	
	27	1	**096-5915**	2	RETAINER	
	28	1	**096-4003**	1	SET-BEARING	
		1	**7Y-4234**	1	RACE-NEEDLE ROLLER	
J	29	1	**095-1585**	1	SEAL-O-RING	
	30	1	**087-4742**	1	VALVE	
	31	1	**096-1519**	1	SEAT	
	32	1	**095-7380**	1	SPRING	
	33	1	**095-7382**	1	RETAINER	
	34	1	**094-1875**	1	DOWEL	
	35	1	**095-7378**	1	WASHER SET	
	36	1	**8T-6759**	10	PLUG-PIPE	
J	37	1	**095-1575**	3	SEAL-O-RING	
J	38	1	**096-4378**	1	RING-BACKUP	
J	39	1	**096-4377**	2	SEAL-O-RING	
	40	1	**8T-6759**	1	PLUG-PIPE	
J	41	1	**095-7384**	1	SEAL-O-RING	
J	42	1	**095-7383**	1	SEAL-O-RING	
J	43	1	**095-7386**	1	RING-BACKUP	
J	44	1	**095-7387**	1	RING	
J	45	1	**095-1685**	1	SEAL-O-RING	
	46	1	**118-4057**	9	SPRING	

209-5992 **MOTOR GP-TRAVEL (**contd.**)** **i04303450**

NOTE	REF NO	GRAPHIC REF	PART NUMBER	QTY	PART NAME 1 2 3 4 5 6 (PRODUCT LEVEL)	SEE PAGE
	47	1	**7Y-4215**	1	SPACER	
J	48	1	**095-1586**	2	SEAL-O-RING	
J	49	1	**7Y-4217**	2	RING-BACKUP	
J	50	1	**096-4376**	1	SEAL-LIP TYPE	
	51	1	**123-2008**	2	KEY	
J	54	1	**3K-0360**	1	SEAL-O-RING	
	55	1	**9S-4185**	1	PLUG (3/4-16-THD)	
J	56	1	**095-1700**	2	SEAL-O-RING	
	57	1	**7Y-4224**	2	ORIFICE	
	58	1	**096-3978**	1	SPRING	
	59	1	**7Y-4216**	1	SPOOL	
J	60	1	**2M-9780**	1	SEAL-O-RING	
	61	1	**087-4786**	1	ADAPTER	
	62	1	**121-1558**	2	PIN	
B	64	1	**094-1882**	11	PLUG	
					AVAILABLE REPAIR KIT(S):	
J			**7Y-4222**	1	KIT-SEAL (TRAVEL MOTOR)	

B - USE AS REQUIRED
J - KIT MARKED J SERVICES PART(S) MARKED J
M - METRIC PART

209-5992 **MOTOR GP-TRAVEL (**contd.**)** **i04303450**

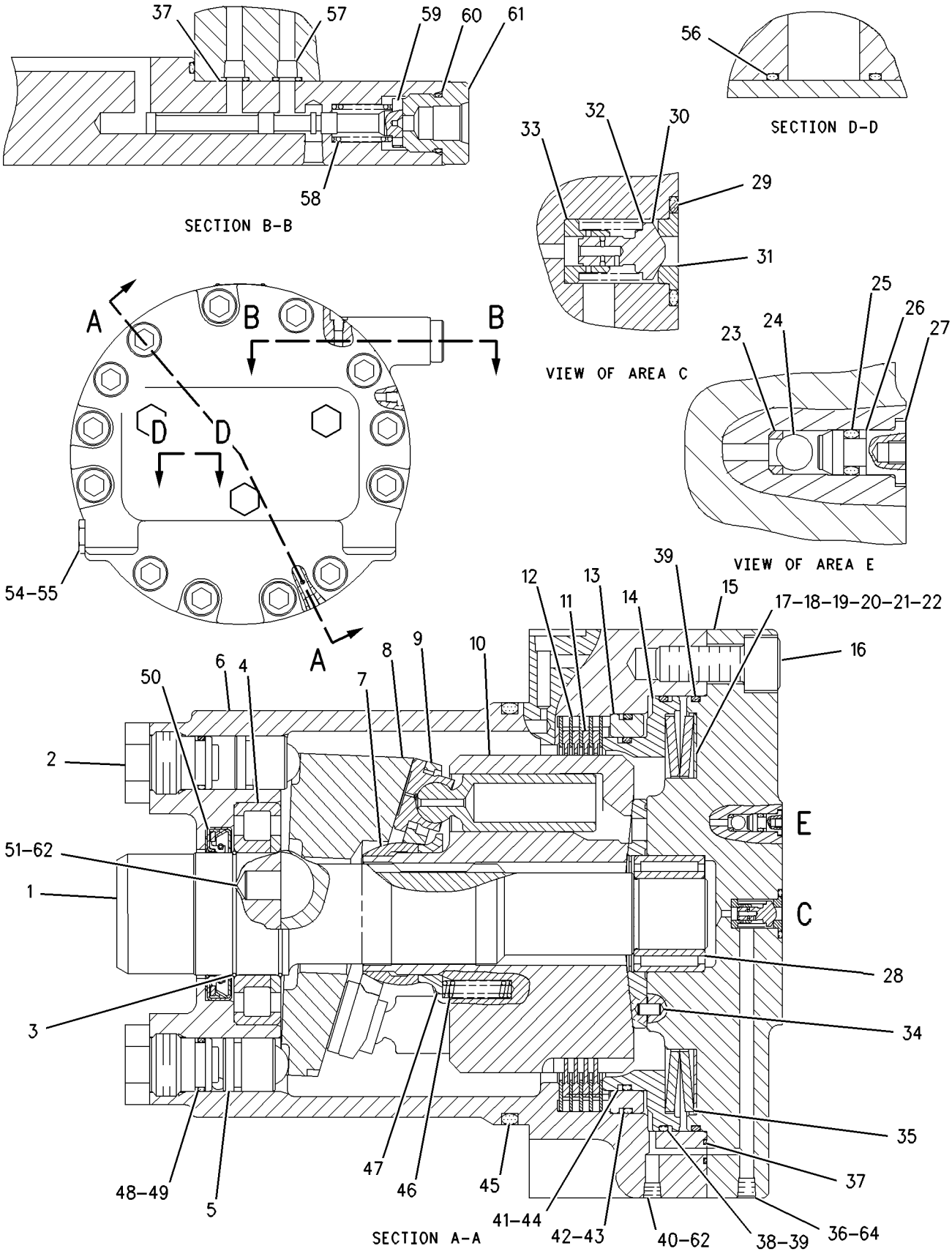

GRAPHIC #1 <END> g00879895

511-0313 MOTOR GP-TRAVEL

S/N: BR61-UP

PART OF 519-2478 MOTOR & MTG GP-TRAVEL

SMCS-4351, 5058 **i07357533**

NOTE	REF NO	GRAPHIC REF	PART NUMBER	QTY	PART NAME 1 2 3 4 5 6 (PRODUCT LEVEL)	SEE PAGE
	1	1	**551-5110**	1	BALL BEARING	
M	2	1	**8T-2503**	7	BOLT-SOCKET HEAD (M14X2X35-MM)	
	3	1	**551-5116**	4	PIN	
	4	1	**551-5104**	1	ROTATING GP-MOTOR	
	5	1	**551-5105**	1	RETAINER AS	
	6	1	**551-5108**	1	SWASHPLATE	
	7	1	**551-5118**	4	SPRING	
	8	1	**139-7308**	2	PLUG	
	9	1	**551-5107**	1	SHAFT	
	10	1	**551-5106**	1	BODY AS	
	11	1	**551-5111**	1	SEAL-LIP TYPE	
	12	1	**551-5109**	1	BEARING-ROLLER	
	13	1	**536-2651**	2	BALL	
	14	1	**551-5112**	4	PLATE	
	15	1	**551-5113**	4	PLATE	
	16	1	**551-5115**	1	GUIDE-PISTON	
	17	1	**551-5114**	1	PISTON-BRAKE	
	18	1	**137-3688**	1	ORIFICE	
	19	1	**551-5117**	14	SPRING-BRAKE	
	20	1	**280-3109**	1	PIN	
	21	1	**279-4706**	2	PLUG	
	22	1	**551-5103**	1	HEAD-MOTOR	
	23	1	**536-2638**	2	VALVE AS-RELIEF	
	24	1	**551-5120**	1	SPRING	
	25	1	**099-7197**	2	PLUG	
	26	1	**551-5119**	2	PLUG	
	27	1	**108-9151**	2	ORIFICE	
	28	1	**536-2643**	2	SEAT-SPRING	
	29	1	**536-2644**	2	SPRING	
	30	1	**536-2645**	2	SEAT-SPRING	
	31	1	**536-2637**	2	CAP AS	
	32	1	**536-2648**	2	ORIFICE	

M - METRIC PART

511-0313 **MOTOR GP-TRAVEL** (contd.) **i07357533**

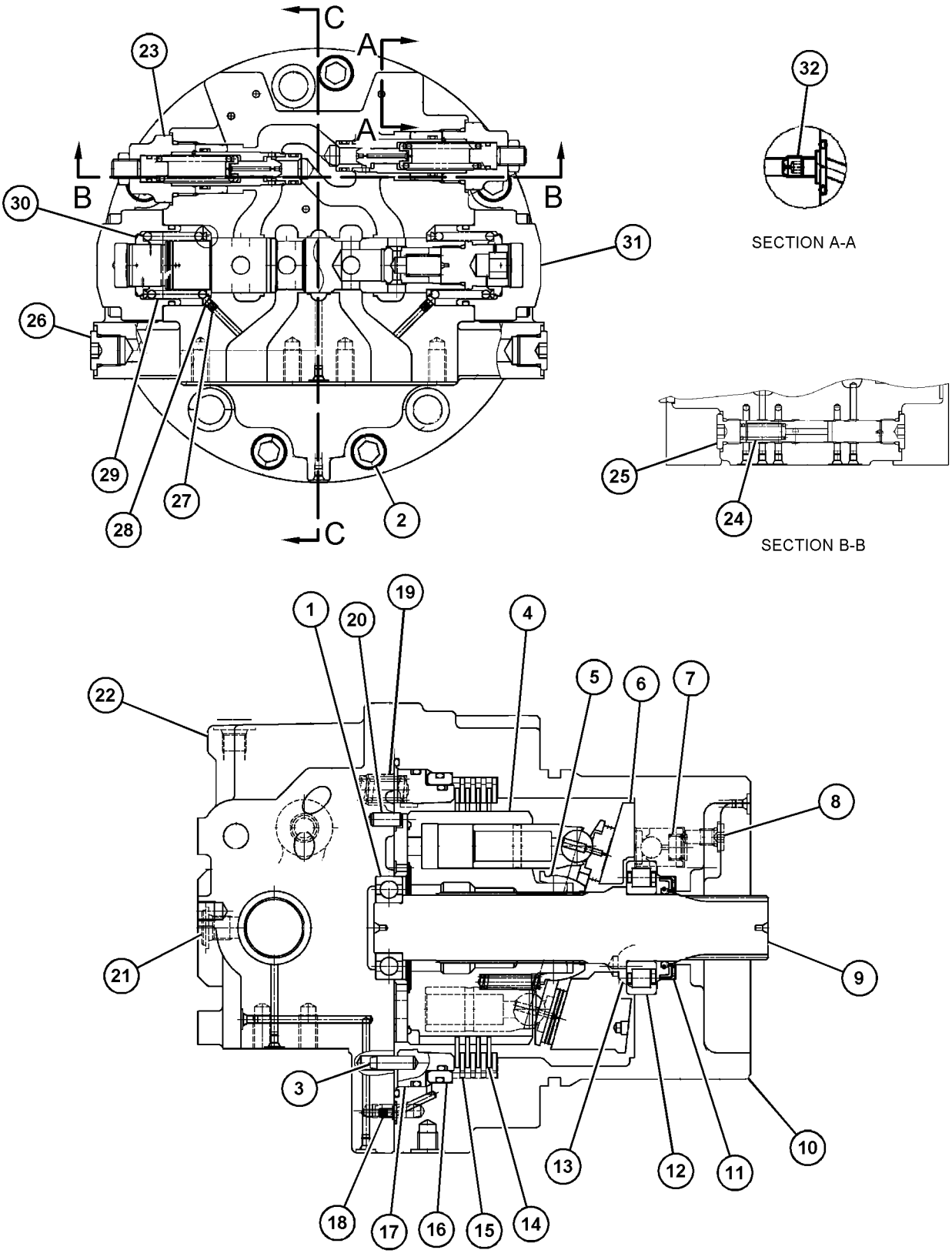

GRAPHIC #1 <END> g06296803

489-2939 MOUNTING GP-MAIN CONTROL VALVE

S/N: BR61-UP

PART OF 514-4877 HYDRAULIC AR

SMCS-5051 **i07358928**

NOTE	REF NO	GRAPHIC REF	PART NUMBER	QTY	PART NAME 1 2 3 4 5 6 (PRODUCT LEVEL)	SEE PAGE
	1	1	**325-9001**	4	SPACER (22X40X22-MM THK)	
M	2	1	**447-1717**	4	BOLT (M20X2.5X45-MM)	
	3	1	**451-2176**	4	WASHER-HARD (22X35X3.5-MM THK)	
M	4	1	**453-2846**	4	BOLT (M20X2.5X60-MM)	
	5	1	**507-6641**	1	SUPPORT AS	
	6	1	**540-4237**	1	SUPPORT AS	

M - METRIC PART

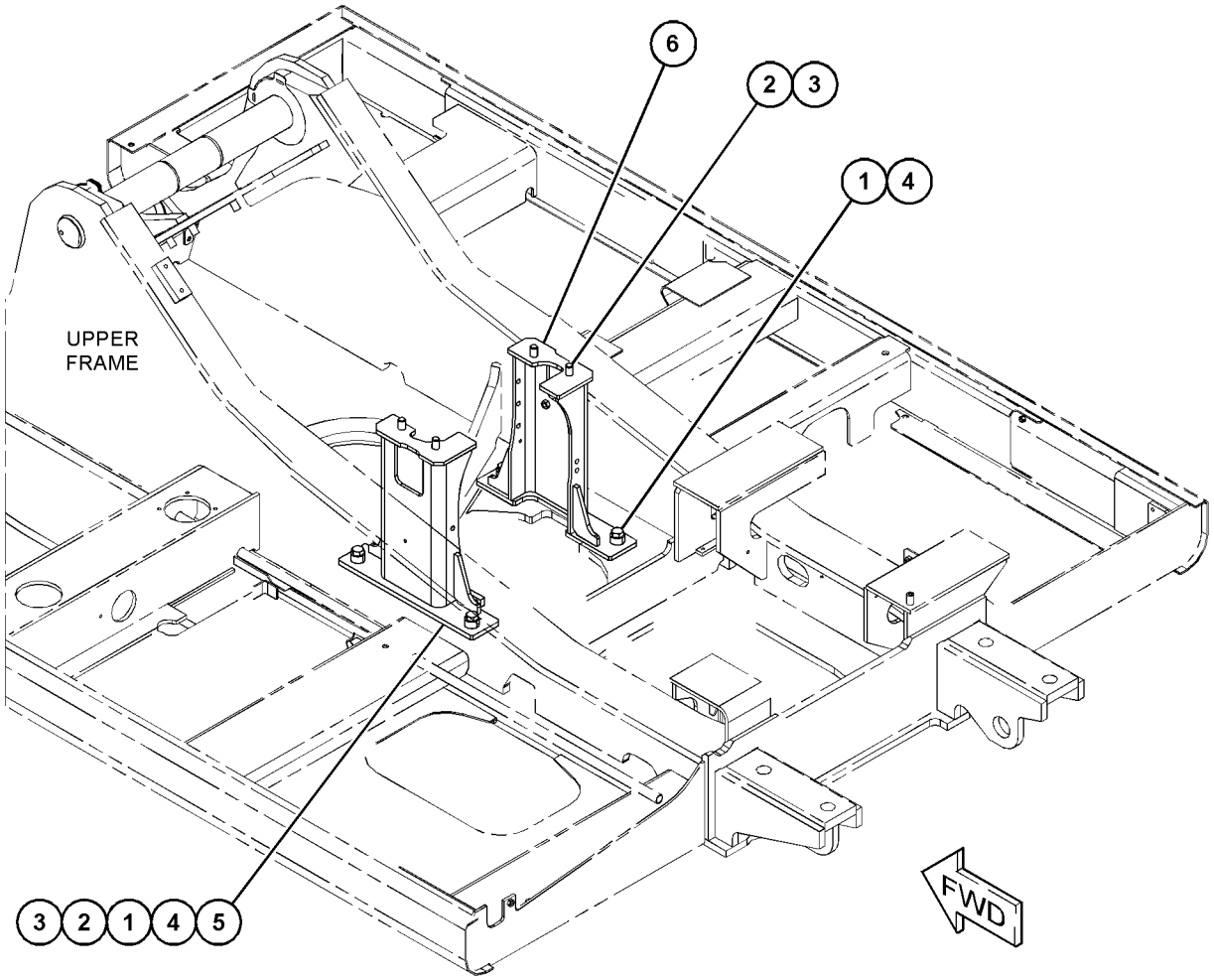

GRAPHIC #1 <END> g06231411

512-6143 PLUG GP-CONTROL VALVE–MOUNTING

S/N: BR61-UP

PART OF 556-2902 DISTRIBUTION AR

SMCS-5051 **i07352515**

NOTE	REF NO	GRAPHIC REF	PART NUMBER	QTY	PART NAME 1 2 3 4 5 6 (PRODUCT LEVEL)	SEE PAGE
	1	1	*366-4699*	3	PLUG AS	
					(EACH INCLUDES)	
		1	**3J-1907**	1	SEAL-O-RING	
		1	**360-3692**	1	PLUG	

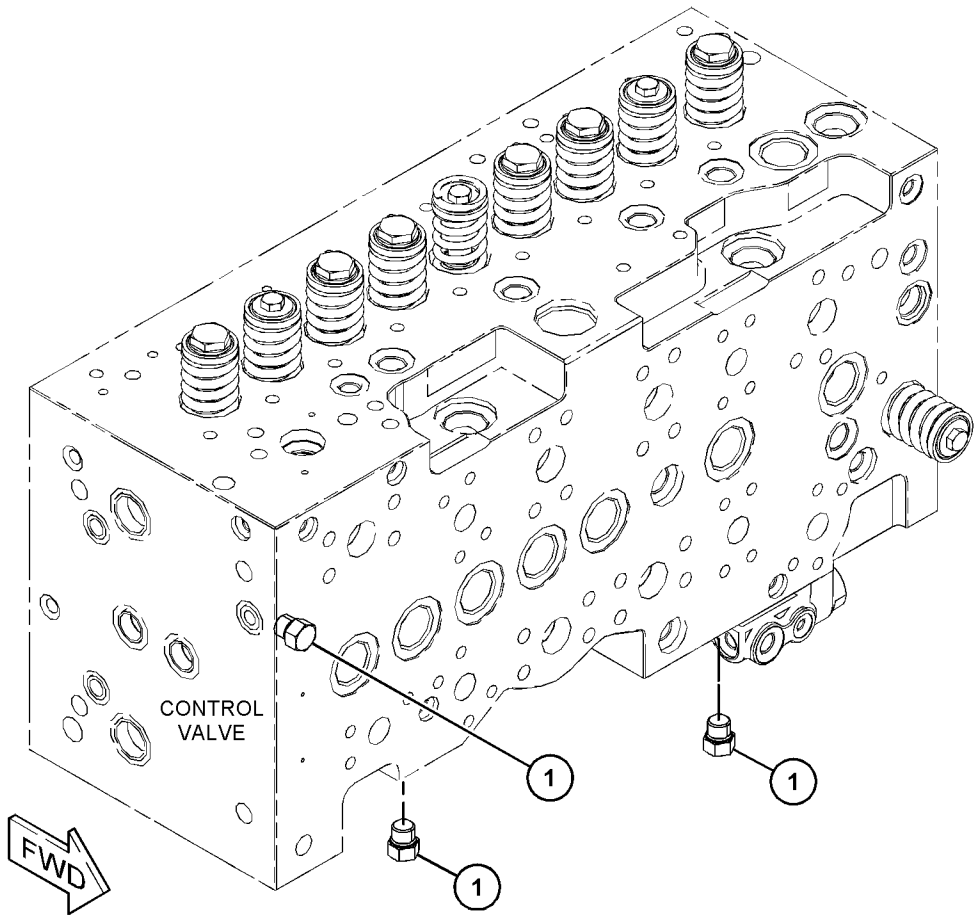

GRAPHIC #1 <END> g06229705

489-3484 PUMP & MTG GP-MAIN HYDRAULIC

S/N: BR61-UP

PART OF 514-4877 HYDRAULIC AR

SMCS-5070 **i07369349**

NOTE	REF NO	GRAPHIC REF	PART NUMBER	QTY	PART NAME 1 2 3 4 5 6 (PRODUCT LEVEL)	SEE PAGE
M	1	1	**8T-4195**	12	BOLT (M10X1.5X30-MM)	
	2	1	**8T-4121**	12	WASHER-HARD (11X21X2.5-MM THK)	
Y	3	1	**531-9886**	1	PUMP GP-MAIN HYDRAULIC	504

M - METRIC PART
Y - SEPARATE ILLUSTRATION

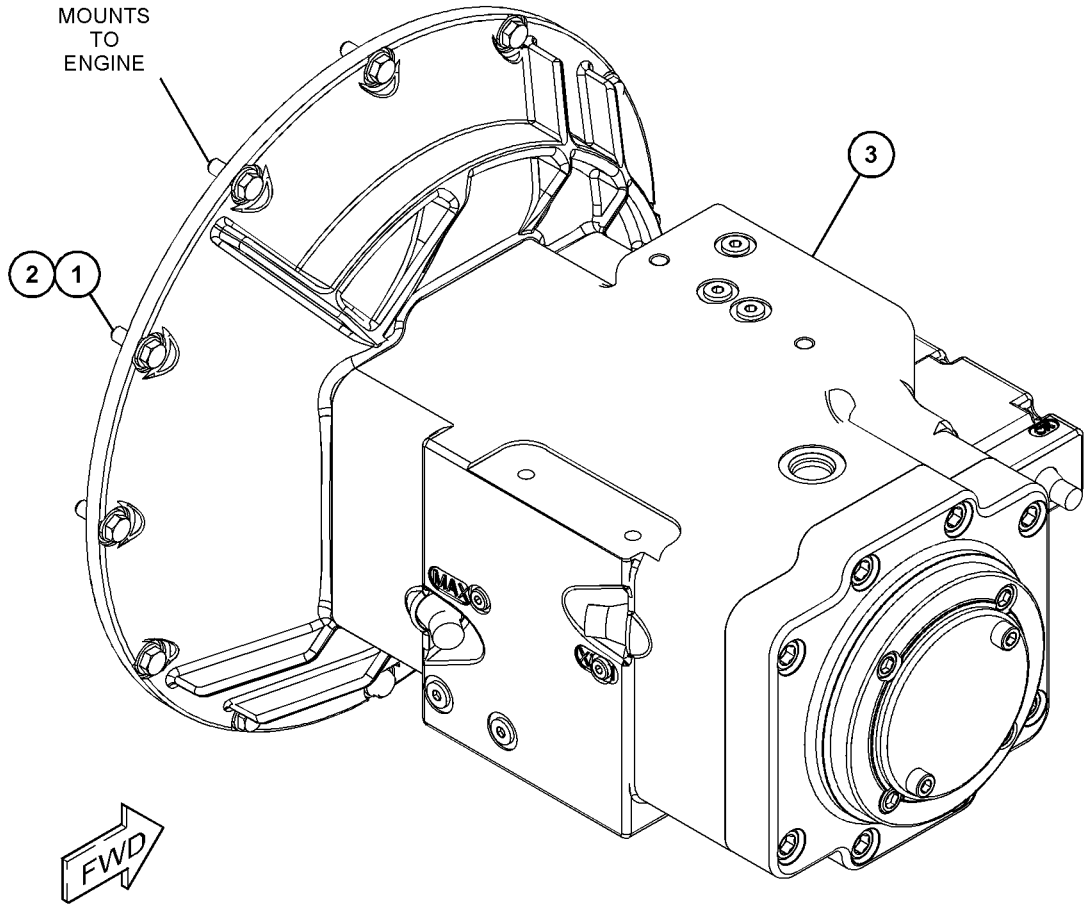

GRAPHIC #1 <END> g06231046

531-9886 PUMP GP-MAIN HYDRAULIC—DOUBLE PISTON

S/N: BR61-UP

PART OF 489-3484 PUMP & MTG GP-MAIN HYDRAULIC

SMCS-5070 **i07377600**

NOTE	REF NO	GRAPHIC REF	PART NUMBER	QTY	PART NAME 1 2 3 4 5 6 (PRODUCT LEVEL)	SEE PAGE
Y	1	1	*543-3690*	1	SWASHPLATE GP	509
Y	2	1	*543-3692*	2	CONTROL AS-PISTON PUMP	381
Y	3	1	*543-3689*	1	SHAFT & CPLG GP-PISTON PUMP (MAIN HYDRAULIC)	508
Y	4	1	*543-3694*	2	VALVE GP-PUMP CONTROL	534
Y	5	1	*543-3691*	1	SWASHPLATE GP	510
Y	6	1	*543-3693*	1	COVER GP-PUMP	384
	7	1	**517-2780**	1	RING-RETAINING	
	8	1	**543-3698**	1	SEAL-LIP TYPE	
	9	1	**9T-3743**	2	SHIM (1-MM THK)	
M	10	1	**095-0687**	16	BOLT-SOCKET HEAD (M14X2X45-MM)	
	11	1	**543-3745**	1	FLANGE	
Y	12	1	**543-3687**	1	ROTATING GP-PUMP	506
	13	1	**465-4551**	4	PIN-CYLINDER	
	14	1	**543-3697**	2	GASKET	
Y	15	1	**543-3688**	1	ROTATING GP-PUMP	507
	16	1	**543-3696**	1	BLOCK	
	17	1	**469-3314**	1	SEAL-O-RING	
	18	1	**543-3699**	1	COVER	
M	19	1	**6V-3938**	2	BOLT (M10X1.5X20-MM)	

M - METRIC PART
Y - SEPARATE ILLUSTRATION

531-9886 **PUMP GP-MAIN HYDRAULIC (**contd.**)** **i07377600**

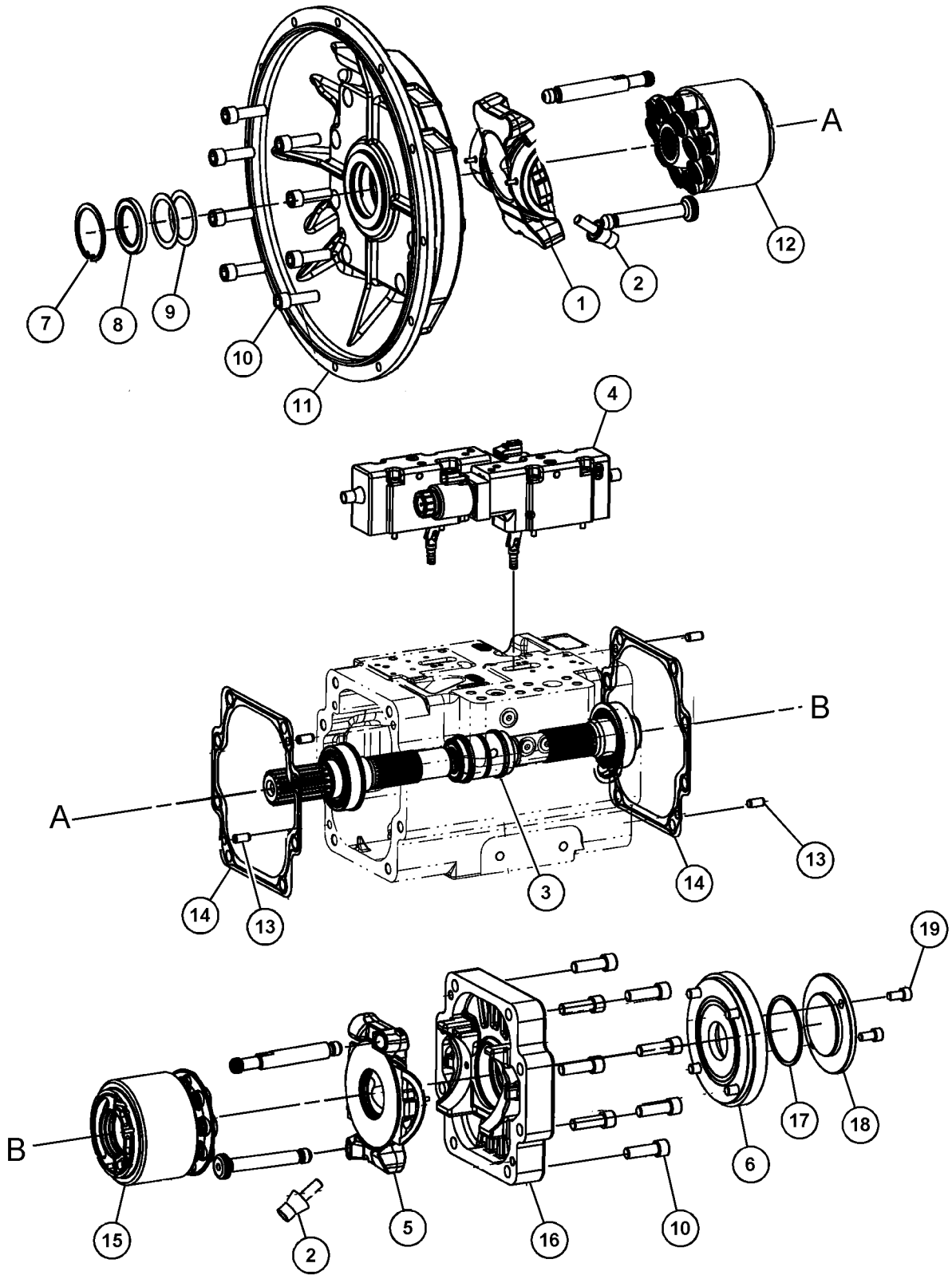

GRAPHIC #1 <END> g06288132

543-3687 ROTATING GP-PUMP

S/N: BR61-UP

PART OF 531-9886 PUMP GP-MAIN HYDRAULIC

SMCS-5070 **i07359753**

NOTE	REF NO	GRAPHIC REF	PART NUMBER	QTY	PART NAME 1 2 3 4 5 6 (PRODUCT LEVEL)	SEE PAGE
	1	1	**543-3703**	1	PLATE-RETAINING	
	2	1	**543-3701**	9	PISTON AS	
	3	1	**179-6916**	20	SPRING	
	4	1	**543-3705**	2	PLATE	
	5	1	**543-3706**	1	RING-RETAINING	
	6	1	**543-3700**	1	BARREL	
	7	1	**202-6535**	1	PIN	
	8	1	**543-3704**	1	PLATE-CONTROL	
	9	1	**6E-4373**	1	SPRING	
	10	1	**543-3707**	1	PLATE	
	11	1	**543-3702**	1	GUIDE-BALL	

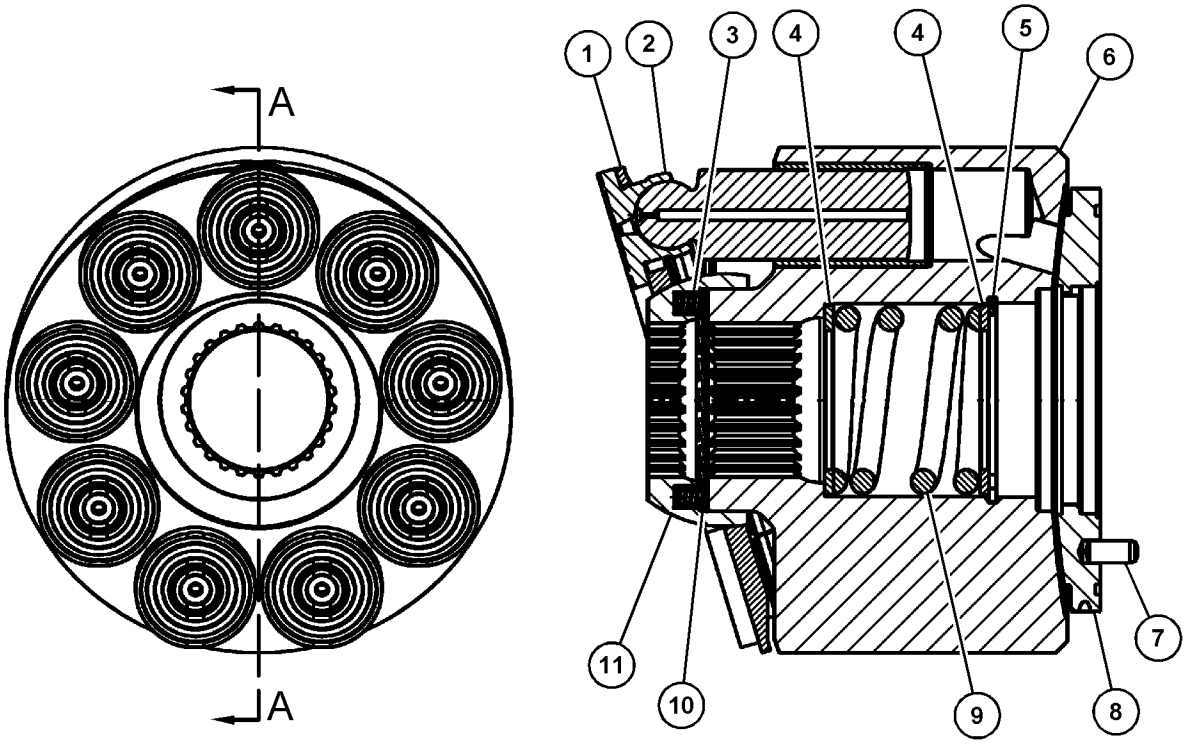

SECTION A-A

GRAPHIC #1 <END> g06235037

543-3688 ROTATING GP-PUMP

S/N: BR61-UP

PART OF 531-9886 PUMP GP-MAIN HYDRAULIC

SMCS-5070 **i07359910**

NOTE	REF NO	GRAPHIC REF	PART NUMBER	QTY	PART NAME 1 2 3 4 5 6 (PRODUCT LEVEL)	SEE PAGE
	1	1	**543-3703**	1	PLATE-RETAINING	
	2	1	**543-3701**	9	PISTON AS	
	3	1	**179-6916**	20	SPRING	
	4	1	**543-3705**	2	PLATE	
	5	1	**543-3706**	1	RING-RETAINING	
	6	1	**543-3700**	1	BARREL	
	7	1	**202-6535**	1	PIN	
	8	1	**543-3708**	1	PLATE-CONTROL	
	9	1	**6E-4373**	1	SPRING	
	10	1	**543-3707**	1	PLATE	
	11	1	**543-3702**	1	GUIDE-BALL	

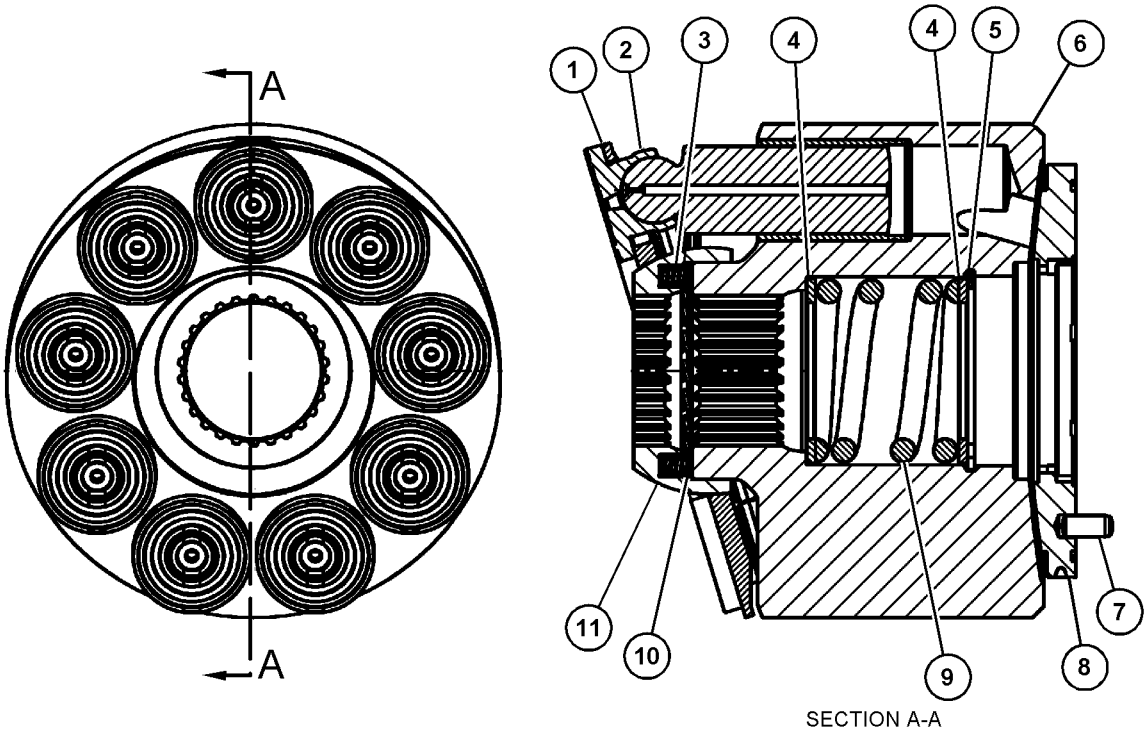

SECTION A-A

GRAPHIC #1 <END> g06236523

543-3689 SHAFT & CPLG GP-PISTON PUMP–MAIN HYDRAULIC

S/N: BR61-UP

PART OF 531-9886 PUMP GP-MAIN HYDRAULIC

SMCS-5070 **i07359572**

NOTE	REF NO	GRAPHIC REF	PART NUMBER	QTY	PART NAME 1 2 3 4 5 6 (PRODUCT LEVEL)	SEE PAGE
	1	1	**543-3709**	1	SHAFT-FRONT	
	2	1	**199-7560**	1	RING-RETAINING	
	3	1	**543-3712**	1	COUPLING	
	4	1	**543-3710**	1	SHAFT-REAR	
	5	1	**543-3711**	2	SLEEVE AS	
	6	1	**543-3713**	2	BEARING-ROLLER	
	7	1	**6V-5590**	2	RING-RETAINING	
	8	1	**6V-5204**	2	RING-RETAINING	

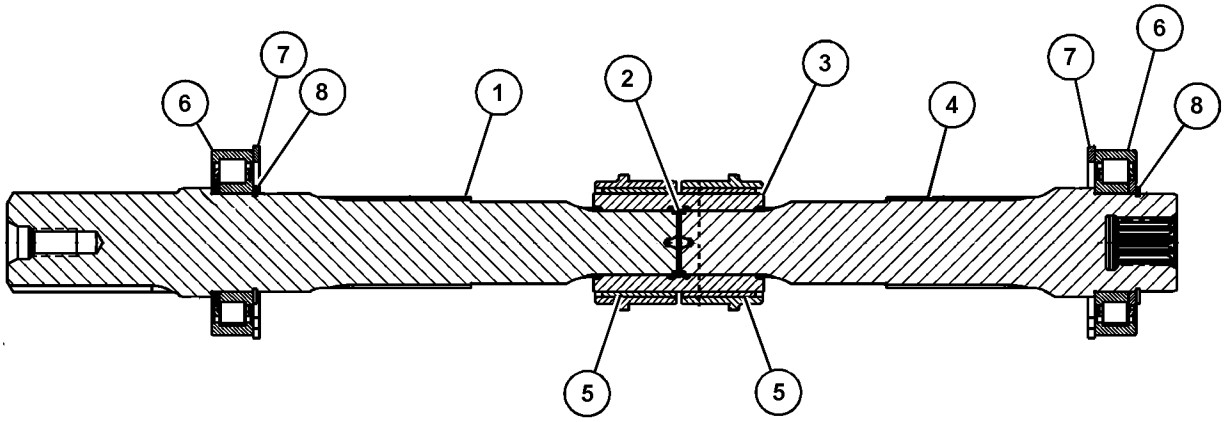

GRAPHIC #1 <END> g06287206

543-3690 SWASHPLATE GP

S/N: BR61-UP

PART OF 531-9886 PUMP GP-MAIN HYDRAULIC

SMCS-5070 **i07359195**

NOTE	REF NO	GRAPHIC REF	PART NUMBER	QTY	PART NAME 1 2 3 4 5 6 (PRODUCT LEVEL)	SEE PAGE
	1	1	**543-3714**	1	SWASHPLATE AS	
	2	1	**543-3716**	1	LINER-BEARING	
	3	1	**543-3717**	1	LINER-BEARING	
	4	1	**543-3715**	1	PLATE	
	5	1	**543-3718**	2	SCREW (M5X16-MM)	

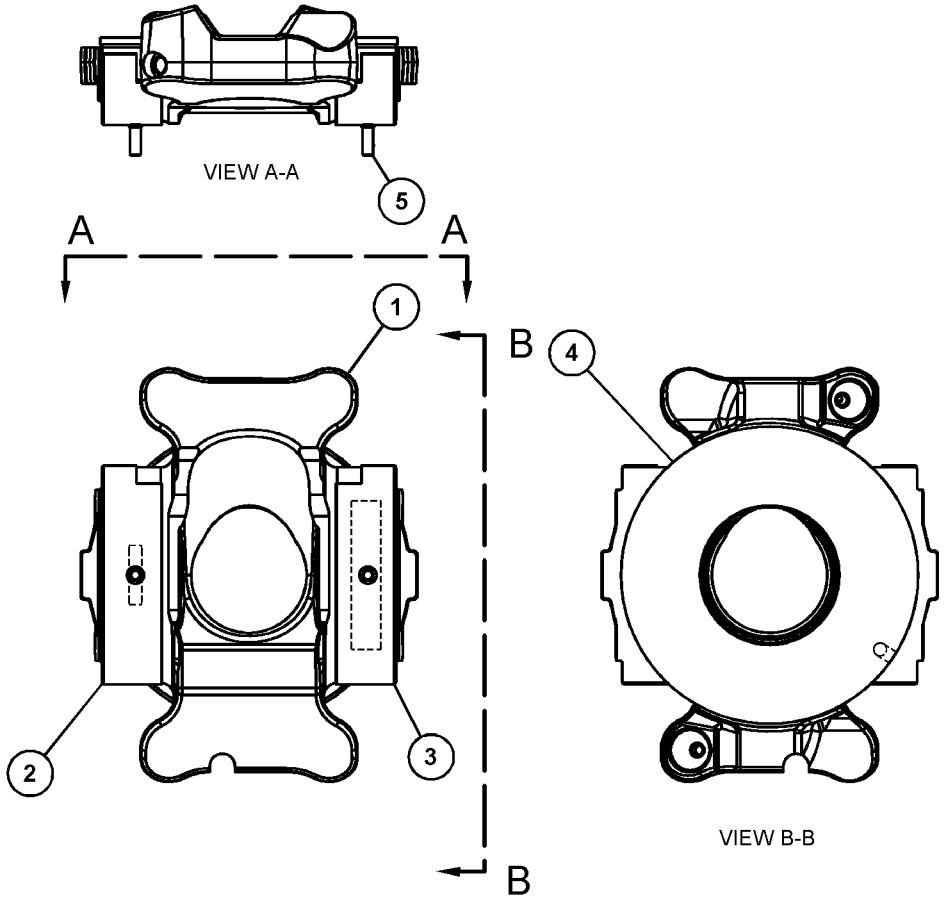

GRAPHIC #1 <END> g06271493

543-3691 SWASHPLATE GP

S/N: BR61-UP

PART OF 531-9886 PUMP GP-MAIN HYDRAULIC

SMCS-5070 **i07359720**

NOTE	REF NO	GRAPHIC REF	PART NUMBER	QTY	PART NAME 1 2 3 4 5 6 (PRODUCT LEVEL)	SEE PAGE
	1	1	**543-3719**	1	SWASHPLATE AS	
	2	1	**543-3720**	1	LINER-BEARING	
	3	1	**543-3721**	1	LINER-BEARING	
	4	1	**543-3715**	1	PLATE	
	5	1	**543-3718**	2	SCREW (M5X16-MM)	

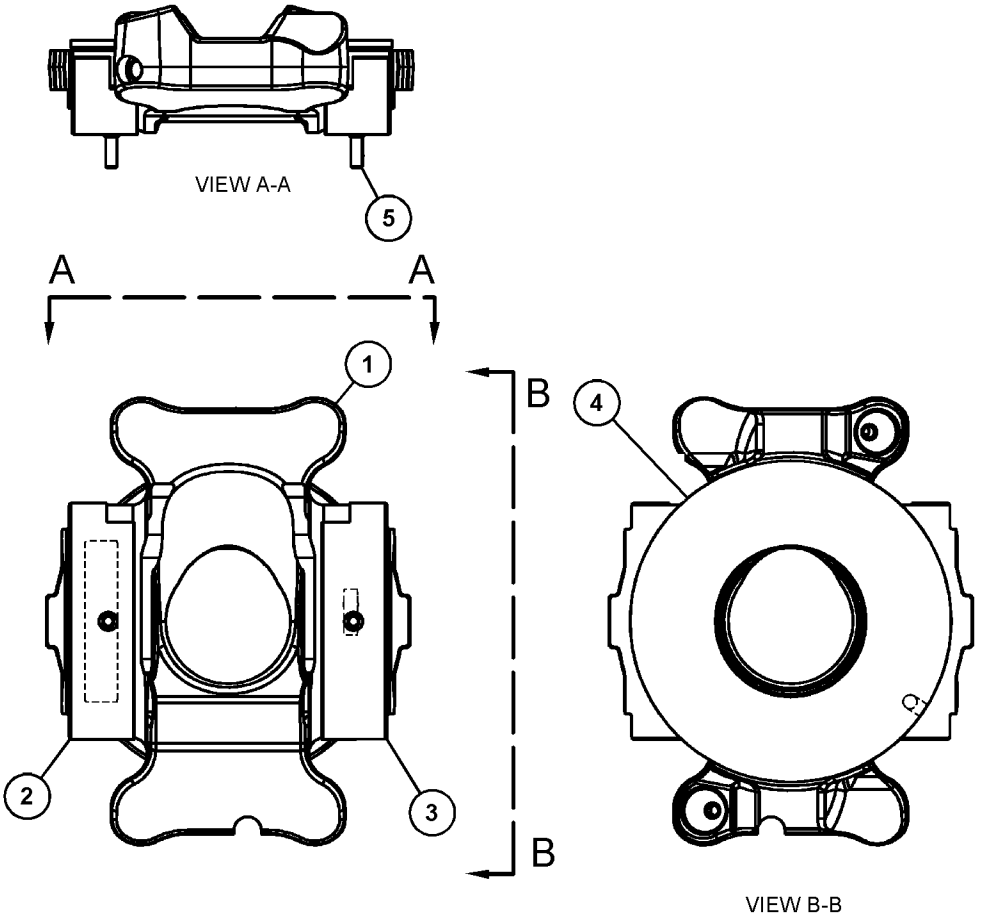

GRAPHIC #1 <END> g06271526

488-8576 SWIVEL & MOUNTING GP

S/N: BR61-UP

PART OF 514-4877 HYDRAULIC AR

SMCS-5060 **i07359931**

NOTE	REF NO	GRAPHIC REF	PART NUMBER	QTY	PART NAME 1 2 3 4 5 6 (PRODUCT LEVEL)	SEE PAGE
M	1	1	**451-2181**	2	BOLT (M12X1.75X30-MM)	
M	2	1	**453-3440**	6	BOLT (M10X1.5X30-MM)	
	3	1	**453-3454**	6	WASHER-HARD (11X21X2.5-MM THK)	
	4	1	**453-3456**	2	WASHER-HARD (13.5X25.5X5-MM THK)	
Y	5	1	**490-3995**	1	SWIVEL GP	512
	6	1	**508-9757**	1	STOPPER	

M - METRIC PART
Y - SEPARATE ILLUSTRATION

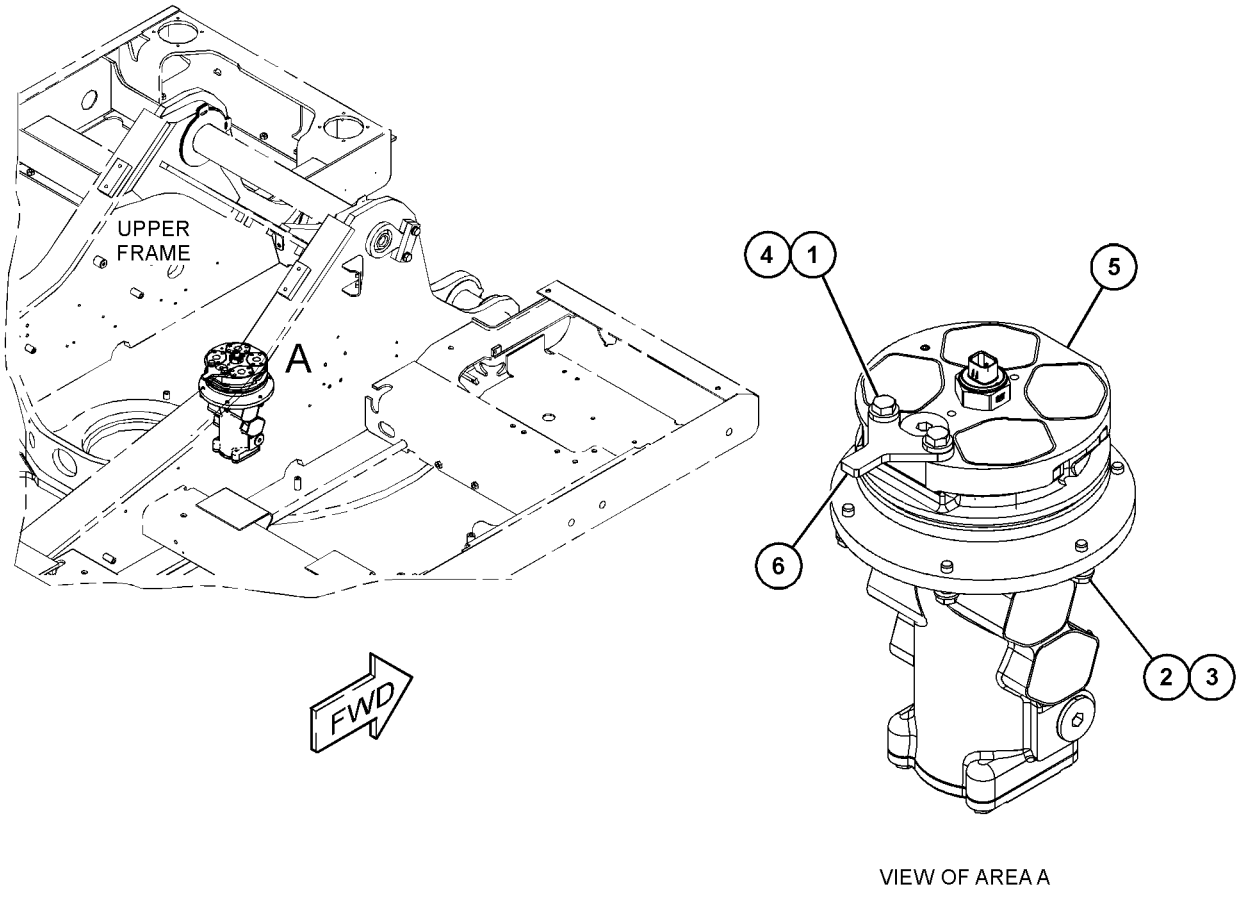

VIEW OF AREA A

GRAPHIC #1 <END> g06230909

490-3995 SWIVEL GP

S/N: BR61-UP

PART OF 488-8576 SWIVEL & MOUNTING GP

SMCS-5060 **i07359937**

NOTE	REF NO	GRAPHIC REF	PART NUMBER	QTY	PART NAME 1 2 3 4 5 6 (PRODUCT LEVEL)	SEE PAGE
	1	1	**162-4694**	5	SEAL-RING	
	2	1	**453-3454**	2	WASHER-HARD (11X21X2.5-MM THK)	
M	3	1	**455-3798**	6	BOLT (M10X1.5X25-MM)	
	4	1	**487-5859**	1	SENSOR GP-POSITION (SWING)	
		1	**238-5084**	1	SEAL-O-RING	
	5	1	**487-5860**	1	SENSOR-POSITION	
	6	1	**490-3996**	1	HOUSING-SWIVEL	
	7	1	**490-3997**	1	ROTOR-SWIVEL	
	8	1	**490-3999**	1	RETAINER	
	9	1	**492-2080**	1	COVER AS-SHAFT	
	10	1	**095-1623**	2	SEAL-O-RING	
	11	1	**095-1714**	1	SEAL-O-RING	
	12	1	**8T-6759**	2	PLUG-PIPE	

M - METRIC PART

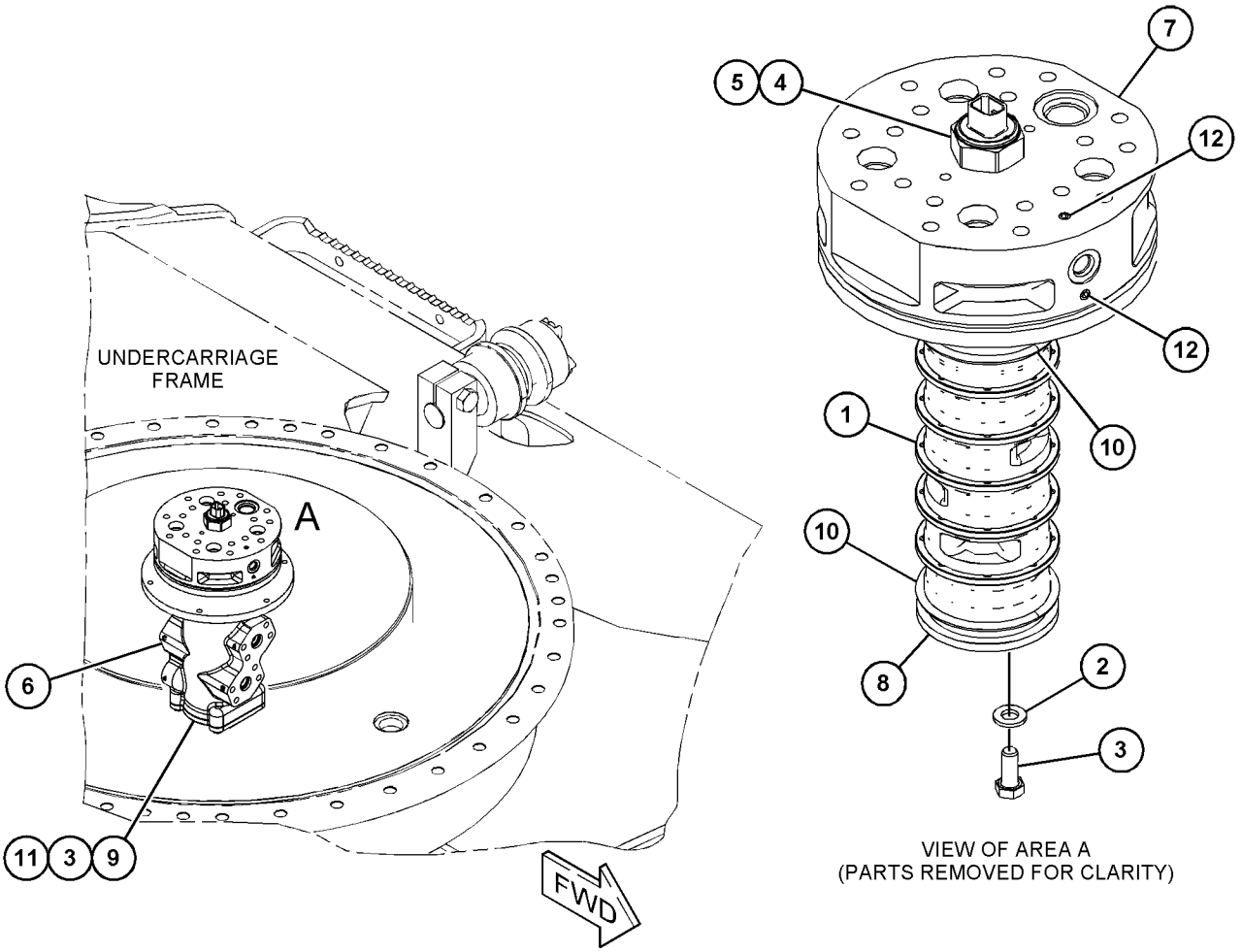

GRAPHIC #1 <END> g06230919

489-2942 TANK & FILTER GP-HYDRAULIC

S/N: BR61-UP

PART OF 489-2941 TANK GP-HYDRAULIC

SMCS-5056, 5068 **i07376590**

NOTE	REF NO	GRAPHIC REF	PART NUMBER	QTY	PART NAME 1 2 3 4 5 6 (PRODUCT LEVEL)	SEE PAGE
	1	1	**1U-2827**	1	GUIDE-VALVE	
	2	1	**8J-8782**	1	BODY-DRAIN VALVE	
	3	1	**8J-8783**	1	VALVE-DRAIN	
	4	1	**9J-7031**	1	PLUG-DRAIN	
	5	1	**165-3256**	1	PIPE AS	
Y	6	1	**256-6453**	1	SENSOR-TEMPERATURE (2-PIN)	220
Y	7	1	**347-6081**	1	GAUGE GP-SIGHT (HYDRAULIC OIL LEVEL)	417
Y	8	1	**488-8581**	1	FILTER GP-OIL (RETURN)	416
	9	1	**491-6075**	1	FILTER GP-OIL (HYDRAULIC CASE DRAIN)	
		1	**6K-6307**	1	SEAL-O-RING	
	10	1	**491-7102**	1	SCREEN GP-HYDRAULIC	
	11	1	**492-0469**	1	PIPE	
	12	1	**492-3014**	1	BREATHER GP	
	13	1	**504-9586**	1	SWITCH AS-DIFF PRESSURE (RETURN FILTER)	
		1	**8T-8729**	2	PIN-CONNECTOR (16-GA TO 18-GA)	
		1	**192-7510**	1	SEAL-O-RING	
		1	**512-4914**	1	SEAL-FACE	
	14	1	**519-8217**	1	COVER AS	
	16	1	**541-2739**	1	PIPE AS	
	17	1	**095-1730**	1	SEAL-O-RING	
M	18	1	**105-3484**	4	BOLT-SOCKET HEAD (M10X1.5X25-MM)	
	19	1	**175-6176**	1	SEAL-O-RING	
	20	1	**175-7896**	1	SEAL-O-RING	
	21	1	**3K-0360**	1	SEAL-O-RING	
	22	1	**4J-0527**	1	SEAL-O-RING	
M	23	1	**5C-9553**	3	BOLT (M6X1X16-MM)	
	24	1	**5M-2057**	1	SEAL-O-RING	
	25	1	**6D-9157**	1	SEAL-O-RING	
	26	1	**7B-3039**	1	SPRING	
M	27	1	**8T-0267**	2	BOLT-SOCKET HEAD (M6X1X12-MM)	
	28	1	**8T-3298**	1	SEAL-RECTANGULAR	
	29	1	**8T-4121**	8	WASHER-HARD (11X21X2.5-MM THK)	
M	30	1	**8T-4137**	6	BOLT (M10X1.5X20-MM)	
M	31	1	**8T-4196**	2	BOLT (M10X1.5X35-MM)	
	32	1	**8T-4223**	4	WASHER-HARD (13.5X25.5X3-MM THK)	
M	33	1	**8T-4910**	4	BOLT (M12X1.75X60-MM)	
	34	1	**9X-8256**	3	WASHER (6.6X12X2-MM THK)	

M - METRIC PART
Y - SEPARATE ILLUSTRATION

489-2942 **TANK & FILTER GP-HYDRAULIC (**contd.**)** **i07376590**

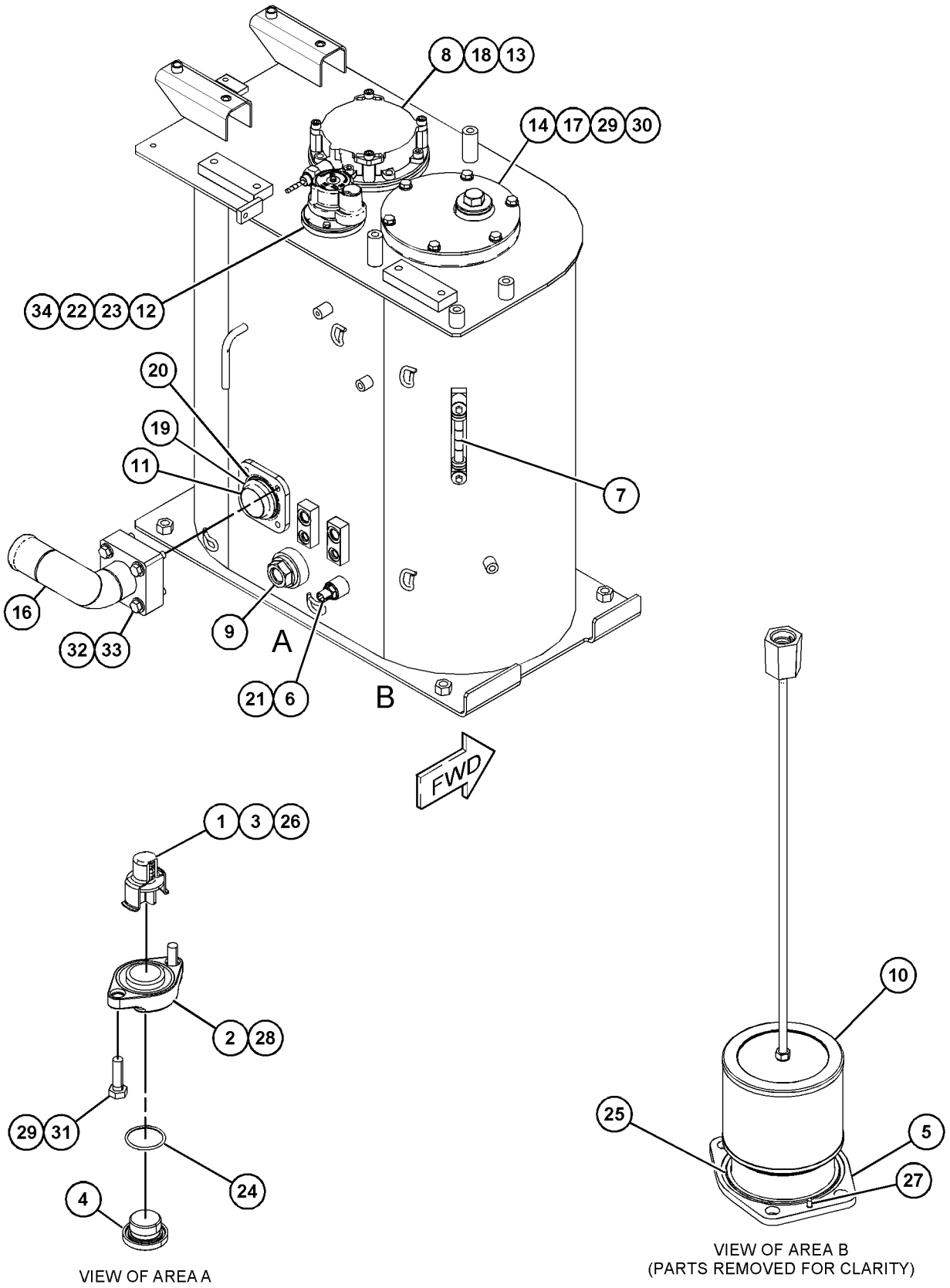

VIEW OF AREA A

VIEW OF AREA B
(PARTS REMOVED FOR CLARITY)

GRAPHIC #1 <END> g06278032

489-2940 TANK & MTG GP-HYDRAULIC

S/N: BR61-UP

PART OF 514-4877 HYDRAULIC AR

SMCS-5056 **i07359942**

NOTE	REF NO	GRAPHIC REF	PART NUMBER	QTY	PART NAME 1 2 3 4 5 6 (PRODUCT LEVEL)	SEE PAGE
	1	1	**085-9310**	4	SPACER (16.6X32X26-MM THK)	
M	2	1	**447-1707**	4	BOLT (M16X2X60-MM)	
Y	3	1	*489-2941*	1	TANK GP-HYDRAULIC	516

M - METRIC PART
Y - SEPARATE ILLUSTRATION

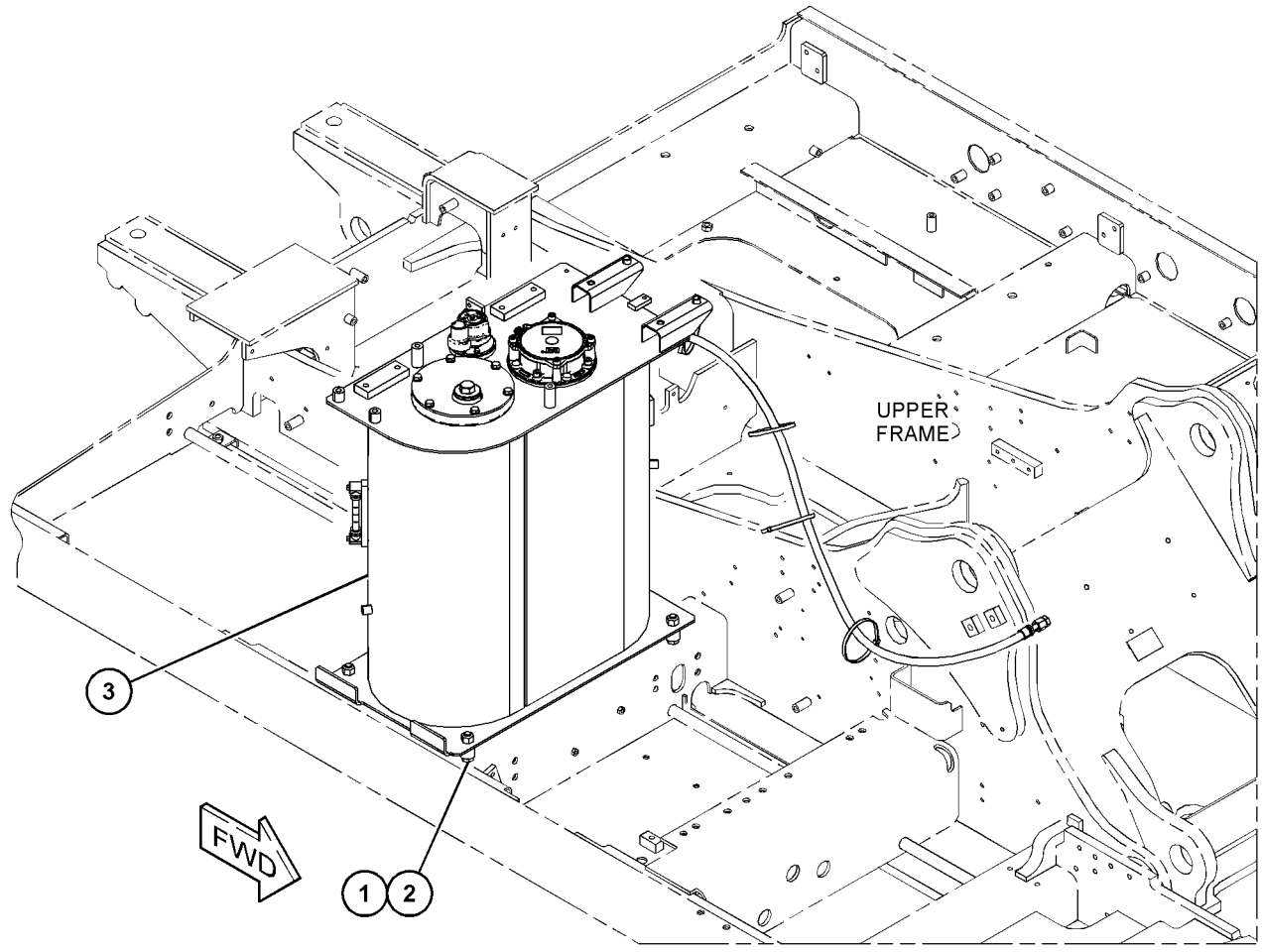

GRAPHIC #1 <END> g06233166

489-2941 TANK GP-HYDRAULIC

S/N: BR61-UP

PART OF 489-2940 TANK & MTG GP-HYDRAULIC

SMCS-5056, 5068, 7479 **i07359945**

NOTE	REF NO	GRAPHIC REF	PART NUMBER	QTY	PART NAME 1 2 3 4 5 6 (PRODUCT LEVEL)	SEE PAGE
Y	1	1	**489-2942**	1	TANK & FILTER GP-HYDRAULIC	513
Y	2	1	*489-2943*	1	LINES GP-HYDRAULIC	464

Y - SEPARATE ILLUSTRATION

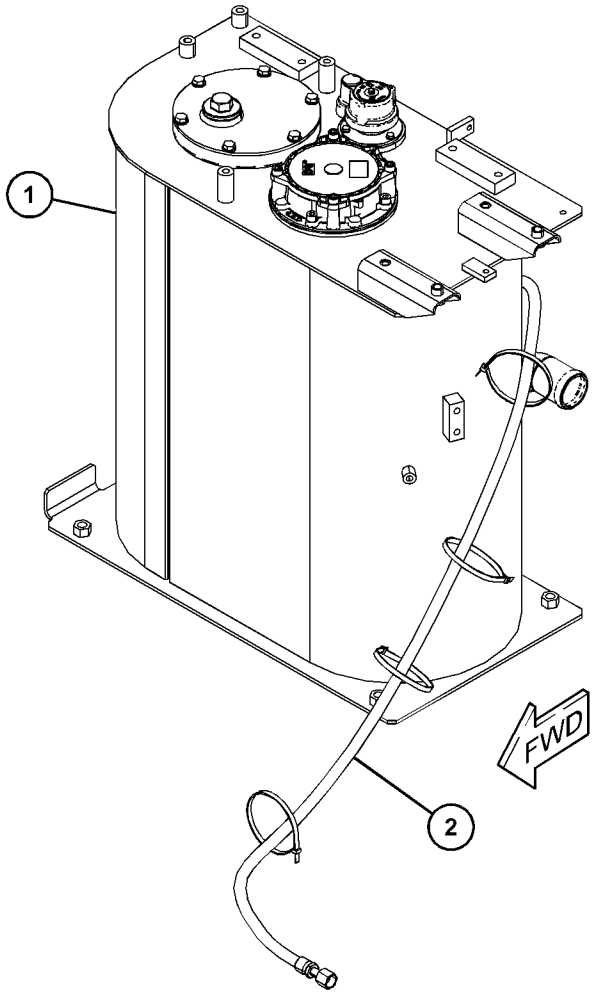

GRAPHIC #1 <END> g06230833

516-8626 VALVE & MTG GP-MAIN CONTROL–AUXILIARY

S/N: BR61-UP

PART OF 490-3949 VALVE AR-MAIN CONTROL

SMCS-5051 **i07376611**

NOTE	REF NO	GRAPHIC REF	PART NUMBER	QTY	PART NAME 1 2 3 4 5 6 (PRODUCT LEVEL)	SEE PAGE
	1	1	**1P-3702**	8	SEAL-RECTANGULAR	
Y	2	1	**516-8631**	2	VALVE GP-CONTROL (AUXILIARY)	525
	3	1	**4J-5309**	3	SEAL-O-RING	
	4	1	**6V-3922**	3	SEAL-O-RING	
	5	1	**7Y-5219**	19	SEAL-O-RING	
	6	1	**096-3044**	8	SEAL-O-RING	
Y	7	1	**516-8628**	1	VALVE GP-MAIN CONTROL (HEAVY LIFT)	529
	8	1	**451-2175**	8	WASHER-HARD (17.5X30X3.5-MM THK)	
M	9	1	**453-2843**	8	BOLT (M16X2X180-MM)	
Y	10	1	**487-5869**	1	COVER GP-VALVE END (MAIN CONTROL VALVE, LH)	385
Y	11	1	**488-7773**	1	COVER GP-VALVE END (MAIN CONTROL VALVE, RH)	386

M - METRIC PART
Y - SEPARATE ILLUSTRATION

516-8626 **VALVE & MTG GP-MAIN CONTROL (**contd.**)** **i07376611**

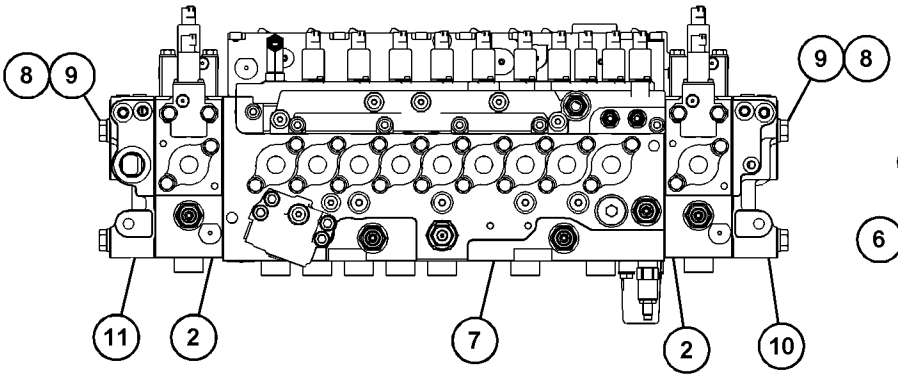

VIEW E-E

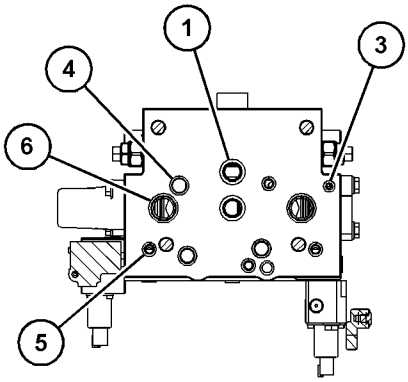

SECTION B-B

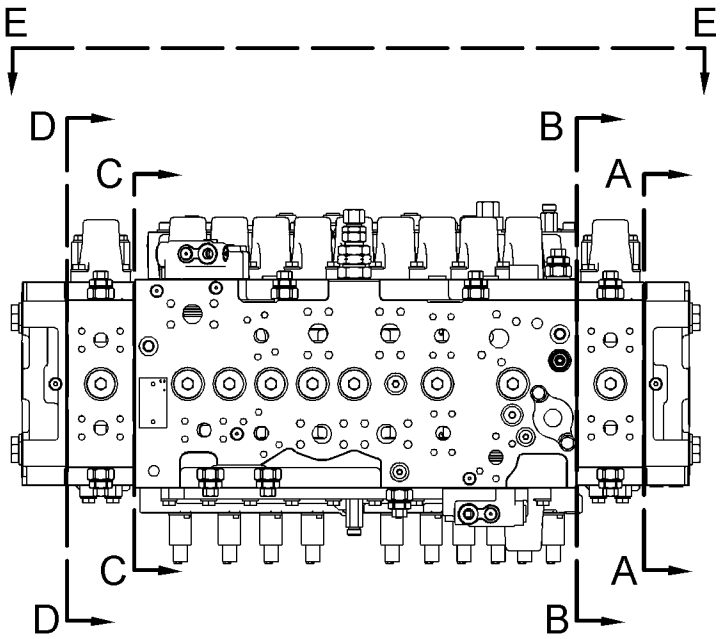

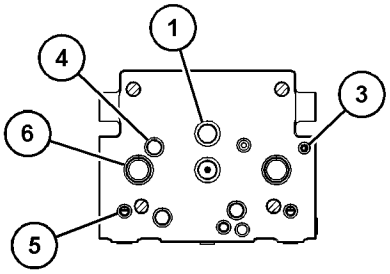

SECTION A-A

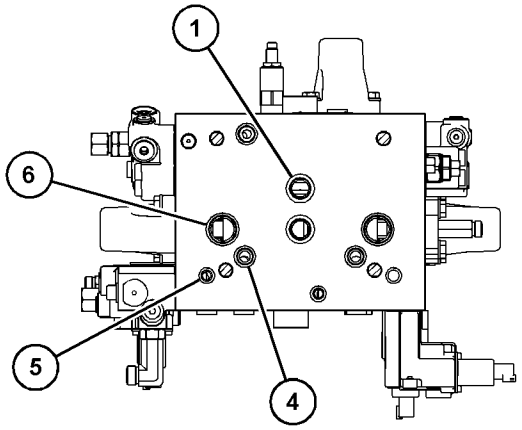

SECTION C-C

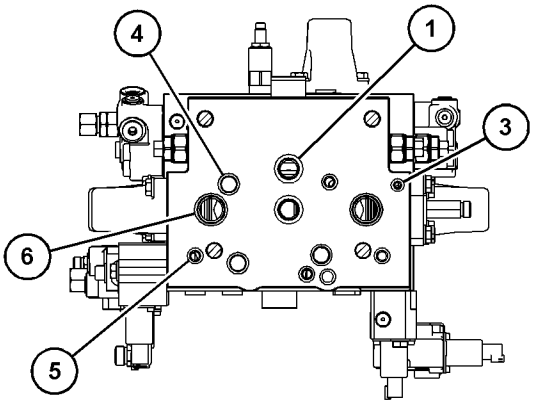

SECTION D-D

GRAPHIC #1 <END> g06233492

491-7697 VALVE & MTG GP-SOLENOID—UPPER

S/N: BR61-UP
WITH BLOCK
PART OF 516-8631 VALVE GP-CONTROL

SMCS-5479 **i07356677**

NOTE	REF NO	GRAPHIC REF	PART NUMBER	QTY	PART NAME 1 2 3 4 5 6 (PRODUCT LEVEL)	SEE PAGE
M	1	1	**8T-3998**	2	BOLT (M4X0.7X12-MM)	
	2	1	*225-4818*	4	PLUG AS	
					(EACH INCLUDES)	
		1	**4J-7533**	1	SEAL-O-RING	
		1	**225-4804**	1	PLUG	
	3	1	**485-5747**	1	VALVE GP-SOLENOID (12-VOLT)	
		1	**509-8010**	1	SEAL-O-RING	
		1	**509-8011**	1	SEAL-O-RING	
		1	**509-8012**	1	SEAL-O-RING	

M - METRIC PART

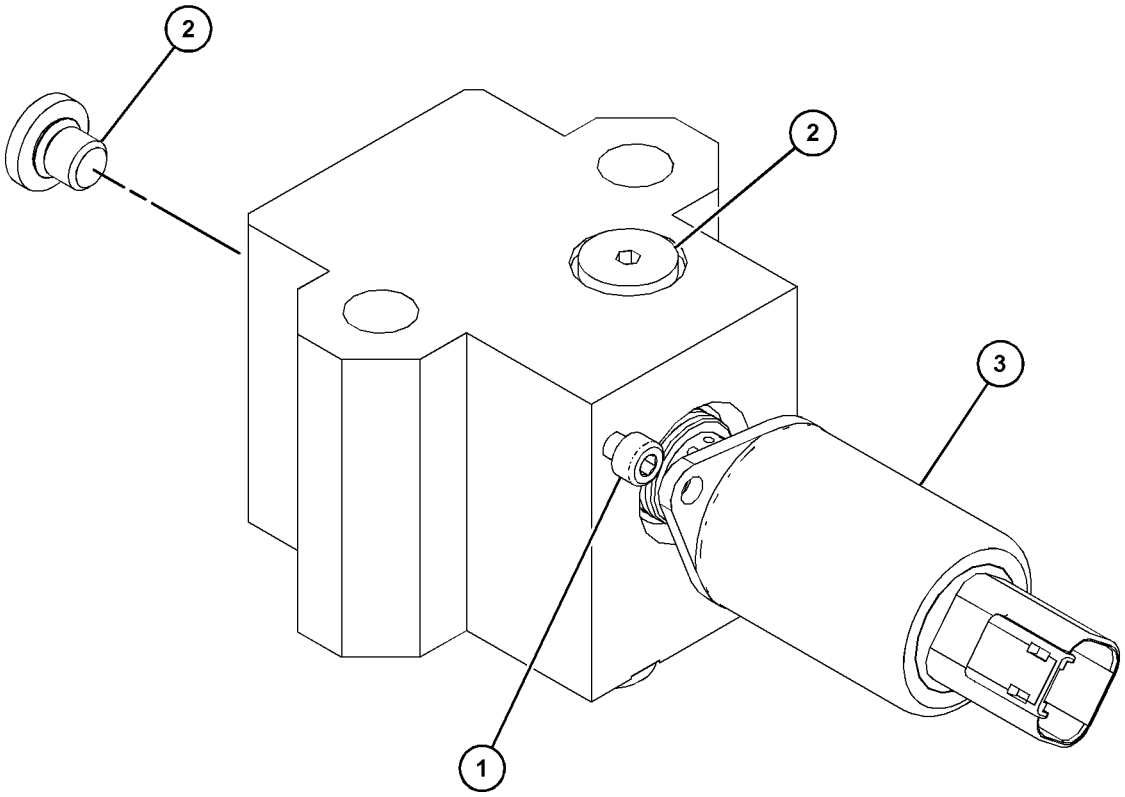

GRAPHIC #1 <END> g06233437

493-4922 VALVE & MTG GP-SOLENOID—LOWER

S/N: BR61-UP
WITH BLOCK
PART OF 516-8631 VALVE GP-CONTROL

SMCS-5479 **i07356681**

NOTE	REF NO	GRAPHIC REF	PART NUMBER	QTY	PART NAME 1 2 3 4 5 6 (PRODUCT LEVEL)	SEE PAGE
M	1	1	**8T-3998**	2	BOLT (M4X0.7X12-MM)	
	2	1	*225-4818*	4	PLUG AS	
					(EACH INCLUDES)	
		1	**4J-7533**	1	SEAL-O-RING	
		1	**225-4804**	1	PLUG	
	3	1	**485-5747**	1	VALVE GP-SOLENOID (12-VOLT)	
		1	**509-8010**	1	SEAL-O-RING	
		1	**509-8011**	1	SEAL-O-RING	
		1	**509-8012**	1	SEAL-O-RING	

M - METRIC PART

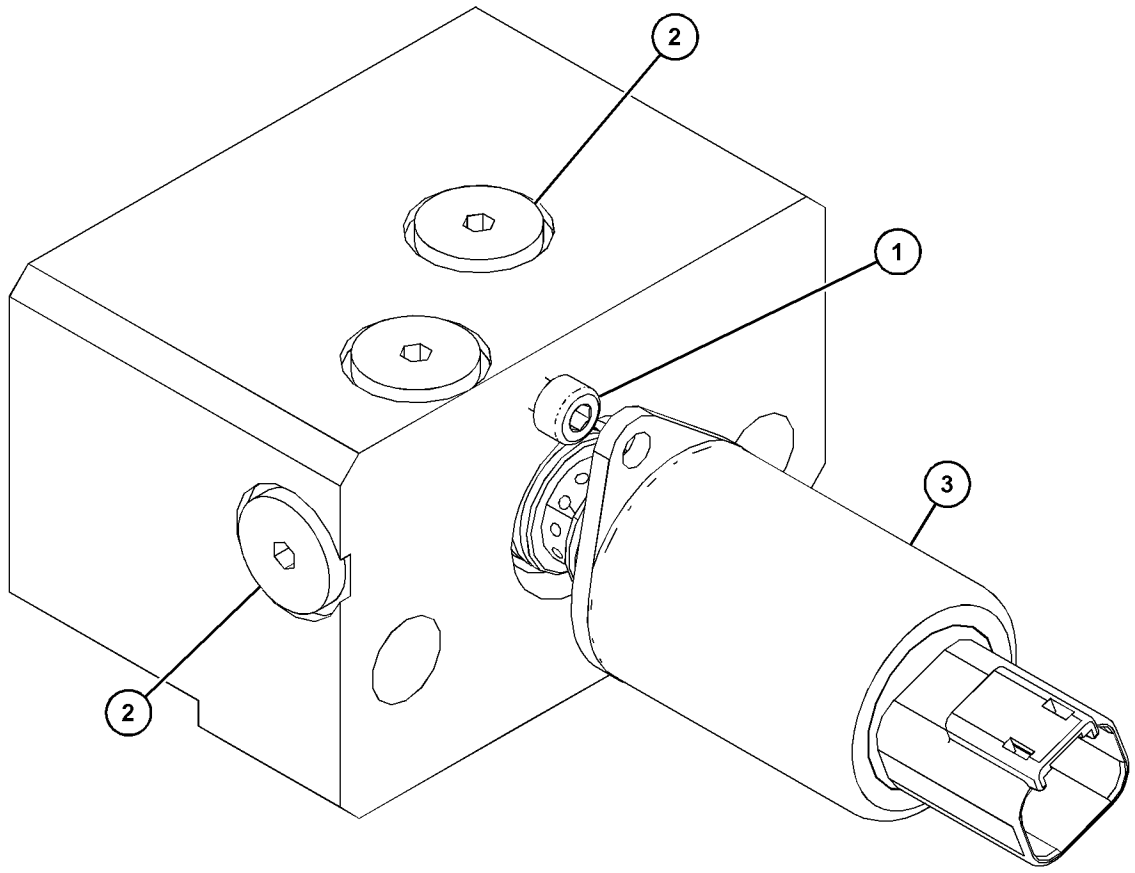

GRAPHIC #1 <END> g06234802

524-0912 VALVE & MTG GP-SOLENOID–ON/OFF

S/N: BR61-UP
WITH BLOCK
PART OF 549-7938 LINES GP-FRONT, 523-6215, 523-6216 LINES GP-PILOT

SMCS-5479 **i07356827**

NOTE	REF NO	GRAPHIC REF	PART NUMBER	QTY	PART NAME 1 2 3 4 5 6 (PRODUCT LEVEL)	SEE PAGE
M	1	1	**8T-3998**	2	BOLT (M4X0.7X12-MM)	
	2	1	**491-0908**	1	VALVE GP-SOLENOID (24-VOLT)	
		1	**509-8010**	1	SEAL-O-RING	
		1	**509-8011**	1	SEAL-O-RING	
		1	**509-8012**	1	SEAL-O-RING	

M - METRIC PART

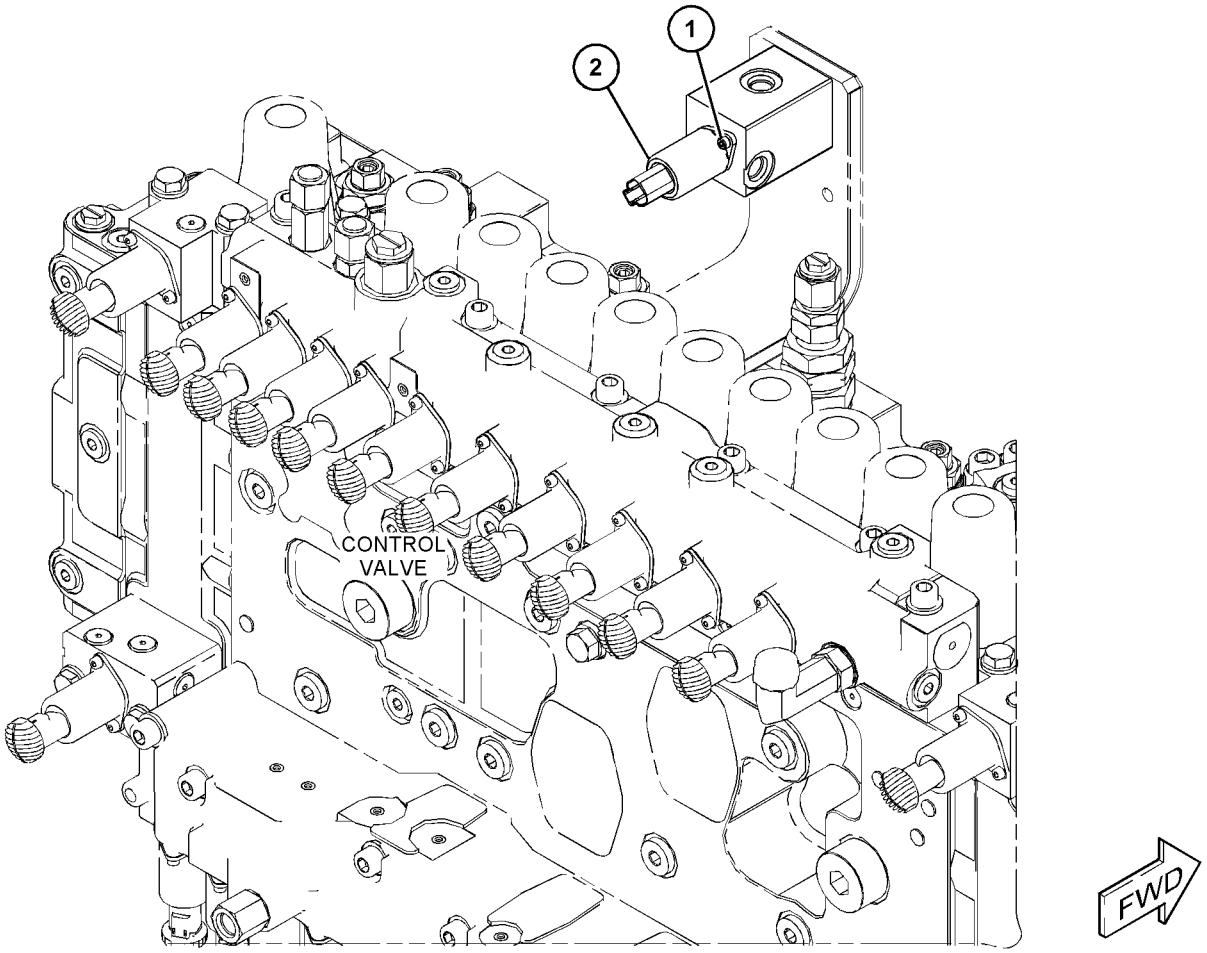

GRAPHIC #1 <END> g06232749

490-3948 VALVE AR-MAIN CONTROL—HEAVY LIFT

S/N: BR61-UP

PART OF 532-9539 OPTION AR-HYDRAULIC

SMCS-5051 **i07361034**

NOTE	PART NUMBER	QTY	PART NAME 1 2 3 4 5 6 (PRODUCT LEVEL)	SEE PAGE
Y	*523-6215*	1	LINES GP-PILOT	475
Y	*516-8625*	1	VALVE GP-MAIN CONTROL (HEAVY LIFT) (HEAVY LIFT)	528
Y	*524-8376*	1	WIRING GP-VALVE (HEAVY LIFT)	279

Y - SEPARATE ILLUSTRATION

<END>

490-3949 VALVE AR-MAIN CONTROL—AUXILIARY

S/N: BR61-UP

PART OF 537-5861 OPTION AR-HYDRAULIC

SMCS-5051 **i07361985**

NOTE	PART NUMBER	QTY	PART NAME 1 2 3 4 5 6 (PRODUCT LEVEL)	SEE PAGE
Y	*523-6216*	1	LINES GP-PILOT	477
Y	**516-8626**	1	VALVE & MTG GP-MAIN CONTROL	517
Y	*524-8376*	1	WIRING GP-VALVE (HEAVY LIFT)	279

Y - SEPARATE ILLUSTRATION

<END>

490-3958 VALVE GP-CHECK–RETURN

S/N: BR61-UP

PART OF 489-2930 LINES GP-HYDRAULIC OIL COOLER

SMCS-5067 **i07362194**

NOTE	REF NO	GRAPHIC REF	PART NUMBER	QTY	PART NAME 1 2 3 4 5 6 (PRODUCT LEVEL)	SEE PAGE
M	1	1	**5A-3604**	4	BOLT-SOCKET HEAD (M8X1.25X25-MM)	
	2	1	**453-3451**	4	WASHER-HARD (8.8X16X2-MM THK)	
	3	1	**095-1599**	2	SEAL-O-RING	
	4	1	**491-3416**	2	VALVE-CHECK	
	5	1	**491-3417**	2	SLEEVE	
	6	1	**491-3418**	2	COVER-VALVE	
	7	1	**491-3419**	1	SPRING-CHECK VALVE	
	8	1	**491-3420**	1	SPRING-CHECK VALVE	
					PARTS SHOWN IN GRAPHIC(S) WITHOUT A REFERENCE NUMBER ARE NOT SERVICED SEPARATELY	

M - METRIC PART

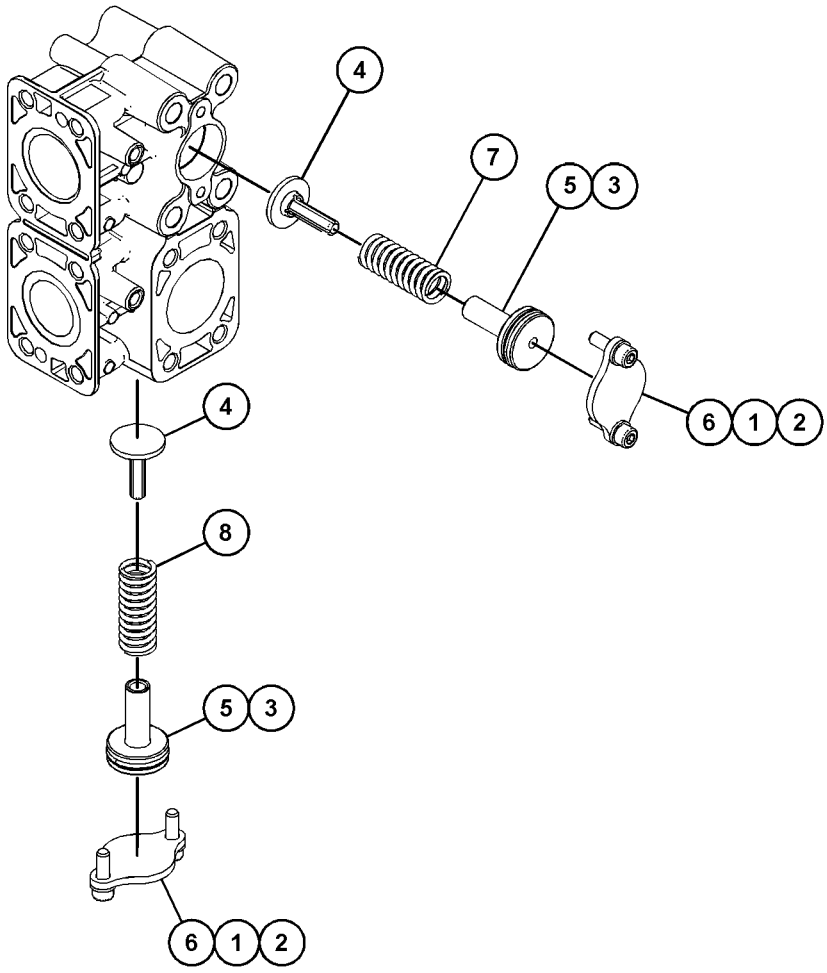

GRAPHIC #1 <END> g06233395

516-8629 VALVE GP-CONTROL—MAIN CONTROL

S/N: BR61-UP

PART OF 516-8628 VALVE GP-MAIN CONTROL

SMCS-5051 **i07356645**

NOTE	REF NO	GRAPHIC REF	PART NUMBER	QTY	PART NAME 1 2 3 4 5 6 (PRODUCT LEVEL)	SEE PAGE
	1	1	**8T-6850**	1	SEAL-O-RING	
	2	1	**3J-1907**	3	SEAL-O-RING	
	3	1	**6E-2271**	22	RETAINER	
	4	1	**9N-0869**	5	WASHER-HARD (8.8X25.5X2-MM THK)	
M	5	1	**153-5276**	6	BOLT-SPECIAL (M10X1.5X82-MM) (M10X1.5X83-MM)	
	6	1	**259-7513**	2	SPRING-CHECK VALVE	
	7	1	**294-7687**	1	SPRING	
	8	1	**352-7057**	8	SPRING-RETURN	
	9	1	**352-7058**	2	SPRING-RETURN	
M	10	1	**453-3432**	5	BOLT (M8X1.25X20-MM)	
	11	1	**463-6984**	2	GUIDE-SPRING	
	12	1	**487-5879**	1	GUIDE-SPRING	
	13	1	**487-5880**	1	VALVE-CHECK	
	14	1	**487-5881**	1	SPRING-CHECK VALVE	
	15	1	**487-8022**	2	VALVE-CHECK	
	16	1	**487-8023**	1	PLUG	

M - METRIC PART

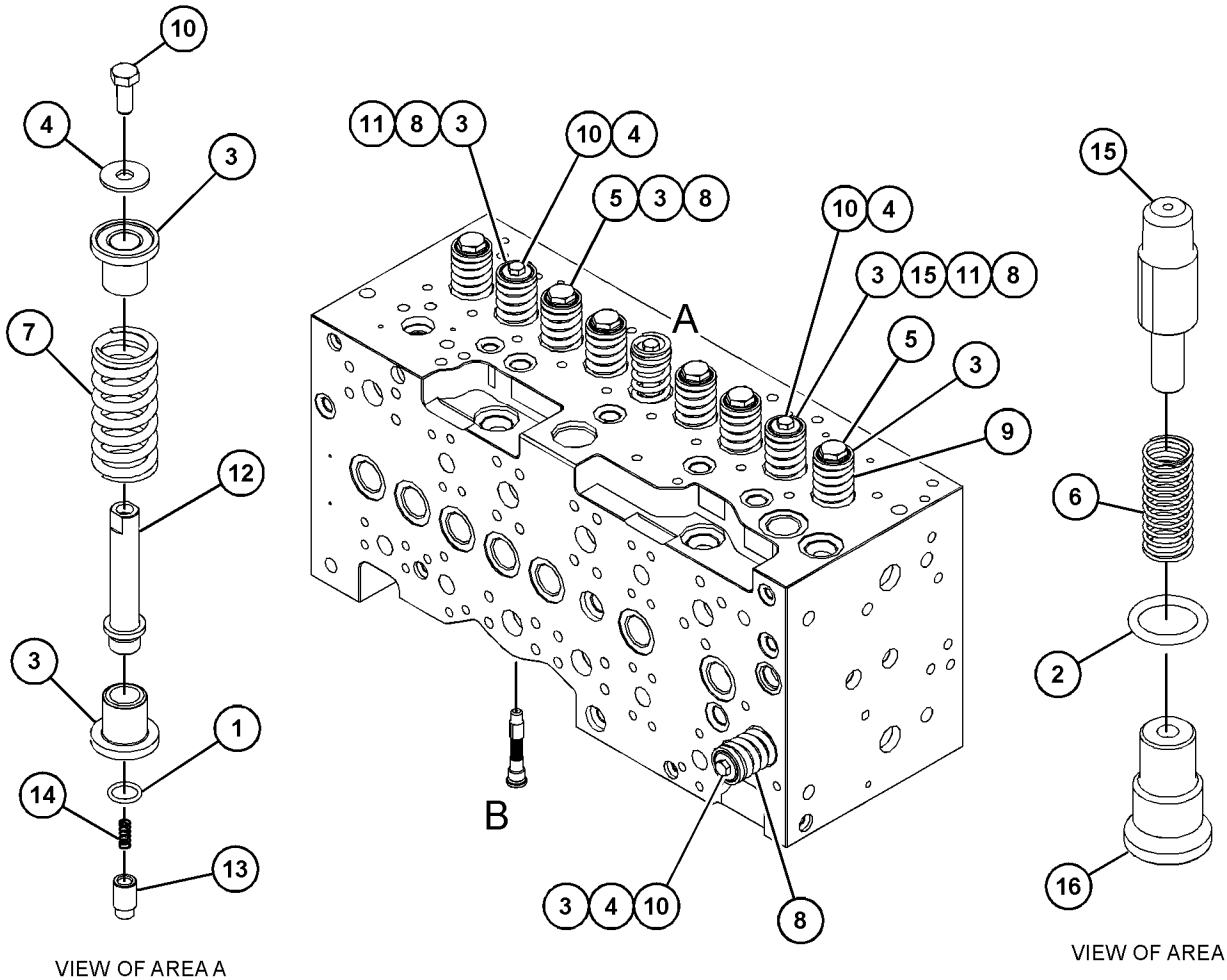

VIEW OF AREA A

VIEW OF AREA B

GRAPHIC #1

<END>

g06235973

516-8631 VALVE GP-CONTROL

S/N: BR61-UP

PART OF 516-8626 VALVE & MTG GP-MAIN CONTROL

SMCS-5051 **i07356674**

NOTE	REF NO	GRAPHIC REF	PART NUMBER	QTY	PART NAME 1 2 3 4 5 6 (PRODUCT LEVEL)	SEE PAGE
M	1	1	**8T-5005**	4	BOLT (M10X1.5X70-MM)	
	2	1	**095-1787**	1	RING-BACKUP	
	3	1	**4J-5309**	7	SEAL-O-RING	
	4	1	**6V-5597**	2	SEAL-O-RING	
	5	1	**7I-1248**	1	SPRING	
	6	1	**095-1590**	1	SEAL-O-RING	
	7	1	*225-4818*	4	PLUG AS	
					(EACH INCLUDES)	
		1	**4J-7533**	1	SEAL-O-RING	
		1	**225-4804**	1	PLUG	
M	8	1	**453-3440**	4	BOLT (M10X1.5X30-MM)	
	9	1	**453-3454**	8	WASHER-HARD (11X21X2.5-MM THK)	
	10	1	**466-0113**	1	VALVE-CHECK	
	11	1	**487-5871**	1	COVER-PILOT	
	12	1	**487-5873**	1	PLUG-CHECK VALVE	
	13	1	**491-7696**	1	COVER-PILOT	
Y	14	1	**491-7697**	1	VALVE & MTG GP-SOLENOID (UPPER)	519
Y	15	1	**493-4922**	1	VALVE & MTG GP-SOLENOID (LOWER)	520
	16	1	**527-1720**	2	VALVE AS-RELIEF	
	17	1	*516-8632*	1	VALVE GP-CONTROL (AUXILIARY)	
		1	**6E-2271**	2	RETAINER	
M		1	**153-5276**	1	BOLT-SPECIAL (M10X1.5X82-MM)	
		1	**352-7057**	1	SPRING-RETURN	

M - METRIC PART
Y - SEPARATE ILLUSTRATION

516-8631 **VALVE GP-CONTROL (**contd.**)** **i07356674**

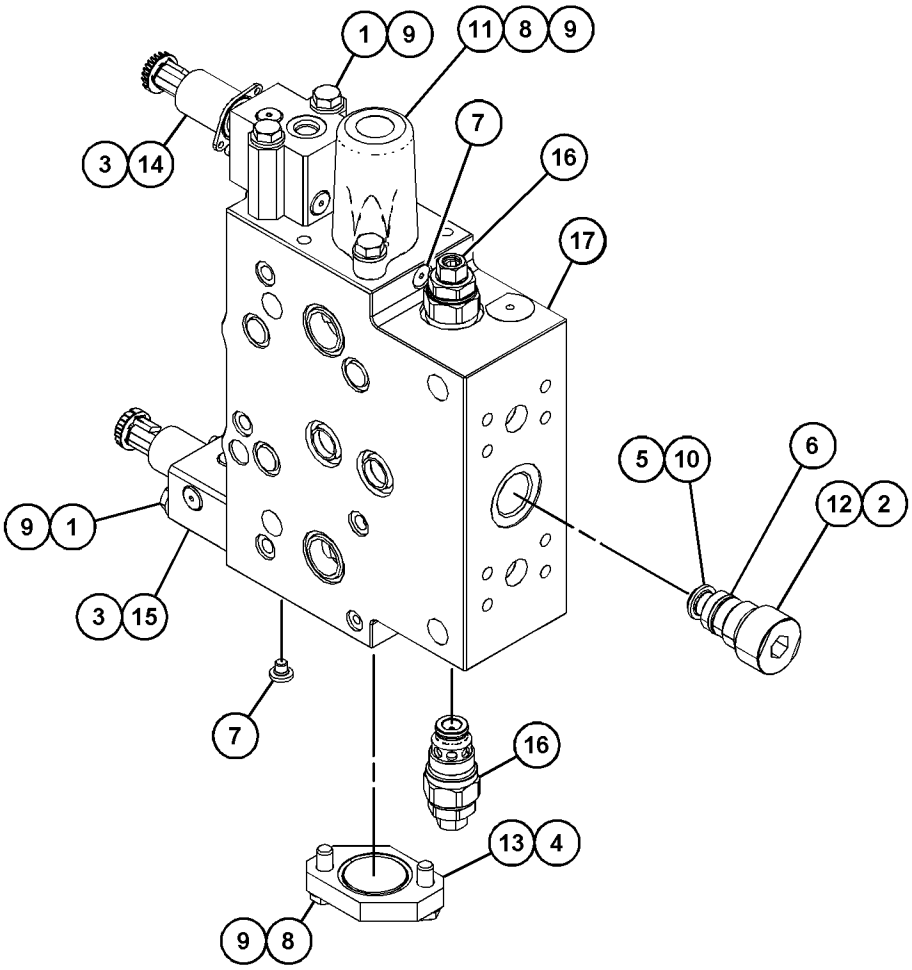

GRAPHIC #1 <END> g06232974

487-5875 VALVE GP-LOAD CONTROL—DRIFT REDUCTION

S/N: BR61-UP

PART OF 516-8628 VALVE GP-MAIN CONTROL

SMCS-5067, 5117, 5147, 5811 **i07356657**

NOTE	REF NO	GRAPHIC REF	PART NUMBER	QTY	PART NAME 1 2 3 4 5 6 (PRODUCT LEVEL)	SEE PAGE
	1	1	*148-8395*	1	PLUG AS	
		1	**3K-0360**	1	SEAL-O-RING	
		1	**9S-8005**	1	PLUG (3/4-16-THD)	
	2	1	*225-4818*	2	PLUG AS	
					(EACH INCLUDES)	
		1	**4J-7533**	1	SEAL-O-RING	
		1	**225-4804**	1	PLUG	
	3	1	*225-4820*	1	PLUG AS	
		1	**3J-7354**	1	SEAL-O-RING	
		1	**225-4821**	1	PLUG	
	4	1	**441-1105**	1	SPRING-RETURN	
	5	1	**441-1107**	1	RETAINER	

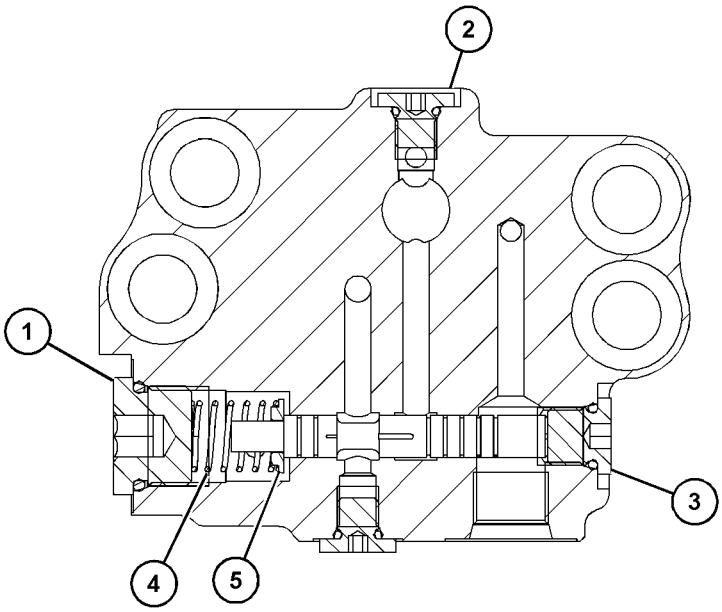

SECTION A-A

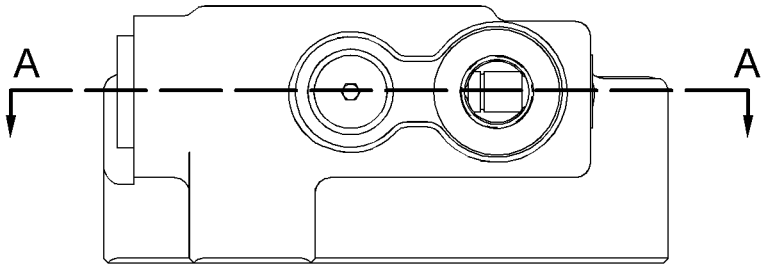

GRAPHIC #1 <END> g06230002

516-8625 VALVE GP-MAIN CONTROL–HEAVY LIFT

S/N: BR61-UP

PART OF 490-3948 VALVE AR-MAIN CONTROL

SMCS-5051 **i07376602**

NOTE	REF NO	GRAPHIC REF	PART NUMBER	QTY	PART NAME 1 2 3 4 5 6 (PRODUCT LEVEL)	SEE PAGE
	1	1	**1P-3702**	4	SEAL-RECTANGULAR	
Y	2	1	**516-8628**	1	VALVE GP-MAIN CONTROL (HEAVY LIFT)	529
	3	1	**4J-5309**	1	SEAL-O-RING	
	4	1	**6V-3922**	6	SEAL-O-RING	
	5	1	**7Y-5219**	8	SEAL-O-RING	
	6	1	**096-3044**	4	SEAL-O-RING	
Y	7	1	**488-7773**	1	COVER GP-VALVE END (MAIN CONTROL VALVE, RH)	386
M	8	1	**447-1704**	8	BOLT (M16X2X90-MM)	
	9	1	**451-2175**	8	WASHER-HARD (17.5X30X3.5-MM THK)	
Y	10	1	**487-5869**	1	COVER GP-VALVE END (MAIN CONTROL VALVE, LH)	385

M - METRIC PART
Y - SEPARATE ILLUSTRATION

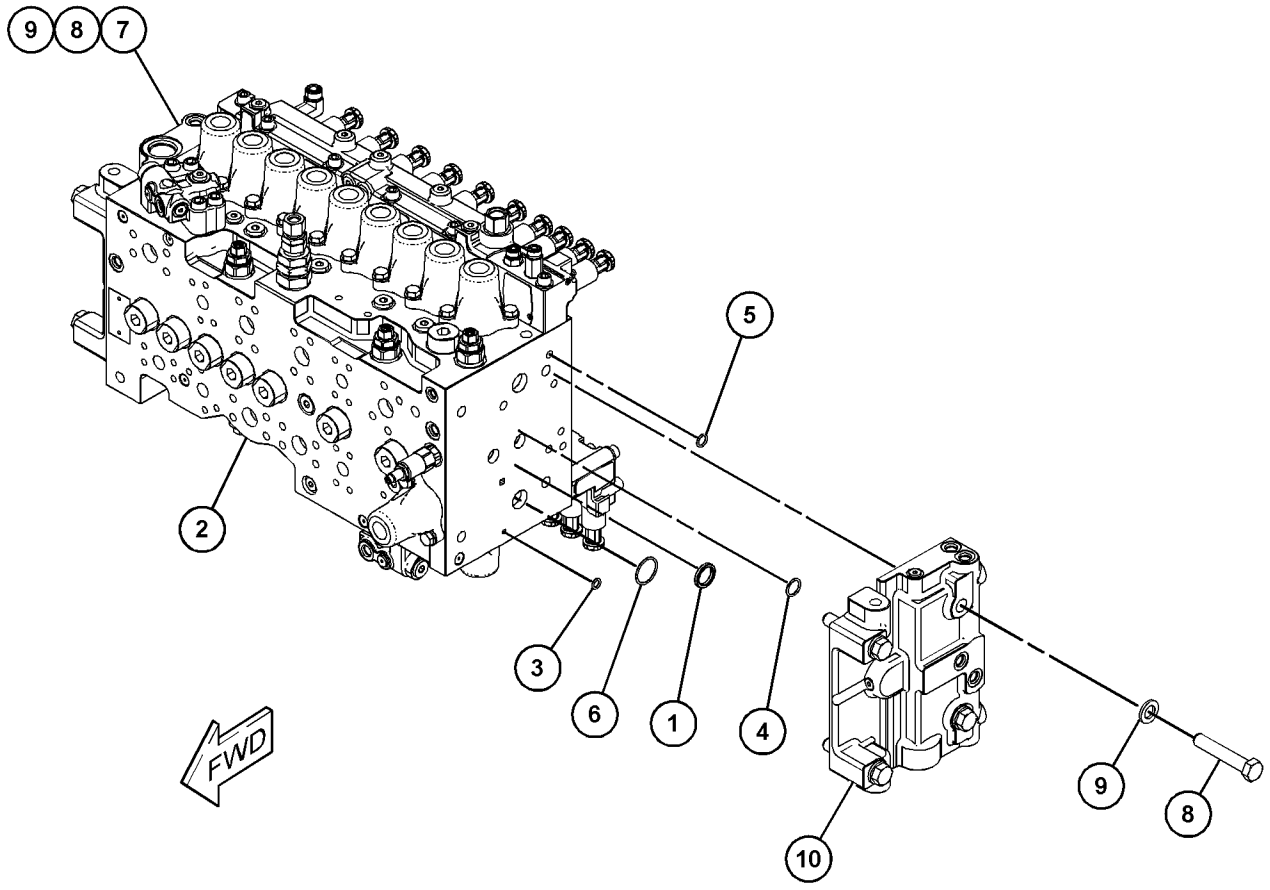

GRAPHIC #1 <END> g06267526

516-8628 VALVE GP-MAIN CONTROL—HEAVY LIFT

S/N: BR61-UP

PART OF 516-8626 VALVE & MTG GP-MAIN CONTROL, 516-8625 VALVE GP-MAIN CONTROL

SMCS-5051 **i07361042**

NOTE	REF NO	GRAPHIC REF	PART NUMBER	QTY	PART NAME 1 2 3 4 5 6 (PRODUCT LEVEL)	SEE PAGE
	1	3	**4J-5309**	4	SEAL-O-RING	
	2	2,3	**6V-3922**	3	SEAL-O-RING	
	3	3	**6V-5393**	2	SEAL-O-RING	
	4	2	**6V-5556**	1	SEAL-O-RING	
	5	2,3	**6V-5597**	19	SEAL-O-RING	
	6	2	**7J-9933**	1	SEAL-O-RING	
	7	2	**7Y-5219**	25	SEAL-O-RING	
	8	1,3	**095-1590**	10	SEAL-O-RING	
	9	1,2	*162-0177*	4	PLUG AS	
					(EACH INCLUDES)	
		1,2	**3J-1907**	1	SEAL-O-RING	
		1,2	**9S-8004**	1	PLUG (9/16-18-THD)	
M	10	1,2,3	**453-3440**	32	BOLT (M10X1.5X30-MM)	
	11	1,2,3	**453-3454**	45	WASHER-HARD (11X21X2.5-MM THK)	
	12	1,3	**095-1787**	10	RING-BACKUP	
	13	3	**197-0199**	1	SPRING	
	14	1,2,3	*225-4818*	16	PLUG AS	
					(EACH INCLUDES)	
		1,2,3	**4J-7533**	1	SEAL-O-RING	
		1,2,3	**225-4804**	1	PLUG	
	15	2	*225-4820*	3	PLUG AS	
					(EACH INCLUDES)	
		2	**3J-7354**	1	SEAL-O-RING	
		2	**225-4821**	1	PLUG	
Y	16	1	**323-7464**	1	VALVE GP-RELIEF (PILOT OPERATED)	538
M	17	2	**9X-2158**	7	BOLT-SOCKET HEAD (M10X1.5X90-MM)	
	18	1,3	*366-4695*	5	PLUG AS	
					(EACH INCLUDES)	
		1,3	**3J-1907**	1	SEAL-O-RING	
		1,3	**360-3679**	1	PLUG-CONNECTOR (9/16-18-THD)	
	19	1,3	*367-6003*	16	PLUG AS	
					(EACH INCLUDES)	
		1,3	**3K-0360**	1	SEAL-O-RING	
		1,3	**360-3680**	1	PLUG	
	20	3	**441-1106**	2	SPRING-CHECK VALVE	
	21	1,3	**466-0113**	9	VALVE-CHECK	
	22	1	**466-0114**	1	VALVE-CHECK	
	23	1,2,3	**487-5871**	8	COVER-PILOT	
	24	1,3	**487-5873**	10	PLUG-CHECK VALVE	
	25	3	**487-5874**	1	VALVE-CHECK	
Y	26	3	**487-5875**	2	VALVE GP-LOAD CONTROL (DRIFT REDUCTION)	527
M	27	2,3	**8T-7811**	8	BOLT-SOCKET HEAD (M12X1.75X50-MM)	
Y	28	2	**515-2709**	1	VALVE GP-SOLENOID & MANIFOLD (UPPER)	541
Y	29	2	**515-2710**	1	VALVE GP-SOLENOID & MANIFOLD (LOWER)	543
Y	30	3	*516-8629*	1	VALVE GP-CONTROL (WITHOUT COVERS, HOUSINGS) (MAIN)	524
	31	2	*518-1160*	1	COVER GP-ACCESS (PILOT)	
		2	**3J-1907**	1	SEAL-O-RING	

516-8628 **VALVE GP-MAIN CONTROL (**contd.**)** **i07361042**

NOTE	REF NO	GRAPHIC REF	PART NUMBER	QTY	PART NAME 1 2 3 4 5 6 (PRODUCT LEVEL)	SEE PAGE
		2	**6V-8397**	1	SEAL-O-RING	
		2	**9X-2297**	1	CONNECTOR	
		2	**487-5872**	1	COVER-PILOT (PILOT)	
	32	2	**527-1720**	4	VALVE AS-RELIEF	
	33	2	**527-1721**	2	VALVE AS-RELIEF	
	34	1	**536-7311**	1	VALVE AS-PRESSURE REDUCING (PILOT)	
		1	**2M-9780**	1	SEAL-O-RING	
	35	3	**552-8903**	3	COVER AS	
					(EACH INCLUDES)	
		3	*164-5567*	1	COUPLER AS-QUICK DISCONNECT (MALE)	
		3	**6V-3965**	1	FITTING (QUICK DISCONNECT)	
		3	**214-7568**	1	SEAL-O-RING	
	36	1,3	**7I-1248**	10	SPRING	
M	37	2	**8T-0342**	6	BOLT-SOCKET HEAD (M10X1.5X80-MM)	

M - METRIC PART
Y - SEPARATE ILLUSTRATION

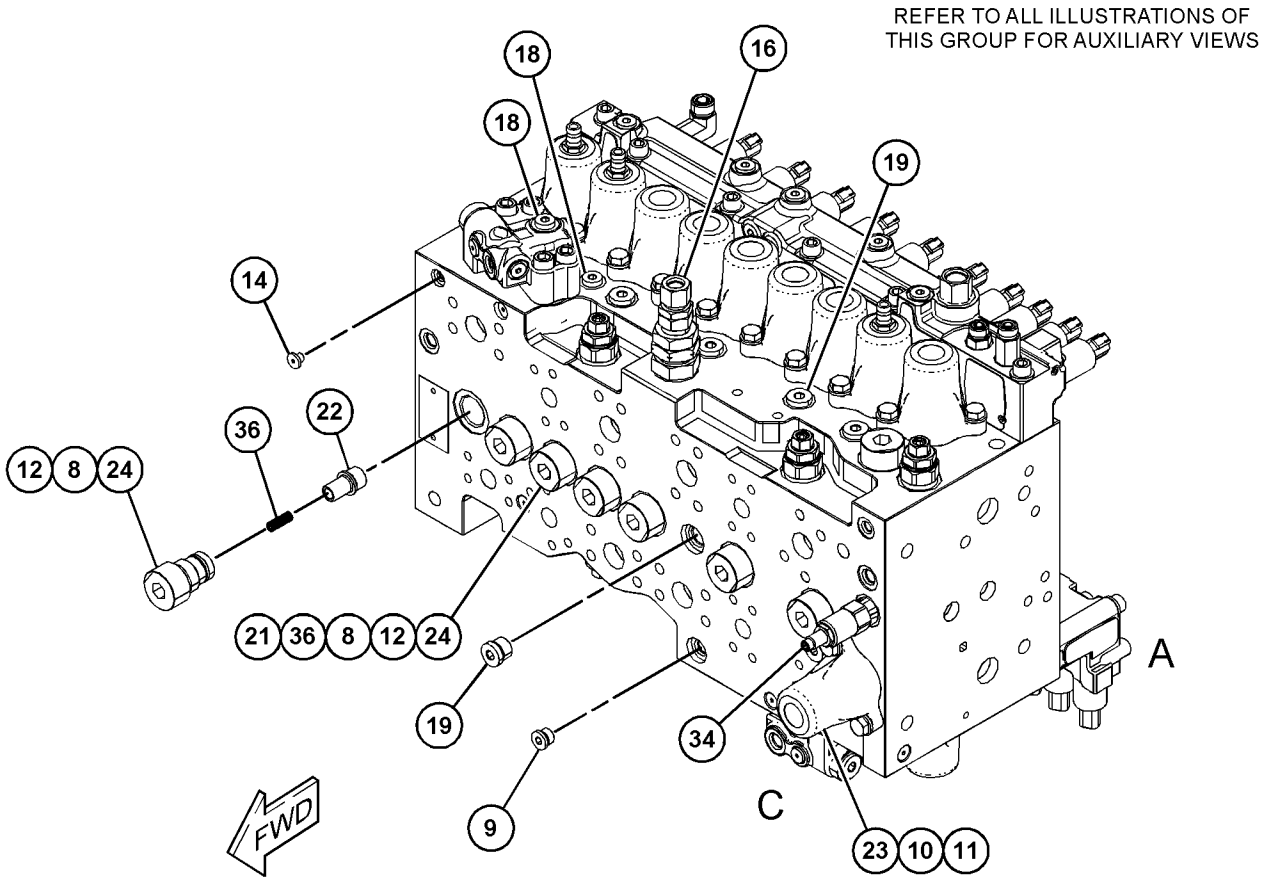

GRAPHIC #1 g06288127

516-8628 **VALVE GP-MAIN CONTROL (**contd.**)** **i07361042**

REFER TO ALL ILLUSTRATIONS OF
THIS GROUP FOR AUXILIARY VIEWS

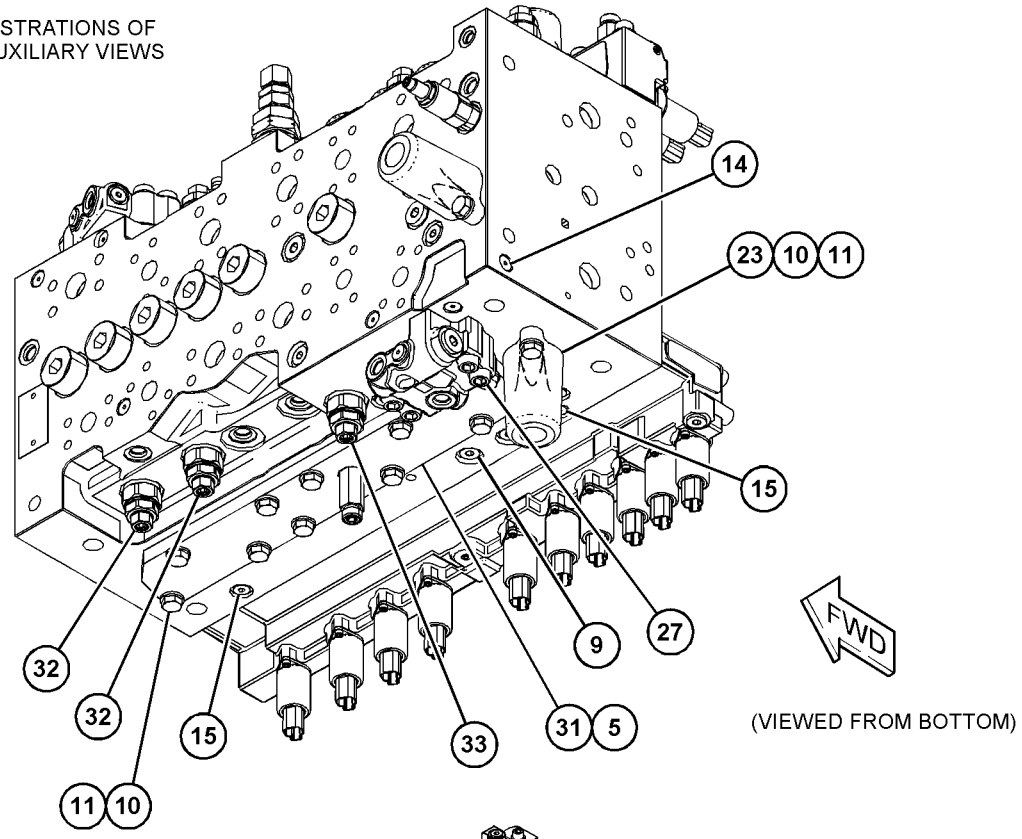

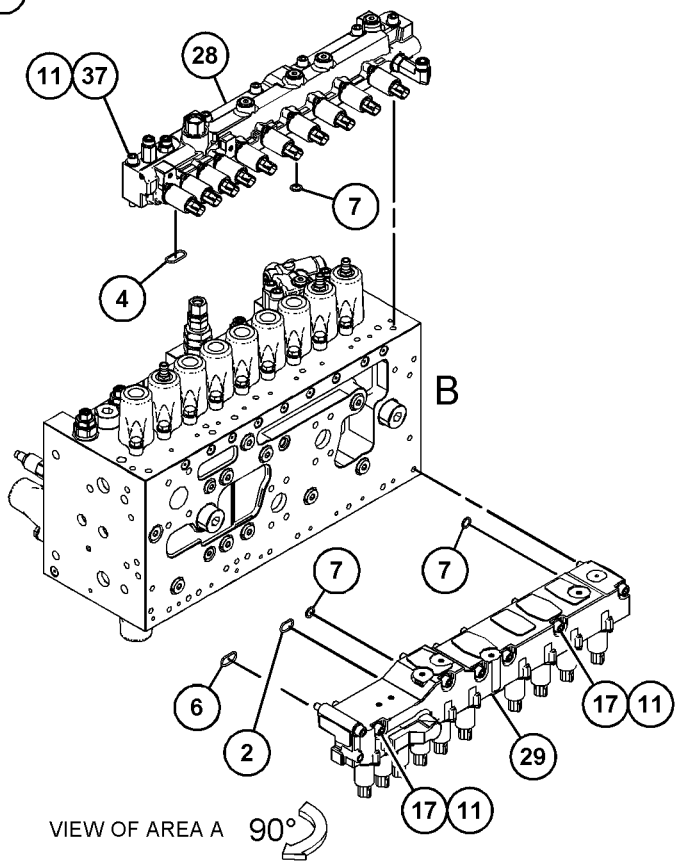

GRAPHIC #2

g06288128

516-8628 **VALVE GP-MAIN CONTROL (**contd.**)** **i07361042**

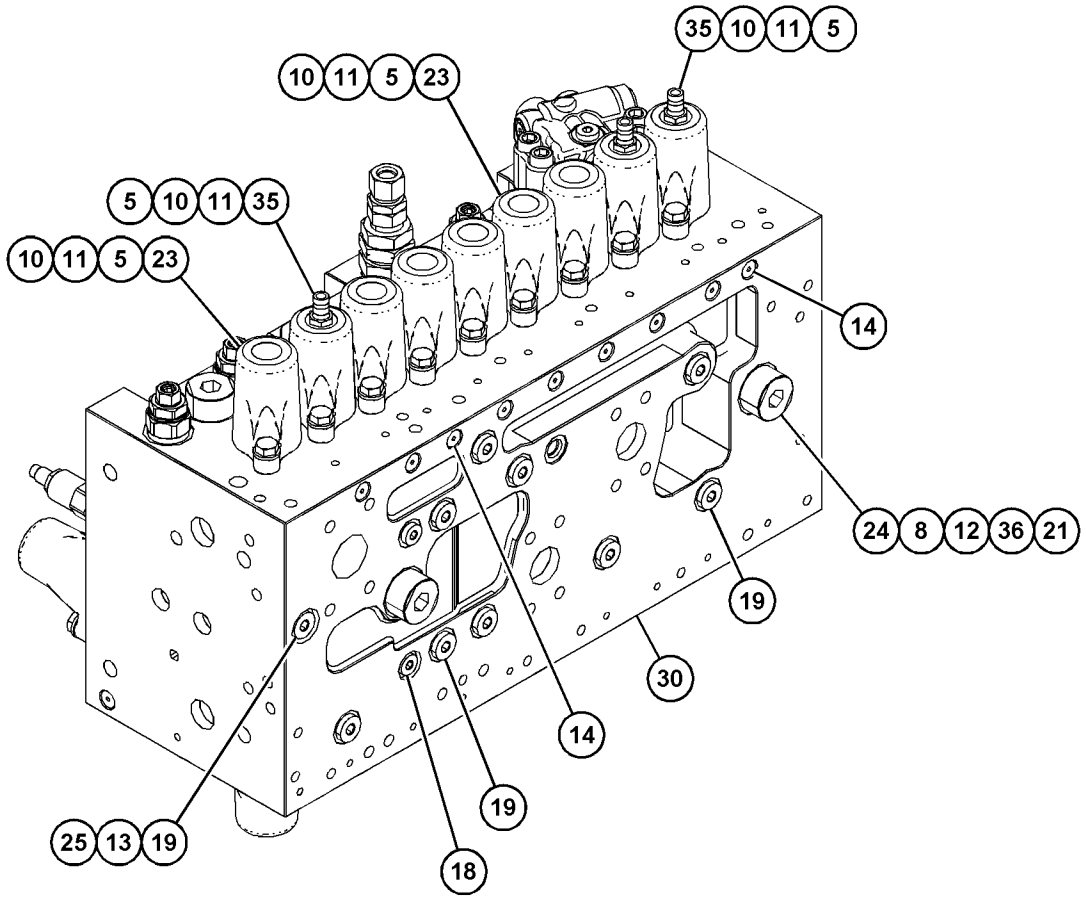

VIEW OF AREA B

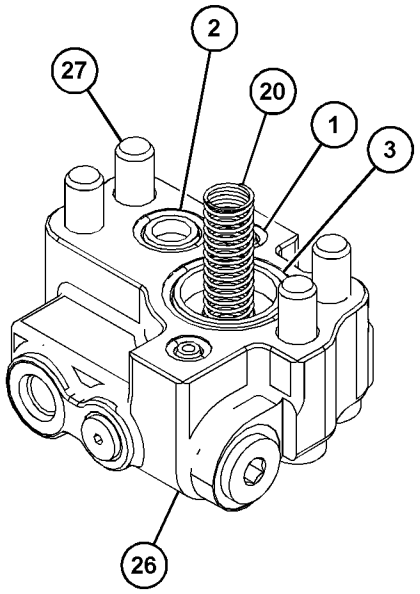

VIEW OF AREA C
(PARTS REMOVED FOR CLARITY)

GRAPHIC #3 <END> g06288129

389-2407 VALVE GP-MANUAL–AUXILIARY, SHUTOFF

S/N: BR61-UP

PART OF 356-8117 LINES GP-AUXILIARY HYDRAULIC, 531-3323, 558-1390 LINES GP-FRONT

SMCS-1329, 5001, 5130

i06920775

NOTE	REF NO	GRAPHIC REF	PART NUMBER	QTY	PART NAME 1 2 3 4 5 6 (PRODUCT LEVEL)	SEE PAGE
	1	1	**302-9466**	1	HANDLE	
	2	1	**3J-1907**	1	SEAL-O-RING	
	3	1	**360-3692**	1	PLUG	

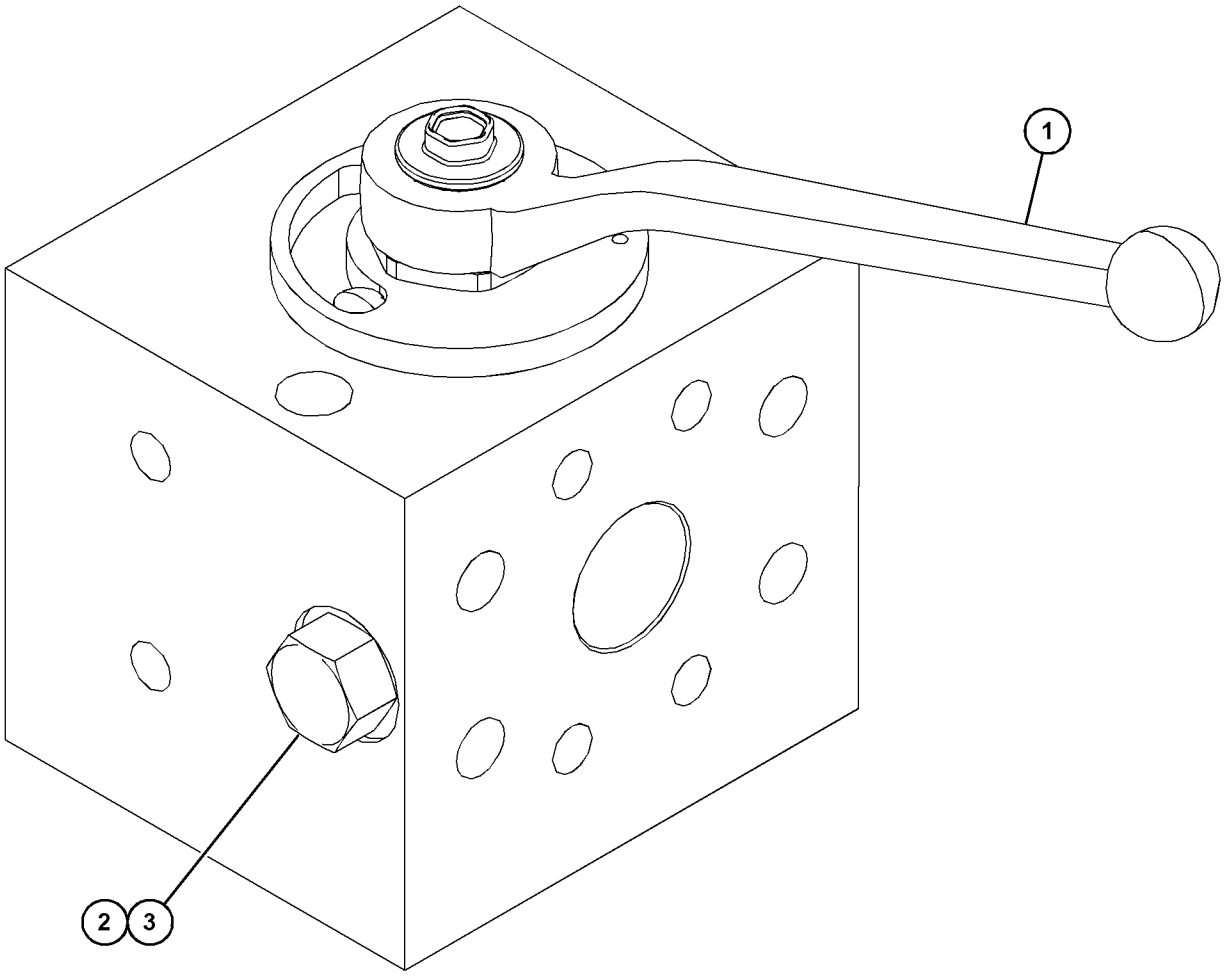

GRAPHIC #1 <END> g03878383

543-3694 VALVE GP-PUMP CONTROL

S/N: BR61-UP

PART OF 531-9886 PUMP GP-MAIN HYDRAULIC

SMCS-5455 **i07359576**

NOTE	REF NO	GRAPHIC REF	PART NUMBER	QTY	PART NAME 1 2 3 4 5 6 (PRODUCT LEVEL)	SEE PAGE
Y	1	1	**543-3728**	1	VALVE GP-PUMP CONTROL	535
	2	1	**543-3727**	1	PIN AS	
	3	1	**202-6535**	2	PIN	
	4	1	**464-9758**	1	GASKET	
M	5	1	**143-6020**	4	BOLT-SOCKET HEAD (M6X1X75-MM)	

M - METRIC PART
Y - SEPARATE ILLUSTRATION

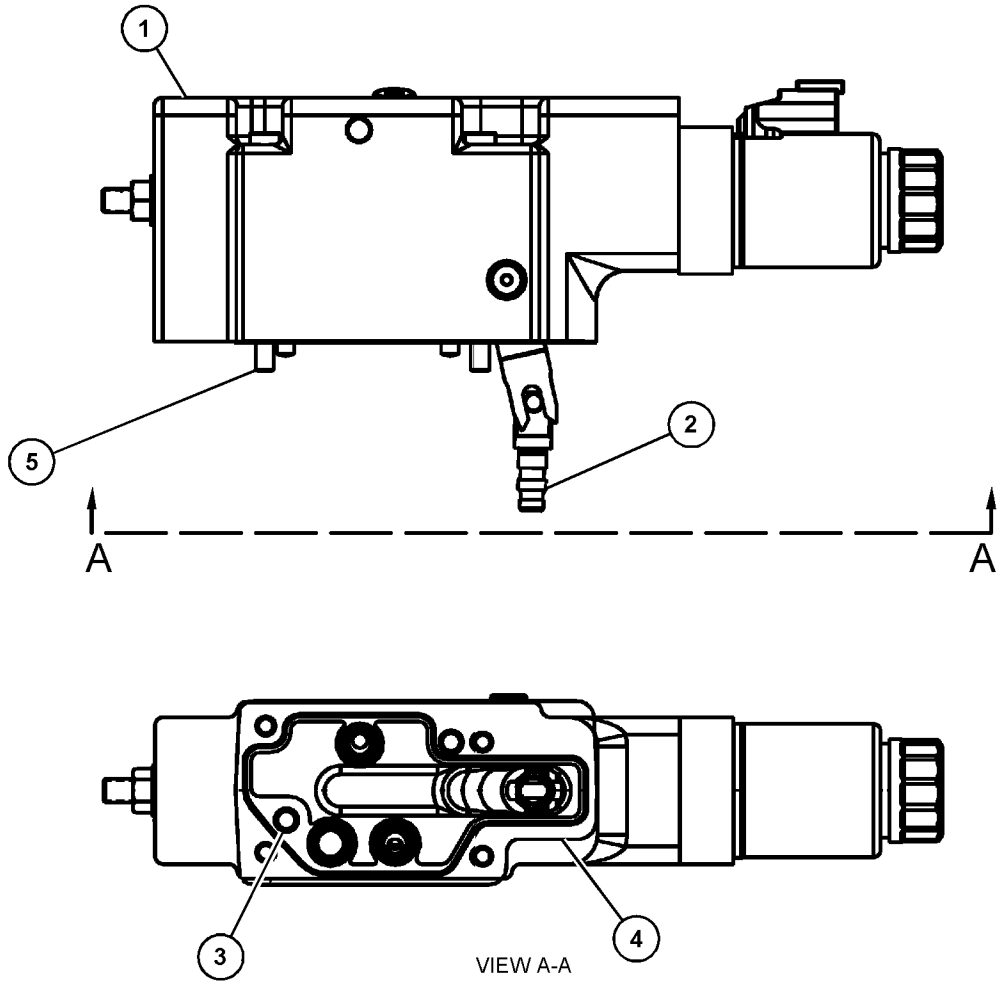

GRAPHIC #1 <END> g06233624

543-3728 VALVE GP-PUMP CONTROL

S/N: BR61-UP

PART OF 543-3694 VALVE GP-PUMP CONTROL

SMCS-5455 **i07359702**

NOTE	REF NO	GRAPHIC REF	PART NUMBER	QTY	PART NAME 1 2 3 4 5 6 (PRODUCT LEVEL)	SEE PAGE
	1	1	**258-0144**	1	LOCKNUT-SCREW	
	2	1	**543-3735**	1	SPRING	
	3	1	**543-3733**	1	SPRING	
	4	1	**177-7747**	3	RING	
	5	1	**543-3730**	1	SPOOL	
	6	1	**543-3739**	1	VALVE GP-SOLENOID & PRESS REDC	
	7	1	**543-3731**	1	COVER	
	8	1	**5P-8210**	1	SEAL-O-RING	
	9	1	**543-3729**	1	SLEEVE	
	10	1	**543-3737**	1	LEVER-FEEDBACK	
	11	1	**543-3734**	1	SLEEVE-GUIDE	
	12	1	**543-3732**	1	GUIDE-SPRING	
	13	1	**543-3736**	1	SETSCREW	
	14	1	**543-3740**	1	PLUG	
	15	1	**543-3738**	1	PIN	
	16	1	**460-6304**	1	LOCKSCREW	
	17	1	**139-7757**	1	PLUG	
M	18	1	**096-4833**	4	BOLT-SOCKET HEAD (M5X0.8X20-MM)	

M - METRIC PART

543-3728 **VALVE GP-PUMP CONTROL (**contd.**)** **i07359702**

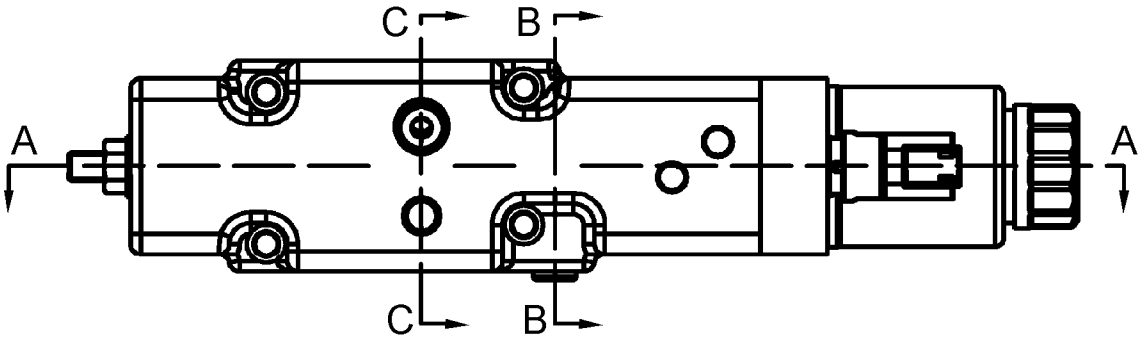

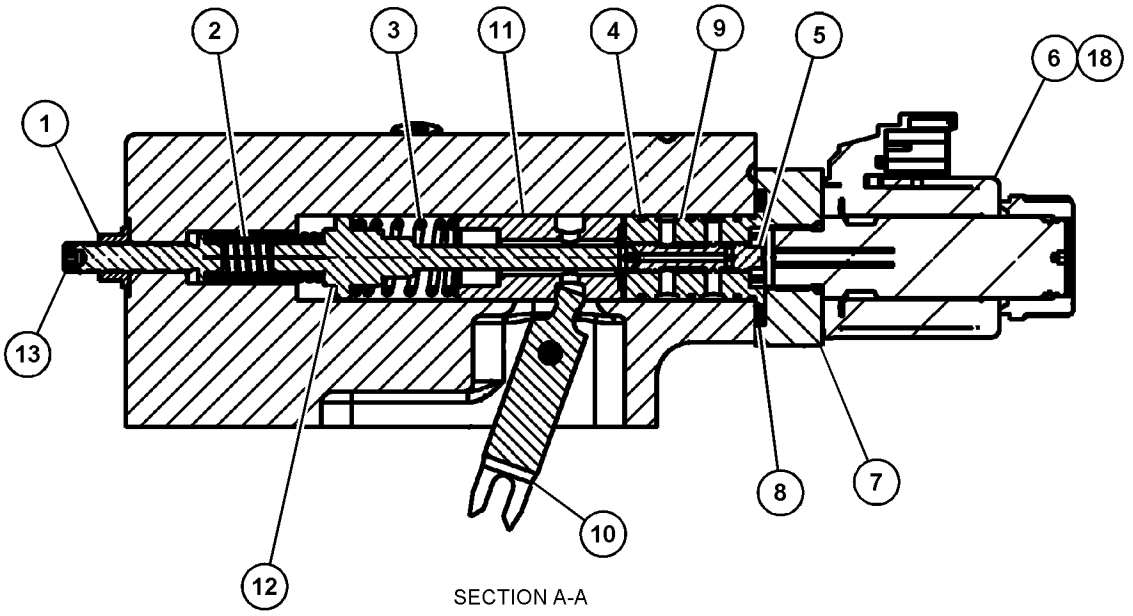

SECTION A-A

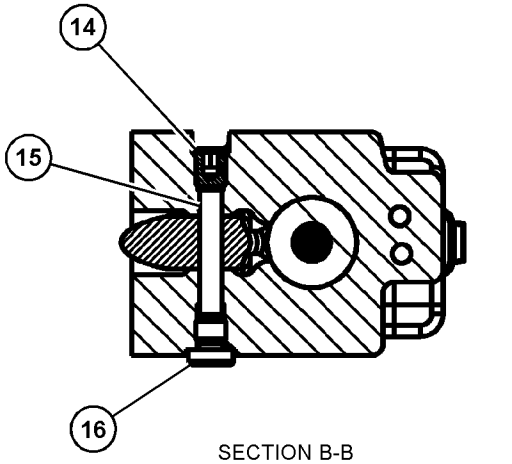

SECTION B-B

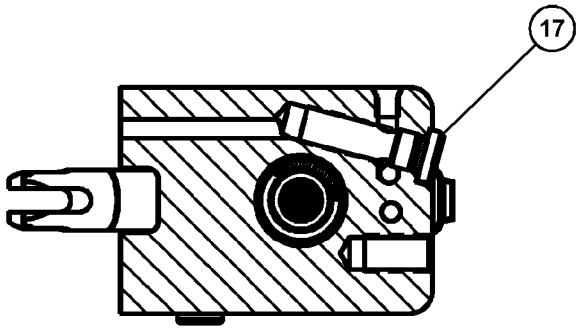

SECTION C-C

GRAPHIC #1 <END> g06236635

173-3452 VALVE GP-RELIEF

S/N: BR61-UP

PART OF 489-3487 MOTOR GP-SWING

SMCS-5069, 5117

i01375454

NOTE	REF NO	GRAPHIC REF	PART NUMBER	QTY	PART NAME 1 2 3 4 5 6 (PRODUCT LEVEL)	SEE PAGE
	1	1	**168-0765**	1	RING-BACKUP	
	2	1	**7J-9933**	1	SEAL-O-RING	
	3	1	**7I-0966**	1	RING-BACKUP	
	4	1	**6V-5556**	1	SEAL-O-RING	
	5	1	**095-1698**	1	SEAL-O-RING	

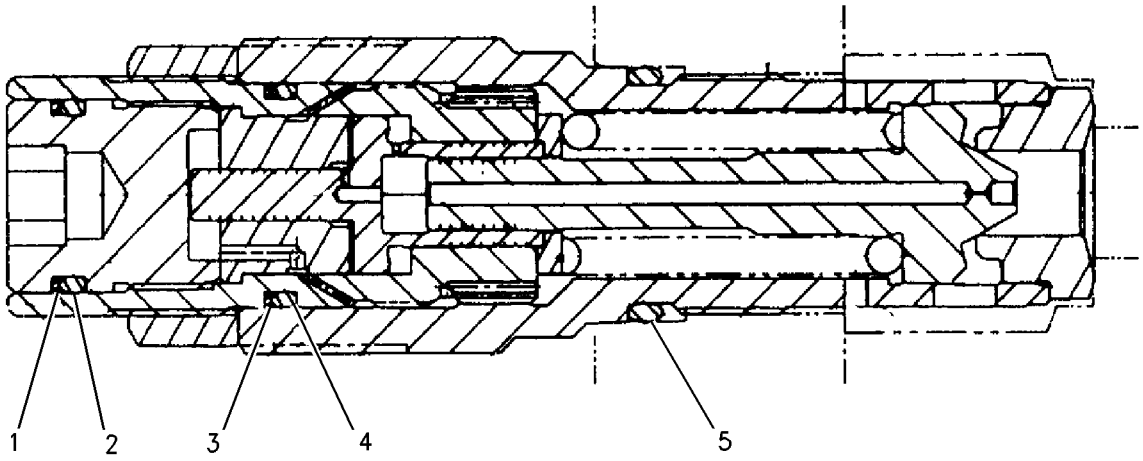

GRAPHIC #1 <END> g00671043

323-7464 VALVE GP-RELIEF–PILOT OPERATED

S/N: BR61-UP

PART OF 516-8628 VALVE GP-MAIN CONTROL

SMCS-5069, 5117 **i07361044**

NOTE	REF NO	GRAPHIC REF	PART NUMBER	QTY	PART NAME 1 2 3 4 5 6 (PRODUCT LEVEL)	SEE PAGE
	1	1	**4I-3510**	1	SPRING	
	2	1	**4I-7714**	1	NUT (3/4-16-THD)	
	3	1	**6I-6795**	1	SPRING	
	4	1	**095-1786**	1	RING-BACKUP	
	5	1	**107-6540**	1	COLLAR	
	6	1	**107-6541**	1	RING-RETAINING	
	7	1	**119-5398**	1	SCREEN-FILTER	
	8	1	**352-6864**	1	SEAT-VALVE	
	9	1	**171-0037**	1	VALVE	
	10	1	**259-7848**	1	SLEEVE	
	11	1	**259-7849**	1	PISTON	
	12	1	**259-7850**	1	SLEEVE	
	13	1	**259-7851**	1	ADJUSTER	
M	14	1	**287-2499**	1	NUT (M24X2-THD)	
	16	1	**095-1579**	1	SEAL-O-RING	
	17	1	**095-1584**	1	SEAL-O-RING	
	18	1	**095-1587**	1	SEAL-O-RING	
	19	1	**095-1590**	1	SEAL-O-RING	
	20	1	**3D-2824**	1	SEAL-O-RING	
	21	1	**6V-8218**	1	SEAL-O-RING	
	22	1	**6V-8978**	1	SEAL-O-RING	
					PARTS SHOWN IN GRAPHIC(S) WITHOUT A REFERENCE NUMBER ARE NOT SERVICED SEPARATELY	

M - METRIC PART

323-7464 **VALVE GP-RELIEF (**contd.**)** **i07361044**

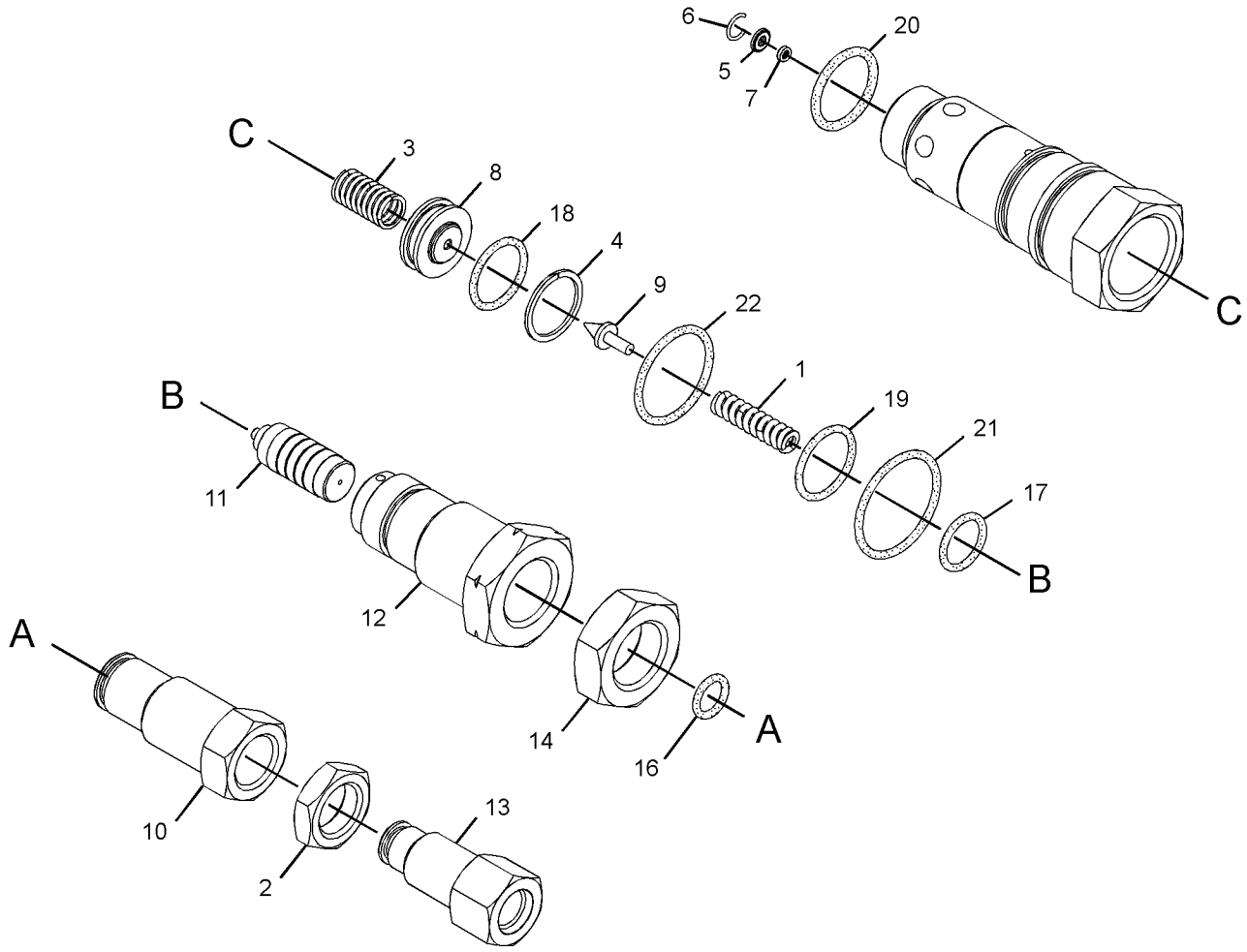

GRAPHIC #1 <END> g02210074

360-4588 VALVE GP-RELIEF

S/N: BR61-UP

PART OF 322-8714 VALVE GP-TRAVEL COUNTERBALANCE

SMCS-5069, 5117 **i04855195**

NOTE	REF NO	GRAPHIC REF	PART NUMBER	QTY	PART NAME 1 2 3 4 5 6 (PRODUCT LEVEL)	SEE PAGE
	1	1	**095-1583**	1	SEAL-O-RING	
	2	1	**095-1590**	1	SEAL-O-RING	
	3	1	**7E-4846**	1	SEAL-O-RING	
	4	1	**099-8232**	1	SEAL-O-RING	
	5	1	**364-1975**	1	RING-BACKUP	
	6	1	**364-1976**	2	RING-BACKUP	
	7	1	**364-1977**	2	RING-BACKUP	
	8	1	**364-1978**	1	RING-BACKUP	

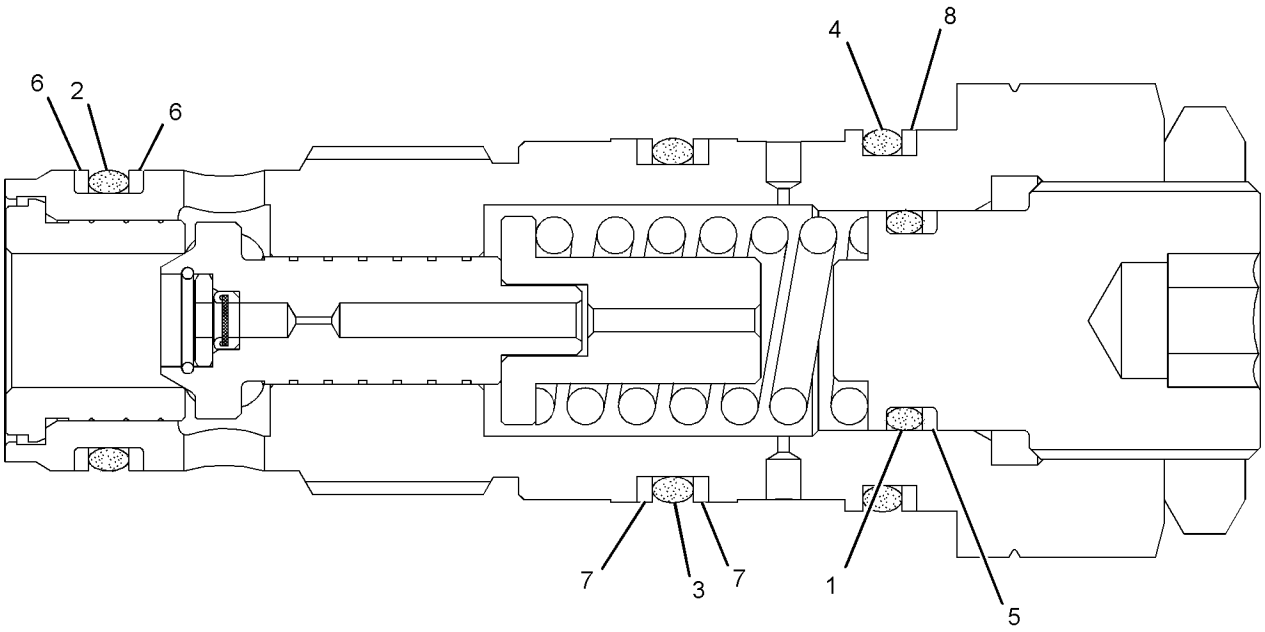

GRAPHIC #1 <END> g02267093

515-2709 VALVE GP-SOLENOID & MANIFOLD

S/N: BR61-UP

PART OF 516-8628 VALVE GP-MAIN CONTROL

SMCS-5264, 5479 **i07356654**

NOTE	REF NO	GRAPHIC REF	PART NUMBER	QTY	PART NAME 1 2 3 4 5 6 (PRODUCT LEVEL)	SEE PAGE
	1	1	**2M-9780**	1	SEAL-O-RING	
	2	1	**526-1837**	1	ADAPTER	
M	3	1	**8T-3998**	20	BOLT (M4X0.7X12-MM)	
	4	1	*148-8336*	1	CONNECTOR AS	
		1	**3J-1907**	1	SEAL-O-RING	
		1	**6V-8397**	1	SEAL-O-RING	
		1	**6V-8636**	1	CONNECTOR	
	5	1	*148-8338*	1	CONNECTOR AS	
		1	**3J-1907**	1	SEAL-O-RING	
		1	**6V-8397**	1	SEAL-O-RING	
		1	**8T-0075**	1	CONNECTOR	
	6	1	*148-8346*	1	ELBOW AS	
		1	**3K-0360**	1	SEAL-O-RING	
		1	**6V-8398**	1	SEAL-O-RING	
		1	**8T-1686**	1	ADAPTER-ELBOW	
	7	1	*162-0177*	8	PLUG AS	
					(EACH INCLUDES)	
		1	**3J-1907**	1	SEAL-O-RING	
		1	**9S-8004**	1	PLUG (9/16-18-THD)	
	8	1	**491-0908**	3	VALVE GP-SOLENOID (24-VOLT)	
	9	1	**485-5747**	7	VALVE GP-SOLENOID (12-VOLT)	
					(EACH VALVE GP-SOLENOID INCLUDES)	
		1	**509-8010**	1	SEAL-O-RING	
		1	**509-8011**	1	SEAL-O-RING	
		1	**509-8012**	1	SEAL-O-RING	

M - METRIC PART

515-2709 **VALVE GP-SOLENOID & MANIFOLD (**contd.**)** **i07356654**

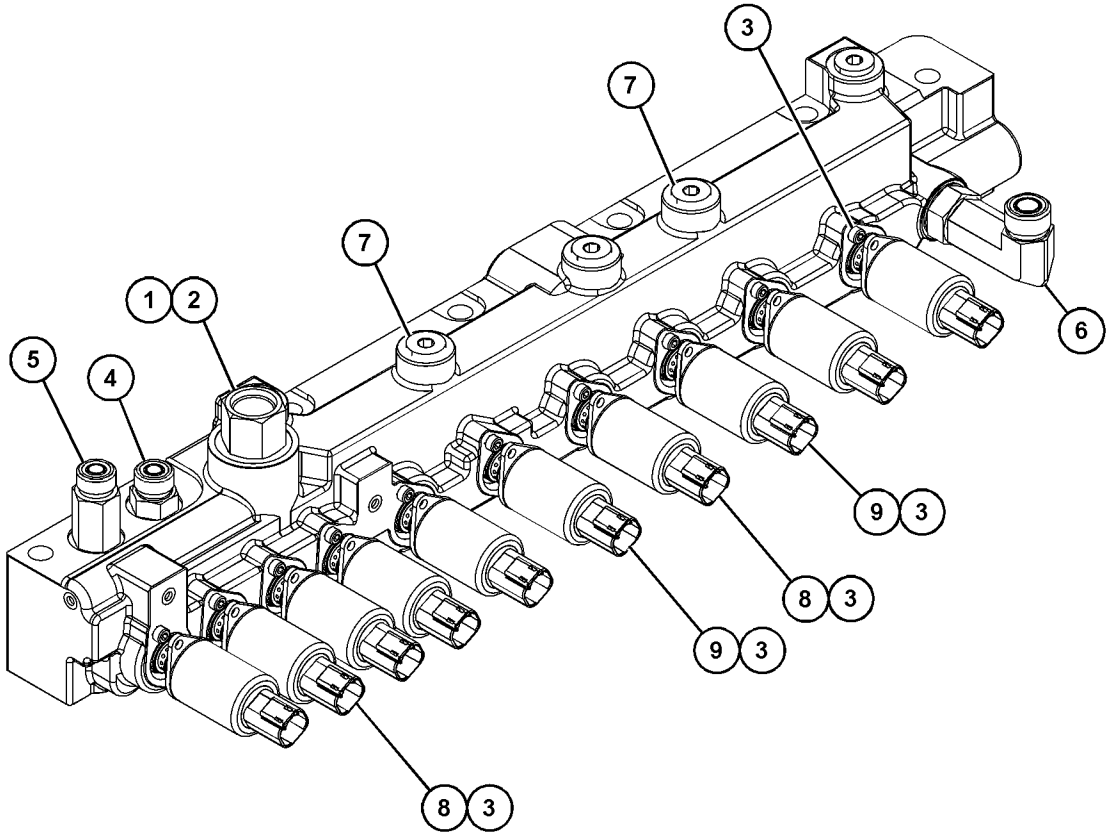

GRAPHIC #1 <END> g06235618

515-2710 VALVE GP-SOLENOID & MANIFOLD

S/N: BR61-UP

PART OF 516-8628 VALVE GP-MAIN CONTROL

SMCS-5264, 5479 **i07356652**

NOTE	REF NO	GRAPHIC REF	PART NUMBER	QTY	PART NAME 1 2 3 4 5 6 (PRODUCT LEVEL)	SEE PAGE
	1	1	**491-0908**	1	VALVE GP-SOLENOID (24-VOLT)	
		1	**509-8010**	1	SEAL-O-RING	
		1	**509-8012**	1	SEAL-O-RING	
		1	**509-8011**	1	SEAL-O-RING	
M	2	1	**8T-3998**	20	BOLT (M4X0.7X12-MM)	
	3	1	*162-0177*	1	PLUG AS	
		1	**3J-1907**	1	SEAL-O-RING	
		1	**9S-8004**	1	PLUG (9/16-18-THD)	
	4	1	**485-5747**	9	VALVE GP-SOLENOID (12-VOLT)	
					(EACH INCLUDES)	
		1	**509-8010**	1	SEAL-O-RING	
		1	**509-8011**	1	SEAL-O-RING	
		1	**509-8012**	1	SEAL-O-RING	

M - METRIC PART

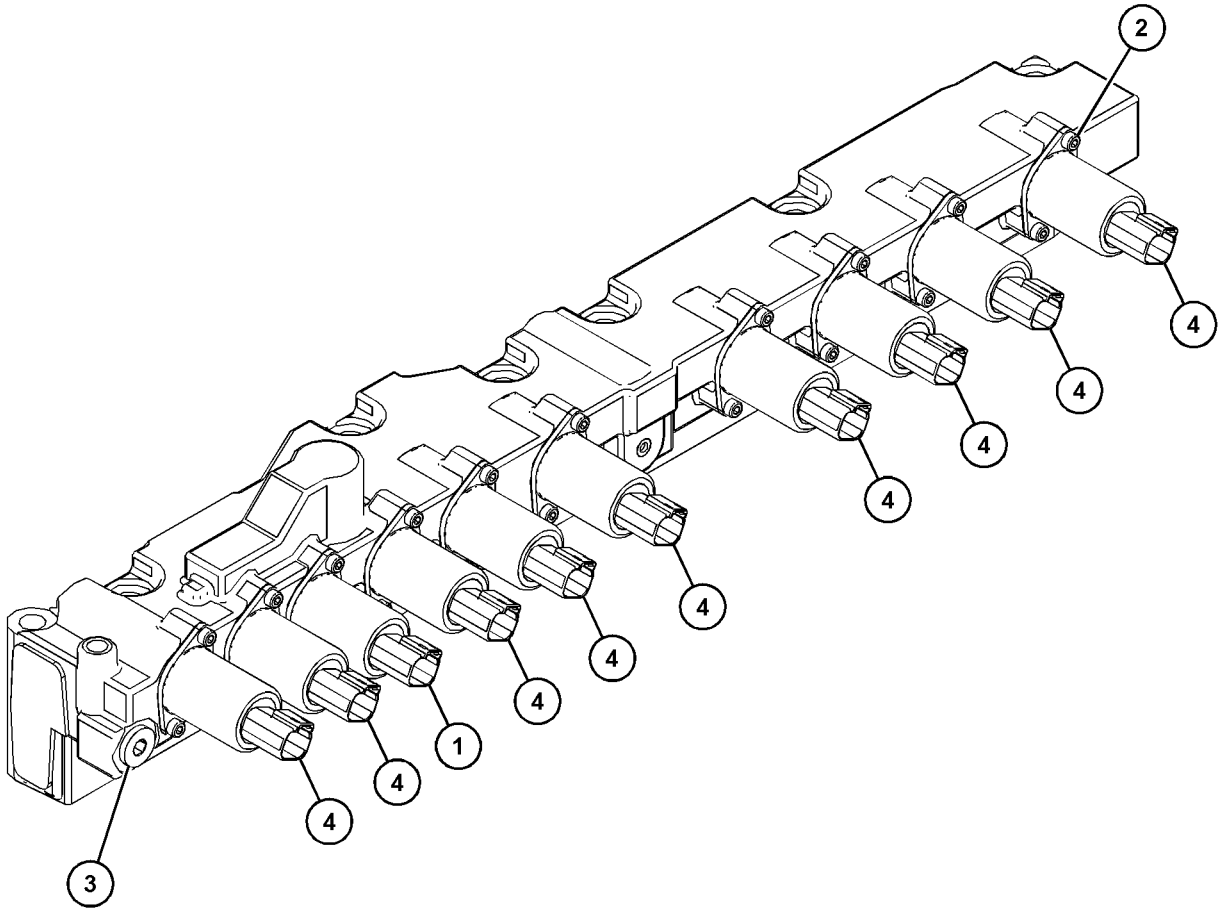

GRAPHIC #1 <END> g06234823

322-8714 VALVE GP-TRAVEL COUNTERBALANCE

S/N: BR61-UP

PART OF 334-9986 MOTOR & MTG GP-TRAVEL

SMCS-5811 **i04855134**

NOTE	REF NO	GRAPHIC REF	PART NUMBER	QTY	PART NAME 1 2 3 4 5 6 (PRODUCT LEVEL)	SEE PAGE
	1	2	**096-2902**	2	ORIFICE	
	2	2	**102-0818**	2	PLUG	
	3	2	**334-9940**	2	COVER	
	4	2	**360-4583**	2	SPRING	
	5	2	**360-4584**	2	GUIDE	
	6	2	**360-4585**	2	PLUG	
	7	2	**360-4586**	2	VALVE	
	8	2	**360-4587**	2	SPRING	
	9	2	**225-4821**	2	PLUG	
	10	2	**096-4514**	2	PLUG	
M	11	2	**8T-7811**	8	BOLT-SOCKET HEAD (M12X1.75X50-MM)	
	12	2	**095-1582**	2	SEAL-O-RING	
	13	2	**095-1587**	2	SEAL-O-RING	
	14	2	**5P-2568**	2	SEAL-O-RING	
	15	2	**3J-7354**	2	SEAL-O-RING	
	16	2	**3J-1907**	2	SEAL-O-RING	
Y	17	2	**360-4588**	2	VALVE GP-RELIEF	540

M - METRIC PART
Y - SEPARATE ILLUSTRATION

322-8714 **VALVE GP-TRAVEL COUNTERBALANCE** (contd.) **i04855134**

REFER TO ALL ILLUSTRATIONS OF
THIS GROUP FOR AUXILIARY VIEWS

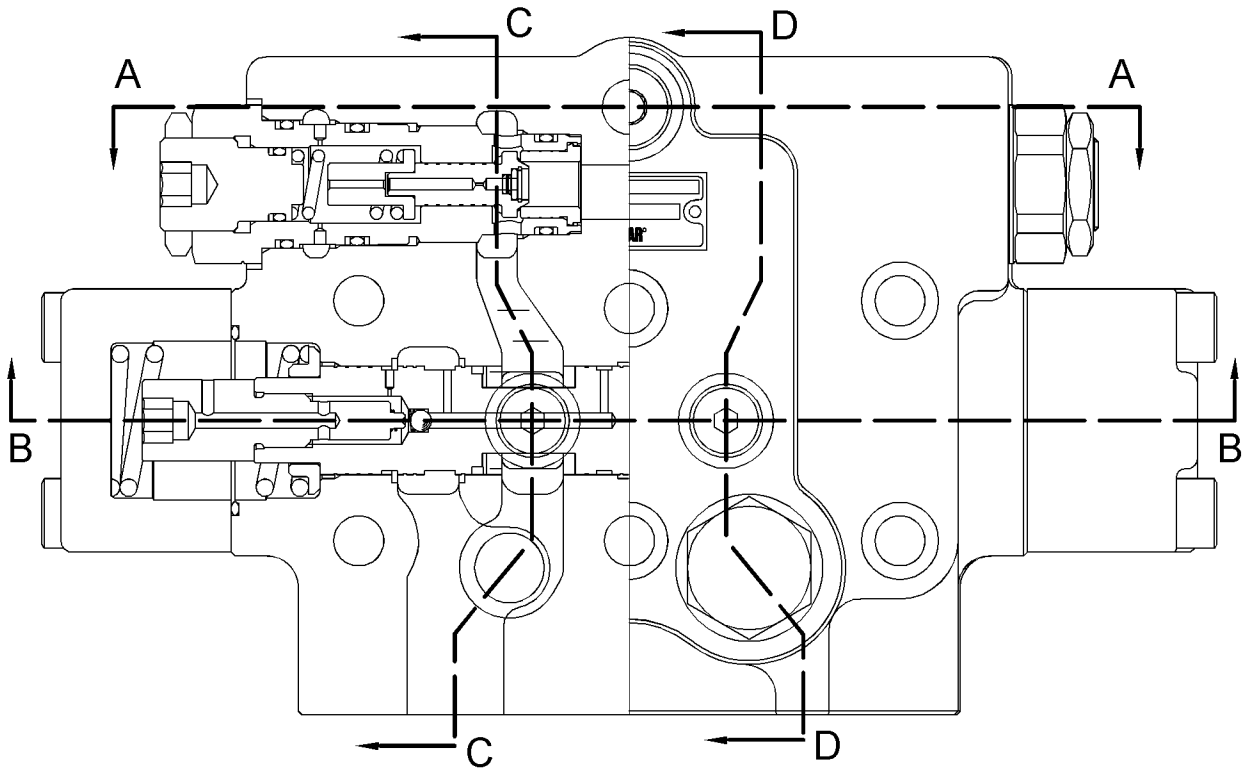

GRAPHIC #1 g02262520

322-8714 **VALVE GP-TRAVEL COUNTERBALANCE (**contd.**)** **i04855134**

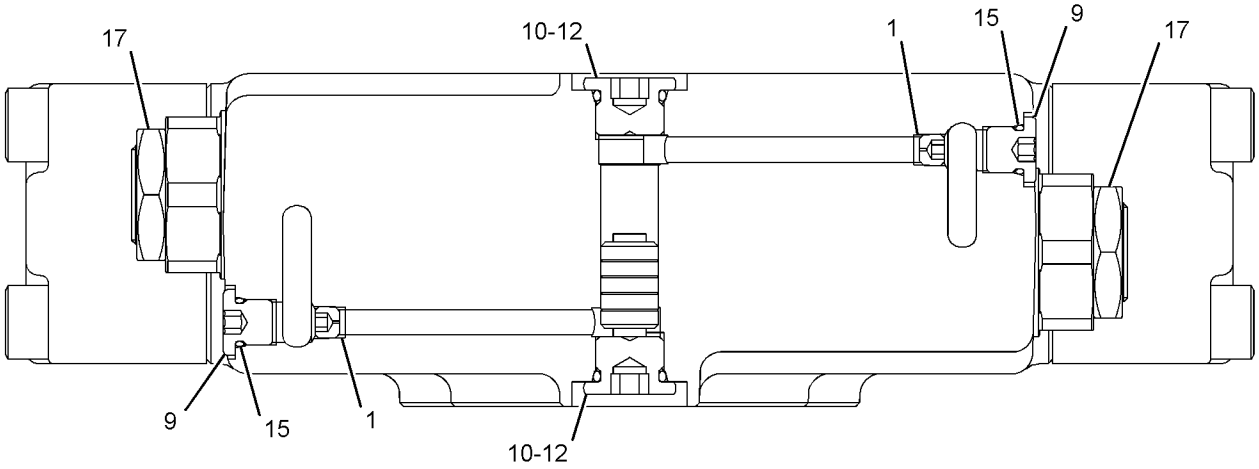

SECTION A-A

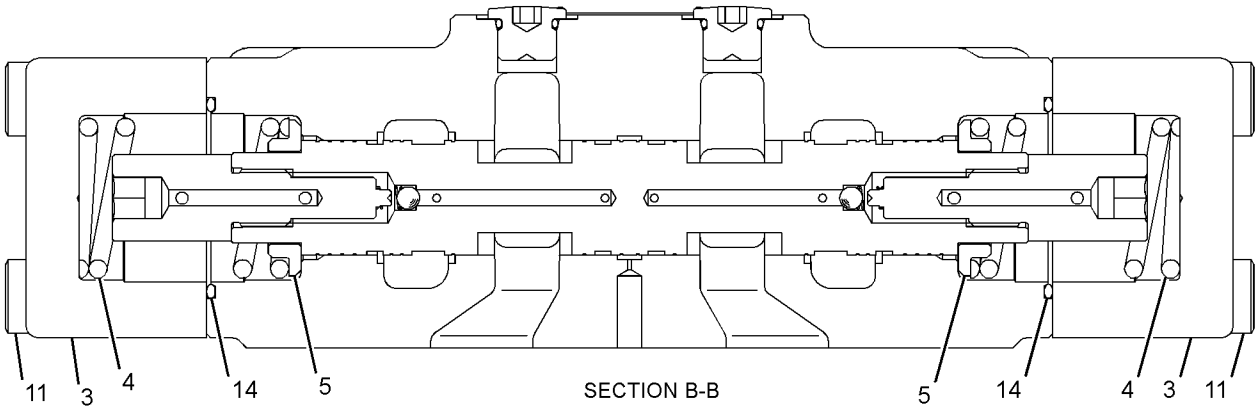

SECTION B-B

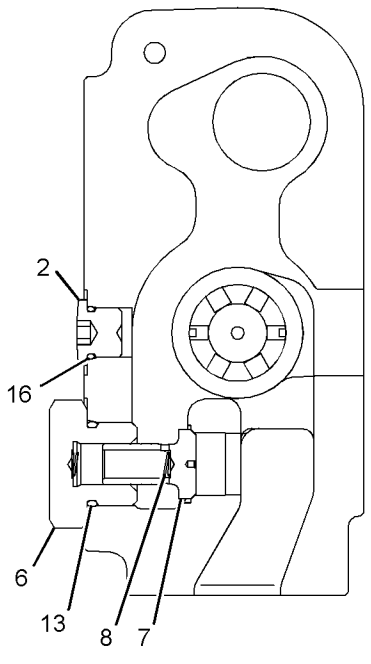

SECTION C-C

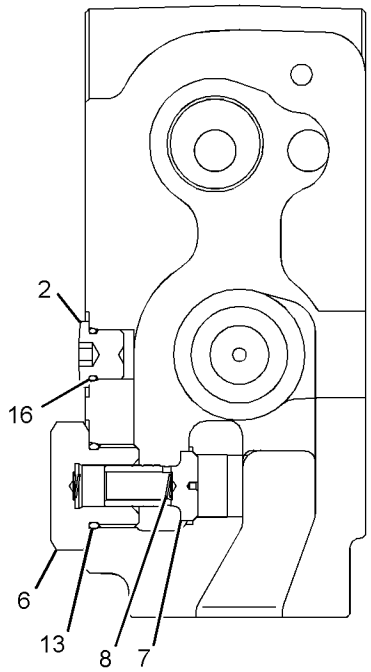

SECTION D-D

GRAPHIC #2 <END> g02262521

490-7669 BOOM AR

S/N: BR61-UP

PART OF 532-9518, 556-2902 DISTRIBUTION AR

SMCS-6000 **i07366400**

NOTE	PART NUMBER	QTY	PART NAME 1 2 3 4 5 6 (PRODUCT LEVEL)	SEE PAGE
Y	*489-0414*	1	BOOM GP (SUPER LONG REACH)	550
Y	*521-1524*	1	FILM GP (REACH BOOM)	685
Y	*525-6162*	1	LINES GP-BOOM (SUPER LONG REACH)	426
Y	*543-0214*	1	LINES GP-GREASE (SUPER LONG REACH)	555
Y	*116-9115*	1	LOCK GP-TRANSPORT	558

Y - SEPARATE ILLUSTRATION

<END>

490-7671 BOOM AR-REACH—HEAVY DUTY

S/N: BR61-UP

5.7-M (18.7-FT). GRADE CONTROL

PART OF 532-9515, 556-2899 DISTRIBUTION AR

SMCS-7000 **i07362980**

NOTE	PART NUMBER	QTY	PART NAME 1 2 3 4 5 6 (PRODUCT LEVEL)	SEE PAGE
Y	*489-0379*	1	BOOM GP	548
Y	*521-1524*	1	FILM GP (REACH BOOM)	685
Y	*489-2964*	1	LINES GP-BOOM (REACH)	424
Y	*543-0213*	1	LINES GP-GREASE	553

Y - SEPARATE ILLUSTRATION

<END>

489-0379 BOOM GP

S/N: BR61-UP

PART OF 490-7671 BOOM AR-REACH

SMCS-6301, 6302, 6460, 6501, 6516, 6521, 6535, 6536 **i07362982**

NOTE	REF NO	GRAPHIC REF	PART NUMBER	QTY	PART NAME 1 2 3 4 5 6 (PRODUCT LEVEL)	SEE PAGE
	1	1	**166-1495**	2	SEAL-LIP TYPE	
	2	1	**4I-3308**	2	PLATE	
	3	1	**4I-3309**	2	SPACER (82X110X3-MM THK)	
	4	1	**4I-4809**	1	PIN AS	
	5	1	**8T-4223**	6	WASHER-HARD (13.5X25.5X3-MM THK)	
M	6	1	**8T-4956**	6	BOLT (M12X1.75X35-MM)	
B	7	1	**093-0084**	2	SHIM (1-MM THK)	
	8	1	**093-0116**	2	SHIM (2-MM THK)	
	9	1	**093-0349**	1	WASHER (22X60X6-MM THK)	
	10	1	**093-0363**	1	SPACER (83X120X12-MM THK)	
B	11	1	**113-2127**	1	SHIM (0.5-MM THK)	
	12	1	**166-1486**	2	SHIM (2-MM THK)	
	13	1	**166-1487**	2	SHIM (2-MM THK)	
	14	1	**437-3391**	1	PIN	
	15	1	**324-0938**	1	PLATE	
	16	1	**346-7276**	1	PIN AS	
	17	1	**451-2175**	2	WASHER-HARD (17.5X30X3.5-MM THK)	
	18	1	**451-2176**	1	WASHER-HARD (22X35X3.5-MM THK)	
M	19	1	**453-1259**	2	BOLT (M16X2X40-MM)	
M	20	1	**453-2844**	1	BOLT (M20X2.5X30-MM)	
	21	1	**489-0380**	1	BOOM & BEARING AS	
	21A	1	**489-3008**	2	BEARING-SLEEVE	
B	22	1	**093-0116**	1	SHIM (2-MM THK)	

B - USE AS REQUIRED
M - METRIC PART

489-0379 **BOOM GP** (contd.) **i07362982**

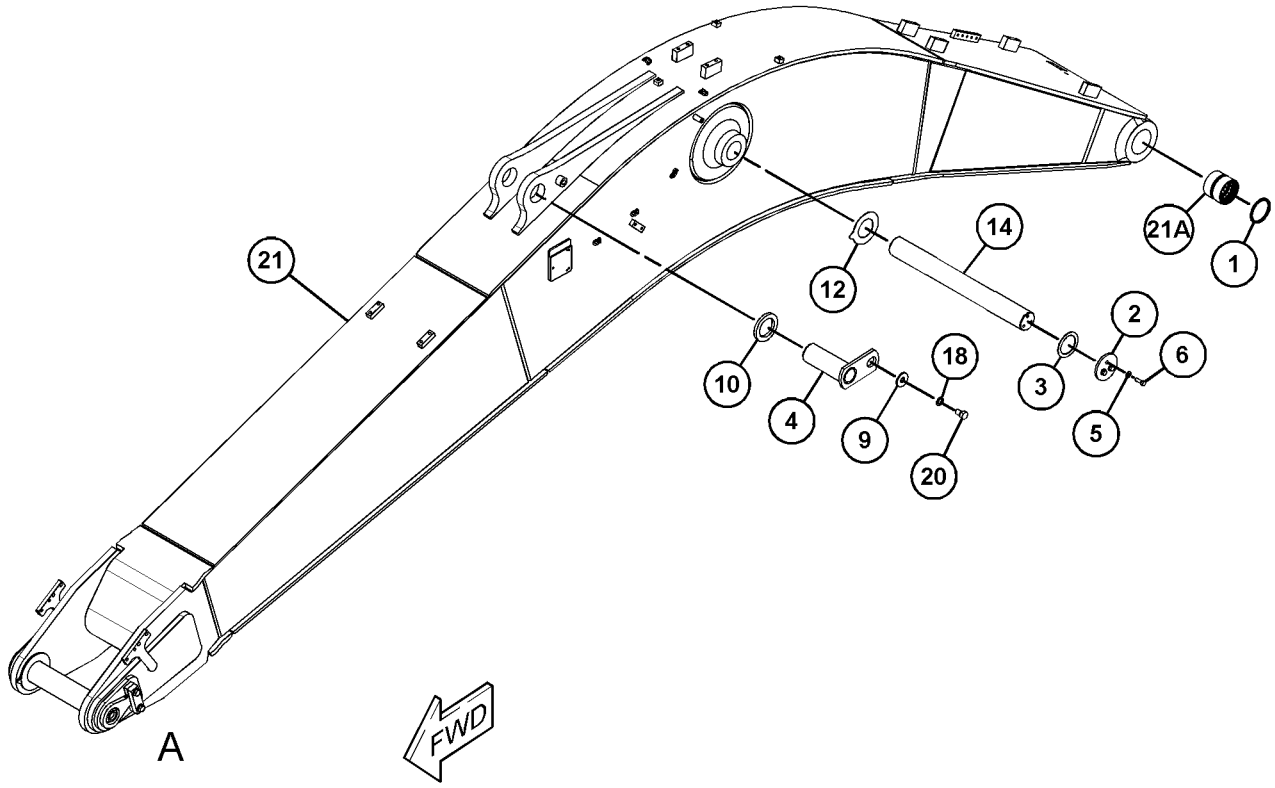

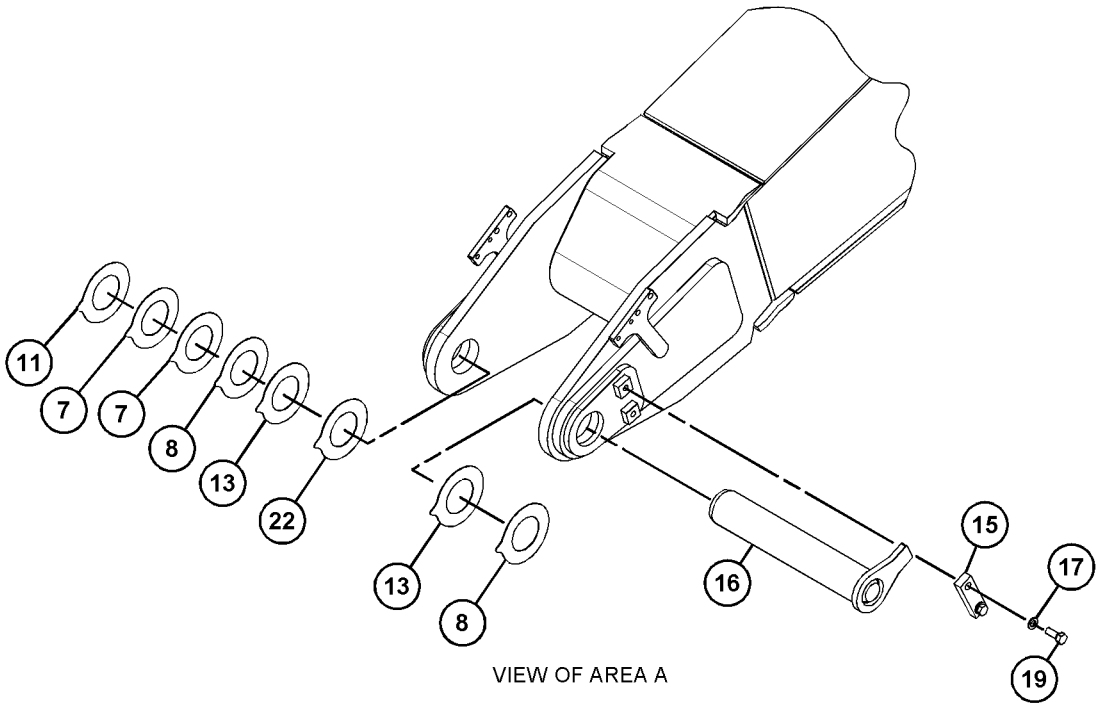

VIEW OF AREA A

GRAPHIC #1 <END> g06230848

489-0414 BOOM GP—SUPER LONG REACH

S/N: BR61-UP
8850-MM (348.4-IN)
PART OF 490-7669 BOOM AR

SMCS-6301, 6302, 6460, 6501, 6516, 6521, 6535, 6536 **i07366401**

NOTE	REF NO	GRAPHIC REF	PART NUMBER	QTY	PART NAME 1 2 3 4 5 6 (PRODUCT LEVEL)	SEE PAGE
	1	1	**4I-3308**	2	PLATE	
	2	1	**4I-3309**	2	SPACER (82X110X3-MM THK)	
	3	1	**4I-4618**	1	PIN AS	
B	4	1	**093-0084**	2	SHIM (1-MM THK)	
	5	1	**093-0349**	1	WASHER (22X60X6-MM THK)	
	6	1	**093-0363**	1	SPACER (83X120X12-MM THK)	
B	7	1	**113-2127**	1	SHIM (0.5-MM THK)	
	8	1	**166-1486**	2	SHIM (2-MM THK)	
	9	1	**166-1487**	2	SHIM (2-MM THK)	
	10	1	**166-1495**	2	SEAL-LIP TYPE	
	11	1	**437-3391**	1	PIN	
	12	1	**324-0938**	1	PLATE	
	13	1	**346-7276**	1	PIN AS	
	14	1	**451-2175**	2	WASHER-HARD (17.5X30X3.5-MM THK)	
	15	1	**451-2176**	1	WASHER-HARD (22X35X3.5-MM THK)	
	16	1	**451-2182**	6	WASHER-HARD (13.5X25.5X3-MM THK)	
M	17	1	**453-1259**	2	BOLT (M16X2X40-MM)	
M	18	1	**453-2844**	1	BOLT (M20X2.5X30-MM)	
M	19	1	**453-3446**	6	BOLT (M12X1.75X35-MM)	
	20	1	**526-7139**	1	BOOM & BEARING AS	
	20A	1	**489-3008**	2	BEARING-SLEEVE	

B - USE AS REQUIRED
M - METRIC PART

489-0414 **BOOM GP** (contd.) **i07366401**

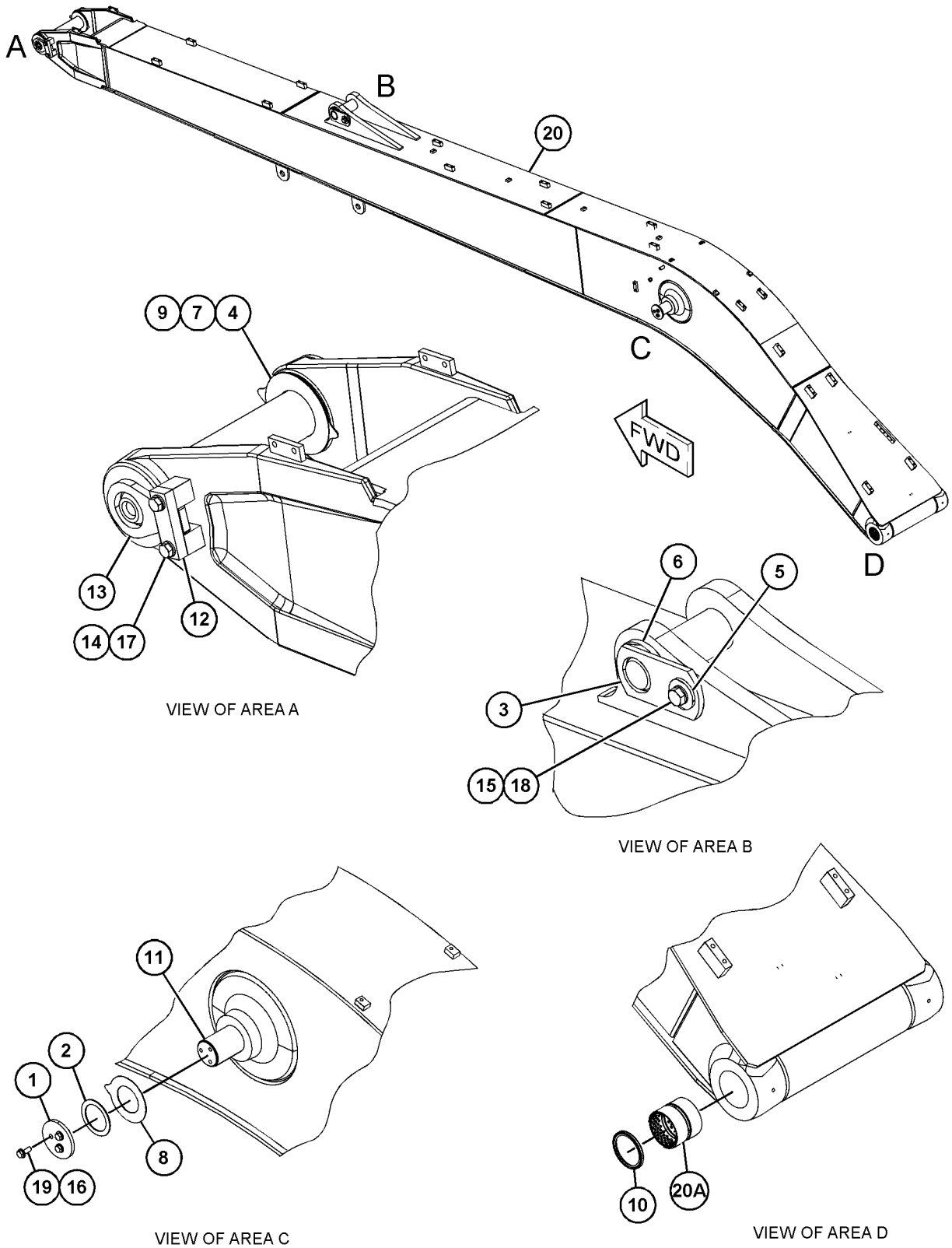

GRAPHIC #1 <END> g06233343

127-6625 LINES GP-GREASE–STICK

S/N: BR61-UP

PART OF 531-3494 STICK AR

SMCS-7510 **i06858572**

NOTE	REF NO	GRAPHIC REF	PART NUMBER	QTY	PART NAME 1 2 3 4 5 6 (PRODUCT LEVEL)	SEE PAGE
	1	1	**5I-7238**	2	TUBE AS	
	2	1	**5I-7239**	1	TUBE AS	
	3	1	**132-1531**	1	TUBE AS	
I	4	1	**087-5966**	2	HOSE AS	
					(EACH INCLUDES)	
		1	**105-6431**	1	CONNECTOR	
M	5	1	**8T-4191**	10	BOLT (M10X1.5X16-MM)	
	6	1	**8T-4121**	10	WASHER-HARD (11X21X2.5-MM THK)	
	7	1	**8M-2772**	10	CLIP (LOOP)	
	8	1	**3B-8489**	3	FITTING-GREASE (1/8-27 PTF)	
	9	1	**6L-3616**	3	CONNECTOR	
	10	1	**5K-9242**	2	UNION-FLARED	
	11	1	**5H-8936**	1	ADAPTER	
	12	1	**5K-9243**	1	ELBOW-FLARED	
	13	1	**6V-3342**	1	ELBOW-PIPE	

I - REFER TO HYDRAULIC INFORMATION SYSTEM
M - METRIC PART

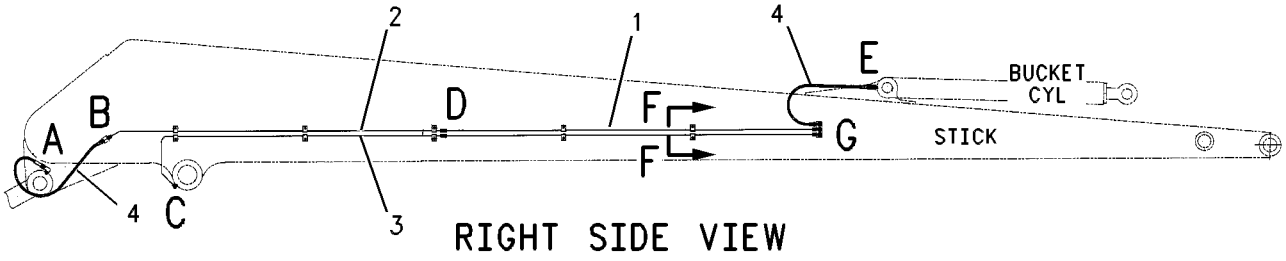

RIGHT SIDE VIEW

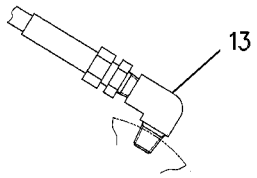

VIEW OF AREA A

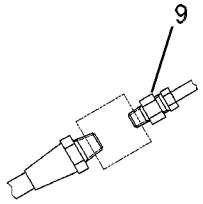

VIEW OF AREA B

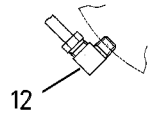

VIEW OF AREA C

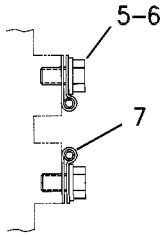

SECTION F-F

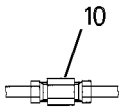

VIEW OF AREA D

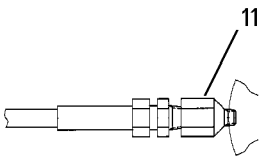

VIEW OF AREA E

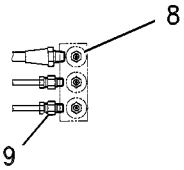

VIEW OF AREA G

GRAPHIC #1 <END> g00420078

543-0213 LINES GP-GREASE

S/N: BR61-UP

PART OF 490-7671 BOOM AR-REACH

SMCS-7510 **i07351244**

NOTE	REF NO	GRAPHIC REF	PART NUMBER	QTY	PART NAME 1 2 3 4 5 6 (PRODUCT LEVEL)	SEE PAGE
	1	1	**3B-8485**	5	ELBOW	
	2	1	**4I-4543**	1	TUBE AS	
	3	1	**4I-4544**	1	TUBE AS	
	4	1	**5K-9243**	2	ELBOW-FLARED	
	5	1	**6L-3616**	2	CONNECTOR	
	6	1	**134-9137**	1	HOSE AS	
	7	1	**166-1579**	3	CLIP	
	8	1	**216-6682**	2	HOSE AS	
					(EACH INCLUDES)	
		1	**105-6431**	1	CONNECTOR	
	9	1	**033-8248**	3	CLIP	
	10	1	**8M-2772**	2	CLIP (LOOP)	
	11	1	**8T-4121**	8	WASHER-HARD (11X21X2.5-MM THK)	
M	12	1	**8T-4133**	5	NUT (M10X1.5-THD)	
M	13	1	**8T-4191**	3	BOLT (M10X1.5X16-MM)	

M - METRIC PART

543-0213 **LINES GP-GREASE (**contd.**)** **i07351244**

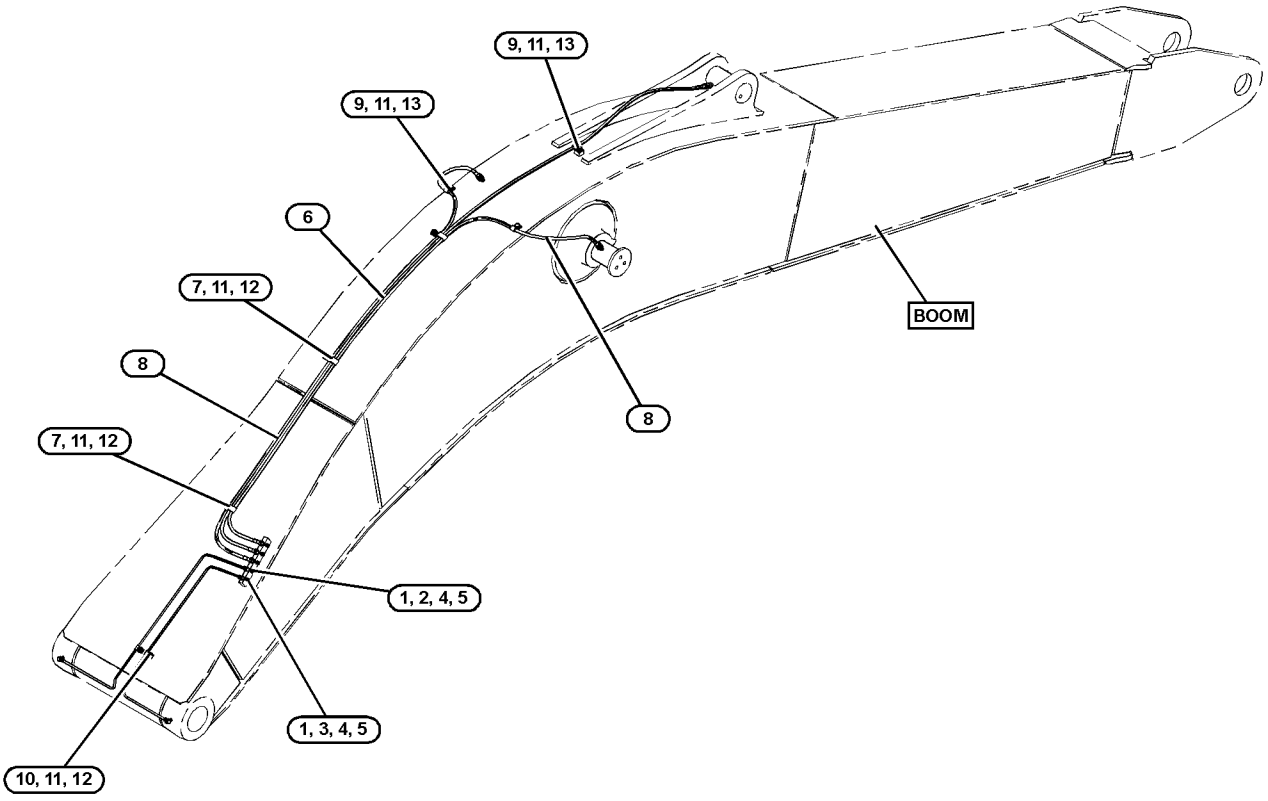

GRAPHIC #1 <END> g06230550

543-0214 LINES GP-GREASE—SUPER LONG REACH

S/N: BR61-UP
8850-MM (348.4-IN) BOOM
PART OF 490-7669 BOOM AR

SMCS-7510 **i07366403**

NOTE	REF NO	GRAPHIC REF	PART NUMBER	QTY	PART NAME 1 2 3 4 5 6 (PRODUCT LEVEL)	SEE PAGE
	1	1	**3B-8485**	5	ELBOW	
	2	1	**4I-4543**	1	TUBE AS	
	3	1	**4I-4544**	1	TUBE AS	
I	4	1	**4I-6608**	1	HOSE AS	
	5	1	**5K-9243**	2	ELBOW-FLARED	
	6	1	**6L-3616**	2	CONNECTOR	
I	7	1	**105-6458**	1	HOSE AS	
	8	1	**166-1579**	3	CLIP	
	9	1	**342-1962**	1	HOSE AS	
M	10	1	**344-5675**	5	NUT (M10X1.5-THD)	
	11	1	**033-8248**	6	CLIP	
	12	1	**5H-8936**	3	ADAPTER	
	13	1	**8M-2772**	2	CLIP (LOOP)	
	14	1	**8T-4121**	11	WASHER-HARD (11X21X2.5-MM THK)	
M	15	1	**8T-4191**	6	BOLT (M10X1.5X16-MM)	

I - REFER TO HYDRAULIC INFORMATION SYSTEM
M - METRIC PART

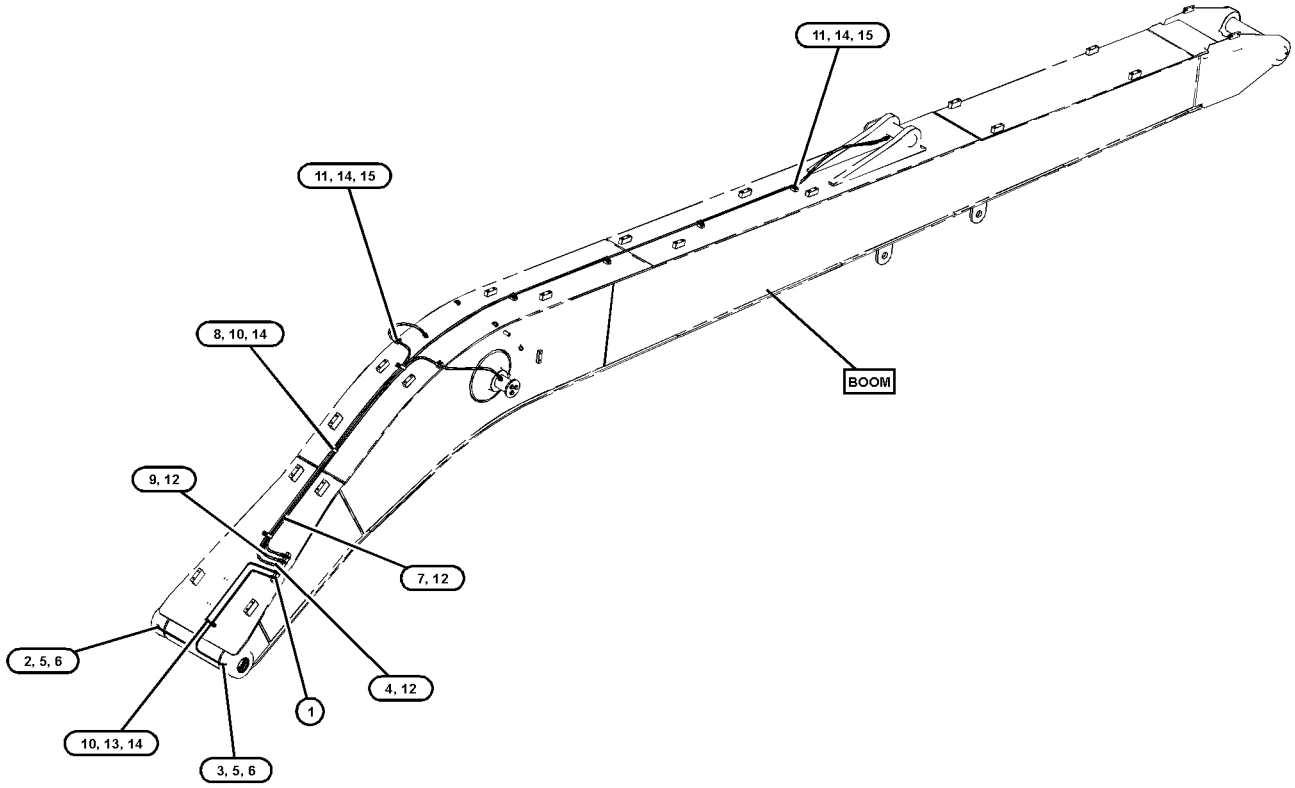

GRAPHIC #1 <END> g06232567

492-8537 LINKAGE GP-BUCKET—B1-FAMILY, WITH LIFTING EYE

S/N: BR61-UP

SMCS-6513 **i07369133**

NOTE	REF NO	GRAPHIC REF	PART NUMBER	QTY	PART NAME 1 2 3 4 5 6 (PRODUCT LEVEL)	SEE PAGE
	1	1	**3B-8489**	5	FITTING-GREASE (1/8-27 PTF)	
	2	1	**087-5805**	2	PIN	
B	3	1	**166-1486**	2	SHIM (2-MM THK)	
	4	1	**244-4255**	1	LINK	
M	5	1	**451-2183**	8	NUT (M16X2-THD)	
	6	1	**492-8532**	1	LINK AS	
	7	1	**492-8533**	1	PIN	
	8	1	**492-8534**	1	PIN	
	9	1	**492-8535**	1	SPACER (72X118X16-MM THK)	
	10	1	**492-8536**	1	SPACER (82X135X16-MM THK)	
	11	1	**513-2526**	1	LINK & BEARING AS	
	11A	1	**489-3018**	2	BEARING-SLEEVE	
	11B	1	**489-3020**	2	BEARING-SLEEVE	
	12	1	**166-1494**	6	SEAL-LIP TYPE	
M	13	1	**236-6365**	2	BOLT (M16X2X150-MM)	
M	14	1	**236-6366**	2	BOLT (M16X2X195-MM)	
	15	1	**367-8467**	4	SEAL-O-RING	

B - USE AS REQUIRED
M - METRIC PART

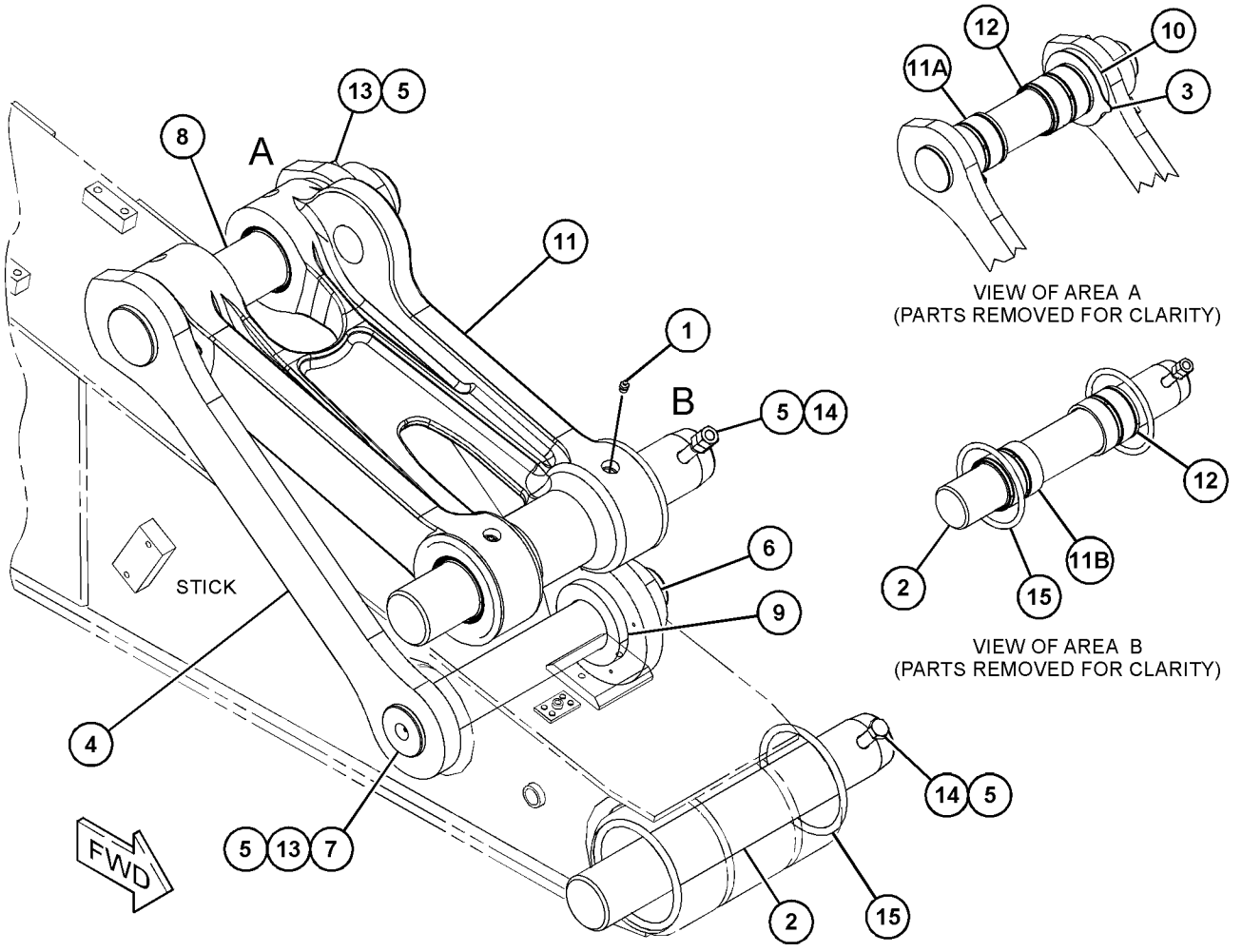

VIEW OF AREA A
(PARTS REMOVED FOR CLARITY)

VIEW OF AREA B
(PARTS REMOVED FOR CLARITY)

GRAPHIC #1 <END> g06230067

521-2393 LINKAGE GP-BUCKET—WITH LIFTING EYE

S/N: BR61-UP

SMCS-6513 **i07369401**

NOTE	REF NO	GRAPHIC REF	PART NUMBER	QTY	PART NAME 1 2 3 4 5 6 (PRODUCT LEVEL)	SEE PAGE
	1	1	**3B-8489**	5	FITTING-GREASE (1/8-27 PTF)	
	2	1	**7I-6843**	1	PIN	
	3	1	**166-1482**	2	SHIM (2-MM THK)	
	4	1	**235-7679**	4	SEAL-LIP TYPE	
	5	1	**248-7820**	1	PIN	
	6	1	**248-7822**	1	LINK	
	7	1	**248-7823**	1	LINK AS	
	8	1	**248-7836**	2	SEAL-LIP TYPE	
M	9	1	**451-2183**	2	NUT (M16X2-THD)	
	10	1	**517-6026**	2	PIN	
	11	1	**521-2395**	1	LINK & BEARING AS	
	11A	1	**517-6017**	2	BEARING-SLEEVE	
	11B	1	**517-6019**	2	BEARING-SLEEVE	
M	12	1	**096-4876**	6	NUT (M14X2-THD)	
M	13	1	**099-0707**	1	BOLT (M14X2X115-MM)	
M	14	1	**099-0724**	2	BOLT (M14X2X145-MM)	
M	15	1	**236-6365**	1	BOLT (M16X2X150-MM)	
	16	1	**367-8465**	4	SEAL-O-RING	

M - METRIC PART

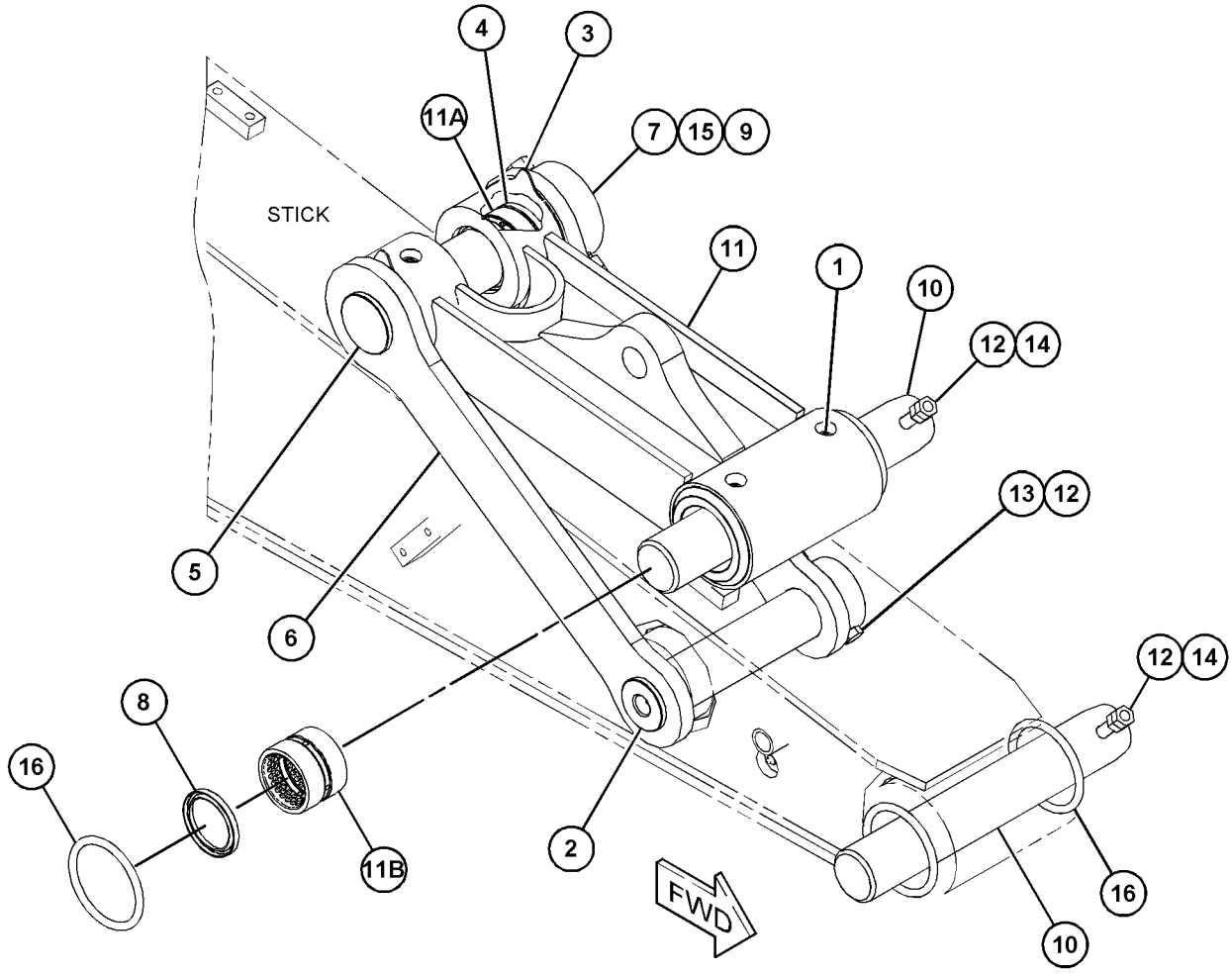

GRAPHIC #1 <END> g06232931

116-9115 LOCK GP-TRANSPORT

S/N: BR61-UP

PART OF 490-7669 BOOM AR

SMCS-7505 **i06858565**

NOTE	REF NO	GRAPHIC REF	PART NUMBER	QTY	PART NAME 1 2 3 4 5 6 (PRODUCT LEVEL)	SEE PAGE
	1	1	**7Y-6649**	2	PIN	
	2	1	**7Y-6641**	1	ROD AS	
M	3	1	**8T-6466**	2	BOLT (M10X1.5X60-MM)	
M	4	1	**8T-4133**	4	NUT (M10X1.5-THD)	

M - METRIC PART

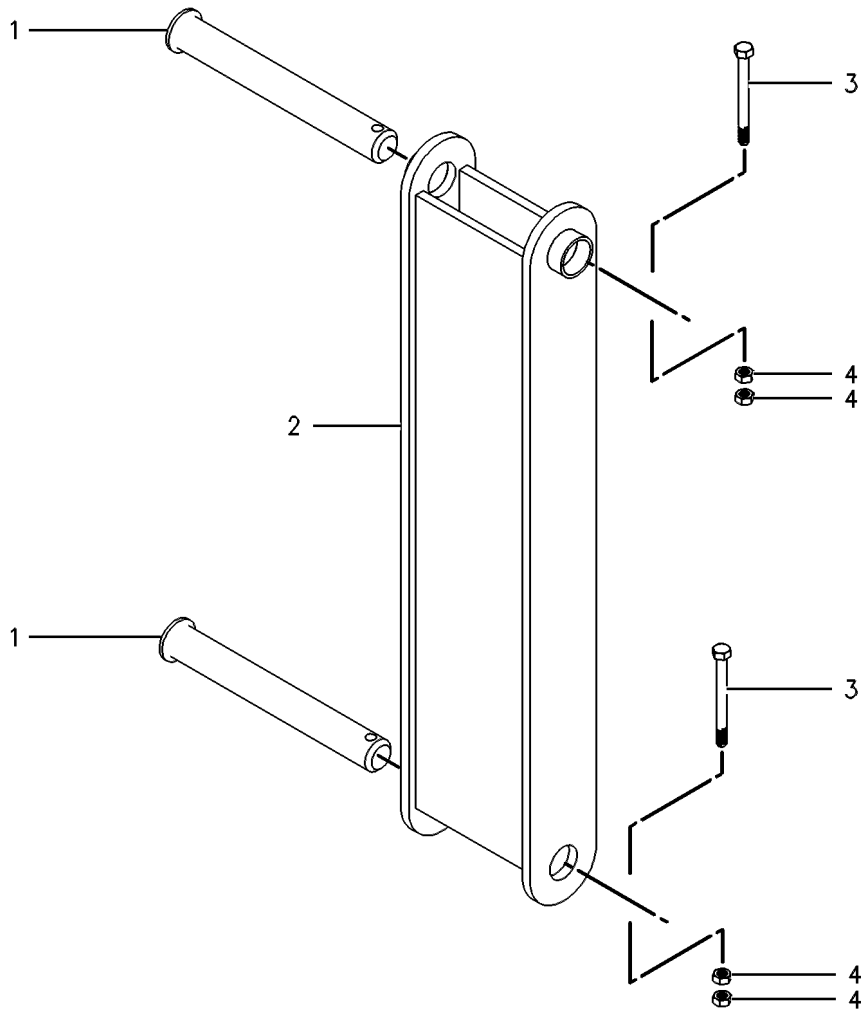

GRAPHIC #1 <END> g00287071

177-8628 PIN GP–COUPLER

S/N: BR61-UP

PART OF 455-3909 COUPLER AR-QUICK

SMCS-6108, 6501, 6502 **i06917620**

NOTE	REF NO	GRAPHIC REF	PART NUMBER	QTY	PART NAME 1 2 3 4 5 6 (PRODUCT LEVEL)	SEE PAGE
	1	1	**087-5805**	2	PIN	
M	2	1	**451-2183**	4	NUT (M16X2-THD)	
M	3	1	**236-6366**	2	BOLT (M16X2X195-MM)	

M - METRIC PART

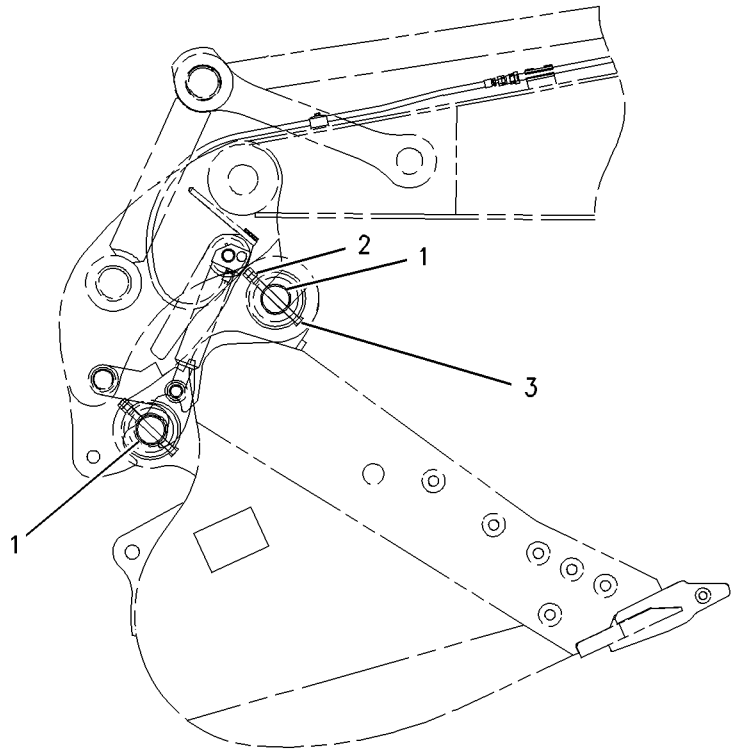

LEFT SIDE VIEW

GRAPHIC #1 <END> g00808848

339-4055 PIN GP-EXCAVATOR

S/N: BR61-UP

PART OF 510-7419 COMMON AR

SMCS-6108, 6501, 6502 **i07358577**

NOTE	REF NO	GRAPHIC REF	PART NUMBER	QTY	PART NAME 1 2 3 4 5 6 (PRODUCT LEVEL)	SEE PAGE
B	1	1	**093-0083**	4	SHIM (1-MM THK)	
B	2	1	**093-0115**	2	SHIM (2-MM THK)	
	3	1	**093-0349**	2	WASHER (22X60X6-MM THK)	
	4	1	**093-0363**	2	SPACER (83X120X12-MM THK)	
B	5	1	**133-2425**	2	SHIM (0.5-MM THK)	
	6	1	**4I-4812**	2	PIN AS	
	7	1	**212-2838**	2	SHIM (2-MM THK)	
B	8	1	**308-8775**	1	SHIM (0.5-MM THK)	
B	9	1	**308-8776**	2	SHIM (1-MM THK)	
B	10	1	**308-8777**	1	SHIM (2-MM THK)	
	11	1	**324-0938**	1	PLATE	
	12	1	**343-9295**	1	PIN AS	
M	13	1	**453-1259**	2	BOLT (M16X2X40-MM)	
	14	1	**451-2176**	2	WASHER-HARD (22X35X3.5-MM THK)	
M	15	1	**453-2844**	2	BOLT (M20X2.5X30-MM)	
	16	1	**451-2175**	2	WASHER-HARD (17.5X30X3.5-MM THK)	

B - USE AS REQUIRED
M - METRIC PART

339-4055 **PIN GP-EXCAVATOR (**contd.**)** **i07358577**

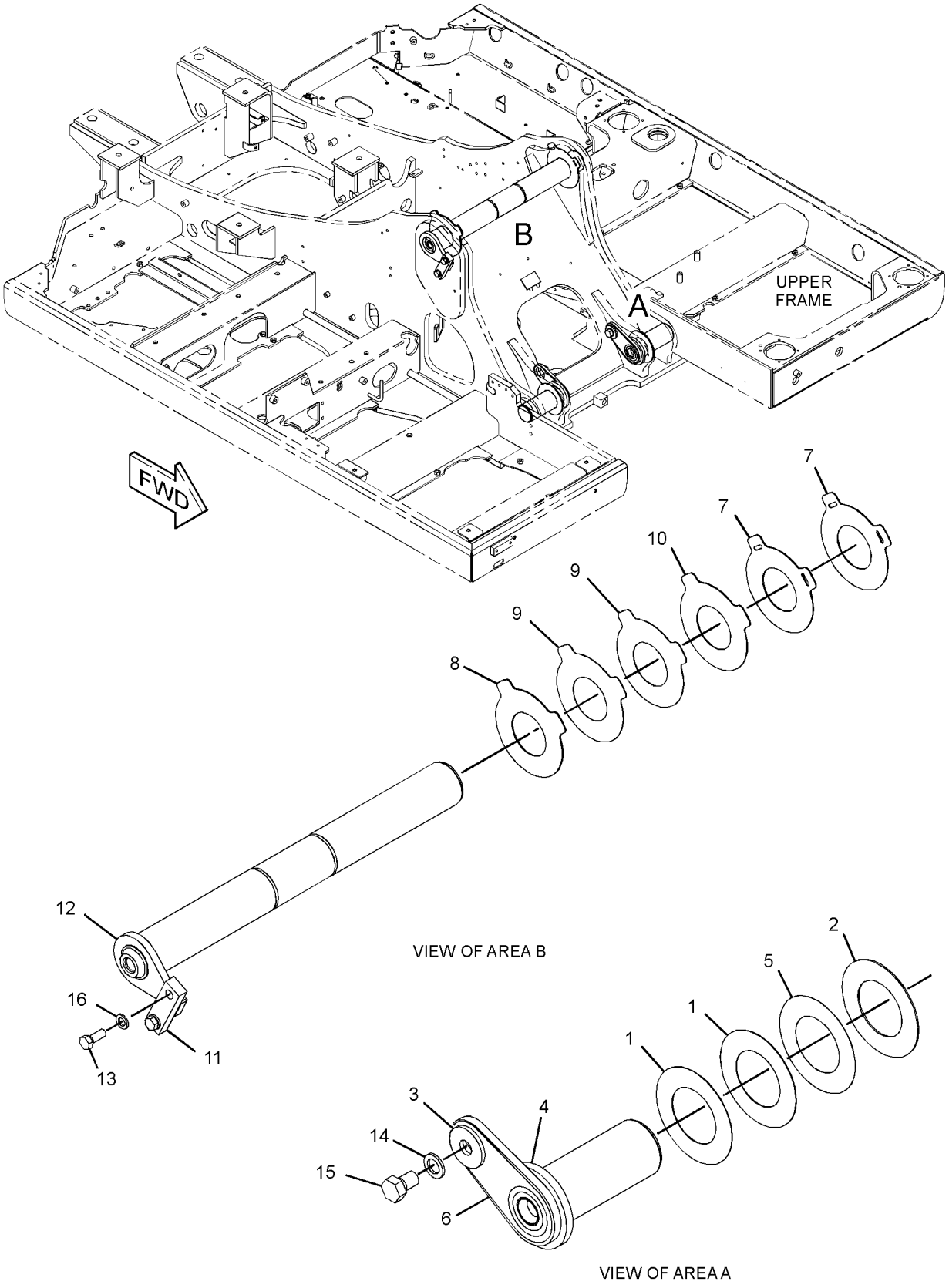

GRAPHIC #1 <END> g02615197

531-3494 STICK AR—SUPER LONG REACH

S/N: BR61-UP
6.3-M (20.7-FT)

SMCS-6502 **i07368017**

NOTE	PART NUMBER	QTY	PART NAME 1 2 3 4 5 6 (PRODUCT LEVEL)	SEE PAGE
Y	*525-6163*	1	LINES GP-BUCKET CYLINDER	440
Y	*127-6625*	1	LINES GP-GREASE (STICK)	552
Y	*489-0418*	1	STICK GP-HOE	565

Y - SEPARATE ILLUSTRATION

<END>

490-7677 STICK AR-HOE—REACH

S/N: BR61-UP
2.9-M (9.4-FT). B1-FAMILY, HEAVY-DUTY. GRADE CONTROL

SMCS-6502 **i07362987**

NOTE	PART NUMBER	QTY	PART NAME 1 2 3 4 5 6 (PRODUCT LEVEL)	SEE PAGE
Y	*187-5693*	1	LINES GP-BUCKET CYLINDER (REACH)	437
Y	*489-0389*	1	STICK GP-HOE (B1-FAMILY, HEAVY-DUTY)	563

Y - SEPARATE ILLUSTRATION

<END>

490-7678 STICK AR-HOE—B1-FAMILY, GRADE CONTROL

S/N: BR61-UP
2.5-M (8.2-FT) REACH. HEAVY DUTY

SMCS-6502 **i07366405**

NOTE	PART NUMBER	QTY	PART NAME 1 2 3 4 5 6 (PRODUCT LEVEL)	SEE PAGE
Y	*260-8011*	1	LINES GP-STICK	483
Y	*489-0405*	1	STICK GP-HOE	564

Y - SEPARATE ILLUSTRATION

<END>

489-0389 STICK GP-HOE—REACH

S/N: BR61-UP

2.9-M (9.4-FT). B1-FAMILY, HEAVY-DUTY. GRADE CONTROL

PART OF 490-7677 STICK AR-HOE

SMCS-6502 **i07362989**

NOTE	REF NO	GRAPHIC REF	PART NUMBER	QTY	PART NAME 1 2 3 4 5 6 (PRODUCT LEVEL)	SEE PAGE
	1	1	**166-1494**	2	SEAL-LIP TYPE	
	2	1	**166-1495**	2	SEAL-LIP TYPE	
	3	1	**3B-8489**	3	FITTING-GREASE (1/8-27 PTF)	
	4	1	**4I-4809**	1	PIN AS	
	5	1	**4I-4811**	1	PIN AS	
	6	1	**093-0349**	2	WASHER (22X60X6-MM THK)	
	7	1	**093-0363**	1	SPACER (83X120X12-MM THK)	
	8	1	**118-5982**	1	SPACER (73X105X14-MM THK)	
	9	1	**166-1486**	2	SHIM (2-MM THK)	
	10	1	**235-7679**	2	SEAL-LIP TYPE	
	11	1	**451-2176**	2	WASHER-HARD (22X35X3.5-MM THK)	
M	12	1	**453-2844**	2	BOLT (M20X2.5X30-MM)	
	13	1	**542-1394**	1	STICK & BEARING AS	
	13A	1	**229-1096**	2	BUSHING	
	13B	1	**489-3008**	2	BEARING-SLEEVE	
	13C	1	**489-3010**	2	BEARING-SLEEVE	

M - METRIC PART

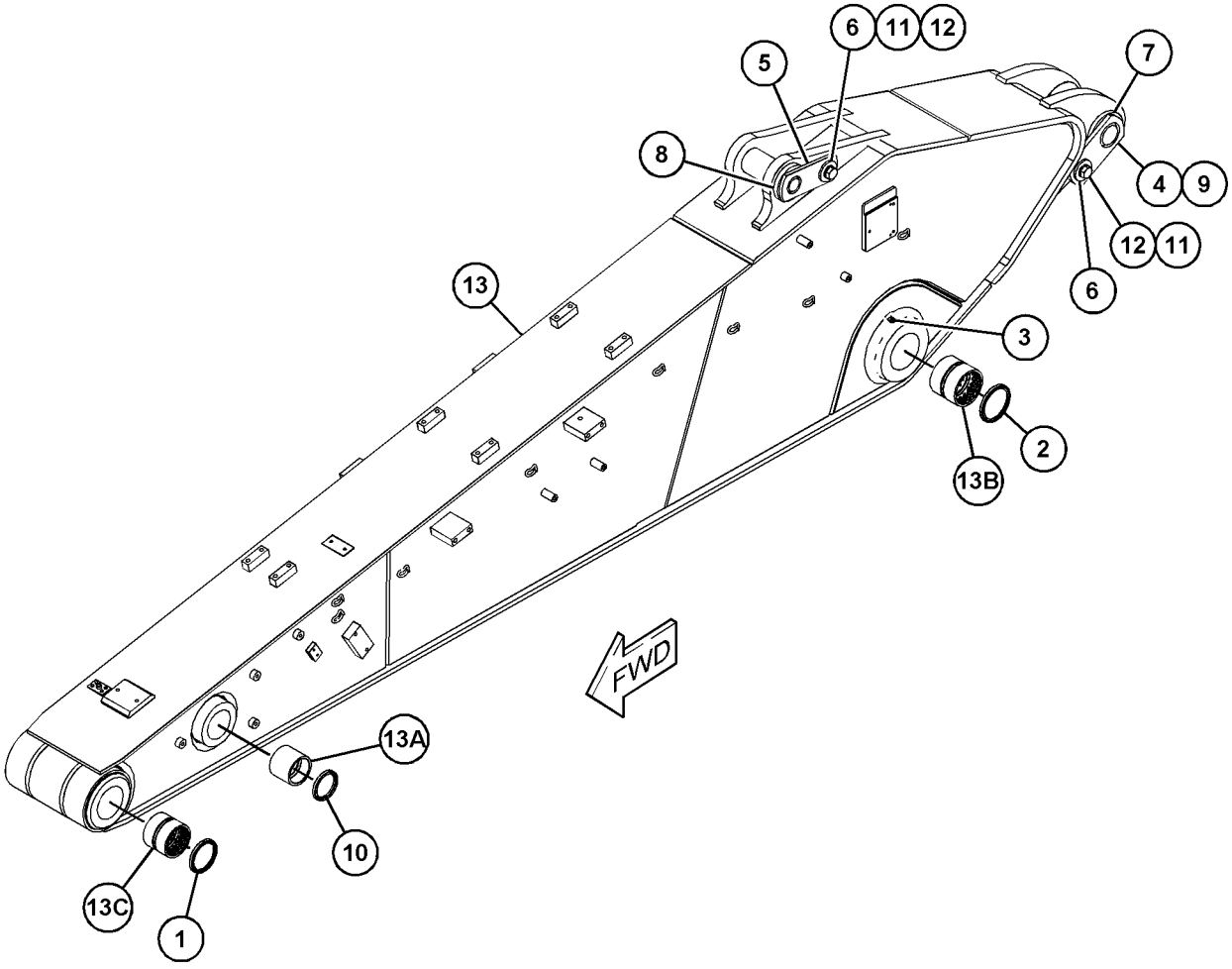

GRAPHIC #1 <END> g06232984

489-0405 STICK GP-HOE—B1-FAMILY

S/N: BR61-UP
2.5-M (8.2-FT). REACH
PART OF 490-7678 STICK AR-HOE

SMCS-6502 **i07366406**

NOTE	REF NO	GRAPHIC REF	PART NUMBER	QTY	PART NAME 1 2 3 4 5 6 (PRODUCT LEVEL)	SEE PAGE
	1	1	**166-1494**	2	SEAL-LIP TYPE	
	2	1	**166-1495**	2	SEAL-LIP TYPE	
	3	1	**3B-8489**	3	FITTING-GREASE (1/8-27 PTF)	
	4	1	**4I-4809**	1	PIN AS	
	5	1	**4I-4811**	1	PIN AS	
	6	1	**093-0349**	2	WASHER (22X60X6-MM THK)	
	7	1	**093-0363**	1	SPACER (83X120X12-MM THK)	
	8	1	**118-5982**	1	SPACER (73X105X14-MM THK)	
	9	1	**166-1486**	2	SHIM (2-MM THK)	
	10	1	**235-7679**	2	SEAL-LIP TYPE	
	11	1	**451-2176**	2	WASHER-HARD (22X35X3.5-MM THK)	
M	12	1	**453-2844**	2	BOLT (M20X2.5X30-MM)	
	13	1	**542-1396**	1	STICK & BEARING AS	
	13A	1	**229-1096**	2	BUSHING	
	13B	1	**489-3008**	2	BEARING-SLEEVE	
	13C	1	**489-3010**	2	BEARING-SLEEVE	

M - METRIC PART

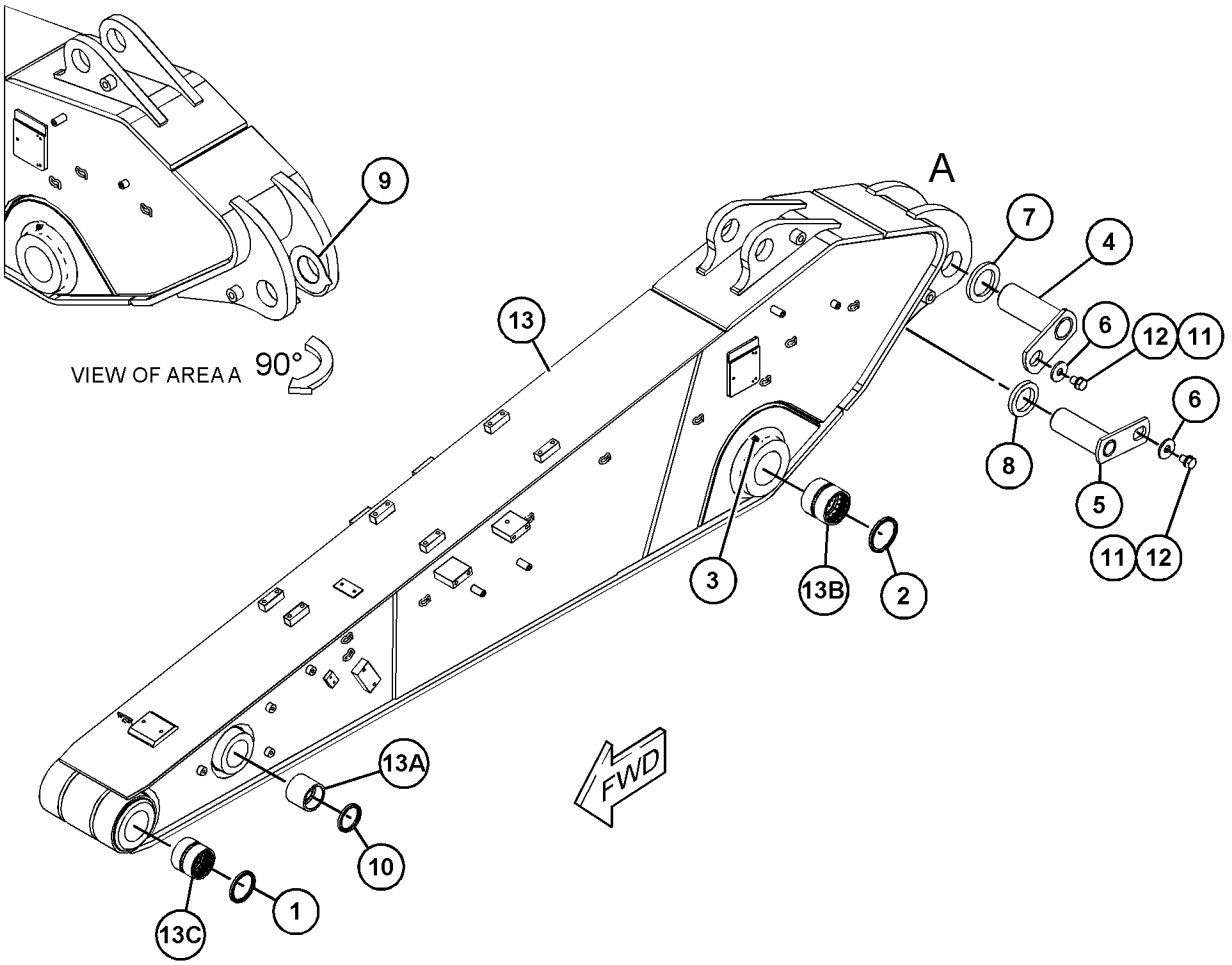

GRAPHIC #1 <END> g06269845

489-0418 STICK GP-HOE

S/N: BR61-UP
6280-MM (247.2-IN)
PART OF 531-3494 STICK AR

SMCS-6502 **i07368014**

NOTE	REF NO	GRAPHIC REF	PART NUMBER	QTY	PART NAME 1 2 3 4 5 6 (PRODUCT LEVEL)	SEE PAGE
	1	1	**3B-8489**	2	FITTING-GREASE (1/8-27 PTF)	
	2	1	**4I-4618**	1	PIN AS	
M	3	1	**8T-4179**	1	BOLT (M12X1.75X20-MM)	
	4	1	**086-0297**	1	WASHER (13X50X6-MM THK)	
	5	1	**093-0349**	1	WASHER (22X60X6-MM THK)	
	6	1	**093-0357**	1	SPACER (63X100X9-MM THK)	
	7	1	**093-0363**	1	SPACER (83X120X12-MM THK)	
	8	1	**093-1433**	2	SEAL-LIP TYPE	
	9	1	**096-0131**	2	SEAL-LIP TYPE	
	10	1	**127-3913**	1	PIN AS	
	11	1	**166-1486**	2	SHIM (2-MM THK)	
	12	1	**166-1495**	2	SEAL-LIP TYPE	
	13	1	**451-2176**	1	WASHER-HARD (22X35X3.5-MM THK)	
	14	1	**451-2182**	1	WASHER-HARD (13.5X25.5X3-MM THK)	
M	15	1	**453-2844**	1	BOLT (M20X2.5X30-MM)	
	16	1	**542-1397**	1	STICK & BEARING AS	
	16A	1	**489-3008**	2	BEARING-SLEEVE	
	16B	1	**229-1095**	2	BUSHING	
	16C	1	**526-7666**	2	BEARING-SLEEVE	

M - METRIC PART

489-0418 **STICK GP-HOE (**contd.**)** **i07368014**

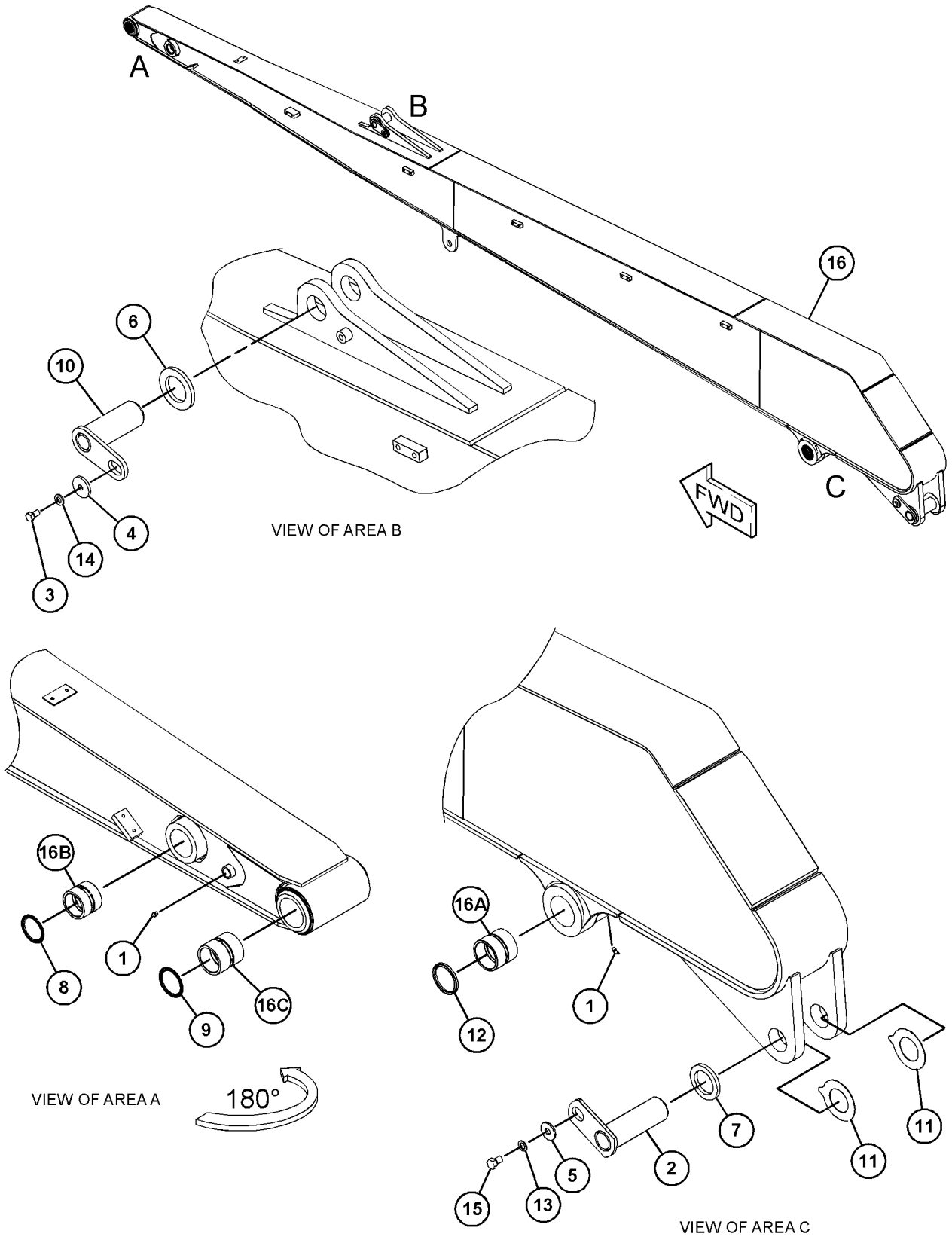

GRAPHIC #1 <END> g06270045

7Y-2219 ADJUSTER GP-BUCKET—B-FAMILY

S/N: BR61-UP

PART OF 347-6730, 347-6852, 347-6853 BUCKET & ADJUSTER GP

SMCS-6513, 6700

i04707433

NOTE	REF NO	GRAPHIC REF	PART NUMBER	QTY	PART NAME 1 2 3 4 5 6 (PRODUCT LEVEL)	SEE PAGE
B	1	1	**086-0322**	6	SHIM (1-MM THK)	
B	2	1	**086-0321**	4	SHIM (0.5-MM THK)	
	3	1	**193-5014**	1	PIN	
	4	1	**134-8948**	1	PLATE	
M	5	1	**8T-4193**	4	BOLT (M16X2X50-MM)	
	6	1	**9X-8257**	4	WASHER (17.5X30X3.5-MM THK)	
	7	1	**193-5015**	1	FLANGE	

B - USE AS REQUIRED
M - METRIC PART

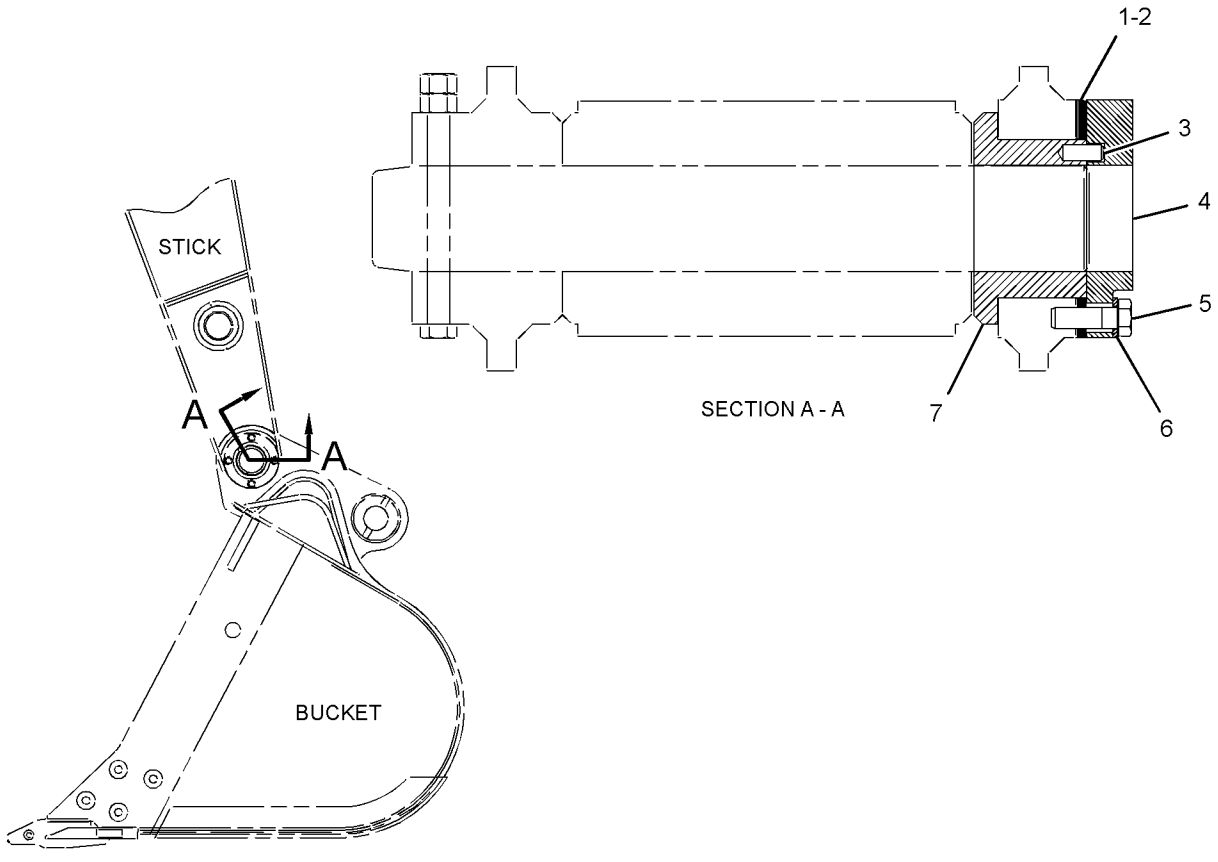

RIGHT SIDE VIEW

GRAPHIC #1 <END> g02812617

347-6730 BUCKET & ADJUSTER GP—HEAVY-DUTY, B-FAMILY

S/N: BR61-UP

1050-MM (42-IN) WIDE X 1-CU M (1.31-CU YD) CAPACITY. K-90 ADAPTERS, QTY OF 5

SMCS-6503, 6513 **i07156019**

NOTE	PART NUMBER	QTY	PART NAME 1 2 3 4 5 6 (PRODUCT LEVEL)	SEE PAGE
Y	**7Y-2219**	1	ADJUSTER GP-BUCKET (B-FAMILY)	567
Y	*347-6736*	1	BUCKET AS-HEAVY DUTY (B-FAMILY)	571
	2C-9259	2	PLATE-IDENTIFICATION (CAT)	
			(ON LH & RH SIDES OF BUCKET)	
	312-5694	1	SETSCREW (1/4-20X0.25-IN)	
			(USE TO MOUNT BUCKET INFORMATION PLATE)	
Y - SEPARATE ILLUSTRATION				

<END>

347-6852 BUCKET & ADJUSTER GP—HEAVY-DUTY, B-FAMILY

S/N: BR61-UP

1200-MM (48-IN) WID X 1.19-CU M (1.56-CU YD) CAPACITY. K-90 ADAPTERS, QTY OF 4

PART OF 511-3073, 547-5435 BUCKET AR-HEAVY DUTY

SMCS-6503, 6513 **i06804894**

NOTE	PART NUMBER	QTY	PART NAME 1 2 3 4 5 6 (PRODUCT LEVEL)	SEE PAGE
Y	**7Y-2219**	1	ADJUSTER GP-BUCKET (B-FAMILY)	567
Y	*371-9085*	1	BUCKET AS-HEAVY DUTY (B-FAMILY)	572
	2C-9259	2	PLATE-IDENTIFICATION (CAT)	
			(ON LH & RH SIDES OF BUCKET)	
	312-5694	1	SETSCREW (1/4-20X0.25-IN)	
			(USE TO MOUNT BUCKET INFORMATION PLATE)	
Y - SEPARATE ILLUSTRATION				

<END>

347-6853 BUCKET & ADJUSTER GP—HEAVY-DUTY SPADE, B-FAMILY

S/N: BR61-UP

1350-MM (54-IN) WIDE X 1.4-CU M (1.83-CU YD) CAPACITY. K-90 ADAPTERS, QTY OF 5

PART OF 511-3074, 543-4399, 546-6063 BUCKET AR-HEAVY DUTY

SMCS-6503, 6513 **i06804539**

NOTE	PART NUMBER	QTY	PART NAME 1 2 3 4 5 6 (PRODUCT LEVEL)	SEE PAGE
Y	**7Y-2219**	1	ADJUSTER GP-BUCKET (B-FAMILY)	567
Y	*371-9086*	1	BUCKET AS-HEAVY DUTY SPADE (B-FAMILY)	573
	2C-9259	2	PLATE-IDENTIFICATION (CAT)	
			(ON LH & RH SIDES OF BUCKET)	
	312-5694	1	SETSCREW (1/4-20X0.25-IN)	
			(USE TO MOUNT BUCKET INFORMATION PLATE)	
Y - SEPARATE ILLUSTRATION				

<END>

441-6077 BUCKET AR-DITCH CLEANING—A-FAMILY

S/N: BR61-UP

1200-MM (48-IN) WIDE X 0.57-CU M (0.57-CU M) CAPACITY

SMCS-6526 **i06801155**

NOTE	PART NUMBER	QTY	PART NAME 1 2 3 4 5 6 (PRODUCT LEVEL)	SEE PAGE
Y	*452-6069*	1	BUCKET GP-DITCH CLEANING	574
Y	*443-4366*	1	EDGE GP-CUTTING	578

Y - SEPARATE ILLUSTRATION

<END>

511-3073 BUCKET AR-HEAVY DUTY—B-FAMILY

S/N: BR61-UP

1200-MM (48-IN) WIDE X 1.19-CU M (1.56-CU YD) CAPACITY

SMCS-6531 **i06821115**

NOTE	PART NUMBER	QTY	PART NAME 1 2 3 4 5 6 (PRODUCT LEVEL)	SEE PAGE
Y	**347-6852**	1	BUCKET & ADJUSTER GP (HEAVY-DUTY, B-FAMILY)	568
Y	**357-2698**	1	SIDECUTTER GP	579
Y	*217-4893*	4	TIP GP-PENETRATION PLUS (K-90)	580

Y - SEPARATE ILLUSTRATION

<END>

511-3074 BUCKET AR-HEAVY DUTY—B-FAMILY

S/N: BR61-UP

1350-MM (54-IN) WIDE X1.40-CU M (1.83-CU YD) CAPACITY

SMCS-6531 **i06821106**

NOTE	PART NUMBER	QTY	PART NAME 1 2 3 4 5 6 (PRODUCT LEVEL)	SEE PAGE
Y	**347-6853**	1	BUCKET & ADJUSTER GP (HEAVY-DUTY SPADE, B-FAMILY)	568
Y	**357-2698**	1	SIDECUTTER GP	579
Y	*217-4893*	5	TIP GP-PENETRATION PLUS (K-90)	580

Y - SEPARATE ILLUSTRATION

<END>

543-4399 BUCKET AR-HEAVY DUTY—B-FAMILY

S/N: BR61-UP

1350-MM (54-IN) WIDE X 1.40 CU M (1.83-CU YD) CAPACITY

SMCS-6531 **i07360993**

NOTE	PART NUMBER	QTY	PART NAME 1 2 3 4 5 6 (PRODUCT LEVEL)	SEE PAGE
Y	**347-6853**	2	BUCKET & ADJUSTER GP (HEAVY-DUTY SPADE, B-FAMILY)	568

Y - SEPARATE ILLUSTRATION

<END>

546-6063 BUCKET AR-HEAVY DUTY—B-FAMILY

S/N: BR61-UP

1350-MM (54-IN) WIDE X 1.40-CU M (1.83-CU YD) CAPACITY

SMCS-6531 **i07361011**

NOTE	PART NUMBER	QTY	PART NAME 1 2 3 4 5 6 (PRODUCT LEVEL)	SEE PAGE
Y	**347-6853**	1	BUCKET & ADJUSTER GP (HEAVY-DUTY SPADE, B-FAMILY)	568

Y - SEPARATE ILLUSTRATION

<END>

547-5435 BUCKET AR-HEAVY DUTY—B-FAMILY

S/N: BR61-UP

1200-MM (48-IN) WIDE X 1.19-CU M (1.56-CU YD) CAPACITY

SMCS-6531 **i07362140**

NOTE	PART NUMBER	QTY	PART NAME 1 2 3 4 5 6 (PRODUCT LEVEL)	SEE PAGE
Y	**347-6852**	1	BUCKET & ADJUSTER GP (HEAVY-DUTY, B-FAMILY)	568

Y - SEPARATE ILLUSTRATION

<END>

347-6736 BUCKET AS-HEAVY DUTY–B-FAMILY

S/N: BR61-UP

1050-MM (42-IN) WIDE X 1.0-CU M (1.31-CU YD) CAPACITY. K-90 ADAPTERS, QTY OF 5

PART OF 347-6730 BUCKET & ADJUSTER GP

SMCS-6531 **i05164597**

NOTE	REF NO	GRAPHIC REF	PART NUMBER	QTY	PART NAME 1 2 3 4 5 6 (PRODUCT LEVEL)	SEE PAGE
	1	1	**279-4093**	1	EDGE AS	
	1A	1	**220-9094**	3	ADAPTER-TIP (K-90, 2-STRAP, CENTER)	
	1B	1	**232-2095**	1	ADAPTER-TIP (K-90, 2-STRAP, RH)	
	1C	1	**232-2096**	1	ADAPTER-TIP (K-90, 2-STRAP, LH)	
	1D	1	**8P-9770**	1	PLATE	
	2	1	**347-7516**	1	PLATE AS-HINGE	
	3	1	**347-7544**	1	PLATE-WEAR	
	4	1	**347-7551**	4	PLATE-WEAR	
	5	1	**347-7556**	1	PLATE-WEAR	
	6	1	**347-7571**	1	PLATE (LH)	
	7	1	**347-7572**	1	PLATE (RH)	
	8	1	**347-7574**	2	PLATE-WEAR	

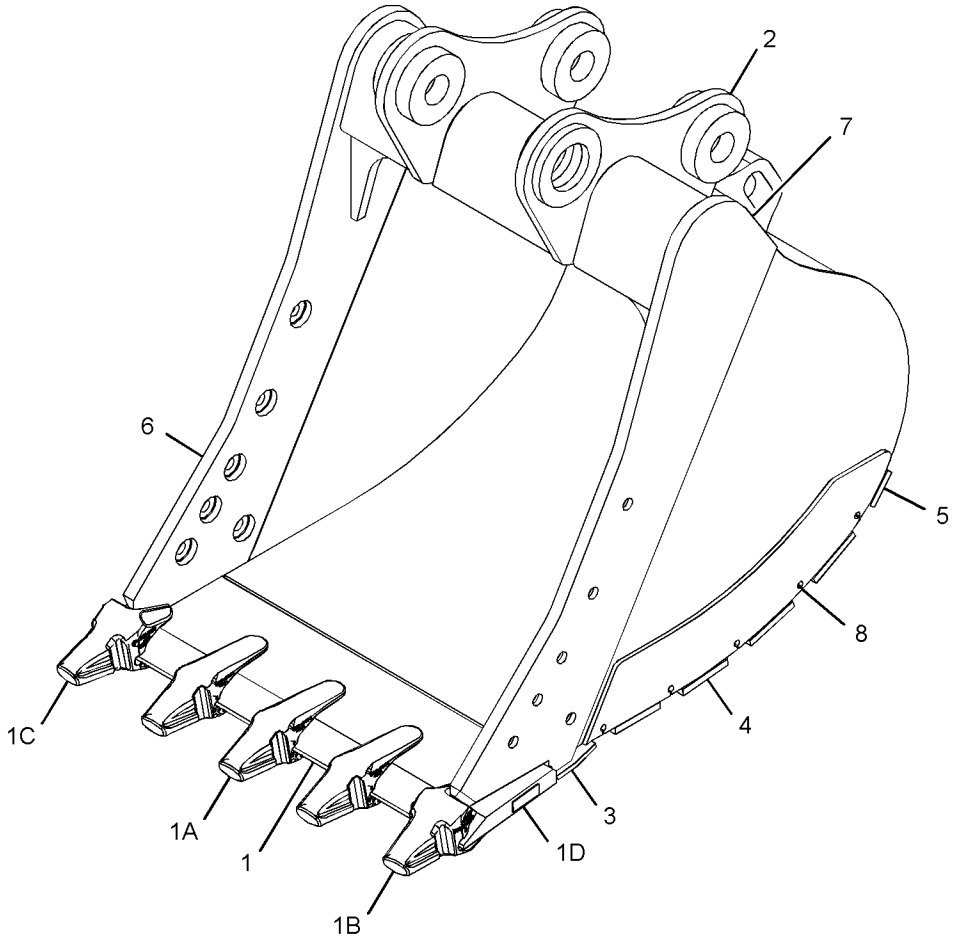

GRAPHIC #1 <END> g02910917

371-9085 BUCKET AS-HEAVY DUTY–B-FAMILY

S/N: BR61-UP

1200-MM (48-IN) WIDE X 1.19-CU M (1.56-CU YD) CAPACITY. K-90 ADAPTERS, QTY OF 4

PART OF 347-6852 BUCKET & ADJUSTER GP

SMCS-6531 **i05770166**

NOTE	REF NO	GRAPHIC REF	PART NUMBER	QTY	PART NAME 1 2 3 4 5 6 (PRODUCT LEVEL)	SEE PAGE
	1	1	**348-3184**	1	PLATE AS-HINGE	
	2	1	**331-1924**	4	PLATE-WEAR	
	3	1	**331-1926**	1	PLATE-WEAR	
	4	1	**347-7545**	1	PLATE-WEAR	
	5	1	**347-7574**	2	PLATE-WEAR	
	6	1	**347-7572**	1	PLATE (RH)	
	7	1	**347-7571**	1	PLATE (LH)	
	8	1	**348-3094**	1	EDGE AS	
	8A	1	**8P-9770**	1	PLATE	
	8B	1	**220-9094**	2	ADAPTER-TIP (K-90, 2-STRAP, CENTER)	
	8C	1	**232-2095**	1	ADAPTER-TIP (K-90, 2-STRAP, RH)	
	8D	1	**232-2096**	1	ADAPTER-TIP (K-90, 2-STRAP, LH)	

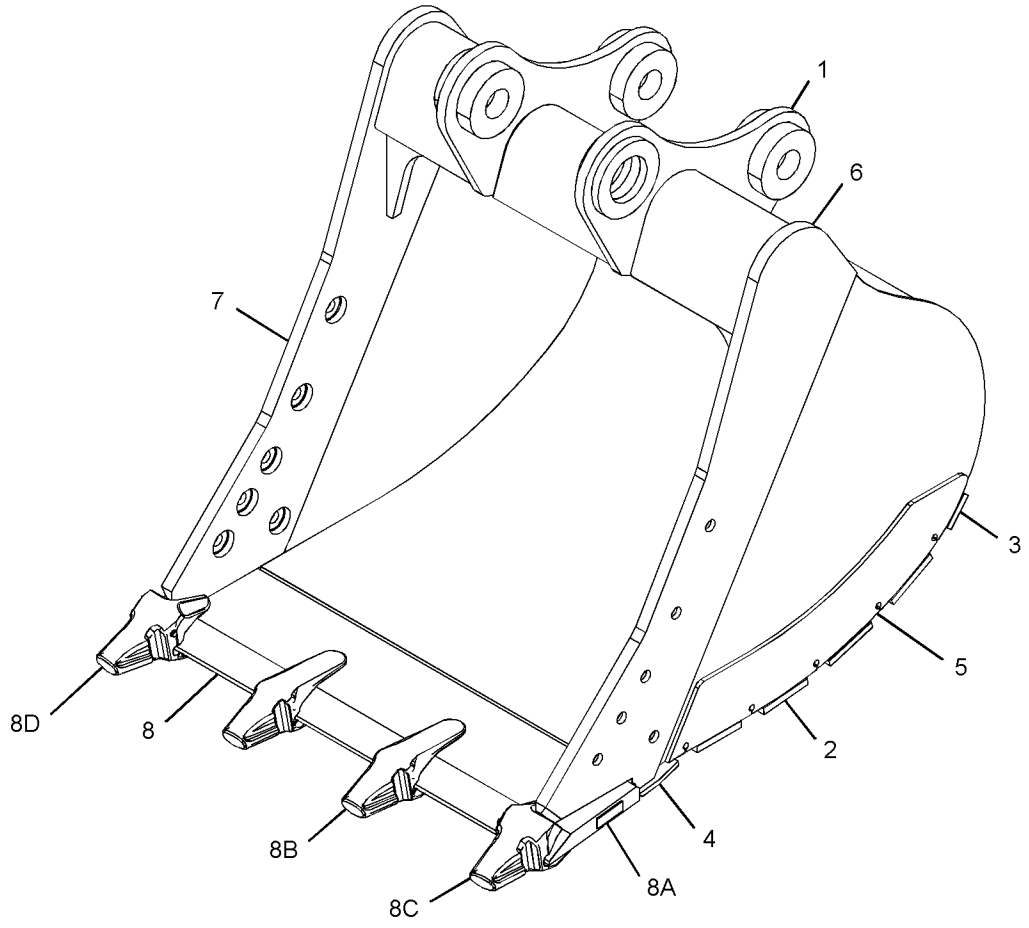

GRAPHIC #1 <END> g03345877

371-9086 BUCKET AS-HEAVY DUTY SPADE—B-FAMILY

S/N: BR61-UP

1350-MM (54-IN) WIDE X 1.4-CU M (1.83-CU YD) CAPACITY. K-90 ADAPTERS, QTY OF 5

PART OF 347-6853 BUCKET & ADJUSTER GP

SMCS-6001 **i05164679**

NOTE	REF NO	GRAPHIC REF	PART NUMBER	QTY	PART NAME 1 2 3 4 5 6 (PRODUCT LEVEL)	SEE PAGE
	1	1	**348-3185**	1	PLATE AS-HINGE	
	2	1	**331-1925**	4	PLATE-WEAR	
	3	1	**331-1927**	1	PLATE-WEAR	
	4	1	**347-7547**	1	PLATE-WEAR	
	5	1	**347-7571**	1	PLATE (LH)	
	6	1	**347-7572**	1	PLATE (RH)	
	7	1	**347-7574**	2	PLATE-WEAR	
	8	1	**371-9146**	1	EDGE AS	
	8A	1	**220-9094**	3	ADAPTER-TIP (K-90, 2-STRAP, CENTER)	
	8B	1	**232-2095**	1	ADAPTER-TIP (K-90, 2-STRAP, RH)	
	8C	1	**232-2096**	1	ADAPTER-TIP (K-90, 2-STRAP, LH)	
	8D	1	**8P-9770**	1	PLATE	

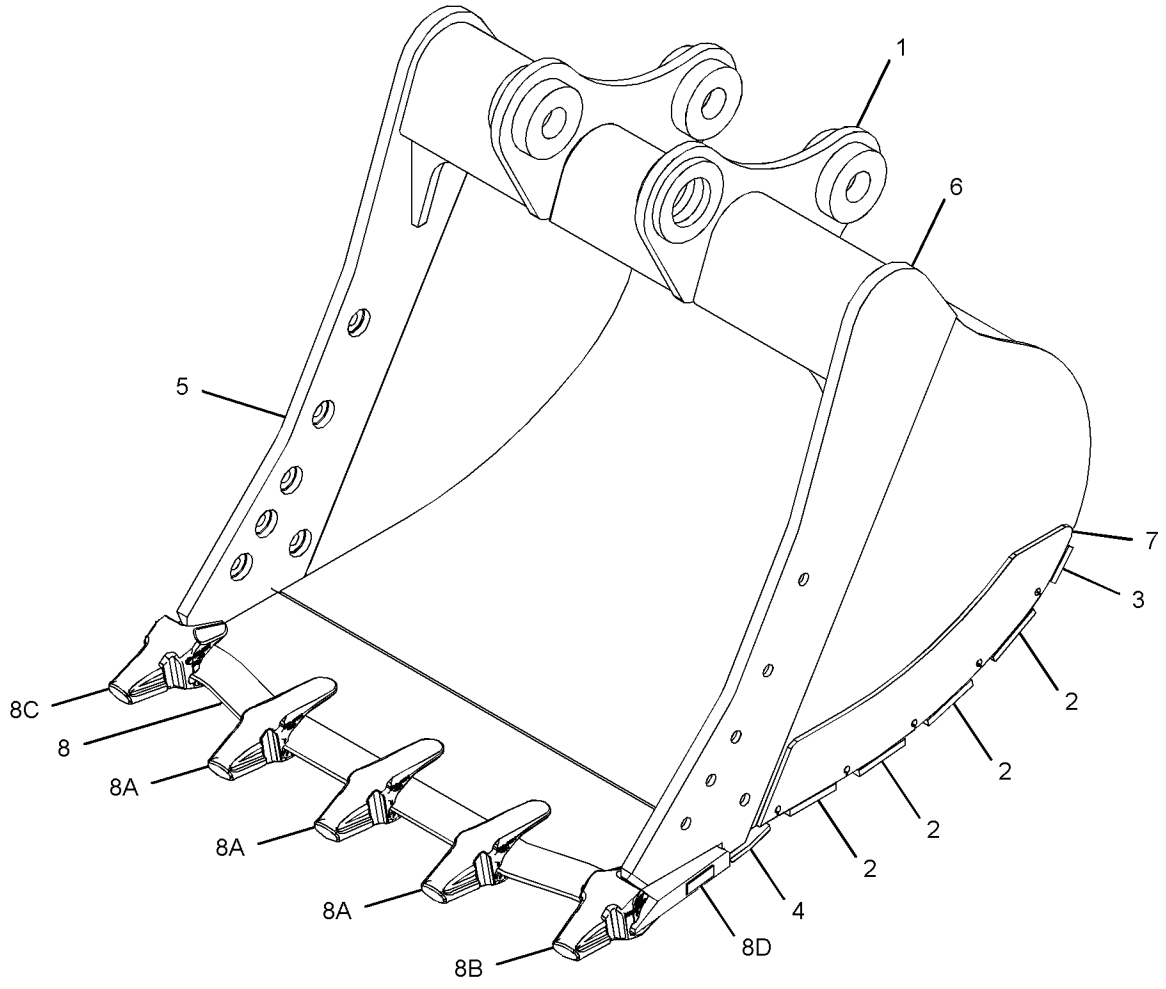

GRAPHIC #1 <END> g03317879

452-6069 BUCKET GP-DITCH CLEANING–A-FAMILY

S/N: BR61-UP

1200-MM (48-IN) WIDE X 0.57-CU M (0.57-CU M) CAPACITY

PART OF 441-6077 BUCKET AR-DITCH CLEANING

SMCS-6526 **i06755924**

NOTE	REF NO	GRAPHIC REF	PART NUMBER	QTY	PART NAME 1 2 3 4 5 6 (PRODUCT LEVEL)	SEE PAGE
	1	1	**312-5694**	1	SETSCREW (1/4-20X0.25-IN)	
	2	1	*452-6071*	1	BUCKET AS-DITCH CLEANING	
	2A	1	**442-1790**	1	EDGE	
	2B	1	**442-1798**	1	PLATE AS-HINGE	
	2C	1	**2C-9259**	1	PLATE-IDENTIFICATION (CAT)	
	2D	1	**452-6080**	2	PLATE	
	2E	1	**442-1795**	2	PLATE (CORNER)	
	2F	1	**442-1793**	2	PLATE-SIDE BAR	

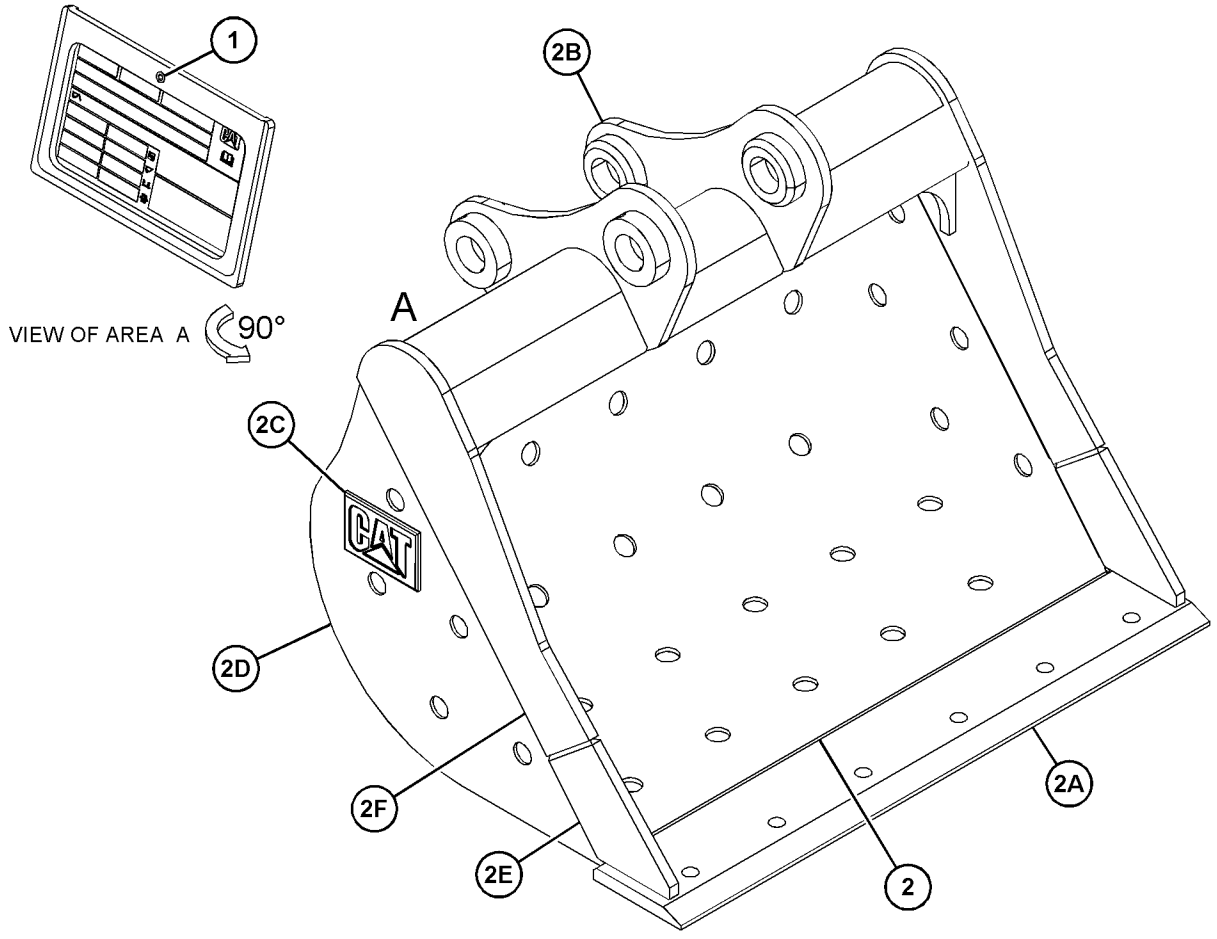

GRAPHIC #1 <END> g03833104

517-4758 CONTROL AR-QUICK COUPLER

S/N: BR61-UP

SMCS-6129 **i07410278**

NOTE	PART NUMBER	QTY	PART NAME 1 2 3 4 5 6 (PRODUCT LEVEL)	SEE PAGE
Y	*488-6825*	1	SWITCH GP-ROCKER	227
Y	*511-9446*	1	WIRING GP-VALVE	278

Y - SEPARATE ILLUSTRATION

<END>

455-3909 COUPLER AR-QUICK–B-LINKAGE

S/N: BR61-UP

SMCS-1408, 5057, 6129 **i06755836**

NOTE	PART NUMBER	QTY	PART NAME 1 2 3 4 5 6 (PRODUCT LEVEL)	SEE PAGE
Y	*455-3910*	1	COUPLER AR-QUICK	575
Y	*177-8628*	1	PIN GP (COUPLER)	559

Y - SEPARATE ILLUSTRATION

<END>

455-3910 COUPLER AR-QUICK–B-LINKAGE

S/N: BR61-UP

PART OF 455-3909 COUPLER AR-QUICK

SMCS-1408, 5057, 6129 **i06820997**

NOTE	PART NUMBER	QTY	PART NAME 1 2 3 4 5 6 (PRODUCT LEVEL)	SEE PAGE
Y	**388-0067**	1	COUPLER GP-QUICK	576
Y	**449-1136**	1	LINES GP-COUPLER	443
	160-8290	2	SHIM (1-MM THK)	

Y - SEPARATE ILLUSTRATION

<END>

388-0067 COUPLER GP-QUICK—B-LINKAGE

S/N: BR61-UP

PART OF 455-3910 COUPLER AR-QUICK

SMCS-1408, 5057, 6129 **i06919092**

NOTE	REF NO	GRAPHIC REF	PART NUMBER	QTY	PART NAME 1 2 3 4 5 6 (PRODUCT LEVEL)	SEE PAGE
M	1	1	**8T-4137**	1	BOLT (M10X1.5X20-MM)	
	2	1	**159-8036**	1	FILM-WARNING (READ OMM)	
	3	1	**355-5804**	2	PLUG	
	4	1	**388-0084**	1	LATCH	
	5	1	**388-0085**	1	ROCKER ARM	
	6	1	**388-0086**	1	ROCKER ARM	
	7	1	**388-0088**	2	SPRING-SPACER	
	8	1	**388-0090**	2	SPRING-GUIDE	
	9	1	**388-0091**	1	PIN	
	10	1	**388-0099**	1	PIN	
I	11	1	**388-0105**	3	HOSE AS	
I	12	1	**388-0110**	1	HOSE AS	
	13	1	**388-6876**	1	PIN	
Y	14	1	**390-9505**	1	CYLINDER GP-COUPLER	410
I	15	1	**393-7499**	1	HOSE AS	
	16	1	**424-6681**	2	SPRING	
I	17	1	**440-5314**	1	HOSE AS	
I	18	1	**440-5315**	1	HOSE AS	
	19	1	**446-7944**	1	PIN	
M	20	1	**8T-4136**	5	BOLT (M10X1.5X25-MM)	
	21	1	**458-3274**	1	PLATE-COVER	
	22	1	**458-3275**	1	PLATE	
	23	1	**463-1603**	1	WEDGE	
	24	1	**096-0015**	4	RING-RETAINING	
	25	1	**2D-6398**	2	RING-RETAINING	
	26	1	**2P-1279**	2	LOCKNUT (9/16-18-THD)	
	27	1	**349-6114**	1	PIN	
	28	1	**3J-1907**	1	SEAL-O-RING	
	29	1	**3J-7354**	1	SEAL-O-RING	
	30	1	**4D-1322**	2	RING-RETAINING	
	31	1	**4D-7794**	2	CLIP	
	32	1	**4J-5477**	3	SEAL-O-RING	
	33	1	**4M-8973**	2	ELBOW	
	34	1	**5B-0935**	7	FITTING-GREASE	
	35	1	**5P-9436**	2	PLUG	
	36	1	**6J-7836**	2	RING-SNAP	
	37	1	**6V-8397**	3	SEAL-O-RING	
	38	1	**6V-8636**	1	CONNECTOR	
	39	1	**6V-8647**	1	CONNECTOR	
	40	1	**6V-8979**	1	ELBOW	
	41	1	**6V-8980**	1	ELBOW	
	42	1	**6V-9168**	2	NUT (11/16-16-THD)	
	43	1	**6V-9828**	1	CAP (ORFS)	
	44	1	**6V-9829**	1	CAP	
	45	1	**8T-4121**	7	WASHER-HARD (11X21X2.5-MM THK)	

I - REFER TO HYDRAULIC INFORMATION SYSTEM
M - METRIC PART
Y - SEPARATE ILLUSTRATION

388-0067 **COUPLER GP-QUICK (**contd.**)** **i06919092**

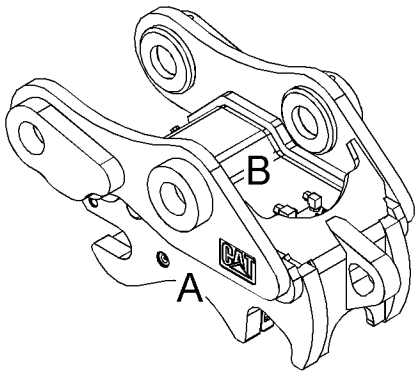

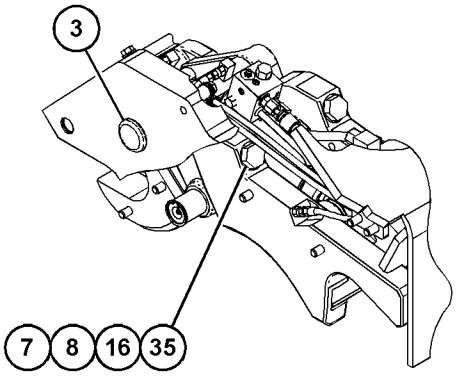

VIEW OF AREA A
(PARTS REMOVED FOR CLARITY)

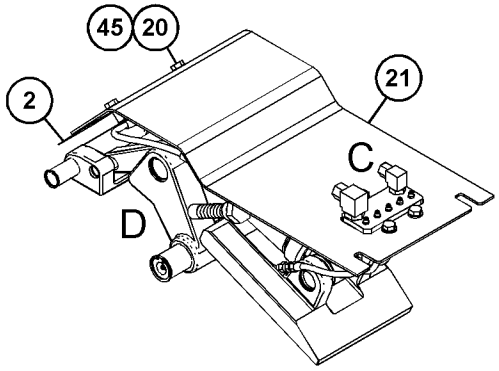

VIEW OF AREA B
(PARTS REMOVED FOR CLARITY)

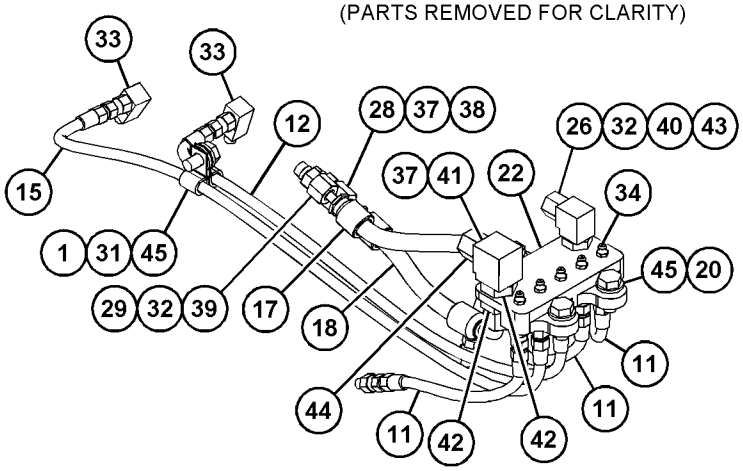

VIEW OF AREA C
(PARTS REMOVED FOR CLARITY)

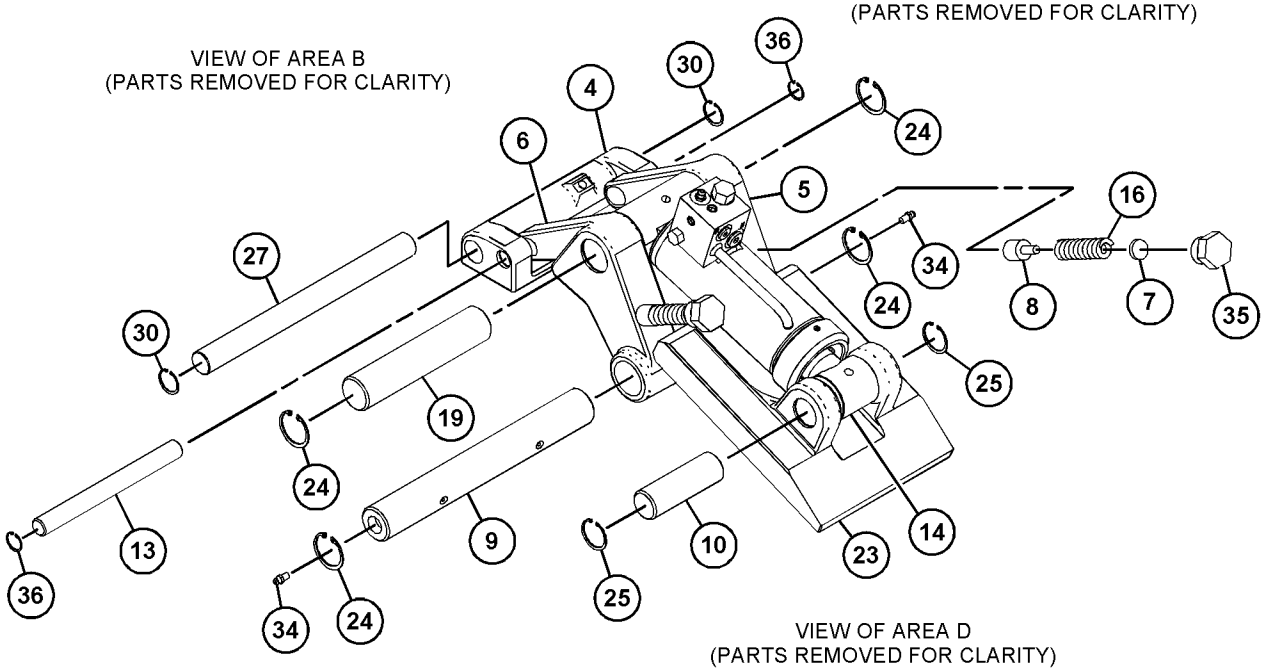

VIEW OF AREA D
(PARTS REMOVED FOR CLARITY)

GRAPHIC #1 <END> g03732255

443-4366 EDGE GP-CUTTING

S/N: BR61-UP

PART OF 441-6077 BUCKET AR-DITCH CLEANING

SMCS-6801 **i06755926**

NOTE	REF NO	GRAPHIC REF	PART NUMBER	QTY	PART NAME 1 2 3 4 5 6 (PRODUCT LEVEL)	SEE PAGE
	1	1	**441-6620**	2	EDGE-CUTTING	
	2	1	**2J-3507**	6	NUT-FULL (1-8-THD)	
	3	1	**4J-9058**	6	BOLT-PLOW (1-8X3.25-IN)	
	4	1	**5P-8250**	6	WASHER (28X49X5-MM THK)	

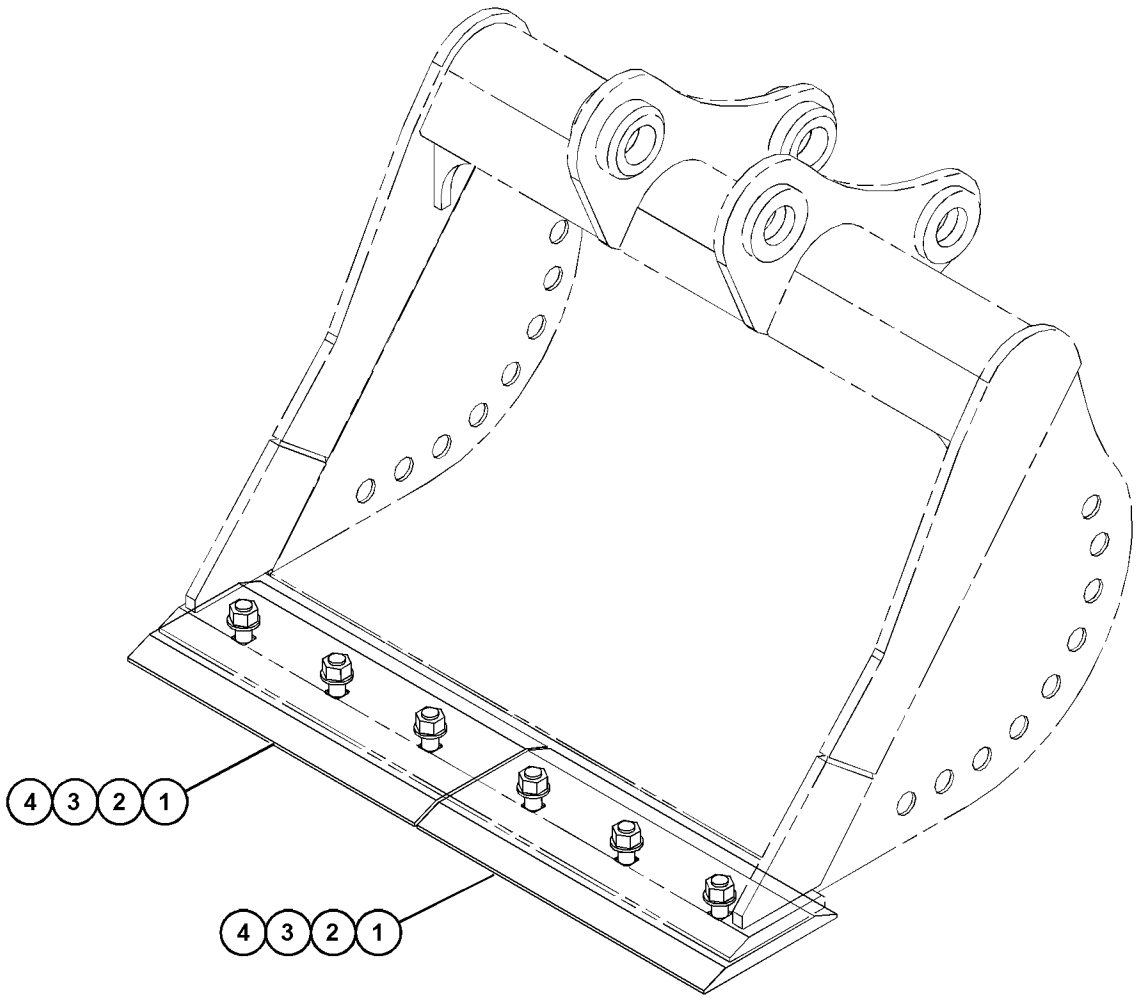

GRAPHIC #1 <END> g03581925

357-2698 SIDECUTTER GP

S/N: BR61-UP

PART OF 511-3073, 511-3074 BUCKET AR-HEAVY DUTY

SMCS-6813 **i07157317**

NOTE	REF NO	GRAPHIC REF	PART NUMBER	QTY	PART NAME 1 2 3 4 5 6 (PRODUCT LEVEL)	SEE PAGE
	1	1	**522-6333**	1	SIDECUTTER (RH)	
	2	1	**522-6334**	1	SIDECUTTER (LH)	
	3	1	**1D-4635**	8	BOLT (1-8X2.5-IN)	
	4	1	**2J-3507**	8	NUT-FULL (1-8-THD)	
	5	1	**3K-5234**	8	WASHER-HARD (28X49X6-MM THK)	

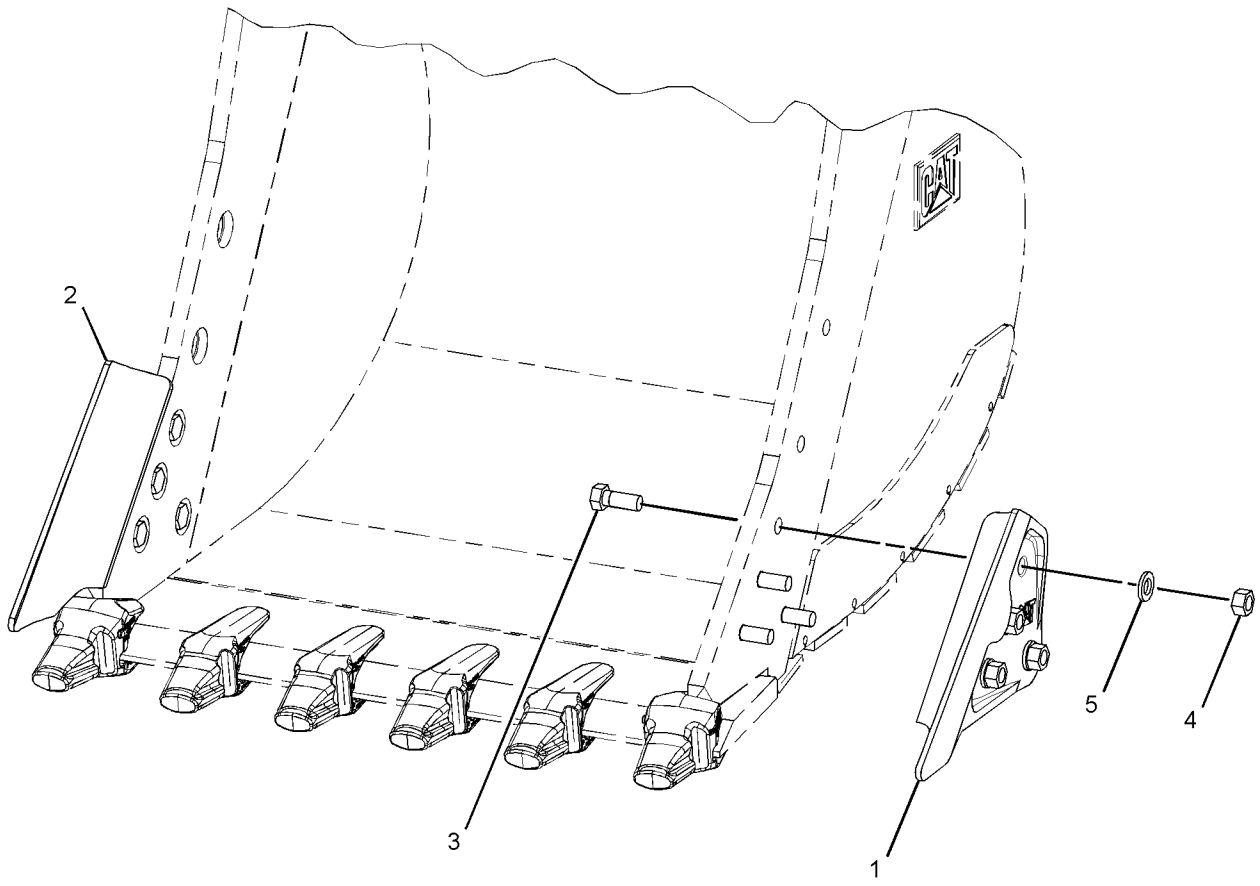

GRAPHIC #1 <END> g02266733

217-4893 TIP GP-PENETRATION PLUS–K-90

S/N: BR61-UP

PART OF 511-3073, 511-3074 BUCKET AR-HEAVY DUTY

SMCS-6805 **i06811366**

NOTE	REF NO	GRAPHIC REF	PART NUMBER	QTY	PART NAME 1 2 3 4 5 6 (PRODUCT LEVEL)	SEE PAGE
	1	1	**220-9090**	1	RETAINER-G.E.T. (K-80, K-90, K-100)	
	2	1	**475-5482**	1	TIP-PENETRATION PLUS (K-90)	

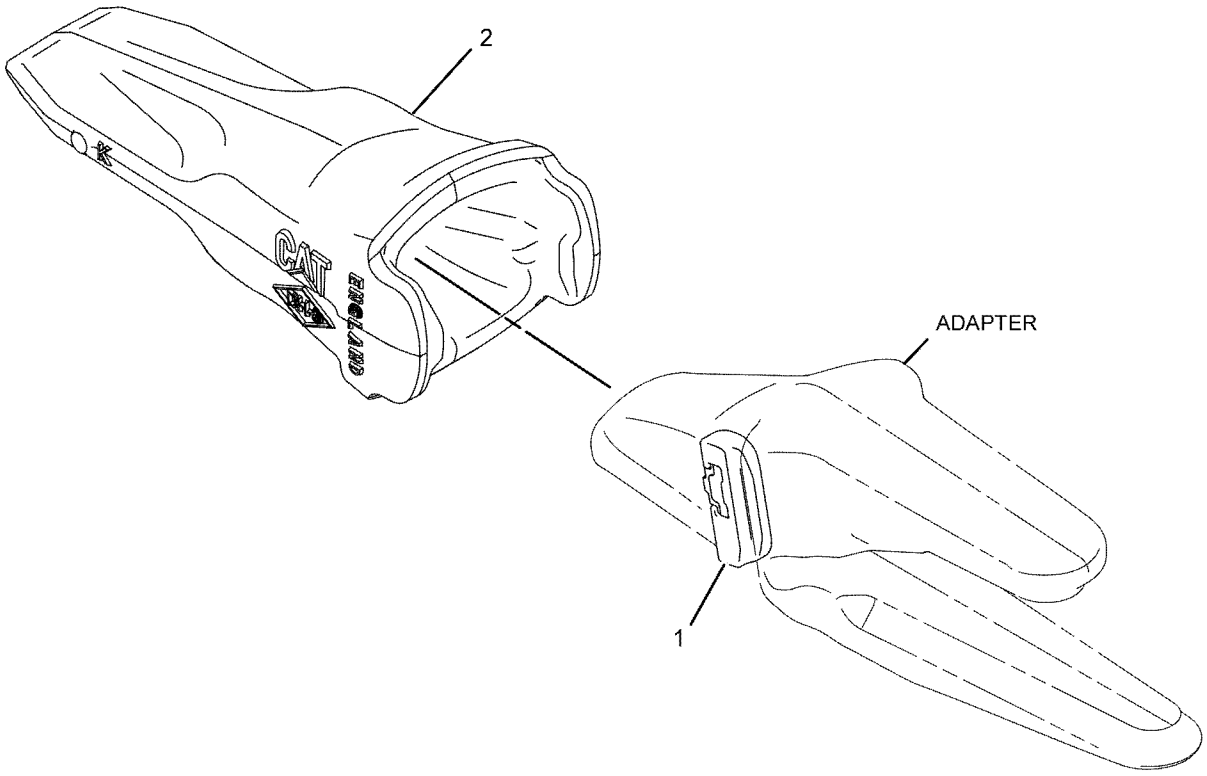

GRAPHIC #1 <END> g01074401

488-6600 AIR CONDITIONER & MOUNTING GP

S/N: BR61-UP

PART OF 487-7000, 487-7001 OPERATOR AR

SMCS-7320 **i07344902**

NOTE	REF NO	GRAPHIC REF	PART NUMBER	QTY	PART NAME 1 2 3 4 5 6 (PRODUCT LEVEL)	SEE PAGE
	1	1	**372-9583**	4	RIVET	
Y	2	1	**488-6601**	1	AIR CONDITIONER GP	583
	3	1	**488-6602**	1	CONTROLLER	
	4	1	**501-4899**	1	PLATE	
	5	1	**6V-3265**	1	CLIP	
	6	1	**7X-7729**	7	WASHER (11X25X3-MM THK)	
M	7	1	**7Y-5292**	2	SCREW-TRUSS HEAD (SELF-TAPPING)	
	8	1	**8T-4121**	1	WASHER-HARD (11X21X2.5-MM THK)	
M	9	1	**8T-4136**	7	BOLT (M10X1.5X25-MM)	
M	10	1	**8T-4137**	1	BOLT (M10X1.5X20-MM)	

M - METRIC PART
Y - SEPARATE ILLUSTRATION

488-6600 **AIR CONDITIONER & MOUNTING GP** (contd.) **i07344902**

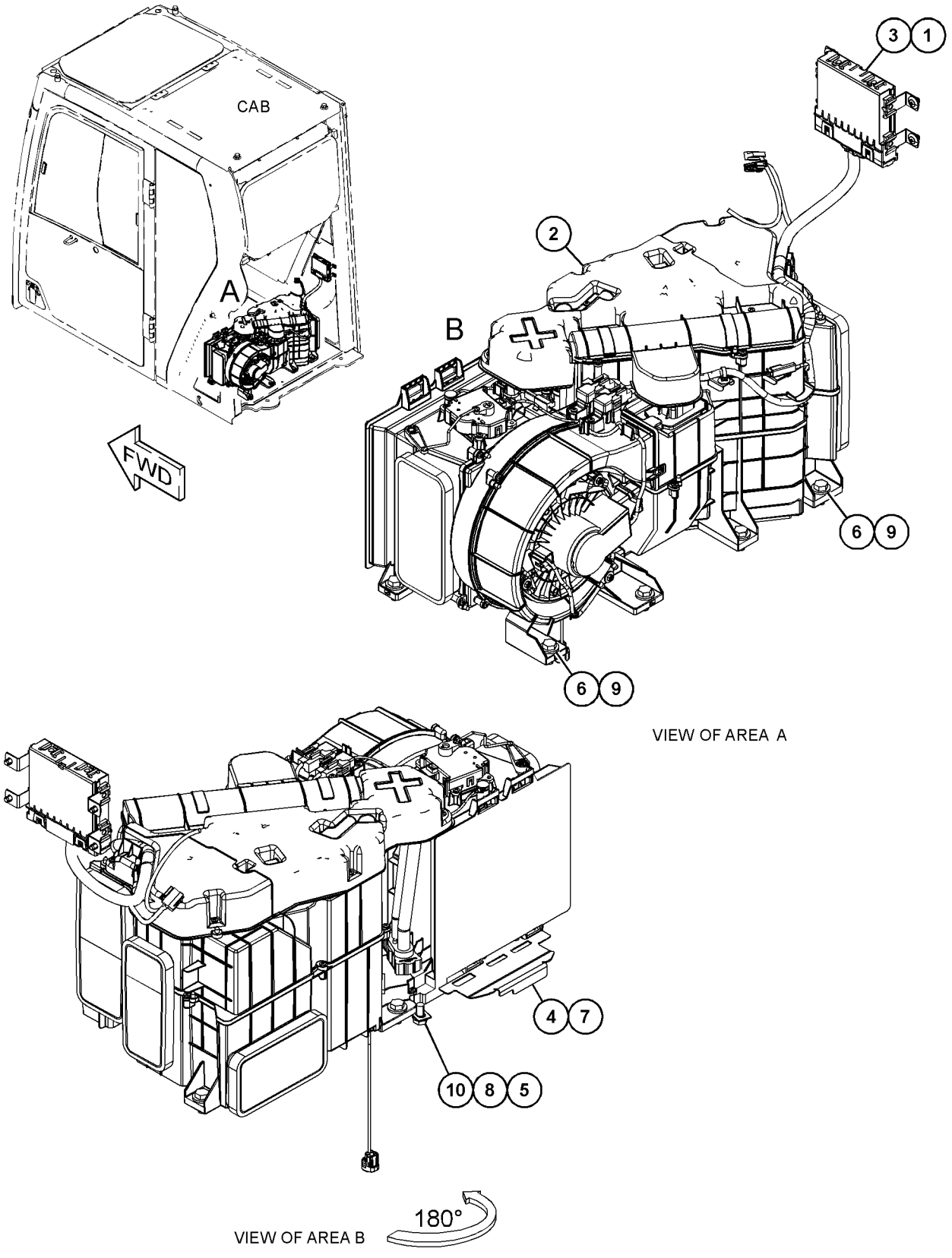

GRAPHIC #1 <END> g06229598

488-6601 AIR CONDITIONER GP

S/N: BR61-UP

PART OF 488-6600 AIR CONDITIONER & MOUNTING GP

SMCS-7320 **i07344909**

NOTE	REF NO	GRAPHIC REF	PART NUMBER	QTY	PART NAME 1 2 3 4 5 6 (PRODUCT LEVEL)	SEE PAGE
	1	1	**185-8300**	36	SCREW-TAPPING	
	2	1	**185-8302**	1	SCREW-TAPPING	
	3	1	**245-7819**	1	CLIP	
	4	1	**245-7856**	3	SCREW-TAPPING	
	5	1	**420-2380**	2	RELAY (AIR CONDITIONER, HEATER)	
	6	1	**420-2403**	1	HOLDER	
	7	1	**452-5529**	1	CONTROL AS	
	8	1	**500-0957**	1	FILTER AS	
	9	1	**520-8297**	2	PACKING	
	10	1	**520-8298**	1	PACKING	
	11	1	**520-8323**	1	CASE GP-HEATER & EVAPORATOR	
M		1	**9X-6615**	2	BOLT (M5X0.8X30-MM)	
M		1	**281-0791**	2	BOLT-SOCKET HEAD (M5X0.8X40-MM)	
		1	**520-8296**	1	PACKING	
		1	**520-8324**	1	VALVE AS-EXPANSION	
	12	1	**520-8235**	1	BRACKET	
	13	1	**520-8326**	1	CORE AS-HEATER	
	14	1	**520-8328**	1	MOTOR-ELECTRIC	
	15	1	**520-8329**	1	MOTOR-ELECTRIC (INTAKE AIR)	
	16	1	**520-8330**	1	THERMISTOR	
	17	1	**520-8331**	1	MOTOR-ELECTRIC (WITH FAN)	
	18	1	**520-8332**	1	HARNESS AS-HEATER & AIR COND	
	19	1	**520-8338**	1	MOTOR-ELECTRIC (AIR OUTLET)	
	20	1	**526-8544**	2	PACKING	

M - METRIC PART

488-6601 **AIR CONDITIONER GP (**contd.**)** **i07344909**

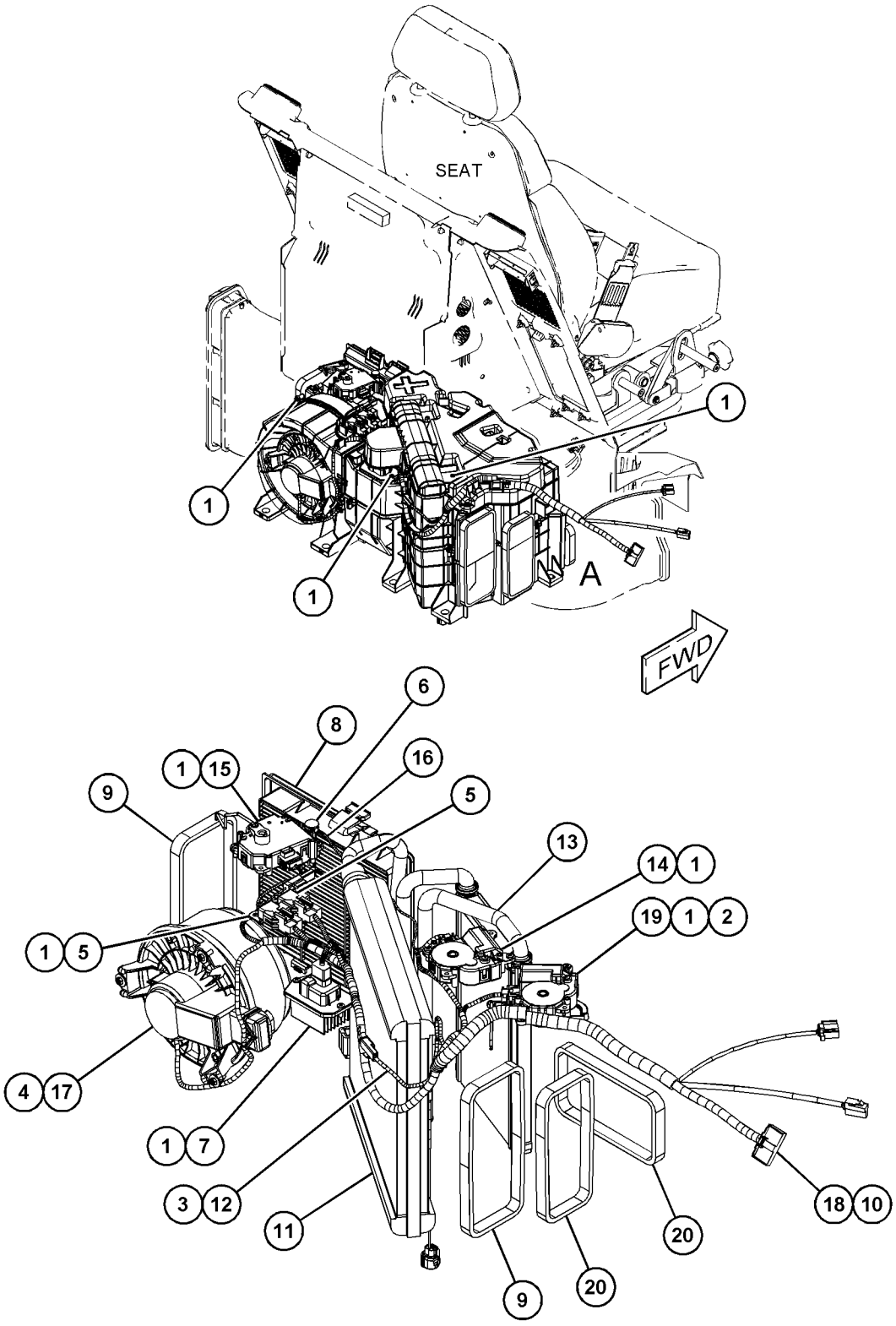

VIEW OF AREA A
(PARTS REMOVED FOR CLARITY)

GRAPHIC #1 <END> g06234772

487-6658 ARMREST GP

S/N: BR61-UP

PART OF 488-6550 CONSOLE GP-OPERATOR

SMCS-7307 **i07347308**

NOTE	REF NO	GRAPHIC REF	PART NUMBER	QTY	PART NAME 1 2 3 4 5 6 (PRODUCT LEVEL)	SEE PAGE
	1	1	**488-6535**	1	ARMREST AS (LH)	
	2	1	**488-6536**	1	ARMREST AS (RH)	
	3	1	**516-4918**	2	COVER	
	4	1	**516-4919**	2	COVER	
M	5	1	**128-2135**	4	SCREW-TRUSS HEAD (M6X1X13-MM)	
M	6	1	**9X-2041**	6	SCREW-TRUSS HEAD (M10X1.5X20-MM)	

M - METRIC PART

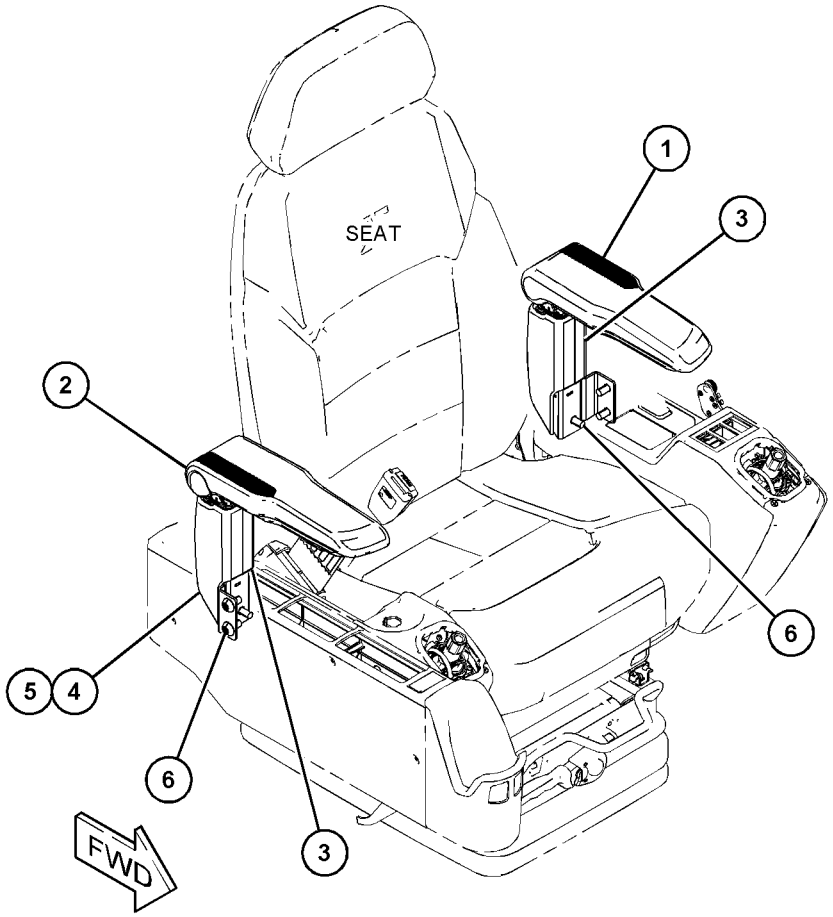

GRAPHIC #1 <END> g06227294

487-6659 ARMREST GP

S/N: BR61-UP

PART OF 488-6560 CONSOLE GP-OPERATOR

SMCS-7307 **i07360133**

NOTE	REF NO	GRAPHIC REF	PART NUMBER	QTY	PART NAME 1 2 3 4 5 6 (PRODUCT LEVEL)	SEE PAGE
	1	1	**473-9230**	1	ARMREST GP (LH)	
	2	1	**473-9232**	1	ARMREST GP (RH)	
	3	1	**516-4918**	2	COVER	
	4	1	**516-4919**	2	COVER	
M	5	1	**128-2135**	4	SCREW-TRUSS HEAD (M6X1X13-MM)	
M	6	1	**9X-2041**	6	SCREW-TRUSS HEAD (M10X1.5X20-MM)	

M - METRIC PART

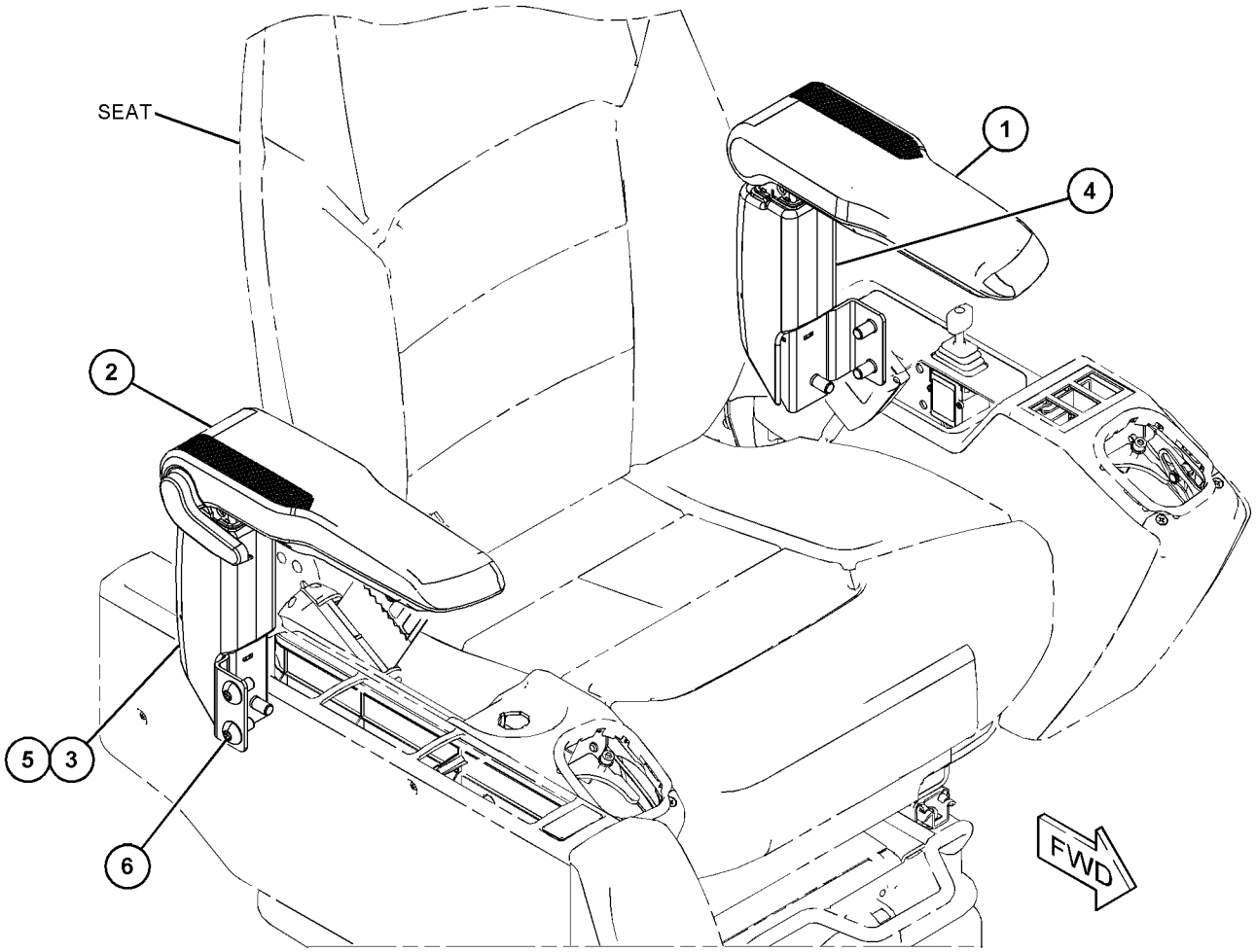

GRAPHIC #1 <END> g06230515

511-9454 BRACKET & MTG GP-CAB–GRADE CONTROL

S/N: BR61-UP

PART OF 516-0551 GRADE CONTROL AR

SMCS-0635 **i07368971**

NOTE	REF NO	GRAPHIC REF	PART NUMBER	QTY	PART NAME 1 2 3 4 5 6 (PRODUCT LEVEL)	SEE PAGE
	1	1	**483-7800**	4	SPACER (11X20X20-MM THK)	
	2	1	**525-6178**	1	BRACKET AS	
	3	1	**526-4018**	2	BRACKET AS (RECEIVER)	
	4	1	**8T-4121**	8	WASHER-HARD (11X21X2.5-MM THK)	
M	5	1	**8T-4191**	4	BOLT (M10X1.5X16-MM)	
M	6	1	**8T-4196**	4	BOLT (M10X1.5X35-MM)	

M - METRIC PART

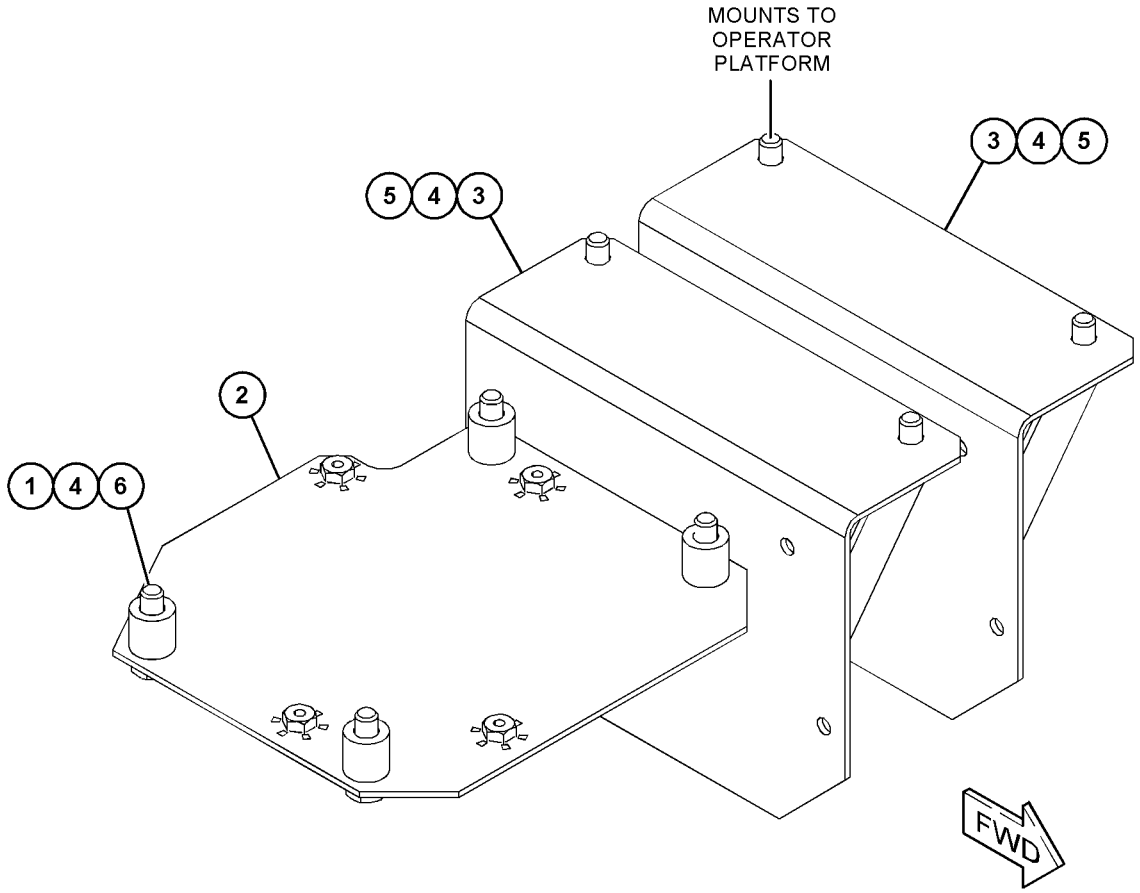

GRAPHIC #1 <END> g06230530

487-6755 BRACKET GP-MOUNTING

S/N: BR61-UP

PART OF 486-5500, 498-7719 CAB GP

SMCS-0635 **i07346366**

NOTE	REF NO	GRAPHIC REF	PART NUMBER	QTY	PART NAME 1 2 3 4 5 6 (PRODUCT LEVEL)	SEE PAGE
	1	1	**488-6566**	1	BRACKET AS	
	2	1	**488-6567**	1	BRACKET AS	
	3	1	**500-0932**	1	BRACKET AS	
	4	1	**511-5957**	1	BRACKET	
M	5	1	**9X-2041**	8	SCREW-TRUSS HEAD (M10X1.5X20-MM)	

M - METRIC PART

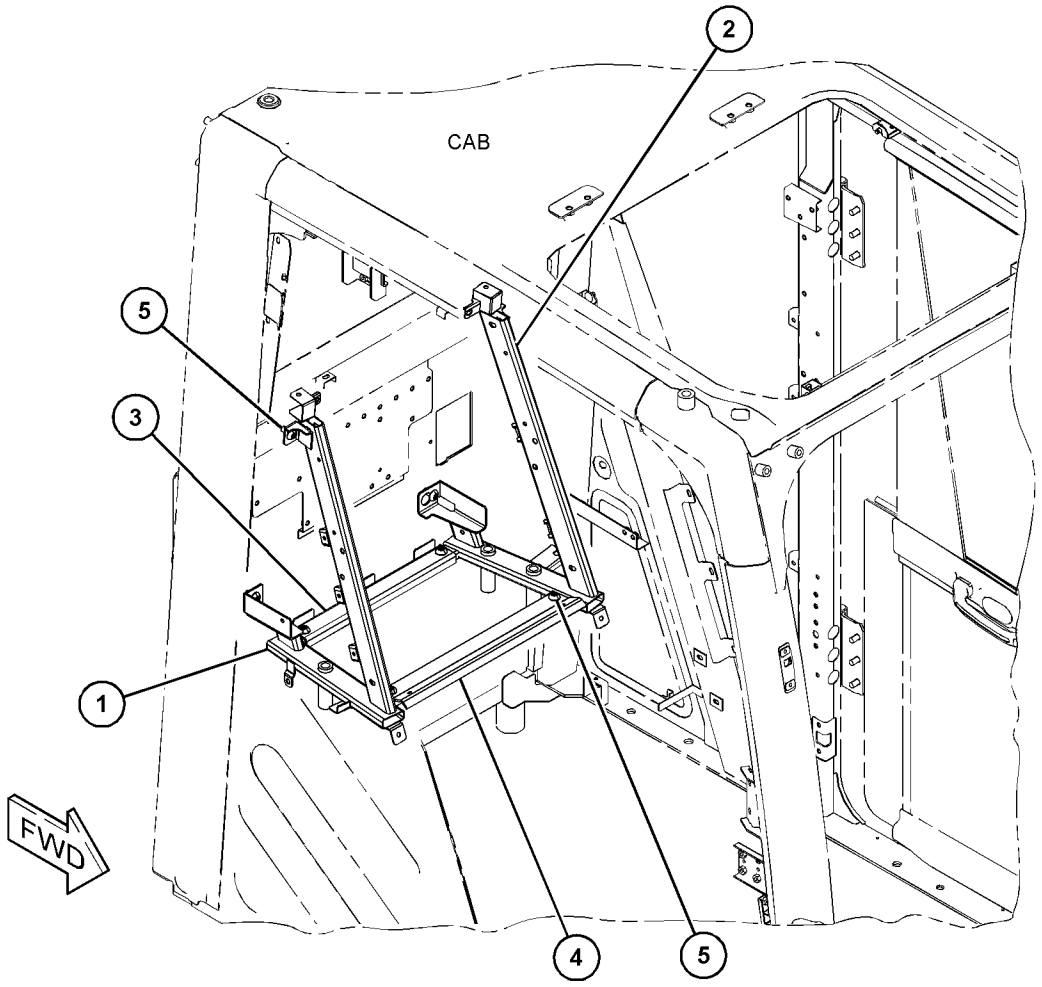

GRAPHIC #1 <END> g06230525

477-7565 CAB GP

S/N: BR61-UP

PART OF 486-5500, 498-7719 CAB GP

SMCS-7301, 7325 **i07360128**

NOTE	REF NO	GRAPHIC REF	PART NUMBER	QTY	PART NAME 1 2 3 4 5 6 (PRODUCT LEVEL)	SEE PAGE
	1	1	**4I-3090**	9	SEAL	
	2	1	**7Y-8561**	1	BUMPER	
	3	1	**156-6480**	2	SEAL	
	4	1	**156-6599**	1	STRIKER	
	5	1	**167-7042**	3	SEAL	
Y	6	1	**394-9460**	1	MIRROR GP	644
M	7	1	**189-2864**	2	SCREW-FLAT HEAD (M8X1.25X30-MM)	
	8	1	**451-2175**	1	WASHER-HARD (17.5X30X3.5-MM THK)	
M	9	1	**451-2180**	1	BOLT (M16X2X35-MM)	
	10	1	**453-3454**	1	WASHER-HARD (11X21X2.5-MM THK)	
M	11	1	**457-8759**	3	BOLT (M10X1.5X20-MM)	
	12	1	**488-6476**	1	LATCH AS	
	13	1	**488-6486**	1	HANDRAIL AS (FRONT)	
	14	1	**488-6488**	1	HANDRAIL AS (SIDE)	
	15	1	**488-6538**	1	LEVER AS	
		1	**526-8575**	1	LEVER AS	
		1	**526-8576**	1	CABLE AS	
	16	1	**500-0732**	1	PLATE	
	17	1	**500-0962**	1	INSULATION	
	18	1	**500-0963**	1	INSULATION	
	19	1	**511-5969**	1	BUMPER	
	20	1	**516-4923**	1	COVER	
	21	1	**520-8321**	1	MOUNTING GP-MIRROR	
		1	**3B-4504**	2	LOCKWASHER	
M		1	**9X-6153**	2	BOLT (M6X1X10-MM)	
Y	22	1	**524-7742**	1	COVER GP-CAB	618
	23	1	**526-8550**	1	BRACKET	
	24	1	**526-8551**	1	PLATE	
M	25	1	**127-0580**	2	SCREW-FLAT HEAD (M8X1.25X20-MM)	
	26	1	**163-6795**	3	STRAP-CABLE	
	27	1	**1R-5998**	4	LOCKWASHER	
M	28	1	**344-5675**	2	NUT (M10X1.5-THD)	
M	29	1	**3E-8020**	4	SCREW-TRUSS HEAD (M6X1X25-MM)	
	30	1	**7X-0578**	1	WASHER-HARD (10.2X32X2.5-MM THK)	
	31	1	**7X-7729**	2	WASHER (11X25X3-MM THK)	
	32	1	**8T-4121**	3	WASHER-HARD (11X21X2.5-MM THK)	
M	33	1	**8T-4137**	2	BOLT (M10X1.5X20-MM)	
	34	1	**8T-4224**	2	WASHER-HARD (8.8X16X2-MM THK)	
M	35	1	**9X-2041**	1	SCREW-TRUSS HEAD (M10X1.5X20-MM)	
M	36	1	**9X-2044**	6	SCREW-TRUSS HEAD (M6X1X16-MM)	
M	37	1	**8T-4200**	2	BOLT (M8X1.25X16-MM)	

M - METRIC PART
Y - SEPARATE ILLUSTRATION

477-7565 **CAB GP** (contd.) **i07360128**

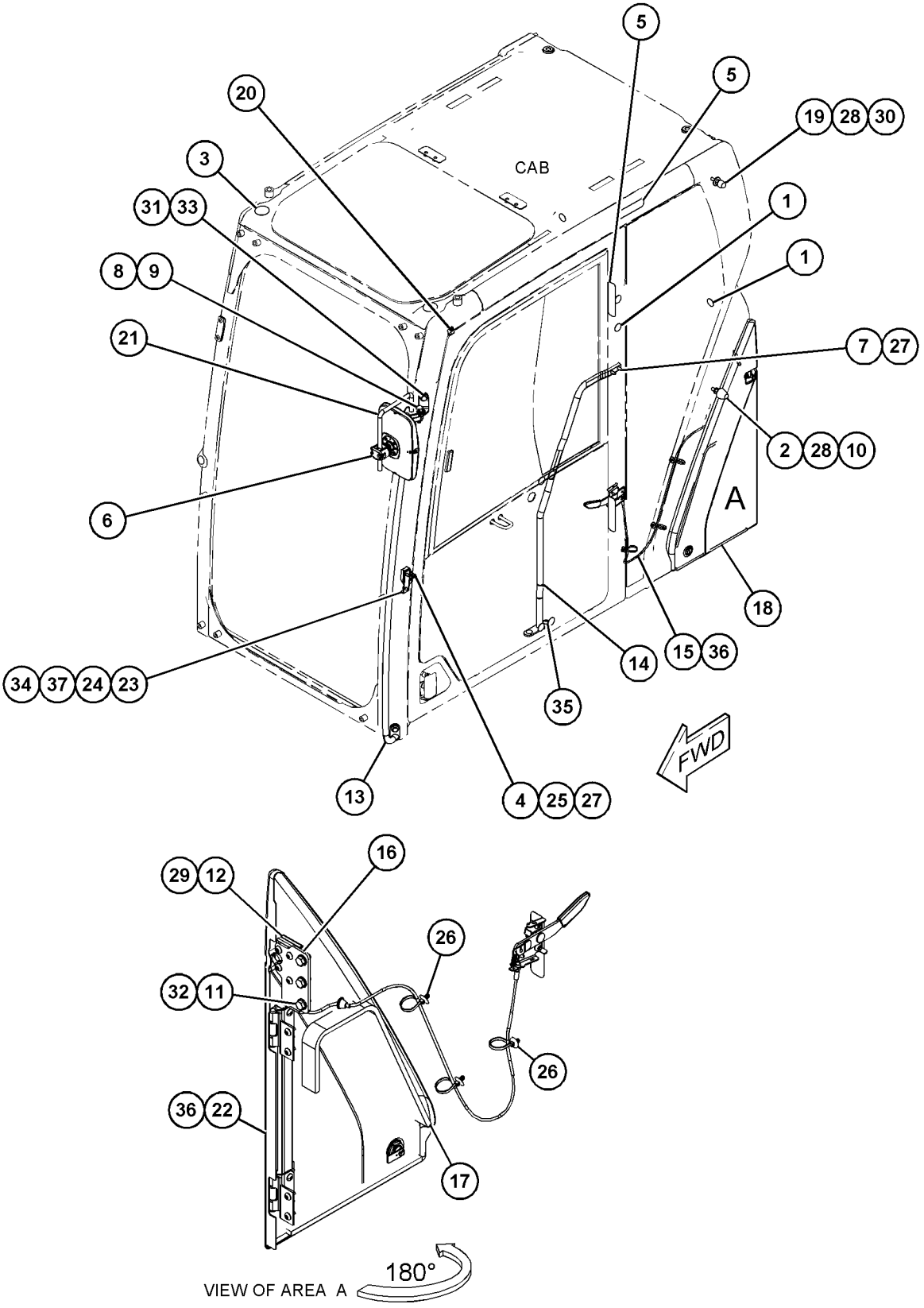

GRAPHIC #1 <END> g06261497

477-7566 CAB GP

S/N: BR61-UP

PART OF 486-5500, 498-7719 CAB GP

SMCS-7301, 7325 **i07344996**

NOTE	REF NO	GRAPHIC REF	PART NUMBER	QTY	PART NAME 1 2 3 4 5 6 (PRODUCT LEVEL)	SEE PAGE
	1	1	**477-7562**	1	CAB AS	
M	2	1	**9X-2041**	6	SCREW-TRUSS HEAD (M10X1.5X20-MM)	
	3	1	**488-6552**	2	HINGE	
	4	1	**8T-4121**	6	WASHER-HARD (11X21X2.5-MM THK)	
M	5	1	**8T-4137**	6	BOLT (M10X1.5X20-MM)	

M - METRIC PART

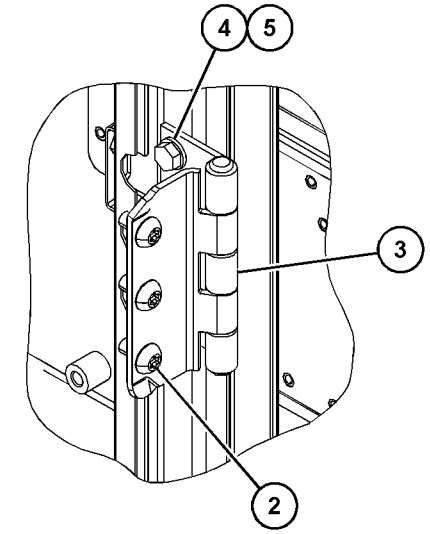

VIEW OF AREA A
(PARTS REMOVED FOR CLARITY)

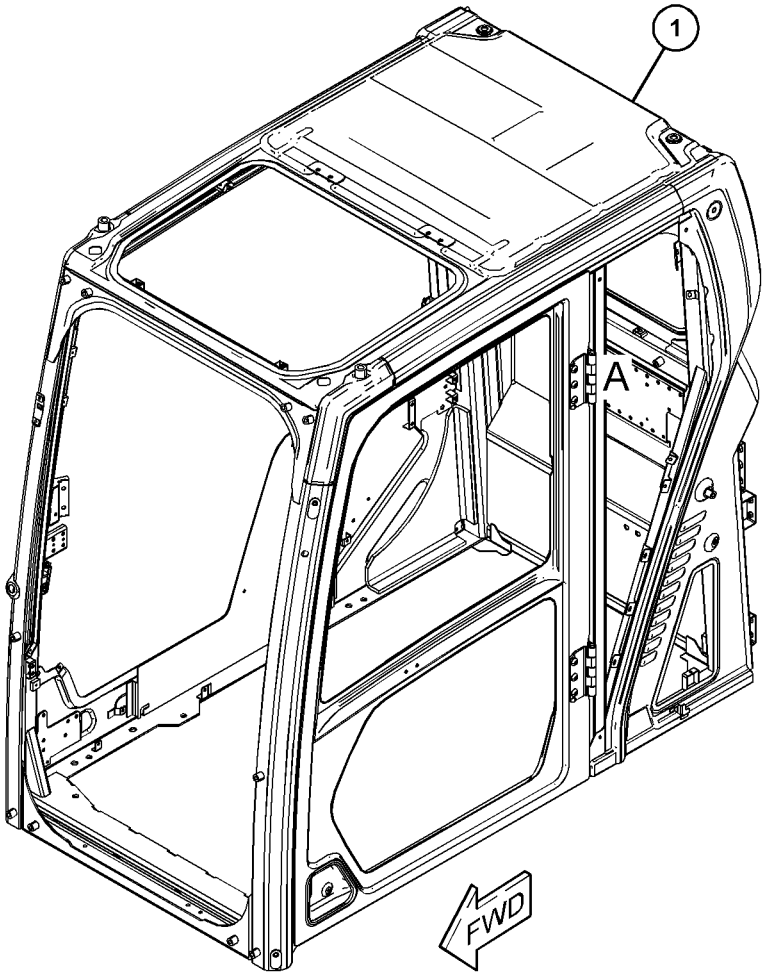

GRAPHIC #1 <END> g06236887

486-5500 CAB GP

S/N: BR61-UP

PART OF 487-6900 CAB GP

SMCS-7301, 7325 **i07362896**

NOTE	PART NUMBER	QTY	PART NAME 1 2 3 4 5 6 (PRODUCT LEVEL)	SEE PAGE
Y	*487-6755*	1	BRACKET GP-MOUNTING	588
Y	*477-7565*	1	CAB GP (EXTERIOR)	589
Y	*477-7566*	1	CAB GP	591
Y	*487-6666*	1	CAB GP (INTERIOR)	592
Y	**477-7567**	1	DOOR GP-CAB	620
Y	*487-6639*	1	HATCH GP-ROOF	628
Y	*477-7563*	1	WINDOW GP-CAB (FRONT)	671
Y	*477-7564*	1	WINDOW GP-CAB (REAR, SIDE)	673
Y	*486-5407*	1	WIPER GP-WINDOW	677

Y - SEPARATE ILLUSTRATION

<END>

487-6666 CAB GP—INTERIOR

S/N: BR61-UP

PART OF 486-5500, 498-7719 CAB GP

SMCS-7301, 7325 **i07346330**

NOTE	PART NUMBER	QTY	PART NAME 1 2 3 4 5 6 (PRODUCT LEVEL)	SEE PAGE
Y	*487-6678*	1	COVER GP-CAB (REAR)	614
Y	*488-6451*	1	COVER GP-CAB (FRONT)	616
Y	*487-7003*	1	DUCT GP-CAB AIR	623
Y	*487-6672*	1	SCREEN GP-SUN	660

Y - SEPARATE ILLUSTRATION

<END>

487-6900 CAB GP

S/N: BR61-UP

PART OF 487-7001 OPERATOR AR

SMCS-7301, 7325 **i07362881**

NOTE	REF NO	GRAPHIC REF	PART NUMBER	QTY	PART NAME 1 2 3 4 5 6 (PRODUCT LEVEL)	SEE PAGE
Y	1	1	**486-5500**	1	CAB GP	592
M	2	1	**8T-4190**	4	BOLT (M16X2X25-MM)	
M	3	1	**8T-4192**	8	BOLT (M12X1.75X25-MM)	
	4	1	**8T-4223**	8	WASHER-HARD (13.5X25.5X3-MM THK)	
	5	1	**9X-8257**	4	WASHER (17.5X30X3.5-MM THK)	
M	6	1	**9X-2041**	1	SCREW-TRUSS HEAD (M10X1.5X20-MM)	

M - METRIC PART
Y - SEPARATE ILLUSTRATION

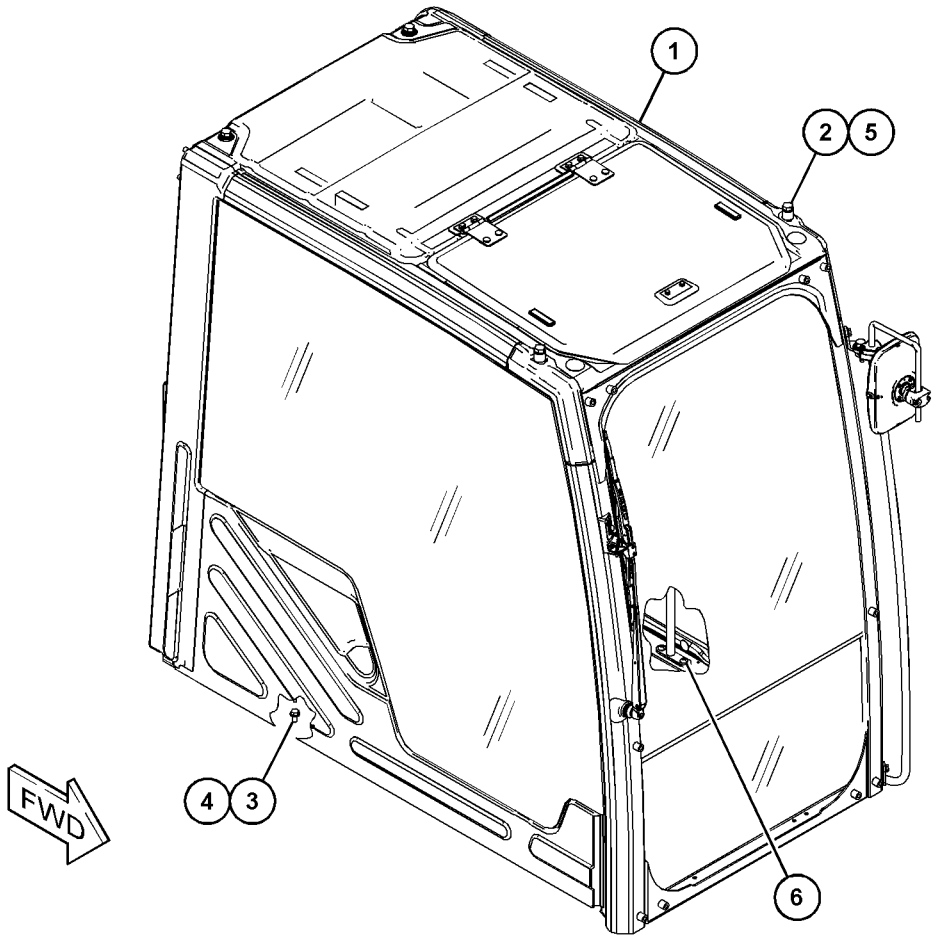

GRAPHIC #1 <END> g06272466

498-7718 CAB GP

S/N: BR61-UP

PART OF 487-7000 OPERATOR AR

SMCS-7301, 7325 **i07344919**

NOTE	REF NO	GRAPHIC REF	PART NUMBER	QTY	PART NAME 1 2 3 4 5 6 (PRODUCT LEVEL)	SEE PAGE
Y	1	1	**498-7719**	1	CAB GP	595
M	2	1	**8T-4190**	4	BOLT (M16X2X25-MM)	
M	3	1	**8T-4192**	8	BOLT (M12X1.75X25-MM)	
	4	1	**8T-4223**	8	WASHER-HARD (13.5X25.5X3-MM THK)	
	5	1	**9X-8257**	4	WASHER (17.5X30X3.5-MM THK)	
M	6	1	**9X-2041**	1	SCREW-TRUSS HEAD (M10X1.5X20-MM)	

M - METRIC PART
Y - SEPARATE ILLUSTRATION

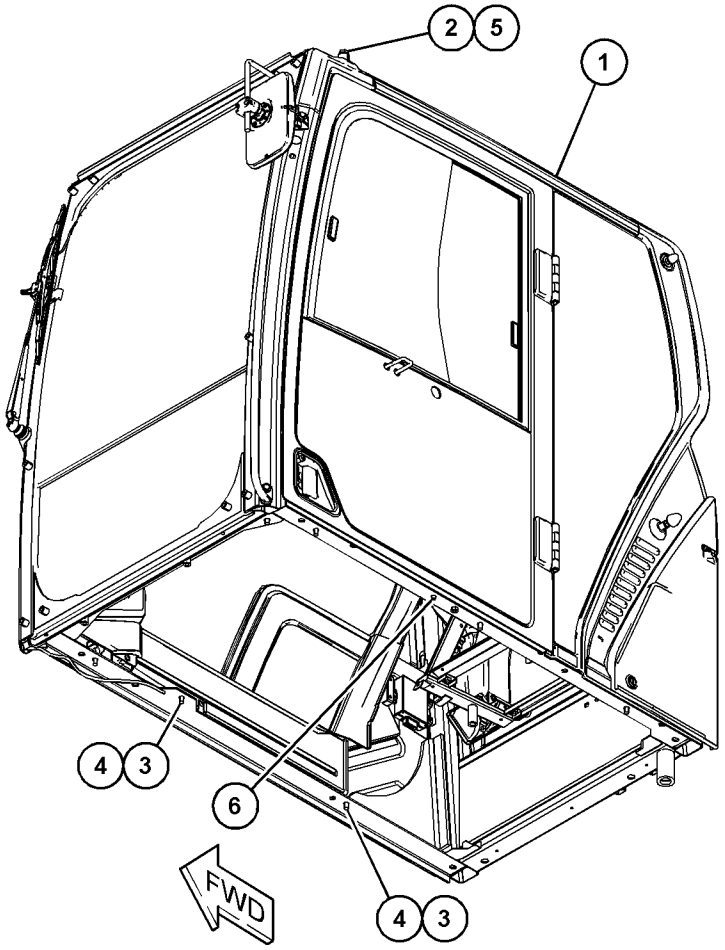

(VIEWED FROM BOTTOM)

GRAPHIC #1 <END> g06267895

498-7719 CAB GP

S/N: BR61-UP

PART OF 498-7718 CAB GP

SMCS-7301, 7325

i07344927

NOTE	PART NUMBER	QTY	PART NAME 1 2 3 4 5 6 (PRODUCT LEVEL)	SEE PAGE
Y	*487-6755*	1	BRACKET GP-MOUNTING	588
Y	*477-7565*	1	CAB GP (EXTERIOR)	589
Y	*477-7566*	1	CAB GP	591
Y	*487-6666*	1	CAB GP (INTERIOR)	592
Y	**477-7567**	1	DOOR GP-CAB	620
Y	*483-7867*	1	HATCH GP-ROOF	627
Y	*477-7563*	1	WINDOW GP-CAB (FRONT)	671
Y	*477-7564*	1	WINDOW GP-CAB (REAR, SIDE)	673
Y	*486-5407*	1	WIPER GP-WINDOW	677

Y - SEPARATE ILLUSTRATION

<END>

502-9408 COMPRESSOR & MTG GP-REFRIG

S/N: BR61-UP

PART OF 490-4803 ENGINE AR, 559-2577 ENGINE AR-COMPLETE

SMCS-1802 **i07362554**

NOTE	REF NO	GRAPHIC REF	PART NUMBER	QTY	PART NAME 1 2 3 4 5 6 (PRODUCT LEVEL)	SEE PAGE
	1	1	**532-7321**	1	COMPRESSOR AS	
		1	**9W-0852**	2	PIN-CONNECTOR (14-GA TO 16-GA)	
		1	**243-4505**	1	RECEPTACLE AS-CONNECTOR (2-PIN)	
M	2	1	**364-1614**	4	BOLT-FLANGE HEAD (M8X1.25X95-MM)	

M - METRIC PART

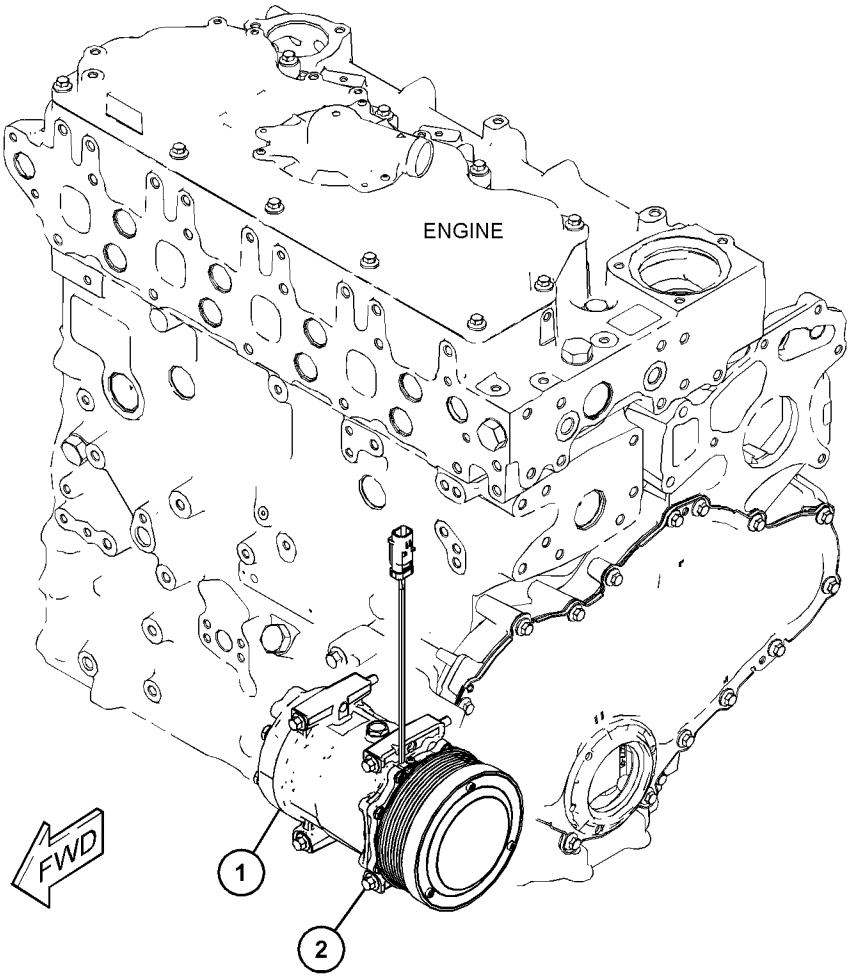

GRAPHIC #1 <END> g06229415

488-6610 CONDENSER & MTG GP-REFRIGERANT

S/N: BR61-10000

PART OF 488-6606 LINES GP-AIR CONDITIONER

SMCS-1805 **i07360940**

NOTE	REF NO	GRAPHIC REF	PART NUMBER	QTY	PART NAME 1 2 3 4 5 6 (PRODUCT LEVEL)	SEE PAGE
Y	1	1	**488-6612**	1	CONDENSER GP-REFRIGERANT	599
	2	1	**488-6613**	1	BRACKET AS	
M		1	**6V-9632**	2	NUT-WELD (M6X1-THD)	
M		1	**8T-3490**	1	NUT-WELD (M10X1.5-THD)	
M		1	**8T-3612**	2	NUT-WELD (M8X1.25-THD)	
	3	1	**500-0782**	1	BRACKET	
M	4	1	**5C-9553**	4	BOLT (M6X1X16-MM)	
	5	1	**8T-4121**	4	WASHER-HARD (11X21X2.5-MM THK)	
M	6	1	**8T-4137**	4	BOLT (M10X1.5X20-MM)	
M	7	1	**8T-4971**	2	BOLT (M6X1X30-MM)	
	8	1	**9X-2038**	2	WASHER (7X19X2-MM THK)	
	9	1	**9X-8256**	4	WASHER (6.6X12X2-MM THK)	

M - METRIC PART
Y - SEPARATE ILLUSTRATION

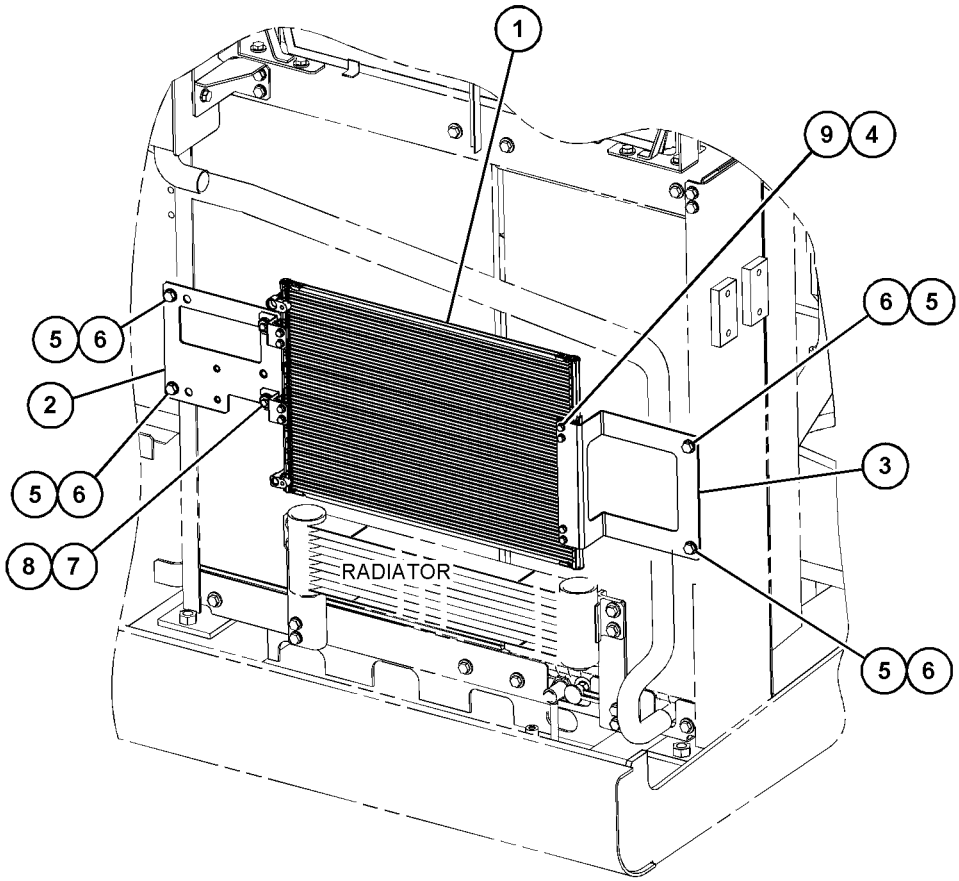

REAR VIEW
(UPPER LEFT)

GRAPHIC #1 <END> g06230087

532-7388 CONDENSER & MTG GP-REFRIGERANT

S/N: BR610001-UP

PART OF 488-6609 LINES GP-AIR CONDITIONER

SMCS-1805 **i07434284**

NOTE	REF NO	GRAPHIC REF	PART NUMBER	QTY	PART NAME 1 2 3 4 5 6 (PRODUCT LEVEL)	SEE PAGE
M	1	1	**5C-9553**	4	BOLT (M6X1X16-MM)	
M	2	1	**8T-4971**	2	BOLT (M6X1X30-MM)	
	3	1	**9X-2038**	2	WASHER (7X19X2-MM THK)	
Y	4	1	**488-6612**	1	CONDENSER GP-REFRIGERANT	599
	5	1	**532-7389**	1	BRACKET AS	
M		1	**8T-3490**	1	NUT-WELD (M10X1.5-THD)	
	6	1	**532-7390**	1	BRACKET AS	
	7	1	**8T-4121**	4	WASHER-HARD (11X21X2.5-MM THK)	
M	8	1	**8T-4137**	4	BOLT (M10X1.5X20-MM)	
	9	1	**9X-8256**	4	WASHER (6.6X12X2-MM THK)	

M - METRIC PART
Y - SEPARATE ILLUSTRATION

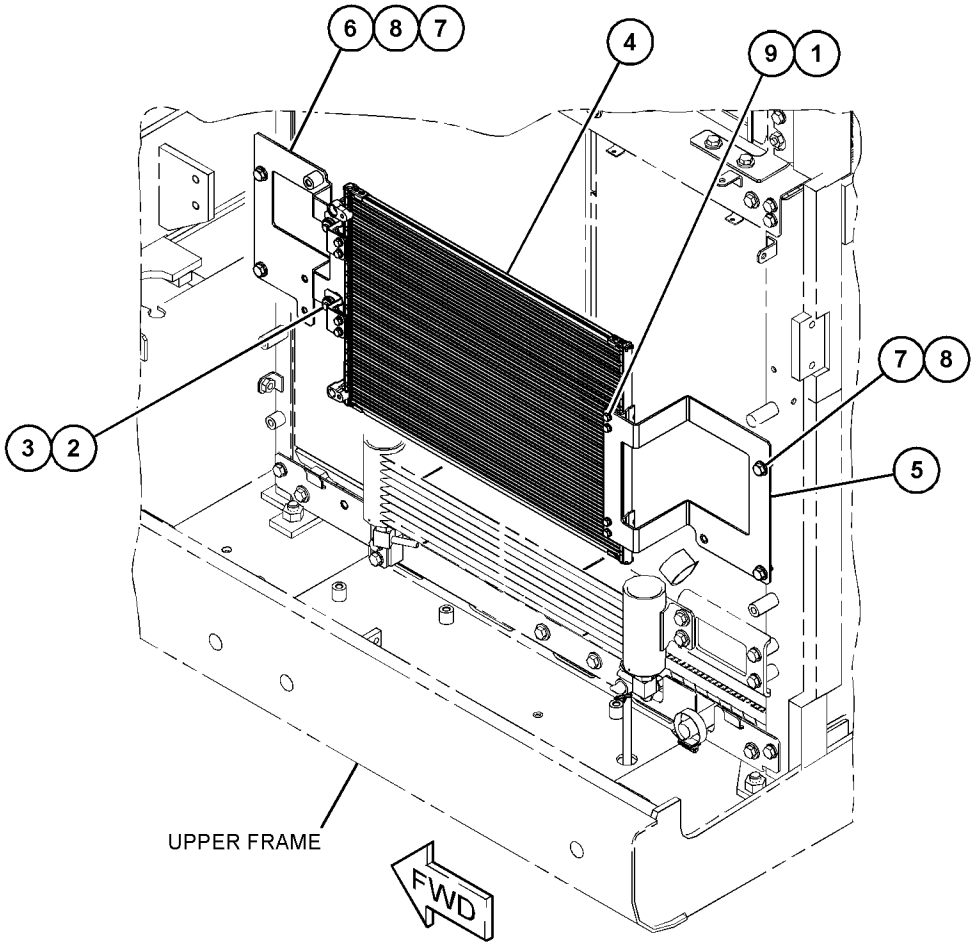

GRAPHIC #1 <END> g06323491

488-6612 CONDENSER GP-REFRIGERANT

S/N: BR61-UP

PART OF 488-6610, 532-7388 CONDENSER & MTG GP-REFRIGERANT

SMCS-1805 **i07360947**

NOTE	REF NO	GRAPHIC REF	PART NUMBER	QTY	PART NAME 1 2 3 4 5 6 (PRODUCT LEVEL)	SEE PAGE
	1	1	**245-7750**	2	BUSHING-RUBBER	
	2	1	**500-0784**	2	BRACKET	
	3	1	**1H-3338**	4	LOCKWASHER (EXTERNAL TOOTH)	
M	4	1	**5C-9553**	4	BOLT (M6X1X16-MM)	
	5	1	**9X-8256**	4	WASHER (6.6X12X2-MM THK)	

M - METRIC PART

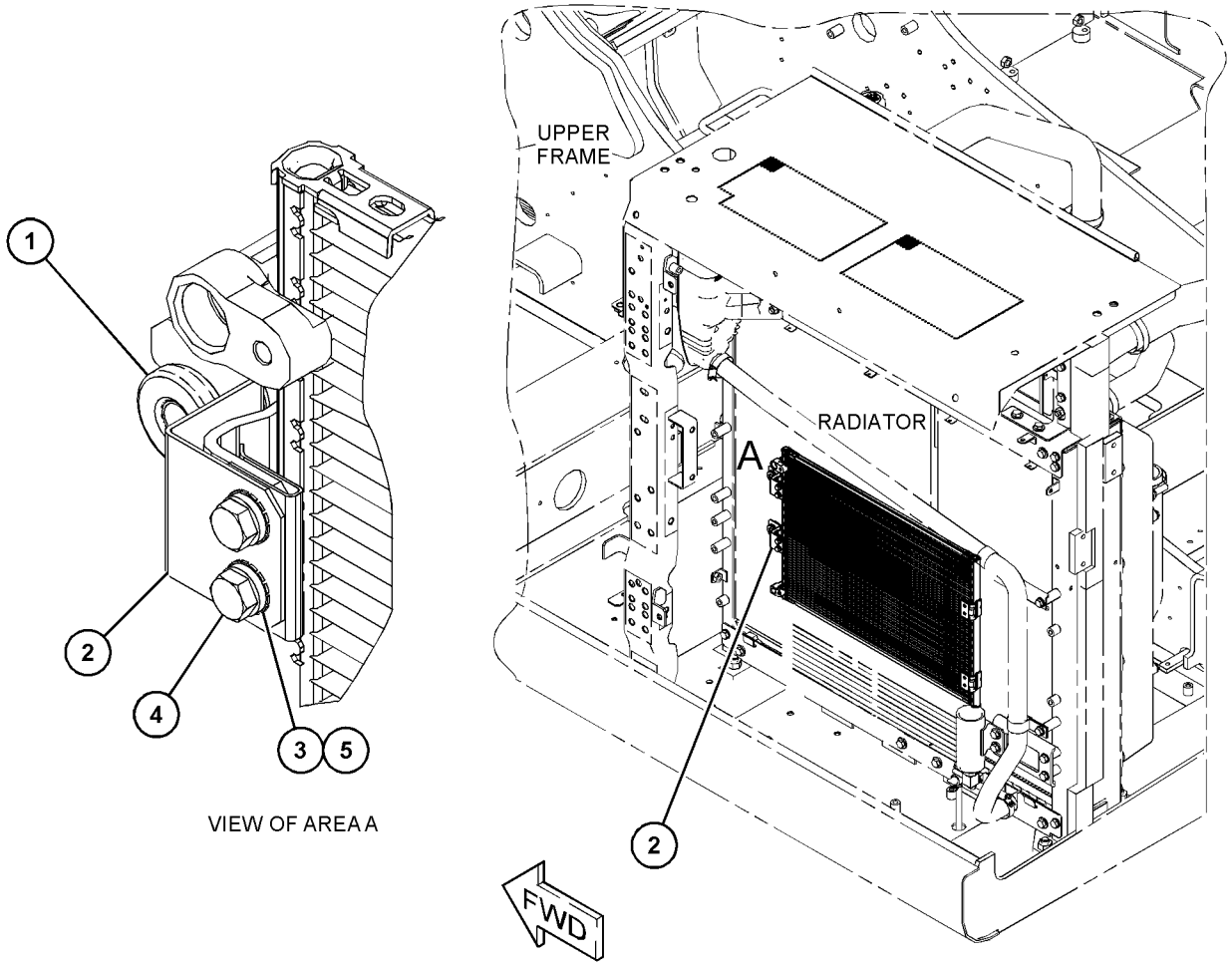

GRAPHIC #1 <END> g06229996

511-6024 CONSOLE GP

S/N: BR61-UP

PART OF 488-6550 CONSOLE GP-OPERATOR

SMCS-5258, 7451 **i07348718**

NOTE	REF NO	GRAPHIC REF	PART NUMBER	QTY	PART NAME 1 2 3 4 5 6 (PRODUCT LEVEL)	SEE PAGE
	1	1	**487-6653**	1	COVER AS	
	2	1	**487-6654**	1	COVER AS	
					(EACH COVER AS INCLUDES)	
		1	**234-6579**	1	NUT-SPEED	
		1	**511-5919**	5	CLIP	
	3	1	**487-6832**	1	COVER	
	4	1	**487-6838**	1	COVER	
	5	1	**498-7728**	1	COVER AS	
		1	**511-5982**	3	COVER	
	6	1	**500-0930**	1	COVER AS-CONSOLE	
		1	**487-6652**	1	COVER AS	
		1	**487-6829**	1	COVER	
		1	**511-5919**	4	CLIP	
		1	**538-9680**	1	GUIDE	
		1	**533-0365**	4	CLIP	
		1	**487-6828**	1	COVER	
	7	1	**500-0933**	1	SUPPORT AS (LH)	
	8	1	**511-5921**	1	BAR AS	
	9	1	**511-5922**	1	HANDLE AS	
	10	1	**511-6004**	1	BRACKET AS	
	11	1	**511-6025**	1	LEVER AS	
		1	**4I-3038**	2	WASHER (3.3X8X0.5-MM THK)	
		1	**111-4799**	1	SWITCH AS-LIMIT	
		1	**102-8803**	1	KIT-RECEPTACLE (3-PIN)	
					(INCLUDES RECEPTACLE AS & WEDGE)	
		1	**3E-3371**	1	WEDGE-RECEPTACLE LOCK (3-PIN)	
		1	**8T-8729**	3	PIN-CONNECTOR (16-GA TO 18-GA)	
D		1	**5P-5998**		TUBE (0.3-M)	
M		1	**120-9027**	2	SCREW-PAN HEAD (M3X0.5X16-MM)	
	12	1	**516-4930**	1	COVER	
M	13	1	**520-8227**	1	SCREW-MACHINE (M4X0.7X2.3-MM)	
	14	1	**520-8253**	2	SCREW-TAPPING	
M	15	1	**520-8290**	4	SCREW-MACHINE (M4X0.7X10-MM)	
	16	1	**520-8291**	2	SCREW-MACHINE (M4X0.7X15-MM)	
	17	1	**520-8292**	2	SPACER (4.2X6X3.3-MM THK)	
	18	1	**526-8631**	1	RIVET	
M	19	1	**9X-2042**	3	SCREW-TRUSS HEAD (M6X1X12-MM)	
M	20	1	**9X-2043**	2	SCREW-TRUSS HEAD (M6X1X14-MM)	

D - ORDER BY THE METER
M - METRIC PART

511-6024 **CONSOLE GP** (contd.) **i07348718**

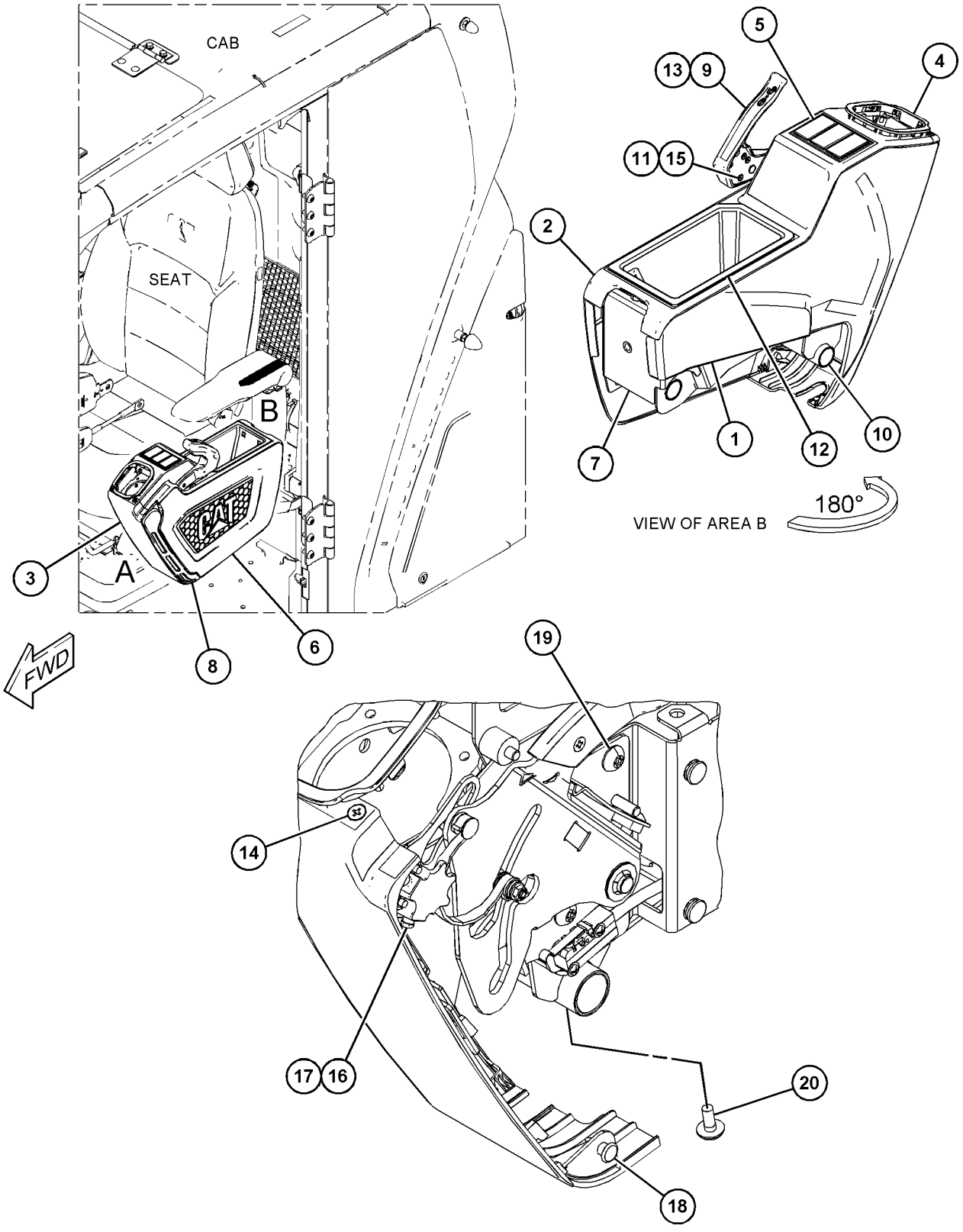

GRAPHIC #1 <END> g06228489

488-6550 CONSOLE GP-OPERATOR

S/N: BR61-UP

PART OF 487-7000 OPERATOR AR

SMCS-5258 **i07346933**

NOTE	REF NO	GRAPHIC REF	PART NUMBER	QTY	PART NAME 1 2 3 4 5 6 (PRODUCT LEVEL)	SEE PAGE
Y	1	1	*487-6658*	1	ARMREST GP (COMFORT)	585
	2	1	**487-8455**	2	BASE AS	
					(EACH INCLUDES)	
		1	**8T-8737**	2	PLUG-SEAL	
		1	**9X-3401**	4	PIN-CONNECTOR (16-GA TO 18-GA)	
		1	**361-7886**	1	RECEPTACLE AS	
Y	3	1	*488-6534*	1	HOLDER GP-CUP	630
Y	4	1	*488-6551*	1	CONSOLE GP-OPERATOR (STORAGE)	604
Y	5	1	*488-6570*	1	CONSOLE GP-OPERATOR (SECONDARY)	607
	6	1	**495-6057**	8	BUSHING	
Y	7	1	**511-6016**	1	COVER GP-CONSOLE (RH)	619
Y	8	1	*511-6024*	1	CONSOLE GP (LH)	600
	9	1	**520-8294**	2	BRACKET	
M	10	1	**3T-0849**	6	BOLT-SOCKET HEAD (M6X1X25-MM)	
M	11	1	**9X-2043**	4	SCREW-TRUSS HEAD (M6X1X14-MM)	
	12	1	**9X-6165**	4	WASHER (6.5X22X2.5-MM THK)	
	13	1	**9X-8256**	6	WASHER (6.6X12X2-MM THK)	

M - METRIC PART
Y - SEPARATE ILLUSTRATION

488-6550 **CONSOLE GP-OPERATOR (**contd.**)** **i07346933**

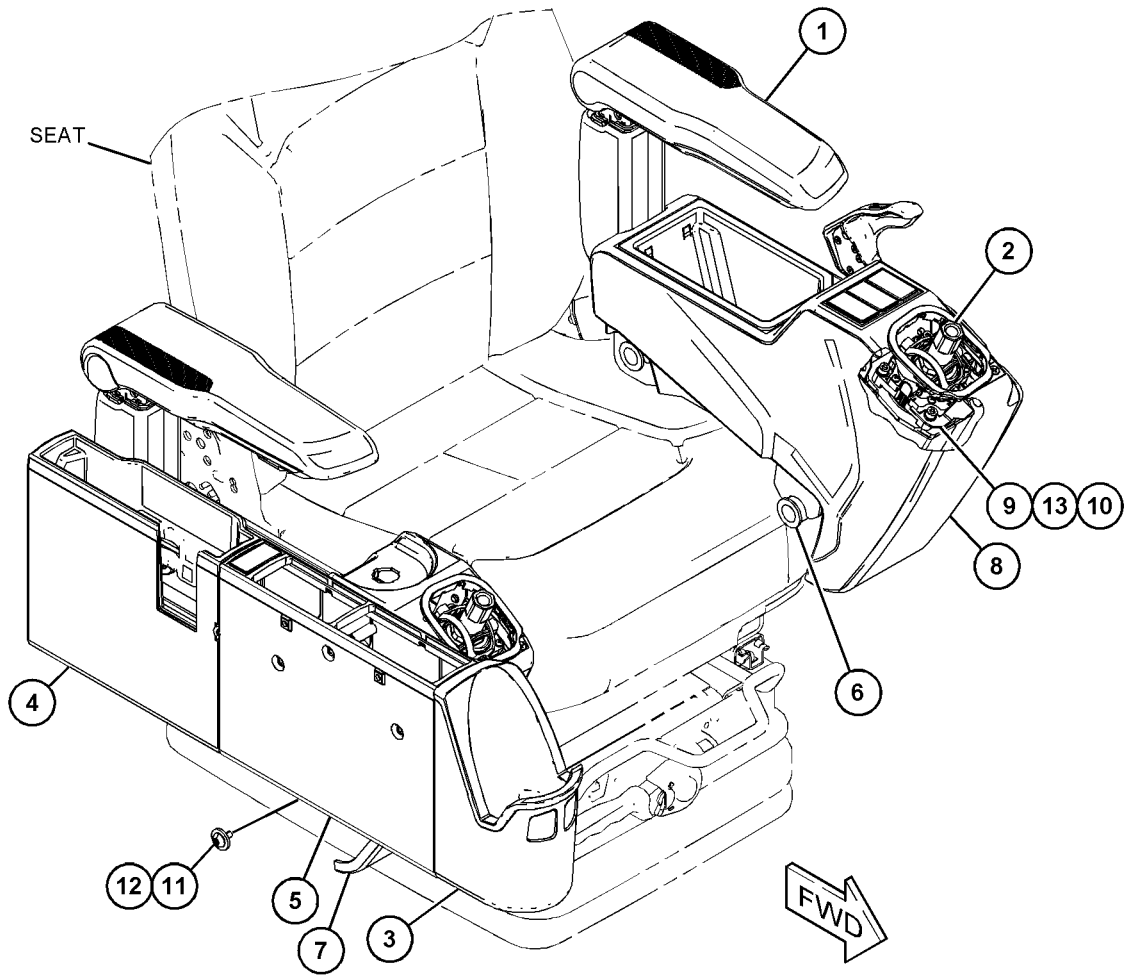

GRAPHIC #1 <END> g06227963

488-6551 CONSOLE GP-OPERATOR

S/N: BR61-UP

PART OF 488-6550, 488-6560 CONSOLE GP-OPERATOR

SMCS-5258 **i07347941**

NOTE	REF NO	GRAPHIC REF	PART NUMBER	QTY	PART NAME 1 2 3 4 5 6 (PRODUCT LEVEL)	SEE PAGE
M	1	1	**128-2135**	3	SCREW-TRUSS HEAD (M6X1X13-MM)	
M	2	1	**474-4582**	1	SCREW-PAN HEAD (M4X1.79X25-MM)	
	3	1	**486-5449**	1	COVER	
	4	1	**487-6657**	1	SUPPORT AS	
	5	1	**498-7684**	1	COVER	
	6	1	**498-7685**	1	COVER	

M - METRIC PART

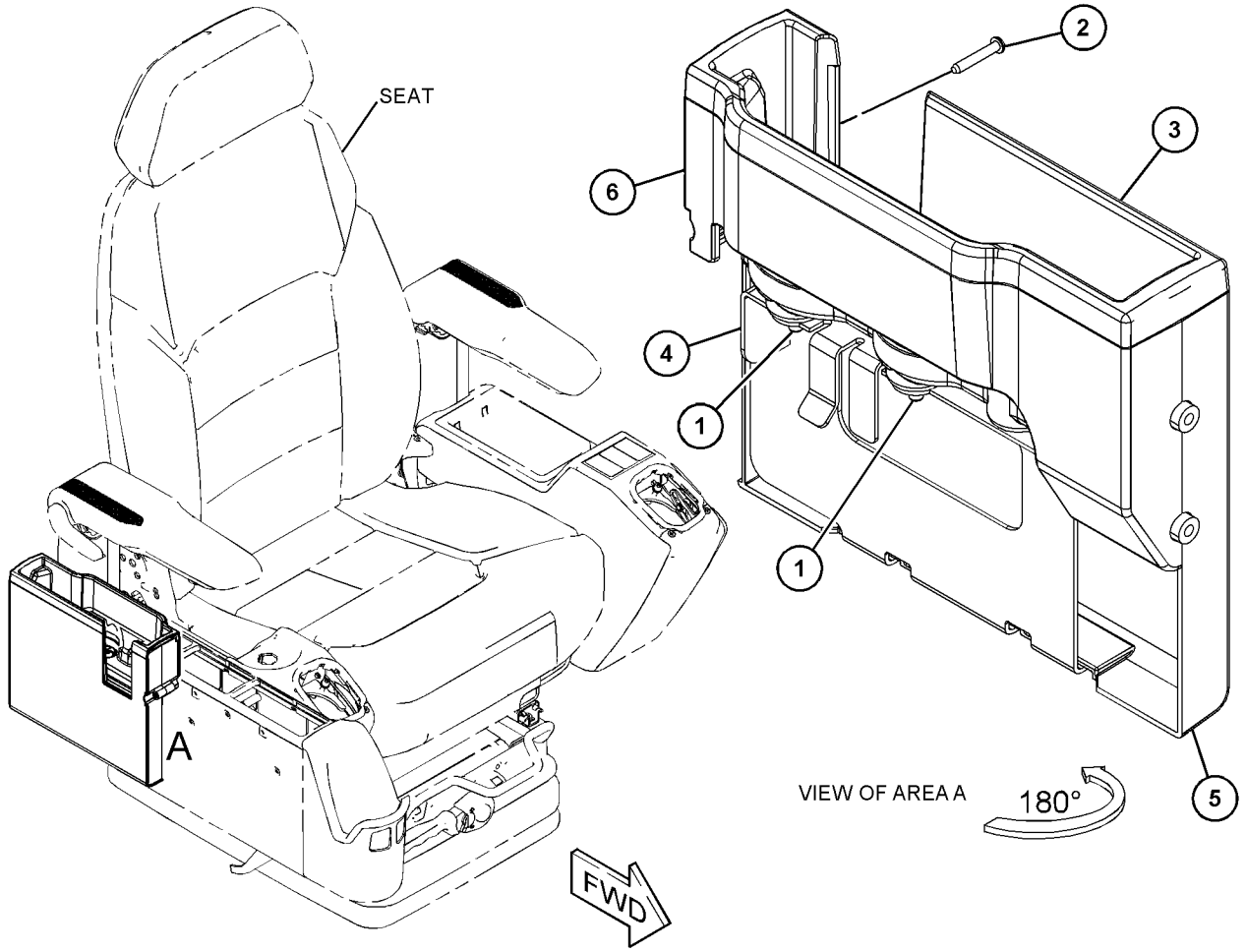

GRAPHIC #1 <END> g06227926

488-6560 CONSOLE GP-OPERATOR

S/N: BR61-UP

PART OF 487-7001 OPERATOR AR

SMCS-5258 **i07360144**

NOTE	REF NO	GRAPHIC REF	PART NUMBER	QTY	PART NAME 1 2 3 4 5 6 (PRODUCT LEVEL)	SEE PAGE
	1	1	**7Y-8561**	1	BUMPER	
Y	2	1	*487-6659*	1	ARMREST GP	586
	3	1	**487-8455**	2	BASE AS	
					(EACH INCLUDES)	
		1	**8T-8737**	2	PLUG-SEAL	
		1	**9X-3401**	4	PIN-CONNECTOR (16-GA TO 18-GA)	
		1	**361-7886**	1	RECEPTACLE AS	
Y	4	1	*488-6534*	1	HOLDER GP-CUP	630
Y	5	1	*488-6551*	1	CONSOLE GP-OPERATOR (STORAGE)	604
Y	6	1	*488-6570*	1	CONSOLE GP-OPERATOR (SECONDARY)	607
	7	1	**495-6057**	6	BUSHING	
	8	1	**500-0884**	1	DAMPER	
Y	9	1	**511-6016**	1	COVER GP-CONSOLE (RH)	619
Y	10	1	**511-6023**	1	CONSOLE GP-OPERATOR (LH)	608
	11	1	**520-8286**	1	STRIKER	
	12	1	**520-8293**	1	SPACER (18.5X34X3.1-MM THK)	
	13	1	**520-8294**	2	BRACKET	
	14	1	**332-0195**	2	CLIP	
M	15	1	**3T-0849**	6	BOLT-SOCKET HEAD (M6X1X25-MM)	
	16	1	**8T-4121**	1	WASHER-HARD (11X21X2.5-MM THK)	
M	17	1	**8T-4133**	1	NUT (M10X1.5-THD)	
M	18	1	**9X-2043**	6	SCREW-TRUSS HEAD (M6X1X14-MM)	
	19	1	**9X-6165**	4	WASHER (6.5X22X2.5-MM THK)	
	20	1	**9X-8256**	6	WASHER (6.6X12X2-MM THK)	

M - METRIC PART
Y - SEPARATE ILLUSTRATION

488-6560 **CONSOLE GP-OPERATOR (**contd.**)** **i07360144**

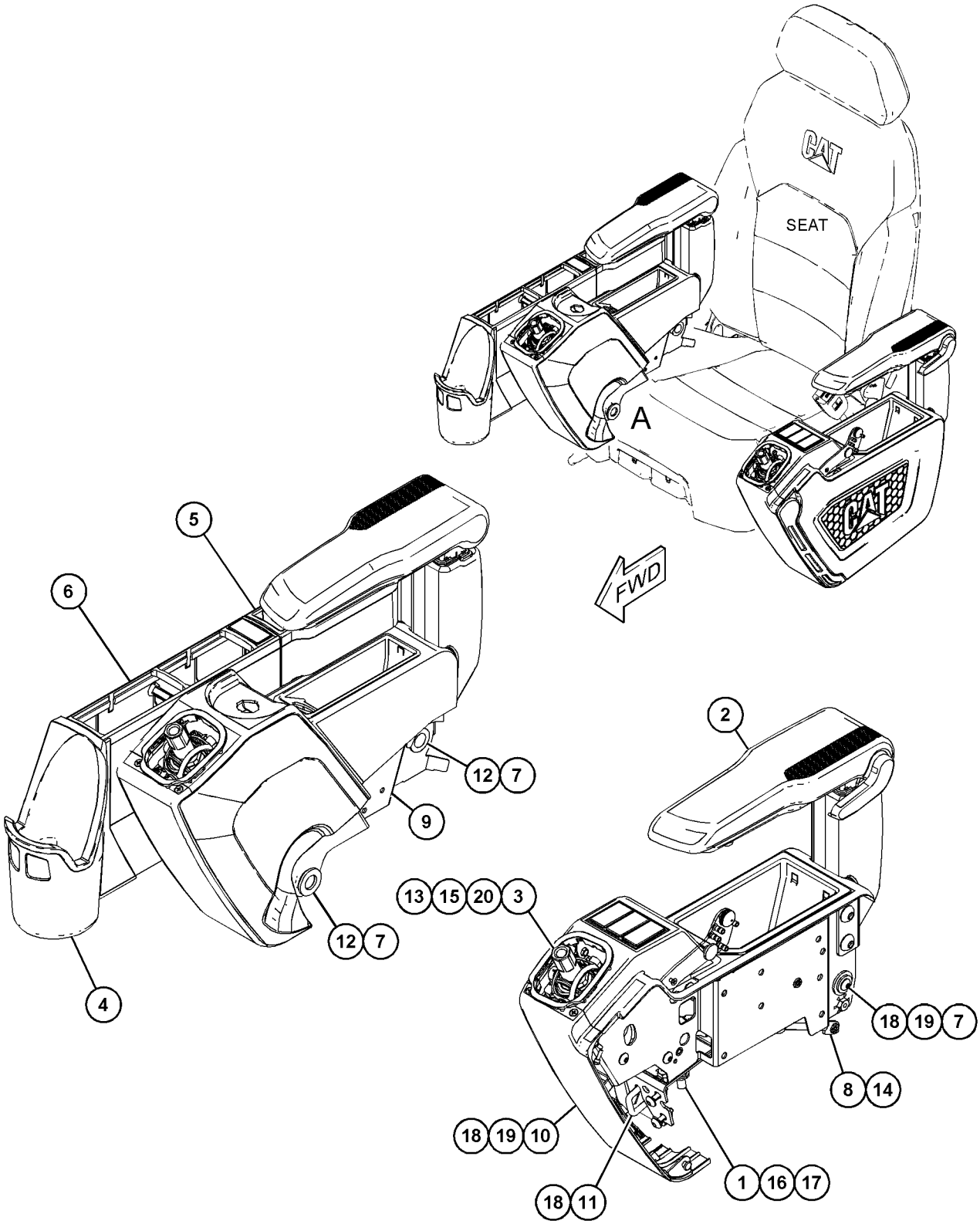

VIEW OF AREA A
(PARTS REMOVED FOR CLARITY)

GRAPHIC #1 <END> g06231059

488-6570 CONSOLE GP-OPERATOR

S/N: BR61-UP

PART OF 488-6550, 488-6560 CONSOLE GP-OPERATOR

SMCS-5258 **i07348322**

NOTE	REF NO	GRAPHIC REF	PART NUMBER	QTY	PART NAME 1 2 3 4 5 6 (PRODUCT LEVEL)	SEE PAGE
M	1	1	**474-4583**	3	SCREW-PAN HEAD (M4X1.79X40-MM)	
	2	1	**488-6490**	1	SUPPORT AS	
	3	1	**498-7678**	1	COVER	
	4	1	**498-7679**	1	COVER	
	5	1	**498-7680**	1	COVER	
	6	1	**511-5982**	1	COVER	
	7	1	**526-8917**	1	SUPPORT	
M	8	1	**9X-2042**	4	SCREW-TRUSS HEAD (M6X1X12-MM)	

M - METRIC PART

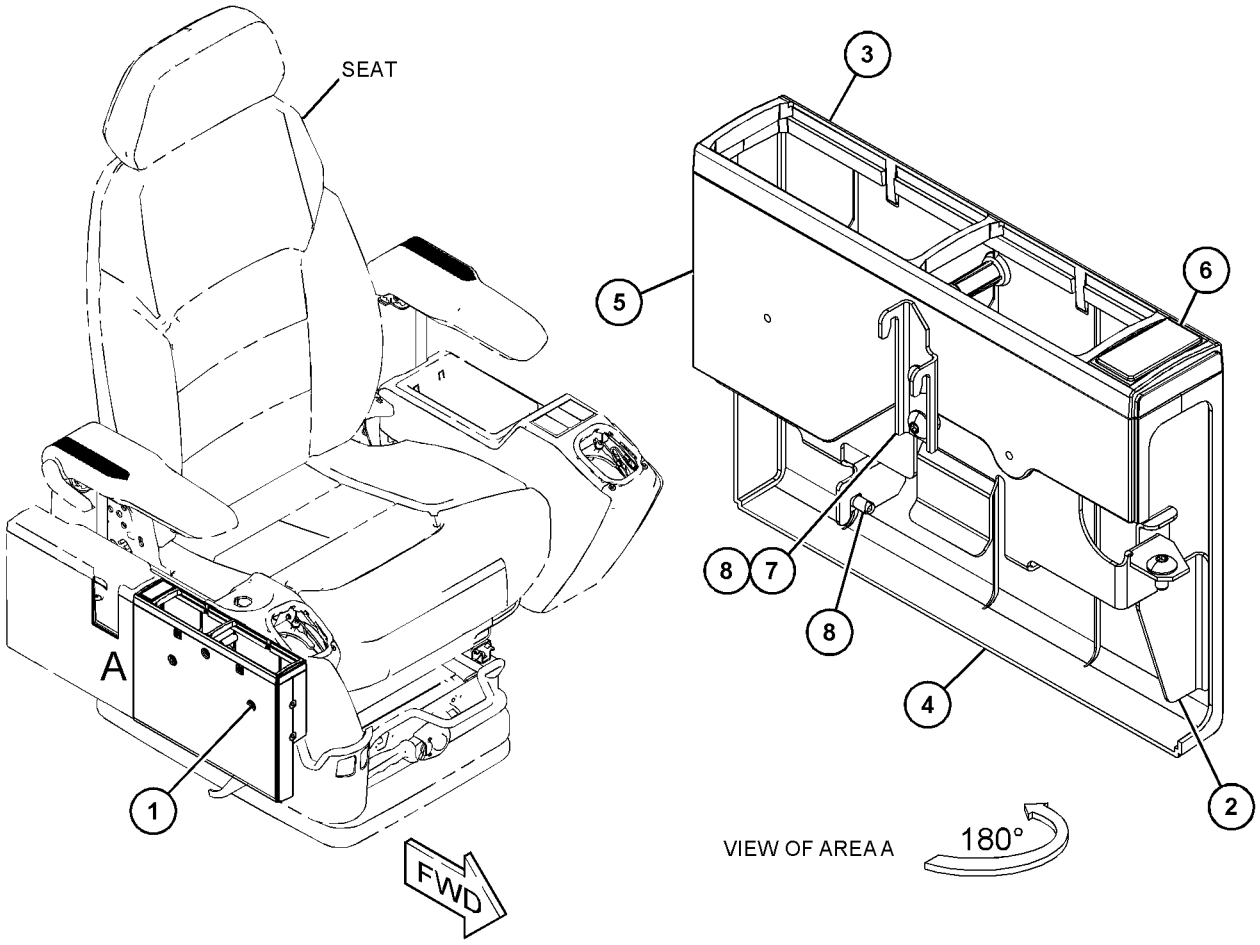

GRAPHIC #1 <END> g06227603

511-6023 CONSOLE GP-OPERATOR—LH

S/N: BR61-UP

PART OF 488-6560 CONSOLE GP-OPERATOR

SMCS-5258 **i07360129**

NOTE	REF NO	GRAPHIC REF	PART NUMBER	QTY	PART NAME 1 2 3 4 5 6 (PRODUCT LEVEL)	SEE PAGE
	1	1	**487-6653**	1	COVER AS	
		1	**234-6579**	1	NUT-SPEED	
		1	**511-5919**	5	CLIP	
	2	1	**487-6654**	1	COVER AS	
		1	**234-6579**	1	NUT-SPEED	
		1	**511-5919**	3	CLIP	
	3	1	**487-6832**	1	COVER	
	4	1	**487-6838**	1	COVER	
	5	1	**498-7728**	1	COVER AS	
		1	**511-5982**	3	COVER	
	6	1	**500-0930**	1	COVER AS-CONSOLE	
	7	1	**500-0933**	1	SUPPORT AS (LH)	
	8	1	**511-5921**	1	BAR AS	
	9	1	**511-6003**	1	HANDLE AS	
	10	1	**511-6026**	1	SWITCH GP-POSITION (HYDRAULIC LOCK)	
		1	**4I-3038**	2	WASHER (3.3X8X0.5-MM THK)	
		1	**111-4799**	1	SWITCH AS-LIMIT (HYDRAULIC LOCK)	
		1	**102-8803**	1	KIT-RECEPTACLE (3-PIN)	
					(INCLUDES RECEPTACLE AS & WEDGE)	
		1	**3E-3371**	1	WEDGE-RECEPTACLE LOCK (3-PIN)	
		1	**8T-8729**	3	PIN-CONNECTOR (16-GA TO 18-GA)	
D		1	**5P-5998**		TUBE (0.3-M)	
M		1	**120-9027**	2	SCREW-PAN HEAD (M3X0.5X16-MM)	
		1	**487-6813**	1	LATCH AS	
	11	1	**511-6027**	1	BRACKET AS	
	12	1	**516-4930**	1	COVER	
M	13	1	**520-8227**	1	SCREW-MACHINE (M4X0.7X2.3-MM)	
	14	1	**520-8253**	2	SCREW-TAPPING	
M	15	1	**520-8290**	4	SCREW-MACHINE (M4X0.7X10-MM)	
	16	1	**520-8291**	2	SCREW-MACHINE (M4X0.7X15-MM)	
	17	1	**520-8292**	2	SPACER (4.2X6X3.3-MM THK)	
	18	1	**526-8631**	1	RIVET	
M	19	1	**3E-8020**	2	SCREW-TRUSS HEAD (M6X1X25-MM)	
M	20	1	**9X-2042**	3	SCREW-TRUSS HEAD (M6X1X12-MM)	
M	21	1	**9X-2043**	2	SCREW-TRUSS HEAD (M6X1X14-MM)	

D - ORDER BY THE METER
M - METRIC PART

511-6023 **CONSOLE GP-OPERATOR (**contd.**)** **i07360129**

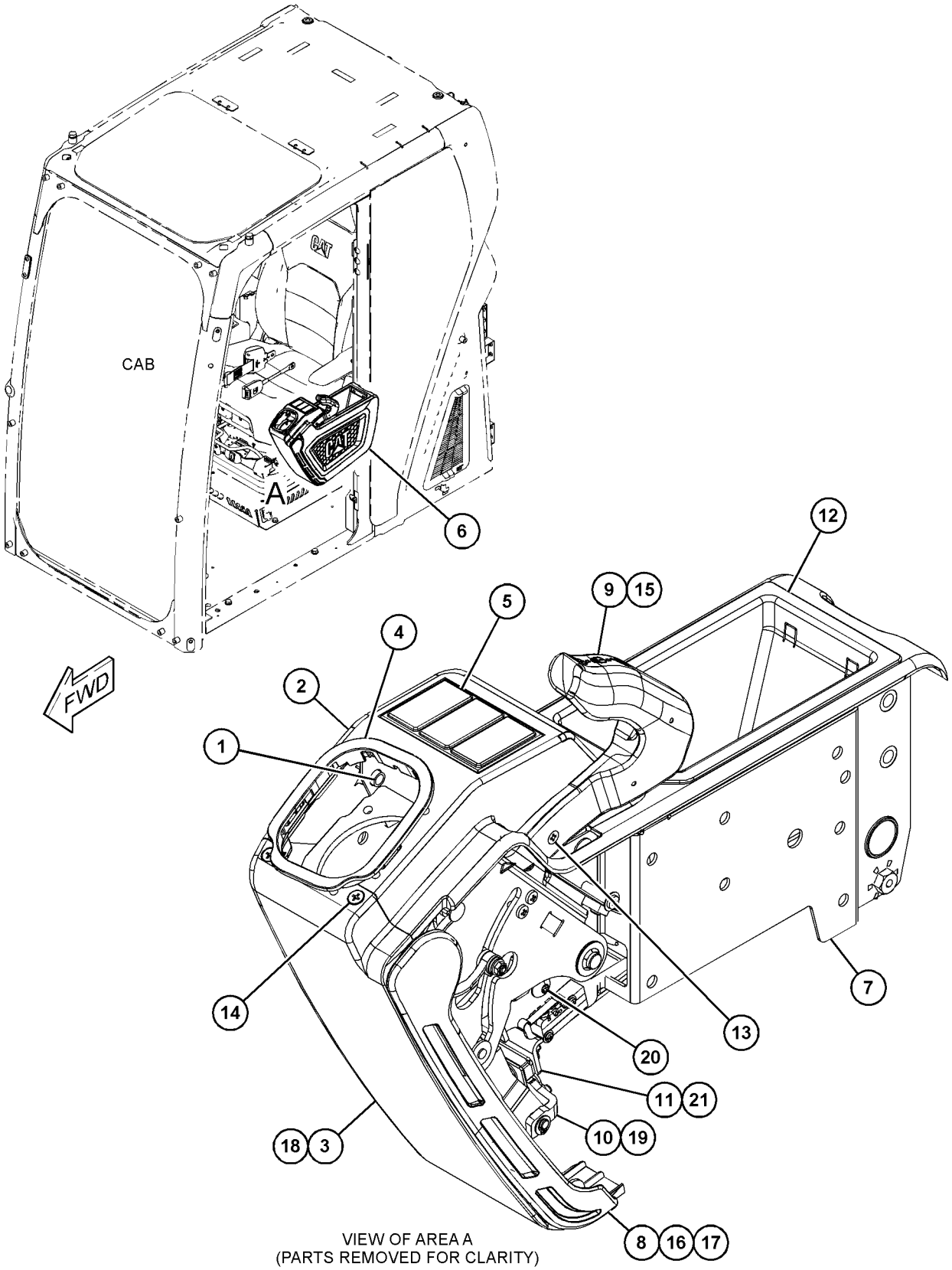

VIEW OF AREA A
(PARTS REMOVED FOR CLARITY)

GRAPHIC #1 <END> g06233199

486-5504 CONTROL & MTG GP-PEDAL

S/N: BR61-UP

PART OF 487-7000, 487-7001 OPERATOR AR

SMCS-5462 **i07348739**

NOTE	REF NO	GRAPHIC REF	PART NUMBER	QTY	PART NAME 1 2 3 4 5 6 (PRODUCT LEVEL)	SEE PAGE
M	1	1	**101-7401**	4	BOLT-SOCKET HEAD (M10X1.5X20-MM)	
	2	1	**117-6356**	2	STEP AS	
	3	1	**122-9608**	1	PEDAL-RUBBER (RH)	
	4	1	**122-9609**	1	PEDAL-RUBBER (LH)	
	5	1	**122-9610**	2	STEP	
	6	1	**142-5546**	2	KNOB	
	7	1	**170-9498**	1	LEVER AS (RH)	
	8	1	**170-9499**	1	LEVER AS (LH)	
	9	1	**488-6458**	1	PEDAL AS (LH)	
	10	1	**488-6459**	1	PEDAL AS (RH)	
	11	1	**490-1012**	1	CONTROL GP-PEDAL	
		1	**509-3085**	1	BOOT	
		1	**8T-8729**	6	PIN-CONNECTOR (16-GA TO 18-GA)	
		1	**151-9275**	1	KIT-RECEPTACLE (6-PIN)	
					(INCLUDES RECEPTACLE AS & WEDGE)	
		1	**509-3087**	1	DAMPER AS	
	12	1	**526-8624**	2	PLATE	
	13	1	**096-6166**	2	WASHER-HARD (4.5X9X1-MM THK)	
M	14	1	**8T-0337**	2	SCREW-MACHINE (M4X0.7X12-MM)	
	15	1	**8T-4121**	12	WASHER-HARD (11X21X2.5-MM THK)	
M	16	1	**8T-4136**	8	BOLT (M10X1.5X25-MM)	
M	17	1	**8T-4191**	4	BOLT (M10X1.5X16-MM)	
	18	1	**9X-2027**	4	WASHER (11X18X2-MM THK)	

M - METRIC PART

486-5504 **CONTROL & MTG GP-PEDAL (**contd.**)** **i07348739**

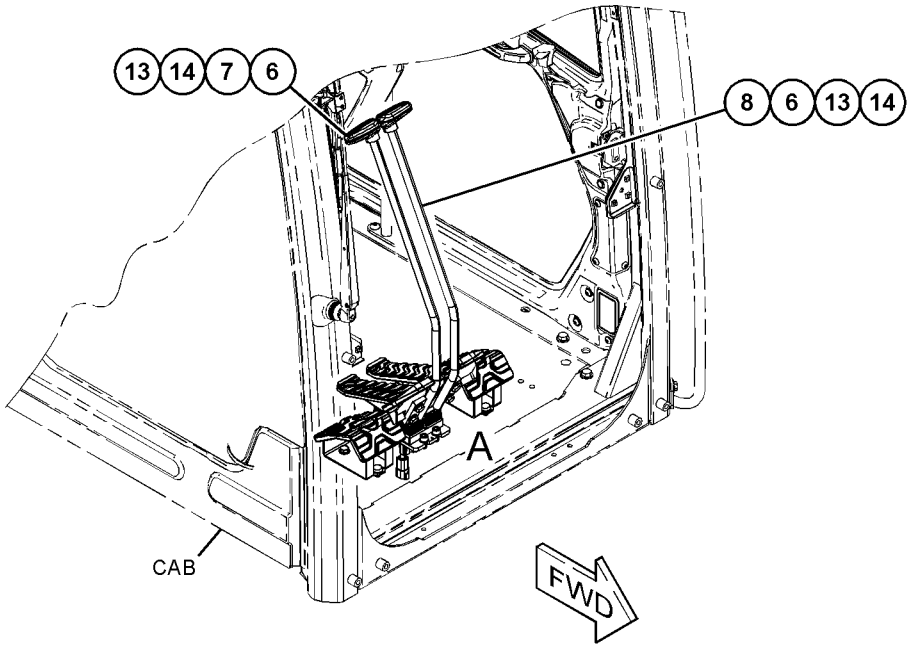

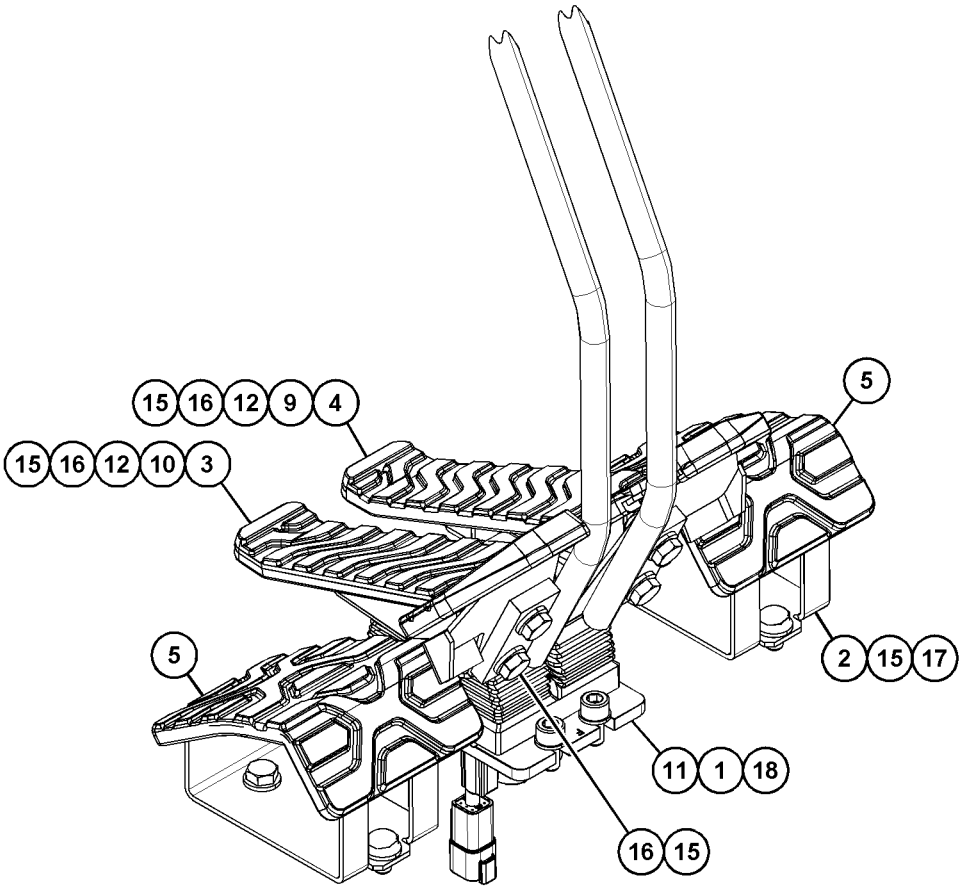

VIEW OF AREA A

GRAPHIC #1 <END> g06229730

487-6660 COVER GP-CAB

S/N: BR61-UP

PART OF 487-7000, 487-7001 OPERATOR AR

SMCS-7301, 7308 **i07348747**

NOTE	REF NO	GRAPHIC REF	PART NUMBER	QTY	PART NAME 1 2 3 4 5 6 (PRODUCT LEVEL)	SEE PAGE
	1	1	**8Y-6967**	2	LOUVER AS-VENT	
M	2	1	**128-2135**	1	SCREW-TRUSS HEAD (M6X1X13-MM)	
	3	1	**164-8474**	2	LOUVER AS-VENT	
	4	1	**234-6498**	3	RIVET	
	5	1	**487-6663**	1	COVER AS-ACCESS	
		1	**487-6839**	12	RIVET	
Y	6	1	*487-6665*	1	DUCT GP-CAB AIR	622
	7	1	**487-6668**	1	COVER AS-ACCESS	
	8	1	**487-6670**	1	COVER AS-ACCESS	
	9	1	**487-6942**	1	COVER	
	10	1	**487-6943**	1	COVER	
	11	1	**487-6944**	1	COVER	
	12	1	**487-6945**	1	COVER	
	13	1	**487-6946**	2	COVER	
	14	1	**487-6952**	1	COVER	
	15	1	**487-6953**	1	SEAL	
	16	1	**487-6954**	1	COVER	
	17	1	**488-6449**	1	COVER	
	18	1	**498-7683**	6	CLIP	
	19	1	**500-0719**	1	BRACKET AS	
	20	1	**526-8555**	1	BRACKET	
	21	1	**526-8556**	2	LINER	
	22	1	**526-8643**	2	LINER	
	23	1	**8T-4121**	4	WASHER-HARD (11X21X2.5-MM THK)	
M	24	1	**8T-4137**	4	BOLT (M10X1.5X20-MM)	

M - METRIC PART
Y - SEPARATE ILLUSTRATION

487-6660 **COVER GP-CAB** (contd.) **i07348747**

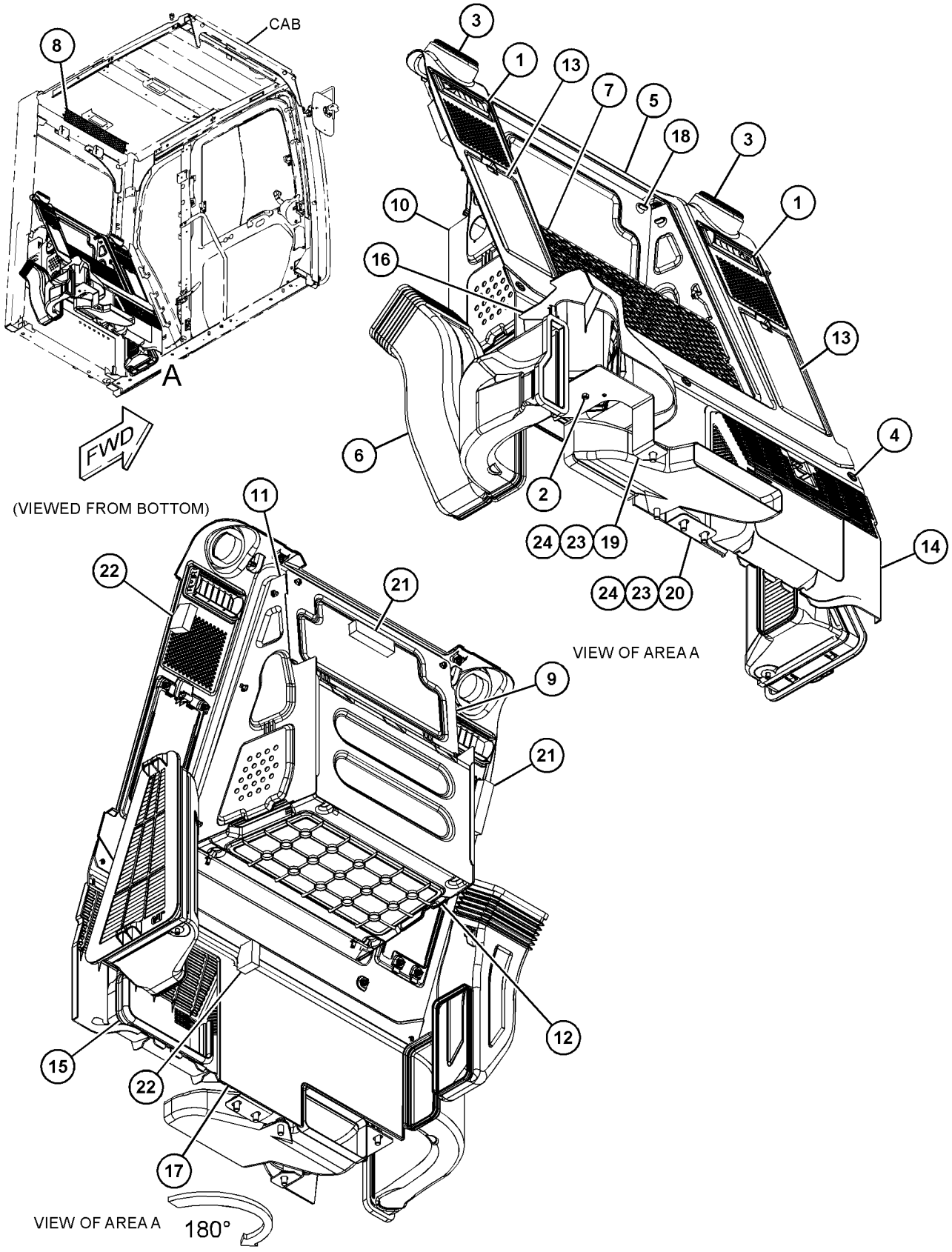

GRAPHIC #1 <END> g06272878

487-6678 COVER GP-CAB

S/N: BR61-UP

PART OF 487-6666 CAB GP

SMCS-7301, 7308 **i07346347**

NOTE	REF NO	GRAPHIC REF	PART NUMBER	QTY	PART NAME 1 2 3 4 5 6 (PRODUCT LEVEL)	SEE PAGE
	1	1	**4I-4270**	1	HOLDER-GLASS	
M	2	1	**128-2135**	4	SCREW-TRUSS HEAD (M6X1X13-MM)	
M	3	1	**128-2136**	2	SCREW-TRUSS HEAD (M6X1X16-MM)	
	4	1	**185-8205**	4	CLIP	
	5	1	**487-6679**	1	COVER AS-ACCESS	
		1	**511-5919**	6	CLIP	
	6	1	**487-6680**	1	COVER AS-ACCESS	
		1	**487-6839**	6	RIVET	
	7	1	**487-6682**	1	COVER AS-ACCESS	
		1	**487-6839**	5	RIVET	
	8	1	**487-6683**	1	COVER AS-ACCESS	
		1	**487-6839**	3	RIVET	
	9	1	**487-6684**	1	COVER	
	10	1	**487-6851**	1	COVER	
	11	1	**487-6955**	2	HOOK	
	12	1	**488-6484**	1	COVER AS-ACCESS	
		1	**487-6839**	2	RIVET	
	13	1	**488-6515**	1	COVER AS-ACCESS	
		1	**511-5919**	8	CLIP	
	14	1	**488-6574**	1	BRACKET AS	
	15	1	**488-6577**	1	BRACKET AS	
M		1	**6V-9632**	2	NUT-WELD (M6X1-THD)	
	16	1	**498-7709**	1	COVER AS-ACCESS	
		1	**487-6839**	3	RIVET	
	17	1	**500-0730**	2	HOLDER	
	18	1	**511-5900**	1	COVER	
	19	1	**511-5901**	1	COVER	
	20	1	**511-5972**	1	INSULATION	
	21	1	**520-8287**	2	PLUG	
	22	1	**526-8556**	2	LINER	
	23	1	**526-8557**	6	LINER	
	24	1	**526-8558**	6	LINER	
	25	1	**526-8559**	4	LINER	
M	26	1	**3E-8020**	6	SCREW-TRUSS HEAD (M6X1X25-MM)	
M	27	1	**9X-2044**	5	SCREW-TRUSS HEAD (M6X1X16-MM)	
	28	1	**526-8643**	1	LINER	
	29	1	**526-8642**	4	CLIP	

M - METRIC PART

487-6678 **COVER GP-CAB** (contd.) **i07346347**

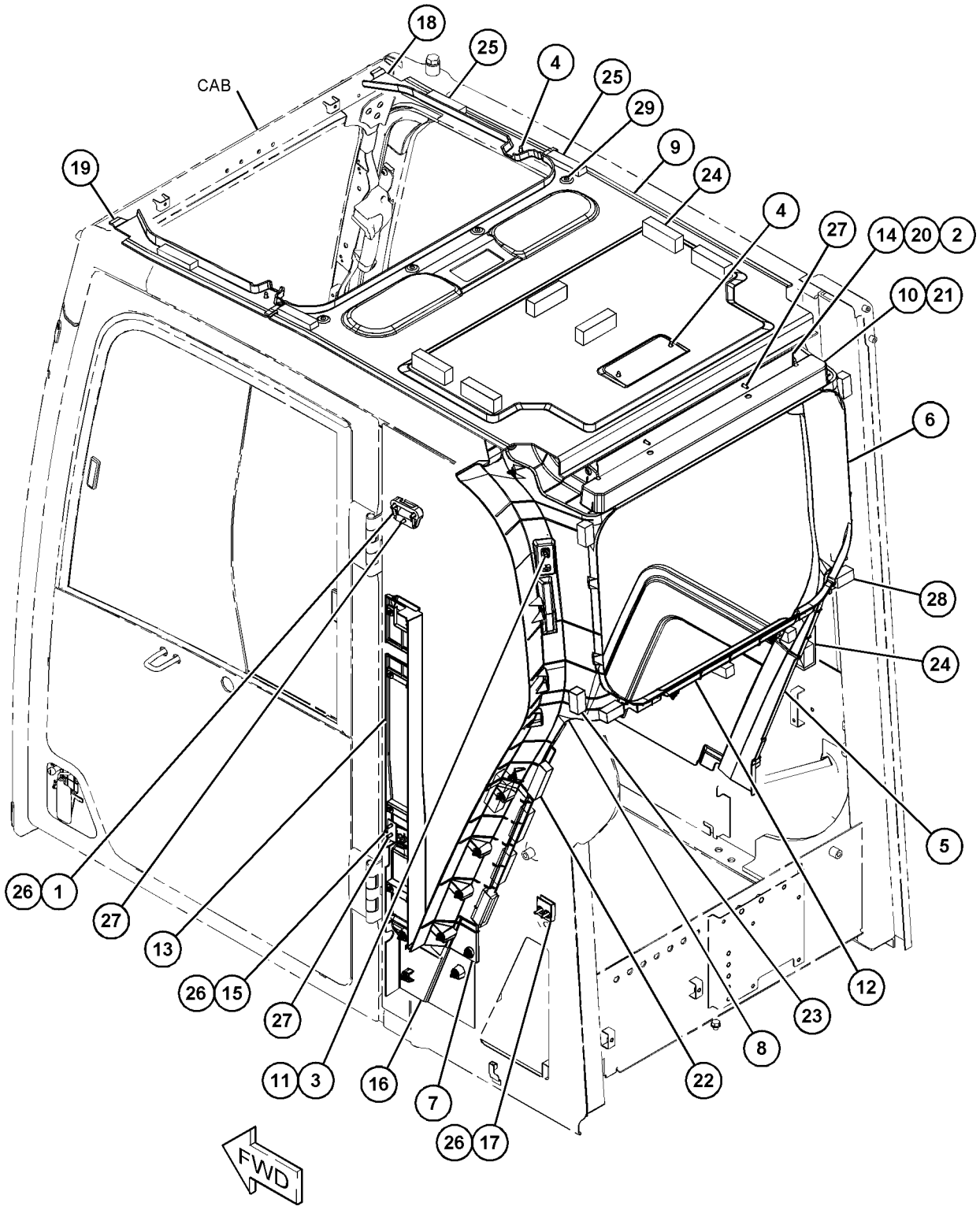

GRAPHIC #1 <END> g06272559

488-6451 COVER GP-CAB

S/N: BR61-UP

PART OF 487-6666 CAB GP

SMCS-7301, 7308 **i07346355**

NOTE	REF NO	GRAPHIC REF	PART NUMBER	QTY	PART NAME 1 2 3 4 5 6 (PRODUCT LEVEL)	SEE PAGE
	1	1	**8Y-6352**	1	LOUVER AS	
	2	1	**164-8474**	3	LOUVER AS-VENT	
	3	1	**488-6578**	1	COVER AS-ACCESS	
		1	**511-5962**	3	RIVET	
	4	1	**488-6579**	1	COVER AS	
		1	**511-5919**	1	CLIP	
		1	**511-5962**	3	RIVET	
	5	1	**491-7133**	1	BRACKET	
	6	1	**511-5959**	1	COVER AS	
	7	1	**511-5960**	1	COVER AS	
					(EACH COVER AS INCLUDES)	
		1	**511-5962**	1	RIVET	
	8	1	**511-5961**	1	DUCT	
	9	1	**526-8578**	2	INSULATION	
M	10	1	**128-2135**	9	SCREW-TRUSS HEAD (M6X1X13-MM)	
M	11	1	**9X-2045**	3	SCREW-TRUSS HEAD (M6X1X20-MM)	

M - METRIC PART

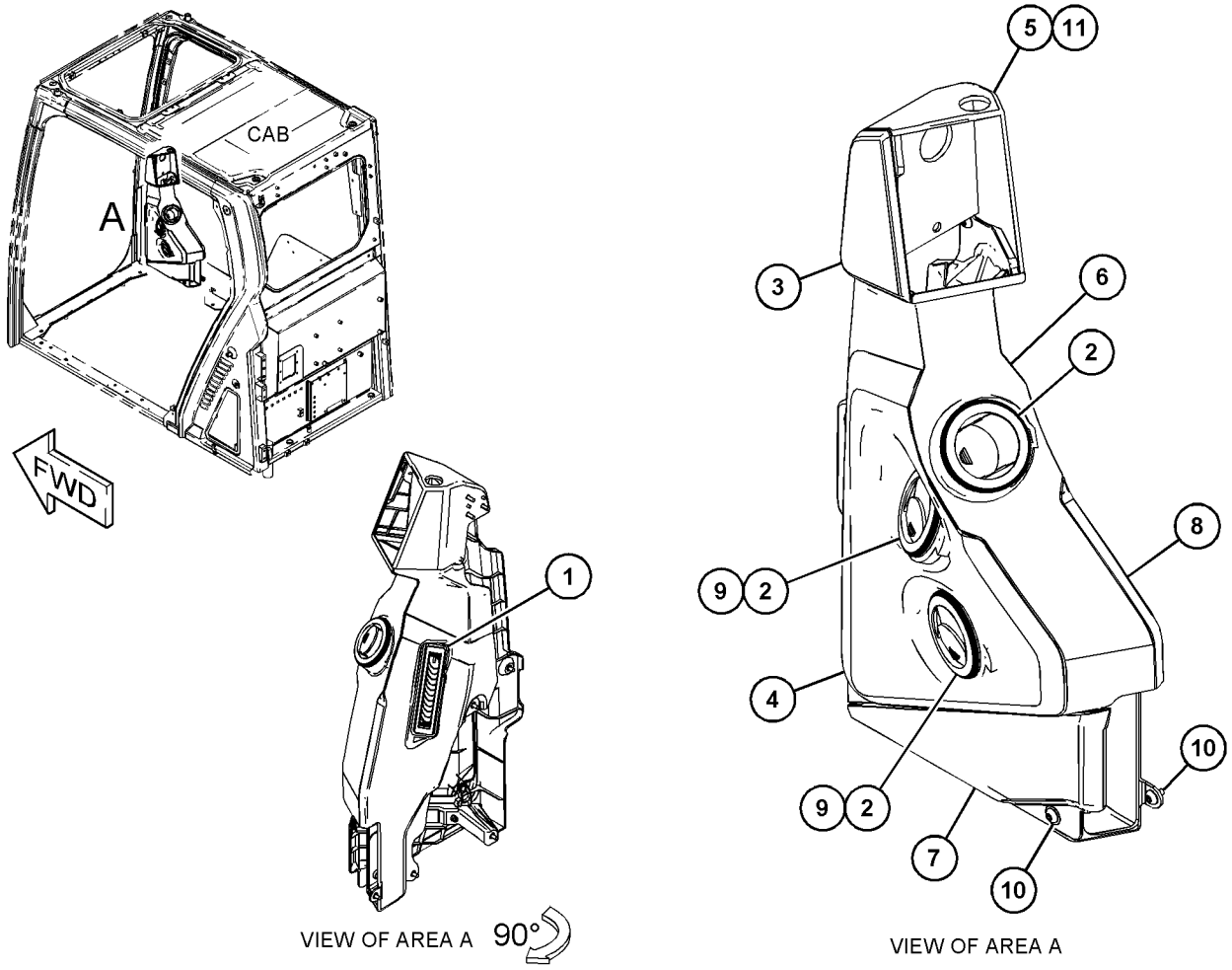

GRAPHIC #1 <END> g06230385

488-6553 COVER GP-CAB

S/N: BR61-UP

PART OF 520-8301, 549-4726 OPERATOR AR-ENCLOSED ROPS

SMCS-7301, 7308 **i07394595**

NOTE	REF NO	GRAPHIC REF	PART NUMBER	QTY	PART NAME 1 2 3 4 5 6 (PRODUCT LEVEL)	SEE PAGE
	1	1	**500-0795**	1	COVER	
	2	1	**500-0796**	1	COVER	
	3	1	**500-0938**	1	BRACKET AS	
	4	1	**519-9781**	2	BRACKET AS	
					(EACH INCLUDES)	
M		1	**5C-2890**	1	NUT (M6X1-THD)	
	5	1	**538-9923**	1	PLUG	
M	6	1	**128-2135**	7	SCREW-TRUSS HEAD (M6X1X13-MM)	
M	7	1	**9X-2042**	6	SCREW-TRUSS HEAD (M6X1X12-MM)	

M - METRIC PART

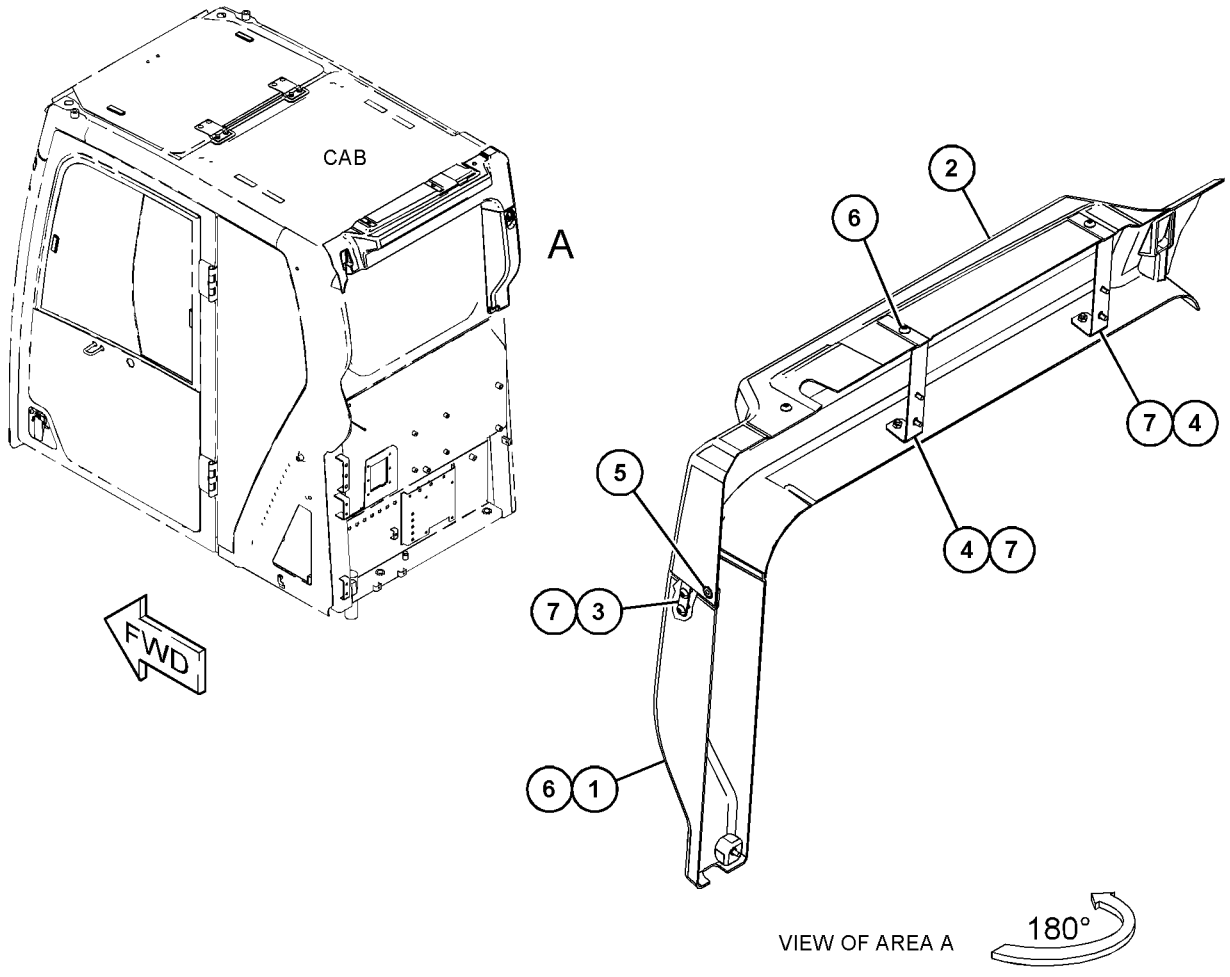

GRAPHIC #1 <END> g06306719

524-7742 COVER GP-CAB

S/N: BR61-UP

PART OF 477-7565 CAB GP

SMCS-7301, 7308 **i07344991**

NOTE	REF NO	GRAPHIC REF	PART NUMBER	QTY	PART NAME 1 2 3 4 5 6 (PRODUCT LEVEL)	SEE PAGE
	1	1	*511-6034*	1	COVER GP-CAB	
	1A	1	**526-8573**	2	HINGE	
M		1	**9X-2044**	4	SCREW-TRUSS HEAD (M6X1X16-MM)	
		1	**511-6035**	1	COVER AS	
	2	1	**526-8574**	1	LOCK AS	

M - METRIC PART

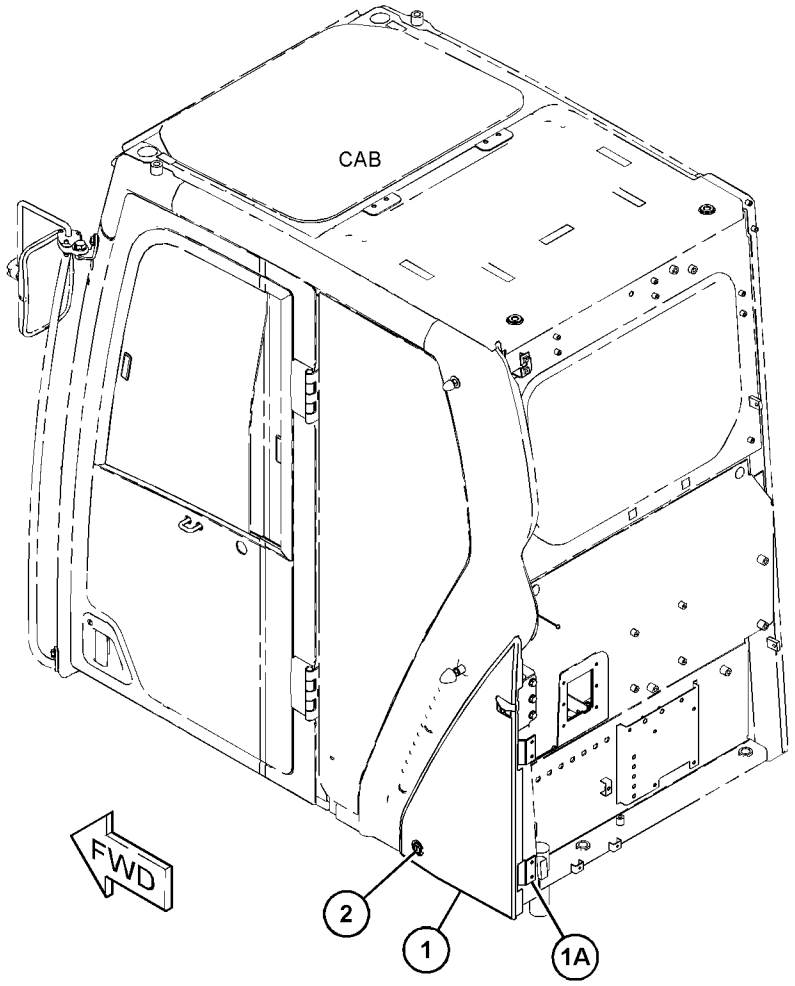

GRAPHIC #1 <END> g06230339

511-6016 COVER GP-CONSOLE

S/N: BR61-UP

PART OF 488-6550, 488-6560 CONSOLE GP-OPERATOR

SMCS-5258 **i07348572**

NOTE	REF NO	GRAPHIC REF	PART NUMBER	QTY	PART NAME 1 2 3 4 5 6 (PRODUCT LEVEL)	SEE PAGE
	1	1	**487-6673**	1	COVER AS	
		1	**234-6579**	1	NUT-SPEED	
		1	**487-6835**	1	COVER	
		1	**511-5919**	5	CLIP	
	2	1	**487-6675**	1	COVER AS	
		1	**234-6579**	1	NUT-SPEED	
		1	**487-6837**	1	COVER	
		1	**511-5919**	3	CLIP	
	3	1	**487-6836**	1	COVER	
	4	1	**487-6838**	1	COVER	
	5	1	**498-7761**	1	COVER	
	6	1	**500-0934**	1	SUPPORT AS (RH)	
	7	1	**520-8253**	2	SCREW-TAPPING	

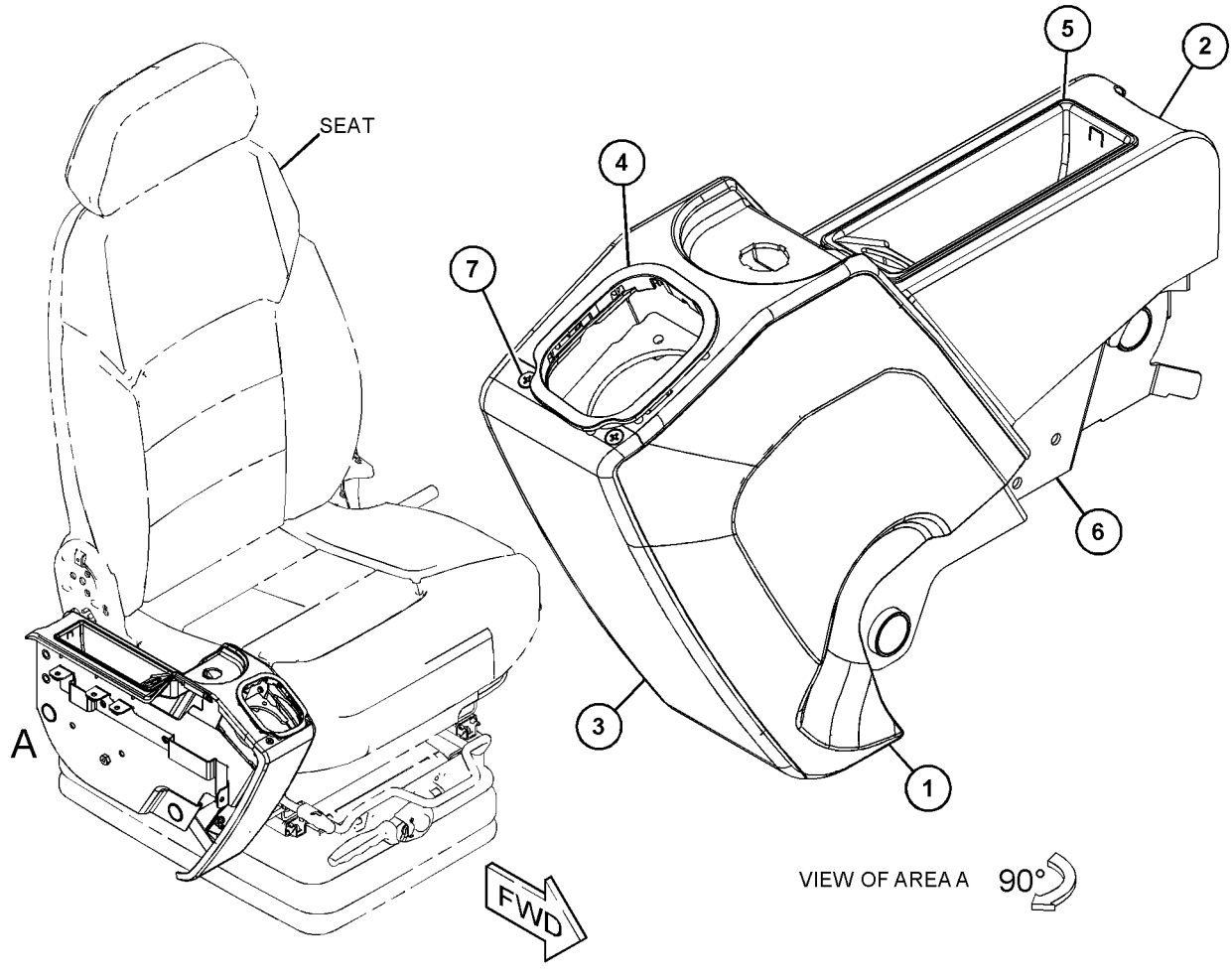

GRAPHIC #1 <END> g06227373

477-7567 DOOR GP-CAB

S/N: BR61-UP

PART OF 486-5500, 498-7719 CAB GP

SMCS-7308 **i07346254**

NOTE	REF NO	GRAPHIC REF	PART NUMBER	QTY	PART NAME 1 2 3 4 5 6 (PRODUCT LEVEL)	SEE PAGE
	1	1	**4I-4286**	1	KNOB	
M	2	1	**096-2622**	2	SCREW-MACHINE (M4X0.7X8-MM)	
M	3	1	**096-3884**	2	NUT-SPRING (M8X1.25-THD)	
M	4	1	**101-8899**	2	SCREW AS (M6X1.0X16-MM)	
M	5	1	**101-8900**	2	SCREW AS (M6X1X20-MM)	
	6	1	**151-9461**	2	SPACER	
	7	1	**156-6643**	2	COVER	
C	8	1	**532-7407**	1	HANDLE AS-DOOR	
		1	**532-7403**	1	HANDLE AS	
		1	**548-0043**	1	ROD-HANDLE	
	9	1	**164-0515**	1	JOINT	
	10	1	**167-7039**	1	GROMMET	
	11	1	**178-5573**	3	SPACER	
	12	1	**178-5574**	2	SPACER	
	13	1	**189-2690**	1	HANDLE	
	14	1	**334-6526**	2	SPACER	
	15	1	**334-6527**	2	SPACER	
	16	1	**334-6538**	1	BUSHING-RUBBER	
	17	1	**486-5461**	1	GLASS	
	18	1	**486-5497**	1	HANDLE AS	
		1	**201-4391**	1	CLIP	
C	19	1	**532-7404**	1	LOCK AS	
		1	**164-0514**	1	CLIP	
		1	**164-0519**	1	CLIP (13-MM)	
	20	1	**487-6775**	1	COVER	
	21	1	**487-6776**	1	COVER	
	22	1	**487-6782**	1	COVER	
	23	1	**488-6548**	1	SWITCH AS-CONTROL (CAB)	
	24	1	**520-8239**	1	HOOK AS	
	25	1	**526-8628**	3	PLUG	
	26	1	**532-7319**	1	SEAL AS	
	27	1	**538-8843**	1	WINDOW GP-DOOR	
	28	1	**538-9681**	1	HANDLE-PULL	
	29	1	**538-9682**	2	CAP	
	30	1	**539-0213**	1	BRACKET AS	
M	31	1	**109-1393**	1	BOLT-SOCKET HEAD (M4X0.7X10-MM)	
M	32	1	**185-8180**	3	SCREW (M6X1X16-MM)	
M	33	1	**9X-2042**	10	SCREW-TRUSS HEAD (M6X1X12-MM)	

C - CHANGE FROM PREVIOUS TYPE
M - METRIC PART

477-7567 **DOOR GP-CAB (**contd.**)** **i07346254**

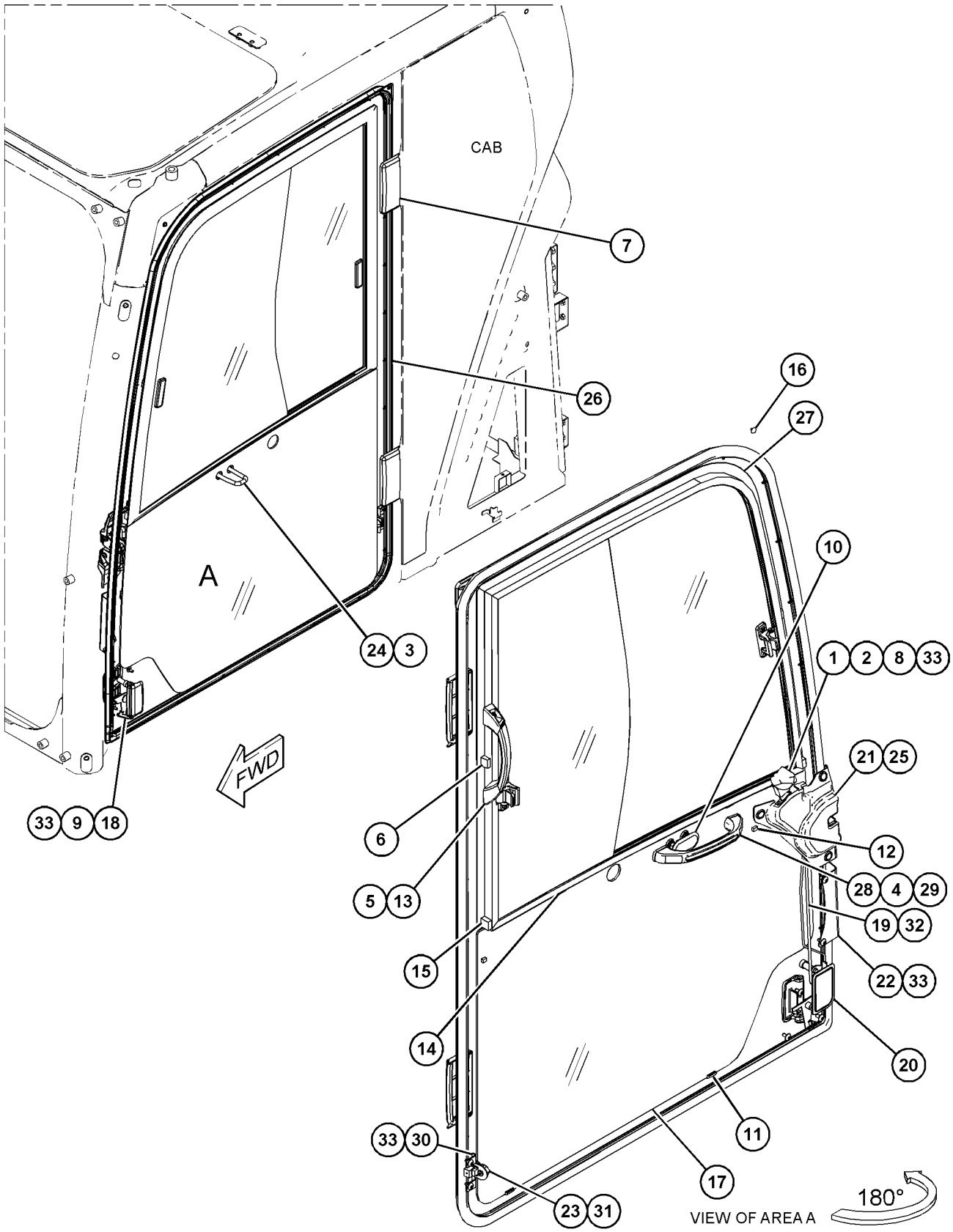

GRAPHIC #1 <END> g06267885

487-6665 DUCT GP-CAB AIR

S/N: BR61-UP

PART OF 487-6660 COVER GP-CAB

SMCS-734D **i07348751**

NOTE	REF NO	GRAPHIC REF	PART NUMBER	QTY	PART NAME 1 2 3 4 5 6 (PRODUCT LEVEL)	SEE PAGE
M	1	1	**8T-4136**	1	BOLT (M10X1.5X25-MM)	
	2	1	**7X-7729**	1	WASHER (11X25X3-MM THK)	
	3	1	**234-6498**	3	RIVET	
	4	1	**487-6940**	1	DUCT	
	5	1	**488-6434**	1	DUCT AS	
	6	1	**488-6435**	1	DUCT AS	
	7	1	**488-6436**	1	DUCT AS	
	8	1	**488-6446**	1	FILTER AS-AIR	

M - METRIC PART

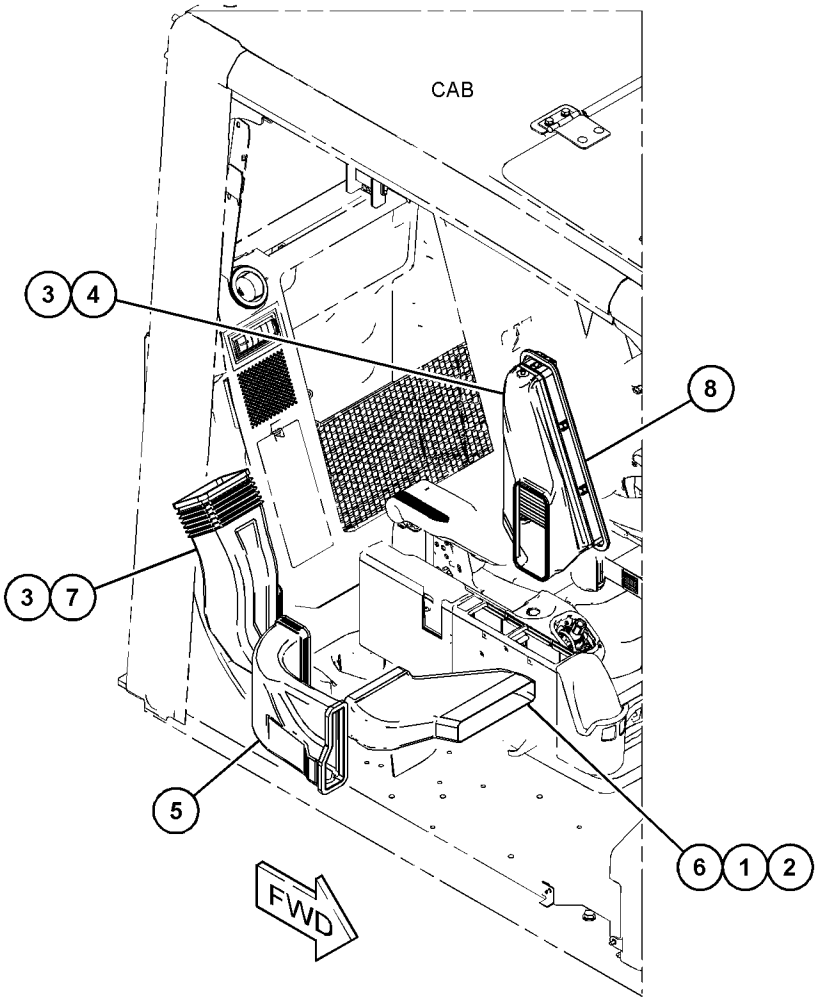

GRAPHIC #1 <END> g06227366

487-7003 DUCT GP-CAB AIR

S/N: BR61-UP

PART OF 487-6666 CAB GP

SMCS-734D **i07346350**

NOTE	REF NO	GRAPHIC REF	PART NUMBER	QTY	PART NAME 1 2 3 4 5 6 (PRODUCT LEVEL)	SEE PAGE
M	1	1	**9X-2042**	1	SCREW-TRUSS HEAD (M6X1X12-MM)	
M	2	1	**128-2135**	1	SCREW-TRUSS HEAD (M6X1X13-MM)	
	3	1	**185-8205**	2	CLIP	
	4	1	**234-6498**	1	RIVET	
	5	1	**327-0325**	2	STRAP-CABLE	
	6	1	**487-6927**	1	DUCT	
	7	1	**488-6431**	1	DUCT AS	
	8	1	**488-6432**	1	DUCT AS	
	9	1	**488-6433**	1	DUCT AS	

M - METRIC PART

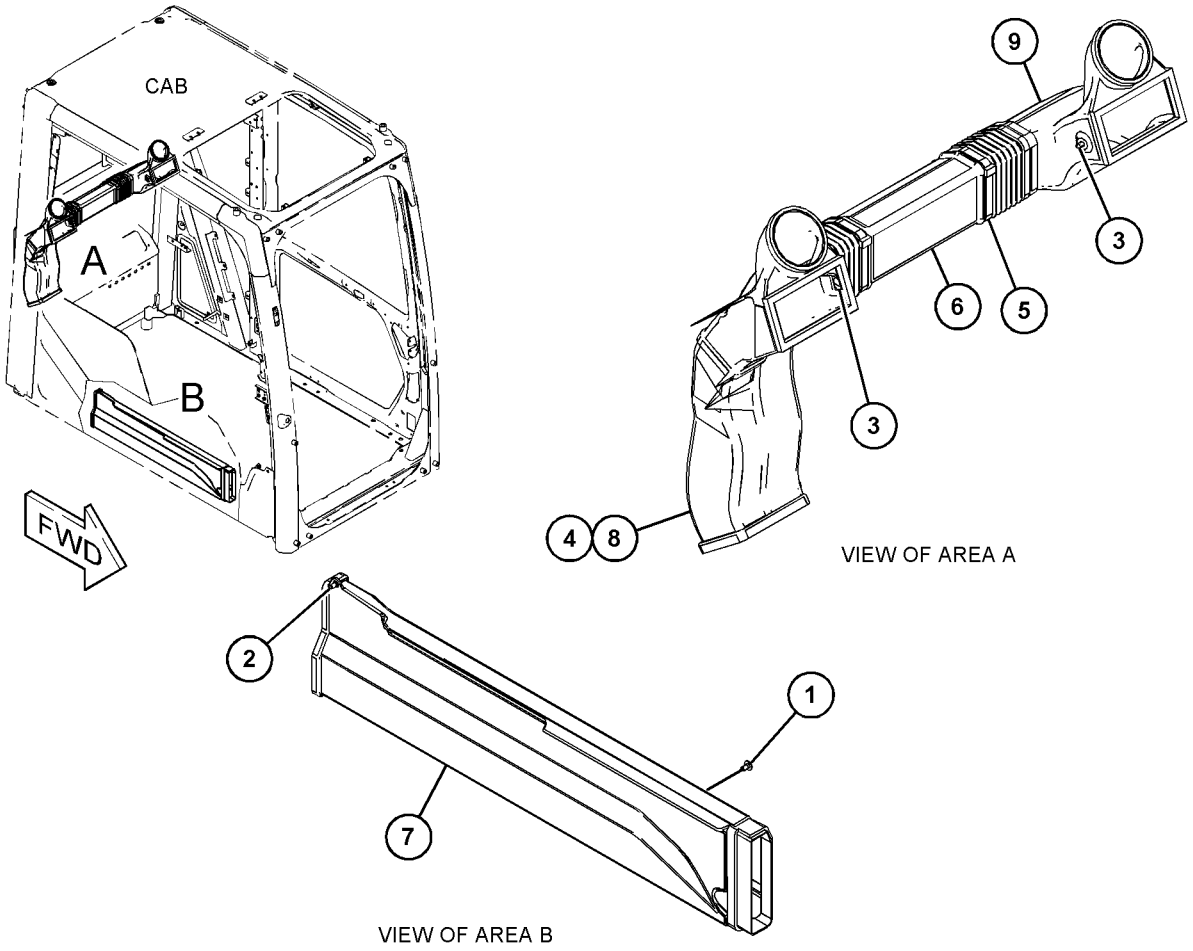

VIEW OF AREA A

VIEW OF AREA B

GRAPHIC #1 <END> g06231308

484-8025 FLOOR MAT GP

S/N: BR610001-UP

PART OF 549-4726 OPERATOR AR-ENCLOSED ROPS

SMCS-7265, 726M

i07360911

NOTE	REF NO	GRAPHIC REF	PART NUMBER	QTY	PART NAME 1 2 3 4 5 6 (PRODUCT LEVEL)	SEE PAGE
	1	1	**500-0948**	1	FLOOR MAT	
	2	1	**500-0949**	1	FLOOR MAT	

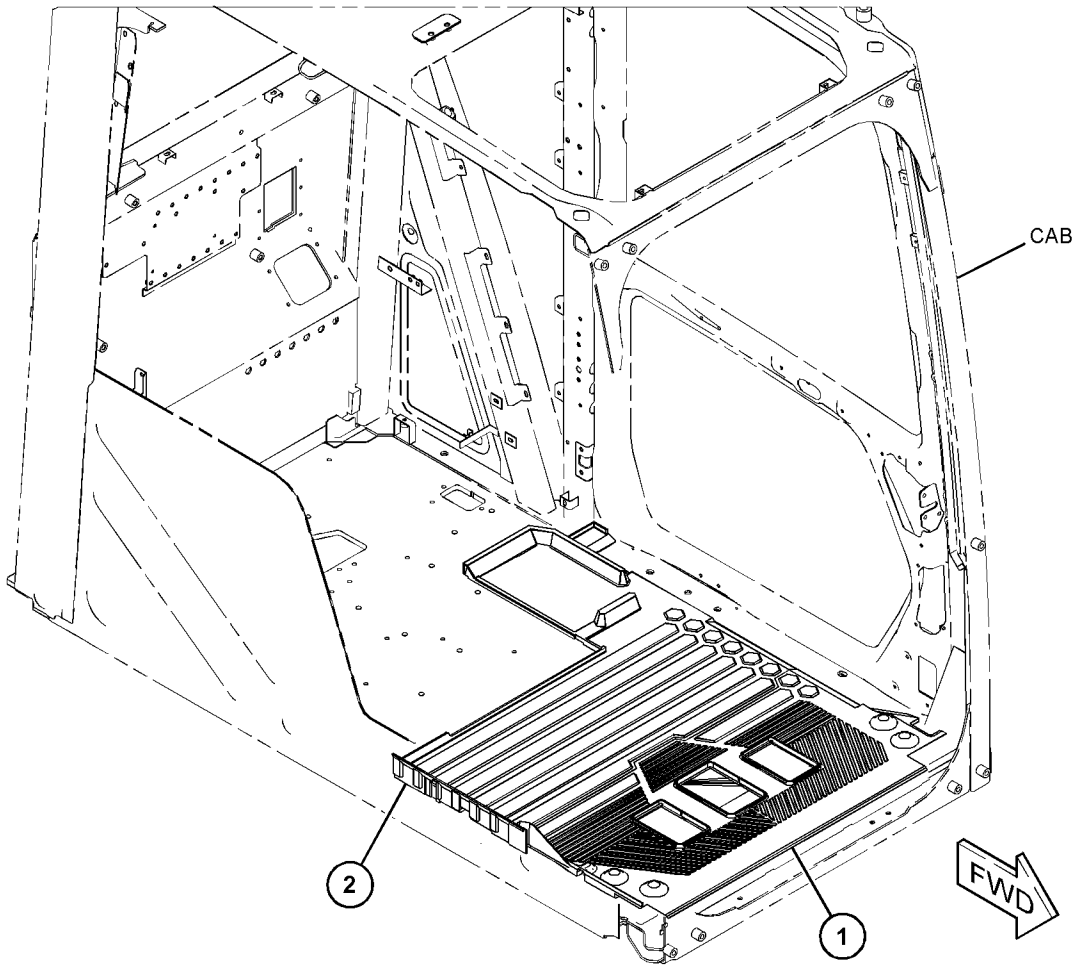

GRAPHIC #1 <END> g06230101

488-6575 GROMMET & MTG GP-WINDOW WASHER

S/N: BR61-UP

PART OF 484-8021 INSTL AR-BUMPER & WASHER LINES

SMCS-7301, 7306 **i07344724**

NOTE	REF NO	GRAPHIC REF	PART NUMBER	QTY	PART NAME 1 2 3 4 5 6 (PRODUCT LEVEL)	SEE PAGE
	1	1	**8T-4121**	2	WASHER-HARD (11X21X2.5-MM THK)	
M	2	1	**8T-4137**	2	BOLT (M10X1.5X20-MM)	
	3	1	**5P-9297**	2	CLIP	
	4	1	**9K-0700**	1	GROMMET	

M - METRIC PART

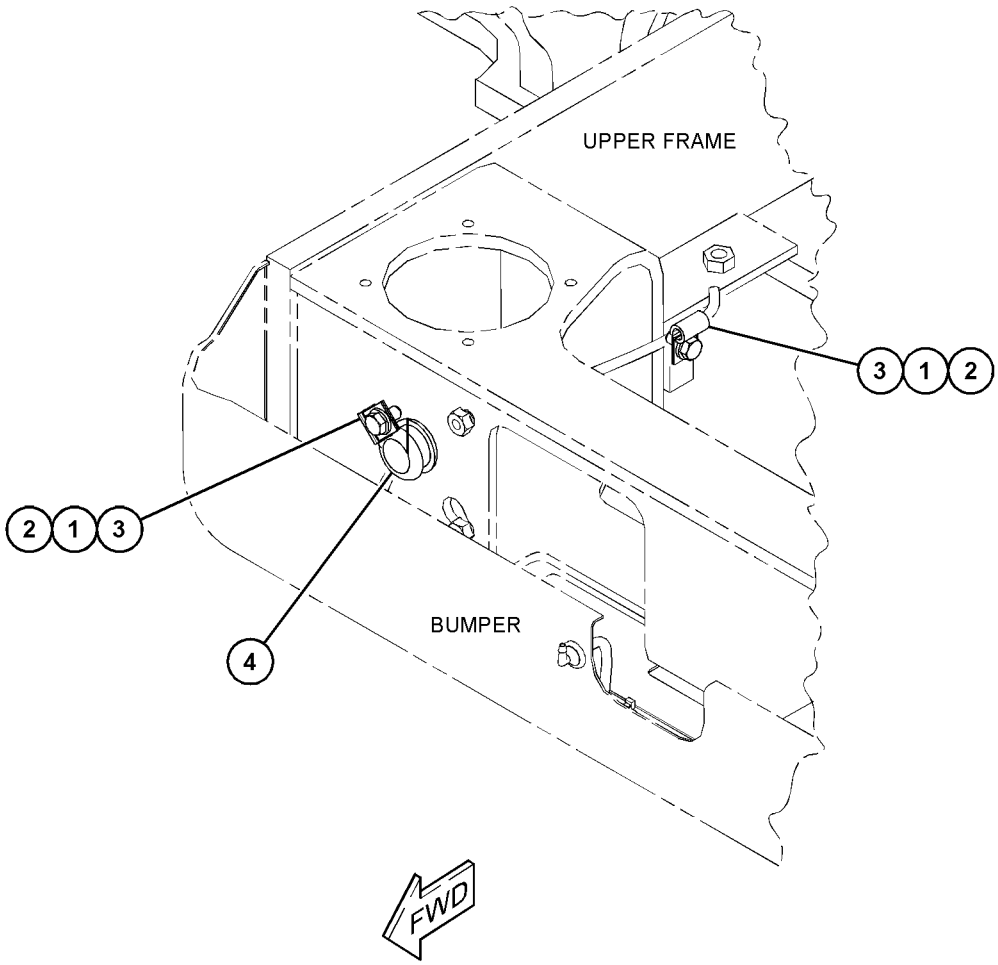

GRAPHIC #1 <END> g06229882

500-0931 GUARD & MTG GP-CAB

S/N: BR61-UP

PART OF 520-8301, 549-4726 OPERATOR AR-ENCLOSED ROPS

SMCS-7165 **i07360918**

NOTE	REF NO	GRAPHIC REF	PART NUMBER	QTY	PART NAME 1 2 3 4 5 6 (PRODUCT LEVEL)	SEE PAGE
M	1	1	**099-0823**	3	SCREW-MACHINE (M6X1X6-MM)	
	2	1	**500-0733**	1	GUARD	

M - METRIC PART

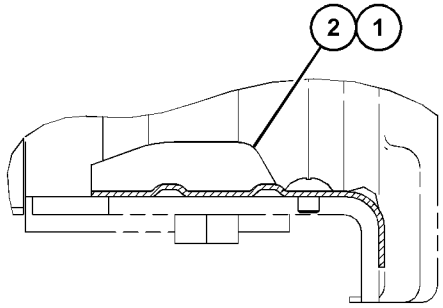

SECTION A-A

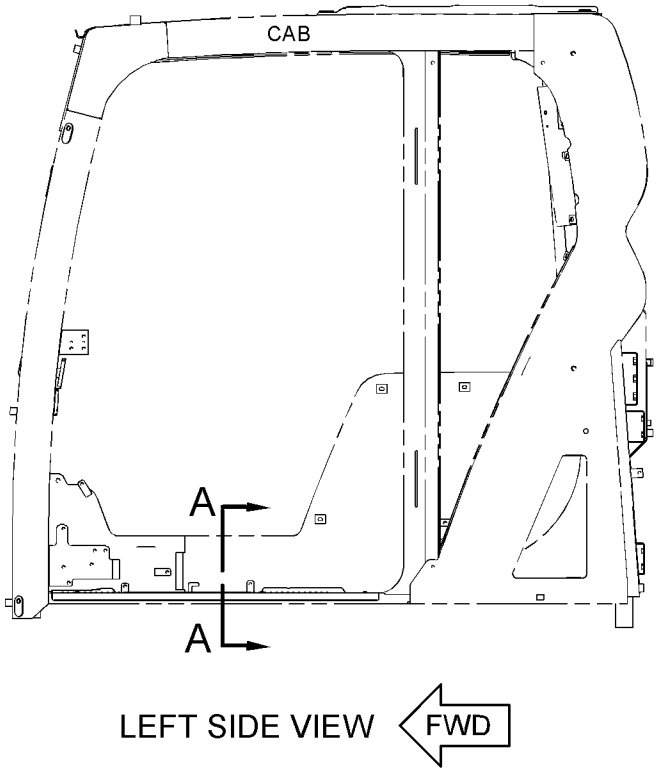

GRAPHIC #1 <END> g06231834

483-7867 HATCH GP-ROOF

S/N: BR61-UP

PART OF 498-7719 CAB GP

SMCS-7303 **i07346301**

NOTE	REF NO	GRAPHIC REF	PART NUMBER	QTY	PART NAME 1 2 3 4 5 6 (PRODUCT LEVEL)	SEE PAGE
	1	1	**099-3506**	2	SPRING AS-GAS (HATCH)	
	2	1	**105-2169**	4	BOLT AS	
	3	1	**363-9351**	1	CATCH	
	4	1	**489-6608**	1	SEAL	
	5	1	**489-6609**	1	STRIKER	
	6	1	**489-6616**	1	HATCH AS	
	6A	1	**340-6623**	2	HINGE	
B	7	1	**511-0962**	1	SHIM (1-MM THK)	
	8	1	**5D-4822**	4	RING-RETAINING	
M	9	1	**9X-2042**	2	SCREW-TRUSS HEAD (M6X1X12-MM)	
M	10	1	**9X-2045**	2	SCREW-TRUSS HEAD (M6X1X20-MM)	

B - USE AS REQUIRED
M - METRIC PART

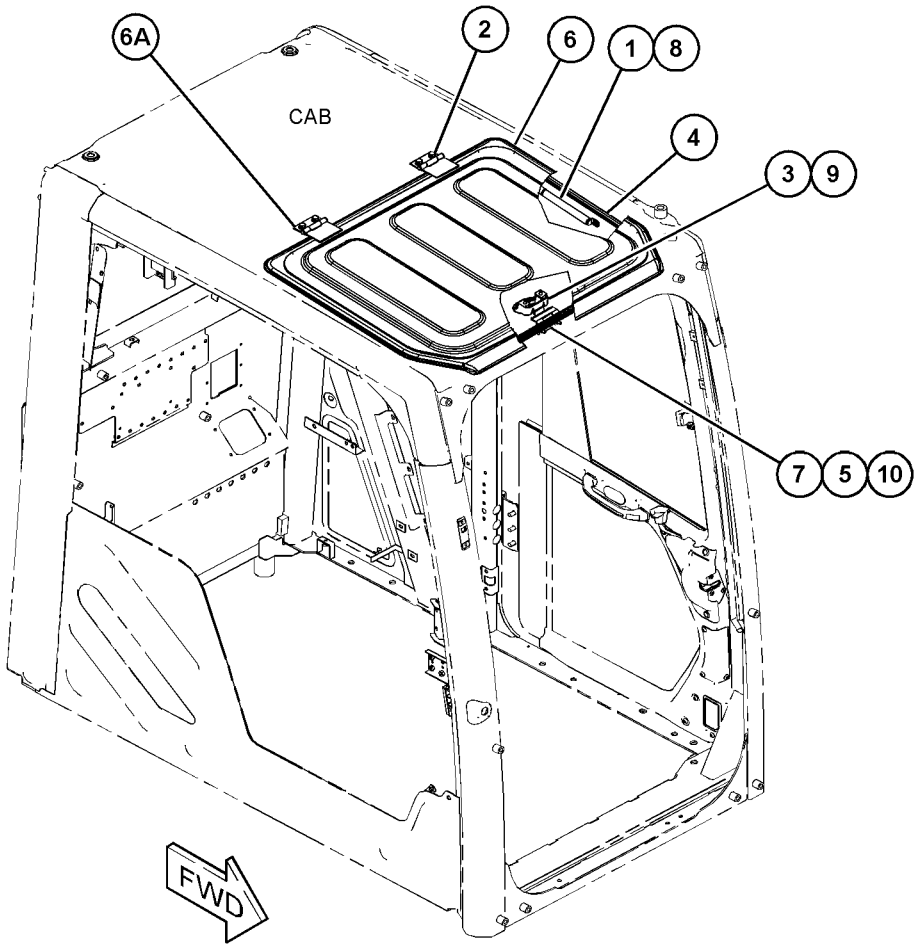

GRAPHIC #1 <END> g06230845

487-6639 HATCH GP-ROOF

S/N: BR61-UP

PART OF 486-5500 CAB GP

SMCS-7303 **i07362903**

NOTE	REF NO	GRAPHIC REF	PART NUMBER	QTY	PART NAME 1 2 3 4 5 6 (PRODUCT LEVEL)	SEE PAGE
	1	1	**099-3506**	2	SPRING AS-GAS (HATCH)	
	2	1	**105-2169**	4	BOLT AS	
	3	1	**489-6608**	1	SEAL	
	4	1	**489-6609**	1	STRIKER	
Y	5	1	**492-3915**	1	HATCH GP-ROOF	629
B	6	1	**511-0962**	1	SHIM (1-MM THK)	
	7	1	**5D-4822**	4	RING-RETAINING	
M	8	1	**9X-2045**	2	SCREW-TRUSS HEAD (M6X1X20-MM)	

B - USE AS REQUIRED
M - METRIC PART
Y - SEPARATE ILLUSTRATION

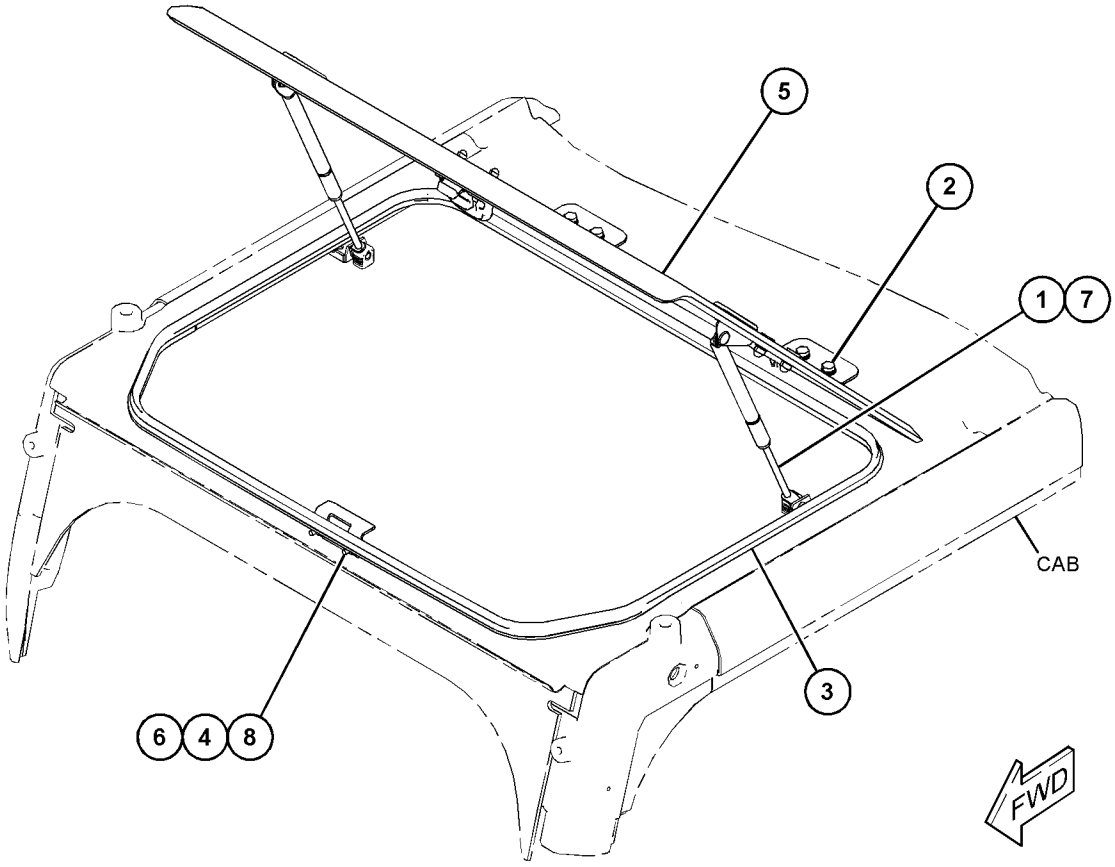

GRAPHIC #1 <END> g06232949

492-3915 HATCH GP-ROOF

S/N: BR61-UP

PART OF 487-6639 HATCH GP-ROOF

SMCS-7303 **i07362915**

NOTE	REF NO	GRAPHIC REF	PART NUMBER	QTY	PART NAME 1 2 3 4 5 6 (PRODUCT LEVEL)	SEE PAGE
	1	1	**4I-4361**	2	RETAINER	
M	2	1	**6I-5342**	4	NUT (M8X1.25-THD)	
	3	1	**085-6449**	2	PACKING	
	4	1	**161-3694**	1	CATCH	
M	5	1	**171-7477**	2	NUT (M6X1-THD)	
	6	1	**189-2693**	1	BRACKET AS	
	7	1	**189-2694**	1	BRACKET AS	
	8	1	**340-6592**	2	HINGE AS	
	9	1	**357-3914**	1	SEAL	
M	10	1	**9X-2045**	2	SCREW-TRUSS HEAD (M6X1X20-MM)	
M	11	1	**271-9408**	4	SCREW-TRUSS HEAD (M5X0.8X10-MM)	
	12	1	**4I-1260**	2	PACKING	

M - METRIC PART

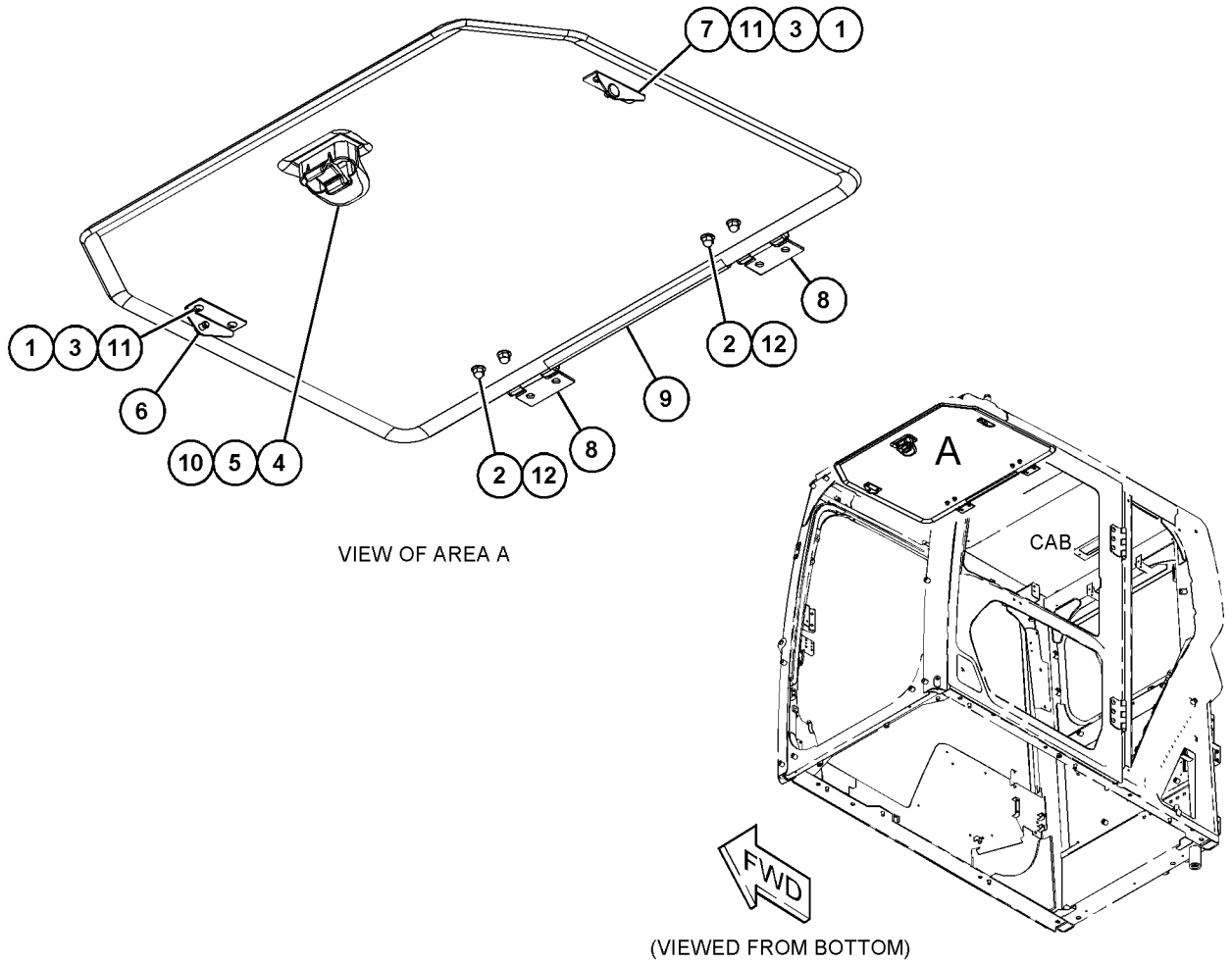

VIEW OF AREA A

(VIEWED FROM BOTTOM)

GRAPHIC #1 <END> g06230917

488-6534 HOLDER GP-CUP

S/N: BR61-UP

PART OF 488-6550, 488-6560 CONSOLE GP-OPERATOR

SMCS-731C **i07347566**

NOTE	REF NO	GRAPHIC REF	PART NUMBER	QTY	PART NAME 1 2 3 4 5 6 (PRODUCT LEVEL)	SEE PAGE
	1	1	**520-8223**	1	BRACKET	
	2	1	**520-8224**	1	HOLDER	
	3	1	**520-8225**	1	HOLDER	
	4	1	**520-8238**	1	SHEET	
M	5	1	**9X-2044**	2	SCREW-TRUSS HEAD (M6X1X16-MM)	
	6	1	**526-8628**	1	PLUG	

M - METRIC PART

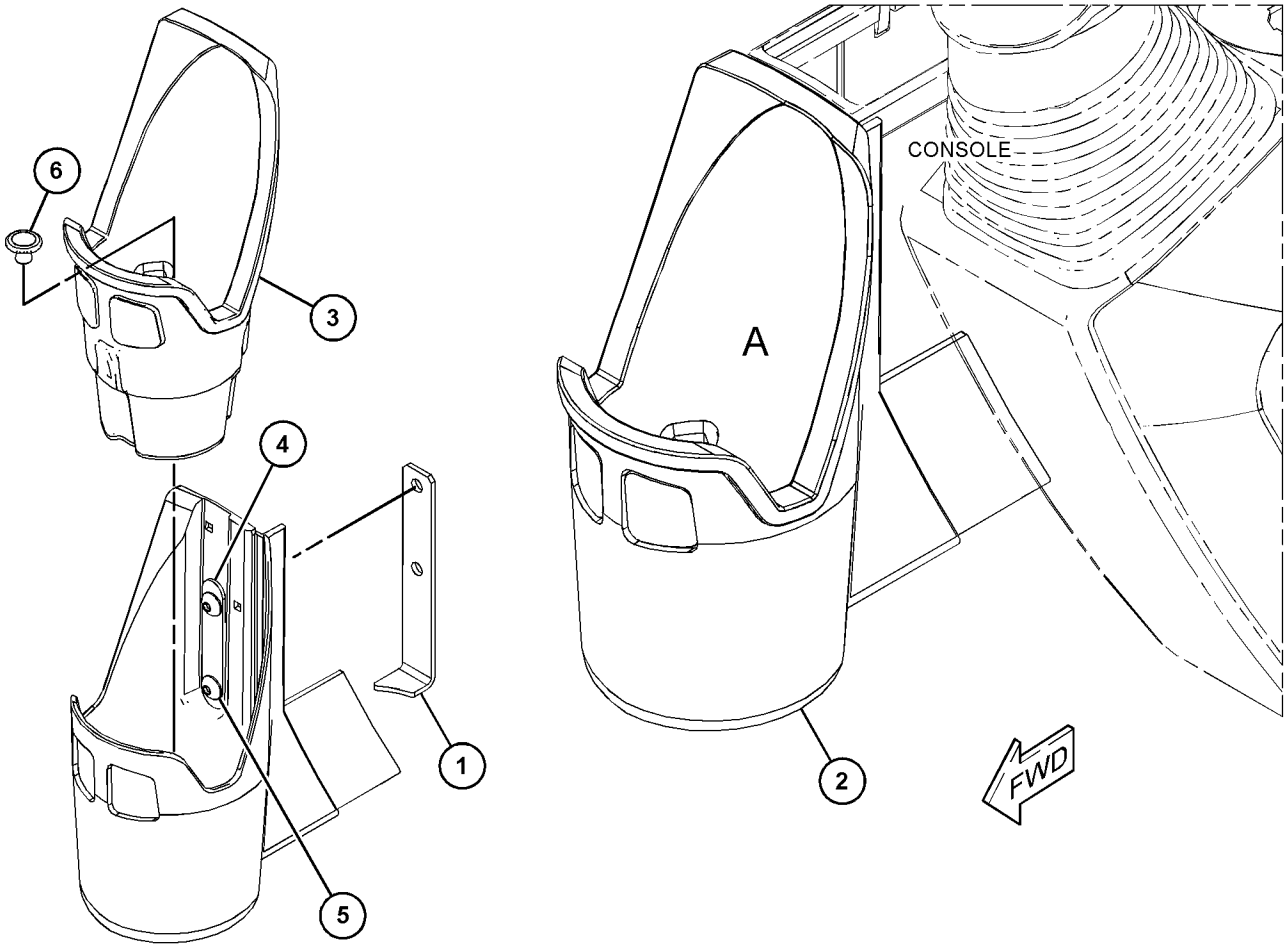

VIEW OF AREA A

GRAPHIC #1 <END> g06265342

490-2682 HORN GP-ELECTRIC

S/N: BR61-UP

PART OF 511-4805 ELECTRICAL AR

SMCS-7402 **i07358869**

NOTE	REF NO	GRAPHIC REF	PART NUMBER	QTY	PART NAME 1 2 3 4 5 6 (PRODUCT LEVEL)	SEE PAGE
	1	1	**491-7825**	1	HORN AS (24-VOLT, HIGH TONE)	
	2	1	**491-7826**	1	HORN AS (24-VOLT, LOW TONE)	
	3	1	**8T-4121**	2	WASHER-HARD (11X21X2.5-MM THK)	
M	4	1	**8T-4137**	2	BOLT (M10X1.5X20-MM)	

M - METRIC PART

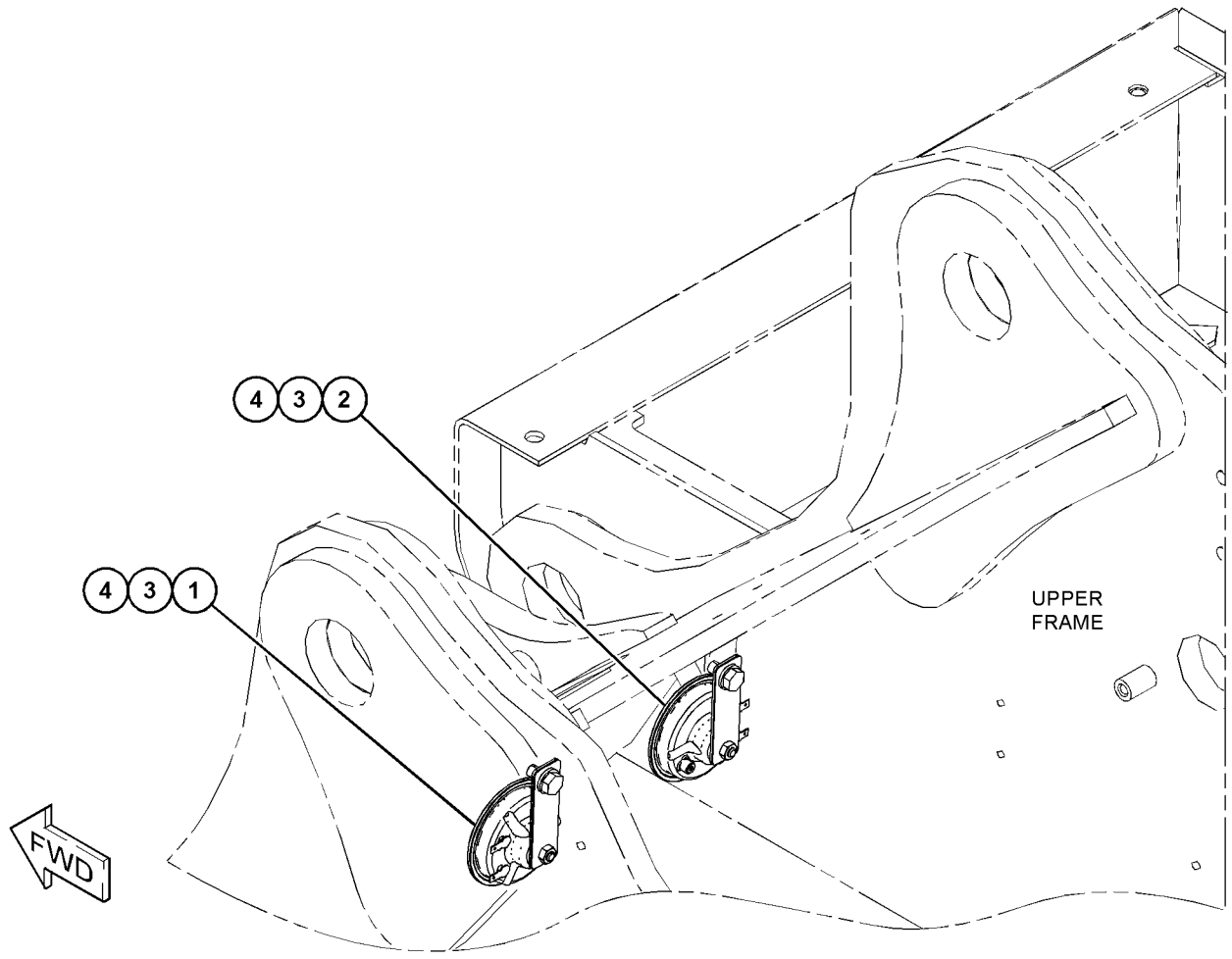

GRAPHIC #1 <END> g06231324

502-7166 INSTALLATION AR-RADIO—INSTALLATION

S/N: BR61-UP
CAN MODULE
PART OF 532-9515, 532-9518, 556-2899, 556-2902 DISTRIBUTION AR

SMCS-1408, 7338 **i07376588**

NOTE	PART NUMBER	QTY	PART NAME 1 2 3 4 5 6 (PRODUCT LEVEL)	SEE PAGE
Y	*488-6823*	1	RADIO GP	659

Y - SEPARATE ILLUSTRATION

<END>

484-8021 INSTL AR-BUMPER & WASHER LINES

S/N: BR61-UP
PART OF 532-9515, 532-9518, 556-2899, 556-2902 DISTRIBUTION AR

SMCS-7156, 7301, 7306 **i07332588**

NOTE	PART NUMBER	QTY	PART NAME 1 2 3 4 5 6 (PRODUCT LEVEL)	SEE PAGE
Y	*487-6760*	1	BUMPER GP-FRONT	304
Y	*488-6575*	1	GROMMET & MTG GP-WINDOW WASHER	625

Y - SEPARATE ILLUSTRATION

<END>

528-3283 KIT-LIGHTING COVER

S/N: BR61-UP
RAIN PROTECTOR KIT

SMCS-1429, 715L **i07213403**

NOTE	PART NUMBER	QTY	PART NAME 1 2 3 4 5 6 (PRODUCT LEVEL)	SEE PAGE
M	**5C-9553**	4	BOLT (M6X1X16-MM)	
M	**6V-7357**	7	BOLT (M6X1X25-MM)	
M	**101-7401**	4	BOLT-SOCKET HEAD (M10X1.5X20-MM)	
	526-8640	1	BRACKET	
	484-1454	2	CLIP	
	532-7317	1	COVER AS	
	532-7318	1	COVER AS	
	539-2832	2	HARNESS AS-CAB (FLOODLIGHTS)	
M	**4I-5049**	7	NUT-SPACER (M6X1-THD)	
	348-5410	10	SEAL	
	526-8639	1	VISOR	
	8T-4121	15	WASHER-HARD (11X21X2.5-MM THK)	

M - METRIC PART

<END>

528-3280 KIT-PEDAL

S/N: BR61-UP

LEFT HAND ELECTRIC PEDAL KIT

SMCS-0740 **i07397318**

NOTE	PART NUMBER	QTY	PART NAME 1 2 3 4 5 6 (PRODUCT LEVEL)	SEE PAGE
M	**8T-4136**	2	BOLT (M10X1.5X25-MM)	
M	**101-7401**	4	BOLT-SOCKET HEAD (M10X1.5X20-MM)	
	490-1013	1	CONTROL GP-PEDAL	
	162-0349	1	COVER	
	554-3789	1	FILM-IDENTIFICATION (OPERATOR CONTROL PEDALS)	
	233-5260	1	LANYARD	
	553-9982	1	PEDAL AS (LH)	
	135-2274	1	PEDAL-RUBBER (LH)	
	8T-0114	1	PIN-SPRING	
M	**095-0735**	2	SCREW-MACHINE (M5X0.8X8-MM)	
	510-0842	1	STOPPER	
	532-7421	1	SUPPORT AS	
	9X-2027	4	WASHER (11X18X2-MM THK)	
	8T-4121	2	WASHER-HARD (11X21X2.5-MM THK)	

M - METRIC PART

<END>

528-3281 KIT-PEDAL

S/N: BR61-UP

RIGHT HAND ELECTRIC PEDAL KIT

SMCS-0740 **i07397165**

NOTE	PART NUMBER	QTY	PART NAME 1 2 3 4 5 6 (PRODUCT LEVEL)	SEE PAGE
M	**8T-4136**	2	BOLT (M10X1.5X25-MM)	
M	**101-7401**	4	BOLT-SOCKET HEAD (M10X1.5X20-MM)	
	490-1013	1	CONTROL GP-PEDAL	
	162-0349	1	COVER	
	554-3789	1	FILM-IDENTIFICATION (OPERATOR CONTROL PEDALS)	
	233-5260	1	LANYARD	
	498-7710	1	PEDAL AS (RH)	
	135-2274	1	PEDAL-RUBBER	
	8T-0114	1	PIN-SPRING	
M	**095-0735**	2	SCREW-MACHINE (M5X0.8X8-MM)	
	510-0842	1	STOPPER	
	498-7711	1	SUPPORT AS	
	9X-2027	4	WASHER (11X18X2-MM THK)	
	8T-4121	2	WASHER-HARD (11X21X2.5-MM THK)	

M - METRIC PART

<END>

528-3289 KIT-ROOF HATCH

S/N: BR61-UP

SMCS-7303 **i07199382**

NOTE	PART NUMBER	QTY	PART NAME 1 2 3 4 5 6 (PRODUCT LEVEL)	SEE PAGE
	363-9351	1	CATCH	
	492-3915	1	HATCH GP-ROOF	
M	**9X-2042**	2	SCREW-TRUSS HEAD (M6X1X12-MM)	

M - METRIC PART

<END>

528-3282 KIT-WINDOW

S/N: BR61-UP

SMCS-7310 **i07204193**

NOTE	PART NUMBER	QTY	PART NAME 1 2 3 4 5 6 (PRODUCT LEVEL)	SEE PAGE
	532-7339	1	BRACKET AS	
M	**9X-2044**	2	SCREW-TRUSS HEAD (M6X1X16-MM)	
	526-8635	1	SEAL	
	532-7340	1	WINDOW GP-CAB	

M - METRIC PART

<END>

528-3279 KIT-WINDOW WIPER

S/N: BR61-UP

RADIAL LOWER WIPER KIT

SMCS-7305, 7310

i07199091

NOTE	PART NUMBER	QTY	PART NAME 1 2 3 4 5 6 (PRODUCT LEVEL)	SEE PAGE
	526-8602	1	ARM AS	
	526-8603	1	BLADE AS	
M	**8T-4137**	2	BOLT (M10X1.5X20-MM)	
M	**8T-4189**	3	BOLT (M8X1.25X20-MM)	
M	**8T-4196**	2	BOLT (M10X1.5X35-MM)	
	4I-1163	1	BRACKET	
	526-8570	1	BRACKET	
	526-8597	1	BUMPER AS-FRONT	
	5P-9297	1	CLIP	
	9X-8582	1	CLIP	
	526-8569	1	COVER	
	9D-3769	1	GROMMET	
	144-0195	59	HOSE	
	7Y-7365	1	JOINT (3-WAY)	
	526-8604	1	MOTOR AS-WINDOW WIPER	
	161-3128	1	RELAY (24-VOLT)	
M	**172-5291**	4	SCREW (M10X1.5X30-MM)	
M	**9X-2042**	2	SCREW-TRUSS HEAD (M6X1X12-MM)	
	4I-3090	1	SEAL	
	201-4441	12	SEAL	
	118-9901	2	SPACER (12X20X10-MM THK)	
	204-1611	1	STRAP (DUAL)	
	163-6795	1	STRAP-CABLE	
	526-8607	1	SUPPORT AS	
	293-1256	1	VALVE AS-CHECK	
	8T-4121	4	WASHER-HARD (11X21X2.5-MM THK)	
	8T-4224	3	WASHER-HARD (8.8X16X2-MM THK)	

M - METRIC PART

<END>

488-6606 LINES GP-AIR CONDITIONER

S/N: BR61-10000

PART OF 520-8301 OPERATOR AR-ENCLOSED ROPS

SMCS-1808 **i07362968**

NOTE	REF NO	GRAPHIC REF	PART NUMBER	QTY	PART NAME 1 2 3 4 5 6 (PRODUCT LEVEL)	SEE PAGE
M	1	2	**8T-4136**	2	BOLT (M10X1.5X25-MM)	
	2	2	**3S-2093**	2	STRAP-CABLE	
	3	2	**121-7098**	1	BRACKET AS	
M		2	**8T-4138**	2	BOLT (M6X1X20-MM)	
		2	**9X-8256**	2	WASHER (6.6X12X2-MM THK)	
	4	2	**176-1902**	1	DRYER AS-REFRIGERANT (RECEIVER)	
	5	1	**235-8891**	1	PLATE	
	6	1	**293-1238**	1	HOSE-DRAIN	
	7	1,2	**305-0441**	2	BAND-MARKER (HS)	
	8	1,2	**305-0442**	2	BAND-MARKER (HR)	
	9	1	**372-9319**	1	HOSE-DRAIN	
	10	2	**483-7802**	1	SPACER (11X20X40-MM THK)	
	11	1,2	**484-1456**	2	STRAP-CABLE	
Y	12	2	**488-6610**	1	CONDENSER & MTG GP-REFRIGERANT	597
	13	2	**488-6615**	1	PIPE AS	
		2	**121-7137**	1	SEAL-O-RING	
		2	**245-7850**	1	CAP	
	14	2	**488-6616**	1	PIPE AS	
		2	**121-7138**	2	SEAL-O-RING	
	15	1	**488-6617**	1	HOSE AS	
		1	**121-7138**	2	SEAL-O-RING	
		1	**130-0270**	1	SWITCH AS-PRESSURE (REFRIGERANT)	
		1	**185-8293**	1	SEAL-O-RING	
	16	1	**488-6618**	1	HOSE AS	
		1	**121-7136**	2	SEAL-O-RING	
	17	2	**488-6624**	1	HOSE AS	
		2	**121-7137**	2	SEAL-O-RING	
	18	2	**488-6625**	1	HOSE AS	
		2	**121-7136**	1	SEAL-O-RING	
		2	**245-7851**	1	CAP	
	19	2	**498-7692**	1	BRACKET AS	
	20	1	**122-9657**	2	CLAMP	
	21	2	**204-1611**	2	STRAP (DUAL)	
	22	1,2	**235-9014**	4	CLAMP-SPRING	
	23	1	**327-0325**	1	STRAP-CABLE	
	24	2	**6D-4244**	2	CLIP	
	25	2	**4S-6668**	3	CLIP	
	26	2	**500-1002**	1	BRACKET AS	
	27	2	**511-5975**	1	PLATE	
	28	2	**100-4336**	3	CLIP	
	29	1	**5P-9297**	1	CLIP	
	30	2	**5P-9299**	1	CLIP (LOOP)	
	31	2	**6D-1641**	5	CLIP (LOOP)	
	32	2	**6V-2235**	1	CLIP	
M	33	1,2	**6V-7357**	4	BOLT (M6X1X25-MM)	
	34	1,2	**8T-4121**	16	WASHER-HARD (11X21X2.5-MM THK)	
M	35	1,2	**8T-4137**	13	BOLT (M10X1.5X20-MM)	
M	36	2	**8T-4200**	2	BOLT (M8X1.25X16-MM)	

488-6606 **LINES GP-AIR CONDITIONER (**contd.**)** **i07362968**

NOTE	REF NO	GRAPHIC REF	PART NUMBER	QTY	PART NAME 1 2 3 4 5 6 (PRODUCT LEVEL)	SEE PAGE
	37	2	**8T-4224**	4	WASHER-HARD (8.8X16X2-MM THK)	
M	38	2	**8T-4971**	1	BOLT (M6X1X30-MM)	
M	39	2	**8T-6466**	1	BOLT (M10X1.5X60-MM)	
M	40	2	**8T-7547**	2	BOLT (M8X1.25X30-MM)	
	41	1,2	**9X-8256**	5	WASHER (6.6X12X2-MM THK)	
B	42	1	**3S-2093**	1	STRAP-CABLE	
B	43	1	**266-7379**	1	STRAP-CABLE	
E	44	1	**5P-0767**		HOSE (370-CM)	
E	44A	1	**5P-0767**		HOSE (351-CM)	

B - USE AS REQUIRED
E - ORDER BY THE CENTIMETER
M - METRIC PART
Y - SEPARATE ILLUSTRATION

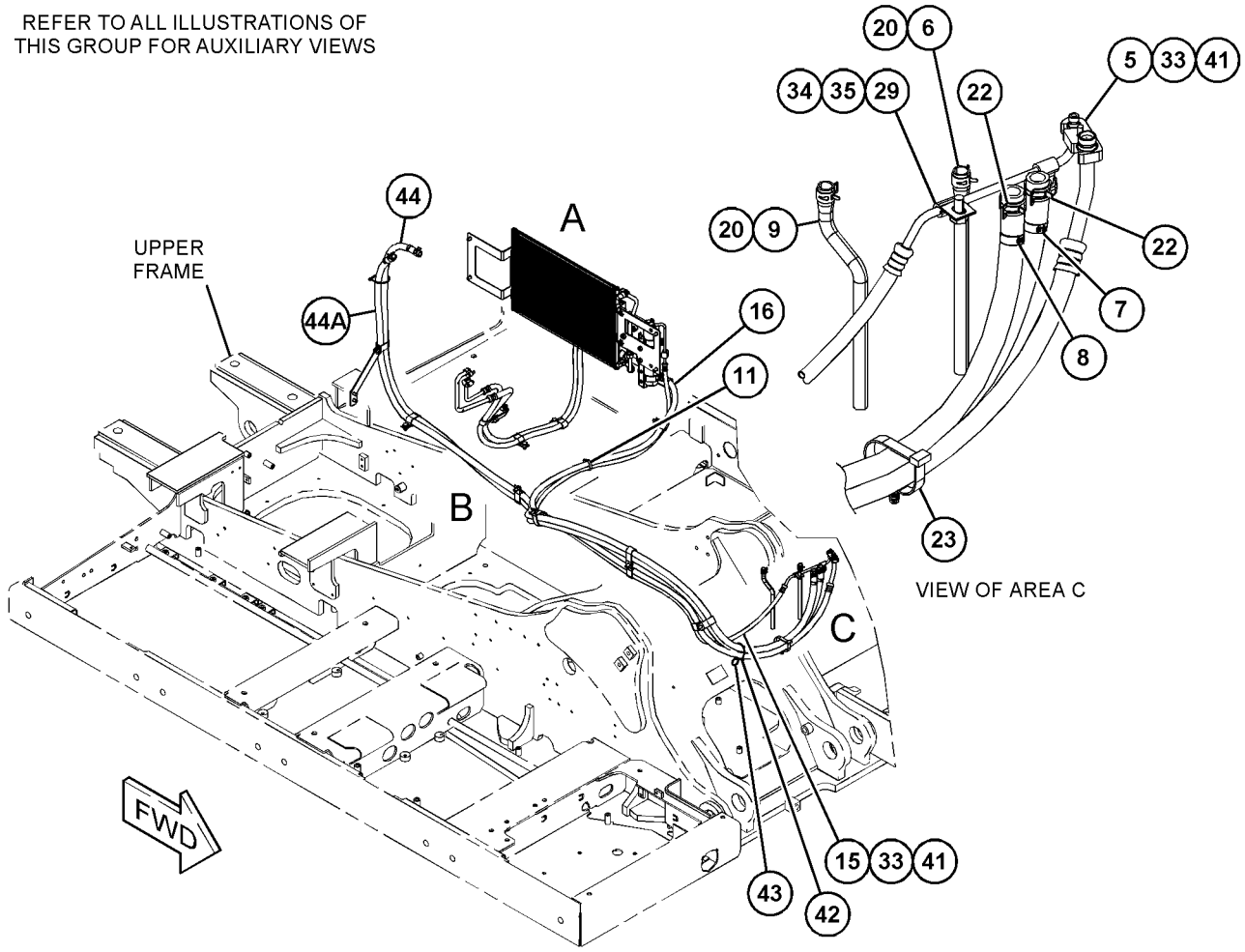

GRAPHIC #1 g06237515

488-6606 **LINES GP-AIR CONDITIONER (**contd.**)** **i07362968**

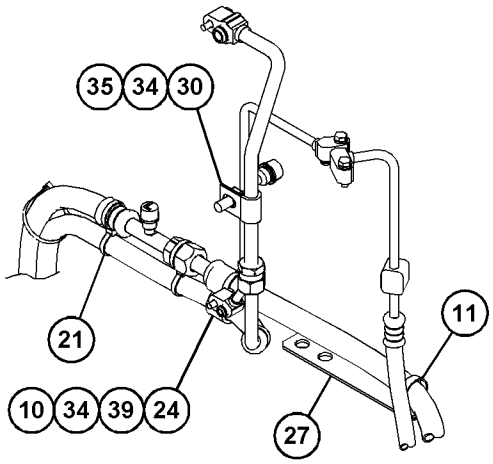

VIEW OF AREA D
(PARTS REMOVED FOR CLARITY)

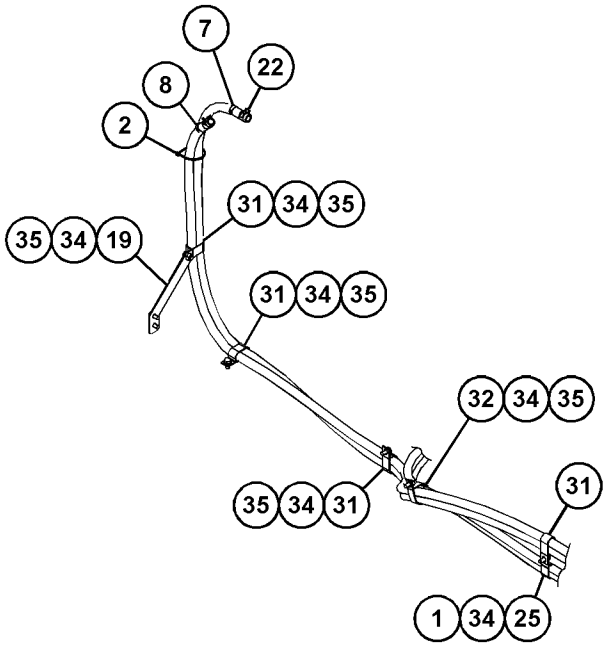

VIEW OF AREA B

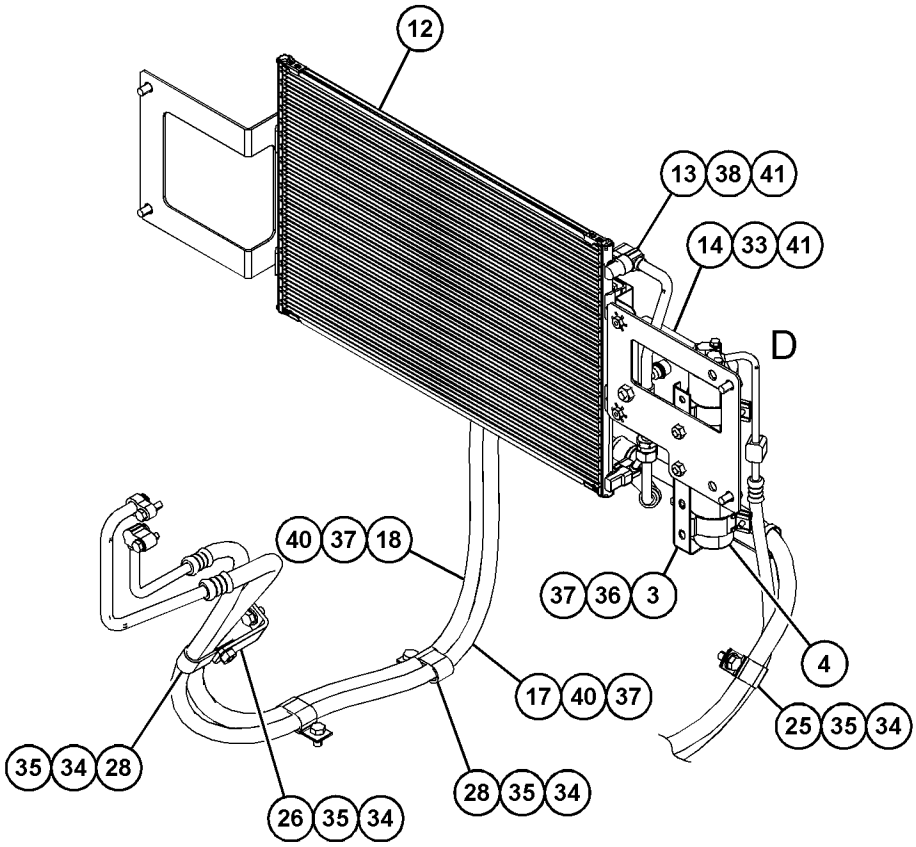

VIEW OF AREA A

GRAPHIC #2 <END> g06237516

488-6609 LINES GP-AIR CONDITIONER

S/N: BR610001-UP

PART OF 549-4726 OPERATOR AR-ENCLOSED ROPS

SMCS-1808 **i07434282**

NOTE	REF NO	GRAPHIC REF	PART NUMBER	QTY	PART NAME 1 2 3 4 5 6 (PRODUCT LEVEL)	SEE PAGE
	1	1	**100-4336**	2	CLIP (LOOP)	
	2	1	**121-7098**	1	BRACKET AS	
M		1	**8T-4138**	2	BOLT (M6X1X20-MM)	
		1	**9X-8256**	2	WASHER (6.6X12X2-MM THK)	
	3	1	**122-9657**	2	CLAMP	
	4	1	**176-1902**	1	DRYER AS-REFRIGERANT (RECEIVER)	
	5	1	**204-1611**	1	STRAP (DUAL)	
	6	1	**235-8891**	1	PLATE	
	7	1	**235-9014**	4	CLAMP-SPRING	
	8	1	**293-1238**	1	HOSE-DRAIN	
	9	1	**305-0441**	2	BAND-MARKER (HS)	
	10	1	**305-0442**	2	BAND-MARKER (HR)	
	11	1	**327-0325**	1	STRAP-CABLE	
	12	1	**372-9319**	1	HOSE-DRAIN	
	13	1	**3S-2093**	1	STRAP-CABLE	
	14	1	**484-1456**	3	STRAP-CABLE	
	15	1	**488-6617**	1	HOSE AS	
		1	**121-7138**	2	SEAL-O-RING	
		1	**130-0270**	1	SWITCH AS-PRESSURE (REFRIGERANT)	
		1	**185-8293**	1	SEAL-O-RING	
	16	1	**498-7692**	1	BRACKET AS	
	17	1	**4S-6668**	2	CLIP	
	18	1	**500-1002**	1	BRACKET AS	
	19	1	**532-7381**	1	PIPE AS	
		1	**121-7138**	2	SEAL-O-RING	
	20	1	**532-7384**	1	HOSE AS	
		1	**121-7137**	2	SEAL-O-RING	
	21	1	**532-7385**	1	HOSE AS	
		1	**121-7137**	1	SEAL-O-RING	
		1	**245-7850**	1	CAP	
	22	1	**532-7386**	1	HOSE AS	
		1	**121-7136**	1	SEAL-O-RING	
		1	**245-7851**	1	CAP	
	23	1	**532-7387**	1	HOSE AS	
		1	**121-7136**	2	SEAL-O-RING	
Y	24	1	*532-7388*	1	CONDENSER & MTG GP-REFRIGERANT	598
	25	1	**532-7391**	1	BRACKET AS	
	26	1	**5P-9297**	1	CLIP (LOOP)	
	27	1	**5P-9299**	1	CLIP (LOOP)	
	28	1	**6D-1641**	4	CLIP (LOOP) (LOOP)	
	29	1	**6D-3479**	1	CLIP (LOOP)	
	30	1	**6V-2235**	2	CLIP (SLOT)	
M	31	1	**6V-7357**	4	BOLT (M6X1X25-MM)	
	32	1	**8T-4121**	16	WASHER-HARD (11X21X2.5-MM THK)	
M	33	1	**8T-4136**	2	BOLT (M10X1.5X25-MM)	
M	34	1	**8T-4137**	14	BOLT (M10X1.5X20-MM)	
M	35	1	**8T-4200**	2	BOLT (M8X1.25X16-MM)	

488-6609 **LINES GP-AIR CONDITIONER (**contd.**)** **i07434282**

NOTE	REF NO	GRAPHIC REF	PART NUMBER	QTY	PART NAME 1 2 3 4 5 6 (PRODUCT LEVEL)	SEE PAGE
	36	1	**8T-4224**	4	WASHER-HARD (8.8X16X2-MM THK)	
M	37	1	**8T-4971**	1	BOLT (M6X1X30-MM)	
M	38	1	**8T-7547**	2	BOLT (M8X1.25X30-MM)	
	39	1	**9X-8256**	5	WASHER (6.6X12X2-MM THK)	
B	40	1	**266-7379**	1	STRAP-CABLE	
B	41	1	**3S-2093**	1	STRAP-CABLE	
E	42	1	**5P-0767**		HOSE (371-CM)	
E	42A	1	**5P-0767**		HOSE (355-CM)	

B - USE AS REQUIRED
E - ORDER BY THE CENTIMETER
M - METRIC PART
Y - SEPARATE ILLUSTRATION

488-6609 **LINES GP-AIR CONDITIONER (**contd.**)** **i07434282**

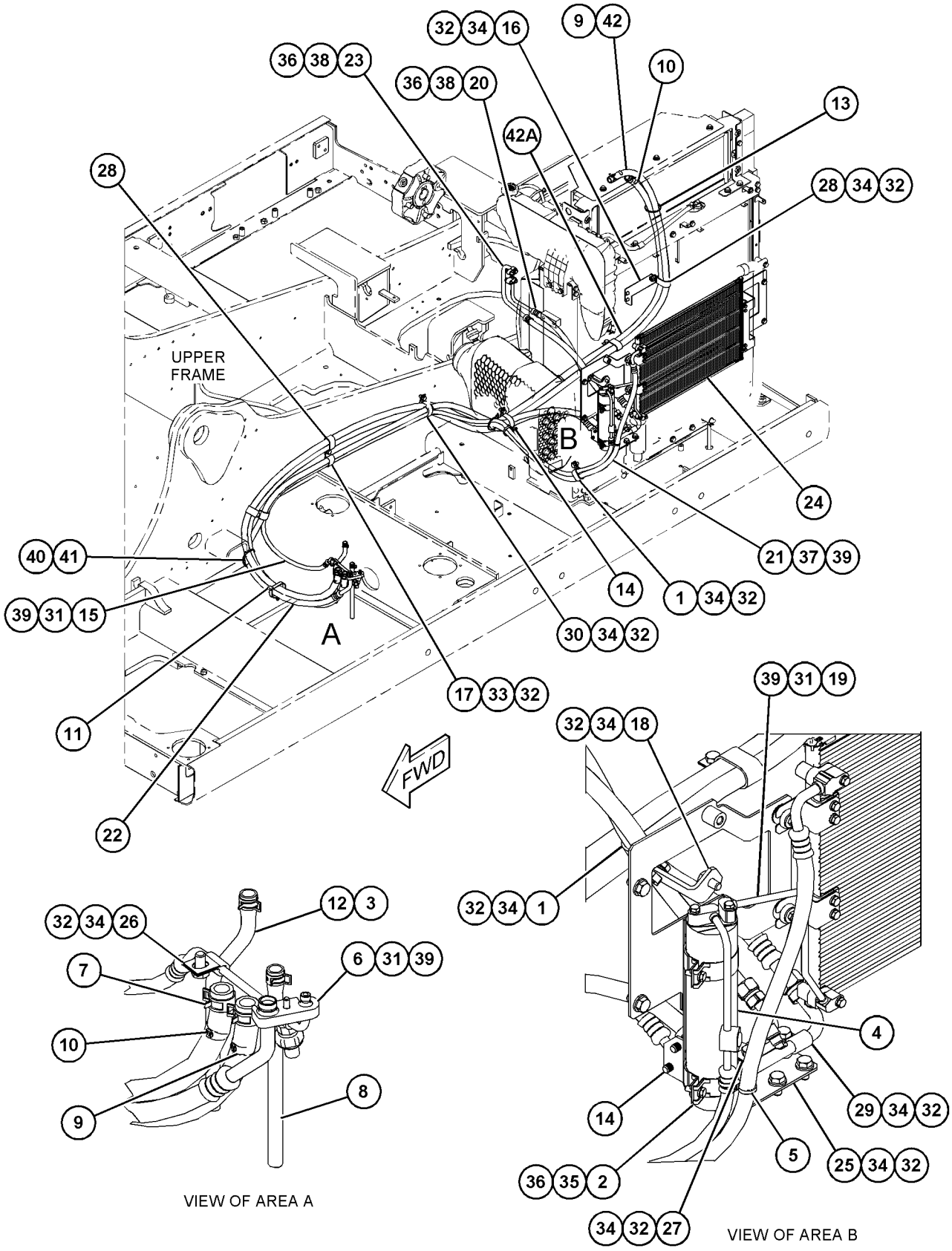

GRAPHIC #1 <END> g06328624

488-6474 LINES GP-WASHER

S/N: BR61-UP

PART OF 487-7000, 487-7001 OPERATOR AR

SMCS-7306 **i07348759**

NOTE	REF NO	GRAPHIC REF	PART NUMBER	QTY	PART NAME 1 2 3 4 5 6 (PRODUCT LEVEL)	SEE PAGE
	1	1	**7Y-3474**	1	VALVE AS-CHECK (WINDOW WASHER)	
	2	1	**484-1456**	7	STRAP-CABLE	
E	3	1	**144-0195**		HOSE (218-CM)	

E - ORDER BY THE CENTIMETER

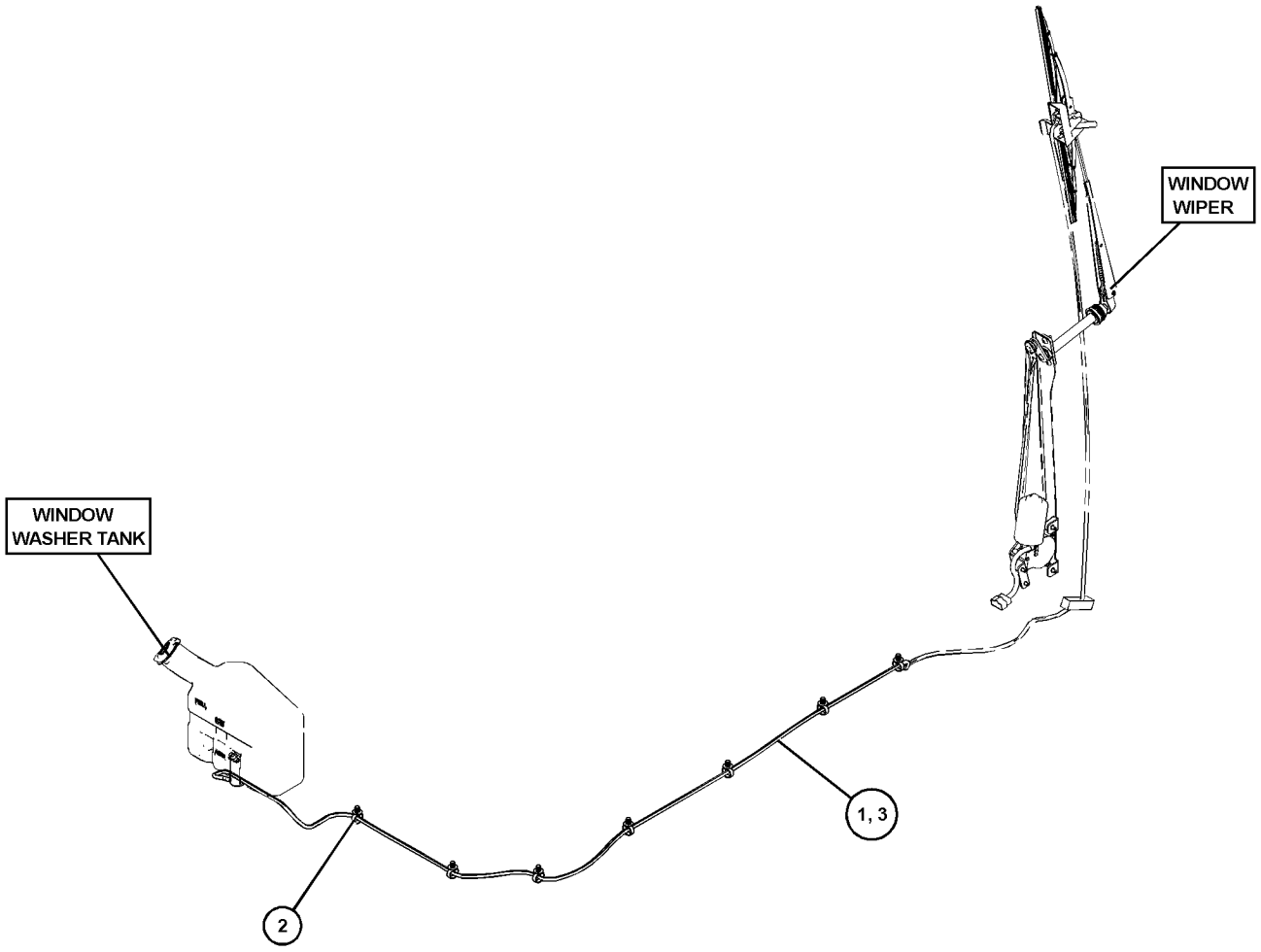

GRAPHIC #1 <END> g06228348

359-2563 LITERATURE GP

S/N: BR61-UP

PART OF 510-7419 COMMON AR

SMCS-7300 **i06064378**

NOTE	PART NUMBER	QTY	PART NAME 1 2 3 4 5 6 (PRODUCT LEVEL)	SEE PAGE
	099-3645	1	CABLE-LANYARD	
	5P-8500	2	KEY	
	5P-7958	2	SLEEVE-CABLE SPLICE	
	364-8522	1	TAG-WARNING (TIPPING HAZARD, READ OMM)	
			(ATTACH TO JOYSTICK WHEN MACHINE IS TRANSPORTED WITHOUT FRONT (BOOM) STRUCTURE OR COUNTERWEIGHT)	

<END>

512-4549 MIRROR AR

S/N: BR61-UP

SMCS-7319 **i07352848**

NOTE	PART NUMBER	QTY	PART NAME 1 2 3 4 5 6 (PRODUCT LEVEL)	SEE PAGE
Y	*502-7171*	1	CAMERA & MOUNTING GP (REAR VIEW)	139
Y	*527-1423*	1	COVER GP-SOUND SUPPRESSION (HYDRAULIC TANK)	19
Y	*527-1411*	1	DOOR & MTG GP-ACCESS	310
Y	*505-7176*	1	MIRROR GP-REAR VIEW	645
Y	*490-2699*	1	WIRING GP-CHASSIS (REAR VIEW, CAMERA)	241

Y - SEPARATE ILLUSTRATION

<END>

394-9460 MIRROR GP

S/N: BR61-UP

PART OF 477-7565 CAB GP

SMCS-7319 **i07344982**

NOTE	REF NO	GRAPHIC REF	PART NUMBER	QTY	PART NAME 1 2 3 4 5 6 (PRODUCT LEVEL)	SEE PAGE
M	1	1	**191-8921**	2	BOLT-SOCKET HEAD (M6X1X25-MM)	
	2	1	**9X-8256**	2	WASHER (6.6X12X2-MM THK)	

M - METRIC PART

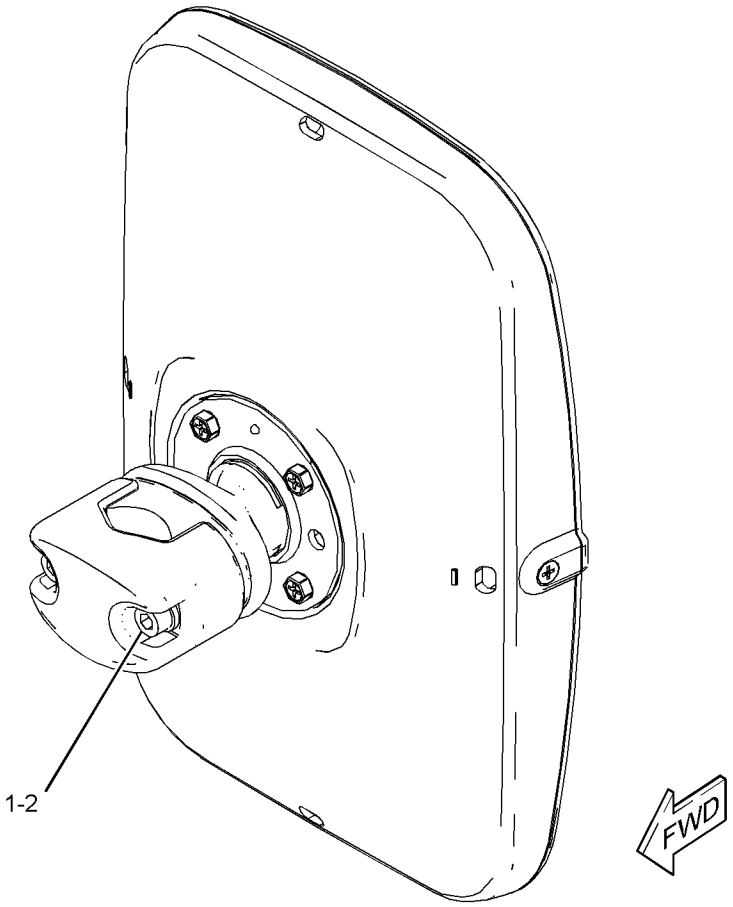

GRAPHIC #1 <END> g03652607

505-7176 MIRROR GP-REAR VIEW

S/N: BR61-UP

PART OF 512-4549 MIRROR AR

SMCS-7319 **i07352941**

NOTE	REF NO	GRAPHIC REF	PART NUMBER	QTY	PART NAME 1 2 3 4 5 6 (PRODUCT LEVEL)	SEE PAGE
	1	1	**394-9459**	1	MIRROR AS	
		1	**9X-8256**	2	WASHER (6.6X12X2-MM THK)	
M		1	**191-8921**	2	BOLT-SOCKET HEAD (M6X1X25-MM)	
	2	1	**505-7150**	1	SUPPORT AS	
	3	1	**508-9725**	2	CLAMP	
	4	1	**8T-4121**	2	WASHER-HARD (11X21X2.5-MM THK)	
M	5	1	**8T-4172**	2	BOLT (M10X1.5X80-MM)	

M - METRIC PART

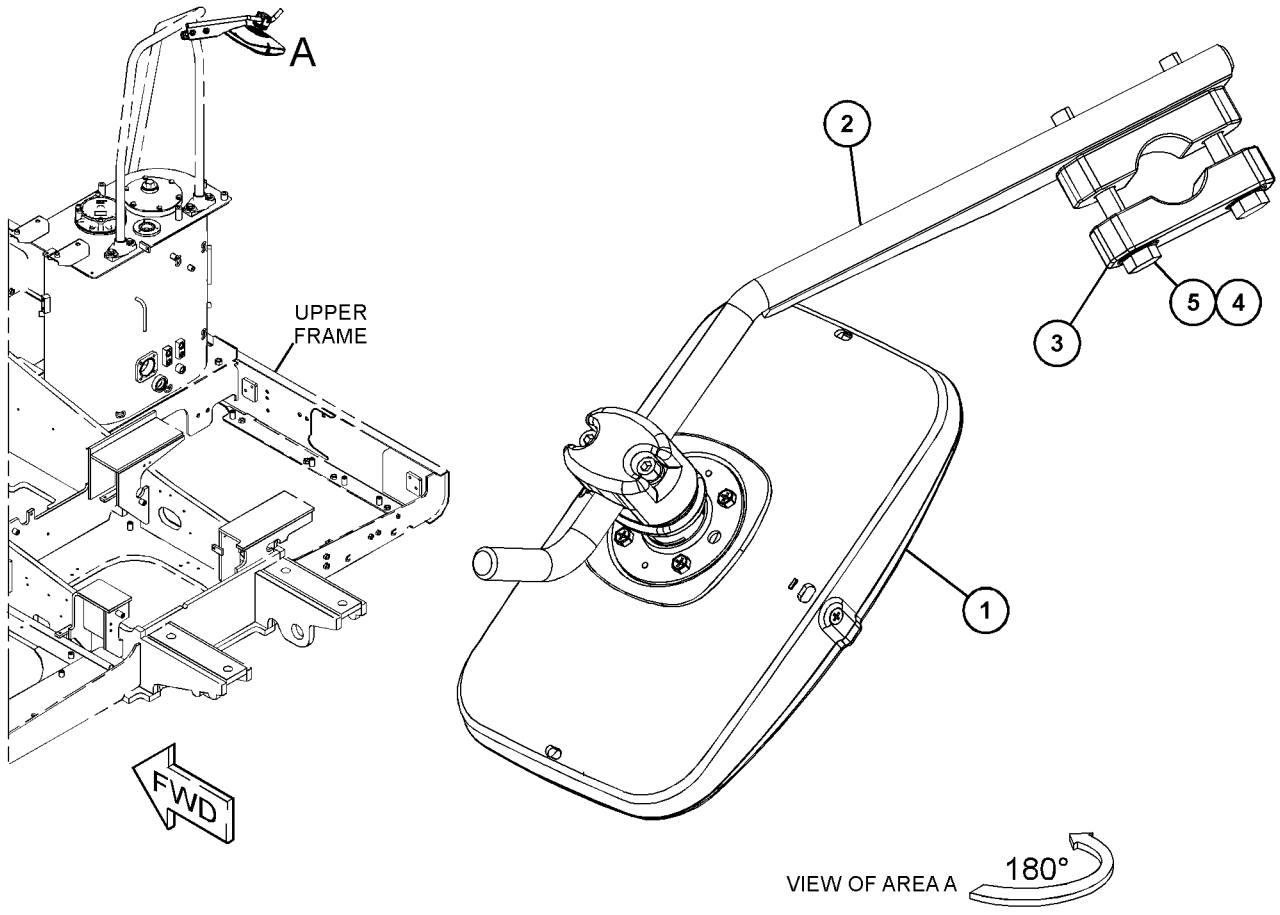

GRAPHIC #1 <END> g06228076

490-5873 MODULE GP-DISPLAY–8-IN TOUCH SCREEN*R

S/N: BR61-UP

PART OF 511-9430 MONITOR & MTG GP-OPERATOR

SMCS-7450, 7490

i07369229

NOTE	PART NUMBER	QTY	PART NAME 1 2 3 4 5 6 (PRODUCT LEVEL)	SEE PAGE
	545-8566	1	COVER	
	548-0139	1	SOFTWARE GP-MONITOR	

<END>

490-5874 MODULE GP-DISPLAY

S/N: BR61-UP

PART OF 488-6813 MONITOR & MTG GP-OPERATOR

SMCS-7450, 7490

i07369222

NOTE	REF NO	GRAPHIC REF	PART NUMBER	QTY	PART NAME 1 2 3 4 5 6 (PRODUCT LEVEL)	SEE PAGE
Y	1	1	*519-6970*	1	ELECTRONICS GP-MONITOR	154

Y - SEPARATE ILLUSTRATION

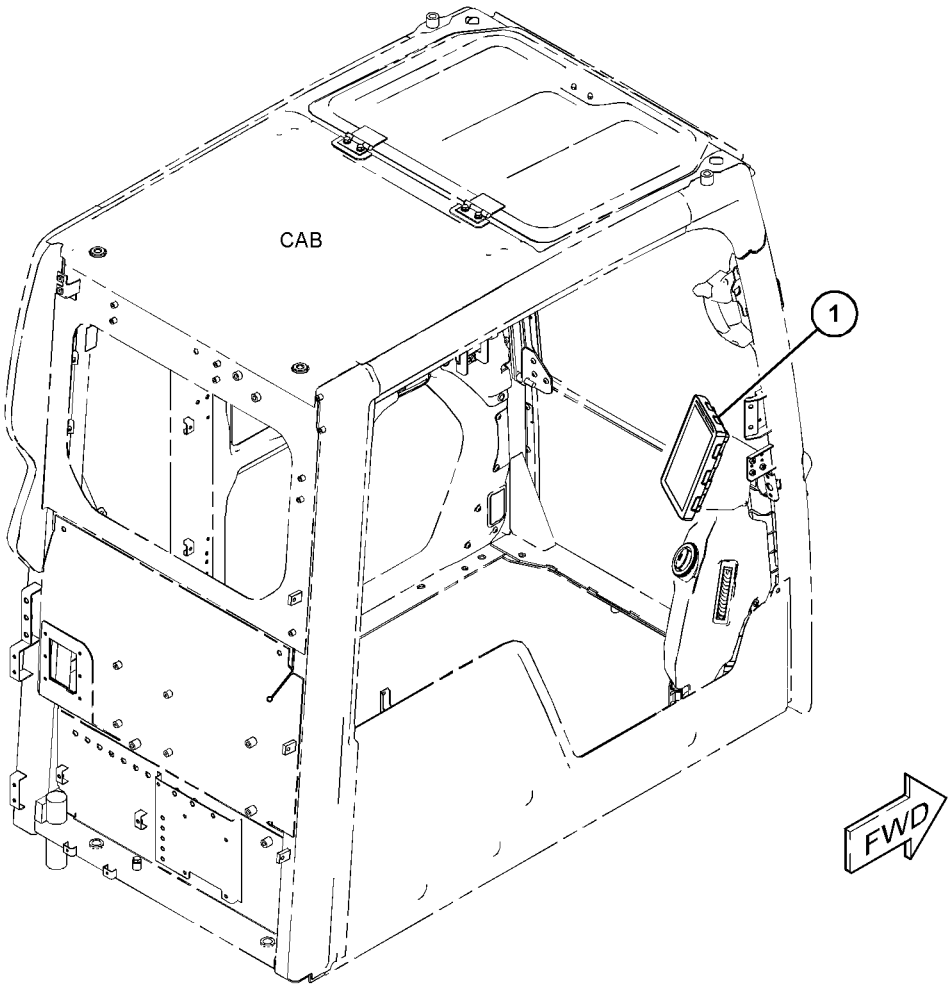

GRAPHIC #1 <END> g06234744

488-6812 MONITOR & MTG GP-OPERATOR

S/N: BR61-UP
8-IN TOUCH
PART OF 511-9427 MONITOR AR

SMCS-7490 **i07432773**

NOTE	REF NO	GRAPHIC REF	PART NUMBER	QTY	PART NAME 1 2 3 4 5 6 (PRODUCT LEVEL)	SEE PAGE
R	1	1	**490-5873**	1	MODULE GP-DISPLAY (8-IN TOUCH SCREEN)	
		1	**519-6974**	1	SOFTWARE GP-MONITOR	
	2	1	**498-7713**	1	BRACKET AS	
	3	1	**520-8260**	1	CAP	
M	4	1	**9X-2042**	7	SCREW-TRUSS HEAD (M6X1X12-MM)	

M - METRIC PART
R - REMANUFACTURED PART MAY BE AVAILABLE

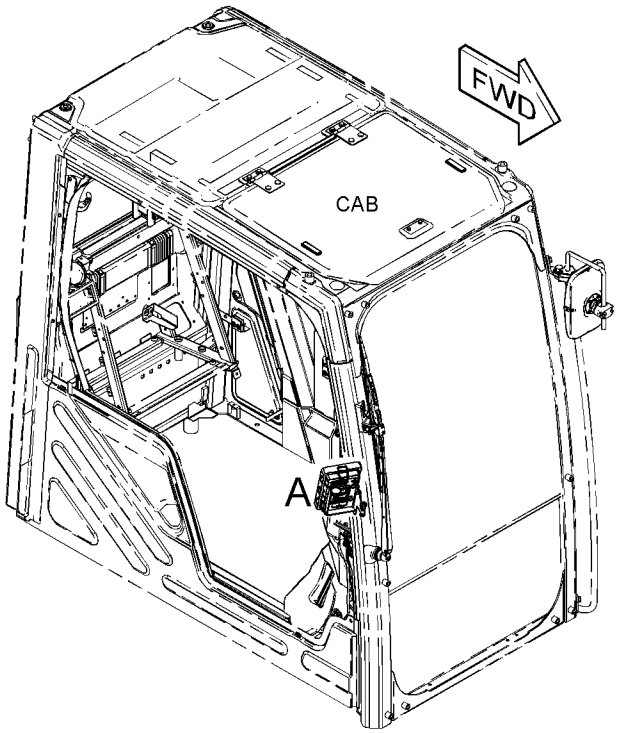

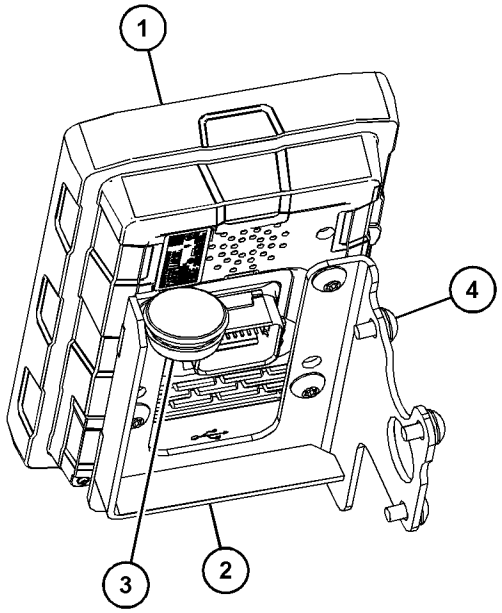

VIEW OF AREA A

GRAPHIC #1 <END> g06229902

488-6813 MONITOR & MTG GP-OPERATOR–10 INCH TOUCHSCREEN

S/N: BR61-UP

PART OF 511-9428 MONITOR AR

SMCS-7490 **i07432787**

NOTE	REF NO	GRAPHIC REF	PART NUMBER	QTY	PART NAME 1 2 3 4 5 6 (PRODUCT LEVEL)	SEE PAGE
Y	1	1	**490-5874**	1	MODULE GP-DISPLAY	647
	2	1	**498-7713**	1	BRACKET AS	
	3	1	**520-8260**	1	CAP	
M	4	1	**9X-2042**	7	SCREW-TRUSS HEAD (M6X1X12-MM)	

M - METRIC PART
Y - SEPARATE ILLUSTRATION

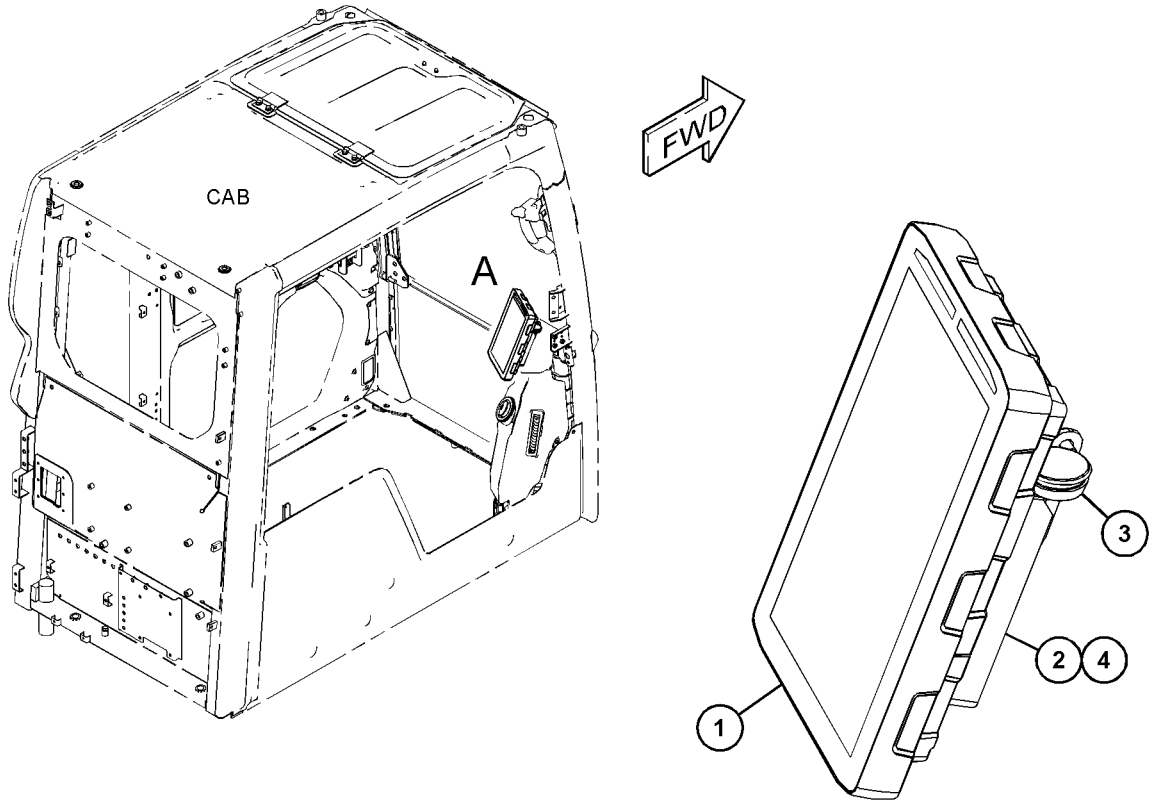

VIEW OF AREA A

GRAPHIC #1 <END> g06234723

511-9430 MONITOR & MTG GP-OPERATOR—8-IN, GRADE CONTROL

S/N: BR61-UP

PART OF 511-9429 MONITOR AR

SMCS-7490 **i07369228**

NOTE	REF NO	GRAPHIC REF	PART NUMBER	QTY	PART NAME 1 2 3 4 5 6 (PRODUCT LEVEL)	SEE PAGE
YR	1	1	**490-5873**	1	MODULE GP-DISPLAY (8-IN TOUCH SCREEN)	646
	2	1	**498-7713**	1	BRACKET AS	
	3	1	**509-0268**	1	MODULE-DISPLAY	
Y	4	1	*525-1535*	1	WIRING GP-CAB (GRADE CONTROL)	235
	5	1	**2Y-5429**	1	GROMMET	
M	6	1	**9X-2041**	2	SCREW-TRUSS HEAD (M10X1.5X20-MM)	
M	7	1	**9X-2042**	10	SCREW-TRUSS HEAD (M6X1X12-MM)	

M - METRIC PART
R - REMANUFACTURED PART MAY BE AVAILABLE
Y - SEPARATE ILLUSTRATION

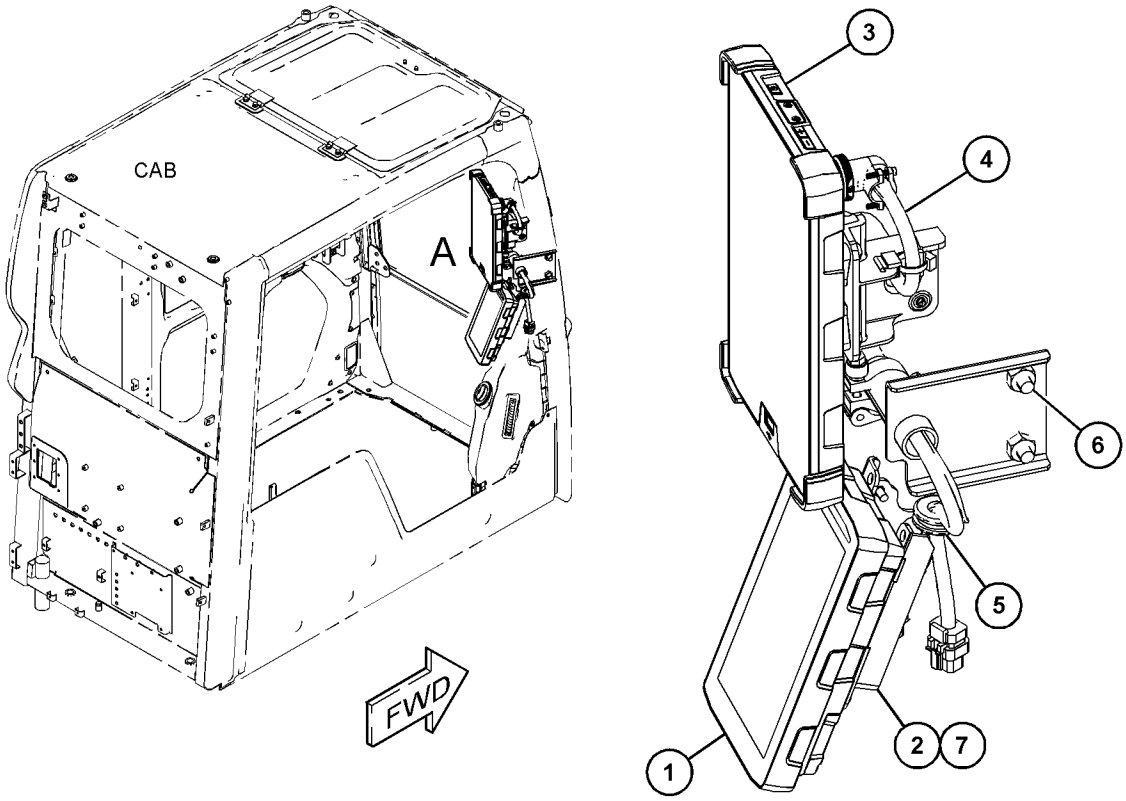

VIEW OF AREA A

GRAPHIC #1 <END> g06234816

511-9432 MONITOR & MTG GP-OPERATOR

S/N: BR61-UP
10-IN. GRADE CONTROL FOR GLOBAL
PART OF 511-9431 MONITOR AR

SMCS-7490 **i07366583**

NOTE	REF NO	GRAPHIC REF	PART NUMBER	QTY	PART NAME 1 2 3 4 5 6 (PRODUCT LEVEL)	SEE PAGE
	1	1	**490-5874**	1	MODULE GP-DISPLAY	
	2	1	**498-7713**	1	BRACKET AS	
	3	1	**509-0268**	1	MODULE-DISPLAY	
Y	4	1	*525-1535*	1	WIRING GP-CAB (GRADE CONTROL)	235
	5	1	**2Y-5429**	1	GROMMET	
M	6	1	**9X-2041**	2	SCREW-TRUSS HEAD (M10X1.5X20-MM)	
M	7	1	**9X-2042**	10	SCREW-TRUSS HEAD (M6X1X12-MM)	

M - METRIC PART
Y - SEPARATE ILLUSTRATION

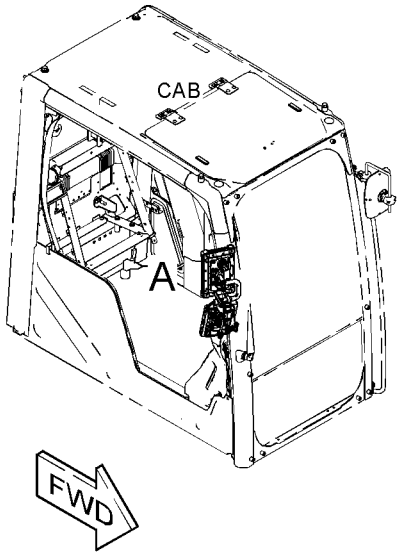

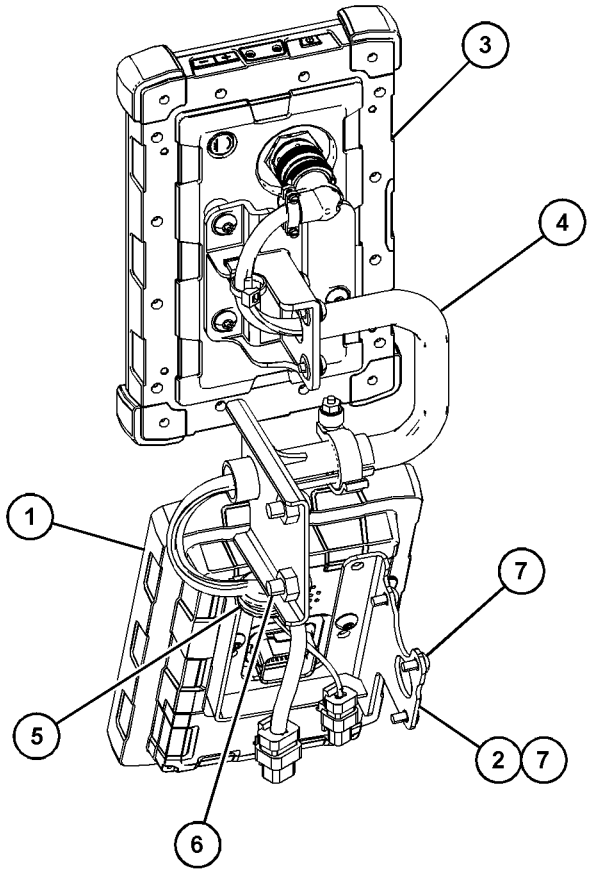

VIEW OF AREA A

GRAPHIC #1 <END> g06231694

554-3627 MONITOR & MTG GP-OPERATOR—GRADE CONTROL

S/N: BR61-UP

SMCS-7490 **i07434661**

NOTE	REF NO	GRAPHIC REF	PART NUMBER	QTY	PART NAME 1 2 3 4 5 6 (PRODUCT LEVEL)	SEE PAGE
M	1	1	**9X-2041**	2	SCREW-TRUSS HEAD (M10X1.5X20-MM)	
M	2	1	**9X-2042**	3	SCREW-TRUSS HEAD (M6X1X12-MM)	
	3	1	**509-0268**	1	MODULE-DISPLAY	
Y	4	1	*525-1535*	1	WIRING GP-CAB (GRADE CONTROL)	235
	5	1	**2Y-5429**	1	GROMMET	
FY		1	*529-7476*	1	FILM GP (GRADE CONTROL DISPLAY)	686

F - NOT SHOWN
M - METRIC PART
Y - SEPARATE ILLUSTRATION

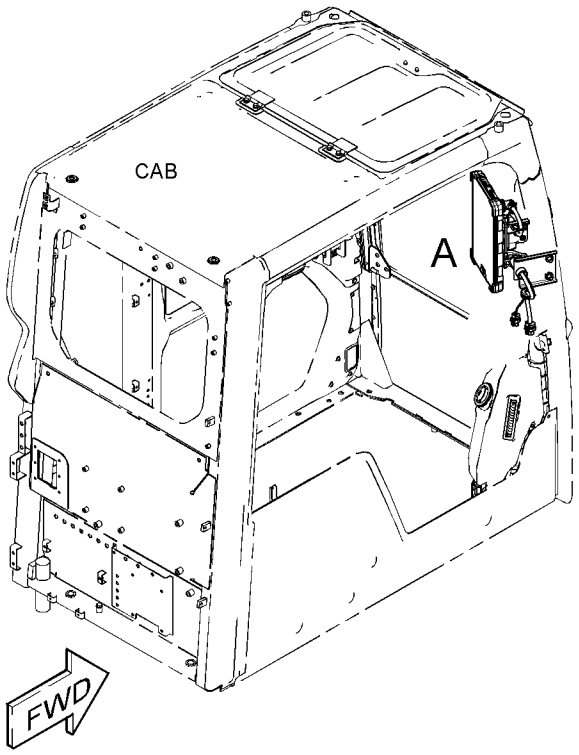

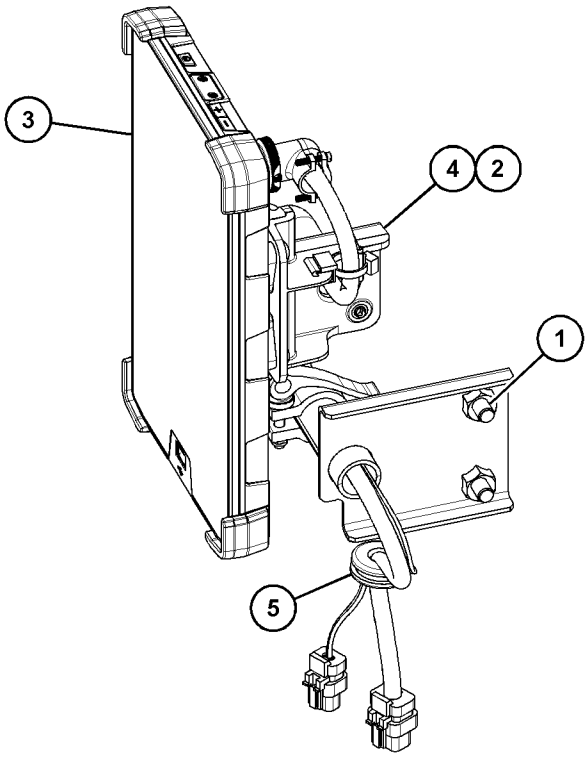

VIEW OF AREA A

GRAPHIC #1 <END> g06286665

511-9427 MONITOR AR

S/N: BR61-UP
8-INTOUCH

SMCS-7490 **i07352781**

NOTE	PART NUMBER	QTY	PART NAME 1 2 3 4 5 6 (PRODUCT LEVEL)	SEE PAGE
Y	*489-3460*	1	ELECTRONICS GP-MONITOR	153
Y	*488-6812*	1	MONITOR & MTG GP-OPERATOR (TOUCHSCREEN)	648

Y - SEPARATE ILLUSTRATION

<END>

511-9428 MONITOR AR

S/N: BR61-UP

SMCS-7490 **i07369218**

NOTE	PART NUMBER	QTY	PART NAME 1 2 3 4 5 6 (PRODUCT LEVEL)	SEE PAGE
Y	*489-3461*	1	ELECTRONICS GP-MONITOR	154
Y	*488-6813*	1	MONITOR & MTG GP-OPERATOR (10 INCH TOUCHSCREEN)	649

Y - SEPARATE ILLUSTRATION

<END>

511-9429 MONITOR AR

S/N: BR61-UP

SMCS-7490 **i07376608**

NOTE	PART NUMBER	QTY	PART NAME 1 2 3 4 5 6 (PRODUCT LEVEL)	SEE PAGE
Y	*489-3460*	1	ELECTRONICS GP-MONITOR	153
Y	*529-7476*	1	FILM GP (GRADE CONTROL DISPLAY)	686
Y	*511-9430*	1	MONITOR & MTG GP-OPERATOR (8-IN, GRADE CONTROL)	650

Y - SEPARATE ILLUSTRATION

<END>

511-9431 MONITOR AR—10 INCH, GRADE CONTROL

S/N: BR61-UP

SMCS-7490 **i07366543**

NOTE	PART NUMBER	QTY	PART NAME 1 2 3 4 5 6 (PRODUCT LEVEL)	SEE PAGE
Y	*489-3461*	1	ELECTRONICS GP-MONITOR	154
Y	*529-7476*	1	FILM GP (GRADE CONTROL DISPLAY)	686
Y	*511-9432*	1	MONITOR & MTG GP-OPERATOR	651

Y - SEPARATE ILLUSTRATION

<END>

484-8017 MOUNTING GP-CAB–PLATFORM

S/N: BR61-UP

PART OF 520-8301, 549-4726 OPERATOR AR-ENCLOSED ROPS

SMCS-7266, 7301 **i07360960**

NOTE	REF NO	GRAPHIC REF	PART NUMBER	QTY	PART NAME 1 2 3 4 5 6 (PRODUCT LEVEL)	SEE PAGE
M	1	1	**8T-4136**	16	BOLT (M10X1.5X25-MM)	
	2	1	**8T-4121**	16	WASHER-HARD (11X21X2.5-MM THK)	
M	3	1	**447-1704**	2	BOLT (M16X2X90-MM)	
M	4	1	**447-1709**	2	BOLT (M16X2X45-MM)	
	5	1	**451-2175**	3	WASHER-HARD (17.5X30X3.5-MM THK)	
	6	1	**484-8018**	4	MOUNT AS	
	7	1	**086-0298**	1	WASHER (19X60X9-MM THK)	

M - METRIC PART

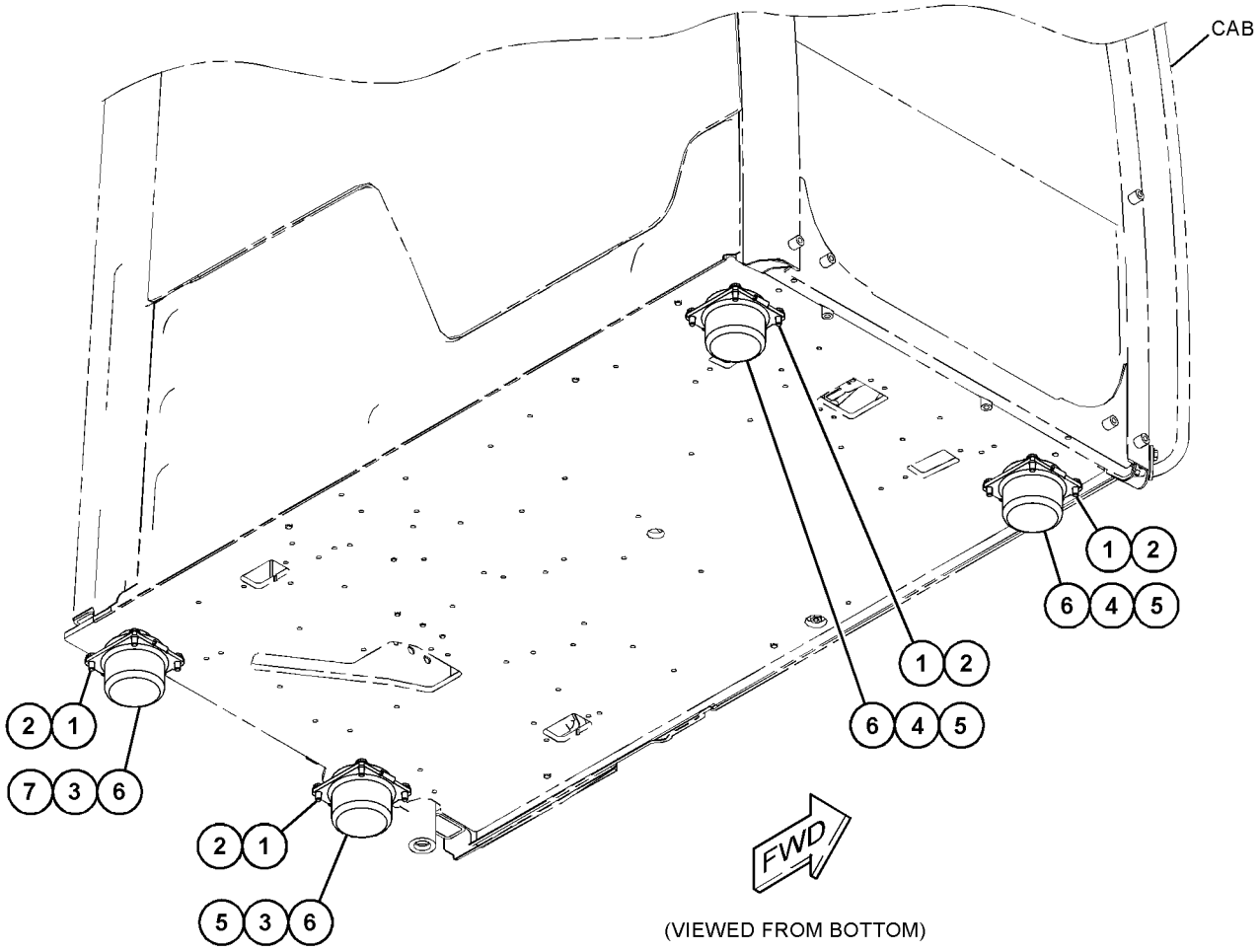

(VIEWED FROM BOTTOM)

GRAPHIC #1 <END> g06231020

487-6904 MOUNTING GP-ROPS

S/N: BR61-UP

PART OF 520-8301, 549-4726 OPERATOR AR-ENCLOSED ROPS

SMCS-7266 **i07360962**

NOTE	REF NO	GRAPHIC REF	PART NUMBER	QTY	PART NAME 1 2 3 4 5 6 (PRODUCT LEVEL)	SEE PAGE
	1	1	**353-2087**	1	STOP (REAR)	
M	2	1	**447-1728**	1	BOLT (M30X3.5X90-MM)	
	3	1	**451-2178**	1	WASHER-HARD (33X56X6-MM THK)	

M - METRIC PART

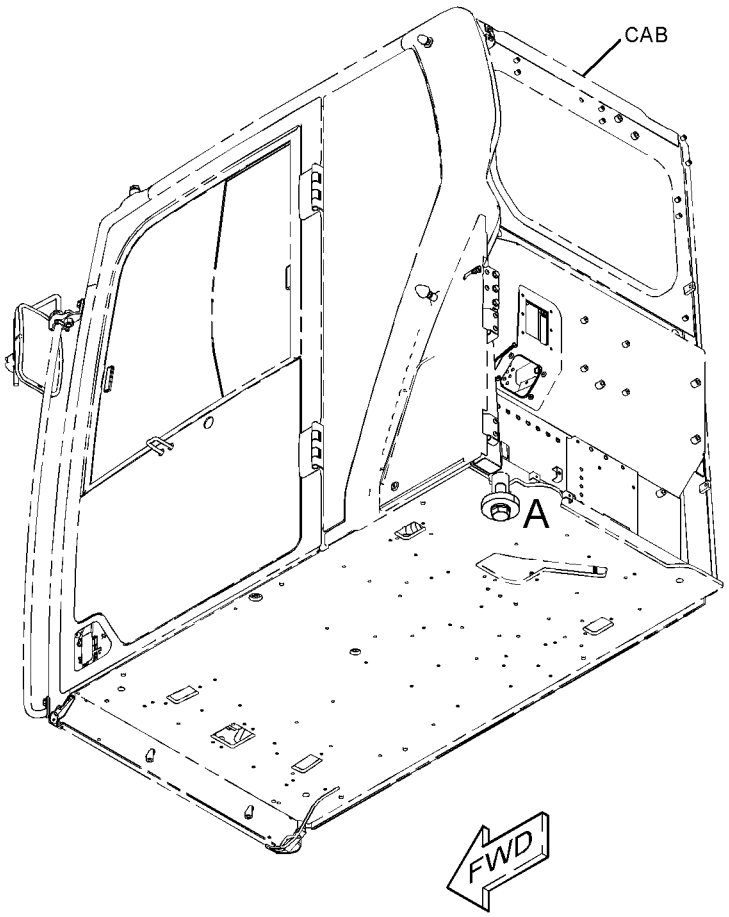

(VIEWED FROM BOTTOM)

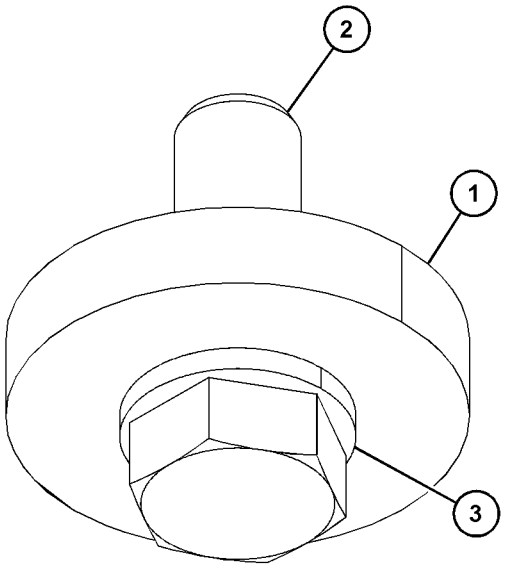

VIEW OF AREA A

GRAPHIC #1 <END> g06231313

487-7000 OPERATOR AR

S/N: BR61-UP

SMCS-7301 **i07344807**

NOTE	PART NUMBER	QTY	PART NAME 1 2 3 4 5 6 (PRODUCT LEVEL)	SEE PAGE
Y	*488-6600*	1	AIR CONDITIONER & MOUNTING GP	581
Y	*498-7718*	1	CAB GP	594
Y	*488-6550*	1	CONSOLE GP-OPERATOR	602
Y	*486-5504*	1	CONTROL & MTG GP-PEDAL	610
Y	*487-6660*	1	COVER GP-CAB	612
Y	*488-6474*	1	LINES GP-WASHER	642
Y	*489-7847*	1	MODULE GP-CAB WIRING (ELECTRICAL)	204
Y	*488-0394*	1	PLATFORM GP-OPERATOR	658
Y	*488-6500*	1	SEAT GP	662
Y	*488-6530*	1	SUPPORT GP-SEAT	666

Y - SEPARATE ILLUSTRATION

<END>

487-7001 OPERATOR AR

S/N: BR61-UP

SMCS-7301 **i07376612**

NOTE	PART NUMBER	QTY	PART NAME 1 2 3 4 5 6 (PRODUCT LEVEL)	SEE PAGE
Y	*488-6600*	1	AIR CONDITIONER & MOUNTING GP	581
Y	*487-6900*	1	CAB GP	593
Y	*488-6560*	1	CONSOLE GP-OPERATOR (DELUXE)	605
Y	*486-5504*	1	CONTROL & MTG GP-PEDAL	610
Y	*487-6660*	1	COVER GP-CAB	612
Y	*488-6474*	1	LINES GP-WASHER	642
Y	*489-7847*	1	MODULE GP-CAB WIRING (ELECTRICAL)	204
Y	*488-0394*	1	PLATFORM GP-OPERATOR	658
Y	*488-6510*	1	SEAT GP	663
Y	*488-6530*	1	SUPPORT GP-SEAT	666

Y - SEPARATE ILLUSTRATION

<END>

520-8301 OPERATOR AR-ENCLOSED ROPS

S/N: BR61-10000

PART OF 510-7419 COMMON AR

SMCS-7300, 7301 **i07372683**

NOTE	PART NUMBER	QTY	PART NAME 1 2 3 4 5 6 (PRODUCT LEVEL)	SEE PAGE
Y	*488-6553*	1	COVER GP-CAB	617
Y	*500-0931*	1	GUARD & MTG GP-CAB	626
Y	*488-6606*	1	LINES GP-AIR CONDITIONER	636
Y	*484-8017*	1	MOUNTING GP-CAB	654
Y	*487-6904*	1	MOUNTING GP-ROPS	655
Y	*488-6576*	1	WASHER GP-WINDOW	670
	484-8025	1	FLOOR MAT GP	

Y - SEPARATE ILLUSTRATION

<END>

549-4726 OPERATOR AR-ENCLOSED ROPS

S/N: BR610001-UP

PART OF 510-7419 COMMON AR

SMCS-7300, 7301

i07434278

NOTE	PART NUMBER	QTY	PART NAME 1 2 3 4 5 6 (PRODUCT LEVEL)	SEE PAGE
Y	*488-6553*	1	COVER GP-CAB	617
Y	*484-8025*	1	FLOOR MAT GP	624
Y	*500-0931*	1	GUARD & MTG GP-CAB	626
Y	*488-6609*	1	LINES GP-AIR CONDITIONER	639
Y	*484-8017*	1	MOUNTING GP-CAB	654
Y	*487-6904*	1	MOUNTING GP-ROPS	655
Y	*488-6576*	1	WASHER GP-WINDOW	670

Y - SEPARATE ILLUSTRATION

<END>

488-0394 PLATFORM GP-OPERATOR

S/N: BR61-UP

PART OF 487-7000, 487-7001 OPERATOR AR

SMCS-7253 **i07349341**

NOTE	REF NO	GRAPHIC REF	PART NUMBER	QTY	PART NAME 1 2 3 4 5 6 (PRODUCT LEVEL)	SEE PAGE
	1	1	**162-0349**	2	COVER	
	2	1	**352-7063**	21	CAP	
	3	1	**488-6479**	1	PLATE & INSULN GP-CAB PLATFORM	
		1	**495-6045**	1	PLATE	
		1	**495-6046**	1	INSULATION	
		1	**495-6047**	2	INSULATION	
		1	**495-6049**	1	INSULATION	

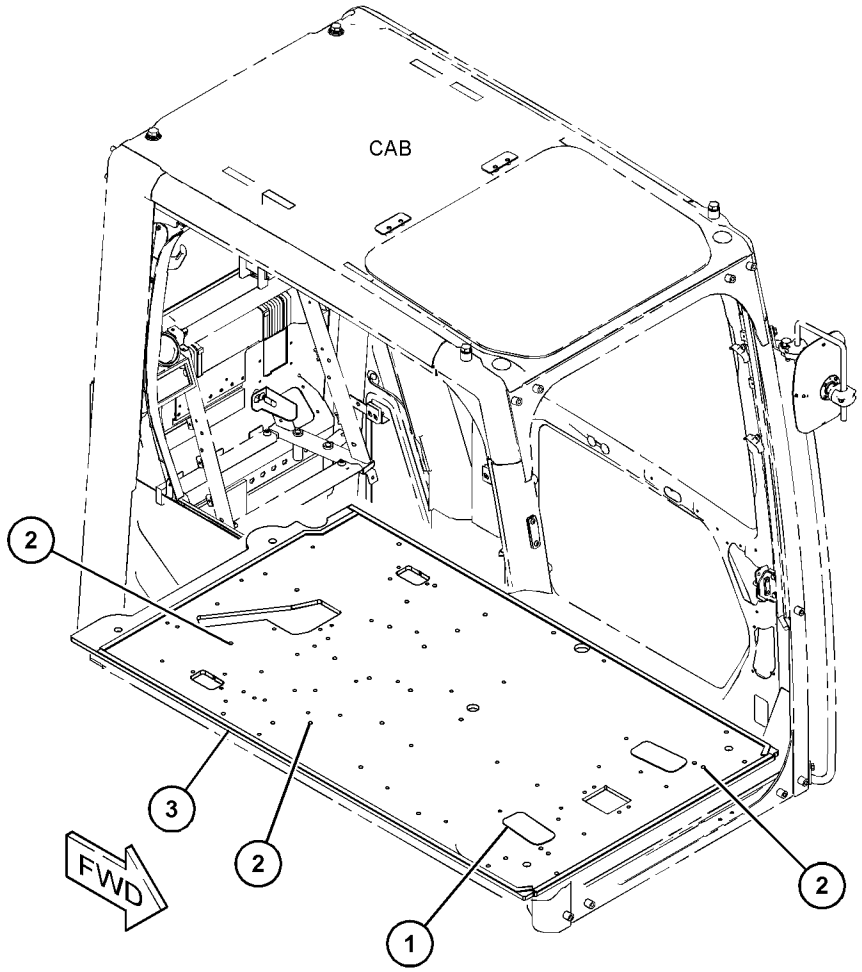

GRAPHIC #1 <END> g06229661

488-6823 RADIO GP—MOUNTING

S/N: BR61-UP
CAN MODULE
PART OF 502-7166 INSTALLATION AR-RADIO

SMCS-7338, 733C

i07359734

NOTE	REF NO	GRAPHIC REF	PART NUMBER	QTY	PART NAME 1 2 3 4 5 6 (PRODUCT LEVEL)	SEE PAGE
	1	1	**487-7440**	1	RADIO GP	
	2	1	**515-8094**	1	ROD	
	3	1	**515-8096**	1	CABLE AS	
	4	1	**524-0479**	1	BRACKET (RADIO)	
	5	1	**524-0480**	1	BRACKET AS	
M	6	1	**095-0735**	4	SCREW-MACHINE (M5X0.8X8-MM)	
	7	1	**096-0192**	4	LOCKWASHER (EXTERNAL TOOTH)	
	8	1	**427-9771**	1	TIE	
	9	1	**8T-0328**	4	WASHER-HARD (5.5X10X1-MM THK)	
M	10	1	**9X-2043**	2	SCREW-TRUSS HEAD (M6X1X14-MM)	

M - METRIC PART

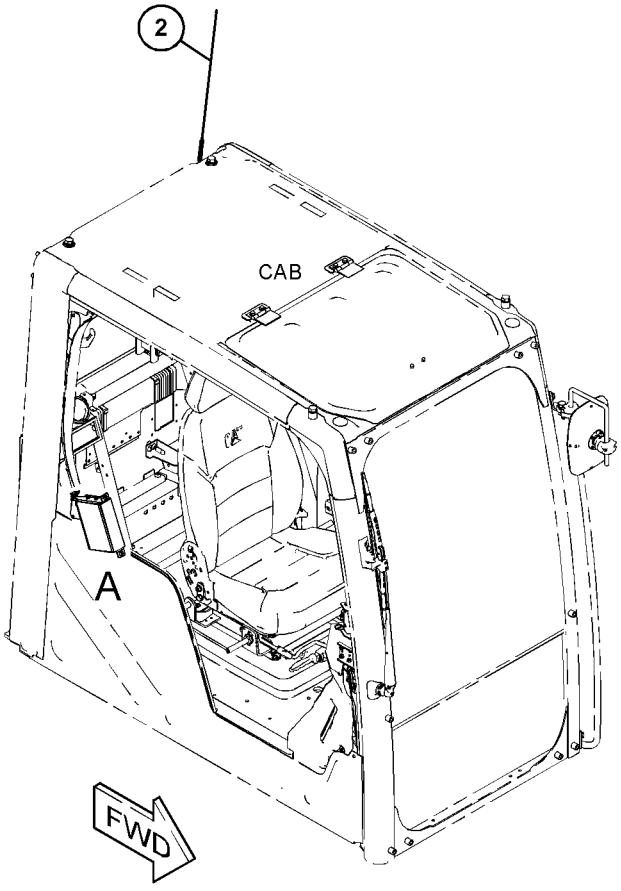

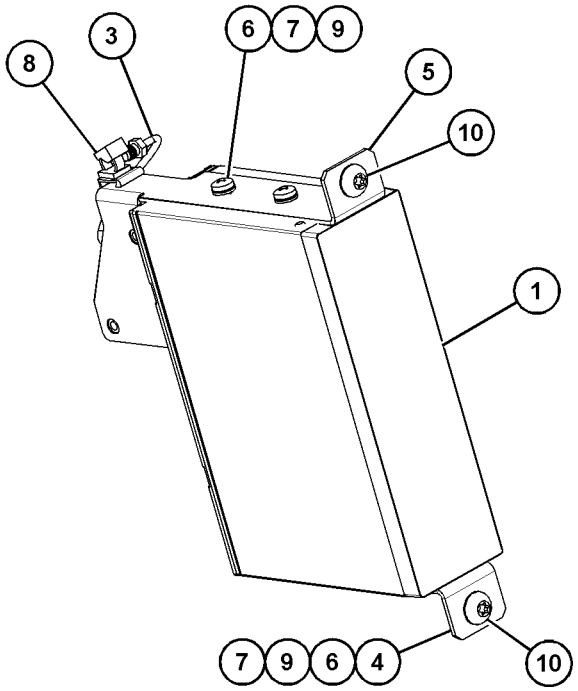

VIEW OF AREA A

GRAPHIC #1 <END> g06227650

487-6672 SCREEN GP-SUN

S/N: BR61-UP

PART OF 487-6666 CAB GP

SMCS-7165 **i07375792**

NOTE	REF NO	GRAPHIC REF	PART NUMBER	QTY	PART NAME 1 2 3 4 5 6 (PRODUCT LEVEL)	SEE PAGE
M	1	1	**128-2135**	14	SCREW-TRUSS HEAD (M6X1X13-MM)	
	2	1	**488-6504**	1	SCREEN AS	
	3	1	**520-8261**	1	VISOR AS	
	4	1	**520-8262**	1	COVER	
	5	1	**520-8263**	1	COVER	
	6	1	**520-8264**	1	COVER	
	7	1	**520-8265**	1	COVER	
	8	1	**526-8638**	4	HOOK	

M - METRIC PART

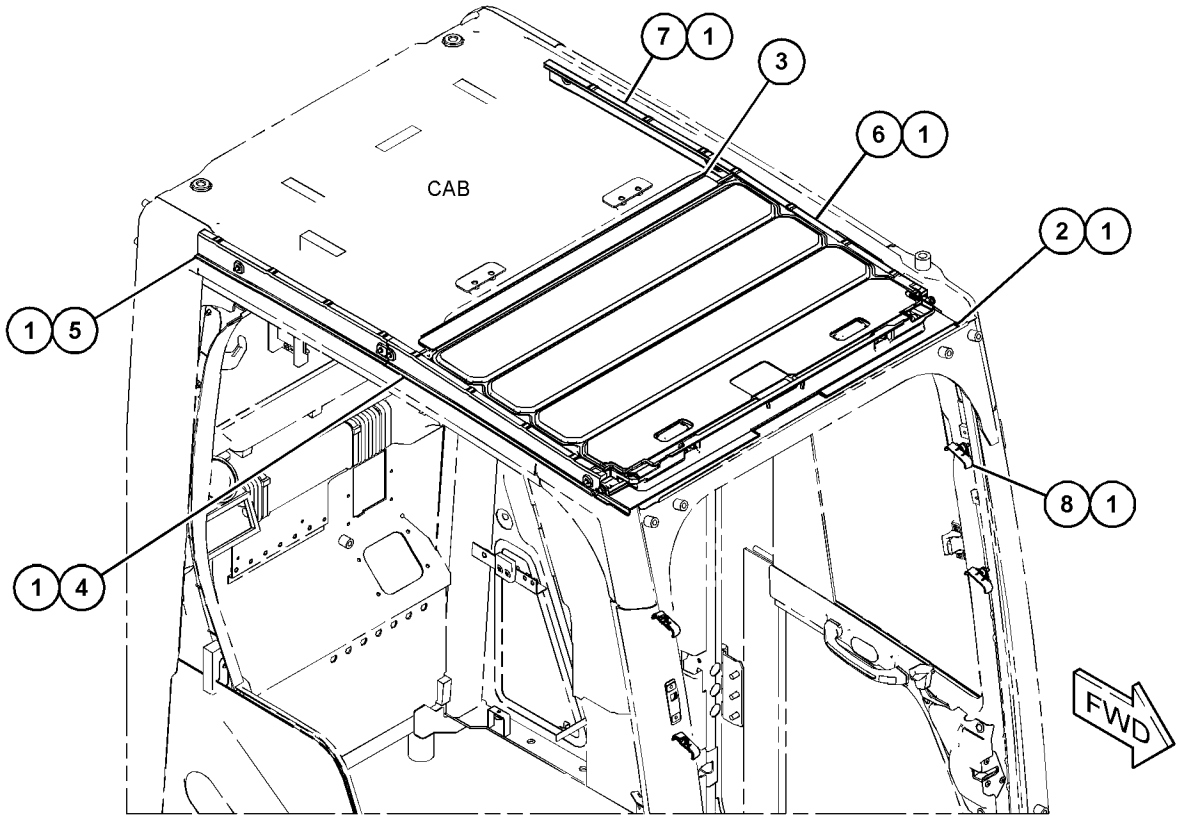

GRAPHIC #1 <END> g06230905

526-8600 SEAT BELT GP

S/N: BR61-UP

PART OF 488-6500, 488-6510 SEAT GP

SMCS-7327 **i07348814**

NOTE	REF NO	GRAPHIC REF	PART NUMBER	QTY	PART NAME 1 2 3 4 5 6 (PRODUCT LEVEL)	SEE PAGE
	1	1	**0T-0244**	1	BOLT (7/16-20X1.25-IN)	
M	2	1	**8T-4133**	1	NUT (M10X1.5-THD)	
	3	1	**8T-5360**	3	WASHER (12X22.5X2.5-MM THK)	
	4	1	**8T-9381**	1	BOLT (7/16-20X1-IN)	
	5	1	**526-8601**	1	SEAT BELT GP	
	6	1	**528-7421**	1	BRACKET AS	
	7	1	**528-7422**	1	BUSHING	
	8	1	**528-7423**	1	BUSHING	

M - METRIC PART

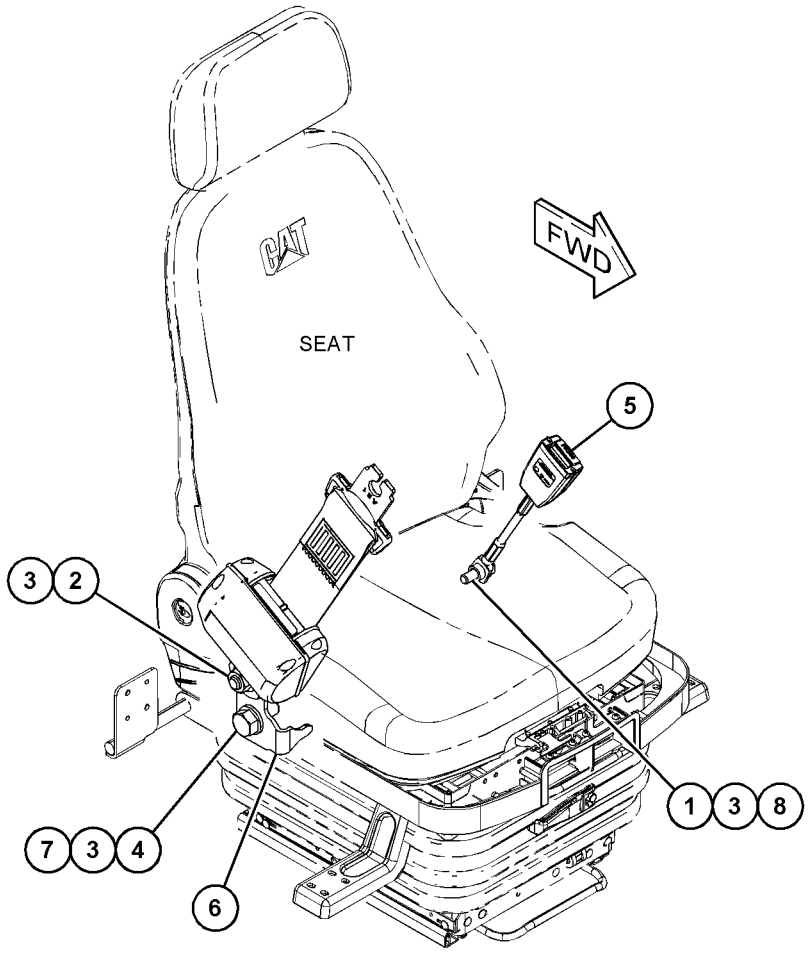

GRAPHIC #1 <END> g06237966

488-6500 SEAT GP

S/N: BR61-UP

PART OF 487-7000 OPERATOR AR

SMCS-7312 **i07406306**

NOTE	REF NO	GRAPHIC REF	PART NUMBER	QTY	PART NAME 1 2 3 4 5 6 (PRODUCT LEVEL)	SEE PAGE
M	1	1	**8T-4970**	2	BOLT (M6X1X14-MM)	
	2	1	**5P-4116**	4	WASHER-HARD (8.8X20.5X2-MM THK)	
M	3	1	**105-3482**	4	BOLT-SOCKET HEAD (M8X1.25X16-MM)	
	4	1	**9X-8256**	2	WASHER (6.6X12X2-MM THK)	
	5	1	**488-6501**	1	SEAT GP-SUSPENSION (COMFORT)	
	6	1	**526-8587**	1	BRACKET	
Y	7	1	*526-8600*	1	SEAT BELT GP (RETRACTABLE, 2-IN)	661

M - METRIC PART
Y - SEPARATE ILLUSTRATION

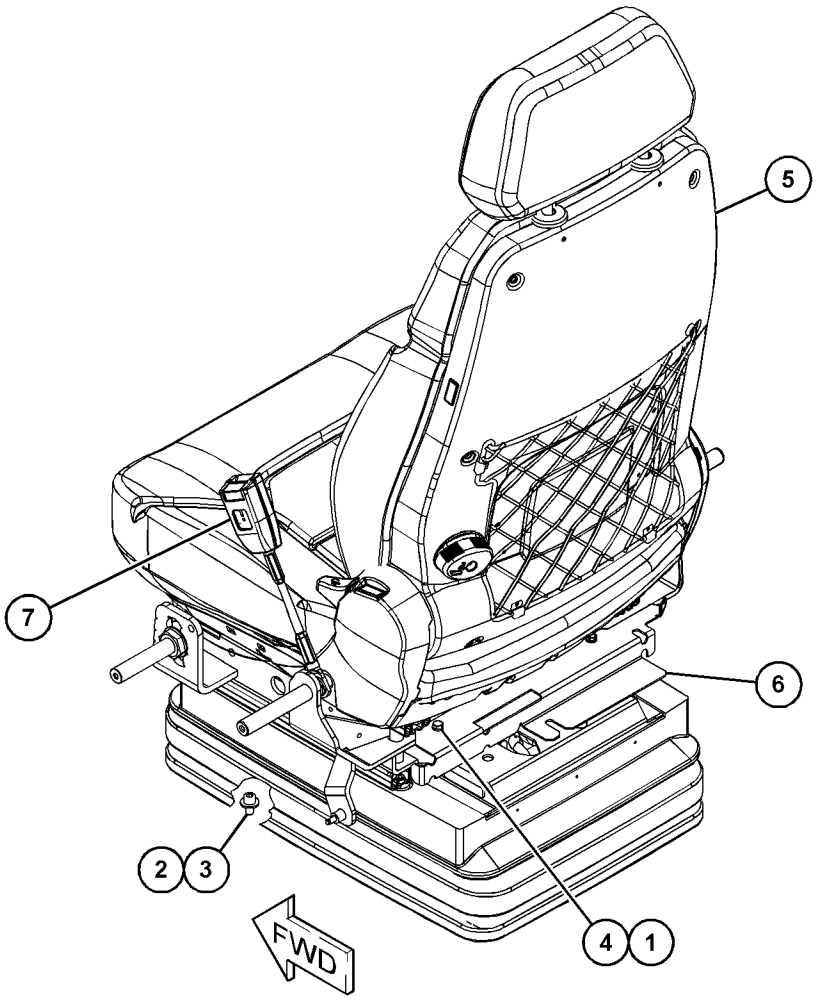

GRAPHIC #1 <END> g06229200

488-6510 SEAT GP

S/N: BR61-UP

PART OF 487-7001 OPERATOR AR

SMCS-7312 **i07366508**

NOTE	REF NO	GRAPHIC REF	PART NUMBER	QTY	PART NAME 1 2 3 4 5 6 (PRODUCT LEVEL)	SEE PAGE
M	1	1	**8T-4970**	2	BOLT (M6X1X14-MM)	
	2	1	**3S-2093**	1	STRAP-CABLE	
M	3	1	**6V-8202**	4	BOLT-SOCKET HEAD (M8X1.25X16-MM)	
	4	1	**9X-8256**	2	WASHER (6.6X12X2-MM THK)	
	5	1	**266-7379**	1	STRAP-CABLE	
Y	6	1	**488-6511**	1	SEAT GP (DELUXE)	664
	7	1	**526-8587**	1	BRACKET	
Y	8	1	*526-8600*	1	SEAT BELT GP (RETRACTABLE, 2-IN)	661
	9	1	**5P-4116**	4	WASHER-HARD (8.8X20.5X2-MM THK)	

M - METRIC PART
Y - SEPARATE ILLUSTRATION

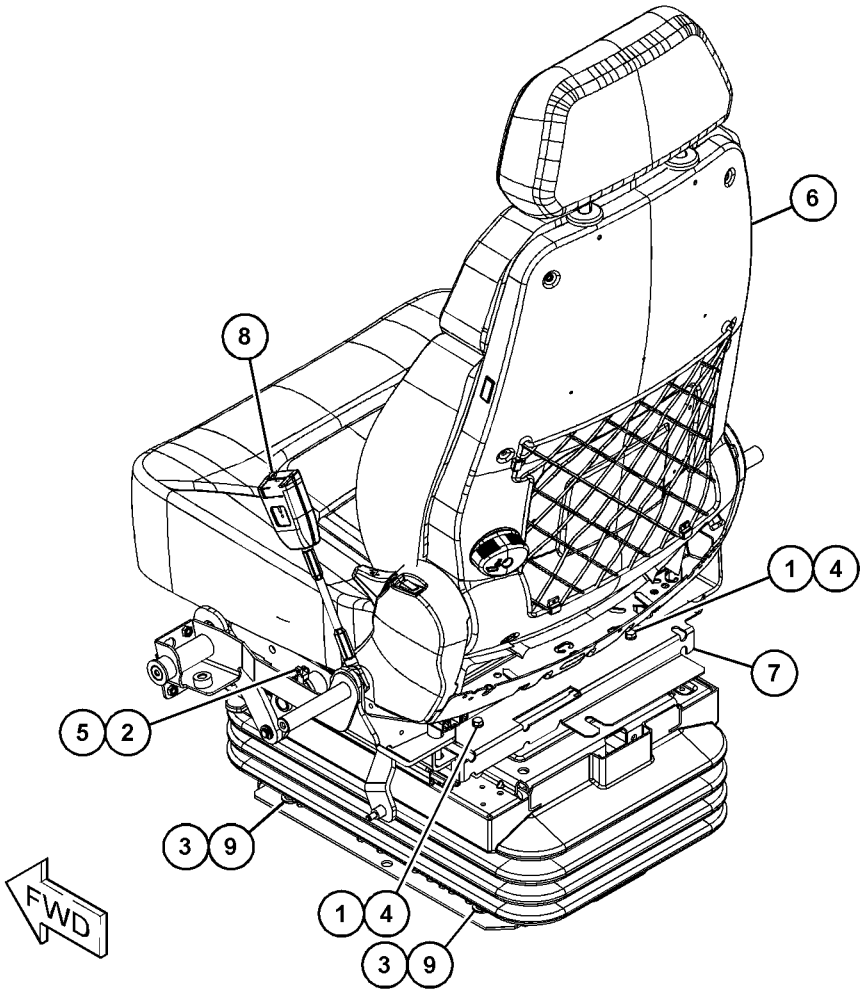

GRAPHIC #1 <END> g06231291

488-6511 SEAT GP–DELUXE

S/N: BR61-UP

PART OF 488-6510 SEAT GP

SMCS-7312 **i07362620**

NOTE	REF NO	GRAPHIC REF	PART NUMBER	QTY	PART NAME 1 2 3 4 5 6 (PRODUCT LEVEL)	SEE PAGE
	1	1	**500-1008**	1	KIT-CUSHION (BACKREST)	
	2	1	**500-1010**	1	KIT-CUSHION (SEAT)	
	3	1	**500-1011**	1	KIT-HEADREST	
Y	4	1	**500-1012**	1	SUSPENSION GP-SEAT (AIR)	667
	5	1	**500-1015**	1	KIT-HANDLE (RECLINER)	
	6	1	**500-1019**	1	KIT-SEAT	
	7	1	**500-1024**	1	KIT-SEAT ADJUSTER	
	8	1	**500-1027**	1	KIT-SUPPORT	
	9	1	**500-1028**	1	KIT-SEAT ADJUSTER	
	10	1	**500-1029**	1	KIT-HARNESS	
	12	1	**500-1031**	1	KIT-HARNESS	
	13	1	**500-1032**	1	KIT-SUPPORT	
	14	1	**500-1033**	1	HANDLE	
	15	1	**526-8646**	1	KIT-HARNESS	

PARTS SHOWN IN GRAPHIC(S) WITHOUT A REFERENCE NUMBER ARE NOT SERVICED SEPARATELY

Y - SEPARATE ILLUSTRATION

488-6511 **SEAT GP** (contd.) **i07362620**

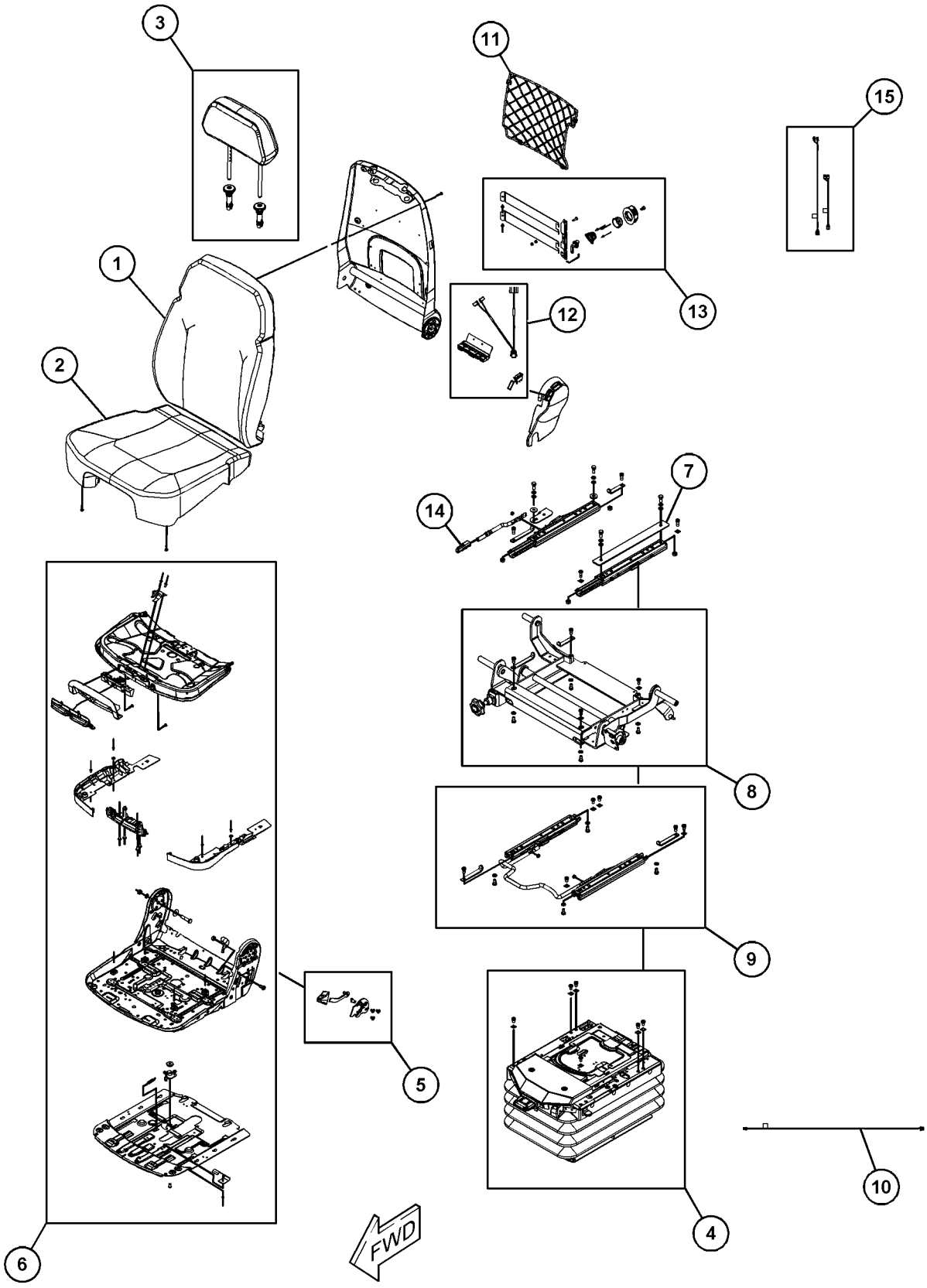

GRAPHIC #1 <END> g06233403

488-6530 SUPPORT GP-SEAT

S/N: BR61-UP

PART OF 487-7000, 487-7001 OPERATOR AR

SMCS-7321 **i07348818**

NOTE	REF NO	GRAPHIC REF	PART NUMBER	QTY	PART NAME 1 2 3 4 5 6 (PRODUCT LEVEL)	SEE PAGE
M	1	1	**8T-4191**	4	BOLT (M10X1.5X16-MM)	
	2	1	**8T-4121**	4	WASHER-HARD (11X21X2.5-MM THK)	
	3	1	**494-7279**	1	SUPPORT AS-SEAT	

M - METRIC PART

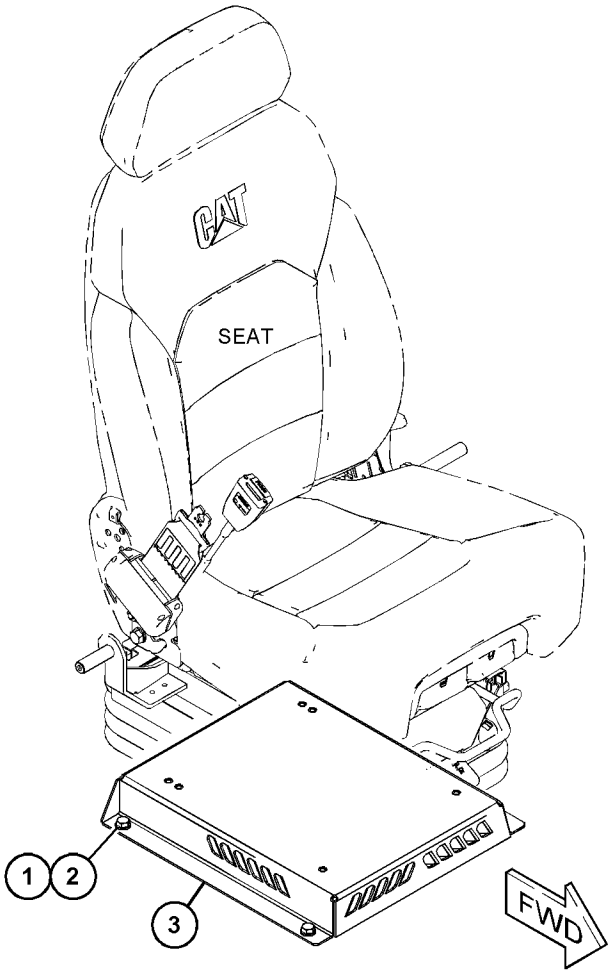

GRAPHIC #1 <END> g06229356

500-1012 SUSPENSION GP-SEAT–AIR

S/N: BR61-UP

PART OF 488-6511 SEAT GP

SMCS-7324 **i07435334**

NOTE	REF NO	GRAPHIC REF	PART NUMBER	QTY	PART NAME 1 2 3 4 5 6 (PRODUCT LEVEL)	SEE PAGE
	1	1	**304-5418**	1	KIT-GAS SPRING (SUSPENSION SEAT)	
	2	1	**304-5422**	1	KIT-SHOCK ABSORBER (SUSPENSION SEAT)	
	3	1	**366-1884**	1	KIT-COMPRESSOR (SUSPENSION SEAT)	
	4	1	**513-9150**	1	KIT-SWITCH	
	5	1	**500-1007**	1	KIT-INDICATOR	
	6	1	**500-1009**	1	KIT-HARNESS	
	7	1	**500-1016**	1	BELLOWS AS	
	8	1	**513-9160**	1	KIT-BEARING	
	9	1	**500-1022**	1	KIT-HOSE	
	10	1	**500-1023**	1	HANDLE	
	11	1	**500-1025**	1	KIT-COVER	
	12	1	**500-1026**	1	KIT-COVER	
					PARTS SHOWN IN GRAPHIC(S) WITHOUT A REFERENCE NUMBER ARE NOT SERVICED SEPARATELY	

500-1012 **SUSPENSION GP-SEAT (**contd.**)** **i07435334**

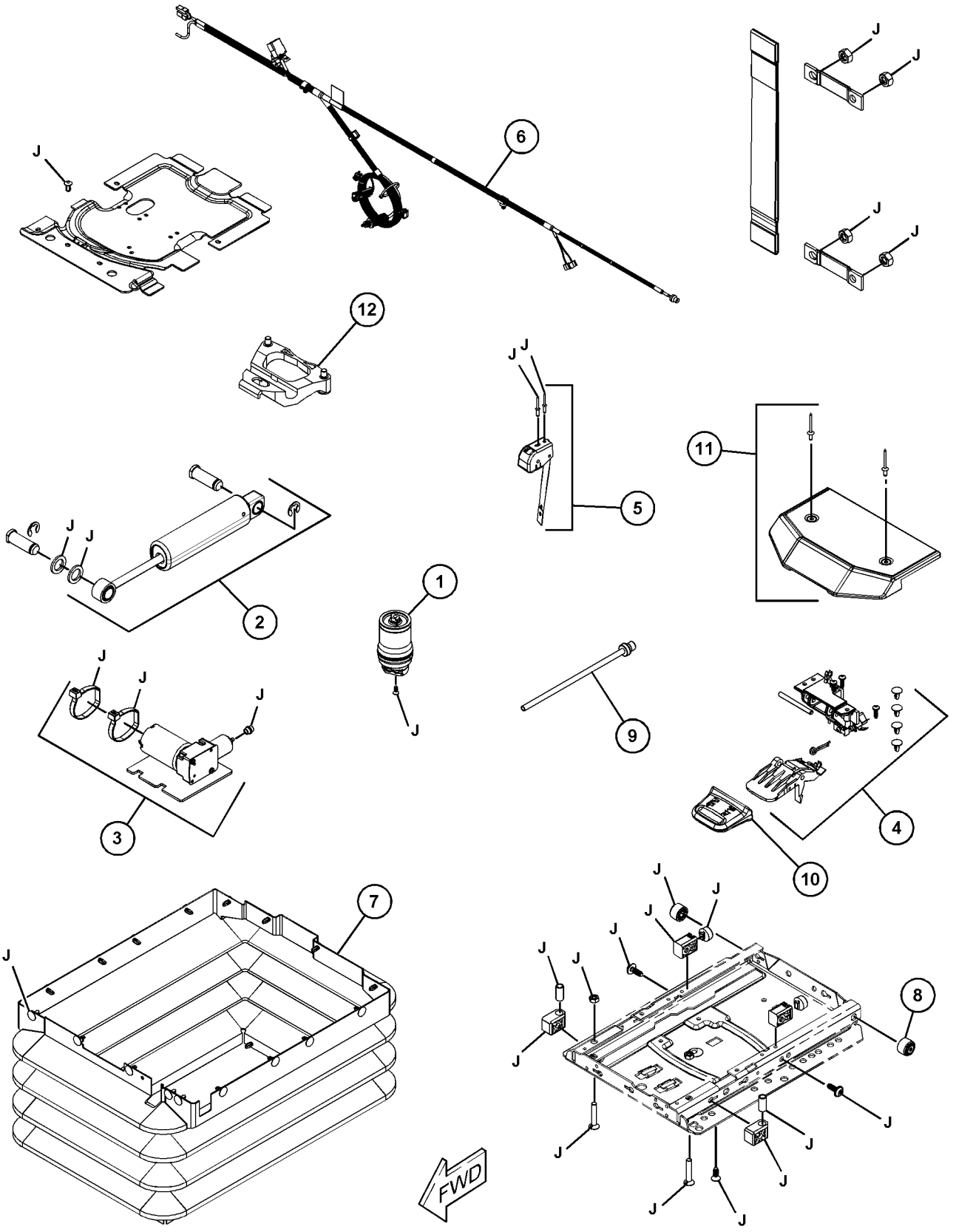

GRAPHIC #1 <END> g06233974

541-3433 VISOR GP-PROTECTION

S/N: BR61-UP

PART OF 525-1735 LIGHTING AR-FLOOD

SMCS-7340 **i07377611**

NOTE	REF NO	GRAPHIC REF	PART NUMBER	QTY	PART NAME 1 2 3 4 5 6 (PRODUCT LEVEL)	SEE PAGE
M	1	1	**5C-9553**	4	BOLT (M6X1X16-MM)	
M	2	1	**4I-5049**	7	NUT-SPACER (M6X1-THD)	
M	3	1	**6V-7357**	7	BOLT (M6X1X25-MM)	
	4	1	**9X-2038**	11	WASHER (7X19X2-MM THK)	
	5	1	**526-8639**	1	VISOR	
	6	1	**526-8648**	1	BRACKET	
P	7	1	**348-5410**		SEAL (6.8-DM)	

M - METRIC PART
P - ORDER BY DECIMETER

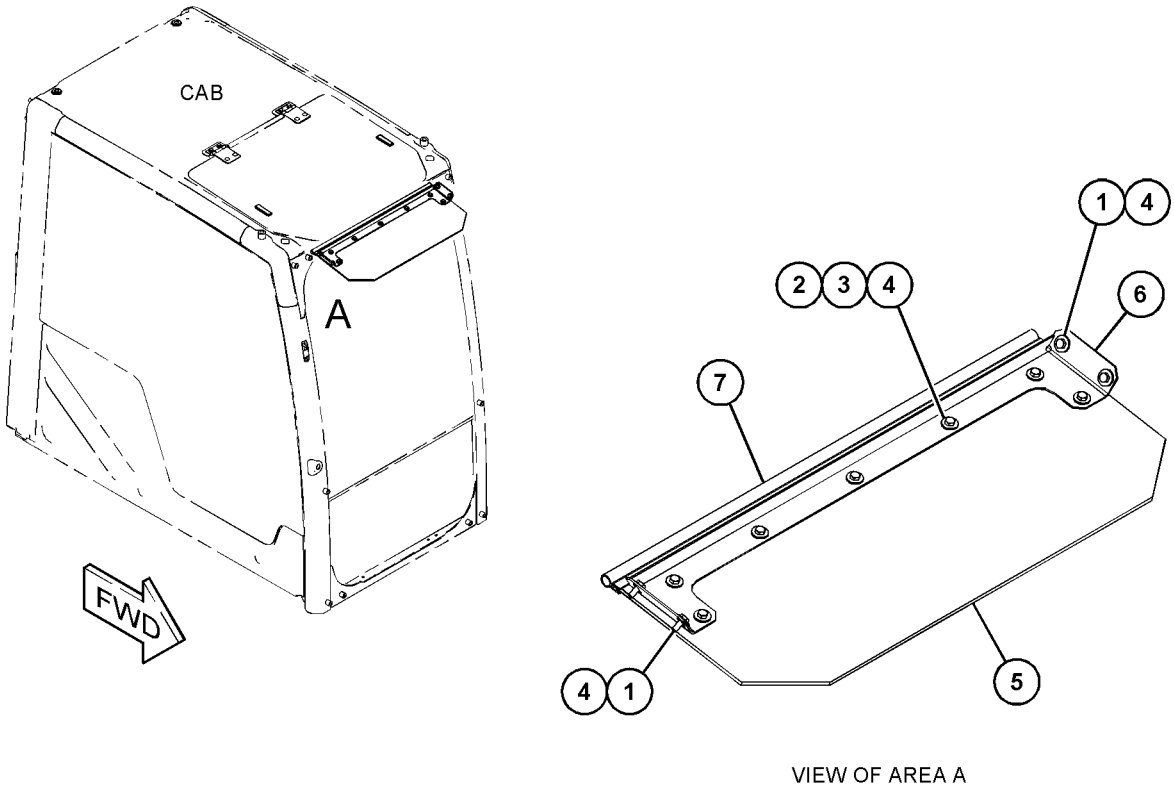

VIEW OF AREA A

GRAPHIC #1 <END> g06232742

488-6576 WASHER GP-WINDOW

S/N: BR61-UP

PART OF 520-8301, 549-4726 OPERATOR AR-ENCLOSED ROPS

SMCS-7306 **i07360968**

NOTE	REF NO	GRAPHIC REF	PART NUMBER	QTY	PART NAME 1 2 3 4 5 6 (PRODUCT LEVEL)	SEE PAGE
M	1	1	**8T-4970**	2	BOLT (M6X1X14-MM)	
	2	1	**9X-8256**	2	WASHER (6.6X12X2-MM THK)	
	3	1	**487-6979**	1	SUPPORT	
	4	1	**163-6795**	2	STRAP-CABLE	
	5	1	**488-6475**	1	TANK AS-WINDOW WASHER	
		1	**5C-8138**	1	GROMMET	
		1	**178-5431**	1	CAP AS-FILLER (WINDOW WASHER)	
		1	**3W-6399**	1	PACKING	
		1	**522-7098**	1	PUMP AS	

M - METRIC PART

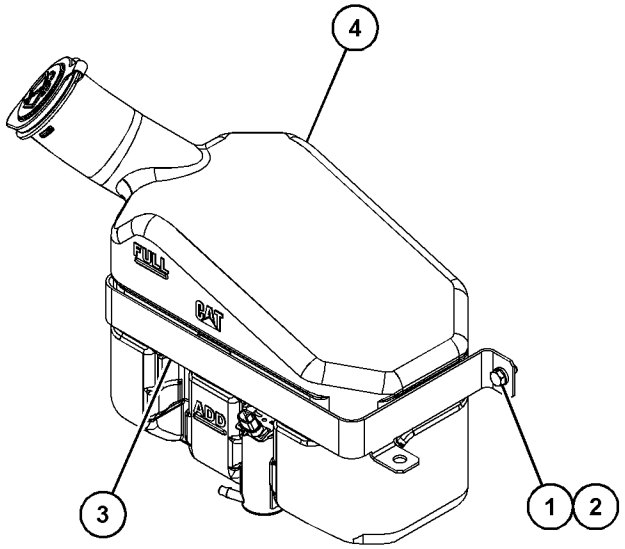

VIEW OF AREA A

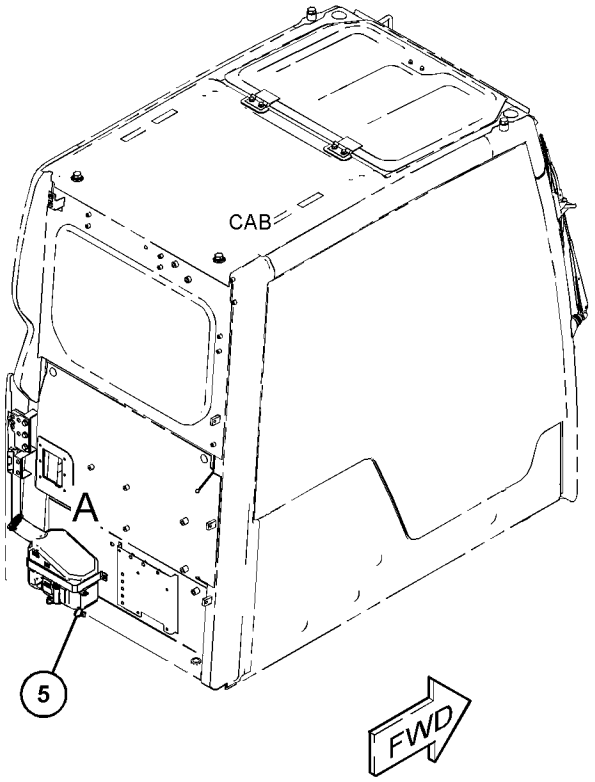

GRAPHIC #1 <END> g06230114

477-7563 WINDOW GP-CAB

S/N: BR61-UP

PART OF 486-5500, 498-7719 CAB GP

SMCS-7310 **i07344935**

NOTE	REF NO	GRAPHIC REF	PART NUMBER	QTY	PART NAME 1 2 3 4 5 6 (PRODUCT LEVEL)	SEE PAGE
M	1	1	**3E-8020**	2	SCREW-TRUSS HEAD (M6X1X25-MM)	
M	2	1	**109-1393**	1	BOLT-SOCKET HEAD (M4X0.7X10-MM)	
	3	1	**151-9557**	2	STOP-RUBBER	
	4	1	**334-6499**	1	BRACKET AS	
B	5	1	**430-5703**	1	SHIM (2-MM THK)	
Y	6	1	*484-8019*	1	WINDOW GP-CAB (FRONT, UPPER)	674
Y	7	1	*488-6492*	1	WINDOW GP-CAB (FRONT, LOWER)	676
	8	1	**488-6529**	1	BRACKET AS	
	9	1	**488-6546**	1	CABLE AS	
	10	1	**488-6548**	1	SWITCH AS-CONTROL	
	11	1	**488-6582**	1	BRACKET AS	
	12	1	**488-6583**	1	BRACKET AS	
	13	1	**498-7783**	1	BRACKET	
	14	1	**500-0740**	2	BRACKET	
	15	1	**500-0791**	1	SEAL	
	16	1	**511-5969**	2	BUMPER	
B	17	1	**526-8616**	2	SHIM (2-MM THK)	
	18	1	**538-9725**	1	COVER	
	19	1	**538-9803**	1	BRACKET	
B	20	1	**096-4007**	4	SPACER (8.2X18X0.5-MM THK)	
	21	1	**8T-4121**	2	WASHER-HARD (11X21X2.5-MM THK)	
M	22	1	**8T-4133**	2	NUT (M10X1.5-THD)	
M	23	1	**9X-2042**	14	SCREW-TRUSS HEAD (M6X1X12-MM)	
M	24	1	**9X-2044**	6	SCREW-TRUSS HEAD (M6X1X16-MM)	

B - USE AS REQUIRED
M - METRIC PART
Y - SEPARATE ILLUSTRATION

477-7563 **WINDOW GP-CAB (**contd.**)** **i07344935**

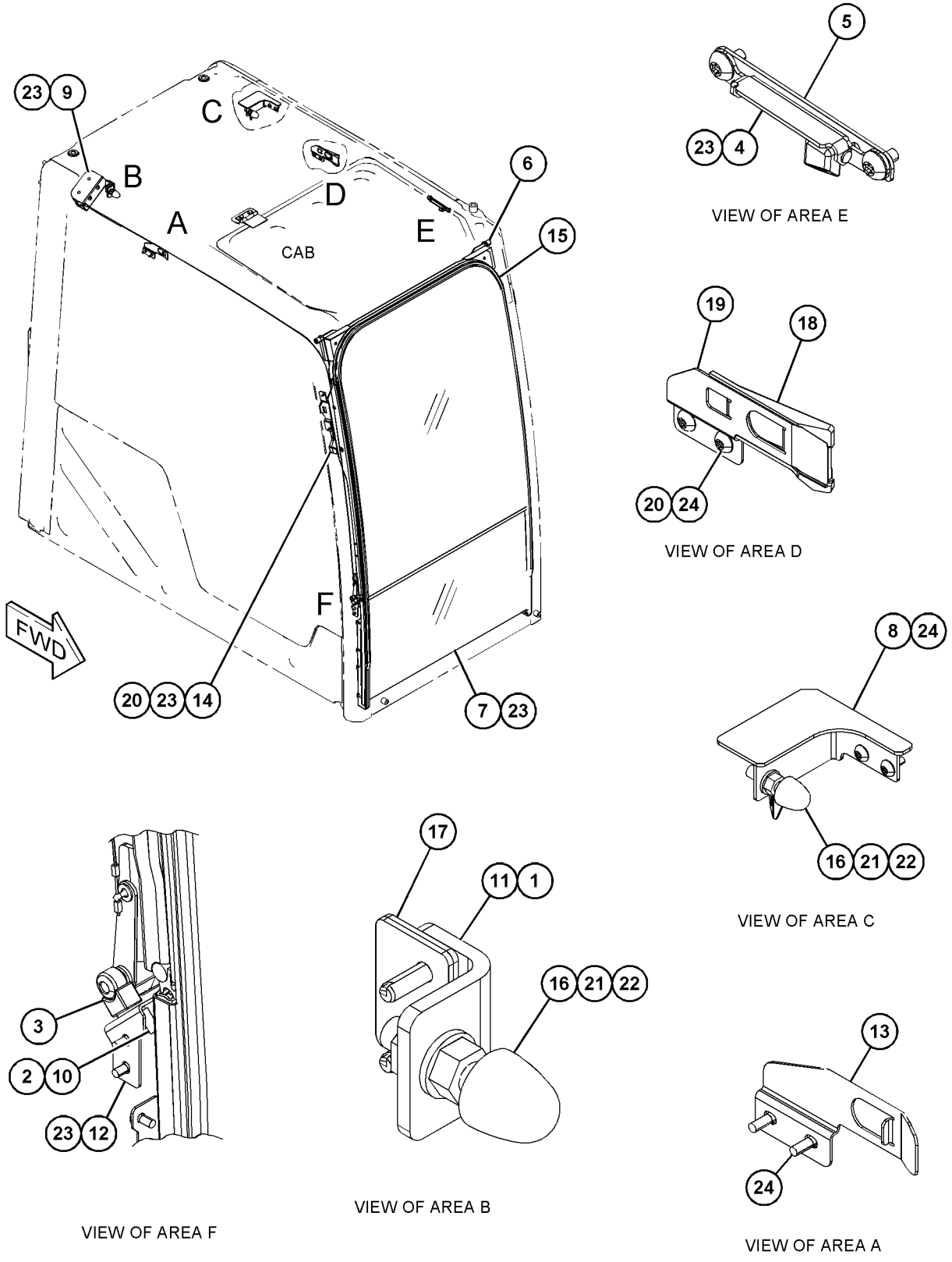

GRAPHIC #1 <END> g06236894

477-7564 WINDOW GP-CAB

S/N: BR61-UP

PART OF 486-5500, 498-7719 CAB GP

SMCS-7310 **i07415476**

NOTE	REF NO	GRAPHIC REF	PART NUMBER	QTY	PART NAME 1 2 3 4 5 6 (PRODUCT LEVEL)	SEE PAGE
	1	1	**099-3629**	1	RING-KEY	
	2	1	**178-5572**	3	SPACER-SPECIAL (WINDOW)	
	3	1	**178-5573**	1	SPACER	
	4	1	**178-5574**	6	SPACER	
	5	1	**486-5426**	1	GLASS	
	6	1	**486-5427**	1	GLASS	
	7	1	**488-6545**	1	SEAL	
	8	1	**516-4875**	1	GLASS	
	9	1	**516-9872**	2	SPACER	

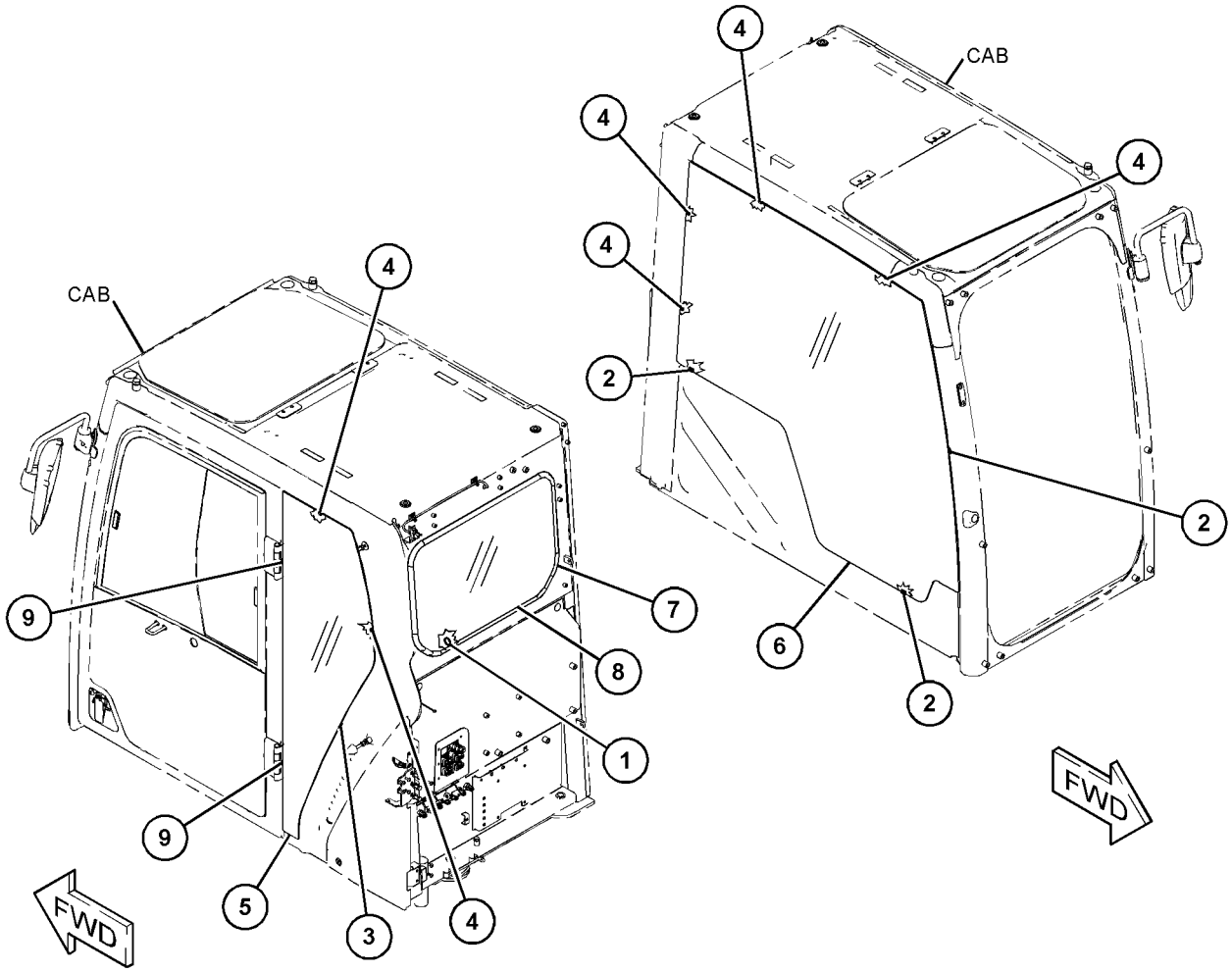

GRAPHIC #1 <END> g06230884

484-8019 WINDOW GP-CAB

S/N: BR61-UP

PART OF 477-7563 WINDOW GP-CAB

SMCS-7310 **i07344940**

NOTE	REF NO	GRAPHIC REF	PART NUMBER	QTY	PART NAME 1 2 3 4 5 6 (PRODUCT LEVEL)	SEE PAGE
	1	1	**151-9576**	1	ROLLER	
	2	1	**334-6482**	3	ROLLER	
	3	1	**438-6968**	1	HANDLE GP-DOOR (LH)	
	4	1	**438-6969**	1	HANDLE GP-DOOR (RH)	
	5	1	**486-5450**	1	GLASS	
	6	1	**486-5457**	1	SEAL	
	7	1	**487-6744**	1	FRAME AS	
	8	1	**487-6745**	1	BRACKET AS	
	9	1	**487-6746**	1	BRACKET AS	
	10	1	**487-6747**	1	BRACKET AS	
	11	1	**487-6748**	1	BRACKET AS	
	12	1	**487-6847**	1	PIN	
	13	1	**487-6849**	1	SEAL	
	14	1	**500-0744**	1	BLOCK	
M	15	1	**136-1613**	4	BOLT-SOCKET HEAD (M6X1X30-MM)	
M	16	1	**9X-2044**	12	SCREW-TRUSS HEAD (M6X1X16-MM)	
M	17	1	**9X-6155**	2	BOLT-SOCKET HEAD (M6X1X16.7-MM)	
	18	1	**9X-8256**	4	WASHER (6.6X12X2-MM THK)	

M - METRIC PART

484-8019 **WINDOW GP-CAB (**contd.**)** **i07344940**

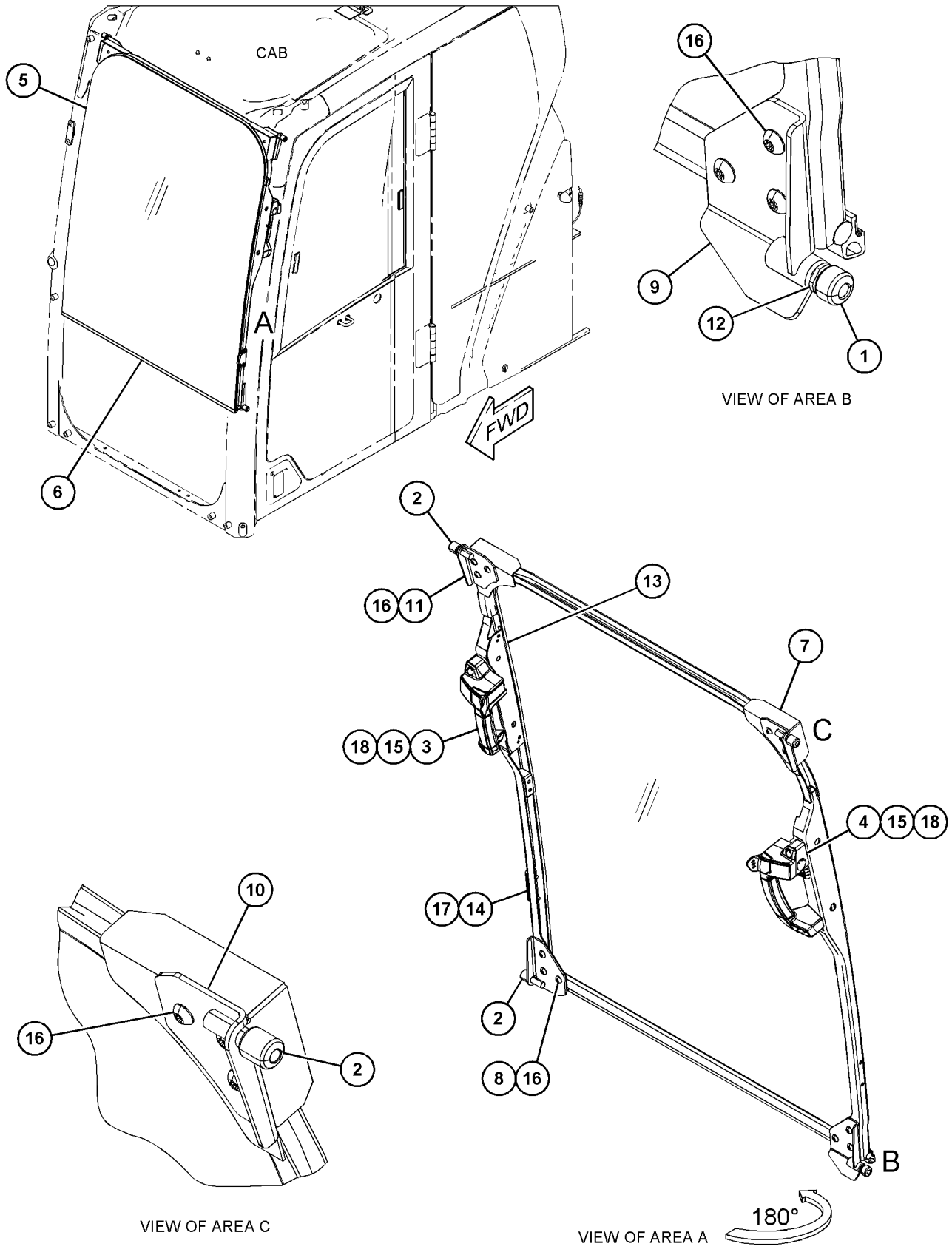

GRAPHIC #1 <END> g06231365

488-6492 WINDOW GP-CAB

S/N: BR61-UP

PART OF 477-7563 WINDOW GP-CAB

SMCS-7310 **i07344963**

NOTE	REF NO	GRAPHIC REF	PART NUMBER	QTY	PART NAME 1 2 3 4 5 6 (PRODUCT LEVEL)	SEE PAGE
	1	1	**346-8030**	2	SEAL	
	2	1	**488-6493**	1	BRACKET AS (RH)	
	3	1	**488-6494**	1	BRACKET AS (LH)	
	4	1	**491-7724**	1	GLASS	
	5	1	**500-0742**	2	STOPPER	
	6	1	**511-5966**	1	SEAL	
	7	1	**511-5967**	2	INSULATION	

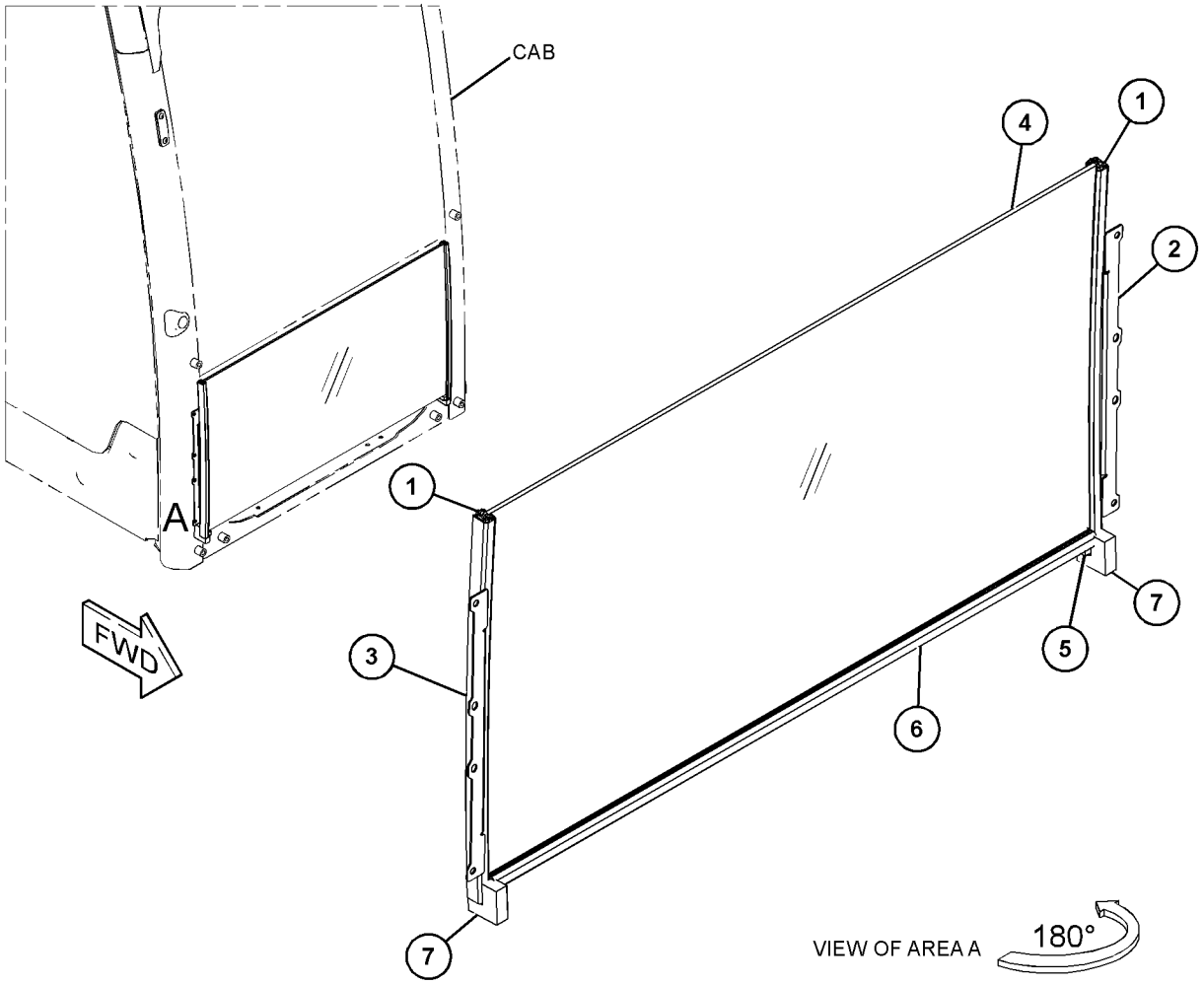

GRAPHIC #1 <END> g06230349

486-5407 WIPER GP-WINDOW

S/N: BR61-UP

PART OF 486-5500, 498-7719 CAB GP

SMCS-7305 **i07366509**

NOTE	REF NO	GRAPHIC REF	PART NUMBER	QTY	PART NAME 1 2 3 4 5 6 (PRODUCT LEVEL)	SEE PAGE
	1	1	**487-6806**	1	MOTOR AS-WINDOW WIPER	
	2	1	*488-6512*	1	LINES GP-WINDOW WASHER	
		1	**500-0729**	1	HOLDER	
M		1	**9X-2044**	2	SCREW-TRUSS HEAD (M6X1X16-MM)	
E		1	**144-0195**		HOSE (178-CM)	
		1	**383-5631**	1	NOZZLE	
	3	1	**556-4868**	1	CONTROLLER AS	
	4	1	**512-6728**	1	ARM AS-WIPER	
		1	**488-6506**	1	ARM AS-WIPER	
		1	**488-6509**	1	BLADE AS-WIPER	
M	5	1	**3E-8020**	2	SCREW-TRUSS HEAD (M6X1X25-MM)	
M	6	1	**9X-2042**	4	SCREW-TRUSS HEAD (M6X1X12-MM)	
M	7	1	**9X-2044**	2	SCREW-TRUSS HEAD (M6X1X16-MM)	
	8	1	**526-8641**	1	INSULATION	

E - ORDER BY THE CENTIMETER
M - METRIC PART

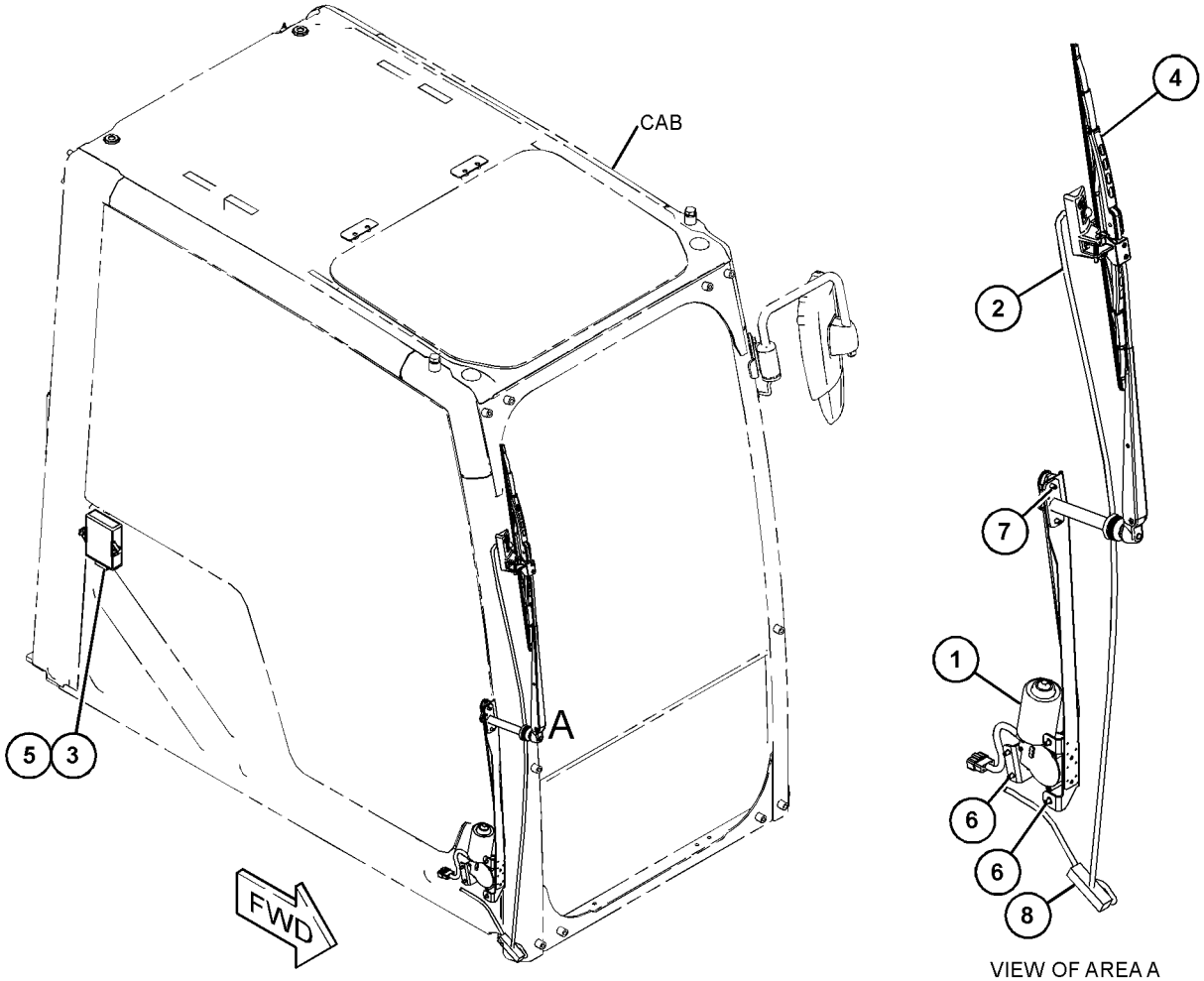

VIEW OF AREA A

GRAPHIC #1 <END> g06265336

393-0367 FILM GP–ENGINE

S/N: E7A1-UP

PART OF 555-5560 ENGINE AR-PRIMARY

SMCS-7405, 7557 **i06894382**

NOTE	REF NO	GRAPHIC REF	PART NUMBER	QTY	PART NAME 1 2 3 4 5 6 (PRODUCT LEVEL)	SEE PAGE
	1	1	**450-9772**	1	PLATE-IDENTIFICATION (CAT)	
	2	1	**326-9053**	1	FILM-WARNING (DO NOT SPRAY, READ OMM)	
	3	1	**346-8219**	2	FILM-WARNING (UNIVERSAL WARNING)	
	4	1	**355-3486**	1	STRIP-ADHESIVE	

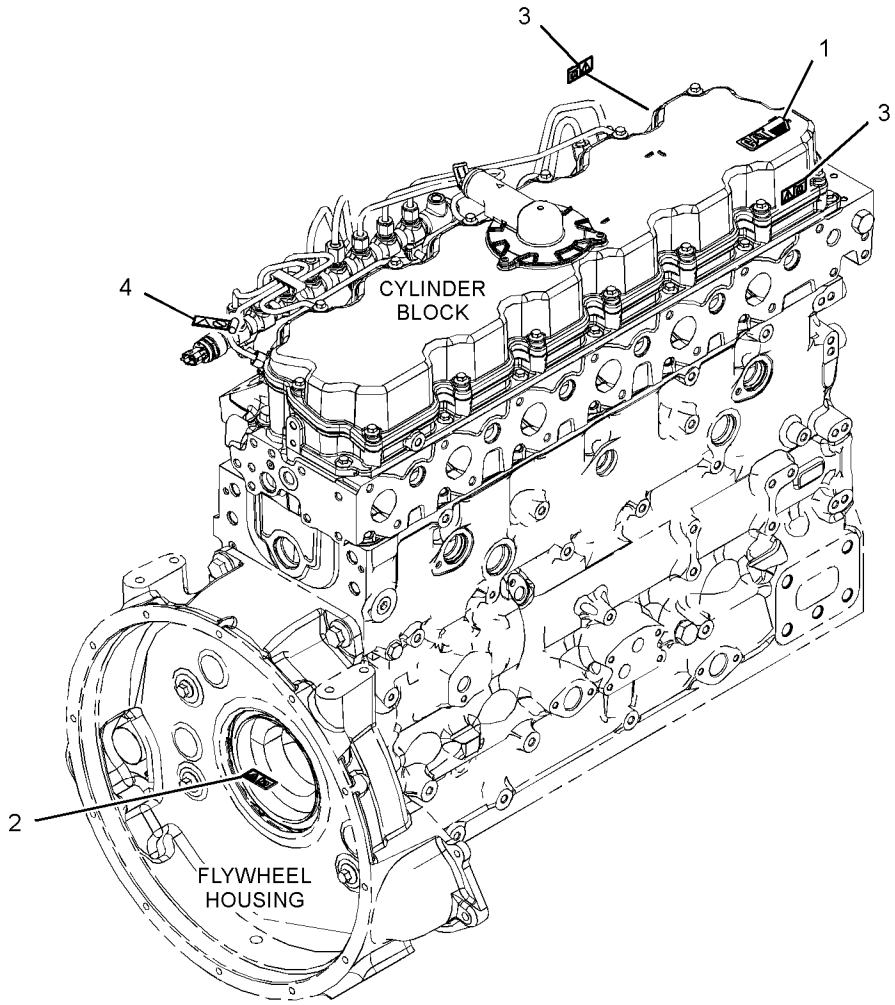

GRAPHIC #1 <END> g03479825

520-9415 FILM GP

S/N: BR61-UP
OUTSIDE JAPAN

SMCS-7405, 7557

i07352155

NOTE	REF NO	GRAPHIC REF	PART NUMBER	QTY	PART NAME 1 2 3 4 5 6 (PRODUCT LEVEL)	SEE PAGE
	1	1	**498-2825**	1	FILM-IDENTIFICATION (OPERATOR CONTROLS, READ OMM)	

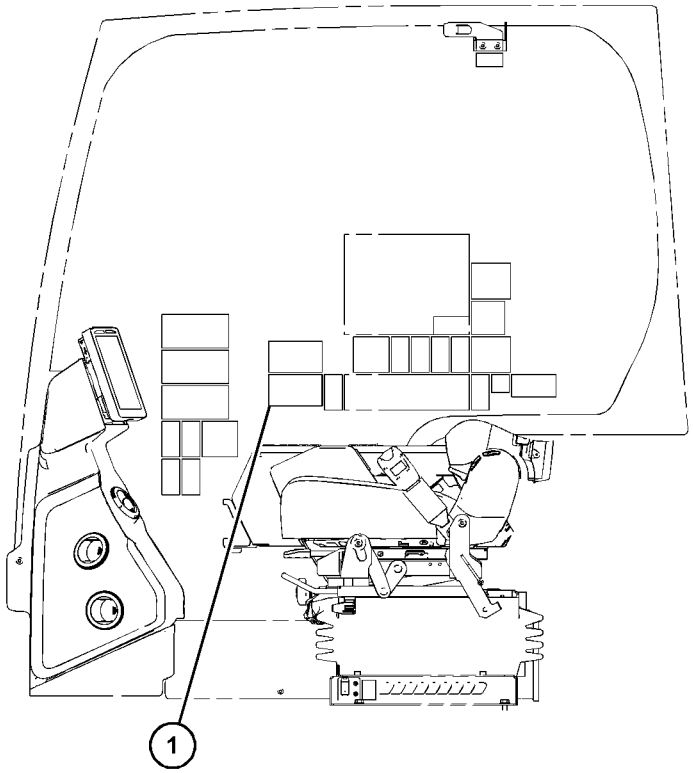

LEFT SIDE VIEW
(CAB INTERIOR)

GRAPHIC #1 <END> g06229583

520-9420 FILM GP–INTERNATIONAL

S/N: BR61-UP

PART OF 528-6841, 558-3528 CONTROL AR-AUXILIARY

SMCS-7405, 7557

i07358120

NOTE	REF NO	GRAPHIC REF	PART NUMBER	QTY	PART NAME 1 2 3 4 5 6 (PRODUCT LEVEL)	SEE PAGE
	1	1	**526-5689**	1	FILM-NOTICE (HAMMER, READ OMM)	

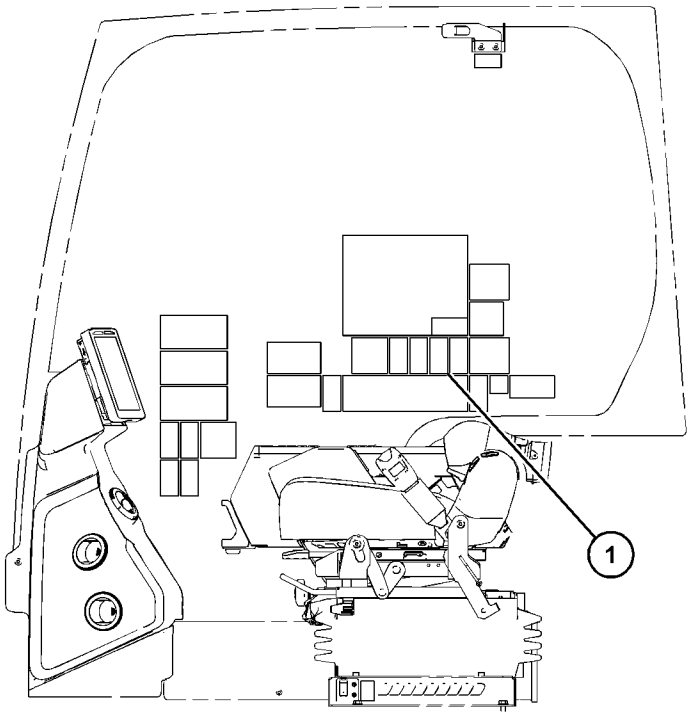

LEFT SIDE VIEW
(CAB INTERIOR)

GRAPHIC #1 <END> g06229564

521-1034 FILM GP–CAB

S/N: BR61-UP

PART OF 532-9515, 532-9518, 556-2899, 556-2902 DISTRIBUTION AR

SMCS-7405, 7557

i07383762

NOTE	REF NO	GRAPHIC REF	PART NUMBER	QTY	PART NAME 1 2 3 4 5 6 (PRODUCT LEVEL)	SEE PAGE
	1	1	**8T-6842**	1	FILM-INSTRUCTION (PULL RING, ALTERNATE EXIT)	
	2	1	**187-0661**	1	FILM-INSTRUCTION (ALTERNATE EXIT)	
	3	1	**214-7915**	1	FILM-INSTRUCTION (ENGINE SHUTOFF)	
	4	1	**219-0302**	1	FILM-WARNING (NO WELD, NO DRILL, READ OMM)	
	5	1	**307-0047**	1	FILM-INFORMATION (PRODUCT LINK, READ OMM)	
	6	1	**331-8008**	2	FILM-WARNING (FRONT WINDOW, READ OMM, INTL)	
	7	1	**519-8821**	1	FILM-WARNING (ROPS, READ OMM)	
	8	1	**519-8822**	1	FILM-WARNING (DO NOT OPERATE, READ OMM)	
	9	1	**520-9106**	1	FILM-WARNING (PRODUCT LINK RADIO, INTL)	
	10	1	**520-9108**	1	FILM-WARNING (CRUSH HAZARD, READ OMM, INTL)	

521-1034 **FILM GP (**contd.**)** **i07383762**

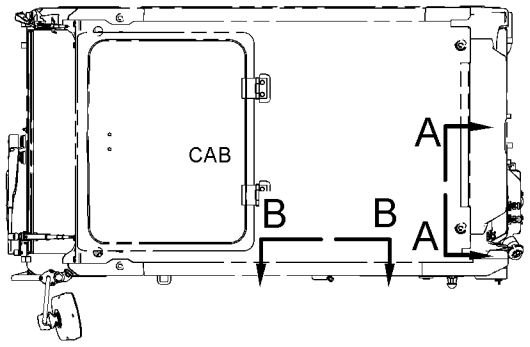

TOP VIEW

FWD

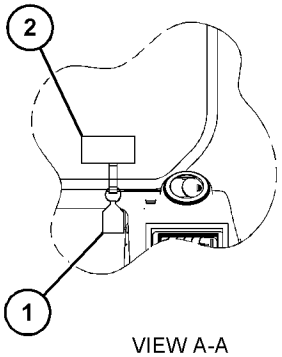

VIEW A-A

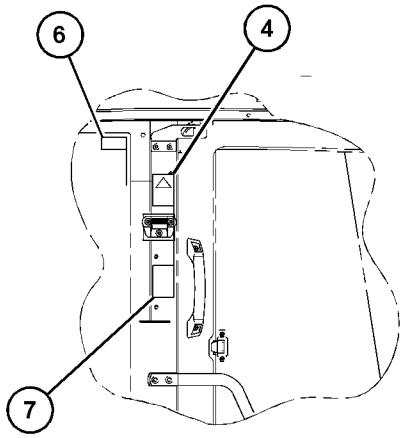

VIEW B-B

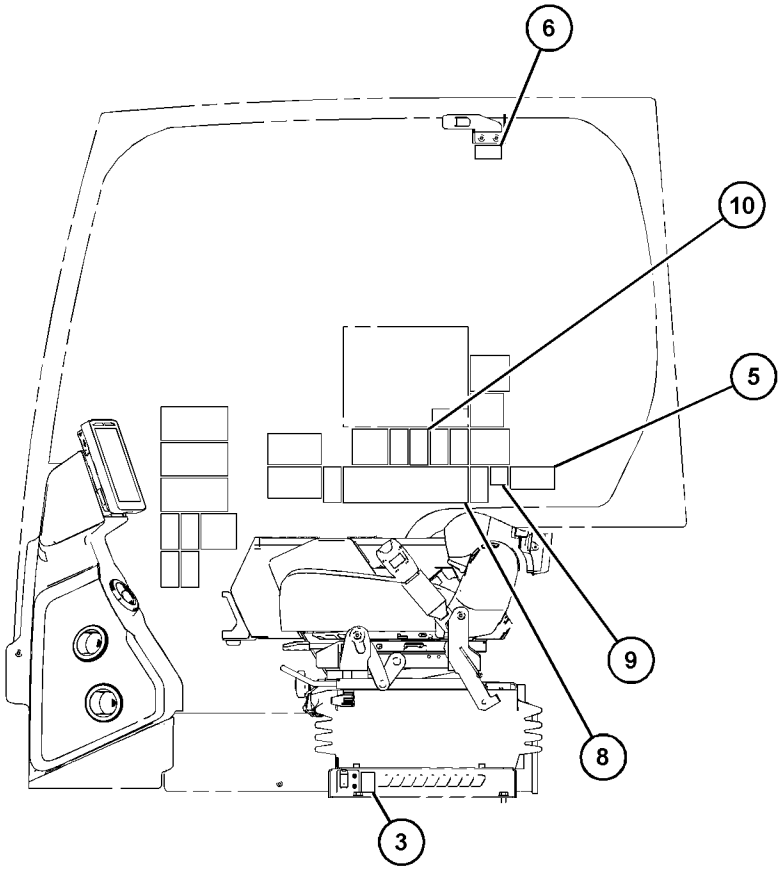

LEFT SIDE VIEW
(CAB INTERIOR)

GRAPHIC #1 <END> g06229662

521-1520 FILM GP

S/N: BR61-UP

PART OF 490-7663 EXCAVATOR AR

SMCS-7405, 7557

i07383763

NOTE	REF NO	GRAPHIC REF	PART NUMBER	QTY	PART NAME 1 2 3 4 5 6 (PRODUCT LEVEL)	SEE PAGE
	1	2	**529-0156**	1	FILM-IDENTIFICATION (CAT 320, LH)	
	2	2	**515-7838**	1	FILM-IDENTIFICATION (CAT 320, RH)	
	3	2	**519-5907**	1	FILM-IDENTIFICATION (OIL FILL, READ OMM)	
	4	2	**528-2341**	1	FILM-IDENTIFICATION (FUSE, RELAY PANEL)	
	5	1	**367-0844**	1	FILM-INSTRUCTION (FUEL, READ OMM)	

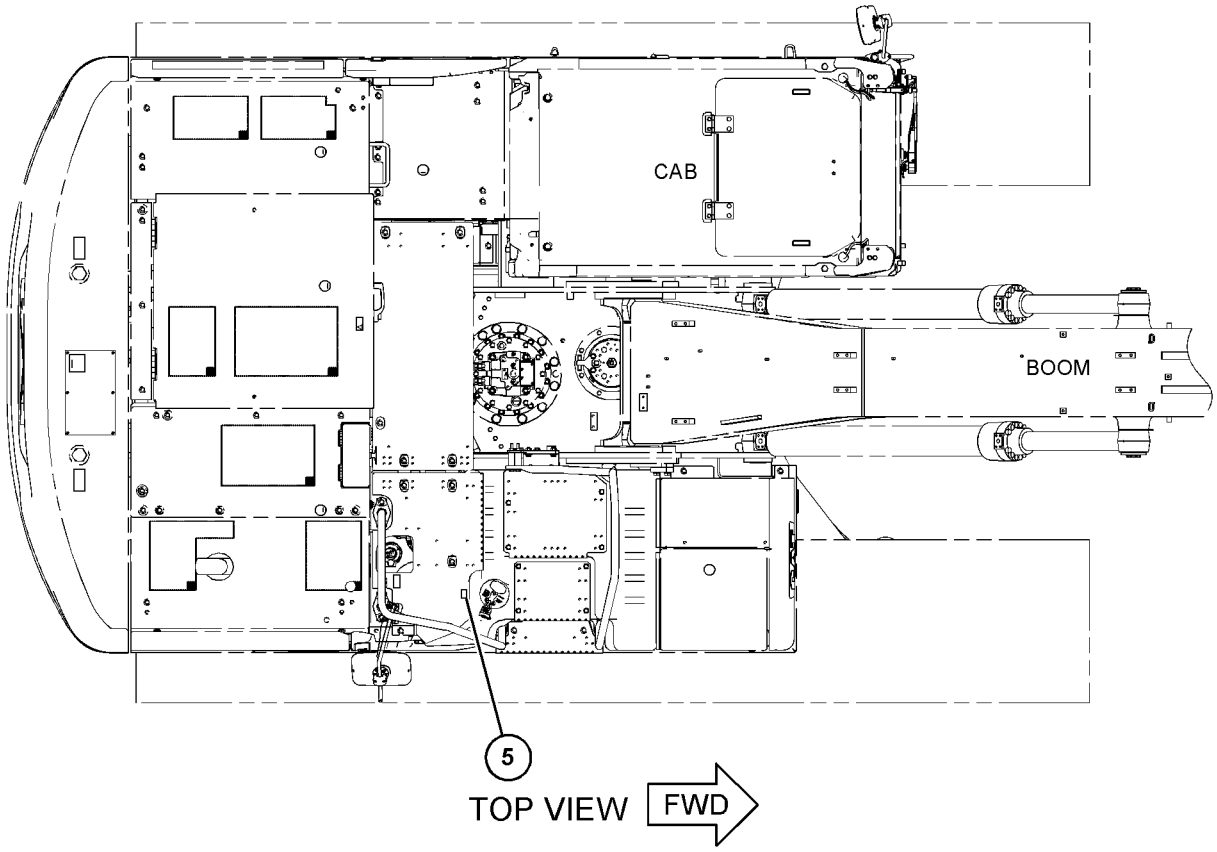

GRAPHIC #1

g06269945

521-1520 **FILM GP (**contd.**)** **i07383763**

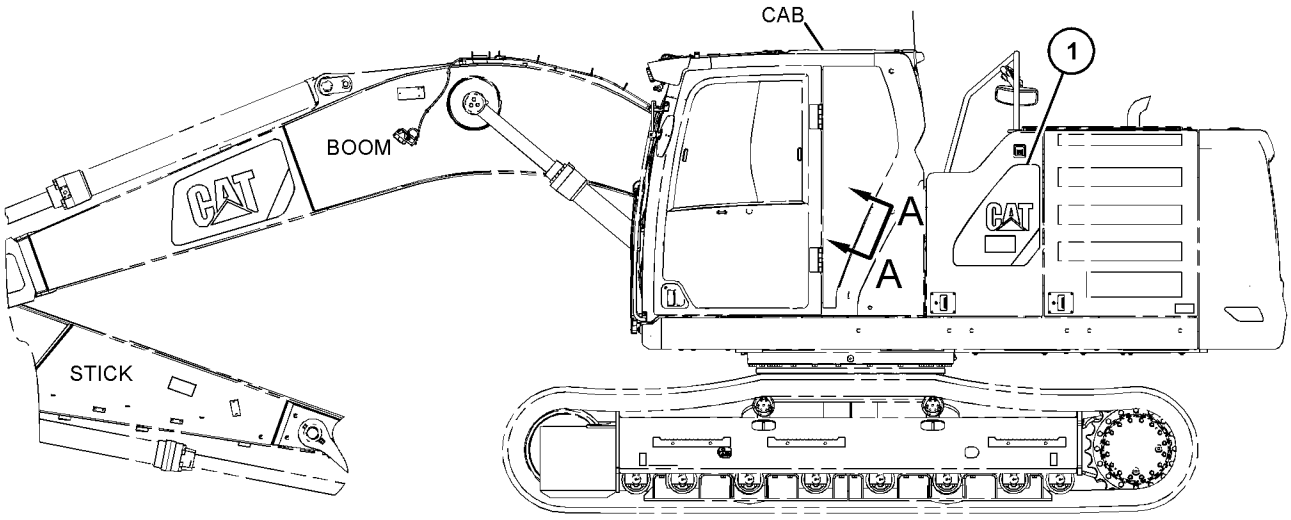

LEFT SIDE VIEW

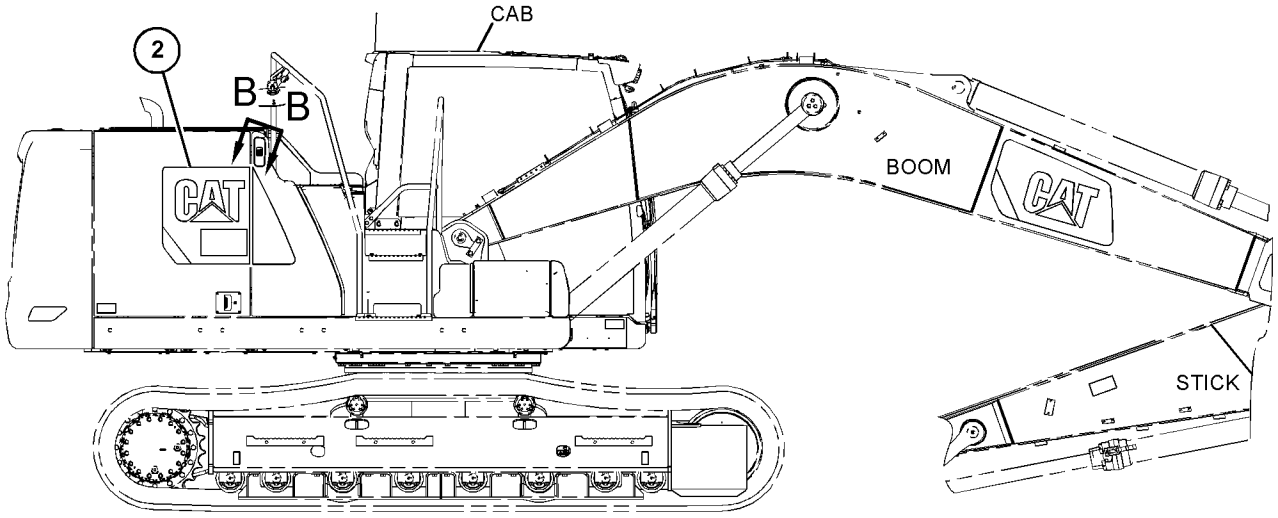

RIGHT SIDE VIEW

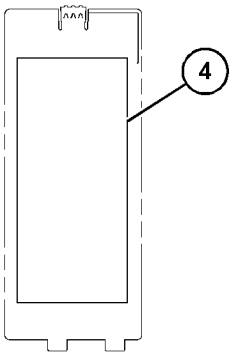

VIEW A-A

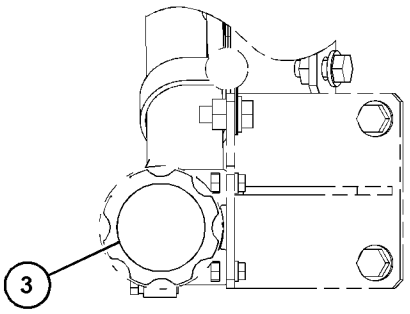

VIEW B-B

GRAPHIC #2 <END> g06225718

521-1524 FILM GP–REACH BOOM DECAL

S/N: BR61-UP

PART OF 490-7669 BOOM AR, 490-7671 BOOM AR-REACH

SMCS-7405, 7557

i07351042

NOTE	PART NUMBER	QTY	PART NAME 1 2 3 4 5 6 (PRODUCT LEVEL)	SEE PAGE
	515-7834	1	FILM-IDENTIFICATION (CAT BOOM, LH)	
	515-7835	1	FILM-IDENTIFICATION (CAT BOOM, RH)	

<END>

529-7476 FILM GP–GRADE CONTROL DISPLAY

S/N: BR61-UP

PART OF 554-3627 MONITOR & MTG GP-OPERATOR, 511-9429, 511-9431 MONITOR AR

SMCS-7405, 7557 **i07366515**

NOTE	REF NO	GRAPHIC REF	PART NUMBER	QTY	PART NAME 1 2 3 4 5 6 (PRODUCT LEVEL)	SEE PAGE
	1	1	**526-5690**	1	FILM-CAUTION (FLYING DEBRIS, READ OMM)	

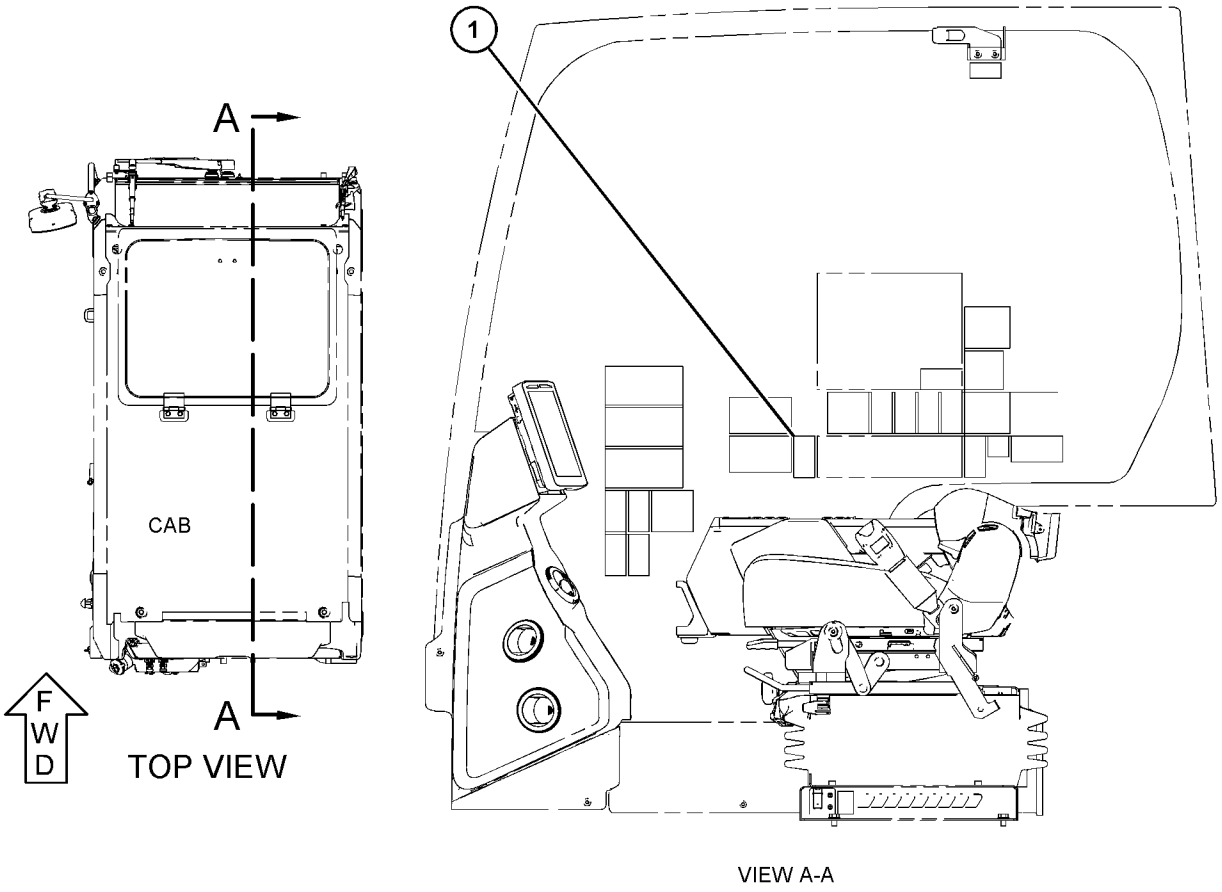

VIEW A-A

GRAPHIC #1 <END> g06231529

532-7907 FILM GP–CAB

S/N: BR61-UP
COUPLER OPERATION
PART OF 549-8149 LINES GP-FRONT

SMCS-7405, 7557

i07356815

NOTE	REF NO	GRAPHIC REF	PART NUMBER	QTY	PART NAME 1 2 3 4 5 6 (PRODUCT LEVEL)	SEE PAGE
	1	1	**528-2348**	1	FILM-IDENTIFICATION (COUPLER OPERATION)	

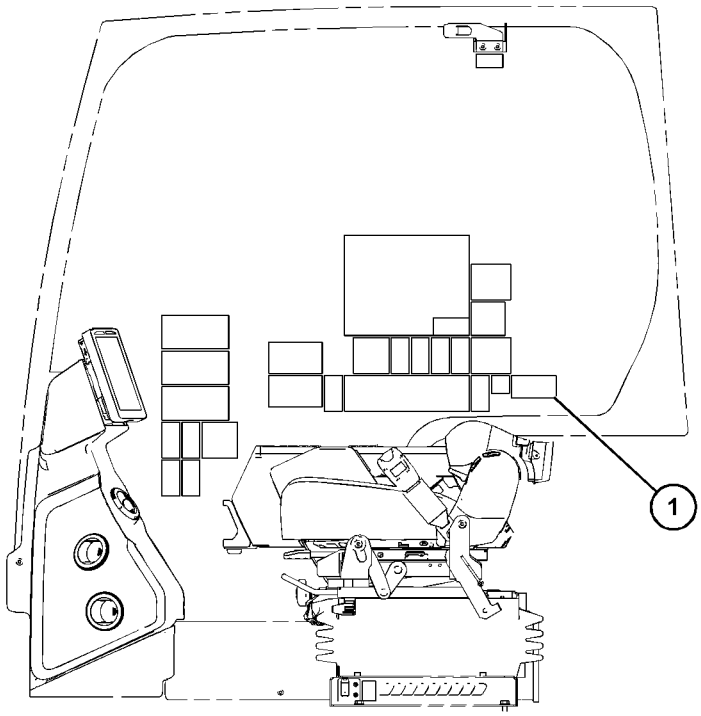

LEFT SIDE VIEW
(CAB INTERIOR)

GRAPHIC #1 <END> g06226940

538-2111 FILM GP–JOYSTICK

S/N: BR61-UP

PART OF 528-6835 CONTROL AR-AUXILIARY

SMCS-7405, 7557 **i07356800**

NOTE	REF NO	GRAPHIC REF	PART NUMBER	QTY	PART NAME 1 2 3 4 5 6 (PRODUCT LEVEL)	SEE PAGE
	1	1	**528-2349**	1	FILM-INFORMATION (JOYSTICK CONTROL, READ OMM)	

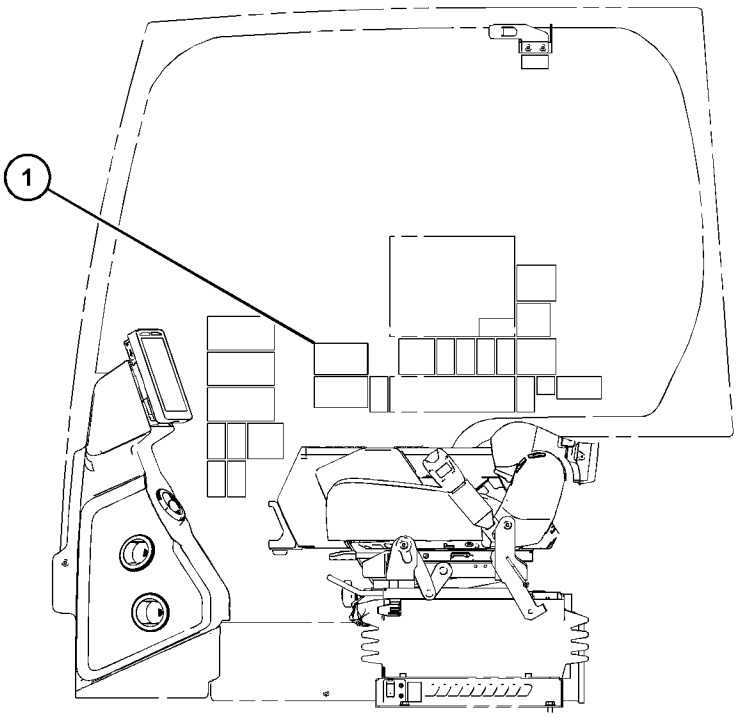

LEFT SIDE VIEW
(CAB INTERIOR)

GRAPHIC #1 <END> g06229604

547-9124 FILM GP

S/N: BR61-UP

PART OF 511-7397 OIL CHANGE AR-HIGH SPEED

SMCS-7405, 7557

i07369209

NOTE	PART NUMBER	QTY	PART NAME 1 2 3 4 5 6 (PRODUCT LEVEL)	SEE PAGE
	309-9690	1	FILM-INFORMATION (READ OMM)	

<END>

548-2353 FILM GP

S/N: BR61-UP
BRAZILE MARKET

SMCS-7405, 7557 **i07358139**

NOTE	REF NO	GRAPHIC REF	PART NUMBER	QTY	PART NAME 1 2 3 4 5 6 (PRODUCT LEVEL)	SEE PAGE
	1	1	**202-9824**	1	FILM-INFORMATION (BRAZIL)	

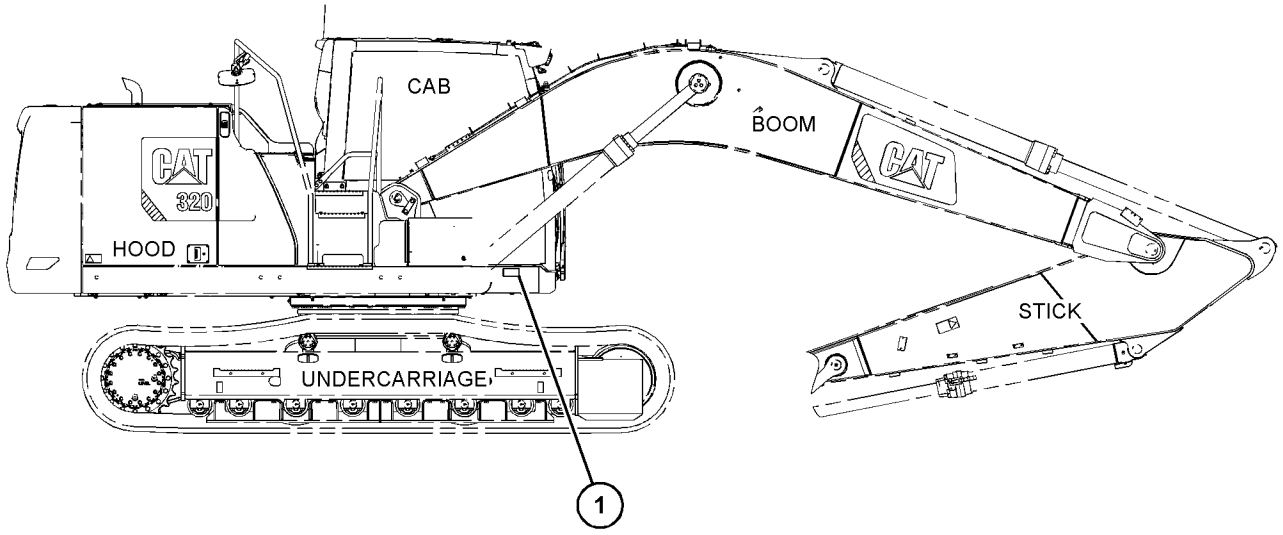

RIGHT SIDE VIEW

GRAPHIC #1 <END> g06293760

468-7361 PLATE & FILM GP

S/N: 4501-UP; E7A1-UP

PART OF 530-2686, 555-7255 ENGINE AR-PRIMARY

SMCS-7405, 7557

i06753959

NOTE	REF NO	GRAPHIC REF	PART NUMBER	QTY	PART NAME 1 2 3 4 5 6 (PRODUCT LEVEL)	SEE PAGE
	1	1	**450-9772**	1	PLATE-IDENTIFICATION (CAT)	
	2	1	**326-9053**	1	FILM-WARNING (DO NOT SPRAY, READ OMM)	
	3	1	**346-8219**	2	FILM-WARNING (UNIVERSAL WARNING)	
	4	1	**355-3486**	1	STRIP-ADHESIVE	
					PARTS SHOWN IN GRAPHIC(S) WITHOUT A REFERENCE NUMBER ARE NOT SERVICED SEPARATELY	

468-7361 **PLATE & FILM GP** (contd.) **i06753959**

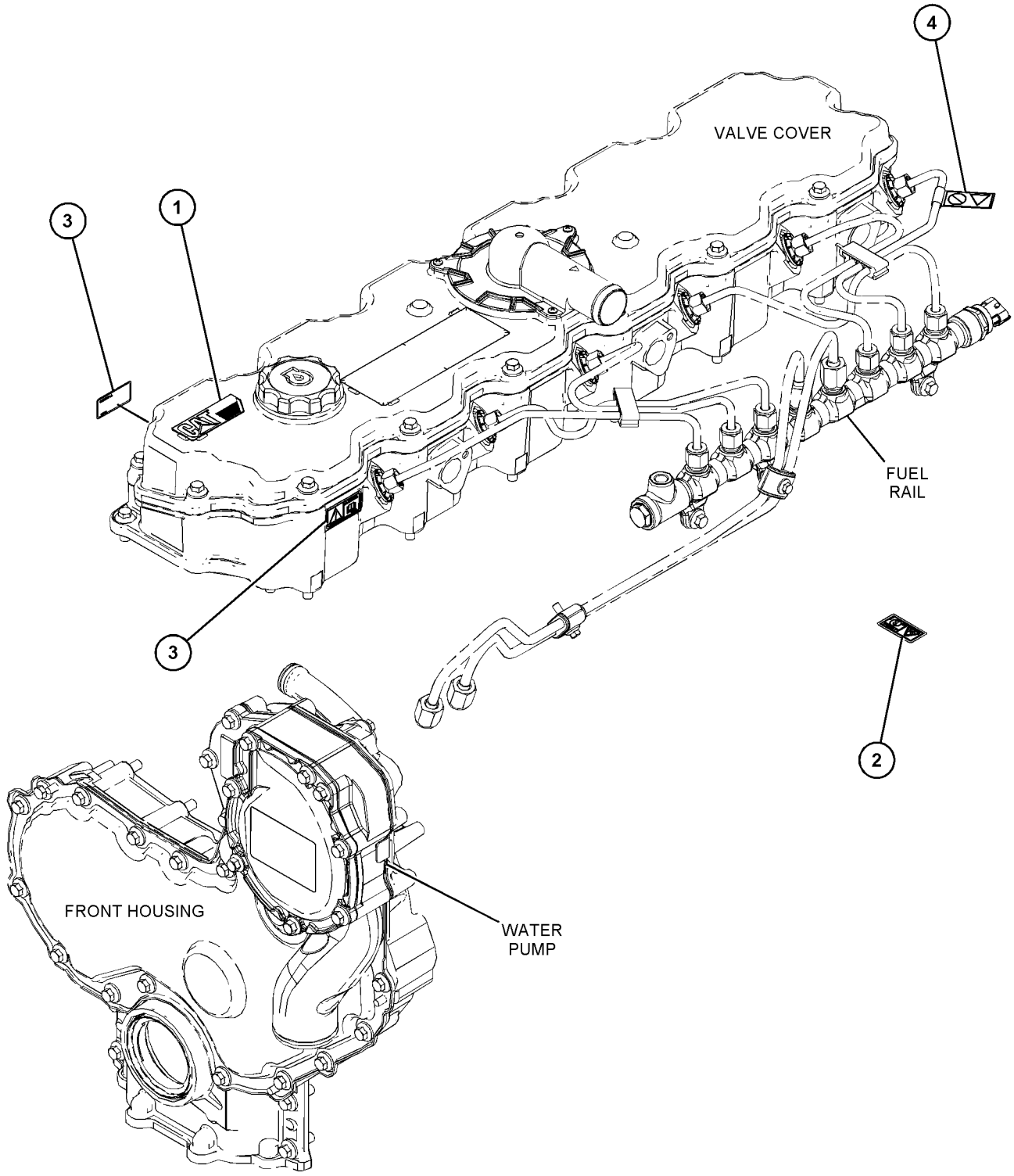

GRAPHIC #1 <END> g06008830

521-1038 PLATE & FILM GP–OUTSIDE

S/N: BR61-UP

PART OF 532-9515, 532-9518, 556-2899, 556-2902 DISTRIBUTION AR

SMCS-7405, 7557

i07351564

NOTE	REF NO	GRAPHIC REF	PART NUMBER	QTY	PART NAME 1 2 3 4 5 6 (PRODUCT LEVEL)	SEE PAGE
	1	1	**167-7270**	5	FILM-INSTRUCTION (NO STEP)	
	2	2	**1P-2807**	4	FILM-IDENTIFICATION (LIFT EYE LOCATION)	
	3	1	**224-8946**	1	FILM-WARNING (NO ETHER SPRAY/AIR INTK, INTL)	
	4	2	**225-0312**	1	FILM-WARNING (JUMP START, READ OMM, INTL)	
	5	1	**225-4257**	1	FILM-WARNING (HOT FLUID UNDER PRESS)	
	6	1	**228-7316**	1	FILM-WARNING (HOT SURFACE, HANDS CLEAR, INTL)	
	7	1	**228-9106**	1	FILM-WARNING (HOT SURFACE, HANDS CLEAR, INTL)	
	8	1	**542-2341**	1	FILM-IDENTIFICATION (HYDRAULIC OIL SYSTEM)	
	9	2	**298-4282**	2	FILM-WARNING (CRUSH HAZARD, STAY BACK, INTL)	
	11	2	**364-3005**	1	FILM-IDENTIFICATION (CAT)	
	12	1	**443-5690**	2	FILM-WARNING (LIFTING EYE, READ OMM)	
	13	3	**493-1610**	1	FILM-WARNING (ACCUMULATOR PRESSURE)	
	14	3	**515-7836**	1	FILM-IDENTIFICATION (CAT)	
	15	2	**515-7839**	1	FILM-IDENTIFICATION (RH)	
	16	2	**515-7905**	1	PLATE-SERIAL NUMBER (MACHINE)	
	17	3	**519-8816**	1	FILM-INFORMATION (LUBRICATION CHART, READ OMM)	
	18	3	**519-8817**	1	FILM-IDENTIFICATION (REFLECTIVE, RED, RH)	
	19	3	**519-8818**	1	FILM-IDENTIFICATION (REFLECTIVE, RED, LH)	
	20	2	**520-4810**	2	FILM-WARNING (MACHINE SWING, CRUSHING)	
	21	3	**524-7769**	1	PLATE-INSTRUCTION (AIR CONDITIONER)	
	22	3	**7X-7644**	6	FILM-IDENTIFICATION (TIE-DOWN)	

521-1038 **PLATE & FILM GP** (contd.) **i07351564**

REFER TO ALL ILLUSTRATIONS OF
THIS GROUP FOR AUXILIARY VIEWS

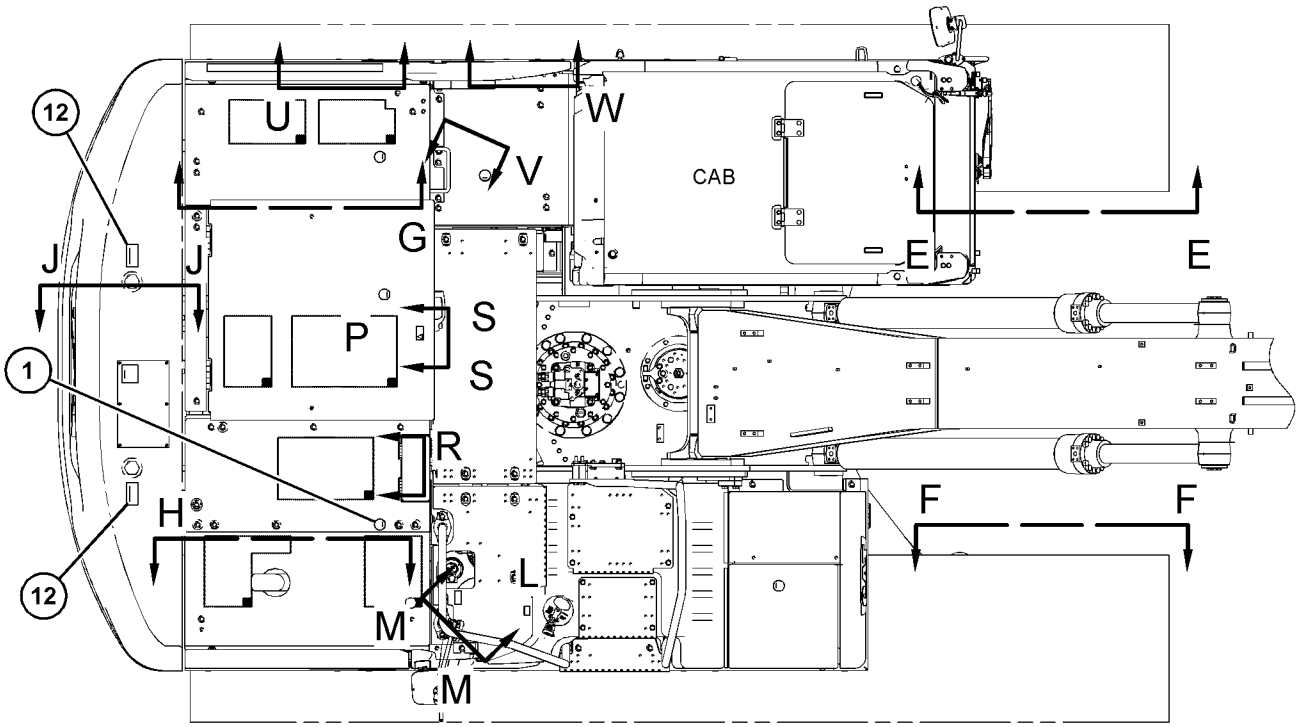

TOP VIEW FWD

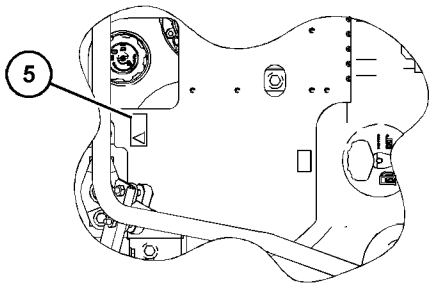

VIEW OF AREA L

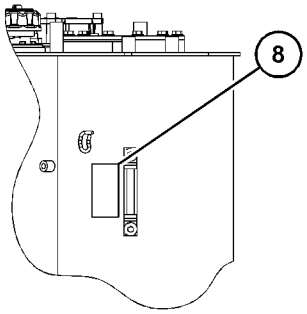

VIEW M-M

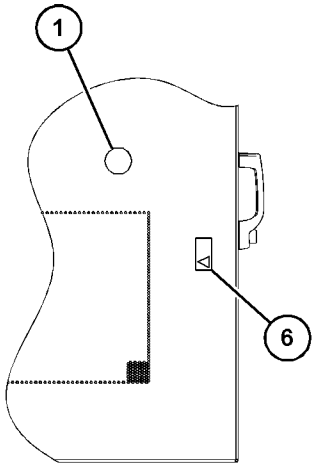

VIEW OF AREA P

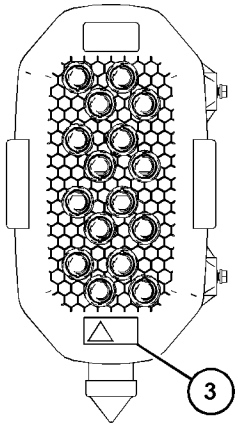

VIEW V

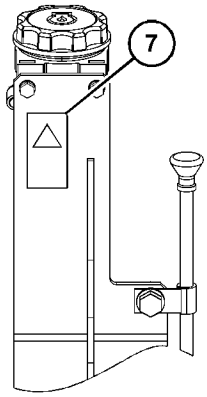

VIEW R

GRAPHIC #1 g06232176

521-1038 **PLATE & FILM GP** (contd.) **i07351564**

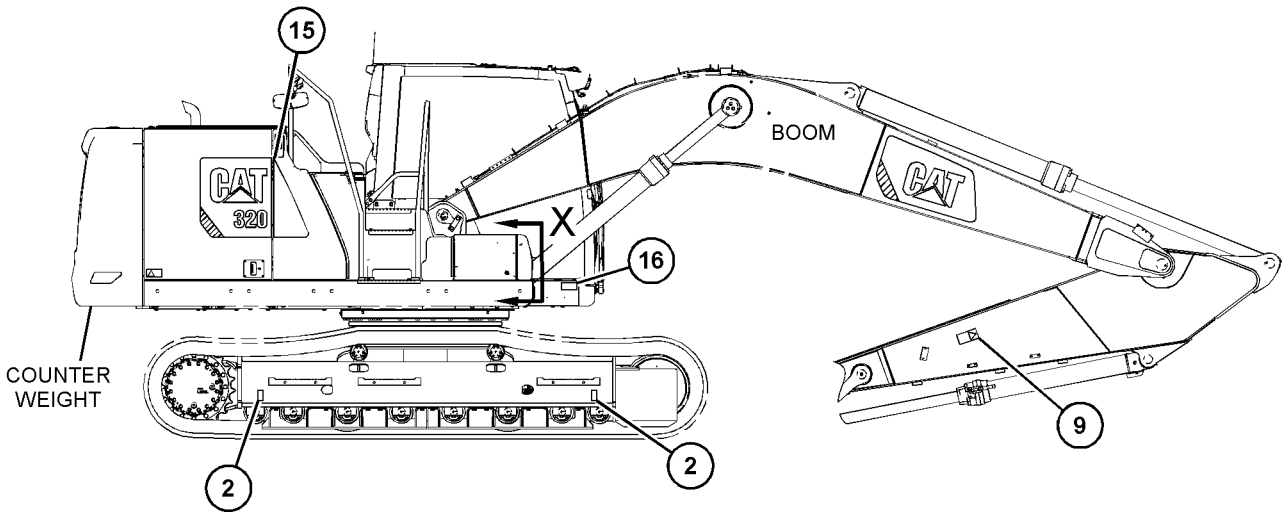

RIGHT SIDE VIEW

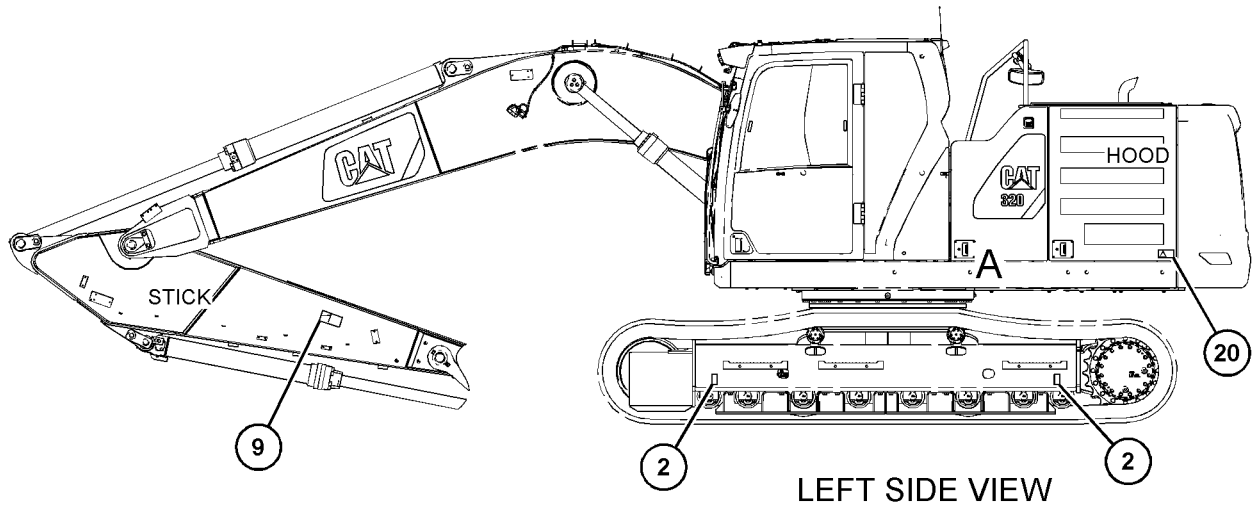

LEFT SIDE VIEW

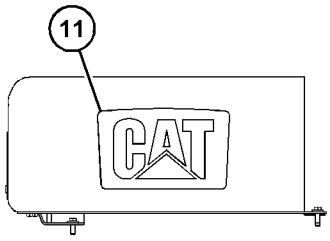

VIEW X

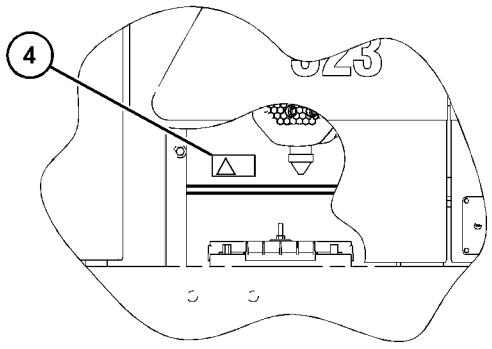

VIEW OF AREA A

GRAPHIC #2 g06272872

521-1038 **PLATE & FILM GP** (contd.) **i07351564**

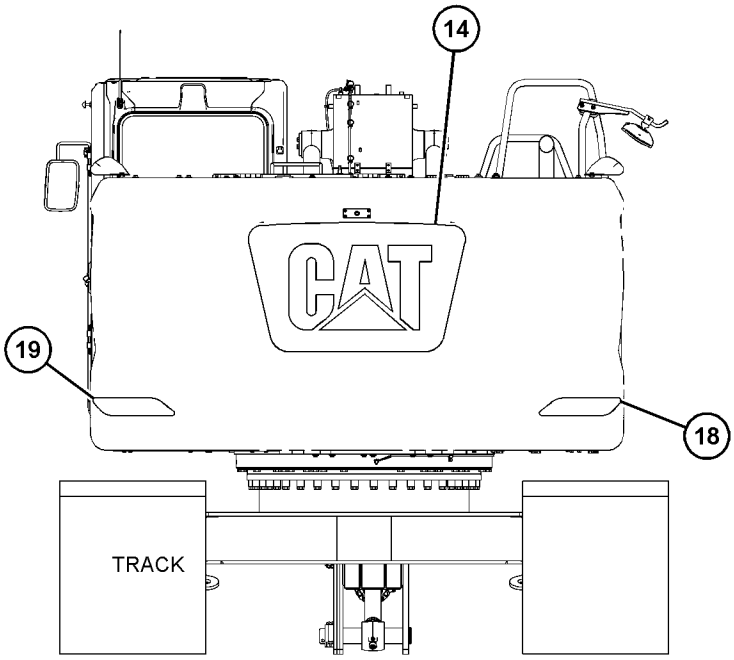

REAR VIEW

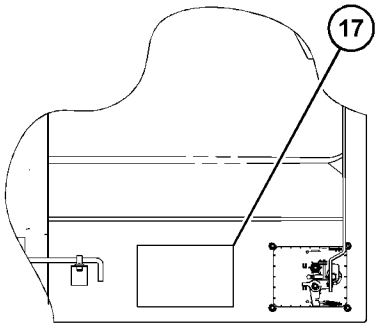

VIEW W

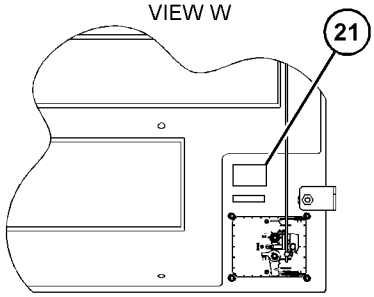

VIEW U

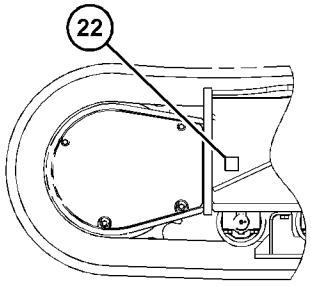

VIEW G

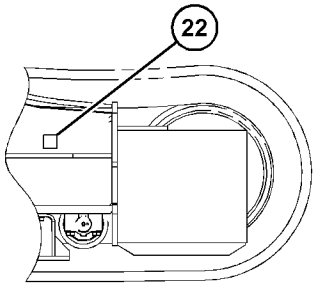

VIEW E-E

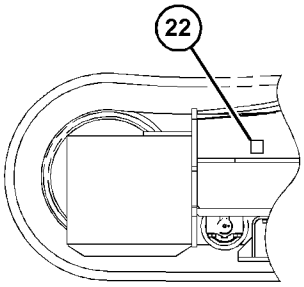

VIEW F-F

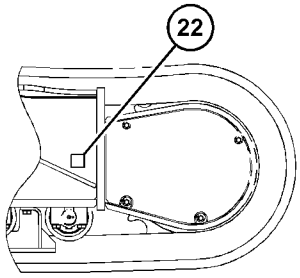

VIEW H

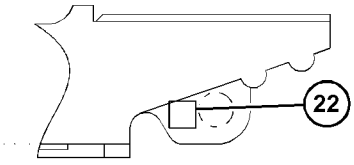

VIEW J-J

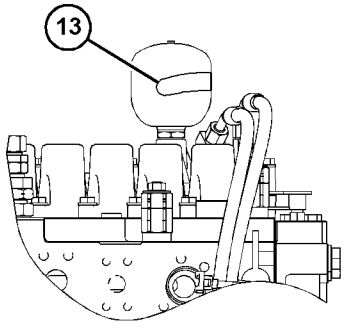

VIEW S-S

GRAPHIC #3 <END> g06232178

559-5099 PLATE & FILM GP–EXTERIOR, INTERNATIONAL

S/N: BR610001-UP

SMCS-7405, 7557

i07460053

NOTE	REF NO	GRAPHIC REF	PART NUMBER	QTY	PART NAME 1 2 3 4 5 6 (PRODUCT LEVEL)	SEE PAGE
	1	2	**1P-2807**	4	FILM-IDENTIFICATION (LIFT EYE LOCATION)	
	2	3	**7X-7644**	6	FILM-IDENTIFICATION (TIE-DOWN)	
	3	1	**224-8946**	1	FILM-WARNING (NO ETHER SPRAY/AIR INTK, INTL)	
	4	2	**225-0312**	1	FILM-WARNING (JUMP START, READ OMM, INTL)	
	5	1	**225-4257**	1	FILM-WARNING (HOT FLUID UNDER PRESS)	
	6	1	**228-7316**	1	FILM-WARNING (HOT SURFACE, HANDS CLEAR, INTL)	
	7	1	**228-9106**	1	FILM-WARNING (HOT SURFACE, HANDS CLEAR, INTL)	
	9	2	**298-4282**	2	FILM-WARNING (CRUSH HAZARD, STAY BACK, INTL)	
	10	2	**364-3005**	1	FILM-IDENTIFICATION (CAT)	
	11	1	**443-5690**	2	FILM-WARNING (LIFTING EYE, READ OMM)	
	12	1	**167-7270**	5	FILM-INSTRUCTION (NO STEP)	
	13	3	**493-1610**	1	FILM-WARNING (ACCUMULATOR PRESSURE)	
	14	3	**515-7836**	1	FILM-IDENTIFICATION (CAT)	
	15	2	**515-7839**	1	FILM-IDENTIFICATION (RH)	
	16	2	**515-7905**	1	PLATE-SERIAL NUMBER (MACHINE)	
	17	3	**519-8817**	1	FILM-IDENTIFICATION (REFLECTIVE, RED, RH)	
	18	3	**519-8818**	1	FILM-IDENTIFICATION (REFLECTIVE, RED, LH)	
	19	2	**519-8819**	1	FILM-NOTICE (SHIPPING)	
	20	2	**520-4810**	2	FILM-WARNING (MACHINE SWING, CRUSHING)	
	21	3	**524-7769**	1	PLATE-INSTRUCTION (AIR CONDITIONER)	
	22	3	**539-2013**	1	FILM-IDENTIFICATION (LUBRICATION CHART, READ OMM)	
	23	1	**542-2341**	1	FILM-IDENTIFICATION (HYDRAULIC OIL SYSTEM)	

559-5099 **PLATE & FILM GP** (contd.) **i07460053**

REFER TO ALL ILLUSTRATIONS OF
THIS GROUP FOR AUXILIARY VIEWS

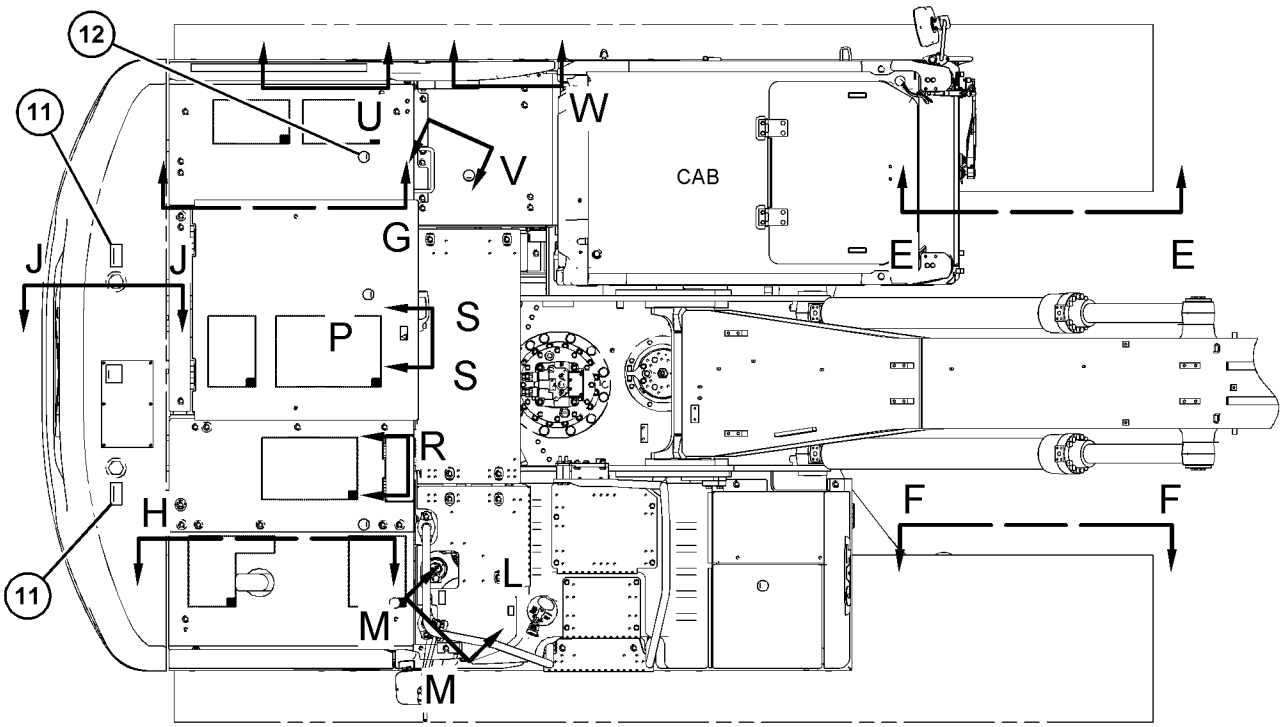

TOP VIEW FWD

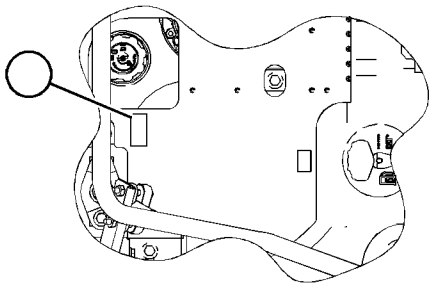

VIEW OF AREA L

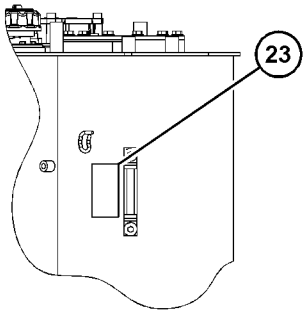

VIEW M-M

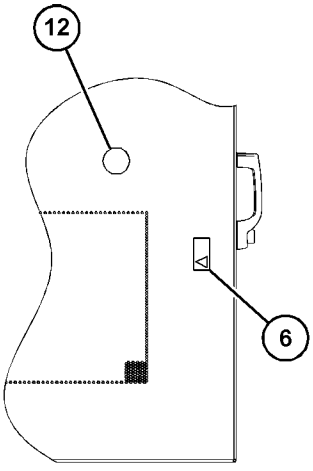

VIEW OF AREA P

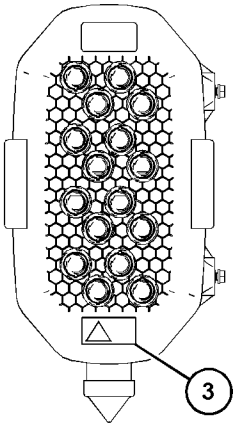

VIEW V

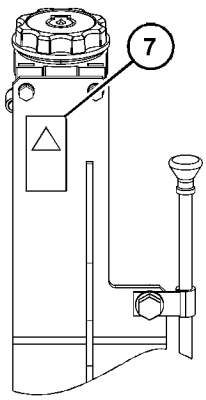

VIEW R

GRAPHIC #1 g06328683

559-5099 **PLATE & FILM GP (**contd.**)** **i07460053**

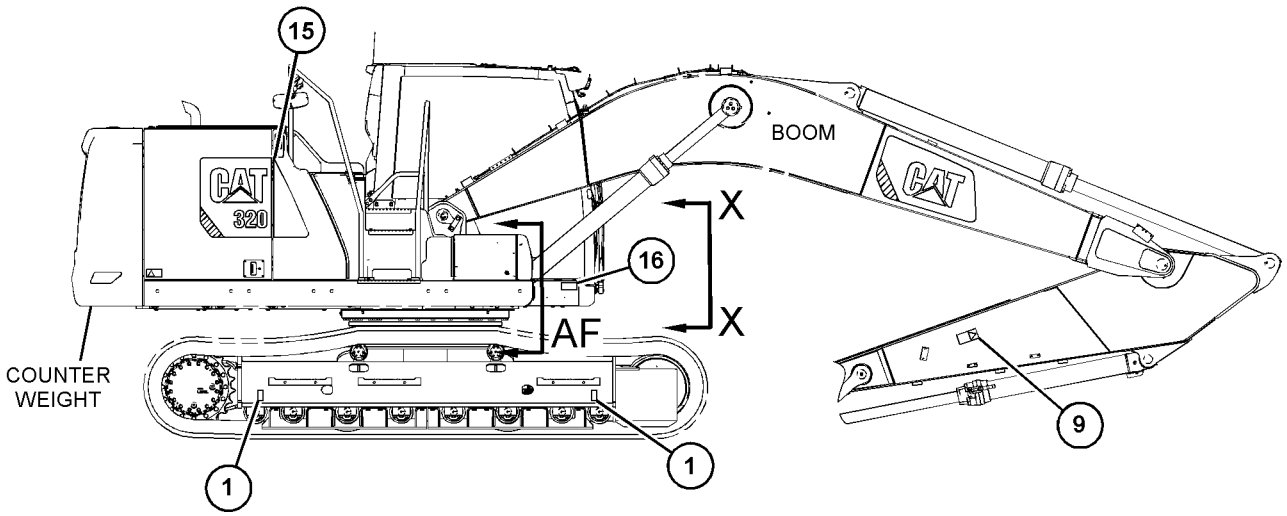

RIGHT SIDE VIEW

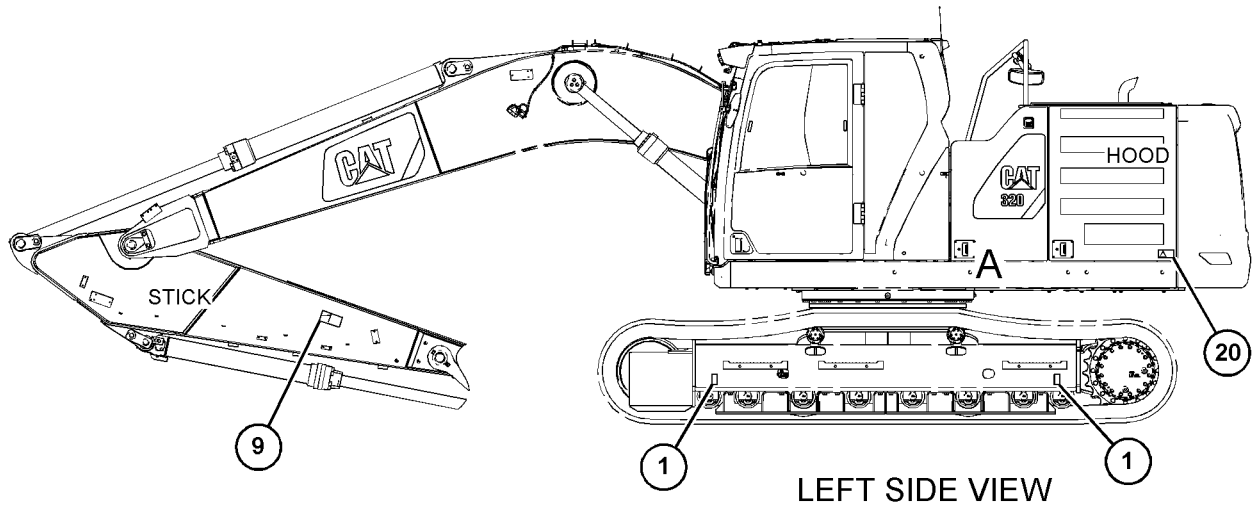

LEFT SIDE VIEW

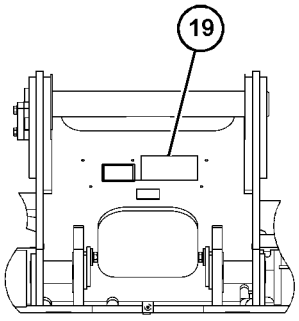

VIEW X-X

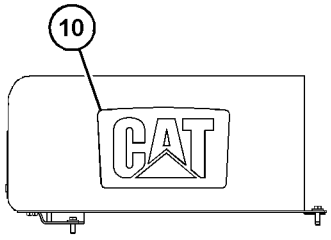

VIEW AF

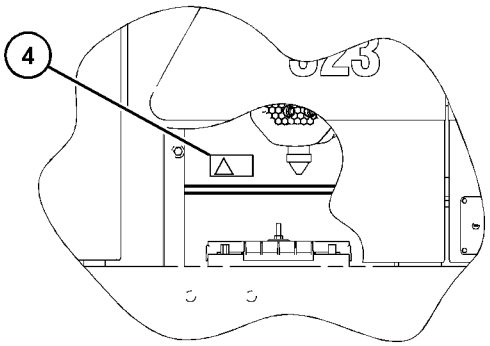

VIEW OF AREA A

GRAPHIC #2 g06328684

559-5099 **PLATE & FILM GP** (contd.) **i07460053**

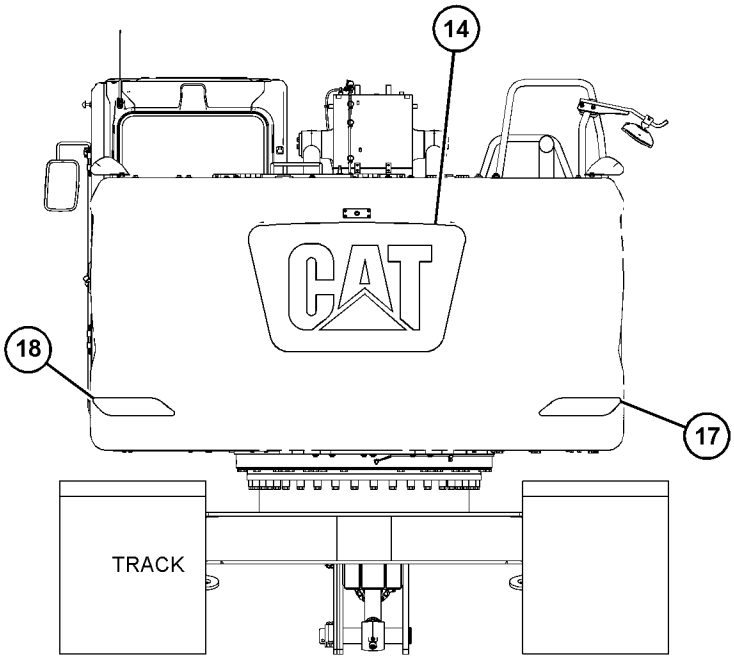

REAR VIEW

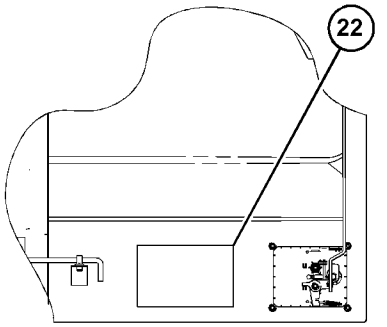

VIEW W

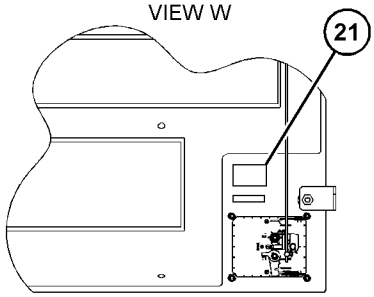

VIEW U

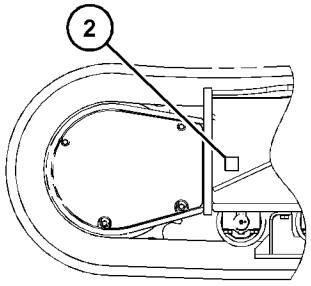

VIEW G

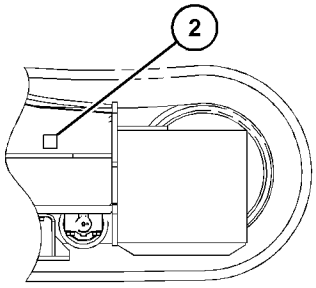

VIEW E-E

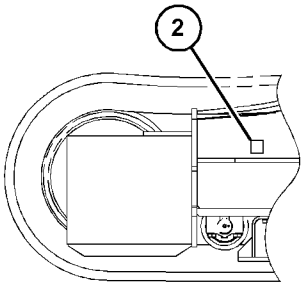

VIEW F-F

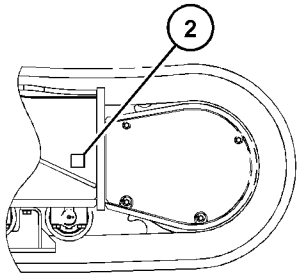

VIEW H

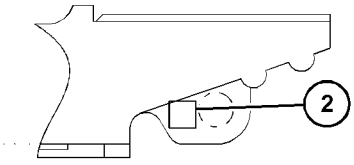

VIEW J-J

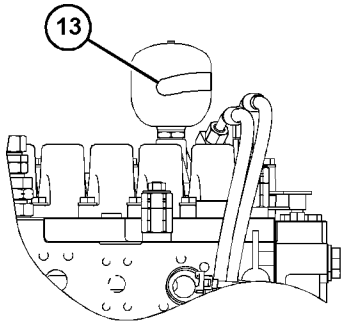

VIEW S-S

GRAPHIC #3 <END> g06328685

478-6398 PLATE GP-SERIAL NUMBER

S/N: E7A1-UP

PART OF 555-7255 ENGINE AR-PRIMARY

SMCS-7557 **i07419449**

NOTE	REF NO	GRAPHIC REF	PART NUMBER	QTY	PART NAME 1 2 3 4 5 6 (PRODUCT LEVEL)	SEE PAGE
	1	1	**332-0905**	2	RIVET-DRIVE	
	2	1	**475-6787**	1	PLATE-SERIAL NUMBER	

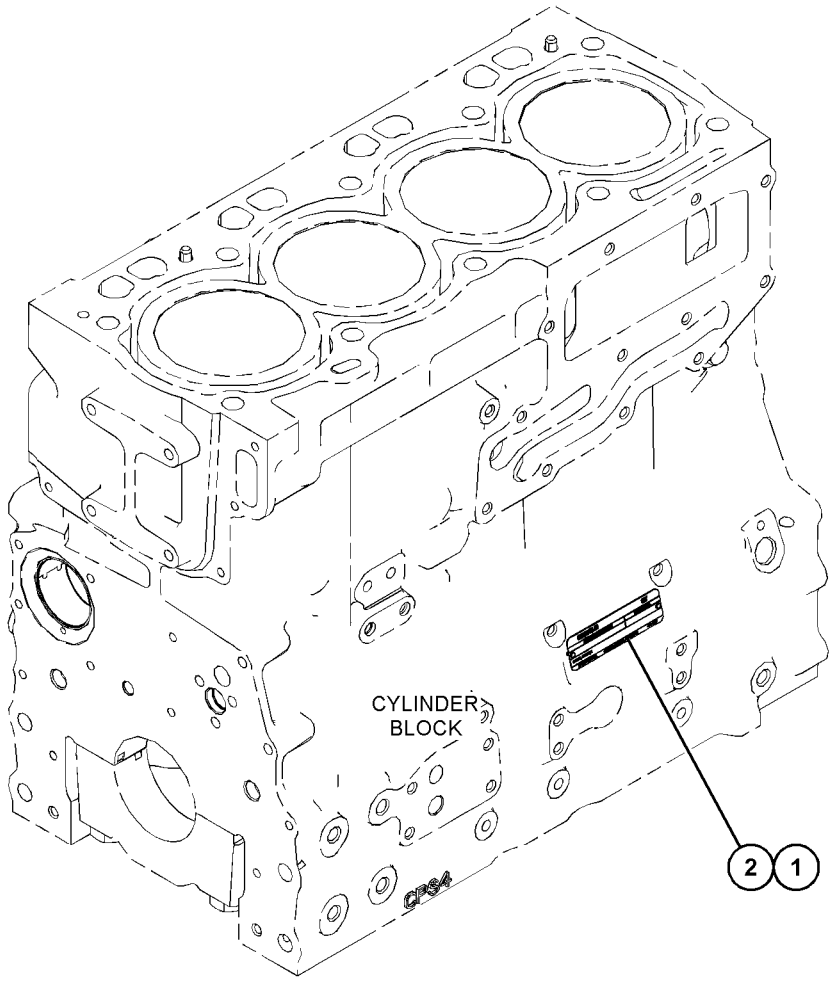

GRAPHIC #1 <END> g06330846

PART NUMBER INDEX

Part Page

0

0S-1603 32
0T-0244 661

1

1D-4635 579
1H-3338 599
1J-2859 479
1M-6119 135
136
1M-6120 135
136
1P-2807 693
697
1P-3702 437
449
451
455
461
483
517
528
1P-3703 420
422
424
426
428
430
437
449
466
483
486
488
1P-3704 420
422
456
461
466
1P-4278 73
75
1P-4578 455
461
1P-5767 420
422
466
1R-5998 589
1S-7252 135
1U-2827 513
1U-8846 324
412
414

2

2C-9259 568
574
2D-6398 576
2D-6642 496
2G-8767 136
2H-3922 225
2J-3507 578
579
2L-8050 221
2L-8051 163
169
2L-8058 221
2L-8067 236
2L-8069 163
169
2L-8075 145
2L-8077 148
166
167
2L-8078 145
2L-8079 163
169
2M-9780 497
530
541
2P-1279 443
576
2S-4078 448
2V-2043 63
2Y-5429 650
651
652
2Y-5503 411

3

3B-4504 589
3B-4509 432
434
3B-4618 336
3B-8485 553
555
3B-8489 323
324
396
398
400
402
405
407
552
556
557
563
564
565
3C-6969 231
3D-2824 446
464
471
486
488
538
3D-2891 396
400
3E-2338 282
286
289
293
3E-3217 368
3E-3371 271
600
608
3E-3377 269
270
3E-3383 171
172
3E-3390 174
177
184
3E-4313 139
140
141
142
143
3E-5169 271
3E-5239 249
3E-6600 214
3E-6910 398
3E-7410 458
3E-8020 589
608
614
671
677
3E-8320 209
3J-1907 218
219
385
386
410
446
455
458
461
464
466
469
475
477
486
488
494
502
524
529
533
541
543
544
576
3J-7354 385
386
410
469
479
527
529
544
576
3K-0360 28
379
412
446
464
486
488
497
513
527
529
541
3K-5234 579
3S-2093 63
112
129
132
156
159
161
162
163
165
166
167
169
170
171
172
173
176
179
180
181
182
184
185
190
191
195
197
198
200
208
214
227
230
234
236
239
241
242
243
244
245
246
247
249
251
252
254
258
259
260
261
263
265
266
267
268
269
270
271
273
274
275
277
636
637
639
640
663
3T-0849 602
605
3T-0852 196
197
198
199
200
202
3V-9744 444
3W-6399 670

4

4B-4158 370
371
4B-4278 308
337
4B-9880 402
405

PART NUMBER INDEX

Part	Page
	407
4D-1322	576
4D-7388	57
4D-7794	576
4E-1487	343
	344
4F-2294	226
4H-6112	414
4I-0379	107
	112
4I-1163	635
4I-1260	629
4I-1674	424
	426
	428
	430
4I-1676	424
	426
	428
	430
4I-3038	600
	608
4I-3090	209
	589
	635
4I-3308	548
	550
4I-3309	548
	550
4I-3510	538
4I-3615	396
	400
4I-3621	432
	434
	436
4I-3627	405
4I-3628	405
4I-3631	405
4I-4270	614
4I-4286	620
4I-4361	629
4I-4543	553
	555
4I-4544	553
	555
4I-4618	550
	565
4I-4809	548
	563
	564
4I-4811	563
	564
4I-4812	560
4I-5049	632
	669
4I-6054	486
4I-6608	555
4I-7714	538
4I-7745	446
4I-8785	437
4I-8789	426
4I-8864	396
4I-9521	458
4I-9522	458
4I-9524	469
4J-0522	455
	462
	468
4J-0524	466
4J-0525	448
4J-0527	466
	513
4J-0528	79
	80
	466
	468
4J-5309	517
	525
	528
	529
4J-5477	441
	442
	443
	576
4J-7533	385
	519
	520
	525
	527
	529
4J-9058	578
4M-8973	576
4N-9170	324
4S-1962	63
4S-6668	636
	639

5

Part	Page
5A-3604	523
5B-0935	576
5C-2874	187
5C-2890	61
	190
	221
	617
5C-7261	133
	136
	187
	302
	331
	337
5C-8138	670
5C-9553	121
	123
	249
	312
	313
	314
	315
	316
	317
	318
	341
	513
	597
	598
	599
	632
	669
5D-1026	411
5D-4822	343
	344
	627
	628
5D-8159	85
5E-9684	455
	461
5F-9757	254
5G-3676	107
	112
5H-8936	552
	555
5I-4174	437
	483
5I-4353	430
5I-4387	458
5I-7238	552
5I-7239	552
5I-8417	494
5I-8426	494
5I-8510	420
5I-8623	494
5I-8625	494
5K-9090	426
	448
	452
	454
	455
	461
5K-9242	552
5K-9243	324
	552
	553
	555
5M-2057	513
5M-6214	82
5P-0048	420
5P-0767	411
	637
	640
5P-1076	328
	331
	342
5P-1404	107
5P-1518	113
5P-2568	544
5P-3454	163
	169
5P-3455	163
	169
5P-4116	77
	129
	196
	197
	198
	249
	302
	308
	331
	336
	662
	663
5P-5623	129
	174
5P-5930	73
	75
5P-5998	600
	608
5P-5999	236
5P-6006	145
5P-7958	643
5P-8210	535
5P-8245	282
	286
	289
	293
5P-8250	578
5P-8500	121
	123
	643
5P-9205	140
5P-9297	625
	635
	636
	639
5P-9299	636
	639
5P-9436	576
5Q-3560	324
5Q-4212	441
	442
	444
5Q-4213	444
5V-9155	107
	108

6

Part	Page
6D-0692	282
	286
	289
	293
6D-1641	636
	639
6D-3479	73
	75
	639
6D-4244	636
6D-5801	118
6D-9157	481
	513
6E-2271	524
	525
6E-4373	506
	507
6F-4855	417
6F-6672	417
6F-7045	225
6G-2256	135
6G-2263	136
6H-3615	428
	430
6I-0217	21
	34
	42
	72
	81
	94
	95
	97
	117
6I-0254	81
6I-0260	42
	53
	70
	92
	97
	120
6I-0292	206
6I-0293	206
6I-0455	72
6I-0456	149
6I-0563	94
	95
6I-0572	42
6I-0594	117
6I-0631	114
	115
6I-0645	34
6I-0650	34
6I-0654	37
	42
	117
6I-0839	81
6I-0917	33
	92
6I-1090	67
6I-1497	58
	60
	61
6I-4200	97

► PRIMARY REFERENCE

PART NUMBER INDEX

Part	Page
6I-4681	42
6I-4793	70
	72
6I-5342	629
6I-6646	346
6I-6795	538
6I-9399	369
6I-9453	376
6I-9454	375
6J-7836	576
6K-6307	513
6L-3616	552
	553
	555
6S-4039	271
6S-8620	107
	108
	112
6T-0465	135
6T-5598	173
6V-0357	439
6V-0400	420
	422
	424
	426
	449
	479
	486
	488
6V-0852	469
	471
6V-1722	486
	488
6V-2235	636
	639
6V-2369	230
6V-2689	179
6V-2722	135
6V-3265	581
6V-3342	552
6V-3922	456
	461
	517
	528
	529
6V-3938	504
6V-3965	469
	471
	530
6V-4249	439
6V-5200	490
6V-5204	508
6V-5393	529
6V-5556	529
	537
6V-5590	508
6V-5597	525
	529
6V-5653	107
6V-5842	439
6V-7238	28
	412
6V-7357	343
	344
	632
	636
	639
	669
6V-7658	360
6V-7661	367
6V-7723	101
6V-8076	107
	455
	461
6V-8200	484
	485
6V-8202	215
	663
6V-8218	538
6V-8237	411
6V-8397	441
	442
	443
	444
	446
	458
	464
	475
	477
	486
	488
	530
	541
	576
6V-8398	441
	442
	444
	446
	464
	486
	488
	541
6V-8625	446
	464
	486
	488
6V-8635	54
	426
	452
	454
	455
	461
6V-8636	458
	475
	477
	541
	576
6V-8647	576
6V-8714	54
6V-8716	63
6V-8723	464
6V-8724	446
	458
	475
	477
	486
6V-8774	486
	488
6V-8782	486
	488
6V-8935	441
	442
6V-8936	441
	442
6V-8939	464
6V-8978	538
6V-8979	443
	576
6V-8980	443
	576
6V-9001	446
6V-9004	471
6V-9007	446
6V-9008	54
	448
	455
	461
6V-9027	82
6V-9028	87
6V-9168	443
	576
6V-9175	464
6V-9182	461
6V-9491	231
6V-9632	244
	245
	246
	247
	252
	314
	315
	316
	597
	614
6V-9669	231
6V-9671	271
6V-9746	424
	426
	428
	430
	440
	446
	455
	461
	464
	471
6V-9828	576
6V-9829	576
6V-9832	439
6V-9844	446
6W-6005	133
6Y-8185	364
6Y-8186	364
	208
	224
	230
	234
	236
	239
	241
	243
	244
	245
	246
	247
	249
	251
	252
	254
	258
	259
	263
	267
	268
	273
	443
	458
	464
	469
	473
	475
	477
	486
	488
7M-8485	80
	282
	286
	289
	293
	426
	448
	452
	454
	455
	461
	462
	468
7N-0719	209
	►225
7T-0094	173
7V-6571	107
	112
7W-2632	149
7W-4669	68
7X-0515	343
7X-0578	589
7X-0579	107
7X-0796	439
7X-2534	147
7X-2536	372
7X-2539	107
7X-2543	112
	136
	448
7X-2554	73
	75
7X-2621	146
	271
7X-6315	145
7X-7644	693
	697
7X-7729	82
	210
	581
	589
	622
7X-7888	148

7

Part	Page
7B-3039	513
7C-4616	34
7D-1553	58
	61
7E-4846	540
7F-8268	368
7H-3171	360
	367
7H-3937	187
7I-0966	537
7I-1024	108
7I-1248	525
	530
7I-2272	231
7I-2673	107
	112
	191
	197
	198
	208
	243
7I-6843	557
7I-7439	108
	113
7I-7623	412
7J-9108	464
7J-9933	529
	537
7K-1181	73
	75
	163
	169
	202
	207

► PRIMARY REFERENCE

PART NUMBER INDEX

Part	Page
7Y-0466	382
7Y-0467	382
7Y-0468	382
	383
7Y-0623	343
	344
7Y-0633	321
7Y-0682	373
7Y-1434	412
7Y-1558	282
	286
	289
	293
7Y-1647	324
7Y-1648	324
7Y-1650	324
7Y-1746	370
	371
7Y-1781	372
7Y-1976	73
	75
	82
7Y-2219	►567
	568
7Y-2853	331
	336
7Y-2854	331
	336
7Y-3195	107
	113
	448
7Y-3474	642
7Y-3950	236
7Y-3951	172
	231
	236
7Y-3952	172
	230
	236
7Y-3953	236
7Y-3954	231
7Y-3955	236
7Y-3958	236
7Y-3962	159
	179
	200
	202
7Y-3963	159
	179
	200
	202
	236
7Y-3964	159
	179
	200
	202
7Y-3965	159
	179
	200
	202
	236
7Y-3966	159
	179
	200
	202
7Y-3967	159
	179
	200
	202
	236
7Y-3993	230
7Y-4202	496
7Y-4212	496
7Y-4213	496
7Y-4215	497
7Y-4216	497
7Y-4217	497
7Y-4222	497
7Y-4224	497
7Y-4234	496
7Y-4538	420
	422
7Y-4868	424
	426
	440
7Y-5219	517
	528
	529
7Y-5221	494
7Y-5237	455
	461
7Y-5247	466
7Y-5292	581
7Y-6215	54
	93
7Y-6641	558
7Y-6649	558
7Y-7365	635
7Y-7904	440
7Y-8561	589
	605
7Y-8990	331
	336
8	
8C-3445	54
8C-3446	54
	469
8C-3451	469
8C-5607	145
	190
8C-5608	145
	190
8C-5918	135
	136
8C-8451	145
	190
8C-8729	491
8C-8840	289
	293
8C-8992	328
	342
8E-4359	360
8E-5600	365
	366
	►367
8E-5601	367
8E-5602	367
8E-5604	367
8E-5605	367
8E-5606	367
8E-5607	367
8E-5608	367
8E-6792	367
8E-6793	367
8E-9805	300
8F-6711	369
8H-5303	225
8H-5306	225
8J-8782	513
8J-8783	513
8L-2786	42
8L-8413	135
	136
8M-2770	73
	75
8M-2772	552
	553
	555
8N-0869	135
8P-9770	354
	355
	571
	572
	573
8S-2634	191
	192
8T-0075	541
8T-0114	633
8T-0267	513
8T-0269	42
8T-0271	439
8T-0328	125
	127
	214
	231
	659
8T-0337	231
	610
8T-0342	530
8T-0348	282
	286
	289
	293
	412
8T-1158	494
8T-1159	367
	416
8T-1447	396
	400
8T-1685	455
	461
8T-1686	541
8T-1779	475
	477
8T-1889	107
	113
	136
8T-1890	107
	112
	136
8T-1905	488
8T-2503	499
8T-3282	298
	299
8T-3298	513
8T-3490	77
	112
	244
	245
	246
	247
	252
	304
	329
	597
	598
8T-3597	19
	309
	314
	315
	316
	342
	349
8T-3612	54
	77
	210
	597
8T-3653	432
	434
	436
8T-3957	384
8T-3998	519
	520
	521
	541
	543
8T-4121	57
	58
	60
	61
	63
	73
	75
	82
	107
	113
	129
	136
	140
	142
	143
	146
	191
	192
	196
	197
	198
	199
	200
	202
	209
	210
	211
	214
	215
	231
	239
	249
	254
	263
	265
	267
	268
	271
	275
	278
	302
	308
	317
	318
	324
	329
	331
	337
	343
	344
	420
	437
	443
	448
	449
	451
	455
	458
	462
	466
	468
	469
	475
	477
	483
	503

► PRIMARY REFERENCE

PART NUMBER INDEX

Part	Page
	513
	552
	553
	555
	576
	581
	587
	589
	591
	597
	598
	605
	610
	612
	625
	631
	632
	633
	635
	636
	639
	645
	654
	666
	671
8T-4127	125
	127
8T-4133	73
	75
	82
	93
	191
	197
	202
	210
	302
	308
	331
	337
	553
	558
	605
	661
	671
8T-4136	58
	60
	61
	63
	82
	107
	113
	129
	140
	191
	196
	197
	198
	209
	211
	215
	239
	254
	263
	265
	271
	275
	317
	318
	324
	329
	331
	337
	343
	344
	456
	462
	468
	469
	475
	477
	576
	581
	610
	622
	633
	636
	639
	654
8T-4137	63
	73
	75
	82
	107
	113
	136
	143
	191
	192
	199
	202
	210
	214
	239
	249
	254
	263
	265
	267
	268
	271
	275
	278
	324
	370
	371
	443
	458
	513
	576
	581
	589
	591
	597
	598
	612
	625
	631
	635
	636
	639
8T-4138	58
	61
	118
	146
	209
	214
	302
	636
	639
8T-4139	63
	420
	422
	424
	426
	428
	430
	440
	444
	456
	462
8T-4149	455
8T-4172	239
	254
	645
8T-4177	249
8T-4178	112
	136
	249
8T-4179	372
	565
8T-4182	57
	107
	136
	191
	210
	249
	263
	437
	449
	451
	456
	461
	483
8T-4184	331
	420
	422
	424
	426
	444
	449
	479
	486
	488
8T-4185	275
8T-4189	77
	129
	191
	192
	302
	458
	475
	477
	635
8T-4190	593
	594
8T-4191	552
	553
	555
	587
	610
	666
8T-4192	54
	428
	430
	593
	594
8T-4193	567
8T-4194	420
	422
	428
	430
	466
8T-4195	82
	503
8T-4196	60
	107
	112
	136
	214
	239
	254
	263
	432
	434
	436
	438
	456
	458
	461
	484
	485
	513
	587
	635
8T-4197	54
8T-4198	107
	231
	239
	254
	437
	483
8T-4199	324
8T-4200	87
	341
	589
	636
	639
8T-4222	214
8T-4223	54
	63
	79
	80
	121
	123
	330
	342
	343
	344
	420
	422
	424
	426
	428
	430
	438
	440
	441
	442
	444
	449
	455
	462
	466
	468
	479
	484
	485
	486
	488
	513
	548
	593
	594
8T-4224	87
	136
	187
	191
	192
	209
	210
	211
	212
	213
	215
	302
	341

PART NUMBER INDEX

Part	Page
	343
	344
	458
	475
	477
	589
	635
	637
	640
8T-4226	133
8T-4240	412
8T-4244	444
8T-4648	422
8T-4896	432
	434
	436
	438
	484
	485
8T-4908	136
	191
	192
	210
	343
	344
8T-4910	438
	484
	513
8T-4944	496
8T-4956	420
	441
	442
	456
	462
	466
	548
8T-4970	662
	663
	670
8T-4971	597
	598
	637
	640
8T-4984	78
8T-4987	88
8T-5005	82
	525
8T-5041	330
	456
	461
	466
8T-5092	121
	123
8T-5360	661
8T-6453	54
8T-6466	73
	75
	112
	136
	192
	249
	263
	275
	558
	637
8T-6685	420
8T-6703	78
	79
	80
	466
	468
8T-6759	496
	512
8T-6842	681
8T-6850	524
8T-6868	330
	422
	444
	456
	461
8T-6869	107
8T-6912	196
	197
	198
	199
	200
	202
8T-7547	77
	211
	212
	213
	215
	637
	640
8T-7811	529
	544
8T-7876	87
8T-8729	129
	159
	160
	161
	162
	163
	165
	166
	167
	168
	170
	171
	172
	173
	174
	177
	180
	181
	182
	183
	184
	185
	195
	207
	224
	236
	269
	270
	271
	513
	600
	608
	610
8T-8730	159
	160
	161
	162
	163
	165
	166
	167
	169
	170
	171
	172
	173
	174
	176
	177
	180
	181
	182
	183
	184
	185
	195
	226
	236
8T-8737	159
	161
	162
	163
	165
	166
	167
	169
	170
	171
	172
	173
	174
	176
	177
	180
	182
	183
	185
	236
	252
	602
	605
8T-8799	163
	168
8T-8827	135
8T-8887	458
8T-8987	448
8T-9381	661
8T-9403	437
	449
	451
	455
	461
	483
8T-9655	107
8T-9756	135
8Y-5745	343
	344
8Y-6352	616
8Y-6967	612

9

9D-3769	635
9F-2167	410
	428
	430
9G-0002	135
9G-0005	135
9G-2673	239
9G-4343	230
9J-7031	513
9K-0700	625
9M-0164	58
	61
9M-2904	58
	61
9M-9729	384
9N-0869	524
9R-2672	108
	191
9R-7941	244
	245
	246
	247
	252
9R-7980	244
	245
	246
	247
	252
9S-4181	54
	80
	468
9S-4182	54
	479
9S-4185	42
	497
9S-4190	107
9S-4191	464
	466
	469
9S-8002	118
	410
9S-8004	385
	386
	410
	529
	541
	543
9S-8005	527
9T-3743	504
9W-0844	148
	159
	160
	162
	163
	165
	172
	174
	176
	177
	178
	179
	182
	183
	200
	202
	236
9W-0852	161
	162
	163
	166
	174
	177
	178
	182
	183
	236
	596
9W-2146	368
	369
9W-2201	360
9W-3137	364
9W-3138	364
9W-3361	374
	375
	376
9W-3619	374
	375
	376
9W-9455	360
9X-0196	161
	166
	174
9X-0262	108
9X-1054	165
9X-1055	165

► PRIMARY REFERENCE

PART NUMBER INDEX

Part	Page
9X-1813	129
9X-2027	610
	633
9X-2038	121
	123
	597
	598
	669
9X-2041	585
	586
	588
	589
	591
	593
	594
	650
	651
	652
9X-2042	134
	151
	190
	195
	231
	244
	245
	246
	247
	252
	259
	271
	600
	607
	608
	617
	620
	623
	627
	634
	635
	648
	649
	650
	651
	652
	671
	677
9X-2043	139
	231
	600
	602
	605
	608
	659
9X-2044	260
	589
	614
	618
	630
	634
	671
	674
	677
9X-2045	616
	627
	628
	629
9X-2158	529
9X-2201	88
	481
9X-2297	530
9X-2404	402
	407
9X-3401	125
	127
	186
	217
	602
	605
9X-3402	175
9X-3959	68
9X-6032	438
9X-6153	589
9X-6155	674
9X-6165	145
	190
	602
	605
9X-6581	464
9X-6582	441
	442
9X-6615	583
9X-8256	58
	61
	146
	190
	209
	214
	237
	247
	249
	302
	312
	313
	314
	315
	316
	317
	318
	341
	343
	344
	513
	597
	598
	599
	602
	605
	636
	637
	639
	640
	644
	645
	662
	663
	670
	674
9X-8257	567
	593
	594
9X-8267	118
9X-8268	282
	286
	289
	293
	412
9X-8582	635

0

Part	Page
030-1705	135
030-1707	136
030-1708	135
030-1709	136
033-6034	262
033-6042	108
033-8248	553
	555
067-6043	24
067-6070	221
067-6135	18
	22
067-6179	34
067-6823	24
	68
085-6449	629
085-7356	219
085-8604	402
	405
	407
085-8605	402
	405
	407
085-9310	515
086-0255	396
	400
086-0297	565
086-0298	654
086-0321	567
086-0322	567
087-4441	475
	477
087-4742	496
087-4743	496
087-4757	496
087-4786	497
087-5805	556
	559
087-5966	552
091-2436	167
093-0083	560
093-0084	548
	550
093-0115	560
093-0116	548
093-0349	548
	550
	560
	563
	564
	565
093-0357	565
093-0363	548
	550
	560
	563
	564
	565
093-1433	565
093-1436	373
093-1512	373
094-0580	282
	286
	289
	293
094-0584	282
	286
	289
	293
	412
094-0611	282
	286
	289
	293
	412
094-0747	396
	400
094-1399	496
094-1875	496
094-1882	497
094-1920	432
	434
	436
094-1931	405
095-0687	504
095-0707	491
	492
095-0735	633
	659
095-0742	237
095-0843	308
095-0891	282
	286
	289
	293
095-1022	412
095-1207	205
095-1269	281
	285
	288
	292
095-1386	108
	112
095-1388	29
095-1572	496
095-1575	496
095-1578	494
095-1579	538
095-1582	415
	544
095-1583	540
095-1584	538
095-1585	496
095-1586	497
095-1587	538
	544
095-1590	525
	529
	538
	540
095-1597	432
	434
	436
	438
095-1599	523
095-1600	484
	485
	494
095-1623	512
095-1685	491
	492
	496
095-1698	537
095-1700	497
095-1704	373
095-1714	512
095-1717	396
	400
	415
095-1721	405
095-1723	402
	407
	418
095-1730	513
095-1786	538
095-1787	525
	529
095-7378	496
095-7380	496
095-7382	496
095-7383	496
095-7384	496
095-7386	496
095-7387	496

PART NUMBER INDEX

Part	Page
095-9785	57
096-0015	576
096-0131	565
096-0192	187
	659
096-1519	496
096-1521	496
096-1522	496
096-1523	496
096-1568	396
	400
096-1570	405
096-1571	405
096-1773	282
	286
	289
	293
096-1774	282
	286
	289
	293
096-1775	282
	286
	289
	293
096-1776	282
	286
	289
	293
096-1777	282
	286
	289
	293
096-1778	282
	286
	289
	293
096-1779	282
	286
	289
	293
096-1780	282
	286
	289
	293
096-1781	282
	286
	289
	293
096-2622	620
096-2902	544
096-3044	517
	528
096-3216	282
	286
	289
	293
	396
	400
096-3780	308
096-3785	496
096-3786	496
096-3787	496
096-3788	496
096-3884	620
096-3964	396
	400
096-3978	497
096-4003	496
096-4007	671
096-4035	73
	75
	82
096-4255	360
096-4376	497
096-4377	496
096-4378	496
096-4402	396
	400
096-4412	438
096-4447	485
096-4480	438
	484
096-4514	544
096-4755	411
096-4833	535
096-4876	557
096-4883	456
	461
	466
096-4902	324
096-5625	405
096-5915	496
096-5916	496
096-5919	496
096-5962	231
096-6073	415
096-6166	231
	610
096-6210	402
	405
	407
096-6331	343
	344
096-7803	396
	400
099-0707	557
099-0724	557
099-0823	626
099-3506	627
	628
099-3629	673
099-3645	643
099-5572	402
	407
099-5573	402
	407
099-6025	485
099-6418	120
	312
	313
	314
	315
	316
	317
	318
099-7197	499
099-7857	341
099-8232	540
	610
	632
	633
101-7404	428
	430
	432
	434
	436
	439
	456
	461
101-8899	620
101-8900	620
101-9848	19
	20
	302
	306
	308
	309
	331
	332
	336
	337
	341
	348
	349
	350
	352
102-0818	544
102-7965	236
102-8801	165
	166
	167
	171
	172
	252
102-8802	125
	127
	129
	160
	161
	163
	168
	171
	173
	181
	182
	184
	185
	195
102-8803	271
	600
	608
102-8804	165
	182
	183
	186
102-8805	171
	172
	207
	224
102-8806	159
	171
103-0050	131
103-5687	69
103-5705	21
105-2169	627
	628
105-2740	17
	92
105-3482	662
105-3484	513
105-6431	552
	553
105-6458	555
107-2348	90
107-3136	163
	169
107-6540	538
107-6541	538
107-6954	496
107-6955	496
107-6969	496
108-7118	486
	488
108-7206	488
108-9151	499
109-1393	620
	671
109-9329	39
110-8827	63
111-0859	30
	38
111-4799	600
	608
111-4816	236
112-7704	221
113-2004	79
	80
	466
	468
113-2127	548
	550
113-4630	186
113-6416	481
113-6761	486
113-8129	81
113-8490	237
113-8491	237
113-8492	237
113-8493	237
114-0706	402
	407
	418
114-0710	402
	407
	418
114-0711	402
	407
	418
114-0713	402
	407
	418
114-0741	468
114-1398	414
114-1399	414
114-1539	282
	286
	289
	293
114-6658	147
	148
116-0118	197
	267
	268
	271
116-9115	547
	►558
117-5540	354
	355
117-6356	610
117-8568	448
118-0166	448
118-4057	496
118-5982	563
	564
118-9901	60
	635

1

► PRIMARY REFERENCE

PART NUMBER INDEX

Part	Page
118-9930	39
119-3662	163
	165
	169
	172
	173
	176
	179
	236
119-5398	538
119-7934	73
	75
120-9027	600
	608
121-1022	236
121-1372	405
121-1548	402
121-1549	402
121-1558	497
121-7098	636
	639
121-7136	636
	639
121-7137	636
	639
121-7138	636
	639
122-5114	496
122-5318	494
122-9608	610
122-9609	610
122-9610	610
122-9657	636
	639
123-1373	133
123-2008	497
123-2899	37
	69
123-4750	458
123-7615	167
124-0506	58
124-1019	484
124-1020	484
124-1047	446
124-1062	428
	430
124-1063	428
	430
124-3536	43
	45
124-3548	230
	237
124-3815	17
	34
	94
	95
	97
	216
	262
125-4785	171
	172
	173
	236
125-4840	236
125-7874	159
	161
	163
	165
	166
	167
	169
	170
	171
	172
	173
	175
	176
	177
	180
	182
	183
	185
	236
125-7875	162
	163
	165
	166
	167
	169
	171
	172
	173
	176
	177
	178
	179
	182
	183
	185
	236
125-7876	173
126-1767	167
	168
	170
	186
126-1768	175
126-1935	396
126-2055	494
127-0580	589
127-3913	565
127-3947	343
	344
127-6625	▶552
	562
128-2135	585
	586
	604
	612
	614
	616
	617
	623
	660
128-2136	258
	259
	614
130-0270	636
	639
130-6001	58
	61
131-8829	87
132-1531	552
132-1805	135
132-1806	263
132-5789	262
133-1011	34
133-2425	560
133-6777	496
133-9469	90
134-2540	177
	183
134-8875	▶328
134-8876	328
	342
134-8878	328
	342
134-8948	567
134-9137	553
135-2274	633
135-3980	444
135-5010	165
135-8573	19
	20
	121
	123
	312
	313
	314
	315
	316
	317
	318
	331
	336
135-8575	19
	20
	121
	123
	141
	310
	311
	312
	313
	316
	317
	318
	329
	330
	331
	335
	336
135-8577	121
	123
	301
	331
	336
135-8578	330
136-1613	674
137-3688	499
139-7308	499
139-7757	535
140-0860	263
141-2759	237
141-6518	54
141-6526	249
142-5546	610
143-0811	282
	286
	289
	293
143-6020	534
144-0195	635
	642
	677
144-0367	78
	466
145-0603	249
145-3035	372
145-3042	280
	284
	296
	297
	▶300
145-3576	416
145-4911	32
145-9278	324
147-5860	496
148-4636	412
148-4640	412
148-4642	412
148-4643	412
148-4685	323
148-4689	324
148-4703	324
148-4704	324
148-4715	282
	286
	289
	293
148-8335	426
	452
	454
	455
	461
148-8336	458
	475
	477
	541
148-8338	541
148-8346	541
148-8347	446
148-8353	446
148-8357	448
	455
	461
148-8360	461
148-8364	446
	464
	486
	488
148-8374	464
148-8378	446
	458
	475
	477
	486
148-8384	443
148-8391	448
148-8395	527
148-8407	464
	466
	469
148-8415	441
	442
148-8416	464
148-8419	441
	442
148-8428	486
	488
148-8439	486
	488
148-8442	455
	461
149-5050	230
149-5051	236
149-5069	236
149-5070	236
149-5071	236
150-3036	488
150-4037	446
150-4044	475
	477
150-4049	455
150-4086	140
150-5785	211
	212
	213
	215
151-9274	177
	269
	270
151-9275	610
151-9461	620
151-9557	671
151-9576	674
153-2540	236

PART NUMBER INDEX

Part	Page
153-2602	163
	169
153-2631	163
	169
	171
	173
153-5276	524
	525
153-6237	471
153-6249	458
153-8798	422
153-8800	422
154-9023	82
155-0576	149
155-2255	165
	167
	171
	172
155-2256	161
	166
155-2258	161
	165
	166
	174
155-2259	159
	171
155-2260	171
	173
	182
155-2265	171
155-2270	159
	160
	161
	162
	163
	168
	170
	173
	178
	179
	182
	184
	185
	195
	200
	202
	226
155-2271	165
	175
	177
	182
	183
155-2274	172
	182
155-3624	479
155-7321	488
156-6480	589
156-6599	589
156-6643	620
156-9791	63
157-0670	82
158-4380	364
158-4381	364
159-8036	576
159-8047	135
159-8048	136
159-8049	135
159-8050	135
	136
159-9526	369
160-8290	575
161-3128	237
	635
161-3694	629
161-7614	106
161-9820	16
	38
162-0177	385
	386
	529
	541
	543
162-0349	633
	658
162-2222	118
162-4694	512
163-6659	172
	173
	236
163-6699	171
	172
	236
163-6795	200
	231
	589
	635
	670
163-6800	172
164-0514	620
164-0515	620
164-0519	620
164-4180	80
	468
164-5546	458
164-5552	446
164-5567	469
	471
	530
164-5578	464
164-5590	469
164-6874	219
164-8474	612
	616
165-0142	436
165-3256	513
165-5785	282
	286
	289
	293
166-1482	557
166-1486	548
	550
	556
	563
	564
	565
166-1487	548
	550
166-1492	398
166-1494	396
	400
	402
	405
	407
	556
	563
	564
166-1495	548
	550
	563
	564
	565
166-1579	553
	555
167-3593	230
167-7039	620
167-7042	589
167-7270	693
	697
168-0765	537
169-0705	159
	165
	166
	167
	230
169-9763	107
170-3016	331
	336
170-6827	171
	172
	179
	236
170-6888	236
170-6890	236
170-6891	236
170-8553	342
	428
	430
	466
170-9360	191
	331
	336
170-9394	237
170-9498	610
170-9499	610
170-9985	494
170-9986	494
170-9996	494
171-0037	538
171-5713	369
171-7477	629
171-9383	412
171-9464	324
172-5291	304
	343
	344
	635
172-9966	485
173-1016	118
173-3440	494
173-3441	494
173-3442	494
173-3443	494
173-3444	494
173-3445	494
173-3447	494
173-3450	494
173-3451	494
173-3452	493
	▶537
173-7916	420
	422
173-7995	422
174-0503	177
	183
174-4874	282
	286
	289
	293
175-6176	416
	513
175-7896	513
176-1902	636
	639
176-2947	165
	177
	183
177-2215	136
	191
	192
	263
177-2584	494
177-2611	396
	400
177-6315	320
	322
177-7747	535
177-8628	▶559
	575
177-9648	173
178-3620	267
	268
178-5431	670
178-5572	673
178-5573	620
	673
178-5574	620
	673
178-5576	302
178-6450	73
	75
179-5235	444
179-6916	506
	507
179-7400	118
179-7701	455
	461
183-1343	41
184-0983	223
184-9114	82
185-0884	24
185-1860	175
185-1861	163
	169
	236
185-8180	620
185-8205	614
	623
185-8293	636
	639
185-8300	583
185-8302	583
187-0661	681
187-5693	▶437
	562
187-6058	483
187-7051	455
	461
188-7536	118
188-7541	118
189-2690	620
189-2693	629
189-2694	629
189-2864	589
190-3523	364
190-3524	364
191-1782	107
191-1783	107
191-8921	644
	645
192-7510	513
193-5014	567
193-5015	567
193-6606	422
194-5226	175
194-5227	175
194-8353	402
194-8355	402
	407
	418
194-8359	402
195-0036	455
	462
195-9245	21
196-8876	143
	174

► PRIMARY REFERENCE

PART NUMBER INDEX

Part	Page
197-0199	529
199-4561	412
199-7560	101
	508
199-9252	216
199-9267	216
199-9751	27
	216
2	
201-4391	620
201-4441	304
	635
201-4534	343
	344
201-7949	411
202-4004	239
	254
202-5397	163
	168
202-5400	163
	168
	236
202-6535	506
	507
	534
202-6996	424
202-9824	690
203-3470	458
203-9007	231
204-1611	191
	197
	239
	254
	266
	267
	268
	278
	279
	635
	636
	639
204-2281	135
	136
	163
	165
	169
	171
	172
	173
	176
	182
	185
	231
	239
	254
	271
	469
204-6101	187
204-8000	469
206-1345	57
	175
206-1826	120
206-2423	469
206-9211	368
206-9212	369
208-8469	221
209-5894	496
209-5909	496
209-5992	491
	►496
209-9219	25
210-9966	442
212-2838	560
213-8433	410
213-9100	129
214-7566	54
	108
214-7568	107
	108
	217
	469
	471
	530
214-7915	681
215-9509	112
216-6589	422
216-6676	415
216-6677	415
216-6678	415
216-6682	553
217-0099	149
217-4893	569
	►580
217-9039	175
	221
	262
219-0302	681
219-8136	107
219-8469	356
220-9090	580
220-9094	571
	572
	573
223-7048	458
224-1685	415
224-1687	►415
	455
	461
224-8946	693
	697
225-0312	693
	697
225-4257	693
	697
225-4804	385
	519
	520
	525
	527
	529
225-4818	385
	519
	520
	525
	527
	529
225-4820	385
	527
	529
225-4821	385
	527
	529
	544
225-6522	53
225-6524	53
225-7738	81
225-7944	72
225-8019	81
225-8287	34
225-8524	90
225-8526	90
225-8858	24
227-0265	79
	80
	466
	468
227-0581	466
227-6034	282
	286
	289
	293
227-6071	323
227-6105	324
227-6215	414
227-6221	414
227-6228	412
227-6884	485
228-4947	216
228-7089	58
	60
	61
	107
228-7091	63
228-7092	63
228-7093	54
228-7100	87
	100
228-7102	96
	101
	112
228-7316	693
	697
228-9106	693
	697
229-1095	398
	565
229-1096	563
	564
230-4009	161
	163
	165
	168
	174
	176
	177
	183
	236
230-4011	148
	160
	161
	162
	163
	165
	168
	170
	175
	176
	178
	184
230-4012	222
230-4013	161
	168
	177
	182
	183
	185
230-4014	214
230-5008	163
	168
	176
	182
	235
230-5009	160
	184
230-5010	163
	168
	174
	177
	182
	183
	185
230-5011	174
230-8094	42
231-2295	164
	168
231-6805	402
232-1322	25
	27
232-1693	262
232-2095	571
	572
	573
232-2096	571
	572
	573
232-3657	34
232-3666	34
232-3751	72
232-7449	25
232-7596	24
232-7597	24
232-7599	24
	54
233-5260	633
233-9821	108
234-4573	402
	407
234-4574	402
	407
	418
234-6171	53
234-6498	612
	622
	623
234-6579	600
	608
	619
235-7679	398
	400
	557
	563
	564
235-8891	636
	639
235-9014	636
	639
236-3257	417
236-3259	417
236-5511	42
236-6365	556
	557
236-6366	556
	559
236-6717	118
236-8360	354
	355
237-0166	165
	166
237-0947	410
238-0112	87
	100
	101
238-2319	237
238-5080	63
238-5081	82
	107
238-5082	54
238-5083	54
238-5084	54
	63
	512
238-8245	163

► PRIMARY REFERENCE

PART NUMBER INDEX

Part	Page
	168
	175
238-8247	175
238-8288	92
238-8292	91
239-4362	360
239-4378	372
239-4382	372
239-4383	372
239-4384	372
239-4391	373
239-4392	373
239-4393	372
239-4394	373
239-7356	161
	176
240-2913	396
240-2914	405
240-2988	357
240-4590	165
240-7874	163
	168
	172
	180
	181
	235
	236
240-7876	172
240-7878	164
	168
	172
	237
241-6158	112
241-6215	455
	461
241-8368	209
	▶226
241-8834	163
	168
	176
241-9264	93
242-6099	73
	75
242-6490	▶441
242-6494	▶442
242-6735	394
	▶484
243-4505	164
	165
	169
	178
	181
	185
	596
243-4507	159
	164
	169
	182
243-4508	161
	184
243-4509	161
	166
	174
	183
243-4510	161
	162
	164
	169
	170
	173
	174
	177
	183
	185
244-4255	556
245-1042	176
245-1043	175
245-1044	175
	176
245-1045	176
245-1048	175
	176
245-5416	486
	488
245-7750	599
245-7819	583
245-7850	636
	639
245-7851	636
	639
245-7856	583
246-2641	121
	123
246-4361	105
246-5425	360
247-4928	97
	105
247-8864	396
247-8865	396
	400
247-8873	405
247-8874	405
247-8883	484
247-8885	400
247-9294	444
248-7143	▶360
	362
	363
248-7174	373
248-7820	557
248-7822	557
248-7823	557
248-7836	557
248-7857	398
250-1439	486
251-0637	230
251-3227	73
	75
253-1346	370
	371
253-2695	269
	270
253-6445	420
253-6453	420
253-6454	420
253-6548	441
253-6551	441
253-6688	442
253-6691	442
253-8110	165
253-8111	165
253-8113	165
256-6453	▶220
	513
256-6454	216
258-0144	535
259-7513	524
259-7848	538
259-7849	538
259-7850	538
259-7851	538
260-8011	▶483
	562
260-8316	424
261-0524	163
	168
	172
262-3390	441
262-4781	360
262-8088	164
	174
263-9574	133
264-3518	108
264-3617	225
264-7029	175
265-8463	331
	336
266-2905	179
266-7379	63
	129
	191
	239
	242
	249
	254
	263
	274
	275
	277
	637
	640
	663
267-6785	414
267-7207	175
	176
267-7208	175
267-9572	175
	176
267-9973	237
268-7047	426
268-7048	426
268-7238	426
268-7256	5
	▶393
270-2679	230
271-9408	629
272-5000	161
	164
	169
	185
272-5841	230
273-3288	159
	180
274-1931	49
274-1935	31
274-4990	175
275-0571	308
275-1442	107
	112
275-1443	107
	112
275-2428	221
275-2431	221
275-9897	42
276-5600	24
276-5602	24
276-5603	25
	216
276-7391	22
276-7394	22
276-7476	43
276-7478	43
	45
276-8116	26
276-8117	26
276-8123	52
276-8133	52
276-8134	27
276-9200	50
276-9201	50
276-9206	50
276-9207	50
276-9230	50
277-0588	32
277-2500	70
277-2537	72
277-2923	81
277-2925	81
277-3012	34
277-3013	34
277-4223	47
277-4302	27
277-4409	221
277-4993	101
	106
277-5065	262
277-5307	50
277-9463	93
277-9602	95
277-9603	95
277-9938	65
277-9940	65
278-0017	94
	95
278-3242	81
278-5111	50
278-5112	50
278-5113	50
278-5125	18
278-5170	103
278-5203	149
278-6796	469
279-4093	571
279-4706	499
279-5772	164
	169
	237
279-9651	37
280-1911	▶50
	52
280-1912	50
280-1913	50
280-1914	50
280-3109	499
281-0791	583
281-3119	164
	168
281-3132	164
	168
	171
	172
281-3395	159
	163
	169
	236
281-3396	163
	169
281-7039	70
281-7040	70
281-8744	69
281-8803	162
	164
	170
281-8804	162
	170
	175
281-8805	217
281-8811	173
282-3735	205
282-5741	444
283-0055	164
	168
283-0056	161
	162
	164
	168

▶ PRIMARY REFERENCE

PART NUMBER INDEX

Part	Page
	170
	177
	182
	183
283-4662	33
283-8301	40
283-8302	40
285-2663	455
	461
285-2664	455
	461
285-2991	42
286-0123	117
286-2890	106
286-7851	91
287-2499	538
287-3585	298
	299
287-8597	33
288-6974	33
288-6975	33
288-7502	422
290-9180	402
292-2491	58
	60
	61
292-2893	221
292-2896	175
292-3462	92
293-1238	636
	639
293-1256	635
294-7687	524
295-4155	214
295-6661	27
296-2735	87
296-6220	282
	286
	289
	293
296-6268	282
	286
	289
	293
	412
296-7058	455
	461
297-7964	107
298-4282	693
	697
299-5511	52

3

Part	Page
301-2981	271
302-9466	533
303-9933	125
	127
303-9937	125
304-5062	37
304-5418	667
304-5422	667
305-0441	636
	639
305-0442	636
	639
305-6873	107
306-8526	136
307-0047	681
308-8775	560
308-8776	560
308-8777	560
309-5130	54
309-5133	54
309-5137	54
309-6678	52
309-9690	689
311-6184	173
311-6185	173
311-8729	164
	168
311-8732	164
	168
	177
	183
311-8748	165
312-5694	568
	574
313-3492	107
314-8102	475
315-9810	95
316-9351	175
317-4767	458
317-5482	43
	45
317-8734	180
319-1260	271
319-6212	54
319-6216	63
319-6220	54
319-8426	18
320-3060	100
	101
	216
320-3062	216
321-8649	54
321-8657	107
322-3154	54
	▶56
322-3155	56
322-8714	491
	▶544
323-7464	529
	▶538
323-9312	43
	45
324-0444	34
324-0938	548
	550
	560
324-5678	163
	165
	169
	237
324-5679	165
324-5682	230
324-5683	230
324-5684	237
324-5685	230
324-5824	164
	169
324-5825	164
	169
325-9001	501
325-9571	167
326-7289	21
326-7401	▶70
	72
326-9053	678
	691
327-0325	623
	636
	639
327-2886	331
	336
327-9955	230
328-0076	165
	182
328-0077	271
328-0111	230
328-0132	135
	191
	192
329-3796	36
329-5459	107
330-1725	16
330-9724	112
331-0290	43
	45
331-1924	572
331-1925	573
331-1926	572
331-1927	573
331-4222	167
	174
331-4226	163
	168
331-6835	24
331-8008	681
332-0195	605
332-0905	9
	347
	701
332-4192	82
332-7865	186
332-8903	374
333-2989	282
	286
333-2990	282
	286
	289
	293
333-2991	282
	286
	289
	293
333-2992	282
	286
	289
	293
333-2993	282
	286
	289
	293
333-2994	282
	286
	289
	293
333-2995	282
	286
	289
	293
333-2996	282
	286
	289
	293
333-2998	282
	286
	289
	293
334-6482	674
334-6499	671
334-6526	620
334-6527	620
334-6538	620
334-9940	544
334-9981	494
334-9986	281
	285
	▶491
335-2092	33
335-5365	230
	259
335-8611	90
335-8849	161
	166
	167
	174
337-6324	131
338-6971	▶218
	219
	428
	430
	455
	458
	462
	469
339-4055	1
	▶560
339-6951	▶382
	383
339-6952	382
339-6953	382
339-6954	382
339-6955	382
339-8780	22
339-9637	52
340-4212	72
340-6592	629
340-6623	627
340-9272	238
341-2177	393
	▶402
341-5368	13
	14
	▶383
341-6797	▶364
	374
	375
	376
342-1962	555
342-2972	161
	164
	168
	172
	178
342-2973	161
	164
	168
	172
	237
342-2974	164
	168
	173
	174
	182
342-2975	164
	168
342-2976	161
	164
	168
342-2978	164
	168
	172
	182
342-6502	49
342-6510	49
342-8419	164
	169
342-9671	191
	192
343-2387	108
	112
343-2410	254

▶ PRIMARY REFERENCE

PART NUMBER INDEX

Part	Page
343-2465	331
	336
343-9295	560
344-5675	133
	555
	589
344-7392	218
345-4467	443
346-0006	117
346-0007	117
346-0407	34
346-0408	34
346-2911	8
	10
	12
	▶68
346-3046	443
346-3047	443
346-3229	54
346-4709	52
346-5215	282
	286
	289
	293
	412
346-7146	▶356
346-7148	▶357
346-7276	548
	550
346-8030	676
346-8219	678
	691
347-4416	107
	112
347-4734	267
	268
347-6081	▶417
	513
347-6082	417
347-6730	▶568
347-6736	568
	▶571
347-6852	▶568
	569
	570
347-6853	▶568
	569
	570
347-7516	571
347-7544	571
347-7545	572
347-7547	573
347-7551	571
347-7556	571
347-7571	571
	572
	573
347-7572	571
	572
	573
347-7574	571
	572
	573
347-8645	108
	112
347-8646	108
	112
348-0495	97
348-3094	572
348-3184	572
348-3185	573
348-4637	262
348-5409	20
	141
	350
	352
348-5410	200
	632
	669
349-6114	576
349-6847	106
349-7059	125
	127
350-0952	396
	400
350-0955	405
350-0956	402
	407
	418
350-0957	396
	400
350-0960	405
350-0961	402
	407
	418
350-7735	125
350-8742	131
350-8958	347
350-9344	402
351-1724	49
351-4315	108
351-4318	108
	112
351-4319	107
	112
351-4320	108
	112
351-4749	42
351-9674	▶378
	379
352-4700	131
352-6772	444
352-6860	▶379
	469
352-6864	538
352-7057	524
	525
352-7058	524
352-7063	462
	658
352-7064	320
	322
	323
	490
353-2087	655
353-5112	108
353-5142	107
353-5143	107
353-6757	308
354-5833	56
	101
354-8322	33
	48
355-0468	82
355-0632	108
355-3486	678
	691
355-5804	576
356-1219	175
356-3986	101
356-8117	▶420
356-9301	330
356-9305	330
357-0147	58
	61
357-2698	569
	▶579
357-3914	629
357-5711	405
357-5712	400
359-2563	1
	▶643
359-3119	▶374
359-8784	426
360-1564	45
360-3679	529
360-3680	529
360-3692	502
	533
360-4583	544
360-4584	544
360-4585	544
360-4586	544
360-4587	544
360-4588	▶540
	544
360-8958	▶99
	100
360-8960	99
361-1045	132
361-7346	96
361-7347	▶96
	101
361-7886	602
	605
362-5412	99
362-9689	100
363-0559	22
363-4122	125
	127
363-9173	237
363-9351	627
	634
364-1614	596
364-1975	540
364-1976	540
364-1977	540
364-1978	540
364-3005	693
	697
364-5145	22
364-8522	643
365-5823	65
366-1884	667
366-4695	529
366-4699	502
367-0844	683
367-1817	69
367-3340	91
367-6003	529
367-8364	412
367-8365	412
367-8367	412
367-8368	412
367-8369	412
367-8465	557
367-8467	556
367-8509	69
367-8512	69
368-3145	221
368-4832	169
368-4833	164
	169
368-4837	168
368-6658	107
368-8559	▶65
	94
	95
369-1255	15
369-1562	210
369-1658	92
369-3774	173
369-3869	58
	61
369-7799	103
369-9620	485
369-9673	393
	395
	▶485
369-9677	391
	▶438
369-9678	438
369-9793	82
370-4059	166
370-5513	115
370-5516	114
370-5517	114
370-5518	114
370-5520	▶114
	120
370-6545	24
370-8376	99
371-2478	8
	10
	12
	▶36
371-2480	8
	10
	12
	▶52
371-2483	8
	10
	12
	▶103
371-2537	8
	10
	12
	▶149
371-2538	8
	10
	12
	▶33
371-2539	8
	10
	12
	▶32
371-2553	8
	10
	12
	▶72
371-2554	8
	10
	12
	▶49
371-2558	8
	10
	12
	▶38
371-2684	117
371-2691	117
371-2716	8
	10
	12
	▶34
371-2740	8
	10
	12
	▶37
371-2742	8
	10
	12
	▶28
371-3069	426
371-3974	103
	▶104

PART NUMBER INDEX

Part	Page
371-7201	494
371-7263	117
371-8298	30
371-9085	568
	▶572
371-9086	568
	▶573
371-9146	573
372-2297	8
	10
	12
	▶81
372-9319	636
	639
372-9583	581
373-3606	8
	10
	12
	▶69
374-0432	8
	10
	12
	▶94
	▶95
374-2640	149
374-4419	81
374-5981	93
374-6013	93
374-6038	93
374-6300	8
	10
	12
	▶22
374-6301	10
	▶43
374-9295	8
	10
	12
	▶47
375-0098	8
	10
	12
	▶31
375-0482	120
375-0483	120
375-2013	18
375-2647	▶116
	117
375-2649	120
375-3937	8
	10
	12
	▶30
375-6988	120
375-8254	116
375-8407	▶186
	262
376-1108	8
	10
	12
	▶15
376-4074	22
376-4078	22
376-6403	104
376-6405	104
376-6409	116
376-6410	116
376-6411	116
376-6464	10
	▶347
376-6871	8
	10
	12
	▶18
376-9967	97
377-0399	26
377-0400	26
377-1293	262
377-2876	90
377-2877	▶90
	94
	95
377-5988	106
377-6932	175
377-9255	30
377-9576	54
378-0594	8
	10
	12
	▶42
378-1012	187
378-4739	32
378-8582	8
	10
	12
	▶92
378-9513	412
378-9514	412
378-9515	412
378-9516	412
378-9517	▶412
	414
378-9609	412
379-4369	107
379-4381	93
379-4382	93
379-4384	93
379-6637	8
	10
	12
	▶16
380-2065	43
	45
380-9615	21
383-1388	21
383-3581	▶24
	25
383-5631	677
383-7908	475
384-2286	91
384-3888	216
384-5313	▶26
	27
384-7567	221
385-1398	105
385-2538	97
385-2572	8
	10
	12
	▶27
385-2834	390
	▶398
385-2890	398
385-2967	439
385-3821	108
	112
385-5997	▶175
	262
385-7922	82
385-8201	132
386-1864	105
386-2112	34
386-2971	116
386-2976	116
386-3819	116
387-6068	82
388-0067	575
	▶576
388-0084	576
388-0085	576
388-0086	576
388-0088	576
388-0090	576
388-0091	576
388-0099	576
388-0105	576
388-0110	576
388-0536	21
388-4707	27
388-6876	576
388-7014	93
389-1995	17
389-2407	420
	455
	462
	▶533
389-3346	8
	10
	12
	▶21
389-3710	455
	461
389-3863	262
389-5775	97
390-0854	8
	10
	12
	▶25
390-4157	398
390-4158	398
390-4159	398
390-4219	398
390-4220	398
390-4221	398
390-4225	398
390-4226	398
390-4227	398
390-4679	▶118
	119
390-6840	108
	▶119
390-7626	92
390-8738	97
390-9505	▶410
	576
391-1817	97
391-2492	97
391-2493	97
391-3732	43
	45
391-3735	43
	45
391-4811	8
	10
	12
	▶117
392-0634	8
	10
	12
	▶17
392-2780	262
393-0367	10
	▶678
393-2034	120
393-2035	120
393-4006	33
393-5467	115
393-5468	115
393-7499	576
393-7694	8
	10
	12
	▶91
394-0525	▶115
	120
394-4451	38
394-9459	645
394-9460	589
	▶644
394-9639	8
	10
	12
	▶120
395-0110	8
	10
	12
	▶216
395-0112	8
	10
	12
	▶206
395-0113	8
	10
	12
	▶262
395-0114	8
	10
	12
	▶221
395-1633	114
	115
398-6226	120

4

Part	Page
415-1418	33
415-1604	37
415-5237	374
	▶375
416-1295	398
416-1296	398
416-1297	398
416-1298	398
416-1299	398
416-1300	398
416-1301	398
416-1302	398
416-1303	398
416-5716	469
416-7547	488
416-7727	91
418-9085	3
	5
	▶390
418-9086	390
	▶439
420-0454	67
420-2371	94
	95
420-2380	583
420-2403	583
421-0290	140
421-2868	252
422-7715	90
422-9111	439
422-9112	439
422-9113	439
423-1981	73
	75
423-1983	177
423-1984	29
423-1985	168
423-2148	458
423-4030	82

▶ PRIMARY REFERENCE

PART NUMBER INDEX

Part	Page
423-6434	108
	▶217
423-7576	30
424-4322	237
424-6681	576
424-6858	72
424-6859	72
424-8398	439
425-7103	34
425-9809	187
425-9879	187
427-9771	190
	221
	231
	259
	260
	659
430-5703	671
430-7160	148
431-2102	169
431-2103	164
	237
431-9515	▶193
	230
433-0190	105
433-1316	97
	▶105
433-4841	101
436-0521	52
436-7781	43
	45
436-8983	118
437-1588	309
437-2150	108
	112
437-3391	548
	550
437-4170	94
	95
438-5386	119
438-6968	674
438-6969	674
439-1887	82
439-5039	101
440-5314	576
440-5315	576
441-1105	527
441-1106	529
441-1107	527
441-3007	2
	3
	▶298
441-6077	▶569
441-6620	578
442-1790	574
442-1793	574
442-1795	574
442-1798	574
442-7199	146
	▶150
442-7945	164
	169
	237
442-7946	164
	169
443-4366	569
	▶578
443-5690	693
	697
443-8462	132
443-9543	45
444-2190	43
	45
444-7595	237
444-7604	175
446-1268	206
446-7230	494
446-7944	576
446-8478	82
447-1704	528
	654
447-1706	343
447-1707	362
	363
	515
447-1709	353
	479
	481
	654
447-1715	39
447-1717	501
447-1725	365
	366
447-1728	655
447-1731	365
	366
447-2461	346
447-7206	118
448-1297	234
	235
	259
	260
	261
448-4180	443
448-4181	443
448-4217	22
448-4218	22
448-4220	22
448-4222	22
448-4227	22
449-1136	▶443
	575
449-5735	448
450-5996	43
450-9772	678
	691
451-2175	343
	344
	353
	479
	481
	517
	528
	548
	550
	560
	589
	654
451-2176	39
	356
	357
	365
	366
	501
	548
	550
	560
	563
	564
	565
451-2178	655
451-2180	589
451-2181	93
	511
451-2182	39
	54
	412
	490
	550
	565
451-2183	556
	557
	559
451-8019	237
451-9333	488
452-5529	583
452-6069	569
	▶574
452-6071	574
452-6080	574
452-9704	92
453-0790	116
453-1259	481
	548
	550
	560
453-2840	343
453-2843	517
453-2844	548
	550
	560
	563
	564
	565
453-2845	356
	357
453-2846	501
453-3432	524
453-3440	511
	525
	529
453-3446	490
	550
453-3447	412
453-3448	54
453-3450	39
453-3451	54
	523
453-3454	93
	511
	512
	525
	529
	589
453-3456	511
453-6523	410
453-7871	169
453-8030	326
	327
	358
	359
453-8033	93
454-5109	116
455-0704	148
	160
	161
	162
	163
	165
	168
	169
	170
	172
	175
	176
	178
	180
	181
	184
	235
	237
455-0705	161
	162
	164
	168
	170
	172
	175
	177
	182
	183
	185
	237
455-0706	163
	168
	172
	176
	182
	235
455-0707	164
	168
	171
	172
	173
	174
	177
	182
	183
	185
455-0708	164
	168
455-0709	159
	161
	163
	165
	169
	174
	176
	177
	183
	236
455-1179	342
455-2302	187
455-3798	93
	512
455-3909	▶575
455-3910	▶575
455-4087	282
	289
455-4089	286
	293
456-0192	396
	400
456-0195	405
456-0196	402
	407
	418
456-0197	396
456-0205	402
456-0207	400
456-0574	169
456-0632	195
457-7977	282
	286
	289
	293
457-8759	589
458-3274	576
458-3275	576
458-7918	45
458-7939	45
458-7940	45
458-8357	94
458-8848	383
458-9768	8

▶ PRIMARY REFERENCE

PART NUMBER INDEX

Part	Page
	10
	12
	▶48
460-5302	101
460-6304	535
461-3876	300
461-7608	2
	4
	▶320
461-7609	320
	▶321
461-7721	342
461-7723	342
461-7725	342
461-7727	342
461-7729	342
461-7752	365
	▶368
462-2235	221
462-6685	8
	10
	12
	▶67
463-1603	576
463-6984	524
464-7899	97
	▶106
464-8596	108
464-9758	534
465-4551	504
465-5181	494
466-0113	525
	529
466-0114	529
466-4849	43
	45
467-4842	93
467-6039	148
467-6040	148
468-5306	324
468-7361	8
	12
	▶691
469-0667	374
	▶376
469-1034	▶374
469-3314	504
470-0191	215
470-8038	43
	45
470-8101	22
470-8171	22
471-1985	▶342
472-0688	438
473-1373	45
473-9230	586
473-9232	586
474-4582	604
474-4583	607
475-5482	580
475-6787	9
	701
476-2947	117
477-7562	591
477-7563	592
	595
	▶671
477-7564	592
	595
	▶673
477-7565	▶589
	592
	595
477-7566	▶591
	592
	595
	▶620
477-9886	54
478-4872	214
478-4875	214
478-6398	8
	12
	▶701
478-8975	260
478-8977	260
479-8364	148
479-8987	▶86
	87
479-8989	86
479-8991	86
479-8993	86
479-8995	86
480-3465	466
480-4489	43
	45
480-4490	43
	45
480-4491	43
	45
480-6771	282
	286
	289
	293
481-4789	366
	▶369
481-4790	369
483-2761	246
483-2762	166
	167
	237
483-2763	166
	167
483-2765	166
	167
	237
	238
483-2767	166
	167
	237
483-2768	166
	167
	237
	246
483-2777	166
	167
	246
483-7800	57
	191
	192
	249
	263
	587
483-7801	108
	135
483-7802	73
	75
	249
	263
	636
483-7803	112
	275
483-7805	112
	135
	239
	249
	254
483-7806	135
	239
	254
483-7867	595
	▶627
483-9066	172
484-1451	135
	191
	192
	197
	239
	249
	254
	258
	259
	263
	265
	271
	275
484-1452	135
	136
	164
	165
	168
	171
	172
	173
	176
	182
	185
	239
	254
	271
484-1453	164
	168
	171
	197
	202
	239
	241
	249
	251
	252
	254
	259
	267
	268
	273
	275
484-1454	129
	161
	162
	164
	166
	167
	168
	170
	171
	172
	173
	174
	181
	185
	208
	239
	246
	247
	251
	254
	263
	265
	275
	632
484-1456	143
	191
	197
	198
	202
	208
	209
	230
	234
	239
	241
	242
	243
	244
	245
	246
	247
	249
	251
	252
	254
	259
	265
	266
	267
	268
	271
	275
	278
	636
	639
	642
484-2732	308
484-8017	▶654
	656
	657
484-8018	654
484-8019	671
	▶674
484-8021	2
	3
	4
	5
	▶632
484-8025	▶624
	656
	657
484-9066	230
485-3070	306
485-4894	81
485-4895	81
485-5747	519
	520
	541
	543
486-0797	402
486-3208	8
	12
	▶45
486-5407	592
	595
	▶677
486-5426	673
486-5427	673
486-5449	604
486-5450	674
486-5457	674
486-5461	620
486-5497	620
486-5500	▶592
	593
486-5504	▶610
	656
486-7064	327
486-7082	319

PART NUMBER INDEX

Part	Page
	▶345
486-7084	319
	▶346
486-7085	319
	▶330
486-7089	5
	▶331
486-7093	2
	4
	▶305
486-7405	▶323
	324
487-2948	223
487-5859	512
487-5860	512
487-5869	▶385
	517
	528
487-5871	525
	529
487-5872	530
487-5873	525
	529
487-5874	529
487-5875	▶527
	529
487-5879	524
487-5880	524
487-5881	524
487-6639	592
	▶628
487-6652	600
487-6653	600
	608
487-6654	600
	608
487-6657	604
487-6658	▶585
	602
487-6659	▶586
	605
487-6660	▶612
	656
487-6663	612
487-6665	612
	▶622
487-6666	▶592
	595
487-6668	612
487-6670	612
487-6672	592
	▶660
487-6673	619
487-6675	619
487-6678	592
	▶614
487-6679	614
487-6680	614
487-6682	614
487-6683	614
487-6684	614
487-6744	674
487-6745	674
487-6746	674
487-6747	674
487-6748	674
487-6755	▶588
	592
	595
487-6760	▶304
	632
487-6761	304
487-6775	620
487-6776	620
487-6782	620
487-6806	677
487-6813	608
487-6828	600
487-6829	600
487-6832	600
	608
487-6835	619
487-6836	619
487-6837	619
487-6838	600
	608
	619
487-6839	612
	614
487-6847	674
487-6849	674
487-6851	614
487-6900	▶593
	656
487-6904	▶655
	656
	657
487-6927	623
487-6940	622
487-6942	612
487-6943	612
487-6944	612
487-6945	612
487-6946	612
487-6952	612
487-6953	612
487-6954	612
487-6955	614
487-6979	670
487-7000	▶656
487-7001	▶656
487-7003	592
	▶623
487-7440	659
487-8022	524
487-8023	524
487-8430	173
487-8455	602
	605
488-0394	656
	▶658
488-2807	▶222
	223
488-3074	1
	▶411
488-3075	411
	▶414
488-3790	222
488-3798	222
488-3799	222
488-5700	73
	75
488-5838	139
	140
	141
	142
	143
488-6431	623
488-6432	623
488-6433	623
488-6434	622
488-6435	622
488-6436	622
488-6446	622
488-6449	612
488-6451	592
	▶616
488-6458	610
488-6459	610
488-6474	▶642
	656
488-6475	670
488-6476	589
488-6479	658
488-6484	614
488-6486	589
488-6488	589
488-6490	607
488-6492	671
	▶676
488-6493	676
488-6494	676
488-6500	656
	▶662
488-6501	662
488-6504	660
488-6506	677
488-6509	677
488-6510	656
	▶663
488-6511	663
	▶664
488-6512	677
488-6515	614
488-6529	671
488-6530	656
	▶666
488-6534	602
	605
	▶630
488-6535	585
488-6536	585
488-6538	589
488-6545	673
488-6546	671
488-6548	620
	671
488-6550	▶602
	656
488-6551	602
	▶604
	605
488-6552	591
488-6553	▶617
	656
	657
488-6560	▶605
	656
488-6566	588
488-6567	588
488-6570	602
	605
	▶607
488-6574	614
488-6575	▶625
	632
488-6576	656
	657
	▶670
488-6577	614
488-6578	616
488-6579	616
488-6582	671
488-6583	671
488-6600	▶581
	656
488-6601	581
	▶583
488-6602	581
488-6606	▶636
	656
488-6609	▶639
	657
488-6610	▶597
	636
488-6612	597
	598
	▶599
488-6613	597
488-6615	636
488-6616	636
488-6617	636
	639
488-6618	636
488-6624	636
488-6625	636
488-6692	8
	10
	12
	▶41
488-6764	204
	▶257
488-6765	257
	▶258
488-6766	257
	▶259
488-6767	257
	▶260
488-6768	204
	▶271
488-6812	▶648
	653
488-6813	▶649
	653
488-6816	2
	3
	4
	5
	▶148
488-6819	▶145
	188
488-6821	▶132
	188
488-6822	▶146
	188
488-6823	632
	▶659
488-6825	▶227
	575
488-7773	▶386
	517
	528
488-8576	418
	▶511
488-8581	▶416
	513
488-9163	139
	140
	141
488-9284	▶354
	377
488-9287	▶358
488-9288	▶359
488-9289	▶353
	374
488-9303	354
	355
488-9305	358
488-9306	358
488-9307	353
489-0379	547
	▶548
489-0380	548
489-0389	562
	▶563

PART NUMBER INDEX

Part	Page
489-0405	562
	▶564
489-0414	547
	▶550
489-0418	562
	▶565
489-1591	▶377
489-1594	▶361
	377
489-1618	361
	▶362
489-1619	361
	▶363
489-1620	363
	▶370
489-1621	362
	▶371
489-1630	▶365
	377
489-1631	▶366
	377
489-2930	418
	▶466
489-2931	418
	▶446
489-2933	418
	▶449
489-2934	418
	▶479
489-2935	418
	▶469
489-2936	418
	▶471
489-2939	418
	▶501
489-2940	418
	▶515
489-2941	515
	▶516
489-2942	▶513
	516
489-2943	▶464
	516
489-2947	418
	▶428
489-2950	2
	3
	4
	5
	▶451
489-2952	2
	3
	4
	5
	▶481
489-2964	▶424
	547
489-2981	▶422
489-2983	▶444
489-3008	548
	550
	563
	564
	565
489-3010	563
	564
489-3018	556
489-3019	400
489-3020	556
489-3021	396
489-3062	377
	▶486
489-3449	▶152
	153
489-3451	▶152
	153
489-3460	▶153
	653
489-3461	▶154
	653
489-3466	2
	3
	4
	5
	▶324
489-3484	418
	▶503
489-3486	414
	▶490
489-3487	490
	▶493
489-3626	350
	352
489-3675	350
	352
489-3697	341
489-3709	345
489-3764	308
489-3797	3
	5
	▶305
489-3802	▶326
489-3803	▶327
489-6594	449
489-6608	627
	628
489-6609	627
	628
489-6616	627
489-7191	370
489-7192	371
489-7195	370
	371
	▶372
489-7197	372
	▶373
489-7198	373
489-7202	373
489-7503	101
489-7819	449
489-7847	▶204
	656
489-7848	204
	▶230
489-7907	147
489-8909	13
	14
	▶78
489-8911	13
	▶73
489-8980	13
	14
	▶77
490-0571	143
	159
	166
	167
	180
	181
	653
490-0572	139
	140
	141
	142
	143
	159
	166
	167
	180
	181
	230
	237
	243
490-0576	181
490-0578	143
	159
	180
	181
	230
	237
	243
490-0579	230
490-0582	139
	140
	141
	142
	143
	159
	180
	238
490-0585	230
490-0588	230
490-1012	610
490-1013	633
490-2680	5
	▶152
490-2682	152
	▶631
490-2683	194
	▶196
490-2684	152
	▶239
490-2691	▶135
	152
490-2693	152
	▶275
490-2699	144
	▶241
	342
	643
490-2700	144
	▶242
	342
490-2704	194
	▶197
490-2714	▶277
	380
490-2762	194
	▶198
490-2767	157
	▶211
490-2768	157
	▶212
490-2769	157
	158
	▶213
490-2770	157
	158
	▶214
490-2771	157
	▶266
490-3875	230
490-3894	359
490-3895	359
490-3896	▶355
	377
490-3948	6
	▶522
490-3949	6
	▶522
490-3958	466
	▶523
490-3995	511
	▶512
490-3996	512
490-3997	512
490-3999	512
490-4143	2
	4
	▶394
490-4144	394
	▶405
490-4179	2
	4
	▶391
490-4180	391
	▶400
490-4803	5
	▶7
490-4811	5
	▶13
490-4818	13
	14
	▶57
490-4821	13
	14
	▶54
490-4826	13
	14
	▶88
490-4830	13
	14
	▶29
490-4835	13
	14
	▶39
490-4839	13
	14
	▶87
490-4841	13
	▶58
490-4846	13
	14
	▶223
490-4857	13
	14
	▶93
490-4919	189
	▶190
490-4924	428
	430
490-4925	428
490-5873	▶646
	648
	650
490-5874	▶647
	649
	651
490-6690	171
	173
490-6963	▶160
	239
490-6965	239
	254
490-7663	2
	3
	4
	5
	▶5
490-7669	3
	5
	▶547
490-7671	2
	4
	▶547
490-7677	▶562

PART NUMBER INDEX

Part	Page
490-7678	▶562
490-7697	▶342
490-7745	451
490-7747	449
490-7851	466
490-7854	79
490-7856	466
490-7859	466
490-7863	466
490-7871	1
	▶153
490-8083	▶209
	239
	254
490-9452	326
490-9453	326
490-9455	326
491-0908	521
	541
	543
491-3416	523
491-3417	523
491-3418	523
491-3419	523
491-3420	523
491-4402	237
491-4409	237
491-5241	416
491-6075	513
491-6082	80
	468
491-6991	6
	▶79
491-6992	6
	▶468
491-7102	513
491-7133	616
491-7696	525
491-7697	▶519
	525
491-7724	676
491-7825	631
491-7826	631
491-7831	132
	230
	259
	261
491-8272	▶85
491-8343	197
	198
491-8344	▶178
	197
491-8345	▶178
	198
491-8349	172
492-0412	6
	▶452
492-0451	343
492-0459	58
492-0460	58
492-0469	513
492-2010	237
492-2011	236
492-2012	230
492-2021	455
	461
492-2037	455
	462
492-2065	419
	▶430
492-2066	6
	▶454
492-2080	512
492-2153	324
492-2913	▶188
492-3014	513
492-3915	628
	▶629
	634
492-8275	87
492-8407	430
492-8532	556
492-8533	556
492-8534	556
492-8535	556
492-8536	556
492-8537	▶556
492-9113	101
492-9114	101
493-0182	481
493-0982	▶261
	380
493-1072	343
	344
493-1075	343
493-1087	343
	344
493-1088	343
	344
493-1091	343
	344
493-1610	693
	697
493-2770	73
	75
493-3209	494
493-4907	▶473
493-4922	▶520
	525
493-6780	210
493-9732	214
494-0022	230
494-0773	278
494-4966	▶387
	409
494-4967	▶388
	▶389
	409
494-4971	387
	▶432
494-4972	388
	▶434
494-4985	2
	3
	4
	5
	▶409
494-6472	145
494-7279	666
495-1188	405
495-1191	400
495-1192	400
495-6045	658
495-6046	658
495-6047	658
495-6049	658
495-6053	205
495-6057	602
	605
495-7716	▶161
	251
495-8338	422
495-8341	422
495-9813	146
498-0799	434
	436
498-0800	434
498-0801	432
	434
	436
498-0802	432
498-0803	432
498-1841	8
	10
	12
	▶97
498-2825	679
498-4574	139
498-4576	331
	336
498-7479	▶121
	319
498-7482	▶301
	319
498-7483	301
	▶302
498-7678	607
498-7679	607
498-7680	607
498-7683	612
498-7684	604
498-7685	604
498-7692	636
	639
498-7709	614
498-7710	633
498-7711	633
498-7713	648
	649
	650
	651
498-7714	▶134
	235
498-7718	▶594
	656
498-7719	594
	▶595
498-7728	600
	608
498-7761	619
498-7783	671
498-9005	282
	286
	289
	293
498-9091	227
499-4939	471
499-8489	57

5

500-0719	612
500-0729	677
500-0730	614
500-0732	589
500-0733	626
500-0740	671
500-0742	676
500-0744	674
500-0782	597
500-0784	599
500-0791	671
500-0795	617
500-0796	617
500-0884	605
500-0898	134
500-0927	134
500-0930	600
	608
500-0931	▶626
	656
	657
500-0932	588
500-0933	600
	608
500-0934	619
500-0938	617
500-0948	624
500-0949	624
500-0957	583
500-0962	589
500-0963	589
500-1002	636
	639
500-1007	667
500-1008	664
500-1009	667
500-1010	664
500-1011	664
500-1012	664
	▶667
500-1015	664
500-1016	667
500-1019	664
500-1022	667
500-1023	667
500-1024	664
500-1025	667
500-1026	667
500-1027	664
500-1028	664
500-1029	664
500-1031	664
500-1032	664
500-1033	664
500-3061	88
500-9282	53
501-1450	211
	212
	213
501-4899	581
501-7449	108
502-3425	93
502-3514	58
	61
502-4189	78
502-4190	78
502-7150	▶131
502-7159	▶147
	204
502-7160	152
	▶265
502-7163	152
	▶263
502-7165	▶224
	257
502-7166	2
	3
	4
	5
	▶632
502-7168	▶207
	257
502-7170	144
	▶243
	342
502-7171	▶139
	144
	342
	643
502-7172	▶140
	144
	342
502-7173	▶141

▶ PRIMARY REFERENCE

PART NUMBER INDEX

Part	Page
	144
	342
502-7174	▶142
	342
502-9408	7
	▶596
503-0847	327
503-0848	327
503-0849	326
	327
503-0850	327
503-0853	330
503-0854	330
503-0863	121
	123
503-0874	121
	123
503-0883	121
	123
503-0887	121
	123
503-0888	121
	123
503-0890	346
503-0946	39
503-0947	39
503-2027	▶151
	204
503-8040	8
	10
	12
	▶53
503-8899	271
504-2756	108
504-3565	▶129
	130
504-3566	129
504-3568	263
504-3577	263
504-3579	135
504-3583	135
504-3589	135
504-3590	135
504-3594	191
504-3595	191
	192
504-4980	▶153
	190
504-7638	407
504-9586	513
505-3564	86
505-6018	73
505-7070	469
505-7087	121
	123
505-7088	121
	123
505-7089	121
	123
505-7110	331
	336
505-7112	308
505-7116	331
	336
505-7118	331
	336
505-7119	331
	336
505-7125	331
	336
505-7126	331
	336
	▶348
505-7131	331
	336
	▶349
505-7132	349
505-7150	645
505-7156	326
505-7157	327
505-7175	1
	▶319
505-7176	643
	▶645
505-7180	331
	336
505-7183	331
	336
505-7185	331
	336
505-7186	331
	336
505-7187	331
	336
	123
505-7193	307
505-7194	307
505-7209	309
505-7210	309
505-7211	309
505-7212	309
505-7215	348
505-7216	348
505-7217	348
505-7222	349
505-7223	349
505-7395	263
505-7400	263
505-7402	263
505-7404	263
505-7406	263
505-7637	159
	166
	167
	230
505-7638	159
	230
506-2794	164
	169
506-3832	479
506-5013	▶133
506-5909	164
	169
506-5910	237
506-5911	237
506-5913	164
	169
506-5915	237
506-5916	237
506-5917	237
506-5918	237
506-7016	275
506-7018	275
506-7022	▶188
506-7031	188
	▶244
	▶245
506-7032	188
	▶246
	▶247
506-9947	▶179
	230
506-9965	452
506-9968	454
507-1069	8
	10
	12
507-1383	237
507-1384	237
507-4784	343
	344
507-4836	3
	5
	▶322
507-4837	322
507-6557	▶280
	298
507-6558	280
	▶281
507-6559	281
	▶282
507-6560	▶284
	298
507-6561	284
	▶285
507-6562	285
	▶286
507-6641	501
507-9360	39
507-9361	39
508-0556	239
	254
508-0558	239
	254
508-6285	73
	75
	▶82
508-6286	82
508-6287	82
508-6288	82
508-6289	82
508-6290	82
508-6291	82
508-6292	82
508-6293	82
508-6294	82
508-6295	82
508-6299	85
508-6300	85
508-6301	77
508-6302	77
508-6303	82
508-6304	82
508-6305	82
508-6306	82
508-6307	82
508-6308	82
508-6309	82
508-6310	82
508-6315	82
508-8884	151
508-9554	331
508-9555	331
	336
508-9560	331
	▶350
508-9583	331
	336
508-9584	331
	336
508-9591	312
	313
	314
	315
	316
	317
	318
508-9592	314
	315
508-9603	312
	314
	315
	316
	317
508-9604	312
	313
	317
	318
508-9607	313
	318
508-9608	314
	315
	316
508-9617	▶329
508-9619	327
508-9620	329
508-9683	331
	336
508-9685	331
	336
508-9686	331
	336
508-9692	331
	336
508-9694	337
508-9698	351
508-9700	351
508-9701	332
	336
508-9716	306
508-9725	645
508-9726	326
508-9728	331
508-9730	312
	313
	314
	315
508-9757	511
509-0268	650
	651
	652
509-1886	289
	293
509-3085	610
509-3087	610
509-5694	101
509-6676	412
509-8010	519
	520
	521
	541
	543
509-8011	519
	520
	521
	541
	543
509-8012	519
	520
	521
	541
	543
510-0842	633
510-3135	302
510-3173	289
	293
510-3417	326
510-5674	191
510-7419	▶1
510-8095	77
510-8931	187
510-9072	135
	▶187
510-9073	187
510-9212	387
	388
	389

PART NUMBER INDEX

Part	Page
	▶396
510-9213	396
510-9214	396
510-9328	▶374
510-9513	446
510-9514	449
511-0264	73
511-0313	492
	▶499
511-0962	627
	628
511-3073	▶569
511-3074	▶569
511-4775	1
	▶13
511-4805	1
	▶152
511-4810	101
511-4823	101
511-4824	101
511-5053	▶101
	112
511-5900	614
511-5901	614
511-5919	600
	608
	614
	616
	619
511-5921	600
	608
511-5922	600
511-5957	588
511-5959	616
511-5960	616
511-5961	616
511-5962	616
511-5966	676
511-5967	676
511-5969	589
	671
511-5972	614
511-5975	636
511-5982	600
	607
	608
511-5988	134
511-6003	608
511-6004	600
511-6006	▶288
	296
511-6007	288
	▶289
511-6008	▶292
	297
511-6009	292
	▶293
511-6016	602
	605
	▶619
511-6023	605
	▶608
511-6024	▶600
	602
511-6025	600
511-6026	608
511-6027	608
511-6034	618
511-6035	618
511-6154	101
511-7397	▶66
511-9427	▶653
511-9428	▶653
511-9429	▶653
511-9430	▶650
	653
511-9431	▶653
511-9432	▶651
	653
511-9440	▶273
	418
511-9442	▶156
	419
511-9446	▶278
	575
511-9448	157
	▶249
511-9451	157
	▶215
511-9452	157
	▶234
511-9454	157
	▶587
512-1247	205
512-1248	205
512-4549	▶643
512-4914	513
512-5353	13
	14
	▶60
512-5573	416
512-6107	58
	61
512-6108	60
512-6143	5
	▶502
512-6145	▶219
	229
512-6385	142
	143
512-6728	677
512-7813	486
512-7854	455
	461
512-8658	154
513-2526	556
513-3065	424
513-3066	424
513-3067	424
513-3068	424
513-3069	424
513-3071	422
513-3085	444
513-3086	444
513-3088	444
513-3181	455
	462
513-3208	3
	5
	▶418
513-3210	2
	4
	▶419
513-3214	2
	3
	4
	▶229
513-4057	121
	123
513-8034	112
513-8035	112
513-9097	125
	127
513-9150	667
513-9160	667
514-4877	1
	▶418
514-7102	449
514-7718	229
	▶274
515-1893	40
515-2709	529
	▶541
515-2710	529
	▶543
515-2711	8
	10
	12
	▶40
515-6103	494
515-6104	494
515-6105	493
	▶494
515-6467	101
515-7178	230
515-7834	685
515-7835	685
515-7836	693
	697
515-7838	683
515-7839	693
	697
515-7905	693
	697
515-8094	659
515-8096	659
515-9533	▶180
	230
516-0550	▶157
516-0551	▶157
516-2545	▶130
516-2546	130
	▶228
516-3432	228
516-4870	148
516-4875	673
516-4918	585
	586
516-4919	585
	586
516-4923	589
516-4929	134
516-4930	600
	608
516-4987	271
516-5064	265
516-5834	395
	▶407
516-5835	407
516-5836	407
516-7392	125
	127
516-7395	302
516-7484	121
	123
516-7525	125
	127
516-7526	125
	127
516-7527	125
	127
516-7528	125
	127
516-7545	331
	336
516-7546	331
	336
516-7551	19
	20
516-8475	458
516-8625	522
	▶528
516-8626	▶517
	522
516-8628	517
	528
	▶529
516-8629	▶524
	529
516-8631	517
	▶525
516-8632	525
516-8663	157
	▶267
516-8664	158
	▶268
516-9872	673
516-9880	2
	4
	▶157
516-9883	▶157
516-9884	▶158
517-0824	▶153
	189
517-2780	504
517-3178	108
	112
517-4758	▶575
517-6017	557
517-6019	557
517-6026	557
517-6076	191
	192
517-6078	192
517-7332	192
517-7927	135
517-7928	191
	192
517-8243	103
517-8382	458
517-8385	458
518-1160	529
518-3528	464
518-3529	449
518-3532	449
518-3535	449
518-3538	449
518-3672	73
518-4286	249
518-4763	63
519-1664	196
519-2478	288
	292
	▶492
519-5907	683
519-6936	▶154
	188
519-6970	▶154
	647
519-6974	648
519-8103	112
519-8217	513
519-8289	456
	462
519-8816	693
519-8817	693
	697
519-8818	693
	697
519-8819	697
519-8821	681
519-8822	681
519-9781	617
520-2491	133
520-3179	385
	386

▶ PRIMARY REFERENCE

PART NUMBER INDEX

Part	Page
520-4558	▶181
	209
520-4810	693
	697
520-8223	630
520-8224	630
520-8225	630
520-8227	600
	608
520-8235	583
520-8238	630
520-8239	620
520-8253	600
	608
	619
520-8260	648
	649
520-8261	660
520-8262	660
520-8263	660
520-8264	660
520-8265	660
520-8286	605
520-8287	614
520-8290	600
	608
520-8291	600
	608
520-8292	600
	608
520-8293	605
520-8294	602
	605
520-8296	583
520-8297	583
520-8298	583
520-8301	1
	▶656
520-8321	589
520-8323	583
520-8324	583
520-8326	583
520-8328	583
520-8329	583
520-8330	583
520-8331	583
520-8332	583
520-8338	583
520-8689	456
520-8692	456
520-9106	681
520-9108	681
520-9415	▶679
520-9420	380
	▶680
521-1034	2
	3
	4
	5
	▶681
521-1038	2
	3
	4
	5
	▶693
521-1520	5
	▶683
521-1524	547
	▶685
521-2393	▶557
521-2395	557
521-3281	307
521-3306	▶374
521-4624	422
521-4630	444
521-4640	424
521-5214	82
521-5338	▶153
	157
521-6648	135
521-6649	136
521-6827	97
522-1083	153
522-1194	405
522-1741	153
522-6333	579
522-6334	579
522-7098	670
522-8642	121
	123
523-4986	101
523-4987	101
523-4988	101
523-5673	13
	▶107
523-6215	▶475
	522
523-6216	▶477
	522
523-7667	148
523-9010	▶100
	108
523-9235	372
524-0479	659
524-0480	659
524-0912	458
	475
	477
	▶521
524-1450	▶161
	244
524-4341	▶162
	239
524-4342	196
524-4347	54
524-4349	54
524-4350	54
524-4392	▶208
	380
524-4506	244
	245
	246
	247
	252
524-5076	108
524-5077	108
524-5078	108
524-5079	108
524-5085	108
524-5086	108
524-6339	381
524-7408	331
524-7742	589
	▶618
524-7769	693
	697
524-8272	2
	3
	4
	5
	▶189
524-8314	194
	▶199
524-8376	▶279
	522
524-8403	230
524-8405	230
524-8408	230
524-8521	199
	200
	202
524-8522	191
525-0749	▶312
	331
525-0751	▶313
	331
525-1535	▶235
	650
	651
	652
525-1734	▶194
525-1735	▶194
525-2621	▶184
	279
525-2970	458
525-2974	475
	477
525-3041	▶184
	278
525-3622	63
525-3637	458
525-3638	477
525-3639	477
525-3740	▶182
	274
525-4108	▶183
	266
525-6162	▶426
	547
525-6163	▶440
	562
525-6177	211
	215
525-6178	587
525-7638	121
	▶125
525-9160	125
525-9580	101
525-9735	341
526-0467	440
526-1028	246
526-1763	426
526-1764	426
526-1765	426
526-1768	440
526-1769	440
526-1837	541
526-1956	405
526-1957	405
526-1958	405
526-1960	405
	407
	418
526-1961	405
526-2037	101
526-2268	345
526-2620	▶306
	332
	336
526-3220	332
	336
	▶351
526-3222	332
	336
526-3225	351
526-3226	351
526-3244	332
	336
526-3983	332
526-3984	332
	336
526-3985	332
	336
526-3986	332
	336
526-3990	332
526-3995	351
526-4014	▶179
	199
526-4018	587
526-4904	191
	196
	197
	198
526-4905	191
526-5208	332
526-5689	680
526-5690	686
526-5708	207
	224
526-5998	302
526-6000	302
526-7139	550
526-7666	565
526-7690	▶180
	235
526-8033	405
526-8544	583
526-8550	589
526-8551	589
526-8555	612
526-8556	612
	614
526-8557	614
526-8558	614
526-8559	614
526-8569	635
526-8570	635
526-8573	618
526-8574	618
526-8575	589
526-8576	589
526-8578	616
526-8586	190
526-8587	662
	663
526-8597	635
526-8600	▶661
	662
	663
526-8601	661
526-8602	635
526-8603	635
526-8604	635
526-8607	635
526-8616	671
526-8624	610
526-8628	620
	630
526-8631	600
	608
526-8635	634
526-8638	660
526-8639	632
	669
526-8640	632
526-8641	677
526-8642	614
526-8643	612
	614
526-8646	664
526-8648	669
526-8917	607
526-9415	332
	336
527-0090	329

▶ PRIMARY REFERENCE

PART NUMBER INDEX

Part	Page
527-0507	332
	336
527-0545	332
	337
527-0639	332
527-1411	▶310
	643
527-1412	310
	▶314
527-1413	314
527-1414	19
527-1415	19
527-1416	▶335
	342
527-1417	▶315
	335
527-1418	315
527-1419	20
527-1420	20
527-1421	312
527-1422	313
527-1423	▶19
	643
527-1424	▶20
	144
	342
527-1637	21
527-1641	21
527-1696	354
	355
527-1697	354
	355
527-1720	525
	530
527-1721	530
527-1760	332
527-1848	205
527-1849	205
527-1870	▶185
	277
527-5711	194
	▶200
527-6534	332
527-7077	▶296
	299
527-7078	▶297
	299
527-7671	302
527-7673	302
527-7674	302
527-7802	341
527-7804	332
	337
527-7805	332
	337
527-9199	332
	337
527-9502	190
528-0022	▶195
	257
528-0174	▶251
	380
528-1514	231
528-2341	683
528-2348	687
528-2349	688
528-3279	▶635
528-3280	▶633
528-3281	▶633
528-3282	▶634
528-3283	▶632
528-3286	▶191
528-3287	▶192
528-3288	▶191
528-3289	▶634
528-3290	▶342
528-3291	▶343
528-3292	▶344
528-3293	▶344
528-3453	▶308
	332
	337
528-3454	308
528-3491	20
528-4253	407
528-4254	407
528-4255	407
528-4257	407
	418
528-4258	407
	▶418
528-5783	153
528-6060	66
	▶448
528-6515	249
528-6835	6
	▶380
528-6841	6
	▶380
528-7323	63
528-7421	661
528-7422	661
528-7423	661
529-0156	683
529-0428	▶183
	267
529-3052	2
	3
	▶377
529-6948	377
	▶488
529-7070	141
529-7071	140
529-7072	140
529-7073	141
529-7074	140
529-7141	▶205
	380
529-7476	652
	653
	▶686
529-8095	▶163
	239
529-8751	▶176
	263
529-8754	▶173
	265
529-8755	▶180
	241
529-8756	▶181
	241
529-8757	243
529-8758	▶181
	242
529-8759	▶165
	249
529-8762	▶166
	246
530-1753	209
530-1939	231
	▶236
530-1940	236
530-1941	237
530-1942	238
530-1943	▶171
	258
530-1944	▶172
	259
530-1945	▶173
	260
530-1946	195
530-1947	▶182
	271
530-1948	▶159
	200
	202
530-1953	▶159
	234
530-1954	▶177
	268
530-2661	▶176
	263
530-2686	▶8
	9
530-2706	456
	462
530-2708	456
	462
530-2709	456
	462
530-2710	456
	462
530-2712	456
	462
530-2713	456
	462
530-2714	456
530-3299	191
531-3323	380
	▶455
531-3494	▶562
531-9886	503
	▶504
532-6348	448
532-7268	▶63
	66
532-7291	343
	344
532-7310	343
	344
532-7317	200
	632
532-7318	200
	632
532-7319	620
532-7321	596
532-7339	634
532-7340	634
532-7381	639
532-7384	639
532-7385	639
532-7386	639
532-7387	639
532-7388	▶598
	639
532-7389	598
532-7390	598
532-7391	639
532-7403	620
532-7404	620
532-7407	620
532-7421	633
532-7907	460
	▶687
532-9006	243
532-9515	▶2
532-9518	▶3
532-9539	▶6
532-9773	456
	462
533-0365	600
533-2245	101
533-2339	271
533-2342	195
533-2343	200
	202
533-2344	142
533-2365	54
533-4958	195
533-5066	191
533-5661	141
533-5685	259
535-6240	344
535-6243	▶299
	377
535-6265	344
535-7983	3
	▶395
536-2637	499
536-2638	499
536-2643	499
536-2644	499
536-2645	499
536-2648	499
536-2651	499
536-5043	488
536-5436	▶174
	267
536-5437	▶177
	268
536-7311	530
536-7945	175
536-7946	175
537-5861	▶6
538-2111	380
	▶688
538-4073	332
	337
538-8471	327
538-8472	326
	327
538-8473	326
538-8843	620
538-9680	600
538-9681	620
538-9682	620
538-9696	444
538-9725	671
538-9803	671
538-9804	159
538-9805	159
538-9923	617
539-0213	620
539-2013	697
539-2832	▶160
	202
	632
539-2833	143
539-2834	143
539-2835	143
539-7274	42
539-7999	101
540-4237	501
540-6968	346
541-0307	456
	462
541-2739	513
541-3433	194
	▶669
541-4823	466
541-8045	473
541-9809	▶307
	332
	337
541-9810	332
	337

▶ PRIMARY REFERENCE

PART NUMBER INDEX

Part	Page
	▶341
542-1394	563
542-1396	564
542-1397	565
542-2341	693
	697
542-3136	341
542-5532	7
	▶9
542-9618	254
543-0213	547
	▶553
543-0214	547
	▶555
543-3687	504
	▶506
543-3688	504
	▶507
543-3689	504
	▶508
543-3690	504
	▶509
543-3691	504
	▶510
543-3692	▶381
	504
543-3693	▶384
	504
543-3694	504
	▶534
543-3696	504
543-3697	504
543-3698	504
543-3699	504
543-3700	506
	507
543-3701	506
	507
543-3702	506
	507
543-3703	506
	507
543-3704	506
543-3705	506
	507
543-3706	506
	507
543-3707	506
	507
543-3708	507
543-3709	508
543-3710	508
543-3711	508
543-3712	508
543-3713	508
543-3714	509
543-3715	509
	510
543-3716	509
543-3717	509
543-3718	509
	510
543-3719	510
543-3720	510
543-3721	510
543-3722	381
543-3723	381
543-3724	381
543-3725	381
543-3726	384
543-3727	534
543-3728	534
	▶535
543-3729	535
543-3730	535
543-3731	535
543-3732	535
543-3733	535
543-3734	535
543-3735	535
543-3736	535
543-3737	535
543-3738	535
543-3739	535
543-3740	535
543-3745	504
543-4399	▶569
543-5303	343
543-5304	343
543-9531	▶154
	188
543-9532	▶154
	188
543-9536	154
544-1117	154
545-7942	153
545-8566	646
546-4979	337
546-4980	316
546-4983	317
	318
546-6063	▶570
547-2608	316
	317
	318
547-5435	▶570
547-6150	82
547-7510	318
547-7511	317
547-7515	311
	▶316
547-8271	316
547-9124	66
	▶689
547-9280	154
548-0043	620
548-0139	646
548-2353	▶690
548-5473	125
	127
548-8354	337
548-8356	144
	▶311
549-4357	331
	336
549-4726	1
	▶657
549-5229	112
549-7938	▶458
	460
549-7972	458
549-8149	▶460
549-9283	▶185
	275
550-0027	112
550-0031	112
550-1970	▶184
	254
550-3471	4
	5
	▶377
550-8903	155
551-0330	▶167
	247
551-1662	▶309
	332
	337
551-1663	309
551-5103	499
551-5104	499
551-5105	499
551-5106	499
551-5107	499
551-5108	499
551-5109	499
551-5110	499
551-5111	499
551-5112	499
551-5113	499
551-5114	499
551-5115	499
551-5116	499
551-5117	499
551-5118	499
551-5119	499
551-5120	499
552-4919	▶174
	245
	252
552-8903	530
553-9982	633
554-3615	▶202
554-3616	▶143
	144
554-3627	▶652
554-3789	633
554-9412	75
555-5560	▶10
	13
555-5728	337
555-7255	▶12
	13
555-7258	▶188
555-7283	▶252
555-7287	▶188
555-8043	▶155
	188
555-8045	▶155
	188
556-2899	▶4
556-2902	▶5
556-4868	677
556-6464	5
	▶336
556-6467	1
	▶319
556-6468	▶123
	319
556-6469	123
	▶127
556-6475	▶317
	337
556-6477	▶318
	337
556-9810	152
	▶254
557-3629	154
557-7808	152
557-7809	152
557-8798	14
	▶112
558-0334	462
558-0337	462
558-0341	462
558-0362	112
558-0363	112
558-0369	112
558-0371	112
558-1230	5
	▶152
558-1390	380
	▶461
558-1493	▶168
	254
558-1494	▶170
	254
558-1933	5
	▶14
558-2713	112
558-2716	112
558-2717	112
558-3528	▶380
558-4976	337
558-4977	337
558-4978	337
558-4979	337
	▶352
558-4981	337
558-4985	337
558-7629	14
	▶75
558-7709	1
	▶14
558-9275	75
559-0034	▶144
559-2492	153
	154
559-2577	5
	▶7
559-2588	7
	▶13
559-5099	▶697
559-9492	150
	155
560-5551	158
	▶210
560-5559	158
	▶269
560-5562	158
	▶270
560-5685	▶158
560-5689	▶158
560-6484	210
560-6489	269
560-6490	270
560-7640	94
561-2355	▶80
561-5804	389
	▶436
561-5807	436
561-6441	14
	▶61
561-6443	61
562-2944	61
563-0598	215
563-5012	78
563-5013	78

▶ PRIMARY REFERENCE



©2018 Caterpillar
All Rights Reserved

CAT, CATERPILLAR, their respective logos, “Caterpillar Yellow”, and the POWER EDGE trade dress as well as corporate and product identity used herein, are trademarks of Caterpillar and may not be used without permission.