CATERPILLAR®

XEBP7614-03
November 2002

RUTHZIL TRATOR COMERCIAL DE PEÇAS LTDA 11 97083-6812 ROLANDO CITRANGULO

320B 320B L
Track-Type Excavators

Powered by 3066 Engine

SERIAL NUMBER
3MR1 To Last Built(Vehicle)
4MR1 To Last Built(Vehicle)
7JK10233 To Last Installed(Engine)

© 2002 Caterpillar
All Rights Reserved

HOW TO USE THE PARTS MANUAL

Caterpillar Parts Manuals include illustrations of the groups or assemblies which make up the machine. These illustrations show the standard components plus many of the attachments available for the machine.

The alphabetical index located in the front part of the book should be used to determine the page number on which specific illustrations are shown. Reference to those pages will identify each of the individual serviceable parts.

Captions

The caption under each illustration identifies the part number and name of the group or assembly shown. If more than one illustration is included for any group, the caption identifies the specific machine serial numbers to which each illustration applies. In some cases it is not possible to determine the specific machine serial numbers to which different illustrations are applicable. In those cases the caption identifies the illustration as “First Type”, “Second Type”, etc. Reference to the actual group or assembly is necessary in those cases to determine which illustration should be used.

Captions provide additional information such as page numbers where illustrations of sub assemblies are shown, information regarding quantities used and other information intended to assist the user in determining parts needs.

This information indicates the effective serial number or effective date on which changes became effective.

Example :

D95.05- : Applicable on and after May 1995

↑——— D indicates the nineteen hundreds.

T00.05- : Applicable on and after May 2000

↑——— T indicates the two thousands.

Indented Part Names

Within each illustration is a parts list identifying each serviceable part in the illustration. When a part name is indented in this list, it means that serviceable item is a part of the serviceable item under which it is indented.

Abbreviations and Symbols

R.H.	Right Hand	Refers to the side of the machine as viewed from the operator's compartment.
L.H.	Left Hand	
L	Length	
T	Thickness	
Z	Number of Gear Teeth	
O.D.	Outside Diameter	
I.D.	Inside Diameter	
O.S.	Over Size	
U.S.	Under Size	
N/S	Not Serviced	
AS	Assembly	
NOM	Nominal	

Abbreviations of Wire Colors

RD	:Red	BR	:Brown
WH	:White	GN	:Green
OR	:Orange	BU	:Blue
YL	:Yellow	T	:Tan
PK	:Pink	DK/BU	:Dark Blue
BK	:Black	DK/GN	:Dark Green
GY	:Gray	LT/BU	:Light Blue
PU	:Purple	LT/GN	:Light Green

Note

Continuing improvement and advancement of product design may cause changes to your machine which may not be included in this publication. Each publication is reviewed and revised, as required, to update and include these changes in later editions.

Whenever a question arises regarding your Caterpillar product, or this publication, please consult your Caterpillar dealer for the latest available information.

UTILISATION DU CATALOGUE DE PIÈCES

Les Catalogues de pièces Caterpillar comportent des illustrations des groupes ou ensembles qui composent la machine. Ces illustrations représentent les composants standard et nombre des accessoires disponibles.

Au début du catalogue figure un index alphabétique qui renvoie aux pages et illustrations correspondantes. Toutes les pièces du moteur avec leur numéro figurent dans ces pages.

Légendes

Chaque illustration comporte une légende comprenant le numéro de pièce et la désignation du groupe ou celle de l'ensemble. Si à un groupe donné correspondent plusieurs illustrations, la légende indiquera le numéro de série de chaque machine spécifique. Parfois, il n'est pas possible de savoir à quels numéros de série spécifiques de la machine se rapportent les différentes illustrations. Dans ce cas, les légendes comportent la mention "Premier type", "Deuxième type", etc. Pour déterminer quelles illustrations utiliser, il faudra connaître la référence du groupe ou de l'ensemble correspondant.

Les légendes indiquent également les numéros de page des plans des sous-ensembles, les quantités utilisées et autres renseignements destinés à aider l'utilisateur à déterminer quelles sont les pièces nécessaires.

Désignations de pièces en retrait

Chaque illustration comporte la liste des pièces qui la constituent et que l'on peut se procurer. Lorsqu'une désignation de pièce est en retrait, cela veut dire que l'article en regard fait partie de l'ensemble sous lequel il figure.

Abréviations et symboles

▲	Symboles utilisés pour attirer l'attention	
•	sur une information supplémentaire figurant ailleurs dans l'illustration	
R.H.	Côté droit	Se réfère au côté
L.H.	Côté gauche	de la machine vu du poste de conduite
C	Modifications de l'illustration antérieure du même groupe ou ensemble.	
O.D.	Diamètre extérieur	
I.D.	Diamètre intérieur	
N/S	Non fourni	
Assem.	Ensemble	
in.	pouce	
ft	pied	
cm	centimètre	
dm	décimètre	

Abréviations des couleurs de câbles

RD :	Rouge	BR :	Marron
WH :	Blanc	GN :	Vert
OR :	Orange	BU :	Bleu
YL :	Jaune	T :	Brun
PK :	Rose	DK/BU :	Bleu foncé
BK :	Noir	DK/GN :	Vert foncé
GY :	Gris	LT/BU :	Bleu clair
PU :	Violet	LT/GN :	Vert clair

NOTA:
En raison du progrès technique et des améliorations continuelles apportées au matériel, votre machine comporte peut-être des modifications qui n'apparaissent pas dans la présente publication. Les éditions ultérieures seront revues et corrigées en conséquence.

En cas de doute sur un détail de votre machine Caterpillar ou sur le texte de la présente publication, adressez-vous à votre concessionnaire Caterpillar.

COMO USAR ESTE CATALOGO

Los Catálogos de Piezas Caterpillar tienen ilustraciones de los grupos o conjuntos que componen la máquina. Estas ilustraciones muestran los componentes estándar y muchos de los accesorios disponibles para la máquina.

Se debe utilizar el índice alfabético al frente de este catálogo para determinar el número de página donde se encuentran ilustraciones específicas. Dichas páginas identifican las piezas utilizables.

Títulos

El título debajo de cada ilustración identifica el número de pieza y el nombre del grupo o del conjunto indicado. Si se incluye más de una ilustración de cualquier grupo, el título identifica números de serie de las máquinas correspondientes a cada ilustración. En algunos casos no es posible determinar los números de serie de las máquinas correspondientes a las diferentes ilustraciones. En esos casos, el título identifica la ilustración como "Primer tipo", "Segundo tipo", etc. Es necesario referirse al grupo o conjunto en sí para determinar cuál ilustración se debe utilizar.

Los títulos proveen información adicional: los números de las páginas en que aparecen las ilustraciones de los subconjuntos, las cantidades utilizadas y demás información para ayudar al usuario a determinar las piezas necesarias.

Nombres de Pieza sangrados

En cada ilustración hay una lista de piezas que identifica las piezas utilizables en la ilustración. Cuando el nombre de una pieza está sangrado en esta lista, significa que esta pieza forma parte de la pieza utilizable inmediatamente arriba.

Abreviaturas y símbolos

▲	Utilizado para indicar que hay información	
•	adicional al respecto en alguna otra parte de la ilustración.	
R.H.	Lado derecho	Se refiere al lado
L.H.	Lado izquierdo	de la máquina visto desde el compartimiento del operador.
C	Indica cambios de la ilustración anterior del mismo grupo o conjunto.	
O.D.	Diámetro exterior	
I.D.	Diámetro interior	
N/S	No se suministra	
Assem.	Conjunto	
in.	Pulgada	
ft	Pie	
cm	Centímetro	
dm	Decímetro	

Abreviaciones de los colores de cables

RD :	Rojo	BR :	Marrón
WH :	Blanco	GN :	Verde
OR :	Anaranjado	BU :	Azul
YL :	Amarillo	T :	Habano
PK :	Rosado	DK/BU :	Azul oscuro
BK :	Negro	DK/GN :	Verde oscuro
GY :	Gris	LT/BU :	Azul claro
PU :	Morado	LT/GN :	Verde claro

NOTA:
Las continuas mejoras y adelantos en diseño podrían originar cambios a su máquina que no se incluyan en esta publicación. Cada publicación es analizada y revisada para actualizar e incluir estos cambios en ediciones subsecuentes.

Cuando tenga alguna pregunta acerca de su producto Caterpillar o de esta publicación, consulte al distribuidor Caterpillar para obtener la información más reciente.

COMO USAR O CATÁLOGO DE PEÇAS

Os Catálogos de Peças Caterpillar incluem ilustrações dos grupos ou conjuntos que compõem o motor. Essas ilustrações mostram os componentes padrão e muitos dos acessórios disponíveis para a máquina.

O índice alfabético, no início do catálogo, deve ser usado para determinar o número da página em que se encontra determinada ilustração. Consultando tais páginas, você identificará cada uma das peças serviçáveis, individualmente.

Legendas A legenda de cada ilustração identifica o número da peça e o nome do grupo ou do conjunto mostrado. Se for incluída mais de uma ilustração para qualquer grupo, a legenda indicará os números de série do motor específico a que cada ilustração se aplica. Em alguns casos, não é possível determinar os números de série do motor específico a que as diferentes ilustrações se aplicam. Em tais casos, a legenda identifica a ilustração como "Primeiro Tipo", "Segundo Tipo", etc. Será, então, necessário referir-se ao conjunto ou grupo real para determinar qual ilustração deverá ser usada.

As legendas fornecem informações adicionais, tais como: números das páginas onde são mostradas as ilustrações de subconjuntos, informações referentes às quantidades usadas e outras informações que se destinam a auxiliar o usuário a determinar as peças necessárias.

Nomes de Peças Desalinhados Cada ilustração apresenta uma lista de peças que identifica cada peça serviçável na ilustração. Quando um nome de peça está desalinhado na lista, significa que tal item é serviçável e faz parte do item serviçável anterior.

Abreviaturas e Símbolos

▲ ●		Usado para alertar sobre informações adicionais mostradas em outro lugar dentro da ilustração.
R.H.	Lado Direito	Refere ao lado da máquina visto desde o compartimento do operador.
L.H.	Lado Esquerdo	Indica modificação da ilustração prévia do mesmo grupo ou conjunto.
O.D.		"Outside Diameter" (Diâmetro Externo)
I.D.		"Inside Diameter" (Diâmetro Interno)
N/S		"Not Serviced" (Não vendida separadamente)
Assem.		Conjunto
in.		Polegada
ft		Pé
cm		Centímetro
dm		Decímetro

Abreviações dos Cores dos Fios	
RD : Vermelho	BR : Marrom
WH : Branco	GN : Verde
OR : Laranja	BU : Azul
YL : Amarelo	T : Pardo
PK : Rosa	DK/BU : Azul escuro
BK : Preto	DK/GN : Verde escuro
GY : Cinza	LT/BU : Azul claro
PU : Violeta	LT/GN : Verde claro

Nota: Os contínuos aperfeiçoamentos e avanços no projeto do produto podem ocasionar modificações em seu motor, que ainda não estejam incluídas nesta publicação. Cada publicação é revisada e corrigida, conforme necessário, para atualizar e incluir essas modificações nas edições mais recentes.

Sempre que surgir uma questão concernente ao seu produto Caterpillar ou a esta publicação, consulte o seu revendedor Caterpillar quanto às mais recentes informações disponíveis.

MODEL VIEW

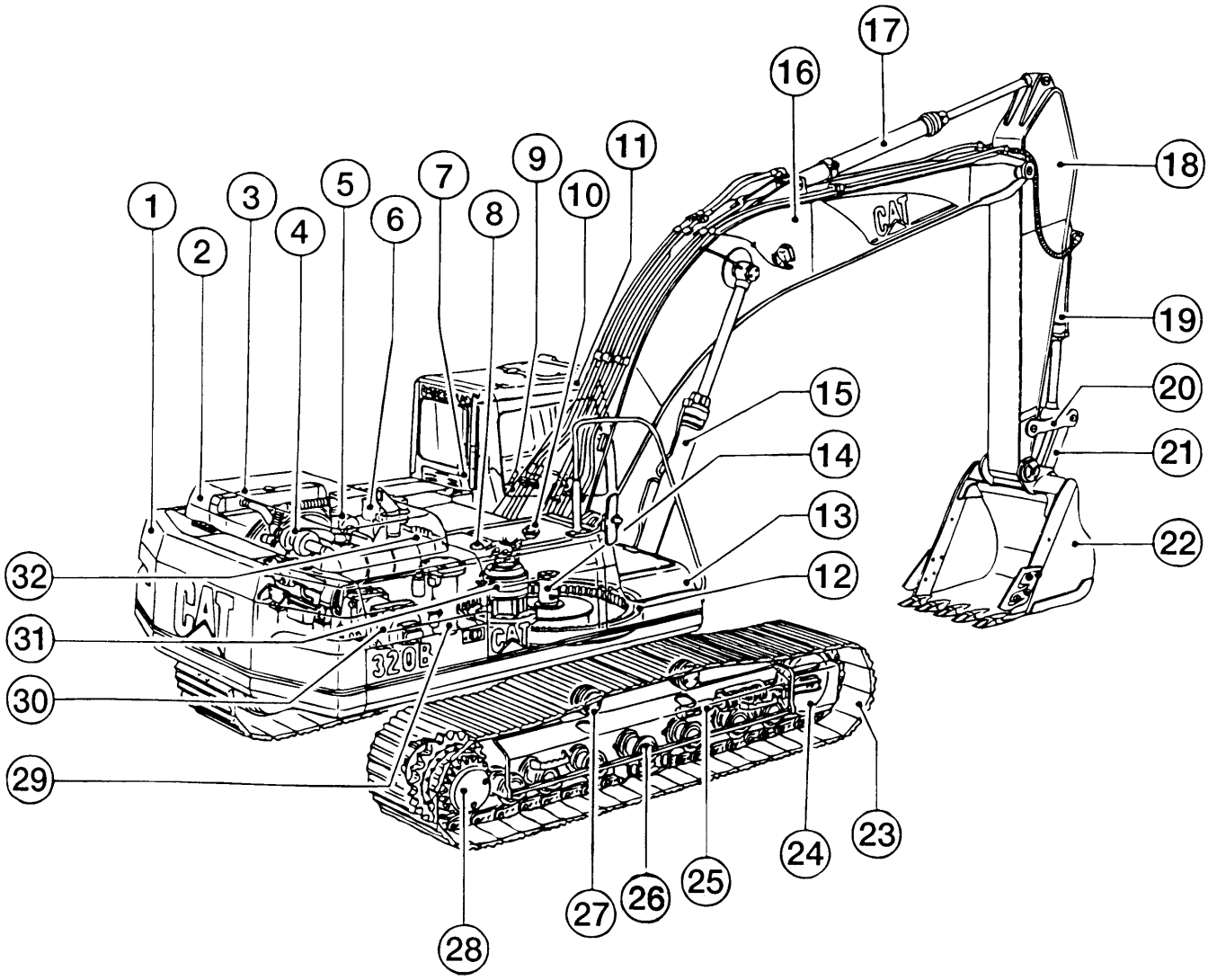

	PAGE		PAGE		PAGE
① Counterweight	142	⑫ Swing Bearing	147	㉓ Track	167
② Engine Hood	118	⑬ Storage Box	136	㉔ Idler	155
③ Radiator & Oil Cooler	33.01	⑭ Swivel	268	㉕ Track Adjuster	157
④ Engine	12	⑮ Boom Cylinder	187	㉖ Track Roller	164
⑤ Air Cleaner	40	⑯ Boom	384	㉗ Carrier Roller	165
⑥ Battery	60	⑰ Stick Cylinder	188	㉘ Final Drive	111
⑦ Operator Seat	363	⑱ Stick	388	㉙ Capsule Filter	182
⑧ Hydraulic Tank	171	⑲ Bucket Cylinder	191	㉚ Pump	174
⑨ Control Lever	270	⑳ Link	398	㉛ Swing Drive	180
⑩ Fuel Tank	54	㉑ Rod	398	㉜ Control Valve	275
⑪ Cab	319.01	㉒ Bucket	413		

REPLACEMENT ITEMS

The following chart provides a convenient listing of those items which require occasional replacement during normal operation or maintenance.

DESCRIPTION	PART NO.	QTY. USED	PAGE NO.
Filter			
Air Conditioner Filter	119-6887	1	371
Air Filter			
Secondary Filter Assembly	131-8821	1	40.02
Primary Filter Assembly	131-8822	1	40.01
Cab Air Filter	4I-1278	1	369.01
Engine Oil Filter	1R-0739	1	32
Fuel Filter	5I-7951	1	48
Hydraulic Oil Drain Filter	093-7521	1	181
Hydraulic Oil Pilot Filter	4I-3948	1	181
Hydraulic Tank Return Filter	126-2081	1	182.01
V-Belt			
Alternator & Fan V-Belt Set	176-5006	1	98
Refrigerant Compressor V-Belt	9M-1091	1	353

LIST OF ATTACHMENTS

The following chart provides a convenient listing of attachments with their reference page numbers as a quick reference for parts ordering.

	Consists of:	Page
111-4696	**ALARM, TRAVEL**	100
126-3780	**AUTO LUBRICATOR**	377
	BOOM	
117-4141	M-BOOM, MASS 5.2M	377
117-4140	R-BOOM, REACH 5.7M	376
	BUCKET (W/LONG TEETH, ADAPTERS & SIDECUTTER)	
	EXCAVATION (X)	
123-5469	B Family 1130MM Wide-0.8Cu.M.-Adapter Size J300	402
123-5470	B Family 1260MM Wide-0.9Cu.M.-Adapter Size J300	403
123-5471	B Family 1370MM Wide-1.0Cu.M.-Adapter Size J300	403
123-5473	C Family 1370MM Wide-1.1Cu.M.-Adapter Size J350	405
123-5474	C Family 1470MM Wide-1.2Cu.M.-Adapter Size J350	406
	EXTREME SERVICE EXCAVATION (EX)	
123-5472	B Family 1100MM Wide-0.8Cu.M.-Adapter Size J350	404
	MASS EXCAVATION (MX)	
123-5615	C Family 1440MM Wide-1.3Cu.M.-Adapter Size J350	406
	BUCKET LINKAGE	
117-4143	B FAMILY	382
102-4758	C FAMILY	382
126-1890	**CONTROL, FINE SWING**	292
122-4070	**COUNTERWEIGHT, EXTRA**	144
111-6310	**FRONT WINDSHIELD, ELEC. OPENABLE (3MR1-04978, 4MR1-00715)**	337
155-7061	**FRONT WINDSHIELD, ELEC. OPENABLE (3MR04979-Up, 4MR00716-Up)**	337.01
120-4976	**FUEL TANK, ADDITIONAL CAPACITY**	57
	GUARD	
117-4136	BOTTOM, HEAVY DUTY	131
126-3784	FALLING OBJECT	355
128-2156	WINDSHIELD, FRONT	356.02
123-2466	**HAND CONTROL PATTERN CHANGER (4 WAYS)**	292
124-3933	**HATCH (Metal Roof)**	328

LIST OF ATTACHMENTS

Consists of:		Page
124-4034	**HEATER & DEFROSTER (3MR1-04978, 4MR1-00715)**	374
154-0675	**HEATER & DEFROSTER (3MR04979-Up, 4MR00716-Up)**	374
	HYDRAULIC SYSTEMS, AUXILIARY	
	ADDITIONAL PERFORMANCE ARRANGEMENTS	
123-2568	2 Pumps Flow	228
	BASIC ARRANGEMENTS	
116-9035	Combined Function	229
121-1969	Double Function	230
127-6676	Single Function	229
	BOOM LINE GROUPS	
116-9102	R-Boom (5.7M) Auxiliary Lines	214
	STICK LINE GROUPS, R-BOOM STICK ONLY	
121-1876	R2.5B Stick Auxiliary Lines	219
121-1872	R2.92B Stick Auxiliary Lines	219
154-0778	**LABEL, COLD WEATHER HYDRAULIC OIL**	445.01
	LIGHT	
116-0215	M-BOOM, RIGHT SIDE	107.01
116-0214	R-BOOM, RIGHT SIDE	106
	WORKING, CAB MOUNT	
7Y-8189	Type A	103
111-4694	Type B	102
	LONG REACH FRONT (15.6M)	
	BUCKET	
7Y-6402	810MM Wide-0.45Cu.M.-Backhoe (4MR1-Up)	413
121-1807	1140MM Wide-0.6Cu.M.-Ditch Cleaning (4MR1-Up)	419
127-6615	LONG REACH FRONT (4MR1-Up)	383
	OPTIONAL SEAT	
124-3927	KAB 524	364
124-3945	KAB 525	366.01
119-6852	KAB T5	365
122-9648	HEADREST (For KAB 525 Seat)	366
142-5465	**PRECLEANER**	40.03
	PUMP, FLOW CONTROL	
120-4984	Combined Function	231
120-4983	Single Function	230

LIST OF ATTACHMENTS

Consists of:		Page
	RADIO	
116-0158	AM	351
111-4693	AM/FM	351
153-2506	AM/FM (With Cassette) (3MR04979-Up, 4MR00716-Up)	350.02
	RAIN PROTECTION	
6I-5387	RAIN PROTECTOR, CAB FRONT	358
111-6314	WIPER, LOWER WINDSHIELD	345
	SIDE CUTTER	
7Y-0729	B FAMILY	422
7Y-0366	C FAMILY	422
	STARTING AID	
116-0153	STARTING, COLD WEATHER(3MR1-06268,4MR1-00915)	64
163-6727	STARTING, COLD WEATHER(3MR06269-Up,4MR00916-Up)	65.01
	STICK	
	STICK-FOR THE MASS (5.2M) BOOM ONLY	
120-4972	M2.4C STICK	381
	STICK-FOR THE REACH (5.7M) BOOM ONLY	
120-4971	R1.9C STICK	380
126-3794	R2.5B STICK	380
126-3793	R2.92B STICK	379
126-3792	R3.9B STICK	378
111-6313	**SUN VISOR, WINDSHIELD**	357
126-3796	**SWING OIL COOLER**	35
	TIP	
	ADAPTER SIZE J300	
8E-3756	Abrasion, Heavy Duty	424
9J-3167	Long	423
8E-3751	Long, Heavy Duty	423
3G-3237	Penetration	425
9W-9188	Sharp-Center	425
9W-9189	Sharp-Corner	426
9J-3175	Short	424
4T-2215	Wide	426.01

LIST OF ATTACHMENTS

Consists of:		Page
	ADAPTER SIZE J350	
8E-3757	Abrasion, Heavy Duty	428
8J-4955	Long	426
8E-3752	Long, Heavy Duty	427
3G-3236	Penetration	428
9W-6472	Sharp-Center	429
9W-6473	Sharp-Corner	429
8J-4954	Short	427
8J-4953	Wide	429.01
7I-0776	**TOOL KIT**	430
	TRACK	
	TRIPLE GROUSER	
9W-9356	600MM (4MR1-Up)	169
117-7120	700MM (3MR1-Up)	167
117-7121	700MM (4MR1-Up)	169
9W-9361	800MM (3MR1-Up)	168
	TRACK GUIDING	
120-7164	GUARD (Between Sprocket & Center) (3MR1-Up)	160
120-7167	GUARD (Between Sprocket & Center) (4MR1-Up)	161
120-7165	GUARD (Full Length) (3MR1-Up)	162
120-7168	GUARD (Full Length) (4MR1-Up)	163
116-0159	**12V-5A POWER SUPPLY SOCKET**	80.16

INDEX

Name Page

A

ADJUSTER GP - BUCKET 420
AIR CLEANER GP 40.01
40.04
AIR CONDITIONER & MOUNTING GP 368
368.04
AIR CONDITIONER GP 367
368.02
368.06
ALARM AS - BACKUP 100.01
ALARM GP - TRAVEL 100
ALTERNATOR GP - CHARGING 99
ARM AS - WIPER 335

B

BATTERY & WIRING GP 60
BATTERY & WIRING GP - COLD WEATH 64
BLOCK AS 316.02
BLOCK GP - HYDRAULIC 182.02
BOOM AR 376
BOOM AR - 1 PIECE LONG 376
BOOM AR - SHORT 377
BOOM GP 384
BOTTLE GP - WINDSHIELD WASHER 347
BOX & MTG GP - STORAGE 136
138
BOX GP - STORAGE 137.01
139.01
329
BREATHER GP 31
BUCKET & ADJUSTER GP 402
BUCKET AS - DITCH CLEANING 419
BUCKET AS - EXCAVATION 414
BUCKET AS - GENERAL PURPOSE 419
BUCKET AS - MASS EXCAVATION 418
BUCKET GP 413

C

CAB GP 319.01
CAB GP (BASIC) 320
CABLE AS 74
93
CAMSHAFT GP 19
CARTRIDGE AS - TURBOCHARGER 43
CLEANER AR 40.03
COMPRESSOR GP - REFRIGERANT 353
CONDENSER & MTG GP - AIR COND 352
CONSOLE GP 360
CONSOLE GP - OPERATOR 359
CONTROL & MTG GP - ELECTRONIC 80
CONTROL & MTG GP - WINDSHIELD 80.02
CONTROL AR - AUXILIARY 229
CONTROL AR - FLOW 230
CONTROL GP - GOVERNOR 51.01
CONTROL GP - HYDRAULIC 273
CONTROL GP - PILOT OPERATED HYD 271
272
COOLER GP - ENGINE OIL 36
COOLING AR 35
COUNTERWEIGHT GP 142
COUPLING GP - FLEXIBLE 179.15
COUPLING GP - PUMP 175
COVER GP 336.02
338.02
COVER GP - STORAGE 336
COVER GP - VALVE MECHANISM 17
CRANKSHAFT GP 18
CYLINDER & LINES GP - BOOM 183
CYLINDER & LINES GP - BUCKET 185
CYLINDER & LINES GP - STICK 184
CYLINDER & SEAL GP - BOOM 187
CYLINDER & SEAL GP - BUCKET 191
CYLINDER & SEAL GP - STICK 188
CYLINDER BLOCK GP 16
CYLINDER GP - BUCKET 194
CYLINDER HEAD GP 14

D

DOOR GP - CAB 324
DOOR GP - HOOD 125
128
DRIVE AS - WINDSHIELD - AUTO 340
DRIVE GP - SWING 180

INDEX

Name Page

DRIVE GP - WINDSHIELD - AUTO 339.01
DUCT AS 371
DUCT GP - AIR 369.01
DUCT GP - DEFROST 369A

E

ENGINE AR 12

F

FAN GP - SUCTION 39
FASTENER GP - SWING & FINAL DR 110
FENDER & COVER GP 141
FILM GP 439
FILTER GP - ENGINE OIL 32
FILTER GP - FUEL 48
FILTER GP - HYDRAULIC 181
FINAL DRIVE GP 111
111.01
FLYWHEEL GP 23
FRAME AS - UNDERCARRIAGE 153
FRAME GP - UPPER 150

G

GASKET & SEAL KITS 446
GEAR & BEARING GP 146
GEAR GP - FRONT 22
GUARD AR - BOTTOM 131
GUARD AR - OVERHEAD 355
GUARD GP - BOTTOM 130
132
GUARD GP - OVERHEAD 356
GUARD GP - SWIVEL 134
GUARD GP - TRACK GUIDE 159
GUARD GP - TRAVEL MOTOR 166
GUARD GP - WINDOW 356.02

H

HANDHOLD GP 135
HANDLE GP - STORAGE DOOR 140

Name Page

HARNESS AS 66
78
92
94.06
94.08
108
109.02
HARNESS AS - CONSOLE 83.02
94.06
96.01
HARNESS AS - WIRING 94.04
HATCH GP 326
HEAD GP - PUMP CONTROL 179.11
HEADREST AS 366
HEATER & MOUNTING GP 375
HEATER AR 374
HEATER GP 375.01
HOOD & GUARD GP 118
127
HOOD GP 129
HOOD GP - ENGINE 124
HORN GP - ELECTRIC 354
HOUSING GP - FILTER 182.03
HOUSING GP - FLYWHEEL 24
HOUSING GP - FRONT 21

I

IDLER GP - FRONT 155
INSTALLATION AR - AUXILIARY 228

K

KNOB AS 271.02

L

LAMP GP - FLOOD 108
LEVER AS 362
LIGHTING GP - BOOM 104
LIGHTING GP - CAB 102
LIGHTING GP - CHASSIS 101
LINES AR - AUXILIARY HYDRAULIC 219

INDEX

Name	Page
LINES GP - AIR	41
	45
	45.02
LINES GP - AIR CONDITIONER	373.01
LINES GP - AUXILIARY HYDRAULIC	214
	220
LINES GP - BOOM	210
LINES GP - BOOM CYLINDER	195
LINES GP - BUCKET CYLINDER	200
LINES GP - DRAIN	45.01
LINES GP - ENGINE OIL	30
LINES GP - FRONT	244
	248
LINES GP - FUEL	49
	52
LINES GP - GREASE	397.01
LINES GP - HEATER	374.02
LINES GP - PILOT	232
LINES GP - PUMP	226
LINES GP - RETURN	254
LINES GP - RETURN & FILTER	252
LINES GP - STICK	215
LINES GP - STICK CYLINDER	197
LINES GP - SWING MOTOR	255
LINES GP - TESTING MACHINE	227.01
	247.07
LINES GP - TRAVEL MOTOR	222
LINES GP - TURBOCHARGER OIL	32.01
LINES GP - WATER	38
LINK AS - TRACK	170
LINKAGE AR	383
LINKAGE AR - BUCKET	382
LINKAGE GP - BUCKET	398
LITERATURE GP	367
LOCK GP - TRANSPORT	397
LUBRICATION AR - AUTOMATIC	377

M

Name	Page
MANIFOLD GP - EXHAUST	47
MANIFOLD GP - INLET	46
MIRROR GP - REAR VIEW	358.01
MONITOR GP - OPERATOR	336.01
MOTOR & MTG GP - SWING	258
MOTOR & MTG GP - TRAVEL	263
MOTOR AS - WINDOW WIPER	335.01
	349
MOTOR GP - SWING	259
MOTOR GP - TRAVEL	264
MOUNTING GP - AIR CLEANER	40
MOUNTING GP - ALTERNATOR	98
MOUNTING GP - ENGINE	27
MOUNTING GP - GREASE GUN	126.01
MOUNTING GP - STARTING MOTOR	97
MOUNTING GP - VALVE	274
MUFFLER GP	44

N

Name	Page
NOZZLE GP - UNIT INJECTOR	48

P

Name	Page
PAN GP - OIL	25
PANEL GP - CIRCUIT BREAKER	76
PISTON & ROD GP	20
PLATE & FILM GP	432
PLATFORM GP - OPERATOR	358.02
PLUG GP	282
PULLEY GP - FAN DRIVE	28
PUMP & MOUNTING GP	174
PUMP AS	397.14
PUMP GP - DOUBLE PISTON	176
PUMP GP - FUEL INJECTION	50
PUMP GP - LUBRICATION - AUTO	397.13
PUMP GP - WATER	37

R

Name	Page
RADIATOR & HYD OIL COOLER GP	34
	35.03
RADIATOR GP	33.01
	35.01
RADIO GP - AM	351
RADIO GP - AM/FM	350.02
ROLLER AR - TRACK & CARRIER	164
ROLLER GP - TRACK CARRIER	165
ROLLER GP - TRACK - SINGLE FLANGE	165.01

INDEX

Name Page

ROTOR GP - SWIVEL 269

S

SCREEN GP 174
SEAT AS 366
SEAT BELT GP 366.12
SEAT GP 363
366.01
366.08
SIDECUTTER GP 422
SPROCKET GP - NONSEGMENTED 111
STARTING MOTOR GP - ELECTRIC 97.03
STICK AR - HOE 378
STICK GP 390
393
STICK GP - HOE 388
391
394
SUPPORT GP - SEAT 362.01
365.01
SUSPENSION AS - SEAT 366.06
SUSPENSION GP - SEAT 366.02
SWITCH AS 88
SWITCH AS - DISCONNECT 79
93
SWITCH AS - MAGNETIC 91
91.03
SWITCH AS - ROTARY 89
SWITCH AS - TOGGLE 88
SWITCH GP - START 90
SWIVEL GP 268

T

TANK & FILTER GP - HYDRAULIC 172
TANK & MTG GP - FUEL 54
TANK & MTG GP - HYDRAULIC 171
TANK AR - ADDITIONAL 57
TANK AS - WINDOW WASHER 344
TANK GP - FUEL 55
58
TIMER AS 78.06

Name Page

TIP GP 425
429
TIP GP - ABRASION 424
428
TIP GP - LONG 423
426
427
TIP GP - PENETRATION 425
428
TIP GP - SHORT 424
427
TIP GP - WIDE 426.01
429.01
TOOL AR 430
TOOL GP 431
TRACK ADJUSTER & RECOIL GP 157
TRACK GP 167
TURBOCHARGER GP 42

V

VALVE AR - 4 WAY 292
VALVE AR - SWING 292
VALVE AS 221.07
316
VALVE AS - BALL 221.05
318
VALVE GP 302
VALVE GP - CHECK 288
304
VALVE GP - CHECK & RELIEF 303.01
VALVE GP - CONTROL 278
286
290
VALVE GP - CUSHION CROSSOVER RLF 257
VALVE GP - FLOW CONTROL 313
VALVE GP - MAIN CONTROL 275
VALVE GP - MANIFOLD & REDUCING 305
VALVE GP - PILOT 270
306
VALVE GP - PILOT RELIEF 285
VALVE GP - PRESS REDUCING SOL 295.01
VALVE GP - PRESSURE CONTROL 276
300

INDEX

Name	Page
VALVE GP - RELIEF	262
	267
	283
	288
	289
	303
	303.02
VALVE GP - SELECTOR	293
VALVE GP - SHUTTLE	315
VALVE GP - SOLENOID	294
	301
VALVE GP - TRACTION CONTROL	266
VALVE MECHANISM GP	15
VISOR GP - PROTECTION - RAIN	358
VISOR GP - SUN	357

W

Name	Page
WASHER GP - WINDOW	343
	346
WINDOW AS - DOOR	325
WINDOW GP	333.01
	334.01
	338
WINDSHIELD AR - AUTO	337
WIPER & WASHER GP - WINDOW	348
WIPER AR - LOWER	345
WIPER GP - WINDOW	334
WIRING GP	80.03
	80.16
	94
WIRING GP - CAB	94.02
WIRING GP - CONSOLE	80.08
	81
WIRING GP - FINE SWING	91.01
WIRING GP - LOWER WIPER	80.04
WIRING GP - RADIO	80.05

ENGINE ARRANGEMENT

Consists of :

			Page
		BASIC ENGINE	
1	125-2954	PAN GP-OIL	25
1	5I-7755	CAMSHAFT GP	19
1	125-2955	CRANKSHAFT GP	18
1	125-2952	CYLINDER BLOCK GP	16
1	5I-7751	CYLINDER HEAD GP	14
1	5I-7752	VALVE MECHANISM GP	15
1	5I-7753	COVER GP-VALVE MECHANISM	17
1	5I-8027	FLYWHEEL GP	23
1	125-2953	HOUSING GP-FLYWHEEL	24
1	5I-8032	GEAR GP-FRONT	22
1	5I-7757	HOUSING GP-FRONT	21
1	5I-7760	PISTON & ROD GP	20
		LUBRICATION SYSTEM	
1	125-2957	FILTER GP-ENGINE OIL	32
1	5I-8034	LINES GP-ENGINE OIL	30
1	5I-7754	BREATHER GP	31
1	5I-7770	LINES GP-TURBOCHARGER OIL	32.01
		COOLING SYSTEM	
1	125-2958	PUMP GP-WATER	37
1	125-2959	LINES GP-WATER	38

H57446E 04

124-1696 ENGINE AR (1/2)
S/N 3MR 1-06593, 4MR 1-00947

ENGINE ARRANGEMENT

Consists of :

			Page
		COOLING SYSTEM	
1	125-2956	COOLER GP-ENGINE OIL	36
1	5I-7774	FAN GP-SUCTION	39
		AIR INLET AND EXHAUST SYSTEM	
1	5I-7764	MANIFOLD GP-INLET	46
1	5I-7766	LINES GP-AIR	45
1	5I-7765	MANIFOLD GP-EXHAUST	47
1	5I-8018	TURBOCHARGER GP	42
1	5I-8033	MUFFLER GP	44
		FUEL SYSTEM	
1	125-2961	PUMP GP-FUEL INJECTION	50
1	5I-7954	FILTER GP-FUEL	48
1	125-2960	LINES GP-FUEL	49
6	5I-7706	NOZZLE GP-UNIT INJECTOR	48
		ELECTRICAL AND STARTING SYSTEM	
1	125-2963	MOUNTING GP-STARTING MOTOR	97
1	125-2988	STARTING MOTOR GP-ELECTRIC	97.03
1	125-2962	MOUNTING GP-ALTERNATOR	98
1	5I-8071	ALTERNATOR GP-CHARGING	99

H57447E 04

ENGINE ARRANGEMENT

Consists of :

			Page
		BASIC ENGINE	
1	125-2954	PAN GP-OIL	25
1	5I-7755	CAMSHAFT GP	19
1	125-2955	CRANKSHAFT GP	18
1	125-2952	CYLINDER BLOCK GP	16
1	5I-7751	CYLINDER HEAD GP	14
1	5I-7752	VALVE MECHANISM GP	15
1	5I-7753	COVER GP-VALVE MECHANISM	17
1	5I-8027	FLYWHEEL GP	23
1	125-2953	HOUSING GP-FLYWHEEL	24
1	5I-8032	GEAR GP-FRONT	22
1	5I-7757	HOUSING GP-FRONT	21
1	5I-7760	PISTON & ROD GP	20
		LUBRICATION SYSTEM	
1	125-2957	FILTER GP-ENGINE OIL	32A
1	5I-8034	LINES GP-ENGINE OIL	30
1	5I-7754	BREATHER GP	31
1	5I-7770	LINES GP-TURBOCHARGER OIL	32.01
		COOLING SYSTEM	
1	125-2958	PUMP GP-WATER	37
1	125-2959	LINES GP-WATER	38

H78042E 05

124-1696 ENGINE AR (1/2)
S/N 3MR 06594-Up, 4MR 00948-Up

ENGINE ARRANGEMENT

Consists of :

			Page
		COOLING SYSTEM	
1	125-2956	COOLER GP-ENGINE OIL	36
1	5I-7774	FAN GP-SUCTION	39
		AIR INLET AND EXHAUST SYSTEM	
1	5I-7764	MANIFOLD GP-INLET	46
1	5I-7766	LINES GP-AIR	45
1	5I-7765	MANIFOLD GP-EXHAUST	47
1	5I-8018	TURBOCHARGER GP	42
1	5I-8033	MUFFLER GP	44
		FUEL SYSTEM	
1	171-3253	PUMP GP-FUEL INJECTION	50.06
1	5I-7954	FILTER GP-FUEL	48
1	125-2960	LINES GP-FUEL	49
6	5I-7706	NOZZLE GP-UNIT INJECTOR	48
		ELECTRICAL AND STARTING SYSTEM	
1	125-2963	MOUNTING GP-STARTING MOTOR	97
1	125-2988	STARTING MOTOR GP-ELECTRIC	97.03
1	125-2962	MOUNTING GP-ALTERNATOR	98
1	5I-8071	ALTERNATOR GP-CHARGING	99

H78043E 05

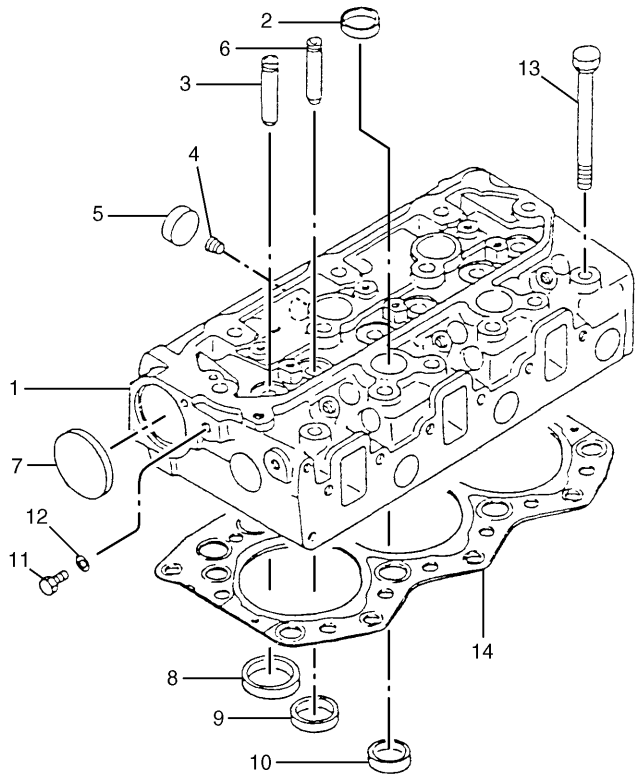

REAR

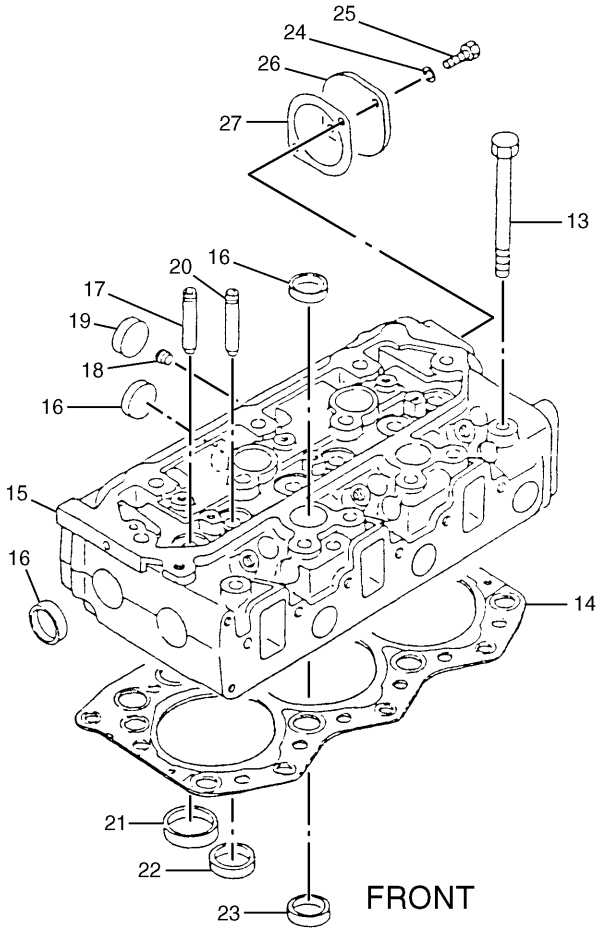

FRONT

NOTE	No.	PART No.	QTY	PART NAME	NOTE	No.	PART No.	QTY	PART NAME
	1	183-8171	1	HEAD AS		15	183-8174	1	HEAD AS
	2	5I-4915	12	CAP		16	5I-4915	12	CAP
	3	183-8172	3	GUIDE (INTAKE)		17	183-8172	3	GUIDE (INTAKE)
	4	5I-7505	3	PLUG		18	5I-7505	3	PLUG
	5	099-4388	3	CAP		19	099-4388	3	CAP
	6	183-8173	3	GUIDE (EXHAUST)		20	183-8173	3	GUIDE (EXHAUST)
	7	5I-4916	1	PLUG		21	5I-8011	3	INSERT (INTAKE)
	8	5I-8011	3	INSERT (INTAKE)		22	5I-8012	3	INSERT (EXHAUST)
	9	5I-8012	3	INSERT (EXHAUST)		23	5I-7583	4	CAP
	10	5I-7583	4	CAP		24	3B-4505	2	LOCKWASHER
	11	5I-5591	1	PLUG		25	8T-4189	2	BOLT (L=20mm)
	12	095-2038	1	WASHER		26	4W-8339	1	COVER
	13	5I-7718	26	BOLT (L=125mm)		27	5I-7728	1	GASKET
	14	5I-7648	2	GASKET					

H71557E 06

5I-7751 CYLINDER HEAD GP

Part of 124-1696-Page12

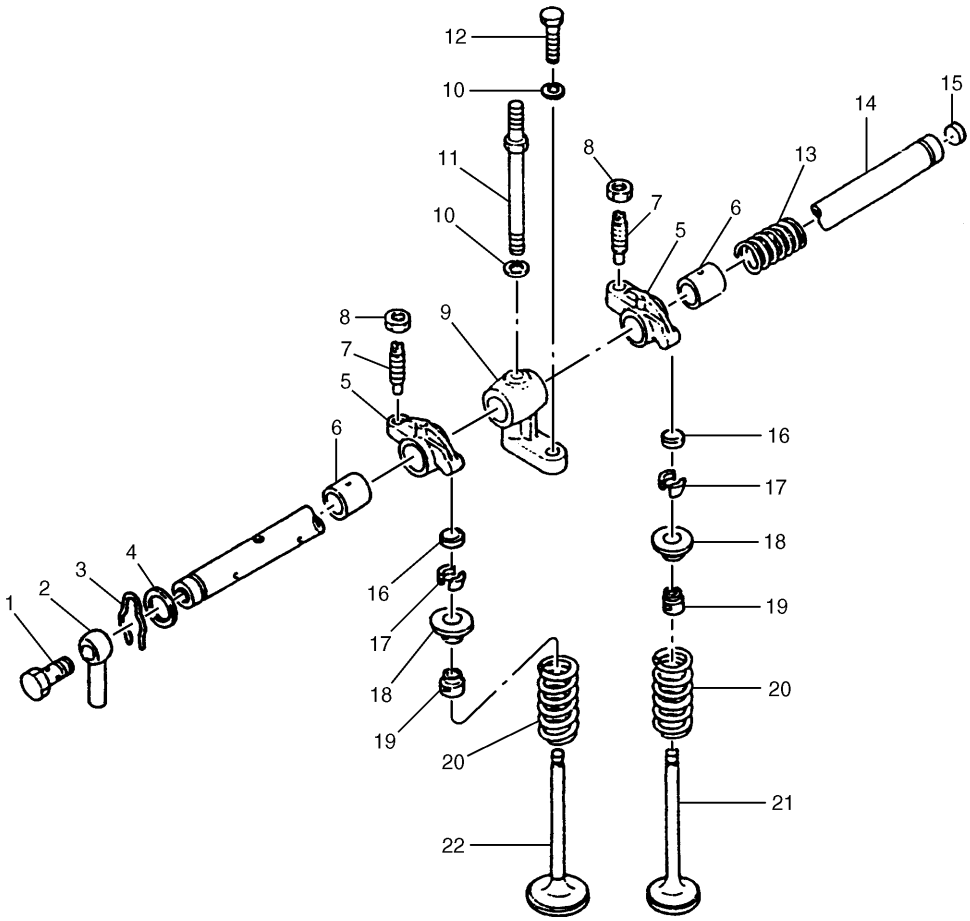

NOTE	No.	PART No.	QTY	PART NAME	NOTE	No.	PART No.	QTY	PART NAME
	1	5I-4921	2	BOLT (L=21mm)		20	5I-7740	12	SPRING
	2	5I-7720	2	PIPE		21	5I-7739	6	VALVE (EXHAUST)
	3	5I-7622	4	RING		22	5I-7738	6	VALVE (INTAKE)
	4	2W-6047	4	WASHER					
	5	5I-7590	12	ROCKER AS					
	6	5I-7631	1	BUSHING					
	7	094-9525	1	SCREW					
	8	091-3474	1	NUT					
	9	5I-7722	6	BRACKET					
	10	095-8638	12	WASHER					
	11	5I-7730	6	BOLT					
	12	8T-4189	6	BOLT (L=20mm)					
	13	5I-7721	4	SPRING					
	14	5I-7731	2	SHAFT AS					
	15	094-4696	1	PLUG					
	16	5I-7630	12	CAP					
	17	5I-7719	24	COTTER					
				(AVAILABLE IN SET WITH PAIR)					
	18	5I-7625	12	RETAINER					
	19	5I-7624	12	SEAL					

H52866E 03

5I-7752 VALVE MECHANISM GP

Part of 124-1696-Page12

BASIC ENGINE

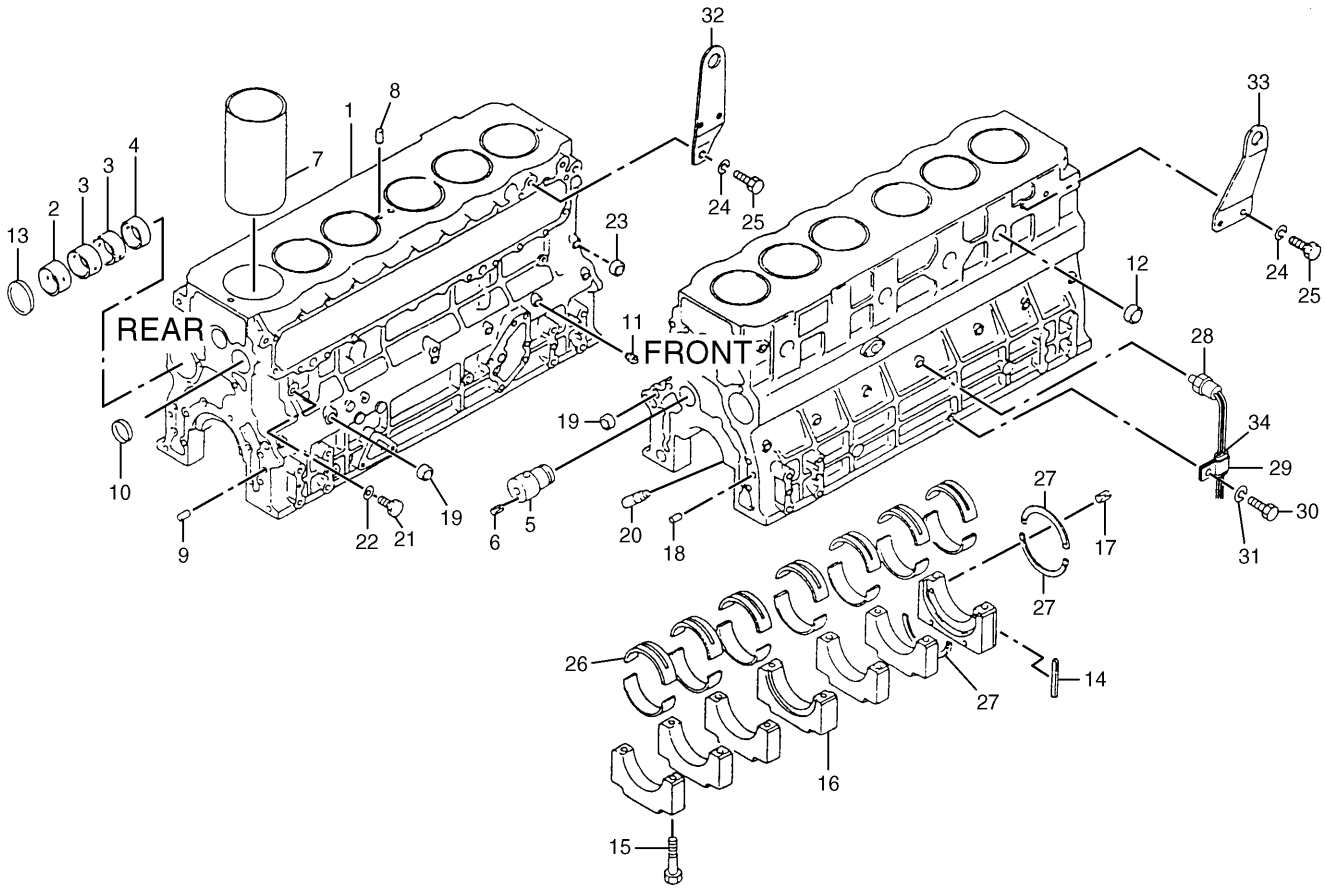

NOTE	No.	PART No.	QTY	PART NAME	NOTE	No.	PART No.	QTY	PART NAME
	1	125-2964	1	CRANKCASE AS		21	8T-4191	1	BOLT (L=16mm)
	2	5I-7529	1	BUSHING		22	095-2039	1	WASHER
	3	5I-7528	2	BUSHING		23	095-2005	2	CAP
	4	5I-8009	1	BUSHING		24	096-2501	3	WASHER
	5	5I-7672	1	SHAFT AS		25	8T-4179	3	BOLT (L=20mm)
	6	095-0879	1	PIN		26	5I-7588	7	BEARING SET (STANDARD)
	7	5I-7523	6	SLEEVE	A		5I-7784	7	BEARING SET (US=0.25mm)
	8	4I-9664	2	PIN	A		5I-7785	7	BEARING SET (US=0.50mm)
	9	099-4420	2	PIN	A		5I-7786	7	BEARING SET (US=0.75mm)
	10	095-2011	1	CAP		27	5I-7654	3	PLATE (STANDARD)
	11	5I-7505	9	PLUG	A		5I-7787	3	PLATE (OS=0.15mm)
	12	3P-1896	6	PLUG	A		5I-7788	3	PLATE (OS=0.30mm)
	13	5I-7525	1	PLUG	A		5I-7789	3	PLATE (OS=0.45mm)
	14	5I-7524	2	SEAL		28	5I-8005	1	SWITCH
	15	094-7115	14	BOLT		29	4D-7794	1	CLIP
	16	5I-7652	1	CAP SET		30	7X-2536	1	BOLT (L=14mm)
	17	6V-8236	6	PIN		31	095-8638	1	WASHER
	18	5I-7724	2	PIN		32	5I-7636	1	EYE
	19	096-3741	5	CAP		33	5I-7603	1	EYE
	20	5I-7526	12	VALVE		34	5I-7978	1	SHEET

A—NOT PART OF THIS GROUP

H53349E 00

125-2952 CYLINDER BLOCK GP

Part of 124-1696-Page12

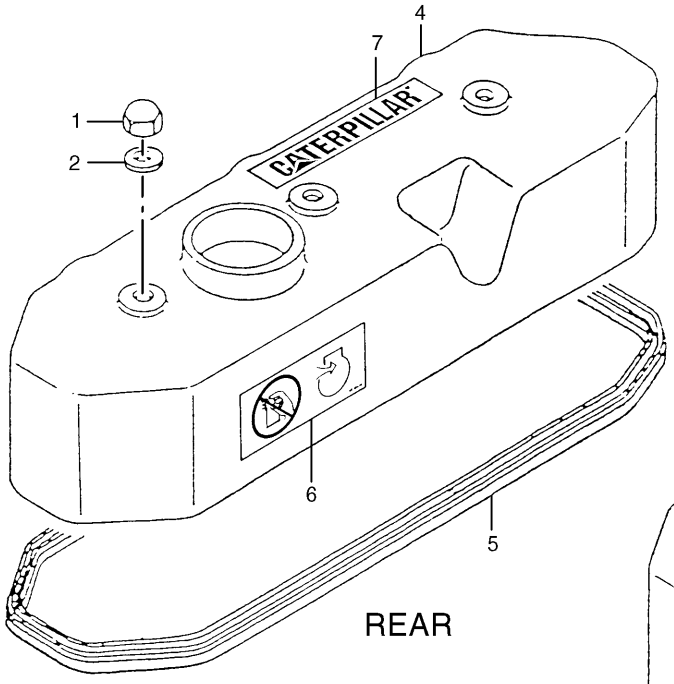

REAR

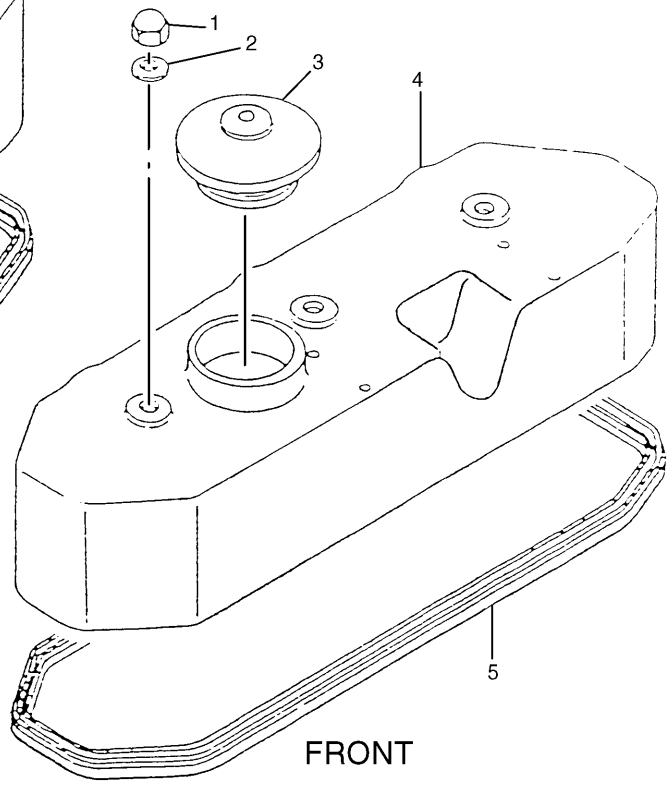

FRONT

NOTE	No.	PART No.	QTY	PART NAME	NOTE	No.	PART No.	QTY	PART NAME
	1	5I-7626	6	NUT					
	2	176-4983	6	GASKET					
	3	5I-7584	1	CAP					
	4	5I-8001	2	COVER					
	5	5I-8002	2	GASKET					
	6	4P-6422	1	FILM (WARNING)					
	7	4P-6445	1	PLATE (CAT)					

H67553E 06

5I-7753 COVER GP-VALVE MECHANISM

Part of 124-1696-Page12

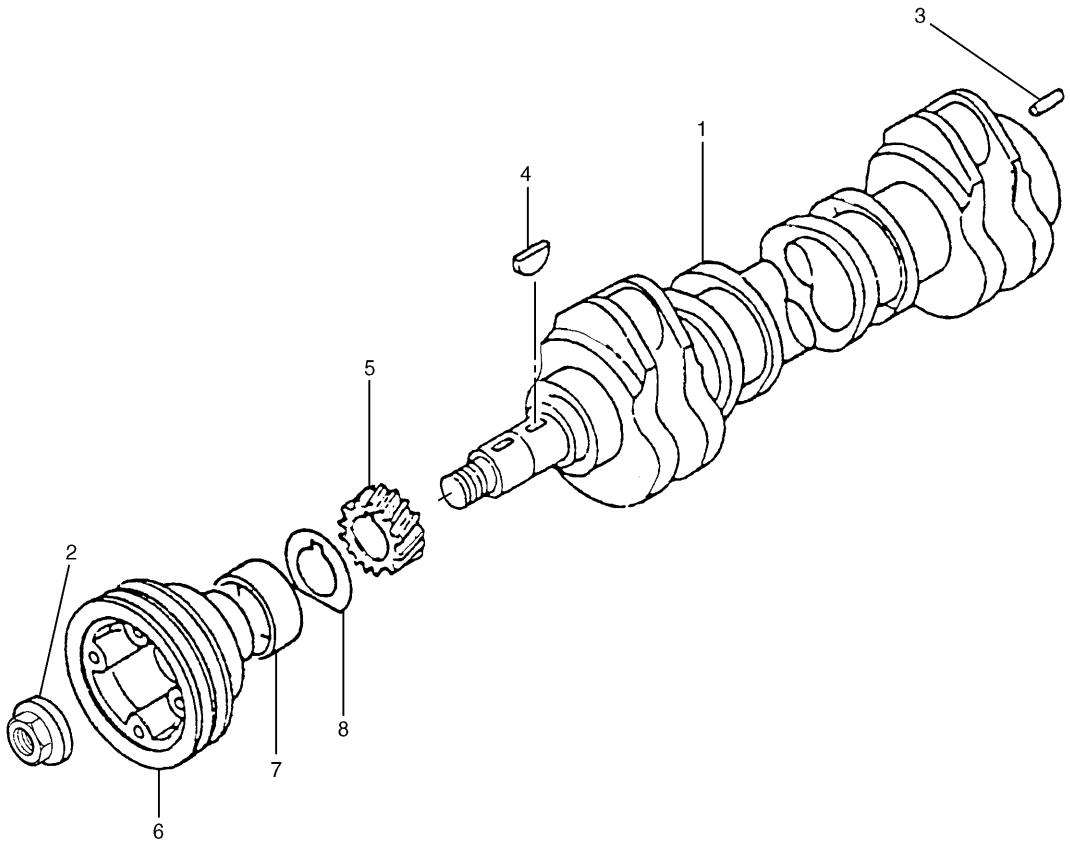

NOTE	No.	PART No.	QTY	PART NAME	NOTE	No.	PART No.	QTY	PART NAME
	1	125-3005	1	CRANKSHAFT AS					
	2	130-7596	1	NUT					
	3	085-9513	2	PIN					
	4	094-4628	2	KEY					
	5	5I-7674	1	GEAR (Z=23)					
	6	125-2969	1	PULLEY AS					
	7	5I-7540	1	SLEEVE					
	8	5I-7541	1	PLATE					

H53590E 01

125-2955 CRANKSHAFT GP

Part of 124-1696-Page12

BASIC ENGINE

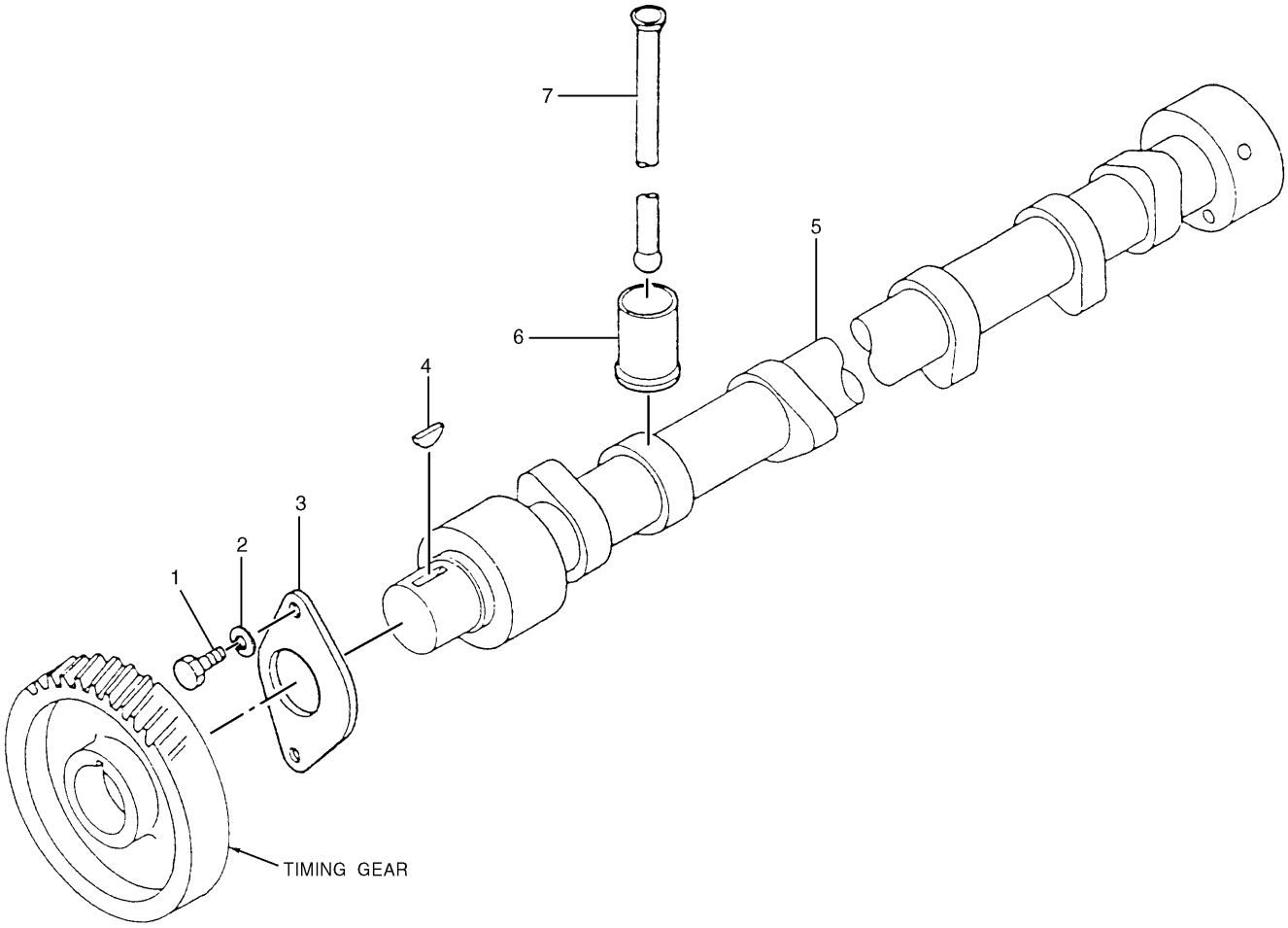

NOTE	No.	PART No.	QTY	PART NAME	NOTE	No.	PART No.	QTY	PART NAME
	1	8T-4200	2	BOLT (L=16mm)					
	2	095-8638	2	WASHER					
	3	5I-7650	1	PLATE					
	4	094-4628	1	KEY					
	5	5I-8068	1	CAMSHAFT					
	6	222-8183	12	TAPPET					
	7	5I-7723	12	PUSHROD					

H82000E 05

5I-7755 CAMSHAFT GP

Part of 124-1696-Page12

BASIC ENGINE

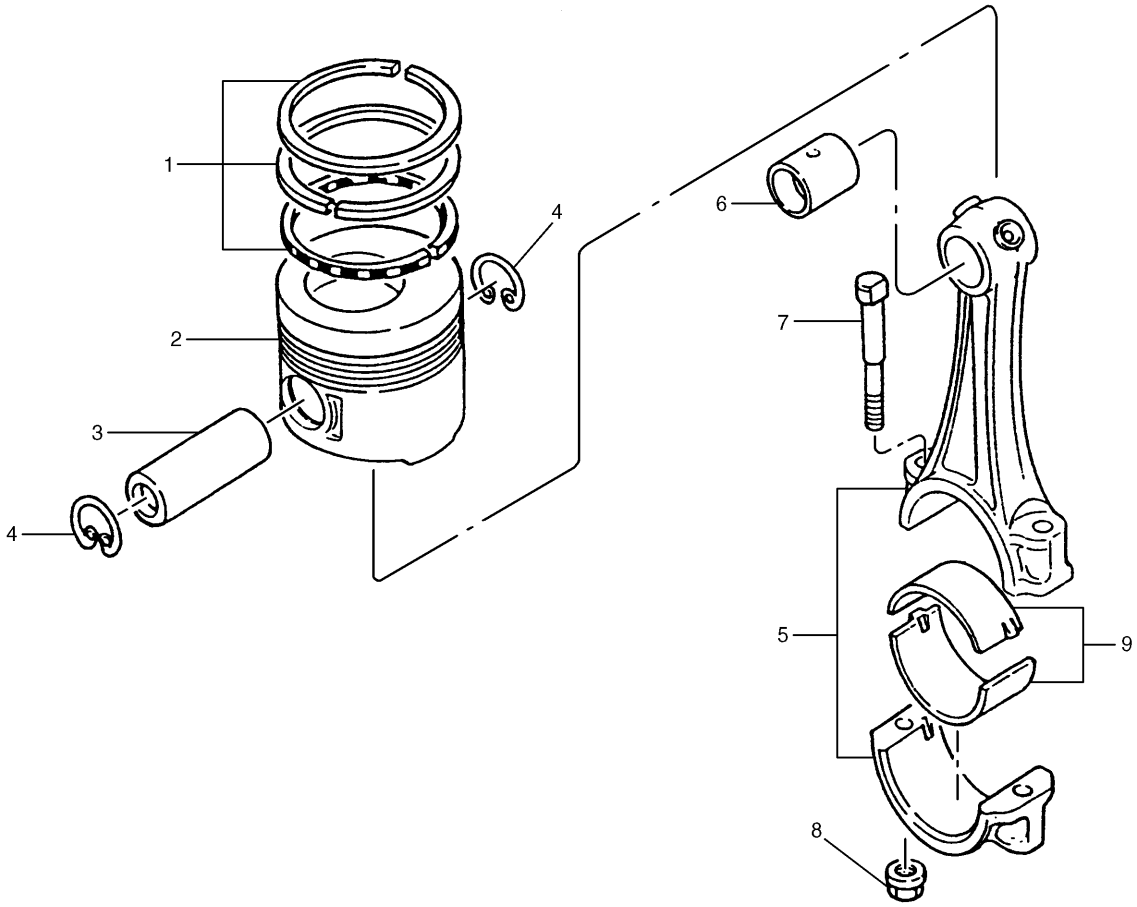

NOTE	No.	PART No.	QTY	PART NAME	NOTE	No.	PART No.	QTY	PART NAME
	1	5I-7538	6	RING SET (STANDARD)					
A		5I-7790	6	RING SET (OS=0.25mm)					
A		5I-7791	6	RING SET (OS=0.50mm)					
	2	5I-7537	6	PISTON (STANDARD)					
A		5I-7792	6	PISTON (OS=0.25mm)					
A		5I-7793	6	PISTON (OS=0.50mm)					
	3	094-7134	6	PIN					
	4	5I-7667	12	RING					
	5	5I-7668	6	ROD AS					
	6	5I-7539	1	BUSHING					
	7	094-7154	2	BOLT (L=85mm)					
	8	094-7516	2	NUT					
	9	5I-7637	12	BEARING					
				(AVAILABLE IN SET WITH PAIR)					
A		5I-7794	12	BEARING (US=0.25mm)					
A		5I-7795	12	BEARING (US=0.50mm)					
A		5I-7796	12	BEARING (US=0.75mm)					

A—NOT PART OF THIS GROUP

H52874E 02

5I-7760 PISTON & ROD GP
Part of 124-1696-Page12

BASIC ENGINE

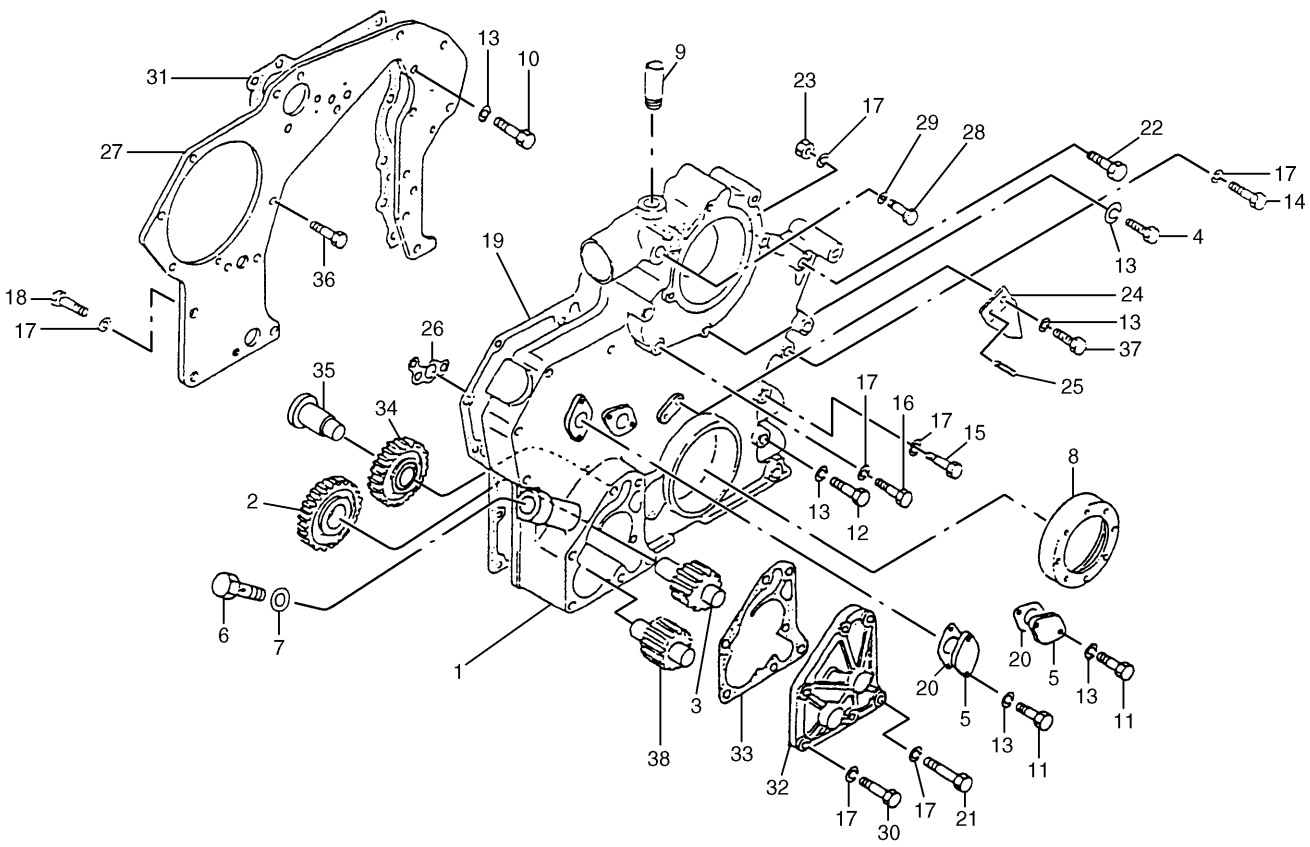

NOTE	No.	PART No.	QTY	PART NAME	NOTE	No.	PART No.	QTY	PART NAME
	1	5I-7596	1	BODY AS		21	8T-6685	4	BOLT (L=110mm)
	2	125-2951	1	GEAR (Z=23)		22	5I-4969	2	BOLT (L=70mm)
	3	125-2950	1	GEAR AS		23	6V-8231	2	NUT
	4	8T-4177	2	BOLT (L=90mm)		24	5I-7533	1	POINTER
	5	6F-7556	2	COVER		25	6V-8236	1	PIN
	6	5I-7559	1	VALVE AS		26	5I-7657	1	GASKET
	7	2Y-5872	1	GASKET		27	5I-7659	1	PLATE
	8	5I-7656	1	SEAL		28	096-9435	1	PLUG
	9	5I-7632	1	PIPE		29	096-9532	1	WASHER
	10	8T-4200	2	BOLT (L=16mm)		30	8T-4195	3	BOLT (L=30mm)
	11	8T-4189	4	BOLT (L=20mm)		31	5I-7534	1	GASKET
	12	8T-6870	4	BOLT (L=70mm)		32	5I-7685	1	COVER AS
	13	095-8638	13	WASHER		33	5I-7684	1	GASKET
	14	8T-6466	1	BOLT (L=60mm)		34	5I-7686	1	GEAR AS (Z=24)
	15	8T-5005	4	BOLT (L=70mm)		35	5I-7683	1	SPINDLE
	16	8T-4172	2	BOLT (L=80mm)		36	5I-7610	1	BOLT (L=20mm)
	17	7X-0796	18	LOCKWASHER		37	7X-2536	1	BOLT (L=14mm)
	18	8T-4137	2	BOLT (L=20mm)		38	5I-7558	1	GEAR AS
	19	5I-7658	1	GASKET					
	20	6F-7557	2	GASKET					

H52875E 08

5I-7757 HOUSING GP-FRONT

Part of 124-1696-Page12

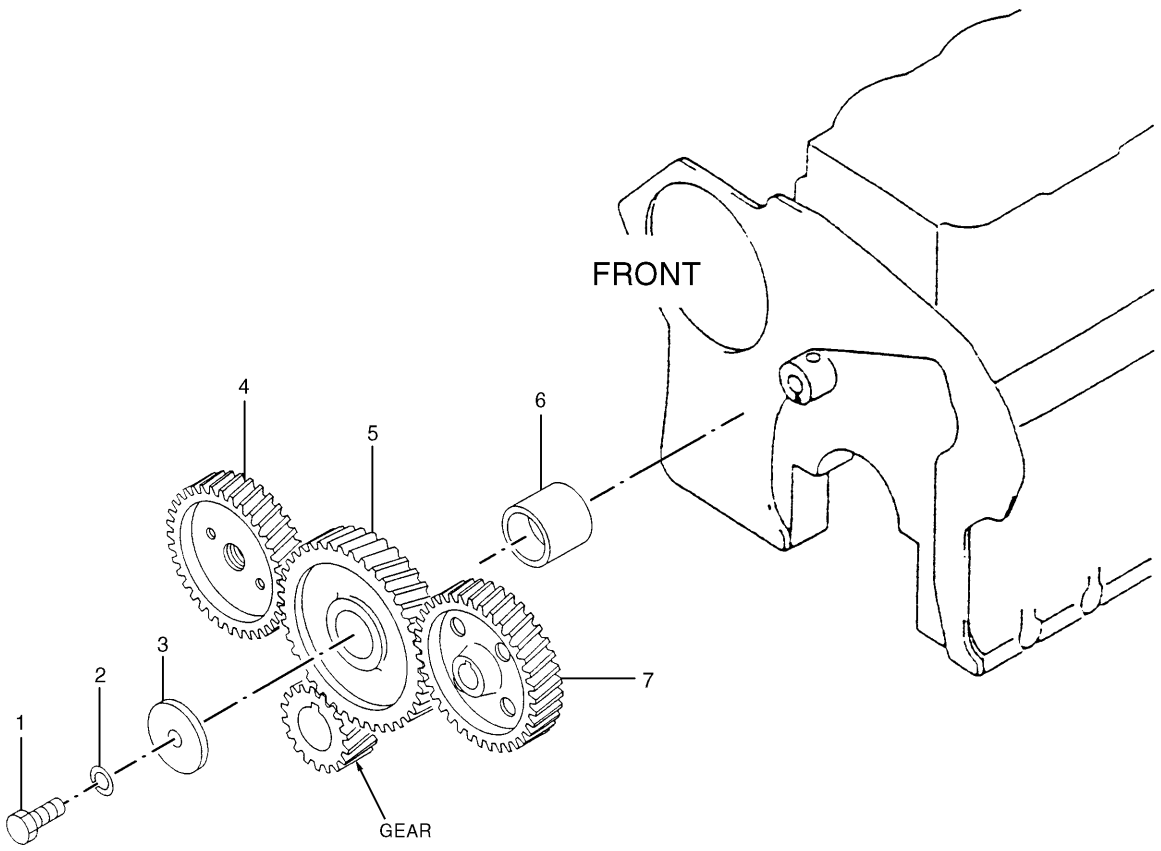

NOTE	No.	PART No.	QTY	PART NAME	NOTE	No.	PART No.	QTY	PART NAME
	1	5I-4936	1	BOLT (L=20mm)					
	2	7X-0796	1	LOCKWASHER					
	3	5I-7543	1	PLATE					
	4	5I-8038	1	GEAR					
	5	5I-7611	1	IDLER AS					
	6	5I-7542	1	BUSHING					
	7	5I-7673	1	GEAR (Z=46)					

H54021E 00

5I-8032 GEAR GP-FRONT

High Ambient,Emission Package

Part of 124-1696-Page12

BASIC ENGINE

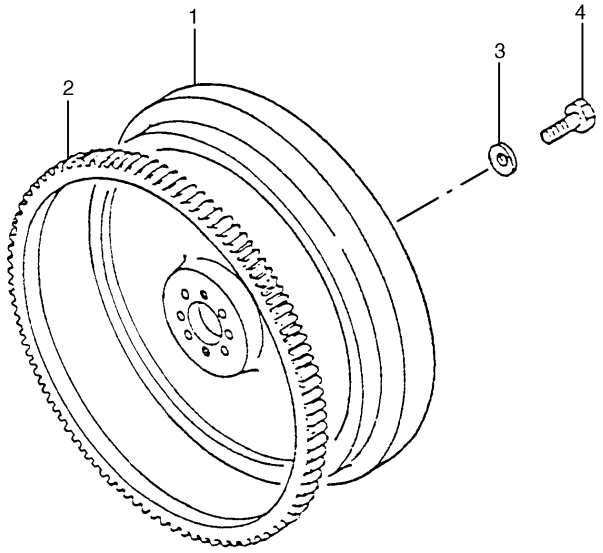

NOTE	No.	PART No.	QTY	PART NAME
	1	205-6793	1	FLYWHEEL AS
	2	205-6788	1	GEAR
	3	096-2501	6	WASHER
	4	5I-5005	6	BOLT (L=35mm)

H52879E 00

5I-8027 FLYWHEEL GP

Part of 124-1696-Page12

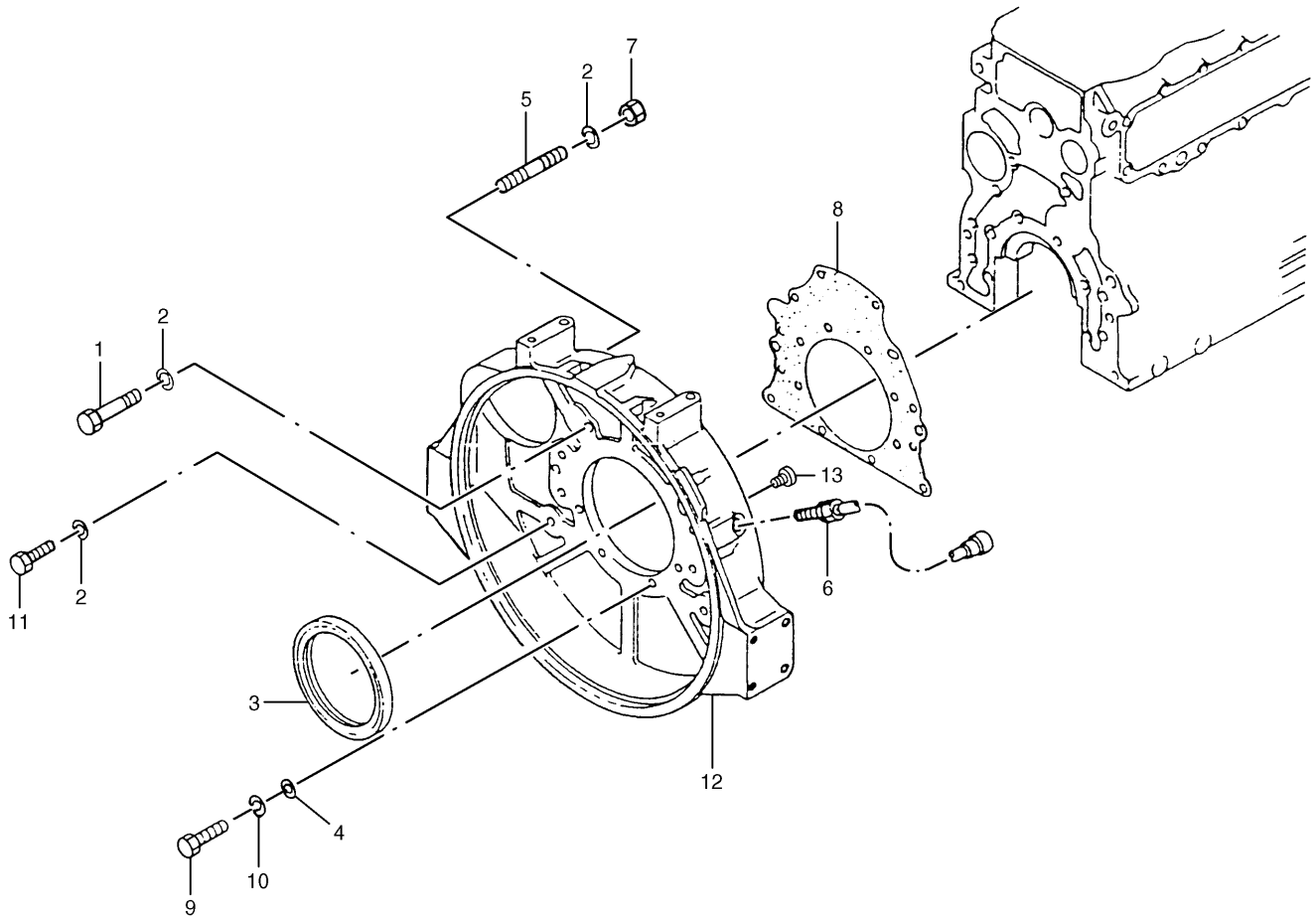

NOTE	No.	PART No.	QTY	PART NAME	NOTE	No.	PART No.	QTY	PART NAME
	1	8T-4136	2	BOLT (L=25mm)					
	2	7X-0796	12	LOCKWASHER					
	3	185-9110	1	SEAL AS					
	4	8T-4224	4	WASHER					
	5	5I-4983	2	STUD (STARTER)					
	6	125-2966	1	SENSOR					
	7	6V-8231	2	NUT					
	8	5I-7661	1	GASKET					
	9	8T-7547	4	BOLT (L=30mm)					
	10	095-8638	4	WASHER					
	11	8T-4195	8	BOLT (L=30mm)					
	12	125-2965	1	HOUSING					
	13	5I-7607	1	PLUG					

H72215E 01

125-2953 HOUSING GP-FLYWHEEL

Part of 124-1696-Page12

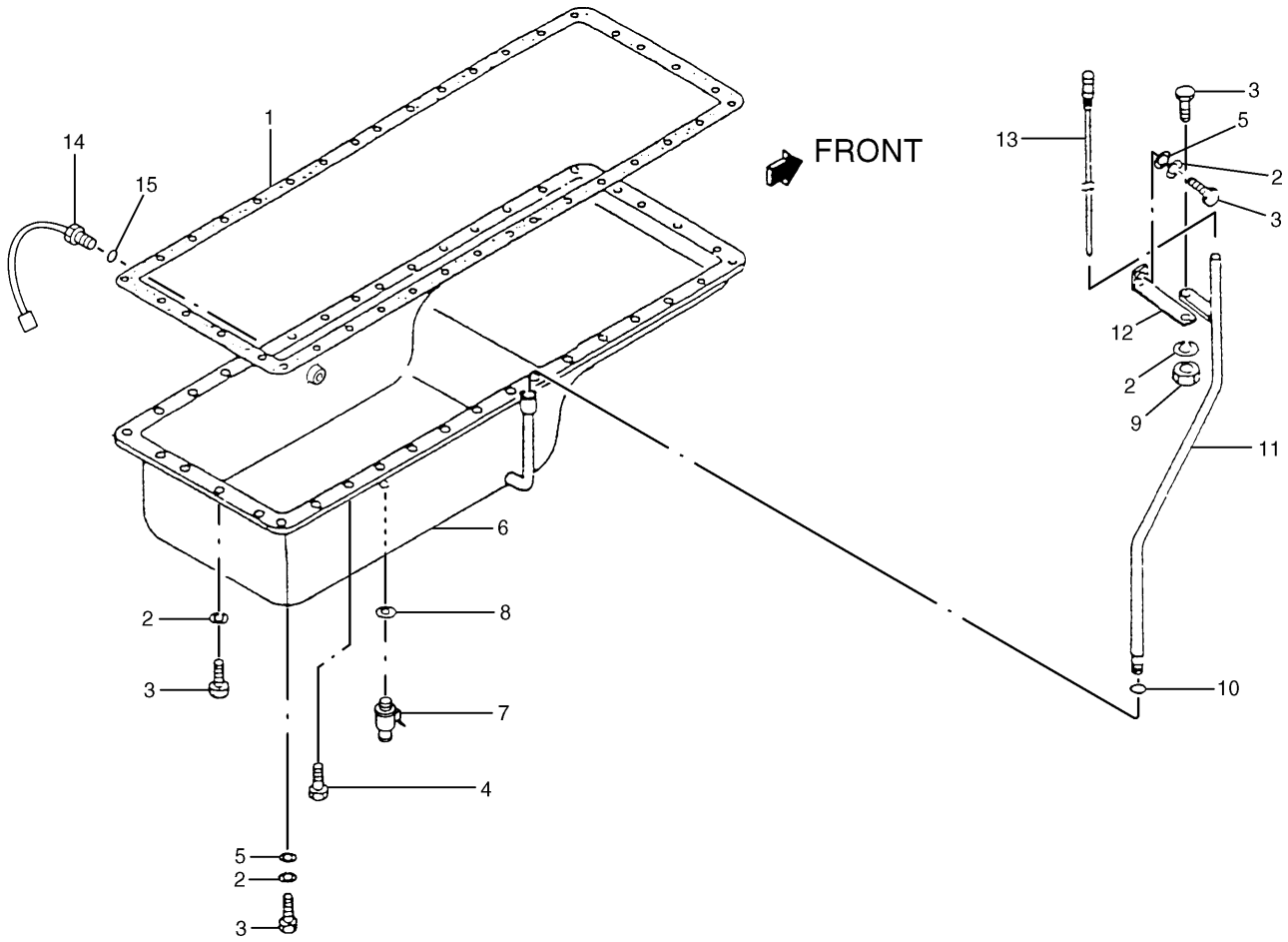

NOTE	No.	PART No.	QTY	PART NAME	NOTE	No.	PART No.	QTY	PART NAME
	1	5I-7666	1	GASKET					
	2	095-8638	18	WASHER					
	3	8T-4189	18	BOLT (L=20mm)					
	4	5I-7663	22	BOLT					
	5	8T-4224	20	WASHER					
	6	125-2967	1	PAN					
	7	5I-8015	1	COCK AS					
	8	5I-8067	1	WASHER					
	9	5C-7261	1	NUT					
	10	5I-4993	1	SEAL					
	11	5I-7665	1	GUIDE					
	12	5I-7535	1	PLATE					
	13	5I-7664	1	GAUGE					
	14	111-4760	1	SWITCH AS					
	15	125-2968	1	SEAL					

H67977E 01

125-2954 PAN GP-OIL
Part of 124-1696-Page12

MEMORANDA

BASIC ENGINE

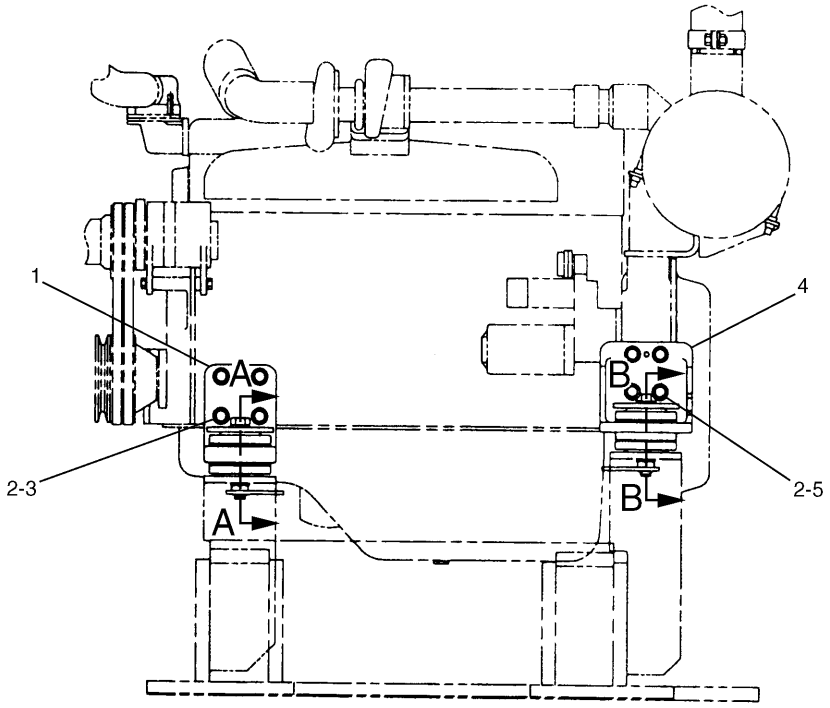

LH VIEW OF ENGINE

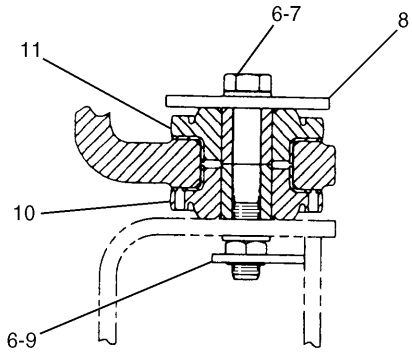

A – A

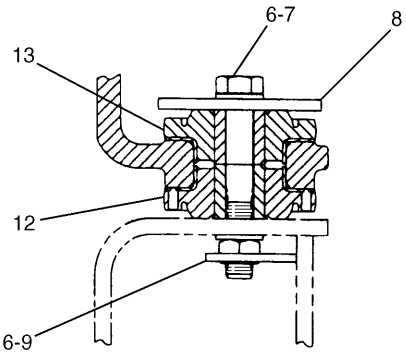

B – B

NOTE	No.	PART No.	QTY	PART NAME	NOTE	No.	PART No.	QTY	PART NAME
	1	118-9785	2	BRACKET					
	2	8T-4223	16	WASHER					
	3	8T-4183	8	BOLT (L=40mm)					
	4	118-9784	2	BRACKET					
	5	8T-4139	8	BOLT (L=30mm)					
	6	8T-4123	8	WASHER					
	7	7X-2532	4	BOLT (L=130mm)					
	8	109-9329	4	WASHER					
	9	118-9930	4	SUPPORT AS					
	10	109-9368	2	MOUNT					
	11	109-9369	2	MOUNT					
	12	109-9349	2	MOUNT					
	13	109-9350	2	MOUNT					

H52883E 02

109-9499 MOUNTING GP-ENGINE

BASIC ENGINE

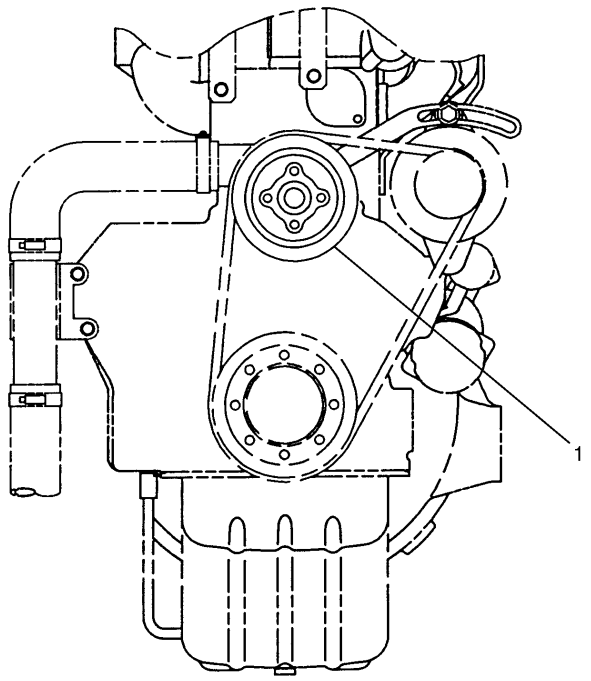

NOTE	No.	PART No.	QTY	PART NAME
	1	5I-7598	1	PULLEY

H54434E 00

135-5702 PULLEY GP-FAN DRIVE

Part of 126-3796-Page35
An Attachment

MEMORANDA

LUBRICATION SYSTEM

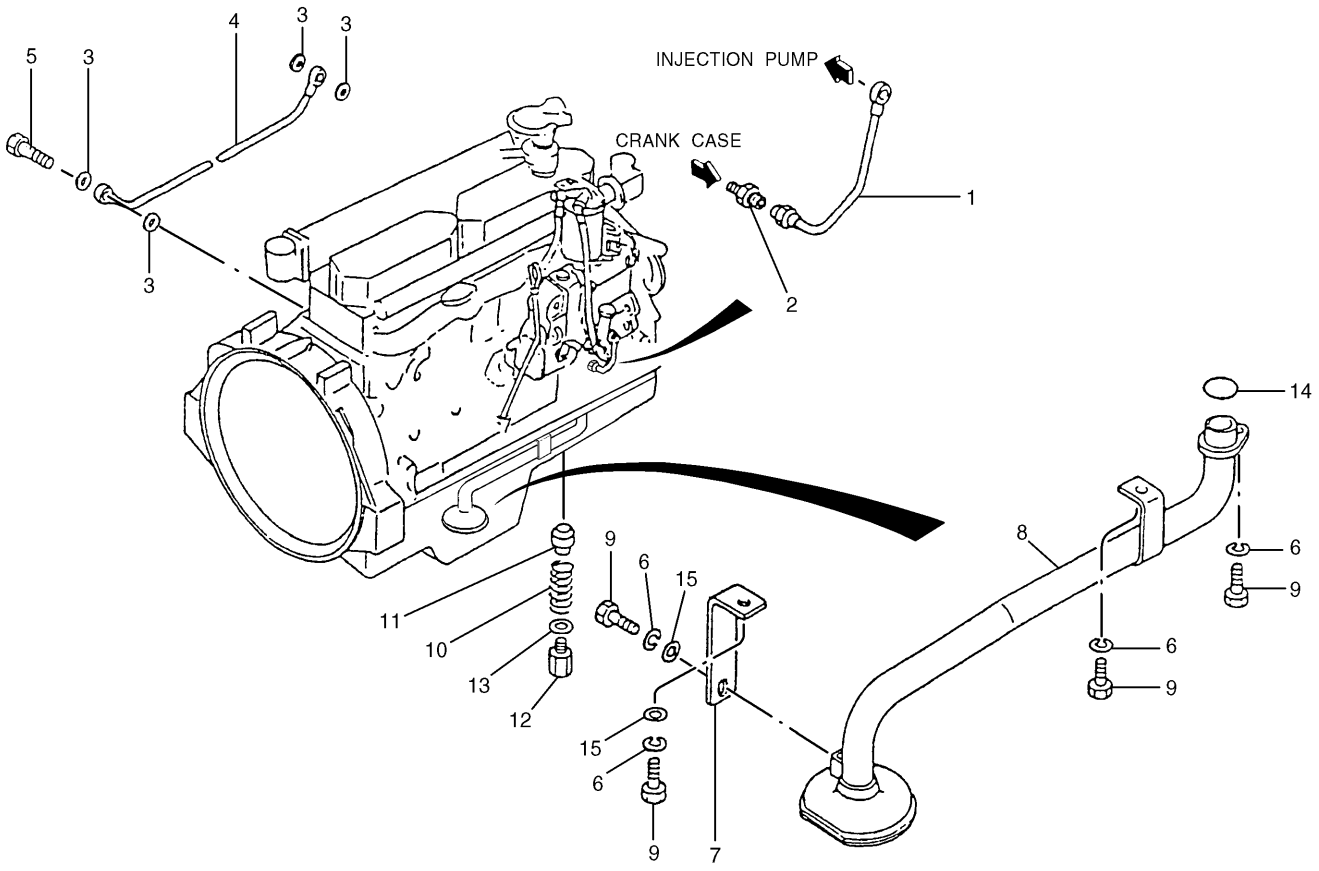

NOTE	No.	PART No.	QTY	PART NAME	NOTE	No.	PART No.	QTY	PART NAME
	1	5I-8070	1	PIPE					
	2	5I-8058	1	CONNECTOR					
	3	095-2038	4	WASHER					
	4	5I-7734	1	PIPE					
	5	5I-5029	2	BOLT (L=17mm)					
	6	095-8638	4	WASHER					
	7	5I-7642	1	PLATE					
	8	5I-7687	1	STRAINER					
	9	8T-4200	4	BOLT (L=16mm)					
	10	5I-7640	1	SPRING					
	11	5I-7643	1	VALVE					
	12	5I-7644	1	PLUG					
	13	9J-2089	1	WASHER					
	14	5I-5038	1	SEAL-O-RING (ID=24.40mm)					
	15	8T-4224	3	WASHER					

H52888E 02

5I-8034 LINES GP-ENGINE OIL

High Ambient,Emission Package

Part of 124-1696-Page12

LUBRICATION SYSTEM

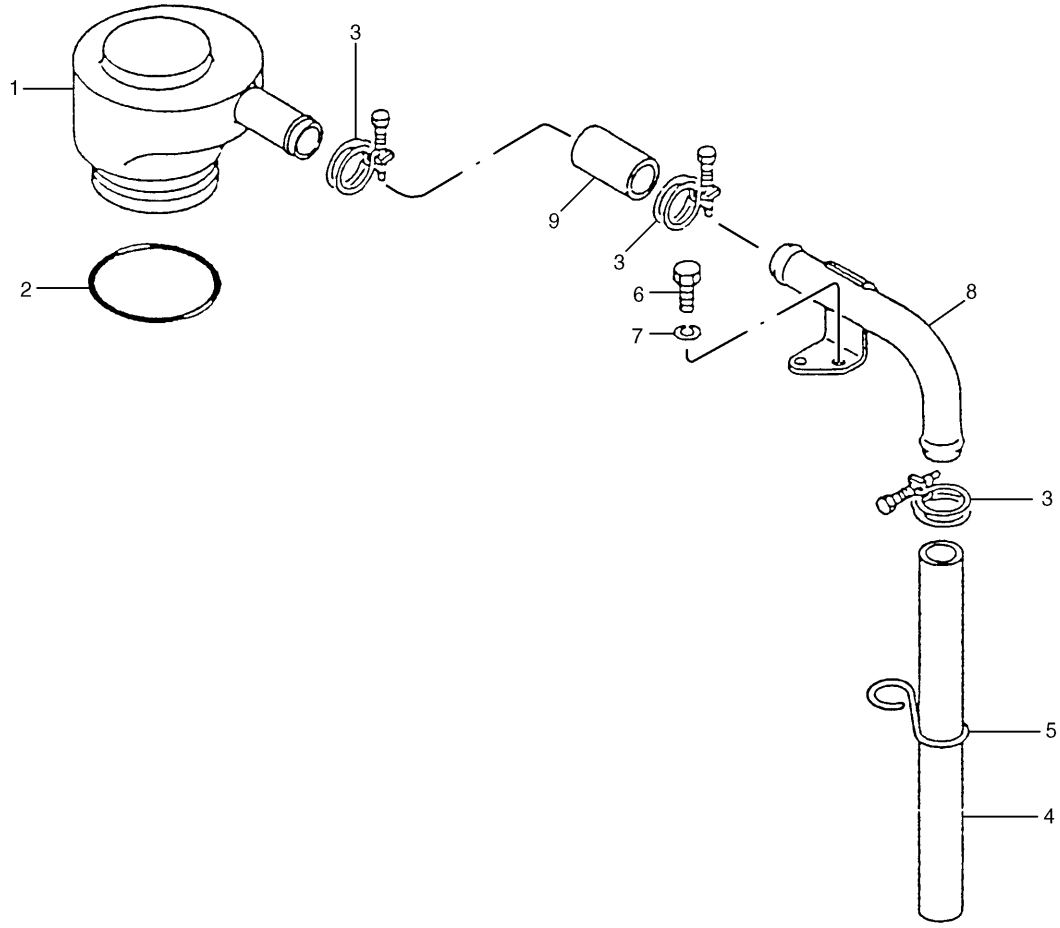

NOTE	No.	PART No.	QTY	PART NAME	NOTE	No.	PART No.	QTY	PART NAME
	1	5I-7725	1	BREATHER					
	2	094-9672	1	SEAL-O-RING (ID=41.20mm)					
	3	2S-3440	3	CLAMP					
	4	5I-7503	1	TUBE					
	5	5I-7726	1	STAY					
	6	8T-4137	1	BOLT (L=20mm)					
	7	7X-0796	2	LOCKWASHER					
	8	5I-7645	1	PIPE					
	9	5I-4940	1	TUBE					

H52889E 05

5I-7754 BREATHER GP
Part of 124-1696-Page12

LUBRICATION SYSTEM

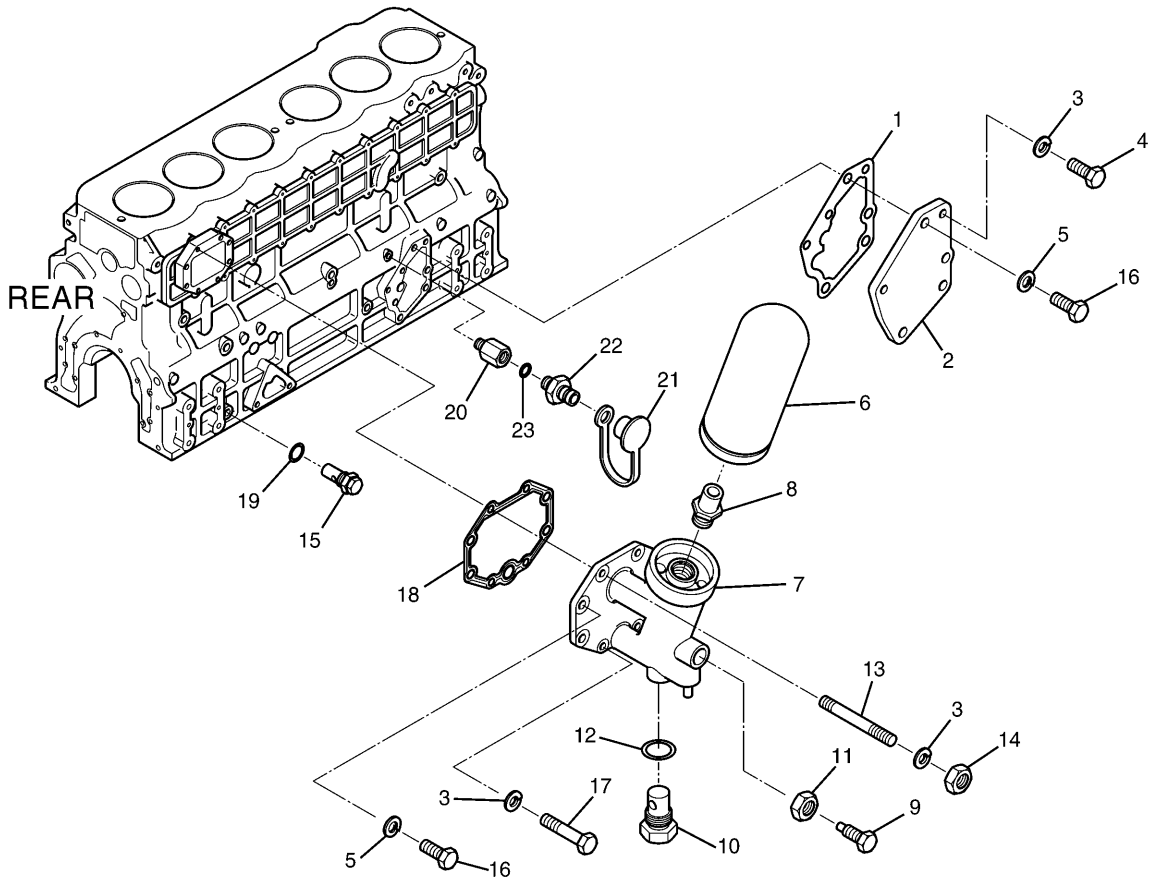

NOTE	No.	PART No.	QTY	PART NAME	NOTE	No.	PART No.	QTY	PART NAME
	1	125-2972	1	GASKET		21	8C-3445	1	CAP
	2	125-2973	1	COVER		22	8C-3446	1	VALVE
	3	095-8638	6	WASHER		23	3J-7354	1	SEAL-O-RING (ID=8.92mm)
	4	8T-4908	2	BOLT (L=25mm)					
	5	7X-0796	8	LOCKWASHER					
	6	1R-0739	1	FILTER AS					
	7	125-2974	1	BRACKET AS					
	8	125-2975	1	CONNECTOR					
	9	094-7925	1	VALVE					
	10	5I-8026	1	VALVE AS					
	11	125-2976	1	NUT					
	12	5B-5947	1	GASKET					
	13	125-2977	2	STUD					
	14	5C-7261	2	NUT					
	15	5I-8066	1	VALVE AS					
	16	8T-4136	8	BOLT (L=25mm)					
	17	8T-7329	2	BOLT (L=55mm)					
	18	125-2979	1	GASKET					
	19	5B-5947	1	GASKET					
	20	135-2368	1	ADAPTER					

H56058E 01

125-2957 FILTER GP-ENGINE OIL

S/N 3MR 1-06107, 4MR 1-00912
Part of 124-1696-Page12

LUBRICATION SYSTEM

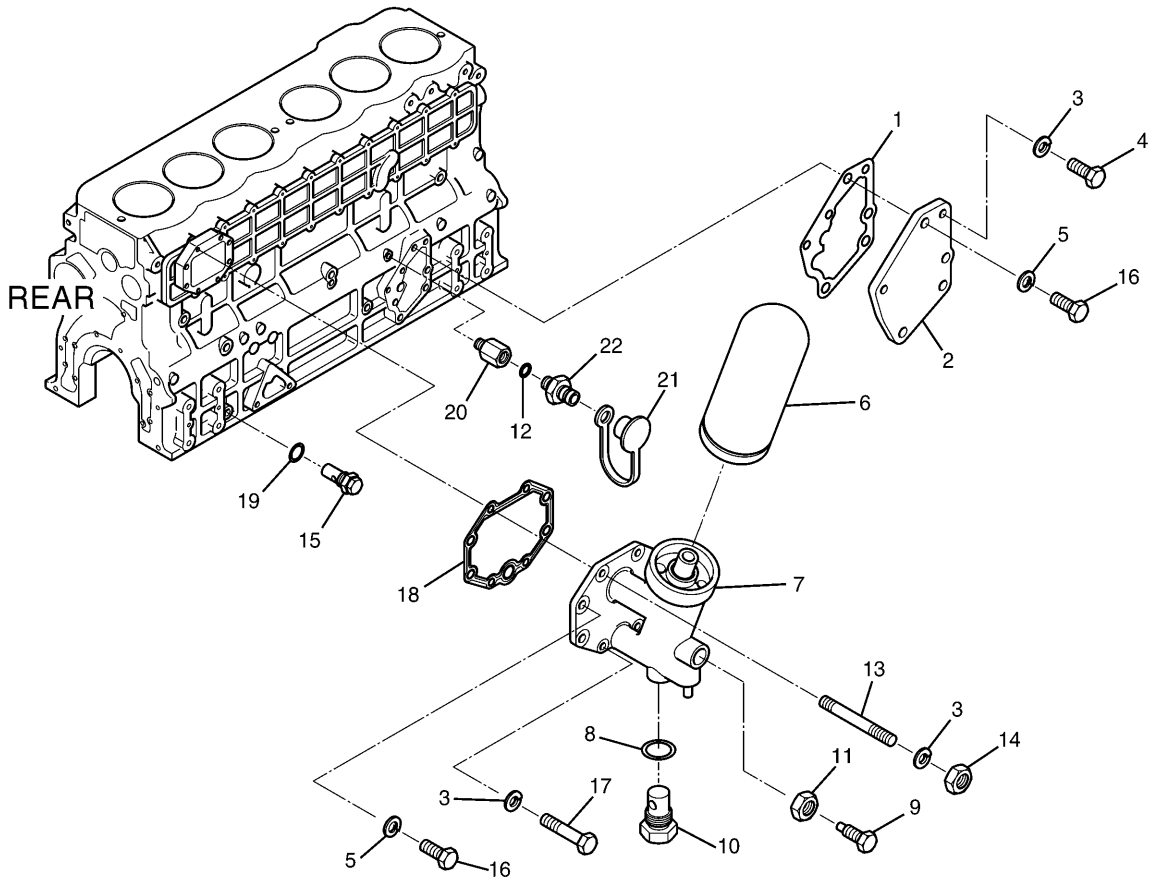

NOTE	No.	PART No.	QTY	PART NAME	NOTE	No.	PART No.	QTY	PART NAME
	1	125-2972	1	GASKET		21	8C-3445	1	CAP
	2	168-0582	1	COVER		22	8C-3446	1	VALVE
	3	095-8638	6	WASHER					
	4	8T-4908	2	BOLT (L=25mm)					
	5	7X-0796	8	LOCKWASHER					
	6	1R-0739	1	FILTER AS					
	7	125-2974	1	BRACKET AS					
	8	5B-5947	1	GASKET					
	9	094-7925	1	VALVE					
	10	5I-8026	1	VALVE AS					
	11	125-2976	1	NUT					
	12	3J-7354	1	SEAL-O-RING (ID=8.92mm)					
	13	125-2977	2	STUD					
	14	5C-7261	2	NUT					
	15	5I-8066	1	VALVE AS					
	16	8T-4136	8	BOLT (L=25mm)					
	17	8T-7329	2	BOLT (L=55mm)					
	18	125-2979	1	GASKET					
	19	5B-5947	1	GASKET					
	20	135-2368	1	ADAPTER					

H65215E 02

125-2957 FILTER GP-ENGINE OIL

S/N 3MR 06108-Up, 4MR 00913-Up
Part of 124-1696-Page12

MEMORANDA

LUBRICATION SYSTEM

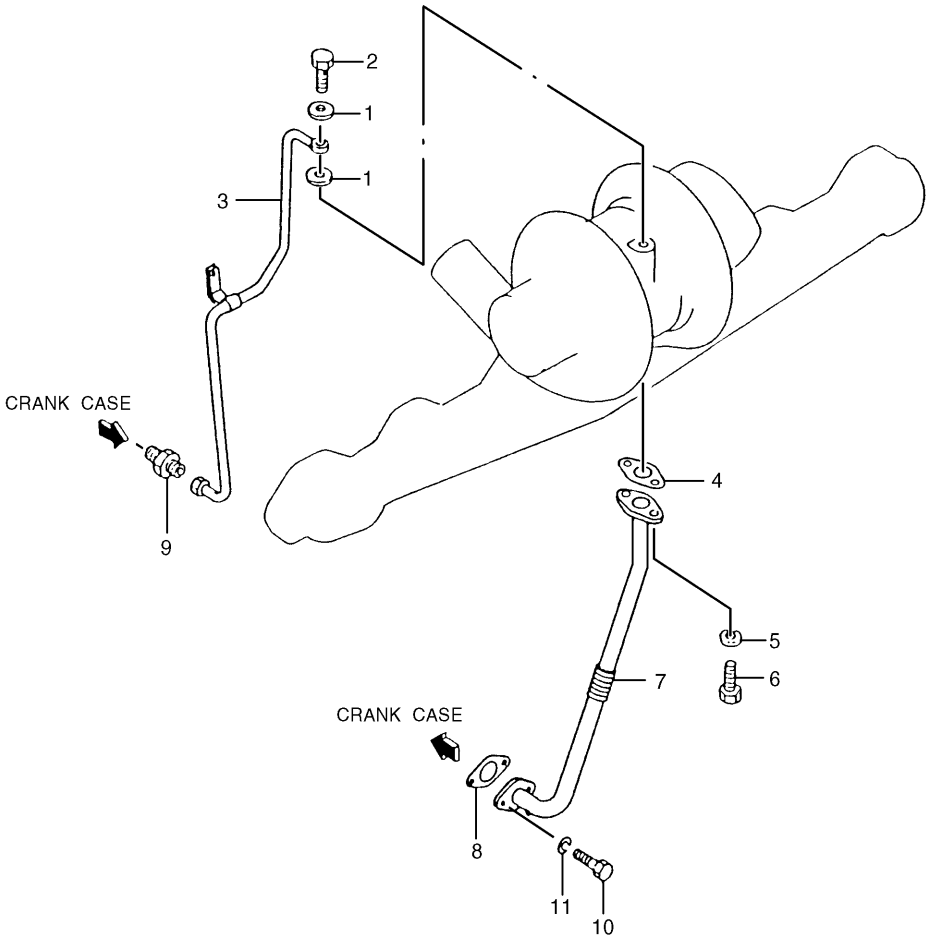

NOTE	No.	PART No.	QTY	PART NAME	NOTE	No.	PART No.	QTY	PART NAME
	1	2A-5222	2	WASHER					
	2	5I-7623	1	BOLT (L=20mm)					
	3	5I-8060	1	PIPE					
	4	5I-7689	1	GASKET					
	5	096-2500	2	WASHER					
	6	5C-9553	2	BOLT (L=16mm)					
	7	5I-7557	1	PIPE					
	8	5I-7561	1	GASKET					
	9	5I-8058	1	CONNECTOR					
	10	8T-4189	2	BOLT (L=20mm)					
	11	095-8638	2	WASHER					

H53594E 05

5I-7770 LINES GP-TURBOCHARGER OIL

Part of 124-1696-Page12

LUBRICATION SYSTEM

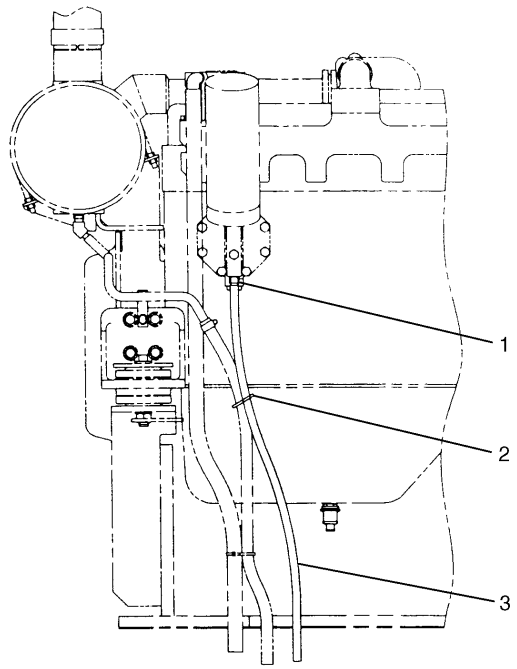

RH SIDE VIEW ENGINE

NOTE	No.	PART No.	QTY	PART NAME
	1	095-1388	1	CLAMP
	2	096-0061	1	STRAP
E	3	103-2529		HOSE…(80cm)

E—ORDER BY THE CENTIMETER

H52882E 00

124-1658 LINES GP-DRAIN

S/N 3MR 1-01607, 4MR 1-00300

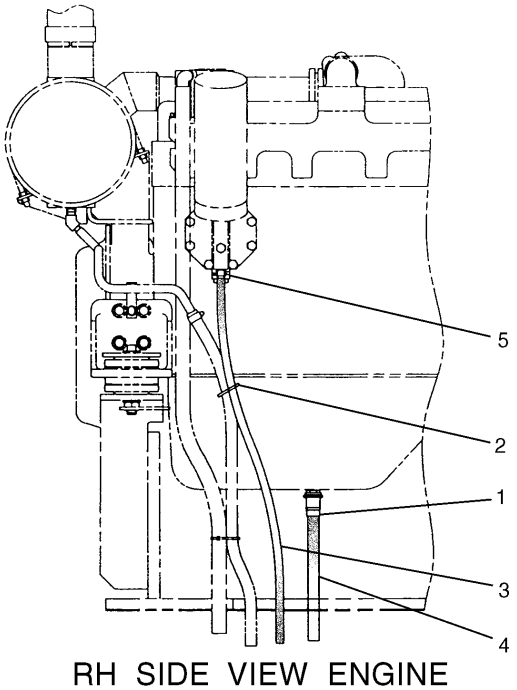

RH SIDE VIEW ENGINE

NOTE	No.	PART No.	QTY	PART NAME
	1	095-1388	1	CLAMP
	2	096-0061	1	STRAP
E	3	103-2529		HOSE…(80cm)
E	4	5P-0743		HOSE…(28cm)
	5	6S-8620	1	CLAMP

E—ORDER BY THE CENTIMETER

H54430E 02

124-1658 LINES GP-DRAIN

S/N 3MR 01608-Up, 4MR 00301-Up

MEMORANDA

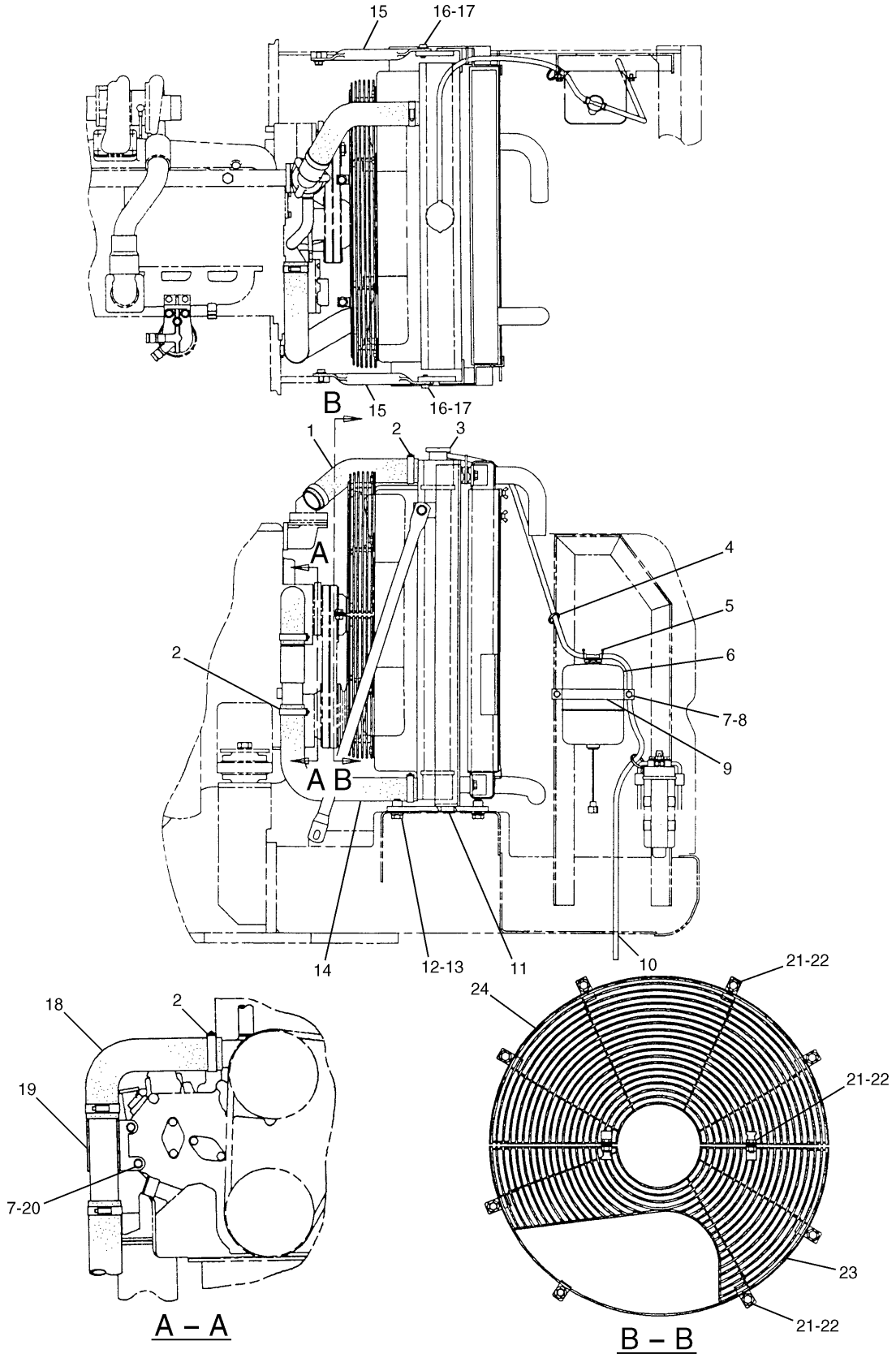

H57456E 02

109-9495 RADIATOR GP
S/N 3MR 1-(D99.12), 4MR 1-(D99.12)
109-9496-Page34

COOLING SYSTEM

NOTE	No.	PART No.	QTY	PART NAME	NOTE	No.	PART No.	QTY	PART NAME
	1	118-9848	1	HOSE					
	2	5P-0597	6	CLAMP					
Y	3	109-9496	1	RADIATOR GP					
	4	096-0061	3	STRAP					
	5	096-4035	1	CLIP					
	6	096-0744	1	TANK AS					
		171-3369	1	CAP AS					
	7	8T-4224	4	WASHER					
	8	8T-4200	2	BOLT (L=16mm)					
	9	099-6607	1	BAND					
E	10	7Y-1976		HOSE…(86cm)					
D	11	6V-5030		SEAL…(1m)					
	12	9X-8257	4	WASHER					
	13	7X-2553	4	BOLT (L=40mm)					
	14	118-9849	1	HOSE					
	15	7Y-1945	2	BRACE					
	16	8T-4223	4	WASHER					
	17	8T-4192	4	BOLT (L=25mm)					
	18	7Y-1941	1	HOSE					
	19	7Y-1938	1	PIPE AS					
	20	8T-3647	2	BOLT (L=80mm)					
	21	7X-7729	10	WASHER					
	22	8T-4137	10	BOLT (L=20mm)					
	23	124-1664	1	GUARD AS					
	24	124-1657	1	GUARD AS					

D—ORDER BY THE METER
E—ORDER BY THE CENTIMETER
Y—SEE SEPARATE ILLUSTRATION

H57456E 02

109-9495 RADIATOR GP

S/N 3MR 1-(D99.12), 4MR 1-(D99.12)
109-9496-Page34

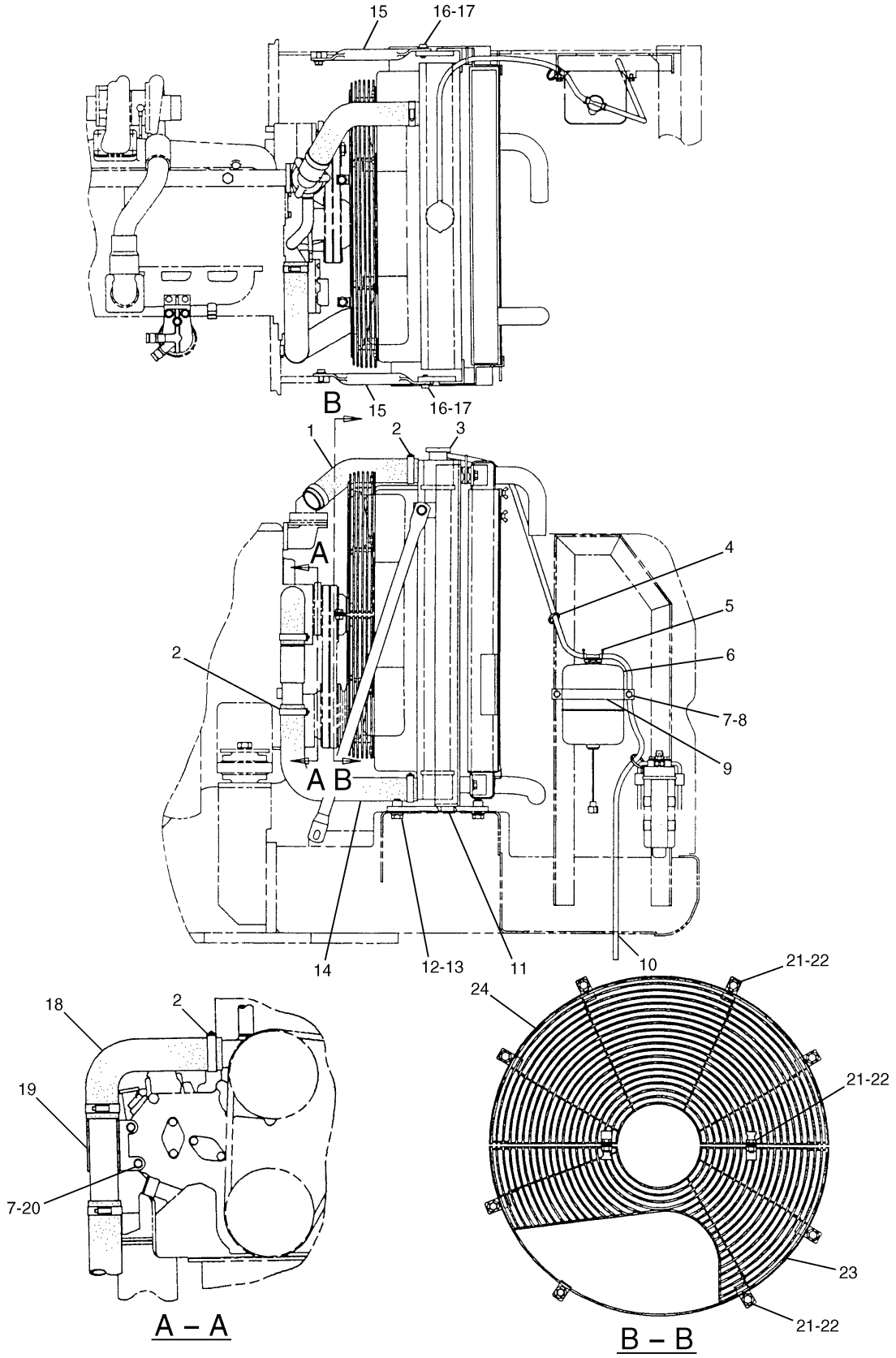

H78031E 03

109-9495 RADIATOR GP
S/N 3MR (T00.01)-Up, 4MR (T00.01)-Up
184-3895-Page34.02

COOLING SYSTEM

NOTE	No.	PART No.	QTY	PART NAME	NOTE	No.	PART No.	QTY	PART NAME
	1	118-9848	1	HOSE					
	2	5P-0597	6	CLAMP					
Y	3	184-3895	1	RADIATOR GP					
	4	096-0061	3	STRAP					
	5	096-4035	1	CLIP					
	6	096-0744	1	TANK AS					
		171-3369	1	CAP AS					
	7	8T-4224	4	WASHER					
	8	8T-4200	2	BOLT (L=16mm)					
	9	099-6607	1	BAND					
E	10	7Y-1976		HOSE…(86cm)					
E	11	6V-5030		SEAL…(590cm)					
	12	9X-8257	4	WASHER					
	13	7X-2553	4	BOLT (L=40mm)					
	14	118-9849	1	HOSE					
	15	7Y-1945	2	BRACE					
	16	8T-4223	4	WASHER					
	17	8T-4192	4	BOLT (L=25mm)					
	18	7Y-1941	1	HOSE					
	19	7Y-1938	1	PIPE AS					
	20	8T-3647	2	BOLT (L=80mm)					
	21	7X-7729	10	WASHER					
	22	8T-4137	10	BOLT (L=20mm)					
	23	124-1664	1	GUARD AS					
	24	124-1657	1	GUARD AS					

E—ORDER BY THE CENTIMETER

Y—SEE SEPARATE ILLUSTRATION

H78031E 03

109-9495 RADIATOR GP

S/N 3MR (T00.01)-Up, 4MR (T00.01)-Up

184-3895-Page34.02

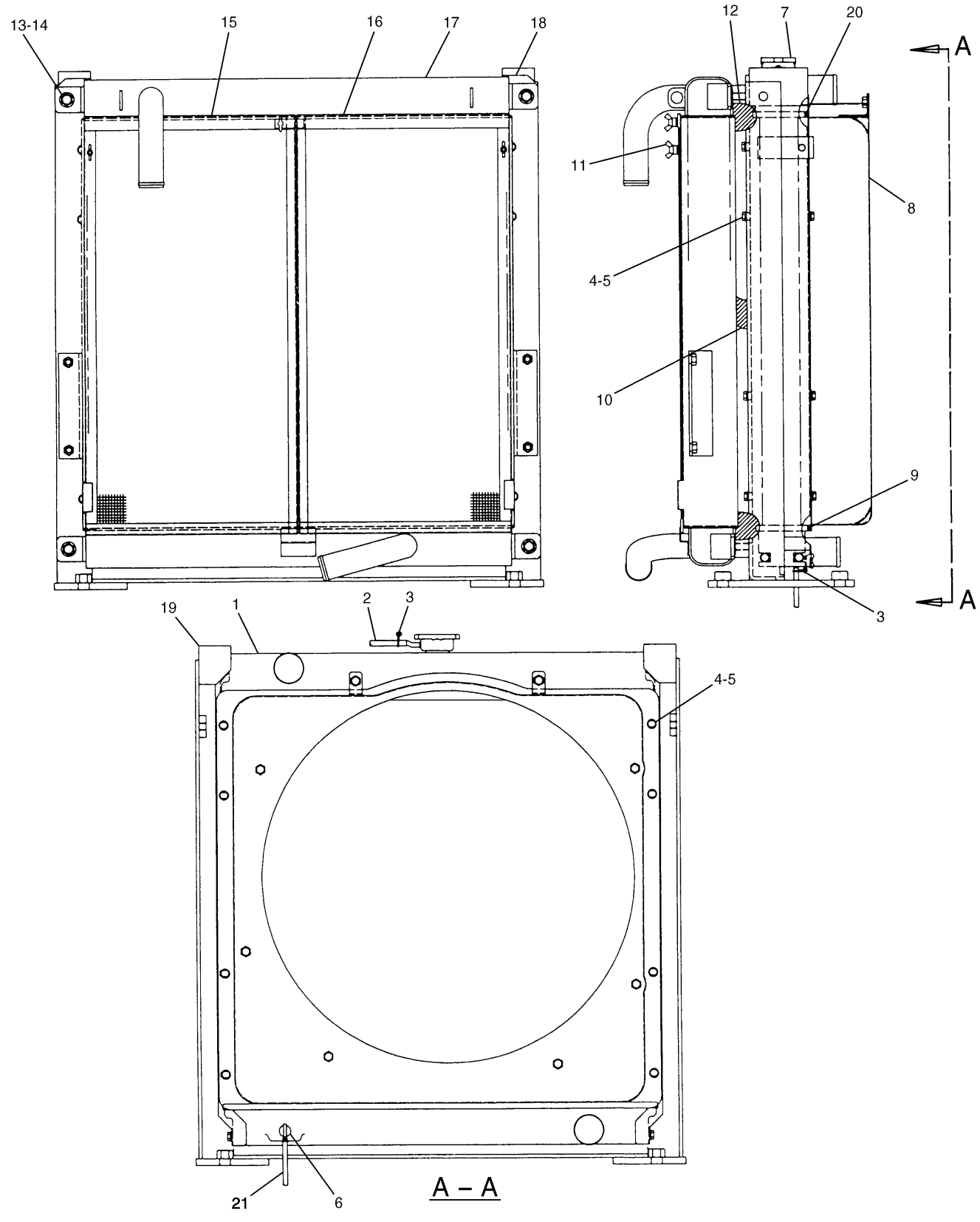

H78180E 07

109-9496 RADIATOR & HYD OIL COOLER GP

S/N 3MR 1-(D99.12), 4MR 1-(D99.12)
Part of 109-9495-Page33.02

COOLING SYSTEM

NOTE	No.	PART No.	QTY	PART NAME	NOTE	No.	PART No.	QTY	PART NAME
	1	118-9953	1	CORE AS (RADIATOR)					
E	2	7Y-1976		HOSE…(110cm)					
	3	096-4035	3	CLIP					
	4	8T-4224	16	WASHER					
	5	8T-4200	16	BOLT (L=16mm)					
	6	124-1574	1	COCK AS					
	7	124-1613	1	CAP AS					
	8	135-5620	1	SHROUD AS					
	9	124-1586	2	SEAL					
	10	124-1588	2	SEAL					
	11	096-4034	3	BOLT					
	12	124-1587	2	SEAL					
	13	8T-4223	4	WASHER					
	14	8T-4192	4	BOLT (L=25mm)					
	15	122-5247	1	SCREEN AS					
	16	122-5246	1	SCREEN AS					
	17	118-9954	1	CORE AS (OIL COOLER)					
	18	118-9955	1	FRAME AS					
	19	124-1698	2	SEAL					
	20	155-7102	2	SEAL					
E	21	7Y-1976		HOSE…(25cm)					

E—ORDER BY THE CENTIMETER

H78180E 07

109-9496 RADIATOR & HYD OIL COOLER GP

S/N 3MR 1-(D99.12), 4MR 1-(D99.12)
Part of 109-9495-Page33.02

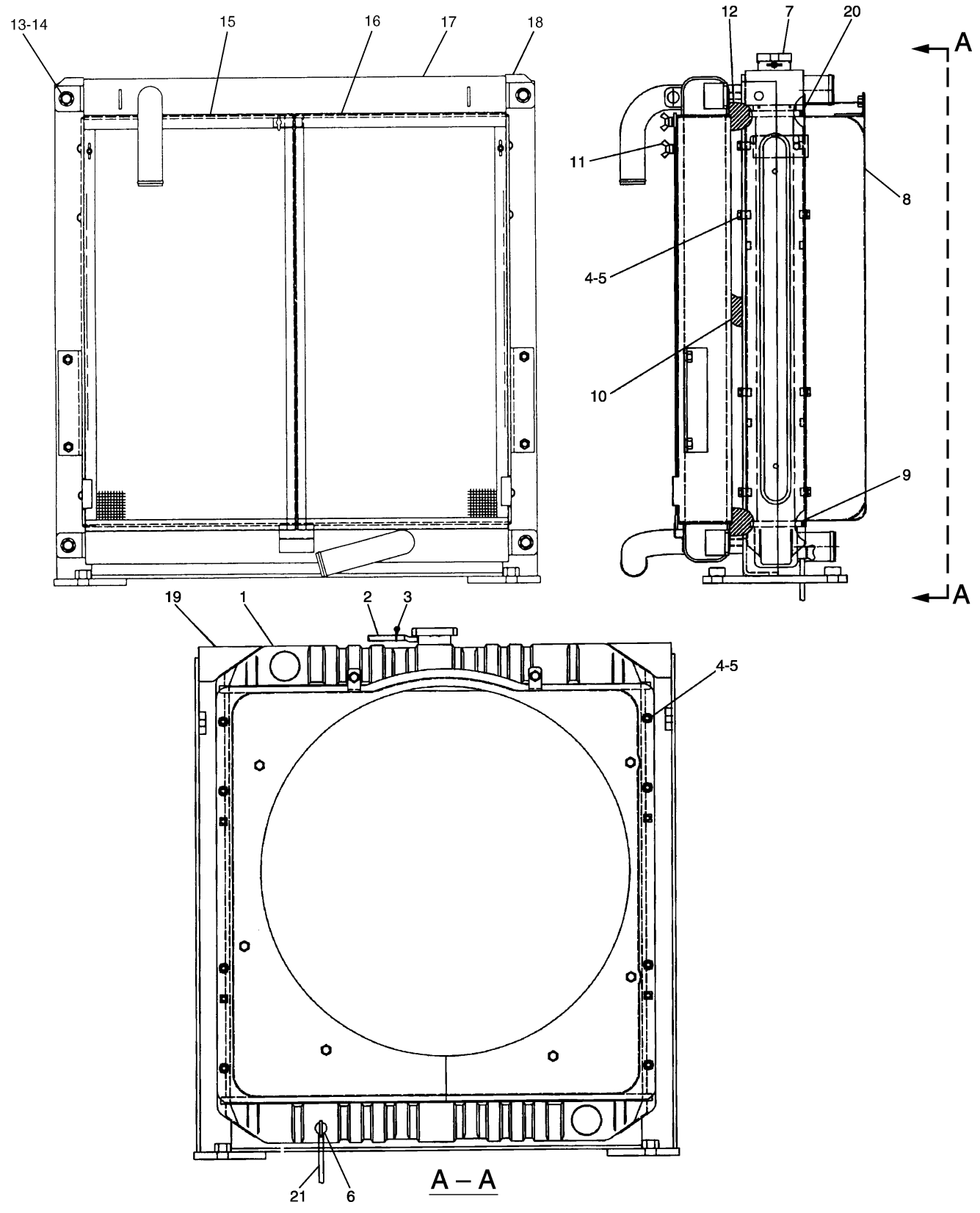

H78033E 02

184-3895 RADIATOR & HYD OIL COOLER GP
S/N 3MR (T00.01)-Up, 4MR (T00.01)-Up
Part of 109-9495-Page33.04

COOLING SYSTEM

NOTE	No.	PART No.	QTY	PART NAME	NOTE	No.	PART No.	QTY	PART NAME
	1	184-3896	1	CORE AS (RADIATOR)					
E	2	7Y-1976		HOSE…(110cm)					
	3	096-4035	3	CLIP					
	4	8T-4224	16	WASHER					
	5	8T-4200	16	BOLT (L=16mm)					
	6	093-5432	1	COCK AS					
	7	184-3949	1	CAP AS					
	8	135-5620	1	SHROUD AS					
	9	124-1586	2	SEAL					
	10	124-1588	2	SEAL					
	11	096-4034	3	BOLT					
	12	124-1587	2	SEAL					
	13	8T-4223	4	WASHER					
	14	8T-4192	4	BOLT (L=25mm)					
	15	122-5247	1	SCREEN AS					
	16	122-5246	1	SCREEN AS					
	17	118-9954	1	CORE AS (OIL COOLER)					
	18	118-9955	1	FRAME AS					
	19	184-3901	2	SEAL					
	20	155-7102	2	SEAL					
E	21	7Y-1976		HOSE…(25cm)					

E—ORDER BY THE CENTIMETER

H78033E 02

184-3895 RADIATOR & HYD OIL COOLER GP

S/N 3MR (T00.01)-Up, 4MR (T00.01)-Up
Part of 109-9495-Page33.04

MEMORANDA

COOLING SYSTEM

Consists of :

			Page
1	114-1481	GEAR & BEARING GP	149.01
1	128-9802	FRAME GP-UPPER	152.02
1	131-8947	RADIATOR GP	35.01
1	133-5779	LINES GP-RETURN	254
1	134-6197	HOOD & GUARD GP	123.07
1	135-5702	PULLEY GP-FAN DRIVE	28

H54435E 02

126-3796 COOLING AR
Swing Oil Cooler
An Attachment

COOLING SYSTEM

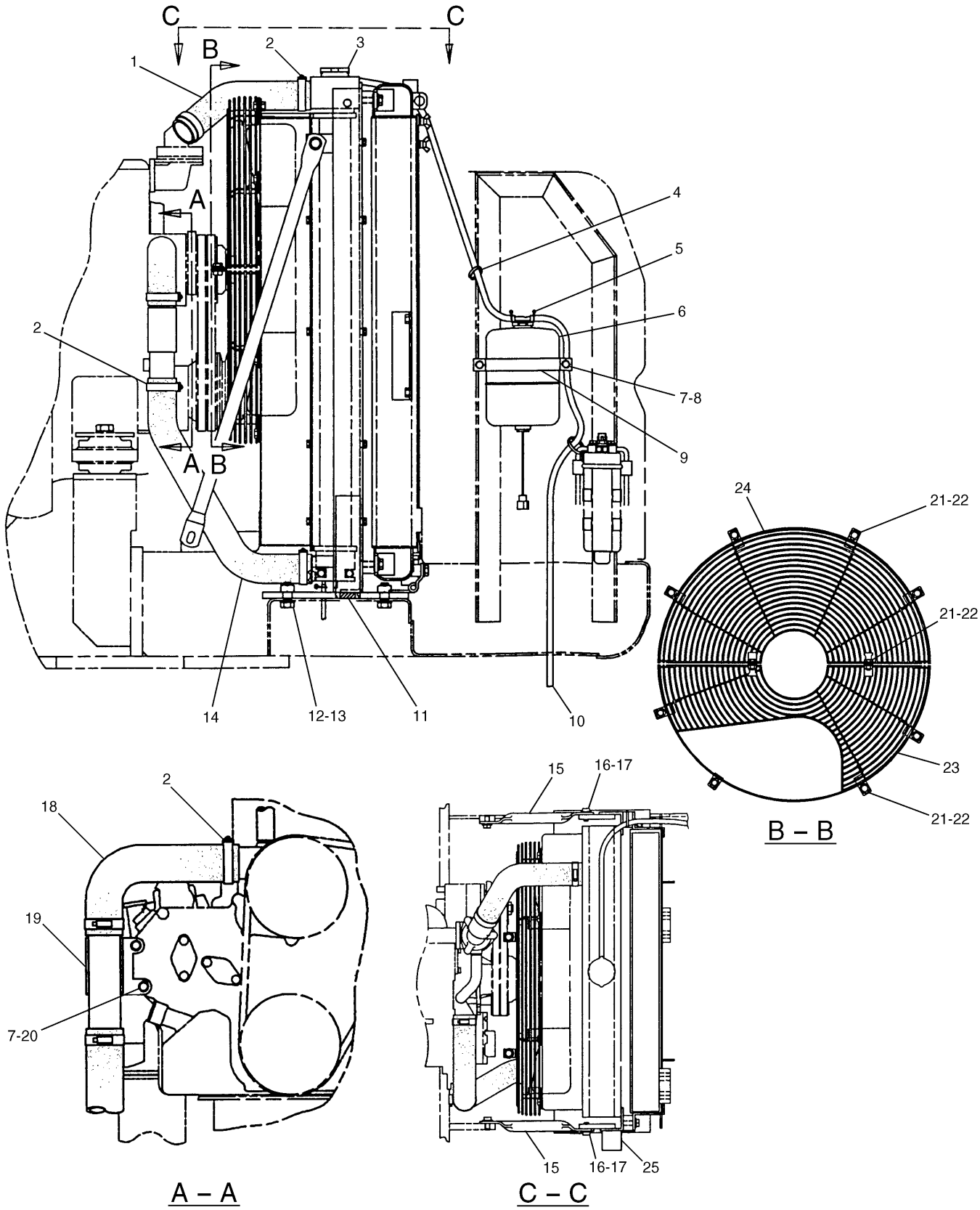

131-8947 RADIATOR GP

Part of 126-3796-Page35

131-8944-Page35.03

An Attachment

COOLING SYSTEM

NOTE	No.	PART No.	QTY	PART NAME	NOTE	No.	PART No.	QTY	PART NAME
	1	118-9848	1	HOSE					
	2	5P-0597	6	CLAMP					
Y	3	131-8944	1	RADIATOR GP					
	4	096-0061	3	STRAP					
	5	096-4035	1	CLIP					
	6	096-0744	1	TANK AS					
		171-3369	1	CAP AS					
	7	8T-4224	4	WASHER					
	8	8T-4200	2	BOLT (L=16mm)					
	9	099-6607	1	BAND					
E	10	7Y-1976		HOSE…(86cm)					
D	11	6V-5030		SEAL…(0.5m)					
	12	9X-8257	4	WASHER					
	13	7X-2553	4	BOLT (L=40mm)					
	14	131-8945	1	HOSE					
	15	7Y-1945	2	BRACE					
	16	8T-4223	4	WASHER					
	17	8T-4192	4	BOLT (L=25mm)					
	18	7Y-1941	1	HOSE					
	19	7Y-1938	1	PIPE AS					
	20	8T-3647	2	BOLT (L=80mm)					
	21	7X-7729	10	WASHER					
	22	8T-4137	10	BOLT (L=20mm)					
	23	124-1664	1	GUARD AS					
	24	124-1657	1	GUARD AS					
	25	121-4930	1	LINER					

D—ORDER BY THE METER
E—ORDER BY THE CENTIMETER
Y—SEE SEPARATE ILLUSTRATION

H54439E 01

131-8947 RADIATOR GP

Part of 126-3796-Page35
131-8944-Page35.03
An Attachment

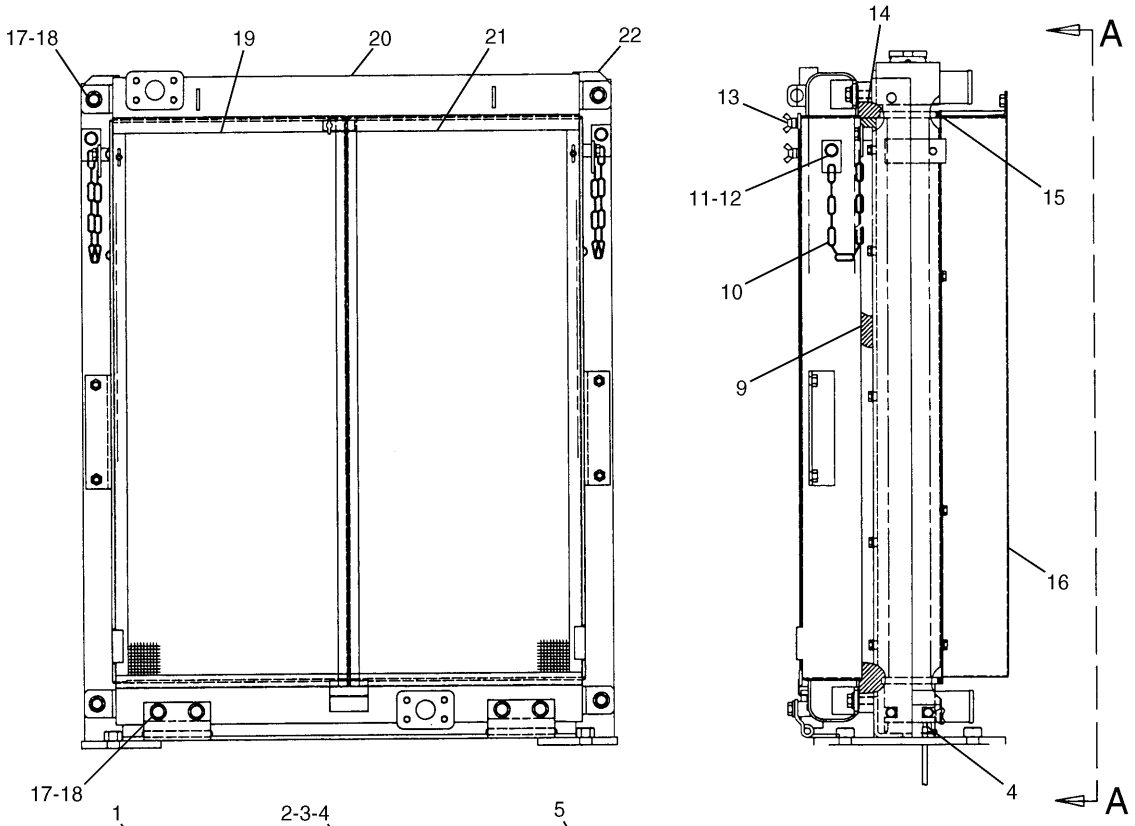

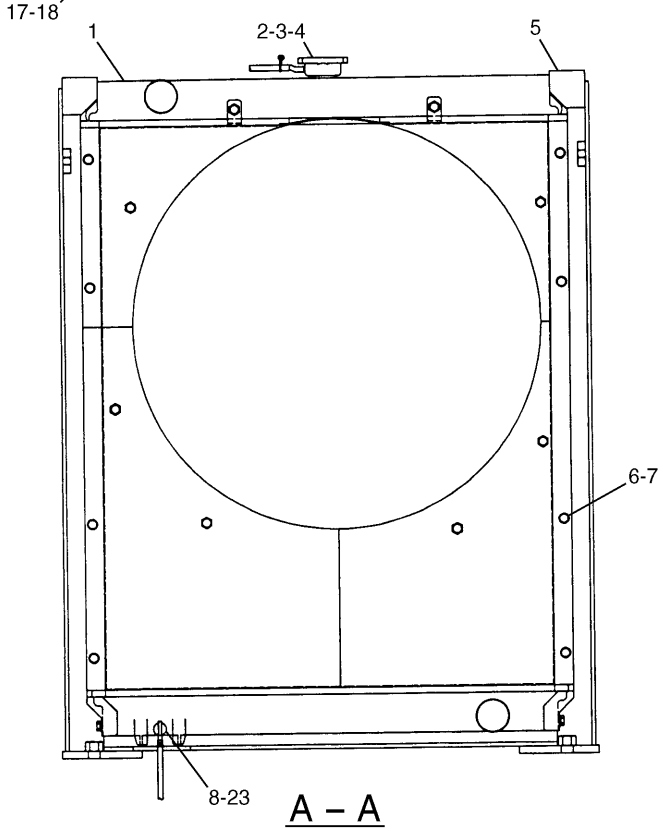

A – A

H54437E 03

131-8944 RADIATOR & HYD OIL COOLER GP
Part of 131-8947-Page35.02
An Attachment

COOLING SYSTEM

NOTE	No.	PART No.	QTY	PART NAME	NOTE	No.	PART No.	QTY	PART NAME
	1	131-9002	1	CORE AS (RADIATOR)					
	2	124-1613	1	CAP AS					
E	3	7Y-1976		HOSE…(110cm)					
	4	096-4035	3	CLIP					
	5	124-1698	2	SEAL					
	6	8T-4200	16	BOLT (L=16mm)					
	7	8T-4224	16	WASHER					
	8	124-1574	1	COCK AS					
	9	135-5632	2	SEAL					
	10	131-8952	2	CHAIN					
	11	8T-4121	4	WASHER					
	12	8T-4137	4	BOLT (L=20mm)					
	13	096-4034	3	BOLT					
	14	124-1587	2	SEAL					
	15	124-1586	2	SEAL					
	16	131-9005	1	SHROUD AS					
	17	8T-4179	8	BOLT (L=20mm)					
	18	8T-4223	8	WASHER					
	19	131-9001	1	SCREEN AS					
	20	131-9003	1	CORE AS (OIL COOLER)					
	21	131-9000	1	SCREEN AS					
	22	131-9004	1	FRAME AS					
E	23	7Y-1976		HOSE…(25cm)					

E—ORDER BY THE CENTIMETER

H54437E 03

131-8944 RADIATOR & HYD OIL COOLER GP

Part of 131-8947-Page35.02

An Attachment

COOLING SYSTEM

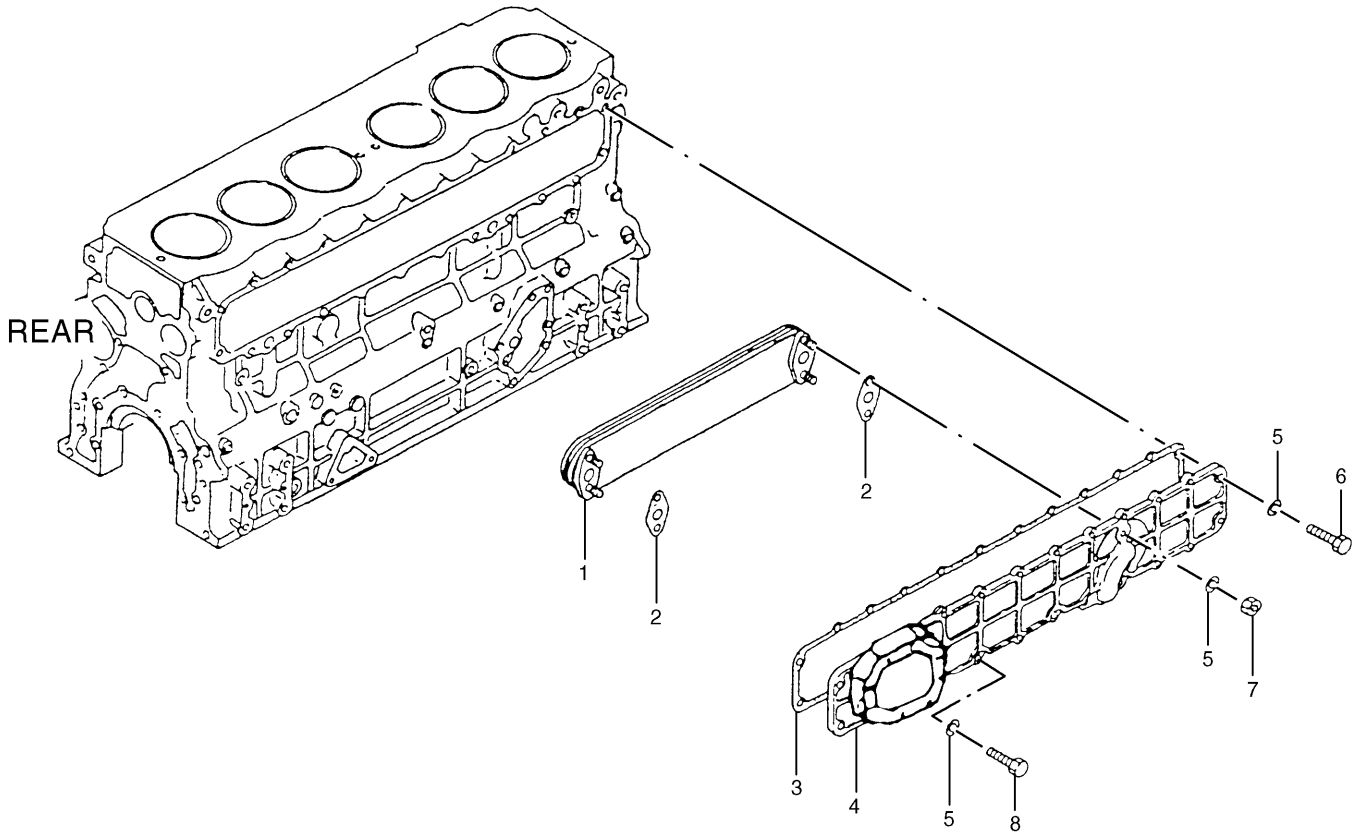

NOTE	No.	PART No.	QTY	PART NAME	NOTE	No.	PART No.	QTY	PART NAME
	1	125-2970	1	ELEMENT					
	2	5I-7691	2	GASKET					
	3	5I-7690	1	GASKET					
	4	125-2971	1	COVER					
	5	095-8638	24	WASHER					
	6	8T-4908	14	BOLT (L=25mm)					
	7	5C-7261	4	NUT					
	8	8T-4189	6	BOLT (L=20mm)					

H52895E 00

125-2956 COOLER GP-ENGINE OIL

Part of 124-1696-Page13

COOLING SYSTEM

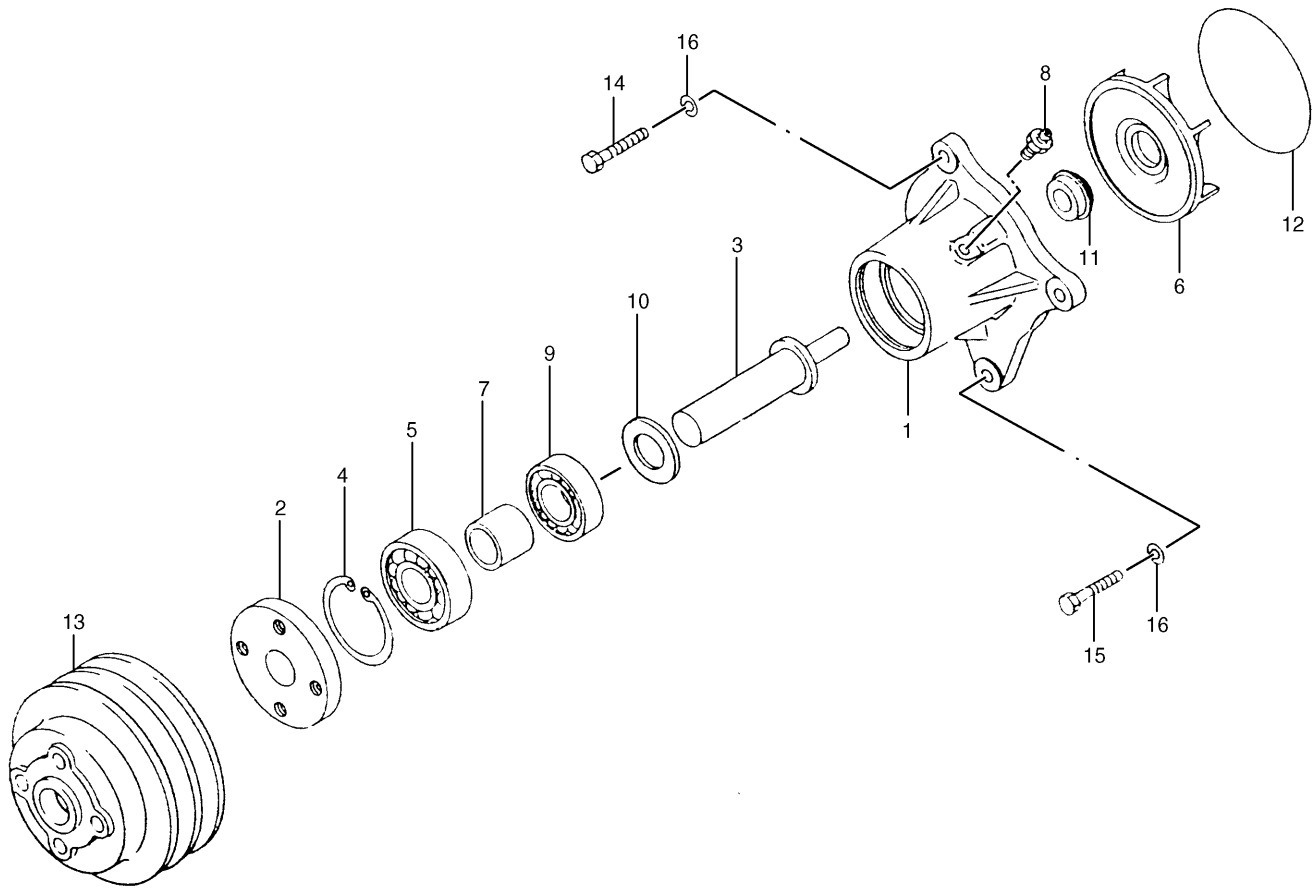

NOTE	No.	PART No.	QTY	PART NAME	NOTE	No.	PART No.	QTY	PART NAME
	1	125-2989	1	PUMP AS					
	2	5I-7696	1	FLANGE					
	3	5I-7695	1	SHAFT					
	4	8T-9598	1	RING					
	5	5L-6326	1	BEARING					
	6	5I-7694	1	IMPELLER					
	7	5I-7697	1	SPACER					
	8	095-0948	1	NIPPLE					
	9	2H-3814	1	BEARING					
	10	125-2947	1	WASHER					
	11	125-2990	1	SEAL					
	12	096-9528	1	SEAL-O-RING (ID=109.50mm)					
	13	125-2980	1	PULLEY					
	14	8T-4189	2	BOLT (L=20mm)					
	15	8T-4177	2	BOLT (L=90mm)					
	16	095-8638	4	WASHER					

H53354E 00

125-2958 PUMP GP-WATER

Part of 124-1696-Page12

COOLING SYSTEM

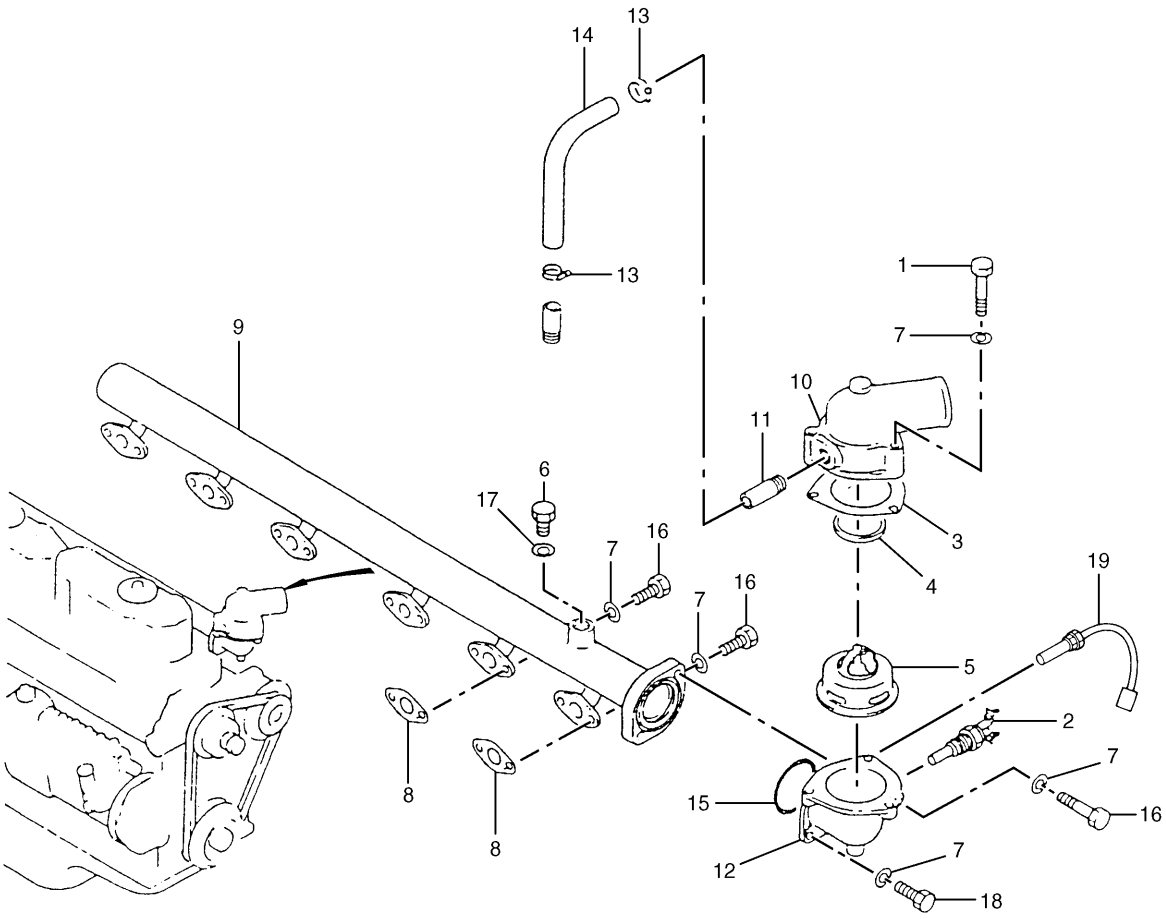

NOTE	No.	PART No.	QTY	PART NAME	NOTE	No.	PART No.	QTY	PART NAME
	1	8T-6912	3	BOLT (L=50mm)					
	2	5I-7578	1	SENDER					
	3	5I-7572	1	GASKET					
	4	5I-7735	1	GASKET					
	5	5I-8010	1	REGULATOR					
	6	5I-8056	2	PLUG					
	7	095-8638	17	WASHER					
	8	160-4407	6	GASKET					
	9	5I-7977	1	PIPE					
	10	125-2981	1	COVER AS					
	11	5I-7655	1	PIPE					
	12	5I-7646	1	ELBOW					
	13	2S-3440	2	CLAMP					
	14	5I-7699	1	HOSE					
	15	095-1663	1	SEAL-O-RING (ID=54.40mm)					
	16	8T-4908	13	BOLT (L=25mm)					
	17	096-9532	2	WASHER					
	18	8T-4177	1	BOLT (L=90mm)					
	19	135-2336	1	SENSOR					

H71570E 03

125-2959 LINES GP-WATER
Part of 124-1696-Page12

COOLING SYSTEM

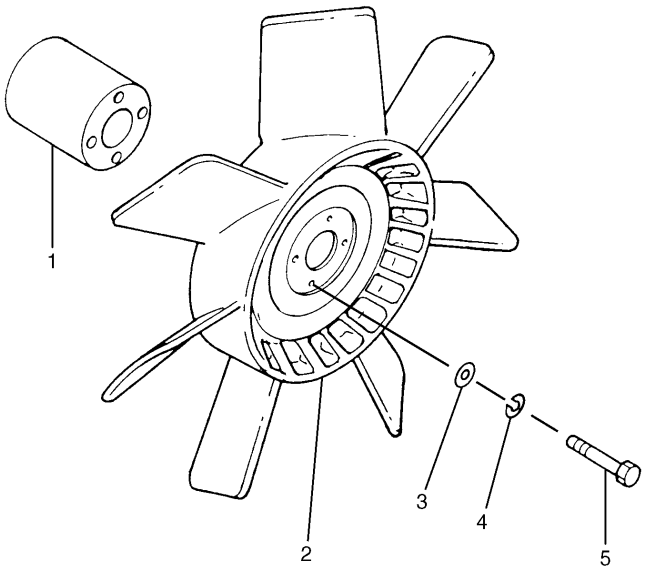

NOTE	No.	PART No.	QTY	PART NAME
	1	5I-7595	1	SPACER
	2	5I-8000	1	FAN
	3	8T-4121	4	WASHER
	4	7X-0796	4	LOCKWASHER
	5	8T-4198	4	BOLT (L=100mm)

H52899E 04

5I-7774 FAN GP-SUCTION

Part of 124-1696-Page13

AIR INLET AND EXHAUST SYSTEM

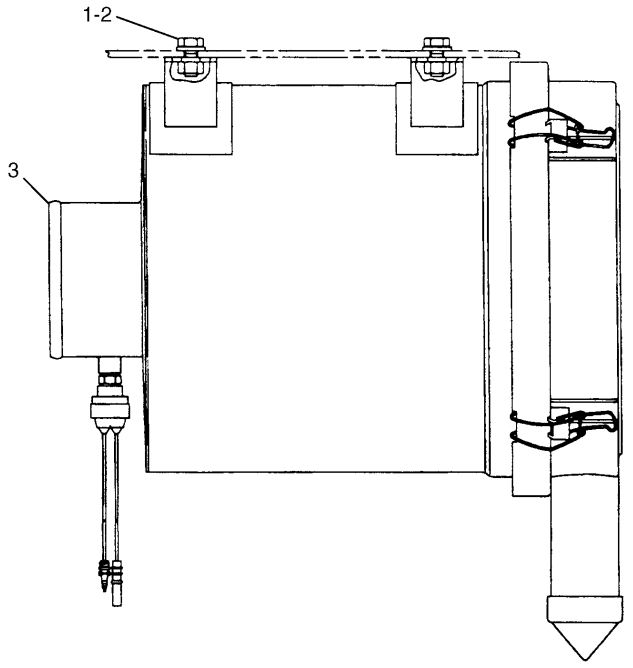

NOTE	No.	PART No.	QTY	PART NAME
	1	8T-4121	4	WASHER
	2	8T-4137	4	BOLT (L=20mm)
Y	3	124-1736	1	CLEANER GP

Y—SEE SEPARATE ILLUSTRATION

H53355E 02

109-9497 MOUNTING GP-AIR CLEANER

S/N 3MR 1-00221
124-1736-Page40.01

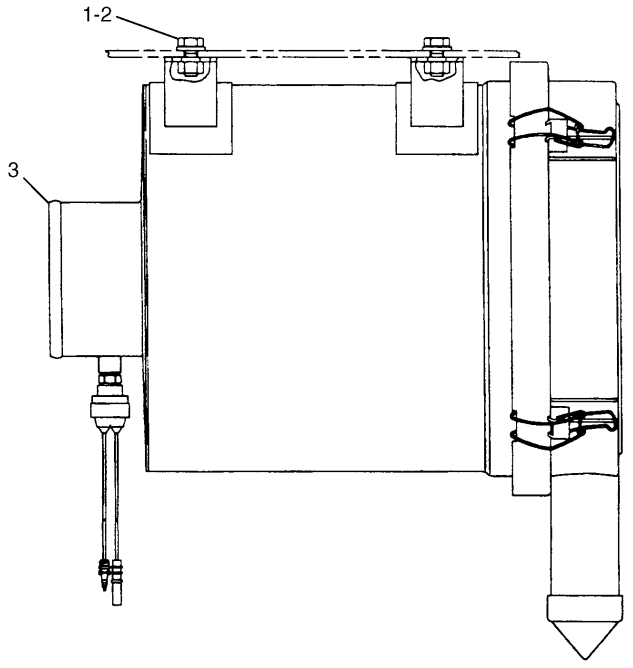

NOTE	No.	PART No.	QTY	PART NAME
	1	8T-4121	4	WASHER
	2	8T-4137	4	BOLT (L=20mm)
Y	3	124-1711	1	CLEANER GP

Y—SEE SEPARATE ILLUSTRATION

H74012E 04

109-9313 MOUNTING GP-AIR CLEANER

S/N 3MR 00222-Up, 4MR 1-Up
124-1711-Page40.02

AIR INLET AND EXHAUST SYSTEM

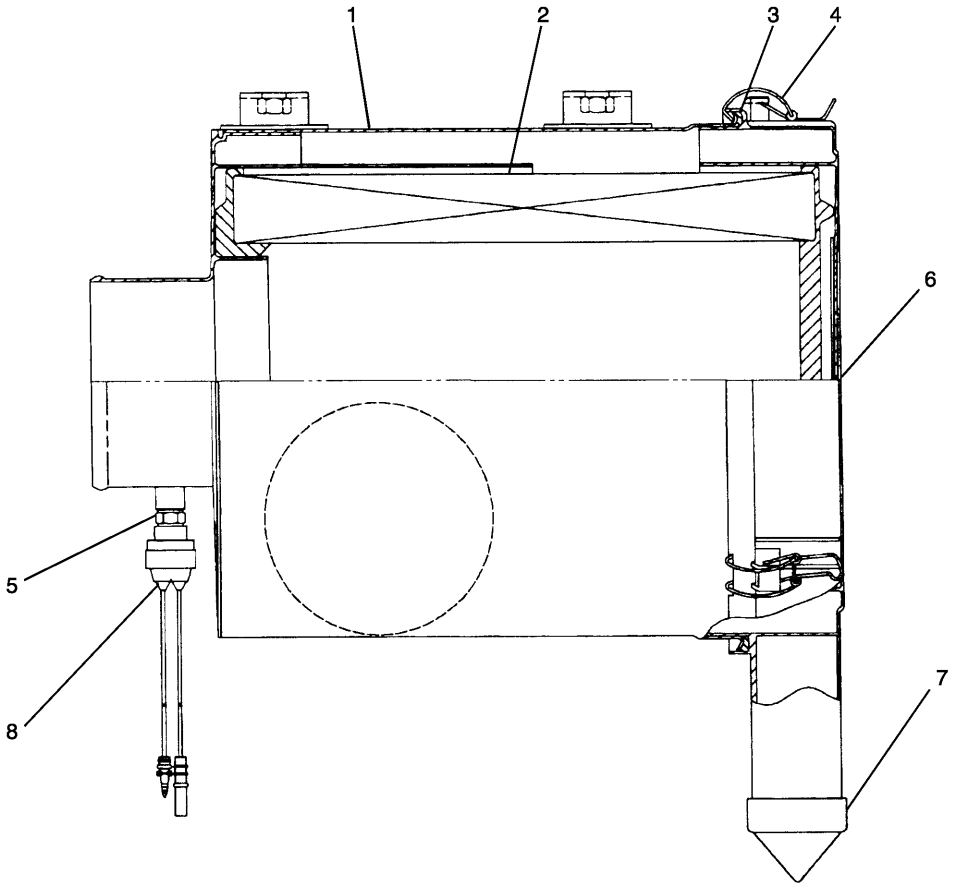

NOTE	No.	PART No.	QTY	PART NAME	NOTE	No.	PART No.	QTY	PART NAME
	1	131-8820	1	BODY AS					
	2	131-8822	1	ELEMENT AS					
	3	131-8824	1	SEAL					
	4	131-8932	4	LATCH					
	5	5L-3233	1	FITTING					
	6	131-8826	1	FILM					
	7	112-9717	1	VALVE (VACUATOR)					
	8	109-9330	1	INDICATOR					

H55800E 02

124-1736 AIR CLEANER GP
S/N 3MR 1-00221
Part of 109-9497-Page40

AIR INLET AND EXHAUST SYSTEM

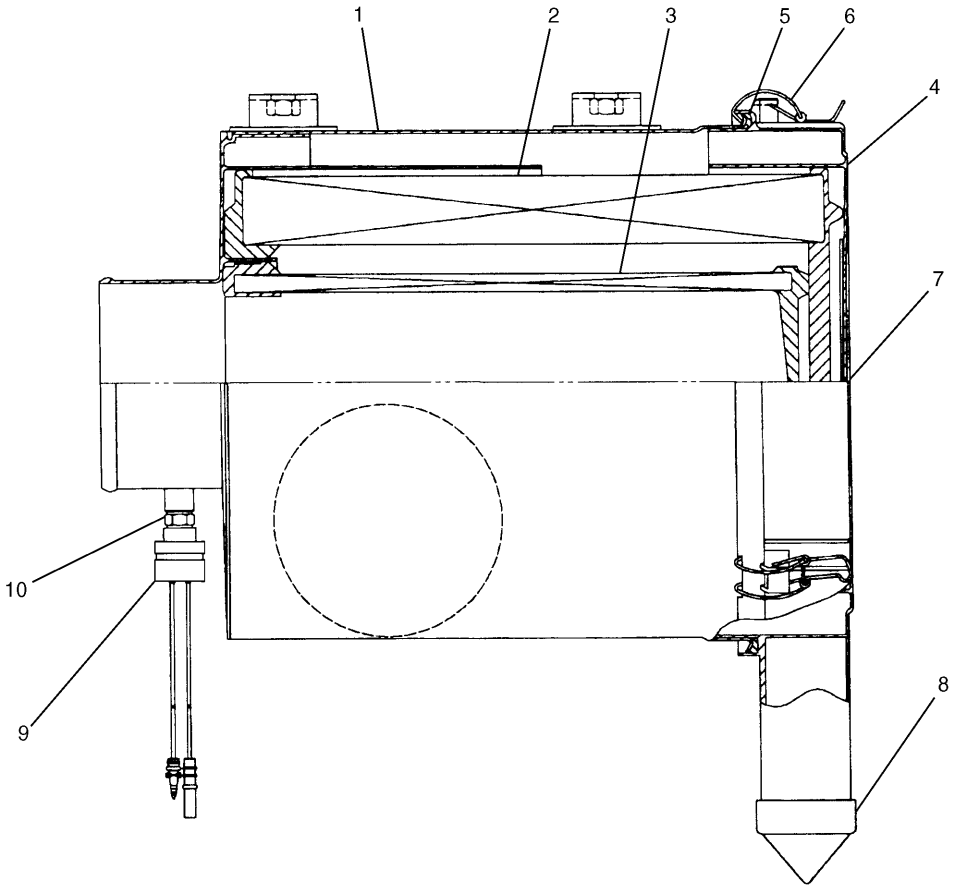

NOTE	No.	PART No.	QTY	PART NAME	NOTE	No.	PART No.	QTY	PART NAME
	1	131-8820	1	BODY AS					
	2	131-8822	1	ELEMENT AS					
	3	131-8821	1	ELEMENT AS					
	4	184-3983	1	COVER AS					
	5	168-0792	1	SEAL					
	6	131-8932	4	LATCH					
	7	131-8826	1	FILM					
	8	112-9717	1	VALVE (VACUATOR)					
	9	154-0498	1	INDICATOR AS					
	10	5L-3233	1	FITTING					

H83395E 05

124-1711 AIR CLEANER GP

S/N 3MR 00222-Up, 4MR 1-Up

Part of 109-9313-Page40

AIR INLET AND EXHAUST SYSTEM

Consists of :

			Page
1	142-5466	HOOD GP	129
1	154-0795	LINES GP-AIR	45.02

H65374E 00

142-5465 CLEANER AR
An Attachment

AIR INLET AND EXHAUST SYSTEM

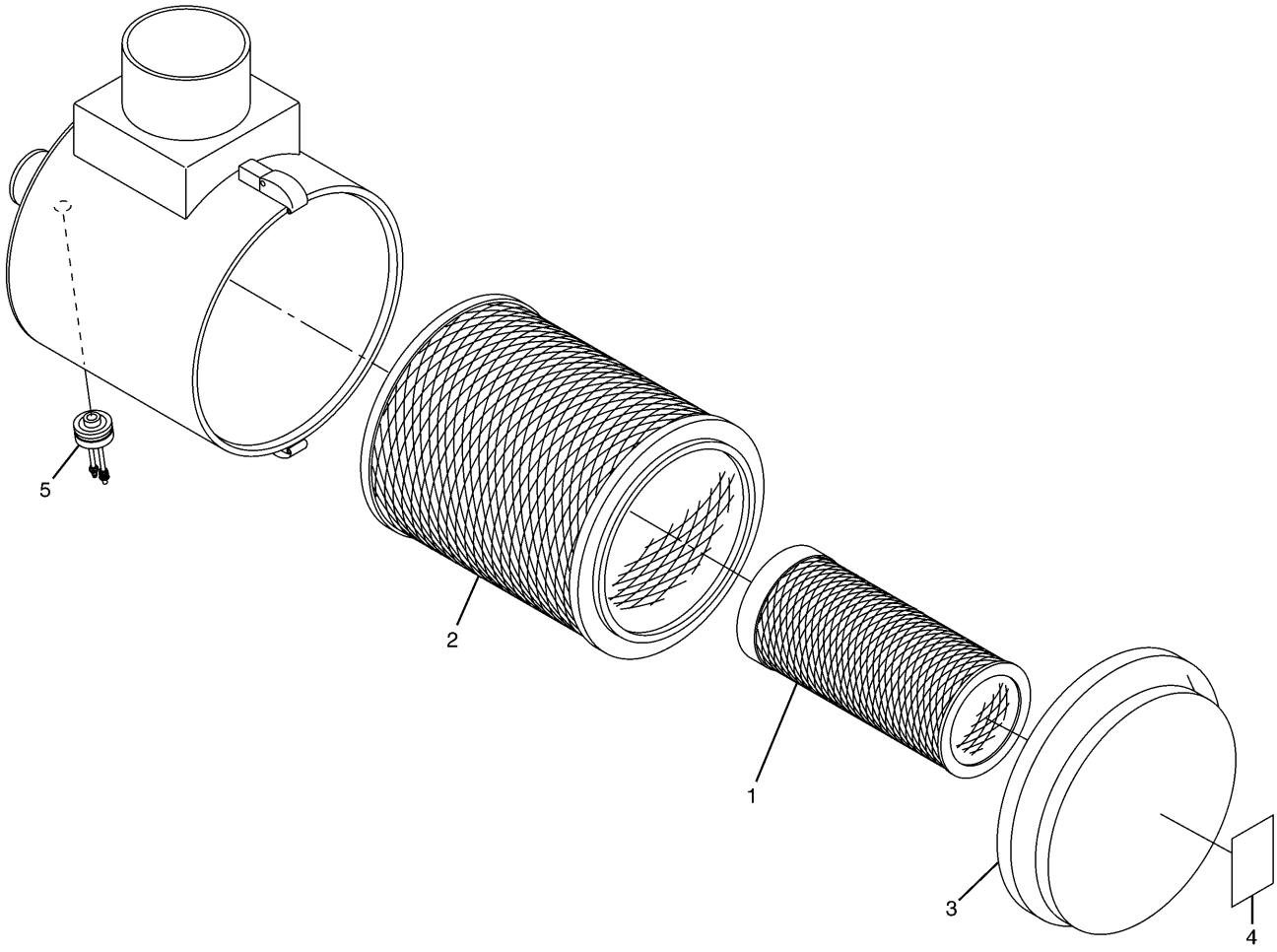

NOTE	No.	PART No.	QTY	PART NAME	NOTE	No.	PART No.	QTY	PART NAME
	1	6I-2502	1	ELEMENT AS					
	2	6I-2501	1	ELEMENT AS					
	3	6I-4464	1	COVER AS					
	4	4P-6464	1	FILM (RADIAL SEAL AIR CLEANER)					
	5	154-0498	1	INDICATOR AS					
		109-9330	1	INDICATOR					

H65375E 01

154-0785 AIR CLEANER GP
Part of 154-0795-Page45.02
An Attachment

AIR INLET AND EXHAUST SYSTEM

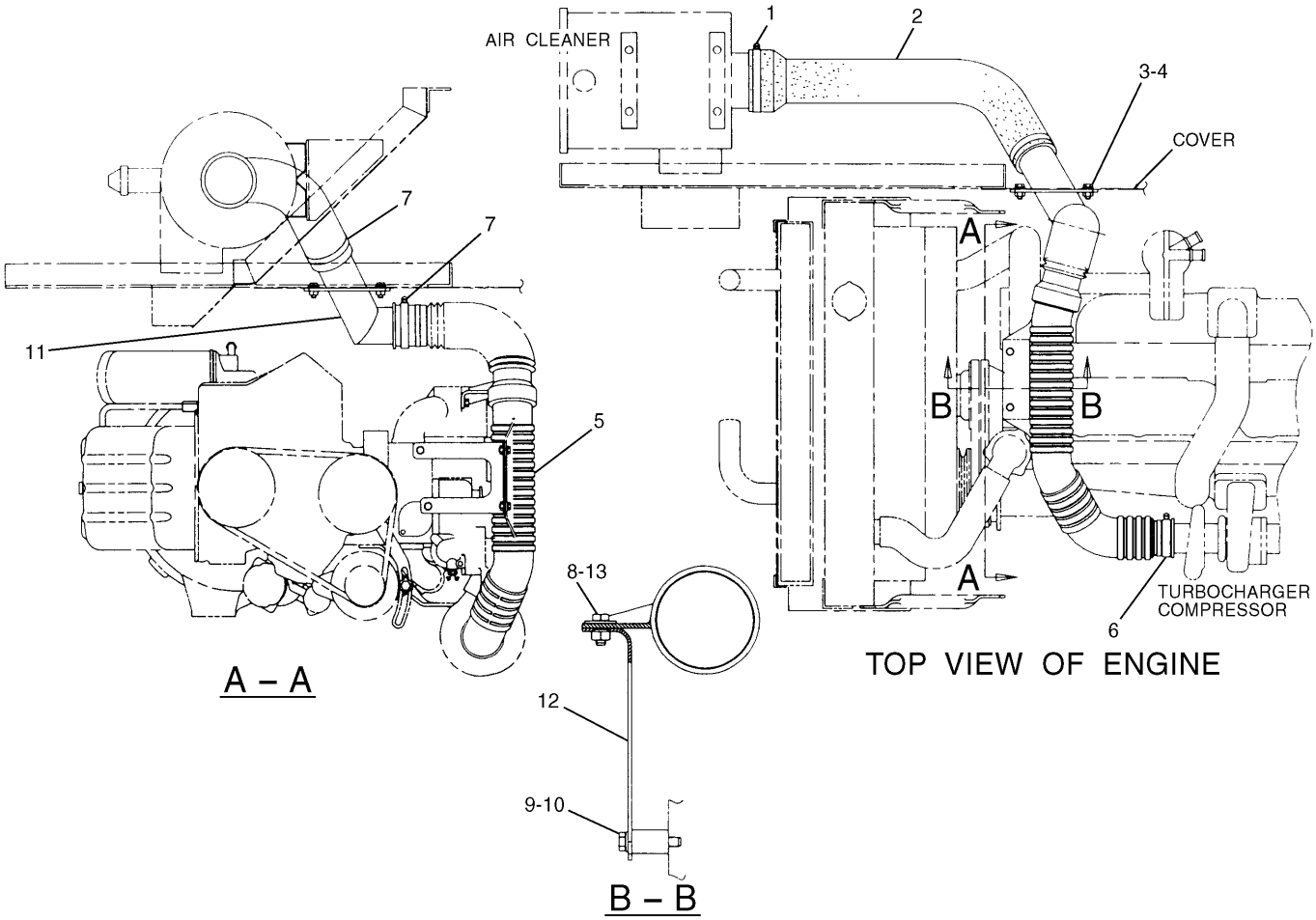

NOTE	No.	PART No.	QTY	PART NAME	NOTE	No.	PART No.	QTY	PART NAME
	1	5P-1717	1	CLAMP					
	2	118-9847	1	HOSE					
	3	8T-4121	4	WASHER					
	4	8T-4136	4	BOLT (L=25mm)					
	5	124-1600	1	PIPE AS					
		135-5789	1	SEAL					
		135-5790	1	SEAL					
	6	5P-4868	1	CLAMP					
	7	6V-3582	2	CLAMP					
	8	8T-4189	2	BOLT (L=20mm)					
	9	8T-4224	2	WASHER					
	10	7X-0818	2	BOLT (L=45mm)					
	11	118-9823	1	PIPE AS					
	12	124-1601	1	SUPPORT AS					
	13	7X-0579	2	WASHER					

H52900E 01

109-9503 LINES GP-AIR
S/N 3MR 1-04644, 4MR 1-00666

AIR INLET AND EXHAUST SYSTEM

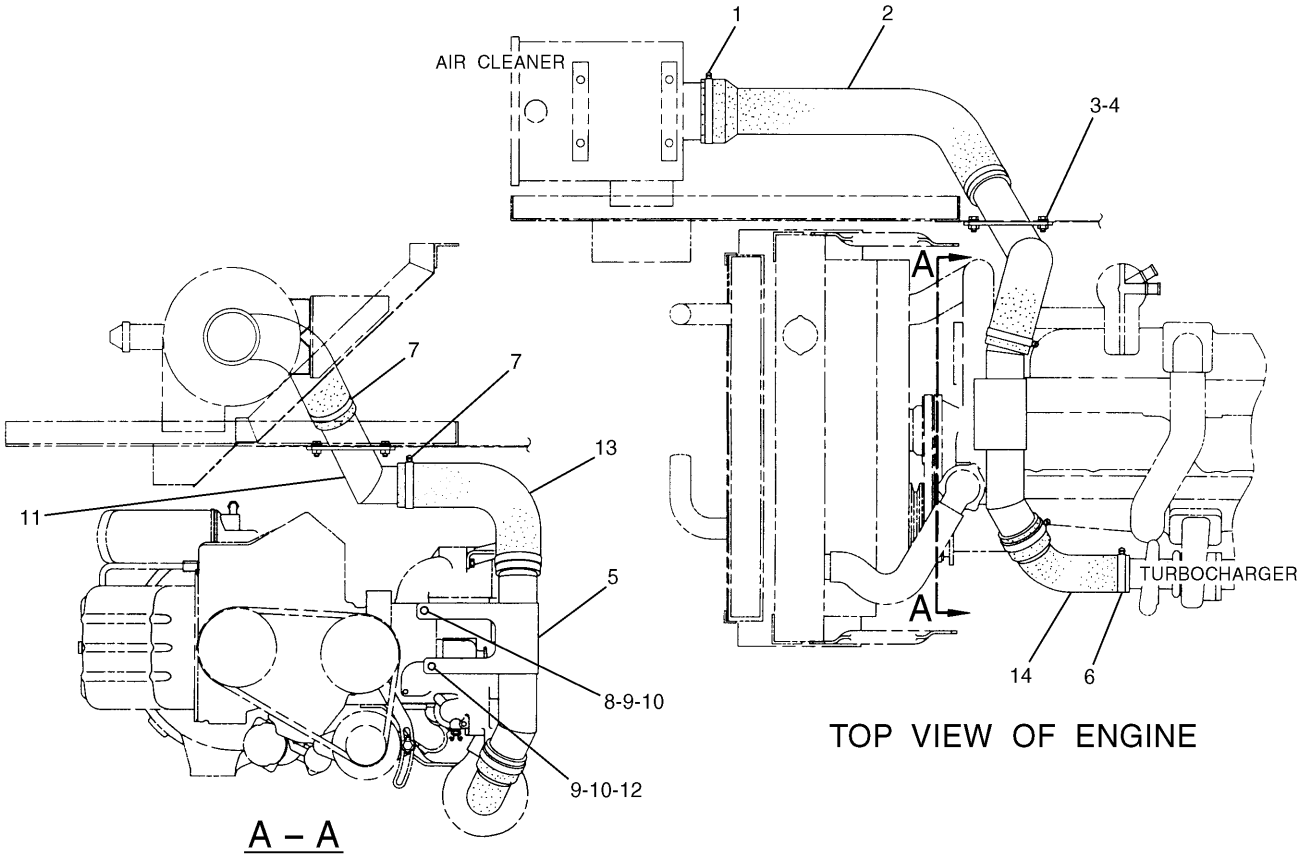

NOTE	No.	PART No.	QTY	PART NAME	NOTE	No.	PART No.	QTY	PART NAME
	1	5P-1717	1	CLAMP					
	2	118-9847	1	HOSE					
	3	8T-4121	4	WASHER					
	4	8T-4136	4	BOLT (L=25mm)					
	5	118-9827	1	PIPE AS					
	6	5P-4868	1	CLAMP					
	7	6V-3582	4	CLAMP					
	8	085-7329	1	SPACER					
	9	8T-4224	2	WASHER					
	10	7X-0818	2	BOLT (L=45mm)					
	11	118-9823	1	PIPE AS					
	12	7Y-1924	1	SPACER					
	13	7Y-1916	1	HOSE					
	14	7Y-1910	1	HOSE					

H65219E 02

109-9503 LINES GP-AIR
S/N 3MR 04645-(T00.03), 4MR 00667-Up

AIR INLET AND EXHAUST SYSTEM

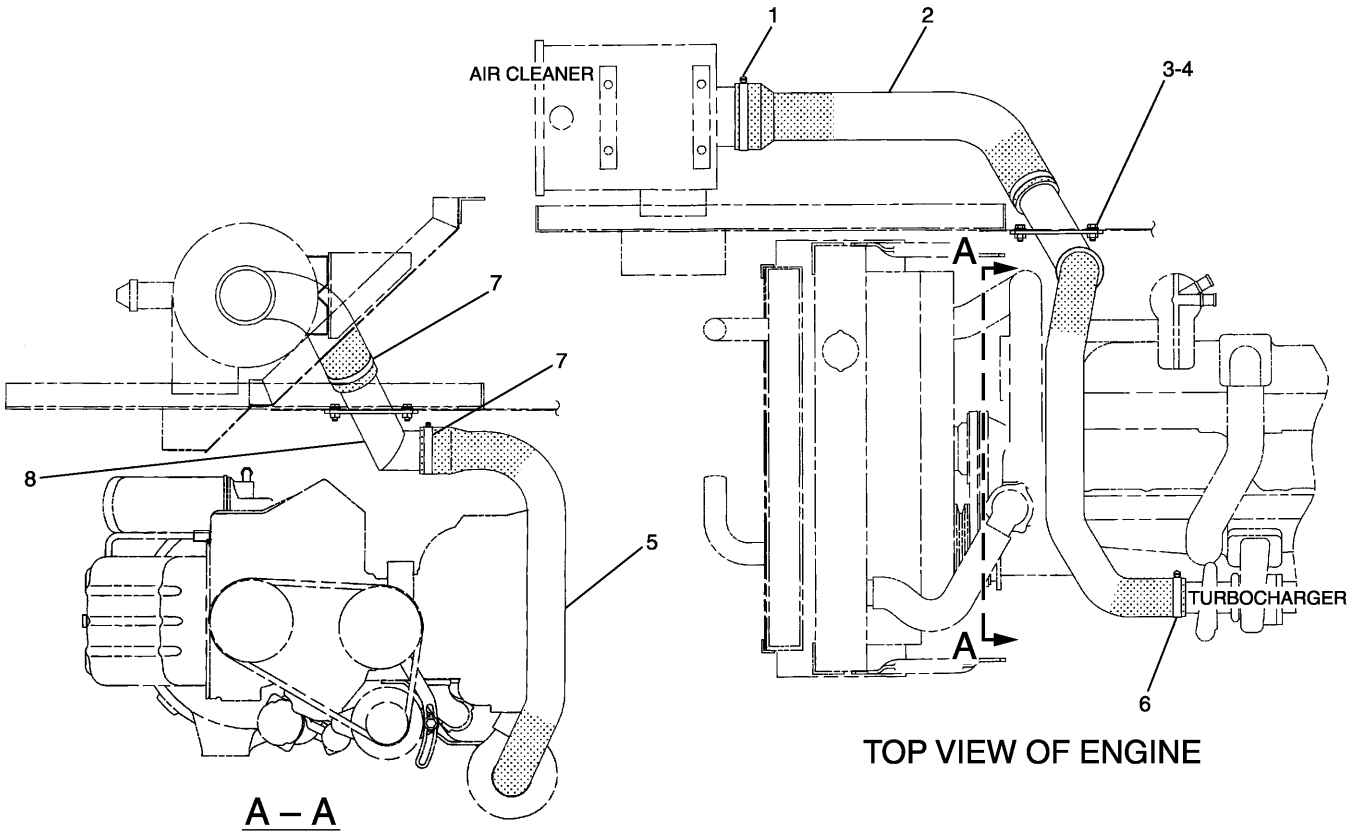

NOTE	No.	PART No.	QTY	PART NAME	NOTE	No.	PART No.	QTY	PART NAME
	1	5P-1717	1	CLAMP					
	2	118-9847	1	HOSE					
	3	8T-4121	4	WASHER					
	4	8T-4136	4	BOLT (L=25mm)					
	5	166-3118	1	HOSE					
	6	5P-4868	1	CLAMP					
	7	6V-3582	2	CLAMP					
	8	118-9823	1	PIPE AS					

H78044E 03

109-9503 LINES GP-AIR
S/N 3MR (T00.04)-Up

AIR INLET AND EXHAUST SYSTEM

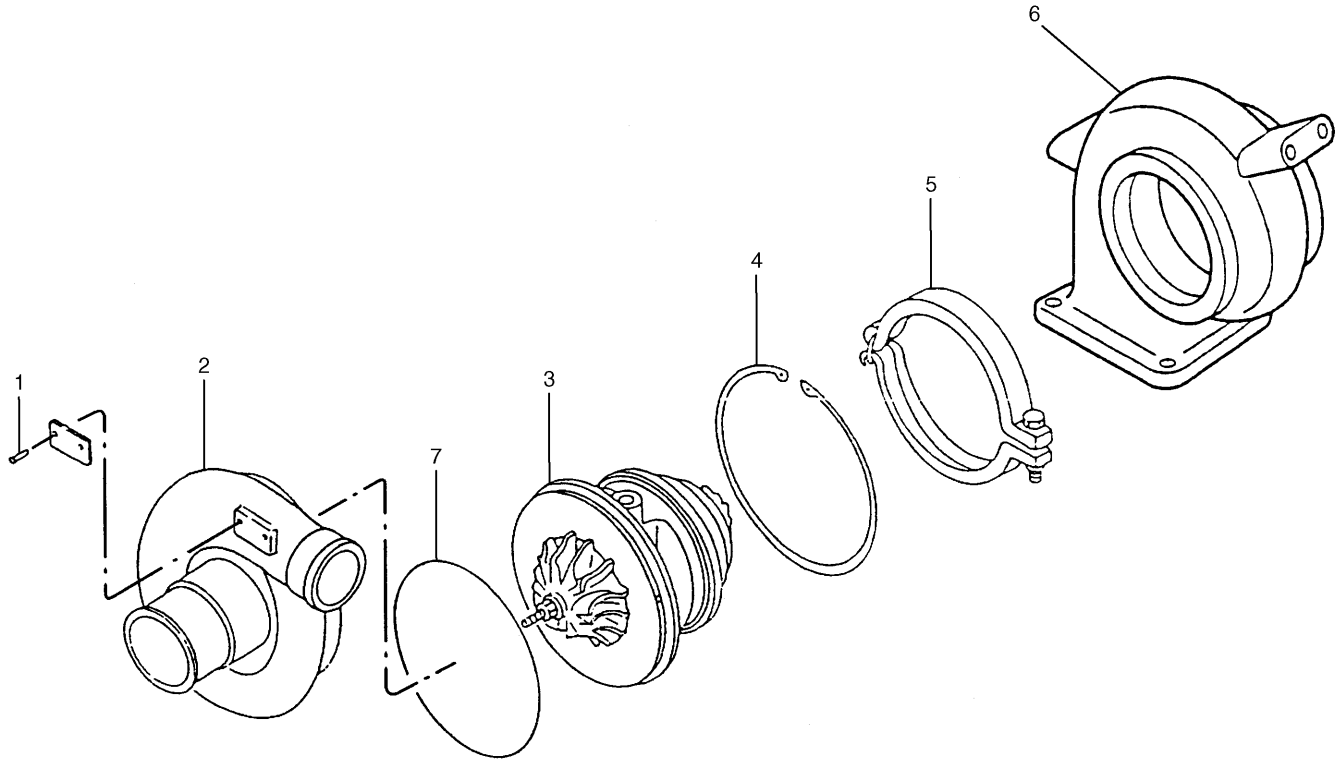

NOTE	No.	PART No.	QTY	PART NAME	NOTE	No.	PART No.	QTY	PART NAME
	1	5B-9304	2	SCREW					
	2	5I-7587	1	COVER					
Y	3	5I-7589	1	CARTRIDGE AS					
	4	5I-7748	1	RING					
	5	5I-7602	1	COUPLING AS					
	6	5I-8041	1	HOUSING					
	7	5I-7981	1	SEAL					

Y—SEE SEPARATE ILLUSTRATION

H52902E 00

5I-8018 TURBOCHARGER GP
High Ambient,Emission Package
Part of 124-1696-Page13
5I-7589-Page43

AIR INLET AND EXHAUST SYSTEM

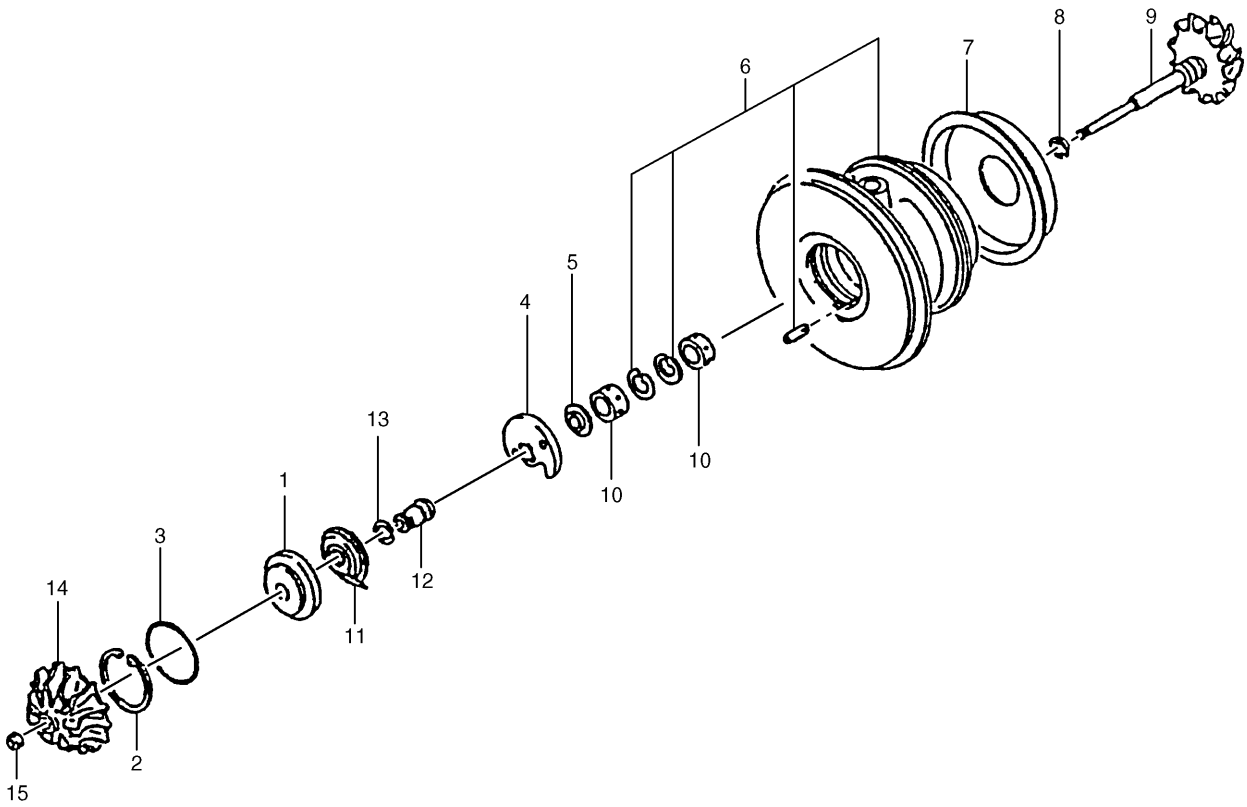

NOTE	No.	PART No.	QTY	PART NAME	NOTE	No.	PART No.	QTY	PART NAME
	1	135-2351	1	INSERT					
	2	135-2352	1	RING					
	3	135-2355	1	SEAL-O-RING (ID=49.40mm)					
	4	135-2347	1	BEARING					
	5	135-2356	1	RING					
	6	135-2359	1	HOUSING					
	7	135-2346	1	PLATE					
	8	135-2354	1	RING					
	9	135-2357	1	WHEEL AS					
	10	135-2358	2	BEARING					
	11	135-2348	1	DEFLECTOR					
	12	135-2349	1	SLEEVE					
	13	135-2350	1	RING					
	14	135-2360	1	WHEEL					
	15	135-2353	1	NUT					

H57457E 02

5I-7589 CARTRIDGE AS-TURBOCHARGER
Part of 5I-8018-Page42

AIR INLET AND EXHAUST SYSTEM

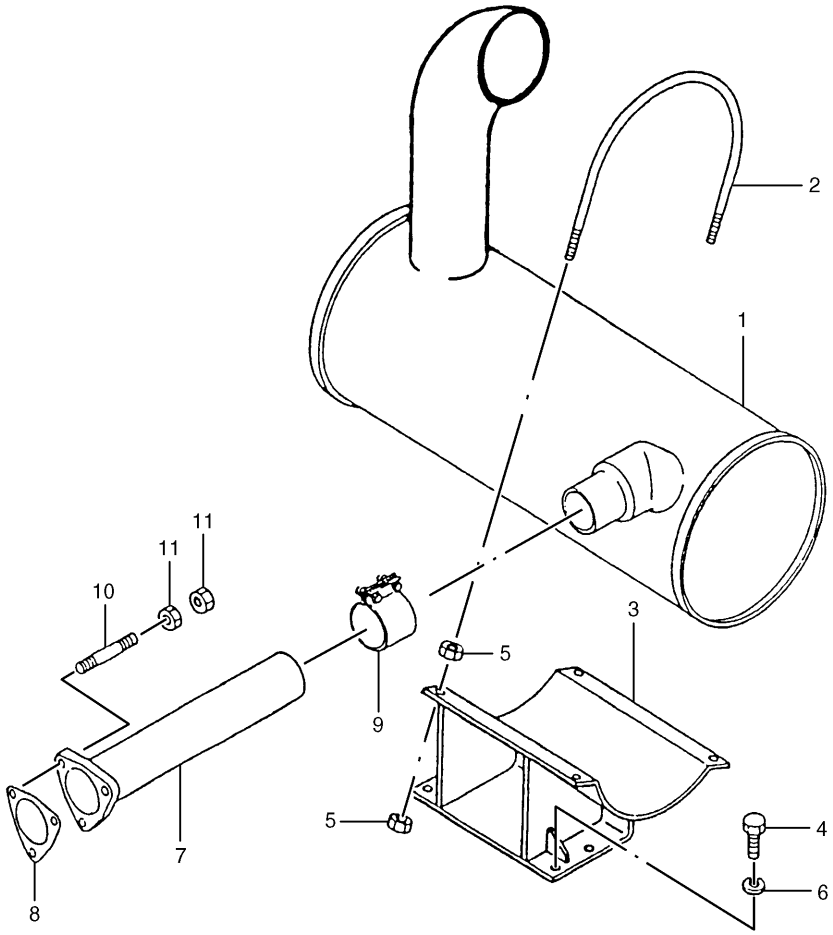

NOTE	No.	PART No.	QTY	PART NAME	NOTE	No.	PART No.	QTY	PART NAME
	1	125-2945	1	MUFFLER					
	2	5I-7680	2	U-BOLT					
	3	176-5005	1	BRACKET					
	4	8T-4137	4	BOLT (L=20mm)					
	5	6V-8231	8	NUT					
	6	7X-0796	4	LOCKWASHER					
	7	5I-8040	1	PIPE					
	8	5I-7679	1	GASKET					
	9	094-7583	1	CLAMP AS					
	10	094-2524	3	STUD					
	11	5I-7633	6	NUT					

H67555E 02

5I-8033 MUFFLER GP
High Ambient,Emission Package
Part of 124-1696-Page13

AIR INLET AND EXHAUST SYSTEM

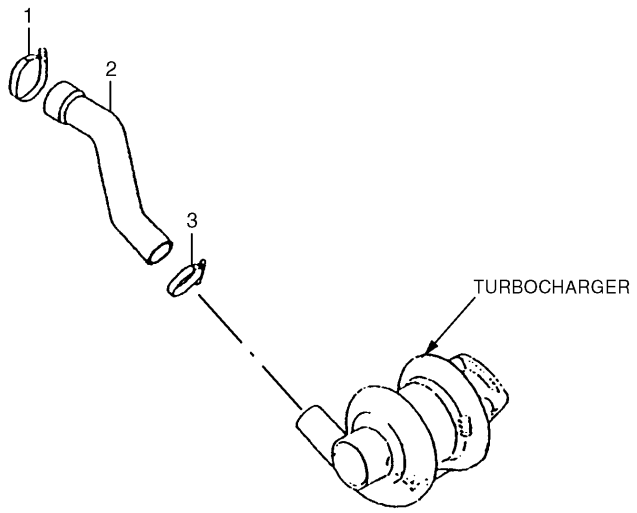

NOTE	No.	PART No.	QTY	PART NAME
	1	5P-4868	1	CLAMP
	2	5I-8053	1	HOSE
	3	5P-0597	1	CLAMP

H52906E 03

5I-7766 LINES GP-AIR

Part of 124-1696-Page13

AIR INLET AND EXHAUST SYSTEM

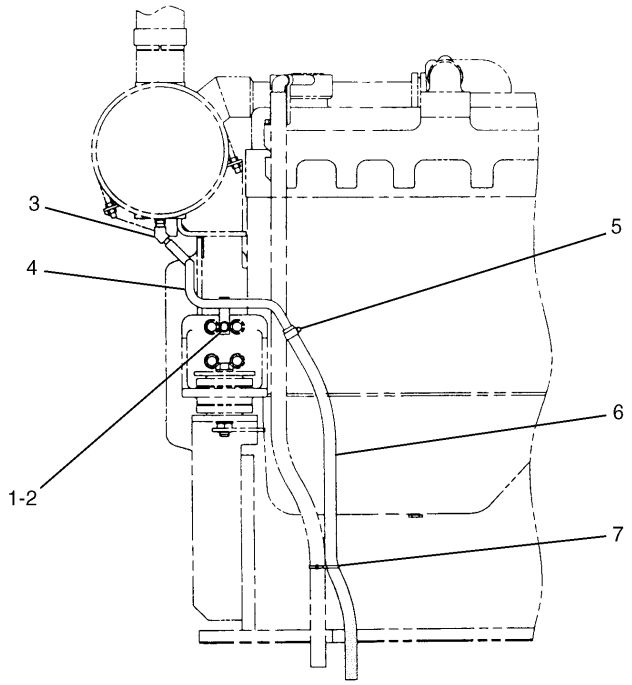

RH SIDE VIEW ENGINE

NOTE	No.	PART No.	QTY	PART NAME
	1	8T-4121	1	WASHER
	2	8T-4137	1	BOLT (L=20mm)
	3	7Y-1229	1	CONNECTOR
	4	124-1654	1	PIPE AS
	5	5D-1026	1	CLAMP
E	6	5P-0767		HOSE…(75cm)
	7	096-0061	1	STRAP

E—ORDER BY THE CENTIMETER

H52881E 01

118-9828 LINES GP-DRAIN

AIR INLET AND EXHAUST SYSTEM

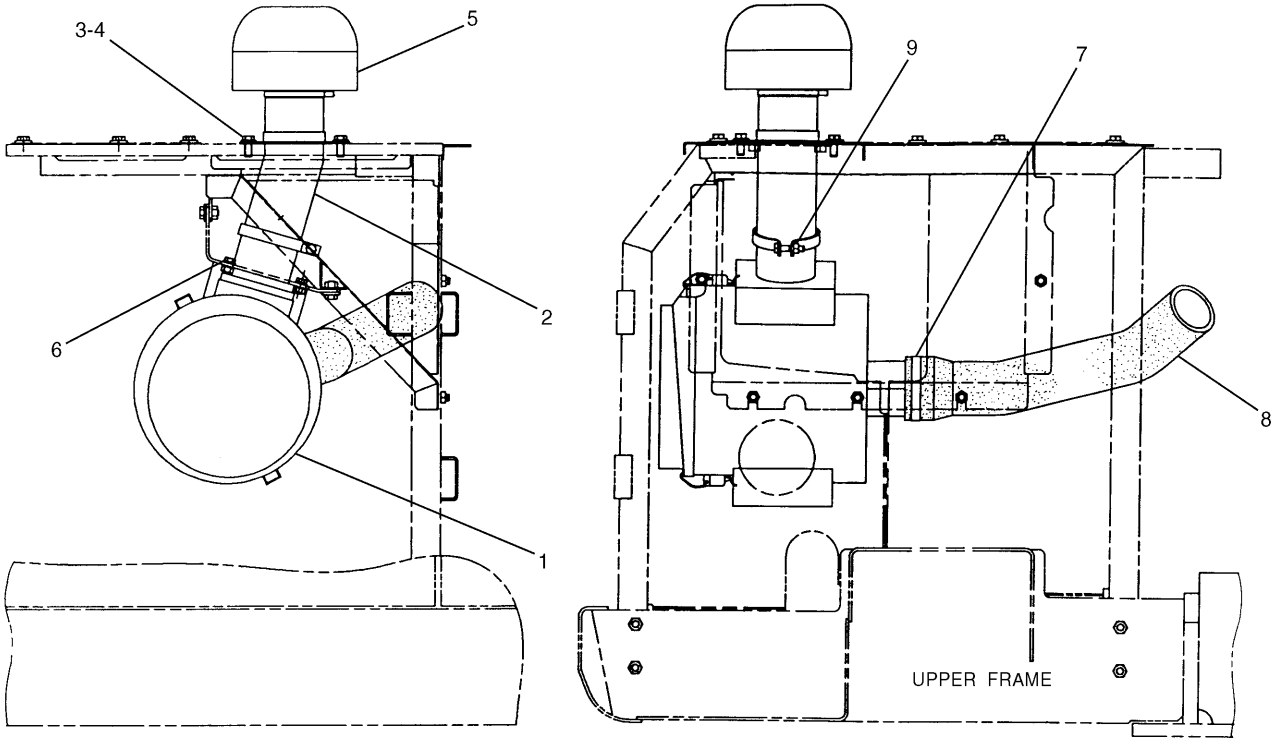

NOTE	No.	PART No.	QTY	PART NAME	NOTE	No.	PART No.	QTY	PART NAME
Y	1	154-0785	1	CLEANER GP					
	2	154-0800	1	PIPE AS					
	3	8T-4139	4	BOLT (L=30mm)					
	4	8T-4223	4	WASHER					
	5	130-3279	1	PRECLEANER					
		174-5414	1	CLAMP					
	6	8T-4121	4	WASHER					
	7	6V-3582	1	CLAMP					
	8	154-0796	1	HOSE					
	9	154-0788	1	CLAMP					

Y—SEE SEPARATE ILLUSTRATION

H65376E 00

154-0795 LINES GP-AIR

Precleaner

Part of 142-5465-Page40.03
154-0785-Page40.04
An Attachment

AIR INLET AND EXHAUST SYSTEM

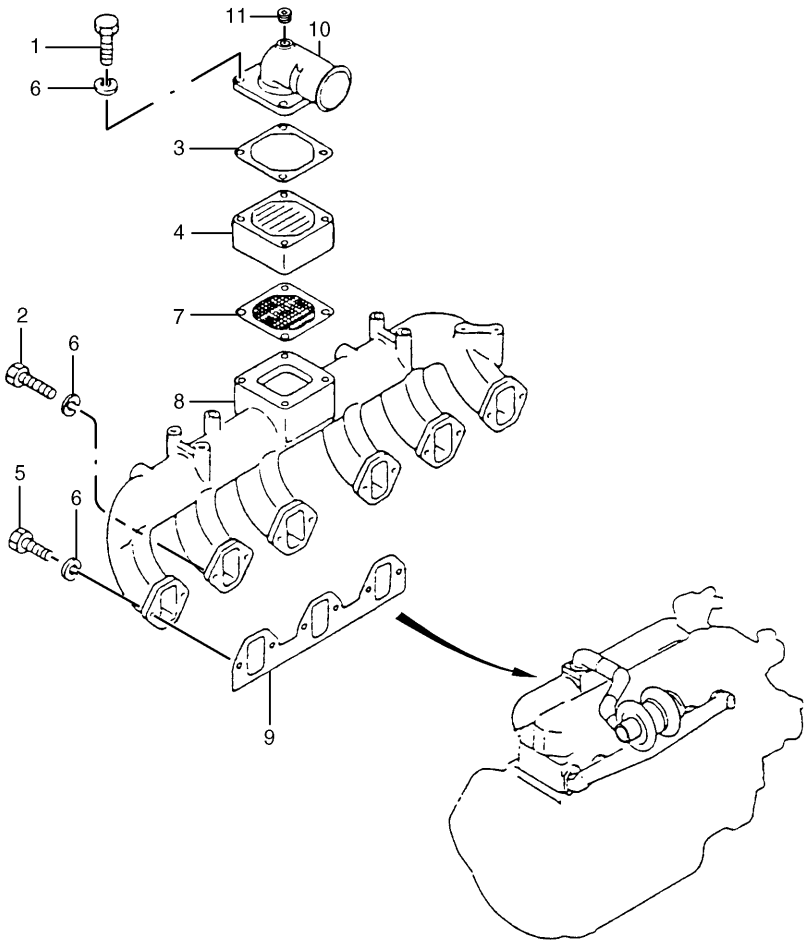

NOTE	No.	PART No.	QTY	PART NAME	NOTE	No.	PART No.	QTY	PART NAME
	1	5I-5010	4	BOLT (L=65mm)					
	2	8T-7547	2	BOLT (L=30mm)					
	3	5I-7678	1	GASKET					
	4	5I-7746	1	HEATER AS					
	5	8T-4908	10	BOLT (L=25mm)					
	6	095-8638	16	WASHER					
	7	5I-7677	1	GASKET					
	8	5I-7547	1	MANIFOLD					
	9	135-2367	2	GASKET					
	10	5I-8021	1	ELBOW AS					
		5I-8022	1	ELBOW					
	11	5I-8023	1	PLUG					

H54440E 05

5I-7764 MANIFOLD GP-INLET

Part of 124-1696-Page13

AIR INLET AND EXHAUST SYSTEM

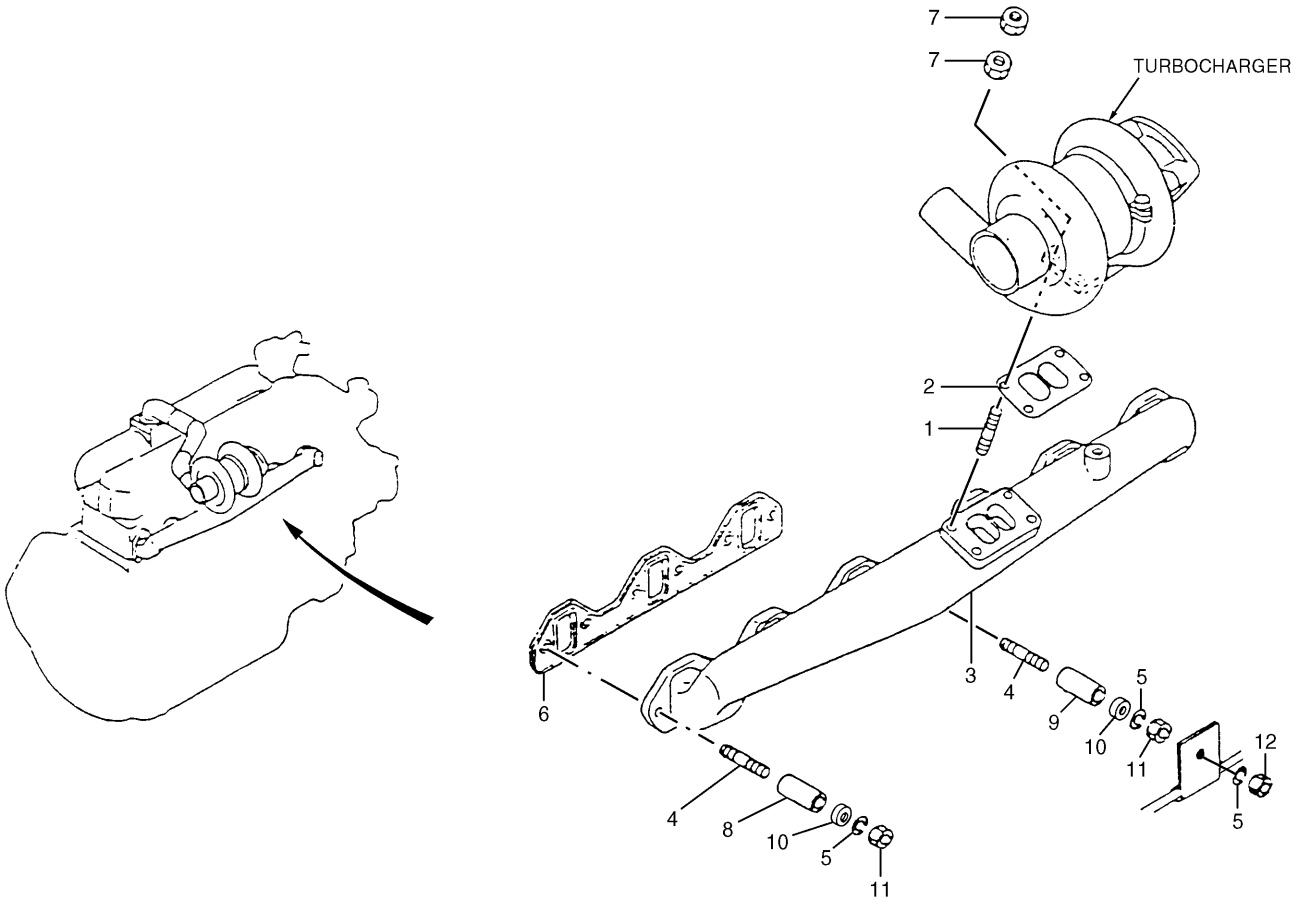

NOTE	No.	PART No.	QTY	PART NAME	NOTE	No.	PART No.	QTY	PART NAME
	1	5I-6024	4	STUD					
	2	5I-7742	1	GASKET					
	3	5I-8054	1	MANIFOLD					
	4	5I-7549	12	STUD					
	5	095-8638	13	WASHER					
	6	178-6553	2	GASKET					
	7	5I-7633	8	NUT					
	8	5I-7550	11	SPACER					
	9	5I-7601	1	SPACER					
	10	5I-8013	12	WASHER					
	11	5C-7261	13	NUT					
	12	091-3474	1	NUT					

H73215E 09

5I-7765 MANIFOLD GP-EXHAUST

Part of 124-1696-Page13

FUEL SYSTEM

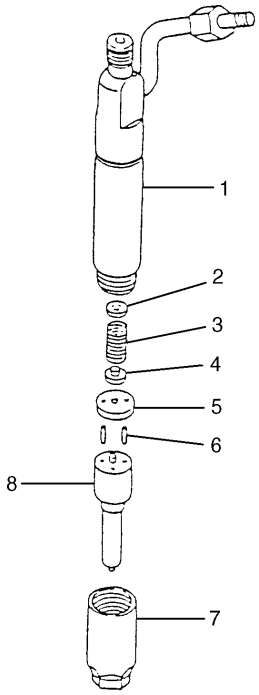

NOTE	No.	PART No.	QTY	PART NAME
Z	1		1	HOLDER AS
B	2	125-3006	1	SHIM (T=0.10mm)
B		125-3007	1	SHIM (T=0.20mm)
B		125-3008	1	SHIM (T=0.30mm)
B		125-3009	1	SHIM (T=0.40mm)
B		125-3010	1	SHIM (T=0.50mm)
B		125-3011	1	SHIM (T=0.52mm)
B		125-3012	1	SHIM (T=0.54mm)
B		125-3013	1	SHIM (T=0.56mm)
B		125-3014	1	SHIM (T=0.58mm)
	3	096-7928	1	SPRING
	4	5I-5175	1	SEAT
	5	096-9481	1	SPACER
	6	096-9478	2	PIN
	7	085-9275	1	NUT
	8	5I-7713	1	NOZZLE TIP AS

B—USE AS REQUIRED

Z—NOT SERVICED

H54380E 02

5I-7706 NOZZLE GP-UNIT INJECTOR

Part of 124-1696-Page13

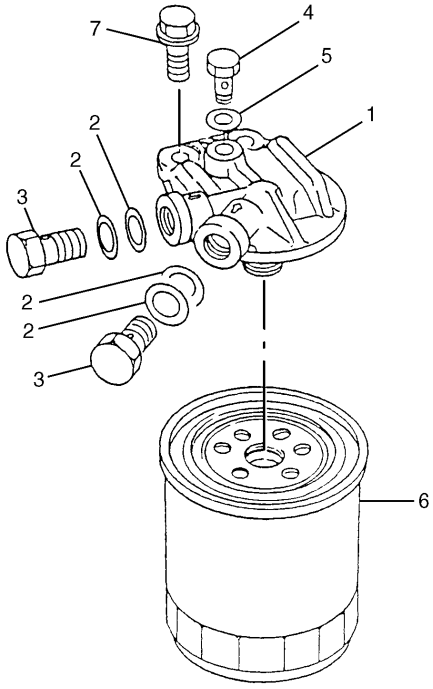

NOTE	No.	PART No.	QTY	PART NAME
	1	094-7998	1	HEAD
	2	096-9013	4	GASKET
	3	094-9726	2	BOLT (L=26mm)
	4	094-9725	1	PLUG
	5	096-9014	1	GASKET
	6	5I-7951	1	ELEMENT
	7	096-5101	2	BOLT

H52302E 00

5I-7954 FILTER GP-FUEL

Part of 124-1696-Page13

FUEL SYSTEM

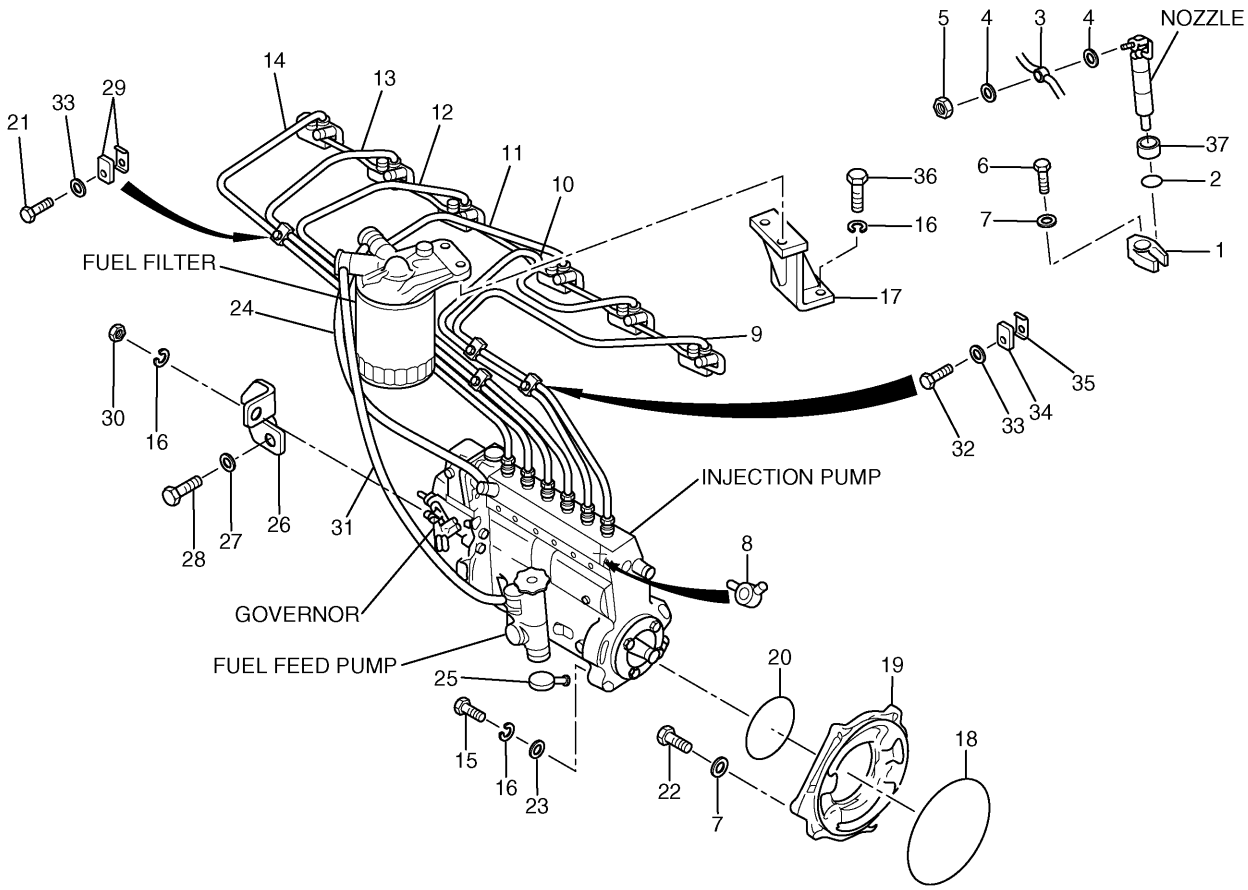

NOTE	No.	PART No.	QTY	PART NAME	NOTE	No.	PART No.	QTY	PART NAME
	1	113-0363	6	SUPPORT		21	6V-7357	3	BOLT (L=25mm)
	2	1R-6573	6	GASKET		22	5I-5108	2	BOLT (L=18mm)
	3	5I-8043	1	PIPE		23	8T-4121	4	WASHER
	4	085-7269	12	WASHER		24	094-9022	1	HOSE AS
	5	5I-5111	6	NUT		25	125-2983	1	JOINT
	6	8T-4189	6	BOLT (L=20mm)		26	135-2345	1	BRACKET
	7	095-8638	8	WASHER		27	096-2501	1	WASHER
	8	5I-7743	1	JOINT		28	8T-4179	1	BOLT (L=20mm)
	9	5I-8044	1	PIPE		29	094-9581	6	CLAMP
	10	5I-8045	1	PIPE		30	6V-8231	1	NUT
	11	5I-8046	1	PIPE		31	094-9034	1	HOSE AS
	12	5I-8047	1	PIPE		32	5C-9553	5	BOLT (L=16mm)
	13	5I-8048	1	PIPE		33	096-2500	8	WASHER
	14	5I-8049	1	PIPE		34	094-9597	5	CLAMP
	15	8T-4196	4	BOLT (L=35mm)		35	094-9596	5	CLAMP
	16	7X-0796	9	LOCKWASHER		36	8T-4136	4	BOLT (L=25mm)
	17	5I-7647	1	BRACKET		37	154-0489	6	SEAL
	18	096-9529	1	SEAL-O-RING (ID=139.50mm)					
	19	5I-7576	1	FLANGE					
	20	5I-7744	1	SEAL-O-RING (ID=74.50mm)					

H66905E 02

125-2960 LINES GP-FUEL
High Ambient,Emission Package
Part of 124-1696-Page13

FUEL SYSTEM

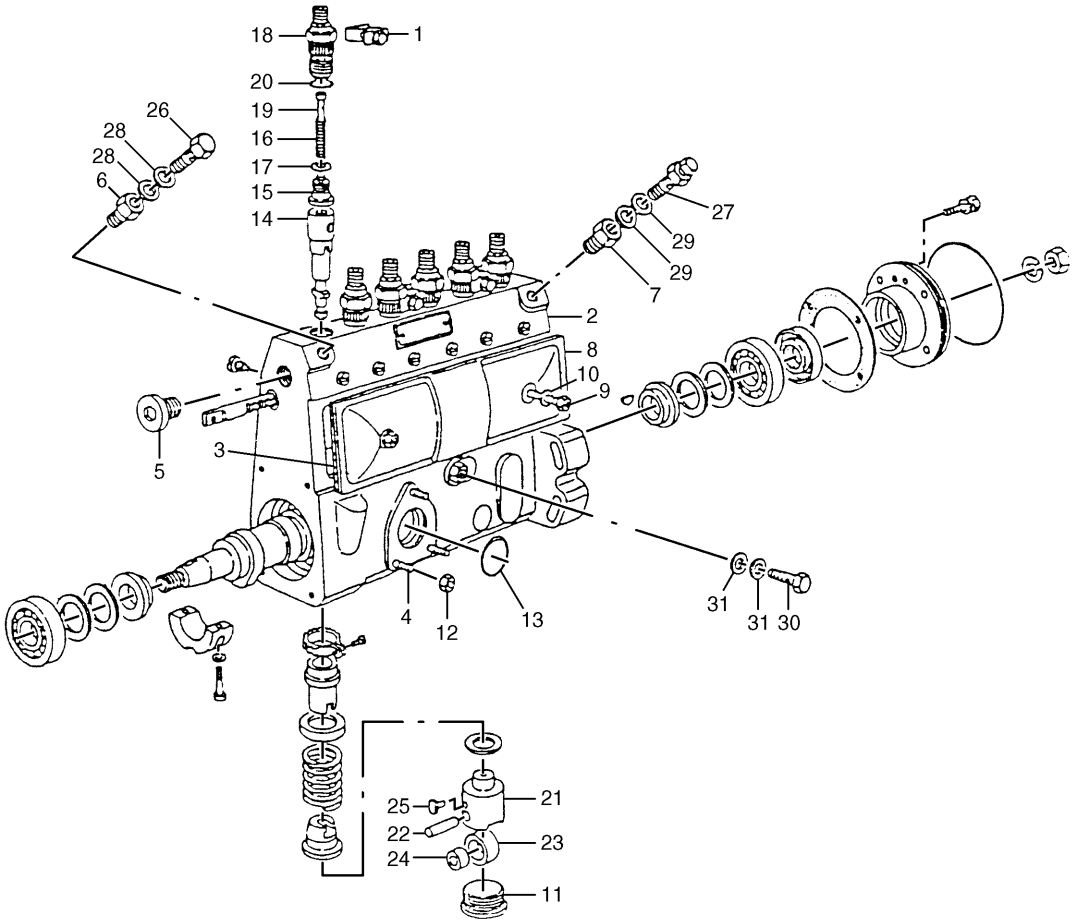

NOTE	No.	PART No.	QTY	PART NAME	NOTE	No.	PART No.	QTY	PART NAME
	1	096-9492	3	PLATE		21	125-2930	6	TAPPET
	2	125-2922	1	HOUSING		22	096-9495	6	PIN
	3	5I-7508	1	GASKET		23	125-2931	6	ROLLER
	4	085-9659	3	STUD		24	125-2932	6	BUSHING
	5	085-9199	1	PLUG		25	125-2933	6	GUIDE
	6	125-2923	1	ADAPTER		26	085-9888	1	EYEBOLT
	7	125-2924	1	ADAPTER		27	5I-5147	1	VALVE
	8	085-9832	1	COVER		28	095-2040	2	WASHER
	9	096-9486	2	SCREW		29	5I-5148	2	GASKET
	10	099-2389	2	GASKET		30	085-9260	1	EYEBOLT
	11	125-2925	6	PLUG		31	096-7632	2	GASKET
	12	1R-9206	3	NUT					
	13	096-8294	1	SEAL-O-RING					
	14	125-2926	6	PLUNGER AS					
	15	125-2927	6	VALVE					
	16	125-2928	6	SPRING					
	17	096-8307	6	GASKET					
	18	125-2929	6	HOLDER					
	19	096-9491	6	STOPPER					
	20	096-8290	6	SEAL					

H78045E 02

125-2961 PUMP GP-FUEL INJECTION (1/6)

S/N 3MR 1-06593, 4MR 1-00947
Part of 124-1696-Page13

FUEL SYSTEM

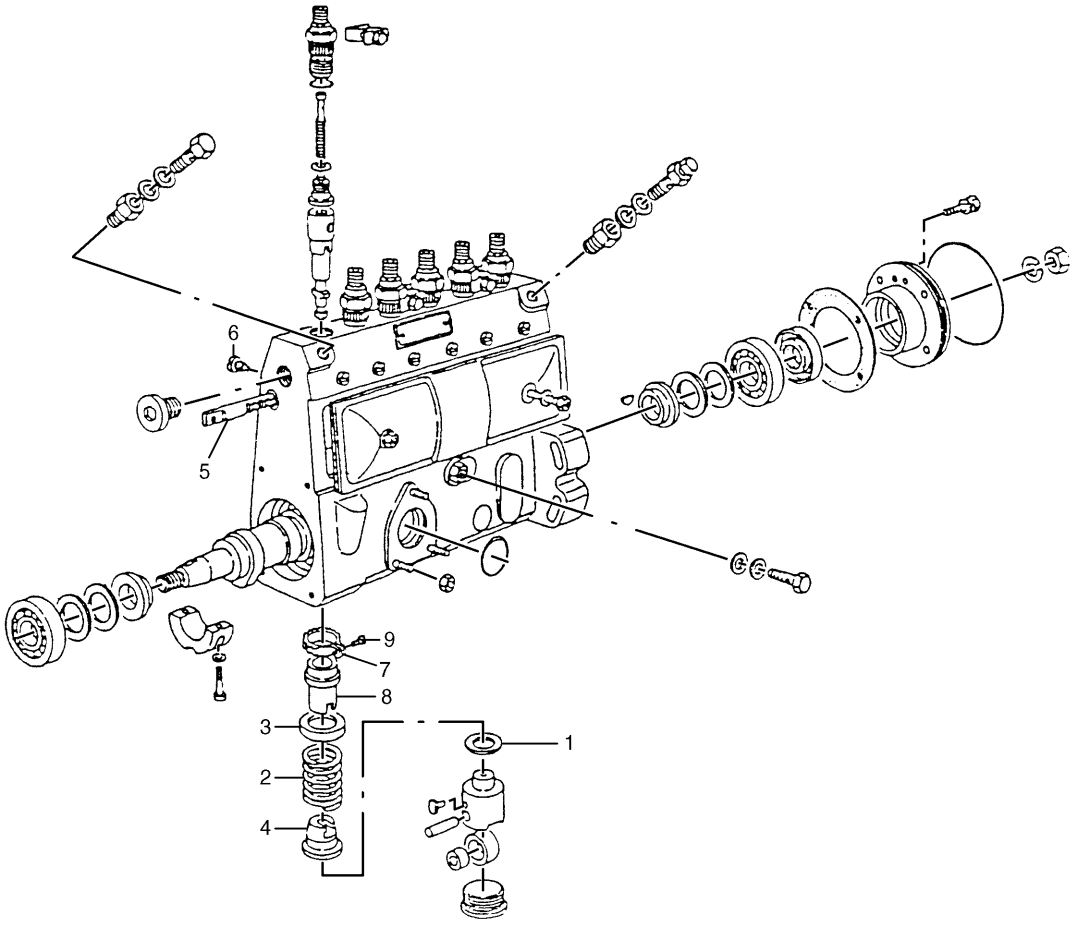

NOTE	No.	PART No.	QTY	PART NAME	NOTE	No.	PART No.	QTY	PART NAME
B	1	096-9408	1	SHIM (T=0.30mm)	B		085-9239	1	SHIM (T=1.50mm)
B		085-9223	1	SHIM (T=0.40mm)	B		085-9240	1	SHIM (T=1.60mm)
B		085-9224	1	SHIM (T=0.50mm)	B		085-9241	1	SHIM (T=0.20mm)
B		085-9225	1	SHIM (T=0.60mm)	B		085-9242	1	SHIM (T=0.25mm)
B		096-9409	1	SHIM (T=0.70mm)	B		085-9243	1	SHIM (T=0.35mm)
B		085-9226	1	SHIM (T=0.80mm)	B		085-9244	1	SHIM (T=0.45mm)
B		085-9227	1	SHIM (T=0.90mm)	B		085-9245	1	SHIM (T=1.35mm)
B		085-6719	1	SHIM (T=1.00mm)	B		085-9246	1	SHIM (T=1.45mm)
B		085-9228	1	SHIM (T=1.10mm)	B		085-9247	1	SHIM (T=1.55mm)
B		085-9229	1	SHIM (T=1.20mm)		2	096-8310	6	SPRING
B		085-9230	1	SHIM (T=1.30mm)		3	096-9500	6	SEAT
B		085-6720	1	SHIM (T=1.40mm)		4	096-9502	6	SEAT
B		085-9231	1	SHIM (T=0.55mm)		5	096-9506	1	CONTROL
B		085-9232	1	SHIM (T=0.65mm)		6	085-9838	1	SCREW
B		085-9233	1	SHIM (T=0.75mm)		7	096-9503	6	PINION
B		085-9234	1	SHIM (T=0.85mm)		8	096-9505	6	SLEEVE
B		085-9235	1	SHIM (T=0.95mm)		9	085-9195	6	SCREW
B		085-9236	1	SHIM (T=1.05mm)					
B		085-9237	1	SHIM (T=1.15mm)					
B		085-9238	1	SHIM (T=1.25mm)					

B—USE AS REQUIRED

H78046E 02

125-2961 PUMP GP-FUEL INJECTION (2/6)

S/N 3MR 1-06593, 4MR 1-00947
Part of 124-1696-Page13

FUEL SYSTEM

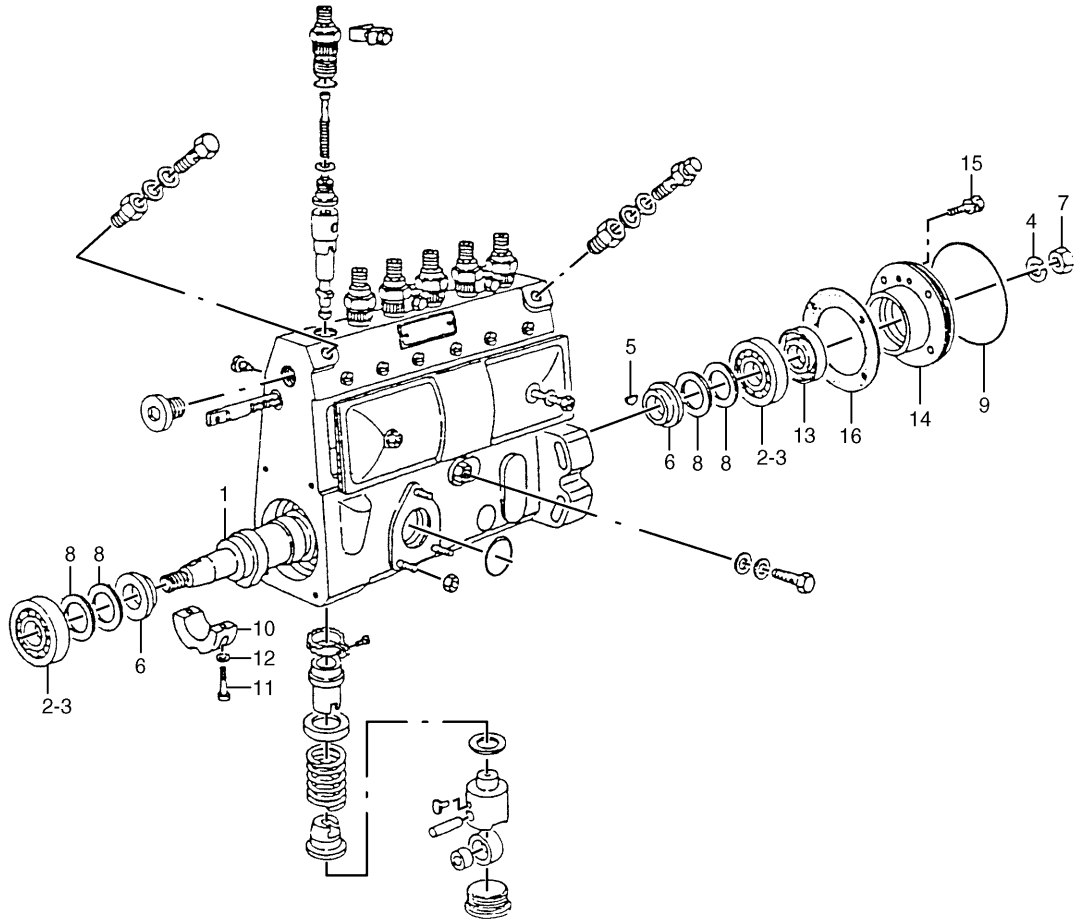

NOTE	No.	PART No.	QTY	PART NAME	NOTE	No.	PART No.	QTY	PART NAME
	1	125-2934	1	CAMSHAFT		13	096-7571	1	SEAL
B	2	096-8273	2	BEARING		14	085-9197	1	COVER
B	3	085-6723	2	BEARING		15	085-9258	4	BOLT
	4	087-8884	1	WASHER		16	125-2937	1	GASKET
	5	085-9259	1	KEY					
	6	096-9507	2	RING					
	7	5I-5146	1	NUT					
B	8	096-9410	2	SHIM (T=0.10mm)					
B		085-9682	2	SHIM (T=0.12mm)					
B		085-9683	2	SHIM (T=0.14mm)					
B		085-9684	2	SHIM (T=0.16mm)					
B		085-9685	2	SHIM (T=0.18mm)					
B		096-9411	2	SHIM (T=0.50mm)					
B		096-9412	2	SHIM (T=1.00mm)					
B		085-9686	2	SHIM (T=0.30mm)					
B		5I-7831	2	SHIM (T=0.70mm)					
	9	096-7570	1	SEAL-O-RING					
	10	125-2935	1	BEARING					
	11	125-2936	2	SCREW					
	12	096-9385	2	GASKET					

B—USE AS REQUIRED

H78047E 02

125-2961 PUMP GP-FUEL INJECTION (3/6)

S/N 3MR 1-06593, 4MR 1-00947
Part of 124-1696-Page13

FUEL SYSTEM

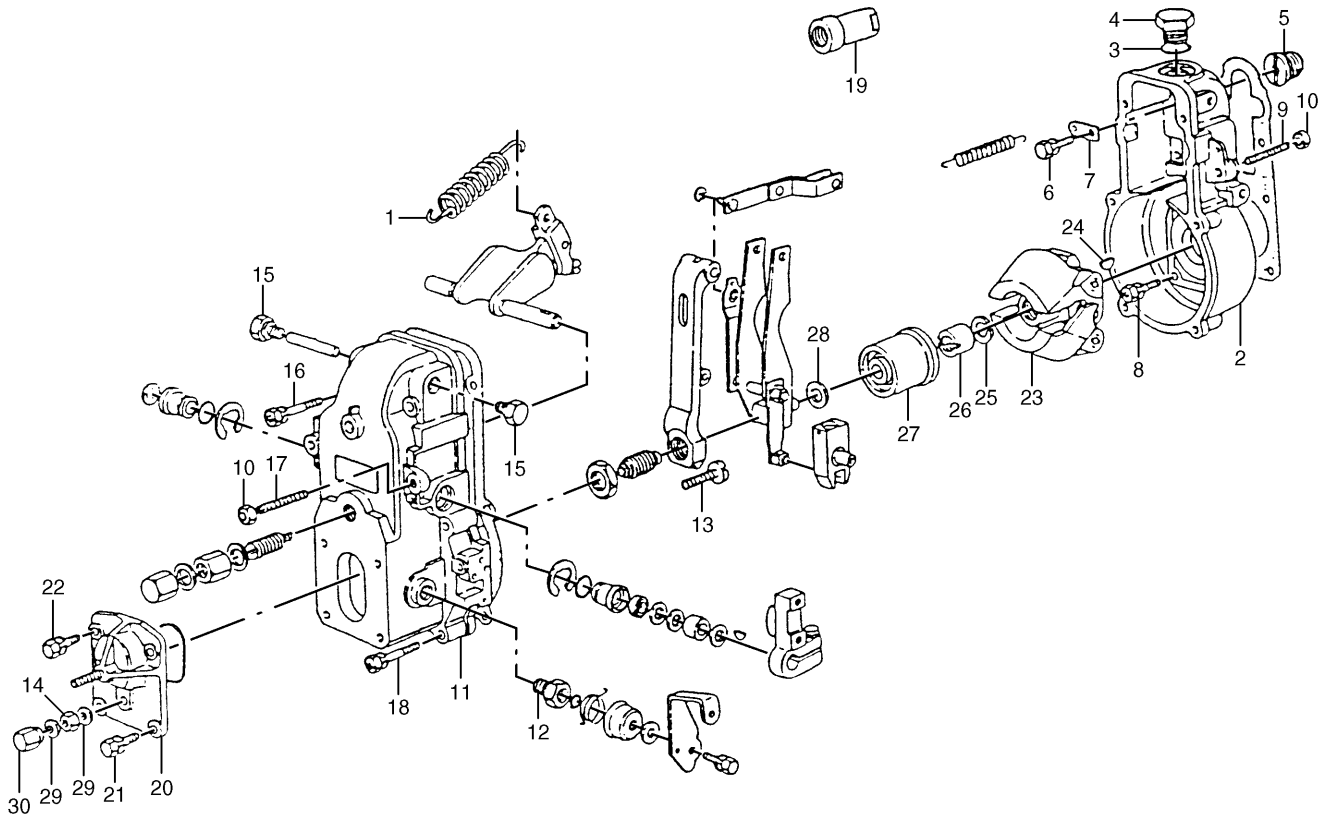

NOTE	No.	PART No.	QTY	PART NAME	NOTE	No.	PART No.	QTY	PART NAME
	1	096-6361	1	SPRING		21	085-9264	2	BOLT
	2	125-2938	1	HOUSING		22	085-7913	2	BOLT
	3	096-8292	1	SEAL-O-RING		23	5I-5153	1	FLYWEIGHT AS
	4	085-9211	1	PLUG		24	085-9653	1	KEY
	5	096-9585	1	ADAPTER		25	096-8280	1	WASHER
	6	085-9261	1	BOLT		26	085-9267	1	NUT
	7	085-9208	1	PLATE		27	085-9910	1	SLEEVE
	8	085-9658	6	BOLT	B	28	085-9677	1	SHIM (T=0.20mm)
	9	085-9903	1	SCREW	B		085-9678	1	SHIM (T=0.30mm)
	10	085-9205	2	NUT	B		085-9679	1	SHIM (T=0.40mm)
	11	5I-5151	1	COVER	B		085-9680	1	SHIM (T=1.00mm)
	12	099-8485	1	BUSHING	B		085-9882	1	SHIM (T=0.50mm)
	13	085-9215	1	SCREW	B		085-9883	1	SHIM (T=1.50mm)
	14	5I-5152	1	NUT	B		085-9884	1	SHIM (T=2.00mm)
	15	099-6495	2	PLUG	B		085-9885	1	SHIM (T=3.00mm)
	16	085-9266	2	BOLT	B		085-9886	1	SHIM (T=4.00mm)
	17	085-9210	1	SCREW		29	085-7914	2	GASKET
	18	085-9265	4	BOLT		30	085-9218	1	NUT
	19	085-9906	1	LIMITER					
	20	085-9277	1	COVER					

B—USE AS REQUIRED

H78048E 02

125-2961 PUMP GP-FUEL INJECTION (4/6)

S/N 3MR 1-06593, 4MR 1-00947
Part of 124-1696-Page13

FUEL SYSTEM

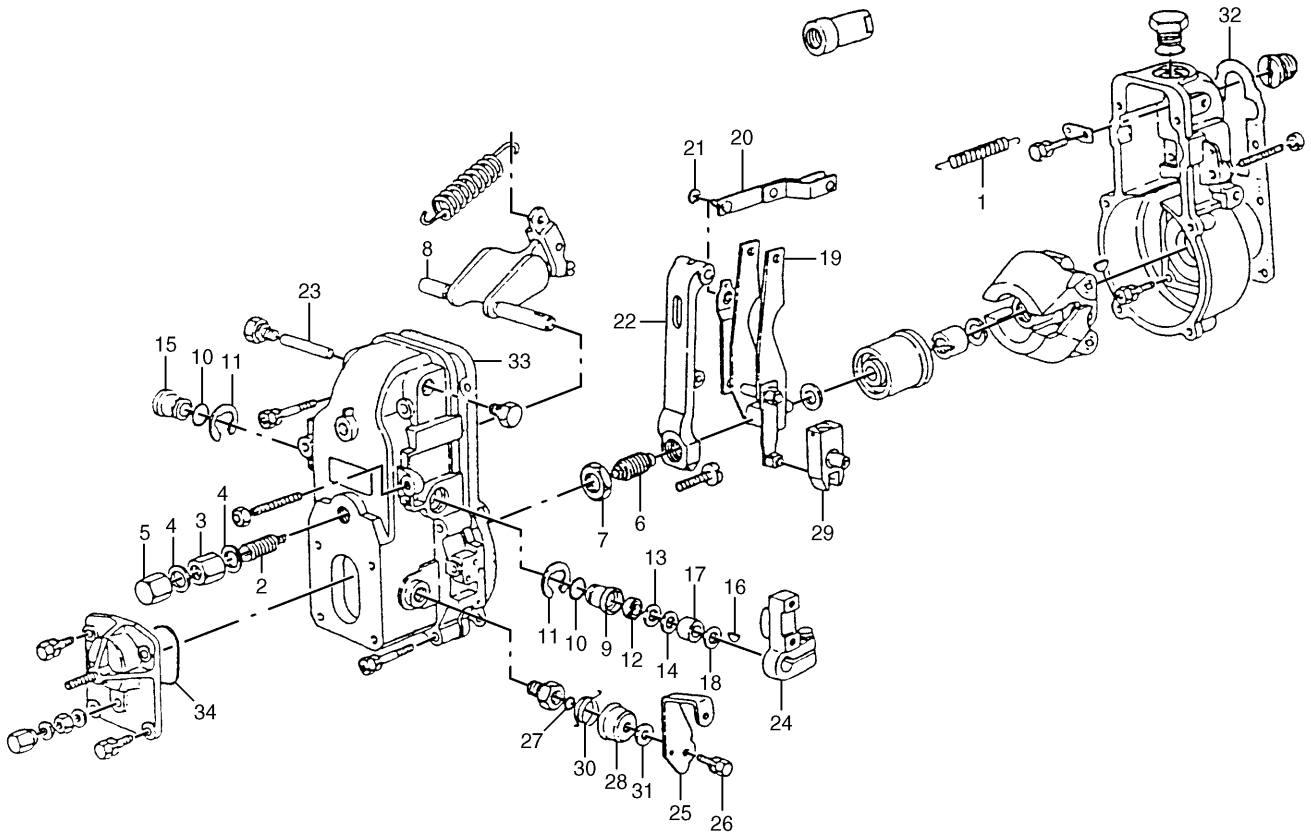

NOTE	No.	PART No.	QTY	PART NAME	NOTE	No.	PART No.	QTY	PART NAME
	1	085-9913	1	SPRING		21	085-9645	1	RING
	2	085-9916	1	CAPSULE		22	085-9929	1	LEVER
	3	085-9212	1	NUT		23	085-9213	1	PIN
	4	096-8274	2	GASKET		24	085-9936	1	LEVER
	5	085-9206	1	NUT		25	5I-7832	1	LEVER
	6	5I-5154	1	CAPSULE		26	085-9649	1	BOLT
	7	085-9269	1	NUT		27	096-8286	1	SEAL
	8	5I-7512	1	LEVER		28	096-6353	1	CAP
	9	190-5893	1	BUSHING		29	085-9932	1	LEVER AS
	10	096-8289	2	SEAL-O-RING		30	099-0059	1	SPRING
	11	085-9271	2	RING	B	31	096-6346	1	SHIM (T=0.20mm)
	12	096-7567	1	SEAL	B		096-6347	1	SHIM (T=0.25mm)
	13	085-9887	1	SHIM	B		096-6348	1	SHIM (T=0.30mm)
B	14	085-9681	1	SHIM (T=0.30mm)	B		096-6349	1	SHIM (T=0.35mm)
	15	5I-7514	1	BUSHING	B		096-6350	1	SHIM (T=0.40mm)
	16	085-9652	1	KEY	B		096-6351	1	SHIM (T=0.50mm)
	17	085-7916	1	COLLAR		32	125-2939	1	GASKET
B	18	085-9207	1	WASHER		33	1R-9210	1	GASKET
	19	096-8359	1	LEVER AS		34	096-8297	1	SEAL-O-RING
	20	096-9587	1	LINK					

B—USE AS REQUIRED

H78049E 02

125-2961 PUMP GP-FUEL INJECTION (5/6)

S/N 3MR 1-06593, 4MR 1-00947
Part of 124-1696-Page13

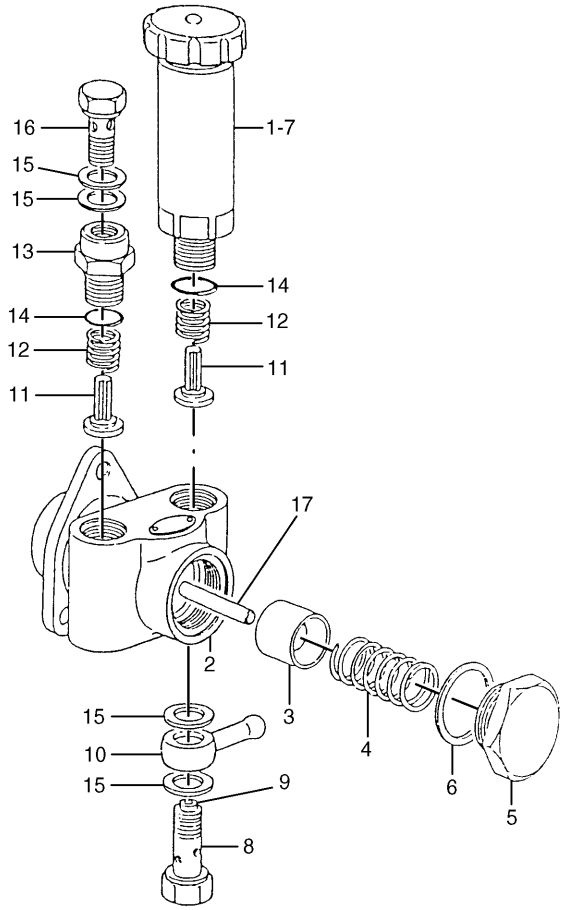

NOTE	No.	PART No.	QTY	PART NAME	NOTE	No.	PART No.	QTY	PART NAME
	1	125-2946	1	PUMP AS (D.K.C)					
	2	125-2940	1	HOUSING					
	3	125-2942	1	PISTON					
	4	096-8336	1	SPRING					
	5	5I-5159	1	PLUG					
	6	125-2943	1	GASKET					
	7	5I-7511	1	PRIMING PUMP					
	8	085-9899	1	EYEBOLT					
	9	5I-5164	1	FILTER					
	10	5I-5163	1	EYEBOLT					
	11	1R-5708	2	VALVE					
	12	095-2490	2	SPRING					
	13	085-9222	1	ADAPTER					
	14	096-8288	2	SEAL-O-RING					
	15	095-2040	4	WASHER					
	16	085-9888	1	EYEBOLT					
	17	125-2941	1	PUSHROD					

H78050E 02

125-2961 PUMP GP-FUEL INJECTION (6/6)

S/N 3MR 1-06593, 4MR 1-00947
Part of 124-1696-Page13

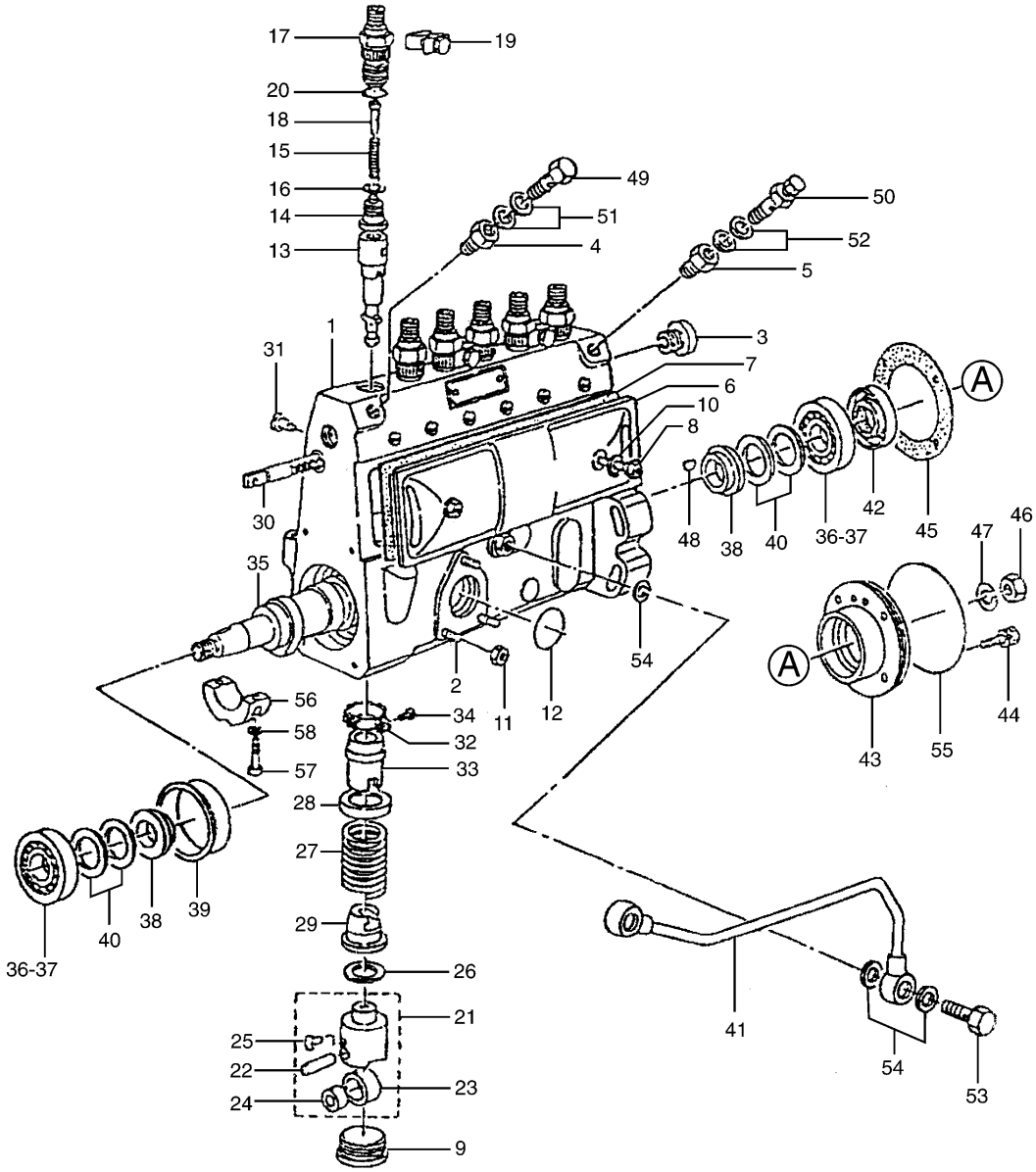

H82133E 01

171-3253 PUMP GP-FUEL INJECTION (1/3)

S/N 3MR 06594-Up, 4MR 00948-Up
Part of 124-1696-Page13.02

FUEL SYSTEM

NOTE	No.	PART No.	QTY	PART NAME
	1	125-2922	1	HOUSING
	2	085-9659	3	STUD
	3	085-9199	1	PLUG
	4	125-2923	1	ADAPTER
	5	125-2924	1	ADAPTER
	6	085-9832	1	COVER
	7	5I-7508	1	GASKET
	8	096-9486	2	SCREW
	9	125-2925	6	PLUG
	10	099-2389	2	GASKET
	11	1R-9206	3	NUT
	12	096-8294	1	SEAL-O-RING
	13	125-2926	6	PLUNGER AS
	14	125-2927	6	VALVE
	15	125-2928	6	SPRING
	16	096-8307	6	GASKET
	17	125-2929	6	HOLDER
	18	096-9491	6	STOPPER
	19	096-9492	3	PLATE
	20	096-8290	6	SEAL
	21	125-2930	6	TAPPET
	22	096-9495	6	PIN
	23	125-2931	6	ROLLER
	24	125-2932	6	BUSHING
	25	125-2933	6	GUIDE
B	26	085-9241	1	SHIM (T=0.20mm)
B		085-9242	1	SHIM (T=0.25mm)
B		096-9408	1	SHIM (T=0.30mm)
B		085-9243	1	SHIM (T=0.35mm)
B		085-9223	1	SHIM (T=0.40mm)
B		085-9244	1	SHIM (T=0.45mm)
B		085-9224	1	SHIM (T=0.50mm)
B		085-9231	1	SHIM (T=0.55mm)
B		085-9225	1	SHIM (T=0.60mm)
B		085-9232	1	SHIM (T=0.65mm)
B		096-9409	1	SHIM (T=0.70mm)
B		085-9233	1	SHIM (T=0.75mm)
B		085-9226	1	SHIM (T=0.80mm)
B		085-9234	1	SHIM (T=0.85mm)
B		085-9227	1	SHIM (T=0.90mm)
B		085-9235	1	SHIM (T=0.95mm)
B		085-6719	1	SHIM (T=1.00mm)
B		085-9236	1	SHIM (T=1.05mm)
B		085-9228	1	SHIM (T=1.10mm)
B		085-9237	1	SHIM (T=1.15mm)
B		085-9229	1	SHIM (T=1.20mm)
B		085-9238	1	SHIM (T=1.25mm)
B		085-9230	1	SHIM (T=1.30mm)
B		085-9245	1	SHIM (T=1.35mm)
B		085-6720	1	SHIM (T=1.40mm)
B		085-9246	1	SHIM (T=1.45mm)
B		085-9239	1	SHIM (T=1.50mm)
B		085-9247	1	SHIM (T=1.55mm)
B		085-9240	1	SHIM (T=1.60mm)
	27	096-8310	6	SPRING
	28	096-9500	6	SEAT
	29	096-9502	6	SEAT
	30	096-9506	1	CONTROL
	31	085-9838	1	SCREW
	32	096-9503	6	PINION
	33	096-9505	6	SLEEVE
	34	085-9195	6	SCREW
	35	125-2934	1	CAMSHAFT
B	36	096-8273	2	BEARING
B	37	085-6723	2	BEARING
	38	096-9507	2	RING
	39	096-9508	1	RING
B	40	096-9410	2	SHIM (T=0.10mm)
B		085-9682	2	SHIM (T=0.12mm)
B		085-9683	2	SHIM (T=0.14mm)
B		085-9684	2	SHIM (T=0.16mm)
B		085-9685	2	SHIM (T=0.18mm)
B		085-9686	2	SHIM (T=0.30mm)
B		096-9411	2	SHIM (T=0.50mm)
B		5I-7831	2	SHIM (T=0.70mm)
B		096-9412	2	SHIM (T=1.00mm)
	41	191-3131	1	PIPE
	42	096-7571	1	SEAL
	43	085-9197	1	COVER
	44	085-9258	4	BOLT
	45	125-2937	1	GASKET
	46	5I-5146	1	NUT
	47	087-8884	1	WASHER
	48	085-9259	1	KEY
	49	085-9888	1	EYEBOLT
	50	5I-5147	1	VALVE
	51	095-2040	2	WASHER
	52	5I-5148	2	GASKET
	53	190-5859	1	EYEBOLT
	54	096-7632	3	GASKET
	55	096-7570	1	SEAL-O-RING
	56	125-2935	1	BEARING
	57	125-2936	2	SCREW
	58	096-9385	2	GASKET

B—USE AS REQUIRED

H82133E 01

171-3253 PUMP GP-FUEL INJECTION (1/3)

S/N 3MR 06594-Up, 4MR 00948-Up
Part of 124-1696-Page13.02

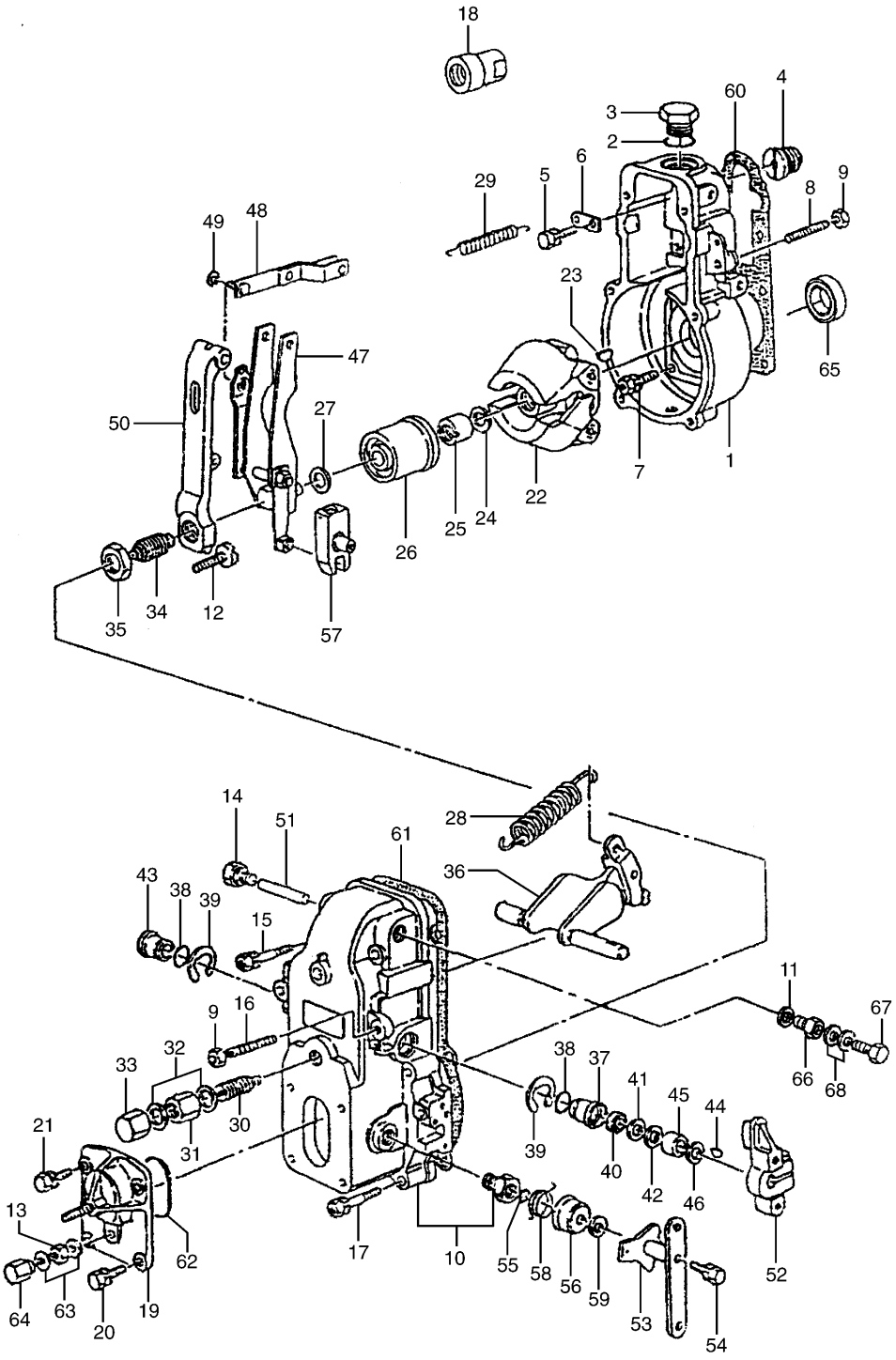

H82134E 01

171-3253 PUMP GP-FUEL INJECTION (2/3)
S/N 3MR 06594-Up, 4MR 00948-Up
Part of 124-1696-Page13.02

FUEL SYSTEM

NOTE	No.	PART No.	QTY	PART NAME
	1	125-2938	1	HOUSING
	2	096-8292	1	SEAL-O-RING
	3	085-9211	1	PLUG
	4	096-9585	1	ADAPTER
	5	085-9261	1	BOLT
	6	085-9208	1	PLATE
	7	085-9658	6	BOLT
	8	085-9903	1	SCREW
	9	085-9205	2	NUT
	10	191-3132	1	COVER
	11	190-5914	1	GASKET
	12	085-9215	1	SCREW
	13	5I-5152	1	NUT
	14	099-6495	1	PLUG
	15	085-9266	2	BOLT
	16	085-9210	1	SCREW
	17	085-9265	4	BOLT
	18	085-9906	1	LIMITER
	19	085-9277	1	COVER
	20	085-9264	2	BOLT
	21	085-7913	2	BOLT
	22	085-9909	1	FLYWEIGHT AS
	23	085-9653	1	KEY
	24	096-8280	1	WASHER
	25	085-9267	1	NUT
	26	190-5889	1	SLEEVE
B	27	085-9677	1	SHIM (T=0.20mm)
B		085-9678	1	SHIM (T=0.30mm)
B		085-9679	1	SHIM (T=0.40mm)
B		085-9882	1	SHIM (T=0.50mm)
B		085-9680	1	SHIM (T=1.00mm)
B		085-9883	1	SHIM (T=1.50mm)
B		085-9884	1	SHIM (T=2.00mm)
B		085-9885	1	SHIM (T=3.00mm)
B		085-9886	1	SHIM (T=4.00mm)
	28	096-6361	1	SPRING
	29	085-9913	1	SPRING
	30	085-9916	1	CAPSULE
	31	085-9212	1	NUT
	32	096-8274	2	GASKET
	33	085-9206	1	NUT
	34	5I-5154	1	CAPSULE
	35	085-9269	1	NUT
	36	5I-7512	1	LEVER
	37	190-5893	1	BUSHING
	38	096-8289	2	SEAL-O-RING
	39	085-9271	2	RING
	40	096-7567	1	SEAL
	41	085-9887	1	SHIM
	42	190-5894	1	SHIM (T=0.50mm)
	43	190-5895	1	BUSHING
	44	085-9652	1	KEY
	45	085-7916	1	COLLAR
	46	085-9207	1	WASHER
	47	096-8359	1	LEVER AS
	48	096-9587	1	LINK
	49	085-9645	1	RING
	50	085-9929	1	LEVER
	51	190-5903	1	PIN
	52	085-9936	1	LEVER
	53	5I-7832	1	LEVER
	54	191-3139	1	BOLT
	55	096-8286	1	SEAL
	56	096-6353	1	CAP
	57	085-9932	1	LEVER AS
	58	099-0059	1	SPRING
B	59	096-6346	1	SHIM (T=0.20mm)
B		096-6347	1	SHIM (T=0.25mm)
B		096-6348	1	SHIM (T=0.30mm)
B		096-6349	1	SHIM (T=0.35mm)
B		096-6350	1	SHIM (T=0.40mm)
B		096-6351	1	SHIM (T=0.50mm)
	60	125-2939	1	GASKET
	61	1R-9210	1	GASKET
	62	096-8297	1	SEAL-O-RING
	63	085-7914	2	GASKET
	64	085-9218	1	NUT
	65	190-5904	1	SEAL
	66	190-5911	1	ADAPTER
	67	190-5912	1	EYEBOLT
	68	190-5913	2	GASKET

B—USE AS REQUIRED

H82134E 01

171-3253 PUMP GP-FUEL INJECTION (2/3)

S/N 3MR 06594-Up, 4MR 00948-Up
Part of 124-1696-Page13.02

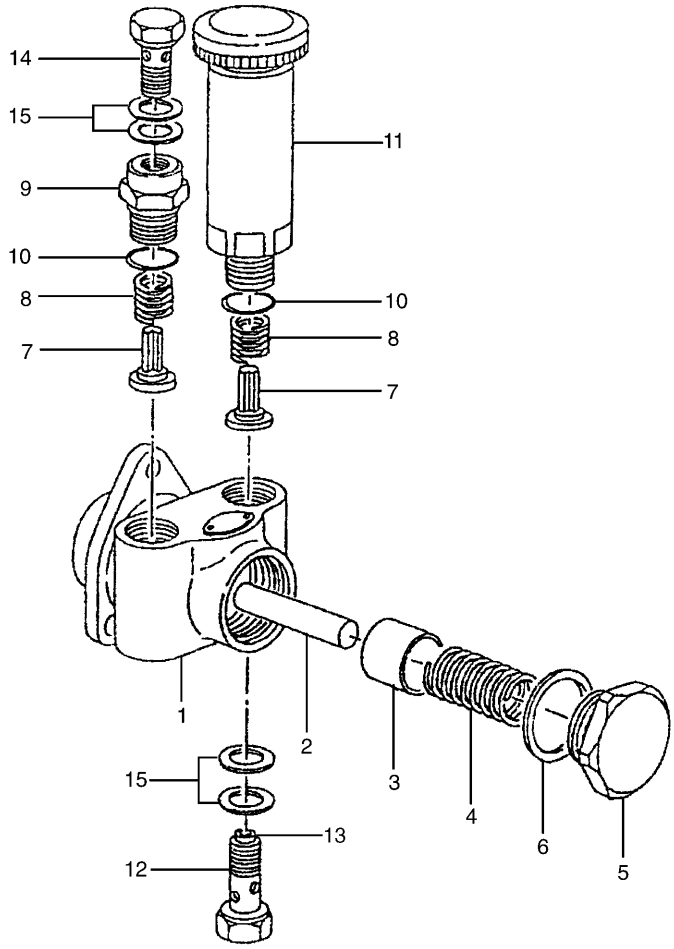

H82135E 01

171-3253 PUMP GP-FUEL INJECTION (3/3)
S/N 3MR 06594-Up, 4MR 00948-Up
Part of 124-1696-Page13.02

FUEL SYSTEM

NOTE	No.	PART No.	QTY	PART NAME	NOTE	No.	PART No.	QTY	PART NAME
	1	125-2940	1	HOUSING					
	2	125-2941	1	PUSHROD					
	3	125-2942	1	PISTON					
	4	096-8336	1	SPRING					
	5	5I-5159	1	PLUG					
	6	125-2943	1	GASKET					
	7	095-2489	2	VALVE					
	8	095-2490	2	SPRING					
	9	085-9222	1	ADAPTER					
	10	096-8288	2	SEAL-O-RING					
	11	5I-7511	1	PRIMING PUMP					
	12	085-9899	1	EYEBOLT					
	13	5I-5164	1	FILTER					
	14	085-9888	1	EYEBOLT					
	15	095-2040	4	WASHER					

H82135E 01

171-3253 PUMP GP-FUEL INJECTION (3/3)

S/N 3MR 06594-Up, 4MR 00948-Up
Part of 124-1696-Page13.02

MEMORANDA

MEMORANDA

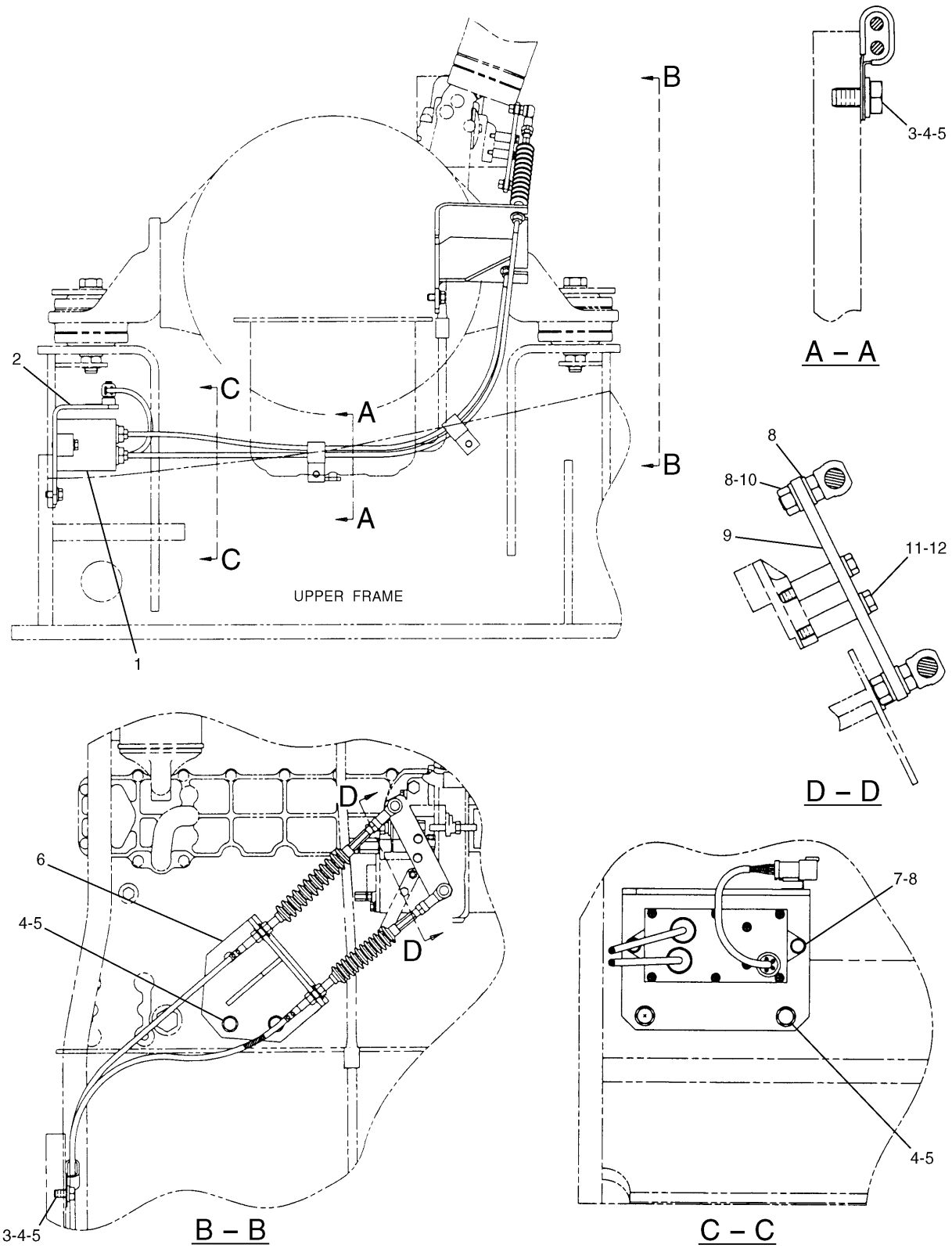

H65221E 05

119-0608 CONTROL GP-GOVERNOR

FUEL SYSTEM

NOTE	No.	PART No.	QTY	PART NAME	NOTE	No.	PART No.	QTY	PART NAME
	1	119-0633	1	MOTOR AS					
		102-8805	1	RECEPTACLE KIT DE CONECTORES					
		3E-3383	1	WEDGE					
		9W-0852	6	PIN					
		157-3160	2	JOINT					
	2	126-2987	1	BRACKET AS					
	3	4K-6177	2	CLIP					
	4	8T-4121	6	WASHER					
	5	8T-4137	6	BOLT (L=20mm)					
	6	119-0627	1	BRACKET AS					
	7	7X-2537	2	BOLT (L=35mm)					
	8	8T-4224	6	WASHER					
	9	119-0629	1	LEVER AS					
	10	5C-7261	2	NUT					
	11	9X-8256	2	WASHER					
	12	8C-8451	2	BOLT (L=40mm)					

H65221E 05

119-0608 CONTROL GP-GOVERNOR

FUEL SYSTEM

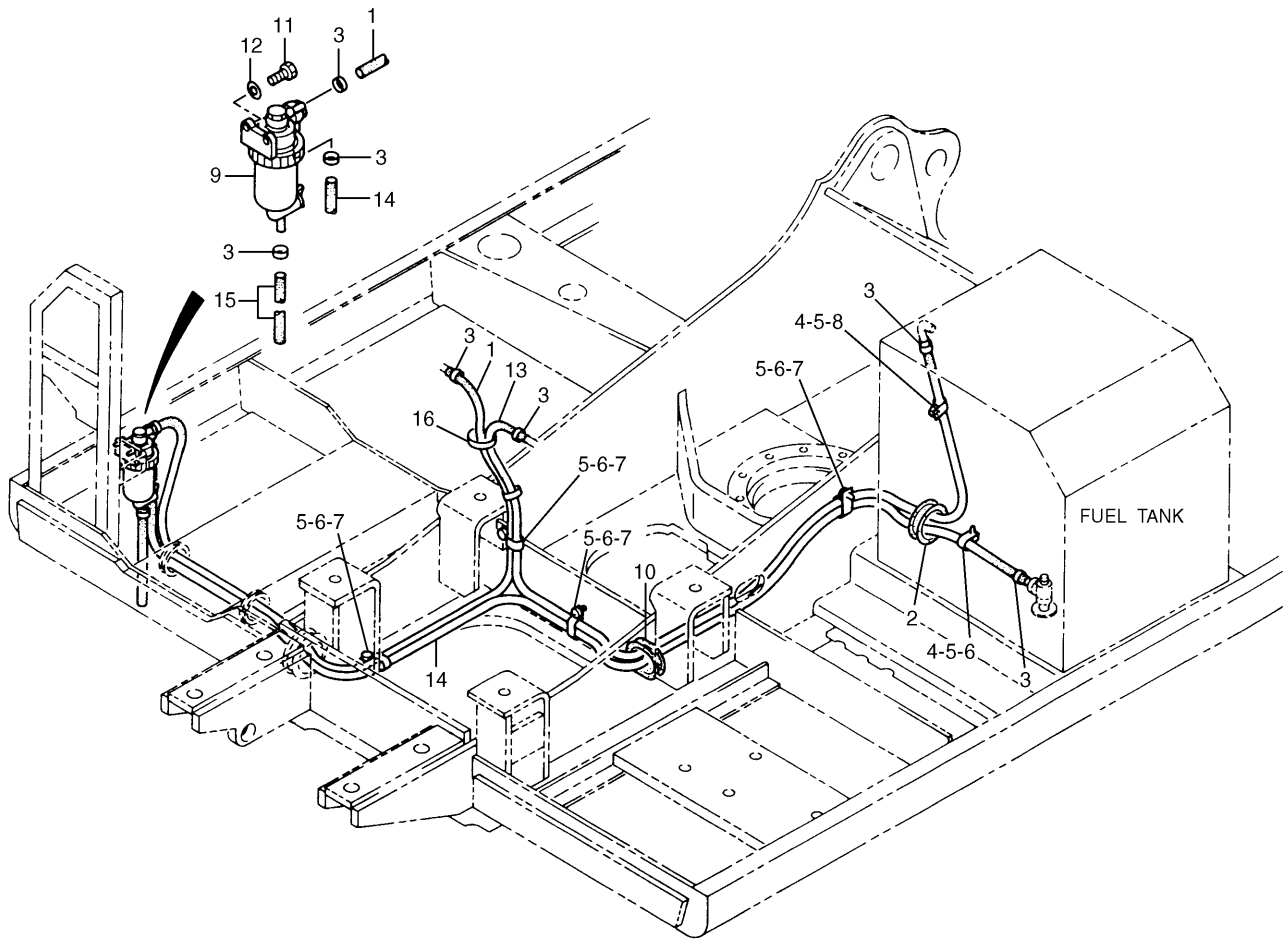

NOTE	No.	PART No.	QTY	PART NAME	NOTE	No.	PART No.	QTY	PART NAME
E	1	5P-1442		HOSE…(320cm)					
	2	7Y-8167	1	GROMMET					
	3	095-1386	7	CLAMP					
	4	9M-8406	2	CLIP					
	5	8T-4121	6	WASHER					
	6	8T-4191	5	BOLT (L=16mm)					
	7	5K-8451	4	CLIP					
	8	8T-4133	1	NUT					
	9	108-9139	1	SEPARATOR					
		6V-7658	1	SEAL-O-RING (ID=59.40mm)					
		095-1517	1	SEAL-O-RING (ID=13.80mm)					
		095-1511	1	SEAL-O-RING (ID=6.80mm)					
		168-0786	1	CASE AS					
	10	093-2063	1	GROMMET					
	11	8T-4908	2	BOLT (L=25mm)					
	12	8T-4224	2	WASHER					
E	13	5P-1442		HOSE…(360cm)					
E	14	5P-1442		HOSE…(400cm)					
E	15	5P-1442		HOSE…(25cm)					
	16	096-0061	2	STRAP					

E—ORDER BY THE CENTIMETER

H65222E 04

117-4276 LINES GP-FUEL

FUEL SYSTEM

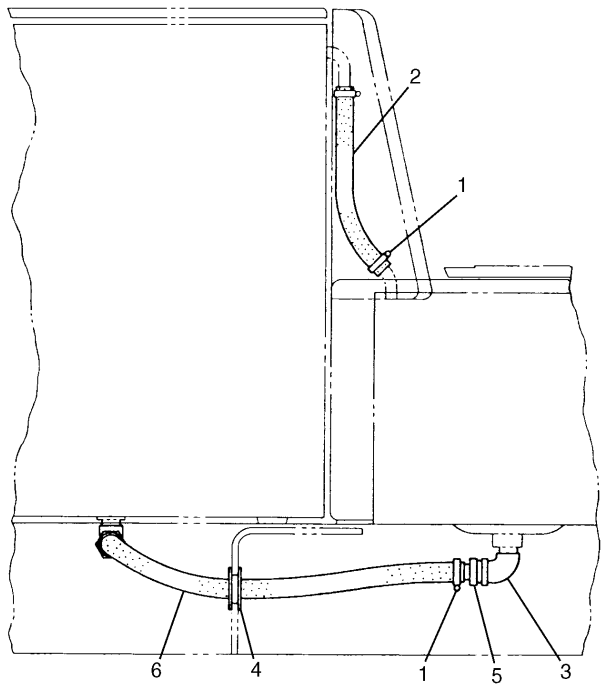

NOTE	No.	PART No.	QTY	PART NAME
	1	2S-3440	3	CLAMP
E	2	5P-0743		HOSE…(33cm)
	3	006-5707	2	ELBOW
	4	093-2064	1	GROMMET
	5	102-6170	2	CONNECTOR
E	6	8C-8773		HOSE…(73cm)

E—ORDER BY THE CENTIMETER

H50986E 01

114-6222 LINES GP-FUEL

Part of 120-4976-Page57

An Attachment

FUEL SYSTEM

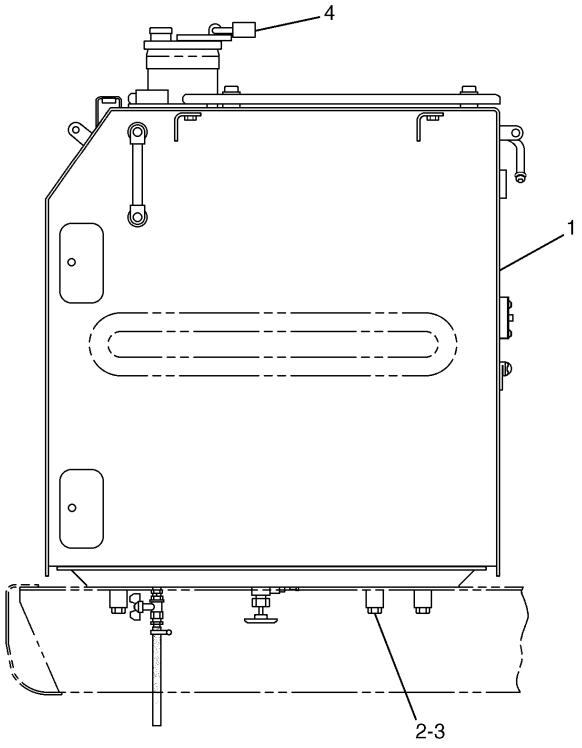

NOTE	No.	PART No.	QTY	PART NAME
Y	1	117-4272	1	TANK GP
	2	8T-4140	4	BOLT (L=60mm)
	3	6I-6123	4	SPACER
	4	5P-8502	1	PADLOCK GP
		5P-8500	1	KEY
		8Y-6364	1	SLEEVE

Y—SEE SEPARATE ILLUSTRATION

H54442E 02

117-4271 TANK & MTG GP-FUEL

117-4272-Page55

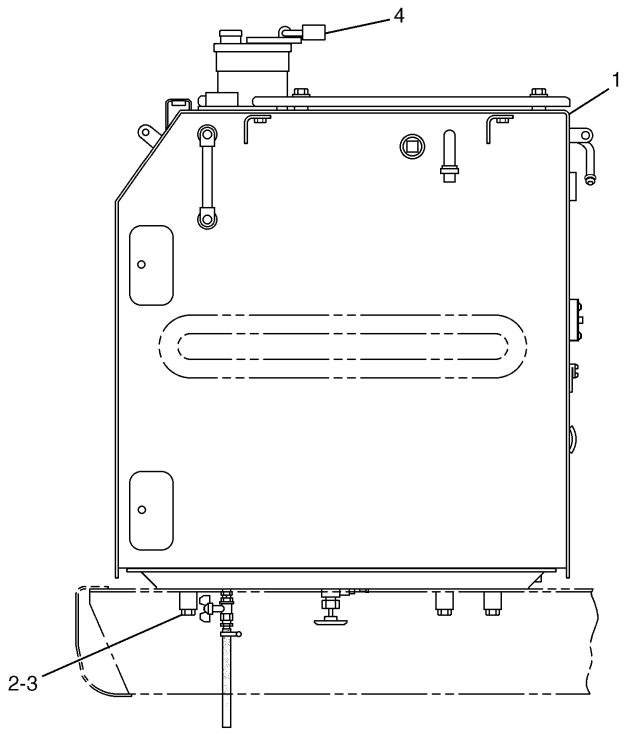

NOTE	No.	PART No.	QTY	PART NAME
Y	1	122-3997	1	TANK GP
	2	8T-4140	4	BOLT (L=60mm)
	3	6I-6123	4	SPACER
	4	5P-8502	1	PADLOCK GP
		5P-8500	1	KEY
		8Y-6364	1	SLEEVE

Y—SEE SEPARATE ILLUSTRATION

H65223E 02

122-3996 TANK & MTG GP-FUEL

Part of 120-4976-Page57

122-3997-Page56

An Attachment

FUEL SYSTEM

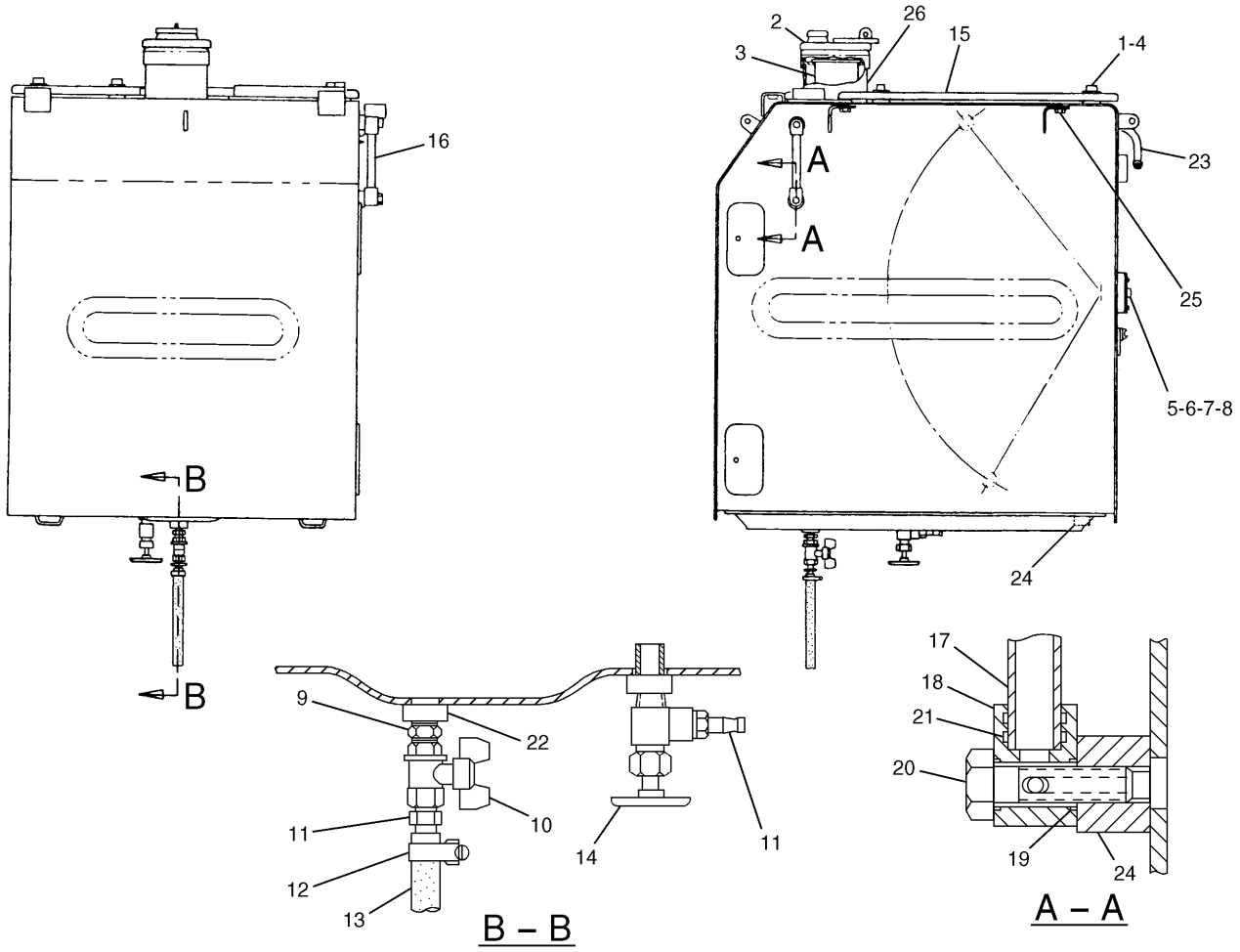

NOTE	No.	PART No.	QTY	PART NAME	NOTE	No.	PART No.	QTY	PART NAME
	1	5P-1076	6	WASHER		16	7Y-2398	1	GAUGE AS
	2	7X-7700	1	CAP AS		17	4I-0123	1	PIPE
		9X-2205	1	FILTER KIT		18	7Y-4754	2	BLOCK
		9X-8600	1	SEAL-O-RING (ID=110.49mm)		19	095-1514	4	SEAL-O-RING (ID=9.80mm)
	3	9P-7121	1	STRAINER		20	094-3247	2	BOLT (L=36mm)
	4	8T-4192	6	BOLT (L=25mm)		21	095-1517	4	SEAL-O-RING (ID=13.80mm)
	5	4I-0378	1	PACKING		22	6B-8692	1	BOSS
	6	095-0736	5	SCREW		23	4I-0050	1	PIPE
	7	8T-0328	5	WASHER		24	9R-3924	3	BOSS
	8	105-9911	1	SENSOR		25	8T-3490	2	NUT
		8T-8729	2	PIN		26	131-7501	1	ADAPTER AS
		102-8802	1	RECEPTACLE KIT			9X-2206	1	ADAPTER AS
	9	004-6683	1	NIPPLE			7Y-8737	1	FILLER
	10	4I-0379	1	VALVE					
	11	003-7764	2	END					
	12	095-1388	1	CLAMP					
E	13	103-2529		HOSE…(18cm)					
	14	128-4411	1	VALVE AS					
	15	120-5170	1	COVER AS					

E—ORDER BY THE CENTIMETER

H61583E 07

117-4272 TANK GP-FUEL

Capacity 340 Liters
S/N 3MR 1-06367, 4MR 1-00927
Part of 117-4271-Page54

FUEL SYSTEM

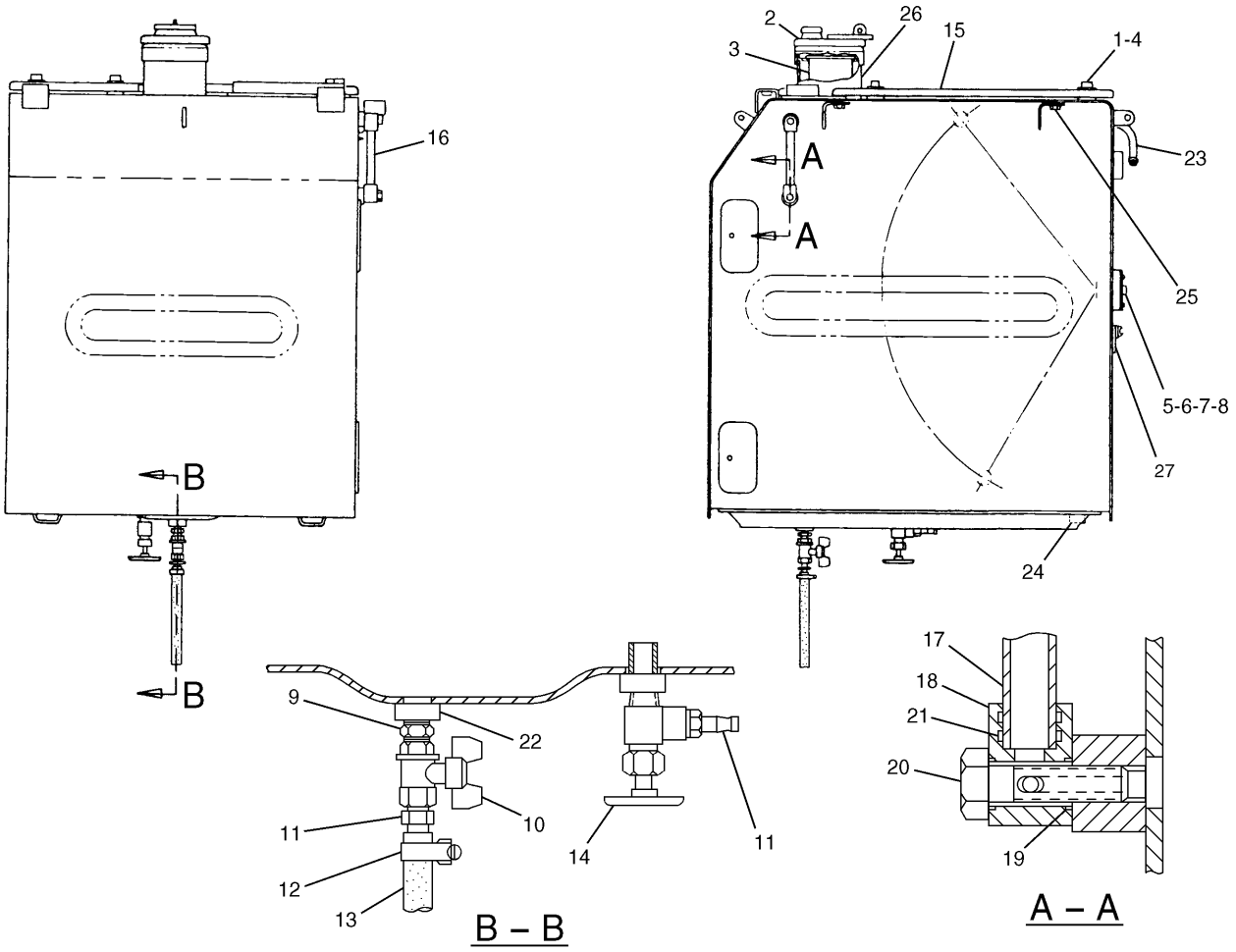

NOTE	No.	PART No.	QTY	PART NAME	NOTE	No.	PART No.	QTY	PART NAME
	1	5P-1076	6	WASHER		16	7Y-2398	1	GAUGE AS
	2	7X-7700	1	CAP AS		17	4I-0123	1	PIPE
		9X-2205	1	FILTER KIT		18	7Y-4754	2	BLOCK
		9X-8600	1	SEAL-O-RING (ID=110.49mm)		19	095-1514	4	SEAL-O-RING (ID=9.80mm)
	3	9P-7121	1	STRAINER		20	094-3247	2	BOLT (L=36mm)
	4	8T-4192	6	BOLT (L=25mm)		21	095-1517	4	SEAL-O-RING (ID=13.80mm)
	5	4I-0378	1	PACKING		22	6B-8692	1	BOSS
	6	095-0736	5	SCREW		23	4I-0050	1	PIPE
	7	8T-0328	5	WASHER		24	9R-3924	1	BOSS
	8	105-9911	1	SENSOR		25	8T-3490	2	NUT
		8T-8729	2	PIN		26	131-7501	1	ADAPTER AS
		102-8802	1	RECEPTACLE KIT			9X-2206	1	ADAPTER AS
	9	004-6683	1	NIPPLE			7Y-8737	1	FILLER
	10	4I-0379	1	VALVE		27	121-1029	2	CLIP
	11	003-7764	2	END					
	12	095-1388	1	CLAMP					
E	13	103-2529		HOSE···(18cm)					
	14	128-4411	1	VALVE AS					
	15	120-5170	1	COVER AS					

E—ORDER BY THE CENTIMETER

H65224E 08

117-4272 TANK GP-FUEL

Capacity 340 Liters
S/N 3MR 06368-Up, 4MR 00928-Up
Part of 117-4271-Page54

MEMORANDA

FUEL SYSTEM

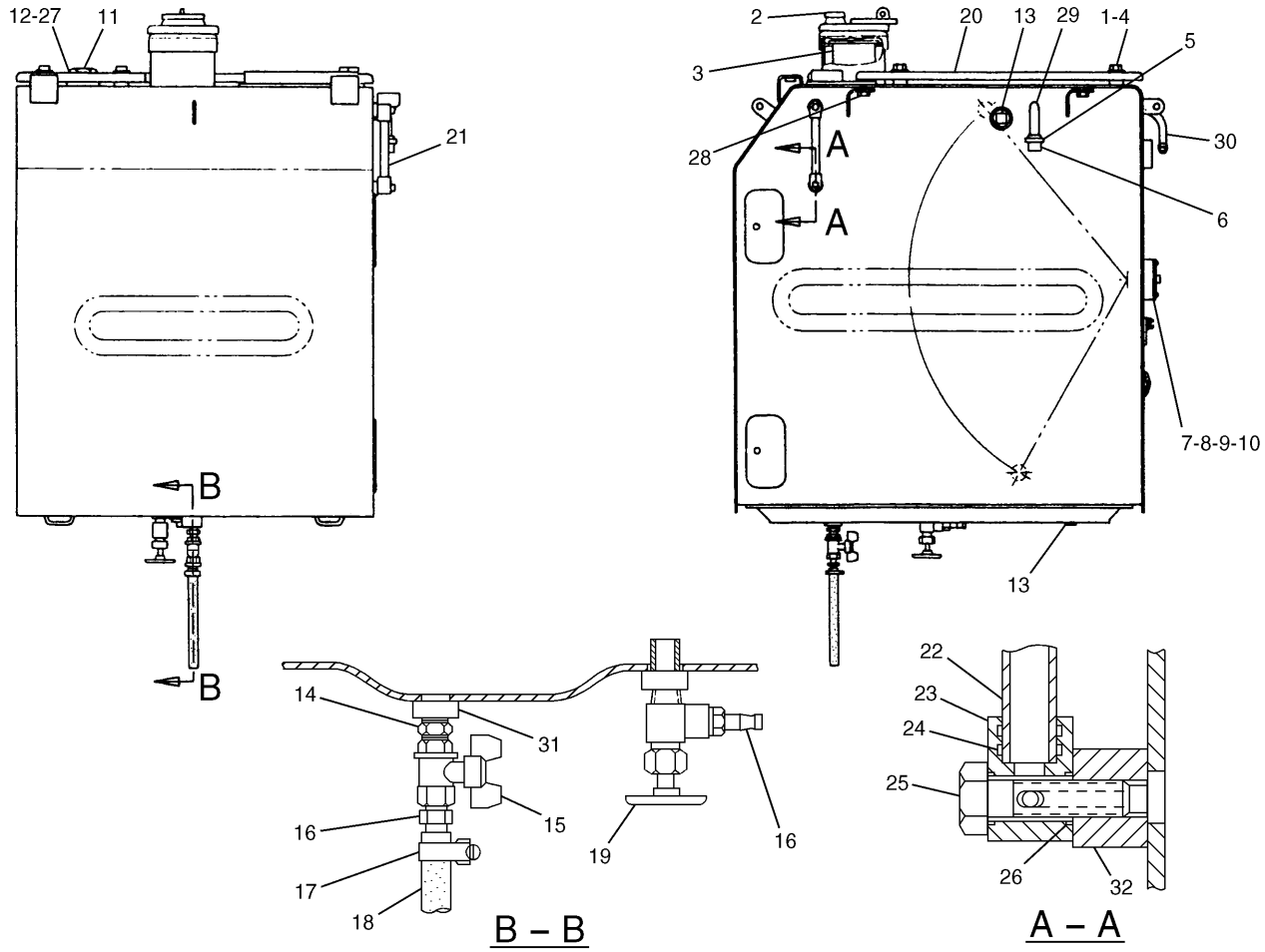

NOTE	No.	PART No.	QTY	PART NAME	NOTE	No.	PART No.	QTY	PART NAME
	1	8T-4192	6	BOLT (L=25mm)		17	095-1388	1	CLAMP
	2	7X-7700	1	CAP AS	E	18	103-2529		HOSE…(18cm)
		9X-2205	1	FILTER KIT		19	128-4411	1	VALVE AS
		9X-8600	1	SEAL-O-RING (ID=110.49mm)		20	120-5170	1	COVER AS
	3	9P-7121	1	STRAINER		21	7Y-2398	1	GAUGE AS
	4	5P-1076	6	WASHER		22	4I-0123	1	PIPE
	5	2S-3440	1	CLAMP		23	7Y-4754	2	BLOCK
	6	087-3832	1	CAP		24	095-1517	4	SEAL-O-RING (ID=13.80mm)
	7	4I-0378	1	PACKING		25	094-3247	2	BOLT (L=36mm)
	8	095-0736	5	SCREW		26	095-1514	4	SEAL-O-RING (ID=9.80mm)
	9	8T-0328	5	WASHER		27	8J-9208	1	BOSS
	10	105-9911	1	SENSOR		28	8T-3490	2	NUT
		8T-8729	2	PIN		29	7Y-2262	1	PIPE
		102-8802	1	RECEPTACLE KIT		30	4I-0050	1	PIPE
	11	9S-6130	1	PLUG		31	6B-8692	1	BOSS
	12	2S-4078	1	SEAL-O-RING (ID=37.47mm)		32	9R-3924	3	BOSS
	13	3B-0551	2	PLUG					
	14	004-6683	1	NIPPLE					
	15	4I-0379	1	VALVE					
	16	003-7764	2	END					

E—ORDER BY THE CENTIMETER

H65225E 05

122-3997 TANK GP-FUEL

Capacity 340 Liters
S/N 3MR 1-06367, 4MR 1-00927
Part of 122-3996-Page54
An Attachment

FUEL SYSTEM

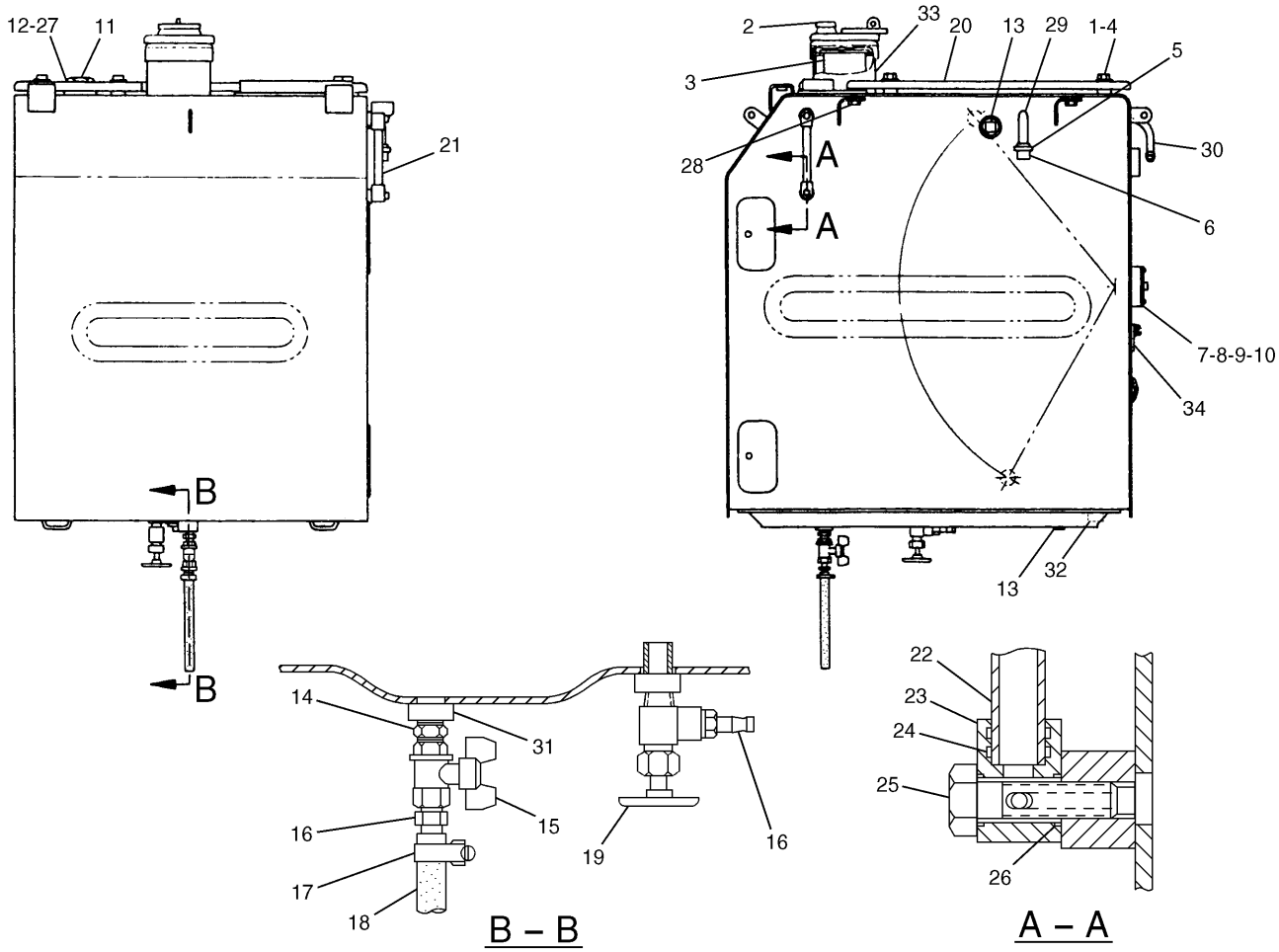

NOTE	No.	PART No.	QTY	PART NAME	NOTE	No.	PART No.	QTY	PART NAME
	1	8T-4192	6	BOLT (L=25mm)		17	095-1388	1	CLAMP
	2	7X-7700	1	CAP AS	E	18	103-2529		HOSE…(18cm)
		9X-2205	1	FILTER KIT		19	128-4411	1	VALVE AS
		9X-8600	1	SEAL-O-RING (ID=110.49mm)		20	120-5170	1	COVER AS
	3	9P-7121	1	STRAINER		21	7Y-2398	1	GAUGE AS
	4	5P-1076	6	WASHER		22	4I-0123	1	PIPE
	5	2S-3440	1	CLAMP		23	7Y-4754	2	BLOCK
	6	087-3832	1	CAP		24	095-1517	4	SEAL-O-RING (ID=13.80mm)
	7	4I-0378	1	PACKING		25	094-3247	2	BOLT (L=36mm)
	8	095-0736	5	SCREW		26	095-1514	4	SEAL-O-RING (ID=9.80mm)
	9	8T-0328	5	WASHER		27	8J-9208	1	BOSS
	10	105-9911	1	SENSOR		28	8T-3490	2	NUT
		8T-8729	2	PIN		29	7Y-2262	1	PIPE
		102-8802	1	RECEPTACLE KIT		30	4I-0050	1	PIPE
	11	9S-6130	1	PLUG		31	6B-8692	1	BOSS
	12	2S-4078	1	SEAL-O-RING (ID=37.47mm)		32	9R-3924	1	BOSS
	13	3B-0551	2	PLUG		33	131-7501	1	ADAPTER AS
	14	004-6683	1	NIPPLE			9X-2206	1	ADAPTER AS
	15	4I-0379	1	VALVE			7Y-8737	1	FILLER
	16	003-7764	2	END		34	121-1029	2	CLIP

E—ORDER BY THE CENTIMETER

H65226E 06

122-3997 TANK GP-FUEL

Capacity 340 Liters
S/N 3MR 06368-Up, 4MR 00928-Up
Part of 122-3996-Page54
An Attachment

MEMORANDA

FUEL SYSTEM

Consists of :

			Page
1	114-6214	TANK GP-FUEL	58
1	114-6222	LINES GP-FUEL	53
1	122-3996	TANK & MTG GP-FUEL	54
1	122-4022	BOX & MTG GP-STORAGE	138
1	125-4774	LIGHTING GP-CHASSIS	101.01
1	129-3377	GUARD GP-BOTTOM	133

H54444E 03

120-4976 TANK AR-ADDITIONAL
An Attachment

FUEL SYSTEM

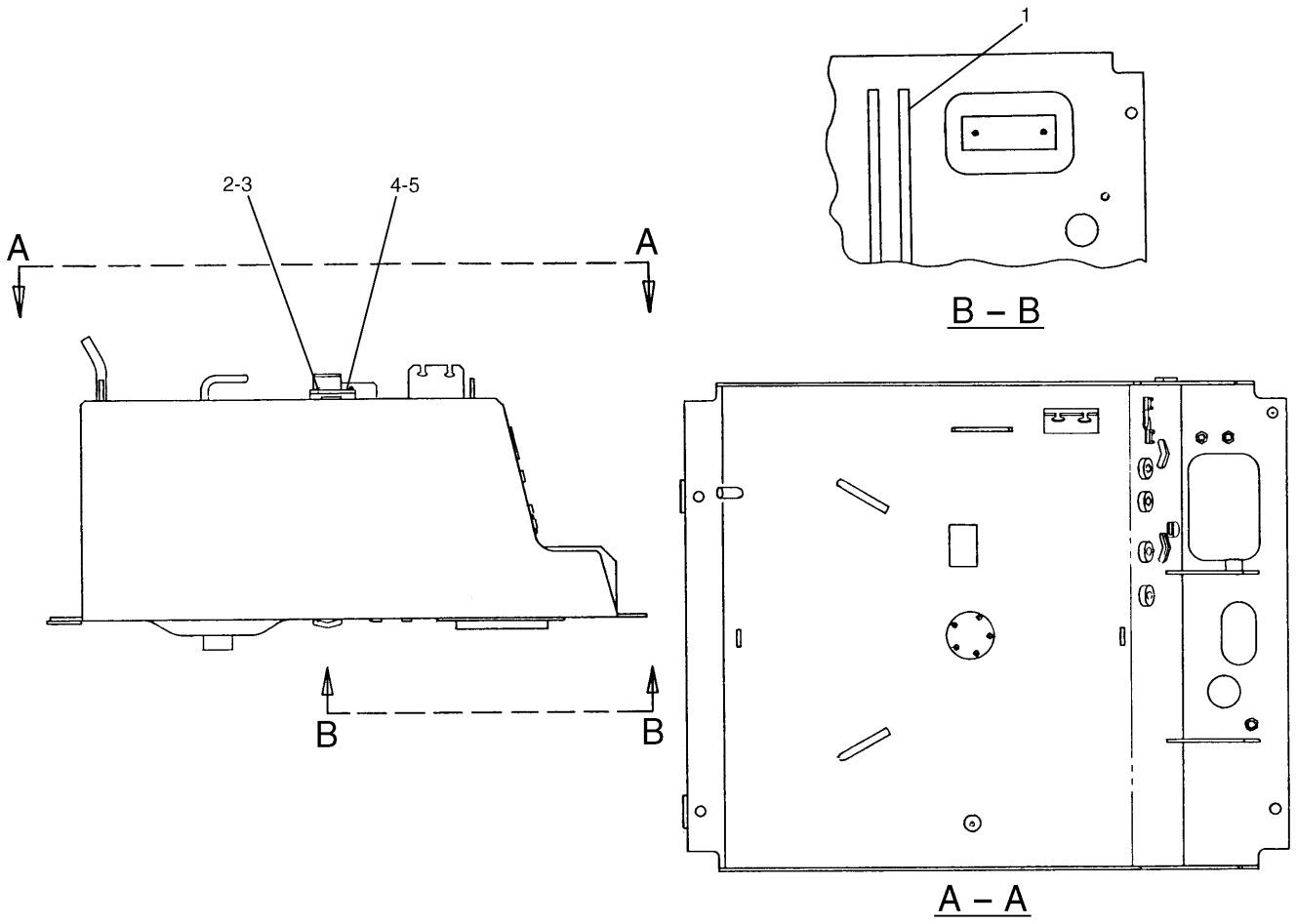

NOTE	No.	PART No.	QTY	PART NAME	NOTE	No.	PART No.	QTY	PART NAME
	1	41-0378	1	PACKING					
	2	095-0736	5	SCREW					
	3	8T-0328	5	WASHER					
	4	122-3970	1	PLATE					
▲	5	7T-9352		SEAL…(6.25dm × 2)					

▲—ORDER BY THE DECIMETER

H54441E 05

114-6214 TANK GP-FUEL

Capacity 143 Liters

Part of 120-4976-Page57

An Attachment

MEMORANDA

ELECTRICAL AND STARTING SYSTEM

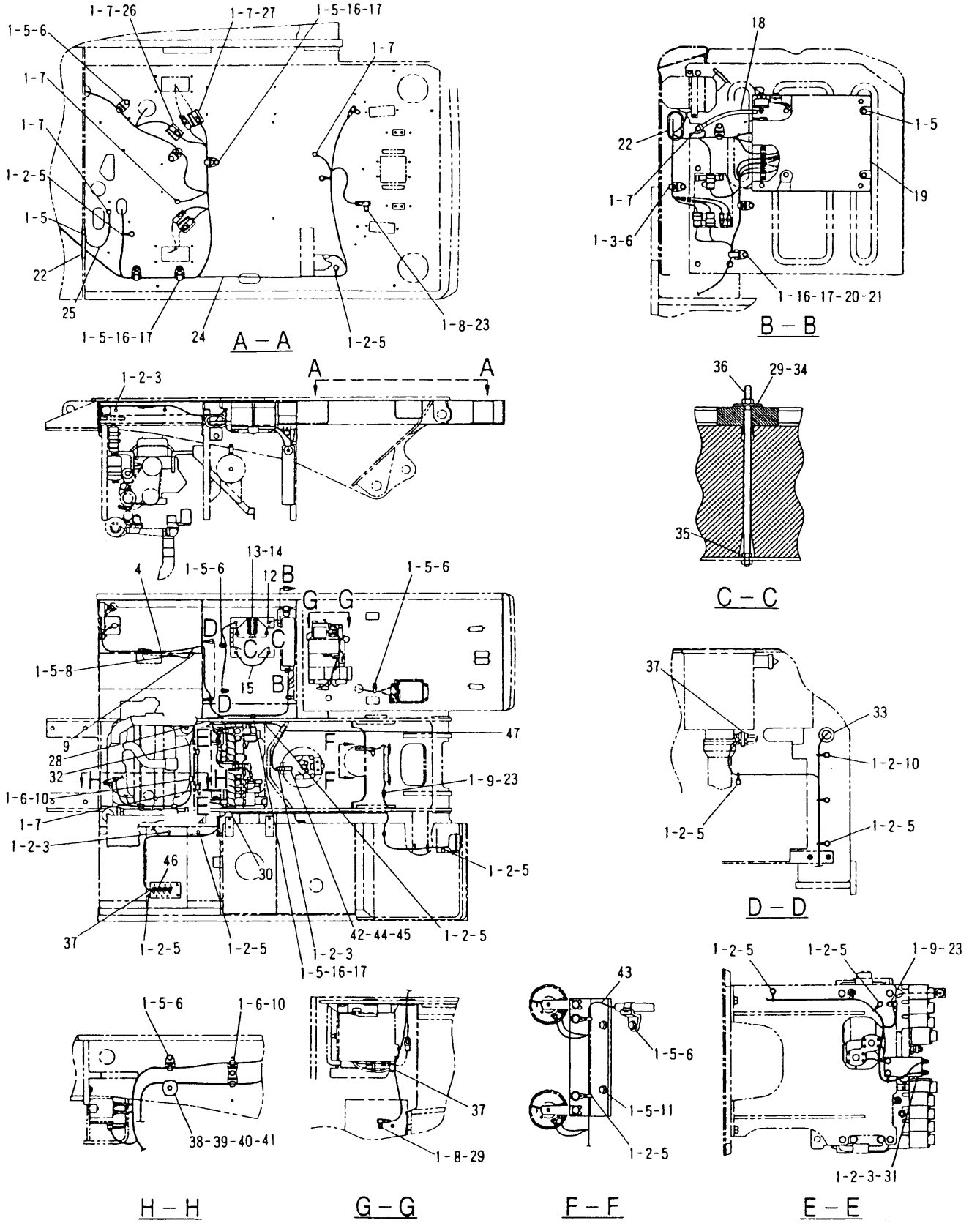

H57463E 04

116-0149 BATTERY & WIRING GP (1/2)

S/N 3MR 1-01083, 4MR 1-00253

116-0226-Page66,128-8969-Page70,125-4873-Page73,116-0080,125-4727-Page74,116-0151-Page76

ELECTRICAL AND STARTING SYSTEM

NOTE	No.	PART No.	QTY	PART NAME	NOTE	No.	PART No.	QTY	PART NAME
	1	8T-4121	68	WASHER					
	2	111-4836	25	CLIP					
	3	8T-4136	10	BOLT (L=25mm)					
Y	4	116-0226	1	HARNESS AS					
	5	8T-4137	35	BOLT (L=20mm)					
	6	111-4837	14	CLIP					
	7	8T-4191	11	BOLT (L=16mm)					
	8	116-0118	6	CLIP					
	9	131-7547	1	GROMMET					
	10	8T-4195	4	BOLT (L=30mm)					
	11	116-0068	1	BRACKET					
Y	12	125-4727	1	CABLE AS					
	13	6W-6005	1	HOLDDOWN					
	14	3T-5760	2	BATTERY					
Y	15	116-0080	1	CABLE AS					
	16	111-4838	5	CLIP					
	17	111-4839	5	STRAP					
	18	111-4881	1	CABLE AS					
		1S-7251	1	TERMINAL					
		1S-7252	1	TERMINAL					
Y	19	116-0151	1	PANEL GP					
	20	8T-4198	1	BOLT (L=100mm)					
	21	102-7886	1	SLEEVE					
	22	7Y-3196	2	GROMMET					
	23	7X-2621	4	BOLT (L=12mm)					
Y	24	128-8969	1	HARNESS AS					
	25	7G-1060	1	STRAP AS					
	26	116-0230	1	BRACKET AS					
	27	116-0229	2	BRACKET AS					
	28	087-4587	1	GROMMET					
	29	8T-4133	2	NUT					
	30	4I-3503	1	GROMMET					
	31	111-4883	1	BRACKET AS					
	32	8D-0482	1	GROMMET					
	33	131-7546	1	GROMMET					
	34	8T-4226	1	WASHER					
	35	5C-7261	1	NUT					
	36	5I-8304	1	ROD					
	37	3S-2093	3	STRAP					
	38	6G-2256	1	CLAMP					
	39	6G-2263	1	SPACER					
	40	8T-4182	2	BOLT (L=45mm)					
	41	2G-8767	1	WASHER					
	42	9X-8256	2	WASHER					
Y	43	125-4873	1	HARNESS AS					
	44	128-8943	1	BRACKET AS					
	45	8T-4171	2	BOLT (L=12mm)					
	46	7I-2673	1	STRAP					
	47	7Y-8167	1	GROMMET					

Y—SEE SEPARATE ILLUSTRATION

H57463E 04

116-0149 BATTERY & WIRING GP (1/2)

S/N 3MR 1-01083, 4MR 1-00253

116-0226-Page66,128-8969-Page70,125-4873-Page73,116-0080,125-4727-Page74,116-0151-Page76

ELECTRICAL AND STARTING SYSTEM

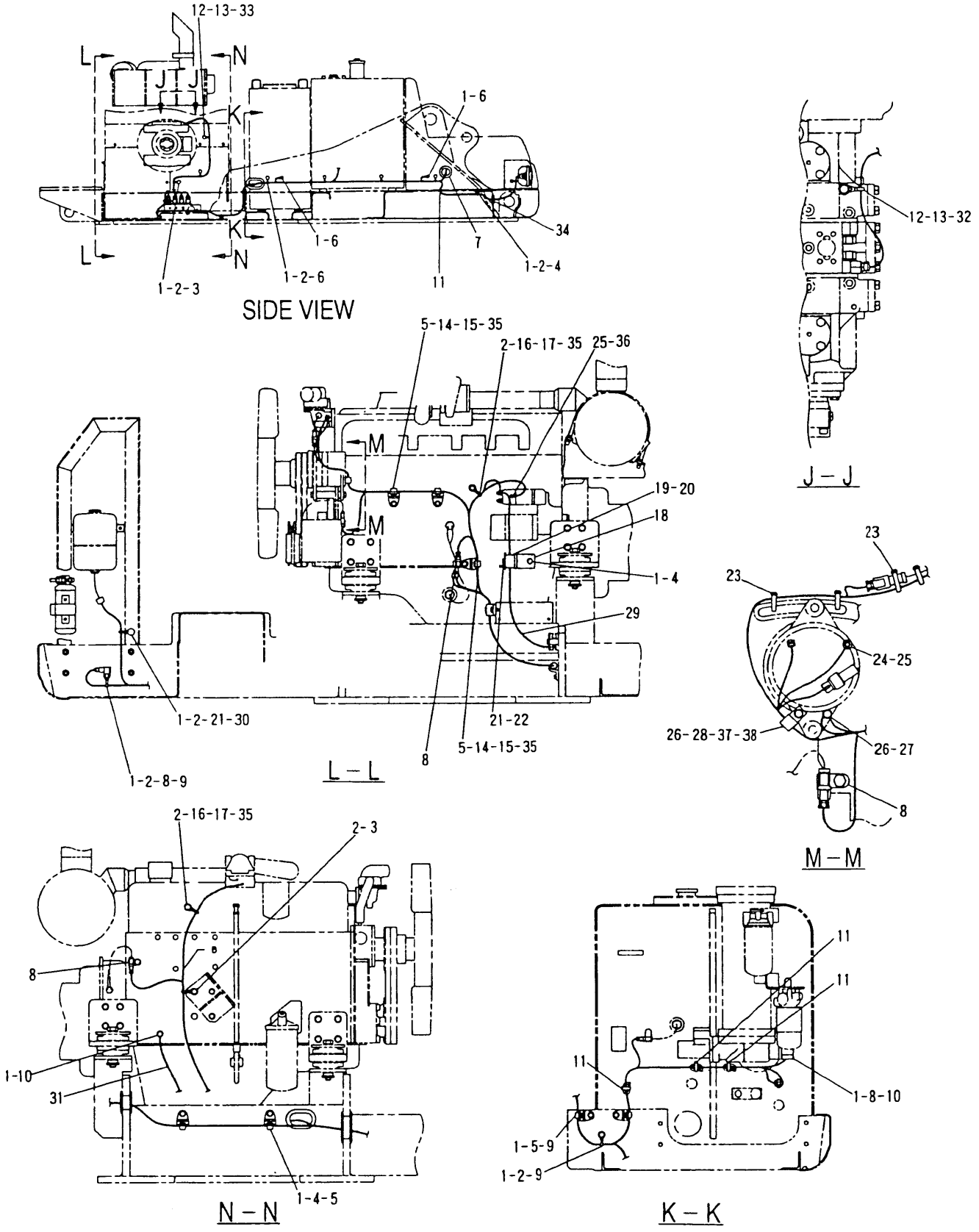

116-0149 BATTERY & WIRING GP (2/2)
S/N 3MR 1-01083, 4MR 1-00253
116-0228-Page75

ELECTRICAL AND STARTING SYSTEM

NOTE	No.	PART No.	QTY	PART NAME	NOTE	No.	PART No.	QTY	PART NAME
	1	8T-4121	18	WASHER					
	2	111-4836	12	CLIP					
	3	8T-4136	2	BOLT (L=25mm)					
	4	8T-4137	8	BOLT (L=20mm)					
	5	111-4837	7	CLIP					
	6	8T-4191	2	BOLT (L=16mm)					
	7	7Y-8167	1	GROMMET					
	8	116-0118	5	CLIP					
	9	8T-4195	4	BOLT (L=30mm)					
	10	7X-2621	2	BOLT (L=12mm)					
	11	3S-2093	4	STRAP					
	12	8T-4121	3	WASHER					
	13	111-4836	3	CLIP					
	14	7X-0818	3	BOLT (L=45mm)					
	15	7Y-1924	3	SPACER					
	16	8T-6912	2	BOLT (L=50mm)					
	17	085-7329	2	SPACER					
	18	102-7880	1	BRACKET					
	19	6G-2256	1	CLAMP					
	20	6G-2263	1	SPACER					
	21	8T-4182	2	BOLT (L=45mm)					
	22	2G-8767	1	WASHER					
	23	7I-2673	4	STRAP					
	24	5C-2874	1	NUT					
	25	8T-0328	2	WASHER					
	26	9X-8256	2	WASHER					
	27	7X-2619	1	BOLT (L=10mm)					
	28	8J-1256	1	CLIP					
Y	29	116-0228	1	CABLE AS					
	30	091-9035	1	SPACER					
	31	132-1806	1	STRAP AS					
		1S-7251	2	TERMINAL					
	32	8T-4137	1	BOLT (L=20mm)					
	33	8T-4136	2	BOLT (L=25mm)					
	34	093-2068	1	GROMMET					
	35	5P-4116	5	WASHER					
	36	8T-0286	1	BOLT (L=8mm)					
	37	4J-9448	1	LUG					
	38	7X-2533	1	BOLT (L=35mm)					

Y—SEE SEPARATE ILLUSTRATION

H57465E 04

116-0149 BATTERY & WIRING GP (2/2)

S/N 3MR 1-01083, 4MR 1-00253

116-0228-Page75

ELECTRICAL AND STARTING SYSTEM

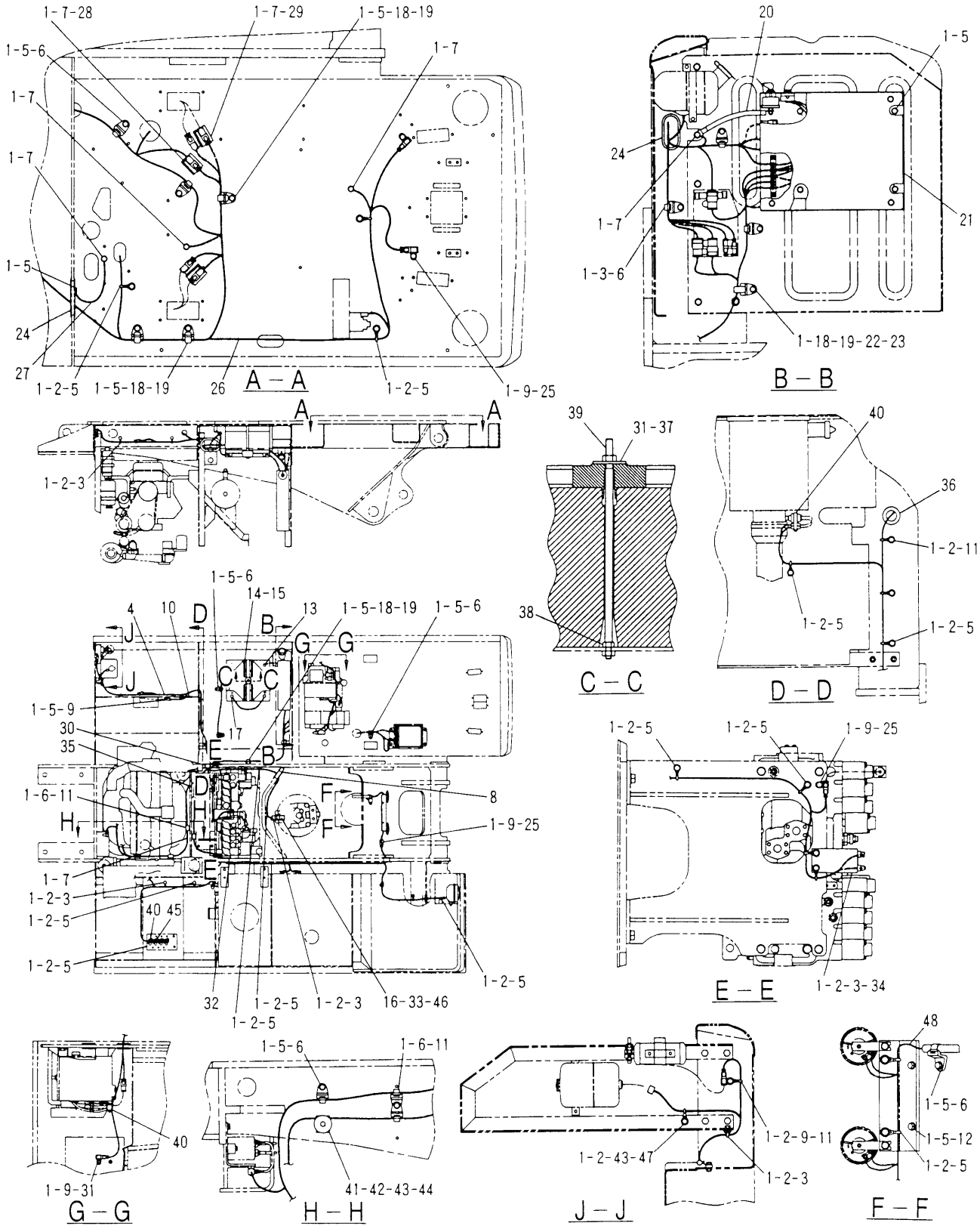

116-0149 BATTERY & WIRING GP (1/2)

S/N 3MR 01084-01376, 4MR 00254-00285

116-0226-Page68.01,136-4056-Page72.04,125-4873-Page73,116-0080,125-4727-Page74,116-0151-Page77.03

ELECTRICAL AND STARTING SYSTEM

NOTE	No.	PART No.	QTY	PART NAME	NOTE	No.	PART No.	QTY	PART NAME
	1	8T-4121	70	WASHER					
	2	111-4836	30	CLIP					
	3	8T-4136	12	BOLT (L=25mm)					
Y	4	116-0226	1	HARNESS AS					
	5	8T-4137	35	BOLT (L=20mm)					
	6	111-4837	14	CLIP					
	7	8T-4191	11	BOLT (L=16mm)					
	8	7Y-8167	1	GROMMET					
	9	116-0118	8	CLIP					
	10	131-7547	1	GROMMET					
	11	8T-4195	5	BOLT (L=30mm)					
	12	116-0068	1	BRACKET					
Y	13	125-4727	1	CABLE AS					
	14	6W-6005	1	HOLDDOWN					
	15	3T-5760	2	BATTERY					
	16	8T-4171	2	BOLT (L=12mm)					
Y	17	116-0080	1	CABLE AS					
	18	111-4838	5	CLIP					
	19	111-4839	5	STRAP					
	20	111-4881	1	CABLE AS					
		1S-7251	1	TERMINAL					
		1S-7252	1	TERMINAL					
Y	21	116-0151	1	PANEL GP					
	22	8T-4198	1	BOLT (L=100mm)					
	23	102-7886	1	SLEEVE					
	24	7Y-3196	2	GROMMET					
	25	7X-2621	4	BOLT (L=12mm)					
Y	26	136-4056	1	HARNESS AS					
	27	7G-1060	1	STRAP AS					
	28	116-0230	1	BRACKET AS					
	29	116-0229	2	BRACKET AS					
	30	087-4587	1	GROMMET					
	31	8T-4133	2	NUT					
	32	4I-3503	1	GROMMET					
	33	128-8943	1	BRACKET AS					
	34	111-4883	1	BRACKET AS					
	35	8D-0482	1	GROMMET					
	36	131-7546	1	GROMMET					
	37	8T-4226	1	WASHER					
	38	5C-7261	1	NUT					
	39	5I-8304	1	ROD					
	40	3S-2093	3	STRAP					
	41	6G-2256	1	CLAMP					
	42	6G-2263	1	SPACER					
	43	8T-4182	2	BOLT (L=45mm)					
	44	2G-8767	1	WASHER					
	45	7I-2673	1	STRAP					
	46	9X-8256	2	WASHER					
	47	091-9035	1	SPACER					
Y	48	125-4873	1	HARNESS AS					

Y—SEE SEPARATE ILLUSTRATION

H52921E 05

116-0149 BATTERY & WIRING GP (1/2)

S/N 3MR 01084-01376, 4MR 00254-00285

116-0226-Page68.01,136-4056-Page72.04,125-4873-Page73,116-0080,125-4727-Page74,116-0151-Page77.03

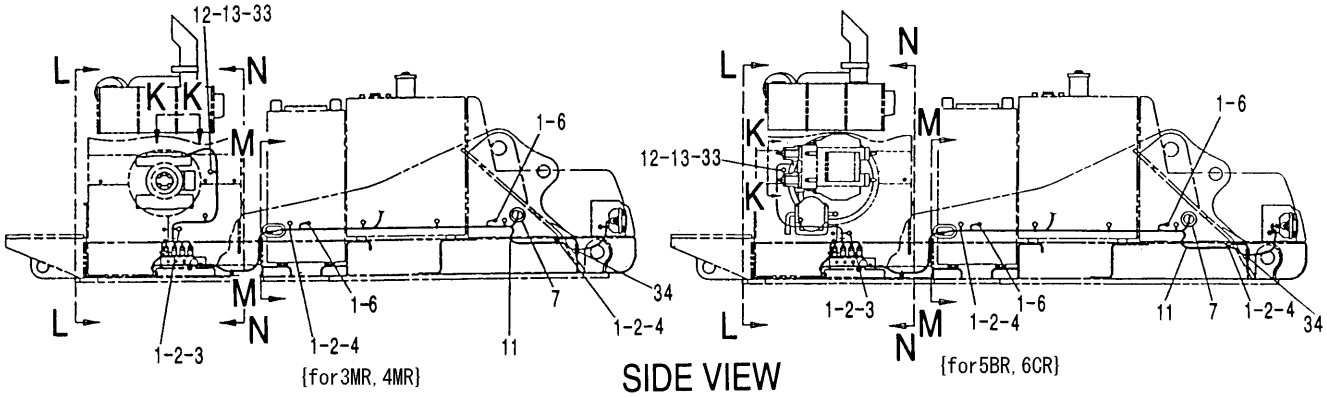

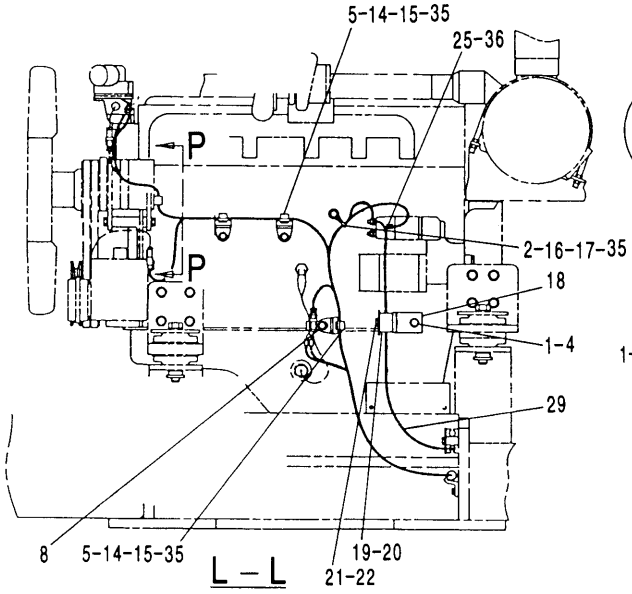

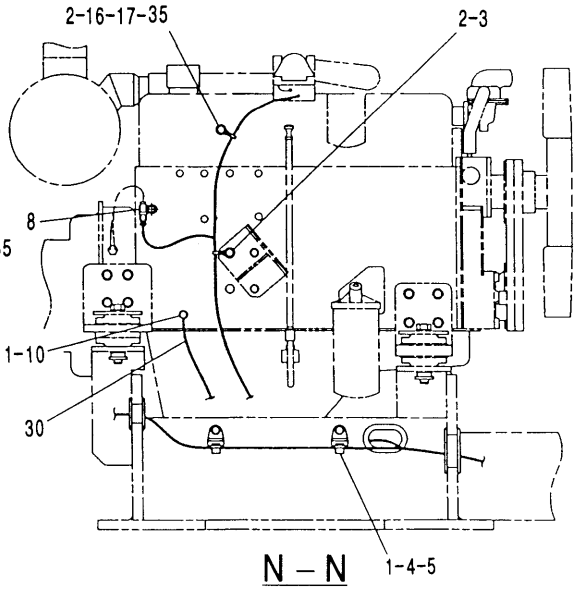

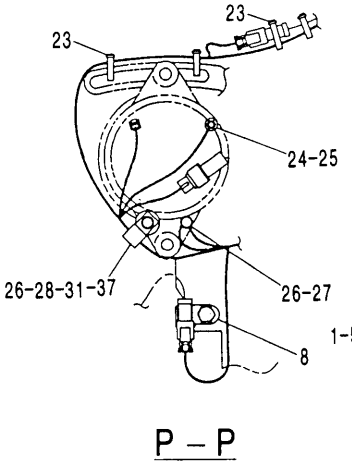

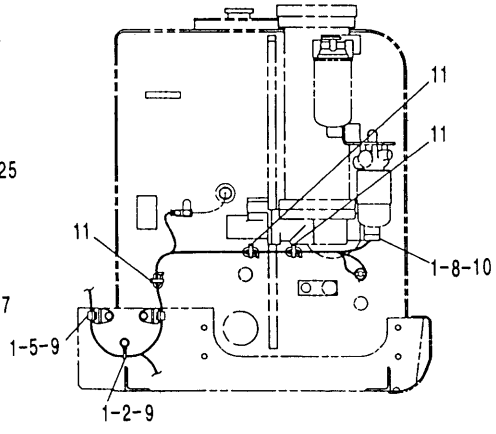

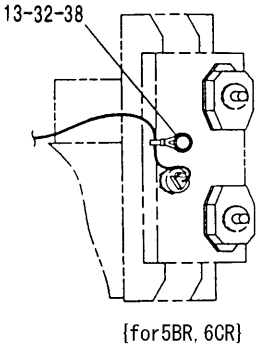

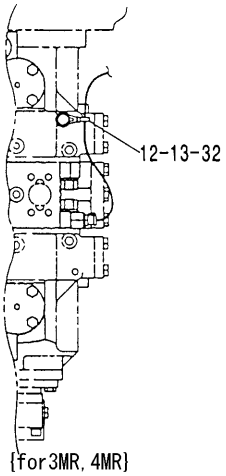

H52923E 05

116-0149 BATTERY & WIRING GP (2/2)
S/N 3MR 01084-01376, 4MR 00254-00285
116-0228-Page75

ELECTRICAL AND STARTING SYSTEM

NOTE	No.	PART No.	QTY	PART NAME	NOTE	No.	PART No.	QTY	PART NAME
	1	8T-4121	16	WASHER					
	2	111-4836	9	CLIP					
	3	8T-4136	2	BOLT (L=25mm)					
	4	8T-4137	8	BOLT (L=20mm)					
	5	111-4837	7	CLIP					
	6	8T-4191	2	BOLT (L=16mm)					
	7	7Y-8167	1	GROMMET					
	8	116-0118	3	CLIP					
	9	8T-4195	3	BOLT (L=30mm)					
	10	7X-2621	2	BOLT (L=12mm)					
	11	3S-2093	4	STRAP					
	12	8T-4121	2	WASHER {for5BR, 6CR}					
		8T-4121	3	WASHER {for3MR, 4MR}					
	13	111-4836	3	CLIP					
	14	7X-0818	3	BOLT (L=45mm)					
	15	7Y-1924	3	SPACER					
	16	8T-6912	2	BOLT (L=50mm)					
	17	085-7329	2	SPACER					
	18	102-7880	1	BRACKET					
	19	6G-2256	1	CLAMP					
	20	6G-2263	1	SPACER					
	21	8T-4182	1	BOLT (L=45mm)					
	22	2G-8767	1	WASHER					
	23	7I-2673	4	STRAP					
	24	5C-2874	1	NUT					
	25	8T-0328	2	WASHER					
	26	9X-8256	2	WASHER					
	27	7X-2619	1	BOLT (L=10mm)					
	28	8J-1256	1	CLIP					
Y	29	116-0228	1	CABLE AS					
	30	132-1806	1	STRAP AS					
	31	7X-2533	1	BOLT (L=35mm)					
	32	5P-4116	1	WASHER {for5BR, 6CR}					
		8T-4137	1	BOLT (L=20mm) {for3MR, 4MR}					
	33	8T-4136	2	BOLT (L=25mm)					
	34	093-2068	1	GROMMET					
	35	5P-4116	5	WASHER					
	36	8T-0286	1	BOLT (L=8mm)					
	37	4J-9448	1	LUG					
	38	8T-4189	1	BOLT (L=20mm)					

Y—SEE SEPARATE ILLUSTRATION

H52923E 05

116-0149 BATTERY & WIRING GP (2/2)

S/N 3MR 01084-01376, 4MR 00254-00285

116-0228-Page75

ELECTRICAL AND STARTING SYSTEM

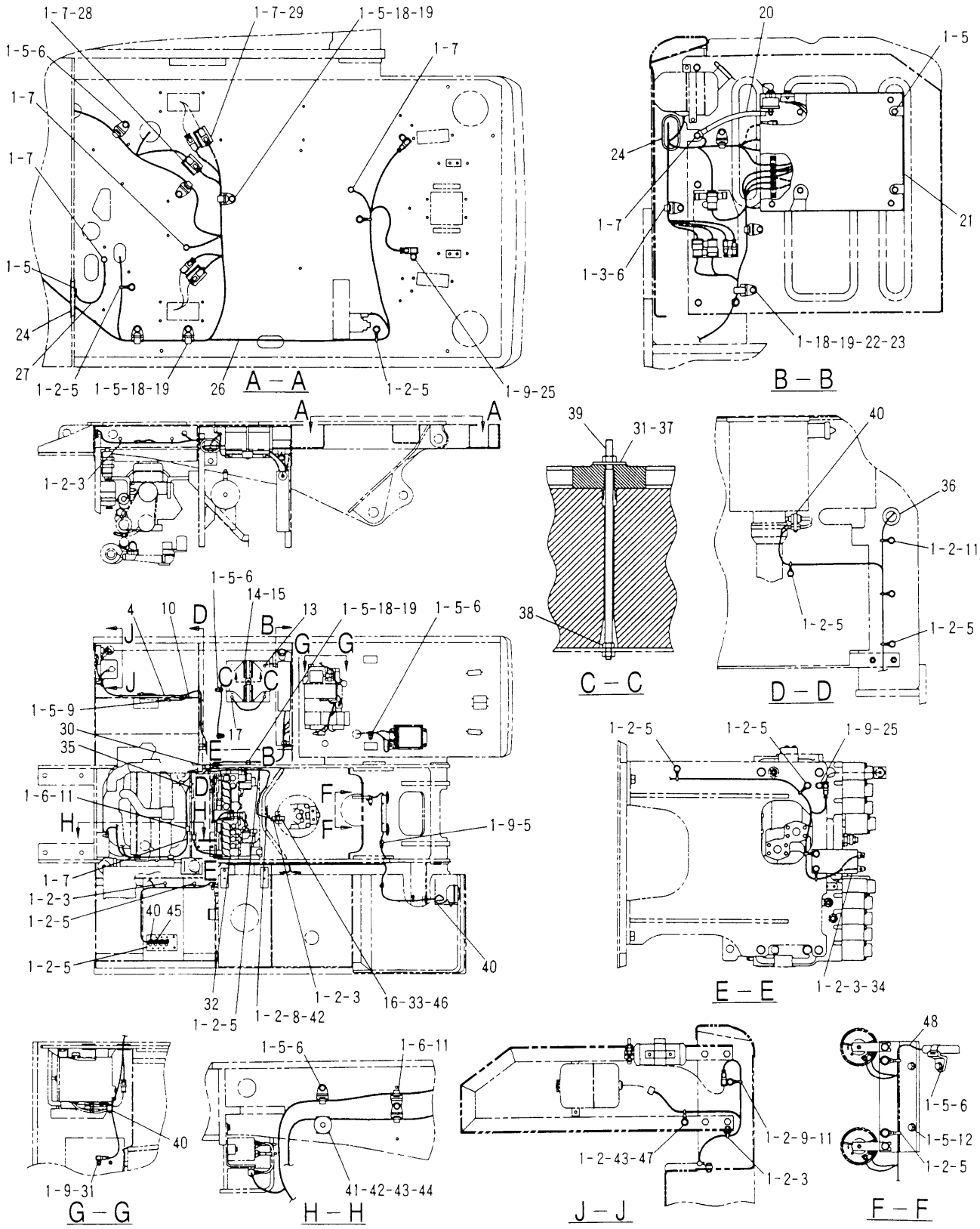

H56074E 07

116-0149 BATTERY & WIRING GP (1/2)

S/N 3MR 01377-04840, 4MR 00286-00704

138-5134-Page68.04,136-4056-Page72.04,125-4873-Page73,116-0080,125-4727-Page74,116-0151-Page77.03

ELECTRICAL AND STARTING SYSTEM

NOTE	No.	PART No.	QTY	PART NAME	NOTE	No.	PART No.	QTY	PART NAME
	1	8T-4121	69	WASHER					
	2	111-4836	29	CLIP					
	3	8T-4136	12	BOLT (L=25mm)					
Y	4	138-5134	1	HARNESS AS					
	5	8T-4137	36	BOLT (L=20mm)					
	6	111-4837	14	CLIP					
	7	8T-4191	11	BOLT (L=16mm)					
	8	8T-4185	1	BOLT (L=50mm)					
	9	116-0118	8	CLIP					
	10	131-7547	1	GROMMET					
	11	8T-4195	5	BOLT (L=30mm)					
	12	116-0068	1	BRACKET					
Y	13	125-4727	1	CABLE AS					
	14	6W-6005	1	HOLDDOWN					
	15	3T-5760	2	BATTERY					
	16	8T-4171	2	BOLT (L=12mm)					
Y	17	116-0080	1	CABLE AS					
	18	111-4838	5	CLIP					
	19	111-4839	5	STRAP					
	20	132-1805	1	STRAP AS					
		1S-7251	1	TERMINAL					
		1S-7252	1	TERMINAL					
Y	21	116-0151	1	PANEL GP					
	22	8T-4198	1	BOLT (L=100mm)					
	23	102-7886	1	SLEEVE					
	24	7Y-3196	2	GROMMET					
	25	7X-2621	3	BOLT (L=12mm)					
Y	26	136-4056	1	HARNESS AS					
	27	7G-1060	1	STRAP AS					
	28	116-0230	1	BRACKET AS					
	29	116-0229	2	BRACKET AS					
	30	087-4587	1	GROMMET					
	31	8T-4133	2	NUT					
	32	4I-3503	1	GROMMET					
	33	128-8943	1	BRACKET AS					
	34	111-4883	1	BRACKET AS					
	35	8D-0482	1	GROMMET					
	36	131-7546	1	GROMMET					
	37	8T-4226	1	WASHER					
	38	5C-7261	1	NUT					
	39	5I-8304	1	ROD					
	40	3S-2093	4	STRAP					
	41	6G-2256	1	CLAMP					
	42	6G-2263	2	SPACER					
	43	8T-4182	2	BOLT (L=45mm)					
	44	2G-8767	1	WASHER					
	45	7I-2673	1	STRAP					
	46	9X-8256	2	WASHER					
	47	091-9035	1	SPACER					
Y	48	125-4873	1	HARNESS AS					

Y—SEE SEPARATE ILLUSTRATION

H56074E 07

116-0149 BATTERY & WIRING GP (1/2)

S/N 3MR 01377-04840, 4MR 00286-00704

138-5134-Page68.04,136-4056-Page72.04,125-4873-Page73,116-0080,125-4727-Page74,116-0151-Page77.03

ELECTRICAL AND STARTING SYSTEM

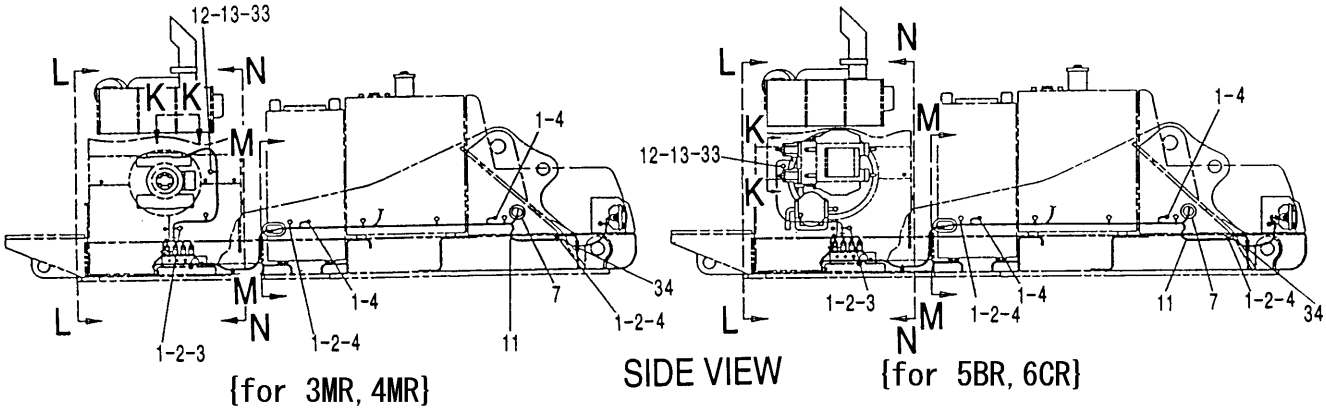

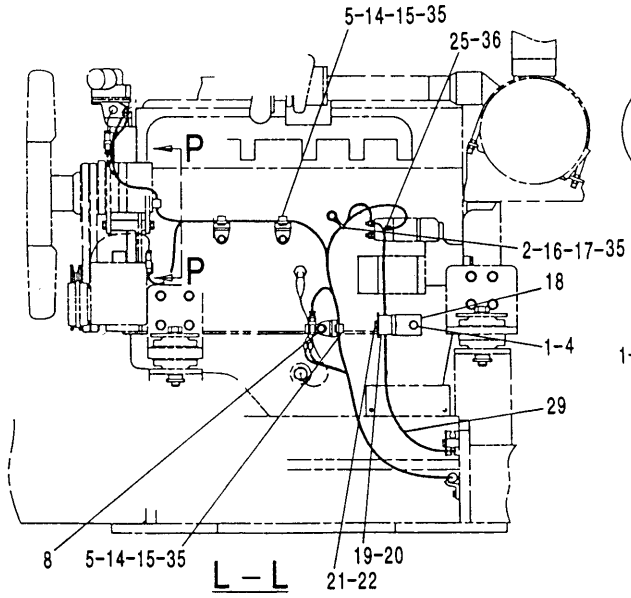

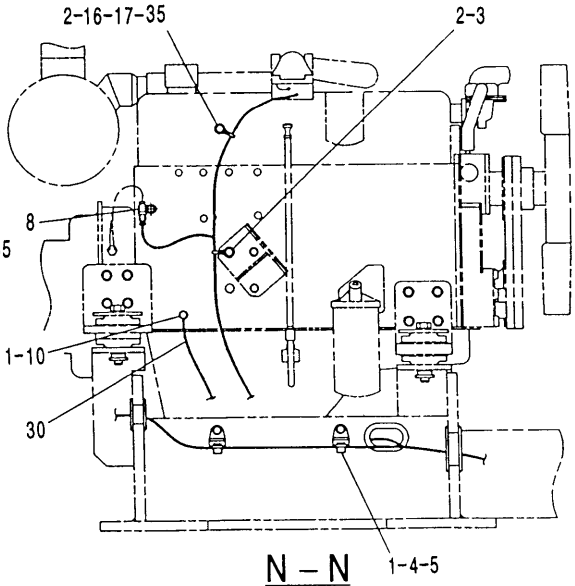

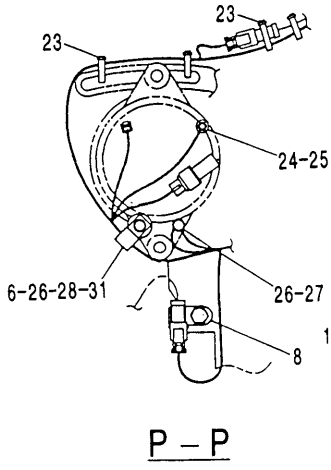

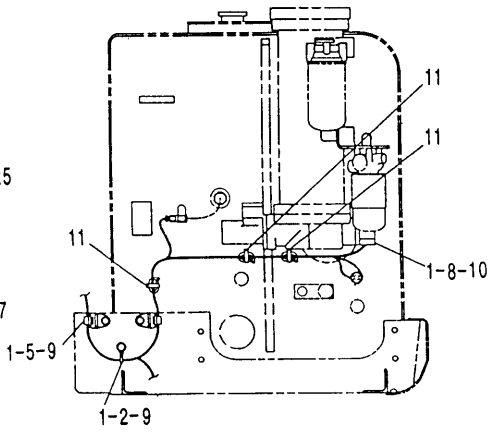

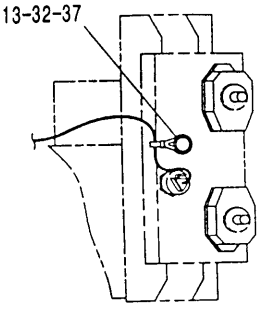

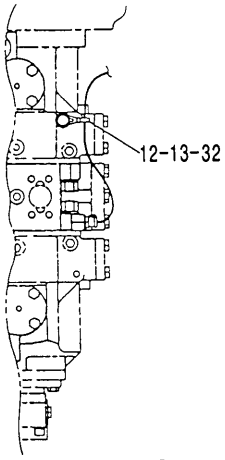

H56076E 07

116-0149 BATTERY & WIRING GP (2/2)
S/N 3MR 01377-04840, 4MR 00286-00704
116-0228-Page75

ELECTRICAL AND STARTING SYSTEM

NOTE	No.	PART No.	QTY	PART NAME	NOTE	No.	PART No.	QTY	PART NAME
	1	8T-4121	16	WASHER					
	2	111-4836	9	CLIP					
	3	8T-4136	2	BOLT (L=25mm)					
	4	8T-4137	8	BOLT (L=20mm)					
	5	111-4837	7	CLIP					
	6	4J-9448	1	LUG					
	7	7Y-8167	1	GROMMET					
	8	116-0118	3	CLIP					
	9	8T-4195	3	BOLT (L=30mm)					
	10	7X-2621	2	BOLT (L=12mm)					
	11	3S-2093	4	STRAP					
	12	8T-4121	2	WASHER {for5BR, 6CR}					
		8T-4121	3	WASHER {for3MR, 4MR}					
	13	111-4836	3	CLIP					
	14	7X-0818	3	BOLT (L=45mm)					
	15	7Y-1924	3	SPACER					
	16	8T-6912	2	BOLT (L=50mm)					
	17	085-7329	2	SPACER					
	18	102-7880	1	BRACKET					
	19	6G-2256	1	CLAMP					
	20	6G-2263	1	SPACER					
	21	8T-4182	1	BOLT (L=45mm)					
	22	2G-8767	1	WASHER					
	23	7I-2673	4	STRAP					
	24	5C-2874	1	NUT					
	25	8T-0328	2	WASHER					
	26	9X-8256	2	WASHER					
	27	7X-2619	1	BOLT (L=10mm)					
	28	8J-1256	1	CLIP					
Y	29	116-0228	1	CABLE AS					
	30	132-1806	1	STRAP AS					
	31	7X-2533	1	BOLT (L=35mm)					
	32	5P-4116	1	WASHER {for5BR, 6CR}					
		8T-4137	1	BOLT (L=20mm) {for3MR, 4MR}					
	33	8T-4136	2	BOLT (L=25mm)					
	34	093-2068	1	GROMMET					
	35	5P-4116	5	WASHER					
	36	8T-0286	1	BOLT (L=8mm)					
	37	8T-4189	1	BOLT (L=20mm)					

Y—SEE SEPARATE ILLUSTRATION

H56076E 07

116-0149 BATTERY & WIRING GP (2/2)

S/N 3MR 01377-04840, 4MR 00286-00704

116-0228-Page75

ELECTRICAL AND STARTING SYSTEM

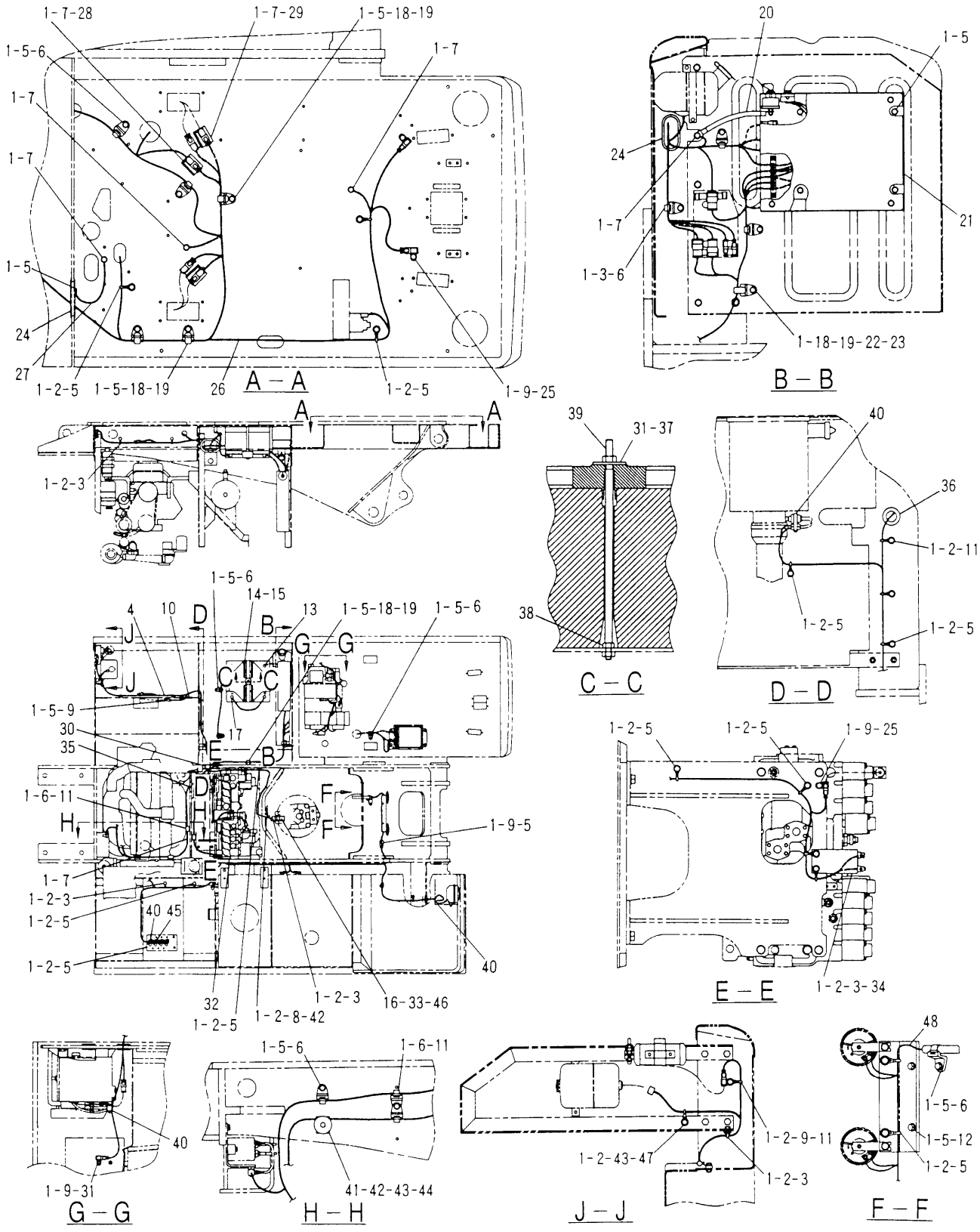

H65228E 09

116-0149 BATTERY & WIRING GP (1/2)

S/N 3MR 04841-04978, 4MR 00705-00715

138-5134-Page68.04,136-4056-Page72.04,125-4873-Page73,116-0080,125-4727-Page74,116-0151-Page77.03

ELECTRICAL AND STARTING SYSTEM

NOTE	No.	PART No.	QTY	PART NAME	NOTE	No.	PART No.	QTY	PART NAME
	1	8T-4121	69	WASHER					
	2	111-4836	29	CLIP					
	3	8T-4136	12	BOLT (L=25mm)					
Y	4	138-5134	1	HARNESS AS					
	5	8T-4137	36	BOLT (L=20mm)					
	6	111-4837	14	CLIP					
	7	8T-4191	11	BOLT (L=16mm)					
	8	8T-4185	1	BOLT (L=50mm)					
	9	116-0118	8	CLIP					
	10	131-7547	1	GROMMET					
	11	8T-4195	5	BOLT (L=30mm)					
	12	116-0068	1	BRACKET					
Y	13	125-4727	1	CABLE AS					
	14	6W-6005	1	HOLDDOWN					
	15	3T-5760	2	BATTERY					
	16	8T-4171	2	BOLT (L=12mm)					
Y	17	116-0080	1	CABLE AS					
	18	111-4838	5	CLIP					
	19	111-4839	5	STRAP					
	20	132-1805	1	STRAP AS					
		1S-7251	1	TERMINAL					
		1S-7252	1	TERMINAL					
Y	21	116-0151	1	PANEL GP					
	22	8T-4198	1	BOLT (L=100mm)					
	23	102-7886	1	SLEEVE					
	24	142-5536	2	GROMMET					
	25	7X-2621	3	BOLT (L=12mm)					
Y	26	136-4056	1	HARNESS AS					
	27	7G-1060	1	STRAP AS					
	28	116-0230	1	BRACKET AS					
	29	116-0229	2	BRACKET AS					
	30	087-4587	1	GROMMET					
	31	8T-4133	2	NUT					
	32	4I-3503	1	GROMMET					
	33	128-8943	1	BRACKET AS					
	34	111-4883	1	BRACKET AS					
	35	8D-0482	1	GROMMET					
	36	131-7546	1	GROMMET					
	37	8T-4226	1	WASHER					
	38	5C-7261	1	NUT					
	39	5I-8304	1	ROD					
	40	3S-2093	4	STRAP					
	41	6G-2256	1	CLAMP					
	42	6G-2263	2	SPACER					
	43	8T-4182	2	BOLT (L=45mm)					
	44	2G-8767	1	WASHER					
	45	7I-2673	1	STRAP					
	46	9X-8256	2	WASHER					
	47	091-9035	1	SPACER					
Y	48	125-4873	1	HARNESS AS					

Y—SEE SEPARATE ILLUSTRATION

H65228E 09

116-0149 BATTERY & WIRING GP (1/2)

S/N 3MR 04841-04978, 4MR 00705-00715

138-5134-Page68.04,136-4056-Page72.04,125-4873-Page73,116-0080,125-4727-Page74,116-0151-Page77.03

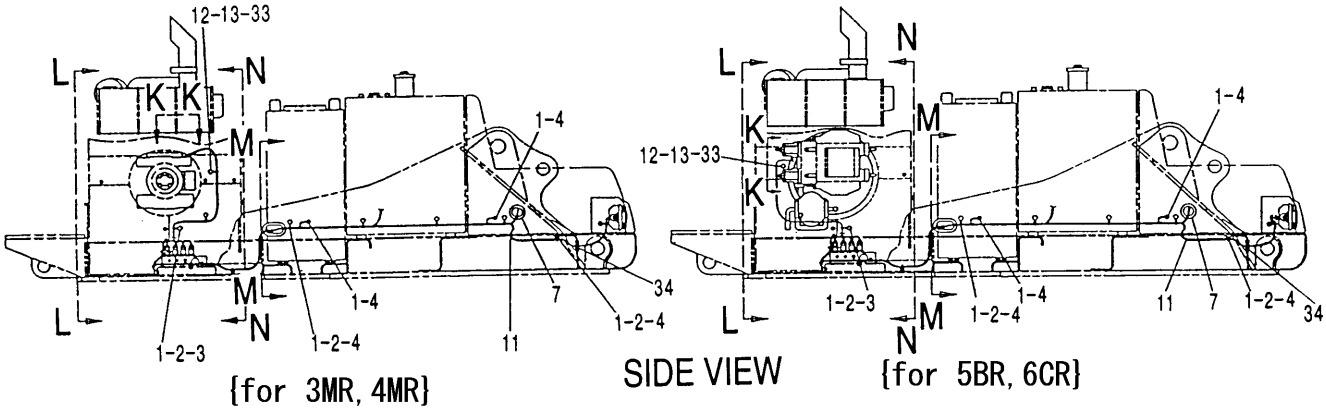

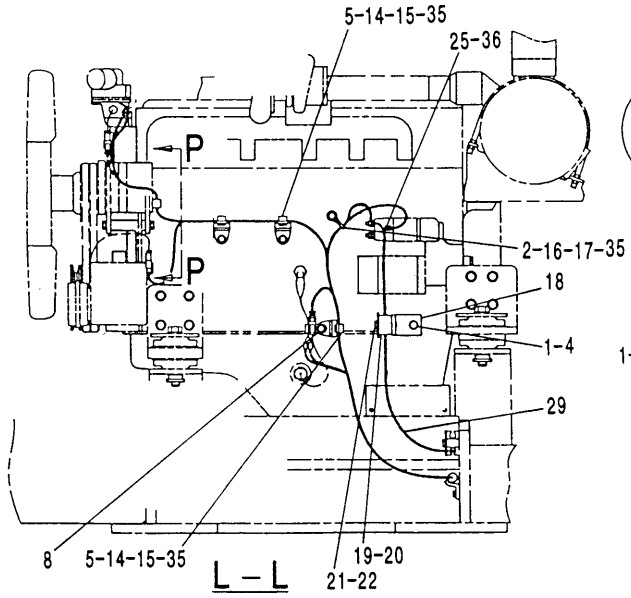

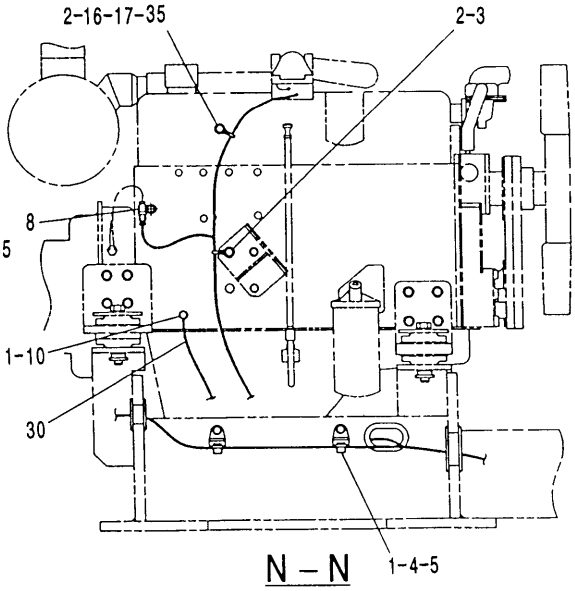

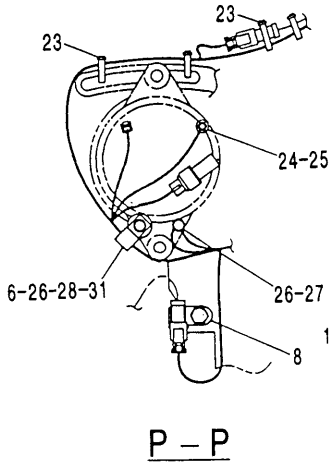

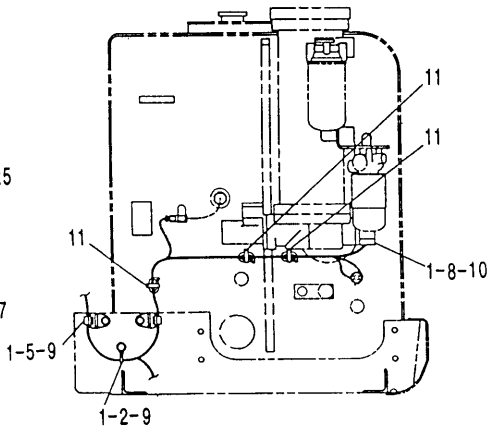

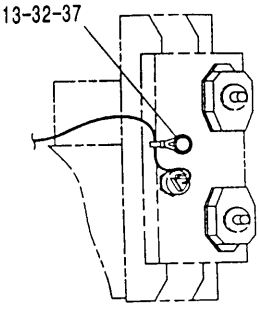

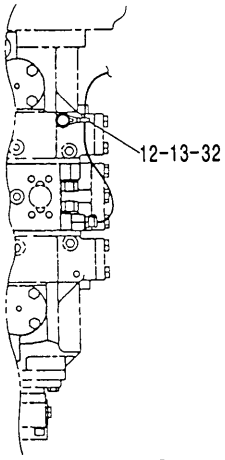

H65230E 09

116-0149 BATTERY & WIRING GP (2/2)
S/N 3MR 04841-04978, 4MR 00705-00715
116-0228-Page75

ELECTRICAL AND STARTING SYSTEM

NOTE	No.	PART No.	QTY	PART NAME	NOTE	No.	PART No.	QTY	PART NAME
	1	8T-4121	16	WASHER					
	2	111-4836	9	CLIP					
	3	8T-4136	2	BOLT (L=25mm)					
	4	8T-4137	8	BOLT (L=20mm)					
	5	111-4837	7	CLIP					
	6	4J-9448	1	LUG					
	7	7Y-8167	1	GROMMET					
	8	116-0118	3	CLIP					
	9	8T-4195	3	BOLT (L=30mm)					
	10	7X-2621	2	BOLT (L=12mm)					
	11	3S-2093	4	STRAP					
	12	8T-4121	2	WASHER {for5BR, 6CR}					
		8T-4121	3	WASHER {for3MR, 4MR}					
	13	111-4836	3	CLIP					
	14	7X-0818	3	BOLT (L=45mm)					
	15	7Y-1924	3	SPACER					
	16	8T-6912	2	BOLT (L=50mm)					
	17	085-7329	2	SPACER					
	18	102-7880	1	BRACKET					
	19	6G-2256	1	CLAMP					
	20	6G-2263	1	SPACER					
	21	8T-4182	1	BOLT (L=45mm)					
	22	2G-8767	1	WASHER					
	23	7I-2673	4	STRAP					
	24	5C-2874	1	NUT					
	25	8T-0328	2	WASHER					
	26	9X-8256	2	WASHER					
	27	7X-2619	1	BOLT (L=10mm)					
	28	8J-1256	1	CLIP					
Y	29	116-0228	1	CABLE AS					
	30	132-1806	1	STRAP AS					
	31	7X-2533	1	BOLT (L=35mm)					
	32	5P-4116	1	WASHER {for5BR, 6CR}					
		8T-4137	1	BOLT (L=20mm) {for3MR, 4MR}					
	33	8T-4136	2	BOLT (L=25mm)					
	34	093-2068	1	GROMMET					
	35	5P-4116	5	WASHER					
	36	8T-0286	1	BOLT (L=8mm)					
	37	8T-4189	1	BOLT (L=20mm) {for5BR, 6CR}					

Y—SEE SEPARATE ILLUSTRATION

H65230E 09

116-0149 BATTERY & WIRING GP (2/2)

S/N 3MR 04841-04978, 4MR 00705-00715

116-0228-Page75

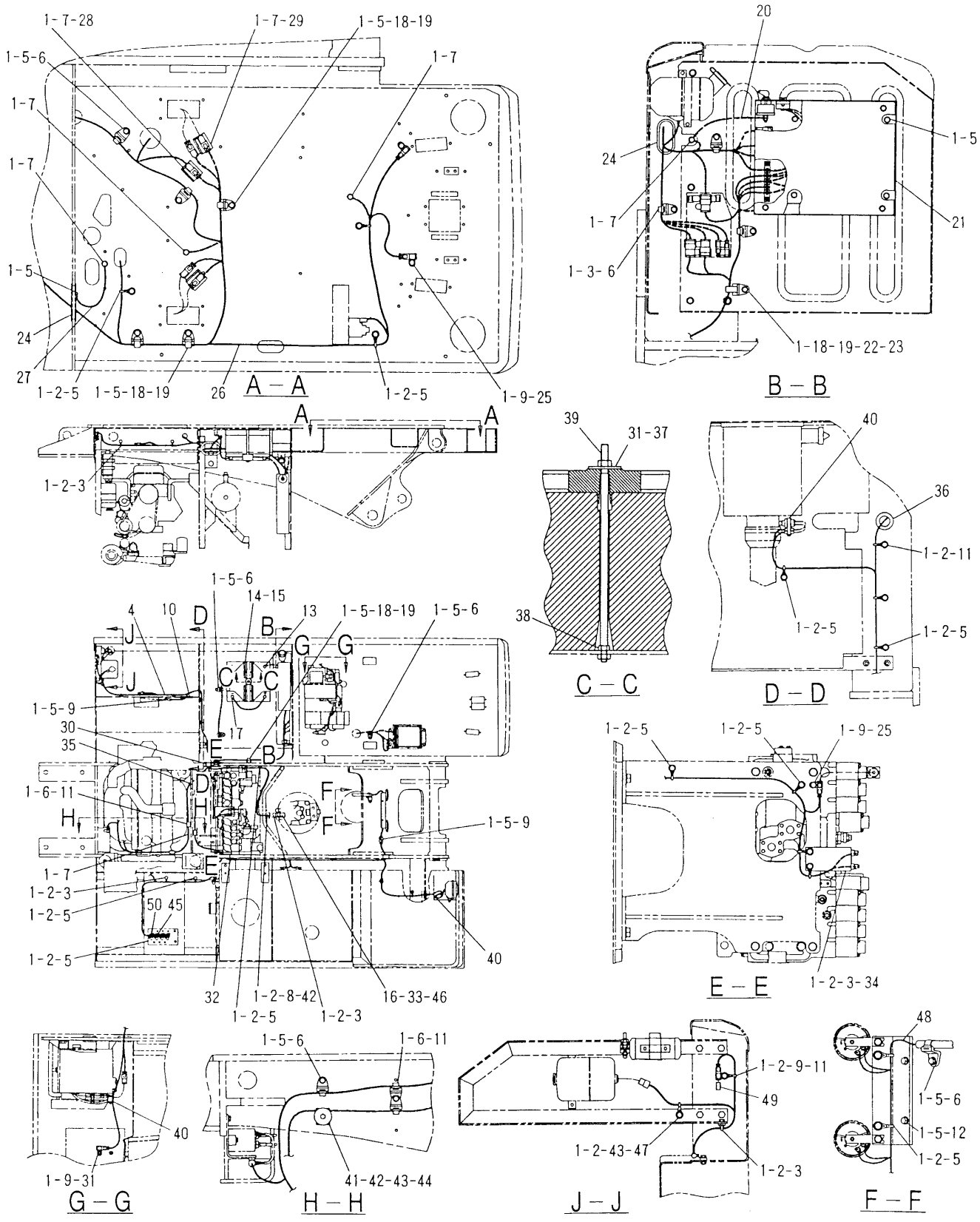

H78061E 14

116-0149 BATTERY & WIRING GP (1/2)

S/N 3MR 04979-Up, 4MR 00716-Up

138-5134-Page68.04,150-6998-Page72.07,125-4873-Page73,116-0080,125-4727-Page74,116-0151-Page77.05

ELECTRICAL AND STARTING SYSTEM

NOTE	No.	PART No.	QTY	PART NAME	NOTE	No.	PART No.	QTY	PART NAME
	1	8T-4121	69	WASHER					
	2	111-4836	29	CLIP					
	3	8T-4136	12	BOLT (L=25mm)					
Y	4	138-5134	1	HARNESS AS					
	5	8T-4137	36	BOLT (L=20mm)					
	6	111-4837	14	CLIP					
	7	8T-4191	11	BOLT (L=16mm)					
	8	8T-4185	1	BOLT (L=50mm)					
	9	116-0118	8	CLIP					
	10	131-7547	1	GROMMET					
	11	8T-4195	5	BOLT (L=30mm)					
	12	116-0068	1	BRACKET					
Y	13	125-4727	1	CABLE AS					
	14	6W-6005	1	HOLDDOWN					
	15	3T-5760	2	BATTERY					
	16	8T-4171	2	BOLT (L=12mm)					
Y	17	116-0080	1	CABLE AS					
	18	111-4838	5	CLIP					
	19	111-4839	5	STRAP					
	20	132-1805	1	STRAP AS					
Y	21	116-0151	1	PANEL GP					
	22	8T-4198	1	BOLT (L=100mm)					
	23	102-7886	1	SLEEVE					
	24	142-5536	2	GROMMET					
	25	7X-2621	3	BOLT (L=12mm)					
Y	26	150-6998	1	HARNESS AS					
	27	7G-1060	1	STRAP AS					
	28	116-0230	1	BRACKET AS					
	29	116-0229	2	BRACKET AS					
	30	087-4587	1	GROMMET					
	31	8T-4133	2	NUT					
	32	4I-3503	1	GROMMET					
	33	128-8943	1	BRACKET AS					
	34	111-4883	1	BRACKET AS					
	35	8D-0482	1	GROMMET					
	36	131-7546	1	GROMMET					
	37	8T-4226	1	WASHER					
	38	5C-7261	1	NUT					
	39	5I-8304	1	ROD					
	40	3S-2093	3	STRAP					
	41	6G-2256	1	CLAMP					
	42	6G-2263	2	SPACER					
	43	8T-4182	2	BOLT (L=45mm)					
	44	2G-8767	1	WASHER					
	45	7I-2673	1	STRAP					
	46	9X-8256	2	WASHER					
	47	091-9035	1	SPACER					
Y	48	125-4873	1	HARNESS AS					
	49	153-2492	1	WIRE AS					
		102-8802	1	RECEPTACLE KIT					
		3E-3365	1	WEDGE					
		8T-8729	2	PIN					
	50	7K-1181	1	STRAP					

Y—SEE SEPARATE ILLUSTRATION

H78061E 14

116-0149 BATTERY & WIRING GP (1/2)

S/N 3MR 04979-Up, 4MR 00716-Up

138-5134-Page68.04,150-6998-Page72.07,125-4873-Page73,116-0080,125-4727-Page74,116-0151-Page77.05

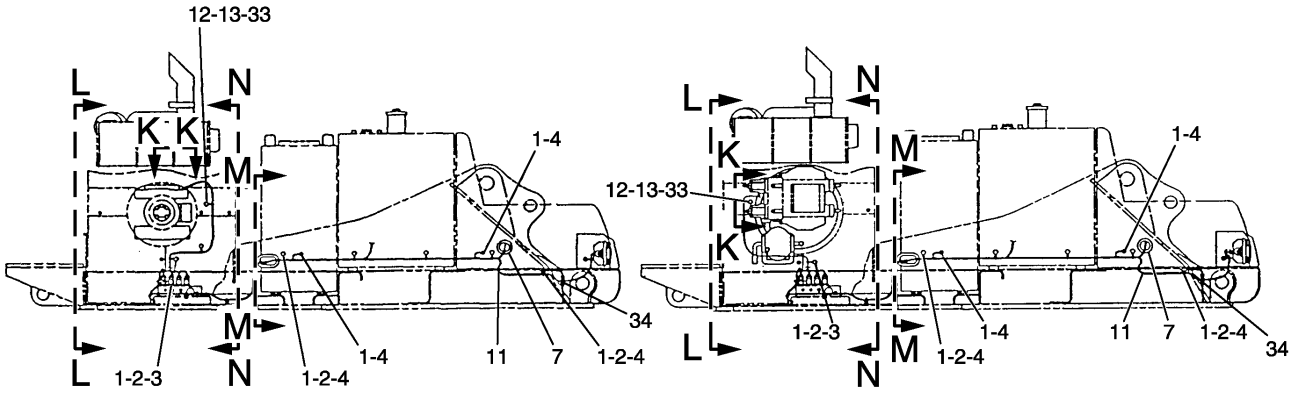

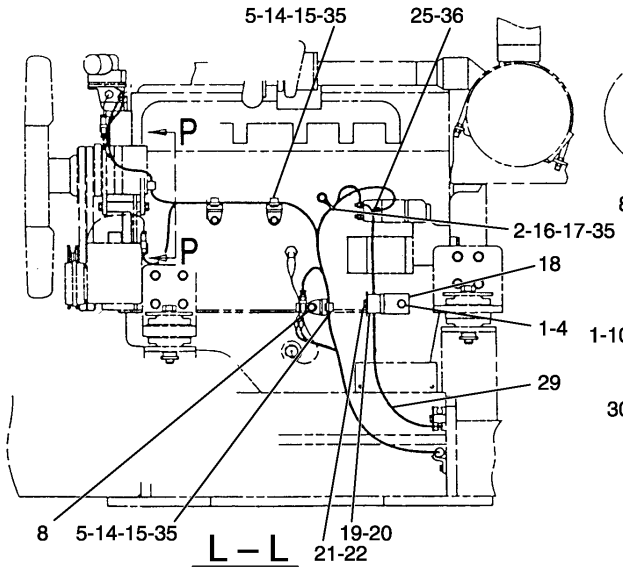

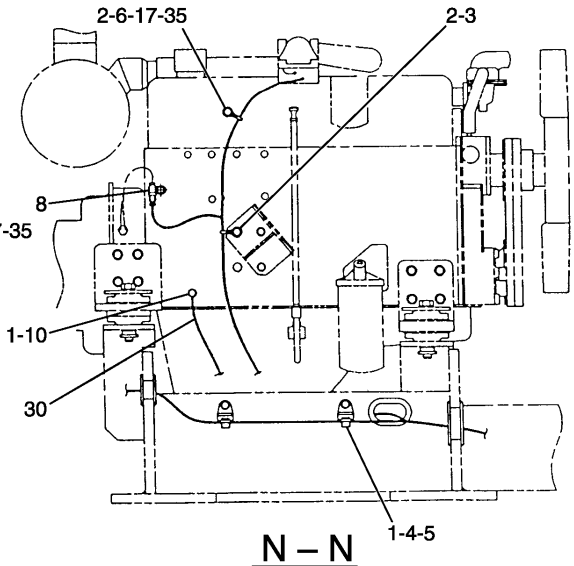

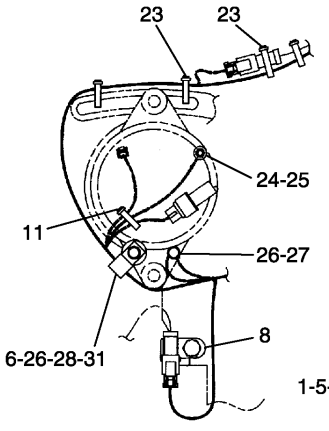

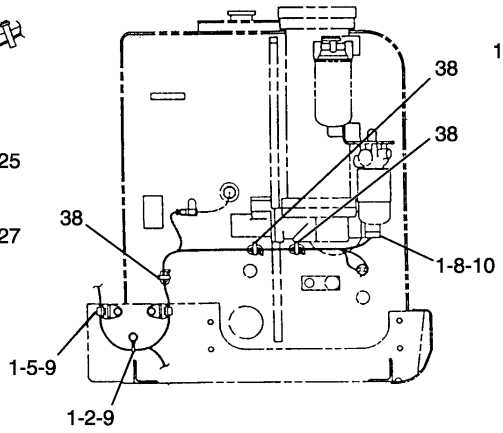

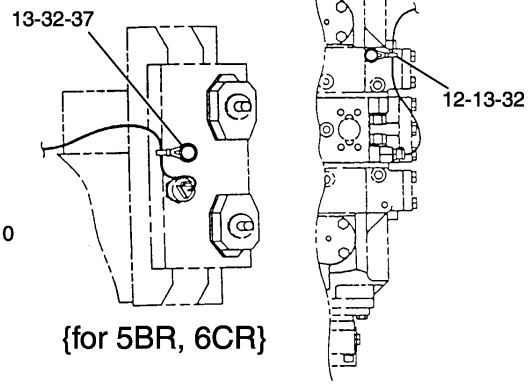

H78063E 14

116-0149 BATTERY & WIRING GP (2/2)
S/N 3MR 04979-Up, 4MR 00716-Up
116-0228-Page75

ELECTRICAL AND STARTING SYSTEM

NOTE	No.	PART No.	QTY	PART NAME	NOTE	No.	PART No.	QTY	PART NAME
	1	8T-4121	16	WASHER					
	2	111-4836	9	CLIP					
	3	8T-4136	2	BOLT (L=25mm)					
	4	8T-4137	8	BOLT (L=20mm)					
	5	111-4837	7	CLIP					
	6	4J-9448	1	LUG					
	7	7Y-8167	1	GROMMET					
	8	116-0118	3	CLIP					
	9	8T-4195	3	BOLT (L=30mm)					
	10	7X-2621	2	BOLT (L=12mm)					
	11	3S-2093	2	STRAP					
	12	8T-4121	2	WASHER {for5BR, 6CR}					
		8T-4121	3	WASHER {for3MR, 4MR}					
	13	111-4836	3	CLIP					
	14	7X-0818	3	BOLT (L=45mm)					
	15	7Y-1924	3	SPACER					
	16	8T-6912	2	BOLT (L=50mm)					
	17	085-7329	2	SPACER					
	18	102-7880	1	BRACKET					
	19	6G-2256	1	CLAMP					
	20	6G-2263	1	SPACER					
	21	8T-4182	1	BOLT (L=45mm)					
	22	2G-8767	1	WASHER					
	23	7I-2673	4	STRAP					
	24	5C-2874	1	NUT					
	25	8T-0328	2	WASHER					
	26	9X-8256	2	WASHER					
	27	7X-2619	1	BOLT (L=10mm)					
	28	8J-1256	1	CLIP					
Y	29	116-0228	1	CABLE AS					
	30	132-1806	1	STRAP AS					
	31	7X-2533	1	BOLT (L=35mm)					
	32	5P-4116	1	WASHER {for5BR, 6CR}					
		8T-4137	1	BOLT (L=20mm) {for3MR, 4MR}					
	33	8T-4136	2	BOLT (L=25mm)					
	34	093-2068	1	GROMMET					
	35	5P-4116	5	WASHER					
	36	8T-0286	1	BOLT (L=8mm)					
	37	8T-4189	1	BOLT (L=20mm) {for5BR, 6CR}					
	38	7K-1181	3	STRAP					

Y—SEE SEPARATE ILLUSTRATION

H78063E 14

116-0149 BATTERY & WIRING GP (2/2)

S/N 3MR 04979-Up, 4MR 00716-Up

116-0228-Page75

ELECTRICAL AND STARTING SYSTEM

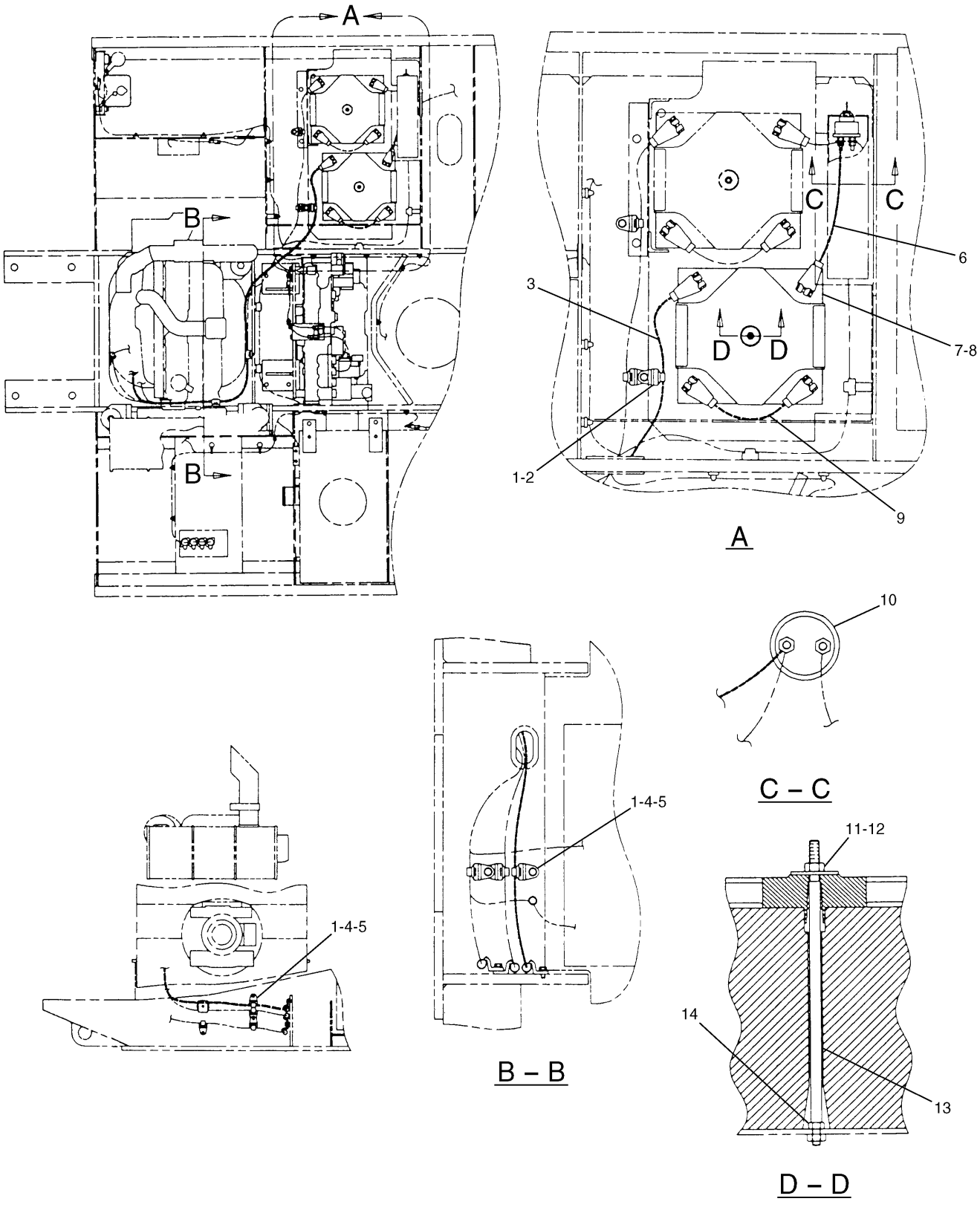

116-0153 BATTERY & WIRING GP-COLD WEATH
S/N 3MR 1-06268, 4MR 1-00915
116-0080-Page74,128-8871-Page75,7N-0719,116-0242-Page93
An Attachment

ELECTRICAL AND STARTING SYSTEM

NOTE	No.	PART No.	QTY	PART NAME	NOTE	No.	PART No.	QTY	PART NAME
	1	111-4837	3	CLIP					
	2	8T-4195	1	BOLT (L=30mm)					
Y	3	128-8871	1	CABLE AS					
	4	8T-4121	2	WASHER					
	5	8T-4137	2	BOLT (L=20mm)					
Y	6	116-0242	1	CABLE AS					
	7	3T-5760	2	BATTERY					
	8	6W-6005	1	HOLDDOWN					
Y	9	116-0080	1	CABLE AS					
Y	10	7N-0719	1	SWITCH AS (DISCONNECT)					
	11	8T-4133	1	NUT					
	12	8T-4226	1	WASHER					
	13	5I-8304	1	ROD					
	14	5C-7261	1	NUT					

Y—SEE SEPARATE ILLUSTRATION

H52925E 00

116-0153 BATTERY & WIRING GP-COLD WEATH

S/N 3MR 1-06268, 4MR 1-00915
116-0080-Page74,128-8871-Page75,7N-0719,116-0242-Page93
An Attachment

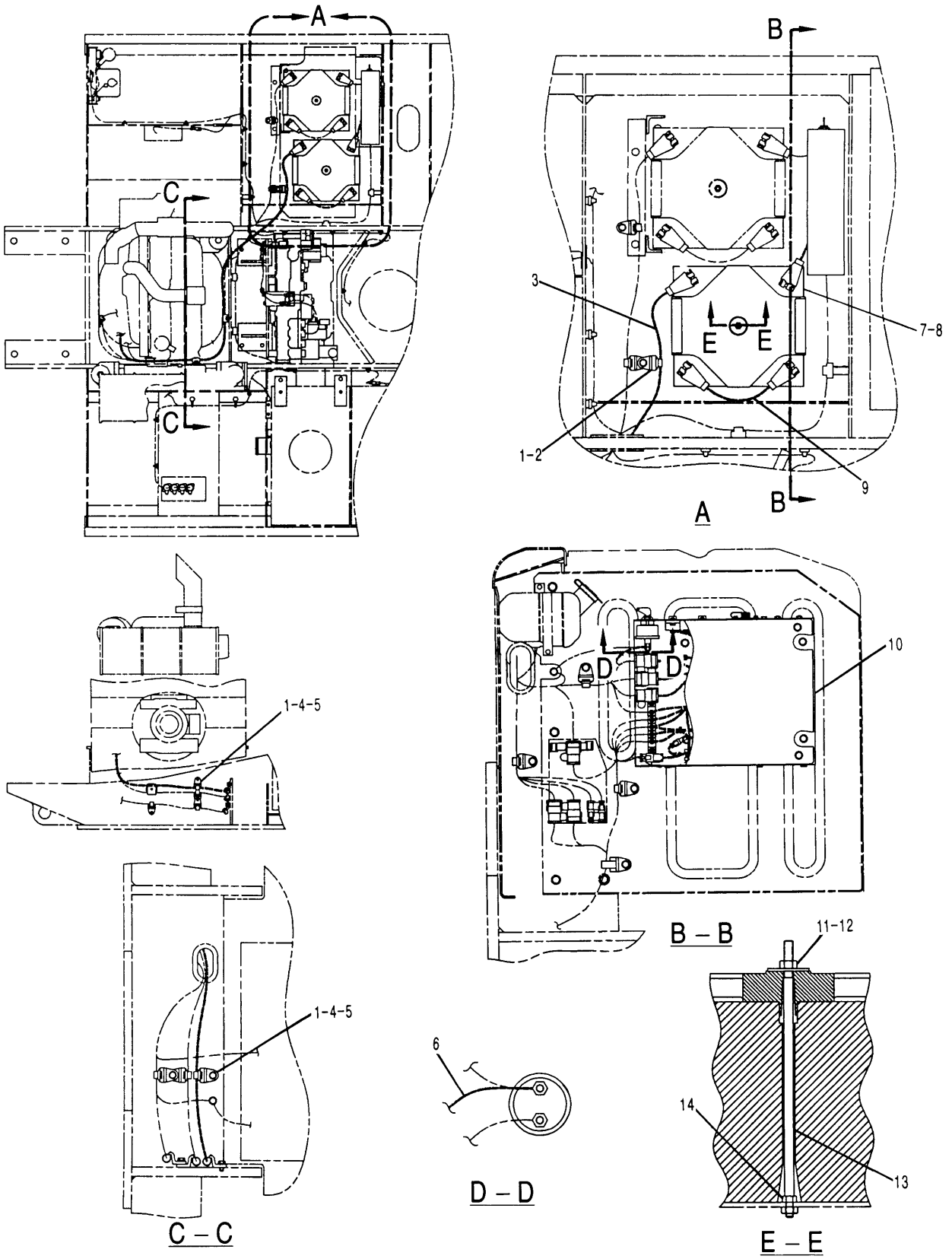

H65378E 00

163-6727 BATTERY & WIRING GP-COLD WEATH

S/N 3MR 06269-Up, 4MR 00916-Up

116-0080-Page74,128-8871-Page75,163-6675-Page77.09,116-0242-Page93

An Attachment

ELECTRICAL AND STARTING SYSTEM

NOTE	No.	PART No.	QTY	PART NAME	NOTE	No.	PART No.	QTY	PART NAME
	1	111-4837	3	CLIP					
	2	8T-4195	1	BOLT (L=30mm)					
Y	3	128-8871	1	CABLE AS					
	4	8T-4121	2	WASHER					
	5	8T-4137	2	BOLT (L=20mm)					
Y	6	116-0242	1	CABLE AS					
	7	3T-5760	2	BATTERY					
	8	6W-6005	1	HOLDDOWN					
Y	9	116-0080	1	CABLE AS					
Y	10	163-6675	1	PANEL GP					
	11	8T-4133	1	NUT					
	12	8T-4226	1	WASHER					
	13	5I-8304	1	ROD					
	14	5C-7261	1	NUT					

Y—SEE SEPARATE ILLUSTRATION

H65378E 00

163-6727 BATTERY & WIRING GP-COLD WEATH

S/N 3MR 06269-Up, 4MR 00916-Up

116-0080-Page74,128-8871-Page75,163-6675-Page77.09,116-0242-Page93

An Attachment

ELECTRICAL AND STARTING SYSTEM

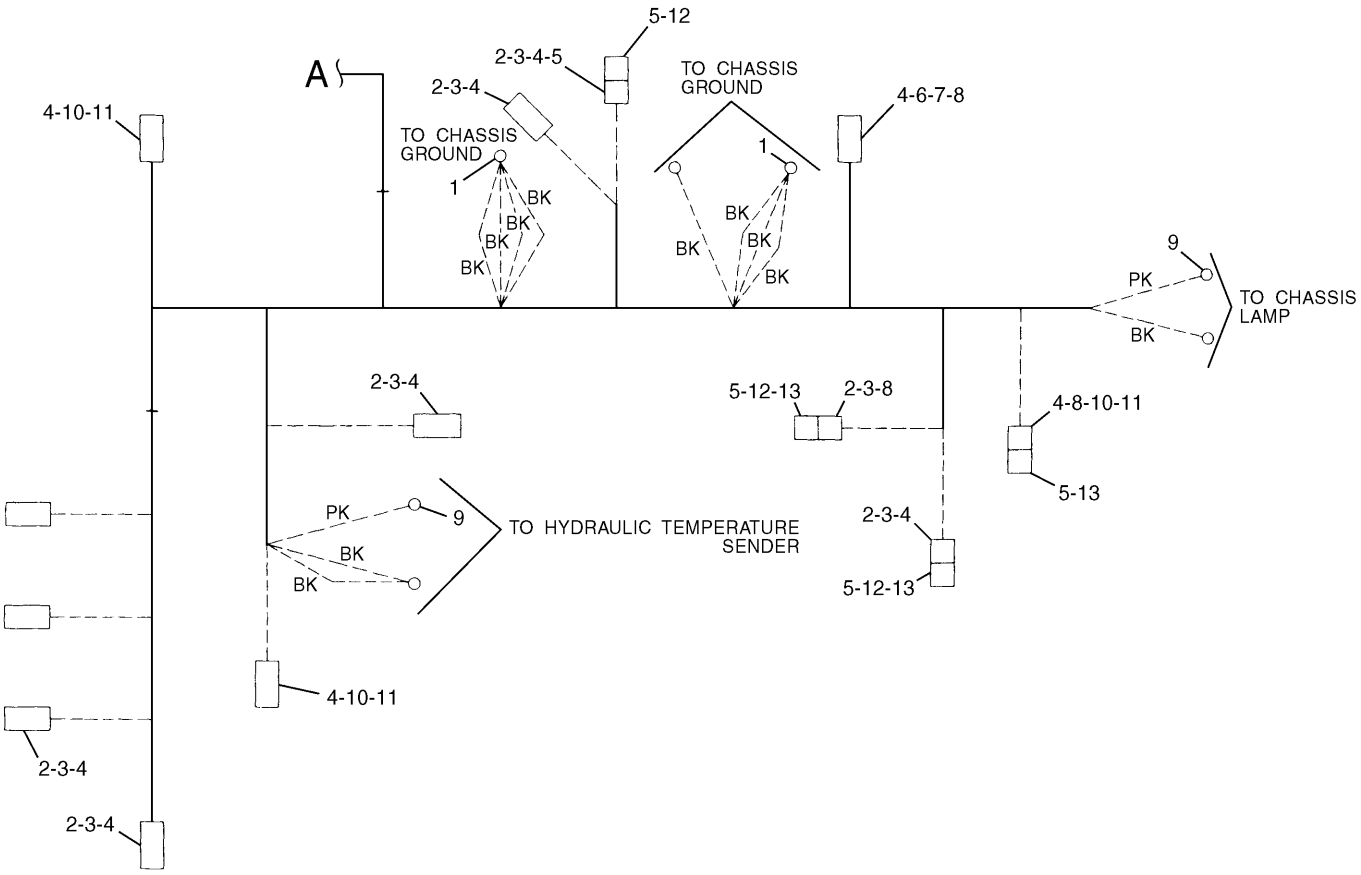

NOTE	No.	PART No.	QTY	PART NAME	NOTE	No.	PART No.	QTY	PART NAME
	1	3T-4696	3	TERMINAL					
	2	155-2270	9	PLUG KIT					
	3	3E-3362	9	WEDGE					
	4	8T-8730	24	SOCKET					
	5	8T-8737	10	PLUG					
	6	102-8809	1	PLUG KIT					
	7	3E-3374	1	WEDGE					
	8	9W-0844	6	SOCKET					
	9	2L-8075	2	TERMINAL					
	10	102-8808	3	PLUG KIT					
	11	3E-3368	3	WEDGE					
	12	102-8802	1	RECEPTACLE KIT					
	13	3S-2093	3	STRAP					

H57466E 03

116-0226 HARNESS AS (1/3)

S/N 3MR 1-01083, 4MR 1-00253
Part of 116-0149-Page61

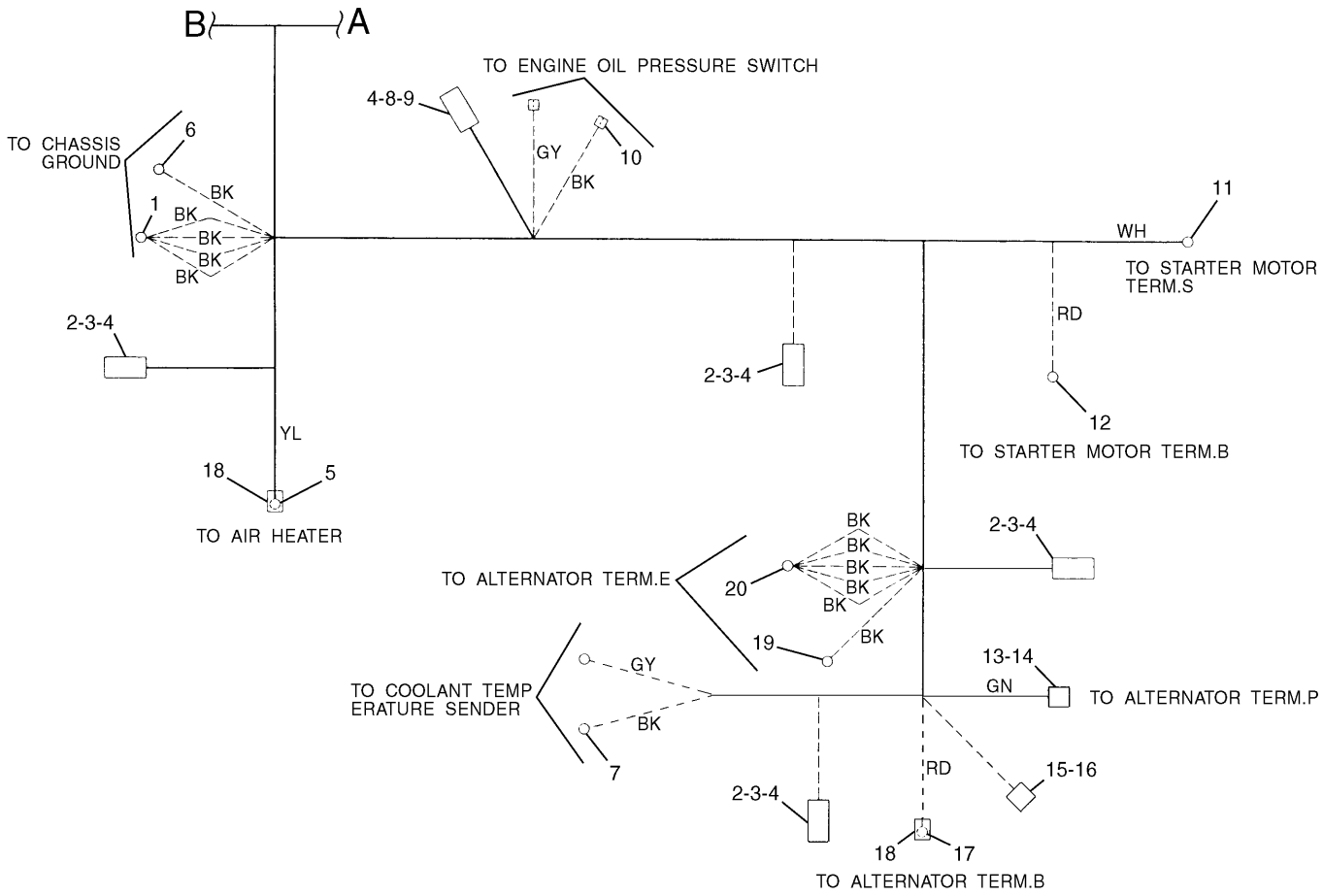

NOTE	No.	PART No.	QTY	PART NAME	NOTE	No.	PART No.	QTY	PART NAME
	1	3T-4696	1	TERMINAL		20	2L-8067	1	TERMINAL
	2	155-2270	4	PLUG KIT					
	3	3E-3362	4	WEDGE					
	4	8T-8730	14	SOCKET					
	5	9G-4343	1	TERMINAL					
	6	3T-4692	1	TERMINAL					
	7	2L-8075	2	TERMINAL					
	8	102-8810	1	PLUG KIT					
	9	3E-3380	1	WEDGE					
	10	7Y-3963	2	TERMINAL					
		7Y-3965	2	TUBE					
	11	2L-8049	1	TERMINAL					
	12	9G-4336	1	TERMINAL					
	13	7Y-3995	1	CONNECTOR					
	14	7Y-3996	1	TERMINAL					
	15	7Y-3820	1	HOUSING					
	16	7Y-3821	2	SOCKET					
	17	2L-8050	1	TERMINAL					
	18	8T-8799	2	BOOT					
	19	2L-8058	1	TERMINAL					

H57467E 03

116-0226 HARNESS AS (2/3)

S/N 3MR 1-01083, 4MR 1-00253

Part of 116-0149-Page61

ELECTRICAL AND STARTING SYSTEM

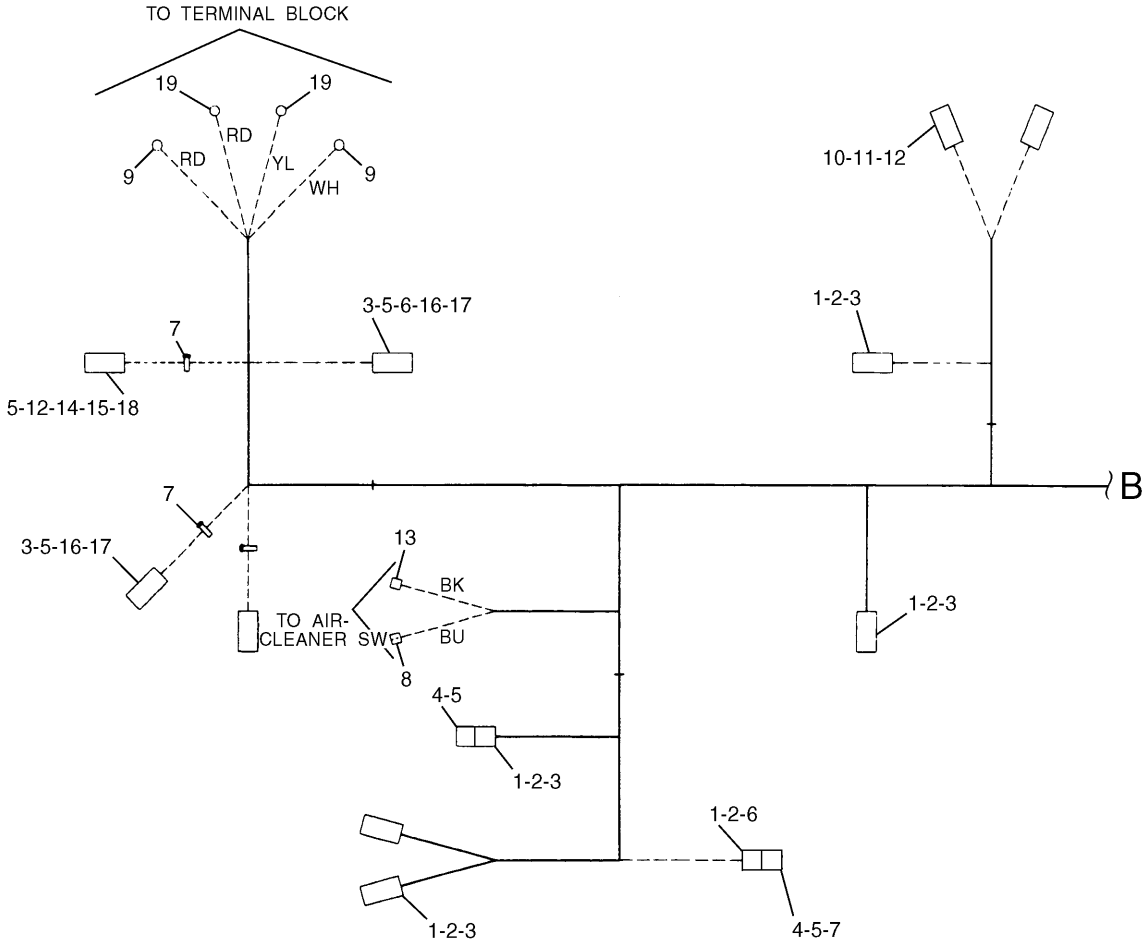

NOTE	No.	PART No.	QTY	PART NAME	NOTE	No.	PART No.	QTY	PART NAME
	1	155-2270	5	PLUG KIT		19	9G-4343	2	TERMINAL
	2	3E-3362	5	WEDGE					
	3	8T-8730	27	SOCKET					
	4	102-8802	2	RECEPTACLE KIT					
	5	8T-8737	11	PLUG					
	6	9W-0844	4	SOCKET					
	7	3S-2093	4	STRAP					
	8	7Y-3963	1	TERMINAL					
		7Y-3965	1	TUBE					
	9	2L-8058	2	TERMINAL					
	10	102-8802	2	RECEPTACLE KIT					
	11	3E-3365	2	WEDGE					
	12	8T-8729	22	PIN					
	13	7Y-3962	1	TERMINAL					
		7Y-3964	1	TUBE					
	14	102-8801	2	RECEPTACLE KIT					
	15	3E-5180	2	WEDGE					
	16	102-8800	2	PLUG KIT					
	17	3E-5177	2	WEDGE					
	18	9W-0852	2	PIN					

H57468E 03

116-0226 HARNESS AS (3/3)

S/N 3MR 1-01083, 4MR 1-00253
Part of 116-0149-Page61

ELECTRICAL AND STARTING SYSTEM

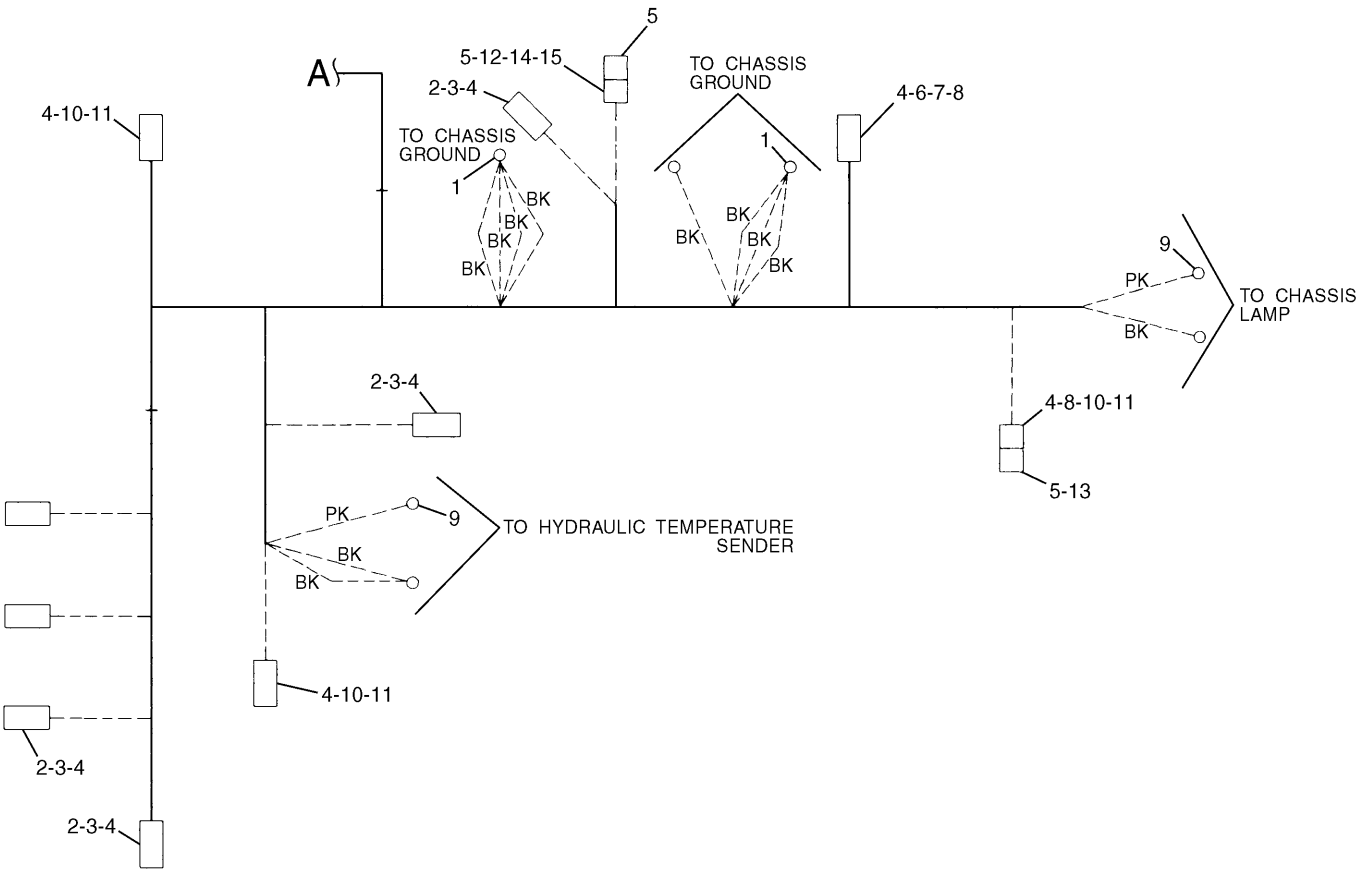

NOTE	No.	PART No.	QTY	PART NAME	NOTE	No.	PART No.	QTY	PART NAME
	1	3T-4696	3	TERMINAL					
	2	155-2270	6	PLUG KIT					
	3	3E-3362	6	WEDGE					
	4	8T-8730	21	SOCKET					
	5	8T-8737	6	PLUG					
	6	102-8809	2	PLUG KIT					
	7	3E-3374	1	WEDGE					
	8	9W-0844	4	SOCKET					
	9	2L-8075	4	TERMINAL					
	10	102-8808	3	PLUG KIT					
	11	3E-3368	3	WEDGE					
	12	8T-8729	1	PIN					
	13	3S-2093	1	STRAP					
	14	102-8802	1	RECEPTACLE KIT					
	15	3E-3365	1	WEDGE					

H52926E 04

116-0226 HARNESS AS (1/3)

S/N 3MR 01084-01376, 4MR 00254-00285

Part of 116-0149-Page63.02

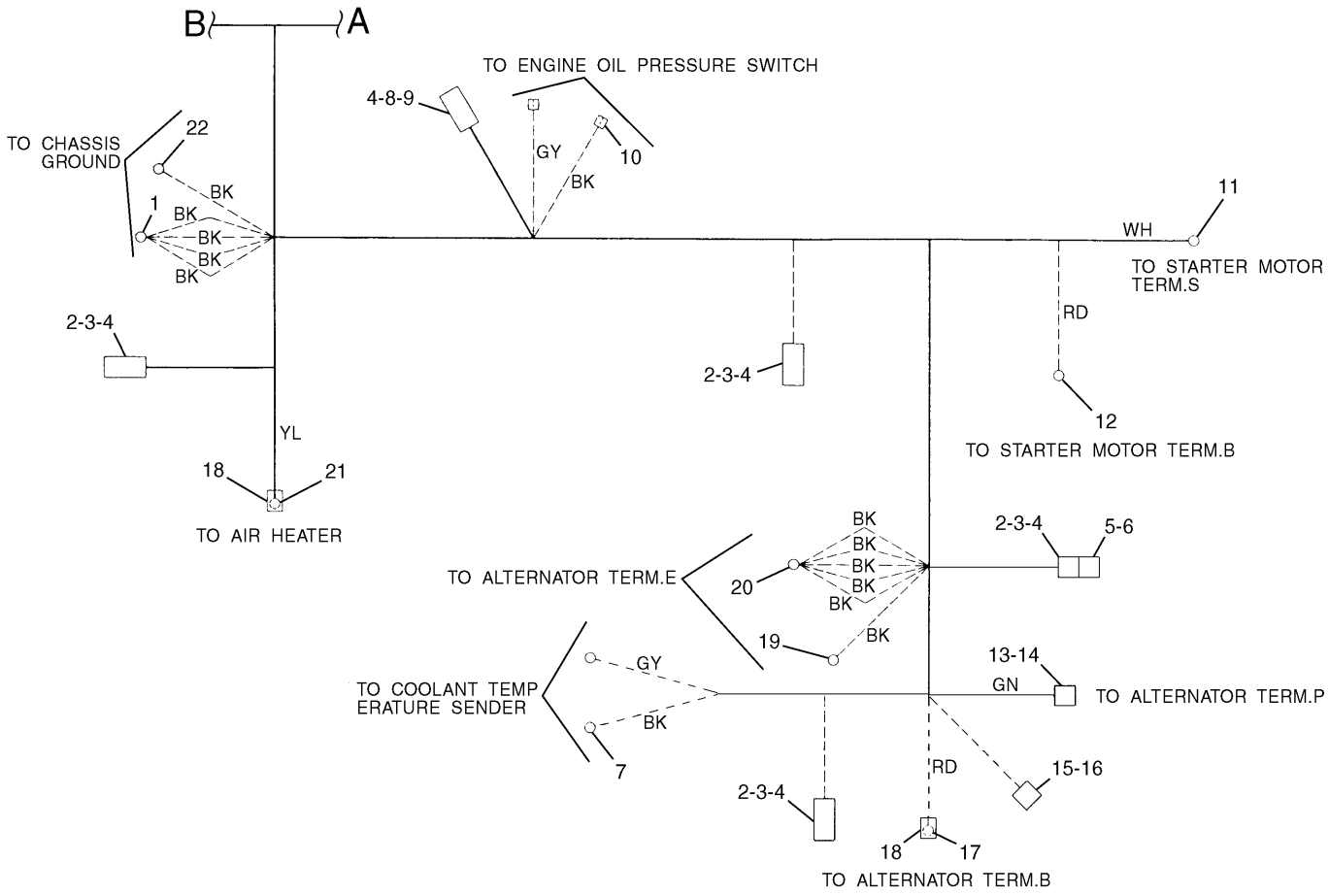

NOTE	No.	PART No.	QTY	PART NAME	NOTE	No.	PART No.	QTY	PART NAME
	1	3T-4696	1	TERMINAL		20	2L-8067	1	TERMINAL
	2	155-2270	4	PLUG KIT		21	9G-4343	1	TERMINAL
	3	3E-3362	4	WEDGE		22	3T-4692	1	TERMINAL
	4	8T-8730	14	SOCKET					
	5	102-8802	1	RECEPTACLE KIT					
	6	8T-8737	2	PLUG					
	7	2L-8075	2	TERMINAL					
	8	102-8810	1	PLUG KIT					
	9	3E-3380	1	WEDGE					
	10	7Y-3963	2	TERMINAL					
		7Y-3965	2	TUBE					
	11	2L-8049	1	TERMINAL					
	12	9G-4336	1	TERMINAL					
	13	7Y-3995	1	CONNECTOR					
	14	7Y-3996	1	TERMINAL					
	15	7Y-3820	1	HOUSING					
	16	7Y-3821	2	SOCKET					
	17	2L-8050	1	TERMINAL					
	18	8T-8799	2	BOOT					
	19	2L-8058	1	TERMINAL					

H52927E 04

116-0226 HARNESS AS (2/3)

S/N 3MR 01084-01376, 4MR 00254-00285

Part of 116-0149-Page63.02

ELECTRICAL AND STARTING SYSTEM

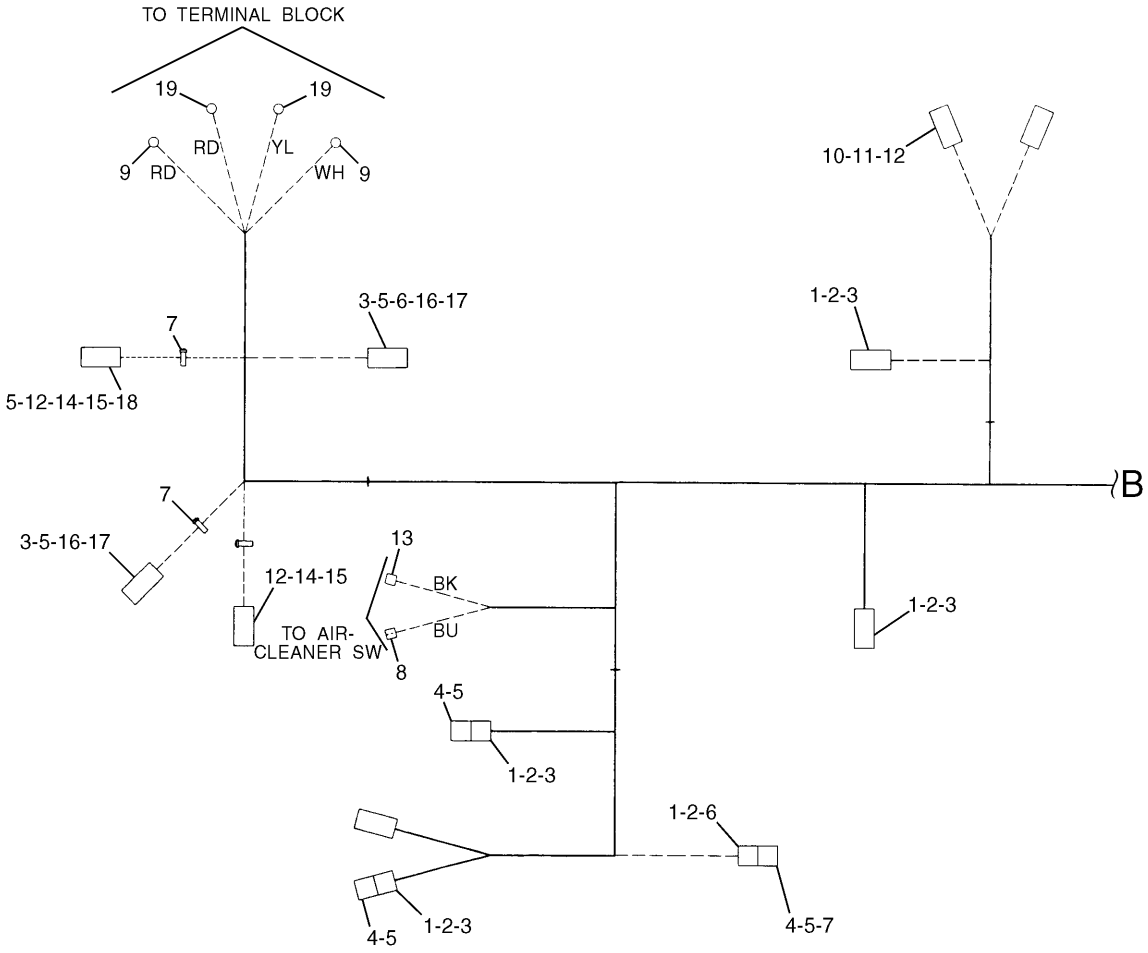

NOTE	No.	PART No.	QTY	PART NAME	NOTE	No.	PART No.	QTY	PART NAME
	1	155-2270	5	PLUG KIT		19	9G-4343	2	TERMINAL
	2	3E-3362	5	WEDGE					
	3	8T-8730	26	SOCKET					
	4	102-8802	3	RECEPTACLE KIT					
	5	8T-8737	15	PLUG					
	6	9W-0844	3	SOCKET					
	7	3S-2093	4	STRAP					
	8	7Y-3963	1	TERMINAL					
		7Y-3965	1	TUBE					
	9	2L-8058	2	TERMINAL					
	10	102-8802	2	RECEPTACLE KIT					
	11	3E-3365	2	WEDGE					
	12	8T-8729	22	PIN					
	13	7Y-3962	1	TERMINAL					
		7Y-3964	1	TUBE					
	14	102-8801	2	RECEPTACLE KIT					
	15	3E-5180	2	WEDGE					
	16	102-8800	2	PLUG KIT					
	17	3E-5177	2	WEDGE					
	18	9W-0852	2	PIN					

H52928E 04

116-0226 HARNESS AS (3/3)

S/N 3MR 01084-01376, 4MR 00254-00285
Part of 116-0149-Page63.02

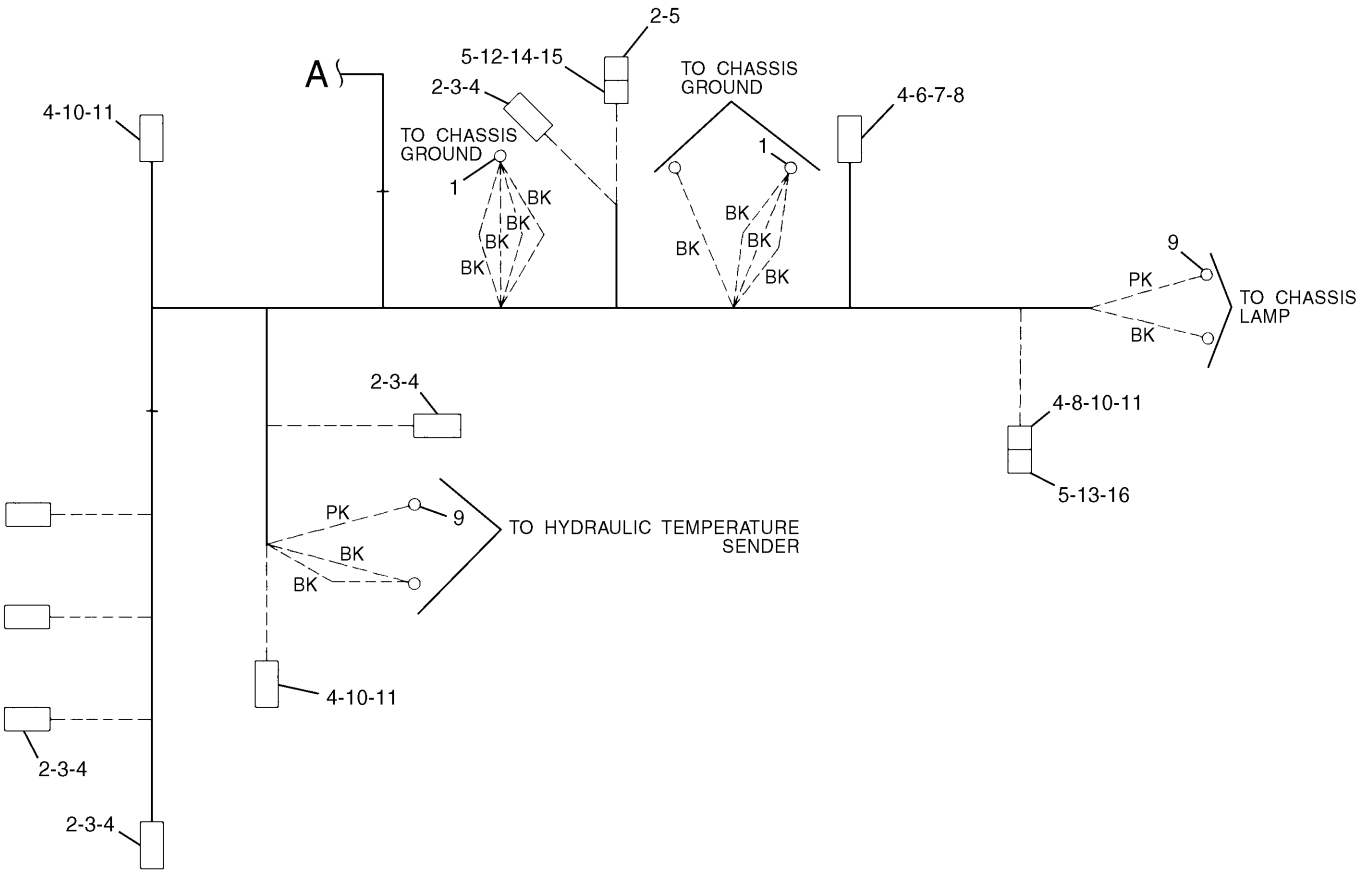

NOTE	No.	PART No.	QTY	PART NAME	NOTE	No.	PART No.	QTY	PART NAME
	1	3T-4696	3	TERMINAL					
	2	155-2270	6	PLUG KIT					
		102-8812	6	SEAL					
	3	3E-3362	6	WEDGE					
	4	186-3736	21	SOCKET					
	5	8T-8737	6	PLUG					
	6	155-2271	2	PLUG KIT					
		102-8814	2	SEAL					
	7	3E-3374	1	WEDGE					
	8	9W-0844	4	SOCKET					
	9	2L-8075	4	TERMINAL					
	10	155-2260	3	PLUG KIT					
		102-8813	3	SEAL					
	11	3E-3368	3	WEDGE					
	12	186-3735	1	PIN					
	13	3S-2093	1	STRAP					
	14	102-8802	1	RECEPTACLE KIT					
	15	3E-3365	1	WEDGE					
	16	102-8803	1	RECEPTACLE KIT					

H65235E 01

138-5134 HARNESS AS (1/3)

S/N 3MR 01377-Up, 4MR 00286-Up
Part of 116-0149-Page63.06

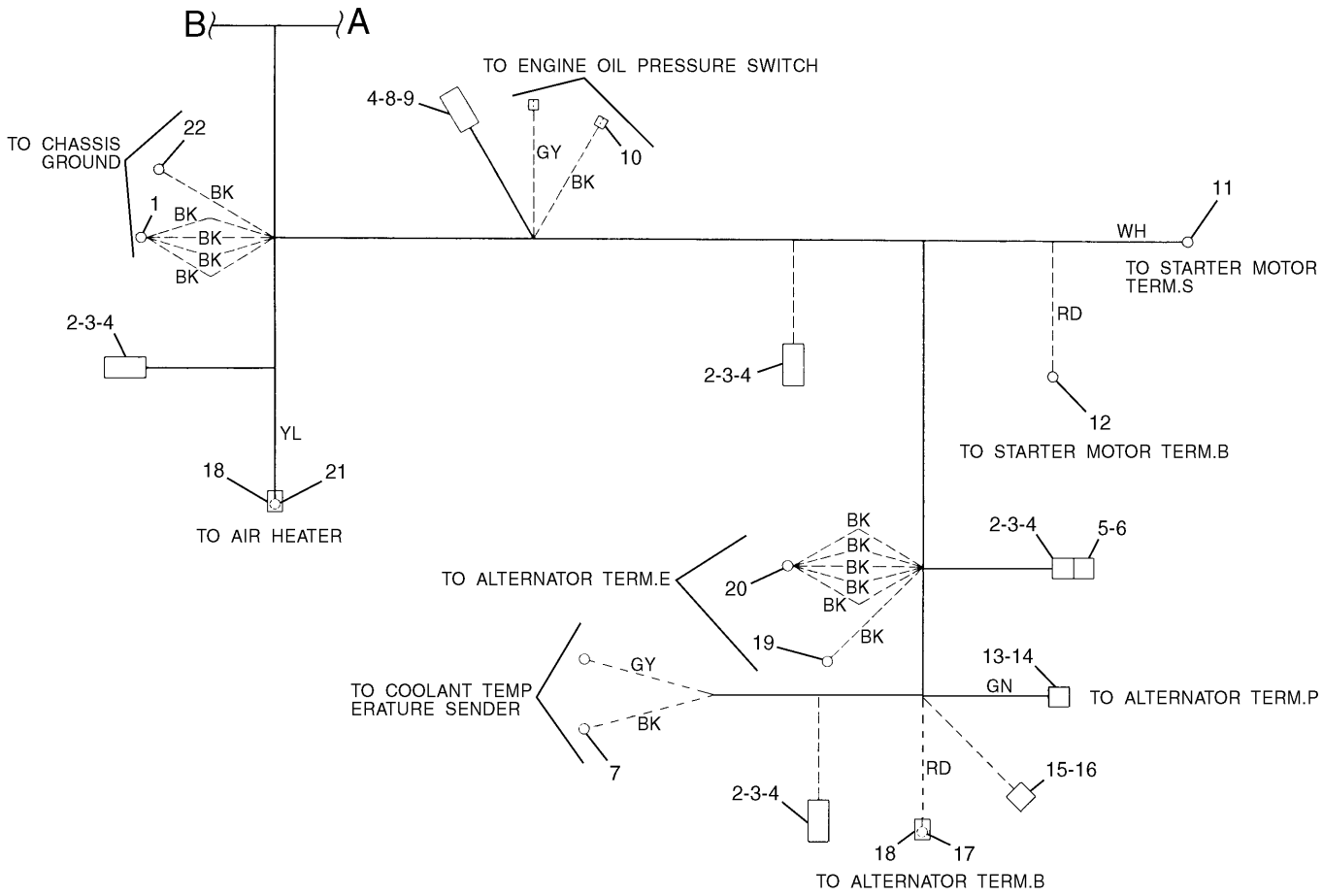

NOTE	No.	PART No.	QTY	PART NAME	NOTE	No.	PART No.	QTY	PART NAME
	1	3T-4696	1	TERMINAL		18	8T-8799	2	BOOT
	2	155-2270	4	PLUG KIT		19	2L-8058	1	TERMINAL
		102-8812	4	SEAL		20	2L-8067	1	TERMINAL
	3	3E-3362	4	WEDGE		21	9G-4343	1	TERMINAL
	4	186-3736	14	SOCKET		22	3T-4692	1	TERMINAL
	5	102-8802	1	RECEPTACLE KIT					
	6	8T-8737	2	PLUG					
	7	2L-8075	2	TERMINAL					
	8	155-2274	1	PLUG KIT					
		102-8815	1	SEAL					
	9	3E-3380	1	WEDGE					
	10	7Y-3963	2	TERMINAL					
		7Y-3965	2	TUBE					
	11	2L-8049	1	TERMINAL					
	12	9G-4336	1	TERMINAL					
	13	7Y-3995	1	CONNECTOR					
	14	7Y-3996	1	TERMINAL					
	15	7Y-3820	1	HOUSING					
	16	7Y-3821	2	SOCKET					
	17	2L-8050	1	TERMINAL					

H65236E 01

138-5134 HARNESS AS (2/3)

S/N 3MR 01377-Up, 4MR 00286-Up

Part of 116-0149-Page63.06

ELECTRICAL AND STARTING SYSTEM

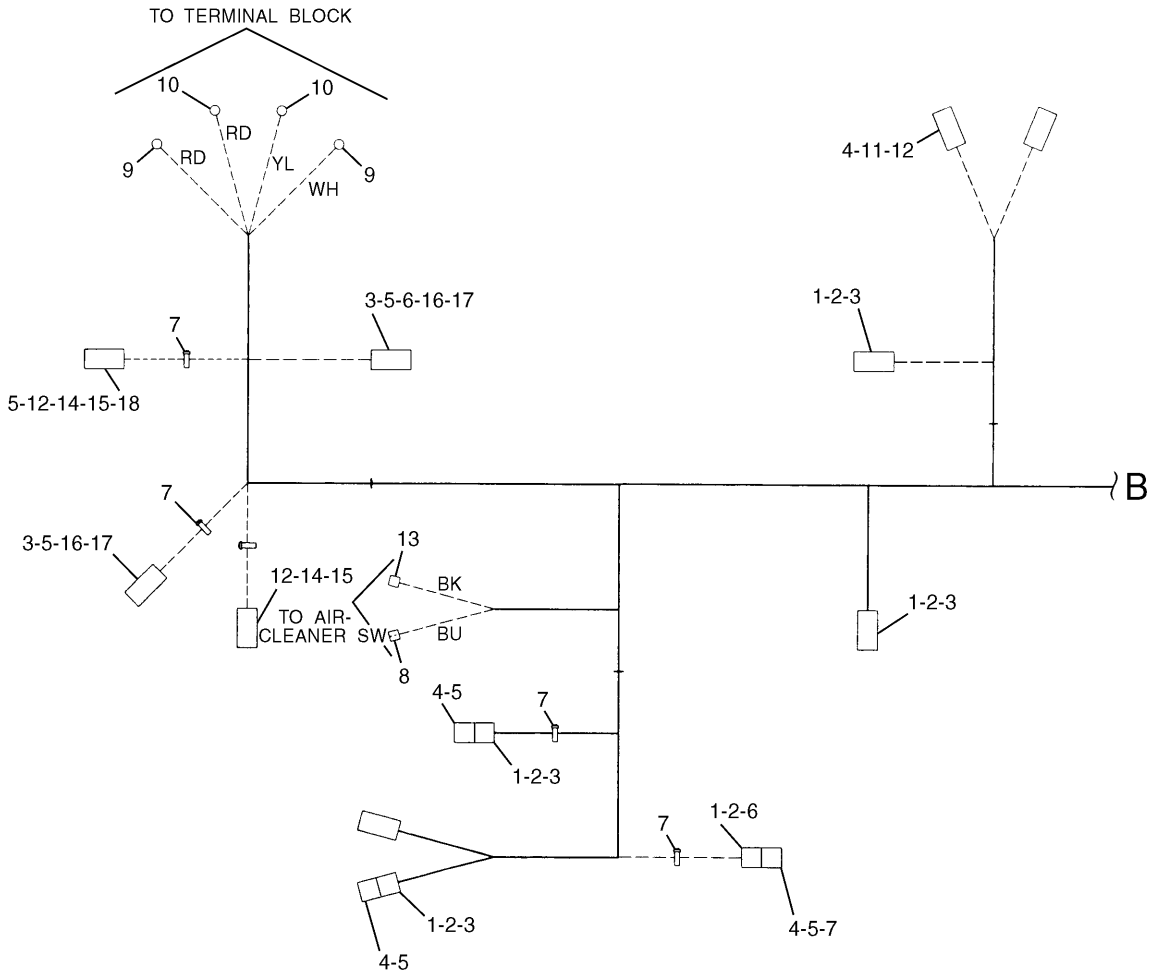

NOTE	No.	PART No.	QTY	PART NAME	NOTE	No.	PART No.	QTY	PART NAME
	1	155-2270	5	PLUG KIT		17	3E-5177	2	WEDGE
		102-8812	5	SEAL		18	9W-0852	2	PIN
	2	3E-3362	5	WEDGE					
	3	186-3736	26	SOCKET					
	4	102-8802	5	RECEPTACLE KIT					
	5	8T-8737	15	PLUG					
	6	9W-0844	3	SOCKET					
	7	3S-2093	6	STRAP					
	8	7Y-3963	1	TERMINAL					
		7Y-3965	1	TUBE					
	9	2L-8058	2	TERMINAL					
	10	9G-4343	2	TERMINAL					
	11	3E-3365	2	WEDGE					
	12	186-3735	22	PIN					
	13	7Y-3962	1	TERMINAL					
		7Y-3964	1	TUBE					
	14	102-8801	2	RECEPTACLE KIT					
	15	3E-5180	2	WEDGE					
	16	155-2255	2	PLUG KIT					
		102-8817	2	SEAL					

H65237E 01

138-5134 HARNESS AS (3/3)

S/N 3MR 01377-Up, 4MR 00286-Up
Part of 116-0149-Page63.06

MEMORANDA

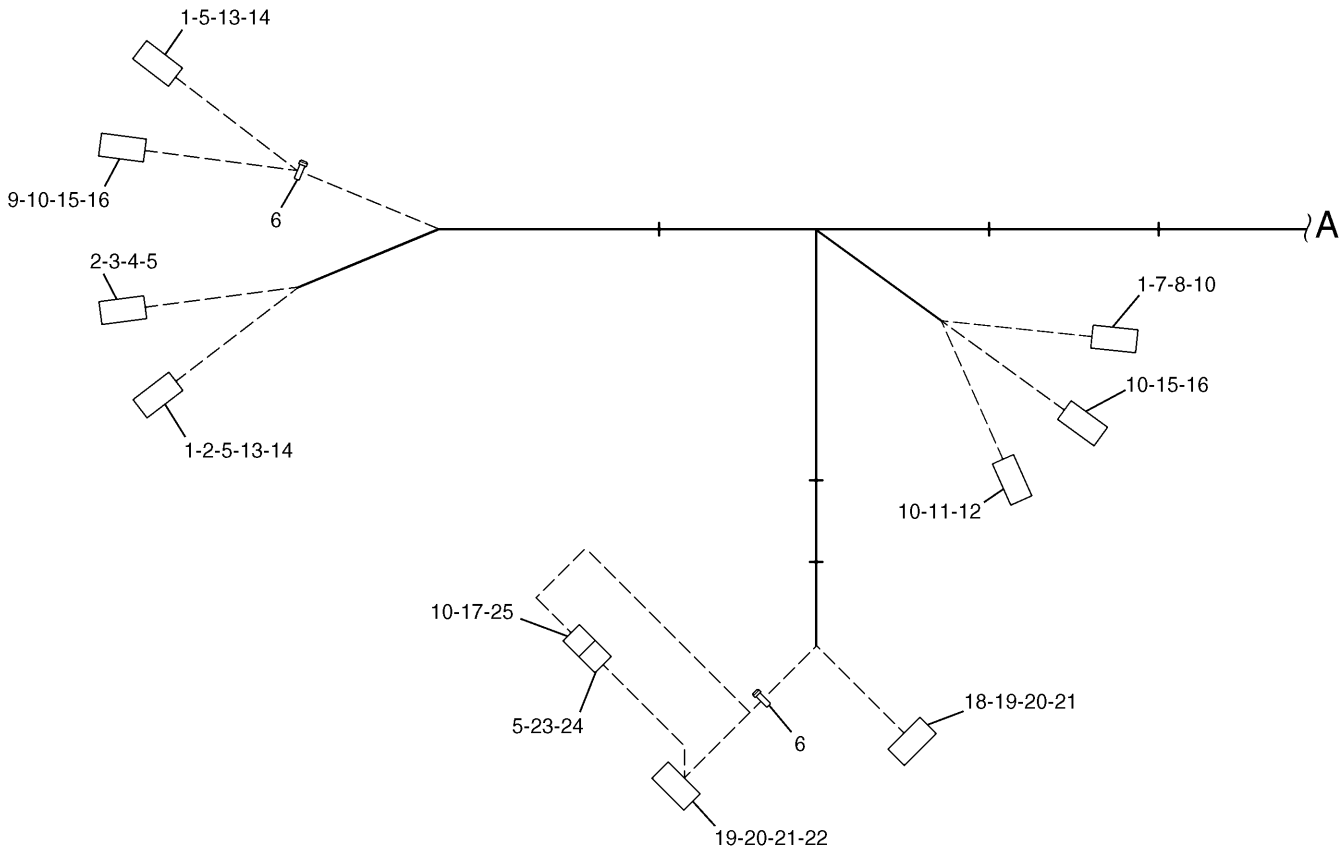

NOTE	No.	PART No.	QTY	PART NAME	NOTE	No.	PART No.	QTY	PART NAME
	1	8T-8737	3	PLUG		21	111-4765	33	PLUG
	2	9W-0844	3	SOCKET		22	111-4762	1	PLUG AS
	3	102-8810	1	PLUG KIT		23	102-8808	1	PLUG KIT
	4	3E-3380	1	WEDGE		24	3E-3368	1	WEDGE
	5	8T-8730	20	SOCKET		25	102-8803	1	RECEPTACLE KIT
	6	3S-2093	2	STRAP					
	7	102-8801	1	RECEPTACLE KIT					
	8	3E-5180	1	WEDGE					
	9	9W-0852	2	PIN					
	10	8T-8729	34	PIN					
	11	102-8805	1	RECEPTACLE KIT					
	12	3E-3383	1	WEDGE					
	13	102-8811	2	PLUG KIT					
	14	3E-3386	2	WEDGE					
	15	102-8806	2	RECEPTACLE KIT					
	16	3E-3389	2	WEDGE					
	17	3E-3371	1	WEDGE					
	18	111-4763	1	PLUG AS					
	19	111-4764	2	WEDGE					
	20	111-4766	47	SOCKET					

H50545E 03

128-8969 HARNESS AS (1/3)

S/N 3MR 1-00787, 4MR 1-00227
Part of 116-0149-Page61

ELECTRICAL AND STARTING SYSTEM

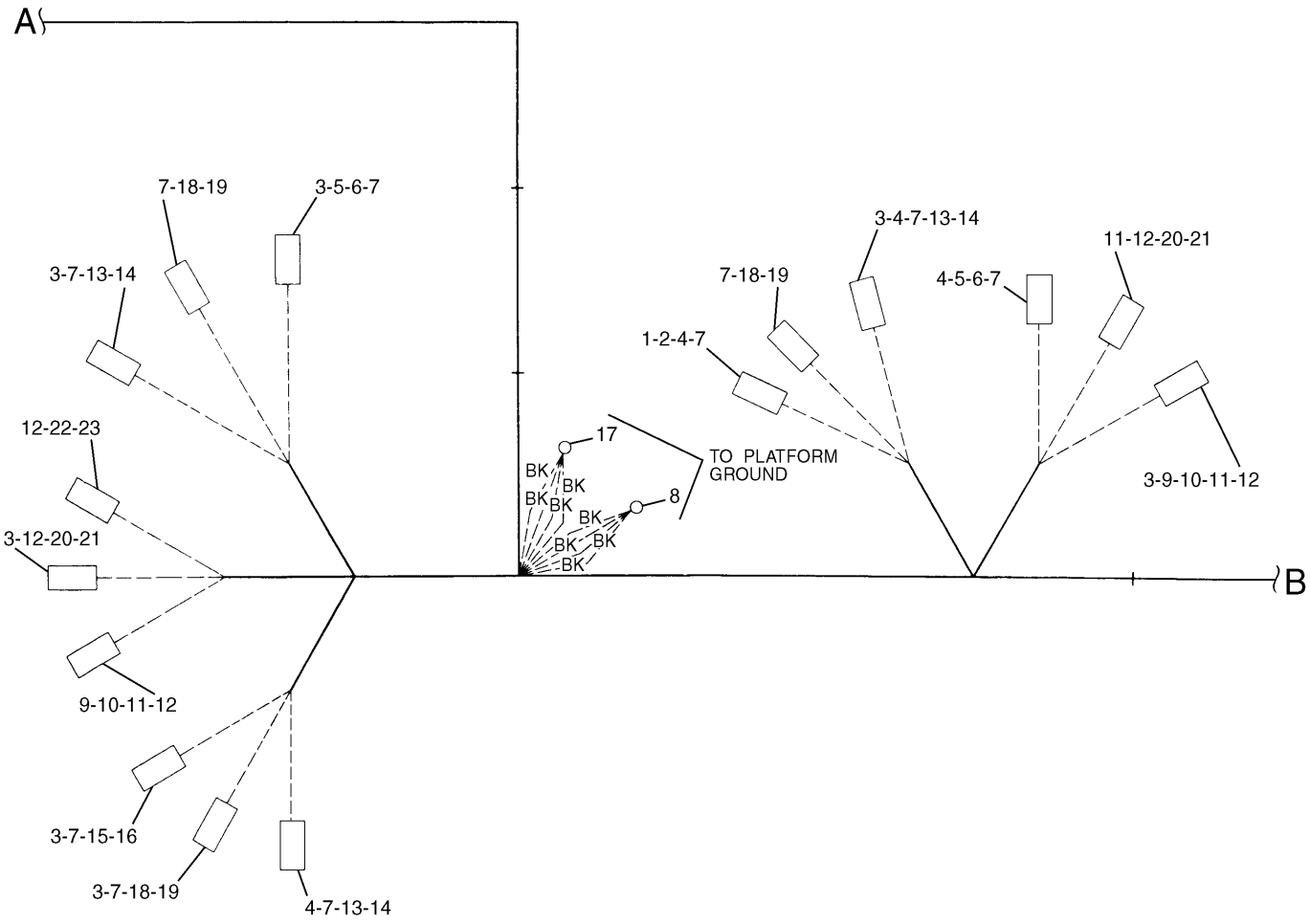

NOTE	No.	PART No.	QTY	PART NAME	NOTE	No.	PART No.	QTY	PART NAME
	1	155-2270	1	PLUG KIT		21	3E-3389	2	WEDGE
	2	3E-3362	1	WEDGE		22	102-8804	1	RECEPTACLE KIT
	3	8T-8737	7	PLUG		23	3E-3377	1	WEDGE
	4	9W-0844	13	SOCKET					
	5	102-8810	2	PLUG KIT					
	6	3E-3380	2	WEDGE					
	7	8T-8730	50	SOCKET					
	8	3T-4696	1	TERMINAL					
	9	102-8801	2	RECEPTACLE KIT					
	10	3E-5180	2	WEDGE					
	11	9W-0852	14	PIN					
	12	8T-8729	28	PIN					
	13	102-8800	3	PLUG KIT					
	14	3E-5177	3	WEDGE					
	15	102-8809	1	PLUG KIT					
	16	3E-3374	1	WEDGE					
	17	3T-4692	1	TERMINAL					
	18	102-8811	3	PLUG KIT					
	19	3E-3386	3	WEDGE					
	20	102-8806	2	RECEPTACLE KIT					

H50546E 03

128-8969 HARNESS AS (2/3)

S/N 3MR 1-00787, 4MR 1-00227
Part of 116-0149-Page61

ELECTRICAL AND STARTING SYSTEM

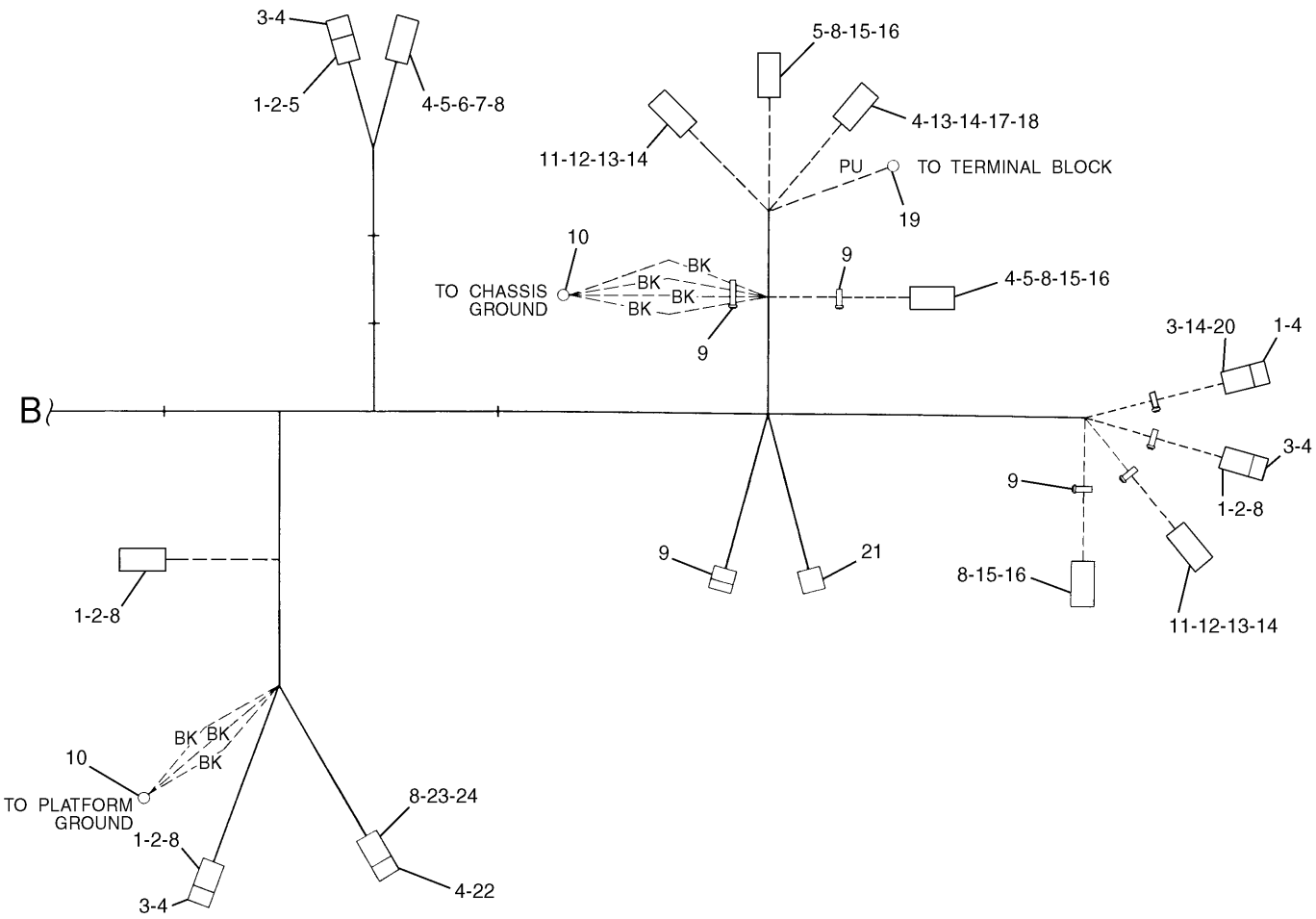

NOTE	No.	PART No.	QTY	PART NAME	NOTE	No.	PART No.	QTY	PART NAME
	1	155-2270	5	PLUG KIT		21	9X-0196	2	TERMINAL AS
	2	3E-3362	4	WEDGE		22	102-8804	1	RECEPTACLE KIT
	3	102-8802	4	RECEPTACLE KIT		23	102-8809	1	PLUG KIT
	4	8T-8737	16	PLUG		24	3E-3374	1	WEDGE
	5	9W-0844	9	SOCKET					
	6	102-8810	1	PLUG KIT					
	7	3E-3380	1	WEDGE					
	8	8T-8730	43	SOCKET					
	9	3S-2093	7	STRAP					
	10	3T-4696	2	TERMINAL					
	11	102-8801	2	RECEPTACLE KIT					
	12	3E-5180	2	WEDGE					
	13	9W-0852	9	PIN					
	14	8T-8729	21	PIN					
	15	102-8800	3	PLUG KIT					
	16	3E-5177	3	WEDGE					
	17	102-8805	1	RECEPTACLE KIT					
	18	3E-3383	1	WEDGE					
	19	2L-8050	1	TERMINAL					
	20	3E-3365	1	WEDGE					

H50547E 03

128-8969 HARNESS AS (3/3)

S/N 3MR 1-00787, 4MR 1-00227
Part of 116-0149-Page61

ELECTRICAL AND STARTING SYSTEM

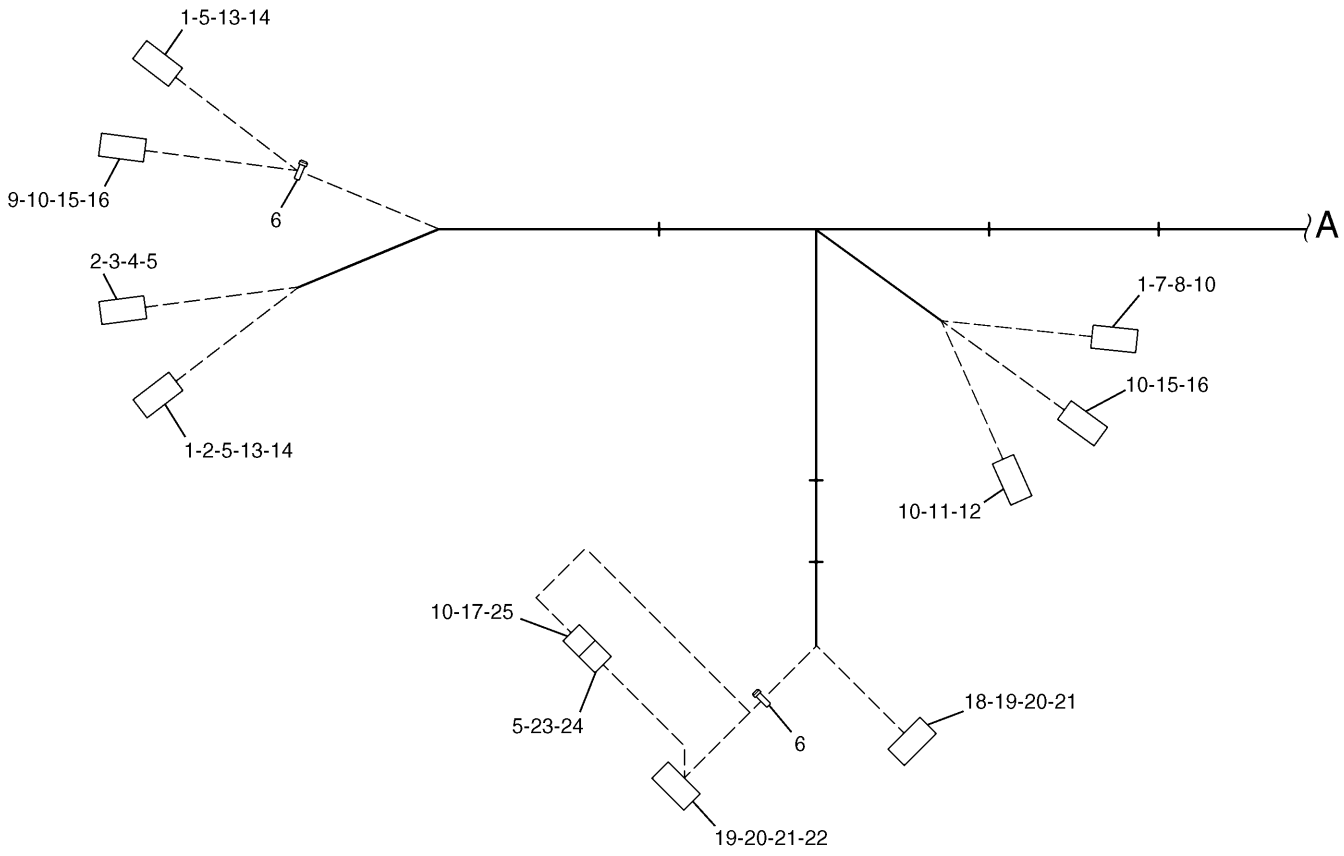

NOTE	No.	PART No.	QTY	PART NAME	NOTE	No.	PART No.	QTY	PART NAME
	1	8T-8737	3	PLUG		21	111-4765	33	PLUG
	2	9W-0844	3	SOCKET		22	111-4762	1	PLUG AS
	3	102-8810	1	PLUG KIT		23	102-8808	1	PLUG KIT
	4	3E-3380	1	WEDGE		24	3E-3368	1	WEDGE
	5	8T-8730	20	SOCKET		25	102-8803	1	RECEPTACLE KIT
	6	3S-2093	2	STRAP					
	7	102-8801	1	RECEPTACLE KIT					
	8	3E-5180	1	WEDGE					
	9	9W-0852	2	PIN					
	10	8T-8729	34	PIN					
	11	102-8805	1	RECEPTACLE KIT					
	12	3E-3383	1	WEDGE					
	13	102-8811	2	PLUG KIT					
	14	3E-3386	2	WEDGE					
	15	102-8806	2	RECEPTACLE KIT					
	16	3E-3389	2	WEDGE					
	17	3E-3371	1	WEDGE					
	18	111-4763	1	PLUG AS					
	19	111-4764	2	WEDGE					
	20	111-4766	47	SOCKET					

H57469E 04

128-8969 HARNESS AS (1/3)

S/N 3MR 00788-01083, 4MR 00228-00253

Part of 116-0149-Page61

ELECTRICAL AND STARTING SYSTEM

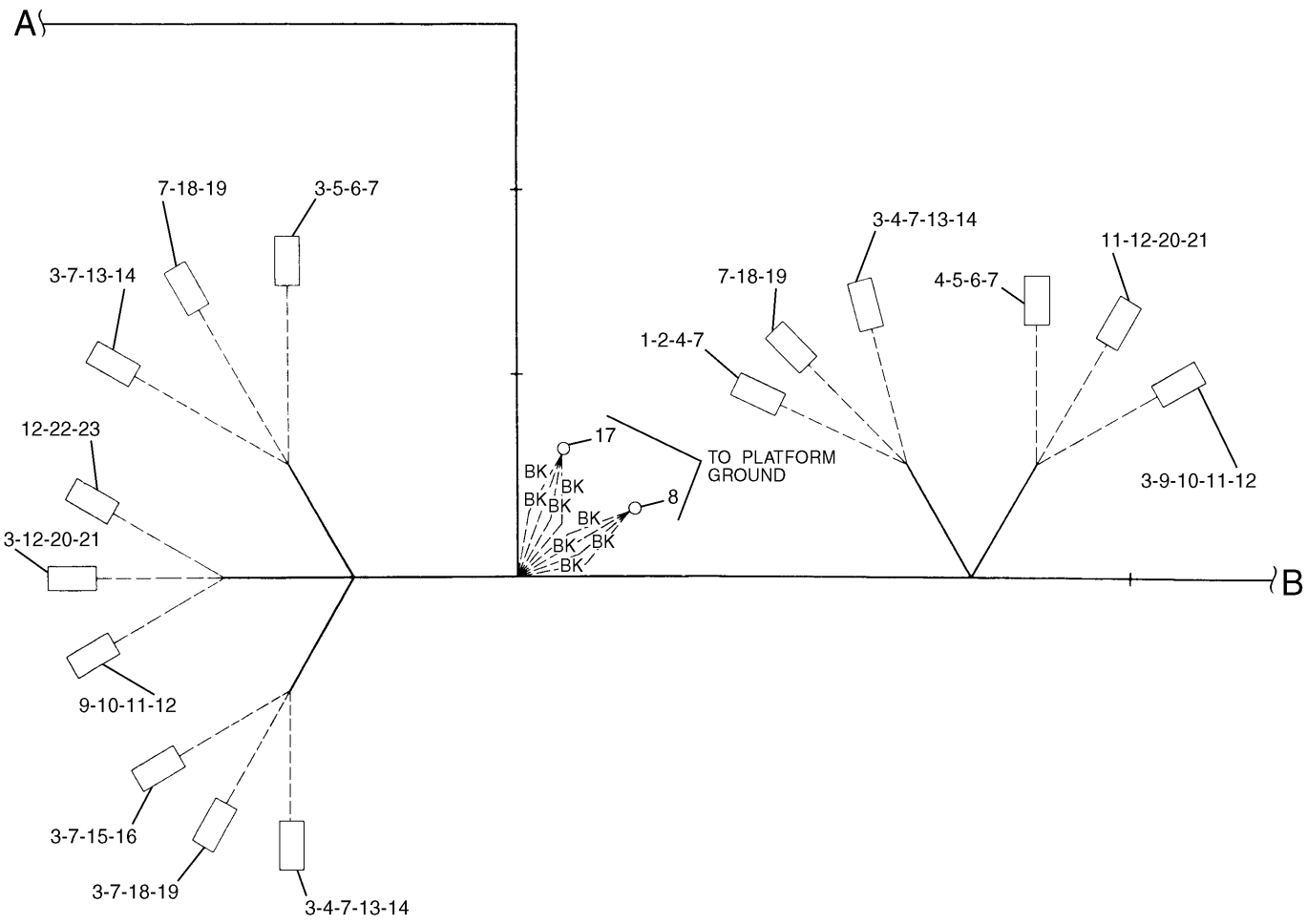

NOTE	No.	PART No.	QTY	PART NAME	NOTE	No.	PART No.	QTY	PART NAME
	1	155-2270	1	PLUG KIT		21	3E-3389	2	WEDGE
	2	3E-3362	1	WEDGE		22	102-8804	1	RECEPTACLE KIT
	3	8T-8737	8	PLUG		23	3E-3377	1	WEDGE
	4	9W-0844	17	SOCKET					
	5	102-8810	2	PLUG KIT					
	6	3E-3380	2	WEDGE					
	7	8T-8730	55	SOCKET					
	8	3T-4696	1	TERMINAL					
	9	102-8801	2	RECEPTACLE KIT					
	10	3E-5180	2	WEDGE					
	11	9W-0852	15	PIN					
	12	8T-8729	27	PIN					
	13	102-8800	3	PLUG KIT					
	14	3E-5177	3	WEDGE					
	15	102-8809	1	PLUG KIT					
	16	3E-3374	1	WEDGE					
	17	3T-4692	1	TERMINAL					
	18	102-8811	3	PLUG KIT					
	19	3E-3386	3	WEDGE					
	20	102-8806	2	RECEPTACLE KIT					

H57470E 04

128-8969 HARNESS AS (2/3)

S/N 3MR 00788-01083, 4MR 00228-00253
Part of 116-0149-Page61

ELECTRICAL AND STARTING SYSTEM

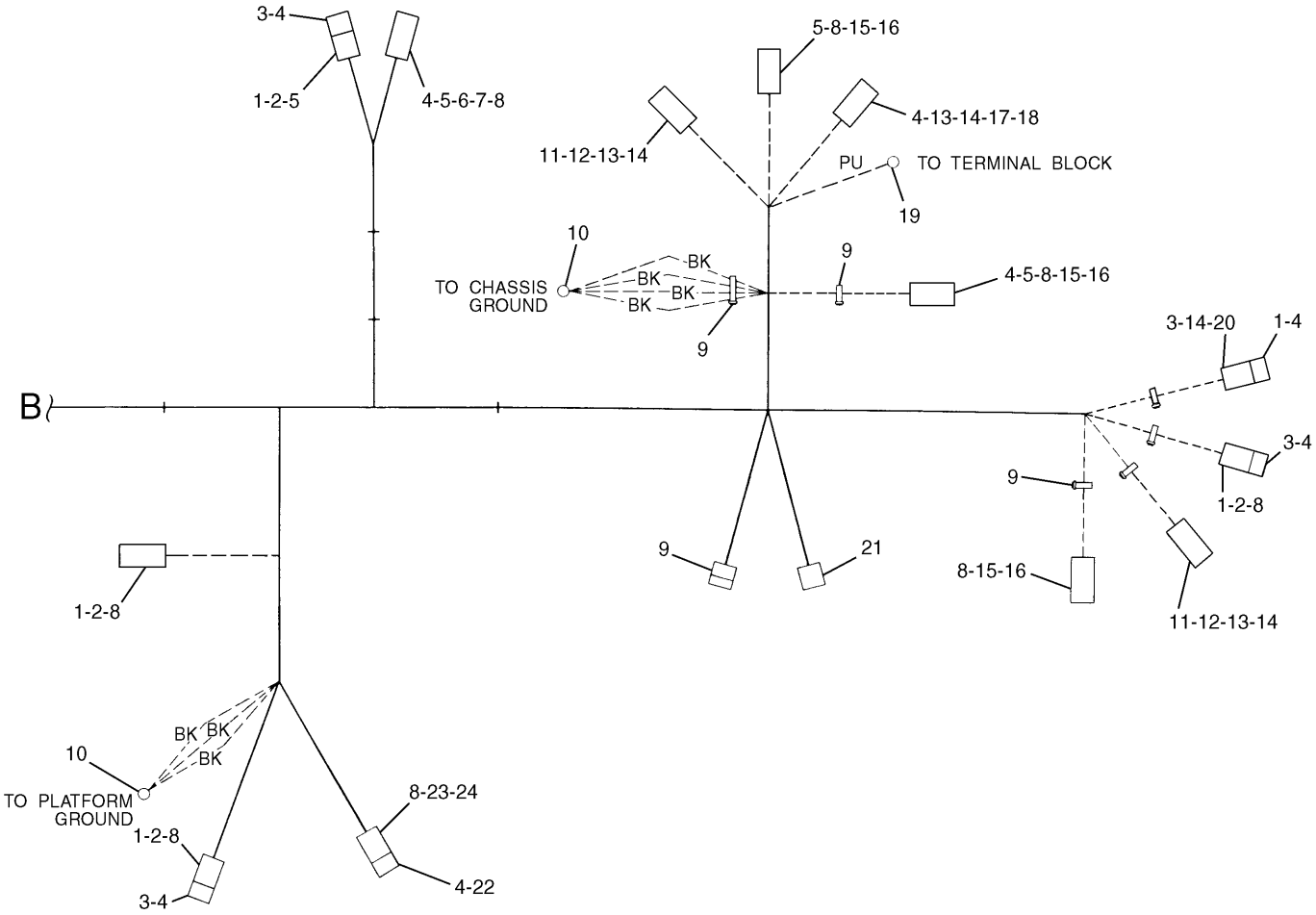

NOTE	No.	PART No.	QTY	PART NAME	NOTE	No.	PART No.	QTY	PART NAME
	1	155-2270	5	PLUG KIT		21	9X-0196	2	TERMINAL AS
	2	3E-3362	4	WEDGE		22	102-8804	1	RECEPTACLE KIT
	3	102-8802	4	RECEPTACLE KIT		23	102-8809	1	PLUG KIT
	4	8T-8737	16	PLUG		24	3E-3374	1	WEDGE
	5	9W-0844	9	SOCKET					
	6	102-8810	1	PLUG KIT					
	7	3E-3380	1	WEDGE					
	8	8T-8730	43	SOCKET					
	9	3S-2093	7	STRAP					
	10	3T-4696	2	TERMINAL					
	11	102-8801	2	RECEPTACLE KIT					
	12	3E-5180	2	WEDGE					
	13	9W-0852	9	PIN					
	14	8T-8729	21	PIN					
	15	102-8800	3	PLUG KIT					
	16	3E-5177	3	WEDGE					
	17	102-8805	1	RECEPTACLE KIT					
	18	3E-3383	1	WEDGE					
	19	2L-8050	1	TERMINAL					
	20	3E-3365	1	WEDGE					

H57471E 04

128-8969 HARNESS AS (3/3)

S/N 3MR 00788-01083, 4MR 00228-00253

Part of 116-0149-Page61

ELECTRICAL AND STARTING SYSTEM

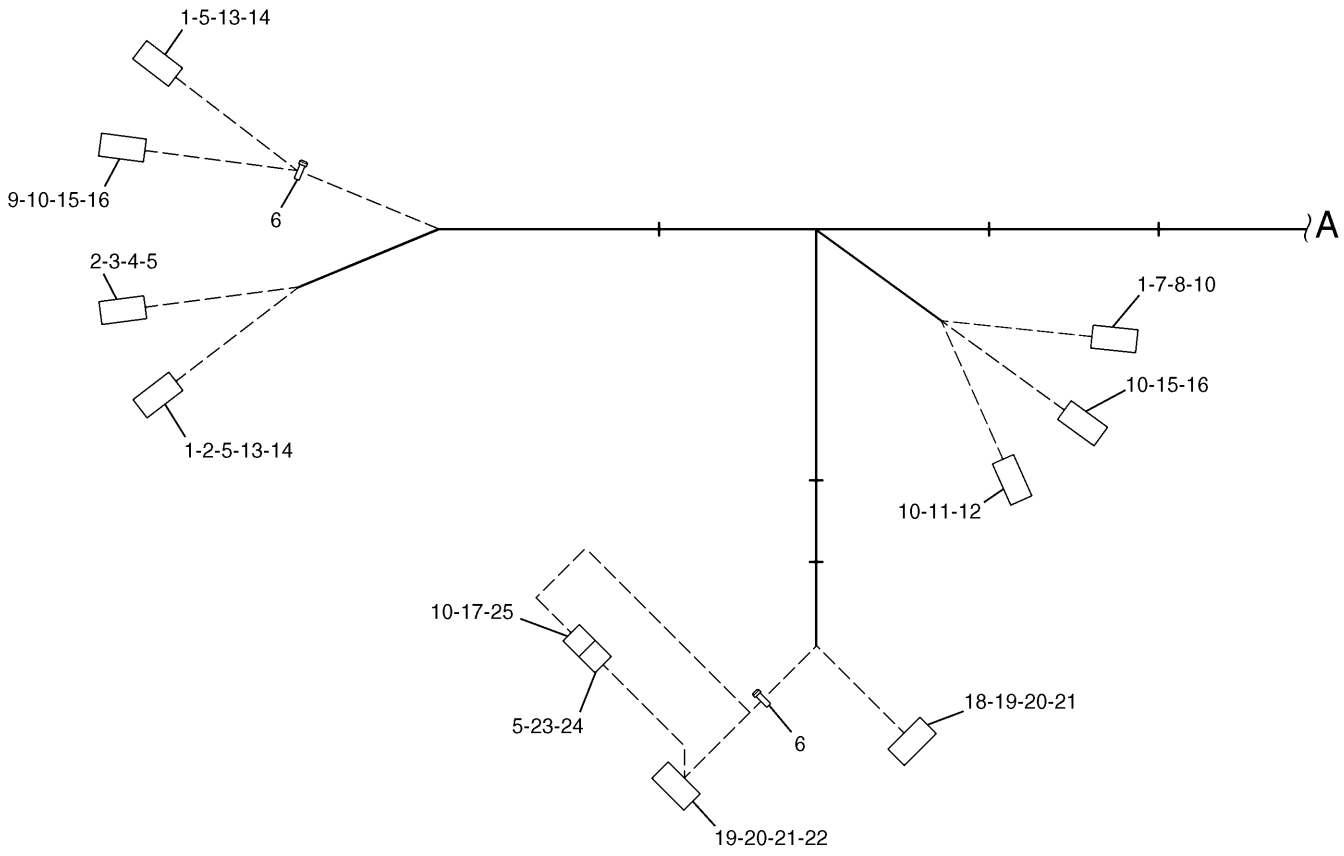

NOTE	No.	PART No.	QTY	PART NAME	NOTE	No.	PART No.	QTY	PART NAME
	1	8T-8737	3	PLUG		21	111-4765	33	PLUG
	2	9W-0844	3	SOCKET		22	111-4762	1	PLUG AS
	3	102-8810	1	PLUG KIT		23	102-8808	1	PLUG KIT
	4	3E-3380	1	WEDGE		24	3E-3368	1	WEDGE
	5	8T-8730	20	SOCKET		25	102-8803	1	RECEPTACLE KIT
	6	3S-2093	2	STRAP					
	7	102-8801	1	RECEPTACLE KIT					
	8	3E-5180	1	WEDGE					
	9	9W-0852	2	PIN					
	10	8T-8729	34	PIN					
	11	102-8805	1	RECEPTACLE KIT					
	12	3E-3383	1	WEDGE					
	13	102-8811	2	PLUG KIT					
	14	3E-3386	2	WEDGE					
	15	102-8806	2	RECEPTACLE KIT					
	16	3E-3389	2	WEDGE					
	17	3E-3371	1	WEDGE					
	18	111-4763	1	PLUG AS					
	19	111-4764	2	WEDGE					
	20	111-4766	47	SOCKET					

H52930E 00

136-4056 HARNESS AS (1/3)

S/N 3MR 01084-04978, 4MR 00254-00715

Part of 116-0149-Page63.02

ELECTRICAL AND STARTING SYSTEM

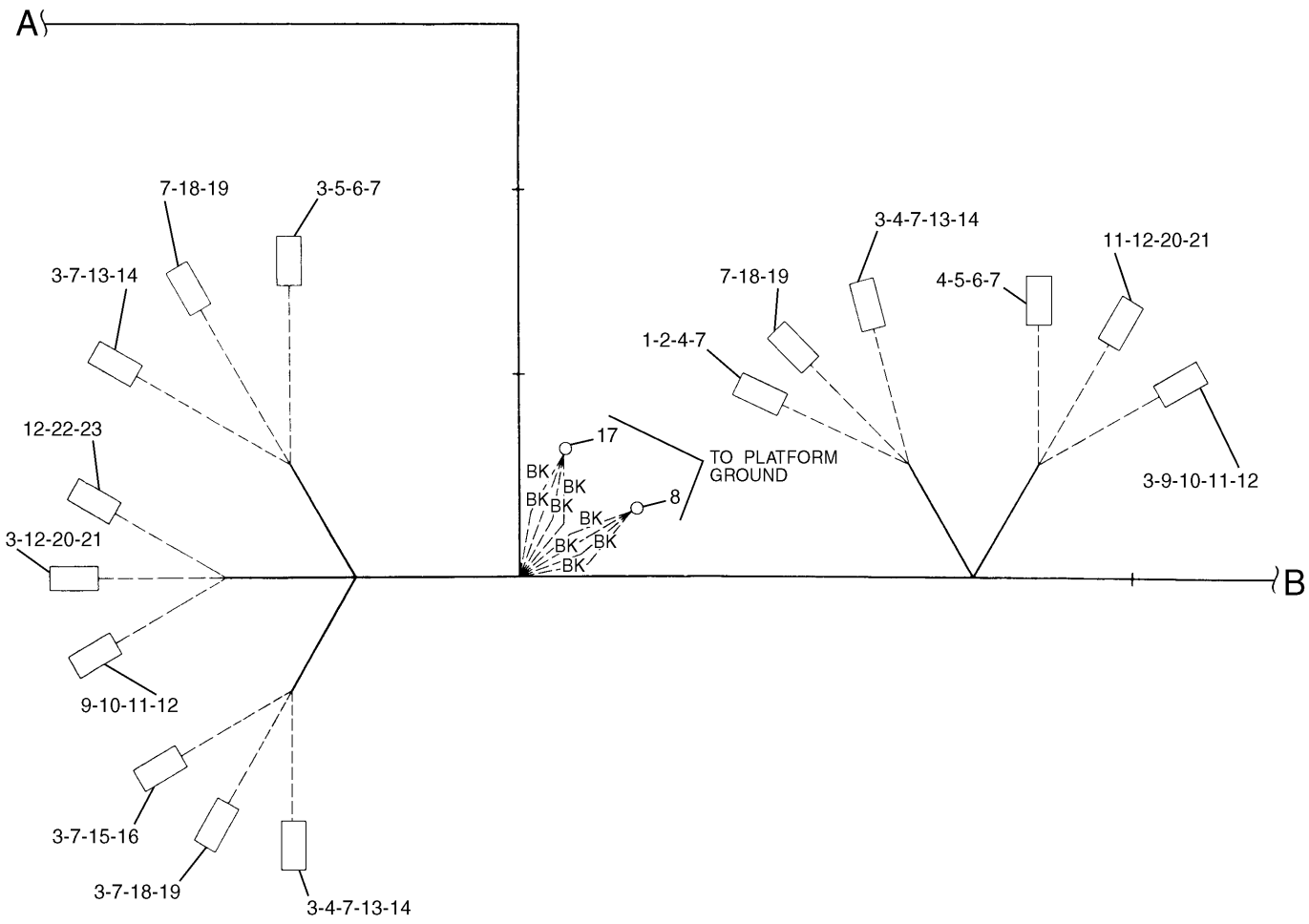

NOTE	No.	PART No.	QTY	PART NAME	NOTE	No.	PART No.	QTY	PART NAME
	1	155-2270	1	PLUG KIT		21	3E-3389	2	WEDGE
	2	3E-3362	1	WEDGE		22	102-8804	1	RECEPTACLE KIT
	3	8T-8737	10	PLUG		23	3E-3377	1	WEDGE
	4	9W-0844	15	SOCKET					
	5	102-8810	2	PLUG KIT					
	6	3E-3380	2	WEDGE					
	7	8T-8730	55	SOCKET					
	8	3T-4696	1	TERMINAL					
	9	102-8801	2	RECEPTACLE KIT					
	10	3E-5180	2	WEDGE					
	11	9W-0852	15	PIN					
	12	8T-8729	27	PIN					
	13	102-8800	3	PLUG KIT					
	14	3E-5177	3	WEDGE					
	15	102-8809	1	PLUG KIT					
	16	3E-3374	1	WEDGE					
	17	3T-4692	1	TERMINAL					
	18	102-8811	3	PLUG KIT					
	19	3E-3386	3	WEDGE					
	20	102-8806	2	RECEPTACLE KIT					

H52931E 00

136-4056 HARNESS AS (2/3)

S/N 3MR 01084-04978, 4MR 00254-00715

Part of 116-0149-Page63.02

ELECTRICAL AND STARTING SYSTEM

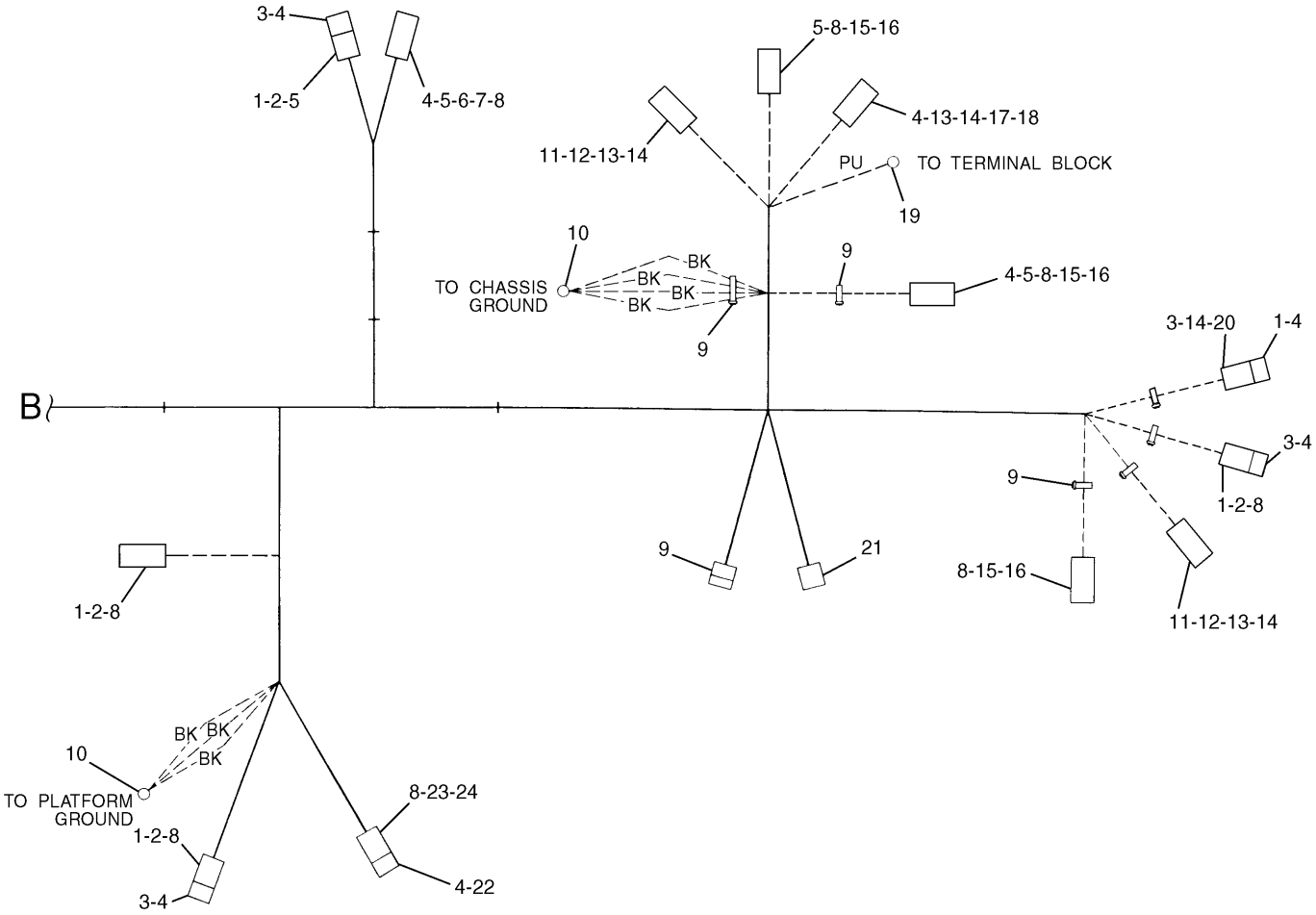

NOTE	No.	PART No.	QTY	PART NAME	NOTE	No.	PART No.	QTY	PART NAME
	1	155-2270	5	PLUG KIT		21	9X-0196	2	TERMINAL AS
	2	3E-3362	4	WEDGE		22	102-8804	1	RECEPTACLE KIT
	3	102-8802	4	RECEPTACLE KIT		23	102-8809	1	PLUG KIT
	4	8T-8737	16	PLUG		24	3E-3374	1	WEDGE
	5	9W-0844	9	SOCKET					
	6	102-8810	1	PLUG KIT					
	7	3E-3380	1	WEDGE					
	8	8T-8730	43	SOCKET					
	9	3S-2093	7	STRAP					
	10	3T-4696	2	TERMINAL					
	11	102-8801	2	RECEPTACLE KIT					
	12	3E-5180	2	WEDGE					
	13	9W-0852	9	PIN					
	14	8T-8729	21	PIN					
	15	102-8800	3	PLUG KIT					
	16	3E-5177	3	WEDGE					
	17	102-8805	1	RECEPTACLE KIT					
	18	3E-3383	1	WEDGE					
	19	2L-8050	1	TERMINAL					
	20	3E-3365	1	WEDGE					

H52932E 00

136-4056 HARNESS AS (3/3)

S/N 3MR 01084-04978, 4MR 00254-00715

Part of 116-0149-Page63.02

ELECTRICAL AND STARTING SYSTEM

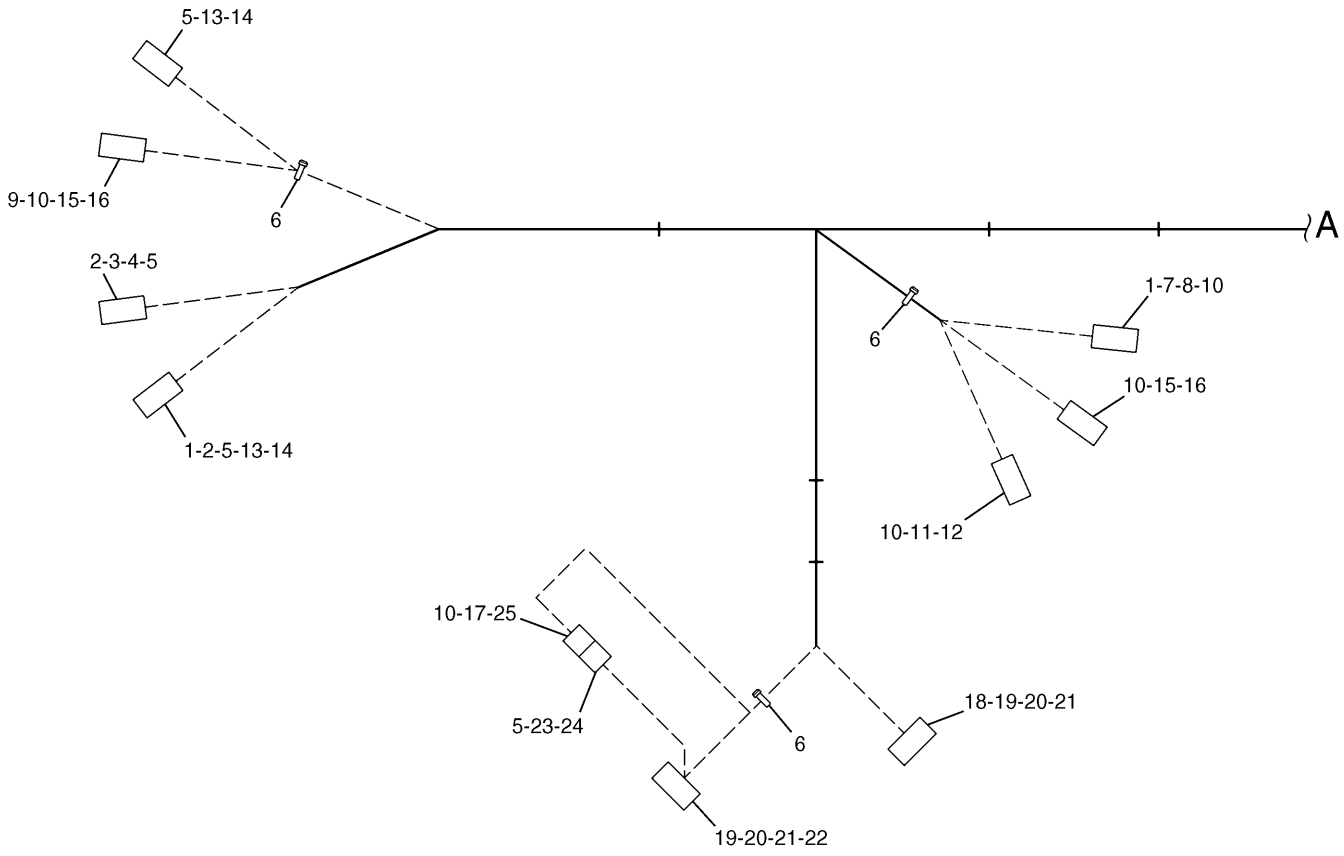

NOTE	No.	PART No.	QTY	PART NAME	NOTE	No.	PART No.	QTY	PART NAME
	1	8T-8737	2	PLUG		20	111-4766	47	SOCKET
	2	9W-0844	3	SOCKET		21	111-4765	33	PLUG
	3	155-2274	1	PLUG KIT		22	111-4762	1	PLUG AS
		102-8814	1	SEAL		23	102-8808	1	PLUG KIT
	4	3E-3380	1	WEDGE		24	3E-3368	1	WEDGE
	5	186-3736	21	SOCKET		25	102-8803	1	RECEPTACLE KIT
	6	3S-2093	3	STRAP					
	7	102-8801	1	RECEPTACLE KIT					
	8	3E-5180	1	WEDGE					
	9	9W-0852	2	PIN					
	10	8T-8729	34	PIN					
	11	102-8805	1	RECEPTACLE KIT					
	12	3E-3383	1	WEDGE					
	13	102-8811	2	PLUG KIT					
	14	3E-3386	2	WEDGE					
	15	102-8806	2	RECEPTACLE KIT					
	16	3E-3389	2	WEDGE					
	17	3E-3371	1	WEDGE					
	18	111-4763	1	PLUG AS					
	19	111-4764	2	WEDGE					

H65238E 02

150-6998 HARNESS AS (1/3)

S/N 3MR 04979-Up, 4MR 00716-Up
Part of 116-0149-Page63.10

ELECTRICAL AND STARTING SYSTEM

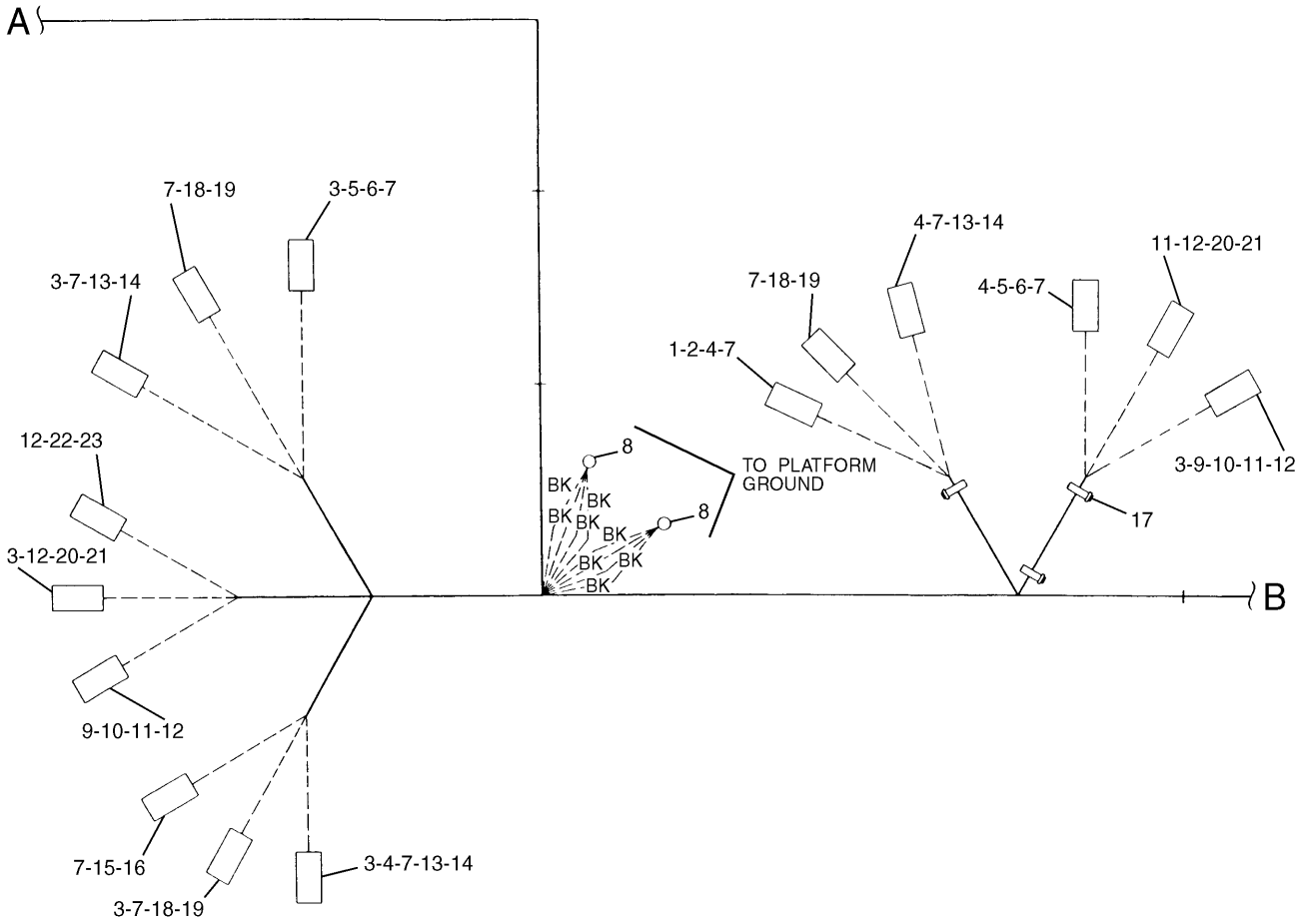

NOTE	No.	PART No.	QTY	PART NAME	NOTE	No.	PART No.	QTY	PART NAME
	1	155-2270	1	PLUG KIT		17	3S-2093	3	STRAP
		102-8812	1	SEAL		18	102-8811	3	PLUG KIT
	2	3E-3362	1	WEDGE		19	3E-3386	3	WEDGE
	3	8T-8737	7	PLUG		20	102-8806	2	RECEPTACLE KIT
	4	9W-0844	17	SOCKET		21	3E-3389	2	WEDGE
	5	155-2274	2	PLUG KIT		22	102-8804	1	RECEPTACLE KIT
		102-8815	2	SEAL		23	3E-3377	1	WEDGE
	6	3E-3380	2	WEDGE					
	7	3E-3391	56	SOCKET					
	8	3T-4696	4	TERMINAL					
	9	102-8801	2	RECEPTACLE KIT					
	10	3E-5180	2	WEDGE					
	11	9W-0852	15	PIN					
	12	186-3735	27	PIN					
	13	155-2255	3	PLUG KIT					
		102-8817	3	SEAL					
	14	3E-5177	3	WEDGE					
	15	155-2271	1	PLUG KIT					
		102-8814	1	SEAL					
	16	3E-3374	1	WEDGE					

H65239E 02

150-6998 HARNESS AS (2/3)

S/N 3MR 04979-Up, 4MR 00716-Up

Part of 116-0149-Page63.10

ELECTRICAL AND STARTING SYSTEM

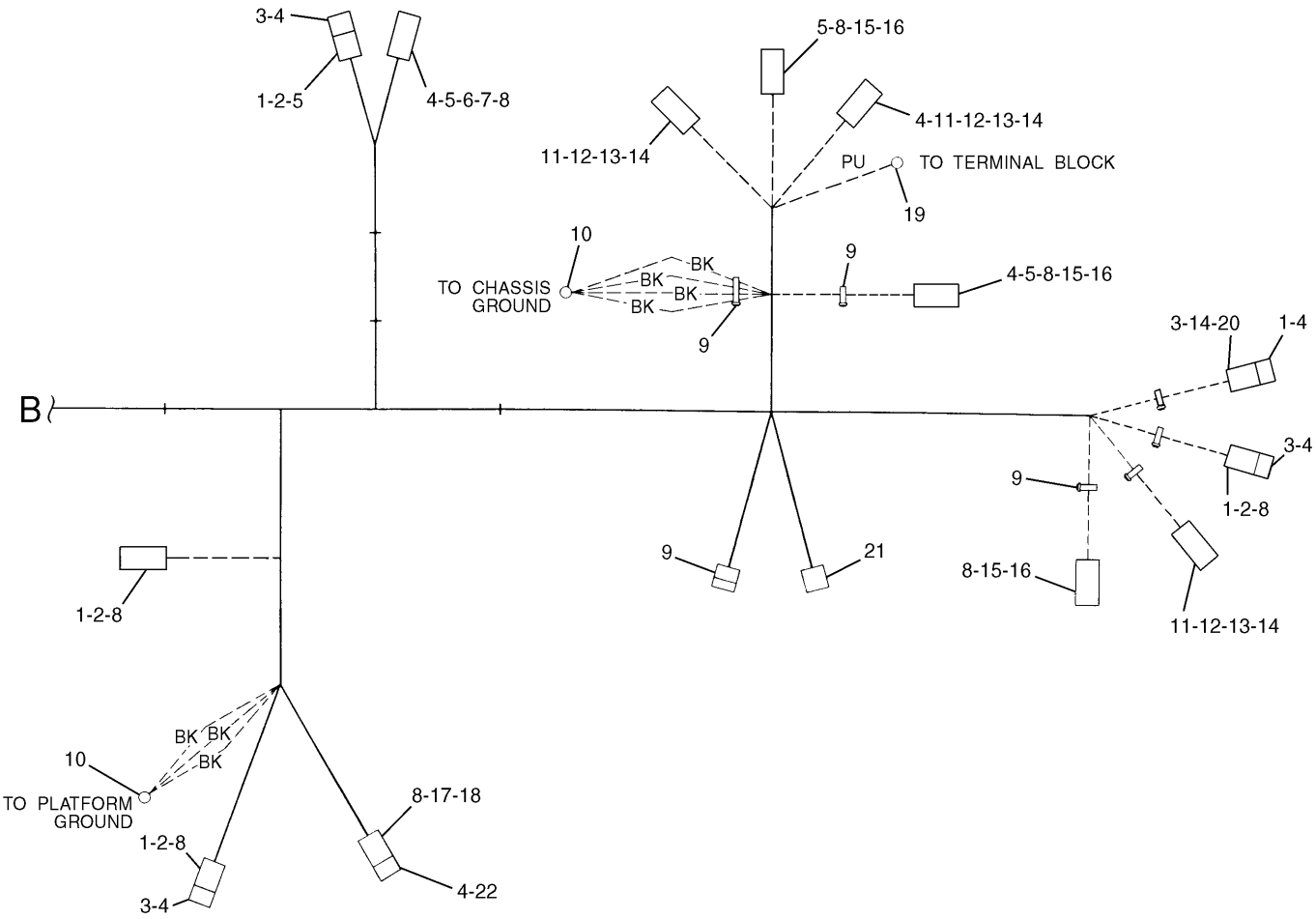

NOTE	No.	PART No.	QTY	PART NAME	NOTE	No.	PART No.	QTY	PART NAME
	1	155-2270	5	PLUG KIT		17	155-2271	1	PLUG KIT
		102-8812	5	SEAL			102-8814	1	SEAL
	2	3E-3362	4	WEDGE		18	3E-3374	1	WEDGE
	3	102-8802	4	RECEPTACLE KIT		19	2L-8050	1	TERMINAL
	4	8T-8737	20	PLUG		20	3E-3365	1	WEDGE
	5	9W-0844	11	SOCKET		21	9X-0196	2	TERMINAL AS
	6	155-2274	1	PLUG KIT		22	102-8804	1	RECEPTACLE KIT
		102-8815	1	SEAL					
	7	3E-3380	1	WEDGE					
	8	186-3736	42	SOCKET					
	9	3S-2093	7	STRAP					
	10	3T-4696	2	TERMINAL					
	11	102-8801	3	RECEPTACLE KIT					
	12	3E-5180	3	WEDGE					
	13	9W-0852	10	PIN					
	14	186-3735	21	PIN					
	15	155-2255	3	PLUG KIT					
		102-8817	3	SEAL					
	16	3E-5177	3	WEDGE					

H65240E 02

150-6998 HARNESS AS (3/3)

S/N 3MR 04979-Up, 4MR 00716-Up

Part of 116-0149-Page63.10

MEMORANDA

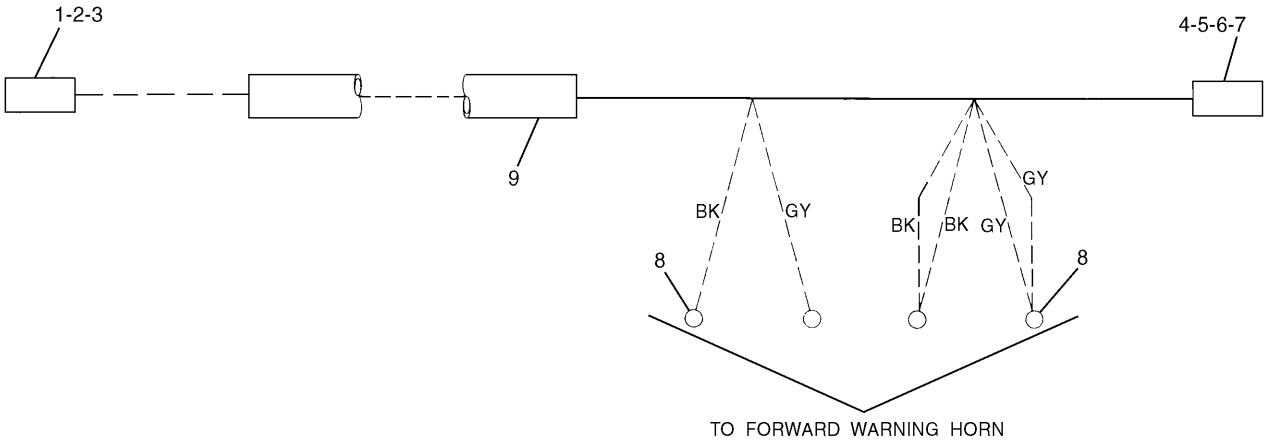

NOTE	No.	PART No.	QTY	PART NAME	NOTE	No.	PART No.	QTY	PART NAME
	1	9W-0844	2	SOCKET					
	2	155-2270	1	PLUG KIT					
	3	3E-3362	1	WEDGE					
	4	102-8804	1	RECEPTACLE KIT					
	5	3E-3377	1	WEDGE					
	6	8T-8729	2	PIN					
	7	9W-0852	2	PIN					
	8	2L-8075	4	TERMINAL					
E	9	103-2529		HOSE…(80cm)					

E—ORDER BY THE CENTIMETER

H52934E 00

125-4873 HARNESS AS
Part of 116-0149-Page61

ELECTRICAL AND STARTING SYSTEM



NOTE	No.	PART No.	QTY	PART NAME
	1	8N-1725	1	COVER
	2	3S-6049	1	TERMINAL AS
		1M-6119	1	BOLT
		1M-6120	1	NUT
	3	7N-5274	1	COVER
	4	3S-6050	1	TERMINAL AS
		1M-6119	1	BOLT
		1M-6120	1	NUT

H50550E 01

116-0080 CABLE AS

Part of 116-0149-Page61,116-0153-Page65,163-6727-Page65.02

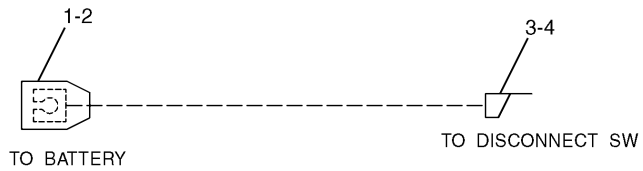

NOTE	No.	PART No.	QTY	PART NAME
	1	3S-6050	1	TERMINAL AS
		1M-6119	1	BOLT
		1M-6120	1	NUT
	2	7N-5274	1	COVER
	3	1S-7252	1	TERMINAL
	4	9G-8909	1	COVER

H50552E 00

125-4727 CABLE AS

Part of 116-0149-Page61

ELECTRICAL AND STARTING SYSTEM



NOTE	No.	PART No.	QTY	PART NAME
	1	8N-1725	1	COVER
	2	3S-6049	1	TERMINAL AS
		1M-6119	1	BOLT
		1M-6120	1	NUT
	3	1S-7252	1	TERMINAL
	4	8N-0869	1	COVER

H82009E 03

116-0228 CABLE AS

Part of 116-0149-Page63



NOTE	No.	PART No.	QTY	PART NAME
	1	8N-1725	1	COVER
	2	3S-6049	1	TERMINAL AS
		1M-6119	1	BOLT
		1M-6120	1	NUT
	3	1S-7252	1	TERMINAL

H52936E 00

128-8871 CABLE AS

Part of 116-0153-Page65,163-6727-Page65.02
An Attachment

ELECTRICAL AND STARTING SYSTEM

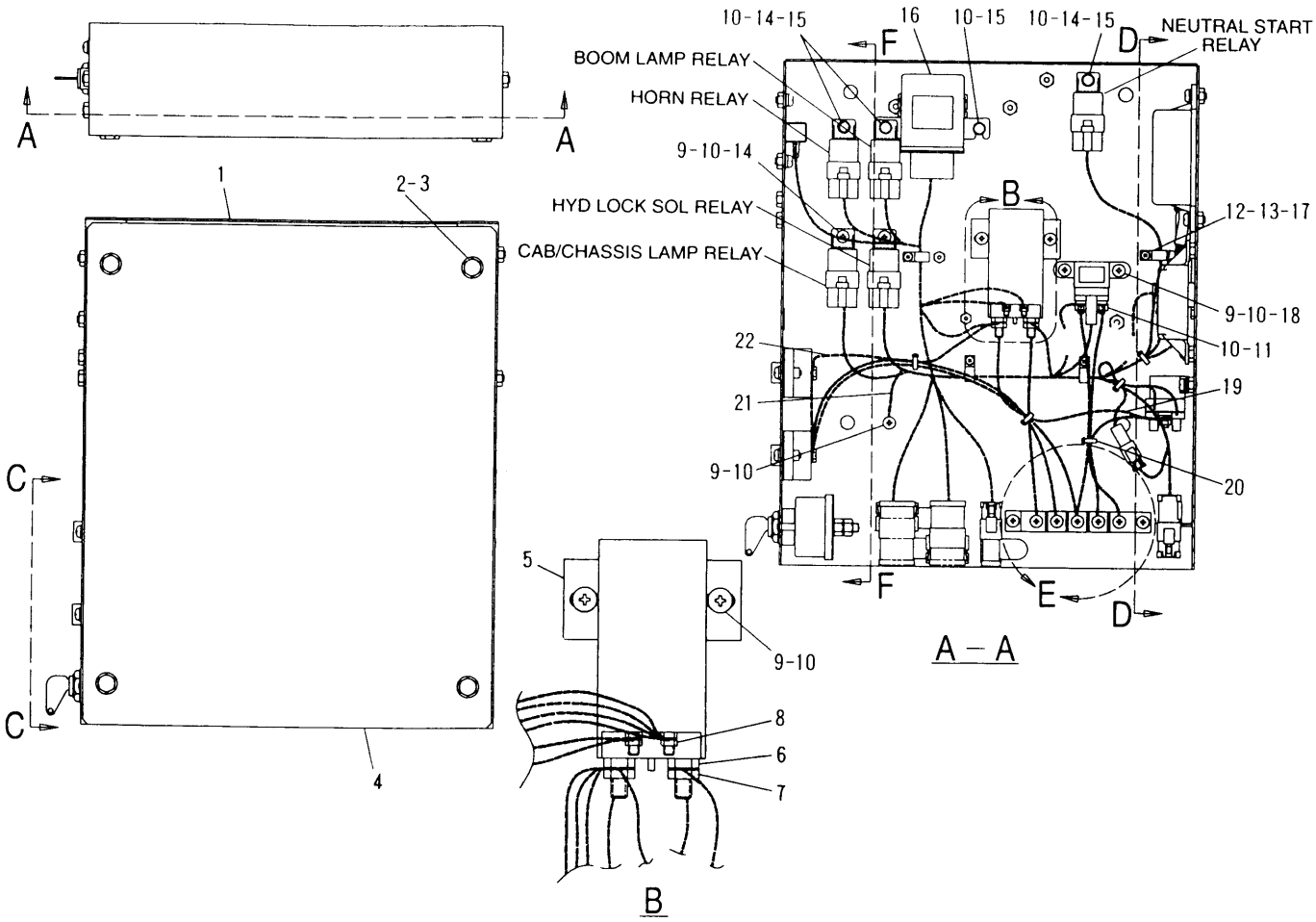

NOTE	No.	PART No.	QTY	PART NAME	NOTE	No.	PART No.	QTY	PART NAME
	1	132-1900	1	BRACKET AS		19	128-8938	1	WIRE AS
	2	8T-4191	4	BOLT (L=16mm)			2L-8051	1	TERMINAL
	3	8T-4121	4	WASHER			2L-8058	1	TERMINAL
	4	111-4874	1	COVER		20	3S-2093	5	STRAP
	5	3T-0376	1	SWITCH AS (MAIN RELAY)	Y	21	132-1886	1	HARNESS AS
	6	4F-2294	2	NUT		22	128-8937	1	WIRE AS
	7	6V-8186	2	NUT			2L-8050	1	TERMINAL
	8	6V-8378	2	NUT			2L-8051	1	TERMINAL
	9	8T-6411	7	SCREW					
	10	9X-8256	13	WASHER					
	11	5C-2890	2	NUT					
	12	8C-7581	4	SCREW					
	13	096-6166	4	WASHER					
	14	111-4871	5	RELAY					
	15	7X-2619	4	BOLT (L=10mm)					
	16	104-3204	1	CONTROLLER					
	17	105-9981	4	CLIP					
	18	9X-8124	1	SWITCH AS (HEATER RELAY)					
		8T-4134	2	NUT					

Y—SEE SEPARATE ILLUSTRATION

H57472E 03

116-0151 PANEL GP-CIRCUIT BREAKER (1/2)

S/N 3MR 1-00787, 4MR 1-00227
Part of 116-0149-Page61
132-1886-Page78

ELECTRICAL AND STARTING SYSTEM

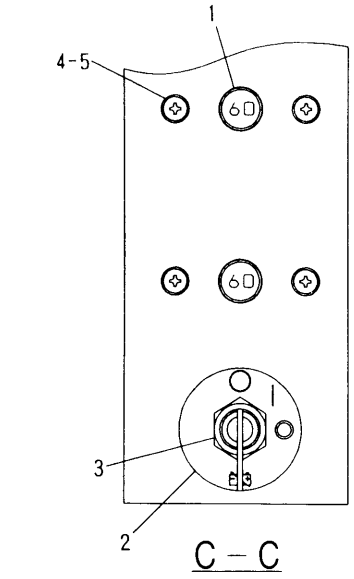

C – C

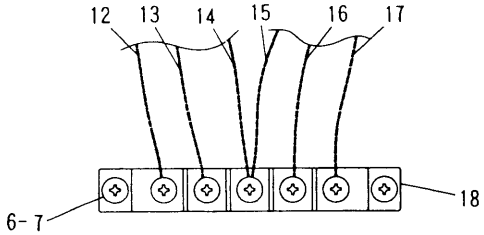

E

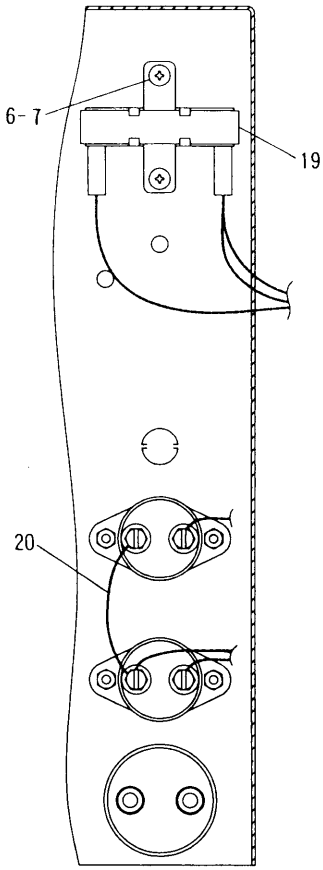

F – F

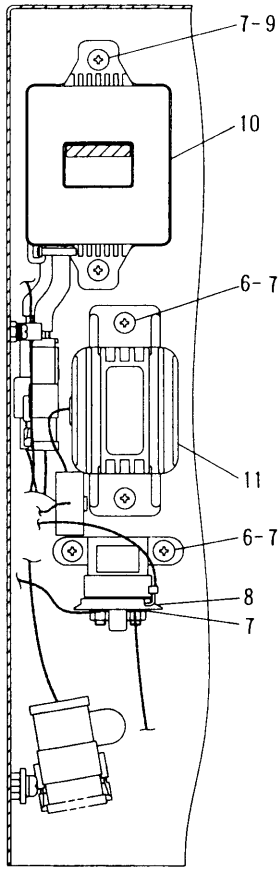

D – D

NOTE	No.	PART No.	QTY	PART NAME	NOTE	No.	PART No.	QTY	PART NAME
	1	9S-0174	2	BREAKER AS		15	116-0233	1	CABLE AS
		1H-3244	2	LOCKWASHER			9G-4343	2	TERMINAL
		6V-8365	2	SCREW		16	116-0234	1	CABLE AS
	2	3E-8320	1	PLATE (INSTRUCTION)			9G-4343	2	TERMINAL
Y	3	7N-0718	1	SWITCH AS (DISCONNECT)		17	111-4829	1	WIRE AS
	4	6V-5645	4	SCREW			2L-8050	1	TERMINAL
	5	8T-0328	4	WASHER			2L-8058	1	TERMINAL
	6	8T-6411	13	SCREW		18	121-1023	1	BLOCK
	7	9X-8256	17	WASHER		19	102-8016	1	RESISTOR AS
Y	8	125-1302	1	SWITCH AS (START RELAY)		20	128-8936	1	WIRE AS
	9	095-0742	2	SCREW			2L-8050	2	TERMINAL
Y	10	111-4870	1	TIMER AS					
	11	094-2080	1	RELAY					
	12	111-4826	1	WIRE AS					
		2L-8050	1	TERMINAL					
		2L-8051	1	TERMINAL					
	13	111-4831	1	WIRE AS					
		2L-8050	2	TERMINAL					
	14	111-4830	1	WIRE AS					
		2L-8050	2	TERMINAL					

Y—SEE SEPARATE ILLUSTRATION

H57473E 03

116-0151 PANEL GP-CIRCUIT BREAKER (2/2)

S/N 3MR 1-00787, 4MR 1-00227
Part of 116-0149-Page61
111-4870-Page78.06,7N-0718-Page79,125-1302-Page91

ELECTRICAL AND STARTING SYSTEM

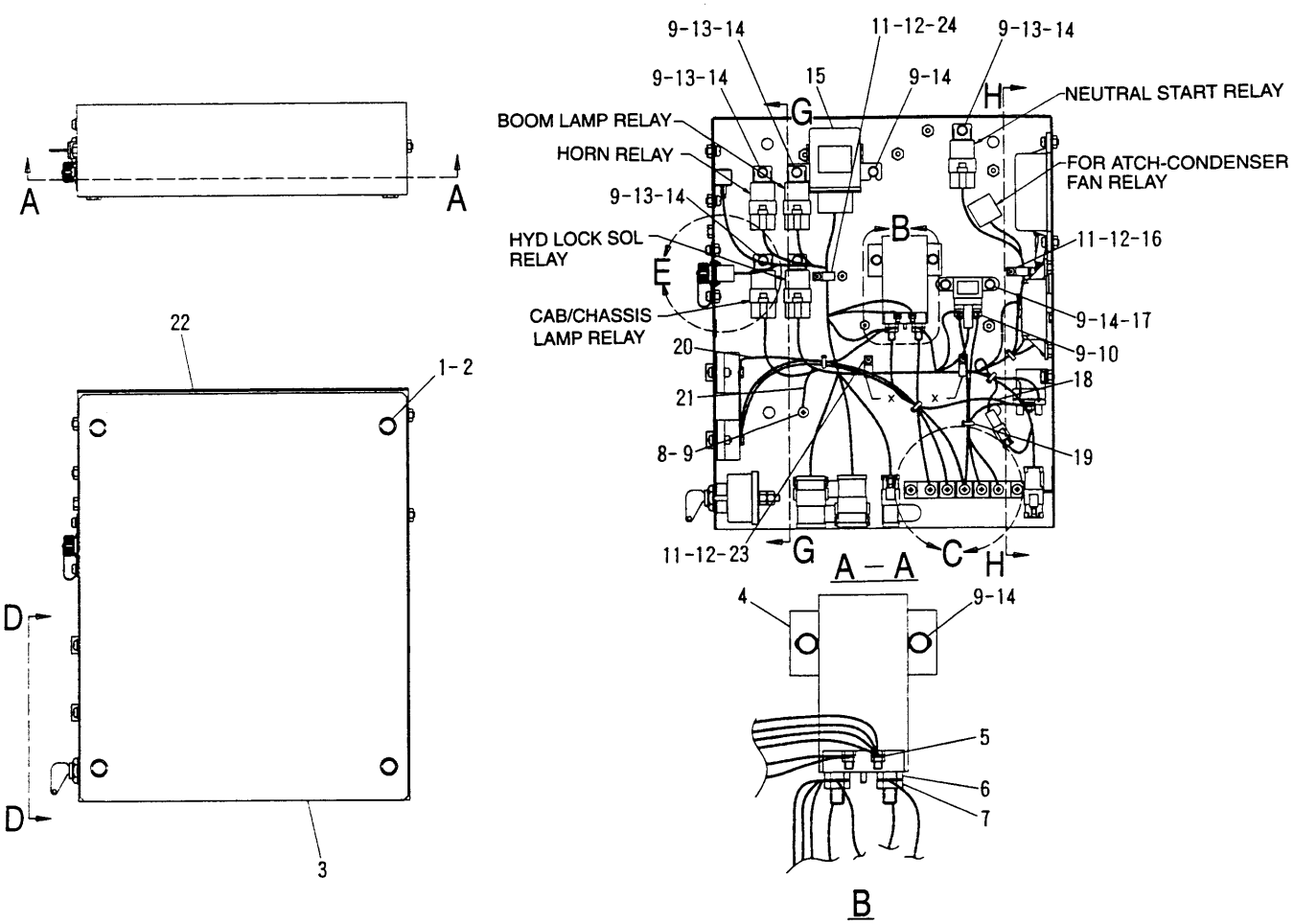

NOTE	No.	PART No.	QTY	PART NAME	NOTE	No.	PART No.	QTY	PART NAME
	1	8T-4191	4	BOLT (L=16mm)		18	128-8938	1	WIRE AS
	2	8T-4121	4	WASHER			2L-8050	1	TERMINAL
	3	111-4874	1	COVER			2L-8051	1	TERMINAL
	4	3T-0376	1	SWITCH AS (MAIN RELAY)		19	3S-2093	5	STRAP
	5	6V-8378	2	NUT		20	128-8937	1	WIRE AS
	6	6V-8186	2	NUT			2L-8050	1	TERMINAL
	7	4F-2294	2	NUT			2L-8051	1	TERMINAL
	8	8T-6411	1	SCREW	Y	21	132-1901	1	HARNESS AS
	9	9X-8256	13	WASHER		22	132-1902	1	BRACKET AS
	10	5C-2890	2	NUT		23	105-9982	2	CLIP
	11	8C-7581	4	SCREW		24	105-9983	1	CLIP
	12	096-6166	4	WASHER					
	13	111-4871	5	RELAY					
	14	7X-2619	10	BOLT (L=10mm)					
	15	104-3204	1	CONTROLLER					
	16	105-9981	1	CLIP					
	17	9X-8124	1	SWITCH AS (HEATER RELAY)					
		8T-4134	2	NUT					

Y—SEE SEPARATE ILLUSTRATION

H51164E 04

116-0151 PANEL GP-CIRCUIT BREAKER (1/2)

S/N 3MR 00788-01083, 4MR 00228-00253
Part of 116-0149-Page61
132-1901-Page78.01

ELECTRICAL AND STARTING SYSTEM

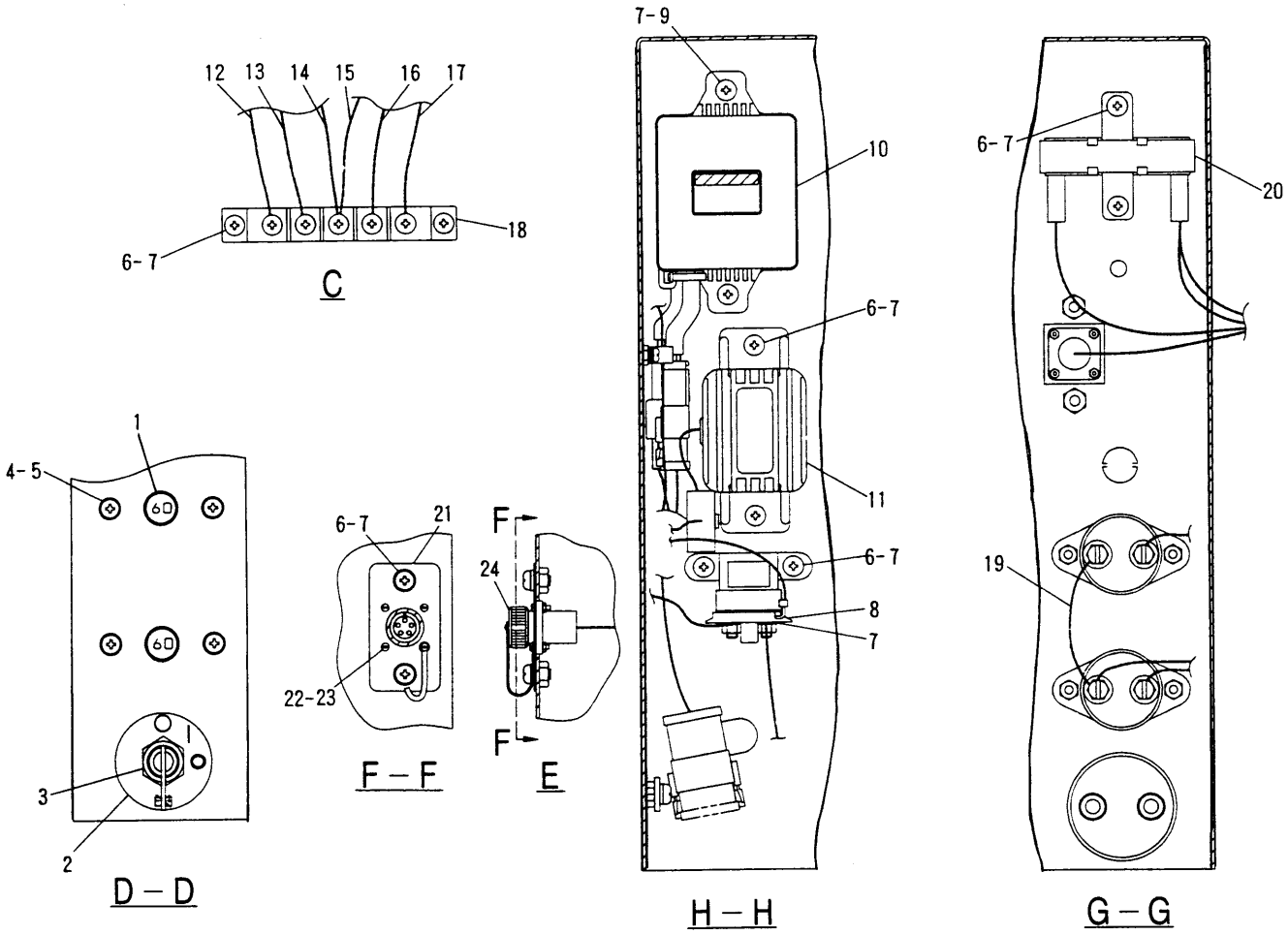

NOTE	No.	PART No.	QTY	PART NAME	NOTE	No.	PART No.	QTY	PART NAME
	1	9S-0174	2	BREAKER AS		15	116-0233	1	CABLE AS
		1H-3244	2	LOCKWASHER			9G-4343	2	TERMINAL
		6V-8365	2	SCREW		16	116-0234	1	CABLE AS
	2	3E-8320	1	PLATE (INSTRUCTION)			9G-4343	2	TERMINAL
Y	3	7N-0718	1	SWITCH AS (DISCONNECT)		17	111-4829	1	WIRE AS
	4	6V-5645	4	SCREW			2L-8050	2	TERMINAL
	5	8T-0328	4	WASHER		18	121-1023	1	BLOCK
	6	8T-6411	15	SCREW		19	128-8936	1	WIRE AS
	7	9X-8256	19	WASHER			2L-8050	2	TERMINAL
Y	8	125-1302	1	SWITCH AS (START RELAY)		20	102-8016	1	RESISTOR AS
	9	095-0742	2	SCREW		21	132-1863	1	STRIP
Y	10	111-4870	1	TIMER AS		22	6V-9326	4	SCREW
	11	094-2080	1	RELAY		23	6V-8950	4	NUT
	12	111-4826	1	WIRE AS		24	3E-5165	1	CAP AS
		2L-8050	1	TERMINAL					
		2L-8051	1	TERMINAL					
	13	111-4831	1	WIRE AS					
		2L-8050	2	TERMINAL					
	14	111-4830	1	WIRE AS					
		2L-8050	2	TERMINAL					

Y—SEE SEPARATE ILLUSTRATION

H51165E 04

116-0151 PANEL GP-CIRCUIT BREAKER (2/2)

S/N 3MR 00788-01083, 4MR 00228-00253
Part of 116-0149-Page61
111-4870-Page78.06,7N-0718-Page79,125-1302-Page91

ELECTRICAL AND STARTING SYSTEM

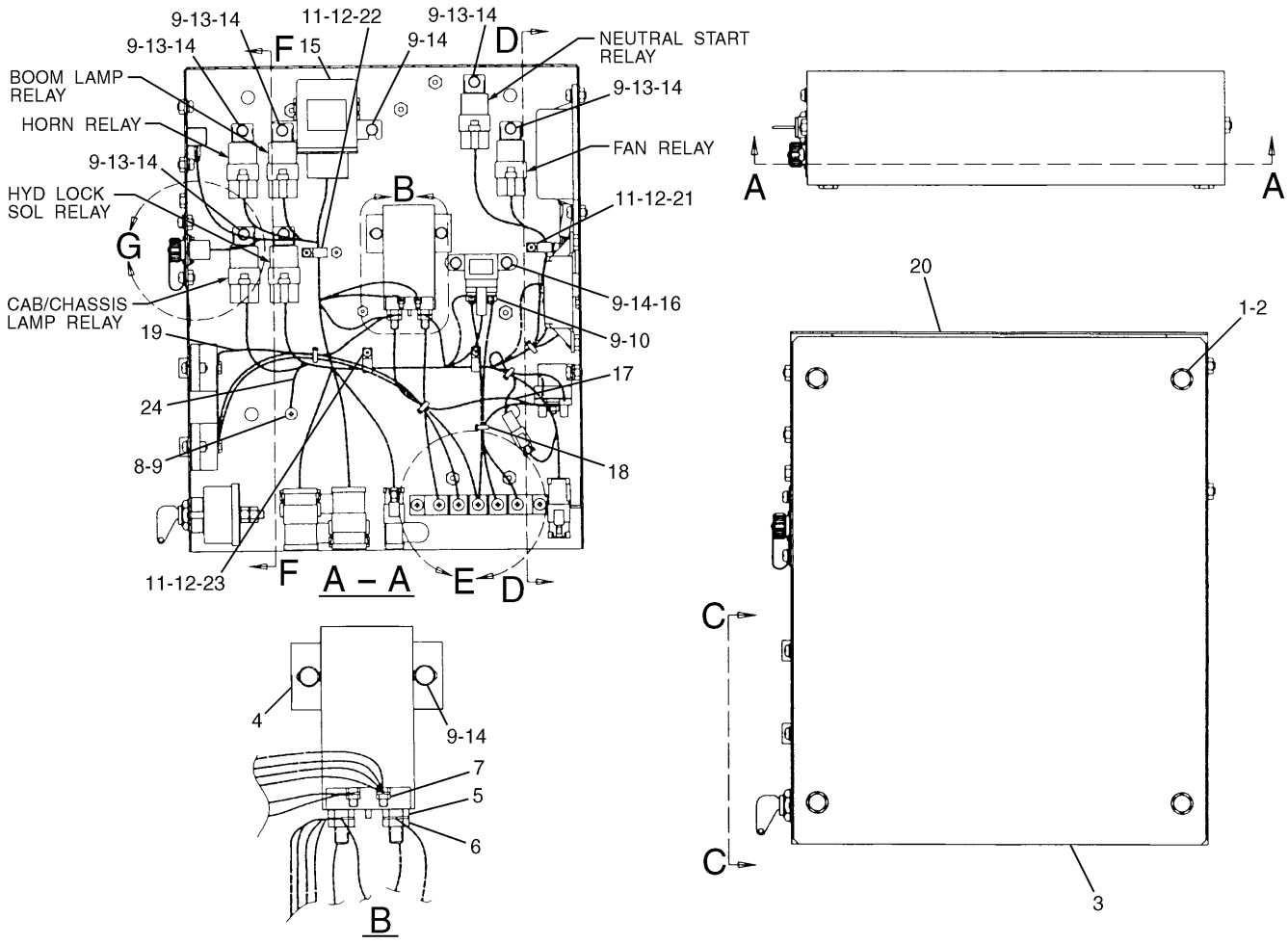

NOTE	No.	PART No.	QTY	PART NAME	NOTE	No.	PART No.	QTY	PART NAME
	1	8T-4191	4	BOLT (L=16mm)		18	3S-2093	5	STRAP
	2	8T-4121	4	WASHER		19	128-8937	1	WIRE AS
	3	111-4874	1	COVER			2L-8050	1	TERMINAL
	4	3T-0376	1	SWITCH AS (MAIN RELAY)		20	132-1902	1	BRACKET AS
	5	4F-2294	2	NUT		21	105-9982	1	CLIP
	6	6V-8186	2	NUT		22	105-9984	1	CLIP
	7	6V-8378	2	NUT		23	111-4718	2	CLIP
	8	8T-6411	1	SCREW	Y	24	136-4057	1	HARNESS AS
	9	9X-8256	14	WASHER					
	10	5C-2890	2	NUT					
	11	8C-7581	4	SCREW					
	12	096-6166	4	WASHER					
	13	111-4871	6	RELAY					
	14	7X-2619	11	BOLT (L=10mm)					
	15	104-3204	1	CONTROLLER					
	16	9X-8124	1	SWITCH AS (HEATER RELAY)					
		8T-4134	2	NUT					
	17	128-8938	1	WIRE AS					
		2L-8050	1	TERMINAL					
		2L-8051	1	TERMINAL					

Y—SEE SEPARATE ILLUSTRATION

H52320E 05

116-0151 PANEL GP-CIRCUIT BREAKER (1/2)

S/N 3MR 01084-04978, 4MR 00254-00715
Part of 116-0149-Page63.02
136-4057-Page78.02

ELECTRICAL AND STARTING SYSTEM

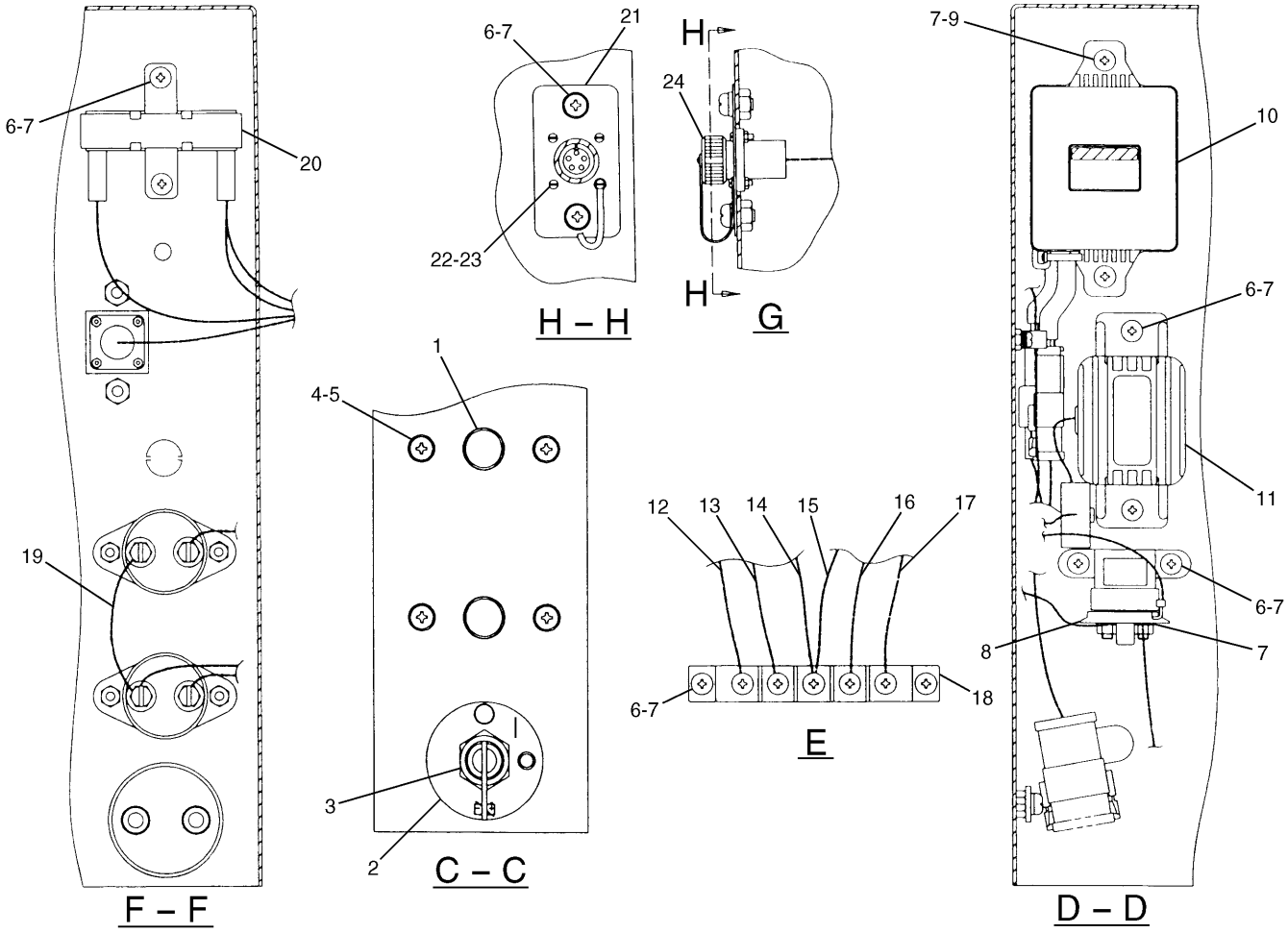

NOTE	No.	PART No.	QTY	PART NAME	NOTE	No.	PART No.	QTY	PART NAME
	1	9S-0174	2	BREAKER AS		15	116-0233	1	CABLE AS
		1H-3244	2	LOCKWASHER			9G-4343	2	TERMINAL
		6V-8365	2	SCREW		16	116-0234	1	CABLE AS
	2	3E-8320	1	PLATE (INSTRUCTION)			9G-4343	2	TERMINAL
Y	3	7N-0718	1	SWITCH AS (DISCONNECT)		17	111-4829	1	WIRE AS
	4	6V-5645	4	SCREW			2L-8050	1	TERMINAL
	5	8T-0328	4	WASHER		18	121-1023	1	BLOCK
	6	8T-6411	15	SCREW		19	128-8936	1	WIRE AS
	7	9X-8256	19	WASHER			2L-8050	1	TERMINAL
Y	8	125-1302	1	SWITCH AS (START RELAY)		20	102-8016	1	RESISTOR AS
	9	095-0742	2	SCREW		21	132-1863	1	STRIP
Y	10	111-4870	1	TIMER AS		22	6V-9326	4	SCREW
	11	094-2080	1	RELAY		23	6V-8950	4	NUT
	12	111-4826	1	WIRE AS		24	3E-5165	1	CAP AS
		2L-8050	1	TERMINAL					
	13	111-4831	1	WIRE AS					
		2L-8050	1	TERMINAL					
	14	111-4830	1	WIRE AS					
		2L-8050	1	TERMINAL					

Y—SEE SEPARATE ILLUSTRATION

H52321E 05

116-0151 PANEL GP-CIRCUIT BREAKER (2/2)

S/N 3MR 01084-04978, 4MR 00254-00715
Part of 116-0149-Page63.02
111-4870-Page78.06,7N-0718-Page79,125-1302-Page91

ELECTRICAL AND STARTING SYSTEM

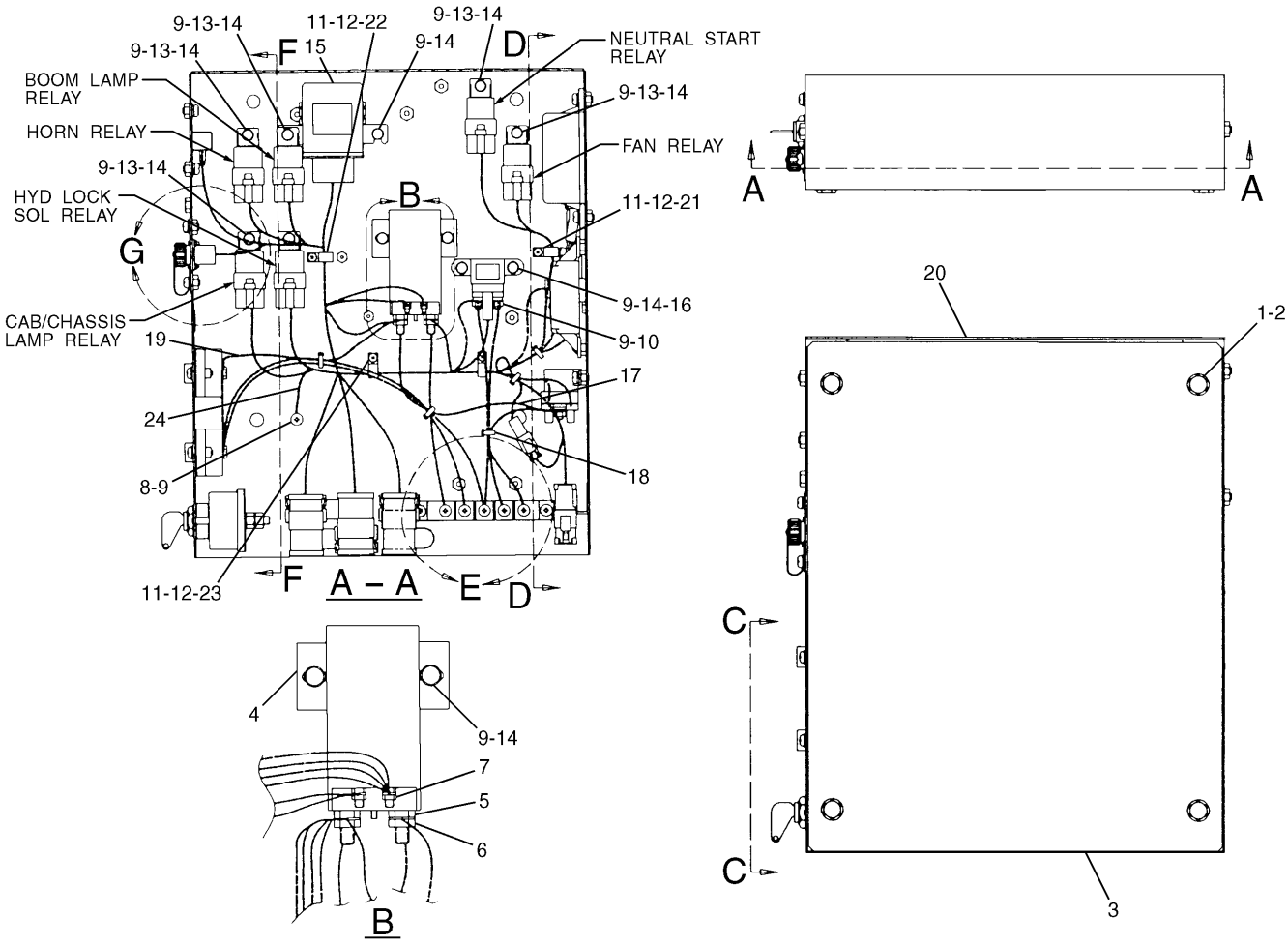

NOTE	No.	PART No.	QTY	PART NAME	NOTE	No.	PART No.	QTY	PART NAME
	1	8T-4191	4	BOLT (L=16mm)		18	3S-2093	5	STRAP
	2	8T-4121	4	WASHER		19	128-8937	1	WIRE AS
	3	111-4874	1	COVER			2L-8050	1	TERMINAL
	4	3T-0376	1	SWITCH AS (MAIN RELAY)			2L-8051	1	TERMINAL
	5	4F-2294	2	NUT		20	132-1902	1	BRACKET AS
	6	6V-8186	2	NUT		21	105-9982	1	CLIP
	7	6V-8378	2	NUT		22	105-9984	1	CLIP
	8	8T-6411	1	SCREW		23	111-4718	2	CLIP
	9	9X-8256	14	WASHER	Y	24	153-2496	1	HARNESS AS
	10	5C-2890	2	NUT					
	11	8C-7581	4	SCREW					
	12	096-6166	4	WASHER					
	13	111-4871	6	RELAY					
	14	7X-2619	11	BOLT (L=10mm)					
	15	104-3204	1	CONTROLLER					
	16	9X-8124	1	SWITCH AS (HEATER RELAY)					
		8T-4134	2	NUT					
	17	128-8938	1	WIRE AS					
		2L-8050	1	TERMINAL					
		2L-8051	1	TERMINAL					

Y—SEE SEPARATE ILLUSTRATION

H60297E 06

116-0151 PANEL GP-CIRCUIT BREAKER (1/2)

S/N 3MR 04979-06468, 4MR 00716-00995
Part of 116-0149-Page63.10
153-2496-Page78.03

ELECTRICAL AND STARTING SYSTEM

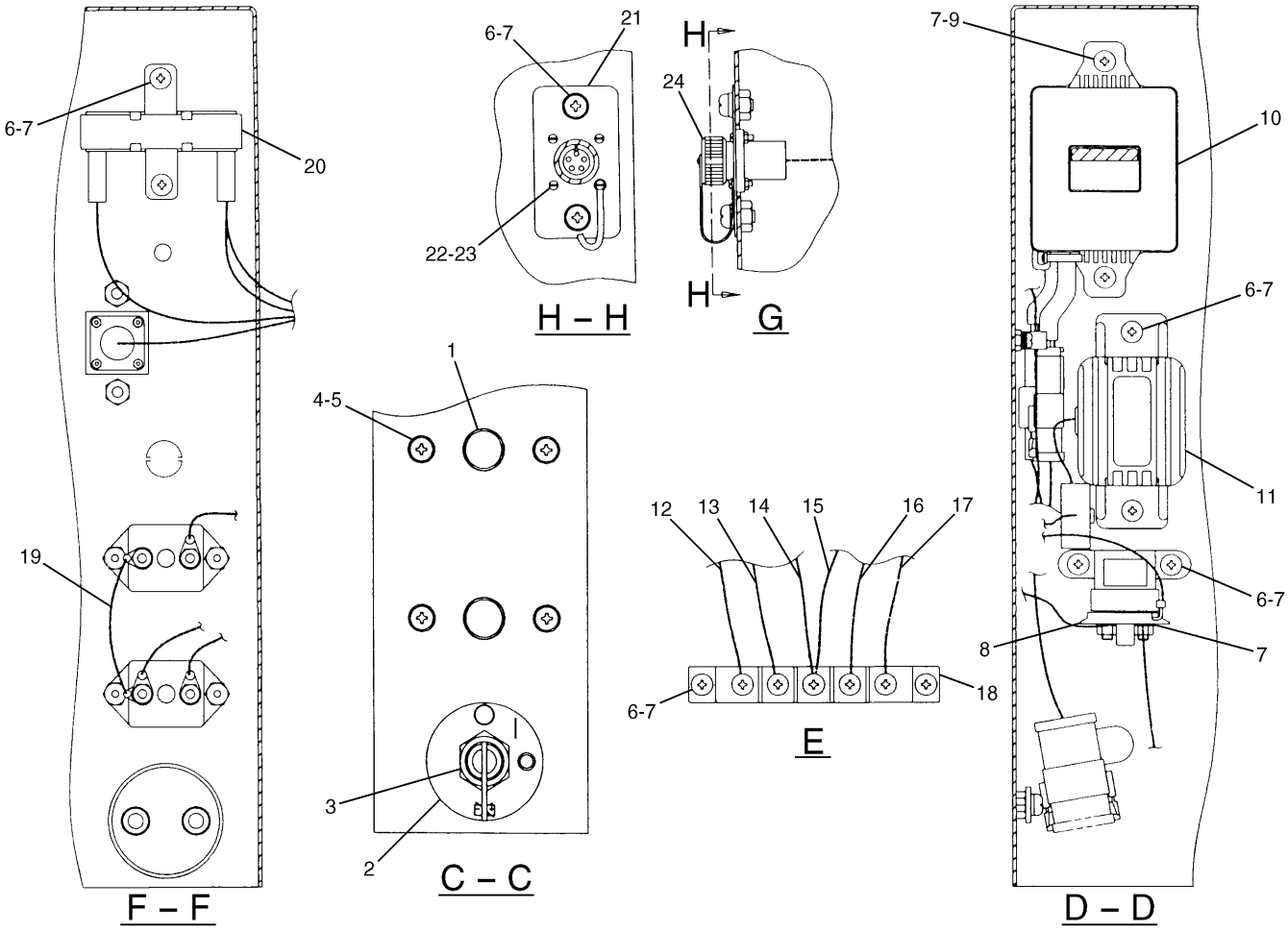

NOTE	No.	PART No.	QTY	PART NAME	NOTE	No.	PART No.	QTY	PART NAME
	1	9S-0174	2	BREAKER AS		15	116-0233	1	CABLE AS
		1H-3244	2	LOCKWASHER			9G-4343	2	TERMINAL
		6V-8365	2	SCREW		16	116-0234	1	CABLE AS
	2	3E-8320	1	PLATE (INSTRUCTION)			9G-4343	2	TERMINAL
Y	3	7N-0718	1	SWITCH AS (DISCONNECT)		17	111-4829	1	WIRE AS
	4	6V-5645	4	SCREW			2L-8050	1	TERMINAL
	5	8T-0328	4	WASHER		18	121-1023	1	BLOCK
	6	8T-6411	15	SCREW		19	128-8936	1	WIRE AS
	7	9X-8256	19	WASHER			2L-8050	2	TERMINAL
Y	8	125-1302	1	SWITCH AS (START RELAY)		20	102-8016	1	RESISTOR AS
	9	095-0742	2	SCREW		21	132-1863	1	STRIP
Y	10	111-4870	1	TIMER AS		22	6V-9326	4	SCREW
	11	094-2080	1	RELAY		23	6V-8950	4	NUT
	12	111-4826	1	WIRE AS		24	3E-5165	1	CAP AS
		2L-8050	1	TERMINAL					
		2L-8051	1	TERMINAL					
	13	111-4831	1	WIRE AS					
		2L-8050	1	TERMINAL					
	14	111-4830	1	WIRE AS					
		2L-8050	2	TERMINAL					

Y—SEE SEPARATE ILLUSTRATION

H60298E 06

116-0151 PANEL GP-CIRCUIT BREAKER (2/2)

S/N 3MR 04979-06468, 4MR 00716-00995
Part of 116-0149-Page63.10
111-4870-Page78.06,7N-0718-Page79,125-1302-Page91

ELECTRICAL AND STARTING SYSTEM

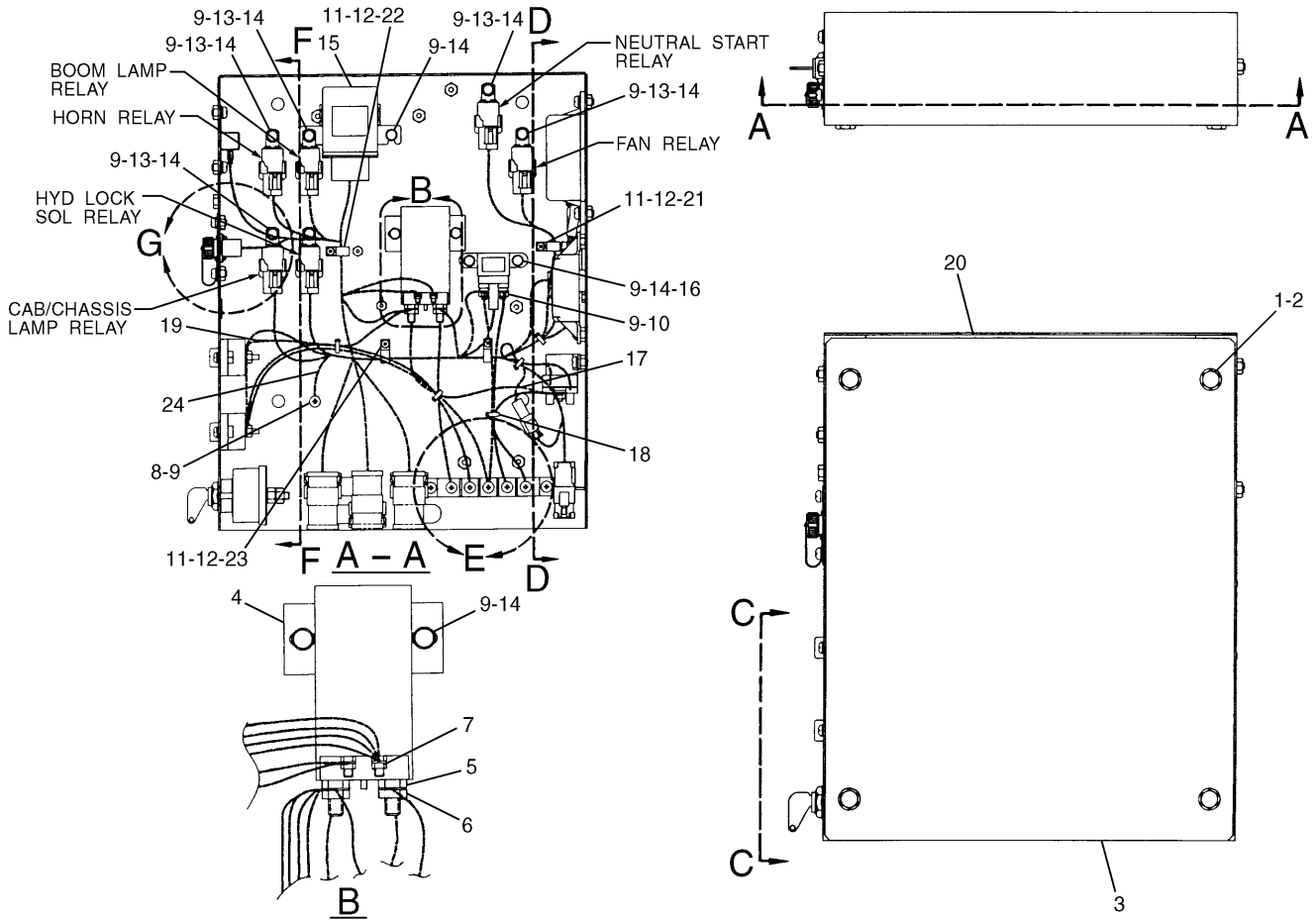

NOTE	No.	PART No.	QTY	PART NAME	NOTE	No.	PART No.	QTY	PART NAME
	1	8T-4191	4	BOLT (L=16mm)		18	3S-2093	5	STRAP
	2	8T-4121	4	WASHER		19	128-8937	1	WIRE AS
	3	111-4874	1	COVER			2L-8050	1	TERMINAL
	4	165-4026	1	SWITCH AS (MAIN RELAY)			2L-8051	1	TERMINAL
	5	4F-2294	2	NUT		20	132-1902	1	BRACKET AS
	6	6V-8186	2	NUT		21	105-9982	1	CLIP
	7	6V-8378	2	NUT		22	105-9984	1	CLIP
	8	8T-6411	1	SCREW		23	111-4718	2	CLIP
	9	9X-8256	14	WASHER	Y	24	167-3494	1	HARNESS AS
	10	5C-2890	2	NUT					
	11	8C-7581	4	SCREW					
	12	096-6166	4	WASHER					
	13	149-5050	6	RELAY					
	14	7X-2619	11	BOLT (L=10mm)					
	15	104-3204	1	CONTROLLER					
	16	9X-8124	1	SWITCH AS (HEATER RELAY)					
		8T-4134	2	NUT					
	17	128-8938	1	WIRE AS					
		2L-8050	1	TERMINAL					
		2L-8051	1	TERMINAL					

Y—SEE SEPARATE ILLUSTRATION

H82505E 07

116-0151 PANEL GP-CIRCUIT BREAKER (1/2)

S/N 3MR 06469-Up, 4MR 00996-Up
Part of 116-0149-Page63.10
167-3494-Page78.04

ELECTRICAL AND STARTING SYSTEM

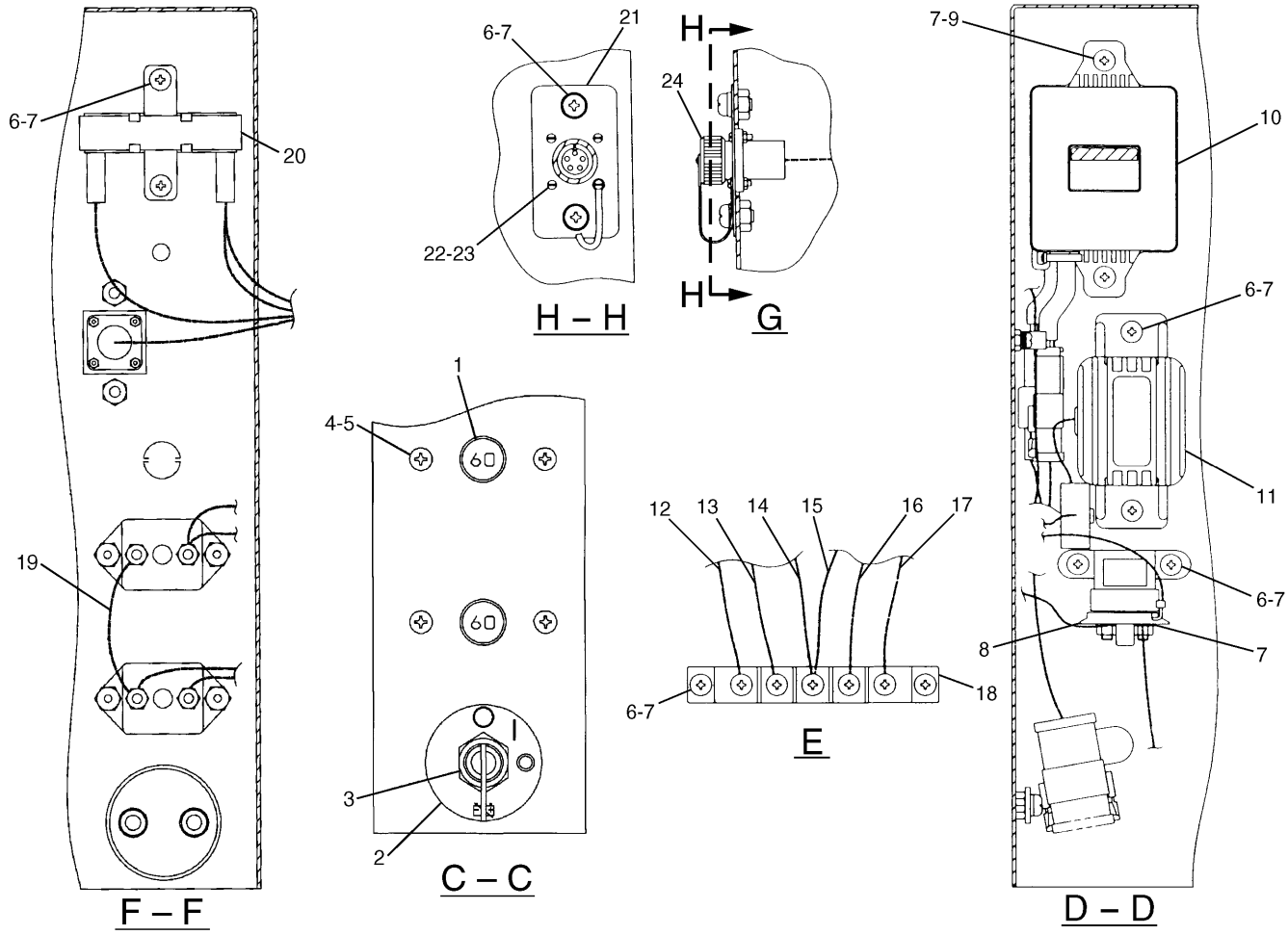

NOTE	No.	PART No.	QTY	PART NAME	NOTE	No.	PART No.	QTY	PART NAME
	1	9S-0174	2	BREAKER AS		14	111-4830	1	WIRE AS
		1H-3244	2	LOCKWASHER			2L-8050	2	TERMINAL
		8T-4205	2	WASHER		15	116-0233	1	CABLE AS
		7X-3182	2	BOLT (L=13mm)			9G-4343	2	TERMINAL
B		0S-1570	2	BOLT (L=16mm)		16	116-0234	1	CABLE AS
	2	3E-8320	1	PLATE (INSTRUCTION)			9G-4343	2	TERMINAL
Y	3	7N-0718	1	SWITCH AS (DISCONNECT)		17	111-4829	1	WIRE AS
	4	6V-5645	4	SCREW			2L-8050	1	TERMINAL
	5	8T-0328	4	WASHER		18	121-1023	1	BLOCK
	6	8T-6411	15	SCREW		19	128-8936	1	WIRE AS
	7	9X-8256	19	WASHER			2L-8050	2	TERMINAL
Y	8	125-1302	1	SWITCH AS (START RELAY)		20	102-8016	1	RESISTOR AS
	9	095-0742	2	SCREW		21	132-1863	1	STRIP
Y	10	111-4870	1	TIMER AS		22	6V-9326	4	SCREW
	11	094-2080	1	RELAY		23	6V-8950	4	NUT
	12	111-4826	1	WIRE AS		24	3E-5165	1	CAP AS
		2L-8050	1	TERMINAL					
		2L-8051	1	TERMINAL					
	13	111-4831	1	WIRE AS					
		2L-8050	2	TERMINAL					

B—USE AS REQUIRED

Y—SEE SEPARATE ILLUSTRATION

H82506E 07

116-0151 PANEL GP-CIRCUIT BREAKER (2/2)

S/N 3MR 06469-Up, 4MR 00996-Up

Part of 116-0149-Page63.10

111-4870-Page78.06,7N-0718-Page79,125-1302-Page91

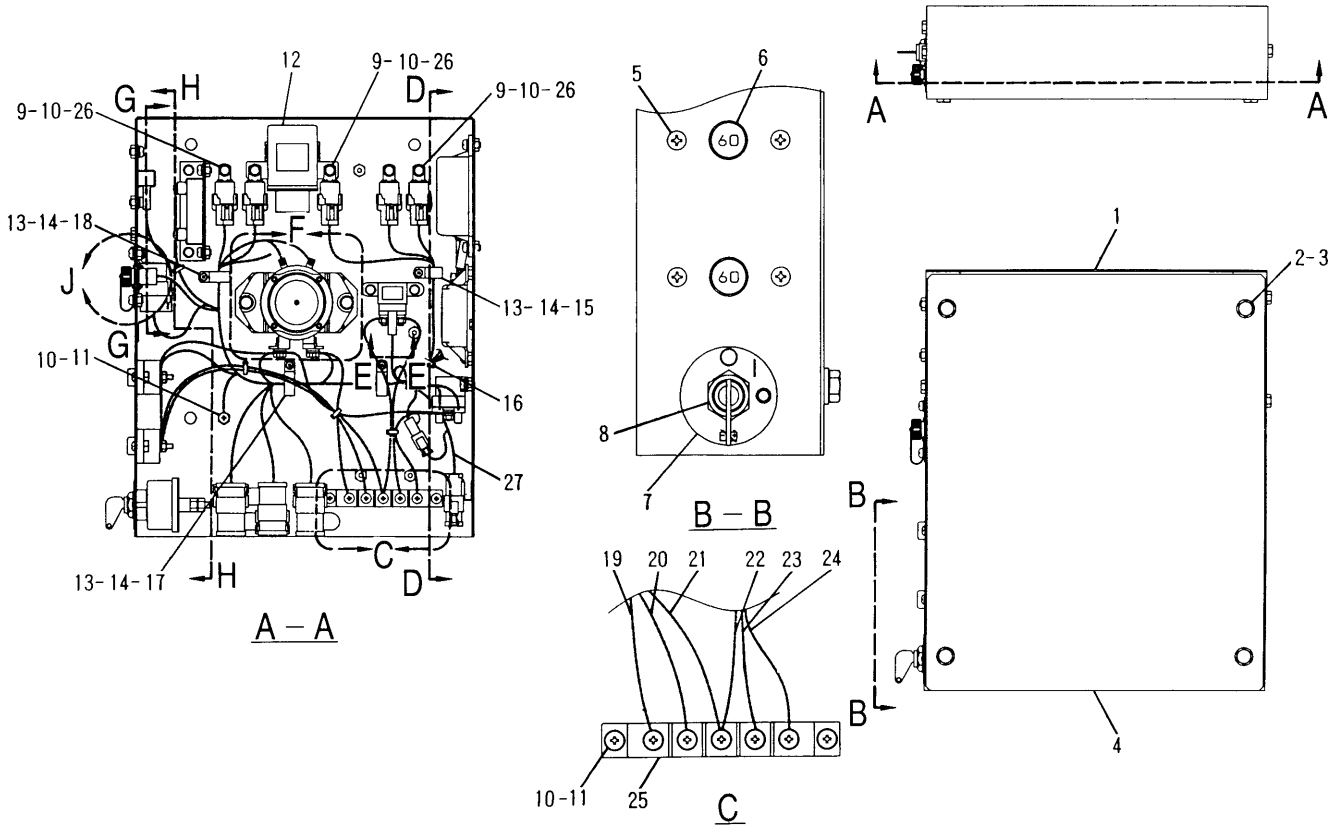

NOTE	No.	PART No.	QTY	PART NAME	NOTE	No.	PART No.	QTY	PART NAME
	1	163-6684	1	BRACKET AS		17	105-9985	2	CLIP
	2	8T-4191	4	BOLT (L=16mm)		18	111-4718	1	CLIP
	3	8T-4121	4	WASHER		19	163-6691	1	WIRE AS
	4	111-4874	1	COVER			2L-8050	1	TERMINAL
	5	6V-5645	4	SCREW			2L-8051	1	TERMINAL
	6	9S-0174	2	BREAKER AS		20	111-4831	1	WIRE AS
		1H-3244	2	LOCKWASHER			2L-8050	2	TERMINAL
		0S-1570	2	BOLT (L=16mm)		21	111-4830	1	WIRE AS
		8T-4205	2	WASHER			2L-8050	2	TERMINAL
		7X-8182	2	BOLT		22	116-0233	1	CABLE AS
	7	3E-8320	1	PLATE (INSTRUCTION)			9G-4343	2	TERMINAL
Y	8	7N-0719	1	SWITCH AS (DISCONNECT)		23	116-0234	1	CABLE AS
	9	7X-2619	5	BOLT (L=10mm)			9G-4343	2	TERMINAL
	10	9X-8256	13	WASHER		24	111-4829	1	WIRE AS
	11	8T-6411	8	SCREW			2L-8050	2	TERMINAL
	12	104-3204	1	CONTROLLER		25	121-1023	1	BLOCK
	13	8C-7581	4	SCREW		26	149-5050	5	RELAY
	14	096-6166	4	WASHER	Y	27	167-3579	1	HARNESS AS
	15	105-9983	1	CLIP					
	16	3S-2093	6	STRAP					

Y—SEE SEPARATE ILLUSTRATION

H81883E 01

163-6675 PANEL GP-CIRCUIT BREAKER (1/2)

S/N 3MR 06269-Up, 4MR 00916-Up
Part of 163-6727-Page65.02
167-3579-Page78.05,7N-0719-Page93
An Attachment

ELECTRICAL AND STARTING SYSTEM

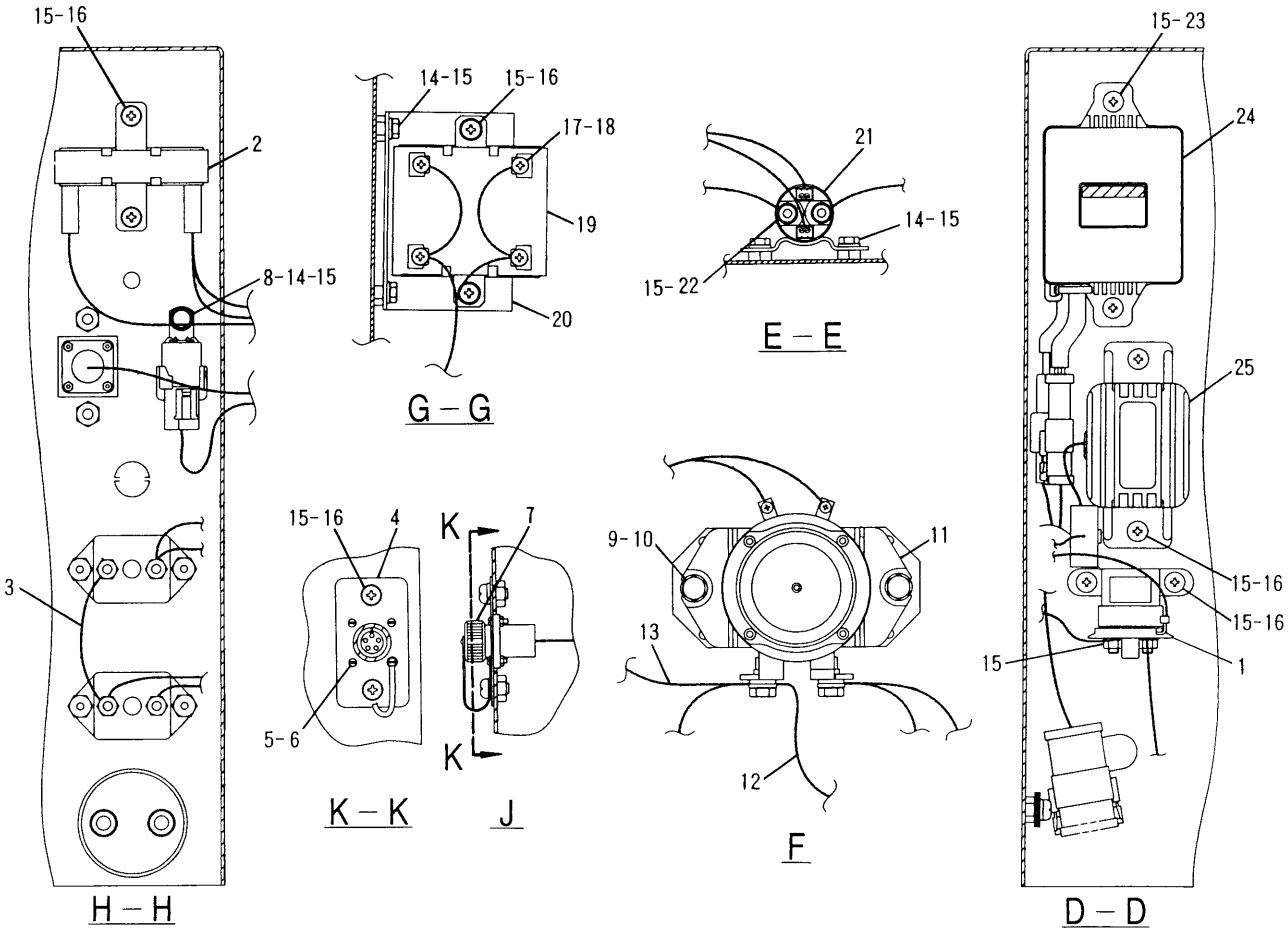

NOTE	No.	PART No.	QTY	PART NAME	NOTE	No.	PART No.	QTY	PART NAME
Y	1	125-1302	1	SWITCH AS (START RELAY)		17	095-0735	4	SCREW
	2	102-8016	1	RESISTOR AS		18	8T-0328	4	WASHER
	3	128-8936	1	WIRE AS		19	163-6616	1	RESISTOR AS
		2L-8050	2	TERMINAL		20	163-6769	1	BRACKET AS
	4	132-1863	1	STRIP		21	9X-8124	1	SWITCH AS (HEATER RELAY)
	5	6V-9326	4	SCREW			8T-4134	2	NUT
	6	6V-8950	4	NUT		22	5C-2890	2	NUT
	7	3E-5165	1	CAP AS		23	095-0742	2	SCREW
	8	149-5050	1	RELAY	Y	24	111-4870	1	TIMER AS
	9	8T-4189	2	BOLT (L=20mm)		25	094-2080	1	RELAY
	10	8T-4224	2	WASHER					
	11	159-9108	1	SWITCH AS (MAIN RELAY)					
	12	163-6693	1	WIRE AS					
		2L-8050	2	TERMINAL					
	13	163-6692	1	WIRE AS					
		2L-8050	1	TERMINAL					
		2L-8051	1	TERMINAL					
	14	7X-2619	5	BOLT (L=10mm)					
	15	9X-8256	21	WASHER					
	16	8T-6411	10	SCREW					

Y—SEE SEPARATE ILLUSTRATION

H81884E 01

163-6675 PANEL GP-CIRCUIT BREAKER (2/2)

S/N 3MR 06269-Up, 4MR 00916-Up
Part of 163-6727-Page65.02
111-4870-Page78.06,125-1302-Page91
An Attachment

ELECTRICAL AND STARTING SYSTEM

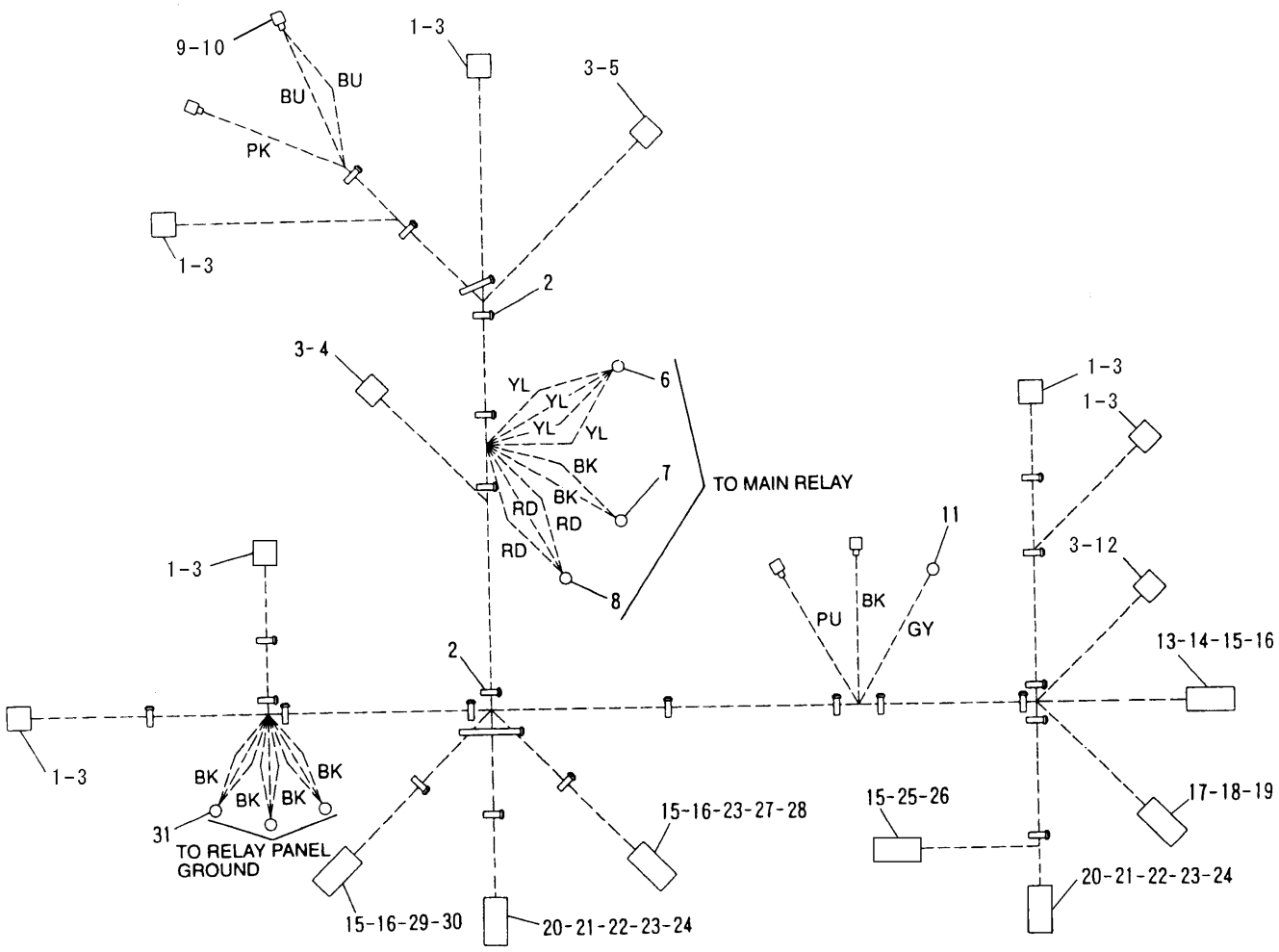

NOTE	No.	PART No.	QTY	PART NAME	NOTE	No.	PART No.	QTY	PART NAME
	1	111-4875	6	HOUSING		21	3E-5180	2	WEDGE
	2	3S-2093	26	STRAP		22	9W-0852	4	PIN
	3	7Y-3951	38	TERMINAL		23	8T-8737	9	PLUG
	4	7Y-3952	1	CONNECTOR		24	8T-8729	14	PIN
	5	104-6573	1	PLUG		25	155-2270	1	PLUG KIT
	6	2L-8066	1	TERMINAL		26	3E-3362	1	WEDGE
	7	2L-8076	1	TERMINAL		27	102-8810	1	PLUG KIT
	8	2L-8051	1	TERMINAL		28	3E-3380	1	WEDGE
	9	6T-6505	4	HOUSING		29	102-8800	1	PLUG KIT
	10	6T-6506	4	TERMINAL		30	3E-5177	1	WEDGE
	11	2L-8078	1	TERMINAL		31	2L-8067	3	TERMINAL
	12	7Y-3958	1	CONNECTOR					
	13	102-8809	1	PLUG KIT					
	14	3E-3374	1	WEDGE					
	15	8T-8730	13	SOCKET					
	16	9W-0844	8	SOCKET					
	17	116-0126	1	HOUSING					
	18	116-0128	1	SEAL					
	19	116-0255	2	TERMINAL					
	20	102-8801	2	RECEPTACLE KIT					

H57474E 00

132-1886 HARNESS AS

S/N 3MR 1-00787, 4MR 1-00227
Part of 116-0151-Page76

ELECTRICAL AND STARTING SYSTEM

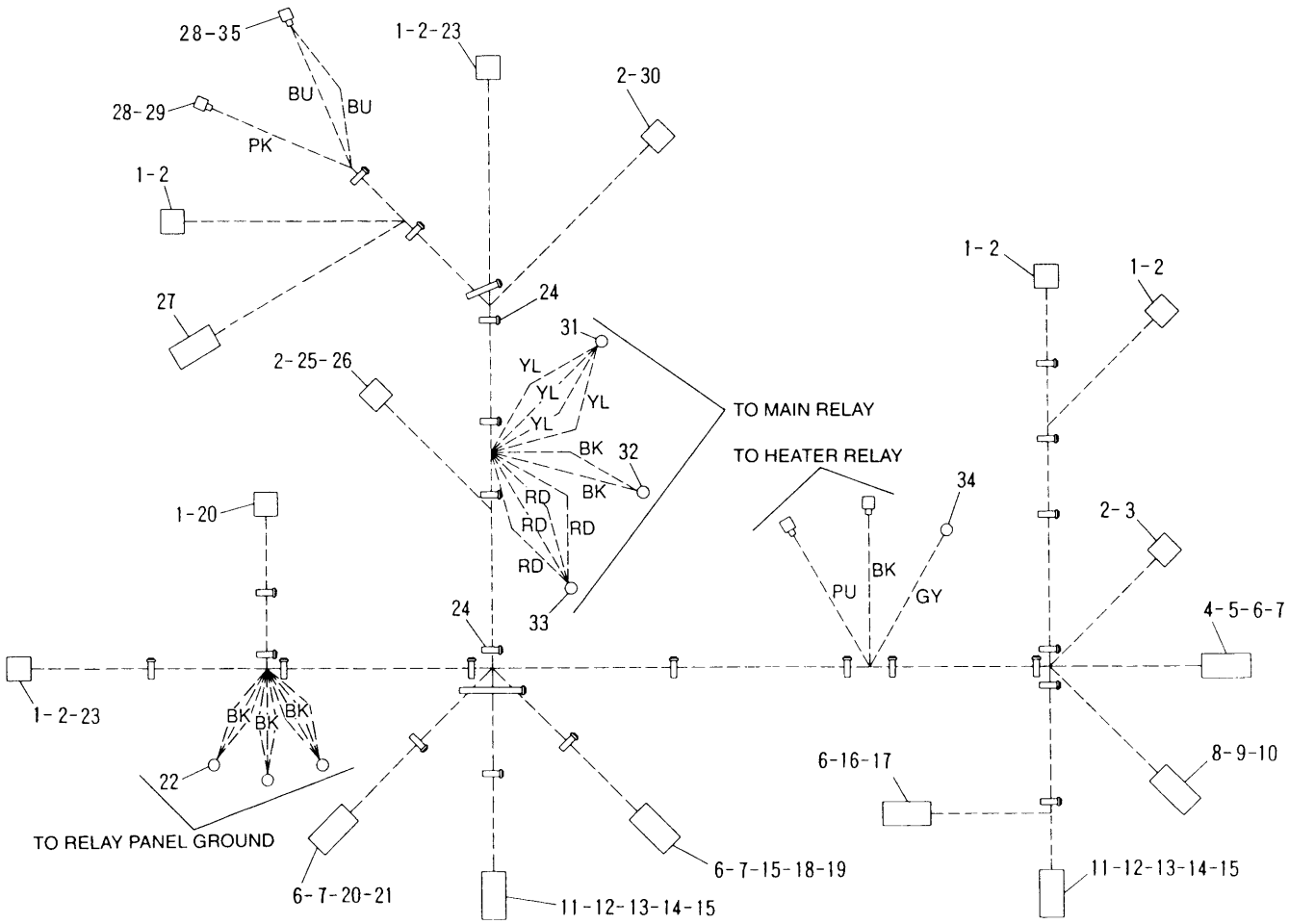

NOTE	No.	PART No.	QTY	PART NAME	NOTE	No.	PART No.	QTY	PART NAME
	1	111-4875	6	HOUSING		21	3E-5177	1	WEDGE
	2	7Y-3951	35	TERMINAL		22	2L-8067	3	TERMINAL
	3	7Y-3958	1	CONNECTOR		23	7Y-3993	3	TERMINAL
	4	102-8809	1	PLUG KIT		24	3S-2093	26	STRAP
	5	3E-3374	1	WEDGE		25	121-1022	1	DIODE
	6	8T-8730	13	SOCKET		26	7Y-3952	1	CONNECTOR
	7	9W-0844	8	SOCKET		27	3E-5136	1	RECEPTACLE AS
	8	116-0126	1	HOUSING		28	6T-6505	4	HOUSING
	9	116-0128	1	SEAL		29	6T-6506	4	TERMINAL
	10	116-0255	2	TERMINAL		30	104-6573	1	PLUG
	11	102-8801	2	RECEPTACLE KIT		31	2L-8066	1	TERMINAL
	12	3E-5180	2	WEDGE		32	2L-8076	1	TERMINAL
	13	8T-8729	14	PIN		33	2L-8051	1	TERMINAL
	14	9W-0852	7	PIN		34	2L-8078	1	TERMINAL
	15	8T-8737	6	PLUG		35	8T-9850	1	TERMINAL
	16	155-2270	1	PLUG KIT					
	17	3E-3362	1	WEDGE					
	18	102-8810	1	PLUG KIT					
	19	3E-3380	1	WEDGE					
	20	102-8800	1	PLUG KIT					

H51949E 00

132-1901 HARNESS AS

S/N 3MR 00788-01083, 4MR 00228-00253
Part of 116-0151-Page77.01

ELECTRICAL AND STARTING SYSTEM

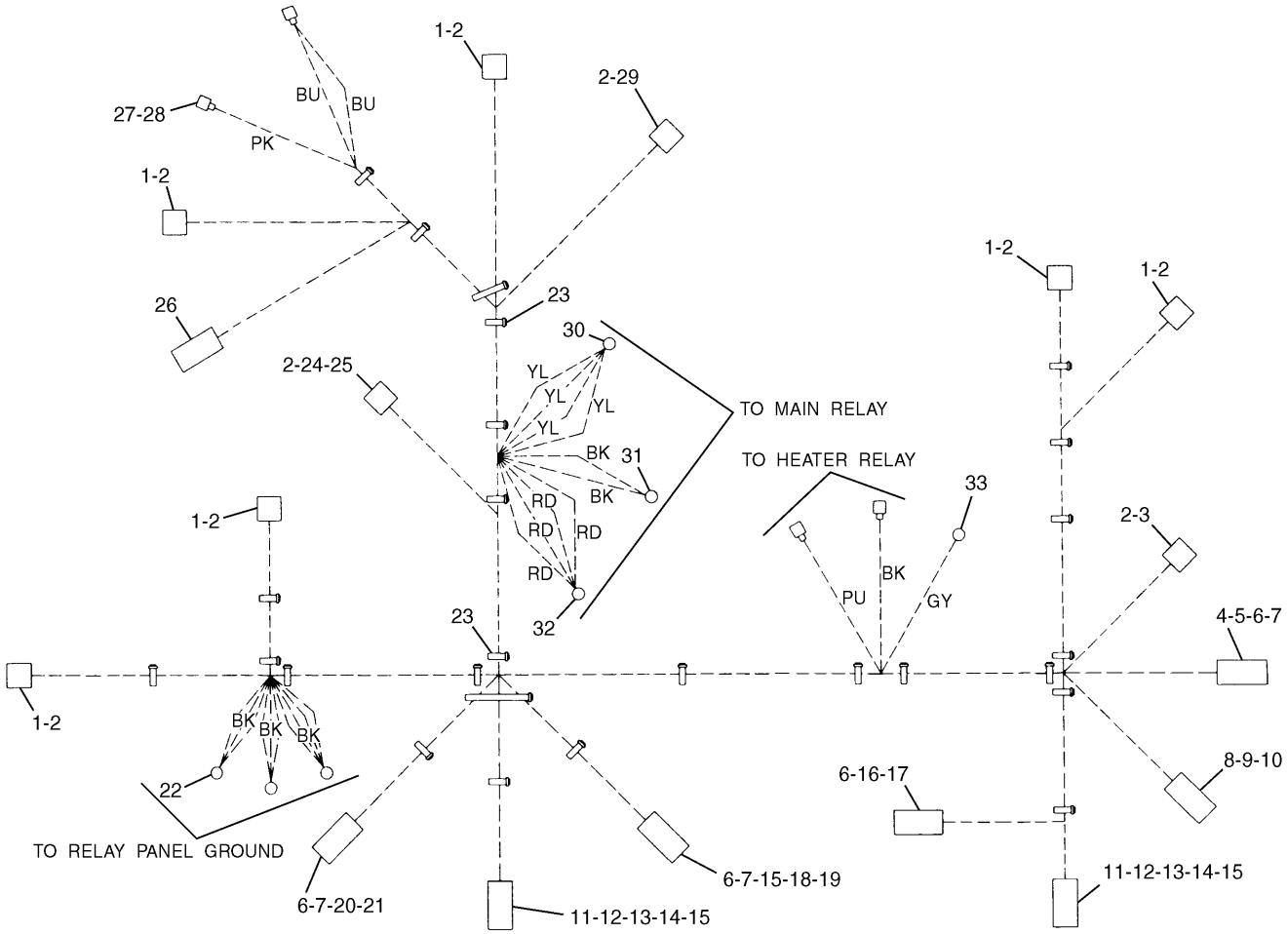

NOTE	No.	PART No.	QTY	PART NAME	NOTE	No.	PART No.	QTY	PART NAME
	1	111-4875	6	HOUSING		21	3E-5177	1	WEDGE
	2	7Y-3951	35	TERMINAL		22	2L-8067	3	TERMINAL
	3	7Y-3958	1	CONNECTOR		23	3S-2093	26	STRAP
	4	102-8809	1	PLUG KIT		24	121-1022	1	DIODE
	5	3E-3374	1	WEDGE		25	7Y-3952	1	CONNECTOR
	6	8T-8730	13	SOCKET		26	3E-5136	1	RECEPTACLE AS
	7	9W-0844	8	SOCKET		27	6T-6505	4	HOUSING
	8	116-0126	1	HOUSING		28	6T-6506	4	TERMINAL
	9	116-0128	1	SEAL		29	104-6573	1	PLUG
	10	116-0255	2	TERMINAL		30	2L-8066	1	TERMINAL
	11	102-8801	2	RECEPTACLE KIT		31	2L-8076	1	TERMINAL
	12	3E-5180	2	WEDGE		32	2L-8051	1	TERMINAL
	13	8T-8729	13	PIN		33	2L-8078	1	TERMINAL
	14	9W-0852	6	PIN					
	15	8T-8737	8	PLUG					
	16	155-2270	1	PLUG KIT					
	17	3E-3362	1	WEDGE					
	18	102-8810	1	PLUG KIT					
	19	3E-3380	1	WEDGE					
	20	102-8800	1	PLUG KIT					

H52564E 00

136-4057 HARNESS AS

S/N 3MR 01084-04978, 4MR 00254-00715

Part of 116-0151-Page77.03

ELECTRICAL AND STARTING SYSTEM

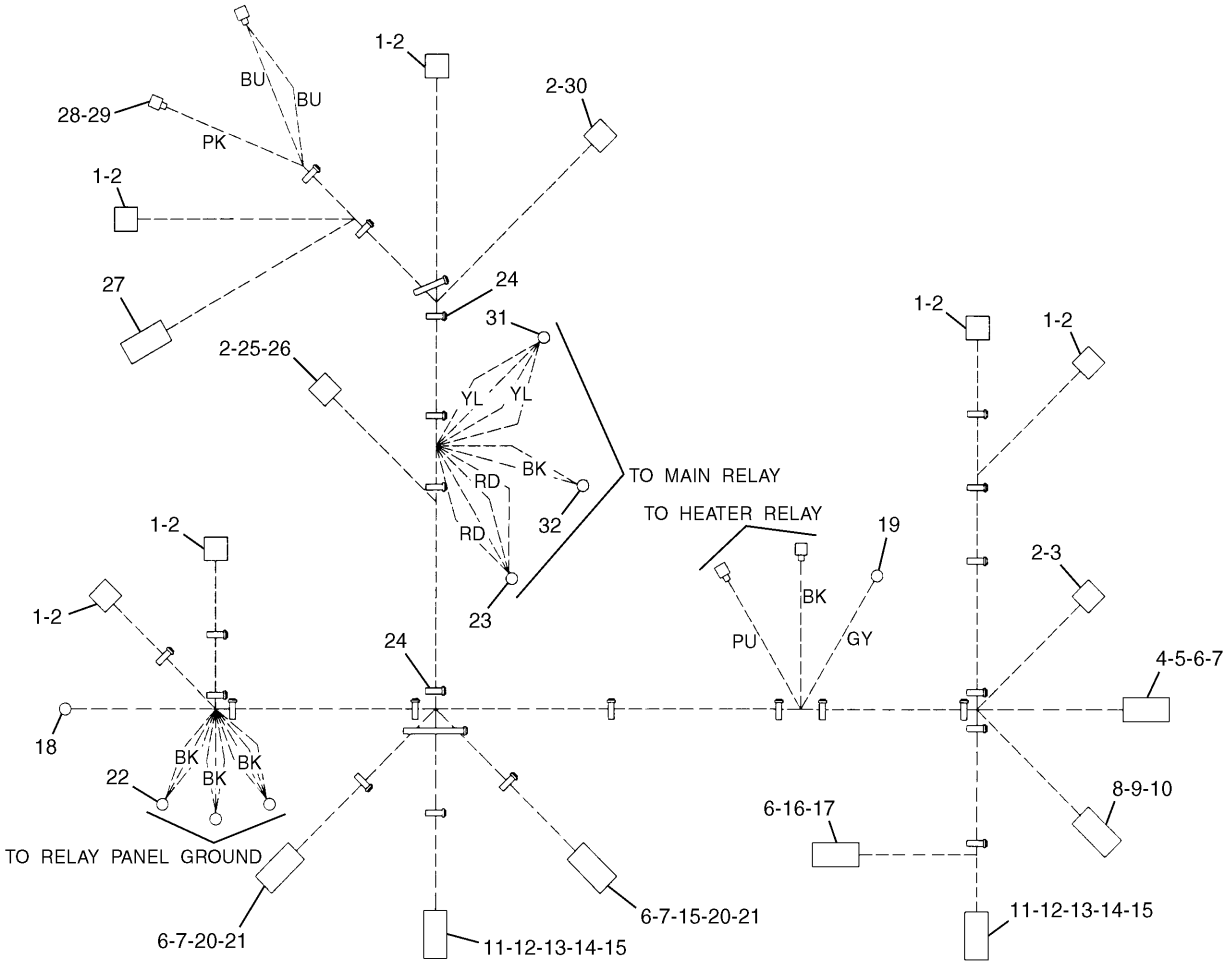

NOTE	No.	PART No.	QTY	PART NAME	NOTE	No.	PART No.	QTY	PART NAME
	1	111-4875	6	HOUSING		21	3E-5177	2	WEDGE
	2	7Y-3951	35	TERMINAL		22	2L-8067	1	TERMINAL
	3	7Y-3958	1	CONNECTOR		23	2L-8051	1	TERMINAL
	4	102-8809	1	PLUG KIT		24	3S-2093	26	STRAP
	5	3E-3374	1	WEDGE		25	121-1022	1	DIODE
	6	8T-8730	13	SOCKET		26	7Y-3952	1	CONNECTOR
	7	9W-0844	9	SOCKET		27	3E-5136	1	RECEPTACLE AS
	8	116-0126	1	HOUSING		28	6T-6505	4	HOUSING
	9	116-0128	1	SEAL		29	6T-6506	4	TERMINAL
	10	116-0255	2	TERMINAL		30	104-6573	1	PLUG
	11	102-8801	2	RECEPTACLE KIT		31	2L-8066	1	TERMINAL
	12	3E-5180	2	WEDGE		32	2L-8076	1	TERMINAL
	13	8T-8729	13	PIN					
	14	9W-0852	6	PIN					
	15	8T-8737	13	PLUG					
	16	155-2270	1	PLUG KIT					
	17	3E-3362	1	WEDGE					
	18	2L-8077	1	TERMINAL					
	19	2L-8078	1	TERMINAL					
	20	102-8800	2	PLUG KIT					

H60299E 00

153-2496 HARNESS AS

S/N 3MR 04979-06468, 4MR 00716-00995
Part of 116-0151-Page77.05

ELECTRICAL AND STARTING SYSTEM

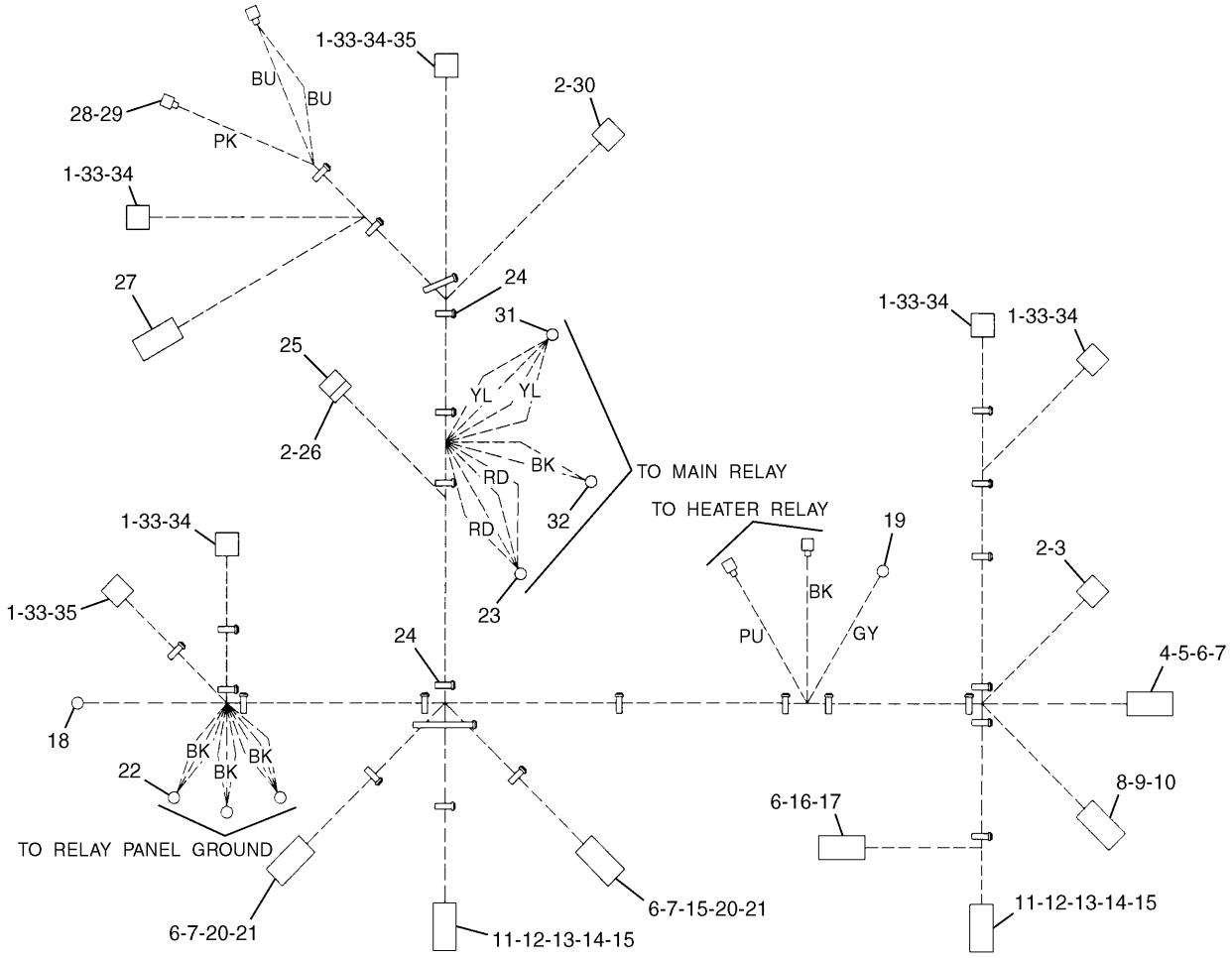

NOTE	No.	PART No.	QTY	PART NAME	NOTE	No.	PART No.	QTY	PART NAME
	1	149-5051	6	CONNECTOR		21	3E-5177	2	WEDGE
	2	7Y-3951	14	TERMINAL		22	2L-8067	3	TERMINAL
	3	7Y-3958	1	CONNECTOR		23	2L-8051	1	TERMINAL
	4	102-8809	1	PLUG KIT		24	3S-2093	26	STRAP
	5	3E-3374	1	WEDGE		25	121-1022	1	DIODE
	6	8T-8730	13	SOCKET		26	7Y-3952	1	CONNECTOR
	7	9W-0844	9	SOCKET		27	3E-5136	1	RECEPTACLE AS
	8	116-0126	1	HOUSING		28	6T-6505	4	HOUSING
	9	116-0128	1	SEAL		29	6T-6506	4	TERMINAL
	10	116-0255	2	TERMINAL		30	104-6573	1	PLUG
	11	102-8801	2	RECEPTACLE KIT		31	2L-8066	1	TERMINAL
	12	3E-5180	2	WEDGE		32	2L-8076	1	TERMINAL
	13	8T-8729	13	PIN		33	149-5070	12	TERMINAL
	14	9W-0852	6	PIN		34	149-5069	9	TERMINAL
	15	8T-8737	13	PLUG		35	149-5071	3	TERMINAL
	16	155-2270	1	PLUG KIT					
	17	3E-3362	1	WEDGE					
	18	2L-8077	1	TERMINAL					
	19	2L-8078	1	TERMINAL					
	20	102-8800	2	PLUG KIT					

H65243E 01

167-3494 HARNESS AS

S/N 3MR 06469-Up, 4MR 00996-Up
Part of 116-0151-Page77.07

ELECTRICAL AND STARTING SYSTEM

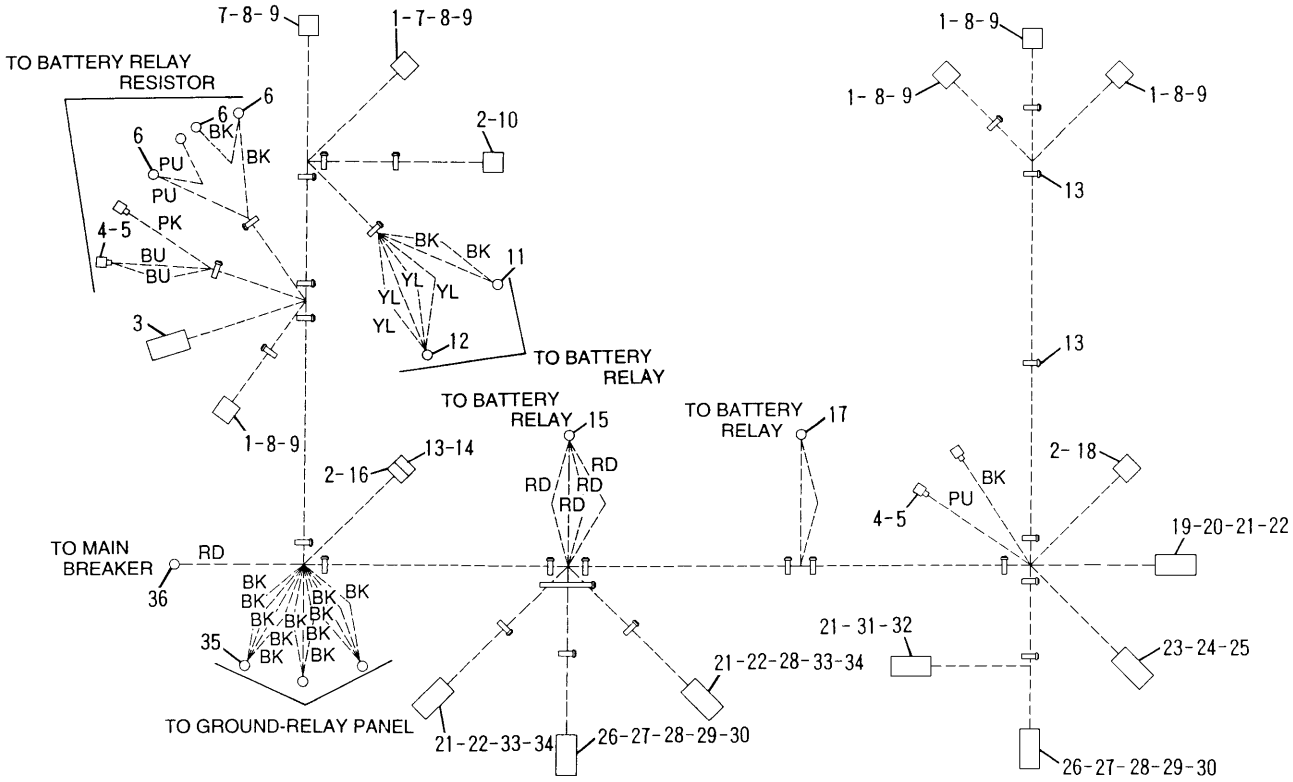

NOTE	No.	PART No.	QTY	PART NAME	NOTE	No.	PART No.	QTY	PART NAME
	1	149-5069	9	TERMINAL		21	8T-8730	13	SOCKET
	2	7Y-3951	14	TERMINAL		22	9W-0844	9	SOCKET
	3	3E-5136	1	RECEPTACLE AS		23	116-0126	1	HOUSING
	4	153-2602	4	CONNECTOR		24	116-0128	1	SEAL
	5	153-2631	4	TERMINAL		25	116-0255	2	TERMINAL
	6	2L-8076	4	TERMINAL		26	102-8801	2	RECEPTACLE KIT
	7	149-5071	3	TERMINAL		27	3E-5180	2	WEDGE
	8	149-5070	12	TERMINAL		28	8T-8737	13	PLUG
	9	149-5051	6	CONNECTOR		29	8T-8729	13	PIN
	10	104-6573	1	PLUG		30	9W-0852	6	PIN
	11	2L-8075	1	TERMINAL		31	155-2270	1	PLUG KIT
	12	2L-8065	1	TERMINAL		32	3E-3362	1	WEDGE
	13	3S-2093	29	STRAP		33	102-8800	2	PLUG KIT
	14	121-1022	1	DIODE		34	3E-5177	2	WEDGE
	15	2L-8078	1	TERMINAL		35	2L-0704	3	TERMINAL
	16	7Y-3952	1	CONNECTOR		36	2L-8077	1	TERMINAL
	17	2L-8051	1	TERMINAL					
	18	7Y-3958	1	CONNECTOR					
	19	102-8809	1	PLUG KIT					
	20	3E-3374	1	WEDGE					

H65489E 00

167-3579 HARNESS AS

S/N 3MR 06269-Up, 4MR 00916-Up
Part of 163-6675-Page77.09
An Attachment

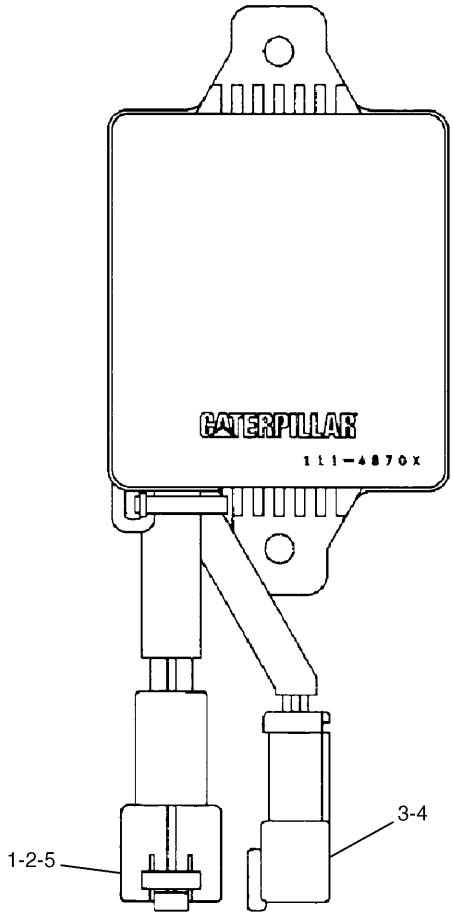

NOTE	No.	PART No.	QTY	PART NAME	NOTE	No.	PART No.	QTY	PART NAME
	1	121-1038	1	HOUSING					
	2	121-1039	2	TERMINAL					
	3	102-8804	1	RECEPTACLE KIT					
	4	8T-8729	4	PIN					
	5	116-0128	1	SEAL					

H54130E 02

111-4870 TIMER AS

Off Delay

Part of 116-0151-Page77,163-6675-Page77.10

ELECTRICAL AND STARTING SYSTEM

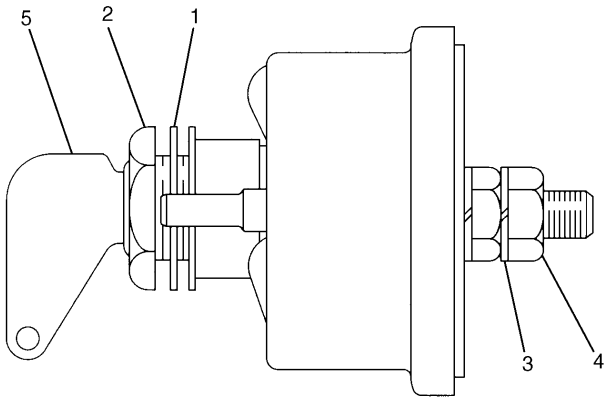

NOTE	No.	PART No.	QTY	PART NAME
	1	2H-3922	2	LOCKWASHER
	2	8H-5303	1	NUT
	3	9F-5644	2	LOCKWASHER
	4	6F-7045	2	NUT
	5	8H-5306	1	KEY

H56260E 13

7N-0718 SWITCH AS-DISCONNECT

Part of 116-0151-Page77

ELECTRICAL AND STARTING SYSTEM

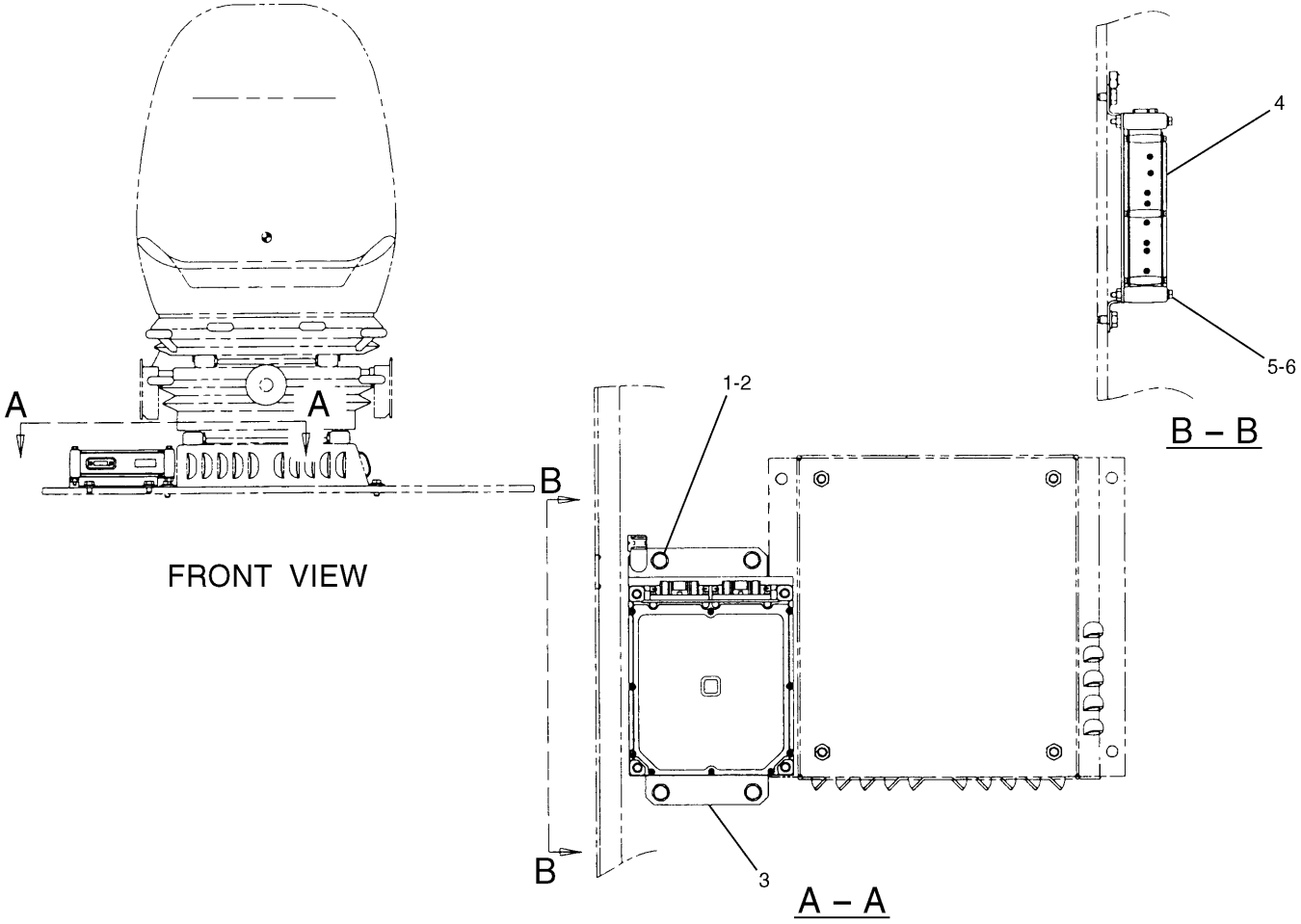

NOTE	No.	PART No.	QTY	PART NAME	NOTE	No.	PART No.	QTY	PART NAME
	1	8T-4191	4	BOLT (L=16mm)					
	2	8T-4121	4	WASHER					
	3	106-0191	1	BRACKET AS					
	4	119-0607	1	CONTROL GP					
	5	8T-3844	4	BOLT (L=70mm)					
	6	9X-8256	4	WASHER					
				THE FOLLOWING SERVICE REPAIR IS AVAILABLE:					
A		164-8294	1	CONTROL KIT					

A—NOT PART OF THIS GROUP

H52938E 01

119-0606 CONTROL & MTG GP-ELECTRONIC
S/N 3MR 1-03049, 4MR 1-00438

ELECTRICAL AND STARTING SYSTEM

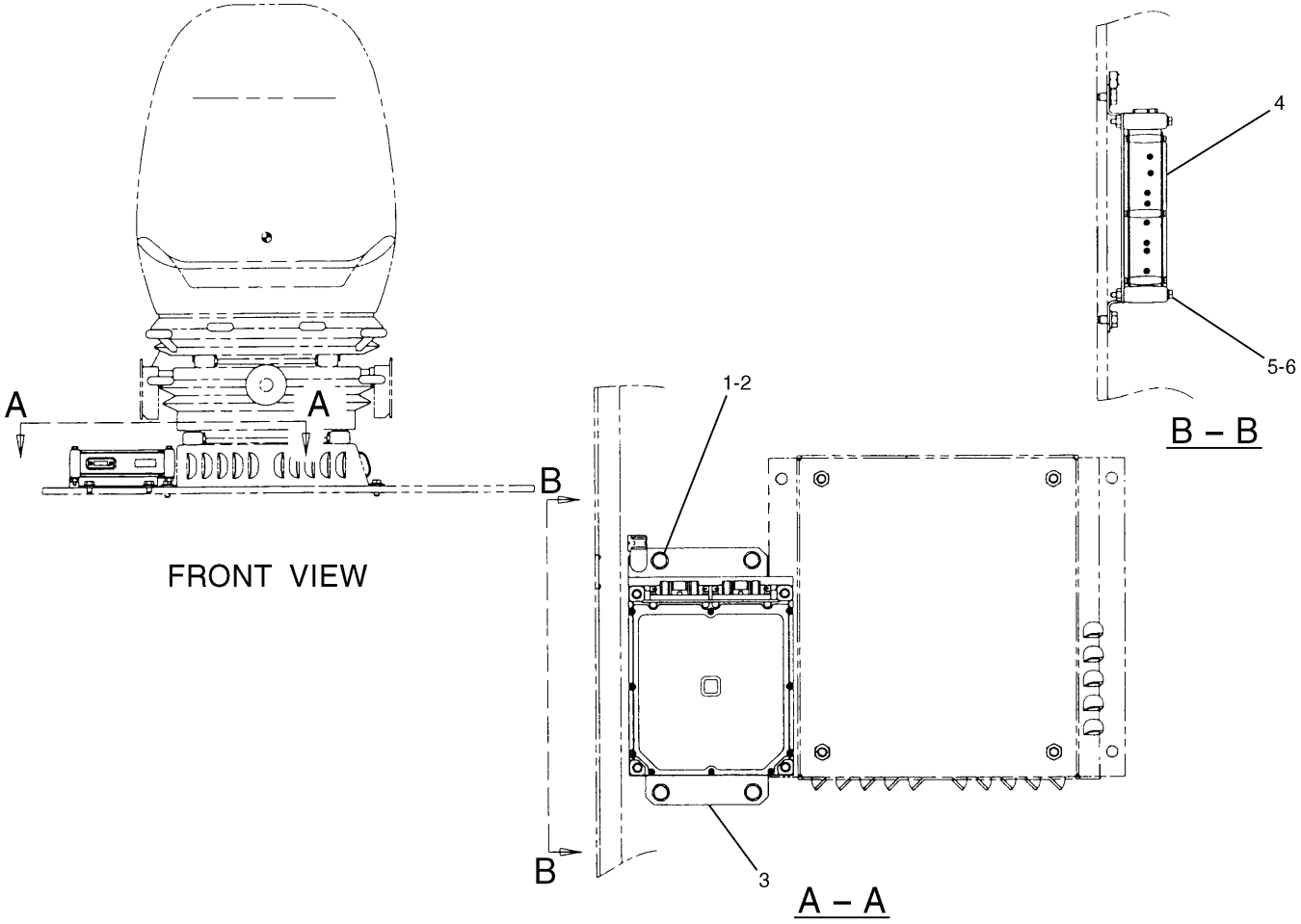

NOTE	No.	PART No.	QTY	PART NAME	NOTE	No.	PART No.	QTY	PART NAME
	1	8T-4191	4	BOLT (L=16mm)					
	2	8T-4121	4	WASHER					
	3	106-0191	1	BRACKET AS					
	4	151-9293	1	CONTROL GP					
	5	8T-3844	4	BOLT (L=70mm)					
	6	9X-8256	4	WASHER					
				THE FOLLOWING SERVICE REPAIR IS AVAILABLE:					
A		171-2579	1	CONTROL KIT					

A—NOT PART OF THIS GROUP

H62249E 02

145-3060 CONTROL & MTG GP-ELECTRONIC
S/N 3MR 03050-Up, 4MR 00439-Up

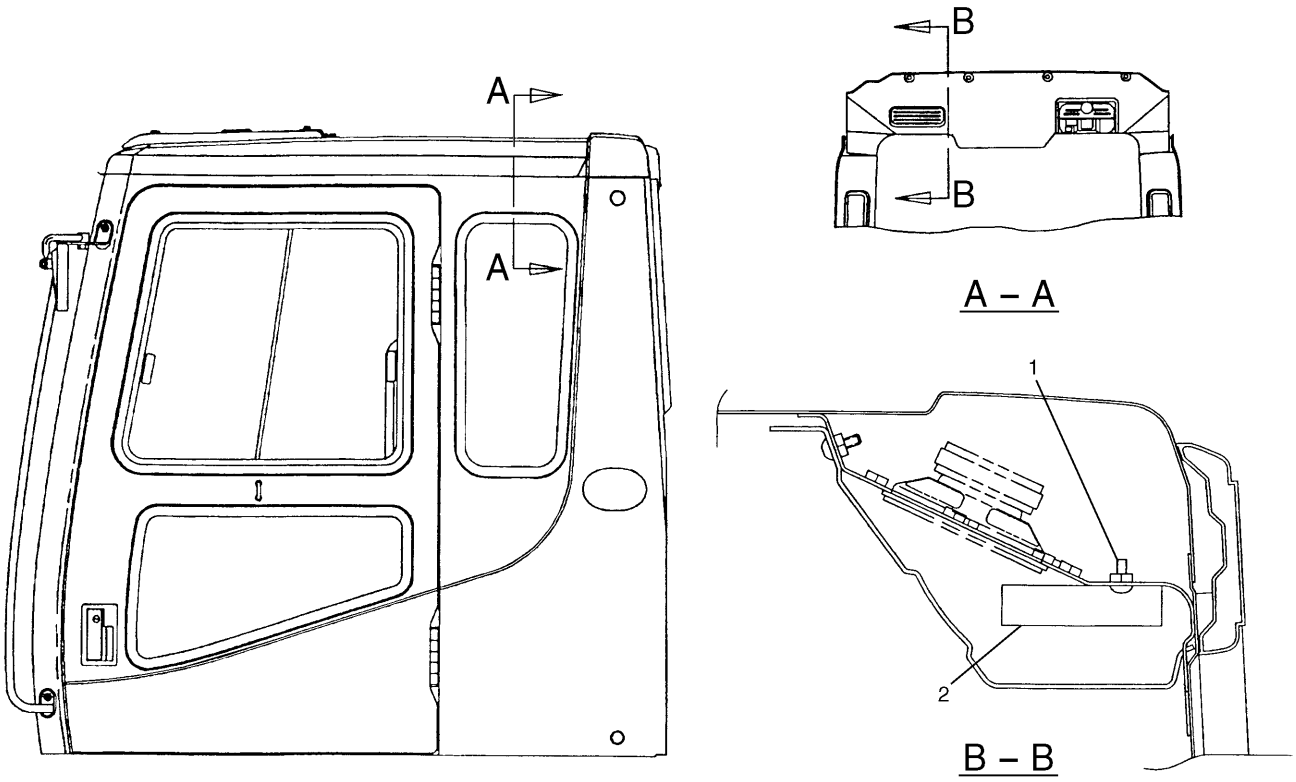

NOTE	No.	PART No.	QTY	PART NAME	NOTE	No.	PART No.	QTY	PART NAME
	1	9X-2044	2	SCREW					
	2	117-6305	1	CONTROL GP					

H57476E 00

117-6264 CONTROL & MTG GP-WINDSHIELD

Part of 111-6310-Page337,155-7061-Page337.01
An Attachment

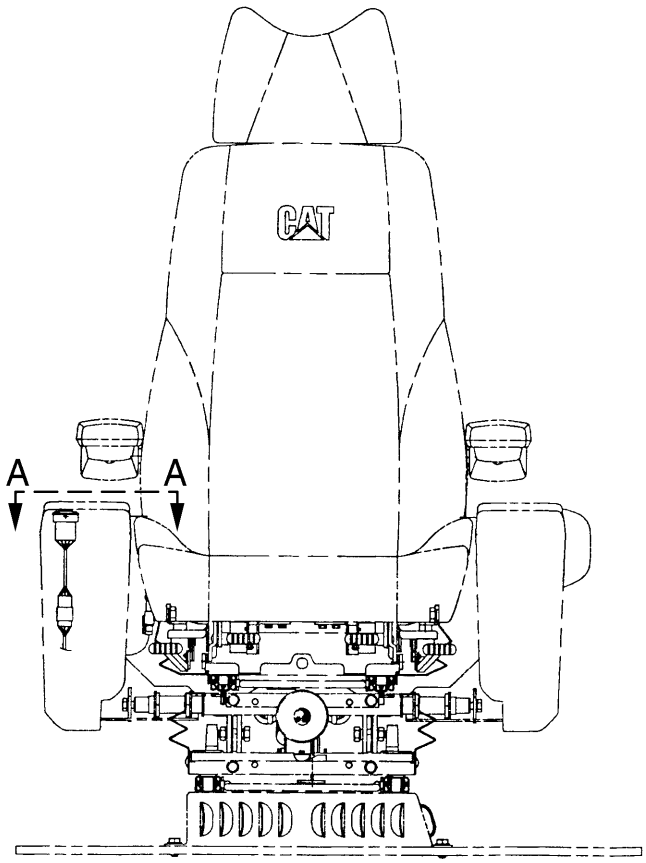

FRONT VIEW

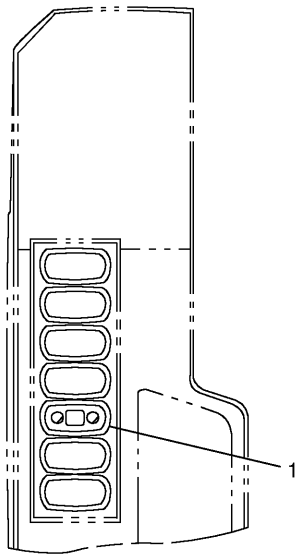

A – A

NOTE	No.	PART No.	QTY	PART NAME	NOTE	No.	PART No.	QTY	PART NAME
	1	111-4789	1	SWITCH AS					
		116-0173	1	CONNECTOR					
		116-0174	5	TERMINAL					

H57477E 00

121-1099 WIRING GP

Part of 111-6310-Page337,155-7061-Page337.01
An Attachment

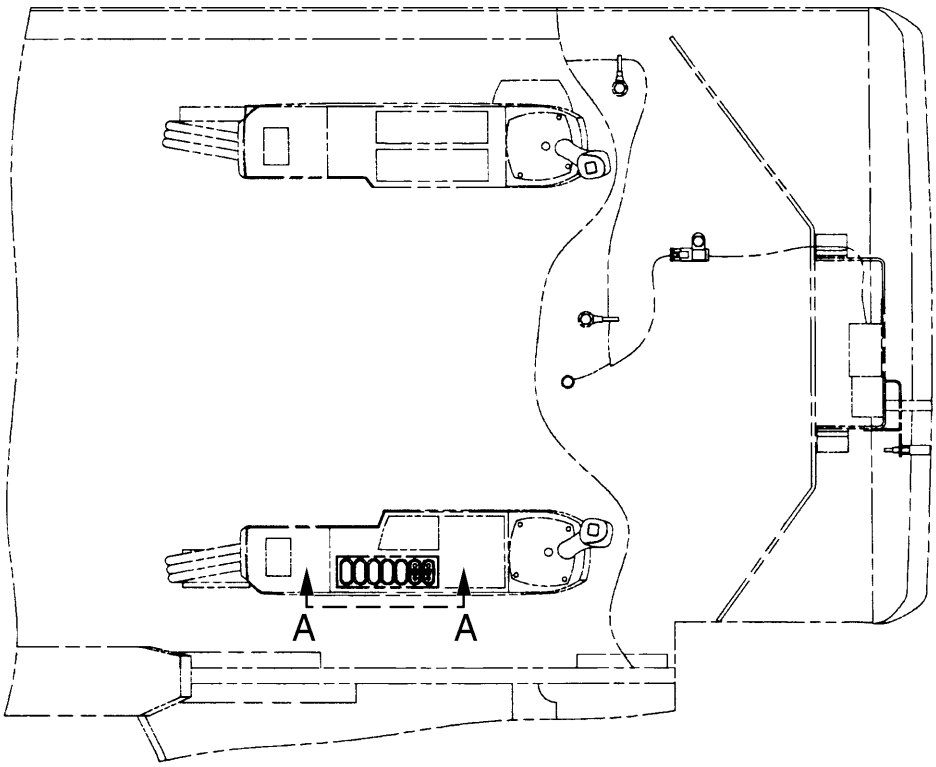

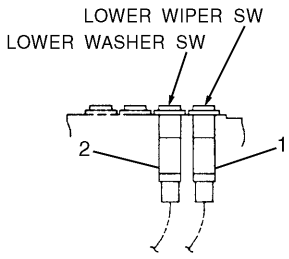

A – A

NOTE	No.	PART No.	QTY	PART NAME	NOTE	No.	PART No.	QTY	PART NAME
	1	111-4785	1	SWITCH AS (LOWER WIPER)					
		116-0173	1	CONNECTOR					
		116-0174	5	TERMINAL					
	2	111-4786	1	SWITCH AS (LOWER WASHER)					
		116-0173	1	CONNECTOR					
		116-0174	4	TERMINAL					

H51079E 02

111-4695 WIRING GP-LOWER WIPER

Part of 111-6314-Page345
An Attachment

ELECTRICAL AND STARTING SYSTEM

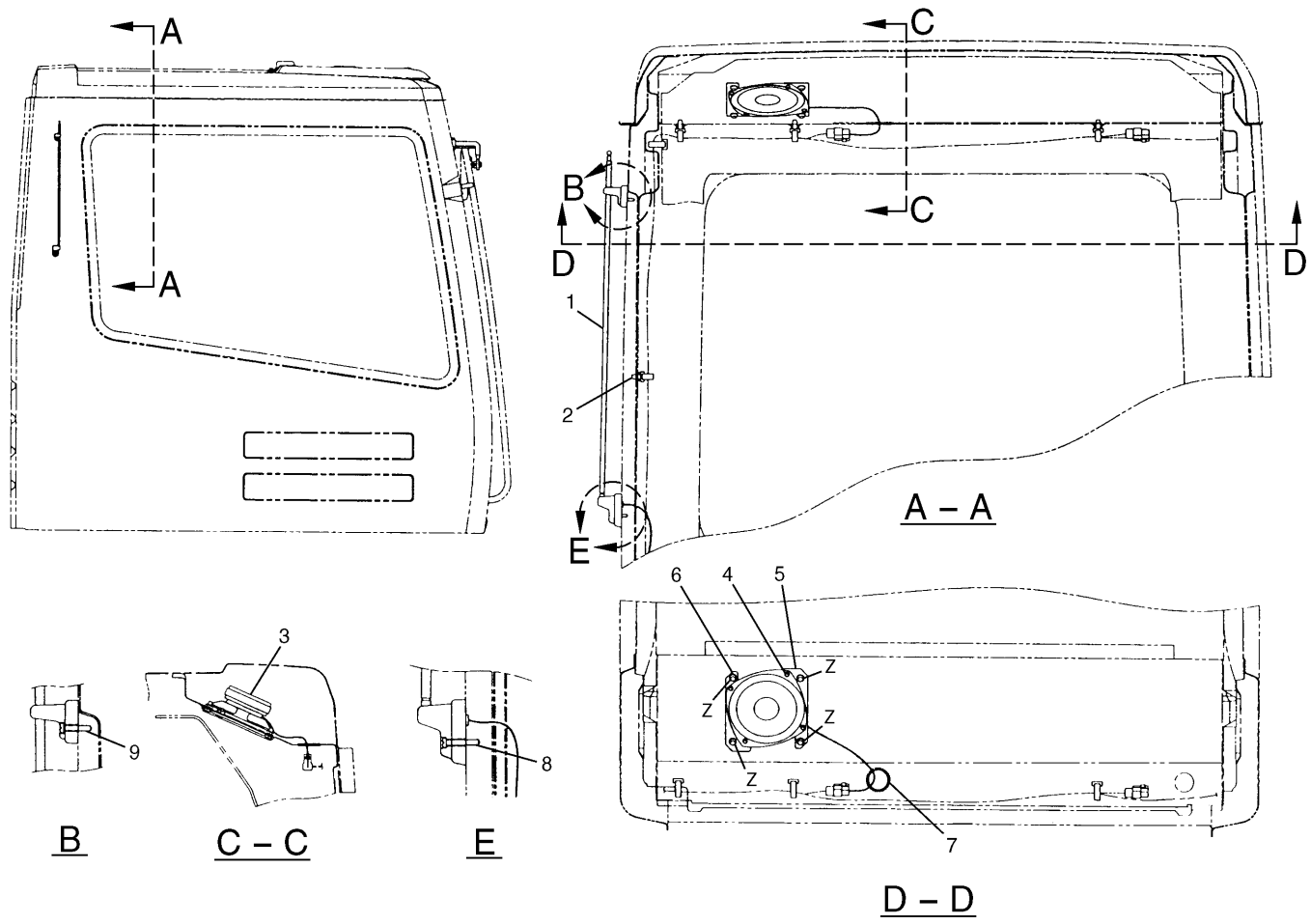

NOTE	No.	PART No.	QTY	PART NAME	NOTE	No.	PART No.	QTY	PART NAME
	1	106-0036	1	ANTENNA AS					
		106-0035	1	ROD AS					
		7Y-5285	1	SCREW AS					
	2	3S-2093	4	STRAP					
	3	7Y-5505	1	SPEAKER AS					
		7Y-3951	2	TERMINAL					
	4	8C-7581	4	SCREW					
	5	116-0210	2	BRACKET AS					
	6	099-7127	4	SCREW					
E	7	101-2846		GUARD…(9cm)					
	8	6V-9492	1	SCREW					
	9	6V-9491	1	SCREW					

E—ORDER BY THE CENTIMETER

H54593E 03

116-0236 WIRING GP-RADIO

AM Radio

Part of 116-0158-Page351

An Attachment

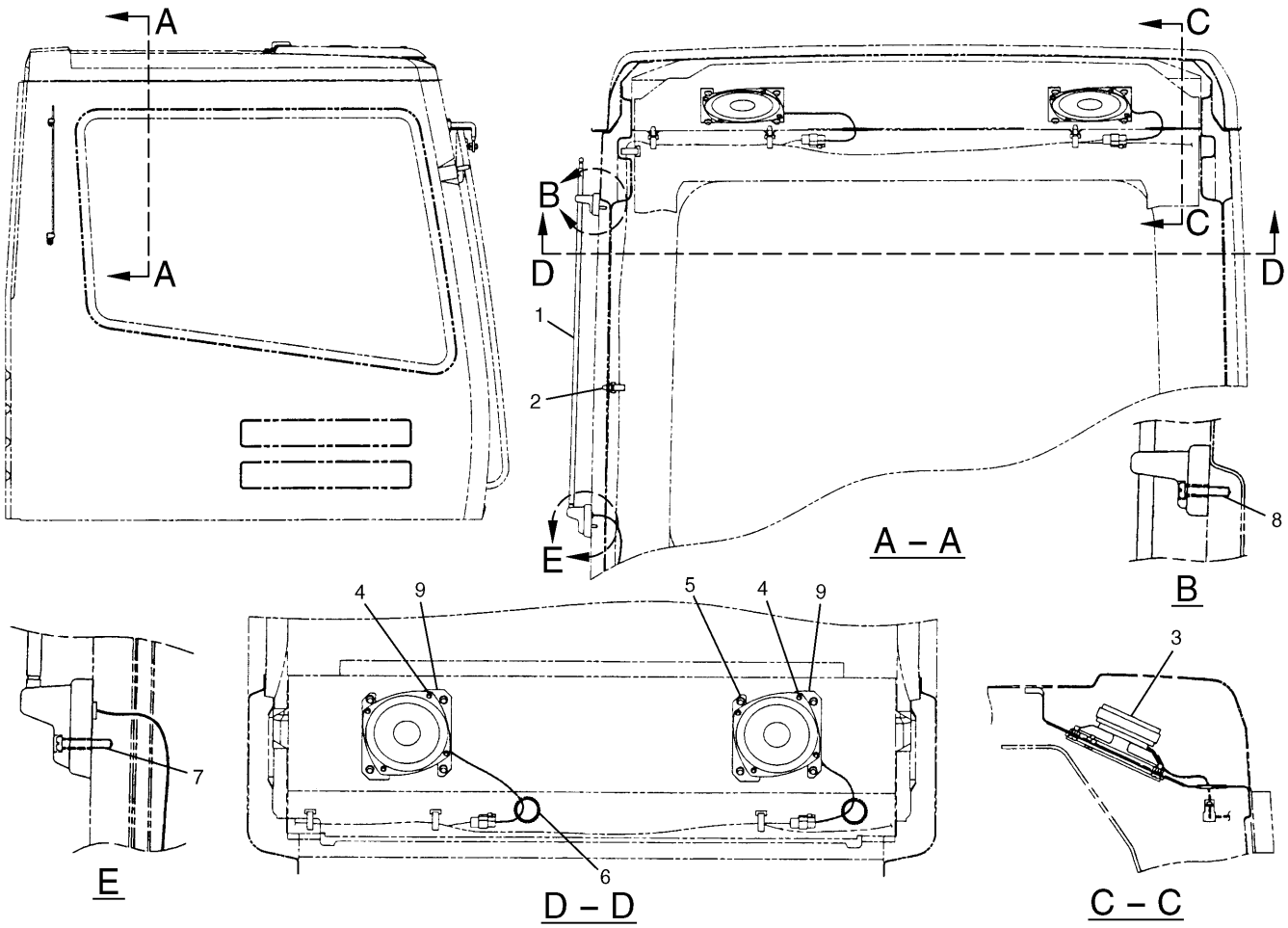

NOTE	No.	PART No.	QTY	PART NAME	NOTE	No.	PART No.	QTY	PART NAME
	1	106-0036	1	ANTENNA AS					
		106-0035	1	ROD AS					
		7Y-5285	1	SCREW AS					
	2	3S-2093	4	STRAP					
	3	7Y-5505	2	SPEAKER AS					
		7Y-3951	2	TERMINAL					
	4	8C-7581	8	SCREW					
	5	099-7127	8	SCREW					
E	6	101-2846		GUARD…(9cm × 2)					
	7	6V-9492	1	SCREW					
	8	6V-9491	1	SCREW					
	9	116-0210	4	BRACKET AS					

E—ORDER BY THE CENTIMETER

H54584E 04

111-4844 WIRING GP-RADIO

AM/FM Radio

Part of 153-2506-Page350.02,111-4693-Page351

An Attachment

MEMORANDA

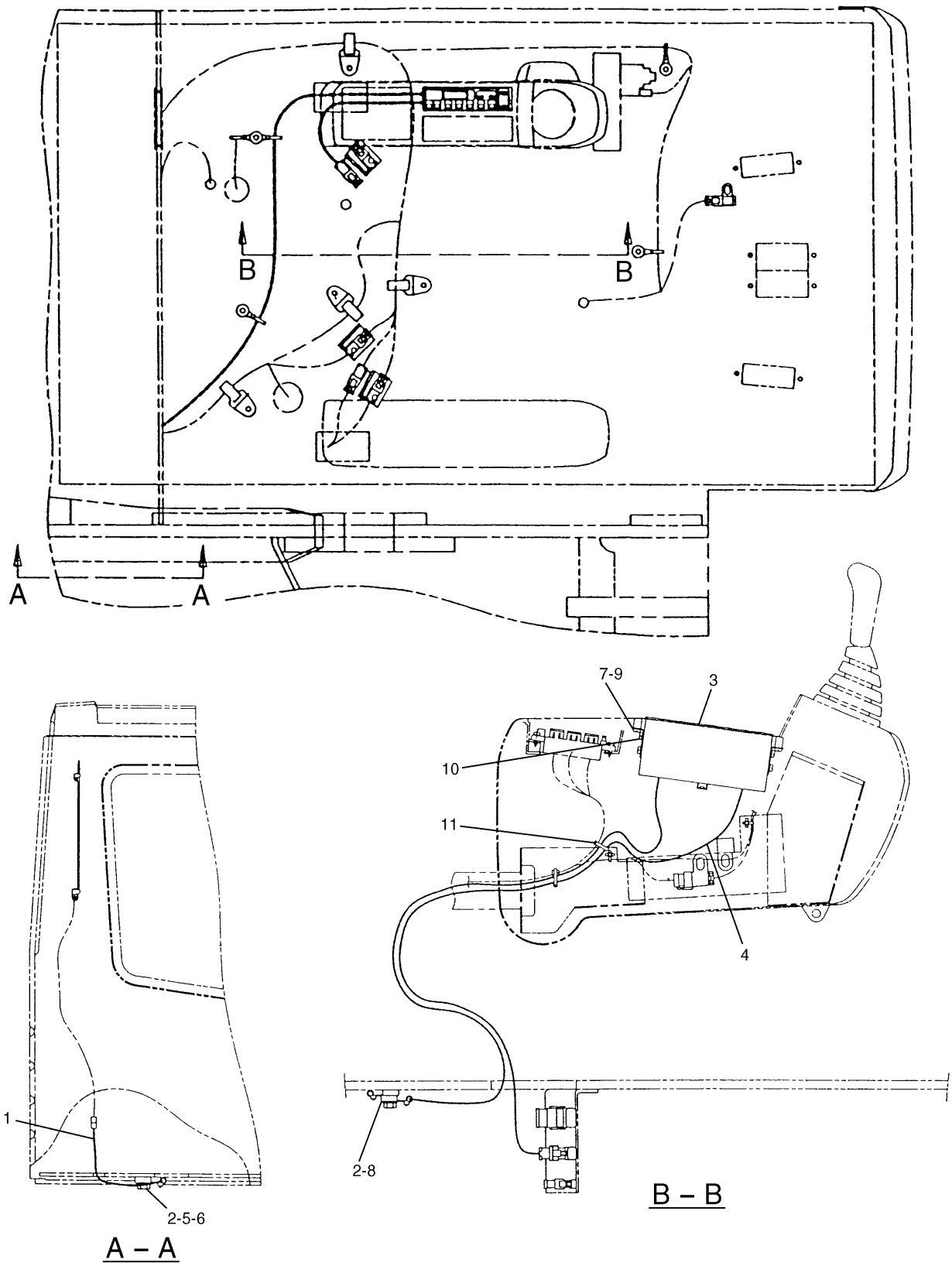

H57479E 01

116–0217 WIRING GP–CONSOLE
AM Radio
S/N 3MR 1–(D96.04), 4MR 1–(D96.04)
Part of 116–0158–Page351
111–4841–Page94.06
An Attachment

ELECTRICAL AND STARTING SYSTEM

NOTE	No.	PART No.	QTY	PART NAME	NOTE	No.	PART No.	QTY	PART NAME
	1	111-4846	1	CABLE					
	2	111-4836	2	CLIP					
	3	116-0218	1	RADIO (AM)					
Y	4	111-4841	1	HARNESS AS					
	5	8T-4137	1	BOLT (L=20mm)					
	6	8T-4121	1	WASHER					
	7	117-6259	2	ANGLE					
	8	8T-4195	1	BOLT (L=30mm)					
	9	119-5026	4	SCREW					
	10	095-0736	4	SCREW					
		8T-0328	4	WASHER					
	11	3S-2093	1	STRAP					

Y—SEE SEPARATE ILLUSTRATION

H57479E 01

116-0217 WIRING GP-CONSOLE

AM Radio
S/N 3MR 1-(D96.04), 4MR 1-(D96.04)
Part of 116-0158-Page351
111-4841-Page94.06
An Attachment

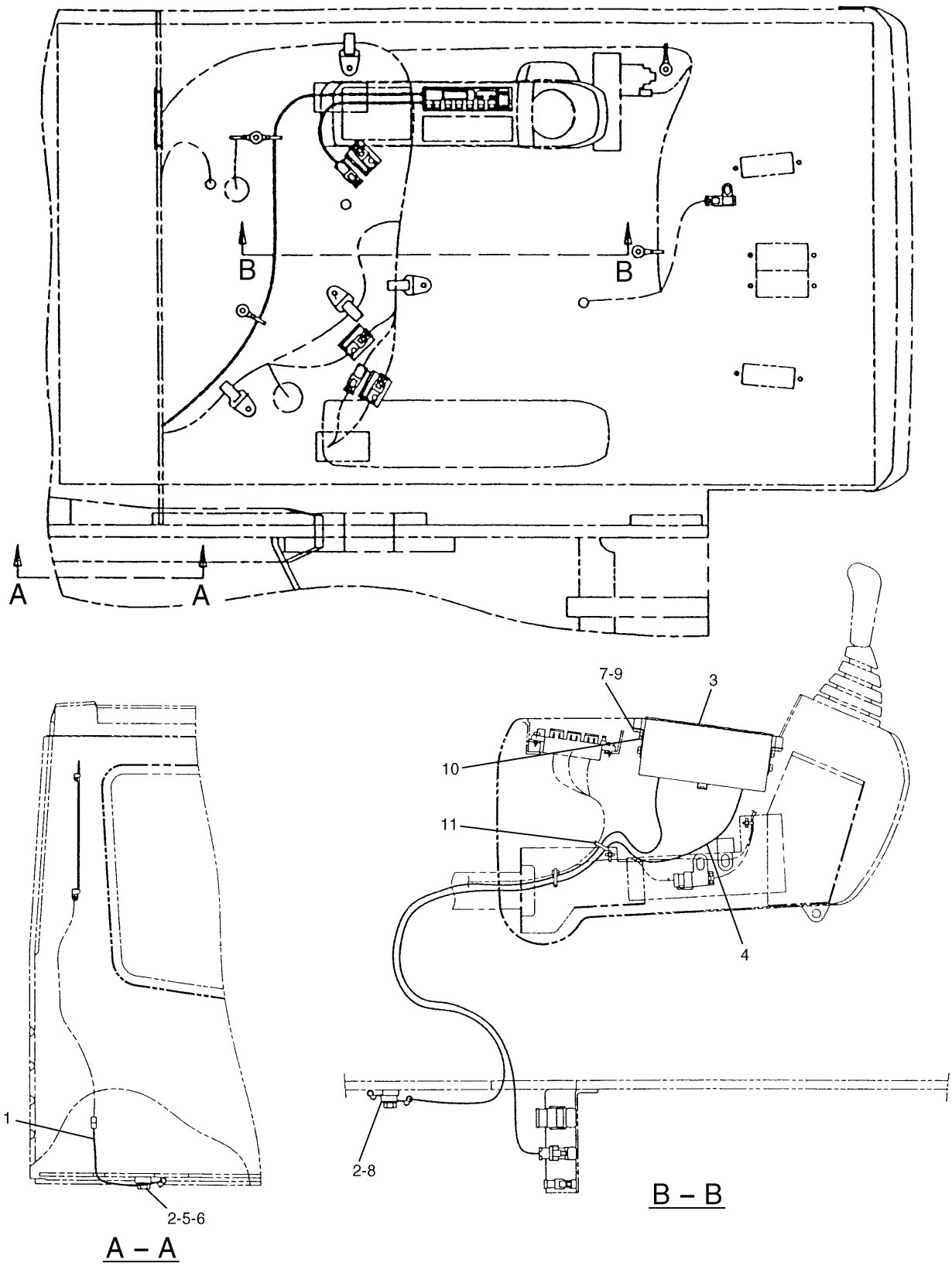

H57481E 02

116–0217 WIRING GP–CONSOLE
AM Radio
S/N 3MR (D96.05)–Up, 4MR (D96.05)–Up
Part of 116–0158–Page351
111–4841–Page94.06
An Attachment

ELECTRICAL AND STARTING SYSTEM

NOTE	No.	PART No.	QTY	PART NAME	NOTE	No.	PART No.	QTY	PART NAME
	1	111-4846	1	CABLE					
	2	111-4836	2	CLIP					
	3	136-4006	1	RADIO (AM)					
Y	4	111-4841	1	HARNESS AS					
	5	8T-4137	1	BOLT (L=20mm)					
	6	8T-4121	1	WASHER					
	7	117-6259	2	ANGLE					
	8	8T-4195	1	BOLT (L=30mm)					
	9	119-5026	4	SCREW					
	10	095-0736	4	SCREW					
		8T-0328	4	WASHER					
	11	3S-2093	1	STRAP					

Y—SEE SEPARATE ILLUSTRATION

H57481E 02

116-0217 WIRING GP-CONSOLE

AM Radio
S/N 3MR (D96.05)-Up, 4MR (D96.05)-Up
Part of 116-0158-Page351
111-4841-Page94.06
An Attachment

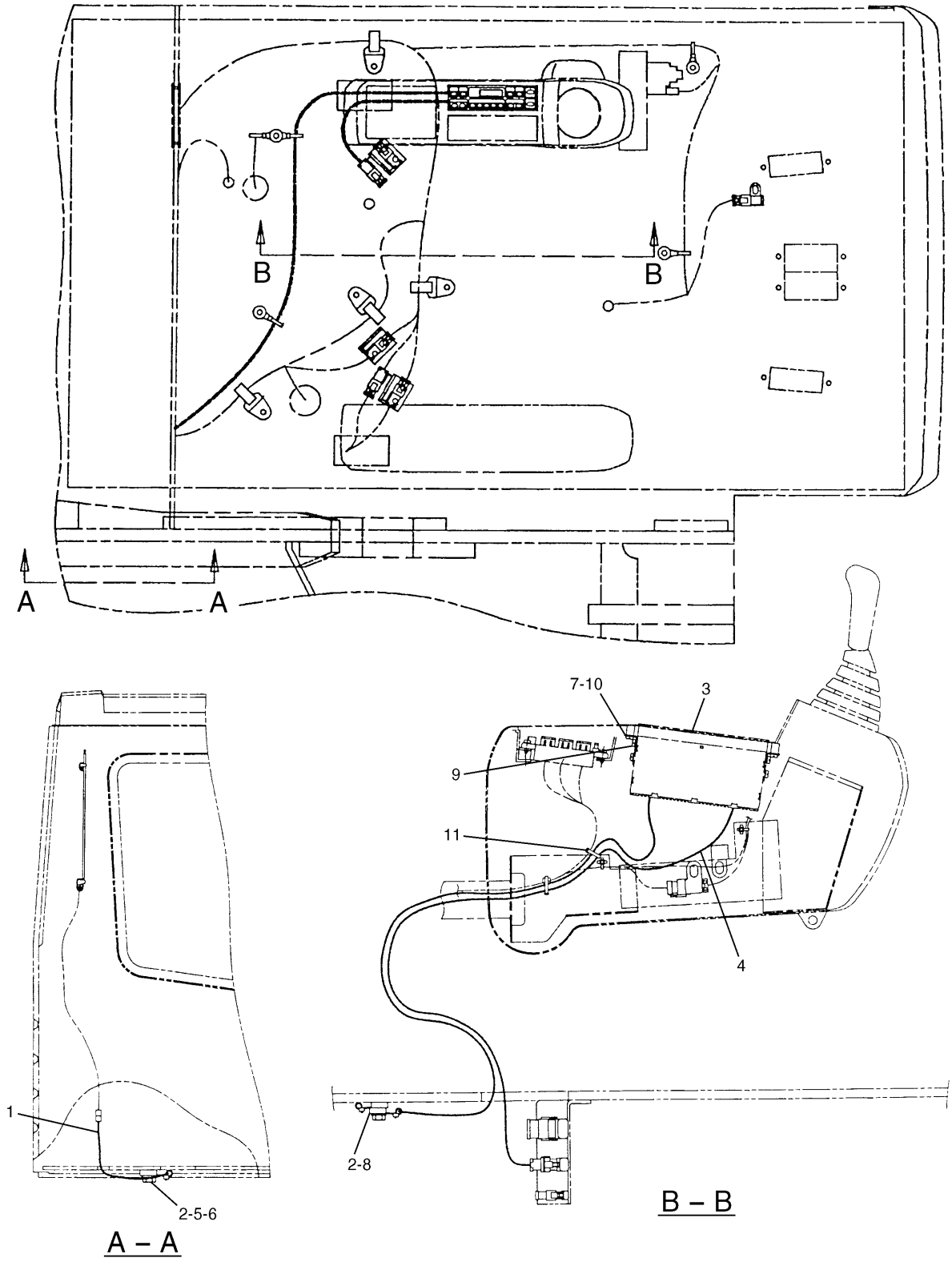

H57483E 04

111-4845 WIRING GP-CONSOLE

AM/FM Radio
S/N 3MR 1-(D96.04), 4MR 1-(D96.04)
Part of 111-4693-Page351
111-4841-Page94.06
An Attachment

ELECTRICAL AND STARTING SYSTEM

NOTE	No.	PART No.	QTY	PART NAME	NOTE	No.	PART No.	QTY	PART NAME
	1	111-4846	1	CABLE					
	2	111-4836	2	CLIP					
	3	111-4840	1	RADIO (AM/FM)					
Y	4	111-4841	1	HARNESS AS					
	5	8T-4137	1	BOLT (L=20mm)					
	6	8T-4121	1	WASHER					
	7	117-6259	2	ANGLE					
	8	8T-4195	1	BOLT (L=30mm)					
	9	095-0736	4	SCREW					
		8T-0328	4	WASHER					
	10	119-5026	4	SCREW					
	11	3S-2093	1	STRAP					

Y—SEE SEPARATE ILLUSTRATION

H57483E 04

111-4845 WIRING GP-CONSOLE

AM/FM Radio
S/N 3MR 1-(D96.04), 4MR 1-(D96.04)
Part of 111-4693-Page351
111-4841-Page94.06
An Attachment

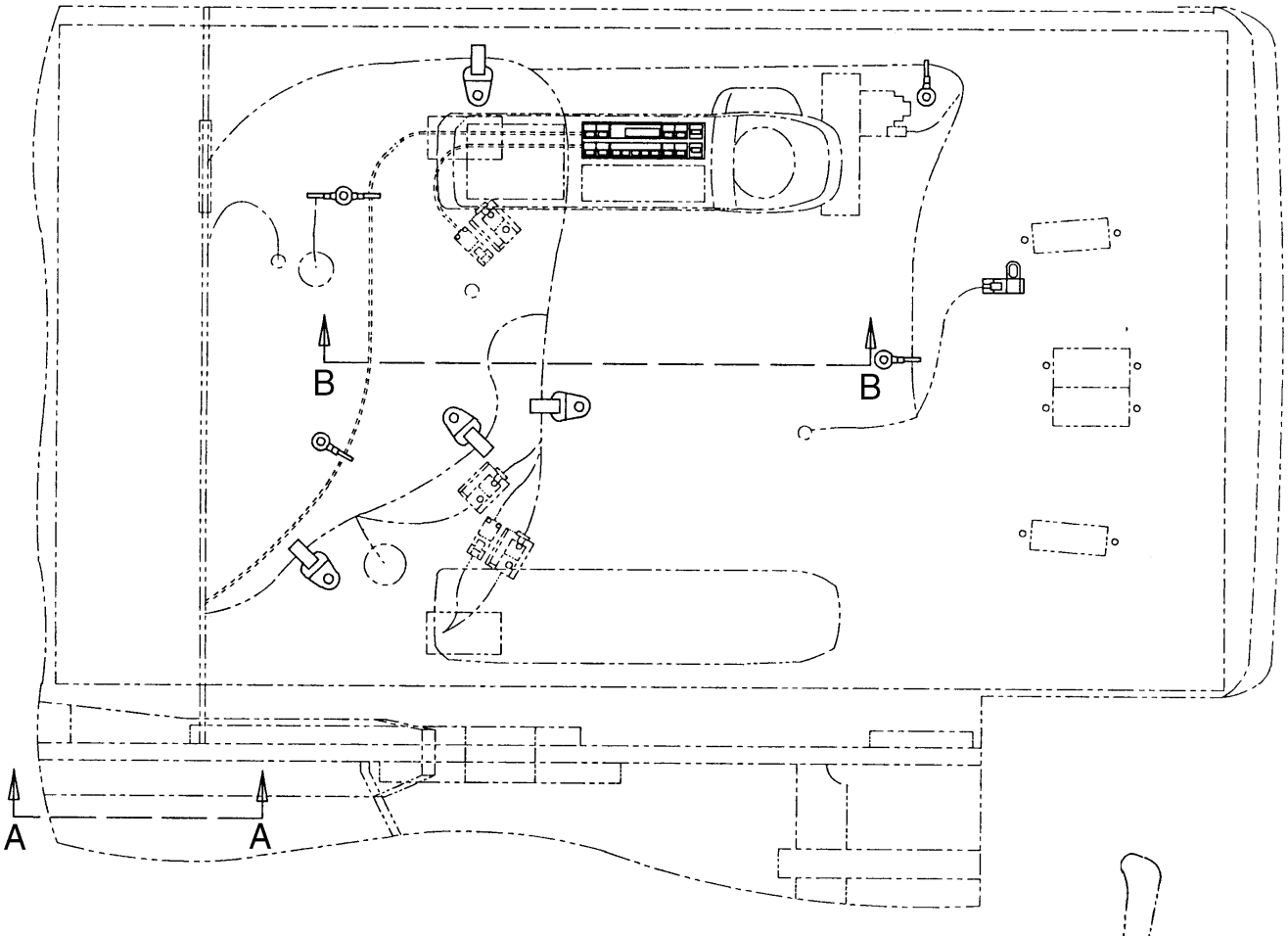

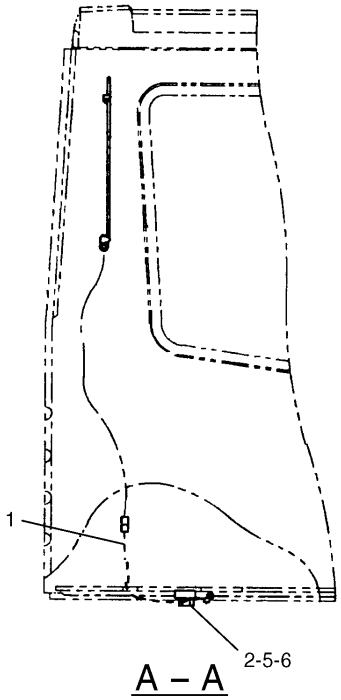

A – A

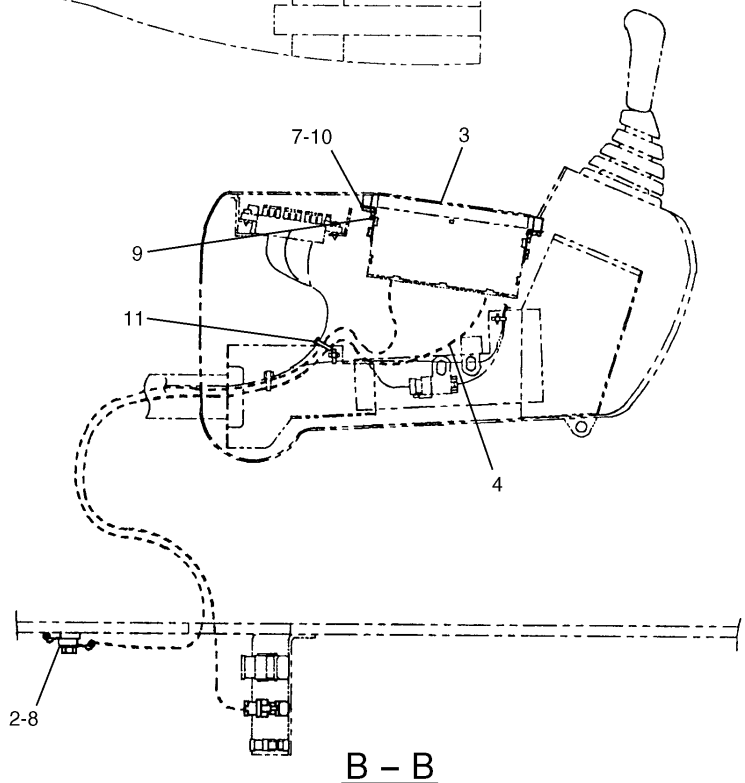

B – B

H61692E 07

111-4845 WIRING GP-CONSOLE

AM/FM Radio
S/N 3MR (D96.05)-Up, 4MR (D96.05)-Up
Part of 111-4693-Page351
111-4841-Page94.06
An Attachment

ELECTRICAL AND STARTING SYSTEM

NOTE	No.	PART No.	QTY	PART NAME	NOTE	No.	PART No.	QTY	PART NAME
	1	111-4846	1	CABLE					
	2	111-4836	2	CLIP					
	3	153-2444	1	RADIO (AM/FM)					
Y	4	111-4841	1	HARNESS AS					
	5	8T-4137	1	BOLT (L=20mm)					
	6	8T-4121	1	WASHER					
	7	117-6259	2	ANGLE					
	8	8T-4195	1	BOLT (L=30mm)					
	9	095-0736	4	SCREW					
		8T-0328	4	WASHER					
	10	119-5026	4	SCREW					
	11	3S-2093	1	STRAP					

Y—SEE SEPARATE ILLUSTRATION

H61692E 07

111-4845 WIRING GP-CONSOLE

AM/FM Radio
S/N 3MR (D96.05)-Up, 4MR (D96.05)-Up
Part of 111-4693-Page351
111-4841-Page94.06
An Attachment

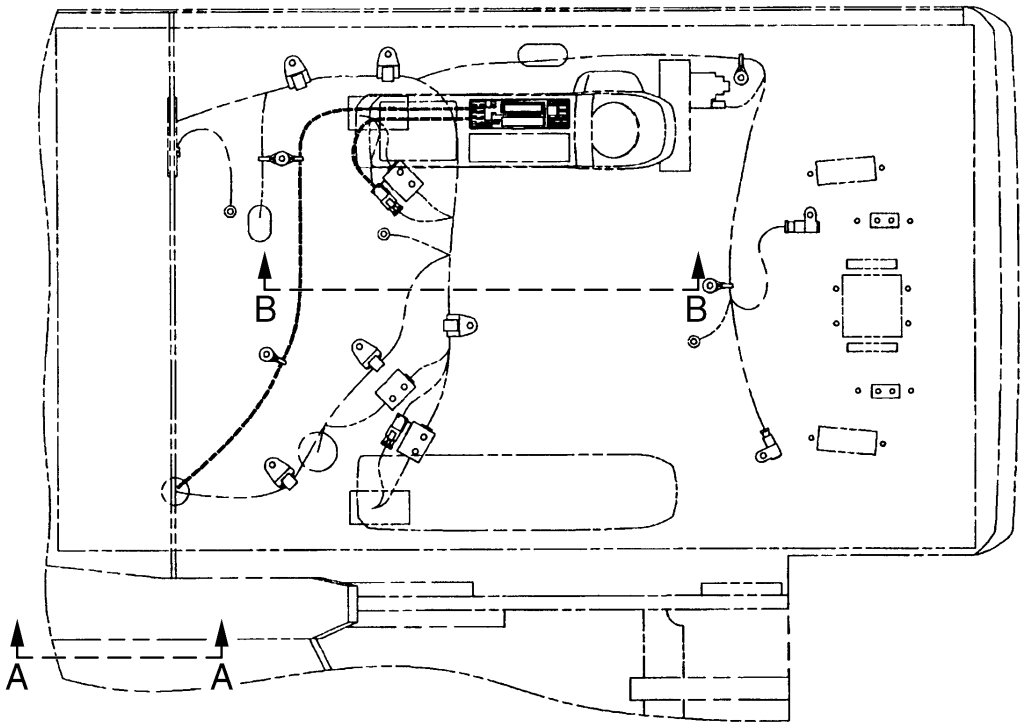

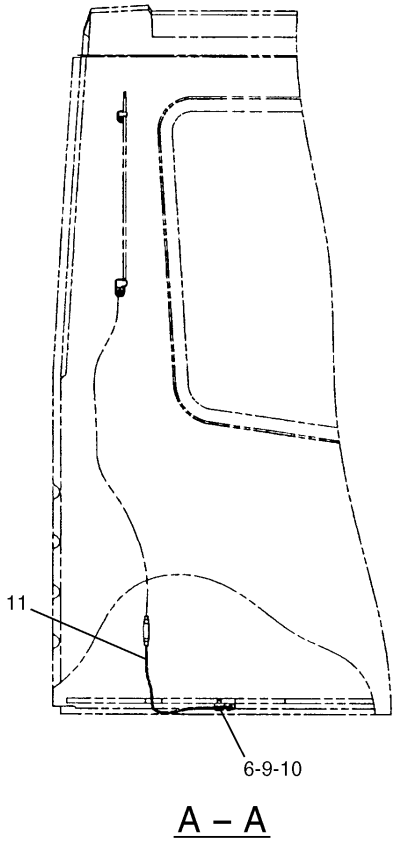

A – A

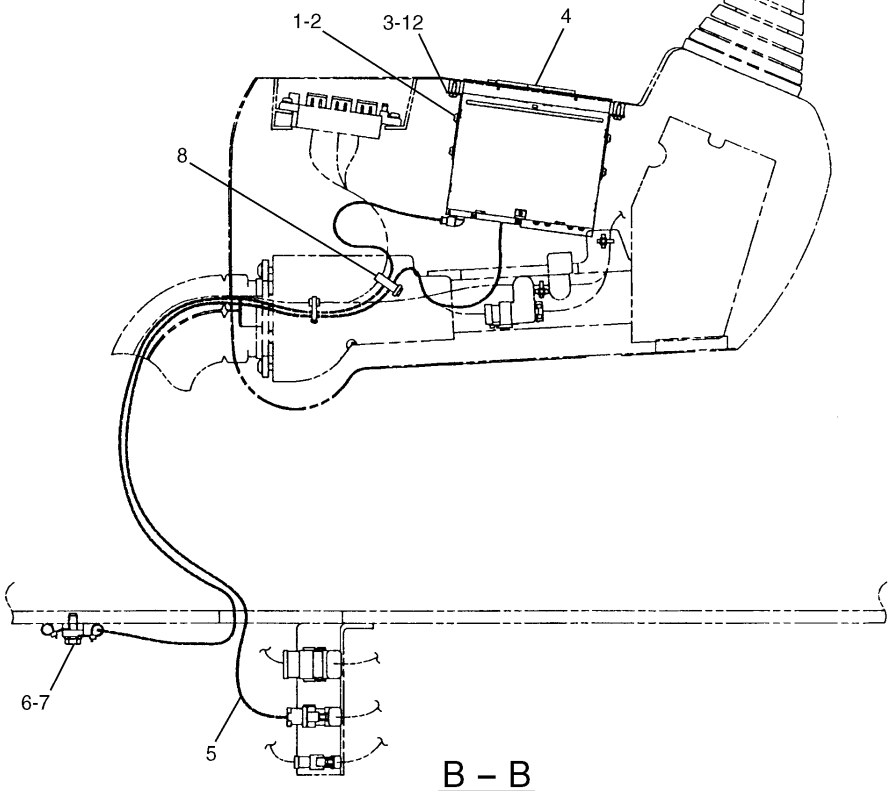

B – B

H60346E 00

153-2505 WIRING GP-CONSOLE

AM/FM Radio (With Casette)
S/N 3MR 04979-06337, 4MR 00716-00927
Part of 153-2506-Page350.02
153-2499-Page96.01
An Attachment

ELECTRICAL AND STARTING SYSTEM

NOTE	No.	PART No.	QTY	PART NAME	NOTE	No.	PART No.	QTY	PART NAME
	1	095-0736	4	SCREW					
	2	8T-0328	4	WASHER					
	3	119-5026	4	SCREW					
	4	153-2503	1	RADIO (AM/FM)					
Y	5	153-2499	1	HARNESS AS					
	6	111-4836	2	CLIP					
	7	8T-4195	1	BOLT (L=30mm)					
	8	3S-2093	1	STRAP					
	9	8T-4137	1	BOLT (L=20mm)					
	10	8T-4121	1	WASHER					
	11	153-2504	1	CABLE					
	12	153-2507	2	ANGLE					

Y—SEE SEPARATE ILLUSTRATION

H60346E 00

153-2505 WIRING GP-CONSOLE

AM/FM Radio (With Casette)
S/N 3MR 04979-06337, 4MR 00716-00927
Part of 153-2506-Page350.02
153-2499-Page96.01
An Attachment

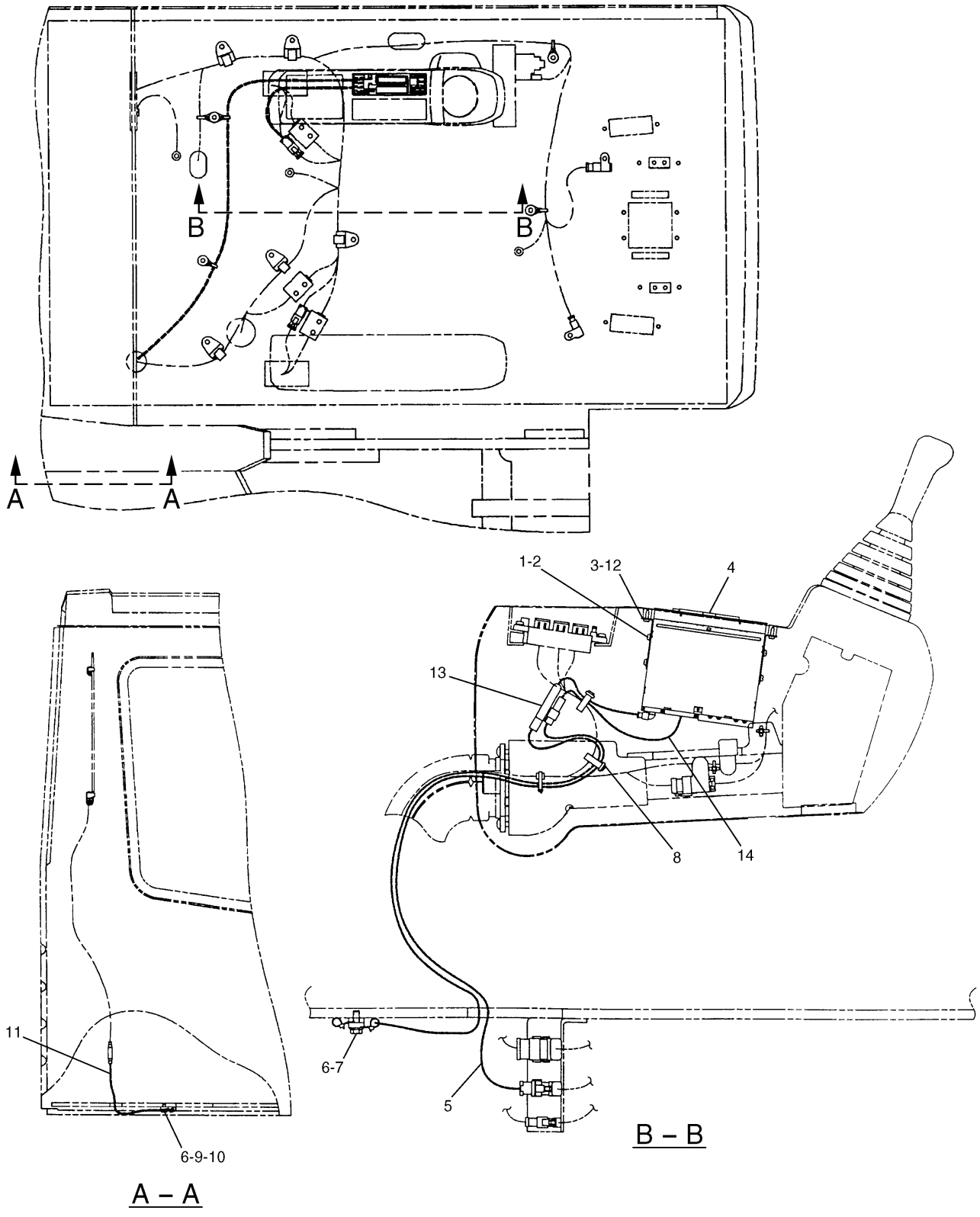

H65245E 01

153-2505 WIRING GP-CONSOLE
AM/FM Radio (With Casette)
S/N 3MR 06338-Up, 4MR 00928-Up
Part of 153-2506-Page350.02
111-4841-Page94.06,167-3485-Page96.02
An Attachment

ELECTRICAL AND STARTING SYSTEM

NOTE	No.	PART No.	QTY	PART NAME	NOTE	No.	PART No.	QTY	PART NAME
	1	095-0736	4	SCREW					
	2	8T-0328	4	WASHER					
	3	119-5026	4	SCREW					
	4	153-2503	1	RADIO (AM/FM)					
Y	5	111-4841	1	HARNESS AS					
	6	111-4836	2	CLIP					
	7	8T-4195	1	BOLT (L=30mm)					
	8	3S-2093	2	STRAP					
	9	8T-4137	1	BOLT (L=20mm)					
	10	8T-4121	1	WASHER					
	11	111-4846	1	CABLE					
	12	153-2507	2	ANGLE					
	13	167-3484	1	CABLE					
Y	14	167-3485	1	HARNESS AS					

Y—SEE SEPARATE ILLUSTRATION

H65245E 01

153-2505 WIRING GP-CONSOLE

AM/FM Radio (With Casette)
S/N 3MR 06338-Up, 4MR 00928-Up
Part of 153-2506-Page350.02
111-4841-Page94.06,167-3485-Page96.02
An Attachment

ELECTRICAL AND STARTING SYSTEM

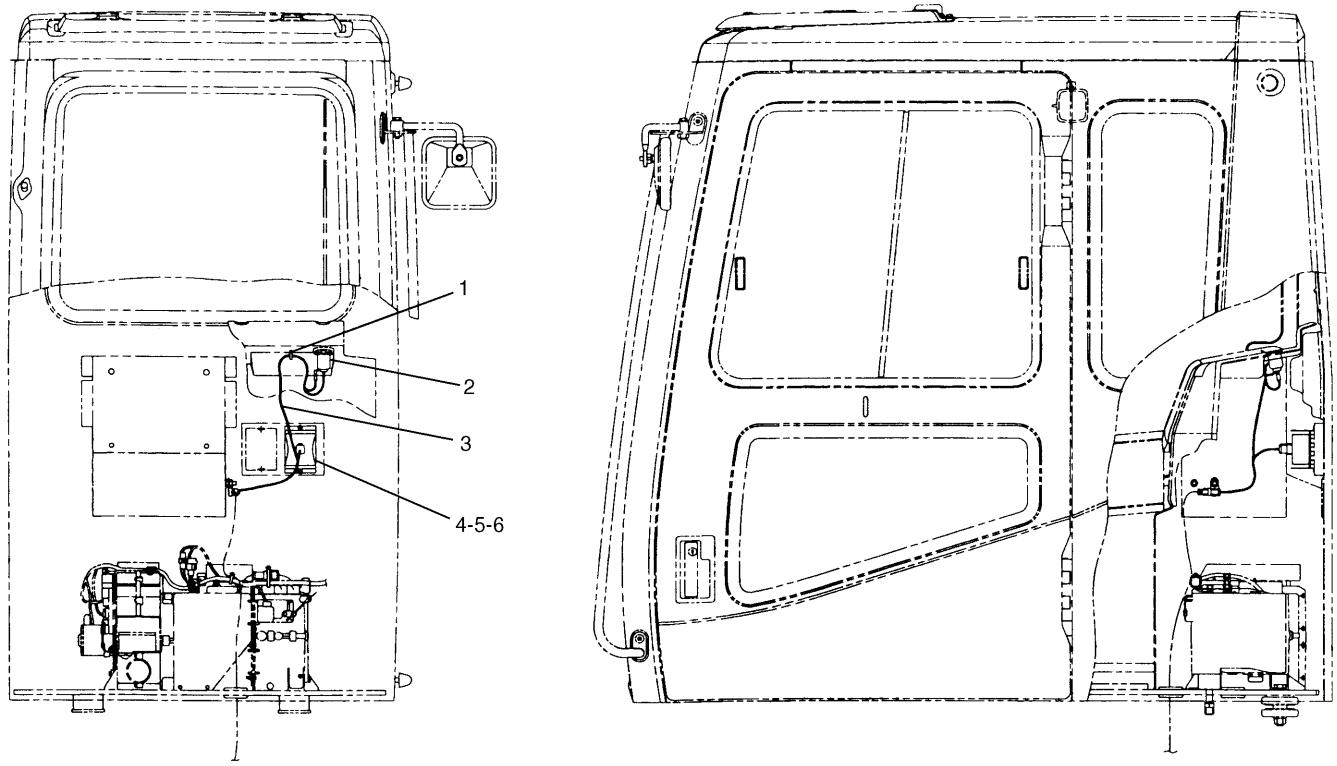

NOTE	No.	PART No.	QTY	PART NAME	NOTE	No.	PART No.	QTY	PART NAME
	1	132-1903	1	STRAP					
	2	121-0987	1	SOCKET					
Y	3	116-0258	1	HARNESS AS					
	4	119-1733	1	CONVERTER					
	5	6V-9673	2	SCREW					
	6	8T-0328	2	WASHER					

Y—SEE SEPARATE ILLUSTRATION

H52460E 04

116-0159 WIRING GP

12V-7A Power Supply
116-0258-Page94.06
An Attachment

ELECTRICAL AND STARTING SYSTEM

Consists of :

			Page
1	106-0057	WIRING GP-CONSOLE.....	82
1	106-0058	WIRING GP-CONSOLE.....	83

H50057E 01

106-0056 WIRING GP-CONSOLE

ELECTRICAL AND STARTING SYSTEM

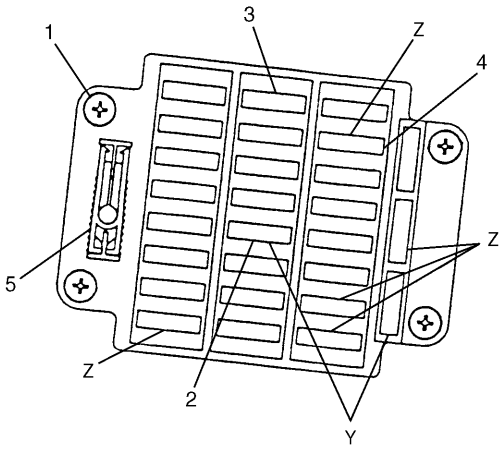

A – A

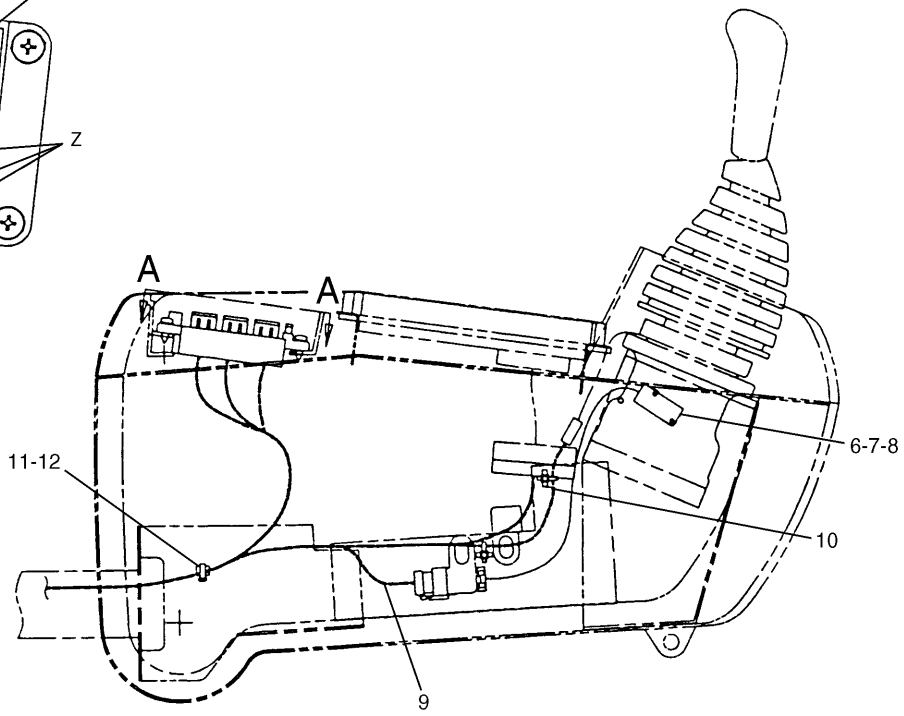

NOTE	No.	PART No.	QTY	PART NAME	NOTE	No.	PART No.	QTY	PART NAME
	1	119-5026	4	SCREW					
	2	8T-9636	2	FUSE (30A)					
	3	9W-1442	20	FUSE (10A)					
	4	9W-1441	5	FUSE (15A)					
	5	7Y-5493	1	TOOL					
Y	6	111-4799	1	SWITCH AS (NEUTRAL START LIMIT)					
	7	120-9027	2	SCREW					
	8	096-5962	2	WASHER					
Y	9	128-8963	1	HARNESS AS					
	10	116-0082	2	STRAP					
	11	125-4726	1	CLIP					
	12	3S-2093	1	STRAP					

Y—SEE SEPARATE ILLUSTRATION

H53379E 07

106-0057 WIRING GP-CONSOLE

Left Hand
S/N 3MR 1-00236, 4MR 1-00140
Part of 106-0056-Page81
128-8963-Page83.03,111-4799-Page88

ELECTRICAL AND STARTING SYSTEM

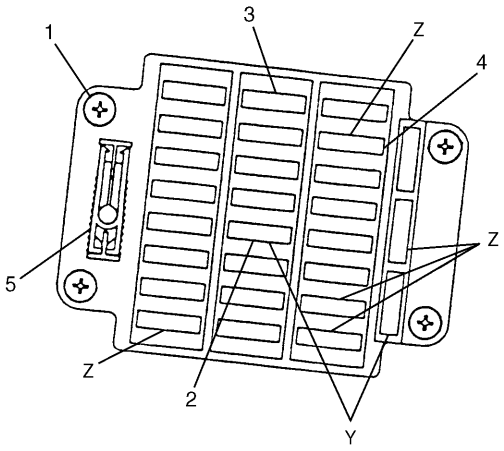

A – A

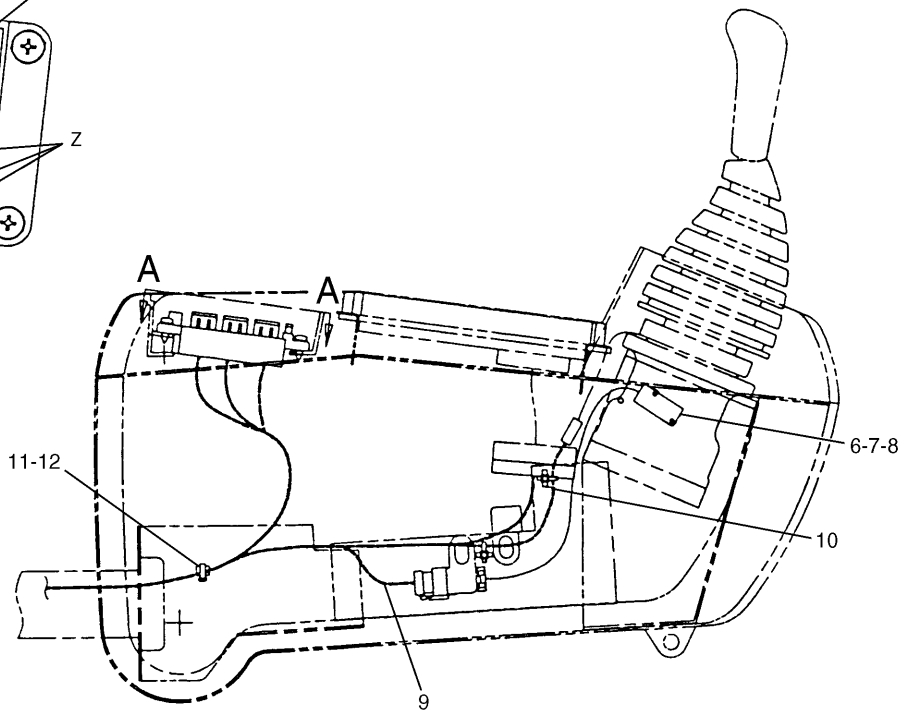

NOTE	No.	PART No.	QTY	PART NAME	NOTE	No.	PART No.	QTY	PART NAME
	1	119-5026	4	SCREW					
	2	8T-9636	2	FUSE (30A)					
	3	9W-1442	20	FUSE (10A)					
	4	9W-1441	5	FUSE (15A)					
	5	7Y-5493	1	TOOL					
Y	6	111-4799	1	SWITCH AS (NEUTRAL START LIMIT)					
	7	120-9027	2	SCREW					
	8	096-5962	2	WASHER					
Y	9	132-1892	1	HARNESS AS					
	10	116-0082	2	STRAP					
	11	125-4726	1	CLIP					
	12	3S-2093	1	STRAP					

Y—SEE SEPARATE ILLUSTRATION

H52939E 09

106-0057 WIRING GP-CONSOLE

Left Hand
S/N 3MR 00237-04978, 4MR 00141-00715
Part of 106-0056-Page81
132-1892-Page83.03,111-4799-Page88

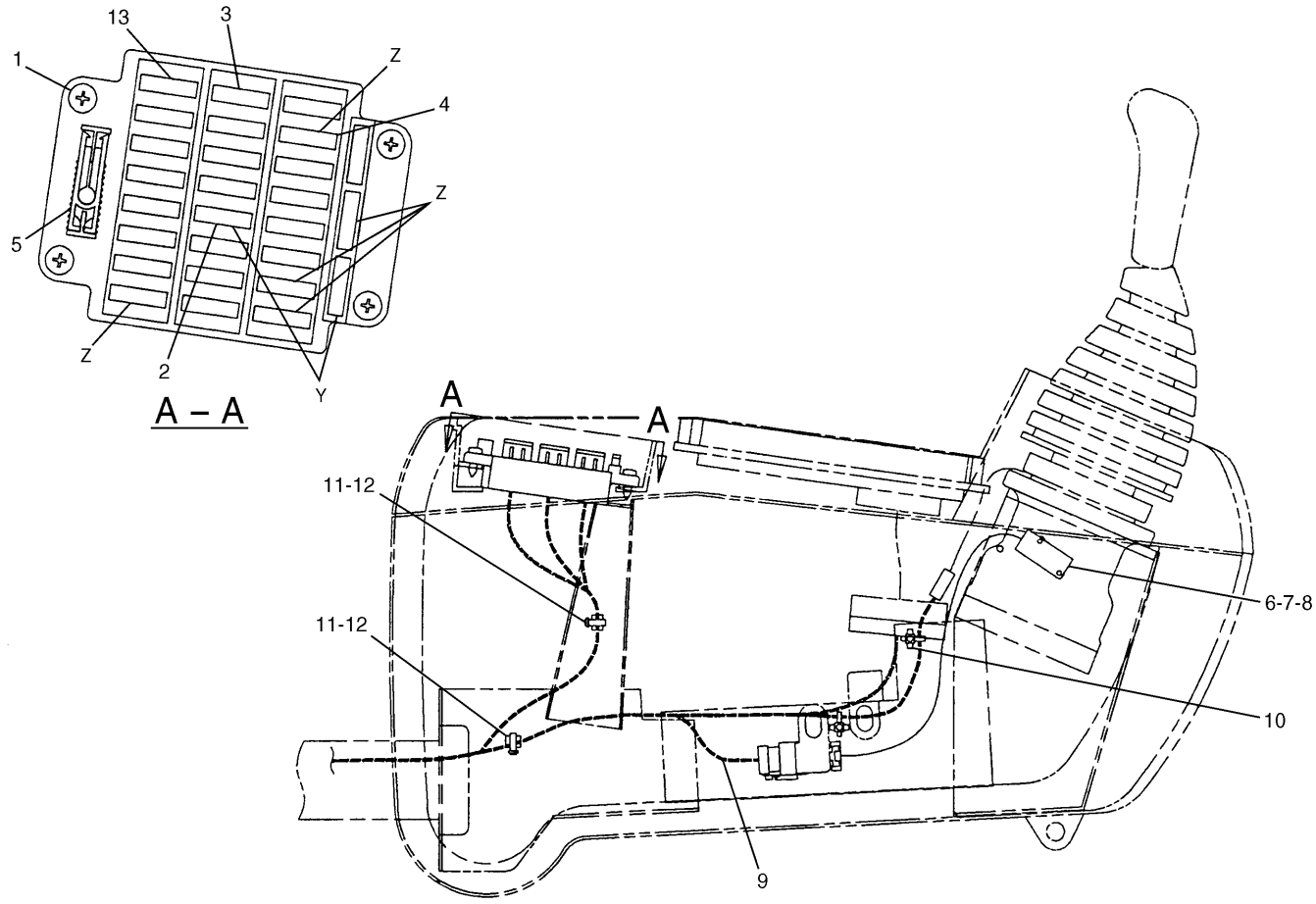

NOTE	No.	PART No.	QTY	PART NAME	NOTE	No.	PART No.	QTY	PART NAME
	1	119-5026	4	SCREW					
	2	8T-9636	2	FUSE (30A)					
	3	9W-1442	19	FUSE (10A)					
	4	9W-1441	5	FUSE (15A)					
	5	7Y-5493	1	TOOL					
Y	6	111-4799	1	SWITCH AS (NEUTRAL START LIMIT)					
	7	120-9027	2	SCREW					
	8	096-5962	2	WASHER					
Y	9	153-2491	1	HARNESS AS					
	10	116-0082	2	STRAP					
	11	125-4726	2	CLIP					
	12	3S-2093	2	STRAP					
	13	9W-1446	1	FUSE (20A)					

Y—SEE SEPARATE ILLUSTRATION

H60347E 10

106-0057 WIRING GP-CONSOLE

Left Hand
S/N 3MR 04979-Up, 4MR 00716-Up
Part of 106-0056-Page81
153-2491-Page85.03,111-4799-Page88

ELECTRICAL AND STARTING SYSTEM

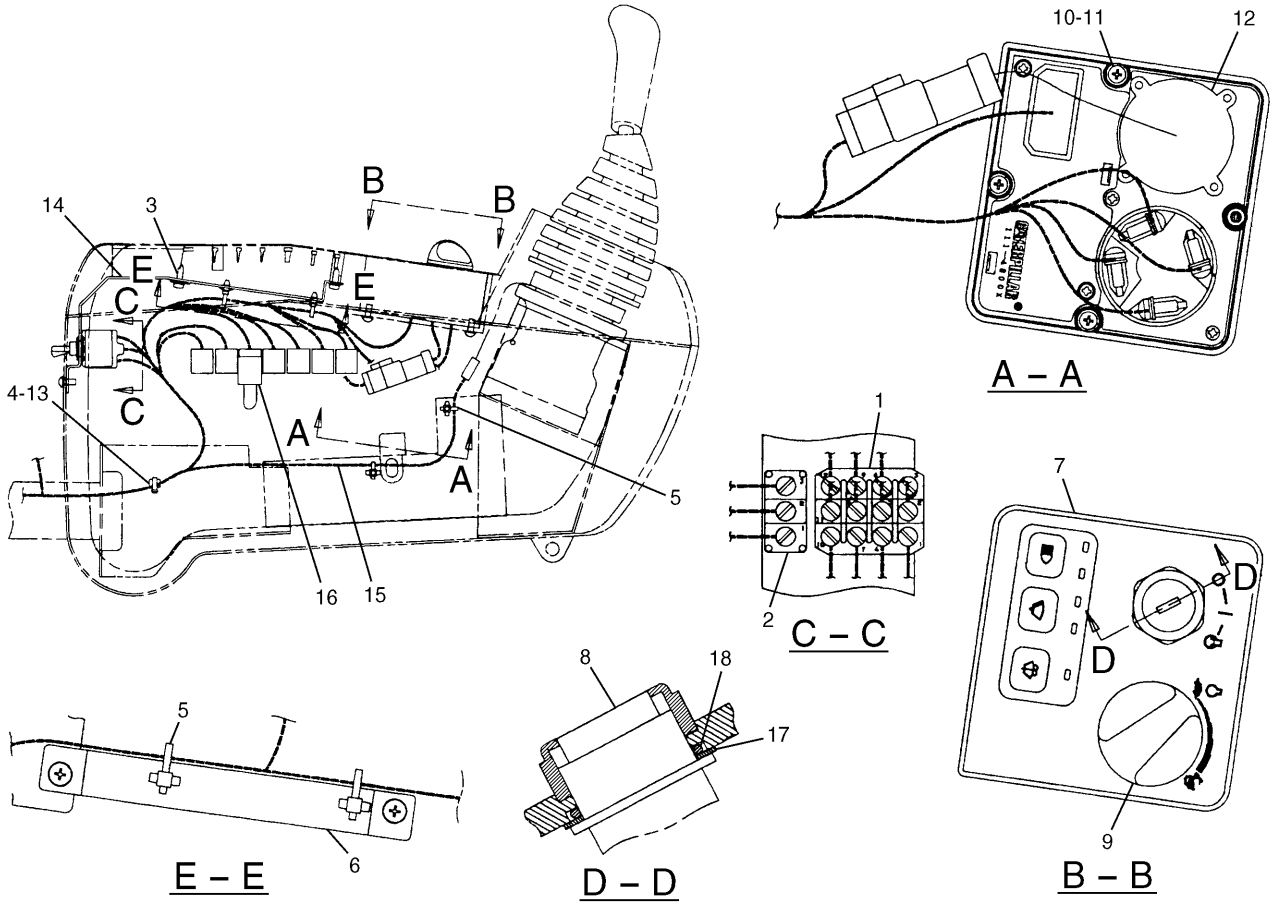

NOTE	No.	PART No.	QTY	PART NAME	NOTE	No.	PART No.	QTY	PART NAME
Y	1	114-0421	1	SWITCH AS (BACKUP)		17	121-1160	1	WASHER
Y	2	110-7884	1	SWITCH AS (BACKUP)		18	113-0308	1	SEAL-O-RING (ID=26.00mm)
	3	119-5026	3	SCREW					
	4	125-4726	1	CLIP					
	5	116-0082	4	STRAP					
	6	121-1049	1	BRACKET					
	7	111-4800	1	PANEL AS					
Y	8	9G-7641	1	SWITCH GP (ENGINE STARTER)					
	9	113-3453	1	KNOB AS					
		124-4002	1	SPRING					
		124-4003	1	PLATE					
	10	6V-5210	4	SCREW					
	11	096-6166	4	WASHER					
Y	12	106-0107	1	SWITCH AS (ACCELERATOR)					
	13	3S-2093	1	STRAP					
	14	106-0211	1	BRACKET AS					
Y	15	128-8966	1	HARNESS AS					
	16	116-0237	1	WIRE AS					
		116-0173	1	CONNECTOR					
		116-0174	2	TERMINAL					

Y—SEE SEPARATE ILLUSTRATION

H53605E 07

106-0058 WIRING GP-CONSOLE

Right Hand
S/N 3MR 1-04978, 4MR 1-00715
Part of 106-0056-Page81
128-8966-Page86,114-0421-Page88,106-0107,110-7884-Page89,9G-7641-Page90

ELECTRICAL AND STARTING SYSTEM

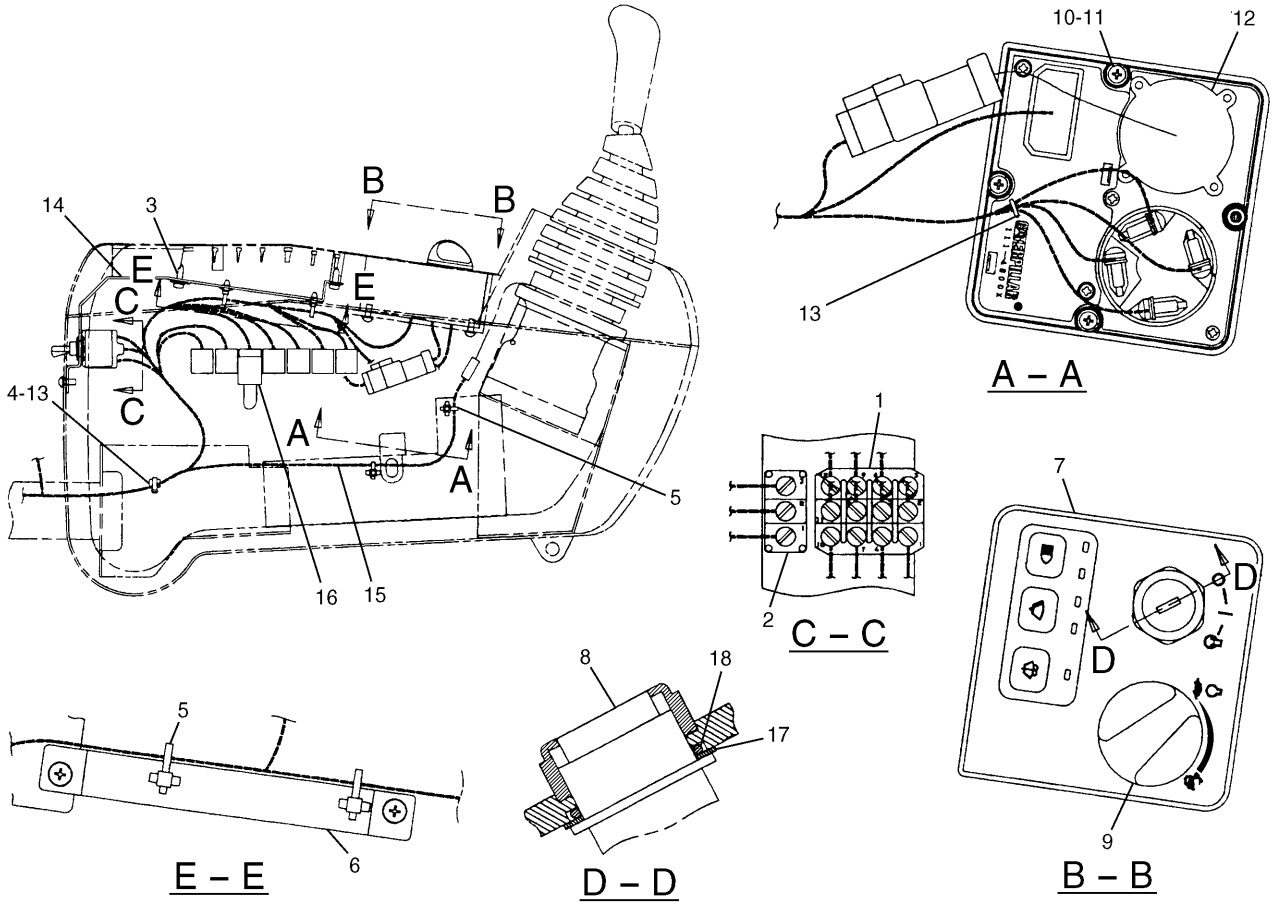

NOTE	No.	PART No.	QTY	PART NAME	NOTE	No.	PART No.	QTY	PART NAME
Y	1	114-0421	1	SWITCH AS (BACKUP)		17	121-1160	1	WASHER
Y	2	110-7884	1	SWITCH AS (BACKUP)		18	113-0308	1	SEAL-O-RING (ID=26.00mm)
	3	119-5026	3	SCREW					
	4	125-4726	1	CLIP					
	5	116-0082	4	STRAP					
	6	121-1049	1	BRACKET					
	7	153-2500	1	PANEL AS					
Y	8	9G-7641	1	SWITCH GP (ENGINE STARTER)					
	9	113-3453	1	KNOB AS					
		124-4002	1	SPRING					
		124-4003	1	PLATE					
	10	6V-5210	4	SCREW					
	11	096-6166	4	WASHER					
Y	12	106-0107	1	SWITCH AS (ACCELERATOR)					
	13	3S-2093	2	STRAP					
	14	106-0211	1	BRACKET AS					
Y	15	150-6999	1	HARNESS AS					
	16	116-0237	1	WIRE AS					
		116-0173	1	CONNECTOR					
		116-0174	2	TERMINAL					

Y—SEE SEPARATE ILLUSTRATION

H63504E 09

106-0058 WIRING GP-CONSOLE

Right Hand
S/N 3MR 04979-Up, 4MR 00716-Up
Part of 106-0056-Page81
150-6999-Page83.02,114-0421-Page88,106-0107,110-7884-Page89,9G-7641-Page90

Consists of :

			Page
1	150-7000	HARNESS AS-CONSOLE	87.01
		-OR-	
1	150-7001	HARNESS AS-CONSOLE	87.03

H60349E 00

150-6999 HARNESS AS-CONSOLE
S/N 3MR 04979-Up, 4MR 00716-Up
Part of 106-0058-Page83.01

Consists of :

			Page
1	128-8964	HARNESS AS-CONSOLE	84
		-OR-	
1	128-8965	HARNESS AS-CONSOLE	85A

H63412E 00

128-8963 HARNESS AS-CONSOLE

S/N 3MR 1-00236, 4MR 1-00140
Part of 106-0057-Page82

Consists of :

			Page
1	132-1893	HARNESS AS-CONSOLE	85.01
		-OR-	
1	132-1894	HARNESS AS-CONSOLE	85.02A

H63413E 00

132-1892 HARNESS AS-CONSOLE

S/N 3MR 00237-04978, 4MR 00141-00715
Part of 106-0057-Page82.01

MEMORANDA

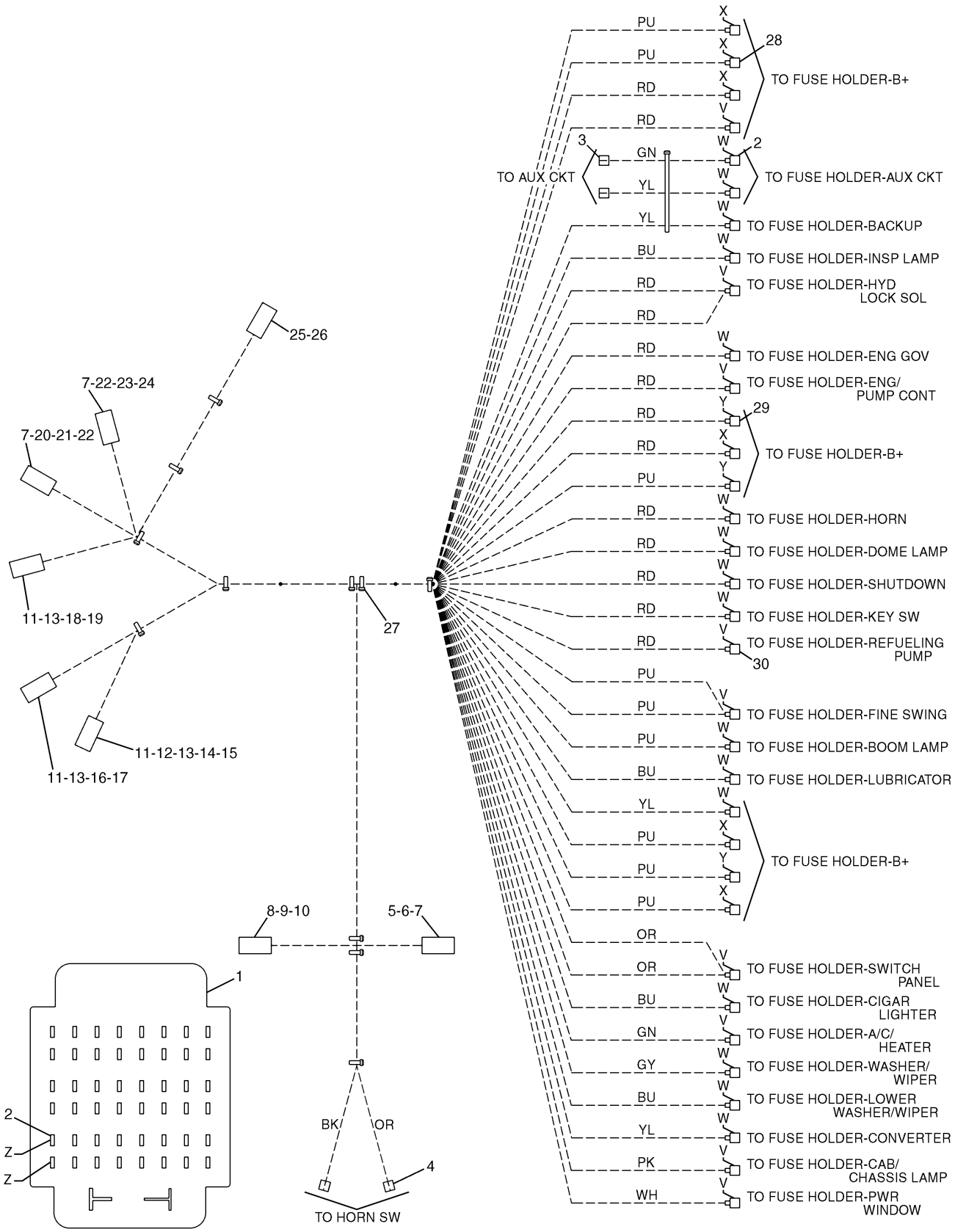

128-8964 HARNESS AS-CONSOLE

S/N 3MR 1-00236, 4MR 1-00140
Part of 128-8963-Page83.03

ELECTRICAL AND STARTING SYSTEM

NOTE	No.	PART No.	QTY	PART NAME	NOTE	No.	PART No.	QTY	PART NAME
	1	111-4812	1	BASE					
	2	7Y-5494	18	TERMINAL					
	3	3M-6018	2	TERMINAL					
	4	7Y-3963	2	TERMINAL					
		7Y-3965	2	TUBE					
	5	102-8808	1	PLUG KIT					
	6	3E-3368	1	WEDGE					
	7	8T-8730	10	SOCKET					
	8	125-4841	1	WEDGE					
	9	102-7964	1	CONNECTOR					
	10	102-7965	18	TERMINAL					
	11	8T-8729	8	PIN					
	12	8T-8737	2	PLUG					
	13	9W-0852	10	PIN					
	14	102-8801	1	RECEPTACLE KIT					
	15	3E-5180	1	WEDGE					
	16	102-8802	1	RECEPTACLE KIT					
	17	3E-3365	1	WEDGE					
	18	102-8805	1	RECEPTACLE KIT					
	19	3E-3383	1	WEDGE					
	20	102-8811	1	PLUG KIT					
	21	3E-3386	1	WEDGE					
	22	9W-0844	13	SOCKET					
	23	102-8800	1	PLUG KIT					
	24	3E-5177	1	WEDGE					
	25	121-1168	1	CONNECTOR					
	26	121-1173	18	TERMINAL					
	27	3S-2093	12	STRAP					
	28	7Y-5495	6	TERMINAL					
	29	7Y-5496	3	TERMINAL					
	30	7Y-5475	9	TERMINAL					

H63419E 01

128-8964 HARNESS AS-CONSOLE

S/N 3MR 1-00236, 4MR 1-00140

Part of 128-8963-Page83.03

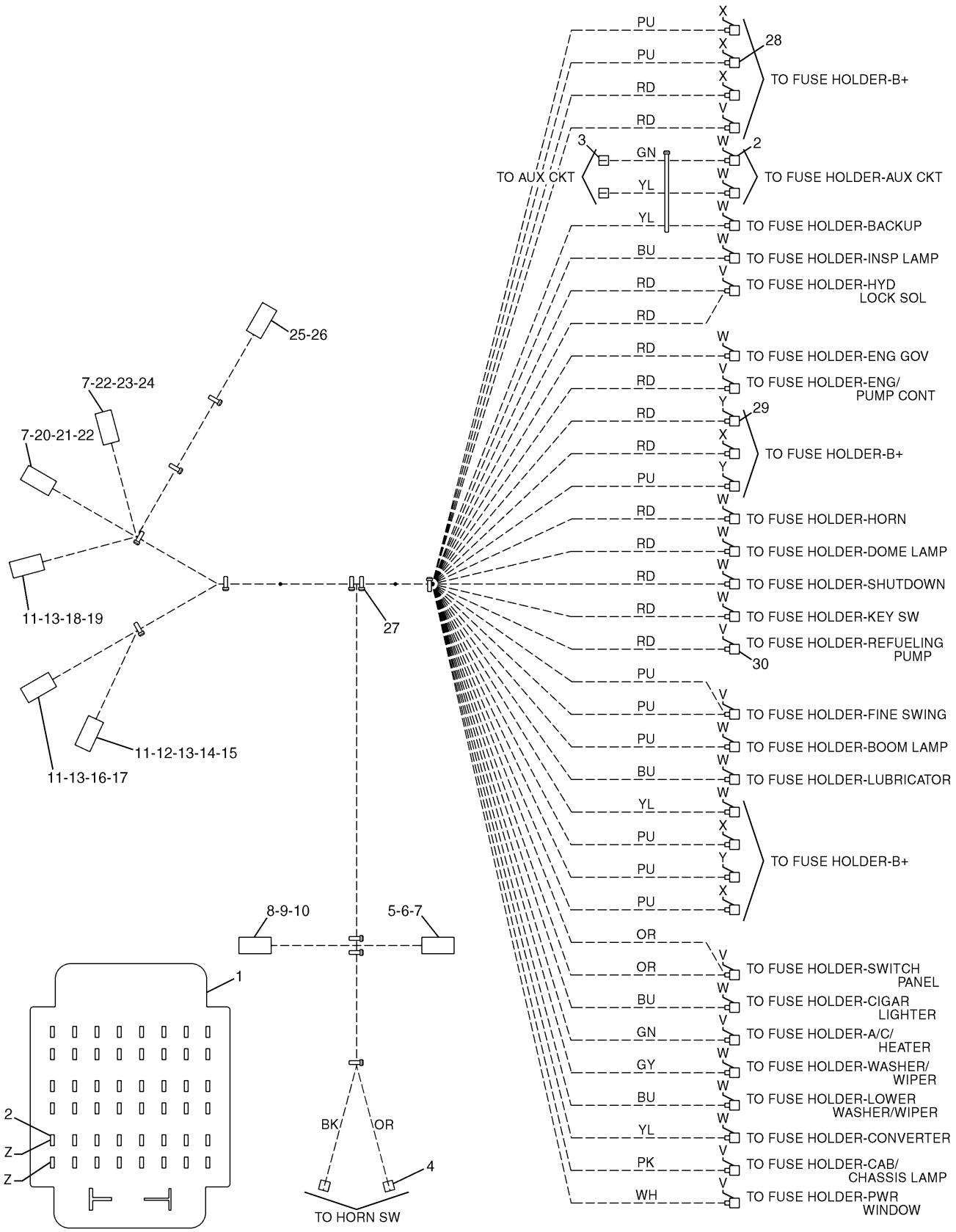

128-8965 HARNESS AS-CONSOLE

S/N 3MR 1-00236, 4MR 1-00140
Part of 128-8963-Page83.03

ELECTRICAL AND STARTING SYSTEM

NOTE	No.	PART No.	QTY	PART NAME	NOTE	No.	PART No.	QTY	PART NAME
	1	111-4812	1	BASE					
	2	7Y-5494	18	TERMINAL					
	3	3M-6018	2	TERMINAL					
	4	7Y-3963	2	TERMINAL					
		7Y-3965	2	TUBE					
	5	102-8808	1	PLUG KIT					
	6	3E-3368	1	WEDGE					
	7	8T-8730	10	SOCKET					
	8	125-4841	1	WEDGE					
	9	102-7964	1	CONNECTOR					
	10	102-7965	18	TERMINAL					
	11	8T-8729	8	PIN					
	12	8T-8737	2	PLUG					
	13	9W-0852	10	PIN					
	14	102-8801	1	RECEPTACLE KIT					
	15	3E-5180	1	WEDGE					
	16	102-8802	1	RECEPTACLE KIT					
	17	3E-3365	1	WEDGE					
	18	102-8805	1	RECEPTACLE KIT					
	19	3E-3383	1	WEDGE					
	20	102-8811	1	PLUG KIT					
	21	3E-3386	1	WEDGE					
	22	9W-0844	13	SOCKET					
	23	102-8800	1	PLUG KIT					
	24	3E-5177	1	WEDGE					
	25	121-1168	1	CONNECTOR					
	26	121-1173	18	TERMINAL					
	27	3S-2093	12	STRAP					
	28	7Y-5495	6	TERMINAL					
	29	7Y-5496	3	TERMINAL					
	30	7Y-5475	9	TERMINAL					

H63421E 01

128-8965 HARNESS AS-CONSOLE

S/N 3MR 1-00236, 4MR 1-00140
Part of 128-8963-Page83.03

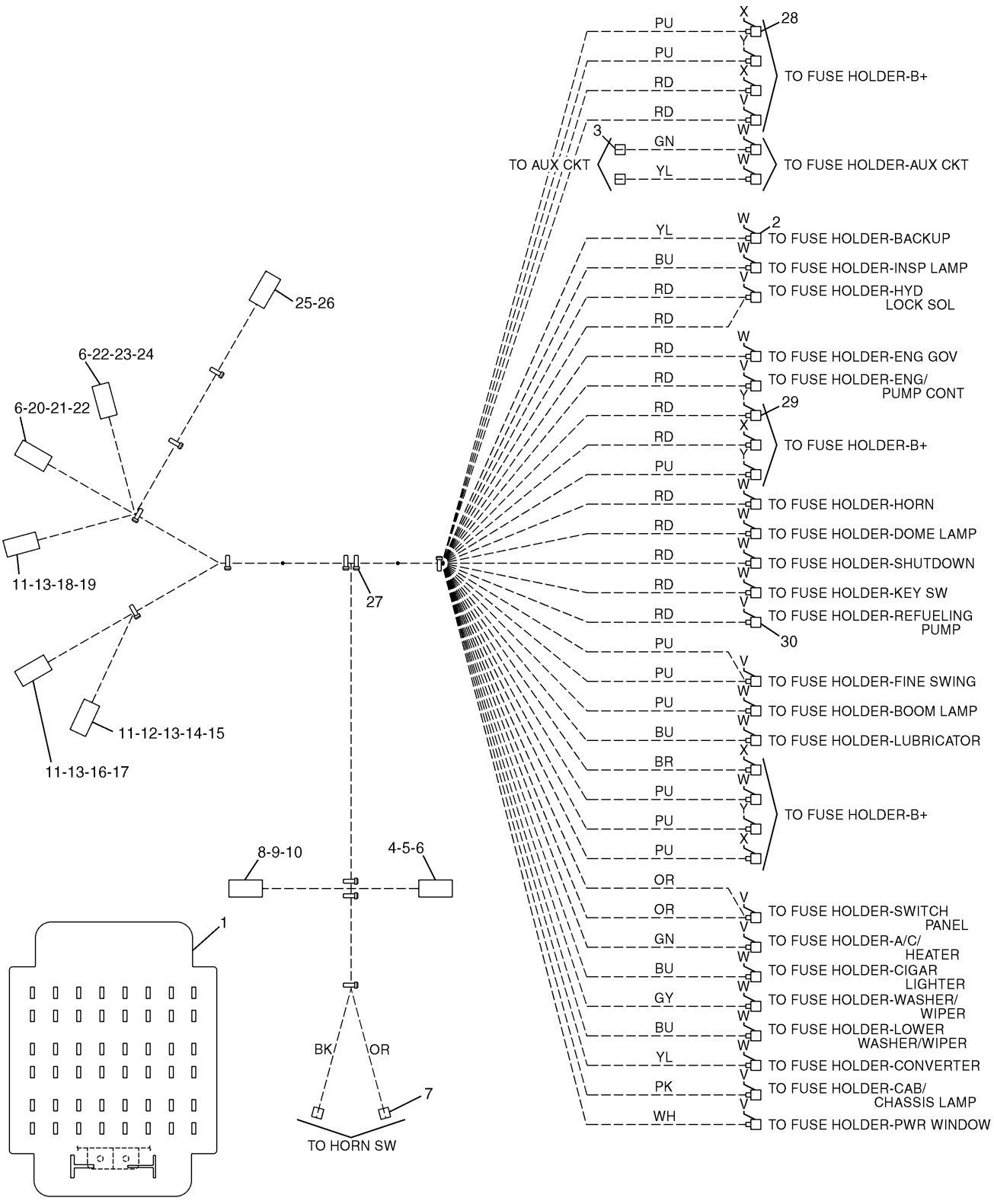

132-1893 HARNESS AS-CONSOLE

S/N 3MR 00237-04978, 4MR 00141-00715

Part of 132-1892-Page83.03

ELECTRICAL AND STARTING SYSTEM

NOTE	No.	PART No.	QTY	PART NAME	NOTE	No.	PART No.	QTY	PART NAME
	1	111-4812	1	BASE					
	2	7Y-5494	16	TERMINAL					
	3	3M-6018	2	TERMINAL					
	4	102-8808	1	PLUG KIT					
	5	3E-3368	1	WEDGE					
	6	8T-8730	10	SOCKET					
	7	7Y-3963	2	TERMINAL					
		7Y-3965	2	TUBE					
	8	125-4841	1	WEDGE					
	9	102-7964	1	CONNECTOR					
	10	102-7965	18	TERMINAL					
	11	8T-8729	8	PIN					
	12	8T-8737	2	PLUG					
	13	9W-0852	10	PIN					
	14	102-8801	1	RECEPTACLE KIT					
	15	3E-5180	1	WEDGE					
	16	102-8802	1	RECEPTACLE KIT					
	17	3E-3365	1	WEDGE					
	18	102-8805	1	RECEPTACLE KIT					
	19	3E-3383	1	WEDGE					
	20	102-8811	1	PLUG KIT					
	21	3E-3386	1	WEDGE					
	22	9W-0844	13	SOCKET					
	23	102-8800	1	PLUG KIT					
	24	3E-5177	1	WEDGE					
	25	121-1168	1	CONNECTOR					
	26	121-1173	18	TERMINAL					
	27	3S-2093	11	STRAP					
	28	7Y-5495	5	TERMINAL					
	29	7Y-5496	4	TERMINAL					
	30	7Y-5475	9	TERMINAL					

H63423E 05

132-1893 HARNESS AS-CONSOLE

S/N 3MR 00237-04978, 4MR 00141-00715

Part of 132-1892-Page83.03

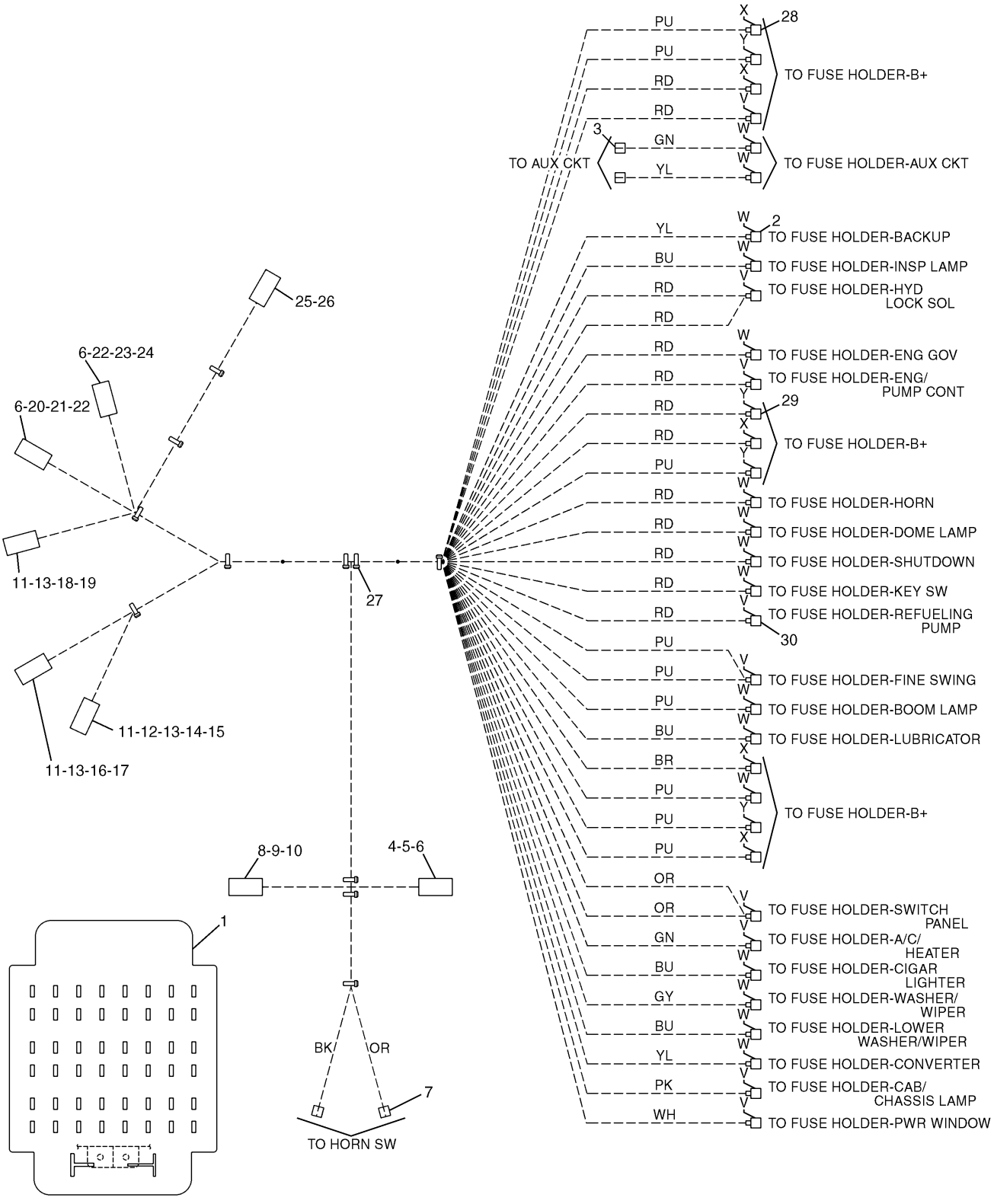

132-1894 HARNESS AS-CONSOLE

S/N 3MR 00237-04978, 4MR 00141-00715

Part of 132-1892-Page83.03

ELECTRICAL AND STARTING SYSTEM

NOTE	No.	PART No.	QTY	PART NAME	NOTE	No.	PART No.	QTY	PART NAME
	1	111-4812	1	BASE					
	2	7Y-5494	16	TERMINAL					
	3	3M-6018	2	TERMINAL					
	4	102-8808	1	PLUG KIT					
	5	3E-3368	1	WEDGE					
	6	8T-8730	10	SOCKET					
	7	7Y-3963	2	TERMINAL					
		7Y-3965	2	TUBE					
	8	125-4841	1	WEDGE					
	9	102-7964	1	CONNECTOR					
	10	102-7965	18	TERMINAL					
	11	8T-8729	8	PIN					
	12	8T-8737	2	PLUG					
	13	9W-0852	10	PIN					
	14	102-8801	1	RECEPTACLE KIT					
	15	3E-5180	1	WEDGE					
	16	102-8802	1	RECEPTACLE KIT					
	17	3E-3365	1	WEDGE					
	18	102-8805	1	RECEPTACLE KIT					
	19	3E-3383	1	WEDGE					
	20	102-8811	1	PLUG KIT					
	21	3E-3386	1	WEDGE					
	22	9W-0844	13	SOCKET					
	23	102-8800	1	PLUG KIT					
	24	3E-5177	1	WEDGE					
	25	121-1168	1	CONNECTOR					
	26	121-1173	18	TERMINAL					
	27	3S-2093	11	STRAP					
	28	7Y-5495	5	TERMINAL					
	29	7Y-5496	4	TERMINAL					
	30	7Y-5475	9	TERMINAL					

H63425E 05

132-1894 HARNESS AS-CONSOLE

S/N 3MR 00237-04978, 4MR 00141-00715

Part of 132-1892-Page83.03

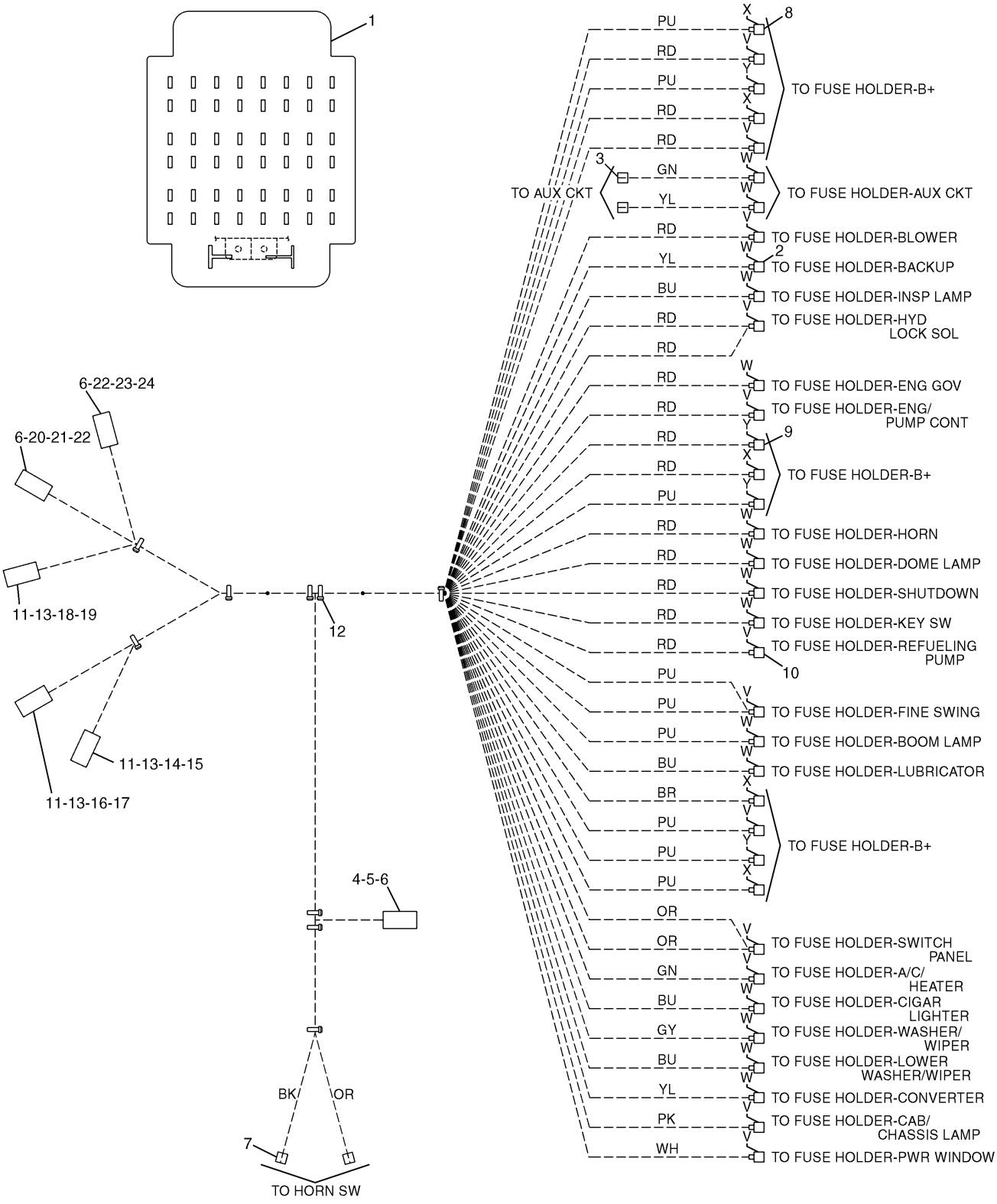

153-2491 HARNESS AS-CONSOLE

S/N 3MR 04979-Up, 4MR 00716-Up
Part of 106-0057-Page82.02

ELECTRICAL AND STARTING SYSTEM

NOTE	No.	PART No.	QTY	PART NAME	NOTE	No.	PART No.	QTY	PART NAME
	1	111-4812	1	BASE					
	2	7Y-5494	15	TERMINAL					
	3	3M-6018	2	TERMINAL					
	4	102-8808	1	PLUG KIT					
	5	3E-3368	1	WEDGE					
	6	8T-8730	10	SOCKET					
	7	7Y-3963	2	TERMINAL					
		7Y-3965	2	TUBE					
	8	7Y-5495	5	TERMINAL					
	9	7Y-5496	4	TERMINAL					
	10	7Y-5475	13	TERMINAL					
	11	8T-8729	8	PIN					
	12	3S-2093	9	STRAP					
	13	9W-0852	12	PIN					
	14	102-8801	1	RECEPTACLE KIT					
	15	3E-5180	1	WEDGE					
	16	102-8802	1	RECEPTACLE KIT					
	17	3E-3365	1	WEDGE					
	18	102-8805	1	RECEPTACLE KIT					
	19	3E-3383	1	WEDGE					
	20	102-8811	1	PLUG KIT					
	21	3E-3386	1	WEDGE					
	22	9W-0844	13	SOCKET					
	23	102-8800	1	PLUG KIT					
	24	3E-5177	1	WEDGE					

H60351E 00

153-2491 HARNESS AS-CONSOLE

S/N 3MR 04979-Up, 4MR 00716-Up

Part of 106-0057-Page82.02

ELECTRICAL AND STARTING SYSTEM

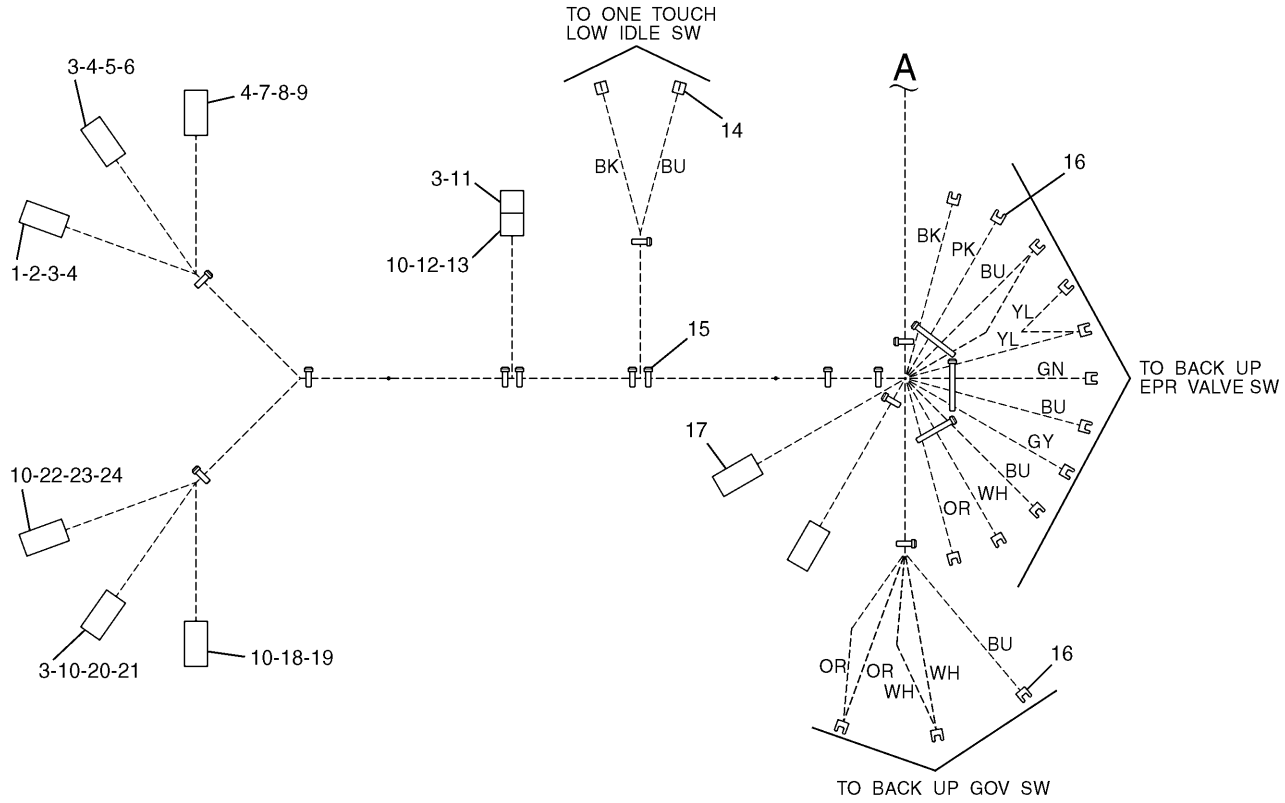

NOTE	No.	PART No.	QTY	PART NAME	NOTE	No.	PART No.	QTY	PART NAME
	1	102-8804	1	RECEPTACLE KIT		20	102-8811	1	PLUG KIT
	2	3E-3377	1	WEDGE		21	3E-3386	1	WEDGE
	3	8T-8737	5	PLUG		22	9W-0844	1	SOCKET
	4	8T-8729	20	PIN		23	102-8800	1	PLUG KIT
	5	102-8806	1	RECEPTACLE KIT		24	3E-5177	1	WEDGE
	6	3E-3389	1	WEDGE					
	7	9W-0852	2	PIN					
	8	102-8801	1	RECEPTACLE KIT					
	9	3E-5180	1	WEDGE					
	10	8T-8730	24	SOCKET					
	11	102-8802	1	RECEPTACLE KIT					
	12	155-2270	1	PLUG KIT					
	13	3E-3362	1	WEDGE					
	14	7Y-3963	2	TERMINAL					
		7Y-3965	2	TUBE					
	15	3S-2093	16	STRAP					
	16	5P-2321	14	TERMINAL					
	17	116-0087	2	CONNECTOR					
	18	102-8809	1	PLUG KIT					
	19	3E-3374	1	WEDGE					

H50561E 00

128-8966 HARNESS AS-CONSOLE (1/2)

S/N 3MR 1-04978, 4MR 1-00715
Part of 106-0058-Page83

ELECTRICAL AND STARTING SYSTEM

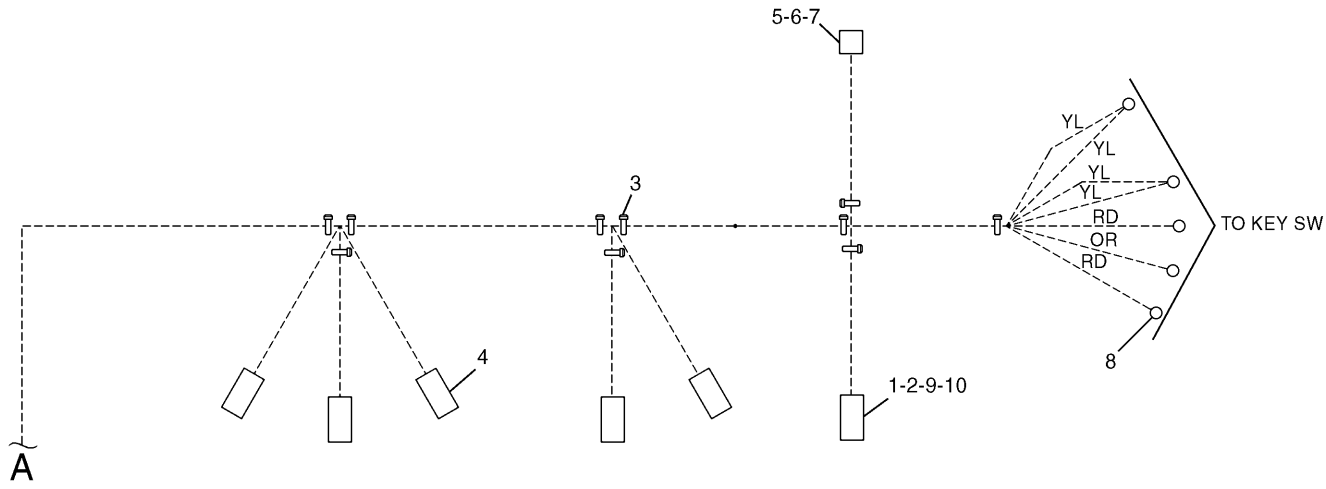

NOTE	No.	PART No.	QTY	PART NAME	NOTE	No.	PART No.	QTY	PART NAME
	1	8T-8737	1	PLUG					
	2	8T-8730	5	SOCKET					
	3	3S-2093	10	STRAP					
	4	116-0087	5	CONNECTOR					
	5	125-4839	1	WEDGE					
	6	116-0086	1	CONNECTOR					
	7	102-7965	7	TERMINAL					
	8	2L-8075	5	TERMINAL					
	9	102-8810	1	PLUG KIT					
	10	3E-3380	1	WEDGE					

H50562E 00

128-8966 HARNESS AS-CONSOLE (2/2)

S/N 3MR 1-04978, 4MR 1-00715
Part of 106-0058-Page83

ELECTRICAL AND STARTING SYSTEM

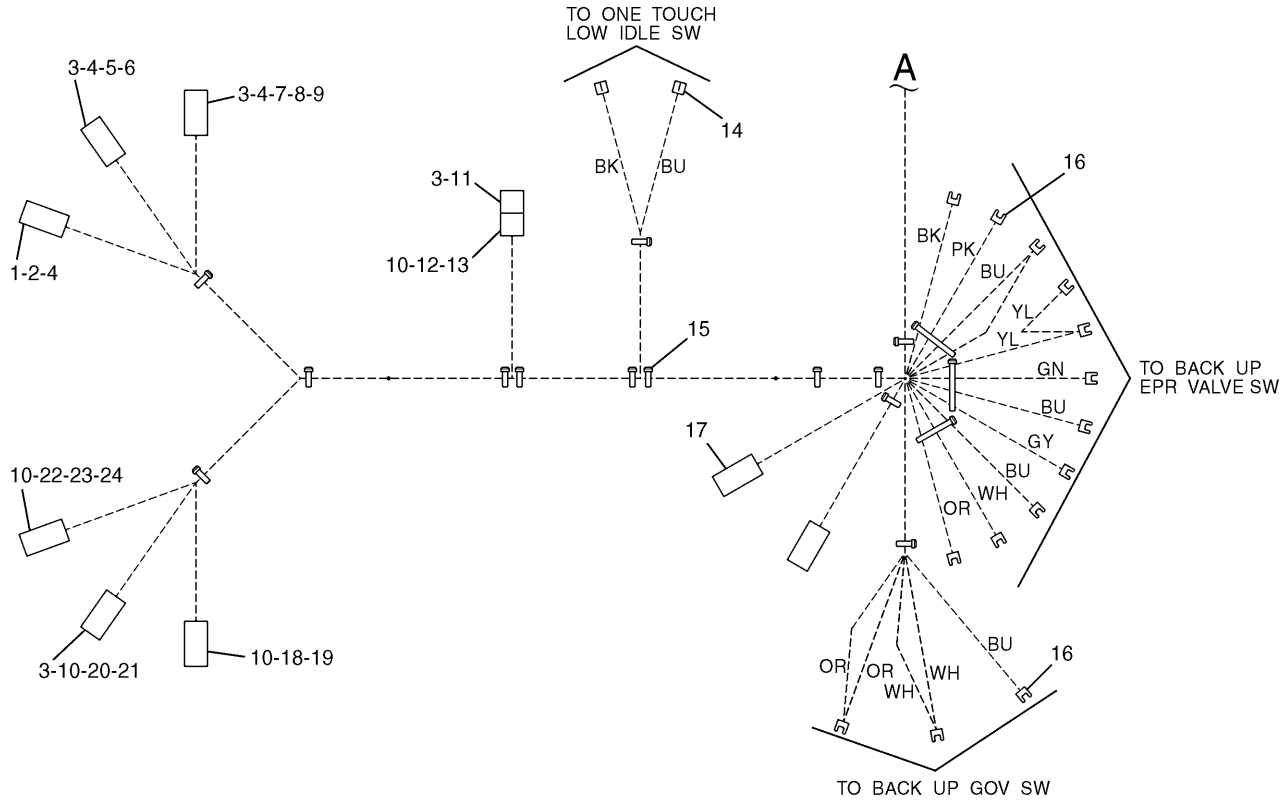

NOTE	No.	PART No.	QTY	PART NAME	NOTE	No.	PART No.	QTY	PART NAME
	1	102-8804	1	RECEPTACLE KIT		20	102-8811	1	PLUG KIT
	2	3E-3377	1	WEDGE		21	3E-3386	1	WEDGE
	3	8T-8737	6	PLUG		22	9W-0844	1	SOCKET
	4	186-3735	17	PIN		23	102-8800	1	PLUG KIT
	5	102-8806	1	RECEPTACLE KIT		24	3E-5177	1	WEDGE
	6	3E-3389	1	WEDGE					
	7	9W-0852	4	PIN					
	8	102-8801	1	RECEPTACLE KIT					
	9	3E-5180	1	WEDGE					
	10	8T-8730	24	SOCKET					
	11	102-8802	1	RECEPTACLE KIT					
	12	155-2270	1	PLUG KIT					
	13	3E-3362	1	WEDGE					
	14	7Y-3963	2	TERMINAL					
		7Y-3965	2	TUBE					
	15	3S-2093	16	STRAP					
	16	5P-2321	14	TERMINAL					
	17	116-0087	2	CONNECTOR					
	18	102-8809	1	PLUG KIT					
	19	3E-3374	1	WEDGE					

H60352E 00

150-7000 HARNESS AS-CONSOLE (1/2)

S/N 3MR 04979-Up, 4MR 00716-Up
Part of 150-6999-Page83.02

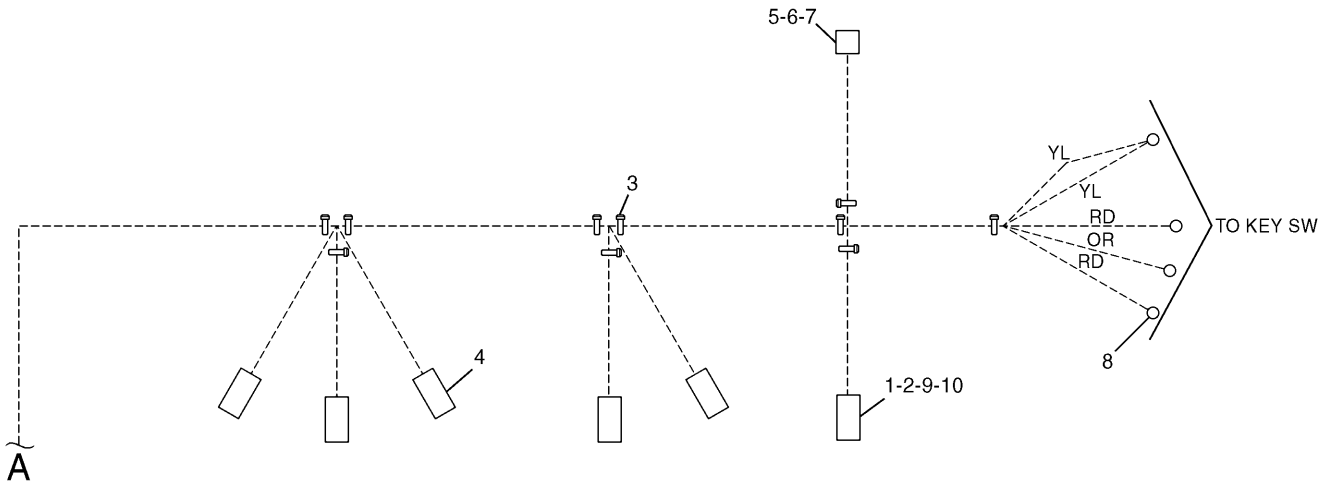

NOTE	No.	PART No.	QTY	PART NAME	NOTE	No.	PART No.	QTY	PART NAME
	1	8T-8737	1	PLUG					
	2	8T-8730	5	SOCKET					
	3	3S-2093	10	STRAP					
	4	116-0087	5	CONNECTOR					
	5	125-4839	1	WEDGE					
	6	116-0086	1	CONNECTOR					
	7	102-7965	8	TERMINAL					
	8	2L-8075	4	TERMINAL					
	9	102-8810	1	PLUG KIT					
	10	3E-3380	1	WEDGE					

H60353E 00

150-7000 HARNESS AS-CONSOLE (2/2)

S/N 3MR 04979-Up, 4MR 00716-Up
Part of 150-6999-Page83.02

ELECTRICAL AND STARTING SYSTEM

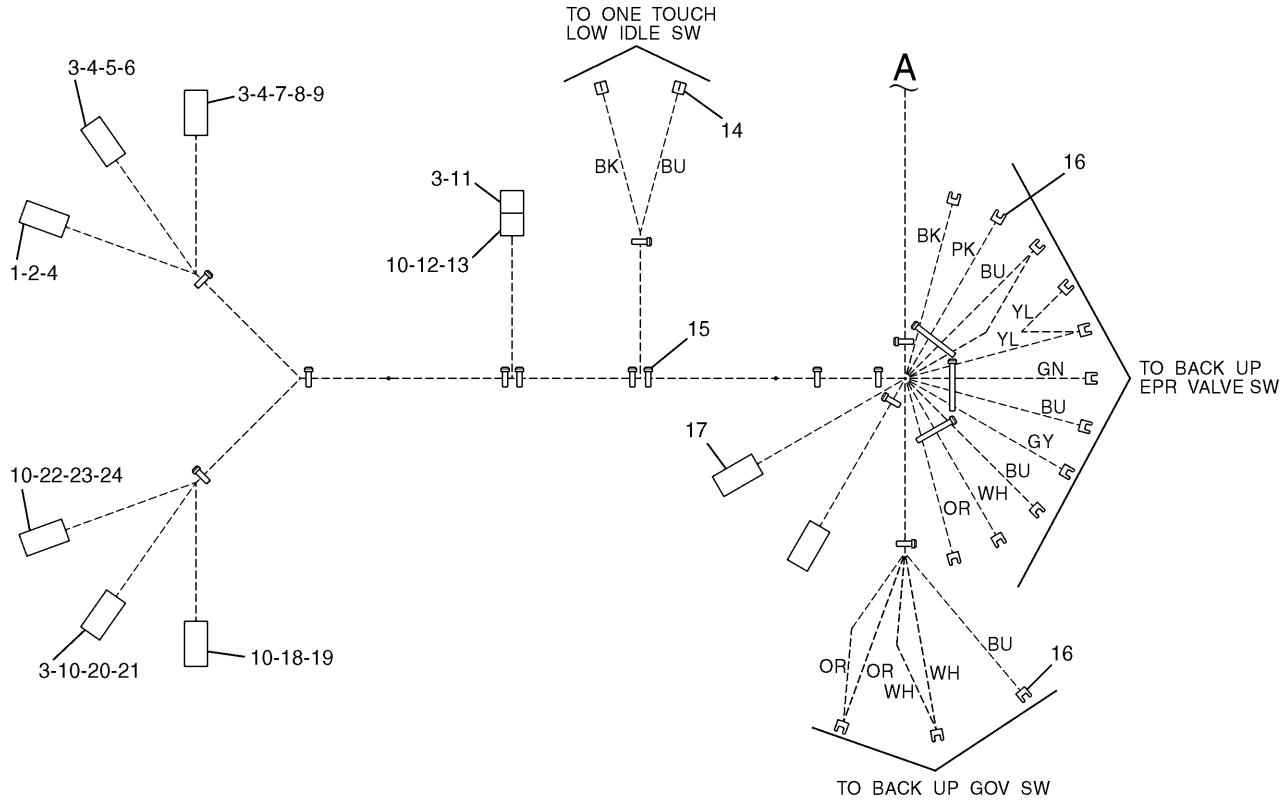

NOTE	No.	PART No.	QTY	PART NAME	NOTE	No.	PART No.	QTY	PART NAME
	1	102-8804	1	RECEPTACLE KIT		20	102-8811	1	PLUG KIT
	2	3E-3377	1	WEDGE		21	3E-3386	1	WEDGE
	3	8T-8737	6	PLUG		22	9W-0844	1	SOCKET
	4	186-3735	17	PIN		23	102-8800	1	PLUG KIT
	5	102-8806	1	RECEPTACLE KIT		24	3E-5177	1	WEDGE
	6	3E-3389	1	WEDGE					
	7	9W-0852	4	PIN					
	8	102-8801	1	RECEPTACLE KIT					
	9	3E-5180	1	WEDGE					
	10	8T-8730	24	SOCKET					
	11	102-8802	1	RECEPTACLE KIT					
	12	155-2270	1	PLUG KIT					
	13	3E-3362	1	WEDGE					
	14	7Y-3963	2	TERMINAL					
		7Y-3965	2	TUBE					
	15	3S-2093	16	STRAP					
	16	5P-2321	14	TERMINAL					
	17	116-0087	2	CONNECTOR					
	18	102-8809	1	PLUG KIT					
	19	3E-3374	1	WEDGE					

H60354E 00

150-7001 HARNESS AS-CONSOLE (1/2)

S/N 3MR 04979-Up, 4MR 00716-Up
Part of 150-6999-Page83.02

ELECTRICAL AND STARTING SYSTEM

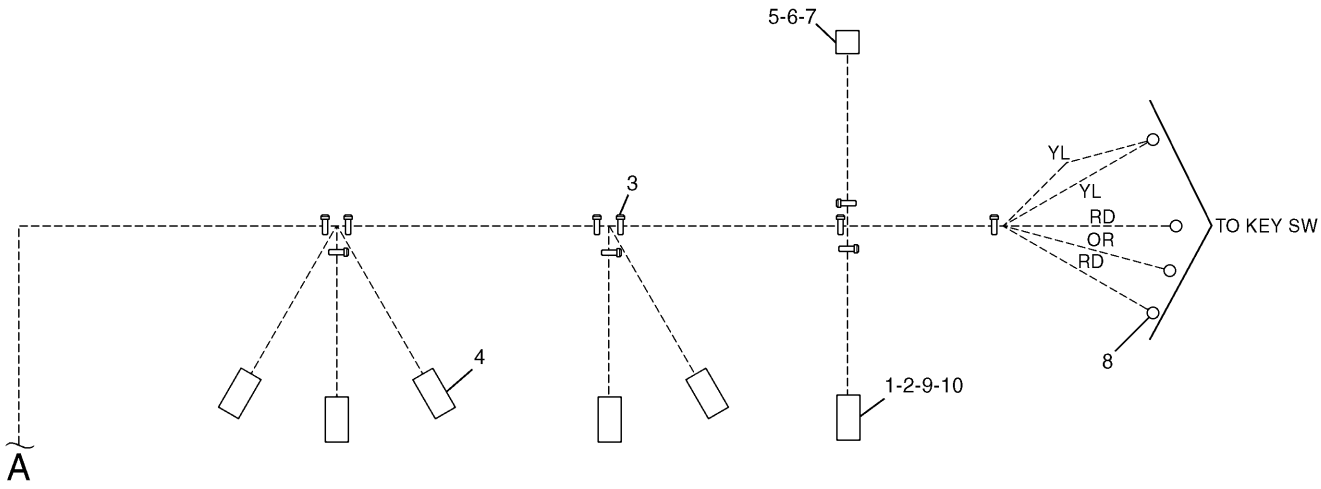

NOTE	No.	PART No.	QTY	PART NAME	NOTE	No.	PART No.	QTY	PART NAME
	1	8T-8737	1	PLUG					
	2	8T-8730	5	SOCKET					
	3	3S-2093	10	STRAP					
	4	116-0087	5	CONNECTOR					
	5	125-4839	1	WEDGE					
	6	116-0086	1	CONNECTOR					
	7	102-7965	8	TERMINAL					
	8	2L-8075	4	TERMINAL					
	9	102-8810	1	PLUG KIT					
	10	3E-3380	1	WEDGE					

H60355E 00

150-7001 HARNESS AS-CONSOLE (2/2)

S/N 3MR 04979-Up, 4MR 00716-Up
Part of 150-6999-Page83.02

ELECTRICAL AND STARTING SYSTEM

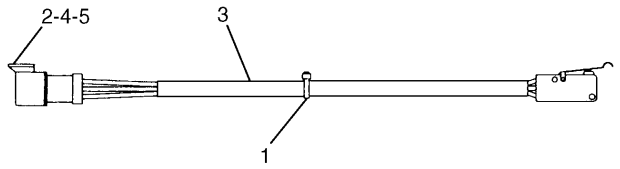

NOTE	No.	PART No.	QTY	PART NAME
	1	3S-2093	1	STRAP
	2	102-8803	1	RECEPTACLE KIT
D	3	5P-5998		TUBE…(0.22m)
	4	8T-8729	3	PIN
	5	3E-3371	1	WEDGE

D—ORDER BY THE METER

H50563E 03

111-4799 SWITCH AS

Limit

Part of 106-0057-Page82

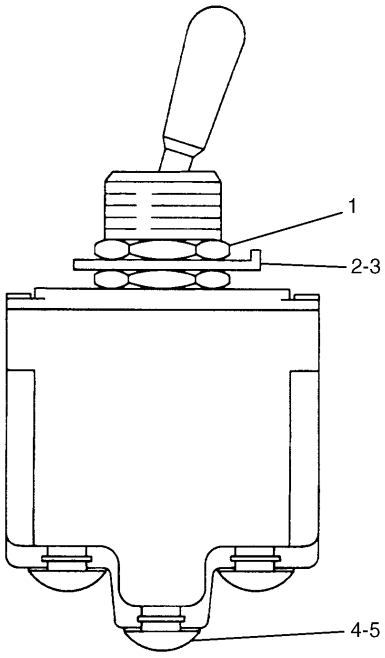

NOTE	No.	PART No.	QTY	PART NAME
	1	6T-3631	2	NUT
	2	6T-3632	1	LOCKWASHER
	3	6T-3633	1	RING
	4	6V-8374	12	SCREW
	5	3L-8187	12	LOCKWASHER

H50565E 00

114-0421 SWITCH AS-TOGGLE

Part of 106-0058-Page83

ELECTRICAL AND STARTING SYSTEM

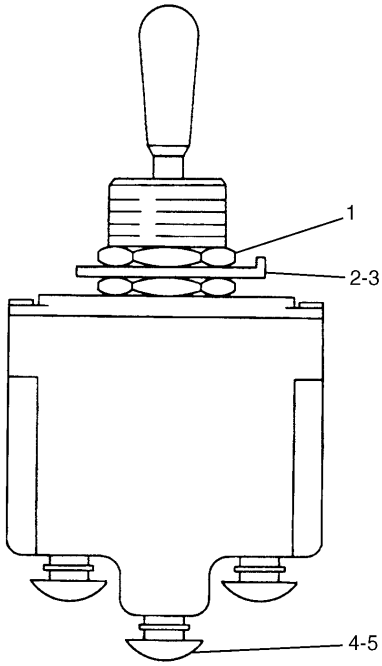

NOTE	No.	PART No.	QTY	PART NAME
	1	6T-3631	2	NUT
	2	6T-3632	1	LOCKWASHER
	3	6T-3633	1	RING
	4	6V-8374	3	SCREW
	5	3L-8187	3	LOCKWASHER

H50566E 00

110-7884 SWITCH AS-TOGGLE

Part of 106-0058-Page83

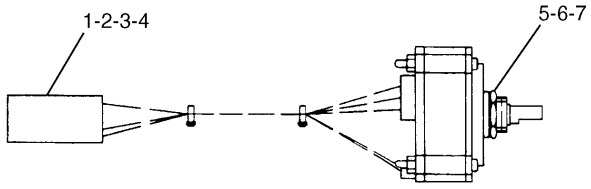

NOTE	No.	PART No.	QTY	PART NAME
	1	8T-8737	1	PLUG
	2	8T-8729	5	PIN
	3	102-8805	1	RECEPTACLE KIT
	4	3E-3383	1	WEDGE
	5	7Y-5458	1	NUT
	6	7Y-5464	1	WASHER
	7	106-0210	1	SEAL

H50567E 01

106-0107 SWITCH AS-ROTARY

Part of 106-0058-Page83

ELECTRICAL AND STARTING SYSTEM

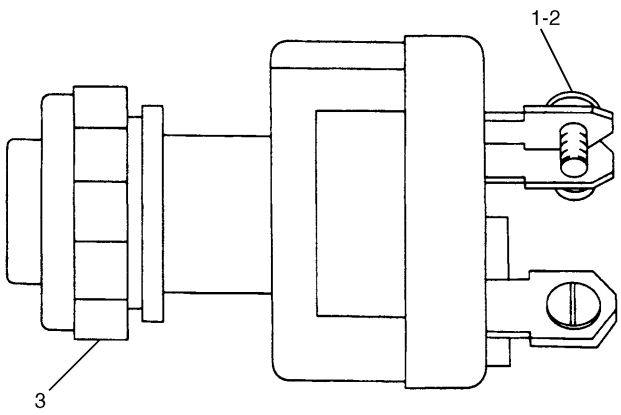

NOTE	No.	PART No.	QTY	PART NAME
	1	6V-8362	4	SCREW
	2	9B-7233	4	LOCKWASHER
	3	7T-6799	1	NUT

H50072E 06

9G-7641 SWITCH GP-START

Part of 106-0058-Page83

Consists of :

			Page
1	175-2314	SWITCH AS-MAGNETIC	91.04
		-OR-	
1	175-2313	SWITCH AS-MAGNETIC	91.03

H68366E 01

125-1302 SWITCH AS-MAGNETIC

Part of 116-0151-Page77,163-6675-Page77.10

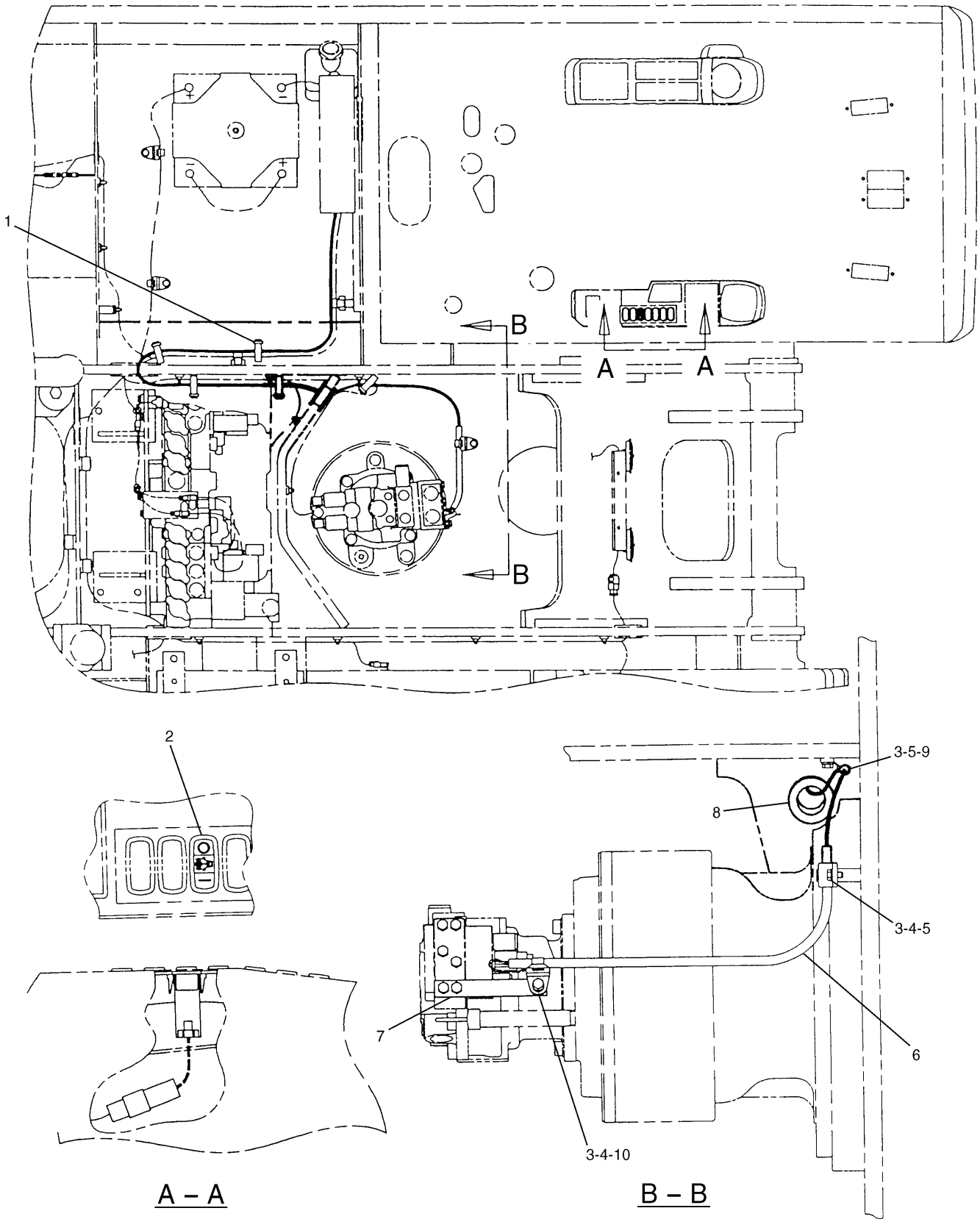

121-1153 WIRING GP-FINE SWING
Part of 126-1890-Page292
128-8872-Page92
An Attachment

ELECTRICAL AND STARTING SYSTEM

NOTE	No.	PART No.	QTY	PART NAME	NOTE	No.	PART No.	QTY	PART NAME
	1	3S-2093	5	STRAP					
	2	111-4788	1	SWITCH AS					
		116-0173	1	CONNECTOR					
		116-0174	5	TERMINAL					
	3	8T-4121	3	WASHER					
	4	111-4837	2	CLIP					
	5	8T-4137	2	BOLT (L=20mm)					
Y	6	128-8872	1	HARNESS AS					
	7	7Y-8109	1	BRACKET AS					
	8	7Y-8167	1	GROMMET					
	9	111-4836	1	CLIP					
	10	8T-4136	1	BOLT (L=25mm)					

Y—SEE SEPARATE ILLUSTRATION

H65247E 03

121-1153 WIRING GP-FINE SWING

Part of 126-1890-Page292
128-8872-Page92
An Attachment

ELECTRICAL AND STARTING SYSTEM

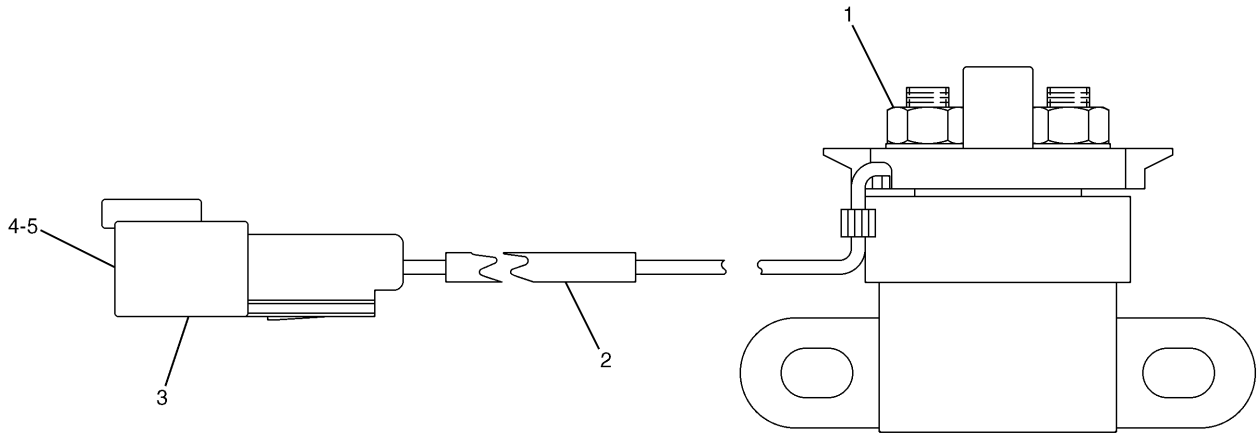

NOTE	No.	PART No.	QTY	PART NAME	NOTE	No.	PART No.	QTY	PART NAME
	1	5C-2890	2	NUT					
E	2	9X-1813		SLEEVE…(15.5cm)					
	3	102-8802	1	RECEPTACLE KIT					
	4	186-3735	2	PIN					
	5	3E-3365	1	WEDGE					

E—ORDER BY THE CENTIMETER

H68413E 00

175-2313 SWITCH AS-MAGNETIC

Part of 125-1302-Page91

ELECTRICAL AND STARTING SYSTEM

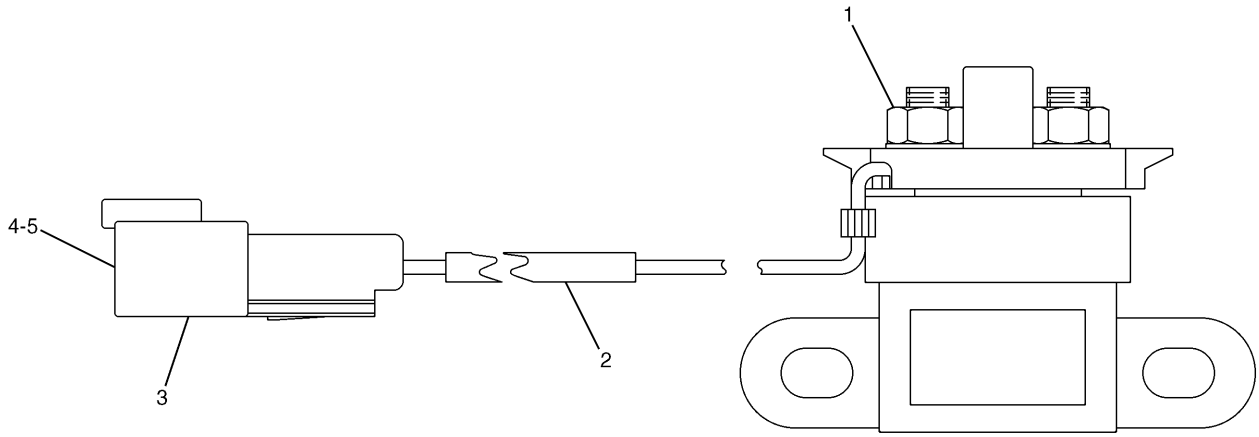

NOTE	No.	PART No.	QTY	PART NAME	NOTE	No.	PART No.	QTY	PART NAME
	1	5C-2890	2	NUT					
E	2	9X-1386		SLEEVE…(15.5cm)					
	3	102-8802	1	RECEPTACLE KIT					
	4	186-3735	2	PIN					
	5	3E-3365	1	WEDGE					

E—ORDER BY THE CENTIMETER

H68414E 00

175-2314 SWITCH AS-MAGNETIC

Part of 125-1302-Page91

ELECTRICAL AND STARTING SYSTEM

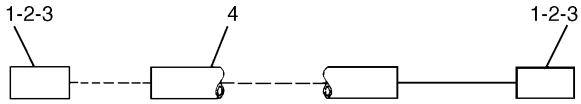

NOTE	No.	PART No.	QTY	PART NAME
	1	8T-8730	4	SOCKET
	2	155-2270	2	PLUG KIT
	3	3E-3362	2	WEDGE
E	4	103-2529		HOSE…(62cm)

E—ORDER BY THE CENTIMETER

H52943E 00

128-8872 HARNESS AS

Part of 121-1153-Page91.02

An Attachment

ELECTRICAL AND STARTING SYSTEM



NOTE	No.	PART No.	QTY	PART NAME
	1	7N-5274	1	COVER
	2	3S-6050	1	TERMINAL AS
		1M-6119	1	BOLT
		1M-6120	1	NUT
	3	1S-7252	1	TERMINAL

H50572E 02

116-0242 CABLE AS

Part of 116-0153-Page65,163-6727-Page65.02
An Attachment

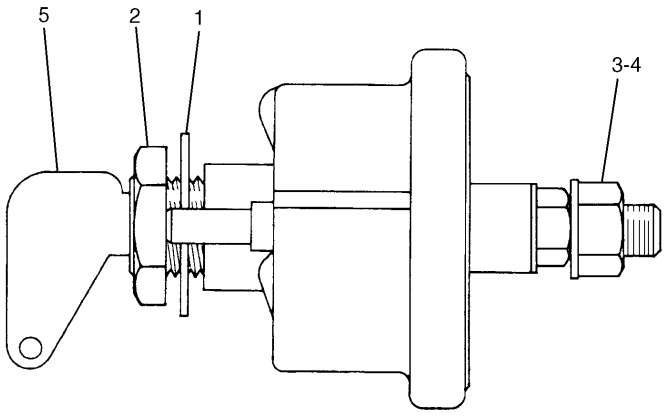

NOTE	No.	PART No.	QTY	PART NAME
	1	2H-3922	1	LOCKWASHER
	2	8H-5303	1	NUT
	3	9F-5644	2	LOCKWASHER
	4	6F-7045	2	NUT
	5	8H-5306	1	KEY

H81797E 11

7N-0719 SWITCH AS-DISCONNECT

Part of 116-0153-Page65,163-6675-Page77.09
An Attachment

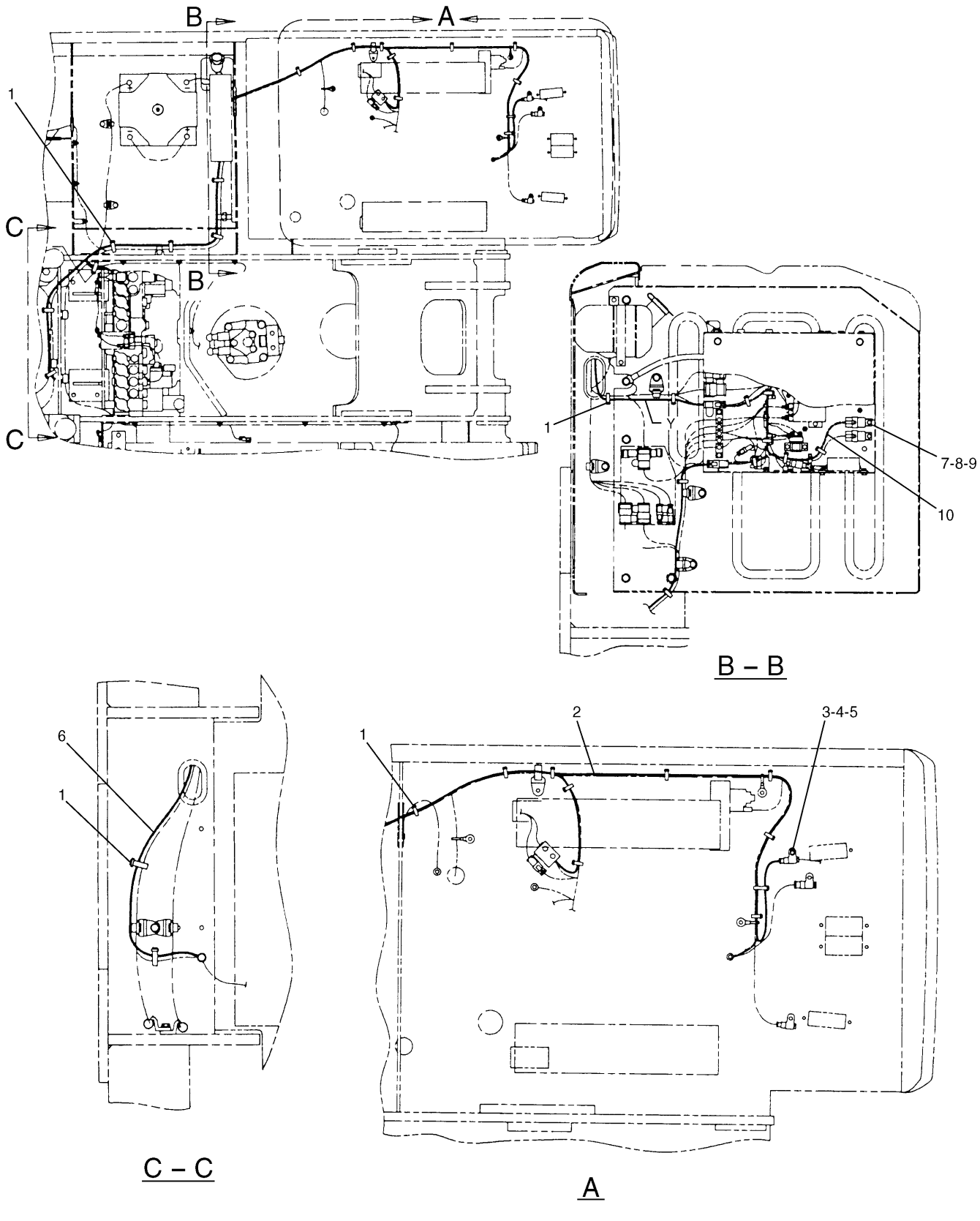

121-1045 WIRING GP
Flow Control
Part of 120-4983-Page230,120-4984-Page231
121-1033,167-3589-Page95,128-8879-Page96
An Attachment

ELECTRICAL AND STARTING SYSTEM

NOTE	No.	PART No.	QTY	PART NAME	NOTE	No.	PART No.	QTY	PART NAME
	1	3S-2093	25	STRAP					
Y	2	121-1033	1	HARNESS AS					
	3	116-0118	1	CLIP					
	4	8T-4121	1	WASHER					
	5	7X-2621	1	BOLT (L=12mm)					
Y	6	128-8879	1	HARNESS AS					
	7	149-5050	1	RELAY					
	8	7X-2619	1	BOLT (L=10mm)					
	9	9X-8256	1	WASHER					
Y	10	167-3589	1	HARNESS AS					

Y—SEE SEPARATE ILLUSTRATION

H65249E 01

121-1045 WIRING GP

Flow Control

Part of 120-4983-Page230,120-4984-Page231
121-1033,167-3589-Page95,128-8879-Page96

An Attachment

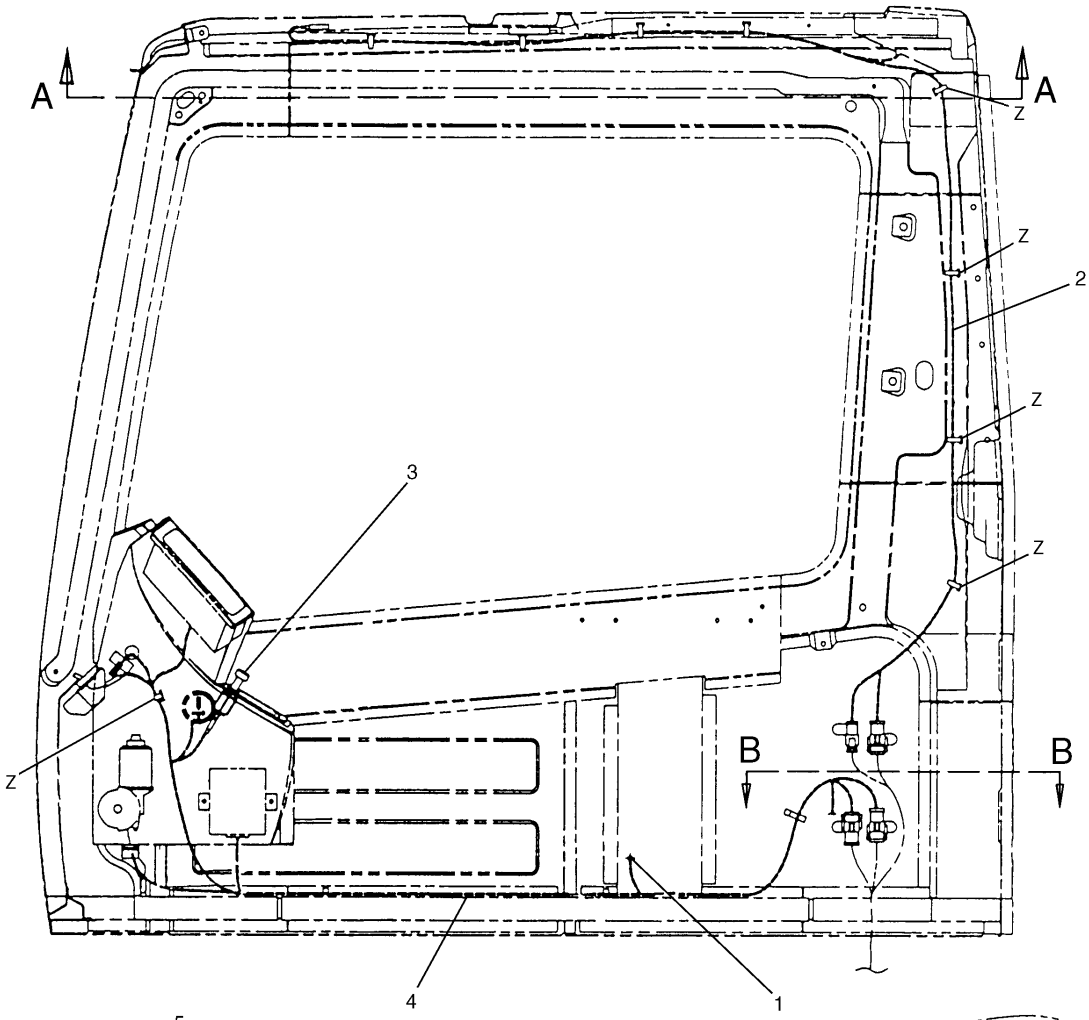

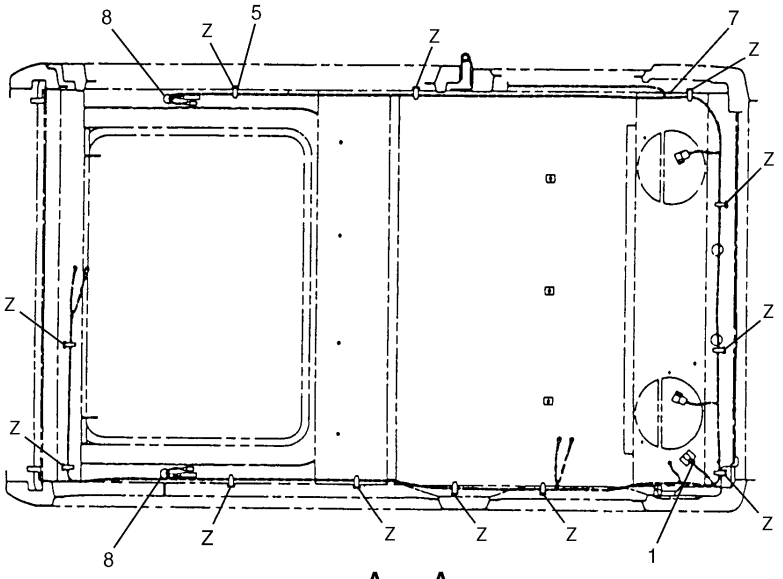

A – A

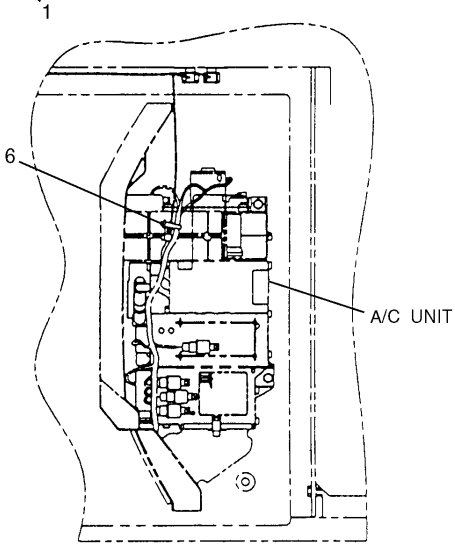

B – B

H53747E 06

106-0054 WIRING GP-CAB
S/N 3MR 1-(D97.10), 4MR 1-(D97.10)
Part of 111-6271-Page323,155-7018-Page323.08
111-4795-Page94.04,111-4796-Page94.05

ELECTRICAL AND STARTING SYSTEM

NOTE	No.	PART No.	QTY	PART NAME	NOTE	No.	PART No.	QTY	PART NAME
	1	41-3043	2	SCREW					
Y	2	111-4795	1	HARNESS AS					
	3	9W-0335	1	LIGHTER AS					
Y	4	111-4796	1	HARNESS AS					
	5	121-1000	17	STRAP					
	6	3S-2093	1	STRAP					
E	7	41-3064		GUARD…(9cm)					
E	8	41-3064		GUARD…(11.5cm × 2)					

E—ORDER BY THE CENTIMETER

Y—SEE SEPARATE ILLUSTRATION

H53747E 06

106-0054 WIRING GP-CAB

S/N 3MR 1-(D97.10), 4MR 1-(D97.10)

Part of 111-6271-Page323,155-7018-Page323.08

111-4795-Page94.04,111-4796-Page94.05

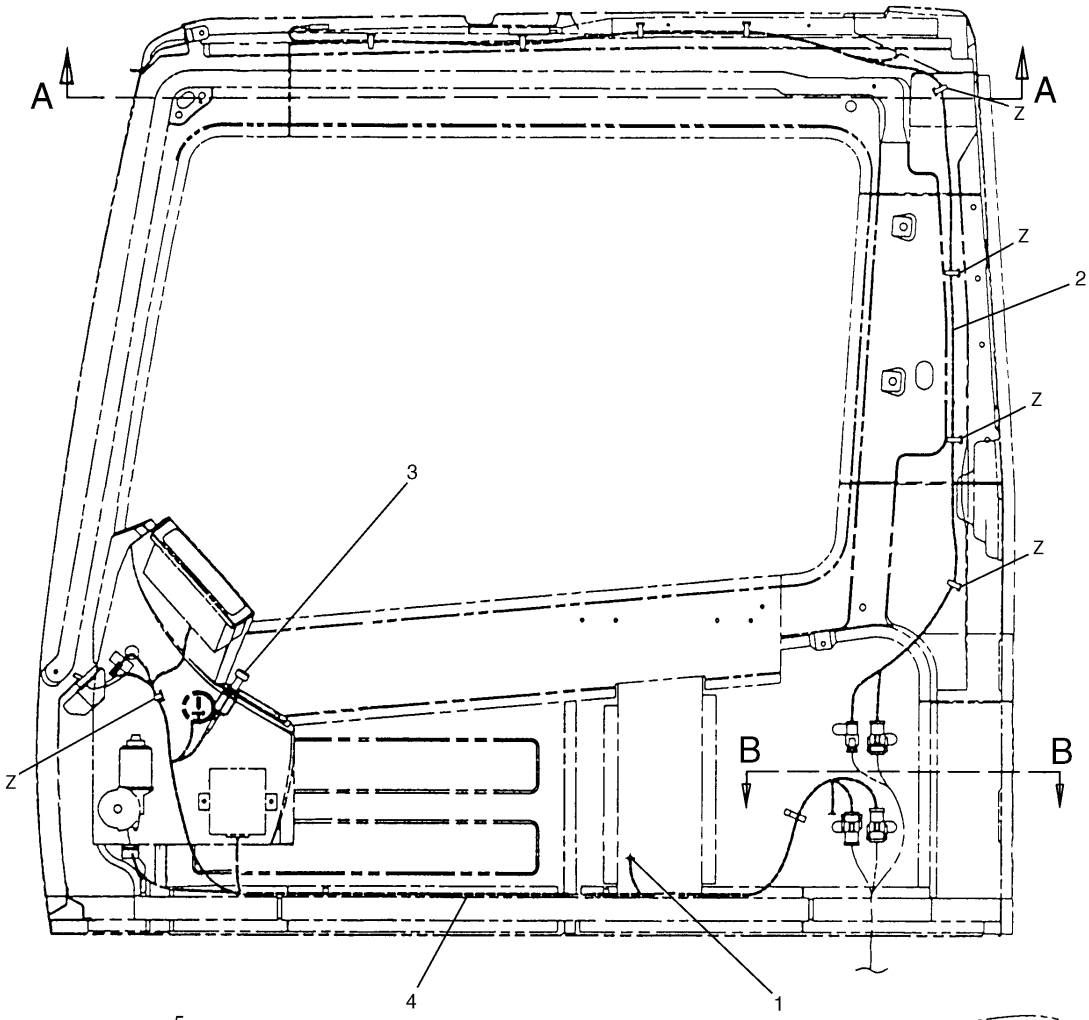

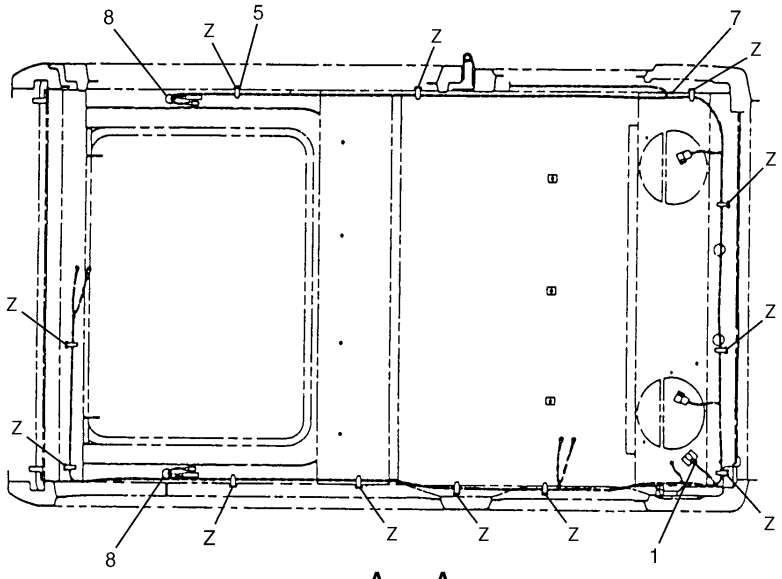

A – A

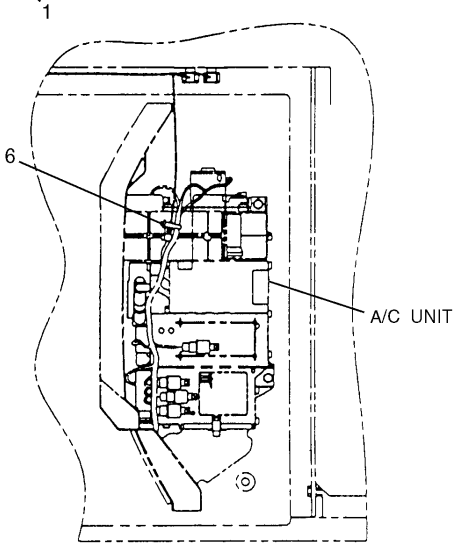

B – B

H59604E 07

106-0054 WIRING GP-CAB
S/N 3MR (D97.11)-04978, 4MR (D97.11)-00715
Part of 111-6271-Page323,155-7018-Page323.08
150-6989,150-6992-Page94.05A

ELECTRICAL AND STARTING SYSTEM

NOTE	No.	PART No.	QTY	PART NAME	NOTE	No.	PART No.	QTY	PART NAME
	1	41-3043	2	SCREW					
Y	2	150-6989	1	HARNESS AS					
	3	9W-0335	1	LIGHTER AS					
Y	4	150-6992	1	HARNESS AS					
	5	121-1000	17	STRAP					
	6	3S-2093	1	STRAP					
E	7	41-3064		GUARD…(9cm)					
E	8	41-3064		GUARD…(11.5cm × 2)					

E—ORDER BY THE CENTIMETER

Y—SEE SEPARATE ILLUSTRATION

H59604E 07

106-0054 WIRING GP-CAB

S/N 3MR (D97.11)-04978, 4MR (D97.11)-00715

Part of 111-6271-Page323,155-7018-Page323.08

150-6989,150-6992-Page94.05A

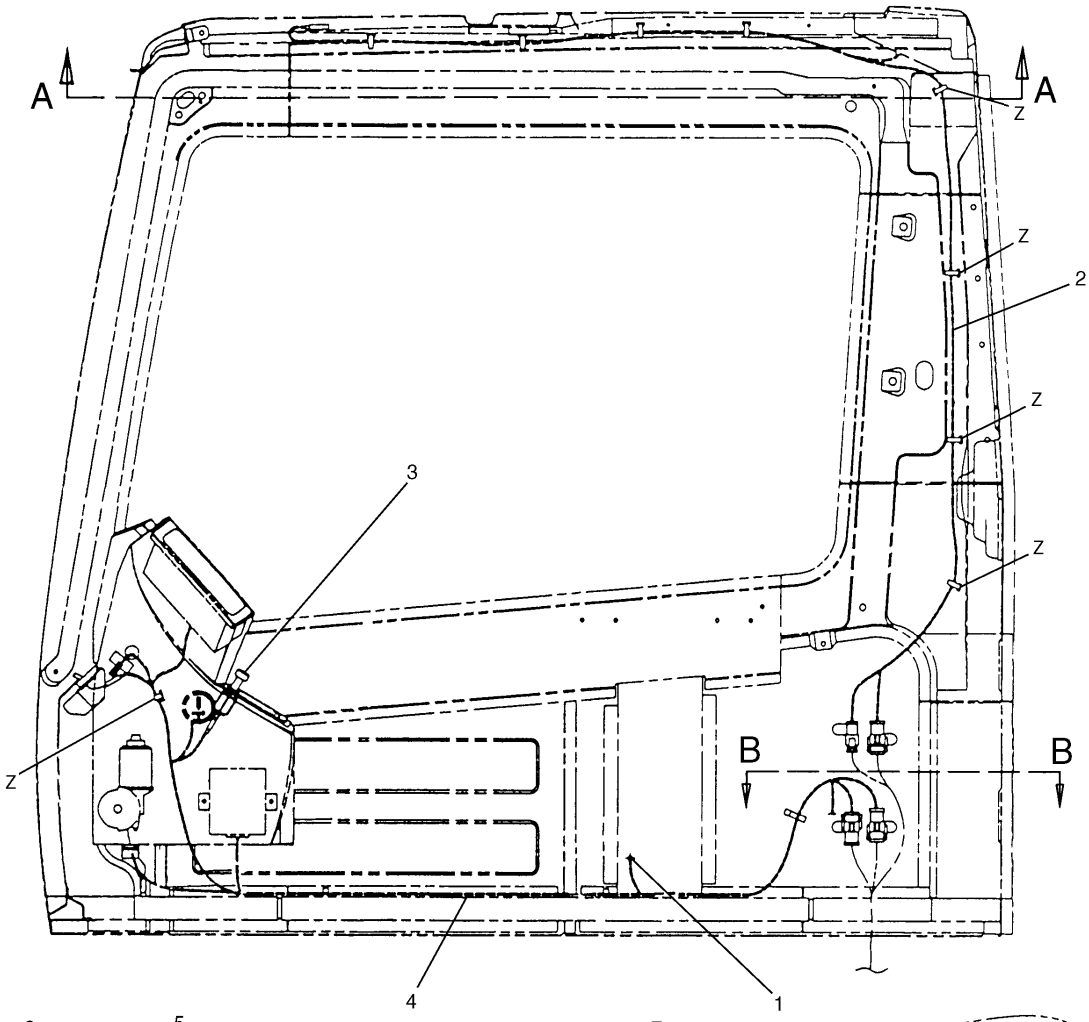

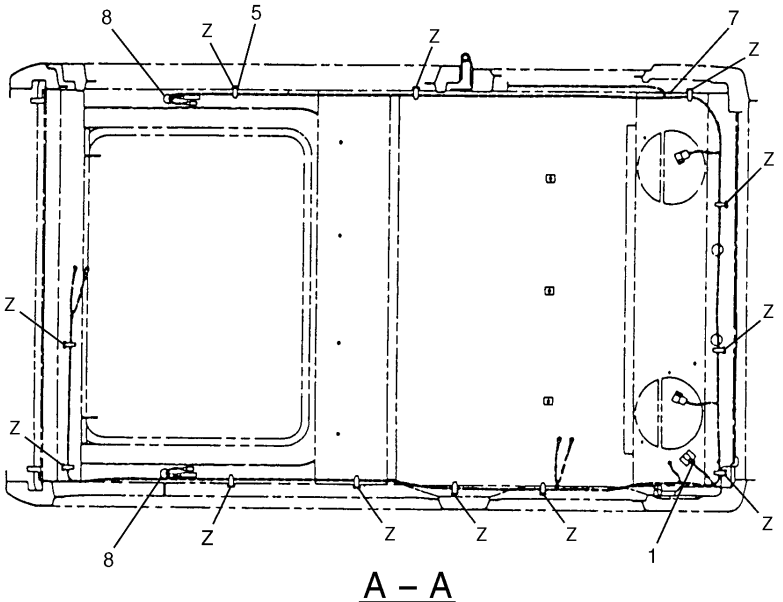

A – A

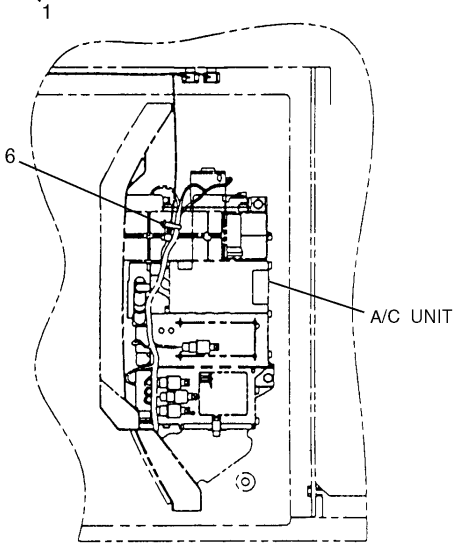

B – B

H60182E 08

106-0054 WIRING GP-CAB
S/N 3MR 04979-Up, 4MR 00716-Up
Part of 111-6271-Page323,155-7018-Page323.08
150-6989-Page94.05A,153-2555-Page94.05B

ELECTRICAL AND STARTING SYSTEM

NOTE	No.	PART No.	QTY	PART NAME	NOTE	No.	PART No.	QTY	PART NAME
	1	41-3043	2	SCREW					
Y	2	150-6989	1	HARNESS AS					
	3	9W-0335	1	LIGHTER AS					
Y	4	153-2555	1	HARNESS AS					
	5	121-1000	17	STRAP					
	6	3S-2093	1	STRAP					
E	7	41-3064		GUARD…(9cm)					
E	8	41-3064		GUARD…(11.5cm × 2)					

E—ORDER BY THE CENTIMETER

Y—SEE SEPARATE ILLUSTRATION

H60182E 08

106-0054 WIRING GP-CAB

S/N 3MR 04979-Up, 4MR 00716-Up

Part of 111-6271-Page323,155-7018-Page323.08

150-6989-Page94.05A,153-2555-Page94.05B

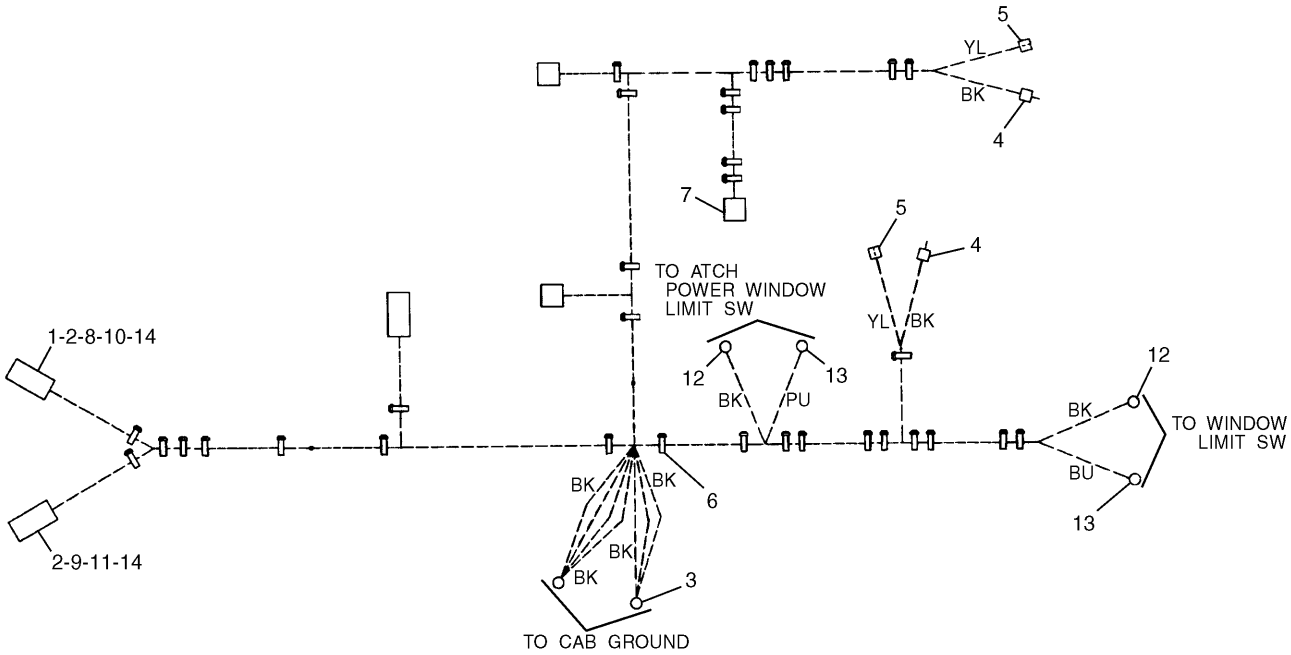

NOTE	No.	PART No.	QTY	PART NAME	NOTE	No.	PART No.	QTY	PART NAME
	1	8T-8737	1	PLUG					
	2	9W-0852	3	PIN					
	3	2L-8066	2	TERMINAL					
	4	7Y-3962	2	TERMINAL					
		7Y-3964	2	TUBE					
	5	7Y-3963	2	TERMINAL					
		7Y-3965	2	TUBE					
	6	1S-9593	33	STRAP					
	7	9X-0196	1	TERMINAL AS					
	8	102-8806	1	RECEPTACLE KIT					
	9	102-8805	1	RECEPTACLE KIT					
	10	3E-3389	1	WEDGE					
	11	3E-3383	1	WEDGE					
	12	2L-8075	2	TERMINAL					
	13	5P-2321	2	TERMINAL					
	14	8T-8729	10	PIN					

H50660E 01

111-4795 HARNESS AS-WIRING

S/N 3MR 1-(D97.10), 4MR 1-(D97.10)
Part of 106-0054-Page94.03

ELECTRICAL AND STARTING SYSTEM

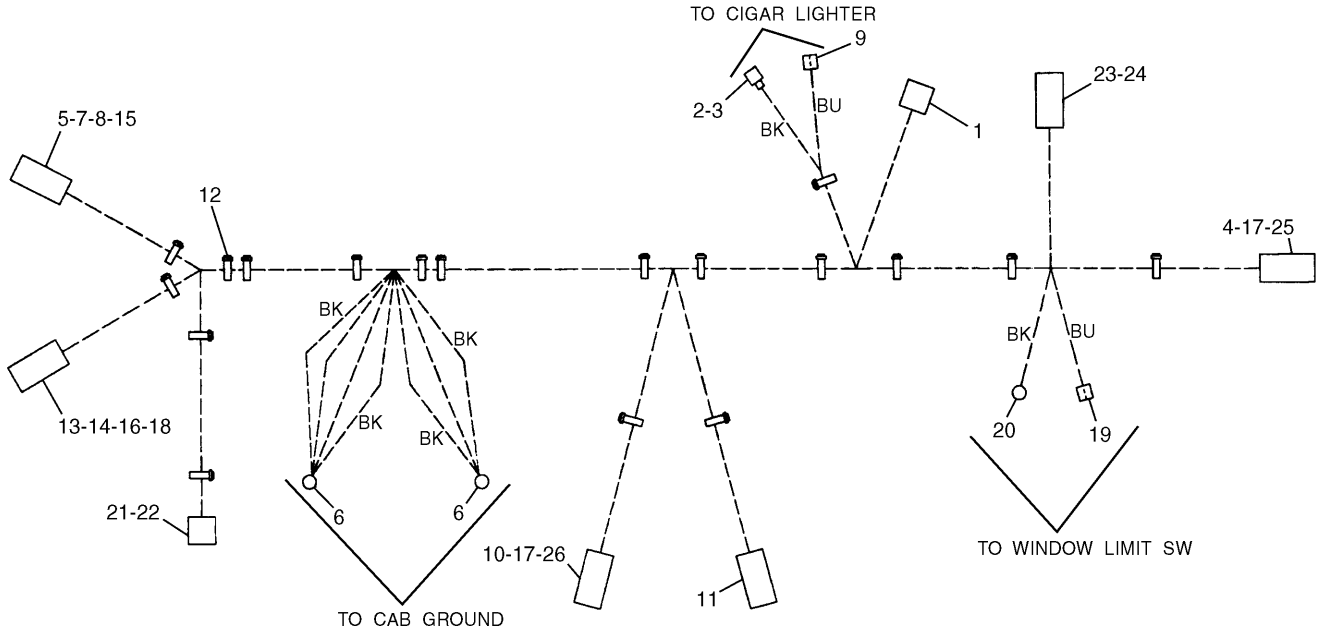

NOTE	No.	PART No.	QTY	PART NAME	NOTE	No.	PART No.	QTY	PART NAME
	1	9X-0196	1	TERMINAL AS		20	2L-8075	1	TERMINAL
	2	6T-6505	1	HOUSING		21	121-1156	1	CONNECTOR
	3	6T-6506	1	TERMINAL		22	121-1157	2	TERMINAL
	4	111-4815	1	CONNECTOR		23	121-1159	2	TERMINAL
	5	9W-0844	2	SOCKET		24	121-1158	1	CONNECTOR
	6	2L-8066	2	TERMINAL		25	125-4838	1	WEDGE
	7	102-8811	1	PLUG KIT		26	125-4840	1	WEDGE
	8	3E-3386	1	WEDGE					
	9	5P-6271	1	CONNECTOR AS					
	10	111-4816	1	CONNECTOR					
	11	7Y-3958	1	CONNECTOR					
	12	1S-9593	18	STRAP					
	13	102-8806	1	RECEPTACLE KIT					
	14	3E-3389	1	WEDGE					
	15	8T-8730	6	SOCKET					
	16	8T-8729	7	PIN					
	17	102-7965	18	TERMINAL					
	18	8T-8737	1	PLUG					
	19	7Y-3963	1	TERMINAL					
		7Y-3965	1	TUBE					

H50661E 01

111-4796 HARNESS AS-WIRING

S/N 3MR 1-(D97.10), 4MR 1-(D97.10)

Part of 106-0054-Page94.03

Consists of :

			Page
1	150-6993	HARNESS AS-WIRING.....	94.05C
		-OR-	
1	150-6994	HARNESS AS-WIRING.....	94.05D

H59605E 00

150-6992 HARNESS AS-WIRING

S/N 3MR (D97.11)-04978, 4MR (D97.11)-00715
Part of 106-0054-Page94.03B

Consists of :

			Page
1	150-6990	HARNESS AS-WIRING.....	94.05E
		-OR-	
1	150-6991	HARNESS AS-WIRING.....	94.05F

H59326E 00

150-6989 HARNESS AS-WIRING

S/N 3MR (D97.11)-Up, 4MR (D97.11)-Up
Part of 106-0054-Page94.03B

Consists of :

			Page
1	153-2556	HARNESS AS-WIRING.....	94.05G
		-OR-	
1	153-2557	HARNESS AS-WIRING.....	94.05H

H60183E 00

153-2555 HARNESS AS-WIRING

S/N 3MR 04979-Up, 4MR 00716-Up
Part of 106-0054-Page94.03D

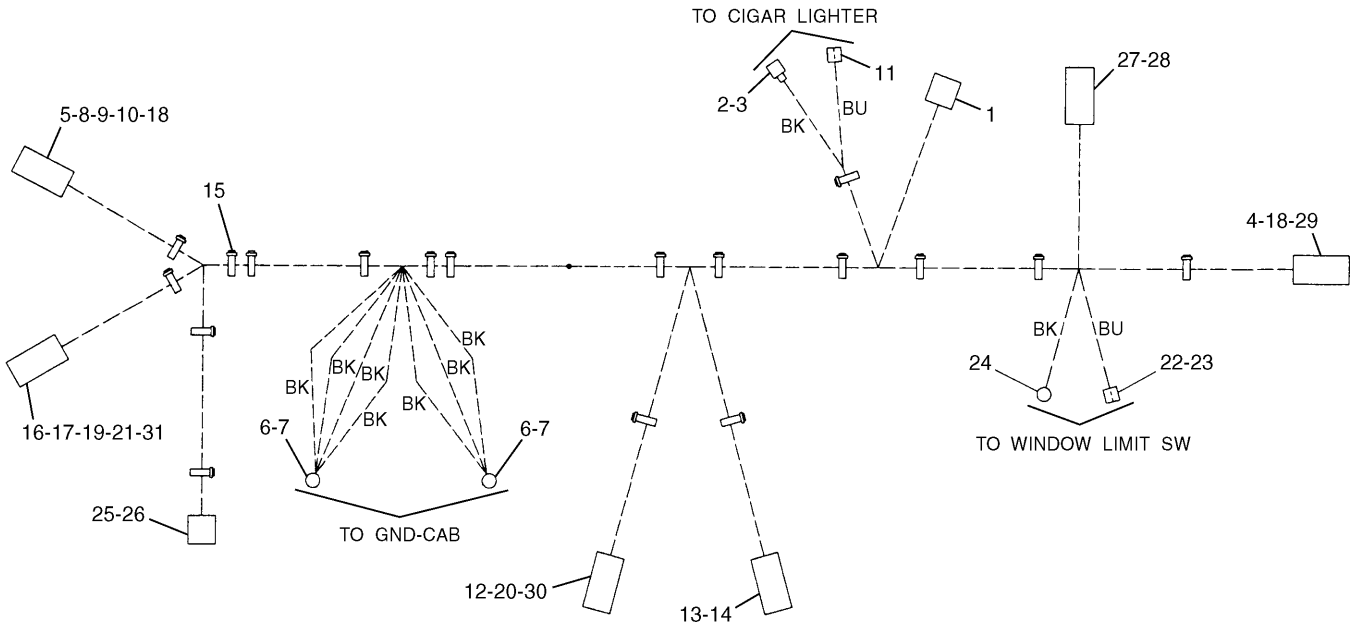

NOTE	No.	PART No.	QTY	PART NAME	NOTE	No.	PART No.	QTY	PART NAME
	1	9X-0196	1	TERMINAL AS		21	8T-8737	1	PLUG
	2	6T-6505	1	HOUSING		22	7Y-3963	1	TERMINAL
	3	6T-6506	1	TERMINAL		23	7Y-3965	1	TUBE
	4	111-4815	1	CONNECTOR		24	2L-8075	1	TERMINAL
	5	9W-0844	2	SOCKET		25	121-1156	1	CONNECTOR
	6	2L-8066	2	TERMINAL		26	121-1157	2	TERMINAL
	7	5P-6006	2	TUBE		27	121-1159	2	TERMINAL
	8	102-8811	1	PLUG KIT		28	121-1158	1	CONNECTOR
	9	102-8816	1	SEAL		29	125-4838	1	WEDGE
	10	3E-3386	1	WEDGE		30	125-4840	1	WEDGE
	11	3M-6018	1	TERMINAL		31	9W-0852	2	PIN
	12	111-4816	1	CONNECTOR					
	13	7Y-3958	1	CONNECTOR					
	14	7Y-3951	5	TERMINAL					
	15	1S-9593	18	STRAP					
	16	102-8806	1	RECEPTACLE KIT					
	17	3E-3389	1	WEDGE					
	18	8T-8730	6	SOCKET					
	19	8T-8729	5	PIN					
	20	102-7965	18	TERMINAL					

H83367E 00

150-6993 HARNESS AS-WIRING

S/N 3MR (D97.11)-04978, 4MR (D97.11)-00715

Part of 150-6992-Page94.05A

ELECTRICAL AND STARTING SYSTEM

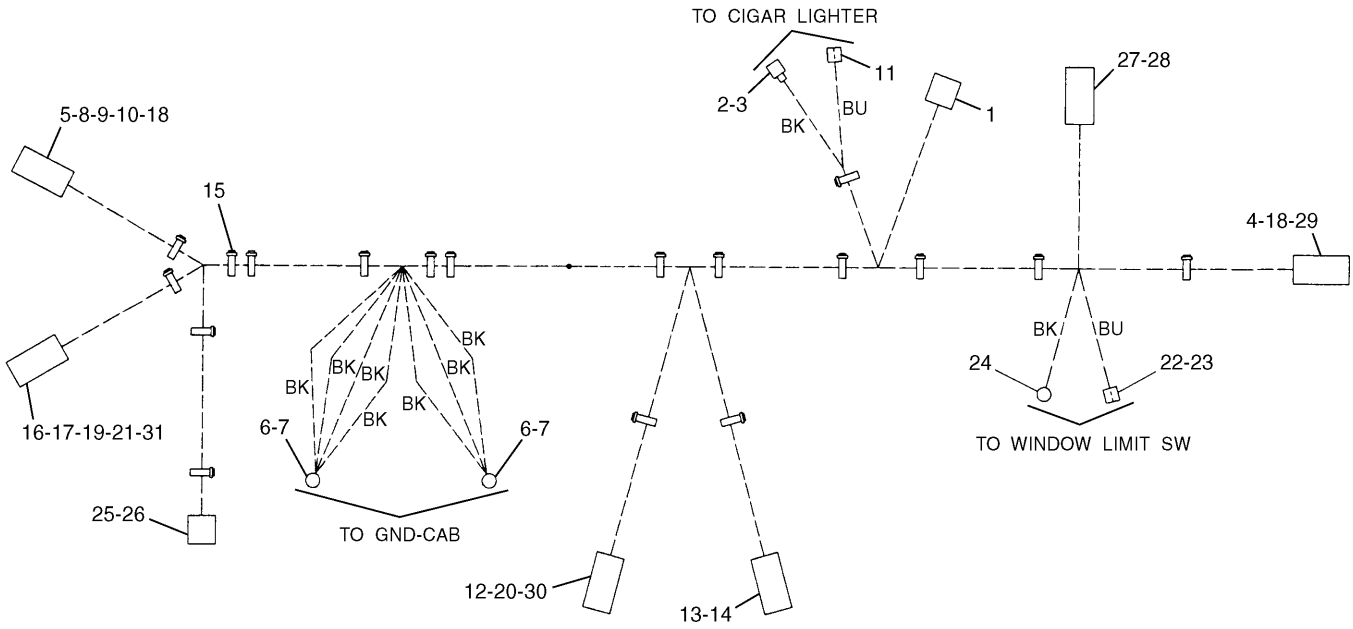

NOTE	No.	PART No.	QTY	PART NAME	NOTE	No.	PART No.	QTY	PART NAME
	1	9X-0196	1	TERMINAL AS		21	8T-8737	1	PLUG
	2	6T-6505	1	HOUSING		22	7Y-3963	1	TERMINAL
	3	6T-6506	1	TERMINAL		23	7Y-3965	1	TUBE
	4	111-4815	1	CONNECTOR		24	2L-8075	1	TERMINAL
	5	9W-0844	2	SOCKET		25	121-1156	1	CONNECTOR
	6	2L-8066	2	TERMINAL		26	121-1157	2	TERMINAL
	7	5P-6006	2	TUBE		27	121-1159	2	TERMINAL
	8	102-8811	1	PLUG KIT		28	121-1158	1	CONNECTOR
	9	102-8816	1	SEAL		29	125-4838	1	WEDGE
	10	3E-3386	1	WEDGE		30	125-4840	1	WEDGE
	11	3M-6018	1	TERMINAL		31	9W-0852	2	PIN
	12	111-4816	1	CONNECTOR					
	13	7Y-3958	1	CONNECTOR					
	14	7Y-3951	5	TERMINAL					
	15	1S-9593	18	STRAP					
	16	102-8806	1	RECEPTACLE KIT					
	17	3E-3389	1	WEDGE					
	18	8T-8730	6	SOCKET					
	19	8T-8729	5	PIN					
	20	102-7965	18	TERMINAL					

H83368E 00

150-6994 HARNESS AS-WIRING

S/N 3MR (D97.11)-04978, 4MR (D97.11)-00715

Part of 150-6992-Page94.05A

ELECTRICAL AND STARTING SYSTEM

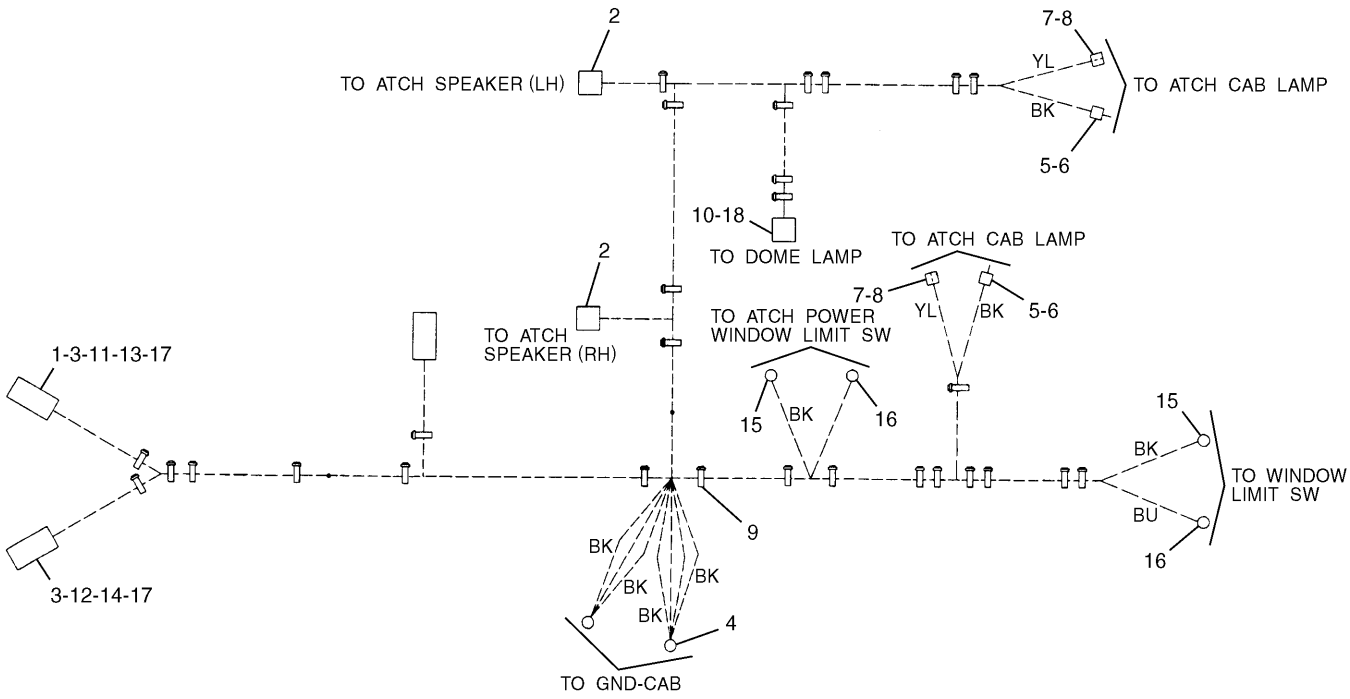

NOTE	No.	PART No.	QTY	PART NAME	NOTE	No.	PART No.	QTY	PART NAME
	1	8T-8737	1	PLUG					
	2	7Y-3950	4	TERMINAL					
	3	9W-0852	5	PIN					
	4	2L-8066	2	TERMINAL					
	5	7Y-3962	2	TERMINAL					
	6	7Y-3964	2	TUBE					
	7	7Y-3963	2	TERMINAL					
	8	7Y-3965	2	TUBE					
	9	1S-9593	29	STRAP					
	10	7Y-3952	1	CONNECTOR					
	11	102-8806	1	RECEPTACLE KIT					
	12	102-8805	1	RECEPTACLE KIT					
	13	3E-3389	1	WEDGE					
	14	3E-3383	1	WEDGE					
	15	2L-8075	2	TERMINAL					
	16	5P-2321	2	TERMINAL					
	17	8T-8729	8	PIN					
	18	7Y-3951	2	TERMINAL					

H65081E 02

150-6990 HARNESS AS-WIRING

S/N 3MR (D97.11)-Up, 4MR (D97.11)-Up
Part of 150-6989-Page94.05A

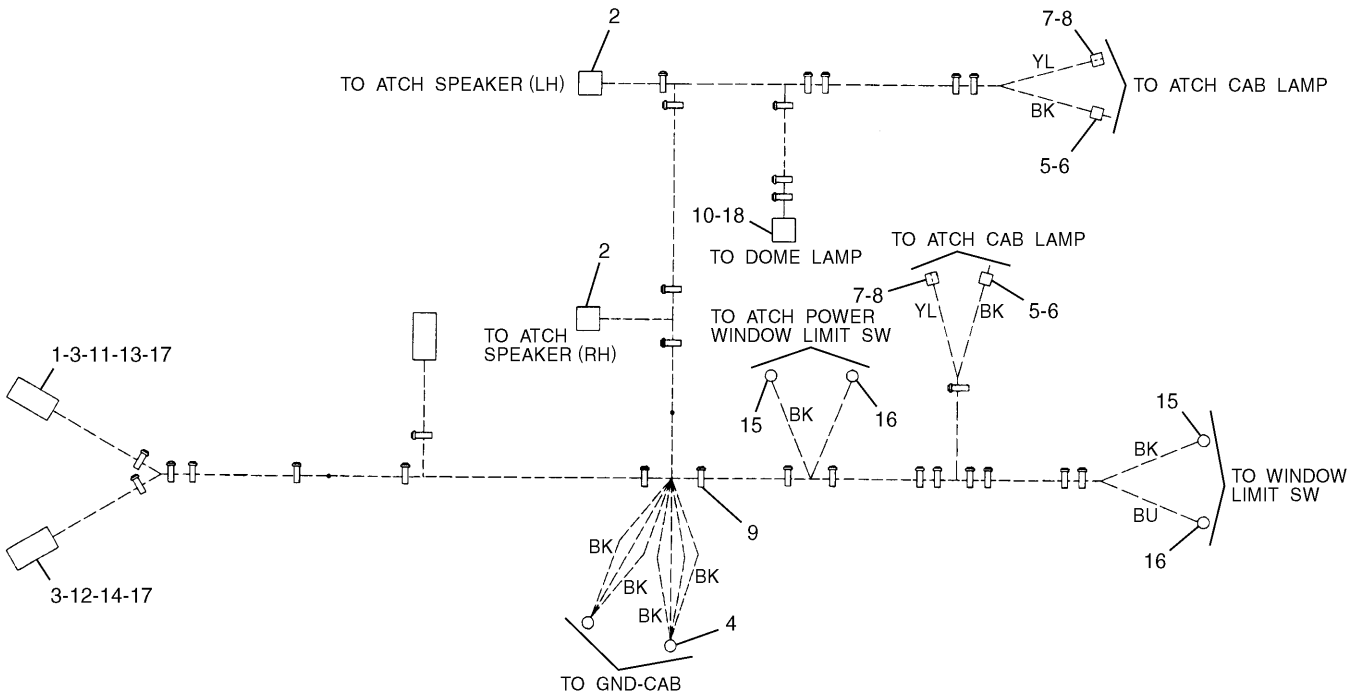

NOTE	No.	PART No.	QTY	PART NAME	NOTE	No.	PART No.	QTY	PART NAME
	1	8T-8737	1	PLUG					
	2	7Y-3950	4	TERMINAL					
	3	9W-0852	5	PIN					
	4	2L-8066	2	TERMINAL					
	5	7Y-3962	2	TERMINAL					
	6	7Y-3964	2	TUBE					
	7	7Y-3963	2	TERMINAL					
	8	7Y-3965	2	TUBE					
	9	1S-9593	29	STRAP					
	10	7Y-3952	1	CONNECTOR					
	11	102-8806	1	RECEPTACLE KIT					
	12	102-8805	1	RECEPTACLE KIT					
	13	3E-3389	1	WEDGE					
	14	3E-3383	1	WEDGE					
	15	2L-8075	2	TERMINAL					
	16	5P-2321	2	TERMINAL					
	17	8T-8729	8	PIN					
	18	7Y-3951	2	TERMINAL					

H65082E 02

150-6991 HARNESS AS-WIRING

S/N 3MR (D97.11)-Up, 4MR (D97.11)-Up
Part of 150-6989-Page94.05A

ELECTRICAL AND STARTING SYSTEM

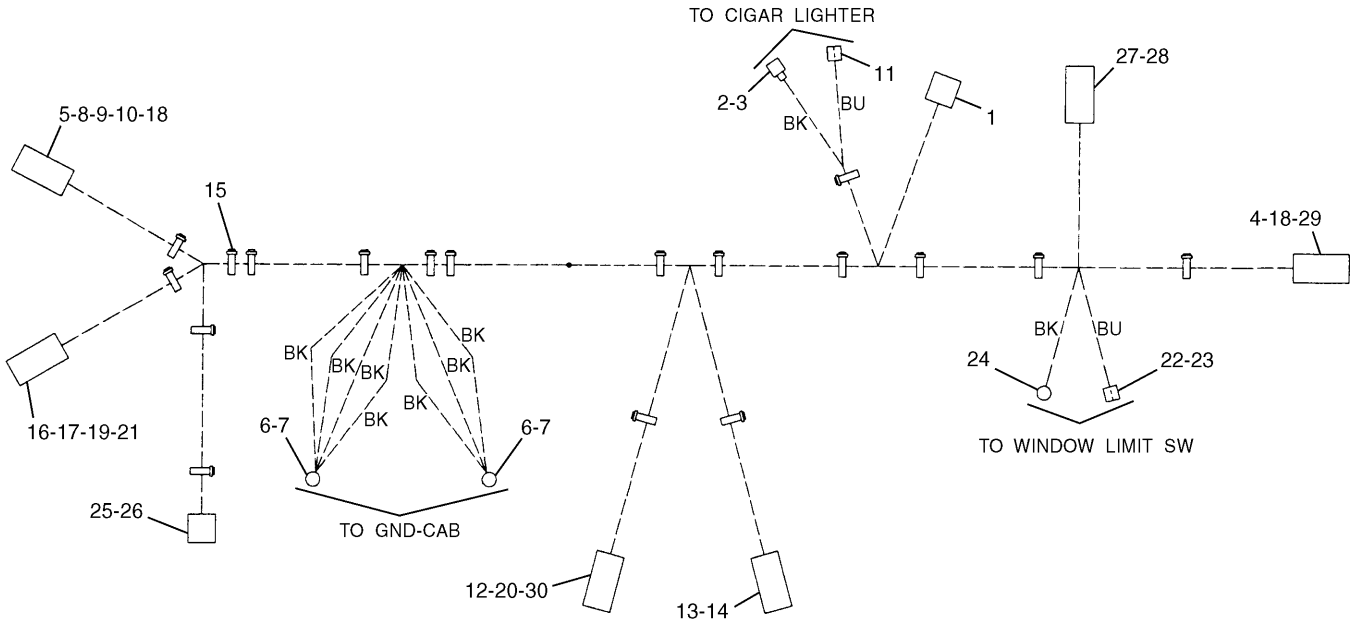

NOTE	No.	PART No.	QTY	PART NAME	NOTE	No.	PART No.	QTY	PART NAME
	1	9X-0196	1	TERMINAL AS		21	9W-0852	2	PIN
	2	6T-6505	1	HOUSING		22	7Y-3963	1	TERMINAL
	3	6T-6506	1	TERMINAL		23	7Y-3965	1	TUBE
	4	111-4815	1	CONNECTOR		24	2L-8075	1	TERMINAL
	5	9W-0844	2	SOCKET		25	121-1156	1	CONNECTOR
	6	2L-8066	2	TERMINAL		26	121-1157	2	TERMINAL
	7	5P-6006	2	TUBE		27	121-1159	2	TERMINAL
	8	102-8811	1	PLUG KIT		28	121-1158	1	CONNECTOR
	9	102-8816	1	SEAL		29	125-4838	1	WEDGE
	10	3E-3386	1	WEDGE		30	125-4840	1	WEDGE
	11	3M-6018	1	TERMINAL					
	12	111-4816	1	CONNECTOR					
	13	7Y-3958	1	CONNECTOR					
	14	7Y-3951	5	TERMINAL					
	15	1S-9593	18	STRAP					
	16	102-8806	1	RECEPTACLE KIT					
	17	3E-3389	1	WEDGE					
	18	8T-8730	6	SOCKET					
	19	8T-8729	6	PIN					
	20	102-7965	19	TERMINAL					

H83106E 00

153-2556 HARNESS AS-WIRING

S/N 3MR 04979-Up, 4MR 00716-Up

Part of 153-2555-Page94.05B

ELECTRICAL AND STARTING SYSTEM

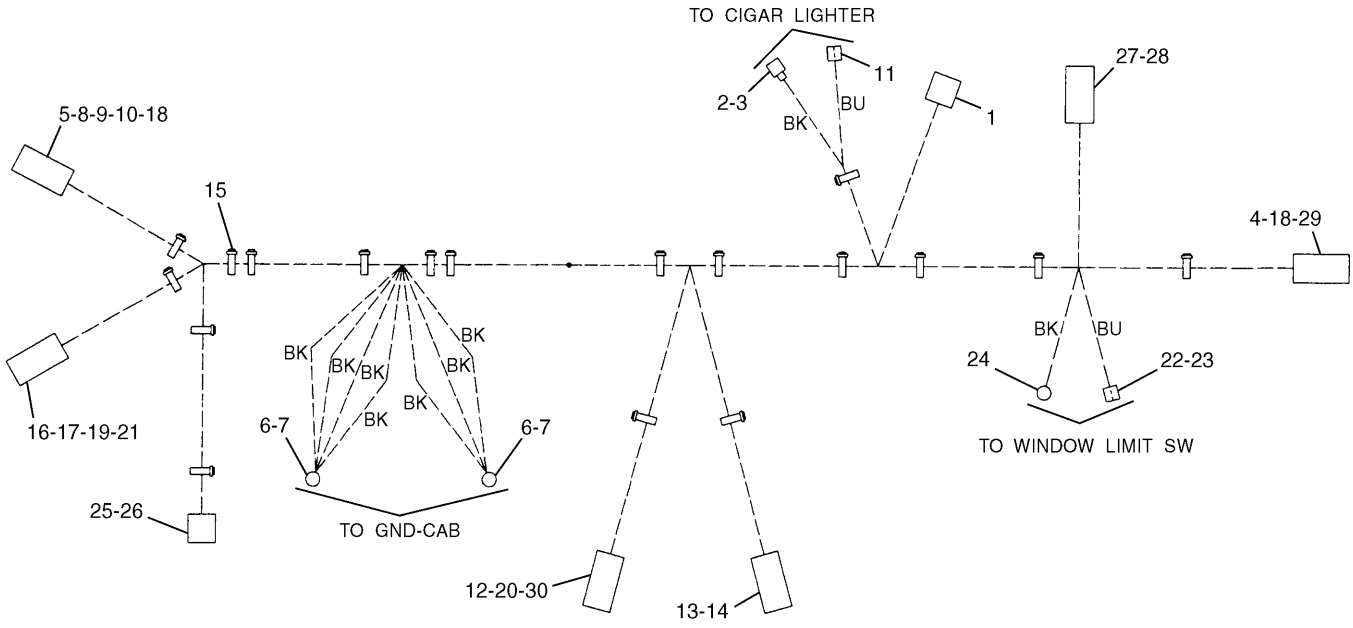

NOTE	No.	PART No.	QTY	PART NAME	NOTE	No.	PART No.	QTY	PART NAME
	1	9X-0196	1	TERMINAL AS		21	9W-0852	2	PIN
	2	6T-6505	1	HOUSING		22	7Y-3963	1	TERMINAL
	3	6T-6506	1	TERMINAL		23	7Y-3965	1	TUBE
	4	111-4815	1	CONNECTOR		24	2L-8075	1	TERMINAL
	5	9W-0844	2	SOCKET		25	121-1156	1	CONNECTOR
	6	2L-8066	2	TERMINAL		26	121-1157	2	TERMINAL
	7	5P-6006	2	TUBE		27	121-1159	2	TERMINAL
	8	102-8811	1	PLUG KIT		28	121-1158	1	CONNECTOR
	9	102-8816	1	SEAL		29	125-4838	1	WEDGE
	10	3E-3386	1	WEDGE		30	125-4840	1	WEDGE
	11	3M-6018	1	TERMINAL					
	12	111-4816	1	CONNECTOR					
	13	7Y-3958	1	CONNECTOR					
	14	7Y-3951	5	TERMINAL					
	15	1S-9593	18	STRAP					
	16	102-8806	1	RECEPTACLE KIT					
	17	3E-3389	1	WEDGE					
	18	8T-8730	6	SOCKET					
	19	8T-8729	6	PIN					
	20	102-7965	19	TERMINAL					

H83107E 00

153-2557 HARNESS AS-WIRING

S/N 3MR 04979-Up, 4MR 00716-Up

Part of 153-2555-Page94.05B

Consists of :

			Page
1	111-4842	HARNESS AS-CONSOLE	94.07
		-OR-	
1	111-4843	HARNESS AS-CONSOLE	94.07

H65182E 01

111-4841 HARNESS AS-CONSOLE

Part of 116-0217-Page80.09,111-4845-Page80.13,153-2505-Page80.15D
An Attachment

Consists of :

			Page
1	116-0259	HARNESS AS	94.08
		-OR-	
1	116-0260	HARNESS AS	94.08

H65183E 01

116-0258 HARNESS AS

Part of 116-0159-Page80.16
An Attachment

ELECTRICAL AND STARTING SYSTEM

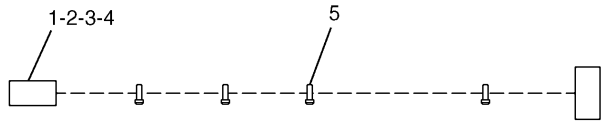

NOTE	No.	PART No.	QTY	PART NAME
	1	9W-0852	4	PIN
	2	8T-8729	4	PIN
	3	102-8806	1	RECEPTACLE KIT
	4	3E-3389	1	WEDGE
	5	3S-2093	4	STRAP

H65083E 04

111-4842 HARNESS AS-CONSOLE

Part of 111-4841-Page94.06
An Attachment

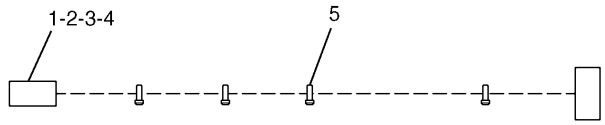

NOTE	No.	PART No.	QTY	PART NAME
	1	9W-0852	4	PIN
	2	8T-8729	4	PIN
	3	102-8806	1	RECEPTACLE KIT
	4	3E-3389	1	WEDGE
	5	3S-2093	4	STRAP

H65084E 04

111-4843 HARNESS AS-CONSOLE

Part of 111-4841-Page94.06
An Attachment

ELECTRICAL AND STARTING SYSTEM

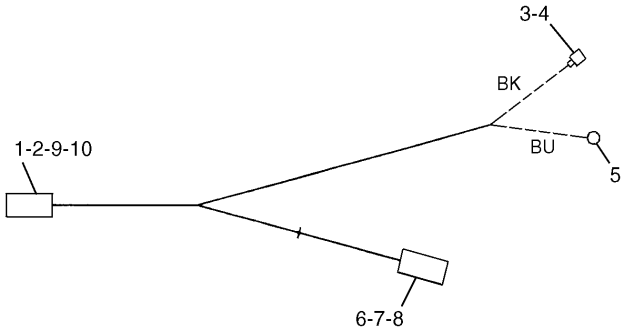

NOTE	No.	PART No.	QTY	PART NAME
	1	102-8810	1	PLUG KIT
	2	3E-3380	1	WEDGE
	3	6T-6506	1	TERMINAL
	4	6T-6505	1	HOUSING
	5	2L-8075	1	TERMINAL
	6	9W-0852	2	PIN
	7	102-8802	1	RECEPTACLE KIT
	8	3E-3365	1	WEDGE
	9	8T-8737	1	PLUG
	10	9W-0844	5	SOCKET

H57344E 02

116-0259 HARNESS AS

Part of 116-0258-Page94.06
An Attachment

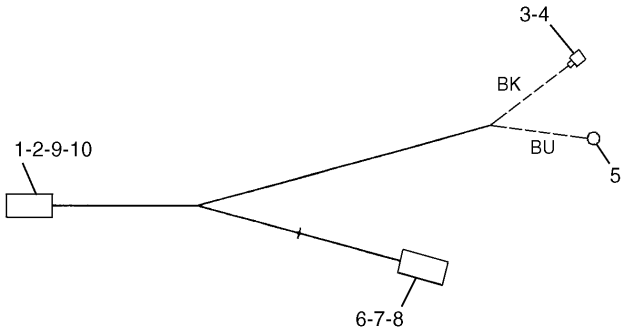

NOTE	No.	PART No.	QTY	PART NAME
	1	102-8810	1	PLUG KIT
	2	3E-3380	1	WEDGE
	3	6T-6506	1	TERMINAL
	4	6T-6505	1	HOUSING
	5	2L-8075	1	TERMINAL
	6	9W-0852	2	PIN
	7	102-8802	1	RECEPTACLE KIT
	8	3E-3365	1	WEDGE
	9	8T-8737	1	PLUG
	10	9W-0844	5	SOCKET

H65085E 02

116-0260 HARNESS AS

Part of 116-0258-Page94.06
An Attachment

ELECTRICAL AND STARTING SYSTEM

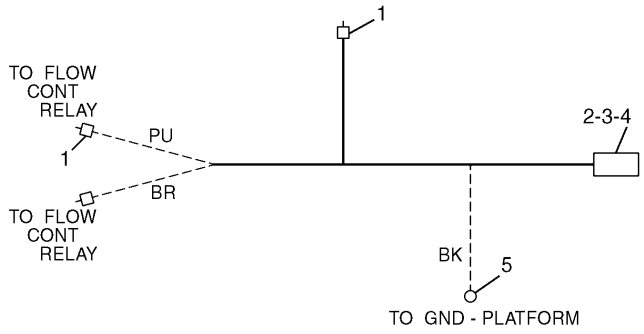

NOTE	No.	PART No.	QTY	PART NAME
	1	8T-8729	3	PIN
	2	155-2270	1	PLUG KIT
	3	3E-3362	1	WEDGE
	4	8T-8730	2	SOCKET
	5	3T-4696	1	TERMINAL

H50577E 01

121-1033 HARNESS AS

Part of 121-1045-Page94.01
An Attachment

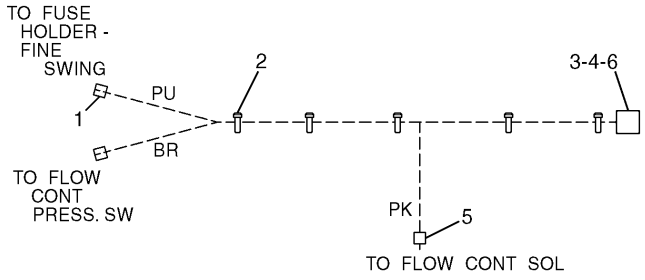

NOTE	No.	PART No.	QTY	PART NAME
	1	8T-8730	2	SOCKET
	2	3S-2093	5	STRAP
	3	149-5051	1	CONNECTOR
	4	149-5069	2	TERMINAL
	5	8T-8729	1	PIN
	6	149-5070	2	TERMINAL

H65250E 00

167-3589 HARNESS AS

Part of 121-1045-Page94.01
An Attachment

ELECTRICAL AND STARTING SYSTEM

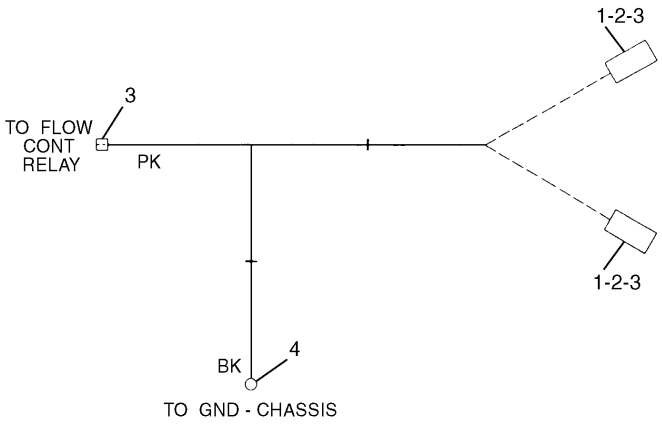

NOTE	No.	PART No.	QTY	PART NAME
	1	155-2270	2	PLUG KIT
	2	3E-3362	2	WEDGE
	3	8T-8730	5	SOCKET
	4	3T-4696	1	TERMINAL

H52946E 00

128-8879 HARNESS AS
Part of 121-1045-Page94.01
An Attachment

ELECTRICAL AND STARTING SYSTEM

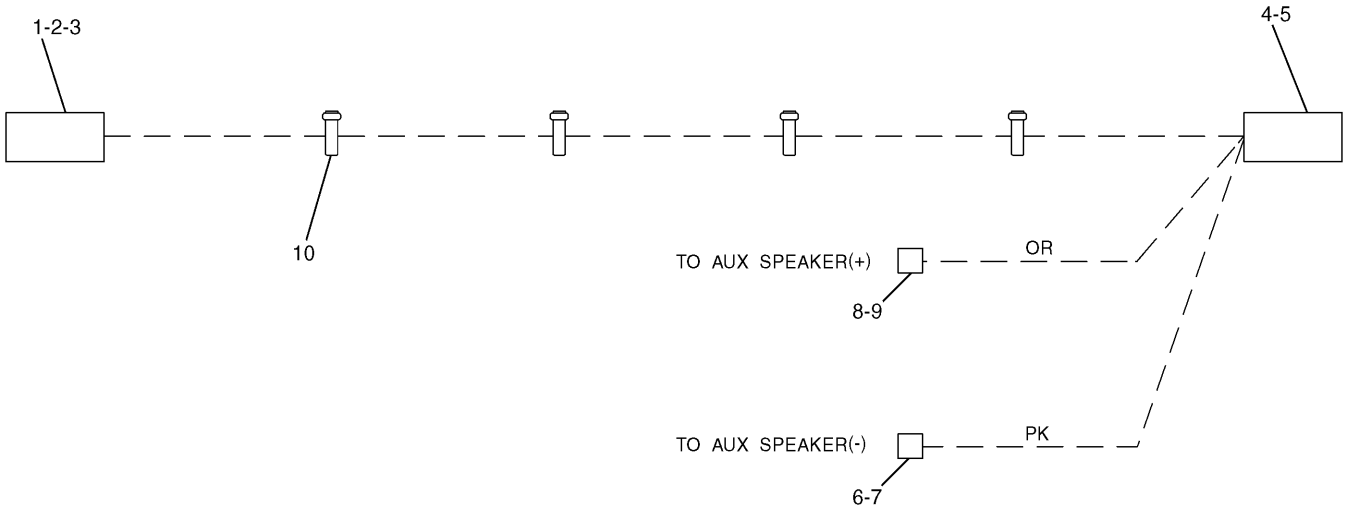

NOTE	No.	PART No.	QTY	PART NAME	NOTE	No.	PART No.	QTY	PART NAME
	1	8T-8729	8	PIN					
	2	102-8806	1	RECEPTACLE KIT					
	3	3E-3389	1	WEDGE					
	4	153-2541	1	CONNECTOR					
	5	153-2540	10	TERMINAL					
	6	7Y-3962	1	TERMINAL					
	7	7Y-3964	1	TUBE					
	8	7Y-3963	1	TERMINAL					
	9	7Y-3965	1	TUBE					
	10	3S-2093	4	STRAP					

H60789E 00

153-2499 HARNESS AS-CONSOLE

S/N 3MR 04979-06337, 4MR 00716-00927
Part of 153-2505-Page80.15B
An Attachment

ELECTRICAL AND STARTING SYSTEM

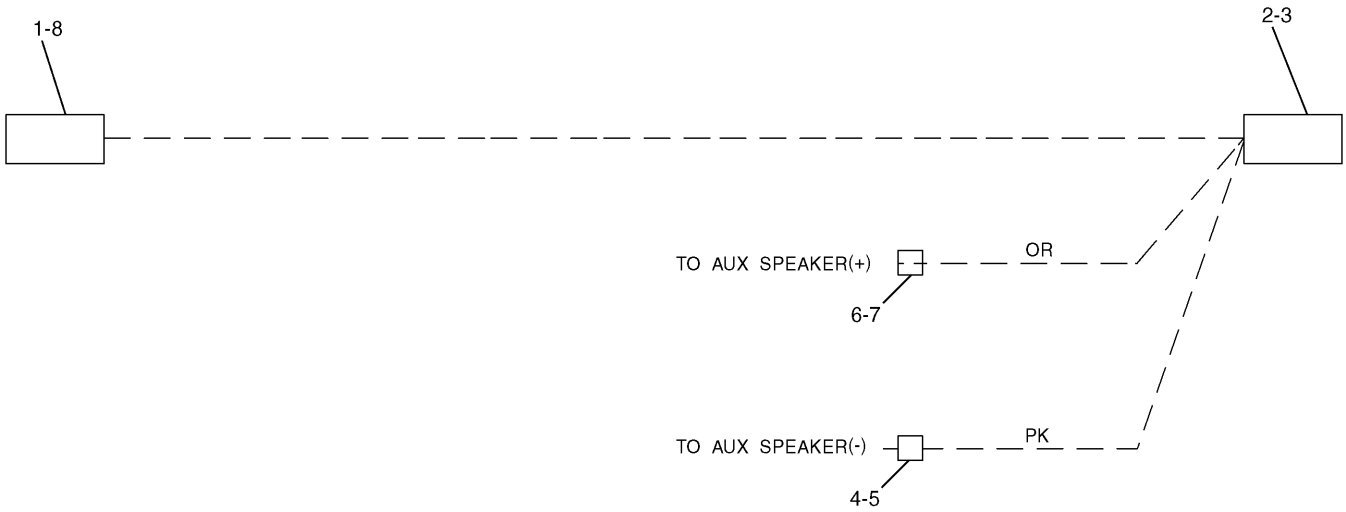

NOTE	No.	PART No.	QTY	PART NAME	NOTE	No.	PART No.	QTY	PART NAME
	1	116-0174	8	TERMINAL					
	2	153-2541	1	CONNECTOR					
	3	153-2540	10	TERMINAL					
	4	7Y-3962	1	TERMINAL					
	5	7Y-3964	1	TUBE					
	6	7Y-3963	1	TERMINAL					
	7	7Y-3965	1	TUBE					
	8	167-3486	1	CONNECTOR					

H65251E 00

167-3485 HARNESS AS-CONSOLE

S/N 3MR 06338-Up, 4MR 00928-Up
Part of 153-2505-Page80.15D
An Attachment

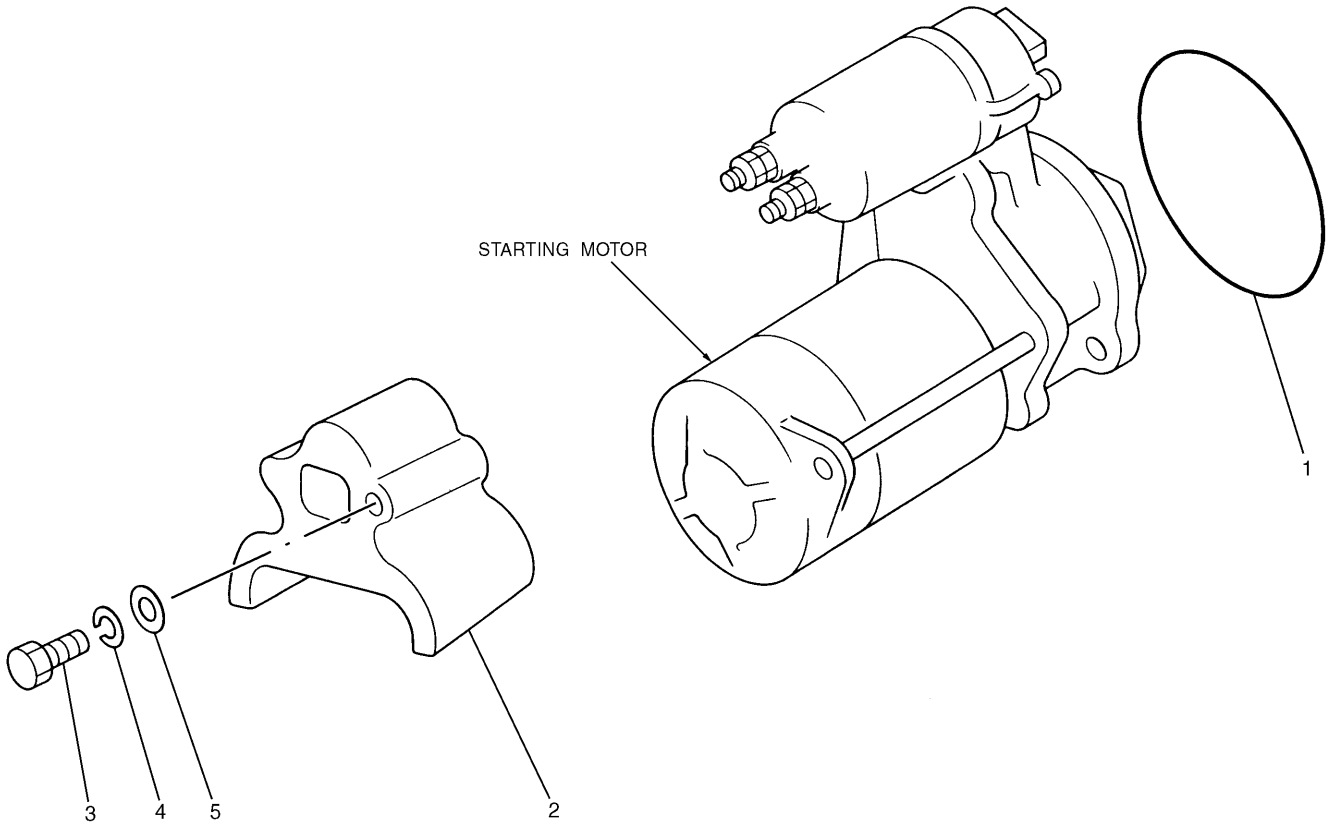

NOTE	No.	PART No.	QTY	PART NAME	NOTE	No.	PART No.	QTY	PART NAME
	1	5I-7599	1	SEAL-O-RING (ID=79.50mm)					
	2	125-2984	1	COVER					
	3	125-2985	1	BOLT (L=12mm)					
	4	3B-4503	1	LOCKWASHER					
	5	8T-0328	1	WASHER					

H52327E 00

125-2963 MOUNTING GP-STARTING MOTOR

S/N 3MR 1-(D97.03), 4MR 1-(D97.03)
Part of 124-1696-Page13

ELECTRICAL AND STARTING SYSTEM

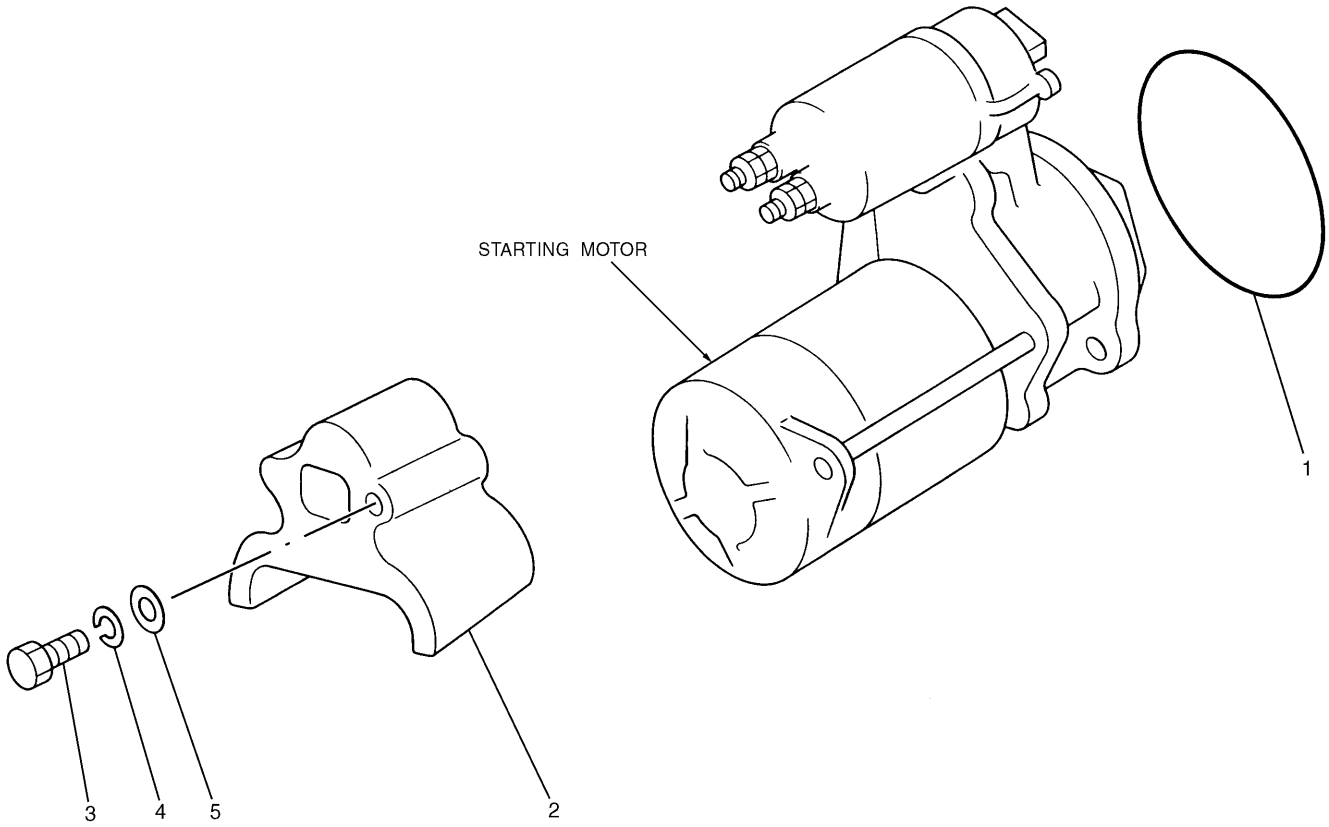

NOTE	No.	PART No.	QTY	PART NAME	NOTE	No.	PART No.	QTY	PART NAME
	1	5I-7599	1	SEAL-O-RING (ID=79.50mm)					
	2	135-2369	1	COVER					
	3	135-2370	1	BOLT (L=25mm)					
	4	3B-4503	1	LOCKWASHER					
	5	8T-0328	1	WASHER					

H56078E 01

125-2963 MOUNTING GP-STARTING MOTOR

High Ambient,Emission Package
S/N 3MR (D97.04)-Up, 4MR (D97.04)-Up
Part of 124-1696-Page13

MEMORANDA

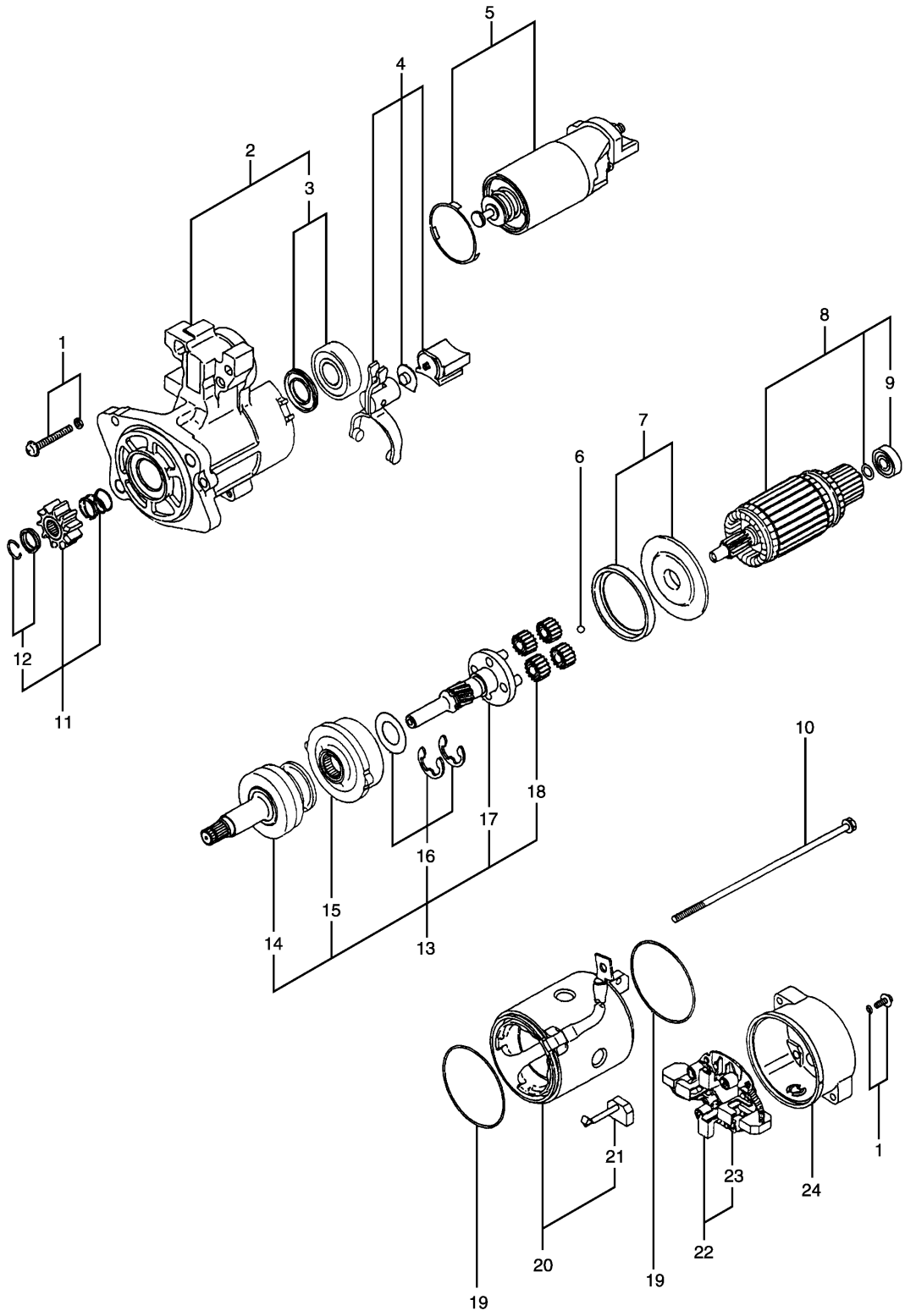

H57489E 01

125-2988 STARTING MOTOR GP-ELECTRIC
Part of 124-1696-Page13

ELECTRICAL AND STARTING SYSTEM

NOTE	No.	PART No.	QTY	PART NAME	NOTE	No.	PART No.	QTY	PART NAME
	1	127-5947	1	SETSCREW					
	2	135-2363	1	BRACKET AS					
	3	127-5937	1	BEARING AS					
	4	127-5944	1	LEVER AS					
	5	135-2364	1	SWITCH AS					
	6	127-5948	1	BALL					
	7	127-5949	1	PACKING AS					
	8	127-5950	1	ARMATURE AS					
	9	095-0410	1	BEARING					
	10	095-0085	1	BOLT SET					
	11	135-2365	1	PINION SET					
	12	094-9950	1	STOPPER SET					
	13	127-5938	1	SHAFT AS					
	14	127-5942	1	CLUTCH					
	15	127-5941	1	GEAR AS					
	16	127-5940	1	WASHER AS					
	17	127-5939	1	SHAFT AS					
	18	127-5943	4	GEAR AS					
	19	094-9980	2	GASKET					
	20	127-5952	1	YOKE AS					
	21	127-5953	2	BRUSH					
	22	127-5955	1	HOLDER AS					
	23	127-5956	4	SPRING					
	24	135-2366	1	BRACKET					

H57489E 01

125-2988 STARTING MOTOR GP-ELECTRIC
Part of 124-1696-Page13

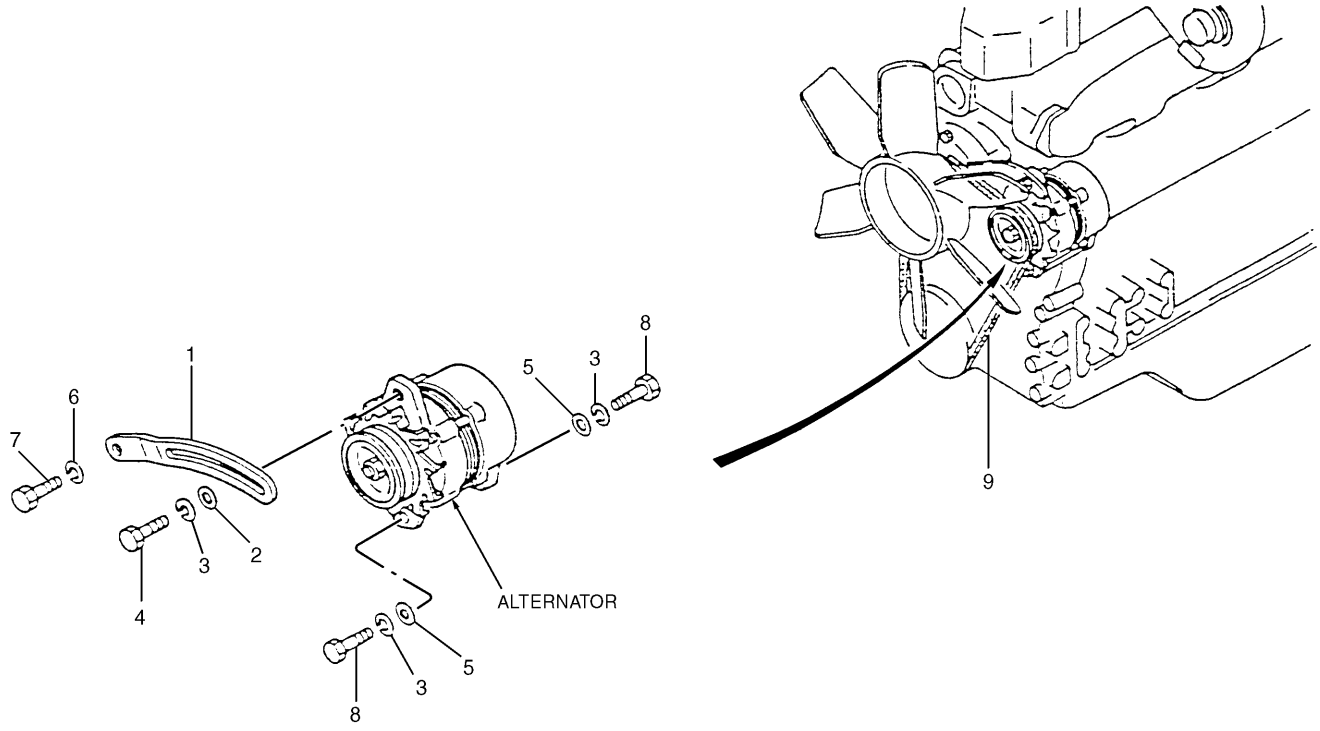

NOTE	No.	PART No.	QTY	PART NAME	NOTE	No.	PART No.	QTY	PART NAME
	1	5I-8019	1	PLATE					
	2	5I-7966	1	WASHER					
	3	096-2501	3	WASHER					
	4	099-4483	1	BOLT (L=30mm)					
	5	5I-7750	2	WASHER					
	6	7X-0796	1	LOCKWASHER					
	7	8T-4137	1	BOLT (L=20mm)					
	8	8T-4183	2	BOLT (L=40mm)					
	9	176-5006	1	V-BELT SET					

H67565E 01

125-2962 MOUNTING GP-ALTERNATOR

Part of 124-1696-Page13

ELECTRICAL AND STARTING SYSTEM

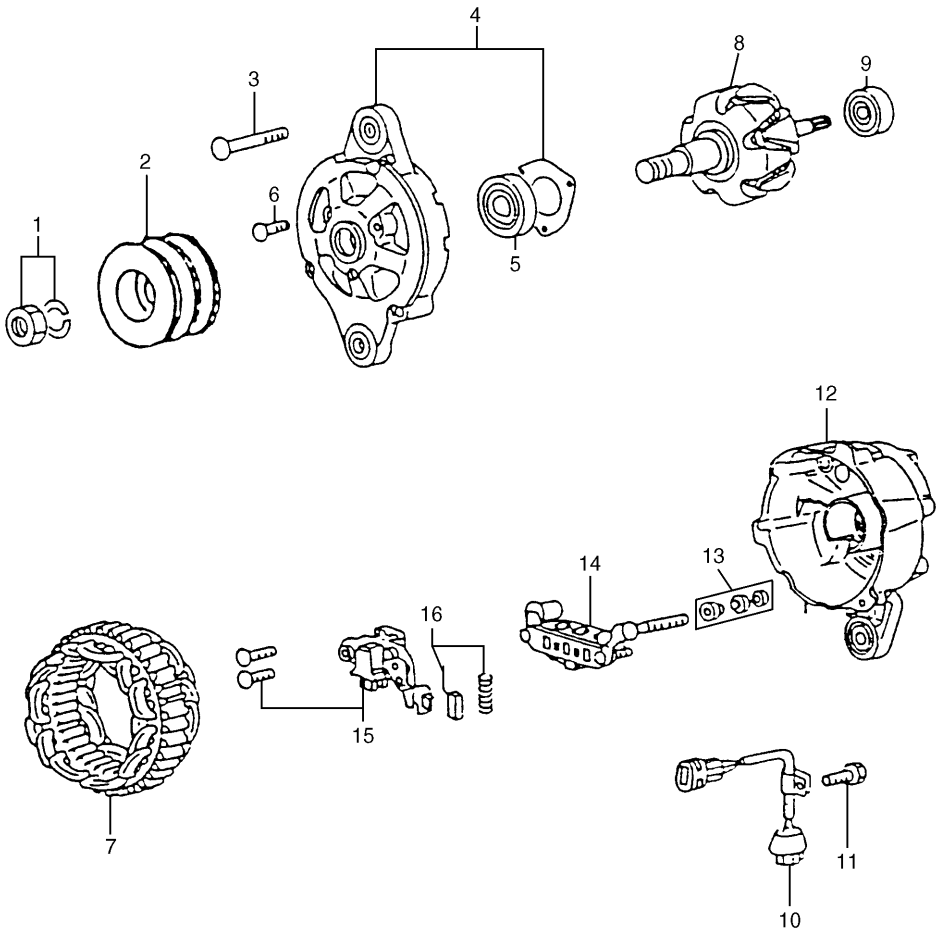

NOTE	No.	PART No.	QTY	PART NAME	NOTE	No.	PART No.	QTY	PART NAME
	1	099-3913	1	NUT SET					
	2	5I-8072	1	PULLEY					
	3	5I-8073	1	SETSCREW					
	4	5I-8074	1	BRACKET AS					
	5	5I-9155	1	BEARING					
	6	5I-8075	1	SETSCREW					
	7	5I-8078	1	STATOR					
	8	5I-8076	1	ROTOR AS					
	9	5I-8077	1	BEARING					
	10	5I-8080	1	CONNECTOR AS					
	11	5I-8081	1	BOLT					
	12	5I-8079	1	BRACKET AS					
	13	085-9429	1	NUT SET					
	14	5I-8082	1	RECTIFIER AS					
	15	5I-8083	1	REGULATOR AS					
	16	5I-8084	2	BRUSH					

H53344E 00

5I-8071 ALTERNATOR GP-CHARGING
Part of 124-1696-Page13

ELECTRICAL AND STARTING SYSTEM

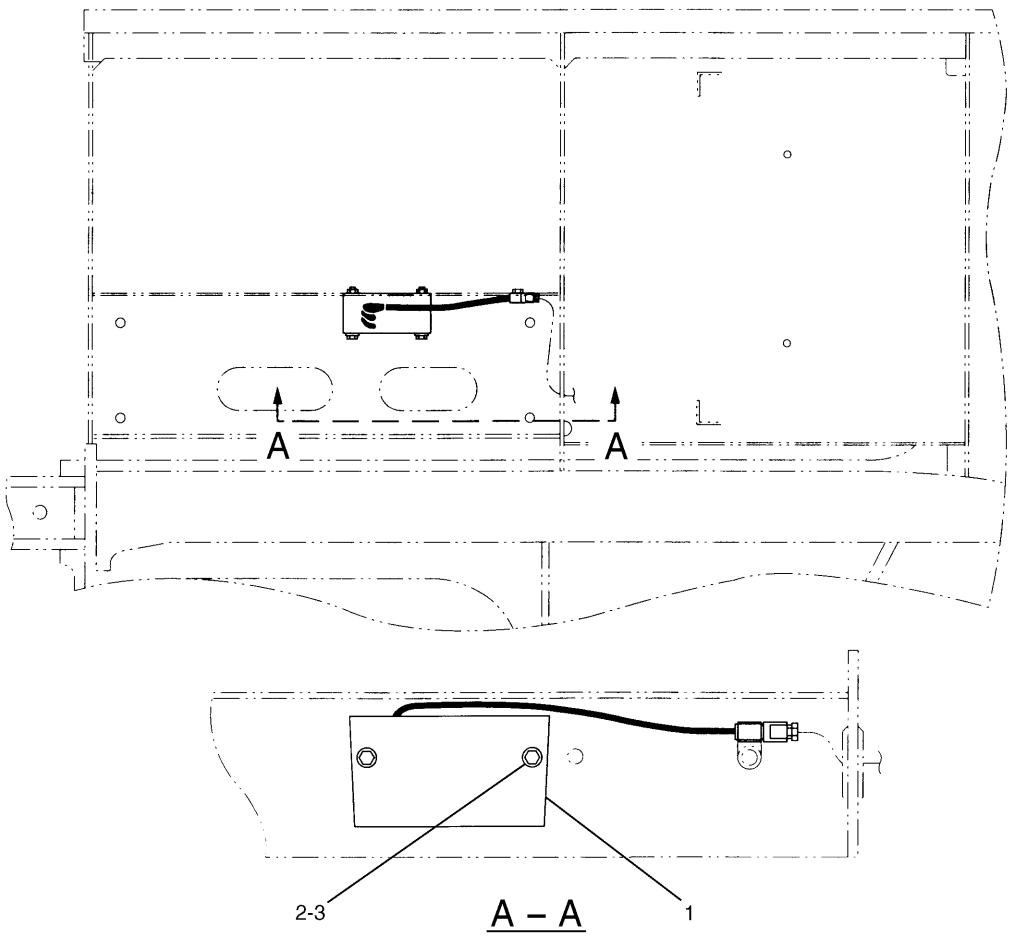

NOTE	No.	PART No.	QTY	PART NAME	NOTE	No.	PART No.	QTY	PART NAME
Y	1	3E-7738	1	ALARM AS					
	2	8T-4224	2	WASHER					
	3	7X-2538	2	BOLT (L=100mm)					

Y—SEE SEPARATE ILLUSTRATION

H51179E 01

111-4696 ALARM GP-TRAVEL

3E-7738-Page100.01
An Attachment

ELECTRICAL AND STARTING SYSTEM

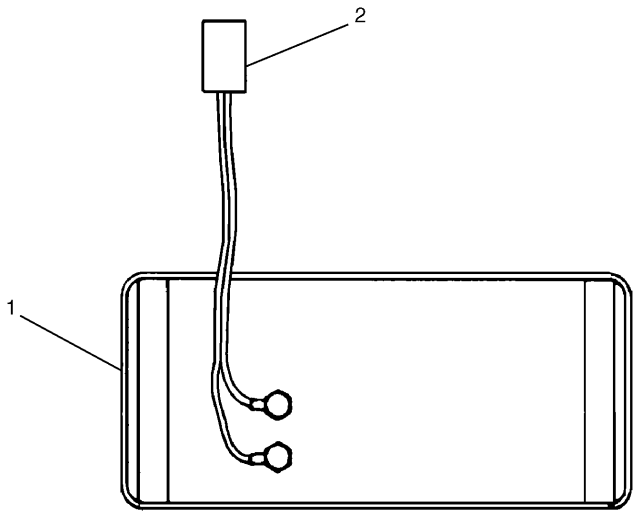

NOTE	No.	PART No.	QTY	PART NAME
	1	3T-1815	1	ALARM
	2	3E-7739	1	WIRE AS
		3E-3365	1	WEDGE
		186-3735	2	PIN
		102-8802	1	RECEPTACLE KIT
		5P-1475	2	TERMINAL

H52051E 00

3E-7738 ALARM AS-BACKUP
Part of 111-4696-Page100
An Attachment

MEMORANDA

ELECTRICAL AND STARTING SYSTEM

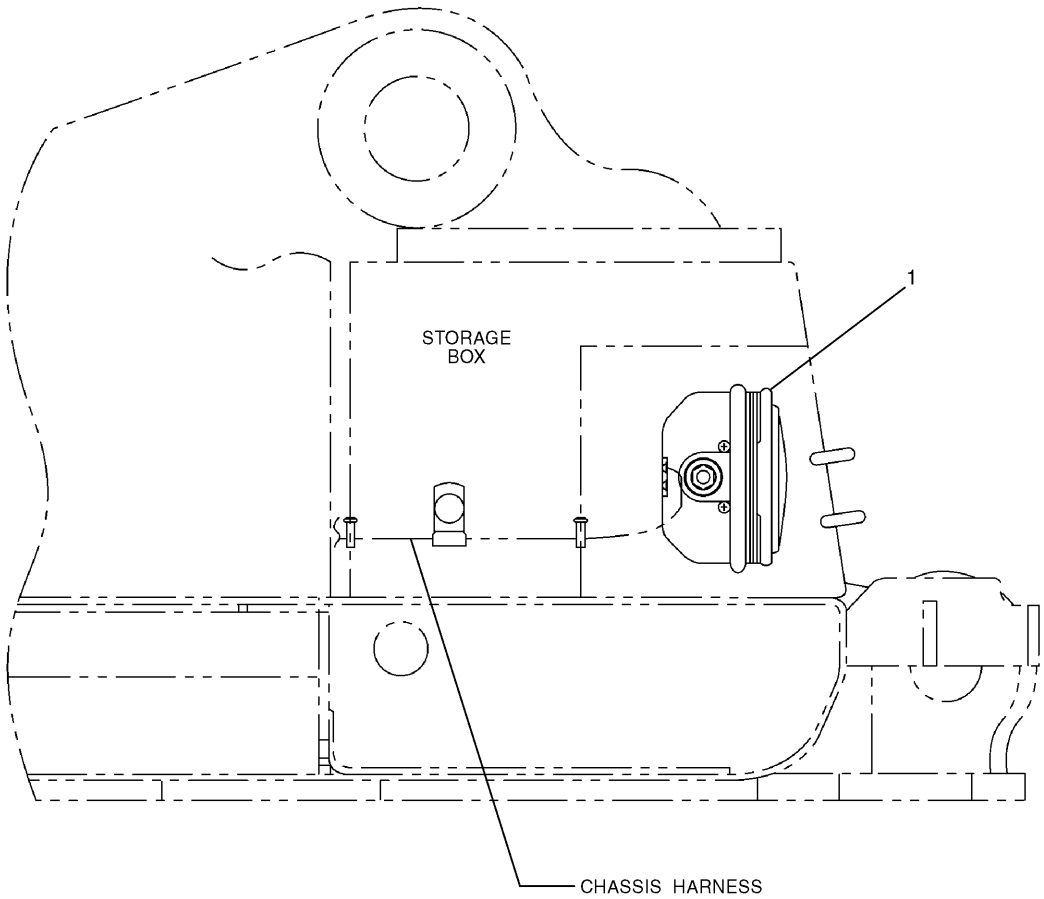

NOTE	No.	PART No.	QTY	PART NAME	NOTE	No.	PART No.	QTY	PART NAME
Y	1	5I-8251	1	LAMP GP					

Y—SEE SEPARATE ILLUSTRATION

H61690E 02

4I-5409 LIGHTING GP-CHASSIS

S/N 3MR 1-05528, 4MR 1-00779
5I-8251-Page108.01

ELECTRICAL AND STARTING SYSTEM

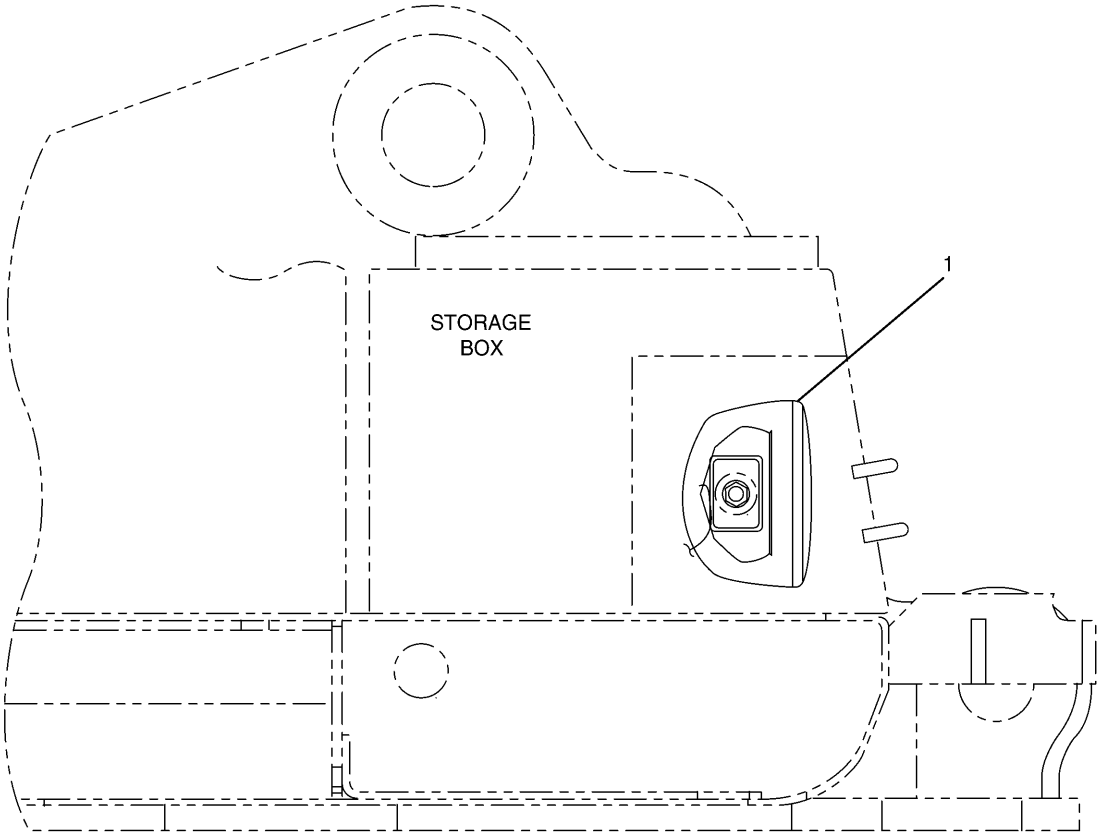

NOTE	No.	PART No.	QTY	PART NAME	NOTE	No.	PART No.	QTY	PART NAME
Y	1	153-2523	1	LAMP GP					

Y—SEE SEPARATE ILLUSTRATION

H62242E 03

4I-5409 LIGHTING GP-CHASSIS

S/N 3MR 05529-Up, 4MR 00780-Up
153-2523-Page108.01A

MEMORANDA

ELECTRICAL AND STARTING SYSTEM

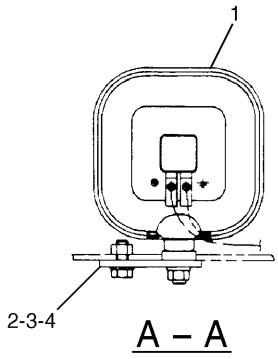

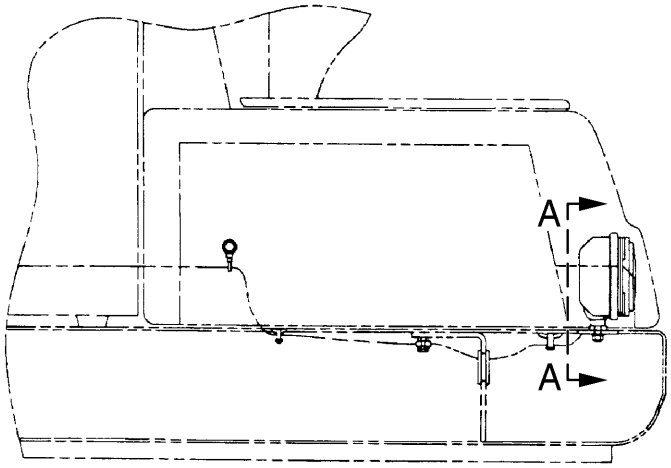

NOTE	No.	PART No.	QTY	PART NAME	NOTE	No.	PART No.	QTY	PART NAME
Y	1	5I-8250	1	LAMP GP					
	2	125-4775	1	SUPPORT AS					
	3	8T-4137	2	BOLT (L=20mm)					
	4	8T-4121	2	WASHER					

Y—SEE SEPARATE ILLUSTRATION

H52950E 00

125-4774 LIGHTING GP-CHASSIS

S/N 3MR 1-05528, 4MR 1-00779
Part of 120-4976-Page57
5I-8250-Page108.02
An Attachment

ELECTRICAL AND STARTING SYSTEM

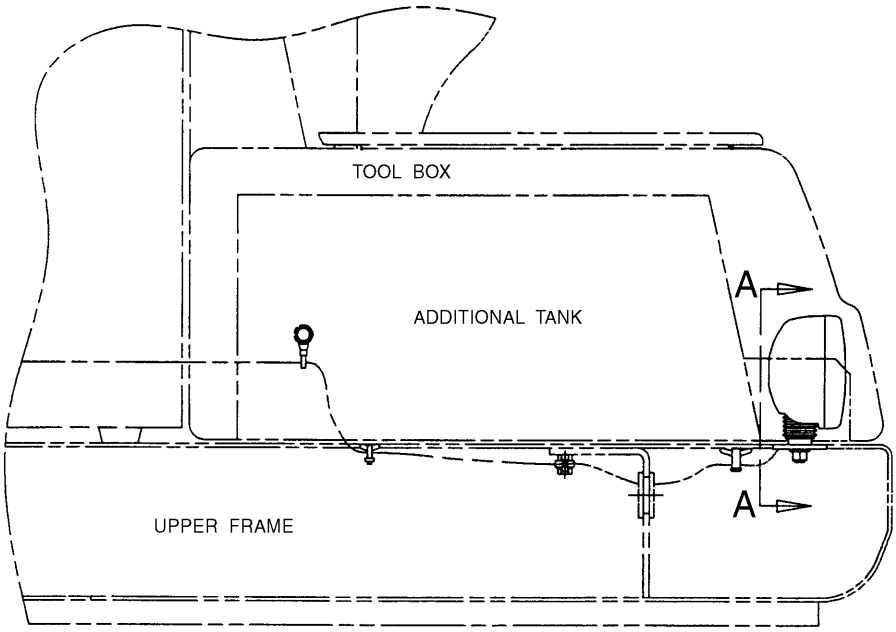

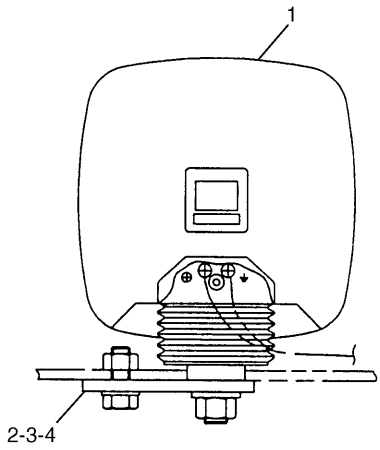

A – A

NOTE	No.	PART No.	QTY	PART NAME	NOTE	No.	PART No.	QTY	PART NAME
Y	1	153-2521	1	LAMP GP					
	2	125-4775	1	SUPPORT AS					
	3	8T-4137	2	BOLT (L=20mm)					
	4	8T-4121	2	WASHER					

Y—SEE SEPARATE ILLUSTRATION

H63426E 01

125-4774 LIGHTING GP-CHASSIS

S/N 3MR 05529-Up, 4MR 00780-Up
Part of 120-4976-Page57
153-2521-Page109.01
An Attachment

ELECTRICAL AND STARTING SYSTEM

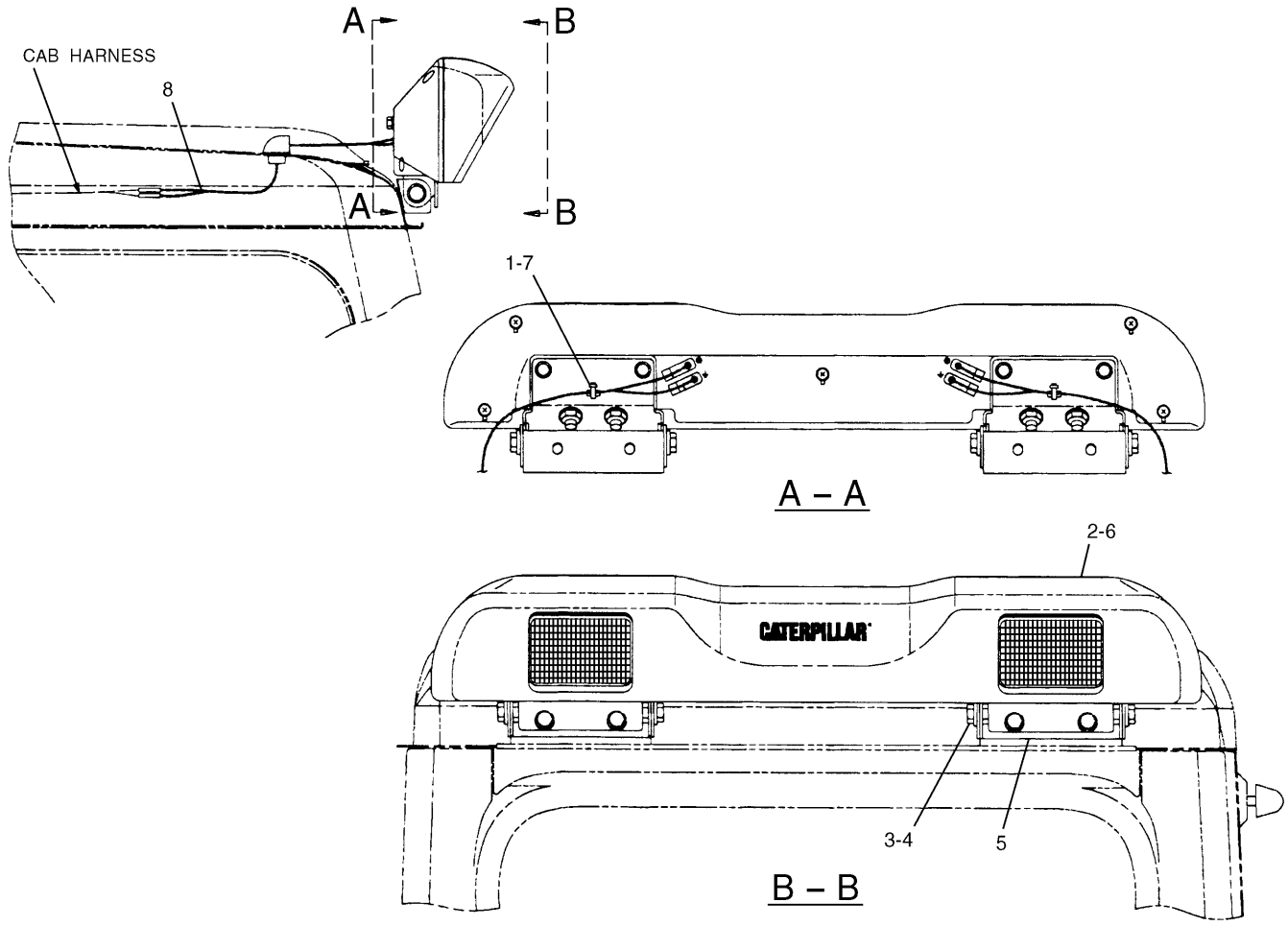

NOTE	No.	PART No.	QTY	PART NAME	NOTE	No.	PART No.	QTY	PART NAME
	1	125-4726	2	CLIP					
	2	140-0853	1	LAMP GP					
	3	8T-4137	4	BOLT (L=20mm)					
	4	8T-4121	4	WASHER					
	5	121-1077	2	BRACKET AS					
Y	6	111-4813	1	LAMP GP					
	7	3S-2093	2	STRAP					
Y	8	116-0243	2	HARNESS AS					

Y—SEE SEPARATE ILLUSTRATION

H53606E 03

111-4694 LIGHTING GP-CAB
111-4813,116-0243-Page108
An Attachment

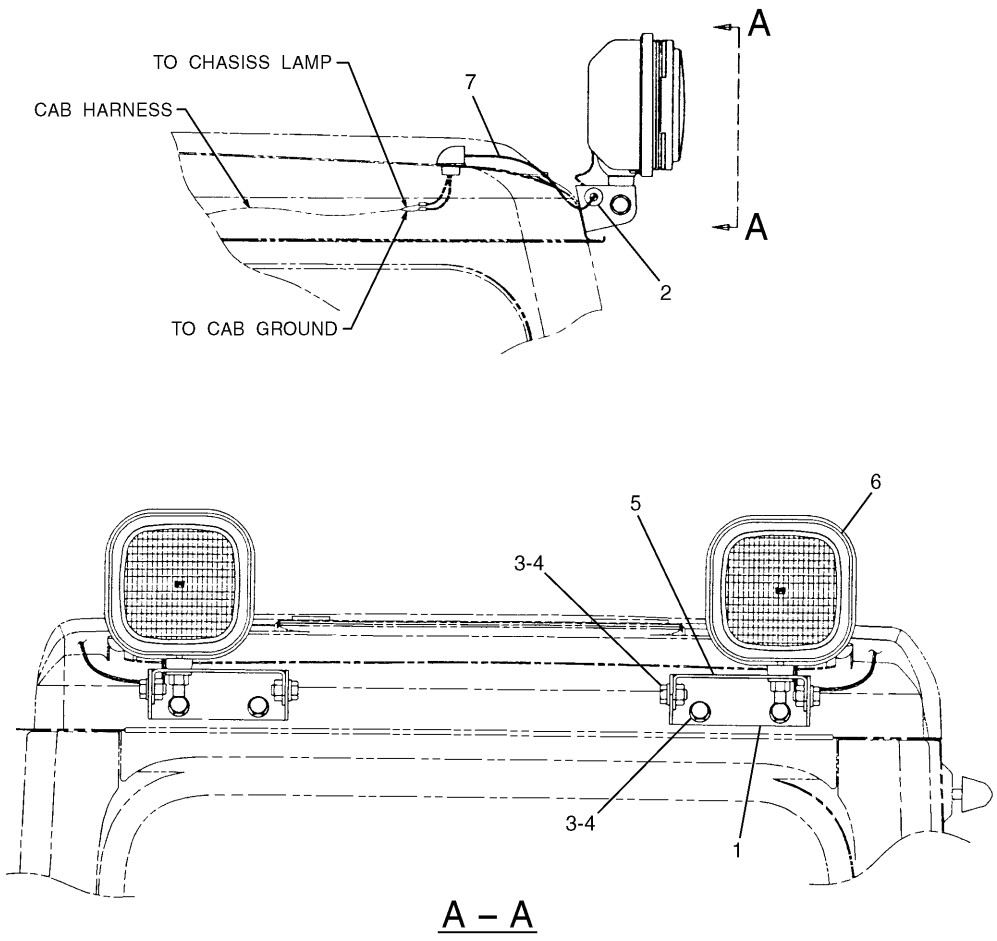

A – A

NOTE	No.	PART No.	QTY	PART NAME	NOTE	No.	PART No.	QTY	PART NAME
	1	4I-5461	2	BRACKET					
	2	3K-8107	2	GROMMET					
	3	4I-3144	8	WASHER					
	4	8T-4137	8	BOLT (L=20mm)					
	5	4I-5459	2	BRACKET AS					
Y	6	5I-8250	2	LAMP GP					
Y	7	116-0243	2	HARNESS AS					

Y—SEE SEPARATE ILLUSTRATION

H51181E 07

7Y-8189 LIGHTING GP-CAB

S/N 3MR 1-05528, 4MR 1-00779
116-0243-Page108,5I-8250-Page108.02
An Attachment

ELECTRICAL AND STARTING SYSTEM

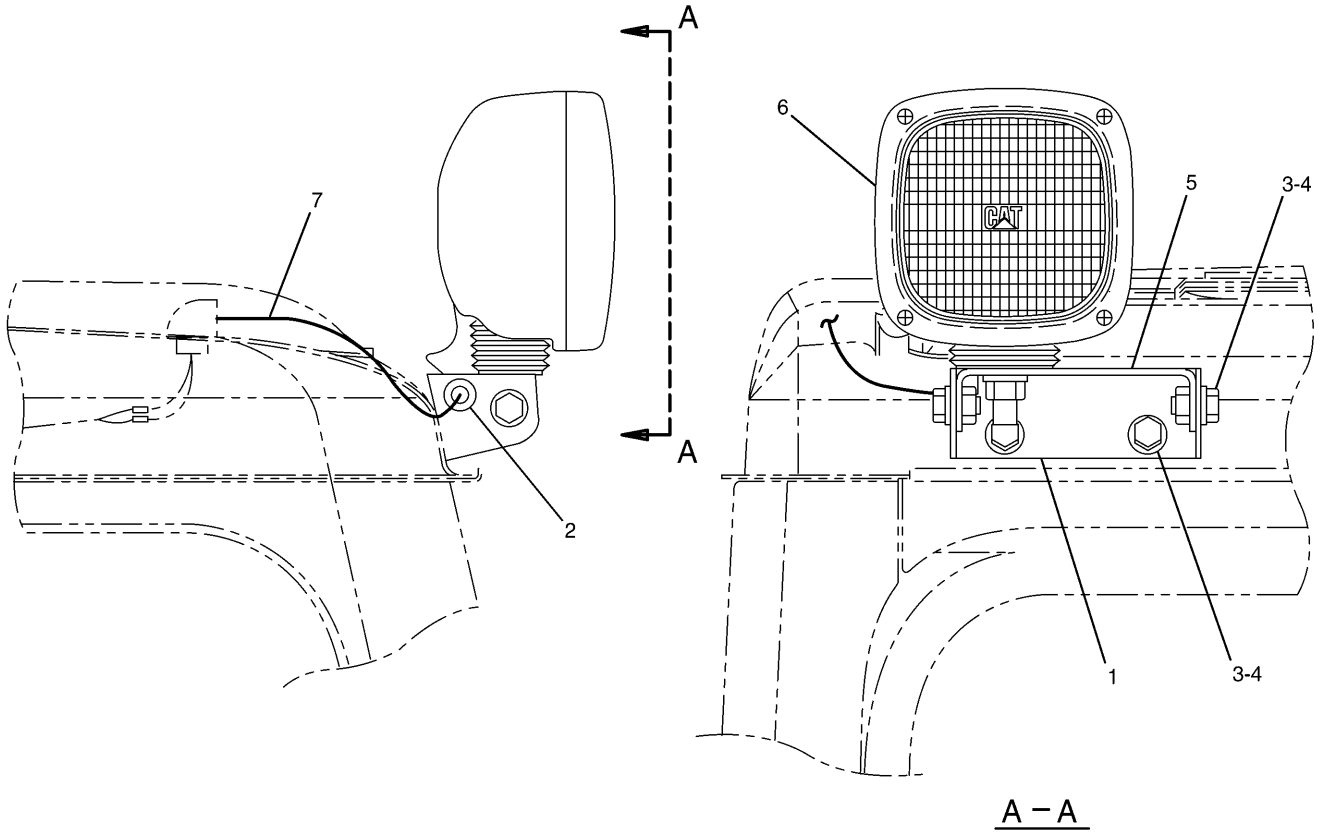

NOTE	No.	PART No.	QTY	PART NAME	NOTE	No.	PART No.	QTY	PART NAME
	1	4I-5461	2	BRACKET					
	2	3K-8107	2	GROMMET					
	3	4I-3144	8	WASHER					
	4	4I-3123	8	BOLT (L=20mm)					
	5	4I-5459	2	BRACKET AS					
Y	6	153-2521	2	LAMP GP					
Y	7	116-0243	2	HARNESS AS					

Y—SEE SEPARATE ILLUSTRATION

H62244E 08

7Y-8189 LIGHTING GP-CAB

S/N 3MR 05529-Up, 4MR 00780-Up
116-0243-Page108,153-2521-Page109.01
An Attachment

MEMORANDA

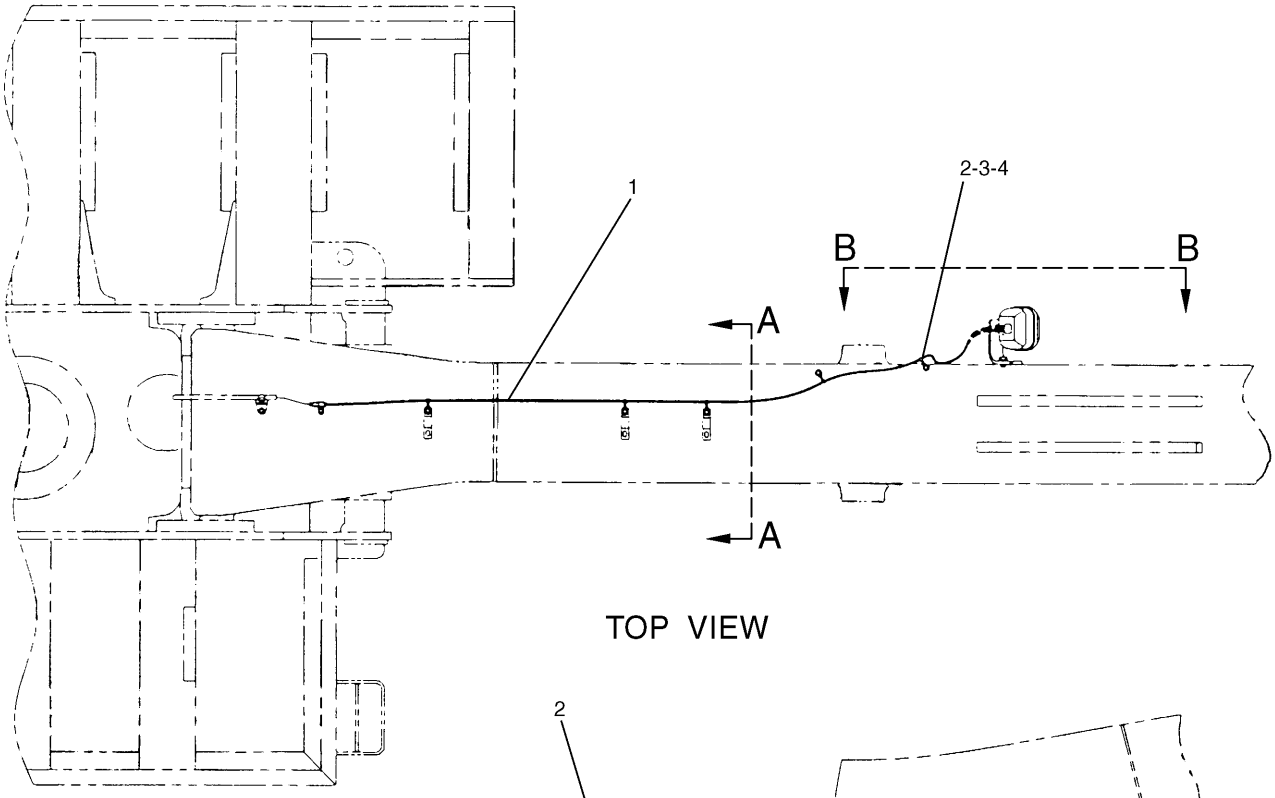

TOP VIEW

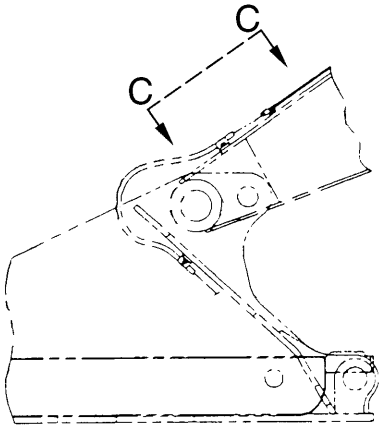

C – C

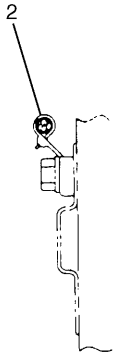

A – A

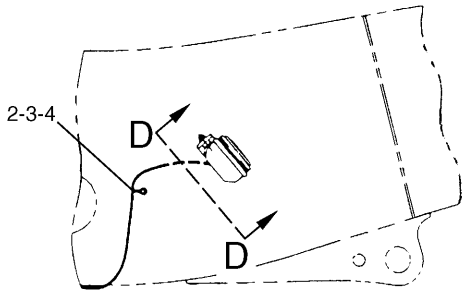

B – B

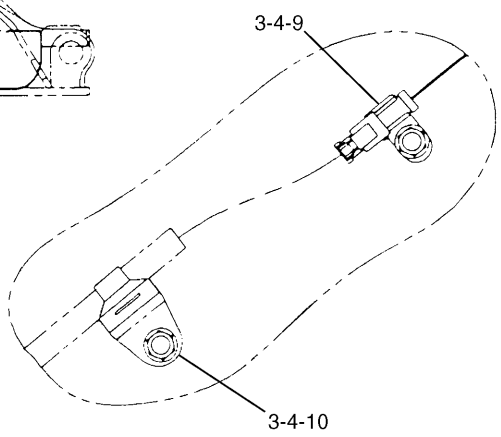

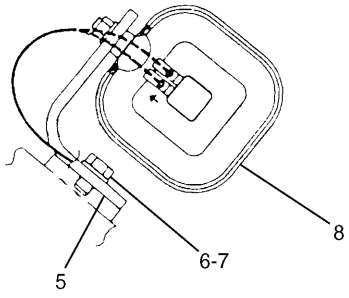

D – D

H52953E 01

116-0157 LIGHTING GP-BOOM
Left Hand
S/N 3MR 1-05528, 4MR 1-00779
Part of 117-4140,120-5012-Page376,117-4141-Page377,127-6615-Page383
5I-8250-Page108.02,116-0227-Page109.02
An Attachment

ELECTRICAL AND STARTING SYSTEM

NOTE	No.	PART No.	QTY	PART NAME	NOTE	No.	PART No.	QTY	PART NAME
Y	1	116-0227	1	HARNESS AS					
	2	111-4836	6	CLIP					
	3	8T-4133	5	NUT					
	4	8T-4121	5	WASHER					
	5	5I-8273	1	BRACKET					
	6	8T-4190	1	BOLT (L=25mm)					
	7	9X-8257	1	WASHER					
Y	8	5I-8250	1	LAMP GP					
	9	116-0118	1	CLIP					
	10	111-4837	1	CLIP					

Y—SEE SEPARATE ILLUSTRATION

H52953E 01

116-0157 LIGHTING GP-BOOM

Left Hand
S/N 3MR 1-05528, 4MR 1-00779
Part of 117-4140,120-5012-Page376,117-4141-Page377,127-6615-Page383
5I-8250-Page108.02,116-0227-Page109.02
An Attachment

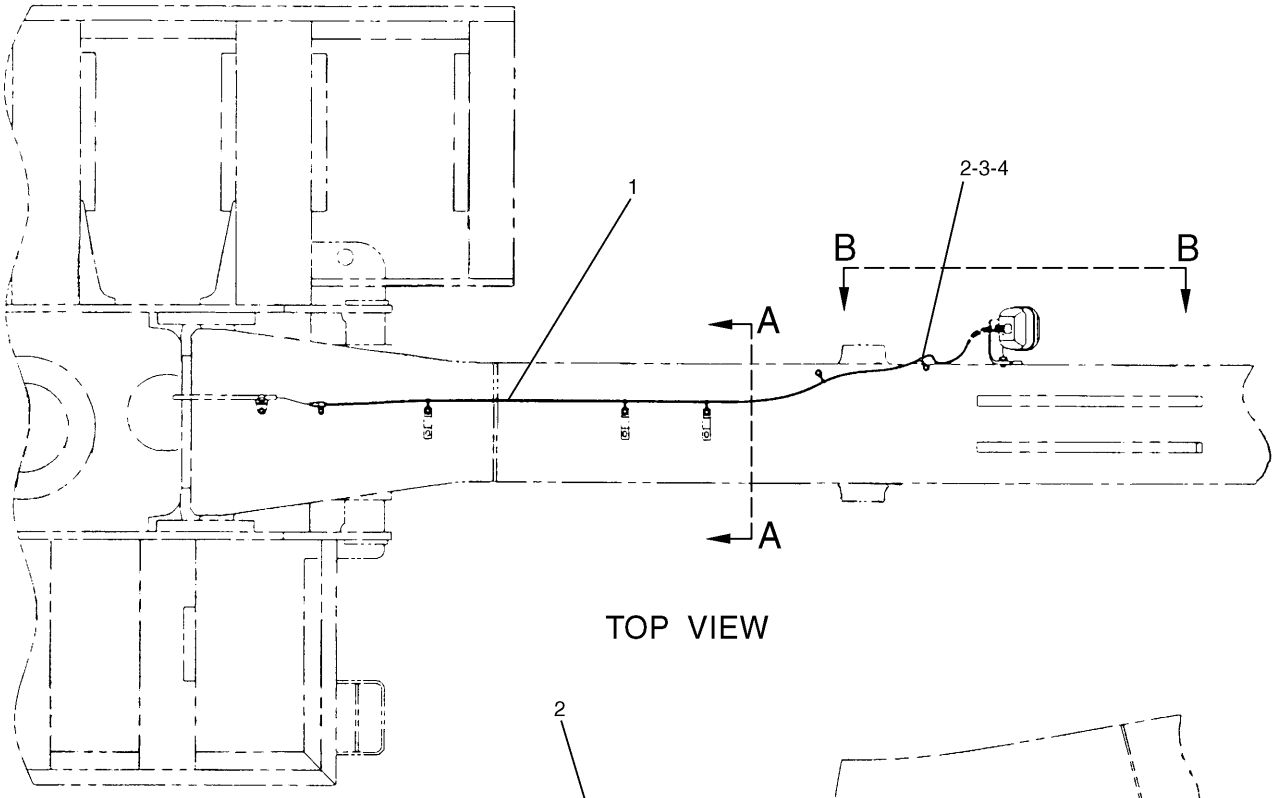

TOP VIEW

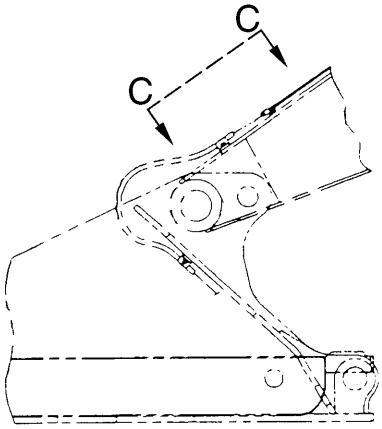

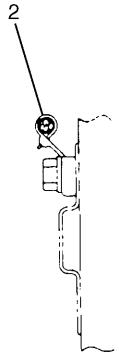

A – A

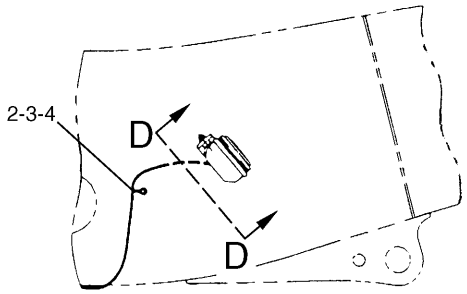

B – B

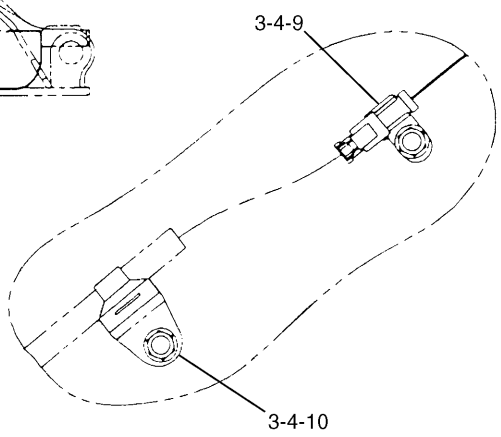

C – C

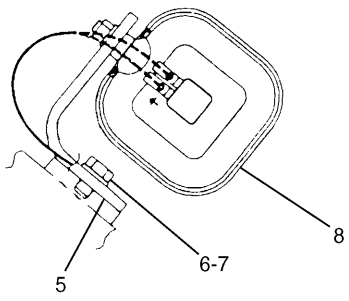

D – D

H65253E 02

116-0157 LIGHTING GP-BOOM
Left Hand
S/N 3MR 05529-Up, 4MR 00780-Up
Part of 117-4140,120-5012-Page376,117-4141-Page377,127-6615-Page383
153-2521-Page109.01,116-0227-Page109.02
An Attachment

ELECTRICAL AND STARTING SYSTEM

NOTE	No.	PART No.	QTY	PART NAME	NOTE	No.	PART No.	QTY	PART NAME
Y	1	116-0227	1	HARNESS AS					
	2	111-4836	6	CLIP					
	3	8T-4133	5	NUT					
	4	8T-4121	5	WASHER					
	5	5I-8273	1	BRACKET					
	6	8T-4190	1	BOLT (L=25mm)					
	7	9X-8257	1	WASHER					
Y	8	153-2521	1	LAMP GP					
	9	116-0118	1	CLIP					
	10	111-4837	1	CLIP					

Y—SEE SEPARATE ILLUSTRATION

H65253E 02

116-0157 LIGHTING GP-BOOM

Left Hand
S/N 3MR 05529-Up, 4MR 00780-Up
Part of 117-4140,120-5012-Page376,117-4141-Page377,127-6615-Page383
153-2521-Page109.01,116-0227-Page109.02
An Attachment

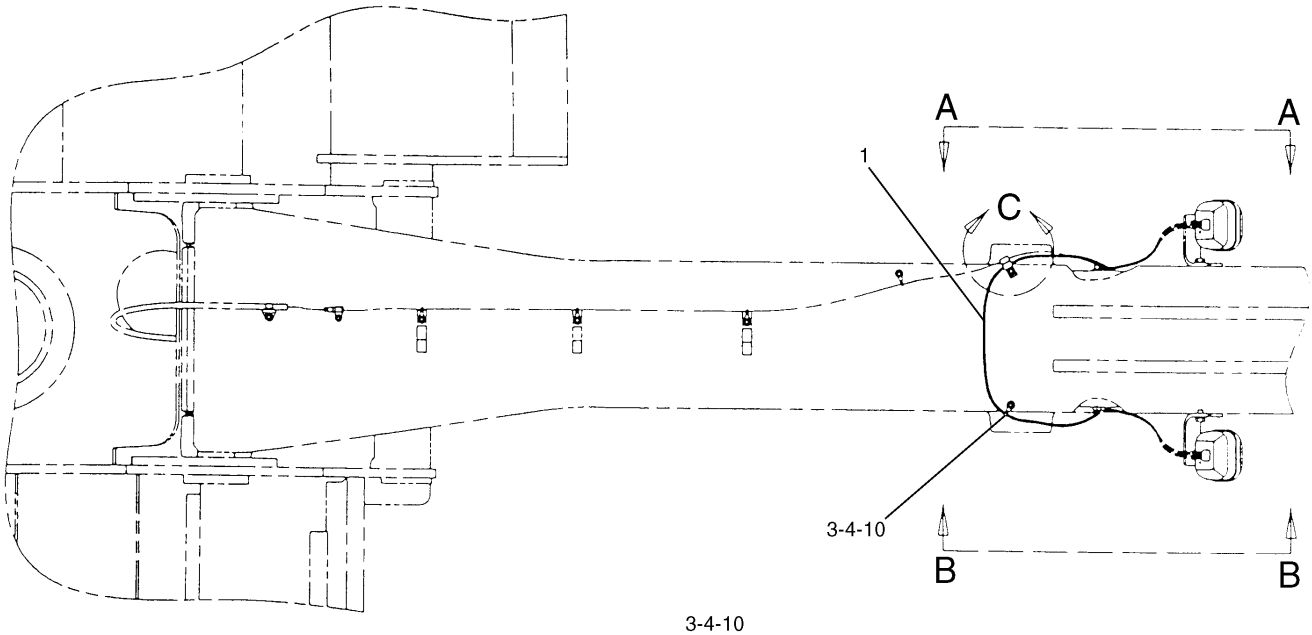

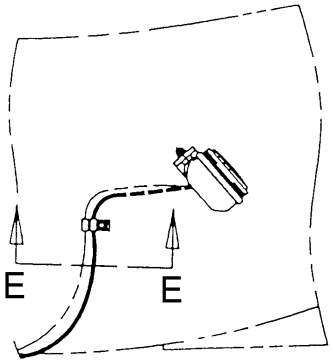

A – A

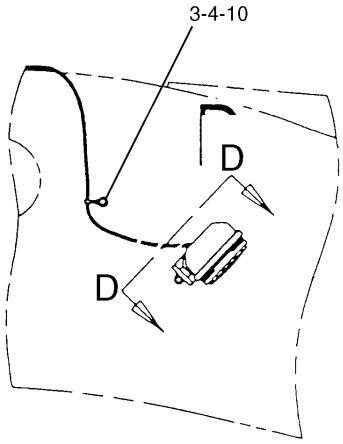

B – B

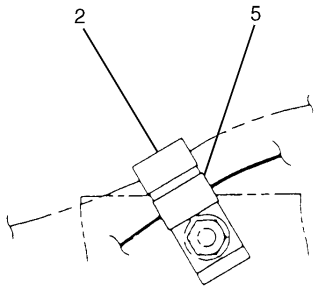

C

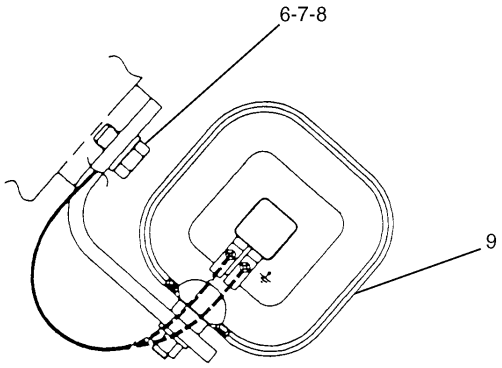

D – D

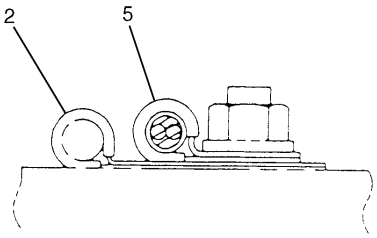

E – E

H65255E 01

116-0214 LIGHTING GP-BOOM
R-Boom Right Hand
S/N 3MR 1-05528, 4MR 1-00779
5I-8250-Page108.02
An Attachment

ELECTRICAL AND STARTING SYSTEM

NOTE	No.	PART No.	QTY	PART NAME	NOTE	No.	PART No.	QTY	PART NAME
	1	7Y-3994	1	HARNESS AS					
		2L-8075	4	TERMINAL					
	2	7N-3718	2	CLIP					
	3	8T-4133	2	NUT					
	4	8T-4121	2	WASHER					
	5	5P-9297	2	CLIP					
	6	8T-4190	1	BOLT (L=25mm)					
	7	9X-8257	1	WASHER					
	8	5I-8273	1	BRACKET					
Y	9	5I-8250	1	LAMP GP					
	10	111-4836	2	CLIP					

Y—SEE SEPARATE ILLUSTRATION

H65255E 01

116-0214 LIGHTING GP-BOOM

R-Boom Right Hand
S/N 3MR 1-05528, 4MR 1-00779
5I-8250-Page108.02
An Attachment

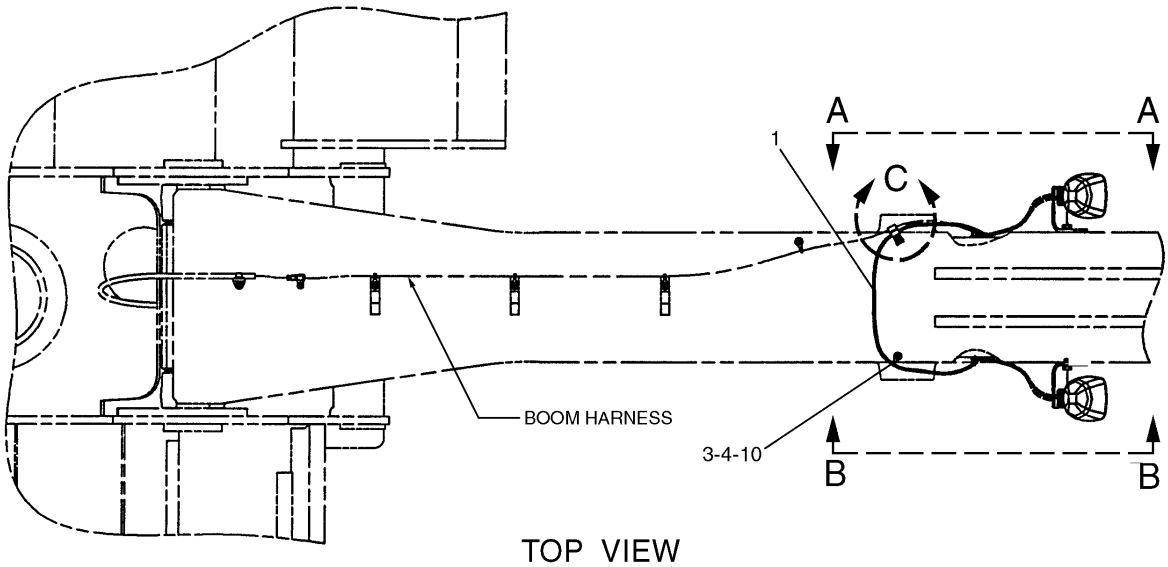

TOP VIEW

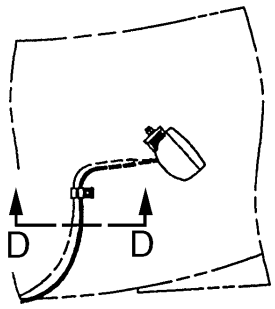

A – A

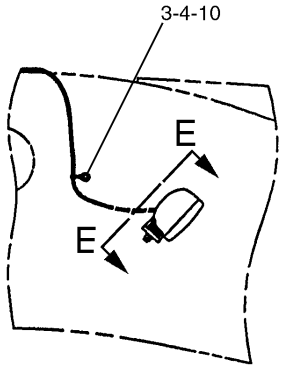

B – B

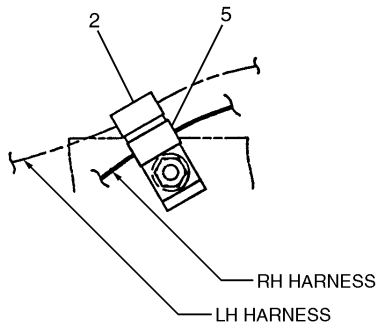

C

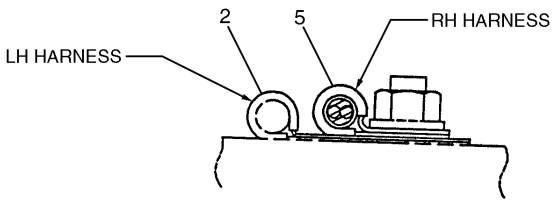

D – D

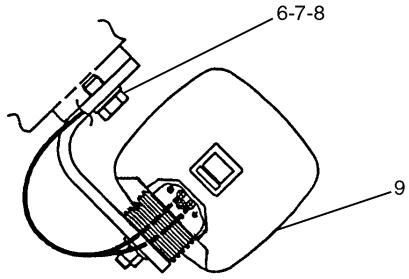

E – E

H77649E 04

116-0214 LIGHTING GP-BOOM
R-Boom Right Hand
S/N 3MR 05529-Up, 4MR 00780-Up
153-2521-Page109.01
An Attachment

ELECTRICAL AND STARTING SYSTEM

NOTE	No.	PART No.	QTY	PART NAME	NOTE	No.	PART No.	QTY	PART NAME
	1	140-0923	1	HARNESS AS					
		2L-8075	4	TERMINAL					
E		125-7874		TUBE…(3cm)					
	2	7N-3718	2	CLIP					
	3	8T-4133	2	NUT					
	4	8T-4121	2	WASHER					
	5	5P-9297	2	CLIP					
	6	8T-4190	1	BOLT (L=25mm)					
	7	9X-8257	1	WASHER					
	8	5I-8273	1	BRACKET					
Y	9	153-2521	1	LAMP GP					
	10	111-4836	2	CLIP					

E—ORDER BY THE CENTIMETER

Y—SEE SEPARATE ILLUSTRATION

H77649E 04

116-0214 LIGHTING GP-BOOM

R-Boom Right Hand

S/N 3MR 05529-Up, 4MR 00780-Up

153-2521-Page109.01

An Attachment

ELECTRICAL AND STARTING SYSTEM

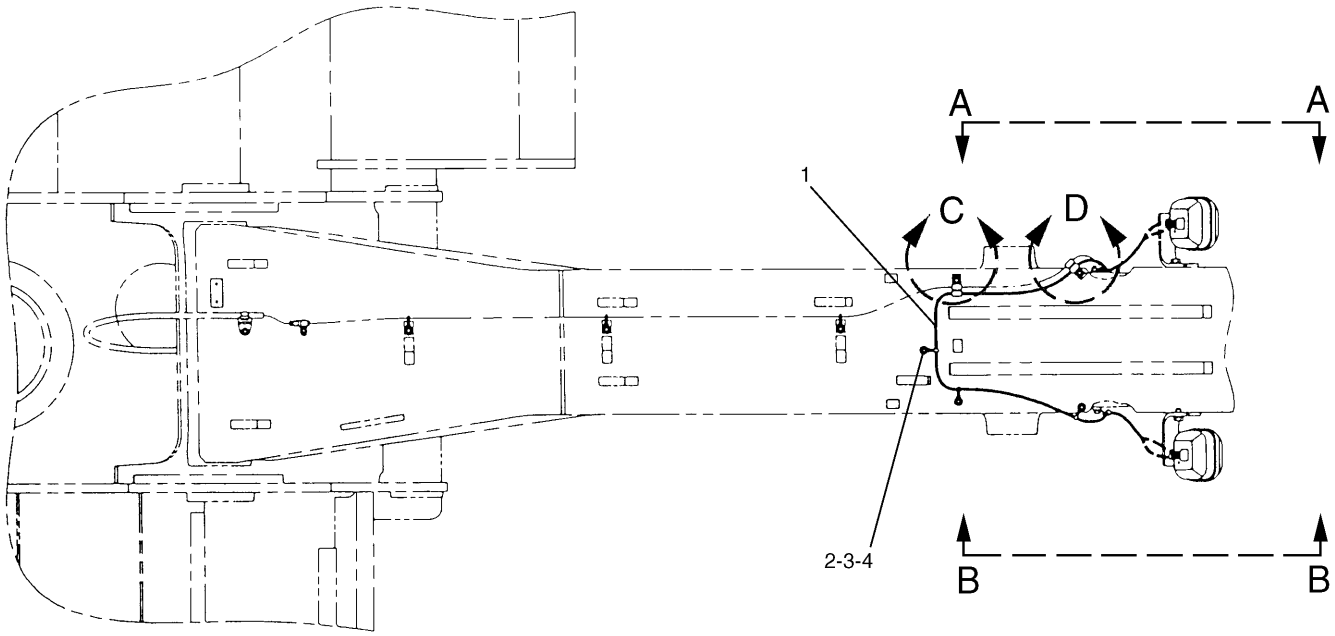

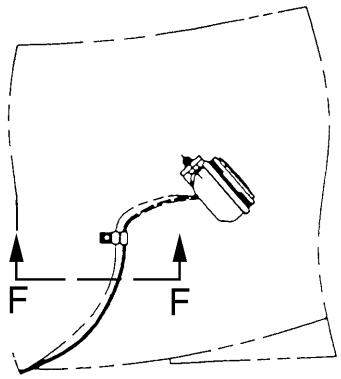

A – A

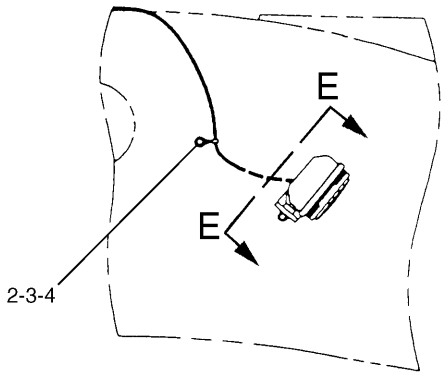

B – B

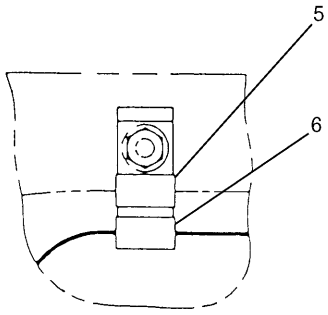

C

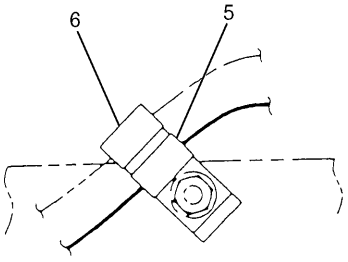

D

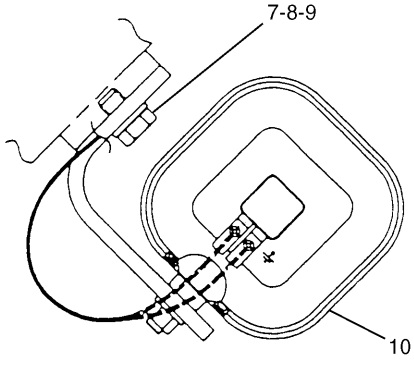

E – E

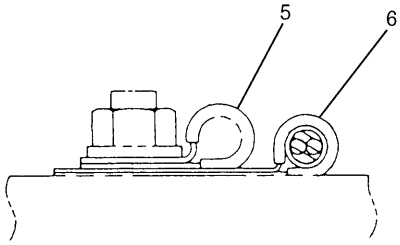

F – F

H52959E 00

116-0215 LIGHTING GP-BOOM
M-Boom Right Hand
S/N 3MR 1-05528, 4MR 1-00779
5I-8250-Page108.02
An Attachment

ELECTRICAL AND STARTING SYSTEM

NOTE	No.	PART No.	QTY	PART NAME	NOTE	No.	PART No.	QTY	PART NAME
	1	4I-5396	1	HARNESS AS					
		2L-8075	1	TERMINAL					
	2	8T-4133	4	NUT					
	3	8T-4121	4	WASHER					
	4	111-4836	4	CLIP					
	5	5P-9297	3	CLIP					
	6	7N-3718	3	CLIP					
	7	8T-4190	1	BOLT (L=25mm)					
	8	9X-8257	1	WASHER					
	9	5I-8273	1	BRACKET					
Y	10	5I-8250	1	LAMP GP					

Y—SEE SEPARATE ILLUSTRATION

H52959E 00

116-0215 LIGHTING GP-BOOM

M-Boom Right Hand
S/N 3MR 1-05528, 4MR 1-00779
5I-8250-Page108.02
An Attachment

ELECTRICAL AND STARTING SYSTEM

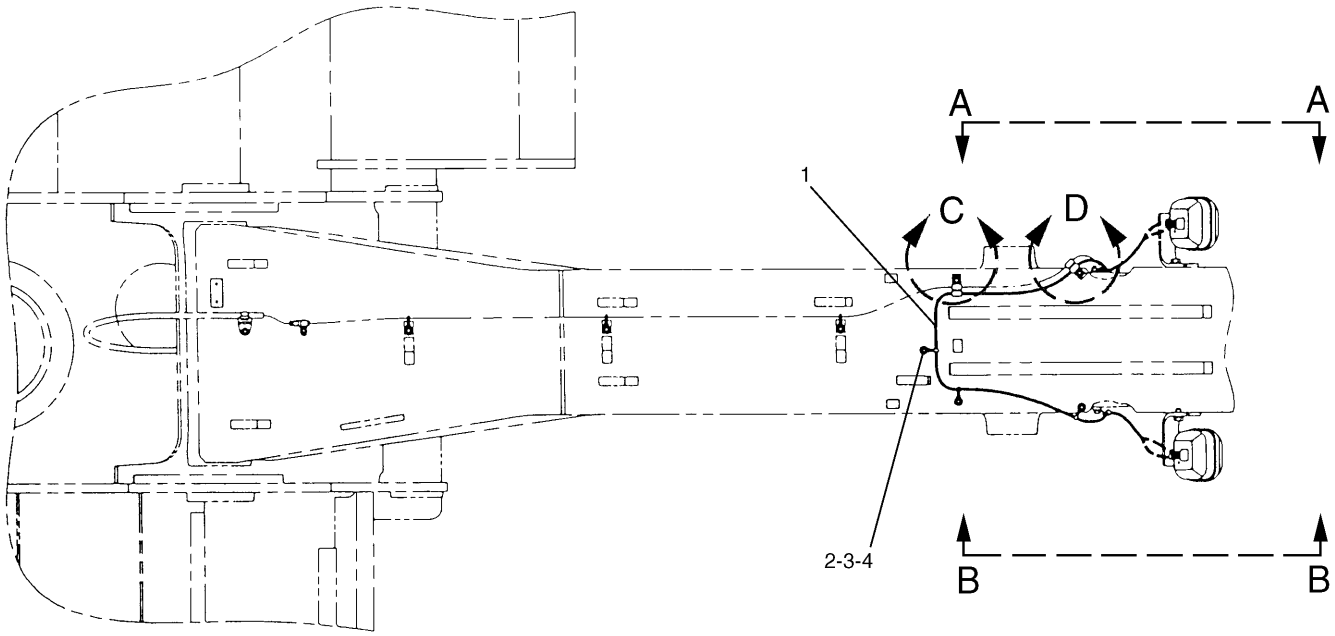

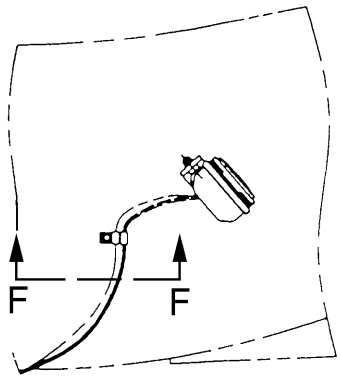

A – A

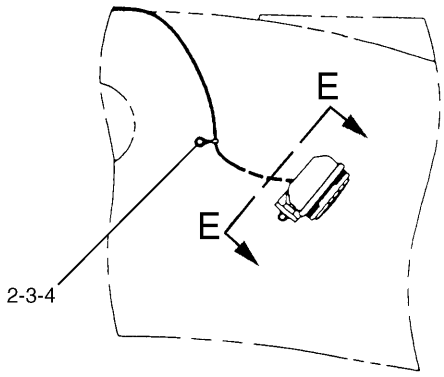

B – B

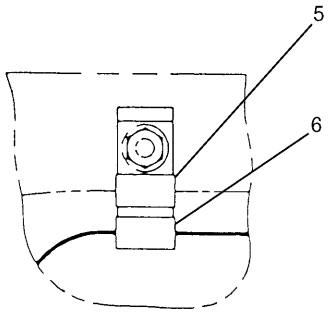

C

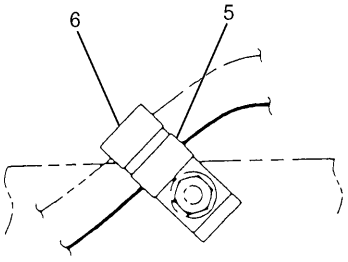

D

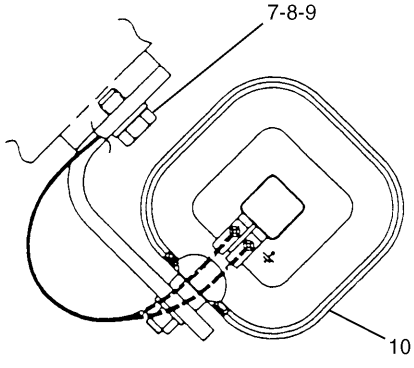

E – E

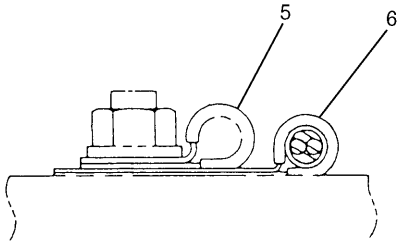

F – F

H65257E 01

116-0215 LIGHTING GP-BOOM
M-Boom Right Hand
S/N 3MR 05529-Up, 4MR 00780-Up
153-2521-Page109.01
An Attachment

ELECTRICAL AND STARTING SYSTEM

NOTE	No.	PART No.	QTY	PART NAME	NOTE	No.	PART No.	QTY	PART NAME
	1	4I-5396	1	HARNESS AS					
		2L-8075	1	TERMINAL					
	2	8T-4133	4	NUT					
	3	8T-4121	4	WASHER					
	4	111-4836	4	CLIP					
	5	5P-9297	3	CLIP					
	6	7N-3718	3	CLIP					
	7	8T-4190	1	BOLT (L=25mm)					
	8	9X-8257	1	WASHER					
	9	5I-8273	1	BRACKET					
Y	10	153-2521	1	LAMP GP					

Y—SEE SEPARATE ILLUSTRATION

H65257E 01

116-0215 LIGHTING GP-BOOM

M-Boom Right Hand
S/N 3MR 05529-Up, 4MR 00780-Up
153-2521-Page109.01
An Attachment

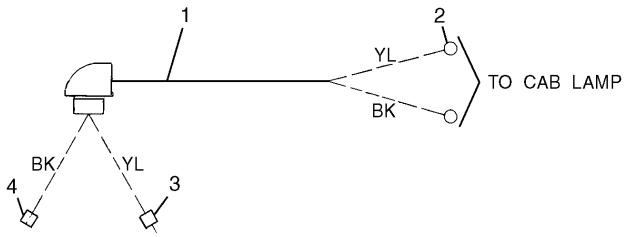

NOTE	No.	PART No.	QTY	PART NAME
D	1	5P-5995		TUBE…(0.22m)
	2	2L-8075	2	TERMINAL
	3	7Y-3962	1	TERMINAL
		7Y-3964	1	TUBE
	4	7Y-3963	1	TERMINAL
		7Y-3965	1	TUBE

D—ORDER BY THE METER

H53613E 01

116-0243 HARNESS AS

Part of 111-4694-Page102,7Y-8189-Page103
An Attachment

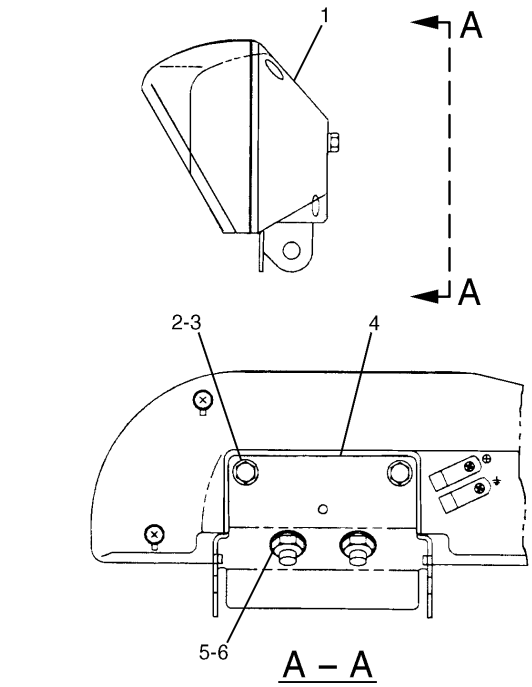

NOTE	No.	PART No.	QTY	PART NAME
	1	121-1069	2	LAMP GP
		9X-3463	1	BULB
	2	8T-4189	4	BOLT (L=20mm)
	3	8T-4224	4	WASHER
	4	121-1072	2	BRACKET
	5	8T-4223	4	WASHER
	6	4I-0755	4	NUT

H50068E 02

111-4813 LAMP GP-FLOOD

Part of 111-4694-Page102
An Attachment

ELECTRICAL AND STARTING SYSTEM

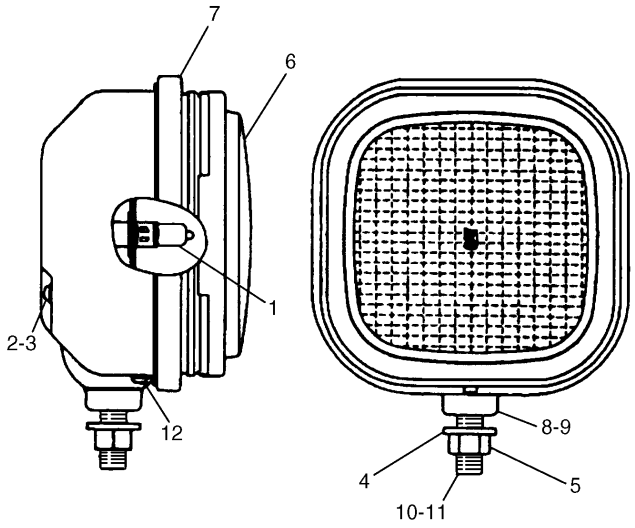

NOTE	No.	PART No.	QTY	PART NAME
	1	9X-3463	1	BULB
	2	6V-5210	2	SCREW
	3	3B-4501	2	LOCKWASHER
	4	8T-4223	1	WASHER
	5	9X-8488	1	NUT
	6	106-0001	1	LENS AS
	7	106-0002	1	BAND
	8	106-0003	1	RING
	9	106-0004	1	RING
	10	106-0005	1	SEAT
	11	7Y-5286	1	BOLT
	12	7Y-5288	2	SCREW

H81133E 05

5I-8251 LAMP GP-FLOOD

S/N 3MR 1-05528, 4MR 1-00779
Part of 4I-5409-Page101

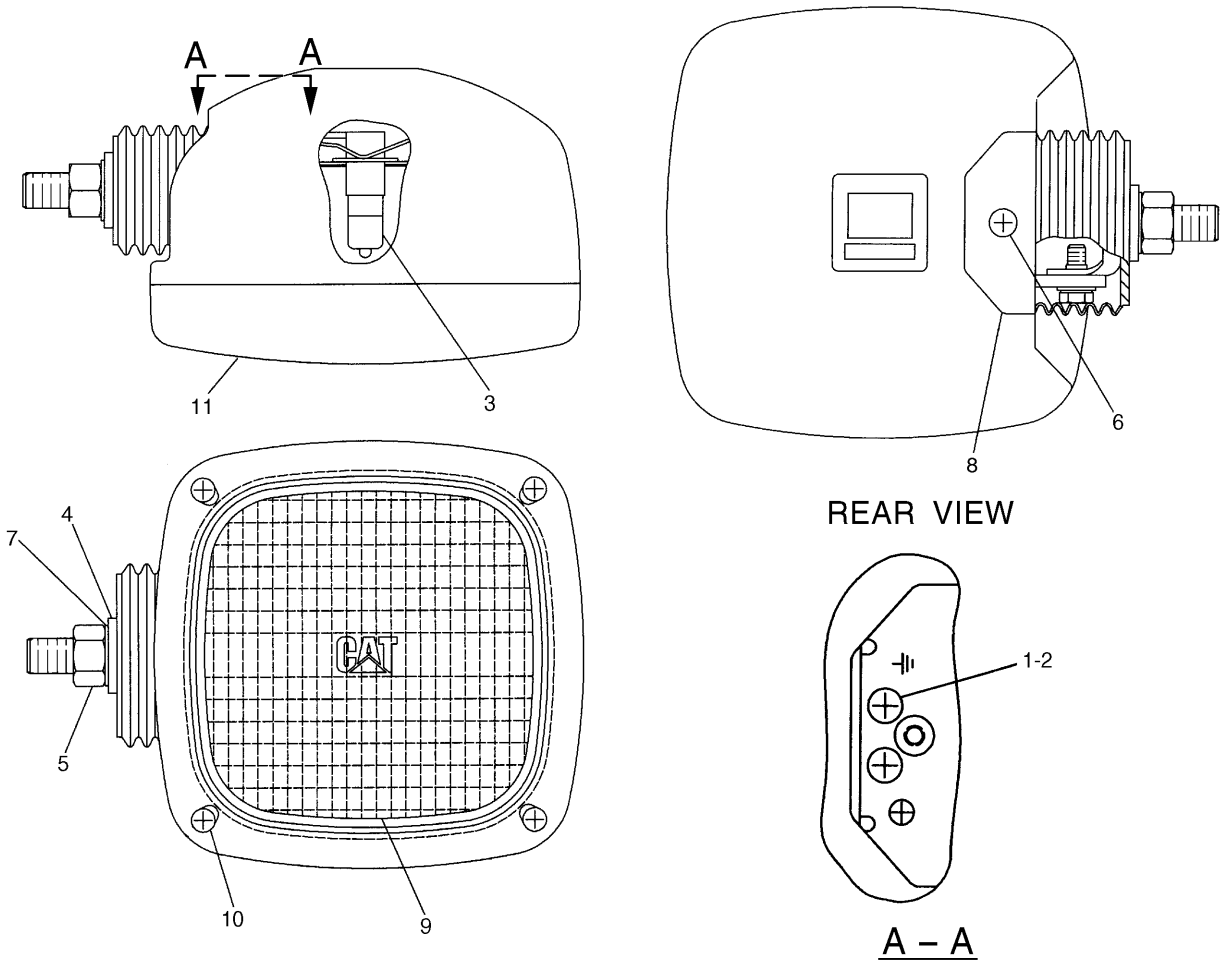

NOTE	No.	PART No.	QTY	PART NAME	NOTE	No.	PART No.	QTY	PART NAME
	1	6V-5210	2	SCREW					
	2	3B-4501	2	LOCKWASHER					
	3	9X-3463	1	BULB					
	4	8T-4223	1	WASHER					
	5	8T-4244	1	NUT					
	6	174-7791	1	SCREW					
	7	5C-2889	1	LOCKWASHER					
	8	170-6993	1	COVER					
	9	170-9417	1	LENS AS					
	10	180-3861	4	SCREW					
	11	170-9418	1	BAND					

H66567E 02

153-2523 LAMP GP-FLOOD

S/N 3MR 05529-Up, 4MR 00780-Up
Part of 4I-5409-Page101A

MEMORANDA

Consists of :

			Page
1	150-6978	LAMP GP-FLOOD.....	109
		-OR-	
1	153-2452	LAMP GP-FLOOD.....	109

H61398E 07

5I-8250 LAMP GP-FLOOD

S/N 3MR 1-05528, 4MR 1-00779
Part of 125-4774-Page101.01,7Y-8189-Page103,116-0157-Page104.01,116-0214-Page107,116-0215-Page107.02
An Attachment

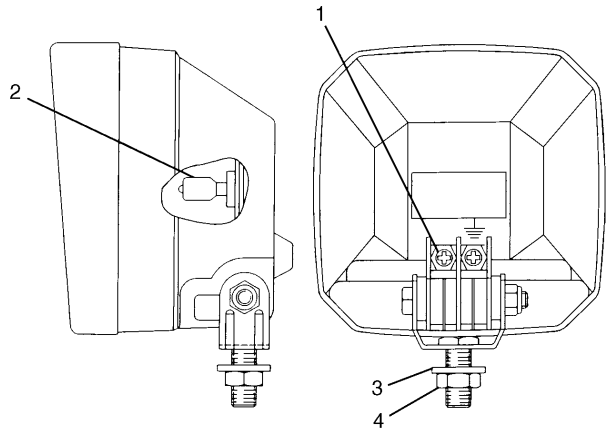

NOTE	No.	PART No.	QTY	PART NAME
	1	8T-0337	2	SCREW
	2	9X-3463	1	BULB
	3	8T-4223	1	WASHER
	4	8T-4244	1	NUT

H61430E 00

150-6978 LAMP GP-FLOOD

S/N 3MR 1-05528, 4MR 1-00779
Part of 5I-8250-Page108.02
An Attachment

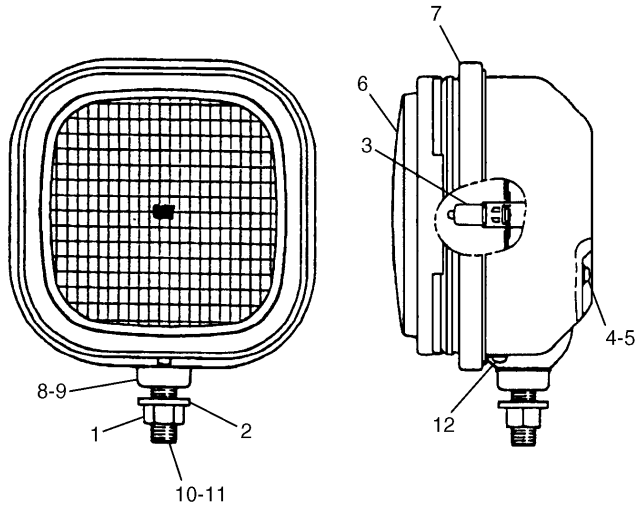

NOTE	No.	PART No.	QTY	PART NAME
	1	9X-8488	1	NUT
	2	8T-4223	1	WASHER
	3	9X-3463	1	BULB
	4	6V-5210	2	SCREW
	5	3B-4501	2	LOCKWASHER
	6	106-0001	1	LENS AS
	7	106-0002	1	BAND
	8	106-0003	1	RING
	9	106-0004	1	RING
	10	106-0005	1	SEAT
	11	145-0556	1	BOLT
	12	7Y-5288	2	SCREW

H61433E 00

153-2452 LAMP GP-FLOOD

S/N 3MR 1-05528, 4MR 1-00779
Part of 5I-8250-Page108.02
An Attachment

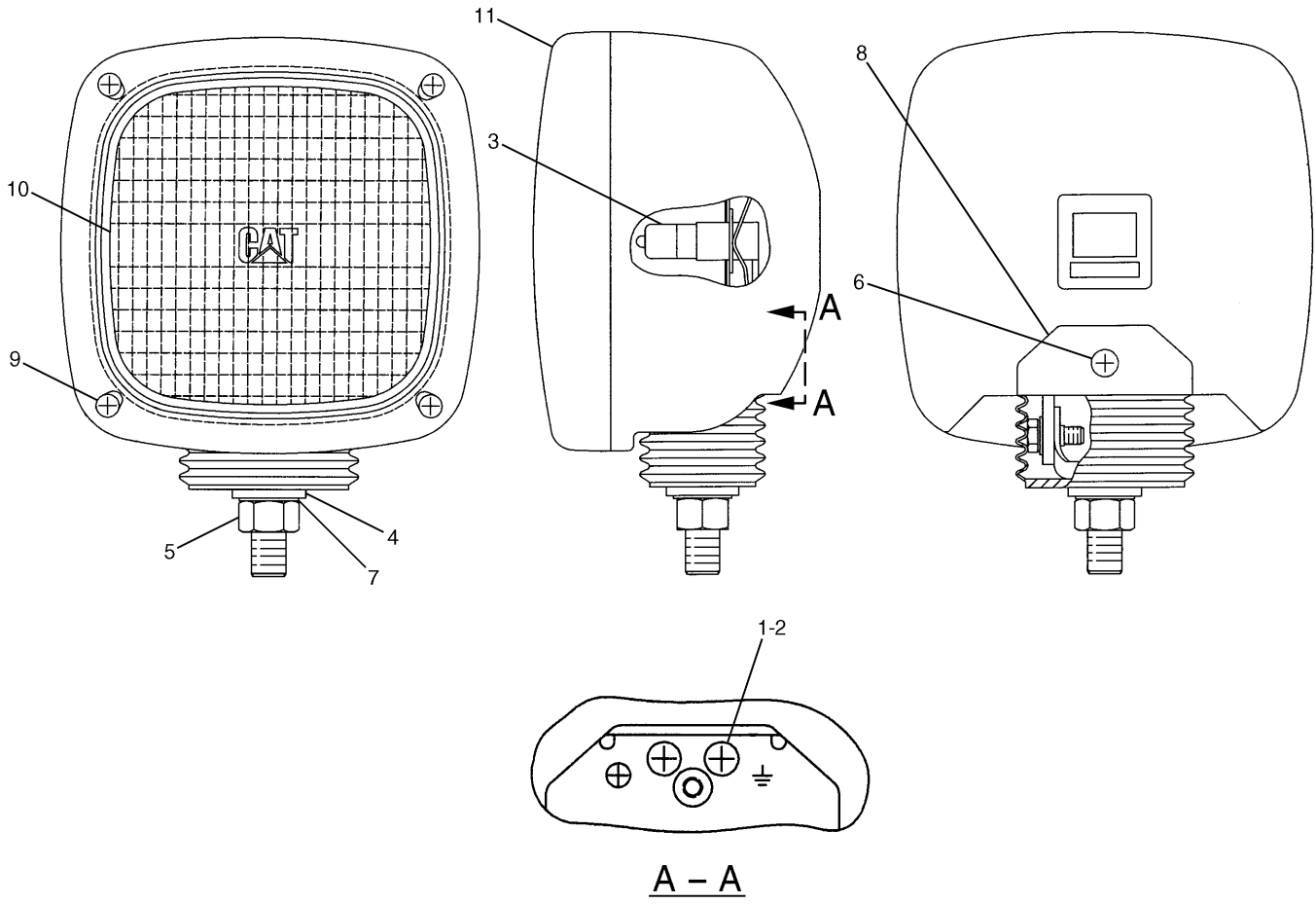

A – A

NOTE	No.	PART No.	QTY	PART NAME	NOTE	No.	PART No.	QTY	PART NAME
	1	6V-5210	2	SCREW					
	2	3B-4501	2	LOCKWASHER					
	3	9X-3463	1	BULB					
	4	8T-4223	1	WASHER					
	5	8T-4244	1	NUT					
	6	174-7791	1	SCREW					
	7	5C-2889	1	LOCKWASHER					
	8	170-6993	1	COVER					
	9	180-3861	4	SCREW					
	10	170-9417	1	LENS AS					
	11	170-9418	1	BAND					

H66565E 02

153-2521 LAMP GP-FLOOD

S/N 3MR 05529-Up, 4MR 00780-Up

Part of 125-4774-Page101.02,7Y-8189-Page103.01,116-0157-Page105.01,116-0215-Page107.04,116-0214-Page107B

An Attachment

ELECTRICAL AND STARTING SYSTEM

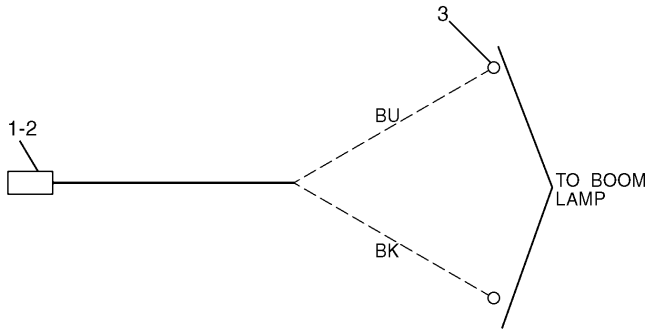

NOTE	No.	PART No.	QTY	PART NAME
	1	9W-0852	2	PIN
	2	102-8802	1	RECEPTACLE KIT
	3	2L-8075	2	TERMINAL

H67979E 02

116-0227 HARNESS AS
Part of 116-0157-Page104.01
An Attachment

ELECTRICAL AND STARTING SYSTEM

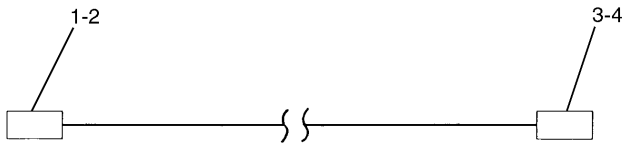

NOTE	No.	PART No.	QTY	PART NAME
	1	8T-8729	3	PIN
	2	102-8803	1	RECEPTACLE KIT
	3	155-2260	1	PLUG KIT
	4	8T-8730	3	SOCKET

H66782E 00

176-5024 HARNESS AS

S/N 3MR 07191-07280, 4MR 01024-01030
Part of 176-5044-Page227.02

MEMORANDA

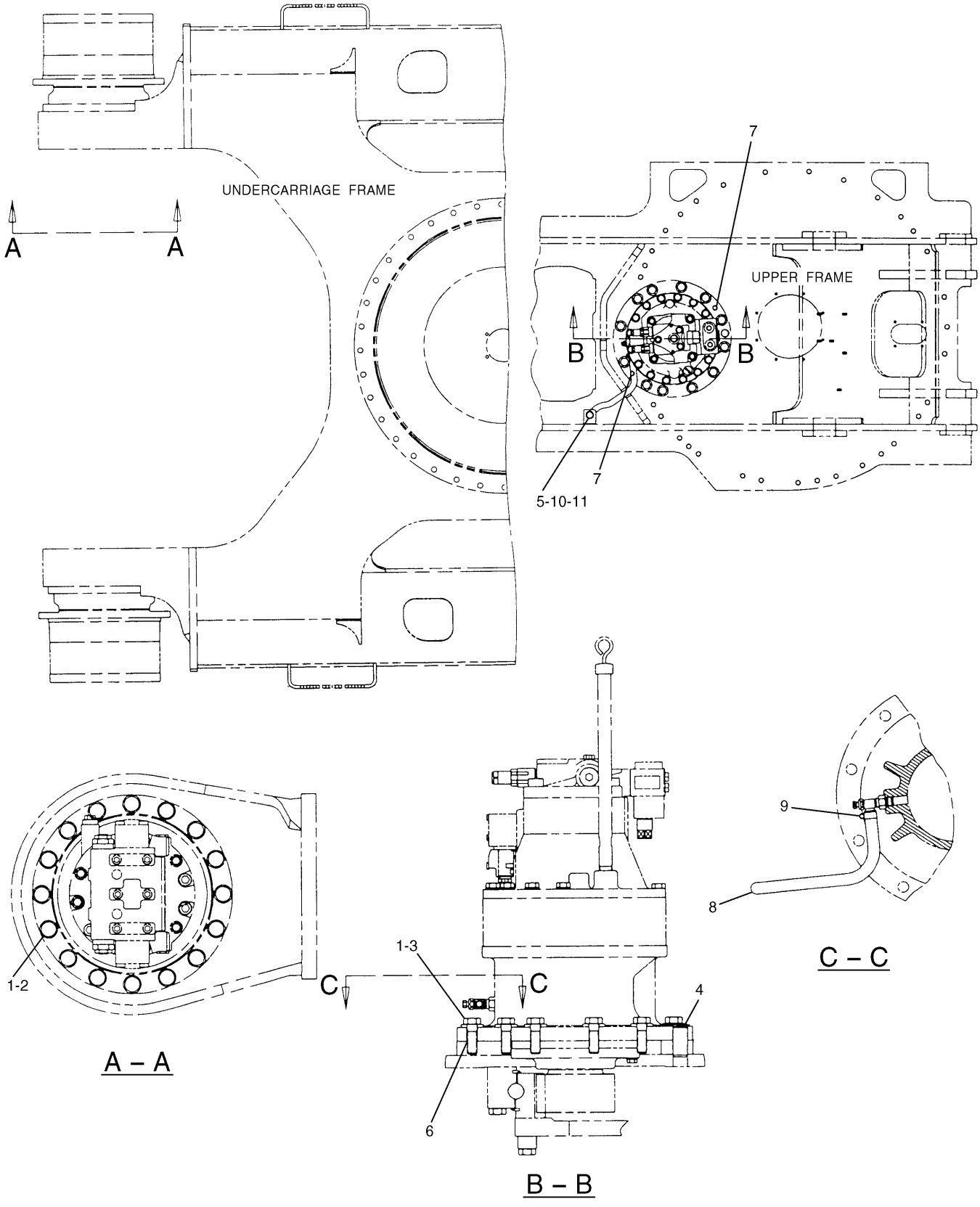

H52962E 01

114-1337 FASTENER GP-SWING & FINAL DR
S/N 3MR 1-05048, 4MR 1-00720

POWER TRAIN

NOTE	No.	PART No.	QTY	PART NAME	NOTE	No.	PART No.	QTY	PART NAME
	1	7X-2563	44	BOLT (L=60mm)					
	2	8T-4123	32	WASHER					
	3	085-9311	12	SPACER					
	4	096-4755	1	PIN					
	5	8T-4121	1	WASHER					
B	6	1U-8846		GASKET MAKER…(15ml)					
	7	2Y-5503	2	CORK					
E	8	5P-0767		HOSE…(67cm)					
	9	5D-1026	1	CLAMP					
	10	114-1374	1	SUPPORT					
	11	8T-4137	1	BOLT (L=20mm)					

B—USE AS REQUIRED

E—ORDER BY THE CENTIMETER

H52962E 01

114-1337 FASTENER GP-SWING & FINAL DR

S/N 3MR 1-05048, 4MR 1-00720

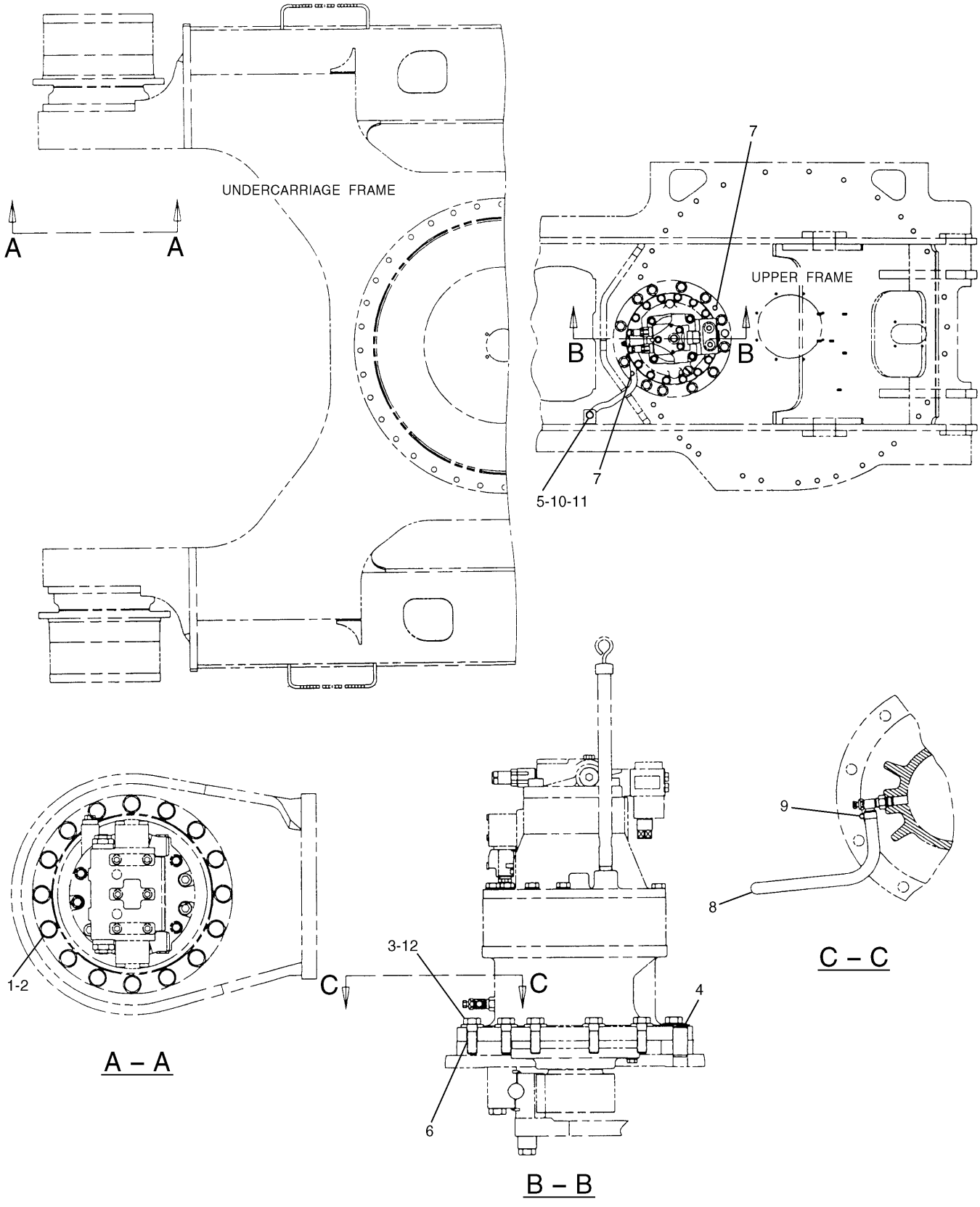

H65260E 02

114-1337 FASTENER GP-SWING & FINAL DR
S/N 3MR 05049-Up, 4MR 00721-Up

POWER TRAIN

NOTE	No.	PART No.	QTY	PART NAME	NOTE	No.	PART No.	QTY	PART NAME
	1	7X-2563	32	BOLT (L=60mm)					
	2	8T-4123	32	WASHER					
	3	085-9311	12	SPACER					
	4	096-4755	1	PIN					
	5	8T-4121	1	WASHER					
B	6	1U-8846		GASKET MAKER…(15ml)					
	7	2Y-5503	2	CORK					
E	8	5P-0767		HOSE…(67cm)					
	9	5D-1026	1	CLAMP					
	10	114-1374	1	SUPPORT					
	11	8T-4137	1	BOLT (L=20mm)					
	12	8T-4141	12	BOLT (L=70mm)					

B—USE AS REQUIRED

E—ORDER BY THE CENTIMETER

H65260E 02

114-1337 FASTENER GP-SWING & FINAL DR

S/N 3MR 05049-Up, 4MR 00721-Up

MEMORANDA

POWER TRAIN

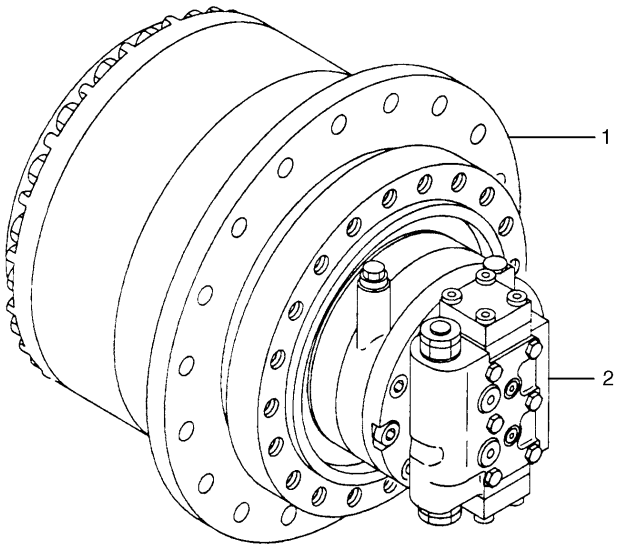

NOTE	No.	PART No.	QTY	PART NAME
Y	1	7Y-1571	1	DRIVE GP
Y	2	107-7028	1	MOTOR GP

Y—SEE SEPARATE ILLUSTRATION

H53391E 01

114-1333 FINAL DRIVE GP

S/N 3MR 1-00221, 4MR 1-00138
7Y-1571-Page112,107-7028-Page263

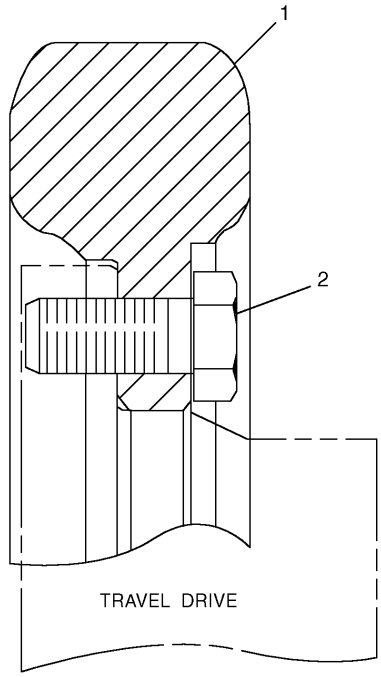

NOTE	No.	PART No.	QTY	PART NAME
	1	8E-9805	1	SPROCKET
	2	7X-2562	16	BOLT (L=45mm)

H52964E 02

7Y-1605 SPROCKET GP-NONSEGMENTED

2 Required

POWER TRAIN

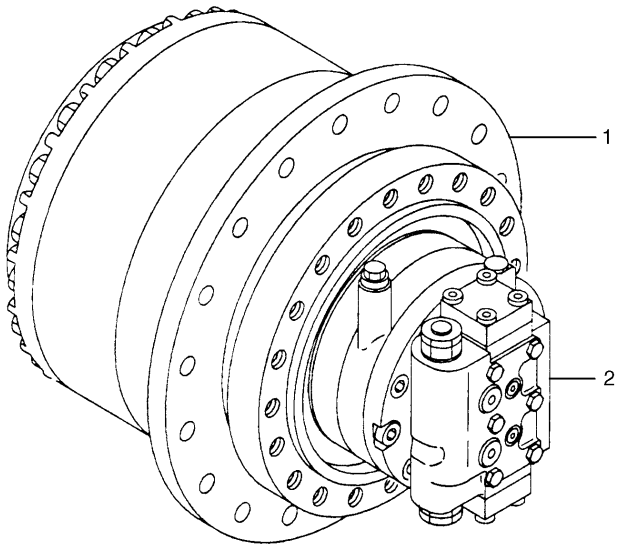

NOTE	No.	PART No.	QTY	PART NAME
Y	1	114-1484	1	DRIVE GP
Y	2	107-7028	1	MOTOR GP

Y—SEE SEPARATE ILLUSTRATION

H52963E 00

114-1483 FINAL DRIVE GP

With Motor-2 Required
S/N 3MR 00222-Up, 4MR 00139-Up
114-1484-Page113.01,107-7028-Page263

MEMORANDA

POWER TRAIN

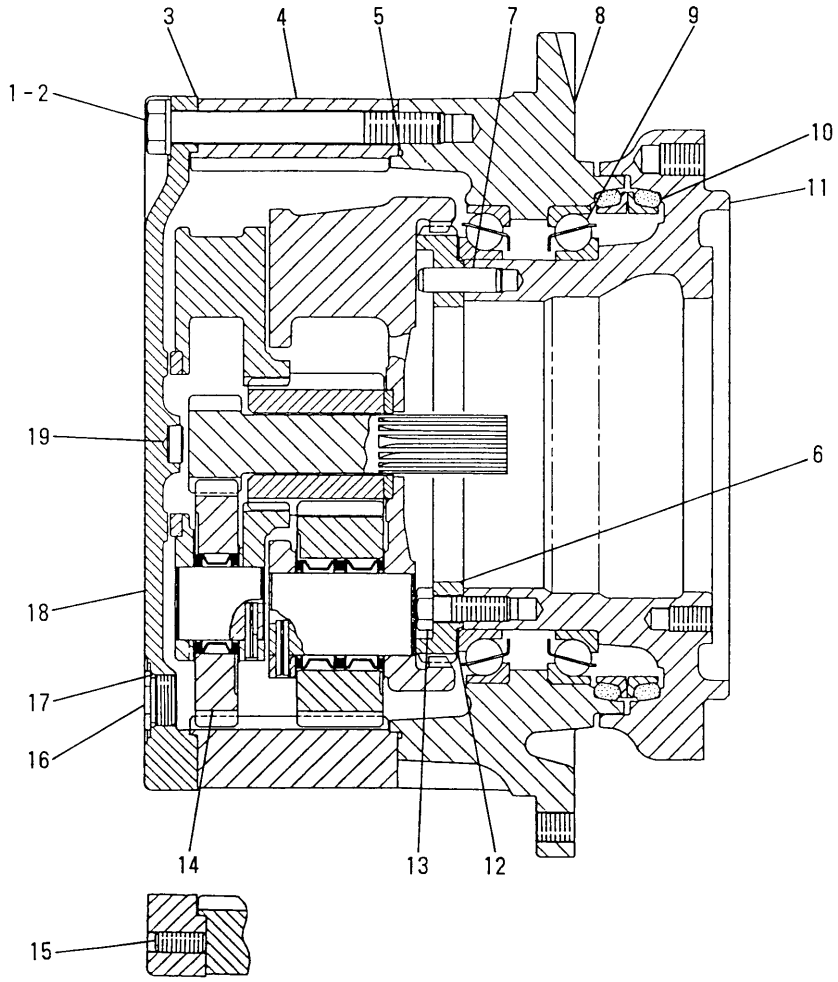

NOTE	No.	PART No.	QTY	PART NAME	NOTE	No.	PART No.	QTY	PART NAME
	1	7X-2568	16	BOLT (L=180mm)		13	6V-5686	16	BOLT (L=50mm)
	2	8T-4123	16	WASHER		14	7Y-1428	3	GEAR (Z=32)
B	3	1U-8846		GASKET MAKER…(10ml)		15	095-1270	2	SETSCREW
	4	7Y-1631	1	GEAR (Z=79)		16	3E-2338	2	PLUG
	5	6D-0692	1	SEAL-O-RING (ID=367.89mm)		17	7M-8485	2	SEAL-O-RING (ID=29.74mm)
	6	7Y-1436	1	GEAR (Z=55)		18	7Y-1426	1	COVER
	7	093-7828	4	PIN		19	094-0580	1	PLATE (T=10.00mm)
	8	7Y-1437	1	HOUSING					
	9	096-6412	2	BEARING					
	10	093-1425	1	SEAL GP					
	11	7Y-1438	1	HOUSING					
B	12	096-1773	1	SHIM (T=0.15mm)					
B		096-1774	1	SHIM (T=0.30mm)					
B		096-1775	1	SHIM (T=0.40mm)					
B		096-1776	1	SHIM (T=0.50mm)					
B		096-1777	1	SHIM (T=0.60mm)					
B		096-1778	1	SHIM (T=0.70mm)					
B		096-1779	1	SHIM (T=0.80mm)					
B		096-1780	1	SHIM (T=1.00mm)					
B		096-1781	1	SHIM (T=1.60mm)					

B—USE AS REQUIRED

H53392E 04

7Y-1571 FINAL DRIVE GP (1/2)

S/N 3MR 1-00221, 4MR 1-00138
Part of 114-1333-Page111

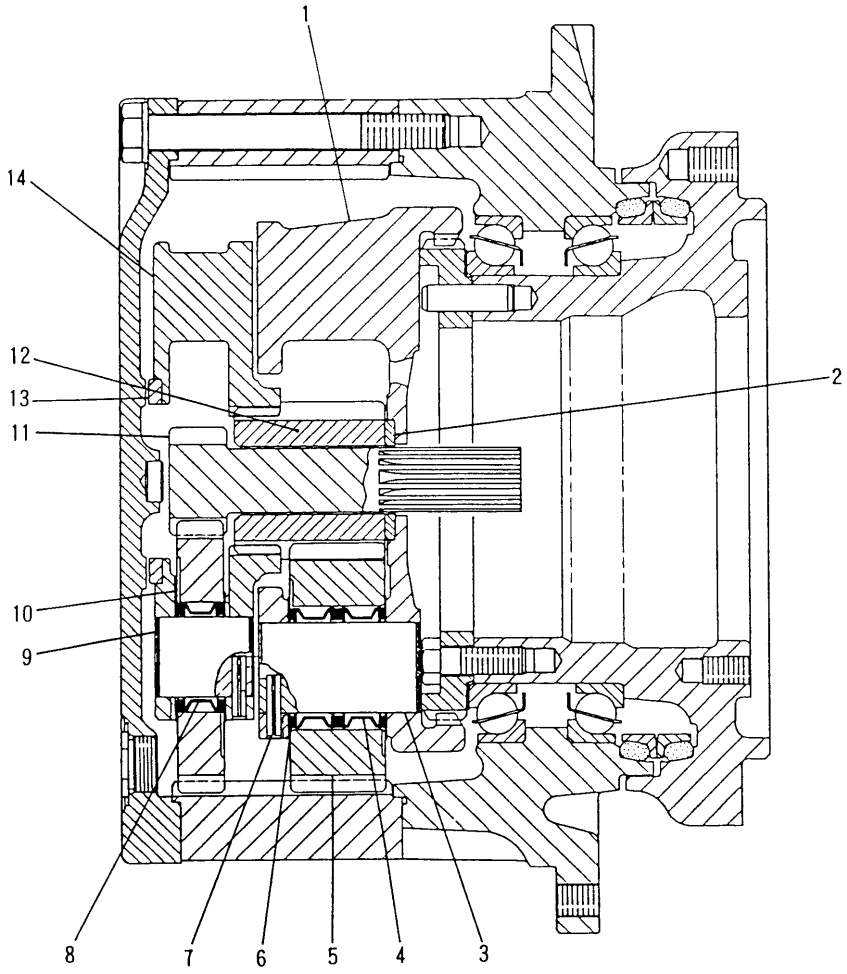

NOTE	No.	PART No.	QTY	PART NAME	NOTE	No.	PART No.	QTY	PART NAME
	1	7Y-1433	1	CARRIER					
	2	7Y-1434	1	SPACER					
	3	7Y-0223	3	SHAFT					
	4	094-1542	6	BEARING					
	5	7Y-1431	3	GEAR (Z=30)					
	6	094-1528	6	WASHER					
	7	095-0891	6	PIN					
	8	094-0616	3	BEARING					
	9	7Y-0225	3	SHAFT					
	10	094-0611	6	WASHER					
	11	7Y-1427	1	GEAR (Z=11)					
	12	7Y-1430	1	GEAR (Z=17)					
	13	7Y-1558	1	SPACER					
	14	7Y-1432	1	CARRIER					

H53393E 04

7Y-1571 FINAL DRIVE GP (2/2)

S/N 3MR 1-00221, 4MR 1-00138
Part of 114-1333-Page111

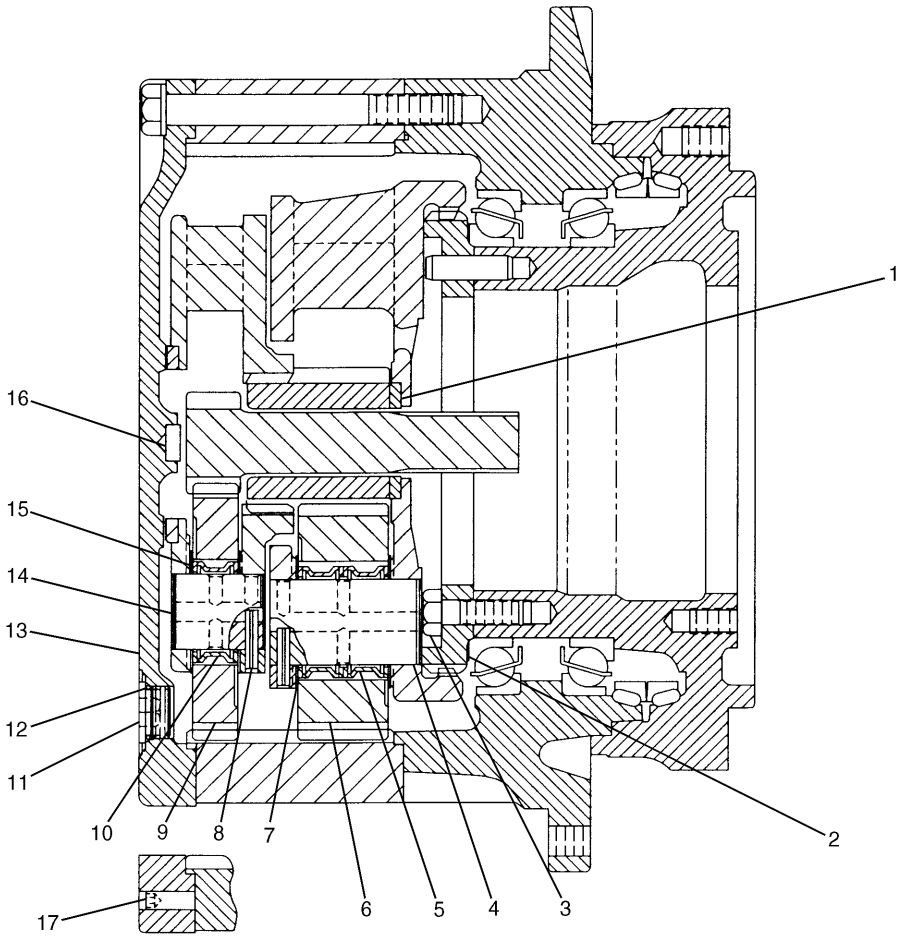

NOTE	No.	PART No.	QTY	PART NAME	NOTE	No.	PART No.	QTY	PART NAME
	1	7Y-1434	1	SPACER		13	7Y-1426	1	COVER
B	2	096-1773	1	SHIM (T=0.15mm)		14	7Y-0225	3	SHAFT
B		096-1774	1	SHIM (T=0.30mm)		15	094-0611	6	WASHER
B		096-1775	1	SHIM (T=0.40mm)		16	094-0580	1	PLATE (T=10.00mm)
B		096-1776	1	SHIM (T=0.50mm)		17	095-1270	2	SETSCREW
B		096-1777	1	SHIM (T=0.60mm)					
B		096-1778	1	SHIM (T=0.70mm)					
B		096-1779	1	SHIM (T=0.80mm)					
B		096-1780	1	SHIM (T=1.00mm)					
B		096-1781	1	SHIM (T=1.60mm)					
	3	6V-5686	16	BOLT (L=50mm)					
	4	7Y-0223	3	SHAFT					
	5	094-1542	6	BEARING					
	6	7Y-1431	3	GEAR (Z=30)					
	7	094-1528	6	WASHER					
	8	095-0891	6	PIN					
	9	7Y-1428	3	GEAR (Z=32)					
	10	094-0616	3	BEARING					
	11	3E-2338	2	PLUG					
	12	7M-8485	2	SEAL-O-RING (ID=29.74mm)					

B—USE AS REQUIRED

H62287E 02

114-1484 FINAL DRIVE GP (1/2)

Without Motor

S/N 3MR 00222-06233, 4MR 00139-00909

Part of 114-1483-Page111.01

POWER TRAIN

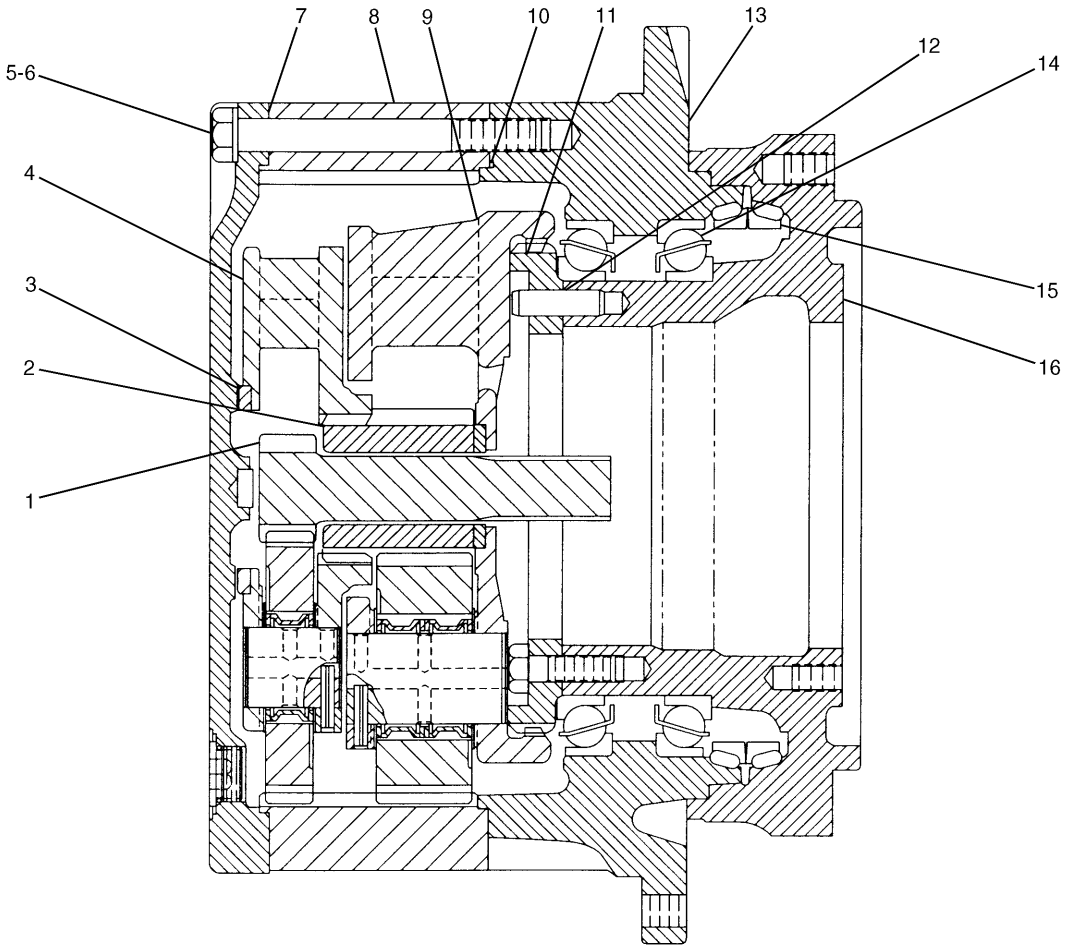

NOTE	No.	PART No.	QTY	PART NAME	NOTE	No.	PART No.	QTY	PART NAME
	1	7Y-1427	1	GEAR (Z=11)					
	2	7Y-1430	1	GEAR (Z=17)					
	3	7Y-1558	1	SPACER					
	4	7Y-1432	1	CARRIER					
	5	7X-2568	16	BOLT (L=180mm)					
	6	8T-4123	16	WASHER					
B	7	1U-8846		GASKET MAKER···(10ml)					
	8	7Y-1631	1	GEAR (Z=79)					
	9	7Y-1433	1	CARRIER					
	10	6D-0692	1	SEAL-O-RING (ID=367.89mm)					
	11	7Y-1436	1	GEAR (Z=55)					
	12	114-1539	4	PIN					
	13	114-1486	1	HOUSING					
	14	096-6412	2	BEARING					
	15	114-1497	1	SEAL GP					
	16	114-1485	1	HOUSING					

B—USE AS REQUIRED

H62288E 02

114-1484 FINAL DRIVE GP (2/2)

Without Motor

S/N 3MR 00222-06233, 4MR 00139-00909

Part of 114-1483-Page111.01

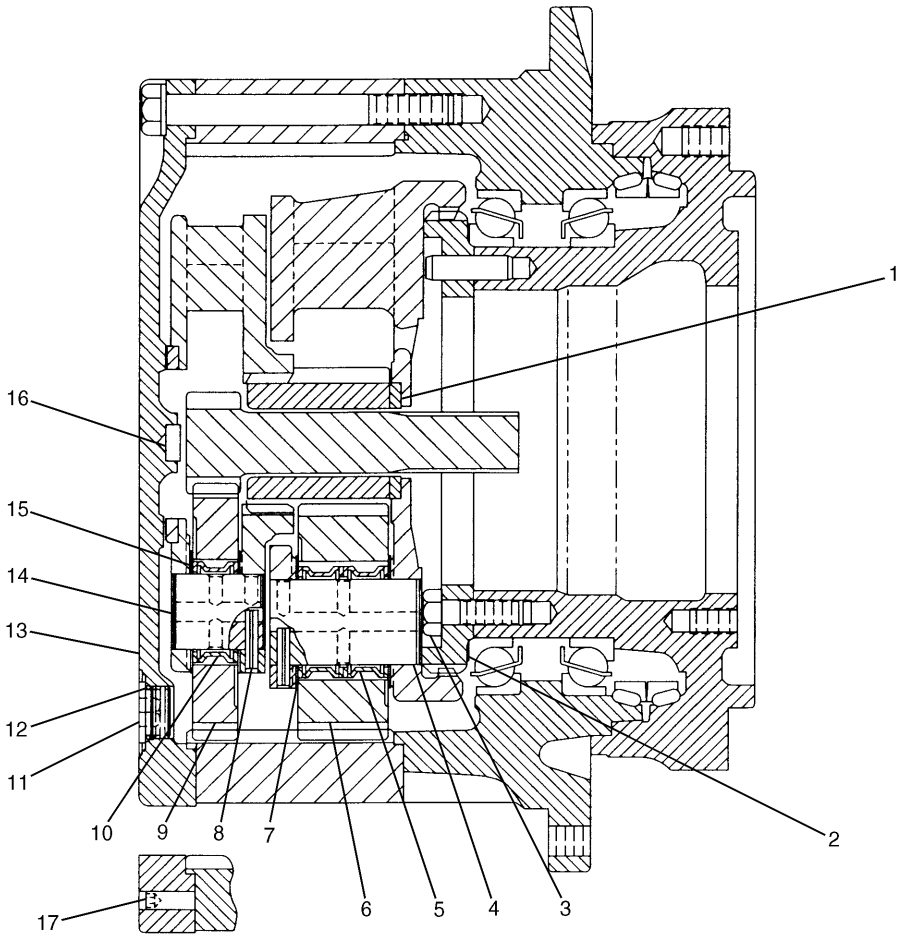

NOTE	No.	PART No.	QTY	PART NAME	NOTE	No.	PART No.	QTY	PART NAME
	1	7Y-1434	1	SPACER		13	7Y-1426	1	COVER
B	2	096-1773	1	SHIM (T=0.15mm)		14	7Y-0225	3	SHAFT
B		096-1774	1	SHIM (T=0.30mm)		15	094-0611	6	WASHER
B		096-1775	1	SHIM (T=0.40mm)		16	094-0580	1	PLATE (T=10.00mm)
B		096-1776	1	SHIM (T=0.50mm)		17	095-1270	2	SETSCREW
B		096-1777	1	SHIM (T=0.60mm)					
B		096-1778	1	SHIM (T=0.70mm)					
B		096-1779	1	SHIM (T=0.80mm)					
B		096-1780	1	SHIM (T=1.00mm)					
B		096-1781	1	SHIM (T=1.60mm)					
	3	6V-3303	14	BOLT (L=60mm)					
	4	7Y-0223	3	SHAFT					
	5	094-1542	6	BEARING					
	6	7Y-1431	3	GEAR (Z=30)					
	7	094-1528	6	WASHER					
	8	095-0891	6	PIN					
	9	7Y-1428	3	GEAR (Z=32)					
	10	094-0616	3	BEARING					
	11	3E-2338	2	PLUG					
	12	7M-8485	2	SEAL-O-RING (ID=29.74mm)					

B—USE AS REQUIRED

H65094E 05

114-1484 FINAL DRIVE GP (1/2)

Without Motor
S/N 3MR 06234-Up, 4MR 00910-Up
Part of 114-1483-Page111.01

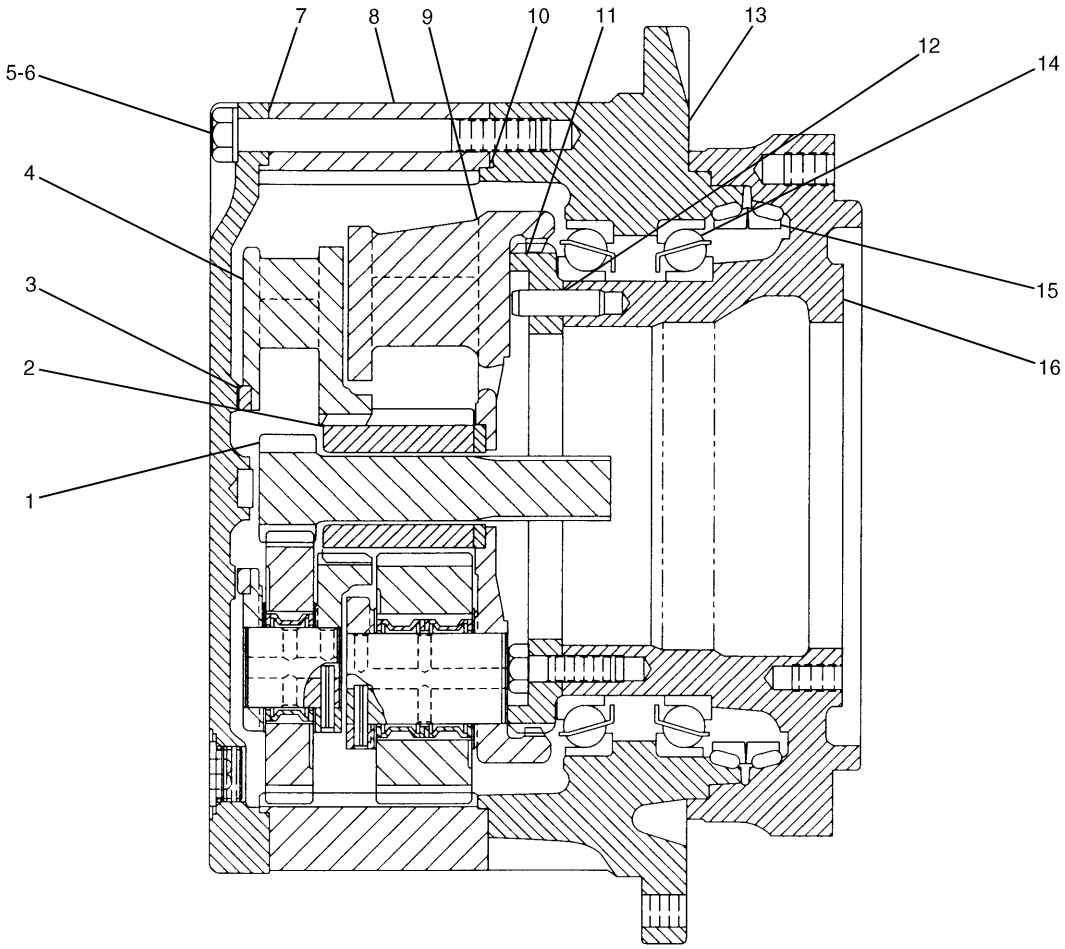

NOTE	No.	PART No.	QTY	PART NAME	NOTE	No.	PART No.	QTY	PART NAME
	1	7Y-1427	1	GEAR (Z=11)					
	2	7Y-1430	1	GEAR (Z=17)					
	3	7Y-1558	1	SPACER					
	4	7Y-1432	1	CARRIER					
	5	7X-2568	16	BOLT (L=180mm)					
	6	8T-4123	16	WASHER					
B	7	1U-8846		GASKET MAKER…(10ml)					
	8	7Y-1631	1	GEAR (Z=79)					
	9	7Y-1433	1	CARRIER					
	10	6D-0692	1	SEAL-O-RING (ID=367.89mm)					
	11	148-4715	1	GEAR (Z=55)					
	12	114-1539	6	PIN					
	13	114-1486	1	HOUSING					
	14	168-8451	2	BEARING					
	15	114-1497	1	SEAL GP					
	16	148-4716	1	HOUSING					

B—USE AS REQUIRED

H65095E 05

114-1484 FINAL DRIVE GP (2/2)

Without Motor
S/N 3MR 06234-Up, 4MR 00910-Up
Part of 114-1483-Page111.01

MEMORANDA

MEMORANDA

FRAME AND BODY

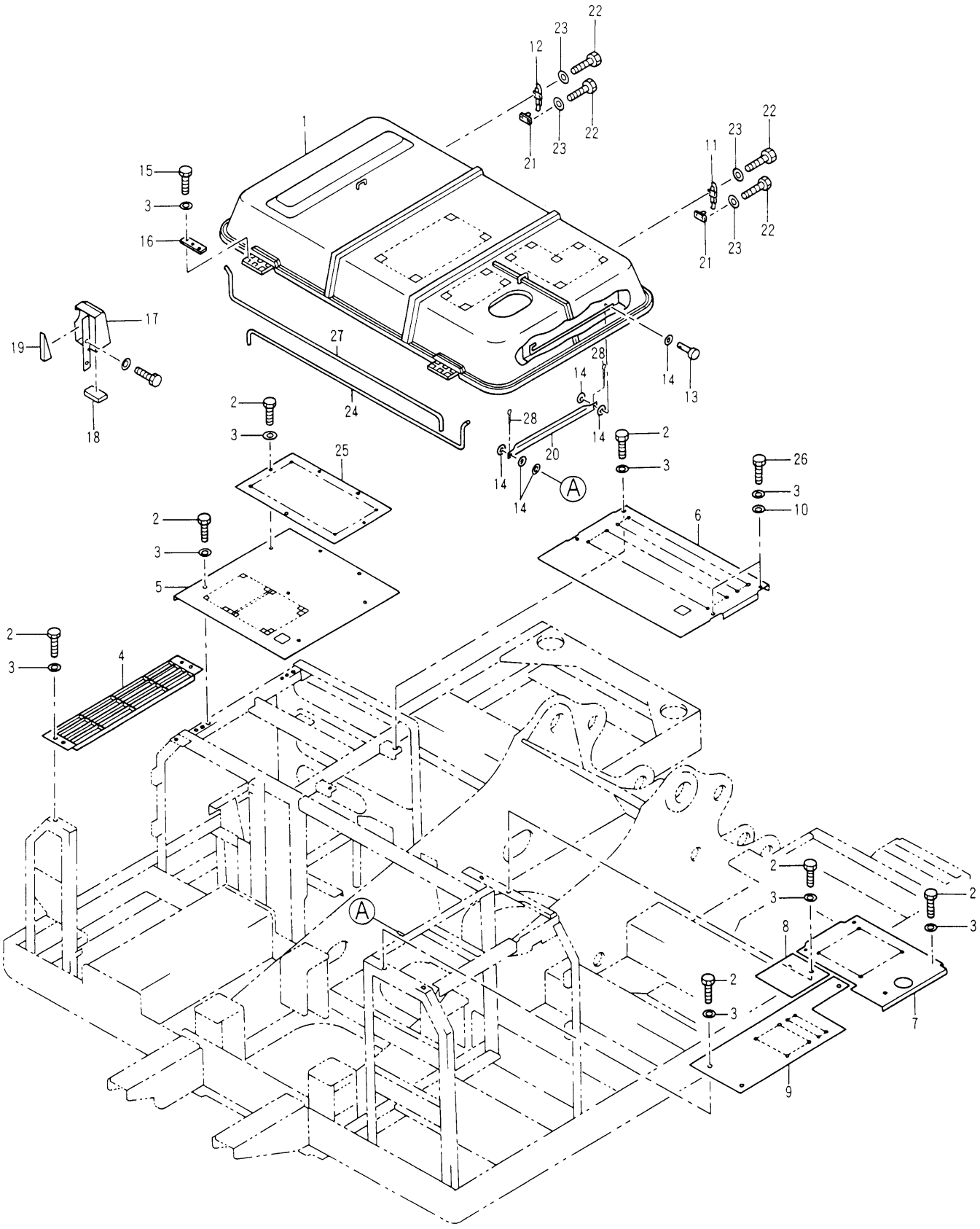

117-4266 HOOD & GUARD GP (1/3)
S/N 3MR 1-01991, 4MR 1-00338
120-5228-Page124

FRAME AND BODY

NOTE	No.	PART No.	QTY	PART NAME	NOTE	No.	PART No.	QTY	PART NAME
Y	1	120-5228	1	HOOD GP					
	2	8T-4192	21	BOLT (L=25mm)					
	3	5P-1076	29	WASHER					
	4	117-4286	1	SUPPORT AS					
	5	117-4290	1	COVER AS					
	6	117-4292	1	COVER AS					
	7	117-4295	1	SHEET					
	8	117-4355	1	SHEET					
	9	117-4297	1	SHEET					
	10	099-1426	2	SPACER					
	11	4I-0117	1	FASTENER					
	12	1R-9958	1	FASTENER					
	13	095-1321	1	PIN					
	14	8T-4121	5	WASHER					
	15	8T-4183	6	BOLT (L=40mm)					
	16	114-6285	2	BAR					
	17	129-3415	1	COVER AS					
	18	129-3416	1	LINER					
	19	129-3417	1	LINER					
	20	129-3422	1	SUPPORT					
	21	4I-0118	2	HOOK					
	22	8T-4200	8	BOLT (L=16mm)					
	23	8T-4224	8	WASHER					
	24	121-4977	1	SPRING					
	25	129-3346	1	SHEET					
	26	8T-4139	2	BOLT (L=30mm)					
	27	131-7603	1	SPRING					
	28	3B-4618	2	COTTER					

Y—SEE SEPARATE ILLUSTRATION

H54649E 01

117-4266 HOOD & GUARD GP (1/3)

S/N 3MR 1-01991, 4MR 1-00338
120-5228-Page124

FRAME AND BODY

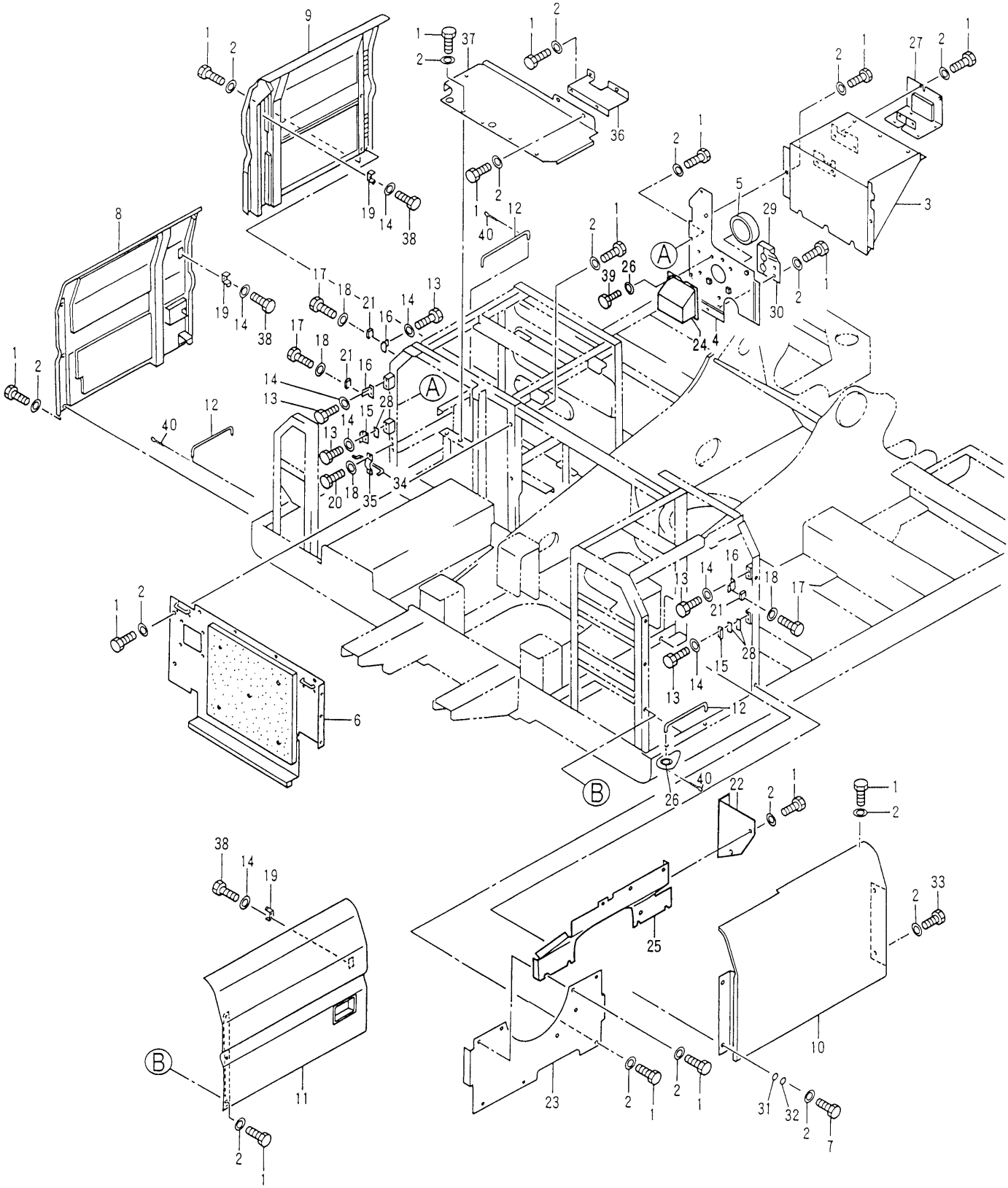

H54651E 01

117-4266 HOOD & GUARD GP (2/3)

S/N 3MR 1-19991, 4MR 1-00338

117-4314-Page125,117-4311-Page125.01,117-4308-Page126

FRAME AND BODY

NOTE	No.	PART No.	QTY	PART NAME	NOTE	No.	PART No.	QTY	PART NAME
	1	8T-4192	60	BOLT (L=25mm)					
	2	5P-1076	64	WASHER					
	3	135-7594	1	COVER AS					
	4	135-7598	1	SHEET AS					
	5	114-6260	1	LINER					
	6	117-4304	1	SHEET AS					
	7	8T-4139	2	BOLT (L=30mm)					
Y	8	117-4308	1	DOOR GP					
Y	9	117-4311	1	DOOR GP					
	10	117-4317	1	DOOR AS					
Y	11	117-4314	1	DOOR GP					
	12	122-4049	3	ROD					
	13	8T-4138	10	BOLT (L=20mm)					
	14	5P-4115	16	WASHER					
	15	4I-0232	2	STRIKER					
	16	7I-1418	3	SUPPORT AS					
	17	8T-0269	6	BOLT (L=20mm)					
	18	9X-8256	8	WASHER					
	19	4I-8019	3	SUPPORT					
	20	5C-9553	8	BOLT (L=16mm)					
	21	6I-6033	3	STOPPER					
	22	117-4307	1	SHEET					
	23	117-4300	1	SHEET AS					
	24	137-2219	1	COVER AS					
	25	135-7551	1	SHEET AS					
	26	8T-4121	5	WASHER					
	27	120-5176	1	SUPPORT AS					
B	28	087-3908	4	SHIM (T=1.00mm)					
B		087-3909	4	SHIM (T=2.00mm)					
	29	121-5056	1	SHEET AS					
	30	121-5057	1	LINER					
	31	7Y-2854	2	SPACER					
	32	7Y-2853	2	SPACER					
	33	7X-2548	2	BOLT (L=16mm)					
	34	122-3980	1	ROD					
	35	122-3979	1	BAND					
	36	122-4093	1	SHEET					
	37	122-3944	1	SHEET AS					
	38	8T-4171	6	BOLT (L=12mm)					
	39	8T-4137	2	BOLT (L=20mm)					
	40	3B-4618	3	COTTER					

B—USE AS REQUIRED

Y—SEE SEPARATE ILLUSTRATION

H54651E 01

117-4266 HOOD & GUARD GP (2/3)

S/N 3MR 1-01991, 4MR 1-00338

117-4314-Page125,117-4311-Page125.01,117-4308-Page126

FRAME AND BODY

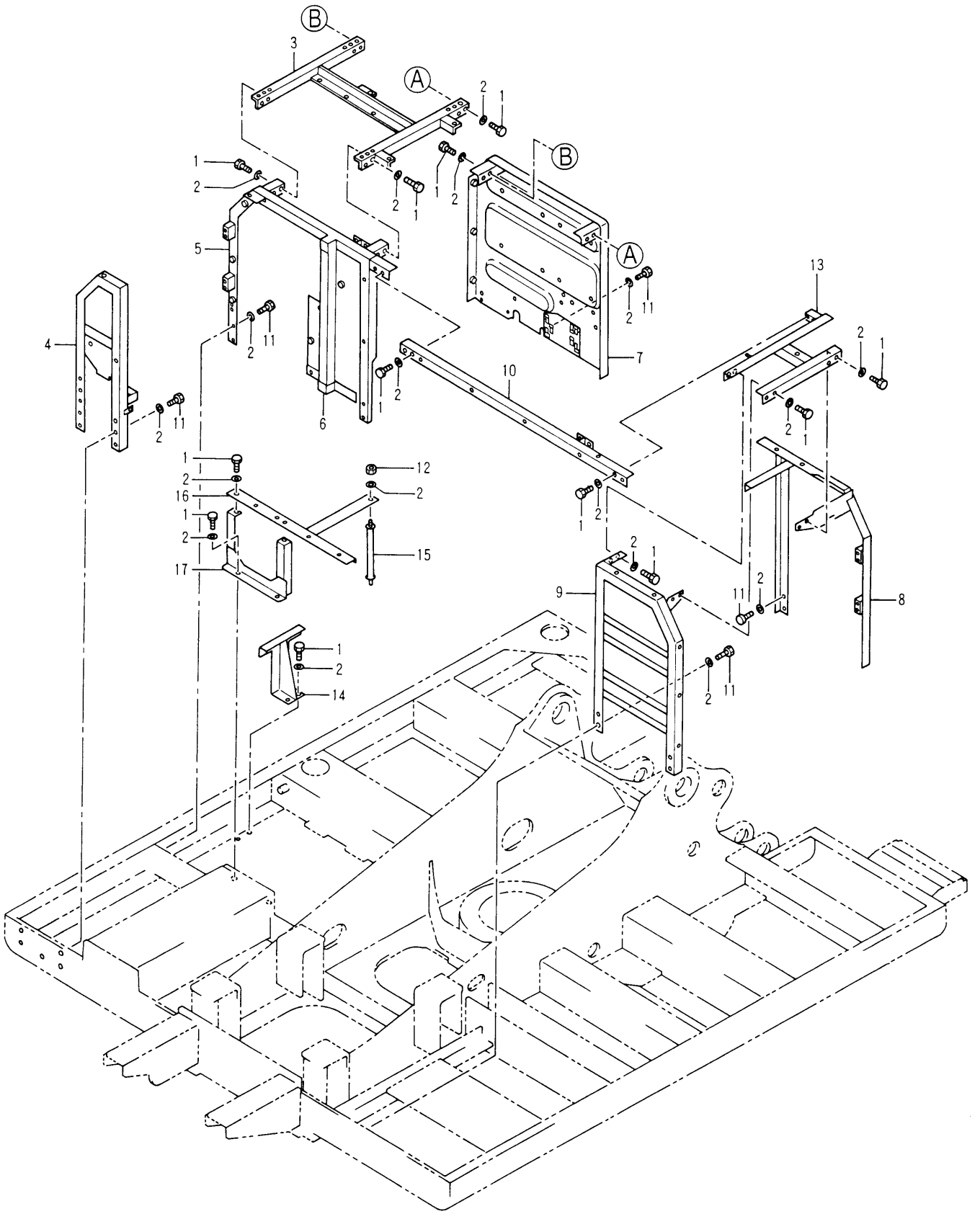

117-4266 HOOD & GUARD GP (3/3)
S/N 3MR 1-01991, 4MR 1-00338

FRAME AND BODY

NOTE	No.	PART No.	QTY	PART NAME	NOTE	No.	PART No.	QTY	PART NAME
	1	8T-4192	26	BOLT (L=25mm)					
	2	5P-1076	48	WASHER					
	3	117-4330	1	SUPPORT AS					
	4	117-4322	1	SUPPORT AS					
	5	117-4332	1	SUPPORT AS					
	6	6I-6167	1	LINER					
	7	116-1658	1	SUPPORT AS					
	8	117-4327	1	SUPPORT AS					
	9	117-4319	1	SUPPORT AS					
	10	117-4336	1	SUPPORT AS					
	11	8T-4139	21	BOLT (L=30mm)					
	12	8T-4244	1	NUT					
	13	117-4325	1	SUPPORT AS					
	14	122-3955	1	SUPPORT AS					
	15	122-3958	1	SUPPORT AS					
	16	122-3948	1	SUPPORT AS					
	17	122-3951	1	SUPPORT AS					

H54653E 01

117-4266 HOOD & GUARD GP (3/3)

S/N 3MR 1-01991, 4MR 1-00338

FRAME AND BODY

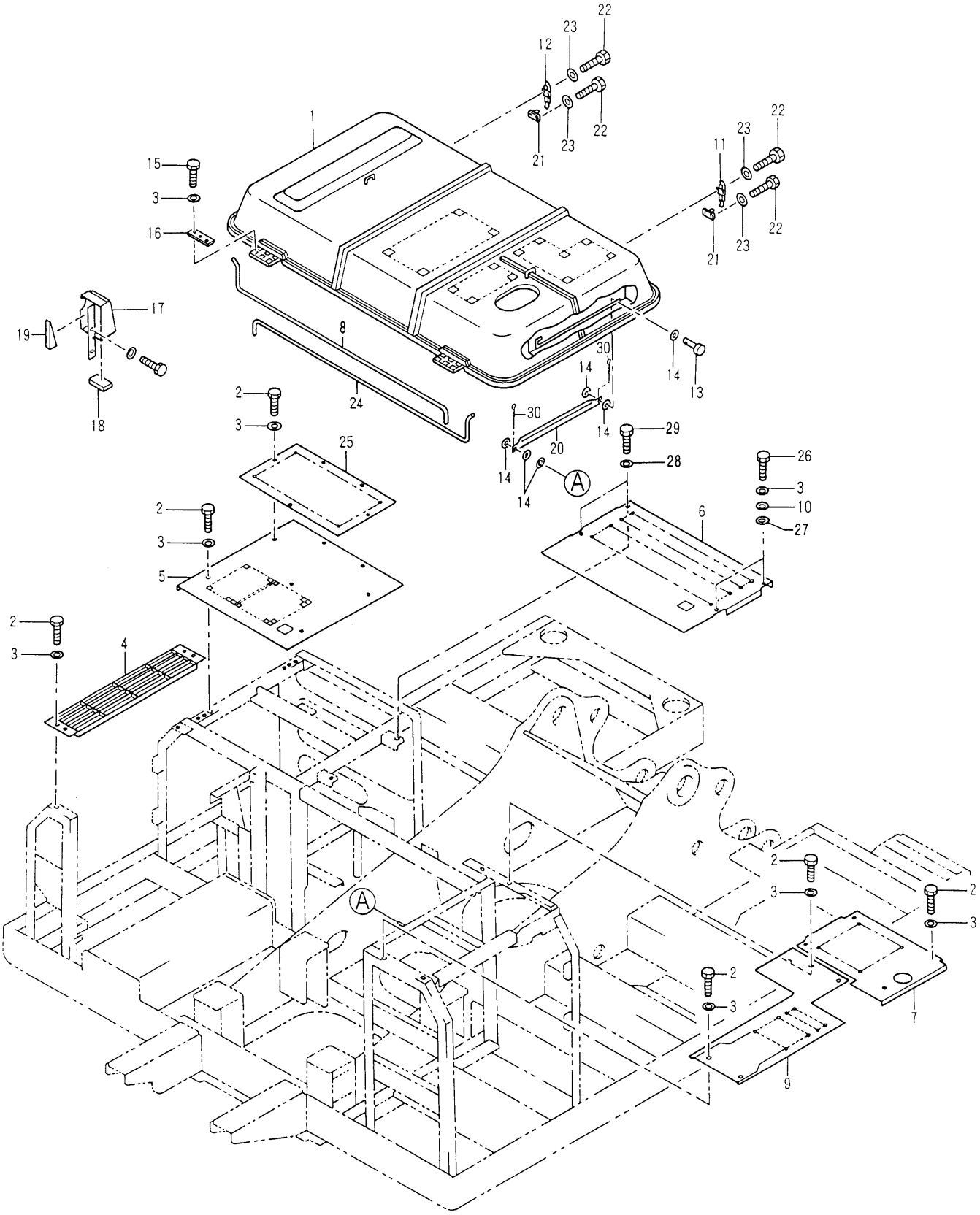

117-4266 HOOD & GUARD GP (1/3)

S/N 3MR 01992-04978, 4MR 00339-00715

120-5228-Page124

FRAME AND BODY

NOTE	No.	PART No.	QTY	PART NAME	NOTE	No.	PART No.	QTY	PART NAME
Y	1	120-5228	1	HOOD GP					
	2	8T-4192	19	BOLT (L=25mm)					
	3	5P-1076	27	WASHER					
	4	117-4286	1	SUPPORT AS					
	5	117-4290	1	COVER AS					
	6	117-4292	1	COVER AS					
	7	117-4295	1	SHEET					
	8	131-7603	1	SPRING					
	9	117-4297	1	SHEET					
	10	099-1426	2	SPACER					
	11	4I-0117	1	FASTENER					
	12	1R-9958	1	FASTENER					
	13	095-1321	1	PIN					
	14	8T-4121	6	WASHER					
	15	8T-4183	6	BOLT (L=40mm)					
	16	114-6285	2	BAR					
	17	129-3415	1	COVER AS					
	18	129-3416	1	LINER					
	19	129-3417	1	LINER					
	20	129-3422	1	SUPPORT					
	21	4I-0118	2	HOOK					
	22	8T-4200	8	BOLT (L=16mm)					
	23	8T-4224	8	WASHER					
	24	121-4977	1	SPRING					
	25	129-3346	1	SHEET					
	26	8T-4139	2	BOLT (L=30mm)					
	27	7Y-2854	2	SPACER					
	28	7X-0618	2	WASHER					
	29	8T-4179	2	BOLT (L=20mm)					
	30	3B-4619	2	COTTER					

Y—SEE SEPARATE ILLUSTRATION

H57684E 08

117-4266 HOOD & GUARD GP (1/3)

S/N 3MR 01992-04978, 4MR 00339-00715

120-5228-Page124

FRAME AND BODY

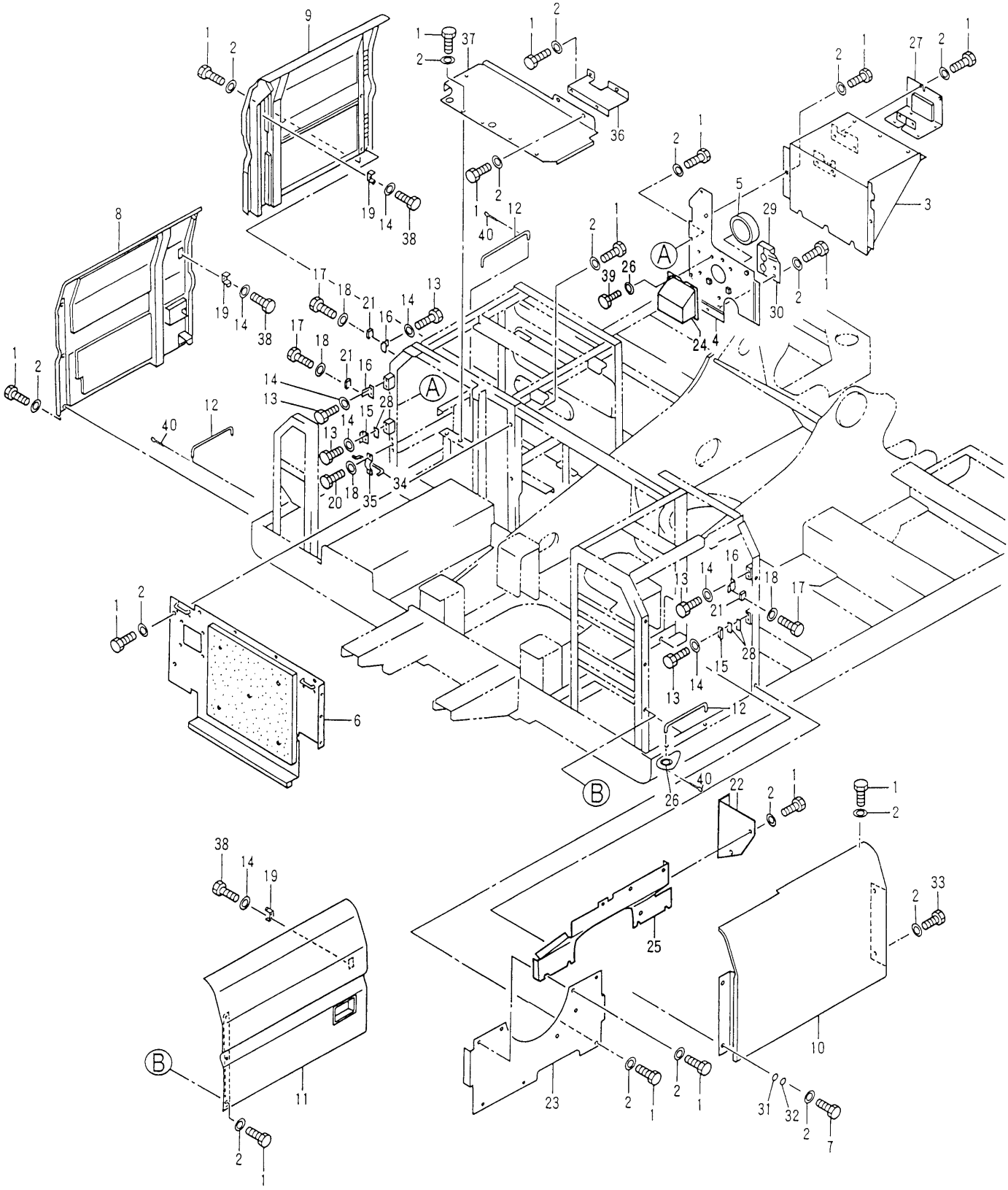

H57686E 08

117-4266 HOOD & GUARD GP (2/3)

S/N 3MR 01992-04978, 4MR 00339-00715

117-4314-Page125,117-4311-Page125.01,117-4308-Page126

FRAME AND BODY

NOTE	No.	PART No.	QTY	PART NAME	NOTE	No.	PART No.	QTY	PART NAME
	1	8T-4192	60	BOLT (L=25mm)					
	2	5P-1076	64	WASHER					
	3	135-7594	1	COVER AS					
	4	135-7598	1	SHEET AS					
	5	114-6260	1	LINER					
	6	117-4304	1	SHEET AS					
	7	8T-4139	2	BOLT (L=30mm)					
Y	8	117-4308	1	DOOR GP					
Y	9	117-4311	1	DOOR GP					
	10	117-4317	1	DOOR AS					
Y	11	117-4314	1	DOOR GP					
	12	122-4049	3	ROD					
	13	8T-4138	10	BOLT (L=20mm)					
	14	5P-4115	16	WASHER					
	15	142-5476	2	STRIKER					
	16	7I-1418	3	SUPPORT AS					
	17	8T-0269	6	BOLT (L=20mm)					
	18	9X-8256	8	WASHER					
	19	4I-8019	3	SUPPORT					
	20	5C-9553	2	BOLT (L=16mm)					
	21	6I-6033	3	STOPPER					
	22	117-4307	1	SHEET					
	23	117-4300	1	SHEET AS					
	24	137-2219	1	COVER AS					
	25	135-7551	1	SHEET AS					
	26	8T-4121	5	WASHER					
	27	120-5176	1	SUPPORT AS					
B	28	087-3908	4	SHIM (T=1.00mm)					
B		087-3909	4	SHIM (T=2.00mm)					
	29	121-5056	1	SHEET AS					
	30	121-5057	1	LINER					
	31	7Y-2854	2	SPACER					
	32	7Y-2853	2	SPACER					
	33	7X-2548	2	BOLT (L=16mm)					
	34	122-3980	1	ROD					
	35	122-3979	1	BAND					
	36	122-4093	1	SHEET					
	37	122-3944	1	SHEET AS					
	38	8T-4171	6	BOLT (L=12mm)					
	39	8T-4137	2	BOLT (L=20mm)					
	40	3B-4618	3	COTTER					

B—USE AS REQUIRED

Y—SEE SEPARATE ILLUSTRATION

H57686E 08

117-4266 HOOD & GUARD GP (2/3)

S/N 3MR 01992-04978, 4MR 00339-00715

117-4314-Page125,117-4311-Page125.01,117-4308-Page126

FRAME AND BODY

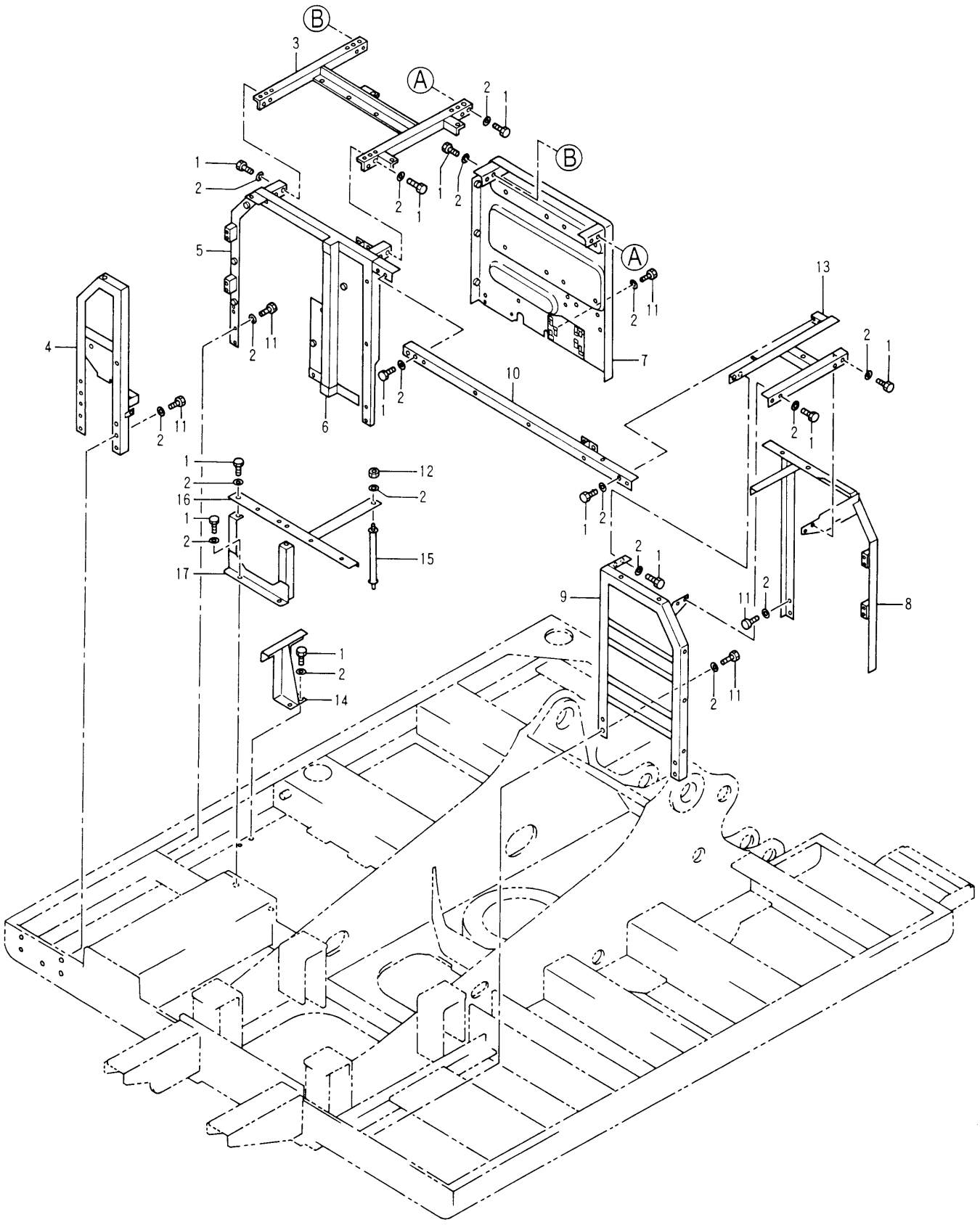

117-4266 HOOD & GUARD GP (3/3)

S/N 3MR 01992-04978, 4MR 00339-00715

FRAME AND BODY

NOTE	No.	PART No.	QTY	PART NAME	NOTE	No.	PART No.	QTY	PART NAME
	1	8T-4192	26	BOLT (L=25mm)					
	2	5P-1076	48	WASHER					
	3	117-4330	1	SUPPORT AS					
	4	117-4322	1	SUPPORT AS					
	5	117-4332	1	SUPPORT AS					
	6	6I-6167	1	LINER					
	7	116-1658	1	SUPPORT AS					
	8	117-4327	1	SUPPORT AS					
	9	117-4319	1	SUPPORT AS					
	10	117-4336	1	SUPPORT AS					
	11	8T-4139	21	BOLT (L=30mm)					
	12	8T-4244	1	NUT					
	13	135-7550	1	SUPPORT AS					
	14	135-7510	1	SUPPORT AS					
	15	122-3958	1	SUPPORT AS					
	16	122-3948	1	SUPPORT AS					
	17	122-3951	1	SUPPORT AS					

H57688E 08

117-4266 HOOD & GUARD GP (3/3)

S/N 3MR 01992-04978, 4MR 00399-00715

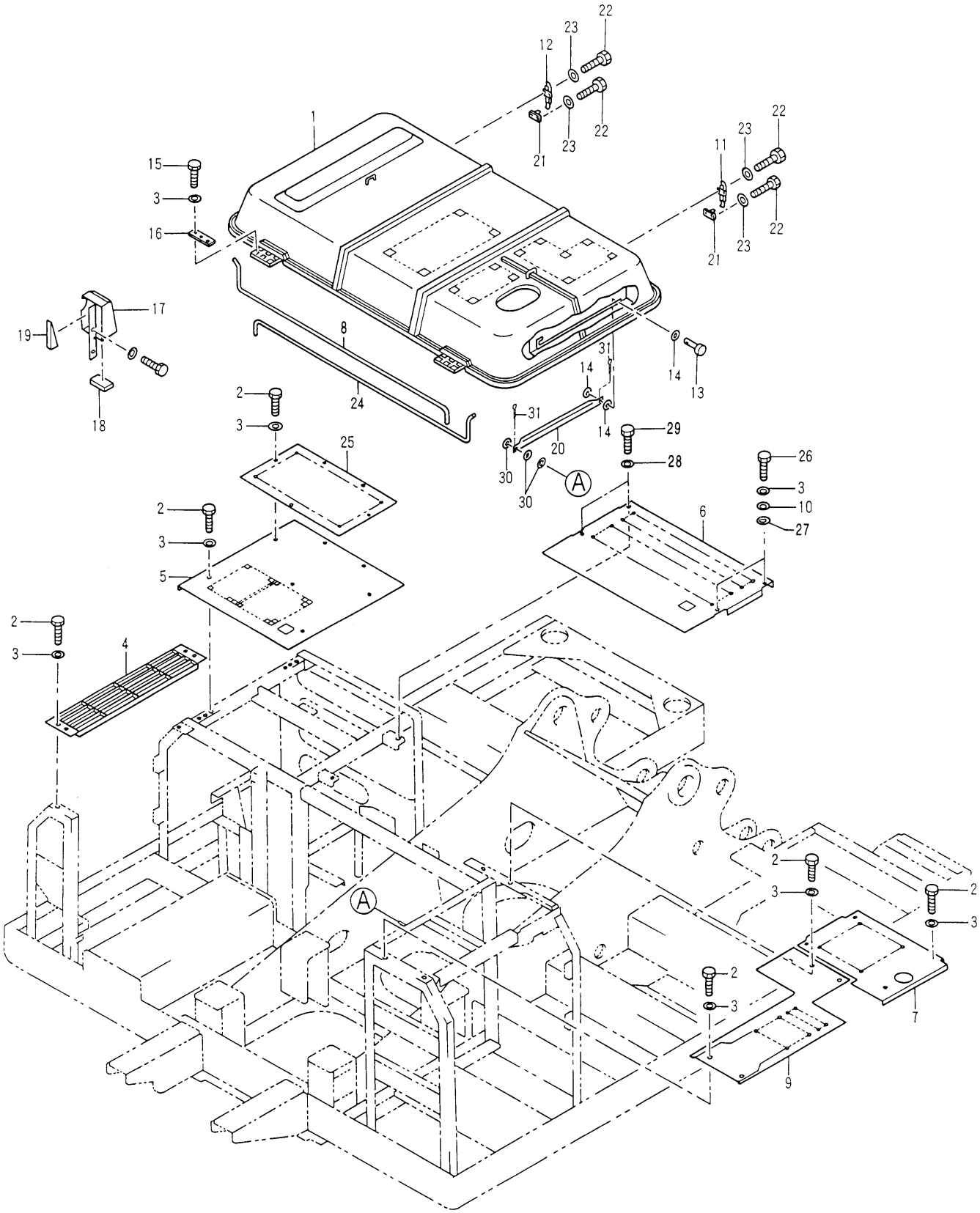

117-4266 HOOD & GUARD GP (1/3)

S/N 3MR 04979-Up, 4MR 00716-Up

120-5228-Page124

FRAME AND BODY

NOTE	No.	PART No.	QTY	PART NAME	NOTE	No.	PART No.	QTY	PART NAME
Y	1	120-5228	1	HOOD GP					
	2	8T-4192	19	BOLT (L=25mm)					
	3	5P-1076	27	WASHER					
	4	117-4286	1	SUPPORT AS					
	5	117-4290	1	COVER AS					
	6	117-4292	1	COVER AS					
	7	117-4295	1	SHEET					
	8	131-7603	1	SPRING					
	9	117-4297	1	SHEET					
	10	099-1426	2	SPACER					
	11	4I-0117	1	FASTENER					
	12	1R-9958	1	FASTENER					
	13	095-1321	1	PIN					
	14	8T-4121	3	WASHER					
	15	8T-4183	6	BOLT (L=40mm)					
	16	114-6285	2	BAR					
	17	129-3415	1	COVER AS					
	18	129-3416	1	LINER					
	19	129-3417	1	LINER					
	20	129-3422	1	SUPPORT					
	21	4I-0118	2	HOOK					
	22	8T-4200	8	BOLT (L=16mm)					
	23	8T-4224	8	WASHER					
	24	121-4977	1	SPRING					
	25	129-3346	1	SHEET					
	26	8T-4139	2	BOLT (L=30mm)					
	27	7Y-2854	2	SPACER					
	28	7X-0618	2	WASHER					
	29	8T-4179	2	BOLT (L=20mm)					
	30	8T-4223	3	WASHER					
	31	7J-5925	2	COTTER					

Y—SEE SEPARATE ILLUSTRATION

H65262E 12

117-4266 HOOD & GUARD GP (1/3)

S/N 3MR 04979-Up, 4MR 00716-Up
120-5228-Page124

FRAME AND BODY

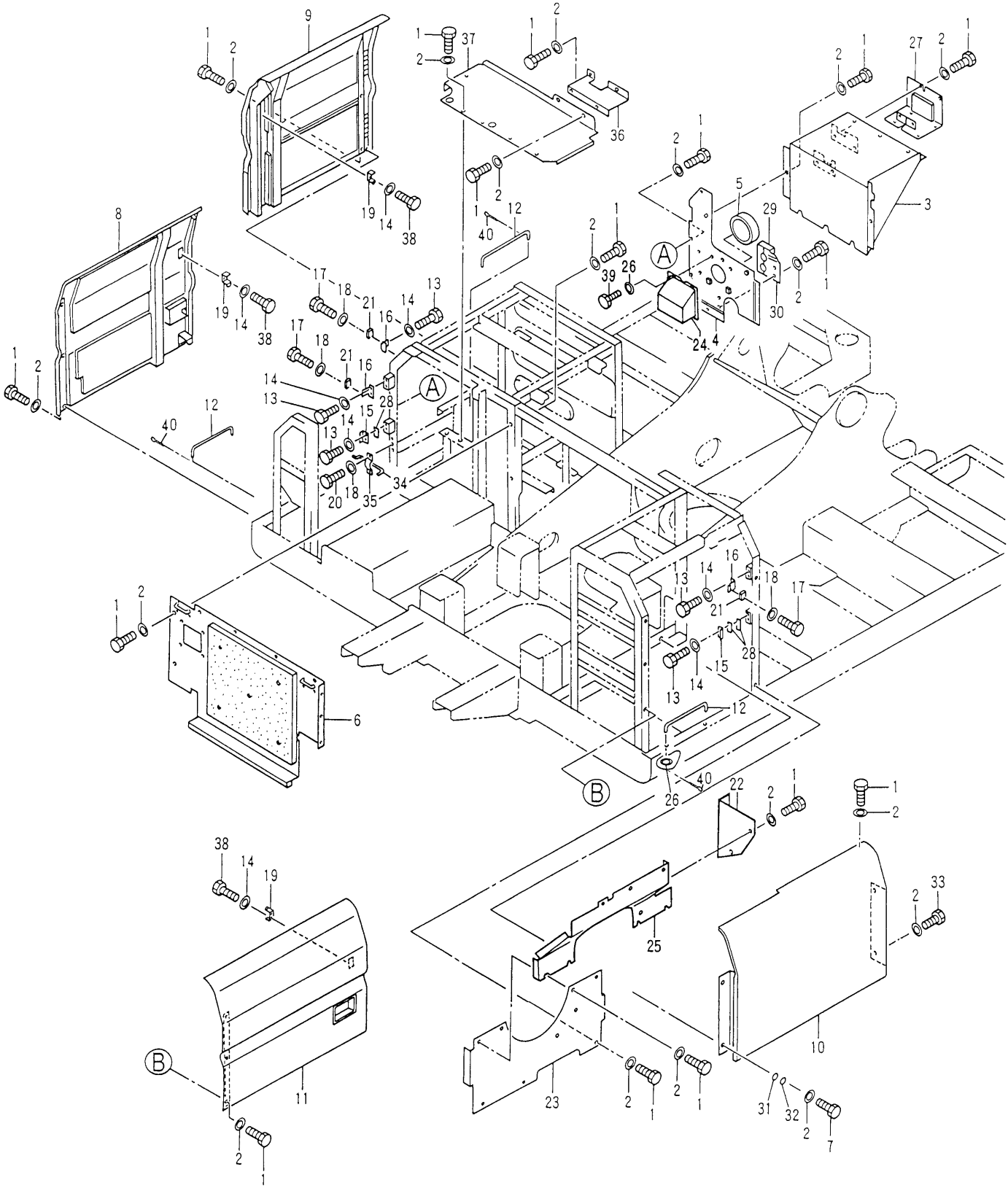

H65264E 12

117-4266 HOOD & GUARD GP (2/3)

S/N 3MR 04979-Up, 4MR 00716-Up

117-4314-Page125,117-4311-Page125.01,117-4308-Page126

FRAME AND BODY

NOTE	No.	PART No.	QTY	PART NAME	NOTE	No.	PART No.	QTY	PART NAME
	1	8T-4192	60	BOLT (L=25mm)					
	2	5P-1076	64	WASHER					
	3	135-7594	1	COVER AS					
	4	135-7598	1	SHEET AS					
	5	114-6260	1	LINER					
	6	117-4304	1	SHEET AS					
	7	8T-4139	2	BOLT (L=30mm)					
Y	8	117-4308	1	DOOR GP					
Y	9	117-4311	1	DOOR GP					
	10	117-4317	1	DOOR AS					
Y	11	117-4314	1	DOOR GP					
	12	122-4049	3	ROD					
	13	8T-4138	10	BOLT (L=20mm)					
	14	5P-4115	16	WASHER					
	15	142-5476	2	STRIKER					
		4I-0232	2	STRIKER					
	16	7I-1418	3	SUPPORT AS					
	17	8T-0269	6	BOLT (L=20mm)					
	18	9X-8256	8	WASHER					
	19	4I-8019	3	SUPPORT					
	20	5C-9553	2	BOLT (L=16mm)					
	21	6I-6033	3	STOPPER					
	22	117-4307	1	SHEET					
	23	117-4300	1	SHEET AS					
	24	137-2219	1	COVER AS					
	25	135-7551	1	SHEET AS					
	26	8T-4121	5	WASHER					
	27	120-5176	1	SUPPORT AS					
B	28	087-3908	4	SHIM (T=1.00mm)					
B		087-3909	4	SHIM (T=2.00mm)					
	29	121-5056	1	SHEET AS					
	30	121-5057	1	LINER					
	31	7Y-2854	2	SPACER					
	32	7Y-2853	2	SPACER					
	33	7X-2548	2	BOLT (L=16mm)					
	34	122-3980	1	ROD					
	35	122-3979	1	BAND					
	36	122-4093	1	SHEET					
	37	122-3944	1	SHEET AS					
	38	8T-4171	6	BOLT (L=12mm)					
	39	8T-4137	2	BOLT (L=20mm)					
	40	3B-4618	3	COTTER					

B—USE AS REQUIRED

Y—SEE SEPARATE ILLUSTRATION

H65264E 12

117-4266 HOOD & GUARD GP (2/3)

S/N 3MR 04979-Up, 4MR 00716-Up

117-4314-Page125,117-4311-Page125.01,117-4308-Page126

FRAME AND BODY

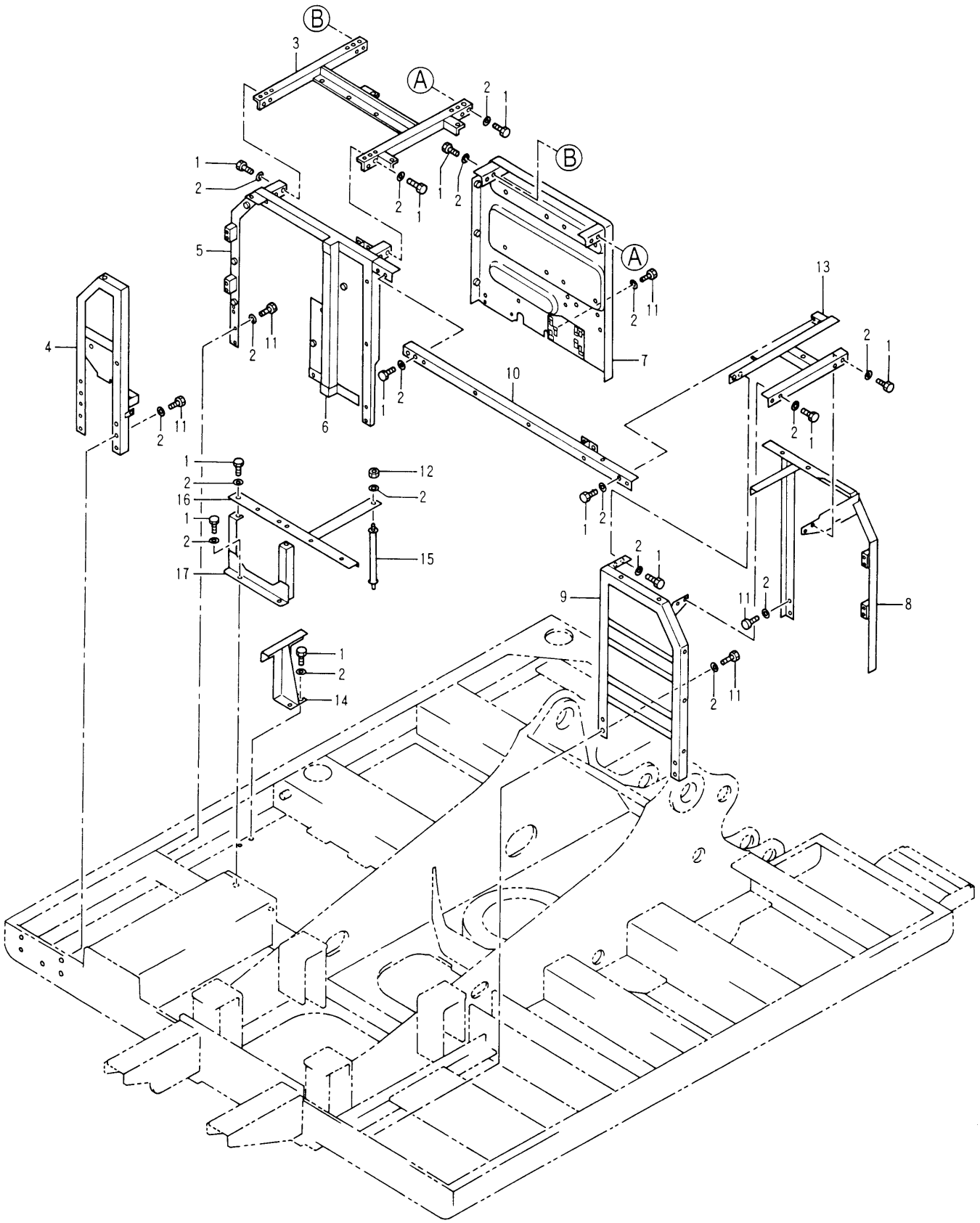

H65266E 12

117-4266 HOOD & GUARD GP (3/3)
S/N 3MR 04979-Up, 4MR 00716-Up

FRAME AND BODY

NOTE	No.	PART No.	QTY	PART NAME	NOTE	No.	PART No.	QTY	PART NAME
	1	8T-4192	26	BOLT (L=25mm)					
	2	5P-1076	48	WASHER					
	3	117-4330	1	SUPPORT AS					
	4	154-0451	1	SUPPORT AS					
	5	117-4332	1	SUPPORT AS					
	6	6I-6167	1	LINER					
	7	116-1658	1	SUPPORT AS					
	8	117-4327	1	SUPPORT AS					
	9	117-4319	1	SUPPORT AS					
	10	117-4336	1	SUPPORT AS					
	11	8T-4139	21	BOLT (L=30mm)					
	12	8T-4244	1	NUT					
	13	135-7550	1	SUPPORT AS					
	14	135-7510	1	SUPPORT AS					
	15	122-3958	1	SUPPORT AS					
	16	122-3948	1	SUPPORT AS					
	17	122-3951	1	SUPPORT AS					

H65266E 12

117-4266 HOOD & GUARD GP (3/3)

S/N 3MR 04979-Up, 4MR 00716-Up

FRAME AND BODY

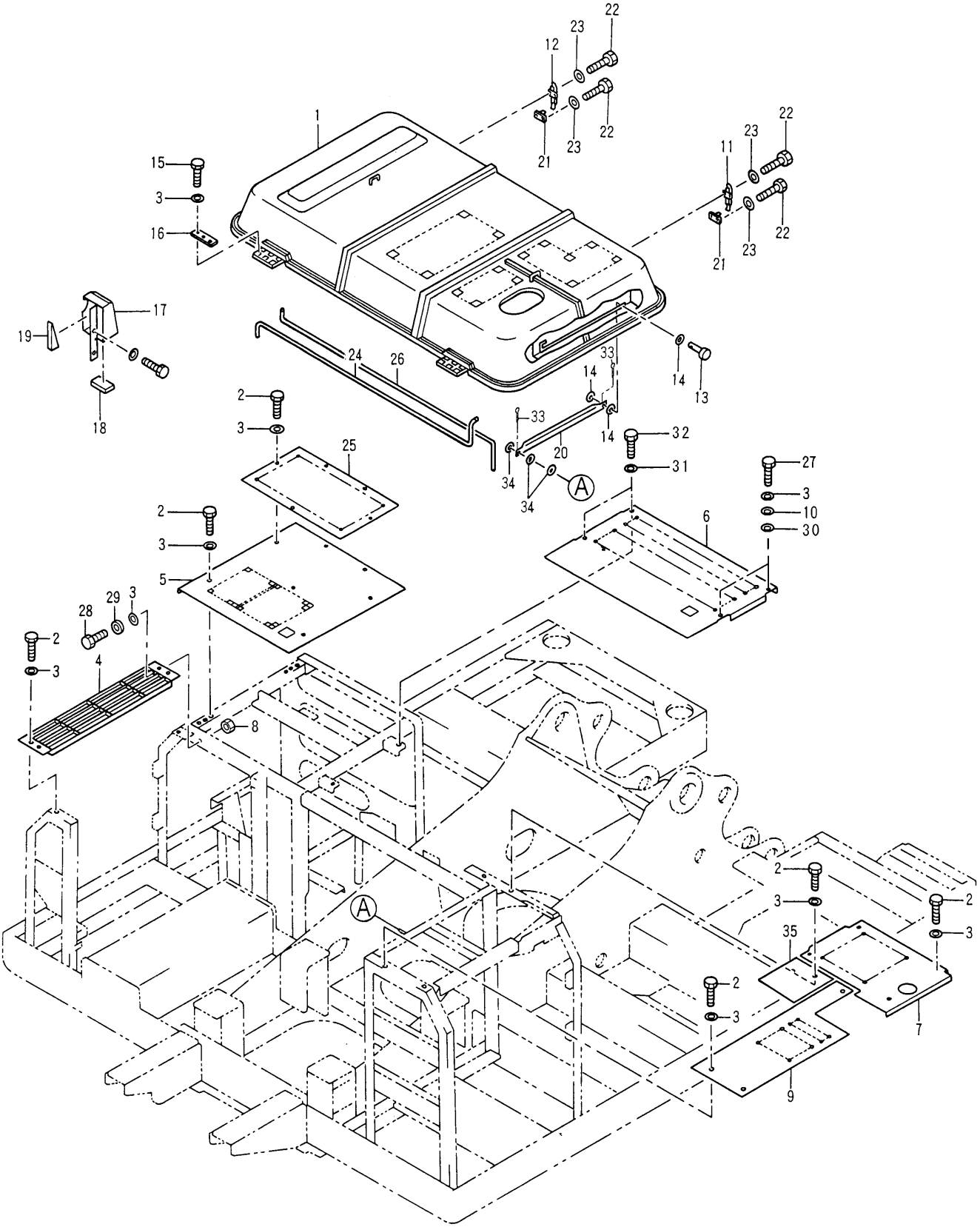

134-6197 HOOD & GUARD GP (1/3)

S/N 3MR 1-(D96.11), 4MR 1-(D96.11)
Part of 126-3796-Page35
135-7567-Page124.01
An Attachment

FRAME AND BODY

NOTE	No.	PART No.	QTY	PART NAME	NOTE	No.	PART No.	QTY	PART NAME
Y	1	135-7567	1	HOOD GP					
	2	8T-4192	19	BOLT (L=25mm)					
	3	5P-1076	51	WASHER					
	4	135-7505	1	SUPPORT AS					
	5	117-4290	1	COVER AS					
	6	117-4292	1	COVER AS					
	7	117-4295	1	SHEET					
	8	8T-4133	4	NUT					
	9	117-4297	1	SHEET					
	10	099-1426	2	SPACER					
	11	4I-0117	1	FASTENER					
	12	1R-9958	1	FASTENER					
	13	095-1321	1	PIN					
	14	8T-4121	3	WASHER					
	15	8T-4183	6	BOLT (L=40mm)					
	16	114-6285	2	BAR					
	17	134-6192	1	COVER AS					
	18	129-3416	1	LINER					
	19	129-3417	1	LINER					
	20	129-3422	1	SUPPORT					
	21	4I-0118	2	HOOK					
	22	8T-4200	8	BOLT (L=16mm)					
	23	8T-4224	8	WASHER					
	24	121-4977	1	SPRING					
	25	129-3346	1	SHEET					
	26	131-7603	1	SPRING					
	27	8T-4139	2	BOLT (L=30mm)					
	28	8T-4136	4	BOLT (L=25mm)					
	29	5I-8748	4	SPACER					
	30	7Y-2854	2	SPACER					
	31	7X-0618	2	WASHER					
	32	8T-4179	2	BOLT (L=20mm)					
	33	3B-4618	2	COTTER					
	34	8T-4223	3	WASHER					
	35	117-4355	1	SHEET					

Y—SEE SEPARATE ILLUSTRATION

H65268E 03

134-6197 HOOD & GUARD GP (1/3)

S/N 3MR 1-(D96.11), 4MR 1-(D96.11)
Part of 126-3796-Page35
135-7567-Page124.01
An Attachment

FRAME AND BODY

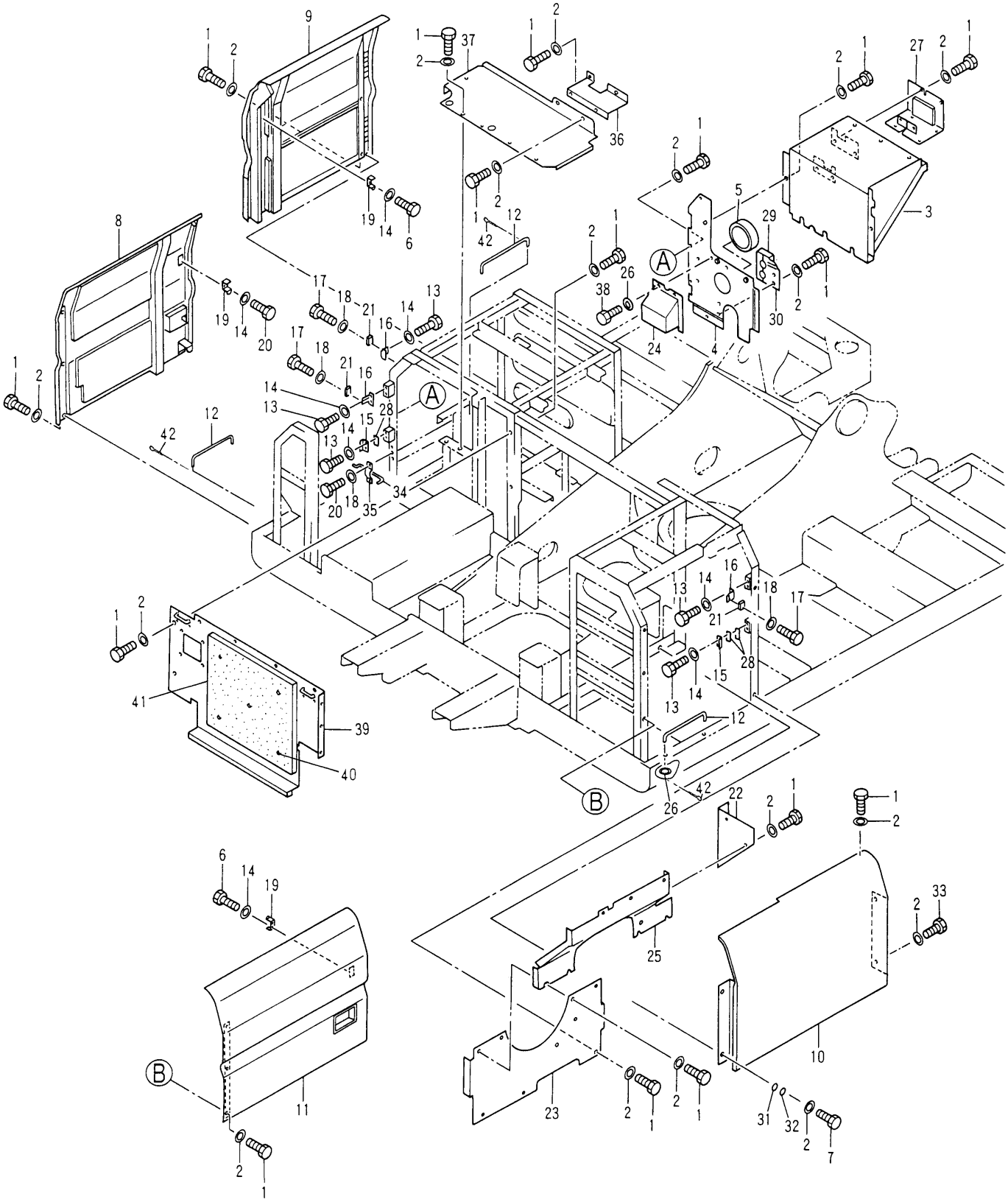

134-6197 HOOD & GUARD GP (2/3)

S/N 3MR 1-(D96.11), 4MR 1-(D96.11)
Part of 126-3796-Page35
117-4314-Page125,117-4311-Page125.01,117-4308-Page126
An Attachment

FRAME AND BODY

NOTE	No.	PART No.	QTY	PART NAME	NOTE	No.	PART No.	QTY	PART NAME
	1	8T-4192	60	BOLT (L=25mm)					
	2	5P-1076	64	WASHER					
	3	135-7594	1	COVER AS					
	4	137-2227	1	SHEET AS					
	5	114-6260	1	LINER					
	6	8T-4171	6	BOLT (L=12mm)					
	7	8T-4139	60	BOLT (L=30mm)					
Y	8	117-4308	1	DOOR GP					
Y	9	117-4311	1	DOOR GP					
	10	117-4317	1	DOOR AS					
Y	11	117-4314	1	DOOR GP					
	12	122-4049	3	ROD					
	13	8T-4138	10	BOLT (L=20mm)					
	14	5P-4115	16	WASHER					
	15	4I-0232	2	STRIKER					
	16	7I-1418	3	SUPPORT AS					
	17	8T-0269	6	BOLT (L=20mm)					
	18	9X-8256	8	WASHER					
	19	4I-8019	3	SUPPORT					
	20	5C-9553	2	BOLT (L=16mm)					
	21	6I-6033	3	STOPPER					
	22	117-4307	1	SHEET					
	23	117-4300	1	SHEET AS					
	24	137-2219	1	COVER AS					
	25	135-7551	1	SHEET AS					
	26	8T-4121	5	WASHER					
	27	120-5176	1	SUPPORT AS					
B	28	087-3908	4	SHIM (T=1.00mm)					
B		087-3909	4	SHIM (T=2.00mm)					
	29	121-5056	1	SHEET AS					
	30	121-5057	1	LINER					
	31	7Y-2854	2	SPACER					
	32	7Y-2853	2	SPACER					
	33	7X-2548	2	BOLT (L=16mm)					
	34	122-3980	1	ROD					
	35	122-3979	1	BAND					
	36	122-4093	1	SHEET					
	37	122-3944	1	SHEET AS					
	38	8T-4137	2	BOLT (L=20mm)					
	39	117-4304	1	SHEET AS					
	40	6P-2216	5	CAP					
	41	7Y-2680	1	LINER					
	42	3B-4618	3	COTTER					

B—USE AS REQUIRED

Y—SEE SEPARATE ILLUSTRATION

H65270E 03

134-6197 HOOD & GUARD GP (2/3)

S/N 3MR 1-(D96.11), 4MR 1-(D96.11)

Part of 126-3796-Page35

117-4314-Page125,117-4311-Page125.01,117-4308-Page126

An Attachment

FRAME AND BODY

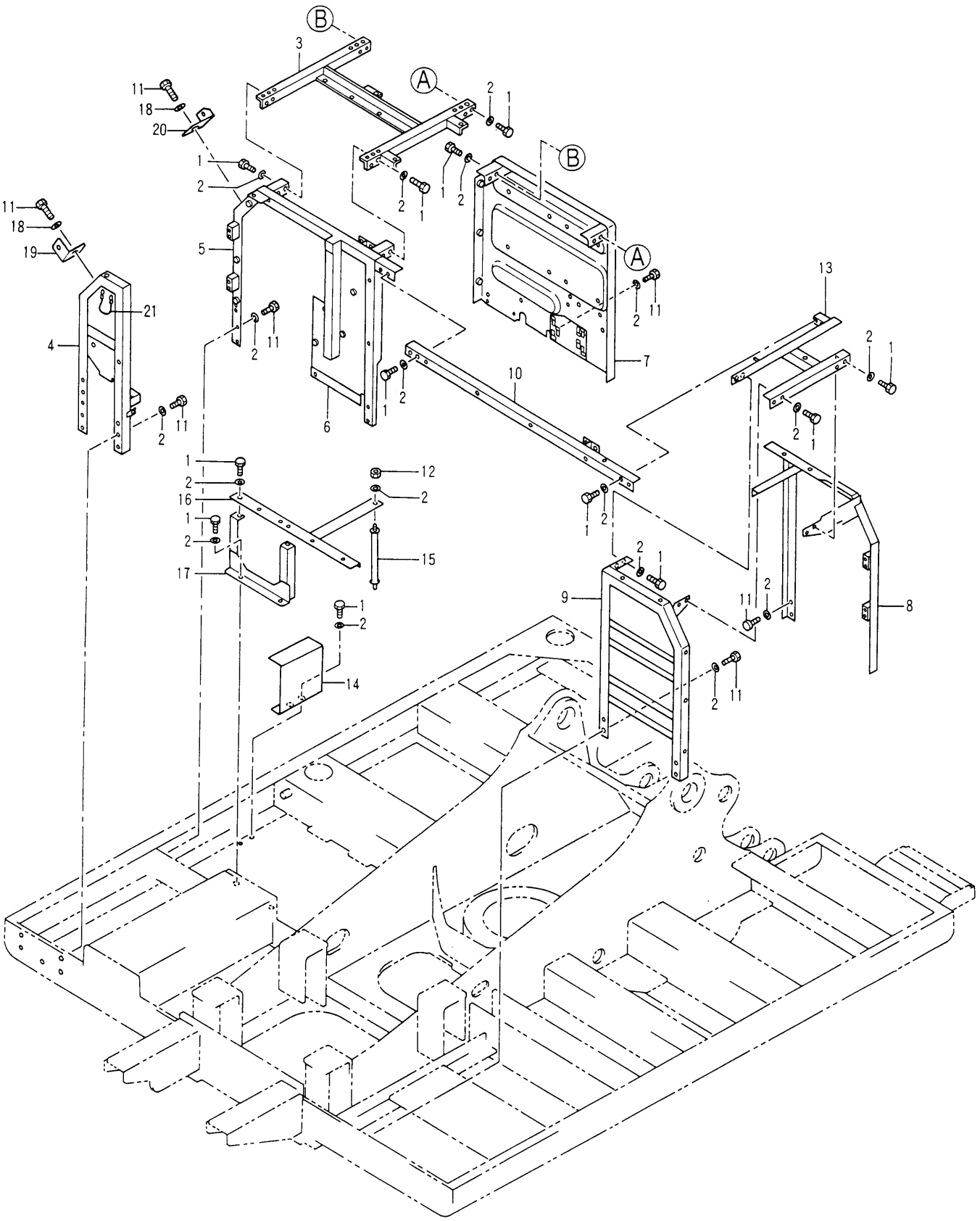

134-6197 HOOD & GUARD GP (3/3)
S/N 3MR 1-(D96.11), 4MR 1-(D96.11)
Part of 126-3796-Page35
An Attachment

FRAME AND BODY

NOTE	No.	PART No.	QTY	PART NAME	NOTE	No.	PART No.	QTY	PART NAME
	1	8T-4192	26	BOLT (L=25mm)					
	2	5P-1076	81	WASHER					
	3	117-4330	1	SUPPORT AS					
	4	135-7503	1	SUPPORT AS					
	5	135-7500	1	SUPPORT AS					
	6	6I-6167	1	LINER					
	7	116-1658	1	SUPPORT AS					
	8	117-4327	1	SUPPORT AS					
	9	117-4319	1	SUPPORT AS					
	10	117-4336	1	SUPPORT AS					
	11	8T-4139	2	BOLT (L=30mm)					
	12	8T-4244	1	NUT					
	13	135-7550	1	SUPPORT AS					
	14	135-7510	1	SUPPORT AS					
	15	122-3958	1	SUPPORT AS					
	16	122-3948	1	SUPPORT AS					
	17	122-3951	1	SUPPORT AS					
	18	8T-4223	2	WASHER					
	19	122-4106	1	ANGLE					
	20	122-4110	1	ANGLE					
	21	131-7611	2	CABLE AS					

H65272E 03

134-6197 HOOD & GUARD GP (3/3)

S/N 3MR 1-(D96.11), 4MR 1-(D96.11)

Part of 126-3796-Page35

An Attachment

FRAME AND BODY

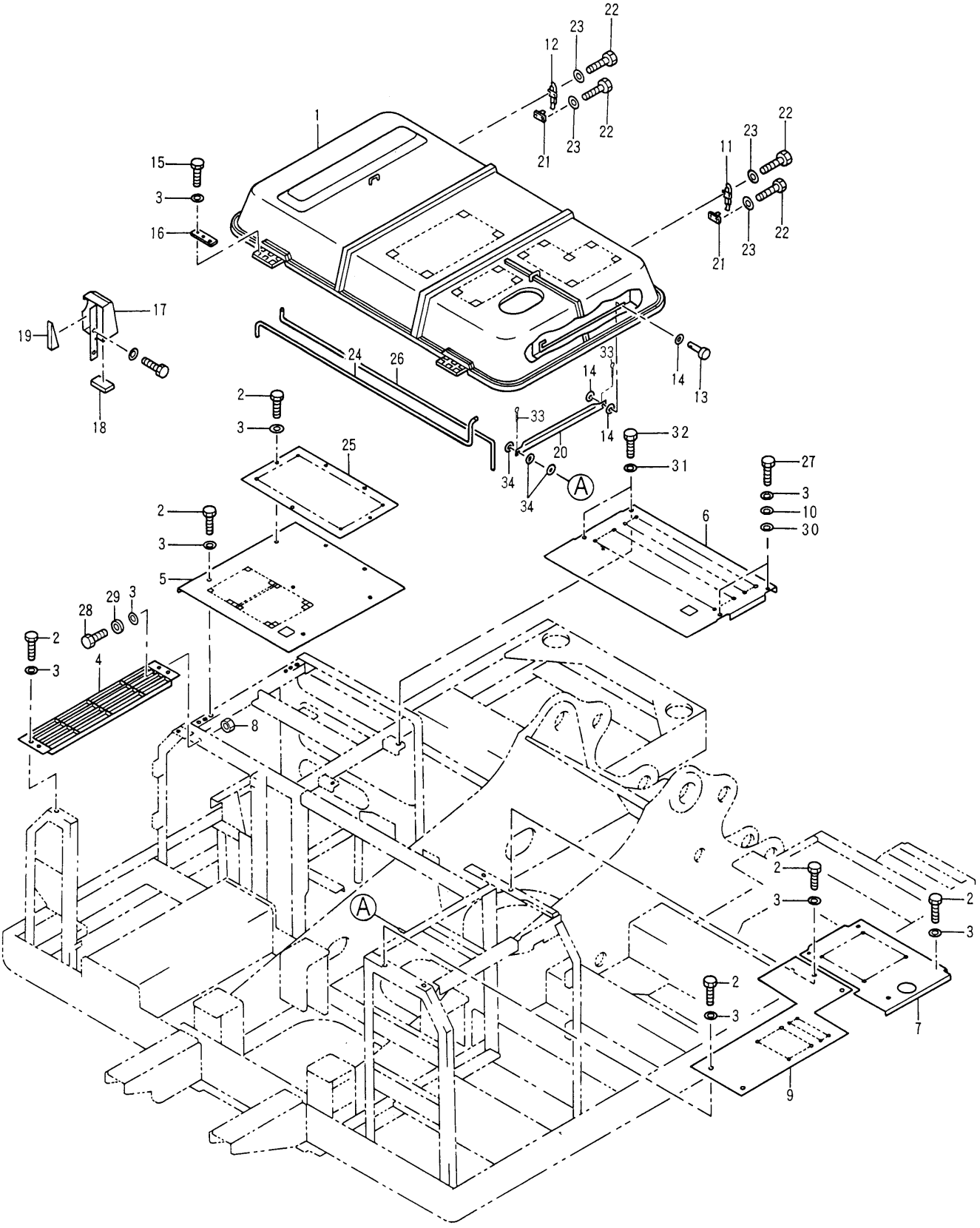

134-6197 HOOD & GUARD GP (1/3)

S/N 3MR (D96.12)-Up, 4MR (D96.12)-Up
Part of 126-3796-Page35
135-7567-Page124.01
An Attachment

FRAME AND BODY

NOTE	No.	PART No.	QTY	PART NAME	NOTE	No.	PART No.	QTY	PART NAME
Y	1	135-7567	1	HOOD GP					
	2	8T-4192	19	BOLT (L=25mm)					
	3	5P-1076	51	WASHER					
	4	135-7505	1	SUPPORT AS					
	5	117-4290	1	COVER AS					
	6	117-4292	1	COVER AS					
	7	117-4295	1	SHEET					
	8	8T-4133	4	NUT					
	9	117-4297	1	SHEET					
	10	099-1426	2	SPACER					
	11	4I-0117	1	FASTENER					
	12	1R-9958	1	FASTENER					
	13	095-1321	1	PIN					
	14	8T-4121	3	WASHER					
	15	8T-4183	6	BOLT (L=40mm)					
	16	114-6285	2	BAR					
	17	134-6192	1	COVER AS					
	18	129-3416	1	LINER					
	19	129-3417	1	LINER					
	20	129-3422	1	SUPPORT					
	21	4I-0118	2	HOOK					
	22	8T-4200	8	BOLT (L=16mm)					
	23	8T-4224	8	WASHER					
	24	121-4977	1	SPRING					
	25	129-3346	1	SHEET					
	26	131-7603	1	SPRING					
	27	8T-4139	2	BOLT (L=30mm)					
	28	8T-4136	4	BOLT (L=25mm)					
	29	5I-8748	4	SPACER					
	30	7Y-2854	2	SPACER					
	31	7X-0618	2	WASHER					
	32	8T-4179	2	BOLT (L=20mm)					
	33	3B-4618	2	COTTER					
	34	8T-4223	3	WASHER					

Y—SEE SEPARATE ILLUSTRATION

H65274E 08

134-6197 HOOD & GUARD GP (1/3)

S/N 3MR (D96.12)-Up, 4MR (D96.12)-Up
Part of 126-3796-Page35
135-7567-Page124.01
An Attachment

FRAME AND BODY

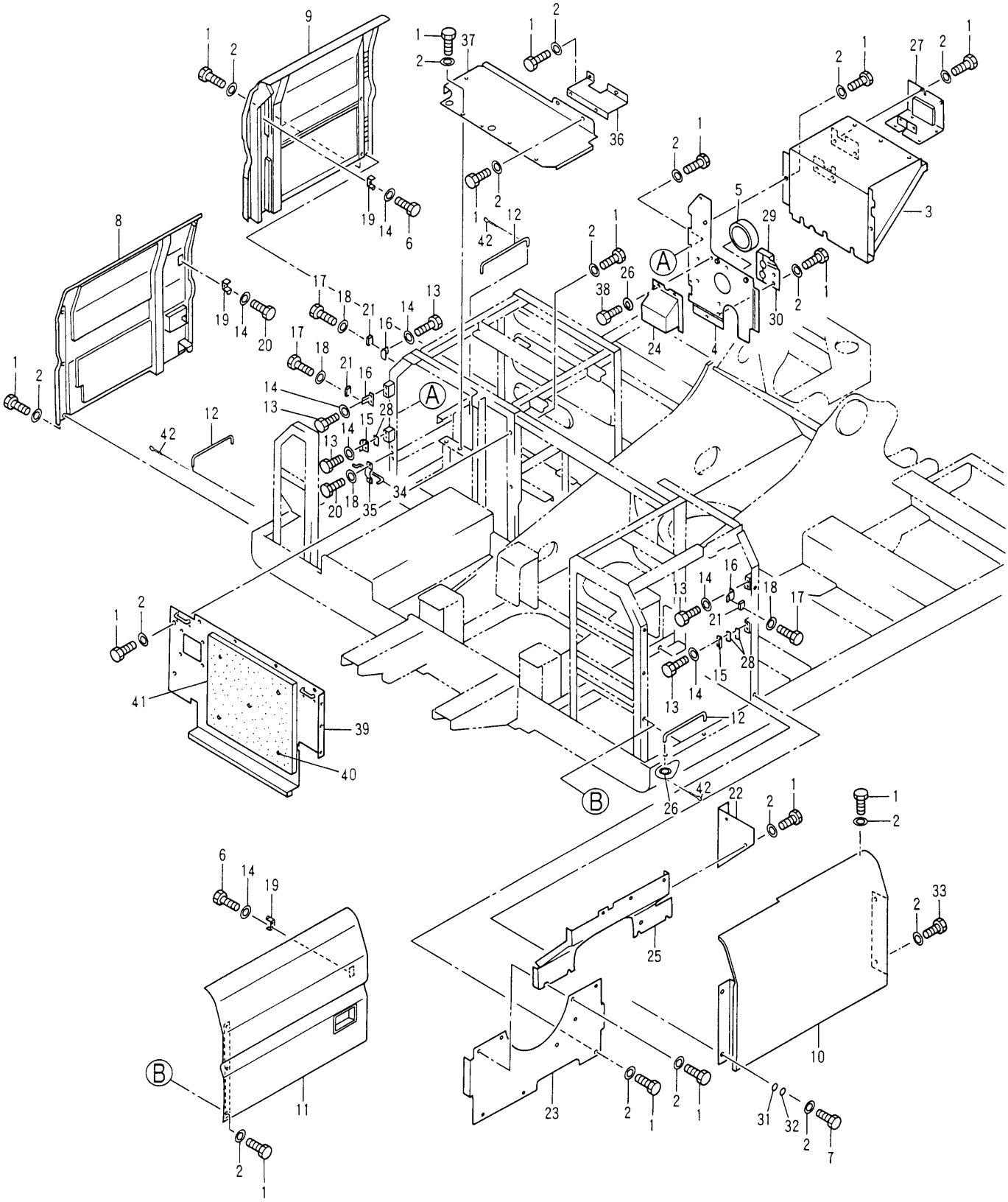

134-6197 HOOD & GUARD GP (2/3)

S/N 3MR (D96.12)-Up, 4MR (D96.12)-Up
Part of 126-3796-Page35
117-4314-Page125,117-4311-Page125.01,117-4308-Page126
An Attachment

FRAME AND BODY

NOTE	No.	PART No.	QTY	PART NAME	NOTE	No.	PART No.	QTY	PART NAME
	1	8T-4192	60	BOLT (L=25mm)					
	2	5P-1076	64	WASHER					
	3	135-7594	1	COVER AS					
	4	137-2227	1	SHEET AS					
	5	114-6260	1	LINER					
	6	8T-4171	6	BOLT (L=12mm)					
	7	8T-4139	60	BOLT (L=30mm)					
Y	8	117-4308	1	DOOR GP					
Y	9	117-4311	1	DOOR GP					
	10	117-4317	1	DOOR AS					
Y	11	117-4314	1	DOOR GP					
	12	122-4049	3	ROD					
	13	8T-4138	10	BOLT (L=20mm)					
	14	5P-4115	16	WASHER					
	15	4I-0232	2	STRIKER					
	16	7I-1418	3	SUPPORT AS					
	17	8T-0269	6	BOLT (L=20mm)					
	18	9X-8256	8	WASHER					
	19	4I-8019	3	SUPPORT					
	20	5C-9553	2	BOLT (L=16mm)					
	21	6I-6033	3	STOPPER					
	22	117-4307	1	SHEET					
	23	117-4300	1	SHEET AS					
	24	137-2219	1	COVER AS					
	25	135-7551	1	SHEET AS					
	26	8T-4121	5	WASHER					
	27	120-5176	1	SUPPORT AS					
B	28	087-3908	4	SHIM (T=1.00mm)					
B		087-3909	4	SHIM (T=2.00mm)					
	29	121-5056	1	SHEET AS					
	30	121-5057	1	LINER					
	31	7Y-2854	2	SPACER					
	32	7Y-2853	2	SPACER					
	33	7X-2548	2	BOLT (L=16mm)					
	34	122-3980	1	ROD					
	35	122-3979	1	BAND					
	36	122-4093	1	SHEET					
	37	122-3944	1	SHEET AS					
	38	8T-4137	2	BOLT (L=20mm)					
	39	117-4304	1	SHEET AS					
	40	6P-2216	5	CAP					
	41	7Y-2680	1	LINER					
	42	3B-4618	3	COTTER					

B—USE AS REQUIRED

Y—SEE SEPARATE ILLUSTRATION

H65276E 08

134-6197 HOOD & GUARD GP (2/3)

S/N 3MR (D96.12)-Up, 4MR (D96.12)-Up

Part of 126-3796-Page35

117-4314-Page125,117-4311-Page125.01,117-4308-Page126

An Attachment

FRAME AND BODY

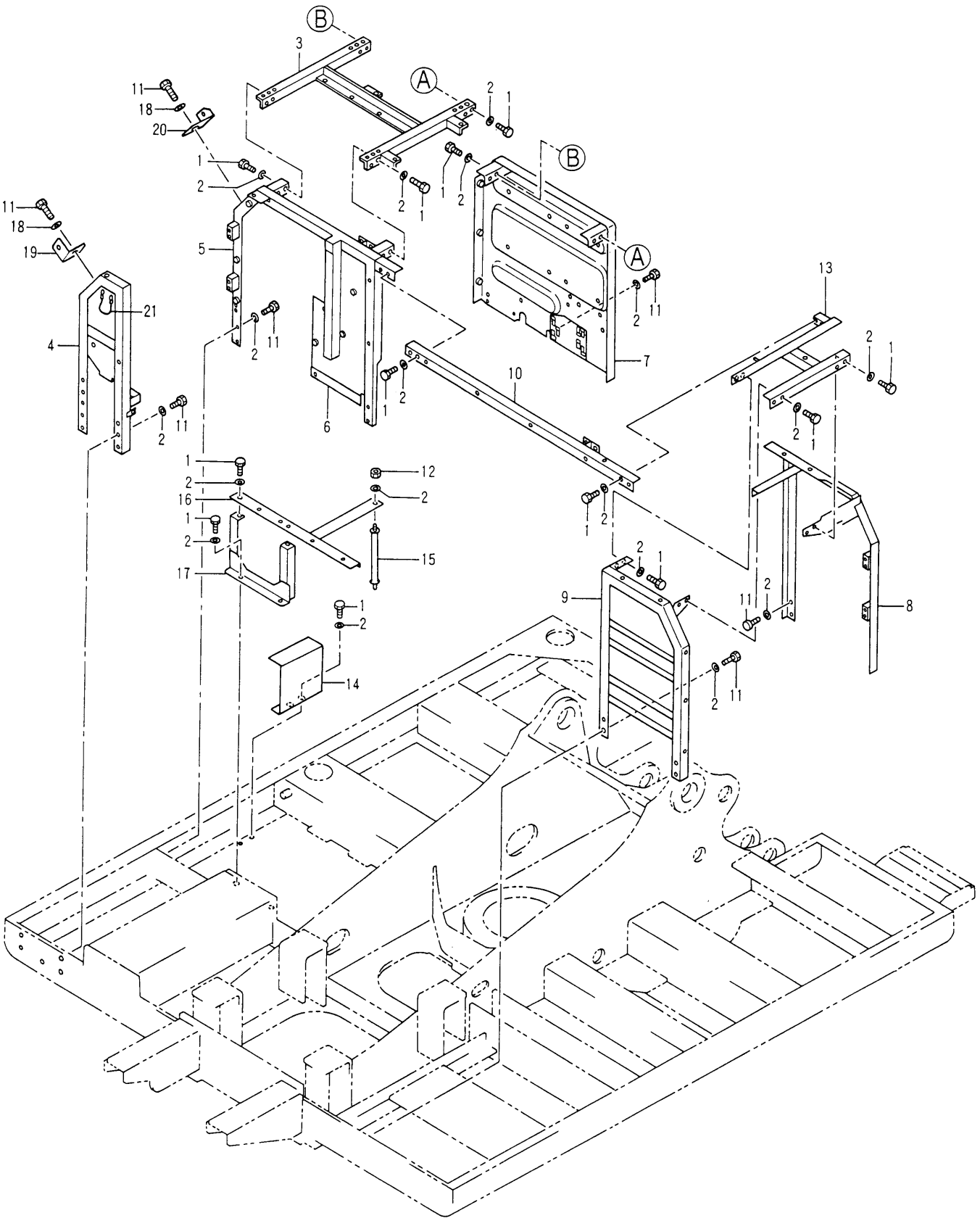

134-6197 HOOD & GUARD GP (3/3)
S/N 3MR (D96.12)-Up, 4MR (D96.12)-Up
Part of 126-3796-Page35
An Attachment

FRAME AND BODY

NOTE	No.	PART No.	QTY	PART NAME	NOTE	No.	PART No.	QTY	PART NAME
	1	8T-4192	26	BOLT (L=25mm)					
	2	5P-1076	81	WASHER					
	3	117-4330	1	SUPPORT AS					
	4	135-7503	1	SUPPORT AS					
	5	135-7500	1	SUPPORT AS					
	6	6I-6167	1	LINER					
	7	116-1658	1	SUPPORT AS					
	8	117-4327	1	SUPPORT AS					
	9	117-4319	1	SUPPORT AS					
	10	117-4336	1	SUPPORT AS					
	11	8T-4139	2	BOLT (L=30mm)					
	12	8T-4244	1	NUT					
	13	135-7550	1	SUPPORT AS					
	14	135-7510	1	SUPPORT AS					
	15	122-3958	1	SUPPORT AS					
	16	122-3948	1	SUPPORT AS					
	17	122-3951	1	SUPPORT AS					
	18	8T-4223	2	WASHER					
	19	122-4106	1	ANGLE					
	20	122-4110	1	ANGLE					
	21	131-7611	2	CABLE AS					

H65278E 08

134-6197 HOOD & GUARD GP (3/3)

S/N 3MR (D96.12)-Up, 4MR (D96.12)-Up

Part of 126-3796-Page35

An Attachment

FRAME AND BODY

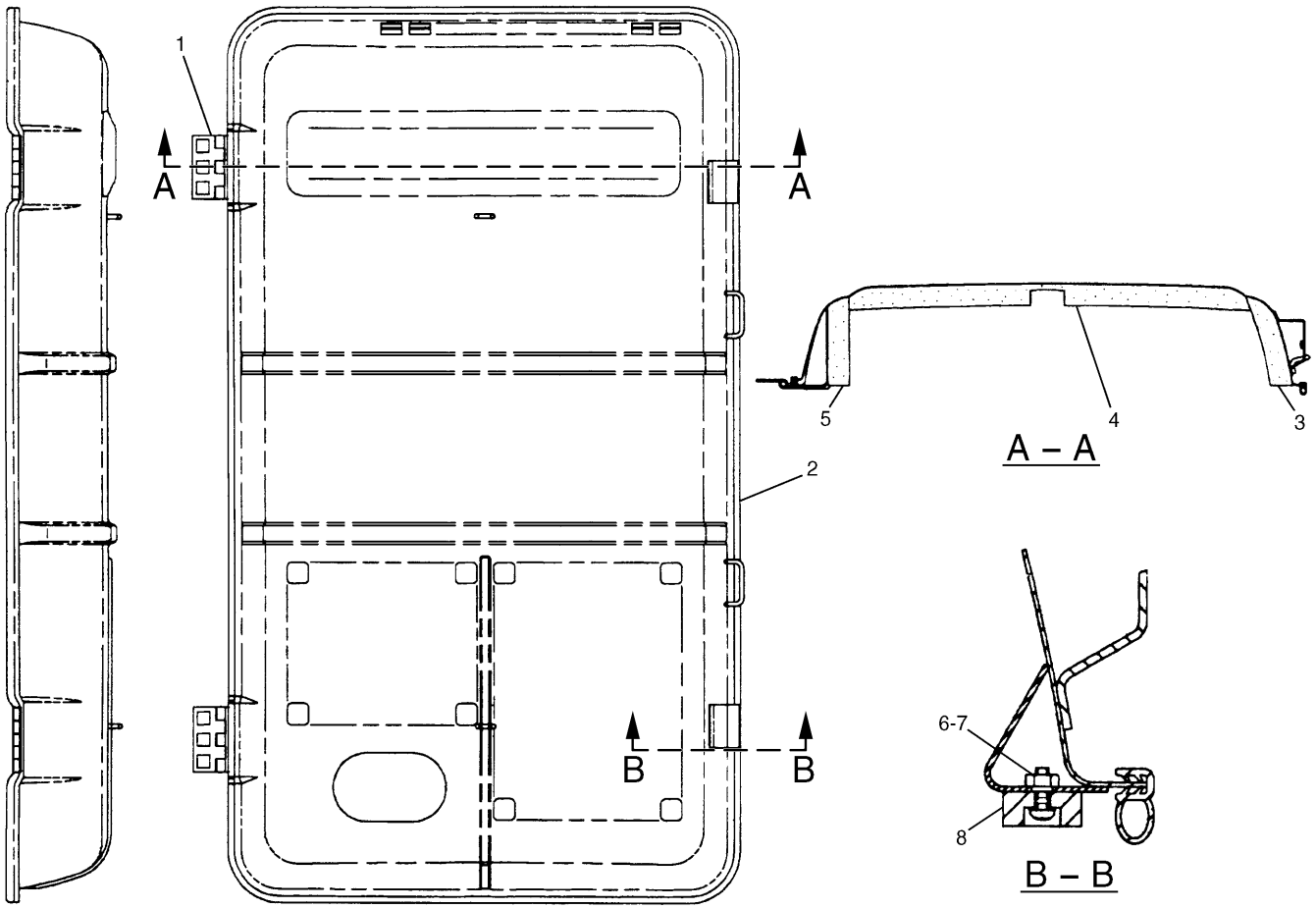

NOTE	No.	PART No.	QTY	PART NAME	NOTE	No.	PART No.	QTY	PART NAME
	1	114-6289	2	HINGE					
D	2	101-9848		SEAL…(5.9m)					
	3	120-5234	1	LINER					
	4	120-5235	1	LINER					
	5	120-5236	1	LINER					
	6	8T-6693	4	SCREW					
	7	8T-0328	4	WASHER					
	8	096-4129	2	CUSHION					

D—ORDER BY THE METER

H52976E 03

120-5228 HOOD GP-ENGINE

Part of 117-4266-Page119

FRAME AND BODY

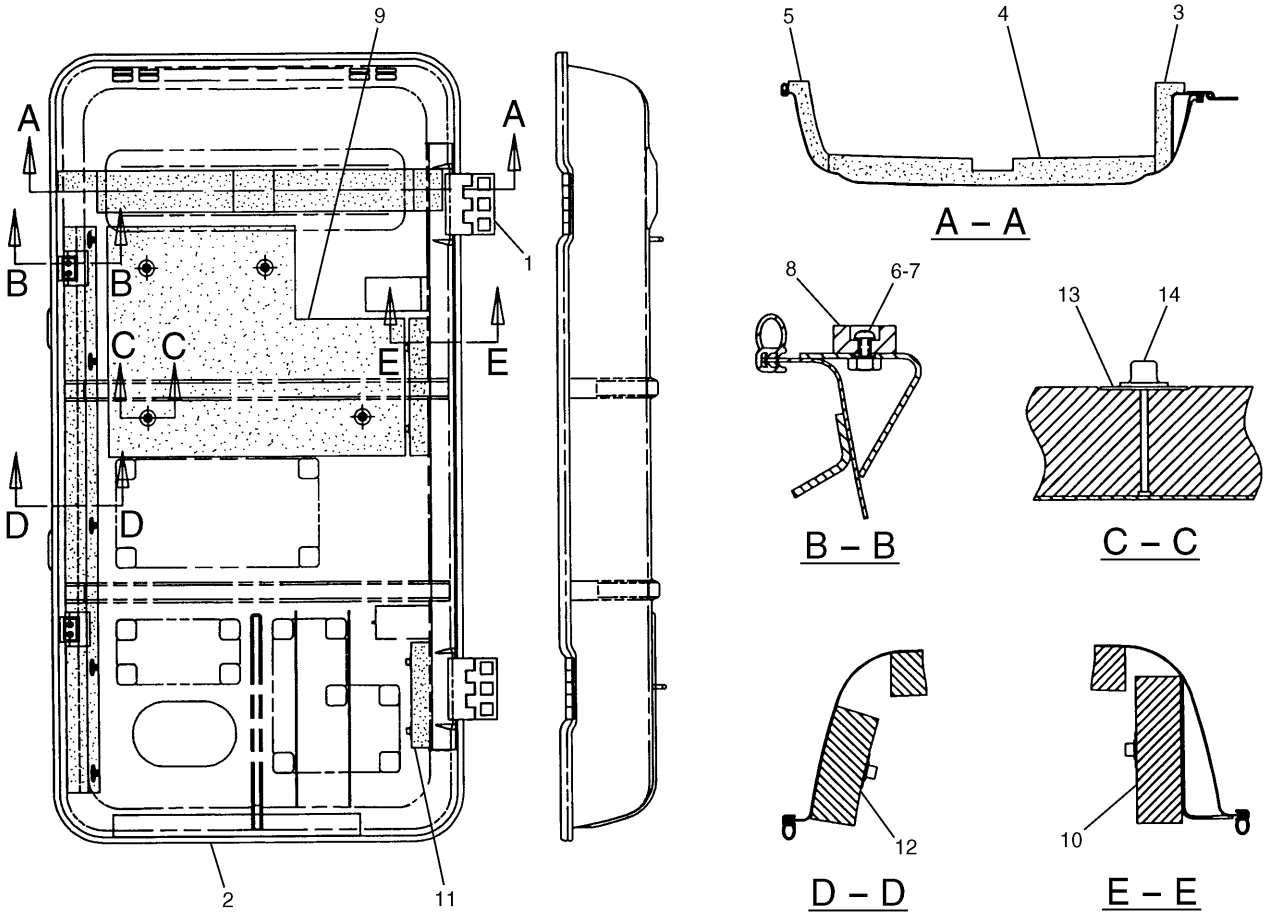

NOTE	No.	PART No.	QTY	PART NAME	NOTE	No.	PART No.	QTY	PART NAME
	1	114-6289	2	HINGE					
D	2	101-9848		SEAL…(5.9m)					
	3	120-5234	1	LINER					
	4	120-5235	1	LINER					
	5	120-5236	1	LINER					
	6	8T-6693	4	SCREW					
	7	8T-0328	4	WASHER					
	8	096-4129	2	CUSHION					
	9	135-7589	1	LINER					
	10	135-7590	1	LINER					
	11	131-7481	1	LINER					
	12	135-7591	1	LINER					
	13	4I-7924	13	WASHER					
	14	6P-2216	13	CAP					

D—ORDER BY THE METER

H54517E 00

135-7567 HOOD GP-ENGINE

Part of 134-6197-Page123.08
An Attachment

MEMORANDA

FRAME AND BODY

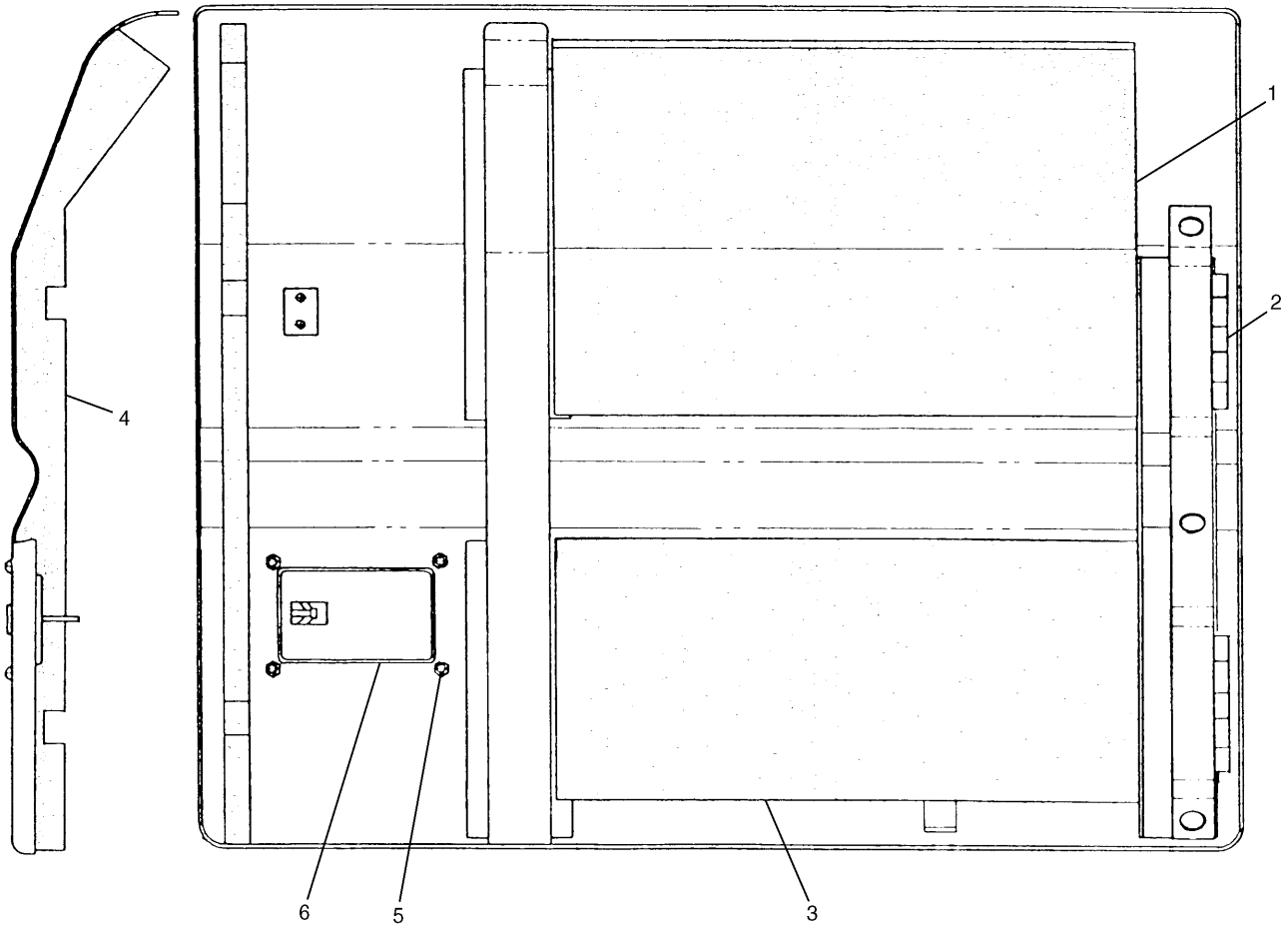

NOTE	No.	PART No.	QTY	PART NAME	NOTE	No.	PART No.	QTY	PART NAME
	1	129-3404	1	LINER					
	2	116-1627	2	HINGE					
	3	129-3405	1	LINER					
	4	129-3358	1	LINER					
	5	099-6418	4	NUT					
	6	142-5542	1	LOCK AS					

H65279E 06

117-4314 DOOR GP-HOOD

Part of 117-4266-Page121,134-6197-Page123.10

FRAME AND BODY

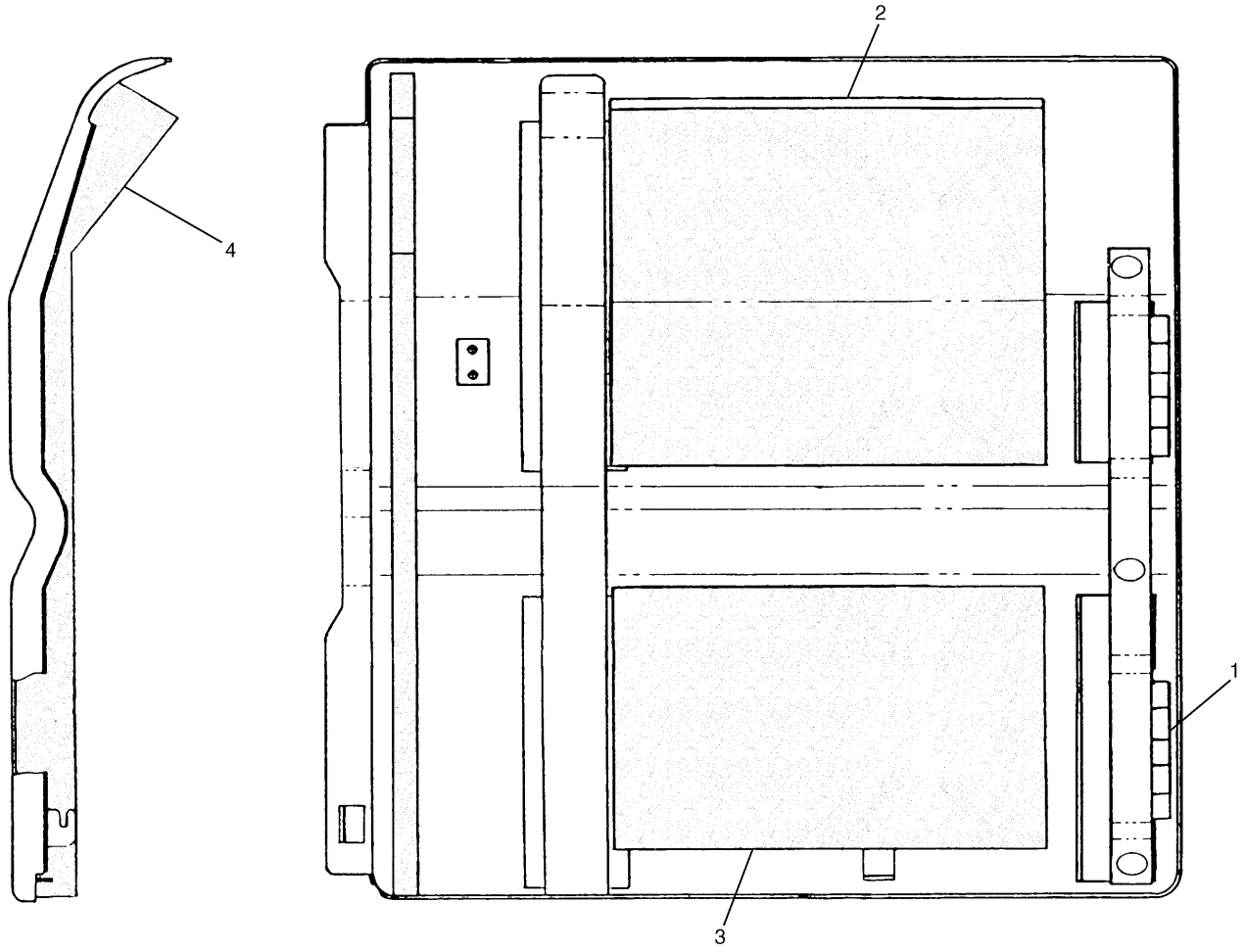

NOTE	No.	PART No.	QTY	PART NAME	NOTE	No.	PART No.	QTY	PART NAME
	1	116-1627	2	HINGE					
	2	103-0468	1	LINER					
	3	103-0469	1	LINER					
	4	117-4356	1	LINER					

H54497E 03

117-4311 DOOR GP-HOOD

Part of 117-4266-Page121,134-6197-Page123.10

MEMORANDA

FRAME AND BODY

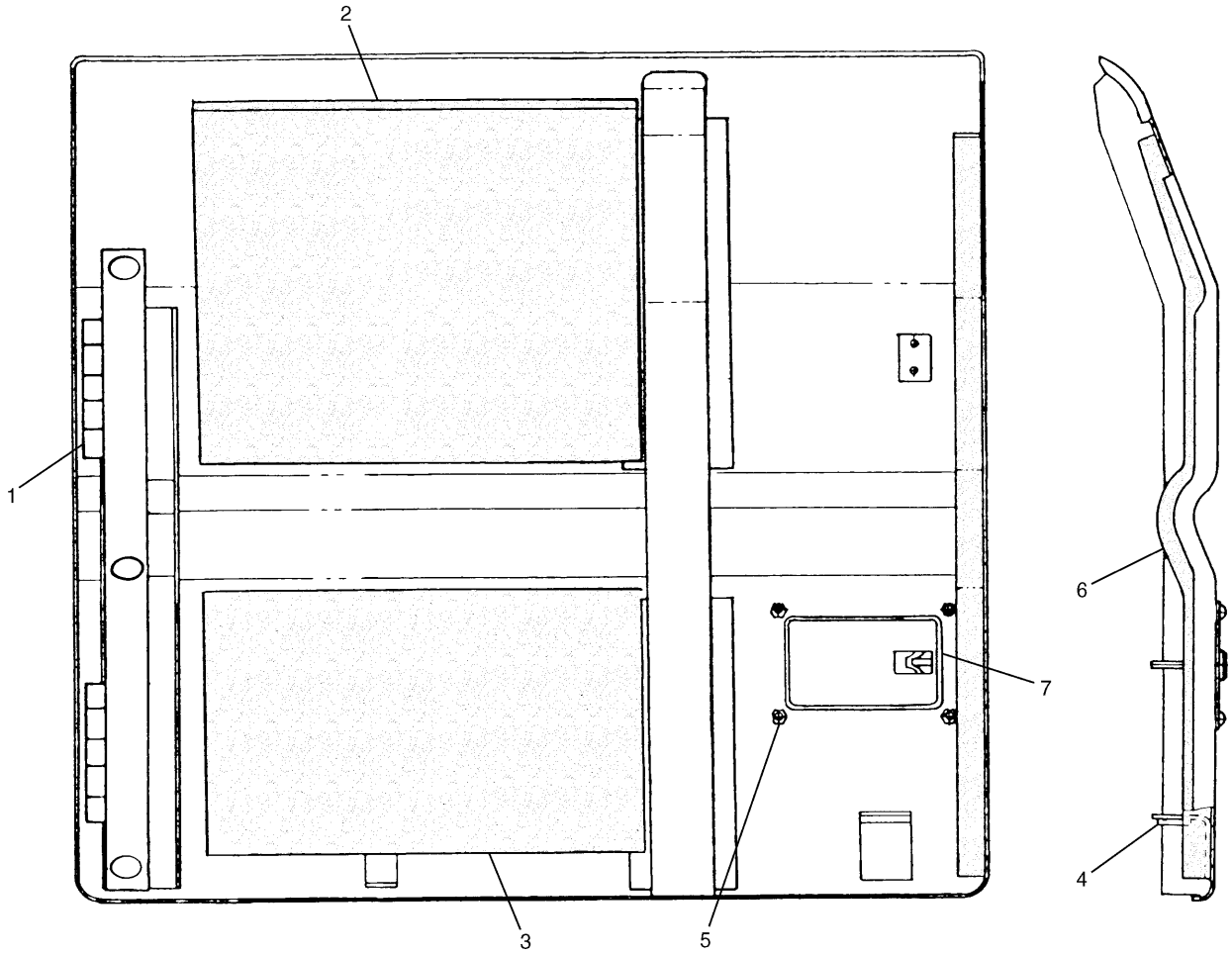

NOTE	No.	PART No.	QTY	PART NAME	NOTE	No.	PART No.	QTY	PART NAME
	1	116-1627	2	HINGE					
	2	103-0468	1	LINER					
	3	103-0469	1	LINER					
	4	122-4101	1	RUBBER					
	5	099-6418	4	NUT					
	6	117-4343	1	LINER					
	7	142-5542	1	LOCK AS					

H65280E 06

117-4308 DOOR GP-HOOD

Part of 117-4266-Page121,134-6197-Page123.10

FRAME AND BODY

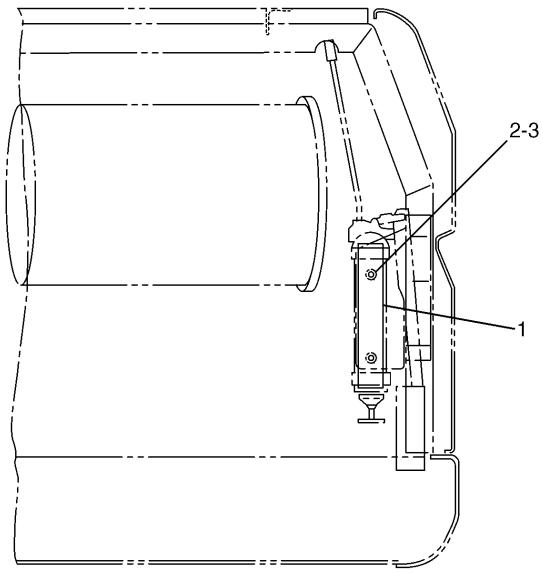

NOTE	No.	PART No.	QTY	PART NAME
	1	4I-8384	1	SUPPORT
	2	8T-4179	2	BOLT (L=20mm)
	3	8T-4223	2	WASHER

H52846E 01

7I-0800 MOUNTING GP-GREASE GUN

Part of 7I-0776-Page430
An Attachment

MEMORANDA

FRAME AND BODY

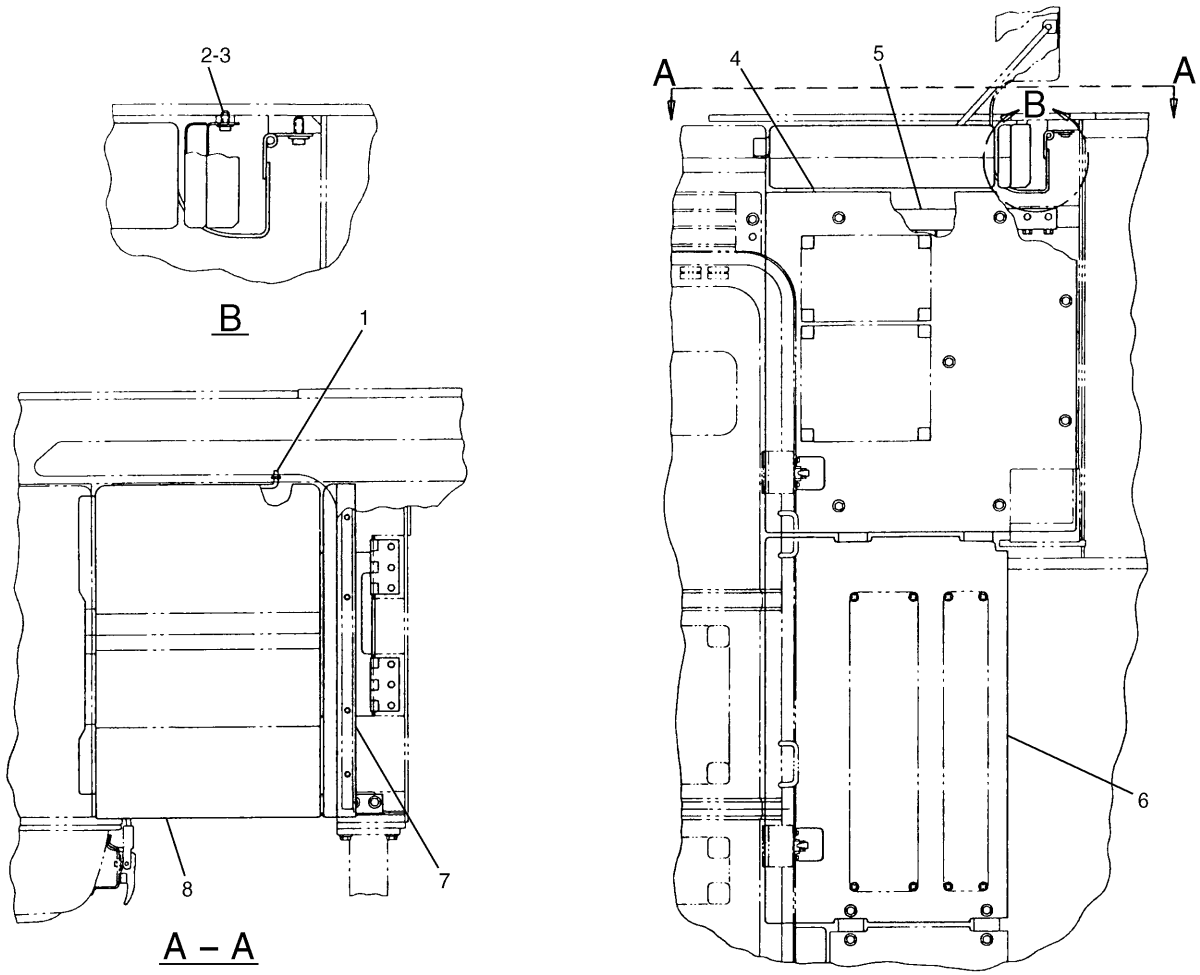

NOTE	No.	PART No.	QTY	PART NAME	NOTE	No.	PART No.	QTY	PART NAME
	1	122-4120	1	ROD					
	2	8T-4136	4	BOLT (L=25mm)					
	3	8T-4121	4	WASHER					
	4	131-7429	1	COVER AS					
	5	131-7431	1	SUPPORT AS					
	6	131-7432	1	COVER AS					
	7	121-4906	1	SUPPORT AS					
Y	8	131-7434	1	DOOR GP					

Y—SEE SEPARATE ILLUSTRATION

H53407E 00

122-4035 HOOD & GUARD GP

Falling Object Guard
Part of 126-3784-Page355
131-7434-Page128
An Attachment

FRAME AND BODY

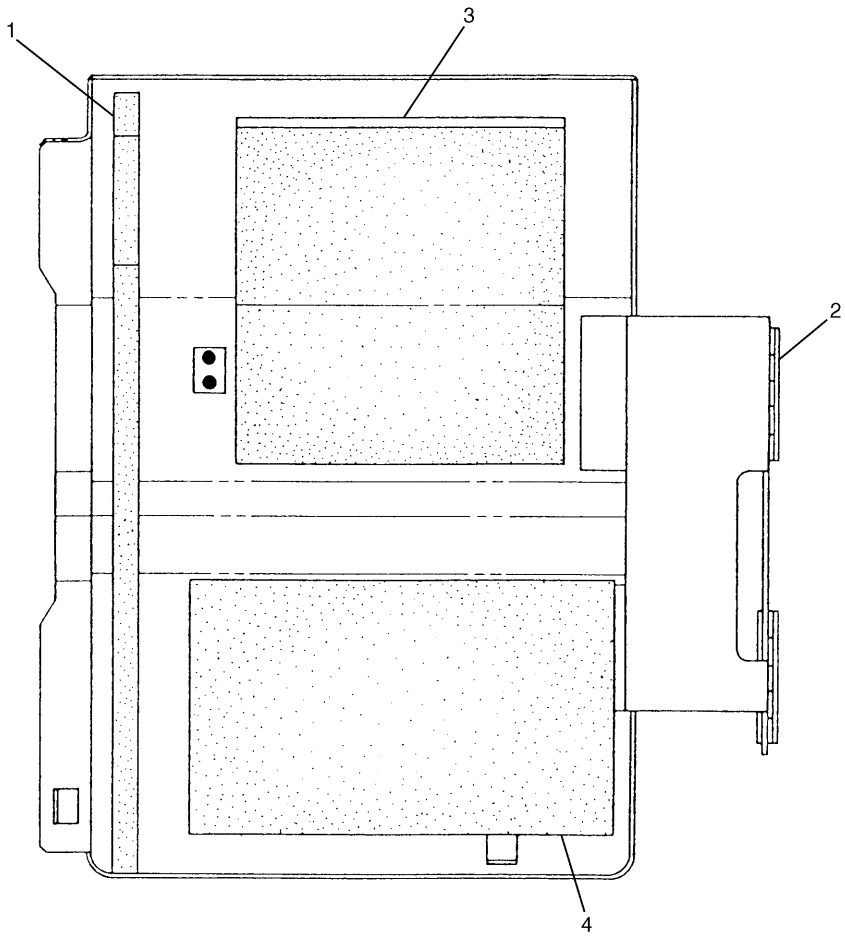

NOTE	No.	PART No.	QTY	PART NAME	NOTE	No.	PART No.	QTY	PART NAME
	1	117-4356	1	LINER					
	2	7Y-2881	2	HINGE					
	3	113-2877	1	LINER					
	4	103-0469	1	LINER					

H58594E 01

131-7434 DOOR GP-HOOD
Part of 122-4035-Page127
An Attachment

FRAME AND BODY

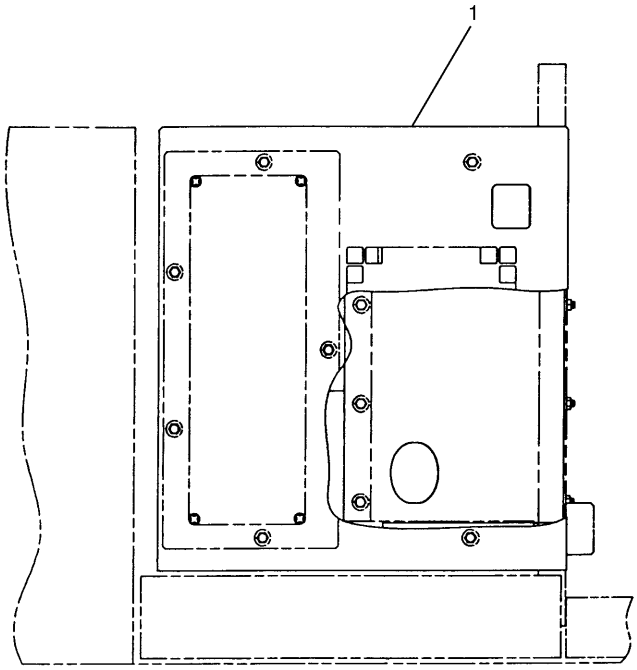

A – A

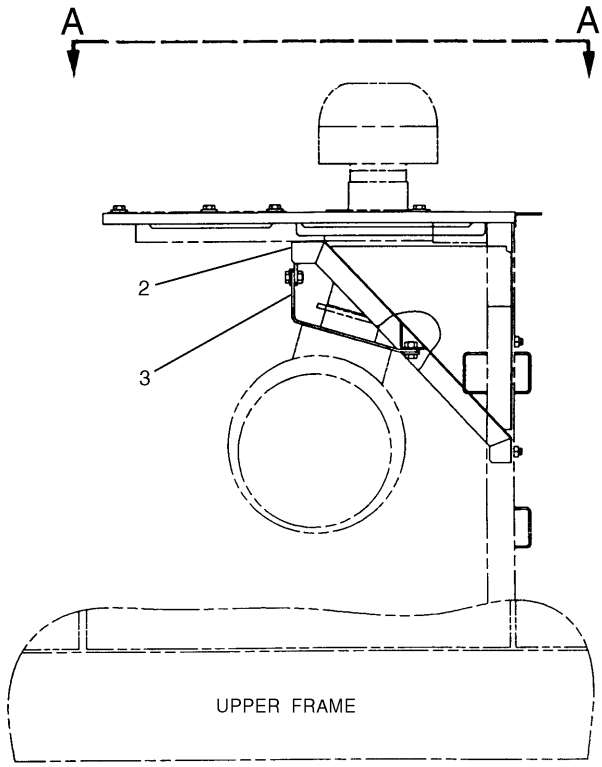

NOTE	No.	PART No.	QTY	PART NAME	NOTE	No.	PART No.	QTY	PART NAME
	1	142-5467	1	COVER AS					
	2	146-0506	1	COVER AS					
	3	146-0558	1	SUPPORT					

H65490E 00

142-5466 HOOD GP
Part of 142-5465-Page40.03
An Attachment

FRAME AND BODY

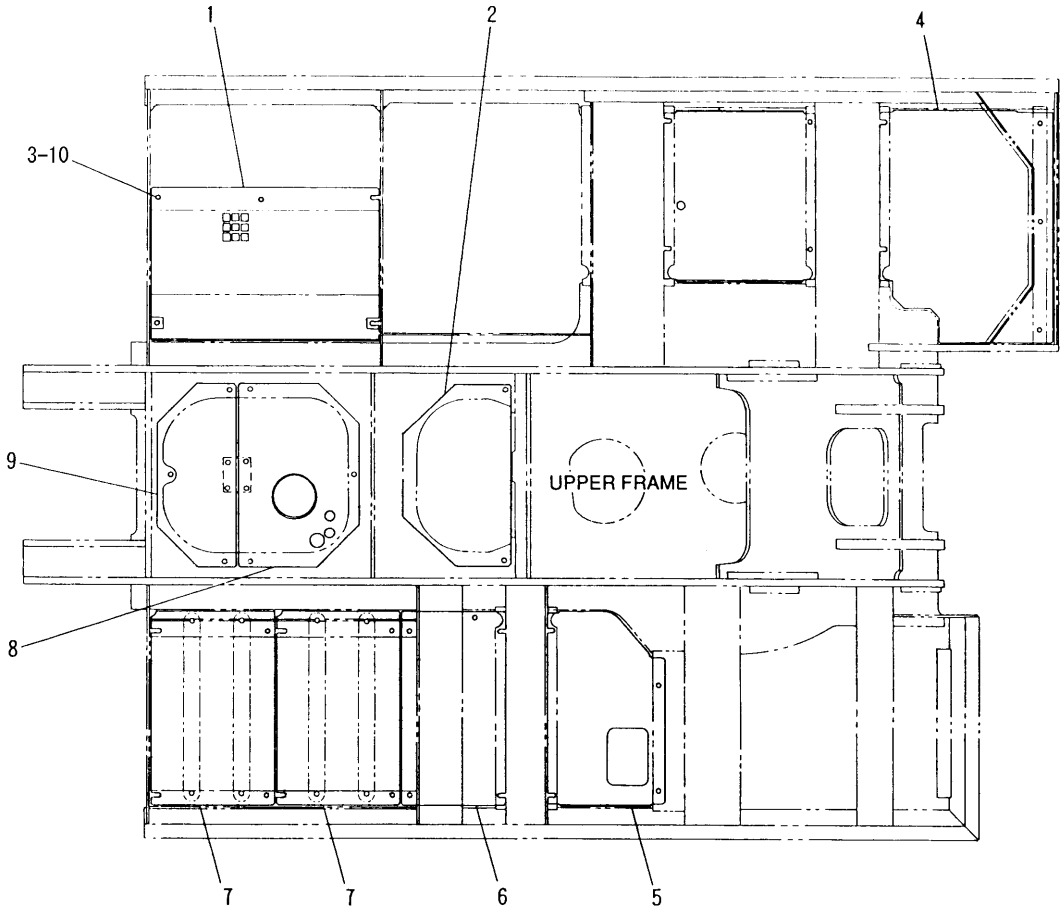

TOP VIEW

NOTE	No.	PART No.	QTY	PART NAME	NOTE	No.	PART No.	QTY	PART NAME
	1	117-4415	1	SHEET					
	2	117-4416	1	SHEET					
	3	5P-1076	41	WASHER					
	4	120-5143	1	SHEET					
	5	120-5144	1	SHEET					
	6	120-5145	1	SHEET					
	7	120-5146	2	SHEET					
	8	122-3850	1	SHEET AS					
	9	120-5147	1	SHEET AS					
		099-7857	1	HINGE					
	10	099-4691	41	BOLT					

H52983E 02

117-4264 GUARD GP-BOTTOM
S/N 3MR 1-01094, 4MR 1-00255

FRAME AND BODY

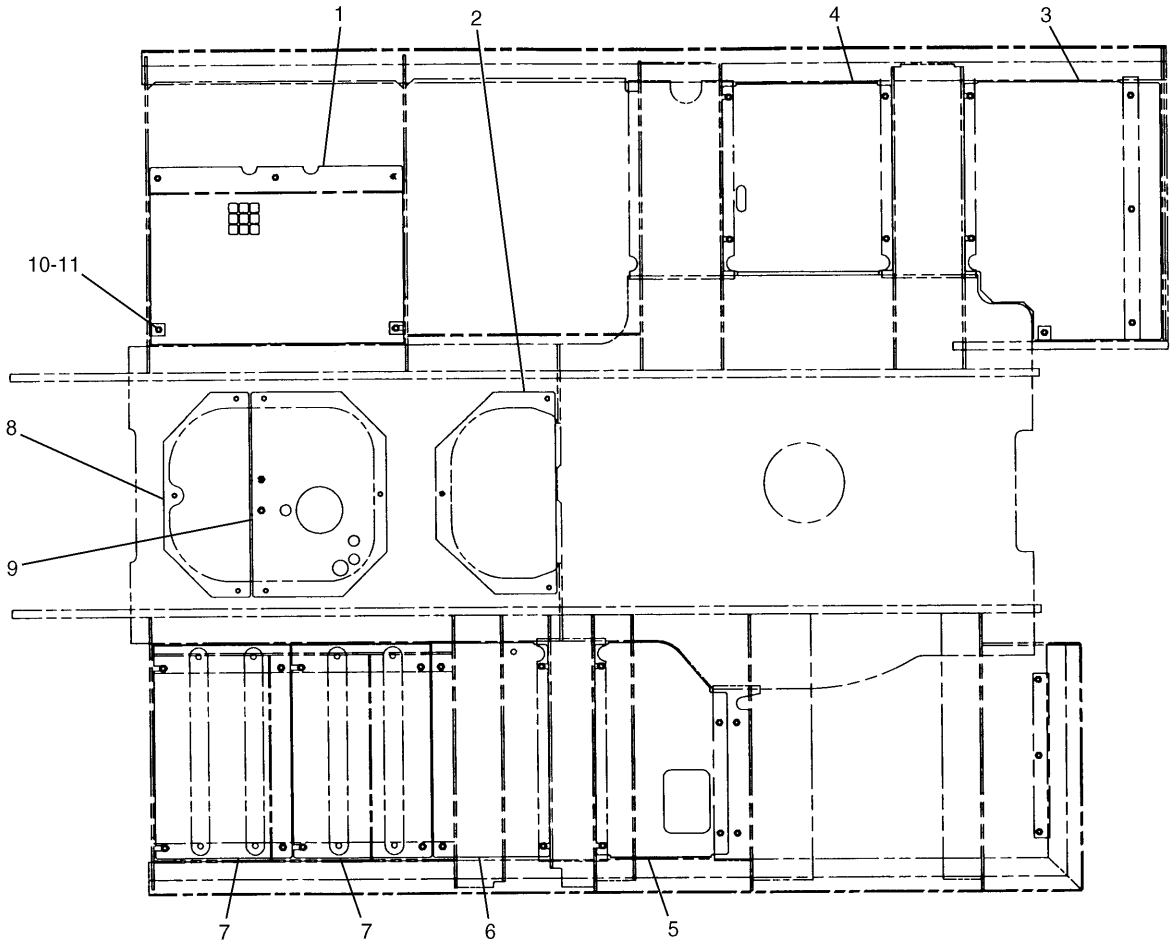

NOTE	No.	PART No.	QTY	PART NAME	NOTE	No.	PART No.	QTY	PART NAME
	1	137-2281	1	SHEET					
	2	117-4416	1	SHEET					
	3	140-0614	1	SHEET					
	4	154-0472	1	SHEET AS					
D		5P-9205		SEAL…(0.5m)					
	5	120-5144	1	SHEET					
	6	120-5145	1	SHEET					
	7	120-5146	2	SHEET					
	8	120-5147	1	SHEET AS					
		099-7857	1	HINGE					
	9	120-5149	1	SHEET AS					
	10	5P-1076	42	WASHER					
	11	099-4691	42	BOLT					

D—ORDER BY THE METER

H60365E 04

137-2279 GUARD GP-BOTTOM

S/N 3MR 01095-Up, 4MR 00256-Up

MEMORANDA

FRAME AND BODY

Consists of :

			Page
1	7Y-2296	GUARD GP-SWIVEL	134
1	117-4268	GUARD GP-BOTTOM	132
1	127-1426	GUARD GP-TRAVEL MOTOR	166.01

H53410E 01

117-4136 GUARD AR-BOTTOM
S/N 3MR 1-(D96.05), 4MR 1-(D96.05)
An Attachment

Consists of :

			Page
1	127-1426	GUARD GP-TRAVEL MOTOR	166.01
1	134-8875	GUARD GP-SWIVEL	134.01
1	117-4268	GUARD GP-BOTTOM	132

H57508E 02

117-4136 GUARD AR-BOTTOM
S/N 3MR (D96.06)-01109, 4MR (D96.06)-02260
An Attachment

Consists of :

			Page
1	127-1426	GUARD GP-TRAVEL MOTOR	166.01
1	134-8875	GUARD GP-SWIVEL	134.01
1	137-2280	GUARD GP-BOTTOM	132.01

H54489E 03

117-4136 GUARD AR-BOTTOM

S/N 3MR 01110-Up, 4MR 00261-Up
An Attachment

MEMORANDA

FRAME AND BODY

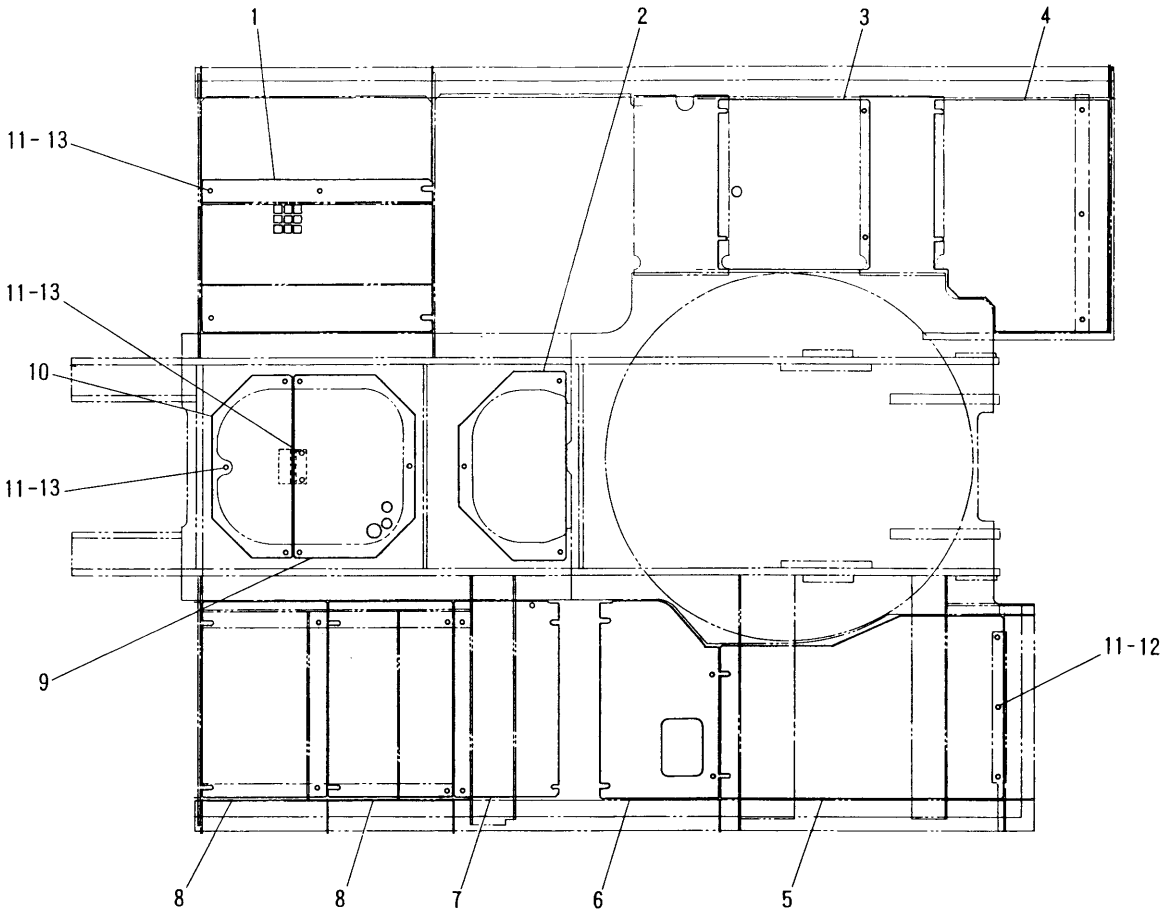

TOP VIEW

NOTE	No.	PART No.	QTY	PART NAME	NOTE	No.	PART No.	QTY	PART NAME
	1	121-4931	1	PLATE AS					
	2	121-4933	1	PLATE AS					
	3	121-4935	1	PLATE AS					
	4	121-4937	1	PLATE AS					
	5	121-4939	1	PLATE AS					
	6	121-4941	1	PLATE AS					
	7	121-4943	1	PLATE AS					
	8	121-4945	2	PLATE AS					
	9	122-3917	1	PLATE AS					
	10	121-4947	1	PLATE AS					
		099-7857	1	HINGE					
	11	8C-8992	46	BOLT (L=30mm)					
	12	5P-1076	5	WASHER					
A	13	5P-1076	41	WASHER					

A—NOT PART OF THIS GROUP

H52985E 03

117-4268 GUARD GP-BOTTOM

S/N 3MR 1-01109, 4MR 1-00260
Part of 117-4136-Page131
An Attachment

FRAME AND BODY

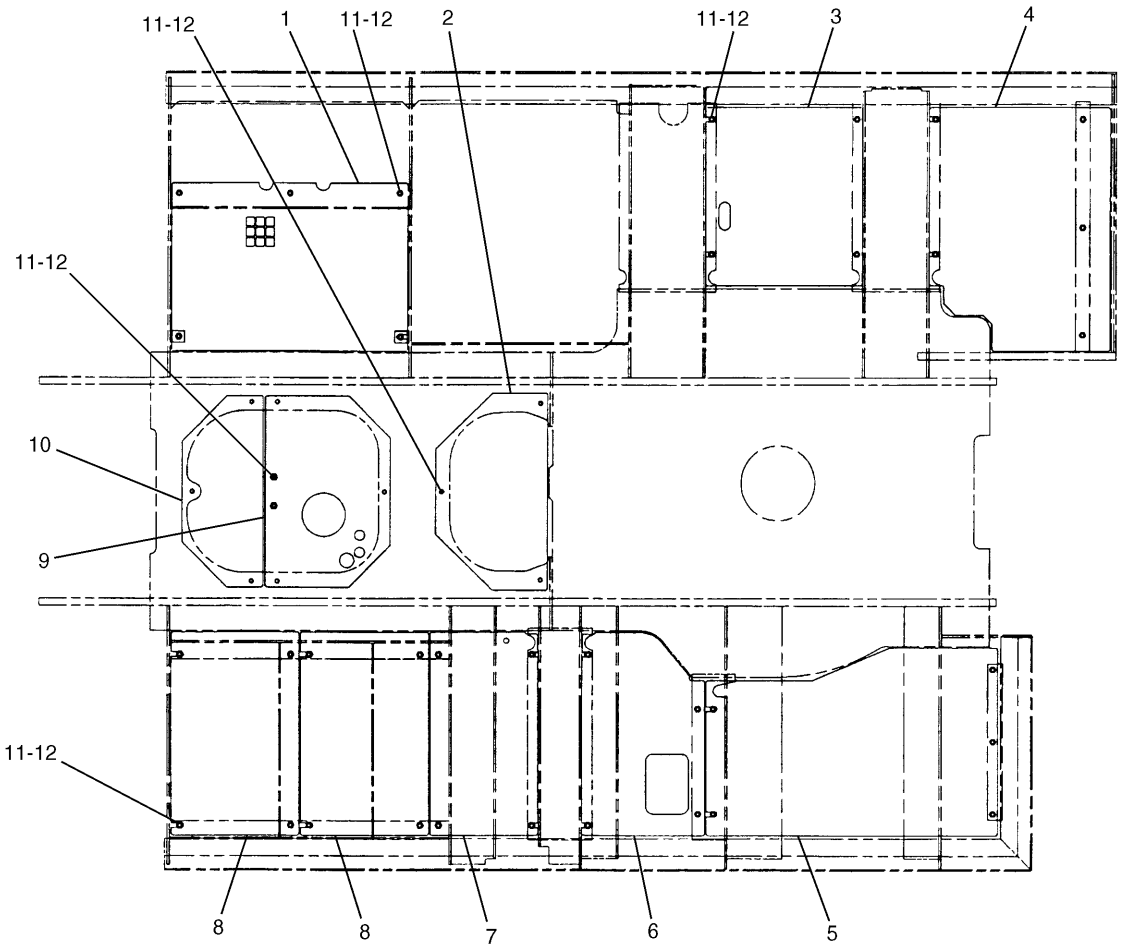

NOTE	No.	PART No.	QTY	PART NAME	NOTE	No.	PART No.	QTY	PART NAME
	1	137-2282	1	PLATE AS					
	2	121-4933	1	PLATE AS					
	3	154-0474	1	PLATE AS					
	4	121-4937	1	PLATE AS					
	5	121-4939	1	PLATE AS					
	6	121-4941	1	PLATE AS					
	7	121-4943	1	PLATE AS					
	8	121-4945	2	PLATE AS					
	9	122-3917	1	PLATE AS					
	10	121-4947	1	PLATE AS					
		099-7857	1	HINGE					
	11	5P-1076	46	WASHER					
	12	8C-8992	46	BOLT (L=30mm)					

H65281E 06

137-2280 GUARD GP-BOTTOM

Heavy Duty
S/N 3MR 01110-Up, 4MR 00261-Up
Part of 117-4136-Page131.01
An Attachment

MEMORANDA

FRAME AND BODY

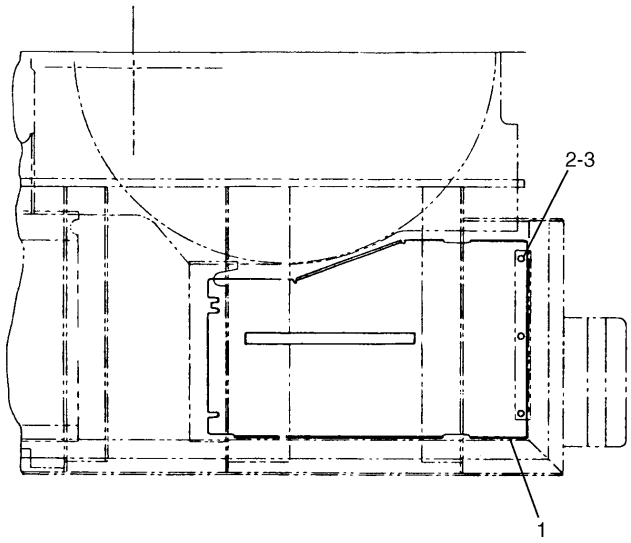

TOP VIEW

NOTE	No.	PART No.	QTY	PART NAME
	1	129-3375	1	SHEET AS
	2	099-4691	5	BOLT
	3	5P-1076	5	WASHER

H65282E 01

129-3377 GUARD GP-BOTTOM

Additional Tank
Part of 120-4976-Page57
An Attachment

FRAME AND BODY

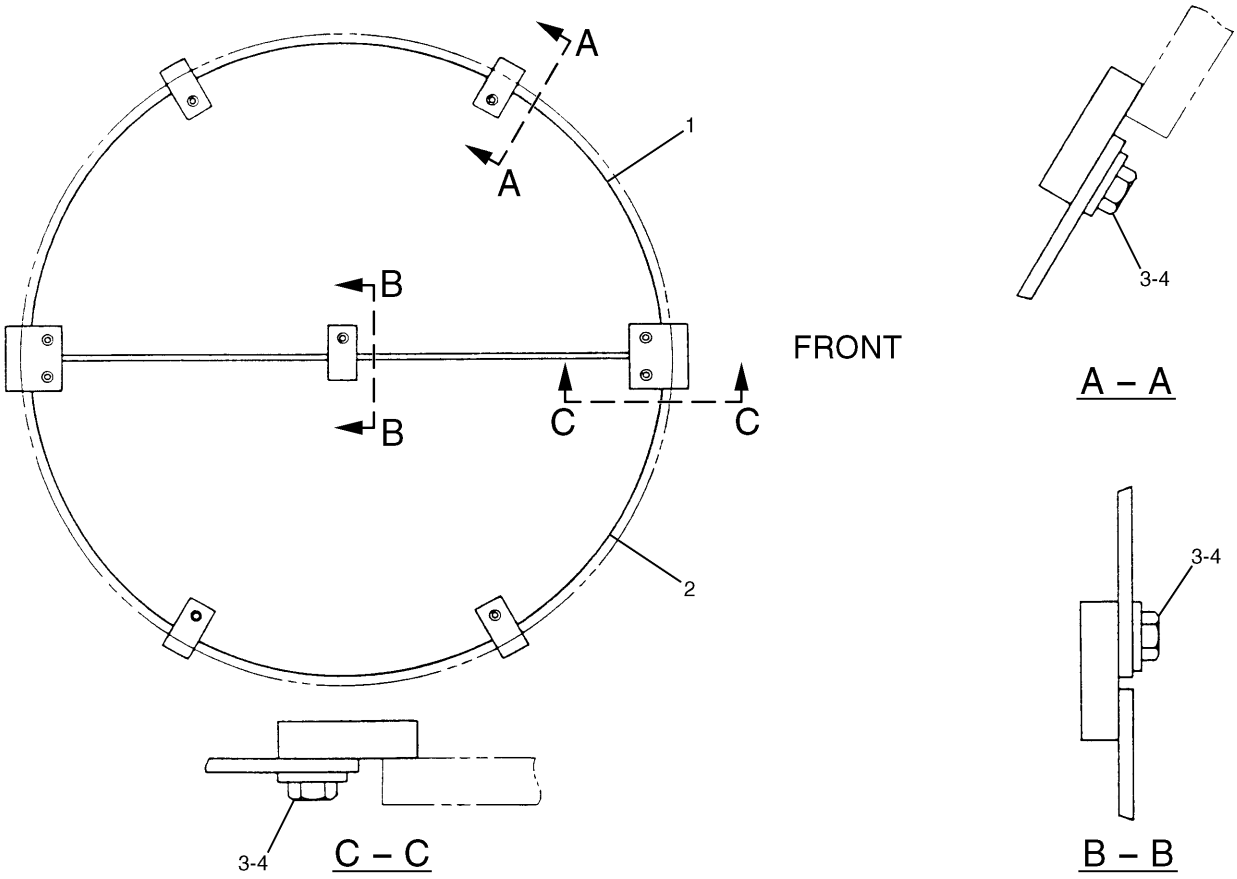

NOTE	No.	PART No.	QTY	PART NAME	NOTE	No.	PART No.	QTY	PART NAME
	1	5I-3534	1	COVER AS					
	2	099-3502	1	COVER AS					
	3	099-4691	9	BOLT					
	4	5P-1076	9	WASHER					

H52757E 03

7Y-2296 GUARD GP-SWIVEL
S/N 3MR 1-(D96.05), 4MR 1-(D96.05)
Part of 117-4136-Page131
An Attachment

FRAME AND BODY

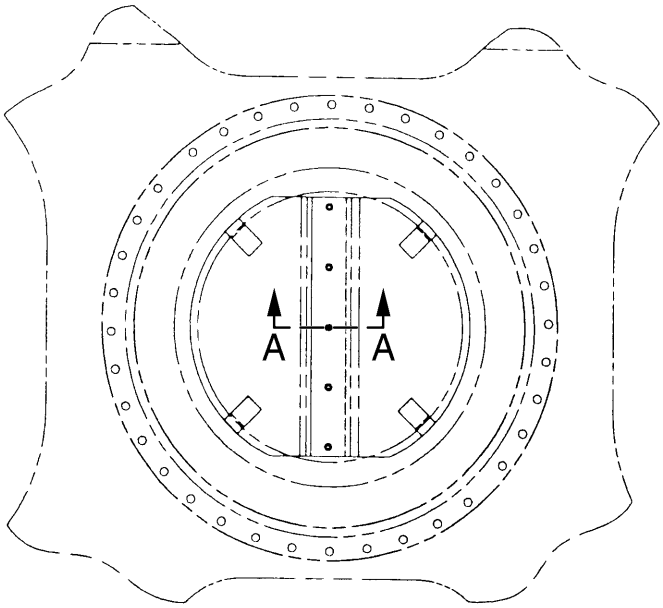

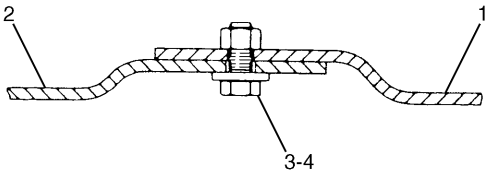

A – A

NOTE	No.	PART No.	QTY	PART NAME	NOTE	No.	PART No.	QTY	PART NAME
	1	134-8876	1	PLATE AS					
	2	134-8878	1	PLATE AS					
	3	8C-8992	5	BOLT (L=30mm)					
	4	5P-1076	5	WASHER					

H54516E 00

134-8875 GUARD GP-SWIVEL
S/N 3MR (D96.06)-Up, 4MR (D96.06)-Up
Part of 117-4136-Page131
An Attachment

MEMORANDA

FRAME AND BODY

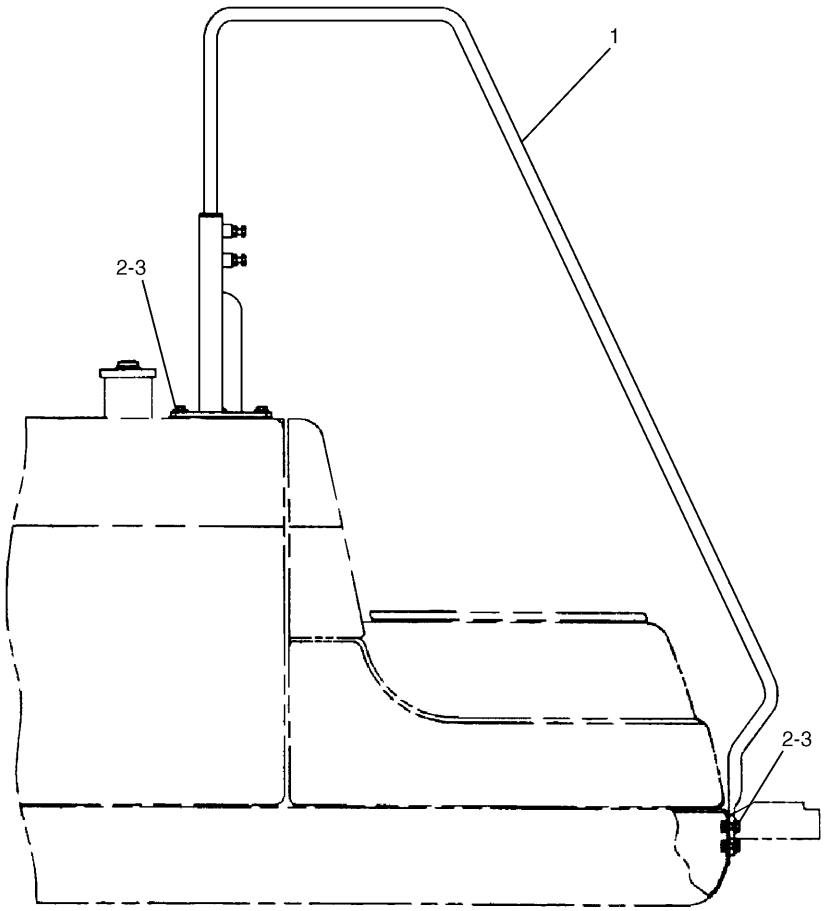

NOTE	No.	PART No.	QTY	PART NAME	NOTE	No.	PART No.	QTY	PART NAME
Y	1	129-3347	1	HANDHOLD GP					
	2	8C-8992	4	BOLT (L=30mm)					
	3	5P-1076	4	WASHER					

Y—SEE SEPARATE ILLUSTRATION

H52987E 04

108-9835 HANDHOLD GP
S/N 3MR 1-01235, 4MR 1-00275
129-3347-Page135.02

FRAME AND BODY

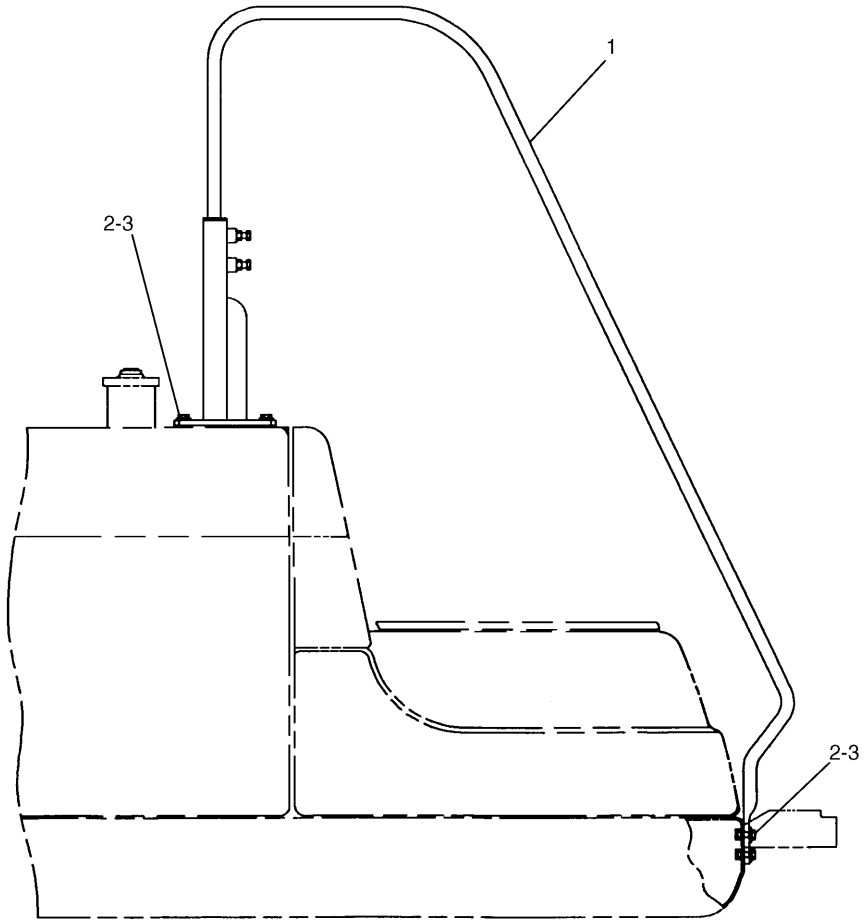

NOTE	No.	PART No.	QTY	PART NAME	NOTE	No.	PART No.	QTY	PART NAME
Y	1	137-2290	1	HANDHOLD GP					
	2	8C-8992	4	BOLT (L=30mm)					
	3	5P-1076	4	WASHER					

Y—SEE SEPARATE ILLUSTRATION

H54485E 05

108-9835 HANDHOLD GP

S/N 3MR 01236-04978, 4MR 00276-00715

137-2290-Page135.03

FRAME AND BODY

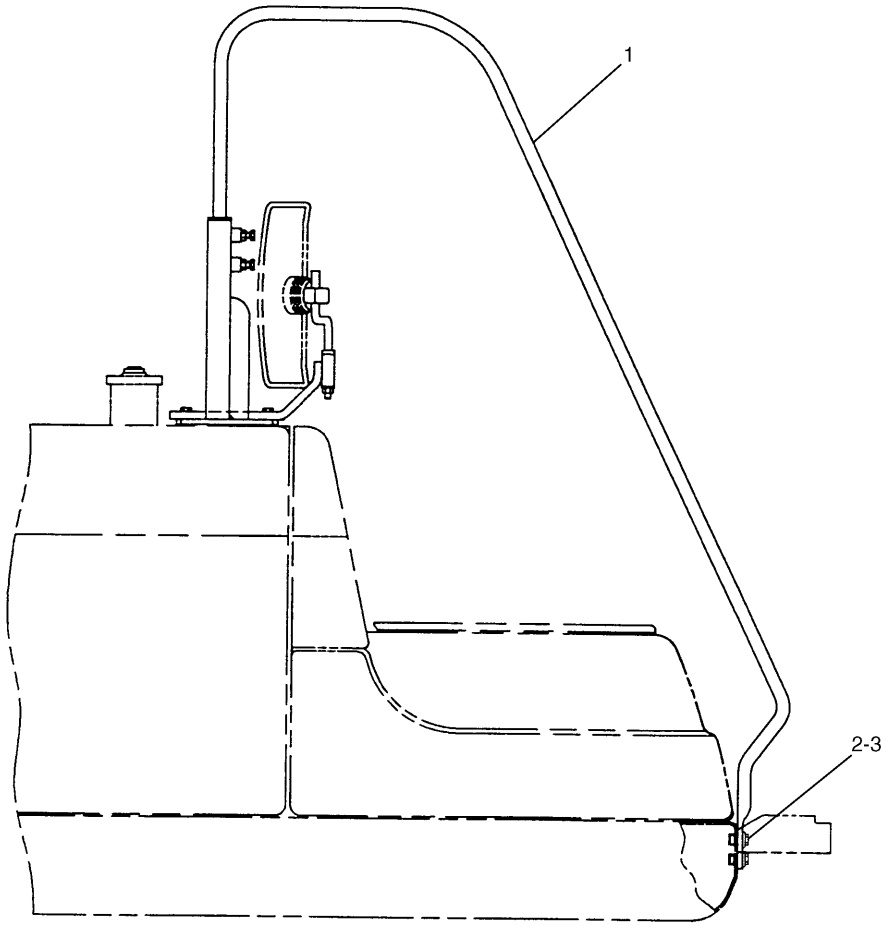

NOTE	No.	PART No.	QTY	PART NAME	NOTE	No.	PART No.	QTY	PART NAME
Y	1	137-2290	1	HANDHOLD GP					
	2	8C-8992	2	BOLT (L=30mm)					
	3	5P-1076	2	WASHER					

Y—SEE SEPARATE ILLUSTRATION

H60367E 06

108-9835 HANDHOLD GP

S/N 3MR 04979-Up, 4MR 00716-Up

137-2290-Page135.03

MEMORANDA

FRAME AND BODY

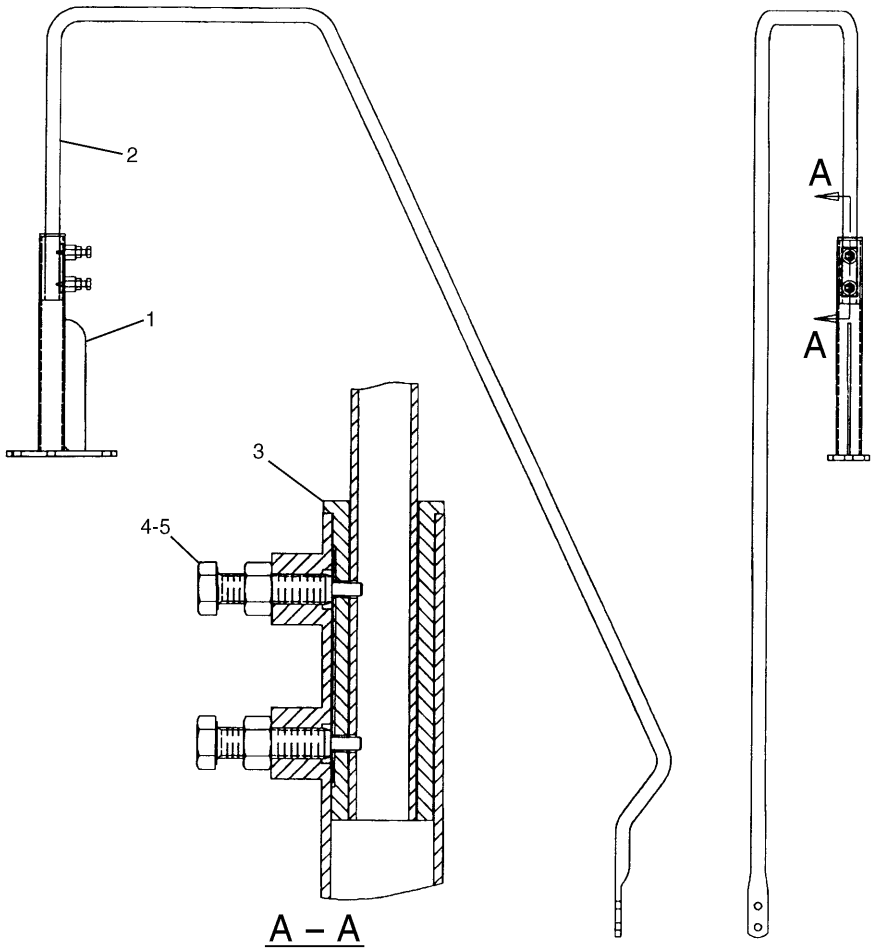

NOTE	No.	PART No.	QTY	PART NAME	NOTE	No.	PART No.	QTY	PART NAME
	1	129-3348	1	PIPE AS					
	2	129-3349	1	PIPE					
	3	129-3410	1	SLEEVE AS					
	4	129-3351	2	BOLT					
	5	8T-4244	2	NUT					

H55767E 00

129-3347 HANDHOLD GP
S/N 3MR 1-01235, 4MR 1-00275
Part of 108-9835-Page135

FRAME AND BODY

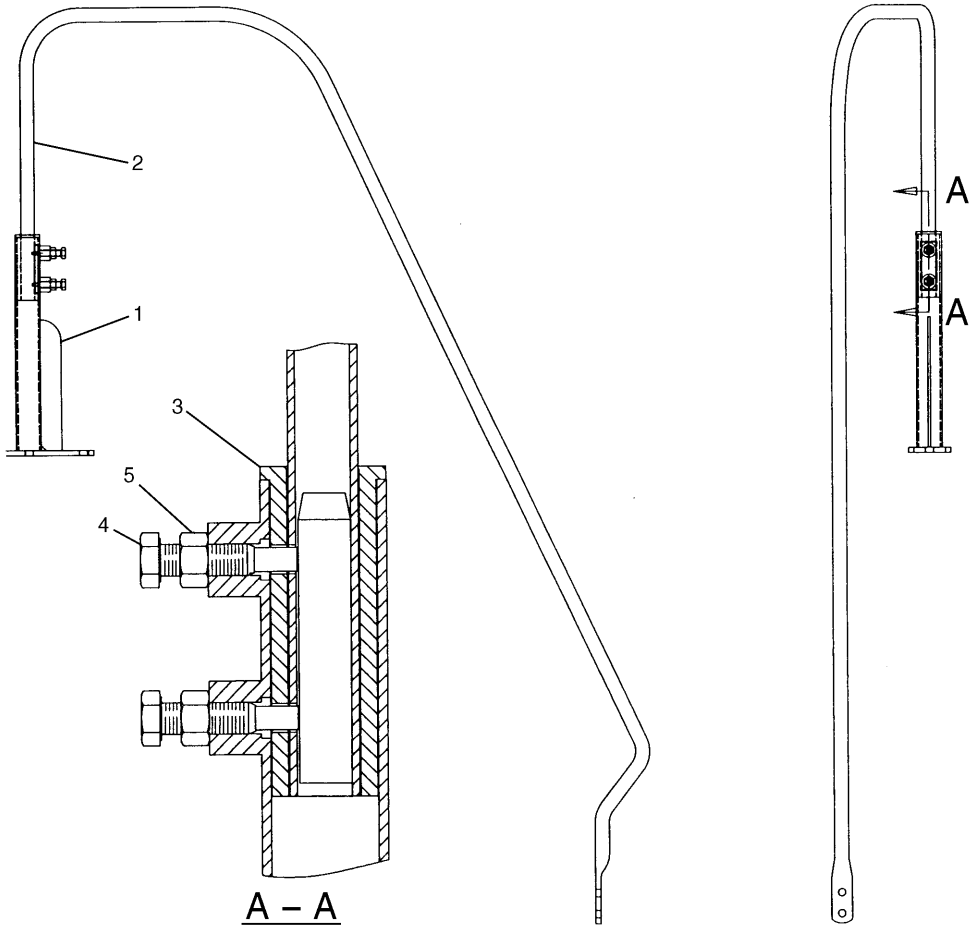

NOTE	No.	PART No.	QTY	PART NAME	NOTE	No.	PART No.	QTY	PART NAME
	1	129-3348	1	PIPE AS					
	2	137-2295	1	PIPE AS					
	3	137-2292	1	SLEEVE					
	4	137-2294	2	BOLT					
	5	8T-4244	2	NUT					

H54520E 00

137-2290 HANDHOLD GP

Basic
S/N 3MR 01236-Up, 4MR 00276-Up
Part of 108-9835-Page135.01

MEMORANDA

FRAME AND BODY

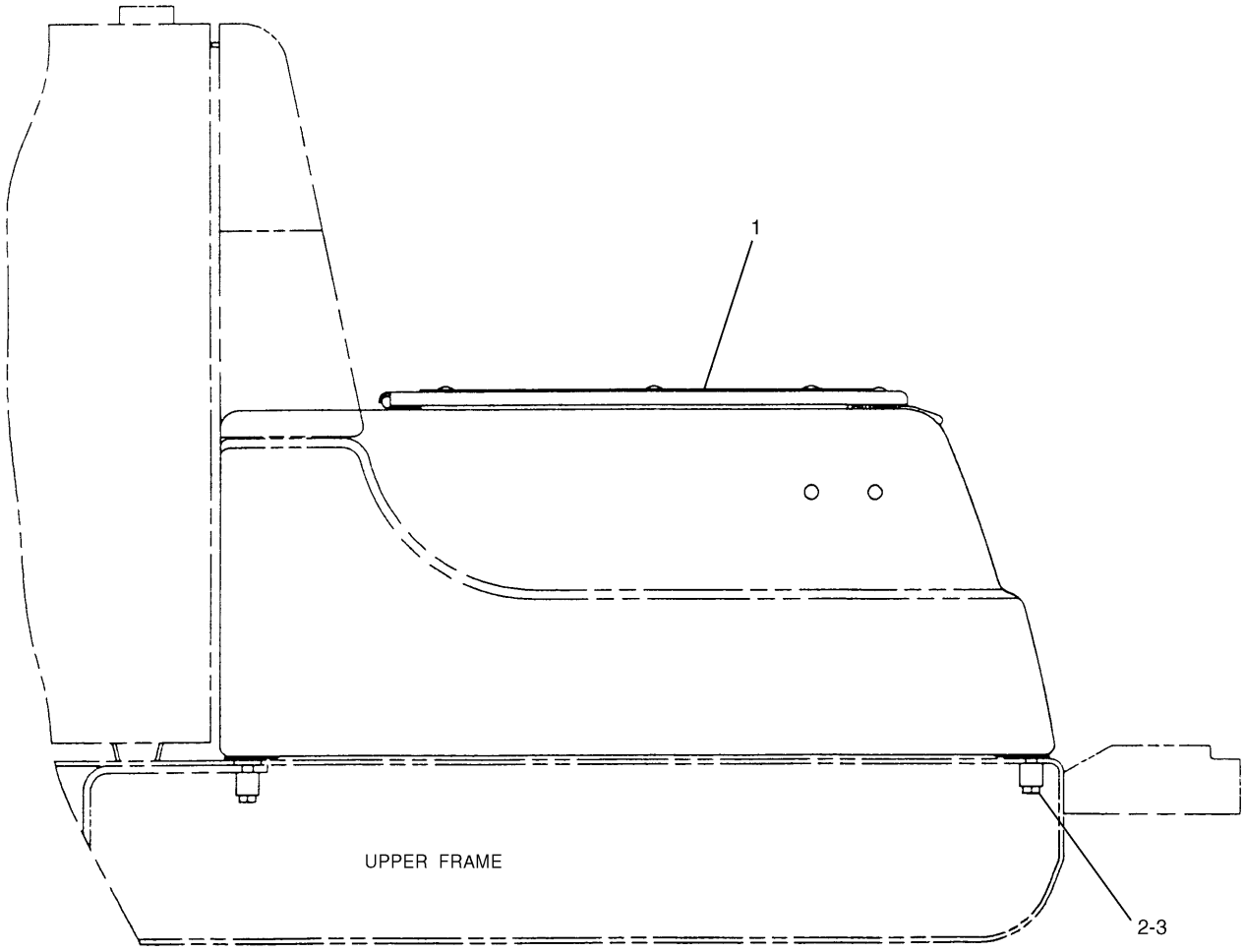

NOTE	No.	PART No.	QTY	PART NAME	NOTE	No.	PART No.	QTY	PART NAME
Y	1	108-9840	1	BOX GP					
	2	6V-8150	4	BOLT (L=60mm)					
	3	122-4026	4	SPACER					

Y—SEE SEPARATE ILLUSTRATION

H52989E 03

108-9839 BOX & MTG GP-STORAGE

S/N 3MR 1-04978, 4MR 1-00715
108-9840-Page137.01

FRAME AND BODY

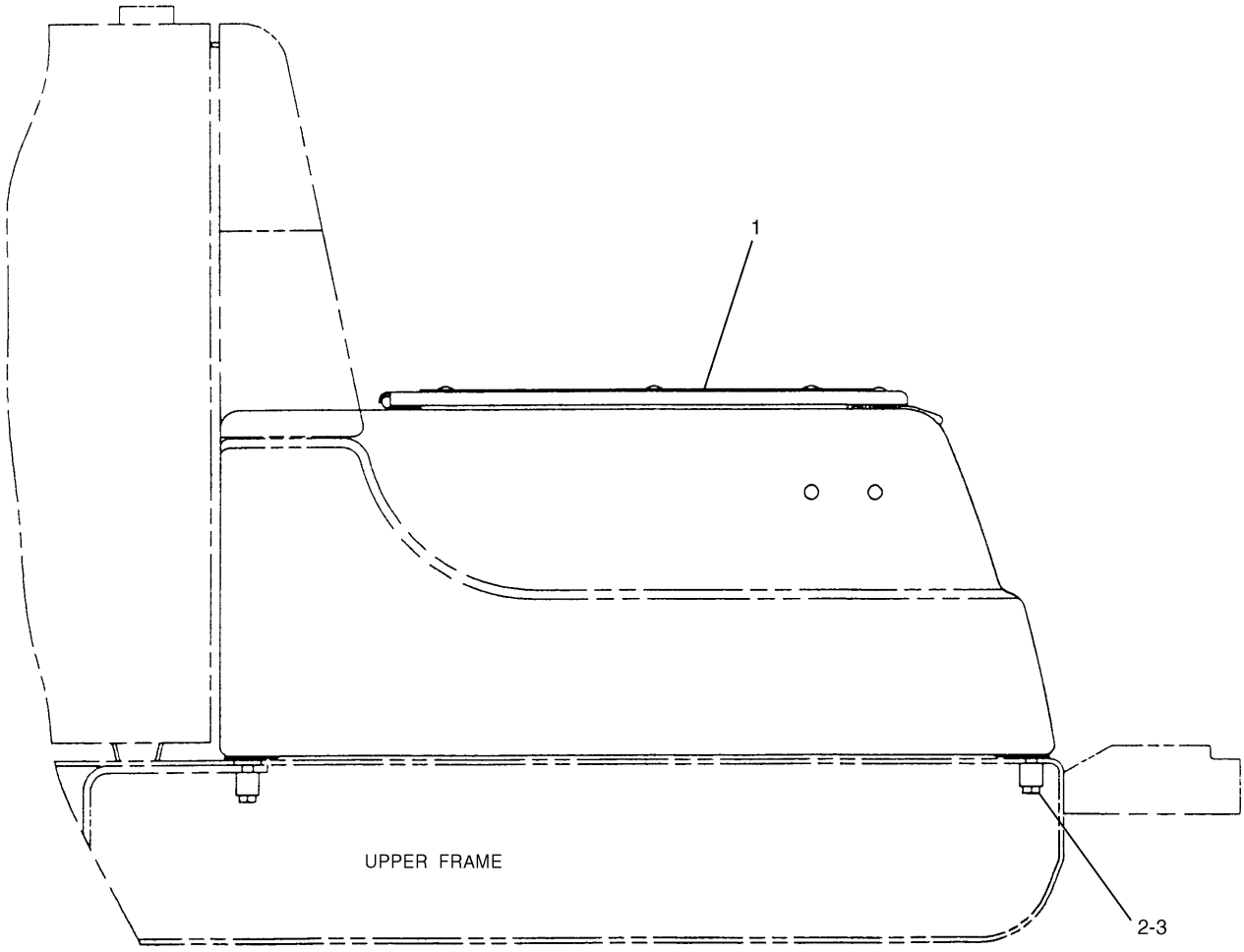

NOTE	No.	PART No.	QTY	PART NAME	NOTE	No.	PART No.	QTY	PART NAME
Y	1	154-0566	1	BOX GP					
	2	162-8284	4	BOLT (L=60mm)					
	3	122-4026	4	SPACER					

Y—SEE SEPARATE ILLUSTRATION

H63432E 05

108-9839 BOX & MTG GP-STORAGE

S/N 3MR 04979-Up, 4MR 00716-Up
154-0566-Page137.03

FRAME AND BODY

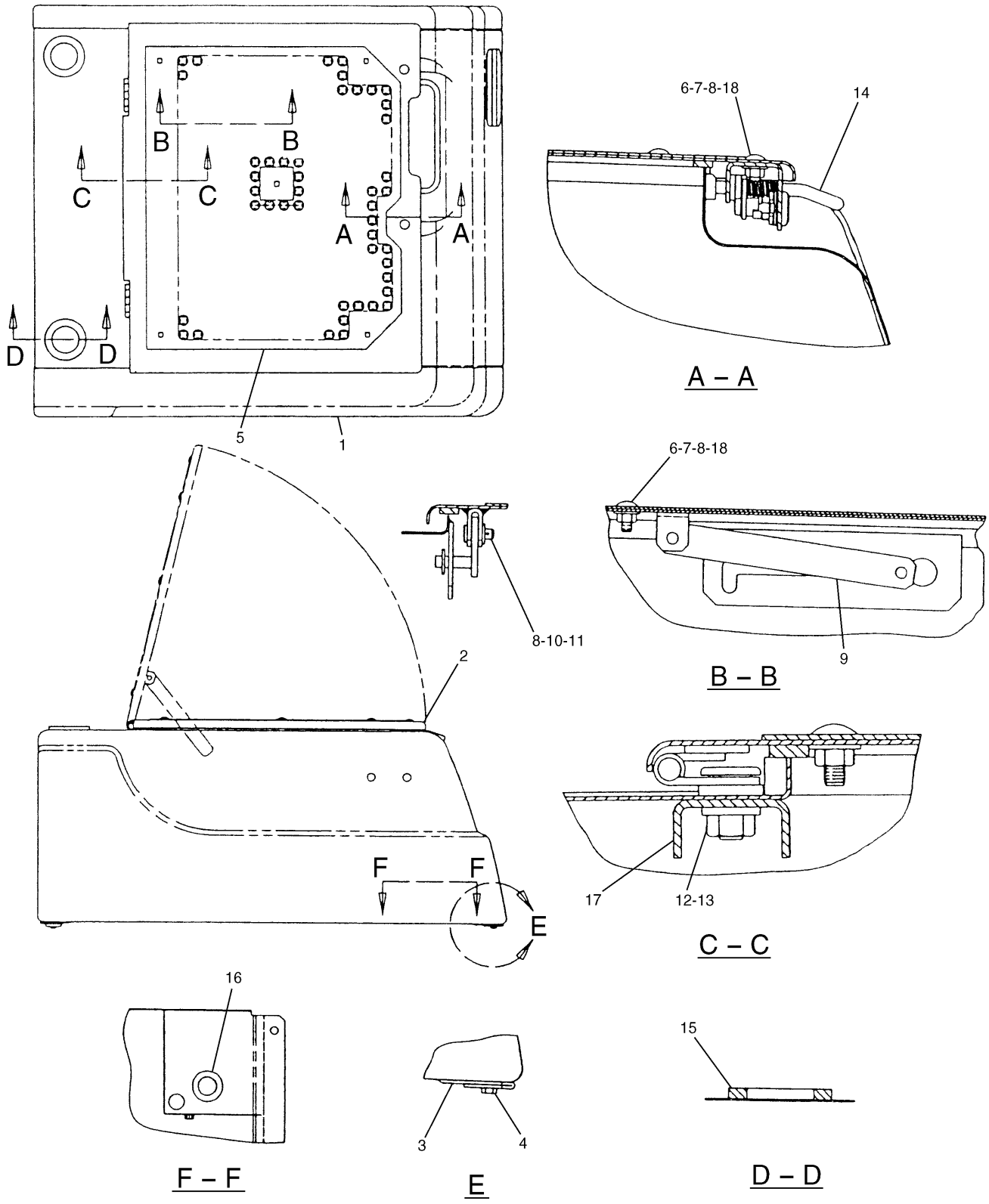

H81637E 06

108-9840 BOX GP-STORAGE
S/N 3MR 1-04978, 4MR 1-00715
Part of 108-9839-Page136
122-3877-Page140

FRAME AND BODY

NOTE	No.	PART No.	QTY	PART NAME	NOTE	No.	PART No.	QTY	PART NAME
	1	108-9888	1	BODY AS					
	2	114-6223	1	COVER AS					
▲		7Y-9352		SEAL…(22dm)					
		3D-9143	2	HINGE					
		8T-5413	4	STUD					
	3	114-6111	1	SHEET AS					
	4	6V-7357	2	BOLT (L=25mm)					
	5	114-6109	1	SHEET					
	6	137-2255	7	BOLT					
	7	5C-7261	7	NUT					
	8	5P-4116	8	WASHER					
	9	4I-2187	1	SUPPORT AS					
	10	096-3780	1	PIN					
	11	095-0843	1	COTTER					
	12	8T-4133	4	NUT					
	13	5P-1075	4	WASHER					
Y	14	122-3877	1	HANDLE GP					
	15	122-4037	2	GROMMET					
	16	7Y-3281	1	GROMMET					
	17	137-2218	1	CHANNEL					
	18	8T-5360	7	WASHER					

▲—ORDER BY THE DECIMETER

Y—SEE SEPARATE ILLUSTRATION

H81637E 06

108-9840 BOX GP-STORAGE

S/N 3MR 1-04978, 4MR 1-00715

Part of 108-9839-Page136
122-3877-Page140

FRAME AND BODY

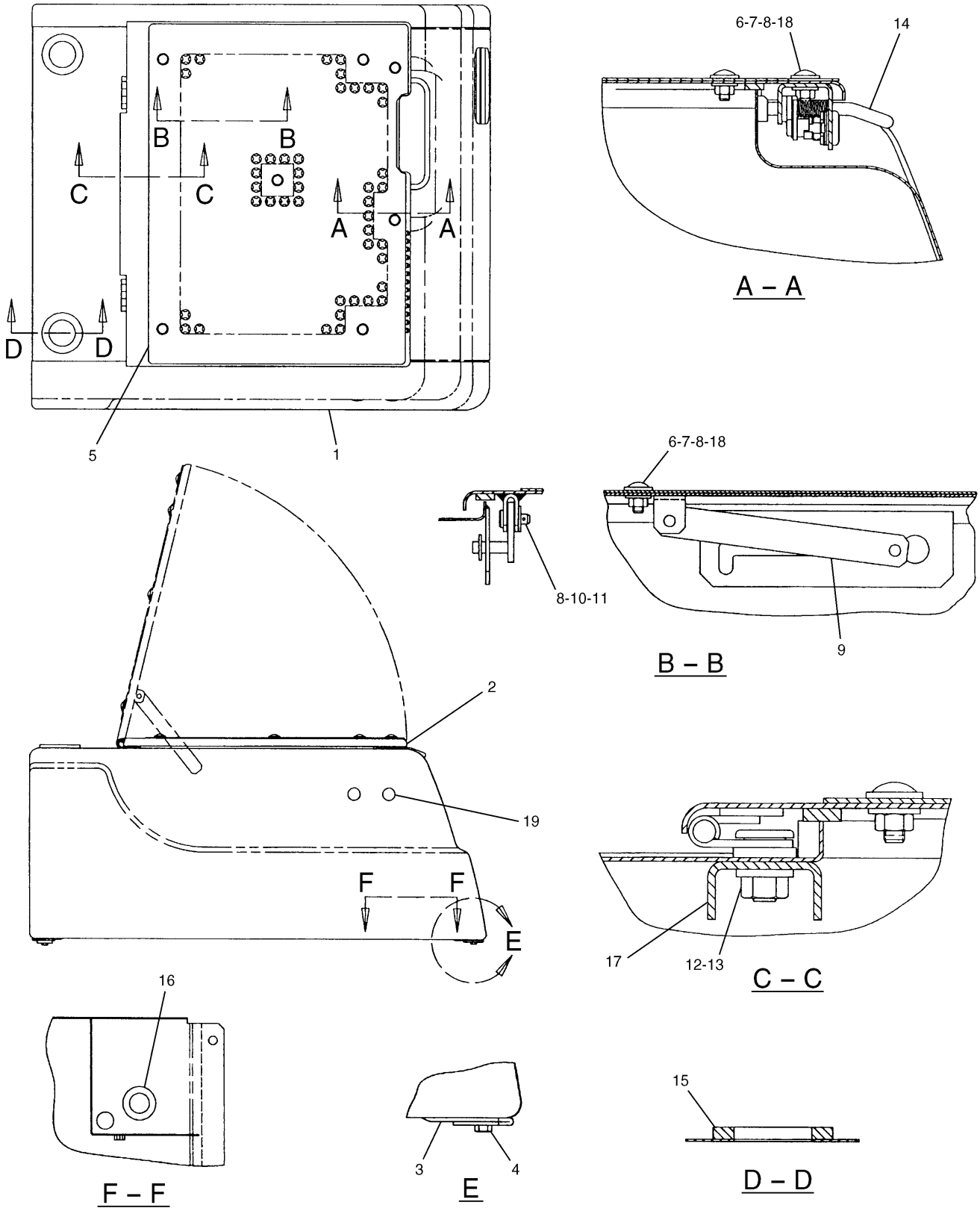

H81633E 00

154-0566 BOX GP-STORAGE
S/N 3MR 04979-Up, 4MR 00716-Up
Part of 108-9839-Page137
122-3877-Page140

FRAME AND BODY

NOTE	No.	PART No.	QTY	PART NAME	NOTE	No.	PART No.	QTY	PART NAME
	1	108-9888	1	BODY AS					
	2	146-4963	1	COVER AS					
▲		7Y-9352		SEAL…(22dm)					
		3D-9143	2	HINGE					
		8T-5413	4	STUD					
	3	114-6111	1	SHEET AS					
	4	6V-7357	2	BOLT (L=25mm)					
	5	154-0567	1	SHEET					
	6	137-2255	7	BOLT					
	7	5C-7261	7	NUT					
	8	5P-4116	8	WASHER					
	9	4I-2187	1	SUPPORT AS					
	10	096-3780	1	PIN					
	11	095-0843	1	COTTER					
	12	8T-4133	4	NUT					
	13	5P-1075	4	WASHER					
Y	14	122-3877	1	HANDLE GP					
	15	122-4037	2	GROMMET					
	16	7Y-3281	1	GROMMET					
	17	137-2218	1	CHANNEL					
	18	8T-5360	7	WASHER					
	19	4I-5034	2	CLIP					

▲—ORDER BY THE DECIMETER

Y—SEE SEPARATE ILLUSTRATION

H81633E 00

154-0566 BOX GP-STORAGE

S/N 3MR 04979-Up, 4MR 00716-Up

Part of 108-9839-Page137

122-3877-Page140

FRAME AND BODY

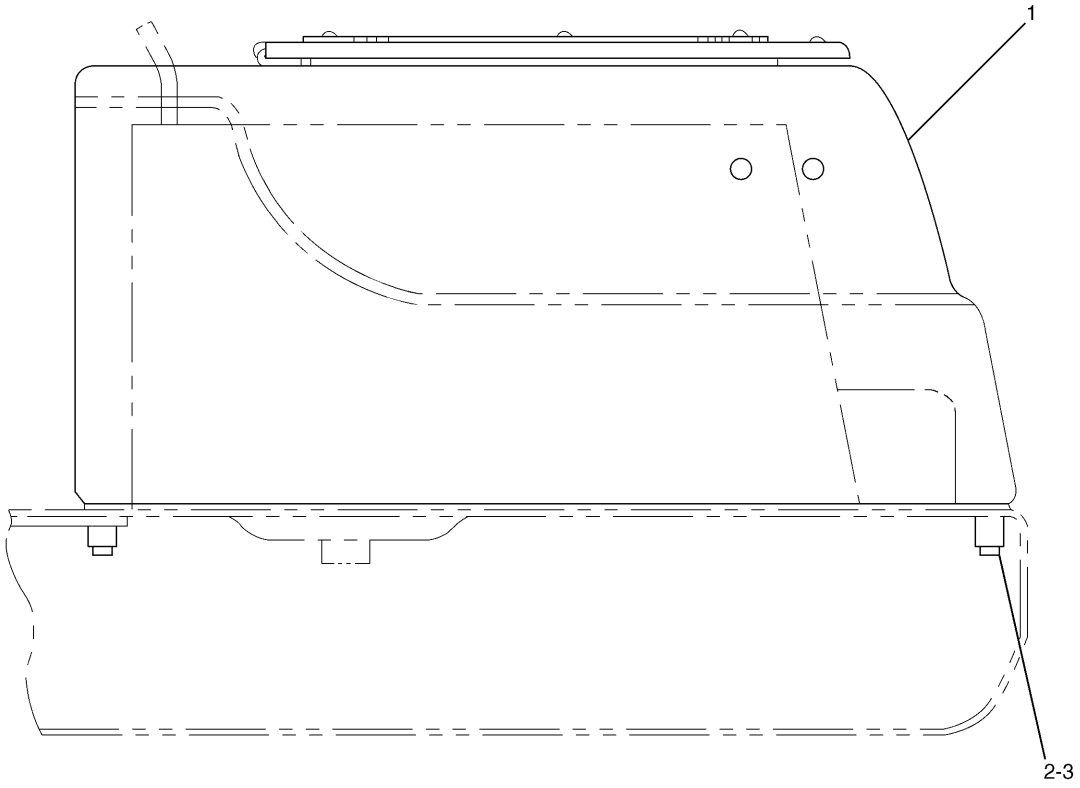

NOTE	No.	PART No.	QTY	PART NAME	NOTE	No.	PART No.	QTY	PART NAME
Y	1	122-4023	1	BOX GP					
	2	6V-8150	4	BOLT (L=60mm)					
	3	122-4026	4	SPACER					

Y—SEE SEPARATE ILLUSTRATION

H52993E 00

122-4022 BOX & MTG GP-STORAGE

S/N 3MR 1-04978, 4MR 1-00715
Part of 120-4976-Page57
122-4023-Page139.01
An Attachment

FRAME AND BODY

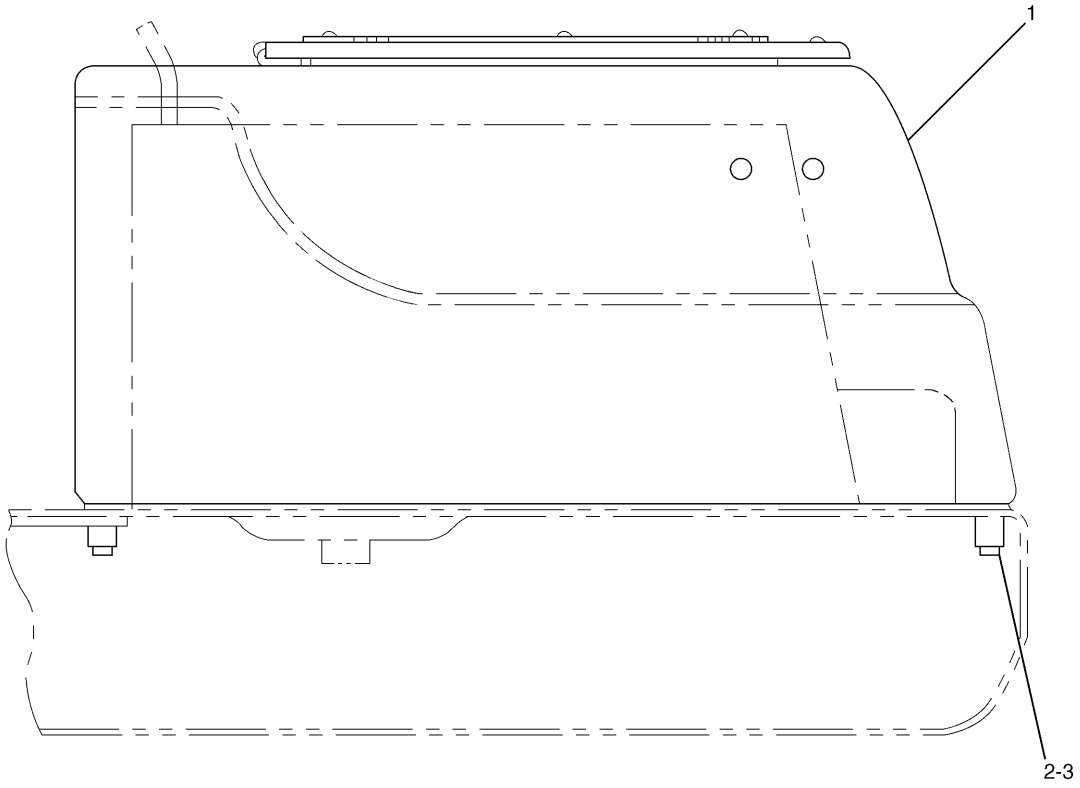

NOTE	No.	PART No.	QTY	PART NAME	NOTE	No.	PART No.	QTY	PART NAME
Y	1	154-0654	1	BOX GP					
	2	162-8284	4	BOLT (L=60mm)					
	3	122-4026	4	SPACER					

Y—SEE SEPARATE ILLUSTRATION

H63435E 02

122-4022 BOX & MTG GP-STORAGE

S/N 3MR 04979-Up, 4MR 00716-Up
Part of 120-4976-Page57
154-0654-Page139.03
An Attachment

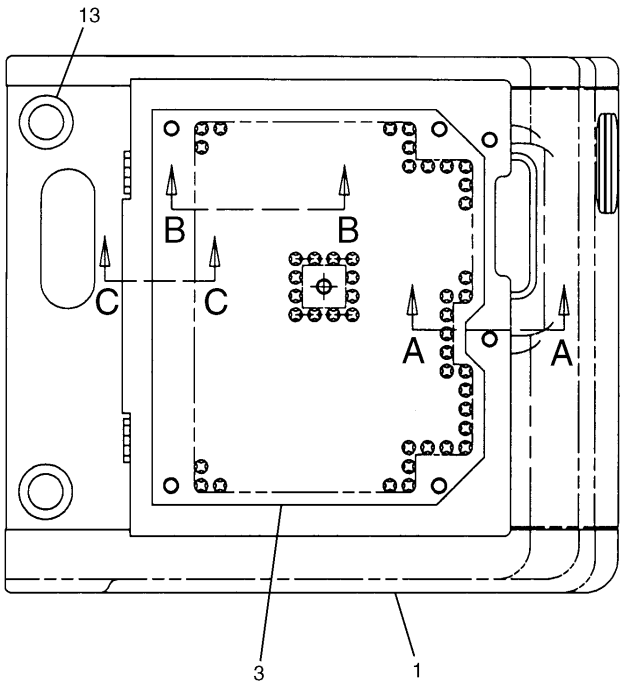

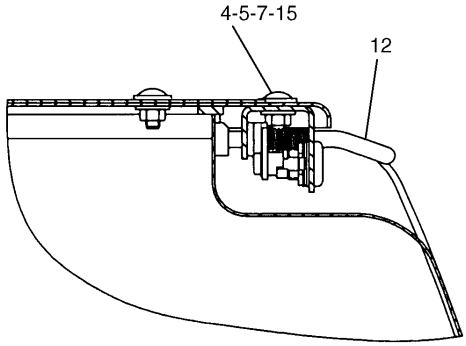

A – A

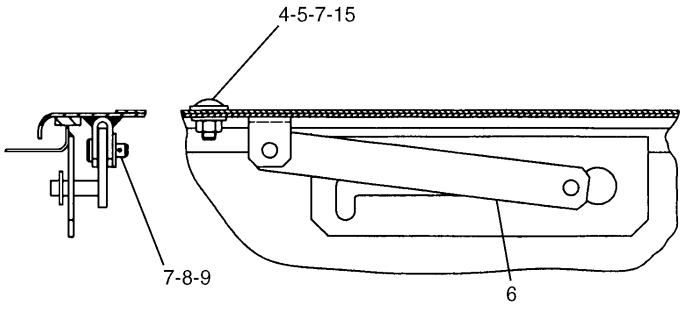

B – B

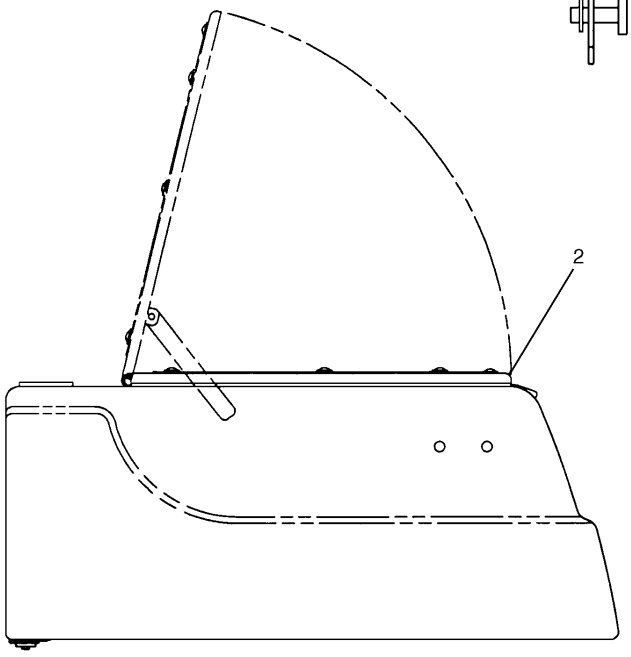

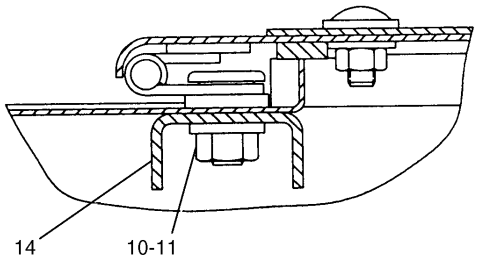

C – C

H53623E 04

122-4023 BOX GP-STORAGE
S/N 3MR 1-04978, 4MR 1-00715
Part of 122-4022-Page138
122-3877-Page140
An Attachment

FRAME AND BODY

NOTE	No.	PART No.	QTY	PART NAME	NOTE	No.	PART No.	QTY	PART NAME
	1	122-4024	1	BODY AS					
	2	114-6223	1	COVER AS					
E		7Y-9352		SEAL…(220cm)					
		3D-9143	2	HINGE					
		8T-5413	4	STUD					
	3	114-6109	1	SHEET					
	4	137-2255	7	BOLT					
	5	5C-7261	7	NUT					
	6	4I-2187	1	SUPPORT AS					
	7	5P-4116	8	WASHER					
	8	096-3780	1	PIN					
	9	095-0843	1	COTTER					
	10	8T-4133	4	NUT					
	11	5P-1075	4	WASHER					
Y	12	122-3877	1	HANDLE GP					
	13	122-4037	2	GROMMET					
	14	137-2218	1	CHANNEL					
	15	8T-5360	7	WASHER					

E—ORDER BY THE CENTIMETER

Y—SEE SEPARATE ILLUSTRATION

H53623E 04

122-4023 BOX GP-STORAGE

S/N 3MR 1-04978, 4MR 1-00715

Part of 122-4022-Page138

122-3877-Page140

An Attachment

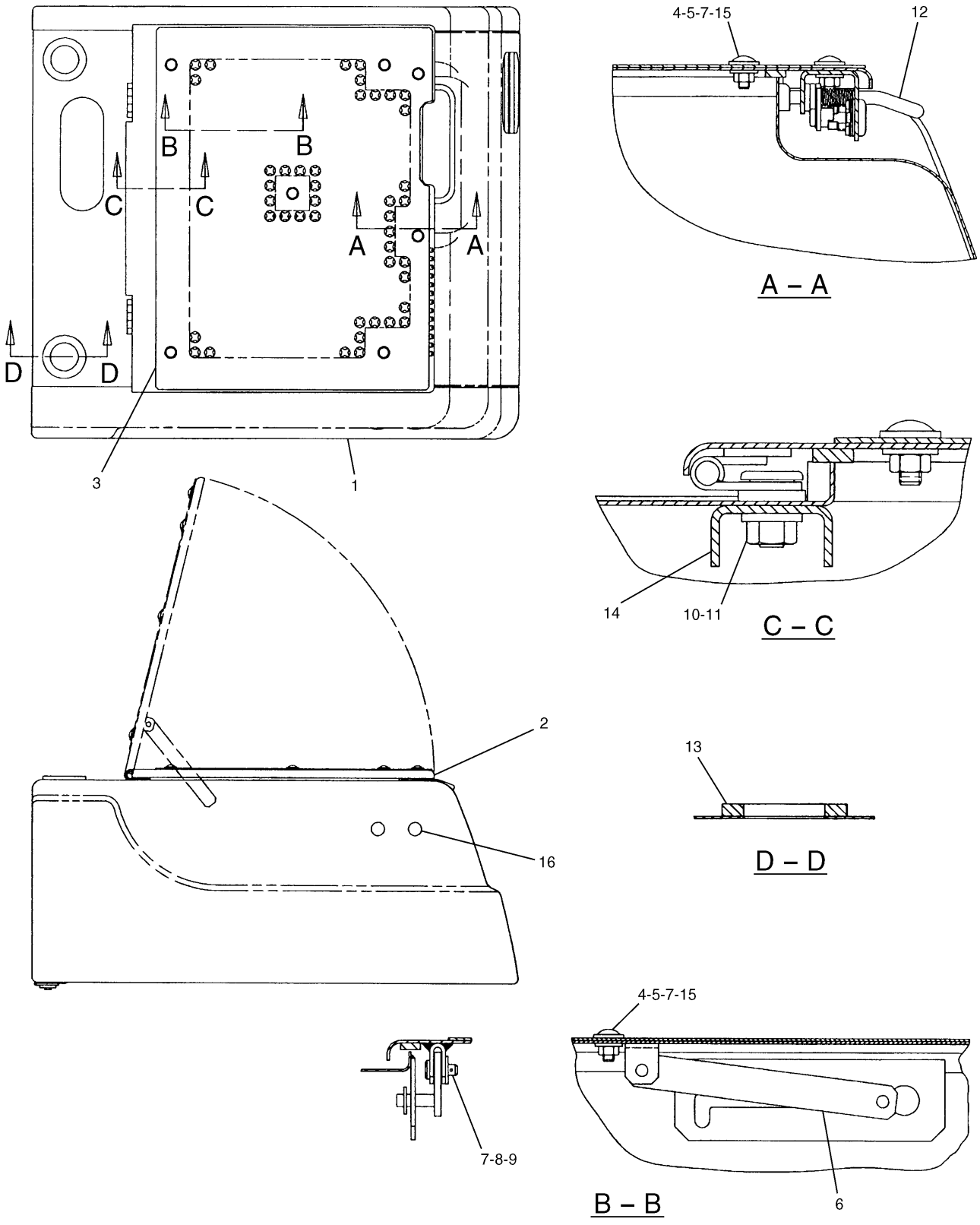

H81640E 00

154-0654 BOX GP-STORAGE
S/N 3MR 04979-Up, 4MR 00716-Up
Part of 122-4022-Page139
122-3877-Page140
An Attachment

FRAME AND BODY

NOTE	No.	PART No.	QTY	PART NAME	NOTE	No.	PART No.	QTY	PART NAME
	1	122-4024	1	BODY AS					
	2	146-4963	1	COVER AS					
▲		7Y-9352		SEAL…(22dm)					
		3D-9143	2	HINGE					
		8T-5413	4	STUD					
	3	154-0567	1	SHEET					
	4	137-2255	7	BOLT					
	5	5C-7261	7	NUT					
	6	4I-2187	1	SUPPORT AS					
	7	5P-4116	8	WASHER					
	8	096-3780	1	PIN					
	9	095-0843	1	COTTER					
	10	8T-4133	4	NUT					
	11	5P-1075	4	WASHER					
Y	12	122-3877	1	HANDLE GP					
	13	122-4037	2	GROMMET					
	14	137-2218	1	CHANNEL					
	15	8T-5360	7	WASHER					
	16	4I-5034	2	CLIP					

▲—ORDER BY THE DECIMETER

Y—SEE SEPARATE ILLUSTRATION

H81640E 00

154-0654 BOX GP-STORAGE

S/N 3MR 04979-Up, 4MR 00716-Up

Part of 122-4022-Page139

122-3877-Page140

An Attachment

FRAME AND BODY

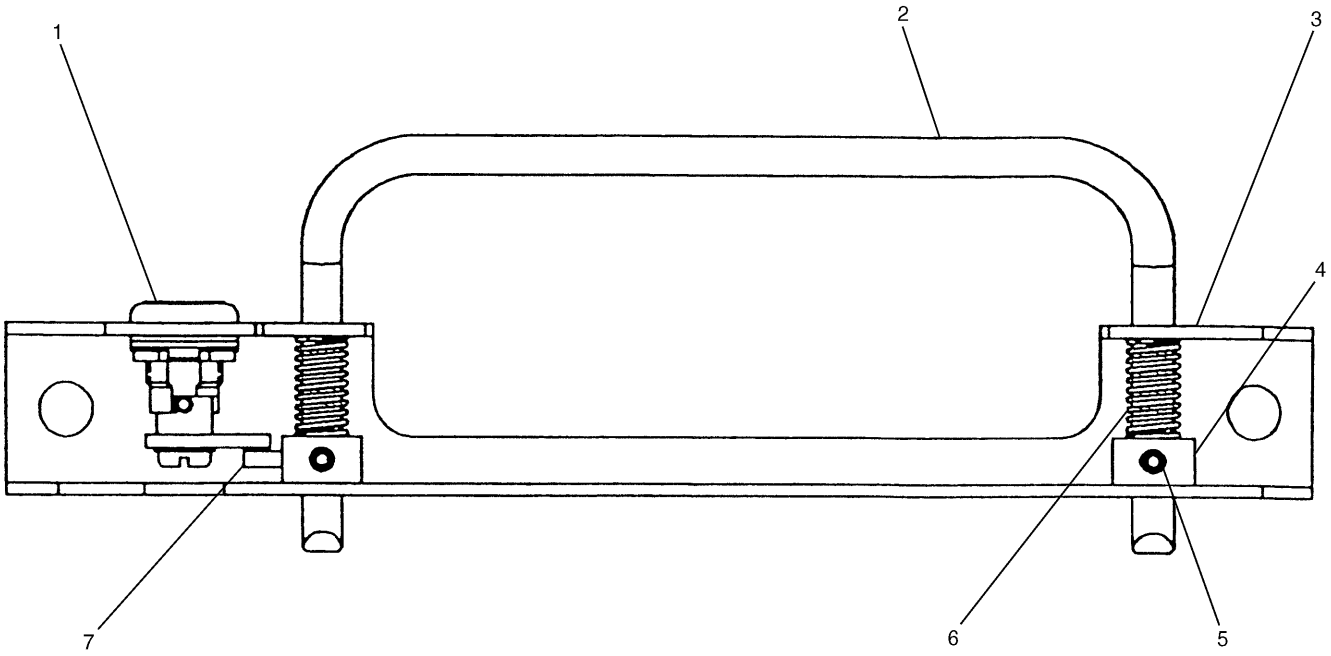

NOTE	No.	PART No.	QTY	PART NAME	NOTE	No.	PART No.	QTY	PART NAME
	1	9G-5582	1	LOCK AS					
		7F-9223	1	LOCKWASHER					
		8T-5004	1	SCREW					
	2	122-3879	1	HANDLE					
	3	122-3878	1	BRACKET					
	4	122-3880	1	BOSS					
	5	095-1272	2	SETSCREW					
	6	122-3882	2	SPRING					
	7	135-7559	1	BOSS AS					

H53642E 03

122-3877 HANDLE GP-STORAGE DOOR

Part of 108-9840-Page137.02,154-0566-Page137.04,122-4023-Page139.02,154-0654-Page139.04

FRAME AND BODY

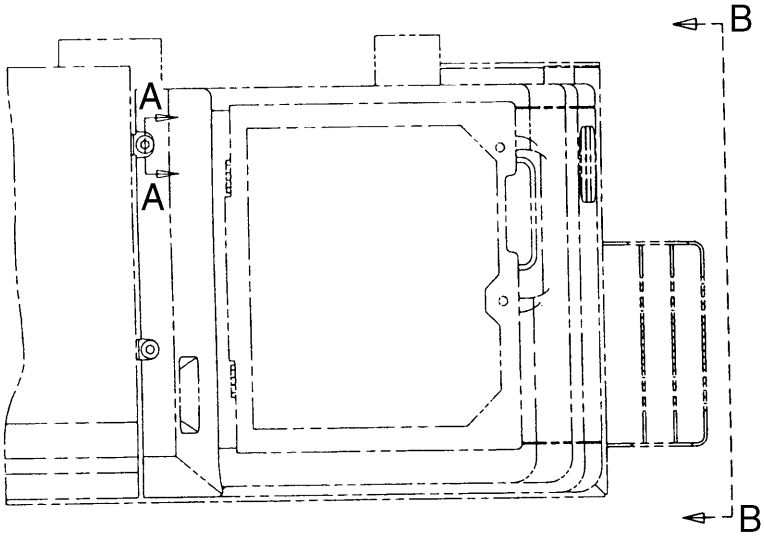

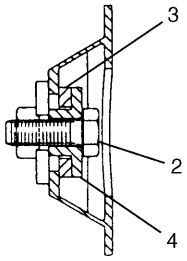

A – A

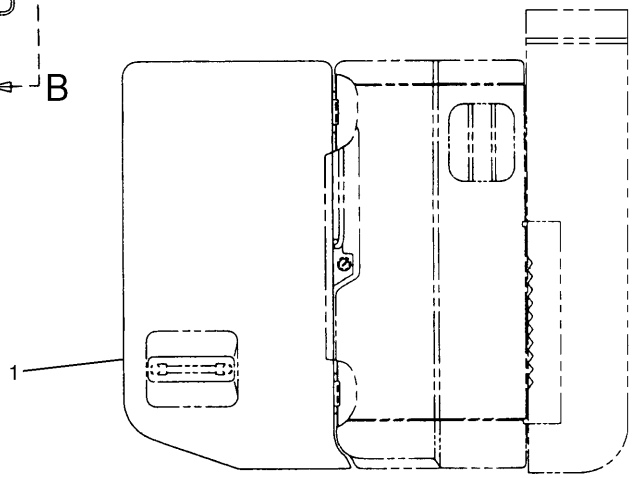

B – B

NOTE	No.	PART No.	QTY	PART NAME	NOTE	No.	PART No.	QTY	PART NAME
	1	114-6302	1	COVER					
	2	8T-0722	2	BOLT (L=30mm)					
	3	116-1724	2	WASHER					
	4	114-6195	2	SPACER					

H52998E 02

114-6300 FENDER & COVER GP
S/N 3MR 1-04978, 4MR 1-00715

FRAME AND BODY

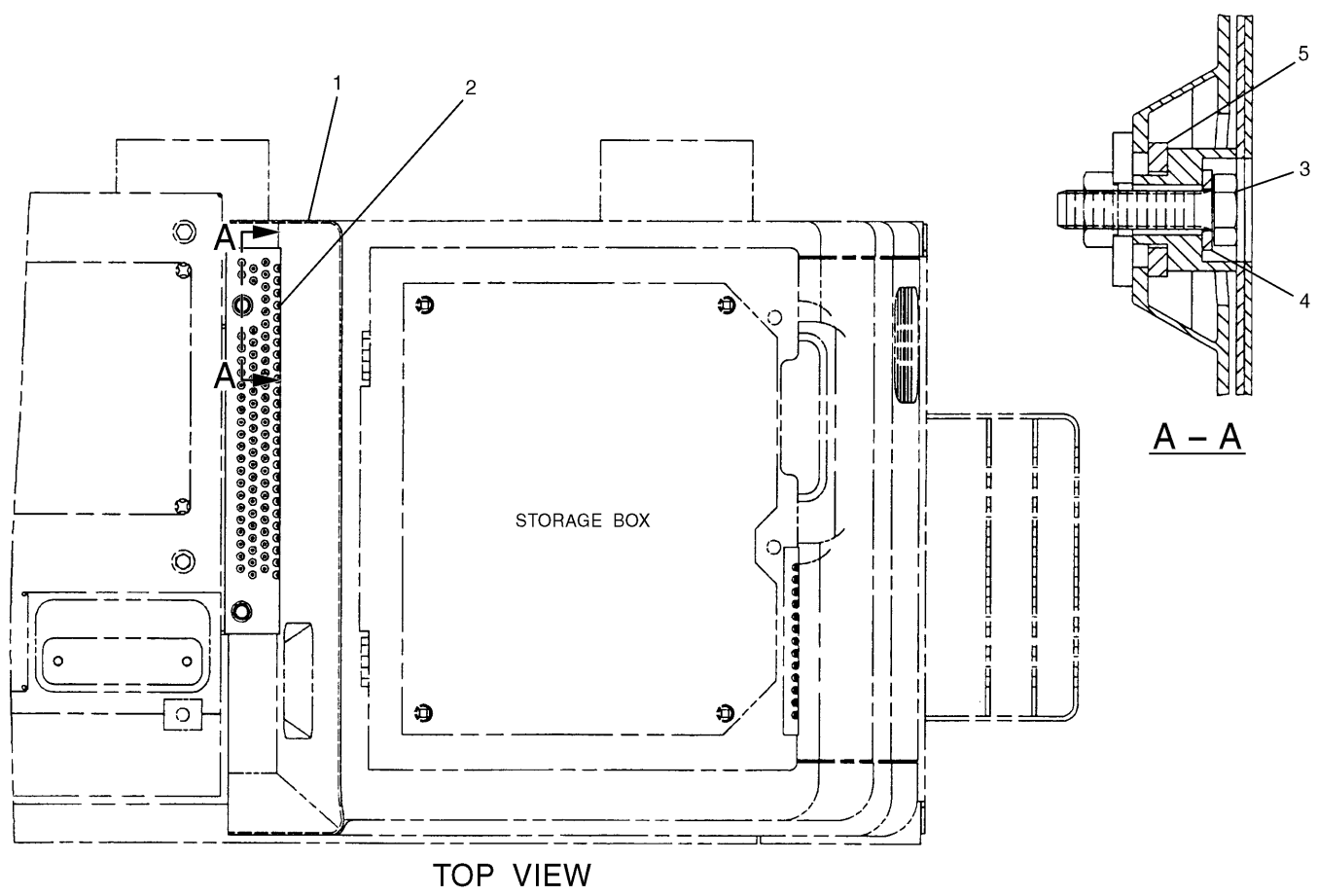

NOTE	No.	PART No.	QTY	PART NAME	NOTE	No.	PART No.	QTY	PART NAME
	1	114-6302	1	COVER					
	2	146-4967	1	SHEET AS					
	3	161-7632	2	BOLT (L=40mm)					
	4	8T-4121	2	WASHER					
	5	116-1724	2	WASHER					

H65283E 01

146-4966 FENDER & COVER GP
S/N 3MR 04979-Up, 4MR 00716-Up

MEMORANDA

FRAME AND BODY

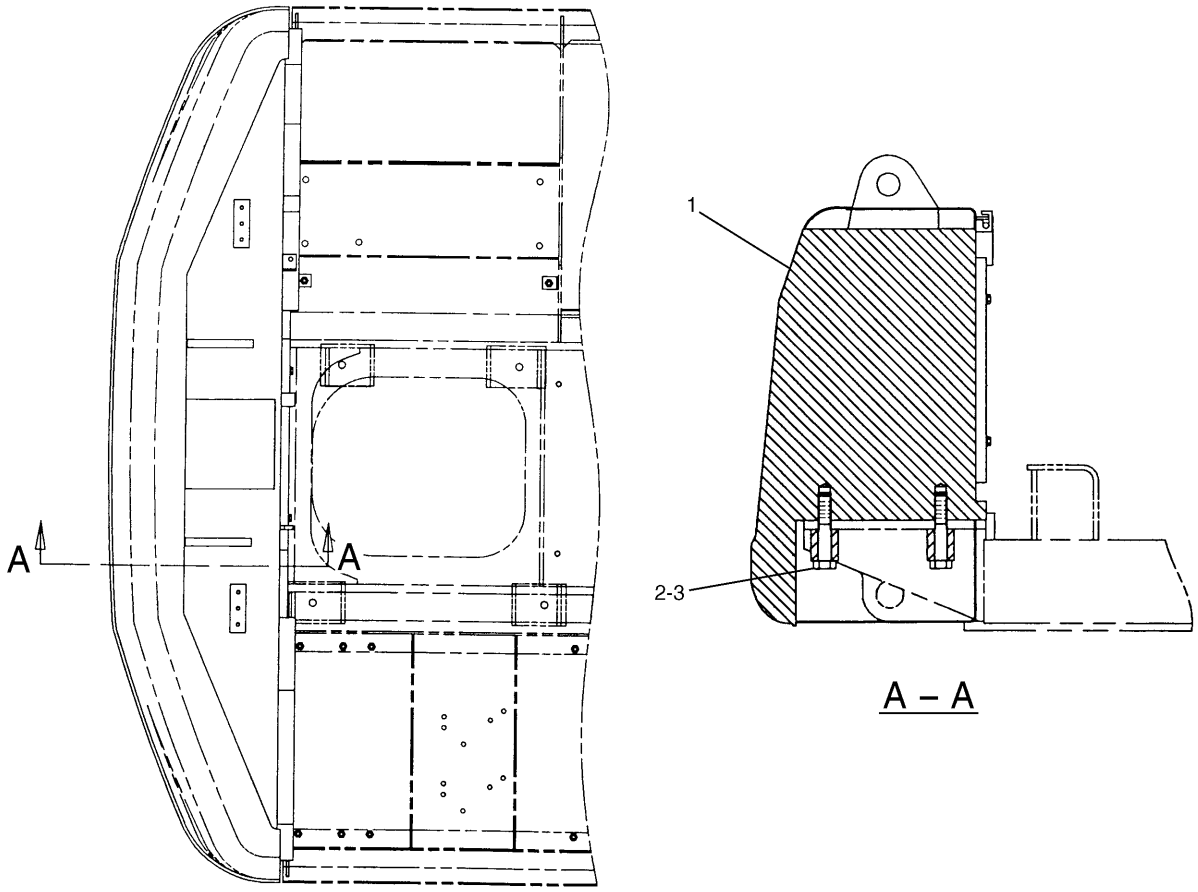

NOTE	No.	PART No.	QTY	PART NAME	NOTE	No.	PART No.	QTY	PART NAME
Y	1	116-1704	1	COUNTERWEIGHT GP					
	2	6I-6646	4	SPACER					
	3	7X-2585	4	BOLT (L=160mm)					

Y—SEE SEPARATE ILLUSTRATION

H53000E 00

116-1703 COUNTERWEIGHT GP

116-1704-Page143

FRAME AND BODY

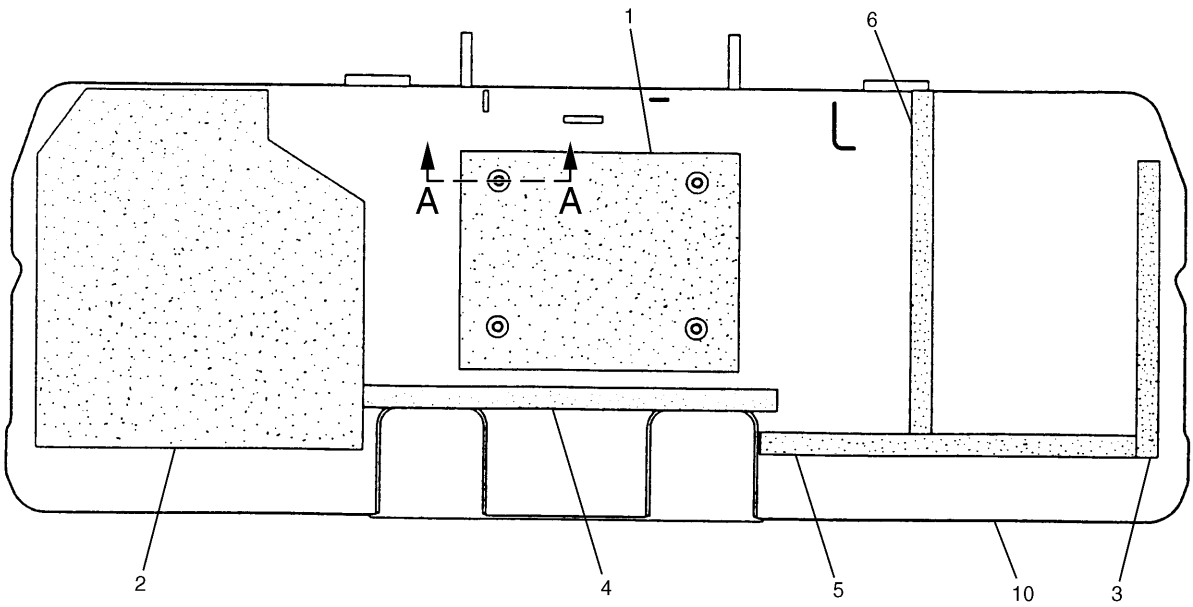

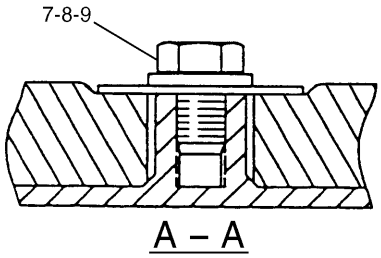

A – A

NOTE	No.	PART No.	QTY	PART NAME	NOTE	No.	PART No.	QTY	PART NAME
	1	121-4928	1	INSULATION					
	2	117-4373	1	INSULATION					
	3	7I-0717	1	LINER					
	4	117-4375	1	LINER					
	5	129-3399	1	LINER					
	6	117-4377	1	LINER					
	7	8T-4223	4	WASHER (OD=25.50mm)					
	8	7Y-2292	4	WASHER (OD=50.00mm)					
	9	8T-4179	4	BOLT (L=20mm)					
	10	117-4379	1	COUNTERWEIGHT AS					

H83398E 01

116-1704 COUNTERWEIGHT GP

Basic

Part of 116-1703-Page142

FRAME AND BODY

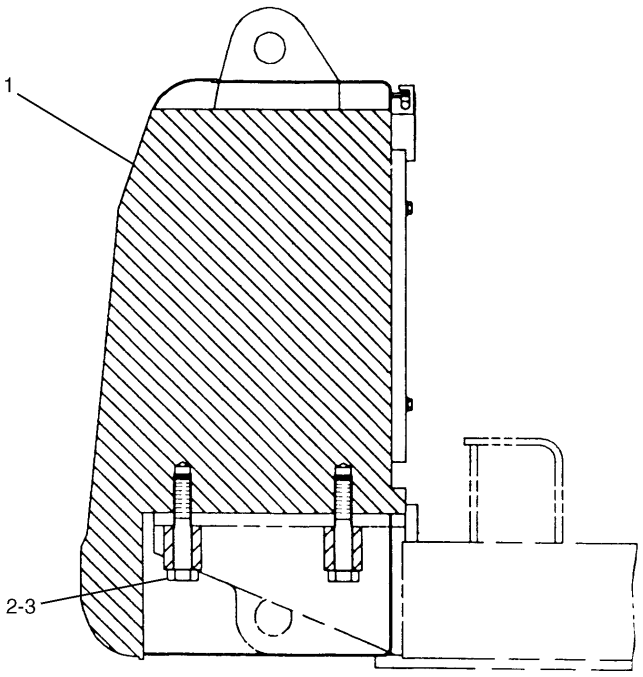

NOTE	No.	PART No.	QTY	PART NAME
Y	1	122-4071	1	COUNTERWEIGHT GP
	2	6I-6646	4	SPACER
	3	7X-2585	4	BOLT (L=160mm)

Y—SEE SEPARATE ILLUSTRATION

H53002E 00

122-4070 COUNTERWEIGHT GP

Extra
Part of 127-6615-Page383
122-4071-Page145
An Attachment

FRAME AND BODY

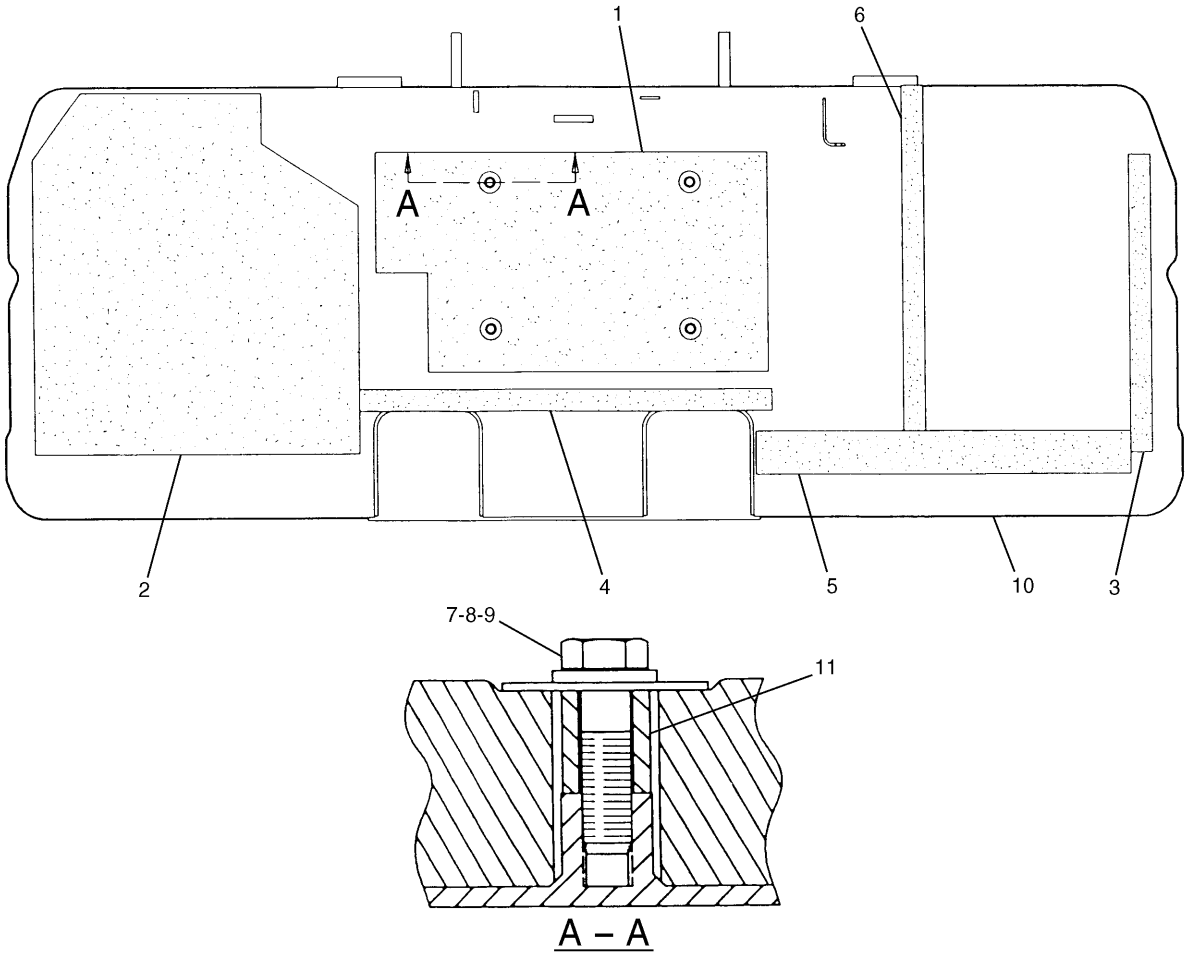

NOTE	No.	PART No.	QTY	PART NAME	NOTE	No.	PART No.	QTY	PART NAME
	1	137-2208	1	INSULATION					
	2	117-4373	1	INSULATION					
	3	7I-0717	1	LINER					
	4	117-4375	1	LINER					
	5	134-6183	1	LINER					
	6	117-4377	1	LINER					
	7	8T-4223	4	WASHER (OD=25.50mm)					
	8	7Y-2292	4	WASHER (OD=50.00mm)					
	9	8T-4184	4	BOLT (L=45mm)					
	10	122-4072	1	COUNTERWEIGHT AS					
	11	081-6344	4	SPACER					

H83399E 02

122-4071 COUNTERWEIGHT GP

Extra

Part of 122-4070-Page144

An Attachment

FRAME AND BODY

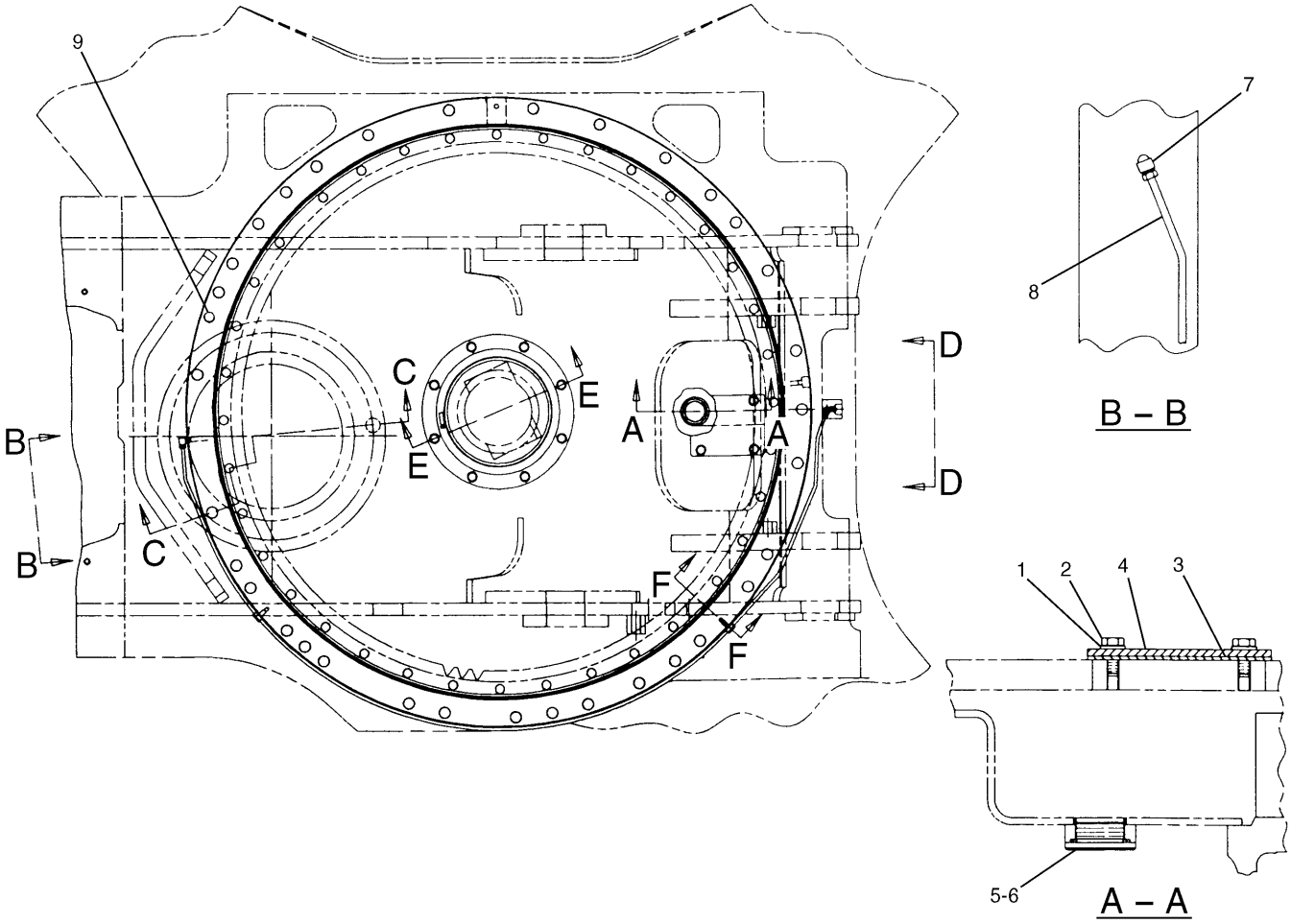

NOTE	No.	PART No.	QTY	PART NAME	NOTE	No.	PART No.	QTY	PART NAME
	1	8T-4121	4	WASHER					
	2	8T-4136	4	BOLT (L=25mm)					
	3	7Y-1647	1	GASKET					
	4	7Y-1648	1	STRIP					
	5	096-6095	1	PLUG					
	6	095-1608	1	SEAL-O-RING (ID=44.70mm)					
	7	5K-9243	1	ELBOW					
	8	114-1352	1	TUBE AS					
	9	096-4902	1	DOWEL					

H53004E 01

114-1340 GEAR & BEARING GP (1/2)
S/N 3MR 1-Up

FRAME AND BODY

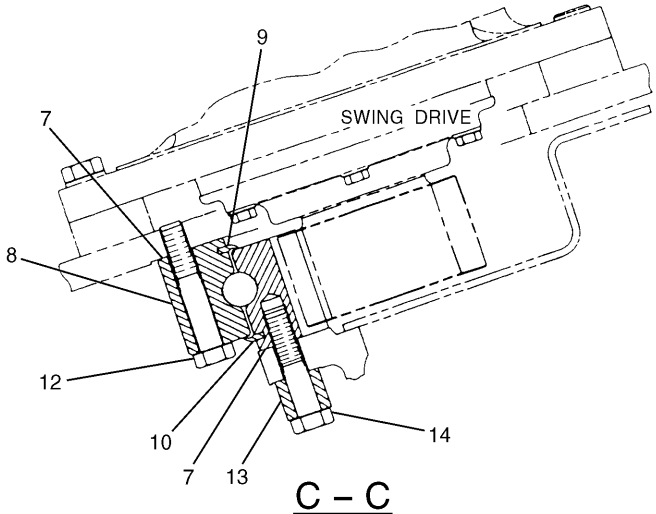

C – C

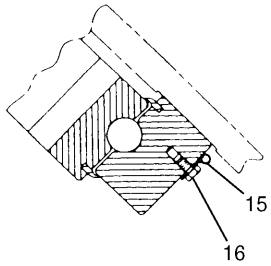

F – F

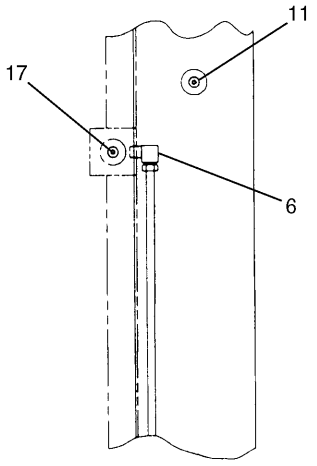

D – D

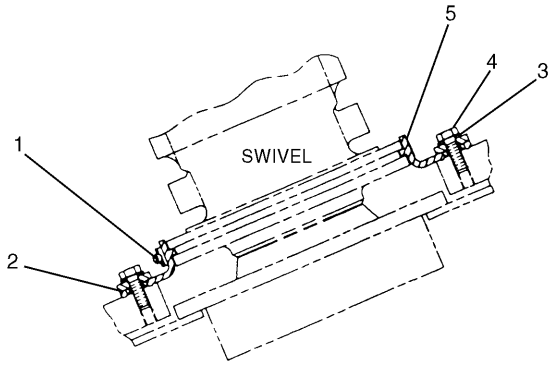

E – E

NOTE	No.	PART No.	QTY	PART NAME	NOTE	No.	PART No.	QTY	PART NAME
	1	7Y-1650	1	CLAMP					
	2	093-0543	1	RETAINER					
	3	8T-4121	8	WASHER					
	4	8T-4136	8	BOLT (L=25mm)					
	5	7Y-1649	1	BOOT					
	6	5K-9243	1	ELBOW					
B	7	1U-8846		GASKET MAKER…(300ml)					
	8	114-1350	1	GEAR GP					
E	9	7Y-0423		SEAL…(377cm)					
E	10	7Y-0423		SEAL…(378cm)					
	11	3B-8489	1	FITTING					
	12	8T-0362	33	BOLT (L=110mm)					
	13	7Y-1863	36	SPACER					
	14	8T-0360	36	BOLT (L=90mm)					
	15	4N-9170	2	CLIP					
	16	8T-4199	2	BOLT (L=12mm)					
	17	3B-8489	1	FITTING					

B—USE AS REQUIRED

E—ORDER BY THE CENTIMETER

H53005E 01

114-1340 GEAR & BEARING GP (2/2)

S/N 3MR 1-Up

FRAME AND BODY

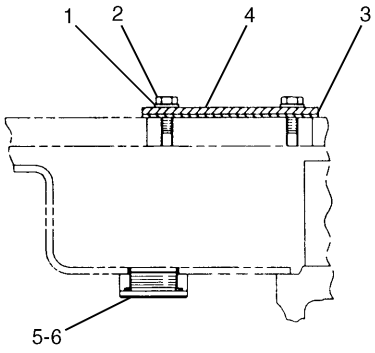

A – A

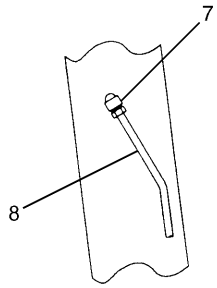

B – B

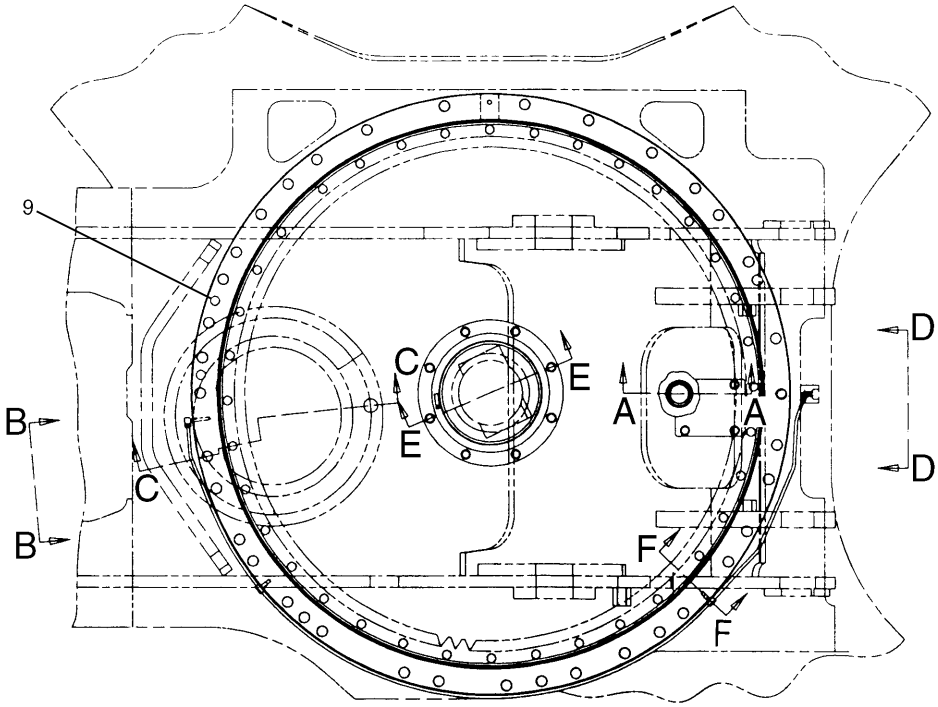

NOTE	No.	PART No.	QTY	PART NAME	NOTE	No.	PART No.	QTY	PART NAME
	1	8T-4121	4	WASHER					
	2	8T-4136	4	BOLT (L=25mm)					
	3	7Y-1647	1	GASKET					
	4	7Y-1648	1	STRIP					
	5	096-6095	1	PLUG					
	6	095-1608	1	SEAL-O-RING (ID=44.70mm)					
	7	5K-9243	1	ELBOW					
	8	114-1352	1	TUBE AS					
	9	096-4902	1	DOWEL					

H54487E 02

114-1341 GEAR & BEARING GP (1/2)
S/N 4MR 1-Up

FRAME AND BODY

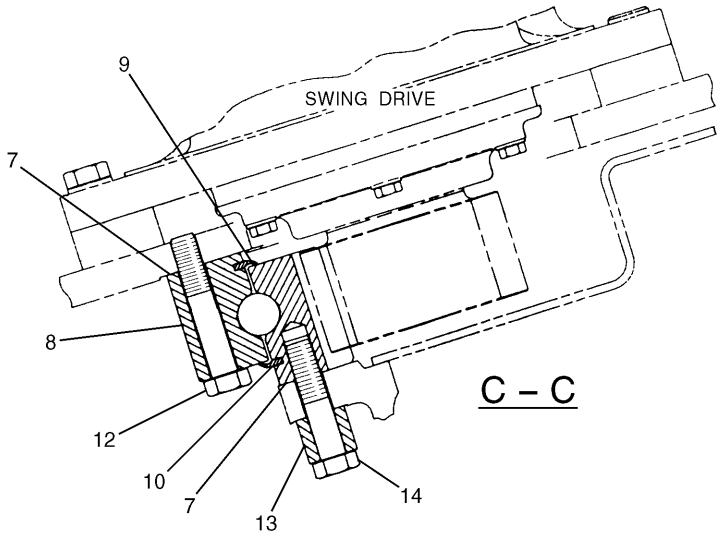

C – C

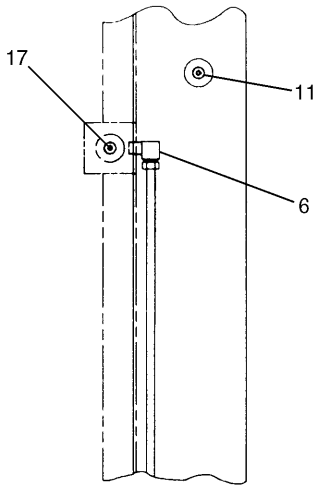

D – D

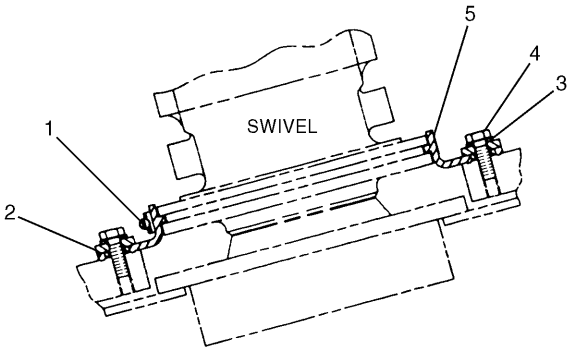

E – E

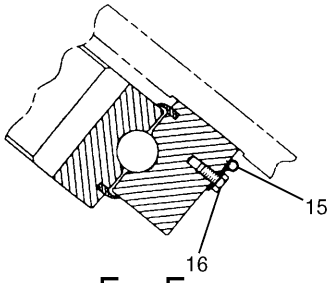

F – F

NOTE	No.	PART No.	QTY	PART NAME	NOTE	No.	PART No.	QTY	PART NAME
	1	7Y-1650	1	CLAMP					
	2	093-0543	1	RETAINER					
	3	8T-4121	8	WASHER					
	4	8T-4136	8	BOLT (L=25mm)					
	5	7Y-1649	1	BOOT					
	6	5K-9243	1	ELBOW					
B	7	1U-8846		GASKET MAKER…(300ml)					
	8	114-1505	1	GEAR GP					
E	9	7Y-0423		SEAL…(377cm)					
E	10	7Y-0423		SEAL…(378cm)					
	11	3B-8489	1	FITTING					
	12	8T-0362	33	BOLT (L=110mm)					
	13	7Y-1863	36	SPACER					
	14	8T-0360	36	BOLT (L=90mm)					
	15	4N-9170	2	CLIP					
	16	8T-4199	2	BOLT (L=12mm)					
	17	3B-8489	1	FITTING					

B—USE AS REQUIRED

E—ORDER BY THE CENTIMETER

H54488E 02

114-1341 GEAR & BEARING GP (2/2)

S/N 4MR 1-Up

FRAME AND BODY

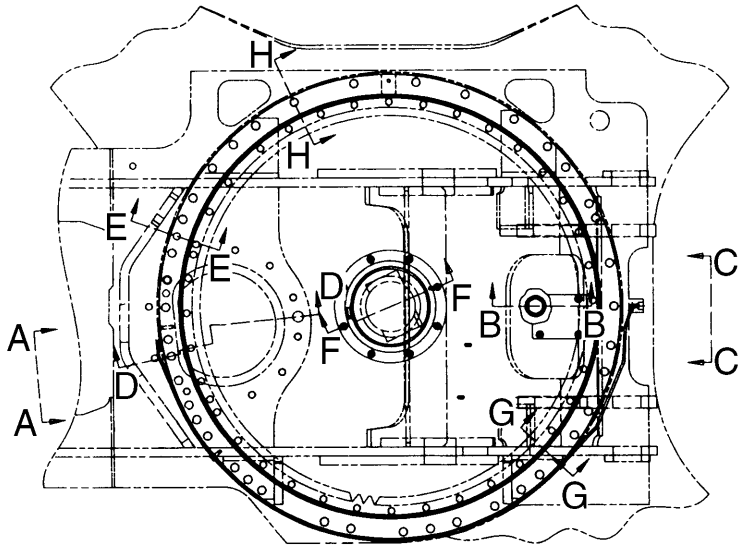

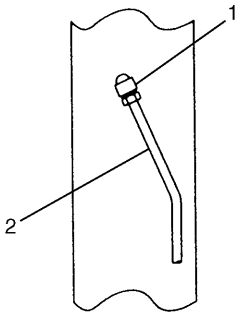

A – A

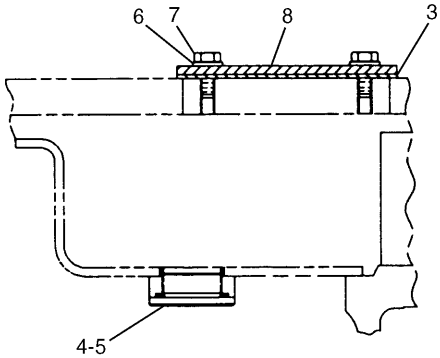

B – B

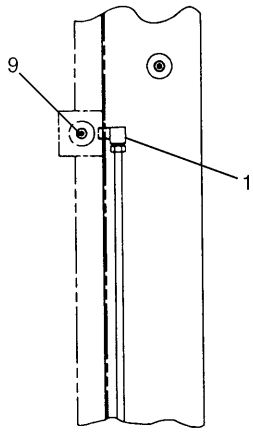

C – C

NOTE	No.	PART No.	QTY	PART NAME	NOTE	No.	PART No.	QTY	PART NAME
	1	5K-9243	2	ELBOW					
	2	114-1352	1	TUBE AS					
	3	7Y-1647	1	GASKET					
	4	096-6095	1	PLUG					
	5	095-1608	1	SEAL-O-RING (ID=44.70mm)					
	6	8T-4121	4	WASHER					
	7	8T-4136	4	BOLT (L=25mm)					
	8	7Y-1648	1	STRIP					
	9	3B-8489	1	FITTING					

H65284E 03

114-1481 GEAR & BEARING GP (1/2)
Part of 126-3796-Page35
An Attachment

FRAME AND BODY

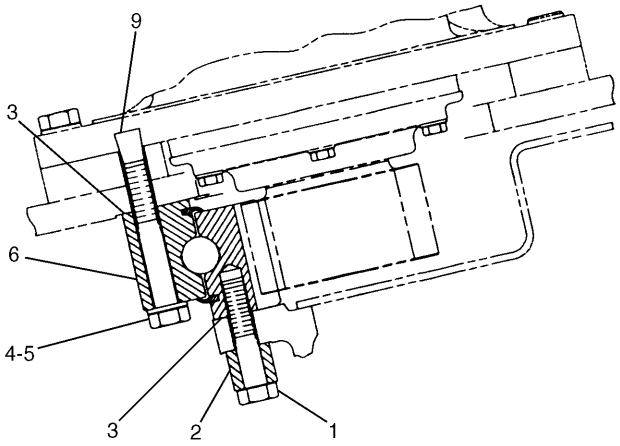

D – D

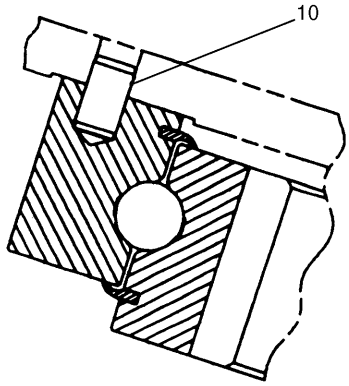

E – E

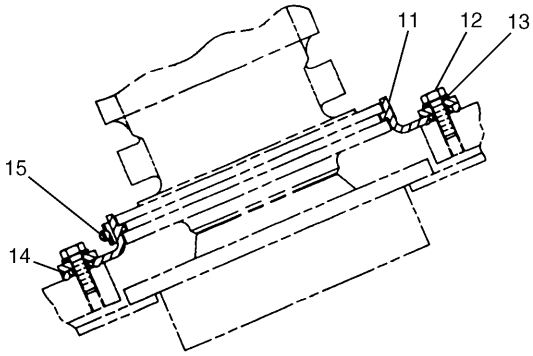

F – F

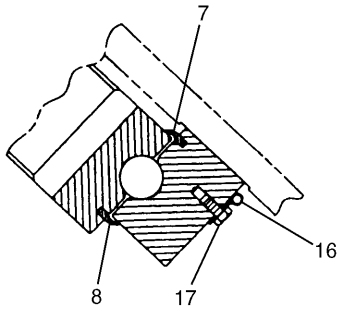

G – G

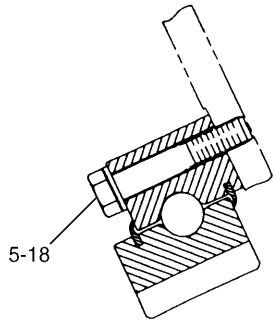

H – H

NOTE	No.	PART No.	QTY	PART NAME	NOTE	No.	PART No.	QTY	PART NAME
	1	145-9278	36	BOLT (L=90mm)					
	2	7Y-1863	36	SPACER					
B	3	1U-8846		GASKET MAKER···(300ml)					
	4	5Q-3561	17	BOLT (L=130mm)					
	5	8T-3282	38	WASHER					
	6	114-1505	1	GEAR GP					
E	7	7Y-0423		SEAL···(377cm)					
E	8	7Y-0423		SEAL···(378cm)					
	9	2B-7561	14	CORK					
	10	096-4902	1	DOWEL					
	11	7Y-1649	1	BOOT					
	12	8T-4136	8	BOLT (L=25mm)					
	13	8T-4121	8	WASHER					
	14	093-0543	1	RETAINER					
	15	7Y-1650	1	CLAMP					
	16	4N-9170	2	CLIP					
	17	8T-4199	2	BOLT (L=12mm)					
	18	5Q-3560	21	BOLT (L=110mm)					

B—USE AS REQUIRED

E—ORDER BY THE CENTIMETER

H65285E 03

114-1481 GEAR & BEARING GP (2/2)

Part of 126-3796-Page35
An Attachment

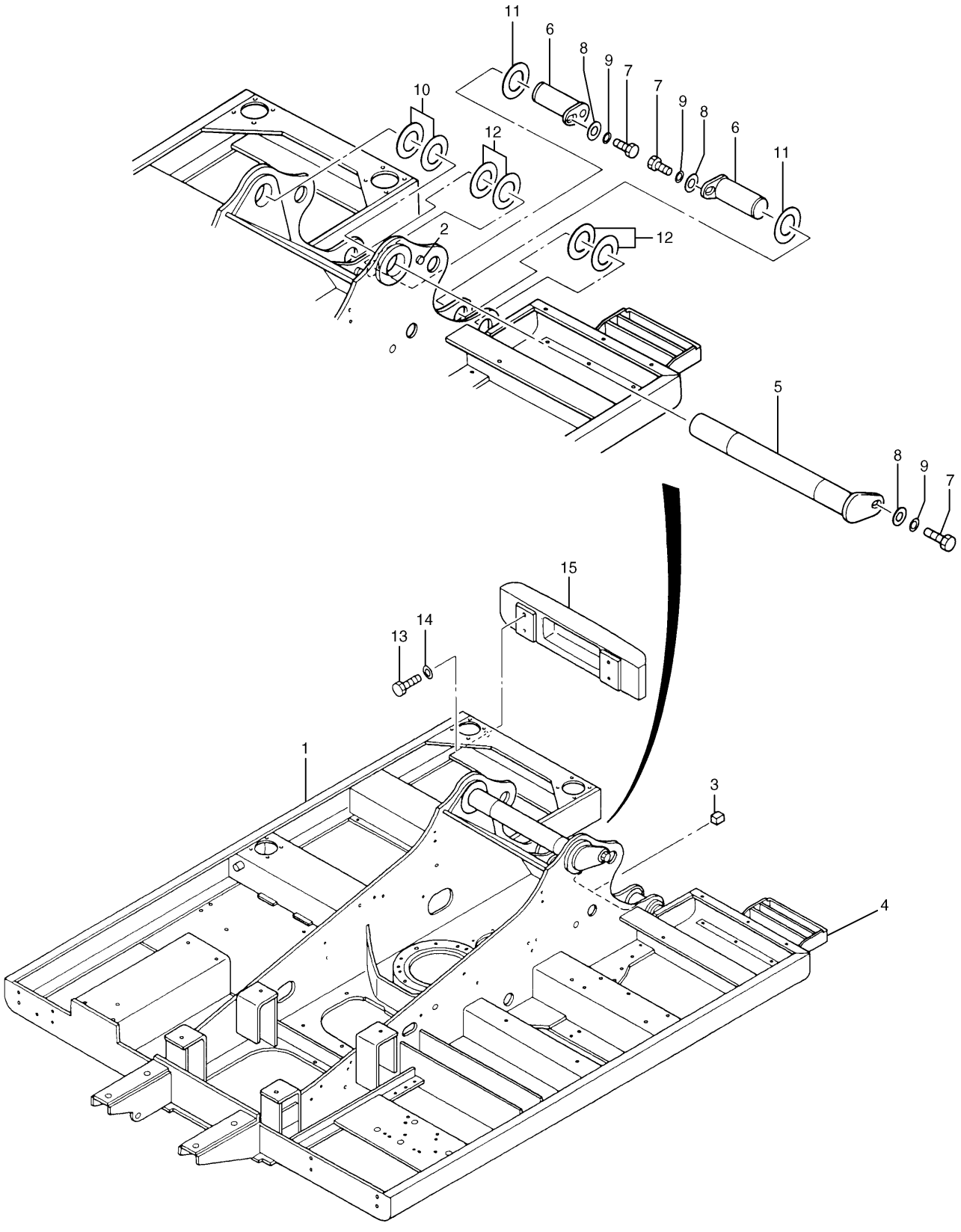

119-5587 FRAME GP-UPPER
S/N 3MR 1-01094

FRAME AND BODY

NOTE	No.	PART No.	QTY	PART NAME	NOTE	No.	PART No.	QTY	PART NAME
	1	119-5588	1	FRAME AS					
	2	4I-7077	1	BOSS					
	3	7Y-0633	1	BOSS					
	4	113-2204	1	PLATE AS					
	5	4I-4808	1	PIN AS					
	6	4I-4812	2	PIN AS					
	7	8T-4780	3	BOLT (L=30mm)					
	8	093-0349	3	WASHER					
	9	8T-4123	3	WASHER					
B	10	093-0084	2	SHIM (T=1.00mm)					
B		093-0116	1	SHIM (T=2.00mm)					
B		113-2127	1	SHIM (T=0.50mm)					
	11	093-0363	2	SPACER					
B	12	093-0083	4	SHIM (T=1.00mm)					
B		133-2425	2	SHIM (T=0.50mm)					
B		093-0115	2	SHIM (T=2.00mm)					
	13	8T-4137	4	BOLT (L=20mm)					
	14	8T-4121	4	WASHER					
	15	5I-8913	1	BUMPER					
				THE FOLLOWING SERVICE					
				REPAIR IS AVAILABLE:					
		7I-6881	1	PLATE (L=1100mm)					

B—USE AS REQUIRED

H82189E 02

119-5587 FRAME GP-UPPER
S/N 3MR 1-01094

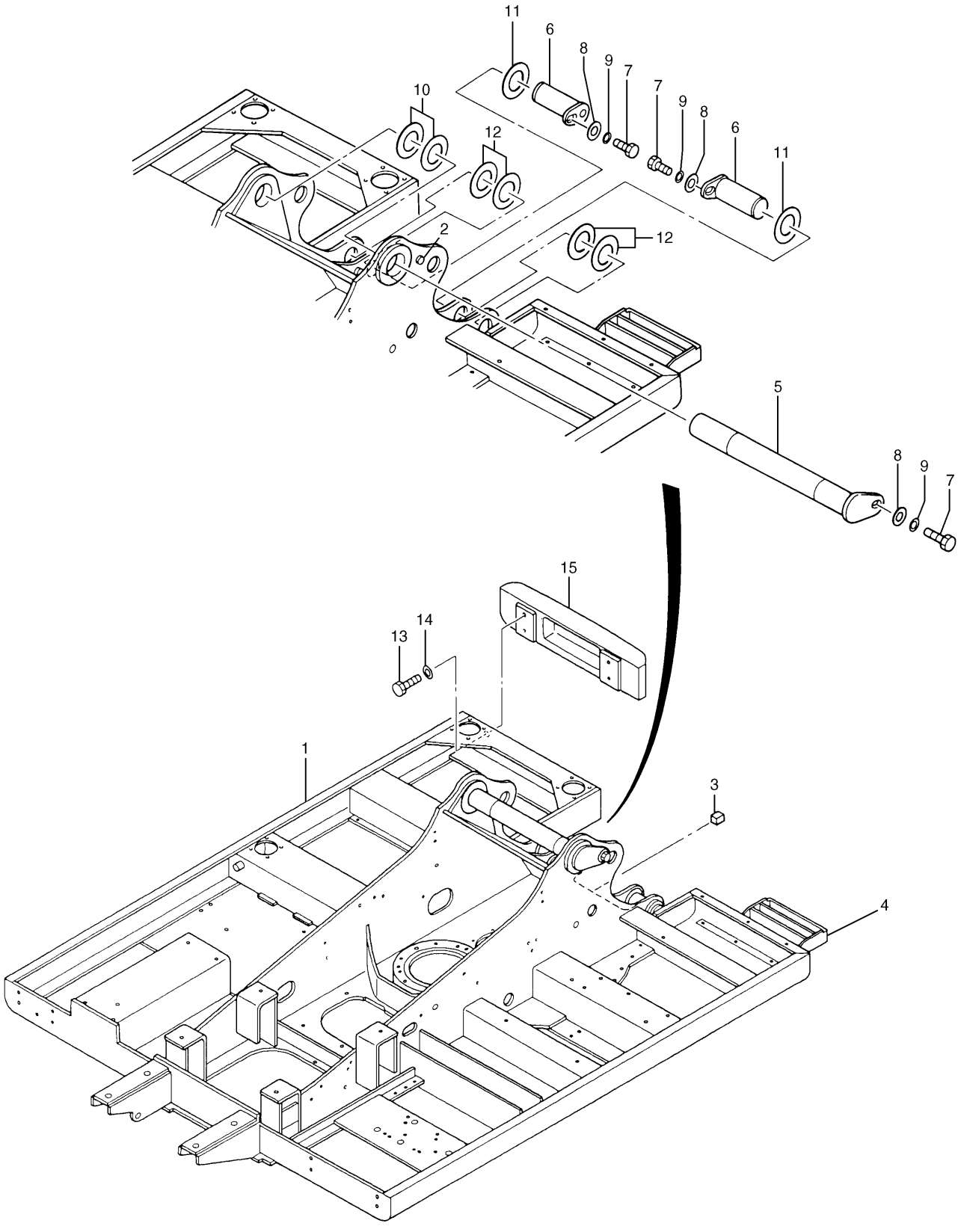

117-5491 FRAME GP-UPPER
S/N 3MR 01095-04919, 4MR 1-00706

FRAME AND BODY

NOTE	No.	PART No.	QTY	PART NAME	NOTE	No.	PART No.	QTY	PART NAME
	1	117-5492	1	FRAME AS					
	2	41-7077	1	BOSS					
	3	7Y-0633	1	BOSS					
	4	113-2204	1	PLATE AS					
	5	41-4808	1	PIN AS					
	6	41-4812	2	PIN AS					
	7	8T-4780	3	BOLT (L=30mm)					
	8	093-0349	3	WASHER					
	9	8T-4123	3	WASHER					
B	10	093-0084	2	SHIM (T=1.00mm)					
B		093-0116	1	SHIM (T=2.00mm)					
B		113-2127	1	SHIM (T=0.50mm)					
	11	093-0363	2	SPACER					
B	12	093-0083	4	SHIM (T=1.00mm)					
B		133-2425	2	SHIM (T=0.50mm)					
B		093-0115	2	SHIM (T=2.00mm)					
	13	8T-4137	4	BOLT (L=20mm)					
	14	8T-4121	4	WASHER					
	15	51-8913	1	BUMPER					
				THE FOLLOWING SERVICE					
				REPAIR IS AVAILABLE:					
		71-6881	1	PLATE (L=1100mm)					

B—USE AS REQUIRED

H54502E 03

117-5491 FRAME GP-UPPER
S/N 3MR 01095-04919, 4MR 1-00706

FRAME AND BODY

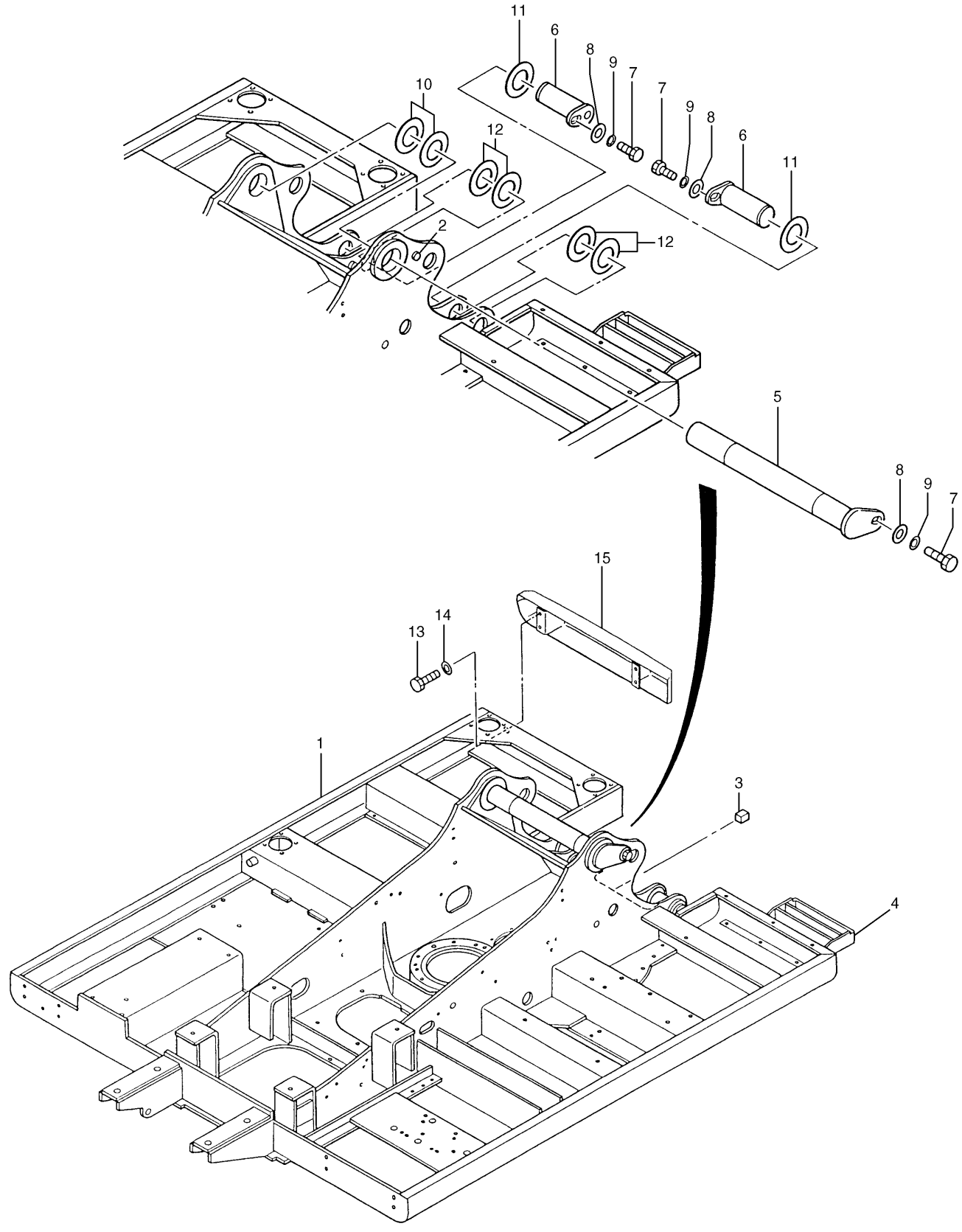

117-5491 FRAME GP-UPPER
S/N 3MR 04920-Up, 4MR 00707-Up

FRAME AND BODY

NOTE	No.	PART No.	QTY	PART NAME	NOTE	No.	PART No.	QTY	PART NAME
	1	117-5492	1	FRAME AS					
	2	41-7077	1	BOSS					
	3	7Y-0633	1	BOSS					
	4	113-2204	1	PLATE AS					
	5	41-4808	1	PIN AS					
	6	41-4812	2	PIN AS					
	7	8T-4780	3	BOLT (L=30mm)					
	8	093-0349	3	WASHER					
	9	8T-4123	3	WASHER					
B	10	093-0084	2	SHIM (T=1.00mm)					
B		093-0116	1	SHIM (T=2.00mm)					
B		113-2127	1	SHIM (T=0.50mm)					
	11	093-0363	2	SPACER					
B	12	093-0083	4	SHIM (T=1.00mm)					
B		133-2425	2	SHIM (T=0.50mm)					
B		093-0115	2	SHIM (T=2.00mm)					
	13	8T-4195	4	BOLT (L=30mm)					
	14	8T-4121	4	WASHER					
	15	154-0551	1	BUMPER AS					
				THE FOLLOWING SERVICE REPAIR IS AVAILABLE:					
		71-6881	1	PLATE (L=1100mm)					

B—USE AS REQUIRED

H65382E 06

117-5491 FRAME GP-UPPER
S/N 3MR 04920-Up, 4MR 00707-Up

FRAME AND BODY

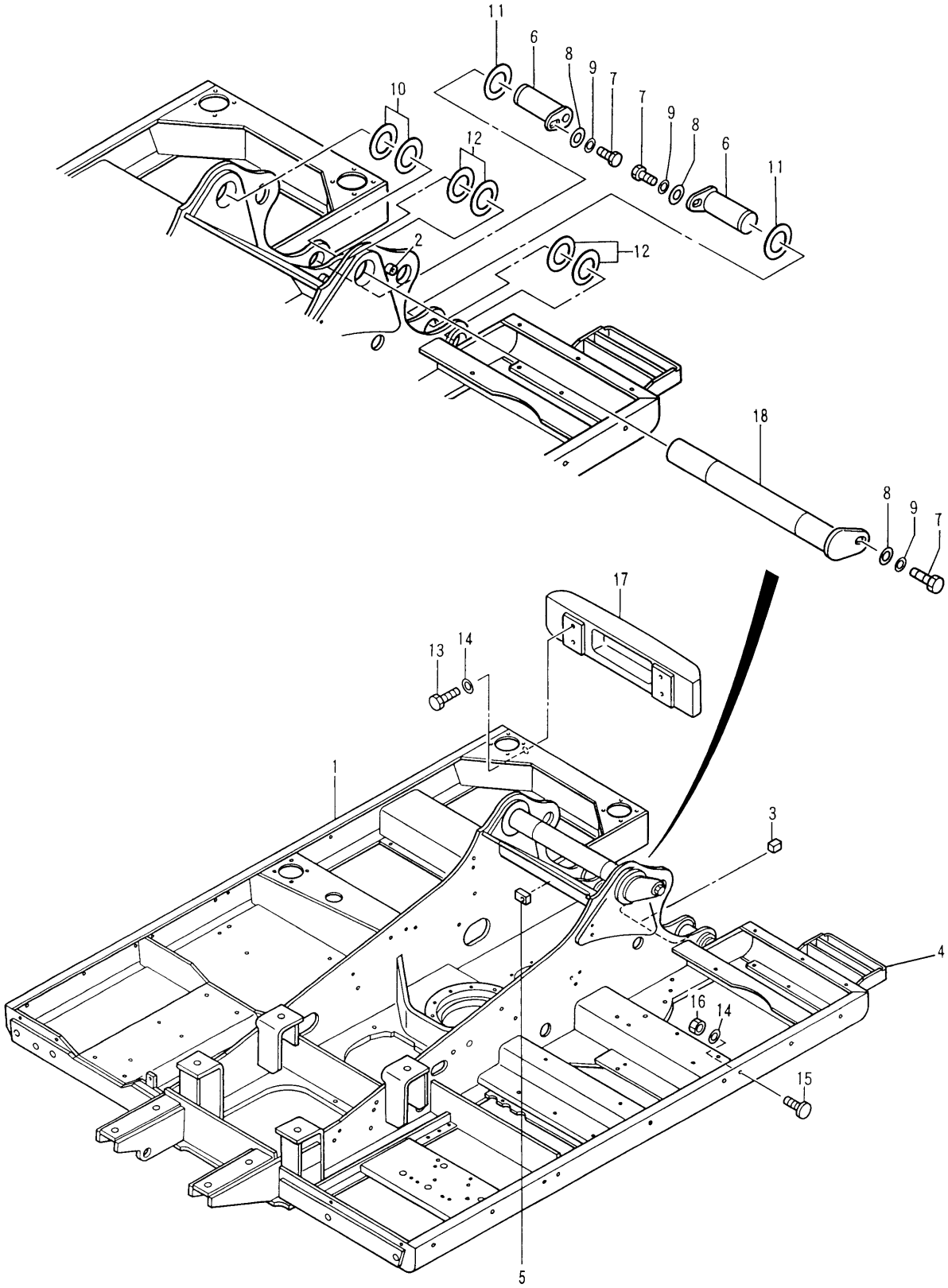

H55000E 02

128-9802 FRAME GP-UPPER
S/N 3MR 1-04919, 4MR 1-00706
Part of 126-3796-Page35
An Attachment

FRAME AND BODY

NOTE	No.	PART No.	QTY	PART NAME	NOTE	No.	PART No.	QTY	PART NAME
	1	128-9803	1	FRAME AS					
	2	41-7077	1	BOSS					
	3	7Y-0633	1	BOSS					
	4	113-2204	1	PLATE AS					
	5	087-5841	1	PLATE					
	6	41-4812	2	PIN AS					
	7	8T-4780	3	BOLT (L=30mm)					
	8	093-0349	3	WASHER					
	9	8T-4123	3	WASHER					
B	10	093-0084	2	SHIM (T=1.00mm)					
B		093-0116	1	SHIM (T=2.00mm)					
B		113-2127	1	SHIM (T=0.50mm)					
	11	093-0363	2	SPACER					
B	12	093-0083	4	SHIM (T=1.00mm)					
B		133-2425	2	SHIM (T=0.50mm)					
B		093-0115	2	SHIM (T=2.00mm)					
	13	8T-4137	4	BOLT (L=20mm)					
	14	8T-4121	21	WASHER					
	15	8T-5413	17	STUD					
	16	8T-4133	17	NUT					
	17	51-8913	1	BUMPER					
	18	41-4808	1	PIN AS					
				THE FOLLOWING SERVICE					
				REPAIR IS AVAILABLE:					
		71-6681	1	PLATE (L=1100mm)					

B—USE AS REQUIRED

H55000E 02

128-9802 FRAME GP-UPPER

S/N 3MR 1-04919, 4MR 1-00706
Part of 126-3796-Page35
An Attachment

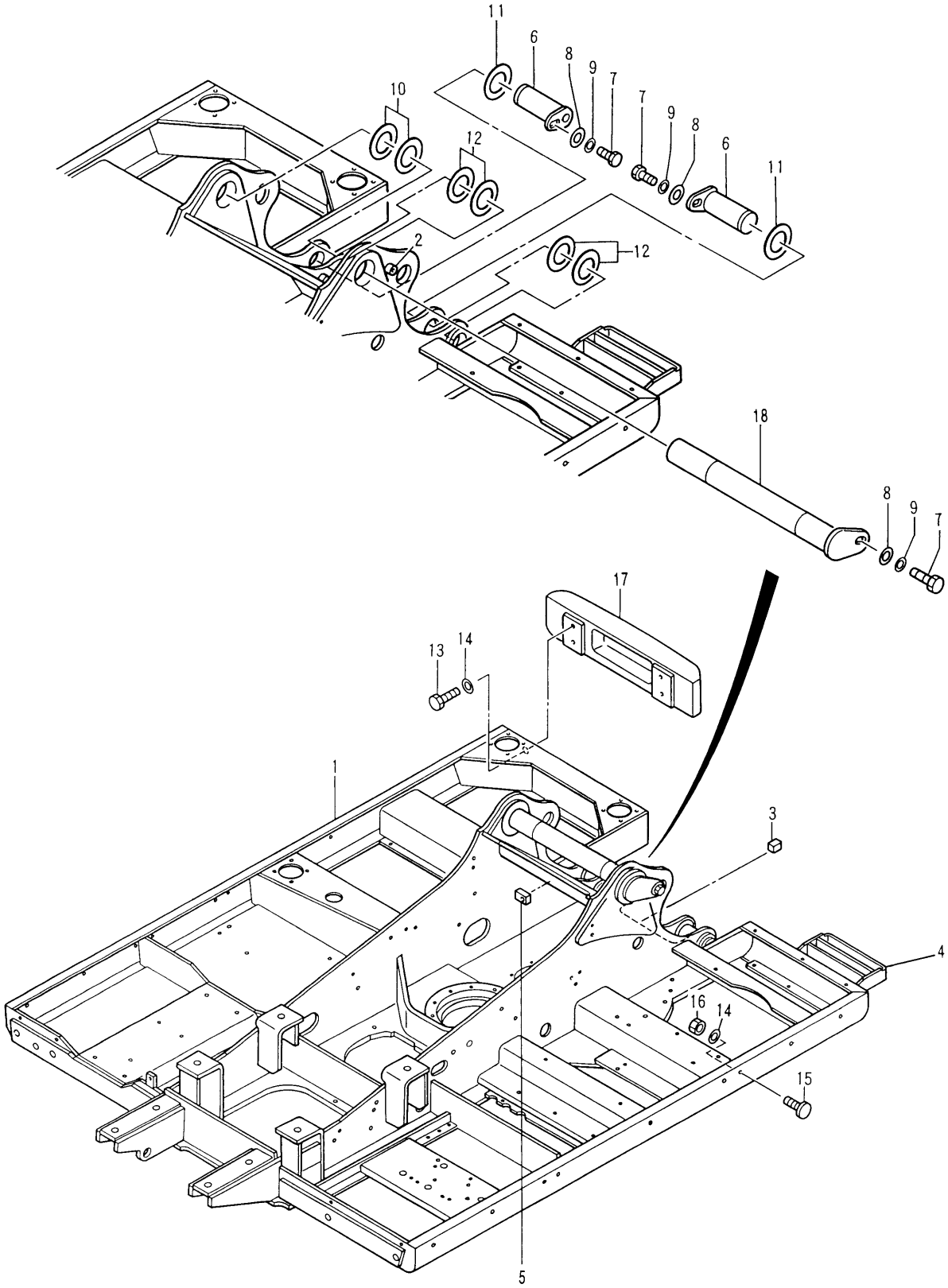

H60378E 04

128-9802 FRAME GP-UPPER
S/N 3MR 04920-(D99.03), 4MR 00707-(D99.03)
Part of 126-3796-Page35
An Attachment

FRAME AND BODY

NOTE	No.	PART No.	QTY	PART NAME
	1	128-9803	1	FRAME AS
	2	41-7077	1	BOSS
	3	7Y-0633	1	BOSS
	4	113-2204	1	PLATE AS
	5	087-5841	1	PLATE
	6	41-4812	2	PIN AS
	7	8T-4780	3	BOLT (L=30mm)
	8	093-0349	3	WASHER
	9	8T-4123	3	WASHER
B	10	093-0084	2	SHIM (T=1.00mm)
B		093-0116	1	SHIM (T=2.00mm)
B		113-2127	1	SHIM (T=0.50mm)
	11	093-0363	2	SPACER
B	12	093-0083	4	SHIM (T=1.00mm)
B		133-2425	2	SHIM (T=0.50mm)
B		093-0115	2	SHIM (T=2.00mm)
	13	8T-4195	4	BOLT (L=30mm)
	14	8T-4121	21	WASHER
	15	8T-5413	17	STUD
	16	8T-4133	17	NUT
	17	154-0551	1	BUMPER AS
	18	41-4808	1	PIN AS
				THE FOLLOWING SERVICE
				REPAIR IS AVAILABLE:
		71-6881	1	PLATE (L=1100mm)

B—USE AS REQUIRED

H60378E 04

128-9802 FRAME GP-UPPER

S/N 3MR 04920-(D99.03), 4MR 00707-(D99.03)

Part of 126-3796-Page35

An Attachment

FRAME AND BODY

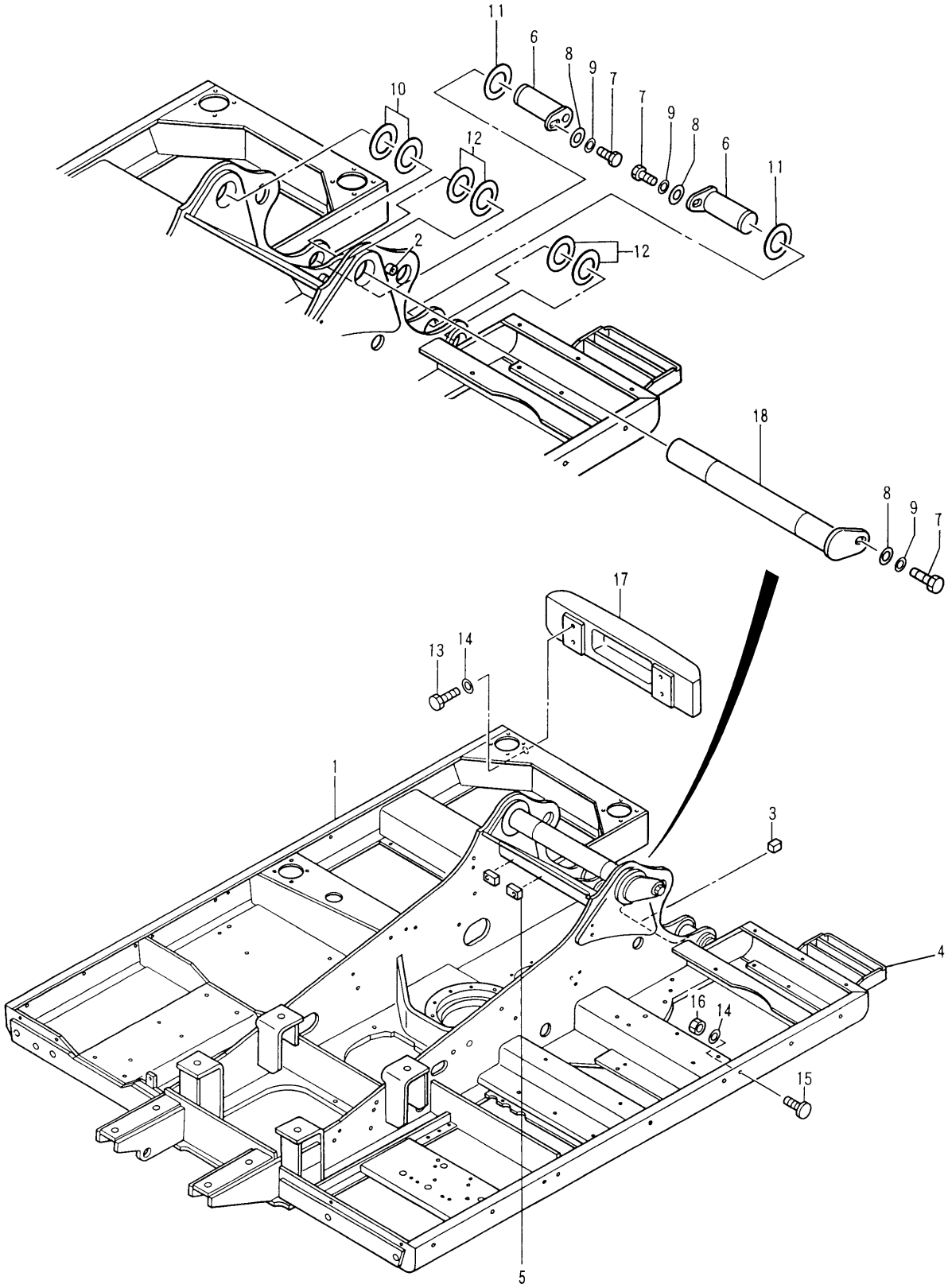

H65384E 05

128-9802 FRAME GP-UPPER
S/N 3MR (D99.04)-Up, 4MR (D99.04)-Up
Part of 126-3796-Page35
An Attachment

FRAME AND BODY

NOTE	No.	PART No.	QTY	PART NAME
	1	128-9803	1	FRAME AS
	2	41-7077	1	BOSS
	3	7Y-0633	1	BOSS
	4	113-2204	1	PLATE AS
	5	087-5841	2	PLATE
	6	41-4812	2	PIN AS
	7	8T-4780	3	BOLT (L=30mm)
	8	093-0349	3	WASHER
	9	8T-4123	3	WASHER
B	10	093-0084	2	SHIM (T=1.00mm)
B		093-0116	1	SHIM (T=2.00mm)
B		113-2127	1	SHIM (T=0.50mm)
	11	093-0363	2	SPACER
B	12	093-0083	4	SHIM (T=1.00mm)
B		133-2425	2	SHIM (T=0.50mm)
B		093-0115	2	SHIM (T=2.00mm)
	13	8T-4195	4	BOLT (L=30mm)
	14	8T-4121	21	WASHER
	15	8T-5413	17	STUD
	16	8T-4133	17	NUT
	17	154-0551	1	BUMPER AS
	18	41-4808	1	PIN AS
				THE FOLLOWING SERVICE
				REPAIR IS AVAILABLE:
		71-6881	1	PLATE (L=1100mm)

B—USE AS REQUIRED

H65384E 05

128-9802 FRAME GP-UPPER

S/N 3MR (D99.04)-Up, 4MR (D99.04)-Up
Part of 126-3796-Page35
An Attachment

MEMORANDA

FRAME AND BODY

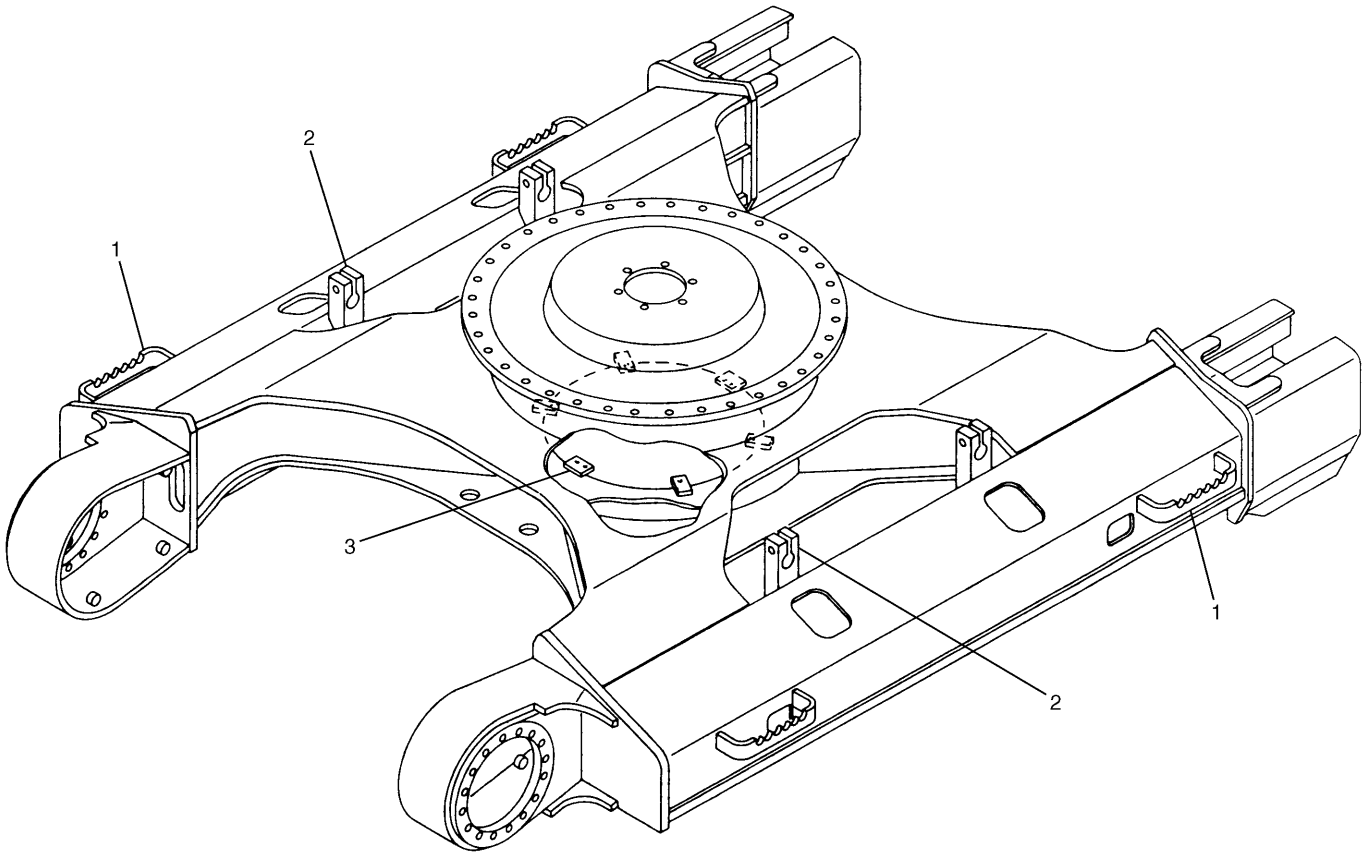

NOTE	No.	PART No.	QTY	PART NAME	NOTE	No.	PART No.	QTY	PART NAME
	1	120-7215	4	STEP					
	2	117-5540	4	BRACKET					
	3	7Y-3431	2	PLATE					

H53417E 01

117-5476 FRAME AS-UNDERCARRIAGE
S/N 3MR 1-01019

FRAME AND BODY

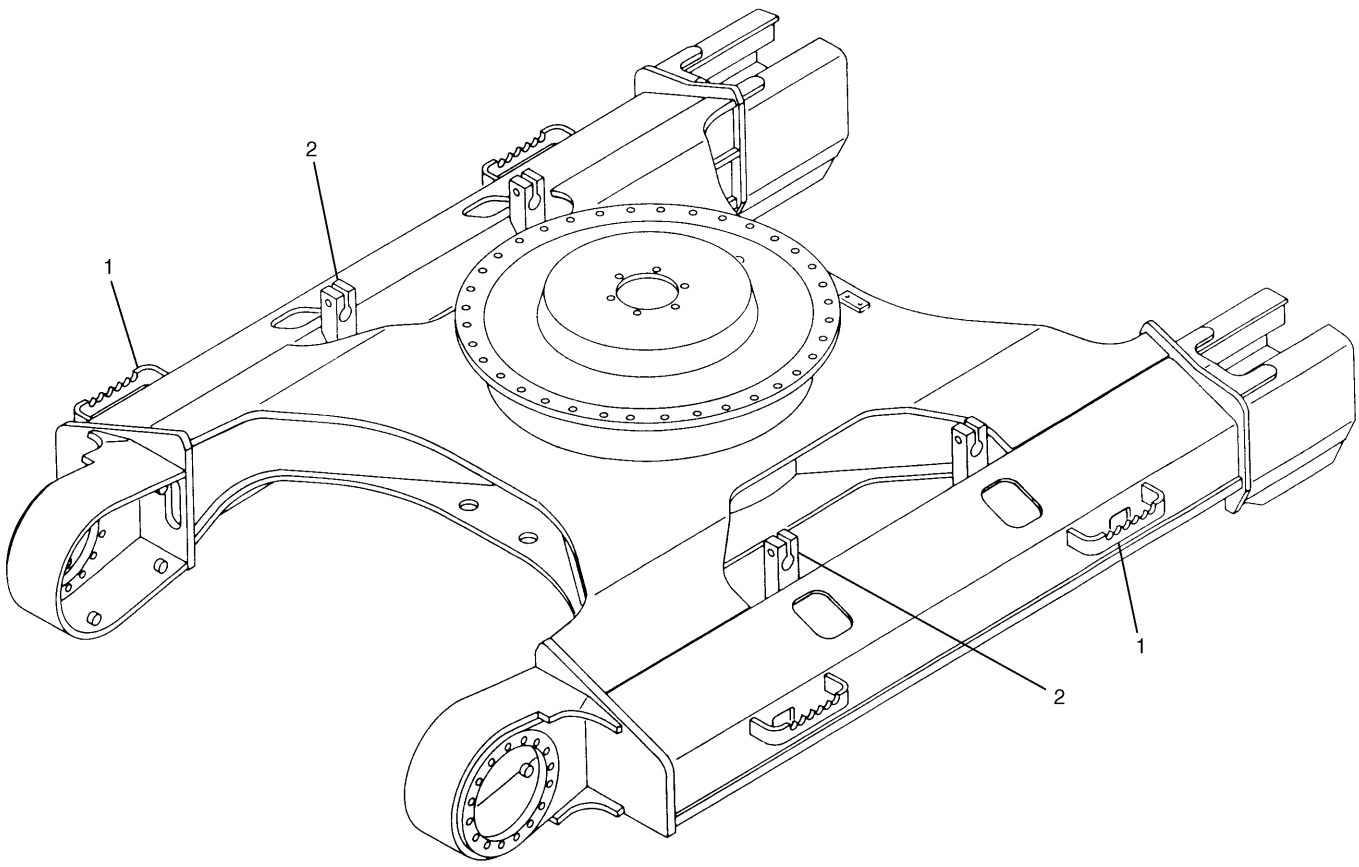

NOTE	No.	PART No.	QTY	PART NAME	NOTE	No.	PART No.	QTY	PART NAME
	1	120-7215	4	STEP					
	2	117-5540	4	BRACKET					

H53010E 02

117-5476 FRAME AS-UNDERCARRIAGE
S/N 3MR 01020-Up

MEMORANDA

FRAME AND BODY

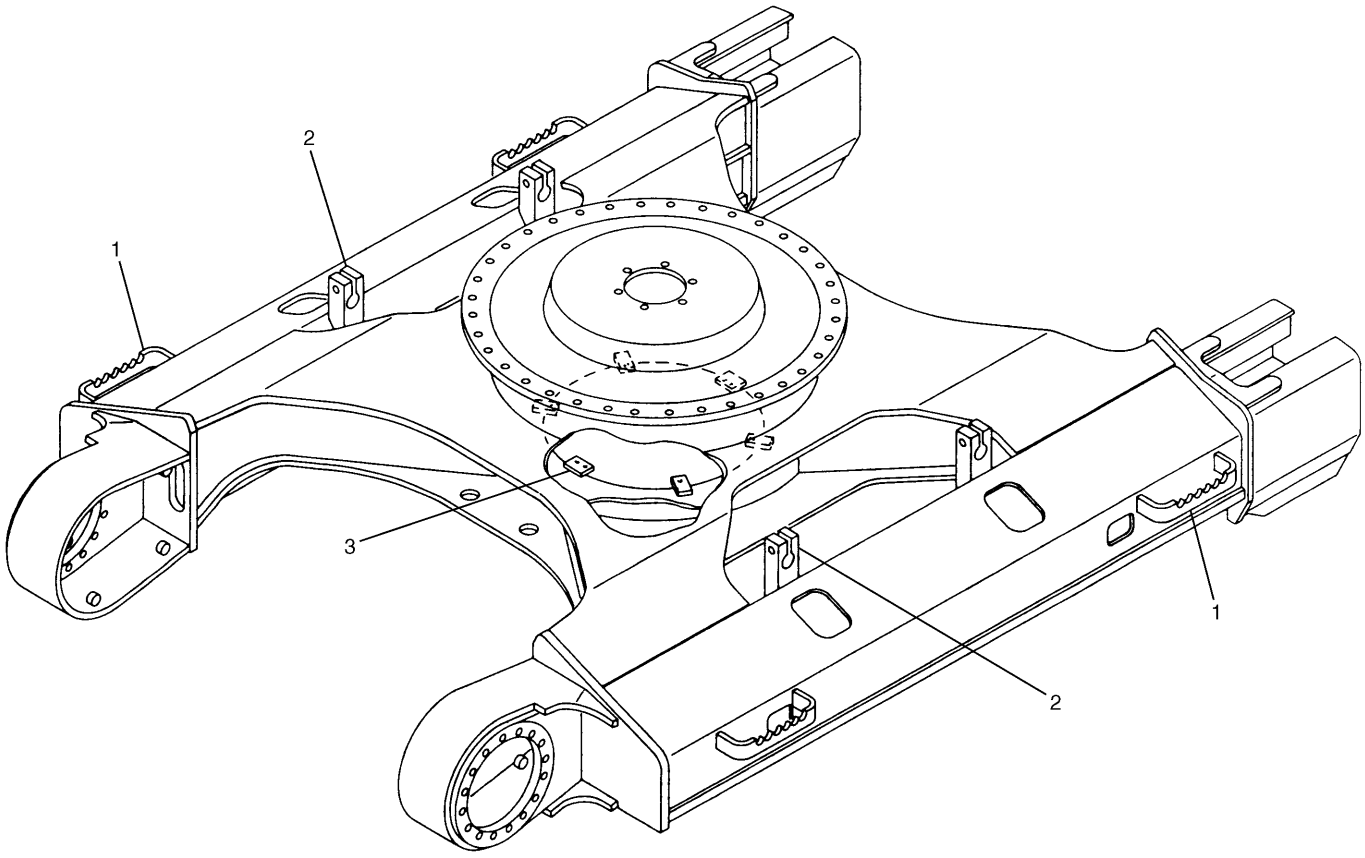

NOTE	No.	PART No.	QTY	PART NAME	NOTE	No.	PART No.	QTY	PART NAME
	1	120-7215	4	STEP					
	2	117-5540	4	BRACKET					
	3	7Y-3431	2	PLATE					

H53419E 01

117-5483 FRAME AS-UNDERCARRIAGE
S/N 4MR 1-00255

FRAME AND BODY

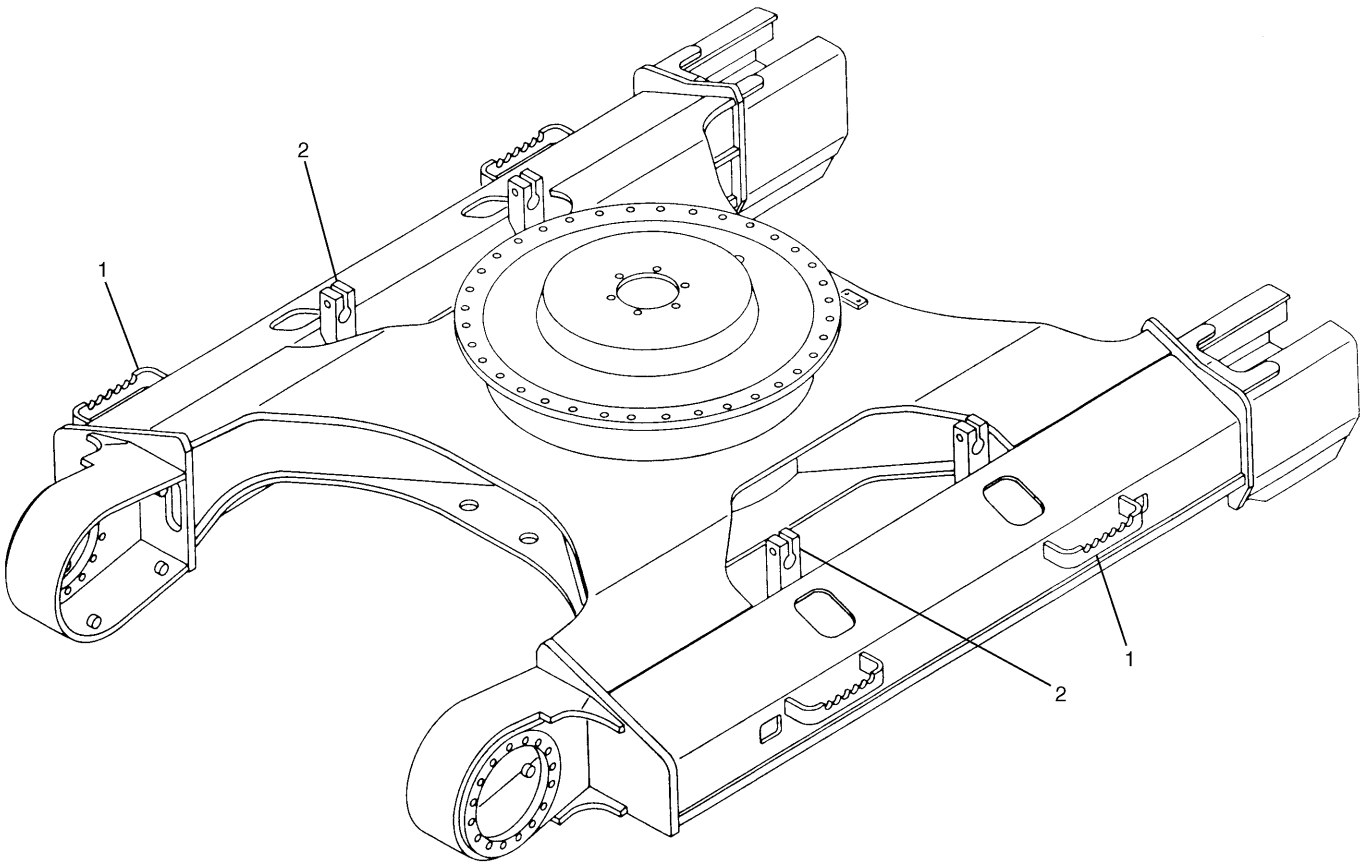

NOTE	No.	PART No.	QTY	PART NAME	NOTE	No.	PART No.	QTY	PART NAME
	1	120-7215	4	STEP					
	2	117-5540	4	BRACKET					

H53011E 02

117-5483 FRAME AS-UNDERCARRIAGE
S/N 4MR 00256-Up

MEMORANDA

FRAME AND BODY

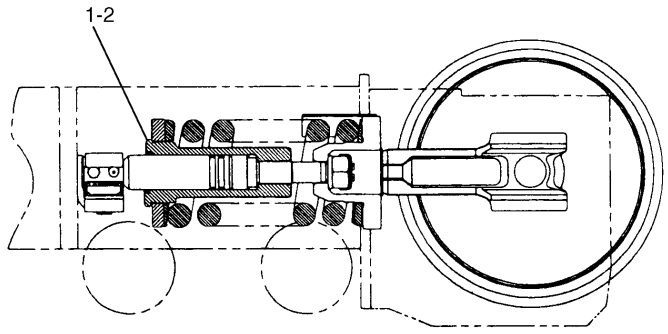

NOTE	No.	PART No.	QTY	PART NAME
Y	1	115-6420	1	IDLER GP (RH)
Y	2	115-6421	1	IDLER GP (LH)

Y—SEE SEPARATE ILLUSTRATION

H53012E 01

115-6419 IDLER GP-FRONT

115-6420-Page155,115-6421-Page156

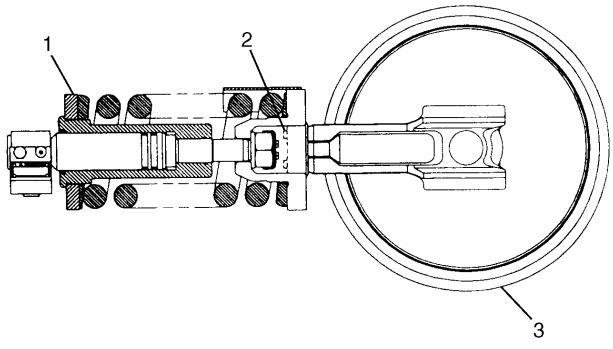

NOTE	No.	PART No.	QTY	PART NAME
Y	1	115-6422	1	RECOIL GP
	2	8T-4140	4	BOLT (L=60mm)
Y	3	113-2907	1	IDLER GP

Y—SEE SEPARATE ILLUSTRATION

H53013E 00

115-6420 IDLER GP-FRONT

Right Hand
Part of 115-6419-Page155
113-2907-Page156,115-6422-Page157

FRAME AND BODY

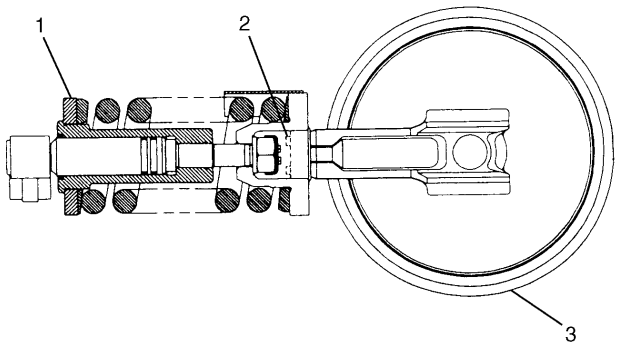

NOTE	No.	PART No.	QTY	PART NAME
Y	1	115-6423	1	RECOIL GP
	2	8T-4140	4	BOLT (L=60mm)
Y	3	113-2907	1	IDLER GP

Y—SEE SEPARATE ILLUSTRATION

H53014E 00

115-6421 IDLER GP-FRONT

Left Hand

Part of 115-6419-Page155
113-2907-Page156,115-6423-Page157

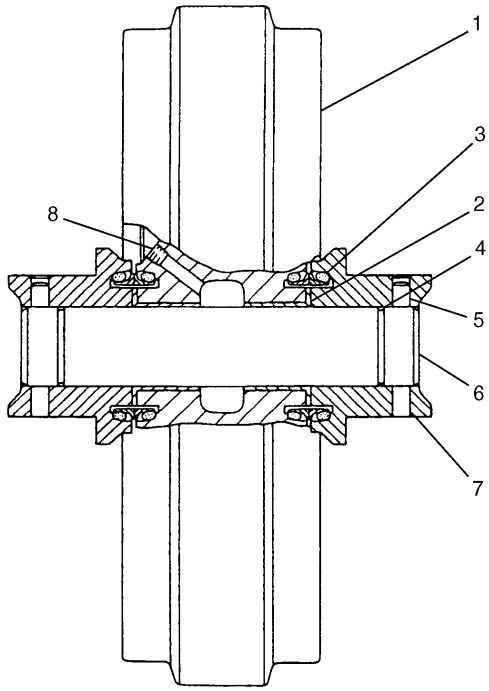

NOTE	No.	PART No.	QTY	PART NAME
	1	115-4926	1	IDLER AS
	2	8E-4359	2	BEARING
	3	9W-2201	2	SEAL GP
	4	6V-7658	2	SEAL-O-RING (ID=59.40mm)
	5	9W-9455	2	PIN
	6	9W-9451	1	SHAFT
	7	115-3701	2	BEARING
	8	7H-3171	1	PLUG

H53422E 01

113-2907 IDLER GP-FRONT

Part of 115-6420-Page155,115-6421-Page156

FRAME AND BODY

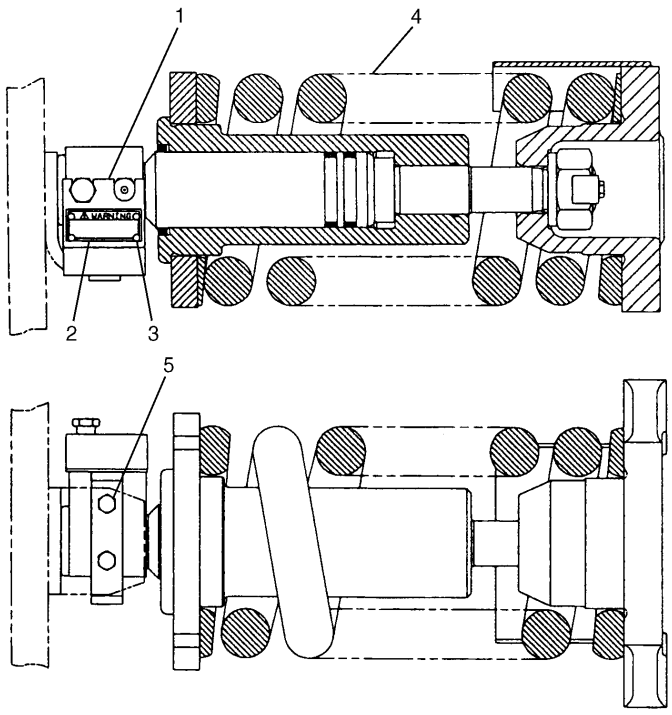

NOTE	No.	PART No.	QTY	PART NAME
	1	115-6410	1	PLATE AS
	2	5P-9891	1	PLATE (WARNING)
	3	4B-4158	4	SCREW
Y	4	115-6424	1	RECOIL GP
	5	8T-4137	2	BOLT (L=20mm)

Y—SEE SEPARATE ILLUSTRATION

H53016E 01

115-6422 TRACK ADJUSTER & RECOIL GP

Right Hand

Part of 115-6420-Page155
115-6424-Page158

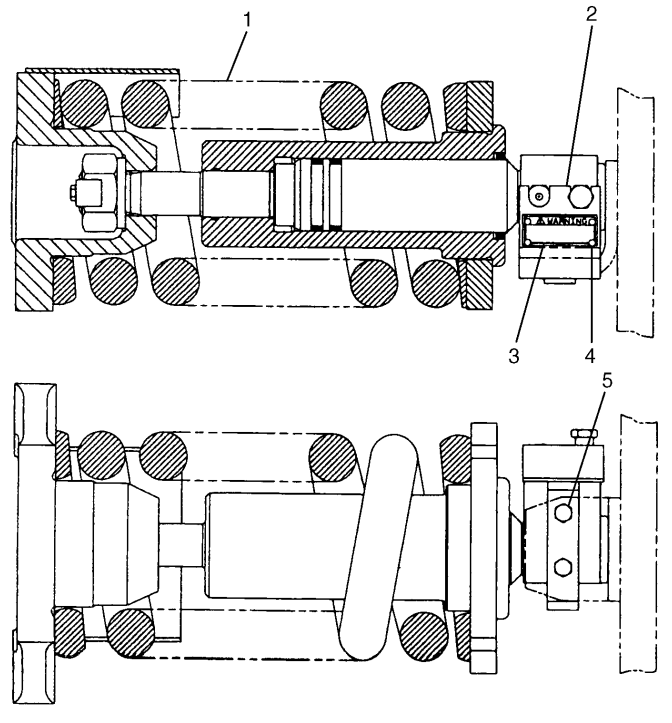

NOTE	No.	PART No.	QTY	PART NAME
Y	1	115-6424	1	RECOIL GP
	2	115-6410	1	PLATE AS
	3	5P-9891	1	PLATE (WARNING)
	4	4B-4158	4	SCREW
	5	8T-4137	2	BOLT (L=20mm)

Y—SEE SEPARATE ILLUSTRATION

H53017E 01

115-6423 TRACK ADJUSTER & RECOIL GP

Left Hand

Part of 115-6421-Page156
115-6424-Page158

FRAME AND BODY

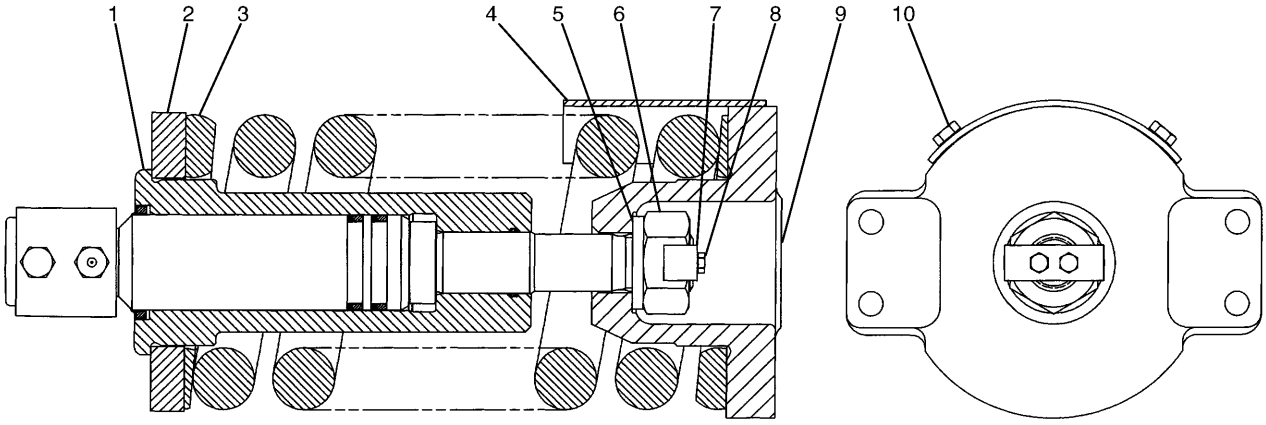

NOTE	No.	PART No.	QTY	PART NAME	NOTE	No.	PART No.	QTY	PART NAME
Y	1	115-6425	1	RECOIL GP					
	2	115-6426	1	PLATE					
	3	115-6427	1	SPRING					
	4	7Y-1781	1	COVER					
	5	7I-7733	1	WASHER					
	6	3E-8024	1	NUT					
	7	122-5253	1	STRIP					
	8	7X-2536	2	BOLT (L=14mm)					
	9	145-3037	1	SUPPORT					
	10	8T-4179	2	BOLT (L=20mm)					

Y—SEE SEPARATE ILLUSTRATION

H67572E 01

115-6424 TRACK ADJUSTER & RECOIL GP

Part of 115-6422,115-6423-Page157
115-6425-Page158.01

FRAME AND BODY

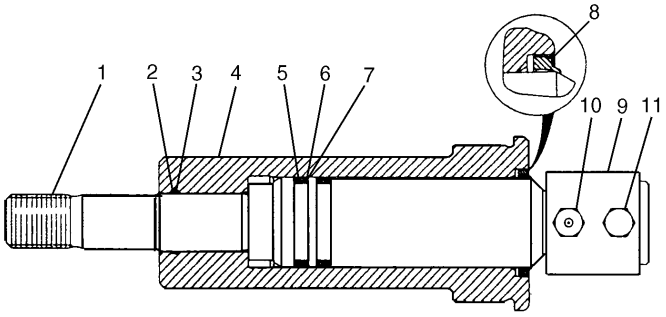

NOTE	No.	PART No.	QTY	PART NAME
	1	122-5076	1	ROD
	2	7I-7734	1	RING
	3	095-1703	1	SEAL-O-RING (ID=44.40mm)
	4	115-6429	1	CYLINDER
	5	095-1619	2	SEAL-O-RING (ID=59.60mm)
	6	093-1512	2	RING
	7	7Y-0682	2	RING
	8	093-1436	1	SEAL
	9	115-6428	1	PISTON AS
	10	095-2927	1	VALVE (FILL)
	11	2S-5926	1	VALVE (RELIEF)

H53019E 00

115-6425 TRACK ADJUSTER & RECOIL GP

Part of 115-6424-Page158

MEMORANDA

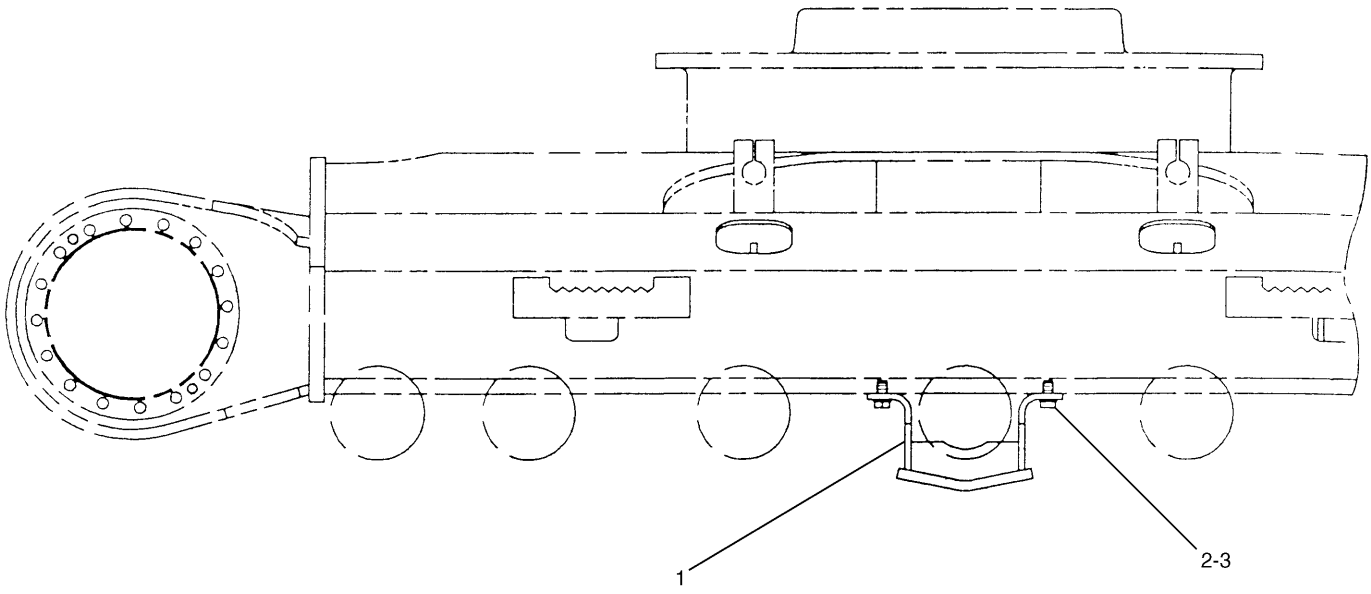

NOTE	No.	PART No.	QTY	PART NAME	NOTE	No.	PART No.	QTY	PART NAME
	1	120-7188	2	GUARD AS					
	2	8T-5460	8	BOLT (L=40mm)					
	3	8T-4123	8	WASHER					

H53425E 01

117-5489 GUARD GP-TRACK GUIDE

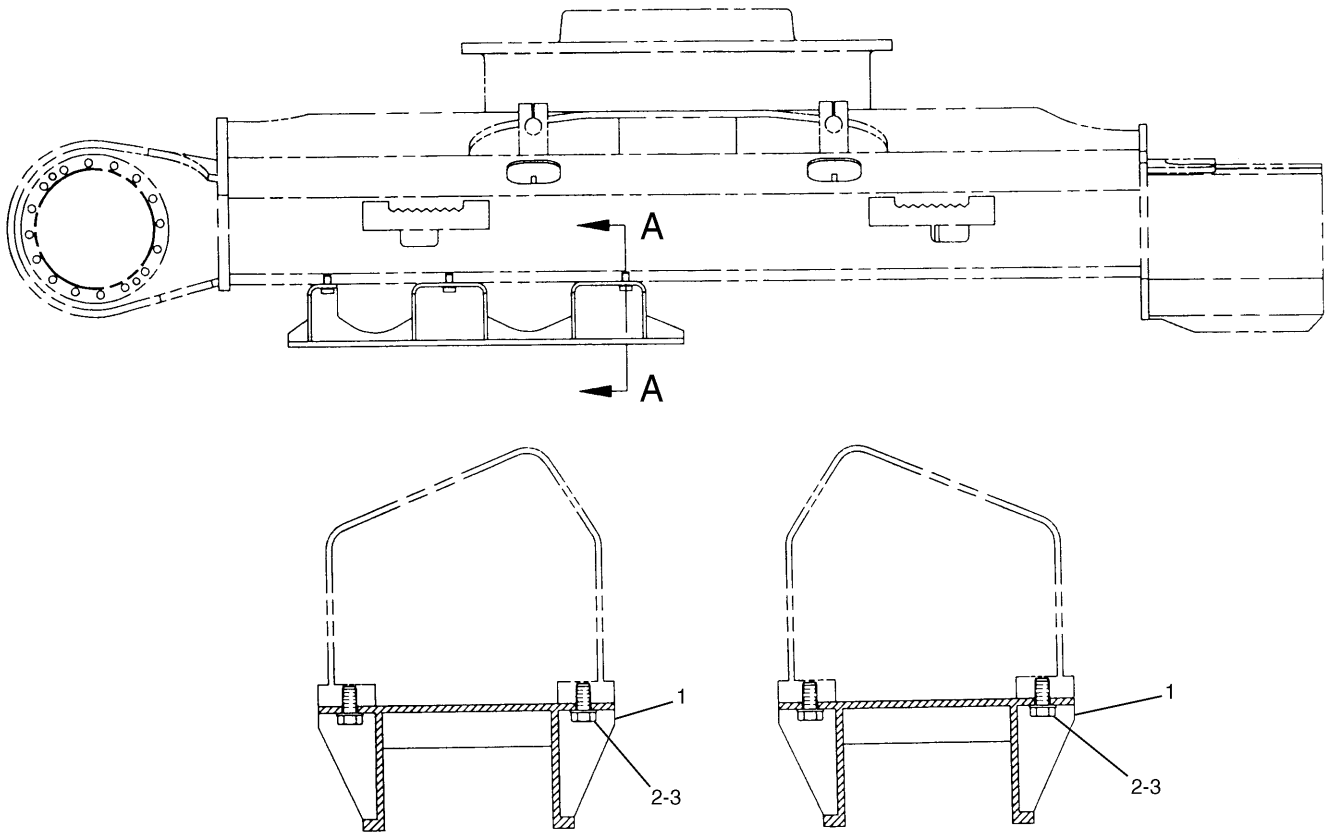

A – A

NOTE	No.	PART No.	QTY	PART NAME	NOTE	No.	PART No.	QTY	PART NAME
	1	120-7166	2	GUARD AS					
	2	8T-5460	12	BOLT (L=40mm)					
	3	8T-4123	12	WASHER					

H53021E 00

120-7164 GUARD GP-TRACK GUIDE
Sprocket
S/N 3MR 1-Up
An Attachment

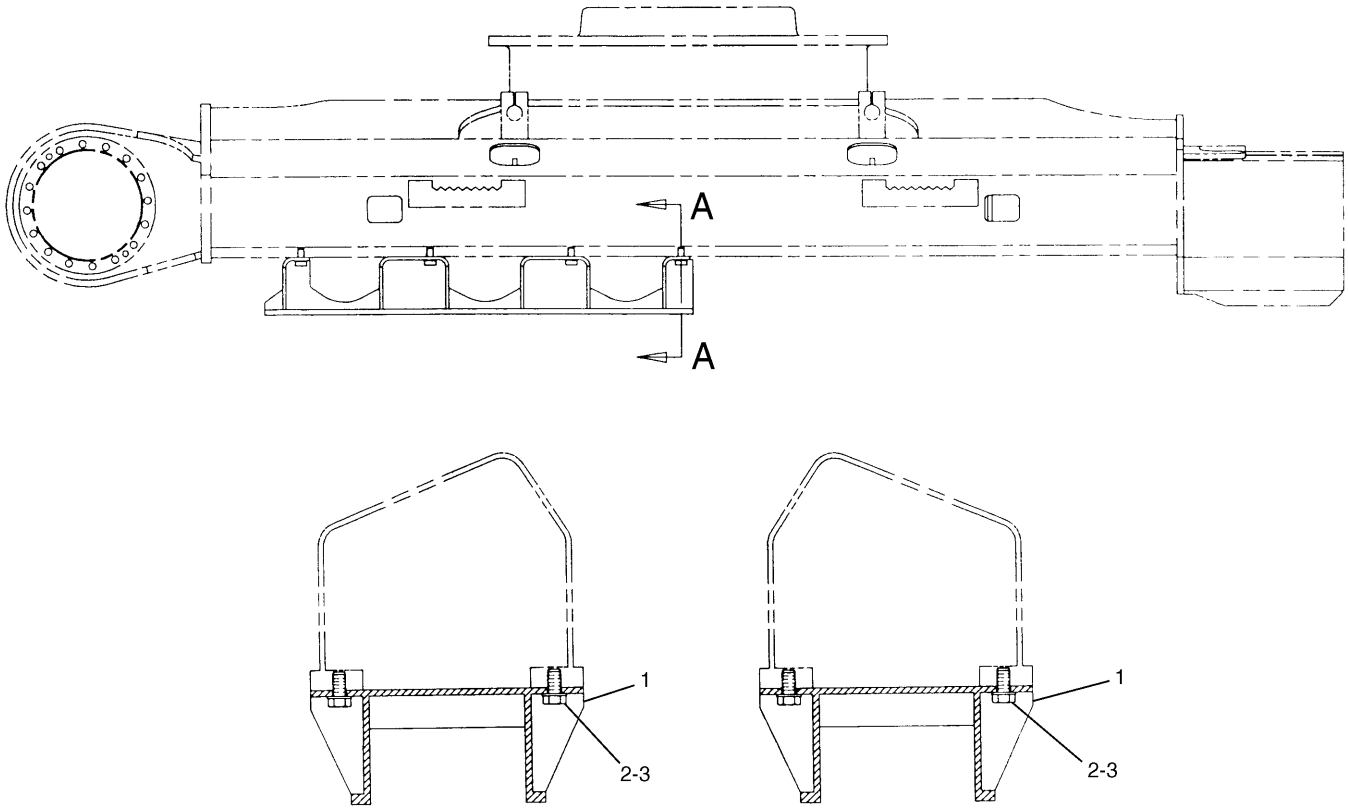

A – A

NOTE	No.	PART No.	QTY	PART NAME	NOTE	No.	PART No.	QTY	PART NAME
	1	120-7169	2	GUARD AS					
	2	8T-5460	16	BOLT (L=40mm)					
	3	8T-4123	16	WASHER					

H53022E 00

120-7167 GUARD GP-TRACK GUIDE

Sprocket
S/N 4MR 1-Up
An Attachment

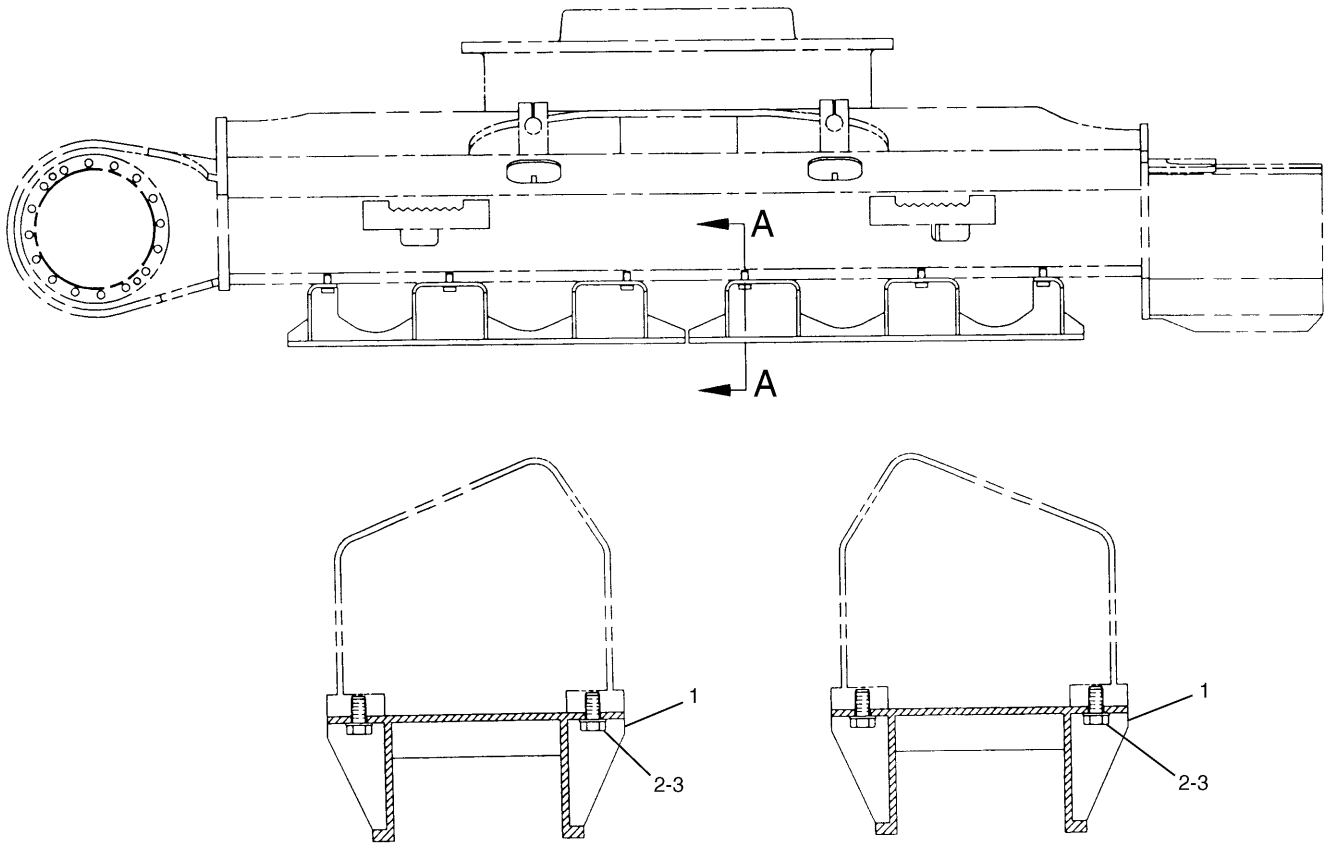

A – A

NOTE	No.	PART No.	QTY	PART NAME	NOTE	No.	PART No.	QTY	PART NAME
	1	120-7166	4	GUARD AS					
	2	8T-5460	24	BOLT (L=40mm)					
	3	8T-4123	24	WASHER					

H53023E 00

120-7165 GUARD GP-TRACK GUIDE

Full Length
S/N 3MR 1-Up
An Attachment

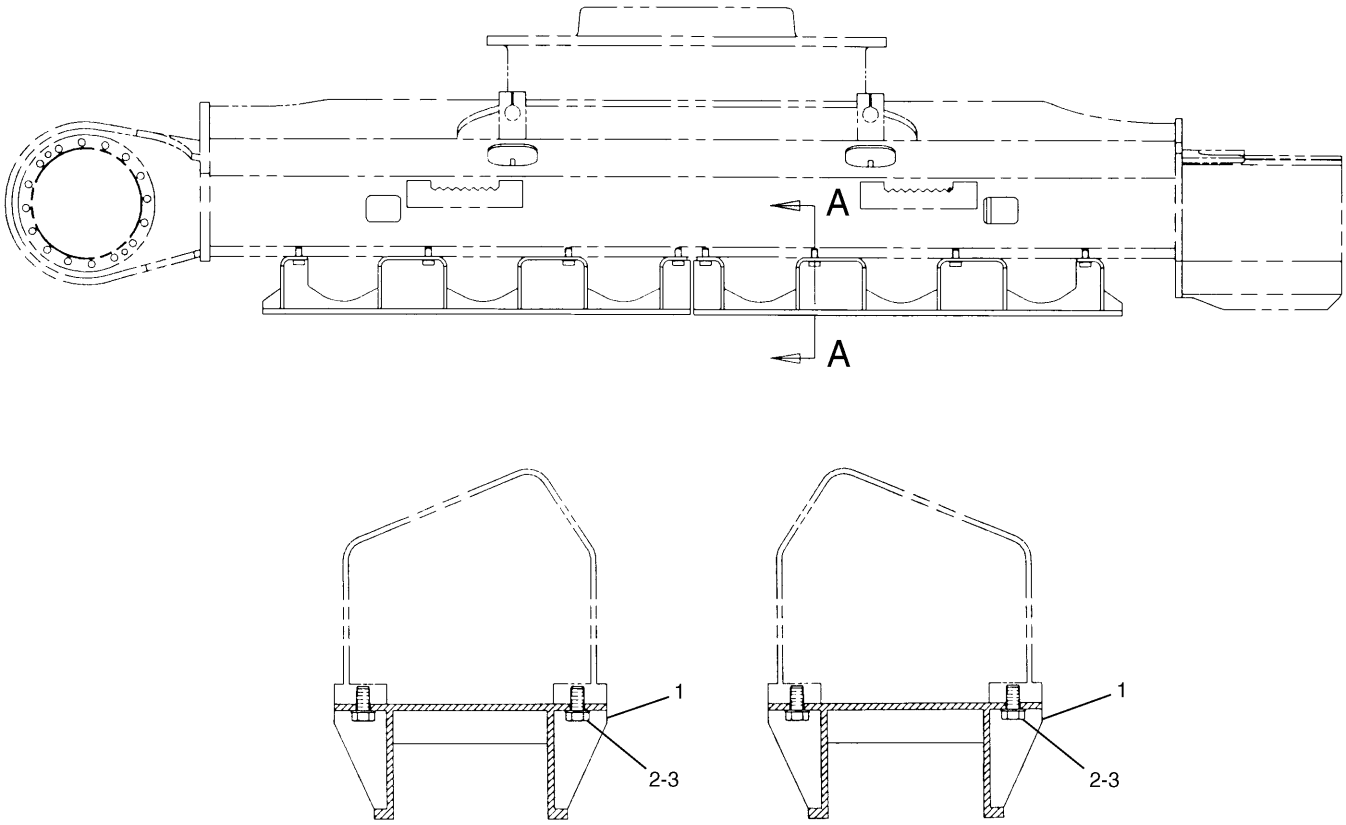

A – A

NOTE	No.	PART No.	QTY	PART NAME	NOTE	No.	PART No.	QTY	PART NAME
	1	120-7169	4	GUARD AS					
	2	8T-5460	32	BOLT (L=40mm)					
	3	8T-4123	32	WASHER					

H53024E 00

120-7168 GUARD GP-TRACK GUIDE

Full Length
S/N 4MR 1-Up
An Attachment

FRAME AND BODY

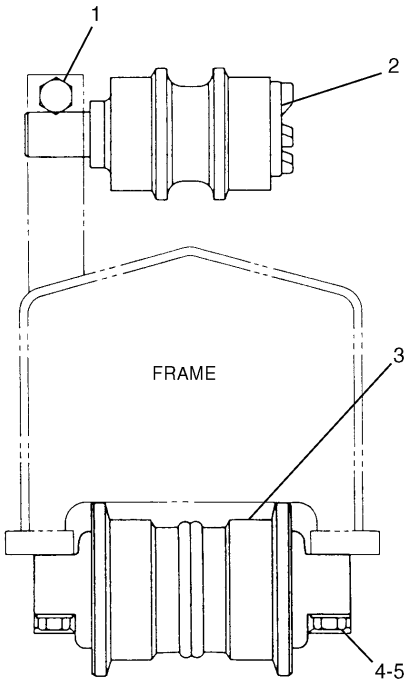

NOTE	No.	PART No.	QTY	PART NAME
	1	8T-5878	4	BOLT (L=80mm)
Y	2	8E-5600	4	ROLLER GP
Y	3	163-4143	14	ROLLER GP
	4	7X-2565	56	BOLT (L=100mm)
	5	8T-4123	56	WASHER

Y—SEE SEPARATE ILLUSTRATION

H64384E 06

7Y-1607 ROLLER AR-TRACK & CARRIER

S/N 3MR 1-Up
8E-5600-Page165,163-4143-Page165.01

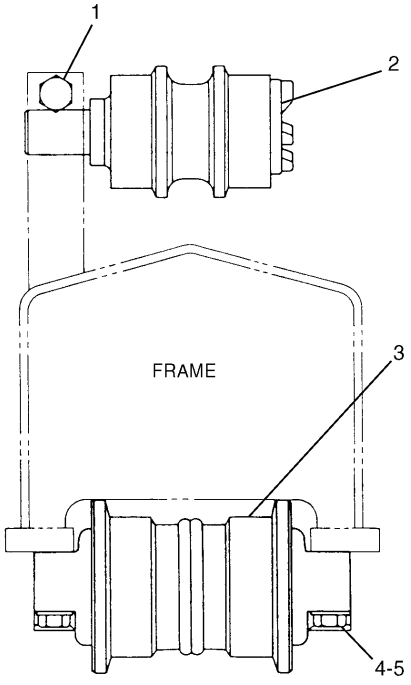

NOTE	No.	PART No.	QTY	PART NAME
	1	8T-5878	4	BOLT (L=80mm)
Y	2	8E-5600	4	ROLLER GP
Y	3	163-4143	16	ROLLER GP
	4	7X-2565	64	BOLT (L=100mm)
	5	8T-4123	64	WASHER

Y—SEE SEPARATE ILLUSTRATION

H66952E 06

7Y-1608 ROLLER AR-TRACK & CARRIER

S/N 4MR 1-Up
8E-5600-Page165,163-4143-Page165.01

FRAME AND BODY

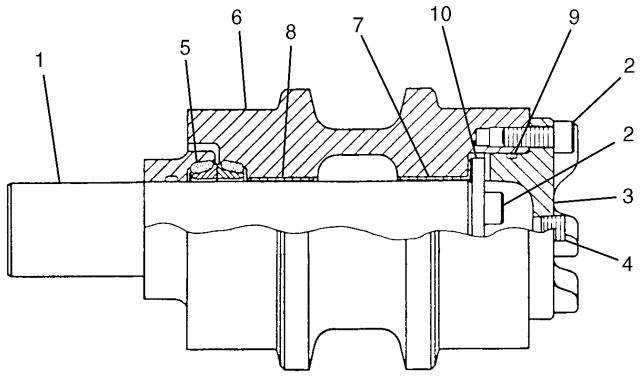

NOTE	No.	PART No.	QTY	PART NAME
	1	8E-5601	1	SHAFT AS
	2	8T-1159	5	BOLT (L=25mm)
	3	8E-5605	1	COVER
	4	7H-3171	1	PLUG
	5	8E-5608	1	SEAL GP
	6	8E-5602	1	ROLLER AS
	7	8E-6793	1	BEARING
	8	8E-6792	1	BEARING
	9	6V-7661	1	SEAL-O-RING (ID=69.40mm)
	10	8E-5606	1	RETAINER

H53027E 03

8E-5600 ROLLER GP-TRACK CARRIER

Part of 7Y-1607,7Y-1608-Page164

FRAME AND BODY

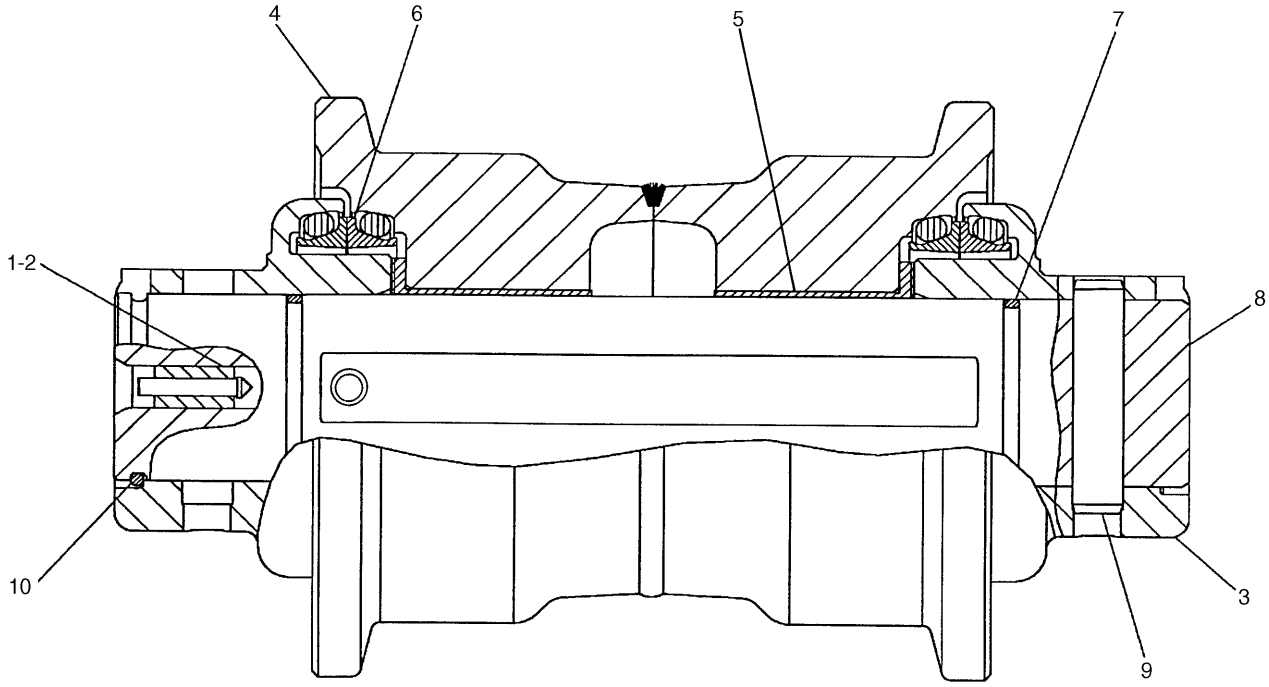

NOTE	No.	PART No.	QTY	PART NAME	NOTE	No.	PART No.	QTY	PART NAME
	1	5G-2247	1	STOPPER					
	2	6Y-0473	1	PLUG					
	3	8E-5037	2	COLLAR					
	4	8E-5032	1	ROLLER AS					
	5	8E-5599	2	BEARING					
	6	9W-2142	2	SEAL GP					
	7	7F-8268	2	SEAL-O-RING (ID=53.57mm)					
	8	8E-5035	1	SHAFT					
	9	3E-3217	1	DOWEL					
	10	8E-5031	2	RING					

H67172E 00

163-4143 ROLLER GP-TRACK-SINGLE FLANGE

Part of 7Y-1607,7Y-1608-Page164

MEMORANDA

FRAME AND BODY

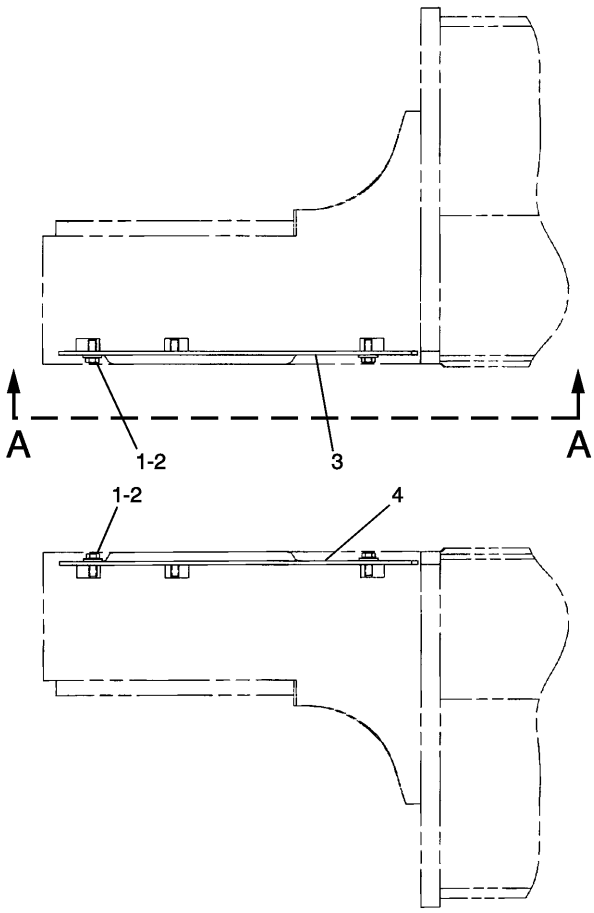

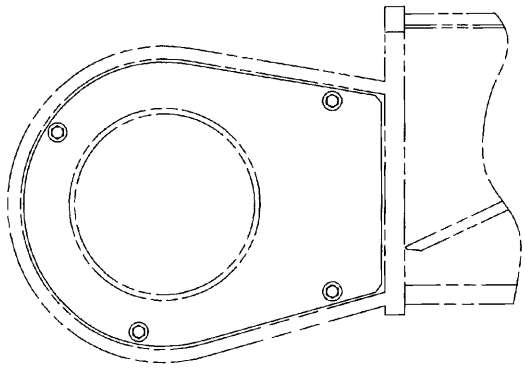

A – A

NOTE	No.	PART No.	QTY	PART NAME	NOTE	No.	PART No.	QTY	PART NAME
	1	8C-8992	8	BOLT (L=30mm)					
	2	5P-1076	8	WASHER					
	3	120-7187	1	COVER					
	4	123-5436	1	COVER					

H54203E 04

117-5490 GUARD GP-TRAVEL MOTOR

FRAME AND BODY

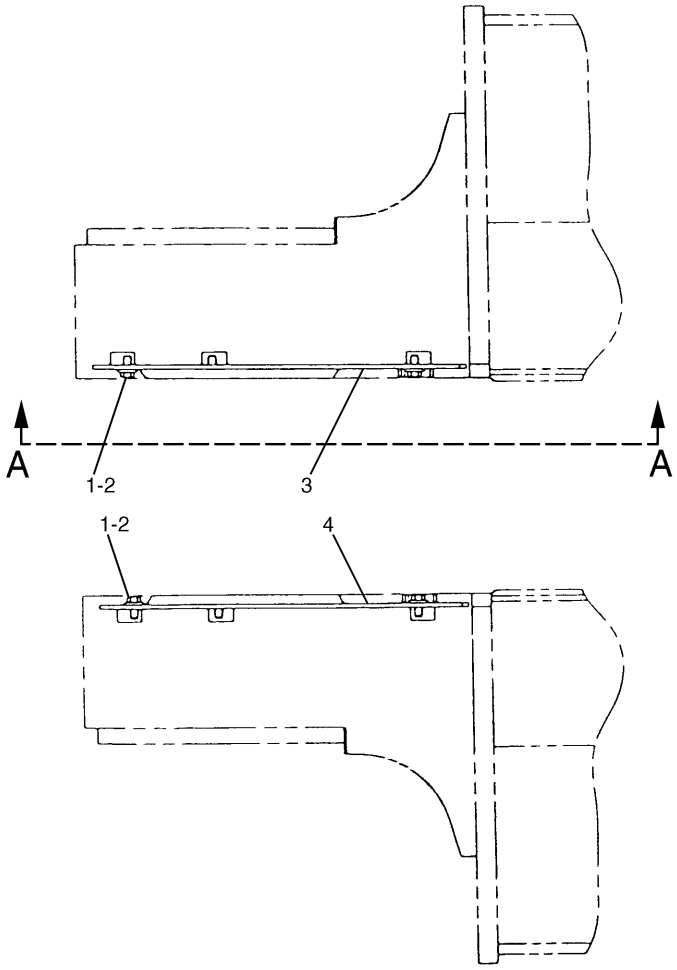

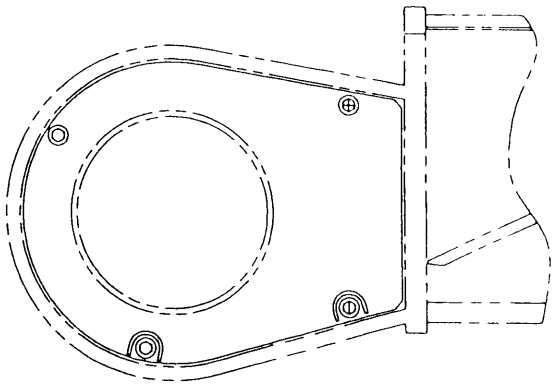

A – A

NOTE	No.	PART No.	QTY	PART NAME	NOTE	No.	PART No.	QTY	PART NAME
	1	8C-8992	8	BOLT (L=30mm)					
	2	5P-1076	8	WASHER					
	3	127-1427	1	COVER AS					
	4	127-1428	1	COVER AS					

H53645E 01

127-1426 GUARD GP-TRAVEL MOTOR

Heavy Duty

Part of 117-4136-Page131

An Attachment

MEMORANDA

Consists of :

			Page
1	9W-9354	LINK AS-TRACK	170
180	9W-3619	BOLT	
45	126-5062	SHOE	
180	9W-3361	NUT	

H53031E 04

9W-9360 TRACK GP

600MM Triple Grouser Shoe-2 Required
S/N 3MR 1-(T01.01)

Consists of :

			Page
1	9W-9354	LINK AS-TRACK	170
180	9W-3619	BOLT	
45	6I-9454	SHOE	
180	9W-3361	NUT	

H53032E 00

117-7120 TRACK GP

700MM Triple Grouser Shoe-2 Required
S/N 3MR 1-Up
An Attachment

Consists of :

			Page
1	9W-9354	LINK AS-TRACK	170
180	9W-3619	BOLT	
45	9W-9351	SHOE	
180	9W-3361	NUT	

H53033E 02

9W-9361 TRACK GP

800MM Triple Grouser Shoe-2 Required
S/N 3MR 1-Up
An Attachment

Consists of :

			Page
1	9W-9353	LINK AS-TRACK	170
196	9W-3619	BOLT	
49	9W-9351	SHOE	
196	9W-3361	NUT	

H54484E 03

9W-9357 TRACK GP

800MM Triple Grouser Shoe-2 Required
S/N 4MR 1-(T01.01)

Consists of :

			Page
1	9W-9353	LINK AS-TRACK	170
196	9W-3619	BOLT	
49	9W-9350	SHOE	
196	9W-3361	NUT	

H53428E 02

9W-9356 TRACK GP
S/N 4MR 1-Up
An Attachment

Consists of :

			Page
1	9W-9353	LINK AS-TRACK	170
196	9W-3619	BOLT	
49	6I-9454	SHOE	
196	9W-3361	NUT	

H53036E 00

117-7121 TRACK GP
700MM Triple Grouser Shoe-2 Required
S/N 4MR 1-Up
An Attachment

Consists of :

			Page
1	164-6893	LINK AS-TRACK	170.01
180	9W-3361	NUT	
180	9W-3619	BOLT	
45	126-5062	SHOE	

H67175E 00

164-6624 TRACK GP

600MM Triple Grouser Shoe/Grease Lubricated-2 Required
S/N 3MR (T01.02)-Up

Consists of :

			Page
1	159-1519	LINK AS-TRACK	170.02
196	9W-3361	NUT	
196	9W-3619	BOLT	
49	9W-9351	SHOE	

H67470E 00

164-6627 TRACK GP

800MM Triple Grouser Shoe/Grease Lubricated-2 Required
S/N 4MR (T01.02)-Up

MEMORANDA

FRAME AND BODY

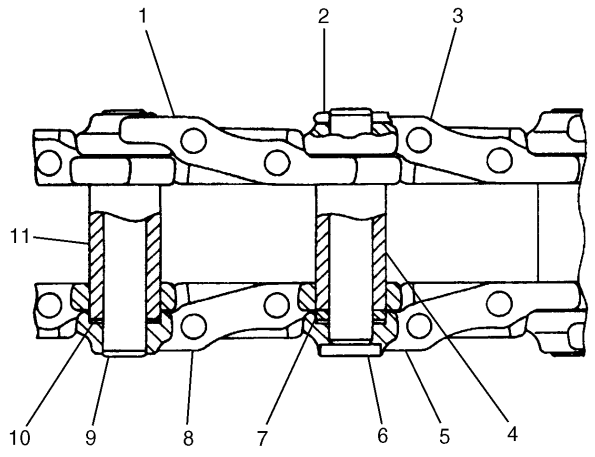

NOTE	No.	PART No.	QTY	PART NAME
	1	9W-3138	44	LINK
	2	095-0863	1	COTTER
	3	8E-8586	1	LINK
	4	117-1372	1	BUSHING
	5	8E-8585	1	LINK
	6	8E-8587	1	PIN
	7	5S-0754	2	SPACER
	8	9W-3137	44	LINK
	9	6Y-8186	44	PIN
	10	5S-0709	180	WASHER
	11	117-1371	44	BUSHING

H53037E 05

9W-9354 LINK AS-TRACK

Part of 9W-9360,117-7120-Page167,9W-9361-Page168

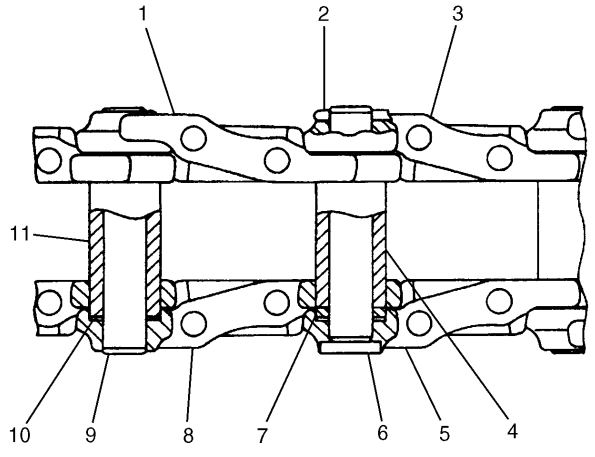

NOTE	No.	PART No.	QTY	PART NAME
	1	9W-3138	48	LINK
	2	095-0863	1	COTTER
	3	8E-8586	1	LINK
	4	117-1372	1	BUSHING
	5	8E-8585	1	LINK
	6	8E-8587	1	PIN
	7	5S-0754	2	SPACER
	8	9W-3137	48	LINK
	9	6Y-8186	48	PIN
	10	5S-0709	196	WASHER
	11	117-1371	48	BUSHING

H53038E 05

9W-9353 LINK AS-TRACK

Part of 9W-9357-Page168,9W-9356,117-7121-Page169

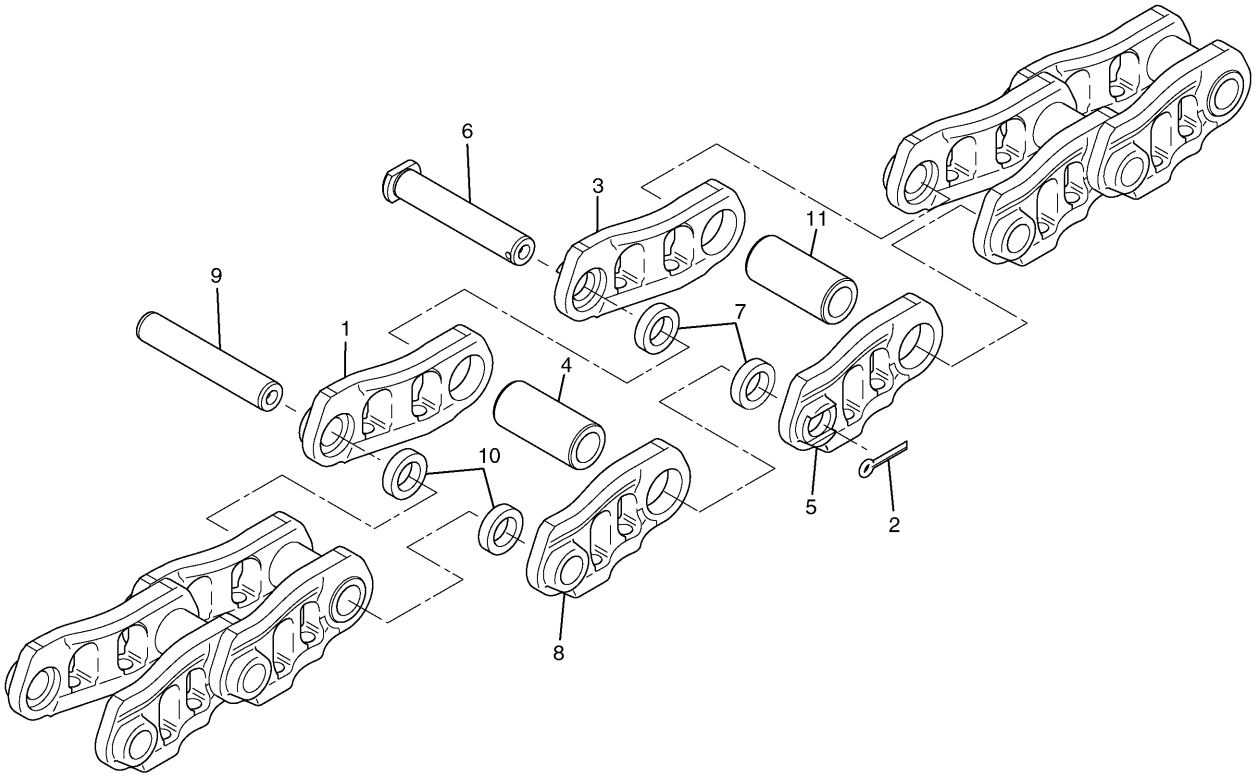

NOTE	No.	PART No.	QTY	PART NAME	NOTE	No.	PART No.	QTY	PART NAME
	1	9W-3138	44	LINK					
	2	095-0863	1	COTTER					
	3	8E-8586	1	LINK					
	4	117-1372	1	BUSHING					
	5	8E-8585	1	LINK					
	6	8E-8587	1	PIN					
	7	158-4381	2	SEAL					
	8	9W-3137	44	LINK					
	9	6Y-8186	44	PIN					
	10	158-4380	88	SEAL					
	11	159-0950	44	BUSHING					

H67471E 00

164-6893 LINK AS-TRACK

Grease Lubricated
S/N 3MR (T01.02)-Up
Part of 164-6624-Page169.01

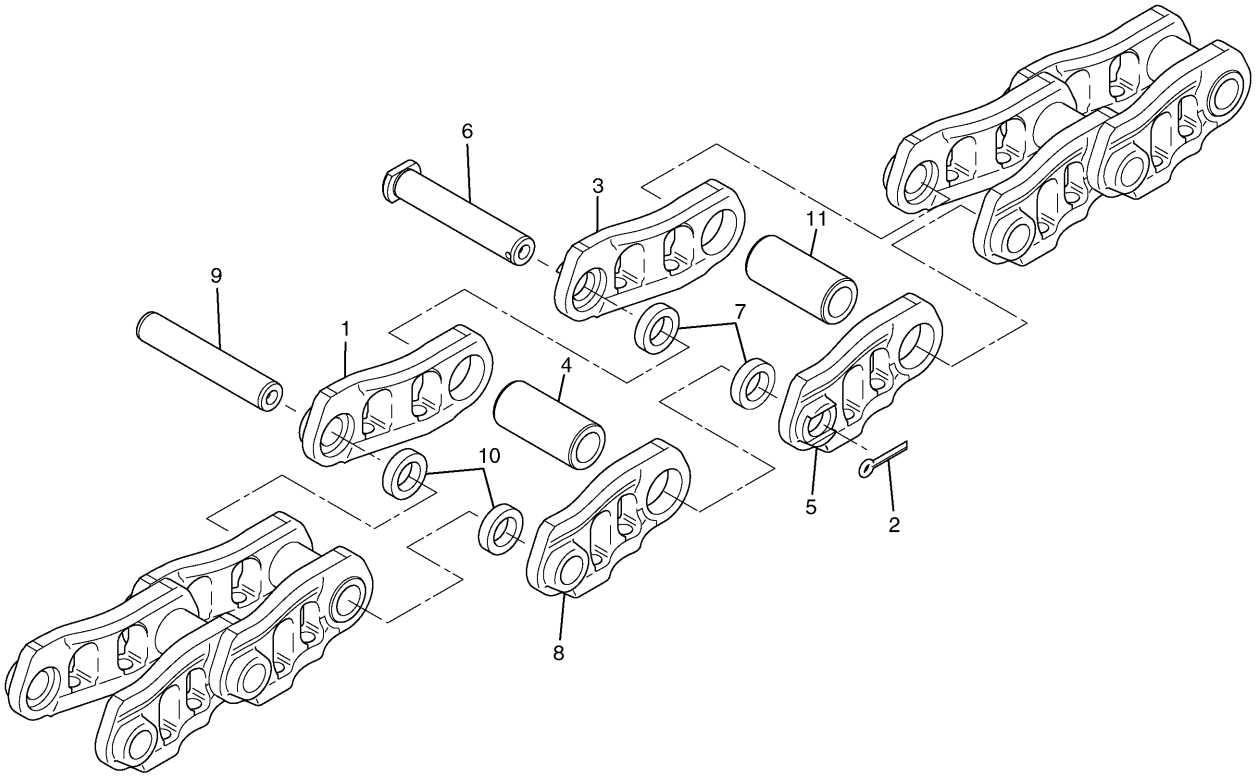

NOTE	No.	PART No.	QTY	PART NAME	NOTE	No.	PART No.	QTY	PART NAME
	1	9W-3138	48	LINK					
	2	095-0863	1	COTTER					
	3	8E-8586	1	LINK					
	4	117-1372	1	BUSHING					
	5	8E-8585	1	LINK					
	6	8E-8587	1	PIN					
	7	158-4381	2	SEAL					
	8	9W-3137	48	LINK					
	9	6Y-8186	48	PIN					
	10	158-4380	96	SEAL					
	11	159-0950	48	BUSHING					

H67164E 01

159-1519 LINK AS-TRACK

Grease Lubricated
S/N 4MR (T01.02)-Up
Part of 164-6627-Page169.01

HYDRAULIC SYSTEM

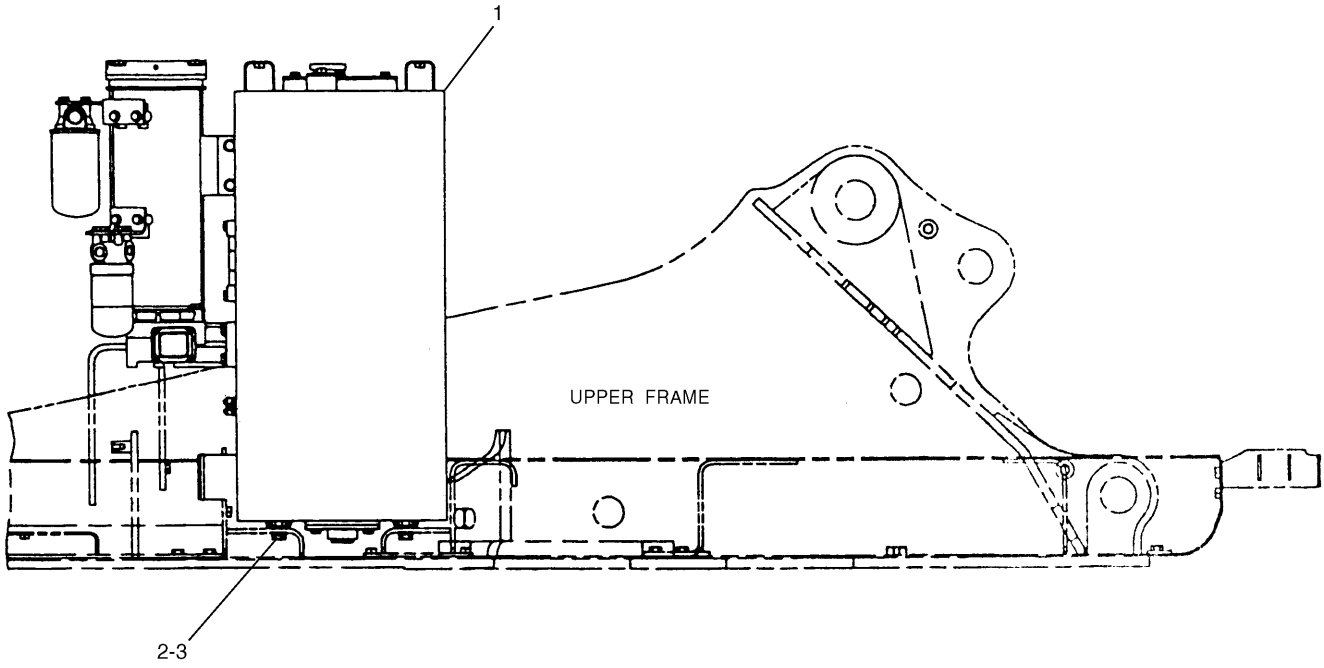

NOTE	No.	PART No.	QTY	PART NAME	NOTE	No.	PART No.	QTY	PART NAME
Y	1	118-3979	1	TANK GP					
	2	7X-2553	6	BOLT (L=40mm)					
	3	9X-8257	6	WASHER					

Y—SEE SEPARATE ILLUSTRATION

H53429E 02

118-3978 TANK & MTG GP-HYDRAULIC
118-3979-Page172

HYDRAULIC SYSTEM

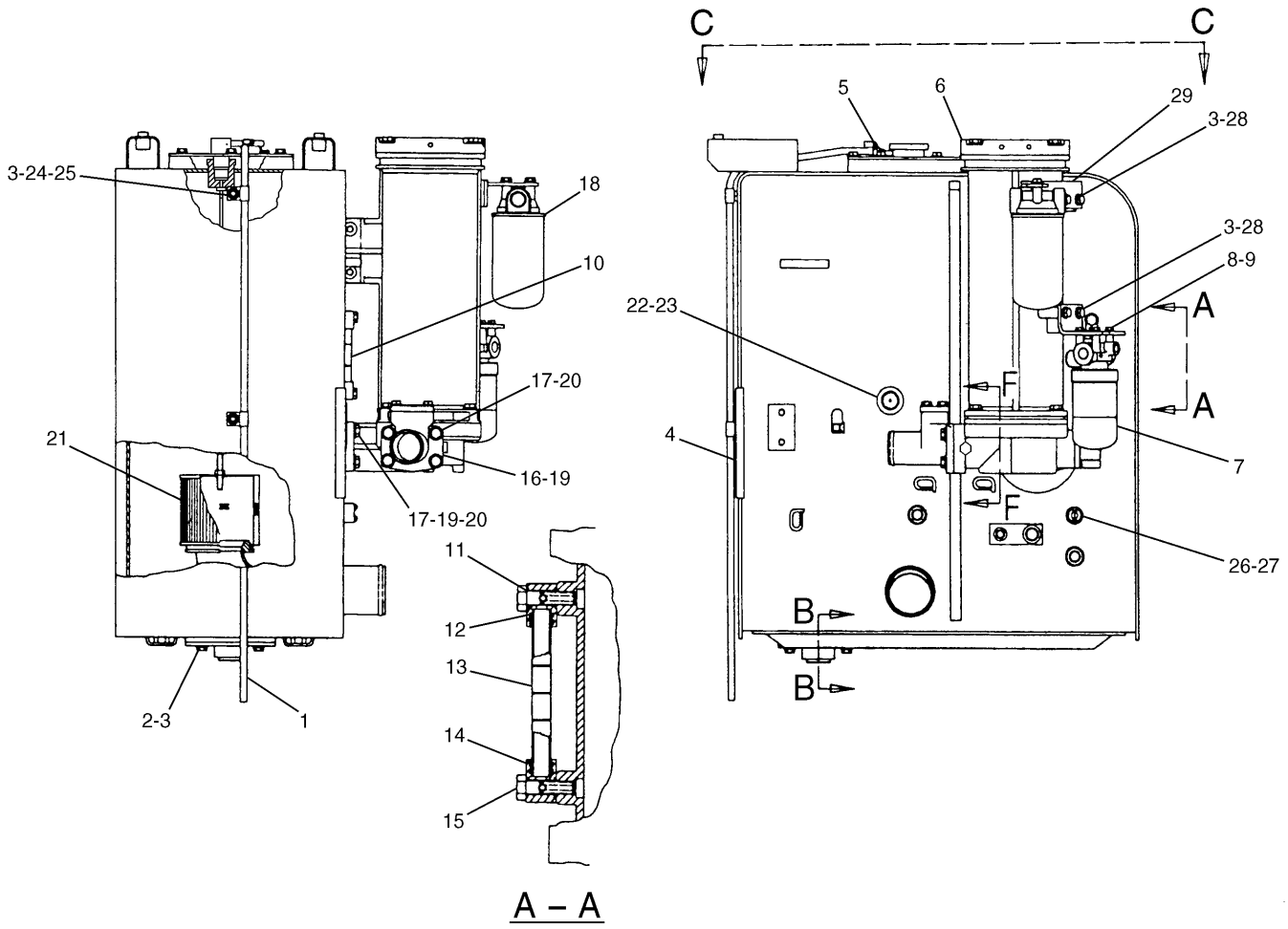

NOTE	No.	PART No.	QTY	PART NAME	NOTE	No.	PART No.	QTY	PART NAME
E	1	7Y-1976		HOSE…(130cm)	Y	21	137-3706	1	SCREEN GP
	2	8T-4137	4	BOLT (L=20mm)		22	111-4760	1	SWITCH AS
	3	8T-4121	10	WASHER			102-8802	1	RECEPTACLE KIT
	4	115-8646	1	GUARD			3E-3365	1	WEDGE
	5	1P-4278	1	CLAMP			8T-8729	2	PIN
Y	6	107-6995	1	FILTER GP		23	3D-2824	1	SEAL-O-RING (ID=23.47mm)
Y	7	4I-3741	1	FILTER GP		24	8T-4133	2	NUT
	8	8T-4224	4	WASHER		25	5P-9299	2	CLIP
	9	8T-4200	4	BOLT (L=16mm)		26	4I-5394	1	SENDER
	10	094-3245	1	GAUGE AS			4I-5490	2	SCREW
	11	095-1514	4	SEAL-O-RING (ID=9.80mm)			095-0826	2	LOCKWASHER
	12	095-1517	4	SEAL-O-RING (ID=13.80mm)		27	3K-0360	1	SEAL-O-RING (ID=16.36mm)
	13	096-4754	1	PIPE		28	8T-4195	4	BOLT (L=30mm)
	14	7Y-4754	2	BLOCK		29	126-2050	1	SUPPORT AS
	15	094-3247	2	BOLT (L=36mm)					
	16	121-6263	1	PIPE					
	17	8T-4223	8	WASHER					
Y	18	126-2075	1	FILTER GP					
	19	6J-2680	2	SEAL-O-RING (ID=69.44mm)					
	20	8T-4956	8	BOLT (L=35mm)					

E—ORDER BY THE CENTIMETER

Y—SEE SEPARATE ILLUSTRATION

H65368E 08

118-3979 TANK & FILTER GP-HYDRAULIC (1/2)

Part of 118-3978-Page171

137-3706-Page174,4I-3741,126-2075-Page181,107-6995-Page182

HYDRAULIC SYSTEM

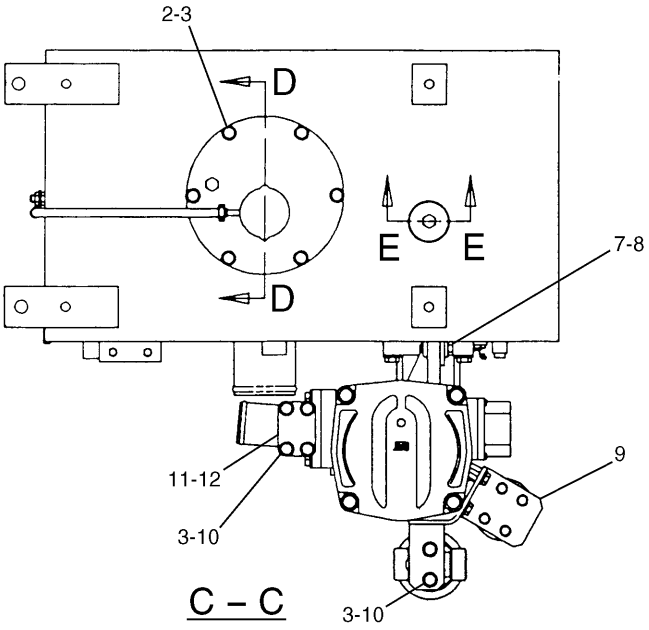

C – C

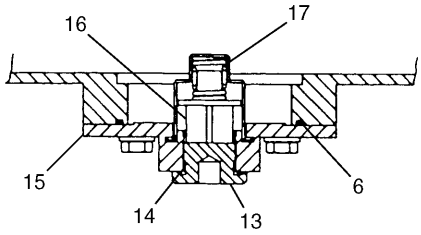

B – B

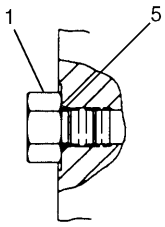

F – F

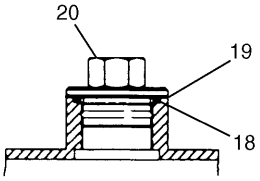

E – E

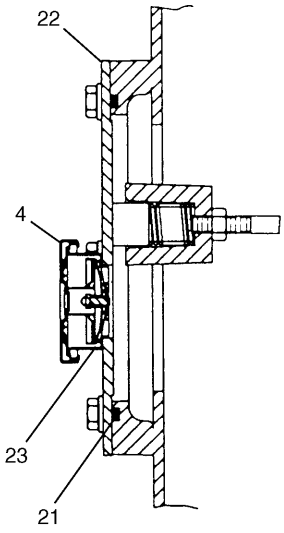

D – D

NOTE	No.	PART No.	QTY	PART NAME	NOTE	No.	PART No.	QTY	PART NAME
	1	9S-4182	1	PLUG		21	095-1730	1	SEAL-O-RING (ID=179.30mm)
	2	8T-4137	6	BOLT (L=20mm)		22	169-7946	1	COVER AS
	3	8T-4121	12	WASHER		23	4I-3743	1	FILLER AS
	4	4I-3745	1	CAP					
	5	3J-7354	1	SEAL-O-RING (ID=8.92mm)					
	6	4M-0189	1	SEAL-O-RING (ID=104.37mm)					
	7	8T-4183	2	BOLT (L=40mm)					
	8	2M-0849	2	WASHER					
	9	112-0065	1	BRACKET					
	10	8T-4136	6	BOLT (L=25mm)					
	11	114-0741	1	COVER					
	12	4J-0522	1	SEAL-O-RING (ID=37.69mm)					
	13	9J-7031	1	PLUG					
	14	5M-2057	1	SEAL-O-RING (ID=34.59mm)					
	15	112-0058	1	COVER AS					
	16	8J-8783	1	VALVE					
	17	1U-2827	1	GUIDE					
	18	095-1608	1	SEAL-O-RING (ID=44.70mm)					
	19	6C-8496	1	WASHER					
	20	105-2652	1	PLUG					

H65369E 08

118-3979 TANK & FILTER GP-HYDRAULIC (2/2)

Part of 118-3978-Page171

HYDRAULIC SYSTEM

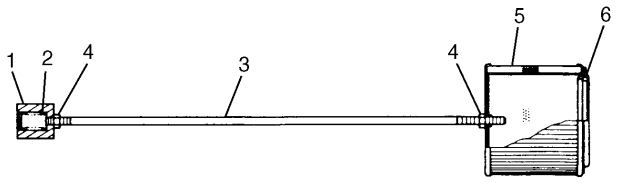

NOTE	No.	PART No.	QTY	PART NAME
	1	095-6641	1	GUIDE
	2	095-6639	1	SPRING
	3	096-2915	1	ROD
	4	8T-4133	2	NUT
	5	087-5297	1	SCREEN AS
	6	5H-5672	1	SEAL-O-RING (ID=113.67mm)

H54532E 00

137-3706 SCREEN GP

Part of 118-3979-Page172

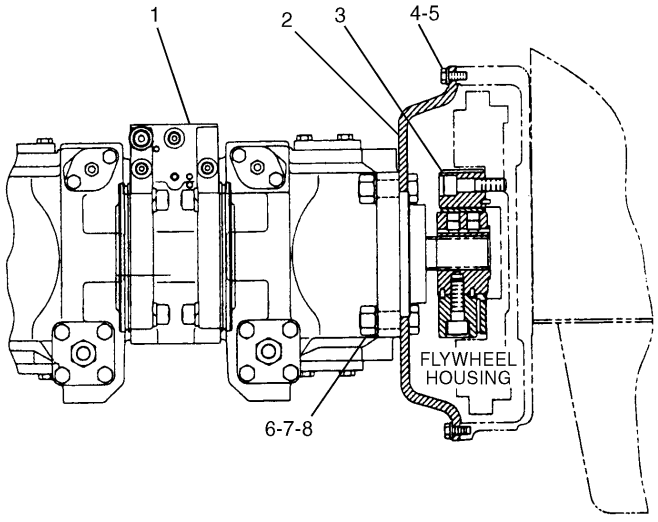

NOTE	No.	PART No.	QTY	PART NAME
Y	1	116-3545	1	PUMP GP
	2	096-4212	1	COVER
Y	3	7Y-1596	1	COUPLING GP
	4	8T-4195	12	BOLT (L=30mm)
	5	8T-4121	12	WASHER
	6	7X-2563	4	BOLT (L=60mm)
	7	8T-4123	4	WASHER
	8	8T-4131	4	NUT

Y—SEE SEPARATE ILLUSTRATION

H53432E 01

109-9491 PUMP & MOUNTING GP

7Y-1596-Page175,116-3545-Page176

HYDRAULIC SYSTEM

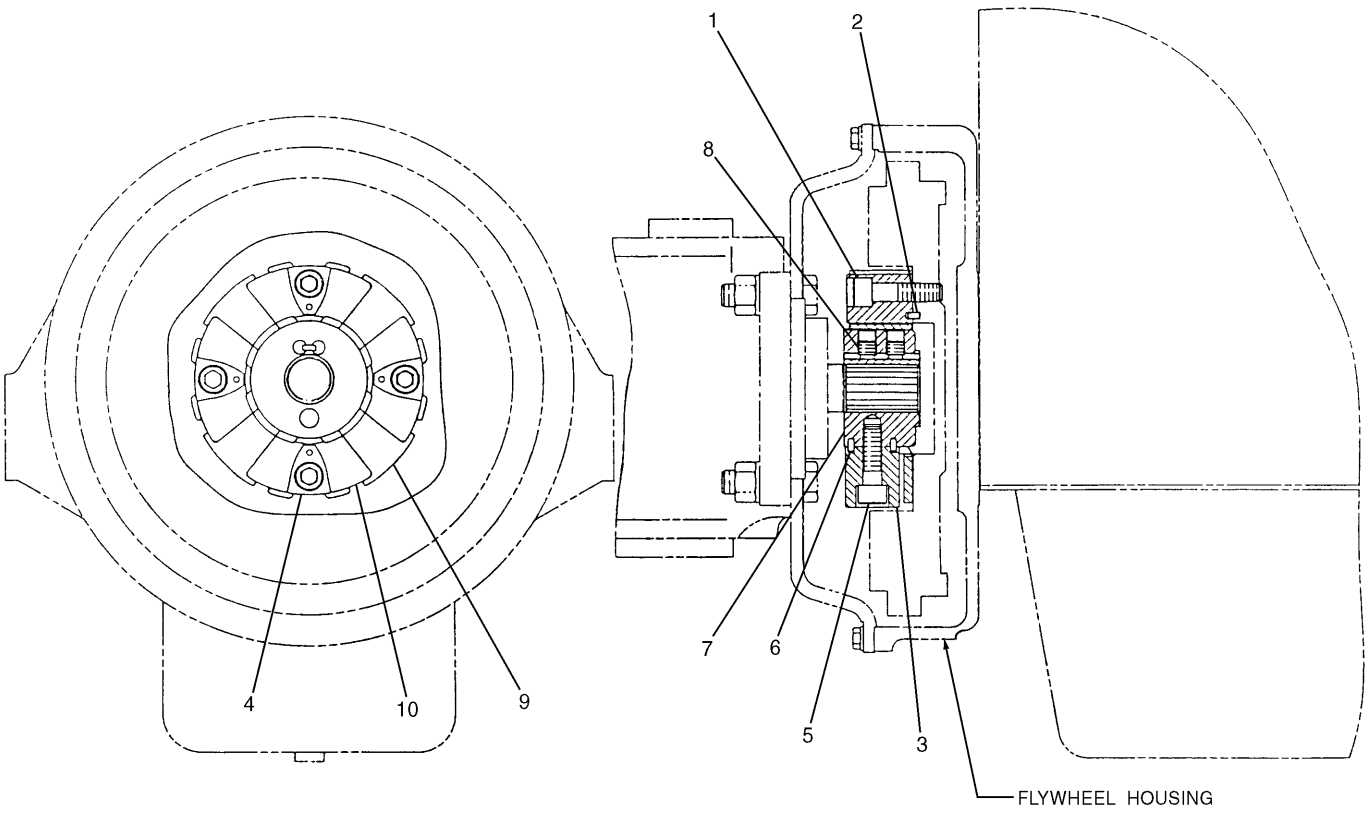

NOTE	No.	PART No.	QTY	PART NAME	NOTE	No.	PART No.	QTY	PART NAME
	1	7Y-1905	4	BOLT (L=60mm)					
	2	7Y-0468	4	PIN					
	3	7Y-1899	1	COUPLING AS					
	4	7Y-1900	4	INSERT					
	5	7Y-1904	4	BOLT (L=50mm)					
	6	7Y-0468	8	PIN					
	7	7Y-1903	1	HUB					
	8	7Y-0466	2	SETSCREW					
	9	7Y-1902	4	INSERT					
	10	7Y-1901	1	ELEMENT					

H53433E 03

7Y-1596 COUPLING GP-PUMP

Part of 109-9491-Page174

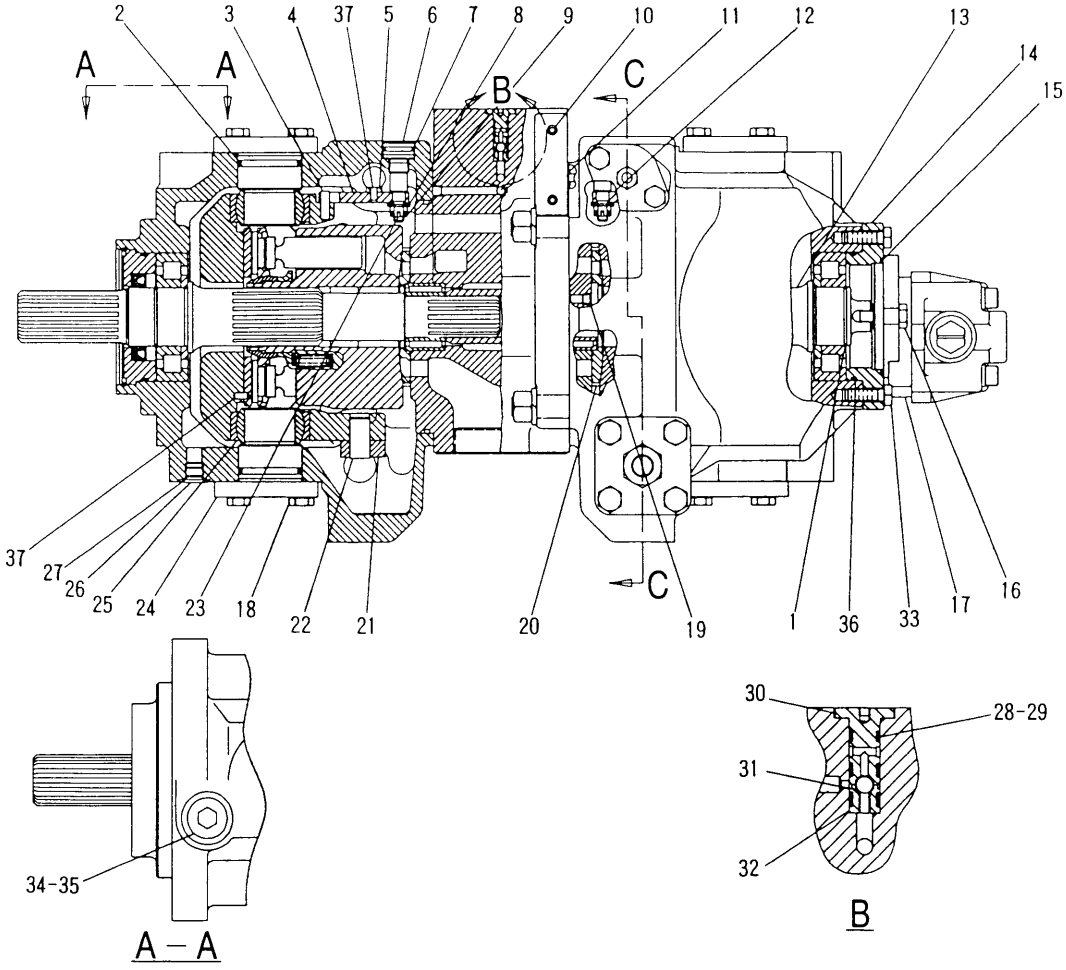

NOTE	No.	PART No.	QTY	PART NAME	NOTE	No.	PART No.	QTY	PART NAME
	1	095-7424	1	RING		21	096-4008	2	BLOCK
J	2	6V-7657	4	SEAL-O-RING (ID=43.70mm)		22	096-4017	2	DOWEL
	3	096-4016	2	DOWEL		23	095-0844	2	COTTER
	4	087-5189	1	LINK (FRONT)		24	087-5199	4	SHAFT
	5	094-1881	2	PLATE		25	094-1850	4	BEARING
	6	087-5204	2	RETAINER		26	9S-8004	2	PLUG
J	7	095-1522	2	SEAL-O-RING (ID=20.80mm)	J	27	3J-1907	2	SEAL-O-RING (ID=11.89mm)
	8	096-4007	2	SPACER	J	28	095-1576	3	SEAL-O-RING (ID=8.80mm)
	9	096-3943	2	NUT	J	29	4I-1014	5	RING
	10	8T-6759	37	PLUG		30	4I-0912	1	SEAT
J	11	095-1578	8	SEAL-O-RING (ID=9.80mm)		31	2D-6642	1	BALL
	12	087-5190	1	LINK (REAR)		32	4I-0911	1	SEAT
	13	087-5196	1	SHAFT		33	8T-4195	4	BOLT (L=30mm)
	14	126-1919	1	COVER	J	34	3D-2824	1	SEAL-O-RING (ID=23.47mm)
J	15	8T-3338	1	SEAL-O-RING (ID=84.40mm)		35	9S-8008	1	PLUG
	16	8T-4137	2	BOLT (L=20mm)	J	36	096-3944	1	SEAL-O-RING (ID=94.40mm)
	17	126-2016	1	PUMP GP		37	094-1875	4	DOWEL
	18	8T-4136	16	BOLT (L=25mm)					
	19	4I-1022	2	ORIFICE					
	20	123-2029	1	BARREL AS					

H57616E 02

116-3545 PUMP GP-DOUBLE PISTON (1/4)

S/N 3MR 1-00783, 4MR 1-00228
Part of 109-9491-Page174

HYDRAULIC SYSTEM

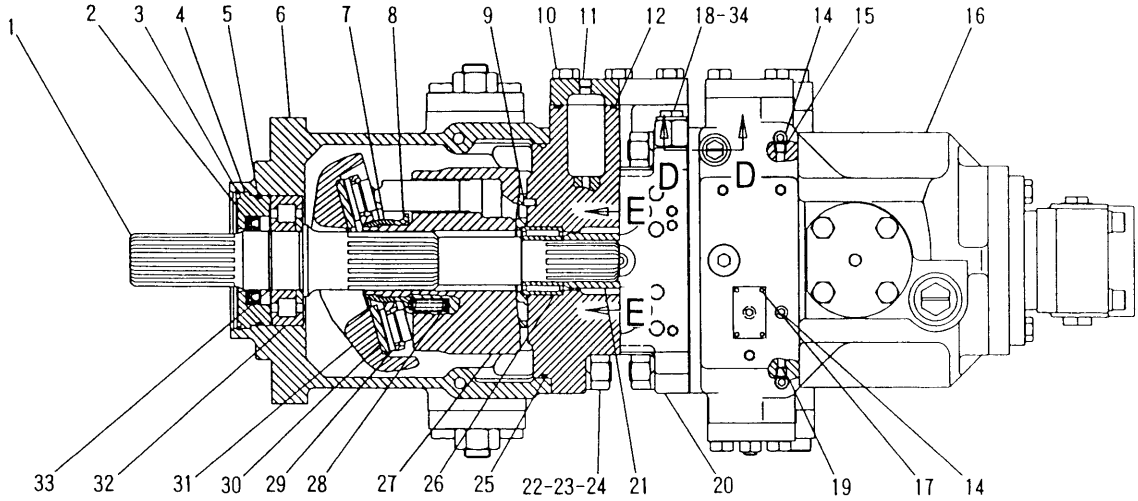

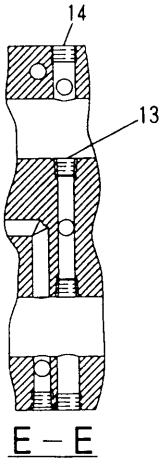

E – E

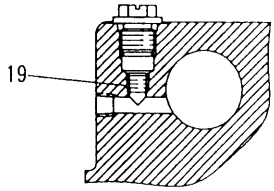

D – D

NOTE	No.	PART No.	QTY	PART NAME	NOTE	No.	PART No.	QTY	PART NAME
	1	087-5178	1	SHAFT		21	087-5200	1	COUPLING
J	2	096-3998	1	SEAL		22	096-3946	8	STUD
	3	096-3983	1	RING		23	8T-4132	8	NUT
	4	096-3984	1	CASE		24	3B-4510	8	LOCKWASHER
J	5	096-3944	1	SEAL-O-RING (ID=94.40mm)	J	25	095-7383	2	SEAL-O-RING (ID=174.00mm)
	6	114-0746	1	BODY		26	096-4003	2	BEARING SET
	7	122-5114	2	GUIDE		27	123-2027	1	BARREL AS
	8	7Y-4215	2	SPACER		28	118-4057	18	SPRING
	9	094-1875	2	DOWEL		29	114-0491	2	PISTON AS
	10	8T-4956	6	BOLT (L=35mm)		30	087-5192	2	PLATE
	11	094-1883	2	PLUG		31	087-5201	2	SWASHPLATE
J	12	095-1606	2	SEAL-O-RING (ID=41.70mm)		32	096-4002	2	BEARING
	13	126-2042	2	ORIFICE		33	095-7424	1	RING
	14	096-1445	12	PLUG	J	34	3J-1907	1	SEAL-O-RING (ID=11.89mm)
	15	1R-8962	2	ORIFICE					
	16	114-0747	1	BODY					
	17	095-7419	4	SCREW					
	18	5P-8874	1	ADAPTER					
	19	096-3831	4	ORIFICE					
	20	114-0748	1	BLOCK					

H57617E 02

116-3545 PUMP GP-DOUBLE PISTON (2/4)

S/N 3MR 1-00783, 4MR 1-00228
Part of 109-9491-Page174

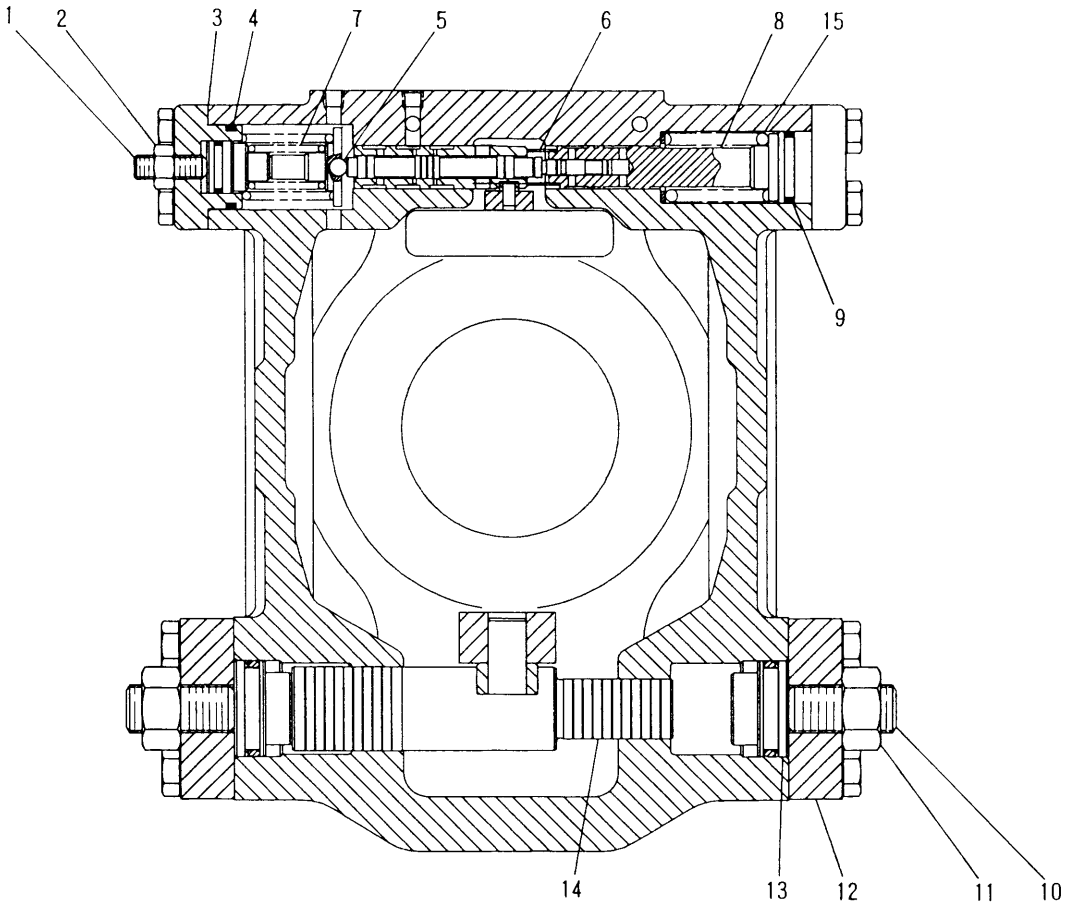

C – C

NOTE	No.	PART No.	QTY	PART NAME	NOTE	No.	PART No.	QTY	PART NAME
	1	096-2966	2	SETSCREW	B		096-9455	4	SHIM (T=1.90mm)
	2	8T-4133	2	NUT	B		096-9347	4	SHIM (T=1.95mm)
B	3	096-9346	4	SHIM (T=1.00mm)	J	4	095-1658	2	SEAL-O-RING (ID=29.40mm)
B		096-9469	4	SHIM (T=1.05mm)		5	3D-2891	2	BALL
B		096-9468	4	SHIM (T=1.10mm)		6	099-3671	2	SPRING
B		096-9466	4	SHIM (T=1.20mm)		7	118-4100	2	SPRING
B		096-9467	4	SHIM (T=1.15mm)		8	118-4102	2	PISTON AS
B		096-9376	4	SHIM (T=1.25mm)	J	9	095-1657	2	SEAL-O-RING (ID=24.40mm)
B		096-9464	4	SHIM (T=1.35mm)		10	096-4011	4	SETSCREW
B		096-9465	4	SHIM (T=1.30mm)		11	8T-4131	4	NUT
B		096-9463	4	SHIM (T=1.40mm)		12	096-4010	4	COVER
B		096-9462	4	SHIM (T=1.45mm)		13	096-4012	4	STOPPER
B		096-9377	4	SHIM (T=1.50mm)		14	096-4009	2	PISTON
B		096-9461	4	SHIM (T=1.55mm)		15	118-4101	2	SPRING
B		096-9460	4	SHIM (T=1.60mm)					
B		096-9459	4	SHIM (T=1.65mm)					
B		096-9458	4	SHIM (T=1.70mm)					
B		096-9378	4	SHIM (T=1.75mm)					
B		096-9457	4	SHIM (T=1.80mm)					
B		096-9456	4	SHIM (T=1.85mm)					

B—USE AS REQUIRED

H57618E 02

116-3545 PUMP GP-DOUBLE PISTON (3/4)

S/N 3MR 1-00783, 4MR 1-00228
Part of 109-9491-Page174

HYDRAULIC SYSTEM

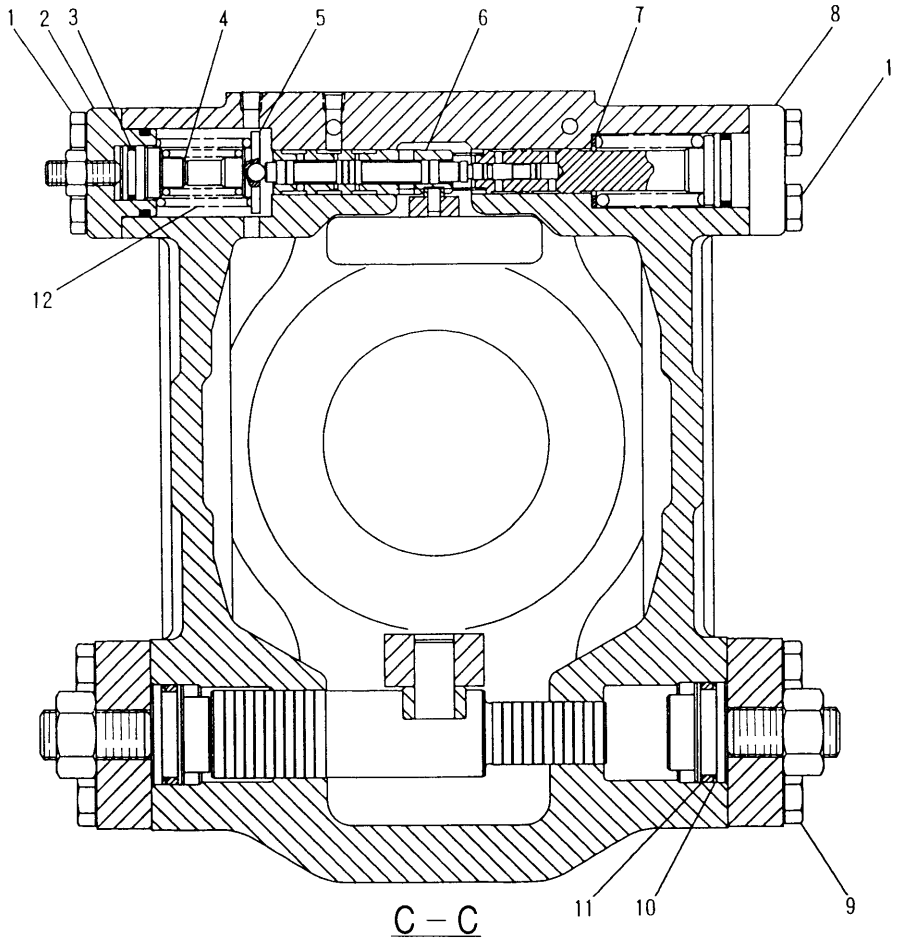

NOTE	No.	PART No.	QTY	PART NAME	NOTE	No.	PART No.	QTY	PART NAME
	1	8T-4136	8	BOLT (L=25mm)	B		099-6111	2	SHIM (T=1.15mm)
	2	096-4020	2	COVER	B		099-6112	2	SHIM (T=1.20mm)
J	3	8T-0211	2	SEAL-O-RING (ID=17.80mm)	B		099-6109	2	SHIM (T=1.05mm)
	4	6I-6750	2	RETAINER	B		099-6110	2	SHIM (T=1.10mm)
	5	6I-6751	2	GUIDE	B		099-6120	2	SHIM (T=1.50mm)
	6	096-4014	2	SPOOL AS	B		099-3669	2	SHIM (T=1.00mm)
B	7	099-6128	2	SHIM (T=1.90mm)		8	096-4015	2	COVER
B		099-6126	2	SHIM (T=1.80mm)		9	8T-4183	16	BOLT (L=40mm)
B		099-6127	2	SHIM (T=1.85mm)	J	10	096-4925	4	RING
B		099-3670	2	SHIM (T=1.95mm)	J	11	095-1600	4	SEAL-O-RING (ID=33.70mm)
B		099-6125	2	SHIM (T=1.75mm)		12	118-4099	2	SPRING
B		099-6123	2	SHIM (T=1.65mm)					
B		099-6124	2	SHIM (T=1.70mm)					THE FOLLOWING REPAIR
B		099-6122	2	SHIM (T=1.60mm)					KIT IS AVAILABLE:
B		099-6121	2	SHIM (T=1.55mm)			126-2030	1	SEAL KIT
B		099-6119	2	SHIM (T=1.45mm)					(INCLUDES PARTS MARKED J)
B		099-6118	2	SHIM (T=1.40mm)					
B		099-6117	2	SHIM (T=1.35mm)					
B		099-6113	2	SHIM (T=1.25mm)					
B		099-6115	2	SHIM (T=1.30mm)					

B—USE AS REQUIRED

H57619E 02

116-3545 PUMP GP-DOUBLE PISTON (4/4)

S/N 3MR 1-00783, 4MR 1-00228
Part of 109-9491-Page174

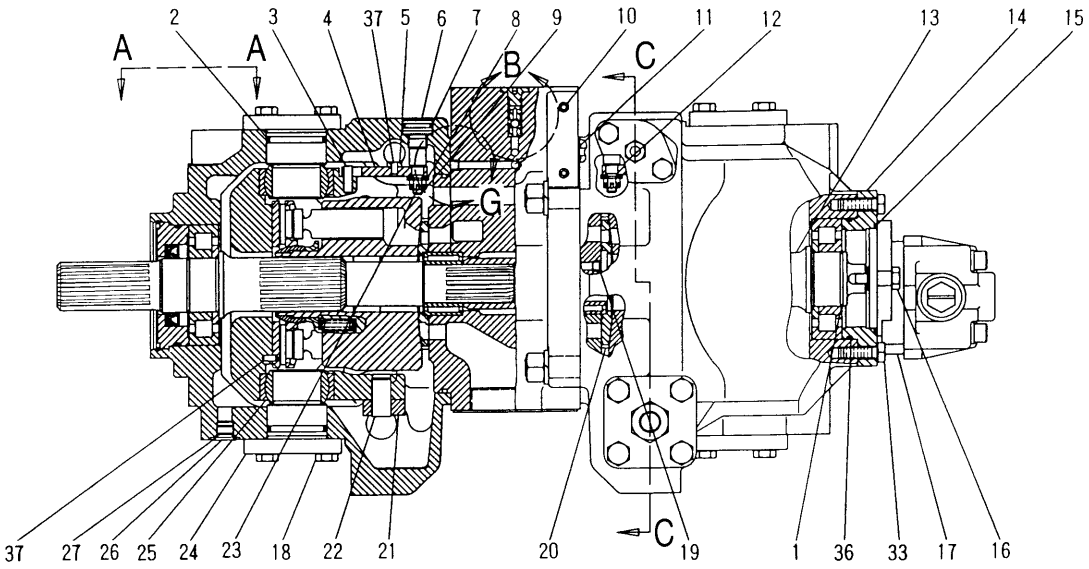

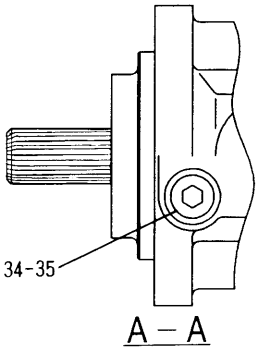

A – A

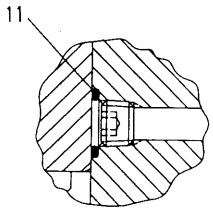

G

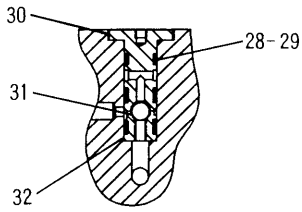

B

NOTE	No.	PART No.	QTY	PART NAME	NOTE	No.	PART No.	QTY	PART NAME
	1	095-7424	1	RING		21	096-4008	2	BLOCK
J	2	6V-7657	4	SEAL-O-RING (ID=43.70mm)		22	096-4017	2	DOWEL
	3	096-4016	2	DOWEL		23	095-0844	2	COTTER
	4	087-5189	1	LINK (FRONT)		24	087-5199	4	SHAFT
	5	094-1881	2	PLATE		25	094-1850	4	BEARING
	6	087-5204	2	RETAINER		26	9S-8004	2	PLUG
J	7	095-1522	2	SEAL-O-RING (ID=20.80mm)	J	27	3J-1907	2	SEAL-O-RING (ID=11.89mm)
	8	096-4007	2	SPACER	J	28	095-1576	3	SEAL-O-RING (ID=8.80mm)
	9	096-3943	2	NUT	J	29	4I-1014	5	RING
	10	094-1882	37	PLUG		30	4I-0912	1	SEAT
J	11	095-1578	13	SEAL-O-RING (ID=9.80mm)		31	2D-6642	1	BALL
	12	087-5190	1	LINK (REAR)		32	4I-0911	1	SEAT
	13	087-5196	1	SHAFT		33	8T-4195	4	BOLT (L=30mm)
	14	126-1919	1	COVER	J	34	3D-2824	1	SEAL-O-RING (ID=23.47mm)
J	15	8T-3338	1	SEAL-O-RING (ID=84.40mm)		35	9S-8008	1	PLUG
	16	8T-4137	2	BOLT (L=20mm)	J	36	096-3944	1	SEAL-O-RING (ID=94.40mm)
	17	126-2016	1	PUMP GP		37	094-1875	4	DOWEL
	18	8T-4136	16	BOLT (L=25mm)					
	19	4I-1022	2	ORIFICE					
	20	123-2029	1	BARREL AS					

116-3545 PUMP GP-DOUBLE PISTON (1/4)

S/N 3MR 00784-Up, 4MR 00229-Up
Part of 109-9491-Page174

HYDRAULIC SYSTEM

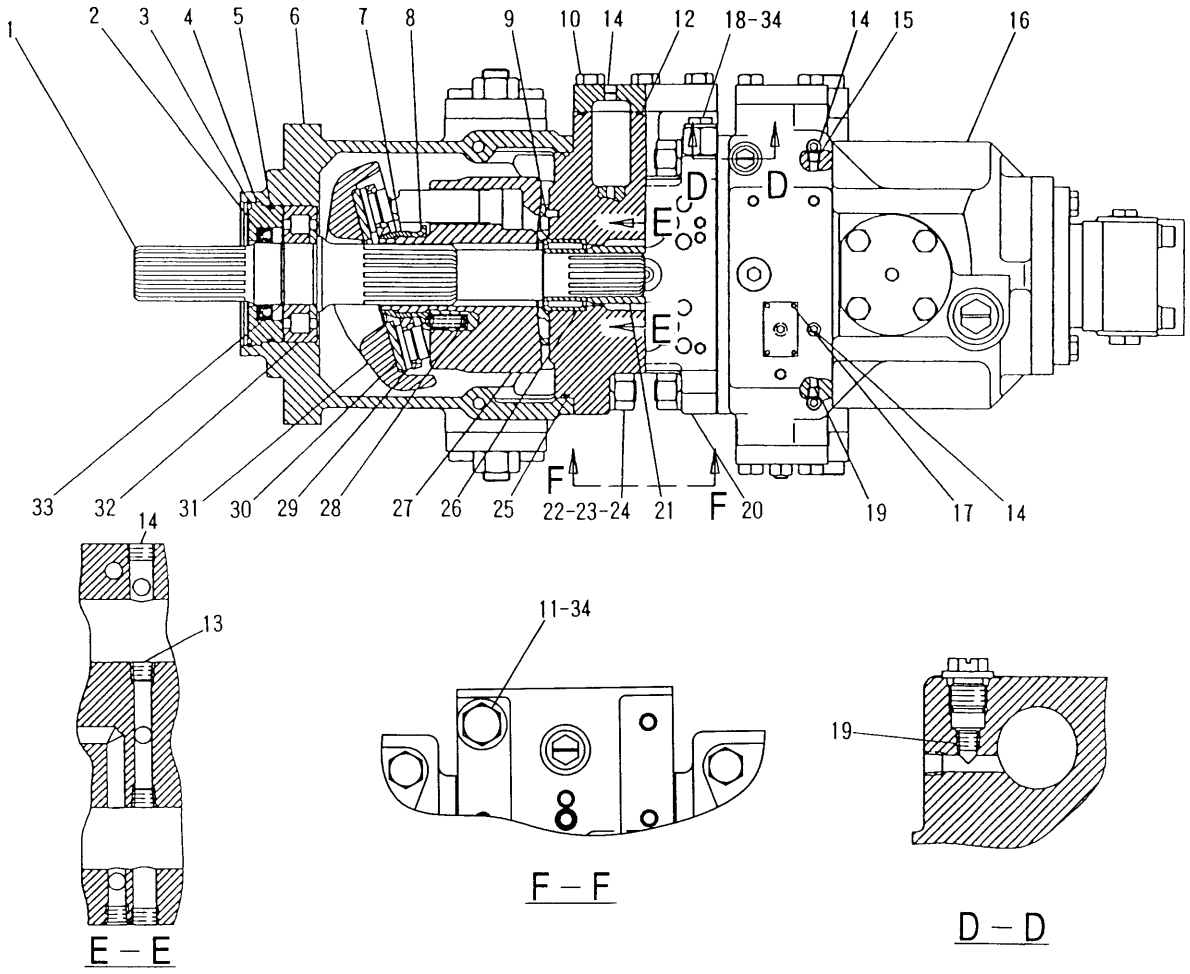

NOTE	No.	PART No.	QTY	PART NAME	NOTE	No.	PART No.	QTY	PART NAME
	1	087-5178	1	SHAFT		17	095-7419	4	SCREW
J	2	096-3998	1	SEAL		18	087-4566	1	CONNECTOR
	3	096-3983	1	RING		19	096-3831	4	ORIFICE
	4	096-3984	1	CASE		20	114-0748	1	BLOCK
J	5	096-3944	1	SEAL-O-RING (ID=94.40mm)		21	087-5200	1	COUPLING
	6	114-0746	1	BODY		22	096-3946	8	STUD
	7	122-5114	2	GUIDE		23	8T-4132	8	NUT
	8	7Y-4215	2	SPACER		24	3B-4510	8	LOCKWASHER
	9	094-1875	2	DOWEL	J	25	095-7383	2	SEAL-O-RING (ID=174.00mm)
	10	8T-4956	6	BOLT (L=35mm)		26	096-4003	2	BEARING SET
	11	9S-4191	1	PLUG		27	123-2027	1	BARREL AS
J	12	095-1606	2	SEAL-O-RING (ID=41.70mm)		28	118-4057	18	SPRING
	13	160-4409	2	ORIFICE		29	114-0491	2	PISTON AS
B		171-3258	2	ORIFICE		30	087-5192	2	PLATE
B		096-3831	2	ORIFICE		31	087-5201	2	SWASHPLATE
B		176-4968	2	ORIFICE		32	096-4002	2	BEARING
B		4I-1022	2	ORIFICE		33	095-7424	1	RING
	14	096-1445	14	PLUG	J	34	3J-1907	2	SEAL-O-RING (ID=11.89mm)
	15	1R-8962	2	ORIFICE					
	16	114-0747	1	BODY					

B—USE AS REQUIRED

H78066E 13

116-3545 PUMP GP-DOUBLE PISTON (2/4)

S/N 3MR 00784-Up, 4MR 00229-Up
Part of 109-9491-Page174

HYDRAULIC SYSTEM

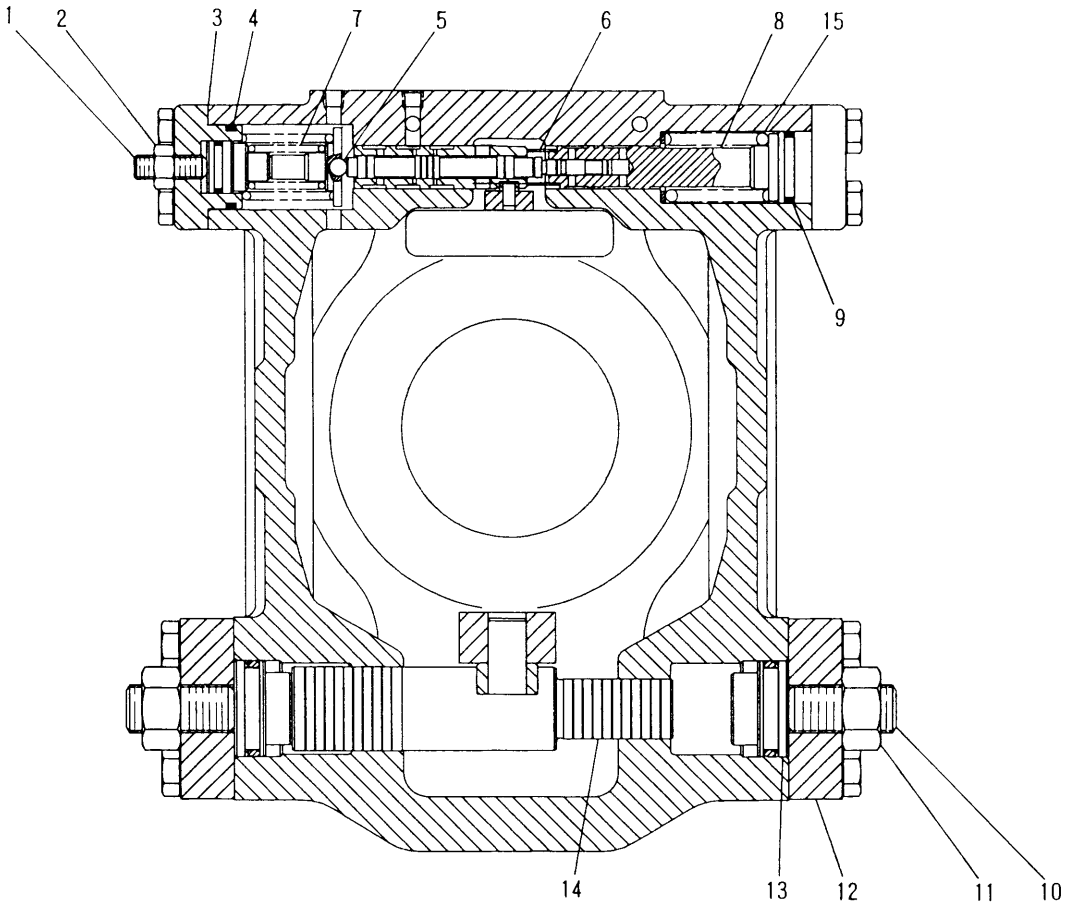

C – C

NOTE	No.	PART No.	QTY	PART NAME	NOTE	No.	PART No.	QTY	PART NAME
	1	096-2966	2	SETSCREW	B		096-9455	4	SHIM (T=1.90mm)
	2	8T-4133	2	NUT	B		096-9347	4	SHIM (T=1.95mm)
B	3	096-9346	4	SHIM (T=1.00mm)	J	4	095-1658	2	SEAL-O-RING (ID=29.40mm)
B		096-9469	4	SHIM (T=1.05mm)		5	3D-2891	2	BALL
B		096-9468	4	SHIM (T=1.10mm)		6	099-3671	2	SPRING
B		096-9466	4	SHIM (T=1.20mm)		7	118-4100	2	SPRING
B		096-9467	4	SHIM (T=1.15mm)		8	168-0815	2	PISTON AS
B		096-9376	4	SHIM (T=1.25mm)	J	9	095-1657	2	SEAL-O-RING (ID=24.40mm)
B		096-9464	4	SHIM (T=1.35mm)		10	096-4011	4	SETSCREW
B		096-9465	4	SHIM (T=1.30mm)		11	8T-4131	4	NUT
B		096-9463	4	SHIM (T=1.40mm)		12	096-4010	4	COVER
B		096-9462	4	SHIM (T=1.45mm)		13	096-4012	4	STOPPER
B		096-9377	4	SHIM (T=1.50mm)		14	096-4009	2	PISTON
B		096-9461	4	SHIM (T=1.55mm)		15	160-4408	2	SPRING
B		096-9460	4	SHIM (T=1.60mm)					
B		096-9459	4	SHIM (T=1.65mm)					
B		096-9458	4	SHIM (T=1.70mm)					
B		096-9378	4	SHIM (T=1.75mm)					
B		096-9457	4	SHIM (T=1.80mm)					
B		096-9456	4	SHIM (T=1.85mm)					

B—USE AS REQUIRED

H78067E 13

116-3545 PUMP GP-DOUBLE PISTON (3/4)

S/N 3MR 00784-Up, 4MR 00229-Up
Part of 109-9491-Page174

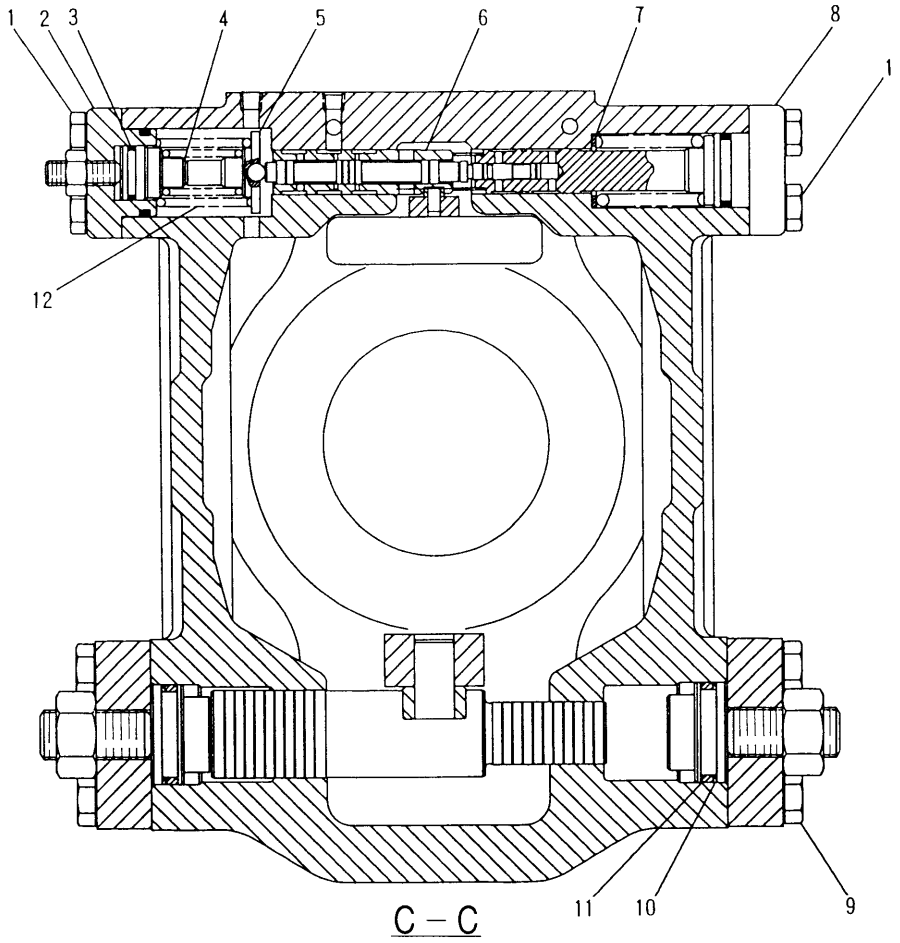

NOTE	No.	PART No.	QTY	PART NAME	NOTE	No.	PART No.	QTY	PART NAME
	1	8T-4136	8	BOLT (L=25mm)	B		099-6111	2	SHIM (T=1.15mm)
	2	096-4020	2	COVER	B		099-6112	2	SHIM (T=1.20mm)
J	3	8T-0211	2	SEAL-O-RING (ID=17.80mm)	B		099-6109	2	SHIM (T=1.05mm)
	4	6I-6750	2	RETAINER	B		099-6110	2	SHIM (T=1.10mm)
	5	185-0169	2	GUIDE	B		099-6120	2	SHIM (T=1.50mm)
	6	096-4014	2	SPOOL AS	B		099-3669	2	SHIM (T=1.00mm)
B	7	099-6128	2	SHIM (T=1.90mm)		8	096-4015	2	COVER
B		099-6126	2	SHIM (T=1.80mm)		9	8T-4183	16	BOLT (L=40mm)
B		099-6127	2	SHIM (T=1.85mm)	J	10	096-4925	4	RING
B		099-3670	2	SHIM (T=1.95mm)	J	11	095-1600	4	SEAL-O-RING (ID=33.70mm)
B		099-6125	2	SHIM (T=1.75mm)		12	118-4099	2	SPRING
B		099-6123	2	SHIM (T=1.65mm)					
B		099-6124	2	SHIM (T=1.70mm)					THE FOLLOWING REPAIR
B		099-6122	2	SHIM (T=1.60mm)					KIT IS AVAILABLE:
B		099-6121	2	SHIM (T=1.55mm)			126-2030	1	SEAL KIT
B		099-6119	2	SHIM (T=1.45mm)					(INCLUDES PARTS MARKED J)
B		099-6118	2	SHIM (T=1.40mm)					
B		099-6117	2	SHIM (T=1.35mm)					
B		099-6113	2	SHIM (T=1.25mm)					
B		099-6115	2	SHIM (T=1.30mm)					

B—USE AS REQUIRED

H78068E 13

116-3545 PUMP GP-DOUBLE PISTON (4/4)

S/N 3MR 00784-Up, 4MR 00229-Up
Part of 109-9491-Page174

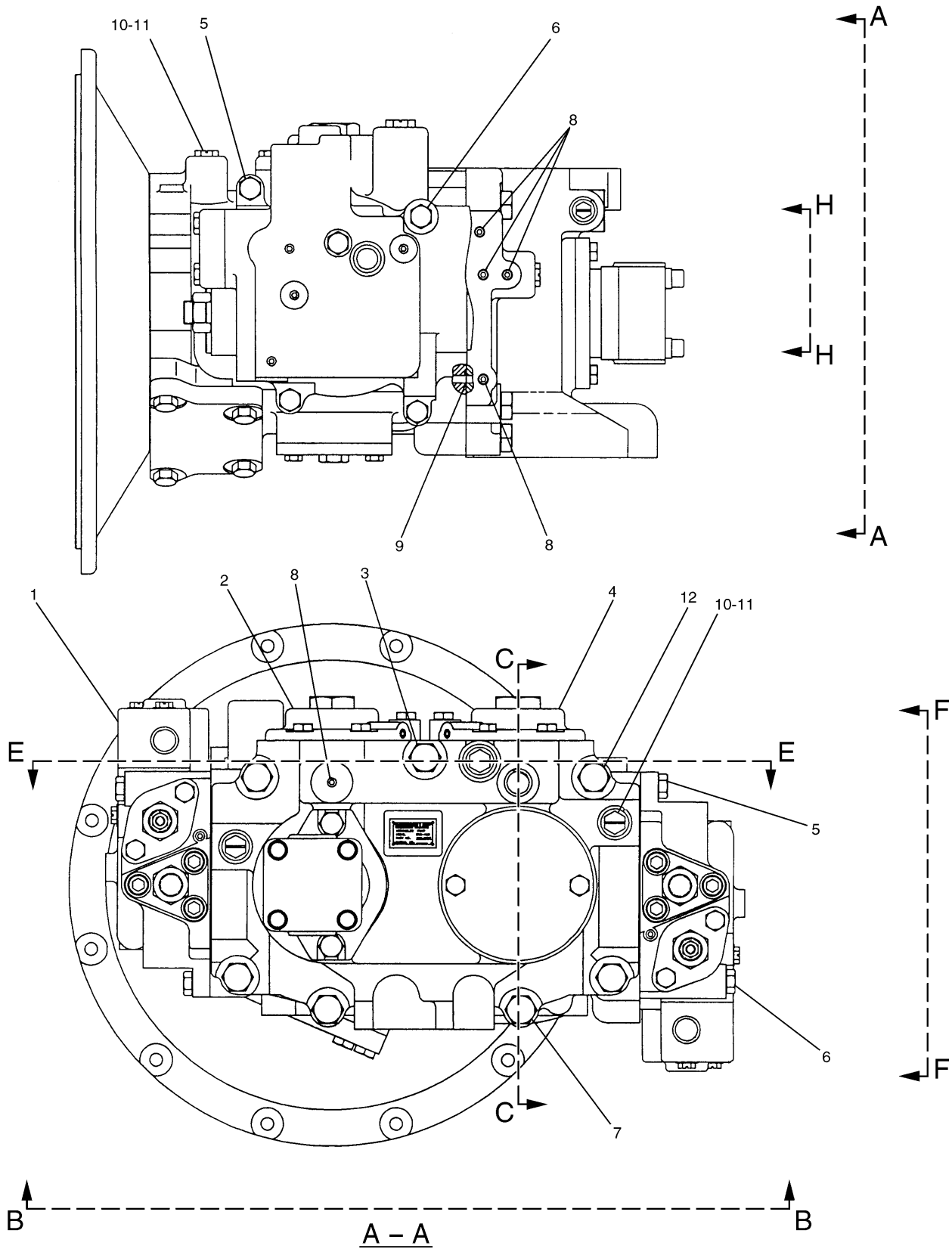

173-3537 PUMP GP-DOUBLE PISTON (1/3)
S/N 3MR 07191-07280, 4MR 01024-01030
Part of 176-5044-Page227.02
179-9619-Page179.11

HYDRAULIC SYSTEM

NOTE	No.	PART No.	QTY	PART NAME	NOTE	No.	PART No.	QTY	PART NAME
Y	1	179-9619	2	HEAD GP					
	2	177-2470	1	COVER					
	3	7X-2557	1	BOLT (L=140mm)					
	4	177-2471	1	COVER					
	5	8T-4139	6	BOLT (L=30mm)					
	6	8T-4176	2	BOLT (L=90mm)					
	7	8T-4140	4	BOLT (L=60mm)					
	8	094-1882	5	PLUG					
	9	095-1578	6	SEAL-O-RING (ID=9.80mm)					
	10	9S-4185	4	PLUG					
	11	3K-0360	4	SEAL-O-RING (ID=16.36mm)					
	12	8T-4175	2	BOLT (L=90mm)					

Y—SEE SEPARATE ILLUSTRATION

H78070E 04

173-3537 PUMP GP-DOUBLE PISTON (1/3)

S/N 3MR 07191-07280, 4MR 01024-01030
Part of 176-5044-Page227.02
179-9619-Page179.11

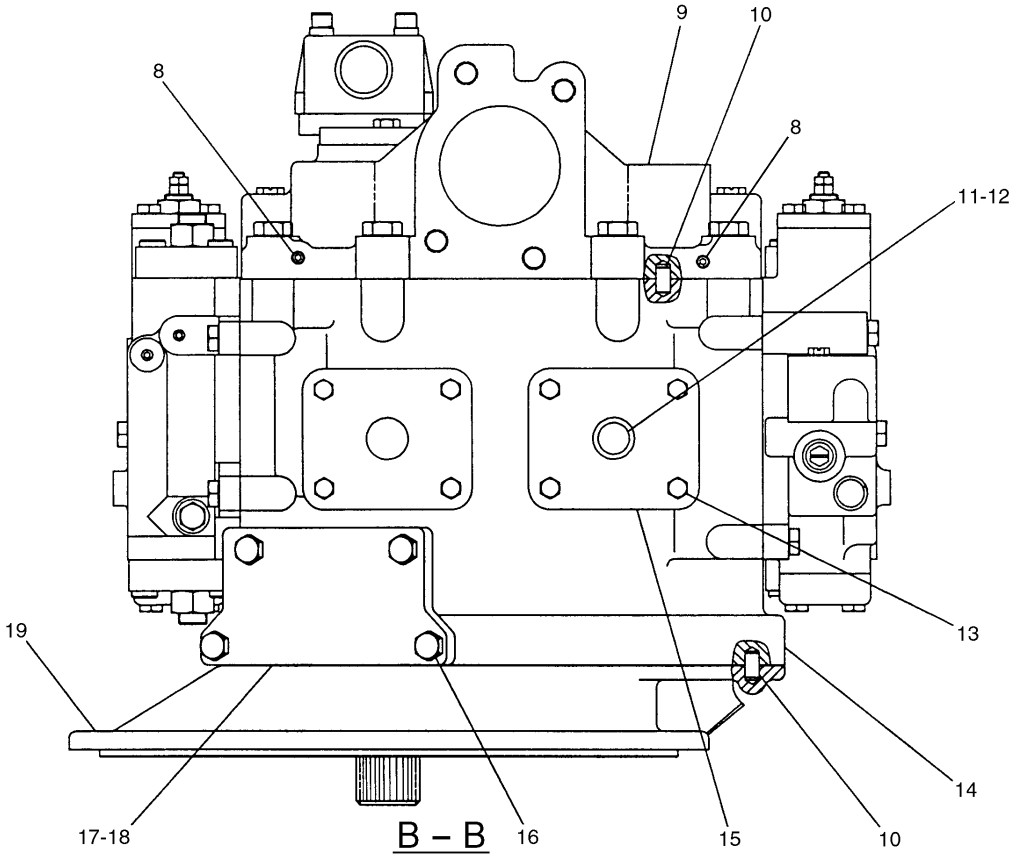

B – B

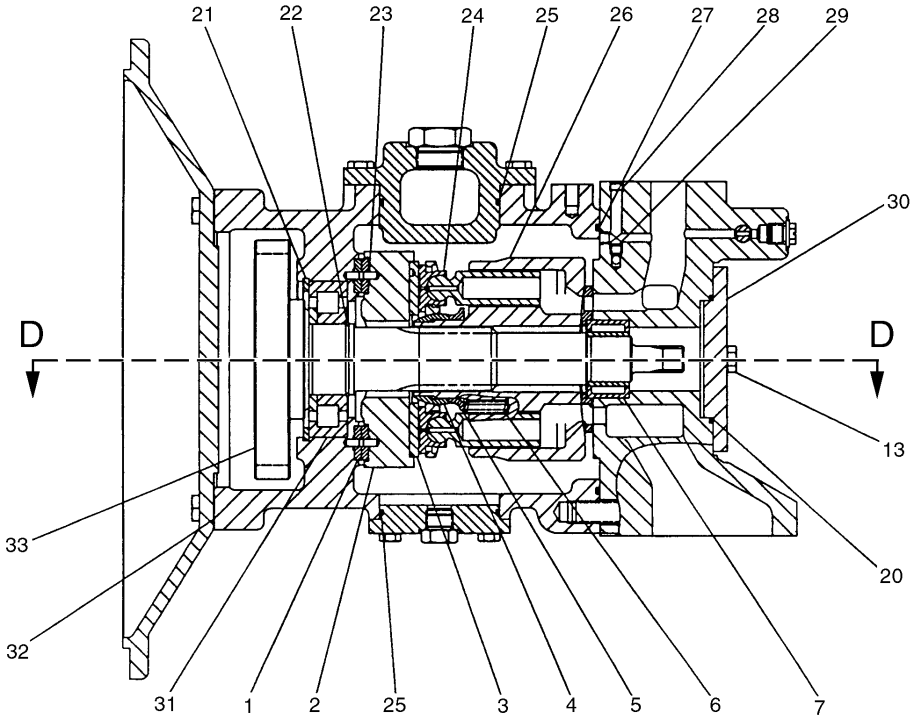

C – C

H78072E 04

173-3537 PUMP GP-DOUBLE PISTON (2/3)
S/N 3MR 07191-07280, 4MR 01024-01030
Part of 176-5044-Page227.02

HYDRAULIC SYSTEM

NOTE	No.	PART No.	QTY	PART NAME	NOTE	No.	PART No.	QTY	PART NAME
	1	177-2583	4	BEARING					
	2	194-8397	2	SWASHPLATE AS					
	3	173-3473	2	PLATE					
	4	173-3427	2	GUIDE					
	5	7Y-4215	2	SPACER					
	6	118-4057	18	SPRING					
	7	129-7859	2	BEARING SET					
	8	094-1882	2	PLUG					
	9	173-3538	1	BLOCK					
	10	129-7979	4	DOWEL					
	11	9S-4185	2	PLUG					
	12	3K-0360	2	SEAL-O-RING (ID=16.36mm)					
	13	8T-4136	10	BOLT (L=25mm)					
	14	173-3371	1	BODY					
	15	150-5782	2	COVER					
	16	8T-4139	4	BOLT (L=30mm)					
	17	129-7863	1	COVER					
	18	129-7857	1	GASKET					
	19	179-9763	1	FLANGE					
	20	8T-3338	1	SEAL-O-RING (ID=84.40mm)					
	21	095-0946	2	RING					
	22	129-7921	2	RING					
	23	150-5785	4	DOWEL					
	24	191-5709	2	PISTON AS					
	25	193-1736	4	SEAL-O-RING (ID=79.40mm)					
	26	173-3498	1	BARREL AS					
	27	177-8740	1	SEAL-O-RING (ID=285.60mm)					
	28	191-5599	2	PLUG					
	29	160-4409	2	ORIFICE					
	30	158-9022	1	COVER					
	31	129-7927	2	BEARING					
	32	129-7855	1	GASKET					
	33	173-3392	1	SHAFT					

H78072E 04

173-3537 PUMP GP-DOUBLE PISTON (2/3)

S/N 3MR 07191-07280, 4MR 01024-01030
Part of 176-5044-Page227.02

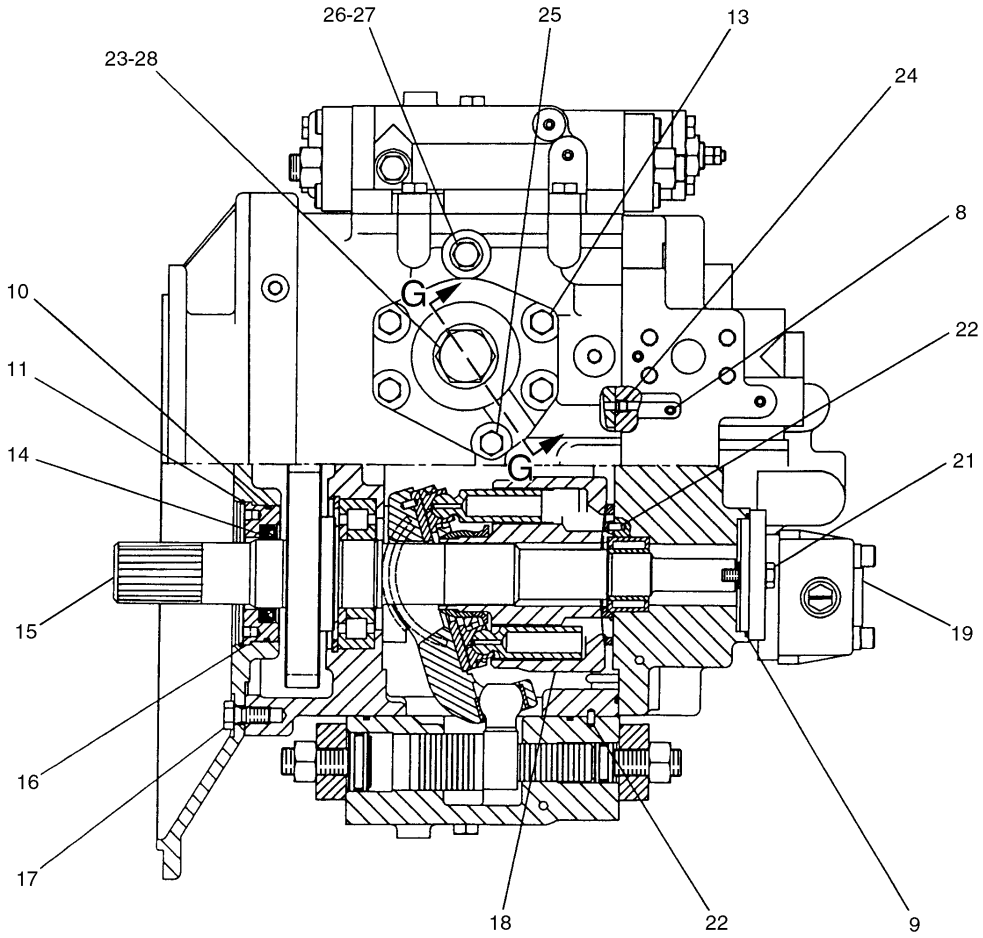

D – D

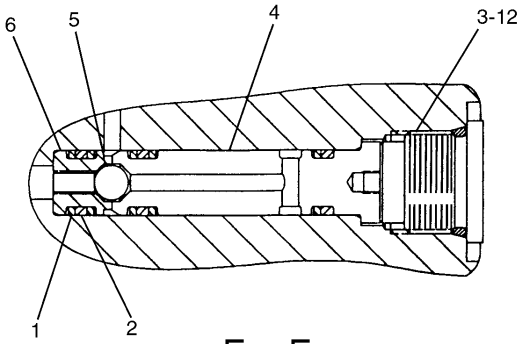

E – E

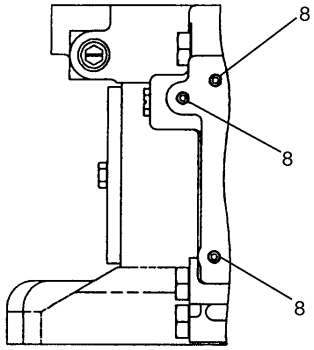

F – F

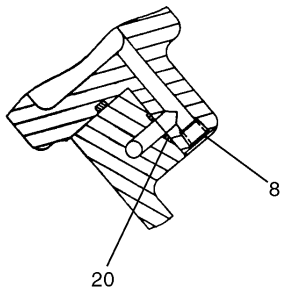

G – G

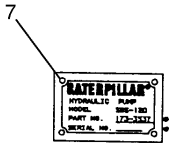

H – H

H78074E 04

173-3537 PUMP GP-DOUBLE PISTON (3/3)
S/N 3MR 07191-07280, 4MR 01024-01030
Part of 176-5044-Page227.02

HYDRAULIC SYSTEM

NOTE	No.	PART No.	QTY	PART NAME	NOTE	No.	PART No.	QTY	PART NAME
	1	4I-1014	5	RING					
	2	095-1576	3	SEAL-O-RING (ID=8.80mm)					
	3	158-9046	1	PLUG					
	4	173-3539	1	SEAT					
	5	2D-6642	1	BALL					
	6	4I-0911	1	SEAT					
	7	095-7419	4	SCREW					
	8	094-1882	9	PLUG					
	9	8T-3338	1	SEAL-O-RING (ID=84.40mm)					
	10	096-3944	1	SEAL-O-RING (ID=94.40mm)					
	11	096-3983	1	RING					
	12	3K-0360	1	SEAL-O-RING (ID=16.36mm)					
	13	8T-4136	8	BOLT (L=25mm)					
	14	129-7925	1	SEAL					
	15	173-3391	1	SHAFT					
	16	129-7854	1	CASE					
	17	8T-4192	10	BOLT (L=25mm)					
	18	173-3496	1	BARREL AS					
	19	126-2016	1	PUMP GP					
	20	095-1578	2	SEAL-O-RING (ID=9.80mm)					
	21	8T-4137	2	BOLT (L=20mm)					
	22	094-1875	6	DOWEL					
	23	7M-8485	2	SEAL-O-RING (ID=29.74mm)					
	24	4I-1022	2	ORIFICE					
	25	8T-4196	2	BOLT (L=35mm)					
	26	9S-4191	1	PLUG					
	27	3J-1907	1	SEAL-O-RING (ID=11.89mm)					
	28	8J-4645	2	PLUG					

H78074E 04

173-3537 PUMP GP-DOUBLE PISTON (3/3)

S/N 3MR 07191-07280, 4MR 01024-01030
Part of 176-5044-Page227.02

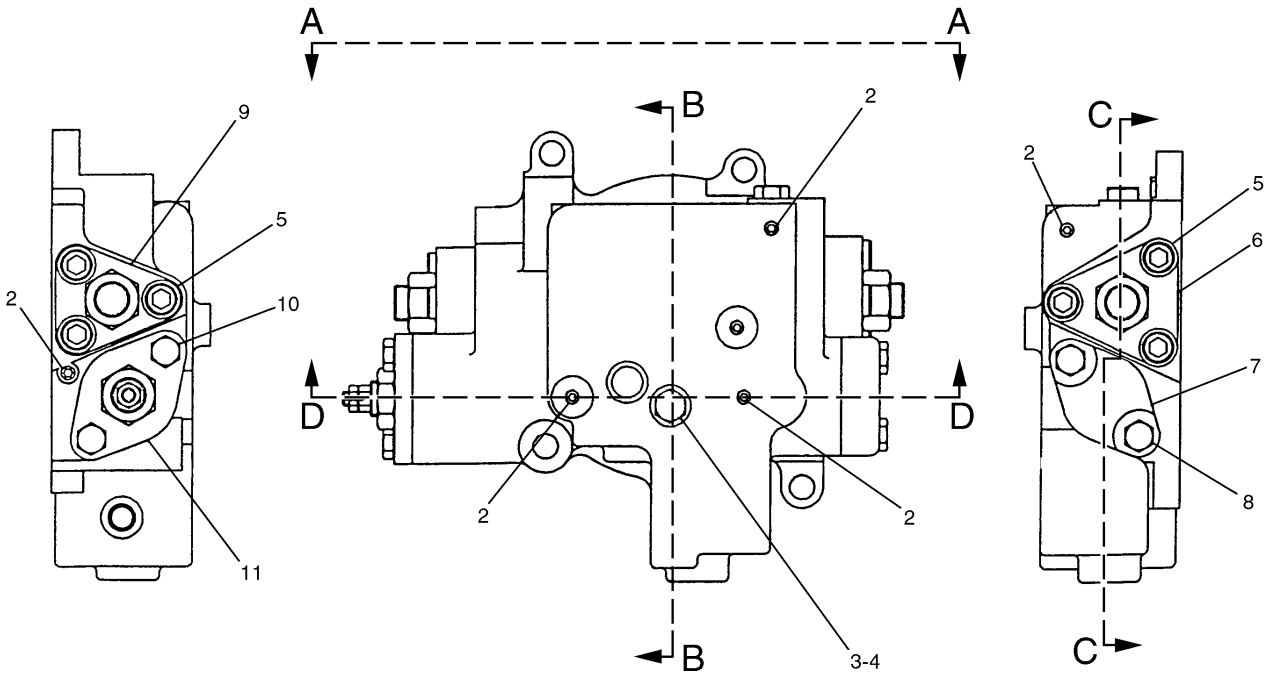

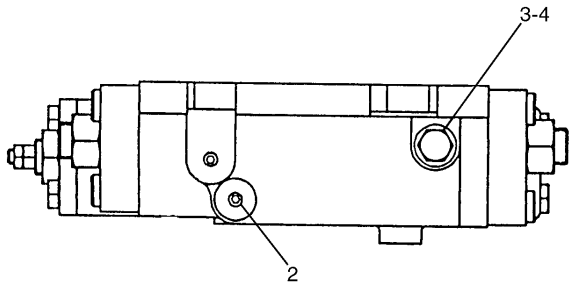

A – A

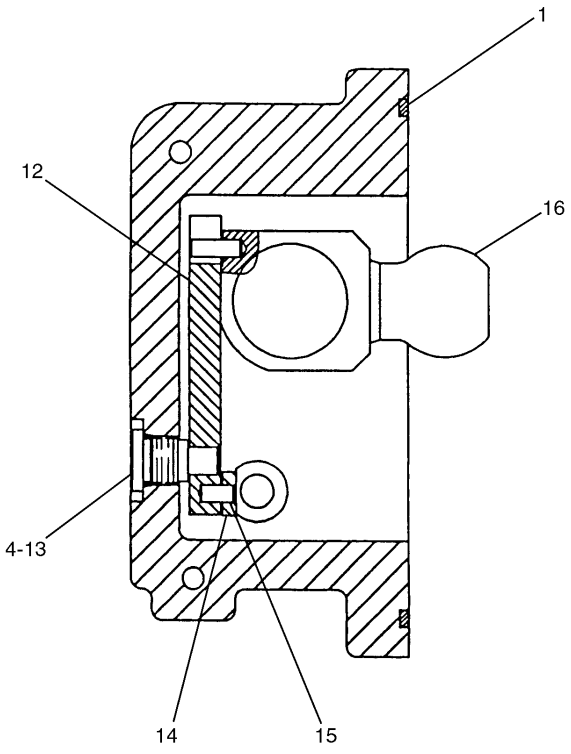

B – B

H78076E 03

179–9619 HEAD GP–PUMP CONTROL (1/2)
S/N 3MR 07191–07280, 4MR 01024–01030
Part of 173–3537–Page179.06

HYDRAULIC SYSTEM

NOTE	No.	PART No.	QTY	PART NAME	NOTE	No.	PART No.	QTY	PART NAME
	1	8F-8733	1	SEAL-O-RING (ID=151.99mm)					
	2	094-1882	6	PLUG					
	3	9S-4191	2	PLUG					
	4	3J-1907	3	SEAL-O-RING (ID=11.89mm)					
	5	6V-8200	6	BOLT (L=35mm)					
	6	173-3405	1	COVER					
	7	173-3413	1	COVER					
	8	8T-4196	2	BOLT (L=35mm)					
	9	173-3404	1	COVER					
	10	8T-4136	2	BOLT (L=25mm)					
	11	173-3398	1	COVER					
	12	173-3397	1	LEVER					
	13	150-5797	1	PIN					
	14	094-1881	1	PLATE					
	15	094-1875	1	DOWEL					
	16	185-0201	1	PIN AS					
		129-7978	1	DOWEL					

H78076E 03

179-9619 HEAD GP-PUMP CONTROL (1/2)

S/N 3MR 07191-07280, 4MR 01024-01030
Part of 173-3537-Page179.06

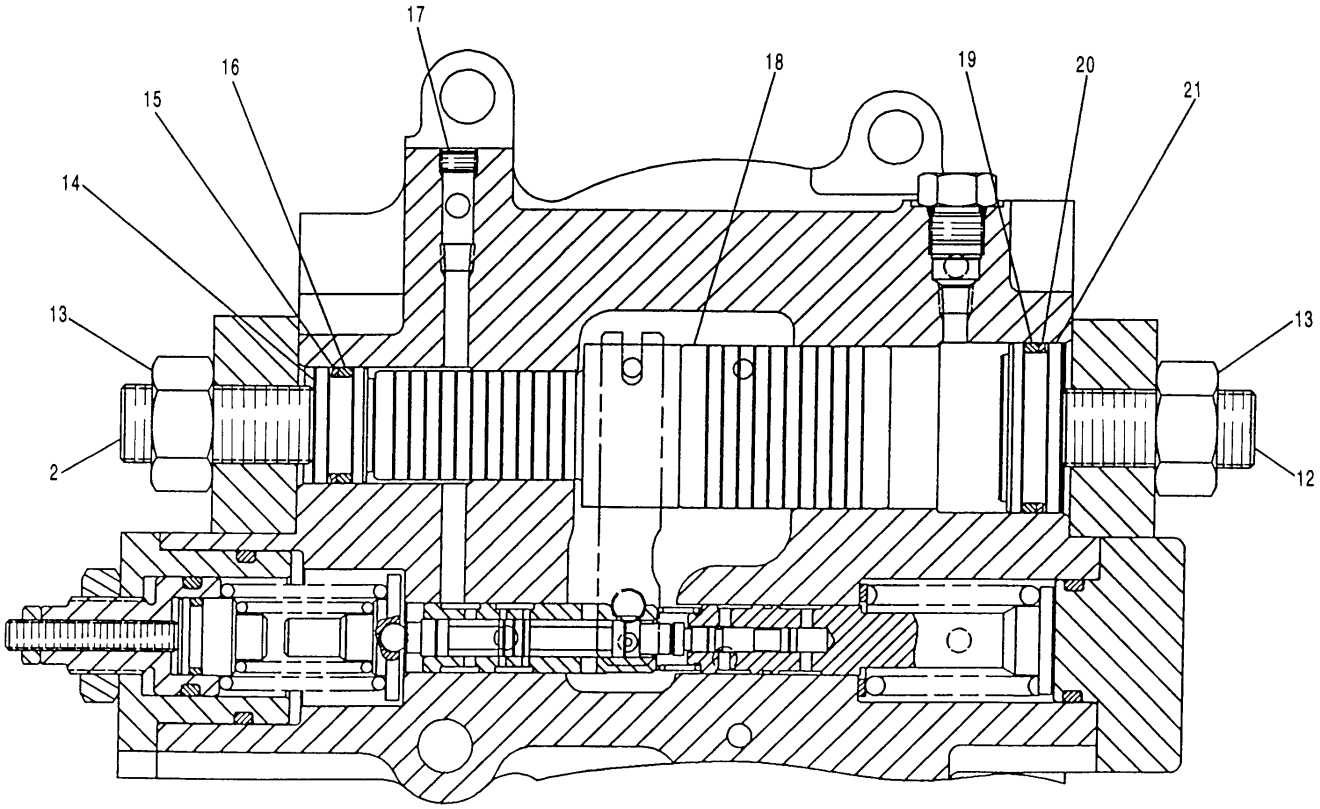

C – C

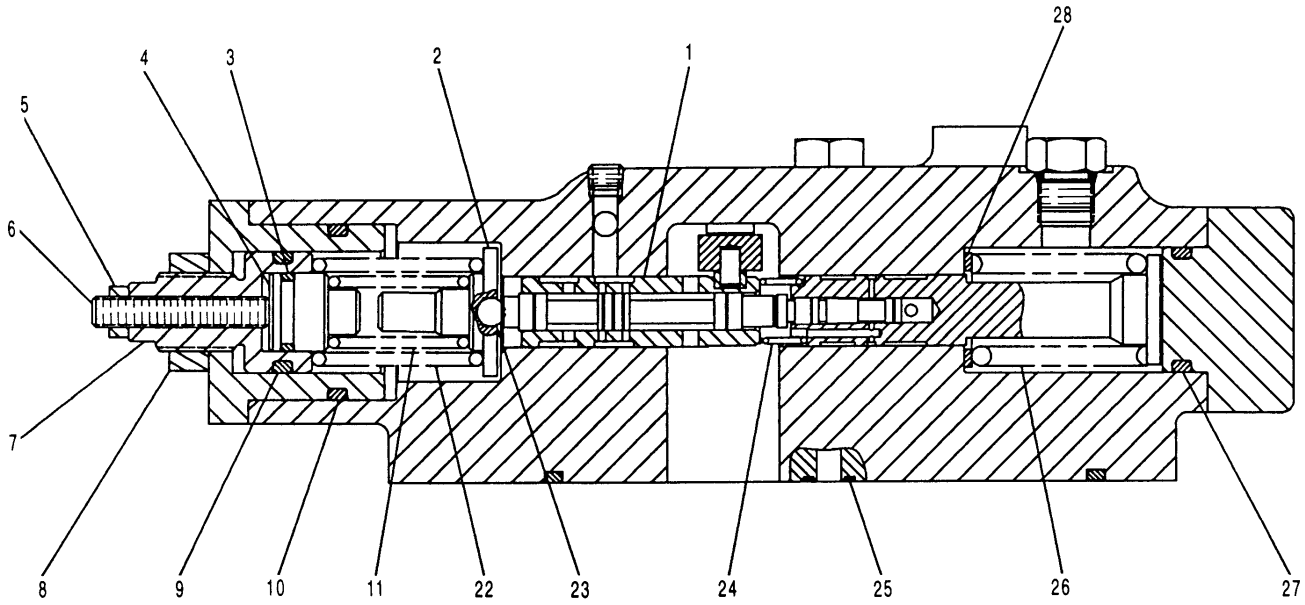

D – D

H78078E 03

179-9619 HEAD GP-PUMP CONTROL (2/2)
S/N 3MR 07191-07280, 4MR 01024-01030
Part of 173-3537-Page179.06

HYDRAULIC SYSTEM

NOTE	No.	PART No.	QTY	PART NAME	NOTE	No.	PART No.	QTY	PART NAME
	1	173-3394	1	SPOOL AS					
	2	185-0169	1	GUIDE					
	3	095-1519	1	SEAL-O-RING (ID=15.80mm)					
	4	185-0172	1	RETAINER					
	5	200-3254	1	NUT					
	6	173-3411	1	SETSCREW					
	7	173-3387	1	ADJUSTER					
	8	200-3255	1	NUT					
	9	095-1527	1	SEAL-O-RING (ID=24.70mm)					
	10	095-1538	1	SEAL-O-RING (ID=38.70mm)					
	11	200-3245	1	SPRING					
	12	096-5400	2	SETSCREW					
	13	8T-4131	2	NUT					
	14	173-3389	1	STOPPER					
	15	185-0347	1	RING					
	16	190-7674	1	SEAL-O-RING (ID=23.70mm)					
	17	191-5599	1	PLUG					
	18	173-3384	1	PISTON					
	19	190-7673	1	SEAL-O-RING (ID=37.70mm)					
	20	185-0348	1	RING					
	21	173-3390	1	STOPPER					
	22	200-3244	1	SPRING					
	23	3D-2891	1	BALL					
	24	099-3671	1	SPRING					
	25	189-9763	3	SEAL-O-RING (ID=9.80mm)					
	26	200-3246	1	SPRING					
	27	095-1528	1	SEAL-O-RING (ID=25.70mm)					
B	28	099-6128	2	SHIM (T=1.90mm)					
B		099-6126	2	SHIM (T=1.80mm)					
B		099-6127	2	SHIM (T=1.85mm)					
B		099-3670	2	SHIM (T=1.95mm)					
B		099-6125	2	SHIM (T=1.75mm)					
B		099-6123	2	SHIM (T=1.65mm)					
B		099-6124	2	SHIM (T=1.70mm)					
B		099-6122	2	SHIM (T=1.60mm)					
B		099-6121	2	SHIM (T=1.55mm)					
B		099-6119	2	SHIM (T=1.45mm)					
B		099-6118	2	SHIM (T=1.40mm)					
B		099-6117	2	SHIM (T=1.35mm)					
B		099-6113	2	SHIM (T=1.25mm)					
B		099-6115	2	SHIM (T=1.30mm)					
B		099-6111	2	SHIM (T=1.15mm)					
B		099-6112	2	SHIM (T=1.20mm)					
B		099-6109	2	SHIM (T=1.05mm)					
B		099-6110	2	SHIM (T=1.10mm)					
B		099-6120	2	SHIM (T=1.50mm)					
B		099-3669	2	SHIM (T=1.00mm)					

B—USE AS REQUIRED

H78078E 03

179-9619 HEAD GP-PUMP CONTROL (2/2)

S/N 3MR 07191-07280, 4MR 01024-01030
Part of 173-3537-Page179.06

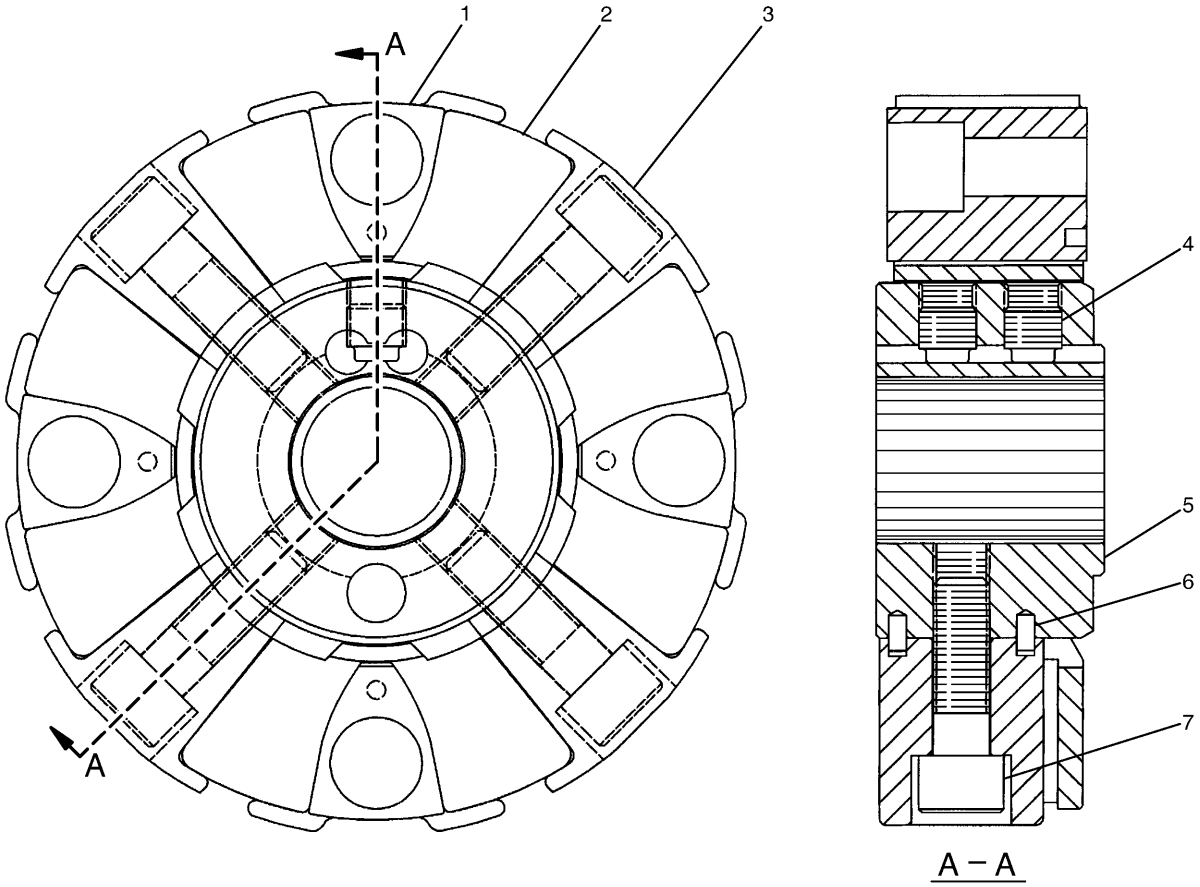

NOTE	No.	PART No.	QTY	PART NAME	NOTE	No.	PART No.	QTY	PART NAME
	1	7Y-1900	4	INSERT					
	2	7Y-1901	1	ELEMENT					
	3	7Y-1902	4	INSERT					
	4	7Y-0466	2	SETSCREW					
	5	171-9066	1	HUB					
	6	7Y-0468	8	PIN					
	7	7Y-1904	4	BOLT (L=50mm)					

H66550E 01

162-6210 COUPLING GP-FLEXIBLE

S/N 3MR 07191-07280, 4MR 01024-01030
Part of 176-5044-Page227.02

MEMORANDA

HYDRAULIC SYSTEM

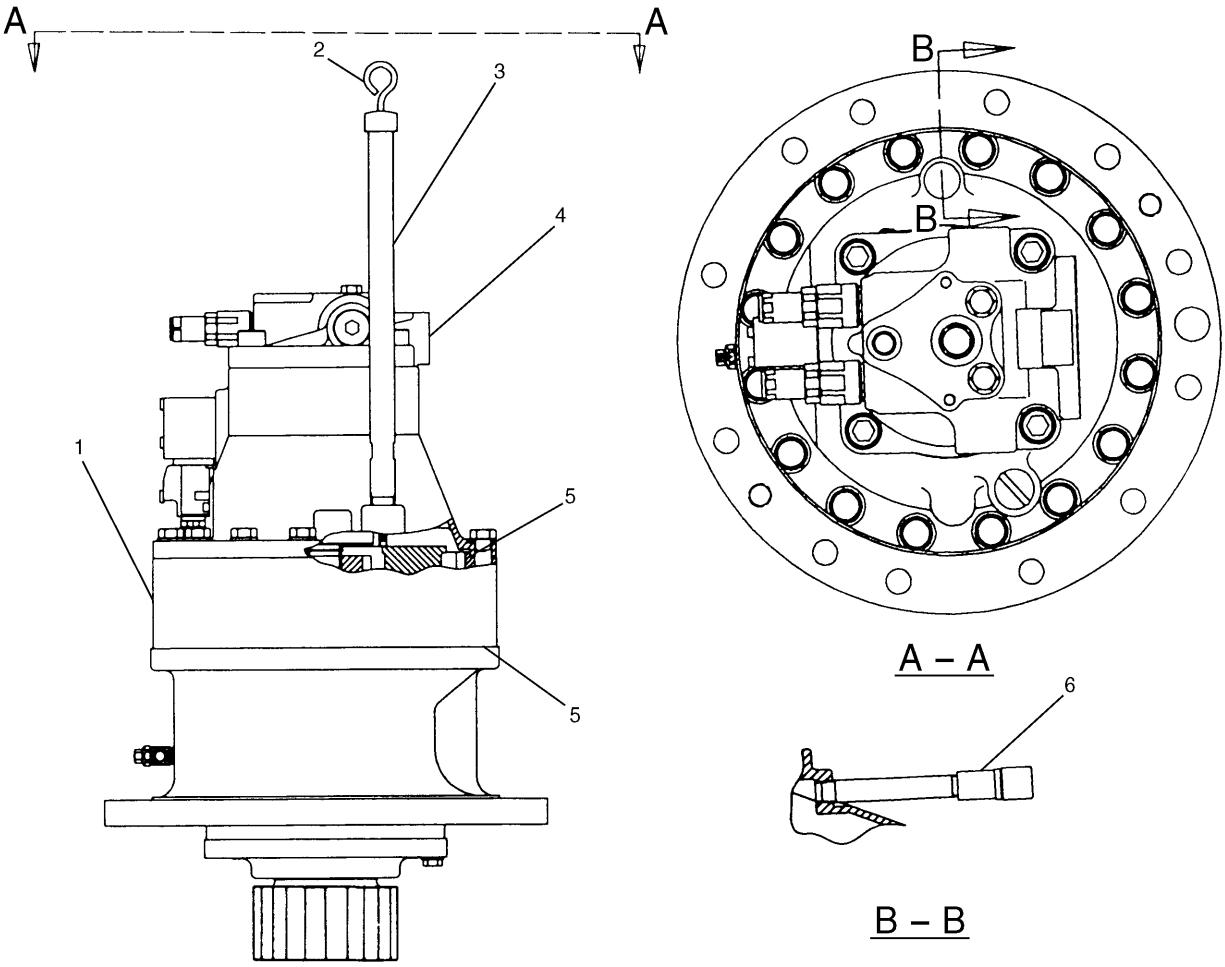

NOTE	No.	PART No.	QTY	PART NAME	NOTE	No.	PART No.	QTY	PART NAME
Y	1	114-1320	1	DRIVE GP					
	2	114-1398	1	GAUGE					
	3	114-1399	1	PIPE					
Y	4	116-3549	1	MOTOR GP					
B	5	1U-8846		GASKET MAKER…(10ml)					
	6	4I-7527	1	BREATHER AS					
		093-5150	1	COUPLING					
		114-8234	1	BREATHER					
		159-7665	1	NIPPLE					

B—USE AS REQUIRED

Y—SEE SEPARATE ILLUSTRATION

H52967E 03

114-1319 DRIVE GP-SWING

114-1320-Page180.01,116-3549-Page258

HYDRAULIC SYSTEM

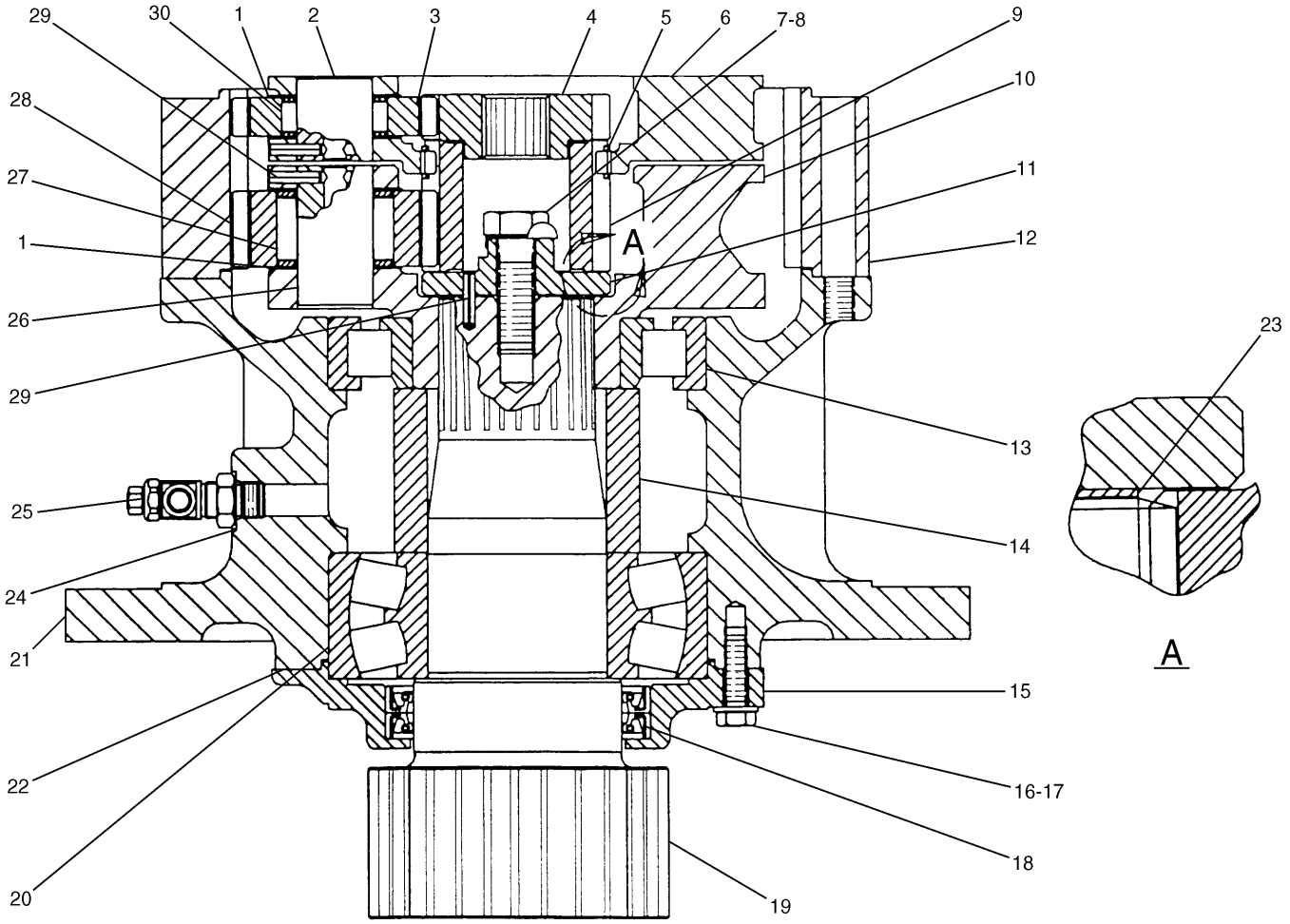

NOTE	No.	PART No.	QTY	PART NAME	NOTE	No.	PART No.	QTY	PART NAME
	1	094-0584	12	WASHER		21	114-1335	1	HOUSING
	2	7Y-1764	3	SHAFT	B	22	1U-8846		GASKET MAKER…(4ml)
	3	7Y-1644	3	GEAR (Z=25)	B	23	7Y-1759	5	SHIM (T=0.10mm)
	4	7Y-1643	2	GEAR (Z=23)	B		7Y-1760	2	SHIM (T=0.30mm)
	5	093-1729	2	RING	B		7Y-1761	1	SHIM (T=0.50mm)
	6	7Y-1751	1	CARRIER	B		7Y-1762	1	SHIM (T=1.00mm)
	7	6V-3532	1	BOLT (L=60mm)		24	3K-0360	1	SEAL-O-RING (ID=16.36mm)
	8	7Y-1765	1	WASHER		25	7E-4761	1	VALVE
	9	7Y-1645	1	GEAR (Z=23)		26	7Y-1646	3	SHAFT
	10	7Y-1752	1	CARRIER		27	7Y-1756	3	BEARING
	11	7Y-1777	1	RETAINER		28	7Y-1754	3	GEAR (Z=25)
	12	7Y-1755	1	GEAR (Z=73)		29	096-4837	7	PIN
	13	096-4339	1	BEARING AS		30	094-1516	3	BEARING
	14	7Y-1758	1	SPACER					
	15	7Y-1772	1	CAGE					
	16	8T-4183	6	BOLT (L=40mm)					
	17	8T-4223	6	WASHER					
	18	7Y-1766	2	SEAL					
	19	7Y-1775	1	SHAFT					
	20	095-1022	1	BEARING					

B—USE AS REQUIRED

H53395E 02

114-1320 DRIVE GP-SWING

S/N 3MR 1-01370, 4MR 1-00299

Part of 114-1319-Page180

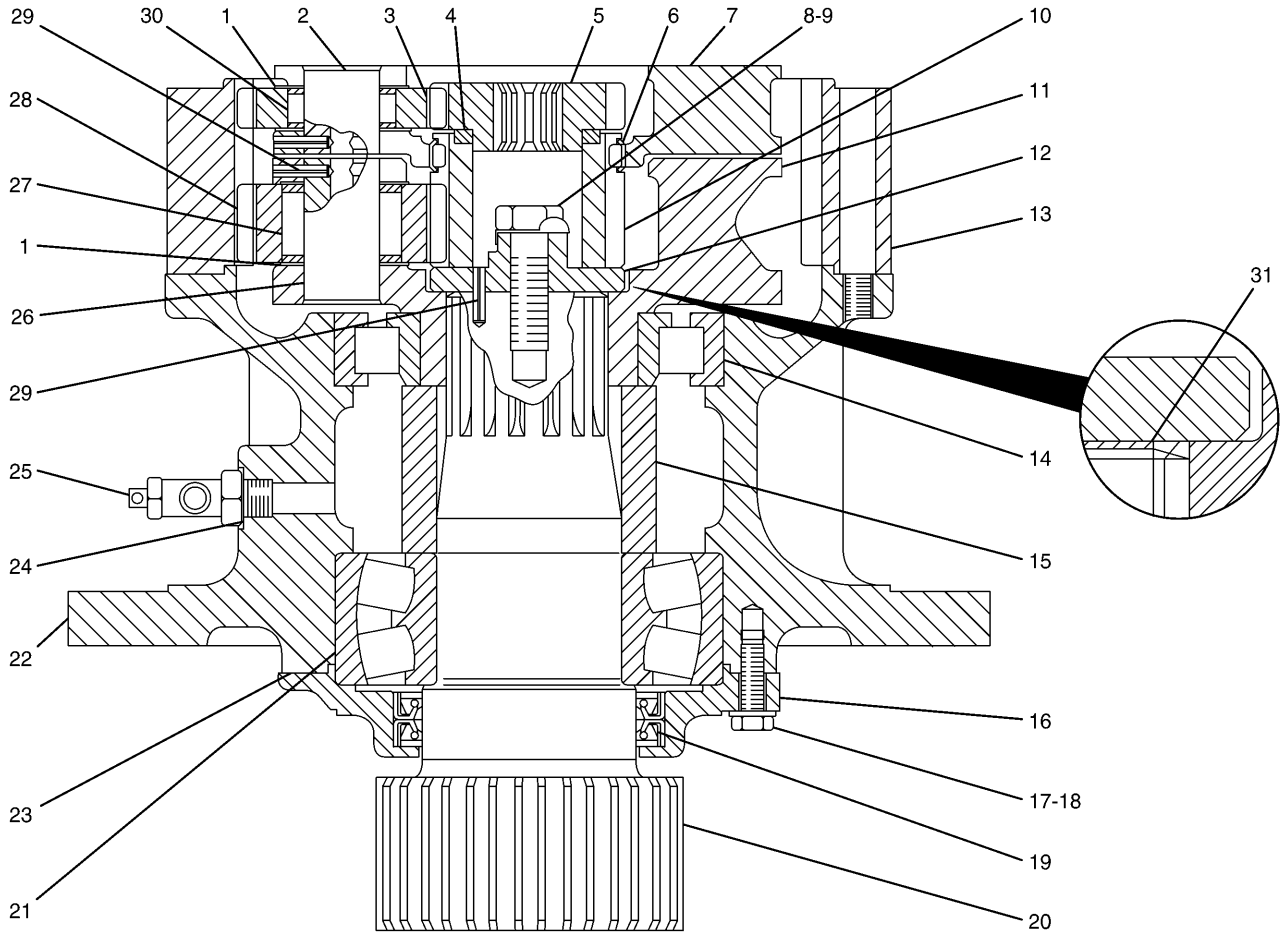

NOTE	No.	PART No.	QTY	PART NAME	NOTE	No.	PART No.	QTY	PART NAME
	1	094-0584	12	WASHER		21	095-1022	1	BEARING
	2	094-1509	3	SHAFT		22	114-1335	1	HOUSING
	3	7Y-1644	3	GEAR (Z=25)	B	23	1U-8846		GASKET MAKER…(4ml)
	4	114-1581	1	SPACER		24	3K-0360	1	SEAL-O-RING (ID=16.36mm)
	5	7Y-1643	1	GEAR (Z=23)		25	6V-7238	1	VALVE
	6	093-1729	2	RING		26	7Y-1646	3	SHAFT
	7	7Y-1751	1	CARRIER		27	7Y-1756	3	BEARING
	8	6V-3532	1	BOLT (L=60mm)		28	127-5970	3	GEAR (Z=25)
	9	7Y-1765	1	WASHER		29	096-4837	7	PIN
	10	127-5969	1	GEAR (Z=23)		30	094-1516	3	BEARING
	11	7Y-1752	1	CARRIER	B	31	7Y-1759	5	SHIM (T=0.10mm)
	12	7Y-1777	1	RETAINER	B		7Y-1760	2	SHIM (T=0.30mm)
	13	7Y-1755	1	GEAR (Z=73)	B		7Y-1761	1	SHIM (T=0.50mm)
	14	096-4339	1	BEARING AS	B		7Y-1762	1	SHIM (T=1.00mm)
	15	7Y-1758	1	SPACER					
	16	7Y-1772	1	CAGE					
	17	8T-4183	6	BOLT (L=40mm)					
	18	8T-4223	6	WASHER					
	19	7Y-1766	2	SEAL					
	20	7Y-1775	1	SHAFT					

B—USE AS REQUIRED

H73223E 11

114-1320 DRIVE GP-SWING

S/N 3MR 01371-Up, 4MR 00300-Up
Part of 114-1319-Page180

HYDRAULIC SYSTEM

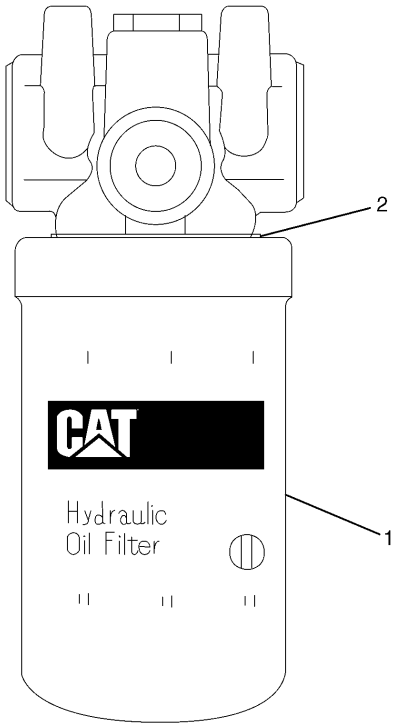

NOTE	No.	PART No.	QTY	PART NAME
	1	4I-3948	1	FILTER AS
	2	103-8236	1	RING

H50010E 03

4I-3741 FILTER GP-HYDRAULIC

Part of 118-3979-Page172

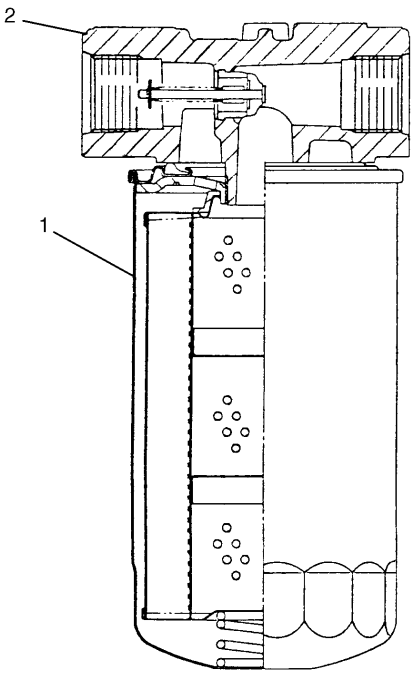

NOTE	No.	PART No.	QTY	PART NAME
	1	093-7521	1	FILTER
	2	126-2076	1	HEAD AS

H66631E 01

126-2075 FILTER GP-HYDRAULIC

Basic

Part of 118-3979-Page172

HYDRAULIC SYSTEM

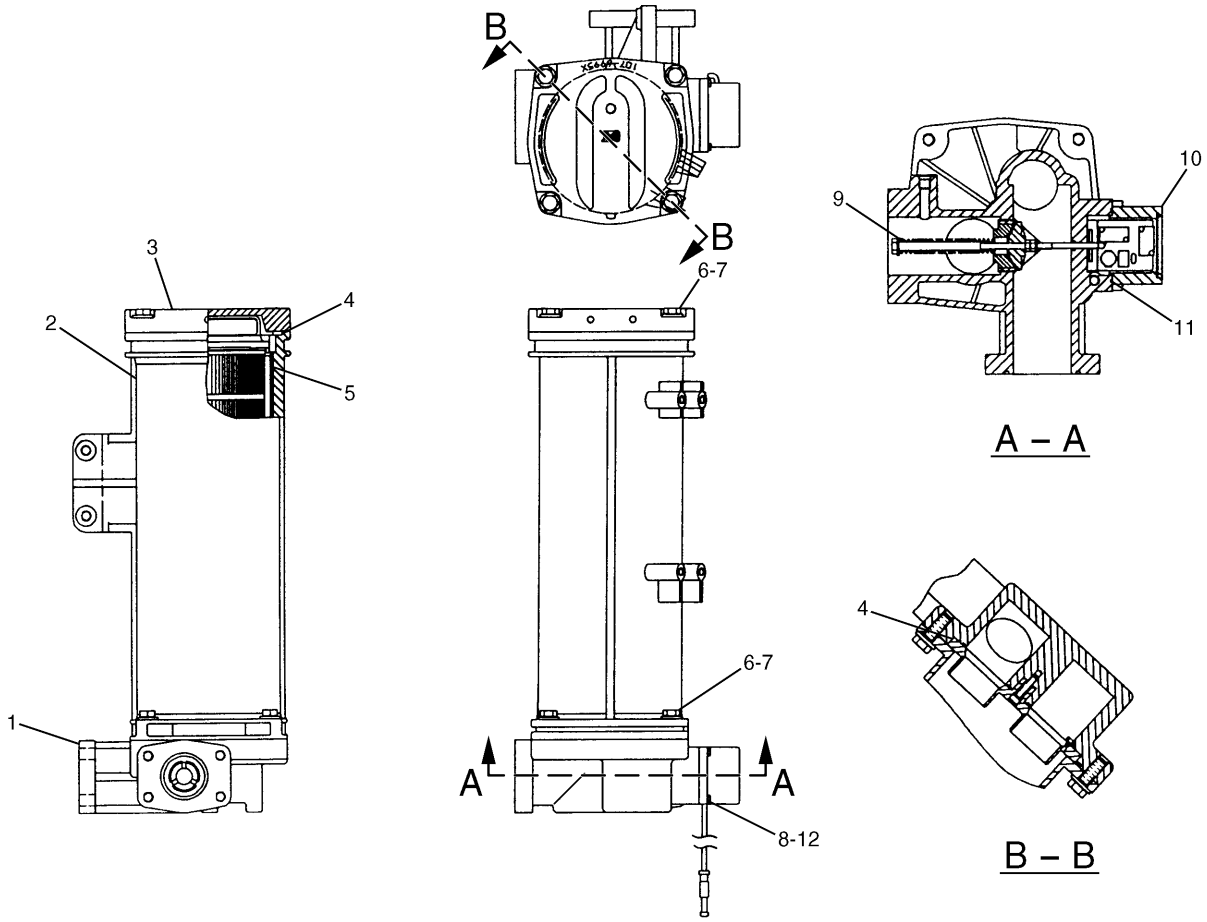

NOTE	No.	PART No.	QTY	PART NAME	NOTE	No.	PART No.	QTY	PART NAME
Y	1	129-8033	1	BLOCK GP					
Y	2	116-3653	1	HOUSING GP					
	3	116-3654	1	COVER					
	4	123-2003	2	SEAL-O-RING (ID=185.00mm)					
Y	5	126-2080	1	FILTER GP					
	6	8T-4184	8	BOLT (L=45mm)					
	7	8T-4223	8	WASHER					
	8	8T-0289	4	BOLT (L=20mm)					
	9	129-8034	1	VALVE AS					
	10	143-7966	1	INDICATOR AS					
		8T-4127	4	SCREW					
		137-3695	1	FILM					
	11	159-7784	1	SEAL-O-RING					
	12	8T-0328	4	WASHER					

Y—SEE SEPARATE ILLUSTRATION

H64618E 10

107-6995 FILTER GP-HYDRAULIC

Part of 118-3979-Page172
126-2080-Page182.01,129-8033-Page182.02,116-3653-Page182.03

HYDRAULIC SYSTEM

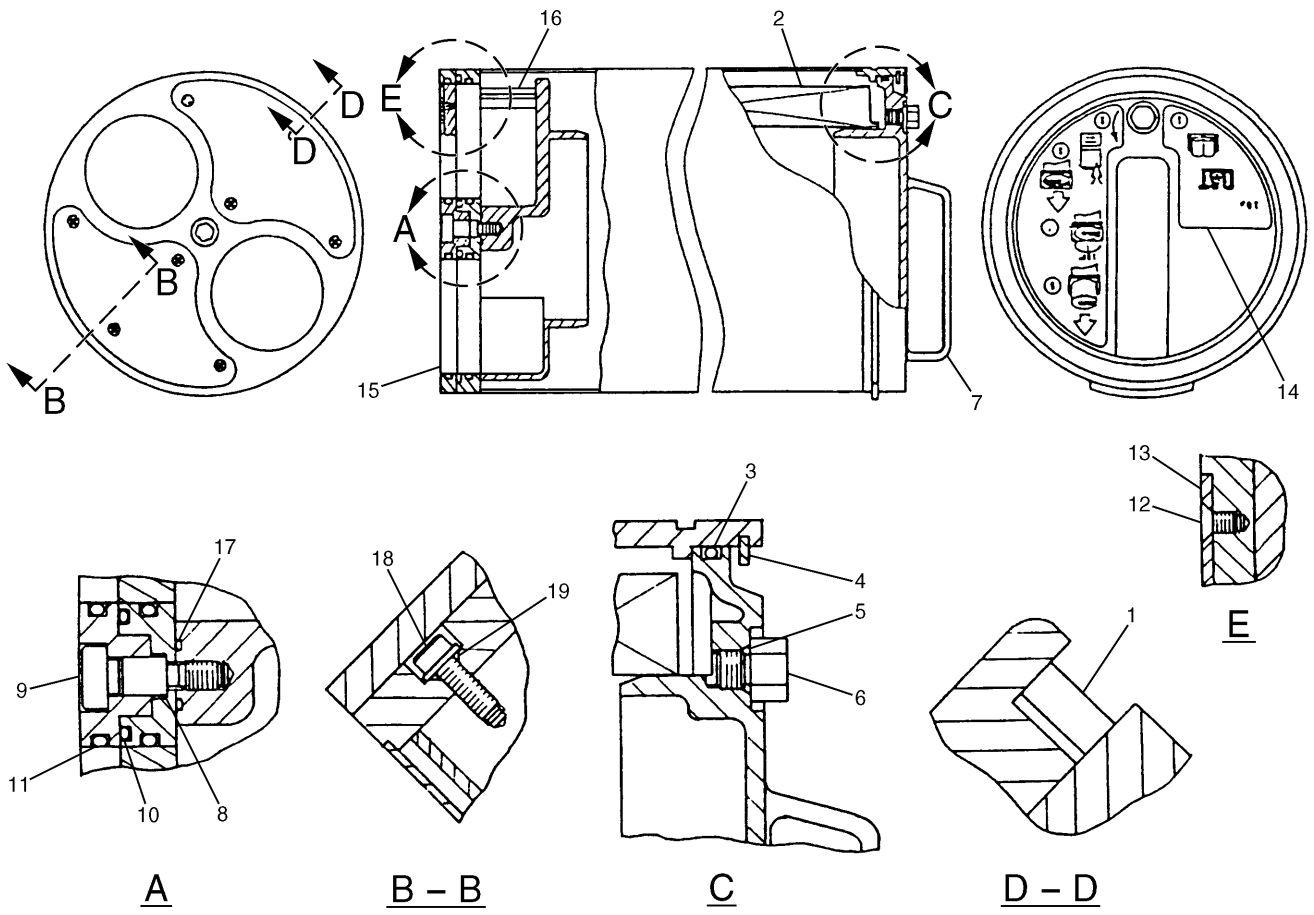

NOTE	No.	PART No.	QTY	PART NAME	NOTE	No.	PART No.	QTY	PART NAME
	1	137-3814	2	PIN					THE FOLLOWING REPAIR
	2	126-2081	1	ELEMENT					KIT IS AVAILABLE:
J	3	095-1681	1	SEAL-O-RING (ID=144.40mm)			137-3635	1	SERVICE KIT
	4	169-8154	1	RING					(INCLUDES PARTS MARKED J)
J	5	4J-7533	1	SEAL-O-RING (ID=6.07mm)					
J	6	9S-4180	1	PLUG					
	7	137-3621	1	HANDLE					
J	8	137-3628	1	SHIM (T=0.10mm)					
	9	137-3626	1	BOLT					
J	10	6V-7658	2	SEAL-O-RING (ID=59.40mm)					
J	11	137-3623	4	SEAL-O-RING (ID=55.60mm)					
J	12	137-3624	8	SCREW					
J	13	137-3625	2	PAD					
	14	137-3810	1	FILM (INSTRUCTION)					
	15	137-3627	1	PLATE					
	16	137-3818	1	BASE					
J	17	3E-4297	1	SEAL-O-RING (ID=10.00mm)					
J	18	137-3813	6	BOLT (L=15mm)					
J	19	095-1510	6	SEAL-O-RING (ID=4.80mm)					

H69085E 02

126-2080 FILTER GP-HYDRAULIC

Part of 107-6995-Page182

HYDRAULIC SYSTEM

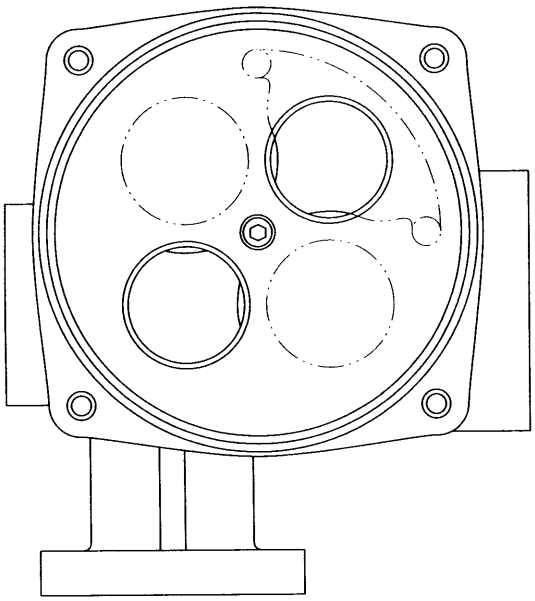

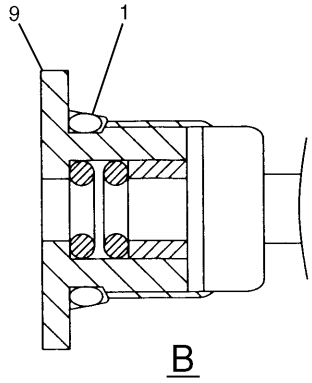

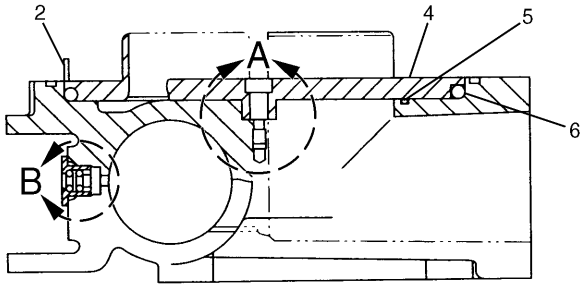

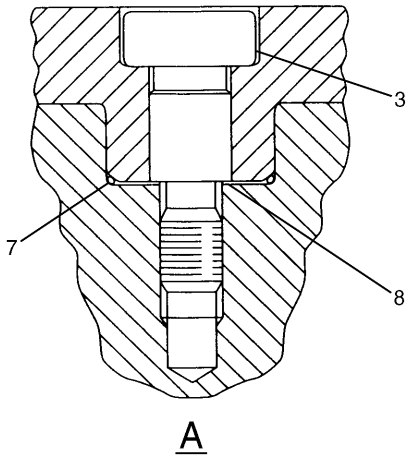

NOTE	No.	PART No.	QTY	PART NAME	NOTE	No.	PART No.	QTY	PART NAME
	1	3J-1907	1	SEAL-O-RING (ID=11.89mm)					
	2	7Y-5272	2	PIN					
	3	137-3626	1	BOLT					
	4	137-3630	1	PLATE					
	5	6V-7658	2	SEAL-O-RING (ID=59.40mm)					
	6	137-3631	1	PACKING					
	7	5L-4758	1	SEAL-O-RING (ID=14.00mm)					
	8	137-3628	1	SHIM (T=0.10mm)					
	9	137-3632	1	PLUG AS					

H54245E 01

129-8033 BLOCK GP-HYDRAULIC
Part of 107-6995-Page182

HYDRAULIC SYSTEM

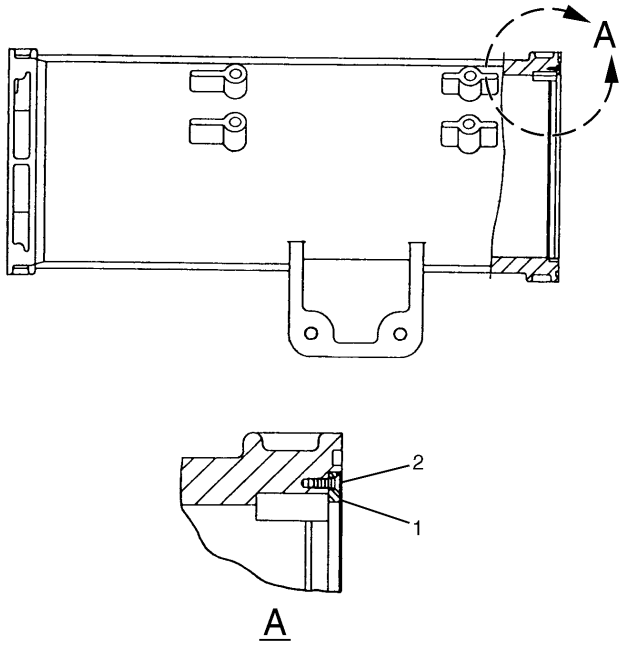

NOTE	No.	PART No.	QTY	PART NAME
	1	137-3634	1	RING
	2	143-7968	8	SCREW

H57624E 03

116-3653 HOUSING GP-FILTER
Part of 107-6995-Page182

MEMORANDA

Consists of :

			Page
1	118-3949	LINES GP-BOOM CYLINDER	195
1	118-4023	CYLINDER & SEAL GP-BOOM	187

H53055E 01

118-3948 CYLINDER & LINES GP-BOOM

Left Hand
Part of 117-4140,120-5012-Page376,117-4141-Page377,127-6615-Page383
An Attachment

Consists of :

			Page
1	118-3957	LINES GP-BOOM CYLINDER	196
1	118-4023	CYLINDER & SEAL GP-BOOM	187

H53056E 01

118-3956 CYLINDER & LINES GP-BOOM

Right Hand
Part of 117-4140,120-5012-Page376,117-4141-Page377,127-6615-Page383
An Attachment

Consists of :

			Page
1	118-3955	CYLINDER & SEAL GP-STICK	188
1	118-3951	LINES GP-STICK CYLINDER	197

H53060E 01

118-3950 CYLINDER & LINES GP-STICK

R-Boom
Part of 117-4140,120-5012-Page376
An Attachment

Consists of :

			Page
1	118-3953	CYLINDER & SEAL GP-STICK	189
1	118-3954	LINES GP-STICK CYLINDER	198

H53061E 01

118-3952 CYLINDER & LINES GP-STICK

M-Boom
Part of 117-4141-Page377
An Attachment

HYDRAULIC SYSTEM

Consists of :

			Page
1	123-2081	CYLINDER & SEAL GP-STICK	190
1	123-2082	LINES GP-STICK CYLINDER	199

H51008E 00

123-2080 CYLINDER & LINES GP-STICK

Long Reach Front
S/N 4MR 1-Up
Part of 127-6615-Page383
An Attachment

Consists of :

			Page
1	171-3379	CYLINDER & SEAL GP-BUCKET	191
1	118-3968	LINES GP-BUCKET CYLINDER	200

H67581E 02

118-3966 CYLINDER & LINES GP-BUCKET

B Family
Part of 117-4143-Page382
An Attachment

Consists of :

			Page
1	123-2084	CYLINDER & SEAL GP-BUCKET	192
1	123-2085	LINES GP-BUCKET CYLINDER	201

H51009E 00

123-2083 CYLINDER & LINES GP-BUCKET

C Family
Part of 102-4758-Page382
An Attachment

Consists of :

			Page
1	4I-7630	CYLINDER & SEAL GP-BUCKET	193
1	127-6797	LINES GP-BUCKET CYLINDER	202

H53069E 00

127-6616 CYLINDER & LINES GP-BUCKET

Long Reach Front
S/N 4MR 1-Up
Part of 127-6615-Page383
An Attachment

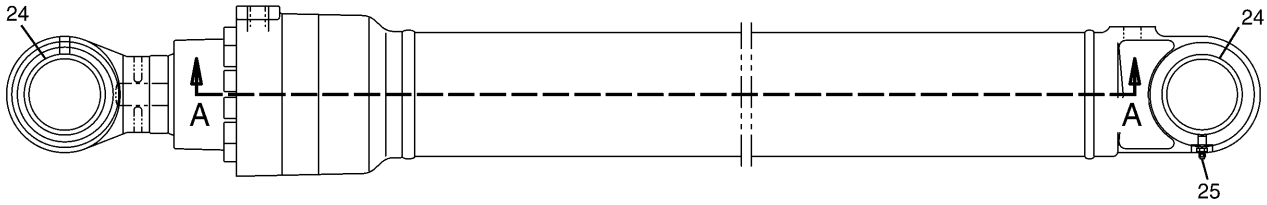

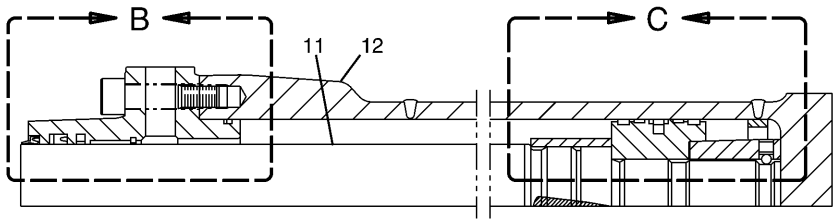

A − A

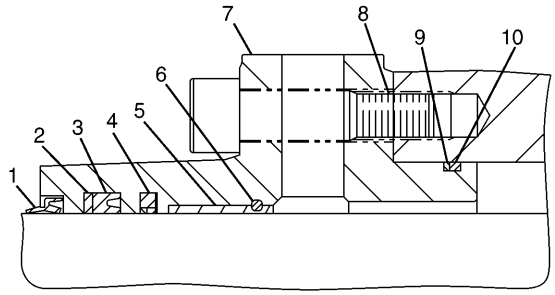

B

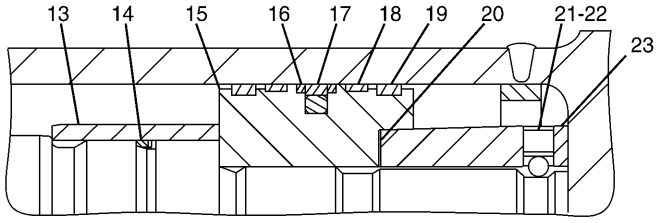

C

NOTE	No.	PART No.	QTY	PART NAME	NOTE	No.	PART No.	QTY	PART NAME
J	1	121-1611	1	SEAL	J	19	086-0255	2	RING
J	2	096-1568	1	RING	J	20	096-4408	1	SHIM (T=0.30mm)
J	3	096-1567	1	SEAL		21	096-3216	1	SETSCREW
J	4	4I-3611	1	SEAL		22	096-3891	1	BALL
	5	096-4402	1	BEARING		23	119-5198	1	LOCKNUT
	6	094-0747	1	RING		24	096-4411	4	SEAL
	7	137-3760	1	HEAD		25	3B-8489	1	FITTING
	8	8T-1447	12	BOLT (L=70mm)					
J	9	096-3964	1	RING					THE FOLLOWING REPAIR
J	10	095-1717	1	SEAL-O-RING (ID=114.40mm)					KIT IS AVAILABLE:
	11	119-5203	1	ROD AS			137-3763	1	SEAL KIT
		119-5200	1	BEARING					(INCLUDES PARTS MARKED J)
	12	129-7771	1	CYLINDER AS					
		129-7770	1	BEARING					
	13	4I-8864	1	STOP					
J	14	126-1935	1	RING					
	15	4I-3614	1	PISTON					
J	16	4I-3615	2	RING					
J	17	096-7803	1	SEAL AS					
J	18	126-1936	2	RING					

H53665E 03

118-4023 CYLINDER & SEAL GP-BOOM

Part of 118-3948,118-3956-Page183
An Attachment

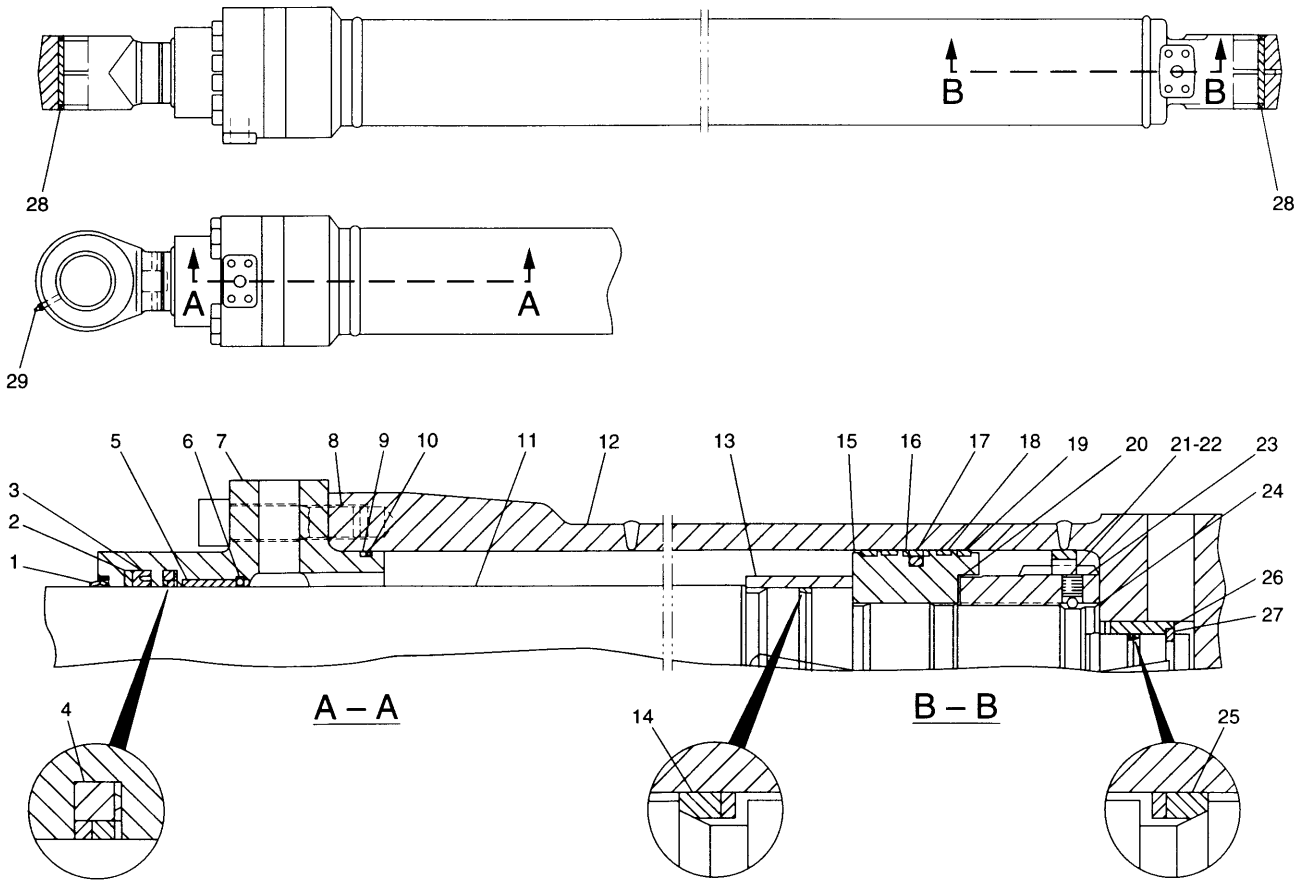

NOTE	No.	PART No.	QTY	PART NAME	NOTE	No.	PART No.	QTY	PART NAME
J	1	133-6904	1	SEAL	J	19	096-1571	2	RING
J	2	121-1372	1	RING	J	20	096-5741	1	SHIM (T=0.30mm)
J	3	121-1371	1	SEAL		21	096-6210	1	SETSCREW
J	4	4I-3626	1	SEAL		22	096-6211	1	BALL
	5	096-5625	1	BEARING		23	119-5211	1	LOCKNUT
	6	094-1931	1	RING		24	096-4461	1	RING
	7	126-1941	1	HEAD	J	25	126-1879	1	RING
	8	4I-3628	12	BOLT (L=80mm)		26	126-1878	1	STOP
J	9	4I-3627	1	RING		27	6I-6971	2	RING
J	10	095-1721	1	SEAL-O-RING (ID=134.40mm)		28	096-4411	4	SEAL
	11	119-5217	1	ROD AS		29	3B-8489	1	FITTING
		119-5214	1	BEARING					
	12	126-1942	1	CYLINDER AS					THE FOLLOWING REPAIR
		119-5214	1	BEARING					KIT IS AVAILABLE:
	13	4I-8869	1	STOP			137-3764	1	SEAL KIT
J	14	126-1876	1	RING					(INCLUDES PARTS MARKED J)
	15	105-2593	1	PISTON					
J	16	4I-3631	2	RING					
J	17	096-1570	1	SEAL AS					
J	18	126-1877	2	RING					

H53659E 02

118-3955 CYLINDER & SEAL GP-STICK

R-Boom

Part of 118-3950-Page184

An Attachment

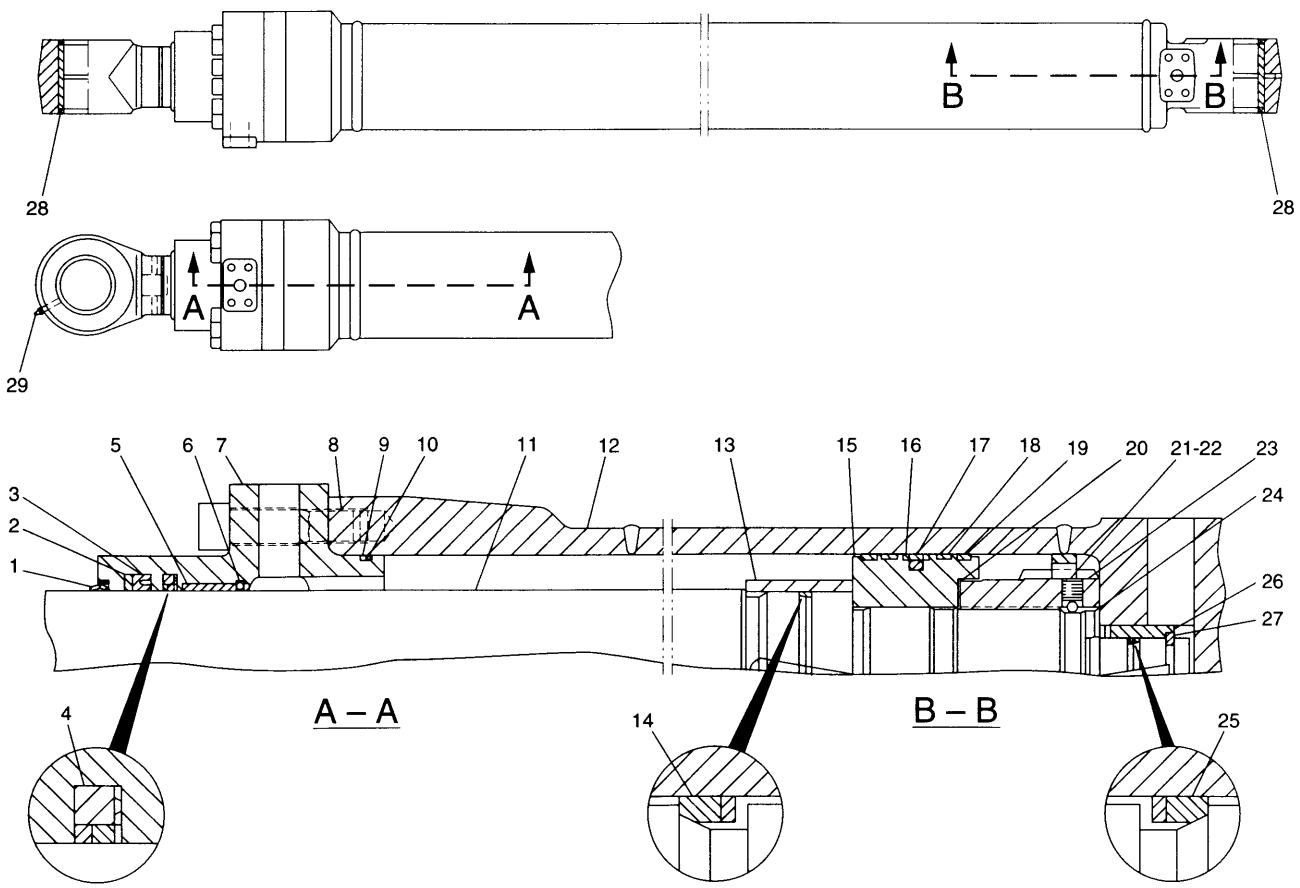

NOTE	No.	PART No.	QTY	PART NAME	NOTE	No.	PART No.	QTY	PART NAME
J	1	133-6904	1	SEAL	J	19	096-1571	2	RING
J	2	121-1372	1	RING	J	20	096-5741	1	SHIM (T=0.30mm)
J	3	121-1371	1	SEAL		21	096-6210	1	SETSCREW
J	4	4I-3626	1	SEAL		22	096-6211	1	BALL
	5	096-5625	1	BEARING		23	119-5211	1	LOCKNUT
	6	094-1931	1	RING		24	096-4461	1	RING
	7	126-1941	1	HEAD	J	25	126-1879	1	RING
	8	4I-3628	12	BOLT (L=80mm)		26	126-1878	1	STOP
J	9	4I-3627	1	RING		27	6I-6971	2	RING
J	10	095-1721	1	SEAL-O-RING (ID=134.40mm)		28	096-4411	4	SEAL
	11	119-5225	1	ROD AS		29	3B-8489	1	FITTING
		119-5214	1	BEARING					
	12	126-1945	1	CYLINDER AS					THE FOLLOWING REPAIR
		119-5214	1	BEARING					KIT IS AVAILABLE:
	13	4I-8869	1	STOP			137-3764	1	SEAL KIT
J	14	126-1876	1	RING					(INCLUDES PARTS MARKED J)
	15	105-2593	1	PISTON					
J	16	4I-3631	2	RING					
J	17	096-1570	1	SEAL AS					
J	18	126-1877	2	RING					

H53658E 02

118-3953 CYLINDER & SEAL GP-STICK

M-Boom

Part of 118-3952-Page184

An Attachment

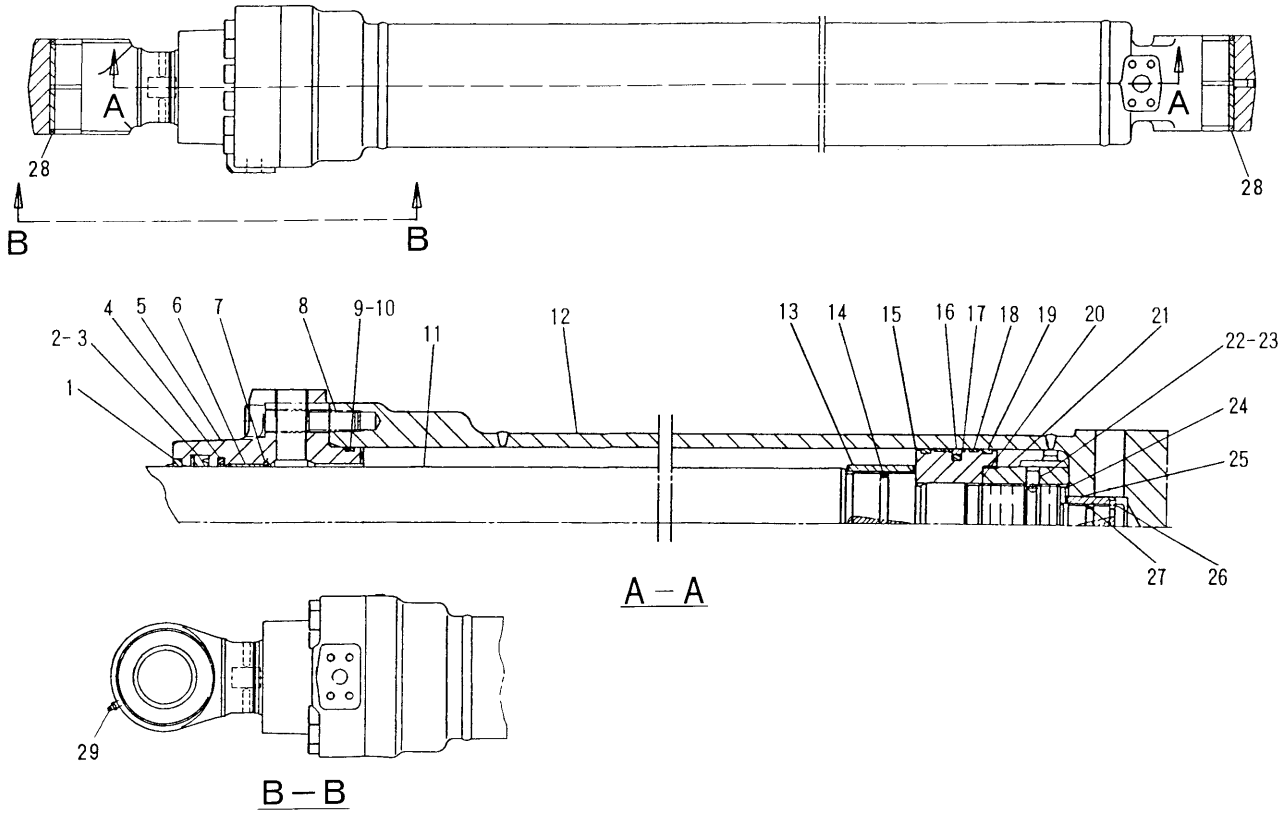

NOTE	No.	PART No.	QTY	PART NAME	NOTE	No.	PART No.	QTY	PART NAME
J	1	133-6909	1	SEAL	J	19	114-0713	2	RING
J	2	099-5575	1	RING	J	20	099-6018	1	SHIM (T=0.30mm)
J	3	095-5600	1	SEAL		21	099-6019	1	LOCKNUT
J	4	114-0704	1	SEAL		22	096-6210	1	SETSCREW
	5	121-1547	1	HEAD		23	096-6211	1	BALL
	6	099-5572	1	BEARING		24	085-8605	1	RING
	7	099-5573	1	RING		25	121-1549	1	STOP
	8	9X-2404	12	BOLT (L=90mm)		26	085-8604	2	RING
J	9	114-0706	1	RING	J	27	085-5864	1	RING
J	10	095-1723	1	SEAL-O-RING (ID=144.40mm)		28	096-0854	4	SEAL
	11	123-2120	1	ROD AS		29	3B-8489	1	FITTING
		121-1550	1	BEARING					
	12	123-2119	1	CYLINDER AS					THE FOLLOWING REPAIR
		121-1550	1	BEARING					KIT IS AVAILABLE:
	13	121-1548	1	STOP			137-3767	1	SEAL KIT
J	14	099-8282	1	RING					(INCLUDES PARTS MARKED J)
	15	114-0709	1	PISTON					
J	16	114-0710	1	SEAL AS					
J	17	114-0711	2	RING					
J	18	114-0712	2	RING					

H54529E 01

123-2081 CYLINDER & SEAL GP-STICK

S/N 4MR 1-Up
Part of 123-2080-Page185
An Attachment

HYDRAULIC SYSTEM

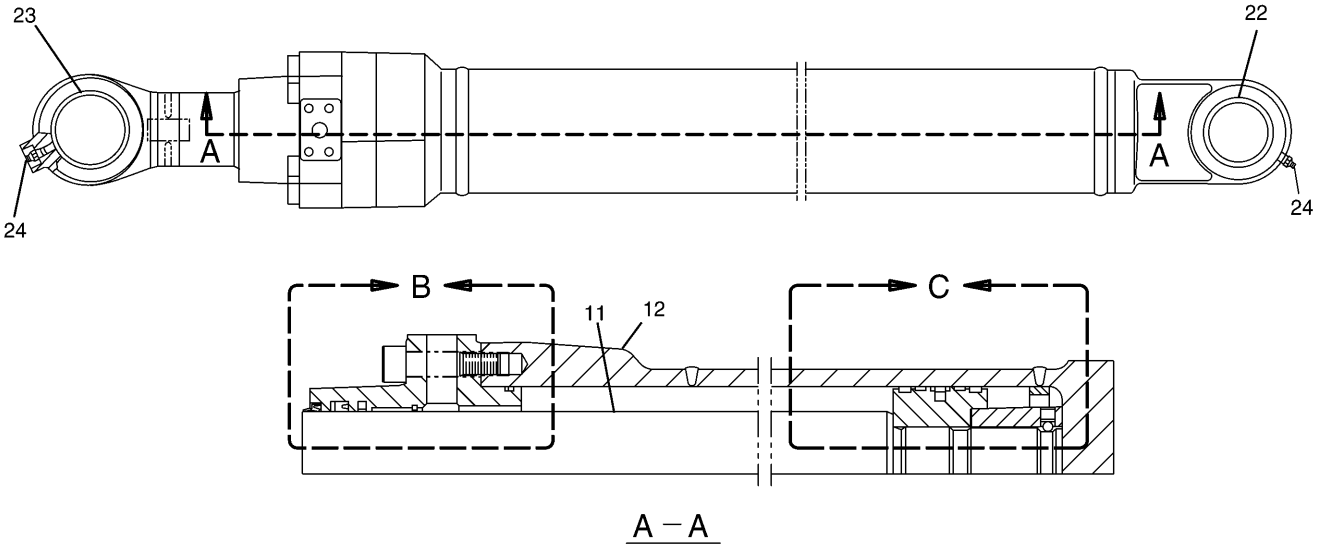

A – A

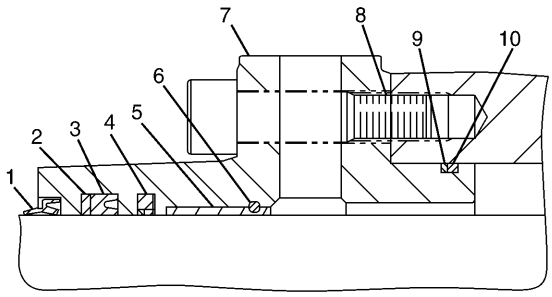

B

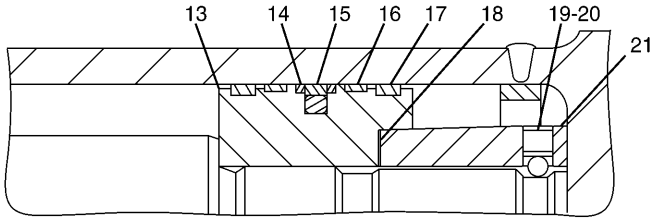

C

NOTE	No.	PART No.	QTY	PART NAME	NOTE	No.	PART No.	QTY	PART NAME
J	1	121-1611	1	SEAL		19	096-3216	1	SETSCREW
J	2	096-1568	1	RING		20	096-3891	1	BALL
J	3	096-1567	1	SEAL		21	119-5198	1	LOCKNUT
J	4	4I-3611	1	SEAL		22	096-4443	2	SEAL
	5	096-4402	1	BEARING		23	096-4411	2	SEAL
	6	094-0747	1	RING		24	3B-8489	2	FITTING
	7	119-5195	1	HEAD					
	8	8T-1447	12	BOLT (L=70mm)					THE FOLLOWING REPAIR
J	9	096-3964	1	RING					KIT IS AVAILABLE:
J	10	095-1717	1	SEAL-O-RING (ID=114.40mm)			126-1947	1	SEAL KIT
	11	171-3380	1	ROD AS					(INCLUDES PARTS MARKED J)
		119-5229	1	BEARING					
	12	126-1948	1	CYLINDER AS					
		119-5228	1	BEARING					
	13	4I-3614	1	PISTON					
J	14	4I-3615	2	RING					
J	15	096-7803	1	SEAL AS					
J	16	126-1936	2	RING					
J	17	086-0255	2	RING					
J	18	096-4408	1	SHIM (T=0.30mm)					

H67583E 00

171-3379 CYLINDER & SEAL GP-BUCKET

B Family

Part of 118-3966-Page185

An Attachment

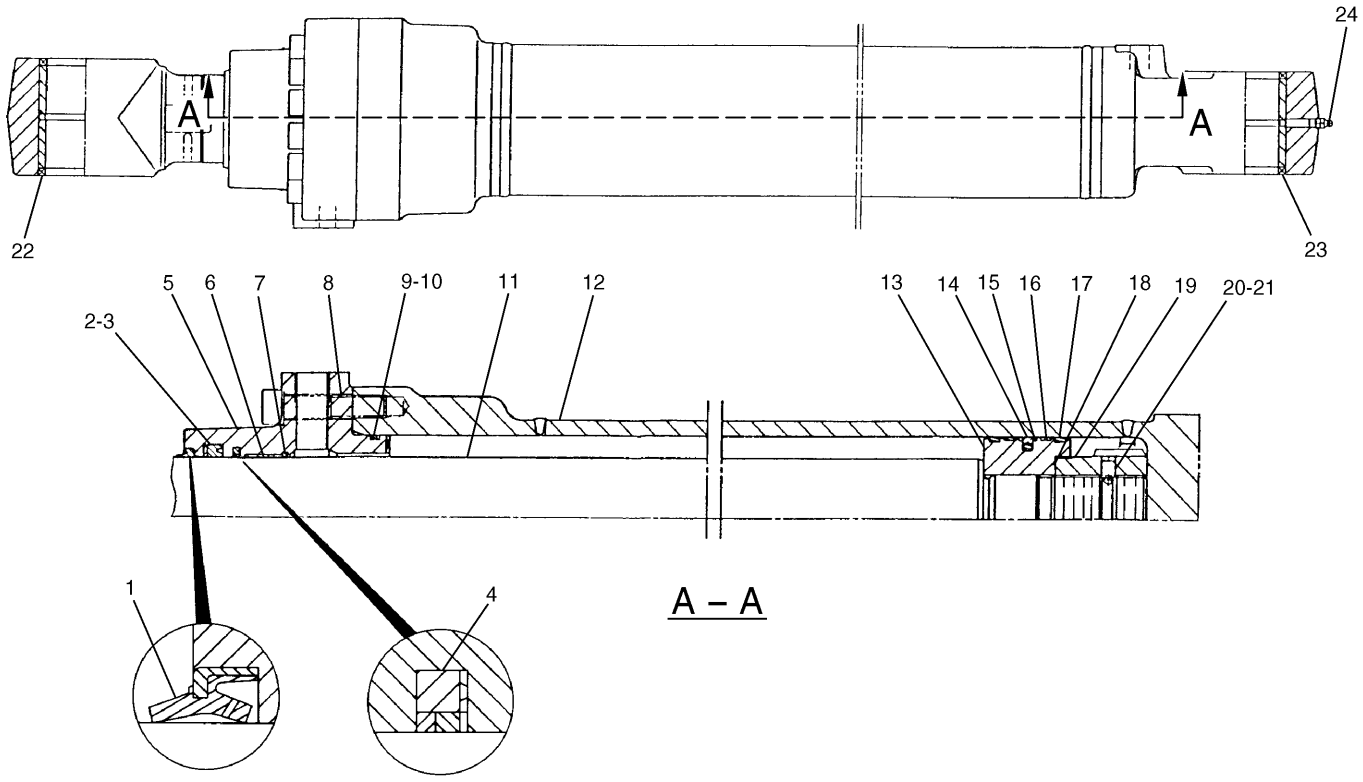

NOTE	No.	PART No.	QTY	PART NAME	NOTE	No.	PART No.	QTY	PART NAME
J	1	094-0723	1	SEAL		19	105-2584	1	LOCKNUT
J	2	105-2578	1	RING		20	096-3216	1	SETSCREW
J	3	105-2577	1	SEAL		21	096-3891	1	BALL
J	4	105-2576	1	SEAL		22	096-0854	2	SEAL
	5	123-2123	1	HEAD		23	093-1434	2	SEAL
	6	105-2575	1	BEARING		24	3B-8489	2	FITTING
	7	093-1571	1	RING					
	8	4I-3628	12	BOLT (L=80mm)					THE FOLLOWING REPAIR
J	9	105-2579	1	RING					KIT IS AVAILABLE:
J	10	095-1719	1	SEAL-O-RING (ID=124.40mm)			123-2124	1	SEAL KIT
	11	123-2126	1	ROD AS					(INCLUDES PARTS MARKED J)
		119-5325	1	BEARING					
	12	123-2125	1	CYLINDER AS					
		119-5324	1	BEARING					
	13	105-2582	1	PISTON					
J	14	086-1345	1	SEAL AS					
J	15	105-2583	2	RING					
J	16	4I-9392	2	RING					
J	17	086-1346	2	RING					
J	18	096-4441	1	SHIM (T=0.30mm)					

H50185E 00

123-2084 CYLINDER & SEAL GP-BUCKET

C Family

Part of 123-2083-Page186

An Attachment

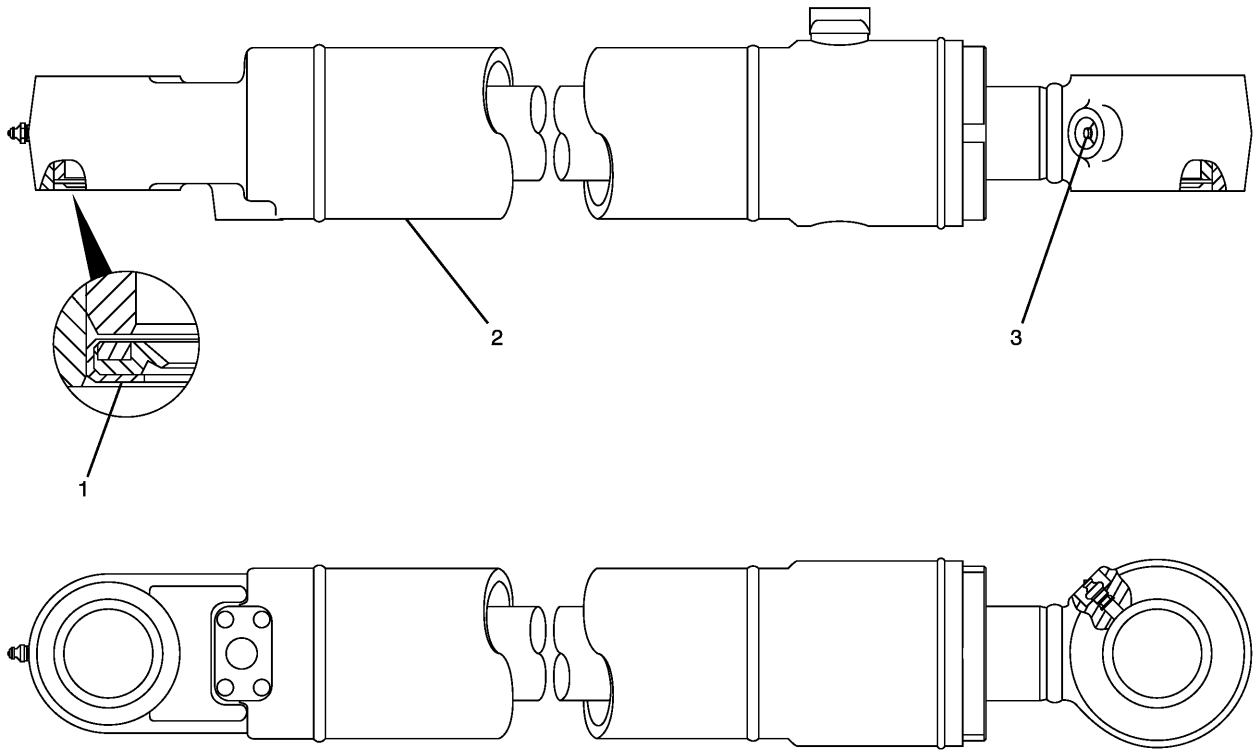

NOTE	No.	PART No.	QTY	PART NAME	NOTE	No.	PART No.	QTY	PART NAME
	1	093-1433	4	SEAL					
Y	2	125-1547	1	CYLINDER GP					
	3	3B-8489	2	FITTING					

Y—SEE SEPARATE ILLUSTRATION

H53082E 02

4I-7630 CYLINDER & SEAL GP-BUCKET

Long Reach Front
S/N 4MR 1-(D96.07)
Part of 127-6616-Page186
125-1547-Page194
An Attachment

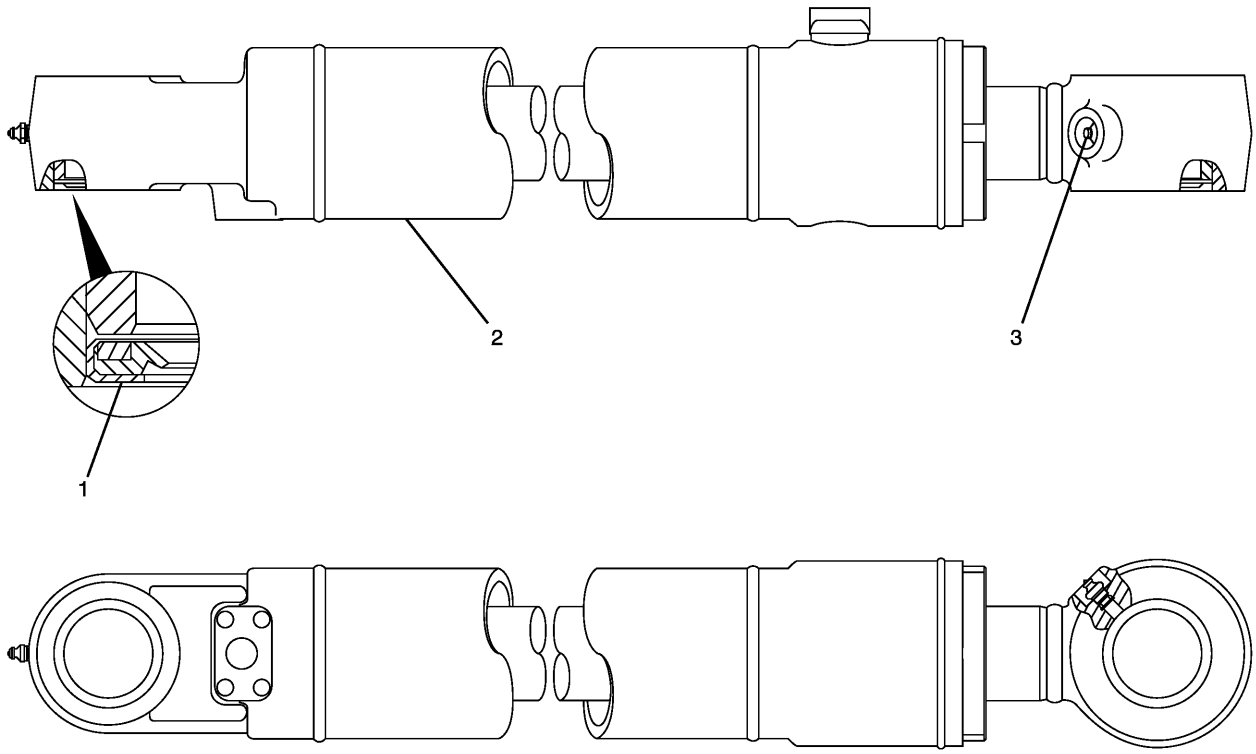

NOTE	No.	PART No.	QTY	PART NAME	NOTE	No.	PART No.	QTY	PART NAME
	1	093-1433	4	SEAL					
Y	2	134-6987	1	CYLINDER GP					
	3	3B-8489	2	FITTING					

Y—SEE SEPARATE ILLUSTRATION

H57548E 03

4I-7630 CYLINDER & SEAL GP-BUCKET

Long Reach Front
S/N 4MR (D96.08)-Up
Part of 127-6616-Page186
134-6987-Page194.01
An Attachment

MEMORANDA

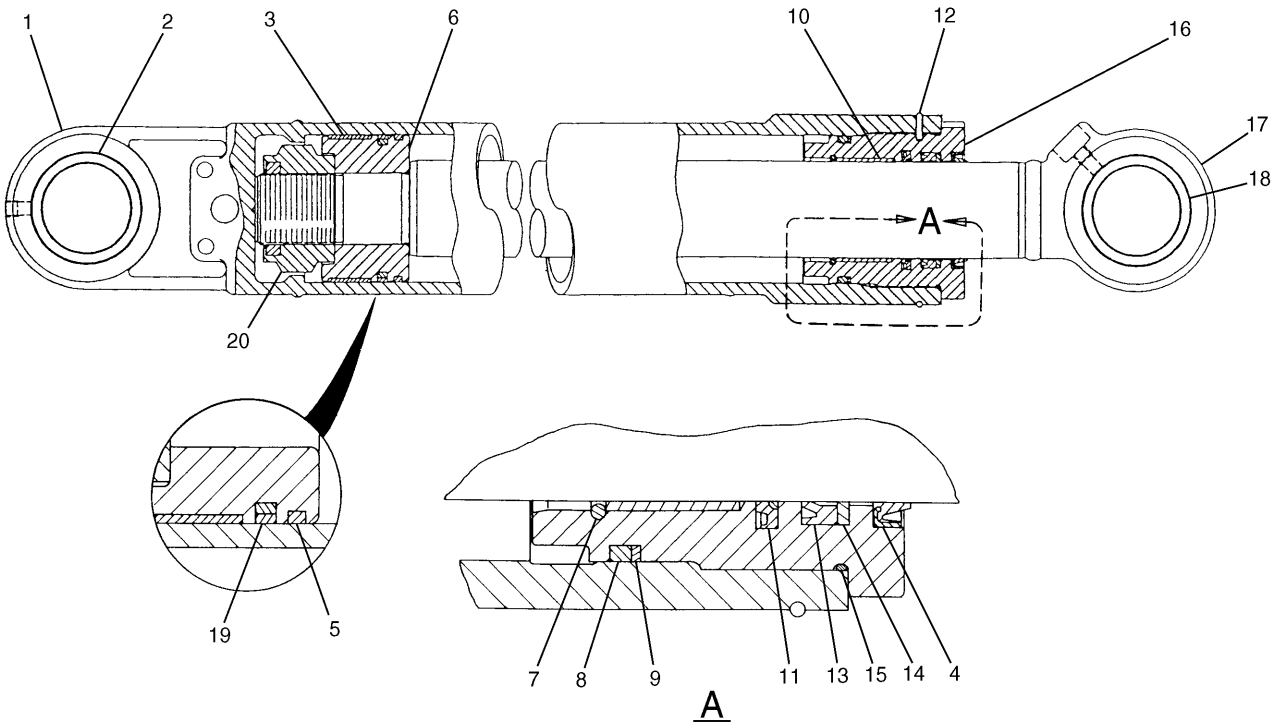

NOTE	No.	PART No.	QTY	PART NAME	NOTE	No.	PART No.	QTY	PART NAME
	1	4I-8911	1	CYLINDER AS					THE FOLLOWING REPAIR
	2	6E-3535	1	BEARING					KIT IS AVAILABLE:
J	3	093-1605	1	RING			4I-8914	1	SEAL KIT
J	4	116-3390	1	SEAL					(INCLUDES PARTS MARKED J)
J	5	093-1628	1	RING					
	6	125-1552	1	PISTON					
	7	099-0700	1	RING					
J	8	095-1625	1	SEAL-O-RING (ID=89.60mm)					
J	9	099-0699	1	RING					
	10	114-0754	1	BEARING					
J	11	093-1482	1	SEAL					
	12	099-0600	1	RING					
J	13	093-1476	1	SEAL					
J	14	096-1055	1	RING					
J	15	6V-8467	1	SEAL-O-RING (ID=99.40mm)					
	16	099-0596	1	HEAD					
	17	125-1586	1	ROD AS					
	18	6E-3535	1	BEARING					
J	19	9X-7298	1	SEAL AS					
	20	7I-1018	1	LOCKNUT					

H53083E 01

125-1547 CYLINDER GP-BUCKET

S/N 4MR 1-(D96.07)
Part of 4I-7630-Page193
An Attachment

HYDRAULIC SYSTEM

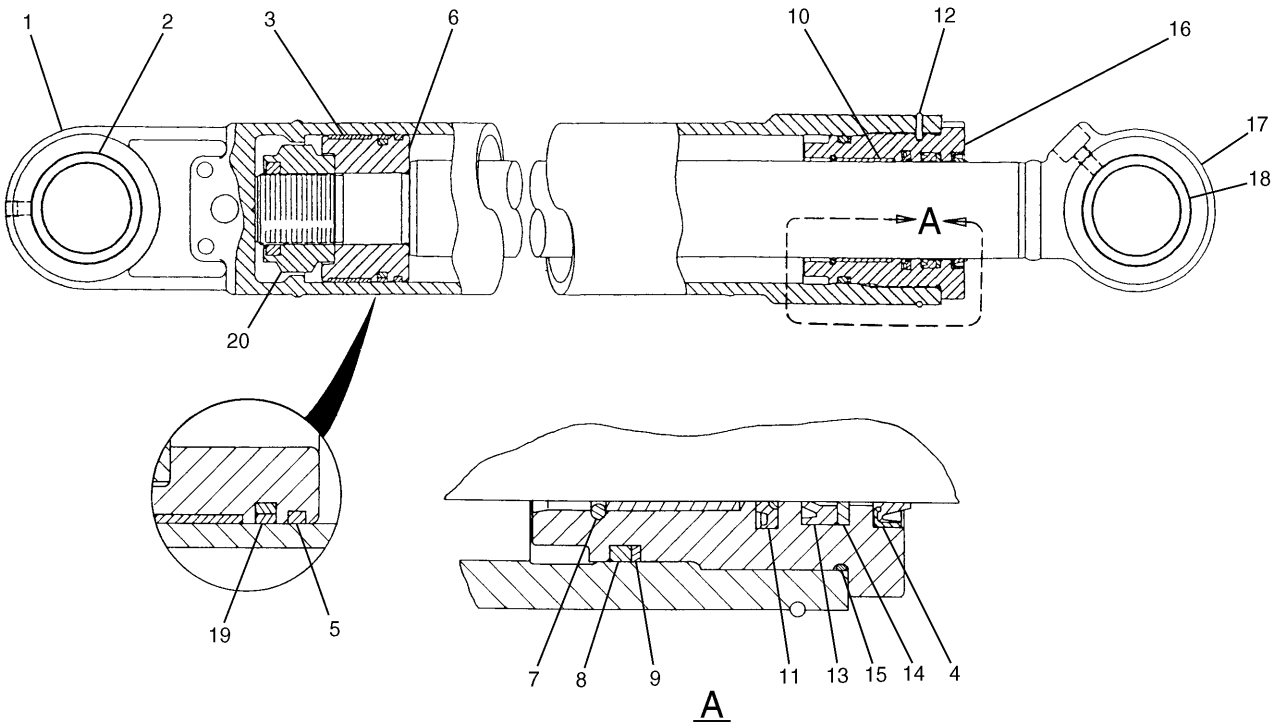

NOTE	No.	PART No.	QTY	PART NAME	NOTE	No.	PART No.	QTY	PART NAME
	1	119-5448	1	CYLINDER AS					THE FOLLOWING REPAIR
	2	6E-3535	1	BEARING					KIT IS AVAILABLE:
J	3	093-1605	1	RING			176-4935	1	SEAL KIT
J	4	165-9282	1	SEAL					(INCLUDES PARTS MARKED J)
J	5	093-1628	1	RING					
	6	125-1552	1	PISTON					
	7	099-0700	1	RING					
J	8	095-1625	1	SEAL-O-RING (ID=89.60mm)					
J	9	099-0699	1	RING					
	10	114-0754	1	BEARING					
J	11	093-1482	1	SEAL					
	12	099-0600	1	RING					
J	13	093-1476	1	SEAL					
J	14	096-1055	1	RING					
J	15	6V-8467	1	SEAL-O-RING (ID=99.40mm)					
	16	099-0596	1	HEAD					
	17	137-3700	1	ROD AS					
	18	6E-3535	1	BEARING					
J	19	9X-7298	1	SEAL AS					
	20	7I-1018	1	LOCKNUT					

H69357E 01

134-6987 CYLINDER GP-BUCKET

Long Reach Front
S/N 4MR (D96.08)-Up
Part of 4I-7630-Page193.01
An Attachment

MEMORANDA

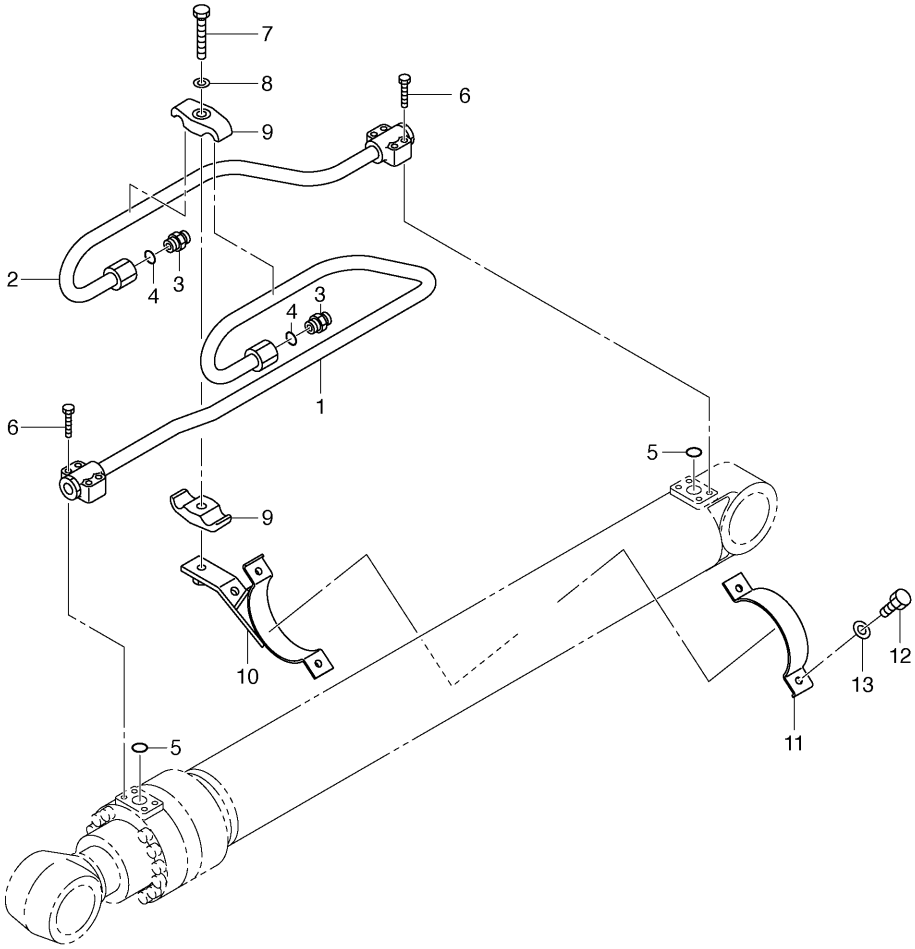

NOTE	No.	PART No.	QTY	PART NAME	NOTE	No.	PART No.	QTY	PART NAME
	1	4I-3618	1	TUBE AS					
	2	4I-3619	1	TUBE AS					
	3	086-2746	2	CONNECTOR					
	4	095-1592	2	SEAL-O-RING (ID=23.70mm)					
	5	095-1597	2	SEAL-O-RING (ID=29.70mm)					
	6	8T-1160	8	BOLT (L=50mm)					
	7	8T-3653	1	BOLT (L=80mm)					
	8	3B-4509	1	LOCKWASHER					
	9	094-1920	2	CLAMP					
	10	4I-3620	1	SUPPORT AS					
	11	4I-3621	1	SUPPORT					
	12	8T-4196	2	BOLT (L=35mm)					
	13	095-9397	2	LOCKWASHER					

H53440E 01

118-3949 LINES GP-BOOM CYLINDER

Part of 118-3948-Page183
An Attachment

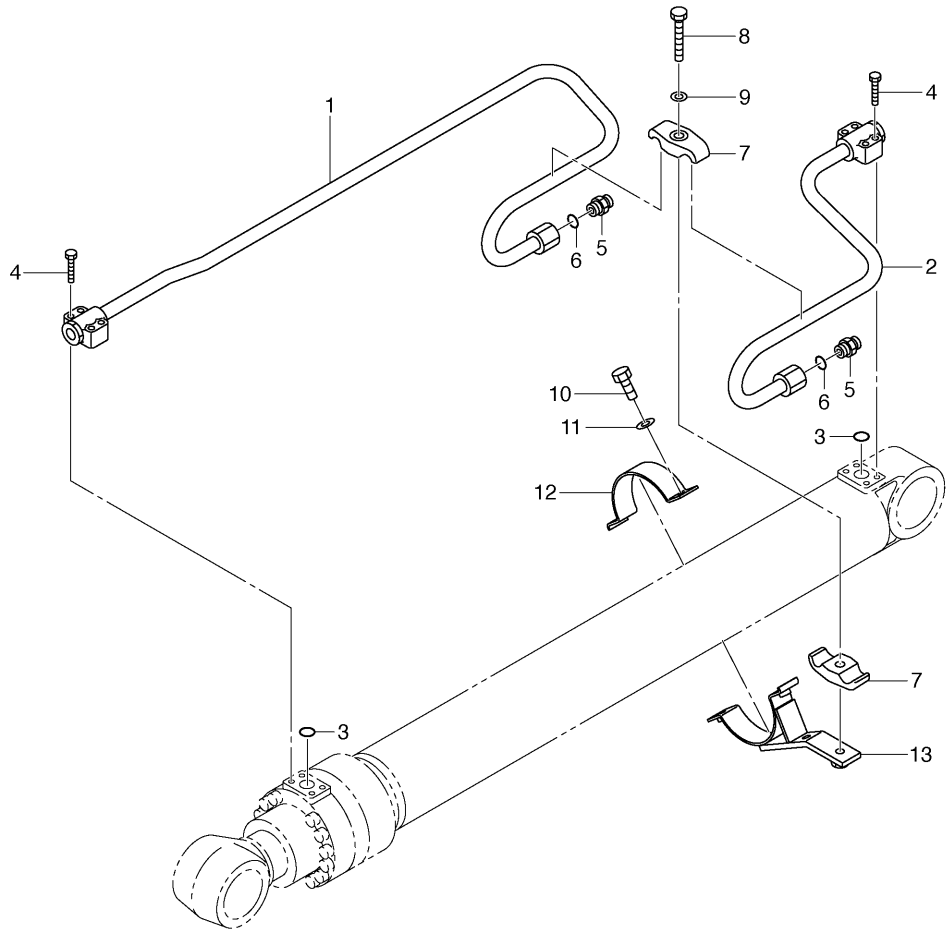

NOTE	No.	PART No.	QTY	PART NAME	NOTE	No.	PART No.	QTY	PART NAME
	1	4I-3616	1	TUBE AS					
	2	4I-3617	1	TUBE AS					
	3	095-1597	2	SEAL-O-RING (ID=29.70mm)					
	4	8T-1160	8	BOLT (L=50mm)					
	5	086-2746	2	CONNECTOR					
	6	095-1592	2	SEAL-O-RING (ID=23.70mm)					
	7	094-1920	2	CLAMP					
	8	8T-3653	1	BOLT (L=80mm)					
	9	3B-4509	1	LOCKWASHER					
	10	8T-4196	2	BOLT (L=35mm)					
	11	095-9397	2	LOCKWASHER					
	12	4I-3621	1	SUPPORT					
	13	137-3709	1	SUPPORT AS					

H53085E 02

118-3957 LINES GP-BOOM CYLINDER

Right Hand

Part of 118-3956-Page183

An Attachment

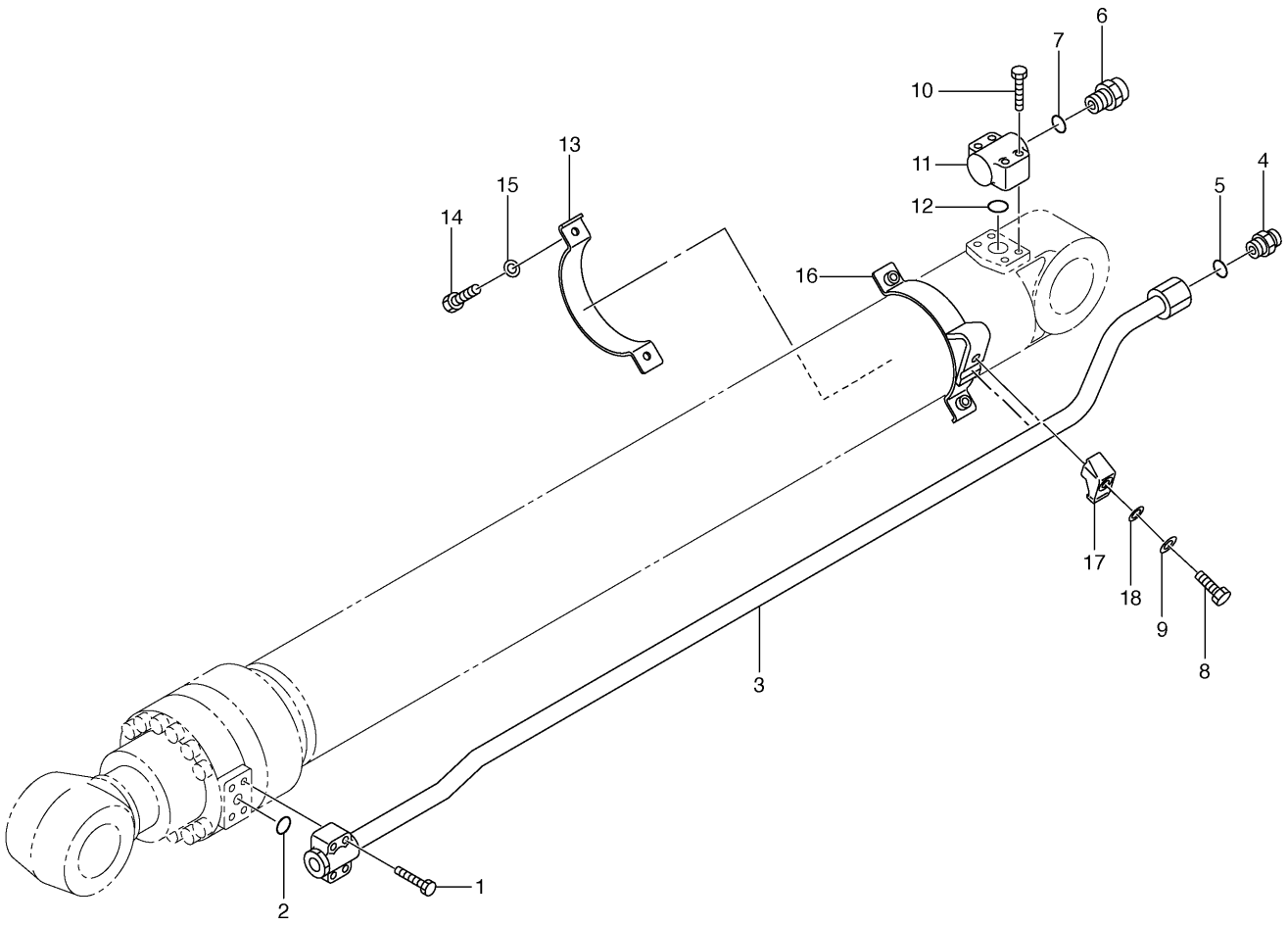

NOTE	No.	PART No.	QTY	PART NAME	NOTE	No.	PART No.	QTY	PART NAME
	1	8T-1160	4	BOLT (L=50mm)					
	2	095-1597	1	SEAL-O-RING (ID=29.70mm)					
	3	124-1032	1	TUBE AS					
	4	086-2746	1	CONNECTOR					
	5	095-1592	1	SEAL-O-RING (ID=23.70mm)					
	6	096-6223	1	CONNECTOR					
	7	095-1596	1	SEAL-O-RING (ID=28.70mm)					
	8	8T-4910	1	BOLT (L=60mm)					
	9	8T-4223	1	WASHER					
	10	8T-0343	4	BOLT (L=55mm)					
	11	096-4445	1	ELBOW					
	12	095-1600	1	SEAL-O-RING (ID=33.70mm)					
	13	124-1020	1	SUPPORT					
	14	8T-4196	2	BOLT (L=35mm)					
	15	095-9397	2	LOCKWASHER					
	16	124-1019	1	SUPPORT AS					
	17	096-4480	1	CLAMP					
	18	9F-4976	1	LOCKWASHER					

H53086E 01

118-3951 LINES GP-STICK CYLINDER

R-Boom

Part of 118-3950-Page184

An Attachment

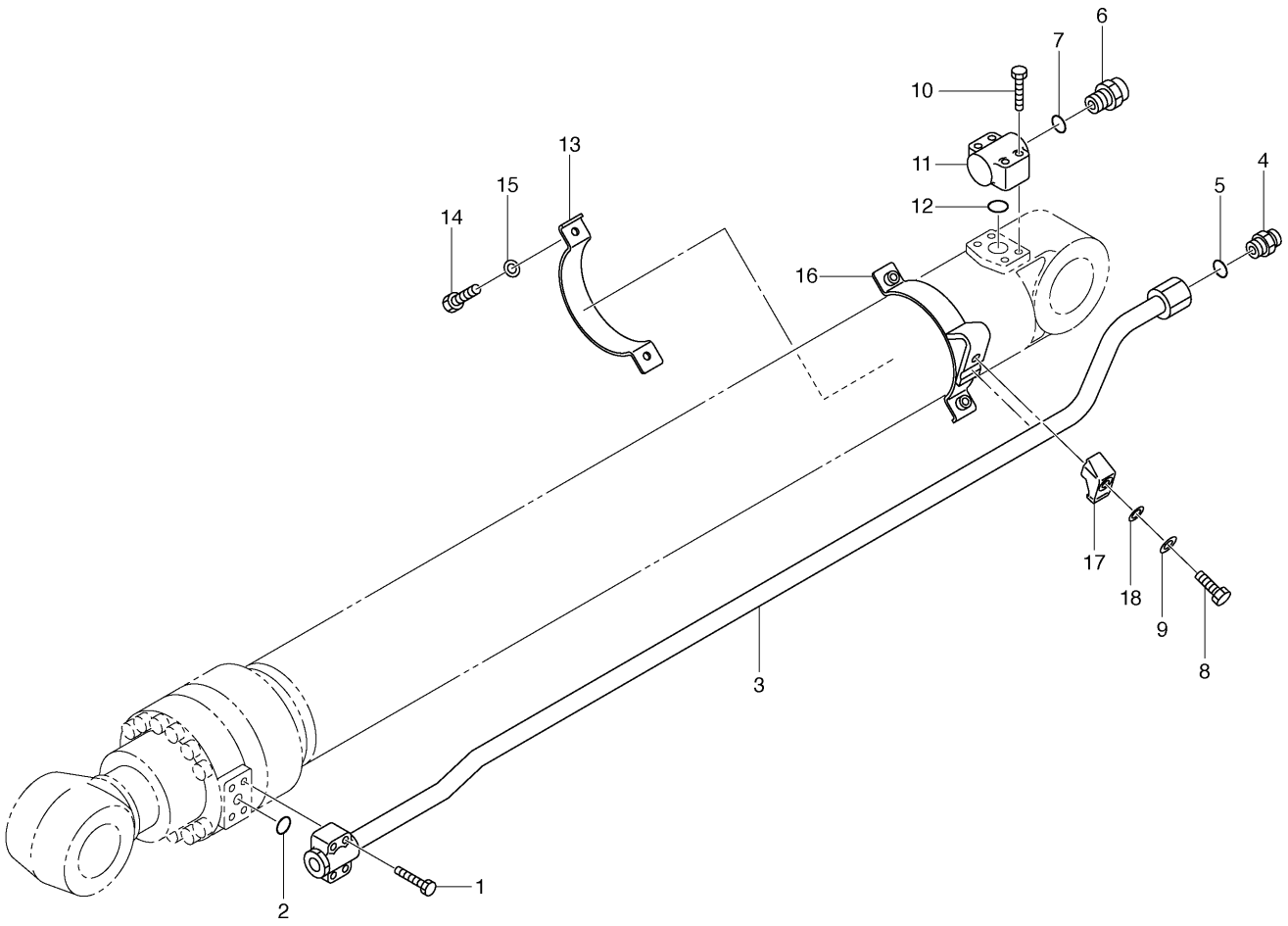

NOTE	No.	PART No.	QTY	PART NAME	NOTE	No.	PART No.	QTY	PART NAME
	1	8T-1160	4	BOLT (L=50mm)					
	2	095-1597	1	SEAL-O-RING (ID=29.70mm)					
	3	124-1033	1	TUBE AS					
	4	086-2746	1	CONNECTOR					
	5	095-1592	1	SEAL-O-RING (ID=23.70mm)					
	6	096-6223	1	CONNECTOR					
	7	095-1596	1	SEAL-O-RING (ID=28.70mm)					
	8	8T-4910	1	BOLT (L=60mm)					
	9	8T-4223	1	WASHER					
	10	8T-0343	4	BOLT (L=55mm)					
	11	096-4445	1	ELBOW					
	12	095-1600	1	SEAL-O-RING (ID=33.70mm)					
	13	124-1020	1	SUPPORT					
	14	8T-4196	2	BOLT (L=35mm)					
	15	095-9397	2	LOCKWASHER					
	16	124-1019	1	SUPPORT AS					
	17	096-4480	1	CLAMP					
	18	9F-4976	1	LOCKWASHER					

H53087E 01

118-3954 LINES GP-STICK CYLINDER

M-Boom

Part of 118-3952-Page184

An Attachment

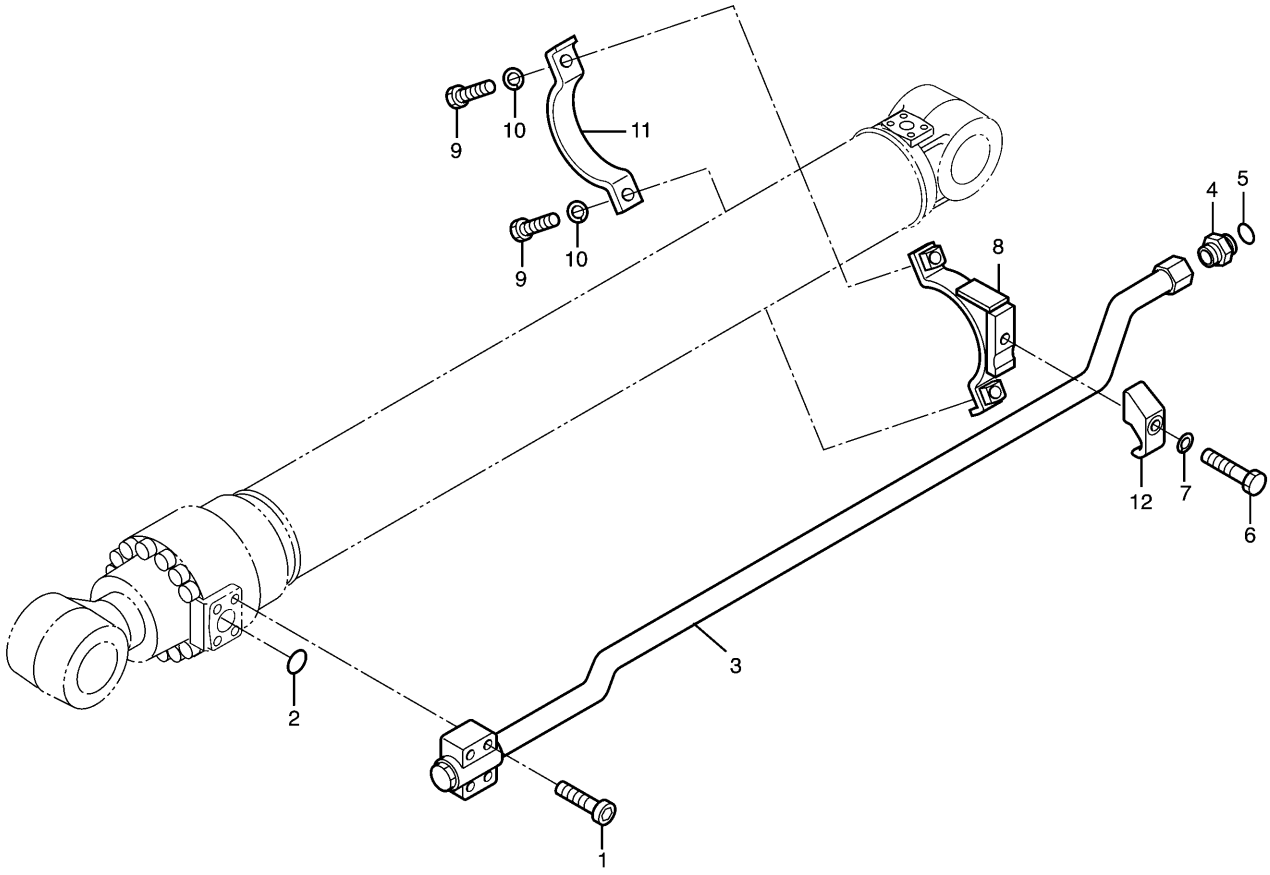

NOTE	No.	PART No.	QTY	PART NAME	NOTE	No.	PART No.	QTY	PART NAME
	1	8T-0343	4	BOLT (L=55mm)					
	2	095-1600	1	SEAL-O-RING (ID=33.70mm)					
	3	114-0718	1	TUBE AS					
	4	096-6223	1	CONNECTOR					
	5	095-1596	1	SEAL-O-RING (ID=28.70mm)					
	6	8T-4910	1	BOLT (L=60mm)					
	7	9F-4976	1	LOCKWASHER					
	8	124-0913	1	SUPPORT AS					
	9	8T-4196	2	BOLT (L=35mm)					
	10	095-9397	2	LOCKWASHER					
	11	124-0914	1	SUPPORT					
	12	096-4447	1	CLAMP					

H51879E 00

123-2082 LINES GP-STICK CYLINDER

S/N 4MR 1-Up
Part of 123-2080-Page185
An Attachment

HYDRAULIC SYSTEM

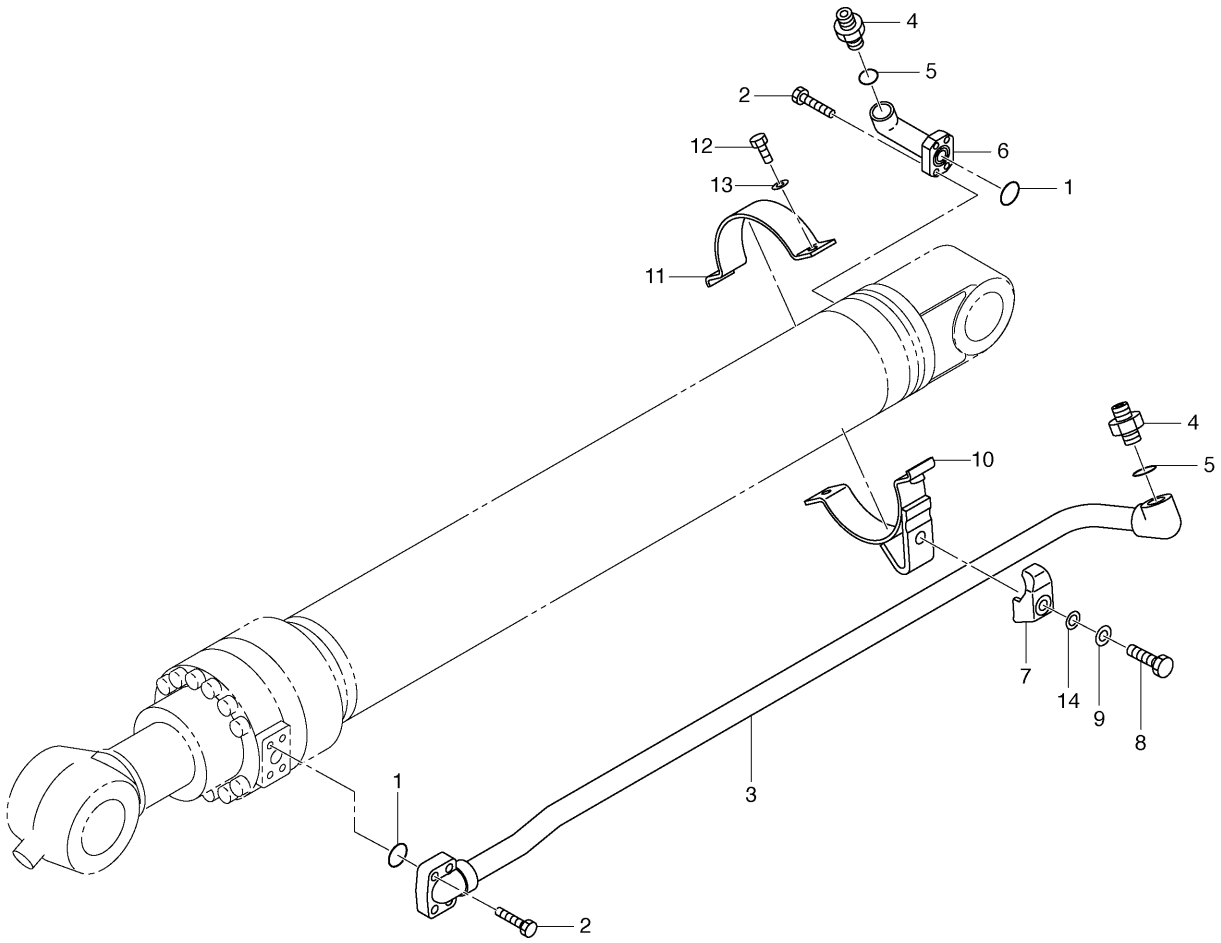

NOTE	No.	PART No.	QTY	PART NAME	NOTE	No.	PART No.	QTY	PART NAME
	1	095-1597	2	SEAL-O-RING (ID=29.70mm)					
	2	9X-6032	8	BOLT (L=30mm)					
	3	4I-3659	1	TUBE AS					
	4	086-2746	2	CONNECTOR					
	5	095-1592	2	SEAL-O-RING (ID=23.70mm)					
	6	4I-8881	1	TUBE AS					
	7	096-4480	1	CLAMP					
	8	8T-4910	1	BOLT (L=60mm)					
	9	8T-4223	1	WASHER					
	10	124-1034	1	SUPPORT AS					
	11	096-4412	1	SUPPORT					
	12	8T-4196	2	BOLT (L=35mm)					
	13	095-9397	2	LOCKWASHER					
	14	9F-4976	1	LOCKWASHER					

H53088E 01

118-3968 LINES GP-BUCKET CYLINDER

B Family-High Ambient

Part of 118-3966-Page185

An Attachment

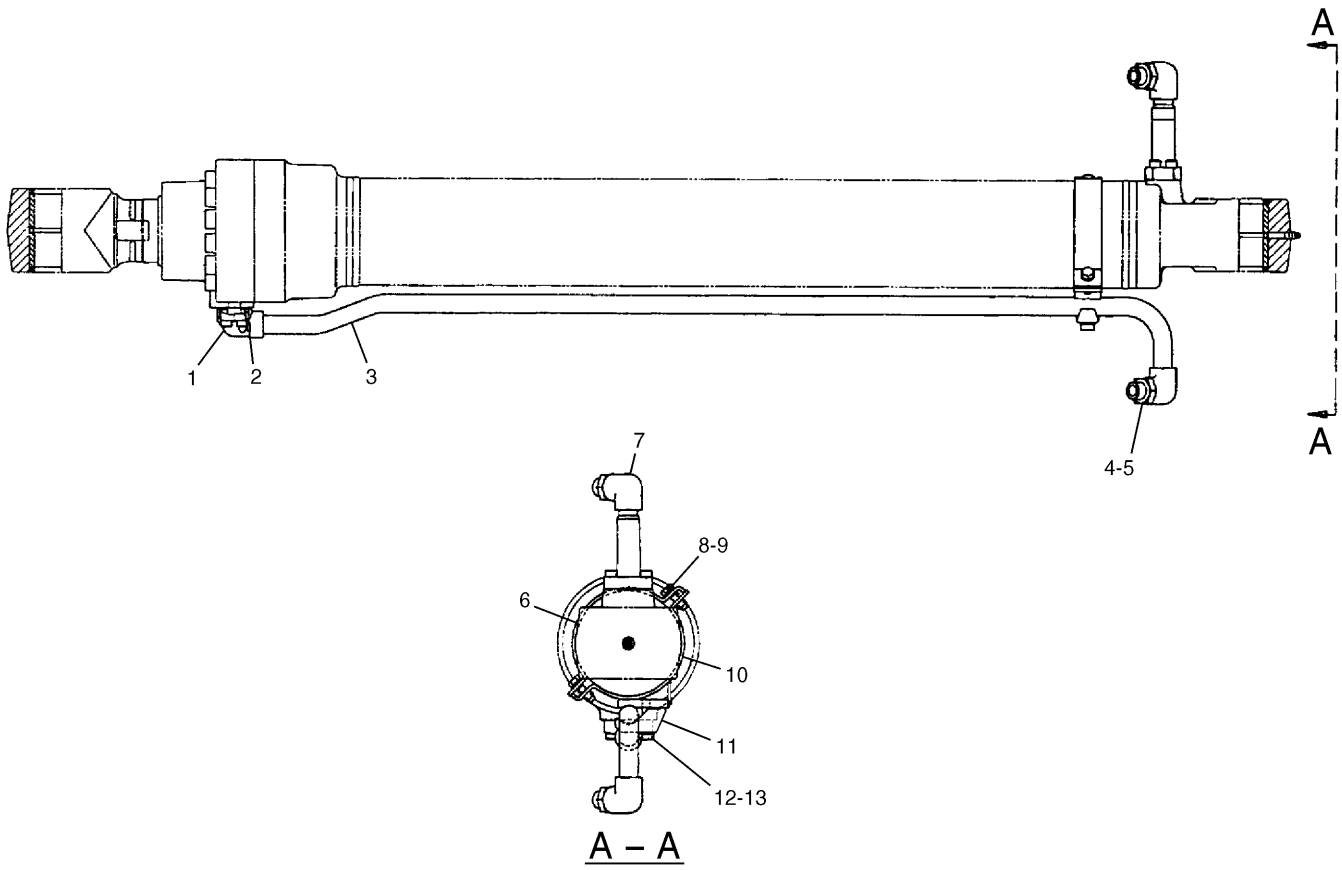

A – A

NOTE	No.	PART No.	QTY	PART NAME	NOTE	No.	PART No.	QTY	PART NAME
	1	9X-6032	8	BOLT (L=30mm)					
	2	095-1597	2	SEAL-O-RING (ID=29.70mm)					
	3	114-0726	1	TUBE AS					
	4	086-2746	2	CONNECTOR					
	5	095-1592	2	SEAL-O-RING (ID=23.70mm)					
	6	096-4449	1	SUPPORT					
	7	116-3411	1	TUBE AS					
	8	8T-4196	2	BOLT (L=35mm)					
	9	095-9397	2	LOCKWASHER					
	10	096-4448	1	SUPPORT AS					
	11	096-4480	1	CLAMP					
	12	6V-7673	1	BOLT (L=50mm)					
	13	9F-4976	1	LOCKWASHER					

H51880E 00

123-2085 LINES GP-BUCKET CYLINDER

Part of 123-2083-Page186
An Attachment

HYDRAULIC SYSTEM

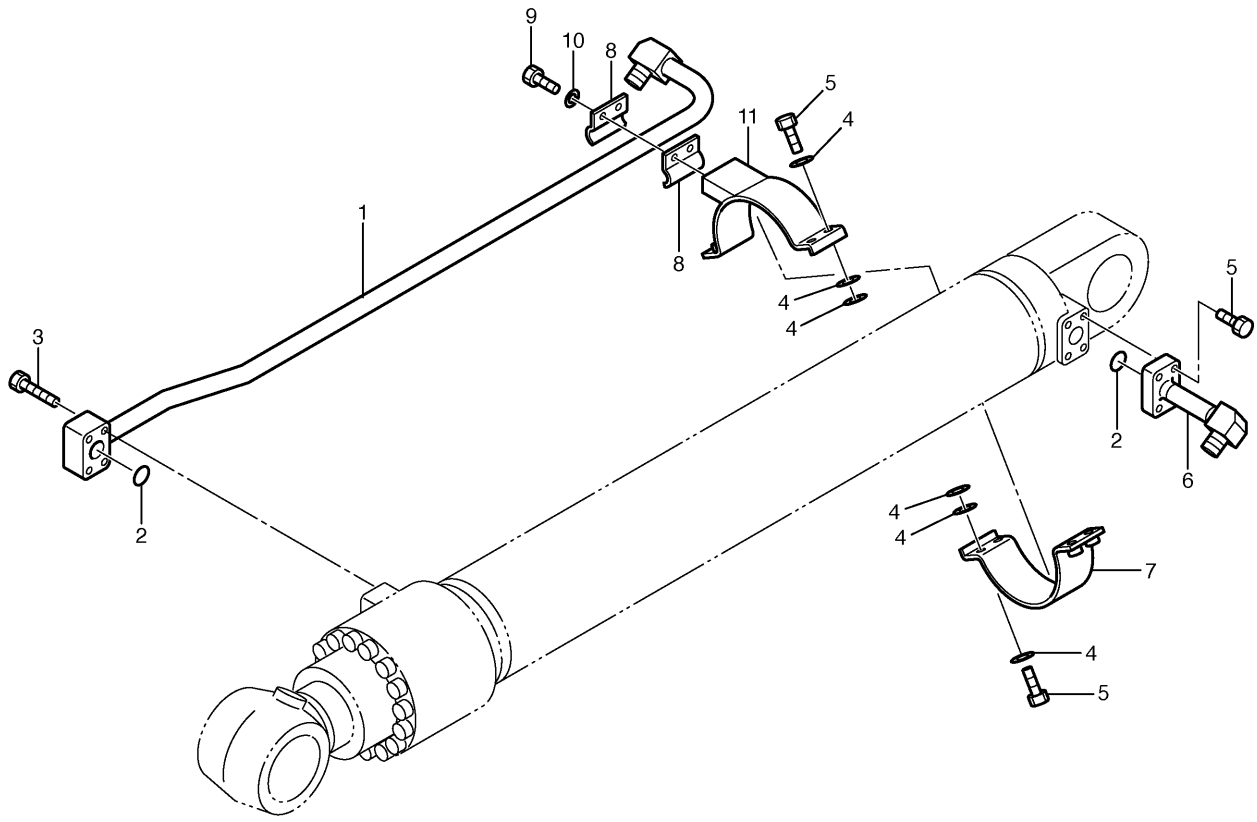

NOTE	No.	PART No.	QTY	PART NAME	NOTE	No.	PART No.	QTY	PART NAME
	1	116-9129	1	TUBE AS					
	2	4J-5267	2	SEAL-O-RING (ID=24.99mm)					
	3	8T-4185	4	BOLT (L=50mm)					
	4	8T-4121	12	WASHER					
	5	8T-4195	8	BOLT (L=30mm)					
	6	7Y-6442	1	TUBE AS					
	7	7Y-6510	1	SUPPORT AS					
	8	7Y-4868	2	CLIP					
	9	8T-4139	2	BOLT (L=30mm)					
	10	8T-4223	2	WASHER					
	11	7Y-6511	1	SUPPORT AS					

H53090E 00

127-6797 LINES GP-BUCKET CYLINDER

Long Reach Front
S/N 4MR 1-Up
Part of 127-6616-Page186
An Attachment

MEMORANDA

MEMORANDA

MEMORANDA

MEMORANDA

MEMORANDA

MEMORANDA

MEMORANDA

HYDRAULIC SYSTEM

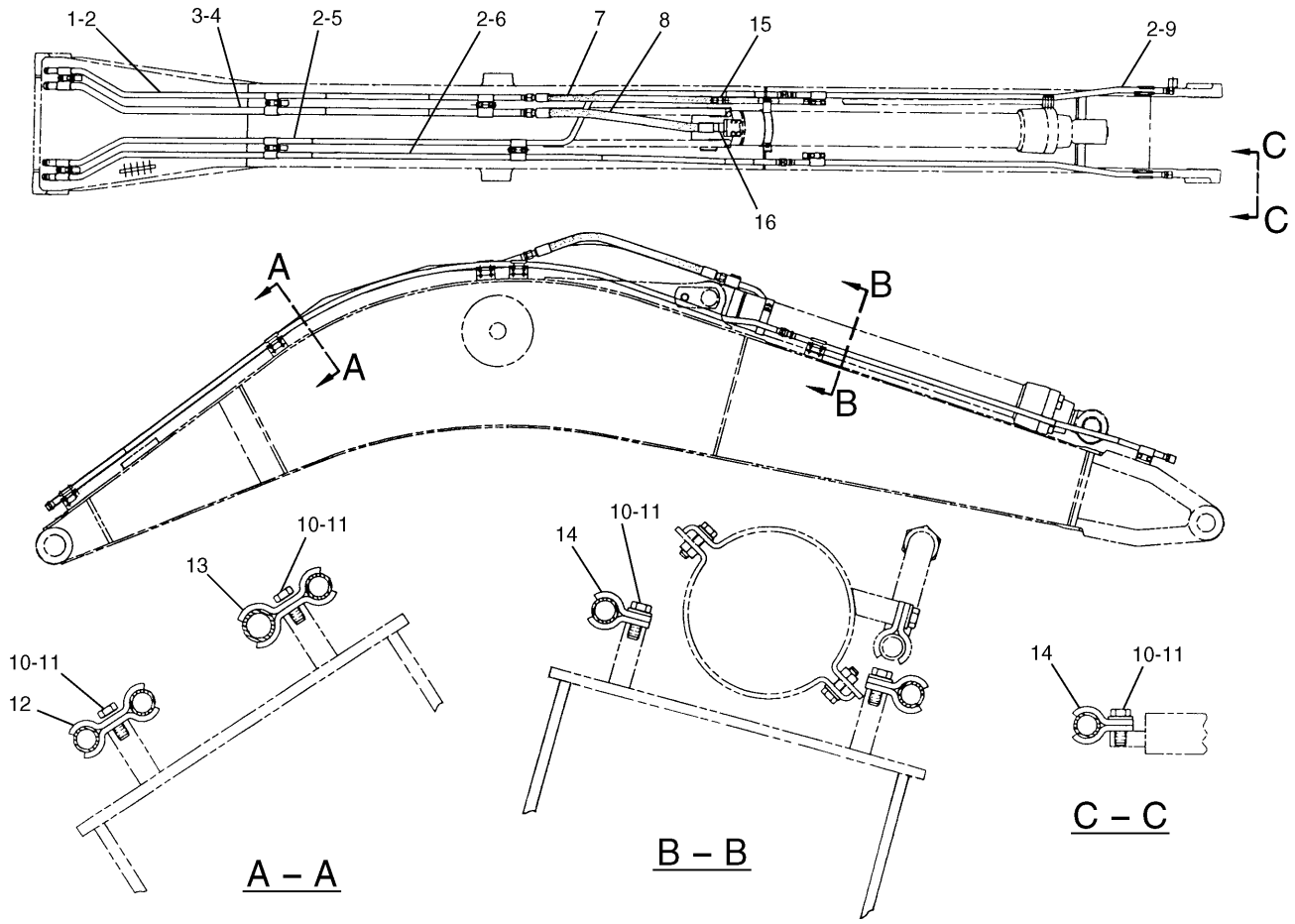

NOTE	No.	PART No.	QTY	PART NAME	NOTE	No.	PART No.	QTY	PART NAME
	1	160-4404	1	TUBE AS		15	6V-9746	1	SEAL-O-RING (OD=22.50mm)
	2	4I-8889	8	SEAL		16	5K-9090	1	SEAL-O-RING (OD=27.22mm)
	3	160-4405	1	TUBE AS					
	4	4I-8891	2	SEAL					
	5	124-1074	1	TUBE AS					
	6	124-1076	1	TUBE AS					
	7	4I-3820	1	HOSE AS					
E		5P-0200		HOSE…(87cm)					
		5P-1027	2	SLEEVE					
		7X-1451	2	STEM AS (STRAIGHT)					
	8	4I-3823	1	HOSE AS					
E		5P-0201		HOSE…(89cm)					
		5P-1010	2	SLEEVE					
		7X-1452	2	STEM AS (STRAIGHT)					
	9	124-1085	2	TUBE AS					
	10	8T-4223	20	WASHER					
	11	8T-4139	20	BOLT (L=30mm)					
	12	4I-1674	6	CLIP					
	13	4I-1676	6	CLIP					
	14	7Y-4868	8	CLIP					

E—ORDER BY THE CENTIMETER

H65286E 02

124-1044 LINES GP-BOOM

R-Boom

Part of 117-4140,120-5012-Page376

An Attachment

MEMORANDA

HYDRAULIC SYSTEM

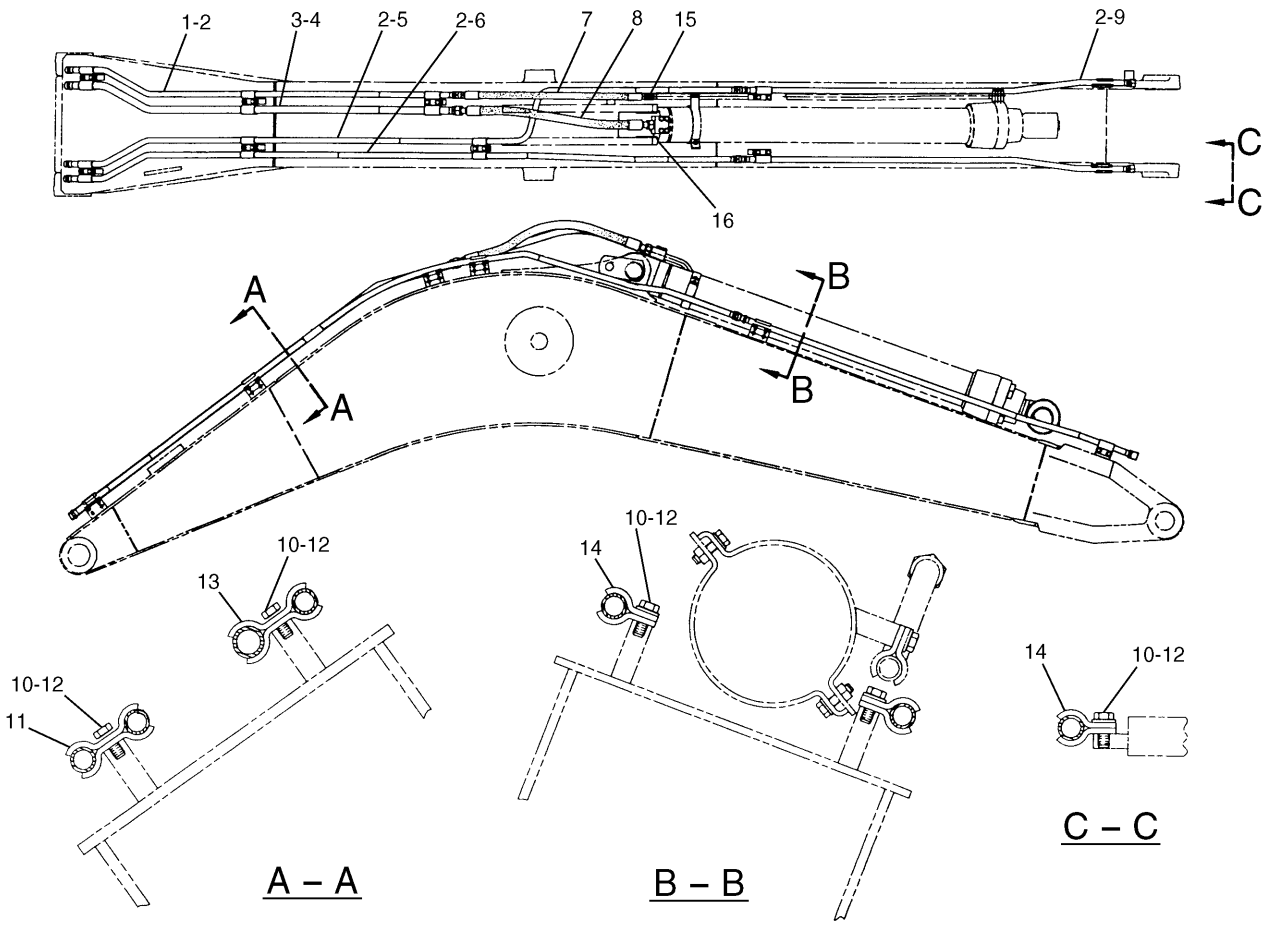

NOTE	No.	PART No.	QTY	PART NAME	NOTE	No.	PART No.	QTY	PART NAME
	1	124-1079	1	TUBE AS		15	6V-9746	1	SEAL-O-RING (OD=22.50mm)
	2	4I-8889	8	SEAL		16	5K-9090	1	SEAL-O-RING (OD=27.22mm)
	3	124-1082	1	TUBE AS					
	4	4I-8891	2	SEAL					
	5	124-1081	1	TUBE AS					
	6	124-1084	1	TUBE AS					
	7	4I-3820	1	HOSE AS					
E		5P-0200		HOSE…(87cm)					
		5P-1027	2	SLEEVE					
		7X-1451	2	STEM AS (STRAIGHT)					
	8	4I-3823	1	HOSE AS					
E		5P-0201		HOSE…(89cm)					
		5P-1027	2	SLEEVE					
		7X-1452	2	STEM AS (STRAIGHT)					
	9	124-1085	2	TUBE AS					
	10	8T-4223	20	WASHER					
	11	4I-1674	6	CLIP					
	12	8T-4139	20	BOLT (L=30mm)					
	13	4I-1676	6	CLIP					
	14	7Y-4868	8	CLIP					

E—ORDER BY THE CENTIMETER

H65287E 01

124-1045 LINES GP-BOOM

M-Boom

Part of 117-4141-Page377

An Attachment

HYDRAULIC SYSTEM

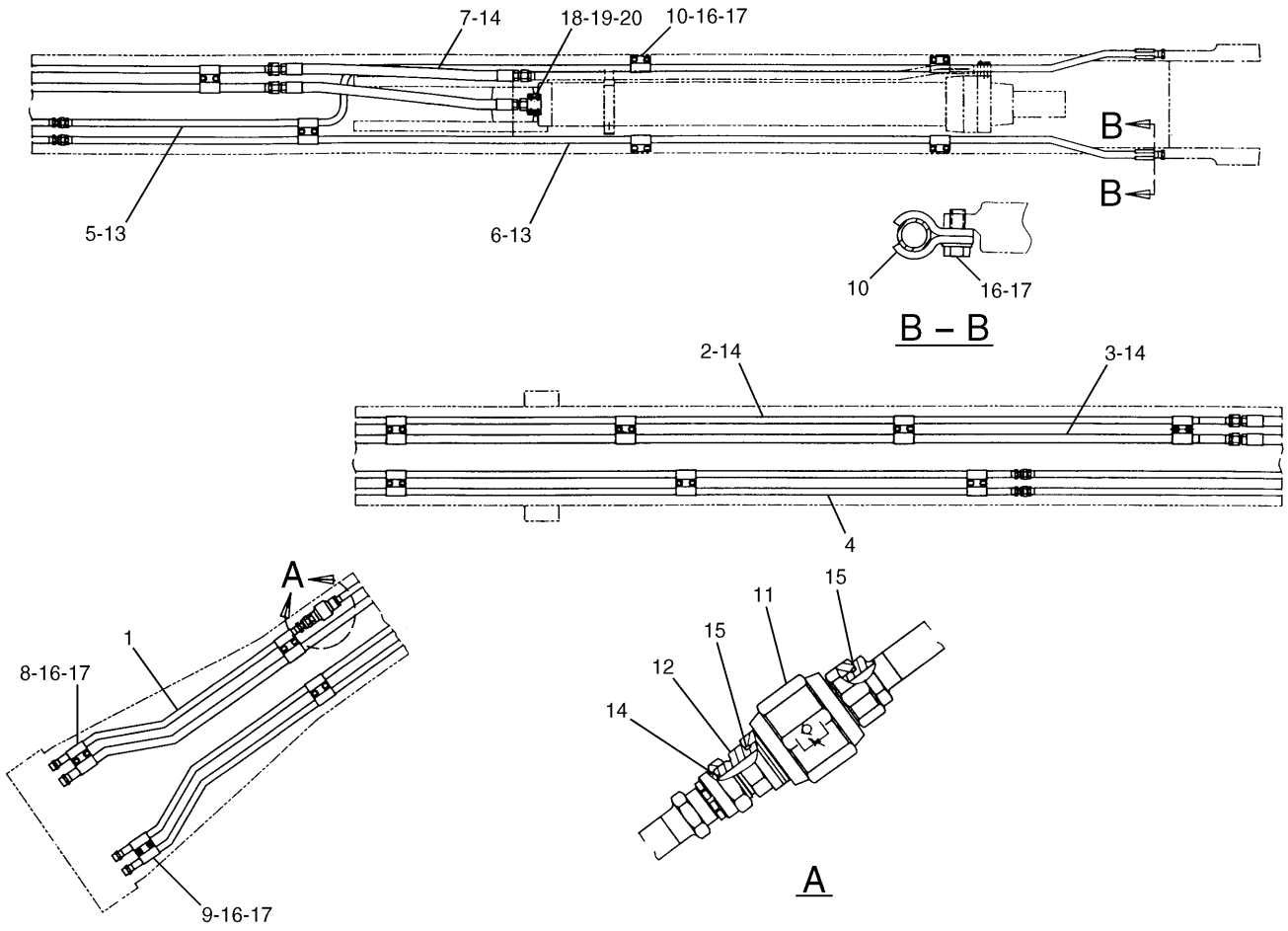

NOTE	No.	PART No.	QTY	PART NAME	NOTE	No.	PART No.	QTY	PART NAME
	1	5I-7223	1	TUBE AS		18	1P-3704	1	SEAL
	2	5I-7225	1	TUBE AS		19	6I-6721	1	ELBOW
	3	5I-7228	1	TUBE AS		20	8T-4648	4	BOLT (L=70mm)
	4	5I-7229	2	TUBE AS					
	5	5I-7230	1	TUBE AS					
	6	5I-7231	1	TUBE AS					
	7	7Y-8036	2	HOSE AS					
E		5P-0201		HOSE…(91cm)					
		5P-1010	2	SLEEVE					
		7X-1452	2	STEM AS (STRAIGHT)					
	8	4I-1676	12	CLIP					
	9	4I-1674	12	CLIP					
	10	7Y-4868	12	CLIP					
	11	4I-8789	1	VALVE GP					
	12	6V-8635	1	CONNECTOR					
	13	6V-9746	2	SEAL-O-RING (OD=22.50mm)					
	14	5K-9090	5	SEAL-O-RING (OD=27.22mm)					
	15	7M-8485	2	SEAL-O-RING (ID=29.74mm)					
	16	8T-4139	36	BOLT (L=30mm)					
	17	8T-4223	36	WASHER					

E—ORDER BY THE CENTIMETER

H54541E 01

127-6621 LINES GP-BOOM

Long Reach Front
S/N 4MR 1-Up
Part of 127-6615-Page383
An Attachment

HYDRAULIC SYSTEM

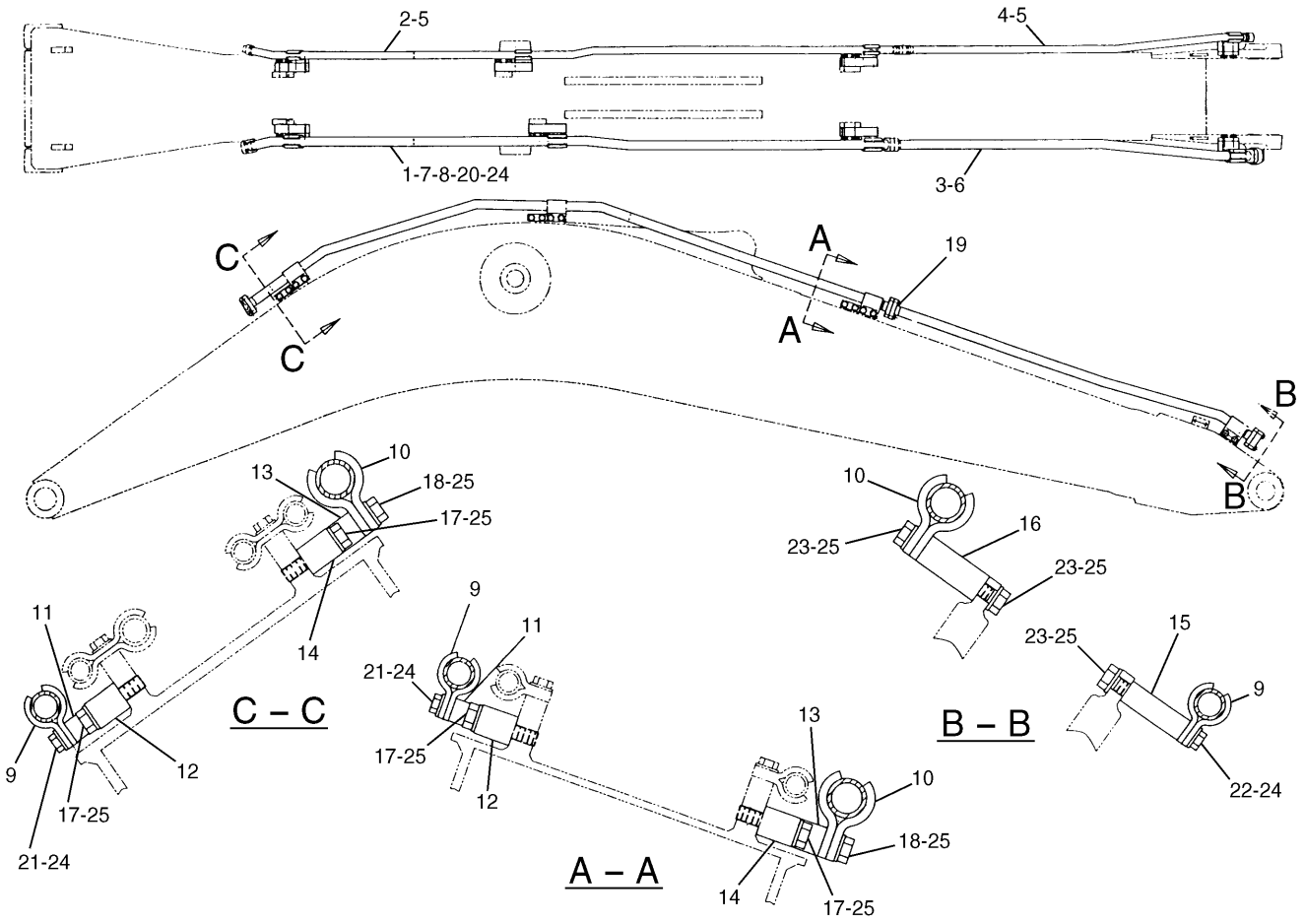

NOTE	No.	PART No.	QTY	PART NAME	NOTE	No.	PART No.	QTY	PART NAME
	1	116-9189	1	TUBE AS		21	8T-4648	6	BOLT (L=70mm)
	2	116-9188	1	TUBE AS		22	8T-4956	2	BOLT (L=35mm)
	3	116-9191	1	TUBE AS		23	8T-7338	6	BOLT (L=45mm)
	4	116-9190	1	TUBE AS		24	8T-4223	16	WASHER
	5	5K-9090	4	SEAL-O-RING (OD=27.22mm)		25	9X-8257	24	WASHER
	6	1P-3705	1	SEAL					
	7	1P-5767	4	FLANGE					
	8	1P-3704	2	SEAL					
	9	7Y-3732	8	CLIP					
	10	124-0909	8	CLIP					
	11	3V-9744	3	SPACER					
	12	121-1674	3	PLATE					
	13	121-1677	3	PLATE					
	14	121-1946	3	PLATE					
	15	127-6817	1	PLATE					
	16	127-6816	1	PLATE					
	17	7X-2554	12	BOLT (L=70mm)					
	18	7X-2555	6	BOLT (L=80mm)					
	19	8T-4184	4	BOLT (L=45mm)					
	20	8T-4194	8	BOLT (L=50mm)					

H54537E 01

116-9102 LINES GP-AUXILIARY HYDRAULIC

R-Boom
An Attachment

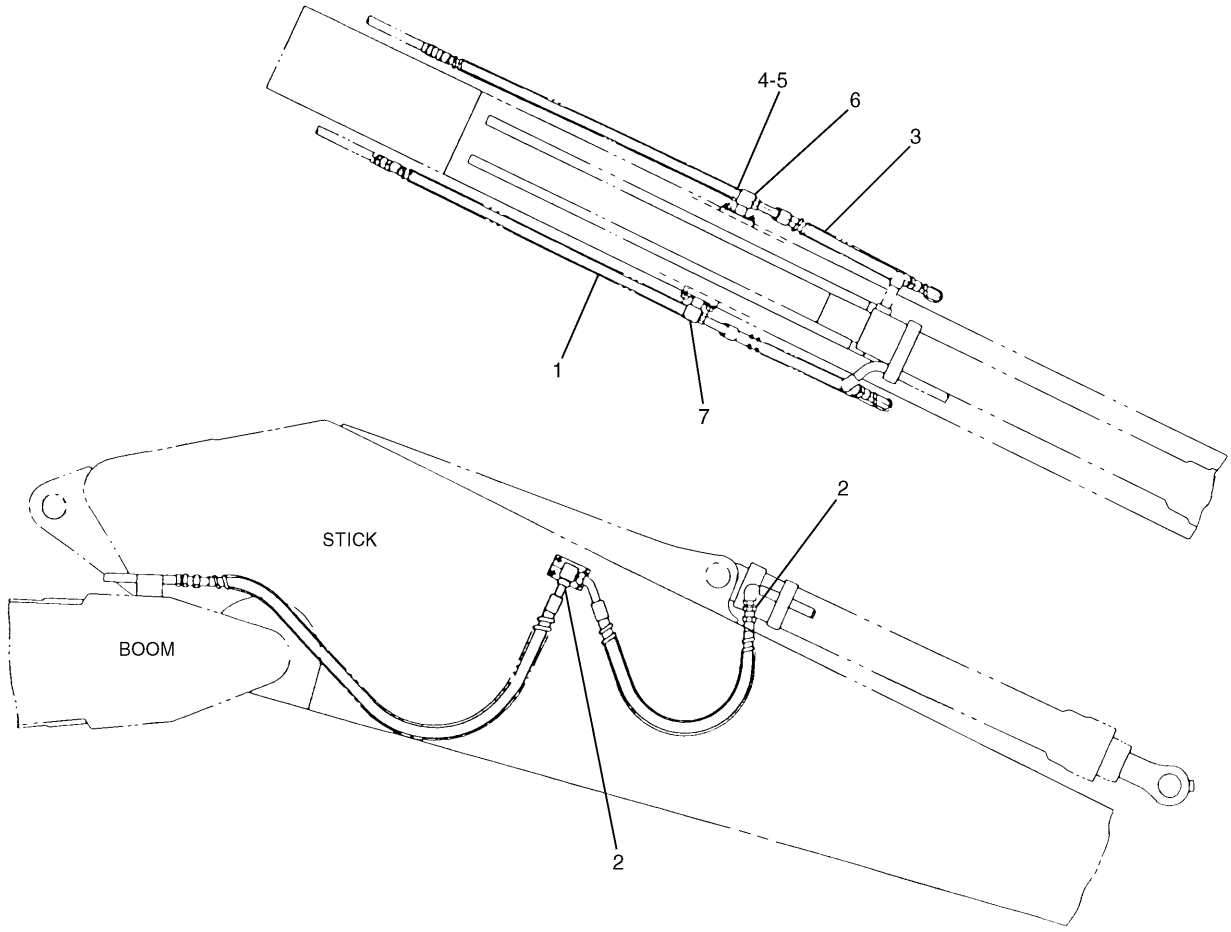

NOTE	No.	PART No.	QTY	PART NAME	NOTE	No.	PART No.	QTY	PART NAME
	1	102-1279	2	HOSE AS					
E		5P-0200		HOSE…(165cm)					
		5P-1027	2	SLEEVE					
E		6V-0756		GUARD…(230cm)					
		7X-1451	2	STEM AS (STRAIGHT)					
	2	6V-9746	6	SEAL-O-RING (OD=22.50mm)					
	3	102-1283	2	HOSE AS					
E		5P-0200		HOSE…(89cm)					
		5P-1027	2	SLEEVE					
E		6V-0756		GUARD…(115cm)					
		7X-1451	1	STEM AS (STRAIGHT)					
		7X-1467	1	STEM AS (45°)					
	4	8T-4179	8	BOLT (L=20mm)					
	5	8T-4223	8	WASHER					
	6	102-1291	1	ELBOW AS					
	7	102-1120	1	ELBOW AS					

E—ORDER BY THE CENTIMETER

H53102E 02

4I-3972 LINES GP-STICK

R3.9B Stick

Part of 126-3792-Page378

An Attachment

HYDRAULIC SYSTEM

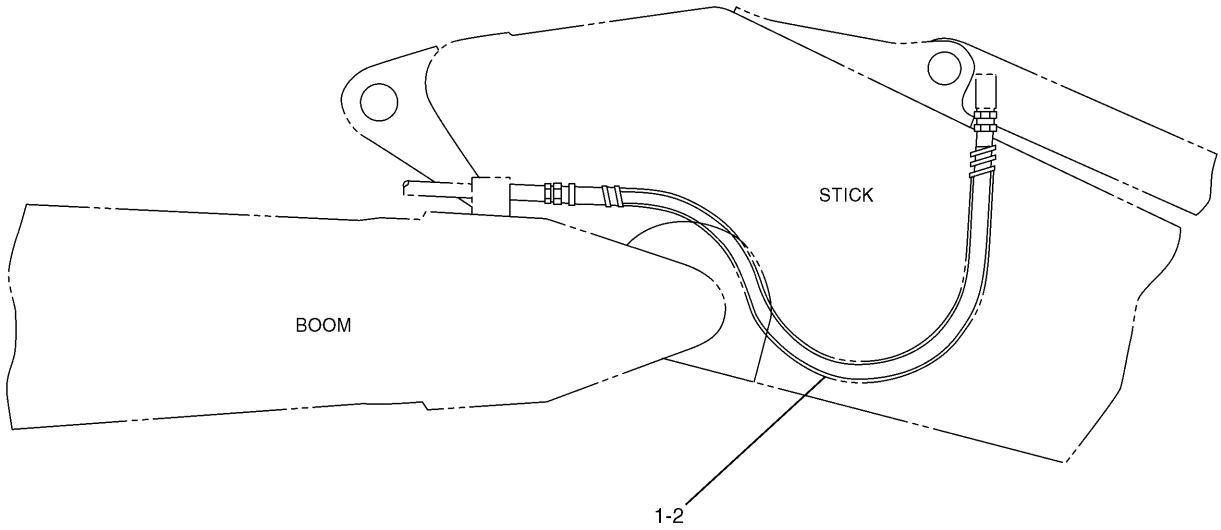

NOTE	No.	PART No.	QTY	PART NAME	NOTE	No.	PART No.	QTY	PART NAME
	1	4I-5556	2	HOSE AS					
E		5P-0200		HOSE···(147cm)					
		5P-1027	2	SLEEVE					
E		6V-0745		GUARD···(203cm)					
		7X-1451	2	STEM AS (STRAIGHT)					
	2	6V-9746	2	SEAL-O-RING (OD=22.50mm)					

E—ORDER BY THE CENTIMETER

H53103E 02

087-5466 LINES GP-STICK

R2.92B Stick

Part of 120-5013,126-3793-Page379

An Attachment

MEMORANDA

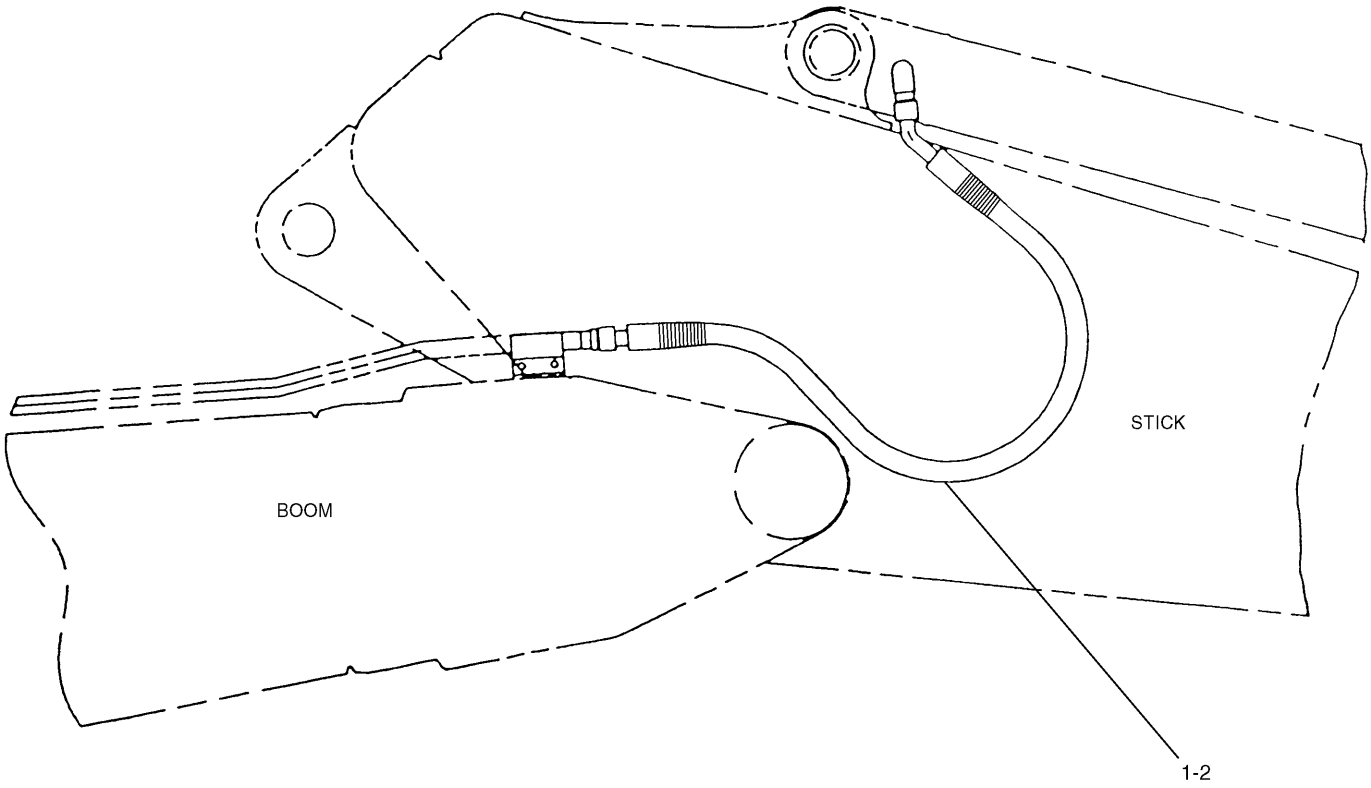

NOTE	No.	PART No.	QTY	PART NAME	NOTE	No.	PART No.	QTY	PART NAME
	1	6V-9746	2	SEAL-O-RING (OD=22.50mm)					
	2	7I-7322	2	HOSE AS					
E		5P-0200		HOSE…(126cm)					
		5P-1027	2	SLEEVE					
E		6V-0756		GUARD…(169cm)					
		7X-1451	1	STEM AS (STRAIGHT)					
		7X-1467	1	STEM AS (45°)					

E—ORDER BY THE CENTIMETER

H53104E 03

4I-3964 LINES GP-STICK

R2.5B Stick

Part of 126-3794-Page380

An Attachment

HYDRAULIC SYSTEM

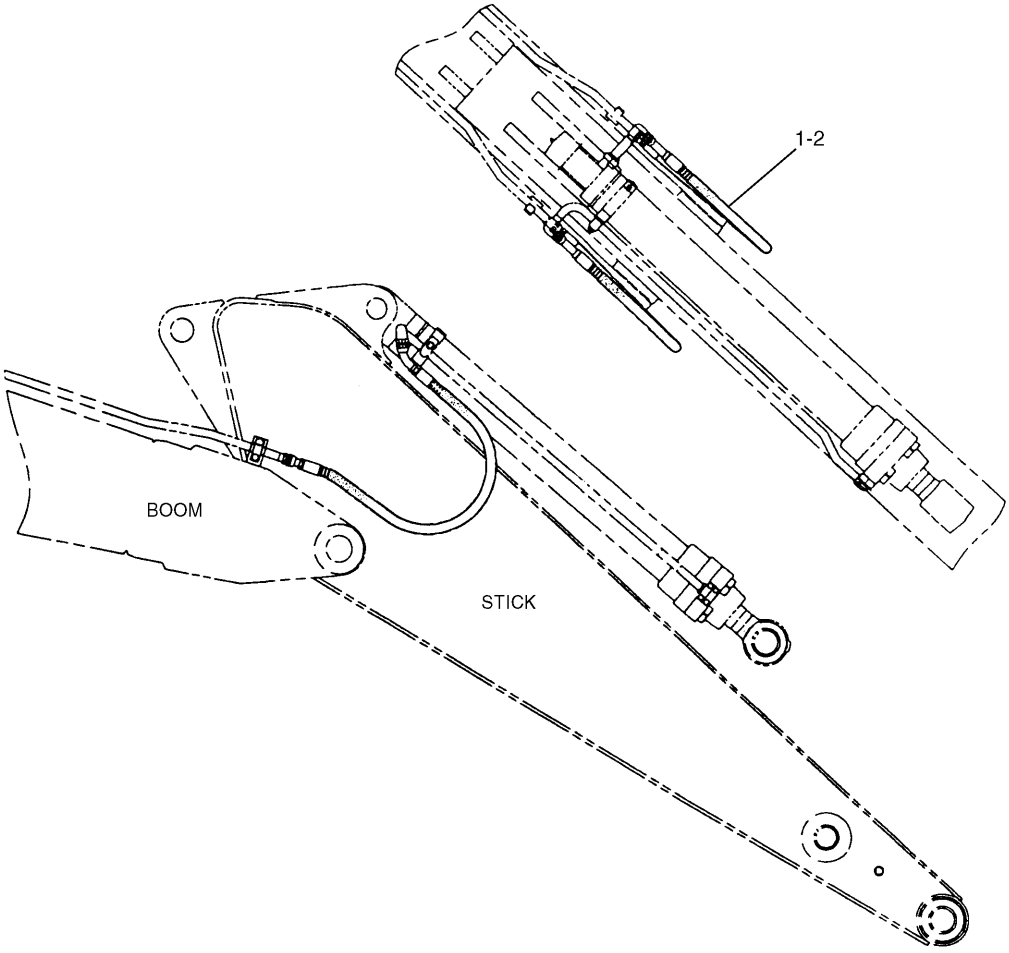

NOTE	No.	PART No.	QTY	PART NAME	NOTE	No.	PART No.	QTY	PART NAME
	1	133-5718	2	HOSE AS					
		3E-4069	1	CLIP					
		5P-1027	2	SLEEVE					
E		5P-0200		HOSE···(129cm)					
E		6V-0745		GUARD···(184cm)					
		7X-1451	2	STEM AS (STRAIGHT)					
	2	6V-9746	2	SEAL-O-RING (OD=22.50mm)					

E—ORDER BY THE CENTIMETER

H53105E 01

119-2533 LINES GP-STICK

R1.9C Stick

Part of 120-4971-Page380

An Attachment

MEMORANDA

HYDRAULIC SYSTEM

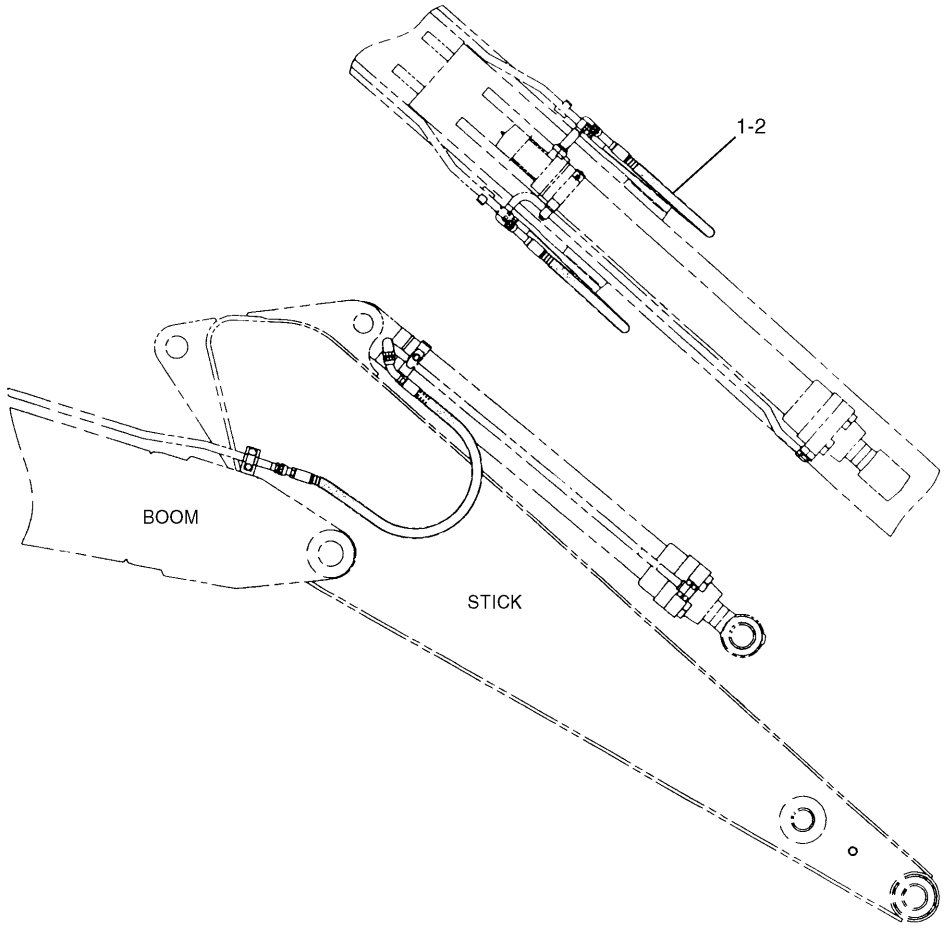

NOTE	No.	PART No.	QTY	PART NAME	NOTE	No.	PART No.	QTY	PART NAME
	1	7I-7322	2	HOSE AS					
E		5P-0200		HOSE···(128cm)					
		5P-1027	2	SLEEVE					
E		6V-0756		GUARD···(169cm)					
		7X-1451	1	STEM AS (STRAIGHT)					
		7X-1467	1	STEM AS (45°)					
	2	6V-9746	2	SEAL-O-RING (OD=22.50mm)					

E—ORDER BY THE CENTIMETER

H53106E 00

119-2534 LINES GP-STICK

M2.4C Stick

Part of 120-4972-Page381

An Attachment

HYDRAULIC SYSTEM

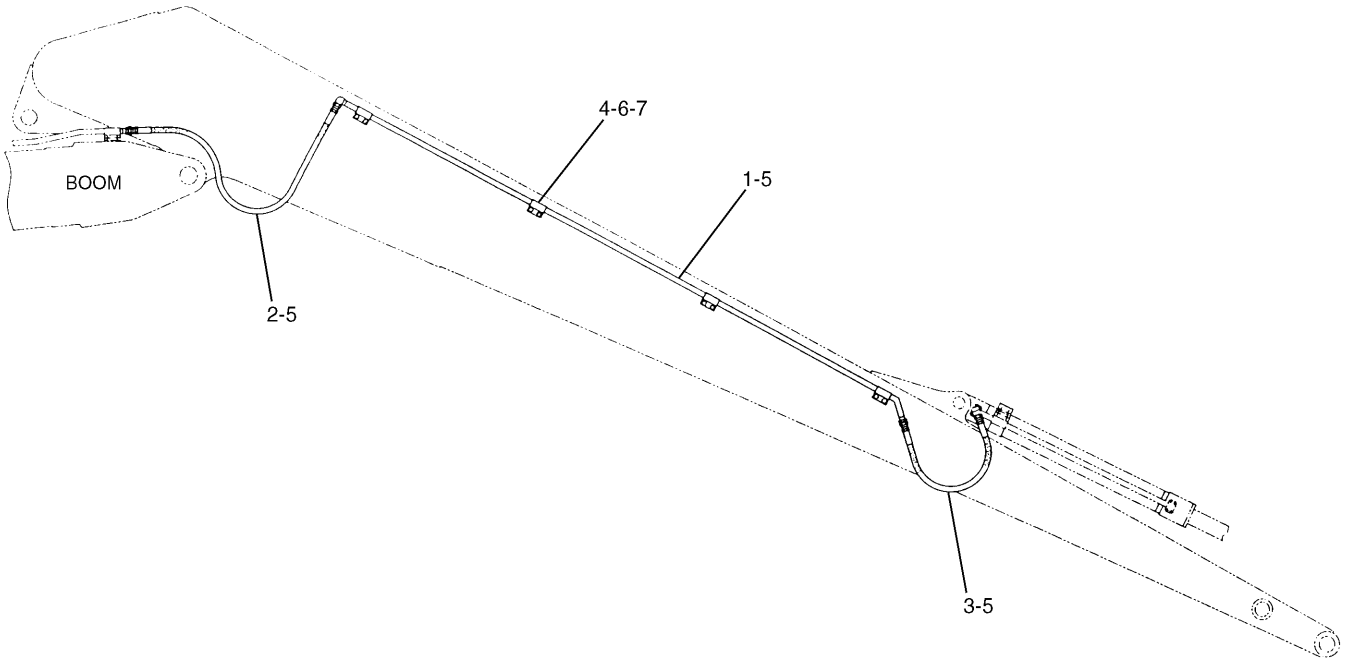

NOTE	No.	PART No.	QTY	PART NAME	NOTE	No.	PART No.	QTY	PART NAME
	1	5I-7233	2	TUBE AS					
	2	4I-5556	2	HOSE AS					
E		5P-0200		HOSE…(147cm)					
		5P-1027	2	SLEEVE					
E		6V-0745		GUARD…(203cm)					
		7X-1451	2	STEM AS (STRAIGHT)					
	3	7Y-7904	2	HOSE AS					
E		5P-0200		HOSE…(73cm)					
		5P-1027	2	SLEEVE					
		7X-1451	2	STEM AS (STRAIGHT)					
	4	7Y-4868	16	CLIP					
	5	6V-9746	8	SEAL-O-RING (OD=22.50mm)					
	6	8T-4139	16	BOLT (L=30mm)					
	7	8T-4223	16	WASHER					

E—ORDER BY THE CENTIMETER

H53107E 00

127-6624 LINES GP-STICK

Long Reach Front
S/N 4MR 1-Up
Part of 127-6615-Page383
An Attachment

Consists of :

			Page
1	121-1873	STICK GP	390
1	116-9103	LINES GP-AUXILIARY HYDRAULIC	220

H53108E 00

121-1872 LINES AR-AUXILIARY HYDRAULIC

R2.92B Stick
S/N 3MR 1-(D97.05), 4MR 1-(D97.05)
An Attachment

Consists of :

			Page
1	121-1877	STICK GP	393
1	116-9104	LINES GP-AUXILIARY HYDRAULIC	221.01

H53109E 00

121-1876 LINES AR-AUXILIARY HYDRAULIC

R2.5B Stick
S/N 3MR 1-(D97.05), 4MR 1-(D97.05)
An Attachment

Consists of :

			Page
1	121-1873	STICK GP	390
1	142-6661	LINES GP-AUXILIARY HYDRAULIC	221A

H62323E 02

121-1872 LINES AR-AUXILIARY HYDRAULIC

R2.92B Stick
S/N 3MR (D97.06)-Up, 4MR (D97.06)-Up
An Attachment

Consists of :

			Page
1	121-1877	STICK GP	393
1	142-6662	LINES GP-AUXILIARY HYDRAULIC	221.03

H62607E 01

121-1876 LINES AR-AUXILIARY HYDRAULIC

R2.5B Stick
S/N 3MR (D97.06)-Up, 4MR (D97.06)-Up
An Attachment

MEMORANDA

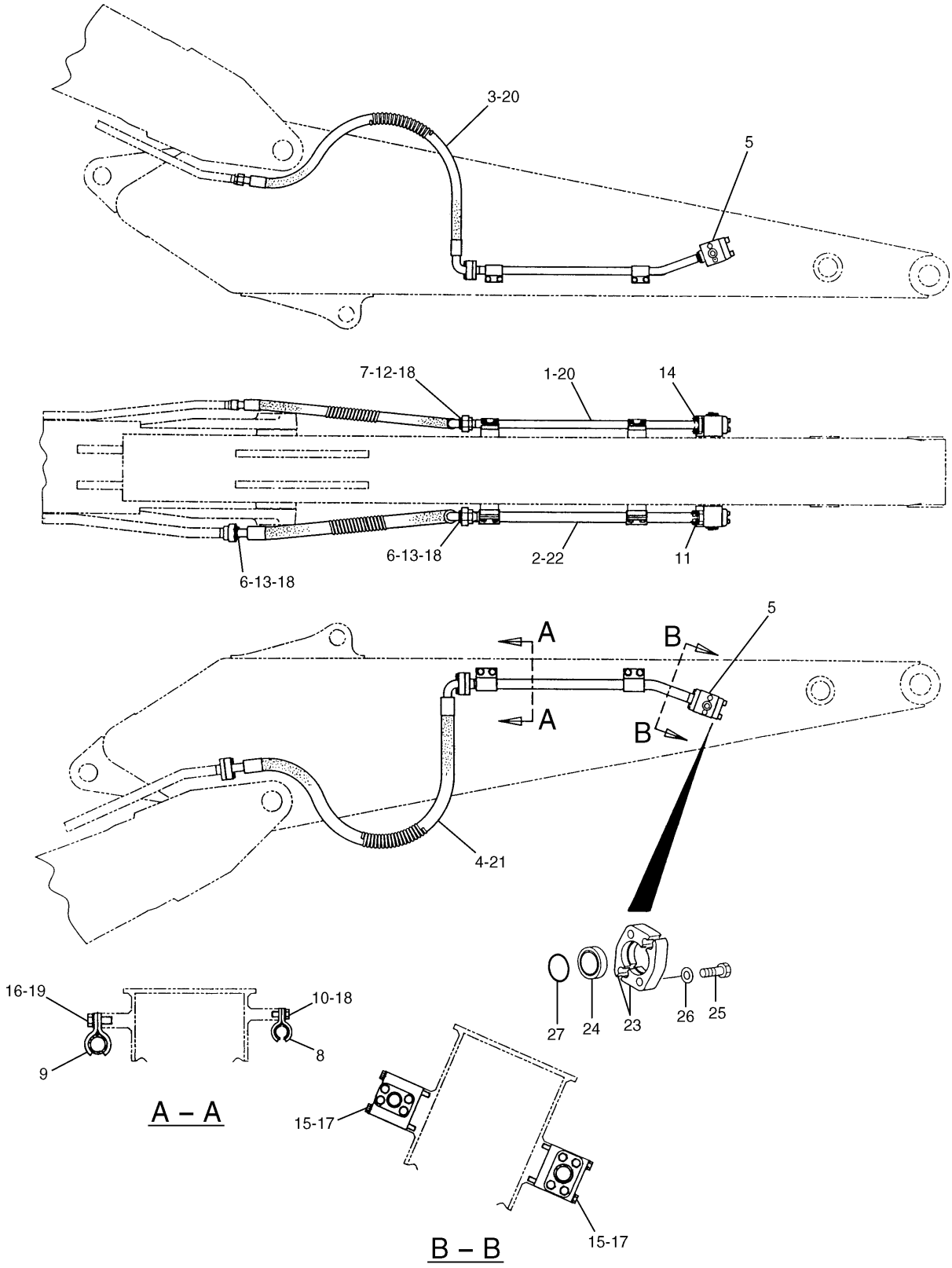

H81178E 02

116-9103 LINES GP-AUXILIARY HYDRAULIC

R2.92B Stick
S/N 3MR 1-(D97.05), 4MR 1-(D97.05)
Part of 121-1872-Page219
An Attachment

HYDRAULIC SYSTEM

NOTE	No.	PART No.	QTY	PART NAME	NOTE	No.	PART No.	QTY	PART NAME
	1	121-1903	1	TUBE AS					
	2	121-1904	1	TUBE AS					
	3	127-6829	1	HOSE AS					
		3E-4069	2	CLIP					
E		5P-0201		HOSE…(150cm)					
		5P-1010	2	SLEEVE					
		5P-1130	1	STEM AS (90°)					
E		6V-0746		GUARD…(206cm)					
		7X-1452	1	STEM AS (STRAIGHT)					
	4	121-1965	1	HOSE AS					
		2P-6732	1	STEM AS (90°)					
		2P-6733	1	STEM AS (STRAIGHT)					
		3E-4062	2	CLIP					
E		5P-0202		HOSE…(152cm)					
		5P-0477	2	SLEEVE					
	5	121-1803	2	VALVE AS					
	6	1P-5767	4	FLANGE					
	7	6V-0400	2	FLANGE					
	8	7Y-3732	4	CLIP					
	9	124-0909	4	CLIP					
	10	8T-4139	4	BOLT (L=30mm)					
	11	8T-4183	4	BOLT (L=40mm)					
	12	8T-4184	4	BOLT (L=45mm)					
	13	8T-4194	8	BOLT (L=50mm)					
	14	8T-4956	4	BOLT (L=35mm)					
	15	8T-6685	4	BOLT (L=110mm)					
	16	8T-7338	4	BOLT (L=45mm)					
	17	8T-4121	4	WASHER					
	18	8T-4223	16	WASHER					
	19	9X-8257	4	WASHER					
	20	1P-3703	2	SEAL					
	21	1P-3704	2	SEAL					
	22	1P-3705	1	SEAL					
	23	1P-5767	4	FLANGE					
	24	5P-0048	2	COVER					
	25	8T-4184	8	BOLT (L=45mm)					
	26	8T-4223	8	WASHER					
	27	1P-3704	2	SEAL					

E—ORDER BY THE CENTIMETER

H81178E 02

116-9103 LINES GP-AUXILIARY HYDRAULIC

R2.92B Stick
S/N 3MR 1-(D97.05), 4MR 1-(D97.05)
Part of 121-1872-Page219
An Attachment

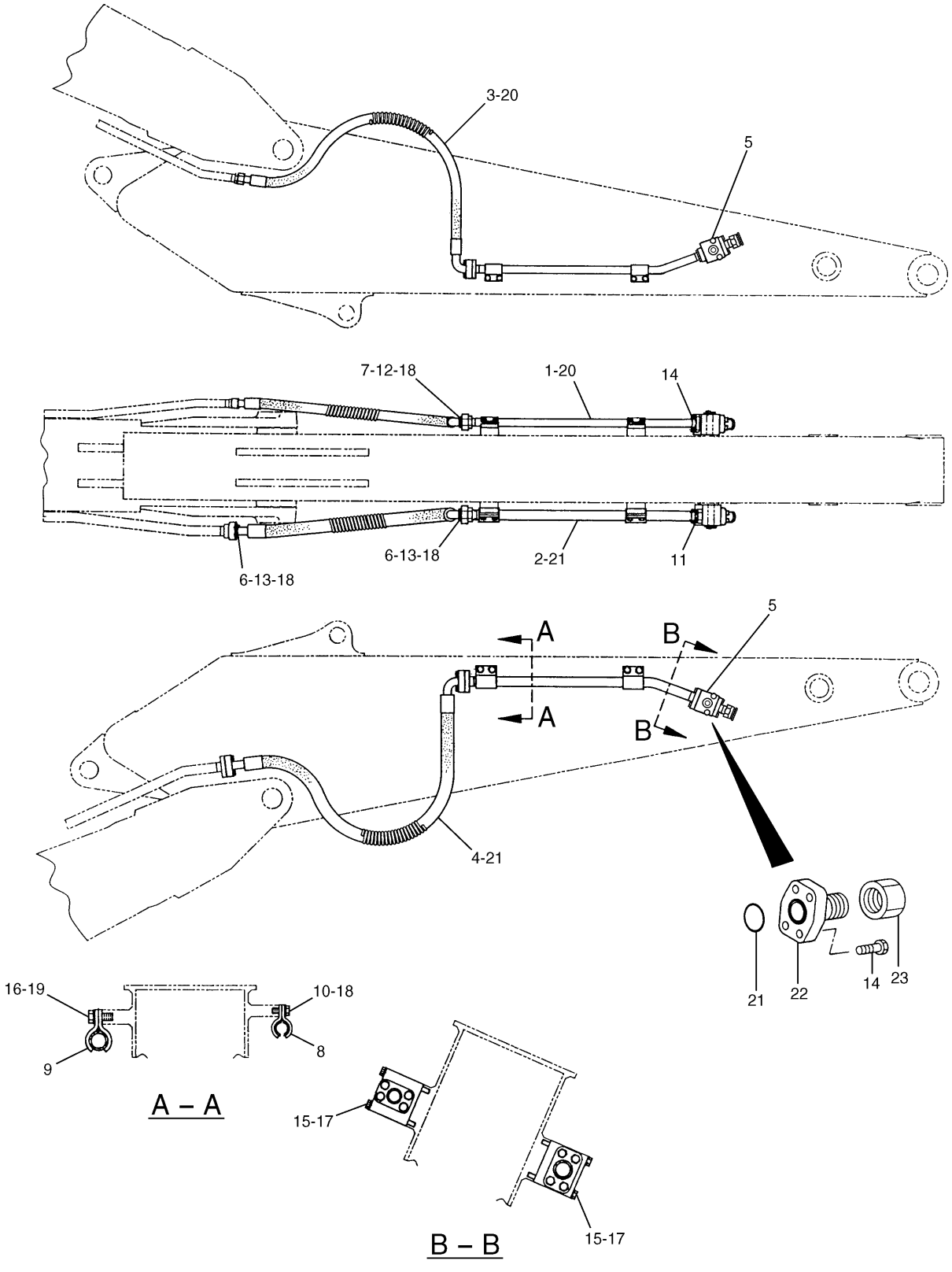

H81192E 01

142-6661 LINES GP-AUXILIARY HYDRAULIC

R2.92B Stick
S/N 3MR (D97.06)-Up, 4MR (D97.06)-Up
Part of 121-1872-Page219.01
137-1594-Page221.05
An Attachment

HYDRAULIC SYSTEM

NOTE	No.	PART No.	QTY	PART NAME	NOTE	No.	PART No.	QTY	PART NAME
	1	121-1903	1	TUBE AS					
	2	142-6583	1	TUBE AS					
	3	127-6829	1	HOSE AS					
		3E-4069	2	CLIP					
E		5P-0201		HOSE···(150cm)					
		5P-1010	2	SLEEVE					
		5P-1130	1	STEM AS (90°)					
E		6V-0746		GUARD···(206cm)					
		7X-1452	1	STEM AS (STRAIGHT)					
	4	121-1965	1	HOSE AS					
		2P-6732	1	STEM AS (90°)					
		2P-6733	1	STEM AS (STRAIGHT)					
		3E-4062	2	CLIP					
E		5P-0202		HOSE···(152cm)					
		5P-0477	2	SLEEVE					
Y	5	137-1594	2	VALVE AS					
	6	1P-5767	4	FLANGE					
	7	6V-0400	2	FLANGE					
	8	7Y-3732	4	CLIP					
	9	124-0909	4	CLIP					
	10	8T-4139	4	BOLT (L=30mm)					
	11	8T-4183	4	BOLT (L=40mm)					
	12	8T-4184	4	BOLT (L=45mm)					
	13	8T-4194	8	BOLT (L=50mm)					
	14	8T-4956	12	BOLT (L=35mm)					
	15	8T-6685	4	BOLT (L=110mm)					
	16	8T-7338	4	BOLT (L=45mm)					
	17	8T-4121	4	WASHER					
	18	8T-4223	16	WASHER					
	19	9X-8257	4	WASHER					
	20	1P-3703	2	SEAL					
	21	1P-3704	5	SEAL					
	22	135-4063	2	FLANGE					
	23	096-1421	2	CAP AS					

E—ORDER BY THE CENTIMETER

Y—SEE SEPARATE ILLUSTRATION

H81192E 01

142-6661 LINES GP-AUXILIARY HYDRAULIC

R2.92B Stick
S/N 3MR (D97.06)-Up, 4MR (D97.06)-Up
Part of 121-1872-Page219.01
137-1594-Page221.05
An Attachment

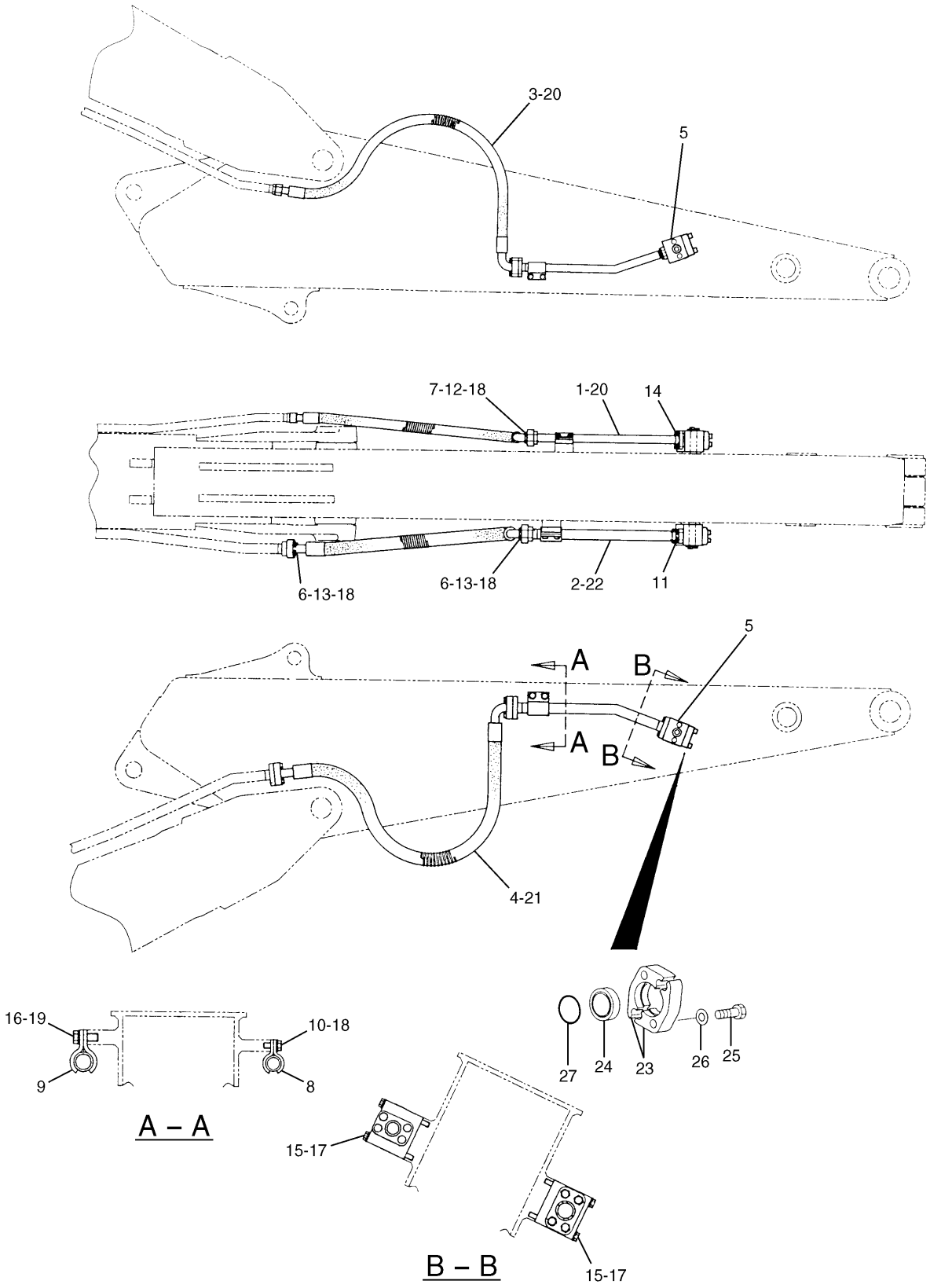

H81179E 01

116-9104 LINES GP-AUXILIARY HYDRAULIC
R2.5B Stick
S/N 3MR 1-(D97.05), 4MR 1-(D97.05)
Part of 121-1876-Page219
An Attachment

HYDRAULIC SYSTEM

NOTE	No.	PART No.	QTY	PART NAME	NOTE	No.	PART No.	QTY	PART NAME
	1	127-6780	1	TUBE AS					
	2	127-6779	1	TUBE AS					
	3	127-6829	1	HOSE AS					
		3E-4069	2	CLIP					
E		5P-0201		HOSE…(150cm)					
		5P-1010	2	SLEEVE					
		5P-1130	1	STEM AS (90°)					
E		6V-0746		GUARD…(206cm)					
		7X-1452	1	STEM AS (STRAIGHT)					
	4	121-1965	1	HOSE AS					
		2P-6732	1	STEM AS (90°)					
		2P-6733	1	STEM AS (STRAIGHT)					
		3E-4062	2	CLIP					
E		5P-0202		HOSE…(152cm)					
		5P-0477	2	SLEEVE					
	5	121-1803	2	VALVE AS					
	6	1P-5767	4	FLANGE					
	7	6V-0400	2	FLANGE					
	8	7Y-3732	2	CLIP					
	9	124-0909	2	CLIP					
	10	8T-4139	2	BOLT (L=30mm)					
	11	8T-4183	4	BOLT (L=40mm)					
	12	8T-4184	4	BOLT (L=45mm)					
	13	8T-4194	8	BOLT (L=50mm)					
	14	8T-4956	4	BOLT (L=35mm)					
	15	8T-6685	4	BOLT (L=110mm)					
	16	8T-7338	2	BOLT (L=45mm)					
	17	8T-4121	4	WASHER					
	18	8T-4223	14	WASHER					
	19	9X-8257	2	WASHER					
	20	1P-3703	2	SEAL					
	21	1P-3704	2	SEAL					
	22	1P-3705	1	SEAL					
	23	1P-5767	4	FLANGE					
	24	5P-0048	2	COVER					
	25	8T-4184	8	BOLT (L=45mm)					
	26	8T-4223	8	WASHER					
	27	1P-3704	2	SEAL					

E—ORDER BY THE CENTIMETER

H81179E 01

116-9104 LINES GP-AUXILIARY HYDRAULIC

R2.5B Stick
S/N 3MR 1-(D97.05), 4MR 1-(D97.05)
Part of 121-1876-Page219
An Attachment

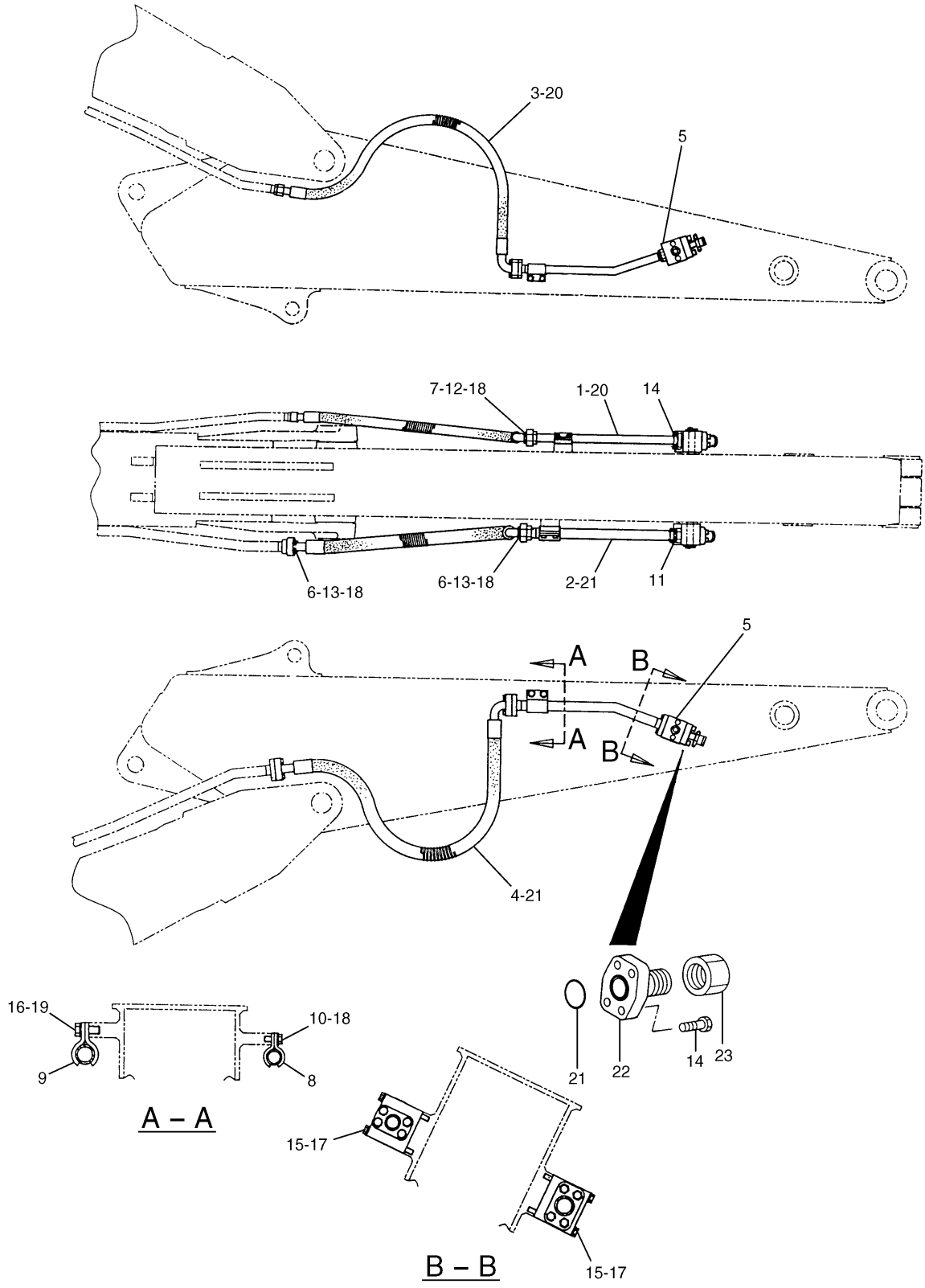

H81193E 01

142-6662 LINES GP-AUXILIARY HYDRAULIC

R2.5B Stick
S/N 3MR (D97.06)-Up, 4MR (D97.06)-Up
Part of 121-1876-Page219.01
137-1594-Page221.05
An Attachment

HYDRAULIC SYSTEM

NOTE	No.	PART No.	QTY	PART NAME	NOTE	No.	PART No.	QTY	PART NAME
	1	127-6780	1	TUBE AS					
	2	142-6582	1	TUBE AS					
	3	127-6829	1	HOSE AS					
		3E-4069	2	CLIP					
E		5P-0201		HOSE…(150cm)					
		5P-1010	2	SLEEVE					
		5P-1130	1	STEM AS (90°)					
E		6V-0746		GUARD…(206cm)					
		7X-1452	1	STEM AS (STRAIGHT)					
	4	121-1965	1	HOSE AS					
		2P-6732	1	STEM AS (90°)					
		2P-6733	1	STEM AS (STRAIGHT)					
		3E-4062	2	CLIP					
E		5P-0202		HOSE…(152cm)					
		5P-0477	2	SLEEVE					
Y	5	137-1594	2	VALVE AS					
	6	1P-5767	4	FLANGE					
	7	6V-0400	2	FLANGE					
	8	7Y-3732	2	CLIP					
	9	124-0909	2	CLIP					
	10	8T-4139	2	BOLT (L=30mm)					
	11	8T-4183	4	BOLT (L=40mm)					
	12	8T-4184	4	BOLT (L=45mm)					
	13	8T-4194	8	BOLT (L=50mm)					
	14	8T-4956	12	BOLT (L=35mm)					
	15	8T-6685	4	BOLT (L=110mm)					
	16	8T-7338	2	BOLT (L=45mm)					
	17	8T-4121	4	WASHER					
	18	8T-4223	14	WASHER					
	19	9X-8257	2	WASHER					
	20	1P-3703	2	SEAL					
	21	1P-3704	5	SEAL					
	22	135-4063	2	FLANGE					
	23	096-1421	2	CAP AS					

E—ORDER BY THE CENTIMETER

Y—SEE SEPARATE ILLUSTRATION

H81193E 01

142-6662 LINES GP-AUXILIARY HYDRAULIC

R2.5B Stick

S/N 3MR (D97.06)-Up, 4MR (D97.06)-Up

Part of 121-1876-Page219.01

137-1594-Page221.05

An Attachment

Consists of :

			Page
1	138-4243	VALVE AS-BALL	221.06
		-OR-	
1	138-4244	VALVE AS.....	221.07

H57969E 02

137-1594 VALVE AS-BALL

S/N 3MR (D97.06)-Up, 4MR (D97.06)-Up
Part of 142-6662-Page221.04,142-6661-Page221B
An Attachment

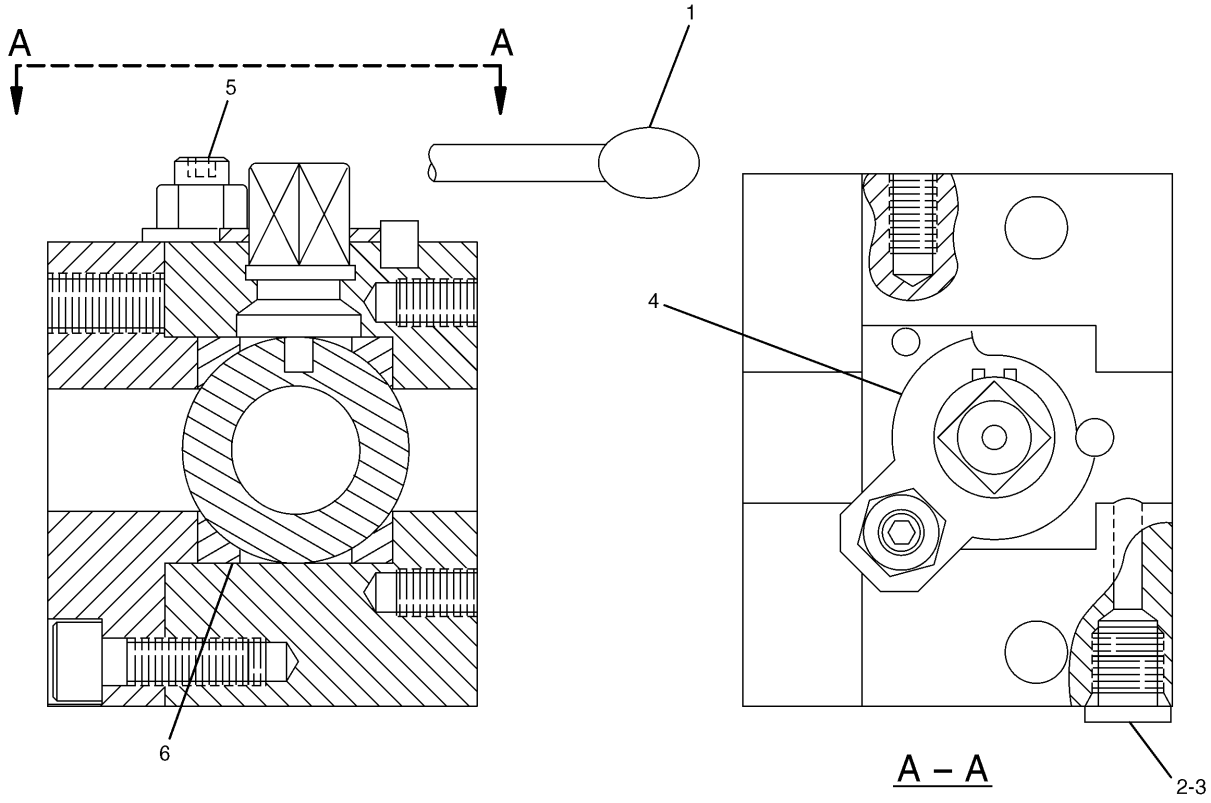

NOTE	No.	PART No.	QTY	PART NAME	NOTE	No.	PART No.	QTY	PART NAME
	1	119-9447	1	HANDLE					
	2	099-5845	1	PLUG					
	3	3J-1907	1	SEAL-O-RING (ID=11.89mm)					
	4	153-8644	1	STOPPER					
	5	153-8645	1	PLUNGER					
	6	153-8748	2	SEAL					

H63680E 04

138-4243 VALVE AS-BALL

S/N 3MR (D97.06)-Up, 4MR (D97.06)-Up
Part of 137-1594-Page221.05
An Attachment

HYDRAULIC SYSTEM

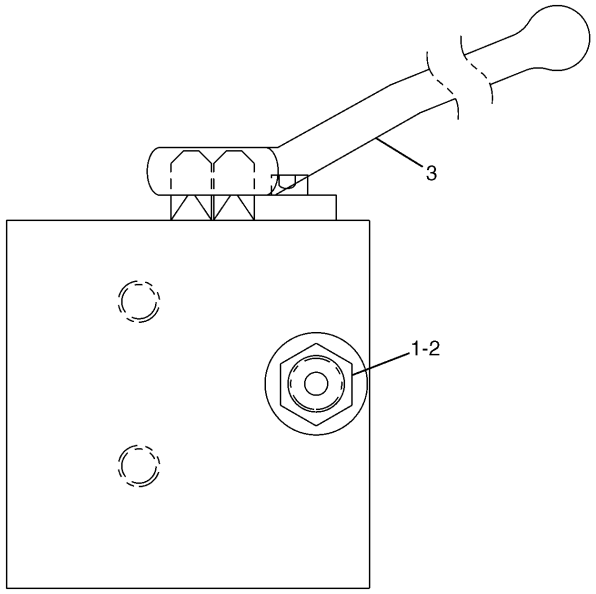

NOTE	No.	PART No.	QTY	PART NAME
	1	9S-4191	1	PLUG
	2	3J-1907	1	SEAL-O-RING (ID=11.89mm)
	3	119-1353	1	HANDLE

H62381E 01

138-4244 VALVE AS

S/N 3MR (D97.06)-Up, 4MR (D97.06)-Up
Part of 137-1594-Page221.05
An Attachment

MEMORANDA

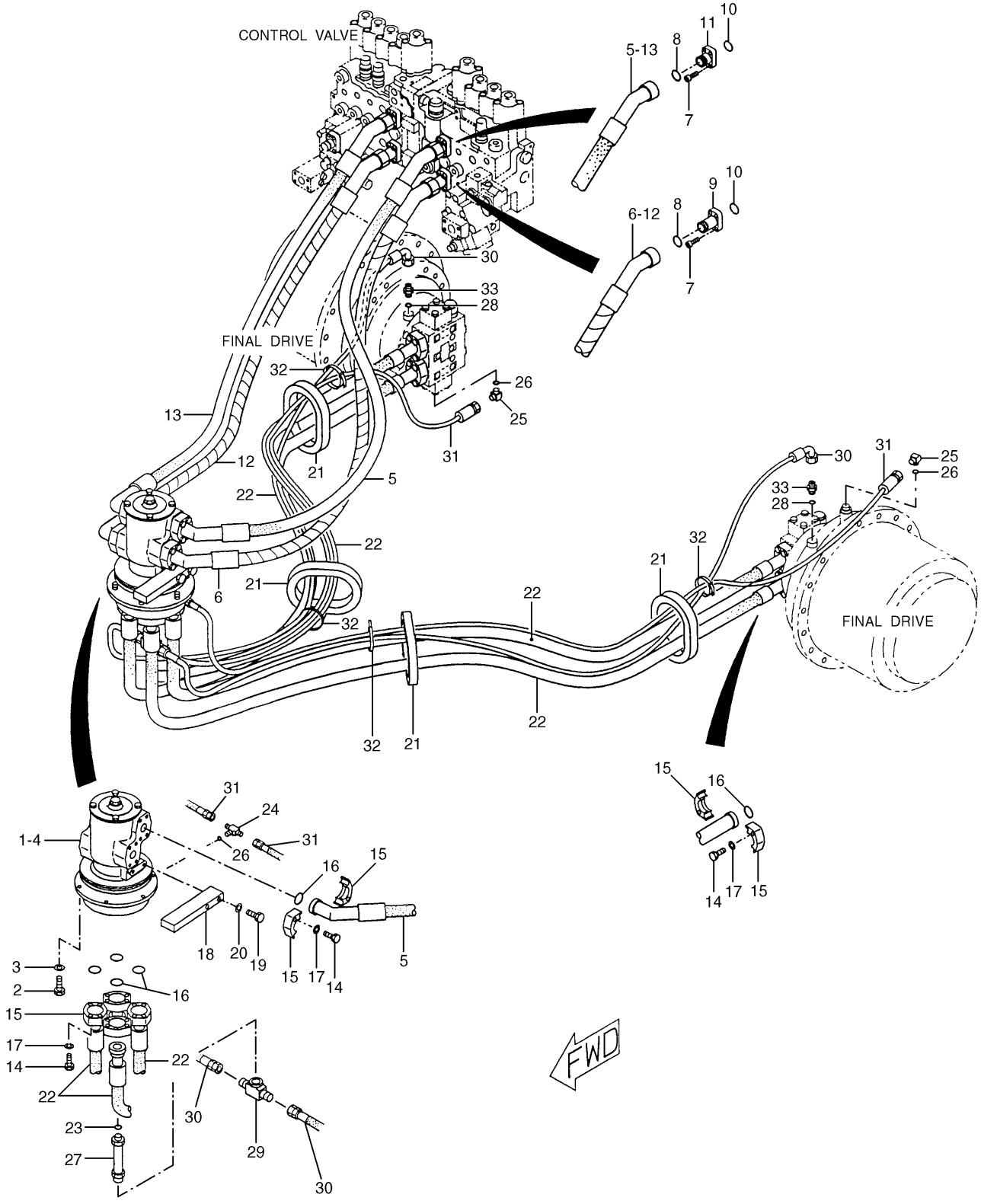

115-8891 LINES GP-TRAVEL MOTOR
S/N 3MR 1-Up
159-7841-Page268

HYDRAULIC SYSTEM

NOTE	No.	PART No.	QTY	PART NAME	NOTE	No.	PART No.	QTY	PART NAME
Y	1	159-7841	1	SWIVEL GP		33	8M-0505	2	CONNECTOR
	2	8T-4136	6	BOLT (L=25mm)					
	3	8T-4121	6	WASHER					
B	4	1U-8846		GASKET MAKER…(2ml)					
	5	124-1069	1	HOSE AS					
E		5P-0201		HOSE…(88cm)					
		5P-1010	2	SLEEVE					
		5P-1128	1	STEM AS (45°)					
		7X-4814	1	STEM AS (45°)					
	6	159-7682	1	HOSE AS					
E		5P-0201		HOSE…(88cm)					
		5P-1010	2	SLEEVE					
		5P-1128	1	STEM AS (45°)					
		7X-4814	1	STEM AS (45°)					
E		7Y-5074		GUARD…(78cm)					
	7	9X-6032	16	BOLT (L=30mm)					
	8	5K-9090	4	SEAL-O-RING (OD=27.22mm)					
	9	113-6479	2	FLANGE					
	10	4J-5267	4	SEAL-O-RING (ID=24.99mm)					
	11	7Y-3730	2	FLANGE					
	12	115-3739	1	HOSE AS					
E		5P-0201		HOSE…(101cm)					
		5P-1010	2	SLEEVE					
		5P-1130	1	STEM AS (90°)					
		7X-4814	1	STEM AS (45°)					
E		7Y-5074		GUARD…(90cm)					
	13	4I-1083	1	HOSE AS					
E		5P-0201		HOSE…(101cm)					
		5P-1010	2	SLEEVE					
		5P-1130	1	STEM AS (90°)					
		7X-4814	1	STEM AS (45°)					
	14	8T-4184	48	BOLT (L=45mm)					
	15	6V-0400	24	FLANGE					
	16	1P-3703	12	SEAL					
	17	8T-4223	48	WASHER					
	18	4I-5546	1	SUPPORT					
	19	8T-4648	2	BOLT (L=70mm)					
	20	5P-1076	2	WASHER					
	21	108-7118	4	GROMMET					
	22	119-2395	4	HOSE AS					
E		5P-0201		HOSE…(202cm)					
		5P-1010	2	SLEEVE					
		5P-1125	2	STEM AS (STRAIGHT)					
	23	3D-2824	1	SEAL-O-RING (ID=23.47mm)					
	24	030-7955	1	TEE					
	25	030-7947	2	ELBOW					
	26	3J-1907	3	SEAL-O-RING (ID=11.89mm)					
	27	030-8189	1	CONNECTOR					
	28	3K-0360	2	SEAL-O-RING (ID=16.36mm)					
	29	5P-3166	1	TEE					
	30	119-2536	2	HOSE AS					
	31	4I-1455	2	HOSE AS					
	32	096-0061	4	STRAP					

B—USE AS REQUIRED
E—ORDER BY THE CENTIMETER
Y—SEE SEPARATE ILLUSTRATION

H65492E 05

115-8891 LINES GP-TRAVEL MOTOR

S/N 3MR 1-Up
159-7841-Page268

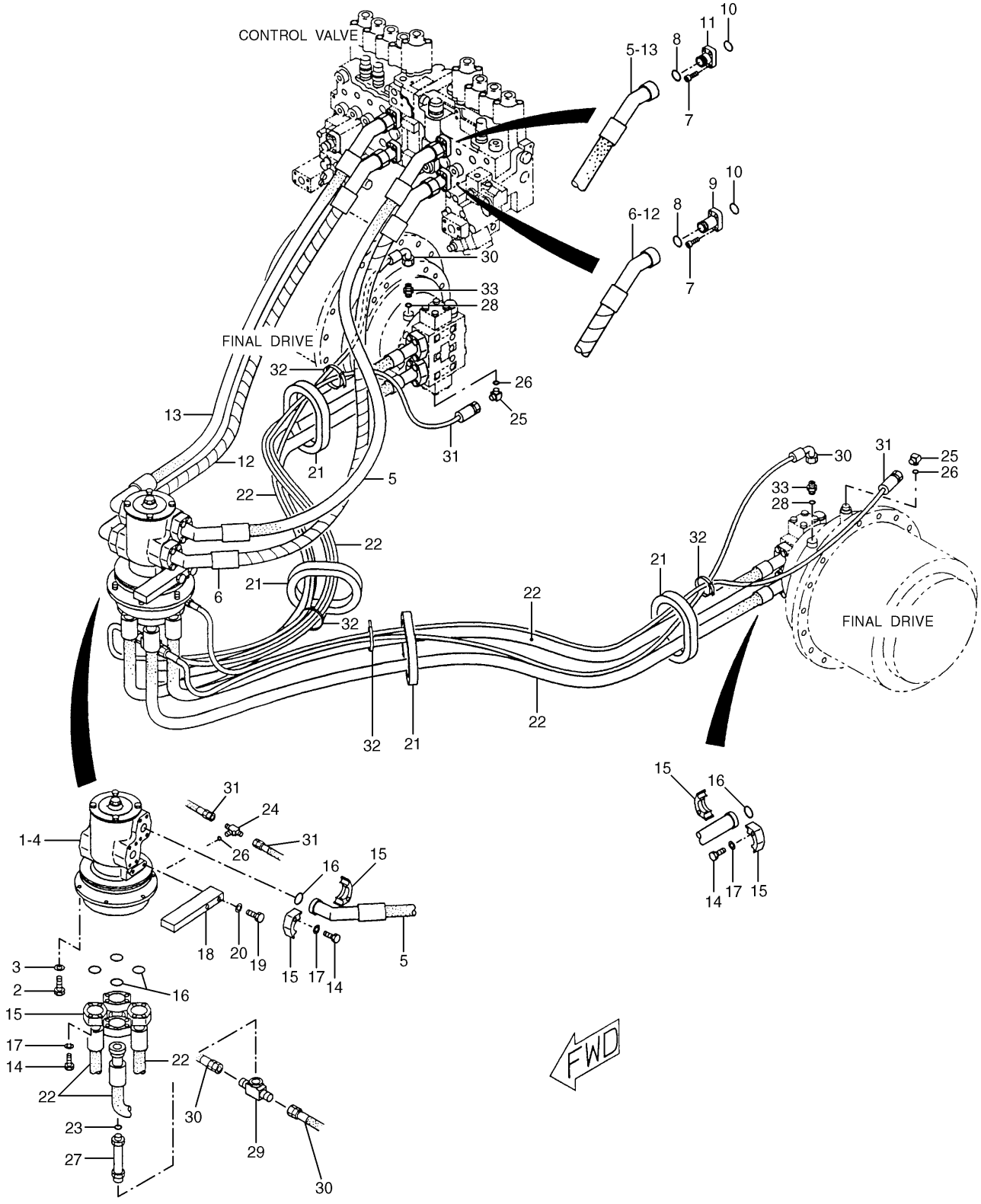

115-8892 LINES GP-TRAVEL MOTOR

S/N 4MR 1-Up
159-7841-Page268

HYDRAULIC SYSTEM

NOTE	No.	PART No.	QTY	PART NAME	NOTE	No.	PART No.	QTY	PART NAME
Y	1	159-7841	1	SWIVEL GP		33	8M-0505	2	CONNECTOR
	2	8T-4136	6	BOLT (L=25mm)					
	3	8T-4121	6	WASHER					
B	4	1U-8846		GASKET MAKER…(2ml)					
	5	124-1069	1	HOSE AS					
E		5P-0201		HOSE…(88cm)					
		5P-1010	2	SLEEVE					
		5P-1128	1	STEM AS (45°)					
		7X-4814	1	STEM AS (45°)					
	6	159-7682	1	HOSE AS					
E		5P-0201		HOSE…(88cm)					
		5P-1010	2	SLEEVE					
		5P-1128	1	STEM AS (45°)					
		7X-4814	1	STEM AS (45°)					
E		7Y-5074		GUARD…(78cm)					
	7	9X-6032	16	BOLT (L=30mm)					
	8	5K-9090	4	SEAL-O-RING (OD=27.22mm)					
	9	113-6479	2	FLANGE					
	10	4J-5267	4	SEAL-O-RING (ID=24.99mm)					
	11	7Y-3730	2	FLANGE					
	12	115-3739	1	HOSE AS					
E		5P-0201		HOSE…(101cm)					
		5P-1010	2	SLEEVE					
		5P-1130	1	STEM AS (90°)					
		7X-4814	1	STEM AS (45°)					
E		7Y-5074		GUARD…(90cm)					
	13	4I-1083	1	HOSE AS					
E		5P-0201		HOSE…(101cm)					
		5P-1010	2	SLEEVE					
		5P-1130	1	STEM AS (90°)					
		7X-4814	1	STEM AS (45°)					
	14	8T-4184	48	BOLT (L=45mm)					
	15	6V-0400	24	FLANGE					
	16	1P-3703	12	SEAL					
	17	8T-4223	48	WASHER					
	18	4I-5546	1	SUPPORT					
	19	8T-4648	2	BOLT (L=70mm)					
	20	5P-1076	2	WASHER					
	21	108-7118	4	GROMMET					
	22	119-2399	4	HOSE AS					
E		5P-0201		HOSE…(222cm)					
		5P-1010	2	SLEEVE					
		5P-1125	2	STEM AS (STRAIGHT)					
	23	3D-2824	1	SEAL-O-RING (ID=23.47mm)					
	24	030-7955	1	TEE					
	25	030-7947	2	ELBOW					
	26	3J-1907	3	SEAL-O-RING (ID=11.89mm)					
	27	030-8189	1	CONNECTOR					
	28	3K-0360	2	SEAL-O-RING (ID=16.36mm)					
	29	5P-3166	1	TEE					
	30	119-2539	2	HOSE AS					
	31	4I-1413	2	HOSE AS					
	32	096-0061	4	STRAP					

B—USE AS REQUIRED
E—ORDER BY THE CENTIMETER
Y—SEE SEPARATE ILLUSTRATION

H65494E 06

115-8892 LINES GP-TRAVEL MOTOR

S/N 4MR 1-Up
159-7841-Page268

HYDRAULIC SYSTEM

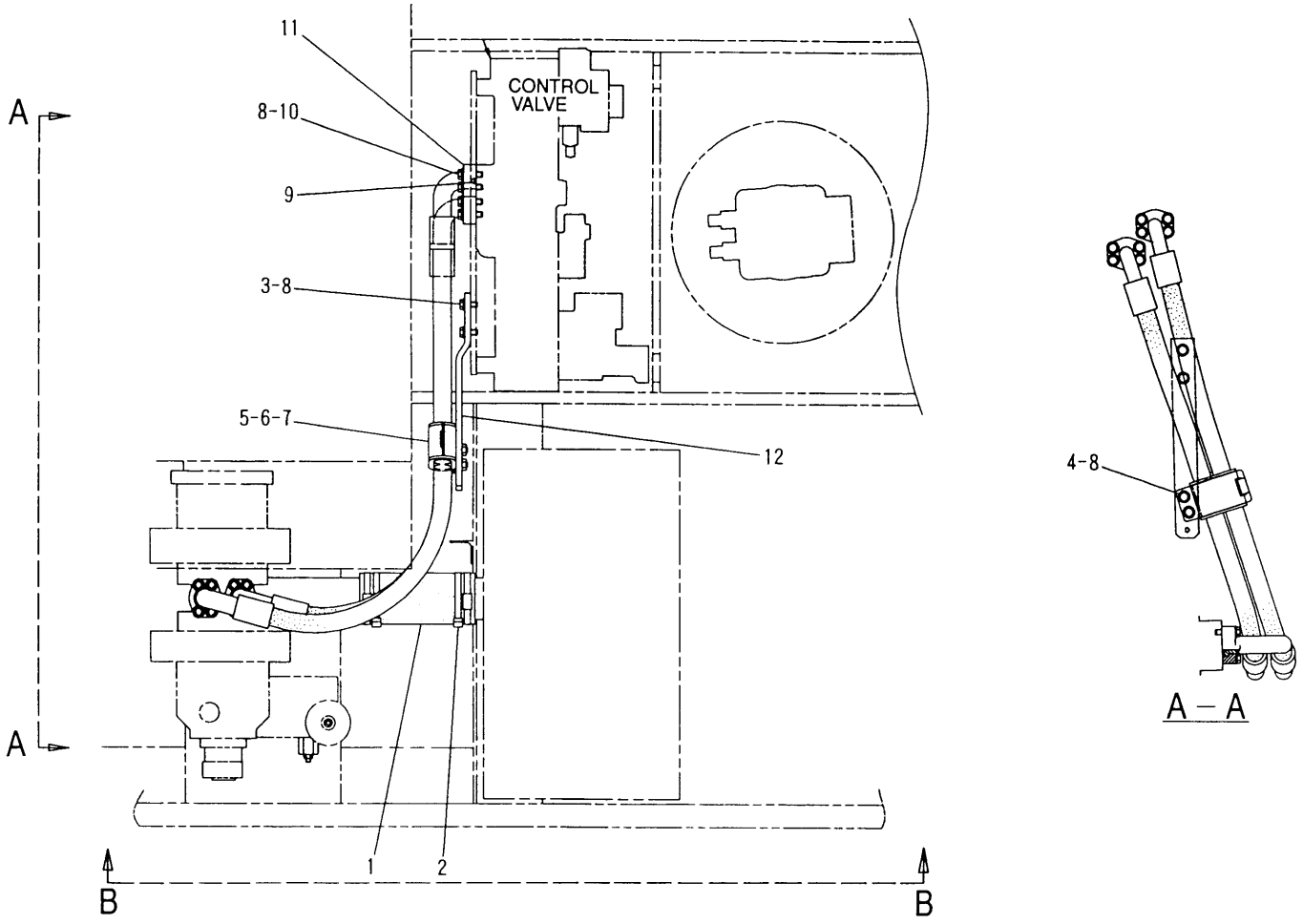

NOTE	No.	PART No.	QTY	PART NAME	NOTE	No.	PART No.	QTY	PART NAME
	1	113-6416	1	HOSE					
	2	8T-6726	4	CLAMP					
	3	8T-4139	2	BOLT (L=30mm)					
	4	8T-4183	2	BOLT (L=40mm)					
	5	7G-5984	1	CLIP					
	6	7G-5985	1	CLIP					
	7	7G-5986	1	GROMMET					
	8	8T-4223	12	WASHER					
	9	1P-3703	2	SEAL					
	10	8T-4184	8	BOLT (L=45mm)					
	11	6V-0400	4	FLANGE					
	12	119-2502	1	SUPPORT AS					

H53457E 01

115-8884 LINES GP-PUMP (1/2)

HYDRAULIC SYSTEM

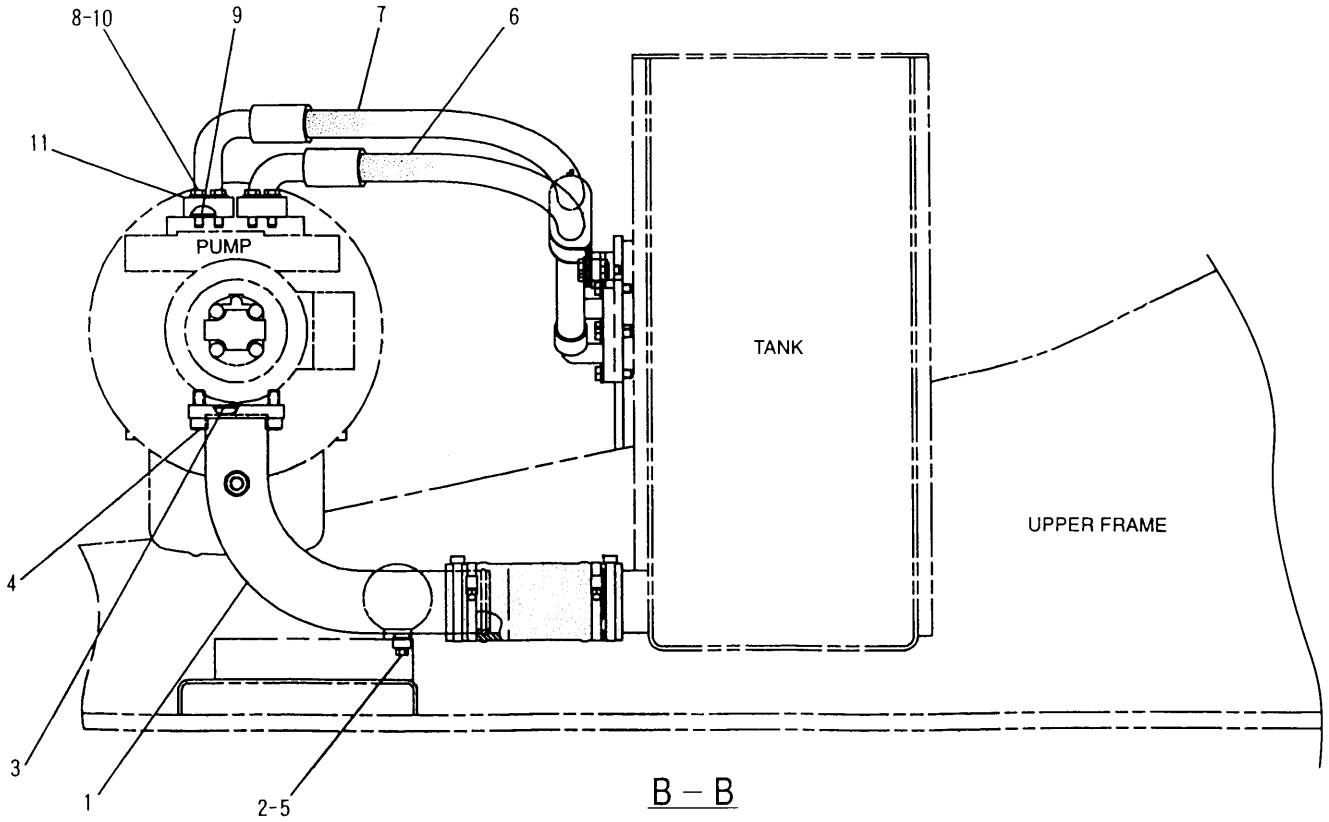

NOTE	No.	PART No.	QTY	PART NAME	NOTE	No.	PART No.	QTY	PART NAME
	1	119-2413	1	PIPE AS					
	2	3J-7354	1	SEAL-O-RING (ID=8.92mm)					
	3	2H-6338	1	SEAL-O-RING (ID=85.32mm)					
	4	8T-4944	4	BOLT (L=40mm)					
	5	9S-4182	1	PLUG					
	6	4I-1059	1	HOSE AS					
	7	4I-1062	1	HOSE AS					
	8	8T-4223	8	WASHER					
	9	1P-3703	2	SEAL					
	10	8T-4184	8	BOLT (L=45mm)					
	11	6V-0400	4	FLANGE					

H53458E 01

115-8884 LINES GP-PUMP (2/2)

HYDRAULIC SYSTEM

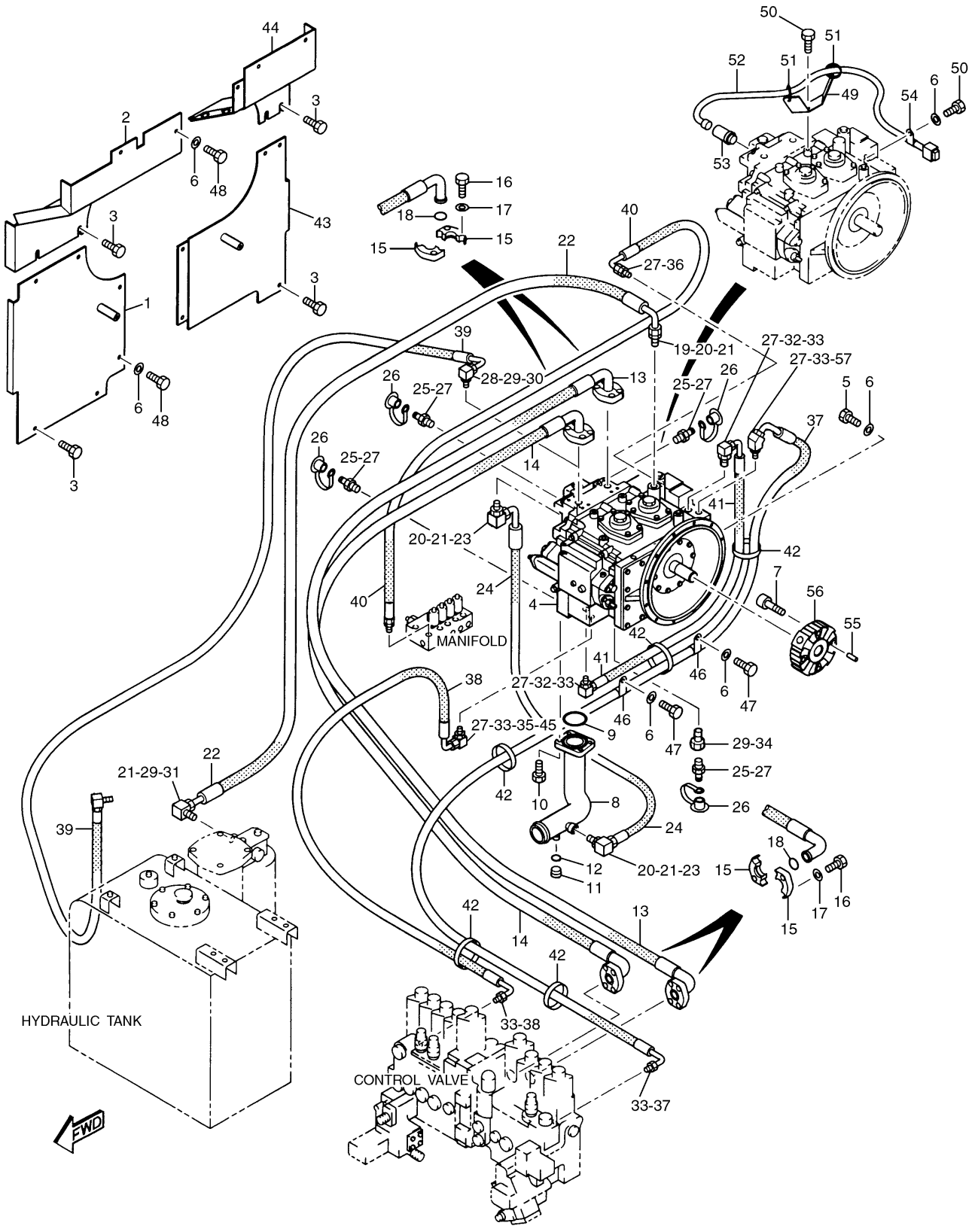

H78080E 02

176-5044 LINES GP-TESTING MACHINE

S/N 3MR 07191-07280, 4MR 01024-01030

176-5024-Page109.03,173-3537-Page179.05,162-6210-Page179.15

HYDRAULIC SYSTEM

NOTE	No.	PART No.	QTY	PART NAME
	1	176-5061	1	SHEET AS
	2	176-5063	1	SHEET AS
	3	135-8573	10	BOLT AS
Y	4	173-3537	1	PUMP GP
	5	8T-4195	12	BOLT (L=30mm)
	6	8T-4121	20	WASHER
	7	7Y-1905	4	BOLT (L=60mm)
	8	176-5065	1	PIPE AS
	9	5H-8624	1	SEAL-O-RING (ID=94.62mm)
	10	8T-4944	4	BOLT (L=40mm)
	11	9S-4182	1	PLUG
	12	3J-7354	1	SEAL-O-RING (ID=8.92mm)
	13	176-5047	1	HOSE AS
	14	176-5051	1	HOSE AS
	15	6V-0400	8	FLANGE
	16	8T-4184	16	BOLT (L=45mm)
	17	8T-4223	16	WASHER
	18	1P-3703	4	SEAL
	19	6V-8637	1	CONNECTOR
	20	3D-2824	3	SEAL-O-RING (ID=23.47mm)
	21	6V-9746	4	SEAL-O-RING (OD=22.50mm)
	22	7I-1377	1	HOSE AS
	23	6V-9007	2	ELBOW
	24	5I-4060	1	HOSE AS
	25	6V-3965	4	NIPPLE AS
	26	6V-0852	4	CAP
	27	3J-1907	9	SEAL-O-RING (ID=11.89mm)
	28	030-8188	1	CONNECTOR
	29	3K-0360	3	SEAL-O-RING (ID=16.36mm)
	30	6K-9194	1	ELBOW
	31	030-7943	1	ELBOW
	32	6V-8724	2	ELBOW
	33	6V-8397	6	SEAL-O-RING (OD=12.83mm)
	34	5P-6944	1	ADAPTER
	35	6V-9850	1	ELBOW
	36	2R-6806	1	CONNECTOR
	37	176-5045	1	HOSE AS
E		7I-7439		GUARD…(116cm)
	38	176-5046	1	HOSE AS
E		7I-7439		GUARD…(157cm)
	39	4I-7675	1	HOSE AS
	40	5I-3109	1	HOSE AS
	41	4I-1401	1	HOSE AS
	42	7K-1181	4	STRAP
	43	176-5055	1	SHEET AS
	44	176-5058	1	SHEET AS
	45	8T-0075	1	CONNECTOR
	46	6D-4246	2	CLIP
	47	8T-4137	2	BOLT (L=20mm)
	48	8T-4191	5	BOLT (L=16mm)
	49	176-5025	1	SHEET
	50	7X-2621	2	BOLT (L=12mm)
	51	3S-2093	2	STRAP
Y	52	176-5024	1	HARNESS AS
	53	106-0178	1	SENSOR AS
		3K-0360	1	SEAL-O-RING (ID=16.36mm)
	54	116-0118	1	CLIP
	55	7Y-0468	4	PIN
Y	56	162-6210	1	COUPLING GP
	57	6V-9001	1	ELBOW

E—ORDER BY THE CENTIMETER

Y—SEE SEPARATE ILLUSTRATION

H78080E 02

176-5044 LINES GP-TESTING MACHINE

S/N 3MR 07191-07280, 4MR 01024-01030

176-5024-Page109.03,173-3537-Page179.05,162-6210-Page179.15

Consists of :

			Page
1	128-7482	LINES GP-FRONT	246
1	128-7483	LINES GP-PILOT	236

H53459E 00

123-2568 INSTALLATION AR-AUXILIARY
An Attachment

HYDRAULIC SYSTEM

Consists of :

			Page
1	111-6428	CONTROL GP-HYDRAULIC	273
1	115-8907	LINES GP-PILOT	237
1	138-5043	LINES GP-FRONT	247.01
1	120-5115	FILM GP	439

H57628E 01

127-6676 CONTROL AR-AUXILIARY
An Attachment

Consists of :

			Page
1	111-6428	CONTROL GP-HYDRAULIC	273
1	138-5048	LINES GP-FRONT	248
1	115-8911	LINES GP-PILOT	238
1	115-8912	LINES GP-PILOT	239
1	120-5116	FILM GP	440

H57629E 02

116-9035 CONTROL AR-AUXILIARY
An Attachment

HYDRAULIC SYSTEM

Consists of :

			Page
1	111-6428	CONTROL GP-HYDRAULIC	273
1	128-7479	LINES GP-FRONT	250
1	128-7480	LINES GP-PILOT	240
1	127-5248	FILM GP	441

H53462E 00

121-1969 CONTROL AR-AUXILIARY
An Attachment

Consists of :

			Page
1	121-1045	WIRING GP	94
1	119-5279	LINES GP-PILOT	241

H53463E 00

120-4983 CONTROL AR-FLOW
An Attachment

Consists of :

			Page
1	121-1045	WIRING GP	94
1	119-5280	LINES GP-PILOT	242

H53464E 00

120-4984 CONTROL AR-FLOW
An Attachment

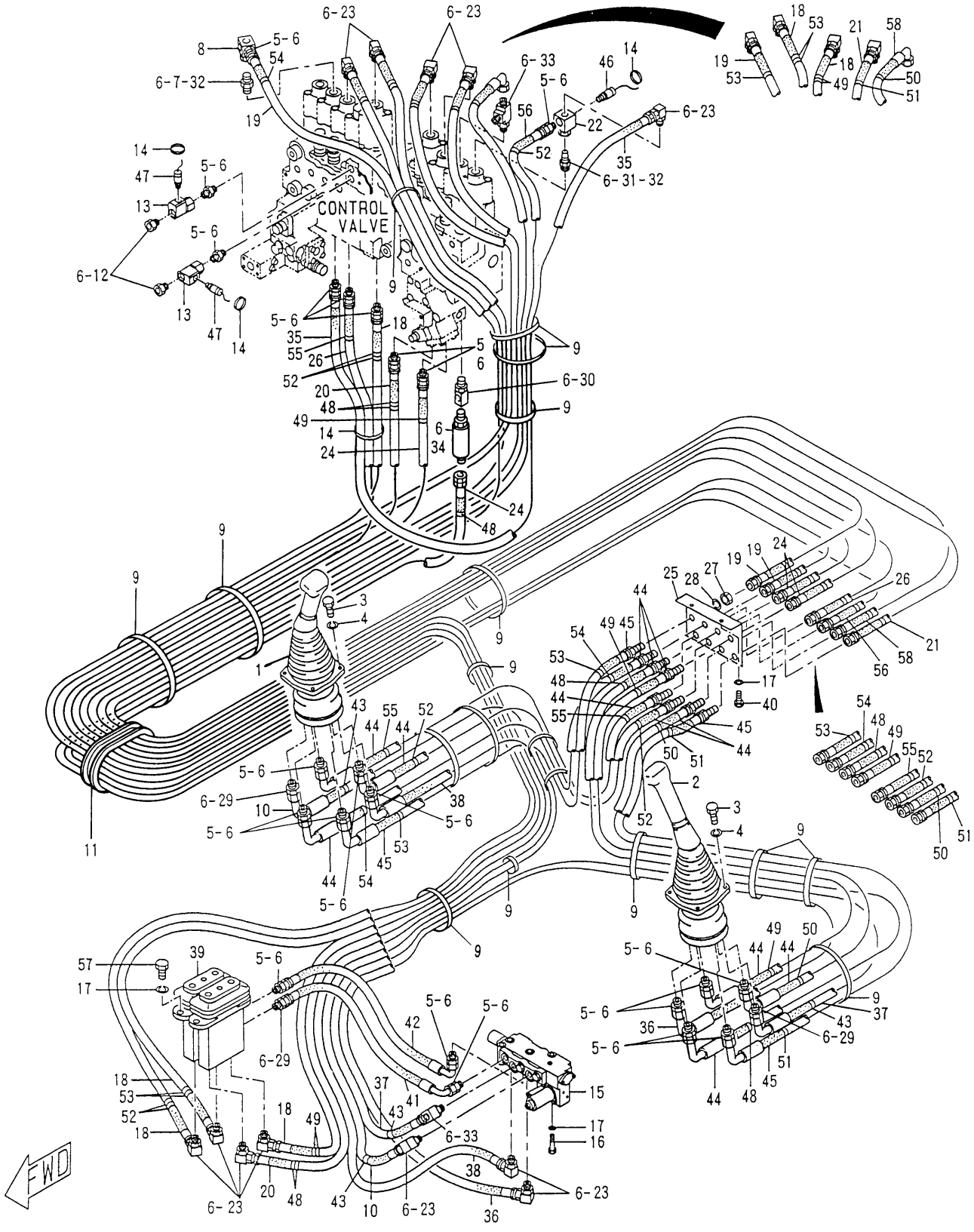

115-8896 LINES GP-PILOT

S/N 3MR 1-01607, 4MR 1-00300

123-2146,123-2147-Page270,107-7058-Page293,123-2148-Page306,111-1141-Page313

HYDRAULIC SYSTEM

NOTE	No.	PART No.	QTY	PART NAME	NOTE	No.	PART No.	QTY	PART NAME
Y	1	123-2146	1	VALVE GP (WORKING CONTROL)		48	4I-9521	8	BAND (L1,RED)
Y	2	123-2147	1	VALVE GP (WORKING CONTROL)		49	4I-9522	8	BAND (L2,YELLOW)
	3	6V-7357	6	BOLT (L=25mm)		50	4I-9523	4	BAND (L3,BLUE)
	4	9X-8256	6	WASHER		51	4I-9524	4	BAND (L4,BROWN)
	5	2R-6806	22	CONNECTOR		52	4I-9525	8	BAND (R1,ORANGE)
	6	3J-1907	45	SEAL-O-RING (ID=11.89mm)		53	4I-9526	8	BAND (R2,WHITE)
	7	8T-1779	1	CONNECTOR		54	4I-9527	4	BAND (R3,GREEN)
	8	124-1035	1	FITTING		55	4I-9528	4	BAND (R4,PURPLE)
	9	7K-1181	18	STRAP		56	7I-0172	1	HOSE AS (NOM 06, L=2100mm)
	10	133-5691	1	HOSE AS (NOM 06, L=1900mm)		57	8T-4136	4	BOLT (L=25mm)
	11	124-0986	1	GROMMET		58	107-1588	1	HOSE AS (NOM 06, L=2300mm)
	12	9S-4191	2	PLUG					
	13	5I-4015	2	FITTING					
	14	096-0061	4	STRAP					
Y	15	107-7058	1	VALVE GP (SAFETY LOCK)					
	16	8T-5005	2	BOLT (L=70mm)					
	17	8T-4121	8	WASHER					
	18	4I-6242	3	HOSE AS (NOM 06, L=2950mm)					
	19	4I-5507	2	HOSE AS (NOM 06, L=2480mm)					
	20	4I-1452	1	HOSE AS (NOM 06, L=2840mm)					
	21	4I-1455	1	HOSE AS (NOM 06, L=2330mm)					
	22	113-6700	1	FITTING					
	23	030-7947	12	ELBOW					
	24	4I-7611	2	HOSE AS (NOM 06, L=2200mm)					
	25	119-2501	1	SUPPORT					
	26	4I-6245	1	HOSE AS (NOM 06, L=2400mm)					
	27	2P-1279	8	LOCKNUT					
	28	9X-8257	8	WASHER					
	29	107-6630	3	CONNECTOR					
	30	4I-1694	1	CONNECTOR					
	31	5I-4371	1	STOPPER					
	32	6V-8397	2	SEAL-O-RING (OD=12.83mm)					
	33	6M-6853	2	TEE					
Y	34	111-1141	1	VALVE GP					
	35	104-9091	1	HOSE AS (NOM 06, L=1650mm)					
	36	124-1105	1	HOSE AS (NOM 06, L=1900mm)					
	37	119-2362	1	HOSE AS (NOM 06, L=1950mm)					
	38	119-2363	1	HOSE AS (NOM 06, L=1700mm)					
Y	39	123-2148	1	VALVE GP (TRAVEL CONTROL)					
	40	8T-4137	2	BOLT (L=20mm)					
	41	5I-4010	1	HOSE AS (NOM 06, L=400mm)					
	42	5I-3103	1	HOSE AS (NOM 06, L=500mm)					
	43	133-5813	4	BAND (P,GRAY)					
	44	119-2359	6	HOSE AS (NOM 06, L=1400mm)					
	45	119-2360	2	HOSE AS (NOM 06, L=1400mm)					
	46	106-0180	1	SWITCH AS (PRESSURE)					
		102-8802	1	RECEPTACLE KIT					
		3E-3365	1	WEDGE					
		9W-0852	2	PIN					
	47	106-0179	2	SWITCH AS (PRESSURE)					
		155-2270	1	PLUG KIT					
		3E-3362	1	WEDGE					
		9W-0844	2	SOCKET					

Y—SEE SEPARATE ILLUSTRATION

H81634E 05

115-8896 LINES GP-PILOT

S/N 3MR 1-01607, 4MR 1-00300

123-2146,123-2147-Page270,107-7058-Page293,123-2148-Page306,111-1141-Page313

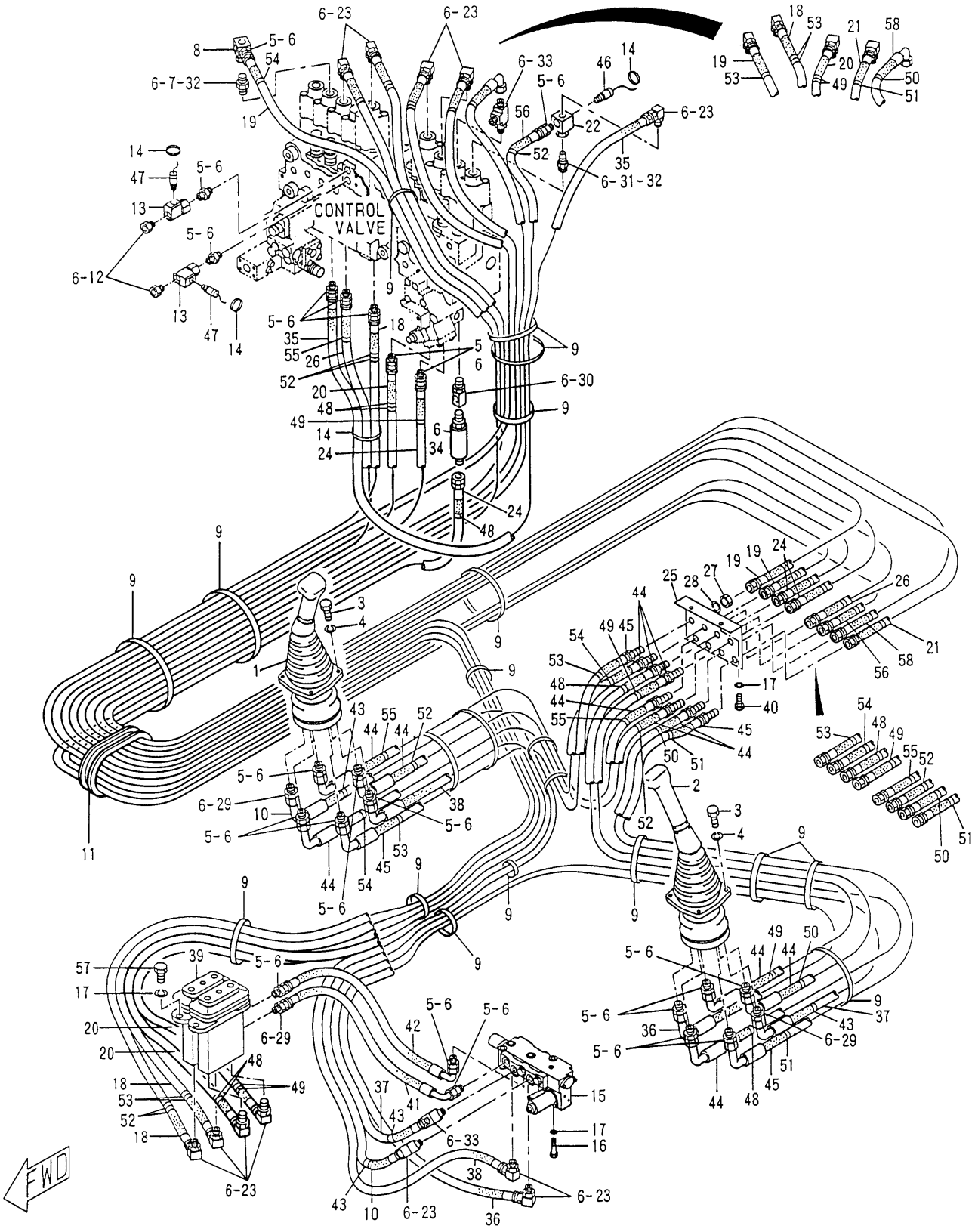

H81636E 07

115-8896 LINES GP-PILOT

S/N 3MR 01608-04840, 4MR 00301-00704

123-2146,123-2147-Page270.01,107-7058-Page293,123-2148-Page306,111-1141-Page313

HYDRAULIC SYSTEM

NOTE	No.	PART No.	QTY	PART NAME	NOTE	No.	PART No.	QTY	PART NAME
Y	1	123-2146	1	VALVE GP (WORKING CONTROL)		48	4I-9521	8	BAND (L1,RED)
Y	2	123-2147	1	VALVE GP (WORKING CONTROL)		49	4I-9522	8	BAND (L2,YELLOW)
	3	6V-7357	6	BOLT (L=25mm)		50	4I-9523	4	BAND (L3,BLUE)
	4	9X-8256	6	WASHER		51	4I-9524	4	BAND (L4,BROWN)
	5	2R-6806	22	CONNECTOR		52	4I-9525	8	BAND (R1,ORANGE)
	6	3J-1907	45	SEAL-O-RING (ID=11.89mm)		53	4I-9526	8	BAND (R2,WHITE)
	7	8T-1779	1	CONNECTOR		54	4I-9527	4	BAND (R3,GREEN)
	8	124-1035	1	FITTING		55	4I-9528	4	BAND (R4,PURPLE)
	9	7K-1181	20	STRAP		56	7I-0172	1	HOSE AS (NOM 06, L=2100mm)
	10	133-5691	1	HOSE AS (NOM 06, L=1900mm)		57	8T-4136	4	BOLT (L=25mm)
	11	124-0986	1	GROMMET		58	107-1588	1	HOSE AS (NOM 06, L=2300mm)
	12	9S-4191	2	PLUG					
	13	5I-4015	2	FITTING					
	14	096-0061	4	STRAP					
Y	15	107-7058	1	VALVE GP (SAFETY LOCK)					
	16	8T-5005	2	BOLT (L=70mm)					
	17	8T-4121	8	WASHER					
	18	4I-6233	2	HOSE AS (NOM 06, L=2650mm)					
	19	4I-5507	2	HOSE AS (NOM 06, L=2480mm)					
	20	4I-1413	2	HOSE AS (NOM 06, L=2530mm)					
	21	4I-1455	1	HOSE AS (NOM 06, L=2330mm)					
	22	113-6700	1	FITTING					
	23	030-7947	12	ELBOW					
	24	4I-7611	2	HOSE AS (NOM 06, L=2200mm)					
	25	119-2501	1	SUPPORT					
	26	4I-6245	1	HOSE AS (NOM 06, L=2400mm)					
	27	2P-1279	8	LOCKNUT					
	28	9X-8257	8	WASHER					
	29	107-6630	3	CONNECTOR					
	30	4I-1694	1	CONNECTOR					
	31	5I-4371	1	STOPPER					
	32	6V-8397	2	SEAL-O-RING (OD=12.83mm)					
	33	6M-6853	2	TEE					
Y	34	111-1141	1	VALVE GP					
	35	104-9091	1	HOSE AS (NOM 06, L=1650mm)					
	36	124-1105	1	HOSE AS (NOM 06, L=1900mm)					
	37	119-2362	1	HOSE AS (NOM 06, L=1950mm)					
	38	119-2363	1	HOSE AS (NOM 06, L=1700mm)					
Y	39	123-2148	1	VALVE GP (TRAVEL CONTROL)					
	40	8T-4137	2	BOLT (L=20mm)					
	41	5I-4010	1	HOSE AS (NOM 06, L=400mm)					
	42	5I-3103	1	HOSE AS (NOM 06, L=500mm)					
	43	133-5813	4	BAND (P,GRAY)					
	44	119-2359	6	HOSE AS (NOM 06, L=1400mm)					
	45	119-2360	2	HOSE AS (NOM 06, L=1400mm)					
	46	106-0180	1	SWITCH AS (PRESSURE)					
		102-8802	1	RECEPTACLE KIT					
		3E-3365	1	WEDGE					
		9W-0852	2	PIN					
	47	106-0179	2	SWITCH AS (PRESSURE)					
		155-2270	1	PLUG KIT					
		3E-3362	1	WEDGE					
		9W-0844	2	SOCKET					

Y—SEE SEPARATE ILLUSTRATION

H81636E 07

115-8896 LINES GP-PILOT

S/N 3MR 01608-04840, 4MR 00301-00704

123-2146,123-2147-Page270.01,107-7058-Page293,123-2148-Page306,111-1141-Page313

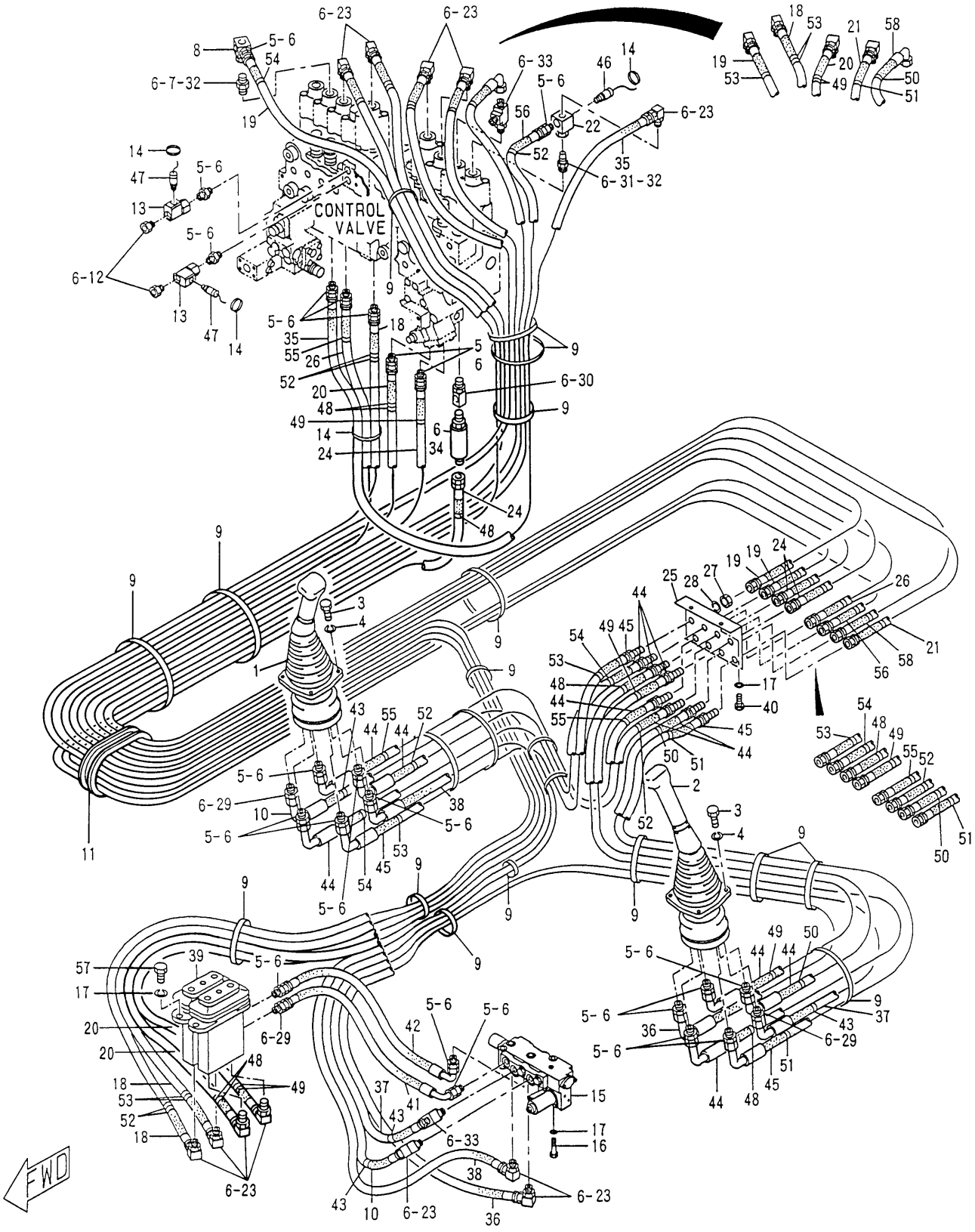

115-8896 LINES GP-PILOT

S/N 3MR 04841-07146, 4MR 00705-01015

123-2146,123-2147-Page270.01,107-7058-Page293,123-2148-Page306,111-1141-Page313

HYDRAULIC SYSTEM

NOTE	No.	PART No.	QTY	PART NAME	NOTE	No.	PART No.	QTY	PART NAME
Y	1	123-2146	1	VALVE GP (WORKING CONTROL)		48	4I-9521	8	BAND (L1,RED)
Y	2	123-2147	1	VALVE GP (WORKING CONTROL)		49	4I-9522	8	BAND (L2,YELLOW)
	3	6V-7357	6	BOLT (L=25mm)		50	4I-9523	4	BAND (L3,BLUE)
	4	9X-8256	6	WASHER		51	4I-9524	4	BAND (L4,BROWN)
	5	2R-6806	22	CONNECTOR		52	4I-9525	8	BAND (R1,ORANGE)
	6	3J-1907	45	SEAL-O-RING (ID=11.89mm)		53	4I-9526	8	BAND (R2,WHITE)
	7	8T-1779	1	CONNECTOR		54	4I-9527	4	BAND (R3,GREEN)
	8	124-1035	1	FITTING		55	4I-9528	4	BAND (R4,PURPLE)
	9	7K-1181	20	STRAP		56	7I-0172	1	HOSE AS (NOM 06, L=2100mm)
	10	133-5691	1	HOSE AS (NOM 06, L=1900mm)		57	8T-4136	4	BOLT (L=25mm)
	11	142-5535	1	GROMMET		58	107-1588	1	HOSE AS (NOM 06, L=2300mm)
	12	9S-4191	2	PLUG					
	13	5I-4015	2	FITTING					
	14	096-0061	4	STRAP					
Y	15	107-7058	1	VALVE GP (SAFETY LOCK)					
	16	8T-5005	2	BOLT (L=70mm)					
	17	8T-4121	8	WASHER					
	18	4I-6233	2	HOSE AS (NOM 06, L=2650mm)					
	19	4I-5507	2	HOSE AS (NOM 06, L=2480mm)					
	20	4I-1413	2	HOSE AS (NOM 06, L=2530mm)					
	21	4I-1455	1	HOSE AS (NOM 06, L=2330mm)					
	22	113-6700	1	FITTING					
	23	030-7947	12	ELBOW					
	24	4I-7611	2	HOSE AS (NOM 06, L=2200mm)					
	25	119-2501	1	SUPPORT					
	26	4I-6245	1	HOSE AS (NOM 06, L=2400mm)					
	27	2P-1279	8	LOCKNUT					
	28	9X-8257	8	WASHER					
	29	107-6630	3	CONNECTOR					
	30	4I-1694	1	CONNECTOR					
	31	5I-4371	1	STOPPER					
	32	6V-8397	2	SEAL-O-RING (OD=12.83mm)					
	33	6M-6853	2	TEE					
Y	34	111-1141	1	VALVE GP					
	35	104-9091	1	HOSE AS (NOM 06, L=1650mm)					
	36	124-1105	1	HOSE AS (NOM 06, L=1900mm)					
	37	119-2362	1	HOSE AS (NOM 06, L=1950mm)					
	38	119-2363	1	HOSE AS (NOM 06, L=1700mm)					
Y	39	123-2148	1	VALVE GP (TRAVEL CONTROL)					
	40	8T-4137	2	BOLT (L=20mm)					
	41	5I-4010	1	HOSE AS (NOM 06, L=400mm)					
	42	5I-3103	1	HOSE AS (NOM 06, L=500mm)					
	43	133-5813	4	BAND (P,GRAY)					
	44	119-2359	6	HOSE AS (NOM 06, L=1400mm)					
	45	119-2360	2	HOSE AS (NOM 06, L=1400mm)					
	46	106-0180	1	SWITCH AS (PRESSURE)					
		102-8802	1	RECEPTACLE KIT					
		3E-3365	1	WEDGE					
		9W-0852	2	PIN					
	47	106-0179	2	SWITCH AS (PRESSURE)					
		155-2270	1	PLUG KIT					
		3E-3362	1	WEDGE					
		9W-0844	2	SOCKET					

Y—SEE SEPARATE ILLUSTRATION

H65291E 08

115-8896 LINES GP-PILOT

S/N 3MR 04841-07146, 4MR 00705-01015

123-2146,123-2147-Page270.01,107-7058-Page293,123-2148-Page306,111-1141-Page313

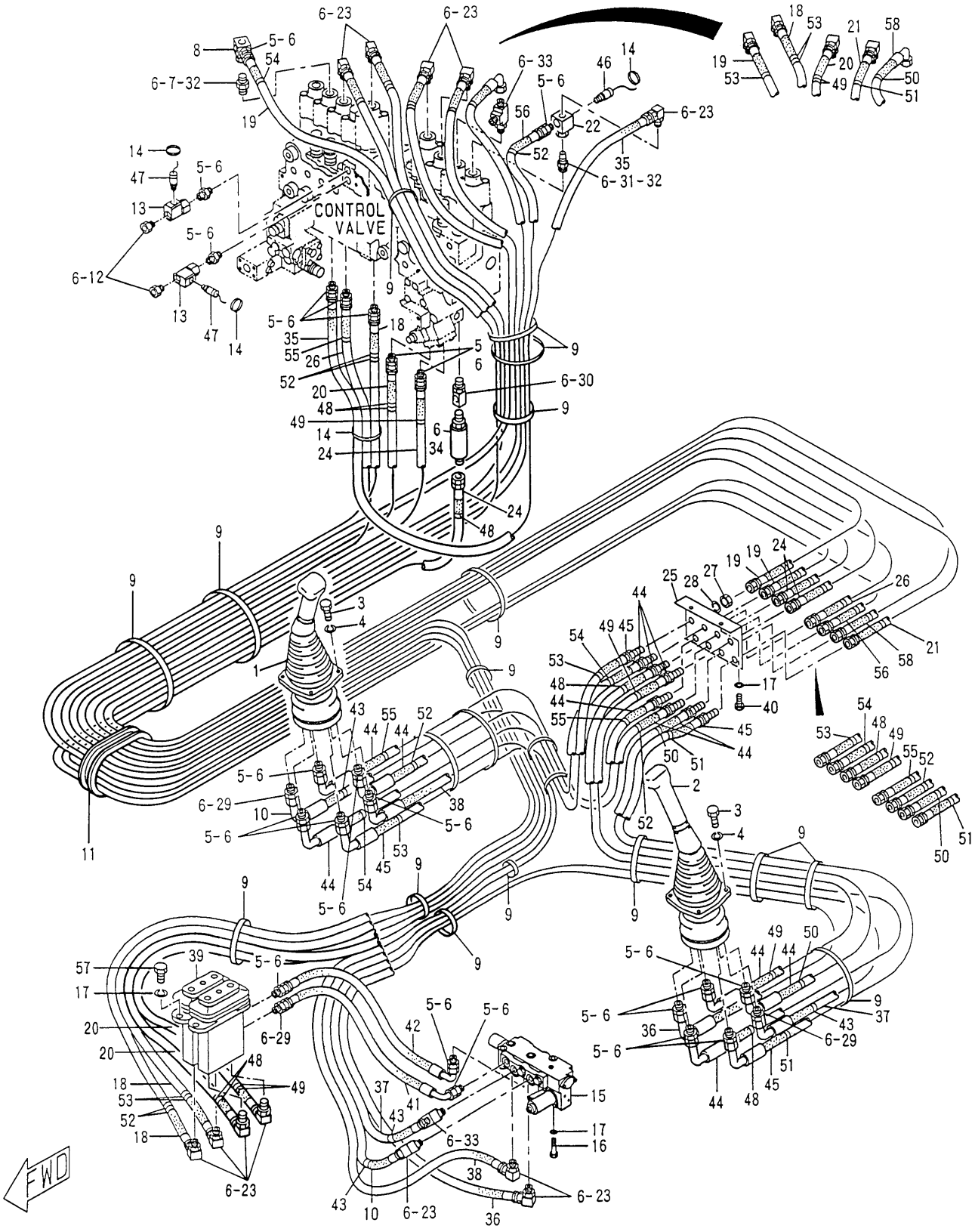

115-8896 LINES GP-PILOT

S/N 3MR 07147-Up, 4MR 01016-Up

176-4985,176-4986-Page270.02,107-7058-Page293,123-2148-Page306,111-1141-Page313

HYDRAULIC SYSTEM

NOTE	No.	PART No.	QTY	PART NAME	NOTE	No.	PART No.	QTY	PART NAME
Y	1	176-4985	1	VALVE GP (WORKING CONTROL)		48	4I-9521	8	BAND (L1,RED)
Y	2	176-4986	1	VALVE GP (WORKING CONTROL)		49	4I-9522	8	BAND (L2,YELLOW)
	3	6V-7357	6	BOLT (L=25mm)		50	4I-9523	4	BAND (L3,BLUE)
	4	9X-8256	6	WASHER		51	4I-9524	4	BAND (L4,BROWN)
	5	2R-6806	22	CONNECTOR		52	4I-9525	8	BAND (R1,ORANGE)
	6	3J-1907	45	SEAL-O-RING (ID=11.89mm)		53	4I-9526	8	BAND (R2,WHITE)
	7	8T-1779	1	CONNECTOR		54	4I-9527	4	BAND (R3,GREEN)
	8	124-1035	1	FITTING		55	4I-9528	4	BAND (R4,PURPLE)
	9	7K-1181	20	STRAP		56	7I-0172	1	HOSE AS (NOM 06, L=2100mm)
	10	133-5691	1	HOSE AS (NOM 06, L=1900mm)		57	8T-4136	4	BOLT (L=25mm)
	11	142-5535	1	GROMMET		58	107-1588	1	HOSE AS (NOM 06, L=2300mm)
	12	9S-4191	2	PLUG					
	13	5I-4015	2	FITTING					
	14	096-0061	4	STRAP					
Y	15	107-7058	1	VALVE GP (SAFETY LOCK)					
	16	8T-5005	2	BOLT (L=70mm)					
	17	8T-4121	8	WASHER					
	18	4I-6233	2	HOSE AS (NOM 06, L=2650mm)					
	19	4I-5507	2	HOSE AS (NOM 06, L=2480mm)					
	20	4I-1413	2	HOSE AS (NOM 06, L=2530mm)					
	21	4I-1455	1	HOSE AS (NOM 06, L=2330mm)					
	22	113-6700	1	FITTING					
	23	030-7947	12	ELBOW					
	24	4I-7611	2	HOSE AS (NOM 06, L=2200mm)					
	25	119-2501	1	SUPPORT					
	26	4I-6245	1	HOSE AS (NOM 06, L=2400mm)					
	27	2P-1279	8	LOCKNUT					
	28	9X-8257	8	WASHER					
	29	107-6630	3	CONNECTOR					
	30	4I-1694	1	CONNECTOR					
	31	5I-4371	1	STOPPER					
	32	6V-8397	2	SEAL-O-RING (OD=12.83mm)					
	33	6M-6853	2	TEE					
Y	34	111-1141	1	VALVE GP					
	35	104-9091	1	HOSE AS (NOM 06, L=1650mm)					
	36	124-1105	1	HOSE AS (NOM 06, L=1900mm)					
	37	119-2362	1	HOSE AS (NOM 06, L=1950mm)					
	38	119-2363	1	HOSE AS (NOM 06, L=1700mm)					
Y	39	123-2148	1	VALVE GP (TRAVEL CONTROL)					
	40	8T-4137	2	BOLT (L=20mm)					
	41	5I-4010	1	HOSE AS (NOM 06, L=400mm)					
	42	5I-3103	1	HOSE AS (NOM 06, L=500mm)					
	43	133-5813	4	BAND (P,GRAY)					
	44	119-2359	6	HOSE AS (NOM 06, L=1400mm)					
	45	119-2360	2	HOSE AS (NOM 06, L=1400mm)					
	46	106-0180	1	SWITCH AS (PRESSURE)					
		102-8802	1	RECEPTACLE KIT					
		3E-3365	1	WEDGE					
		9W-0852	2	PIN					
	47	106-0179	2	SWITCH AS (PRESSURE)					
		155-2270	1	PLUG KIT					
		3E-3362	1	WEDGE					
		9W-0844	2	SOCKET					

Y—SEE SEPARATE ILLUSTRATION

H78082E 09

115-8896 LINES GP-PILOT

S/N 3MR 07147-Up, 4MR 01016-Up

176-4985,176-4986-Page270.02,107-7058-Page293,123-2148-Page306,111-1141-Page313

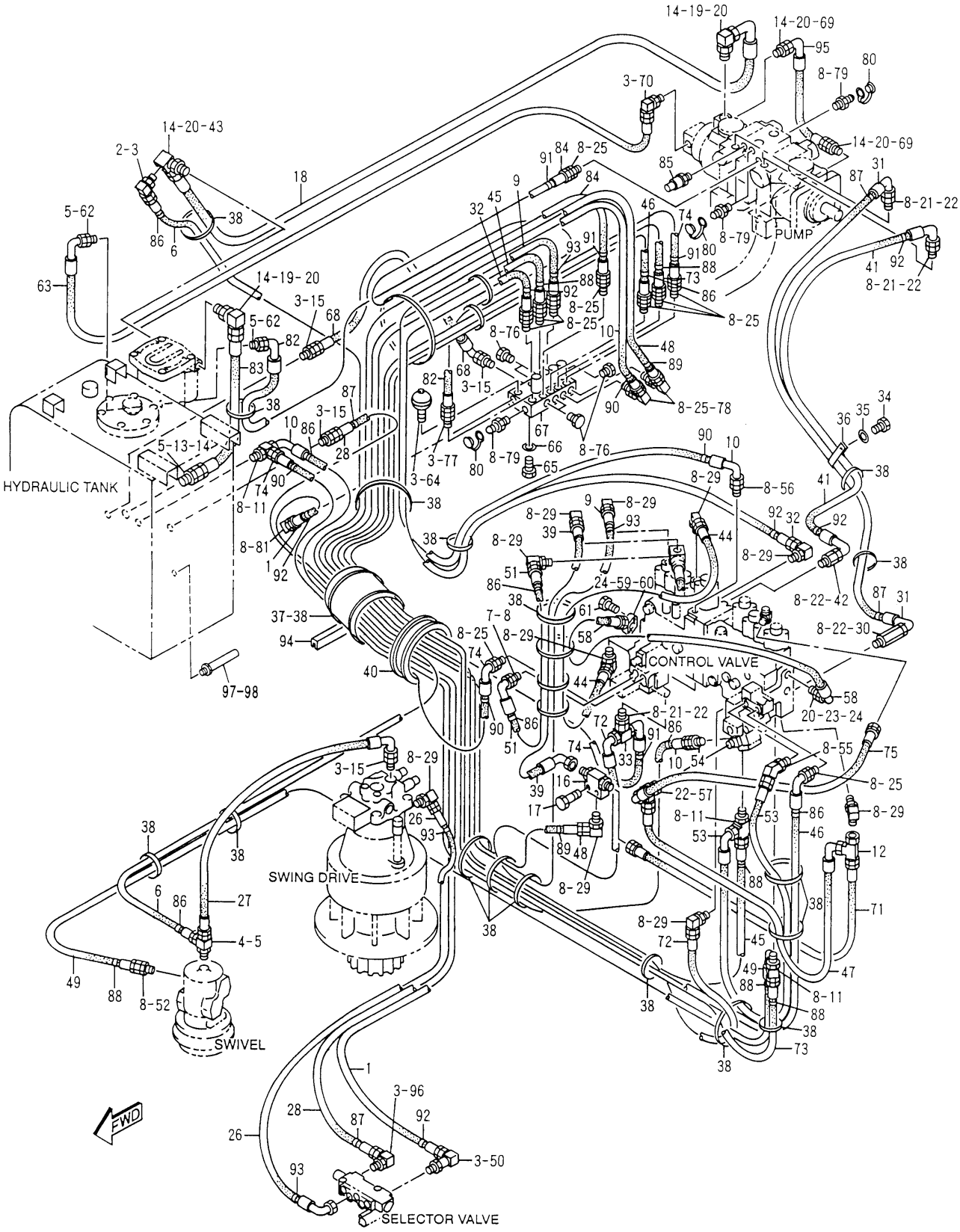

H57691E 04

115-8897 LINES GP-PILOT

S/N 3MR 1-03097, 4MR 1-00448
111-9950-Page305,123-2443,123-2496-Page315

HYDRAULIC SYSTEM

NOTE	No.	PART No.	QTY	PART NAME
	1	4I-1470	1	HOSE AS (NOM 08, L=3800mm)
	2	030-7948	1	ELBOW
	3	3K-0360	10	SEAL-O-RING (ID=16.36mm)
	4	119-2604	1	TEE
	5	2M-9780	4	SEAL-O-RING (ID=19.18mm)
	6	124-1321	1	HOSE AS (NOM 08, L=3100mm)
	7	1P-1376	1	CONNECTOR
	8	3J-1907	44	SEAL-O-RING (ID=11.89mm)
	9	4I-6233	1	HOSE AS (NOM 06, L=2650mm)
	10	108-7252	2	HOSE AS (NOM 06, L=1650mm)
	11	6M-6853	3	TEE
	12	061-9258	1	TEE
	13	6V-8640	1	CONNECTOR
	14	6V-9746	6	SEAL-O-RING (OD=22.50mm)
	15	8M-0505	4	CONNECTOR
Y	16	123-2443	1	VALVE GP
	17	099-3649	2	BOLT (L=40mm)
	18	119-2652	1	HOSE AS (NOM 12, L=860mm)
	19	6V-9007	2	ELBOW
	20	3D-2824	6	SEAL-O-RING (ID=23.47mm)
	21	6V-8636	3	CONNECTOR
	22	6V-8397	8	SEAL-O-RING (OD=12.83mm)
	23	6V-8633	1	CONNECTOR
	24	6V-8398	2	SEAL-O-RING (OD=16.03mm)
	25	2R-6806	11	CONNECTOR
	26	124-1324	1	HOSE AS (NOM 06, L=2500mm)
	27	4I-1464	1	HOSE AS (NOM 08, L=770mm)
	28	4I-1473	1	HOSE AS (NOM 08, L=3550mm)
	29	030-7947	10	ELBOW
	30	8C-0597	1	CONNECTOR
	31	119-2611	1	HOSE AS (NOM 06, L=1510mm)
	32	4I-1410	1	HOSE AS (NOM 06, L=1590mm)
Y	33	123-2496	1	VALVE GP
	34	8T-4137	1	BOLT (L=20mm)
	35	8T-4121	1	WASHER
	36	6D-1641	1	CLIP
	37	115-8645	1	GUARD
	38	7K-1181	23	STRAP
	39	5I-4460	1	HOSE AS (NOM 06, L=1000mm)
	40	087-4587	1	GROMMET
	41	119-2607	1	HOSE AS (NOM 06, L=860mm)
	42	8T-0075	1	CONNECTOR
	43	124-1212	1	FITTING
	44	5I-8603	1	HOSE AS (NOM 06, L=900mm)
	45	102-1227	1	HOSE AS (NOM 06, L=1850mm)
	46	107-1588	1	HOSE AS (NOM 06, L=2300mm)
	47	119-2670	1	HOSE AS (NOM 06, L=580mm)
	48	5I-3139	1	HOSE AS (NOM 06, L=1700mm)
	49	5I-3136	1	HOSE AS (NOM 06, L=1900mm)
	50	3P-2001	1	ELBOW
	51	4I-6380	1	HOSE AS (NOM 06, L=1200mm)
	52	030-7936	1	CONNECTOR
	53	4I-7687	1	HOSE AS (NOM 06, L=950mm)
	54	032-1267	1	CONNECTOR
	55	030-7942	1	ELBOW
	56	107-6630	1	CONNECTOR
	57	6V-9836	1	TEE
	58	087-4480	1	HOSE AS (NOM 08, L=1200mm)
	59	113-6699	1	ELBOW
	60	7J-9933	1	SEAL-O-RING (ID=21.89mm)
	61	8T-4196	2	BOLT (L=35mm)
	62	030-8194	2	CONNECTOR
	63	6I-6752	1	HOSE AS (NOM 06, L=750mm)
	64	087-4456	1	ACCUMULATOR GP
	65	099-4691	3	BOLT
	66	5P-1076	3	WASHER
Y	67	111-9950	1	VALVE GP (PILOT MANIFOLD)
	68	119-2646	1	HOSE AS (NOM 08, L=460mm)
	69	6V-8637	2	CONNECTOR
	70	005-4362	1	ELBOW
	71	7I-0184	1	HOSE AS (NOM 06, L=550mm)
	72	5I-3100	1	HOSE AS (NOM 06, L=850mm)
	73	4I-7611	1	HOSE AS (NOM 06, L=2200mm)
	74	4I-1428	2	HOSE AS (NOM 06, L=1390mm)
	75	124-1327	1	HOSE AS (NOM 06, L=750mm)
	76	9S-4191	5	PLUG
	77	030-8188	1	CONNECTOR
	78	6K-9194	2	ELBOW
	79	6V-3965	4	NIPPLE AS
	80	6V-0852	4	CAP
	81	4K-6297	1	ELBOW
	82	4I-1422	1	HOSE AS (NOM 06, L=550mm)
	83	119-2655	1	HOSE AS (NOM 12, L=780mm)
	84	7I-0196	1	HOSE AS (NOM 06, L=730mm)
	85	106-0178	1	SENSOR AS
		3K-0360	1	SEAL-O-RING (ID=16.36mm)
	86	4I-9521	8	BAND (L1,RED)
	87	4I-9522	4	BAND (L2,YELLOW)
	88	4I-9523	6	BAND (L3,BLUE)
	89	4I-9524	2	BAND (L4,BROWN)
	90	4I-9525	4	BAND (R1,ORANGE)
	91	4I-9526	4	BAND (R2,WHITE)
	92	4I-9527	6	BAND (R3,GREEN)
	93	4I-9528	4	BAND (R4,PURPLE)
	94	115-8647	1	GUARD
	95	129-6064	1	HOSE AS (NOM 12, L=465mm)
	96	122-5273	1	ELBOW
	97	133-5706	1	ROD AS
	98	8T-4223	1	WASHER

Y—SEE SEPARATE ILLUSTRATION

H57691E 04

115-8897 LINES GP-PILOT

S/N 3MR 1-03097, 4MR 1-00448
111-9950-Page305,123-2443,123-2496-Page315

HYDRAULIC SYSTEM

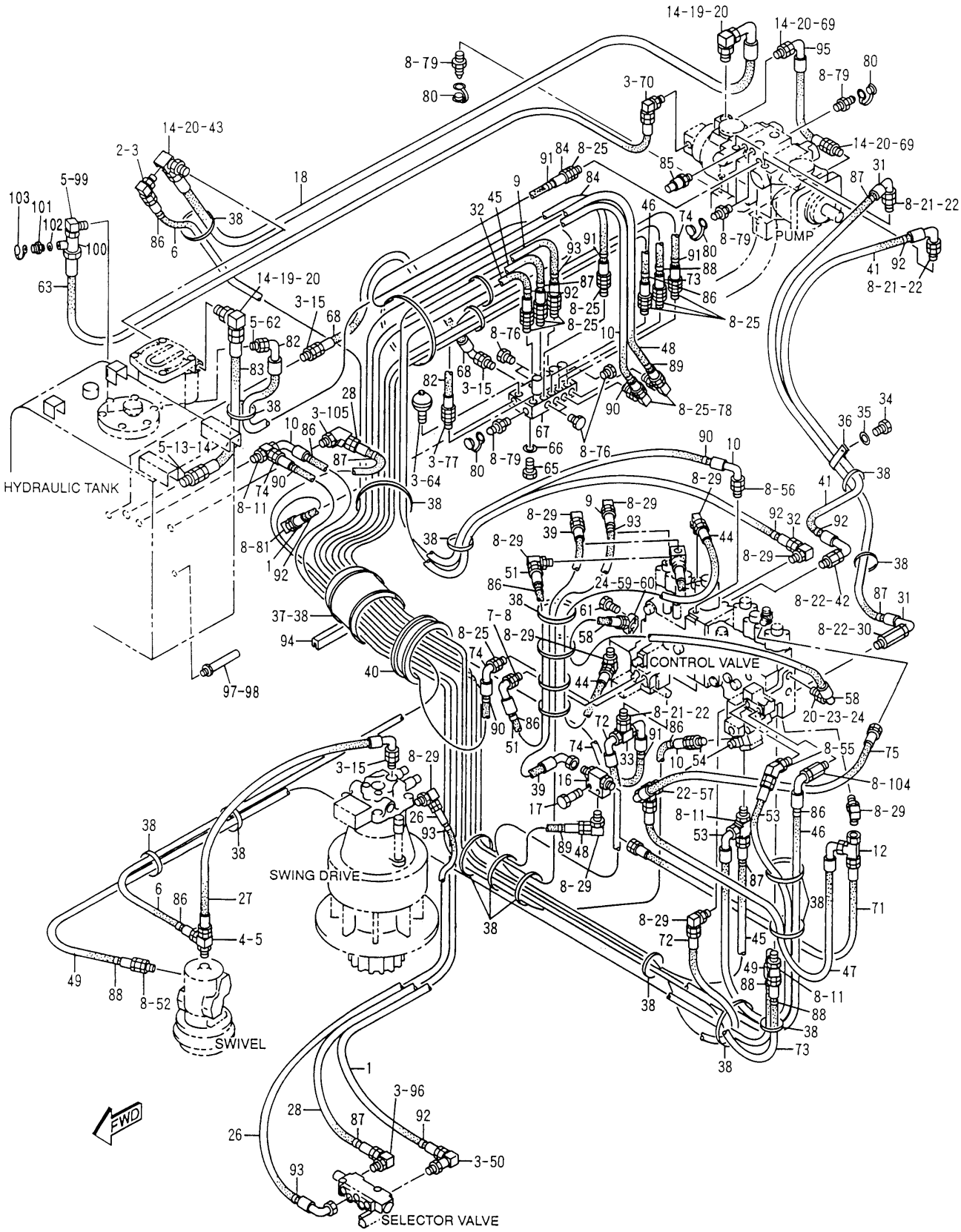

H65293E 08

115-8897 LINES GP-PILOT

S/N 3MR 03098-04978, 4MR 00449-00715
111-9950-Page305,123-2443,123-2496-Page315

HYDRAULIC SYSTEM

NOTE	No.	PART No.	QTY	PART NAME
	1	4I-1470	1	HOSE AS (NOM 08, L=3800mm)
	2	030-7948	1	ELBOW
	3	3K-0360	10	SEAL-O-RING (ID=16.36mm)
	4	119-2604	1	TEE
	5	2M-9780	4	SEAL-O-RING (ID=19.18mm)
	6	124-1321	1	HOSE AS (NOM 08, L=3100mm)
	7	1P-1376	1	CONNECTOR
	8	3J-1907	45	SEAL-O-RING (ID=11.89mm)
	9	4I-6233	1	HOSE AS (NOM 06, L=2650mm)
	10	108-7252	2	HOSE AS (NOM 06, L=1650mm)
	11	6M-6853	3	TEE
	12	061-9258	1	TEE
	13	6V-8640	1	CONNECTOR
	14	6V-9746	6	SEAL-O-RING (OD=22.50mm)
	15	8M-0505	3	CONNECTOR
Y	16	123-2443	1	VALVE GP
	17	099-3649	2	BOLT (L=40mm)
	18	119-2652	1	HOSE AS (NOM 12, L=860mm)
	19	6V-9007	2	ELBOW
	20	3D-2824	6	SEAL-O-RING (ID=23.47mm)
	21	6V-8636	3	CONNECTOR
	22	6V-8397	8	SEAL-O-RING (OD=12.83mm)
	23	6V-8633	1	CONNECTOR
	24	6V-8398	2	SEAL-O-RING (OD=16.03mm)
	25	2R-6806	10	CONNECTOR
	26	124-1324	1	HOSE AS (NOM 06, L=2500mm)
	27	4I-1464	1	HOSE AS (NOM 08, L=770mm)
	28	4I-1473	1	HOSE AS (NOM 08, L=3550mm)
	29	030-7947	10	ELBOW
	30	8C-0597	1	CONNECTOR
	31	119-2611	1	HOSE AS (NOM 06, L=1510mm)
	32	4I-1410	1	HOSE AS (NOM 06, L=1590mm)
Y	33	123-2496	1	VALVE GP
	34	8T-4137	1	BOLT (L=20mm)
	35	8T-4121	1	WASHER
	36	6D-1641	1	CLIP
	37	115-8645	1	GUARD
	38	7K-1181	24	STRAP
	39	5I-4460	1	HOSE AS (NOM 06, L=1000mm)
	40	087-4587	1	GROMMET
	41	119-2607	1	HOSE AS (NOM 06, L=860mm)
	42	8T-0075	1	CONNECTOR
	43	124-1212	1	FITTING
	44	5I-8603	1	HOSE AS (NOM 06, L=900mm)
	45	102-1227	1	HOSE AS (NOM 06, L=1850mm)
	46	107-1588	1	HOSE AS (NOM 06, L=2300mm)
	47	119-2670	1	HOSE AS (NOM 06, L=580mm)
	48	5I-3139	1	HOSE AS (NOM 06, L=1700mm)
	49	5I-3136	1	HOSE AS (NOM 06, L=1900mm)
	50	3P-2001	1	ELBOW
	51	4I-6380	1	HOSE AS (NOM 06, L=1200mm)
	52	030-7936	1	CONNECTOR
	53	4I-7687	1	HOSE AS (NOM 06, L=950mm)
	54	032-1267	1	CONNECTOR
	55	030-7942	1	ELBOW
	56	107-6630	1	CONNECTOR
	57	6V-9836	1	TEE
	58	087-4480	1	HOSE AS (NOM 08, L=1200mm)
	59	113-6699	1	ELBOW
	60	7J-9933	1	SEAL-O-RING (ID=21.89mm)
	61	8T-4196	2	BOLT (L=35mm)
	62	030-8194	1	CONNECTOR
	63	4I-6334	1	HOSE AS (NOM 06, L=600mm)
	64	087-4456	1	ACCUMULATOR GP
	65	099-4691	3	BOLT
	66	5P-1076	3	WASHER
Y	67	111-9950	1	VALVE GP (PILOT MANIFOLD)
	68	119-2646	1	HOSE AS (NOM 08, L=460mm)
	69	6V-8637	2	CONNECTOR
	70	005-4362	1	ELBOW
	71	7I-0184	1	HOSE AS (NOM 06, L=550mm)
	72	5I-3100	1	HOSE AS (NOM 06, L=850mm)
	73	4I-7611	1	HOSE AS (NOM 06, L=2200mm)
	74	4I-1428	2	HOSE AS (NOM 06, L=1390mm)
	75	124-1327	1	HOSE AS (NOM 06, L=750mm)
	76	9S-4191	5	PLUG
	77	030-8188	1	CONNECTOR
	78	6K-9194	2	ELBOW
	79	6V-3965	5	NIPPLE AS
	80	6V-0852	5	CAP
	81	4K-6297	1	ELBOW
	82	4I-1422	1	HOSE AS (NOM 06, L=550mm)
	83	119-2655	1	HOSE AS (NOM 12, L=780mm)
	84	7I-0196	1	HOSE AS (NOM 06, L=730mm)
	85	106-0178	1	SENSOR AS
		3K-0360	1	SEAL-O-RING (ID=16.36mm)
	86	4I-9521	8	BAND (L1,RED)
	87	4I-9522	6	BAND (L2,YELLOW)
	88	4I-9523	4	BAND (L3,BLUE)
	89	4I-9524	2	BAND (L4,BROWN)
	90	4I-9525	4	BAND (R1,ORANGE)
	91	4I-9526	4	BAND (R2,WHITE)
	92	4I-9527	6	BAND (R3,GREEN)
	93	4I-9528	4	BAND (R4,PURPLE)
	94	115-8647	1	GUARD
	95	129-6064	1	HOSE AS (NOM 12, L=465mm)
	96	122-5273	1	ELBOW
	97	133-5706	1	ROD AS
	98	8T-4223	1	WASHER
	99	138-5049	1	ELBOW
	100	127-5918	1	TEE
	101	8C-3446	1	VALVE
	102	3J-7354	1	SEAL-O-RING (ID=8.92mm)
	103	8C-3451	1	CAP
	104	030-7937	1	CONNECTOR
	105	030-7943	1	ELBOW

Y—SEE SEPARATE ILLUSTRATION

H65293E 08

115-8897 LINES GP-PILOT

S/N 3MR 03098-04978, 4MR 00449-00715

111-9950-Page305,123-2443,123-2496-Page315

HYDRAULIC SYSTEM

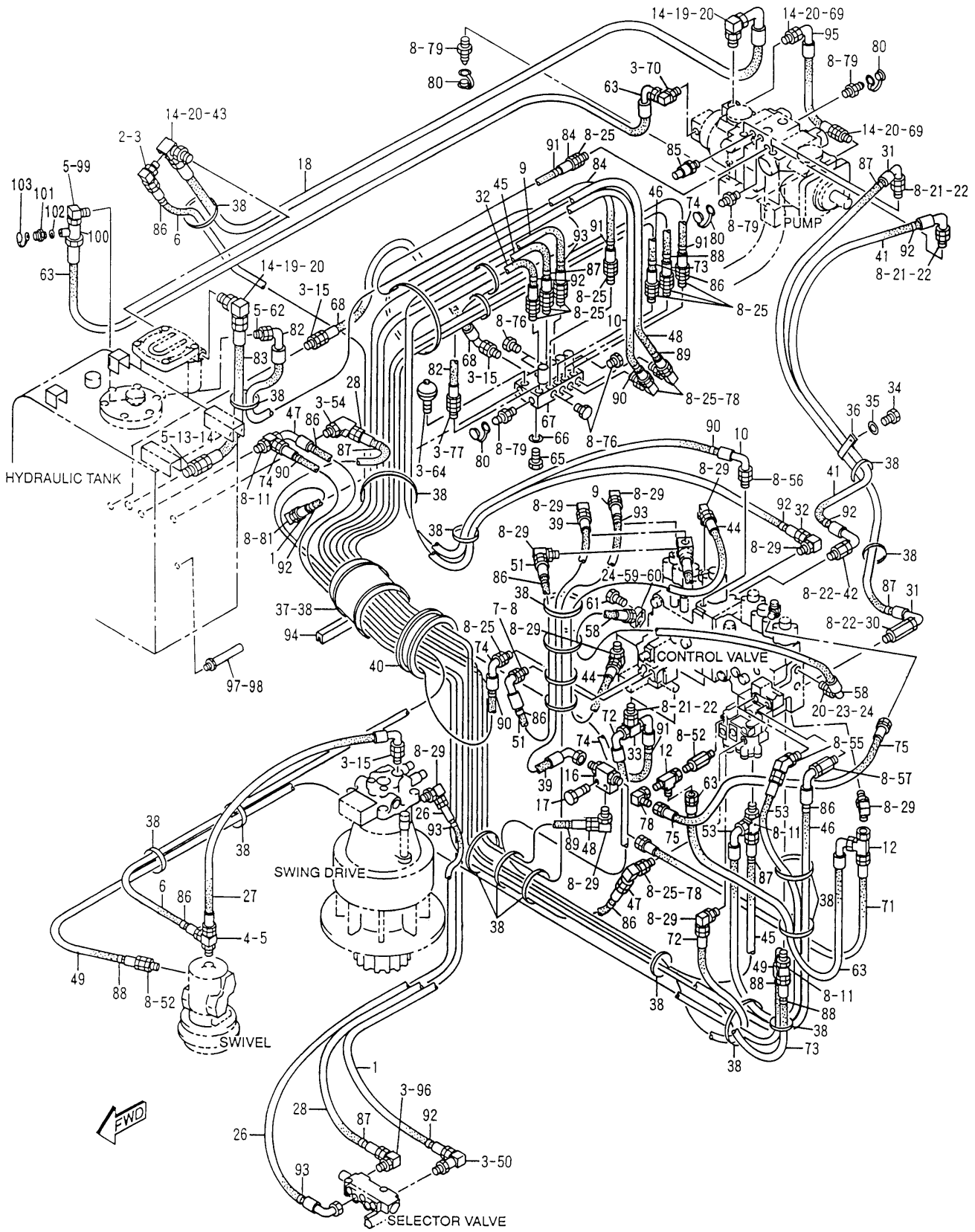

H65295E 10

115-8897 LINES GP-PILOT

S/N 3MR 04979-06235, 4MR 00716-00942
111-9950-Page305,123-2443,123-2496-Page315

HYDRAULIC SYSTEM

NOTE	No.	PART No.	QTY	PART NAME
	1	4I-1470	1	HOSE AS (NOM 08, L=3800mm)
	2	030-7948	1	ELBOW
	3	3K-0360	10	SEAL-O-RING (ID=16.36mm)
	4	119-2604	1	TEE
	5	2M-9780	4	SEAL-O-RING (ID=19.18mm)
	6	124-1321	1	HOSE AS (NOM 08, L=3100mm)
	7	1P-1376	1	CONNECTOR
	8	3J-1907	47	SEAL-O-RING (ID=11.89mm)
	9	4I-6233	1	HOSE AS (NOM 06, L=2650mm)
	10	108-7252	1	HOSE AS (NOM 06, L=1650mm)
	11	6M-6853	3	TEE
	12	061-9258	2	TEE
	13	6V-8640	1	CONNECTOR
	14	6V-9746	6	SEAL-O-RING (OD=22.50mm)
	15	8M-0505	3	CONNECTOR
Y	16	123-2443	1	VALVE GP
	17	099-3649	2	BOLT (L=40mm)
	18	119-2652	1	HOSE AS (NOM 12, L=860mm)
	19	6V-9007	2	ELBOW
	20	3D-2824	6	SEAL-O-RING (ID=23.47mm)
	21	6V-8636	3	CONNECTOR
	22	6V-8397	5	SEAL-O-RING (OD=12.83mm)
	23	6V-8633	1	CONNECTOR
	24	6V-8398	2	SEAL-O-RING (OD=16.03mm)
	25	2R-6806	11	CONNECTOR
	26	124-1324	1	HOSE AS (NOM 06, L=2500mm)
	27	4I-1464	1	HOSE AS (NOM 08, L=770mm)
	28	4I-1473	1	HOSE AS (NOM 08, L=3550mm)
	29	030-7947	10	ELBOW
	30	8C-0597	1	CONNECTOR
	31	119-2611	1	HOSE AS (NOM 06, L=1510mm)
	32	4I-1410	1	HOSE AS (NOM 06, L=1590mm)
Y	33	123-2496	1	VALVE GP
	34	8T-4137	1	BOLT (L=20mm)
	35	8T-4121	1	WASHER
	36	6D-1641	1	CLIP
	37	115-8645	1	GUARD
	38	7K-1181	24	STRAP
	39	5I-4460	1	HOSE AS (NOM 06, L=1000mm)
	40	087-4587	1	GROMMET
	41	119-2607	1	HOSE AS (NOM 06, L=860mm)
	42	8T-0075	1	CONNECTOR
	43	124-1212	1	FITTING
	44	5I-8603	1	HOSE AS (NOM 06, L=900mm)
	45	102-1227	1	HOSE AS (NOM 06, L=1850mm)
	46	107-1588	1	HOSE AS (NOM 06, L=2300mm)
	47	4I-1434	1	HOSE AS (NOM 06, L=1780mm)
	48	5I-3139	1	HOSE AS (NOM 06, L=1700mm)
	49	5I-3136	1	HOSE AS (NOM 06, L=1900mm)
	50	3P-2001	1	ELBOW
	51	4I-6380	1	HOSE AS (NOM 06, L=1200mm)
	52	030-7936	2	CONNECTOR
	53	4I-7687	1	HOSE AS (NOM 06, L=950mm)
	54	030-7943	1	ELBOW
	55	030-7942	1	ELBOW
	56	107-6630	1	CONNECTOR
	57	030-7937	1	CONNECTOR
	58	087-4480	1	HOSE AS (NOM 08, L=1200mm)
	59	113-6699	1	ELBOW
	60	7J-9933	1	SEAL-O-RING (ID=21.89mm)
	61	8T-4196	2	BOLT (L=35mm)
	62	030-8194	1	CONNECTOR
	63	4I-6334	2	HOSE AS (NOM 06, L=600mm)
	64	087-4456	1	ACCUMULATOR GP
	65	099-4691	3	BOLT
	66	5P-1076	3	WASHER
Y	67	111-9950	1	VALVE GP (PILOT MANIFOLD)
	68	119-2646	1	HOSE AS (NOM 08, L=460mm)
	69	6V-8637	2	CONNECTOR
	70	005-4362	1	ELBOW
	71	7I-0184	1	HOSE AS (NOM 06, L=550mm)
	72	5I-3100	1	HOSE AS (NOM 06, L=850mm)
	73	4I-7611	1	HOSE AS (NOM 06, L=2200mm)
	74	4I-1428	2	HOSE AS (NOM 06, L=1390mm)
	75	5I-3124	1	HOSE AS (NOM 06, L=700mm)
	76	9S-4191	5	PLUG
	77	030-8188	1	CONNECTOR
	78	6K-9194	4	ELBOW
	79	6V-3965	5	NIPPLE AS
	80	6V-0852	5	CAP
	81	4K-6297	1	ELBOW
	82	4I-1422	1	HOSE AS (NOM 06, L=550mm)
	83	119-2655	1	HOSE AS (NOM 12, L=780mm)
	84	7I-0196	1	HOSE AS (NOM 06, L=730mm)
	85	106-0178	1	SENSOR AS
		3K-0360	1	SEAL-O-RING (ID=16.36mm)
	86	4I-9521	8	BAND (L1,RED)
	87	4I-9522	6	BAND (L2,YELLOW)
	88	4I-9523	4	BAND (L3,BLUE)
	89	4I-9524	2	BAND (L4,BROWN)
	90	4I-9525	4	BAND (R1,ORANGE)
	91	4I-9526	4	BAND (R2,WHITE)
	92	4I-9527	6	BAND (R3,GREEN)
	93	4I-9528	4	BAND (R4,PURPLE)
	94	115-8647	1	GUARD
	95	129-6064	1	HOSE AS (NOM 12, L=465mm)
	96	122-5273	1	ELBOW
	97	133-5706	1	ROD AS
	98	8T-4223	1	WASHER
	99	138-5049	1	ELBOW
	100	127-5918	1	TEE
	101	8C-3446	1	VALVE
	102	3J-7354	1	SEAL-O-RING (ID=8.92mm)
	103	8C-3451	1	CAP

Y—SEE SEPARATE ILLUSTRATION

H65295E 10

115-8897 LINES GP-PILOT

S/N 3MR 04979-06235, 4MR 00716-00942
111-9950-Page305,123-2443,123-2496-Page315

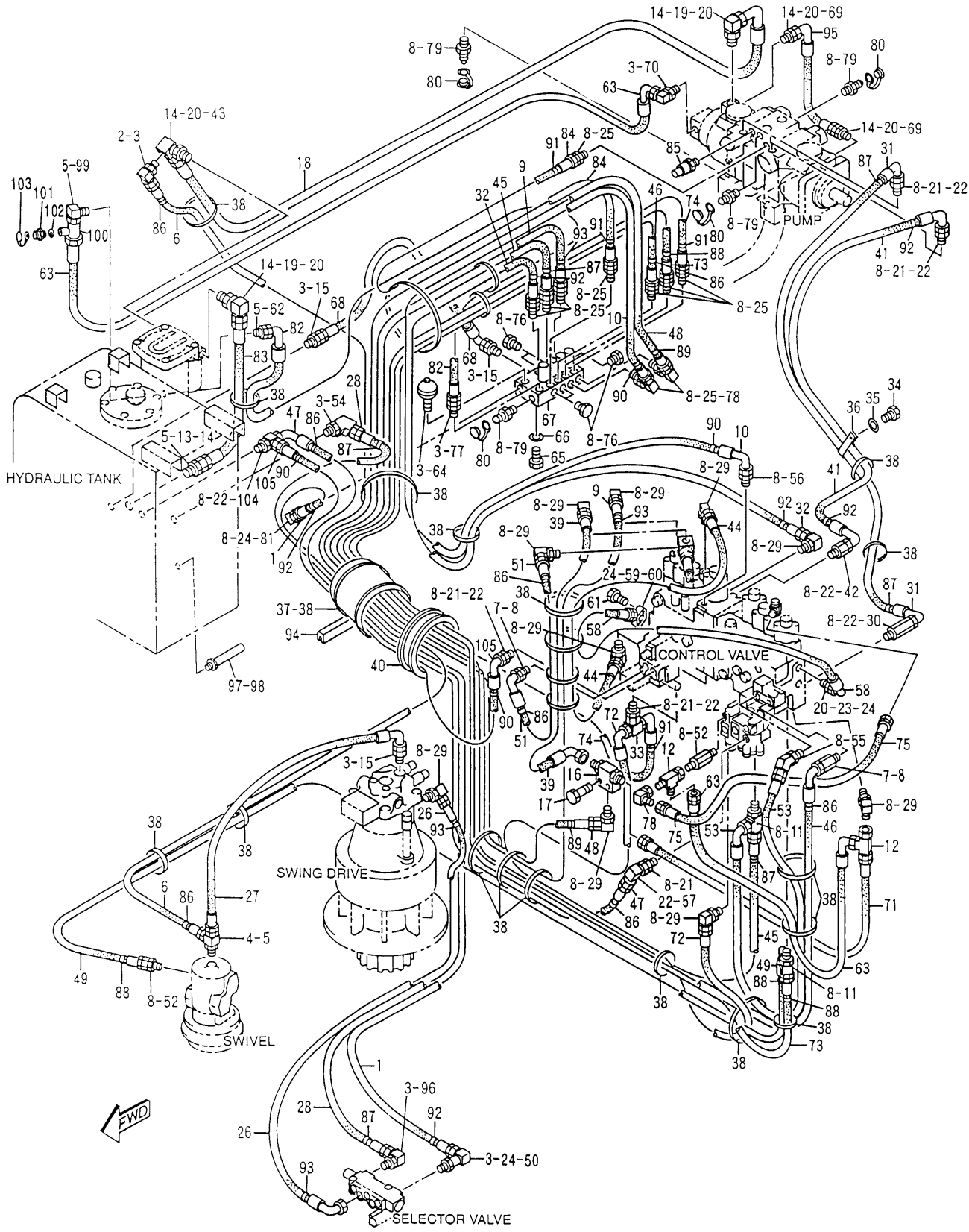

H78084E 13

115-8897 LINES GP-PILOT
S/N 3MR 06236-Up, 4MR 00943-Up
111-9950-Page305,123-2443,123-2496-Page315

HYDRAULIC SYSTEM

NOTE	No.	PART No.	QTY	PART NAME
	1	113-6755	1	HOSE AS (NOM 08, L=3800mm)
	2	030-7948	1	ELBOW
	3	3K-0360	10	SEAL-O-RING (ID=16.36mm)
	4	119-2604	1	TEE
	5	2M-9780	4	SEAL-O-RING (ID=19.18mm)
	6	124-1321	1	HOSE AS (NOM 08, L=3100mm)
	7	1P-1376	2	CONNECTOR
	8	3J-1907	47	SEAL-O-RING (ID=11.89mm)
	9	4I-6233	1	HOSE AS (NOM 06, L=2650mm)
	10	108-7252	1	HOSE AS (NOM 06, L=1650mm)
	11	6M-6853	2	TEE
	12	061-9258	2	TEE
	13	6V-8640	1	CONNECTOR
	14	6V-9746	6	SEAL-O-RING (OD=22.50mm)
	15	8M-0505	3	CONNECTOR
Y	16	123-2443	1	VALVE GP
	17	099-3649	2	BOLT (L=40mm)
	18	119-2652	1	HOSE AS (NOM 12, L=860mm)
	19	6V-9007	2	ELBOW
	20	3D-2824	6	SEAL-O-RING (ID=23.47mm)
	21	6V-8636	5	CONNECTOR
	22	6V-8397	10	SEAL-O-RING (OD=12.83mm)
	23	6V-8633	1	CONNECTOR
	24	6V-8398	4	SEAL-O-RING (OD=16.03mm)
	25	2R-6806	9	CONNECTOR
	26	124-1324	1	HOSE AS (NOM 06, L=2500mm)
	27	4I-1464	1	HOSE AS (NOM 08, L=770mm)
	28	4I-1473	1	HOSE AS (NOM 08, L=3550mm)
	29	030-7947	10	ELBOW
	30	8C-0597	1	CONNECTOR
	31	119-2611	1	HOSE AS (NOM 06, L=1510mm)
	32	4I-1410	1	HOSE AS (NOM 06, L=1590mm)
Y	33	123-2496	1	VALVE GP
	34	8T-4137	1	BOLT (L=20mm)
	35	8T-4121	1	WASHER
	36	6D-1641	1	CLIP
	37	115-8645	1	GUARD
	38	7K-1181	24	STRAP
	39	5I-4460	1	HOSE AS (NOM 06, L=1000mm)
	40	087-4587	1	GROMMET
	41	119-2607	1	HOSE AS (NOM 06, L=860mm)
	42	8T-0075	1	CONNECTOR
	43	124-1212	1	FITTING
	44	5I-8603	1	HOSE AS (NOM 06, L=900mm)
	45	102-1227	1	HOSE AS (NOM 06, L=1850mm)
	46	107-1588	1	HOSE AS (NOM 06, L=2300mm)
	47	087-5778	1	HOSE AS (NOM 06, L=1780mm)
	48	5I-3139	1	HOSE AS (NOM 06, L=1700mm)
	49	5I-3136	1	HOSE AS (NOM 06, L=1900mm)
	50	8T-1686	1	ELBOW
	51	4I-6380	1	HOSE AS (NOM 06, L=1200mm)
	52	030-7936	2	CONNECTOR
	53	4I-7687	1	HOSE AS (NOM 06, L=950mm)
	54	030-7943	1	ELBOW
	55	030-7942	1	ELBOW
	56	107-6630	1	CONNECTOR
	57	6V-9850	1	ELBOW
	58	087-4480	1	HOSE AS (NOM 08, L=1200mm)
	59	113-6699	1	ELBOW
	60	7J-9933	1	SEAL-O-RING (ID=21.89mm)
	61	8T-4196	2	BOLT (L=35mm)
	62	030-8194	1	CONNECTOR
	63	4I-6334	2	HOSE AS (NOM 06, L=600mm)
	64	087-4456	1	ACCUMULATOR GP
	65	099-4691	3	BOLT
	66	5P-1076	3	WASHER
Y	67	111-9950	1	VALVE GP (PILOT MANIFOLD)
	68	119-2646	1	HOSE AS (NOM 08, L=460mm)
	69	6V-8637	2	CONNECTOR
	70	005-4362	1	ELBOW
	71	7I-0184	1	HOSE AS (NOM 06, L=550mm)
	72	5I-3100	1	HOSE AS (NOM 06, L=850mm)
	73	4I-7611	1	HOSE AS (NOM 06, L=2200mm)
	74	4I-1428	1	HOSE AS (NOM 06, L=1390mm)
	75	5I-3124	1	HOSE AS (NOM 06, L=700mm)
	76	9S-4191	5	PLUG
	77	030-8188	1	CONNECTOR
	78	6K-9194	3	ELBOW
	79	6V-3965	5	NIPPLE AS
	80	6V-0852	5	CAP
	81	8T-6876	1	ELBOW
	82	4I-1422	1	HOSE AS (NOM 06, L=550mm)
	83	119-2655	1	HOSE AS (NOM 12, L=780mm)
	84	7I-0196	1	HOSE AS (NOM 06, L=730mm)
	85	106-0178	1	SENSOR AS
		3K-0360	1	SEAL-O-RING (ID=16.36mm)
	86	4I-9521	8	BAND (L1,RED)
	87	4I-9522	6	BAND (L2,YELLOW)
	88	4I-9523	4	BAND (L3,BLUE)
	89	4I-9524	2	BAND (L4,BROWN)
	90	4I-9525	4	BAND (R1,ORANGE)
	91	4I-9526	4	BAND (R2,WHITE)
	92	4I-9527	6	BAND (R3,GREEN)
	93	4I-9528	4	BAND (R4,PURPLE)
	94	115-8647	1	GUARD
	95	129-6064	1	HOSE AS (NOM 12, L=465mm)
	96	122-5273	1	ELBOW
	97	133-5706	1	ROD AS
	98	8T-4223	1	WASHER
	99	138-5049	1	ELBOW
	100	127-5918	1	TEE
	101	8C-3446	1	VALVE
	102	3J-7354	1	SEAL-O-RING (ID=8.92mm)
	103	8C-3451	1	CAP
	104	6V-8781	1	TEE
	105	171-3386	1	HOSE AS (NOM 06, L=1390mm)

Y—SEE SEPARATE ILLUSTRATION

H78084E 13

115-8897 LINES GP-PILOT

S/N 3MR 06236-Up, 4MR 00943-Up
111-9950-Page305,123-2443,123-2496-Page315

HYDRAULIC SYSTEM

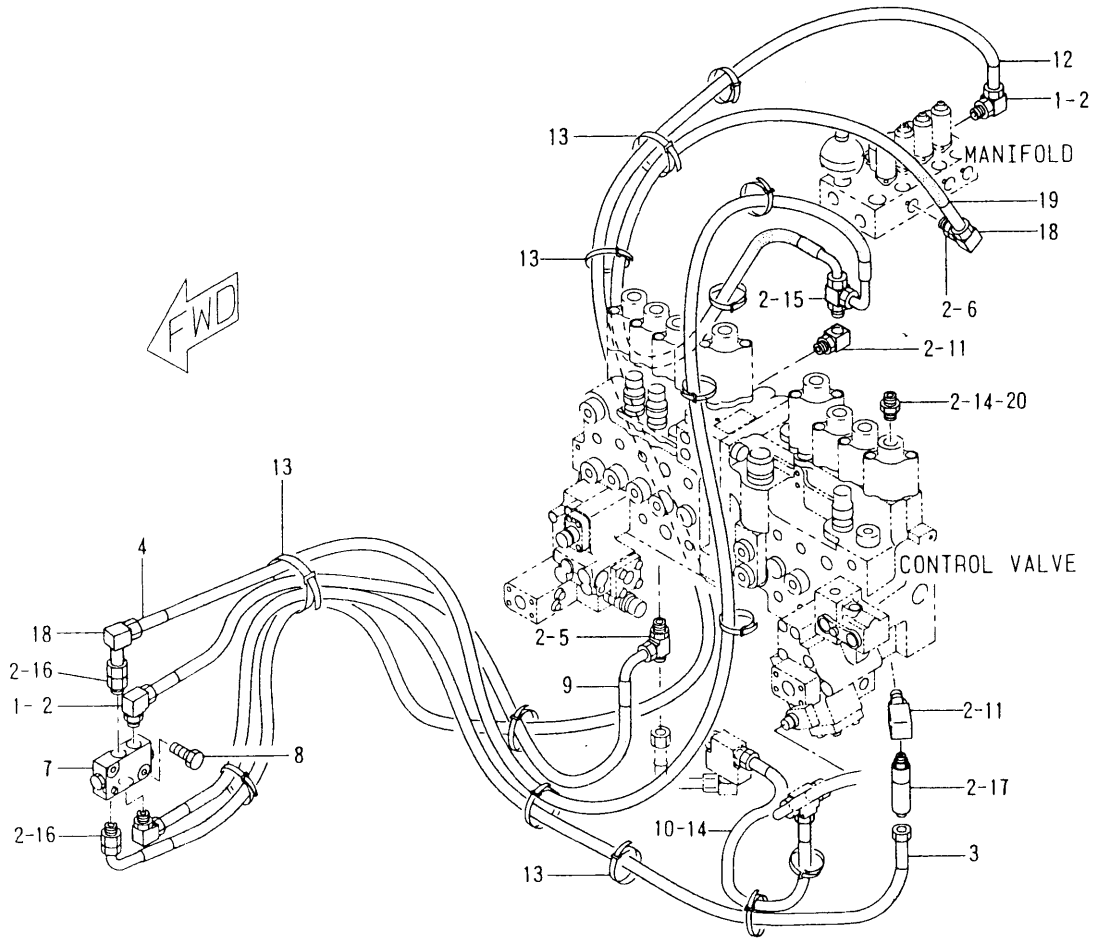

NOTE	No.	PART No.	QTY	PART NAME	NOTE	No.	PART No.	QTY	PART NAME
	1	030-7947	3	ELBOW					
	2	3J-1907	12	SEAL-O-RING (ID=11.89mm)					
	3	4I-1410	1	HOSE AS (NOM 06, L=1590mm)					
	4	7I-7152	1	HOSE AS (NOM 06, L=2100mm)					
	5	6M-6853	1	TEE					
	6	2R-6806	1	CONNECTOR					
Y	7	119-5219	1	VALVE GP					
	8	8T-4186	2	BOLT (L=40mm)					
	9	5I-3109	1	HOSE AS (NOM 06, L=1100mm)					
	10	124-1318	1	HOSE AS (NOM 06, L=700mm)					
	11	085-7356	2	FITTING					
	12	4I-6337	1	HOSE AS (NOM 06, L=2700mm)					
	13	7K-1181	14	STRAP					
	14	6V-8397	2	SEAL-O-RING (OD=12.83mm)					
	15	5I-3187	1	TEE					
	16	1P-1376	2	CONNECTOR					
Y	17	105-7266	1	VALVE GP (SHOCKLESS)					
	18	6K-9194	2	ELBOW					
	19	4I-7684	1	HOSE AS (NOM 06, L=1550mm)					
	20	6V-8636	1	CONNECTOR					

Y—SEE SEPARATE ILLUSTRATION

H53469E 00

128-7483 LINES GP-PILOT

Part of 123-2568-Page228
119-5219-Page311,105-7266-Page314
An Attachment

HYDRAULIC SYSTEM

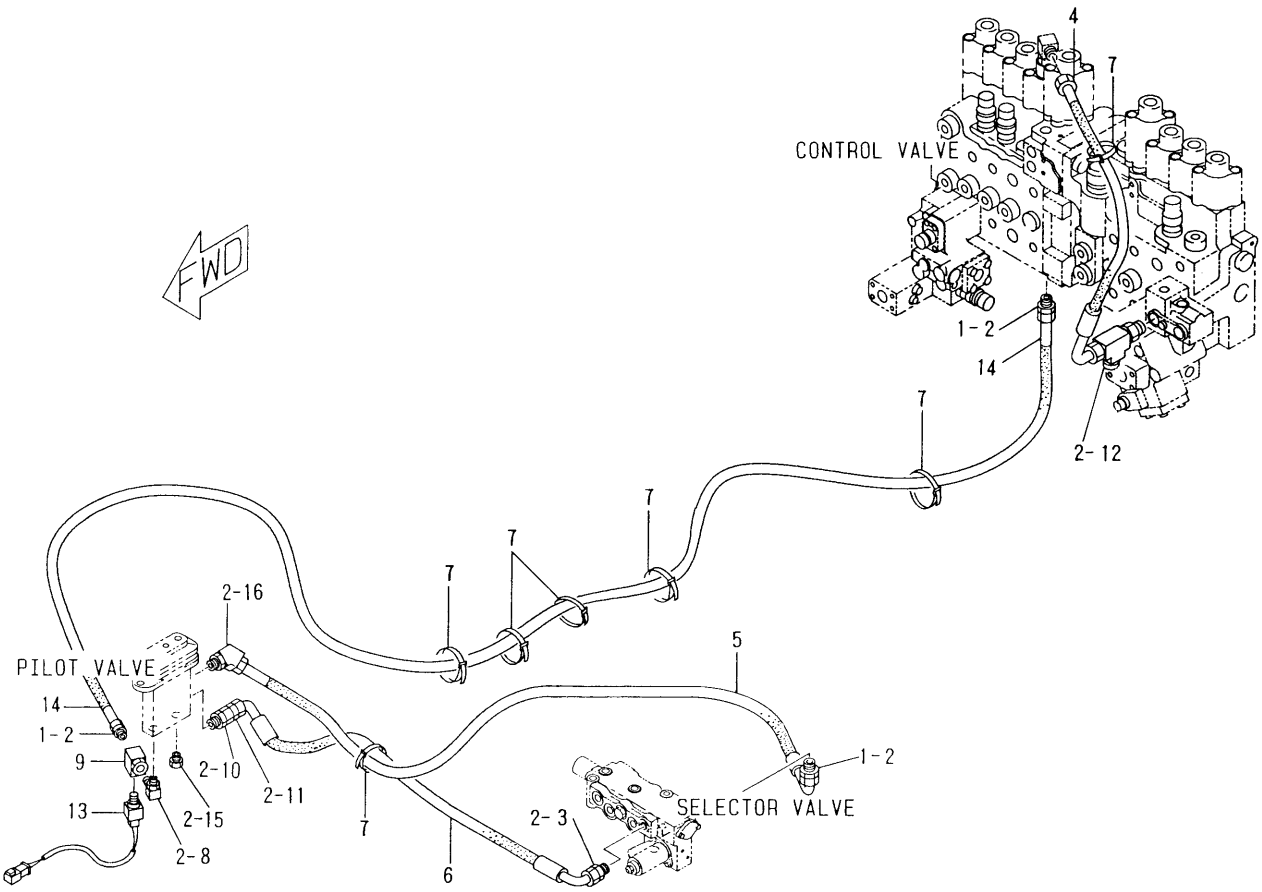

NOTE	No.	PART No.	QTY	PART NAME	NOTE	No.	PART No.	QTY	PART NAME
	1	2R-6806	2	CONNECTOR					
	2	3J-1907	10	SEAL-O-RING (ID=11.89mm)					
	3	1P-1376	1	CONNECTOR					
	4	5I-3100	1	HOSE AS (NOM 06, L=850mm)					
	5	4I-7675	1	HOSE AS (NOM 06, L=800mm)					
	6	119-2658	1	HOSE AS (NOM 06, L=650mm)					
	7	096-0061	7	STRAP					
	8	030-7947	1	ELBOW					
	9	5I-4015	1	FITTING					
	10	108-7507	1	CONNECTOR					
	11	107-6630	1	CONNECTOR					
	12	6M-6853	1	TEE					
	13	106-0181	1	SWITCH AS (PRESSURE)					
		3E-3365	1	WEDGE					
		102-8802	1	RECEPTACLE KIT					
		9W-0852	2	PIN					
	14	4I-6242	1	HOSE AS (NOM 06, L=2950mm)					
	15	9S-4191	1	PLUG					
	16	030-7942	1	ELBOW					

H65298E 02

115-8907 LINES GP-PILOT

Single Function
Part of 127-6676-Page229
An Attachment

HYDRAULIC SYSTEM

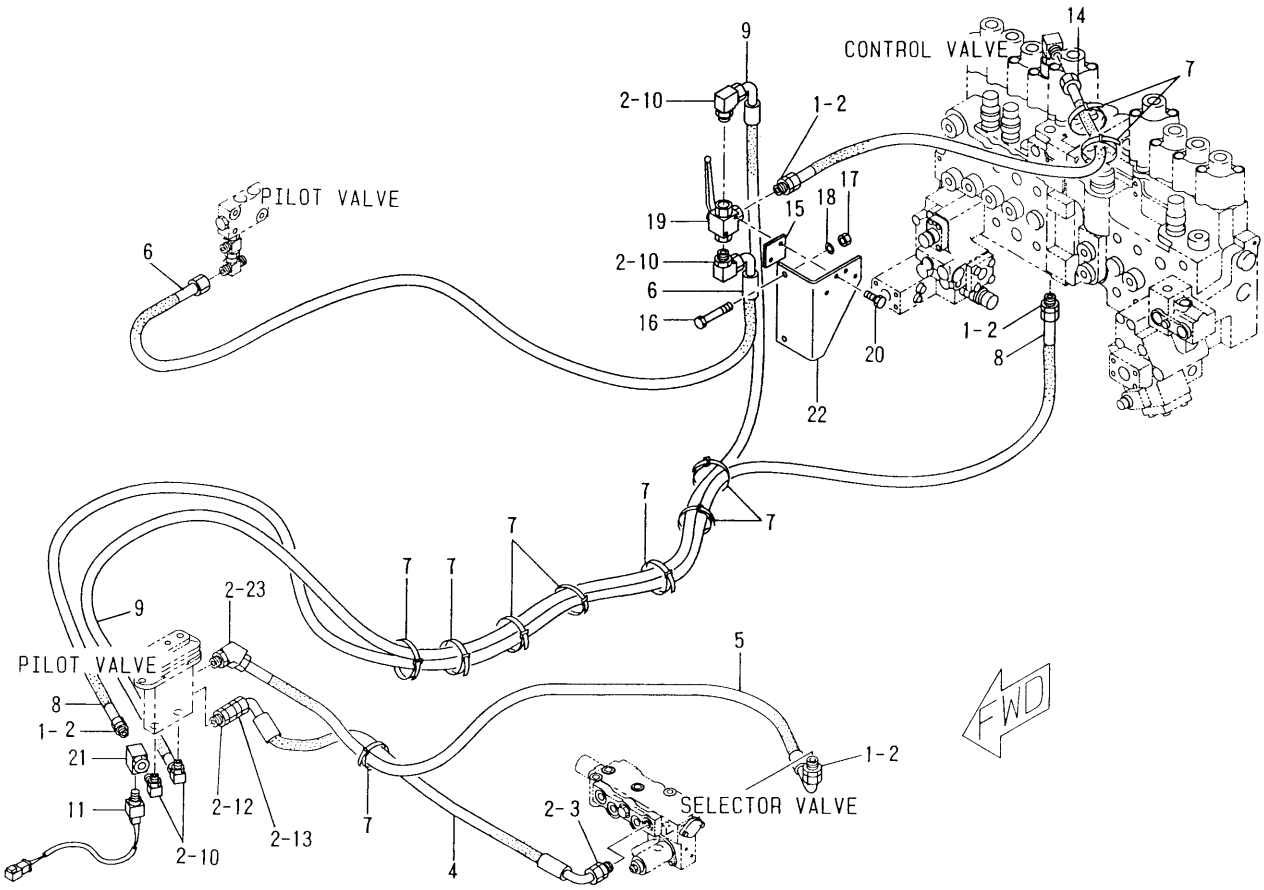

NOTE	No.	PART No.	QTY	PART NAME	NOTE	No.	PART No.	QTY	PART NAME
	1	2R-6806	4	CONNECTOR		18	8T-4121	2	WASHER
	2	3J-1907	12	SEAL-O-RING (ID=11.89mm)	Y	19	4I-6363	1	VALVE AS
	3	1P-1376	1	CONNECTOR		20	8T-4138	2	BOLT (L=20mm)
	4	119-2658	1	HOSE AS (NOM 06, L=650mm)		21	5I-4015	1	FITTING
	5	4I-7675	1	HOSE AS (NOM 06, L=800mm)		22	124-0927	1	SUPPORT
	6	7I-7152	1	HOSE AS (NOM 06, L=2100mm)		23	030-7942	1	ELBOW
	7	096-0061	10	STRAP					
	8	4I-6242	1	HOSE AS (NOM 06, L=2950mm)					
	9	124-1270	1	HOSE AS (NOM 06, L=3250mm)					
	10	030-7947	4	ELBOW					
	11	106-0181	1	SWITCH AS (PRESSURE)					
		102-8802	1	RECEPTACLE KIT					
		3E-3365	1	WEDGE					
		9W-0852	2	PIN					
	12	108-7507	1	CONNECTOR					
	13	107-6630	1	CONNECTOR					
	14	4I-1845	1	HOSE AS (NOM 06, L=400mm)					
	15	124-0928	1	SPACER					
	16	8T-4172	2	BOLT (L=80mm)					
	17	8T-4133	2	NUT					

Y—SEE SEPARATE ILLUSTRATION

H65299E 04

115-8911 LINES GP-PILOT

Combined Function/2 Pumps Circuit
Part of 116-9035-Page229
4I-6363-Page318
An Attachment

HYDRAULIC SYSTEM

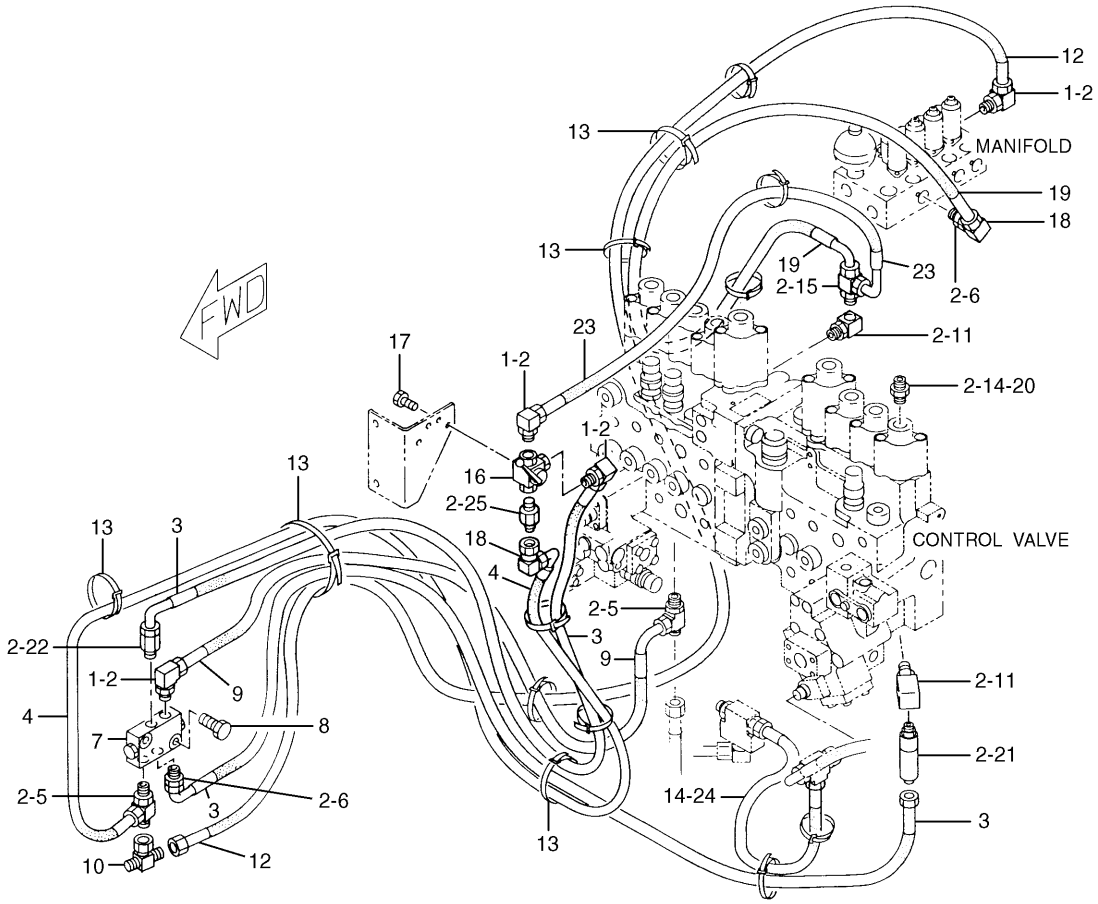

NOTE	No.	PART No.	QTY	PART NAME	NOTE	No.	PART No.	QTY	PART NAME
	1	030-7947	4	ELBOW	Y	21	105-7266	1	VALVE GP (SHOCKLESS)
	2	3J-1907	15	SEAL-O-RING (ID=11.89mm)		22	1P-1376	1	CONNECTOR
	3	4I-6495	2	HOSE AS (NOM 06, L=1600mm)		23	4I-7769	1	HOSE AS (NOM 06, L=700mm)
	4	7I-7152	1	HOSE AS (NOM 06, L=2100mm)		24	124-1318	1	HOSE AS (NOM 06, L=700mm)
	5	6M-6853	2	TEE		25	030-7936	1	CONNECTOR
	6	2R-6806	2	CONNECTOR					
Y	7	119-5219	1	VALVE GP					
	8	8T-4186	2	BOLT (L=40mm)					
	9	5I-3109	1	HOSE AS (NOM 06, L=1100mm)					
	10	053-0700	1	TEE					
	11	085-7356	2	FITTING					
	12	4I-6233	1	HOSE AS (NOM 06, L=2650mm)					
	13	7K-1181	13	STRAP					
	14	6V-8397	2	SEAL-O-RING (OD=12.83mm)					
	15	5I-3187	1	TEE					
Y	16	4I-6363	1	VALVE AS					
	17	8T-4171	2	BOLT (L=12mm)					
	18	6K-9194	2	ELBOW					
	19	4I-7684	1	HOSE AS (NOM 06, L=1550mm)					
	20	6V-8636	1	CONNECTOR					

Y—SEE SEPARATE ILLUSTRATION

H65300E 01

115-8912 LINES GP-PILOT

Part of 116-9035-Page229
119-5219-Page311,105-7266-Page314,4I-6363-Page318
An Attachment

HYDRAULIC SYSTEM

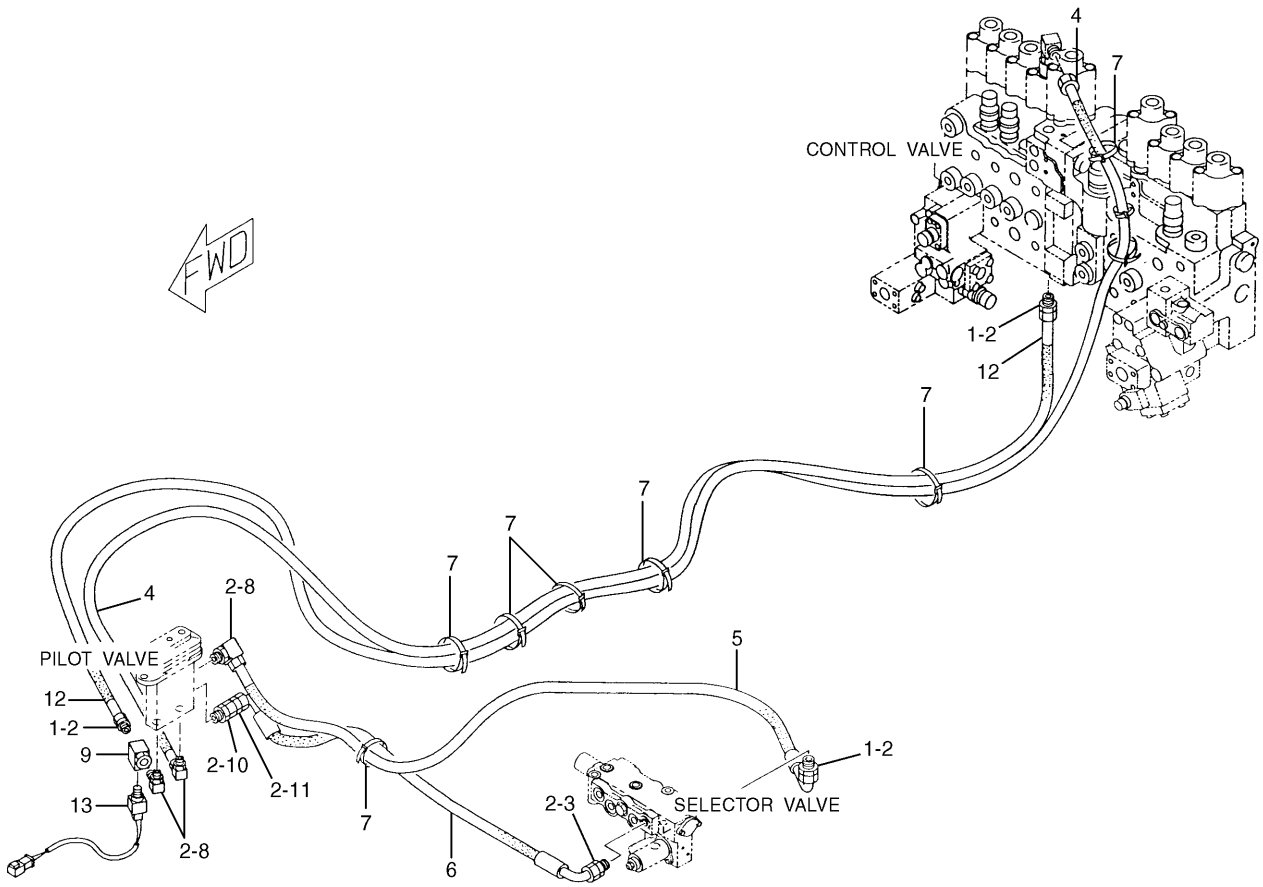

NOTE	No.	PART No.	QTY	PART NAME	NOTE	No.	PART No.	QTY	PART NAME
	1	2R-6806	3	CONNECTOR					
	2	3J-1907	9	SEAL-O-RING (ID=11.89mm)					
	3	1P-1376	1	CONNECTOR					
	4	4I-1449	1	HOSE AS (NOM 06, L=3130mm)					
	5	4I-7675	1	HOSE AS (NOM 06, L=800mm)					
	6	119-2658	1	HOSE AS (NOM 06, L=650mm)					
	7	7K-1181	9	STRAP					
	8	030-7947	3	ELBOW					
	9	5I-4015	1	FITTING					
	10	108-7507	1	CONNECTOR					
	11	107-6630	1	CONNECTOR					
	12	4I-6242	1	HOSE AS (NOM 06, L=2950mm)					
	13	106-0181	1	SWITCH AS (PRESSURE)					
		3E-3365	1	WEDGE					
		102-8802	1	RECEPTACLE KIT					
		9W-0852	2	PIN					

H65301E 01

128-7480 LINES GP-PILOT

Double Function

Part of 121-1969-Page230

An Attachment

HYDRAULIC SYSTEM

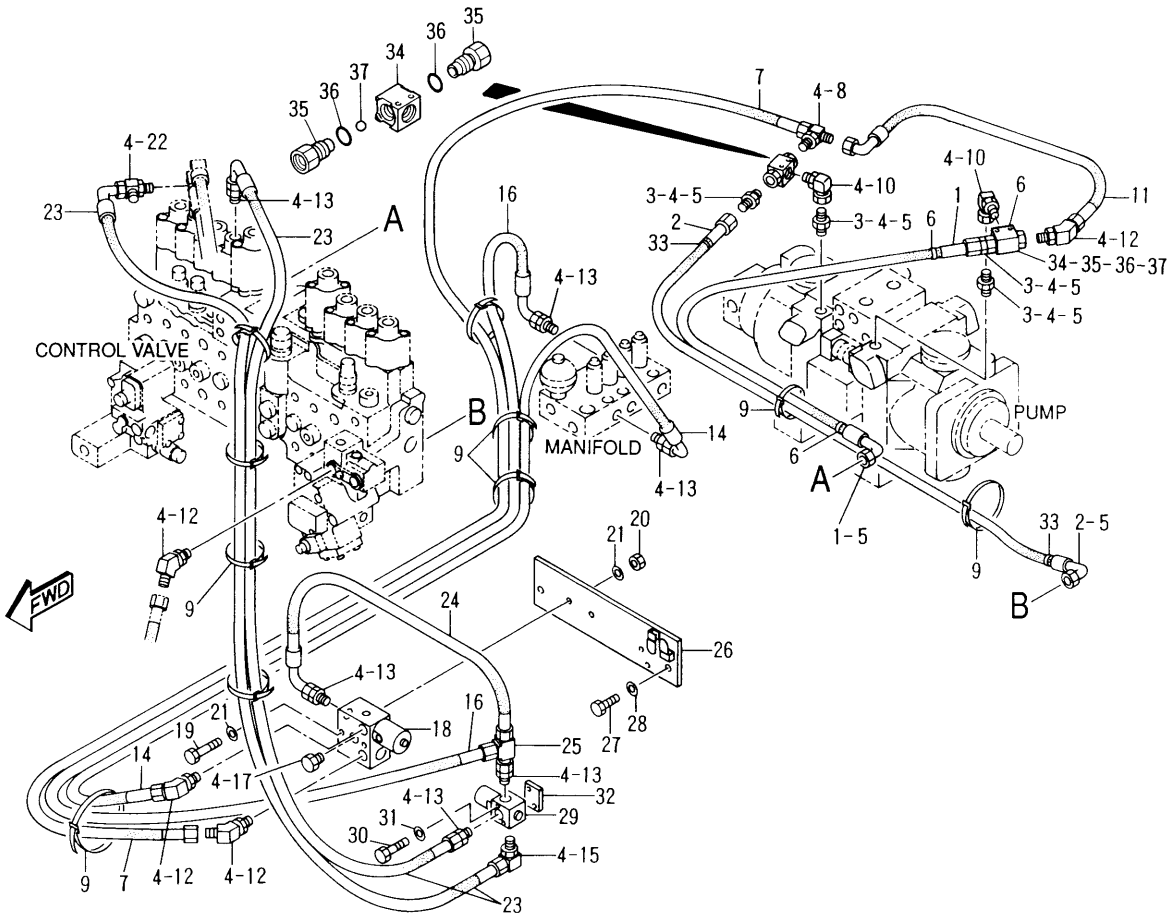

NOTE	No.	PART No.	QTY	PART NAME	NOTE	No.	PART No.	QTY	PART NAME
	1	124-0864	1	HOSE AS (NOM 06, L=860mm)		21	8T-4224	4	WASHER
	2	129-5982	1	HOSE AS (NOM 06, L=1510mm)		22	6M-6853	1	TEE
	3	6V-8636	4	CONNECTOR		23	4I-1428	2	HOSE AS (NOM 06, L=1390mm)
	4	3J-1907	20	SEAL-O-RING (ID=11.89mm)		24	4I-1422	1	HOSE AS (NOM 06, L=550mm)
	5	6V-8397	6	SEAL-O-RING (OD=12.83mm)		25	061-9258	1	TEE
	6	4I-9527	2	BAND (R3,GREEN)		26	121-6415	1	SUPPORT AS
	7	4I-7611	1	HOSE AS (NOM 06, L=2200mm)		27	8T-4195	2	BOLT (L=30mm)
	8	030-7955	1	TEE		28	8T-4121	2	WASHER
	9	7K-1181	10	STRAP	Y	29	121-6303	1	VALVE GP
	10	8T-0788	2	ELBOW		30	8T-4971	2	BOLT (L=30mm)
	11	4I-6334	1	HOSE AS (NOM 06, L=600mm)		31	9X-8256	2	WASHER
	12	030-7942	4	ELBOW		32	129-5926	1	PLATE
	13	2R-6806	6	CONNECTOR		33	4I-9522	2	BAND (L2,YELLOW)
	14	4I-7684	1	HOSE AS (NOM 06, L=1550mm)		34	8J-6875	2	VALVE AS
	15	030-7947	1	ELBOW		35	4T-9905	2	ADAPTER
	16	7I-7152	1	HOSE AS (NOM 06, L=2100mm)		36	2M-9780	2	SEAL-O-RING (ID=19.18mm)
	17	9S-4191	1	PLUG		37	4B-9784	1	BALL
Y	18	122-4459	1	VALVE GP					
	19	8T-3647	2	BOLT (L=80mm)					
	20	5C-7261	2	NUT					

Y—SEE SEPARATE ILLUSTRATION

H65302E 01

119-5279 LINES GP-PILOT

Part of 120-4983-Page230
121-6303-Page299,122-4459-Page300
An Attachment

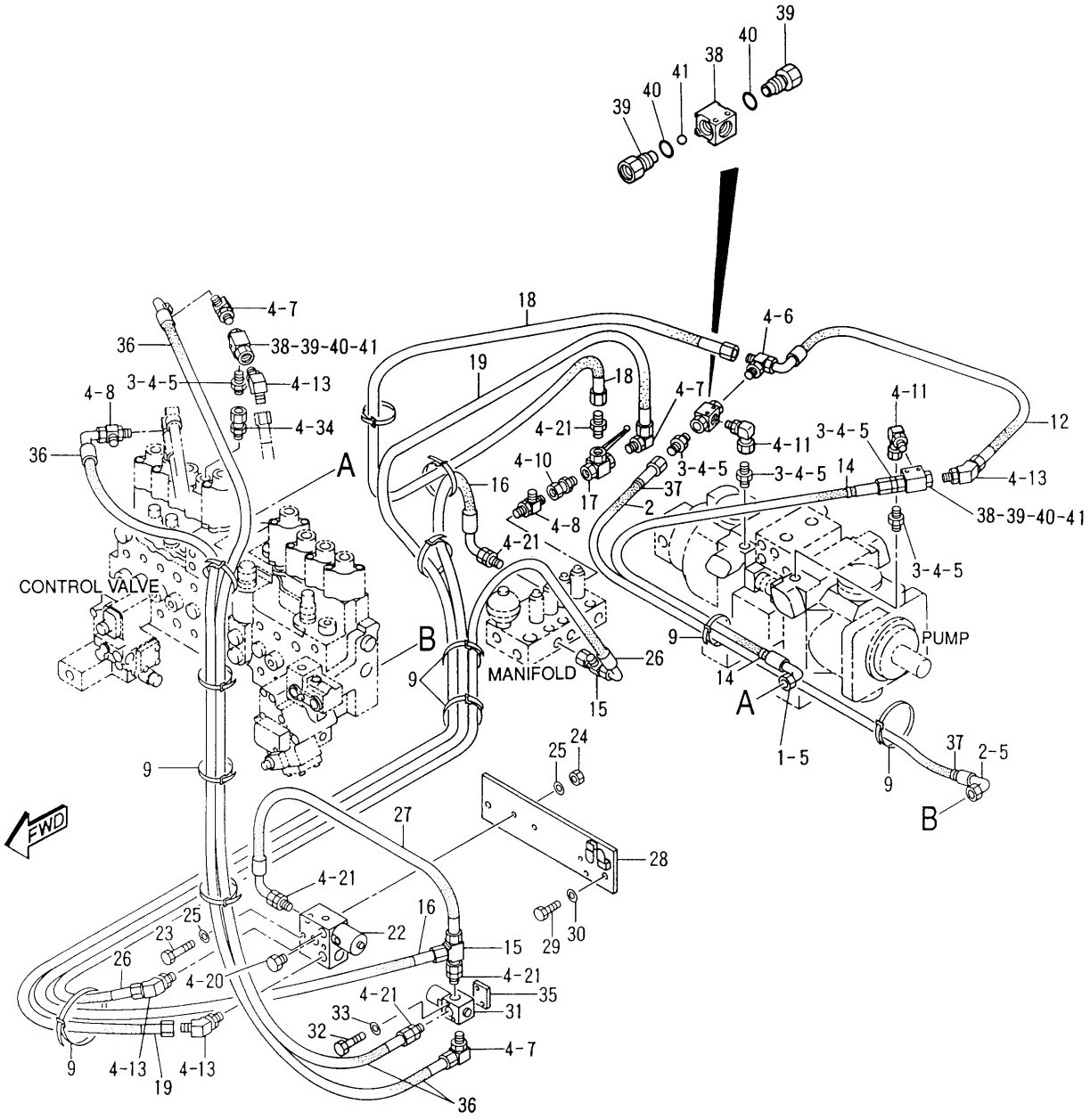

H65304E 01

119-5280 LINES GP-PILOT

Part of 120-4984-Page231
121-6303-Page299,122-4459-Page300,4I-6363-Page318
An Attachment

HYDRAULIC SYSTEM

NOTE	No.	PART No.	QTY	PART NAME	NOTE	No.	PART No.	QTY	PART NAME
	1	124-0864	1	HOSE AS (NOM 06, L=860mm)					
	2	129-5982	1	HOSE AS (NOM 06, L=1510mm)					
	3	6V-8636	5	CONNECTOR					
	4	3J-1907	25	SEAL-O-RING (ID=11.89mm)					
	5	6V-8397	7	SEAL-O-RING (OD=12.83mm)					
	6	030-7955	1	TEE					
	7	030-7947	3	ELBOW					
	8	6M-6853	2	TEE					
	9	7K-1181	10	STRAP					
	10	5I-3178	1	COUPLING AS					
	11	8T-0788	2	ELBOW					
	12	4I-6334	1	HOSE AS (NOM 06, L=600mm)					
	13	030-7942	4	ELBOW					
	14	4I-9527	2	BAND (R3,GREEN)					
	15	061-9258	2	TEE					
	16	7I-7152	1	HOSE AS (NOM 06, L=2100mm)					
Y	17	4I-6363	1	VALVE AS					
	18	4I-6349	1	HOSE AS (NOM 06, L=1000mm)					
	19	5I-3127	1	HOSE AS (NOM 06, L=1900mm)					
	20	9S-4191	1	PLUG					
	21	2R-6806	5	CONNECTOR					
Y	22	122-4459	1	VALVE GP					
	23	8T-3647	2	BOLT (L=80mm)					
	24	5C-7261	2	NUT					
	25	8T-4224	4	WASHER					
	26	4I-7684	1	HOSE AS (NOM 06, L=1550mm)					
	27	4I-1422	1	HOSE AS (NOM 06, L=550mm)					
	28	121-6415	1	SUPPORT AS					
	29	8T-4195	2	BOLT (L=30mm)					
	30	8T-4121	2	WASHER					
Y	31	121-6303	1	VALVE GP					
	32	8T-4971	2	BOLT (L=30mm)					
	33	9X-8256	2	WASHER					
	34	4I-6287	1	COUPLING AS					
	35	129-5926	1	PLATE					
	36	4I-1428	2	HOSE AS (NOM 06, L=1390mm)					
	37	4I-9522	2	BAND (L2,YELLOW)					
	38	8J-6875	3	VALVE AS					
	39	4T-9905	2	ADAPTER					
	40	2M-9780	2	SEAL-O-RING (ID=19.18mm)					
	41	4B-9784	1	BALL					

Y—SEE SEPARATE ILLUSTRATION

H65304E 01

119-5280 LINES GP-PILOT

Part of 120-4984-Page231
121-6303-Page299,122-4459-Page300,4I-6363-Page318
An Attachment

MEMORANDA

HYDRAULIC SYSTEM

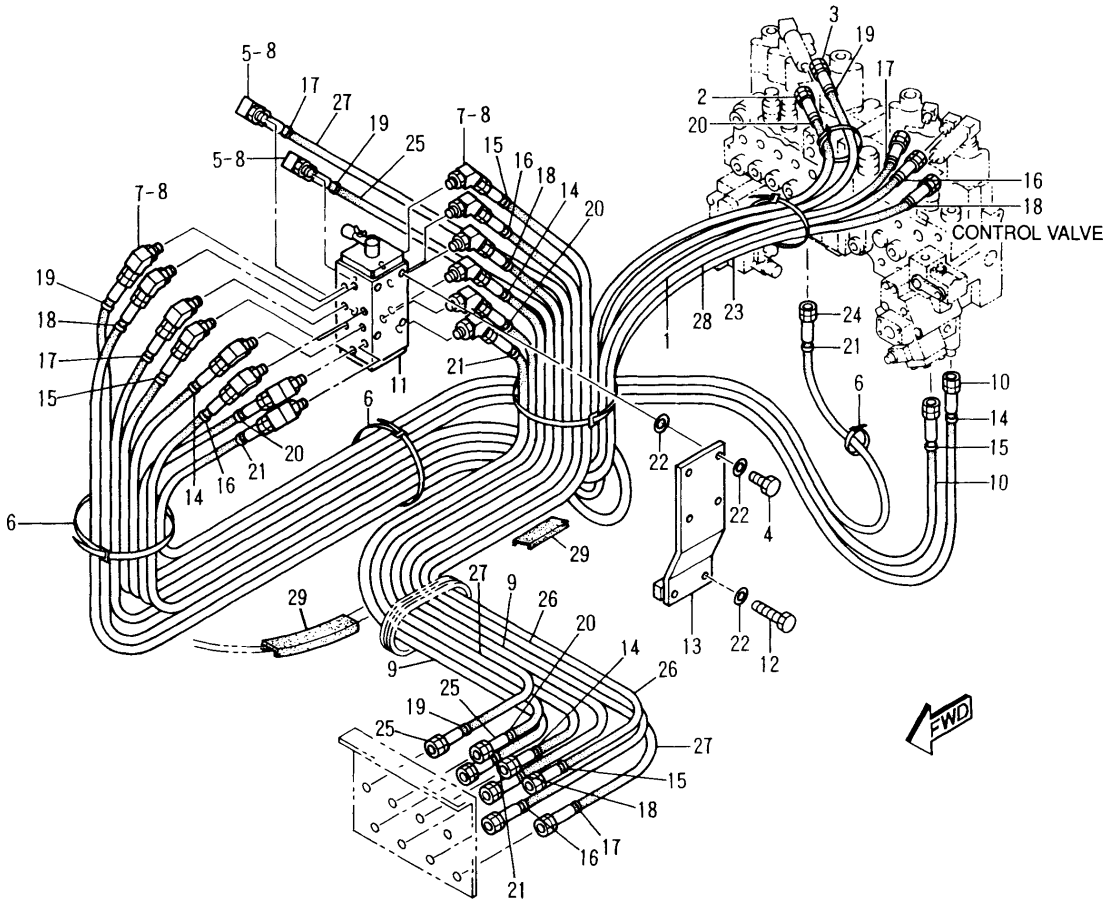

NOTE	No.	PART No.	QTY	PART NAME	NOTE	No.	PART No.	QTY	PART NAME
	1	5I-3142	1	HOSE AS (NOM 06, L=1300mm)		21	4I-9528	4	BAND (R4,PURPLE)
	2	108-7159	1	HOSE AS (NOM 06, L=1450mm)		22	8T-4223	10	WASHER
	3	4I-1410	1	HOSE AS (NOM 06, L=1590mm)		23	5I-4487	1	HOSE AS (NOM 06, L=1350mm)
	4	8T-4956	4	BOLT (L=35mm)		24	124-1122	1	HOSE AS (NOM 06, L=1500mm)
	5	030-7947	2	ELBOW		25	5I-3127	2	HOSE AS (NOM 06, L=1900mm)
	6	096-0061	6	STRAP		26	7I-0172	2	HOSE AS (NOM 06, L=2100mm)
	7	030-7942	14	ELBOW		27	4I-7608	2	HOSE AS (NOM 06, L=2050mm)
	8	3J-1907	16	SEAL-O-RING (ID=11.89mm)		28	102-1276	1	HOSE AS (NOM 06, L=1350mm)
	9	124-1239	2	HOSE AS (NOM 06, L=1950mm)	E	29	102-1174		GUARD…(20cm × 2)
	10	7I-0181	2	HOSE AS (NOM 06, L=1250mm)					
Y	11	085-6455	1	VALVE GP					
	12	8T-4910	2	BOLT (L=60mm)					
	13	124-1125	1	SUPPORT AS					
	14	4I-9521	4	BAND (L1,RED)					
	15	4I-9522	4	BAND (L2,YELLOW)					
	16	4I-9523	4	BAND (L3,BLUE)					
	17	4I-9524	4	BAND (L4,BROWN)					
	18	4I-9525	4	BAND (R1,ORANGE)					
	19	4I-9526	4	BAND (R2,WHITE)					
	20	4I-9527	4	BAND (R3,GREEN)					

E—ORDER BY THE CENTIMETER

Y—SEE SEPARATE ILLUSTRATION

H65305E 04

115-8918 LINES GP-PILOT

4 Way Valve

Part of 123-2466-Page292

085-6455-Page312

An Attachment

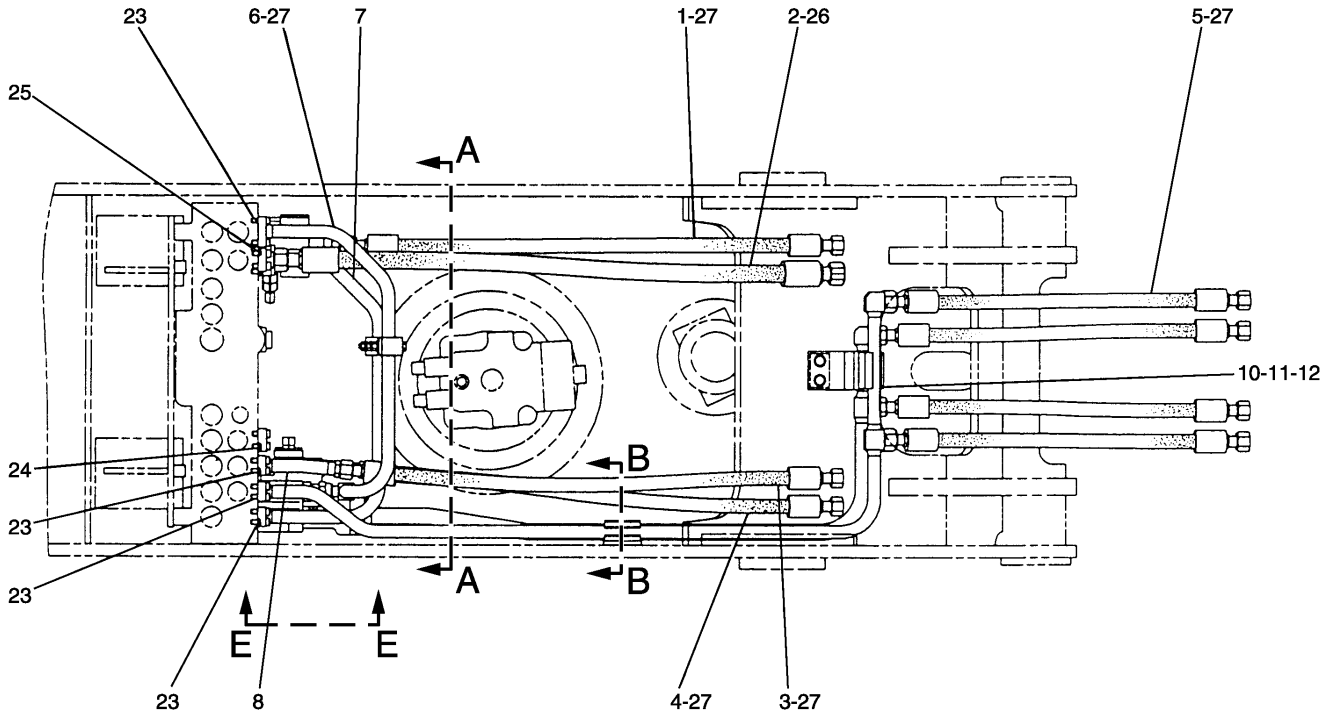

TOP VIEW

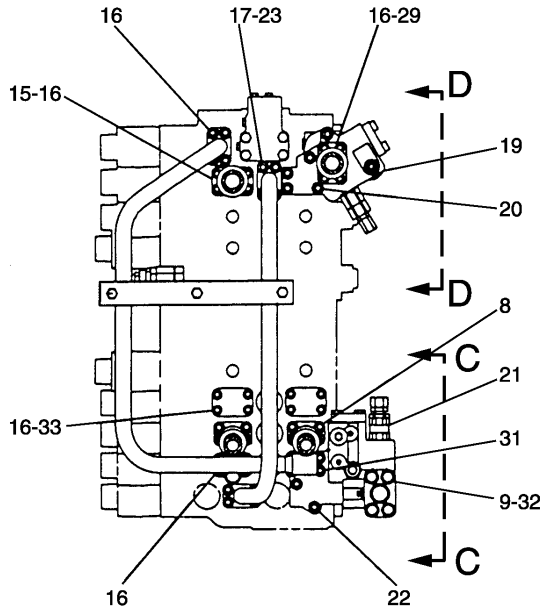

A – A

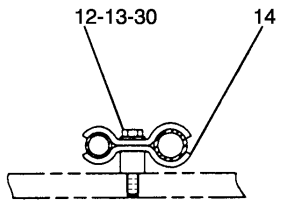

B – B

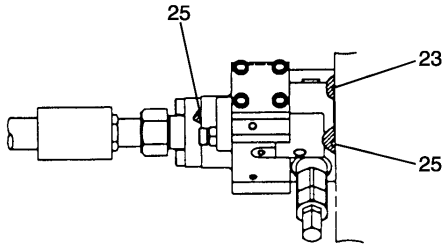

D – D

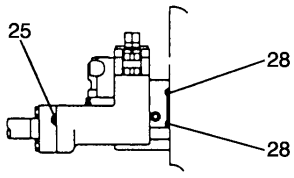

C – C

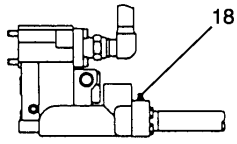

E – E

H57564E 03

115-8895 LINES GP-FRONT (1/2)
S/N 3MR 1-01715, 4MR 1-00317
118-3917-Page308,123-2419-Page309.01

HYDRAULIC SYSTEM

NOTE	No.	PART No.	QTY	PART NAME	NOTE	No.	PART No.	QTY	PART NAME
	1	5I-8835	1	HOSE AS					
E		5P-0200		HOSE…(106cm)					
		5P-1027	2	SLEEVE					
		7X-1451	2	STEM AS (STRAIGHT)					
	2	4I-1074	1	HOSE AS					
E		5P-0201		HOSE…(115cm)					
		5P-1010	2	SLEEVE					
		7X-1452	2	STEM AS (STRAIGHT)					
	3	4I-1071	1	HOSE AS					
E		5P-0200		HOSE…(103cm)					
		5P-1027	2	SLEEVE					
		7X-1451	2	STEM AS (STRAIGHT)					
	4	4I-1077	1	HOSE AS					
	5	124-1047	4	HOSE AS					
E		5P-0200		HOSE…(69cm)					
		5P-1027	2	SLEEVE					
		7X-1451	2	STEM AS (STRAIGHT)					
	6	124-1116	1	TUBE AS					
	7	113-6477	1	TUBE AS					
	8	7Y-3721	2	TUBE AS					
	9	8T-4121	4	WASHER					
	10	4I-1674	2	CLIP					
	11	8T-4139	2	BOLT (L=30mm)					
	12	8T-4223	4	WASHER					
	13	4I-1676	1	CLIP					
	14	124-1063	1	SUPPORT AS					
	15	7Y-3731	1	FLANGE					
	16	9X-6032	36	BOLT (L=30mm)					
	17	8T-9515	4	BOLT (L=40mm)					
	18	9F-2167	1	SCREW					
Y	19	118-3917	1	VALVE GP					
				(STICK DRIFT REDUCTION)					
	20	096-1331	5	BOLT (L=120mm)					
Y	21	123-2419	1	VALVE GP					
				(BOOM DRIFT REDUCTION)					
	22	8T-0272	2	BOLT (L=110mm)					
	23	4J-5267	7	SEAL-O-RING (ID=24.99mm)					
	24	4J-0520	2	SEAL-O-RING (ID=32.92mm)					
	25	1P-3703	4	SEAL					
	26	5K-9090	1	SEAL-O-RING (OD=27.22mm)					
	27	6V-9746	12	SEAL-O-RING (OD=22.50mm)					
	28	6V-5556	2	SEAL-O-RING (ID=25.07mm)					
	29	4I-1683	1	FLANGE					
	30	8T-4910	2	BOLT (L=60mm)					
	31	086-2369	4	BOLT (L=130mm)					
	32	8T-4182	4	BOLT (L=45mm)					
	33	7Y-8099	2	COVER					

E—ORDER BY THE CENTIMETER

Y—SEE SEPARATE ILLUSTRATION

H57564E 03

115-8895 LINES GP-FRONT (1/2)

S/N 3MR 1-01715, 4MR 1-00317

118-3917-Page308,123-2419-Page309.01

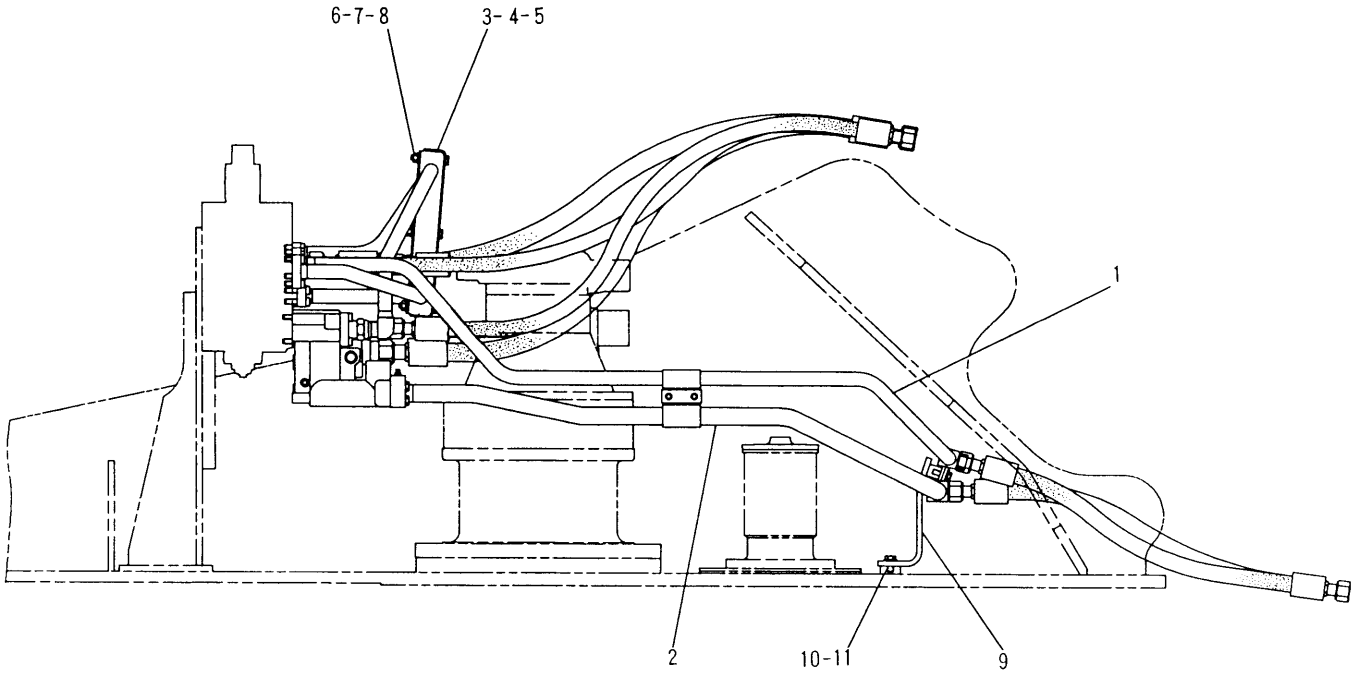

SIDE VIEW

H57632E 03

115-8895 LINES GP-FRONT (2/2)
S/N 3MR 1-01715, 4MR 1-00317

HYDRAULIC SYSTEM

NOTE	No.	PART No.	QTY	PART NAME	NOTE	No.	PART No.	QTY	PART NAME
	1	133-5717	1	TUBE AS					
	2	131-9650	1	TUBE AS					
	3	113-6511	1	SUPPORT					
	4	113-6512	1	PLATE					
	5	113-6513	2	CLAMP					
	6	8T-5005	3	BOLT (L=70mm)					
	7	8T-4133	3	NUT					
	8	8T-4121	3	WASHER					
	9	124-1062	1	SUPPORT AS					
	10	8T-4223	2	WASHER					
	11	8T-4192	2	BOLT (L=25mm)					

H57632E 03

115-8895 LINES GP-FRONT (2/2)

S/N 3MR 1-01715, 4MR 1-00317

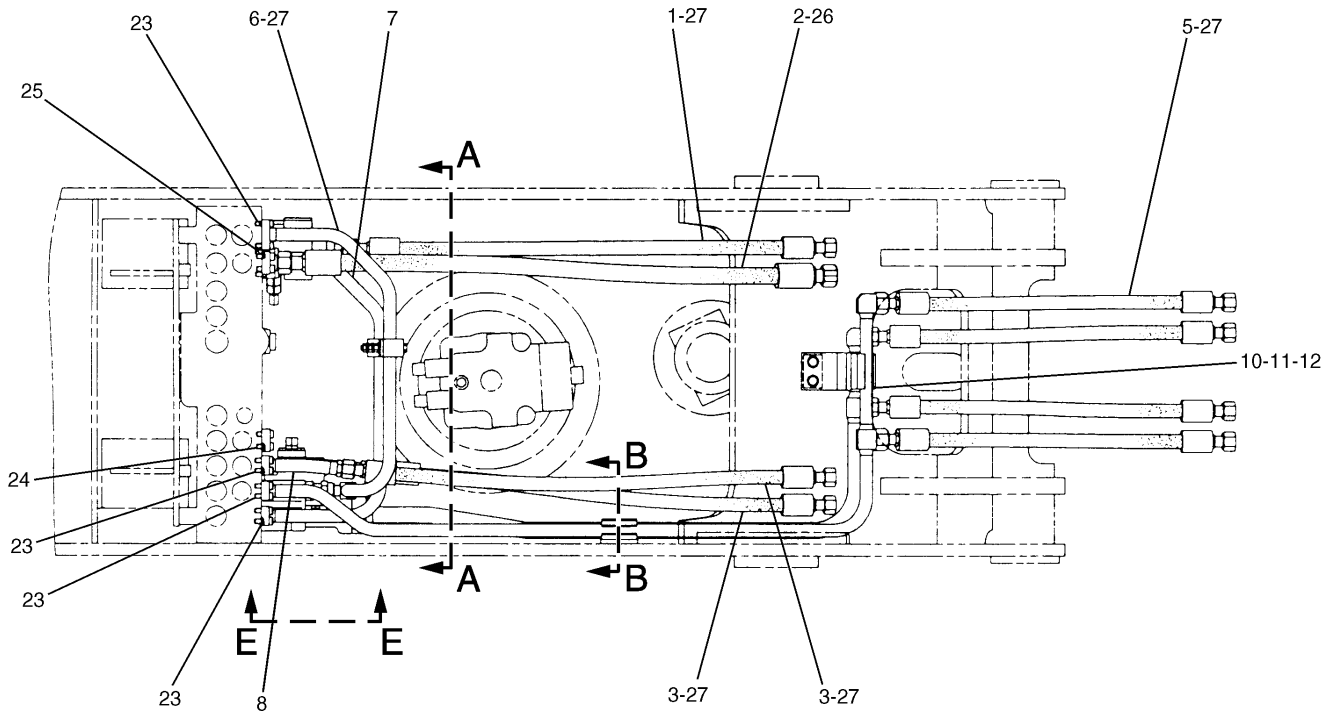

TOP VIEW

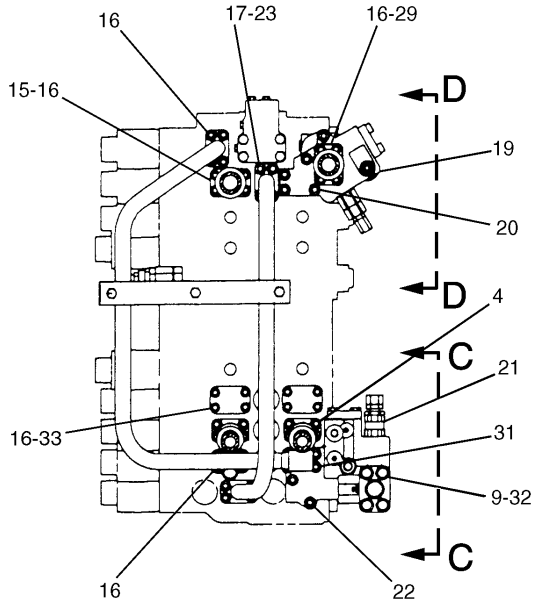

A – A

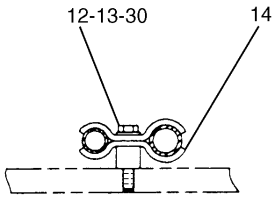

B – B

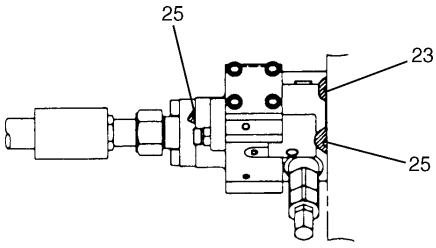

D – D

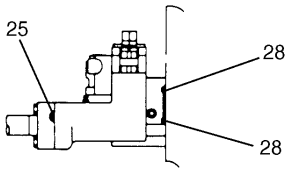

C – C

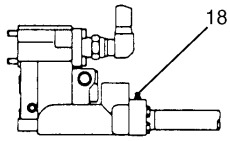

E – E

H65307E 05

115-8895 LINES GP-FRONT (1/2)
S/N 3MR 01716-04978, 4MR 00318-00715
118-3917-Page308,123-2419-Page309.01

HYDRAULIC SYSTEM

NOTE	No.	PART No.	QTY	PART NAME	NOTE	No.	PART No.	QTY	PART NAME
	1	5I-8835	1	HOSE AS					
E		5P-0200		HOSE…(106cm)					
		5P-1027	2	SLEEVE					
		7X-1451	2	STEM AS (STRAIGHT)					
	2	4I-1074	1	HOSE AS					
E		5P-0201		HOSE…(115cm)					
		5P-1010	2	SLEEVE					
		7X-1452	2	STEM AS (STRAIGHT)					
	3	4I-1071	2	HOSE AS					
E		5P-0200		HOSE…(103cm)					
		5P-1027	2	SLEEVE					
		7X-1451	2	STEM AS (STRAIGHT)					
	4	137-0856	1	TUBE AS					
	5	124-1047	4	HOSE AS					
E		5P-0200		HOSE…(69cm)					
		5P-1027	2	SLEEVE					
		7X-1451	2	STEM AS (STRAIGHT)					
	6	124-1116	1	TUBE AS					
	7	113-6477	1	TUBE AS					
	8	7Y-3721	1	TUBE AS					
	9	8T-4121	4	WASHER					
	10	4I-1674	2	CLIP					
	11	8T-4139	2	BOLT (L=30mm)					
	12	8T-4223	4	WASHER					
	13	4I-1676	1	CLIP					
	14	124-1063	1	SUPPORT AS					
	15	7Y-3731	1	FLANGE					
	16	9X-6032	36	BOLT (L=30mm)					
	17	8T-9515	4	BOLT (L=40mm)					
	18	9F-2167	1	SCREW					
Y	19	118-3917	1	VALVE GP					
				(STICK DRIFT REDUCTION)					
	20	096-1331	5	BOLT (L=120mm)					
Y	21	123-2419	1	VALVE GP					
				(BOOM DRIFT REDUCTION)					
	22	8T-0272	2	BOLT (L=110mm)					
	23	4J-5267	7	SEAL-O-RING (ID=24.99mm)					
	24	4J-0520	2	SEAL-O-RING (ID=32.92mm)					
	25	1P-3703	4	SEAL					
	26	5K-9090	1	SEAL-O-RING (OD=27.22mm)					
	27	6V-9746	12	SEAL-O-RING (OD=22.50mm)					
	28	6V-5556	2	SEAL-O-RING (ID=25.07mm)					
	29	4I-1683	1	FLANGE					
	30	8T-4910	2	BOLT (L=60mm)					
	31	086-2369	4	BOLT (L=130mm)					
	32	8T-4182	4	BOLT (L=45mm)					
	33	7Y-8099	2	COVER					

E—ORDER BY THE CENTIMETER

Y—SEE SEPARATE ILLUSTRATION

H65307E 05

115-8895 LINES GP-FRONT (1/2)

S/N 3MR 01716-04978, 4MR 00318-00715

118-3917-Page308,123-2419-Page309.01

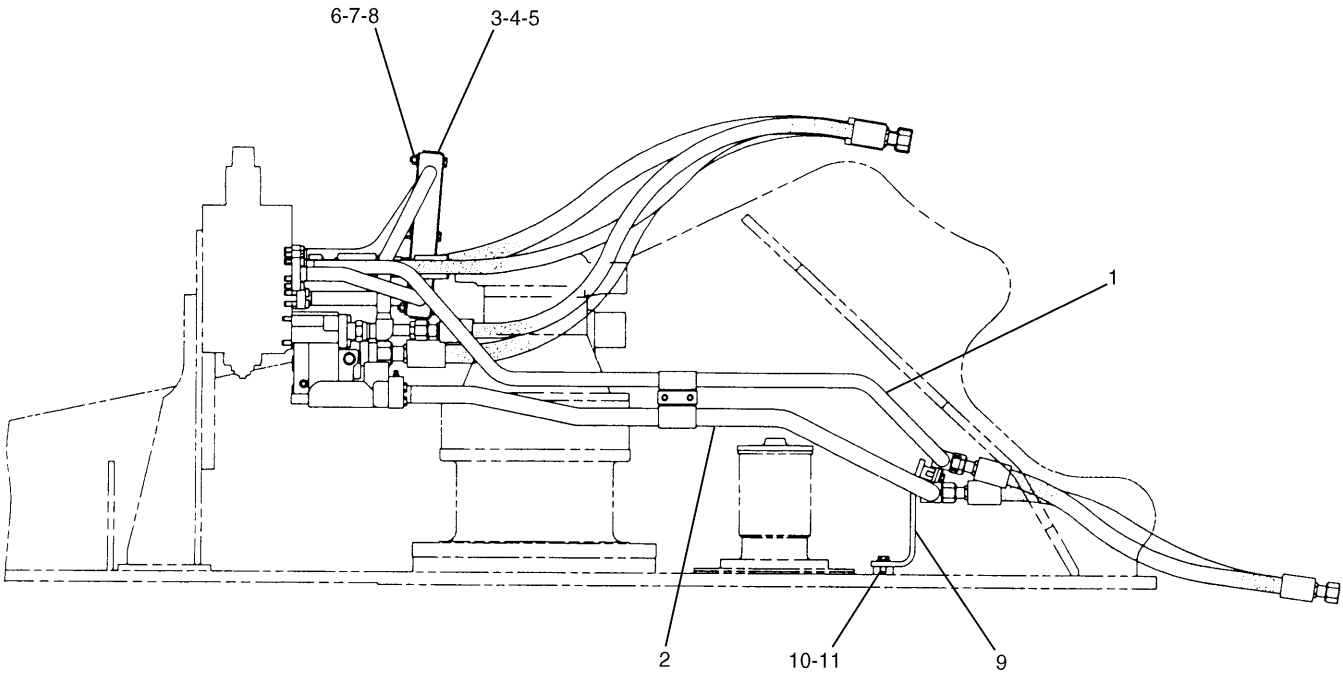

SIDE VIEW

H65309E 05

115-8895 LINES GP-FRONT (2/2)

S/N 3MR 01716-04978, 4MR 00318-00715

HYDRAULIC SYSTEM

NOTE	No.	PART No.	QTY	PART NAME	NOTE	No.	PART No.	QTY	PART NAME
	1	133-5717	1	TUBE AS					
	2	131-9650	1	TUBE AS					
	3	113-6511	1	SUPPORT					
	4	113-6512	1	PLATE					
	5	113-6513	2	CLAMP					
	6	8T-5005	3	BOLT (L=70mm)					
	7	8T-4133	3	NUT					
	8	8T-4121	3	WASHER					
	9	124-1062	1	SUPPORT AS					
	10	8T-4223	2	WASHER					
	11	8T-4192	2	BOLT (L=25mm)					

H65309E 05

115-8895 LINES GP-FRONT (2/2)

S/N 3MR 01716-04978, 4MR 00318-00715

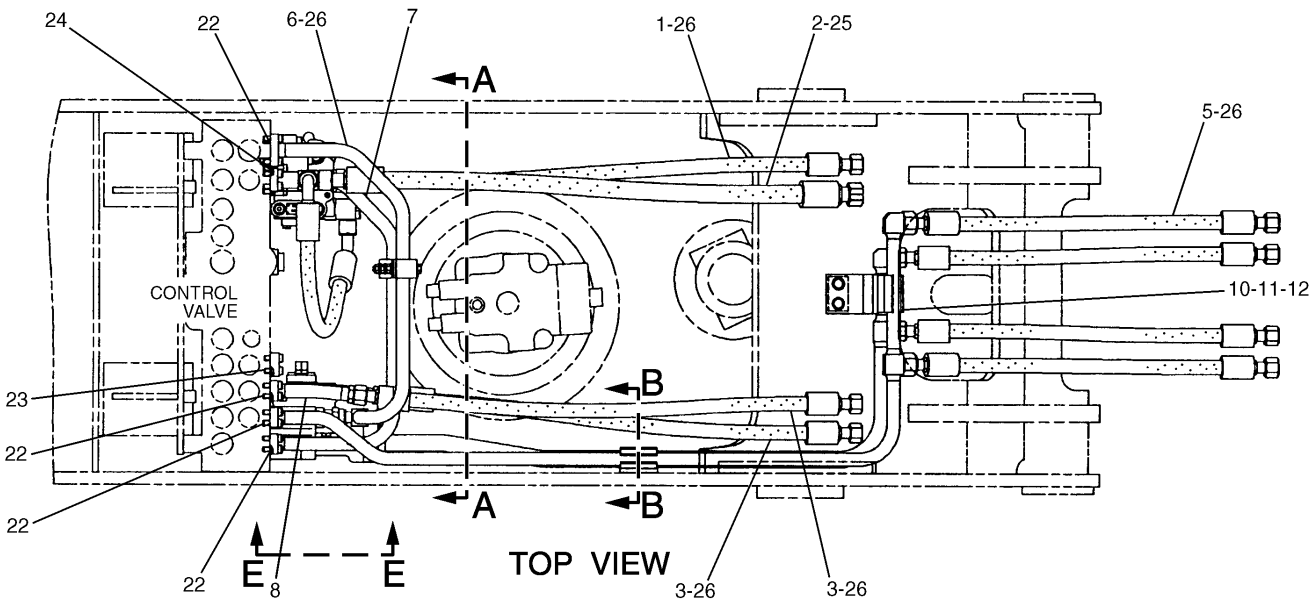

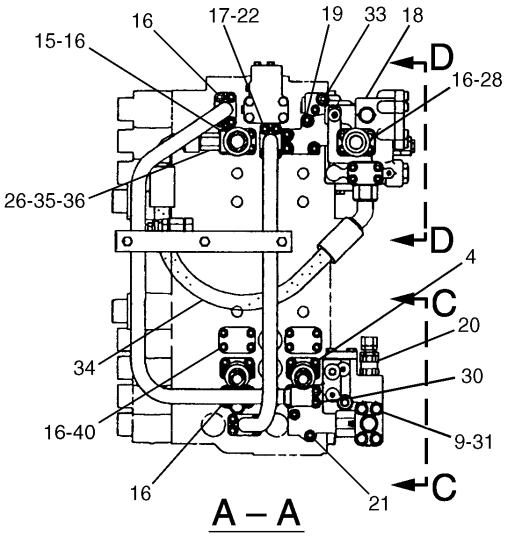

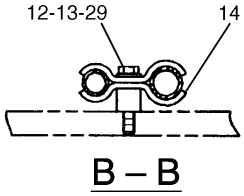

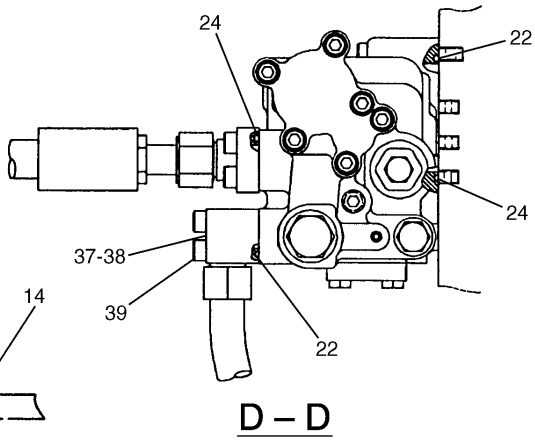

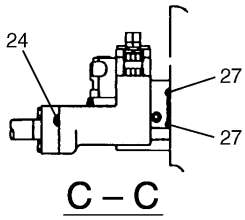

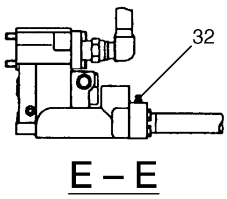

H65311E 08

115-8895 LINES GP-FRONT (1/2)
S/N 3MR 04979-Up, 4MR 00716-Up
155-7067-Page308.02,123-2419-Page309.01

HYDRAULIC SYSTEM

NOTE	No.	PART No.	QTY	PART NAME	NOTE	No.	PART No.	QTY	PART NAME
	1	119-2763	1	HOSE AS		39	8T-1160	4	BOLT (L=50mm)
E		5P-0200		HOSE…(113cm)		40	7Y-8099	2	COVER
		5P-1027	2	SLEEVE					
		7X-1451	2	STEM AS (STRAIGHT)					
E		7Y-5074		GUARD…(130cm)					
	2	134-7049	1	HOSE AS					
E		5P-0201		HOSE…(110cm)					
		5P-1010	2	SLEEVE					
		7X-1452	2	STEM AS (STRAIGHT)					
	3	4I-1071	2	HOSE AS					
E		5P-0200		HOSE…(103cm)					
		5P-1027	2	SLEEVE					
		7X-1451	2	STEM AS (STRAIGHT)					
	4	137-0856	1	TUBE AS					
	5	124-1047	4	HOSE AS					
E		5P-0200		HOSE…(69cm)					
		5P-1027	2	SLEEVE					
		7X-1451	2	STEM AS (STRAIGHT)					
	6	124-1116	1	TUBE AS					
	7	113-6477	1	TUBE AS					
	8	7Y-3721	1	TUBE AS					
	9	8T-4121	4	WASHER					
	10	4I-1674	2	CLIP					
	11	8T-4139	2	BOLT (L=30mm)					
	12	8T-4223	4	WASHER					
	13	4I-1676	1	CLIP					
	14	124-1063	1	SUPPORT AS					
	15	134-7048	1	FLANGE					
	16	9X-6032	36	BOLT (L=30mm)					
	17	8T-9515	4	BOLT (L=40mm)					
Y	18	155-7067	1	VALVE GP					
				(STICK DRIFT REDUCTION)					
	19	9X-2158	4	BOLT (L=90mm)					
Y	20	123-2419	1	VALVE GP					
				(BOOM DRIFT REDUCTION)					
	21	8T-0272	2	BOLT (L=110mm)					
	22	4J-5267	8	SEAL-O-RING (ID=24.99mm)					
	23	4J-0520	2	SEAL-O-RING (ID=32.92mm)					
	24	1P-3703	4	SEAL					
	25	5K-9090	1	SEAL-O-RING (OD=27.22mm)					
	26	6V-9746	13	SEAL-O-RING (OD=22.50mm)					
	27	6V-5556	2	SEAL-O-RING (ID=25.07mm)					
	28	4I-1683	1	FLANGE					
	29	8T-4910	2	BOLT (L=60mm)					
	30	086-2369	4	BOLT (L=130mm)					
	31	8T-4182	4	BOLT (L=45mm)					
	32	9F-2167	1	SCREW					
	33	095-0658	1	BOLT (L=70mm)					
	34	134-7053	1	HOSE AS					
	35	8T-0078	1	CONNECTOR					
	36	3D-2824	1	SEAL-O-RING (ID=23.47mm)					
	37	5I-3071	1	ELBOW					
	38	4I-8889	1	SEAL					

E—ORDER BY THE CENTIMETER

Y—SEE SEPARATE ILLUSTRATION

H65311E 08

115-8895 LINES GP-FRONT (1/2)

S/N 3MR 04979-Up, 4MR 00716-Up

155-7067-Page308.02,123-2419-Page309.01

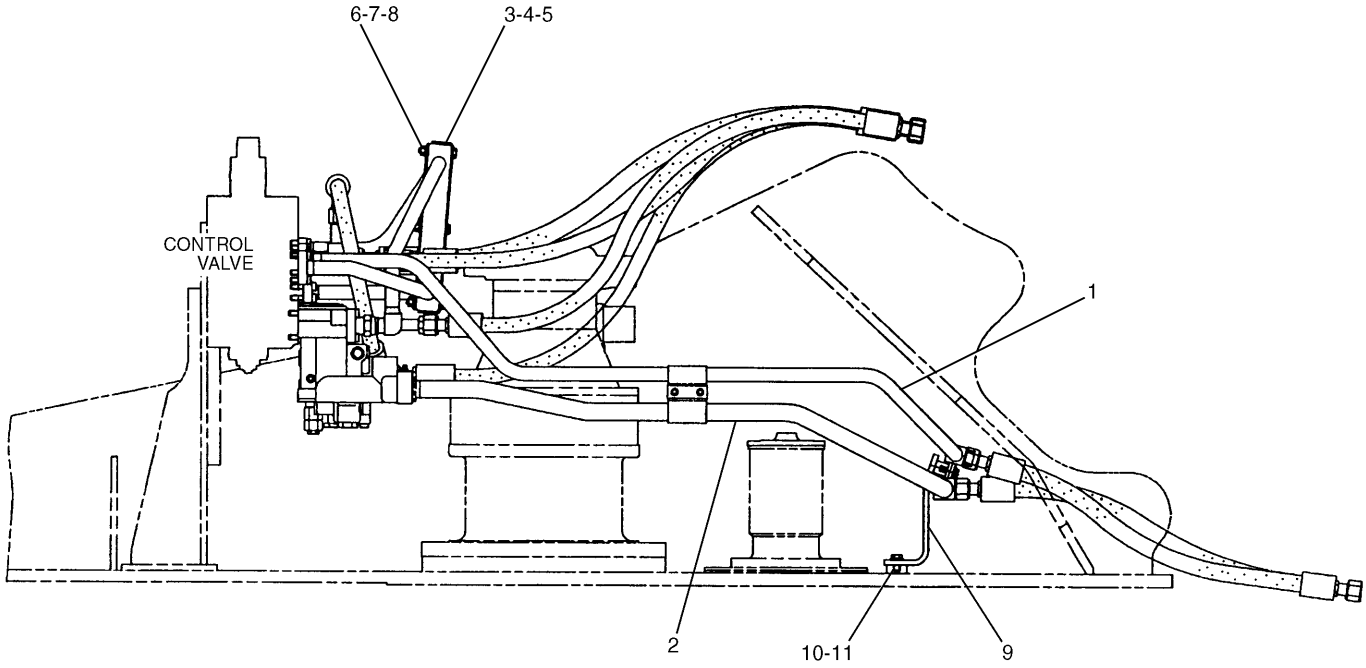

SIDE VIEW

H65313E 08

115-8895 LINES GP-FRONT (2/2)
S/N 3MR 04979-Up, 4MR 00716-Up

HYDRAULIC SYSTEM

NOTE	No.	PART No.	QTY	PART NAME	NOTE	No.	PART No.	QTY	PART NAME
	1	133-5717	1	TUBE AS					
	2	131-9650	1	TUBE AS					
	3	113-6511	1	SUPPORT					
	4	113-6512	1	PLATE					
	5	113-6513	2	CLAMP					
	6	8T-5005	3	BOLT (L=70mm)					
	7	8T-4133	3	NUT					
	8	8T-4121	3	WASHER					
	9	124-1062	1	SUPPORT AS					
	10	8T-4223	2	WASHER					
	11	8T-4192	2	BOLT (L=25mm)					

H65313E 08

115-8895 LINES GP-FRONT (2/2)

S/N 3MR 04979-Up, 4MR 00716-Up

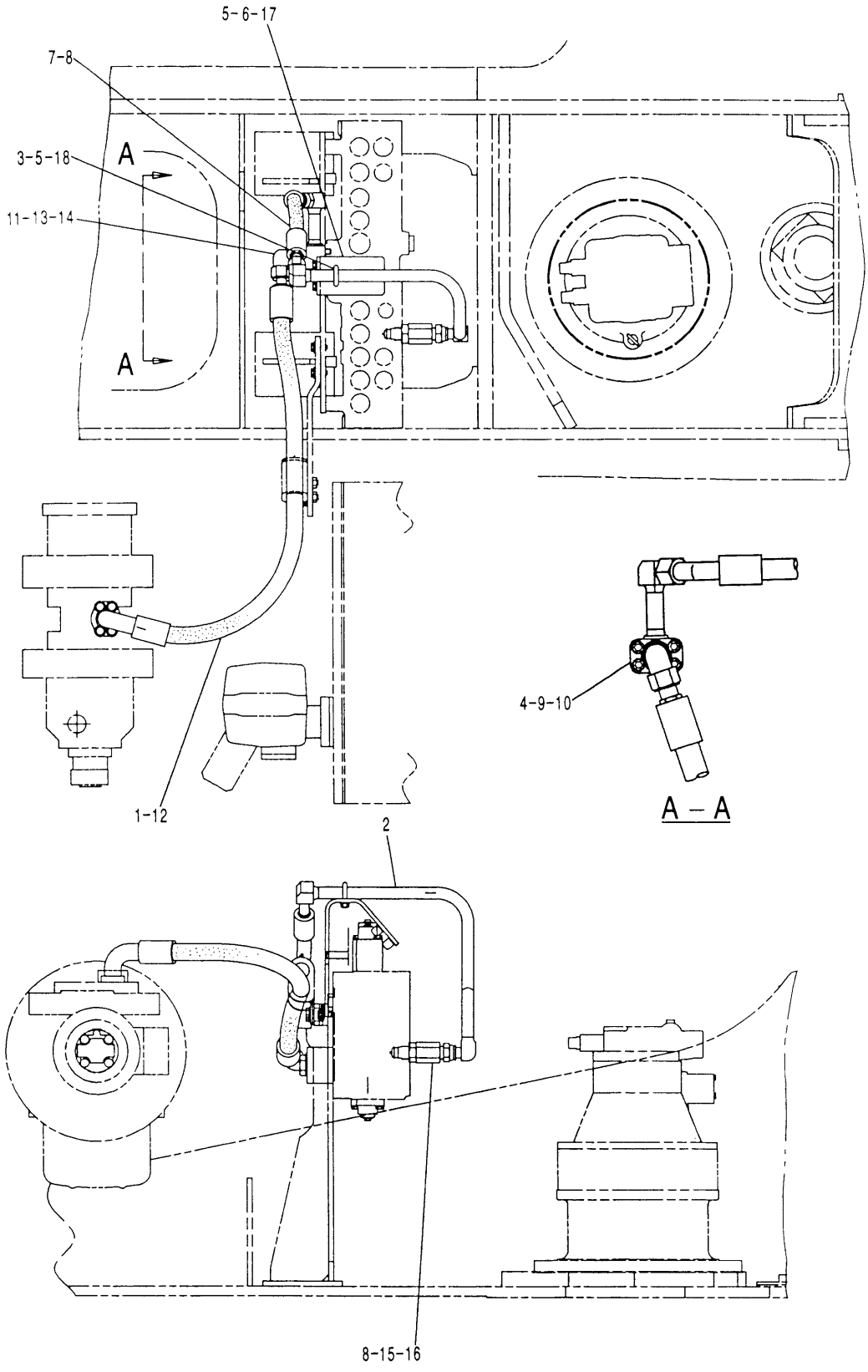

H57634E 00

128-7482 LINES GP-FRONT
Part of 123-2568-Page228
4I-0890-Page304
An Attachment

HYDRAULIC SYSTEM

NOTE	No.	PART No.	QTY	PART NAME	NOTE	No.	PART No.	QTY	PART NAME
	1	5I-3179	1	HOSE AS					
	2	129-5865	1	TUBE AS					
	3	096-4883	2	NUT					
	4	1P-3704	1	SEAL					
	5	8T-4121	4	WASHER					
	6	121-6461	1	SUPPORT AS					
	7	121-6356	1	HOSE AS					
	8	6V-9746	3	SEAL-O-RING (OD=22.50mm)					
	9	121-6270	1	TUBE AS					
	10	095-0673	4	BOLT (L=60mm)					
	11	5K-9090	1	SEAL-O-RING (OD=27.22mm)					
	12	1P-3703	1	SEAL					
	13	7M-8485	1	SEAL-O-RING (ID=29.74mm)					
	14	6V-9008	1	ELBOW					
Y	15	4I-0890	1	VALVE GP					
	16	4K-1388	1	SEAL-O-RING (ID=26.59mm)					
	17	8T-4136	2	BOLT (L=25mm)					
	18	122-8705	1	U-BOLT					

Y—SEE SEPARATE ILLUSTRATION

H57634E 00

128-7482 LINES GP-FRONT

Part of 123-2568-Page228
4I-0890-Page304
An Attachment

HYDRAULIC SYSTEM

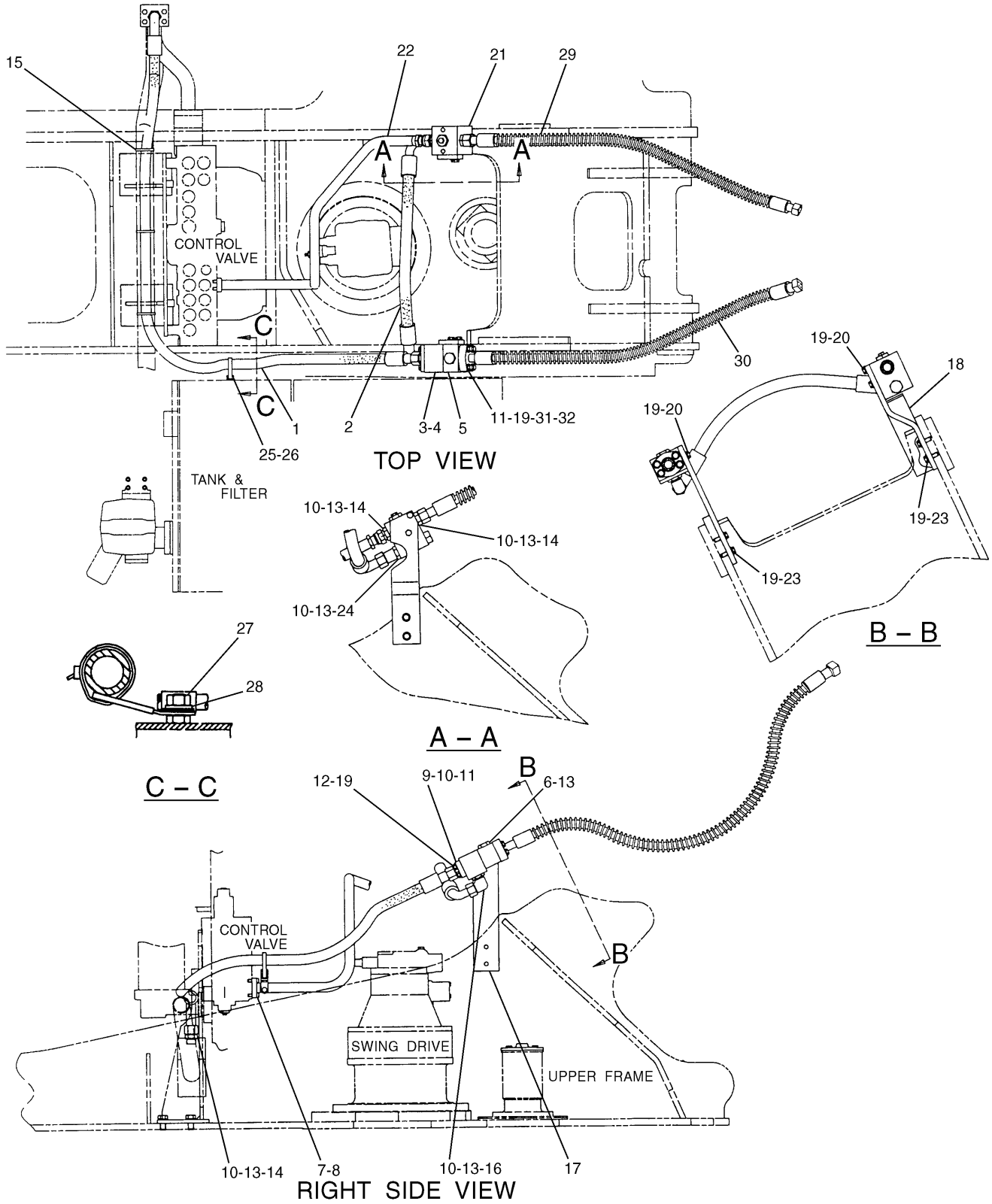

H65496E 03

138-5043 LINES GP-FRONT
S/N 3MR 1-(D98.12), 4MR 1-(D98.12)
Part of 127-6676-Page229
6C-6746-Page302
An Attachment

HYDRAULIC SYSTEM

NOTE	No.	PART No.	QTY	PART NAME	NOTE	No.	PART No.	QTY	PART NAME
	1	138-5042	1	HOSE AS					
	2	111-6545	1	HOSE AS					
E		5P-0201		HOSE…(88cm)					
		5P-1010	2	SLEEVE					
		7X-4815	2	STEM AS (90°)					
	3	1P-3704	1	SEAL					
	4	124-0876	1	BLOCK					
	5	6C-6699	1	BLOCK					
	6	9S-4181	1	PLUG					
	7	1P-3703	1	SEAL					
	8	9X-6032	4	BOLT (L=30mm)					
	9	138-5044	1	FLANGE					
	10	5K-9090	6	SEAL-O-RING (OD=27.22mm)					
	11	1P-3705	2	SEAL					
	12	7X-2550	4	BOLT (L=110mm)					
	13	7M-8485	6	SEAL-O-RING (ID=29.74mm)					
	14	6V-8635	3	CONNECTOR					
	15	7K-1181	3	STRAP					
	16	6V-9008	1	ELBOW					
	17	119-2621	1	PLATE					
	18	166-3121	1	SUPPORT AS					
	19	8T-4223	16	WASHER					
	20	8T-4956	4	BOLT (L=35mm)					
Y	21	6C-6746	1	VALVE GP					
	22	119-2629	1	TUBE AS					
	23	8T-4183	4	BOLT (L=40mm)					
	24	8T-0198	1	CONNECTOR					
	25	5P-5148	1	STRAP					
	26	4P-7582	1	CLIP					
	27	8T-4133	1	NUT					
	28	7X-7729	1	WASHER					
	29	127-6859	1	HOSE AS					
		3E-4069	2	CLIP					
E		5P-0201		HOSE…(146cm)					
		5P-1010	2	SLEEVE					
E		6V-0746		GUARD…(201cm)					
		7X-1452	2	STEM AS (STRAIGHT)					
	30	121-1769	1	HOSE AS					
		2P-6733	2	STEM AS (STRAIGHT)					
		3E-4062	2	CLIP					
E		5P-0202		HOSE…(143cm)					
		5P-0477	2	SLEEVE					
	31	1P-5767	2	FLANGE					
	32	8T-4184	4	BOLT (L=45mm)					

E—ORDER BY THE CENTIMETER

Y—SEE SEPARATE ILLUSTRATION

H65496E 03

138-5043 LINES GP-FRONT

S/N 3MR 1-(D98.12), 4MR 1-(D98.12)

Part of 127-6676-Page229

6C-6746-Page302

An Attachment

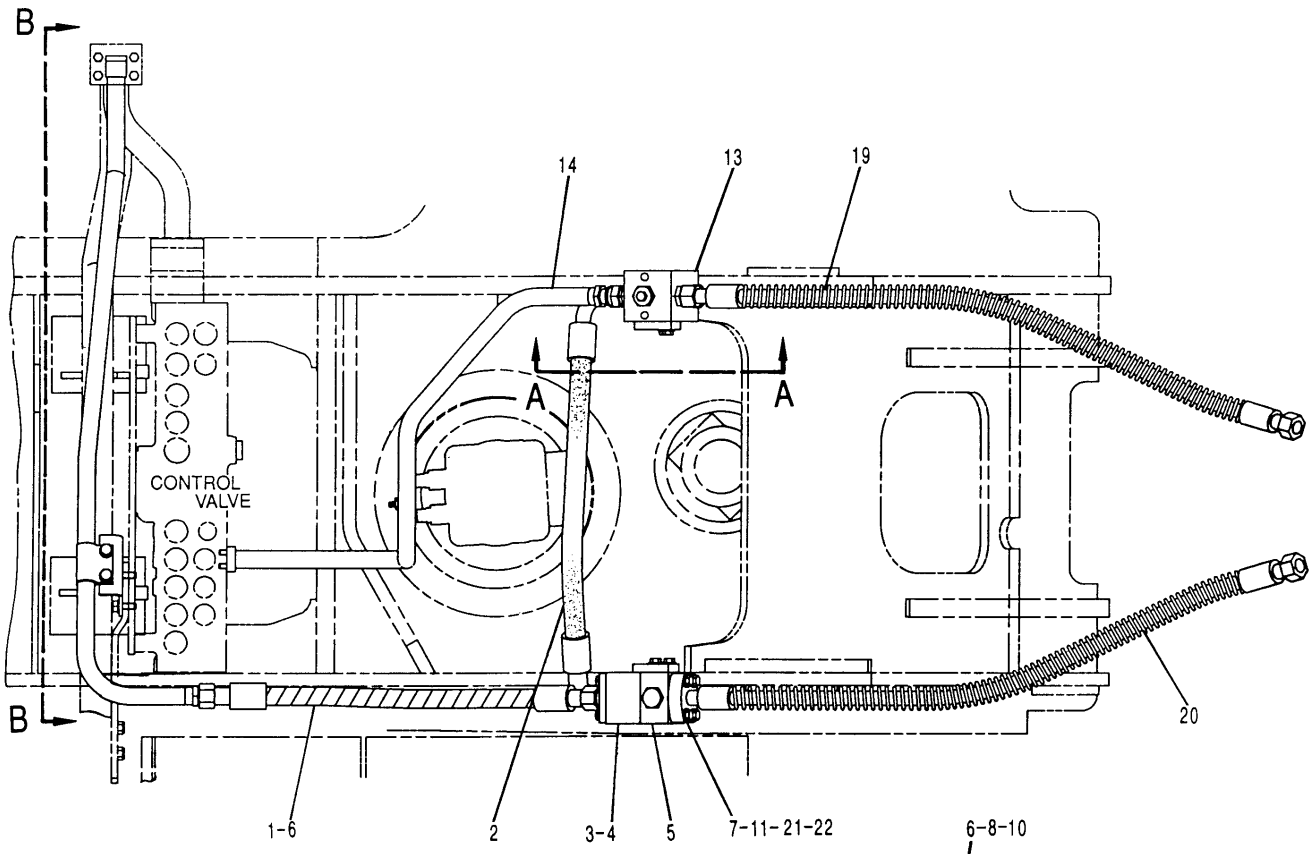

TOP VIEW

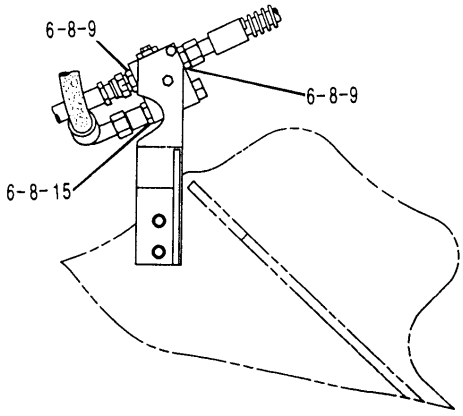

A – A

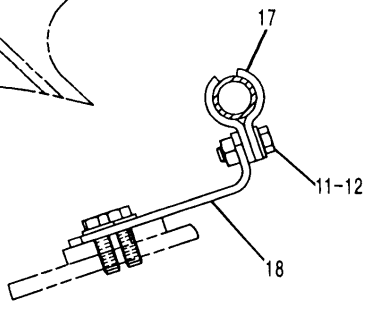

C – C

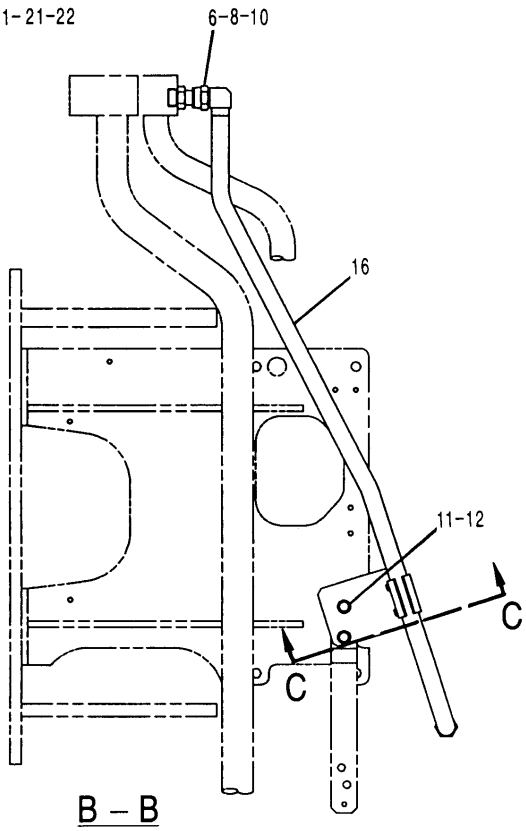

B – B

H65498E 04

138-5043 LINES GP-FRONT (1/2)
S/N 3MR (D99.01)-Up, 4MR (D99.01)-Up
Part of 127-6676-Page229
6C-6746-Page302
An Attachment

HYDRAULIC SYSTEM

NOTE	No.	PART No.	QTY	PART NAME	NOTE	No.	PART No.	QTY	PART NAME
	1	168-0543	1	HOSE AS					
	2	111-6545	1	HOSE AS					
	3	1P-3704	1	SEAL					
	4	124-0876	1	BLOCK					
	5	6C-6699	1	BLOCK					
	6	5K-9090	6	SEAL-O-RING (OD=27.22mm)					
	7	1P-3705	1	SEAL					
	8	7M-8485	4	SEAL-O-RING (ID=29.74mm)					
	9	6V-8635	2	CONNECTOR					
	10	4I-6141	1	COUPLING AS					
	11	8T-4223	8	WASHER					
	12	8T-4956	4	BOLT (L=35mm)					
Y	13	6C-6746	1	VALVE GP					
	14	119-2629	1	TUBE AS					
	15	8T-0198	1	CONNECTOR					
	16	166-3175	1	TUBE AS					
	17	7Y-3732	2	CLIP					
	18	166-3206	1	SUPPORT AS					
	19	127-6859	1	HOSE AS					
	20	121-1769	1	HOSE AS					
	21	1P-5767	2	FLANGE					
	22	8T-4184	4	BOLT (L=45mm)					

Y—SEE SEPARATE ILLUSTRATION

H65498E 04

138-5043 LINES GP-FRONT (1/2)

S/N 3MR (D99.01)-Up, 4MR (D99.01)-Up
Part of 127-6676-Page229
6C-6746-Page302
An Attachment

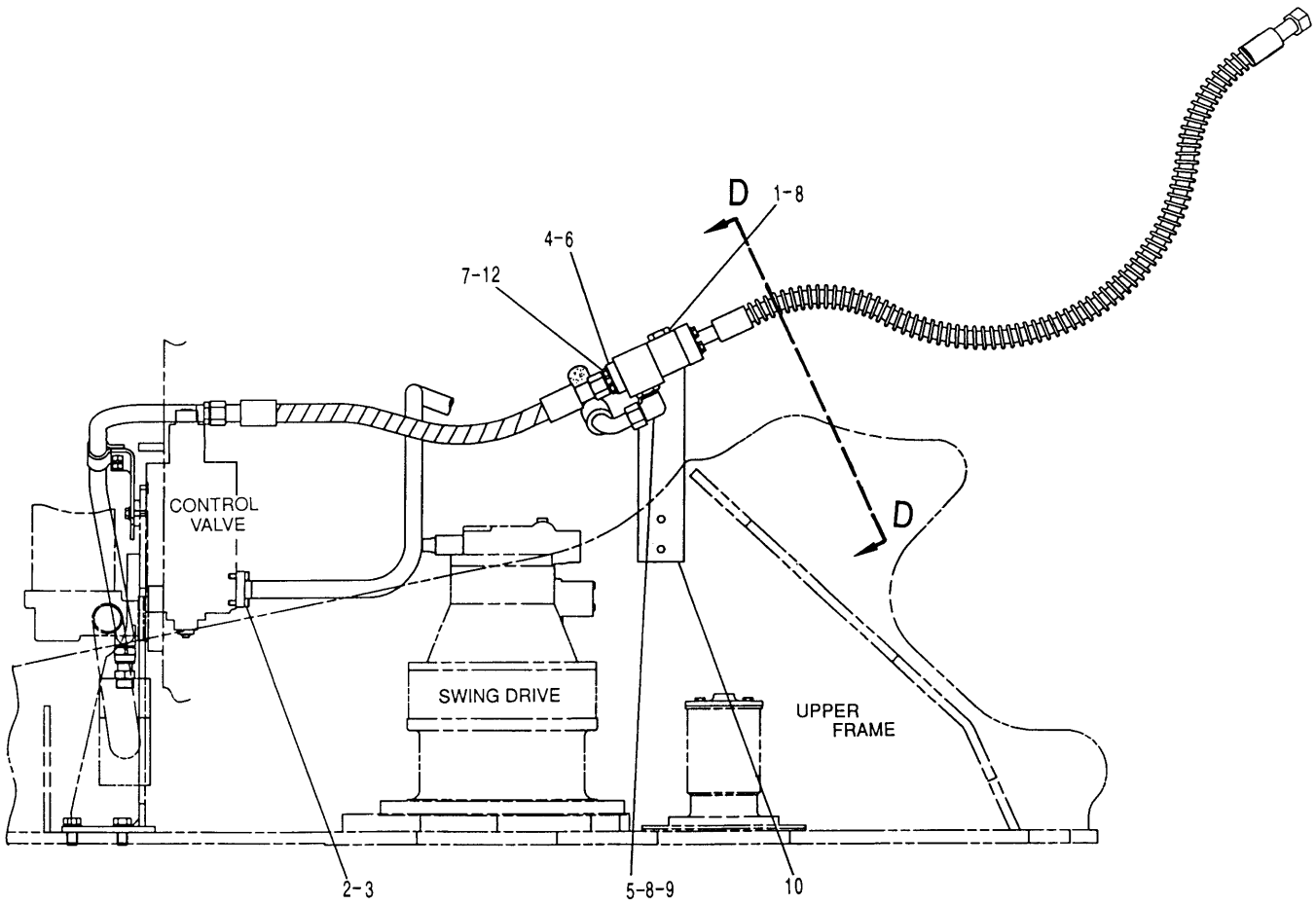

RIGHT SIDE VIEW

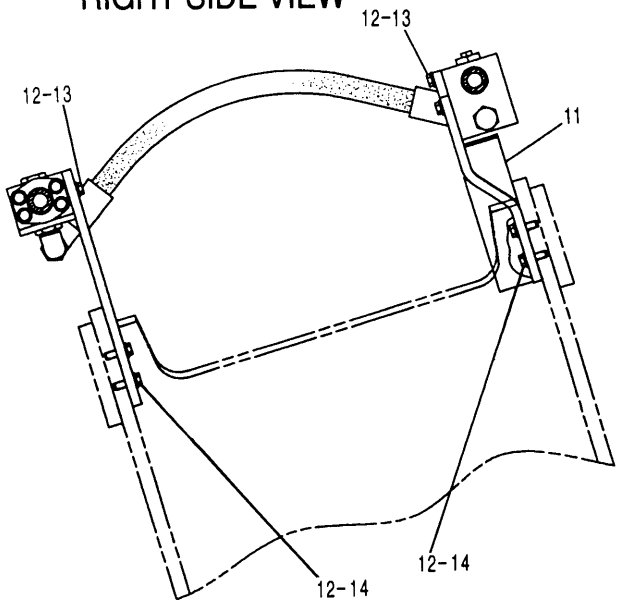

D – D

H65500E 04

138-5043 LINES GP-FRONT (2/2)
S/N 3MR (D99.01)-Up, 4MR (D99.01)-Up
Part of 127-6676-Page229
An Attachment

HYDRAULIC SYSTEM

NOTE	No.	PART No.	QTY	PART NAME	NOTE	No.	PART No.	QTY	PART NAME
	1	9S-4181	1	PLUG					
	2	1P-3703	1	SEAL					
	3	9X-6032	4	BOLT (L=30mm)					
	4	138-5044	1	FLANGE					
	5	5K-9090	1	SEAL-O-RING (OD=27.22mm)					
	6	1P-3705	1	SEAL					
	7	7X-2550	4	BOLT (L=110mm)					
	8	7M-8485	2	SEAL-O-RING (ID=29.74mm)					
	9	6V-9008	1	ELBOW					
	10	119-2621	1	PLATE					
	11	166-3121	1	SUPPORT AS					
	12	8T-4223	12	WASHER					
	13	8T-4956	4	BOLT (L=35mm)					
	14	8T-4183	4	BOLT (L=40mm)					

H65500E 04

138-5043 LINES GP-FRONT (2/2)
S/N 3MR (D99.01)-Up, 4MR (D99.01)-Up
Part of 127-6676-Page229
An Attachment

HYDRAULIC SYSTEM

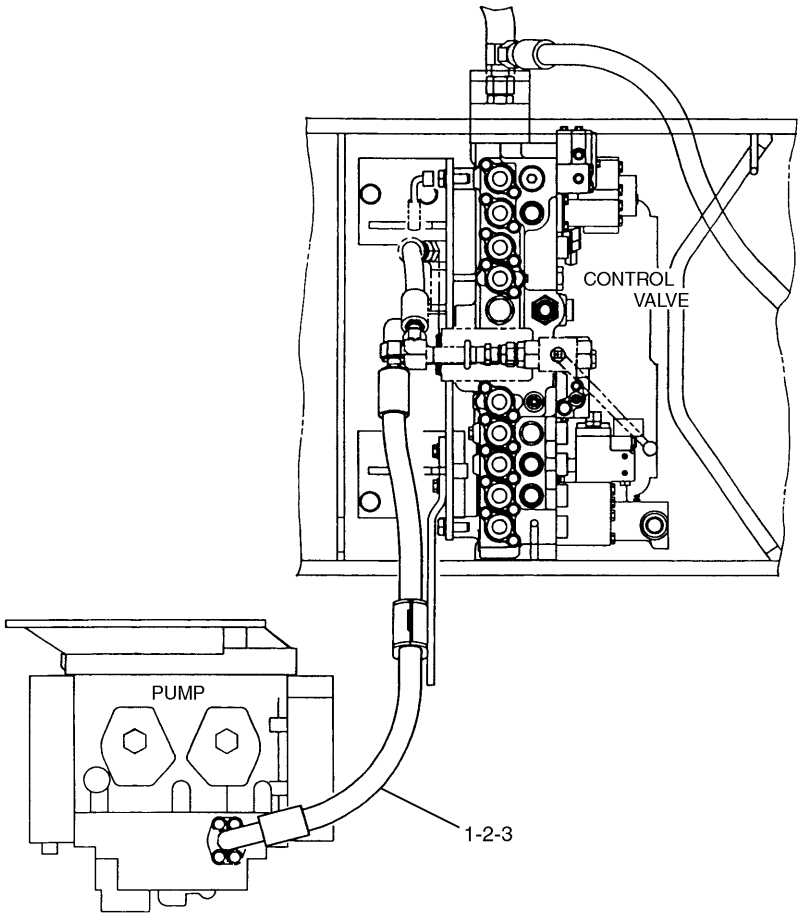

NOTE	No.	PART No.	QTY	PART NAME	NOTE	No.	PART No.	QTY	PART NAME
	1	184-3816	1	HOSE AS					
	2	1P-3703	1	SEAL					
	3	5K-9090	1	SEAL-O-RING (OD=27.22mm)					

H66551E 00

176-5109 LINES GP-TESTING MACHINE
S/N 3MR 07191-07280, 4MR 01024-01030

MEMORANDA

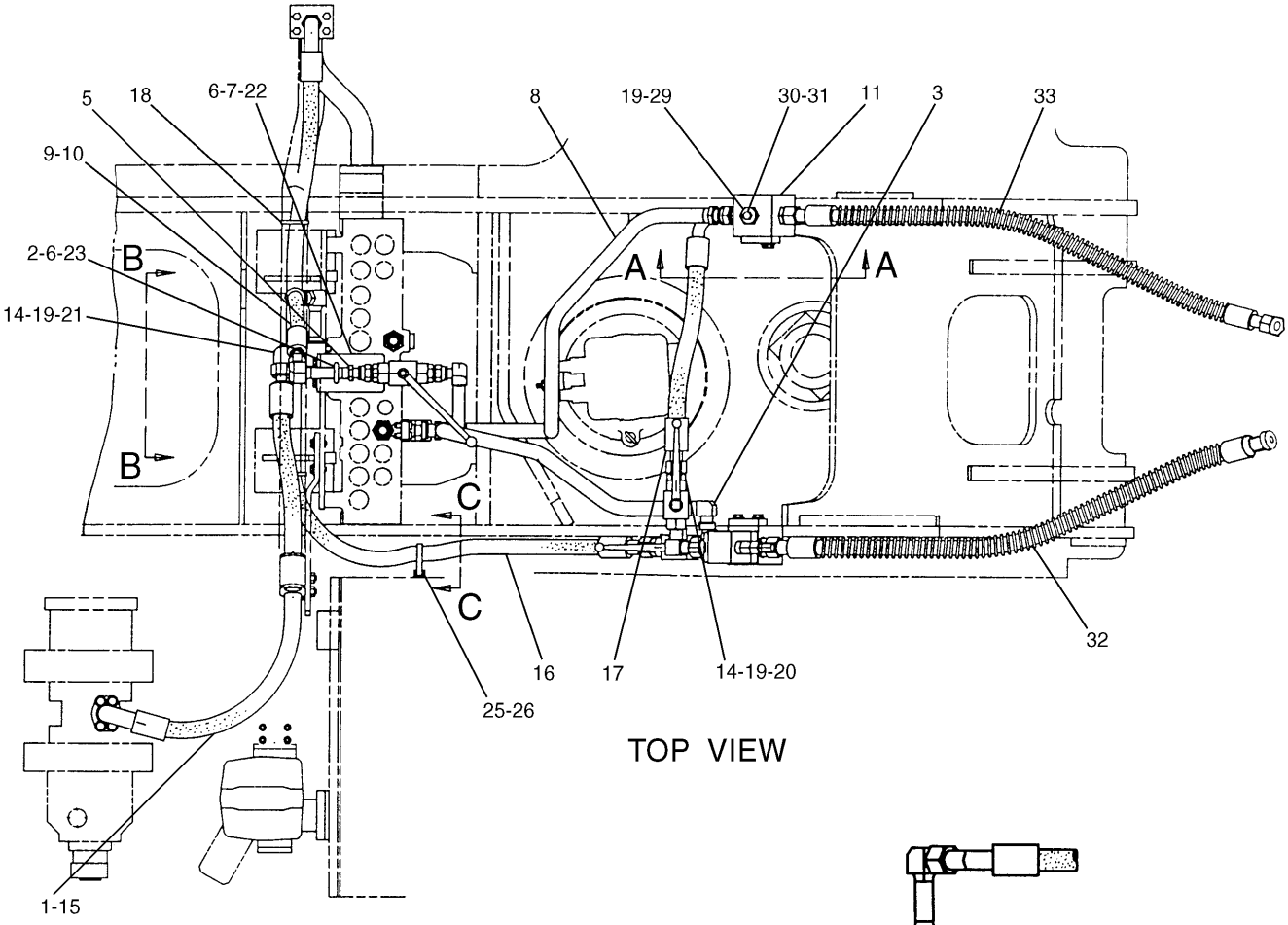

TOP VIEW

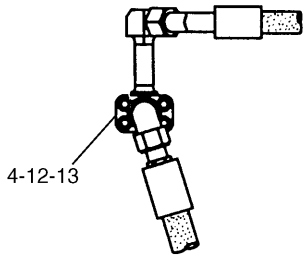

B – B

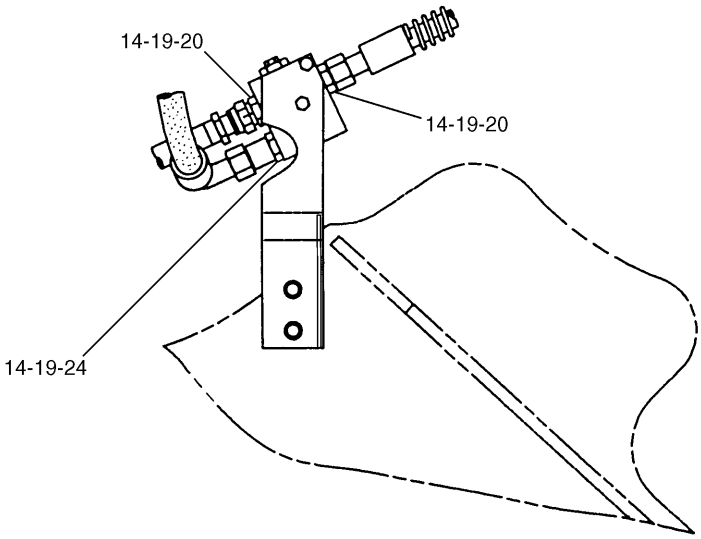

A – A

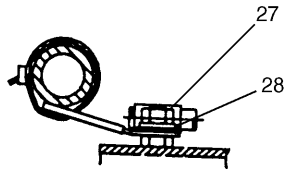

C – C

H65502E 04

138-5048 LINES GP-FRONT (1/2)
Part of 116-9035-Page229
An Attachment

HYDRAULIC SYSTEM

NOTE	No.	PART No.	QTY	PART NAME	NOTE	No.	PART No.	QTY	PART NAME
	1	5I-3179	1	HOSE AS					
	2	096-4883	2	NUT					
	3	138-5103	1	TUBE AS					
	4	1P-3704	1	SEAL					
	5	113-6814	1	TUBE AS					
	6	8T-4121	4	WASHER					
	7	121-6461	1	SUPPORT AS					
	8	119-2629	1	TUBE AS					
	9	121-6356	1	HOSE AS					
	10	6V-9746	2	SEAL-O-RING (OD=22.50mm)					
	11	140-0648	1	BLOCK					
	12	121-6270	1	TUBE AS					
	13	095-0673	4	BOLT (L=60mm)					
	14	5K-9090	5	SEAL-O-RING (OD=27.22mm)					
	15	1P-3703	1	SEAL					
	16	138-5084	1	HOSE AS					
	17	138-5105	1	HOSE AS					
	18	7K-1181	3	STRAP					
	19	7M-8485	6	SEAL-O-RING (ID=29.74mm)					
	20	6V-8635	3	CONNECTOR					
	21	6V-9008	1	ELBOW					
	22	8T-4136	2	BOLT (L=25mm)					
	23	122-8705	1	U-BOLT					
	24	8T-0198	1	CONNECTOR					
	25	5P-5148	1	STRAP					
	26	4P-7582	1	CLIP					
	27	8T-4133	1	NUT					
	28	7X-7729	1	WASHER					
	29	8J-0426	1	PLUG					
	30	9S-4191	1	PLUG					
	31	3J-1907	1	SEAL-O-RING (ID=11.89mm)					
	32	141-1278	1	HOSE AS					
	33	127-6859	1	HOSE AS					

H65502E 04

138-5048 LINES GP-FRONT (1/2)

Part of 116-9035-Page229
An Attachment

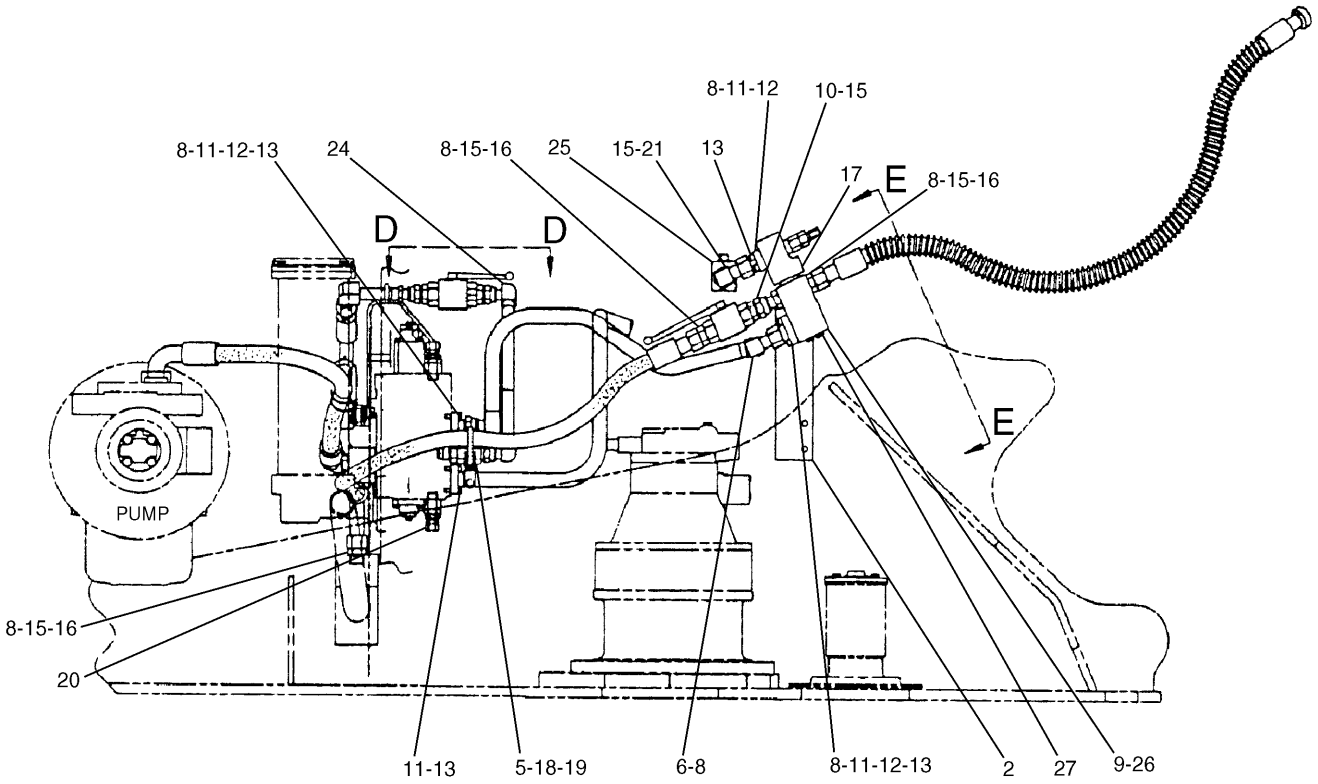

SIDE VIEW

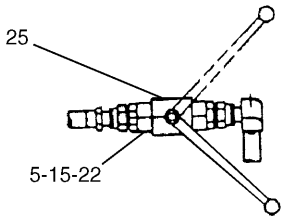

D – D

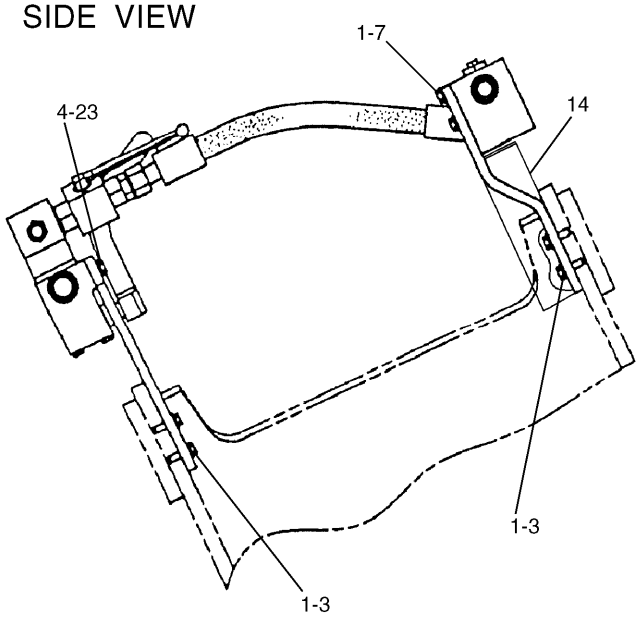

E – E

H65504E 04

138-5048 LINES GP-FRONT (2/2)
Part of 116-9035-Page229
116-3600-Page283,4I-6301-Page303.01,4I-0890-Page304
An Attachment

HYDRAULIC SYSTEM

NOTE	No.	PART No.	QTY	PART NAME	NOTE	No.	PART No.	QTY	PART NAME
	1	8T-4223	6	WASHER					
	2	138-5104	1	PLATE					
	3	8T-4183	4	BOLT (L=40mm)					
	4	8T-4121	2	WASHER					
	5	6V-9746	3	SEAL-O-RING (OD=22.50mm)					
	6	6V-9854	1	ELBOW					
	7	8T-4956	2	BOLT (L=35mm)					
	8	5K-9090	8	SEAL-O-RING (OD=27.22mm)					
	9	6I-6793	1	BLOCK					
	10	4I-6141	1	COUPLING AS					
	11	1P-3703	4	SEAL					
	12	7Y-3731	3	FLANGE					
	13	9X-6032	16	BOLT (L=30mm)					
	14	166-3121	1	SUPPORT AS					
	15	7M-8485	8	SEAL-O-RING (ID=29.74mm)					
	16	6V-8635	4	CONNECTOR					
Y	17	4I-6301	1	VALVE GP					
Y	18	4I-0890	1	VALVE GP					
	19	4K-1388	1	SEAL-O-RING (ID=26.59mm)					
Y	20	116-3600	2	VALVE GP					
	21	5I-3183	1	ELBOW					
	22	6V-8716	2	CONNECTOR					
	23	8T-4136	2	BOLT (L=25mm)					
	24	113-6813	1	TUBE AS					
	25	4I-6264	3	VALVE AS					
		6I-6916	1	HANDLE					
	26	4J-0520	1	SEAL-O-RING (ID=32.92mm)					
	27	8T-6408	4	BOLT (L=160mm)					

Y—SEE SEPARATE ILLUSTRATION

H65504E 04

138-5048 LINES GP-FRONT (2/2)

Part of 116-9035-Page229
116-3600-Page283,4I-6301-Page303.01,4I-0890-Page304
An Attachment

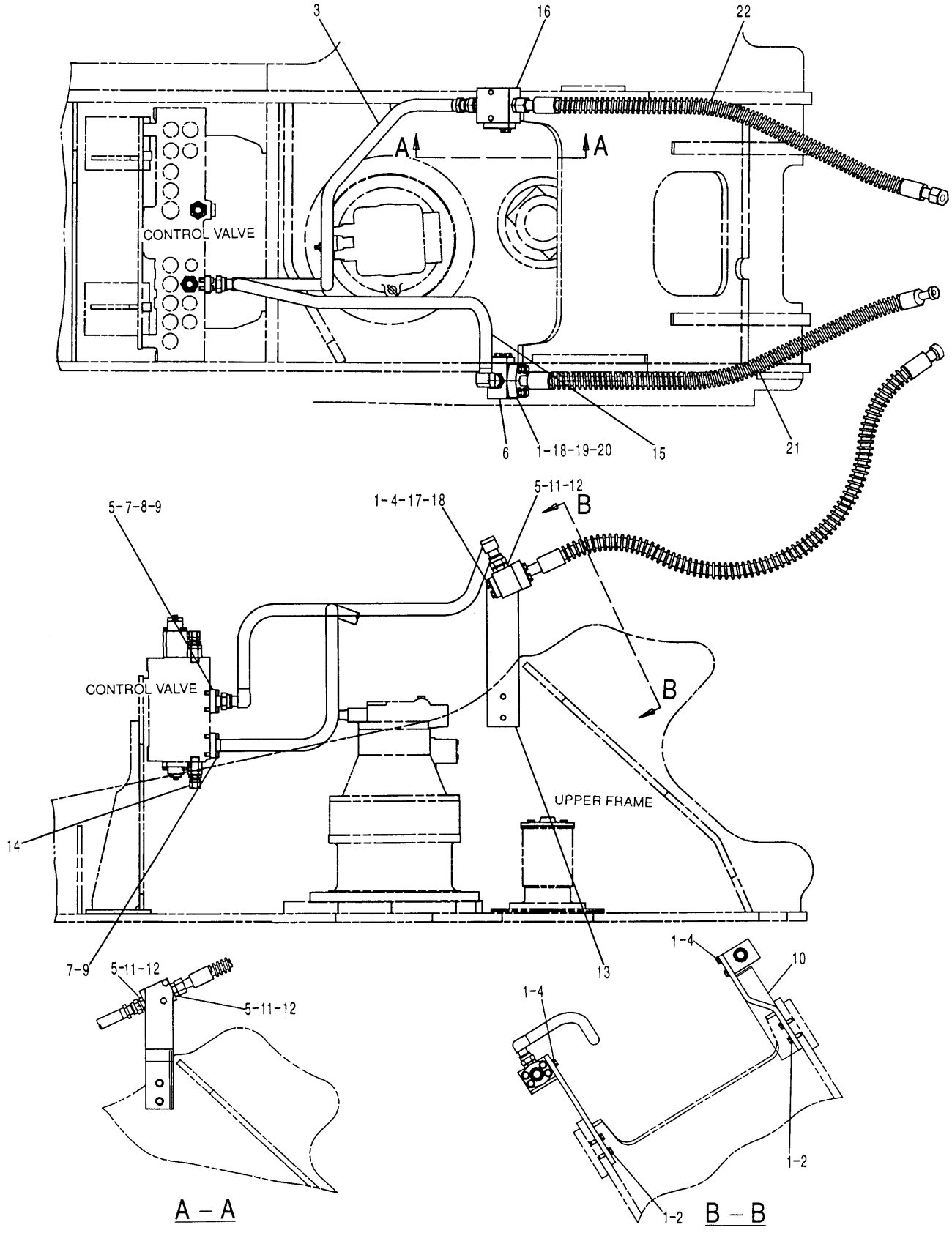

128-7479 LINES GP-FRONT
Double Function
Part of 121-1969-Page230
116-3600-Page283
An Attachment

HYDRAULIC SYSTEM

NOTE	No.	PART No.	QTY	PART NAME	NOTE	No.	PART No.	QTY	PART NAME
	1	8T-4223	16	WASHER					
	2	8T-4183	4	BOLT (L=40mm)					
	3	119-2629	1	TUBE AS					
	4	8T-4956	8	BOLT (L=35mm)					
	5	5K-9090	4	SEAL-O-RING (OD=27.22mm)					
	6	6C-6699	1	BLOCK					
	7	1P-3703	2	SEAL					
	8	7Y-3731	1	FLANGE					
	9	9X-6032	8	BOLT (L=30mm)					
	10	166-3121	1	SUPPORT AS					
	11	7M-8485	3	SEAL-O-RING (ID=29.74mm)					
	12	6V-8635	3	CONNECTOR					
	13	119-2621	1	PLATE					
Y	14	116-3600	2	VALVE GP					
	15	128-7510	1	TUBE AS					
	16	129-5995	1	BLOCK					
	17	4I-7822	1	COVER					
	18	1P-3705	2	SEAL					
	19	1P-5767	2	FLANGE					
	20	8T-4184	4	BOLT (L=45mm)					
	21	121-1769	1	HOSE AS					
		2P-6733	2	STEM AS (STRAIGHT)					
		3E-4062	2	CLIP					
E		5P-0202		HOSE…(143cm)					
		5P-0477	2	SLEEVE					
	22	127-6859	1	HOSE AS					
		3E-4069	2	CLIP					
E		5P-0201		HOSE…(146cm)					
		5P-1010	2	SLEEVE					
E		6V-0746		GUARD…(201cm)					
		7X-1452	2	STEM AS (STRAIGHT)					

E—ORDER BY THE CENTIMETER

Y—SEE SEPARATE ILLUSTRATION

H65506E 02

128-7479 LINES GP-FRONT

Double Function

Part of 121-1969-Page230

116-3600-Page283

An Attachment

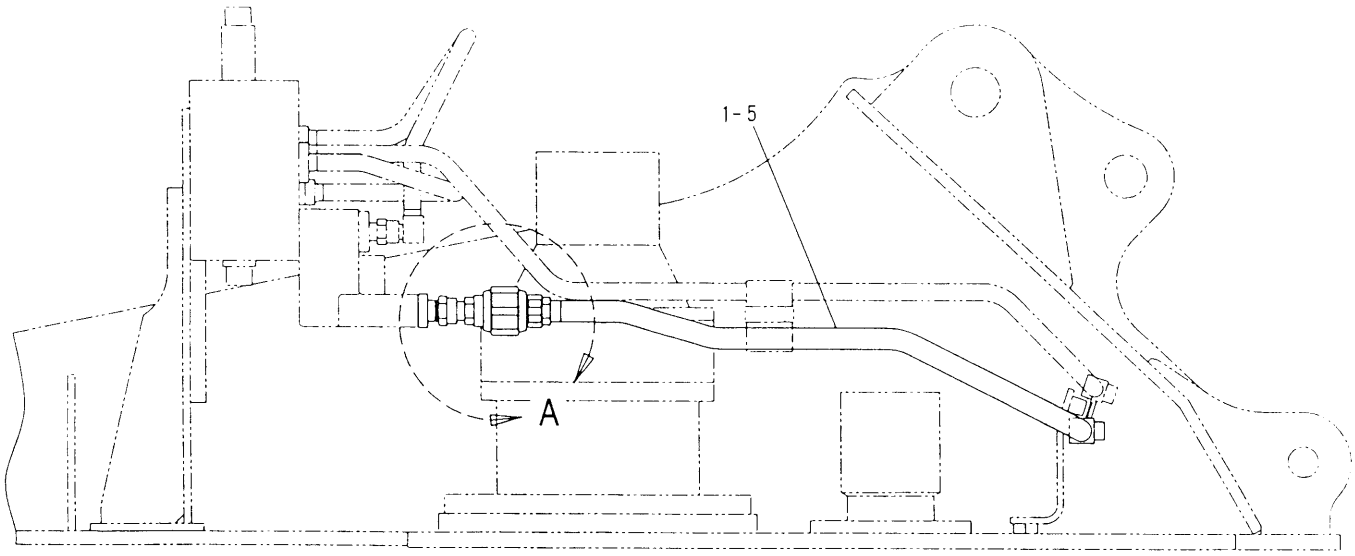

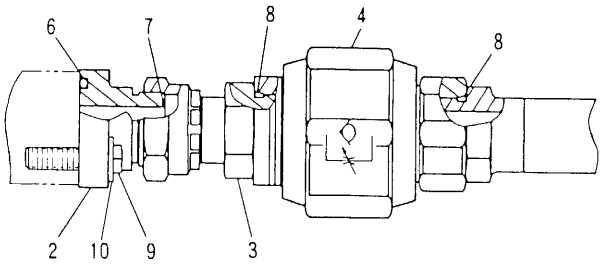

A

H53157E 00

127-6620 LINES GP-FRONT
Long Reach Front
S/N 4MR 1-Up
Part of 127-6615-Page383
An Attachment

HYDRAULIC SYSTEM

NOTE	No.	PART No.	QTY	PART NAME	NOTE	No.	PART No.	QTY	PART NAME
	1	127-6838	1	TUBE AS					
	2	132-1536	1	FLANGE					
	3	4I-6141	1	COUPLING AS					
	4	4I-8789	1	VALVE GP					
	5	6V-9746	2	SEAL-O-RING (OD=22.50mm)					
	6	1P-3703	1	SEAL					
	7	5K-9090	1	SEAL-O-RING (OD=27.22mm)					
	8	7M-8485	2	SEAL-O-RING (ID=29.74mm)					
	9	9X-6032	4	BOLT (L=30mm)					
	10	8T-4121	4	WASHER					

H53157E 00

127-6620 LINES GP-FRONT

Long Reach Front
S/N 4MR 1-Up
Part of 127-6615-Page383
An Attachment

HYDRAULIC SYSTEM

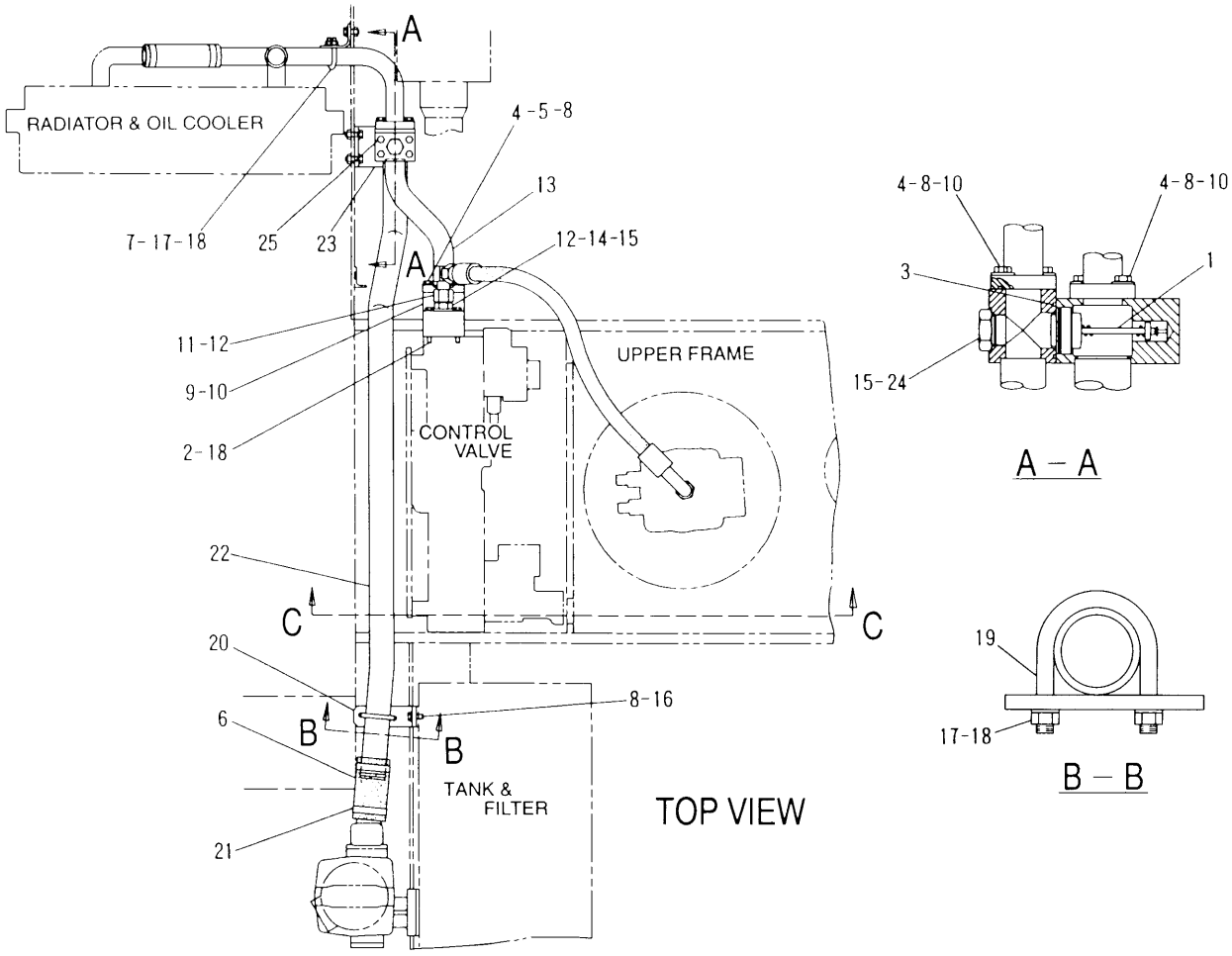

NOTE	No.	PART No.	QTY	PART NAME	NOTE	No.	PART No.	QTY	PART NAME
	1	094-6526	1	VALVE AS		21	5P-4868	2	CLAMP
	2	8T-4172	4	BOLT (L=80mm)		22	119-2415	1	PIPE AS
	3	4J-0526	1	SEAL-O-RING (ID=53.57mm)		23	119-2417	1	SUPPORT
	4	8T-4956	8	BOLT (L=35mm)		24	9S-4181	1	PLUG
	5	4J-0527	1	SEAL-O-RING (ID=56.74mm)		25	8T-4178	4	BOLT (L=90mm)
	6	123-2700	1	HOSE					
	7	7Y-5237	2	U-BOLT					
	8	8T-4223	10	WASHER					
Y	9	142-5516	1	VALVE GP					
	10	4J-0524	3	SEAL-O-RING (ID=47.22mm)					
	11	6V-9854	1	ELBOW					
	12	5K-9090	2	SEAL-O-RING (OD=27.22mm)					
	13	137-0838	1	PIPE AS					
	14	6V-8635	1	CONNECTOR					
	15	7M-8485	2	SEAL-O-RING (ID=29.74mm)					
	16	8T-4139	2	BOLT (L=30mm)					
	17	096-4883	6	NUT					
	18	8T-4121	10	WASHER					
	19	7Y-5247	1	U-BOLT					
	20	119-2418	1	SUPPORT					

Y—SEE SEPARATE ILLUSTRATION

H65507E 05

115-8886 LINES GP-RETURN & FILTER (1/2)

S/N 3MR 1-(T00.01), 4MR 1-(T00.01)
142-5516-Page304.01

HYDRAULIC SYSTEM

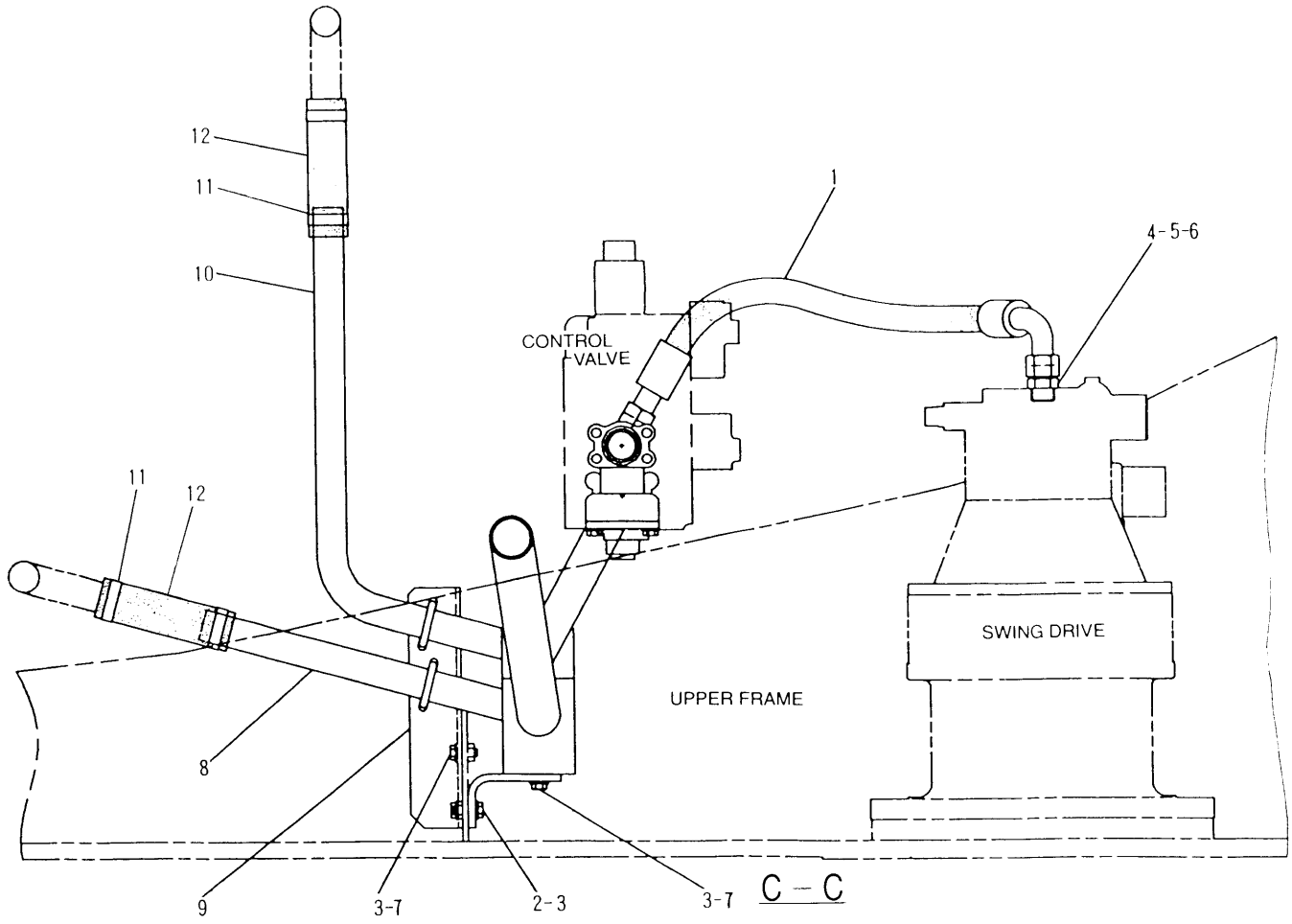

NOTE	No.	PART No.	QTY	PART NAME	NOTE	No.	PART No.	QTY	PART NAME
	1	113-6666	1	HOSE AS					
	2	8T-4956	2	BOLT (L=35mm)					
	3	8T-4223	6	WASHER					
	4	5K-9090	1	SEAL-O-RING (OD=27.22mm)					
	5	6V-8635	1	CONNECTOR					
	6	7M-8485	1	SEAL-O-RING (ID=29.74mm)					
	7	8T-4139	4	BOLT (L=30mm)					
	8	119-2409	1	PIPE AS					
	9	119-2419	1	SUPPORT					
	10	119-2407	1	PIPE AS					
	11	5P-0597	4	CLAMP					
E	12	4I-1607		HOSE···(19cm × 2)					

E—ORDER BY THE CENTIMETER

H65508E 05

115-8886 LINES GP-RETURN & FILTER (2/2)

S/N 3MR 1-(T00.01), 4MR 1-(T00.01)

HYDRAULIC SYSTEM

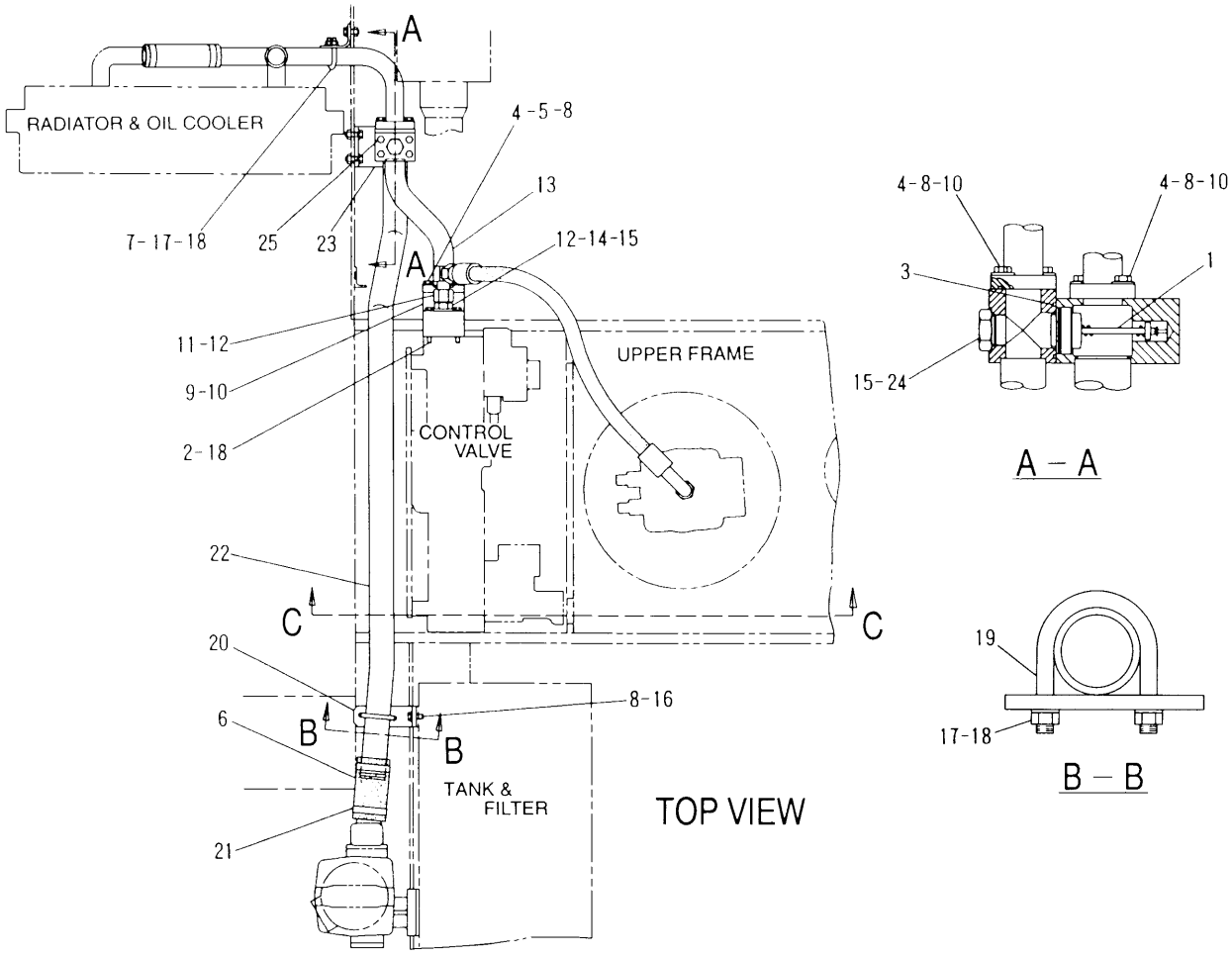

NOTE	No.	PART No.	QTY	PART NAME	NOTE	No.	PART No.	QTY	PART NAME
	1	094-6526	1	VALVE AS		21	5P-4868	2	CLAMP
	2	8T-4172	4	BOLT (L=80mm)		22	119-2415	1	PIPE AS
	3	4J-0526	1	SEAL-O-RING (ID=53.57mm)		23	119-2417	1	SUPPORT
	4	8T-4956	8	BOLT (L=35mm)		24	9S-4181	1	PLUG
	5	4J-0527	1	SEAL-O-RING (ID=56.74mm)		25	8T-4178	4	BOLT (L=90mm)
	6	123-2700	1	HOSE					
	7	7Y-5237	2	U-BOLT					
	8	8T-4223	10	WASHER					
Y	9	184-3831	1	VALVE GP					
	10	4J-0524	3	SEAL-O-RING (ID=47.22mm)					
	11	6V-9854	1	ELBOW					
	12	5K-9090	2	SEAL-O-RING (OD=27.22mm)					
	13	137-0838	1	PIPE AS					
	14	6V-8635	1	CONNECTOR					
	15	7M-8485	2	SEAL-O-RING (ID=29.74mm)					
	16	8T-4139	2	BOLT (L=30mm)					
	17	096-4883	6	NUT					
	18	8T-4121	10	WASHER					
	19	7Y-5247	1	U-BOLT					
	20	119-2418	1	SUPPORT					

Y—SEE SEPARATE ILLUSTRATION

H78085E 06

115-8886 LINES GP-RETURN & FILTER (1/2)

S/N 3MR (T00.02)-Up, 4MR (T00.02)-Up
184-3831-Page304.02

HYDRAULIC SYSTEM

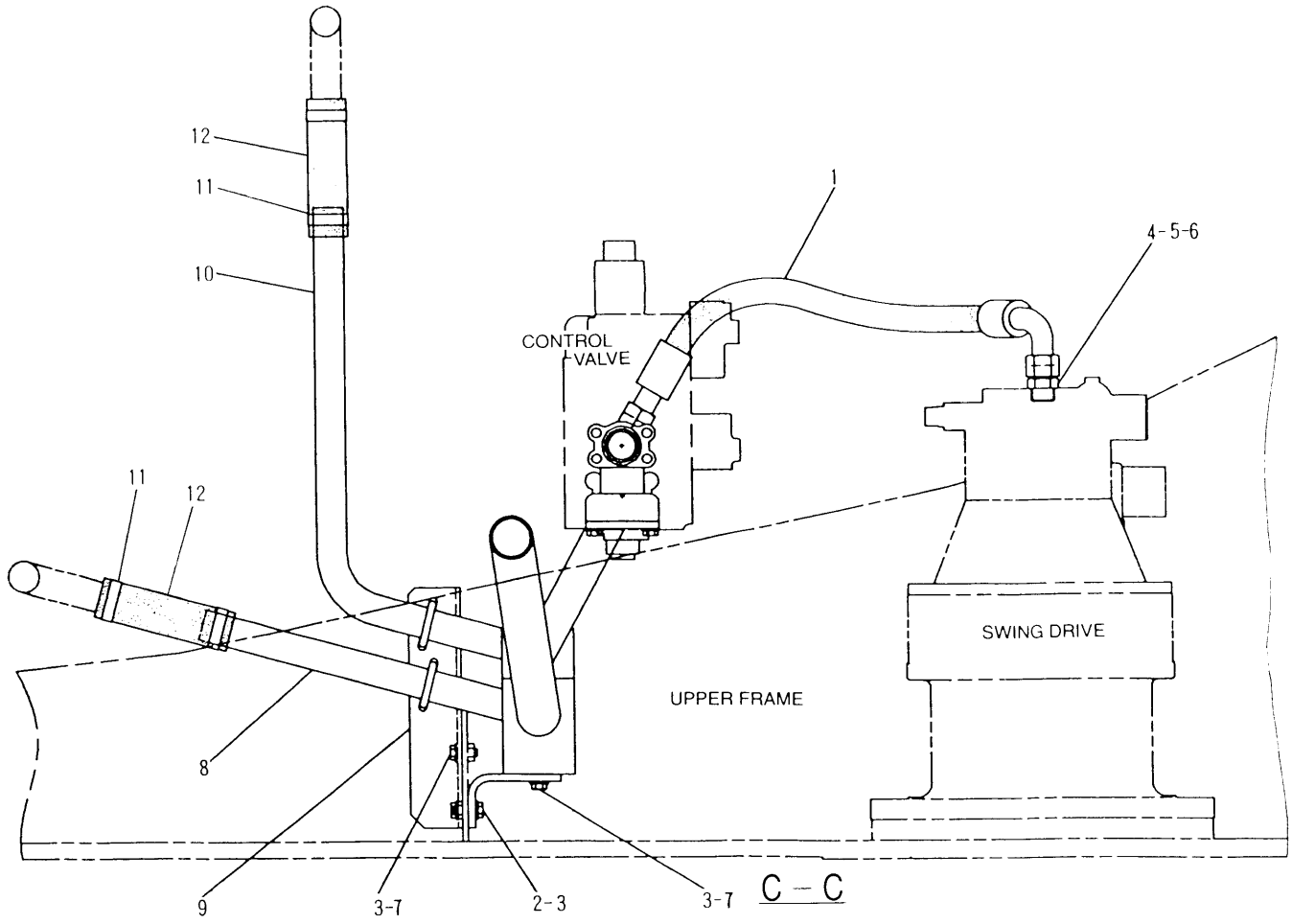

NOTE	No.	PART No.	QTY	PART NAME	NOTE	No.	PART No.	QTY	PART NAME
	1	113-6666	1	HOSE AS					
	2	8T-4956	2	BOLT (L=35mm)					
	3	8T-4223	6	WASHER					
	4	5K-9090	1	SEAL-O-RING (OD=27.22mm)					
	5	6V-8635	1	CONNECTOR					
	6	7M-8485	1	SEAL-O-RING (ID=29.74mm)					
	7	8T-4139	4	BOLT (L=30mm)					
	8	119-2409	1	PIPE AS					
	9	119-2419	1	SUPPORT					
	10	119-2407	1	PIPE AS					
	11	5P-0597	4	CLAMP					
E	12	4I-1607		HOSE…(19cm × 2)					

E—ORDER BY THE CENTIMETER

H78086E 06

115-8886 LINES GP-RETURN & FILTER (2/2)

S/N 3MR (T00.02)-Up, 4MR (T00.02)-Up

HYDRAULIC SYSTEM

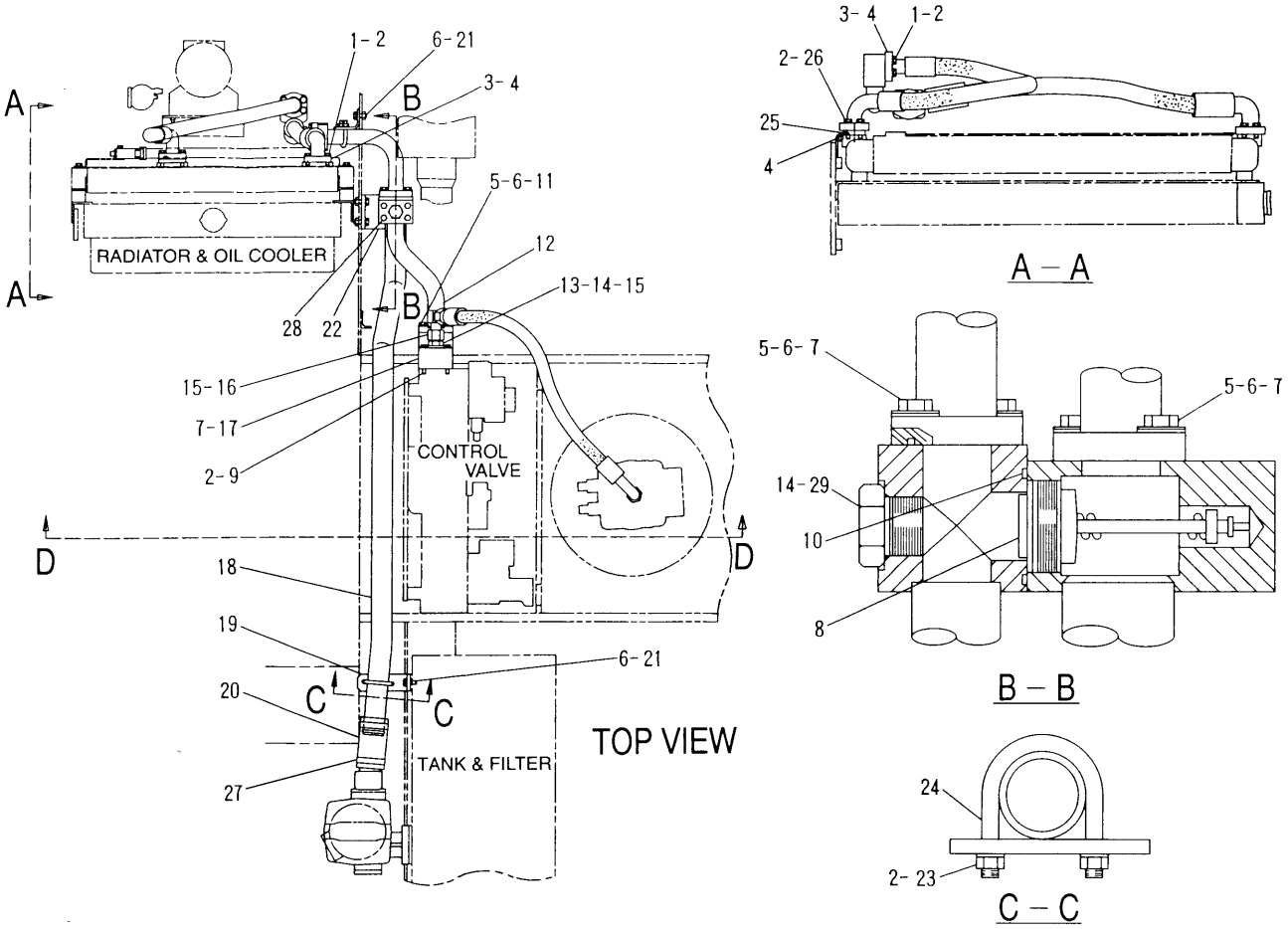

NOTE	No.	PART No.	QTY	PART NAME	NOTE	No.	PART No.	QTY	PART NAME
	1	8T-4195	12	BOLT (L=30mm)		21	8T-4139	4	BOLT (L=30mm)
	2	8T-4121	22	WASHER		22	119-2417	1	SUPPORT
	3	1P-4578	8	FLANGE		23	096-4883	2	NUT
	4	4J-0522	5	SEAL-O-RING (ID=37.69mm)		24	7Y-5247	1	U-BOLT
	5	8T-4956	8	BOLT (L=35mm)		25	7I-8206	1	FLANGE
	6	8T-4223	12	WASHER		26	8T-4182	4	BOLT (L=45mm)
	7	4J-0524	3	SEAL-O-RING (ID=47.22mm)		27	5P-4868	2	CLAMP
	8	094-6526	1	VALVE AS		28	8T-4178	4	BOLT (L=90mm)
	9	8T-4172	4	BOLT (L=80mm)		29	9S-4181	1	PLUG
	10	4J-0526	1	SEAL-O-RING (ID=53.57mm)					
	11	4J-0527	1	SEAL-O-RING (ID=56.74mm)					
	12	137-0838	1	PIPE AS					
	13	6V-8635	1	CONNECTOR					
	14	7M-8485	2	SEAL-O-RING (ID=29.74mm)					
	15	5K-9090	2	SEAL-O-RING (OD=27.22mm)					
	16	6V-9854	1	ELBOW					
Y	17	142-5516	1	VALVE GP					
	18	119-2415	1	PIPE AS					
	19	119-2418	1	SUPPORT					
	20	123-2700	1	HOSE					

Y—SEE SEPARATE ILLUSTRATION

H58582E 02

133-5779 LINES GP-RETURN (1/2)

S/N 3MR 1-(T00.01), 4MR 1-(T00.01)
Part of 126-3796-Page35
142-5516-Page304.01
An Attachment

HYDRAULIC SYSTEM

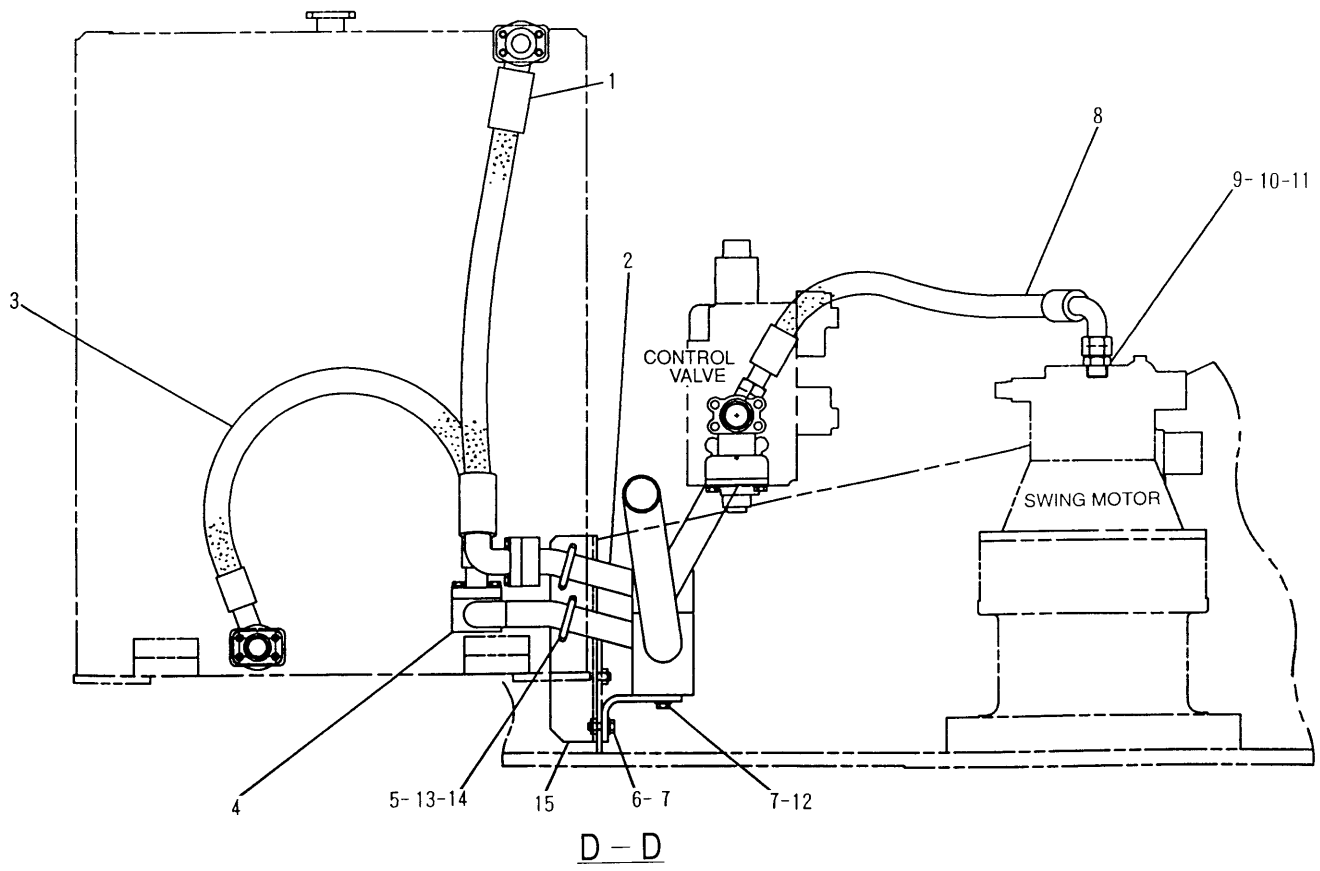

D – D

NOTE	No.	PART No.	QTY	PART NAME	NOTE	No.	PART No.	QTY	PART NAME
	1	129-6030	1	HOSE AS					
	2	129-6036	1	PIPE AS					
	3	133-5765	1	HOSE AS					
	4	133-5762	1	PIPE AS					
	5	8T-4121	4	WASHER					
	6	8T-4956	2	BOLT (L=35mm)					
	7	8T-4223	4	WASHER					
	8	113-6666	1	HOSE AS					
	9	6V-8635	1	CONNECTOR					
	10	7M-8485	1	SEAL-O-RING (ID=29.74mm)					
	11	5K-9090	1	SEAL-O-RING (OD=27.22mm)					
	12	8T-4139	2	BOLT (L=30mm)					
	13	7Y-5237	2	U-BOLT					
	14	096-4883	4	NUT					
	15	119-2419	1	SUPPORT					

H58583E 02

133-5779 LINES GP-RETURN (2/2)
S/N 3MR 1-(T00.01), 4MR 1-(T00.01)
Part of 126-3796-Page35
An Attachment

HYDRAULIC SYSTEM

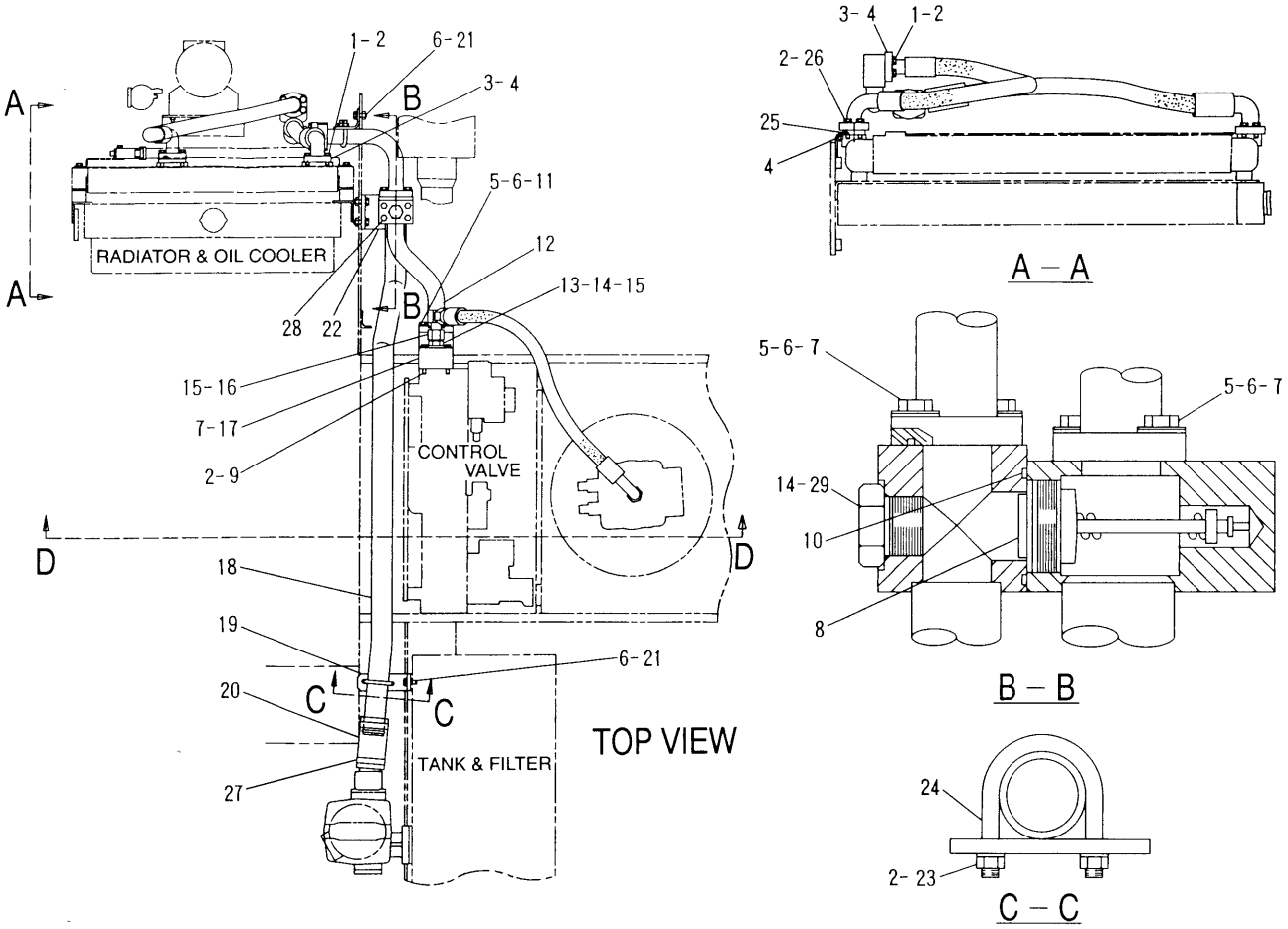

NOTE	No.	PART No.	QTY	PART NAME	NOTE	No.	PART No.	QTY	PART NAME
	1	8T-4195	12	BOLT (L=30mm)		21	8T-4139	4	BOLT (L=30mm)
	2	8T-4121	22	WASHER		22	119-2417	1	SUPPORT
	3	1P-4578	8	FLANGE		23	096-4883	2	NUT
	4	4J-0522	5	SEAL-O-RING (ID=37.69mm)		24	7Y-5247	1	U-BOLT
	5	8T-4956	8	BOLT (L=35mm)		25	7I-8206	1	FLANGE
	6	8T-4223	12	WASHER		26	8T-4182	4	BOLT (L=45mm)
	7	4J-0524	3	SEAL-O-RING (ID=47.22mm)		27	5P-4868	2	CLAMP
	8	094-6526	1	VALVE AS		28	8T-4178	4	BOLT (L=90mm)
	9	8T-4172	4	BOLT (L=80mm)		29	9S-4181	1	PLUG
	10	4J-0526	1	SEAL-O-RING (ID=53.57mm)					
	11	4J-0527	1	SEAL-O-RING (ID=56.74mm)					
	12	137-0838	1	PIPE AS					
	13	6V-8635	1	CONNECTOR					
	14	7M-8485	2	SEAL-O-RING (ID=29.74mm)					
	15	5K-9090	2	SEAL-O-RING (OD=27.22mm)					
	16	6V-9854	1	ELBOW					
Y	17	184-3831	1	VALVE GP					
	18	119-2415	1	PIPE AS					
	19	119-2418	1	SUPPORT					
	20	123-2700	1	HOSE					

Y—SEE SEPARATE ILLUSTRATION

H67972E 03

133-5779 LINES GP-RETURN (1/2)

Swing Oil Cooler
S/N 3MR (T00.02)-Up, 4MR (T00.02)-Up
Part of 126-3796-Page35
184-3831-Page304.02
An Attachment

HYDRAULIC SYSTEM

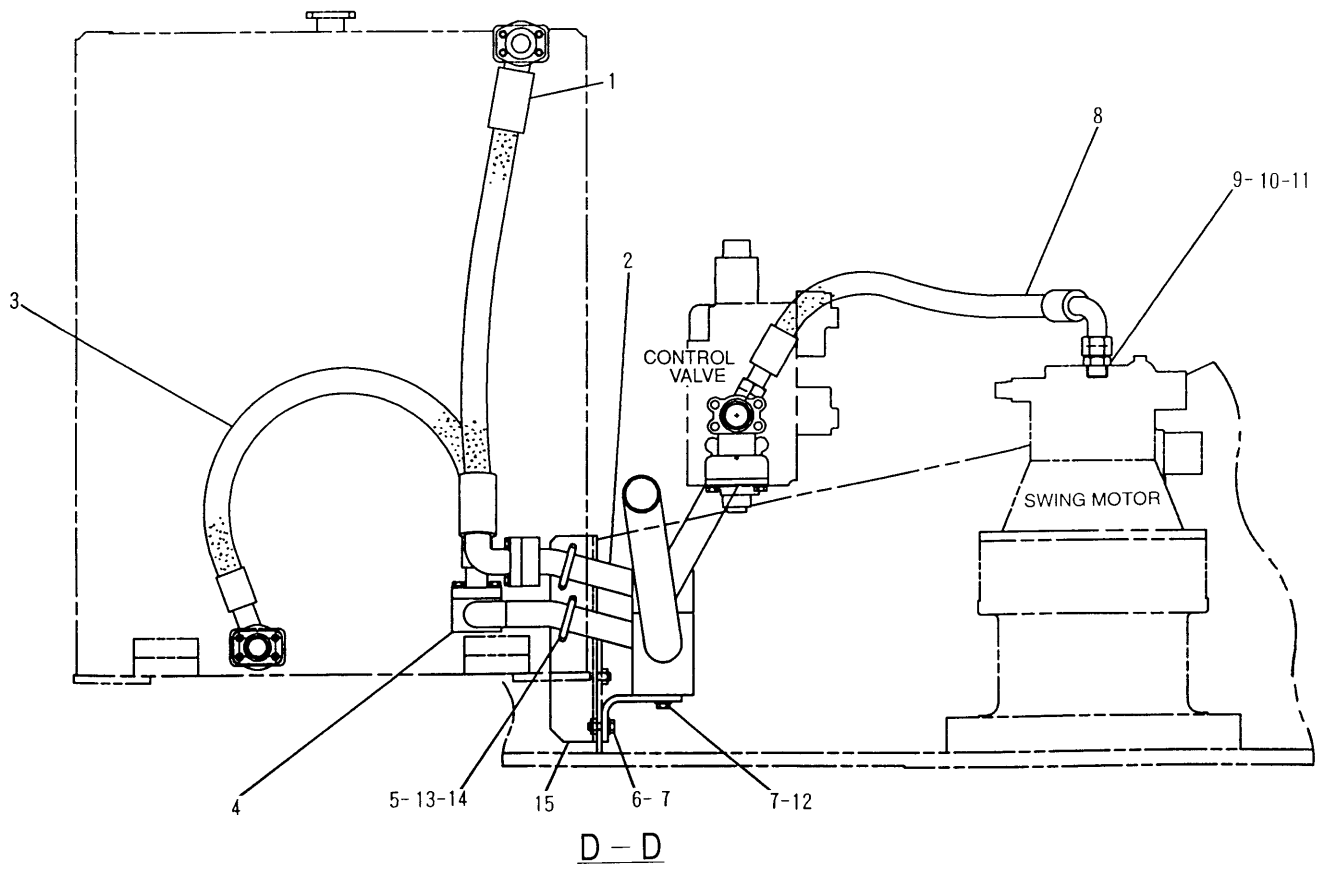

D – D

NOTE	No.	PART No.	QTY	PART NAME	NOTE	No.	PART No.	QTY	PART NAME
	1	129-6030	1	HOSE AS					
	2	129-6036	1	PIPE AS					
	3	133-5765	1	HOSE AS					
	4	133-5762	1	PIPE AS					
	5	8T-4121	4	WASHER					
	6	8T-4956	2	BOLT (L=35mm)					
	7	8T-4223	4	WASHER					
	8	113-6666	1	HOSE AS					
	9	6V-8635	1	CONNECTOR					
	10	7M-8485	1	SEAL-O-RING (ID=29.74mm)					
	11	5K-9090	1	SEAL-O-RING (OD=27.22mm)					
	12	8T-4139	2	BOLT (L=30mm)					
	13	7Y-5237	2	U-BOLT					
	14	096-4883	4	NUT					
	15	119-2419	1	SUPPORT					

H67973E 03

133-5779 LINES GP-RETURN (2/2)

Swing Oil Cooler
S/N 3MR (T00.02)-Up, 4MR (T00.02)-Up
Part of 126-3796-Page35
An Attachment

MEMORANDA

HYDRAULIC SYSTEM

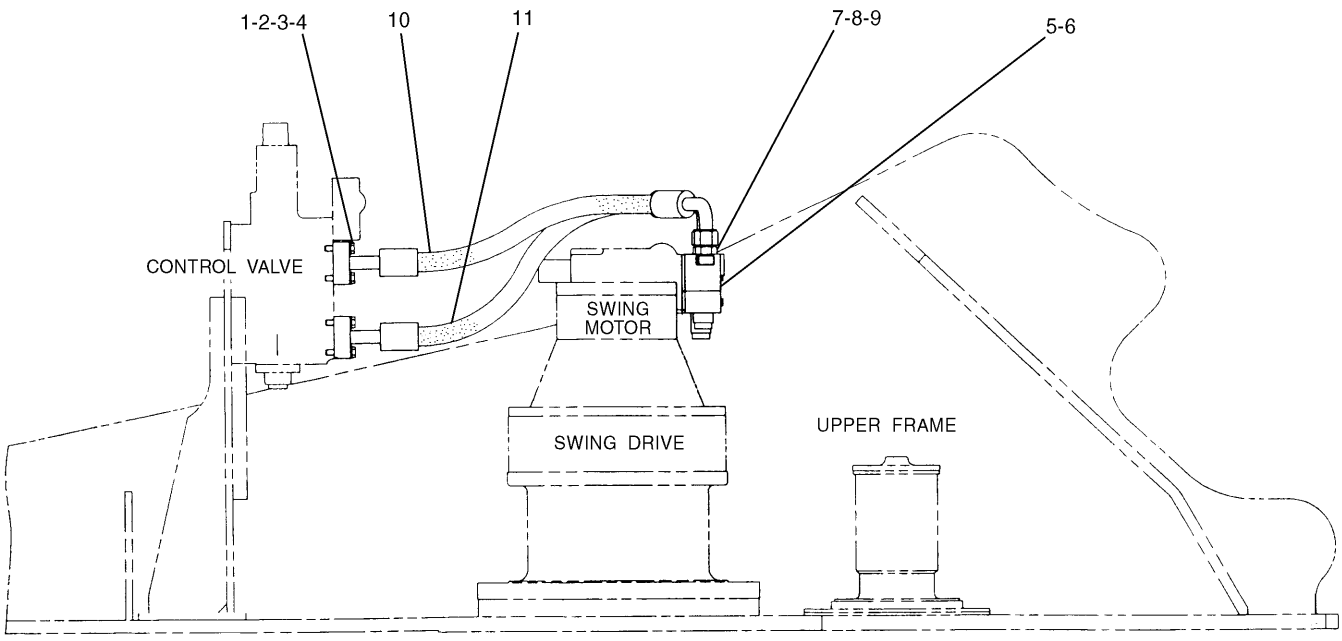

NOTE	No.	PART No.	QTY	PART NAME	NOTE	No.	PART No.	QTY	PART NAME
	1	8T-9403	4	FLANGE					
	2	8T-4182	8	BOLT (L=45mm)					
	3	8T-4121	8	WASHER					
	4	1P-3702	2	SEAL					
	5	8T-4178	6	BOLT (L=90mm)					
Y	6	116-3420	1	VALVE GP					
	7	3D-2824	2	SEAL-O-RING (ID=23.47mm)					
	8	6V-8637	2	CONNECTOR					
	9	6V-9746	2	SEAL-O-RING (OD=22.50mm)					
	10	121-6500	1	HOSE AS					
	11	121-6503	1	HOSE AS					

Y—SEE SEPARATE ILLUSTRATION

H54272E 02

115-8894 LINES GP-SWING MOTOR

116-3420-Page257

HYDRAULIC SYSTEM

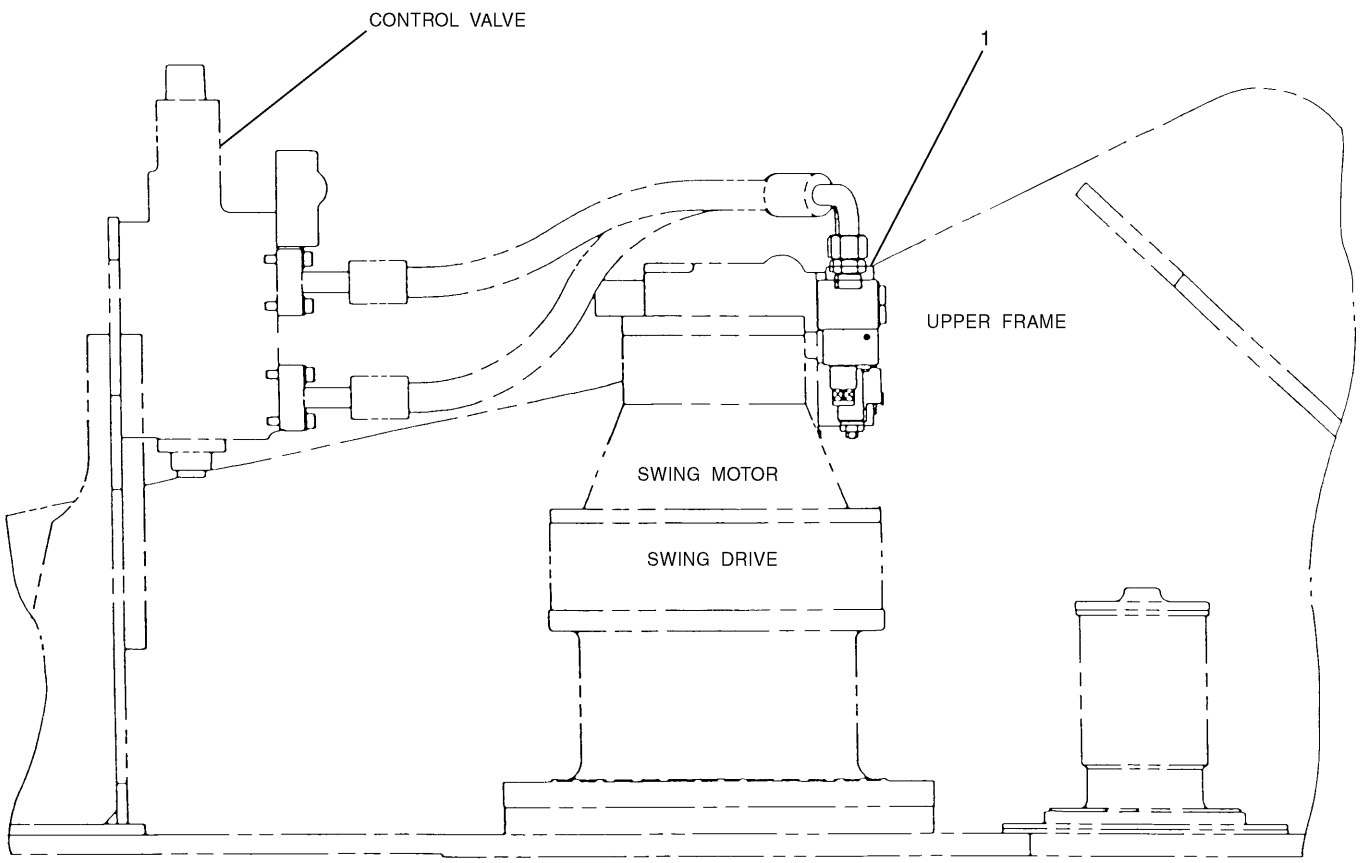

NOTE	No.	PART No.	QTY	PART NAME	NOTE	No.	PART No.	QTY	PART NAME
Y	1	107-7056	1	VALVE GP					

Y—SEE SEPARATE ILLUSTRATION

H53161E 00

126-2023 LINES GP-SWING MOTOR

Part of 126-1890-Page292
107-7056-Page297
An Attachment

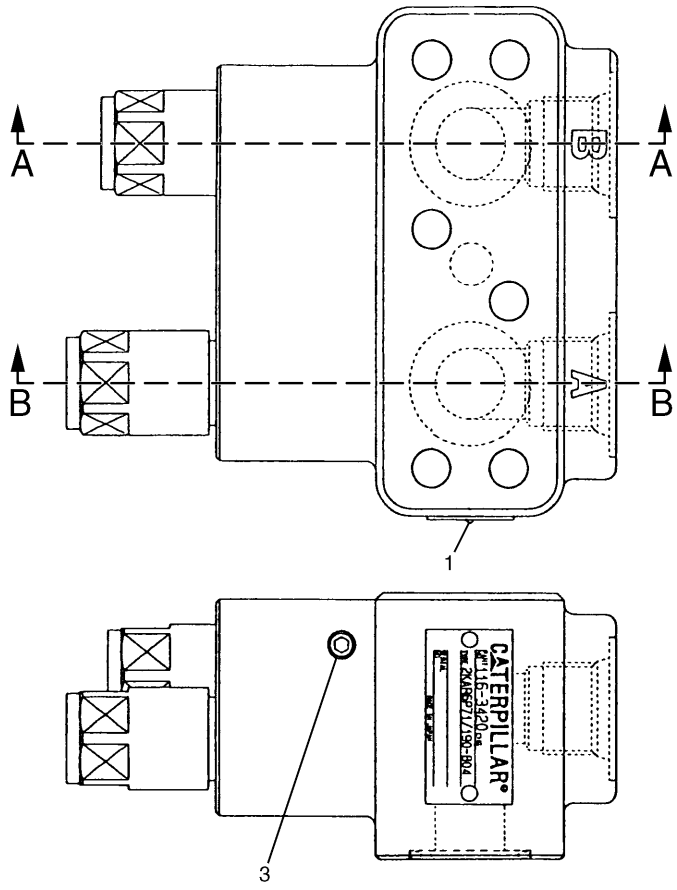

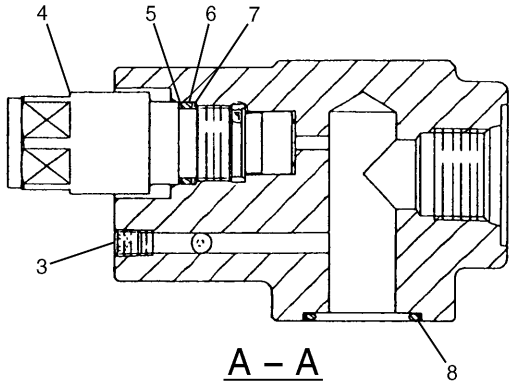

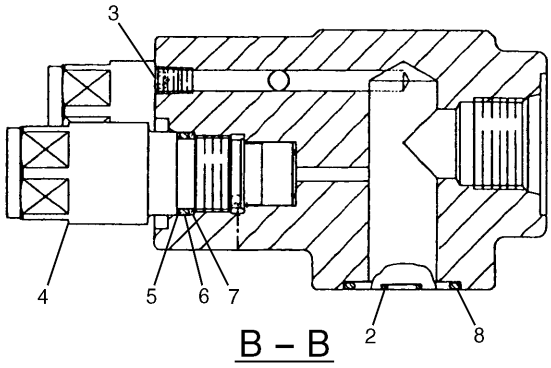

NOTE	No.	PART No.	QTY	PART NAME	NOTE	No.	PART No.	QTY	PART NAME
	1	5B-9304	2	SCREW					
	2	095-1576	1	SEAL-O-RING (ID=8.80mm)					
	3	8T-6759	4	PLUG					
	4	114-0550	2	VALVE GP					
	5	094-1902	2	RING					
	6	095-1586	2	SEAL-O-RING (ID=19.80mm)					
	7	095-1785	2	RING					
	8	095-1698	2	SEAL-O-RING (ID=29.40mm)					

H50300E 02

116-3420 VALVE GP-CUSHION CROSSOVER RLF
Part of 115-8894-Page255

HYDRAULIC SYSTEM

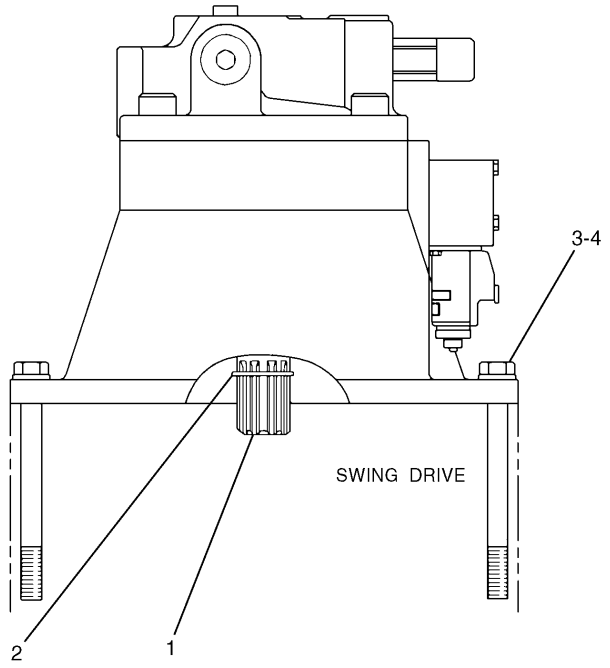

NOTE	No.	PART No.	QTY	PART NAME
Y	1	116-3550	1	MOTOR GP
	2	6V-5200	1	RING
	3	7X-2557	16	BOLT (L=140mm)
	4	9X-8257	16	WASHER

Y—SEE SEPARATE ILLUSTRATION

H53584E 02

116-3549 MOTOR & MTG GP-SWING

S/N 3MR 1-07497, 4MR 1-01065
Part of 114-1319-Page180
116-3550-Page259

HYDRAULIC SYSTEM

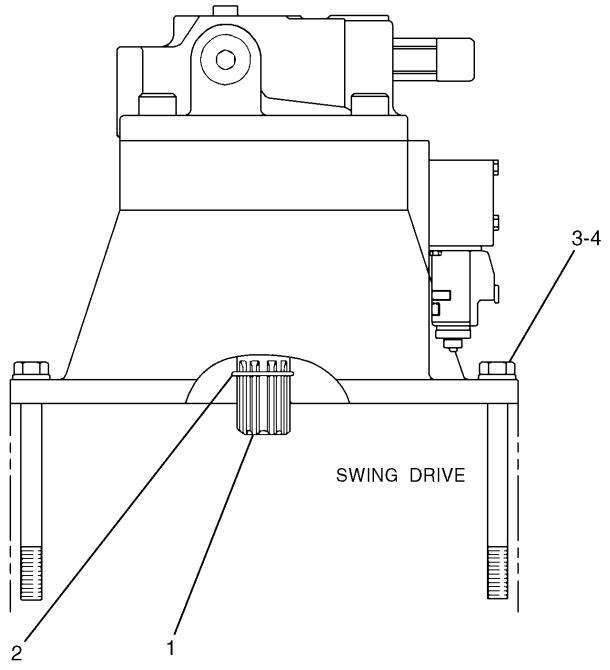

NOTE	No.	PART No.	QTY	PART NAME
Y	1	176-5104	1	MOTOR GP
	2	6V-5200	1	RING
	3	7X-2557	16	BOLT (L=140mm)
	4	9X-8257	16	WASHER

Y—SEE SEPARATE ILLUSTRATION

H78087E 03

116-3549 MOTOR & MTG GP-SWING

S/N 3MR 07498-Up, 4MR 01066-Up
Part of 114-1319-Page180
176-5104-Page259.03

MEMORANDA

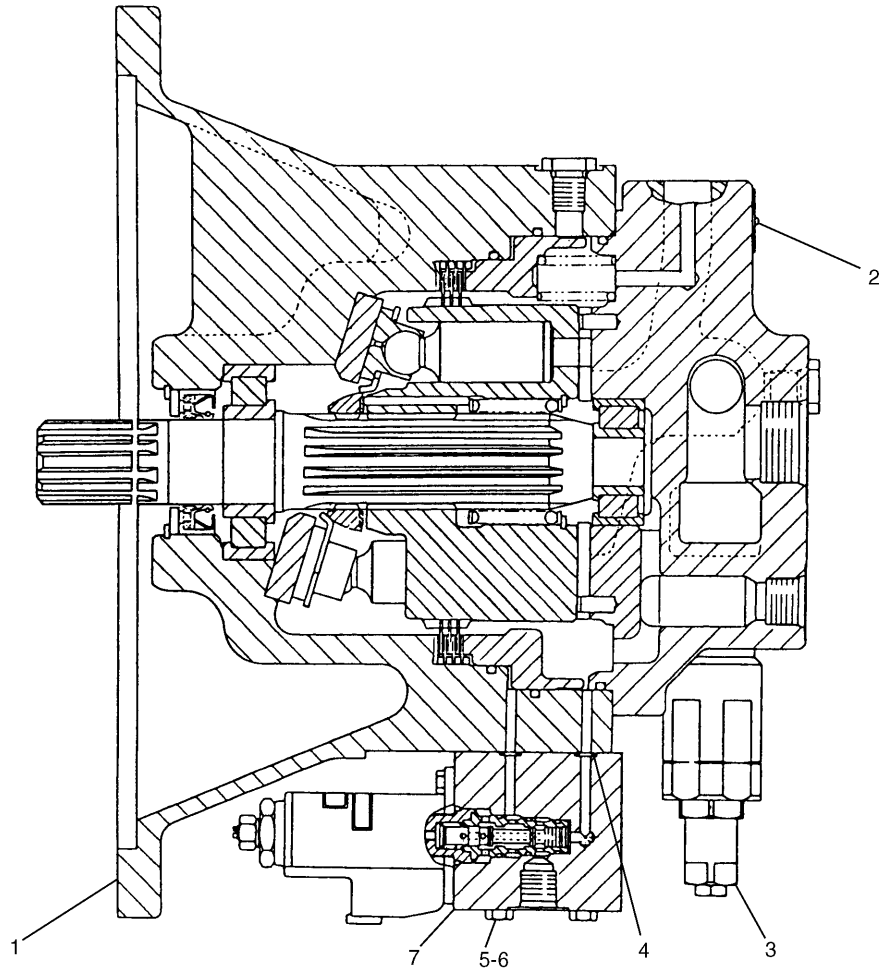

NOTE	No.	PART No.	QTY	PART NAME	NOTE	No.	PART No.	QTY	PART NAME
Y	1	126-2028	1	MOTOR GP					
	2	5B-9304	2	SCREW					
Y	3	7I-7968	2	VALVE GP					
	4	095-1573	2	SEAL-O-RING (ID=5.80mm)					
	5	9X-8256	6	WASHER					
	6	8T-6974	3	BOLT (L=80mm)					
Y	7	121-1565	1	VALVE GP					

Y—SEE SEPARATE ILLUSTRATION

H53487E 01

116-3550 MOTOR GP-SWING

S/N 3MR 1-01663, 4MR 1-00309
Part of 116-3549-Page258
126-2028-Page260,7I-7968-Page262,121-1565-Page294.02

HYDRAULIC SYSTEM

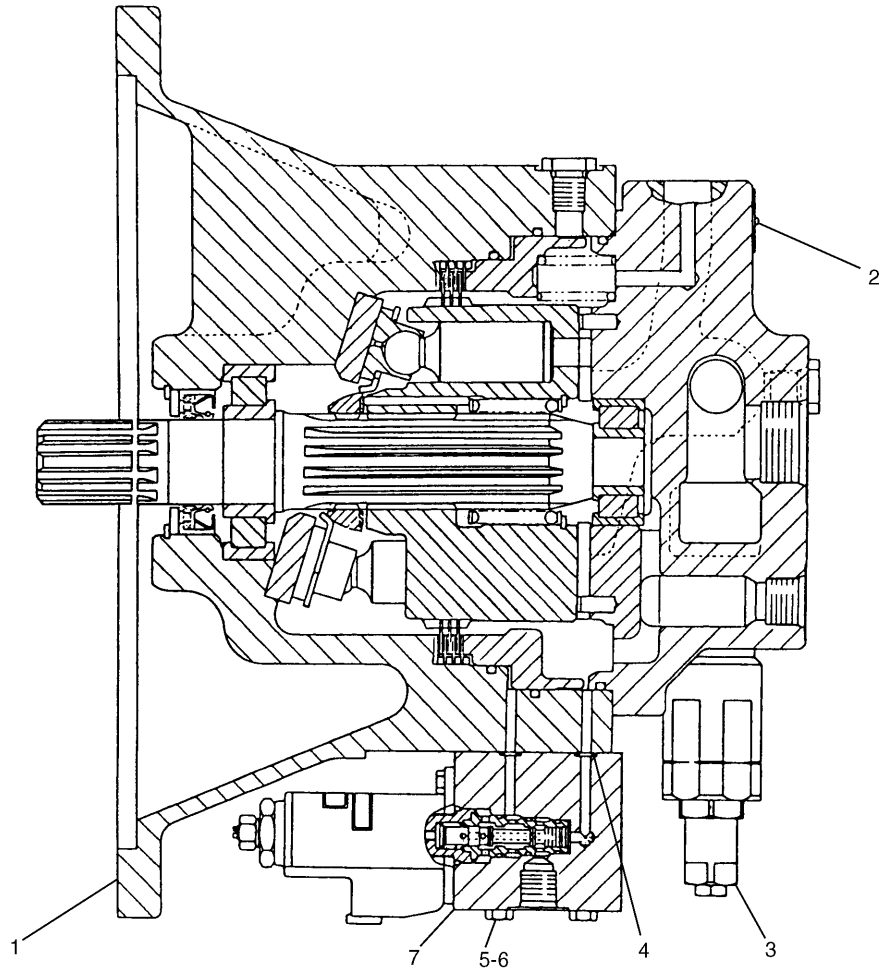

NOTE	No.	PART No.	QTY	PART NAME	NOTE	No.	PART No.	QTY	PART NAME
Y	1	126-2028	1	MOTOR GP					
	2	5B-9304	2	SCREW					
Y	3	7I-7968	2	VALVE GP					
	4	095-1574	2	SEAL-O-RING (ID=6.80mm)					
	5	9X-8256	6	WASHER					
	6	8T-6974	3	BOLT (L=80mm)					
Y	7	137-3637	1	VALVE GP					

Y—SEE SEPARATE ILLUSTRATION

H53729E 03

116-3550 MOTOR GP-SWING

S/N 3MR 01664-04861, 4MR 00310-00707
Part of 116-3549-Page258
126-2028-Page260,7I-7968-Page262,137-3637-Page294.02

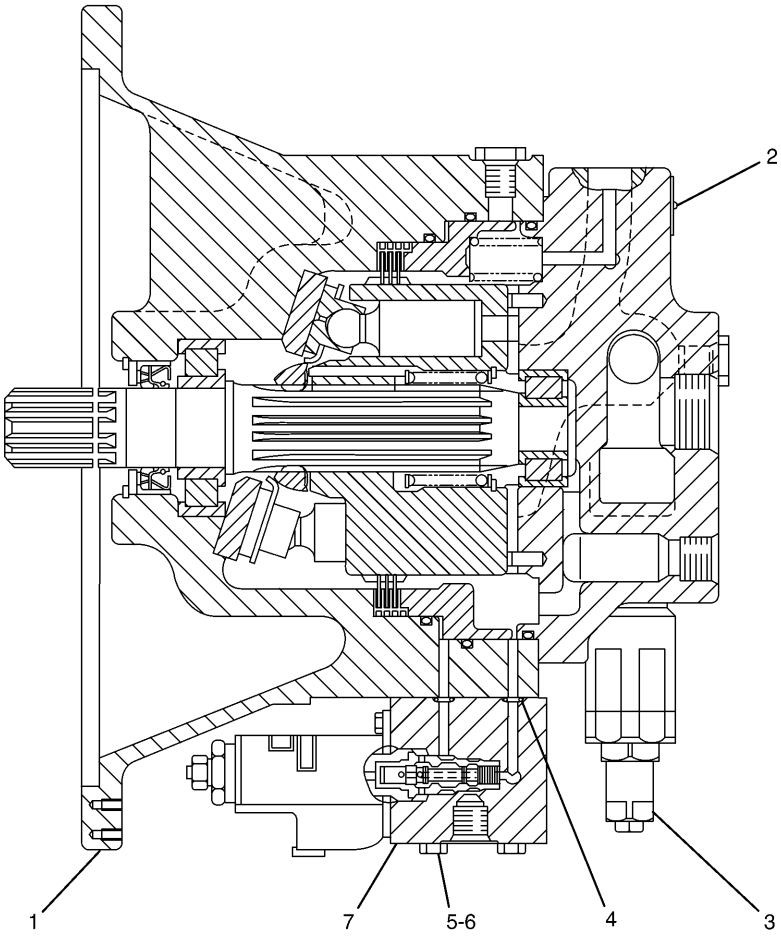

NOTE	No.	PART No.	QTY	PART NAME	NOTE	No.	PART No.	QTY	PART NAME
Y	1	126-2028	1	MOTOR GP					
	2	5B-9304	2	SCREW					
Y	3	154-0401	2	VALVE GP					
	4	095-1574	2	SEAL-O-RING (ID=6.80mm)					
	5	9X-8256	6	WASHER					
	6	8T-6974	3	BOLT (L=80mm)					
Y	7	137-3637	1	VALVE GP					

Y—SEE SEPARATE ILLUSTRATION

H62377E 04

116-3550 MOTOR GP-SWING

S/N 3MR 04862-07497, 4MR 00708-01065
Part of 116-3549-Page258
126-2028-Page260,154-0401-Page262.01,137-3637-Page294.02

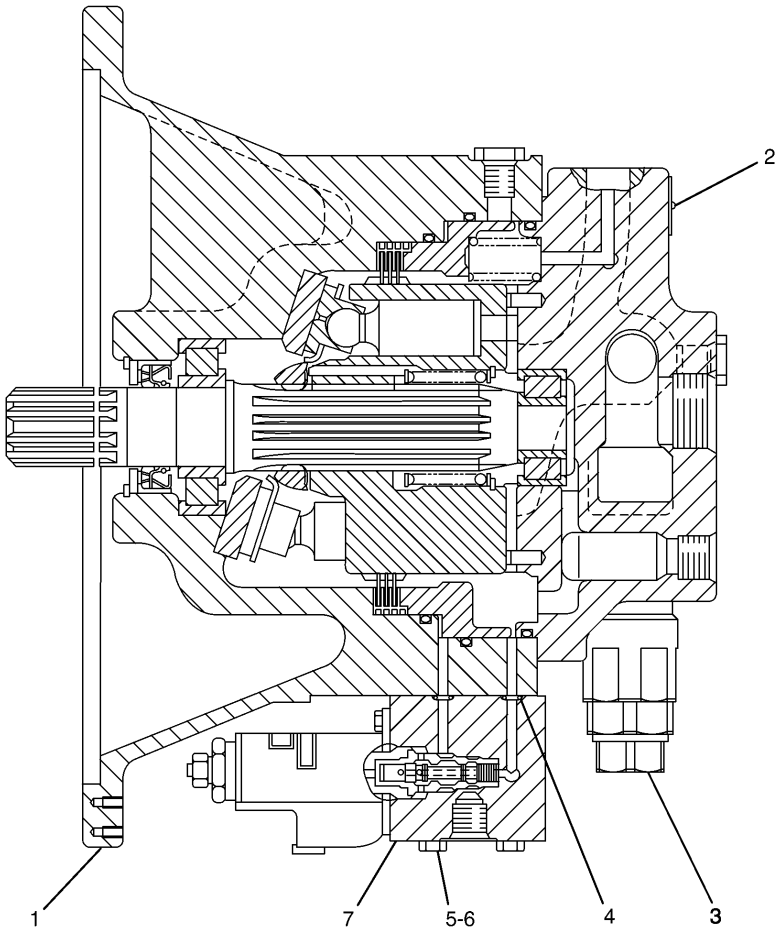

NOTE	No.	PART No.	QTY	PART NAME	NOTE	No.	PART No.	QTY	PART NAME
Y	1	176-5107	1	MOTOR GP					
	2	5B-9304	2	SCREW					
Y	3	176-5105	2	VALVE GP					
	4	095-1574	2	SEAL-O-RING (ID=6.80mm)					
	5	9X-8256	6	WASHER					
	6	8T-6974	3	BOLT (L=80mm)					
Y	7	137-3637	1	VALVE GP					

Y—SEE SEPARATE ILLUSTRATION

H78088E 00

176-5104 MOTOR GP-SWING

S/N 3MR 07498-Up, 4MR 01066-Up
Part of 116-3549-Page258.01
176-5107-Page261.01,176-5105-Page262.02,137-3637-Page294.02

MEMORANDA

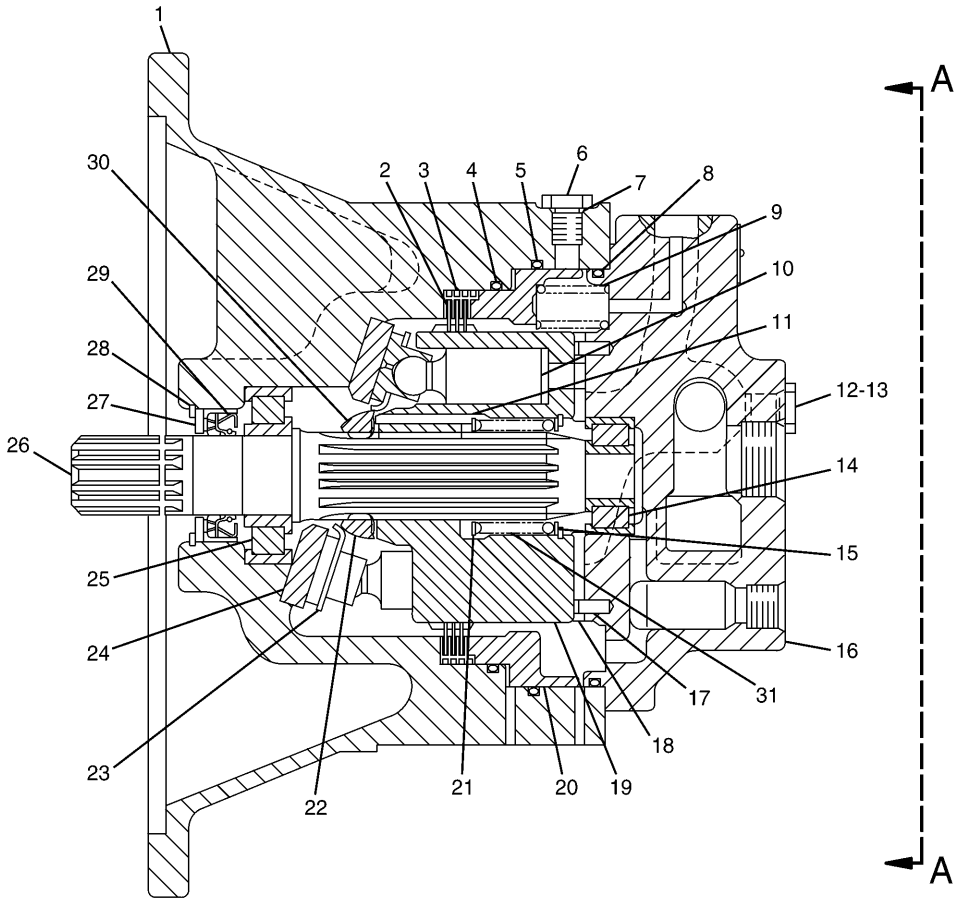

NOTE	No.	PART No.	QTY	PART NAME	NOTE	No.	PART No.	QTY	PART NAME
	1	126-2027	1	BODY		21	5I-8421	2	SPACER
	2	5I-8630	3	PLATE		22	5I-8633	1	SPACER
	3	5I-8629	4	PLATE		23	5I-8636	1	PLATE
J	4	5I-8426	1	SEAL-O-RING		24	5I-8637	1	PLATE
J	5	5I-8417	1	SEAL-O-RING		25	122-5318	1	BEARING
	6	7Y-4274	1	PLUG		26	5I-8640	1	SHAFT
J	7	095-1579	1	SEAL-O-RING (ID=10.80mm)		27	5I-8418	1	PLATE
J	8	5I-8623	1	SEAL-O-RING		28	085-5593	1	RING
	9	126-2055	24	SPRING	J	29	122-5319	1	SEAL
	10	5I-8632	1	PISTON AS		30	5I-8634	1	BUSHING
	11	5I-8420	12	PIN		31	5I-8422	1	SPRING
	12	110-5525	2	PLUG					
J	13	3J-1907	2	SEAL-O-RING (ID=11.89mm)					
	14	5I-8625	1	BEARING					
	15	7Y-5267	1	RING					
	16	126-2026	1	HEAD GP					
	17	095-0882	2	PIN					
	18	5I-8628	1	PLATE					
	19	5I-8631	1	BARREL					
	20	5I-8621	1	PISTON					

H53165E 01

126-2028 MOTOR GP-SWING (1/2)

S/N 3MR 1-07497, 4MR 1-01065
Part of 116-3550-Page259

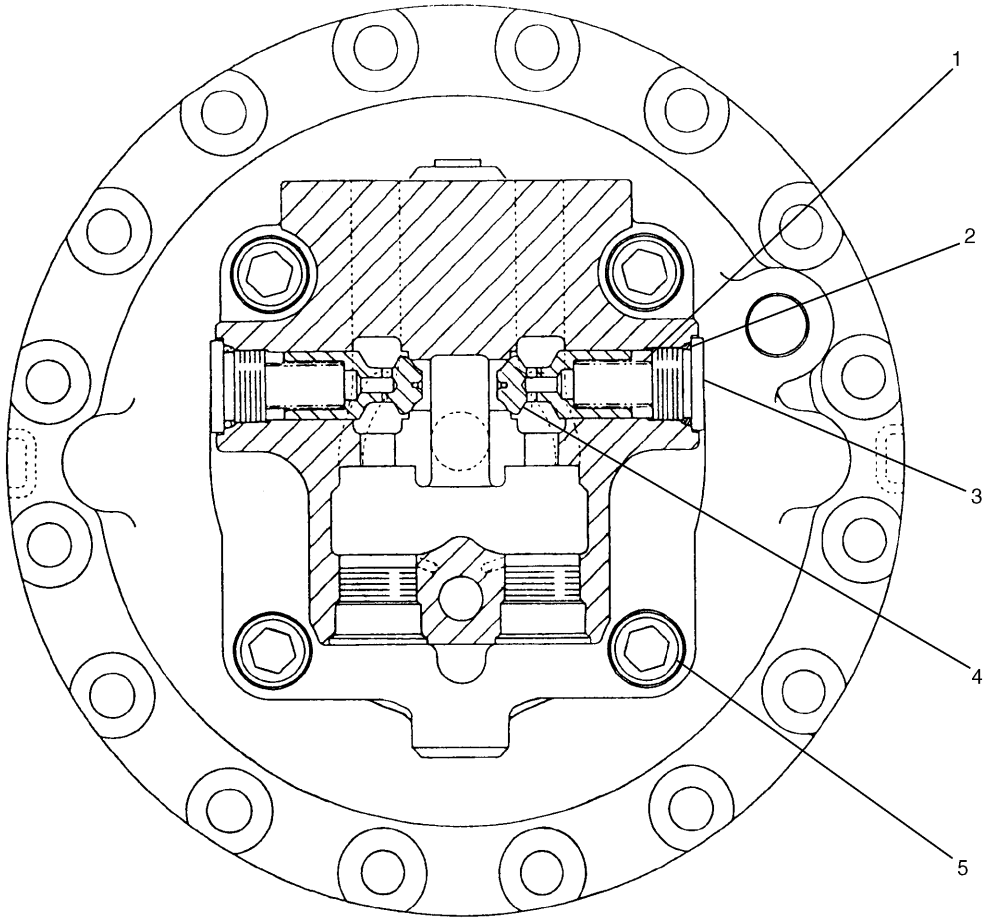

A – A

NOTE	No.	PART No.	QTY	PART NAME	NOTE	No.	PART No.	QTY	PART NAME
	1	7Y-4268	2	SPRING					
J	2	095-1593	2	SEAL-O-RING (ID=24.70mm)					
	3	094-1900	2	PLUG					
	4	7Y-4267	2	VALVE					
	5	7Y-5221	4	BOLT (L=45mm)					
				THE FOLLOWING REPAIR KIT IS AVAILABLE:					
		126-2029	1	SEAL KIT (INCLUDES PARTS MARKED J)					

H53166E 01

126-2028 MOTOR GP-SWING (2/2)

S/N 3MR 1-07497, 4MR 1-01065
Part of 116-3550-Page259

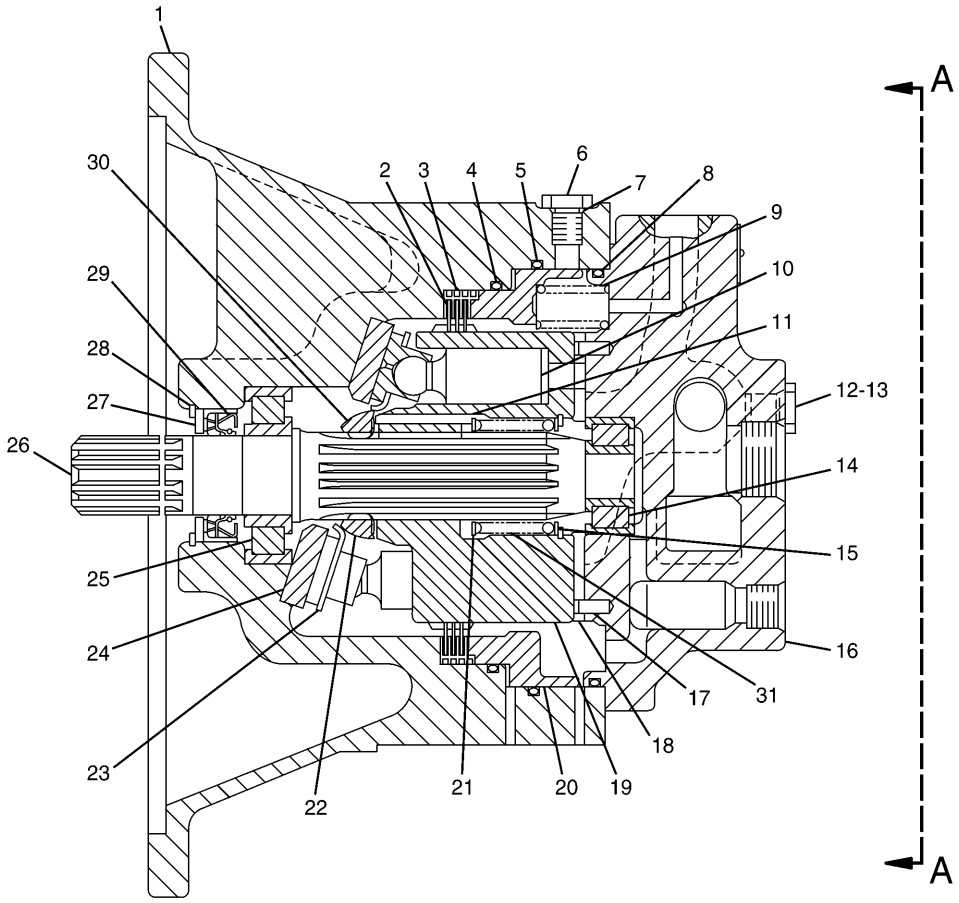

NOTE	No.	PART No.	QTY	PART NAME	NOTE	No.	PART No.	QTY	PART NAME
	1	126-2027	1	BODY		21	5I-8421	2	SPACER
	2	5I-8630	3	PLATE		22	5I-8633	1	SPACER
	3	5I-8629	4	PLATE		23	5I-8636	1	PLATE
J	4	5I-8426	1	SEAL-O-RING		24	5I-8637	1	PLATE
J	5	5I-8417	1	SEAL-O-RING		25	122-5318	1	BEARING
	6	7Y-4274	1	PLUG		26	5I-8640	1	SHAFT
J	7	095-1579	1	SEAL-O-RING (ID=10.80mm)		27	5I-8418	1	PLATE
J	8	5I-8623	1	SEAL-O-RING		28	085-5593	1	RING
	9	126-2055	24	SPRING	J	29	122-5319	1	SEAL
	10	5I-8632	1	PISTON AS		30	5I-8634	1	BUSHING
	11	5I-8420	12	PIN		31	5I-8422	1	SPRING
	12	110-5525	2	PLUG					
J	13	3J-1907	2	SEAL-O-RING (ID=11.89mm)					
	14	5I-8625	1	BEARING					
	15	7Y-5267	1	RING					
	16	126-2026	1	HEAD GP					
	17	095-0882	2	PIN					
	18	5I-8628	1	PLATE					
	19	5I-8631	1	BARREL					
	20	177-2584	1	PISTON					

H73236E 00

176-5107 MOTOR GP-SWING (1/2)

S/N 3MR 07498-Up, 4MR 01066-Up
Part of 176-5104-Page259.03

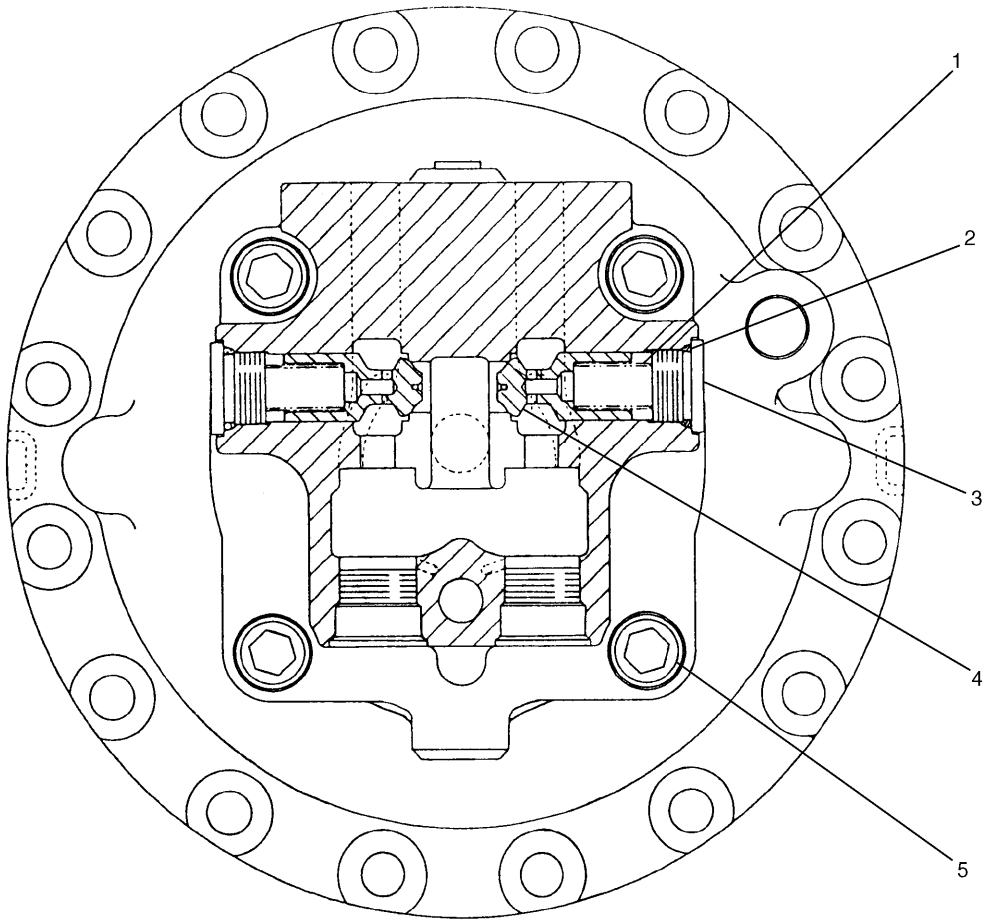

A – A

NOTE	No.	PART No.	QTY	PART NAME	NOTE	No.	PART No.	QTY	PART NAME
	1	7Y-4268	2	SPRING					
J	2	095-1595	2	SEAL-O-RING (ID=27.70mm)					
	3	094-1900	2	PLUG					
	4	7Y-4267	2	VALVE					
	5	7Y-5221	4	BOLT (L=45mm)					
				THE FOLLOWING REPAIR KIT IS AVAILABLE:					
		126-2029	1	SEAL KIT (INCLUDES PARTS MARKED J)					

H73237E 00

176-5107 MOTOR GP-SWING (2/2)

S/N 3MR 07498-Up, 4MR 01066-Up
Part of 176-5104-Page259.03

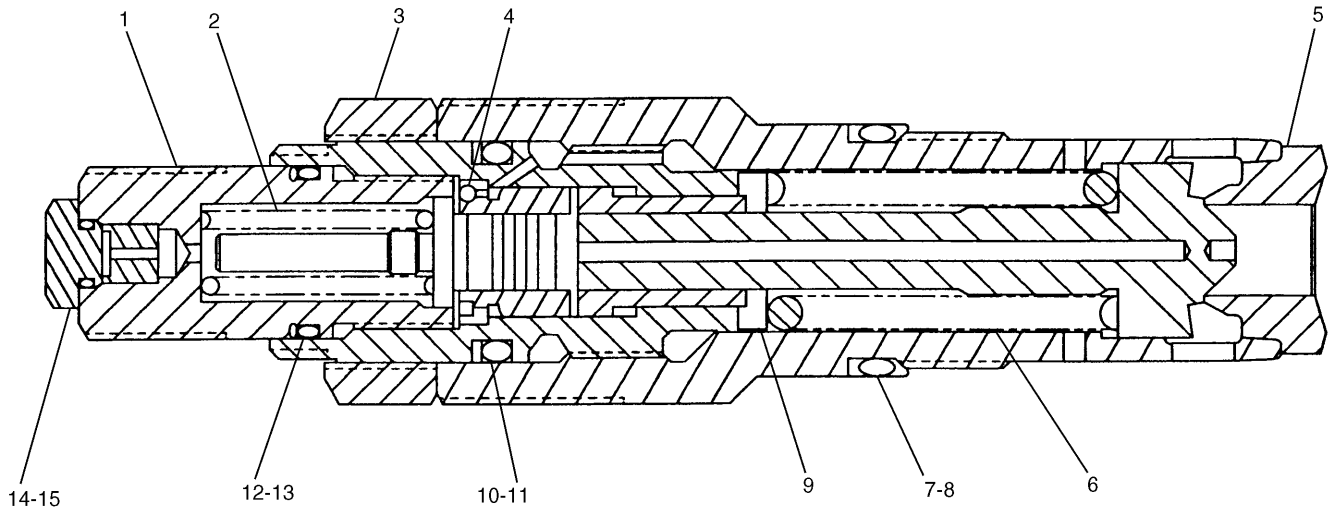

NOTE	No.	PART No.	QTY	PART NAME	NOTE	No.	PART No.	QTY	PART NAME
	1	7I-7970	1	PLUG					
	2	4I-7792	1	SPRING					
	3	4I-7793	1	LOCKNUT					
	4	4I-7837	1	BALL					
	5	4I-7795	1	BODY AS					
	6	7I-7965	1	SPRING					
	7	095-1698	1	SEAL-O-RING (ID=29.40mm)					
	8	7Y-4278	1	RING					
	9	4I-7794	1	RETAINER					
	10	095-1593	1	SEAL-O-RING (ID=24.70mm)					
	11	096-3064	1	RING					
	12	095-1586	1	SEAL-O-RING (ID=19.80mm)					
	13	095-1785	1	RING					
	14	7I-7971	1	PLUG					
	15	7Y-5280	1	SEAL-O-RING (ID=3.80mm)					

H53167E 00

7I-7968 VALVE GP-RELIEF

Direct Operated
S/N 3MR 1-04861, 4MR 1-00707
Part of 116-3550-Page259

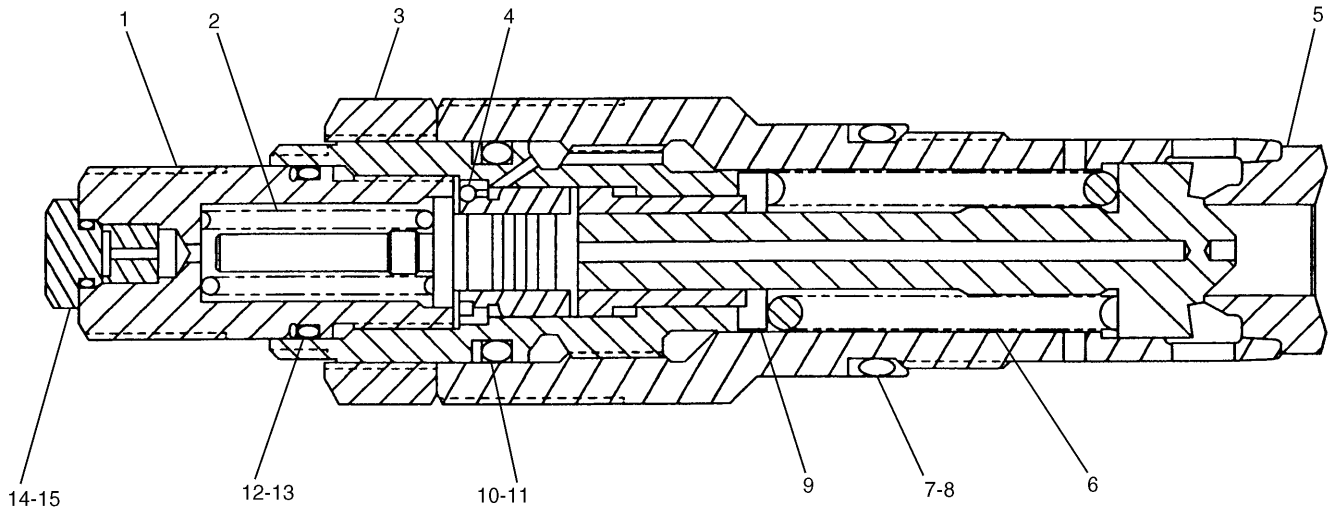

NOTE	No.	PART No.	QTY	PART NAME	NOTE	No.	PART No.	QTY	PART NAME
	1	7I-7970	1	PLUG					
	2	4I-7792	1	SPRING					
	3	4I-7793	1	LOCKNUT					
	4	4I-7837	1	BALL					
	5	155-7168	1	BODY AS					
	6	7I-7965	1	SPRING					
	7	095-1698	1	SEAL-O-RING (ID=29.40mm)					
	8	7Y-4278	1	RING					
	9	4I-7794	1	RETAINER					
	10	095-1593	1	SEAL-O-RING (ID=24.70mm)					
	11	096-3064	1	RING					
	12	095-1586	1	SEAL-O-RING (ID=19.80mm)					
	13	095-1785	1	RING					
	14	7I-7971	1	PLUG					
	15	7Y-5280	1	SEAL-O-RING (ID=3.80mm)					

H62383E 00

154-0401 VALVE GP-RELIEF

Direct Operated
S/N 3MR 04862-07497, 4MR 00708-01065
Part of 116-3550-Page259.02

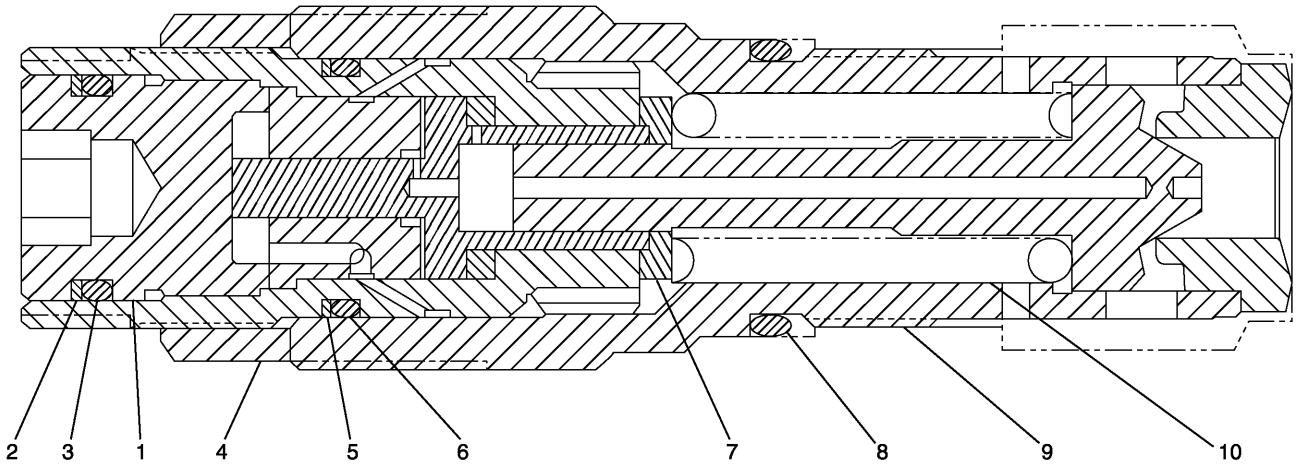

NOTE	No.	PART No.	QTY	PART NAME	NOTE	No.	PART No.	QTY	PART NAME
	1	168-0766	1	PLUG					
	2	168-0765	1	RING					
	3	7J-9933	1	SEAL-O-RING (ID=21.89mm)					
	4	168-0764	1	LOCKNUT					
	5	7I-0966	1	RING					
	6	6V-5556	1	SEAL-O-RING (ID=25.07mm)					
	7	168-0763	1	RETAINER					
	8	095-1698	1	SEAL-O-RING (ID=29.40mm)					
	9	168-0713	1	BODY AS					
	10	7I-7965	1	SPRING					

H78089E 00

176-5105 VALVE GP-RELIEF

Direct Operated
S/N 3MR 07498-Up, 4MR 01066-Up
Part of 176-5104-Page259.03

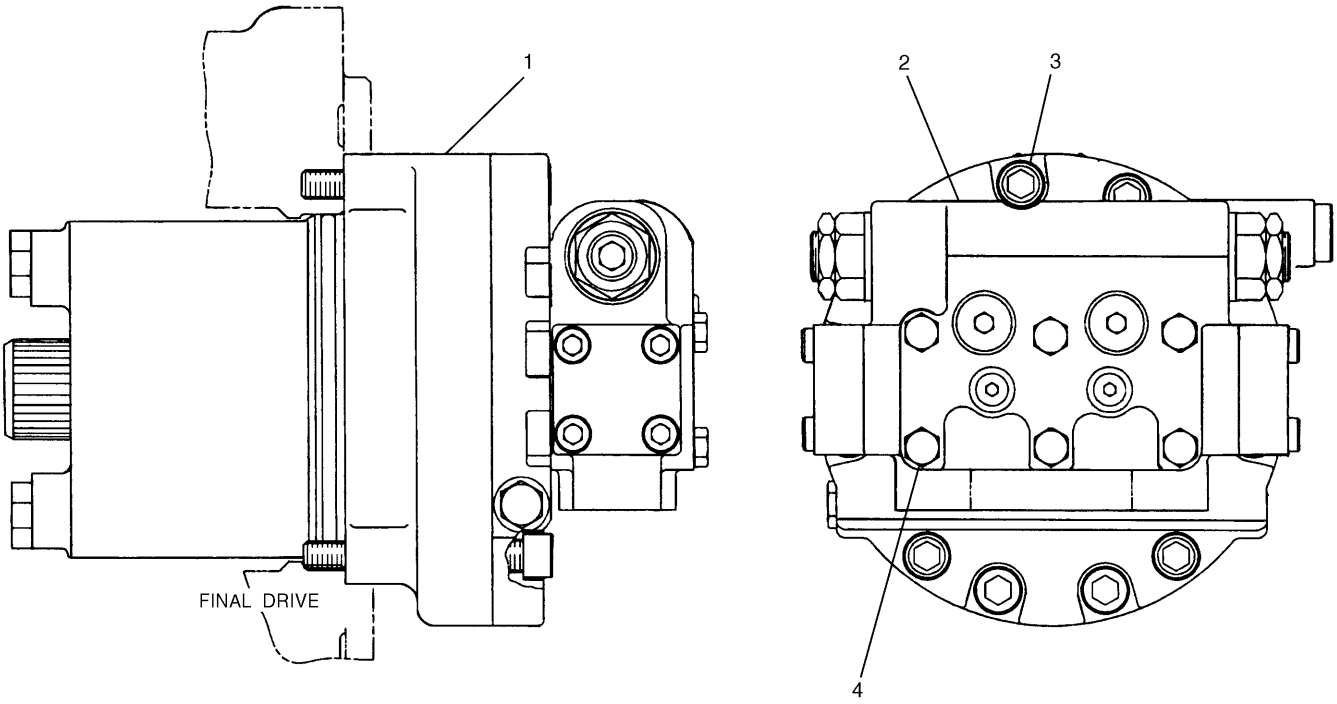

NOTE	No.	PART No.	QTY	PART NAME	NOTE	No.	PART No.	QTY	PART NAME
Y	1	107-7029	1	MOTOR GP					
Y	2	137-3718	1	VALVE GP					
	3	095-0707	3	BOLT (L=120mm)					
	4	8T-4176	6	BOLT (L=90mm)					

Y—SEE SEPARATE ILLUSTRATION

H53712E 04

107-7028 MOTOR & MTG GP-TRAVEL

Part of 114-1333-Page111,114-1483-Page111.01
107-7029-Page264,137-3718-Page266

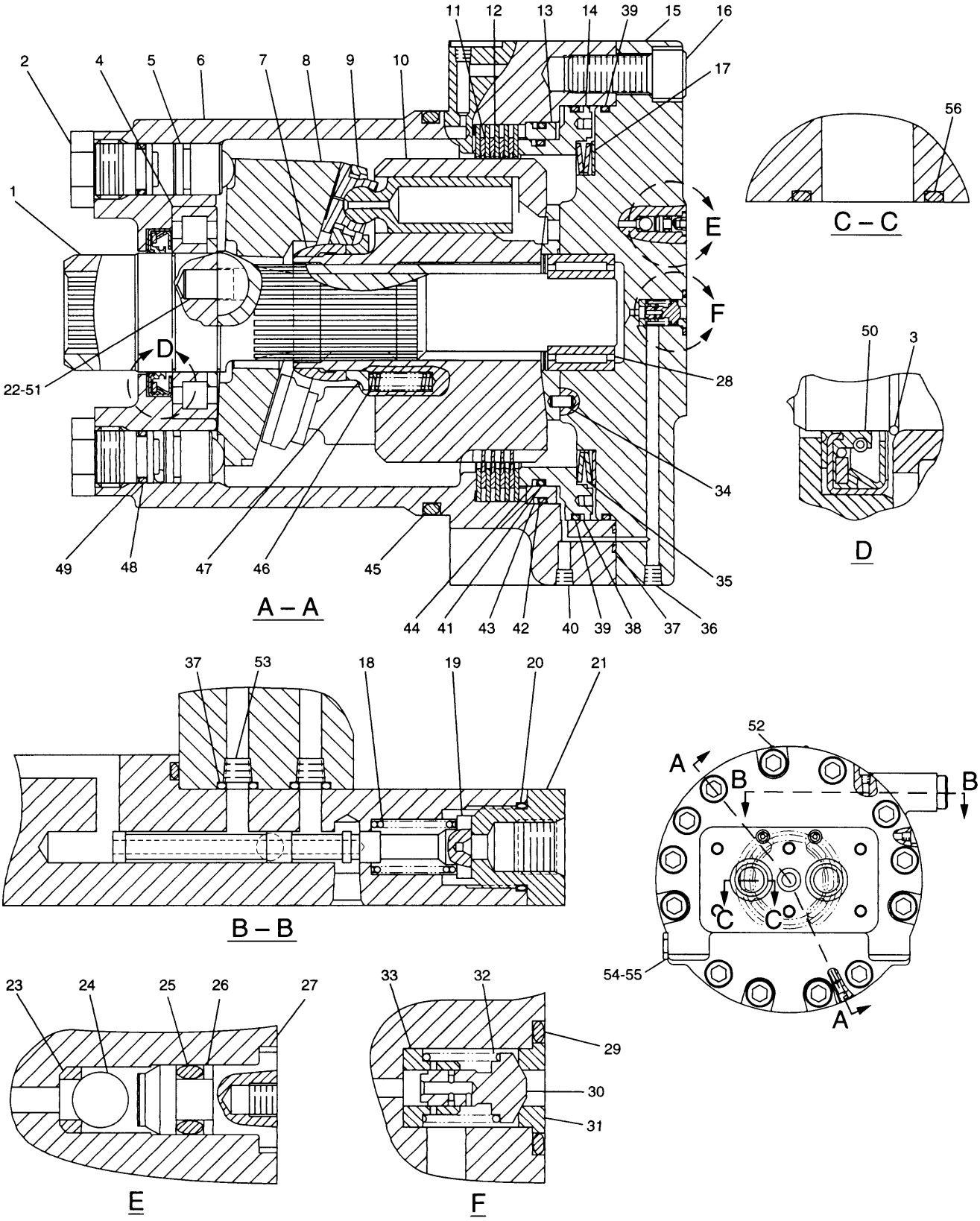

H59680E 07

107-7029 MOTOR GP-TRAVEL
Part of 107-7028-Page263

HYDRAULIC SYSTEM

NOTE	No.	PART No.	QTY	PART NAME
	1	087-4629	1	SHAFT
	2	087-4743	2	STOPPER
	3	094-1399	2	RING
	4	7Y-4212	1	BEARING
	5	087-4757	2	PISTON
	6	107-6969	1	BODY
	7	122-5114	1	GUIDE
	8	087-4628	1	PLATE
	9	147-5860	1	PISTON AS
	10	133-6777	1	BARREL AS
	11	107-6954	4	PLATE
	12	107-6955	5	PLATE
	13	096-1523	1	GUIDE
	14	7Y-4213	1	PISTON
	15	7Y-4202	1	HEAD
	16	8T-4944	10	BOLT (L=40mm)
B	17	096-1521	1	SHIM (T=1.00mm)
B		096-3785	1	SHIM (T=1.20mm)
B		096-3786	1	SHIM (T=1.40mm)
B		096-3787	1	SHIM (T=1.60mm)
B		096-3788	1	SHIM (T=1.80mm)
B		096-1522	1	SHIM (T=2.00mm)
	18	096-3978	1	SPRING
	19	7Y-4216	1	SPOOL
J	20	2M-9780	1	SEAL-O-RING (ID=19.18mm)
	21	087-4786	1	ADAPTER
	22	121-1558	2	PIN
	23	096-5916	2	SEAT
	24	2D-6642	2	BALL
J	25	095-1572	2	SEAL-O-RING (ID=4.80mm)
J	26	096-5919	2	RING
	27	096-5915	2	RETAINER
	28	096-4003	1	BEARING SET
J	29	095-1585	1	SEAL-O-RING (ID=17.80mm)
	30	087-4742	1	VALVE
	31	096-1519	1	SEAT
	32	095-7380	1	SPRING
	33	095-7382	1	RETAINER
	34	094-1875	1	DOWEL
	35	095-7378	1	WASHER SET
	36	8T-6759	10	PLUG
J	37	095-1575	3	SEAL-O-RING (ID=7.80mm)
J	38	096-4378	1	RING
J	39	096-4377	2	SEAL-O-RING (ID=190.00mm)
	40	8T-6759	1	PLUG
J	41	095-7384	1	SEAL-O-RING (ID=160.00mm)
J	42	095-7383	1	SEAL-O-RING (ID=174.00mm)
J	43	095-7386	1	RING
J	44	095-7387	1	RING
J	45	095-1685	1	SEAL-O-RING (ID=179.30mm)
	46	118-4057	9	SPRING
	47	7Y-4215	1	SPACER
J	48	095-1586	2	SEAL-O-RING (ID=19.80mm)
J	49	7Y-4217	2	RING
J	50	096-4376	1	SEAL
	51	123-2008	2	KEY
	52	095-7419	4	SCREW
	53	7Y-4224	2	ORIFICE
J	54	3K-0360	1	SEAL-O-RING (ID=16.36mm)
	55	9S-4185	1	PLUG
J	56	095-1700	2	SEAL-O-RING (ID=34.40mm)
				THE FOLLOWING REPAIR
				KIT IS AVAILABLE:
		7Y-4222	1	SEAL KIT
				(INCLUDES PARTS MARKED J)
				THE FOLLOWING SERVICE
				REPAIR IS AVAILABLE:
		142-5515	2	RING

B—USE AS REQUIRED

H59680E 07

107-7029 MOTOR GP-TRAVEL

Part of 107-7028-Page263

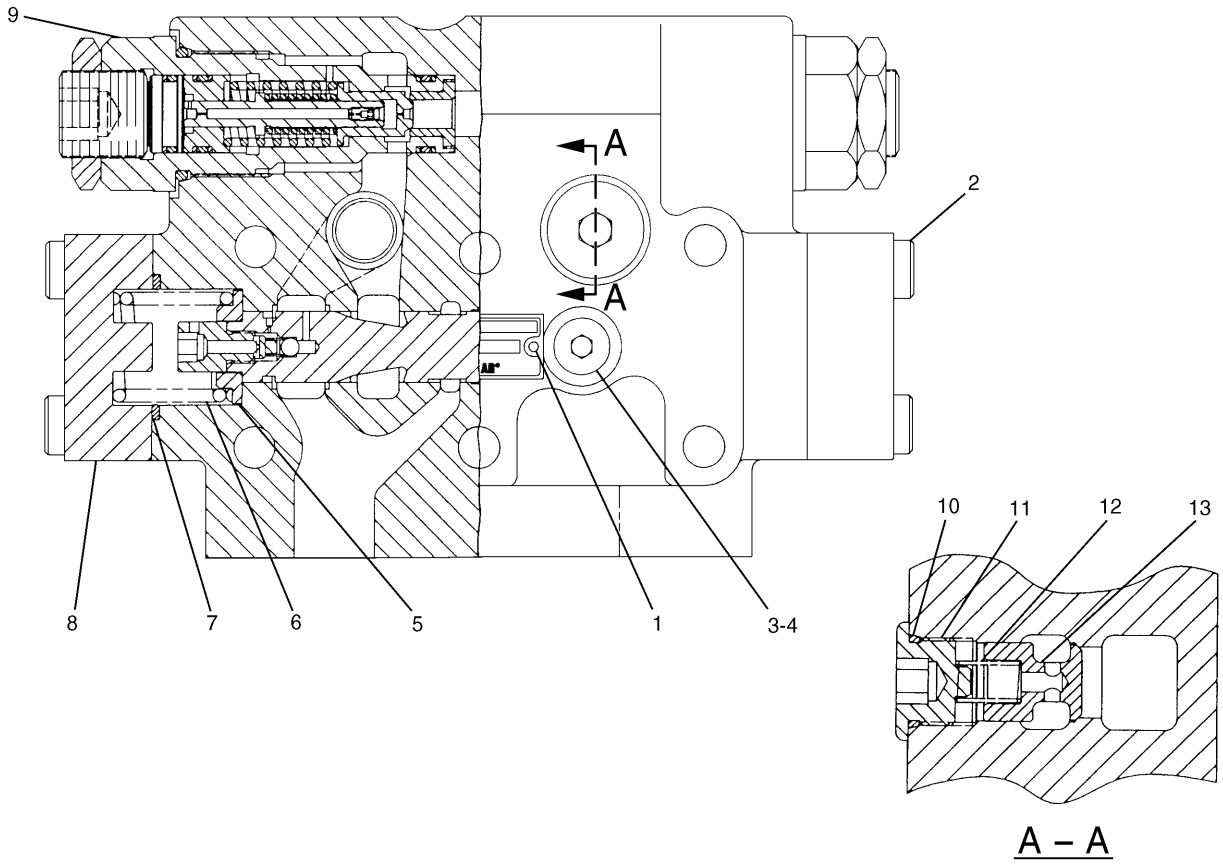

NOTE	No.	PART No.	QTY	PART NAME	NOTE	No.	PART No.	QTY	PART NAME
	1	5B-9304	2	SCREW					
	2	6V-8200	8	BOLT (L=35mm)					
	3	9S-8004	2	PLUG					
	4	3J-1907	2	SEAL-O-RING (ID=11.89mm)					
	5	129-7932	2	GUIDE					
	6	129-7931	2	SPRING					
	7	095-1701	2	SEAL-O-RING (ID=39.40mm)					
	8	119-5360	2	COVER					
Y	9	129-8030	2	VALVE GP					
	10	2M-9780	2	SEAL-O-RING (ID=19.18mm)					
	11	119-5364	2	PLUG					
	12	119-5362	2	SPRING					
	13	119-5365	2	VALVE					

Y—SEE SEPARATE ILLUSTRATION

H61777E 01

137-3718 VALVE GP-TRACTION CONTROL

Part of 107-7028-Page263
129-8030-Page267

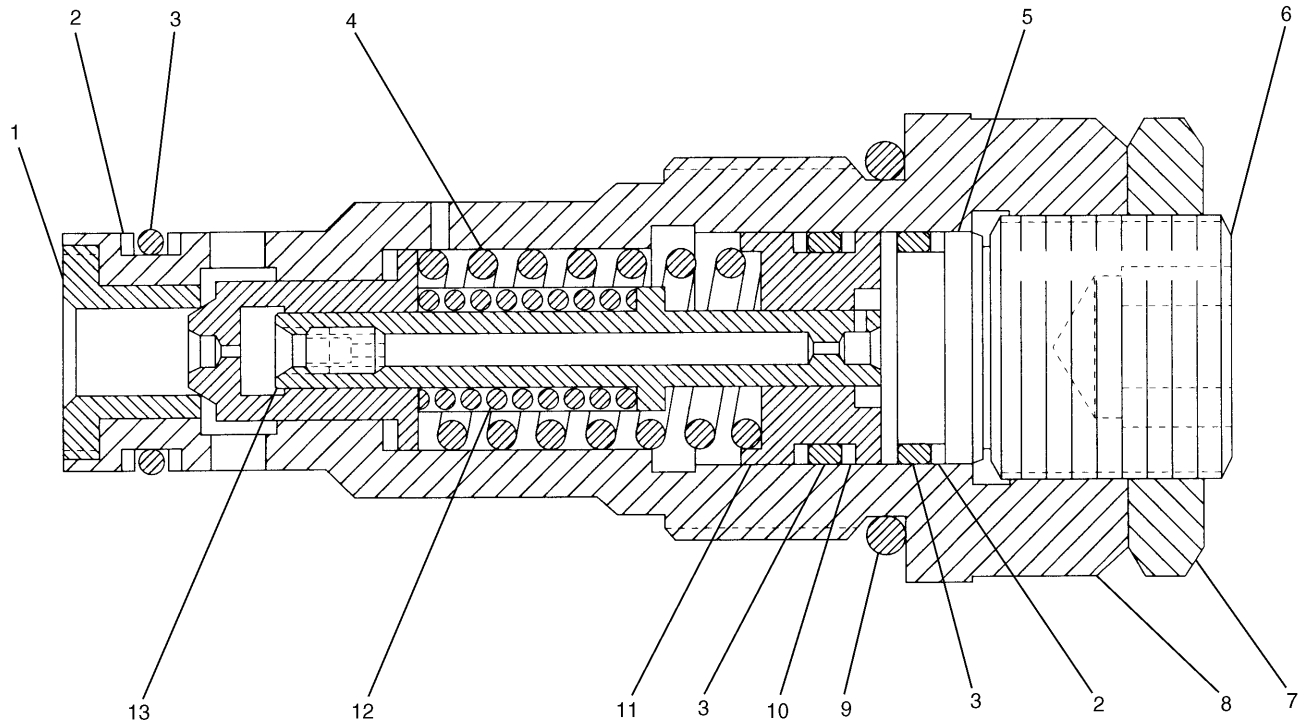

NOTE	No.	PART No.	QTY	PART NAME	NOTE	No.	PART No.	QTY	PART NAME
	1	114-0515	1	SEAT					
	2	095-1785	3	RING					
	3	095-1586	3	SEAL-O-RING (ID=19.80mm)					
	4	114-0516	1	SPRING					
	5	114-0519	1	STOPPER					
	6	7Y-8436	1	SCREW					
	7	7Y-8437	1	NUT					
	8	114-0518	1	BODY					
	9	095-1601	1	SEAL-O-RING (ID=34.70mm)					
	10	121-1459	2	RING					
	11	114-0517	1	PISTON					
	12	114-0514	1	SPRING					
	13	129-8031	1	VALVE GP					

H53739E 01

129-8030 VALVE GP-RELIEF

Part of 137-3718-Page266

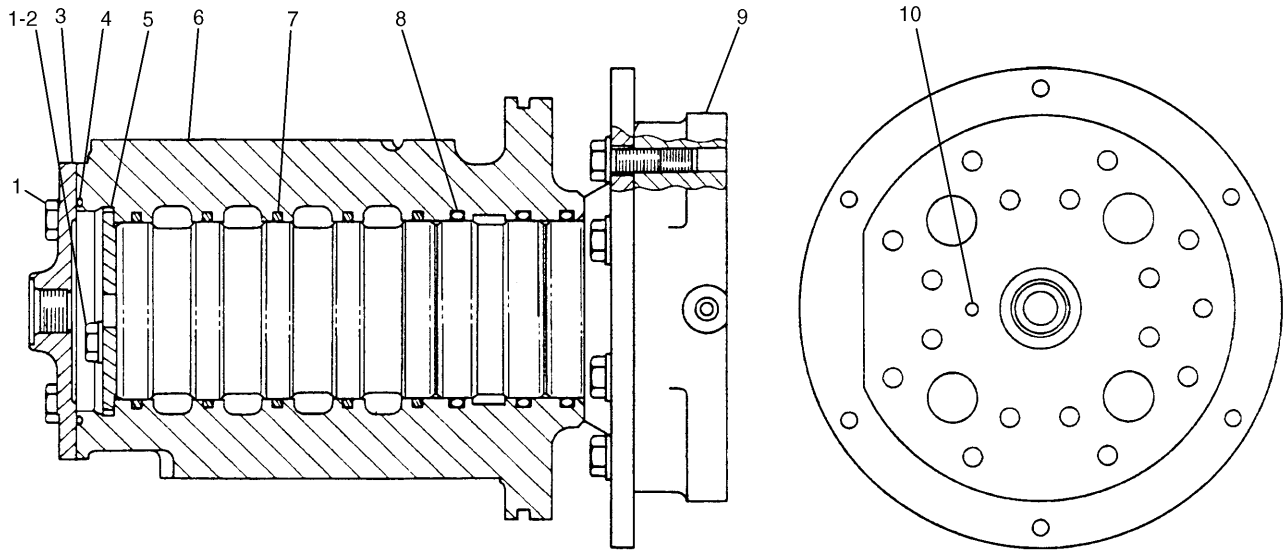

NOTE	No.	PART No.	QTY	PART NAME	NOTE	No.	PART No.	QTY	PART NAME
	1	8T-4136	6	BOLT (L=25mm)					
	2	8T-4121	2	WASHER					
	3	7Y-4817	1	COVER					
	4	095-1716	1	SEAL-O-RING (ID=109.40mm)					
	5	7I-7131	1	RETAINER					
	6	7Y-4801	1	HOUSING					
	7	159-7782	5	SEAL					
	8	095-1625	3	SEAL-O-RING (ID=89.60mm)					
	9	4I-6262	1	ROTOR					
Y		4I-6263	1	ROTOR GP					
	10	8T-6759	1	PLUG					

Y—SEE SEPARATE ILLUSTRATION

H63353E 00

159-7841 SWIVEL GP

Part of 115-8891-Page223,115-8892-Page225
4I-6263-Page269

HYDRAULIC SYSTEM

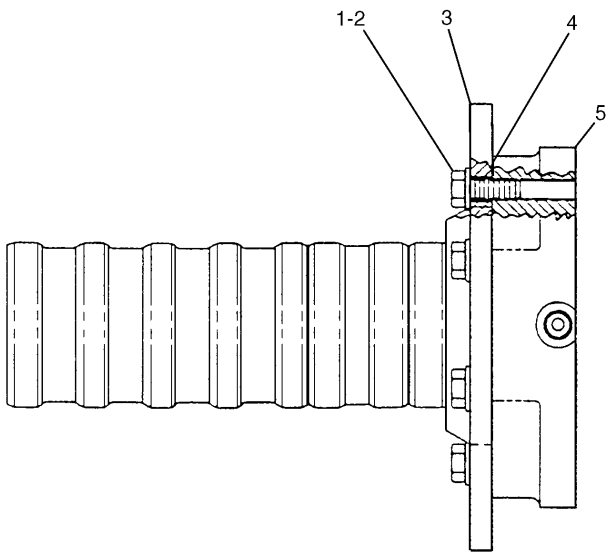

NOTE	No.	PART No.	QTY	PART NAME
	1	8T-4139	5	BOLT (L=30mm)
	2	8T-4223	5	WASHER
	3	7Y-4804	1	PLATE
B	4	1U-8846		GASKET MAKER···(2ml)
	5	7Y-4803	1	ROTOR

B—USE AS REQUIRED

H50628E 01

4I-6263 ROTOR GP-SWIVEL

Part of 159-7841-Page268

HYDRAULIC SYSTEM

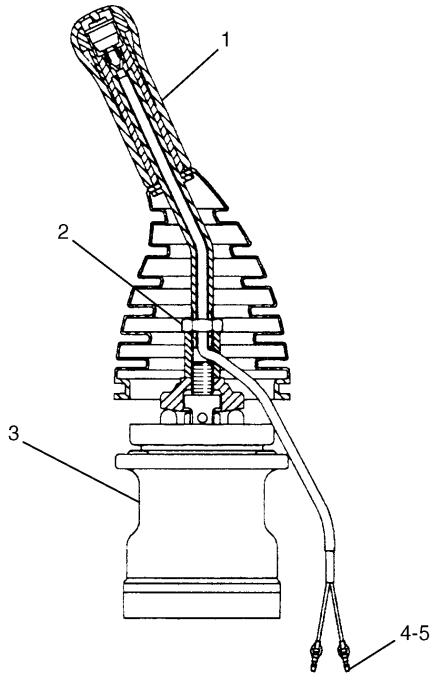

NOTE	No.	PART No.	QTY	PART NAME
Y	1	113-3408	1	CONTROL GP
	2	7Y-8463	1	NUT
Y	3	131-5914	1	VALVE GP
	4	6K-0613	2	TERMINAL
	5	087-4970	2	SLEEVE

Y—SEE SEPARATE ILLUSTRATION

H52810E 01

123-2146 VALVE GP-PILOT

Right Unit
S/N 3MR 1-00236, 4MR 1-00142
Part of 115-8896-Page233
113-3408-Page271,131-5914-Page310

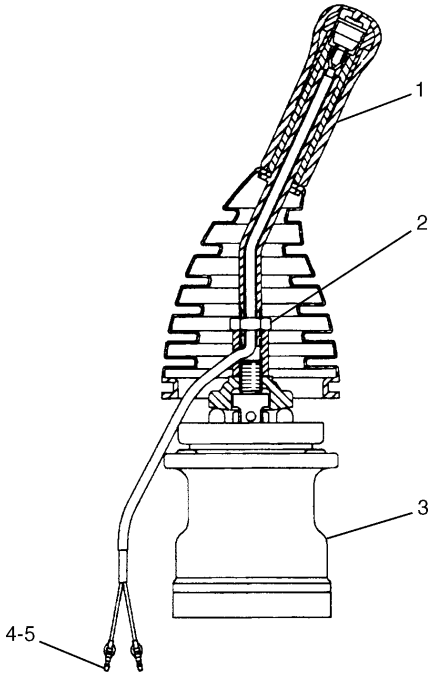

NOTE	No.	PART No.	QTY	PART NAME
Y	1	113-3407	1	CONTROL GP
	2	7Y-8463	1	NUT
Y	3	131-5914	1	VALVE GP
	4	6K-0613	2	TERMINAL
	5	087-4970	2	SLEEVE

Y—SEE SEPARATE ILLUSTRATION

H52811E 01

123-2147 VALVE GP-PILOT

Left Unit
S/N 3MR 1-00236, 4MR 1-00142
Part of 115-8896-Page233
113-3407-Page271,131-5914-Page310

HYDRAULIC SYSTEM

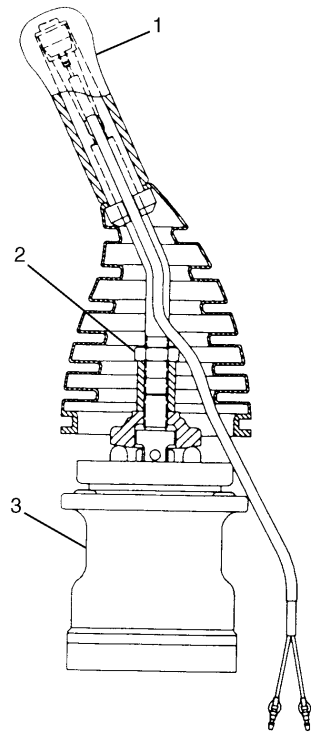

NOTE	No.	PART No.	QTY	PART NAME
Y	1	133-7900	1	CONTROL GP
	2	7Y-8463	1	NUT
Y	3	131-5914	1	VALVE GP

Y—SEE SEPARATE ILLUSTRATION

H52412E 03

123-2146 VALVE GP-PILOT

Right Unit
S/N 3MR 00237-07146, 4MR 00143-01015
Part of 115-8896-Page233
133-7900-Page271.01,131-5914-Page310

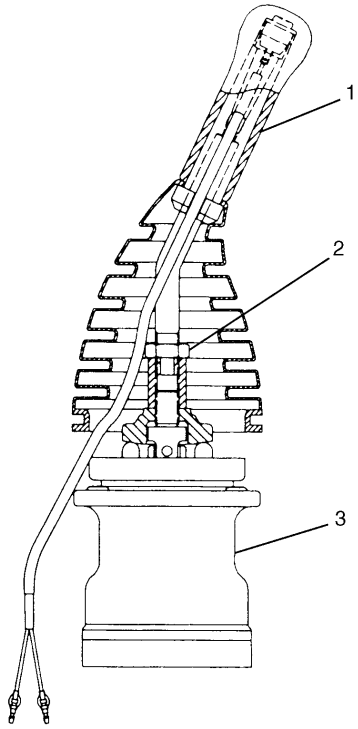

NOTE	No.	PART No.	QTY	PART NAME
Y	1	133-7899	1	CONTROL GP
	2	7Y-8463	1	NUT
Y	3	131-5914	1	VALVE GP

Y—SEE SEPARATE ILLUSTRATION

H52413E 03

123-2147 VALVE GP-PILOT

Left Unit
S/N 3MR 00237-07146, 4MR 00143-01015
Part of 115-8896-Page233
133-7899-Page271.01,131-5914-Page310

HYDRAULIC SYSTEM

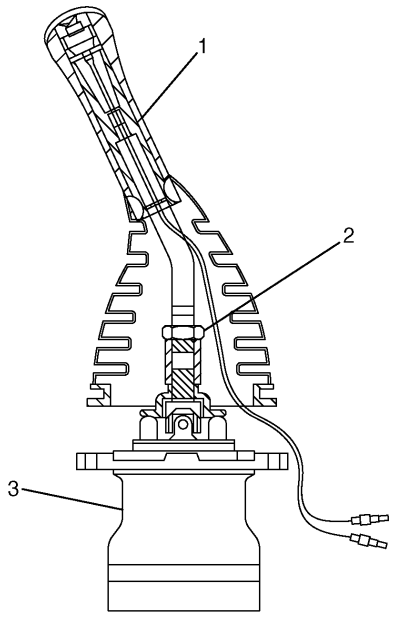

NOTE	No.	PART No.	QTY	PART NAME
Y	1	133-7900	1	CONTROL GP
	2	7Y-8463	1	NUT
Y	3	176-4984	1	VALVE GP
				THE FOLLOWING SERVICE REPAIR ARE AVAILABLE:
Y		184-3899	1	VALVE GP
Y		184-3900	1	VALVE GP

Y—SEE SEPARATE ILLUSTRATION

H69139E 01

176-4985 VALVE GP-PILOT

Right Unit
S/N 3MR 07147-Up, 4MR 01016-Up
Part of 115-8896-Page233.06
133-7900-Page271.01,176-4984-Page310.01,184-3899-Page310.02,184-3900-Page310.03

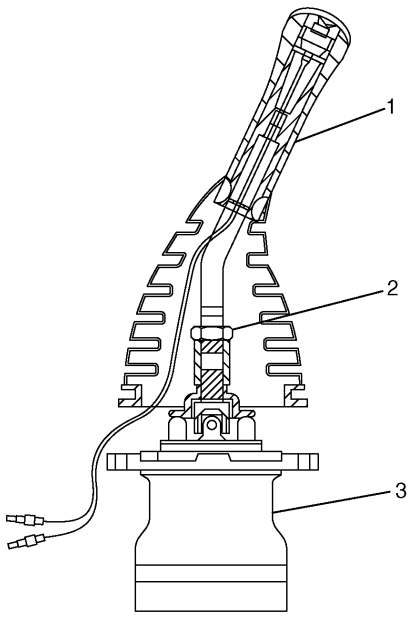

NOTE	No.	PART No.	QTY	PART NAME
Y	1	133-7899	1	CONTROL GP
	2	7Y-8463	1	NUT
Y	3	176-4984	1	VALVE GP
				THE FOLLOWING SERVICE REPAIR ARE AVAILABLE:
Y		184-3899	1	VALVE GP
Y		184-3900	1	VALVE GP

Y—SEE SEPARATE ILLUSTRATION

H69140E 01

176-4986 VALVE GP-PILOT

Left Unit
S/N 3MR 07147-Up, 4MR 01016-Up
Part of 115-8896-Page233.06
133-7899-Page271.01,176-4984-Page310.01,184-3899-Page310.02,184-3900-Page310.03

HYDRAULIC SYSTEM

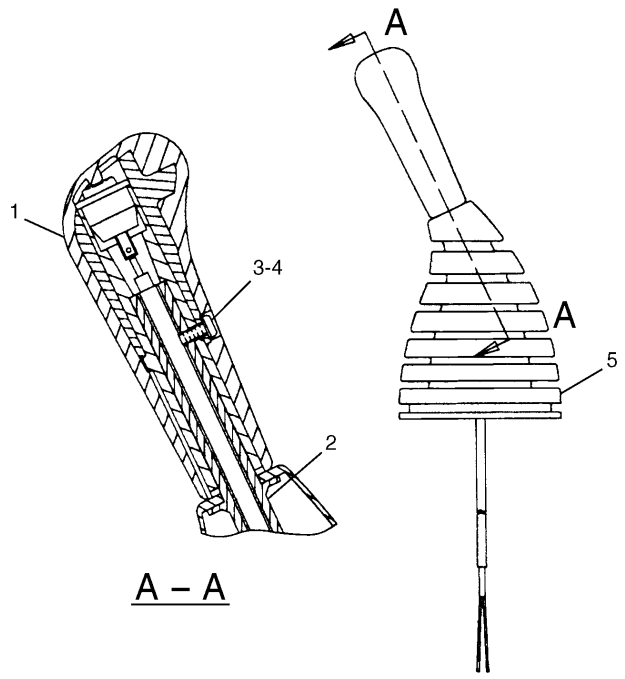

NOTE	No.	PART No.	QTY	PART NAME
	1	122-9620	1	KNOB
	2	113-3409	1	LEVER AS
	3	6V-5698	1	SCREW
	4	8C-9660	1	WASHER
	5	113-3457	1	BOOT

H50292E 02

113-3408 CONTROL GP-PILOT OPERATED HYD

S/N 3MR 1-00236, 4MR 1-00142
Part of 123-2146-Page270

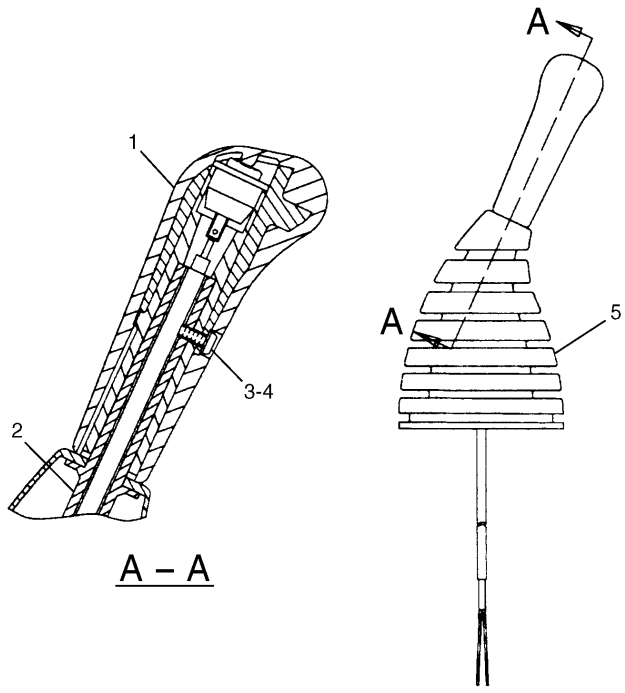

NOTE	No.	PART No.	QTY	PART NAME
	1	122-9621	1	KNOB
	2	113-3409	1	LEVER AS
	3	6V-5698	1	SCREW
	4	8C-9660	1	WASHER
	5	113-3457	1	BOOT

H50293E 02

113-3407 CONTROL GP-PILOT OPERATED HYD

S/N 3MR 1-00236, 4MR 1-00142
Part of 123-2147-Page270

HYDRAULIC SYSTEM

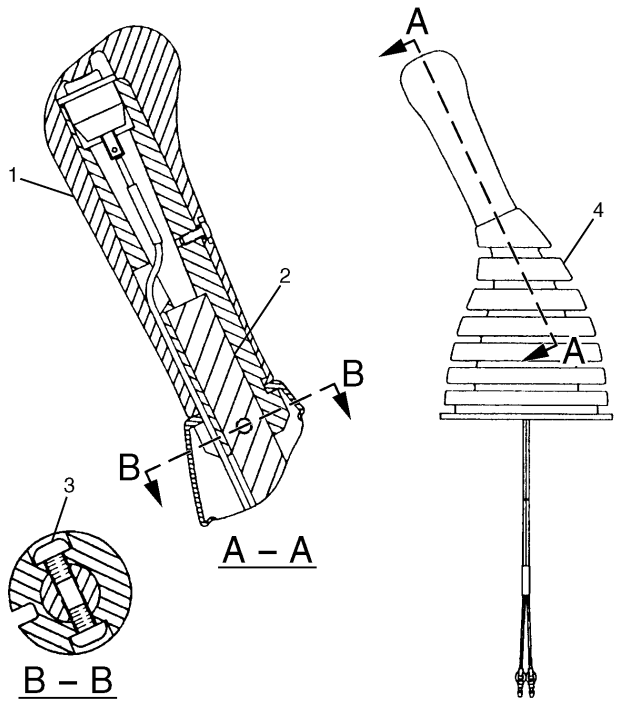

NOTE	No.	PART No.	QTY	PART NAME
Y	1	128-2132	1	KNOB AS
	2	124-4010	1	LEVER
	3	096-2617	2	SCREW
	4	130-0379	1	BOOT

Y—SEE SEPARATE ILLUSTRATION

H50647E 00

133-7900 CONTROL GP-PILOT OPERATED HYD

S/N 3MR 00237-Up, 4MR 00143-Up
Part of 123-2146-Page270.01,176-4985-Page270.02
128-2132-Page271.02

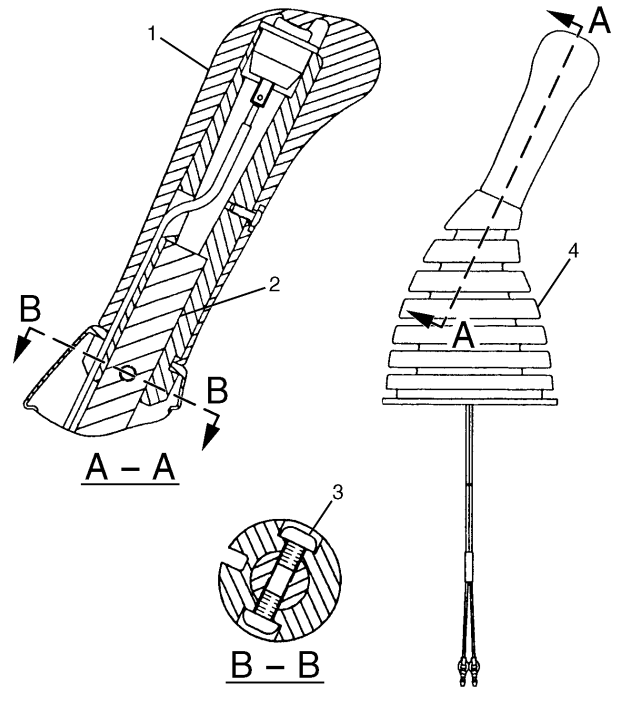

NOTE	No.	PART No.	QTY	PART NAME
Y	1	128-2133	1	KNOB AS
	2	124-4010	1	LEVER
	3	096-2617	2	SCREW
	4	130-0379	1	BOOT

Y—SEE SEPARATE ILLUSTRATION

H50646E 00

133-7899 CONTROL GP-PILOT OPERATED HYD

S/N 3MR 00237-Up, 4MR 00143-Up
Part of 123-2147-Page270.01,176-4986-Page270.02
128-2133-Page271.02

HYDRAULIC SYSTEM

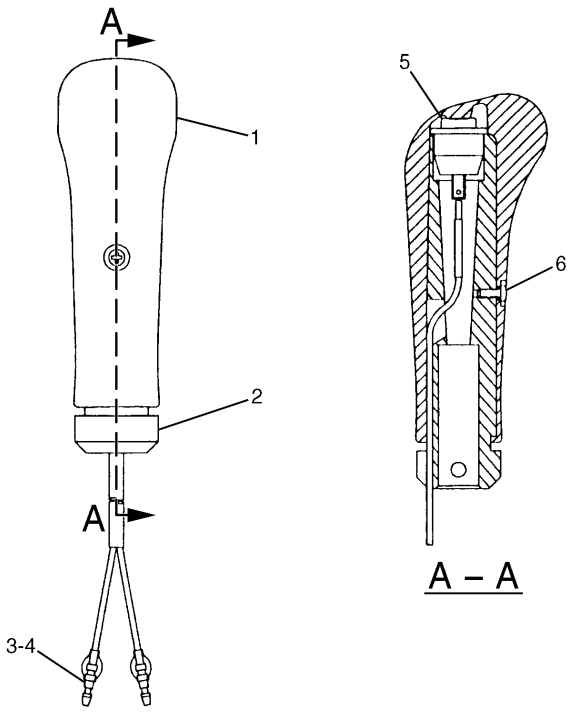

NOTE	No.	PART No.	QTY	PART NAME
	1	124-4008	1	KNOB
	2	124-4009	1	SHAFT
	3	6K-0613	2	TERMINAL
	4	087-4970	2	SLEEVE
	5	128-2134	1	SWITCH AS
	6	6I-5298	1	SCREW

H51040E 00

128-2132 KNOB AS
S/N 3MR 00237-Up, 4MR 00143-Up
Part of 133-7900-Page271.01

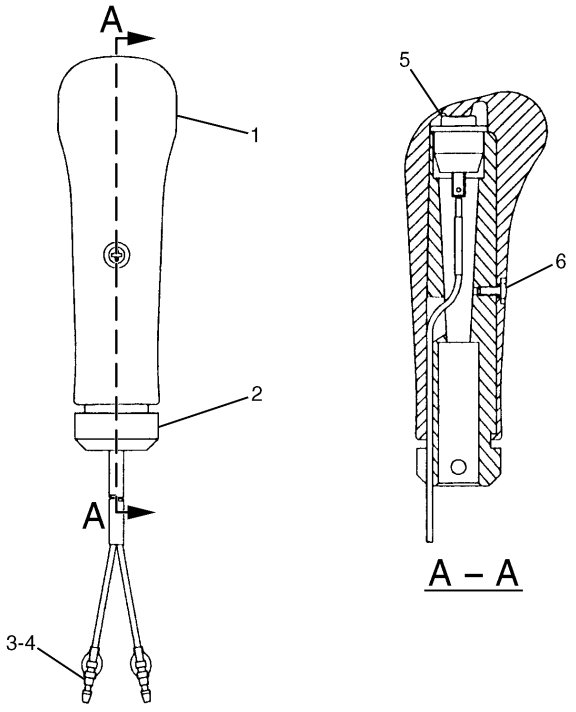

NOTE	No.	PART No.	QTY	PART NAME
	1	128-2131	1	KNOB
	2	124-4009	1	SHAFT
	3	6K-0613	2	TERMINAL
	4	087-4970	2	SLEEVE
	5	128-2134	1	SWITCH AS
	6	6I-5298	1	SCREW

H51041E 00

128-2133 KNOB AS
S/N 3MR 00237-Up, 4MR 00143-Up
Part of 133-7899-Page271.01

HYDRAULIC SYSTEM

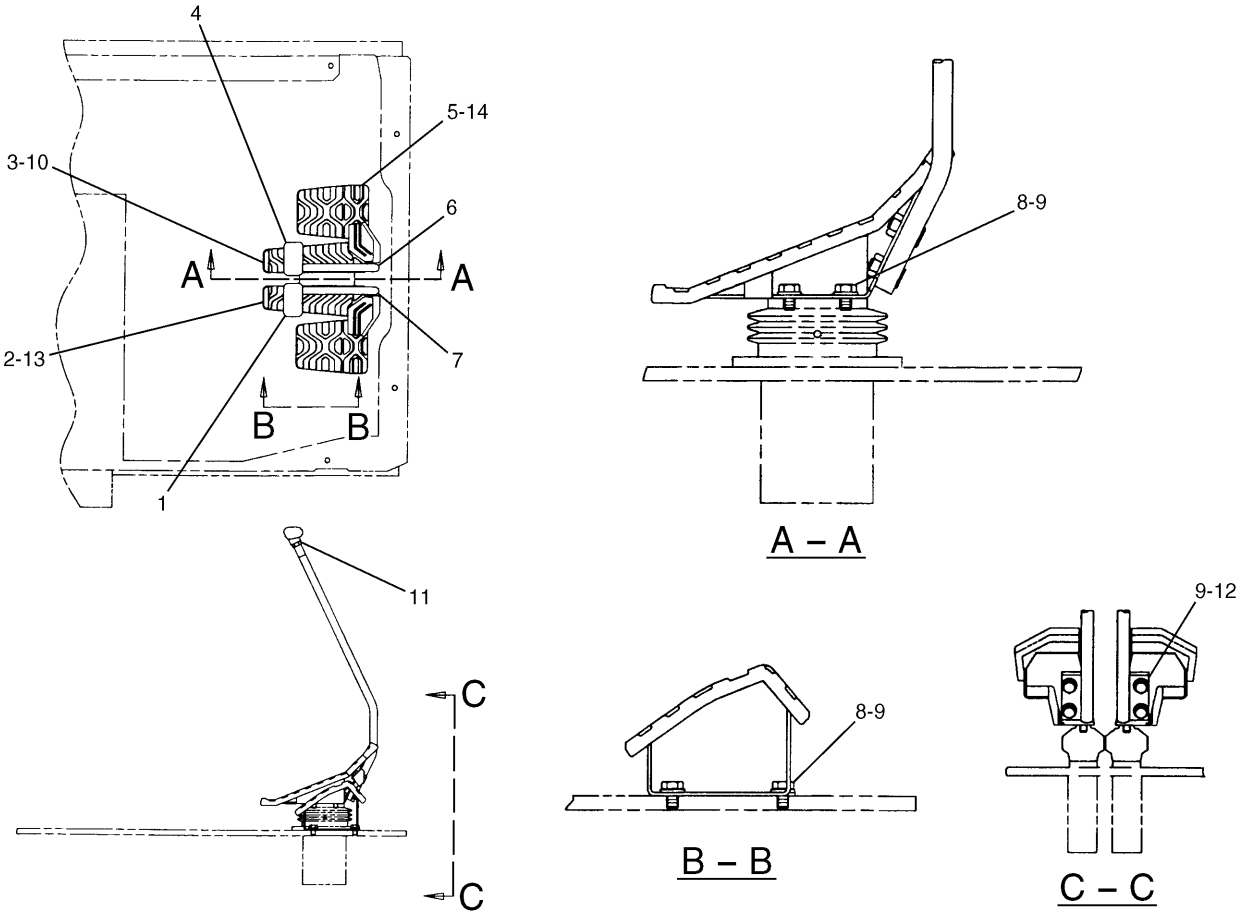

NOTE	No.	PART No.	QTY	PART NAME	NOTE	No.	PART No.	QTY	PART NAME
	1	096-6333	1	KNOB					
	2	117-6350	1	PEDAL AS (RH)					
	3	117-6349	1	PEDAL AS (LH)					
	4	096-6332	1	KNOB					
	5	117-6356	2	STEP AS					
	6	124-4021	1	LEVER AS (LH)					
	7	124-4025	1	LEVER AS (RH)					
	8	8T-4191	8	BOLT (L=16mm)					
	9	8T-4121	12	WASHER					
	10	122-9609	1	PEDAL					
	11	096-6331	2	NUT					
	12	8T-4136	4	BOLT (L=25mm)					
	13	122-9608	1	PEDAL					
	14	122-9610	2	STEP					

H50264E 05

111-6284 CONTROL GP-PILOT OPERATED HYD
S/N 3MR 1-04978, 4MR 1-00715

Consists of :

			Page
1	154-0568	CONTROL GP-PILOT OPERATED HYD	
		-OR-	
1	154-0569	CONTROL GP-PILOT OPERATED HYD.....	272.02

H60196E 06

111-6284 CONTROL GP-PILOT OPERATED HYD
S/N 3MR 04979-Up, 4MR 00716-Up

HYDRAULIC SYSTEM

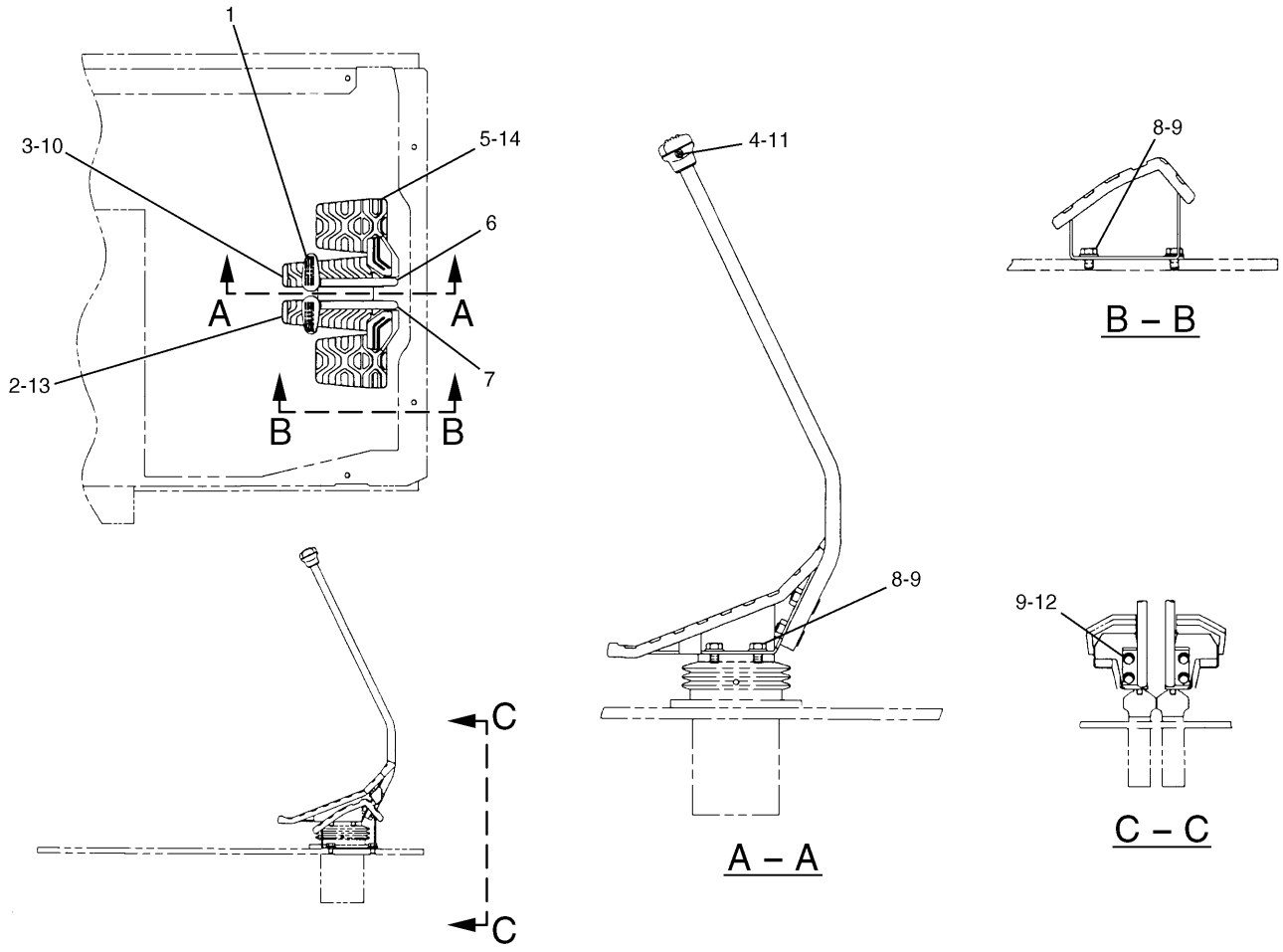

NOTE	No.	PART No.	QTY	PART NAME	NOTE	No.	PART No.	QTY	PART NAME
	1	142-5546	2	KNOB					
	2	117-6350	1	PEDAL AS (RH)					
	3	117-6349	1	PEDAL AS (LH)					
	4	095-0728	2	SCREW					
	5	117-6356	2	STEP AS					
	6	142-5544	1	LEVER AS (LH)					
	7	142-5543	1	LEVER AS (RH)					
	8	8T-4191	8	BOLT (L=16mm)					
	9	8T-4121	12	WASHER					
	10	122-9609	1	PEDAL					
	11	096-6166	2	WASHER					
	12	8T-4136	4	BOLT (L=25mm)					
	13	122-9608	1	PEDAL					
	14	122-9610	2	STEP					

H60197E 00

154-0569 CONTROL GP-PILOT OPERATED HYD

S/N 3MR 04979-Up, 4MR 00716-Up
Part of 111-6284-Page272.01

HYDRAULIC SYSTEM

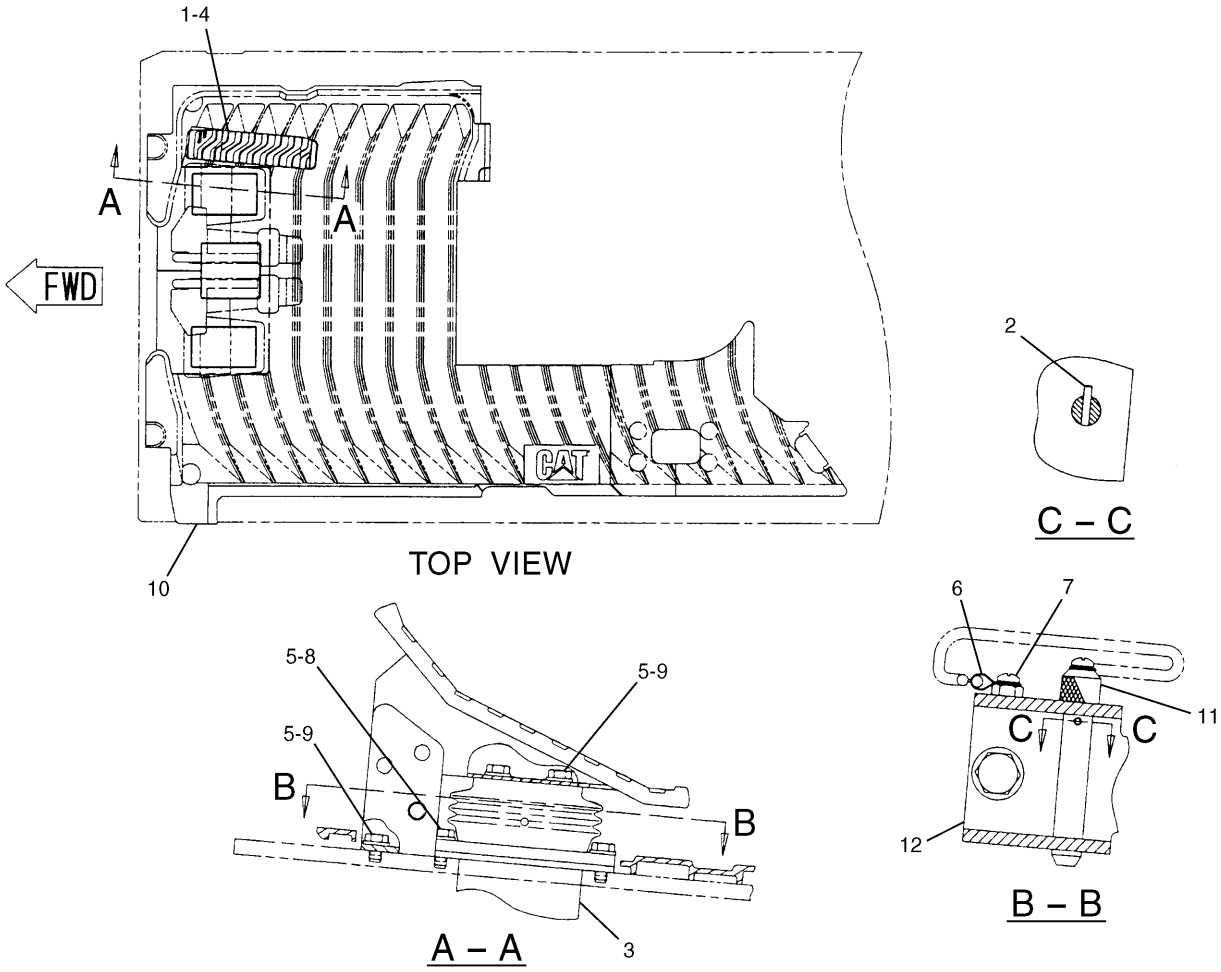

NOTE	No.	PART No.	QTY	PART NAME	NOTE	No.	PART No.	QTY	PART NAME
	1	128-2170	1	PEDAL AS					
	2	8T-0114	1	PIN					
Y	3	123-2604	1	VALVE GP					
	4	122-9611	1	PEDAL					
	5	8T-4121	5	WASHER					
	6	5I-7090	1	CHAIN AS					
	7	095-0735	2	SCREW					
	8	8T-4136	2	BOLT (L=25mm)					
	9	8T-4191	3	BOLT (L=16mm)					
	10	154-0666	1	FLOORMAT					
	11	128-2173	1	PIN					
	12	128-2172	1	SUPPORT AS					

Y—SEE SEPARATE ILLUSTRATION

H60198E 07

111-6428 CONTROL GP-HYDRAULIC

Part of 116-9035,127-6676-Page229,121-1969-Page230
123-2604-Page307
An Attachment

HYDRAULIC SYSTEM

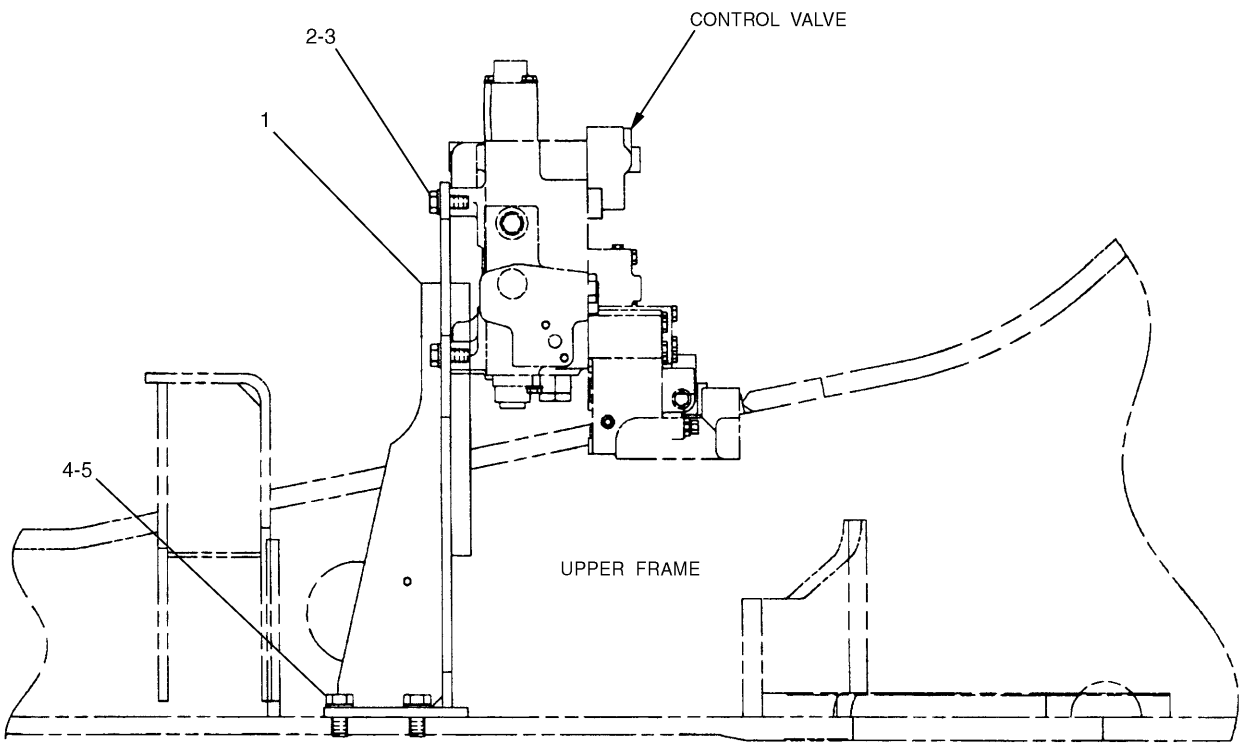

NOTE	No.	PART No.	QTY	PART NAME	NOTE	No.	PART No.	QTY	PART NAME
	1	114-0624	1	BRACKET AS					
	2	100-3866	4	BOLT (L=40mm)					
	3	9X-8257	4	WASHER					
	4	8T-5460	4	BOLT (L=40mm)					
	5	8T-4123	4	WASHER					

H51022E 01

107-7037 MOUNTING GP-VALVE

HYDRAULIC SYSTEM

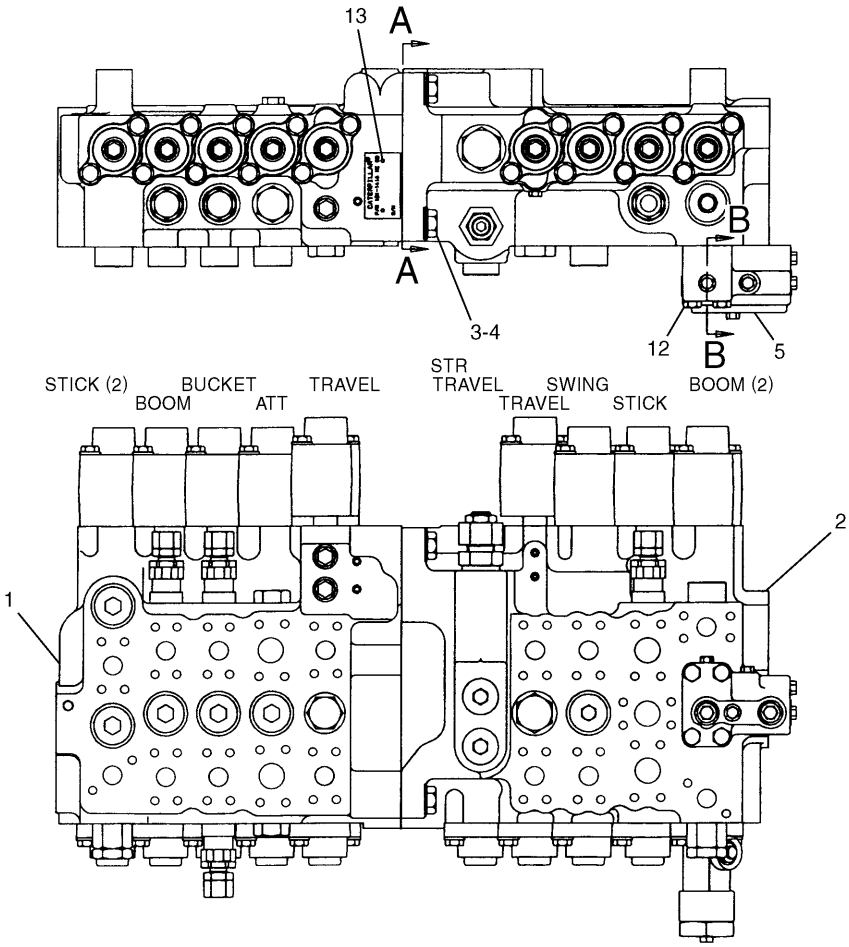

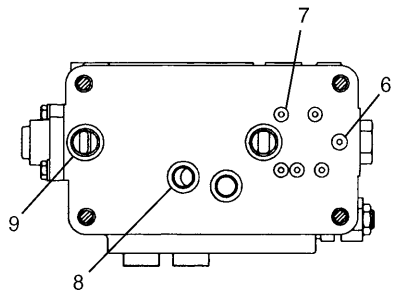

A – A

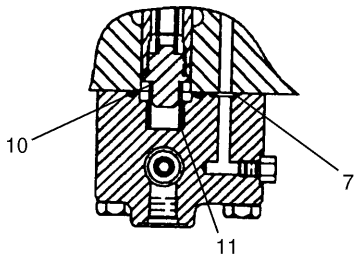

B – B

NOTE	No.	PART No.	QTY	PART NAME	NOTE	No.	PART No.	QTY	PART NAME
Y	1	107-7071	1	VALVE GP					
Y	2	107-7074	1	VALVE GP					
	3	8T-4193	4	BOLT (L=50mm)					
	4	9X-8257	4	WASHER					
Y	5	6E-4281	1	VALVE GP					
	6	4J-9535	1	SEAL-O-RING (ID=10.77mm)					
	7	4J-5309	6	SEAL-O-RING (ID=9.19mm)					
	8	1P-3702	2	SEAL					
	9	6V-0357	2	SEAL-O-RING (ID=29.74mm)					
	10	4J-0519	1	SEAL-O-RING (ID=31.34mm)					
	11	6E-2157	1	SPRING					
	12	8T-5005	4	BOLT (L=70mm)					
	13	4B-4158	2	SCREW					

Y—SEE SEPARATE ILLUSTRATION

H54287E 03

107-7070 VALVE GP-MAIN CONTROL

S/N 3MR 1-04978, 4MR 1-00715

6E-4281-Page276,107-7071-Page278,107-7074-Page286

HYDRAULIC SYSTEM

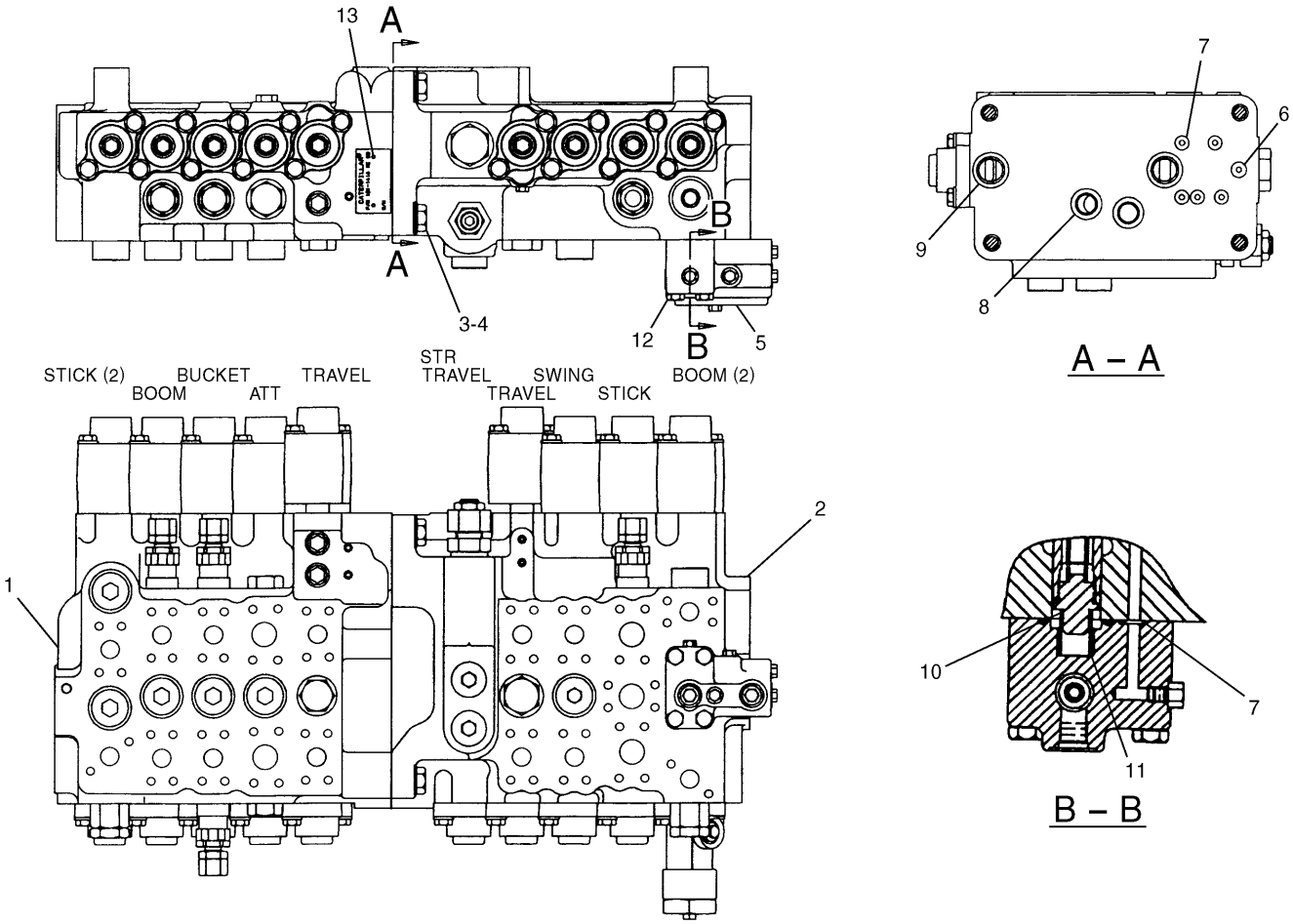

NOTE	No.	PART No.	QTY	PART NAME	NOTE	No.	PART No.	QTY	PART NAME
Y	1	107-7071	1	VALVE GP					
Y	2	154-0530	1	VALVE GP					
	3	8T-4193	4	BOLT (L=50mm)					
	4	9X-8257	4	WASHER					
Y	5	6E-4281	1	VALVE GP					
	6	4J-9535	1	SEAL-O-RING (ID=10.77mm)					
	7	4J-5309	6	SEAL-O-RING (ID=9.19mm)					
	8	1P-3702	2	SEAL					
	9	6V-0357	2	SEAL-O-RING (ID=29.74mm)					
	10	4J-0519	1	SEAL-O-RING (ID=31.34mm)					
	11	6E-2157	1	SPRING					
	12	8T-5005	4	BOLT (L=70mm)					
	13	4B-4158	2	SCREW					

Y—SEE SEPARATE ILLUSTRATION

H60385E 00

154-0529 VALVE GP-MAIN CONTROL

S/N 3MR 04979-Up, 4MR 00716-Up

6E-4281-Page276,107-7071-Page279.03,154-0530-Page287.03

MEMORANDA

HYDRAULIC SYSTEM

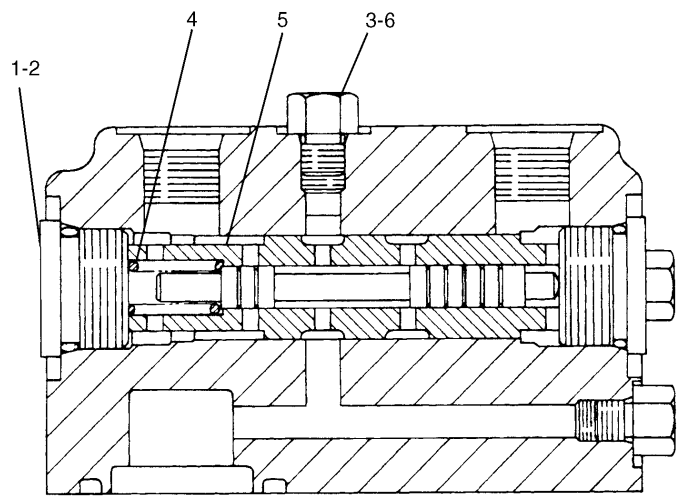

NOTE	No.	PART No.	QTY	PART NAME
	1	9S-8006	2	PLUG
	2	2M-9780	2	SEAL-O-RING (ID=19.18mm)
	3	4J-7533	5	SEAL-O-RING (ID=6.07mm)
	4	6E-2790	1	SPRING
	5	6E-4280	1	VALVE GP
	6	9S-4180	5	PLUG

H50630E 00

6E-4281 VALVE GP-PRESSURE CONTROL

Part of 107-7070-Page275,154-0529-Page275.01

MEMORANDA

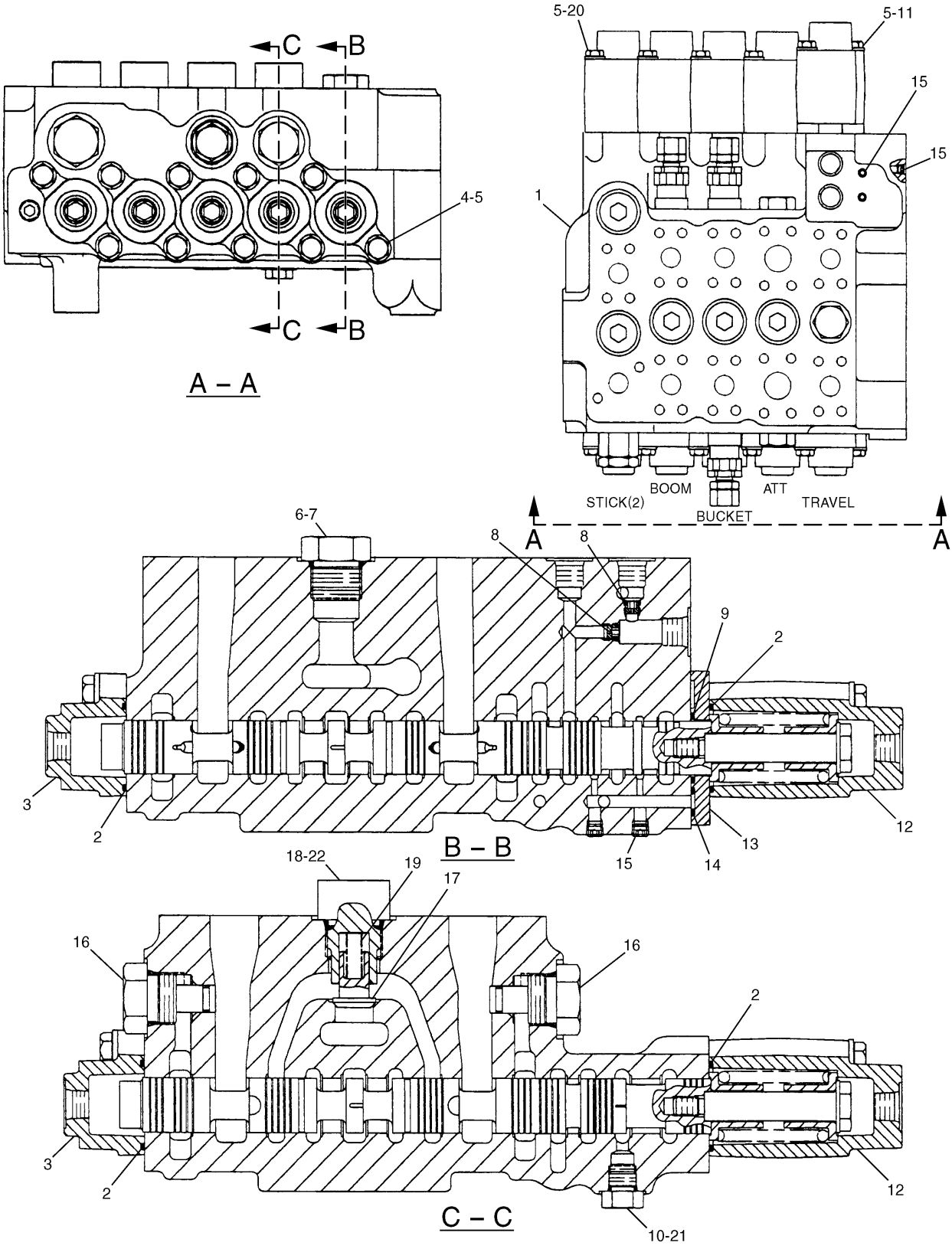

H53716E 02

107-7071 VALVE GP-CONTROL (1/2)
S/N 3MR 1-02905, 4MR 1-00417
Part of 107-7070-Page275
107-7072-Page280,6E-4816-Page282

HYDRAULIC SYSTEM

NOTE	No.	PART No.	QTY	PART NAME	NOTE	No.	PART No.	QTY	PART NAME
Y	1	107-7072	1	VALVE GP					
	2	6V-5597	4	SEAL-O-RING (ID=40.94mm)					
	3	6E-2274	2	COVER					
	4	8T-4195	10	BOLT (L=30mm)					
	5	8T-4121	20	WASHER					
	6	9S-4183	1	PLUG					
	7	3D-2824	1	SEAL-O-RING (ID=23.47mm)					
	8	1T-0936	2	PLUG					
	9	096-3044	1	SEAL-O-RING (ID=31.72mm)					
	10	3J-1907	1	SEAL-O-RING (ID=11.89mm)					
	11	8T-4198	2	BOLT (L=100mm)					
	12	6E-2273	2	HOUSING					
	13	6E-2151	1	ADAPTER					
	14	4J-5309	1	SEAL-O-RING (ID=9.19mm)					
	15	8T-6759	6	PLUG					
Y	16	6E-4816	2	PLUG GP					
	17	6E-5731	1	VALVE					
	18	4K-1388	1	SEAL-O-RING (ID=26.59mm)					
	19	7I-1248	1	SPRING					
	20	8T-4178	8	BOLT (L=90mm)					
	21	9S-4191	1	PLUG					
	22	6E-5730	1	PLUG					

Y—SEE SEPARATE ILLUSTRATION

H53716E 02

107-7071 VALVE GP-CONTROL (1/2)

S/N 3MR 1-02905, 4MR 1-00417
Part of 107-7070-Page275
107-7072-Page280,6E-4816-Page282

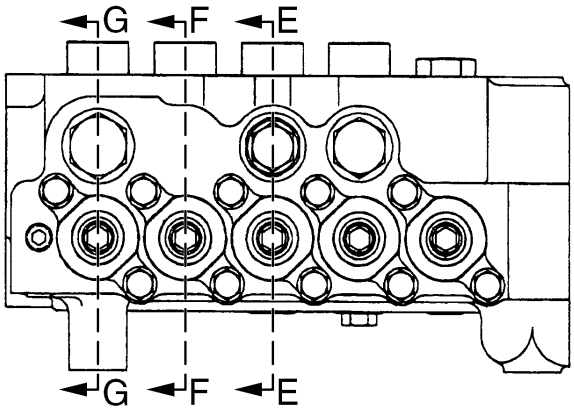

D – D

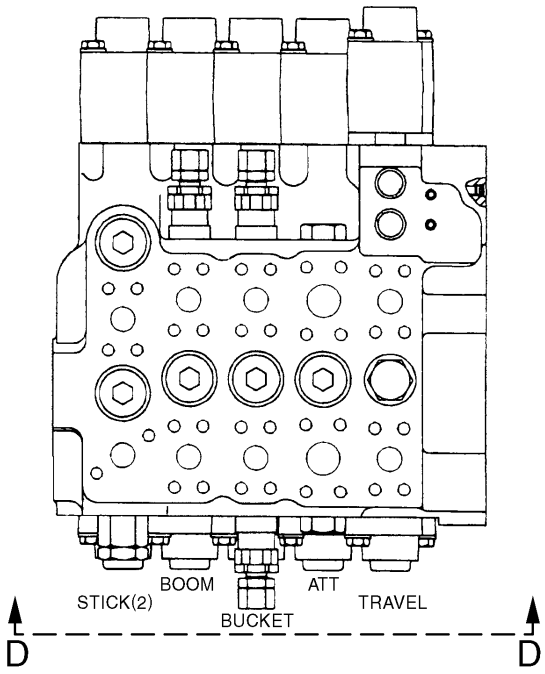

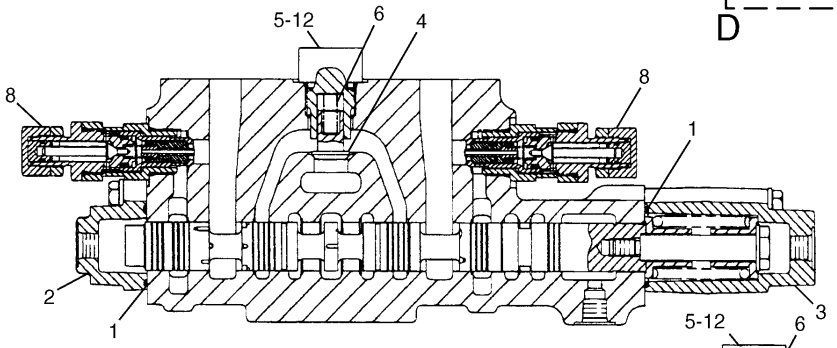

E – E

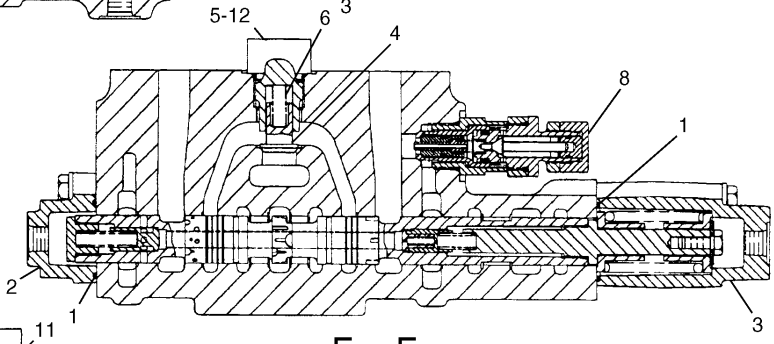

F – F

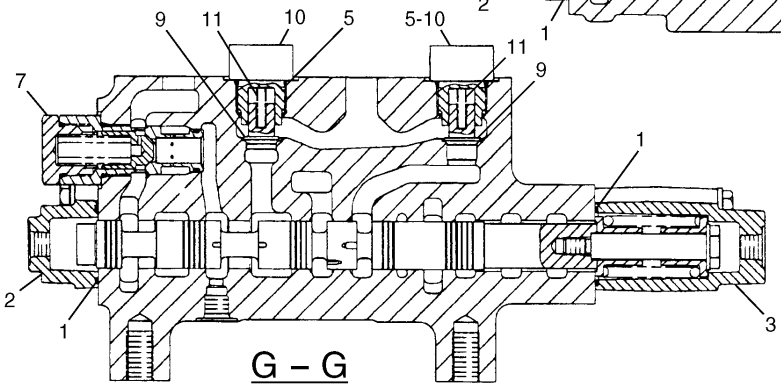

G – G

H53718E 02

107-7071 VALVE GP-CONTROL (2/2)

S/N 3MR 1-02905, 4MR 1-00417
Part of 107-7070-Page275
116-3600-Page283,109-5152-Page283.01

HYDRAULIC SYSTEM

NOTE	No.	PART No.	QTY	PART NAME	NOTE	No.	PART No.	QTY	PART NAME
	1	6V-5597	6	SEAL-O-RING (ID=40.94mm)					
	2	6E-2274	3	COVER					
	3	6E-2273	3	HOUSING					
	4	6E-5731	2	VALVE					
	5	4K-1388	4	SEAL-O-RING (ID=26.59mm)					
	6	7I-1248	2	SPRING					
Y	7	109-5152	1	VALVE GP					
Y	8	116-3600	3	VALVE GP					
	9	6E-5643	2	VALVE					
	10	6E-5644	2	PLUG					
	11	4T-3148	2	SPRING					
	12	6E-5730	2	PLUG					

Y—SEE SEPARATE ILLUSTRATION

H53718E 02

107-7071 VALVE GP-CONTROL (2/2)

S/N 3MR 1-02905, 4MR 1-00417
Part of 107-7070-Page275
116-3600-Page283,109-5152-Page283.01

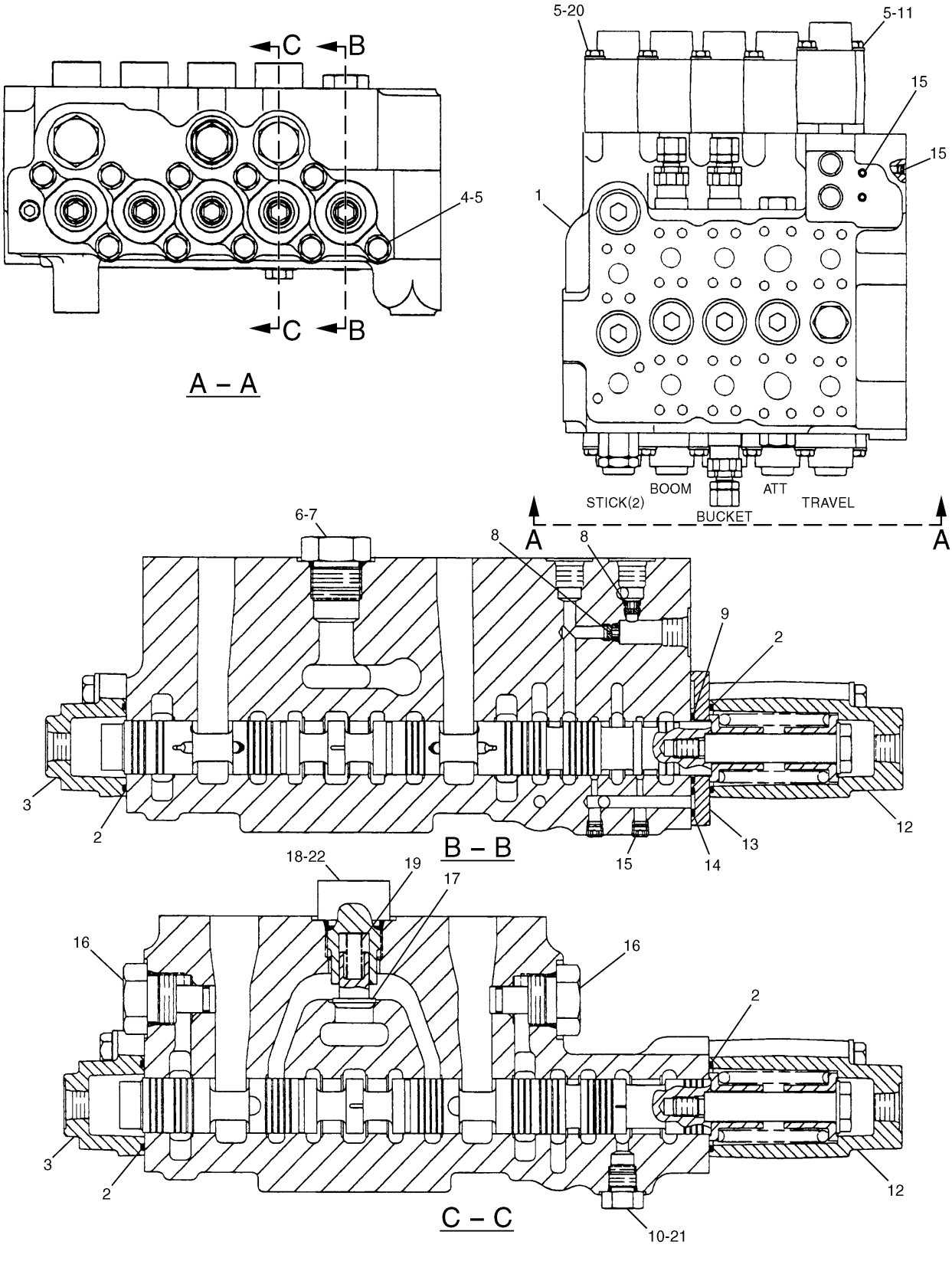

H78091E 05

107-7071 VALVE GP-CONTROL (1/2)
S/N 3MR 02906-Up, 4MR 00418-Up
Part of 107-7070-Page275,154-0529-Page275.01
107-7072-Page280,6E-4816-Page282

HYDRAULIC SYSTEM

NOTE	No.	PART No.	QTY	PART NAME	NOTE	No.	PART No.	QTY	PART NAME
Y	1	107-7072	1	VALVE GP					
	2	6V-5597	4	SEAL-O-RING (ID=40.94mm)					
	3	6E-2274	2	COVER					
	4	8T-4195	10	BOLT (L=30mm)					
	5	8T-4121	20	WASHER					
	6	9S-4183	1	PLUG					
	7	3D-2824	1	SEAL-O-RING (ID=23.47mm)					
	8	1T-0936	2	PLUG					
	9	096-3044	1	SEAL-O-RING (ID=31.72mm)					
	10	3J-1907	1	SEAL-O-RING (ID=11.89mm)					
	11	8T-4198	2	BOLT (L=100mm)					
	12	6E-2273	2	HOUSING					
	13	6E-2151	1	ADAPTER					
	14	4J-5309	1	SEAL-O-RING (ID=9.19mm)					
	15	8T-6759	6	PLUG					
Y	16	6E-4816	2	PLUG GP					
	17	6E-5731	1	VALVE					
	18	4K-1388	1	SEAL-O-RING (ID=26.59mm)					
	19	7I-1248	1	SPRING					
	20	8T-4178	8	BOLT (L=90mm)					
	21	9S-4191	1	PLUG					
	22	6E-5730	1	PLUG					

Y—SEE SEPARATE ILLUSTRATION

H78091E 05

107-7071 VALVE GP-CONTROL (1/2)

S/N 3MR 02906-Up, 4MR 00418-Up
Part of 107-7070-Page275,154-0529-Page275.01
107-7072-Page280,6E-4816-Page282

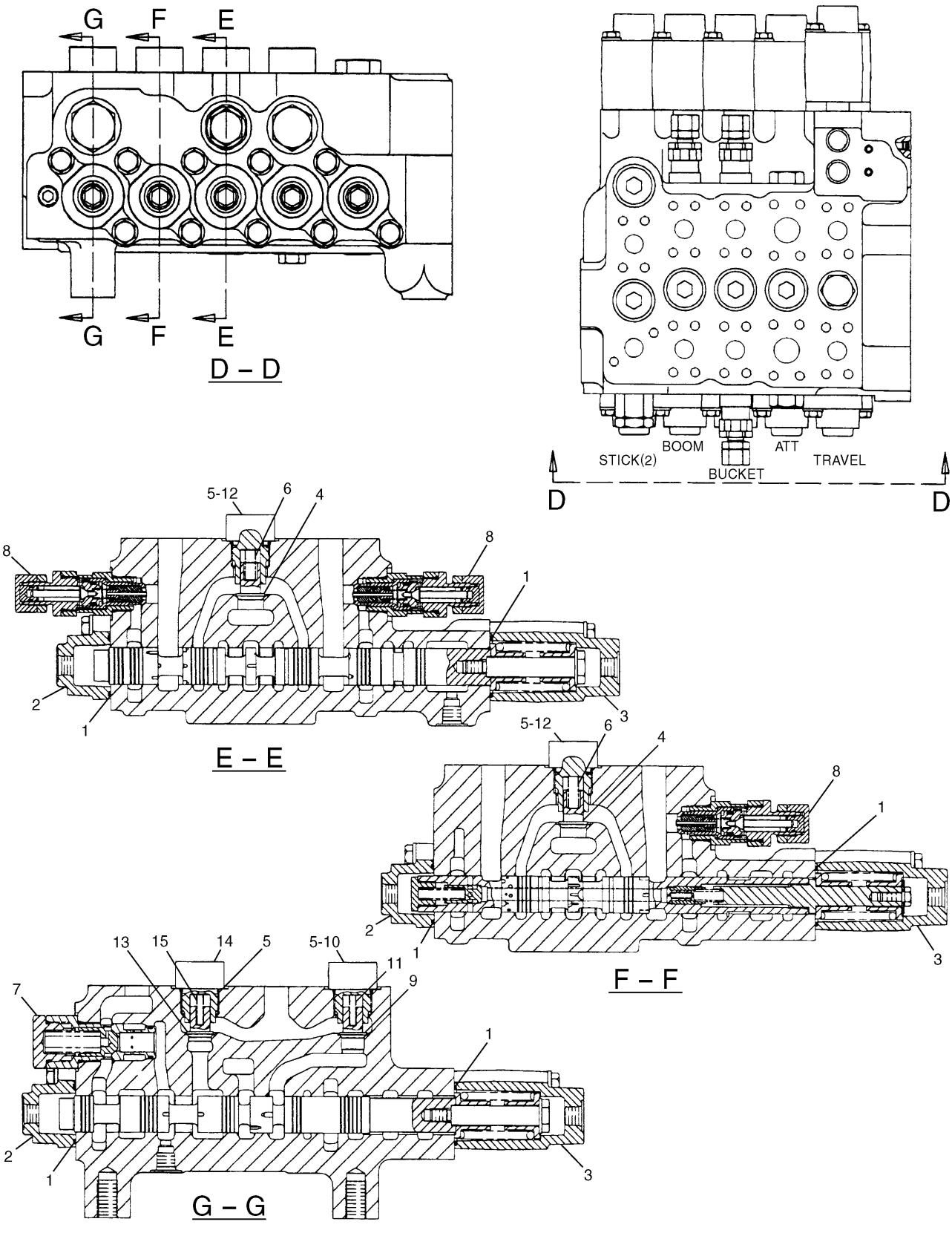

H78093E 05

107-7071 VALVE GP-CONTROL (2/2)
S/N 3MR 02906-Up, 4MR 00418-Up
Part of 107-7070-Page275,154-0529-Page275.01
116-3600-Page283,109-5152-Page283.01

HYDRAULIC SYSTEM

NOTE	No.	PART No.	QTY	PART NAME	NOTE	No.	PART No.	QTY	PART NAME
	1	6V-5597	6	SEAL-O-RING (ID=40.94mm)					
	2	6E-2274	3	COVER					
	3	6E-2273	3	HOUSING					
	4	6E-5731	2	VALVE					
	5	4K-1388	4	SEAL-O-RING (ID=26.59mm)					
	6	7I-1248	2	SPRING					
Y	7	109-5152	1	VALVE GP					
Y	8	116-3600	3	VALVE GP					
	9	6E-5643	1	VALVE					
	10	6E-5644	1	PLUG					
	11	4T-3148	1	SPRING					
	12	6E-5730	2	PLUG					
	13	7I-7416	1	VALVE GP					
	14	140-0708	1	PLUG					
	15	159-7658	1	SPRING					

Y—SEE SEPARATE ILLUSTRATION

H78093E 05

107-7071 VALVE GP-CONTROL (2/2)

S/N 3MR 02906-Up, 4MR 00418-Up
Part of 107-7070-Page275,154-0529-Page275.01
116-3600-Page283,109-5152-Page283.01

Consists of :

			Page
1	107-7073	VALVE GP-CONTROL	281
		-OR-	
1	116-3470	VALVE GP-CONTROL	280.01

H53174E 01

107-7072 VALVE GP-CONTROL

Part of 107-7071-Page279

HYDRAULIC SYSTEM

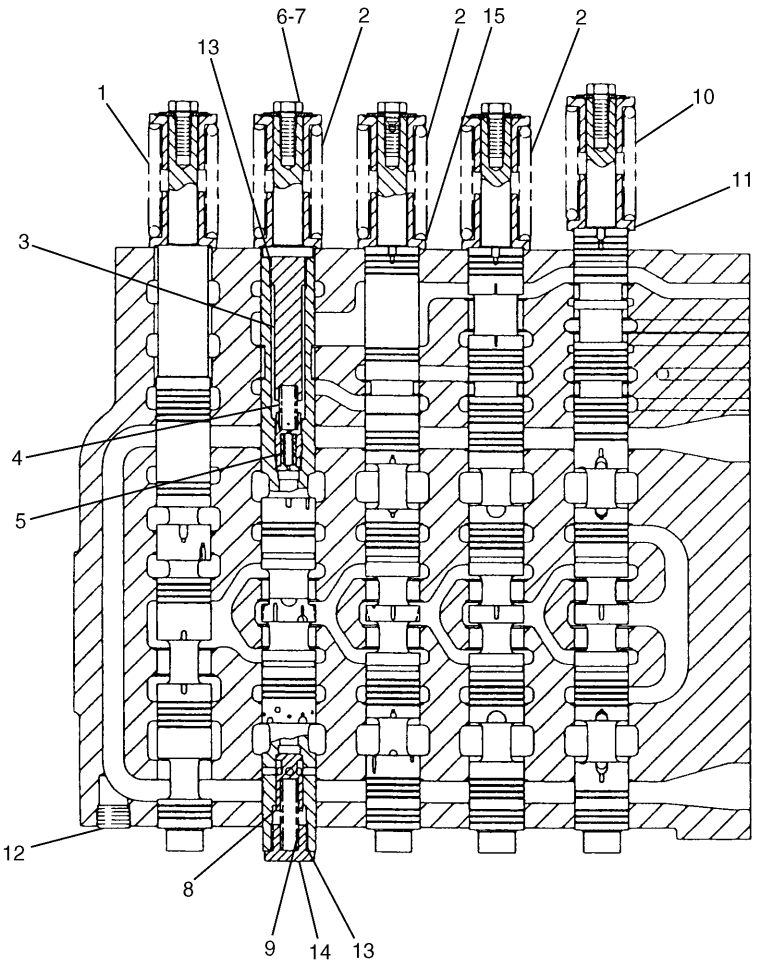

NOTE	No.	PART No.	QTY	PART NAME	NOTE	No.	PART No.	QTY	PART NAME
	1	104-7294	1	SPRING					
	2	104-7293	3	SPRING					
	3	107-6950	1	GUIDE					
	4	116-3451	1	SPRING					
	5	6E-5045	1	SPRING					
	6	9N-0869	5	WASHER					
	7	8T-4189	5	BOLT (L=20mm)					
	8	107-6947	1	VALVE					
	9	107-6948	1	SPRING					
	10	104-7296	1	SPRING					
	11	6E-2271	10	RETAINER					
	12	111-9959	1	PLUG					
	13	3K-0360	2	SEAL-O-RING (ID=16.36mm)					
	14	107-6949	1	PLUG					
	15	5D-1247	2	WASHER					

H53727E 03

116-3470 VALVE GP-CONTROL

S/N 3MR 1-03572, 4MR 1-00522
Part of 107-7072-Page280

HYDRAULIC SYSTEM

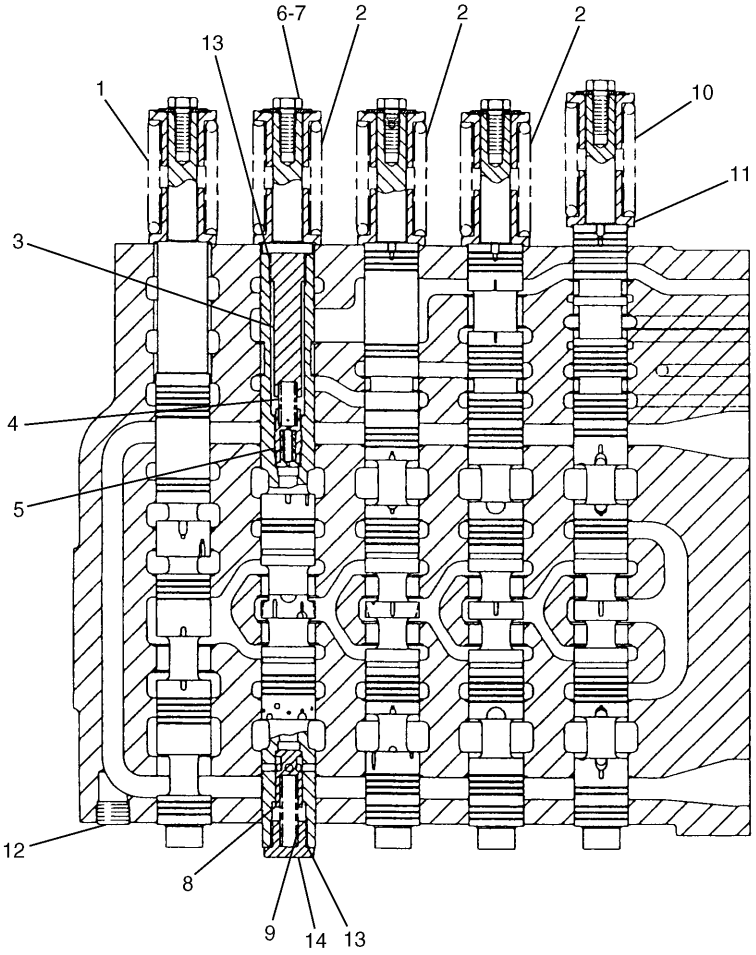

NOTE	No.	PART No.	QTY	PART NAME	NOTE	No.	PART No.	QTY	PART NAME
	1	104-7294	1	SPRING					
	2	104-7293	3	SPRING					
	3	107-6950	1	GUIDE					
	4	116-3451	1	SPRING					
	5	6E-5045	1	SPRING					
	6	9N-0869	5	WASHER					
	7	8T-4189	5	BOLT (L=20mm)					
	8	107-6947	1	VALVE					
	9	107-6948	1	SPRING					
	10	104-7296	1	SPRING					
	11	6E-2271	10	RETAINER					
	12	111-9959	1	PLUG					
	13	3K-0360	2	SEAL-O-RING (ID=16.36mm)					
	14	107-6949	1	PLUG					

H56124E 05

116-3470 VALVE GP-CONTROL

S/N 3MR 03573-Up, 4MR 00523-Up
Part of 107-7072-Page280

HYDRAULIC SYSTEM

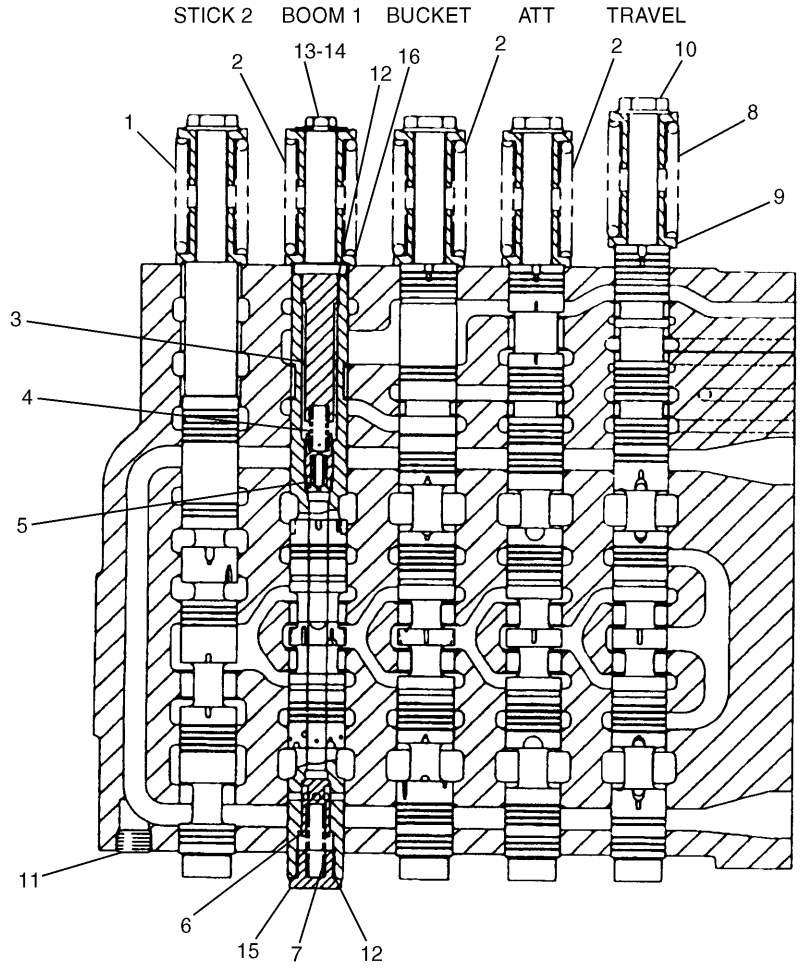

NOTE	No.	PART No.	QTY	PART NAME	NOTE	No.	PART No.	QTY	PART NAME
	1	104-7294	1	SPRING					THE FOLLOWING REPAIR
	2	104-7293	3	SPRING					KITS ARE AVAILABLE:
	3	107-6950	1	GUIDE			155-7120	1	REPAIR KIT (BUCKET)
	4	116-3451	1	SPRING			155-7122	1	REPAIR KIT (STICK 2)
	5	6E-5045	1	SPRING			155-7124	1	REPAIR KIT (TRAVEL)
	6	107-6947	1	VALVE					
	7	107-6948	1	SPRING					
	8	104-7296	1	SPRING					
	9	6E-2271	10	RETAINER					
	10	6E-5122	4	BOLT					
	11	111-9959	1	PLUG					
	12	3K-0360	2	SEAL-O-RING (ID=16.36mm)					
	13	8T-4189	1	BOLT (L=20mm)					
	14	9N-0869	1	WASHER					
	15	107-6949	1	PLUG					
	16	5D-1247	2	WASHER					

H53720E 03

107-7073 VALVE GP-CONTROL

S/N 3MR 1-03572, 4MR 1-00522

Part of 107-7072-Page280

HYDRAULIC SYSTEM

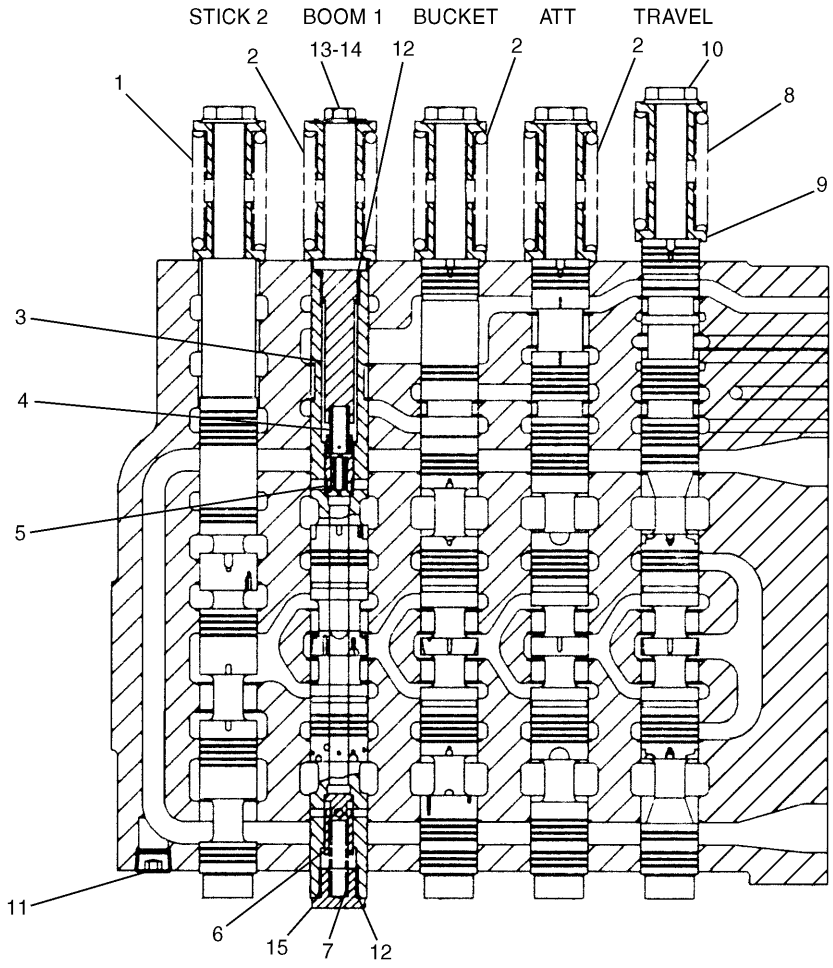

NOTE	No.	PART No.	QTY	PART NAME	NOTE	No.	PART No.	QTY	PART NAME
	1	104-7294	1	SPRING					THE FOLLOWING REPAIR
	2	104-7293	3	SPRING					KITS ARE AVAILABLE:
	3	107-6950	1	GUIDE			155-7117	1	REPAIR KIT (BOOM 1)
	4	116-3451	1	SPRING			155-7120	1	REPAIR KIT (BUCKET)
	5	6E-5045	1	SPRING			155-7122	1	REPAIR KIT (STICK 2)
	6	107-6947	1	VALVE			155-7124	1	REPAIR KIT (TRAVEL)
	7	107-6948	1	SPRING					
	8	104-7296	1	SPRING					
	9	6E-2271	10	RETAINER					
	10	6E-5122	4	BOLT					
	11	111-9959	1	PLUG					
	12	3K-0360	2	SEAL-O-RING (ID=16.36mm)					
	13	8T-4189	1	BOLT (L=20mm)					
	14	9N-0869	1	WASHER					
	15	107-6949	1	PLUG					

H62375E 06

107-7073 VALVE GP-CONTROL

S/N 3MR 03573-Up, 4MR 00523-Up
Part of 107-7072-Page280

MEMORANDA

Consists of :

			Page
1	6E-4793	PLUG GP.....	282.01
		-OR-	
1	6E-2746	PLUG GP.....	282.02

H51076E 00

6E-4816 PLUG GP
Part of 107-7071-Page279

HYDRAULIC SYSTEM

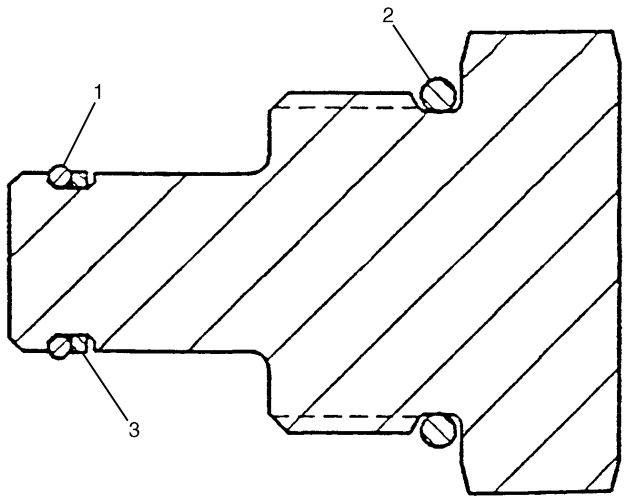

NOTE	No.	PART No.	QTY	PART NAME
	1	6M-5062	1	SEAL-O-RING (ID=10.82mm)
	2	3D-2824	1	SEAL-O-RING (ID=23.47mm)
	3	9J-0705	1	RING

H50289E 01

6E-4793 PLUG GP

Part of 6E-4816-Page282

HYDRAULIC SYSTEM

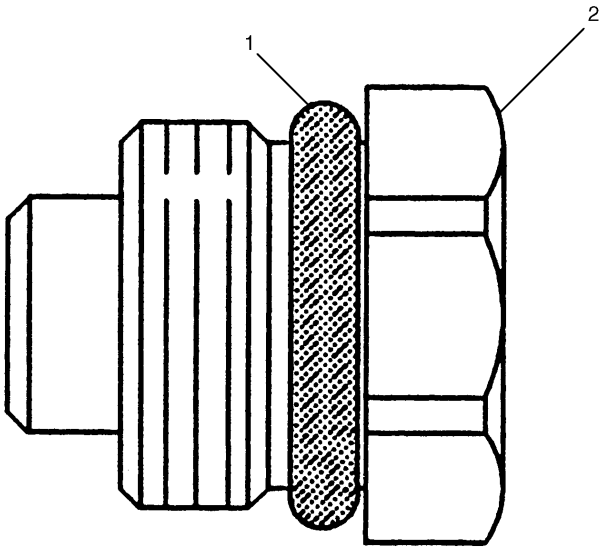

NOTE	No.	PART No.	QTY	PART NAME
	1	6E-2745	1	SEAL
	2	9T-4506	1	PLUG

H58173E 02

6E-2746 PLUG GP

Part of 6E-4816-Page282

Consists of :

			Page
1	118-5410	VALVE GP-RELIEF	284
		-OR-	
1	116-3601	VALVE GP-PILOT RELIEF	285

H50636E 01

116-3600 VALVE GP-RELIEF

Part of 138-5048-Page249.02,128-7479-Page251,107-7071-Page279.02,107-7074-Page287,154-0530-Page287.04 ,118-3917-Page308,155-7067-Page308.03,123-2419-Page309.02

HYDRAULIC SYSTEM

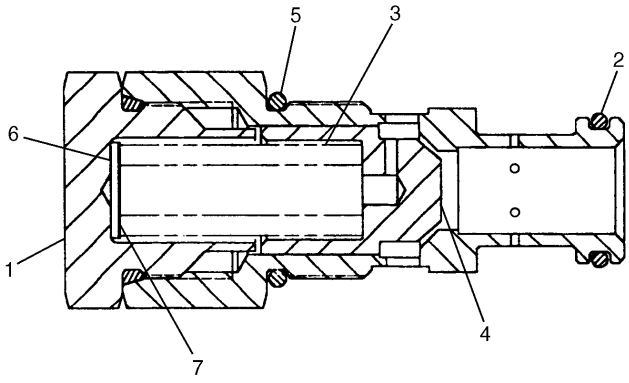

NOTE	No.	PART No.	QTY	PART NAME
	1	5I-4111	1	PLUG
	2	5P-3108	1	SEAL-O-RING (ID=20.30mm)
	3	107-6370	1	SPRING
	4	107-6371	1	VALVE
	5	4K-1388	2	SEAL-O-RING (ID=26.59mm)
B	6	4J-7385	1	SHIM (T=1.219mm)
B	7	4J-7386	1	SHIM (T=0.254mm)

B—USE AS REQUIRED

H51025E 00

109-5152 VALVE GP-RELIEF

Direct Operated

Part of 107-7071-Page279.02

MEMORANDA

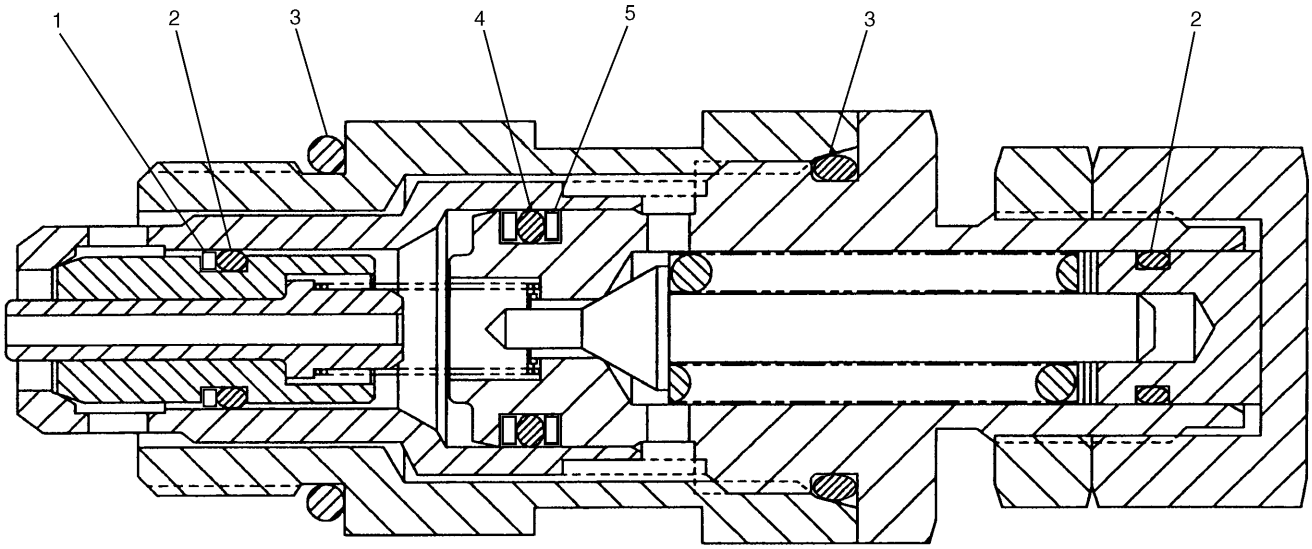

NOTE	No.	PART No.	QTY	PART NAME	NOTE	No.	PART No.	QTY	PART NAME
	1	030-0167	1	RING					
	2	8L-2779	2	SEAL-O-RING (ID=9.25mm)					
	3	033-6036	2	SEAL-O-RING (ID=23.47mm)					
	4	3P-0647	1	SEAL-O-RING (ID=13.94mm)					
	5	9J-0707	2	RING					

H53177E 00

118-5410 VALVE GP-RELIEF

Part of 116-3600-Page283

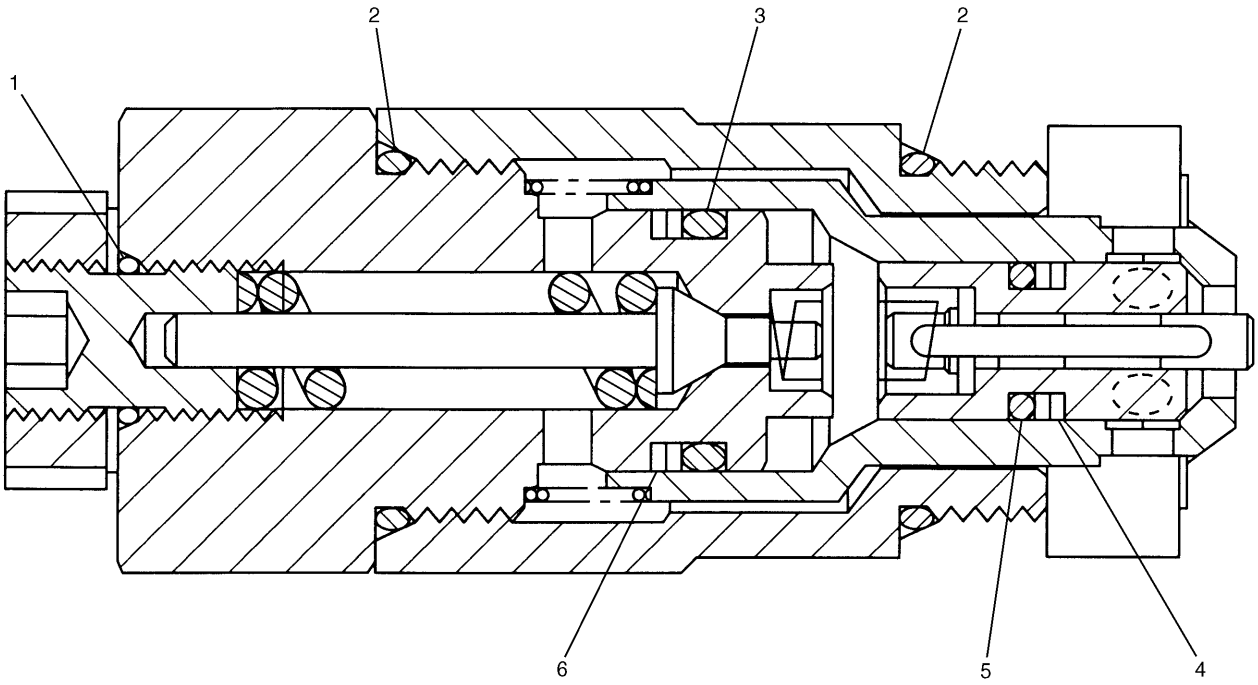

NOTE	No.	PART No.	QTY	PART NAME	NOTE	No.	PART No.	QTY	PART NAME
	1	095-1578	1	SEAL-O-RING (ID=9.80mm)					
	2	3D-2824	2	SEAL-O-RING (ID=23.47mm)					
	3	103-8255	1	SEAL-O-RING (ID=14.80mm)					
	4	103-8252	2	RING					
	5	103-8254	1	SEAL-O-RING (ID=7.80mm)					
	6	103-8253	2	RING					

H53178E 01

116-3601 VALVE GP-PILOT RELIEF

Direct Operated

Part of 116-3600-Page283

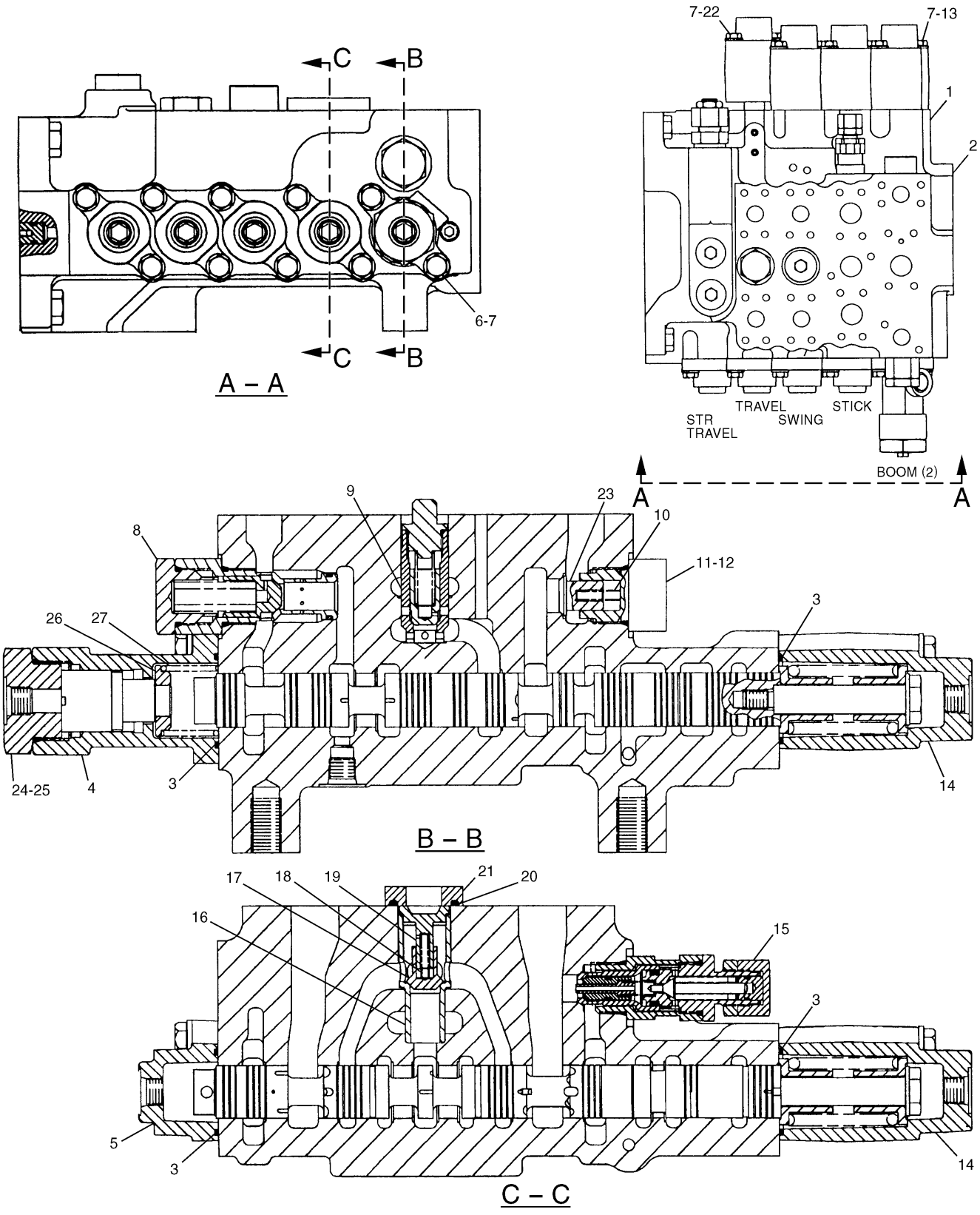

H63393E 05

107-7074 VALVE GP-CONTROL (1/2)
S/N 3MR 1-04978, 4MR 1-00715
Part of 107-7070-Page275
116-3600-Page283,7I-8136,109-2667-Page288,107-7075-Page290

HYDRAULIC SYSTEM

NOTE	No.	PART No.	QTY	PART NAME	NOTE	No.	PART No.	QTY	PART NAME
Y	1	107-7075	1	VALVE GP					
	2	8T-6759	1	PLUG					
	3	6V-5597	4	SEAL-O-RING (ID=40.94mm)					
	4	123-2446	1	VALVE GP					
	5	6E-2274	1	COVER					
	6	8T-4195	10	BOLT (L=30mm)					
	7	8T-4121	18	WASHER					
Y	8	109-2667	1	VALVE GP					
Y	9	7I-8136	1	VALVE GP					
	10	4T-3148	1	SPRING					
	11	6E-5644	1	PLUG					
	12	4K-1388	1	SEAL-O-RING (ID=26.59mm)					
	13	8T-4178	6	BOLT (L=90mm)					
	14	6E-2273	2	HOUSING					
Y	15	116-3600	1	VALVE GP					
	16	116-3445	1	SLEEVE					
	17	6E-3539	1	VALVE					
	18	6E-5168	1	SPRING					
	19	6E-3541	1	PILOT					
	20	6V-0357	1	SEAL-O-RING (ID=29.74mm)					
	21	6E-2158	1	FLANGE					
	22	8T-4198	2	BOLT (L=100mm)					
	23	6E-5643	1	VALVE					
	24	123-2151	1	PLUG					
	25	2S-4078	1	SEAL-O-RING (ID=37.47mm)					
	26	123-2444	1	SPACER					
	27	123-2445	1	SPRING					

Y—SEE SEPARATE ILLUSTRATION

H63393E 05

107-7074 VALVE GP-CONTROL (1/2)

S/N 3MR 1-04978, 4MR 1-00715
Part of 107-7070-Page275
116-3600-Page283,7I-8136,109-2667-Page288,107-7075-Page290

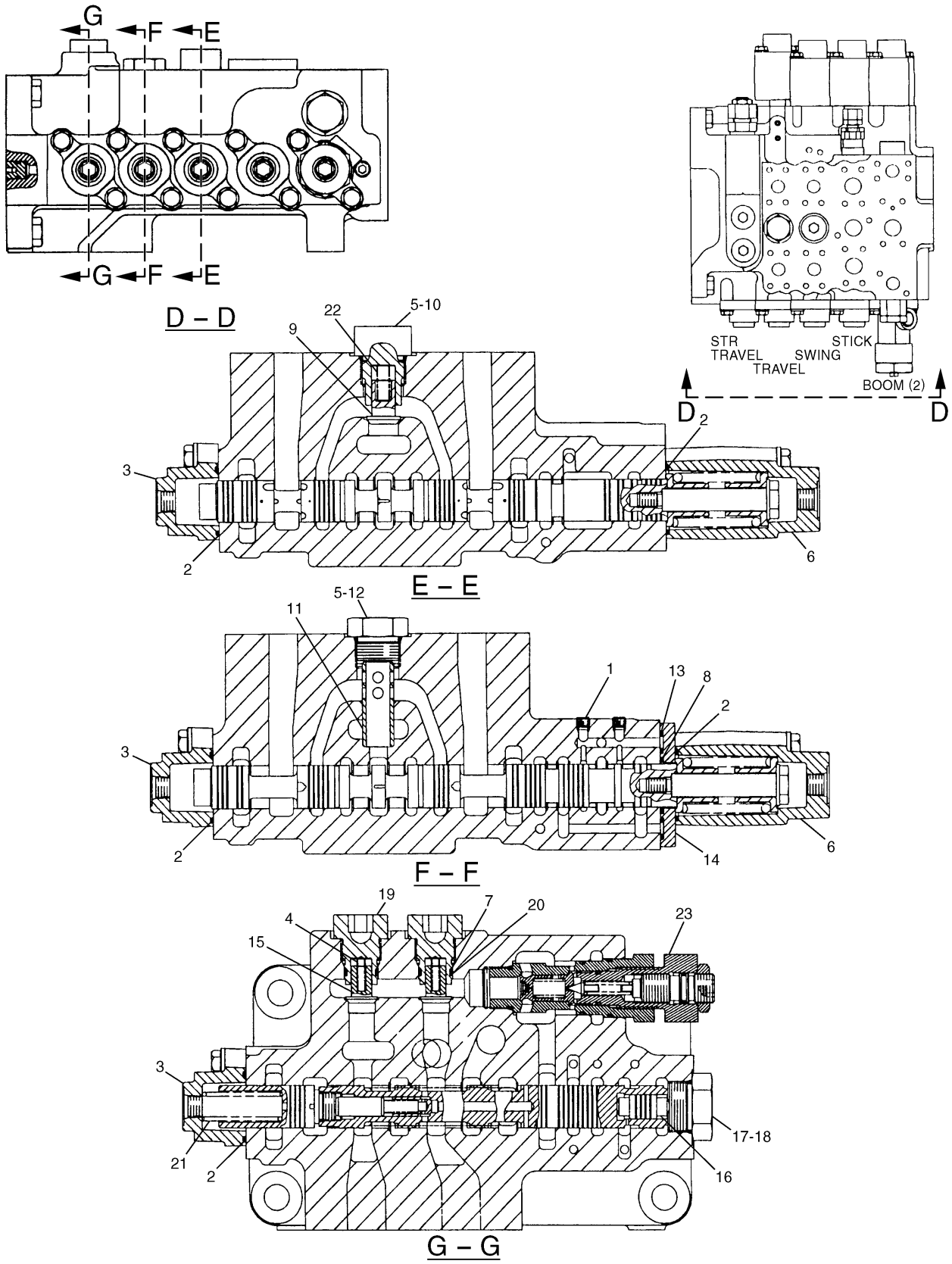

H63395E 05

107-7074 VALVE GP-CONTROL (2/2)
S/N 3MR 1-04978, 4MR 1-00715
Part of 107-7070-Page275
159-7732-Page289

HYDRAULIC SYSTEM

NOTE	No.	PART No.	QTY	PART NAME	NOTE	No.	PART No.	QTY	PART NAME
	1	8T-6759	2	PLUG					
	2	6V-5597	5	SEAL-O-RING (ID=40.94mm)					
	3	6E-2274	3	COVER					
	4	4T-3148	2	SPRING					
	5	4K-1388	2	SEAL-O-RING (ID=26.59mm)					
	6	6E-2273	2	HOUSING					
	7	4I-6397	2	RING					
	8	096-3044	1	SEAL-O-RING (ID=31.72mm)					
	9	6E-5731	1	VALVE					
	10	6E-5730	1	PLUG					
	11	6E-2156	1	SLEEVE					
	12	9S-4188	1	PLUG					
	13	4J-5309	2	SEAL-O-RING (ID=9.19mm)					
	14	6E-2151	1	ADAPTER					
	15	6E-5643	2	VALVE					
	16	6E-2161	1	PISTON					
	17	8J-4645	1	PLUG					
	18	7M-8485	1	SEAL-O-RING (ID=29.74mm)					
	19	6E-5638	2	PLUG					
	20	6V-3922	2	SEAL-O-RING (ID=18.72mm)					
	21	6E-5169	1	SPRING					
	22	7I-1248	1	SPRING					
Y	23	159-7732	1	VALVE GP					

Y—SEE SEPARATE ILLUSTRATION

H63395E 05

107-7074 VALVE GP-CONTROL (2/2)

S/N 3MR 1-04978, 4MR 1-00715
Part of 107-7070-Page275
159-7732-Page289

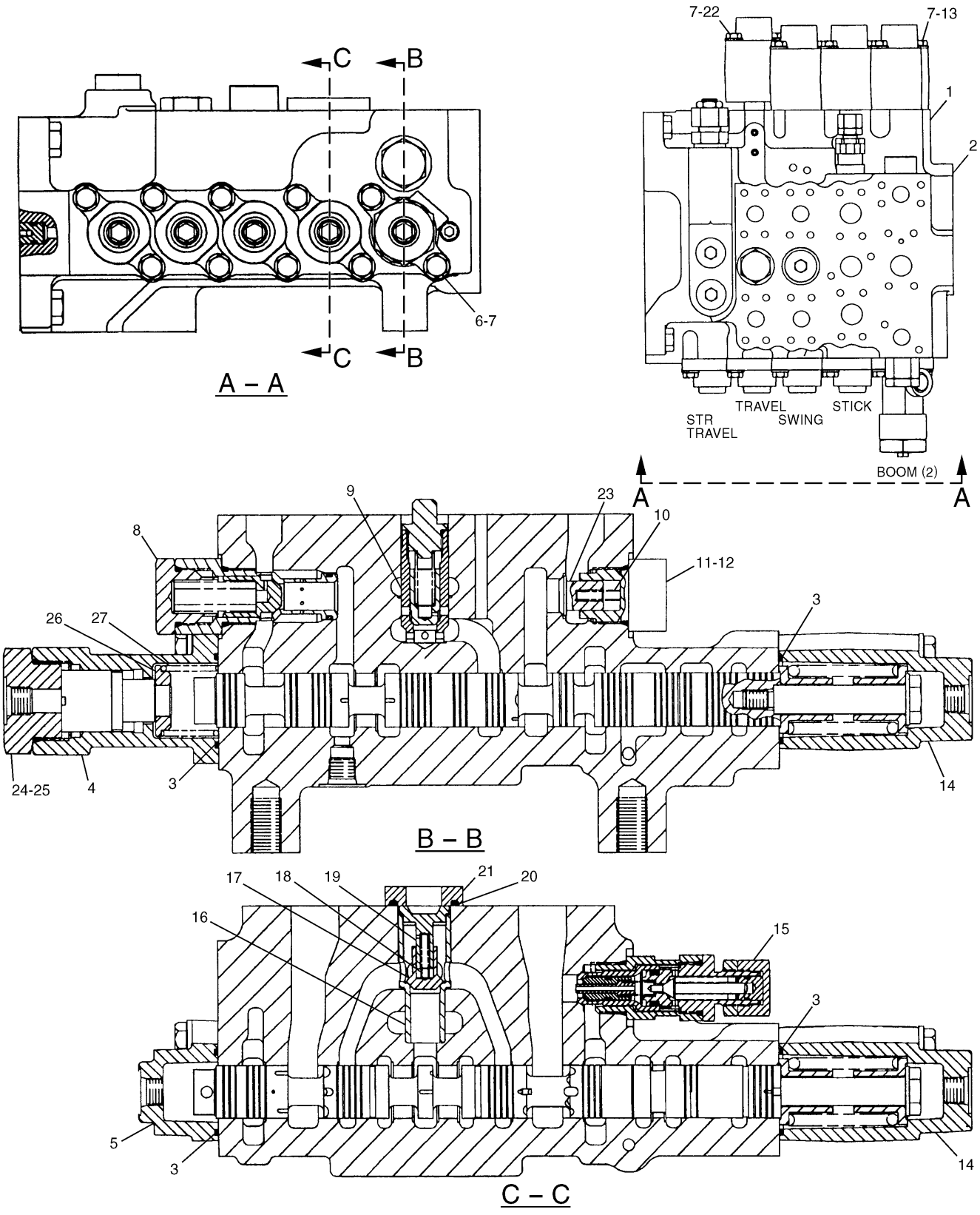

154-0530 VALVE GP-CONTROL (1/2)
S/N 3MR 04979-(T00.01), 4MR 00716-(T00.01)
Part of 154-0529-Page275.01
116-3600-Page283,7I-8136,109-2667-Page288,154-0531-Page290

HYDRAULIC SYSTEM

NOTE	No.	PART No.	QTY	PART NAME	NOTE	No.	PART No.	QTY	PART NAME
Y	1	154-0531	1	VALVE GP					
	2	8T-6759	1	PLUG					
	3	6V-5597	4	SEAL-O-RING (ID=40.94mm)					
	4	123-2446	1	VALVE GP					
	5	6E-2274	1	COVER					
	6	8T-4195	10	BOLT (L=30mm)					
	7	8T-4121	18	WASHER					
Y	8	109-2667	1	VALVE GP					
Y	9	7I-8136	1	VALVE GP					
	10	4T-3148	1	SPRING					
	11	6E-5644	1	PLUG					
	12	4K-1388	1	SEAL-O-RING (ID=26.59mm)					
	13	8T-4178	6	BOLT (L=90mm)					
	14	6E-2273	2	HOUSING					
Y	15	116-3600	1	VALVE GP					
	16	116-3445	1	SLEEVE					
	17	6E-3539	1	VALVE					
	18	6E-5168	1	SPRING					
	19	6E-3541	1	PILOT					
	20	6V-0357	1	SEAL-O-RING (ID=29.74mm)					
	21	6E-2158	1	FLANGE					
	22	8T-4198	2	BOLT (L=100mm)					
	23	6E-5643	1	VALVE					
	24	123-2151	1	PLUG					
	25	2S-4078	1	SEAL-O-RING (ID=37.47mm)					
	26	123-2444	1	SPACER					
	27	123-2445	1	SPRING					

Y—SEE SEPARATE ILLUSTRATION

H62385E 02

154-0530 VALVE GP-CONTROL (1/2)

S/N 3MR 04979-(T00.01), 4MR 00716-(T00.01)
Part of 154-0529-Page275.01
116-3600-Page283,7I-8136,109-2667-Page288,154-0531-Page290

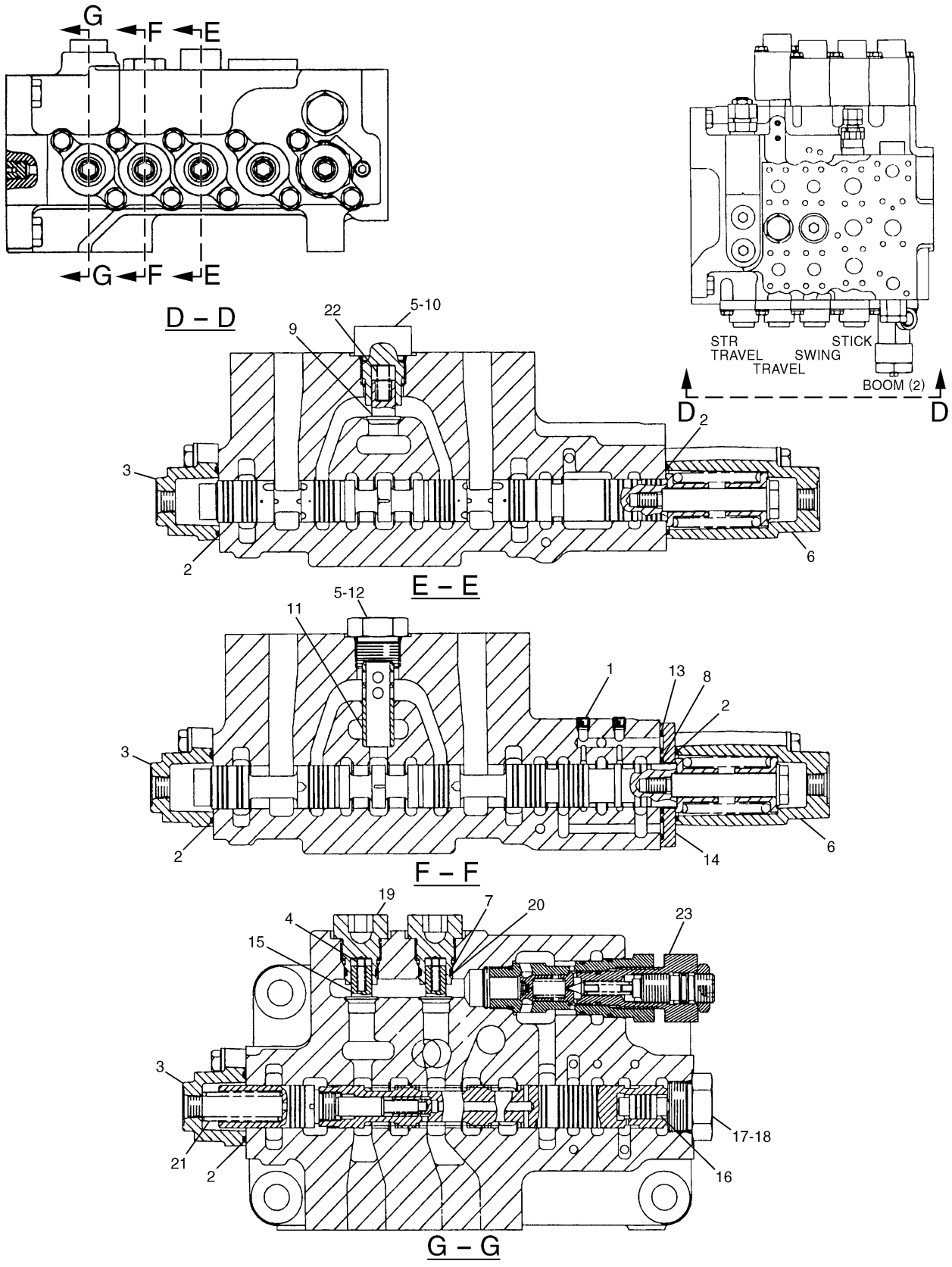

H62387E 02

154-0530 VALVE GP-CONTROL (2/2)
S/N 3MR 04979-(T00.01), 4MR 00716-(T00.01)
Part of 154-0529-Page275.01
159-7732-Page289

HYDRAULIC SYSTEM

NOTE	No.	PART No.	QTY	PART NAME	NOTE	No.	PART No.	QTY	PART NAME
	1	8T-6759	2	PLUG					
	2	6V-5597	5	SEAL-O-RING (ID=40.94mm)					
	3	6E-2274	3	COVER					
	4	4T-3148	2	SPRING					
	5	4K-1388	2	SEAL-O-RING (ID=26.59mm)					
	6	6E-2273	2	HOUSING					
	7	4I-6397	2	RING					
	8	096-3044	1	SEAL-O-RING (ID=31.72mm)					
	9	6E-5731	1	VALVE					
	10	6E-5730	1	PLUG					
	11	6E-2156	1	SLEEVE					
	12	9S-4188	1	PLUG					
	13	4J-5309	2	SEAL-O-RING (ID=9.19mm)					
	14	6E-2151	1	ADAPTER					
	15	6E-5643	2	VALVE					
	16	6E-2161	1	PISTON					
	17	8J-4645	1	PLUG					
	18	7M-8485	1	SEAL-O-RING (ID=29.74mm)					
	19	6E-5638	2	PLUG					
	20	6V-3922	2	SEAL-O-RING (ID=18.72mm)					
	21	6E-5169	1	SPRING					
	22	7I-1248	1	SPRING					
Y	23	159-7732	1	VALVE GP					

Y—SEE SEPARATE ILLUSTRATION

H62387E 02

154-0530 VALVE GP-CONTROL (2/2)

S/N 3MR 04979-(T00.01), 4MR 00716-(T00.01)
Part of 154-0529-Page275.01
159-7732-Page289

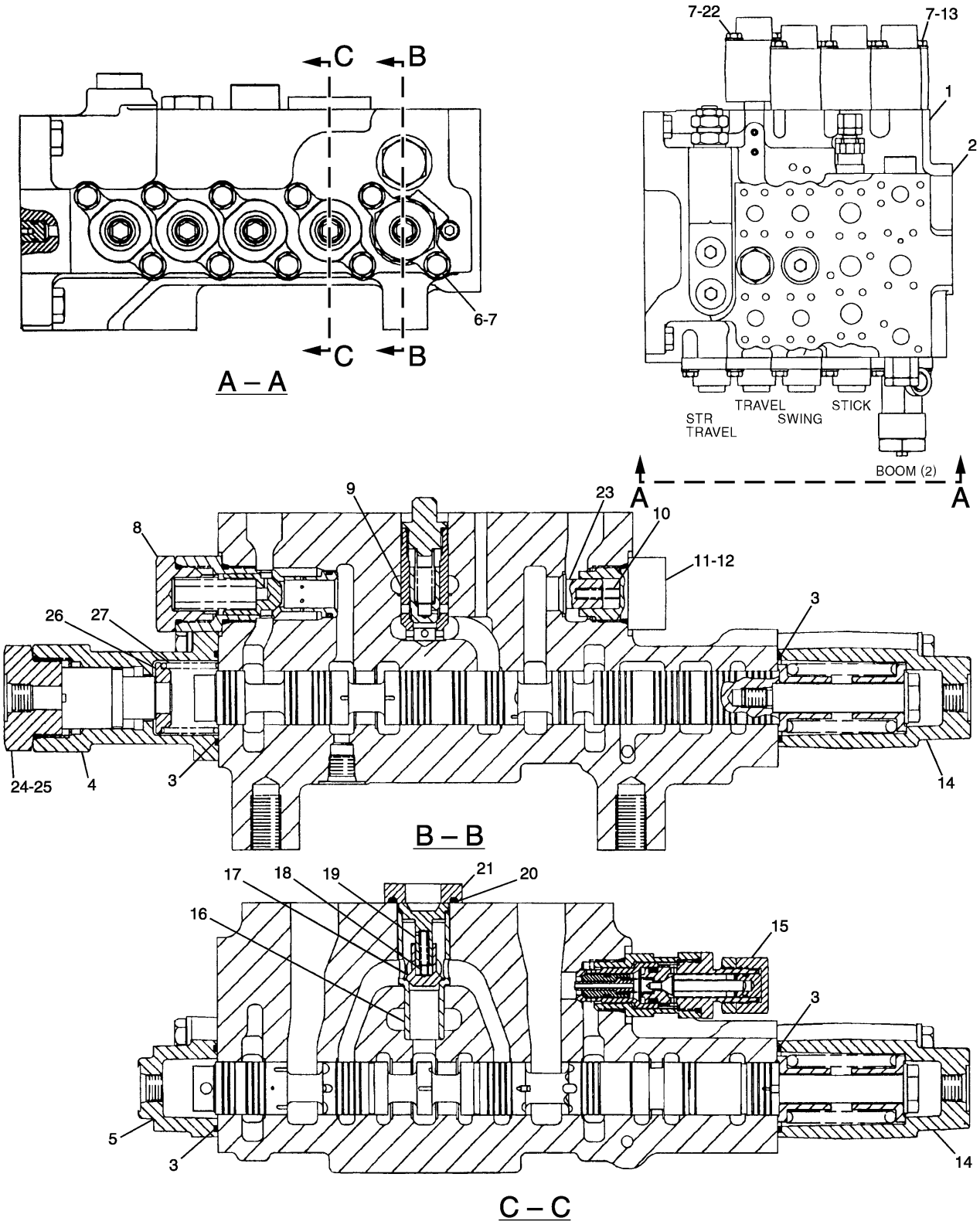

H78095E 04

154-0530 VALVE GP-CONTROL (1/2)
S/N 3MR (T00.02)-Up, 4MR (T00.02)-Up
Part of 154-0529-Page275.01
116-3600-Page283,7I-8136,109-2667-Page288,154-0531-Page290

HYDRAULIC SYSTEM

NOTE	No.	PART No.	QTY	PART NAME	NOTE	No.	PART No.	QTY	PART NAME
Y	1	154-0531	1	VALVE GP					
	2	8T-6759	1	PLUG					
	3	6V-5597	4	SEAL-O-RING (ID=40.94mm)					
	4	123-2446	1	VALVE GP					
	5	6E-2274	1	COVER					
	6	8T-4195	10	BOLT (L=30mm)					
	7	8T-4121	18	WASHER					
Y	8	109-2667	1	VALVE GP					
Y	9	7I-8136	1	VALVE GP					
	10	4T-3148	1	SPRING					
	11	6E-5644	1	PLUG					
	12	4K-1388	1	SEAL-O-RING (ID=26.59mm)					
	13	8T-4178	6	BOLT (L=90mm)					
	14	6E-2273	2	HOUSING					
Y	15	116-3600	1	VALVE GP					
	16	116-3445	1	SLEEVE					
	17	6E-3539	1	VALVE					
	18	6E-5168	1	SPRING					
	19	6E-3541	1	PILOT					
	20	6V-0357	1	SEAL-O-RING (ID=29.74mm)					
	21	6E-2158	1	FLANGE					
	22	8T-4198	2	BOLT (L=100mm)					
	23	6E-5643	1	VALVE					
	24	123-2151	1	PLUG					
	25	2S-4078	1	SEAL-O-RING (ID=37.47mm)					
	26	123-2444	1	SPACER					
	27	123-2445	1	SPRING					

Y—SEE SEPARATE ILLUSTRATION

H78095E 04

154-0530 VALVE GP-CONTROL (1/2)

S/N 3MR (T00.02)-Up, 4MR (T00.02)-Up
Part of 154-0529-Page275.01
116-3600-Page283,7I-8136,109-2667-Page288,154-0531-Page290

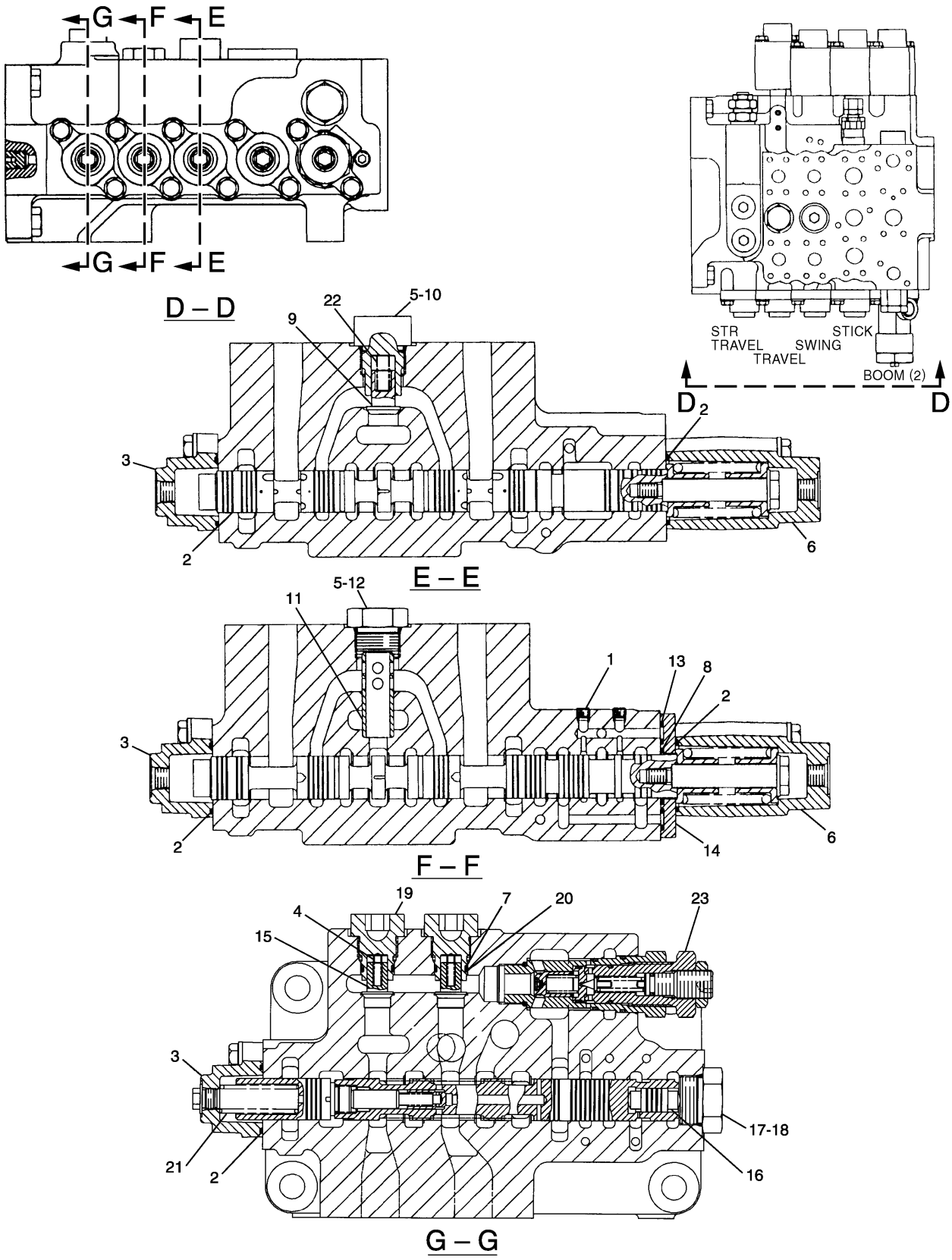

H78097E 04

154-0530 VALVE GP-CONTROL (2/2)
S/N 3MR (T00.02)-Up, 4MR (T00.02)-Up
Part of 154-0529-Page275.01
171-0030-Page289.01

HYDRAULIC SYSTEM

NOTE	No.	PART No.	QTY	PART NAME	NOTE	No.	PART No.	QTY	PART NAME
	1	8T-6759	2	PLUG					
	2	6V-5597	5	SEAL-O-RING (ID=40.94mm)					
	3	6E-2274	3	COVER					
	4	4T-3148	2	SPRING					
	5	4K-1388	2	SEAL-O-RING (ID=26.59mm)					
	6	6E-2273	2	HOUSING					
	7	4I-6397	2	RING					
	8	096-3044	1	SEAL-O-RING (ID=31.72mm)					
	9	6E-5731	1	VALVE					
	10	6E-5730	1	PLUG					
	11	6E-2156	1	SLEEVE					
	12	9S-4188	1	PLUG					
	13	4J-5309	2	SEAL-O-RING (ID=9.19mm)					
	14	6E-2151	1	ADAPTER					
	15	6E-5643	2	VALVE					
	16	6E-2161	1	PISTON					
	17	8J-4645	1	PLUG					
	18	7M-8485	1	SEAL-O-RING (ID=29.74mm)					
	19	6E-5638	2	PLUG					
	20	6V-3922	2	SEAL-O-RING (ID=18.72mm)					
	21	6E-5169	1	SPRING					
	22	7I-1248	1	SPRING					
Y	23	171-0030	1	VALVE GP					

Y—SEE SEPARATE ILLUSTRATION

H78097E 04

154-0530 VALVE GP-CONTROL (2/2)

S/N 3MR (T00.02)-Up, 4MR (T00.02)-Up
Part of 154-0529-Page275.01
171-0030-Page289.01

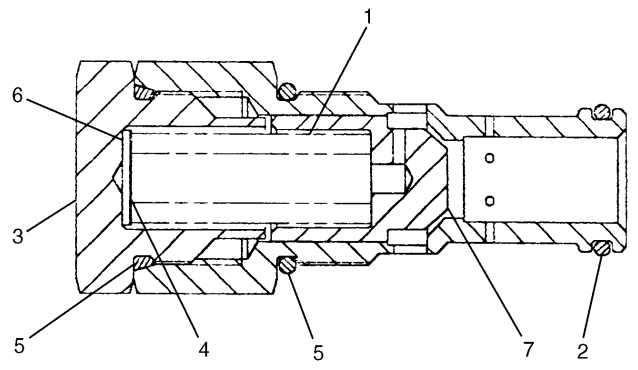

NOTE	No.	PART No.	QTY	PART NAME
	1	107-6370	1	SPRING
	2	5P-3108	1	SEAL-O-RING (ID=20.30mm)
	3	5I-4111	1	PLUG
B	4	4J-7386	5	SHIM (T=0.254mm)
	5	4K-1388	2	SEAL-O-RING (ID=26.59mm)
B	6	4J-7385	1	SHIM (T=1.219mm)
	7	107-6371	1	VALVE

B—USE AS REQUIRED

H78098E 02

109-2667 VALVE GP-RELIEF

Direct Operated

Part of 107-7074-Page287,154-0530-Page287.04

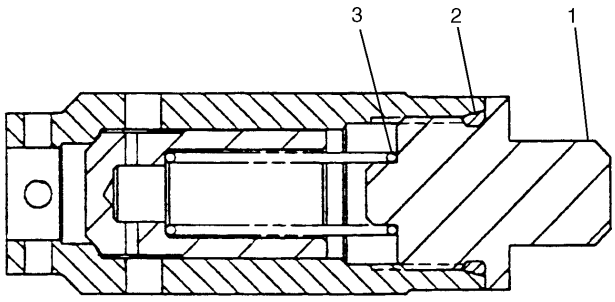

NOTE	No.	PART No.	QTY	PART NAME
	1	5I-3082	1	PLUG
	2	3K-0360	1	SEAL-O-RING (ID=16.36mm)
	3	3N-3252	1	SPRING

H51027E 00

7I-8136 VALVE GP-CHECK

Part of 107-7074-Page287,154-0530-Page287.04

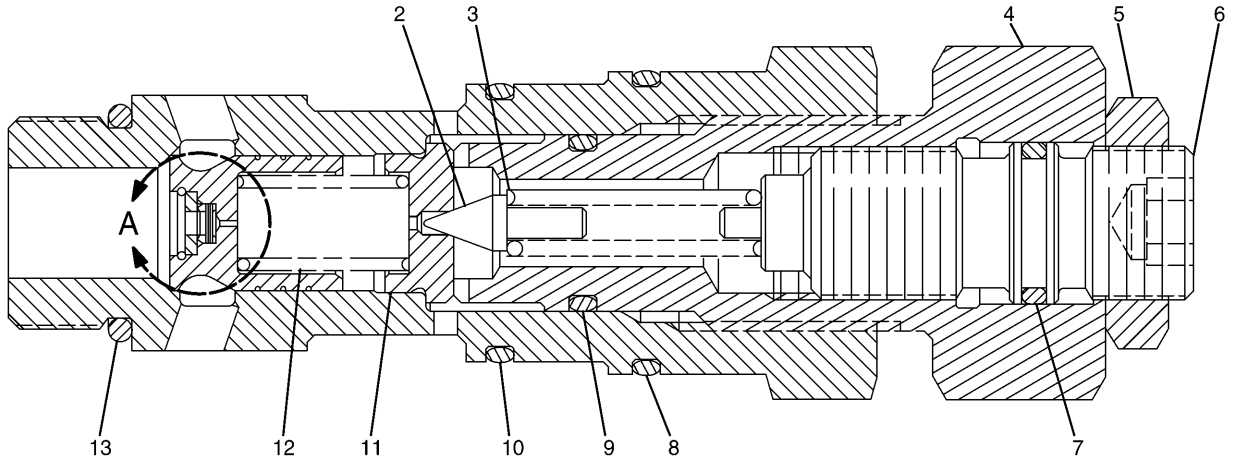

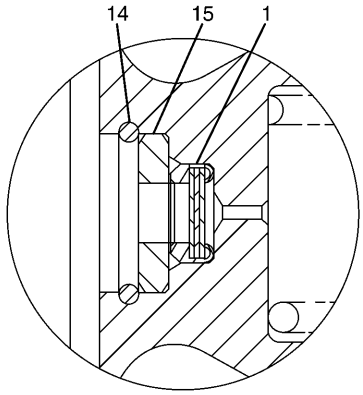

A

NOTE	No.	PART No.	QTY	PART NAME	NOTE	No.	PART No.	QTY	PART NAME
	1	119-5398	1	FILTER					
	2	4I-3873	1	VALVE					
	3	4I-3510	1	SPRING					
	4	119-5341	1	ADAPTER					
	5	4I-7714	1	NUT					
	6	119-5342	1	ADJUSTER					
	7	095-1584	1	SEAL-O-RING (ID=15.80mm)					
	8	6V-8218	1	SEAL-O-RING (ID=32.99mm)					
	9	4J-5351	1	SEAL-O-RING (ID=17.12mm)					
	10	6V-8978	1	SEAL-O-RING (ID=29.82mm)					
	11	6I-6804	1	SEAL					
	12	6I-6795	1	SPRING					
	13	3D-2824	1	SEAL-O-RING (ID=23.47mm)					
	14	107-6541	1	RING					
	15	107-6540	1	COLLAR					

H62392E 00

159-7732 VALVE GP-RELIEF

S/N 3MR 1-(T00.01), 4MR 1-(T00.01)
Part of 107-7074-Page287.02,154-0530-Page287.06

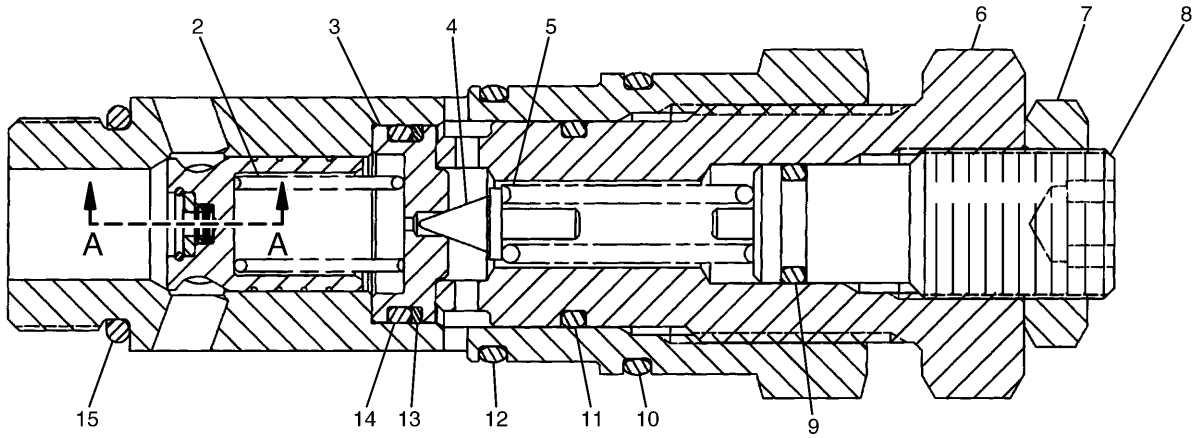

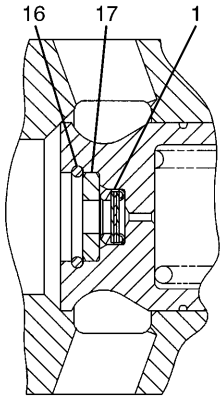

A – A

NOTE	No.	PART No.	QTY	PART NAME	NOTE	No.	PART No.	QTY	PART NAME
	1	119-5398	1	FILTER					
	2	6I-6795	1	SPRING					
	3	171-0034	1	SEAT					
	4	171-0037	1	VALVE					
	5	4I-3510	1	SPRING					
	6	171-0035	1	HOLDER					
	7	4I-7714	1	NUT					
	8	171-0036	1	ADJUSTER					
	9	095-1579	1	SEAL-O-RING (ID=10.80mm)					
	10	6V-8218	1	SEAL-O-RING (ID=32.99mm)					
	11	095-1590	1	SEAL-O-RING (ID=21.80mm)					
	12	6V-8978	1	SEAL-O-RING (ID=29.82mm)					
	13	095-1786	1	RING					
	14	095-1587	1	SEAL-O-RING (ID=20.80mm)					
	15	3D-2824	1	SEAL-O-RING (ID=23.47mm)					
	16	107-6541	1	RING					
	17	107-6540	1	COLLAR					

H67329E 00

171-0030 VALVE GP-RELIEF

Pilot Operated
S/N 3MR (T00.02)-Up, 4MR (T00.02)-Up
Part of 154-0530-Page287.10

MEMORANDA

Consists of :

			Page
1	107-7076	VALVE GP-CONTROL	291
		-OR-	
1	116-3471	VALVE GP-CONTROL	291.01

H53183E 01

107-7075 VALVE GP-CONTROL
S/N 3MR 1-04978, 4MR 1-00715
Part of 107-7074-Page287

Consists of :

			Page
1	154-0532	VALVE GP-CONTROL	291B
		-OR-	
1	154-0533	VALVE GP-CONTROL	291.02

H60390E 00

154-0531 VALVE GP-CONTROL
S/N 3MR 04979-Up, 4MR 00716-Up
Part of 154-0530-Page287.04

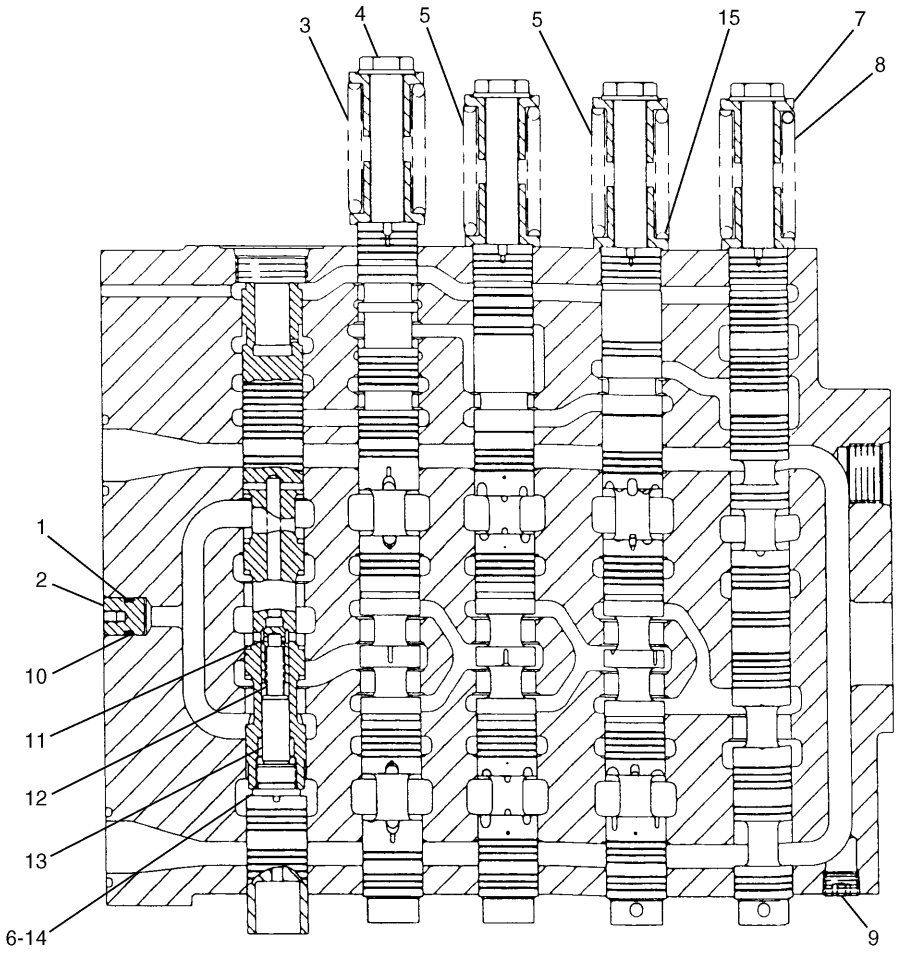

NOTE	No.	PART No.	QTY	PART NAME	NOTE	No.	PART No.	QTY	PART NAME
	1	4I-3569	1	RING					
	2	6E-3653	1	PLUG					
	3	104-7296	1	SPRING					
	4	6E-5122	4	BOLT					
	5	104-7293	2	SPRING					
	6	3K-0360	1	SEAL-O-RING (ID=16.36mm)					
	7	6E-2271	8	RETAINER					
	8	104-7294	1	SPRING					
	9	111-9959	1	PLUG					
	10	7Y-5219	1	SEAL-O-RING (ID=12.37mm)					
	11	6E-2163	1	VALVE					
	12	2S-2596	1	SPRING					
	13	5M-7937	1	DOWEL					
	14	9S-8005	1	PLUG					
	15	5D-1247	3	WASHER					

H53725E 03

107-7076 VALVE GP-CONTROL

S/N 3MR 1-03572, 4MR 1-00522
Part of 107-7075-Page290

HYDRAULIC SYSTEM

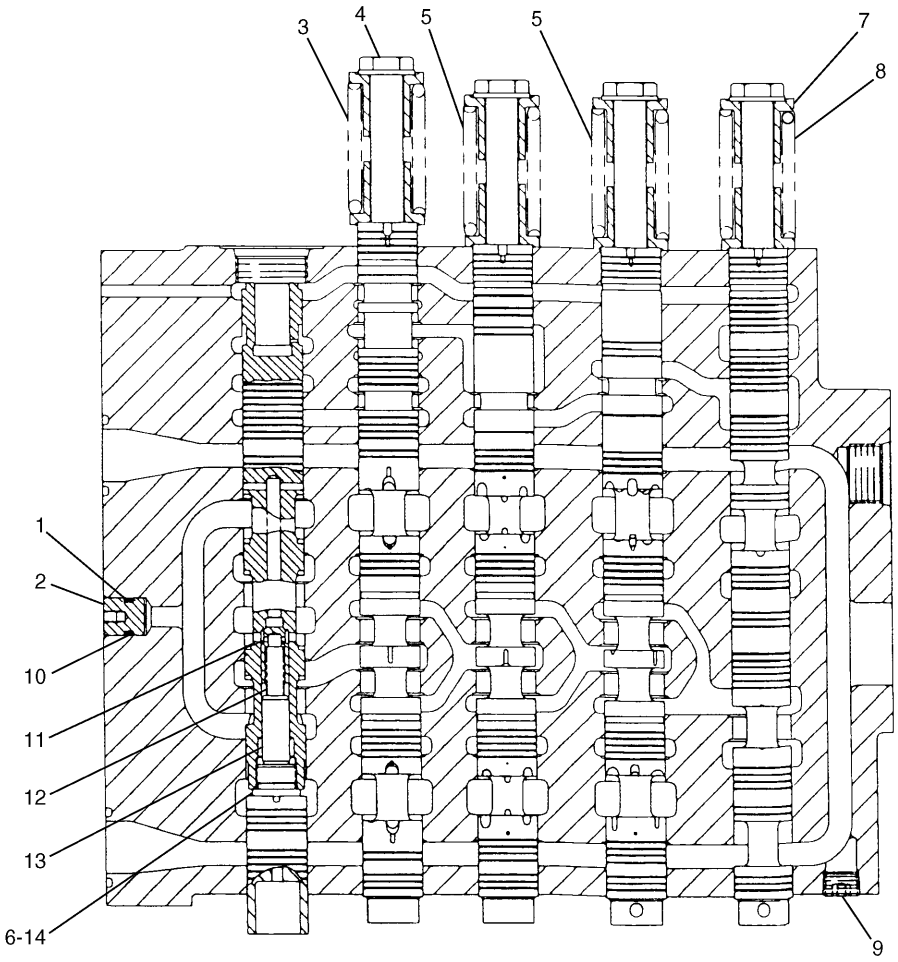

NOTE	No.	PART No.	QTY	PART NAME	NOTE	No.	PART No.	QTY	PART NAME
	1	4I-3569	1	RING					
	2	6E-3653	1	PLUG					
	3	104-7296	1	SPRING					
	4	6E-5122	4	BOLT					
	5	104-7293	2	SPRING					
	6	3K-0360	1	SEAL-O-RING (ID=16.36mm)					
	7	6E-2271	8	RETAINER					
	8	104-7294	1	SPRING					
	9	111-9959	1	PLUG					
	10	7Y-5219	1	SEAL-O-RING (ID=12.37mm)					
	11	6E-2163	1	VALVE					
	12	2S-2596	1	SPRING					
	13	5M-7937	1	DOWEL					
	14	9S-8005	1	PLUG					

H56122E 04

107-7076 VALVE GP-CONTROL

S/N 3MR 03573-04978, 4MR 00523-00715

Part of 107-7075-Page290

HYDRAULIC SYSTEM

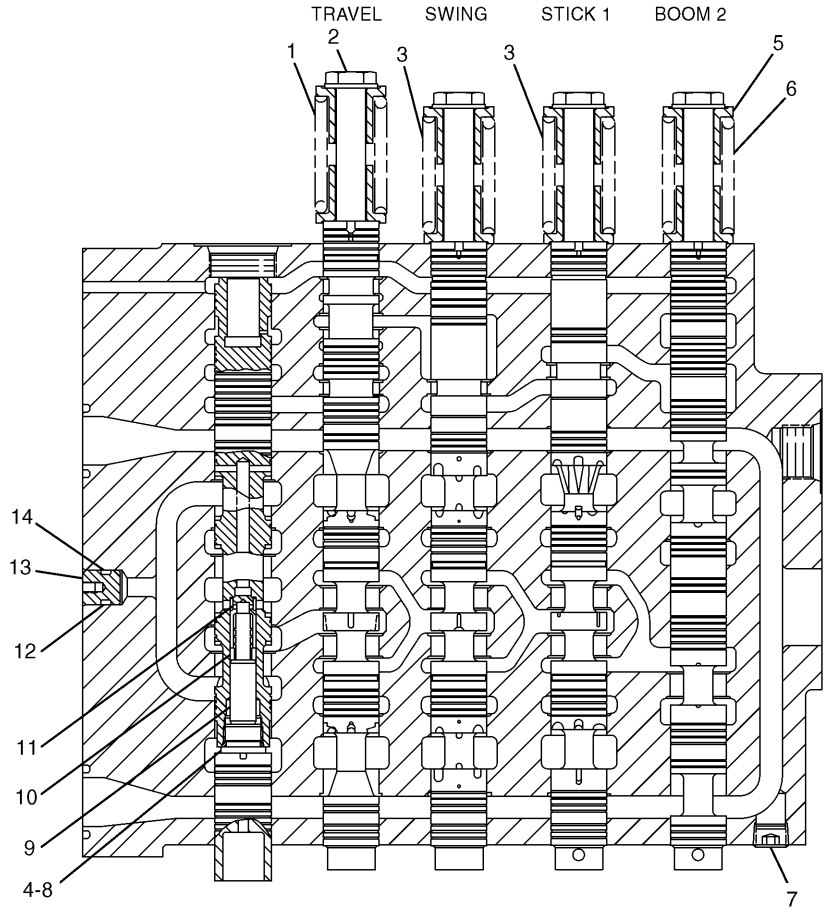

NOTE	No.	PART No.	QTY	PART NAME	NOTE	No.	PART No.	QTY	PART NAME
	1	104-7296	1	SPRING					THE FOLLOWING REPAIR
	2	6E-5122	4	BOLT					KITS ARE AVAILABLE:
	3	104-7293	2	SPRING			155-7138	1	REPAIR KIT (BOOM 2)
	4	3K-0360	1	SEAL-O-RING (ID=16.36mm)			155-7126	1	REPAIR KIT (STICK 1)
	5	6E-2271	8	RETAINER			155-7128	1	REPAIR KIT (SWING)
	6	104-7294	1	SPRING			155-7124	1	REPAIR KIT (TRAVEL)
	7	111-9959	1	PLUG					
	8	9S-8005	1	PLUG					
	9	5M-7937	1	DOWEL					
	10	2S-2596	1	SPRING					
	11	6E-2163	1	VALVE					
	12	7Y-5219	1	SEAL-O-RING (ID=12.37mm)					
	13	6E-3653	1	PLUG					
	14	4I-3569	1	RING					

H62388E 01

154-0532 VALVE GP-CONTROL

S/N 3MR 04979-Up, 4MR 00716-Up

Part of 154-0531-Page290

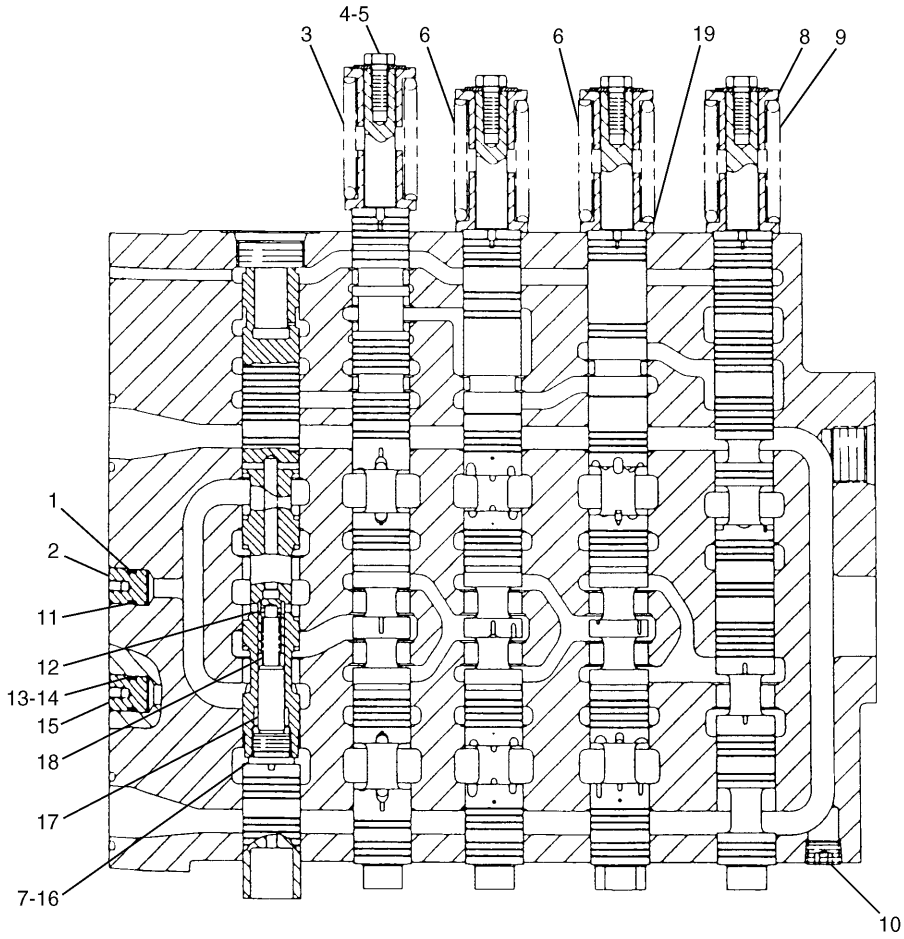

NOTE	No.	PART No.	QTY	PART NAME	NOTE	No.	PART No.	QTY	PART NAME
	1	4I-3569	1	RING					
	2	6E-3653	1	PLUG					
	3	104-7296	1	SPRING					
	4	8T-4189	4	BOLT (L=20mm)					
	5	9N-0869	4	WASHER					
	6	104-7293	2	SPRING					
	7	3K-0360	1	SEAL-O-RING (ID=16.36mm)					
	8	6E-2271	8	RETAINER					
	9	104-7294	1	SPRING					
	10	111-9959	1	PLUG					
	11	7Y-5219	1	SEAL-O-RING (ID=12.37mm)					
	12	6E-2163	1	VALVE					
	13	4I-3569	1	RING					
	14	7Y-5219	1	SEAL-O-RING (ID=12.37mm)					
	15	6E-3653	1	PLUG					
	16	9S-8005	1	PLUG					
	17	5M-7937	1	DOWEL					
	18	2S-2596	1	SPRING					
	19	5D-1247	3	WASHER					

H54294E 04

116-3471 VALVE GP-CONTROL

S/N 3MR 1-03572, 4MR 1-00522
Part of 107-7075-Page290

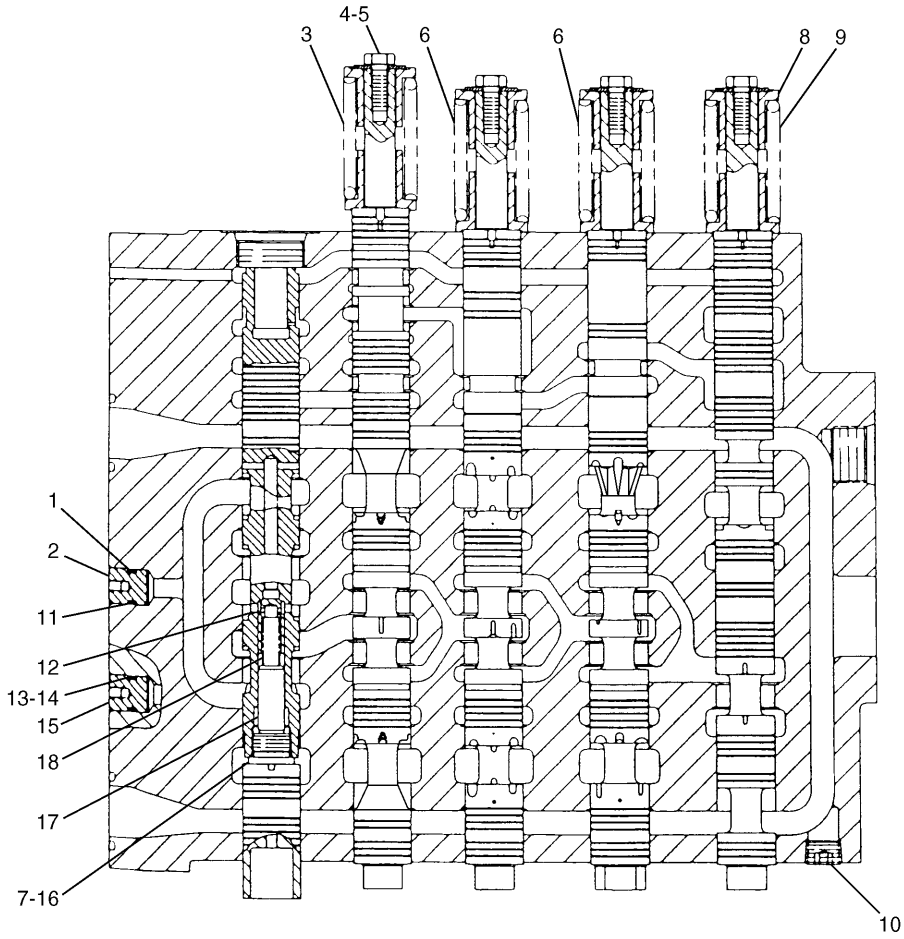

NOTE	No.	PART No.	QTY	PART NAME	NOTE	No.	PART No.	QTY	PART NAME
	1	4I-3569	1	RING					
	2	6E-3653	1	PLUG					
	3	104-7296	1	SPRING					
	4	8T-4189	4	BOLT (L=20mm)					
	5	9N-0869	4	WASHER					
	6	104-7293	2	SPRING					
	7	3K-0360	1	SEAL-O-RING (ID=16.36mm)					
	8	6E-2271	8	RETAINER					
	9	104-7294	1	SPRING					
	10	111-9959	1	PLUG					
	11	7Y-5219	1	SEAL-O-RING (ID=12.37mm)					
	12	6E-2163	1	VALVE					
	13	4I-3569	1	RING					
	14	7Y-5219	1	SEAL-O-RING (ID=12.37mm)					
	15	6E-3653	1	PLUG					
	16	9S-8005	1	PLUG					
	17	5M-7937	1	DOWEL					
	18	2S-2596	1	SPRING					

H56125E 05

116-3471 VALVE GP-CONTROL

S/N 3MR 03573-04978, 4MR 00523-00715

Part of 107-7075-Page290

MEMORANDA

HYDRAULIC SYSTEM

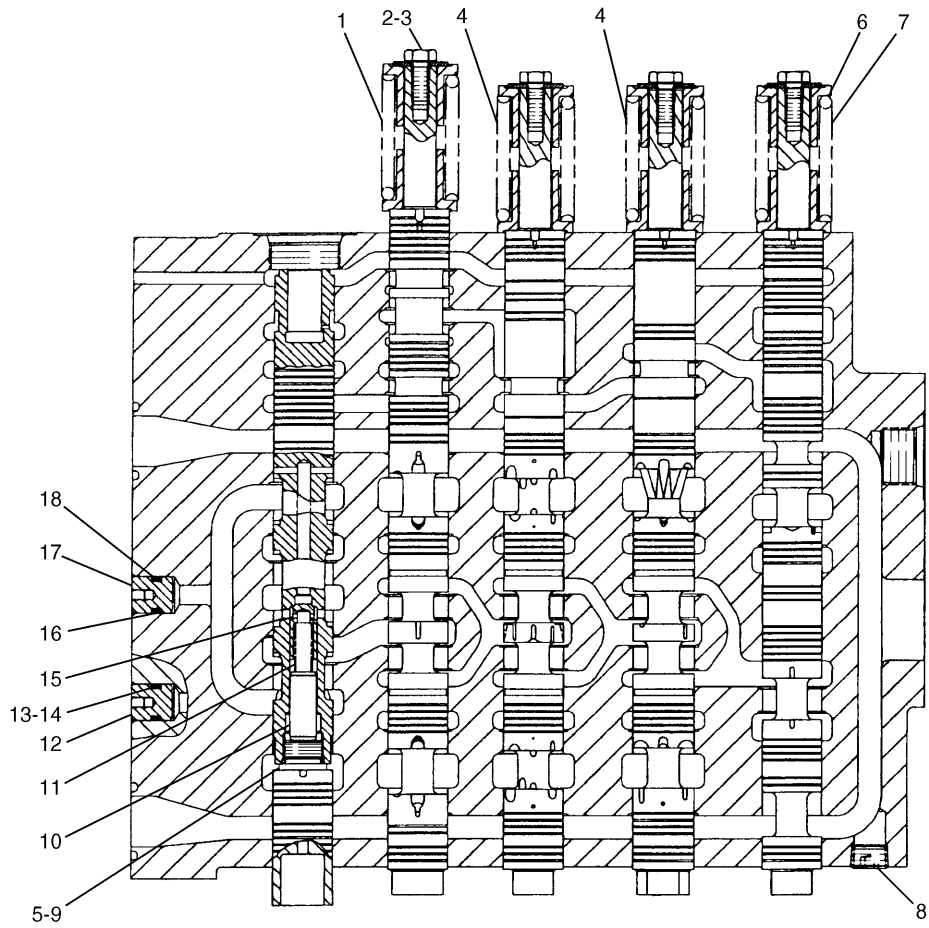

NOTE	No.	PART No.	QTY	PART NAME	NOTE	No.	PART No.	QTY	PART NAME
	1	104-7296	1	SPRING					
	2	8T-4189	4	BOLT (L=20mm)					
	3	9N-0869	4	WASHER					
	4	104-7293	2	SPRING					
	5	3K-0360	1	SEAL-O-RING (ID=16.36mm)					
	6	6E-2271	8	RETAINER					
	7	104-7294	1	SPRING					
	8	111-9959	1	PLUG					
	9	9S-8005	1	PLUG					
	10	5M-7937	1	DOWEL					
	11	2S-2596	1	SPRING					
	12	6E-3653	1	PLUG					
	13	7Y-5219	1	SEAL-O-RING (ID=12.37mm)					
	14	4I-3569	1	RING					
	15	6E-2163	1	VALVE					
	16	7Y-5219	1	SEAL-O-RING (ID=12.37mm)					
	17	6E-3653	1	PLUG					
	18	4I-3569	1	RING					

H60392E 00

154-0533 VALVE GP-CONTROL

S/N 3MR 04979-Up, 4MR 00716-Up

Part of 154-0531-Page290

Consists of :

			Page
1	115-8918	LINES GP-PILOT	243
1	120-5117	FILM GP	442

H53501E 00

123-2466 VALVE AR-4 WAY
An Attachment

Consists of :

			Page
1	126-2023	LINES GP-SWING MOTOR	256
1	121-1153	WIRING GP-FINE SWING	91.01

H53188E 00

126-1890 VALVE AR-SWING
An Attachment

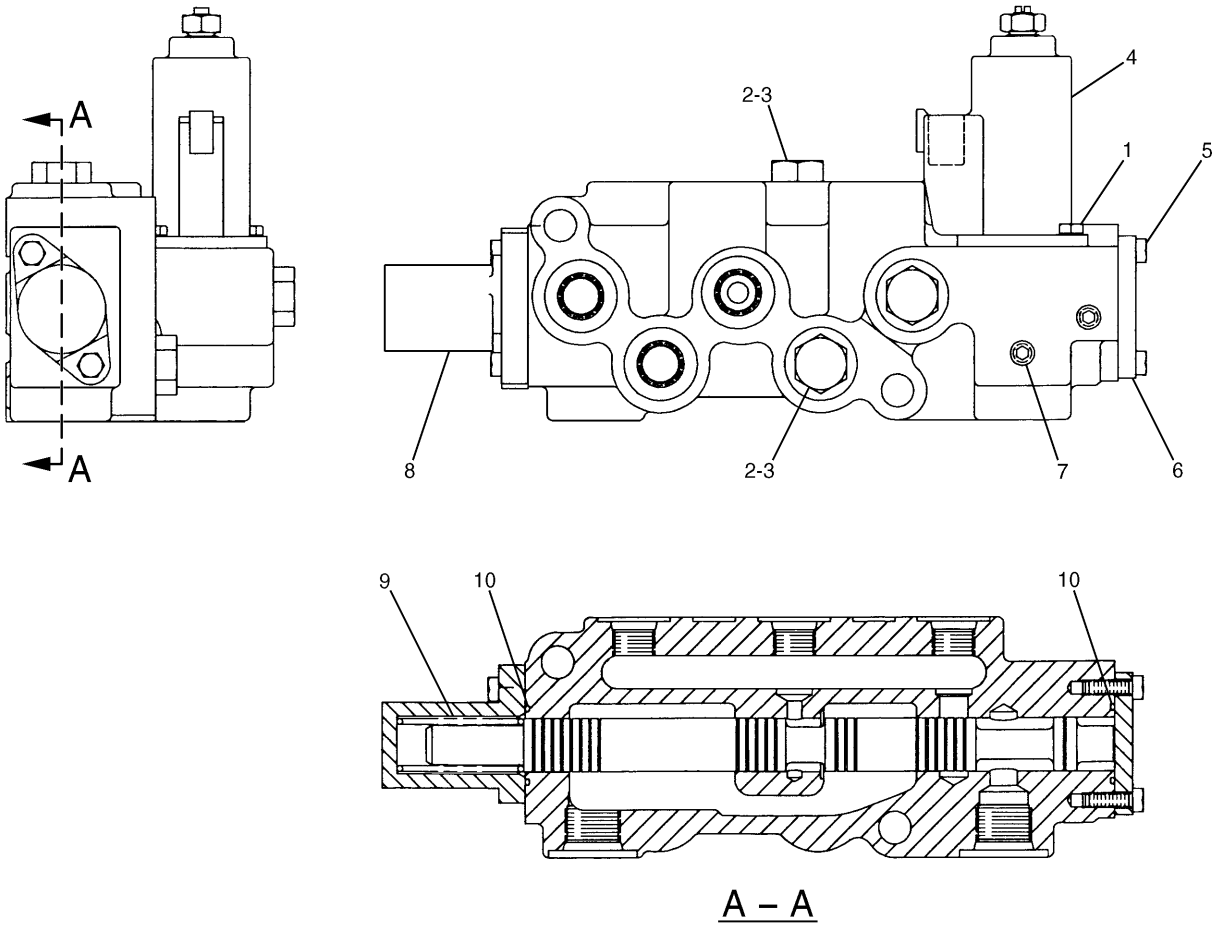

A – A

NOTE	No.	PART No.	QTY	PART NAME	NOTE	No.	PART No.	QTY	PART NAME
	1	7I-2272	2	BOLT (L=12mm)					
	2	9S-4191	4	PLUG					
	3	3J-1907	4	SEAL-O-RING (ID=11.89mm)					
Y	4	121-1491	1	VALVE GP					
	5	7I-2273	4	BOLT (L=16mm)					
	6	107-7062	1	COVER					
	7	8T-6759	4	PLUG					
	8	107-7063	1	COVER					
	9	107-7064	1	SPRING					
	10	5K-9090	2	SEAL-O-RING (OD=27.22mm)					

Y—SEE SEPARATE ILLUSTRATION

H50291E 03

107-7058 VALVE GP-SELECTOR

Part of 115-8896-Page233
121-1491-Page294

Consists of :

			Page
1	131-5745	VALVE GP-SOLENOID	294.01
		-OR-	
1	131-5760	VALVE GP-SOLENOID	294.01

H51371E 02

121-1491 VALVE GP-SOLENOID

Part of 107-7058-Page293,121-1565,137-3637-Page294.02,111-9950-Page305

HYDRAULIC SYSTEM

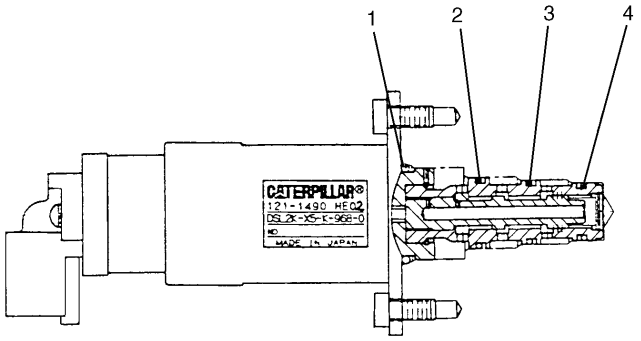

NOTE	No.	PART No.	QTY	PART NAME
	1	095-1586	1	SEAL-O-RING (ID=19.80mm)
	2	095-1751	1	SEAL-O-RING (ID=14.00mm)
	3	6V-8398	1	SEAL-O-RING (OD=16.03mm)
	4	095-1750	1	SEAL-O-RING (ID=10.82mm)

H51372E 00

131-5745 VALVE GP-SOLENOID

Part of 121-1491-Page294

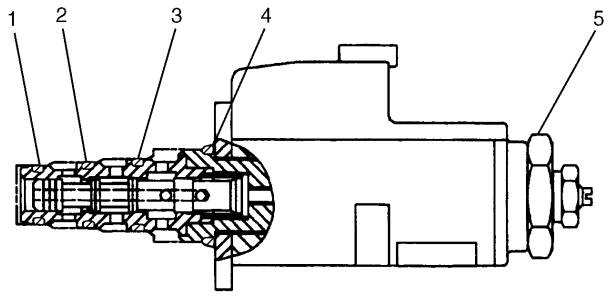

NOTE	No.	PART No.	QTY	PART NAME
	1	095-1750	1	SEAL-O-RING (ID=10.82mm)
	2	6V-8398	1	SEAL-O-RING (OD=16.03mm)
	3	095-1751	1	SEAL-O-RING (ID=14.00mm)
	4	095-1586	1	SEAL-O-RING (ID=19.80mm)
	5	114-0623	1	NUT AS

H51375E 00

131-5760 VALVE GP-SOLENOID

Part of 121-1491-Page294

HYDRAULIC SYSTEM

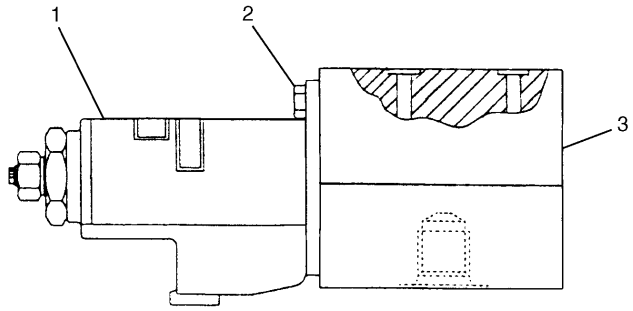

NOTE	No.	PART No.	QTY	PART NAME
Y	1	121-1491	1	VALVE GP
	2	8T-0288	2	BOLT (L=12mm)
	3	121-1570	1	BODY

Y—SEE SEPARATE ILLUSTRATION

H51373E 02

121-1565 VALVE GP-SOLENOID

S/N 3MR 1-01663, 4MR 1-00309
Part of 116-3550-Page259
121-1491-Page294

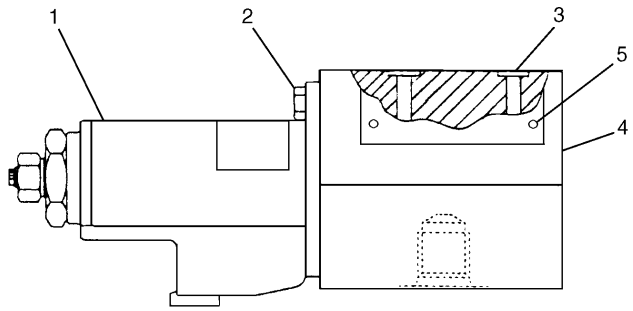

NOTE	No.	PART No.	QTY	PART NAME
Y	1	121-1491	1	VALVE GP
	2	8T-0288	2	BOLT (L=12mm)
	3	137-3639	1	ORIFICE
	4	137-3638	1	BODY
	5	5B-9304	2	SCREW

Y—SEE SEPARATE ILLUSTRATION

H56127E 02

137-3637 VALVE GP-SOLENOID

S/N 3MR 01664-Up, 4MR 00310-Up
Part of 116-3550-Page259.01,176-5104-Page259.03
121-1491-Page294

Consists of :

			Page
1	131-5744	VALVE GP-SOLENOID	295.02
		-OR-	
1	131-5759	VALVE GP-SOLENOID	295.02

H51369E 02

121-1490 VALVE GP-SOLENOID
Part of 111-9950-Page305

HYDRAULIC SYSTEM

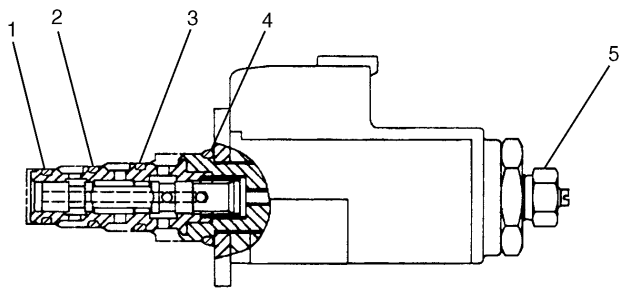

NOTE	No.	PART No.	QTY	PART NAME
	1	6M-5062	1	SEAL-O-RING (ID=10.82mm)
	2	4K-2039	1	SEAL-O-RING (ID=12.42mm)
	3	5L-4758	1	SEAL-O-RING (ID=14.00mm)
	4	095-1586	1	SEAL-O-RING (ID=19.80mm)
	5	114-0623	1	NUT AS

H63679E 02

111-9916 VALVE GP-PRESS REDUCING SOL

Part of 111-9950-Page305

HYDRAULIC SYSTEM

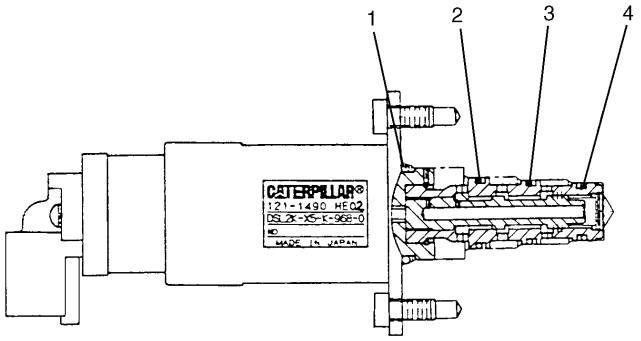

NOTE	No.	PART No.	QTY	PART NAME
	1	095-1586	1	SEAL-O-RING (ID=19.80mm)
	2	095-1751	1	SEAL-O-RING (ID=14.00mm)
	3	6V-8398	1	SEAL-O-RING (OD=16.03mm)
	4	095-1750	1	SEAL-O-RING (ID=10.82mm)

H51370E 00

131-5744 VALVE GP-SOLENOID

Part of 121-1490-Page295

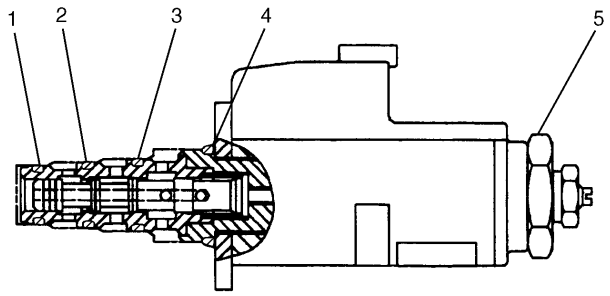

NOTE	No.	PART No.	QTY	PART NAME
	1	095-1750	1	SEAL-O-RING (ID=10.82mm)
	2	6V-8398	1	SEAL-O-RING (OD=16.03mm)
	3	095-1751	1	SEAL-O-RING (ID=14.00mm)
	4	095-1586	1	SEAL-O-RING (ID=19.80mm)
	5	114-0623	1	NUT AS

H51374E 00

131-5759 VALVE GP-SOLENOID

Part of 121-1490-Page295

MEMORANDA

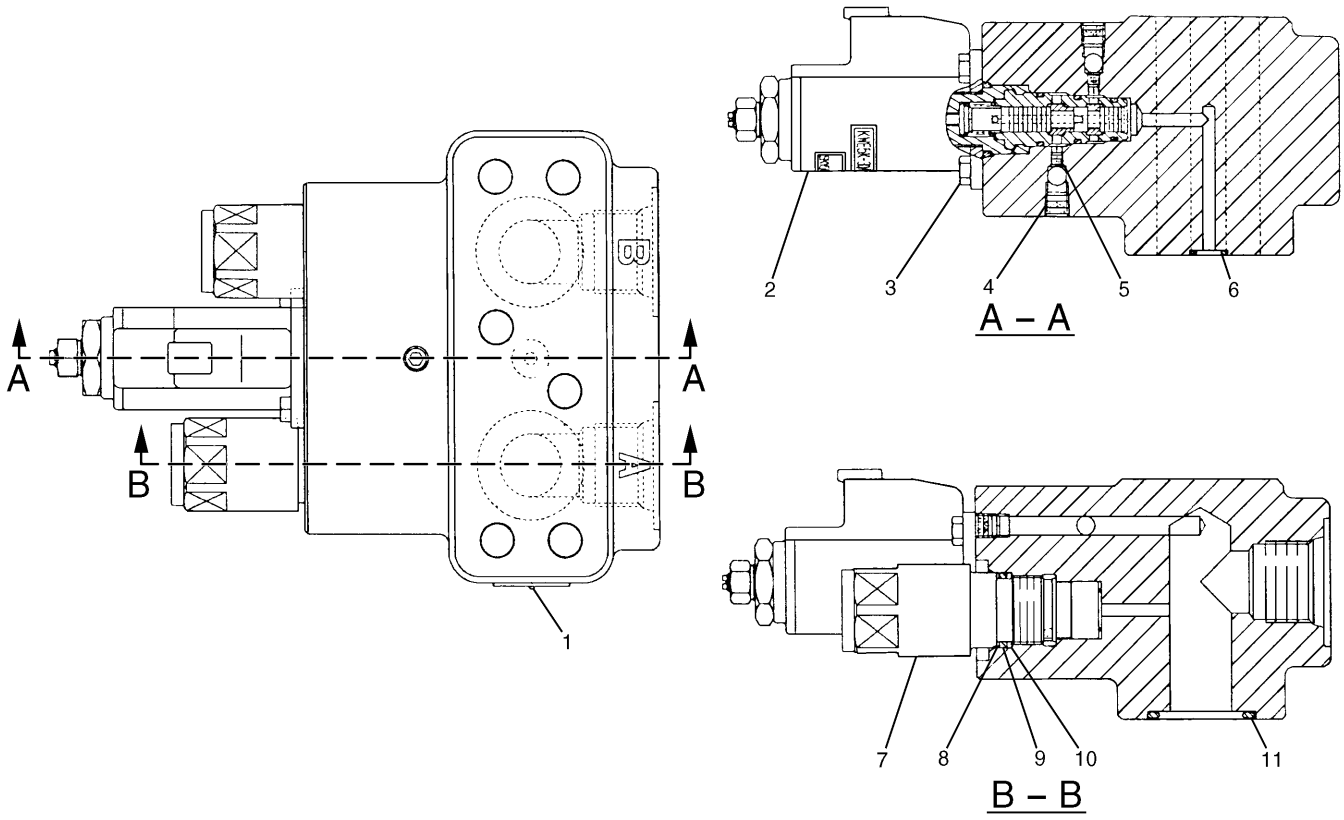

NOTE	No.	PART No.	QTY	PART NAME	NOTE	No.	PART No.	QTY	PART NAME
	1	5B-9304	2	SCREW					
Y	2	116-3526	1	VALVE GP					
	3	8T-0288	2	BOLT (L=12mm)					
	4	8T-6759	6	PLUG					
	5	133-6788	2	ORIFICE					
	6	095-1576	1	SEAL-O-RING (ID=8.80mm)					
	7	114-0550	2	VALVE GP					
	8	094-1902	2	RING					
	9	095-1586	2	SEAL-O-RING (ID=19.80mm)					
	10	095-1785	2	RING					
	11	095-1698	2	SEAL-O-RING (ID=29.40mm)					

Y—SEE SEPARATE ILLUSTRATION

H53190E 04

107-7056 VALVE GP-SOLENOID

Part of 126-2023-Page256
116-3526-Page298
An Attachment

HYDRAULIC SYSTEM

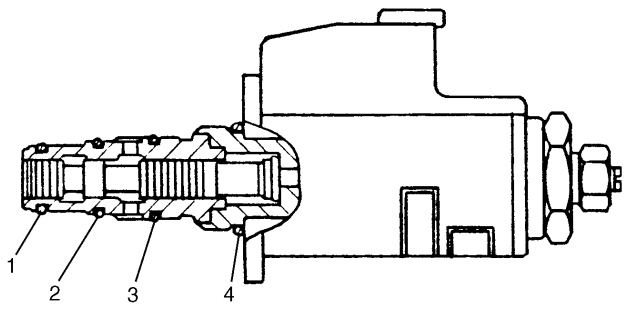

NOTE	No.	PART No.	QTY	PART NAME
	1	126-6514	1	SEAL-O-RING (ID=10.82mm)
	2	126-6515	1	SEAL-O-RING (ID=12.42mm)
	3	126-6516	1	SEAL-O-RING (ID=14.00mm)
	4	095-1586	1	SEAL-O-RING (ID=19.80mm)

H53191E 01

116-3526 VALVE GP-SOLENOID

Part of 107-7056-Page297
An Attachment

HYDRAULIC SYSTEM

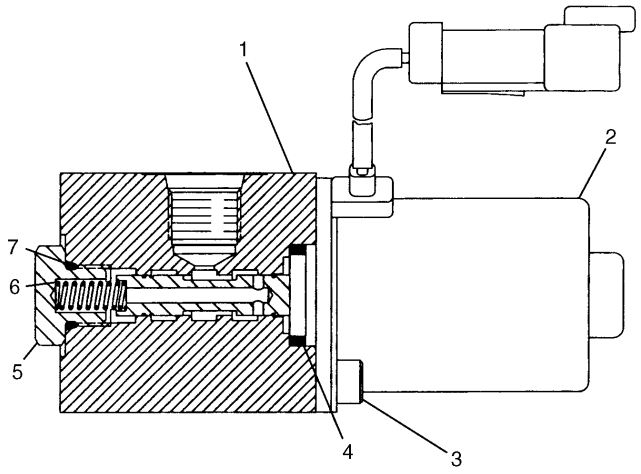

NOTE	No.	PART No.	QTY	PART NAME
	1	7I-8102	1	VALVE AS
	2	121-6304	1	COIL GP
	3	099-0822	2	BOLT (L=10mm)
	4	095-1519	1	SEAL-O-RING (ID=15.80mm)
	5	7I-0986	1	PLUG
	6	7I-7403	1	SPRING
	7	095-1578	1	SEAL-O-RING (ID=9.80mm)

H51030E 01

121-6303 VALVE GP-SOLENOID

Part of 119-5279-Page241,119-5280-Page242.01
An Attachment

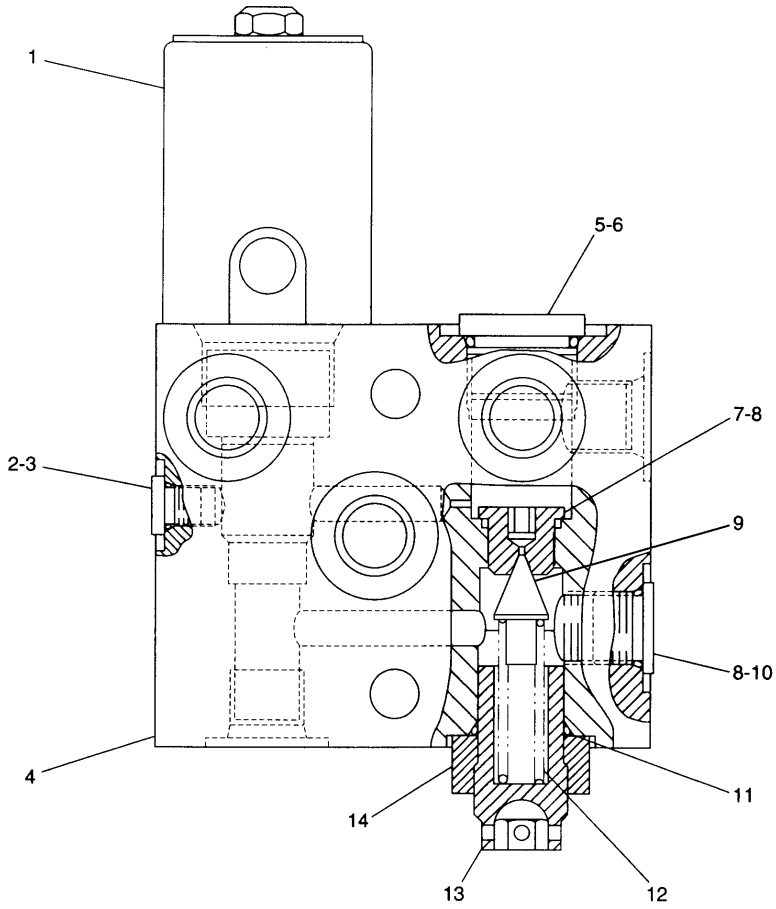

NOTE	No.	PART No.	QTY	PART NAME	NOTE	No.	PART No.	QTY	PART NAME
Y	1	152-8340	1	VALVE GP					
	2	9S-8001	1	PLUG					
	3	4J-7533	1	SEAL-O-RING (ID=6.07mm)					
	4	144-2117	1	BODY					
	5	9S-8006	1	PLUG					
	6	2M-9780	1	SEAL-O-RING (ID=19.18mm)					
	7	8J-0323	1	SEAT					
	8	3J-1907	2	SEAL-O-RING (ID=11.89mm)					
	9	1J-8497	1	VALVE					
	10	9S-8004	1	PLUG					
	11	3K-0360	1	SEAL-O-RING (ID=16.36mm)					
	12	7I-7415	1	SPRING					
	13	6E-5510	1	RETAINER AS					
	14	9X-6395	1	NUT (O-RING)					

Y—SEE SEPARATE ILLUSTRATION

H69477E 05

122-4459 VALVE GP-PRESSURE CONTROL

Part of 119-5279-Page241,119-5280-Page242.01
152-8340-Page301
An Attachment

HYDRAULIC SYSTEM

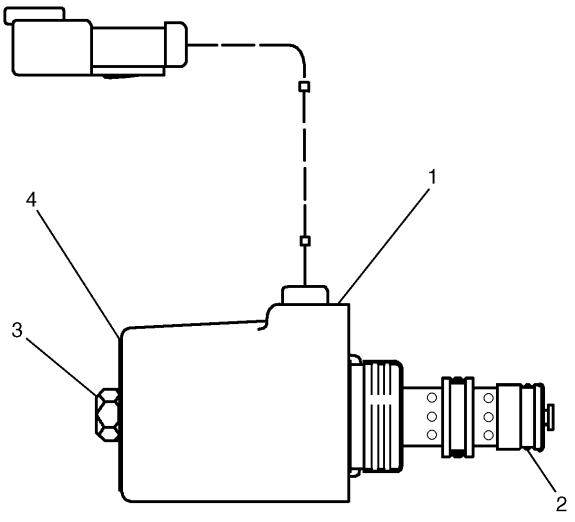

NOTE	No.	PART No.	QTY	PART NAME
	1	141-6787	1	COIL AS
		1S-9593	2	STRAP
		102-8802	1	RECEPTACLE KIT
		8T-8729	2	PIN
	2	152-8338	1	CARTRIDGE AS
		8C-9987	1	WASHER
		111-0343	1	LOCKNUT
	3	111-0343	1	LOCKNUT
	4	8C-9987	1	WASHER
				THE FOLLOWING REPAIR KIT IS AVAILABLE:
		197-7701	1	SEAL KIT

H74091E 03

152-8340 VALVE GP-SOLENOID
Part of 122-4459-Page300
An Attachment

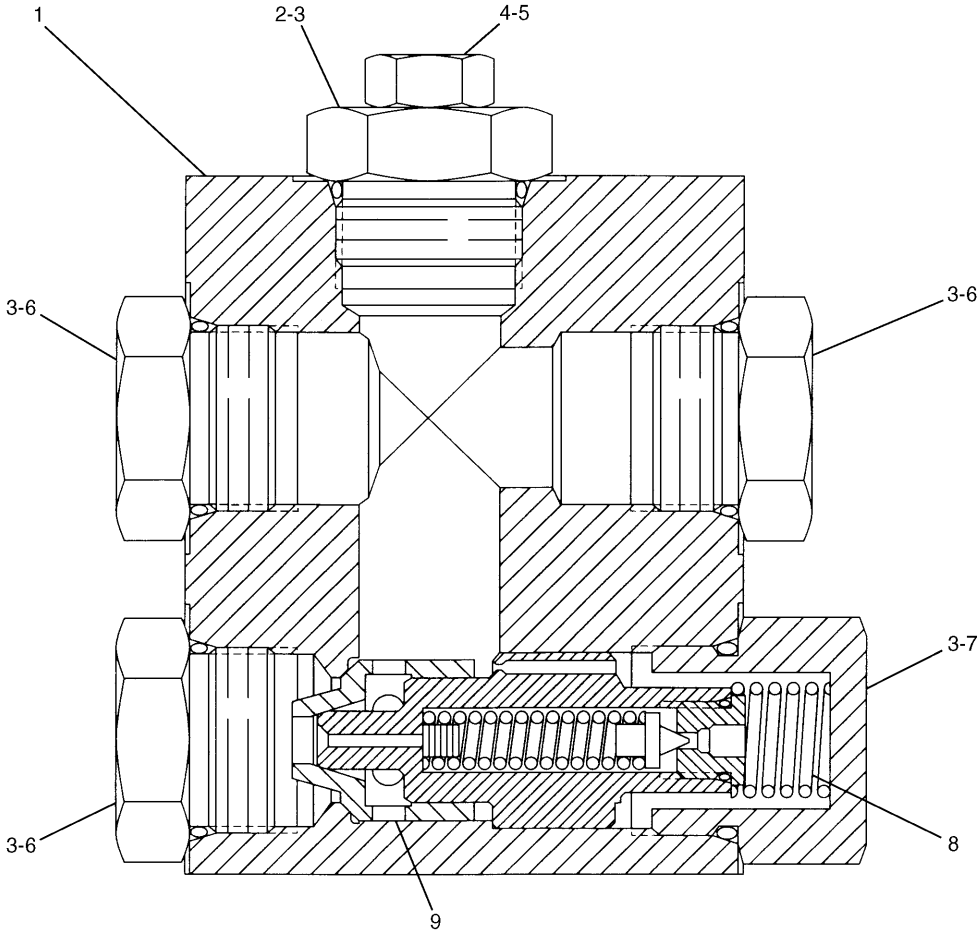

NOTE	No.	PART No.	QTY	PART NAME	NOTE	No.	PART No.	QTY	PART NAME
	1	6C-6628	1	BLOCK					
	2	8J-0426	1	PLUG					
	3	7M-8485	5	SEAL-O-RING (ID=29.74mm)					
	4	9S-4191	1	PLUG					
	5	3J-1907	1	SEAL-O-RING (ID=11.89mm)					
	6	9S-4181	3	PLUG					
	7	8J-0324	1	PLUG					
	8	5F-5835	1	SPRING					
Y	9	6E-1547	1	VALVE GP					

Y—SEE SEPARATE ILLUSTRATION

H53192E 01

6C-6746 VALVE GP

Part of 138-5043-Page247.02
6E-1547-Page303
An Attachment

HYDRAULIC SYSTEM

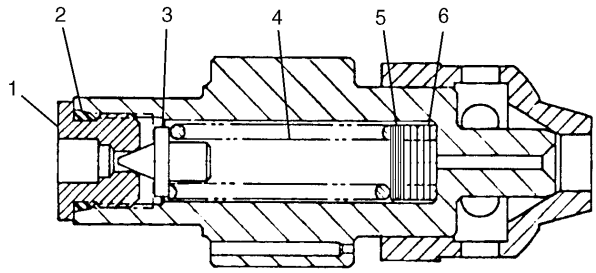

NOTE	No.	PART No.	QTY	PART NAME
	1	8J-0323	1	SEAT
	2	3J-1907	1	SEAL-O-RING (ID=11.89mm)
	3	8J-0331	1	VALVE
	4	8J-0322	1	SPRING
B	5	5J-6153	5	SHIM (T=0.178mm)
B	6	6J-8696	5	SHIM (T=1.219mm)

B—USE AS REQUIRED

H51035E 01

6E-1547 VALVE GP-RELIEF

Part of 6C-6746-Page302
An Attachment

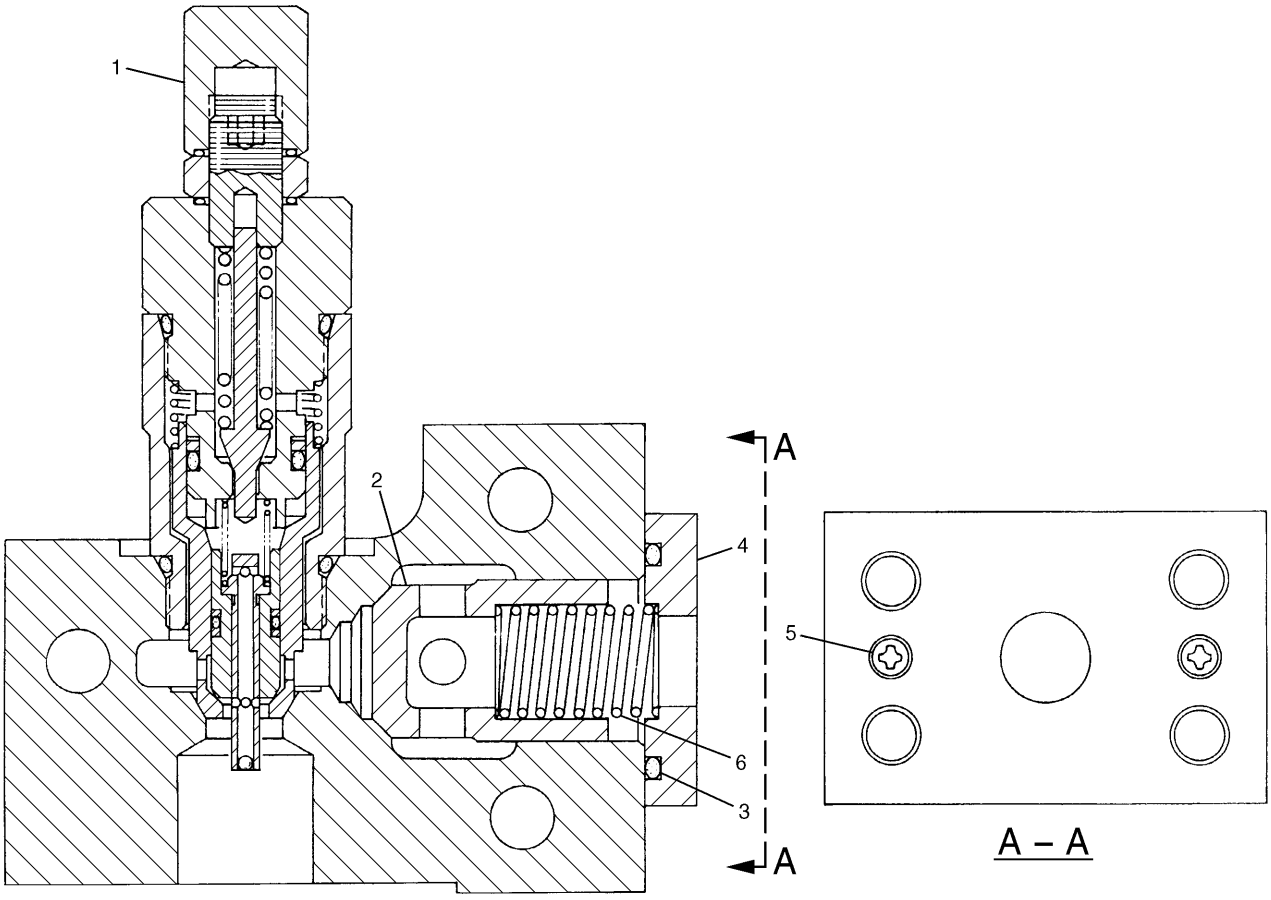

NOTE	No.	PART No.	QTY	PART NAME	NOTE	No.	PART No.	QTY	PART NAME
Y	1	6E-5234	1	VALVE GP					
	2	4I-5520	1	VALVE					
	3	095-1600	1	SEAL-O-RING (ID=33.70mm)					
	4	085-4792	1	RETAINER					
	5	095-0728	2	SCREW					
	6	093-9473	1	SPRING					

Y—SEE SEPARATE ILLUSTRATION

H54561E 03

4I-6301 VALVE GP-CHECK & RELIEF

Part of 138-5048-Page249.02
6E-5234-Page303.02
An Attachment

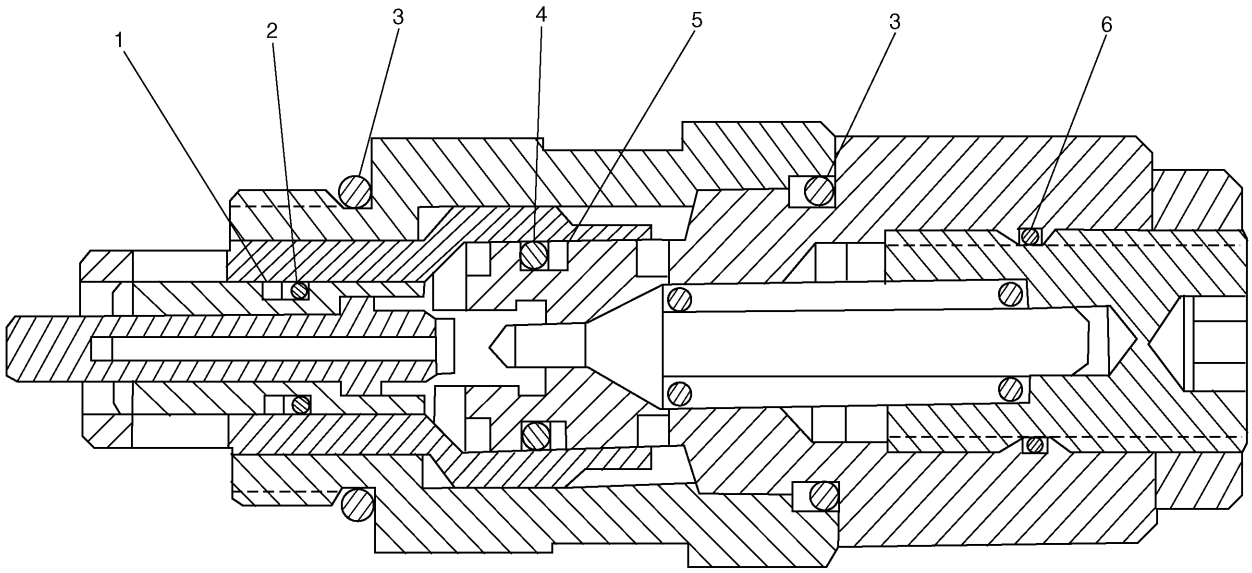

NOTE	No.	PART No.	QTY	PART NAME	NOTE	No.	PART No.	QTY	PART NAME
	1	030-0167	1	RING					
	2	8L-2779	1	SEAL-O-RING (ID=9.25mm)					
	3	033-6036	2	SEAL-O-RING (ID=23.47mm)					
	4	3P-0647	1	SEAL-O-RING (ID=13.94mm)					
	5	9J-0707	1	RING					
	6	2P-2975	1	SEAL-O-RING (ID=17.17mm)					

H69122E 03

6E-5234 VALVE GP-RELIEF

Pilot Operated

Part of 4I-6301-Page303.01

An Attachment

MEMORANDA

MEMORANDA

HYDRAULIC SYSTEM

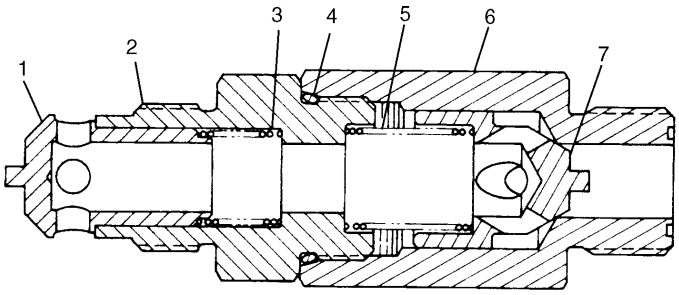

NOTE	No.	PART No.	QTY	PART NAME
	1	4I-0891	1	VALVE
	2	4I-0892	1	FITTING
	3	085-4743	1	SPRING
	4	7M-8485	1	SEAL-O-RING (ID=29.74mm)
	5	099-6954	1	SPRING
	6	4I-0893	1	BODY
	7	099-6953	1	VALVE

H52792E 01

4I-0890 VALVE GP-CHECK

Part of 128-7482-Page247,138-5048-Page249.02
An Attachment

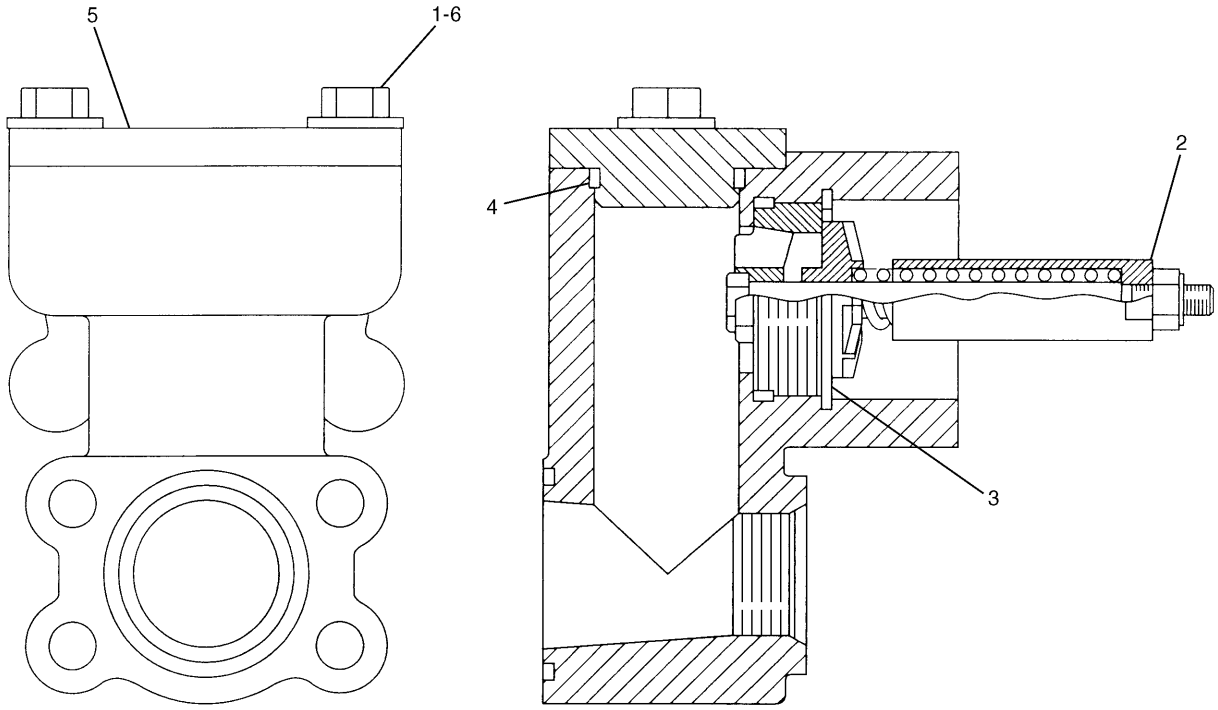

NOTE	No.	PART No.	QTY	PART NAME	NOTE	No.	PART No.	QTY	PART NAME
	1	8T-4139	2	BOLT (L=30mm)					
	2	142-5517	1	VALVE AS					
	3	103-8259	1	RING					
	4	095-1603	1	SEAL-O-RING (ID=37.70mm)					
	5	114-0771	1	COVER					
	6	8T-4123	2	WASHER					

H58584E 00

142-5516 VALVE GP-CHECK

S/N 3MR 1-(T00.01), 4MR 1-(T00.01)
Part of 115-8886-Page252,133-5779-Page254

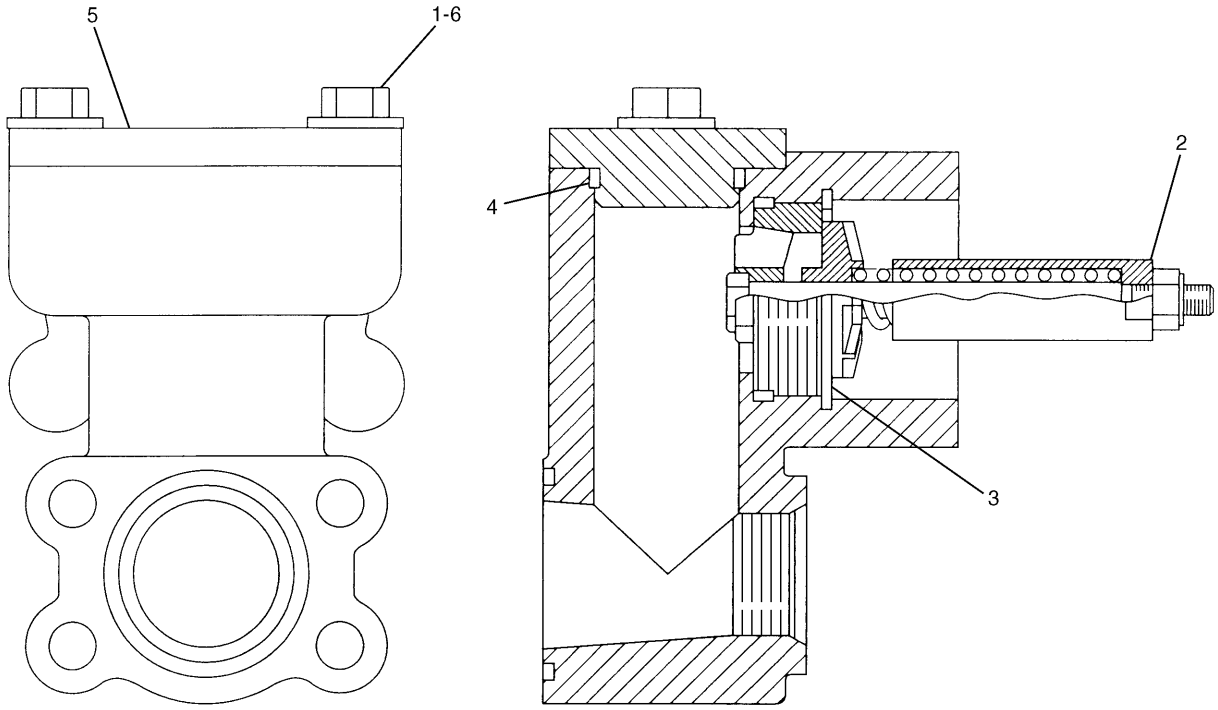

NOTE	No.	PART No.	QTY	PART NAME	NOTE	No.	PART No.	QTY	PART NAME
	1	8T-4139	2	BOLT (L=30mm)					
	2	184-3833	1	VALVE AS					
	3	184-3841	1	RING					
	4	095-1603	1	SEAL-O-RING (ID=37.70mm)					
	5	114-0771	1	COVER					
	6	8T-4123	2	WASHER					

H67974E 00

184-3831 VALVE GP-CHECK

S/N 3MR (T00.02)-Up, 4MR (T00.02)-Up
Part of 115-8886-Page253.01,133-5779-Page254.02

HYDRAULIC SYSTEM

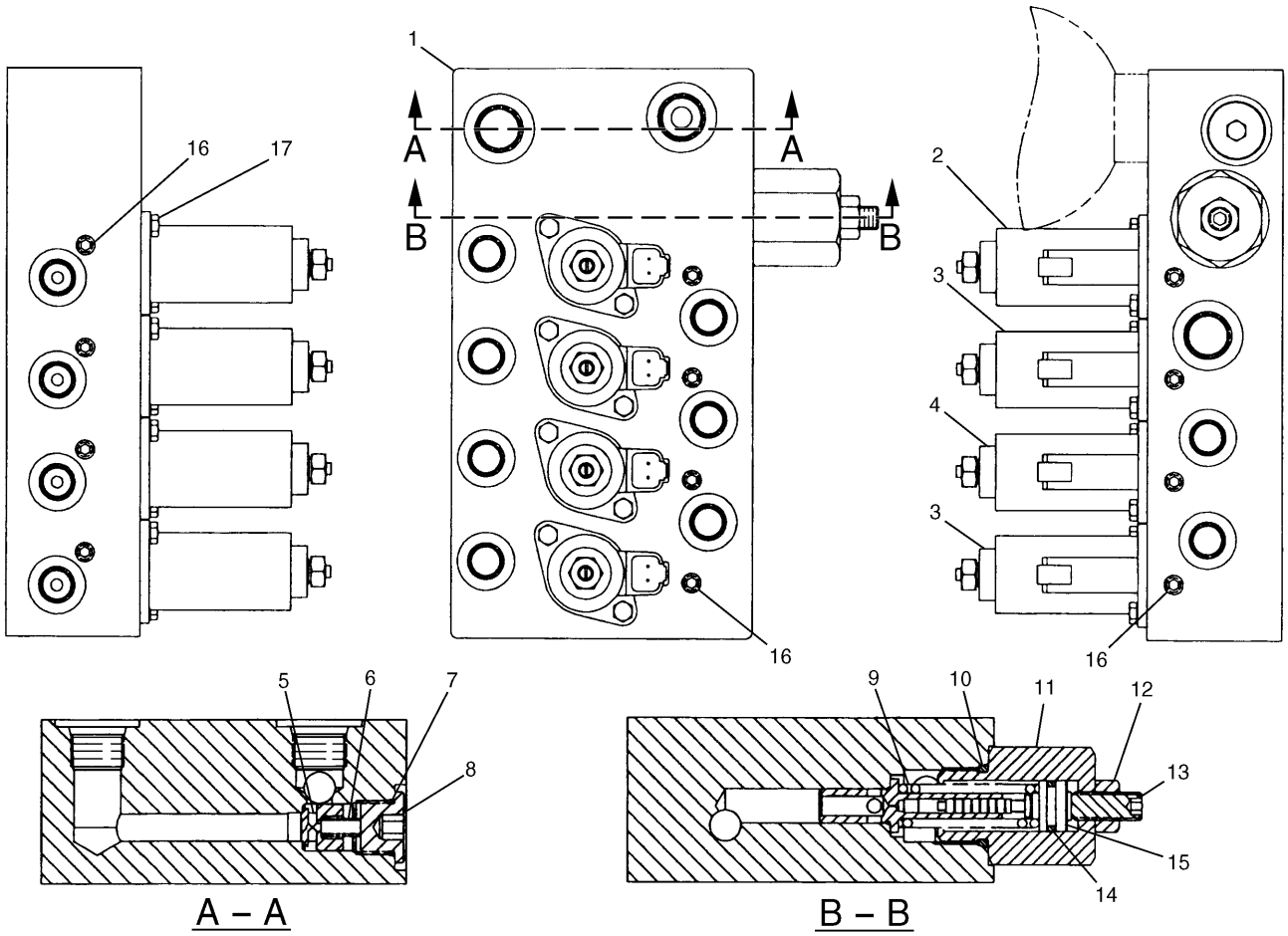

NOTE	No.	PART No.	QTY	PART NAME	NOTE	No.	PART No.	QTY	PART NAME
	1	123-2467	1	VALVE GP					
Y	2	111-9916	1	VALVE GP					
Y	3	121-1490	2	VALVE GP					
Y	4	121-1491	1	VALVE GP					
	5	7Y-5011	1	VALVE					
	6	096-1598	1	SPRING					
	7	3K-0360	1	SEAL-O-RING (ID=16.36mm)					
	8	7Y-5010	1	PLUG					
	9	096-1595	1	SPRING					
	10	095-1592	1	SEAL-O-RING (ID=23.70mm)					
	11	7Y-5009	1	CARTRIDGE					
	12	8T-4133	1	NUT					
	13	4I-8915	1	SETSCREW					
	14	095-1582	1	SEAL-O-RING (ID=13.80mm)					
	15	4I-5657	1	PLUG					
	16	8T-6759	12	PLUG					
	17	7I-2272	8	BOLT (L=12mm)					

Y—SEE SEPARATE ILLUSTRATION

H67594E 08

111-9950 VALVE GP-MANIFOLD & REDUCING

Part of 115-8897-Page235
121-1491-Page294,121-1490-Page295,111-9916-Page295.01

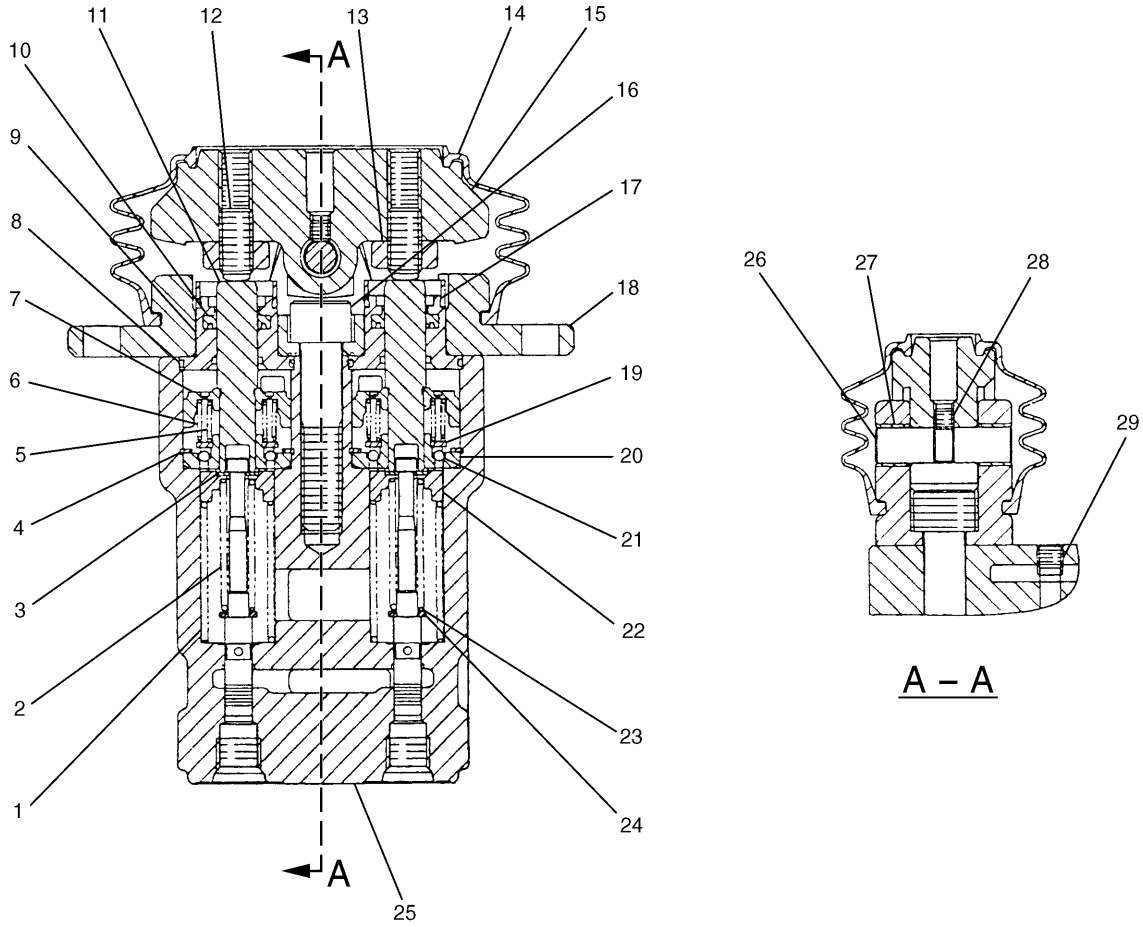

NOTE	No.	PART No.	QTY	PART NAME	NOTE	No.	PART No.	QTY	PART NAME
	1	087-4707	4	SPRING		21	153-5223	12	BALL
	2	131-5818	4	SPRING		22	119-5395	4	SEAT
	3	099-6136	8	WASHER		23	099-6137	4	WASHER
	4	095-0936	4	RING		24	099-6141	4	WASHER
	5	126-1865	4	SPRING		25	119-5385	1	HOUSING
	6	126-1866	4	SPRING		26	099-6145	2	CAMSHAFT
	7	119-5393	4	PISTON		27	099-6144	4	BUSHING
	8	6V-8400	4	SEAL-O-RING (ID=30.01mm)		28	095-1260	2	SETSCREW
	9	119-5387	4	PLUG		29	8T-6759	2	PLUG
	10	119-5389	4	PACKING					
	11	119-5390	4	PUSHROD					
	12	087-4710	4	SETSCREW					
	13	8T-4133	4	NUT					
	14	087-5709	2	BELLOW					
	15	087-5708	2	PEDAL					
	16	8T-0343	2	BOLT (L=55mm)					
	17	119-5388	4	CAP					
	18	119-5386	2	COVER					
	19	119-5391	4	SEAT					
	20	119-5392	4	BUSHING					

H60887E 04

123-2148 VALVE GP-PILOT
Part of 115-8896-Page233

HYDRAULIC SYSTEM

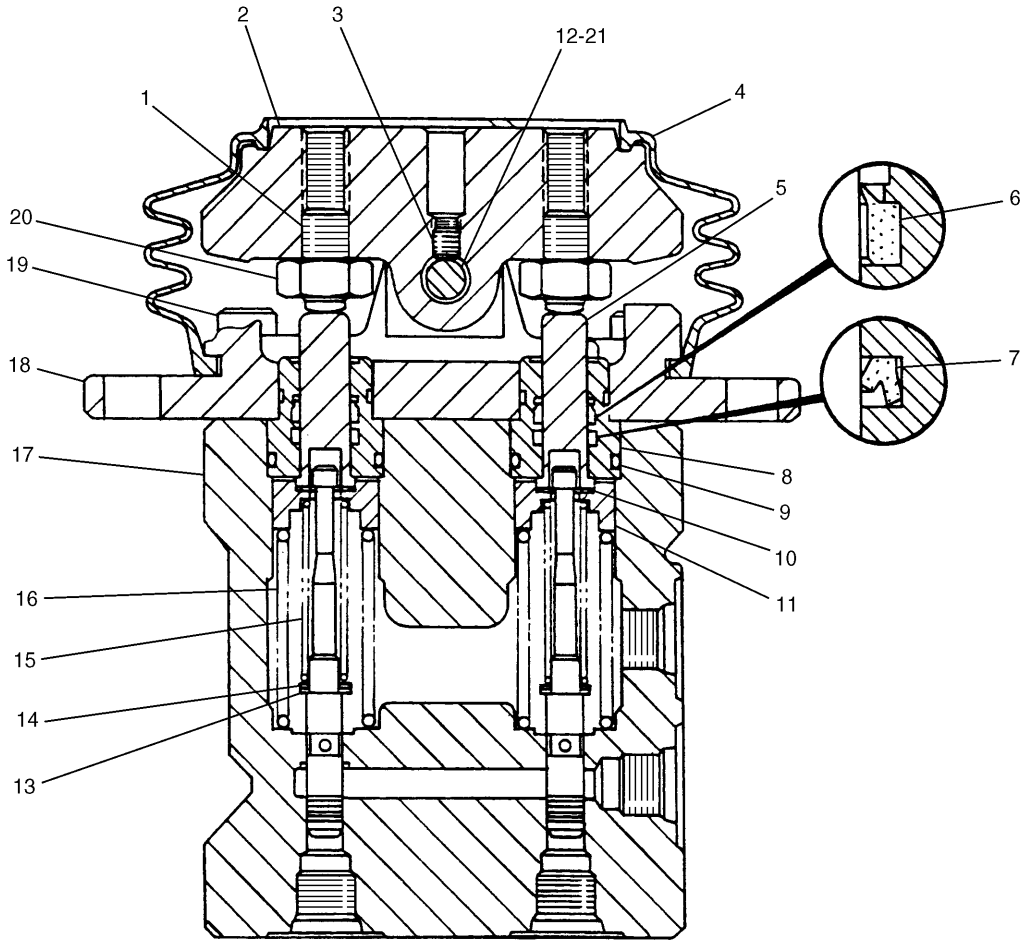

NOTE	No.	PART No.	QTY	PART NAME	NOTE	No.	PART No.	QTY	PART NAME
	1	087-4710	2	SETSCREW		21	099-6144	2	BUSHING
	2	087-5708	1	PEDAL					
	3	095-1260	1	SETSCREW					
	4	087-5709	1	BELLOW					
	5	087-4704	2	ROD					
	6	099-6135	2	SCRAPER					
	7	094-0876	2	SEAL					
	8	087-4703	2	PLUG					
	9	095-1586	2	SEAL-O-RING (ID=19.80mm)					
	10	099-6136	4	WASHER					
	11	099-6140	2	SEAT					
	12	099-6145	1	CAMSHAFT					
	13	099-6141	2	WASHER					
	14	099-6137	2	WASHER					
	15	099-6142	2	SPRING					
	16	123-2605	2	SPRING					
	17	099-6132	1	HOUSING					
	18	087-5707	1	COVER					
	19	087-4448	2	BOLT (L=30mm)					
	20	8T-4133	2	NUT					

H50333E 00

123-2604 VALVE GP-PILOT

Part of 111-6428-Page273
An Attachment

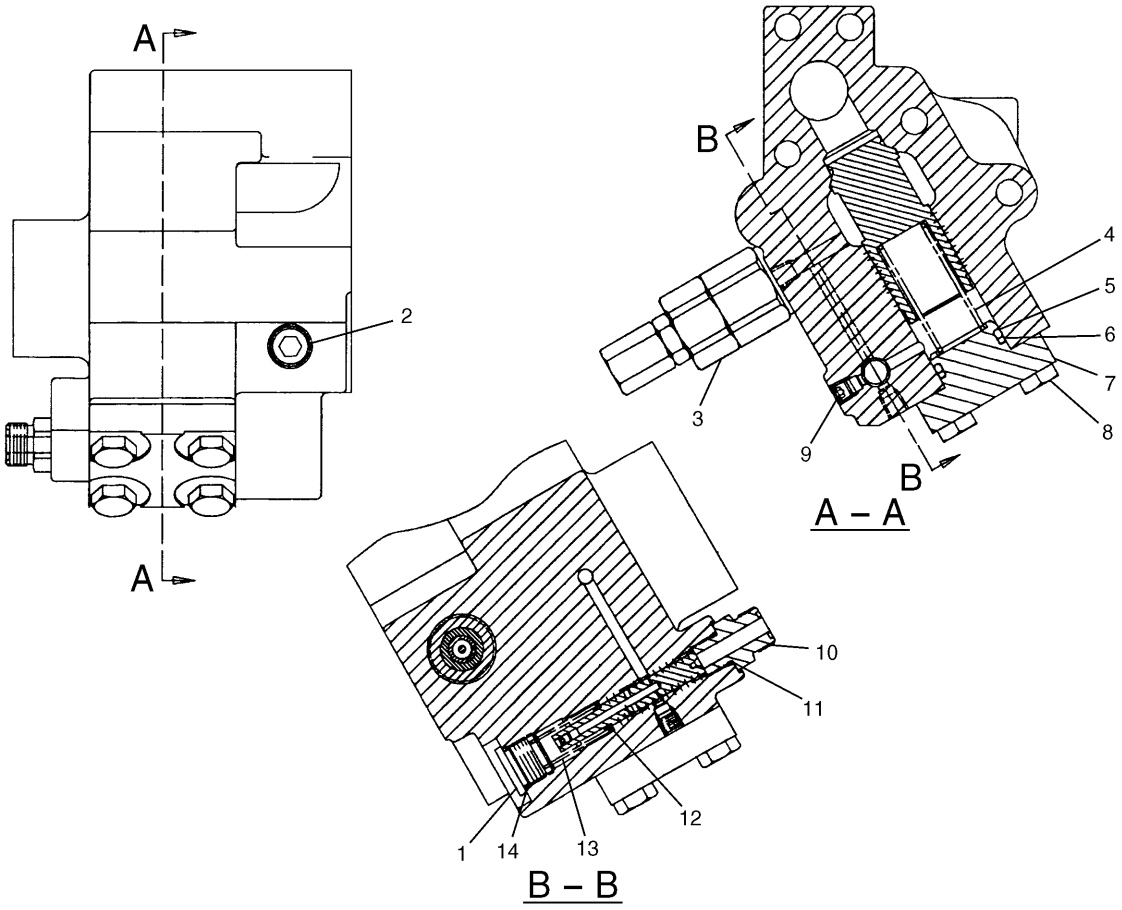

NOTE	No.	PART No.	QTY	PART NAME	NOTE	No.	PART No.	QTY	PART NAME
	1	9S-8005	1	PLUG					
	2	111-9959	2	PLUG					
Y	3	116-3600	1	VALVE GP					
	4	087-5166	1	SPRING					
	5	095-1594	1	SEAL-O-RING (ID=25.70mm)					
	6	095-1789	1	RING					
	7	118-4044	1	COVER					
	8	8T-4136	4	BOLT (L=25mm)					
	9	8T-6759	3	PLUG					
	10	6V-8636	1	CONNECTOR					
	11	3J-1907	1	SEAL-O-RING (ID=11.89mm)					
	12	4I-8965	1	GUIDE					
	13	5I-8511	1	SPRING					
	14	3K-0360	1	SEAL-O-RING (ID=16.36mm)					

Y—SEE SEPARATE ILLUSTRATION

H50301E 01

118-3917 VALVE GP-PILOT

S/N 3MR 1-04978, 4MR 1-00715
Part of 115-8895-Page245
116-3600-Page283

MEMORANDA

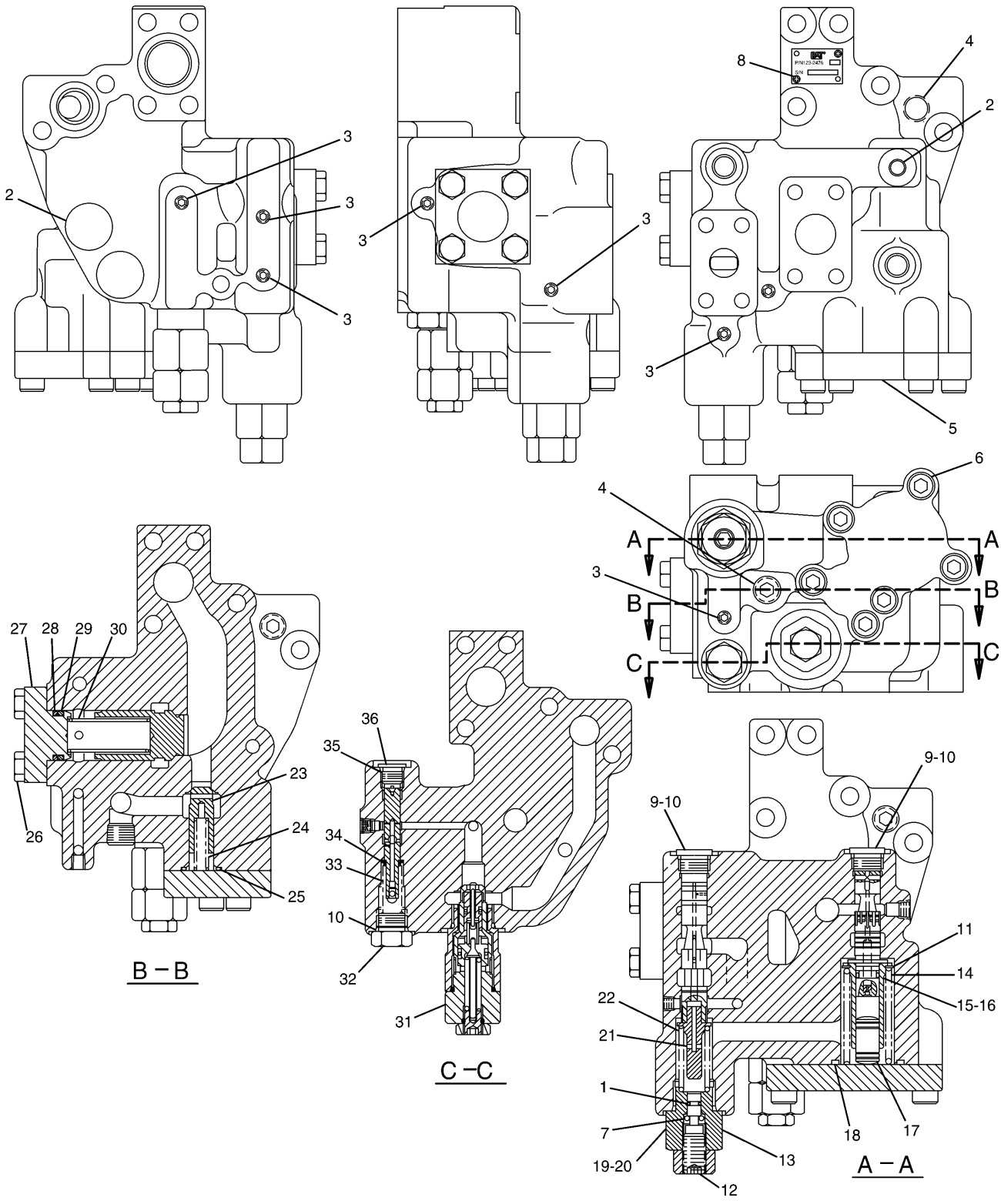

H62510E 00

155-7067 VALVE GP-PILOT
S/N 3MR 04979-Up, 4MR 00716-Up
Part of 115-8895-Page245.08
116-3600-Page283

HYDRAULIC SYSTEM

NOTE	No.	PART No.	QTY	PART NAME	NOTE	No.	PART No.	QTY	PART NAME
	1	095-1574	1	SEAL-O-RING (ID=6.80mm)					
	2	8T-6757	6	PLUG					
	3	8T-6759	8	PLUG					
	4	147-4184	2	PLUG					
	5	123-2481	1	COVER					
	6	9X-6032	6	BOLT (L=30mm)					
	7	8T-2637	1	PIN					
	8	4B-4158	2	SCREW					
	9	9S-8005	2	PLUG					
	10	3K-0360	3	SEAL-O-RING (ID=16.36mm)					
B	11	140-0649	3	SHIM (T=1.00mm)					
B		140-0650	1	SHIM (T=0.50mm)					
B		140-0651	1	SHIM (T=0.25mm)					
	12	147-4138	1	ADJUSTER					
	13	8T-4132	1	NUT					
	14	123-2479	1	SPRING					
	15	095-1579	1	SEAL-O-RING (ID=10.80mm)					
	16	095-1780	1	RING					
	17	123-2482	1	VALVE GP					
	18	095-1604	1	SEAL-O-RING (ID=39.70mm)					
	19	147-4137	1	PLUG					
	20	3D-2824	1	SEAL-O-RING (ID=23.47mm)					
	21	123-2486	1	GUIDE					
	22	123-2492	1	SPRING					
	23	123-2488	1	VALVE					
	24	123-2489	1	SPRING					
	25	095-1586	1	SEAL-O-RING (ID=19.80mm)					
	26	8T-4136	4	BOLT (L=25mm)					
	27	118-4044	1	COVER					
	28	095-1789	1	RING					
	29	095-1594	1	SEAL-O-RING (ID=25.70mm)					
	30	087-5166	1	SPRING					
Y	31	116-3600	1	VALVE GP					
	32	9S-4185	1	PLUG					
	33	5I-8511	1	SPRING					
	34	4I-8965	1	GUIDE					
	35	3J-1907	1	SEAL-O-RING (ID=11.89mm)					
	36	123-2485	1	PLUG					

B—USE AS REQUIRED

Y—SEE SEPARATE ILLUSTRATION

H62510E 00

155-7067 VALVE GP-PILOT

S/N 3MR 04979-Up, 4MR 00716-Up

Part of 115-8895-Page245.08

116-3600-Page283

MEMORANDA

MEMORANDA

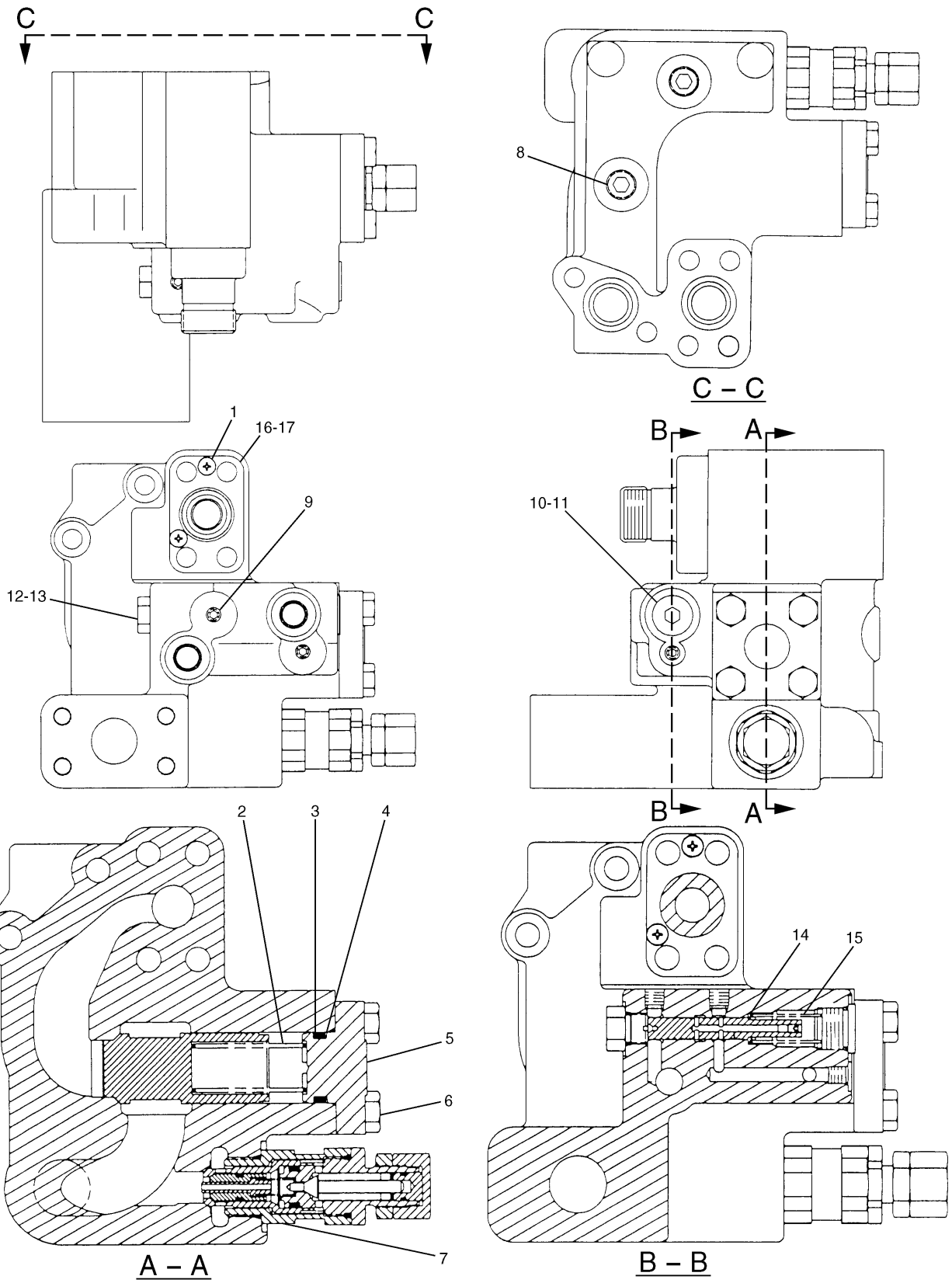

123-2419 VALVE GP-PILOT
Part of 115-8895-Page245
116-3600-Page283

HYDRAULIC SYSTEM

NOTE	No.	PART No.	QTY	PART NAME	NOTE	No.	PART No.	QTY	PART NAME
	1	096-3773	2	SCREW					
	2	087-5166	1	SPRING					
	3	095-1594	1	SEAL-O-RING (ID=25.70mm)					
	4	095-1789	1	RING					
	5	118-4044	1	COVER					
	6	8T-4136	4	BOLT (L=25mm)					
Y	7	116-3600	1	VALVE GP					
	8	111-9959	4	PLUG					
	9	8T-6759	6	PLUG					
	10	9S-8005	1	PLUG					
	11	3K-0360	1	SEAL-O-RING (ID=16.36mm)					
	12	107-6944	1	PLUG					
	13	3J-1907	1	SEAL-O-RING (ID=11.89mm)					
	14	4I-8965	1	GUIDE					
	15	5I-8511	1	SPRING					
	16	123-2423	1	FLANGE					
	17	1P-3702	1	SEAL					

Y—SEE SEPARATE ILLUSTRATION

H53194E 01

123-2419 VALVE GP-PILOT

Part of 115-8895-Page245
116-3600-Page283

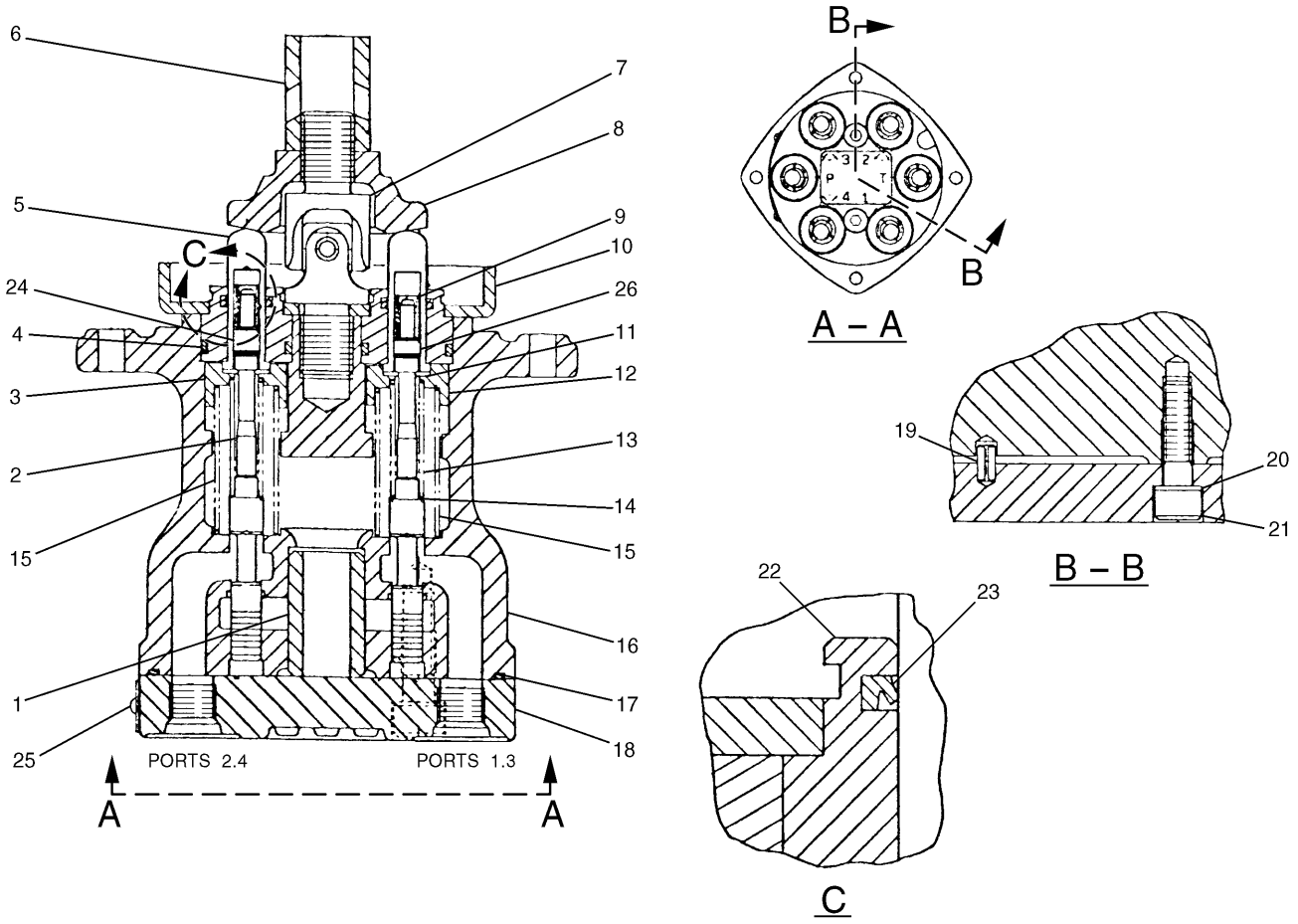

NOTE	No.	PART No.	QTY	PART NAME	NOTE	No.	PART No.	QTY	PART NAME
	1	096-1622	1	BUSHING		21	6V-5192	2	BOLT (L=30mm)
	2	131-5863	2	SPRING		22	096-1628	4	PLUG
	3	118-4083	2	SEAT		23	094-0876	4	SEAL
	4	095-1586	4	SEAL-O-RING (ID=19.80mm)		24	121-1631	2	SEAT
	5	118-4086	4	ROD		25	5B-9304	2	SCREW
	6	131-5915	1	NUT		26	121-1563	2	SEAT
	7	4I-6365	1	JOINT					
	8	4I-6366	1	PLATE					
	9	118-4087	4	SPRING					
	10	094-0872	1	PLATE					
	11	099-6136	8	WASHER					
	12	118-4085	2	SEAT					
	13	131-5864	2	SPRING					
B	14	099-6137	4	WASHER					
	15	118-4082	4	SPRING					
	16	131-5862	1	BODY AS					
	17	096-1621	1	SEAL-O-RING (ID=89.50mm)					
	18	087-4969	1	PLATE					
	19	7Y-0468	1	PIN					
	20	096-4498	2	WASHER					

B—USE AS REQUIRED

H56242E 03

131-5914 VALVE GP-PILOT

S/N 3MR 1-07146, 4MR 1-01015

Part of 123-2146,123-2147-Page270,123-2146,123-2147-Page270.01

HYDRAULIC SYSTEM

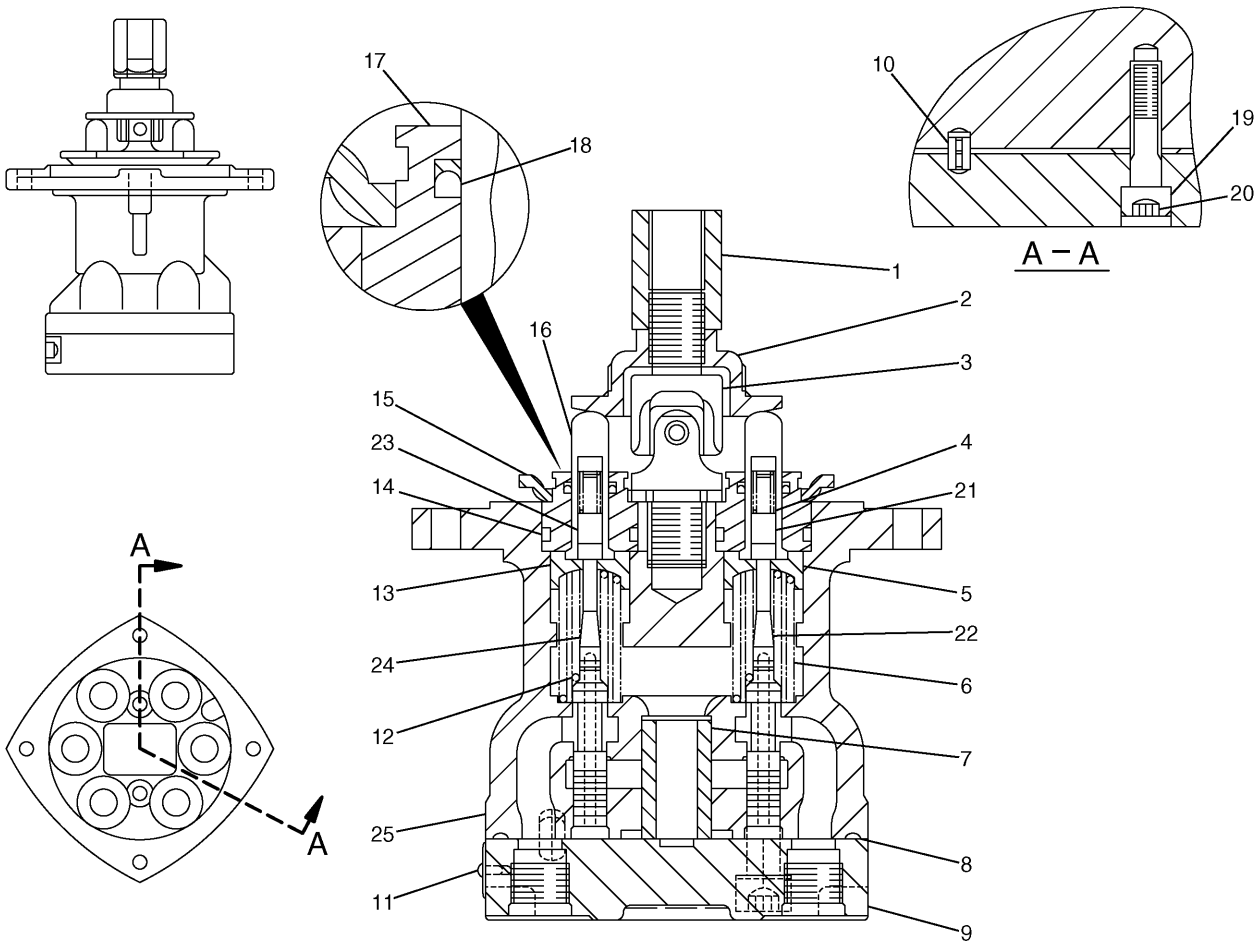

NOTE	No.	PART No.	QTY	PART NAME	NOTE	No.	PART No.	QTY	PART NAME
	1	131-5915	1	NUT		21	165-9444	2	SEAT
	2	165-9431	1	PLATE		22	165-9460	2	SPRING
	3	4I-6365	1	JOINT		23	165-9443	2	SEAT
	4	118-4087	4	SPRING		24	165-9442	2	SPRING
	5	165-9436	2	SEAT		25	168-0787	1	BODY AS
	6	165-9461	4	SPRING					
	7	165-9439	1	BUSHING					
	8	165-9448	1	SEAL-O-RING (ID=84.50mm)					
	9	168-0794	1	PLATE					
	10	7Y-0468	1	PIN					
	11	5B-9304	2	SCREW					
B	12	099-6137	4	WASHER					
	13	165-9435	2	SEAT					
	14	095-1586	4	SEAL-O-RING (ID=19.80mm)					
	15	165-9438	1	PLATE					
	16	118-4086	4	ROD					
	17	096-1628	4	PLUG					
	18	094-0876	4	SEAL					
	19	096-4498	2	WASHER					
	20	6V-8337	2	BOLT (L=35mm)					

B—USE AS REQUIRED

H67596E 00

176-4984 VALVE GP-PILOT

S/N 3MR 07147-Up, 4MR 01016-Up

Part of 176-4985,176-4986-Page270.02

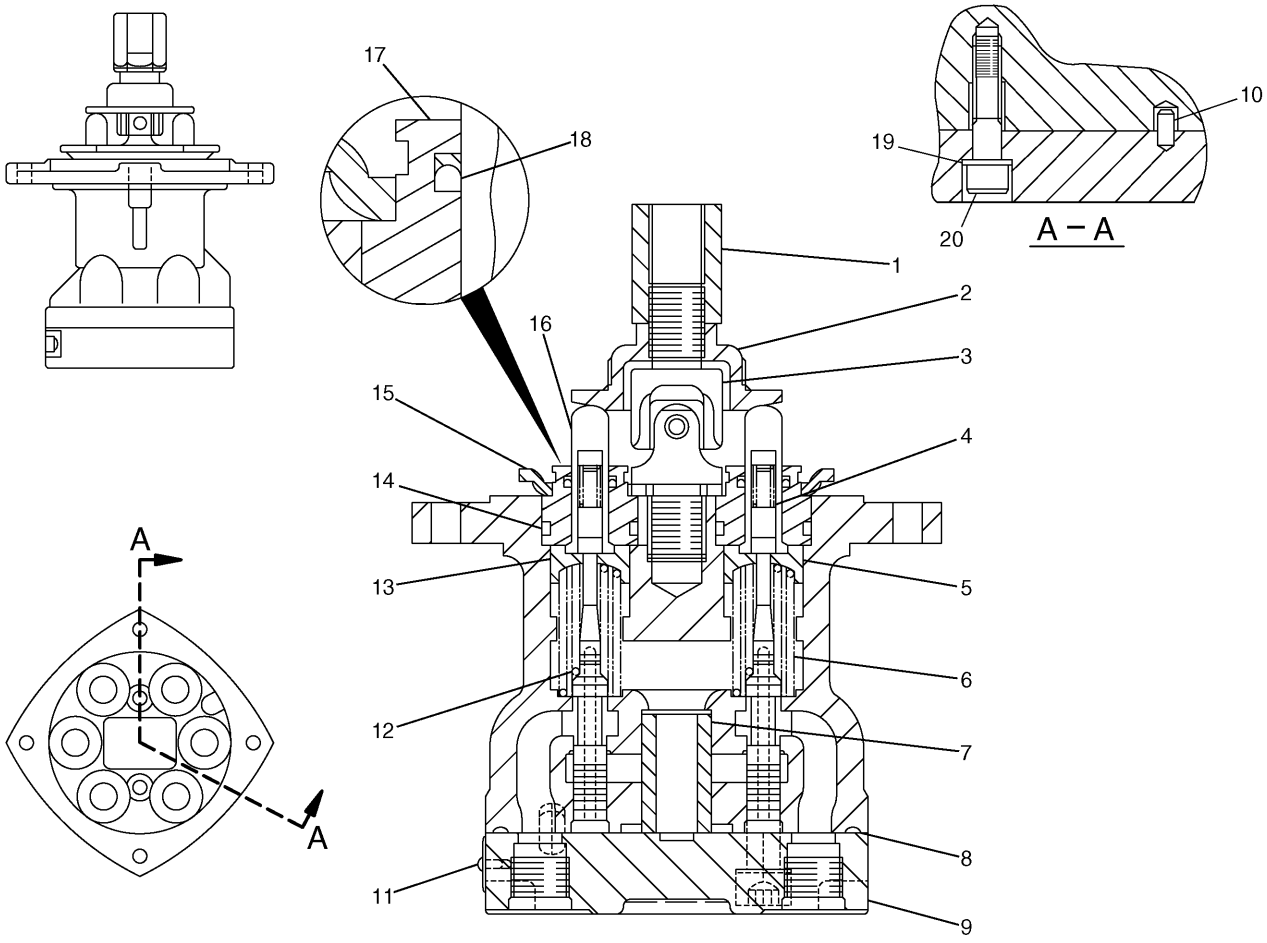

NOTE	No.	PART No.	QTY	PART NAME	NOTE	No.	PART No.	QTY	PART NAME
	1	131-5915	1	NUT					
	2	165-9431	1	PLATE					
	3	4I-6365	1	JOINT					
	4	118-4087	4	SPRING					
	5	165-9436	2	SEAT					
	6	165-9461	4	SPRING					
	7	165-9439	1	BUSHING					
	8	165-9448	1	SEAL-O-RING (ID=84.50mm)					
	9	168-0794	1	PLATE					
	10	7Y-0468	1	PIN					
	11	5B-9304	2	SCREW					
B	12	099-6137	4	WASHER					
	13	165-9435	2	SEAT					
	14	095-1586	4	SEAL-O-RING (ID=19.80mm)					
	15	165-9438	1	PLATE					
	16	118-4086	4	ROD					
	17	096-1628	4	PLUG					
	18	094-0876	4	SEAL					
	19	096-4498	2	WASHER					
	20	6V-8337	2	BOLT (L=35mm)					

B—USE AS REQUIRED

H69144E 00

184-3899 VALVE GP-PILOT

S/N 3MR 07147-Up, 4MR 01016-Up
Part of 176-4985,176-4986-Page270.02

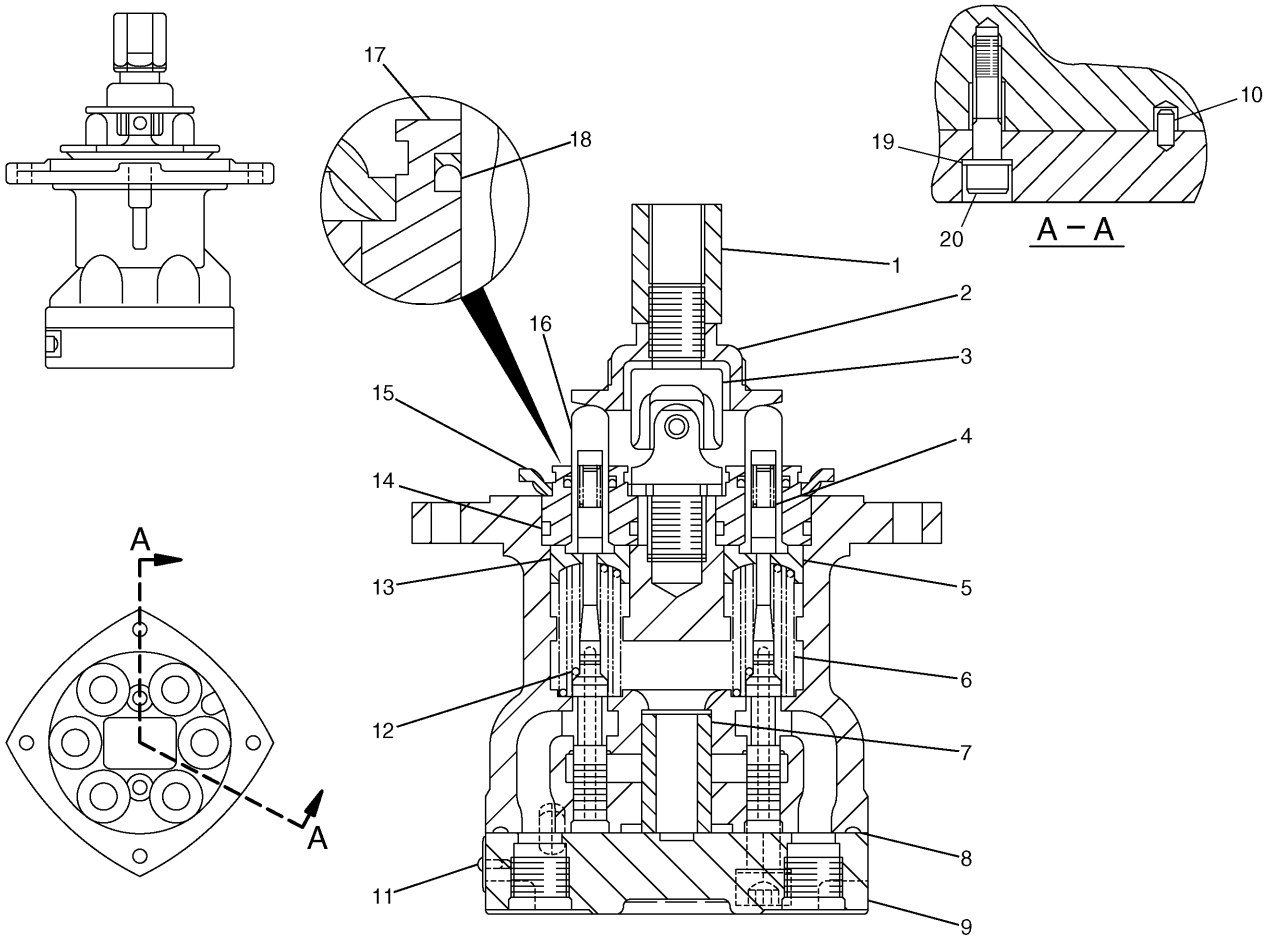

NOTE	No.	PART No.	QTY	PART NAME	NOTE	No.	PART No.	QTY	PART NAME
	1	131-5915	1	NUT					
	2	165-9431	1	PLATE					
	3	4I-6365	1	JOINT					
	4	118-4087	4	SPRING					
	5	165-9436	2	SEAT					
	6	165-9461	4	SPRING					
	7	165-9439	1	BUSHING					
	8	165-9448	1	SEAL-O-RING (ID=84.50mm)					
	9	168-0794	1	PLATE					
	10	7Y-0468	1	PIN					
	11	5B-9304	2	SCREW					
B	12	099-6137	4	WASHER					
	13	165-9435	2	SEAT					
	14	095-1586	4	SEAL-O-RING (ID=19.80mm)					
	15	165-9438	1	PLATE					
	16	118-4086	4	ROD					
	17	096-1628	4	PLUG					
	18	094-0876	4	SEAL					
	19	096-4498	2	WASHER					
	20	6V-8337	2	BOLT (L=35mm)					

B—USE AS REQUIRED

H69145E 00

184-3900 VALVE GP-PILOT

S/N 3MR 07147-Up, 4MR 01016-Up

Part of 176-4985,176-4986-Page270.02

MEMORANDA

HYDRAULIC SYSTEM

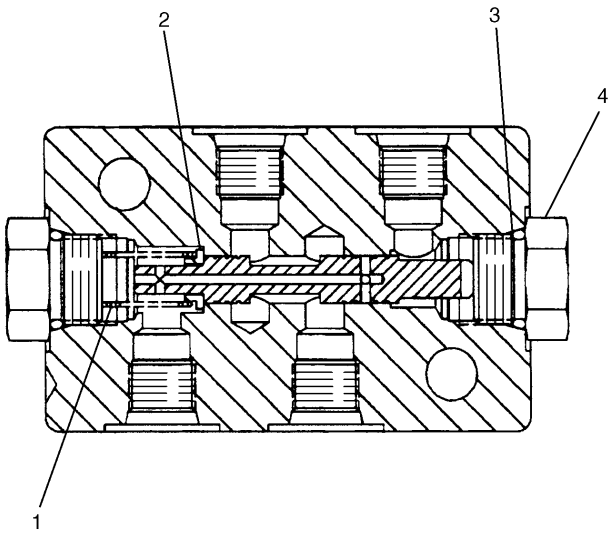

NOTE	No.	PART No.	QTY	PART NAME
	1	096-3375	1	SPRING
	2	096-3376	1	GUIDE
	3	3K-0360	2	SEAL-O-RING (ID=16.36mm)
	4	9S-4185	2	PLUG

H51042E 01

119-5219 VALVE GP-PILOT

Part of 128-7483-Page236,115-8912-Page239
An Attachment

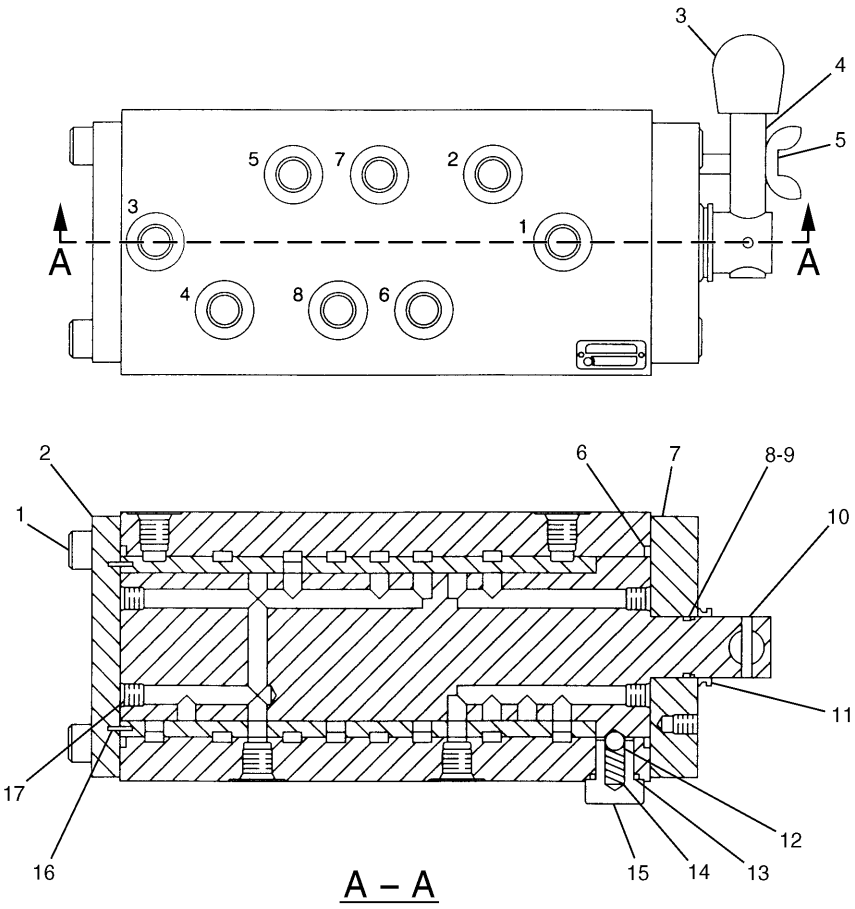

A – A

NOTE	No.	PART No.	QTY	PART NAME	NOTE	No.	PART No.	QTY	PART NAME
	1	8T-1159	8	BOLT (L=25mm)					
	2	085-7076	1	COVER					
	3	085-7079	1	GRIP					
	4	085-7080	1	LEVER					
	5	085-7084	1	BOLT					
	6	095-1710	2	SEAL-O-RING (ID=79.40mm)					
	7	085-7075	1	COVER					
	8	095-1590	1	SEAL-O-RING (ID=21.80mm)					
	9	095-1787	1	RING					
	10	085-7083	1	PIN					
	11	6I-6923	1	SEAL					
	12	085-7085	1	BALL					
	13	095-1582	1	SEAL-O-RING (ID=13.80mm)					
	14	085-7078	1	SPRING					
	15	085-7077	1	PLUG					
	16	085-7081	4	NEEDLE					
	17	085-7082	14	PLUG					

H50319E 03

085-6455 VALVE GP-PILOT

4 Way Valve

Part of 115-8918-Page243

An Attachment

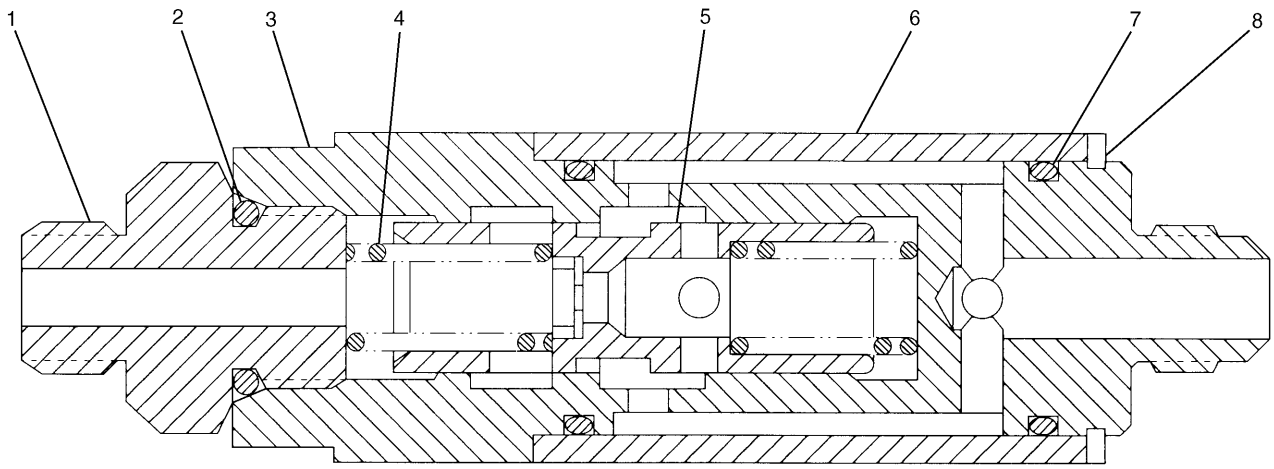

NOTE	No.	PART No.	QTY	PART NAME	NOTE	No.	PART No.	QTY	PART NAME
	1	6I-6904	1	CONNECTOR					
	2	095-1582	1	SEAL-O-RING (ID=13.80mm)					
	3	6I-6908	1	BODY					
	4	099-0365	2	SPRING					
	5	102-0762	1	PLUNGER AS					
	6	6I-6907	1	SLEEVE					
	7	095-1587	2	SEAL-O-RING (ID=20.80mm)					
	8	6V-8754	1	RING					

H53196E 00

111-1141 VALVE GP-FLOW CONTROL

Part of 115-8896-Page233

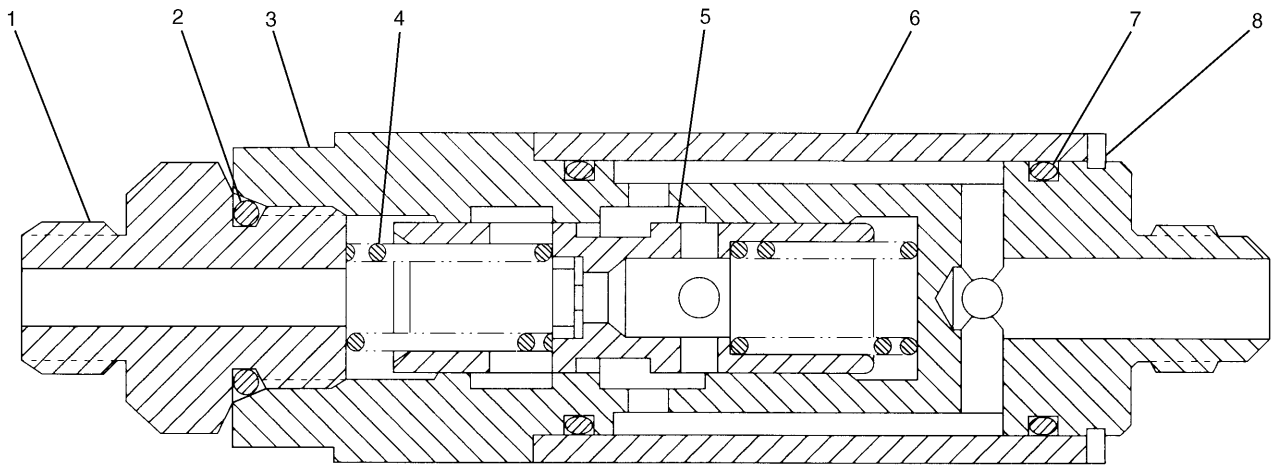

NOTE	No.	PART No.	QTY	PART NAME	NOTE	No.	PART No.	QTY	PART NAME
	1	6I-6904	1	CONNECTOR					
	2	095-1582	1	SEAL-O-RING (ID=13.80mm)					
	3	6I-6908	1	BODY					
	4	099-0365	2	SPRING					
	5	099-0367	1	PLUNGER AS					
	6	6I-6907	1	SLEEVE					
	7	095-1587	2	SEAL-O-RING (ID=20.80mm)					
	8	6V-8754	1	RING					

H53197E 00

105-7266 VALVE GP-FLOW CONTROL

Part of 128-7483-Page236,115-8912-Page239
An Attachment

HYDRAULIC SYSTEM

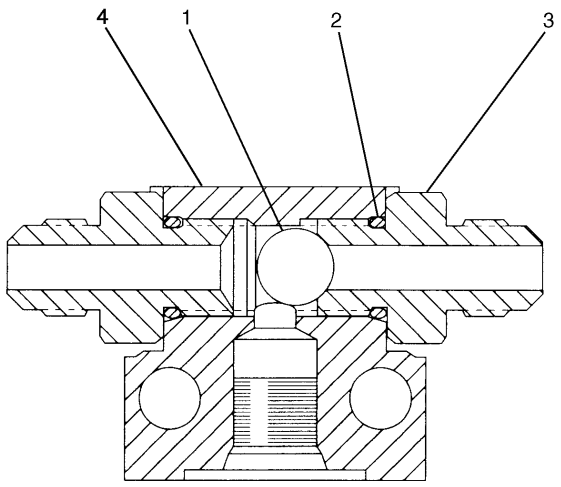

NOTE	No.	PART No.	QTY	PART NAME
	1	4B-9783	1	BALL
	2	3J-1907	2	SEAL-O-RING (ID=11.89mm)
	3	123-2512	2	CONNECTOR
	4	123-2431	1	BODY

H53198E 00

123-2443 VALVE GP-SHUTTLE

Part of 115-8897-Page235

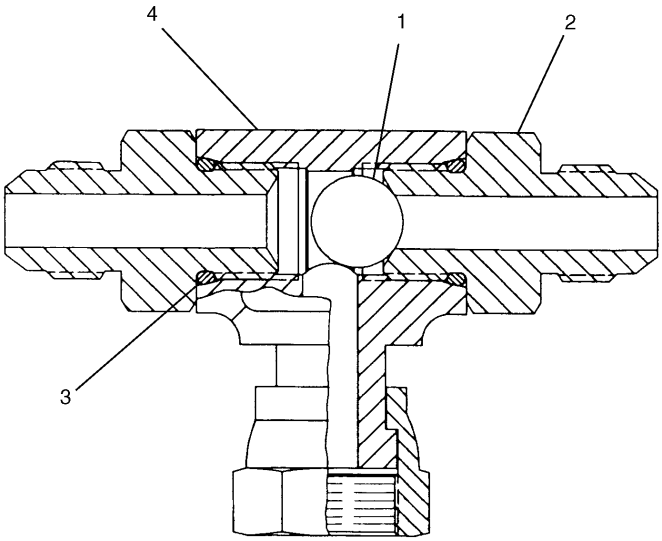

NOTE	No.	PART No.	QTY	PART NAME
	1	4B-9783	1	BALL
	2	123-2512	2	CONNECTOR
	3	3J-1907	2	SEAL-O-RING (ID=11.89mm)
	4	123-2511	1	TEE

H53199E 00

123-2496 VALVE GP-SHUTTLE

Part of 115-8897-Page235

HYDRAULIC SYSTEM

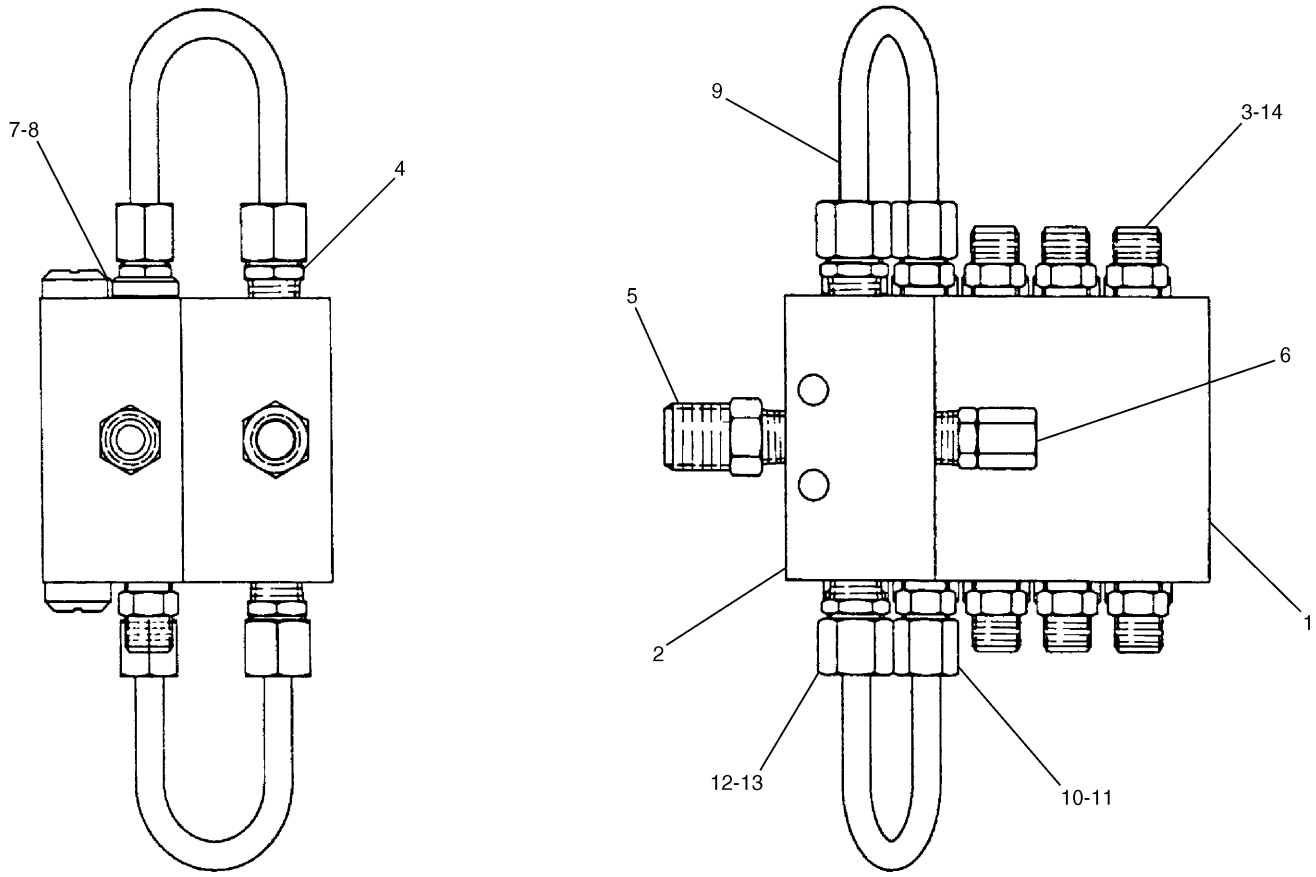

NOTE	No.	PART No.	QTY	PART NAME	NOTE	No.	PART No.	QTY	PART NAME
	1	123-5580	1	VALVE					
	2	123-5596	1	BLOCK					
	3	118-6058	9	CONNECTOR					
	4	127-1212	3	CONNECTOR					
	5	123-5594	1	CONNECTOR					
	6	123-5595	1	NIPPLE AS					
	7	118-6049	1	PLUG					
	8	118-6050	1	WASHER					
	9	127-1324	2	TUBE AS					
	10	118-6051	1	NUT					
	11	118-6052	1	SLEEVE					
	12	123-5588	1	NUT					
	13	123-5589	1	SLEEVE					
	14	118-6057	9	SLEEVE					

H50611E 00

127-1322 VALVE AS

S/N 3MR 1-(D96.08), 4MR 1-(D96.08)
Part of 121-8679-Page397.06
An Attachment

HYDRAULIC SYSTEM

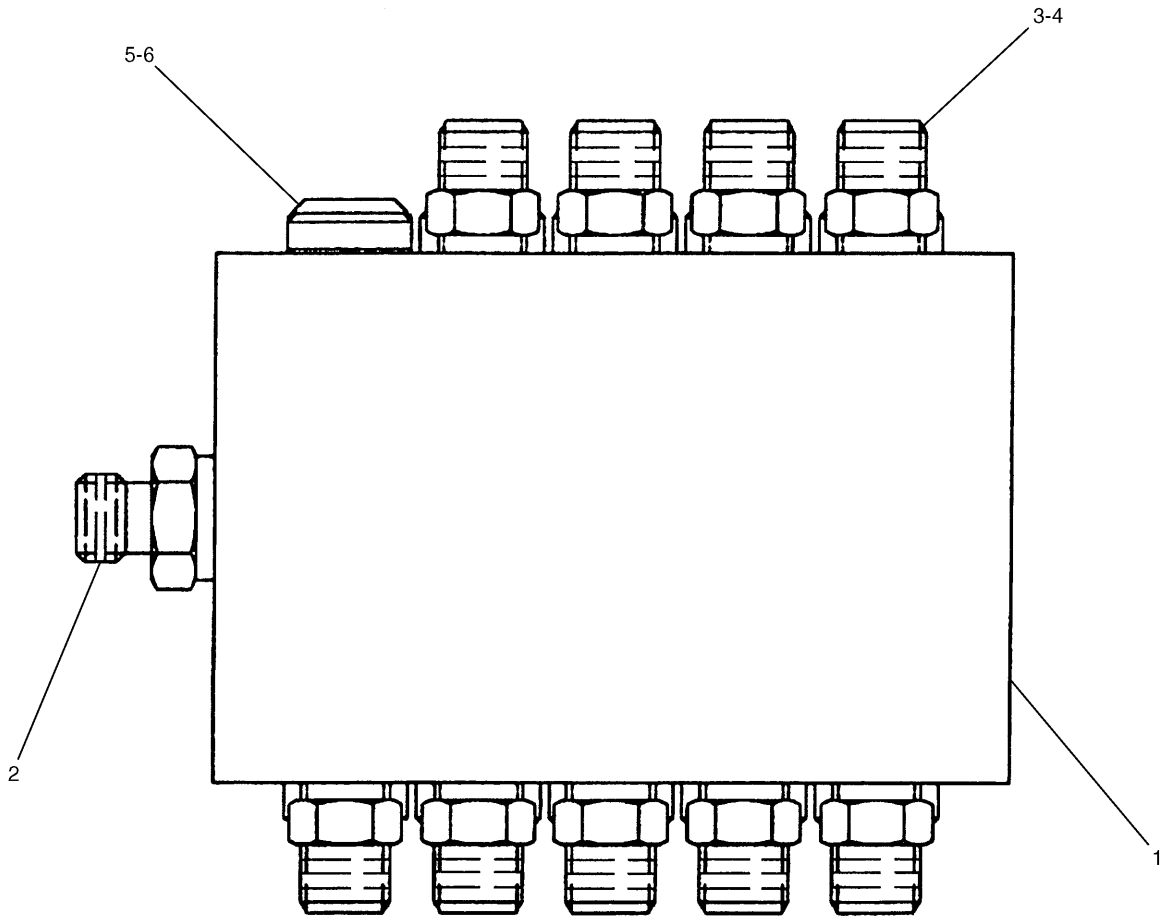

NOTE	No.	PART No.	QTY	PART NAME	NOTE	No.	PART No.	QTY	PART NAME
	1	123-5580	1	VALVE					
	2	134-9247	1	CONNECTOR					
	3	118-6058	9	CONNECTOR					
	4	118-6057	9	SLEEVE					
	5	118-6049	1	PLUG					
	6	118-6050	1	WASHER					

H58793E 00

134-9153 VALVE AS
S/N 3MR (D96.09)-Up, 4MR (D96.09)-Up
Part of 137-3065-Page316.02
An Attachment

HYDRAULIC SYSTEM

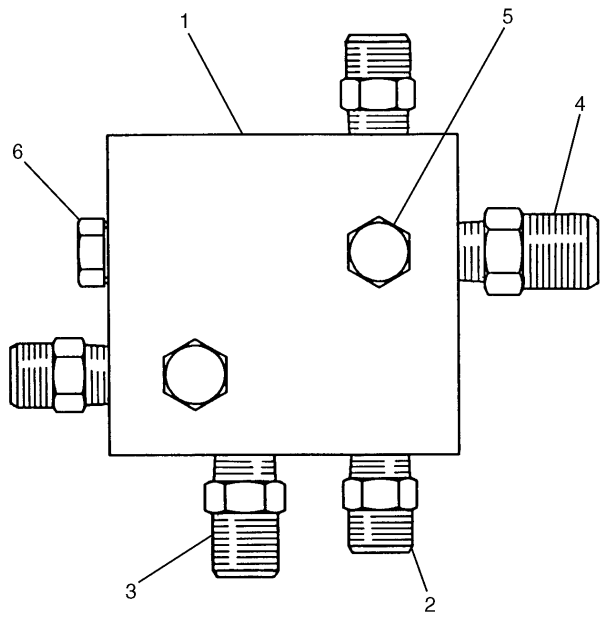

NOTE	No.	PART No.	QTY	PART NAME
	1	134-9152	1	BLOCK
	2	134-9244	3	CONNECTOR
	3	127-1212	1	CONNECTOR
	4	123-5594	1	CONNECTOR
	5	123-5595	2	NIPPLE AS
	6	8T-6764	1	PLUG

H54581E 00

134-9320 BLOCK AS

S/N 3MR (D96.09)-Up, 4MR (D96.09)-Up
Part of 137-3065-Page316.02
An Attachment

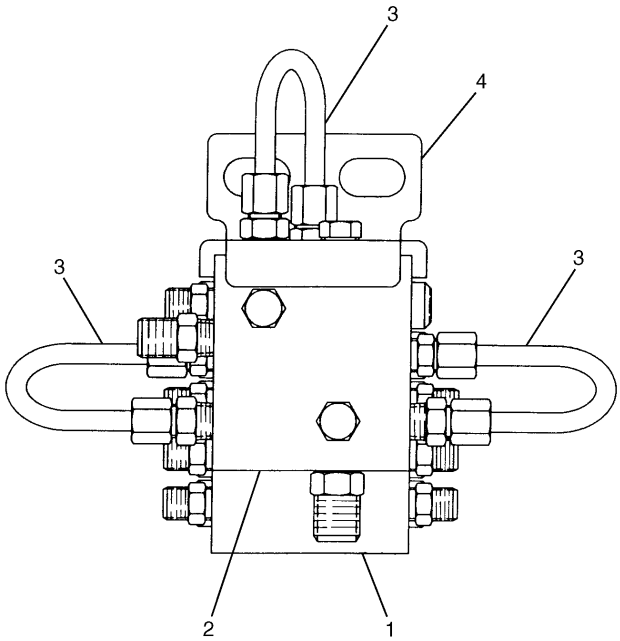

NOTE	No.	PART No.	QTY	PART NAME
Y	1	134-9153	1	VALVE AS
Y	2	134-9320	1	BLOCK AS
	3	134-9242	3	TUBE AS
	4	134-9138	1	CLAMP

Y—SEE SEPARATE ILLUSTRATION

H65509E 00

137-3065 VALVE AS

S/N 3MR (D96.09)-Up, 4MR (D96.09)-Up
Part of 121-8679-Page397.08
134-9153-Page316.01,134-9320-Page316.02
An Attachment

HYDRAULIC SYSTEM

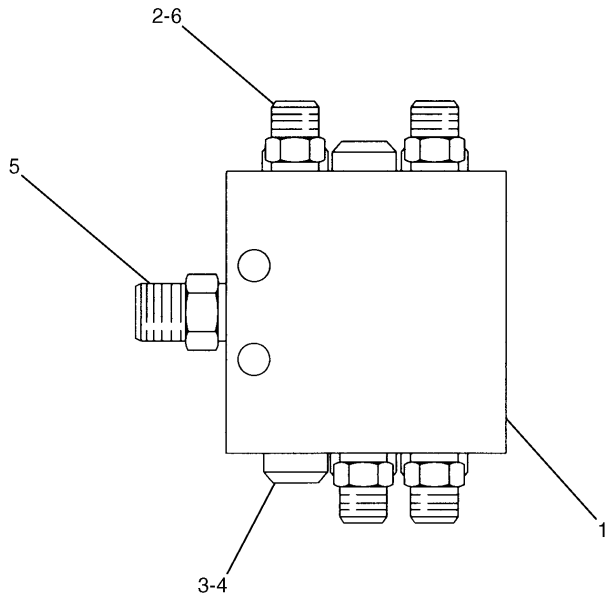

NOTE	No.	PART No.	QTY	PART NAME
	1	123-5578	1	VALVE
	2	118-6058	4	CONNECTOR
	3	118-6049	2	PLUG
	4	118-6050	2	WASHER
	5	154-0689	1	CONNECTOR
	6	118-6057	4	SLEEVE

H60043E 01

127-1323 VALVE AS
Part of 121-8681-Page397.11
An Attachment

HYDRAULIC SYSTEM

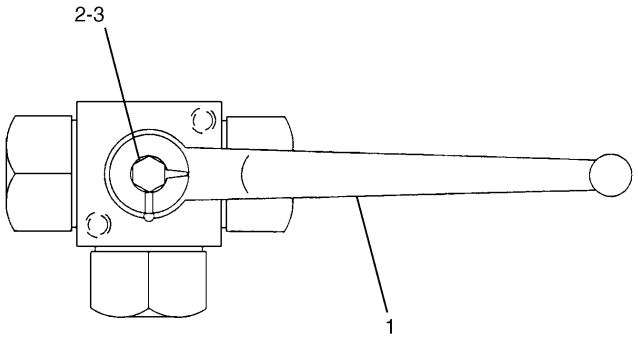

NOTE	No.	PART No.	QTY	PART NAME
	1	134-7113	1	HANDLE
	2	134-7111	1	PLATE
	3	134-7114	1	BOLT (L=10mm)

H59693E 05

4I-6363 VALVE AS-BALL

Part of 115-8911-Page238,115-8912-Page239,119-5280-Page242.01
An Attachment

MEMORANDA

OPERATOR STATION

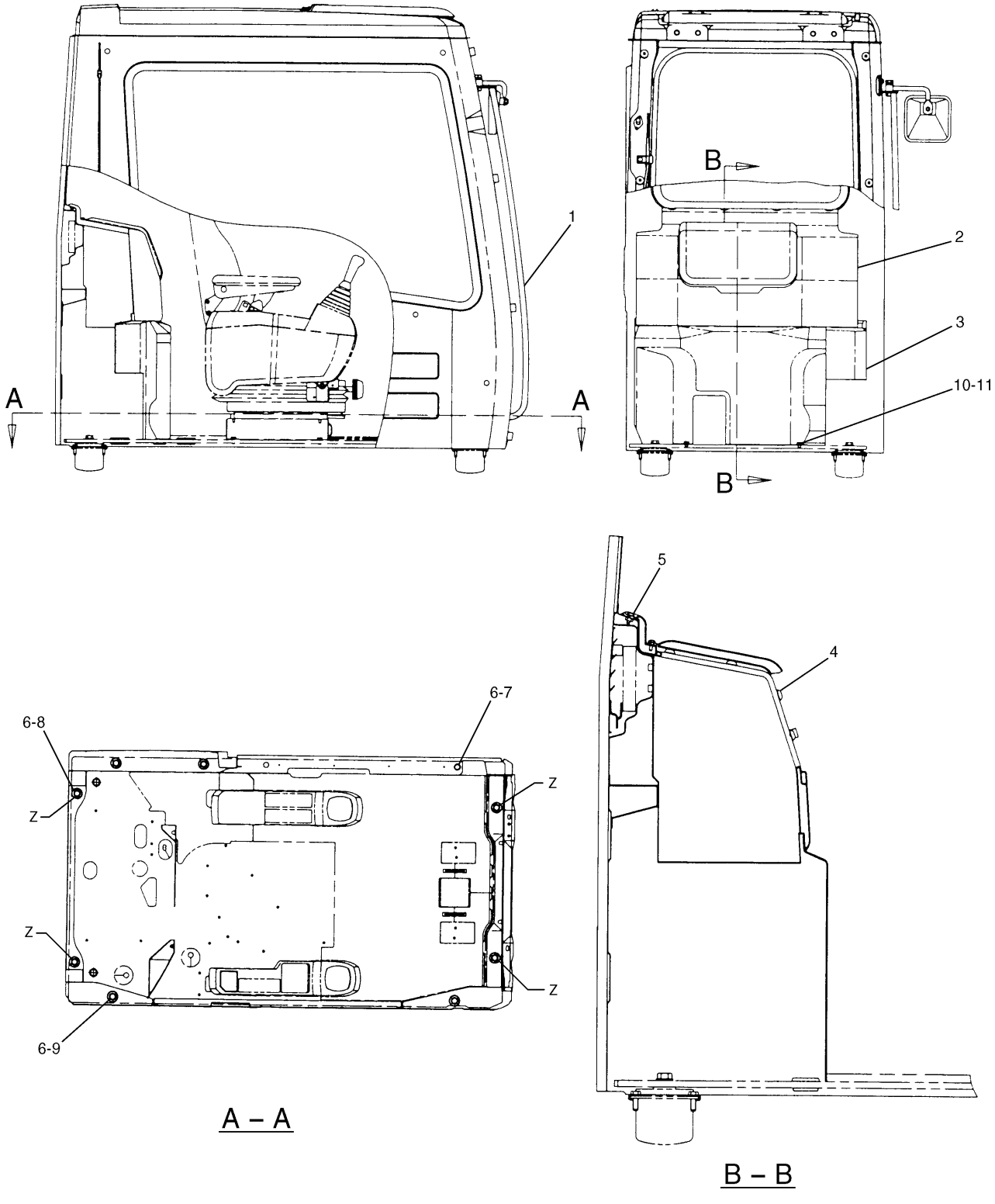

H53202E 04

111-6270 CAB GP
S/N 3MR 1-04978, 4MR 1-00715
111-6271-Page320,111-6277-Page336

OPERATOR STATION

NOTE	No.	PART No.	QTY	PART NAME	NOTE	No.	PART No.	QTY	PART NAME
Y	1	111-6271	1	CAB GP					
Y	2	111-6277	1	COVER GP					
	3	111-6276	1	COVER AS					
		6I-5368	1	RUBBER					
	4	9X-2041	4	SCREW					
	5	9X-2044	4	SCREW					
	6	8T-4223	9	WASHER					
	7	8T-4139	1	BOLT (L=30mm)					
	8	7X-2549	4	BOLT (L=100mm)					
	9	8T-6868	4	BOLT (L=80mm)					
	10	8T-4191	2	BOLT (L=16mm)					
	11	124-7346	2	LOCKWASHER					

Y—SEE SEPARATE ILLUSTRATION

H53202E 04

111-6270 CAB GP

S/N 3MR 1-04978, 4MR 1-00715
111-6271-Page320,111-6277-Page336

OPERATOR STATION

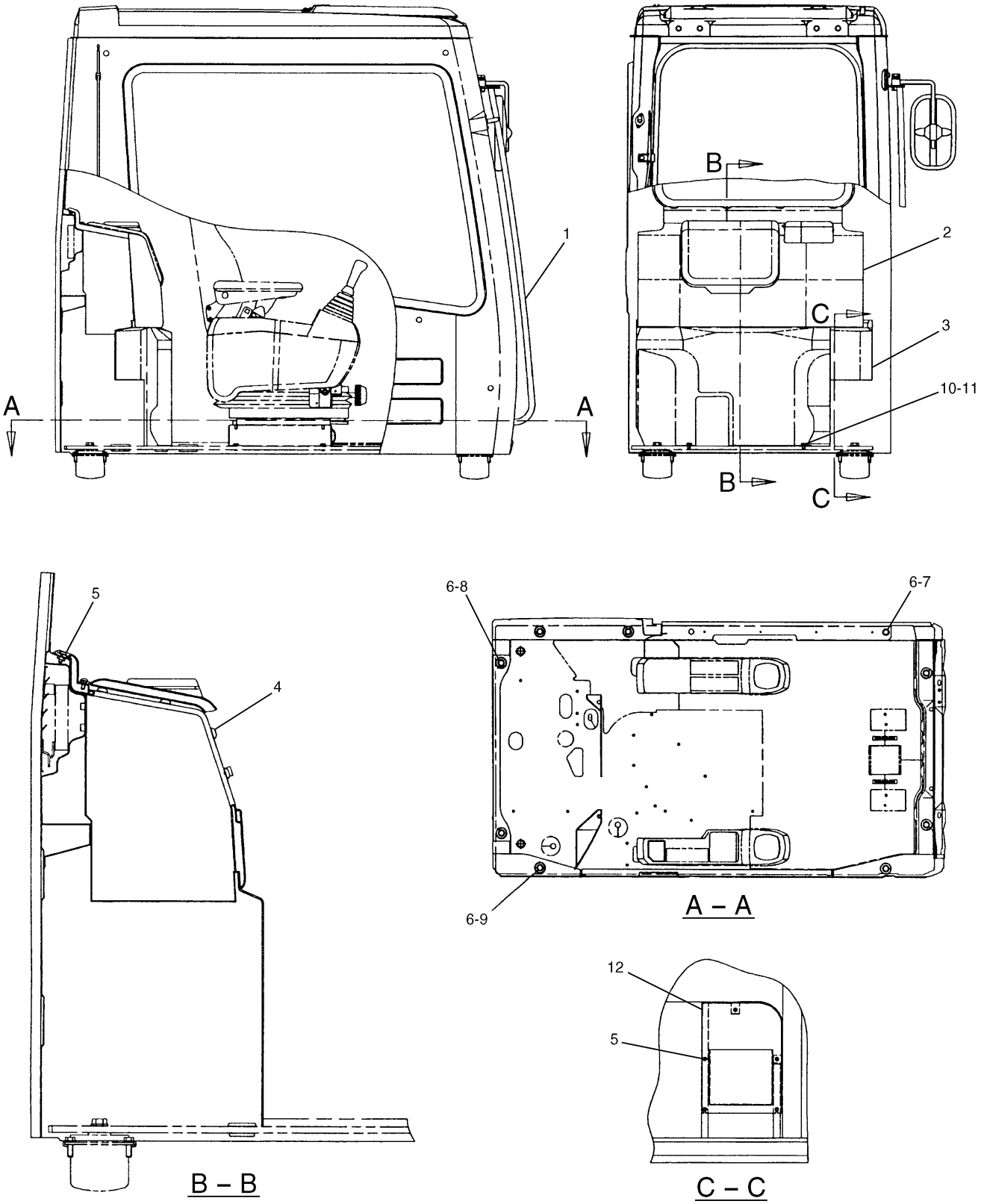

H60396E 00

155-7115 CAB GP
S/N 3MR 04979-Up, 4MR 00716-Up
155-7018-Page323.05,155-7027-Page336A

OPERATOR STATION

NOTE	No.	PART No.	QTY	PART NAME	NOTE	No.	PART No.	QTY	PART NAME
Y	1	155-7018	1	CAB GP					
Y	2	155-7027	1	COVER GP					
	3	111-6276	1	COVER AS					
		6I-5368	1	RUBBER					
	4	9X-2041	4	SCREW					
	5	9X-2044	9	SCREW					
	6	8T-4223	9	WASHER					
	7	8T-4139	1	BOLT (L=30mm)					
	8	7X-2549	4	BOLT (L=100mm)					
	9	8T-6868	4	BOLT (L=80mm)					
	10	8T-4191	2	BOLT (L=16mm)					
	11	124-7346	2	LOCKWASHER					
	12	148-1609	1	CASE AS					

Y—SEE SEPARATE ILLUSTRATION

H60396E 00

155-7115 CAB GP

S/N 3MR 04979-Up, 4MR 00716-Up
155-7018-Page323.05,155-7027-Page336A

OPERATOR STATION

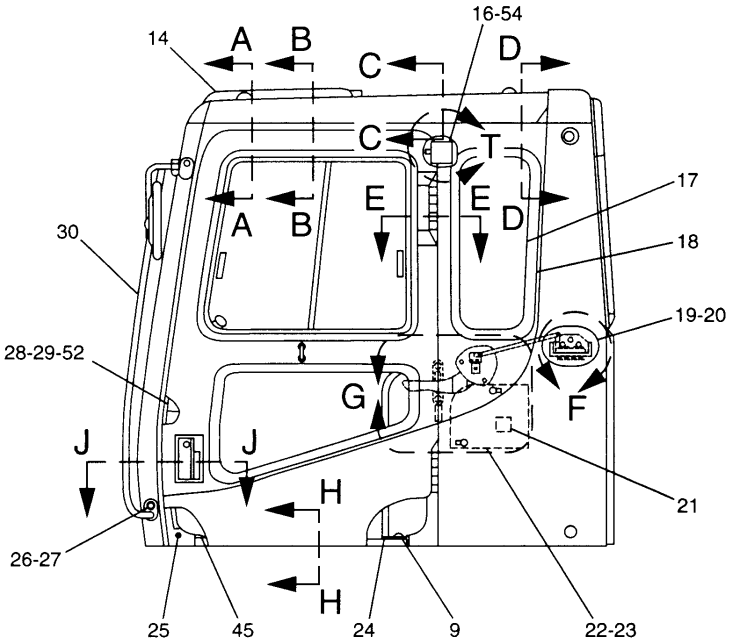

LEFT SIDE VIEW

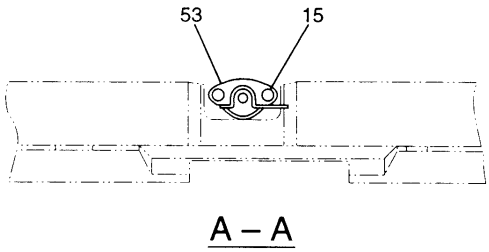

A – A

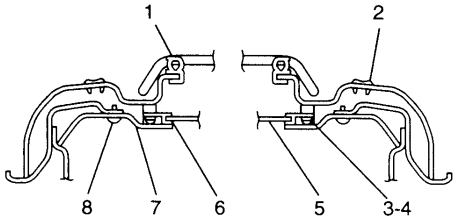

B – B

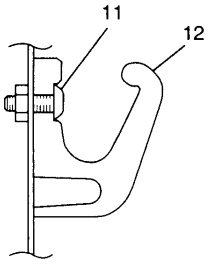

C – C

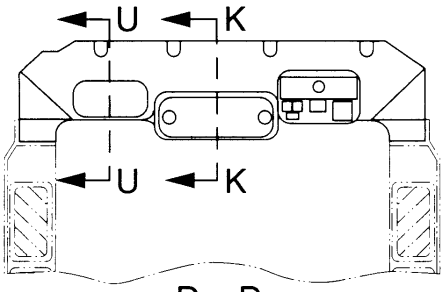

D – D

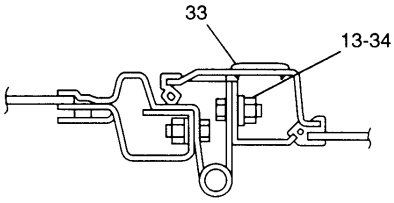

E – E

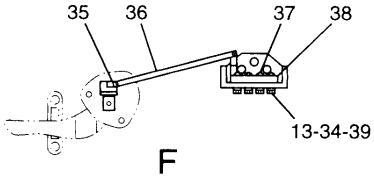

F

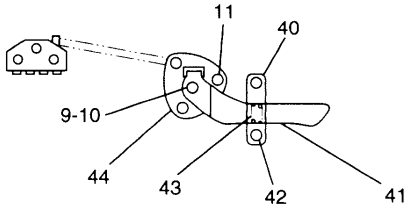

G

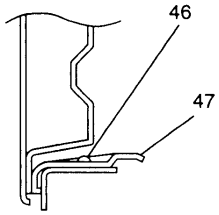

H – H

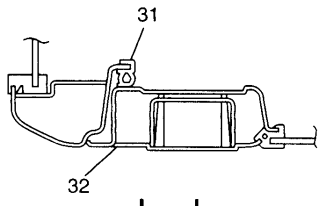

J – J

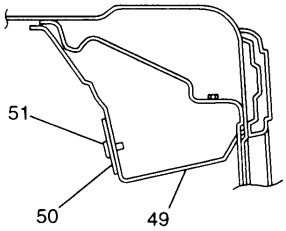

K – K

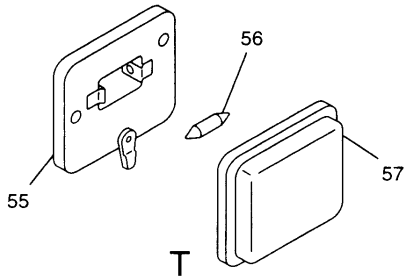

T

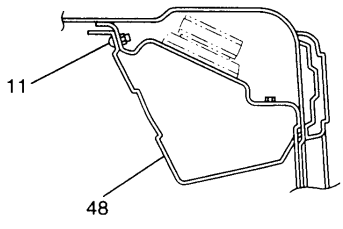

U – U

H52821E 06

111-6271 CAB GP (BASIC) (1/2)
S/N 3MR 1-(D96.10), 4MR 1-(D96.10)
Part of 111-6270-Page319.02
4I-6973-Page324,4I-1273-Page326

OPERATOR STATION

NOTE	No.	PART No.	QTY	PART NAME	NOTE	No.	PART No.	QTY	PART NAME
	1	4I-4353	1	SEAL		53	099-3603	1	CATCH
	2	087-8484	2	GROMMET		54	096-0721	1	LIGHT
	3	8T-6411	6	SCREW		55	099-0864	1	BODY
	4	9X-8256	6	WASHER		56	099-0865	1	LIGHT
	5	124-3943	1	VISOR AS		57	099-0866	1	COVER
		124-3940	2	HANDLE					
	6	124-3938	2	RAIL					
	7	122-9636	1	LINER					
	8	4I-3089	9	CLIP					
	9	9X-2041	4	SCREW					
	10	128-2189	1	PACKING					
	11	9X-2044	8	SCREW					
	12	6V-8928	1	HOOK					
	13	8T-4121	9	WASHER					
Y	14	4I-1273	1	HATCH GP					
	15	096-3772	2	SCREW					
	16	4I-3043	2	SCREW					
	17	4I-1186	1	GLASS					
	18	4I-6829	1	SEAL					
	19	4I-4273	1	COVER					
	20	4I-4392	3	CLIP					
	21	4I-3045	1	SPACER					
	22	4I-3087	2	CLIP					
	23	4I-3053	1	LINER					
	24	122-9637	1	HANDLE AS					
	25	4I-3090	3	SEAL					
	26	8T-4137	2	BOLT (L=20mm)					
	27	4I-3144	2	WASHER					
	28	4I-3066	1	STRIKER					
	29	127-0580	2	SCREW					
	30	124-3978	1	HANDLE AS					
E	31	3E-6647		SEAL…(375cm)					
Y	32	4I-6973	1	DOOR GP					
	33	4I-3096	1	GROMMET					
	34	8T-4133	9	NUT					
	35	6V-7636	2	PIN AS					
	36	4I-4251	1	ROD					
	37	9X-2046	4	SCREW					
	38	8Y-5728	1	LATCH AS					
	39	4I-4228	1	BRACKET AS					
	40	4I-1206	2	GUIDE					
	41	128-2192	1	LEVER AS					
	42	9X-2045	2	SCREW					
	43	4I-3063	1	SPRING					
	44	128-2190	1	BRACKET AS					
	45	4I-4330	2	SEAL					
	46	099-0823	3	SCREW					
	47	122-9638	1	GUARD					
	48	122-9627	1	COVER					
	49	127-3735	1	SEAL					
	50	4I-4241	1	PLATE					
	51	4I-5034	2	CLIP					
	52	1R-5998	2	LOCKWASHER					

E—ORDER BY THE CENTIMETER

Y—SEE SEPARATE ILLUSTRATION

H52821E 06

111-6271 CAB GP (BASIC) (1/2)

S/N 3MR 1-(D96.10), 4MR 1-(D96.10)

Part of 111-6270-Page319.02

4I-6973-Page324,4I-1273-Page326

OPERATOR STATION

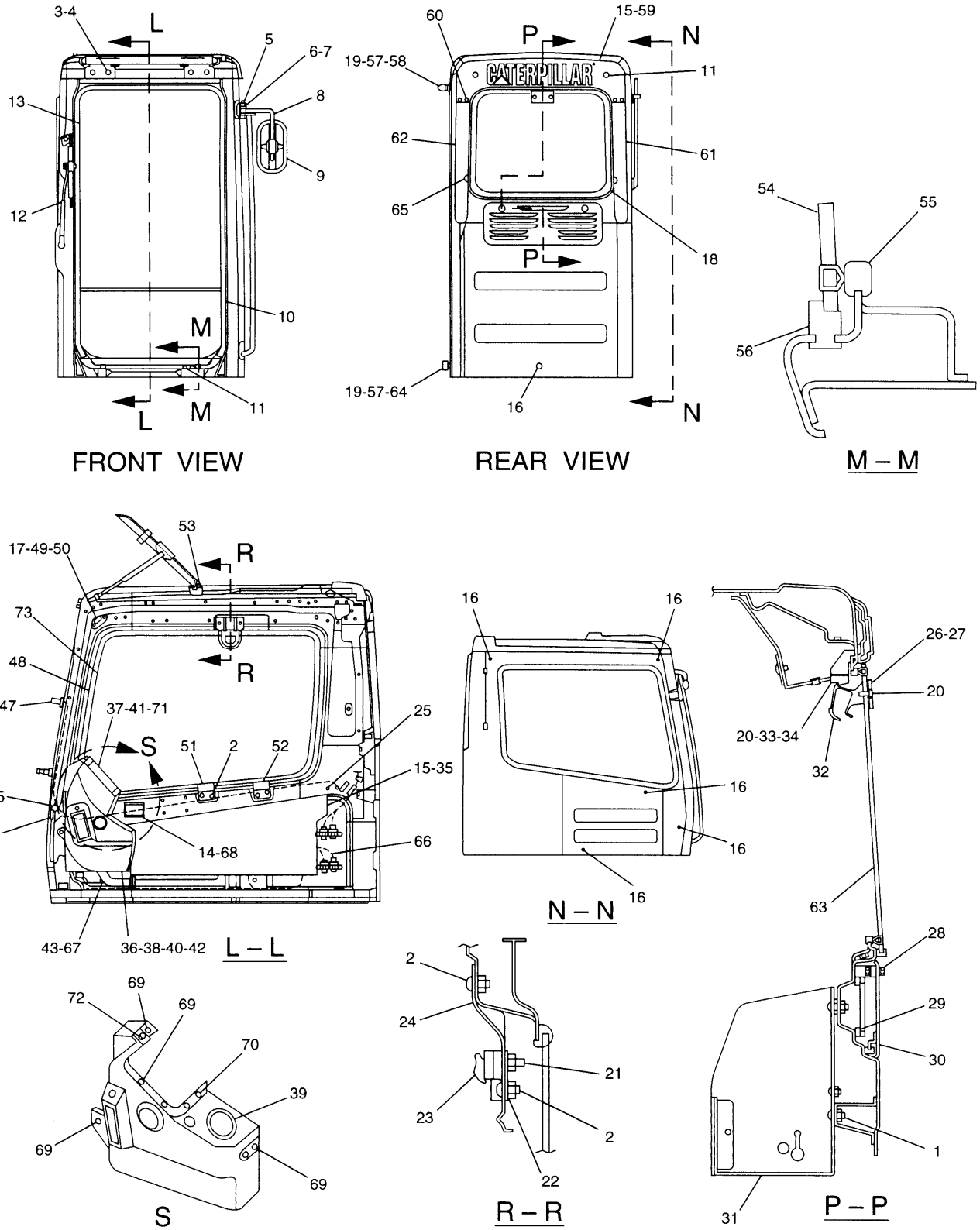

H52823E 06

111-6271 CAB GP (BASIC) (2/2)

S/N 3MR 1-(D96.10), 4MR 1-(D96.10)
Part of 111-6270-Page319.02
106-0054-Page94.02,6I-5444-Page329,111-6273-Page333.01,111-6272-Page334

OPERATOR STATION

NOTE	No.	PART No.	QTY	PART NAME
	1	9X-2041	4	SCREW
	2	9X-2044	7	SCREW
	3	8T-4121	4	WASHER
	4	8T-4137	4	BOLT (L=20mm)
	5	8T-4193	1	BOLT (L=50mm)
	6	9X-8257	1	WASHER
	7	3B-4510	1	LOCKWASHER
	8	122-9612	1	SUPPORT AS
	9	113-3426	1	MIRROR
	10	4I-4287	1	SEAL
	11	5C-9553	4	BOLT (L=16mm)
		8H-3481	4	LOCKWASHER
		9X-8256	4	WASHER
Y	12	111-6272	1	WIPER GP
Y	13	111-6273	1	WINDOW GP
	14	4I-3043	2	SCREW
	15	4I-3087	6	CLIP
	16	4I-3090	6	SEAL
	17	127-0580	4	SCREW
E	18	3E-6647		SEAL…(247cm)
	19	8T-4133	2	NUT
	20	9X-2045	4	SCREW
	21	3E-8020	2	SCREW
	22	4I-4243	1	PLATE AS
	23	4I-4253	1	HOLDER
	24	6I-5440	1	BRACKET
	25	7Y-7364	1	GROMMET
	26	124-4027	1	RETAINER
	27	124-4028	1	PACKING
	28	8T-7547	2	BOLT (L=30mm)
		8T-4224	2	WASHER
E	29	6I-5470		SEAL…(15cm)
	30	105-9539	1	COVER AS
Y	31	6I-5444	1	BOX GP
	32	8T-4160	1	HANDLE AS
	33	6V-6885	1	STRIKER
	34	6W-3275	1	SHIM (T=1.50mm)
	35	122-9631	1	LINER
	36	5I-3707	1	LOUVER
	37	124-4018	1	CAP
	38	124-4017	1	BRACKET
	39	124-4036	1	HOLDER
	40	096-4883	3	NUT
	41	124-4014	1	COVER
	42	124-4015	1	COVER
	43	124-4016	1	DUCT
	44	122-9628	2	CAP
	45	124-3981	2	STOPPER
	46	095-0728	2	SCREW
		096-6166	2	WASHER
	47	105-9525	1	NOZZLE AS
		085-8037	1	NOZZLE
		099-0862	1	HOSE
		105-9526	1	ADAPTER
		105-9527	1	PACKING
	48	4I-5043	1	GLASS
	49	1R-5998	4	LOCKWASHER
	50	122-9640	2	HOLDER AS
	51	122-9629	1	HOLDER
	52	122-9630	1	HOLDER
	53	8T-4200	4	BOLT (L=16mm)
		8T-4224	4	WASHER
	54	122-9632	1	GLASS
	55	122-9634	1	SEAL AS
E		3E-6647		SEAL…(83cm)
	56	4I-4282	2	STOPPER
	57	4B-4278	2	WASHER
	58	7Y-8561	1	BUMPER
	59	4I-4403	1	COVER AS
	60	4I-4315	4	CLIP
	61	6I-5409	1	COVER
	62	6I-5410	1	COVER
	63	124-4026	1	GLASS
	64	4I-1205	1	BUMPER
	65	8C-7581	2	SCREW
Y	66	106-0054	1	WIRING GP
	67	119-5026	3	SCREW
	68	096-6561	1	ASHTRAY AS
	69	128-2135	6	SCREW
	70	128-2136	2	SCREW
	71	4I-4334	1	SCREW
	72	7Y-5293	1	NUT
E	73	3E-8083		SEAL…(400cm)

E—ORDER BY THE CENTIMETER

Y—SEE SEPARATE ILLUSTRATION

H52823E 06

111-6271 CAB GP (BASIC) (2/2)

S/N 3MR 1-(D96.10), 4MR 1-(D96.10)

Part of 111-6270-Page319.02

106-0054-Page94.02,6I-5444-Page329,111-6273-Page333.01,111-6272-Page334

OPERATOR STATION

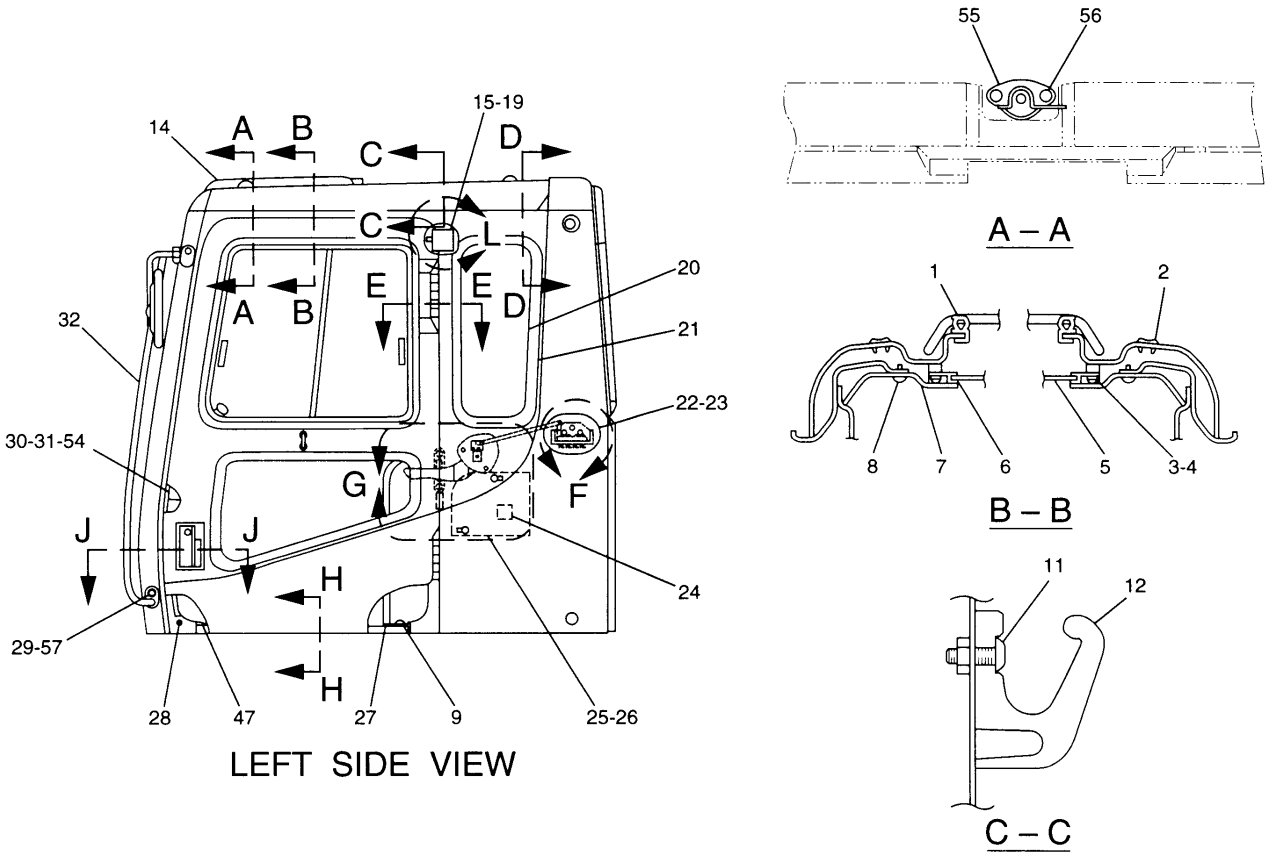

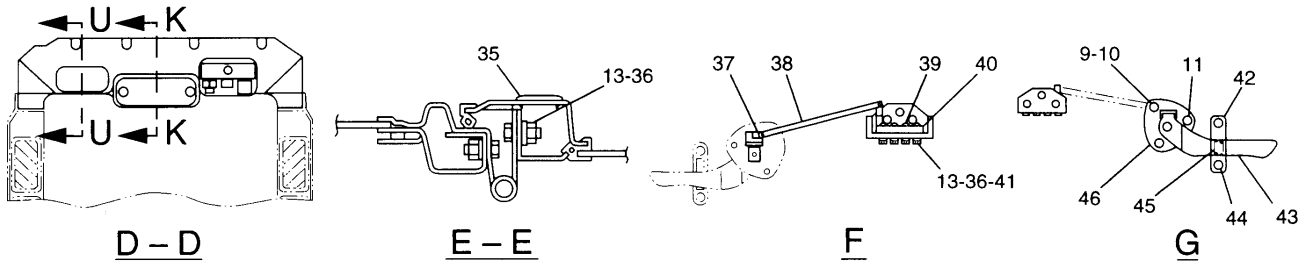

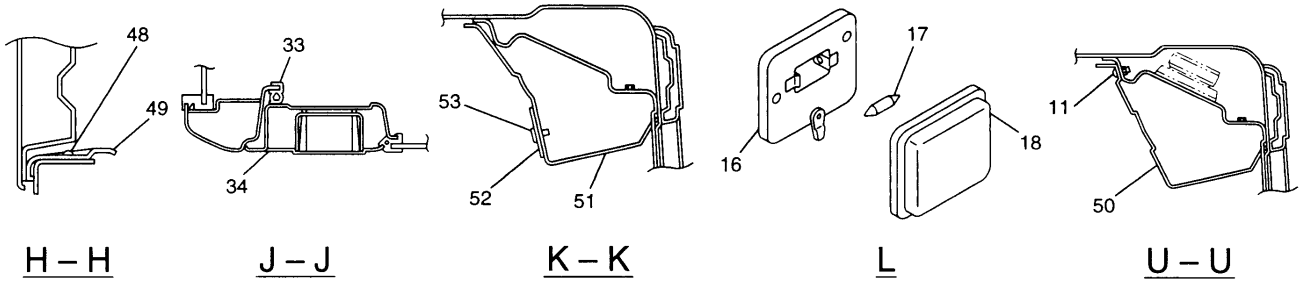

H63468E 18

111-6271 CAB GP (BASIC) (1/2)
S/N 3MR (D96.11)-04978, 4MR (D96.11)-00715
Part of 111-6270-Page319.02
4I-6973-Page324,4I-1273-Page326

OPERATOR STATION

NOTE	No.	PART No.	QTY	PART NAME	NOTE	No.	PART No.	QTY	PART NAME
	1	4I-4353	1	SEAL		53	4I-5034	2	CLIP
	2	087-8484	2	GROMMET		54	1R-5998	2	LOCKWASHER
	3	8T-6411	6	SCREW		55	099-3603	1	CATCH
	4	9X-8256	6	WASHER		56	096-3772	2	SCREW
	5	124-3943	1	VISOR AS		57	8T-4137	2	BOLT (L=20mm)
		124-3940	2	HANDLE					
	6	124-3938	2	RAIL					
	7	122-9636	1	LINER					
	8	4I-3089	9	CLIP					
	9	9X-2041	4	SCREW					
	10	133-8016	1	PACKING					
	11	9X-2044	8	SCREW					
	12	6V-8928	1	HOOK					
	13	8T-4121	9	WASHER					
Y	14	4I-1273	1	HATCH GP					
	15	096-0721	1	LIGHT					
	16	099-0864	1	BODY					
	17	099-0865	1	LIGHT					
	18	099-0866	1	COVER					
	19	4I-3043	2	SCREW					
	20	4I-1186	1	GLASS					
	21	4I-6829	1	SEAL					
	22	4I-4273	1	COVER					
	23	4I-4392	3	CLIP					
	24	4I-3045	1	SPACER					
	25	4I-3087	2	CLIP					
	26	4I-3053	1	LINER					
	27	122-9637	1	HANDLE AS					
	28	4I-3090	3	SEAL					
	29	4I-3144	2	WASHER					
	30	4I-3066	1	STRIKER					
	31	127-0580	2	SCREW					
	32	124-3978	1	HANDLE AS					
E	33	3E-6647		SEAL…(375cm)					
Y	34	4I-6973	1	DOOR GP					
	35	4I-3096	1	GROMMET					
	36	8T-4133	9	NUT					
	37	6V-7636	2	PIN AS					
	38	4I-4251	1	ROD					
	39	9X-2046	4	SCREW					
	40	8Y-5728	1	LATCH AS					
	41	4I-4228	1	BRACKET AS					
	42	4I-1206	2	GUIDE					
	43	128-2192	1	LEVER AS					
	44	9X-2045	2	SCREW					
	45	4I-3063	1	SPRING					
	46	133-8015	1	BRACKET AS					
	47	4I-4330	2	SEAL					
	48	099-0823	3	SCREW					
	49	147-4870	1	GUARD					
	50	122-9627	1	COVER					
	51	127-3735	1	SEAL					
	52	4I-4241	1	PLATE					

E—ORDER BY THE CENTIMETER

Y—SEE SEPARATE ILLUSTRATION

H63468E 18

111-6271 CAB GP (BASIC) (1/2)

S/N 3MR (D96.11)-04978, 4MR (D96.11)-00715

Part of 111-6270-Page319.02

4I-6973-Page324,4I-1273-Page326

OPERATOR STATION

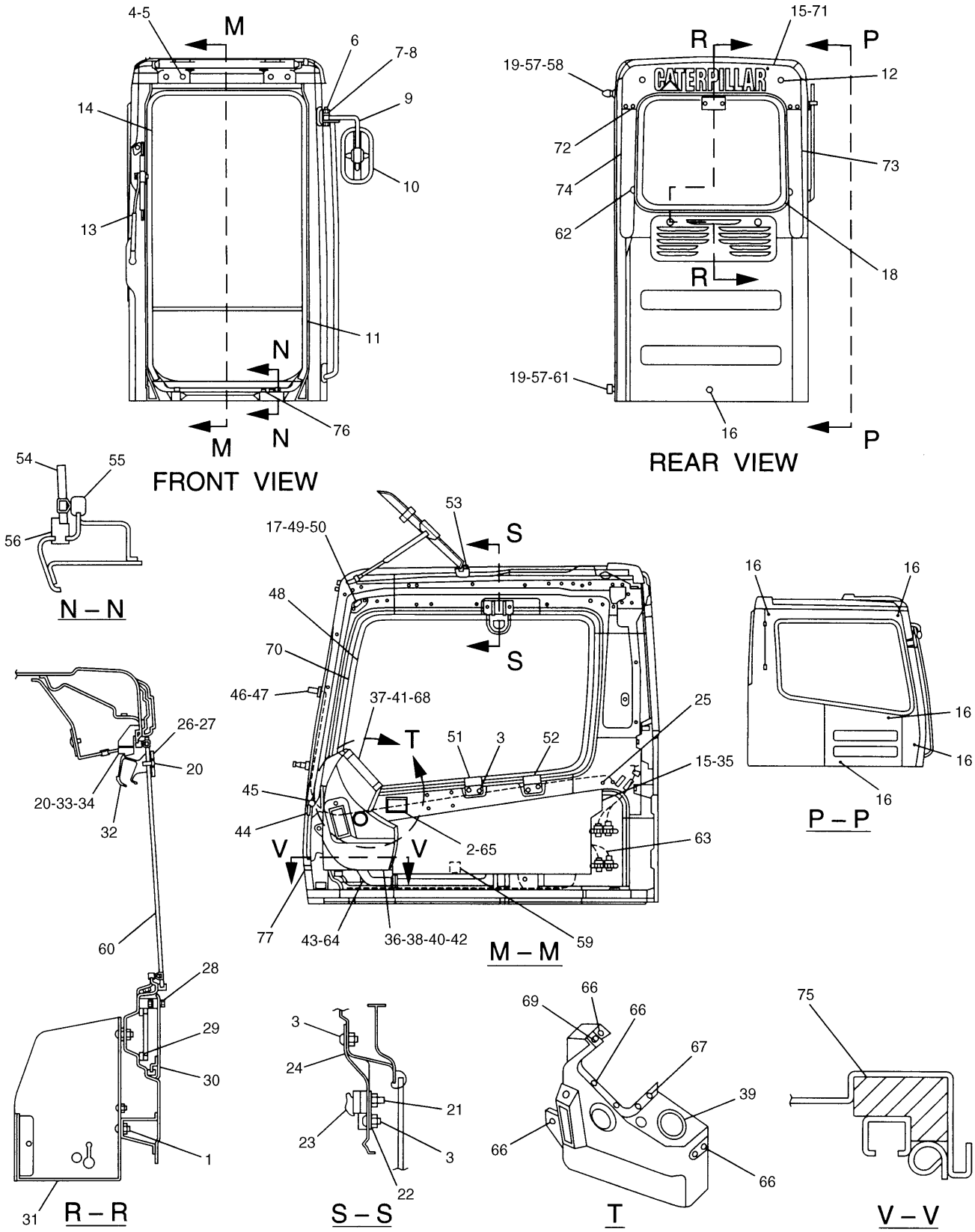

111-6271 CAB GP (BASIC) (2/2)

S/N 3MR (D96.11)-04978, 4MR (D96.11)-00715
Part of 111-6270-Page319.02
106-0054-Page94.02,6I-5444-Page329,111-6273-Page333.01,111-6272-Page334

OPERATOR STATION

NOTE	No.	PART No.	QTY	PART NAME
	1	9X-2041	4	SCREW
	2	095-0735	2	SCREW
	3	9X-2044	8	SCREW
	4	8T-4121	4	WASHER
	5	8T-4137	4	BOLT (L=20mm)
	6	8T-4193	1	BOLT (L=50mm)
	7	9X-8257	1	WASHER
	8	3B-4510	1	LOCKWASHER
	9	122-9612	1	SUPPORT AS
	10	113-3426	1	MIRROR
	11	4I-4287	1	SEAL
	12	5C-9553	2	BOLT (L=16mm)
		8H-3481	2	LOCKWASHER
		9X-8256	2	WASHER
Y	13	111-6272	1	WIPER GP
Y	14	111-6273	1	WINDOW GP
	15	4I-3087	6	CLIP
	16	4I-3090	6	SEAL
	17	127-0580	4	SCREW
E	18	3E-6647		SEAL…(247cm)
	19	8T-4133	2	NUT
	20	9X-2045	4	SCREW
	21	3E-8020	2	SCREW
	22	4I-4243	1	PLATE AS
	23	4I-4253	1	HOLDER
	24	6I-5440	1	BRACKET
	25	7Y-7364	1	GROMMET
	26	124-4027	1	RETAINER
	27	124-4028	1	PACKING
	28	8T-4224	2	WASHER
		8T-7547	2	BOLT (L=30mm)
E	29	6I-5470		SEAL…(150cm)
	30	105-9539	1	COVER AS
Y	31	6I-5444	1	BOX GP
	32	8T-4160	1	HANDLE AS
	33	6V-6885	1	STRIKER
	34	135-2213	1	SHIM (T=1.40mm)
	35	122-9631	1	LINER
	36	5I-3707	1	LOUVER
	37	124-4018	1	CAP
	38	124-4017	1	BRACKET
	39	124-4036	1	HOLDER
	40	096-4883	3	NUT
	41	124-4014	1	COVER
	42	124-4015	1	COVER
	43	124-4016	1	DUCT
	44	4I-4330	2	SEAL
	45	124-3981	2	STOPPER
	46	095-0728	2	SCREW
		096-6166	2	WASHER
	47	105-9525	1	NOZZLE AS
		085-8037	1	NOZZLE
		099-0862	1	HOSE
		105-9526	1	ADAPTER
		105-9527	1	PACKING
	48	4I-5043	1	GLASS
	49	1R-5998	4	LOCKWASHER
	50	122-9640	2	HOLDER AS
	51	122-9629	1	HOLDER
	52	122-9630	1	HOLDER
	53	8T-4200	4	BOLT (L=16mm)
		8T-4224	4	WASHER
	54	122-9632	1	GLASS
	55	122-9634	1	SEAL AS
E		3E-6647		SEAL…(82cm)
	56	4I-4282	2	STOPPER
	57	7X-0578	2	WASHER
	58	7Y-8561	1	BUMPER
	59	135-2331	1	SPACER
	60	124-4026	1	GLASS
	61	4I-1205	1	BUMPER
	62	8C-7581	2	SCREW
Y	63	106-0054	1	WIRING GP
	64	119-5026	3	SCREW
	65	096-6561	1	ASHTRAY AS
	66	128-2135	6	SCREW
	67	128-2136	2	SCREW
	68	4I-4334	1	SCREW
	69	7Y-5293	1	NUT
E	70	3E-8083		SEAL…(400cm)
	71	4I-4403	1	COVER AS
	72	4I-4315	4	CLIP
	73	6I-5409	1	COVER
	74	6I-5410	1	COVER
	75	139-7173	1	SEAL
	76	139-7119	2	PLUG
	77	127-3735	1	SEAL

E—ORDER BY THE CENTIMETER

Y—SEE SEPARATE ILLUSTRATION

H63470E 18

111-6271 CAB GP (BASIC) (2/2)

S/N 3MR (D96.11)-04978, 4MR (D96.11)-00715

Part of 111-6270-Page319.02

106-0054-Page94.02,6I-5444-Page329,111-6273-Page333.01,111-6272-Page334

OPERATOR STATION

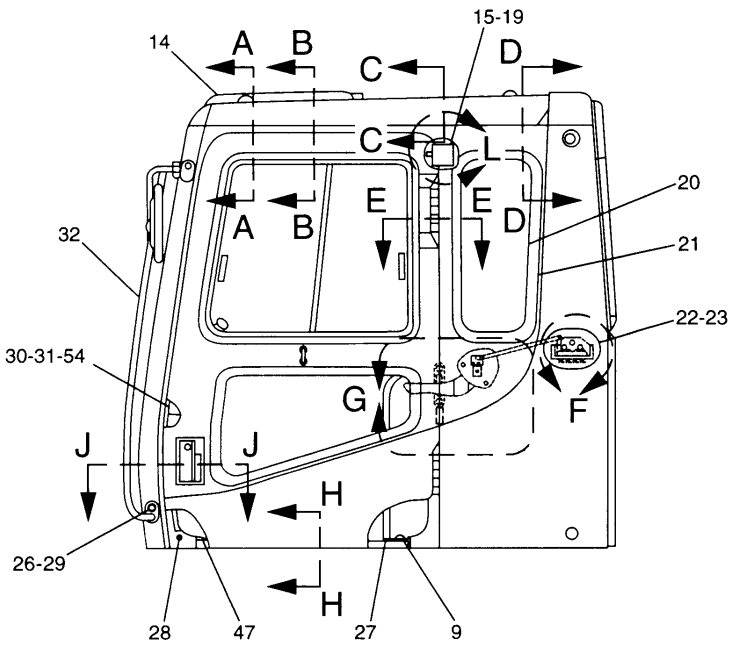

LEFT SIDE VIEW

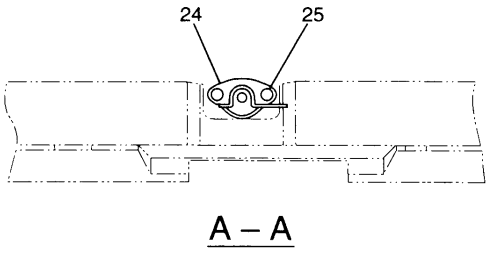

A – A

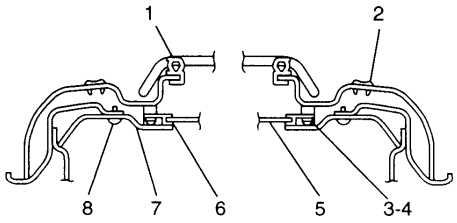

B – B

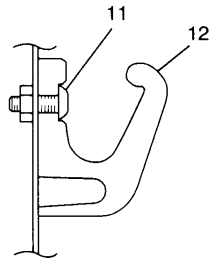

C – C

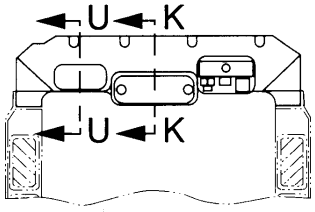

D – D

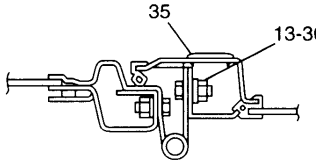

E – E

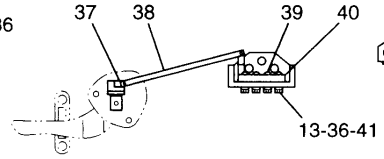

F

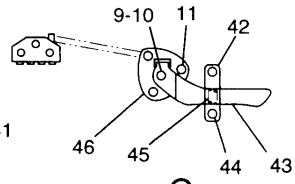

G

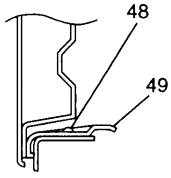

H – H

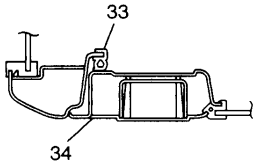

J – J

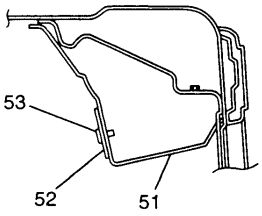

K – K

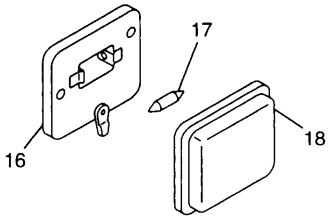

L

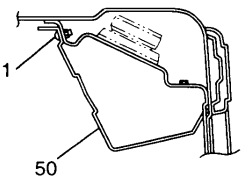

U – U

H74157E 02

155-7018 CAB GP (BASIC) (1/2)
S/N 3MR 04979-Up, 4MR 00716-Up
Part of 155-7115-Page319.04
155-7053-Page324.02,4I-1273-Page326

OPERATOR STATION

NOTE	No.	PART No.	QTY	PART NAME	NOTE	No.	PART No.	QTY	PART NAME
	1	4I-4353	1	SEAL		53	4I-5034	2	CLIP
	2	087-8484	2	GROMMET		54	1R-5998	2	LOCKWASHER
	3	8T-6411	6	SCREW					
	4	9X-8256	6	WASHER					
	5	124-3943	1	VISOR AS					
		124-3940	2	HANDLE					
	6	124-3938	2	RAIL					
	7	122-9636	1	LINER					
	8	4I-3089	9	CLIP					
	9	9X-2041	4	SCREW					
	10	133-8016	1	PACKING					
	11	9X-2044	8	SCREW					
	12	6V-8928	1	HOOK					
	13	8T-4121	9	WASHER					
Y	14	4I-1273	1	HATCH GP					
	15	096-0721	1	LIGHT					
	16	099-0864	1	BODY					
	17	099-0865	1	LIGHT					
	18	099-0866	1	COVER					
	19	4I-3043	2	SCREW					
	20	155-7031	1	GLASS					
	21	4I-6829	1	SEAL					
	22	4I-4273	1	COVER					
	23	4I-4392	3	CLIP					
	24	099-3603	1	CATCH					
	25	096-3772	2	SCREW					
	26	8T-4137	2	BOLT (L=20mm)					
	27	122-9637	1	HANDLE AS					
	28	4I-3090	3	SEAL					
	29	4I-3144	2	WASHER					
	30	4I-3066	1	STRIKER					
	31	127-0580	2	SCREW					
	32	124-3978	1	HANDLE AS					
E	33	3E-6647		SEAL…(375cm)					
Y	34	155-7053	1	DOOR GP					
	35	4I-3096	1	GROMMET					
	36	8T-4133	9	NUT					
	37	6V-7636	2	PIN AS					
	38	171-3278	1	ROD					
	39	9X-2046	4	SCREW					
	40	8Y-5728	1	LATCH AS					
	41	4I-4228	1	BRACKET AS					
	42	4I-1206	2	GUIDE					
	43	128-2192	1	LEVER AS					
	44	9X-2045	2	SCREW					
	45	4I-3063	1	SPRING					
	46	133-8015	1	BRACKET AS					
	47	4I-4330	2	SEAL					
	48	099-0823	3	SCREW					
	49	147-4870	1	GUARD					
	50	122-9627	1	COVER					
	51	127-3735	1	SEAL					
	52	4I-4241	1	PLATE					

E—ORDER BY THE CENTIMETER

Y—SEE SEPARATE ILLUSTRATION

H74157E 02

155-7018 CAB GP (BASIC) (1/2)

S/N 3MR 04979-Up, 4MR 00716-Up

Part of 155-7115-Page319.04

155-7053-Page324.02,4I-1273-Page326

OPERATOR STATION

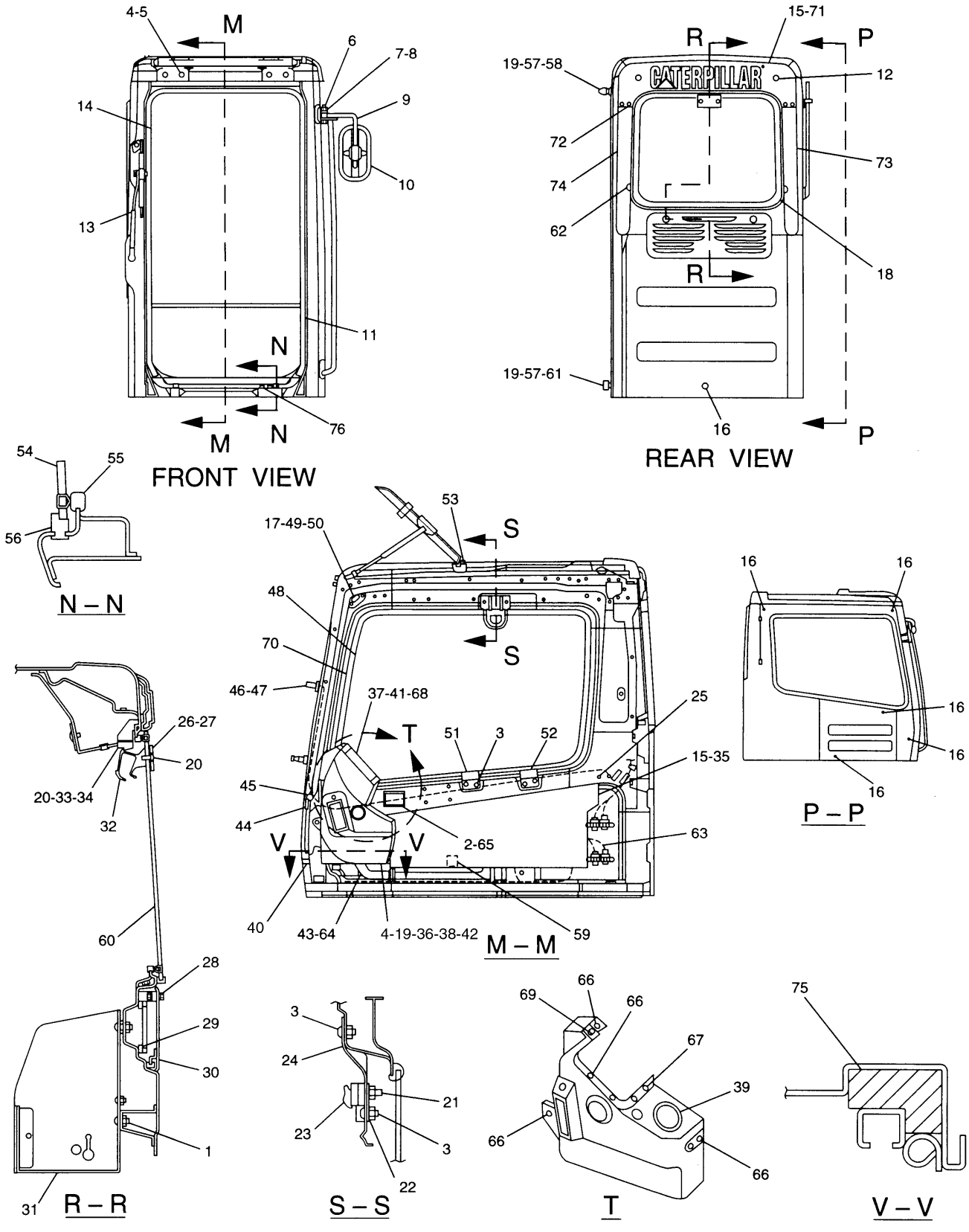

H74159E 02

155-7018 CAB GP (BASIC) (2/2)

S/N 3MR 04979-Up, 4MR 00716-Up

Part of 155-7115-Page319.04

106-0054-Page94.02,6I-5444-Page329,155-7043-Page333.03,155-7041-Page334A,155-7039-Page336.02

OPERATOR STATION

NOTE	No.	PART No.	QTY	PART NAME
	1	9X-2041	4	SCREW
	2	095-0735	2	SCREW
	3	9X-2044	8	SCREW
	4	8T-4121	7	WASHER
	5	8T-4137	4	BOLT (L=20mm)
	6	8T-4193	1	BOLT (L=50mm)
	7	9X-8257	1	WASHER
	8	3B-4510	1	LOCKWASHER
	9	156-6618	1	SUPPORT AS
	10	156-6617	1	MIRROR
	11	4I-4287	1	SEAL
	12	5C-9553	2	BOLT (L=16mm)
		8H-3481	2	LOCKWASHER
		9X-8256	2	WASHER
Y	13	155-7041	1	WIPER GP
Y	14	155-7043	1	WINDOW GP
	15	4I-3087	6	CLIP
	16	4I-3090	6	SEAL
	17	127-0580	4	SCREW
	18	166-3215	1	SEAL
	19	8T-4133	5	NUT
	20	9X-2045	4	SCREW
	21	3E-8020	2	SCREW
	22	4I-4243	1	PLATE AS
	23	4I-4253	1	HOLDER
	24	6I-5440	1	BRACKET
	25	7Y-7364	1	GROMMET
	26	124-4027	1	RETAINER
	27	124-4028	1	PACKING
	28	8T-4224	2	WASHER
		8T-7547	2	BOLT (L=30mm)
E	29	6I-5470		SEAL…(150cm)
	30	105-9539	1	COVER AS
Y	31	6I-5444	1	BOX GP
	32	134-5555	1	LATCH AS
	33	6V-6885	1	STRIKER
	34	135-2213	1	SHIM (T=1.40mm)
	35	122-9631	1	LINER
	36	5I-3707	1	LOUVER
	37	124-4018	1	CAP
	38	124-4017	1	BRACKET
	39	124-4036	1	HOLDER
	40	127-3735	1	SEAL
	41	124-4014	1	COVER
Y	42	155-7039	1	COVER GP
	43	124-4016	1	DUCT
	44	4I-4330	2	SEAL
	45	124-3981	2	STOPPER
	46	095-0728	2	SCREW
		096-6166	2	WASHER
	47	105-9525	1	NOZZLE AS
		085-8037	1	NOZZLE
		099-0862	1	HOSE
		105-9526	1	ADAPTER
		105-9527	1	PACKING
	48	155-7033	1	GLASS
	49	1R-5998	4	LOCKWASHER
	50	122-9640	2	HOLDER AS
	51	122-9629	1	HOLDER
	52	122-9630	1	HOLDER
	53	8T-4200	4	BOLT (L=16mm)
		8T-4224	4	WASHER
	54	155-7035	1	GLASS
	55	122-9634	1	SEAL AS
E		3E-6647		SEAL…(82cm)
	56	4I-4282	2	STOPPER
	57	7X-0578	2	WASHER
	58	7Y-8561	1	BUMPER
	59	135-2331	1	SPACER
	60	155-7036	1	GLASS
	61	4I-1205	1	BUMPER
	62	8C-7581	2	SCREW
Y	63	106-0054	1	WIRING GP
	64	119-5026	3	SCREW
	65	096-6561	1	ASHTRAY AS
	66	128-2135	6	SCREW
	67	128-2136	2	SCREW
	68	4I-4334	1	SCREW
	69	7Y-5293	1	NUT
E	70	3E-8083		SEAL…(400cm)
	71	4I-4403	1	COVER AS
	72	4I-4315	4	CLIP
	73	6I-5409	1	COVER
	74	6I-5410	1	COVER
	75	139-7173	1	SEAL
	76	139-7119	2	PLUG

E—ORDER BY THE CENTIMETER

Y—SEE SEPARATE ILLUSTRATION

H74159E 02

155-7018 CAB GP (BASIC) (2/2)

S/N 3MR 04979-Up, 4MR 00716-Up

Part of 155-7115-Page319.04

106-0054-Page94.02,6I-5444-Page329,155-7043-Page333.03,155-7041-Page334A,155-7039-Page336.02

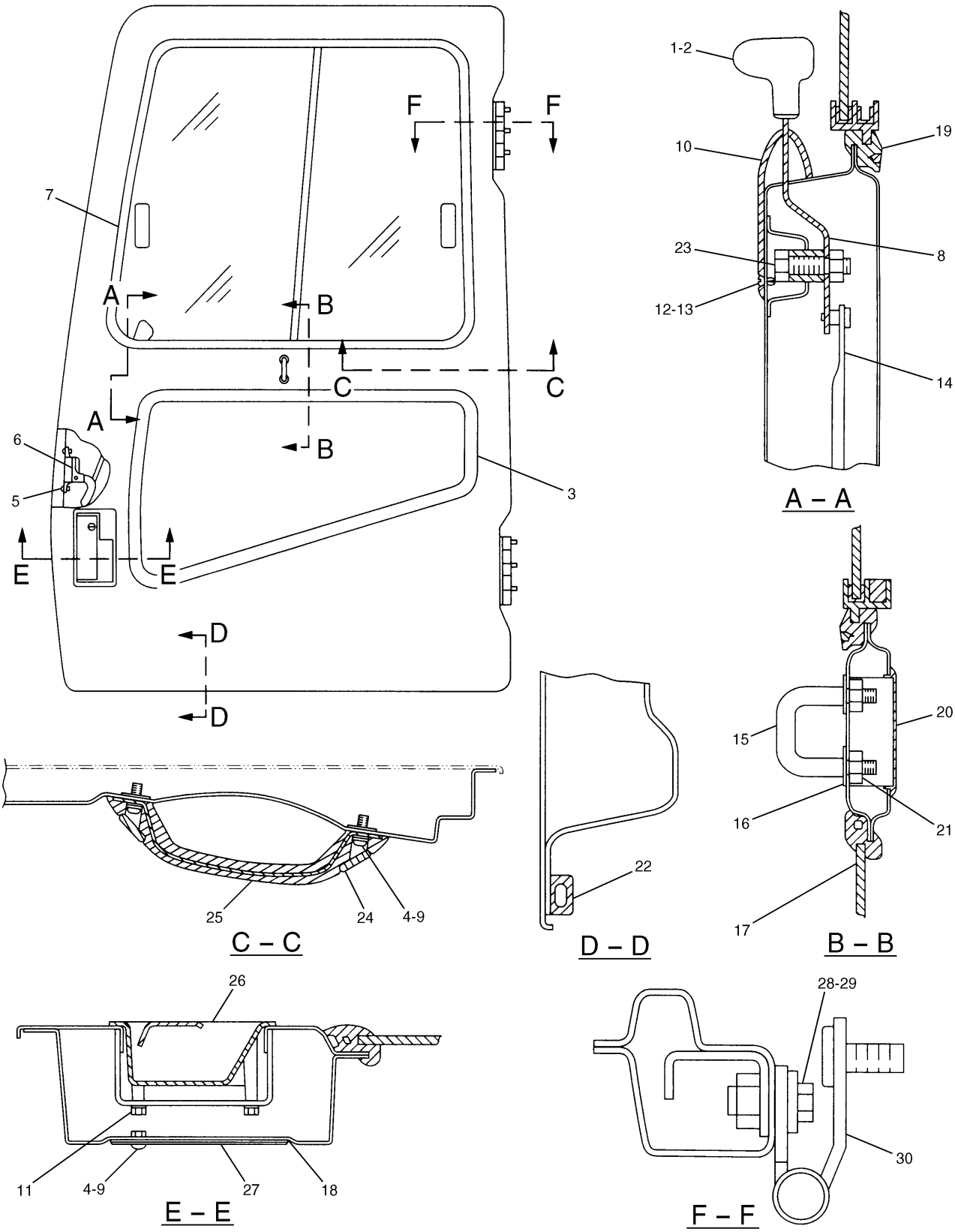

H53220E 08

4I-6973 DOOR GP-CAB
S/N 3MR 1-04978, 4MR 1-00715
Part of 111-6271-Page321
4I-6966-Page325

OPERATOR STATION

NOTE	No.	PART No.	QTY	PART NAME	NOTE	No.	PART No.	QTY	PART NAME
	1	4I-4286	1	KNOB					
	2	096-2622	2	SCREW					
	3	4I-6832	1	SEAL					
	4	095-0742	8	SCREW					
	5	9X-2044	3	SCREW					
	6	4I-4255	1	LOCK AS					
		122-5312	1	SNAP					
Y	7	4I-6966	1	WINDOW AS					
	8	4I-4254	1	HANDLE AS					
	9	095-0827	8	LOCKWASHER					
	10	4I-4332	1	COVER					
	11	4I-6833	4	BOLT (L=16mm)					
	12	4I-4334	2	SCREW					
	13	4I-4357	2	GROMMET					
	14	4I-4250	1	ROD AS					
	15	4I-4244	1	HOOK					
	16	8T-4224	2	WASHER					
	17	4I-1185	1	GLASS					
E	18	4I-5030		SEAL…(70cm)					
E	19	3E-8297		SEAL…(280cm)					
	20	4I-3097	1	GROMMET					
	21	096-3884	2	NUT					
	22	122-5233	1	SEAL					
	23	4I-3124	1	BOLT					
	24	4I-3072	4	CAP					
	25	4I-3071	2	HANDLE					
	26	8Y-4820	1	HANDLE AS					
		8Y-4501	1	SPRING					
	27	4I-4213	1	COVER					
	28	8T-4136	6	BOLT (L=25mm)					
	29	8T-4121	6	WASHER					
	30	4I-1268	2	HINGE AS					

E—ORDER BY THE CENTIMETER

Y—SEE SEPARATE ILLUSTRATION

H53220E 08

4I-6973 DOOR GP-CAB

S/N 3MR 1-04978, 4MR 1-00715

Part of 111-6271-Page321

4I-6966-Page325

OPERATOR STATION

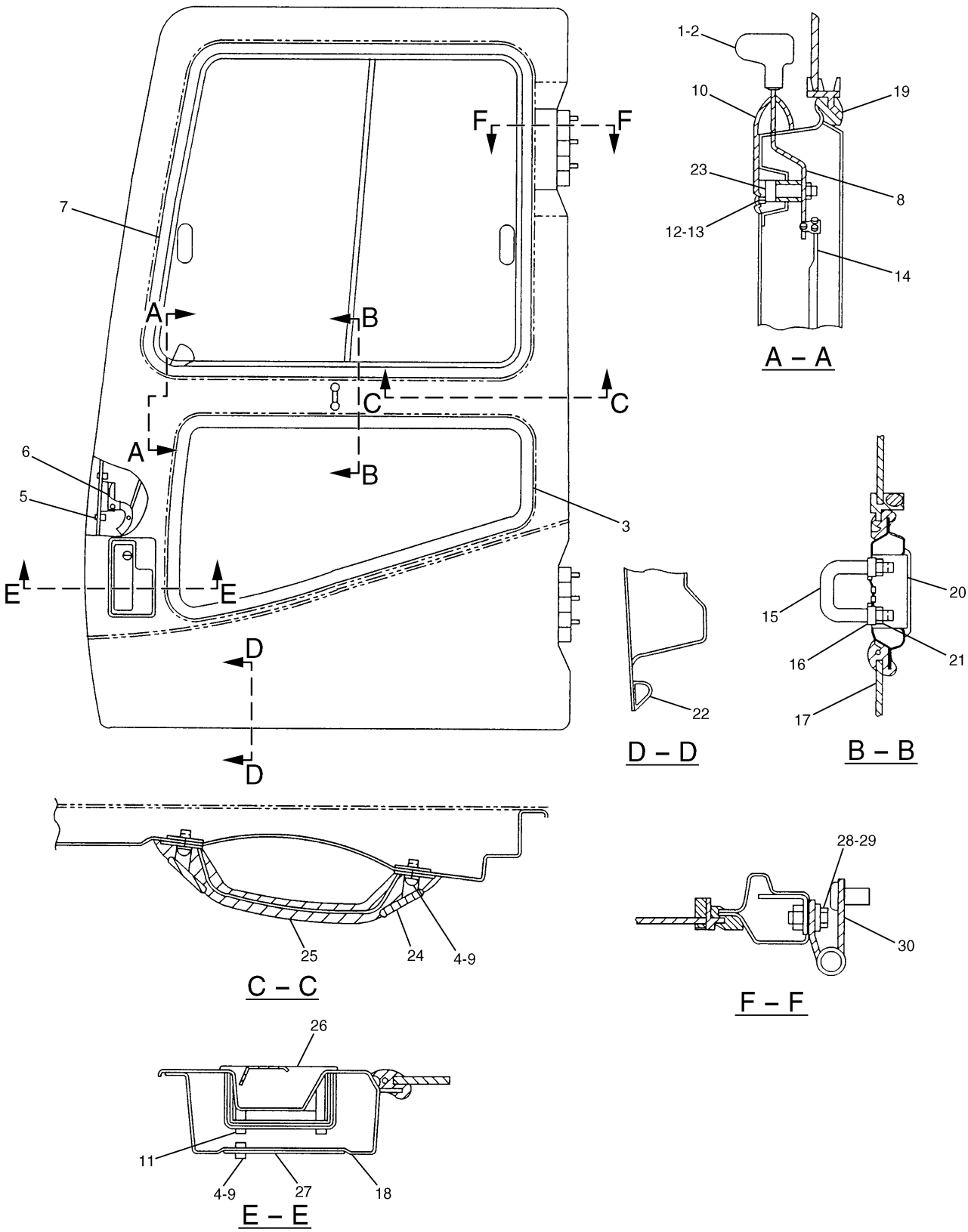

155-7053 DOOR GP-CAB
S/N 3MR 04979-Up, 4MR 00716-Up
Part of 155-7018-Page323.06
155-7058-Page325.01

OPERATOR STATION

NOTE	No.	PART No.	QTY	PART NAME	NOTE	No.	PART No.	QTY	PART NAME
	1	4I-4286	1	KNOB					
	2	096-2622	2	SCREW					
	3	4I-6832	1	SEAL					
	4	095-0742	8	SCREW					
	5	9X-2044	3	SCREW					
	6	4I-4255	1	LOCK AS					
		122-5312	1	SNAP					
Y	7	155-7058	1	WINDOW AS					
	8	4I-4254	1	HANDLE AS					
	9	095-0827	8	LOCKWASHER					
	10	4I-4332	1	COVER					
	11	4I-6833	4	BOLT (L=16mm)					
	12	4I-4334	2	SCREW					
	13	4I-4357	2	GROMMET					
	14	4I-4250	1	ROD AS					
	15	4I-4244	1	HOOK					
	16	8T-4224	2	WASHER					
	17	155-7056	1	GLASS					
E	18	4I-5030		SEAL…(70cm)					
E	19	3E-8297		SEAL…(280cm)					
	20	4I-3097	1	GROMMET					
	21	096-3884	2	NUT					
	22	122-5233	1	SEAL					
	23	4I-3124	1	BOLT					
	24	151-6704	4	CAP					
	25	151-6703	2	HANDLE					
	26	8Y-4820	1	HANDLE AS					
		8Y-4501	1	SPRING					
	27	4I-4213	1	COVER					
	28	8T-4136	6	BOLT (L=25mm)					
	29	8T-4121	6	WASHER					
	30	4I-1268	2	HINGE AS					

E—ORDER BY THE CENTIMETER

Y—SEE SEPARATE ILLUSTRATION

H65163E 01

155-7053 DOOR GP-CAB

S/N 3MR 04979-Up, 4MR 00716-Up

Part of 155-7018-Page323.06
155-7058-Page325.01

MEMORANDA

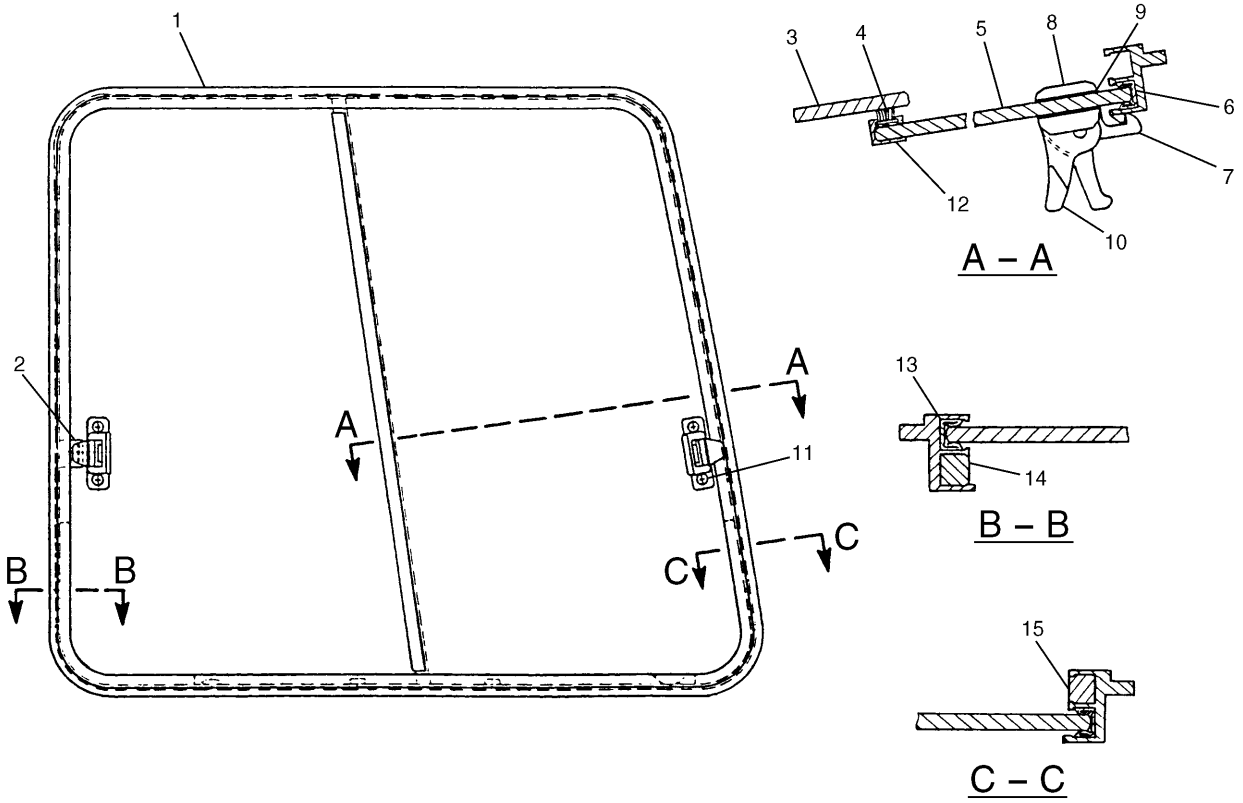

NOTE	No.	PART No.	QTY	PART NAME	NOTE	No.	PART No.	QTY	PART NAME
	1	4I-6967	1	FRAME AS					
	2	4I-4300	1	CATCH					
		099-0139	3	RIVET					
	3	4I-6968	1	GLASS					
	4	4I-6856	1	SEAL					
	5	4I-6969	1	GLASS					
	6	4I-6972	1	SEAL					
	7	085-6444	2	LOCK AS					
		085-6445	1	LOCK					
	8	085-6447	1	RETAINER					
	9	085-6449	1	PACKING					
	10	085-6446	1	LOCK					
	11	085-6448	2	SCREW					
	12	4I-6970	1	CHANNEL					
	13	4I-6971	1	SEAL					
E	14	8C-7585		BUMPER…(30cm)					
E	15	8C-7585		BUMPER…(20cm)					

E—ORDER BY THE CENTIMETER

H50345E 02

4I-6966 WINDOW AS-DOOR

S/N 3MR 1-04978, 4MR 1-00715
Part of 4I-6973-Page324.01

OPERATOR STATION

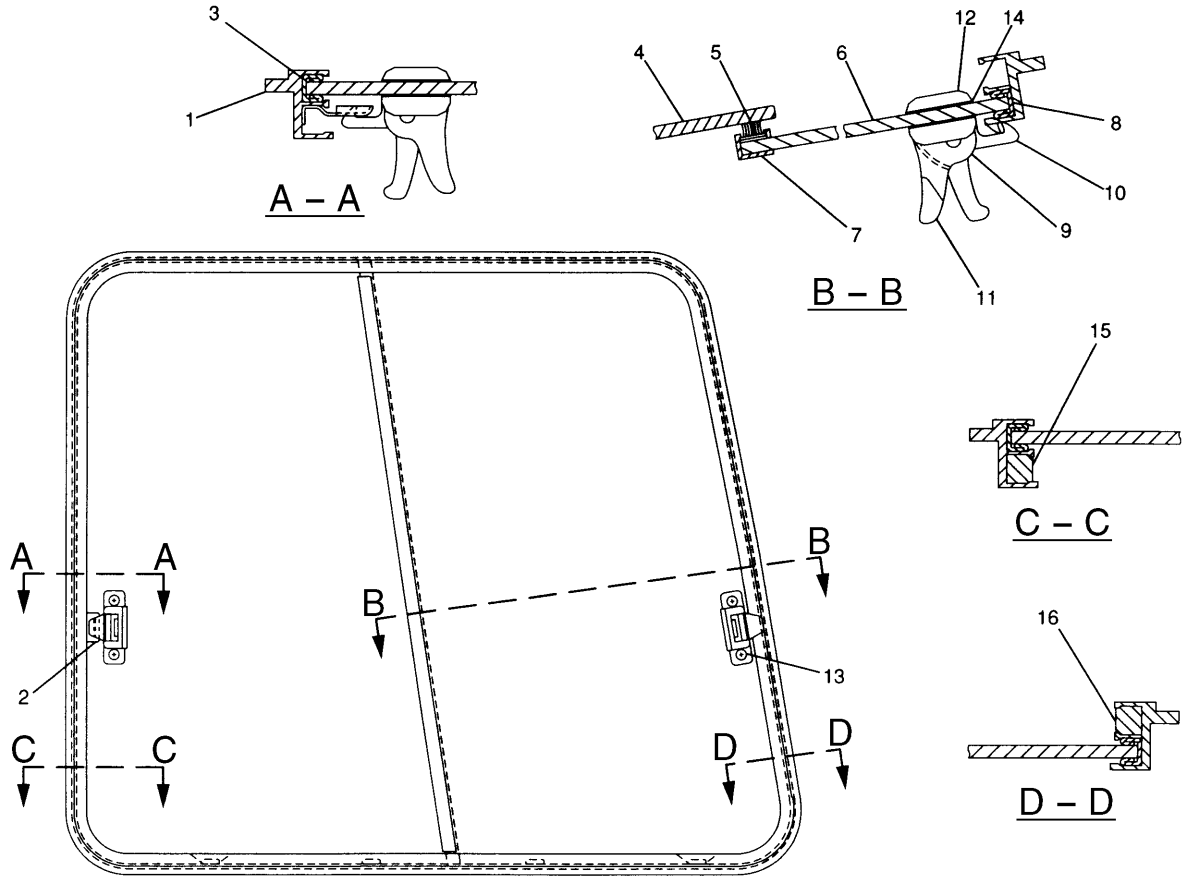

NOTE	No.	PART No.	QTY	PART NAME	NOTE	No.	PART No.	QTY	PART NAME
	1	4I-6967	1	FRAME AS					
	2	4I-4300	1	CATCH					
		099-0139	3	RIVET					
	3	4I-6971	1	SEAL					
	4	155-7059	1	GLASS					
	5	4I-6856	1	SEAL					
	6	155-7060	1	GLASS					
	7	4I-6970	1	CHANNEL					
	8	4I-6972	1	SEAL					
	9	085-6444	2	LOCK AS					
	10	085-6445	1	LOCK					
	11	085-6446	1	LOCK					
	12	085-6447	1	RETAINER					
	13	085-6448	2	SCREW					
	14	085-6449	1	PACKING					
E	15	8C-7585		BUMPER…(30cm)					
E	16	8C-7585		BUMPER…(20cm)					

E—ORDER BY THE CENTIMETER

H60095E 00

155-7058 WINDOW AS-DOOR

S/N 3MR 04979-Up, 4MR 00716-Up
Part of 155-7053-Page324.03

MEMORANDA

OPERATOR STATION

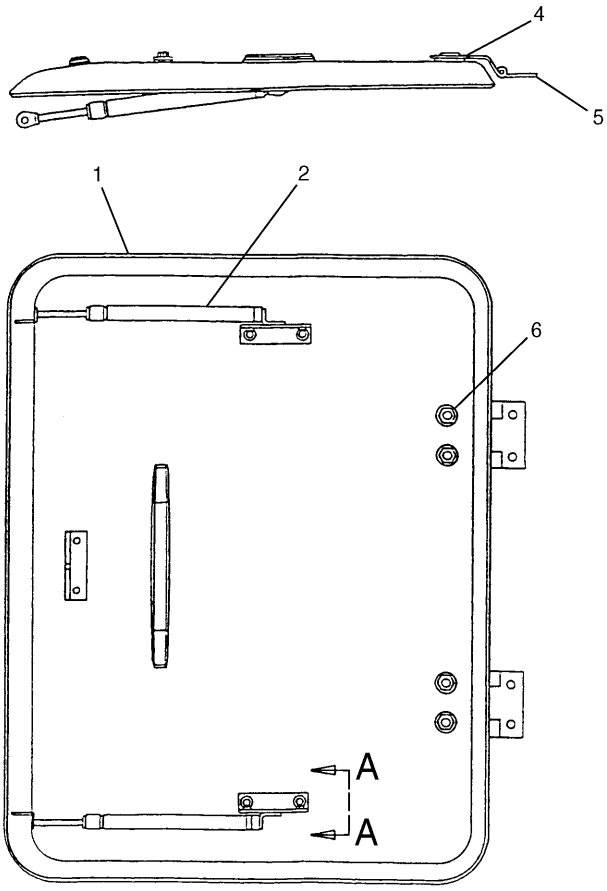

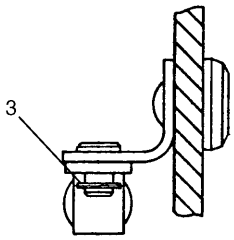

A – A

NOTE	No.	PART No.	QTY	PART NAME	NOTE	No.	PART No.	QTY	PART NAME
Y	1	4I-4204	1	HATCH GP					
	2	099-3506	2	SPRING AS					
	3	5D-4822	4	RING					
	4	4I-1260	2	PACKING					
	5	6I-5338	2	HINGE AS					
	6	6I-5342	4	NUT					

Y—SEE SEPARATE ILLUSTRATION

H51050E 06

4I-1273 HATCH GP

Part of 111-6271-Page321,155-7018-Page323.06
4I-4204-Page327

OPERATOR STATION

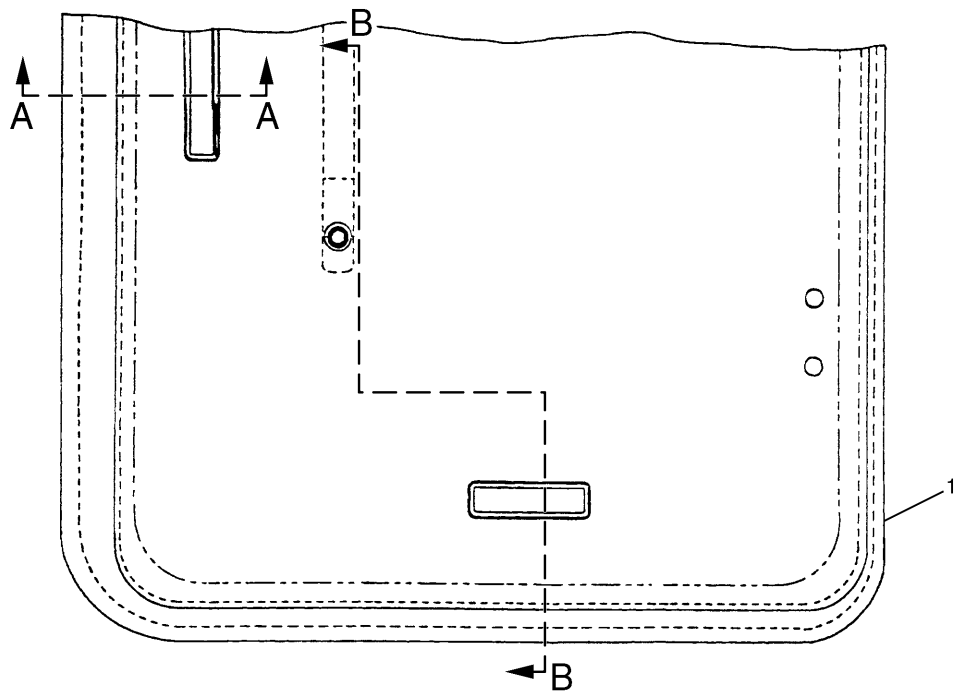

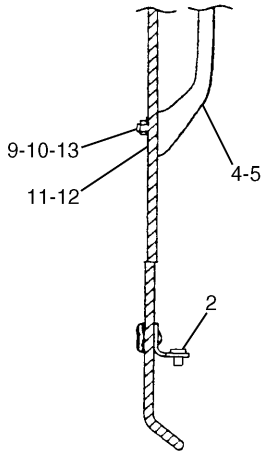

B – B

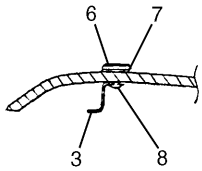

A – A

NOTE	No.	PART No.	QTY	PART NAME	NOTE	No.	PART No.	QTY	PART NAME
	1	4I-4205	1	COVER					
	2	4I-4242	2	BRACKET AS					
	3	6I-5432	1	CATCH					
	4	4I-3071	1	HANDLE					
	5	4I-3072	2	CAP					
	6	4I-4361	3	RETAINER					
	7	085-6449	3	PACKING					
	8	095-0736	6	SCREW					
	9	5C-2890	2	NUT					
	10	8T-6412	2	SCREW					
	11	9X-8256	2	WASHER					
	12	4I-3054	2	PACKING					
	13	095-0827	2	LOCKWASHER					

H50354E 09

4I-4204 HATCH GP
Part of 4I-1273-Page326

OPERATOR STATION

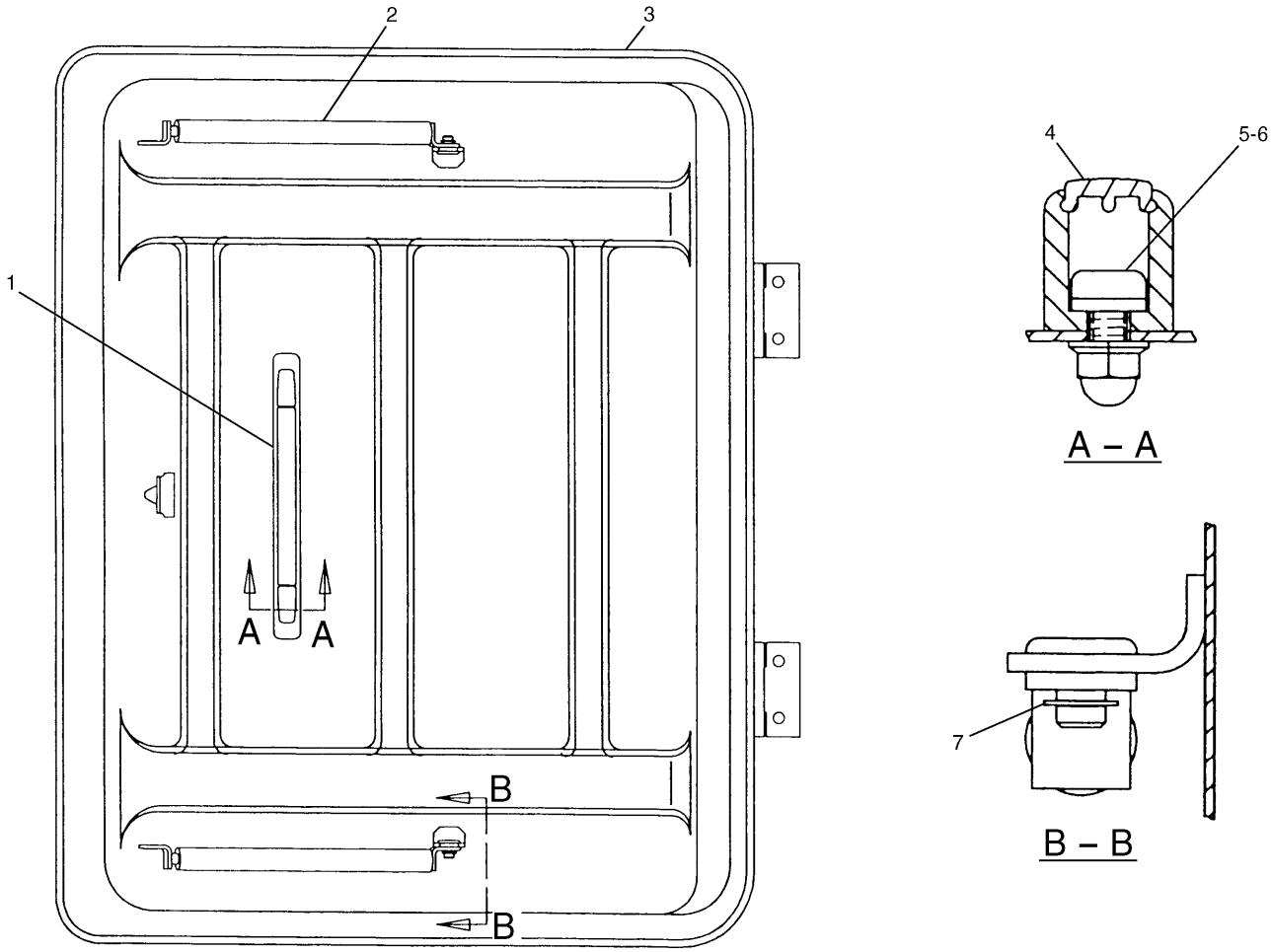

NOTE	No.	PART No.	QTY	PART NAME	NOTE	No.	PART No.	QTY	PART NAME
	1	4I-3071	1	HANDLE					
	2	099-3506	2	SPRING AS					
	3	124-4057	1	COVER AS					
	4	4I-3072	2	CAP					
	5	8T-6411	2	SCREW					
	6	9X-8256	2	WASHER					
	7	2Y-5685	4	RING					

H51393E 01

124-3933 HATCH GP
An Attachment

OPERATOR STATION

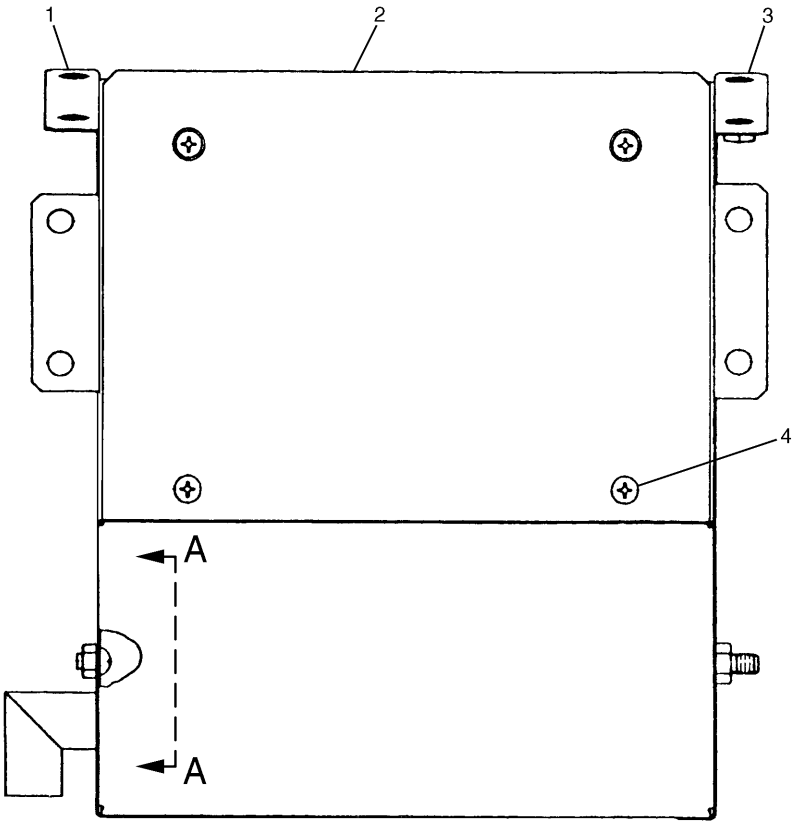

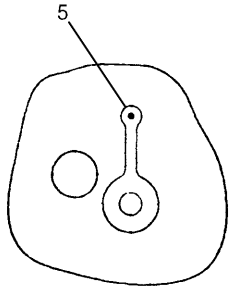

A – A

NOTE	No.	PART No.	QTY	PART NAME	NOTE	No.	PART No.	QTY	PART NAME
	1	6I-5445	1	PANEL AS					
	2	6I-5443	1	PANEL					
	3	6I-5446	1	PANEL AS					
	4	095-0744	4	SCREW					
	5	4I-3081	1	CAP					

H51051E 02

6I-5444 BOX GP-STORAGE

Part of 111-6271-Page323,155-7018-Page323.08

MEMORANDA

MEMORANDA

MEMORANDA

MEMORANDA

OPERATOR STATION

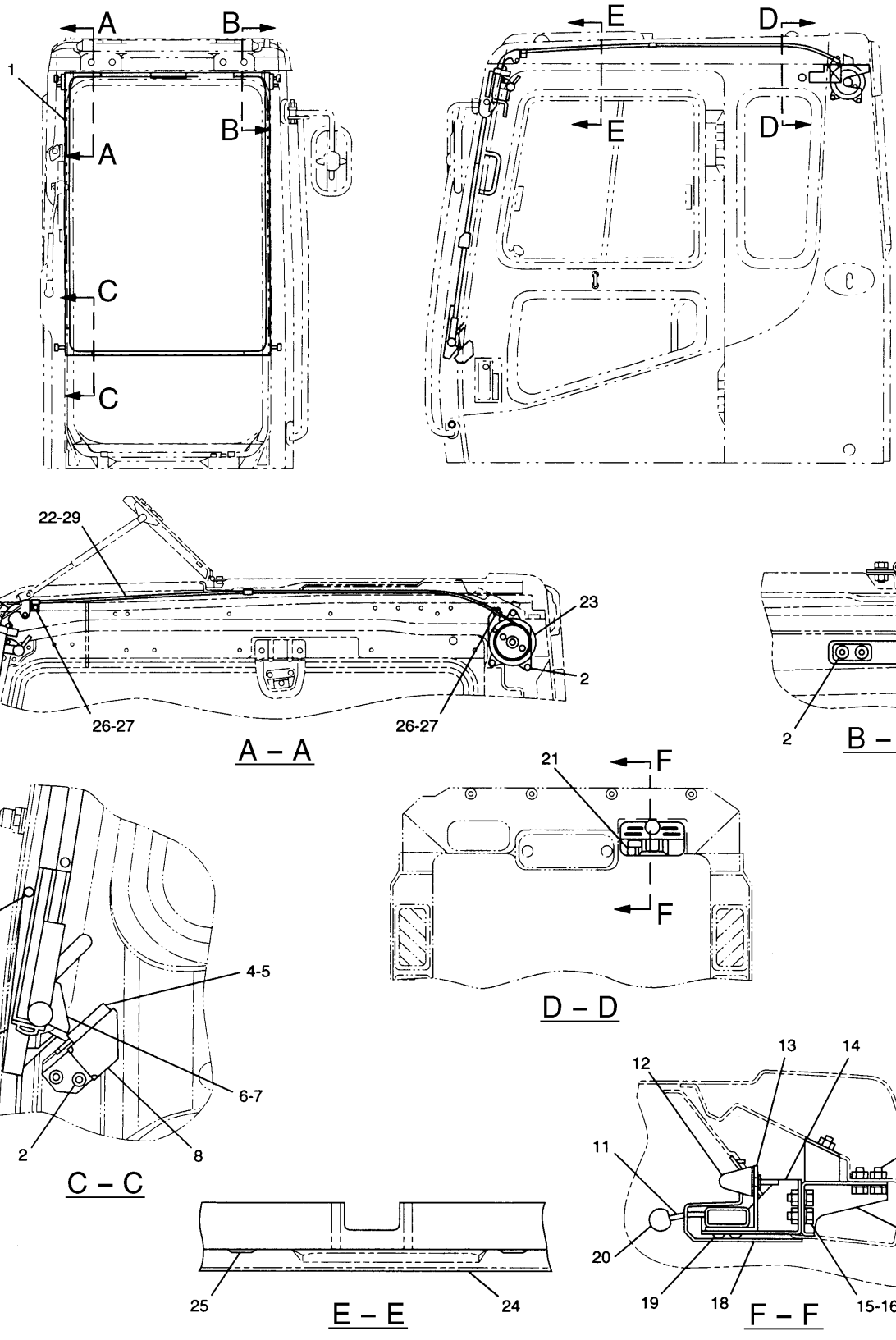

H53227E 05

111-6273 WINDOW GP
S/N 3MR 1-04978, 4MR 1-00715
Part of 111-6271-Page323
124-3963-Page334.01

OPERATOR STATION

NOTE	No.	PART No.	QTY	PART NAME	NOTE	No.	PART No.	QTY	PART NAME
Y	1	124-3963	1	WINDOW GP					
	2	9X-2044	7	SCREW					
	3	124-3966	1	STOPPER					
	4	124-3974	1	SWITCH					
	5	8C-7581	1	SCREW					
	6	124-3965	1	BRACKET					
	7	9X-2042	1	SCREW					
	8	124-3964	1	BRACKET AS					
	9	124-3959	1	RAIL (RH)					
	10	6V-5683	5	BOLT (L=16mm)					
	11	8Y-5745	1	LATCH AS					
	12	4I-1271	1	STOPPER					
	13	4I-3078	1	BRACKET					
	14	4I-4224	1	BRACKET AS					
	15	8T-4137	7	BOLT (L=20mm)					
	16	8T-4121	7	WASHER					
	17	122-9639	1	BRACKET					
	18	4I-4280	1	COVER					
	19	9X-2045	6	SCREW					
	20	102-7688	1	KNOB					
	21	7I-1660	1	FILM (INSTRUCTION)					
	22	124-3957	1	CABLE AS					
	23	124-3956	1	SPRING AS					
	24	122-9635	1	LINER					
	25	4I-3089	4	CLIP					
	26	124-3961	2	CLAMP					
	27	100-2881	2	SCREW					
	28	124-4054	1	GUIDE					
	29	124-3960	2	BLOCK					

Y—SEE SEPARATE ILLUSTRATION

H53227E 05

111-6273 WINDOW GP

S/N 3MR 1-04978, 4MR 1-00715
Part of 111-6271-Page323
124-3963-Page334.01

OPERATOR STATION

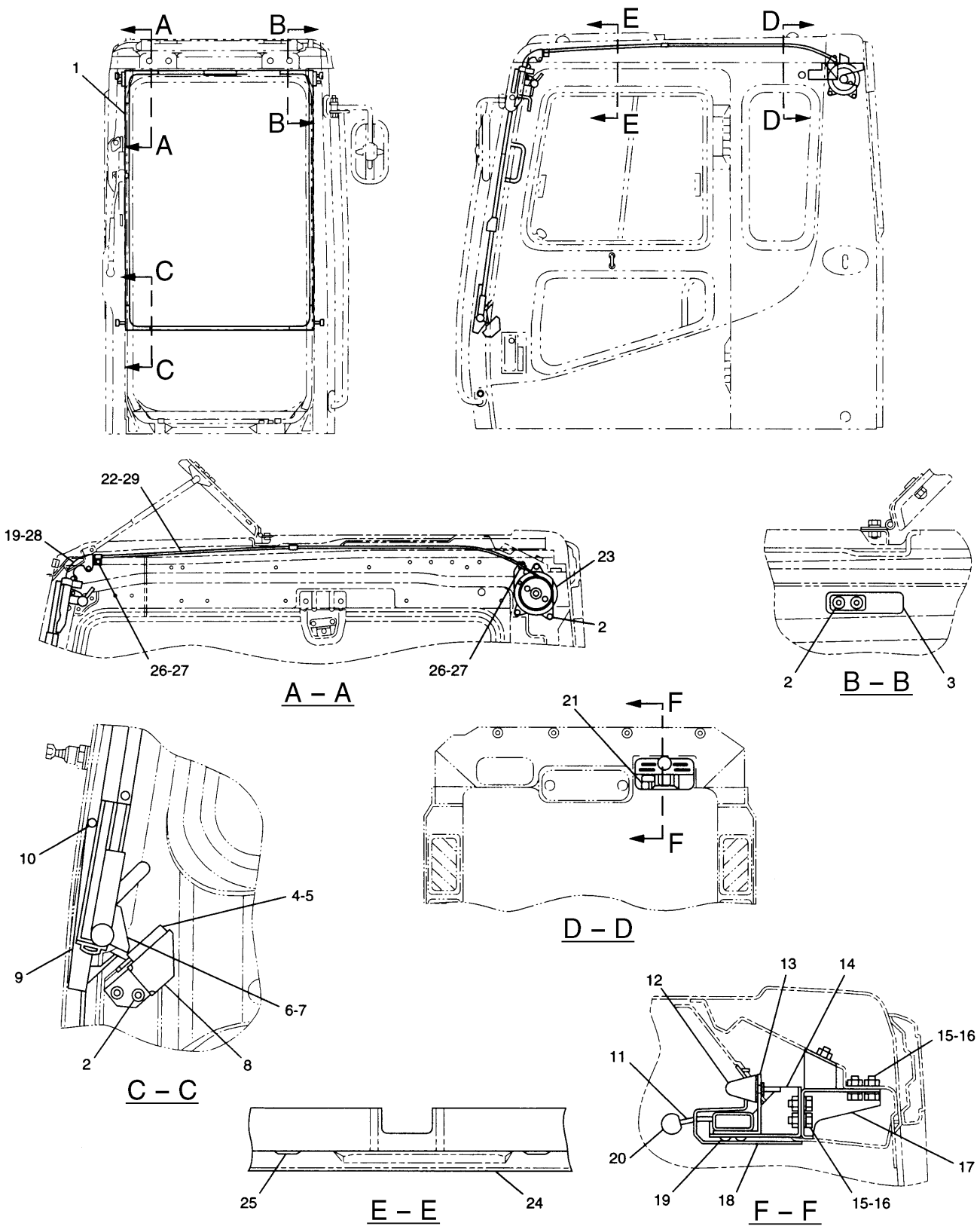

H60214E 00

155–7043 WINDOW GP
S/N 3MR 04979–Up, 4MR 00716–Up
Part of 155–7018–Page323.08
155–7045–Page334.02

OPERATOR STATION

NOTE	No.	PART No.	QTY	PART NAME	NOTE	No.	PART No.	QTY	PART NAME
Y	1	155-7045	1	WINDOW GP					
	2	9X-2044	7	SCREW					
	3	124-3966	1	STOPPER					
	4	124-3974	1	SWITCH					
	5	3E-9873	1	SCREW					
	6	124-3965	1	BRACKET					
	7	9X-2042	1	SCREW					
	8	124-3964	1	BRACKET AS					
	9	124-3959	1	RAIL (RH)					
	10	6V-5683	5	BOLT (L=16mm)					
	11	8Y-5745	1	LATCH AS					
	12	4I-1271	1	STOPPER					
	13	4I-3078	1	BRACKET					
	14	4I-4224	1	BRACKET AS					
	15	8T-4137	7	BOLT (L=20mm)					
	16	8T-4121	7	WASHER					
	17	122-9639	1	BRACKET					
	18	4I-4280	1	COVER					
	19	9X-2045	6	SCREW					
	20	102-7688	1	KNOB					
	21	7I-1660	1	FILM (INSTRUCTION)					
	22	124-3957	1	CABLE AS					
	23	124-3956	1	SPRING AS					
	24	122-9635	1	LINER					
	25	4I-3089	4	CLIP					
	26	124-3961	2	CLAMP					
	27	100-2881	2	SCREW					
	28	124-4054	1	GUIDE					
	29	124-3960	2	BLOCK					

Y—SEE SEPARATE ILLUSTRATION

H60214E 00

155-7043 WINDOW GP

S/N 3MR 04979-Up, 4MR 00716-Up
Part of 155-7018-Page323.08
155-7045-Page334.02

OPERATOR STATION

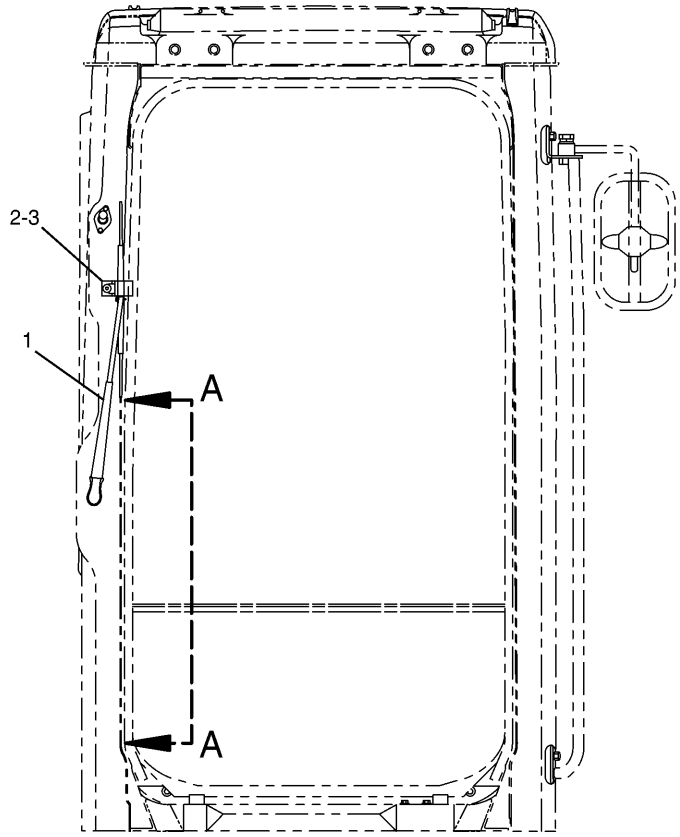

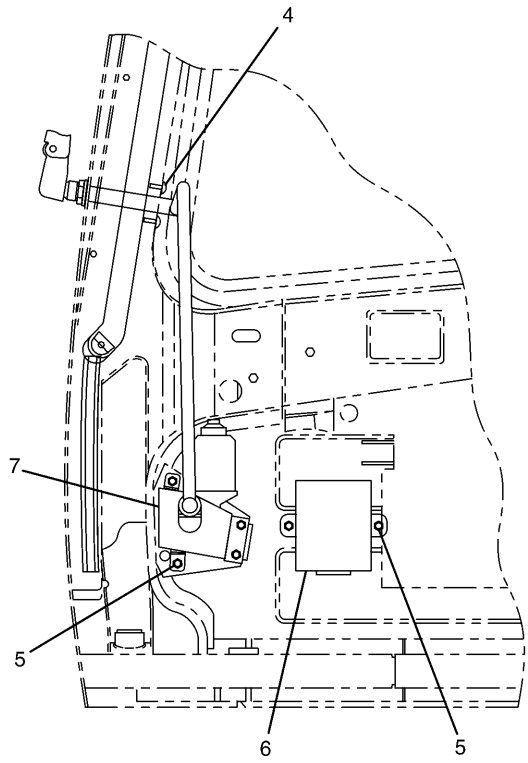

A – A

NOTE	No.	PART No.	QTY	PART NAME	NOTE	No.	PART No.	QTY	PART NAME
Y	1	122-9602	1	ARM AS					
	2	9X-2045	1	SCREW					
	3	124-3955	1	HOLDER					
	4	9X-2044	2	SCREW					
	5	5C-2890	6	NUT					
	6	122-9604	1	RELAY AS					
Y	7	122-9603	1	MOTOR AS					

Y—SEE SEPARATE ILLUSTRATION

H50368E 02

111-6272 WIPER GP-WINDOW

S/N 3MR 1-04978, 4MR 1-00715
Part of 111-6271-Page323
122-9602-Page335,122-9603-Page335.01

OPERATOR STATION

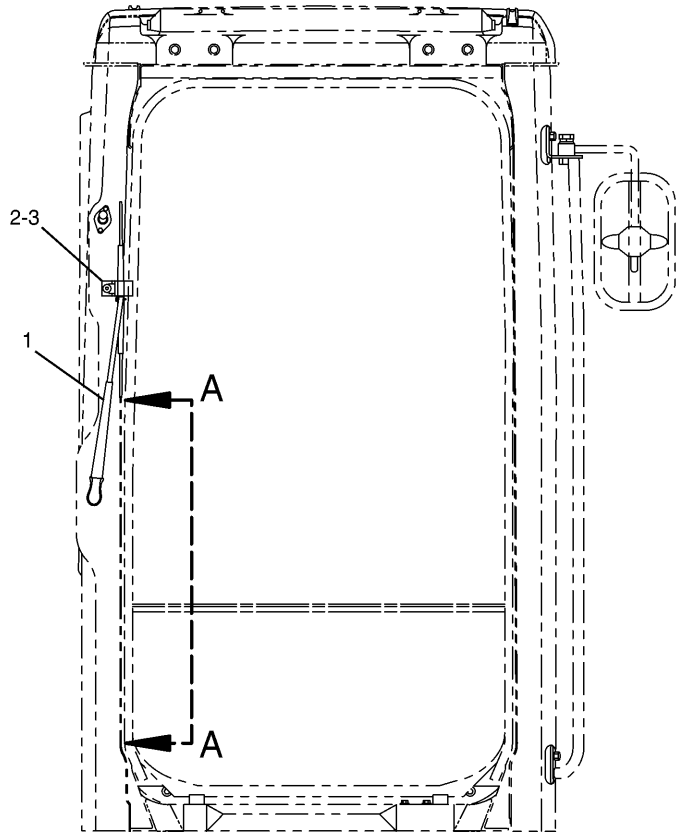

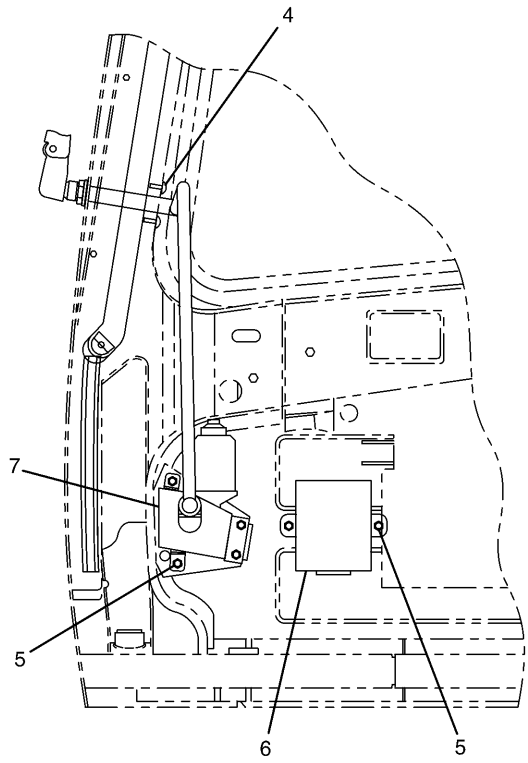

A – A

NOTE	No.	PART No.	QTY	PART NAME	NOTE	No.	PART No.	QTY	PART NAME
Y	1	122-9602	1	ARM AS					
	2	9X-2045	1	SCREW					
	3	124-3955	1	HOLDER					
	4	9X-2044	2	SCREW					
	5	5C-2890	6	NUT					
	6	155-7042	1	RELAY AS					
Y	7	122-9603	1	MOTOR AS					

Y—SEE SEPARATE ILLUSTRATION

H60230E 00

155-7041 WIPER GP-WINDOW

S/N 3MR 04979-Up, 4MR 00716-Up
Part of 155-7018-Page323.08
122-9602-Page335,122-9603-Page335.01

MEMORANDA

OPERATOR STATION

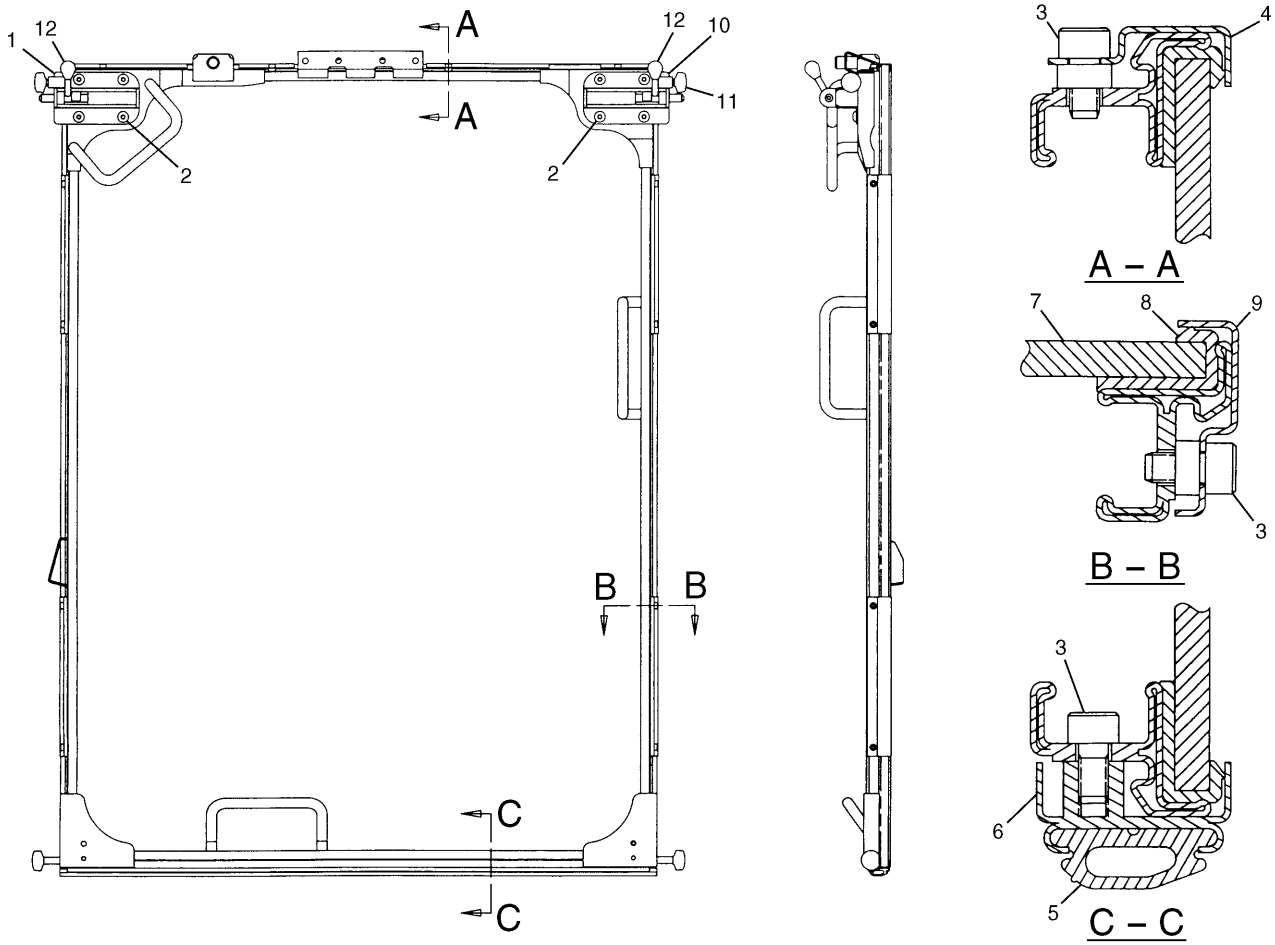

NOTE	No.	PART No.	QTY	PART NAME	NOTE	No.	PART No.	QTY	PART NAME
	1	124-3975	1	LATCH AS (LH)					
	2	9X-2044	8	SCREW					
	3	099-0822	17	BOLT (L=10mm)					
	4	124-3969	2	HOLDER					
	5	124-3971	1	SEAL					
	6	124-3970	1	HOLDER AS					
	7	124-3967	1	GLASS (UPPER)					
	8	124-3972	1	SEAL					
	9	124-3968	4	HOLDER					
	10	124-3976	1	LATCH AS (RH)					
	11	124-3973	4	ROLLER					
	12	096-4085	2	RUBBER					

H53762E 03

124-3963 WINDOW GP
S/N 3MR 1-04978, 4MR 1-00715
Part of 111-6273-Page333.02

OPERATOR STATION

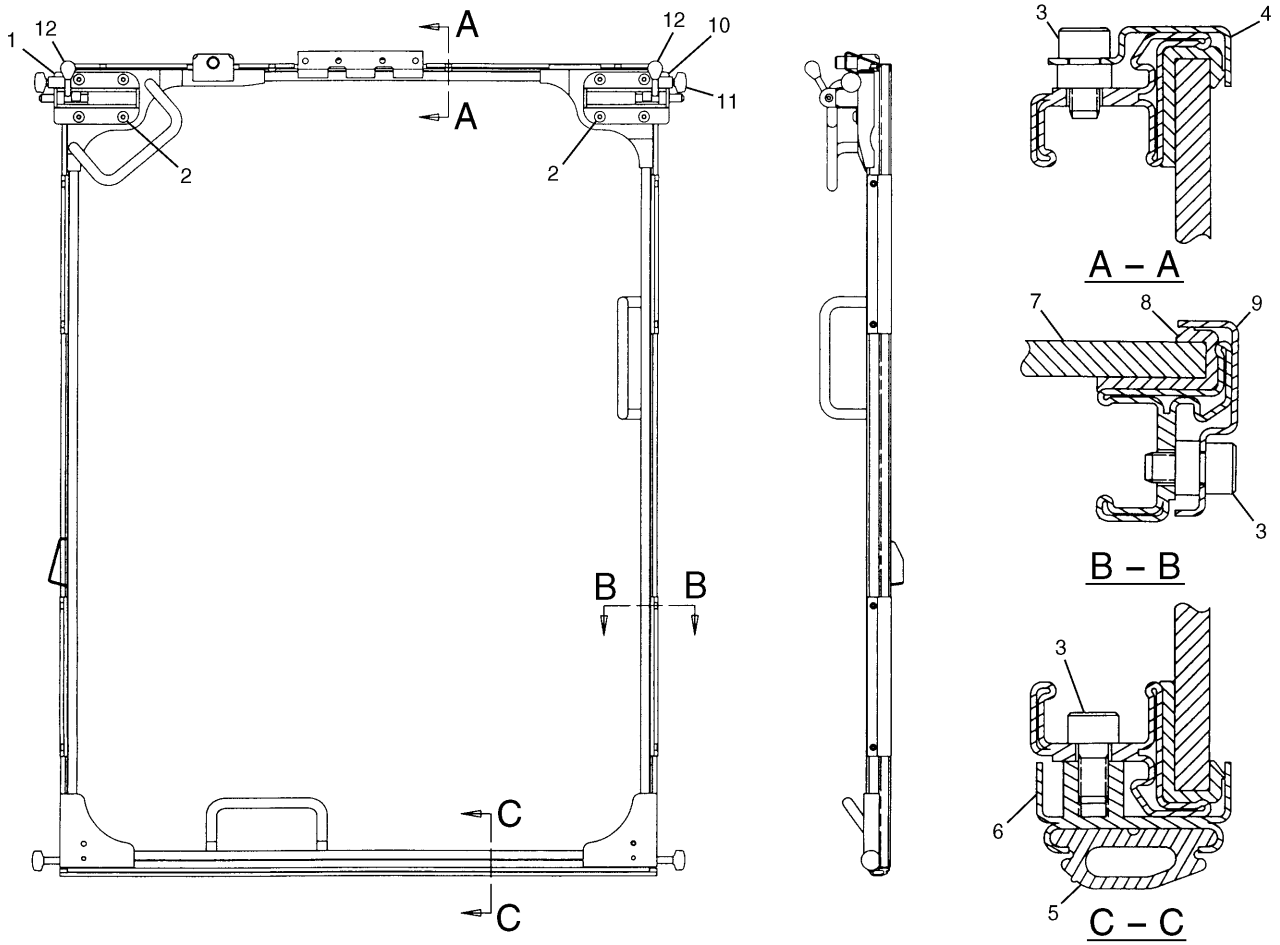

NOTE	No.	PART No.	QTY	PART NAME	NOTE	No.	PART No.	QTY	PART NAME
	1	124-3975	1	LATCH AS (LH)					
	2	9X-2042	8	SCREW					
	3	099-0822	17	BOLT (L=10mm)					
	4	124-3969	2	HOLDER					
	5	124-3971	1	SEAL					
	6	124-3970	1	HOLDER AS					
	7	155-7046	1	GLASS (UPPER)					
	8	124-3972	1	SEAL					
	9	124-3968	4	HOLDER					
	10	124-3976	1	LATCH AS (RH)					
	11	124-3973	4	ROLLER					
	12	096-4085	2	RUBBER					

H60216E 00

155-7045 WINDOW GP
S/N 3MR 04979-Up, 4MR 00716-Up
Part of 155-7043-Page333.04

OPERATOR STATION

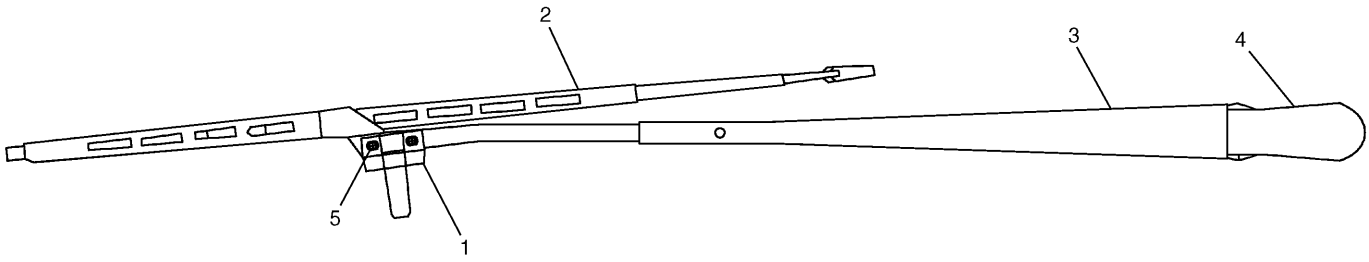

NOTE	No.	PART No.	QTY	PART NAME	NOTE	No.	PART No.	QTY	PART NAME
	1	124-3922	1	GUIDE					
	2	124-3921	1	BLADE AS					
	3	124-3920	1	ARM AS					
	4	124-3996	1	COVER					
	5	147-4954	1	SCREW KIT					

H59425E 02

122-9602 ARM AS-WIPER

Part of 111-6272-Page334,155-7041-Page334A

OPERATOR STATION

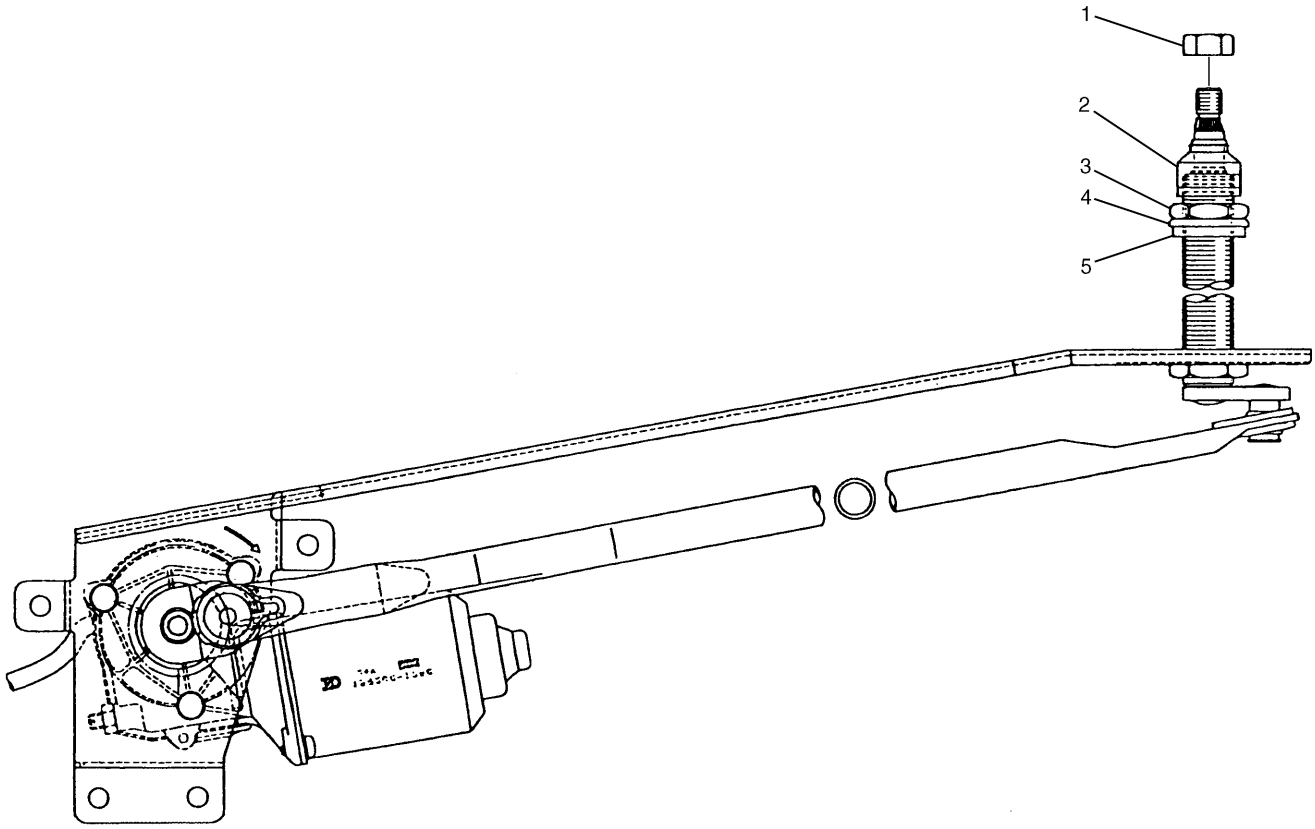

NOTE	No.	PART No.	QTY	PART NAME	NOTE	No.	PART No.	QTY	PART NAME
	1	6V-8231	1	NUT					
	2	7Y-3472	1	CAP					
	3	7Y-3470	1	NUT					
	4	124-3953	1	WASHER					
	5	124-3952	1	PACKING					

H53230E 01

122-9603 MOTOR AS-WINDOW WIPER

Part of 111-6272-Page334,155-7041-Page334A

MEMORANDA

OPERATOR STATION

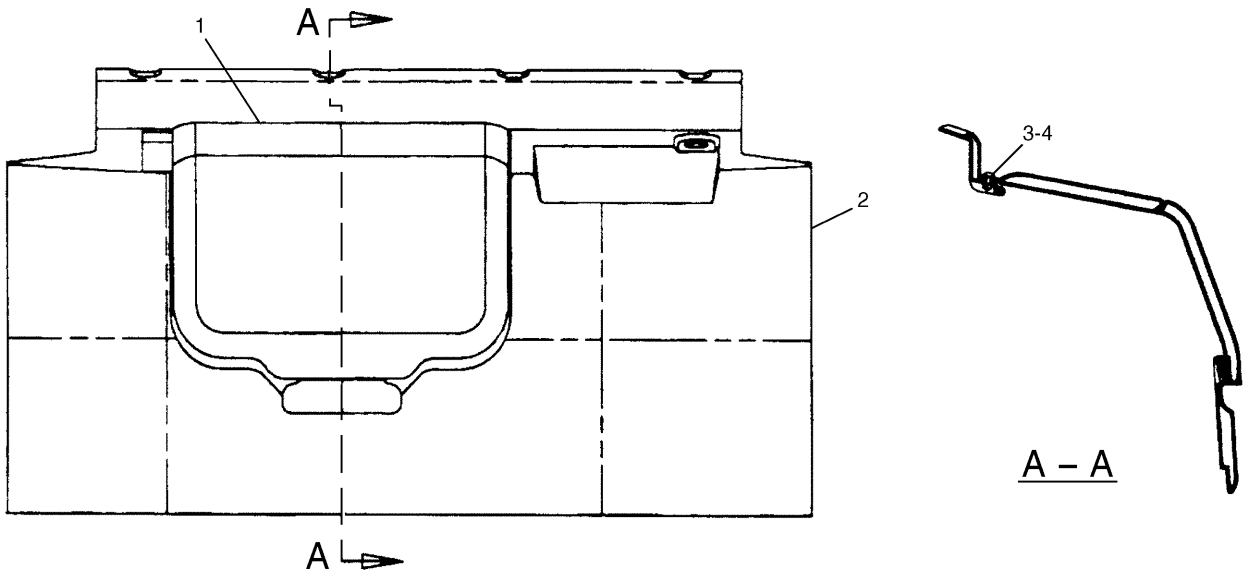

NOTE	No.	PART No.	QTY	PART NAME	NOTE	No.	PART No.	QTY	PART NAME
	1	117-6321	1	COVER AS					
	2	117-6320	1	COVER AS					
	3	9X-2044	3	SCREW					
	4	100-7689	3	NUT AS					

H57643E 01

111-6277 COVER GP-STORAGE

S/N 3MR 1-04978, 4MR 1-00715
Part of 111-6270-Page319.02

OPERATOR STATION

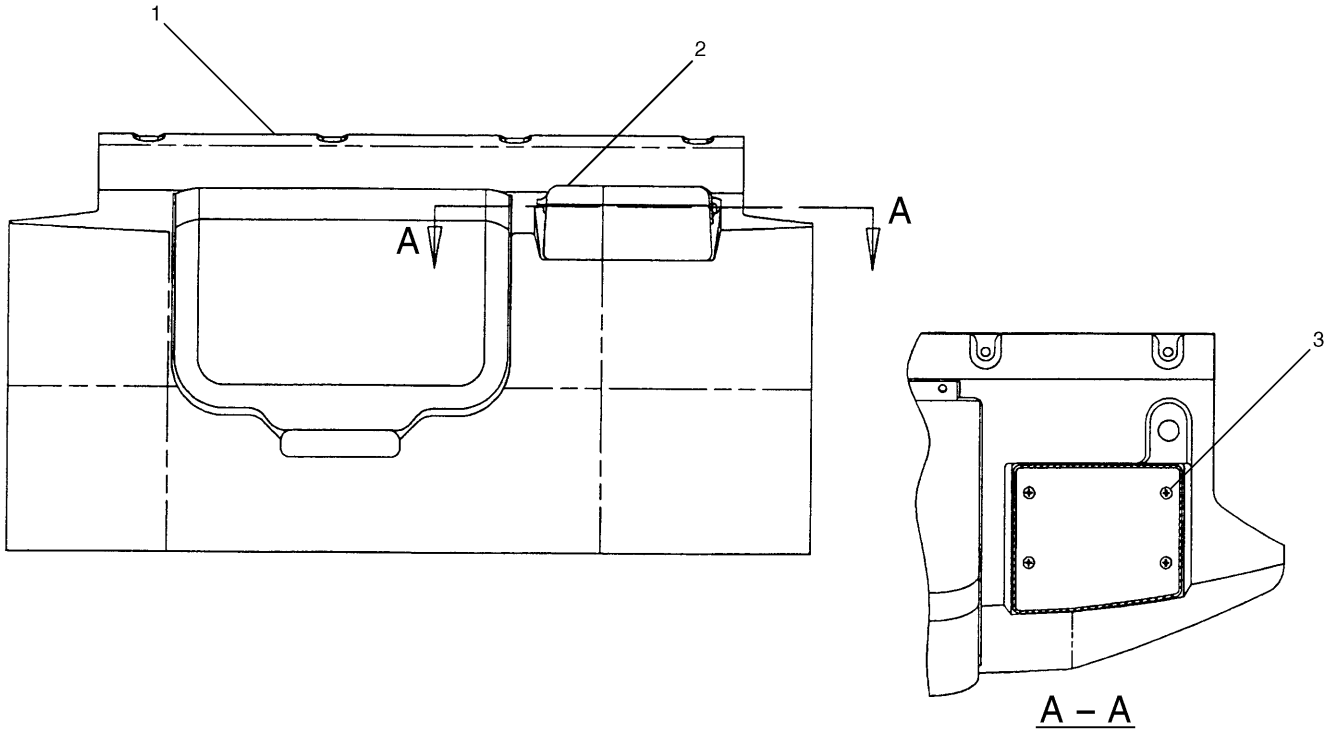

NOTE	No.	PART No.	QTY	PART NAME	NOTE	No.	PART No.	QTY	PART NAME
Y	1	111-6277	1	COVER GP					
	2	155-7028	1	BOX AS					
	3	095-0759	4	SCREW					

Y—SEE SEPARATE ILLUSTRATION

H60226E 00

155-7027 COVER GP-STORAGE

S/N 3MR 04979-Up, 4MR 00716-Up
Part of 155-7115-Page319.04
111-6277-Page336B

OPERATOR STATION

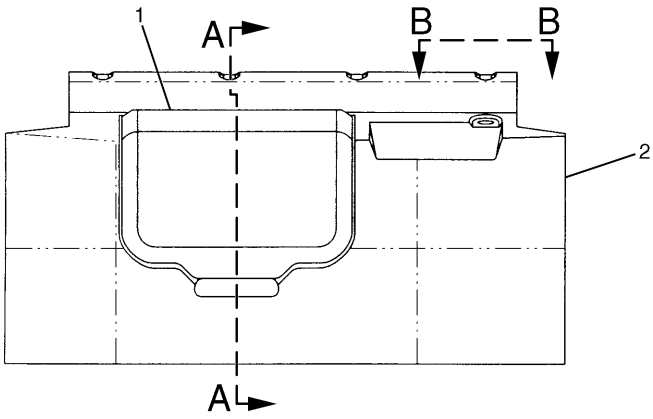

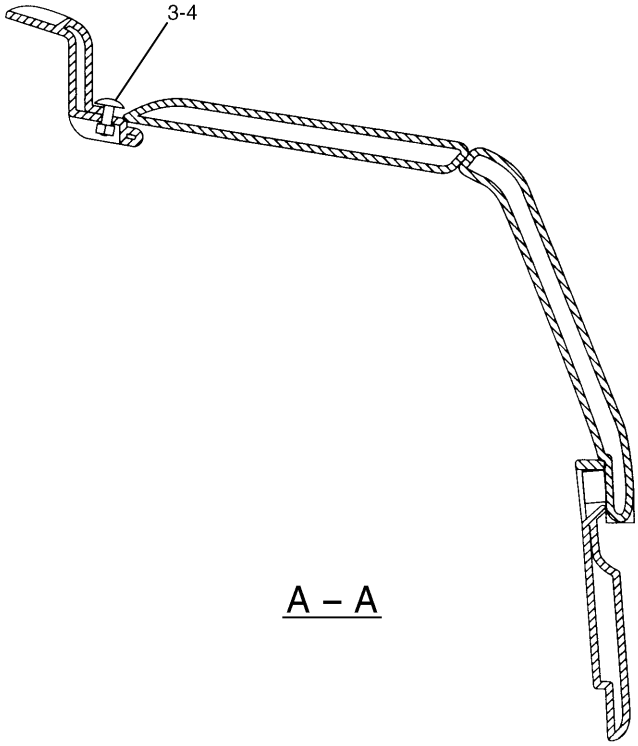

A – A

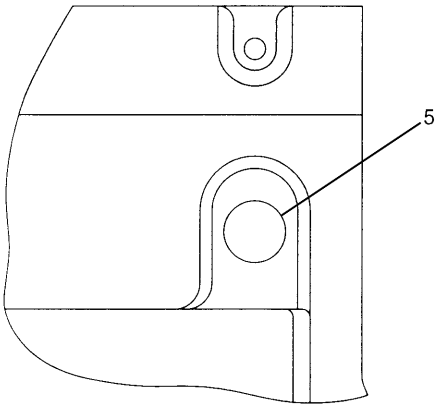

B – B

NOTE	No.	PART No.	QTY	PART NAME	NOTE	No.	PART No.	QTY	PART NAME
	1	130-0275	1	COVER AS					
	2	155-7111	1	COVER AS					
		6I-5331	2	RIVET					
		159-7661	1	SUPPORT AS					
		159-7663	1	SUPPORT AS					
	3	9X-2044	3	SCREW					
	4	100-7689	3	NUT AS					
	5	122-9597	1	CAP					

H59424E 03

111-6277 COVER GP-STORAGE

S/N 3MR 04979-Up, 4MR 00716-Up
Part of 155-7027-Page336A

OPERATOR STATION

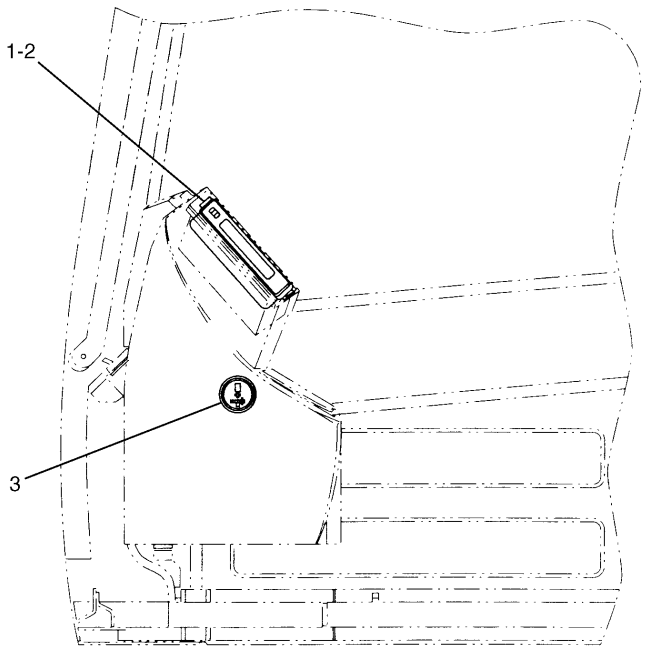

LEFT SIDE VIEW

NOTE	No.	PART No.	QTY	PART NAME
	1	151-9385	1	MONITOR GP
		157-3122	1	ALARM KIT
		171-2655	1	COVER
	2	9X-2044	4	SCREW
	3	9W-1494	1	METER KIT

H60227E 04

106-0176 MONITOR GP-OPERATOR

OPERATOR STATION

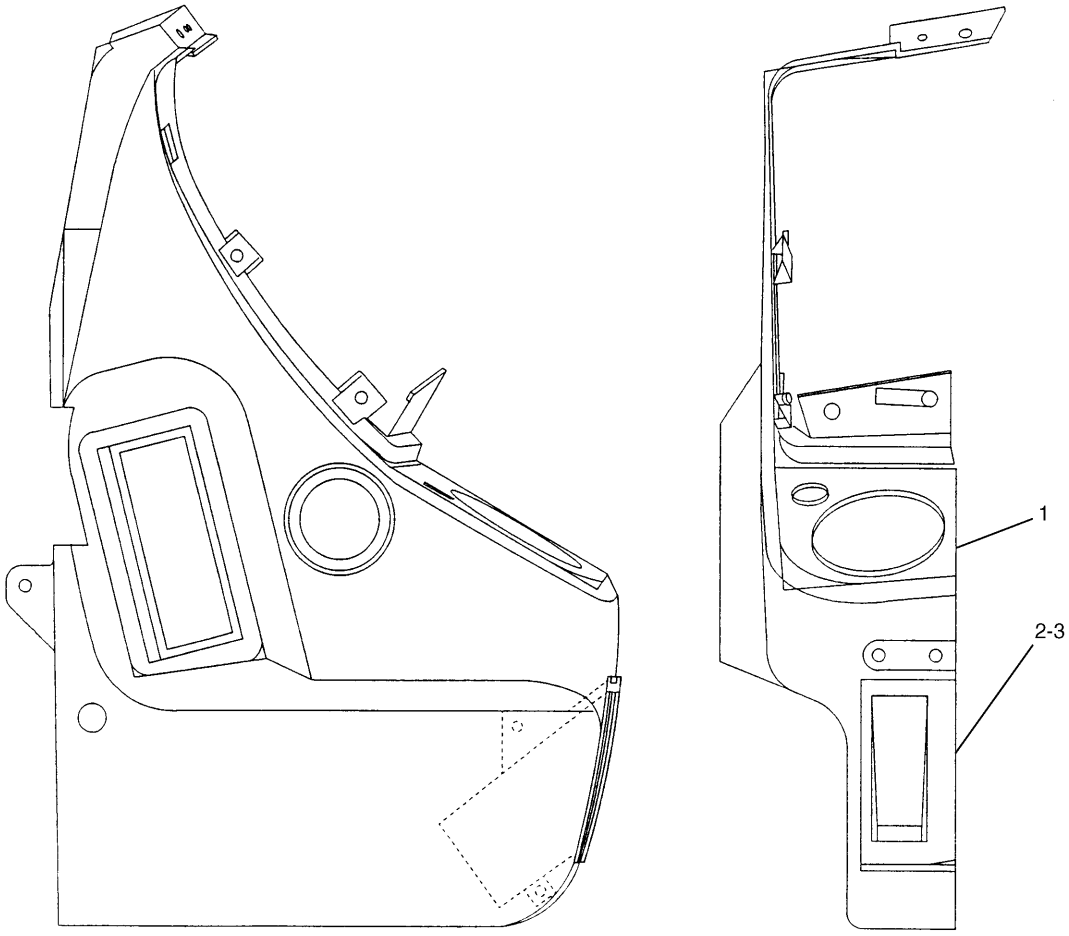

NOTE	No.	PART No.	QTY	PART NAME	NOTE	No.	PART No.	QTY	PART NAME
	1	155-7040	1	COVER					
	2	155-7049	1	HOLDER					
	3	119-5026	2	SCREW					

H60228E 00

155-7039 COVER GP
S/N 3MR 04979-Up, 4MR 00716-Up
Part of 155-7018-Page323.08

OPERATOR STATION

Consists of :

			Page
1	117-6262	WINDOW GP	338
1	117-6263	DRIVE GP-WINDSHIELD-AUTO	339.01
1	117-6264	CONTROL & MTG GP-WINDSHIELD	80.02
1	121-1099	WIRING GP	80.03
1	128-2122	HANDLE	

H50664E 04

111-6310 WINDSHIELD AR-AUTO

S/N 3MR 1-04978, 4MR 1-00716
An Attachment

OPERATOR STATION

Consists of :

			Page
1	155-7062	WINDOW GP	338.01
1	155-7063	DRIVE GP-WINDSHIELD-AUTO	339.03
1	117-6264	CONTROL & MTG GP-WINDSHIELD	80.02
1	121-1099	WIRING GP	80.03
1	128-2122	HANDLE	

H60220E 01

155-7061 WINDSHIELD AR-AUTO

S/N 3MR 04979-Up, 4MR 00716-Up
An Attachment

MEMORANDA

OPERATOR STATION

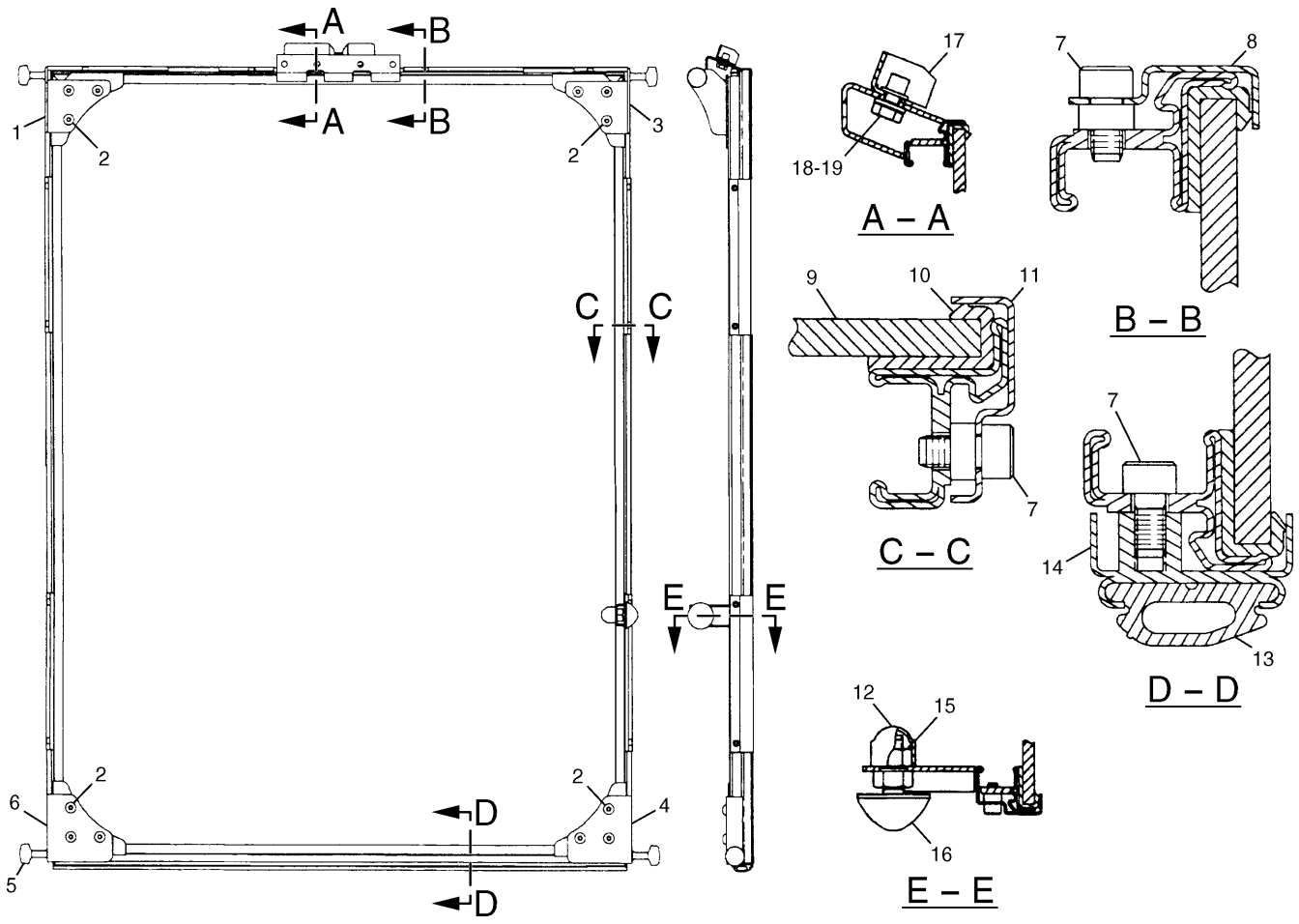

NOTE	No.	PART No.	QTY	PART NAME	NOTE	No.	PART No.	QTY	PART NAME
	1	128-2106	1	BRACKET AS (LH)					
	2	9X-2042	12	SCREW					
	3	128-2108	1	BRACKET AS (RH)					
	4	128-2104	1	BRACKET AS (RH)					
	5	124-3973	4	ROLLER					
	6	128-2102	1	BRACKET AS (LH)					
	7	099-0822	17	BOLT (L=10mm)					
	8	124-3969	2	HOLDER					
	9	124-3967	1	GLASS (UPPER)					
	10	124-3972	1	SEAL					
	11	124-3968	4	HOLDER					
	12	128-2155	1	CAP					
	13	124-3971	1	SEAL					
	14	124-3970	1	HOLDER AS					
	15	8T-4133	1	NUT					
	16	4I-5153	1	BUMPER					
	17	128-2112	1	BRACKET AS					
	18	8T-4200	2	BOLT (L=16mm)					
	19	8T-4224	2	WASHER					

H50399E 01

117-6262 WINDOW GP
S/N 3MR 1-04978, 4MR 1-00715
Part of 111-6310-Page337
An Attachment

OPERATOR STATION

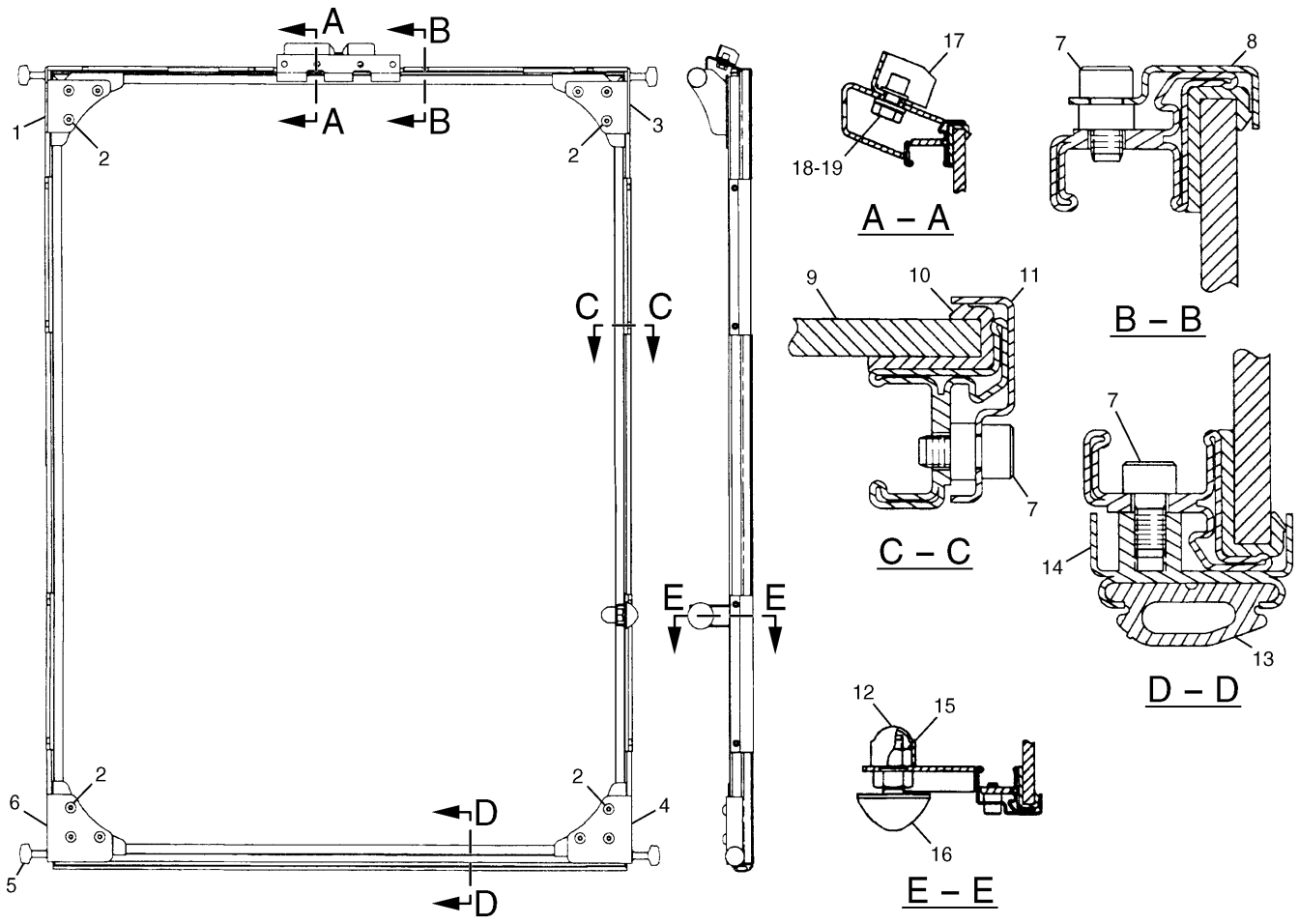

NOTE	No.	PART No.	QTY	PART NAME	NOTE	No.	PART No.	QTY	PART NAME
	1	128-2106	1	BRACKET AS (LH)					
	2	9X-2042	12	SCREW					
	3	128-2108	1	BRACKET AS (RH)					
	4	128-2104	1	BRACKET AS (RH)					
	5	124-3973	4	ROLLER					
	6	128-2102	1	BRACKET AS (LH)					
	7	099-0822	17	BOLT (L=10mm)					
	8	124-3969	2	HOLDER					
	9	155-7046	1	GLASS (UPPER)					
	10	124-3972	1	SEAL					
	11	124-3968	4	HOLDER					
	12	128-2155	1	CAP					
	13	124-3971	1	SEAL					
	14	124-3970	1	HOLDER AS					
	15	8T-4133	1	NUT					
	16	4I-5153	1	BUMPER					
	17	128-2112	1	BRACKET AS					
	18	8T-4200	2	BOLT (L=16mm)					
	19	8T-4224	2	WASHER					

H60218E 00

155-7062 WINDOW GP
S/N 3MR 04979-Up, 4MR 00716-Up
Part of 155-7061-Page337.01
An Attachment

OPERATOR STATION

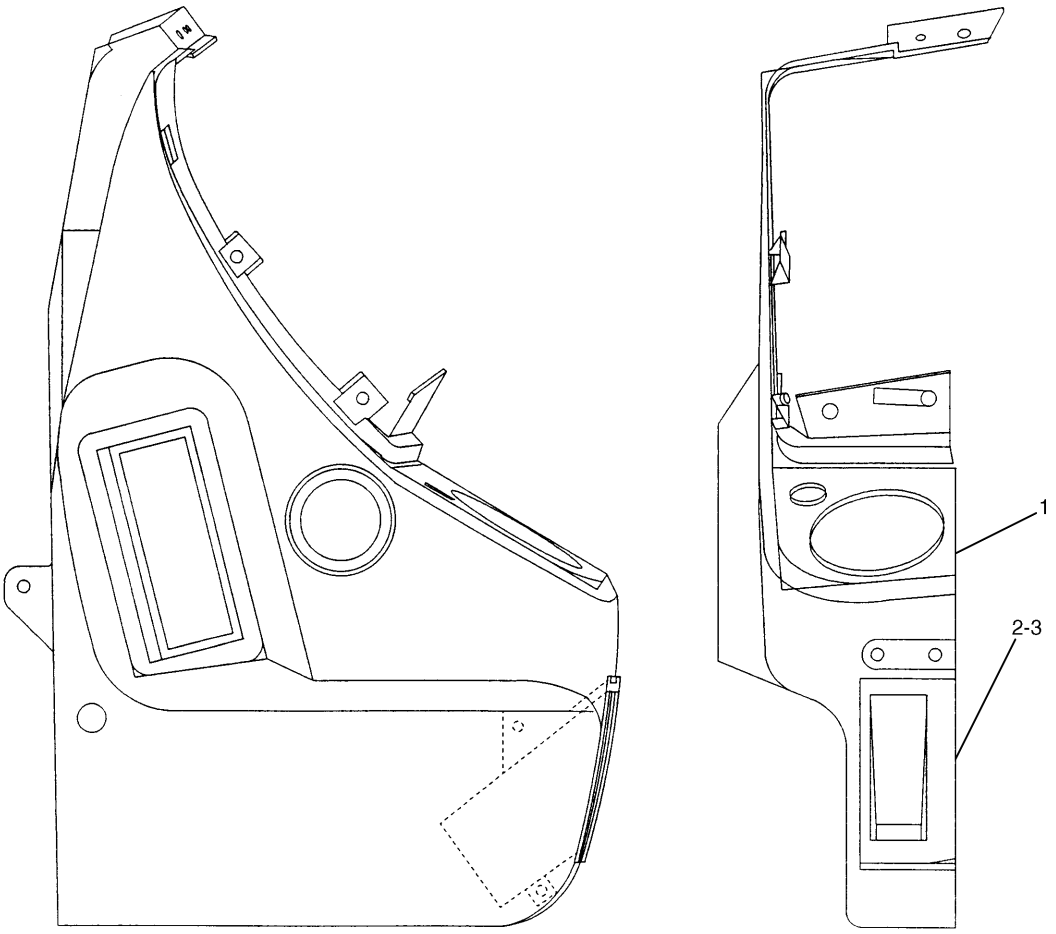

NOTE	No.	PART No.	QTY	PART NAME	NOTE	No.	PART No.	QTY	PART NAME
	1	155-7065	1	COVER					
	2	155-7049	1	HOLDER					
	3	119-5026	2	SCREW					

H60219E 00

155-7064 COVER GP

S/N 3MR 04979-Up, 4MR 00716-Up
Part of 155-7063-Page339.04
An Attachment

MEMORANDA

OPERATOR STATION

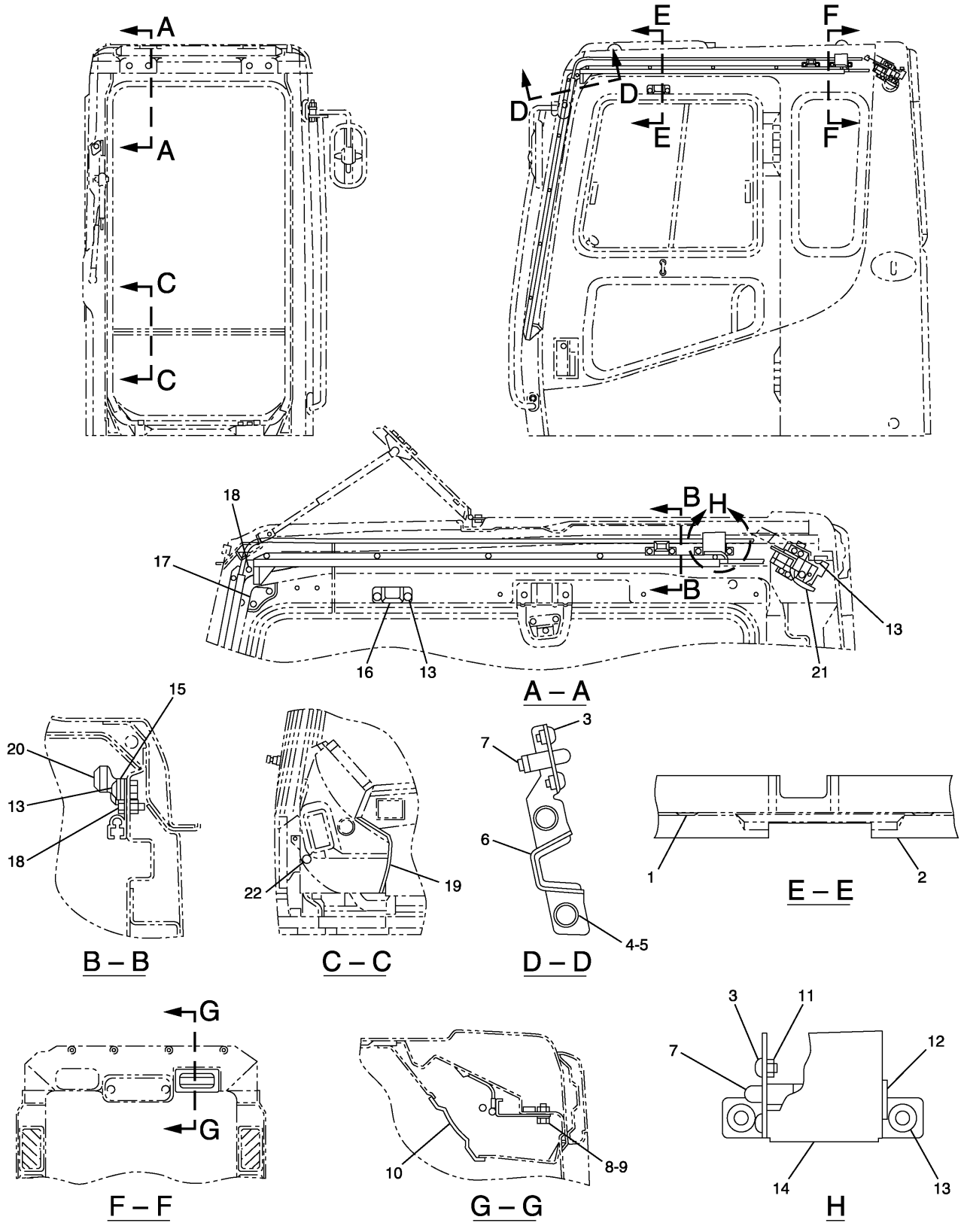

H59701E 03

117-6263 DRIVE GP-WINDSHIELD-AUTO

S/N 3MR 1-04978, 4MR 1-00715
Part of 111-6310-Page337
122-9646-Page340
An Attachment

OPERATOR STATION

NOTE	No.	PART No.	QTY	PART NAME	NOTE	No.	PART No.	QTY	PART NAME
	1	4I-3089	4	CLIP					
	2	128-2111	1	LINER					
	3	8C-7581	4	SCREW					
	4	8T-4200	2	BOLT (L=16mm)					
	5	8T-4224	2	WASHER					
	6	128-2113	1	STOPPER					
	7	117-6306	2	SWITCH					
	8	8T-4137	2	BOLT (L=20mm)					
	9	8T-4121	2	WASHER					
	10	113-4033	1	COVER					
	11	5C-8312	1	NUT					
	12	099-5307	1	GROMMET					
	13	9X-2044	12	SCREW					
	14	128-2116	1	BRACKET AS					
B	15	128-2118	2	SHIM (T=1.00mm)					
B		128-2119	2	SHIM (T=2.00mm)					
B		128-2120	2	SHIM (T=3.00mm)					
	16	128-2115	1	BRACKET					
	17	128-2154	2	PLATE					
	18	6V-5683	22	BOLT (L=16mm)					
	19	128-2099	1	COVER					
	20	128-2117	2	STOPPER					
Y	21	122-9646	1	DRIVE AS					
	22	127-3735	1	SEAL					

B—USE AS REQUIRED

Y—SEE SEPARATE ILLUSTRATION

H59701E 03

117-6263 DRIVE GP-WINDSHIELD-AUTO

S/N 3MR 1-04978, 4MR 1-00715

Part of 111-6310-Page337

122-9646-Page340

An Attachment

OPERATOR STATION

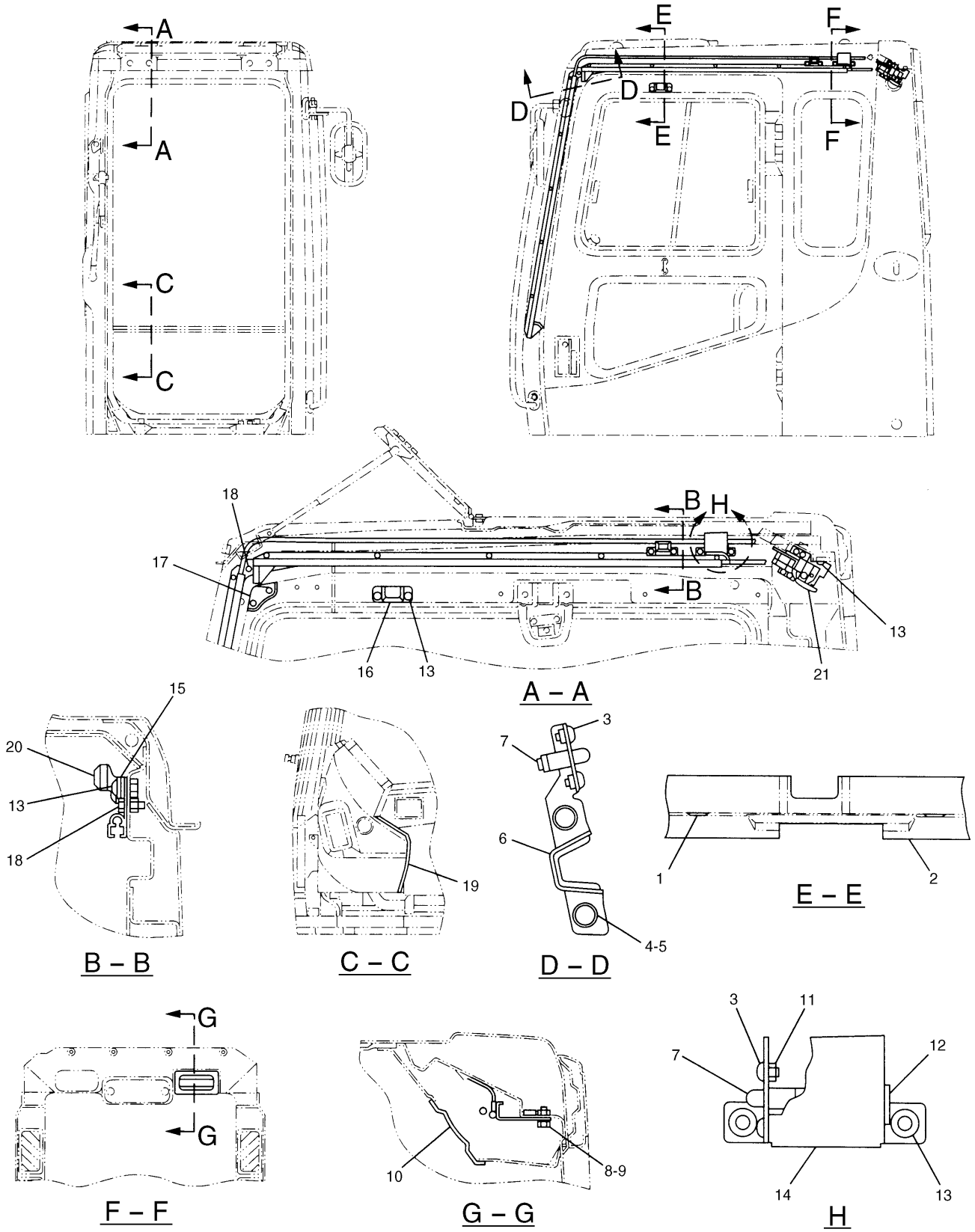

H60224E 00

155–7063 DRIVE GP–WINDSHIELD–AUTO

S/N 3MR 04979–Up, 4MR 00716–Up

Part of 155–7061–Page337.01

155–7064–Page338.02,122–9646–Page340

An Attachment

OPERATOR STATION

NOTE	No.	PART No.	QTY	PART NAME	NOTE	No.	PART No.	QTY	PART NAME
	1	4I-3089	4	CLIP					
	2	128-2111	1	LINER					
	3	8C-7581	4	SCREW					
	4	8T-4200	2	BOLT (L=16mm)					
	5	8T-4224	2	WASHER					
	6	128-2113	1	STOPPER					
	7	117-6306	2	SWITCH					
	8	8T-4137	2	BOLT (L=20mm)					
	9	8T-4121	2	WASHER					
	10	113-4033	1	COVER					
	11	5C-8312	1	NUT					
	12	099-5307	1	GROMMET					
	13	9X-2044	12	SCREW					
	14	128-2116	1	BRACKET AS					
B	15	128-2118	2	SHIM (T=1.00mm)					
B		128-2119	2	SHIM (T=2.00mm)					
B		128-2120	2	SHIM (T=3.00mm)					
	16	128-2115	1	BRACKET					
	17	128-2154	2	PLATE					
	18	6V-5683	22	BOLT (L=16mm)					
Y	19	155-7064	1	COVER GP					
	20	128-2117	2	STOPPER					
Y	21	122-9646	1	DRIVE AS					

B—USE AS REQUIRED

Y—SEE SEPARATE ILLUSTRATION

H60224E 00

155-7063 DRIVE GP-WINDSHIELD-AUTO

S/N 3MR 04979-Up, 4MR 00716-Up
Part of 155-7061-Page337.01
155-7064-Page338.02,122-9646-Page340
An Attachment

OPERATOR STATION

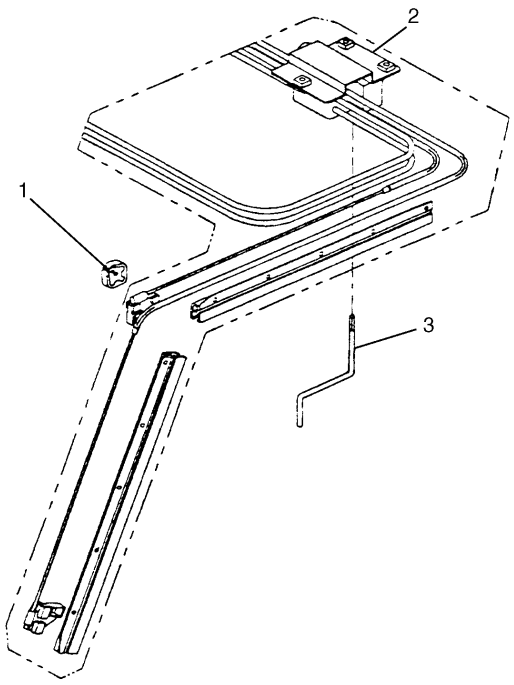

NOTE	No.	PART No.	QTY	PART NAME
	1	128-2121	2	STOPPER
Y	2	128-2123	1	DRIVE AS
A	3	128-2122	1	HANDLE

A—NOT PART OF THIS GROUP

Y—SEE SEPARATE ILLUSTRATION

H50665E 02

122-9646 DRIVE AS-WINDSHIELD-AUTO

Part of 117-6263-Page339.02,155-7063-Page339.04
128-2123-Page341
An Attachment

OPERATOR STATION

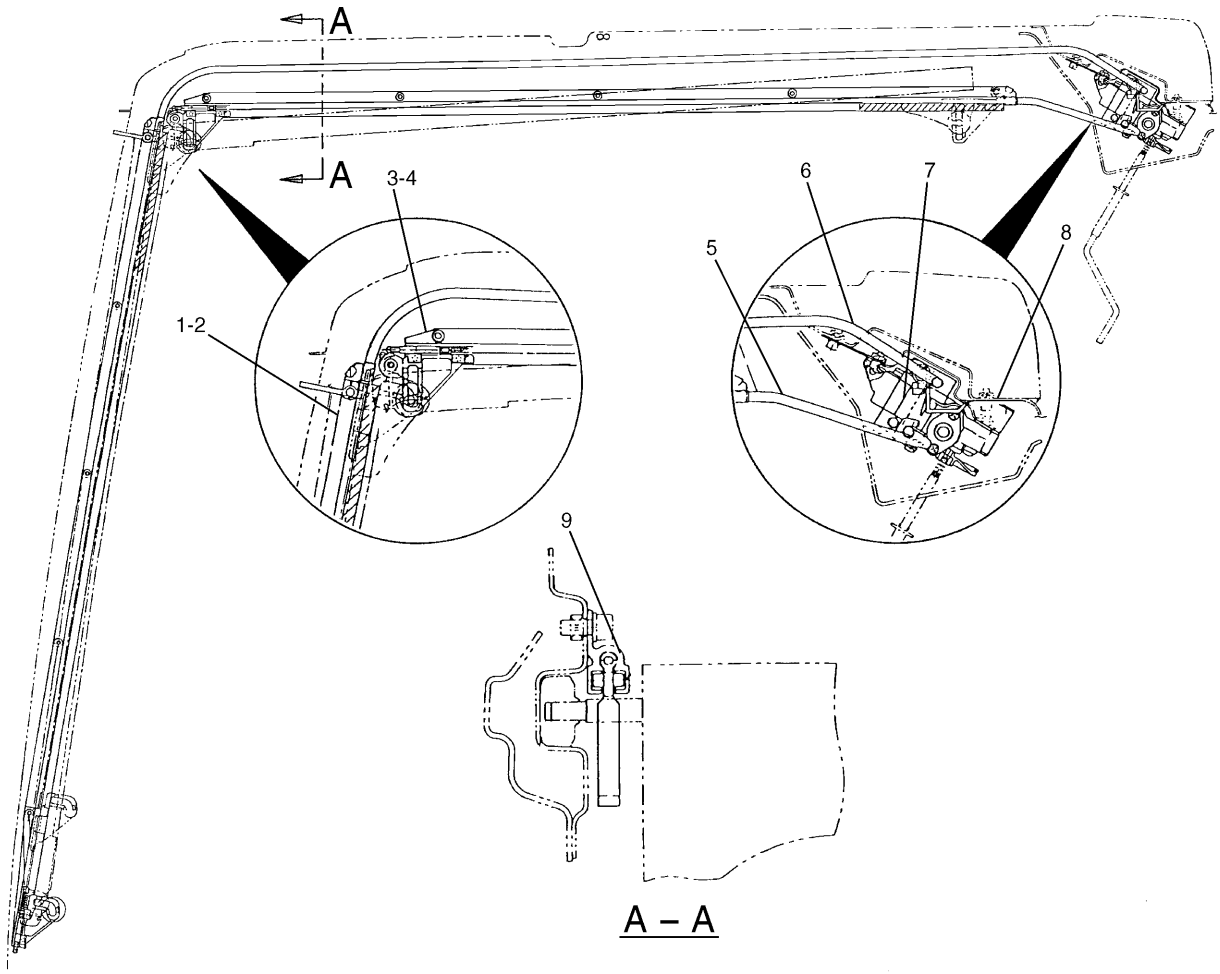

NOTE	No.	PART No.	QTY	PART NAME	NOTE	No.	PART No.	QTY	PART NAME
	1	124-3959	1	RAIL (RH)					
	2	128-2124	1	RAIL (LH)					
	3	128-2125	1	RAIL (RH)					
	4	128-2126	1	RAIL (LH)					
	5	128-2127	1	CABLE AS					
	6	128-2128	1	CABLE AS					
	7	128-2129	1	GEAR AS					
	8	128-2130	1	BRACKET					
	9	124-3960	8	BLOCK					

H50666E 01

128-2123 DRIVE AS-WINDSHIELD-AUTO

Part of 122-9646-Page340
An Attachment

MEMORANDA

OPERATOR STATION

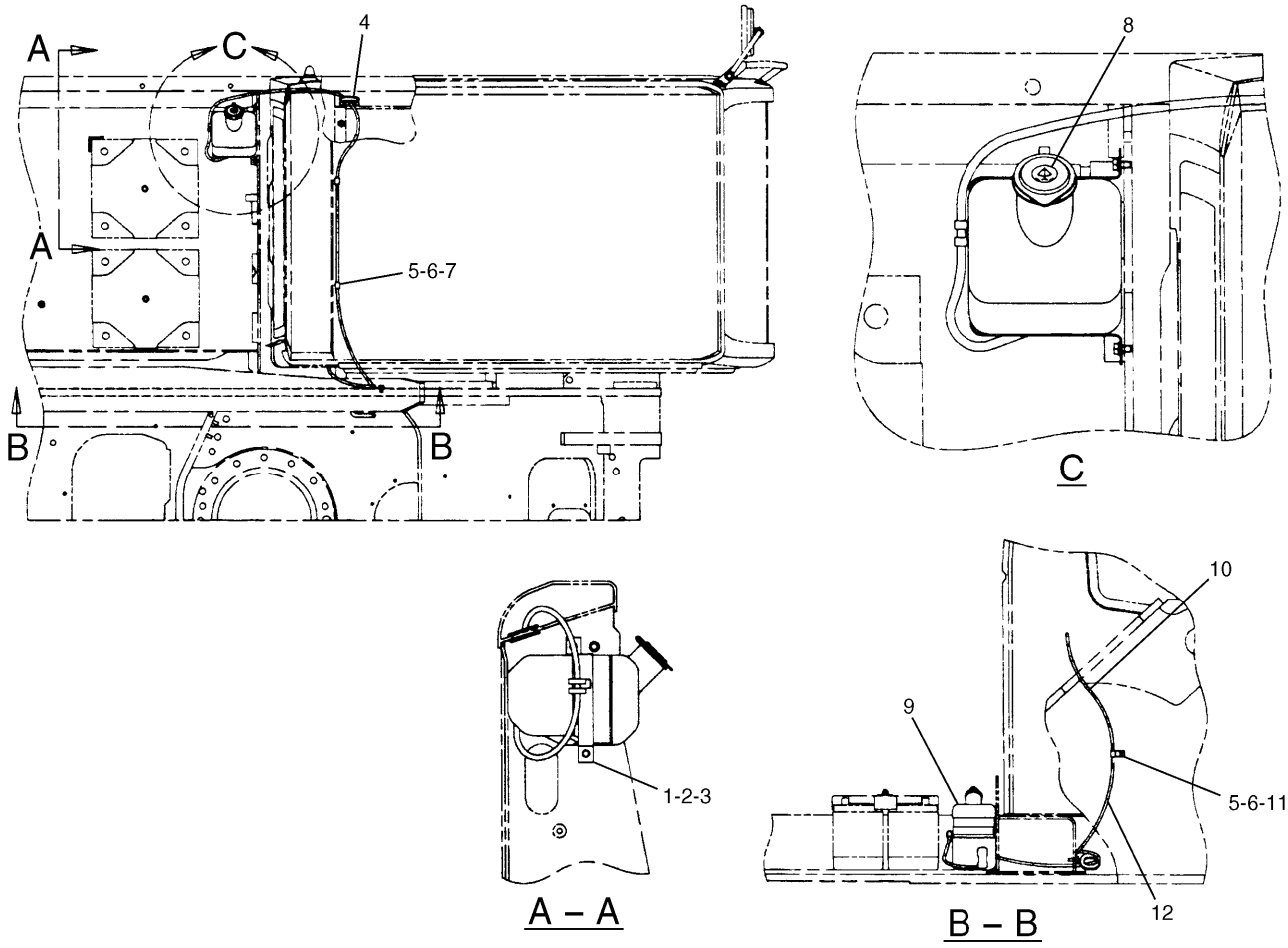

NOTE	No.	PART No.	QTY	PART NAME	NOTE	No.	PART No.	QTY	PART NAME
	1	121-7102	1	SUPPORT AS					
	2	9X-8256	2	WASHER					
	3	8T-4970	2	BOLT (L=14mm)					
	4	2D-1290	1	GROMMET					
	5	6V-3265	3	CLIP					
	6	8T-4121	3	WASHER					
	7	8T-4195	2	BOLT (L=30mm)					
	8	6V-2679	1	FILM (INSTRUCTION)					
Y	9	4I-0559	1	TANK AS					
	10	7Y-3474	1	VALVE AS					
	11	8T-4191	1	BOLT (L=16mm)					
D	12	5P-5992		HOSE…(2.7m)					

D—ORDER BY THE METER

Y—SEE SEPARATE ILLUSTRATION

H50667E 04

111-6267 WASHER GP-WINDOW

4I-0559-Page344

OPERATOR STATION

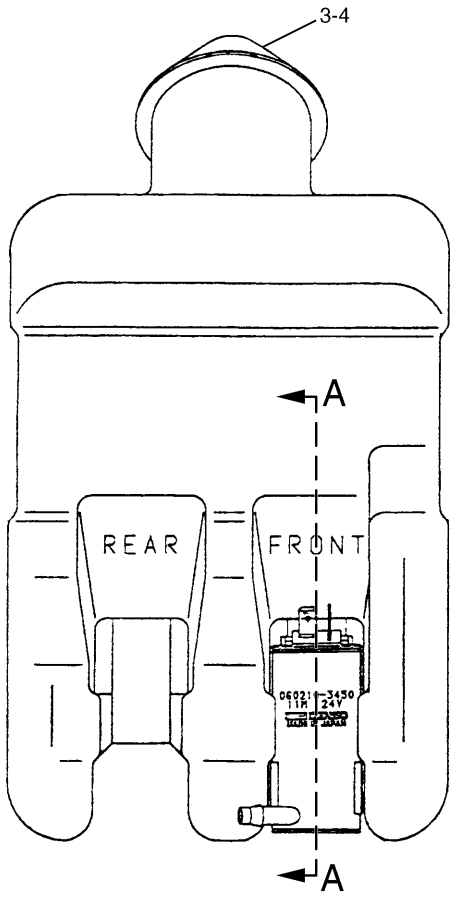

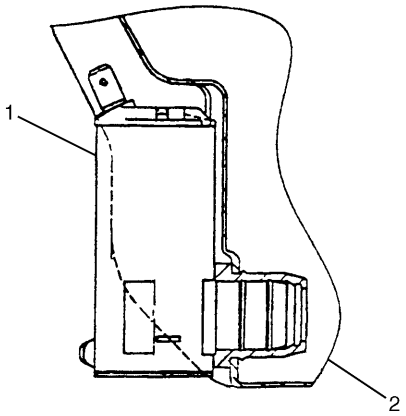

A – A

NOTE	No.	PART No.	QTY	PART NAME	NOTE	No.	PART No.	QTY	PART NAME
	1	7T-8890	1	PUMP AS					
	2	8T-5914	1	GROMMET					
	3	3W-6398	1	CAP					
	4	3W-6399	1	PACKING					

H50668E 02

4I-0559 TANK AS-WINDOW WASHER

Part of 111-6267-Page343

OPERATOR STATION

Consists of :

			Page
1	111-4695	WIRING GP-LOWER WIPER	80.04
1	111-6315	WIPER & WASHER GP-WINDOW	348
1	111-6316	WASHER GP-WINDOW	346

H50364E 01

111-6314 WIPER AR-LOWER
An Attachment

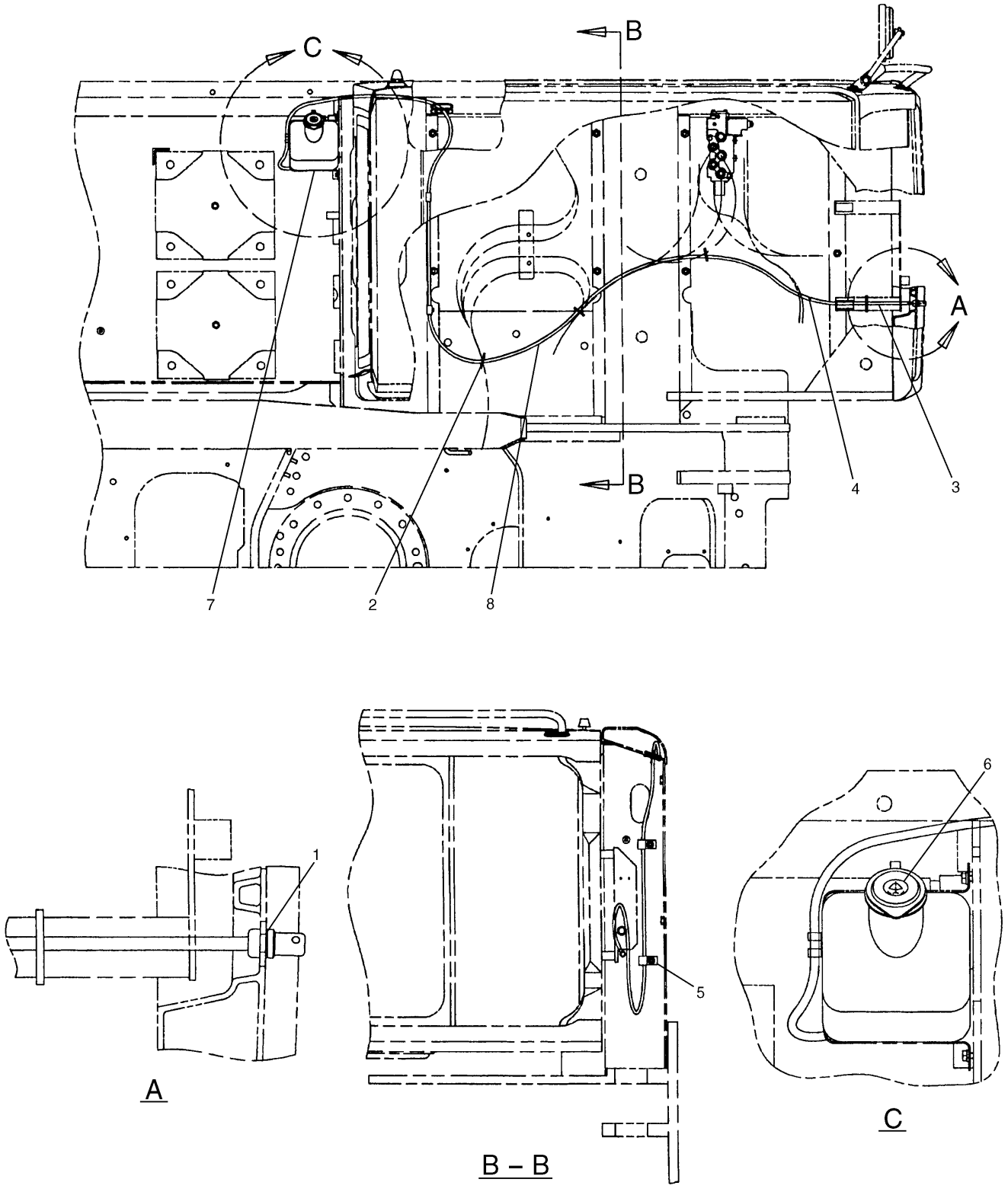

H51772E 03

111-6316 WASHER GP-WINDOW
Lower
Part of 111-6314-Page345
8R-1774-Page347
An Attachment

OPERATOR STATION

NOTE	No.	PART No.	QTY	PART NAME	NOTE	No.	PART No.	QTY	PART NAME
	1	109-4429	1	NOZZLE AS					
	2	096-0061	4	STRAP					
D	3	5P-5992		HOSE…(0.3m)					
	4	7Y-3474	1	VALVE AS					
	5	7S-4244	2	CLIP					
	6	6V-2679	1	FILM (INSTRUCTION)					
Y	7	8R-1774	1	BOTTLE GP					
D	8	5P-5992		HOSE…(3.0m)					

D—ORDER BY THE METER

Y—SEE SEPARATE ILLUSTRATION

H51772E 03

111-6316 WASHER GP-WINDOW

Lower

Part of 111-6314-Page345
8R-1774-Page347

An Attachment

MEMORANDA

OPERATOR STATION

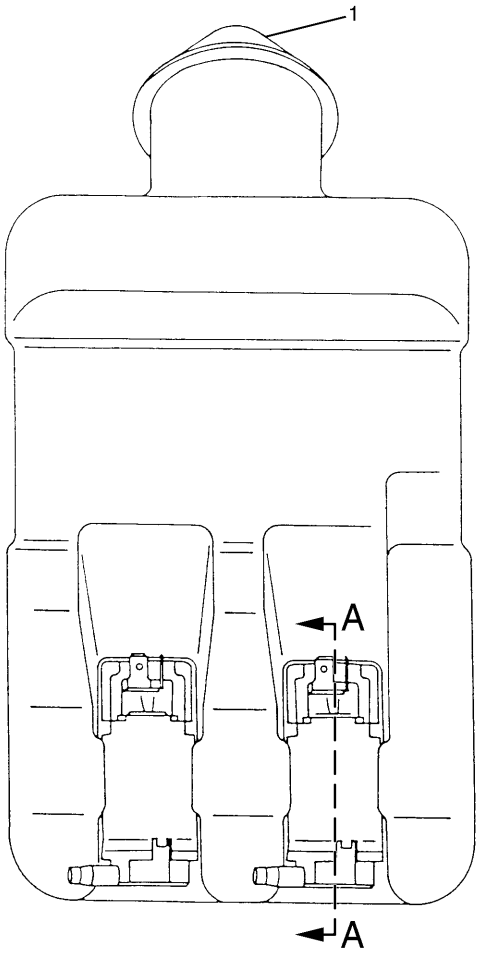

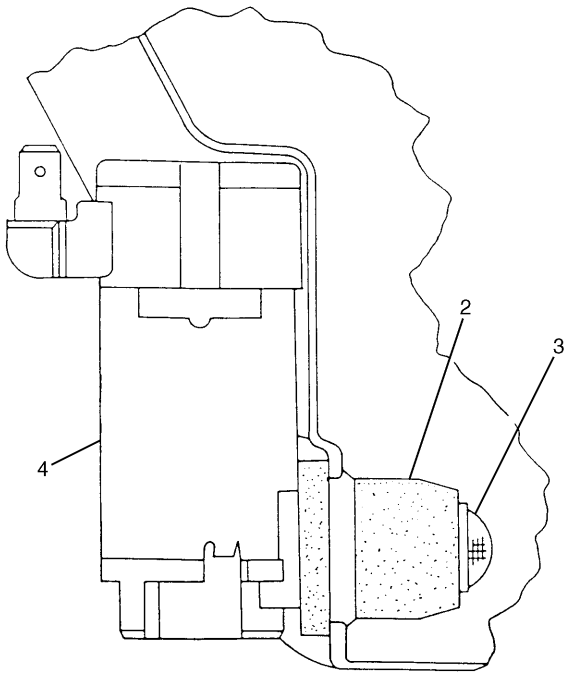

A – A

NOTE	No.	PART No.	QTY	PART NAME	NOTE	No.	PART No.	QTY	PART NAME
	1	3W-6398	1	CAP					
		3W-6399	1	PACKING					
	2	8T-5914	2	GROMMET					
	3	8T-5913	2	FILTER					
	4	7T-8890	2	PUMP AS					

H50389E 02

8R-1774 BOTTLE GP-WINDSHIELD WASHER

For 2 Pumps

Part of 111-6316-Page346.01

An Attachment

OPERATOR STATION

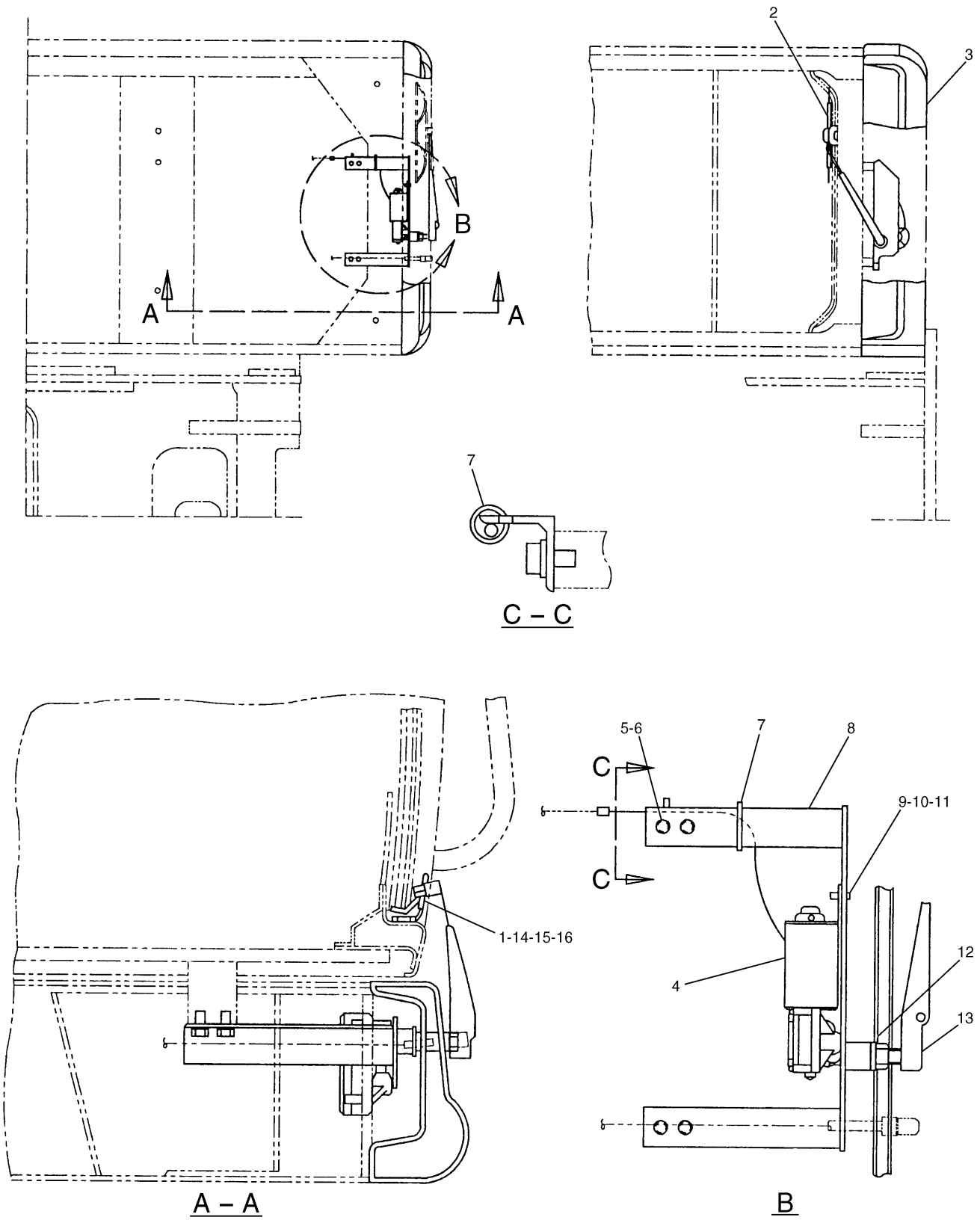

111-6315 WIPER & WASHER GP-WINDOW
Lower
Part of 111-6314-Page345
113-3452-Page349
An Attachment

OPERATOR STATION

NOTE	No.	PART No.	QTY	PART NAME	NOTE	No.	PART No.	QTY	PART NAME
	1	4I-1163	1	BRACKET					
	2	4I-5021	1	BLADE AS					
	3	154-0650	1	BUMPER AS					
Y	4	113-3452	1	MOTOR AS					
	5	8T-4121	4	WASHER					
	6	8T-4191	4	BOLT (L=16mm)					
	7	096-0061	2	STRAP					
	8	113-3439	1	BRACKET AS					
	9	6V-9672	2	SCREW					
	10	5C-8312	2	NUT					
	11	096-6166	4	WASHER					
	12	9X-8257	1	WASHER					
	13	4I-5020	1	ARM AS					
	14	5C-9553	2	BOLT (L=16mm)					
	15	8H-3481	2	LOCKWASHER					
	16	9X-8256	2	WASHER					

Y—SEE SEPARATE ILLUSTRATION

H60403E 06

111-6315 WIPER & WASHER GP-WINDOW

Lower

Part of 111-6314-Page345
113-3452-Page349

An Attachment

MEMORANDA

OPERATOR STATION

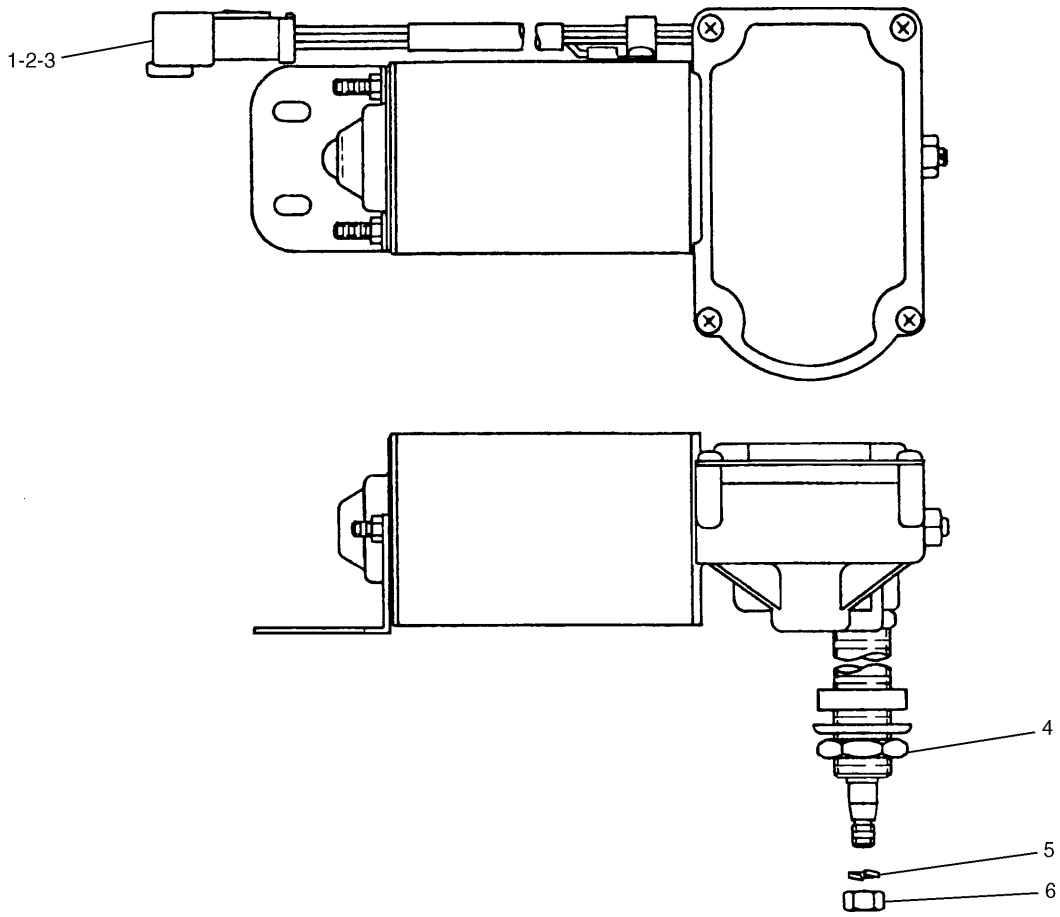

NOTE	No.	PART No.	QTY	PART NAME	NOTE	No.	PART No.	QTY	PART NAME
	1	8T-8729	4	PIN					
	2	102-8804	1	RECEPTACLE KIT					
	3	3E-3377	1	WEDGE					
	4	6I-5497	1	NUT					
	5	6I-5496	1	WASHER					
	6	6I-5495	1	NUT					

H50917E 00

113-3452 MOTOR AS-WINDOW WIPER

Part of 111-6315-Page348.01
An Attachment

MEMORANDA

MEMORANDA

OPERATOR STATION

Consists of :

			Page
1	111-4844	WIRING GP-RADIO	80.06
1	153-2505	WIRING GP-CONSOLE.....	80.15A

H60404E 00

153-2506 RADIO GP-AM/FM
S/N 3MR 04979-Up, 4MR 00716-Up
An Attachment

OPERATOR STATION

Consists of :

			Page
1	116-0236	WIRING GP-RADIO	80.05
1	116-0217	WIRING GP-CONSOLE.....	80.08

H51400E 01

116-0158 RADIO GP-AM
An Attachment

Consists of :

			Page
1	111-4844	WIRING GP-RADIO	80.06
1	111-4845	WIRING GP-CONSOLE.....	80.12

H50373E 01

111-4693 RADIO GP-AM/FM
An Attachment

OPERATOR STATION

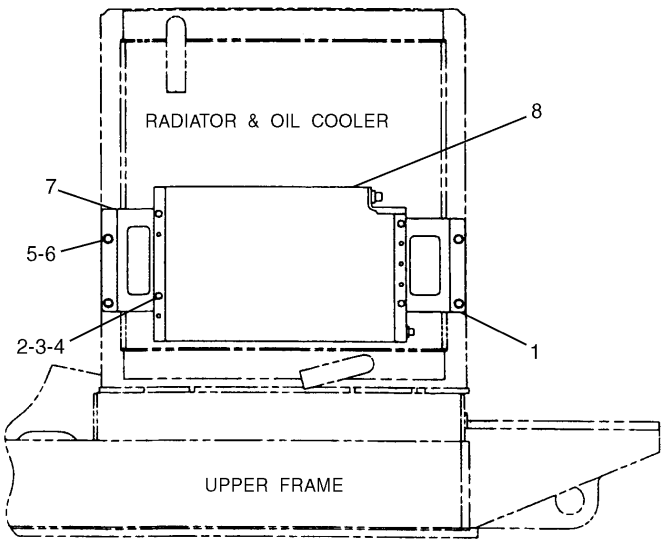

NOTE	No.	PART No.	QTY	PART NAME
	1	4I-4575	1	BRACKET AS
	2	7X-0818	4	BOLT (L=45mm)
	3	7H-3937	4	LOCKWASHER
	4	8T-4224	4	WASHER
	5	8T-4137	4	BOLT (L=20mm)
	6	8T-4121	4	WASHER
	7	124-4060	1	BRACKET AS
	8	105-9343	1	CONDENSER AS

H53350E 03

117-6314 CONDENSER & MTG GP-AIR COND

OPERATOR STATION

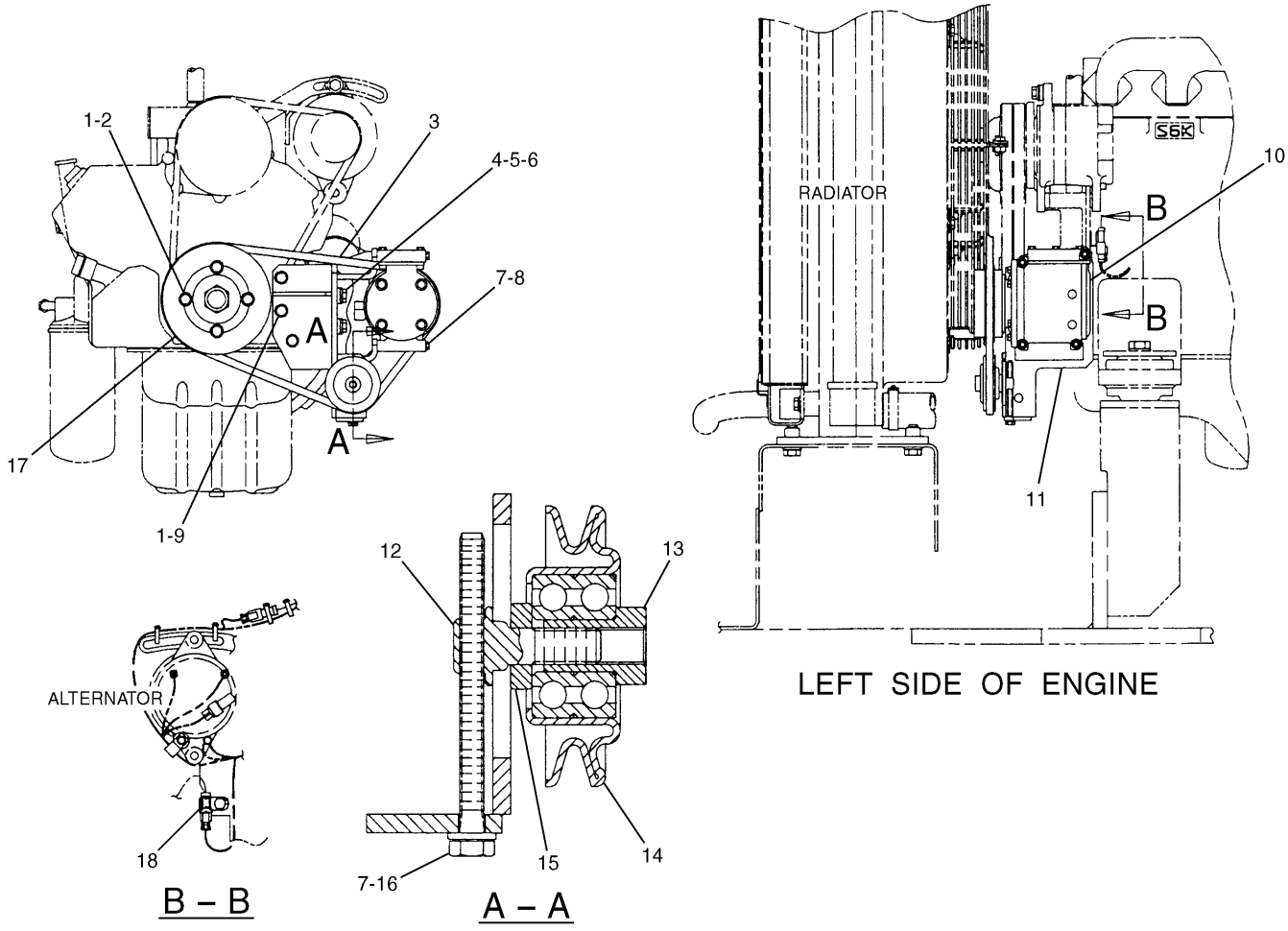

NOTE	No.	PART No.	QTY	PART NAME	NOTE	No.	PART No.	QTY	PART NAME
	1	8T-4121	7	WASHER					
	2	8T-4182	4	BOLT (L=45mm)					
	3	9M-1091	1	V-BELT					
	4	2M-0849	2	WASHER					
	5	8T-4223	2	WASHER					
	6	8T-4648	2	BOLT (L=70mm)					
	7	8T-4224	5	WASHER					
	8	8T-4177	4	BOLT (L=90mm)					
	9	8T-4172	3	BOLT (L=80mm)					
	10	117-6353	1	COMPRESSOR GP					
	11	118-9862	1	BRACKET AS					
	12	118-9864	1	SHAFT					
	13	118-9865	1	COLLAR					
	14	118-9867	1	PULLEY AS					
	15	7Y-1972	1	SPACER					
	16	085-9492	1	BOLT (L=100mm)					
	17	118-9863	1	PULLEY					
	18	116-0118	1	CLIP					

H66996E 03

109-9500 COMPRESSOR GP-REFRIGERANT

OPERATOR STATION

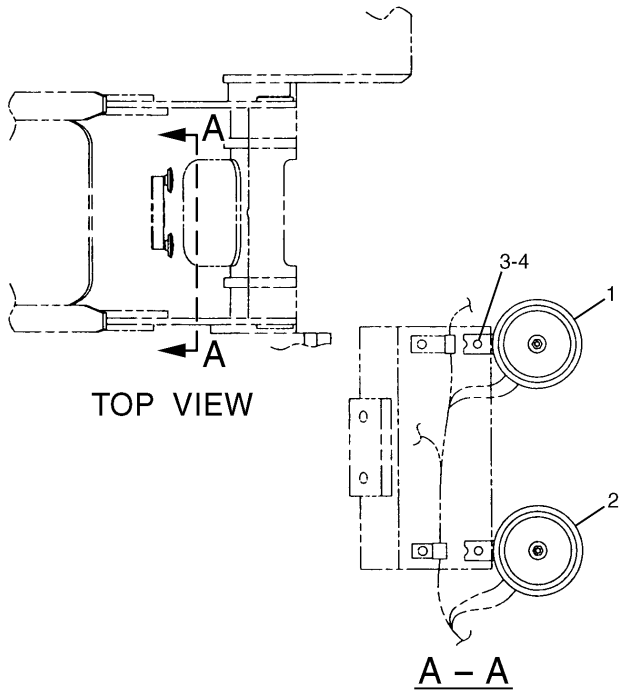

NOTE	No.	PART No.	QTY	PART NAME
	1	7Y-3919	1	HORN AS
		095-0826	2	LOCKWASHER
		095-7930	2	SCREW
	2	7Y-3920	1	HORN AS
		095-0826	2	LOCKWASHER
		095-7930	2	SCREW
	3	8T-4191	2	BOLT (L=16mm)
	4	8T-4121	2	WASHER

H50062E 05

7Y-3813 HORN GP-ELECTRIC

OPERATOR STATION

Consists of :

			Page
1	121-8654	GUARD GP-OVERHEAD	356
1	122-4035	HOOD & GUARD GP	127

H54506E 00

126-3784 GUARD AR-OVERHEAD
An Attachment

OPERATOR STATION

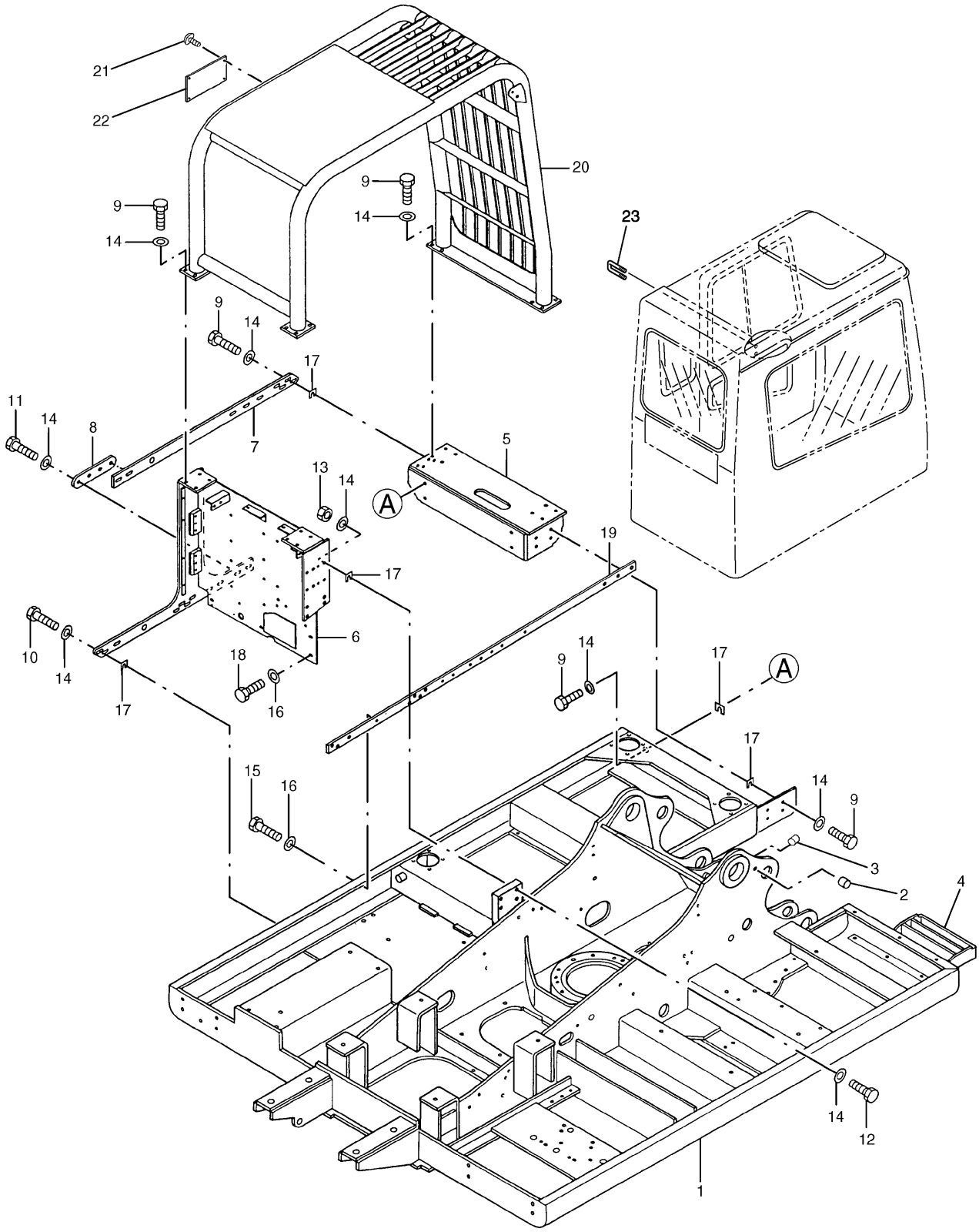

121-8654 GUARD GP-OVERHEAD
Part of 126-3784-Page355
An Attachment

OPERATOR STATION

NOTE	No.	PART No.	QTY	PART NAME	NOTE	No.	PART No.	QTY	PART NAME
	1	130-4243	1	FRAME AS					
		117-5492	1	FRAME AS					
	2	4I-7077	1	BOSS					
	3	7Y-0633	1	BOSS					
	4	113-2204	1	PLATE AS					
	5	134-7106	1	SUPPORT AS					
	6	121-8732	1	SUPPORT AS					
	7	121-8743	1	PLATE					
	8	101-2260	1	PLATE					
	9	7X-2553	28	BOLT (L=40mm)					
	10	8T-4193	12	BOLT (L=50mm)					
	11	8T-4140	4	BOLT (L=60mm)					
	12	8T-4175	4	BOLT (L=90mm)					
	13	8T-4132	4	NUT					
	14	9X-8257	52	WASHER					
	15	8T-4139	2	BOLT (L=30mm)					
	16	8T-4223	6	WASHER					
B	17	093-0331	32	SHIM (T=2.00mm)					
B		093-0332	32	SHIM (T=1.00mm)					
B		093-0333	32	SHIM (T=0.70mm)					
B		093-0334	32	SHIM (T=0.40mm)					
	18	8T-4183	4	BOLT (L=40mm)					
	19	121-8742	1	PLATE					
	20	7I-0323	1	GUARD AS					
	21	4B-4158	4	SCREW					
	22	116-1517	1	PLATE (WARNING)					
	23	171-3375	1	HOOK					
				THE FOLLOWING SERVICE REPAIR IS AVAILABLE:					
		7I-6881	1	PLATE (L=1100mm)					

B—USE AS REQUIRED

H78100E 04

121-8654 GUARD GP-OVERHEAD

Part of 126-3784-Page355
An Attachment

OPERATOR STATION

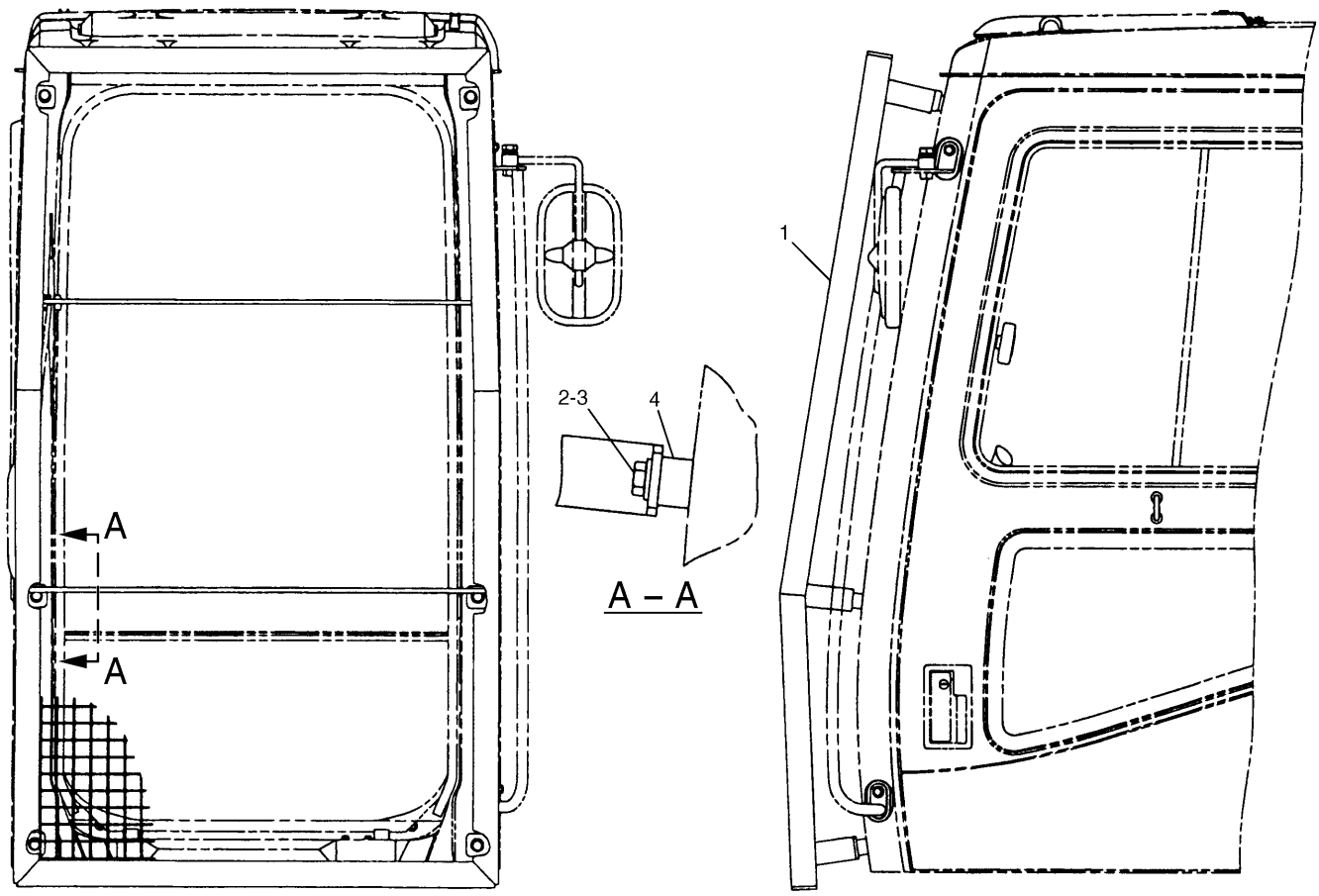

NOTE	No.	PART No.	QTY	PART NAME	NOTE	No.	PART No.	QTY	PART NAME
	1	128-2175	1	FRAME AS					
	2	8T-4192	6	BOLT (L=25mm)					
	3	8T-4223	6	WASHER					
	4	4I-6602	6	BOSS					

H51976E 00

128-2156 GUARD GP-WINDOW
An Attachment

OPERATOR STATION

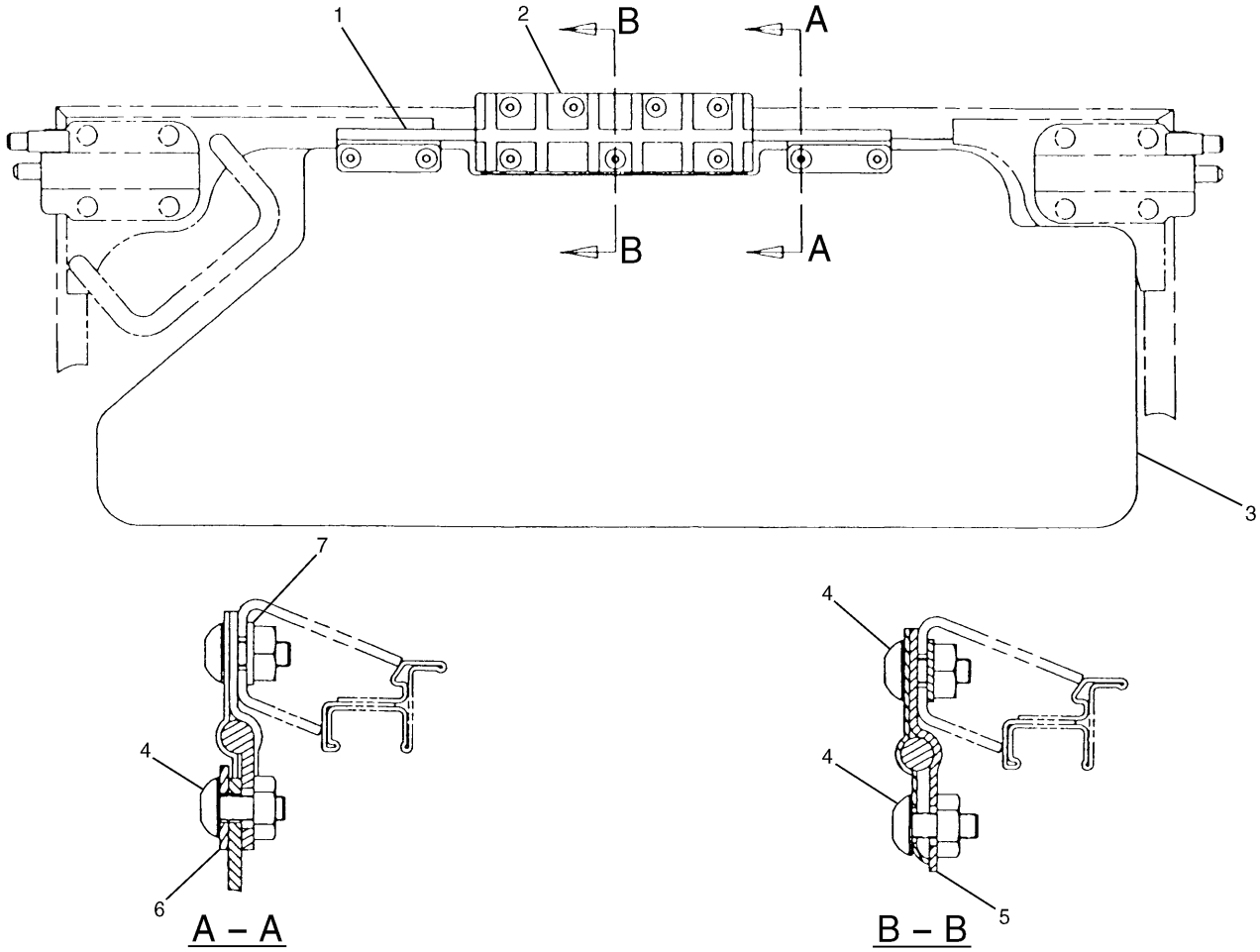

NOTE	No.	PART No.	QTY	PART NAME	NOTE	No.	PART No.	QTY	PART NAME
	1	128-2160	1	SUPPORT AS					
	2	6I-5123	1	PLATE					
	3	128-2152	1	VISOR					
	4	9X-2044	11	SCREW					
	5	6I-5121	1	PLATE AS					
	6	6I-5126	2	STRIP					
	7	4I-7032	1	PLATE AS					

H57649E 00

111-6313 VISOR GP-SUN
An Attachment

OPERATOR STATION

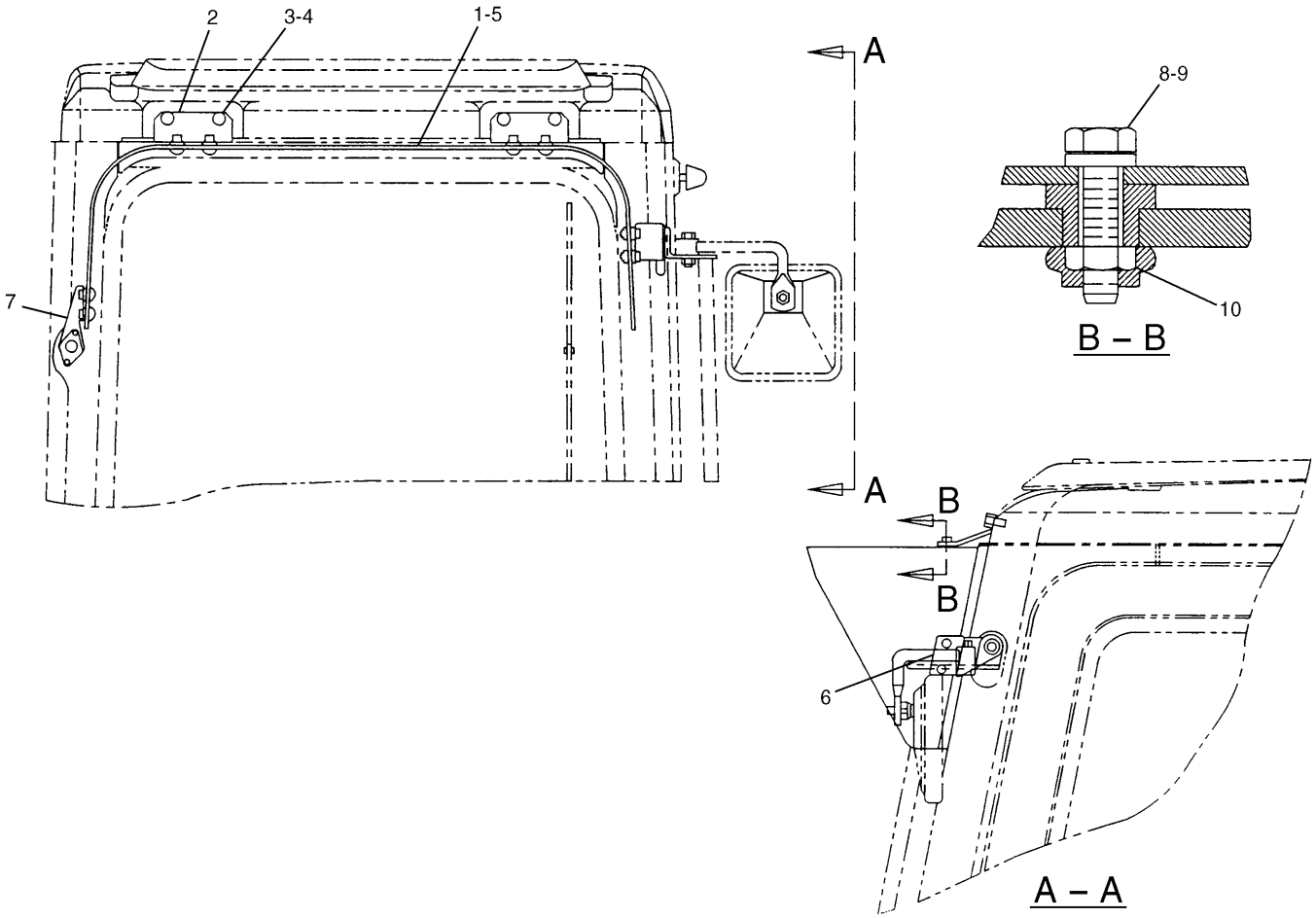

NOTE	No.	PART No.	QTY	PART NAME	NOTE	No.	PART No.	QTY	PART NAME
E	1	3E-8268		TRIM…(131cm)					
	2	4I-5039	2	BRACKET					
	3	8T-4137	4	BOLT (L=20mm)					
	4	8T-4121	4	WASHER					
	5	6I-5388	1	VISOR					
	6	4I-5041	1	BRACKET					
	7	4I-5040	1	BRACKET					
	8	6V-7357	8	BOLT (L=25mm)					
	9	9X-8256	8	WASHER					
	10	4I-5049	8	NUT					

E—ORDER BY THE CENTIMETER

H53234E 02

6I-5387 VISOR GP-PROTECTION-RAIN
An Attachment

OPERATOR STATION

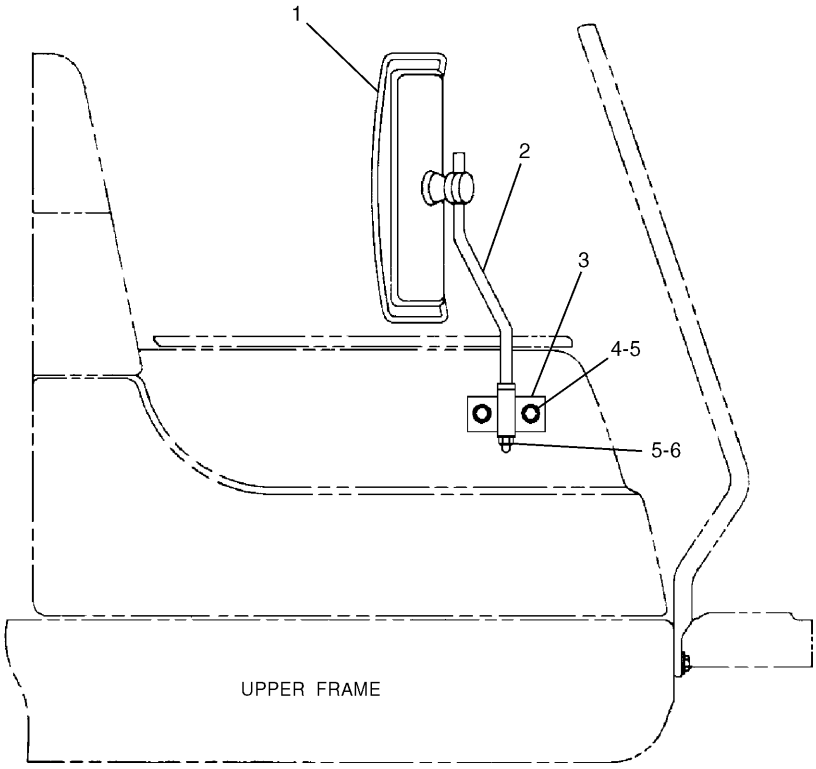

NOTE	No.	PART No.	QTY	PART NAME	NOTE	No.	PART No.	QTY	PART NAME
	1	4I-8135	1	MIRROR					
	2	114-6294	1	BAR AS					
	3	114-6291	1	SUPPORT AS					
	4	099-4691	2	BOLT					
	5	8T-4223	3	WASHER					
	6	8T-4244	1	NUT					

H53235E 01

108-9836 MIRROR GP-REAR VIEW
S/N 3MR 1-04978, 4MR 1-00715

OPERATOR STATION

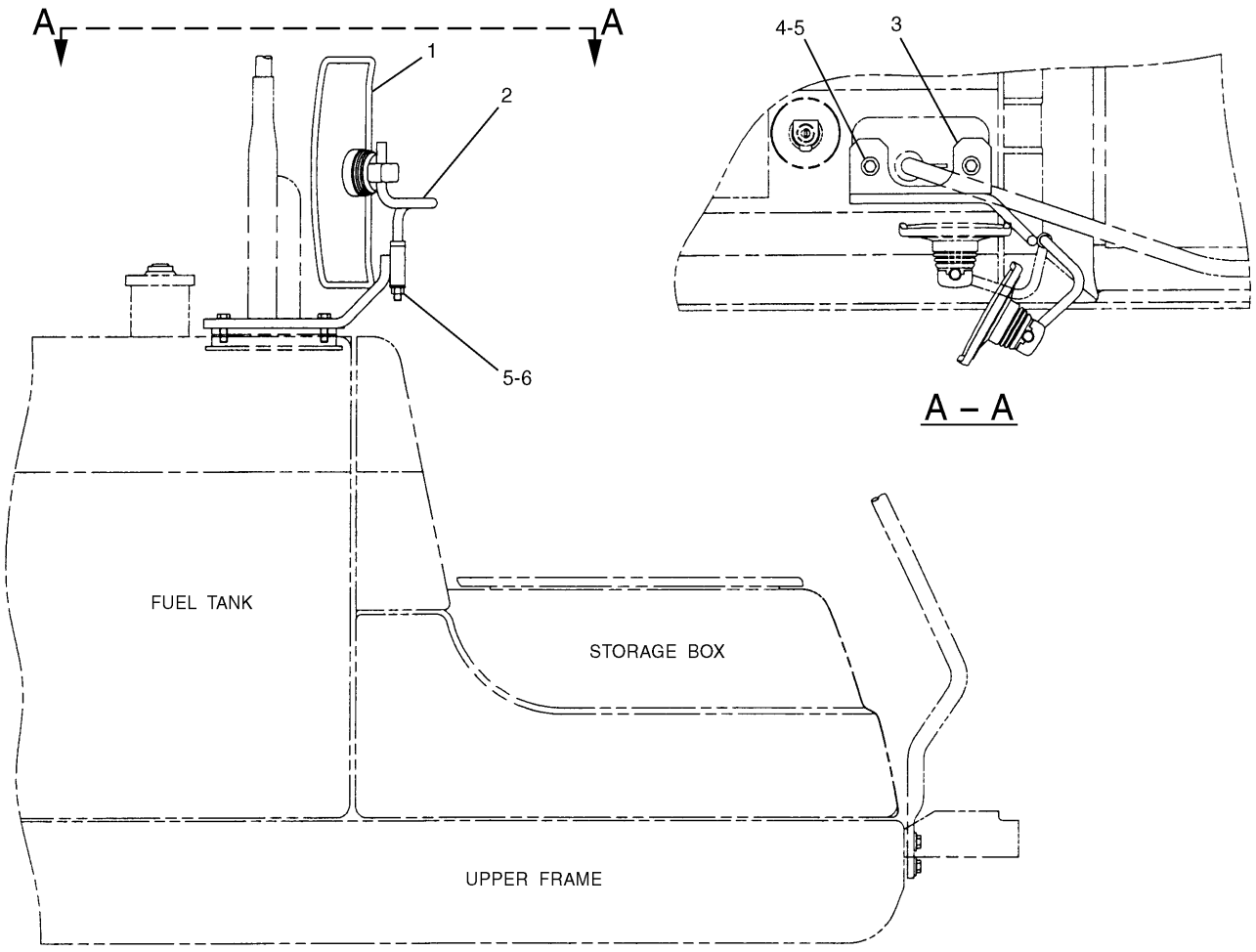

NOTE	No.	PART No.	QTY	PART NAME	NOTE	No.	PART No.	QTY	PART NAME
	1	137-2270	1	MIRROR					
	2	159-7842	1	BAR AS					
	3	155-7004	1	SUPPORT AS					
	4	6V-7611	2	BOLT (L=40mm)					
	5	5P-1076	3	WASHER					
	6	8T-4244	1	NUT					

H64087E 02

155-7001 MIRROR GP-REAR VIEW

S/N 3MR 04979-Up, 4MR 00716-Up

MEMORANDA

OPERATOR STATION

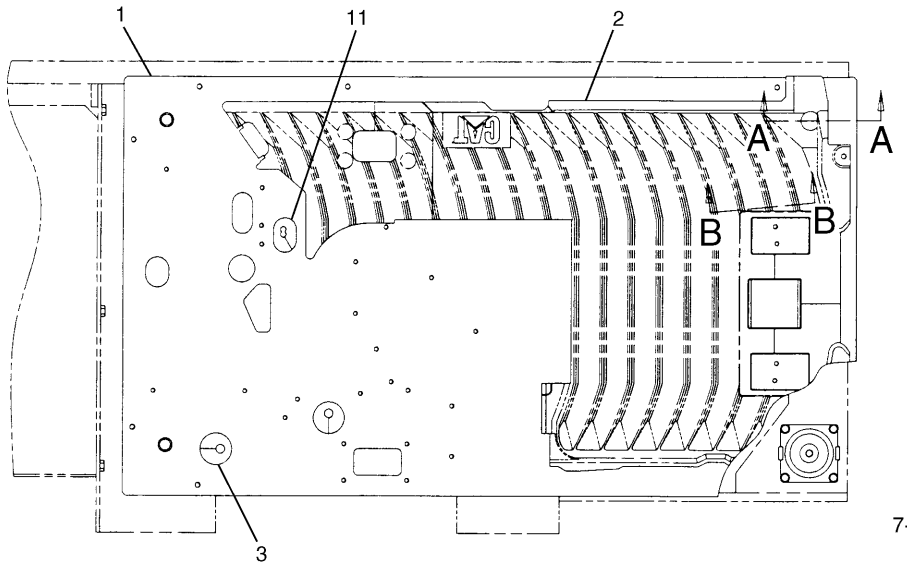

TOP VIEW

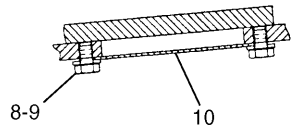

B – B

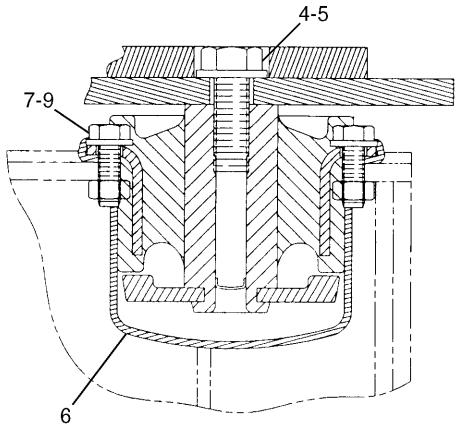

A – A

NOTE	No.	PART No.	QTY	PART NAME	NOTE	No.	PART No.	QTY	PART NAME
	1	122-9599	1	PLATFORM AS					
	2	154-0581	1	FLOORMAT					
	3	121-7059	2	GROMMET					
	4	7X-2553	4	BOLT (L=40mm)					
	5	8T-4122	4	WASHER					
	6	122-9626	4	MOUNT AS					
	7	8T-4195	16	BOLT (L=30mm)					
	8	8T-4191	4	BOLT (L=16mm)					
	9	8T-4121	20	WASHER					
	10	4I-3266	2	STRIP					
	11	117-6307	1	GROMMET					

H60236E 05

111-6285 PLATFORM GP-OPERATOR

OPERATOR STATION

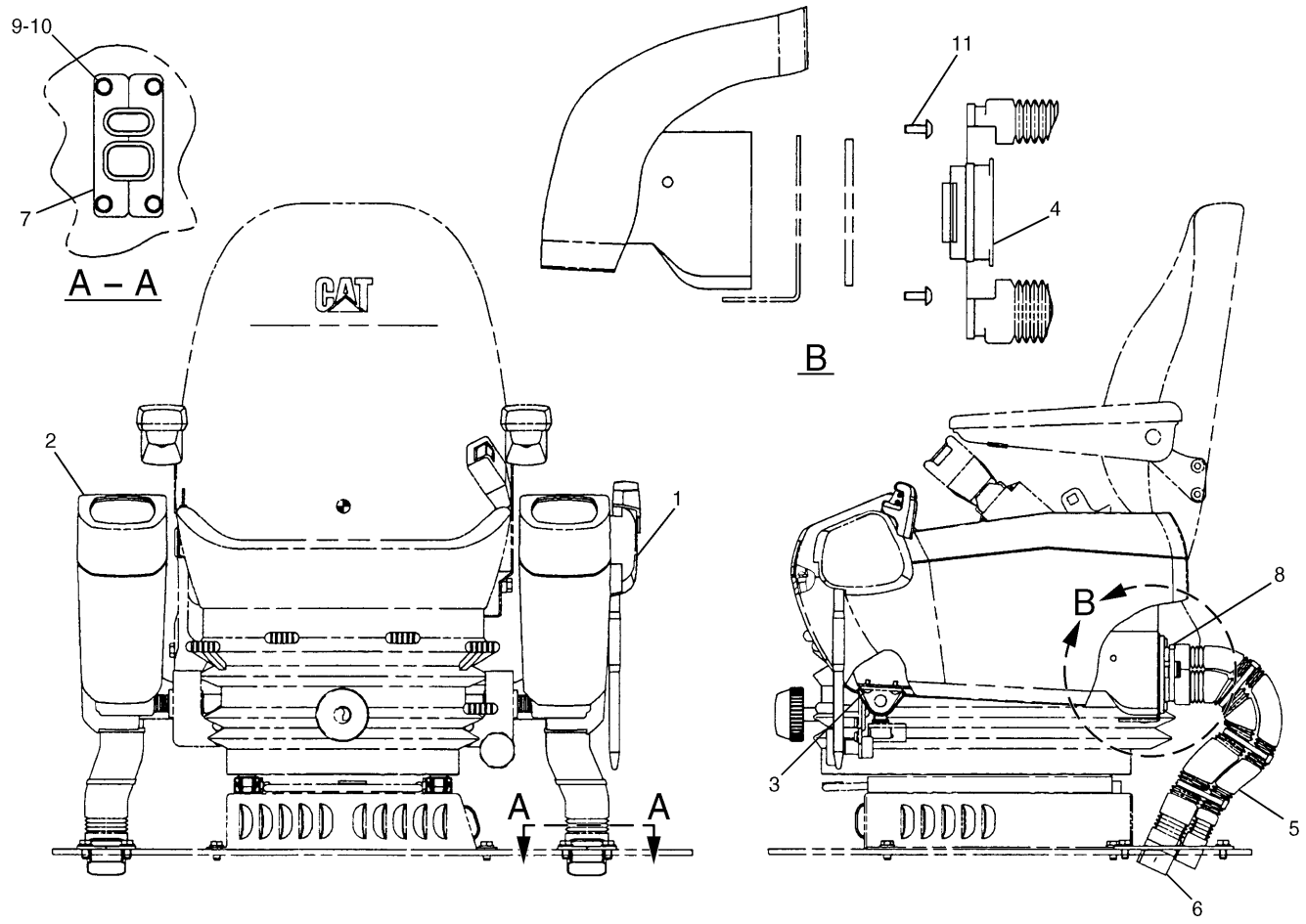

NOTE	No.	PART No.	QTY	PART NAME	NOTE	No.	PART No.	QTY	PART NAME
Y	1	111-6279	1	CONSOLE GP					
Y	2	111-6280	1	CONSOLE GP					
	3	9X-2043	8	SCREW					
	4	122-9622	2	SUPPORT					
	5	122-9618	2	GUARD					
	6	122-9617	2	GUARD					
	7	122-9655	4	SUPPORT					
	8	7K-1181	8	STRAP					
	9	8T-4137	8	BOLT (L=20mm)					
	10	8T-4121	8	WASHER					
	11	9X-2045	8	SCREW					

Y—SEE SEPARATE ILLUSTRATION

H53753E 09

111-6278 CONSOLE GP-OPERATOR

S/N 3MR 1-04978, 4MR 1-00715
111-6280-Page360,111-6279-Page361

OPERATOR STATION

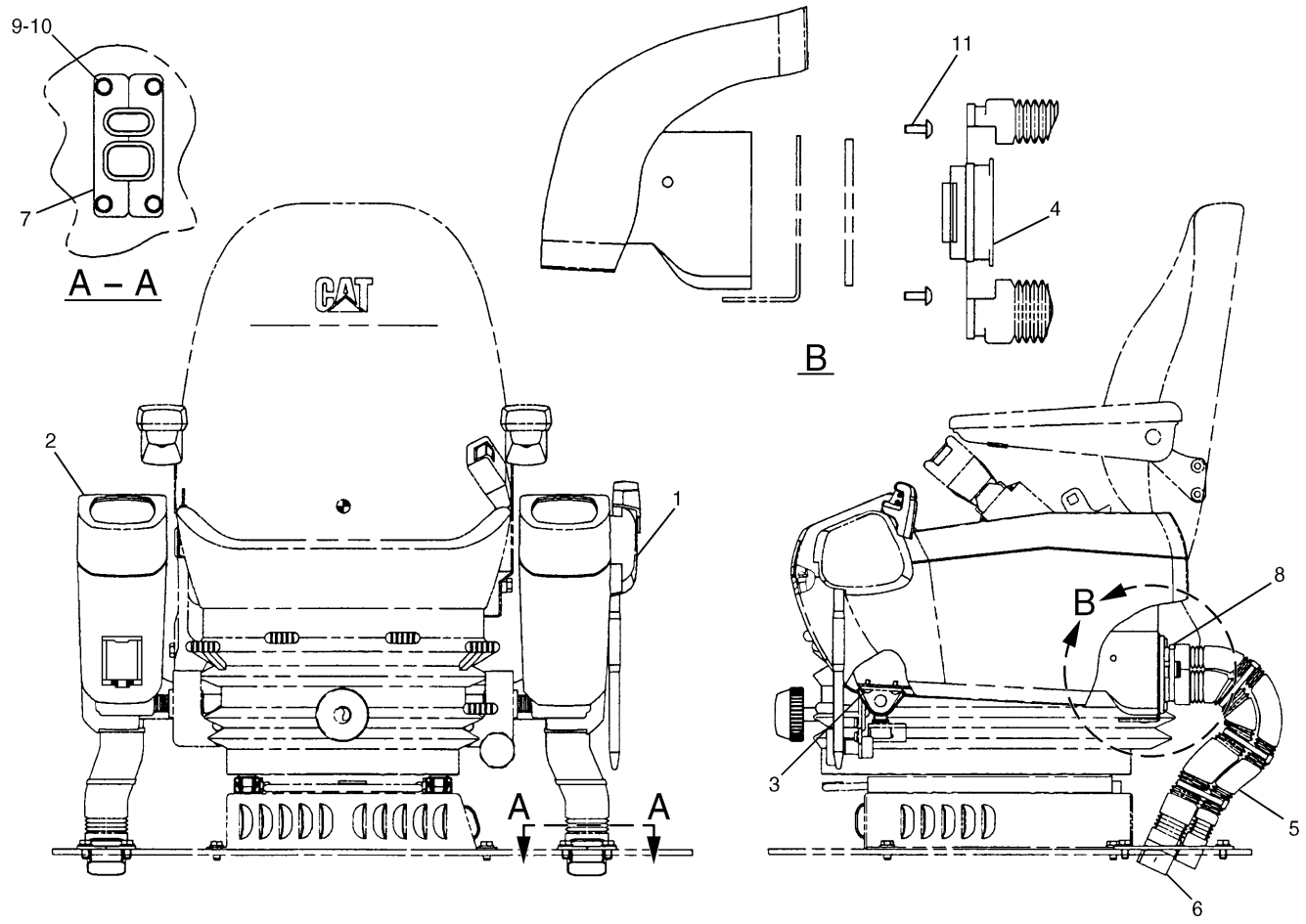

NOTE	No.	PART No.	QTY	PART NAME	NOTE	No.	PART No.	QTY	PART NAME
Y	1	155-7008	1	CONSOLE GP					
Y	2	155-7084	1	CONSOLE GP					
	3	9X-2043	8	SCREW					
	4	122-9622	2	SUPPORT					
	5	122-9618	2	GUARD					
	6	122-9617	2	GUARD					
	7	122-9655	4	SUPPORT					
	8	7K-1181	8	STRAP					
	9	8T-4137	8	BOLT (L=20mm)					
	10	8T-4121	8	WASHER					
	11	9X-2045	8	SCREW					

Y—SEE SEPARATE ILLUSTRATION

H60238E 10

111-6278 CONSOLE GP-OPERATOR

S/N 3MR 04979-Up, 4MR 00716-Up
155-7084-Page360.01,155-7008-Page361.01

MEMORANDA

OPERATOR STATION

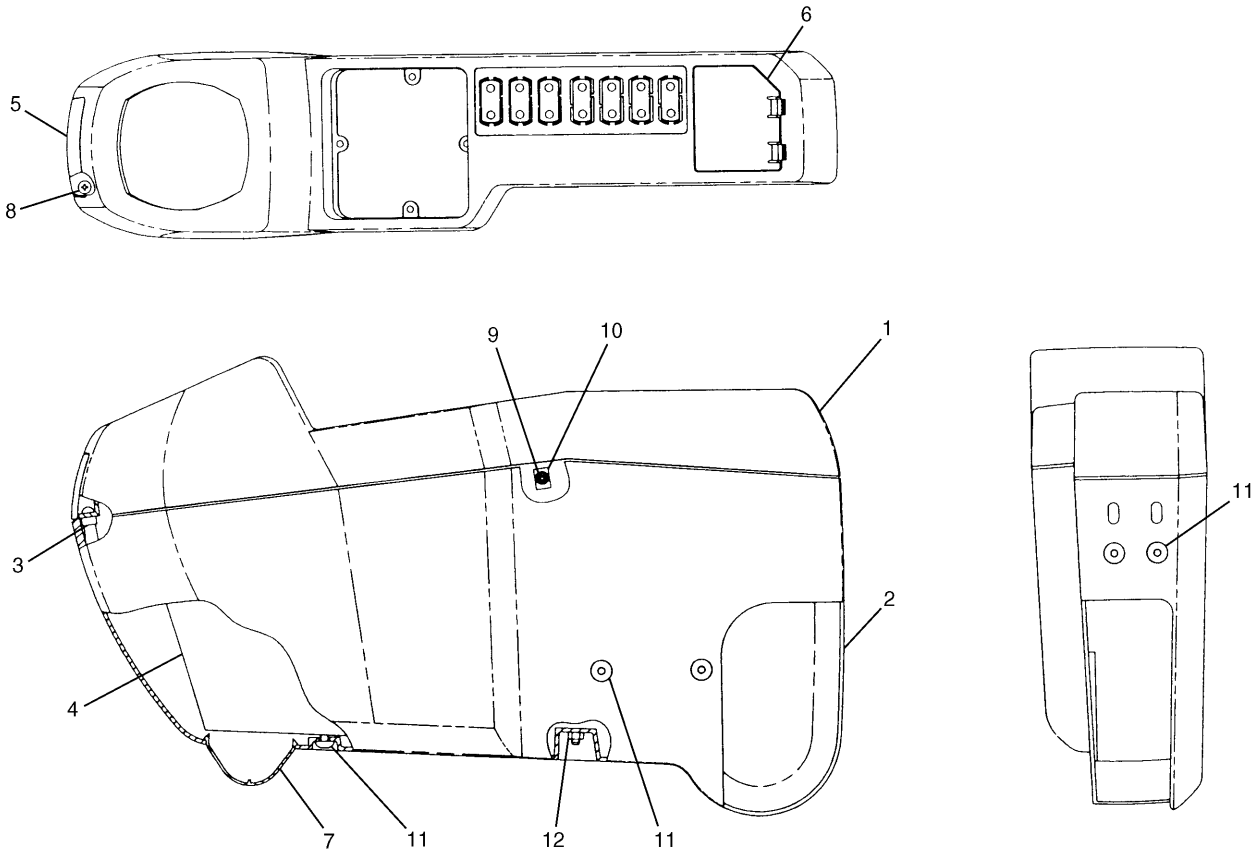

NOTE	No.	PART No.	QTY	PART NAME	NOTE	No.	PART No.	QTY	PART NAME
	1	113-4014	1	PANEL					
	2	113-4012	1	SUPPORT					
	3	124-3932	2	CAP					
	4	117-6256	1	SUPPORT AS					
	5	117-6268	1	COVER					
	6	117-6266	1	COVER					
	7	117-6273	1	COVER					
	8	119-5026	2	SCREW					
	9	7Y-5295	1	SCREW					
	10	7Y-5293	1	NUT					
	11	9X-2042	6	SCREW					
	12	5C-2890	2	NUT					

H52468E 05

111-6280 CONSOLE GP

Right Hand
S/N 3MR 1-04978, 4MR 1-00715
Part of 111-6278-Page359

OPERATOR STATION

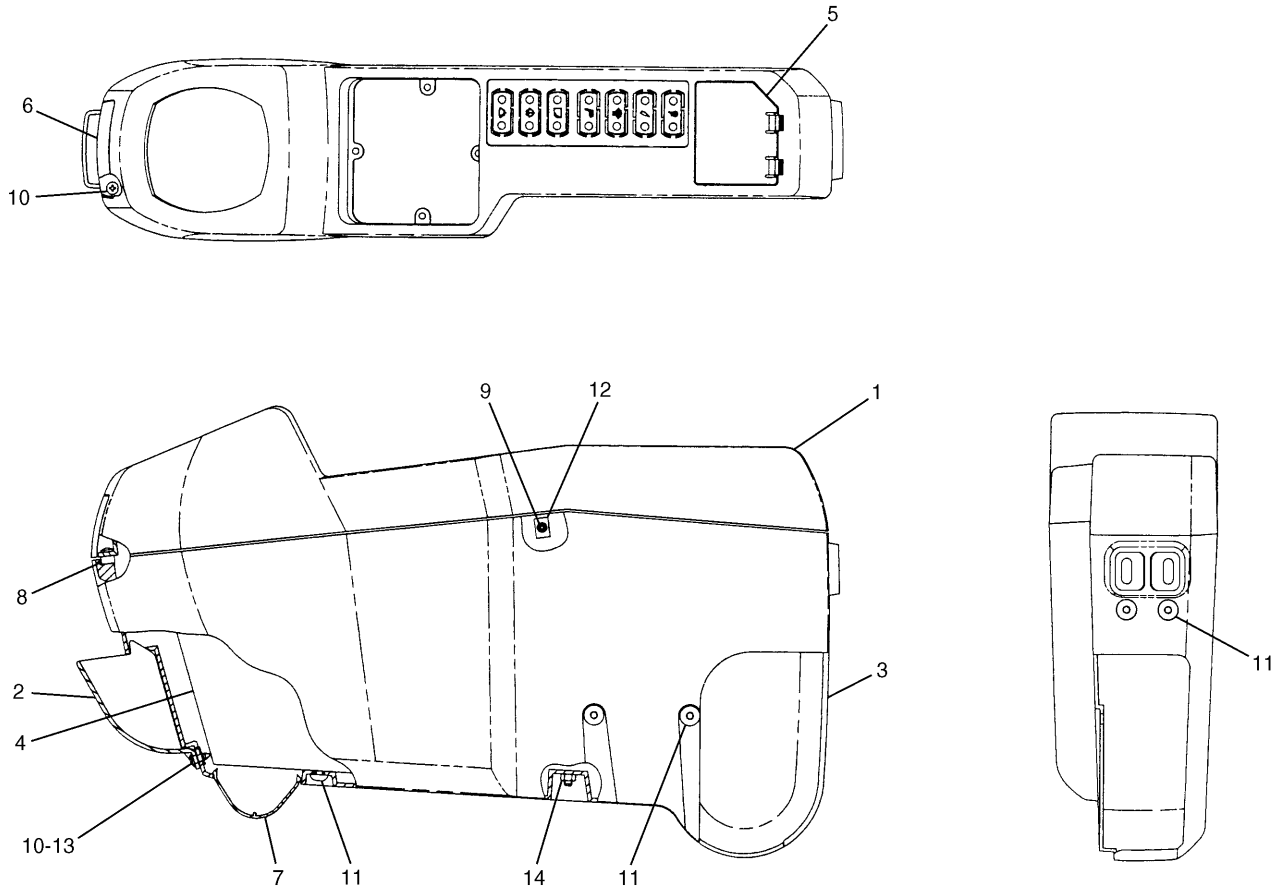

NOTE	No.	PART No.	QTY	PART NAME	NOTE	No.	PART No.	QTY	PART NAME
	1	113-4014	1	PANEL					
	2	155-7085	1	HOLDER					
	3	155-7086	1	SUPPORT					
	4	117-6256	1	SUPPORT AS					
	5	117-6266	1	COVER					
	6	117-6268	1	COVER					
	7	117-6273	1	COVER					
	8	124-3932	2	CAP					
	9	7Y-5295	1	SCREW					
	10	119-5026	4	SCREW					
	11	9X-2042	6	SCREW					
	12	7Y-5293	1	NUT					
	13	155-7099	2	NUT					
	14	5C-2890	2	NUT					

H60240E 00

155-7084 CONSOLE GP
Right Hand (For Harvester Head)
S/N 3MR 04979-Up, 4MR 00716-Up
Part of 111-6278-Page359.01

MEMORANDA

OPERATOR STATION

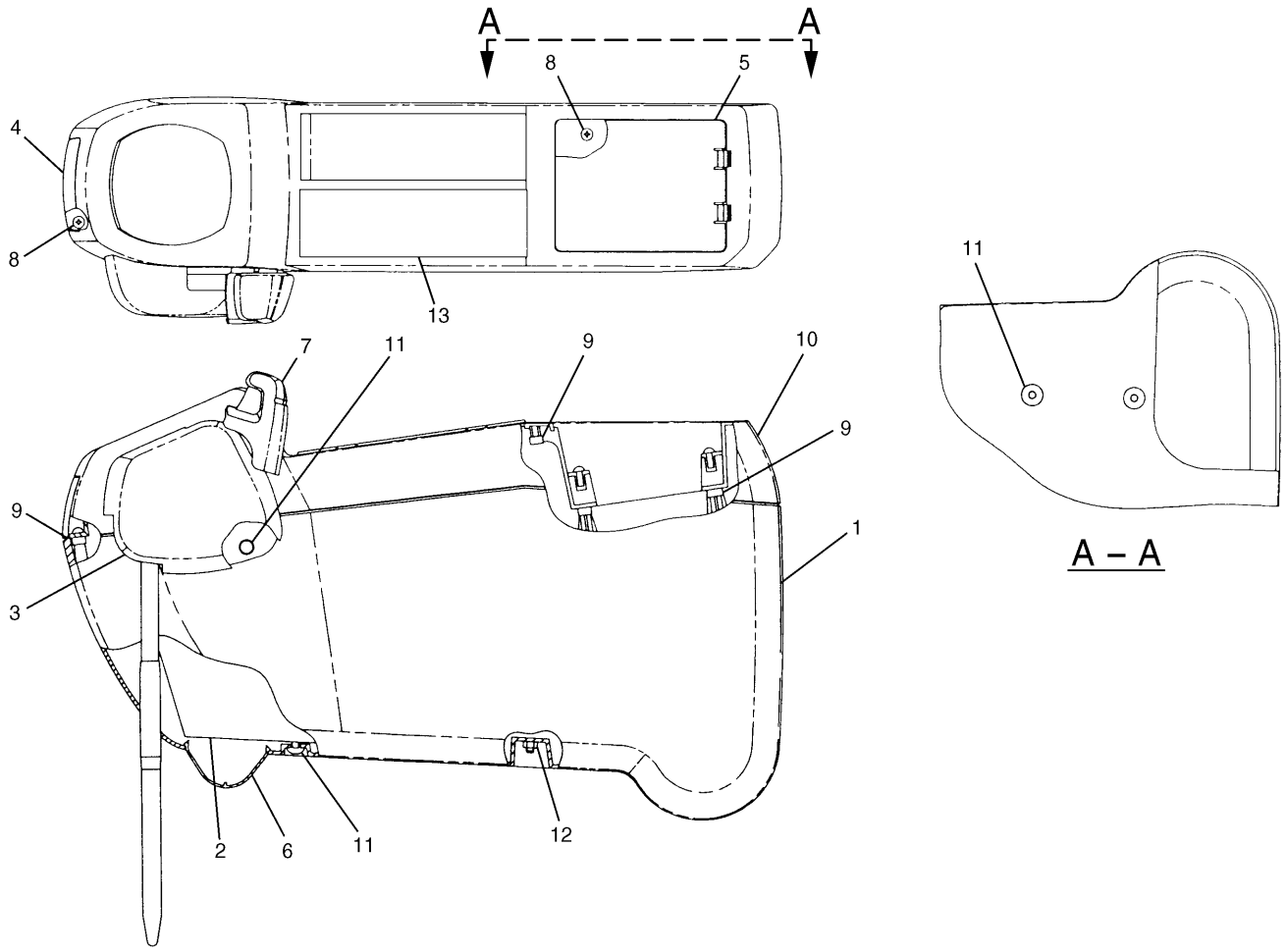

NOTE	No.	PART No.	QTY	PART NAME	NOTE	No.	PART No.	QTY	PART NAME
	1	113-4013	1	SUPPORT					
	2	117-6257	1	SUPPORT AS					
	3	113-4016	1	COVER					
	4	117-6268	1	COVER					
	5	117-6267	1	COVER					
	6	117-6273	1	COVER					
Y	7	117-6265	1	LEVER AS					
	8	119-5026	4	SCREW					
	9	124-3932	12	CAP					
	10	135-2185	1	PANEL					
	11	9X-2042	6	SCREW					
	12	5C-2890	2	NUT					
	13	135-2184	1	COVER					

Y—SEE SEPARATE ILLUSTRATION

H52469E 08

111-6279 CONSOLE GP

Left Hand
S/N 3MR 1-04978, 4MR 1-00715
Part of 111-6278-Page359
117-6265-Page362

OPERATOR STATION

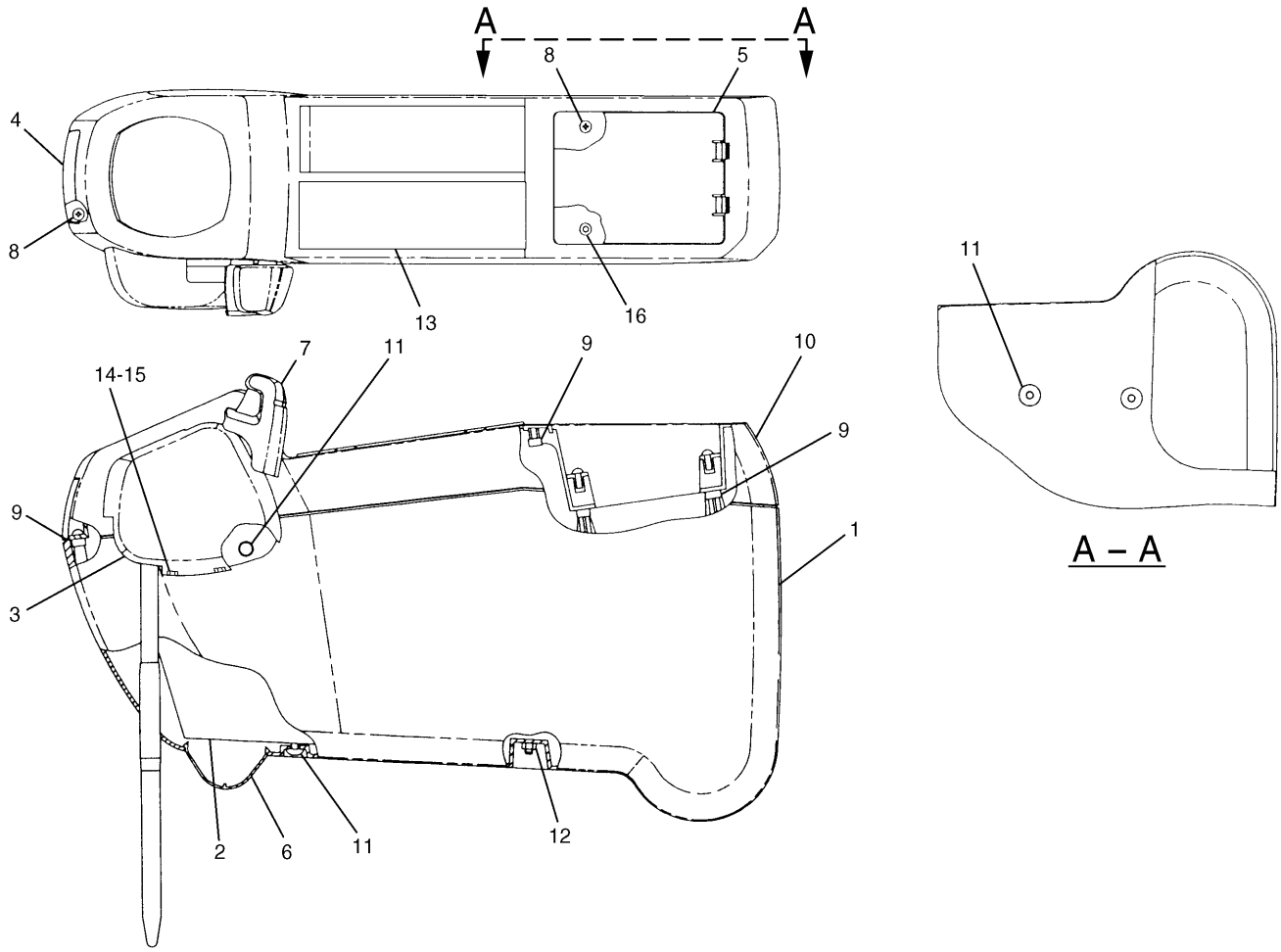

NOTE	No.	PART No.	QTY	PART NAME	NOTE	No.	PART No.	QTY	PART NAME
	1	113-4013	1	SUPPORT					
	2	155-7007	1	SUPPORT AS					
	3	113-4016	1	COVER					
	4	117-6268	1	COVER					
	5	117-6267	1	COVER					
	6	117-6273	1	COVER					
Y	7	159-7744	1	LEVER AS					
	8	119-5026	4	SCREW					
	9	124-3932	12	CAP					
	10	135-2185	1	PANEL					
	11	9X-2042	6	SCREW					
	12	5C-2890	2	NUT					
	13	135-2184	1	COVER					
	14	161-3728	2	NUT					
	15	161-3730	2	SCREW					
	16	161-3729	1	NUT					

Y—SEE SEPARATE ILLUSTRATION

H65167E 02

155-7008 CONSOLE GP

Left Hand
S/N 3MR 04979-Up, 4MR 00716-Up
Part of 111-6278-Page359.01
159-7744-Page362

MEMORANDA

OPERATOR STATION

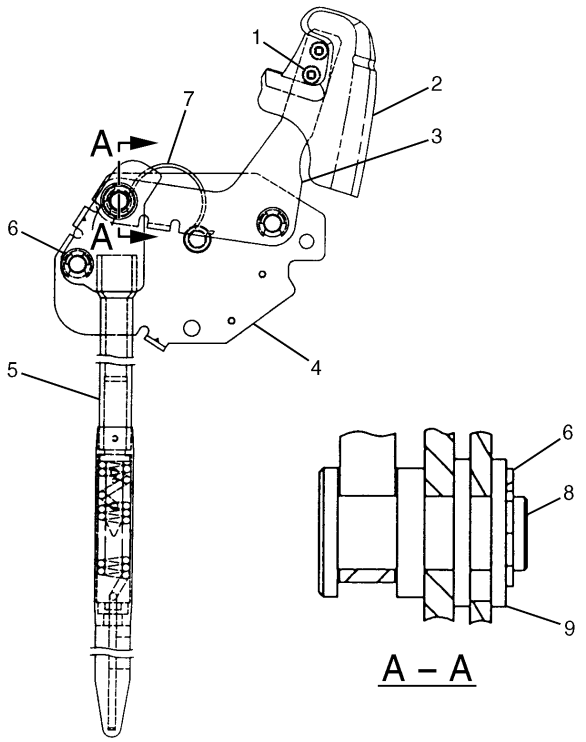

NOTE	No.	PART No.	QTY	PART NAME
	1	095-7930	2	SCREW
	2	121-7057	1	KNOB
	3	117-6269	1	LEVER
	4	117-6270	1	SUPPORT AS
	5	117-6272	1	LEVER AS
	6	100-7740	3	RING
	7	117-6271	1	SPRING
	8	117-6274	1	PIN
	9	8T-4224	2	WASHER

H50920E 02

117-6265 LEVER AS

S/N 3MR 1-04978, 4MR 1-00715
Part of 111-6279-Page361

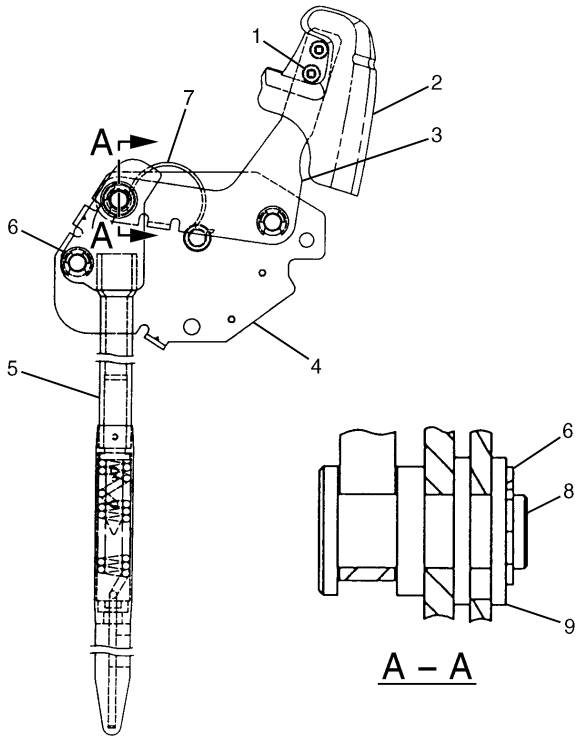

NOTE	No.	PART No.	QTY	PART NAME
	1	095-7930	2	SCREW
	2	121-7057	1	KNOB
	3	117-6269	1	LEVER
	4	117-6270	1	SUPPORT AS
	5	117-6272	1	LEVER AS
	6	5D-4822	3	RING
	7	117-6271	1	SPRING
	8	117-6274	1	PIN
	9	8T-4224	2	WASHER

H62408E 00

159-7744 LEVER AS

S/N 3MR 04979-Up, 4MR 00716-Up
Part of 155-7008-Page361.01

OPERATOR STATION

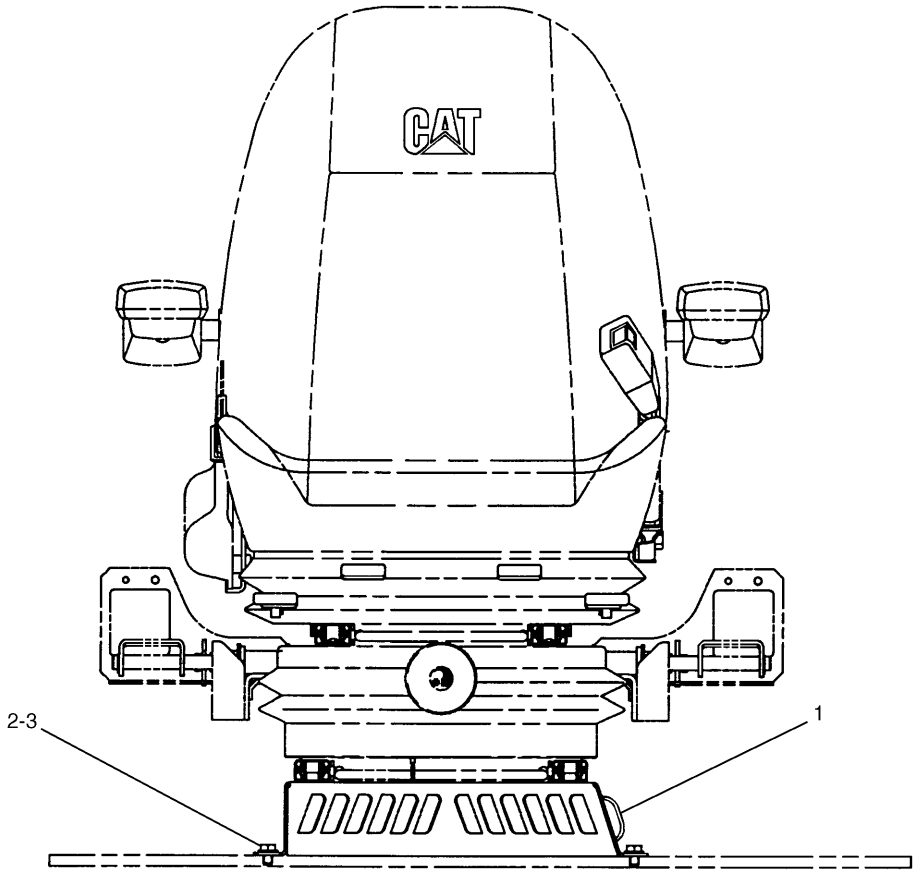

FRONT VIEW

NOTE	No.	PART No.	QTY	PART NAME	NOTE	No.	PART No.	QTY	PART NAME
	1	139-7114	1	SUPPORT AS					
	2	8T-4191	4	BOLT (L=16mm)					
	3	8T-4121	4	WASHER					

H59136E 03

111-6281 SUPPORT GP-SEAT

MEMORANDA

OPERATOR STATION

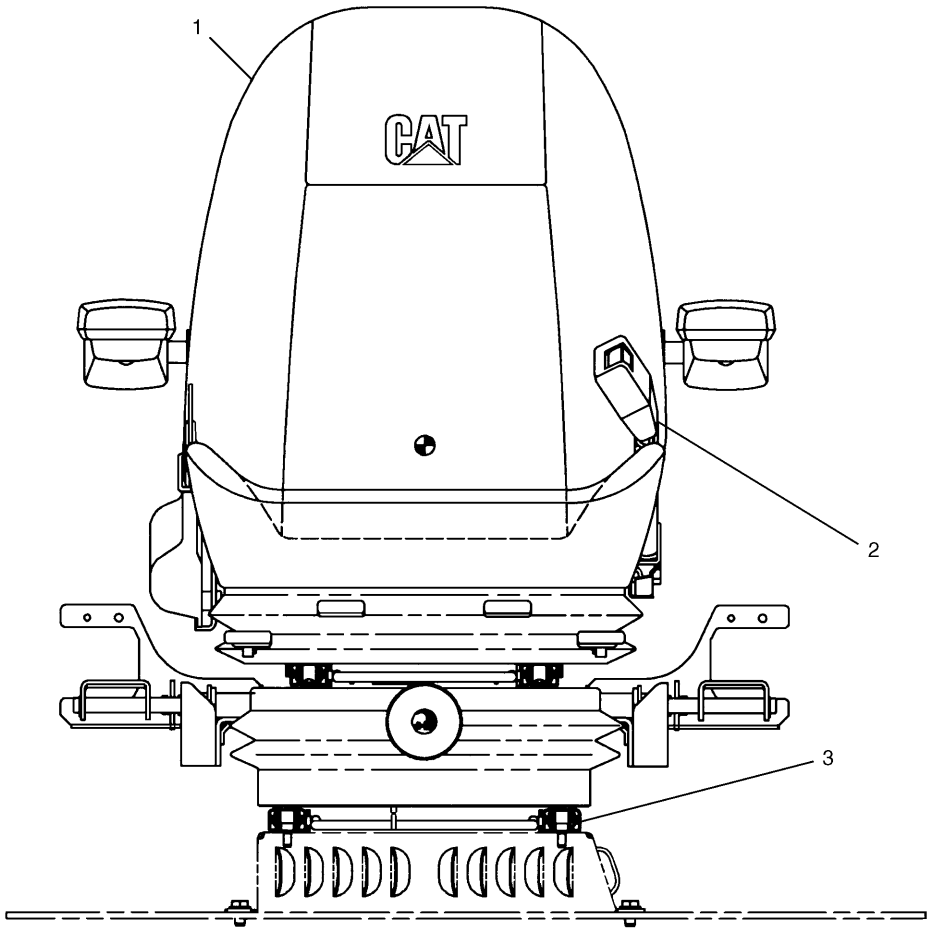

FRONT VIEW

NOTE	No.	PART No.	QTY	PART NAME	NOTE	No.	PART No.	QTY	PART NAME
Y	1	111-6283	1	SEAT GP					
Y	2	122-9625	1	BELT GP					
	3	6V-8202	4	BOLT (L=16mm)					

Y—SEE SEPARATE ILLUSTRATION

H53237E 04

111-6282 SEAT GP

111-6283-Page363.01,122-9625-Page366.12

OPERATOR STATION

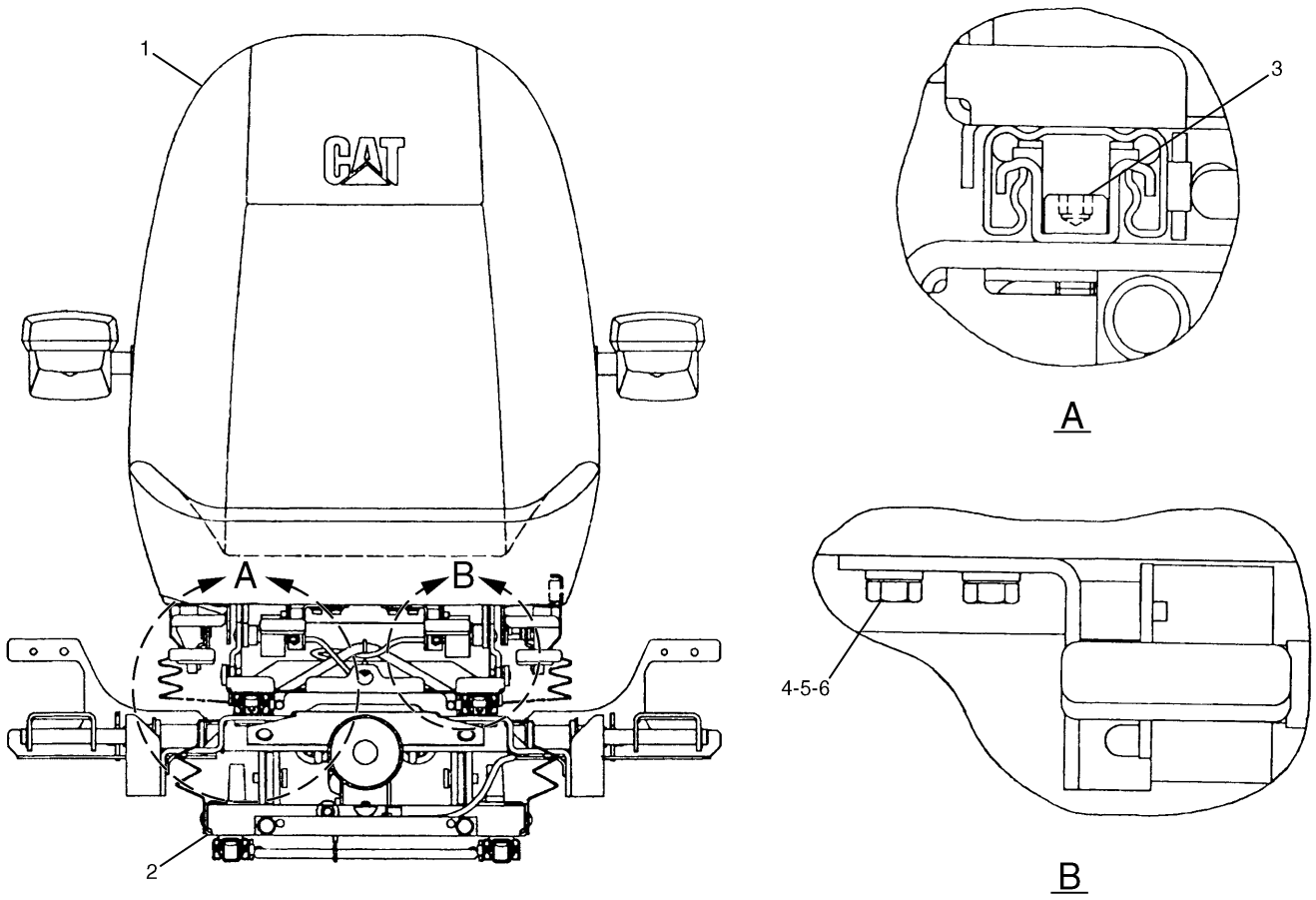

NOTE	No.	PART No.	QTY	PART NAME	NOTE	No.	PART No.	QTY	PART NAME
Y	1	151-9617	1	SEAT GP					
Y	2	111-6391	1	SUSPENSION GP					
	3	8T-1158	4	BOLT (L=20mm)					
	4	5C-9553	2	BOLT (L=16mm)					
	5	1H-3338	2	LOCKWASHER					
	6	9X-8256	2	WASHER					

Y—SEE SEPARATE ILLUSTRATION

H60066E 06

111-6283 SEAT GP

Part of 111-6282-Page363
151-9617-Page363.03,111-6391-Page366.02

MEMORANDA

OPERATOR STATION

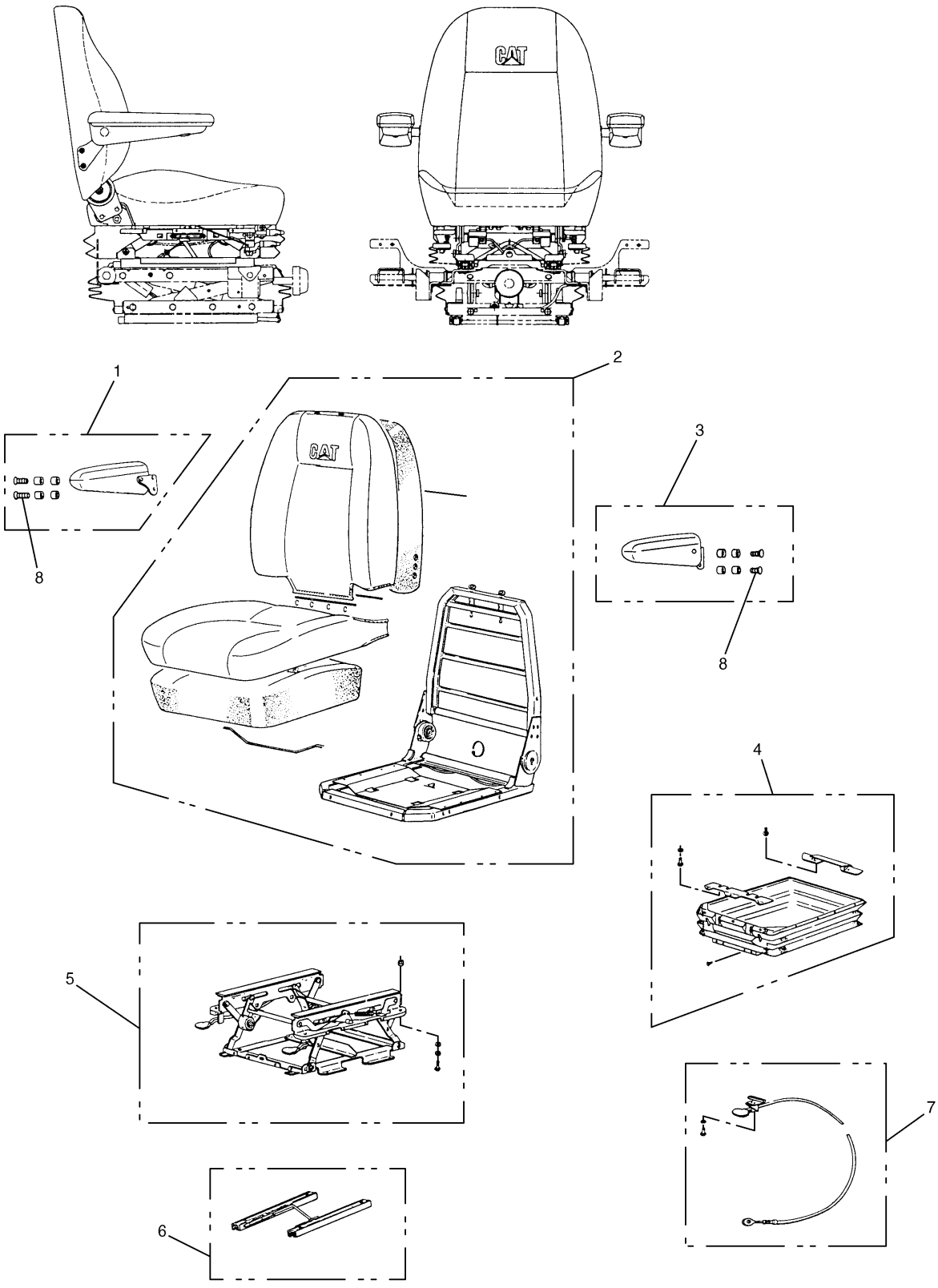

151-9617 SEAT GP

Part of 111-6283-Page363.01
159-7672-Page366

OPERATOR STATION

NOTE	No.	PART No.	QTY	PART NAME	NOTE	No.	PART No.	QTY	PART NAME
	1	133-7882	1	CUSHION KIT					
Y	2	159-7672	1	SEAT AS					
	3	133-7883	1	CUSHION KIT					
	4	130-0337	1	COVER KIT					
		130-0328	1	CLIP KIT					
	5	130-0336	1	RISER KIT					
		130-0348	1	SPRING KIT					
		130-0350	1	SUPPORT KIT					
		133-7884	1	HANDLE KIT					
		133-7885	1	HANDLE KIT					
	6	130-0338	1	ADJUSTER KIT					
		130-0351	1	CABLE KIT					
	7	130-0335	1	CONTROL KIT					
		130-0351	1	CABLE KIT					
		133-7886	1	HANDLE KIT					
	8	114-3350	4	SCREW					

Y—SEE SEPARATE ILLUSTRATION

H62399E 01

151-9617 SEAT GP

Part of 111-6283-Page363.01
159-7672-Page366

OPERATOR STATION

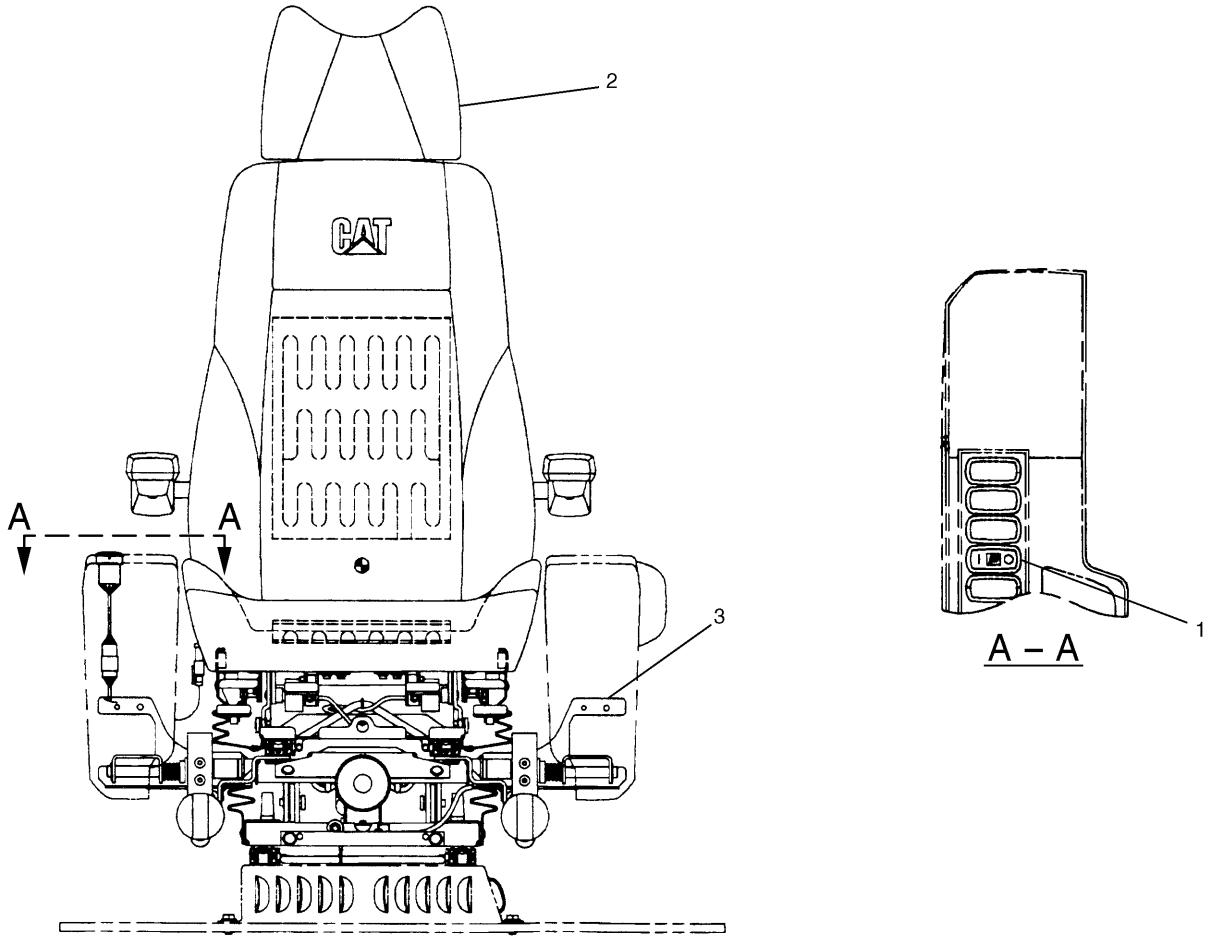

NOTE	No.	PART No.	QTY	PART NAME	NOTE	No.	PART No.	QTY	PART NAME
	1	111-4783	1	SWITCH AS					
		116-0173	1	CONNECTOR					
		116-0174	4	TERMINAL					
Y	2	150-2202	1	SEAT GP					
Y	3	124-3926	1	SUSPENSION GP					

Y—SEE SEPARATE ILLUSTRATION

H60245E 03

124-3927 SEAT GP

124-3926-Page366.04,150-2202-Page366.10
An Attachment

OPERATOR STATION

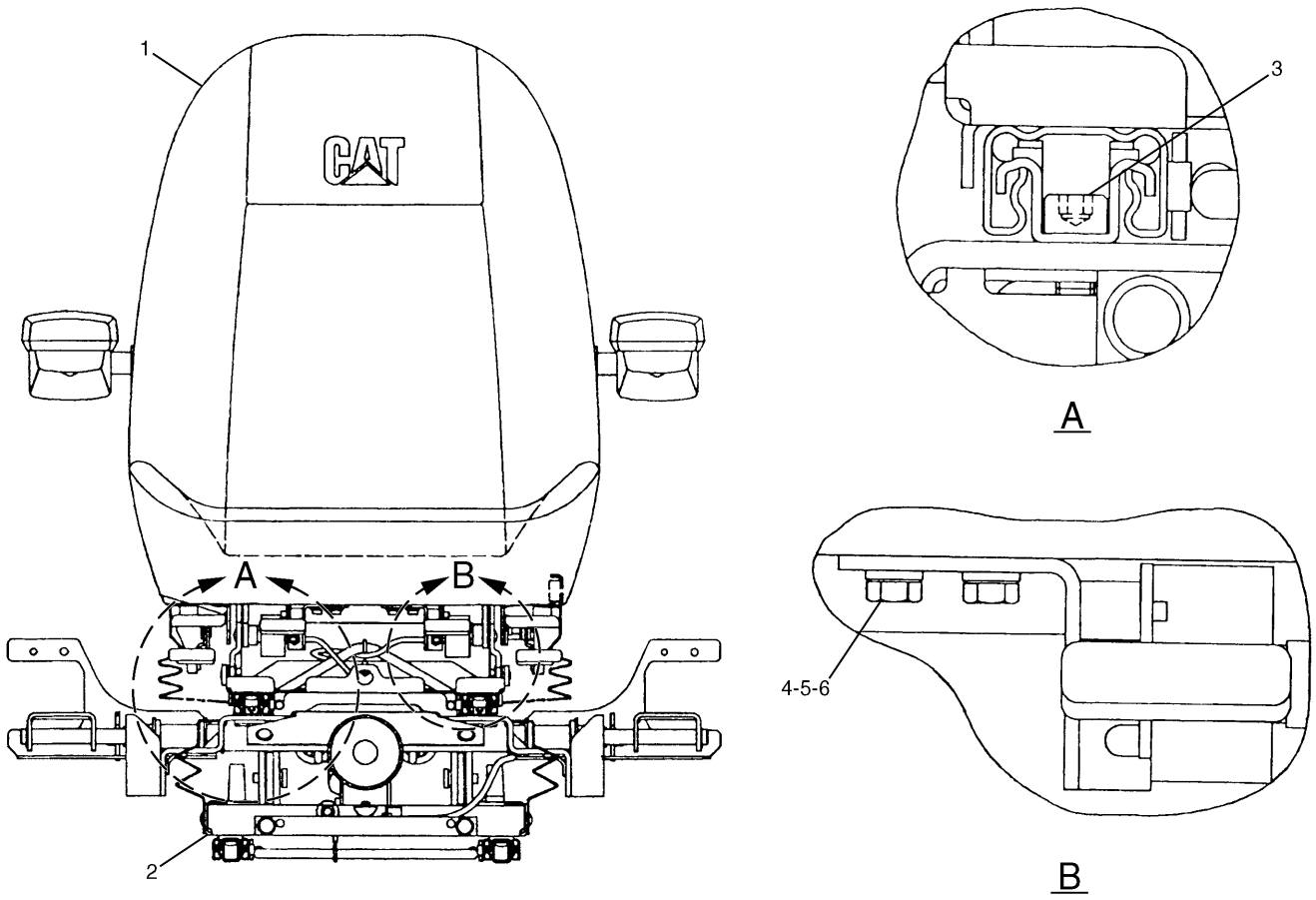

NOTE	No.	PART No.	QTY	PART NAME	NOTE	No.	PART No.	QTY	PART NAME
Y	1	150-2199	1	SEAT GP					
Y	2	122-9647	1	SUPPORT GP					
	3	8T-1158	4	BOLT (L=20mm)					
	4	5C-9553	2	BOLT (L=16mm)					
	5	095-0827	2	LOCKWASHER					
	6	9X-8256	2	WASHER					

Y—SEE SEPARATE ILLUSTRATION

H60249E 04

119-6852 SEAT GP

122-9647-Page365.01,150-2199-Page366.08

An Attachment

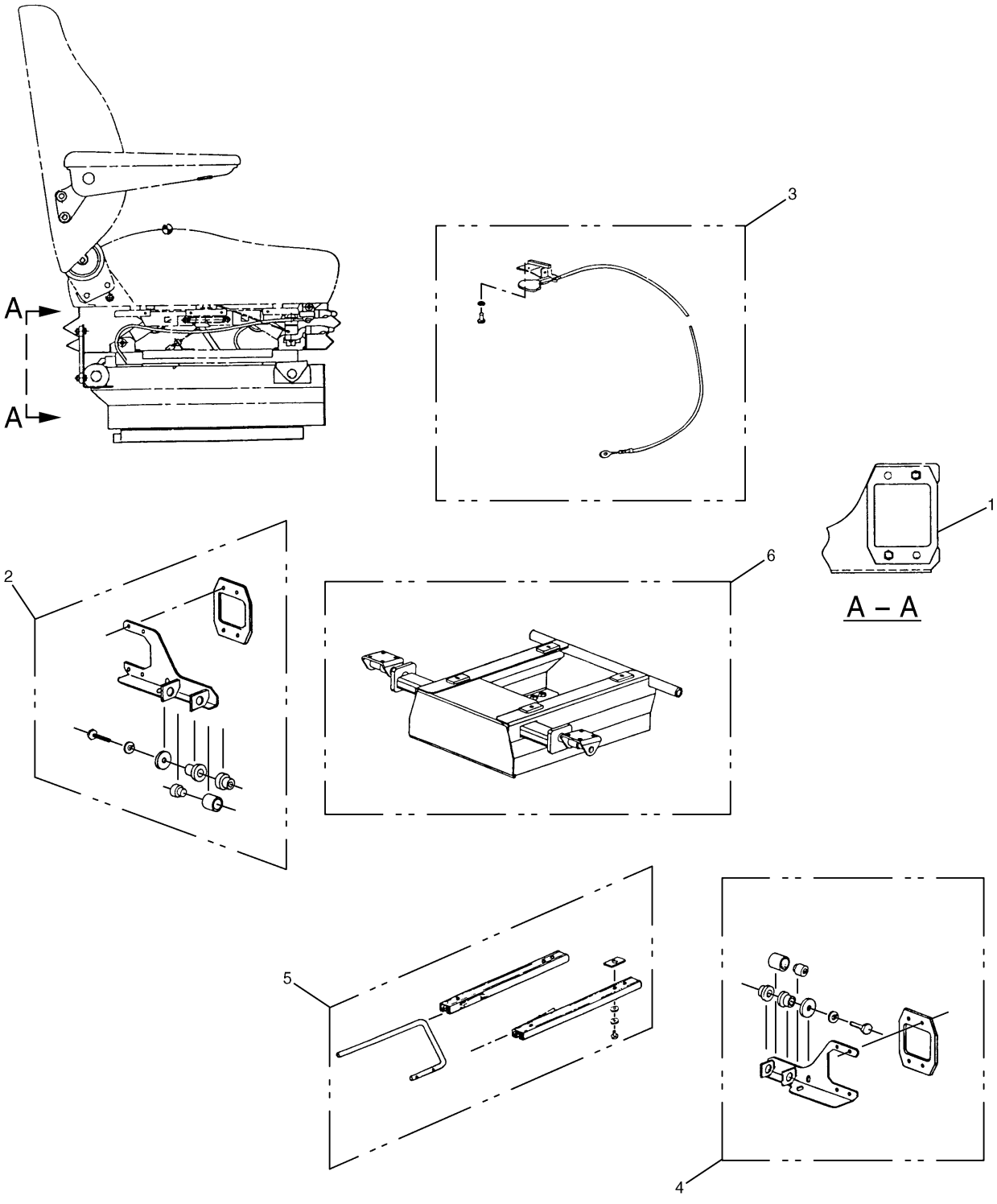

H57152E 05

122-9647 SUPPORT GP-SEAT
Part of 119-6852-Page365
An Attachment

OPERATOR STATION

NOTE	No.	PART No.	QTY	PART NAME	NOTE	No.	PART No.	QTY	PART NAME
	1	124-4004	2	PLATE					
	2	130-0344	1	SUPPORT KIT					
	3	135-2313	1	CONTROL KIT					
		133-7887	1	HANDLE KIT					
		135-2316	1	CABLE KIT					
	4	130-0345	1	SUPPORT KIT					
	5	135-2314	1	ADJUSTER KIT					
		135-2316	1	CABLE KIT					
	6	135-2315	1	SUPPORT KIT					

H57152E 05

122-9647 SUPPORT GP-SEAT

Part of 119-6852-Page365
An Attachment

OPERATOR STATION

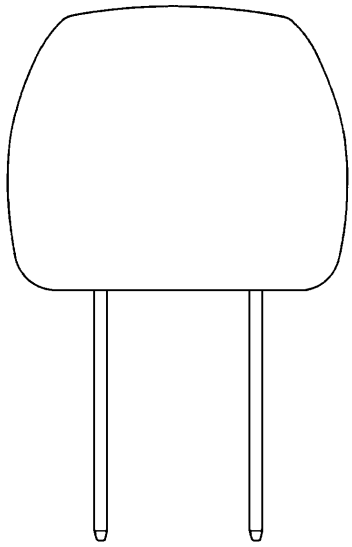

NOTE	No.	PART No.	QTY	PART NAME

H50378E 01

122-9648 HEADREST AS

Seat
An Attachment

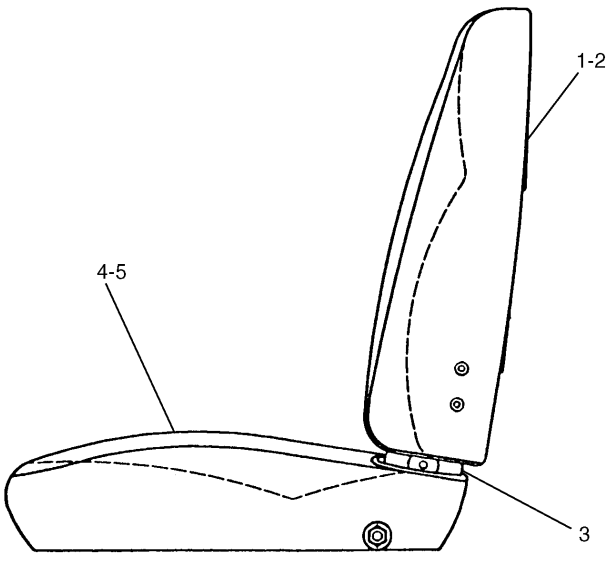

NOTE	No.	PART No.	QTY	PART NAME
	1	159-7673	1	COVER KIT
	2	110-5056	1	FOAM KIT
	3	130-0356	1	FRAME KIT
		130-0347	1	CABLE KIT
	4	159-7674	1	COVER KIT
	5	110-5059	1	FOAM KIT

H62407E 00

159-7672 SEAT AS

Part of 151-9617-Page363.04,150-2199-Page366.09

OPERATOR STATION

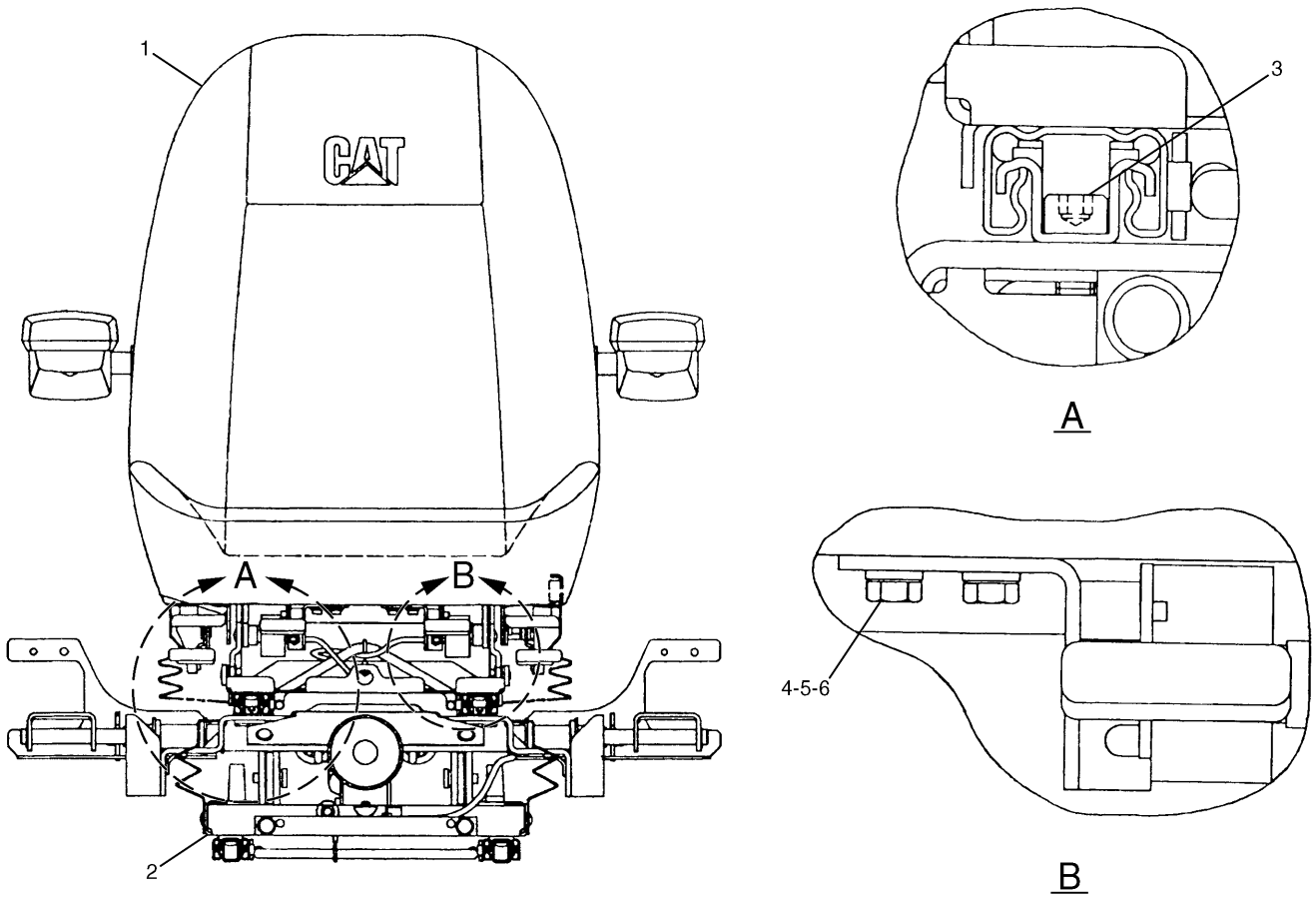

NOTE	No.	PART No.	QTY	PART NAME	NOTE	No.	PART No.	QTY	PART NAME
Y	1	150-2199	1	SEAT GP					
Y	2	111-6391	1	SUSPENSION GP					
	3	8T-1158	4	BOLT (L=20mm)					
	4	5C-9553	2	BOLT (L=16mm)					
	5	1H-3338	2	LOCKWASHER					
	6	9X-8256	2	WASHER					

Y—SEE SEPARATE ILLUSTRATION

H60248E 04

124-3945 SEAT GP

111-6391-Page366.02,150-2199-Page366.08

An Attachment

OPERATOR STATION

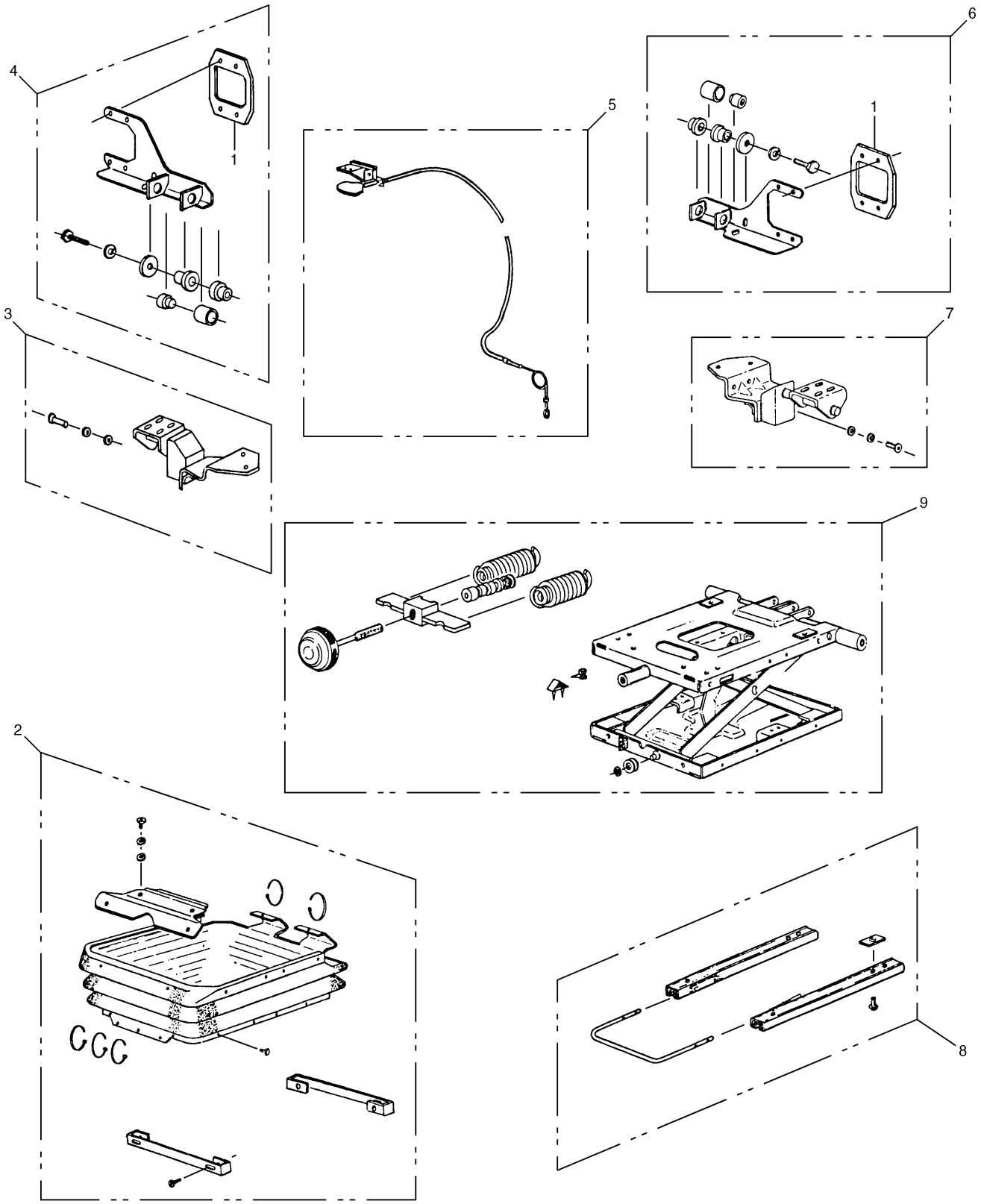

H56833E 06

111-6391 SUSPENSION GP-SEAT

Part of 111-6283-Page363.01,124-3945-Page366.01
130-0340-Page366.06

OPERATOR STATION

NOTE	No.	PART No.	QTY	PART NAME	NOTE	No.	PART No.	QTY	PART NAME
	1	124-4004	2	PLATE					
	2	147-4788	1	COVER KIT					
		130-0328	1	CLIP KIT					
	3	133-7904	1	SUPPORT KIT					
		133-7955	1	FASTENER KIT					
	4	130-0344	1	SUPPORT KIT					
	5	147-4791	1	CONTROL KIT					
		147-4792	1	CABLE KIT					
		133-7887	1	HANDLE KIT					
	6	130-0345	1	SUPPORT KIT					
	7	133-7903	1	SUPPORT KIT					
		133-7955	1	FASTENER KIT					
	8	147-4793	1	ADJUSTER KIT					
		147-4792	1	CABLE KIT					
Y	9	130-0340	1	SUSPENSION AS					

Y—SEE SEPARATE ILLUSTRATION

H56833E 06

111-6391 SUSPENSION GP-SEAT

Part of 111-6283-Page363.01,124-3945-Page366.01
130-0340-Page366.06

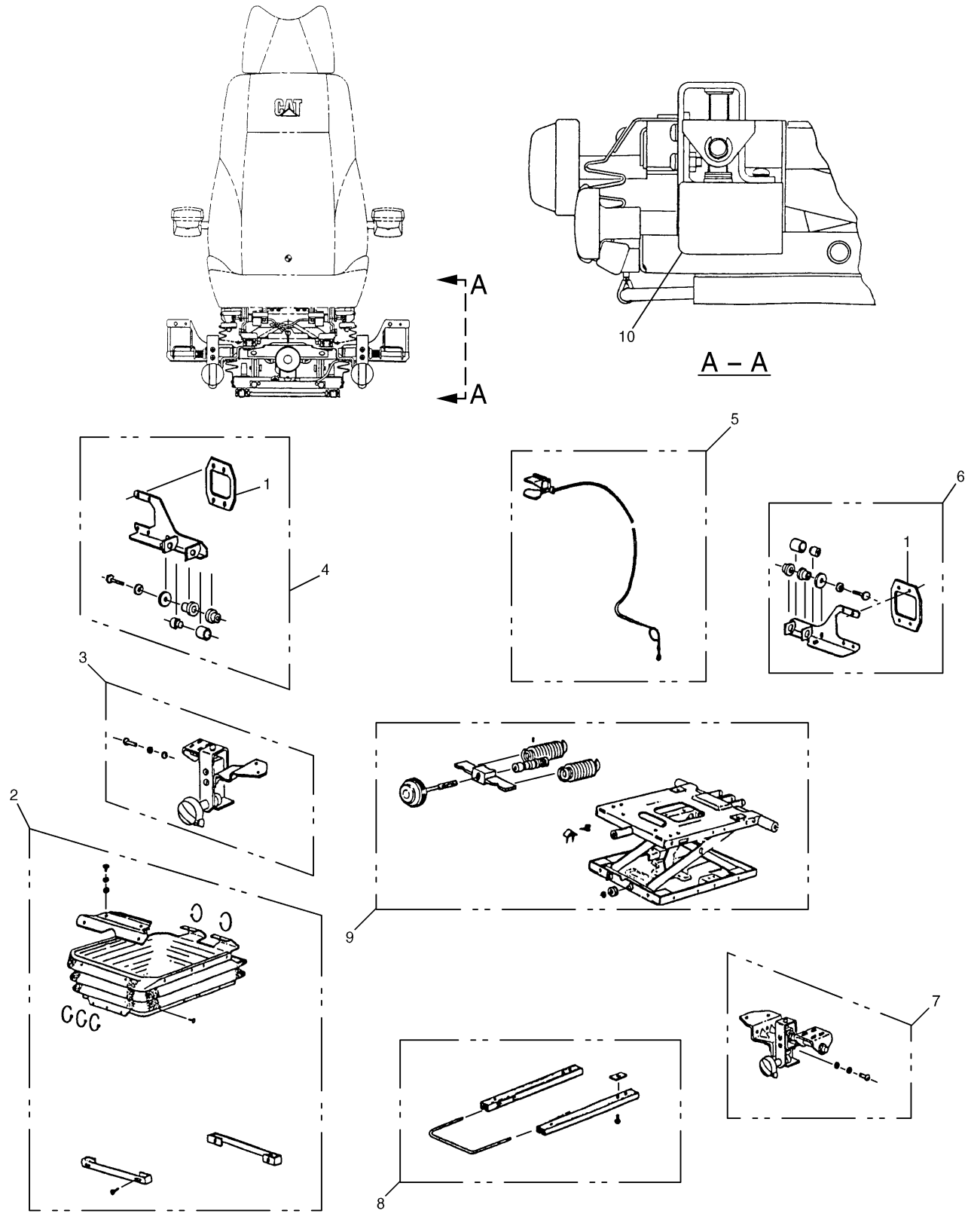

H57987E 05

124-3926 SUSPENSION GP-SEAT
Part of 124-3927-Page364
130-0340-Page366.06
An Attachment

OPERATOR STATION

NOTE	No.	PART No.	QTY	PART NAME	NOTE	No.	PART No.	QTY	PART NAME
	1	124-4004	2	PLATE					
	2	130-0339	1	COVER KIT					
		130-0328	1	CLIP KIT					
	3	130-0342	1	CONTROL KIT					
		133-7955	1	FASTENER KIT					
	4	147-4786	1	SUPPORT KIT					
	5	147-4791	1	CONTROL KIT					
		147-4792	1	CABLE KIT					
		133-7887	1	HANDLE KIT					
	6	147-4787	1	SUPPORT KIT					
	7	130-0343	1	CONTROL KIT					
		133-7955	1	FASTENER KIT					
	8	147-4793	1	ADJUSTER KIT					
		147-4792	1	CABLE KIT					
Y	9	130-0340	1	SUSPENSION AS					
	10	147-4869	1	COVER					

Y—SEE SEPARATE ILLUSTRATION

H57987E 05

124-3926 SUSPENSION GP-SEAT

Part of 124-3927-Page364
130-0340-Page366.06
An Attachment

OPERATOR STATION

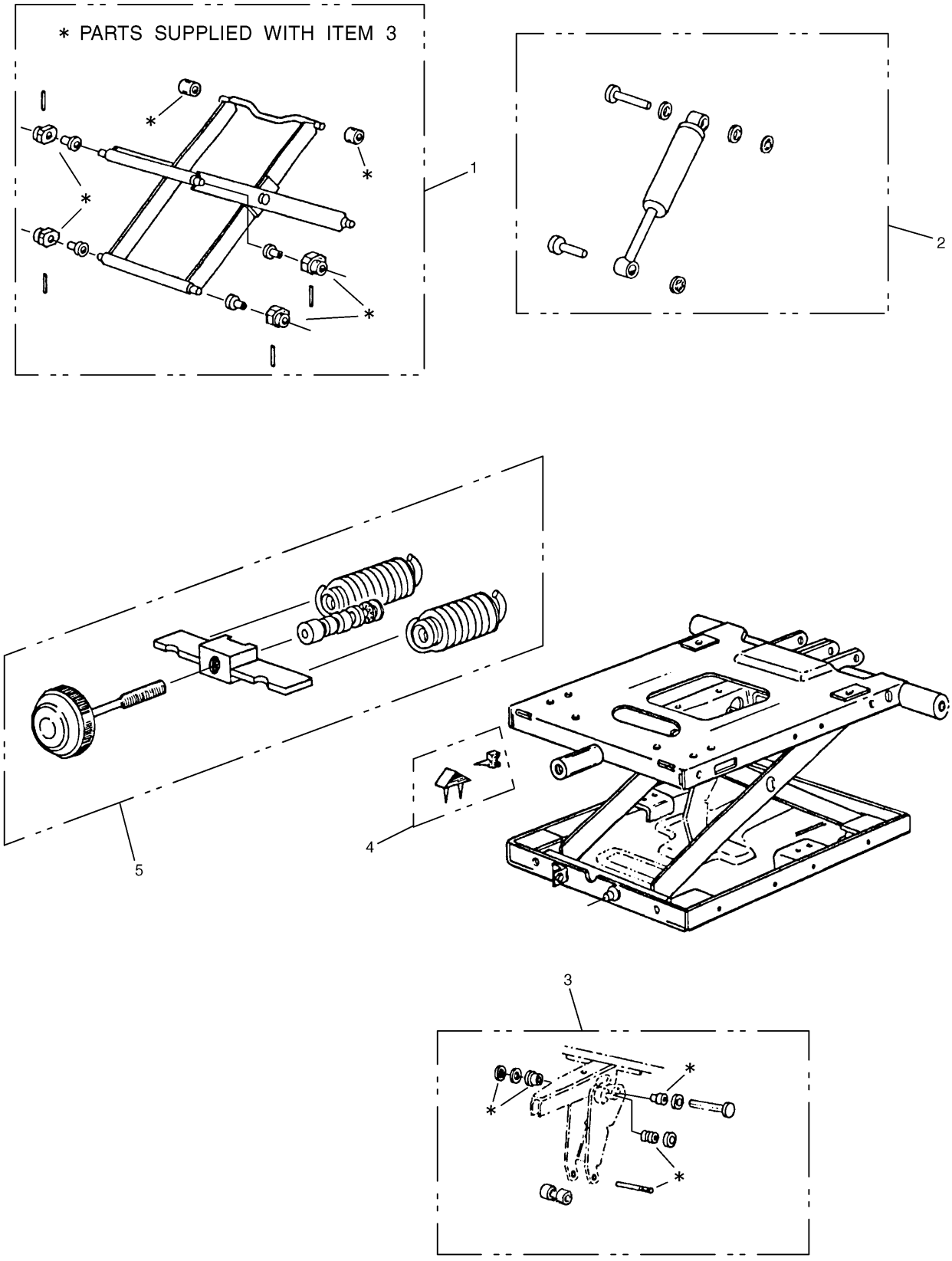

H52473E 01

130-0340 SUSPENSION AS-SEAT
Part of 111-6391-Page366.03,124-3926-Page366.05

OPERATOR STATION

NOTE	No.	PART No.	QTY	PART NAME	NOTE	No.	PART No.	QTY	PART NAME
	1	130-0323	1	LEVER KIT					
	2	130-0321	1	DAMPER KIT					
	3	130-0325	1	BEARING KIT					
	4	110-5066	1	BUMPER KIT					
	5	130-0322	1	ADJUSTER KIT					

H52473E 01

130-0340 SUSPENSION AS-SEAT

Part of 111-6391-Page366.03,124-3926-Page366.05

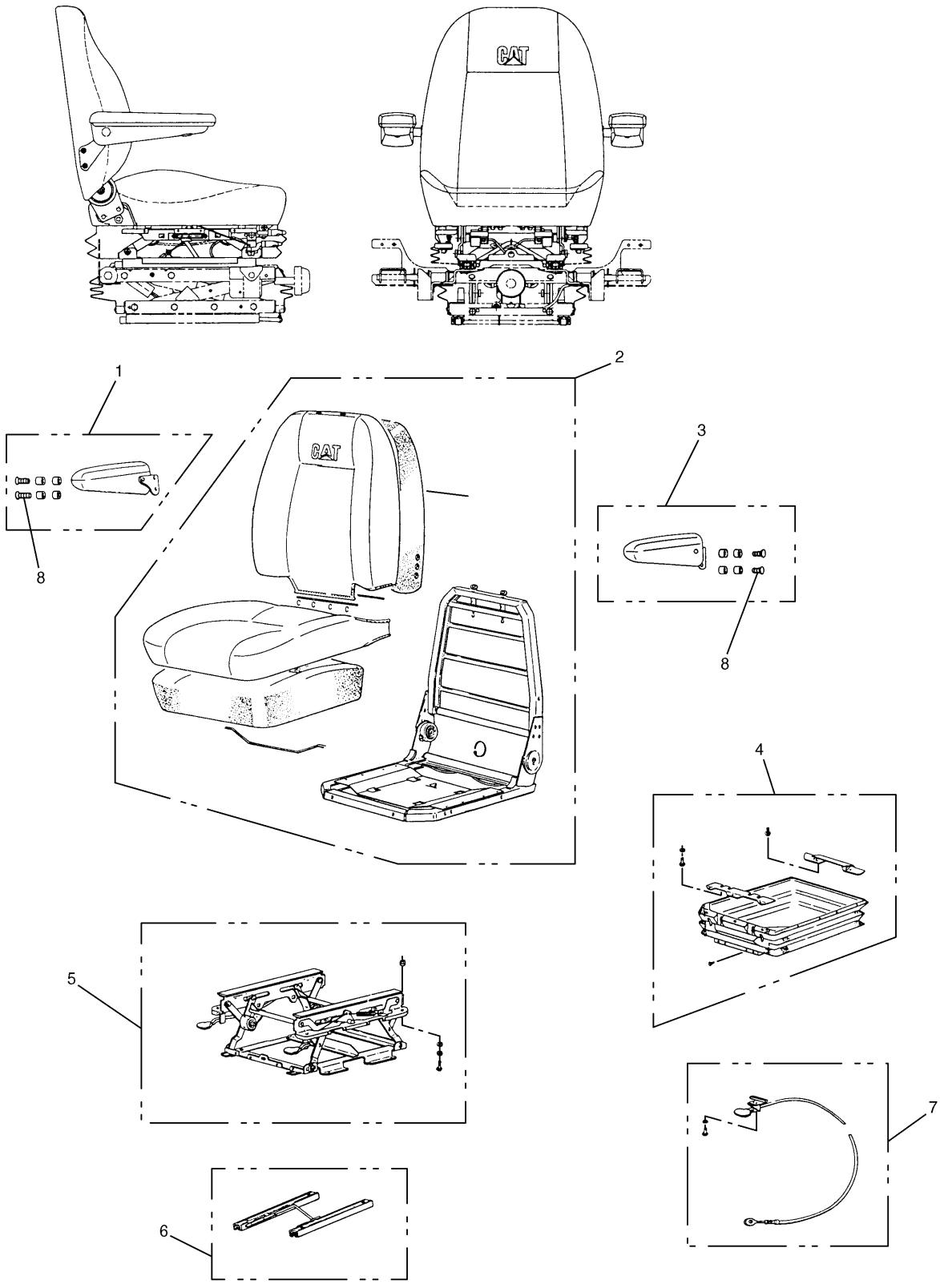

150-2199 SEAT GP

Part of 119-6852-Page365,124-3945-Page366.01
159-7672-Page366
An Attachment

OPERATOR STATION

NOTE	No.	PART No.	QTY	PART NAME	NOTE	No.	PART No.	QTY	PART NAME
	1	130-0332	1	CUSHION KIT					
Y	2	159-7672	1	SEAT AS					
	3	130-0331	1	CUSHION KIT					
	4	130-0337	1	COVER KIT					
		130-0328	1	CLIP KIT					
	5	130-0336	1	RISER KIT					
		130-0348	1	SPRING KIT					
		130-0350	1	SUPPORT KIT					
		133-7884	1	HANDLE KIT					
		133-7885	1	HANDLE KIT					
	6	130-0338	1	ADJUSTER KIT					
		130-0351	1	CABLE KIT					
	7	130-0335	1	CONTROL KIT					
		130-0351	1	CABLE KIT					
		133-7886	1	HANDLE KIT					
	8	114-3350	4	SCREW					

Y—SEE SEPARATE ILLUSTRATION

H62397E 01

150-2199 SEAT GP

Part of 119-6852-Page365,124-3945-Page366.01
159-7672-Page366
An Attachment

OPERATOR STATION

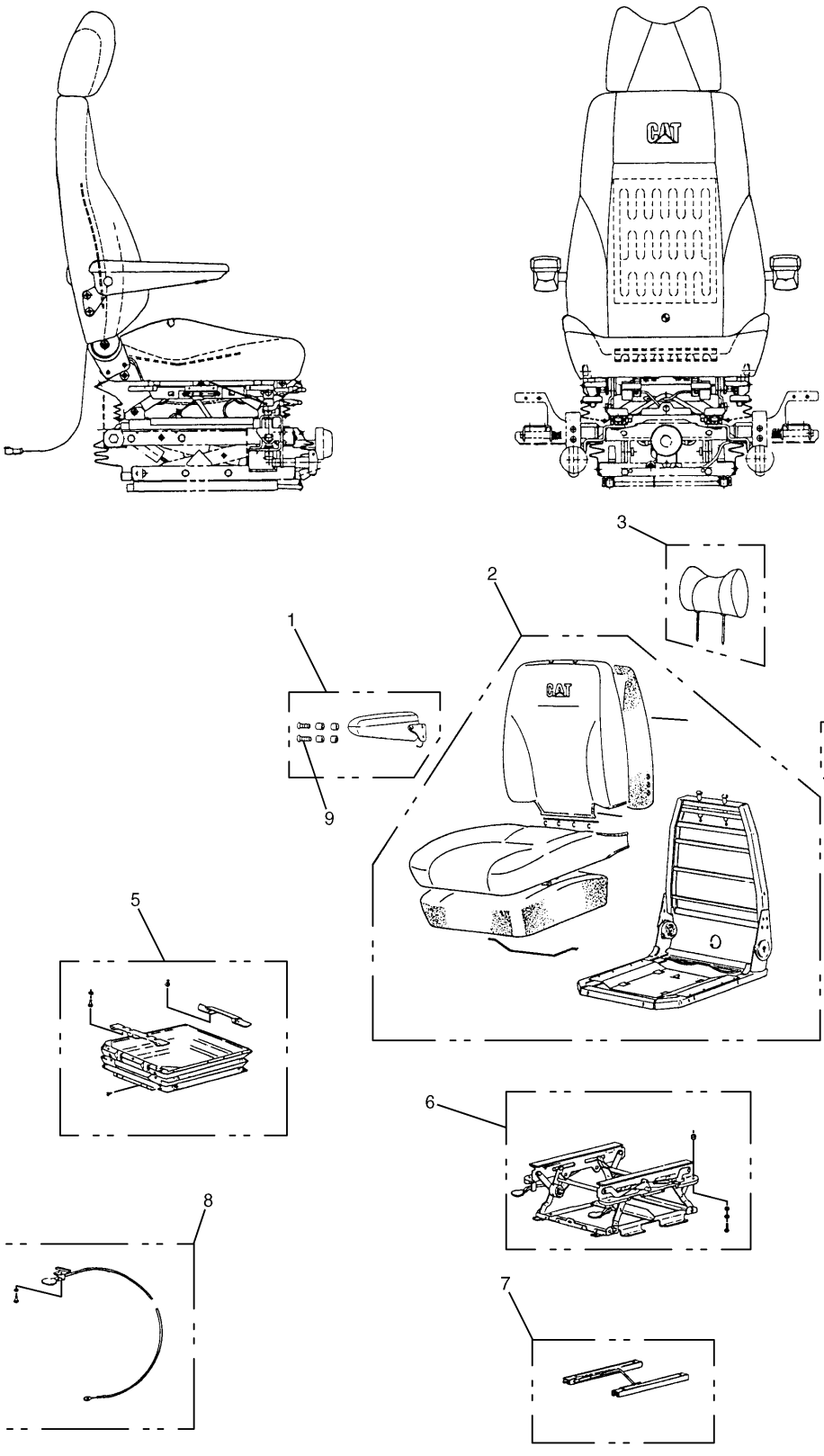

150-2202 SEAT GP
Part of 124-3927-Page364
An Attachment

OPERATOR STATION

NOTE	No.	PART No.	QTY	PART NAME	NOTE	No.	PART No.	QTY	PART NAME
	1	130-0332	1	CUSHION KIT					
	2	154-0774	1	SEAT AS					
		130-0324	1	HANDLE KIT					
	3	130-0333	1	HEADREST KIT					
	4	130-0331	1	CUSHION KIT					
	5	130-0337	1	COVER KIT					
		130-0328	1	CLIP KIT					
	6	130-0336	1	RISER KIT					
		130-0348	1	SPRING KIT					
		130-0350	1	SUPPORT KIT					
		133-7884	1	HANDLE KIT					
		133-7885	1	HANDLE KIT					
	7	130-0338	1	ADJUSTER KIT					
		130-0351	1	CABLE KIT					
	8	130-0335	1	CONTROL KIT					
		130-0351	1	CABLE KIT					
		133-7886	1	HANDLE KIT					
	9	114-3350	4	SCREW					

H69148E 02

150-2202 SEAT GP

Part of 124-3927-Page364

An Attachment

OPERATOR STATION

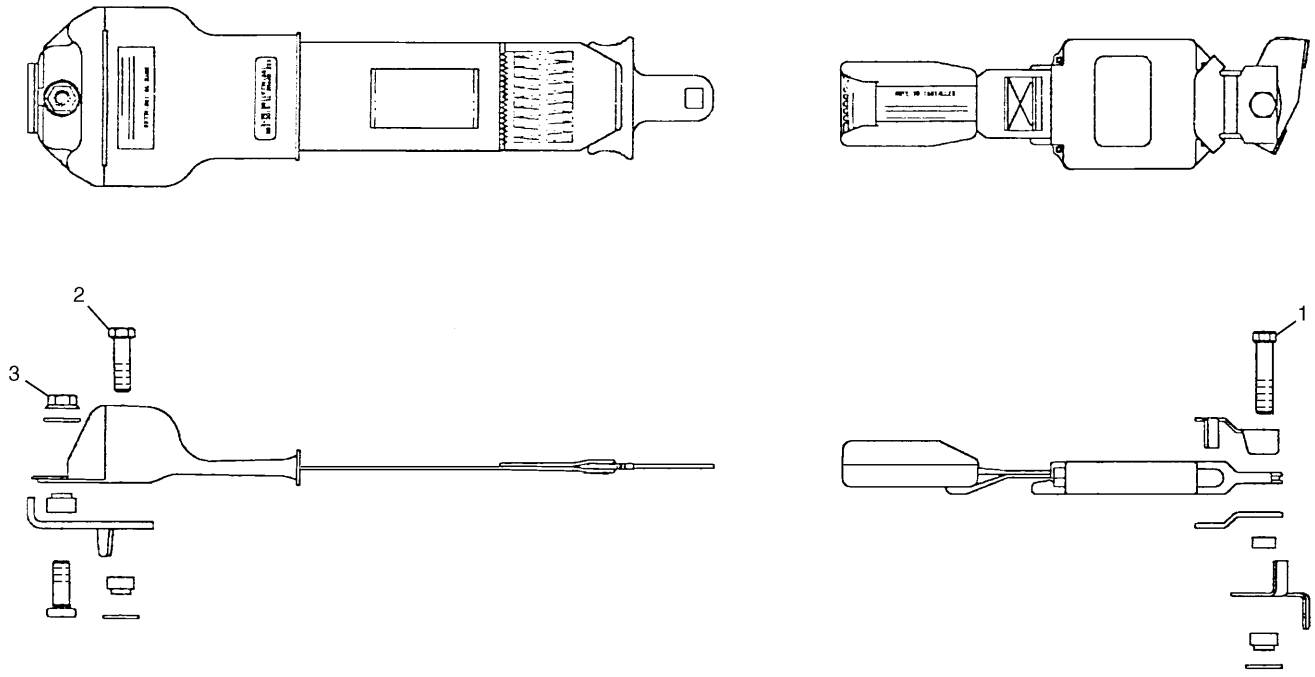

NOTE	No.	PART No.	QTY	PART NAME	NOTE	No.	PART No.	QTY	PART NAME
	1	8S-4724	1	BOLT (L=57mm)					
	2	9L-7816	1	BOLT					
	3	8S-0934	1	LOCKNUT					

H51892E 01

122-9625 SEAT BELT GP

Part of 111-6282-Page363

OPERATOR STATION

Consists of :

			Page
2	5P-7958	SLEEVE	
2	5P-8500	KEY	
1	099-3645	CABLE	

H81780E 01

7Y-0059 LITERATURE GP

Consists of :

			Page
1	4I-1170	DUCT GP-AIR	369.01
1	111-6289	DUCT GP-DEFROST	369A
1	111-6291	DUCT GP-AIR	370
1	117-6327	AIR CONDITIONER & MOUNTING GP	368
1	124-3985	DUCT GP-AIR	370.01

H53510E 01

122-9683 AIR CONDITIONER GP

S/N 3MR 1-04978, 4MR 1-00715

OPERATOR STATION

Consists of :

			Page
1	154-0587	DUCT GP-AIR	369.02
1	111-6289	DUCT GP-DEFROST	369A
1	111-6291	DUCT GP-AIR	370
1	155-7077	AIR CONDITIONER & MOUNTING GP	368.04
1	124-3985	DUCT GP-AIR	370.01

H60407E 00

155-7076 AIR CONDITIONER GP

S/N 3MR 04979-Up, 4MR 00716-Up

MEMORANDA

OPERATOR STATION

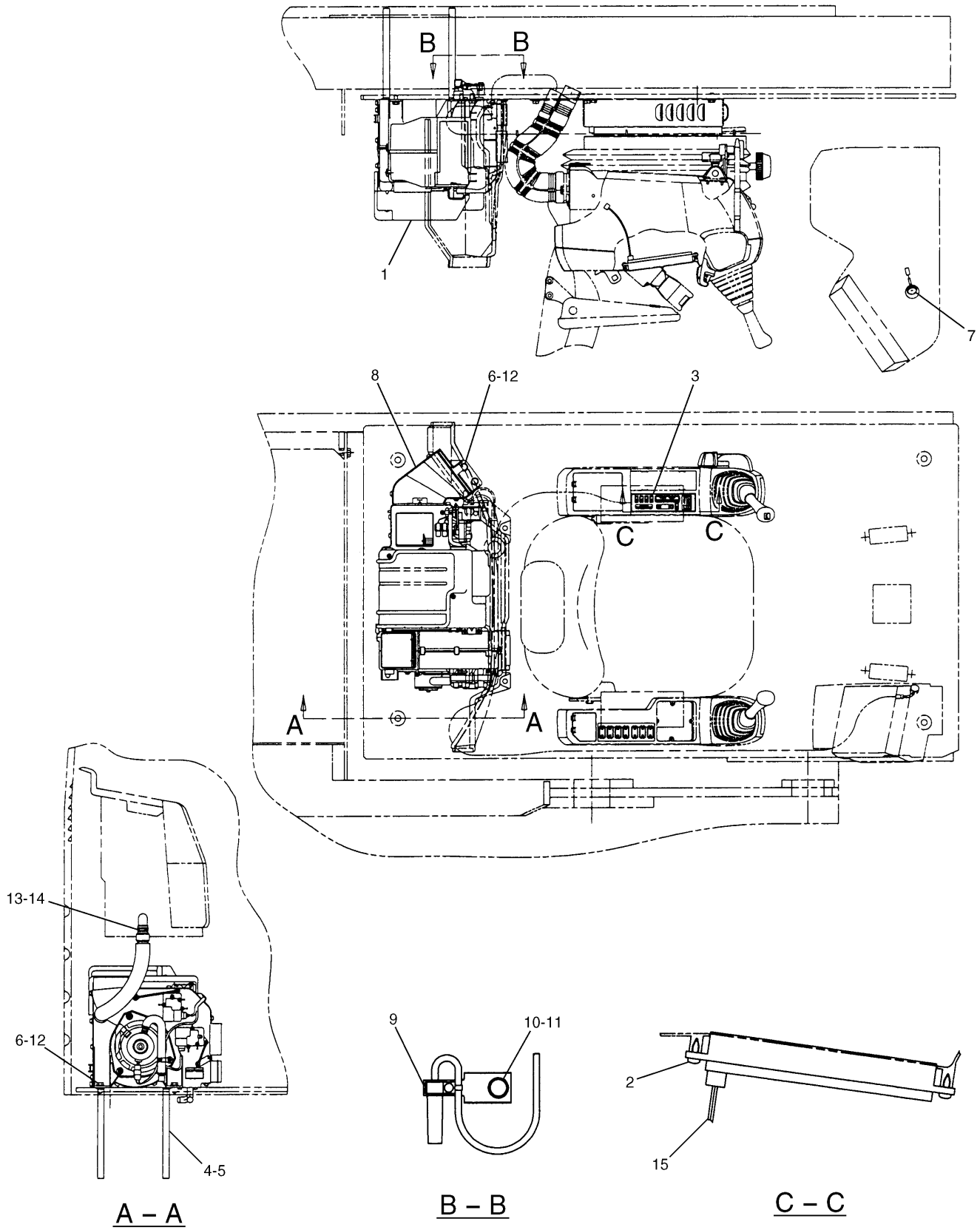

117-6327 AIR CONDITIONER & MOUNTING GP
S/N 3MR 1-04978, 4MR 1-00715
Part of 122-9683-Page367
117-6351-Page368.02,117-6332-Page371

OPERATOR STATION

NOTE	No.	PART No.	QTY	PART NAME	NOTE	No.	PART No.	QTY	PART NAME
Y	1	117-6351	1	CONDITIONER GP					
	2	119-5026	4	SCREW					
	3	119-6828	1	PANEL					
	4	086-0953	2	HOSE					
	5	7I-6968	2	CLAMP					
	6	8T-4137	7	BOLT (L=20mm)					
	7	128-2162	1	SENSOR					
Y	8	117-6332	1	DUCT AS					
	9	128-2163	1	SENSOR					
	10	8T-4200	1	BOLT (L=16mm)					
	11	8T-4224	1	WASHER					
	12	8T-4121	7	WASHER					
	13	4I-3400	1	HOSE					
	14	4I-6600	2	CLAMP					
	15	130-0287	1	HARNESS AS					

Y—SEE SEPARATE ILLUSTRATION

H54602E 03

117-6327 AIR CONDITIONER & MOUNTING GP

S/N 3MR 1-04978, 4MR 1-00715
Part of 122-9683-Page367
117-6351-Page368.02,117-6332-Page371

OPERATOR STATION

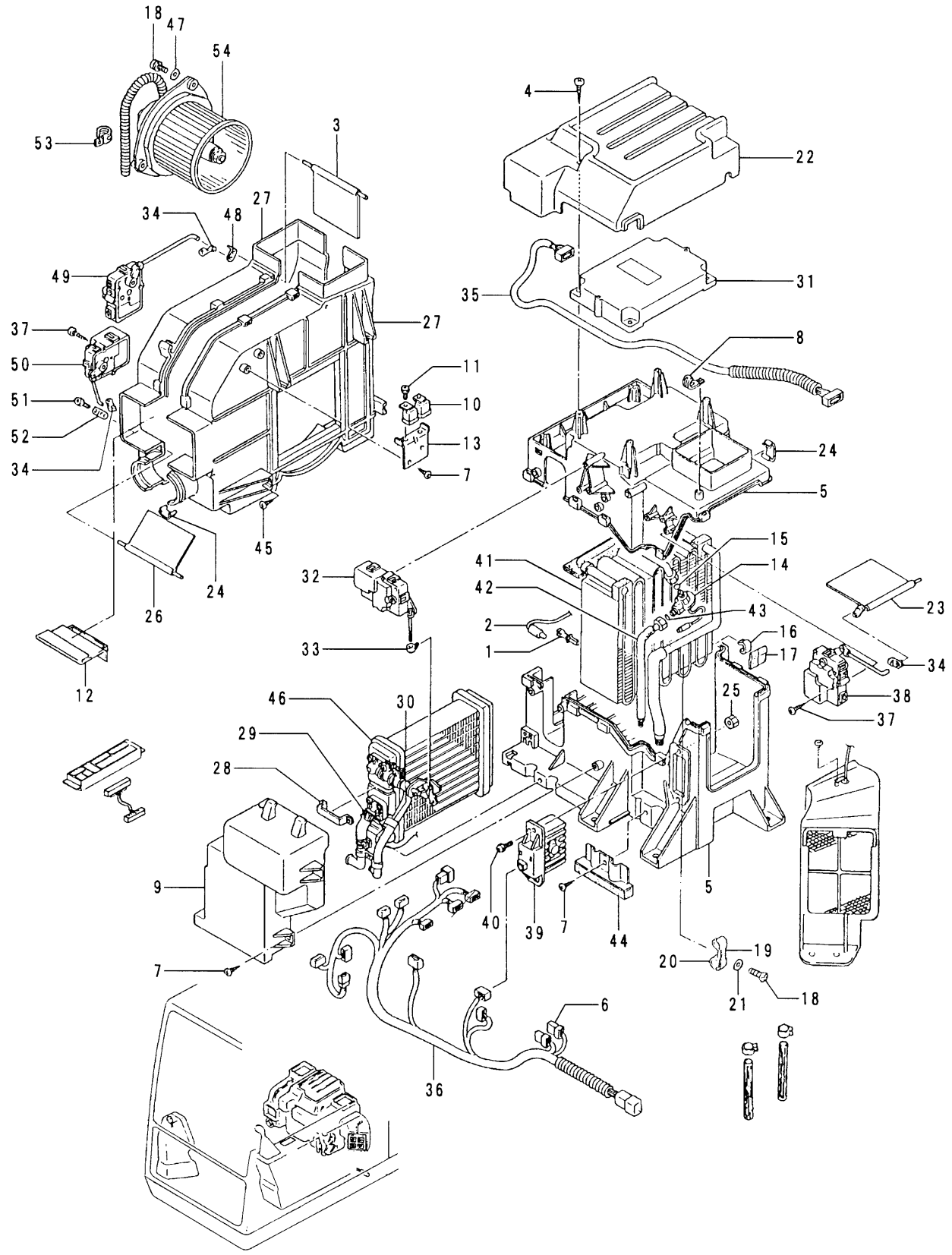

H54965E 03

117-6351 AIR CONDITIONER GP
S/N 3MR 1-04978, 4MR 1-00715
Part of 117-6327-Page368.01

OPERATOR STATION

NOTE	No.	PART No.	QTY	PART NAME
	1	7I-6634	1	CLIP
	2	124-3931	1	THERMISTOR
	3	7I-0388	1	DAMPER
	4	7I-6627	4	SCREW
	5	130-0360	1	CASE
	6	7I-6621	2	FUSE
	7	7I-6625	13	SCREW
	8	7I-6635	2	CLAMP
	9	7I-6617	1	COVER
	10	7I-6605	2	RELAY
	11	7I-6628	2	SCREW AS
	12	101-2362	1	PLATE AS
	13	7I-6608	1	SUPPORT
	14	130-0362	1	VALVE AS
	15	9X-7381	1	SEAL-O-RING (ID=10.82mm)
	16	7I-0398	1	CLIP
	17	130-0318	1	INSULATOR
	18	7I-6629	5	SCREW AS
	19	130-0364	1	CLIP
	20	130-0365	1	CLIP
	21	8T-0328	2	WASHER
	22	7I-6618	1	COVER
	23	130-0366	1	DAMPER AS
		130-0368	1	LEVER
	24	7I-0393	22	CLIP
	25	5C-8312	2	NUT
	26	7I-0389	1	DAMPER
	27	7I-0387	1	CASE
	28	7I-6607	1	SUPPORT
	29	133-7937	1	SENSOR
	30	133-7938	1	CLIP
	31	130-0369	1	CONTROL AS
	32	7I-6614	1	MOTOR AS
	33	130-0319	1	CLIP
	34	7I-0392	3	CLIP
	35	130-0370	1	HARNESS AS
	36	130-0371	1	HARNESS AS
	37	7I-6624	12	SCREW
	38	7I-6611	1	MOTOR AS
	39	135-2326	1	CONTROL AS
	40	7I-6623	2	SCREW AS
	41	130-0361	1	CORE AS
	42	130-0363	1	PIPE
	43	7I-6601	1	SEAL-O-RING (ID=6.73mm)
	44	7I-6609	1	PLATE
	45	7I-6626	4	SCREW
	46	7I-6602	1	CORE AS
	47	9X-2026	3	WASHER
	48	7I-0390	1	LEVER
	49	7I-6612	1	MOTOR AS
	50	7I-6613	1	MOTOR AS
	51	7I-0394	2	SCREW AS
	52	7I-0391	1	LEVER
	53	7I-6636	1	CLAMP
	54	7I-6603	1	MOTOR AS

H54965E 03

117-6351 AIR CONDITIONER GP

S/N 3MR 1-04978, 4MR 1-00715
Part of 117-6327-Page368.01

OPERATOR STATION

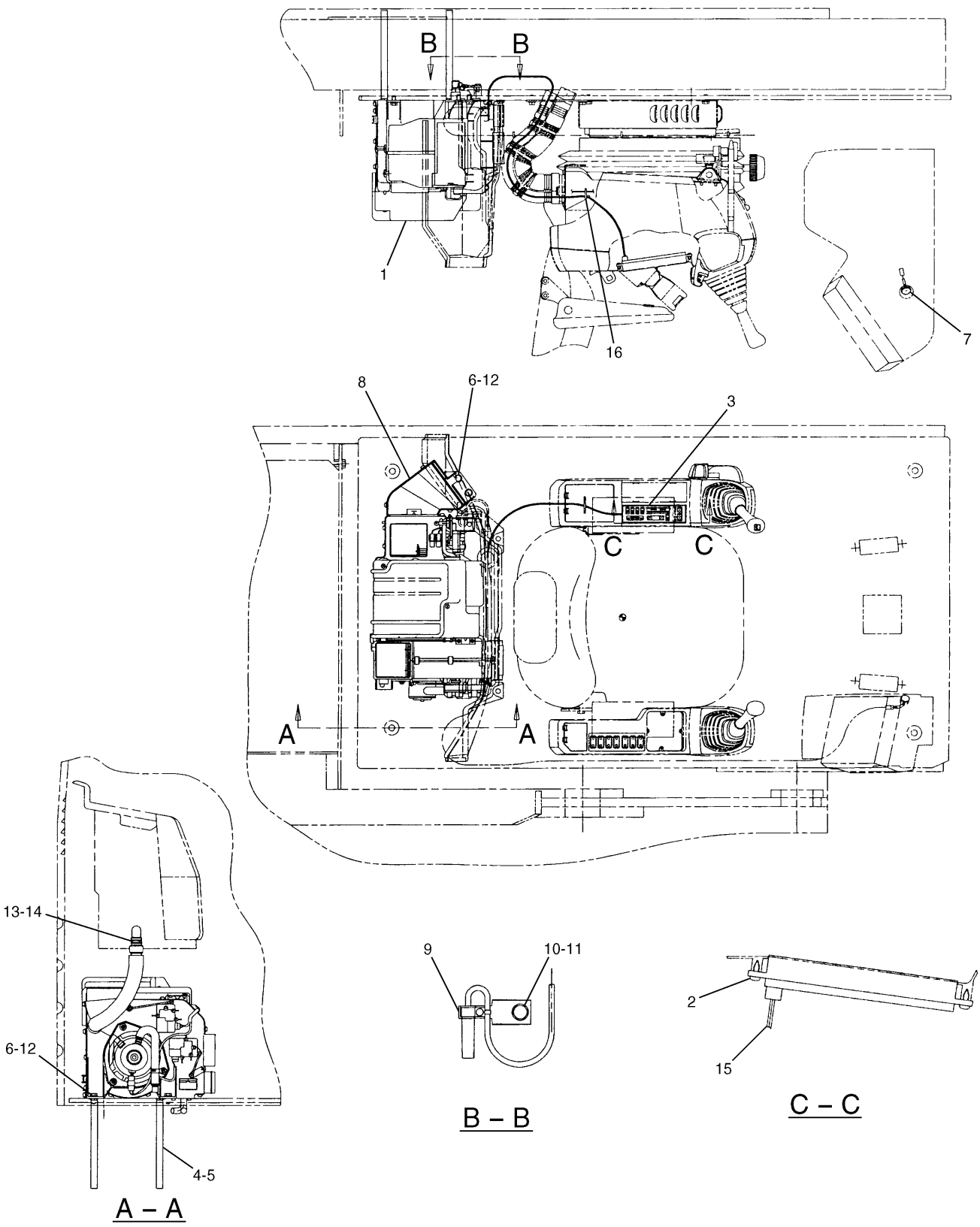

H60409E 00

155-7077 AIR CONDITIONER & MOUNTING GP
S/N 3MR 04979-Up, 4MR 00716-Up
Part of 155-7076-Page367.01
154-0523-Page368.06,117-6332-Page371

OPERATOR STATION

NOTE	No.	PART No.	QTY	PART NAME	NOTE	No.	PART No.	QTY	PART NAME
Y	1	154-0523	1	CONDITIONER GP					
	2	119-5026	4	SCREW					
	3	119-6828	1	PANEL					
	4	086-0953	2	HOSE					
	5	7I-6968	2	CLAMP					
	6	8T-4137	7	BOLT (L=20mm)					
	7	128-2162	1	SENSOR					
Y	8	117-6332	1	DUCT AS					
	9	128-2163	1	SENSOR					
	10	8T-4200	1	BOLT (L=16mm)					
	11	8T-4224	1	WASHER					
	12	8T-4121	7	WASHER					
	13	4I-3400	1	HOSE					
	14	4I-6600	2	CLAMP					
	15	154-0526	1	HARNESS AS					
	16	3S-2093	1	STRAP					

Y—SEE SEPARATE ILLUSTRATION

H60409E 00

155-7077 AIR CONDITIONER & MOUNTING GP

S/N 3MR 04979-Up, 4MR 00716-Up
Part of 155-7076-Page367.01
154-0523-Page368.06,117-6332-Page371

OPERATOR STATION

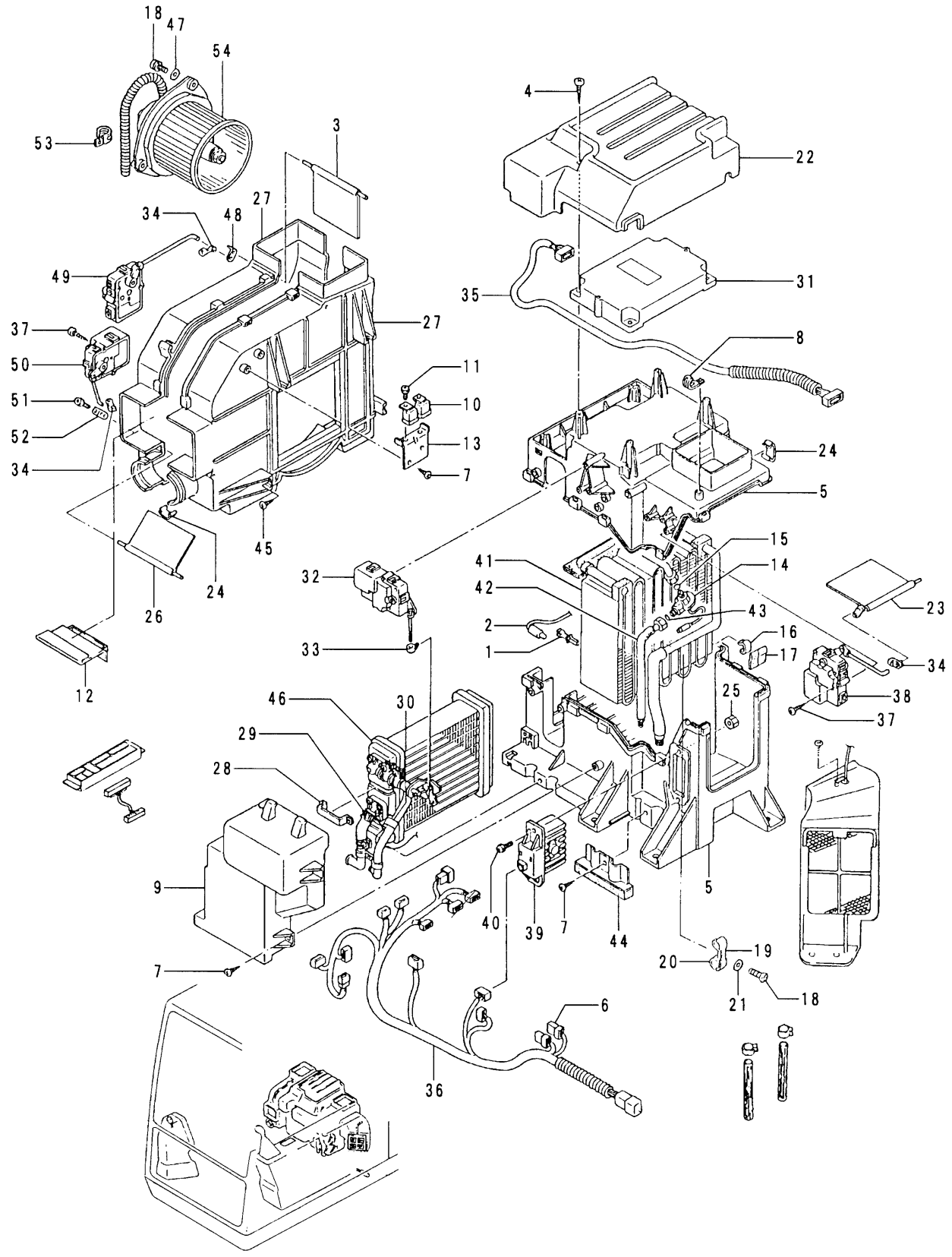

H60256E 00

154-0523 AIR CONDITIONER GP
S/N 3MR 04979-Up, 4MR 00716-Up
Part of 155-7077-Page368.05

OPERATOR STATION

NOTE	No.	PART No.	QTY	PART NAME	NOTE	No.	PART No.	QTY	PART NAME
	1	7I-6634	1	CLIP		53	7I-6636	1	CLAMP
	2	124-3931	1	THERMISTOR		54	154-0524	1	MOTOR AS
	3	7I-0388	1	DAMPER					
	4	7I-6627	4	SCREW					
	5	130-0360	1	CASE					
	6	7I-6621	2	FUSE					
	7	7I-6625	13	SCREW					
	8	7I-6635	2	CLAMP					
	9	7I-6617	1	COVER					
	10	7I-6605	2	RELAY					
	11	7I-6628	2	SCREW AS					
	12	101-2362	1	PLATE AS					
	13	7I-6608	1	SUPPORT					
	14	130-0362	1	VALVE AS					
	15	9X-7381	1	SEAL-O-RING (ID=10.82mm)					
	16	7I-0398	1	CLIP					
	17	130-0318	1	INSULATOR					
	18	7I-6629	5	SCREW AS					
	19	130-0364	1	CLIP					
	20	130-0365	1	CLIP					
	21	8T-0328	2	WASHER					
	22	7I-6618	1	COVER					
	23	130-0366	1	DAMPER AS					
		130-0368	1	LEVER					
	24	7I-0393	22	CLIP					
	25	5C-8312	2	NUT					
	26	7I-0389	1	DAMPER					
	27	7I-0387	1	CASE					
	28	7I-6607	1	SUPPORT					
	29	133-7937	1	SENSOR					
	30	133-7938	1	CLIP					
	31	130-0369	1	CONTROL AS					
	32	7I-6614	1	MOTOR AS					
	33	130-0319	1	CLIP					
	34	7I-0392	3	CLIP					
	35	130-0370	1	HARNESS AS					
	36	154-0525	1	HARNESS AS					
	37	7I-6624	12	SCREW					
	38	7I-6611	1	MOTOR AS					
	39	135-2326	1	CONTROL AS					
	40	7I-6623	2	SCREW AS					
	41	130-0361	1	CORE AS					
	42	130-0363	1	PIPE					
	43	7I-6601	1	SEAL-O-RING (ID=6.73mm)					
	44	7I-6609	1	PLATE					
	45	7I-6626	4	SCREW					
	46	7I-6602	1	CORE AS					
	47	9X-2026	3	WASHER					
	48	7I-0390	1	LEVER					
	49	7I-6612	1	MOTOR AS					
	50	7I-6613	1	MOTOR AS					
	51	7I-0394	2	SCREW AS					
	52	7I-0391	1	LEVER					

H60256E 00

154-0523 AIR CONDITIONER GP

S/N 3MR 04979-Up, 4MR 00716-Up

Part of 155-7077-Page368.05

MEMORANDA

MEMORANDA

OPERATOR STATION

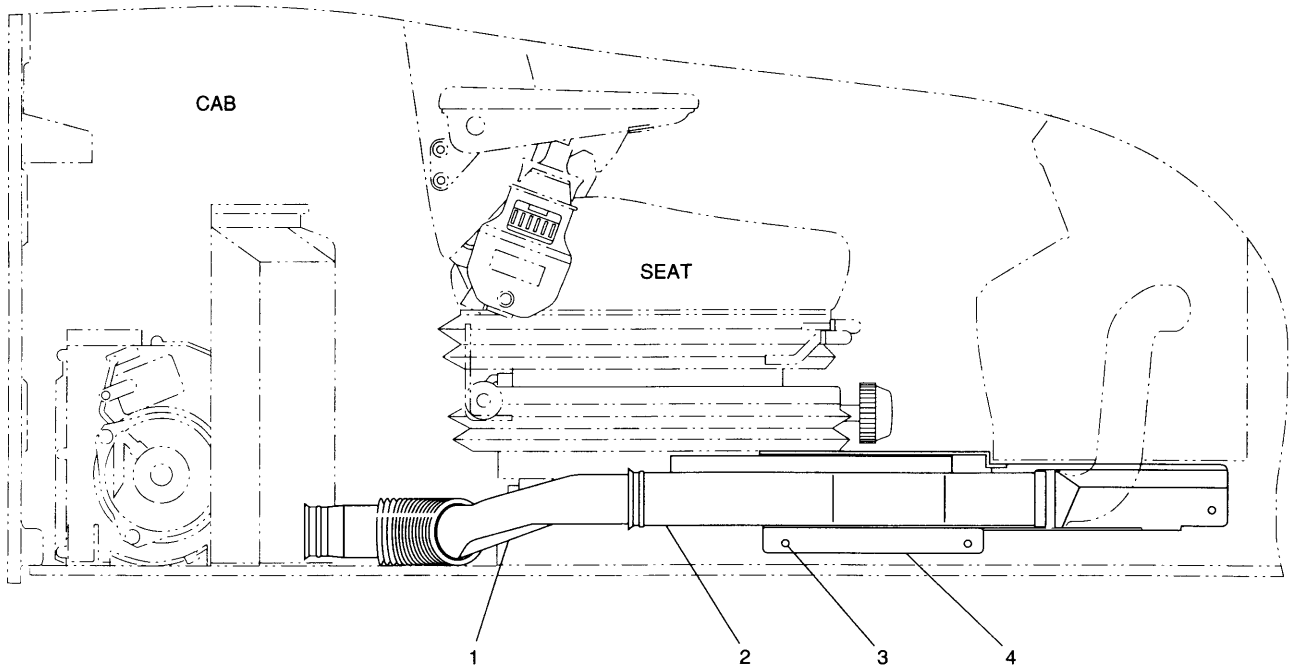

NOTE	No.	PART No.	QTY	PART NAME	NOTE	No.	PART No.	QTY	PART NAME
	1	119-6811	1	DUCT					
	2	119-6812	1	DUCT					
	3	9X-2044	3	SCREW					
	4	124-3989	1	COVER					

H53245E 05

111-6289 DUCT GP-DEFROST

Part of 122-9683-Page367,155-7076-Page367.01

MEMORANDA

OPERATOR STATION

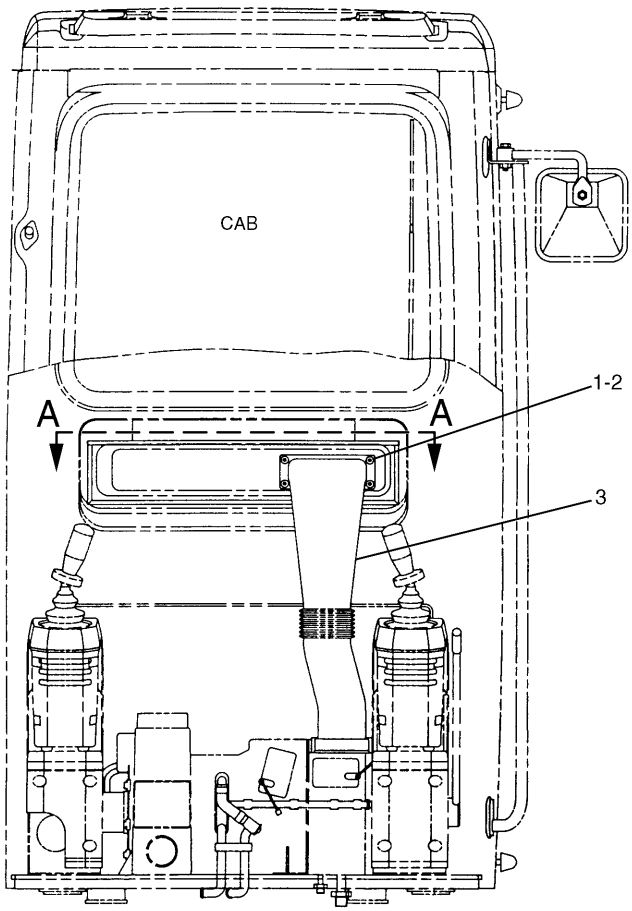

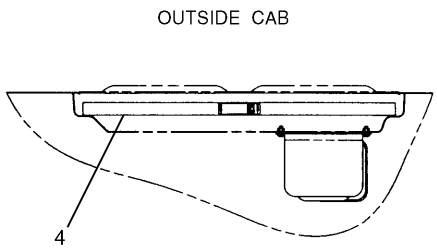

A – A

NOTE	No.	PART No.	QTY	PART NAME	NOTE	No.	PART No.	QTY	PART NAME
	1	095-0742	4	SCREW					
	2	095-0827	4	LOCKWASHER					
	3	4I-1251	1	DUCT					
	4	4I-1278	1	FILTER					

H53246E 05

4I-1170 DUCT GP-AIR

S/N 3MR 1-04978, 4MR 1-00715
Part of 122-9683-Page367

OPERATOR STATION

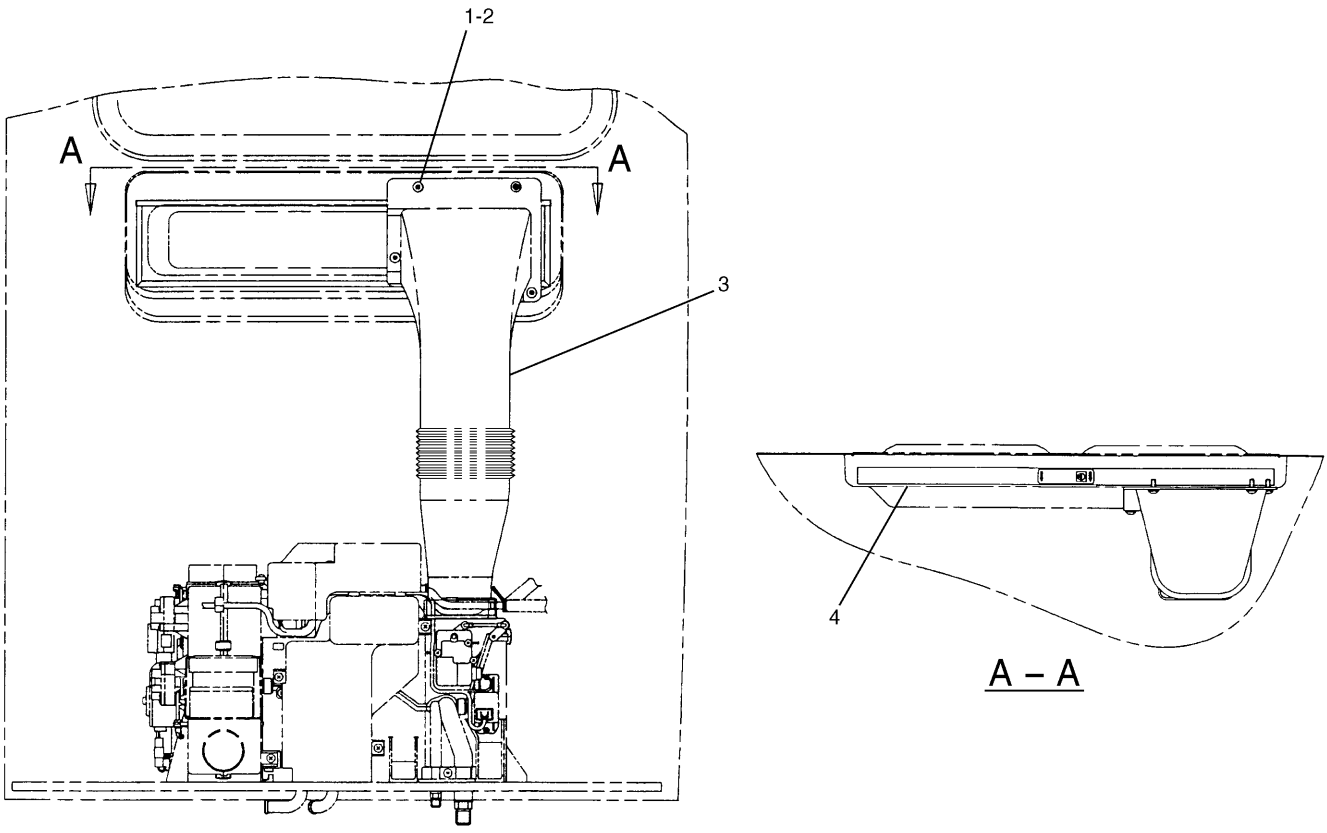

NOTE	No.	PART No.	QTY	PART NAME	NOTE	No.	PART No.	QTY	PART NAME
	1	095-0742	4	SCREW					
	2	095-0827	4	LOCKWASHER					
	3	154-0588	1	DUCT					
	4	41-1278	1	FILTER					

H60411E 01

154-0587 DUCT GP-AIR
S/N 3MR 04979-Up, 4MR 00716-Up
Part of 155-7076-Page367.01

OPERATOR STATION

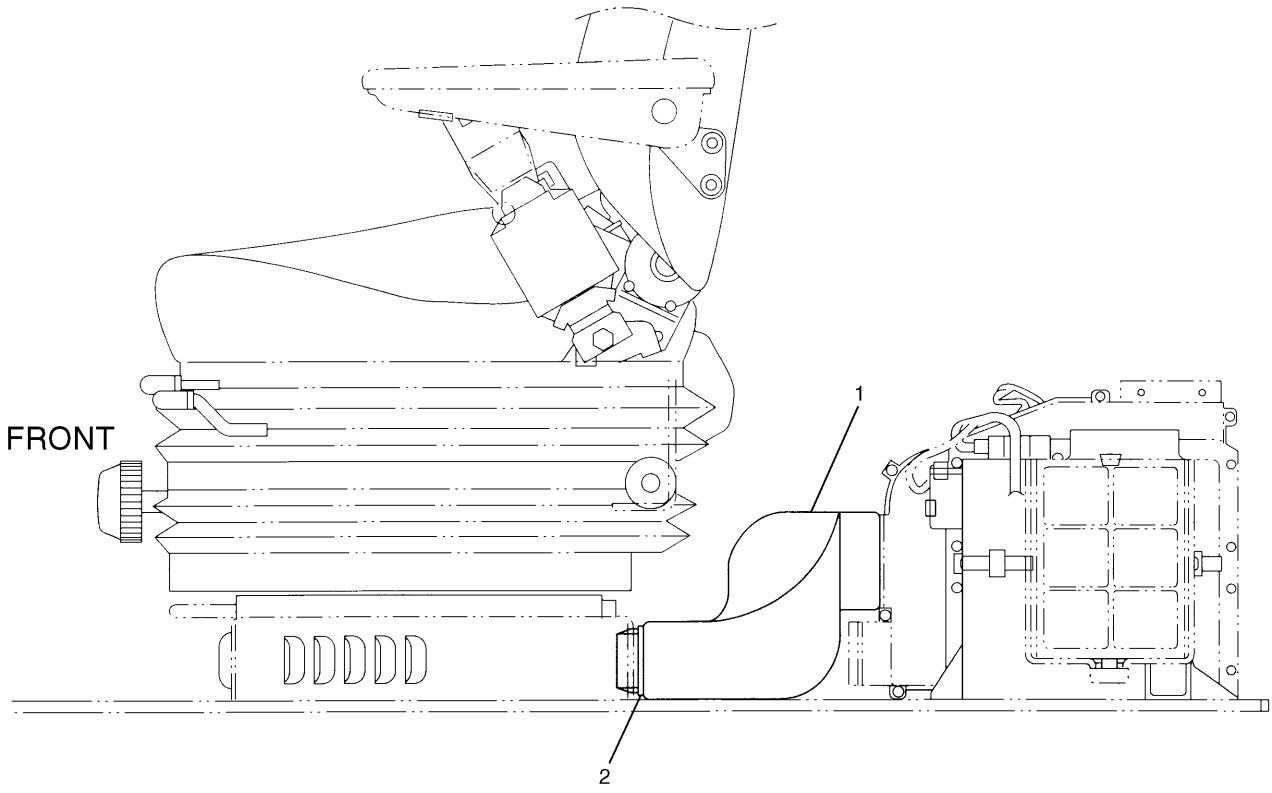

NOTE	No.	PART No.	QTY	PART NAME	NOTE	No.	PART No.	QTY	PART NAME
	1	111-6388	1	DUCT					
	2	111-6389	1	RUBBER					

H53247E 01

111-6291 DUCT GP-AIR

Heater

Part of 122-9683-Page367,155-7076-Page367.01

OPERATOR STATION

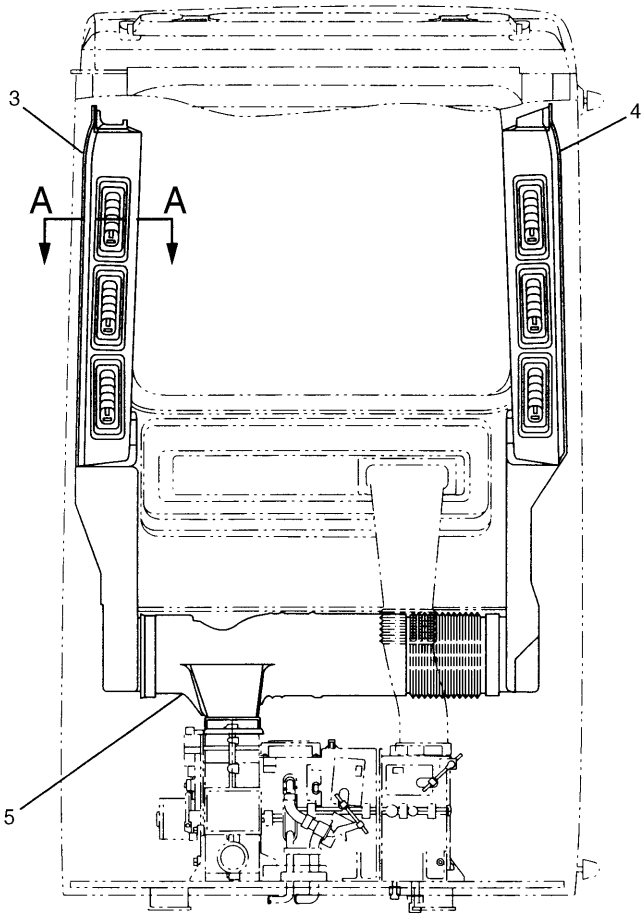

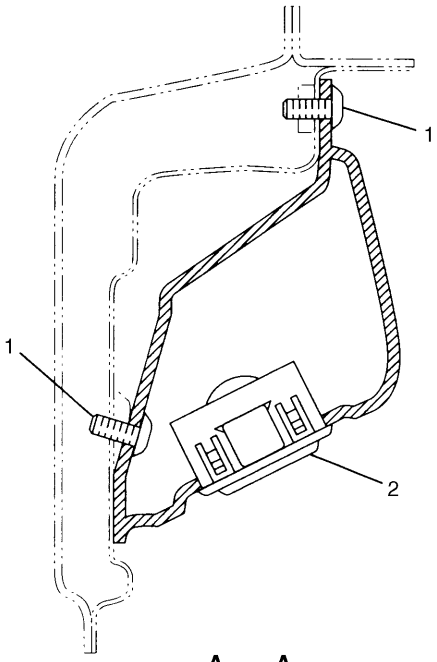

A – A

NOTE	No.	PART No.	QTY	PART NAME	NOTE	No.	PART No.	QTY	PART NAME
	1	9X-2044	8	SCREW					
	2	8Y-6967	6	LOUVER AS					
	3	124-3918	1	DUCT					
	4	124-3917	1	DUCT					
Y	5	124-3982	1	DUCT AS					

Y—SEE SEPARATE ILLUSTRATION

H53248E 00

124-3985 DUCT GP-AIR

Air Conditioner

Part of 122-9683-Page367,155-7076-Page367.01
124-3982-Page371

MEMORANDA

OPERATOR STATION

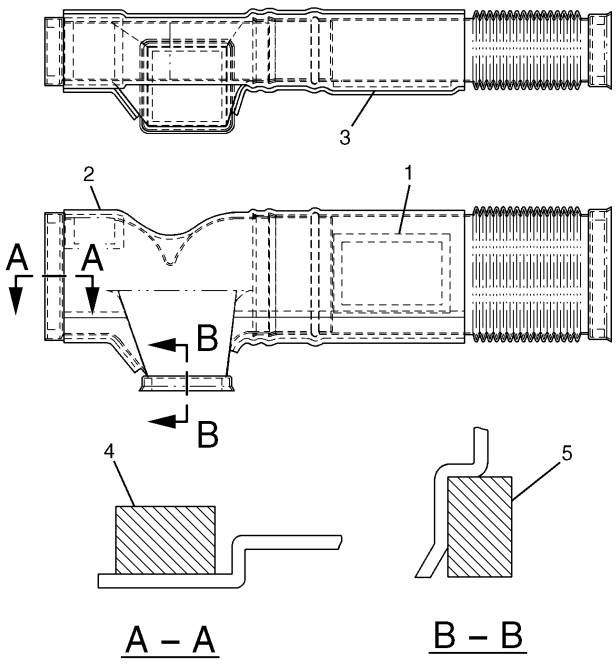

NOTE	No.	PART No.	QTY	PART NAME
	1	124-3983	1	INSULATOR
	2	124-3984	1	INSULATOR
	3	124-3986	1	INSULATOR
	4	105-9533	2	INSULATOR
	5	105-9534	1	INSULATOR

H50680E 01

124-3982 DUCT AS

Part of 124-3985-Page370.01

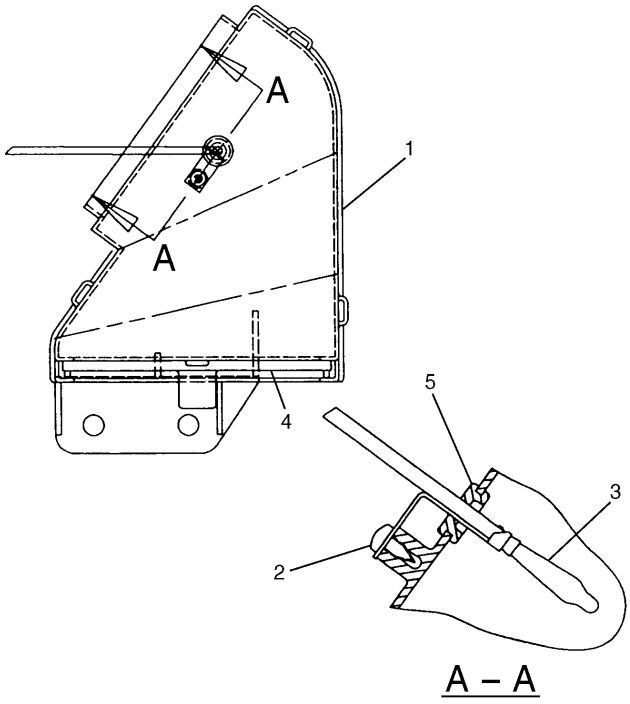

NOTE	No.	PART No.	QTY	PART NAME
	1	119-6886	1	DUCT
	2	7Y-5288	1	SCREW
	3	113-3432	1	SENSOR
	4	119-6887	1	FILTER
	5	130-0288	1	GROMMET

H54603E 02

117-6332 DUCT AS

Part of 117-6327-Page368.01,155-7077-Page368.05

MEMORANDA

MEMORANDA

OPERATOR STATION

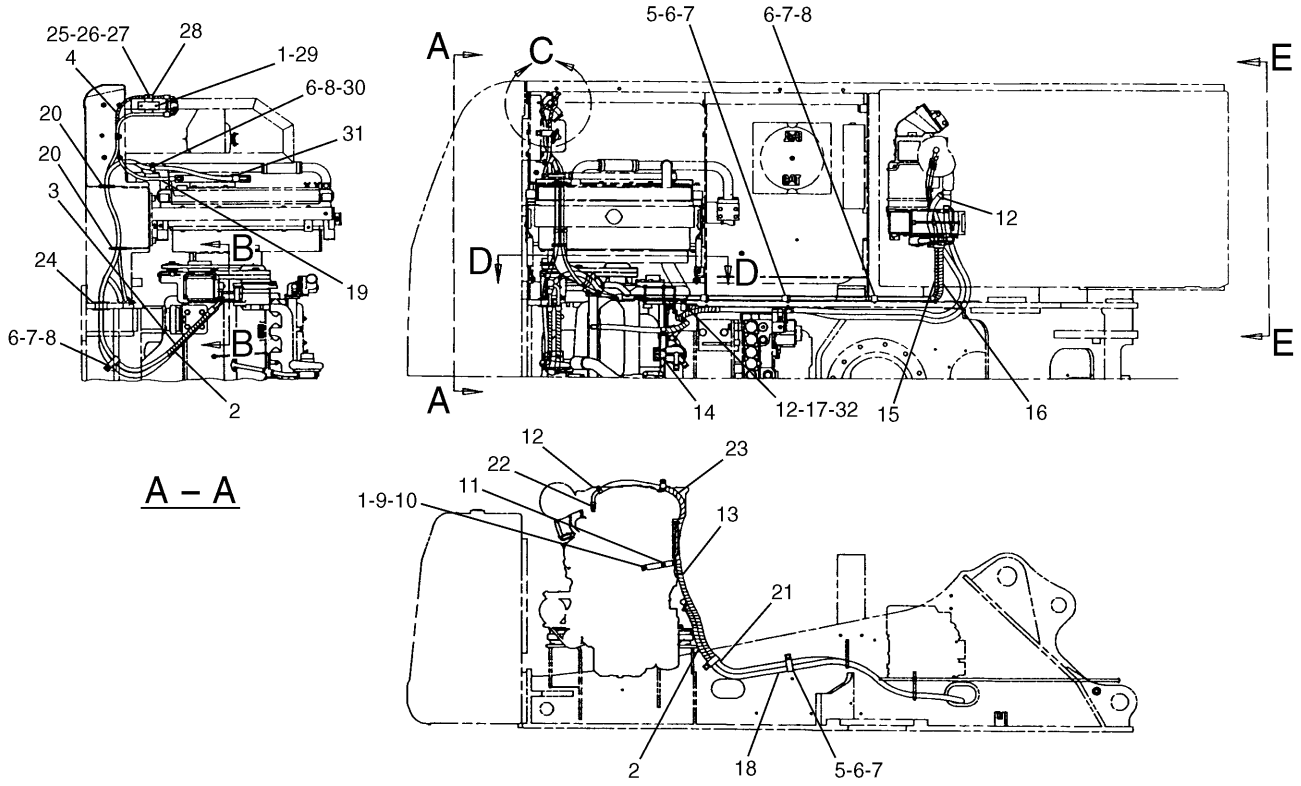

NOTE	No.	PART No.	QTY	PART NAME	NOTE	No.	PART No.	QTY	PART NAME
	1	8T-4224	4	WASHER		20	093-2064	2	GROMMET
E	2	113-3438		GUARD…(45cm × 2)	E	21	5P-0767		HOSE…(345cm)
E	3	113-3438		GUARD…(40cm)		22	4I-4579	1	NIPPLE
E	4	113-3438		GUARD…(30cm)	E	23	113-3438		GUARD…(70cm)
	5	7X-2621	4	BOLT (L=12mm)		24	7Y-8167	1	GROMMET
	6	8T-4121	9	WASHER		25	5C-2890	1	NUT
	7	6D-1641	8	CLIP		26	9X-8256	1	WASHER
	8	8T-4137	5	BOLT (L=20mm)		27	6V-7357	1	BOLT (L=25mm)
	9	4I-4872	2	SPACER		28	086-0950	1	BRACKET AS
	10	8T-3647	2	BOLT (L=80mm)		29	8T-4189	2	BOLT (L=20mm)
	11	135-2215	1	SUPPORT		30	1S-0994	1	CLIP
	12	5D-1026	4	CLAMP		31	119-6837	1	HOSE AS
E	13	113-3438		GUARD…(80cm)			105-9410	2	SEAL-O-RING (ID=10.80mm)
	14	7I-6929	1	SUPPORT AS		32	155-7024	2	SPACER
E	15	113-3438		GUARD…(38cm)					
E	16	113-3438		GUARD…(60cm)					
	17	7I-0375	1	ELBOW					
E	18	5P-0767		HOSE…(235cm)					
	19	119-6833	1	HOSE AS					
		7I-6601	2	SEAL-O-RING (ID=6.73mm)					

E—ORDER BY THE CENTIMETER

H54597E 05

117-6315 LINES GP-AIR CONDITIONER (1/2)

S/N 3MR 1-04978, 4MR 1-00715

OPERATOR STATION

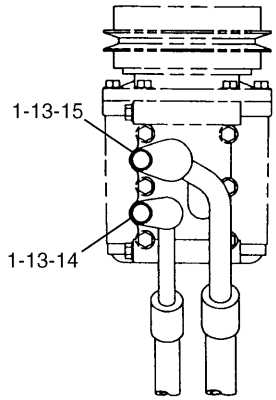

B – B

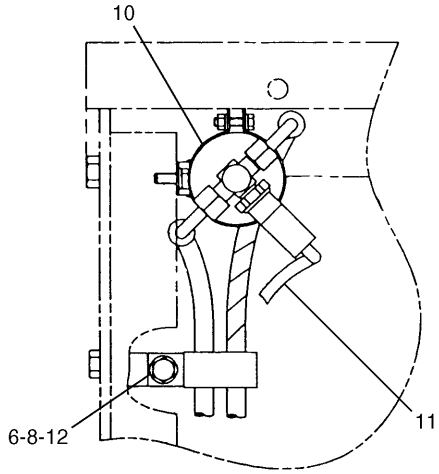

C

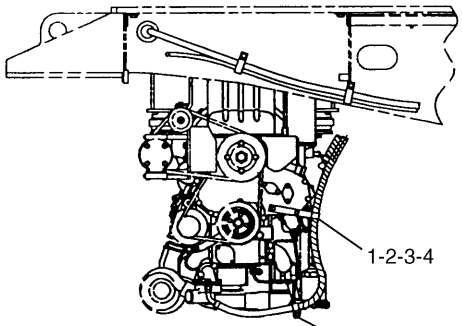

D – D

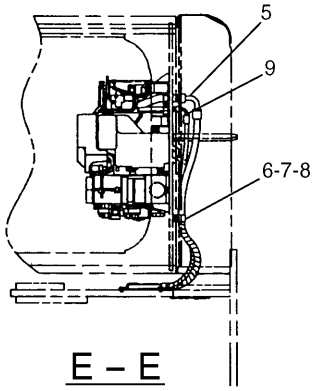

E – E

NOTE	No.	PART No.	QTY	PART NAME	NOTE	No.	PART No.	QTY	PART NAME
	1	8T-4224	4	WASHER					
	2	095-0913	2	CLIP					
	3	8T-4200	2	BOLT (L=16mm)					
	4	5C-7261	1	NUT					
	5	119-6832	1	HOSE AS					
		105-9409	2	SEAL-O-RING (ID=15.88mm)					
	6	8T-4121	2	WASHER					
	7	6D-1641	1	CLIP					
	8	8T-4137	2	BOLT (L=20mm)					
	9	119-6834	1	HOSE AS					
		7I-6601	2	SEAL-O-RING (ID=6.73mm)					
	10	105-9344	1	RECEIVER AS					
	11	119-6838	1	HARNESS AS					
		3E-3365	1	WEDGE					
		9W-0852	2	PIN					
		102-8802	1	RECEPTACLE KIT					
	12	5K-8451	1	CLIP					
	13	7H-3937	2	LOCKWASHER					
	14	7X-2537	1	BOLT (L=35mm)					
	15	7X-0818	1	BOLT (L=45mm)					

H54598E 05

117-6315 LINES GP-AIR CONDITIONER (2/2)

S/N 3MR 1-04978, 4MR 1-00715

OPERATOR STATION

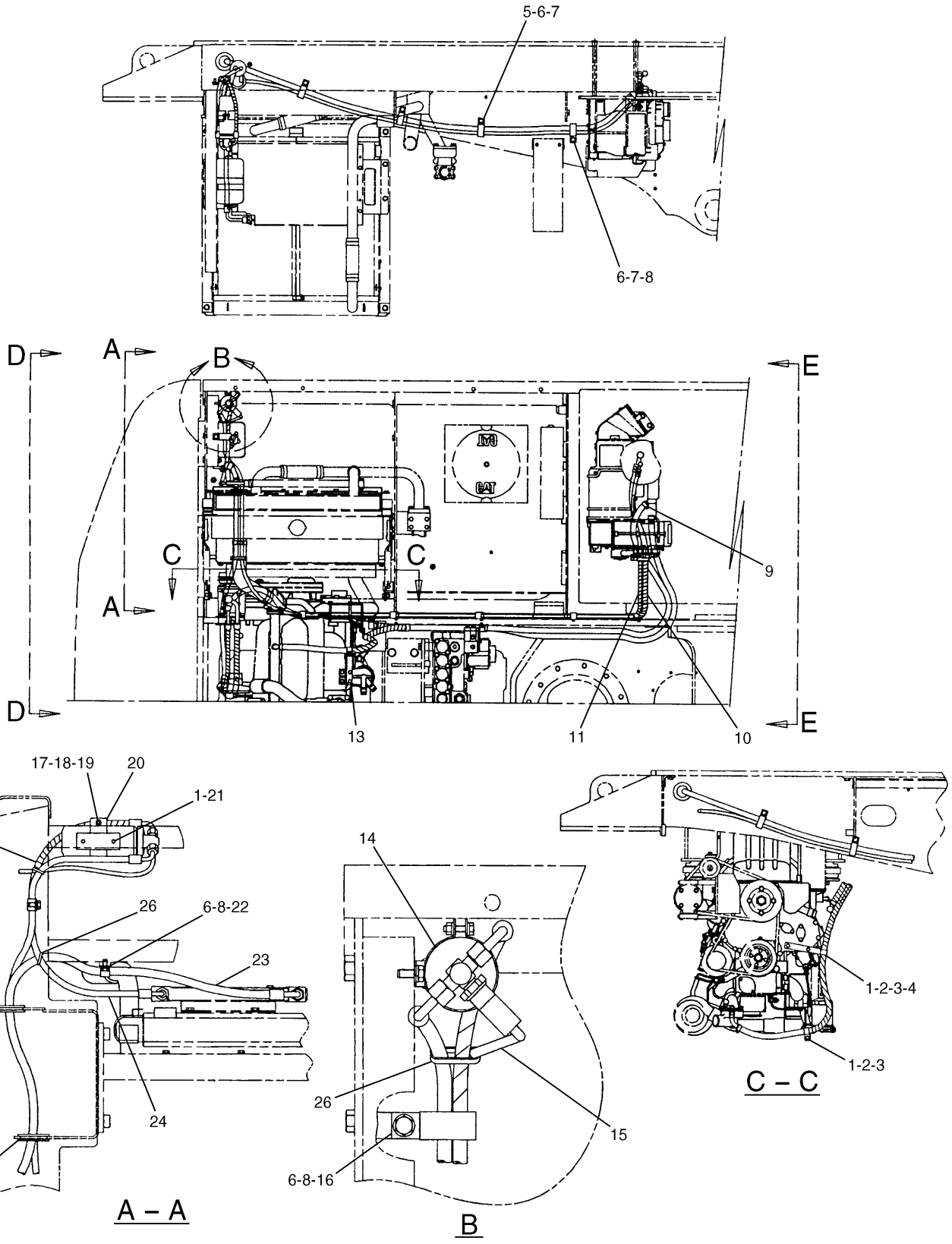

H65511E 08

117-6315 LINES GP-AIR CONDITIONER (1/2)

S/N 3MR 04979-Up, 4MR 00716-Up

OPERATOR STATION

NOTE	No.	PART No.	QTY	PART NAME	NOTE	No.	PART No.	QTY	PART NAME
	1	8T-4224	4	WASHER					
	2	095-0913	2	CLIP					
	3	8T-4200	2	BOLT (L=16mm)					
	4	5C-7261	1	NUT					
	5	7X-2621	2	BOLT (L=12mm)					
	6	8T-4121	7	WASHER					
	7	6D-1641	5	CLIP					
	8	8T-4137	5	BOLT (L=20mm)					
	9	5D-1026	2	CLAMP					
E	10	7I-7439		GUARD…(60cm)					
E	11	7I-7439		GUARD…(38cm)					
E	12	7I-7439		GUARD…(30cm)					
	13	7I-6929	1	SUPPORT AS					
	14	105-9344	1	RECEIVER AS					
	15	119-6838	1	HARNESS AS					
		102-8802	1	RECEPTACLE KIT					
		3E-3365	1	WEDGE					
		9W-0852	2	PIN					
	16	5K-8451	1	CLIP					
	17	5C-2890	1	NUT					
	18	9X-8256	1	WASHER					
	19	6V-7357	1	BOLT (L=25mm)					
	20	086-0950	1	BRACKET AS					
	21	8T-4189	2	BOLT (L=20mm)					
	22	1S-0994	1	CLIP					
	23	119-6837	1	HOSE AS					
		105-9410	2	SEAL-O-RING (ID=10.80mm)					
	24	119-6833	1	HOSE AS					
		7I-6601	1	SEAL-O-RING (ID=6.73mm)					
	25	093-2064	2	GROMMET					
	26	096-0061	2	STRAP					

E—ORDER BY THE CENTIMETER

H65511E 08

117-6315 LINES GP-AIR CONDITIONER (1/2)

S/N 3MR 04979-Up, 4MR 00716-Up

OPERATOR STATION

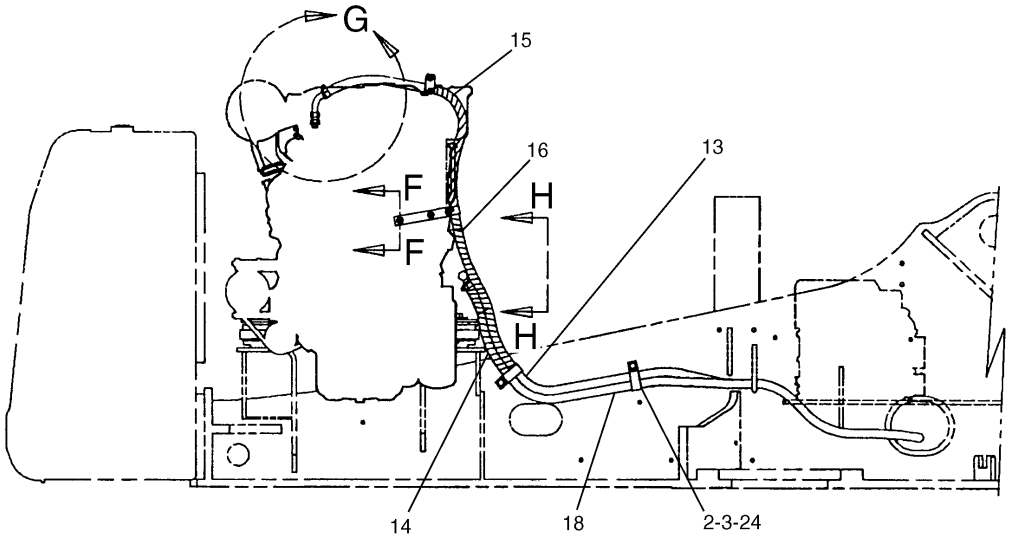

SIDE VIEW

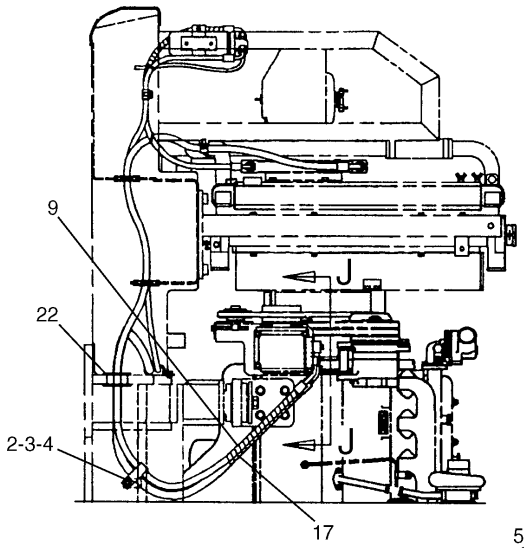

D – D

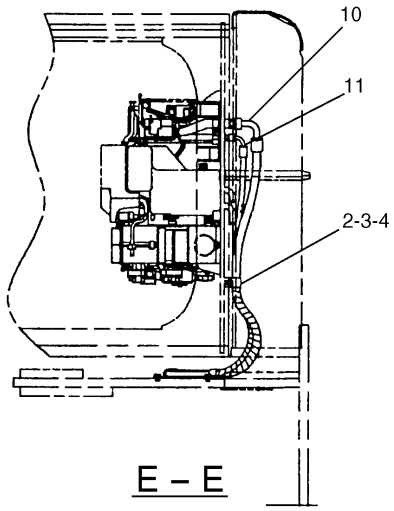

E – E

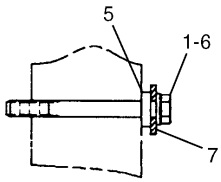

F – F

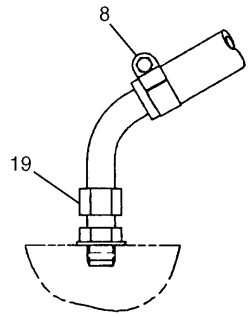

G

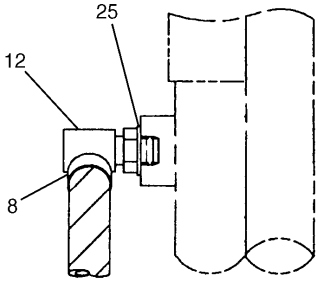

H – H

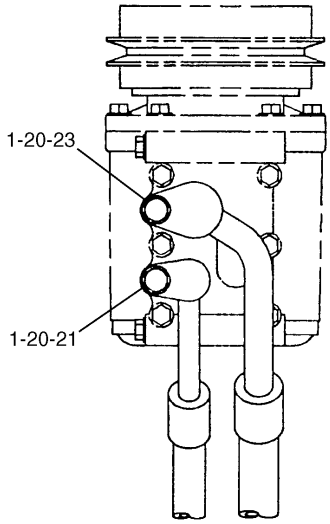

J – J

H65513E 08

117-6315 LINES GP-AIR CONDITIONER (2/2)
S/N 3MR 04979-Up, 4MR 00716-Up

OPERATOR STATION

NOTE	No.	PART No.	QTY	PART NAME	NOTE	No.	PART No.	QTY	PART NAME
	1	8T-4224	4	WASHER					
	2	8T-4121	4	WASHER					
	3	6D-1641	4	CLIP					
	4	8T-4137	2	BOLT (L=20mm)					
	5	4I-4872	2	SPACER					
	6	8T-3647	2	BOLT (L=80mm)					
	7	135-2215	1	SUPPORT					
	8	5D-1026	2	CLAMP					
E	9	7I-7439		GUARD…(40cm)					
	10	119-6832	1	HOSE AS					
		105-9409	2	SEAL-O-RING (ID=15.88mm)					
	11	119-6834	1	HOSE AS					
		7I-6601	2	SEAL-O-RING (ID=6.73mm)					
	12	7I-0375	1	ELBOW					
E	13	5P-0767		HOSE…(345cm)					
E	14	7I-7439		GUARD…(45cm)					
E	15	7I-7439		GUARD…(70cm)					
E	16	7I-7439		GUARD…(80cm)					
E	17	7I-7439		GUARD…(45cm)					
E	18	5P-0767		HOSE…(235cm)					
	19	4I-4579	1	NIPPLE					
	20	7H-3937	2	LOCKWASHER					
	21	7X-2537	1	BOLT (L=35mm)					
	22	7Y-8167	1	GROMMET					
	23	7X-0818	1	BOLT (L=45mm)					
	24	7X-2621	2	BOLT (L=12mm)					
	25	155-7024	2	SPACER					

E—ORDER BY THE CENTIMETER

H65513E 08

117-6315 LINES GP-AIR CONDITIONER (2/2)

S/N 3MR 04979-Up, 4MR 00716-Up

OPERATOR STATION

Consists of :

			Page
1	117-6312	LINES GP-HEATER	374.02
1	117-6325	HEATER & MOUNTING GP	375

H54611E 03

124-4034 HEATER AR
S/N 3MR 1-04978, 4MR 1-00715
An Attachment

Consists of :

			Page
1	117-6312	LINES GP-HEATER	374.04
1	154-0676	HEATER & MOUNTING GP	375A

H60623E 00

154-0675 HEATER AR
S/N 3MR 04979-Up, 4MR 00716-Up
An Attachment

MEMORANDA

OPERATOR STATION

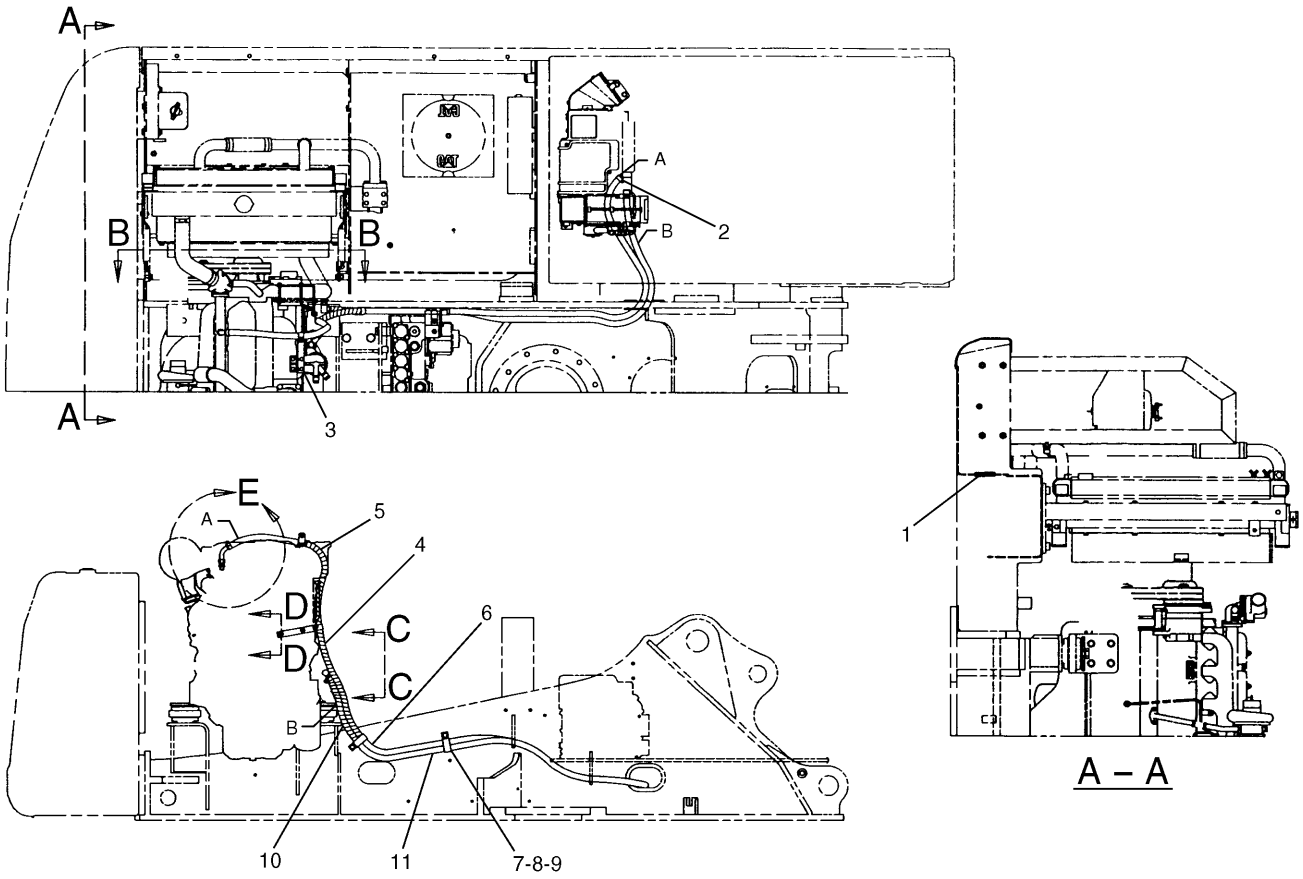

NOTE	No.	PART No.	QTY	PART NAME	NOTE	No.	PART No.	QTY	PART NAME
	1	7I-1542	1	GROMMET					
	2	5D-1026	2	CLAMP					
	3	7I-6929	1	SUPPORT AS					
E	4	113-3438		GUARD…(80cm)					
E	5	113-3438		GUARD…(70cm)					
E	6	5P-0767		HOSE…(345cm)					
	7	7X-2621	2	BOLT (L=12mm)					
	8	8T-4121	2	WASHER					
	9	6D-1641	2	CLIP					
E	10	113-3438		GUARD…(45cm)					
E	11	5P-0767		HOSE…(235cm)					

E—ORDER BY THE CENTIMETER

H54595E 01

117-6312 LINES GP-HEATER (1/2)

S/N 3MR 1-04978, 4MR 1-00715
Part of 124-4034-Page374
An Attachment

OPERATOR STATION

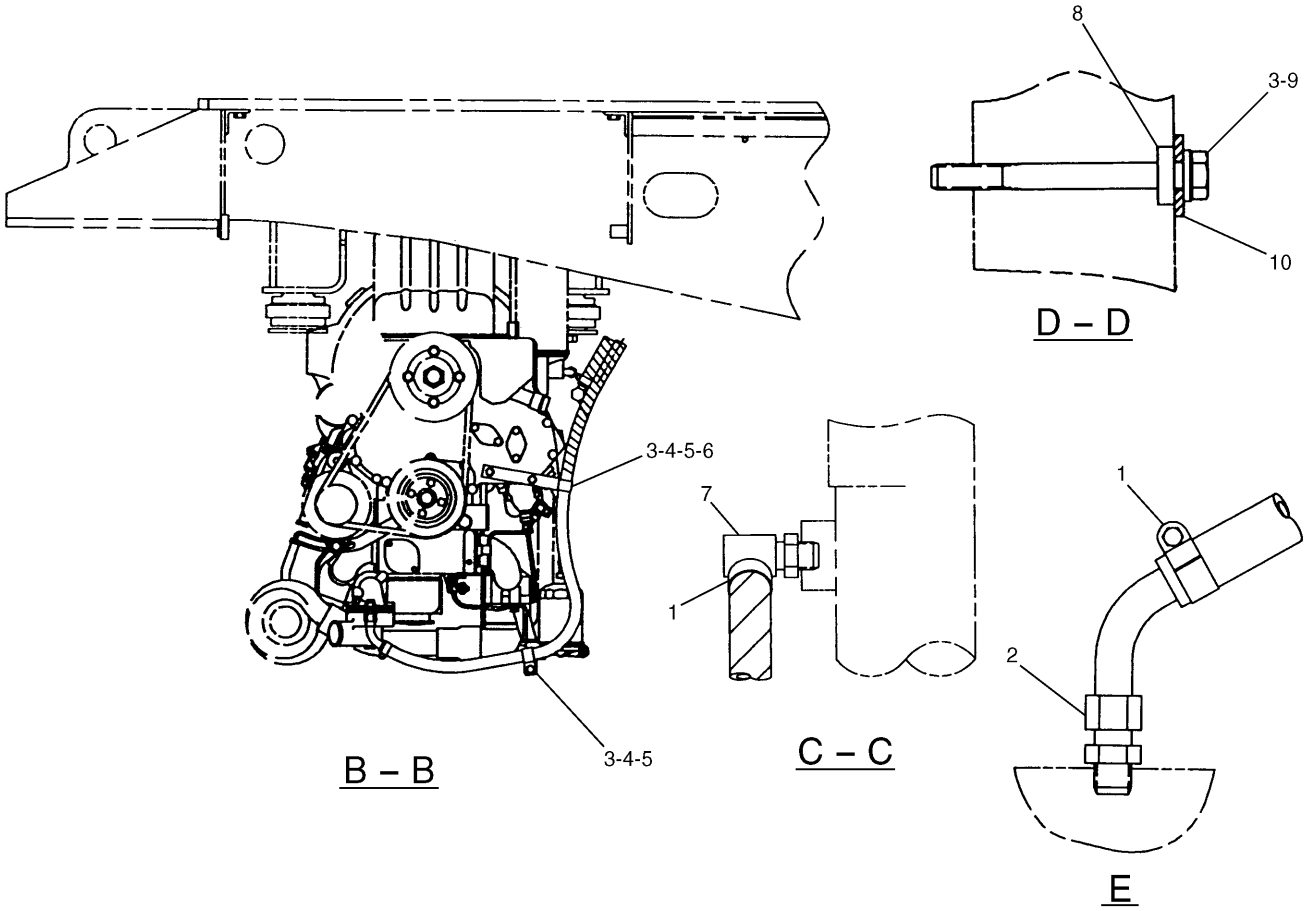

NOTE	No.	PART No.	QTY	PART NAME	NOTE	No.	PART No.	QTY	PART NAME
	1	5D-1026	2	CLAMP					
	2	4I-4579	1	NIPPLE					
	3	8T-4224	4	WASHER					
	4	095-0913	2	CLIP					
	5	8T-4200	2	BOLT (L=16mm)					
	6	5C-7261	1	NUT					
	7	7I-0375	1	ELBOW					
	8	4I-4872	2	SPACER					
	9	8T-3647	2	BOLT (L=80mm)					
	10	135-2215	1	SUPPORT					

H54596E 01

117-6312 LINES GP-HEATER (2/2)

S/N 3MR 1-04978, 4MR 1-00715
Part of 124-4034-Page374
An Attachment

OPERATOR STATION

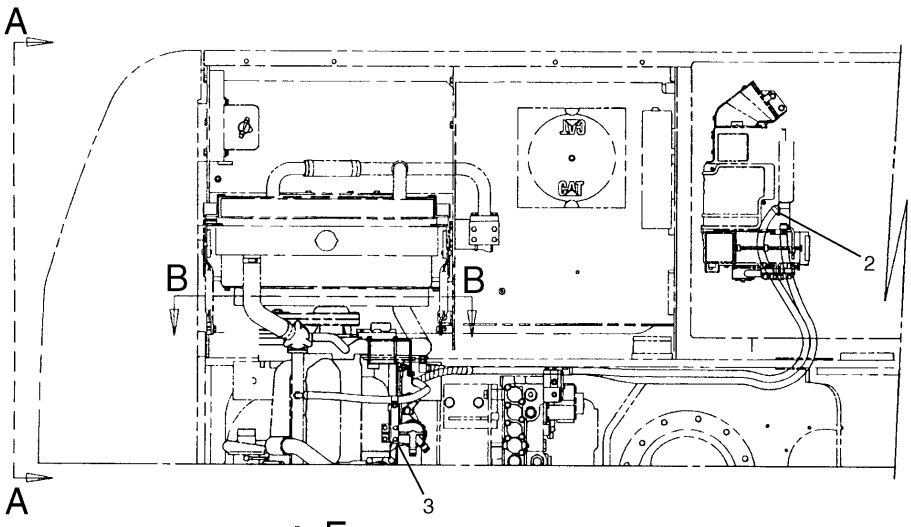

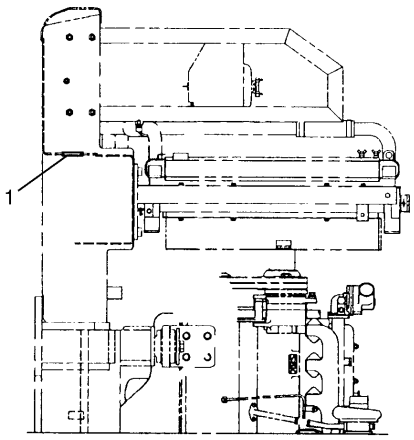

A – A

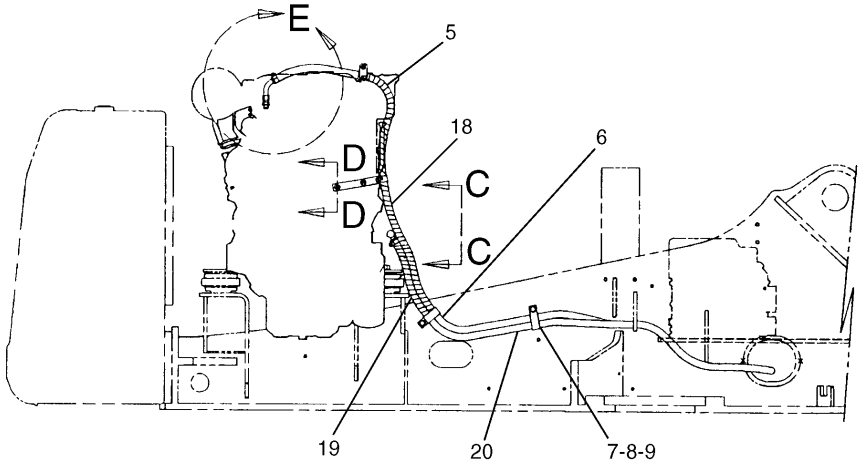

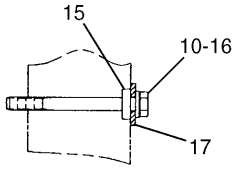

D – D

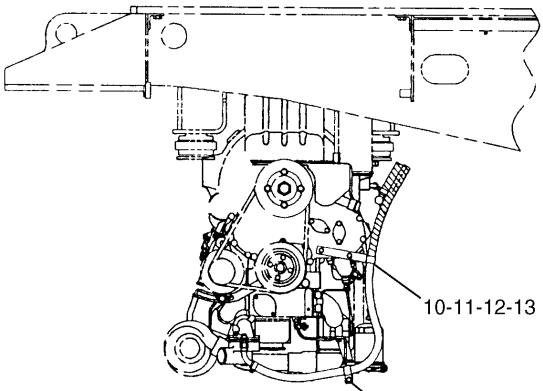

B – B

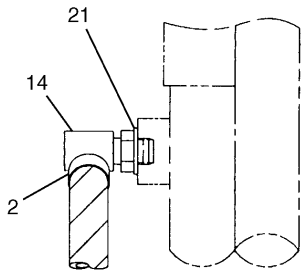

C – C

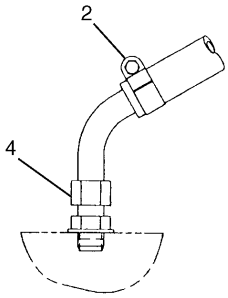

E

H65515E 04

117-6312 LINES GP-HEATER
S/N 3MR 04979-Up, 4MR 00716-Up
Part of 154-0675-Page374
An Attachment

OPERATOR STATION

NOTE	No.	PART No.	QTY	PART NAME	NOTE	No.	PART No.	QTY	PART NAME
	1	7I-1542	1	GROMMET					
	2	5D-1026	4	CLAMP					
	3	7I-6929	1	SUPPORT AS					
	4	4I-4579	1	NIPPLE					
E	5	7I-7439		GUARD…(70cm)					
E	6	5P-0767		HOSE…(345cm)					
	7	7X-2621	2	BOLT (L=12mm)					
	8	8T-4121	2	WASHER					
	9	6D-1641	2	CLIP					
	10	8T-4224	4	WASHER					
	11	095-0913	2	CLIP					
	12	8T-4200	2	BOLT (L=16mm)					
	13	5C-7261	1	NUT					
	14	7I-0375	1	ELBOW					
	15	4I-4872	2	SPACER					
	16	8T-3647	2	BOLT (L=80mm)					
	17	135-2215	1	SUPPORT					
E	18	7I-7439		GUARD…(80cm)					
E	19	7I-7439		GUARD…(45cm)					
E	20	5P-0767		HOSE…(235cm)					
	21	155-7024	2	SPACER					

E—ORDER BY THE CENTIMETER

H65515E 04

117-6312 LINES GP-HEATER

S/N 3MR 04979-Up, 4MR 00716-Up
Part of 154-0675-Page374
An Attachment

MEMORANDA

OPERATOR STATION

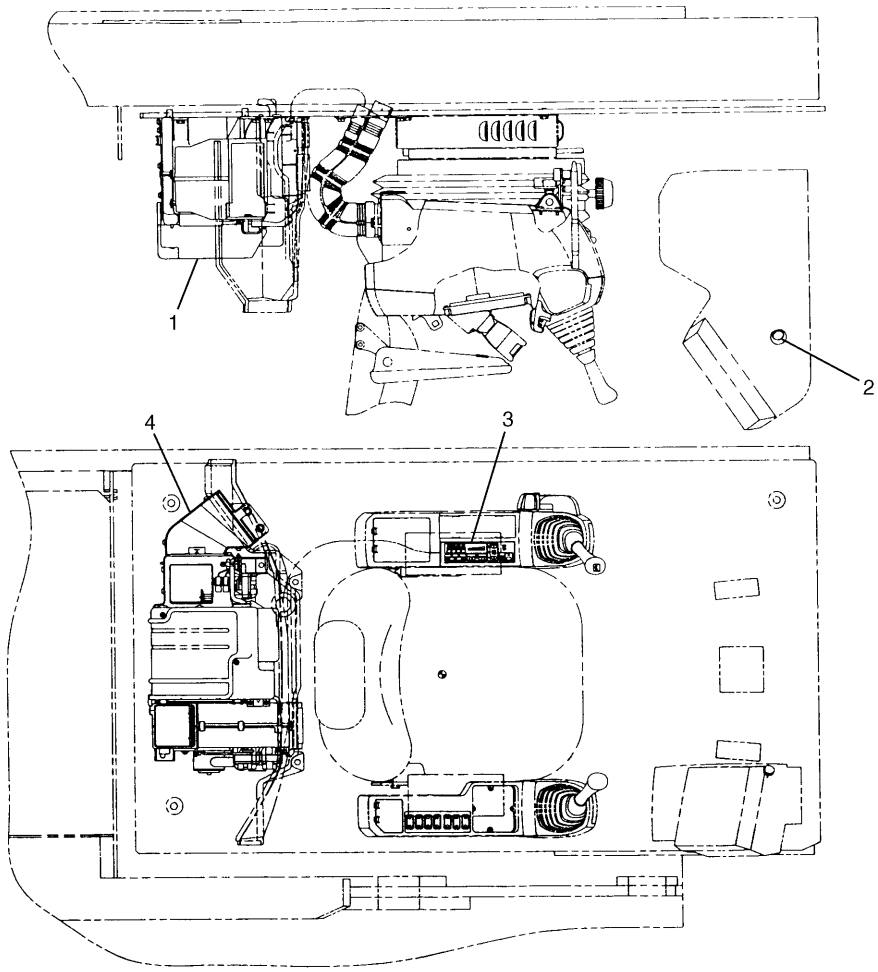

NOTE	No.	PART No.	QTY	PART NAME	NOTE	No.	PART No.	QTY	PART NAME
Y	1	117-6326	1	HEATER GP					
	2	128-2158	1	GROMMET					
	3	119-6826	1	PANEL					
	4	119-6885	1	DUCT AS					
		119-6886	1	DUCT					
		119-6887	1	FILTER					

Y—SEE SEPARATE ILLUSTRATION

H53515E 02

117-6325 HEATER & MOUNTING GP

S/N 3MR 1-04978, 4MR 1-00715
Part of 124-4034-Page374
117-6326-Page375.01
An Attachment

OPERATOR STATION

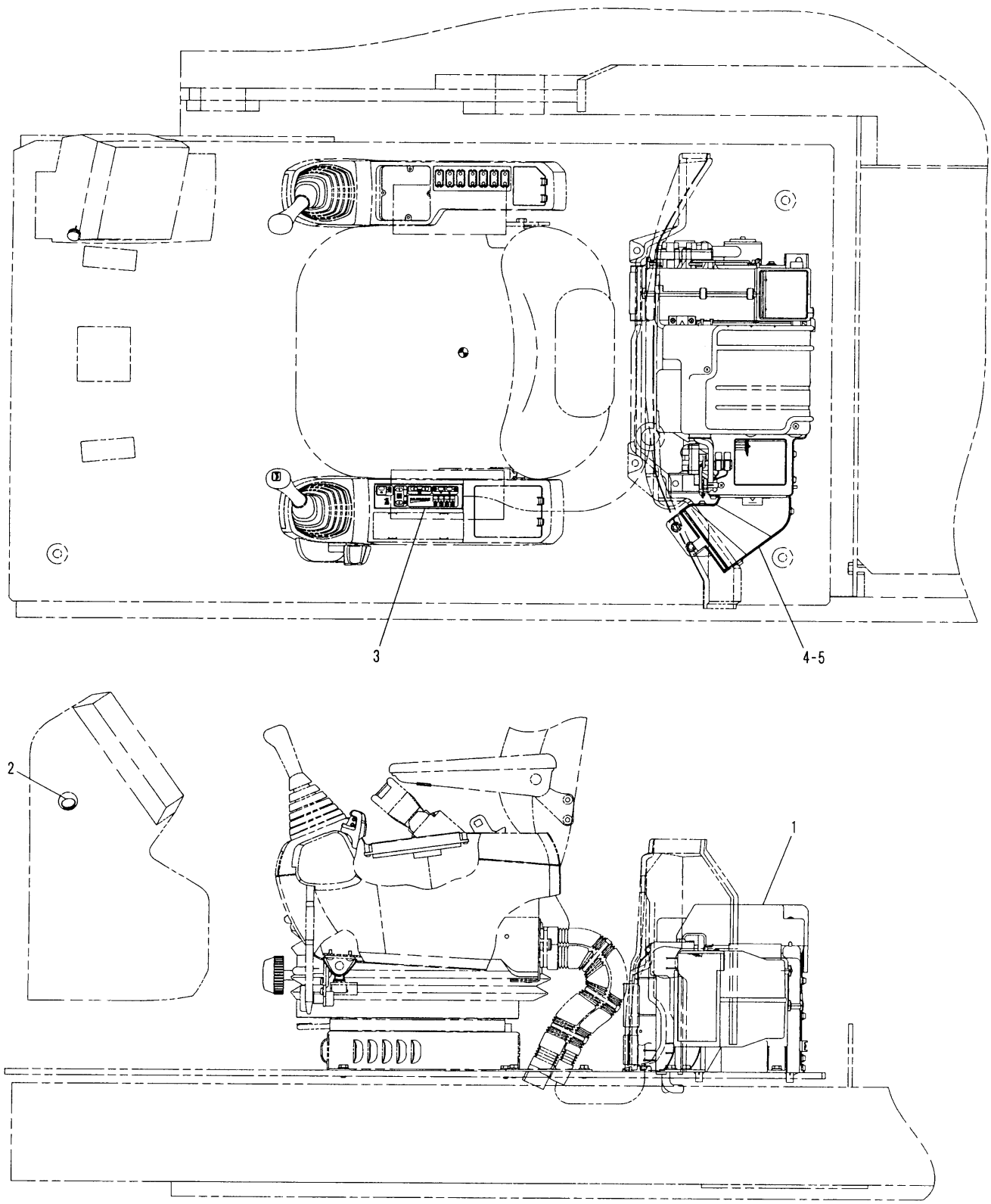

H60625E 00

154-0676 HEATER & MOUNTING GP

S/N 3MR 04979-Up, 4MR 00716-Up
Part of 154-0675-Page374
151-9680-Page375.03
An Attachment

OPERATOR STATION

NOTE	No.	PART No.	QTY	PART NAME	NOTE	No.	PART No.	QTY	PART NAME
Y	1	151-9680	1	HEATER GP					
	2	128-2158	1	GROMMET					
	3	119-6826	1	PANEL					
	4	119-6886	1	DUCT					
	5	119-6887	1	FILTER					

Y—SEE SEPARATE ILLUSTRATION

H60625E 00

154-0676 HEATER & MOUNTING GP

S/N 3MR 04979-Up, 4MR 00716-Up
Part of 154-0675-Page374
151-9680-Page375.03
An Attachment

OPERATOR STATION

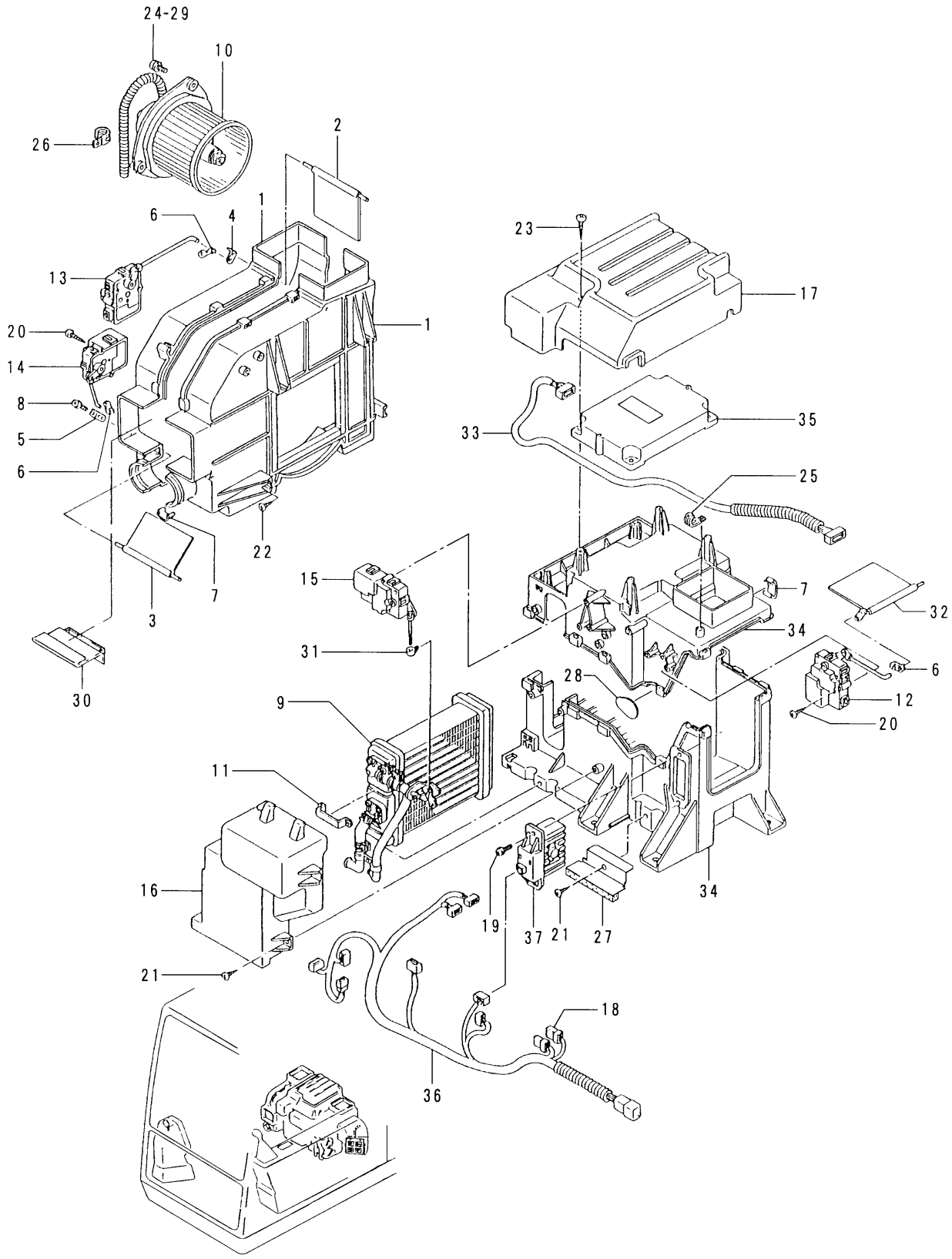

H54966E 03

117-6326 HEATER GP
S/N 3MR 1-04978, 4MR 1-00715
Part of 117-6325-Page375
An Attachment

OPERATOR STATION

NOTE	No.	PART No.	QTY	PART NAME	NOTE	No.	PART No.	QTY	PART NAME
	1	71-0387	1	CASE					
	2	71-0388	1	DAMPER					
	3	71-0389	1	DAMPER					
	4	71-0390	1	LEVER					
	5	71-0391	1	LEVER					
	6	71-0392	3	CLIP					
	7	71-0393	22	CLIP					
	8	71-0394	2	SCREW AS					
	9	71-6602	1	CORE AS					
	10	71-6603	1	MOTOR AS					
	11	71-6607	1	SUPPORT					
	12	71-6611	1	MOTOR AS					
	13	71-6612	1	MOTOR AS					
	14	71-6613	1	MOTOR AS					
	15	71-6614	1	MOTOR AS					
	16	71-6617	1	COVER					
	17	71-6618	1	COVER					
	18	71-6621	2	FUSE					
	19	71-6623	2	SCREW AS					
	20	71-6624	12	SCREW					
	21	71-6625	9	SCREW					
	22	71-6626	4	SCREW					
	23	71-6627	4	SCREW					
	24	71-6629	3	SCREW AS					
	25	71-6635	1	CLAMP					
	26	71-6636	1	CLAMP					
	27	71-6921	1	PLATE					
	28	71-6922	1	PLATE					
	29	9X-2026	3	WASHER					
	30	101-2362	1	PLATE AS					
	31	130-0319	1	CLIP					
	32	130-0366	1	DAMPER AS					
		130-0368	1	LEVER					
	33	130-0370	1	HARNESS AS					
	34	133-7951	1	CASE					
	35	133-7952	1	CONTROL AS					
	36	133-7953	1	HARNESS AS					
	37	135-2326	1	CONTROL AS					

H54966E 03

117-6326 HEATER GP

S/N 3MR 1-04978, 4MR 1-00715
Part of 117-6325-Page375
An Attachment

OPERATOR STATION

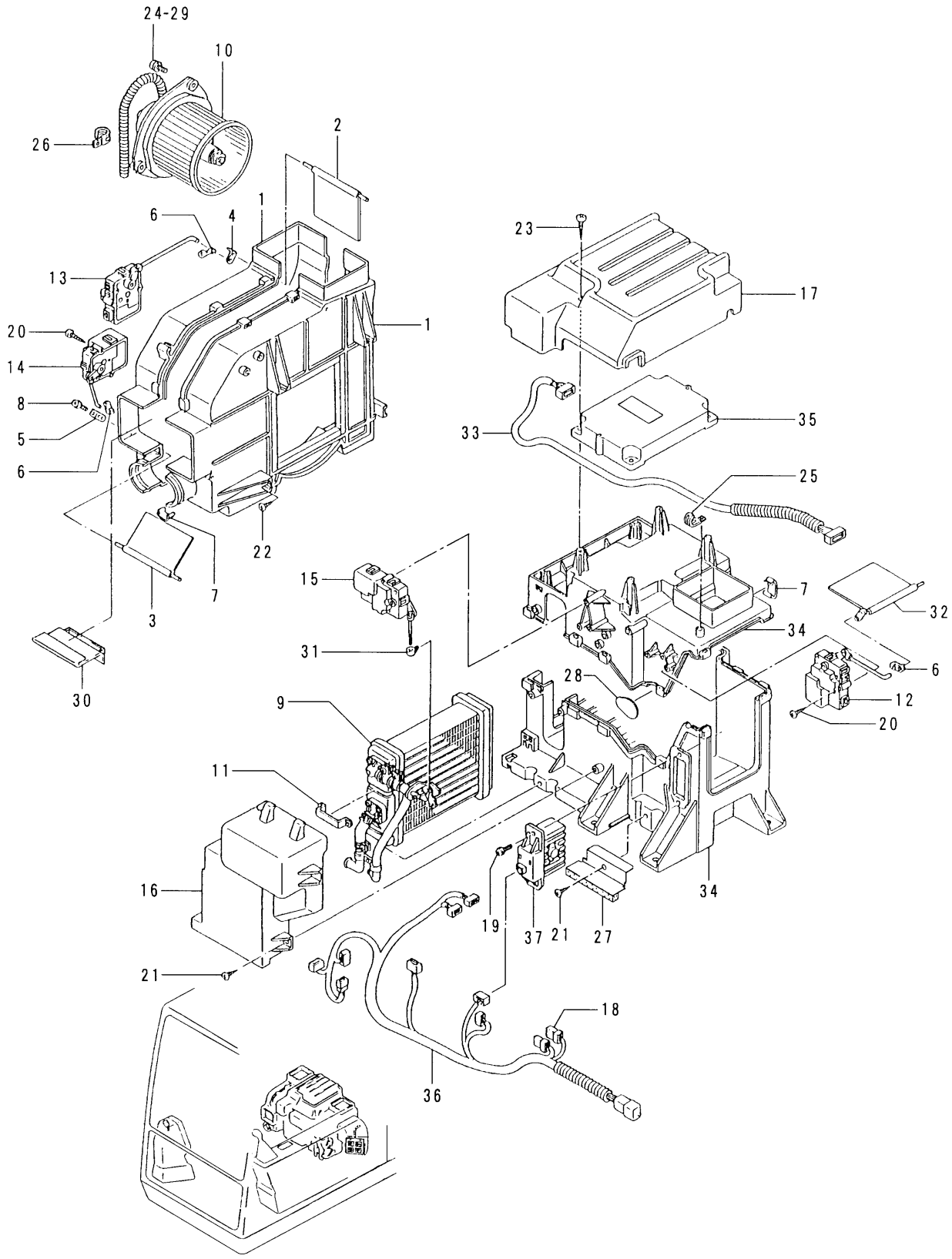

H60594E 00

151-9680 HEATER GP
S/N 3MR 04979-Up, 4MR 00716-Up
Part of 154-0676-Page375B
An Attachment

OPERATOR STATION

NOTE	No.	PART No.	QTY	PART NAME	NOTE	No.	PART No.	QTY	PART NAME
	1	7I-0387	1	CASE					
	2	7I-0388	1	DAMPER					
	3	7I-0389	1	DAMPER					
	4	7I-0390	1	LEVER					
	5	7I-0391	1	LEVER					
	6	7I-0392	3	CLIP					
	7	7I-0393	22	CLIP					
	8	7I-0394	2	SCREW AS					
	9	7I-6602	1	CORE AS					
	10	7I-6603	1	MOTOR AS					
	11	7I-6607	1	SUPPORT					
	12	7I-6611	1	MOTOR AS					
	13	7I-6612	1	MOTOR AS					
	14	7I-6613	1	MOTOR AS					
	15	7I-6614	1	MOTOR AS					
	16	7I-6617	1	COVER					
	17	7I-6618	1	COVER					
	18	7I-6621	2	FUSE					
	19	7I-6623	2	SCREW AS					
	20	7I-6624	12	SCREW					
	21	7I-6625	9	SCREW					
	22	7I-6626	4	SCREW					
	23	7I-6627	4	SCREW					
	24	7I-6629	3	SCREW AS					
	25	7I-6635	1	CLAMP					
	26	7I-6636	1	CLAMP					
	27	7I-6921	1	PLATE					
	28	7I-6922	1	PLATE					
	29	9X-2026	3	WASHER					
	30	101-2362	1	PLATE AS					
	31	130-0319	1	CLIP					
	32	130-0366	1	DAMPER AS					
		130-0368	1	LEVER					
	33	130-0370	1	HARNESS AS					
	34	133-7951	1	CASE					
	35	133-7952	1	CONTROL AS					
	36	151-9681	1	HARNESS AS					
	37	135-2326	1	CONTROL AS					

H60594E 00

151-9680 HEATER GP

S/N 3MR 04979-Up, 4MR 00716-Up
Part of 154-0676-Page375B
An Attachment

Consists of :

			Page
1	116-0157	LIGHTING GP-BOOM	104
1	117-5496	BOOM GP	384
1	117-5497	LINES GP-GREASE	397.01
1	118-3948	CYLINDER & LINES GP-BOOM	183
1	118-3956	CYLINDER & LINES GP-BOOM	183
1	118-3950	CYLINDER & LINES GP-STICK	184
1	124-1044	LINES GP-BOOM	210

H53256E 03

117-4140 BOOM AR-1 PIECE LONG

R-Boom
An Attachment

Consists of :

			Page
1	116-0157	LIGHTING GP-BOOM	104
1	121-8678	BOOM GP	385
1	121-8679	LINES GP-GREASE	397.05
1	118-3948	CYLINDER & LINES GP-BOOM	183
1	118-3956	CYLINDER & LINES GP-BOOM	183
1	118-3950	CYLINDER & LINES GP-STICK	184
1	124-1044	LINES GP-BOOM	210

H54619E 01

120-5012 BOOM AR

Part of 126-3780-Page377
An Attachment

Consists of :

			Page
1	116-0157	LIGHTING GP-BOOM	104
1	117-5498	BOOM GP	386
1	117-5499	LINES GP-GREASE	397.03
1	118-3948	CYLINDER & LINES GP-BOOM	183
1	118-3956	CYLINDER & LINES GP-BOOM	183
1	118-3952	CYLINDER & LINES GP-STICK	184
1	124-1045	LINES GP-BOOM	212

H53257E 03

117-4141 BOOM AR-SHORT
M-Boom
An Attachment

Consists of :

			Page
1	120-5013	STICK AR-HOE	379
1	117-4143	LINKAGE AR-BUCKET	382
1	120-5012	BOOM AR	376
1	120-5110	PUMP GP-LUBRICATION-AUTO	397.13

H53442E 00

126-3780 LUBRICATION AR-AUTOMATIC
An Attachment

Consists of :

			Page
1	4I-0498	LINES GP-GREASE	397.10A
1	4I-3972	LINES GP-STICK	215
1	127-1211	STICK GP-HOE	388

H54351E 01

126-3792 STICK AR-HOE
R3.9B Stick
An Attachment

Consists of :

			Page
1	127-1161	STICK GP-HOE	389
1	087-5466	LINES GP-STICK	215.01

H53263E 00

126-3793 STICK AR-HOE

R2.92B Stick
An Attachment

Consists of :

			Page
1	121-8680	STICK GP-HOE	391
1	087-5466	LINES GP-STICK	215.01
1	121-8681	LINES GP-GREASE	397.11

H53517E 00

120-5013 STICK AR-HOE

Part of 126-3780-Page377
An Attachment

Consists of :

			Page
1	127-1162	STICK GP-HOE	392
1	41-3964	LINES GP-STICK	216

H53264E 00

126-3794 STICK AR-HOE
R2.5B Stick
An Attachment

Consists of :

			Page
1	127-1163	STICK GP-HOE	394
1	119-2533	LINES GP-STICK	216.01

H53265E 00

120-4971 STICK AR-HOE
R1.9C Stick
An Attachment

Consists of :

			Page
1	127-1164	STICK GP-HOE	395
1	119-2534	LINES GP-STICK.....	217

H53266E 00

120-4972 STICK AR-HOE
M2.4C Stick
An Attachment

Consists of :

			Page
1	133-2432	LINKAGE GP-BUCKET	398
1	118-3966	CYLINDER & LINES GP-BUCKET	185

H53268E 02

117-4143 LINKAGE AR-BUCKET

B Family
Part of 126-3780-Page377
An Attachment

Consists of :

			Page
1	133-2434	LINKAGE GP-BUCKET	399
1	123-2083	CYLINDER & LINES GP-BUCKET	186

H50684E 03

102-4758 LINKAGE AR-BUCKET

C Family
An Attachment

Consists of :

			Page
1	5I-7216	BOOM GP	387
1	127-6623	STICK GP-HOE	396
1	116-9115	LOCK GP-TRANSPORT	397
1	118-3948	CYLINDER & LINES GP-BOOM	183
1	118-3956	CYLINDER & LINES GP-BOOM	183
1	123-2080	CYLINDER & LINES GP-STICK	185
1	127-6616	CYLINDER & LINES GP-BUCKET	186
1	116-0157	LIGHTING GP-BOOM	104
1	127-6621	LINES GP-BOOM	213
1	127-6624	LINES GP-STICK	218
1	4I-6912	LINKAGE GP-BUCKET	400
1	5I-7235	LINES GP-GREASE	397.09
1	127-6625	LINES GP-GREASE	397.12
1	127-6620	LINES GP-FRONT	251.01
1	122-4070	COUNTERWEIGHT GP	144
1	127-5262	FILM GP	444

H53519E 00

127-6615 LINKAGE AR
S/N 4MR 1-(D97.01)
An Attachment

Consists of :

			Page
1	5I-7216	BOOM GP	387
1	127-6623	STICK GP-HOE	396
1	116-9115	LOCK GP-TRANSPORT	397
1	118-3948	CYLINDER & LINES GP-BOOM	183
1	118-3956	CYLINDER & LINES GP-BOOM	183
1	123-2080	CYLINDER & LINES GP-STICK	185
1	127-6616	CYLINDER & LINES GP-BUCKET	186
1	116-0157	LIGHTING GP-BOOM	104
1	127-6621	LINES GP-BOOM	213
1	127-6624	LINES GP-STICK	218
1	134-8861	LINKAGE GP-BUCKET	401
1	5I-7235	LINES GP-GREASE	397.09
1	127-6625	LINES GP-GREASE	397.12
1	127-6620	LINES GP-FRONT	251.01
1	122-4070	COUNTERWEIGHT GP	144
1	127-5262	FILM GP	444

H78101E 03

127-6615 LINKAGE AR
S/N 4MR (D97.02)-Up
An Attachment

MEMORANDA

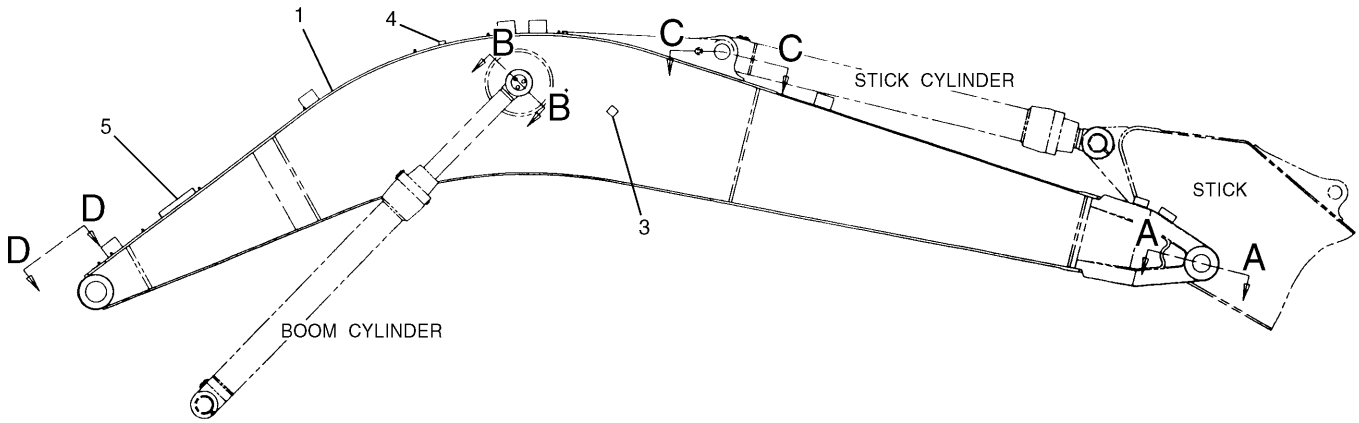

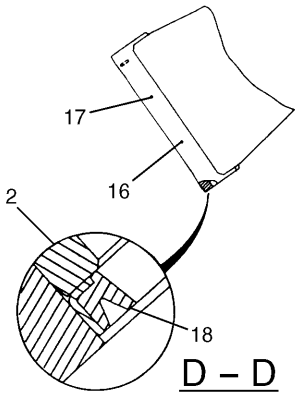

D – D

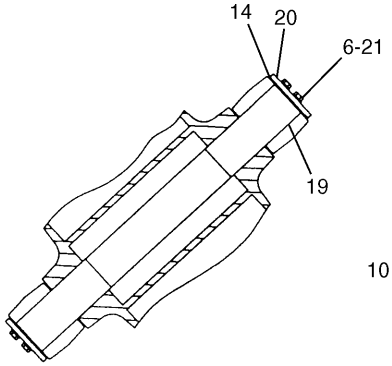

B – B

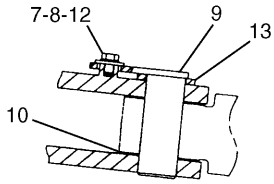

C – C

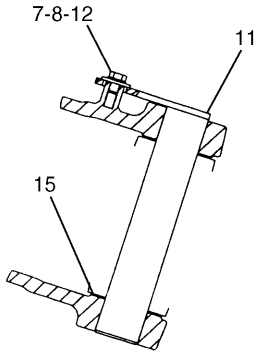

A – A

NOTE	No.	PART No.	QTY	PART NAME	NOTE	No.	PART No.	QTY	PART NAME
	1	137-2887	1	BOOM AS		17	8T-6764	1	PLUG
	2	137-2819	2	BEARING		18	7X-4803	2	SEAL
	3	7Y-2579	2	BAR		19	4I-0465	1	PIN
	4	087-5841	3	PLATE		20	4I-3308	2	PLATE
	5	113-2276	1	MANIFOLD		21	8T-4956	6	BOLT (L=35mm)
	6	8T-4223	6	WASHER					
	7	8T-4780	2	BOLT (L=30mm)					
	8	093-0349	2	WASHER					
	9	4I-4809	1	PIN AS					
B	10	133-2425	1	SHIM (T=0.50mm)					
B		093-0083	2	SHIM (T=1.00mm)					
B		093-0115	1	SHIM (T=2.00mm)					
	11	4I-4813	1	PIN AS					
	12	8T-4123	2	WASHER					
	13	093-0363	1	SPACER					
	14	4I-3309	2	SPACER					
B	15	113-2127	1	SHIM (T=0.50mm)					
B		093-0084	2	SHIM (T=1.00mm)					
B		093-0116	1	SHIM (T=2.00mm)					
	16	3B-8489	1	FITTING					

B—USE AS REQUIRED

H53790E 04

117-5496 BOOM GP

R-Boom (5675mm)

Part of 117-4140-Page376

An Attachment

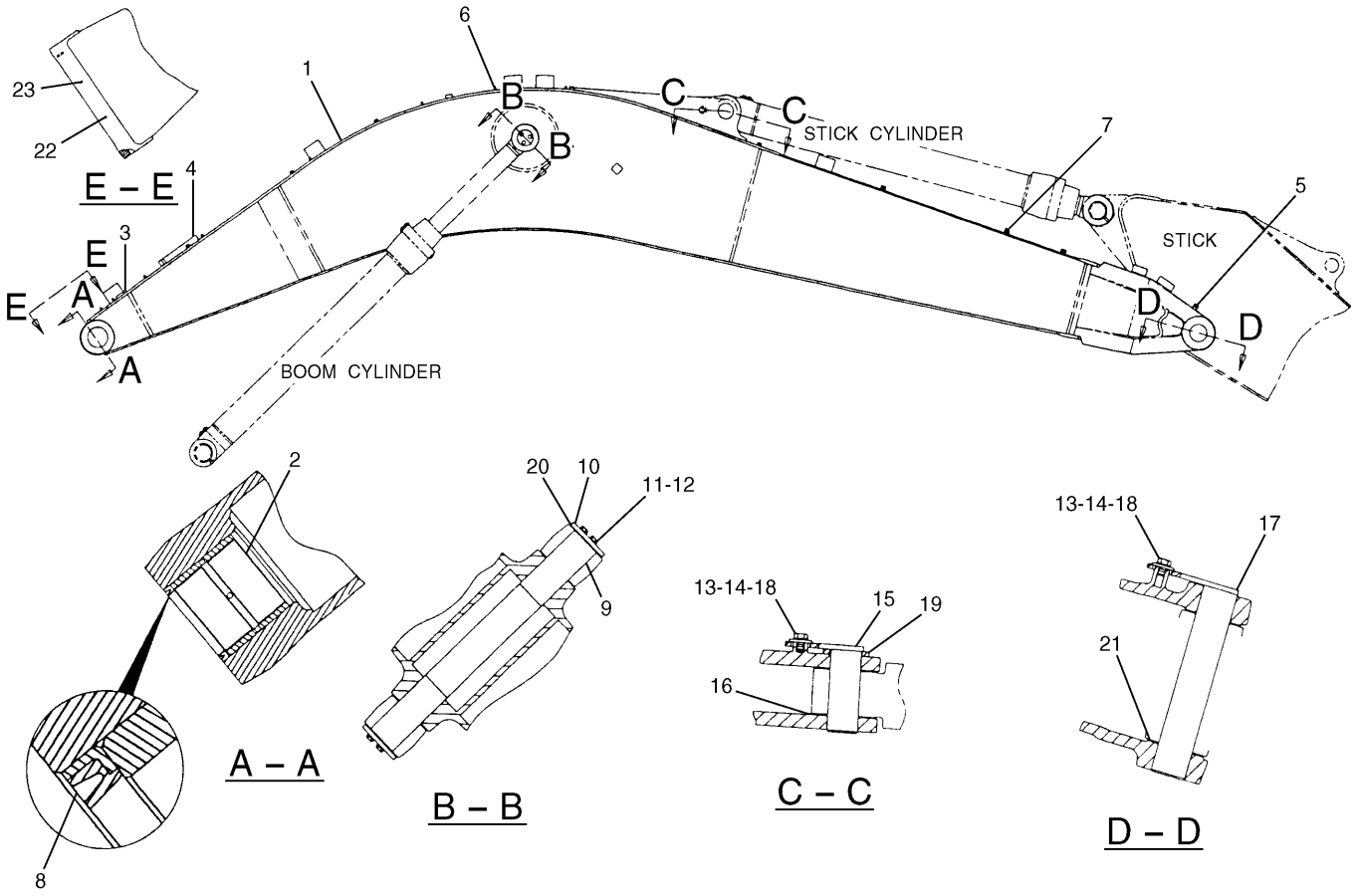

NOTE	No.	PART No.	QTY	PART NAME	NOTE	No.	PART No.	QTY	PART NAME
	1	128-9971	1	BOOM AS		19	093-0363	1	SPACER
	2	128-9882	2	BEARING		20	4I-3309	2	SPACER
	3	123-5581	1	PLATE	B	21	093-0084	2	SHIM (T=1.00mm)
	4	123-5575	1	BLOCK	B		093-0116	1	SHIM (T=2.00mm)
	5	137-3057	1	BLOCK	B		113-2127	1	SHIM (T=0.50mm)
	6	9R-2821	5	BOSS		22	3B-8489	1	FITTING
	7	9R-3924	3	BOSS		23	8T-6764	1	PLUG
	8	7X-4803	2	SEAL					
	9	4I-0465	1	PIN					
	10	4I-3308	2	PLATE					
	11	8T-4956	6	BOLT (L=35mm)					
	12	8T-4223	6	WASHER					
	13	8T-4780	2	BOLT (L=30mm)					
	14	093-0349	2	WASHER					
	15	4I-4809	1	PIN AS					
B	16	093-0083	2	SHIM (T=1.00mm)					
B		093-0115	1	SHIM (T=2.00mm)					
B		133-2425	1	SHIM (T=0.50mm)					
	17	4I-4813	1	PIN AS					
	18	8T-4123	2	WASHER					

B—USE AS REQUIRED

H54621E 01

121-8678 BOOM GP
Part of 120-5012-Page376
An Attachment

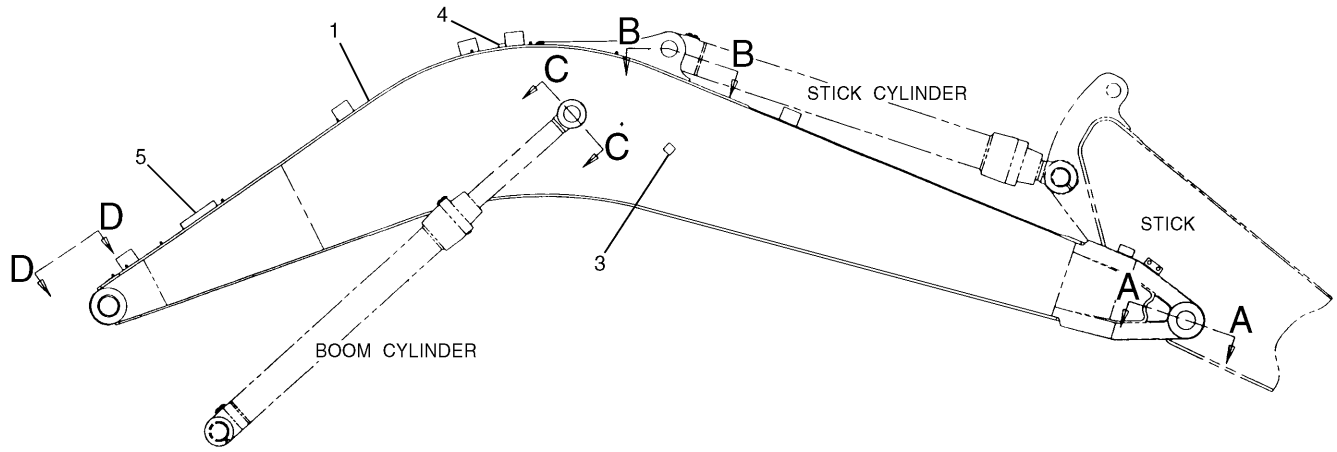

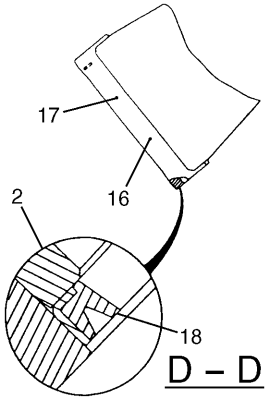

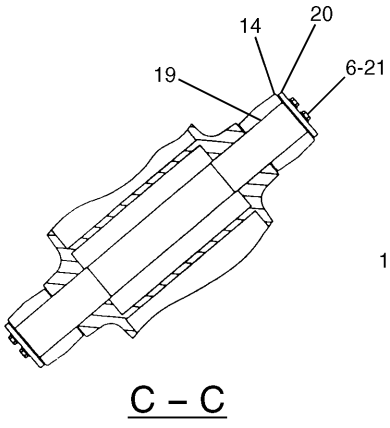

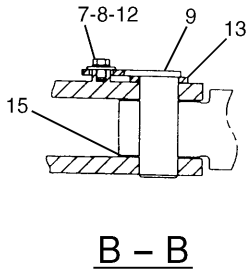

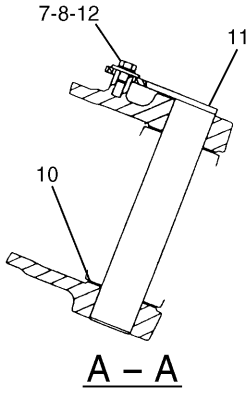

NOTE	No.	PART No.	QTY	PART NAME	NOTE	No.	PART No.	QTY	PART NAME
	1	137-2889	1	BOOM AS		17	8T-6764	1	PLUG
	2	137-2819	2	BEARING		18	7X-4803	2	SEAL
	3	7Y-2579	2	BAR		19	4I-0465	1	PIN
	4	087-5841	3	PLATE		20	4I-3308	2	PLATE
	5	113-2276	1	MANIFOLD		21	8T-4956	6	BOLT (L=35mm)
	6	8T-4223	6	WASHER					
	7	8T-4780	2	BOLT (L=30mm)					
	8	093-0349	2	WASHER					
	9	4I-4809	1	PIN AS					
B	10	113-2127	1	SHIM (T=0.50mm)					
B		093-0084	2	SHIM (T=1.00mm)					
B		093-0116	1	SHIM (T=2.00mm)					
	11	4I-4813	1	PIN AS					
	12	8T-4123	2	WASHER					
	13	093-0363	1	SPACER					
	14	4I-3309	2	SPACER					
B	15	133-2425	1	SHIM (T=0.50mm)					
B		093-0083	2	SHIM (T=1.00mm)					
B		093-0115	1	SHIM (T=2.00mm)					
	16	3B-8489	1	FITTING					

B—USE AS REQUIRED

H53791E 04

117-5498 BOOM GP

M-Boom (5200mm)
Part of 117-4141-Page377
An Attachment

IMPLEMENTS

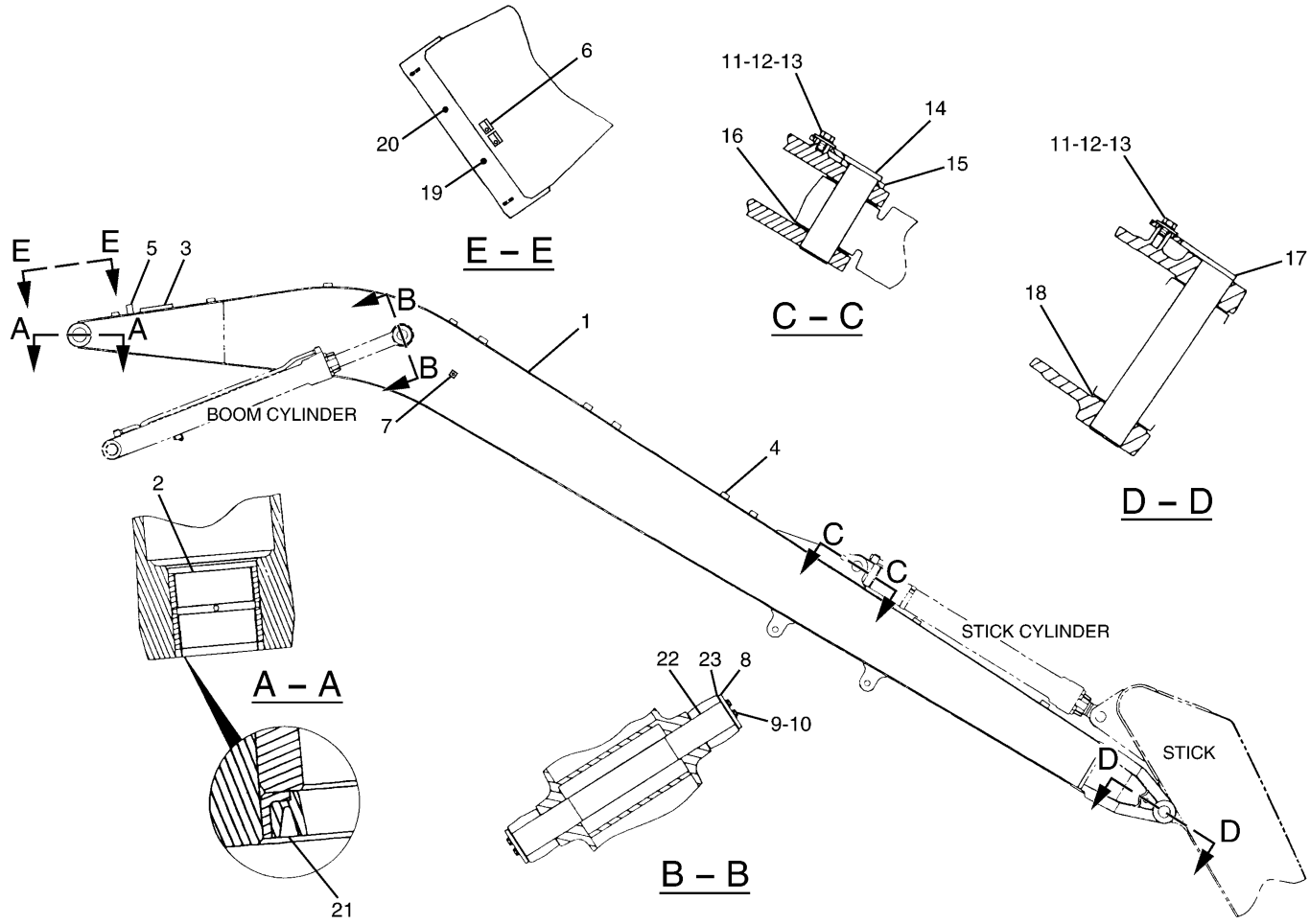

NOTE	No.	PART No.	QTY	PART NAME	NOTE	No.	PART No.	QTY	PART NAME
	1	5I-7215	1	BOOM AS	B	18	093-0116	1	SHIM (T=2.00mm)
	2	128-9882	2	BEARING	B		7Y-2497	1	SHIM (T=1.60mm)
	3	7Y-2580	1	MANIFOLD	B		093-0084	2	SHIM (T=1.00mm)
	4	7Y-4594	8	PLATE		19	3B-8489	1	FITTING
	5	4I-0507	4	PLATE		20	8T-6764	1	PLUG
	6	087-5841	8	PLATE		21	7X-4803	2	SEAL
	7	7Y-2579	2	BAR		22	4I-0465	1	PIN
	8	4I-3308	2	PLATE		23	4I-3309	2	SPACER
	9	8T-4956	6	BOLT (L=35mm)					
	10	8T-4223	6	WASHER					
	11	8T-4780	2	BOLT (L=30mm)					
	12	093-0349	2	WASHER					
	13	8T-4123	2	WASHER					
	14	4I-4618	1	PIN AS					
	15	093-0363	1	SPACER					
B	16	093-0083	2	SHIM (T=1.00mm)					
B		7Y-2498	1	SHIM (T=1.60mm)					
B		093-0115	1	SHIM (T=2.00mm)					
	17	4I-4813	1	PIN AS					

B—USE AS REQUIRED

H53275E 01

5I-7216 BOOM GP

Long Reach Front
S/N 4MR 1-Up
Part of 127-6615-Page383
An Attachment

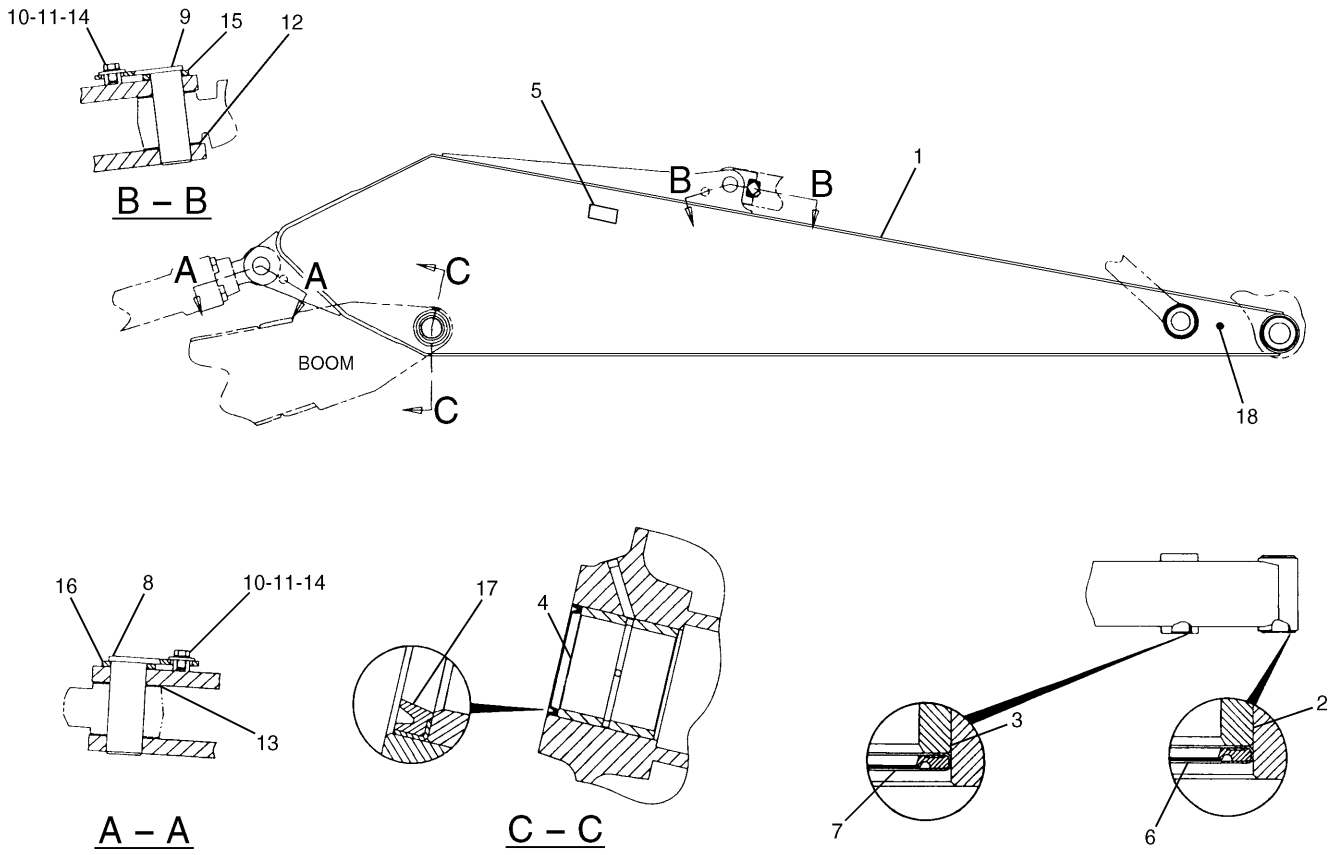

NOTE	No.	PART No.	QTY	PART NAME	NOTE	No.	PART No.	QTY	PART NAME
	1	137-2895	1	STICK AS		17	7X-4803	2	SEAL
	2	128-9884	2	BEARING		18	3B-8489	1	FITTING
	3	7Y-2395	2	BEARING					
	4	128-9863	2	BEARING					
	5	102-1119	2	PLATE					
	6	096-0854	2	SEAL					
	7	093-1434	2	SEAL					
	8	4I-4809	1	PIN AS					
	9	4I-4811	1	PIN AS					
	10	8T-4780	2	BOLT (L=30mm)					
	11	093-0349	2	WASHER					
B	12	133-2424	1	SHIM (T=0.50mm)					
B		093-0086	2	SHIM (T=1.00mm)					
B		093-0118	1	SHIM (T=2.00mm)					
B	13	133-2425	1	SHIM (T=0.50mm)					
B		093-0083	2	SHIM (T=1.00mm)					
B		093-0115	1	SHIM (T=2.00mm)					
	14	8T-4123	2	WASHER					
	15	118-5982	1	SPACER					
	16	093-0363	1	SPACER					

B—USE AS REQUIRED

H53798E 02

127-1211 STICK GP-HOE

R3.9B Stick

Part of 126-3792-Page378

An Attachment

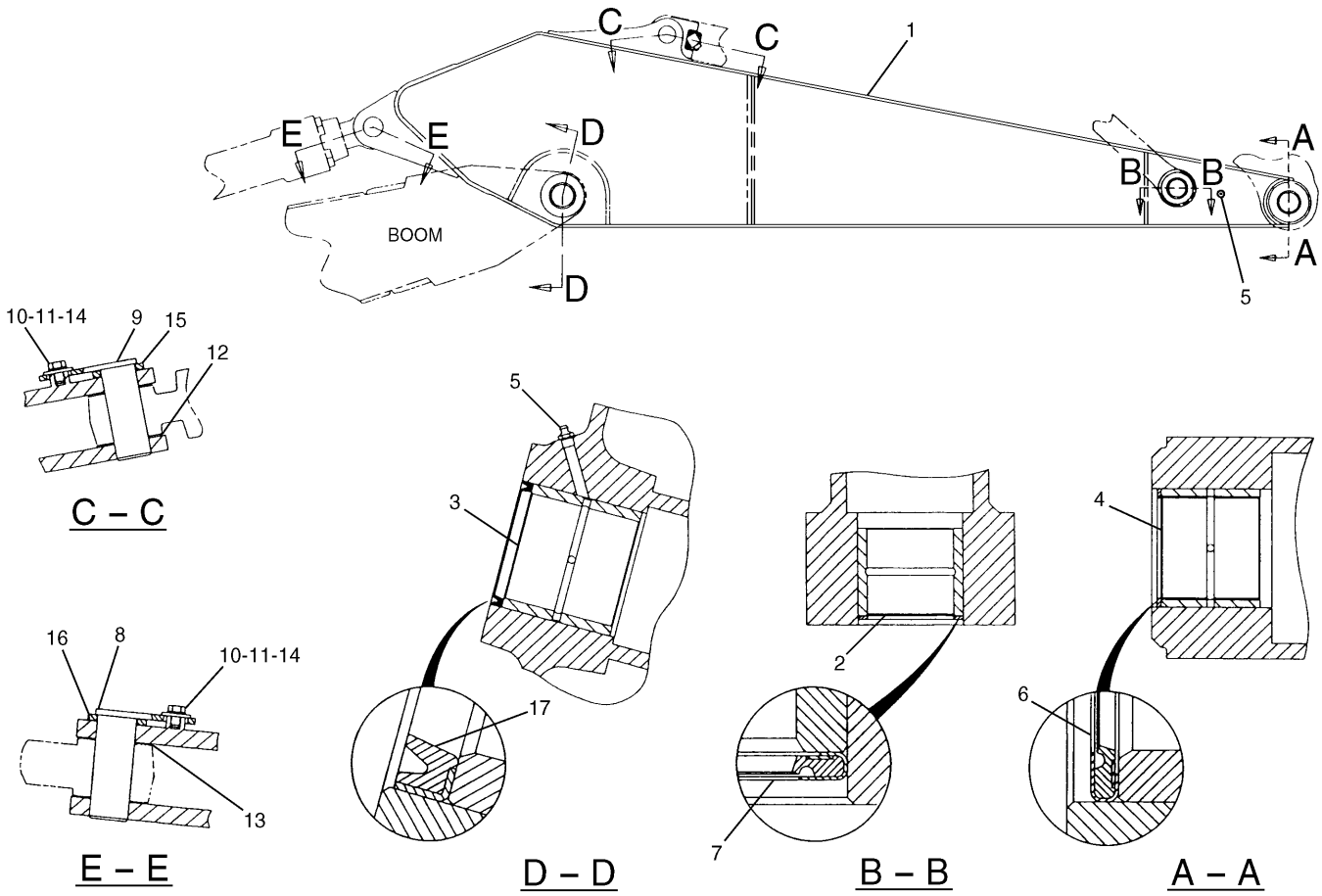

NOTE	No.	PART No.	QTY	PART NAME	NOTE	No.	PART No.	QTY	PART NAME
	1	137-2897	1	STICK AS		17	7X-4803	2	SEAL
	2	7Y-2395	2	BEARING					
	3	137-2819	2	BEARING					
	4	137-2919	2	BEARING					
	5	3B-8489	3	FITTING					
	6	096-0854	2	SEAL					
	7	093-1434	2	SEAL					
	8	4I-4809	1	PIN AS					
	9	4I-4811	1	PIN AS					
	10	8T-4780	2	BOLT (L=30mm)					
	11	093-0349	2	WASHER					
B	12	133-2424	1	SHIM (T=0.50mm)					
B		093-0086	2	SHIM (T=1.00mm)					
B		093-0118	1	SHIM (T=2.00mm)					
B	13	133-2425	1	SHIM (T=0.50mm)					
B		093-0083	2	SHIM (T=1.00mm)					
B		093-0115	1	SHIM (T=2.00mm)					
	14	8T-4123	2	WASHER					
	15	118-5982	1	SPACER					
	16	093-0363	1	SPACER					

B—USE AS REQUIRED

H53794E 03

127-1161 STICK GP-HOE

R2.92B Stick

Part of 126-3793-Page379

An Attachment

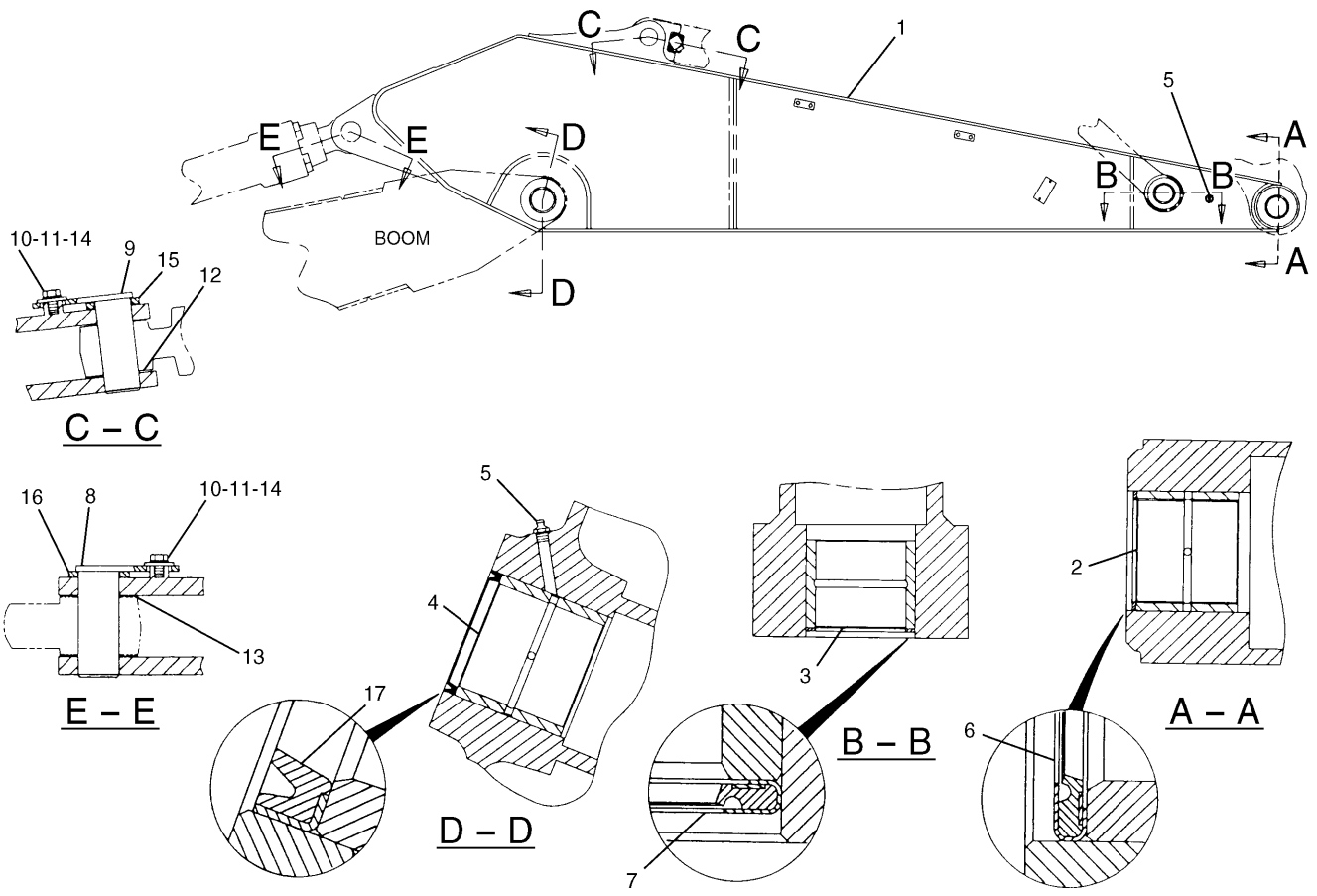

NOTE	No.	PART No.	QTY	PART NAME	NOTE	No.	PART No.	QTY	PART NAME
	1	121-1874	1	STICK AS		17	7X-4803	2	SEAL
	2	128-9884	2	BEARING					
	3	7Y-2395	2	BEARING					
	4	128-9863	2	BEARING					
	5	3B-8489	3	FITTING					
	6	096-0854	2	SEAL					
	7	093-1434	2	SEAL					
	8	4I-4809	1	PIN AS					
	9	4I-4811	1	PIN AS					
	10	8T-4780	2	BOLT (L=30mm)					
	11	093-0349	2	WASHER					
B	12	093-0086	2	SHIM (T=1.00mm)					
B		7Y-2496	1	SHIM (T=1.60mm)					
B		093-0118	1	SHIM (T=2.00mm)					
B	13	093-0083	2	SHIM (T=1.00mm)					
B		7Y-2498	1	SHIM (T=1.60mm)					
B		093-0115	1	SHIM (T=2.00mm)					
	14	8T-4123	2	WASHER					
	15	118-5982	1	SPACER					
	16	093-0363	1	SPACER					

B—USE AS REQUIRED

H53278E 00

121-1873 STICK GP

R2.92B Stick-Auxiliary
Part of 121-1872-Page219
An Attachment

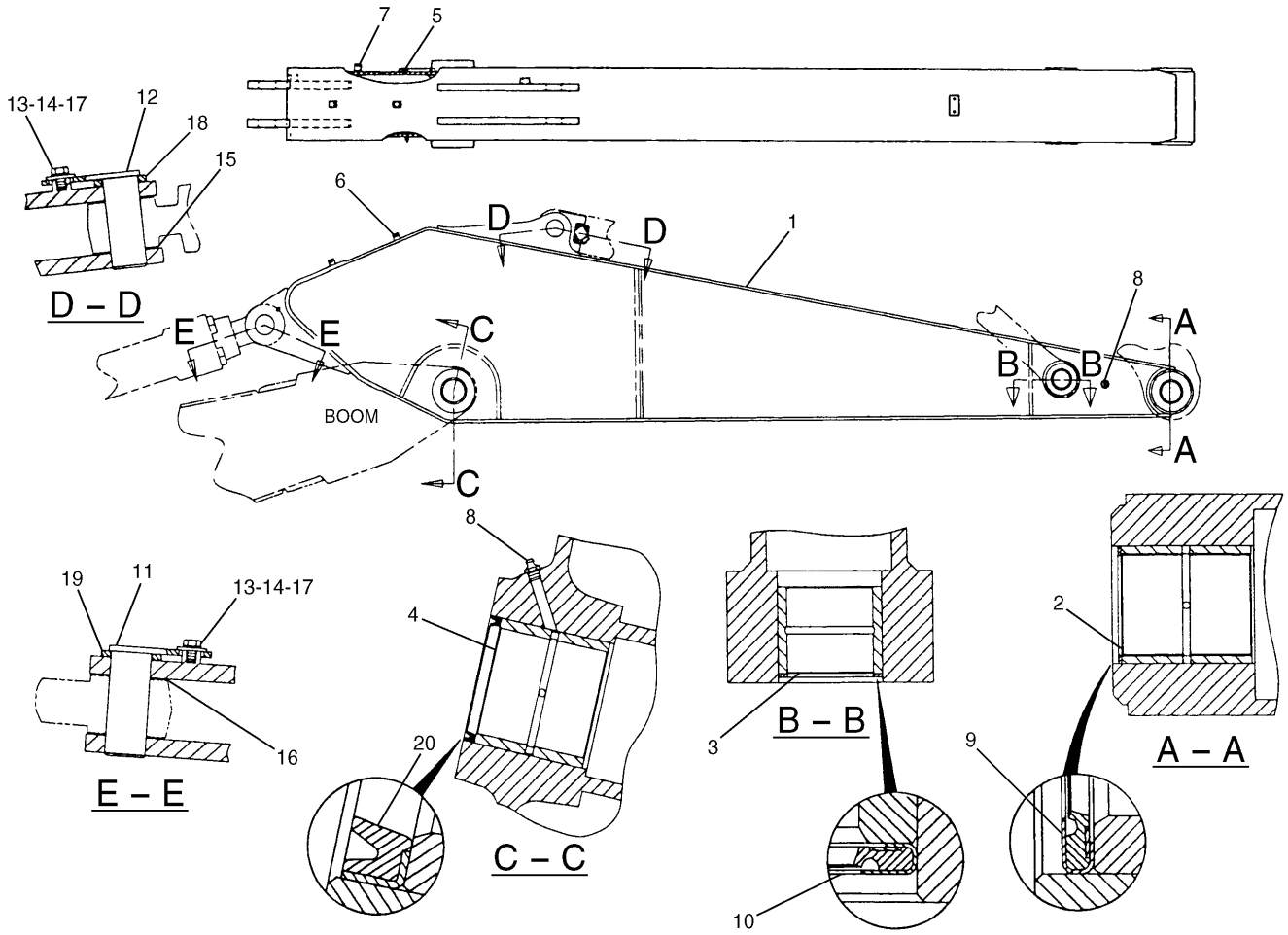

NOTE	No.	PART No.	QTY	PART NAME	NOTE	No.	PART No.	QTY	PART NAME
	1	128-9973	1	STICK AS		17	8T-4123	2	WASHER
	2	128-9884	2	BEARING		18	118-5982	1	SPACER
	3	7Y-2395	2	BEARING		19	093-0363	1	SPACER
	4	128-9863	2	BEARING		20	7X-4803	2	SEAL
	5	123-5579	1	PLATE					
	6	123-5576	2	BLOCK					
	7	7Y-8763	1	BOSS					
	8	3B-8489	3	FITTING					
	9	096-0854	2	SEAL					
	10	093-1434	2	SEAL					
	11	4I-4809	1	PIN AS					
	12	4I-4811	1	PIN AS					
	13	8T-4780	2	BOLT (L=30mm)					
	14	093-0349	2	WASHER					
B	15	093-0086	2	SHIM (T=1.00mm)					
B		133-2424	1	SHIM (T=0.50mm)					
B		093-0118	1	SHIM (T=2.00mm)					
B	16	093-0083	2	SHIM (T=1.00mm)					
B		133-2425	1	SHIM (T=0.50mm)					
B		093-0115	1	SHIM (T=2.00mm)					

B—USE AS REQUIRED

H54622E 01

121-8680 STICK GP-HOE

Part of 120-5013-Page379
An Attachment

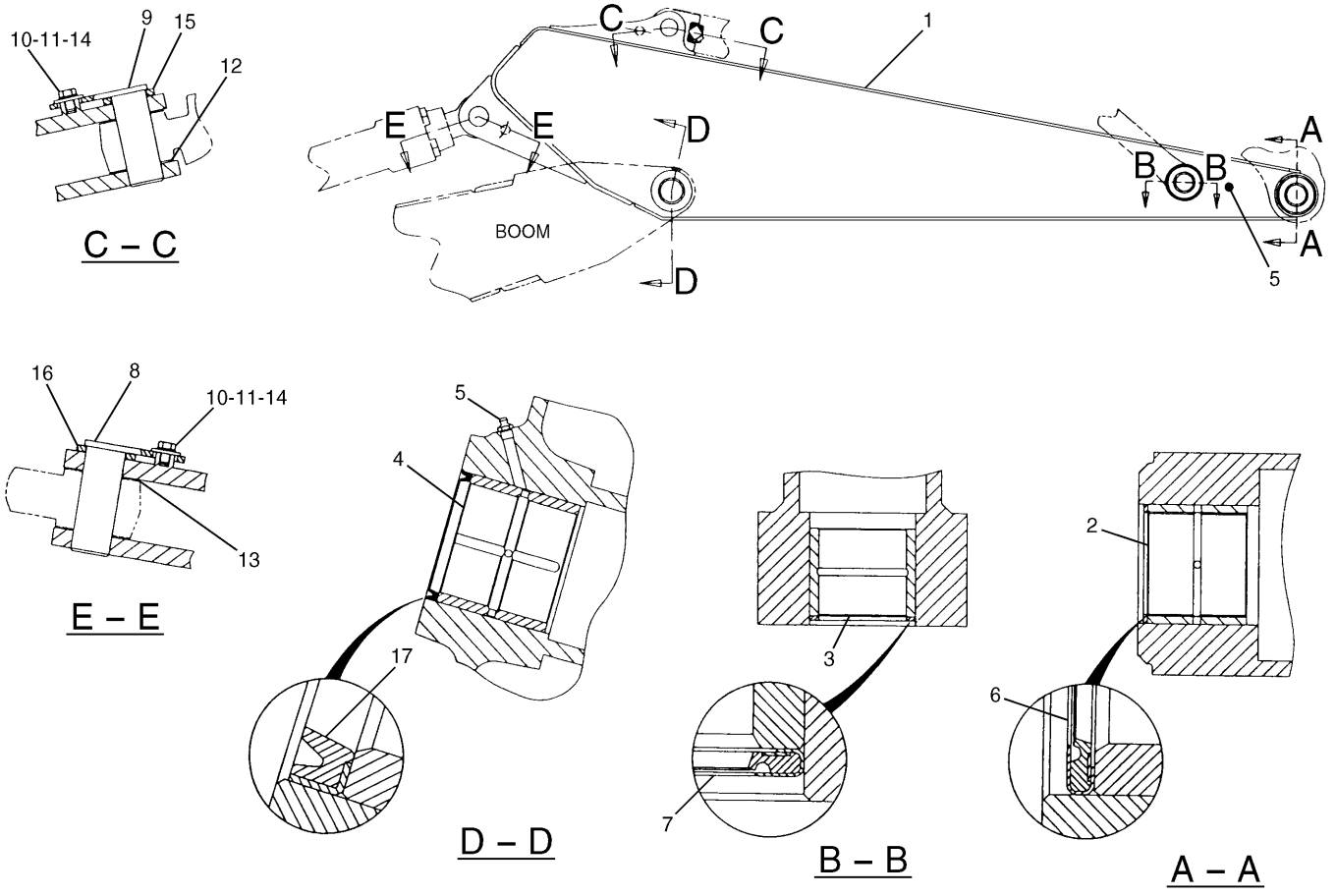

NOTE	No.	PART No.	QTY	PART NAME	NOTE	No.	PART No.	QTY	PART NAME
	1	137-2899	1	STICK AS		17	7X-4803	2	SEAL
	2	128-9884	2	BEARING					
	3	7Y-2395	2	BEARING					
	4	128-9863	2	BEARING					
	5	3B-8489	3	FITTING					
	6	096-0854	2	SEAL					
	7	093-1434	2	SEAL					
	8	4I-4809	1	PIN AS					
	9	4I-4811	1	PIN AS					
	10	8T-4780	2	BOLT (L=30mm)					
	11	093-0349	2	WASHER					
B	12	133-2424	1	SHIM (T=0.50mm)					
B		093-0086	2	SHIM (T=1.00mm)					
B		093-0118	1	SHIM (T=2.00mm)					
B	13	133-2425	1	SHIM (T=0.50mm)					
B		093-0083	2	SHIM (T=1.00mm)					
B		093-0115	1	SHIM (T=2.00mm)					
	14	8T-4123	2	WASHER					
	15	118-5982	1	SPACER					
	16	093-0363	1	SPACER					

B—USE AS REQUIRED

H53795E 03

127-1162 STICK GP-HOE

R2.5B Stick

Part of 126-3794-Page380

An Attachment

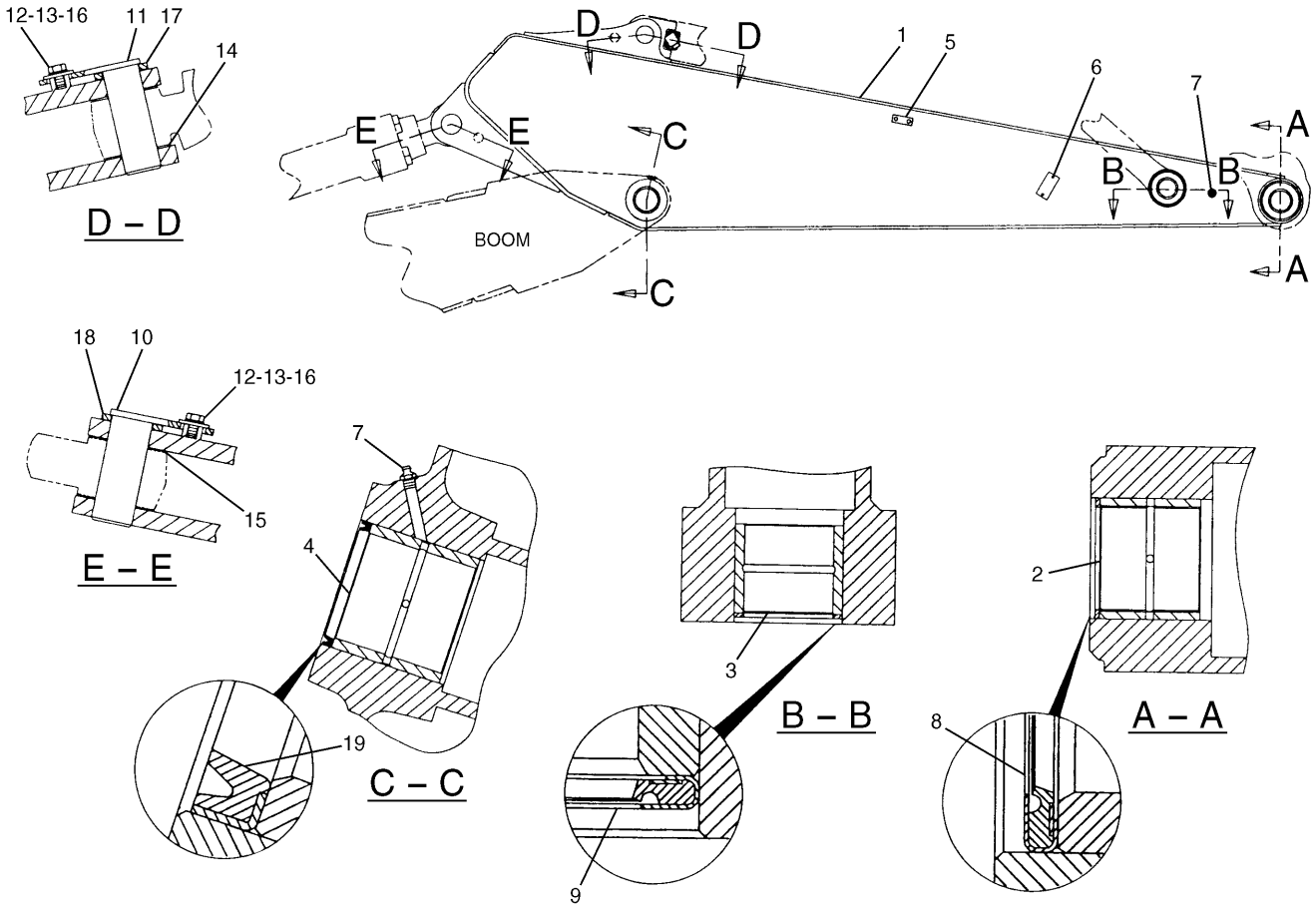

NOTE	No.	PART No.	QTY	PART NAME	NOTE	No.	PART No.	QTY	PART NAME
	1	121-1878	1	STICK AS		16	8T-4123	2	WASHER
	2	128-9884	2	BEARING		17	118-5982	1	SPACER
	3	7Y-2395	2	BEARING		18	093-0363	1	SPACER
	4	128-9863	2	BEARING		19	7X-4803	2	SEAL
	5	121-1759	1	PLATE (RH)					
		121-1905	1	PLATE (LH)					
	6	121-1760	2	PLATE					
	7	3B-8489	3	FITTING					
	8	096-0854	2	SEAL					
	9	093-1434	2	SEAL					
	10	4I-4809	1	PIN AS					
	11	4I-4811	1	PIN AS					
	12	8T-4780	2	BOLT (L=30mm)					
	13	093-0349	2	WASHER					
B	14	093-0086	2	SHIM (T=1.00mm)					
B		7Y-2496	1	SHIM (T=1.60mm)					
B		093-0118	1	SHIM (T=2.00mm)					
B	15	093-0083	2	SHIM (T=1.00mm)					
B		7Y-2498	1	SHIM (T=1.60mm)					
B		093-0115	1	SHIM (T=2.00mm)					

B—USE AS REQUIRED

H53280E 00

121-1877 STICK GP

R2.5B Stick-Auxiliary

Part of 121-1876-Page219

An Attachment

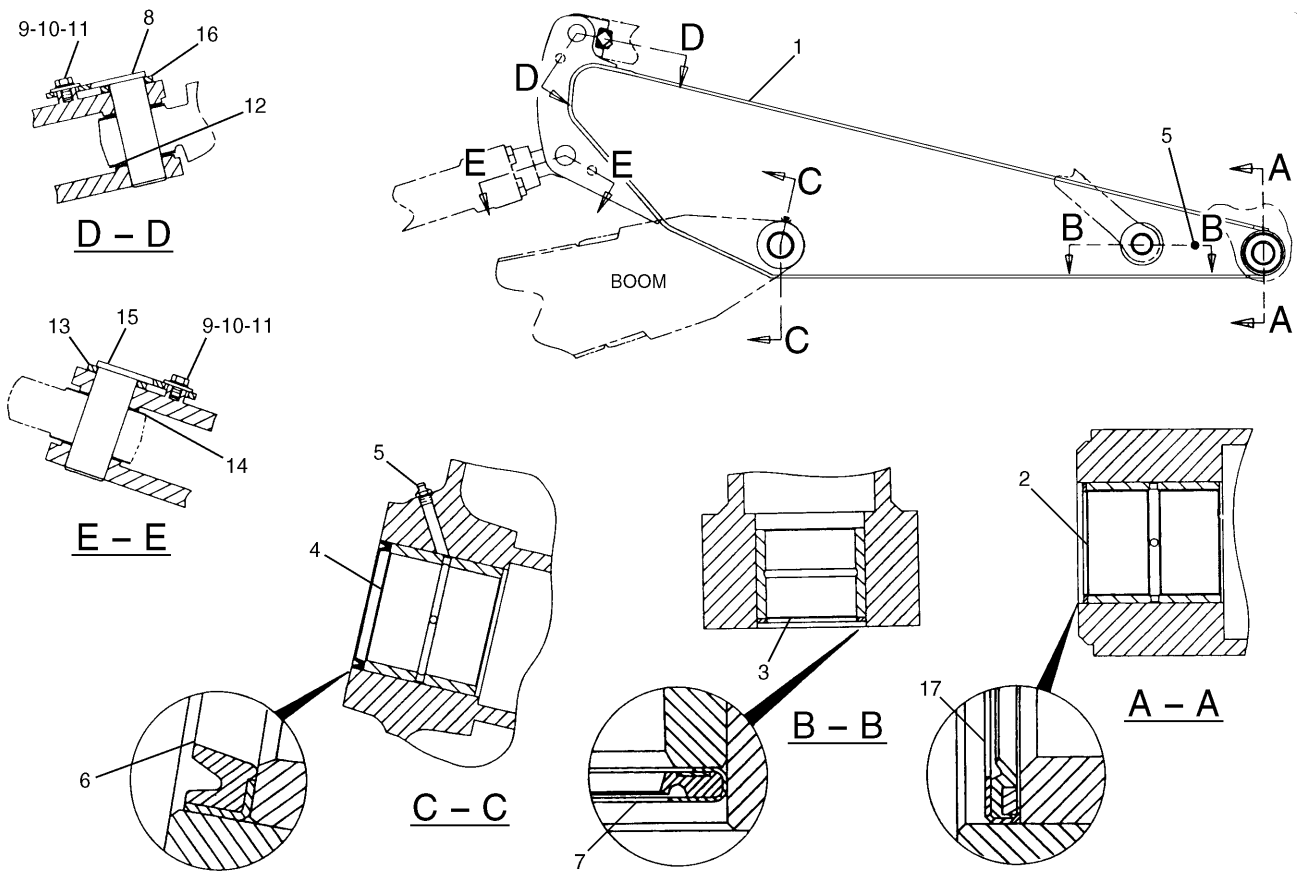

NOTE	No.	PART No.	QTY	PART NAME	NOTE	No.	PART No.	QTY	PART NAME
	1	137-2901	1	STICK AS		17	096-0854	2	SEAL
	2	128-9883	1	BEARING					
	3	7Y-2395	1	BEARING					
	4	128-9863	1	BEARING					
	5	3B-8489	3	FITTING					
	6	7X-4803	2	SEAL					
	7	093-1434	2	SEAL					
	8	4I-4814	1	PIN AS					
	9	8T-4780	2	BOLT (L=30mm)					
	10	8T-4123	2	WASHER					
	11	093-0349	2	WASHER					
B	12	133-2424	1	SHIM (T=0.50mm)					
B		093-0086	2	SHIM (T=1.00mm)					
B		093-0118	1	SHIM (T=2.00mm)					
	13	093-0363	1	SPACER					
B	14	133-2425	1	SHIM (T=0.50mm)					
B		093-0083	2	SHIM (T=1.00mm)					
B		093-0115	1	SHIM (T=2.00mm)					
	15	4I-4809	1	PIN AS					
	16	118-5982	1	SPACER					

B—USE AS REQUIRED

H53796E 03

127-1163 STICK GP-HOE

R1.9C Stick

Part of 120-4971-Page380

An Attachment

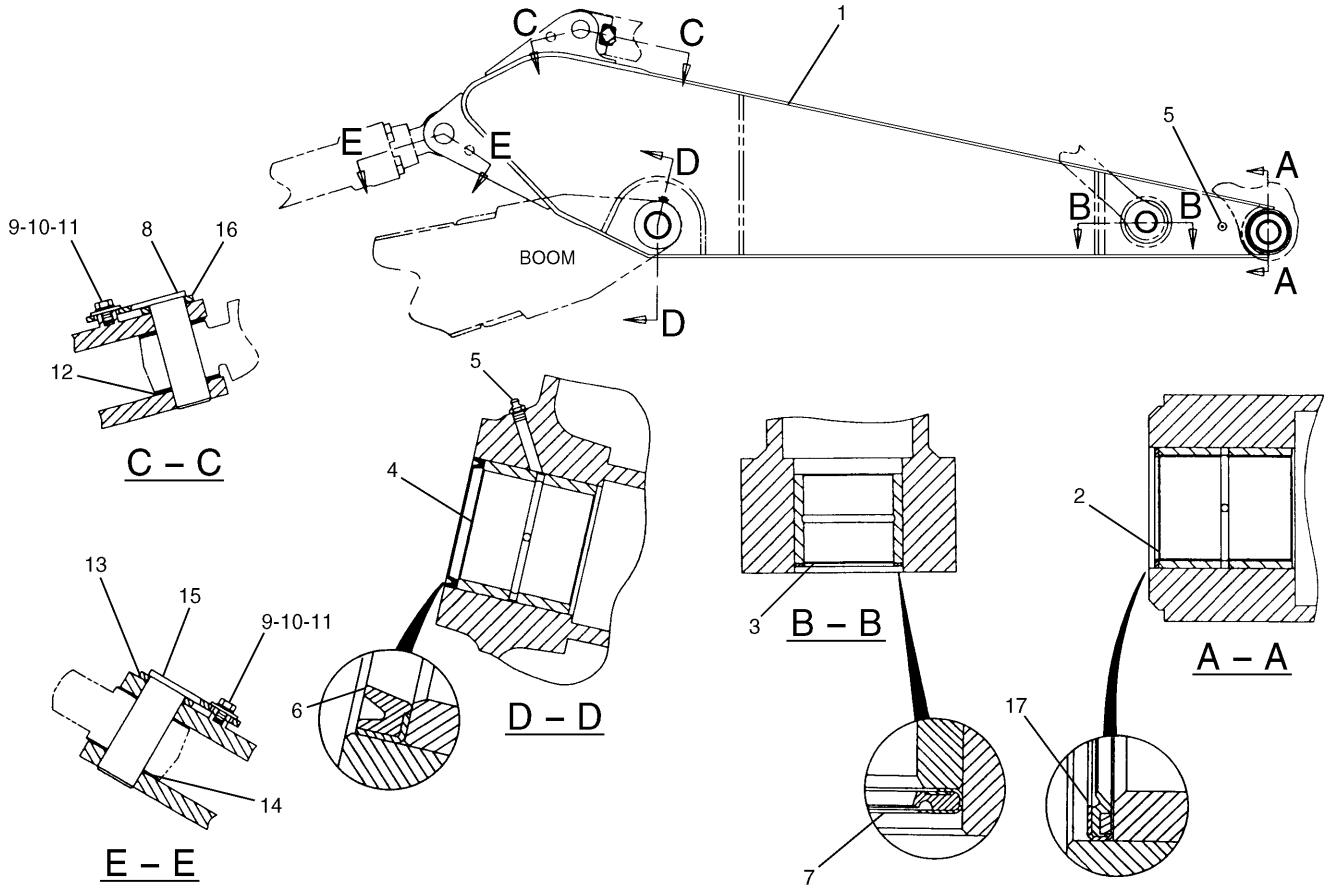

NOTE	No.	PART No.	QTY	PART NAME	NOTE	No.	PART No.	QTY	PART NAME
	1	137-2903	1	STICK AS		17	096-0854	2	SEAL
	2	128-9863	2	BEARING					
	3	7Y-2395	2	BEARING					
	4	128-9883	2	BEARING					
	5	3B-8489	3	FITTING					
	6	7X-4803	2	SEAL					
	7	093-1434	2	SEAL					
	8	4I-4814	1	PIN AS					
	9	8T-4780	2	BOLT (L=30mm)					
	10	8T-4123	2	WASHER					
	11	093-0349	2	WASHER					
B	12	133-2424	1	SHIM (T=0.50mm)					
B		093-0086	2	SHIM (T=1.00mm)					
B		093-0118	1	SHIM (T=2.00mm)					
	13	093-0363	1	SPACER					
B	14	133-2425	1	SHIM (T=0.50mm)					
B		093-0083	2	SHIM (T=1.00mm)					
B		093-0115	1	SHIM (T=2.00mm)					
	15	4I-4809	1	PIN AS					
	16	118-5982	1	SPACER					

B—USE AS REQUIRED

H53797E 03

127-1164 STICK GP-HOE

M2.4C Stick

Part of 120-4972-Page381

An Attachment

IMPLEMENTS

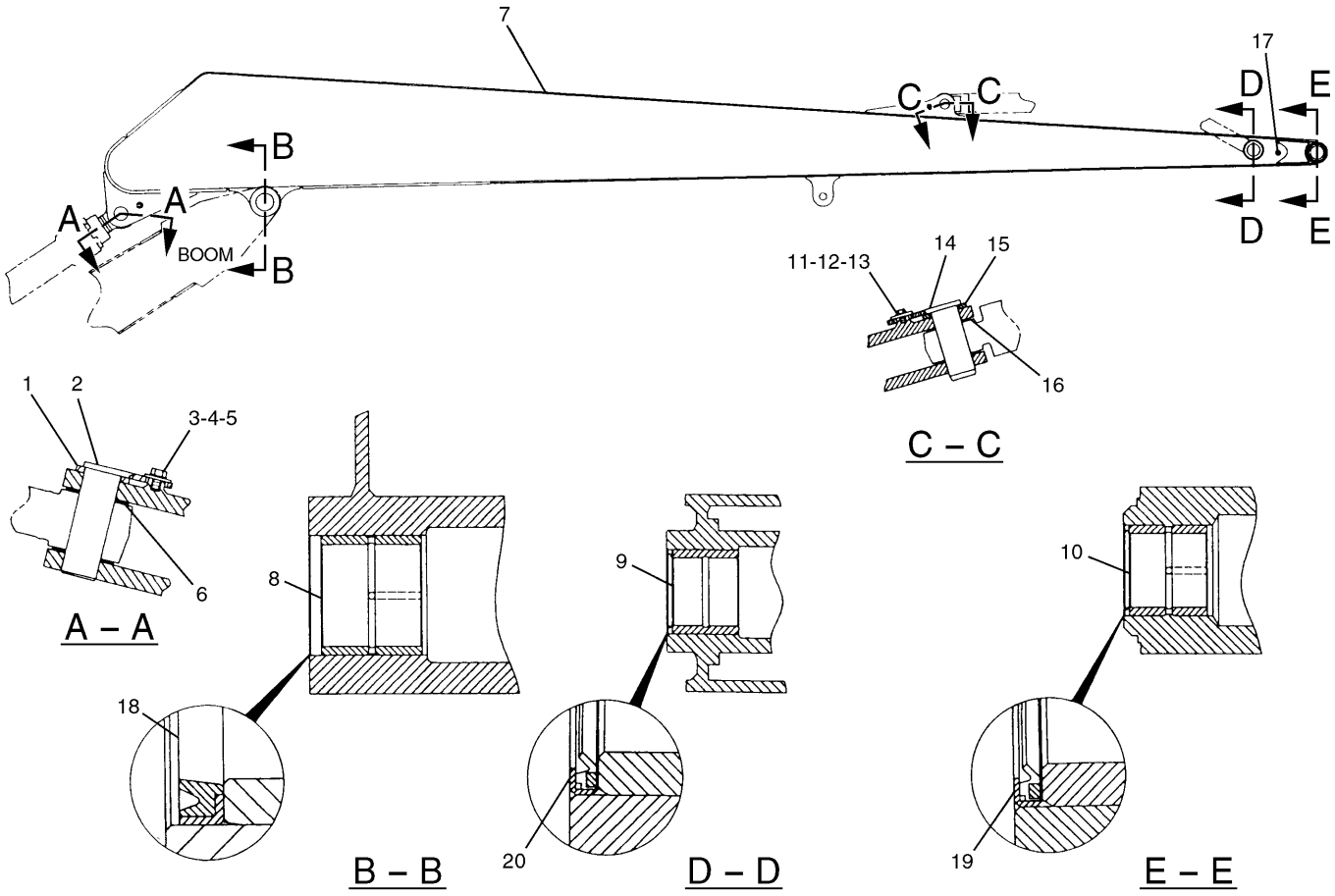

NOTE	No.	PART No.	QTY	PART NAME	NOTE	No.	PART No.	QTY	PART NAME
	1	093-0363	1	SPACER		17	3B-8489	1	FITTING
	2	4I-4618	1	PIN AS		18	7X-4803	2	SEAL
	3	8T-4780	1	BOLT (L=30mm)		19	096-0131	2	SEAL
	4	093-0349	1	WASHER		20	093-1433	2	SEAL
	5	8T-4123	1	WASHER					
B	6	093-0083	2	SHIM (T=1.00mm)					
B		7Y-2498	1	SHIM (T=1.60mm)					
B		093-0115	1	SHIM (T=2.00mm)					
	7	132-1533	1	STICK AS					
	8	7Y-3553	2	BEARING					
	9	099-0718	2	BEARING					
	10	099-0717	2	BEARING					
	11	8T-4179	1	BOLT (L=20mm)					
	12	093-0352	1	WASHER					
	13	8T-4223	1	WASHER					
	14	7Y-6627	1	PIN AS					
	15	093-0357	1	WASHER					
B	16	093-0065	2	SHIM (T=1.00mm)					
B		093-0097	1	SHIM (T=2.00mm)					
B		099-7091	1	SHIM (T=1.50mm)					

B—USE AS REQUIRED

H53283E 00

127-6623 STICK GP-HOE

Long Reach Front
S/N 4MR 1-Up
Part of 127-6615-Page383
An Attachment

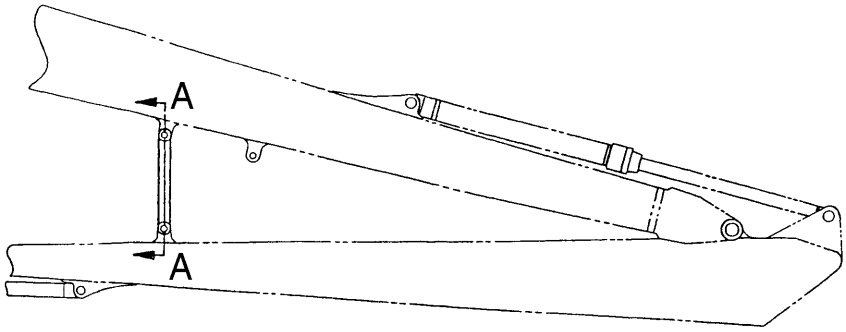

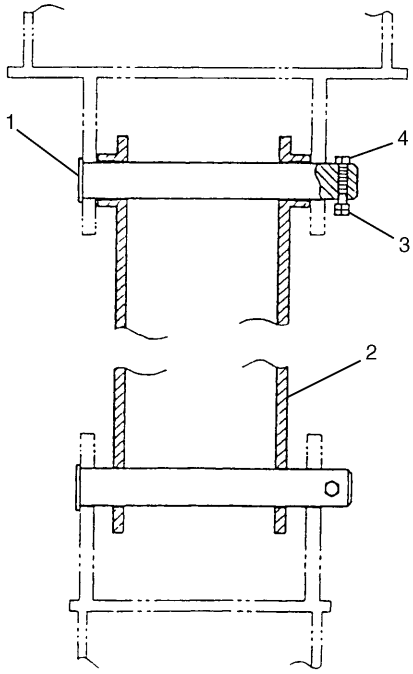

A – A

NOTE	No.	PART No.	QTY	PART NAME	NOTE	No.	PART No.	QTY	PART NAME
	1	7Y-6649	2	PIN					
	2	7Y-6641	1	ROD AS					
	3	8T-4133	4	NUT					
	4	8T-6466	2	BOLT (L=60mm)					

H53284E 00

116-9115 LOCK GP-TRANSPORT

Long Reach Front
S/N 4MR 1-Up
Part of 127-6615-Page383
An Attachment

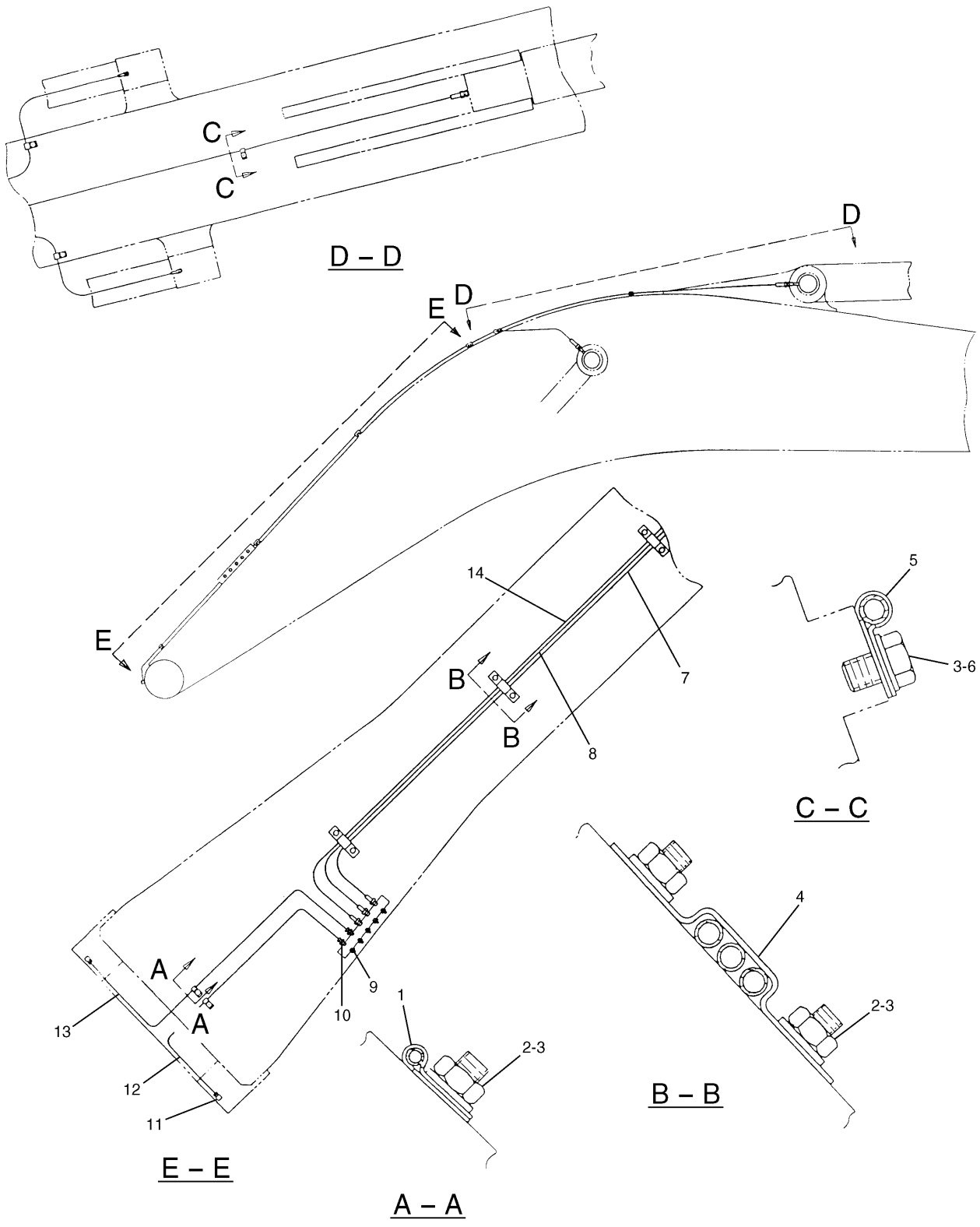

H65517E 02

117-5497 LINES GP-GREASE
R-Boom
Part of 117-4140-Page376
An Attachment

IMPLEMENTS

NOTE	No.	PART No.	QTY	PART NAME	NOTE	No.	PART No.	QTY	PART NAME
	1	8M-2772	2	CLIP					
	2	8T-4133	8	NUT					
	3	8T-4121	11	WASHER					
	4	087-5840	3	PLATE					
	5	033-8248	3	CLIP					
	6	8T-4191	3	BOLT (L=16mm)					
	7	120-7225	1	HOSE AS					
		105-6431	1	CONNECTOR					
	8	120-7224	1	HOSE AS					
		105-6431	1	CONNECTOR					
	9	3B-8489	5	FITTING					
	10	6L-3616	2	CONNECTOR					
	11	5K-9243	2	ELBOW					
	12	4I-4544	1	TUBE AS					
	13	4I-4543	1	TUBE AS					
	14	166-3152	1	HOSE AS					
		105-6431	1	CONNECTOR					

H65517E 02

117-5497 LINES GP-GREASE

R-Boom

Part of 117-4140-Page376

An Attachment

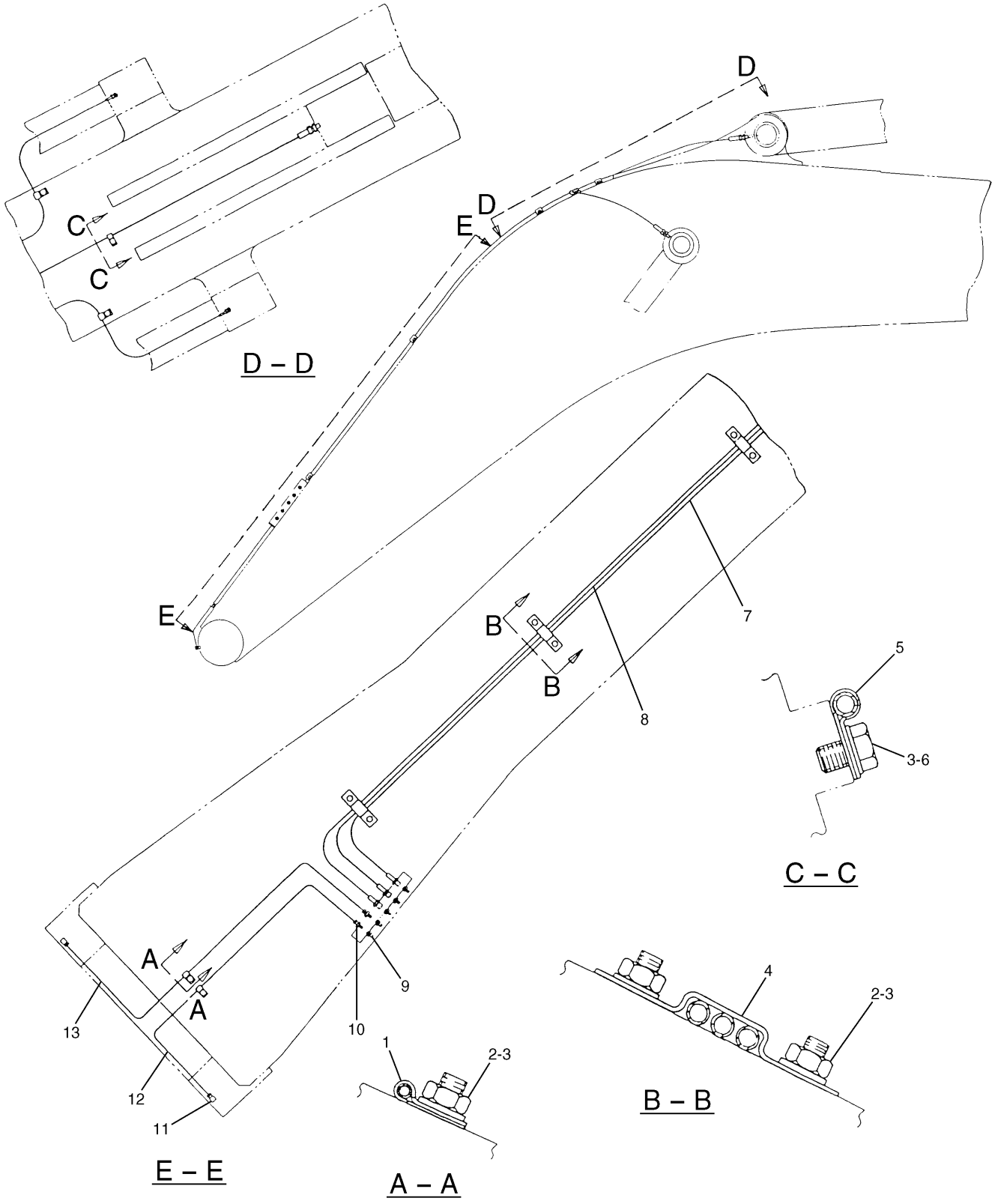

H53094E 01

117-5499 LINES GP-GREASE
M-Boom
Part of 117-4141-Page377
An Attachment

IMPLEMENTS

NOTE	No.	PART No.	QTY	PART NAME	NOTE	No.	PART No.	QTY	PART NAME
	1	8M-2772	2	CLIP					
	2	8T-4133	8	NUT					
	3	8T-4121	11	WASHER					
	4	087-5840	3	PLATE					
	5	033-8248	3	CLIP					
	6	8T-4191	3	BOLT (L=16mm)					
	7	115-2678	2	HOSE AS					
		105-6431	1	CONNECTOR					
	8	121-8460	1	HOSE AS					
		105-6431	1	CONNECTOR					
	9	3B-8489	5	FITTING					
	10	6L-3616	2	CONNECTOR					
	11	5K-9243	2	ELBOW					
	12	4I-4544	1	TUBE AS					
	13	4I-4543	1	TUBE AS					

H53094E 01

117-5499 LINES GP-GREASE

M-Boom

Part of 117-4141-Page377

An Attachment

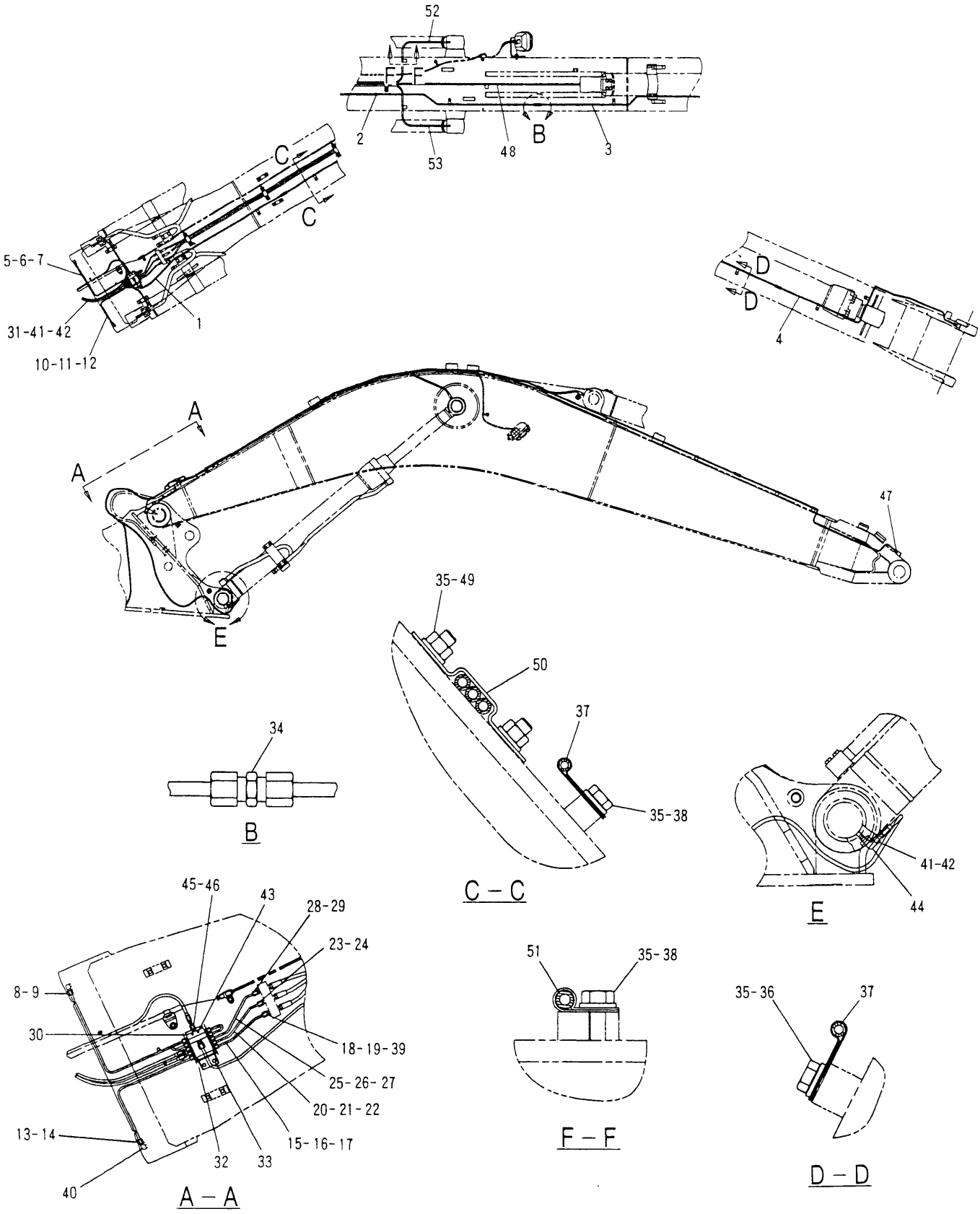

H57662E 01

121-8679 LINES GP-GREASE
S/N 3MR 1-(D96.08), 4MR 1-(D96.08)
Part of 120-5012-Page376
127-1322-Page316
An Attachment

IMPLEMENTS

NOTE	No.	PART No.	QTY	PART NAME	NOTE	No.	PART No.	QTY	PART NAME
	1	130-4208	1	TUBE AS					
	2	130-4209	1	TUBE AS					
	3	130-4210	1	TUBE AS					
	4	130-4211	1	TUBE AS					
	5	130-4212	1	TUBE AS					
	6	118-6051	2	NUT					
	7	118-6052	4	SLEEVE					
	8	123-5588	1	NUT					
	9	123-5589	1	SLEEVE					
	10	130-4213	1	TUBE AS					
	11	118-6051	2	NUT					
	12	118-6052	4	SLEEVE					
	13	123-5588	1	NUT					
	14	123-5589	1	SLEEVE					
	15	130-4214	1	TUBE AS					
	16	118-6051	2	NUT					
	17	118-6052	4	SLEEVE					
	18	123-5588	1	NUT					
	19	123-5589	1	SLEEVE					
	20	130-4215	1	TUBE AS					
	21	118-6051	2	NUT					
	22	118-6052	4	SLEEVE					
	23	123-5588	1	NUT					
	24	123-5589	1	SLEEVE					
	25	130-4216	1	TUBE AS					
	26	118-6051	2	NUT					
	27	118-6052	4	SLEEVE					
	28	123-5588	1	NUT					
	29	123-5589	1	SLEEVE					
Y	30	127-1322	1	VALVE AS					
	31	130-4312	2	HOSE AS					
	32	109-8708	1	CLAMP					
	33	110-9851	2	BOLT					
	34	123-5597	3	CONNECTOR					
	35	8T-4121	17	WASHER					
	36	8T-4137	3	BOLT (L=20mm)					
	37	4D-8123	8	CLIP					
	38	8T-4191	8	BOLT (L=16mm)					
	39	127-1212	3	CONNECTOR					
	40	127-1213	2	ELBOW					
	41	118-6051	4	NUT					
	42	118-6052	4	SLEEVE					
	43	8T-3844	2	BOLT (L=70mm)					
	44	123-5586	2	ELBOW					
	45	123-5588	1	NUT					
	46	123-5589	1	SLEEVE					
	47	123-5594	1	CONNECTOR					
	48	120-7224	1	HOSE AS					
	49	8T-4133	6	NUT					
	50	087-5840	3	PLATE					
	51	033-8248	3	CLIP					
	52	115-2677	1	HOSE AS					
	53	120-7225	1	HOSE AS					

Y—SEE SEPARATE ILLUSTRATION

H57662E 01

121-8679 LINES GP-GREASE

S/N 3MR 1-(D96.08), 4MR 1-(D96.08)
Part of 120-5012-Page376
127-1322-Page316
An Attachment

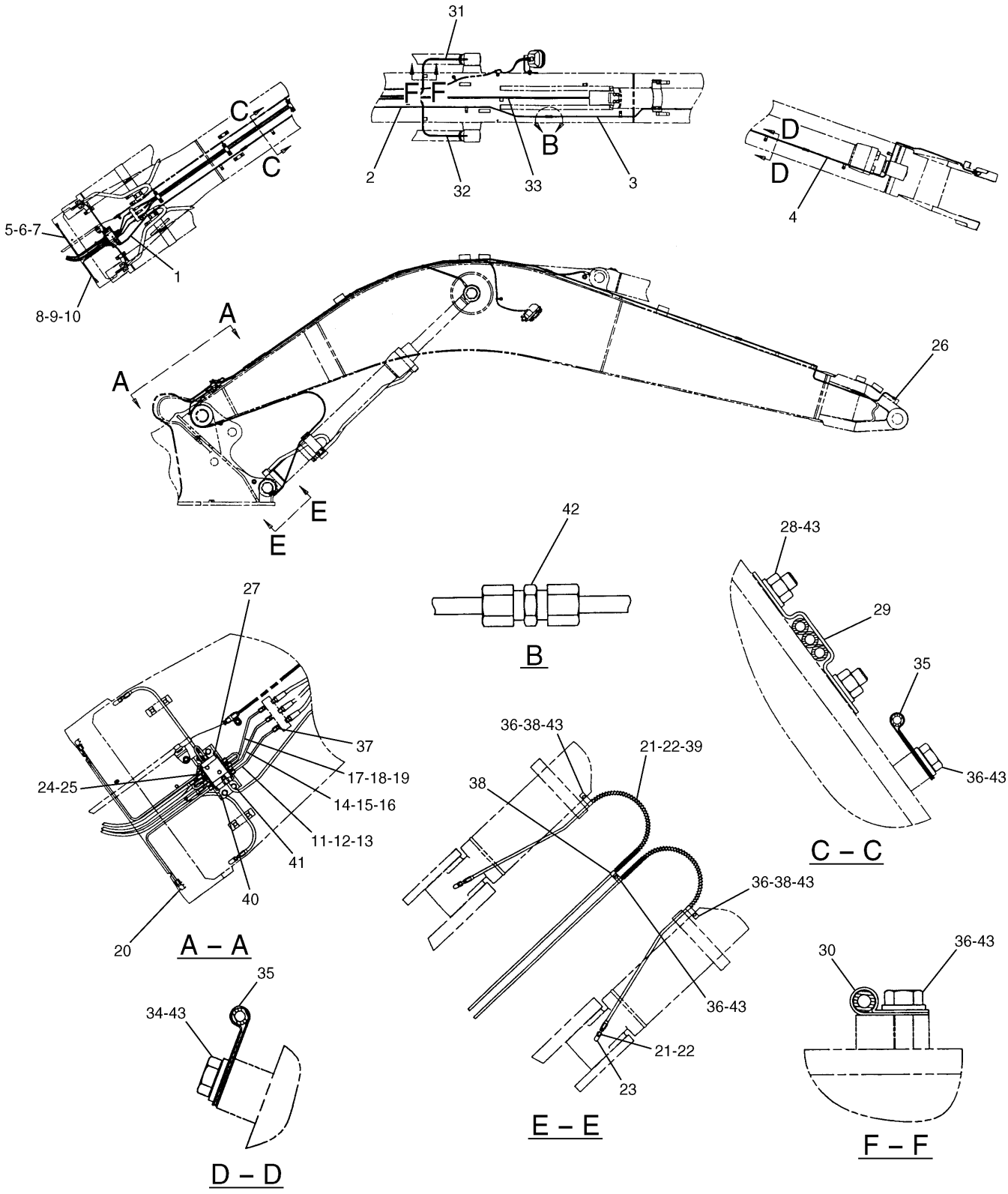

H65519E 04

121-8679 LINES GP-GREASE
S/N 3MR (D96.09)-(D99.03), 4MR (D96.09)-(D99.03)
Part of 120-5012-Page376
137-3065-Page316.02
An Attachment

IMPLEMENTS

NOTE	No.	PART No.	QTY	PART NAME	NOTE	No.	PART No.	QTY	PART NAME
	1	130-4208	1	TUBE AS					
	2	130-4209	1	TUBE AS					
	3	130-4210	1	TUBE AS					
	4	137-2944	1	TUBE AS					
	5	134-9203	1	TUBE AS					
	6	118-6051	2	NUT					
	7	118-6052	2	SLEEVE					
	8	134-9204	1	TUBE AS					
	9	118-6051	2	NUT					
	10	118-6052	2	SLEEVE					
	11	134-9205	1	TUBE AS					
	12	118-6051	2	NUT					
	13	118-6052	2	SLEEVE					
	14	134-9206	1	TUBE AS					
	15	118-6051	2	NUT					
	16	118-6052	2	SLEEVE					
	17	134-9207	1	TUBE AS					
	18	118-6051	2	NUT					
	19	118-6052	2	SLEEVE					
	20	134-9245	2	ELBOW					
	21	118-6051	4	NUT					
	22	118-6052	4	SLEEVE					
	23	123-5586	2	ELBOW					
	24	123-5588	1	NUT					
	25	123-5589	1	SLEEVE					
	26	123-5594	1	CONNECTOR					
Y	27	137-3065	1	VALVE AS					
	28	8T-4133	6	NUT					
	29	087-5840	3	PLATE					
	30	033-8248	3	CLIP					
	31	115-2677	1	HOSE AS					
		105-6431	1	CONNECTOR					
	32	120-7225	1	HOSE AS					
		105-6431	1	CONNECTOR					
	33	120-7224	1	HOSE AS					
		105-6431	1	CONNECTOR					
	34	8T-4137	3	BOLT (L=20mm)					
	35	4D-8123	8	CLIP					
	36	8T-4191	11	BOLT (L=16mm)					
	37	134-9244	3	CONNECTOR					
	38	5P-9085	4	CLIP					
	39	137-2864	2	HOSE AS					
	40	109-8708	1	CLAMP					
	41	110-9851	4	BOLT					
	42	123-5597	3	CONNECTOR					
	43	8T-4121	20	WASHER					

Y—SEE SEPARATE ILLUSTRATION

H65519E 04

121-8679 LINES GP-GREASE

S/N 3MR (D96.09)-(D99.03), 4MR (D96.09)-(D99.03)
Part of 120-5012-Page376
137-3065-Page316.02
An Attachment

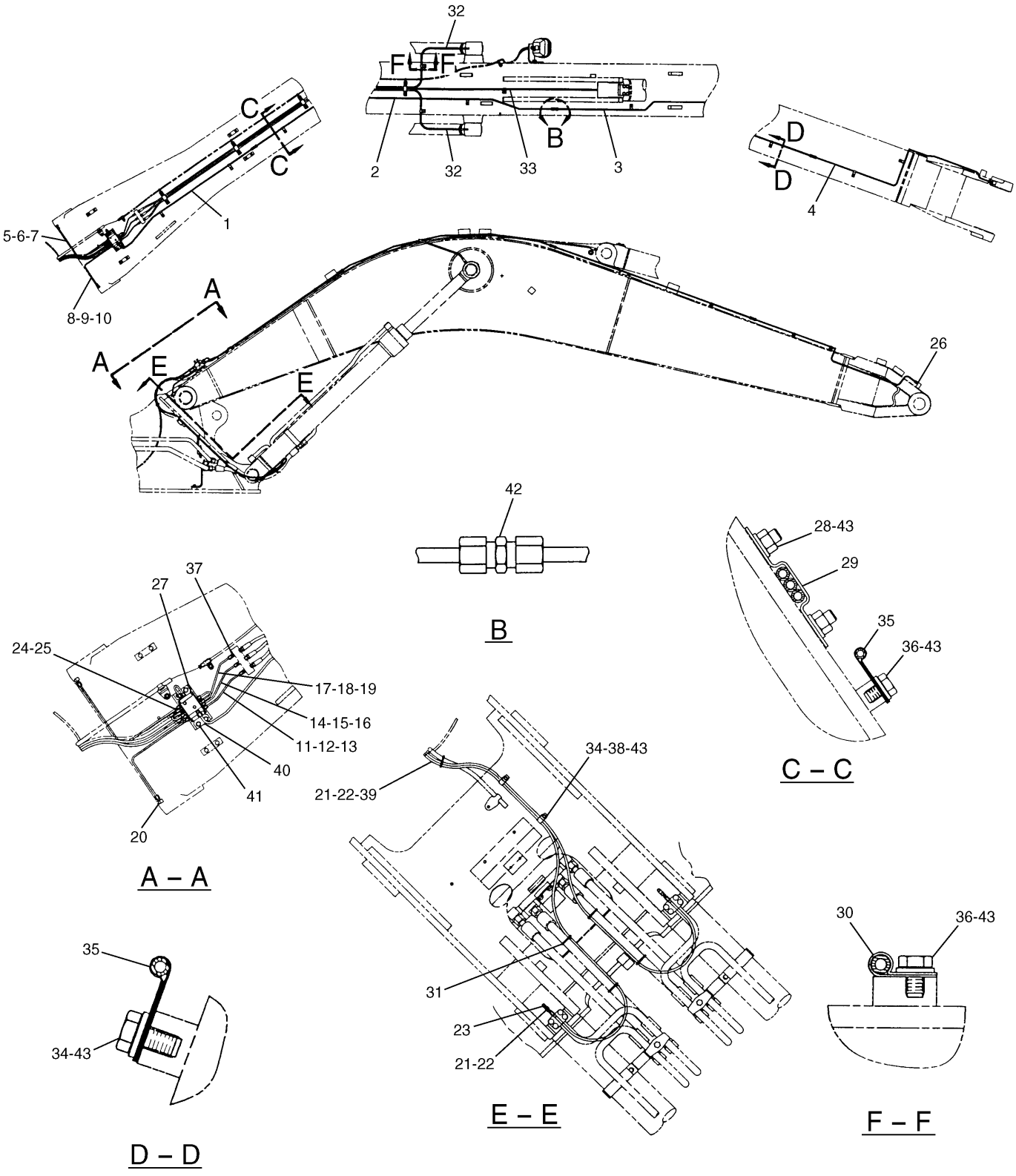

H65521E 05

121-8679 LINES GP-GREASE
S/N 3MR (D99.04)-Up, 4MR (D99.04)-Up
Part of 120-5012-Page376
137-3065-Page316.02
An Attachment

IMPLEMENTS

NOTE	No.	PART No.	QTY	PART NAME	NOTE	No.	PART No.	QTY	PART NAME
	1	130-4208	1	TUBE AS					
	2	130-4209	1	TUBE AS					
	3	130-4210	1	TUBE AS					
	4	137-2944	1	TUBE AS					
	5	134-9203	1	TUBE AS					
	6	118-6051	2	NUT					
	7	118-6052	2	SLEEVE					
	8	134-9204	1	TUBE AS					
	9	118-6051	2	NUT					
	10	118-6052	2	SLEEVE					
	11	134-9205	1	TUBE AS					
	12	118-6051	2	NUT					
	13	118-6052	2	SLEEVE					
	14	134-9206	1	TUBE AS					
	15	118-6051	2	NUT					
	16	118-6052	2	SLEEVE					
	17	134-9207	1	TUBE AS					
	18	118-6051	2	NUT					
	19	118-6052	2	SLEEVE					
	20	134-9245	2	ELBOW					
	21	118-6051	4	NUT					
	22	118-6052	4	SLEEVE					
	23	123-5586	2	ELBOW					
	24	123-5588	1	NUT					
	25	123-5589	1	SLEEVE					
	26	123-5594	1	CONNECTOR					
Y	27	137-3065	1	VALVE AS					
	28	8T-4133	6	NUT					
	29	087-5840	3	PLATE					
	30	033-8248	3	CLIP					
	31	7K-1181	4	STRAP					
	32	120-7225	2	HOSE AS					
		105-6431	1	CONNECTOR					
	33	120-7224	1	HOSE AS					
		105-6431	1	CONNECTOR					
	34	8T-4137	5	BOLT (L=20mm)					
	35	4D-8123	8	CLIP					
	36	8T-4191	8	BOLT (L=16mm)					
	37	134-9244	3	CONNECTOR					
	38	9X-8582	2	CLIP					
	39	151-0606	2	HOSE AS					
	40	109-8708	1	CLAMP					
	41	110-9851	4	BOLT					
	42	123-5597	3	CONNECTOR					
	43	8T-4121	19	WASHER					

Y—SEE SEPARATE ILLUSTRATION

H65521E 05

121-8679 LINES GP-GREASE

S/N 3MR (D99.04)-Up, 4MR (D99.04)-Up
Part of 120-5012-Page376
137-3065-Page316.02
An Attachment

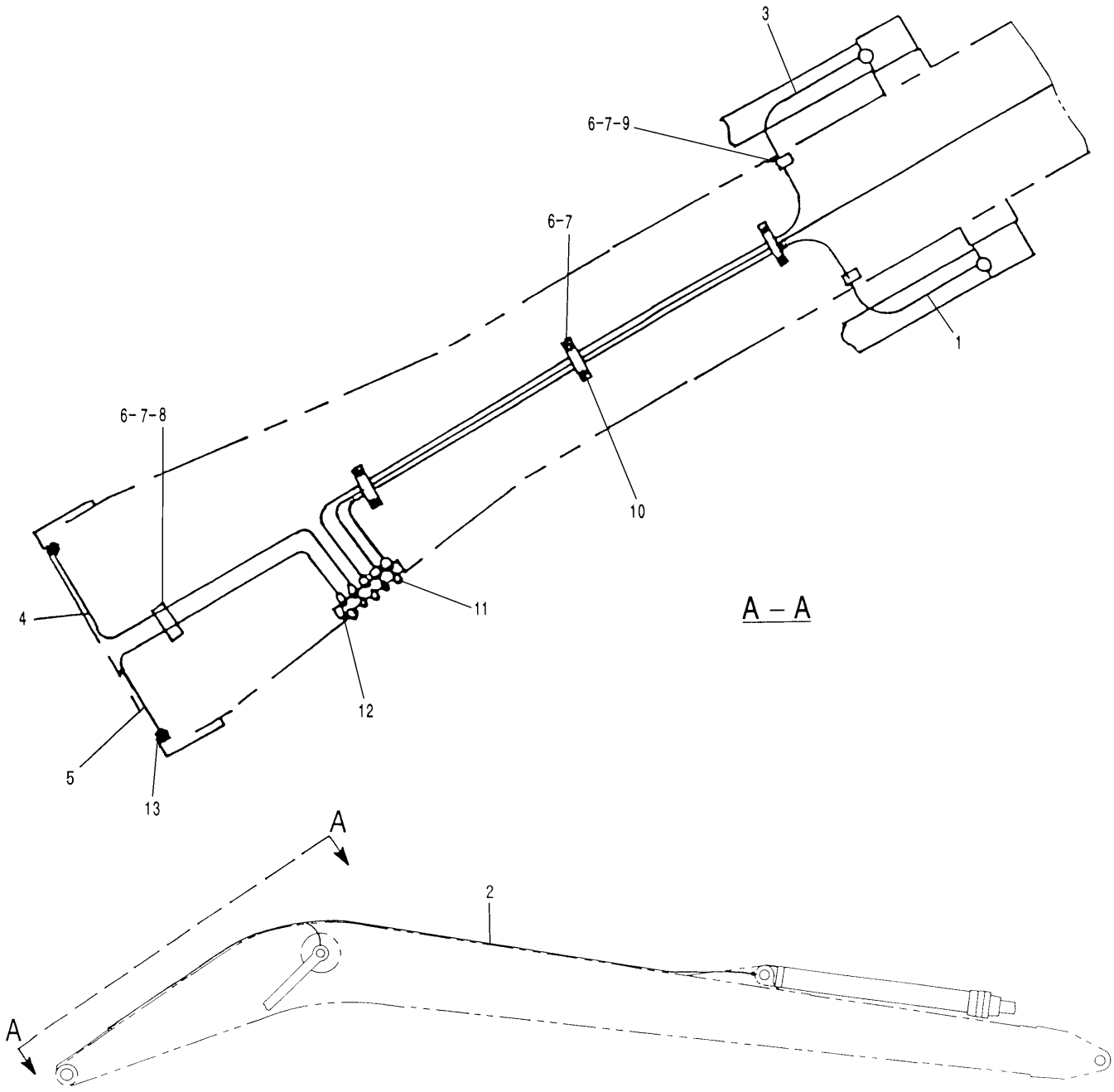

H53096E 00

5I-7235 LINES GP-GREASE
Boom/Long Reach Front
S/N 4MR 1-Up
Part of 127-6615-Page383
An Attachment

IMPLEMENTS

NOTE	No.	PART No.	QTY	PART NAME	NOTE	No.	PART No.	QTY	PART NAME
	1	4I-6610	1	HOSE AS					
	2	5I-7236	1	HOSE AS					
	3	4I-6608	1	HOSE AS					
	4	4I-4543	1	TUBE AS					
	5	4I-4544	1	TUBE AS					
	6	8T-4191	14	BOLT (L=16mm)					
	7	8T-4121	14	WASHER					
	8	8M-2772	2	CLIP					
	9	033-8248	6	CLIP					
	10	087-5840	3	PLATE					
	11	3B-8489	5	FITTING					
	12	6L-3616	2	CONNECTOR					
	13	5K-9243	2	ELBOW					

H53096E 00

5I-7235 LINES GP-GREASE

Boom/Long Reach Front
S/N 4MR 1-Up
Part of 127-6615-Page383
An Attachment

IMPLEMENTS

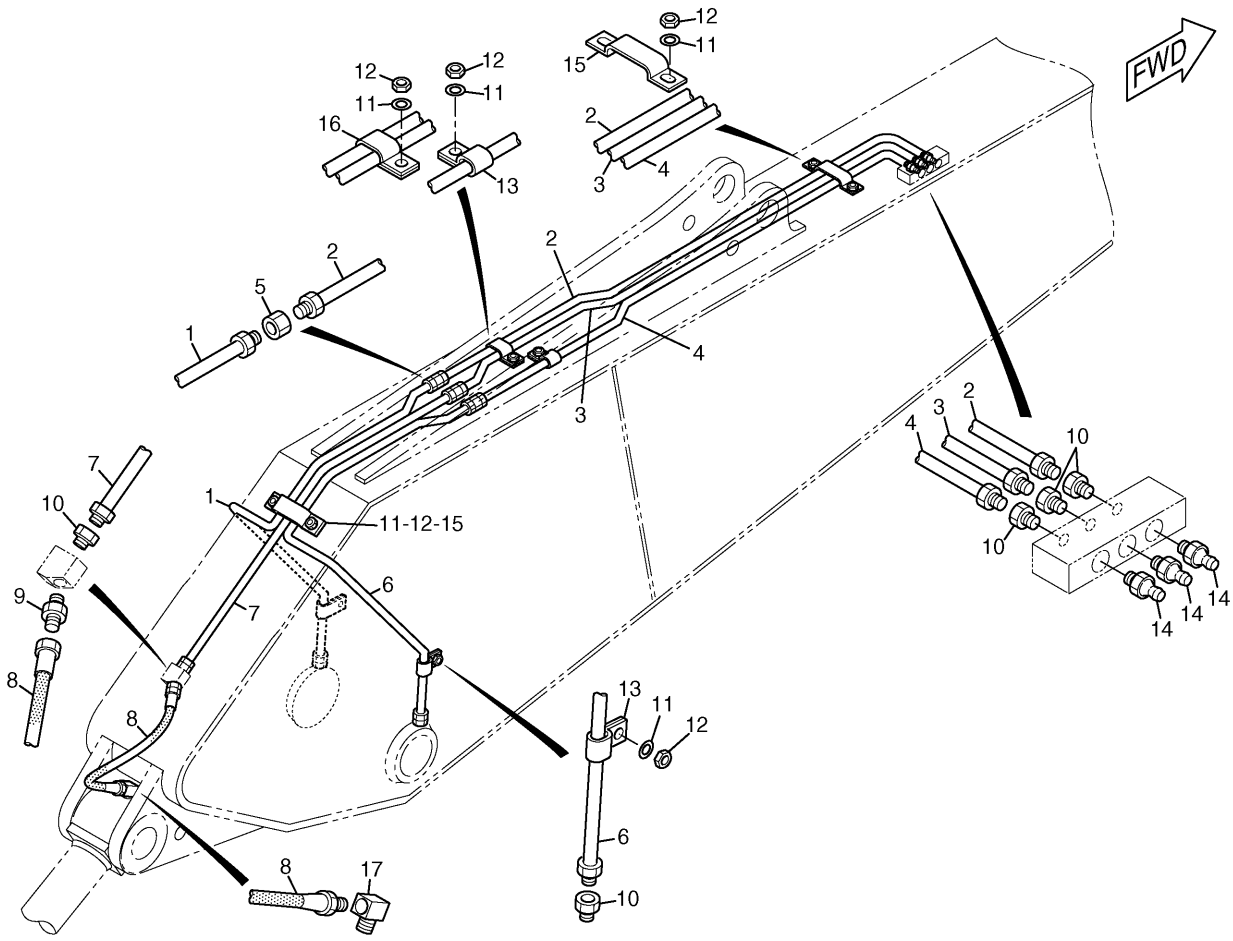

NOTE	No.	PART No.	QTY	PART NAME	NOTE	No.	PART No.	QTY	PART NAME
	1	6I-5133	1	TUBE AS					
	2	6I-5134	1	TUBE AS					
	3	6I-5135	1	TUBE AS					
	4	6I-5136	1	TUBE AS					
	5	5K-9242	3	UNION					
	6	6I-5137	1	TUBE AS					
	7	6I-5138	1	TUBE AS					
	8	7Y-2670	1	HOSE AS					
	9	105-6431	1	CONNECTOR					
	10	6L-3616	6	CONNECTOR					
	11	8T-4121	8	WASHER					
	12	8T-4133	8	NUT					
	13	8M-2772	3	CLIP					
	14	3B-8489	3	FITTING					
	15	087-5838	2	PLATE					
	16	5K-2298	1	CLIP					
	17	6V-3342	1	ELBOW					

H54030E 00

4I-0498 LINES GP-GREASE

R3.9B Stick

Part of 126-3792-Page378

An Attachment

MEMORANDA

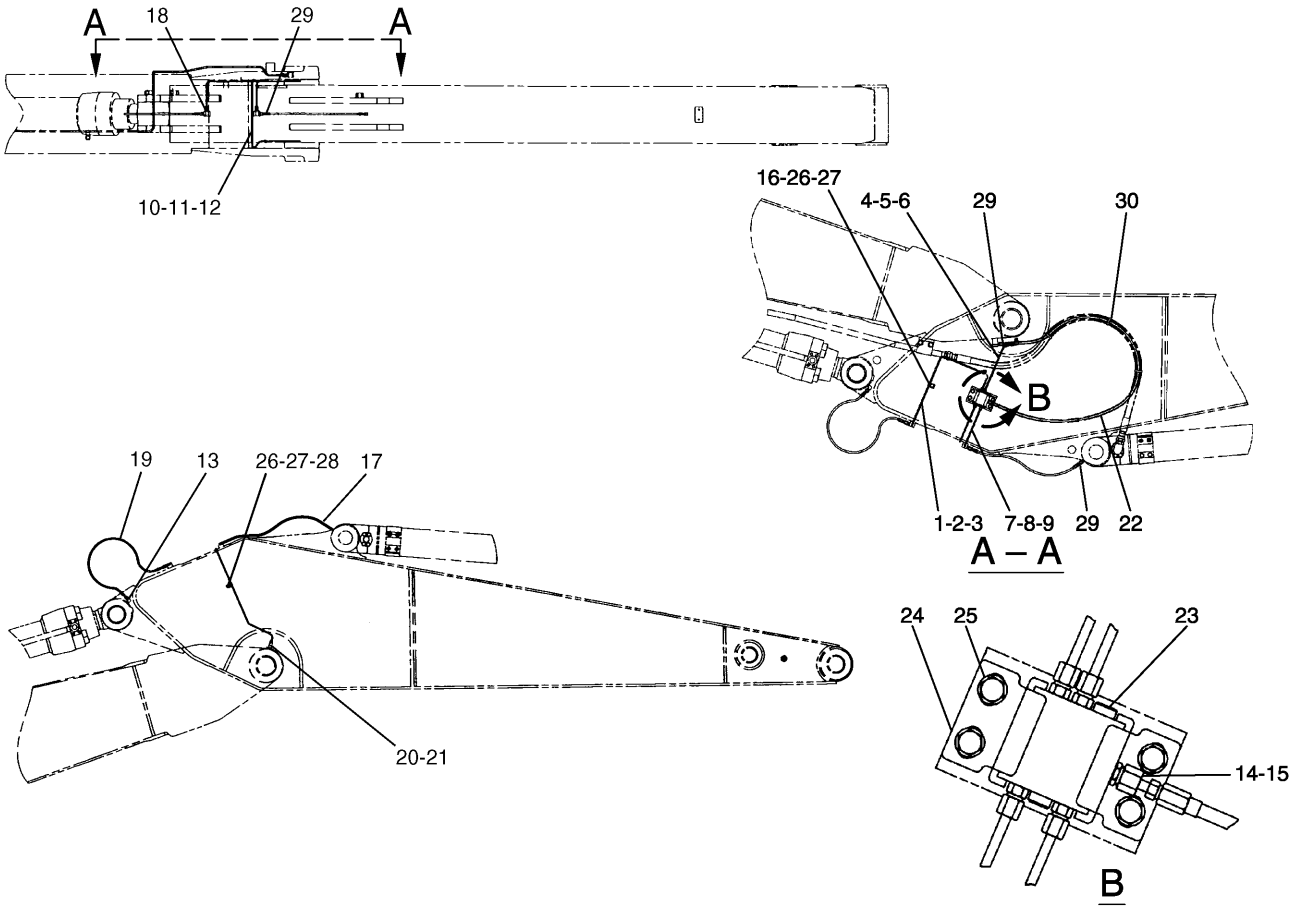

NOTE	No.	PART No.	QTY	PART NAME	NOTE	No.	PART No.	QTY	PART NAME
	1	134-9208	1	TUBE AS		21	4K-3026	2	EXTENSION
	2	118-6051	2	NUT		22	176-4916	1	HOSE AS
	3	118-6052	2	SLEEVE	Y	23	127-1323	1	VALVE AS
	4	137-2939	1	TUBE AS		24	109-8708	2	CLAMP
	5	118-6051	2	NUT		25	110-9851	4	BOLT
	6	118-6052	2	SLEEVE		26	5P-9085	2	CLIP
	7	134-9210	1	TUBE AS		27	8T-4121	2	WASHER
	8	118-6051	2	NUT		28	8T-4133	1	NUT
	9	118-6052	2	SLEEVE		29	127-1212	4	CONNECTOR
	10	137-2940	1	TUBE AS		30	7K-1181	3	STRAP
	11	118-6051	2	NUT					
	12	118-6052	2	SLEEVE					
	13	127-1213	1	ELBOW					
	14	123-5588	6	NUT					
	15	123-5589	6	SLEEVE					
	16	8T-4195	1	BOLT (L=30mm)					
	17	133-2602	1	HOSE AS					
	18	134-9244	2	CONNECTOR					
	19	133-2603	1	HOSE AS					
	20	134-9245	2	ELBOW					

Y—SEE SEPARATE ILLUSTRATION

H78102E 03

121-8681 LINES GP-GREASE

Part of 120-5013-Page379
127-1323-Page317
An Attachment

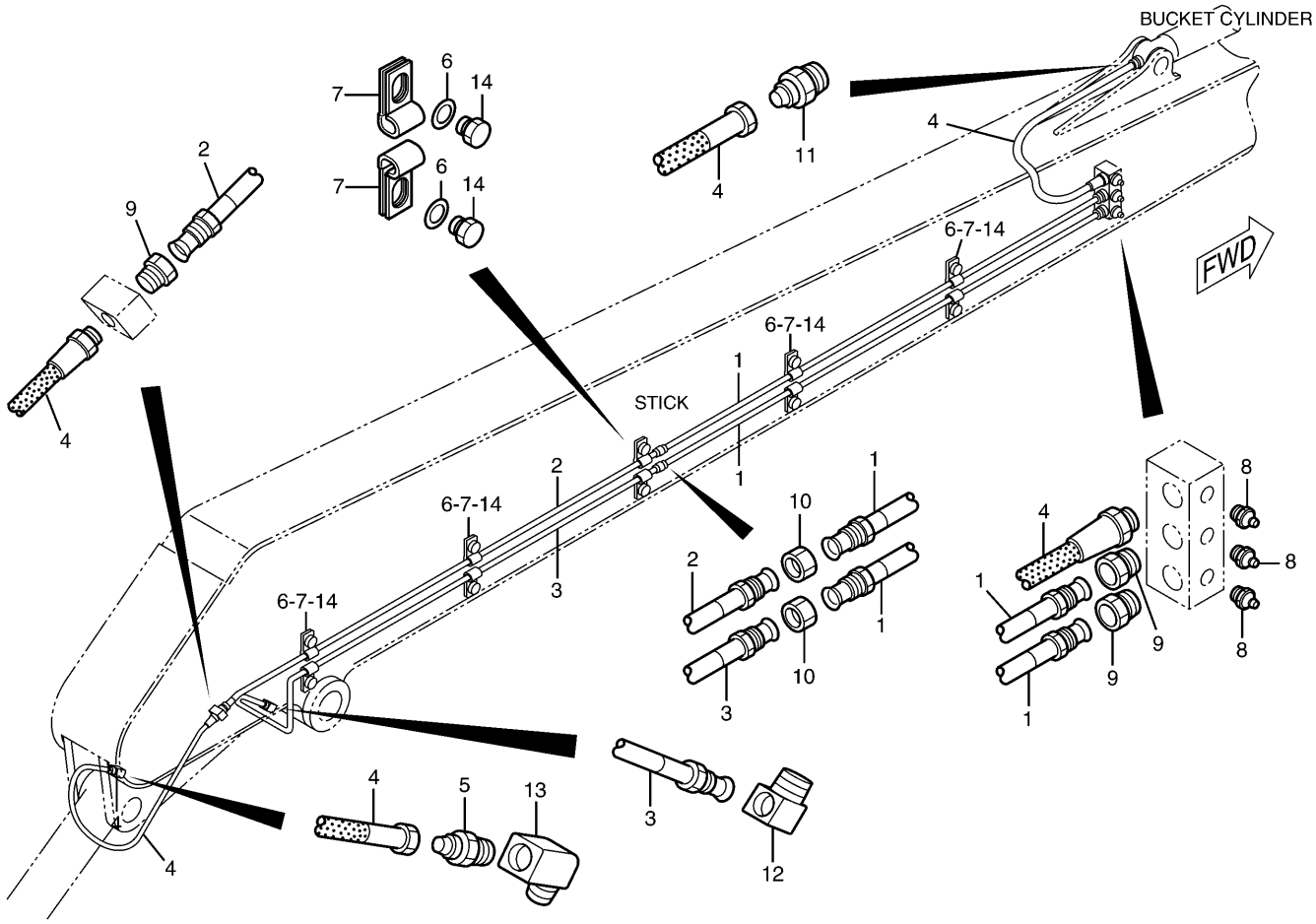

NOTE	No.	PART No.	QTY	PART NAME	NOTE	No.	PART No.	QTY	PART NAME
	1	5I-7238	2	TUBE AS					
	2	5I-7239	1	TUBE AS					
	3	132-1531	1	TUBE AS					
	4	087-5966	2	HOSE AS					
	5	105-6431	1	CONNECTOR					
	6	8T-4121	10	WASHER					
	7	8M-2772	10	CLIP					
	8	3B-8489	3	FITTING					
	9	6L-3616	3	CONNECTOR					
	10	5K-9242	2	UNION					
	11	5H-8936	1	ADAPTER					
	12	5K-9243	1	ELBOW					
	13	6V-3342	1	ELBOW					
	14	8T-4191	10	BOLT (L=16mm)					

H53097E 00

127-6625 LINES GP-GREASE

Stick/Long Reach Front
S/N 4MR 1-Up
Part of 127-6615-Page383
An Attachment

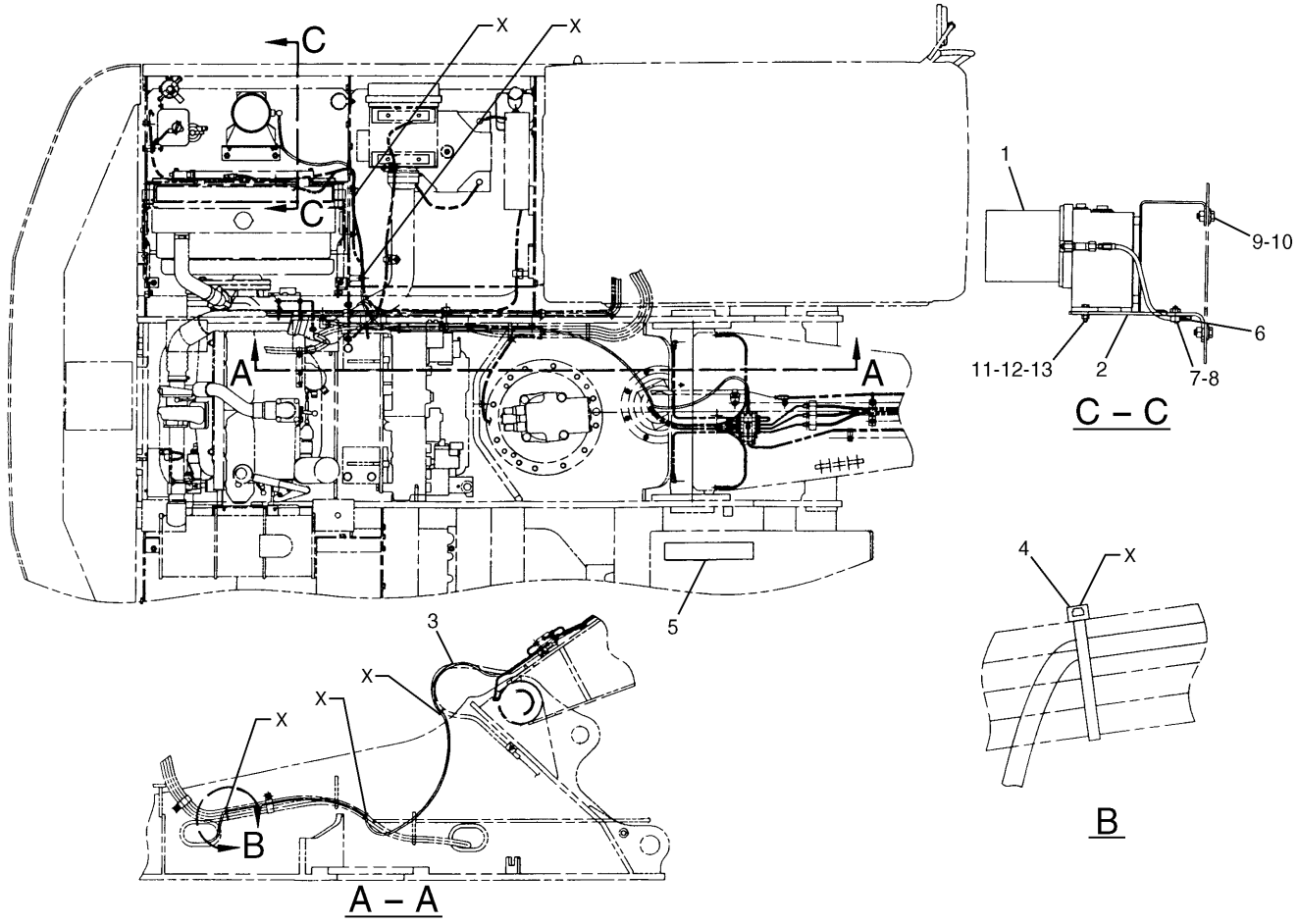

NOTE	No.	PART No.	QTY	PART NAME	NOTE	No.	PART No.	QTY	PART NAME
Y	1	127-5264	1	PUMP AS					
	2	117-4345	1	SUPPORT AS					
	3	131-7518	1	HOSE AS					
		108-6703	2	COUPLING					
		108-6705	2	CONNECTOR					
	4	096-0061	5	STRAP					
	5	127-5266	1	GUN AS					
	6	4D-8123	1	CLIP					
	7	8T-4136	1	BOLT (L=25mm)					
	8	8T-4121	1	WASHER					
	9	8T-4139	3	BOLT (L=30mm)					
	10	5P-1076	3	WASHER					
	11	8T-7547	2	BOLT (L=30mm)					
	12	5C-7261	2	NUT					
	13	8T-4224	2	WASHER					

Y—SEE SEPARATE ILLUSTRATION

H65322E 01

120-5110 PUMP GP-LUBRICATION-AUTO

Part of 126-3780-Page377
127-5264-Page397.14
An Attachment

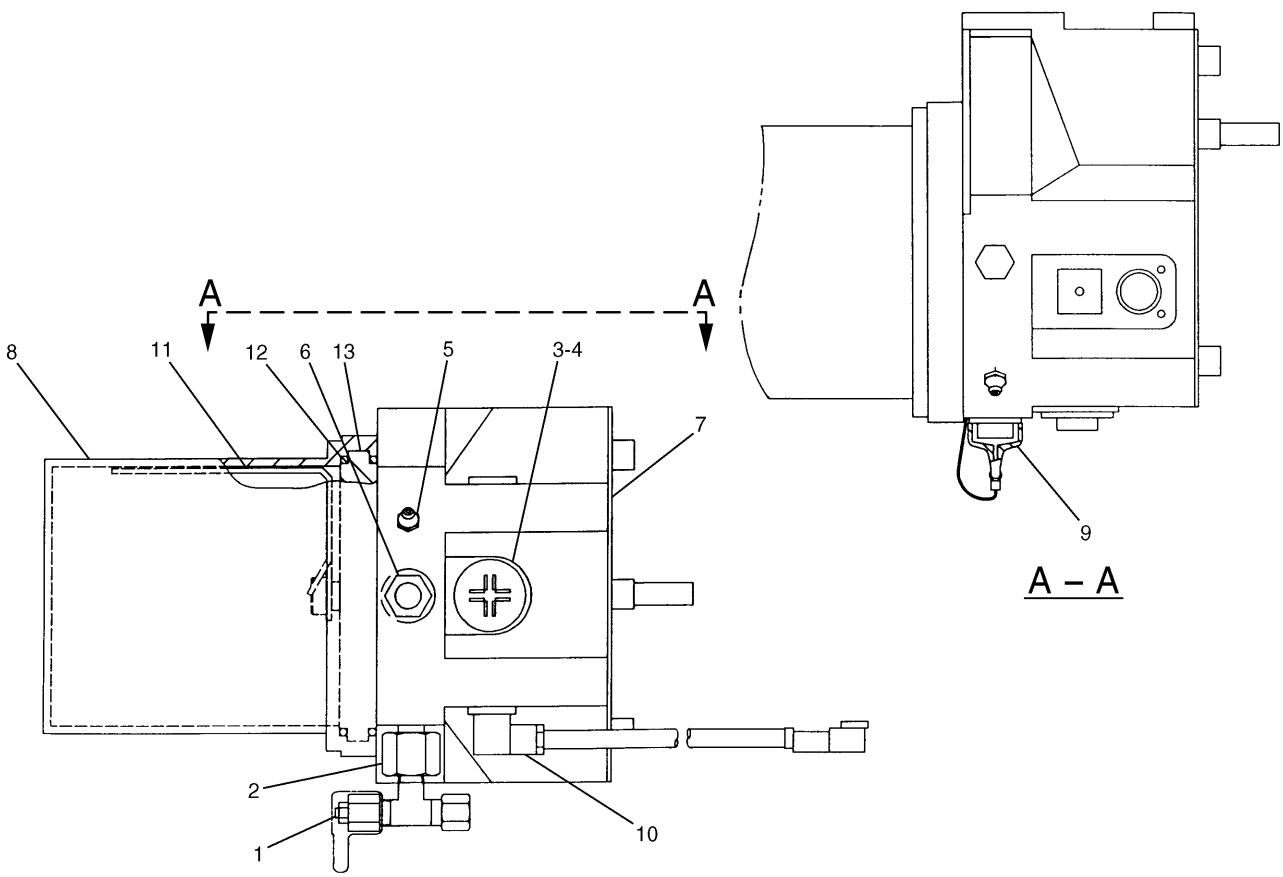

NOTE	No.	PART No.	QTY	PART NAME	NOTE	No.	PART No.	QTY	PART NAME
	1	137-1003	1	VALVE AS					
	2	137-1004	1	ELEMENT AS					
	3	157-2022	1	PLUG					
	4	157-2042	1	SEAL-O-RING (OD=35.00mm)					
	5	150-2823	1	NIPPLE					
	6	150-2822	1	ADAPTER					
	7	150-2821	1	BOARD AS					
	8	128-9251	1	TANK					
	9	168-0761	1	CAP AS					
	10	168-0776	1	MOTOR AS					
	11	168-0773	1	FAN AS					
	12	157-2023	2	SEAL-O-RING					
	13	157-2024	1	PLATE					

H65575E 03

127-5264 PUMP AS

Part of 120-5110-Page397.13
An Attachment

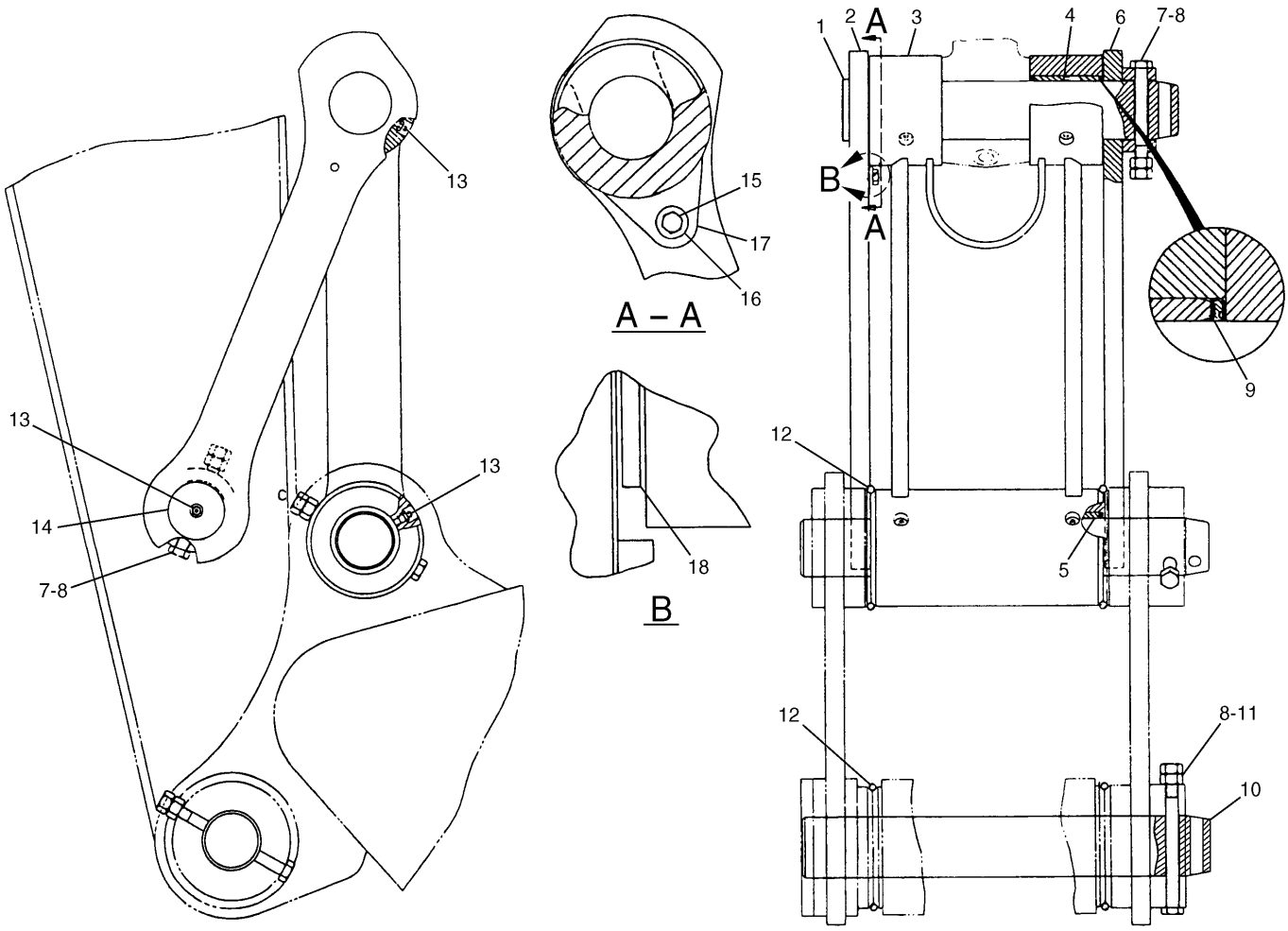

NOTE	No.	PART No.	QTY	PART NAME	NOTE	No.	PART No.	QTY	PART NAME
	1	087-5845	1	PIN		18	093-0115	1	SHIM (T=2.00mm)
	2	133-2437	1	LINK					
	3	184-5791	1	LINK AS					
	4	4I-0453	2	BEARING					
	5	7Y-3428	2	BEARING					
	6	087-5803	1	LINK AS					
	7	7X-2558	2	BOLT (L=150mm)					
	8	8T-4132	8	NUT					
	9	096-0854	6	SEAL					
	10	087-5805	2	PIN					
	11	7Y-5227	2	BOLT (L=190mm)					
	12	093-1344	4	SEAL-O-RING (ID=140.00mm)					
	13	3B-8489	5	FITTING					
	14	087-5806	1	PIN					
	15	8T-4192	1	BOLT (L=25mm)					
	16	5P-1076	1	WASHER					
B	17	133-2429	1	SHIM (T=0.50mm)					
B		133-2436	1	SHIM (T=1.00mm)					
B		133-2446	1	SHIM (T=1.60mm)					
B		133-2476	1	SHIM (T=2.00mm)					

B—USE AS REQUIRED

H78103E 01

133-2432 LINKAGE GP-BUCKET

B Family

Part of 117-4143-Page382

An Attachment

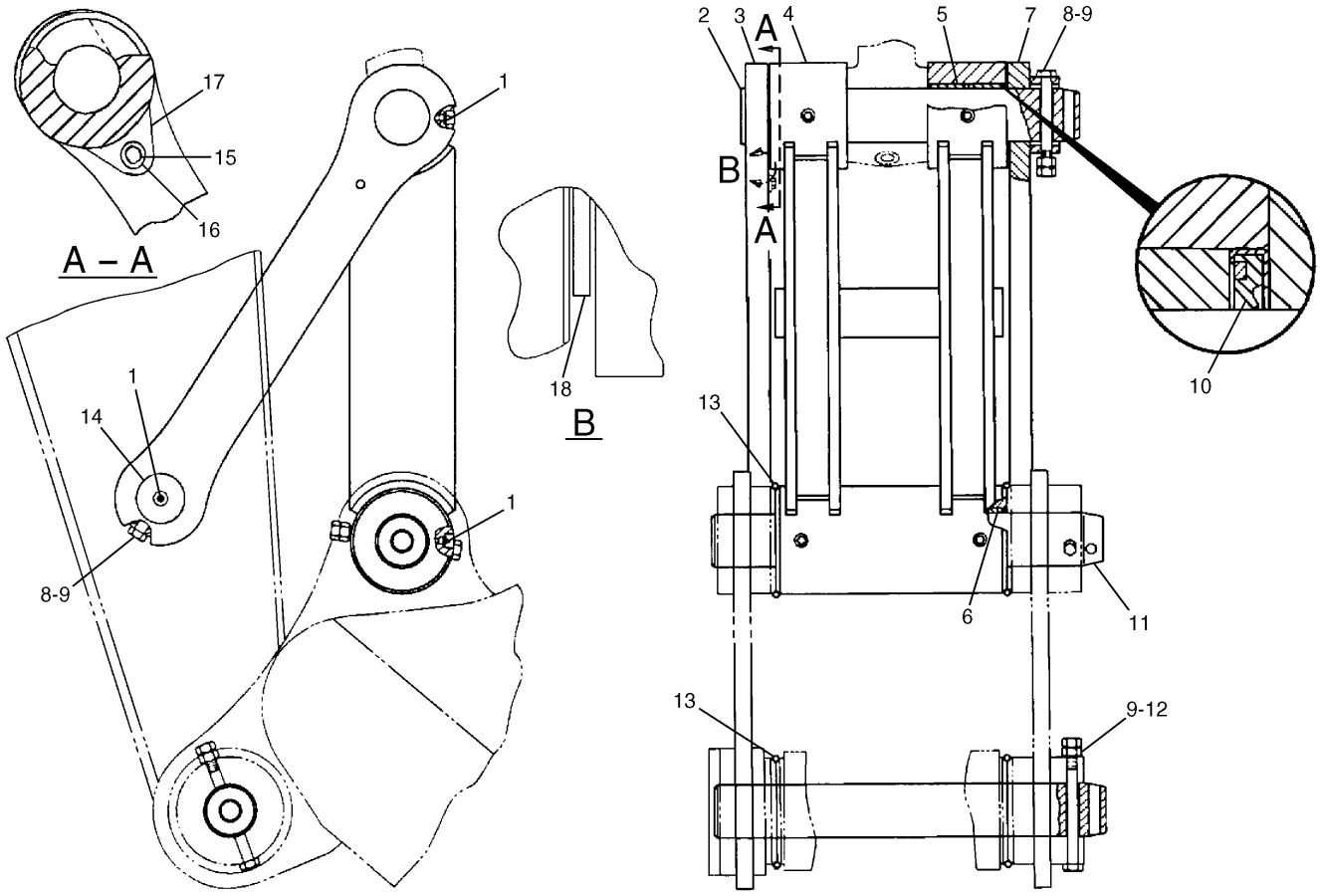

NOTE	No.	PART No.	QTY	PART NAME	NOTE	No.	PART No.	QTY	PART NAME
	1	3B-8489	5	FITTING		18	093-0115	1	SHIM (T=2.00mm)
	2	7Y-2348	1	PIN					
	3	133-2439	1	LINK					
	4	7Y-9525	1	LINK AS					
	5	7Y-5128	2	BEARING					
	6	7Y-3428	2	BEARING					
	7	7Y-2391	1	LINK AS					
	8	7X-2558	2	BOLT (L=150mm)					
	9	8T-4132	8	NUT					
	10	096-0854	6	SEAL					
	11	7Y-2357	2	PIN					
	12	7Y-5227	2	BOLT (L=190mm)					
	13	093-1344	4	SEAL-O-RING (ID=140.00mm)					
	14	7Y-2349	1	PIN					
	15	8T-4192	1	BOLT (L=25mm)					
	16	5P-1076	1	WASHER					
B	17	133-2429	1	SHIM (T=0.50mm)					
B		133-2436	2	SHIM (T=1.00mm)					
B		133-2446	1	SHIM (T=1.60mm)					
B		133-2476	1	SHIM (T=2.00mm)					

B—USE AS REQUIRED

H50691E 00

133-2434 LINKAGE GP-BUCKET

C Family

Part of 102-4758-Page382

An Attachment

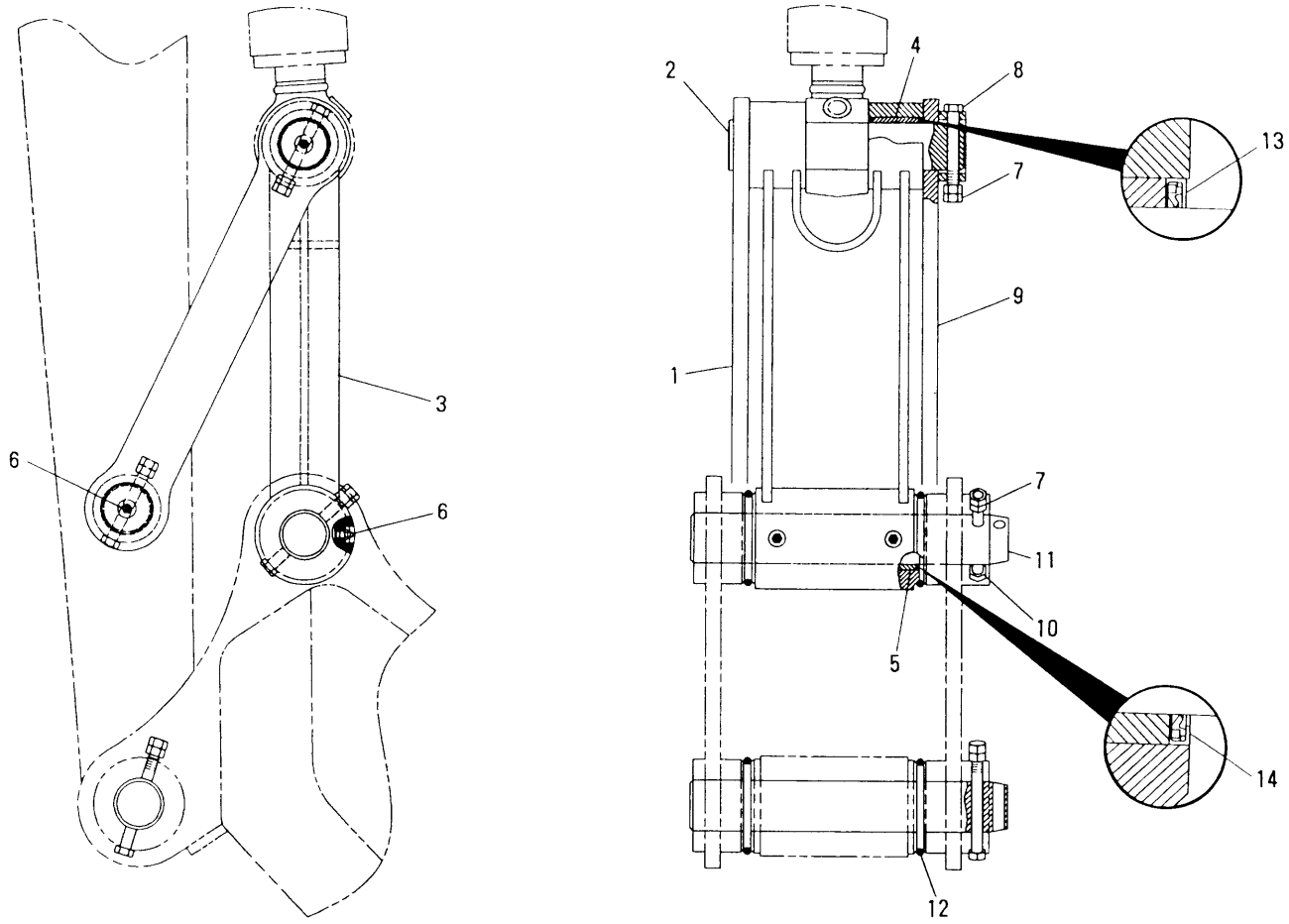

NOTE	No.	PART No.	QTY	PART NAME	NOTE	No.	PART No.	QTY	PART NAME
	1	099-0723	1	LINK					
	2	7I-6843	2	PIN					
	3	5I-3425	1	LINK AS					
	4	099-0718	2	BEARING					
	5	099-0721	2	BEARING					
	6	3B-8489	4	FITTING					
	7	096-4876	8	NUT					
	8	099-0707	2	BOLT (L=115mm)					
	9	099-0722	1	LINK AS					
		099-0723	1	LINK					
	10	099-0724	2	BOLT (L=145mm)					
	11	086-0523	2	PIN					
	12	093-1342	4	SEAL-O-RING (ID=96.00mm)					
	13	093-1433	4	SEAL					
	14	096-0131	2	SEAL					

H53288E 01

4I-6912 LINKAGE GP-BUCKET

Long Reach Front
S/N 4MR 1-(D97.01)
Part of 127-6615-Page383
An Attachment

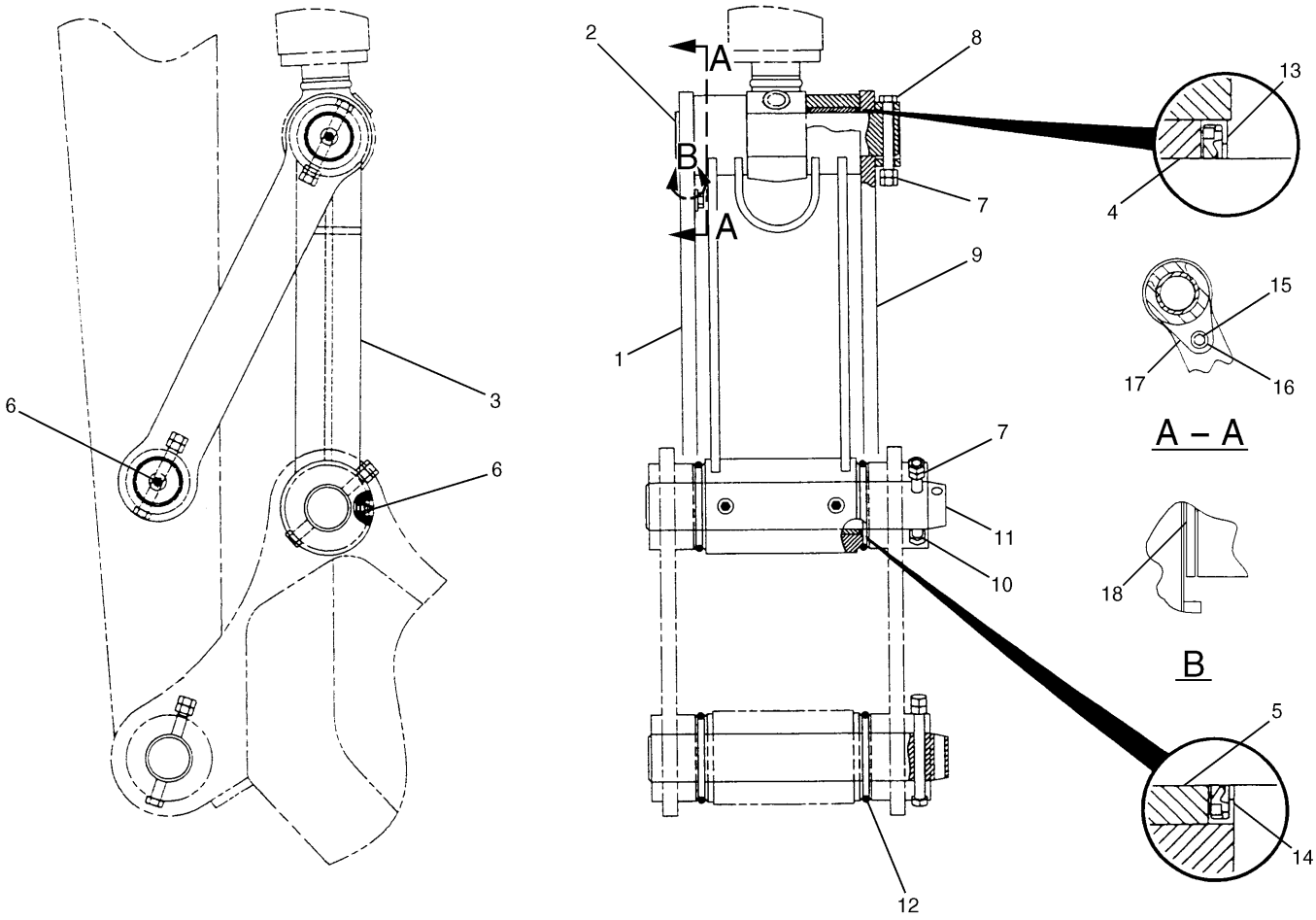

NOTE	No.	PART No.	QTY	PART NAME	NOTE	No.	PART No.	QTY	PART NAME
	1	134-8863	1	LINK	B	17	134-8865	1	SHIM (T=0.50mm)
	2	7I-6843	2	PIN	B		134-8866	2	SHIM (T=1.00mm)
	3	5I-3425	1	LINK AS	B		134-8867	1	SHIM (T=1.50mm)
	4	099-0718	2	BEARING	B		134-8868	1	SHIM (T=2.00mm)
	5	099-0721	2	BEARING		18	093-0097	1	SHIM (T=2.00mm)
	6	3B-8489	4	FITTING					
	7	096-4876	8	NUT					
	8	099-0707	2	BOLT (L=115mm)					
	9	099-0722	1	LINK AS					
		099-0723	1	LINK					
	10	099-0724	2	BOLT (L=145mm)					
	11	086-0523	2	PIN					
	12	093-1342	4	SEAL-O-RING (ID=96.00mm)					
	13	093-1433	4	SEAL					
	14	096-0131	2	SEAL					
	15	8T-4192	1	BOLT (L=25mm)					
	16	5P-1076	1	WASHER					

B—USE AS REQUIRED

H51433E 00

134-8861 LINKAGE GP-BUCKET

Long Reach Front
S/N 4MR (D97.02)-Up
Part of 127-6615-Page383.01
An Attachment

Consists of :

			Page
1	109-7589	BUCKET & ADJUSTER GP	408
1	7Y-0729	SIDECUTTER GP	422
5	9J-3167	TIP GP-LONG	423

H53529E 01

123-5469 BUCKET & ADJUSTER GP

B 1130 X-0.8
An Attachment

Consists of :

			Page
1	113-3015	BUCKET & ADJUSTER GP	409
1	7Y-0729	SIDECUTTER GP	422
6	9J-3167	TIP GP-LONG	423

H54623E 02

123-5470 BUCKET & ADJUSTER GP
An Attachment

Consists of :

			Page
1	113-3023	BUCKET & ADJUSTER GP	409
1	7Y-0729	SIDECUTTER GP	422
6	9J-3167	TIP GP-LONG	423

H53531E 01

123-5471 BUCKET & ADJUSTER GP
B 1370 X-1.0
An Attachment

IMPLEMENTS

Consists of :

			Page
1	6I-5008	BUCKET & ADJUSTER GP	410
1	7Y-0729	SIDECUTTER GP	422
5	8J-4955	TIP GP-LONG	426

H53532E 00

123-5472 BUCKET & ADJUSTER GP

B 1100 EX-0.8
An Attachment

Consists of :

			Page
1	6I-5012	BUCKET & ADJUSTER GP	411
1	7Y-0366	SIDECUTTER GP	422
6	8J-4955	TIP GP-LONG	426

H50434E 00

123-5473 BUCKET & ADJUSTER GP

C 1370 X-1.1
An Attachment

Consists of :

			Page
1	6I-5013	BUCKET & ADJUSTER GP	411
1	7Y-0366	SIDECUTTER GP	422
6	8J-4955	TIP GP-LONG	426

H50435E 00

123-5474 BUCKET & ADJUSTER GP

C 1470 X-1.2
An Attachment

Consists of :

			Page
1	6I-5014	BUCKET & ADJUSTER GP	412
1	7Y-0366	SIDECUTTER GP	422
6	8J-4955	TIP GP-LONG	426

H50438E 00

123-5615 BUCKET & ADJUSTER GP

C 1440 MX-1.3
An Attachment

MEMORANDA

Consists of :

			Page
1	102-8287	BUCKET AS-EXCAVATION	414
1	127-6021	ADJUSTER GP-BUCKET	420

H53536E 01

109-7589 BUCKET & ADJUSTER GP

B 1130 X-0.8
Part of 123-5469-Page402
An Attachment

Consists of :

			Page
1	113-3016	BUCKET AS-EXCAVATION	415
1	7Y-2219	ADJUSTER GP-BUCKET	420.01

H53537E 00

113-3015 BUCKET & ADJUSTER GP

B 1250 X-0.9
Part of 123-5470-Page403
An Attachment

Consists of :

			Page
1	113-3024	BUCKET AS-EXCAVATION	415
1	7Y-2219	ADJUSTER GP-BUCKET	420.01

H53538E 00

113-3023 BUCKET & ADJUSTER GP

B 1360 X-1.0
Part of 123-5471-Page403
An Attachment

Consists of :

			Page
1	7Y-9134	BUCKET AS-EXCAVATION	416
1	7Y-2219	ADJUSTER GP-BUCKET	420.01

H53539E 00

6I-5008 BUCKET & ADJUSTER GP

B 1100 EX-0.8
Part of 123-5472-Page404
An Attachment

Consists of :

			Page
1	5I-3444	BUCKET AS-EXCAVATION	417
1	7Y-3475	ADJUSTER GP-BUCKET	421

H50443E 00

6I-5012 BUCKET & ADJUSTER GP

C 1370 X-1.1
Part of 123-5473-Page405
An Attachment

Consists of :

			Page
1	5I-3335	BUCKET AS-EXCAVATION	418
1	7Y-3475	ADJUSTER GP-BUCKET	421

H50444E 00

6I-5013 BUCKET & ADJUSTER GP

C 1470 X-1.2
Part of 123-5474-Page406
An Attachment

IMPLEMENTS

Consists of :

			Page
1	7Y-7592	BUCKET AS-MASS EXCAVATION	418
1	7Y-3475	ADJUSTER GP-BUCKET	421

H50445E 00

6I-5014 BUCKET & ADJUSTER GP

C 1440 MX-1.3
Part of 123-5615-Page406
An Attachment

IMPLEMENTS

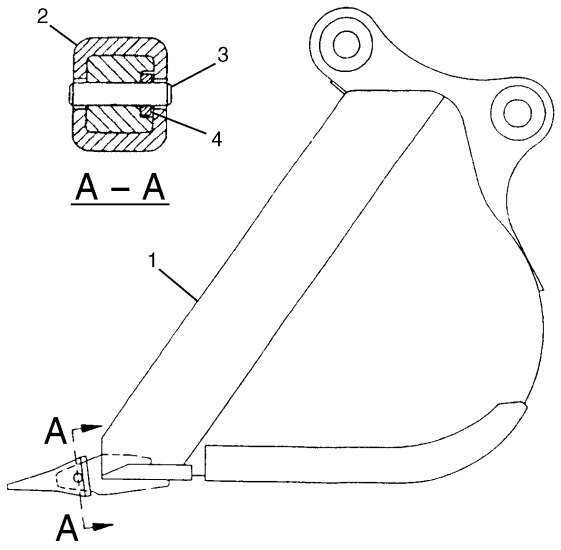

NOTE	No.	PART No.	QTY	PART NAME
Y	1	7Y-6660	1	BUCKET AS
	2	1U-3252	5	TIP
	3	8E-6258	5	PIN
	4	8E-6259	5	RETAINER AS

Y—SEE SEPARATE ILLUSTRATION

H55585E 02

7Y-6402 BUCKET GP

General Purpose (0.45 Long Reach)
S/N 4MR 1-Up
7Y-6660-Page419
An Attachment

IMPLEMENTS

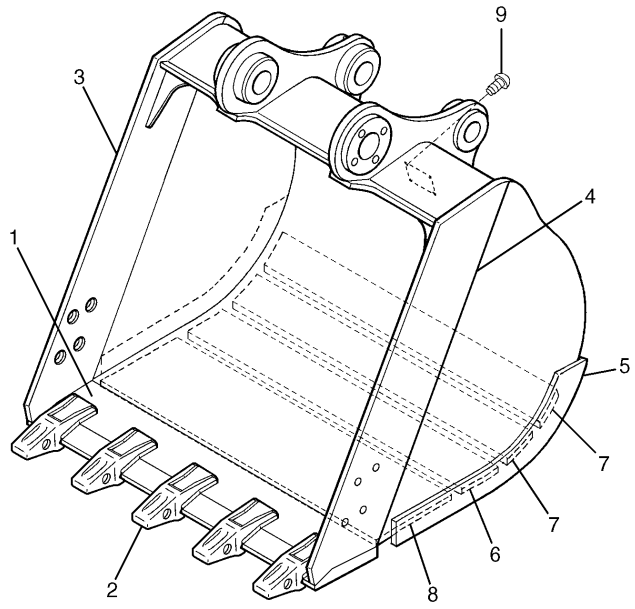

NOTE	No.	PART No.	QTY	PART NAME
	1	1R-8903	1	EDGE
	2	8E-9490	5	ADAPTER
	3	102-8288	1	PLATE
	4	102-8289	1	PLATE
	5	109-7576	2	PLATE
	6	109-7583	1	PLATE
	7	109-7584	2	PLATE
	8	127-6067	1	PLATE
B	9	4B-4158	4	SCREW

B—USE AS REQUIRED

H62415E 09

102-8287 BUCKET AS-EXCAVATION

B Family
1130MM Wide--0.8Cu.M.-Adapter Size J300
Part of 109-7589-Page408
An Attachment

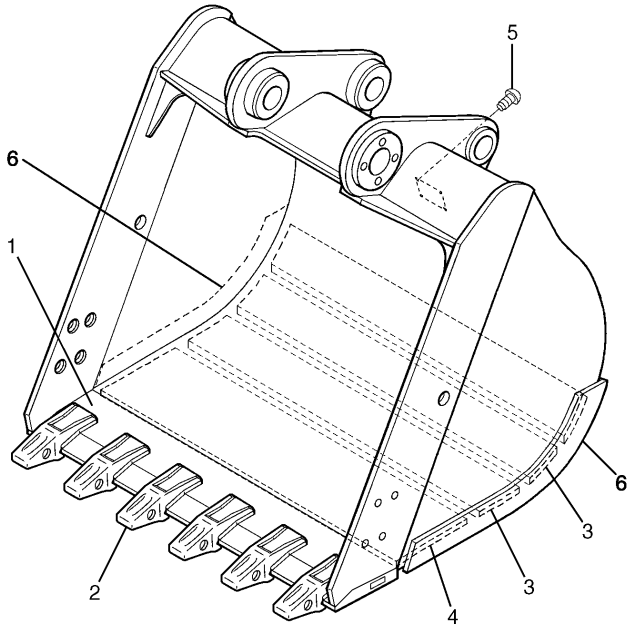

NOTE	No.	PART No.	QTY	PART NAME
	1	165-0830	1	EDGE AS
	2	8E-9490	6	ADAPTER
	3	7I-6697	3	PLATE
	4	127-6068	1	PLATE
B	5	4B-4158	4	SCREW
	6	7I-6705	2	PLATE

B—USE AS REQUIRED

H78104E 09

113-3016 BUCKET AS-EXCAVATION

1260MM Wide--0.9Cu.M.-Adapter Size J300
Part of 113-3015-Page409
An Attachment

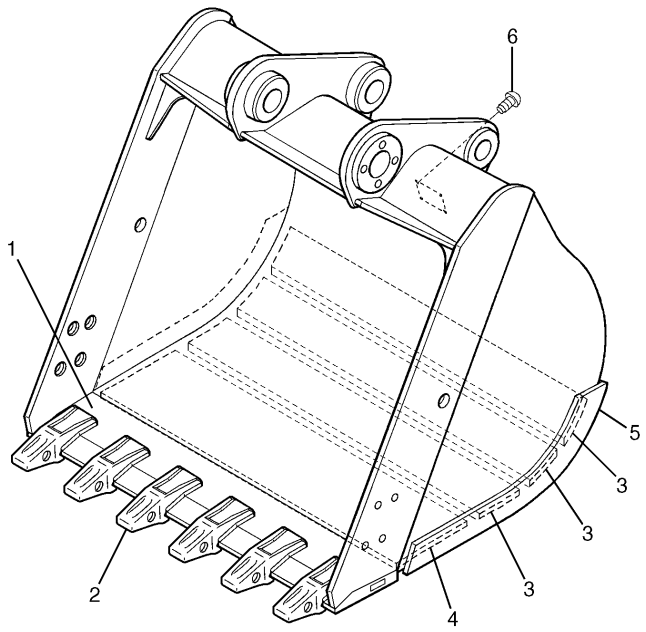

NOTE	No.	PART No.	QTY	PART NAME
	1	165-0832	1	EDGE AS
	2	8E-9490	6	ADAPTER
	3	7I-6709	3	PLATE
	4	127-6069	1	PLATE
	5	7I-6705	2	PLATE
B	6	4B-4158	4	SCREW

B—USE AS REQUIRED

H78105E 09

113-3024 BUCKET AS-EXCAVATION

1370MM Wide--1.0Cu.M.-Adapter Size J300
Part of 113-3023-Page409
An Attachment

IMPLEMENTS

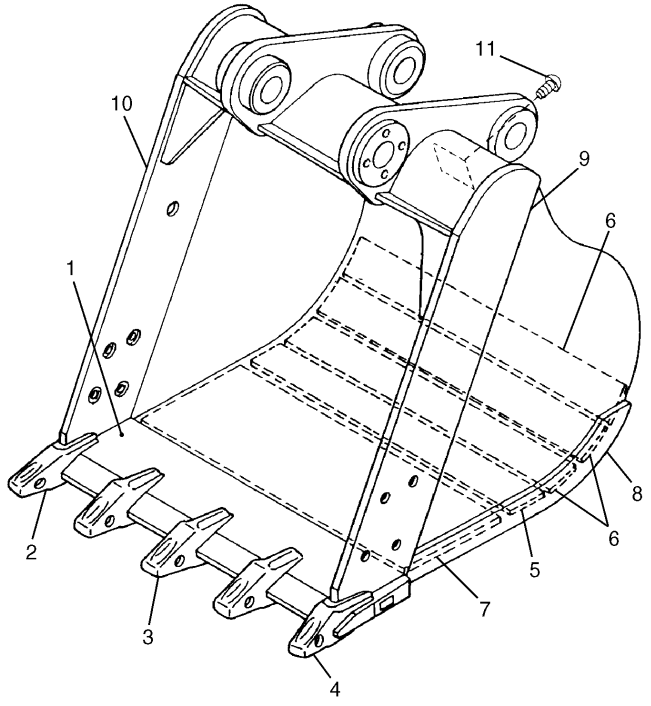

NOTE	No.	PART No.	QTY	PART NAME
	1	6I-5187	1	EDGE AS
	2	6I-6356	1	ADAPTER
	3	6I-6354	3	ADAPTER
	4	6I-6355	1	ADAPTER
	5	4I-7185	1	PLATE
	6	4I-7186	3	PLATE
	7	127-6065	1	PLATE
	8	4I-7181	2	PLATE
	9	6I-5185	1	PLATE
	10	6I-5186	1	PLATE
B	11	4B-4158	4	SCREW

B—USE AS REQUIRED

H62414E 06

7Y-9134 BUCKET AS-EXCAVATION

1100MM Wide--0.8Cu.M.-Adapter Size J350

Part of 6I-5008-Page410

An Attachment

IMPLEMENTS

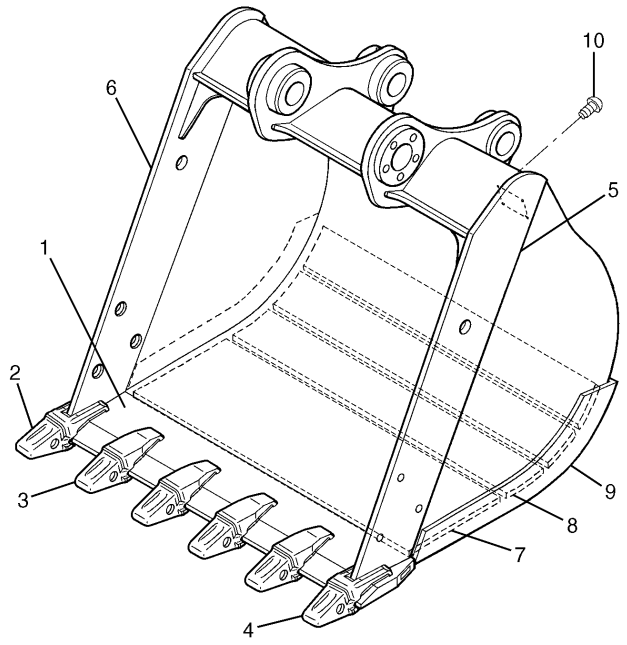

NOTE	No.	PART No.	QTY	PART NAME
	1	6I-5248	1	EDGE AS
	2	6I-6356	1	ADAPTER
	3	6I-6354	4	ADAPTER
	4	6I-6355	1	ADAPTER
	5	6I-5196	1	PLATE
	6	6I-5197	1	PLATE
	7	128-9187	1	PLATE
	8	5I-3452	3	PLATE
	9	5I-3339	2	PLATE
B	10	4B-4158	4	SCREW

B—USE AS REQUIRED

H63483E 08

5I-3444 BUCKET AS-EXCAVATION

C Family
1370MM Wide--1.1Cu.M.-Adapter Size J350
Part of 6I-5012-Page411
An Attachment

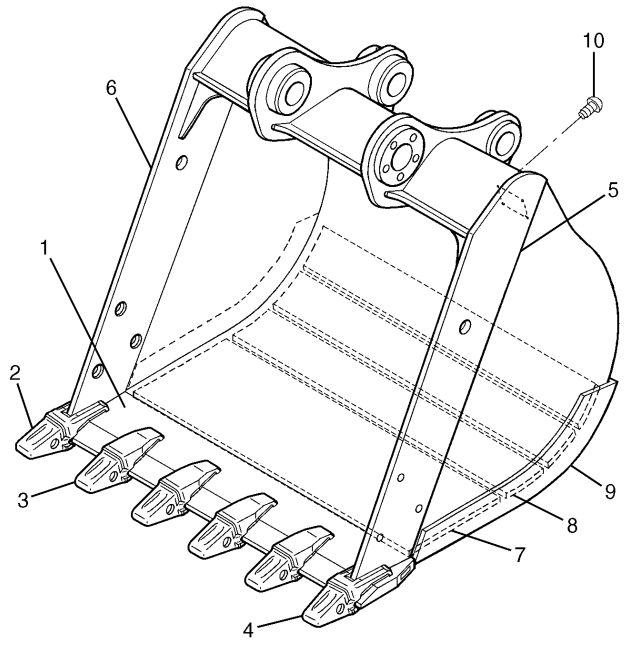

NOTE	No.	PART No.	QTY	PART NAME
	1	6I-5198	1	EDGE AS
	2	6I-6356	1	ADAPTER
	3	6I-6354	4	ADAPTER
	4	6I-6355	1	ADAPTER
	5	6I-5196	1	PLATE
	6	6I-5197	1	PLATE
	7	128-9189	1	PLATE
	8	5I-3353	3	PLATE
	9	5I-3339	2	PLATE
B	10	4B-4158	4	SCREW

B—USE AS REQUIRED

H63484E 08

5I-3335 BUCKET AS-EXCAVATION

C Family
1470MM Wide--1.2Cu.M.-Adapter Size J350
Part of 6I-5013-Page411
An Attachment

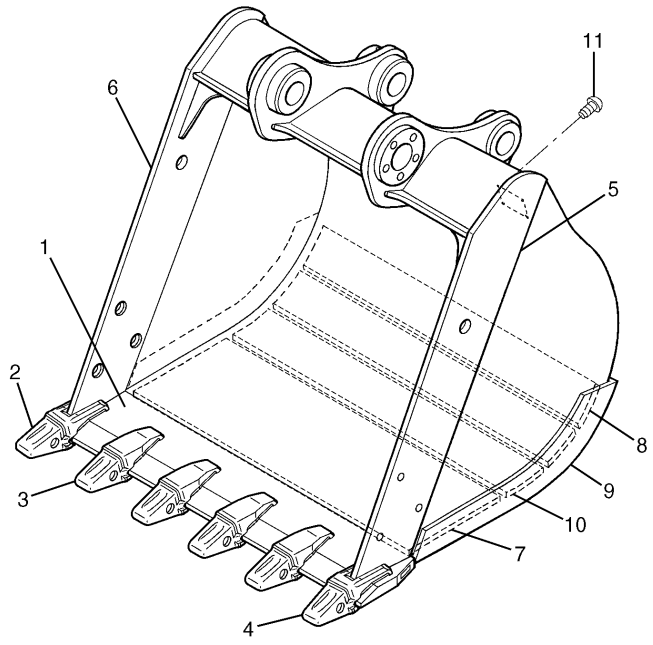

NOTE	No.	PART No.	QTY	PART NAME
	1	6I-5204	1	EDGE AS
	2	6I-6356	1	ADAPTER
	3	6I-6354	4	ADAPTER
	4	6I-6355	1	ADAPTER
	5	6I-5202	1	PLATE
	6	6I-5203	1	PLATE
	7	128-9190	1	PLATE
	8	7Y-7600	2	PLATE
	9	7Y-7410	2	PLATE
	10	7Y-7599	1	PLATE
B	11	4B-4158	4	SCREW

B—USE AS REQUIRED

H63485E 08

7Y-7592 BUCKET AS-MASS EXCAVATION

C Family
1440MM Wide--1.3Cu.M.-Adapter Size J350
Part of 6I-5014-Page412
An Attachment

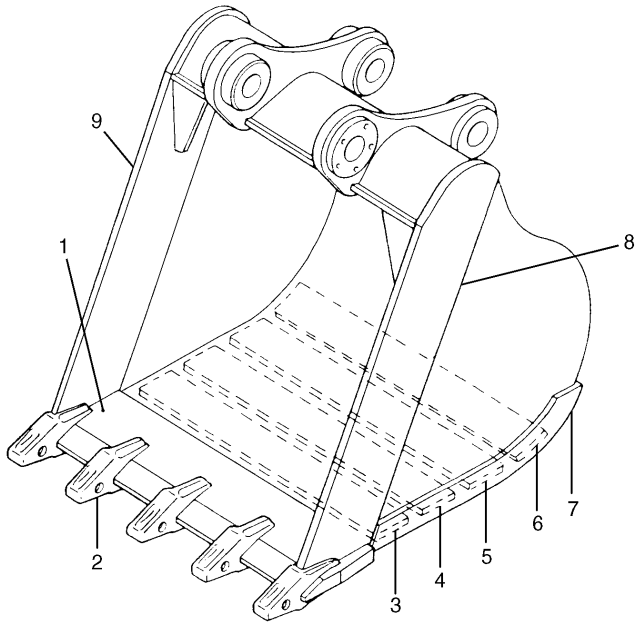

NOTE	No.	PART No.	QTY	PART NAME
	1	7Y-6664	1	EDGE AS
	2	7Y-0254	5	ADAPTER
	3	7Y-6665	1	PLATE
	4	7Y-6666	1	PLATE
	5	7Y-6667	1	PLATE
	6	7Y-6668	1	PLATE
	7	7Y-6673	2	PLATE
	8	7Y-6671	1	PLATE
	9	7Y-6674	1	PLATE

H53295E 01

7Y-6660 BUCKET AS-GENERAL PURPOSE

Long Reach Front
810MM Wide--0.45Cu.M.-Adapter Size J250
S/N 4MR 1-Up
Part of 7Y-6402-Page413
An Attachment

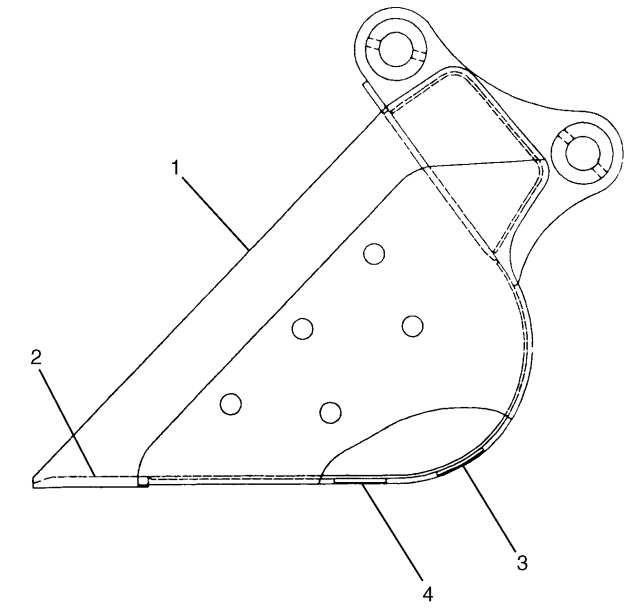

NOTE	No.	PART No.	QTY	PART NAME
	1	121-1809	2	PLATE
	2	7Y-6601	1	EDGE
	3	121-1813	1	PLATE
	4	127-6792	1	PLATE

H53296E 01

121-1807 BUCKET AS-DITCH CLEANING

0.6 Long Reach Front
1140MM Wide--0.6Cu.M.
S/N 4MR 1-Up
An Attachment

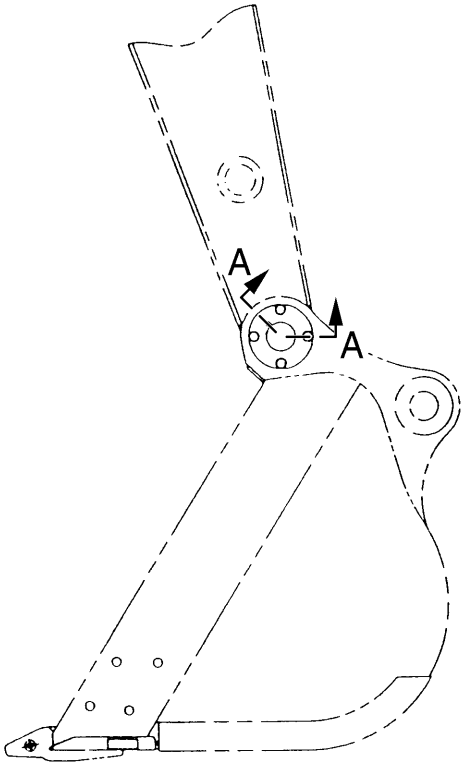

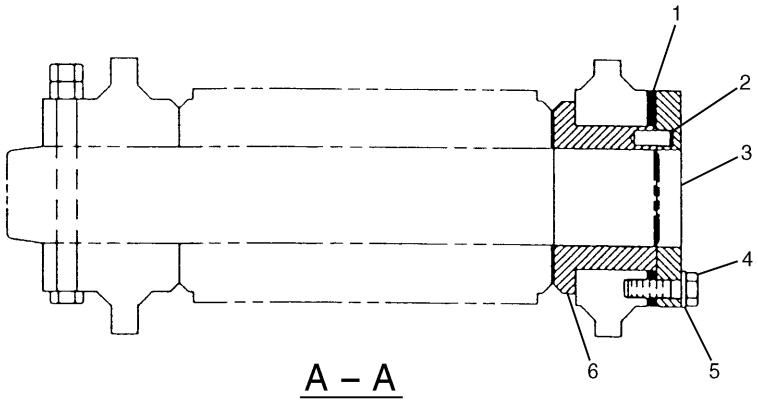

A – A

NOTE	No.	PART No.	QTY	PART NAME	NOTE	No.	PART No.	QTY	PART NAME
B	1	086-0321	6	SHIM (T=0.50mm)					
B		086-0322	6	SHIM (T=1.00mm)					
	2	086-0127	1	DOWEL					
	3	085-8832	1	PLATE					
	4	8T-4193	4	BOLT (L=50mm)					
	5	9X-8257	4	WASHER					
	6	086-0320	1	FLANGE					

B—USE AS REQUIRED

H53546E 00

127-6021 ADJUSTER GP-BUCKET

B Family

Part of 109-7589-Page408

An Attachment

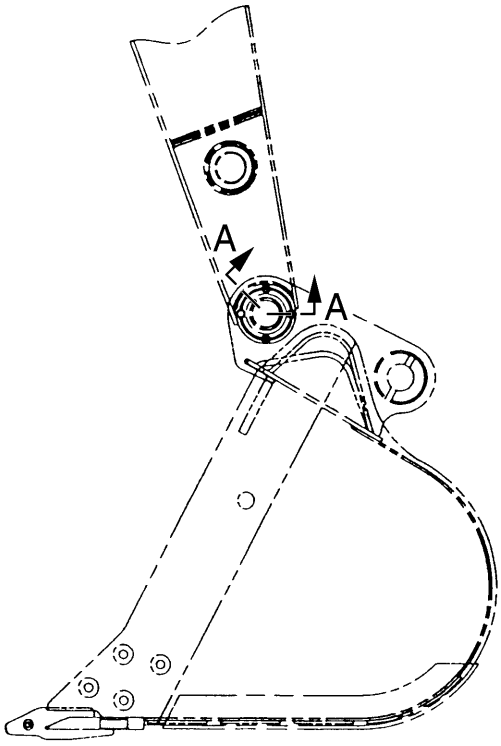

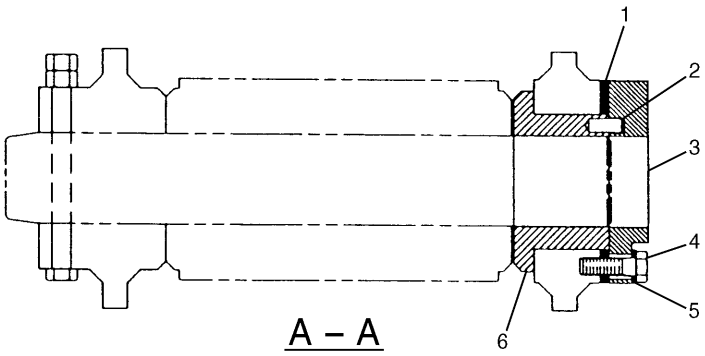

A – A

NOTE	No.	PART No.	QTY	PART NAME	NOTE	No.	PART No.	QTY	PART NAME
B	1	086-0322	6	SHIM (T=1.00mm)					
B		086-0321	4	SHIM (T=0.50mm)					
	2	7Y-7685	1	PIN					
	3	134-8948	1	PLATE					
	4	8T-4193	4	BOLT (L=50mm)					
	5	9X-8257	4	WASHER					
	6	4I-5216	1	FLANGE					

B—USE AS REQUIRED

H53297E 03

7Y-2219 ADJUSTER GP-BUCKET

B Family

Part of 113-3015,113-3023-Page409,6I-5008-Page410

An Attachment

MEMORANDA

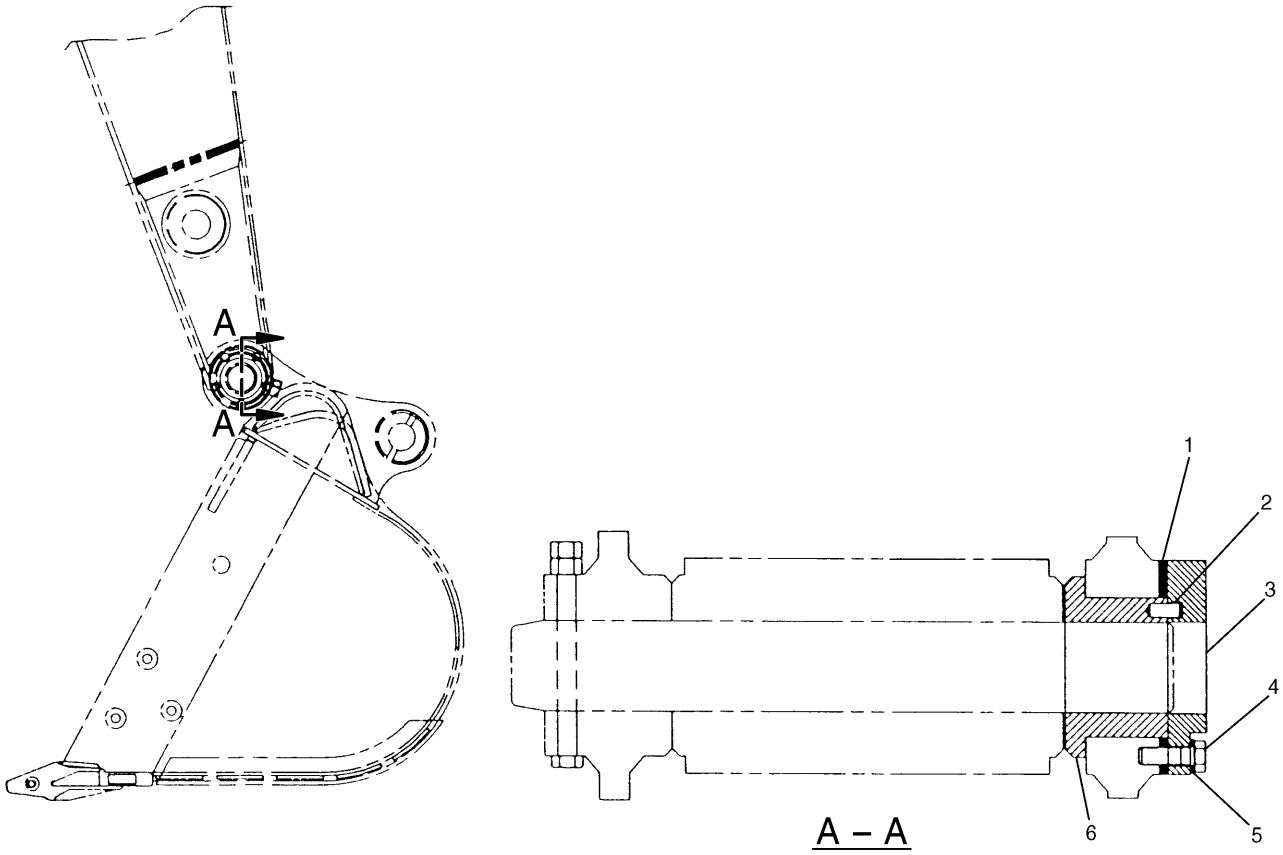

NOTE	No.	PART No.	QTY	PART NAME	NOTE	No.	PART No.	QTY	PART NAME
B	1	7Y-7687	6	SHIM (T=1.00mm)					
B		7Y-7686	4	SHIM (T=0.50mm)					
	2	7Y-7685	1	PIN					
	3	134-8949	1	PLATE					
	4	8T-4193	5	BOLT (L=50mm)					
	5	9X-8257	5	WASHER					
	6	7Y-7688	1	FLANGE					

B—USE AS REQUIRED

H53298E 03

7Y-3475 ADJUSTER GP-BUCKET

C Family

Part of 6I-5012,6I-5013-Page411,6I-5014-Page412

An Attachment

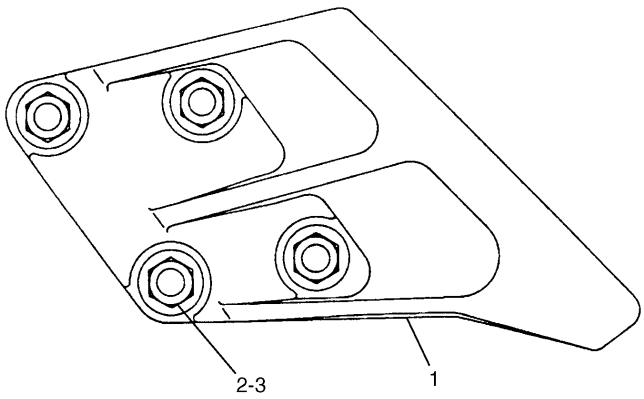

NOTE	No.	PART No.	QTY	PART NAME
	1	096-4747	1	SIDECUTTER (LH)
		096-4748	1	SIDECUTTER (RH)
	2	8T-0380	8	BOLT (L=60mm)
	3	7X-0851	8	NUT

H53299E 04

7Y-0729 SIDECUTTER GP

B Family

Part of 123-5469-Page402,123-5470,123-5471-Page403,123-5472-Page404

An Attachment

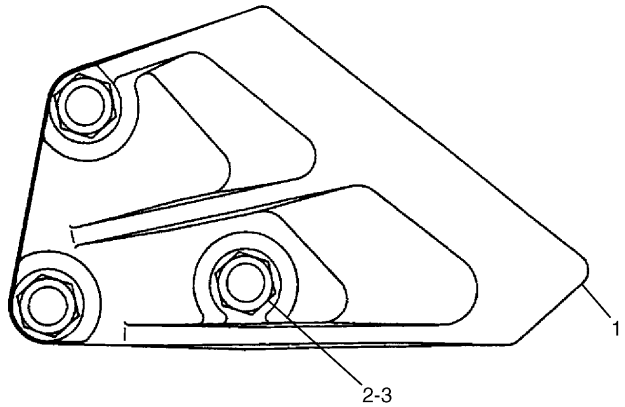

NOTE	No.	PART No.	QTY	PART NAME
	1	7Y-0358	1	SIDECUTTER (LH)
		7Y-0357	1	SIDECUTTER (RH)
	2	6I-6371	6	BOLT (L=64mm)
	3	2J-3507	6	NUT

H50450E 04

7Y-0366 SIDECUTTER GP

C Family

Part of 123-5473-Page405,123-5474,123-5615-Page406

An Attachment

IMPLEMENTS

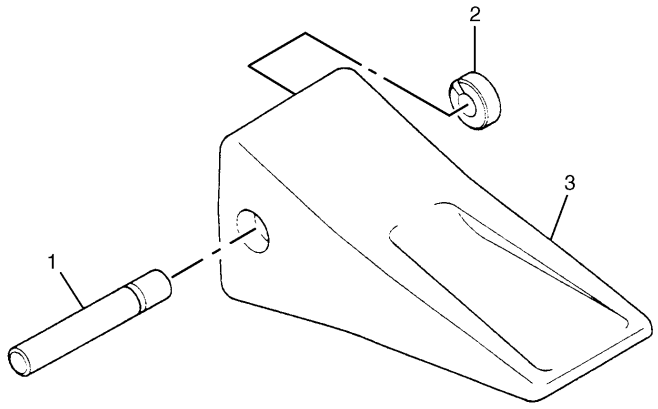

NOTE	No.	PART No.	QTY	PART NAME
	1	107-3308	1	PIN
	2	8E-6259	1	RETAINER AS
	3	1U-3302	1	TIP

H50455E 07

9J-3167 TIP GP-LONG

Adapter Size J300
Part of 123-5469-Page402,123-5470,123-5471-Page403
An Attachment

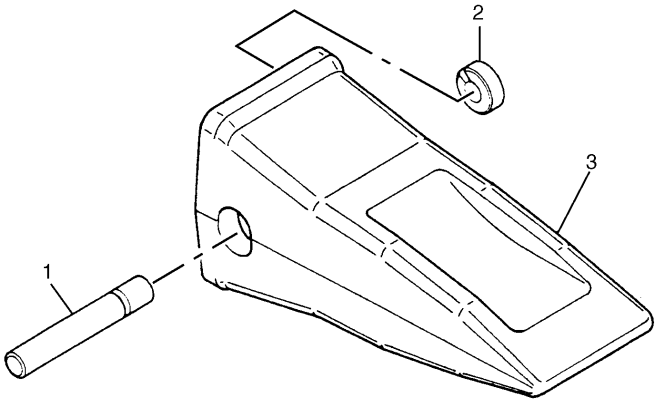

NOTE	No.	PART No.	QTY	PART NAME
	1	107-3308	1	PIN
	2	8E-6259	1	RETAINER AS
	3	9N-4302	1	TIP

H53300E 02

8E-3751 TIP GP-LONG

Heavy Duty
Adapter Size J300
An Attachment

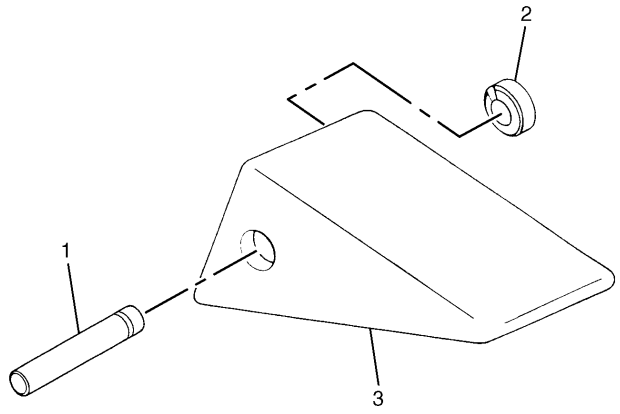

NOTE	No.	PART No.	QTY	PART NAME
	1	107-3308	1	PIN
	2	8E-6259	1	RETAINER AS
	3	1U-3301	1	TIP

H53301E 08

9J-3175 TIP GP-SHORT
Adapter Size J300
An Attachment

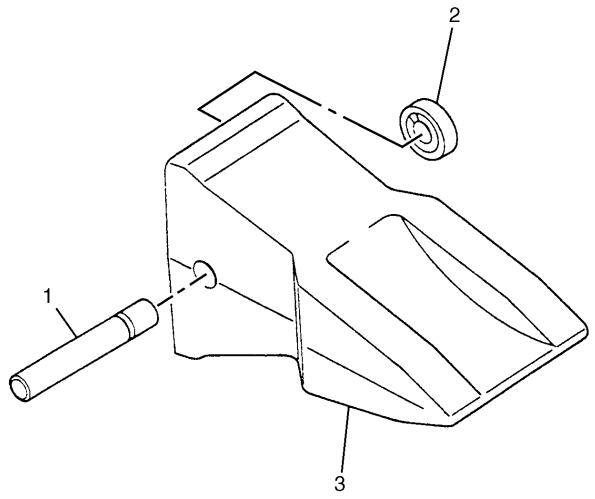

NOTE	No.	PART No.	QTY	PART NAME
	1	107-3308	1	PIN
	2	8E-6259	1	RETAINER AS
	3	9N-4303	1	TIP

H53302E 02

8E-3756 TIP GP-ABRASION
Heavy Duty
Adapter Size J300
An Attachment

IMPLEMENTS

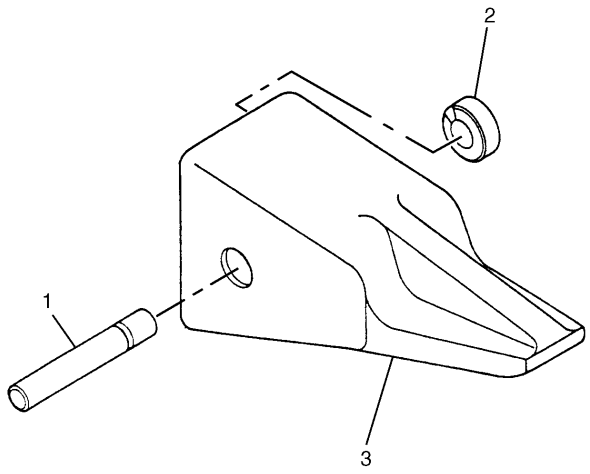

NOTE	No.	PART No.	QTY	PART NAME
	1	107-3308	1	PIN
	2	8E-6259	1	RETAINER AS
	3	9J-4309	1	TIP

H53303E 03

3G-3237 TIP GP-PENETRATION

Adapter Size J300
An Attachment

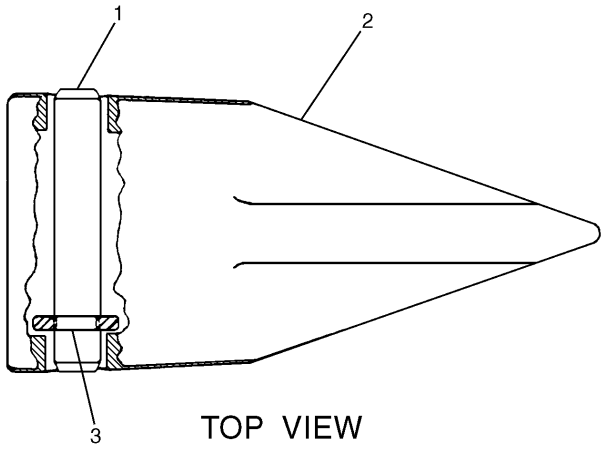

NOTE	No.	PART No.	QTY	PART NAME
	1	107-3308	1	PIN
	2	9W-8309	1	TIP
	3	8E-6259	1	RETAINER AS

H53304E 02

9W-9188 TIP GP

Sharp Center
Adapter Size J300
An Attachment

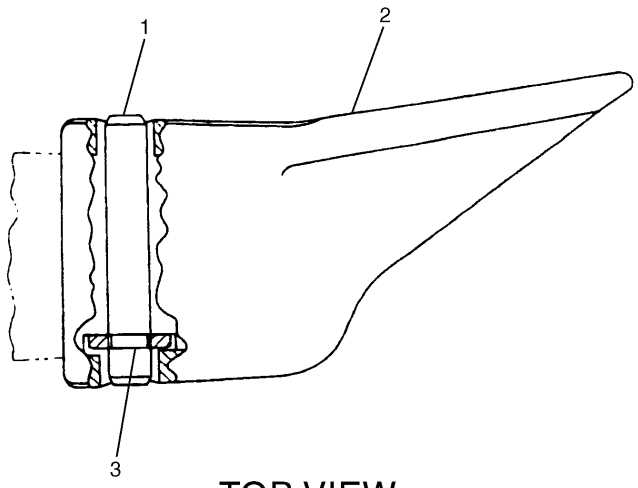

TOP VIEW

NOTE	No.	PART No.	QTY	PART NAME
	1	107-3308	1	PIN
	2	9W-8308	1	TIP
	3	8E-6259	1	RETAINER AS

H53305E 02

9W-9189 TIP GP

Sharp Corner
Adapter Size J300
An Attachment

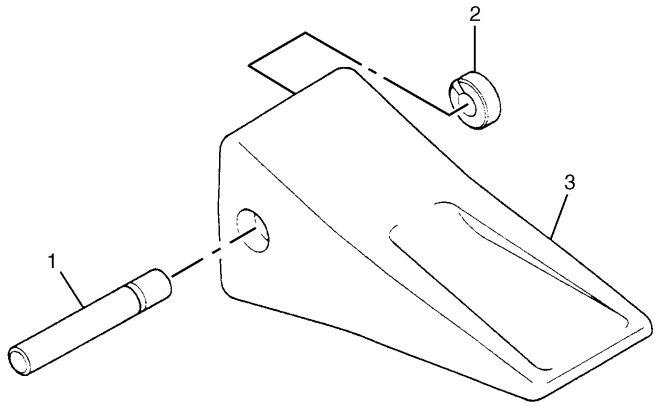

NOTE	No.	PART No.	QTY	PART NAME
	1	114-0358	1	PIN
	2	114-0359	1	RETAINER AS
	3	1U-3352	1	TIP

H53784E 06

8J-4955 TIP GP-LONG

Adapter Size J350
Part of 123-5472-Page404,123-5473-Page405,123-5474,123-5615-Page406
An Attachment

IMPLEMENTS

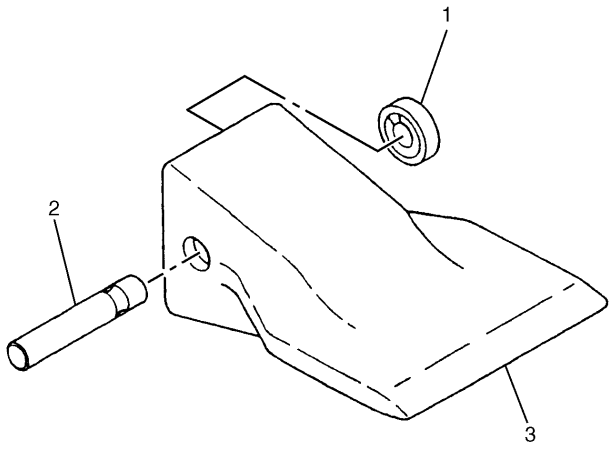

NOTE	No.	PART No.	QTY	PART NAME
	1	8E-6259	1	RETAINER AS
	2	107-3308	1	PIN
	3	107-3300	1	TIP

H57165E 03

4T-2215 TIP GP-WIDE
Adapter Size J300
An Attachment

MEMORANDA

IMPLEMENTS

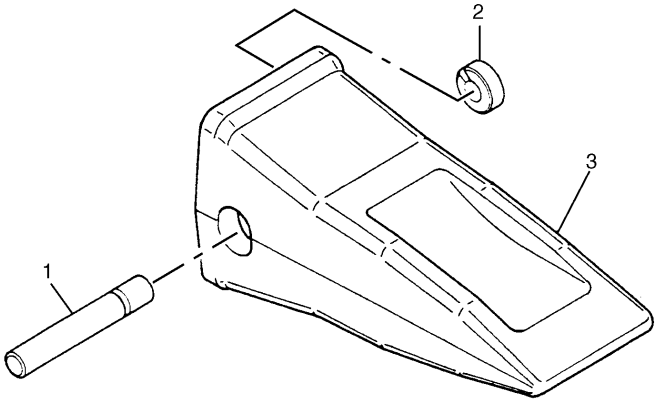

NOTE	No.	PART No.	QTY	PART NAME
	1	8E-6358	1	PIN
	2	8E-6359	1	RETAINER AS
	3	9N-4352	1	TIP

H50702E 01

8E-3752 TIP GP-LONG

Heavy Duty
Adapter Size J350
An Attachment

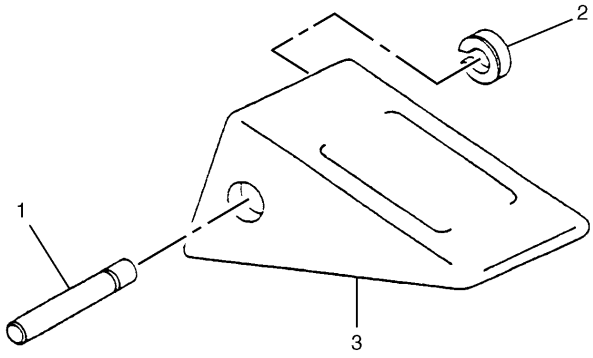

NOTE	No.	PART No.	QTY	PART NAME
	1	8E-6358	1	PIN
	2	8E-6359	1	RETAINER AS
	3	1U-3351	1	TIP

H50703E 05

8J-4954 TIP GP-SHORT

Adapter Size J350
An Attachment

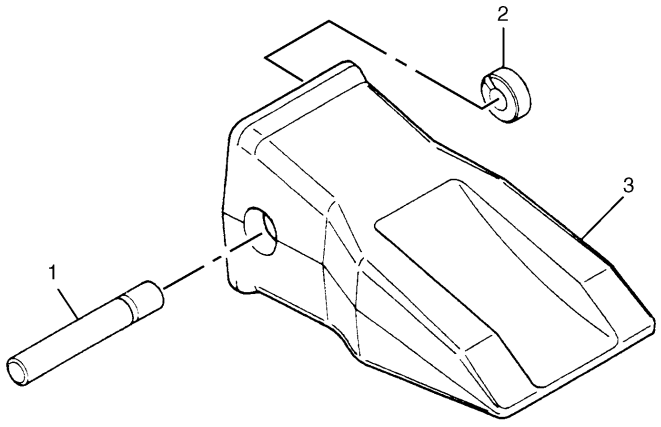

NOTE	No.	PART No.	QTY	PART NAME
	1	8E-6358	1	PIN
	2	8E-6359	1	RETAINER AS
	3	9N-4353	1	TIP

H50704E 02

8E-3757 TIP GP-ABRASION

Heavy Duty
Adapter Size J350
An Attachment

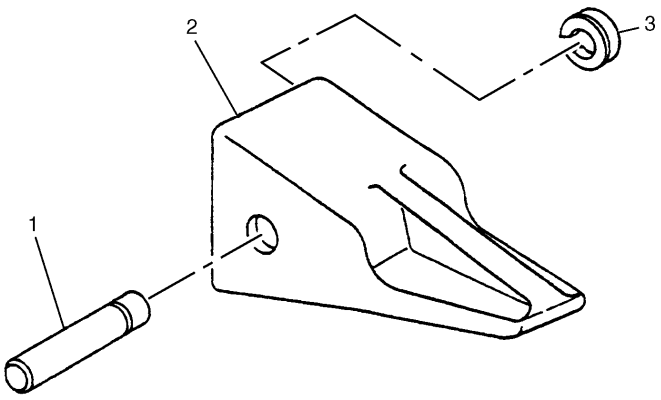

NOTE	No.	PART No.	QTY	PART NAME
	1	8E-6358	1	PIN
	2	9J-4359	1	TIP
	3	8E-6359	1	RETAINER AS

H50705E 04

3G-3236 TIP GP-PENETRATION

Adapter Size J350
An Attachment

IMPLEMENTS

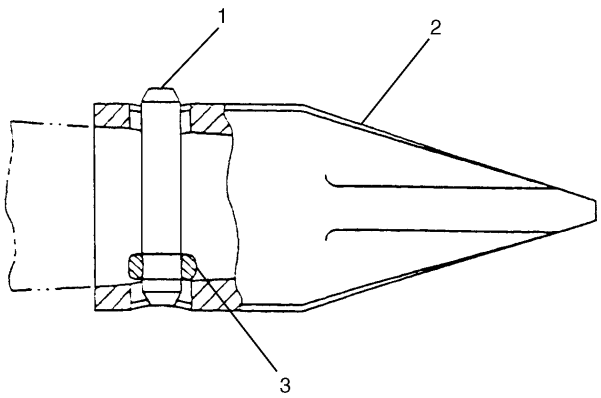

TOP VIEW

NOTE	No.	PART No.	QTY	PART NAME
	1	8E-6358	1	PIN
	2	9W-2359	1	TIP
	3	8E-6359	1	RETAINER AS

H50706E 02

9W-6472 TIP GP
Sharp Center
Adapter Size J350
An Attachment

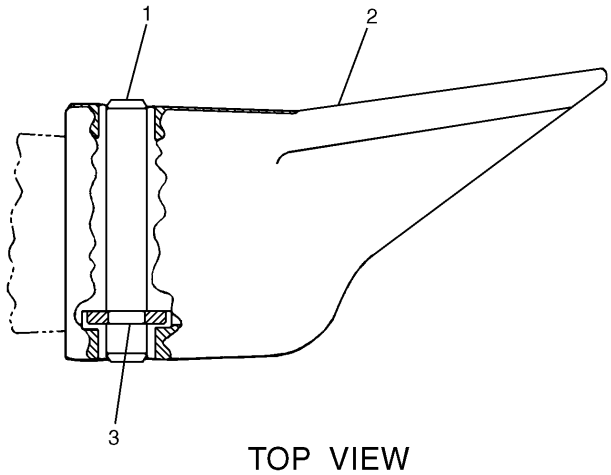

TOP VIEW

NOTE	No.	PART No.	QTY	PART NAME
	1	8E-6358	1	PIN
	2	9W-2358	1	TIP
	3	8E-6359	1	RETAINER AS

H50707E 02

9W-6473 TIP GP
Sharp Corner
Adapter Size J350
An Attachment

IMPLEMENTS

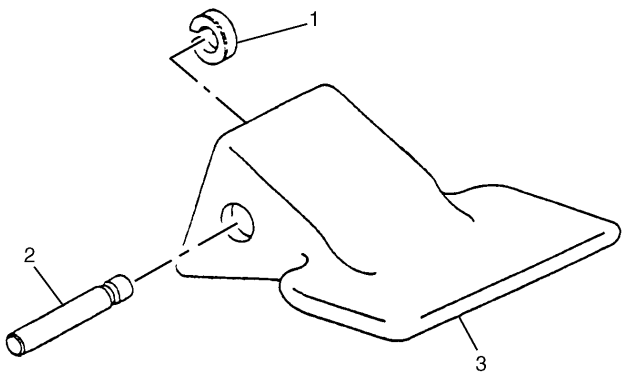

NOTE	No.	PART No.	QTY	PART NAME
	1	114-0359	1	RETAINER AS
	2	114-0358	1	PIN
	3	107-3350	1	TIP

H57350E 08

8J-4953 TIP GP-WIDE
Adapter Size J350
An Attachment

MEMORANDA

SERVICE EQUIPMENT AND SUPPLIES

Consists of :

			Page
1	7Y-0060	TOOL GP	431
1	7I-0800	MOUNTING GP-GREASE GUN	126.01

H52845E 00

7I-0776 TOOL AR
An Attachment

SERVICE EQUIPMENT AND SUPPLIES

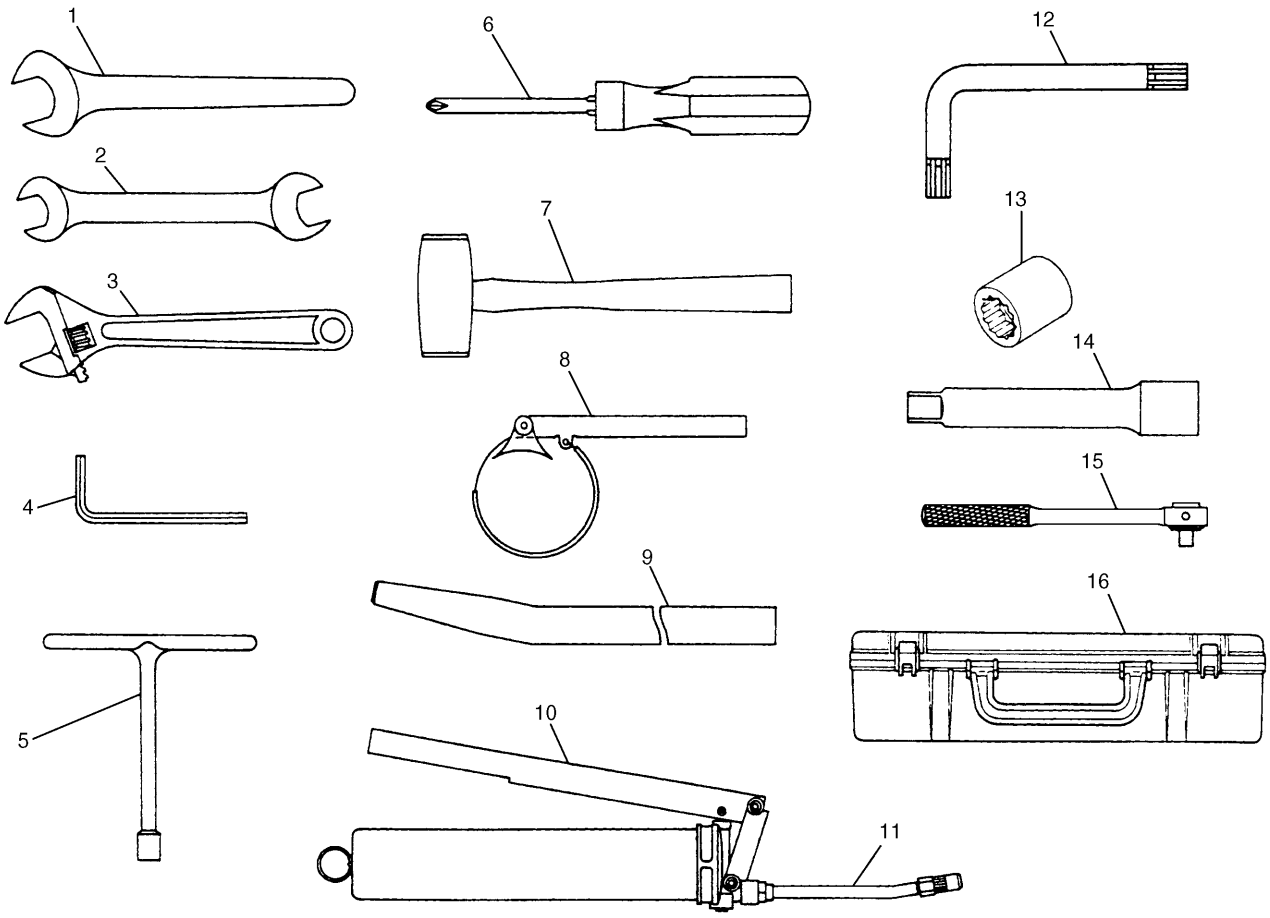

NOTE	No.	PART No.	QTY	PART NAME	NOTE	No.	PART No.	QTY	PART NAME
	1	095-1056	1	WRENCH (36MM)		9	093-7638	1	BAR
		095-1057	1	WRENCH (41MM)		10	099-7464	1	GREASE GUN
	2	099-3245	1	WRENCH (16MM × 18MM)		11	199-7371	1	TUBE AS
		095-1833	1	WRENCH (19MM × 22MM)	A		4Y-0426	1	GREASE (BELLOWS)
		099-3246	1	WRENCH (21MM × 24MM)	A		3Y-7597	1	GREASE (FOR WINTER TIME)
		095-1836	1	WRENCH (27MM × 30MM)	A		1P-0808	1	GREASE (PAPER TUBE)
	3	7I-6395	1	WRENCH (200MM)		12	4I-2604	1	WRENCH (6MM)
	4	1U-7563	1	WRENCH (4MM)			4I-2605	1	WRENCH (10MM)
		1U-7564	1	WRENCH (5MM)		13	095-1064	1	SOCKET (10MM)
		095-1080	1	WRENCH (6MM)			095-1066	1	SOCKET (13MM)
		095-1081	1	WRENCH (8MM)			099-3248	1	SOCKET (16MM)
		095-1082	1	WRENCH (10MM)			099-3249	1	SOCKET (18MM)
		095-1084	1	WRENCH (14MM)			095-1070	1	SOCKET (22MM)
	5	7Y-6108	1	WRENCH (11MM)			095-1071	1	SOCKET (24MM)
	6	095-1855	1	SCREWDRIVER			096-8251	1	SOCKET (30MM)
	7	095-1857	1	HAMMER		14	099-3250	1	EXTENSION
	8	2P-8250	1	WRENCH AS		15	095-1852	1	RATCHET
		1P-0551	1	PIN		16	7Y-0070	1	TOOLBOX
		2P-8253	1	STRAP					
		6H-7378	1	RING					

A—NOT PART OF THIS GROUP

H52847E 05

7Y-0060 TOOL GP

Part of 7I-0776-Page430
An Attachment

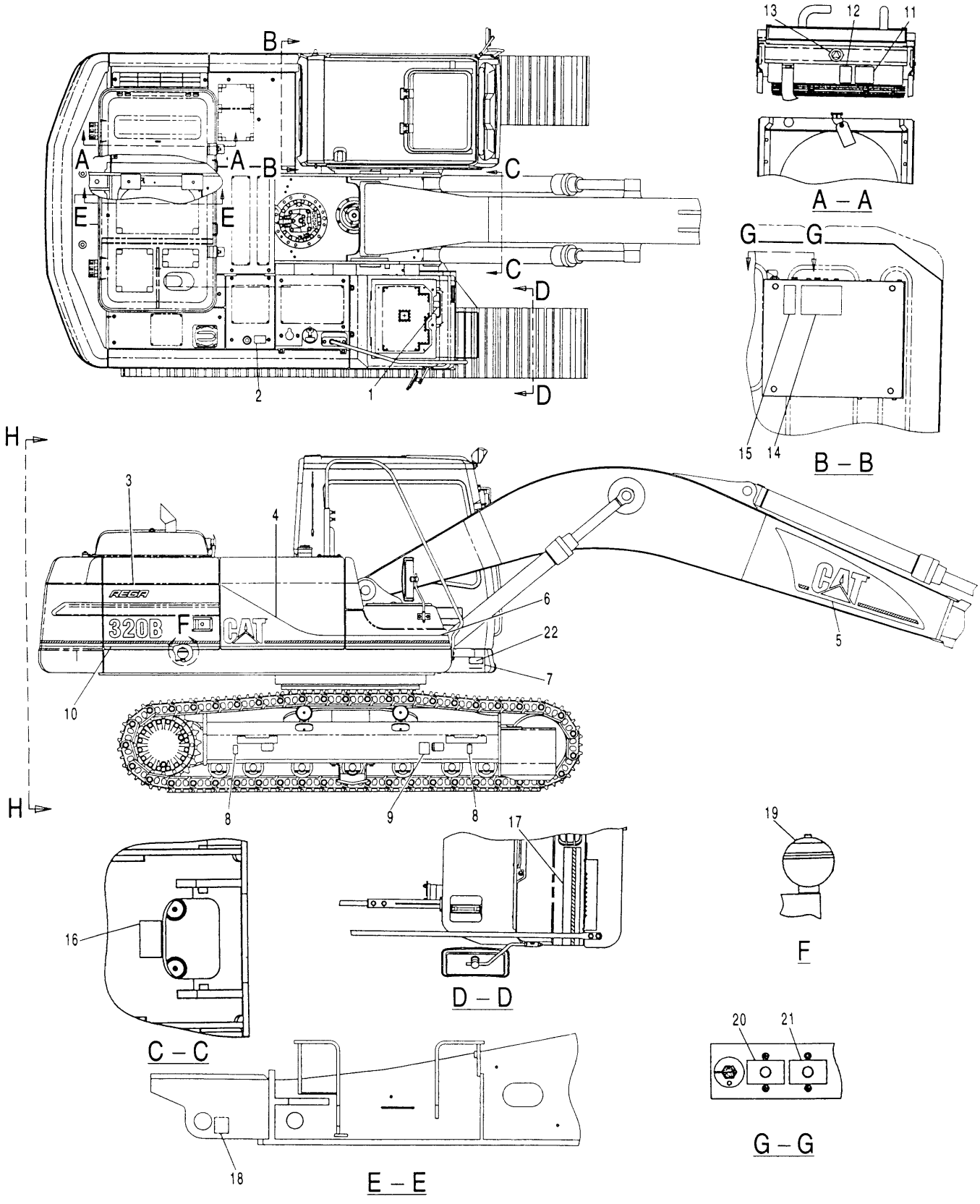

H57664E 01

116-1599 PLATE & FILM GP (1/3)
S/N 3MR 1-00236

SERVICE EQUIPMENT AND SUPPLIES

NOTE	No.	PART No.	QTY	PART NAME	NOTE	No.	PART No.	QTY	PART NAME
	1	127-5286	1	FILM (INSTRUCTION)					
	2	120-5055	1	FILM (WARNING)					
	3	127-5298	1	FILM (REGA)					
	4	116-1550	1	FILM (CAT)					
	5	127-5282	1	FILM (CAT)					
	6	116-1551	1	FILM (STRIPE)					
	7	4B-4158	4	SCREW					
	8	1P-2807	2	FILM (LIFT)					
	9	120-5079	1	FILM (WARNING)					
	10	116-1548	1	FILM (320B)					
	11	120-5059	1	FILM (WARNING)					
	12	120-5058	1	FILM (WARNING)					
	13	120-5107	1	FILM (INSTRUCTION)					
	14	3Y-8905	1	FILM (WARNING)					
	15	7I-6508	1	FILM (NOTICE)					
	16	116-1528	1	FILM (NOTICE)					
	17	116-1552	1	FILM (STRIPE)					
	18	7X-7644	2	FILM (TIE DOWN)					
	19	120-5063	1	FILM (WARNING)					
	20	4I-2927	1	FILM (CIRCUIT BREAKER)					
	21	127-5281	1	FILM (CIRCUIT BREAKER)					
Z	22		1	PLATE (PIN)					

Z—NOT SERVICED

H57664E 01

116-1599 PLATE & FILM GP (1/3)

S/N 3MR 1-00236

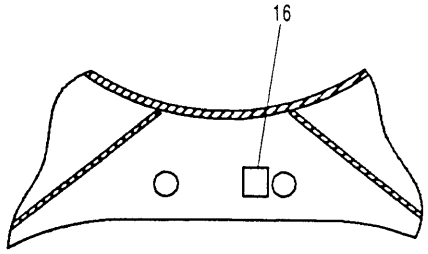

K – K

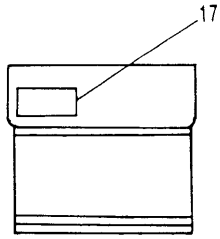

L – L

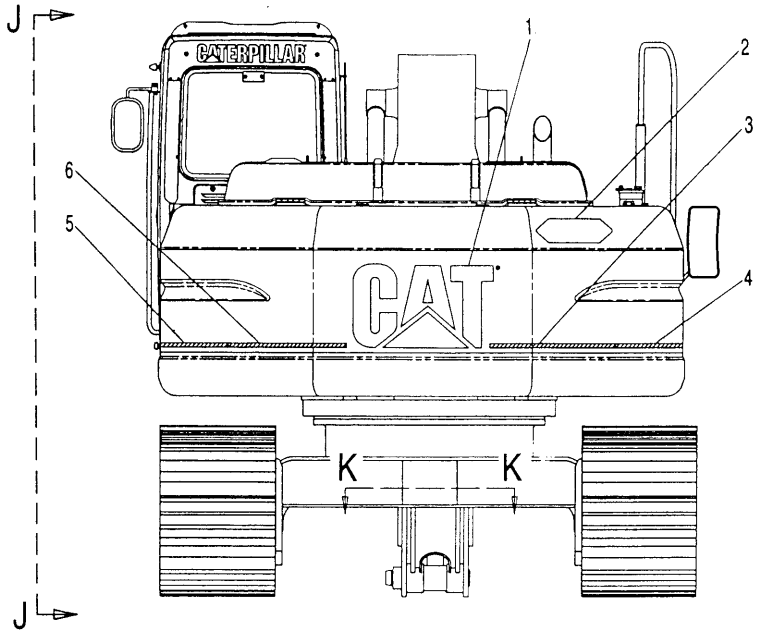

H – H

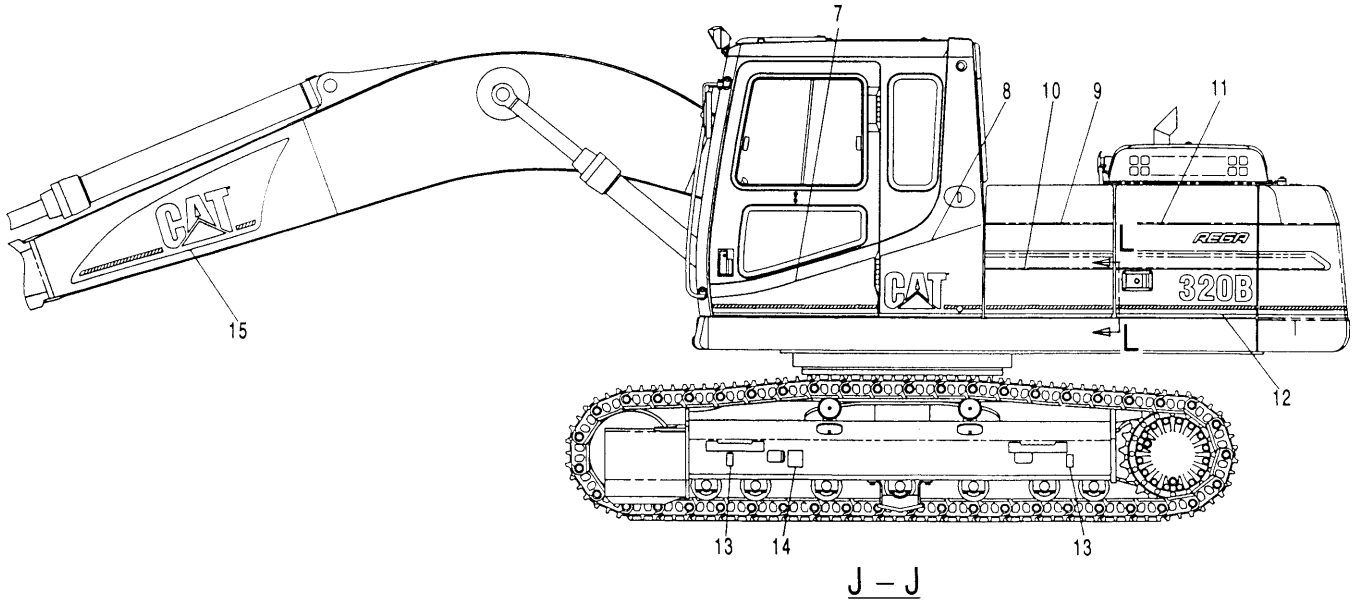

J – J

H57666E 01

116-1599 PLATE & FILM GP (2/3)
S/N 3MR 1-00236

SERVICE EQUIPMENT AND SUPPLIES

NOTE	No.	PART No.	QTY	PART NAME	NOTE	No.	PART No.	QTY	PART NAME
	1	116-1545	1	FILM (CAT)					
	2	116-1529	1	FILM (DANGER)					
	3	120-5082	1	FILM (STRIPE)					
	4	117-8450	1	FILM (STRIPE)					
	5	116-1546	1	FILM (STRIPE)					
	6	116-1569	1	FILM (STRIPE)					
	7	127-5284	1	FILM (STRIPE)					
	8	127-5285	1	FILM (CAT)					
	9	116-1540	1	FILM (STRIPE)					
	10	116-1541	1	FILM (STRIPE)					
	11	127-5297	1	FILM (REGA)					
	12	116-1543	1	FILM (320B)					
	13	1P-2807	2	FILM (LIFT)					
	14	120-5079	1	FILM (WARNING)					
	15	127-5283	1	FILM (CAT)					
	16	7X-7644	2	FILM (TIE DOWN)					
	17	4P-6422	1	FILM (WARNING)					

H57666E 01

116-1599 PLATE & FILM GP (2/3)
S/N 3MR 1-00236

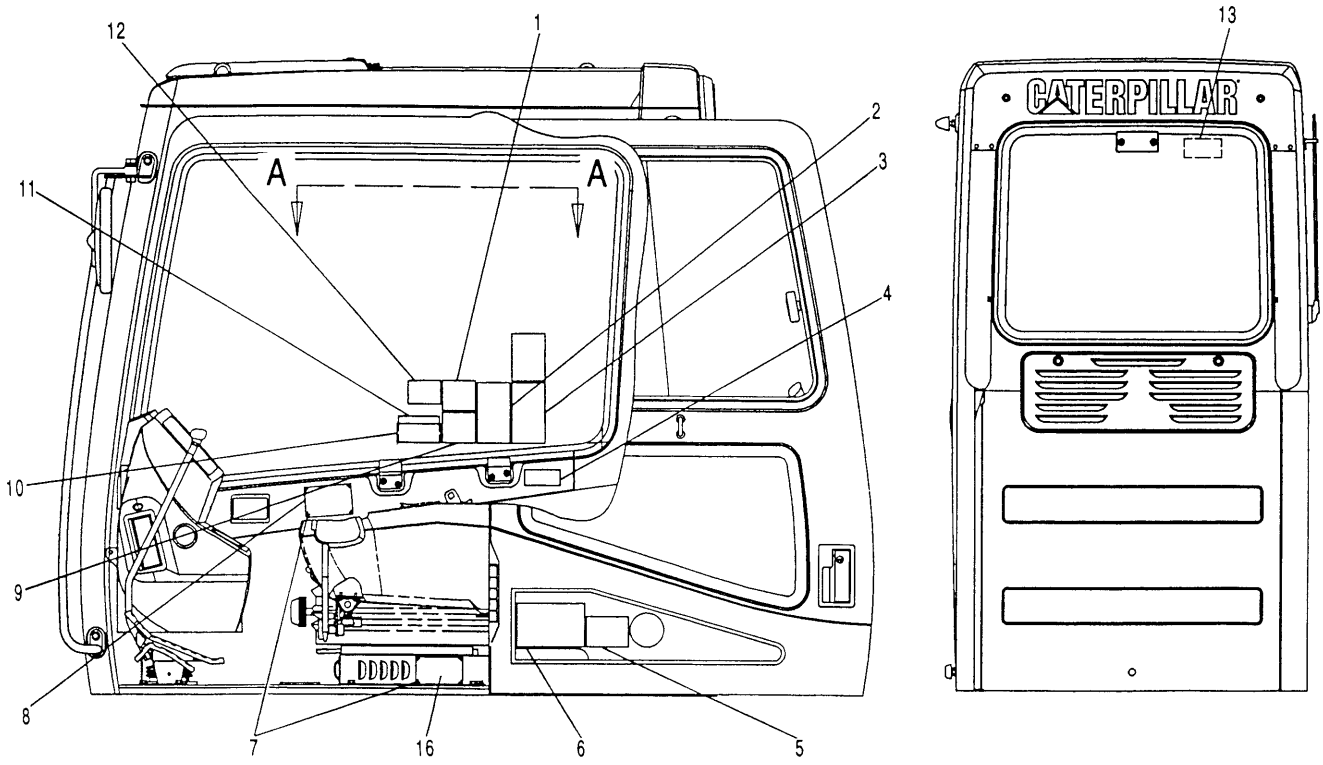

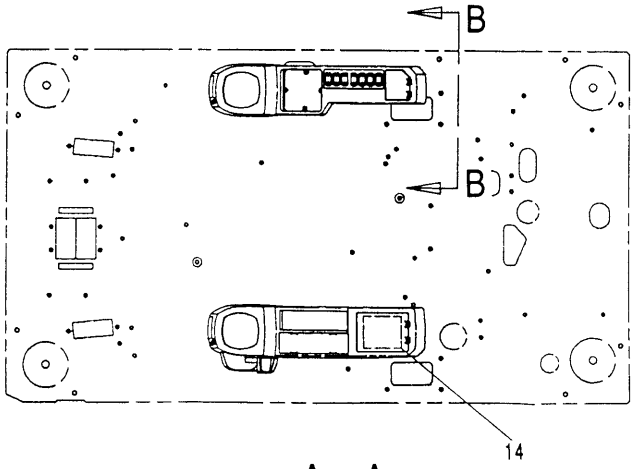

A – A

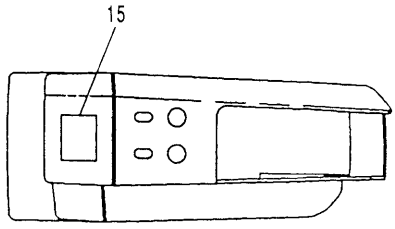

B – B

H57668E 01

116-1599 PLATE & FILM GP (3/3)
S/N 3MR 1-00236

SERVICE EQUIPMENT AND SUPPLIES

NOTE	No.	PART No.	QTY	PART NAME	NOTE	No.	PART No.	QTY	PART NAME
	1	120-5060	1	FILM (WARNING)					
	2	120-5061	1	FILM (WARNING)					
	3	120-5057	1	FILM (WARNING)					
	4	71-1908	1	FILM (NOTICE)					
	5	116-1526	1	FILM					
	6	41-1987	1	FILM (LUBRICANT CHART)					
	7	4B-4158	8	SCREW					
	8	120-5052	1	PLATE (WARNING)					
	9	127-5295	1	FILM (WARNING)					
	10	41-2885	1	CASE					
	11	71-1533	1	PLATE (INSTRUCTION)					
	12	127-5272	1	FILM (WARNING)					
	13	101-2842	1	FILM (EMERGENCY EXIT)					
	14	127-5296	1	FILM (INSTRUCTION)					
	15	116-1523	1	FILM (INSTRUCTION)					
Z	16		1	PLATE (SIN)					

Z—NOT SERVICED

H57668E 01

116-1599 PLATE & FILM GP (3/3)

S/N 3MR 1-00236

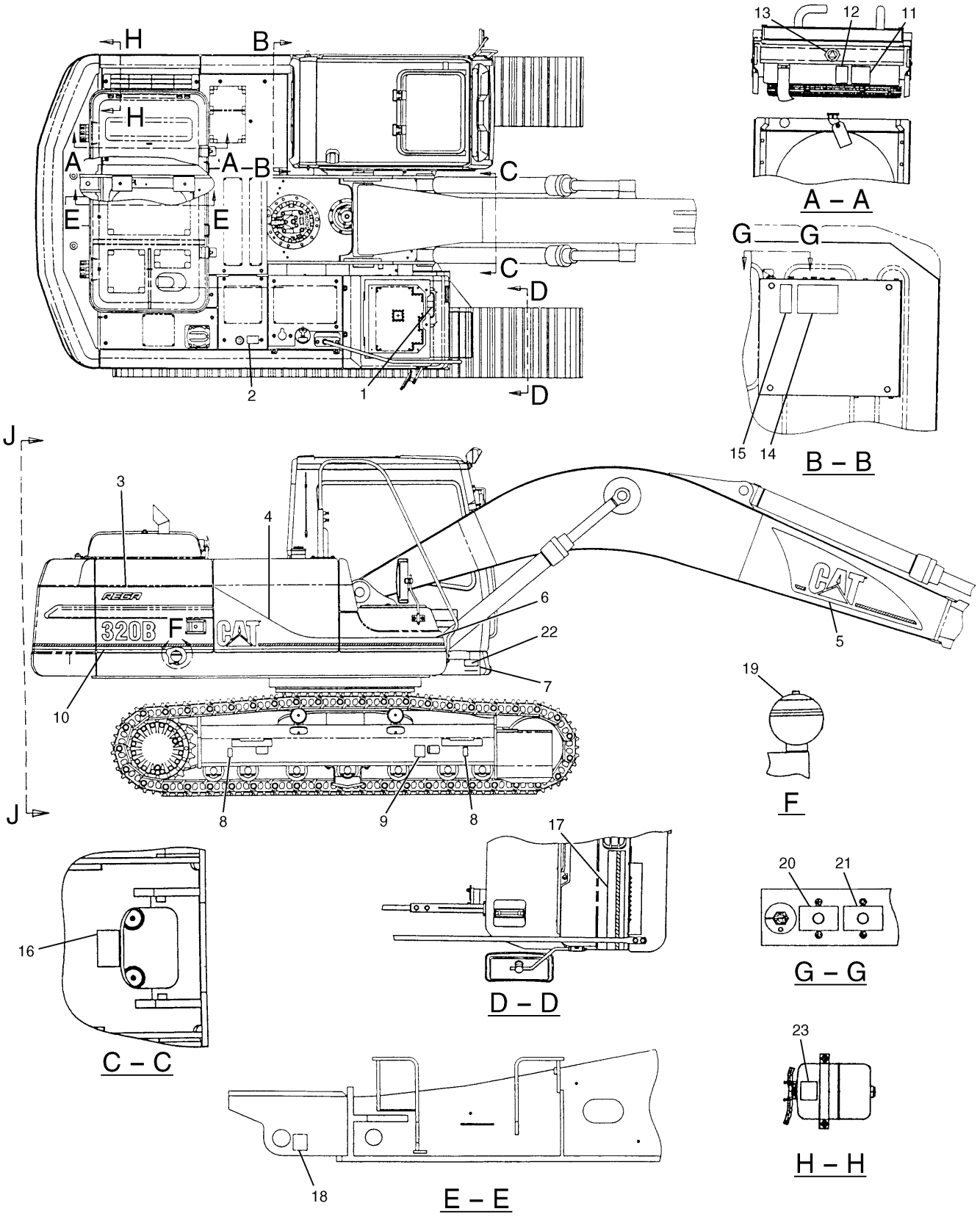

H65324E 07

116-1599 PLATE & FILM GP (1/3)
S/N 3MR 00237-04978

SERVICE EQUIPMENT AND SUPPLIES

NOTE	No.	PART No.	QTY	PART NAME	NOTE	No.	PART No.	QTY	PART NAME
	1	127-5286	1	FILM (INSTRUCTION)					
	2	120-5055	1	FILM (WARNING)					
	3	127-5298	1	FILM (REGA)					
	4	116-1550	1	FILM (CAT)					
	5	127-5282	1	FILM (CAT)					
	6	116-1551	1	FILM (STRIPE)					
	7	4B-4158	4	SCREW					
	8	1P-2807	2	FILM (LIFT)					
	9	120-5079	1	FILM (WARNING)					
	10	116-1548	1	FILM (320B)					
	11	120-5059	1	FILM (WARNING)					
	12	120-5058	1	FILM (WARNING)					
	13	120-5107	1	FILM (INSTRUCTION)					
	14	3Y-8905	1	FILM (WARNING)					
	15	7I-6508	1	FILM (NOTICE)					
	16	116-1528	1	FILM (NOTICE)					
	17	116-1552	1	FILM (STRIPE)					
	18	7X-7644	2	FILM (TIE DOWN)					
	19	120-5063	1	FILM (WARNING)					
	20	4I-2927	1	FILM (CIRCUIT BREAKER)					
	21	127-5281	1	FILM (CIRCUIT BREAKER)					
Z	22		1	PLATE (PIN)					
	23	134-7258	1	FILM (ELC)					

Z—NOT SERVICED

H65324E 07

116-1599 PLATE & FILM GP (1/3)

S/N 3MR 00237-04978

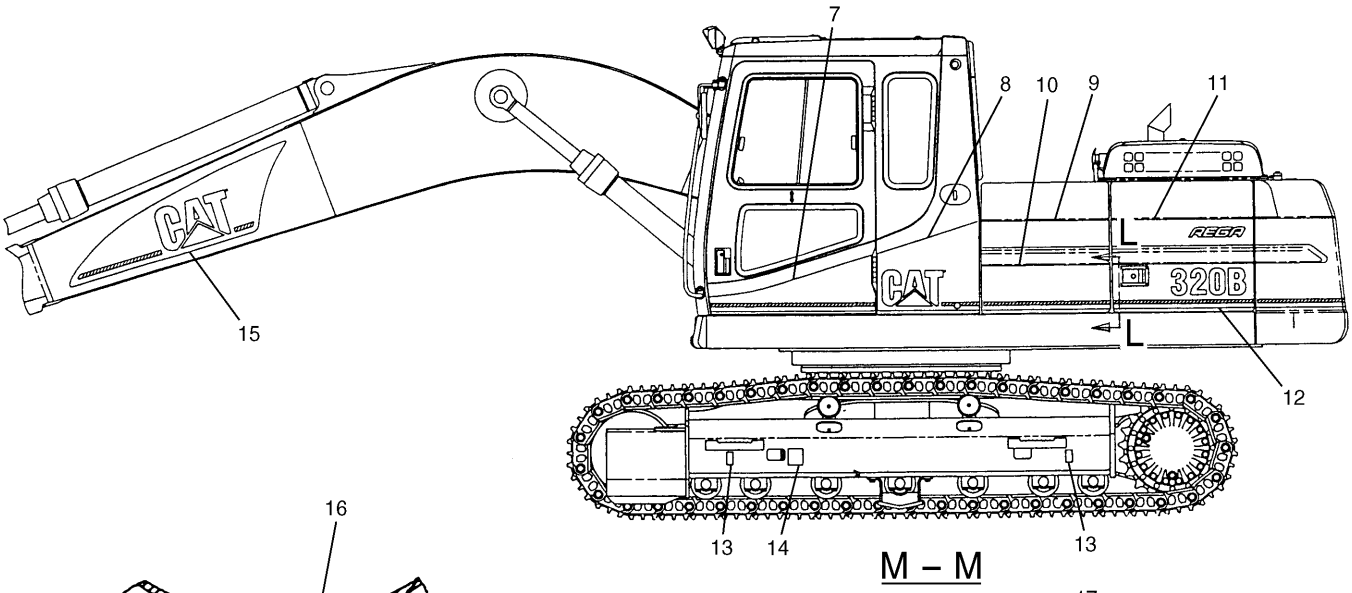

M – M

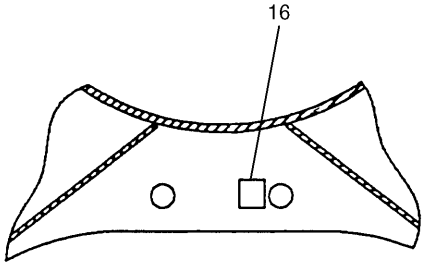

K – K

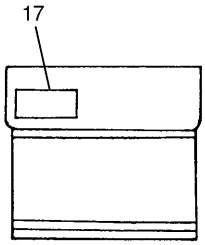

L – L

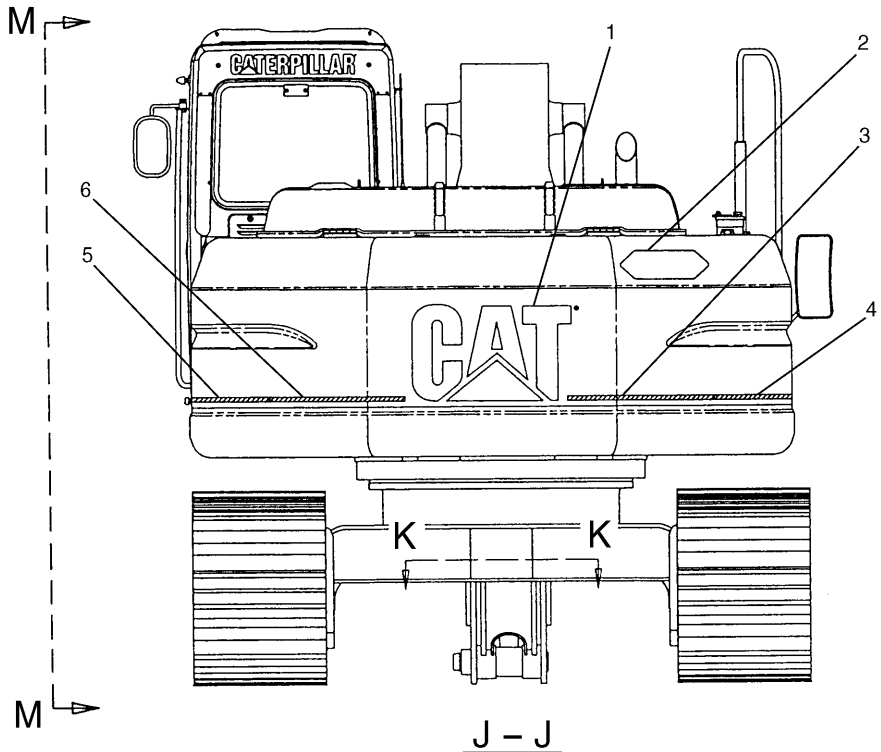

J – J

H65326E 07

116-1599 PLATE & FILM GP (2/3)
S/N 3MR 00237-04978

SERVICE EQUIPMENT AND SUPPLIES

NOTE	No.	PART No.	QTY	PART NAME	NOTE	No.	PART No.	QTY	PART NAME
	1	116-1545	1	FILM (CAT)					
	2	116-1529	1	FILM (DANGER)					
	3	120-5082	1	FILM (STRIPE)					
	4	117-8450	1	FILM (STRIPE)					
	5	116-1546	1	FILM (STRIPE)					
	6	116-1569	1	FILM (STRIPE)					
	7	127-5284	1	FILM (STRIPE)					
	8	127-5285	1	FILM (CAT)					
	9	116-1540	1	FILM (STRIPE)					
	10	116-1541	1	FILM (STRIPE)					
	11	127-5297	1	FILM (REGA)					
	12	116-1543	1	FILM (320B)					
	13	1P-2807	2	FILM (LIFT)					
	14	120-5079	1	FILM (WARNING)					
	15	127-5283	1	FILM (CAT)					
	16	7X-7644	2	FILM (TIE DOWN)					
	17	4P-6422	1	FILM (WARNING)					

H65326E 07

116-1599 PLATE & FILM GP (2/3)

S/N 3MR 00237-04978

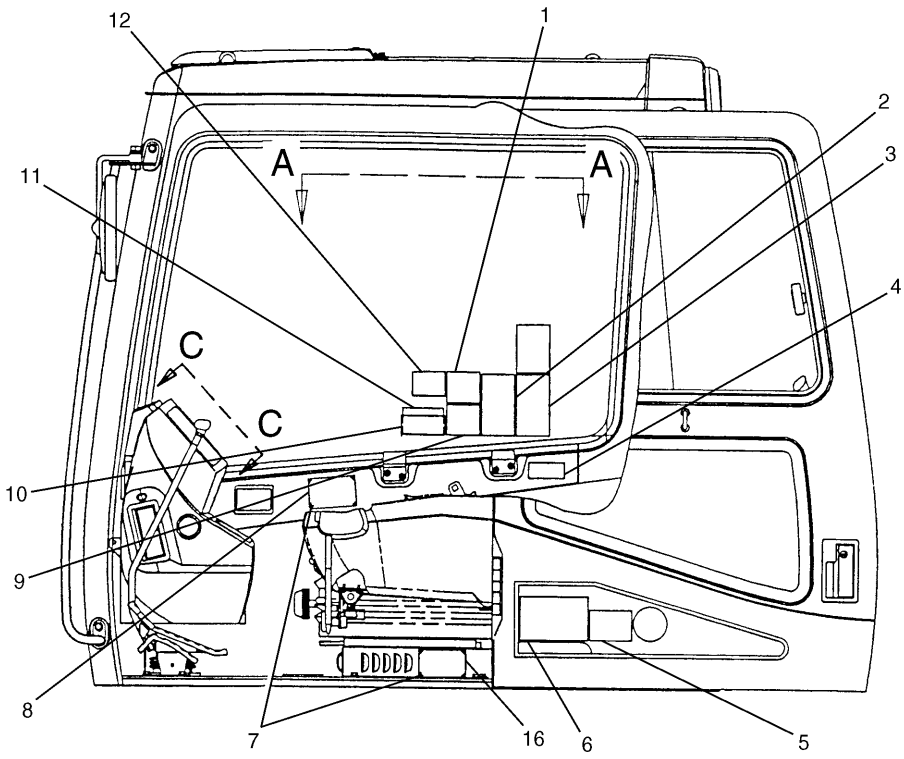

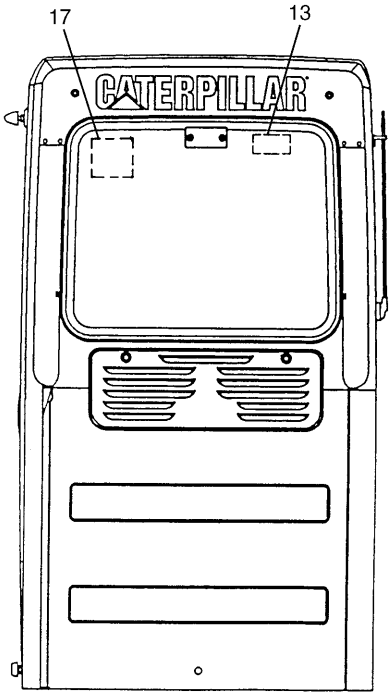

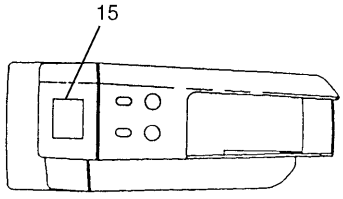

B – B

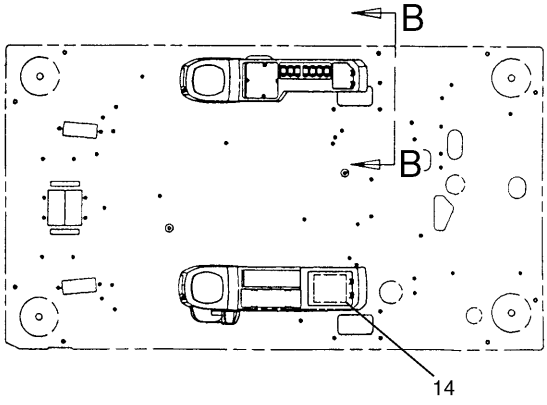

A – A

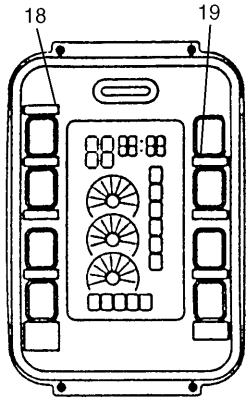

C – C

H65328E 07

116-1599 PLATE & FILM GP (3/3)
S/N 3MR 00237-04978

SERVICE EQUIPMENT AND SUPPLIES

NOTE	No.	PART No.	QTY	PART NAME	NOTE	No.	PART No.	QTY	PART NAME
	1	120-5060	1	FILM (WARNING)					
	2	120-5061	1	FILM (WARNING)					
	3	120-5057	1	FILM (WARNING)					
	4	71-1908	1	FILM (NOTICE)					
	5	137-0987	1	FILM					
	6	41-1987	1	FILM (LUBRICANT CHART)					
	7	4B-4158	8	SCREW					
	8	120-5052	1	PLATE (WARNING)					
	9	127-5295	1	FILM (WARNING)					
	10	41-2885	1	CASE					
	11	71-1533	1	PLATE (INSTRUCTION)					
	12	127-5272	1	FILM (WARNING)					
	13	101-2842	1	FILM (EMERGENCY EXIT)					
	14	134-6118	1	FILM (INSTRUCTION)					
	15	116-1523	1	FILM (INSTRUCTION)					
Z	16		1	PLATE (SIN)					
	17	134-6143	1	FILM (WARNING)					
	18	127-5304	1	FILM (INSTRUCTION)					
	19	127-5305	1	FILM (INSTRUCTION)					

Z—NOT SERVICED

H65328E 07

116-1599 PLATE & FILM GP (3/3)

S/N 3MR 00237-04978

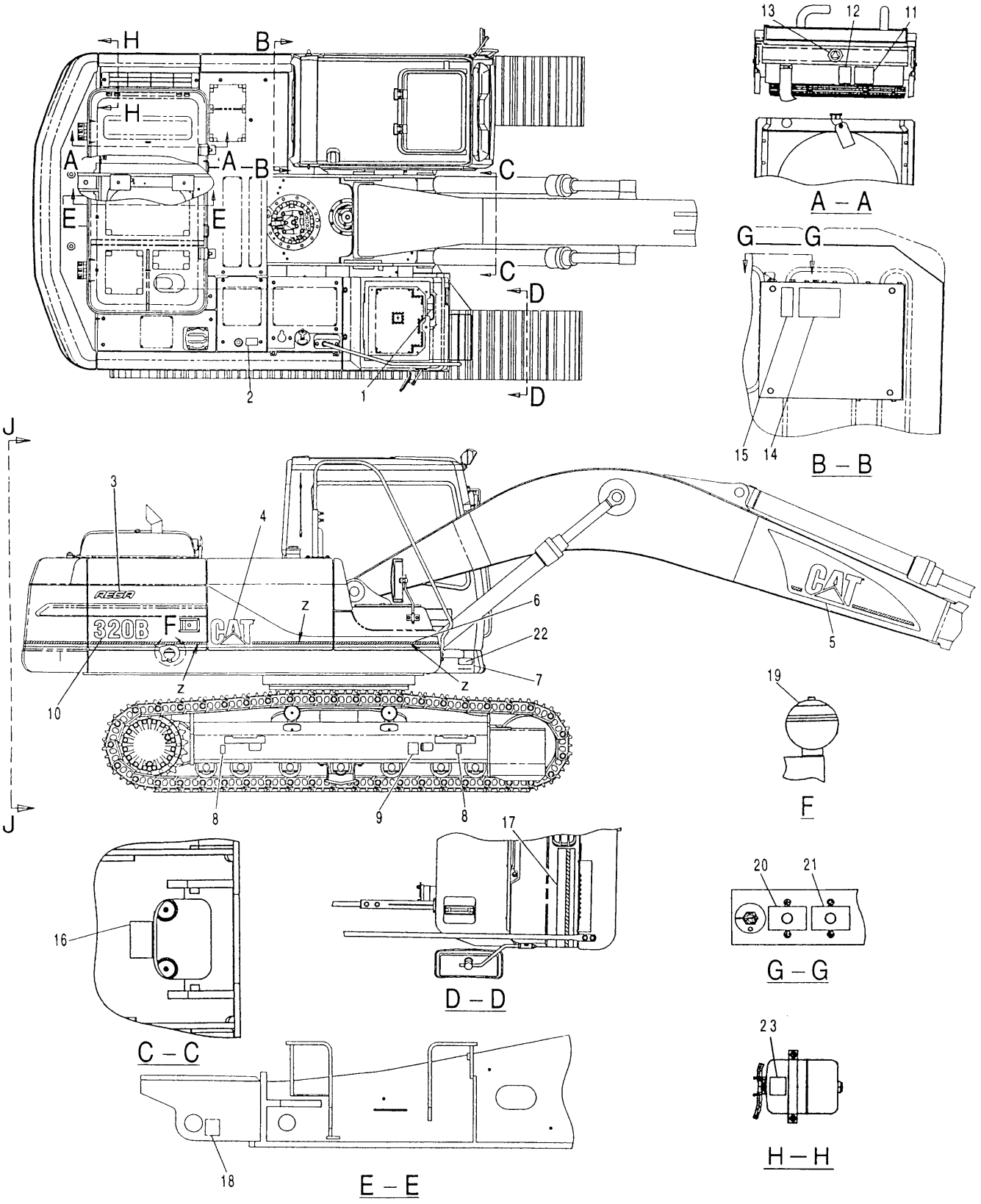

H60627E 09

116-1599 PLATE & FILM GP (1/3)
S/N 3MR 04979-06726

SERVICE EQUIPMENT AND SUPPLIES

NOTE	No.	PART No.	QTY	PART NAME	NOTE	No.	PART No.	QTY	PART NAME
	1	127-5286	1	FILM (INSTRUCTION)					
	2	120-5055	1	FILM (WARNING)					
	3	155-7177	1	FILM (REGA)					
	4	105-7545	1	FILM (CAT)					
	5	127-5282	1	FILM (CAT)					
E	6	134-6146		FILM (STRIPE)…(440cm)					
	7	4B-4158	4	SCREW					
	8	1P-2807	2	FILM (LIFT)					
	9	120-5079	1	FILM (WARNING)					
	10	134-6119	1	FILM (320B)					
	11	120-5059	1	FILM (WARNING)					
	12	120-5058	1	FILM (WARNING)					
	13	120-5107	1	FILM (INSTRUCTION)					
	14	3Y-8905	1	FILM (WARNING)					
	15	7I-6508	1	FILM (NOTICE)					
	16	116-1528	1	FILM (NOTICE)					
	17	116-1552	1	FILM (STRIPE)					
	18	7X-7644	2	FILM (TIE DOWN)					
	19	120-5063	1	FILM (WARNING)					
	20	4I-2927	1	FILM (CIRCUIT BREAKER)					
	21	127-5281	1	FILM (CIRCUIT BREAKER)					
Z	22		1	PLATE (PIN)					
	23	134-7258	1	FILM (ELC)					

E—ORDER BY THE CENTIMETER

Z—NOT SERVICED

H60627E 09

116-1599 PLATE & FILM GP (1/3)

S/N 3MR 04979-06726

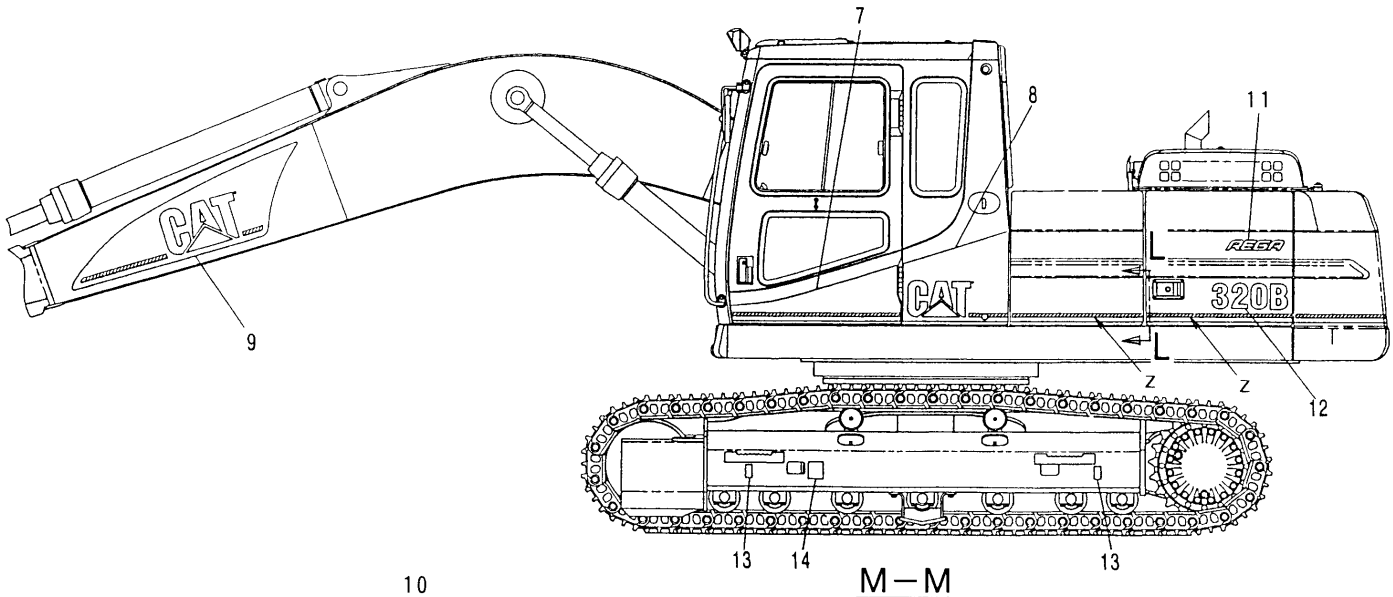

M – M

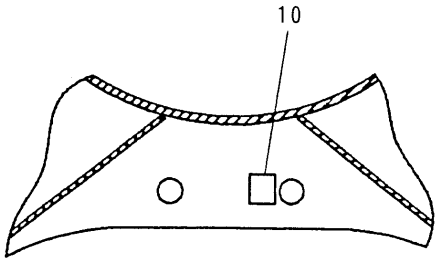

K – K

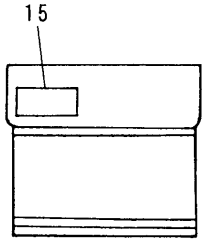

L – L

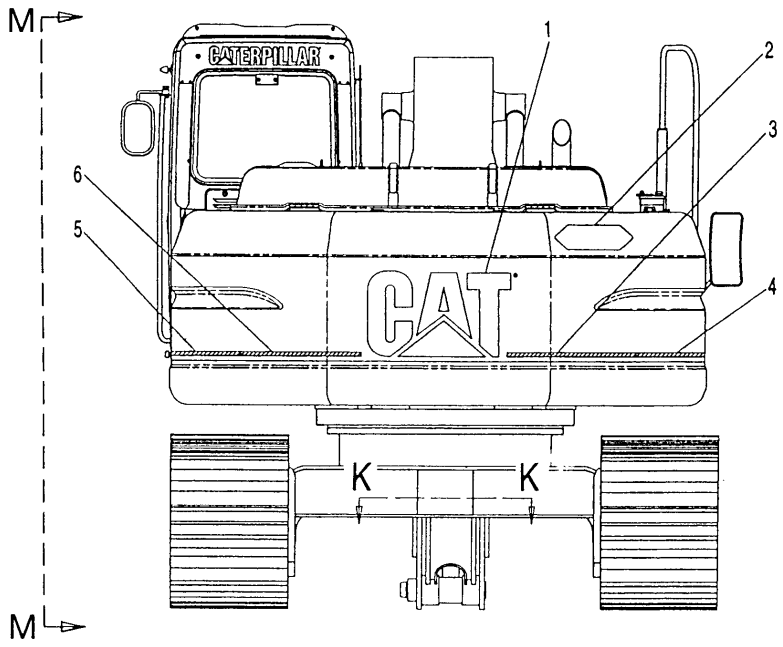

J – J

H60629E 09

116-1599 PLATE & FILM GP (2/3)
S/N 3MR 04979-06726

SERVICE EQUIPMENT AND SUPPLIES

NOTE	No.	PART No.	QTY	PART NAME	NOTE	No.	PART No.	QTY	PART NAME
	1	116-1545	1	FILM (CAT)					
	2	116-1529	1	FILM (DANGER)					
	3	120-5082	1	FILM (STRIPE)					
	4	117-8450	1	FILM (STRIPE)					
	5	116-1546	1	FILM (STRIPE)					
	6	116-1569	1	FILM (STRIPE)					
	7	127-5284	1	FILM (STRIPE)					
	8	127-5285	1	FILM (CAT)					
	9	127-5283	1	FILM (CAT)					
	10	7X-7644	2	FILM (TIE DOWN)					
	11	155-7177	1	FILM (REGA)					
	12	134-6119	1	FILM (320B)					
	13	1P-2807	2	FILM (LIFT)					
	14	120-5079	1	FILM (WARNING)					
	15	4P-6422	1	FILM (WARNING)					

H60629E 09

116-1599 PLATE & FILM GP (2/3)
S/N 3MR 04979-06726

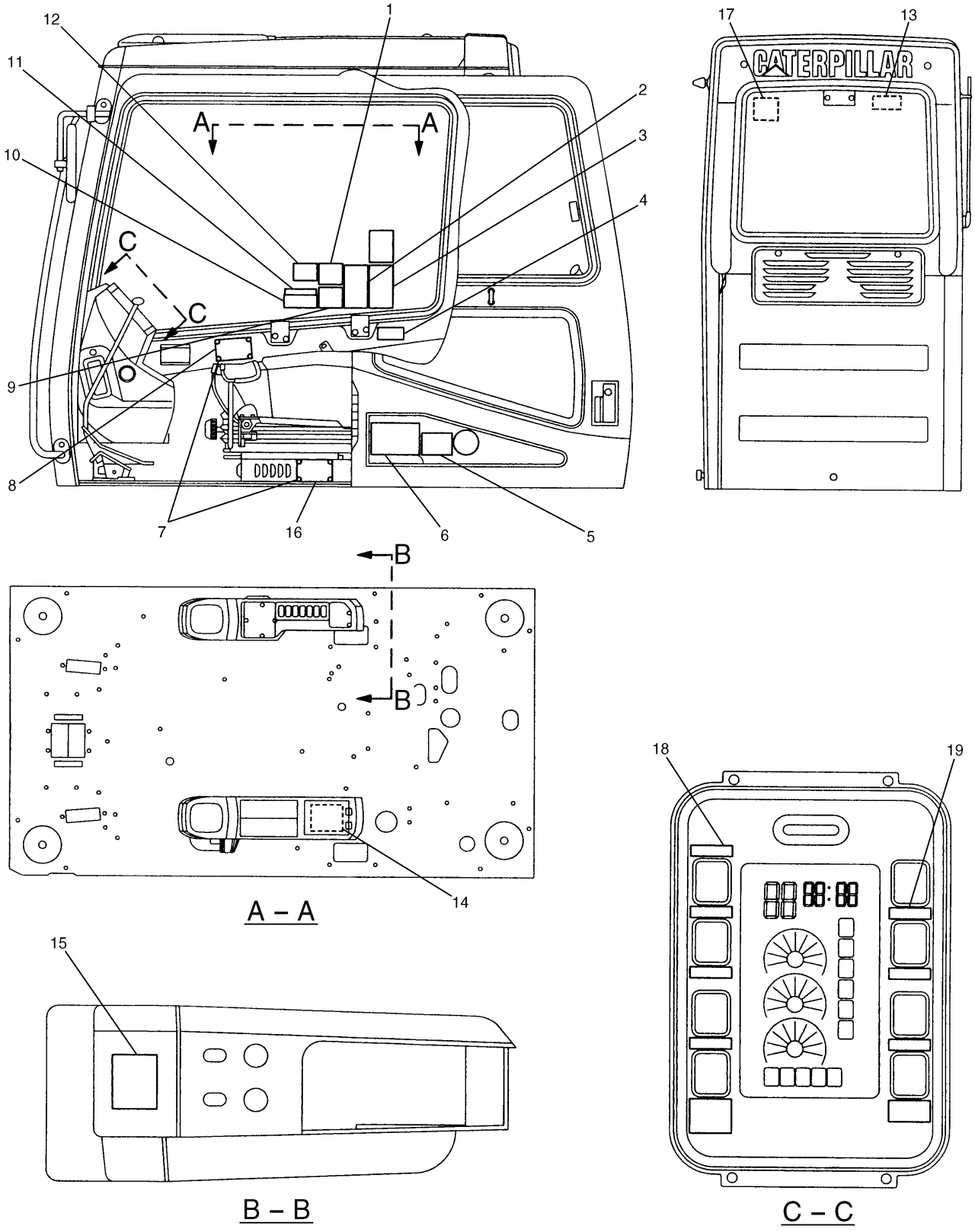

H60631E 09

116-1599 PLATE & FILM GP (3/3)
S/N 3MR 04979-06726

SERVICE EQUIPMENT AND SUPPLIES

NOTE	No.	PART No.	QTY	PART NAME	NOTE	No.	PART No.	QTY	PART NAME
	1	120-5060	1	FILM (WARNING)					
	2	120-5061	1	FILM (WARNING)					
	3	120-5057	1	FILM (WARNING)					
	4	71-1908	1	FILM (NOTICE)					
	5	137-0987	1	FILM					
	6	41-1987	1	FILM (LUBRICANT CHART)					
	7	4B-4158	8	SCREW					
	8	120-5052	1	PLATE (WARNING)					
	9	127-5295	1	FILM (WARNING)					
	10	41-2885	1	CASE					
	11	71-1533	1	PLATE (INSTRUCTION)					
	12	127-5272	1	FILM (WARNING)					
	13	101-2842	1	FILM (EMERGENCY EXIT)					
	14	155-7110	1	FILM (INSTRUCTION)					
	15	116-1523	1	FILM (INSTRUCTION)					
Z	16		1	PLATE (SIN)					
	17	134-6143	1	FILM (WARNING)					
	18	127-5304	1	FILM (INSTRUCTION)					
	19	127-5305	1	FILM (INSTRUCTION)					

Z—NOT SERVICED

H60631E 09

116-1599 PLATE & FILM GP (3/3)

S/N 3MR 04979-06726

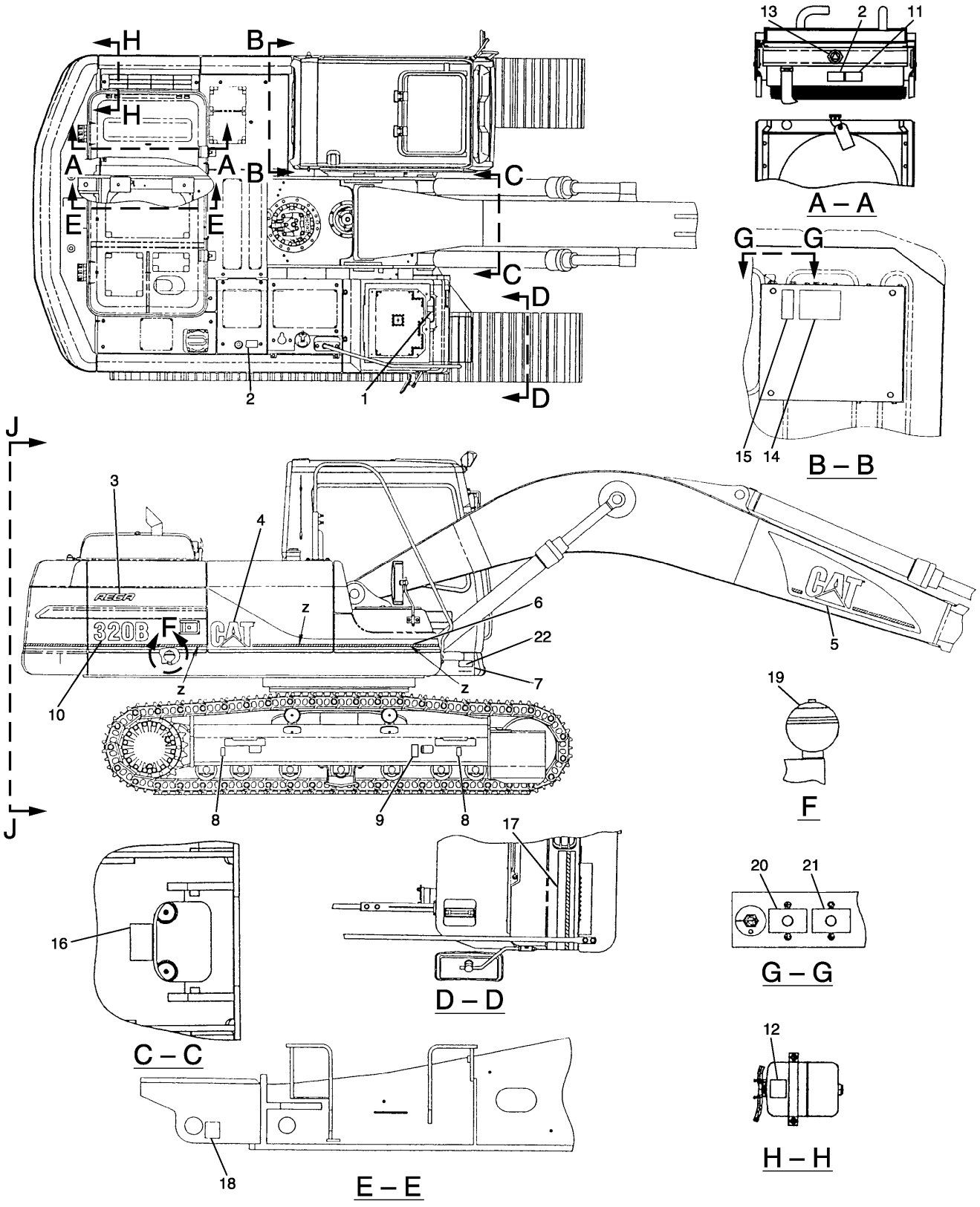

H78107E 10

116-1599 PLATE & FILM GP (1/3)
S/N 3MR 06727-Up

SERVICE EQUIPMENT AND SUPPLIES

NOTE	No.	PART No.	QTY	PART NAME	NOTE	No.	PART No.	QTY	PART NAME
	1	127-5286	1	FILM (INSTRUCTION)					
	2	160-6822	2	FILM (WARNING)					
	3	155-7177	1	FILM (REGA)					
	4	105-7545	1	FILM (CAT)					
	5	127-5282	1	FILM (CAT)					
E	6	134-6146		FILM (STRIPE)…(440cm)					
	7	4B-4158	4	SCREW					
	8	1P-2807	2	FILM (LIFT)					
	9	160-6832	1	FILM (WARNING)					
	10	134-6119	1	FILM (320B)					
	11	160-6841	1	FILM (WARNING)					
	12	134-7258	1	FILM (ELC)					
	13	120-5107	1	FILM (INSTRUCTION)					
	14	3Y-8905	1	FILM (WARNING)					
	15	7I-6508	1	FILM (NOTICE)					
	16	116-1528	1	FILM (NOTICE)					
	17	116-1552	1	FILM (STRIPE)					
	18	7X-7644	2	FILM (TIE DOWN)					
	19	120-5063	1	FILM (WARNING)					
	20	4I-2927	1	FILM (CIRCUIT BREAKER)					
	21	127-5281	1	FILM (CIRCUIT BREAKER)					
Z	22		1	PLATE (PIN)					

E—ORDER BY THE CENTIMETER

Z—NOT SERVICED

H78107E 10

116-1599 PLATE & FILM GP (1/3)

S/N 3MR 06727-Up

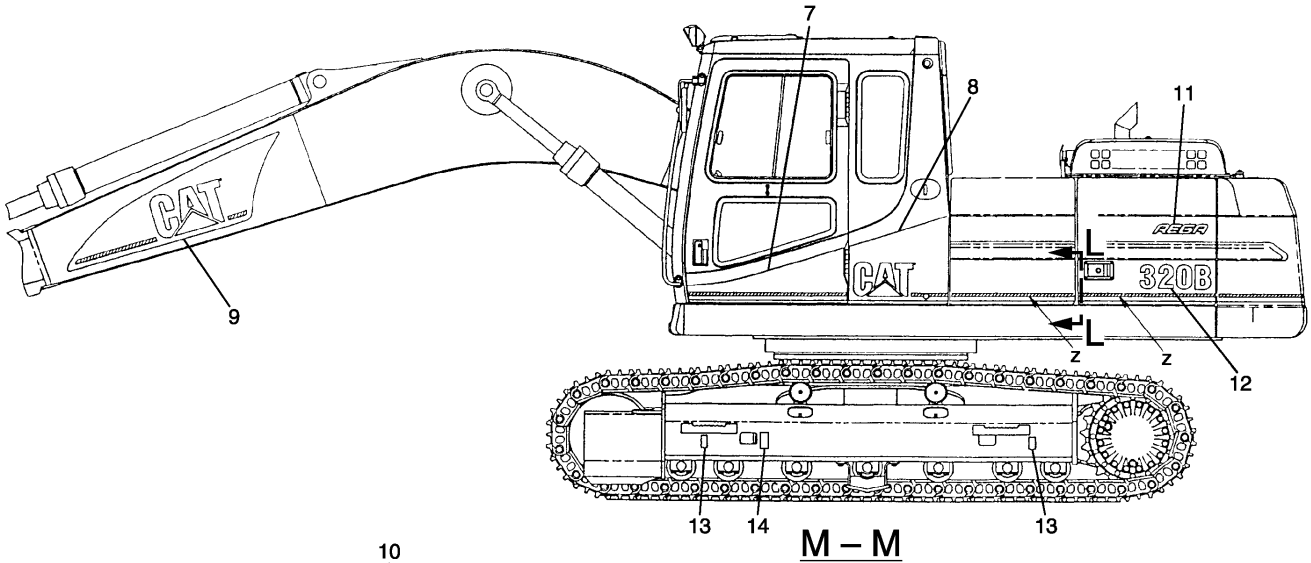

M – M

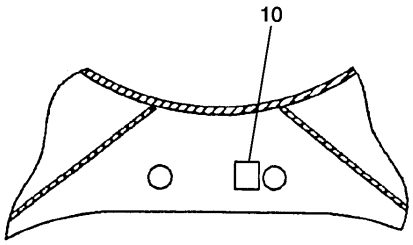

K – K

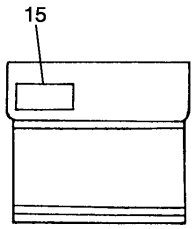

L – L

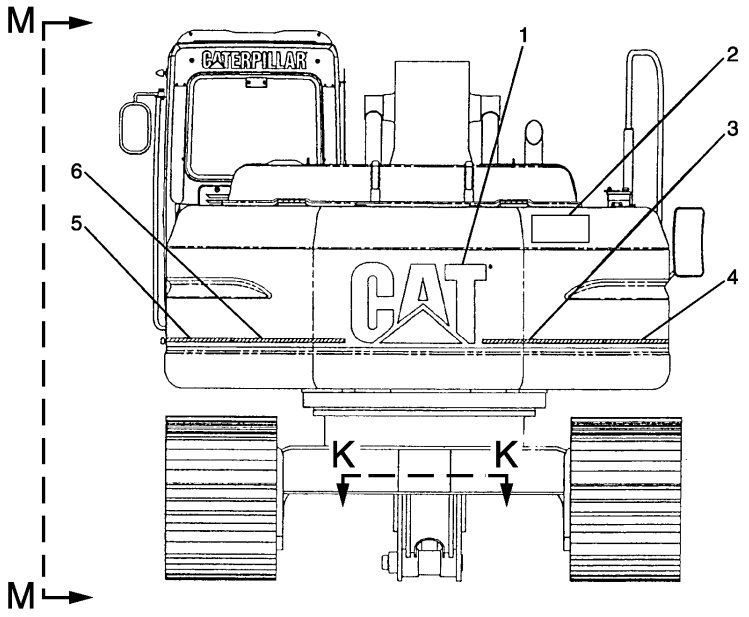

J – J

H78109E 10

116-1599 PLATE & FILM GP (2/3)
S/N 3MR 06727-Up

SERVICE EQUIPMENT AND SUPPLIES

NOTE	No.	PART No.	QTY	PART NAME	NOTE	No.	PART No.	QTY	PART NAME
	1	116-1545	1	FILM (CAT)					
	2	160-6871	1	FILM (DANGER)					
	3	120-5082	1	FILM (STRIPE)					
	4	117-8450	1	FILM (STRIPE)					
	5	116-1546	1	FILM (STRIPE)					
	6	116-1569	1	FILM (STRIPE)					
	7	127-5284	1	FILM (STRIPE)					
	8	127-5285	1	FILM (CAT)					
	9	127-5283	1	FILM (CAT)					
	10	7X-7644	2	FILM (TIE DOWN)					
	11	155-7177	1	FILM (REGA)					
	12	134-6119	1	FILM (320B)					
	13	1P-2807	2	FILM (LIFT)					
	14	160-6832	1	FILM (WARNING)					
	15	4P-6422	1	FILM (WARNING)					

H78109E 10

116-1599 PLATE & FILM GP (2/3)
S/N 3MR 06727-Up

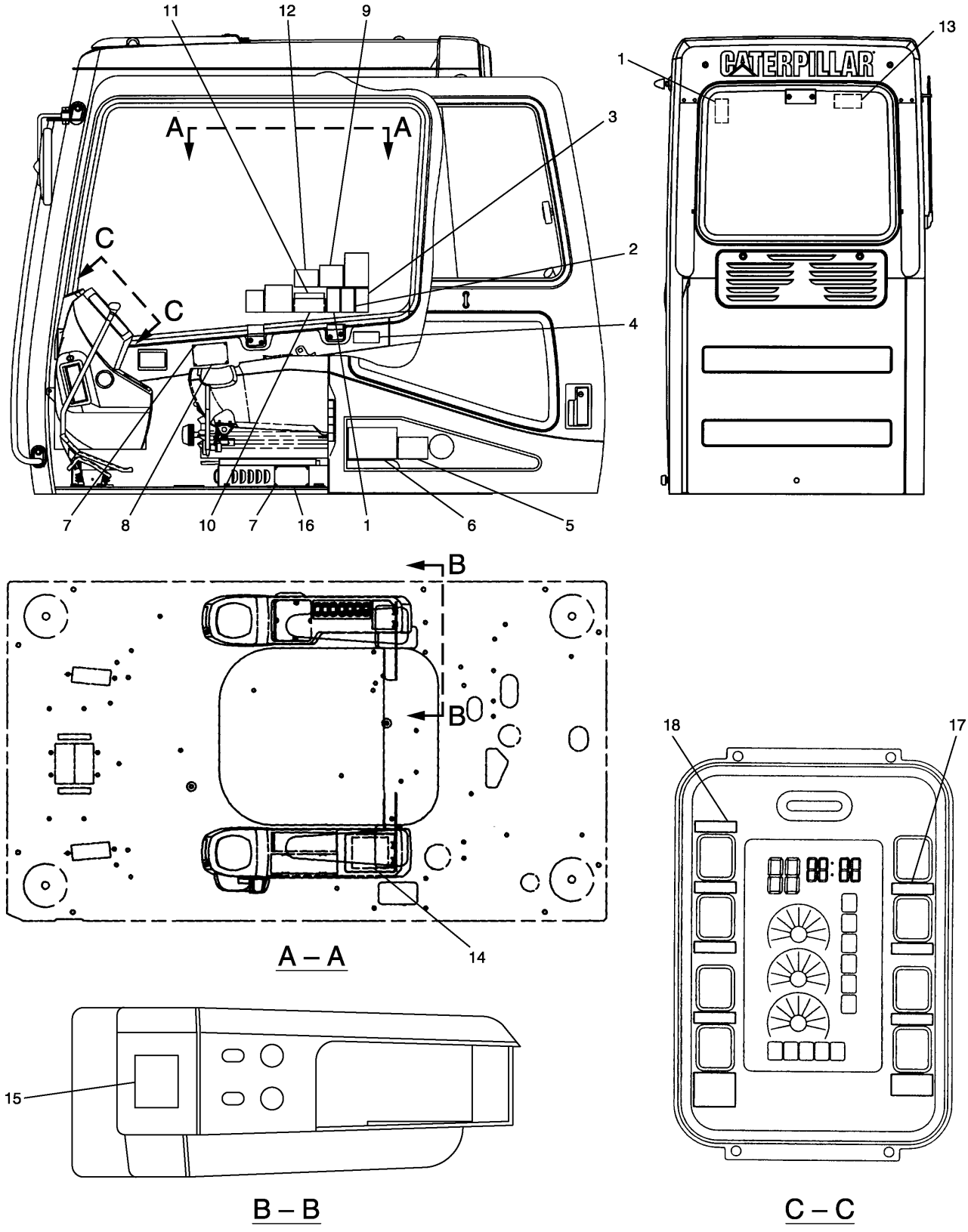

H78111E 10

116-1599 PLATE & FILM GP (3/3)
S/N 3MR 06727-Up

SERVICE EQUIPMENT AND SUPPLIES

NOTE	No.	PART No.	QTY	PART NAME	NOTE	No.	PART No.	QTY	PART NAME
	1	160-6848	2	FILM (WARNING)					
	2	160-6850	1	FILM (DANGER)					
	3	160-6845	1	FILM (WARNING)					
	4	7I-1908	1	FILM (NOTICE)					
	5	137-0987	1	FILM					
	6	4I-1987	1	FILM (LUBRICANT CHART)					
	7	4B-4158	8	SCREW					
	8	160-6870	1	PLATE (WARNING)					
	9	127-5295	1	FILM (WARNING)					
	10	4I-2885	1	CASE					
	11	7I-1533	1	PLATE (INSTRUCTION)					
	12	127-5272	1	FILM (WARNING)					
	13	101-2842	1	FILM (EMERGENCY EXIT)					
	14	155-7110	1	FILM (INSTRUCTION)					
	15	116-1523	1	FILM (INSTRUCTION)					
Z	16		1	PLATE (SIN)					
	17	127-5305	1	FILM (INSTRUCTION)					
	18	127-5304	1	FILM (INSTRUCTION)					

Z—NOT SERVICED

H78111E 10

116-1599 PLATE & FILM GP (3/3)

S/N 3MR 06727-Up

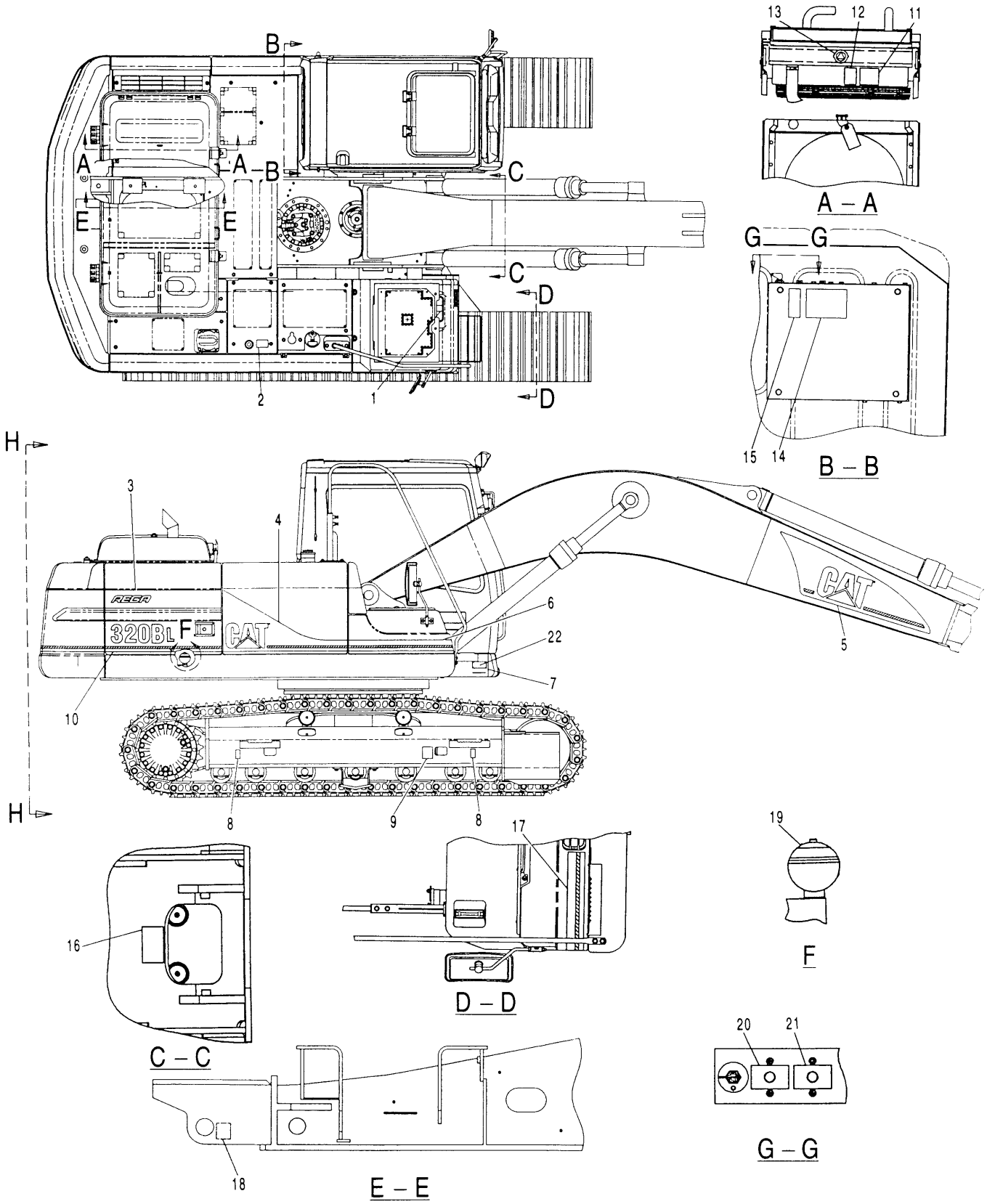

116-1600 PLATE & FILM GP (1/3)
S/N 4MR 1-00140

SERVICE EQUIPMENT AND SUPPLIES

NOTE	No.	PART No.	QTY	PART NAME	NOTE	No.	PART No.	QTY	PART NAME
	1	127-5286	1	FILM (INSTRUCTION)					
	2	120-5055	1	FILM (WARNING)					
	3	127-5298	1	FILM (REGA)					
	4	116-1550	1	FILM (CAT)					
	5	127-5282	1	FILM (CAT)					
	6	116-1551	1	FILM (STRIPE)					
	7	4B-4158	4	SCREW					
	8	1P-2807	2	FILM (LIFT)					
	9	120-5079	1	FILM (WARNING)					
	10	116-1549	1	FILM (320BL)					
	11	120-5059	1	FILM (WARNING)					
	12	120-5058	1	FILM (WARNING)					
	13	120-5107	1	FILM (INSTRUCTION)					
	14	3Y-8905	1	FILM (WARNING)					
	15	7I-6508	1	FILM (NOTICE)					
	16	116-1528	1	FILM (NOTICE)					
	17	116-1552	1	FILM (STRIPE)					
	18	7X-7644	2	FILM (TIE DOWN)					
	19	120-5063	1	FILM (WARNING)					
	20	4I-2927	1	FILM (CIRCUIT BREAKER)					
	21	127-5281	1	FILM (CIRCUIT BREAKER)					
Z	22		1	PLATE (PIN)					

Z—NOT SERVICED

H57673E 01

116-1600 PLATE & FILM GP (1/3)

S/N 4MR 1-00140

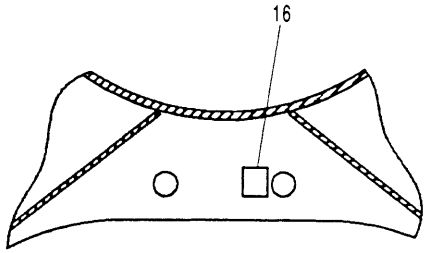

K – K

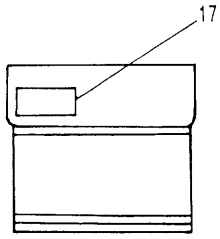

L – L

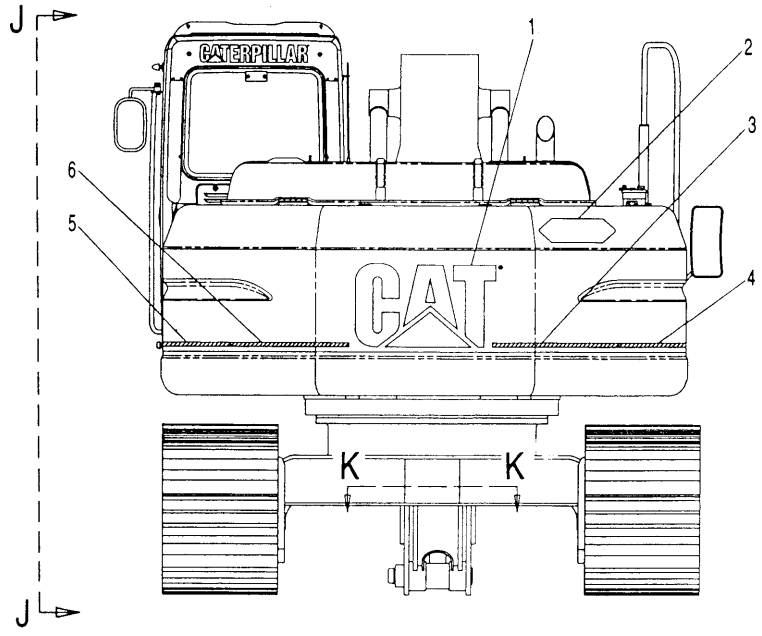

H – H

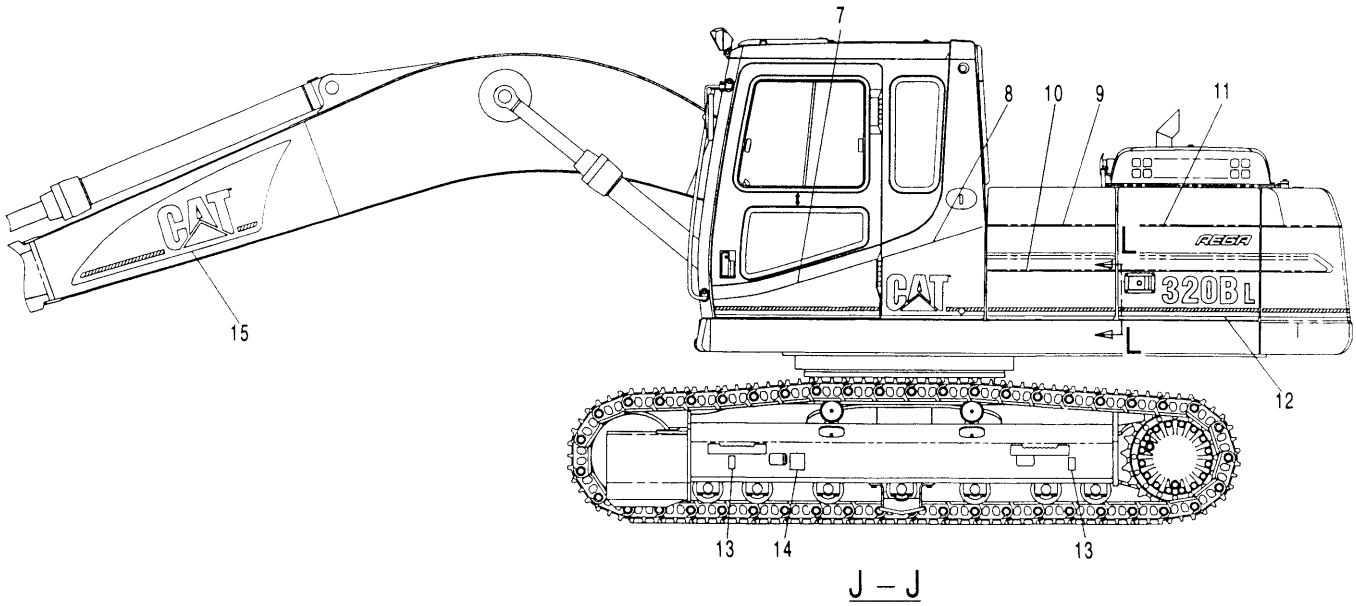

J – J

H57675E 01

116-1600 PLATE & FILM GP (2/3)
S/N 4MR 1-00140

SERVICE EQUIPMENT AND SUPPLIES

NOTE	No.	PART No.	QTY	PART NAME	NOTE	No.	PART No.	QTY	PART NAME
	1	116-1545	1	FILM (CAT)					
	2	116-1529	1	FILM (DANGER)					
	3	120-5082	1	FILM (STRIPE)					
	4	117-8450	1	FILM (STRIPE)					
	5	116-1546	1	FILM (STRIPE)					
	6	116-1569	1	FILM (STRIPE)					
	7	127-5284	1	FILM (STRIPE)					
	8	127-5285	1	FILM (CAT)					
	9	116-1540	1	FILM (STRIPE)					
	10	116-1541	1	FILM (STRIPE)					
	11	127-5297	1	FILM (REGA)					
	12	116-1544	1	FILM (320BL)					
	13	1P-2807	2	FILM (LIFT)					
	14	120-5079	1	FILM (WARNING)					
	15	127-5283	1	FILM (CAT)					
	16	7X-7644	2	FILM (TIE DOWN)					
	17	4P-6422	1	FILM (WARNING)					

H57675E 01

116-1600 PLATE & FILM GP (2/3)

S/N 4MR 1-00140

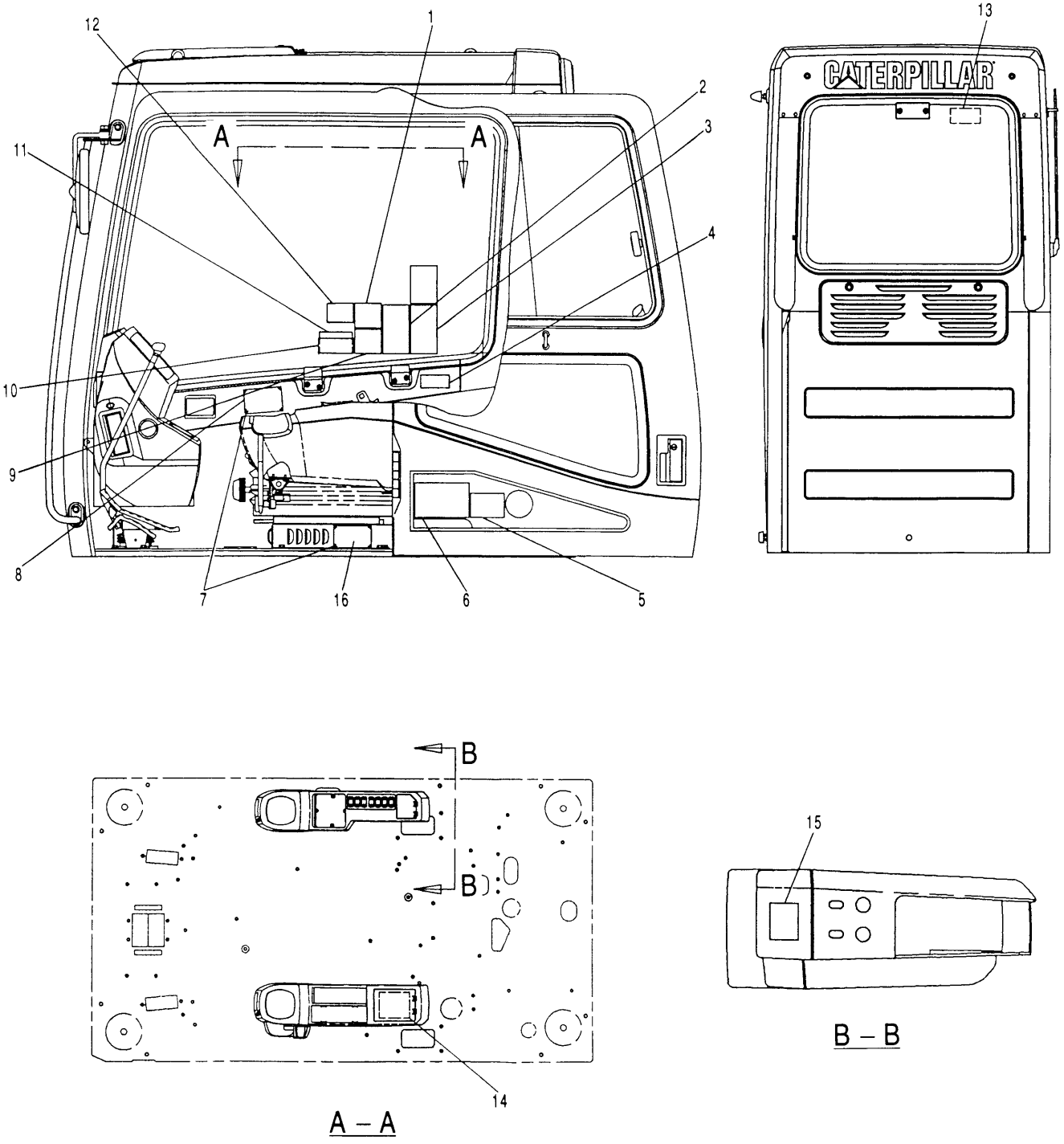

H57677E 01

116-1600 PLATE & FILM GP (3/3)
S/N 4MR 1-00140

SERVICE EQUIPMENT AND SUPPLIES

NOTE	No.	PART No.	QTY	PART NAME	NOTE	No.	PART No.	QTY	PART NAME
	1	120-5060	1	FILM (WARNING)					
	2	120-5061	1	FILM (WARNING)					
	3	120-5057	1	FILM (WARNING)					
	4	71-1908	1	FILM (NOTICE)					
	5	116-1527	1	FILM					
	6	41-1987	1	FILM (LUBRICANT CHART)					
	7	4B-4158	8	SCREW					
	8	120-5052	1	PLATE (WARNING)					
	9	127-5295	1	FILM (WARNING)					
	10	41-2885	1	CASE					
	11	71-1533	1	PLATE (INSTRUCTION)					
	12	127-5272	1	FILM (WARNING)					
	13	101-2842	1	FILM (EMERGENCY EXIT)					
	14	127-5296	1	FILM (INSTRUCTION)					
	15	116-1523	1	FILM (INSTRUCTION)					
Z	16			PLATE (PIN)					

Z—NOT SERVICED

H57677E 01

116-1600 PLATE & FILM GP (3/3)

S/N 4MR 1-00140

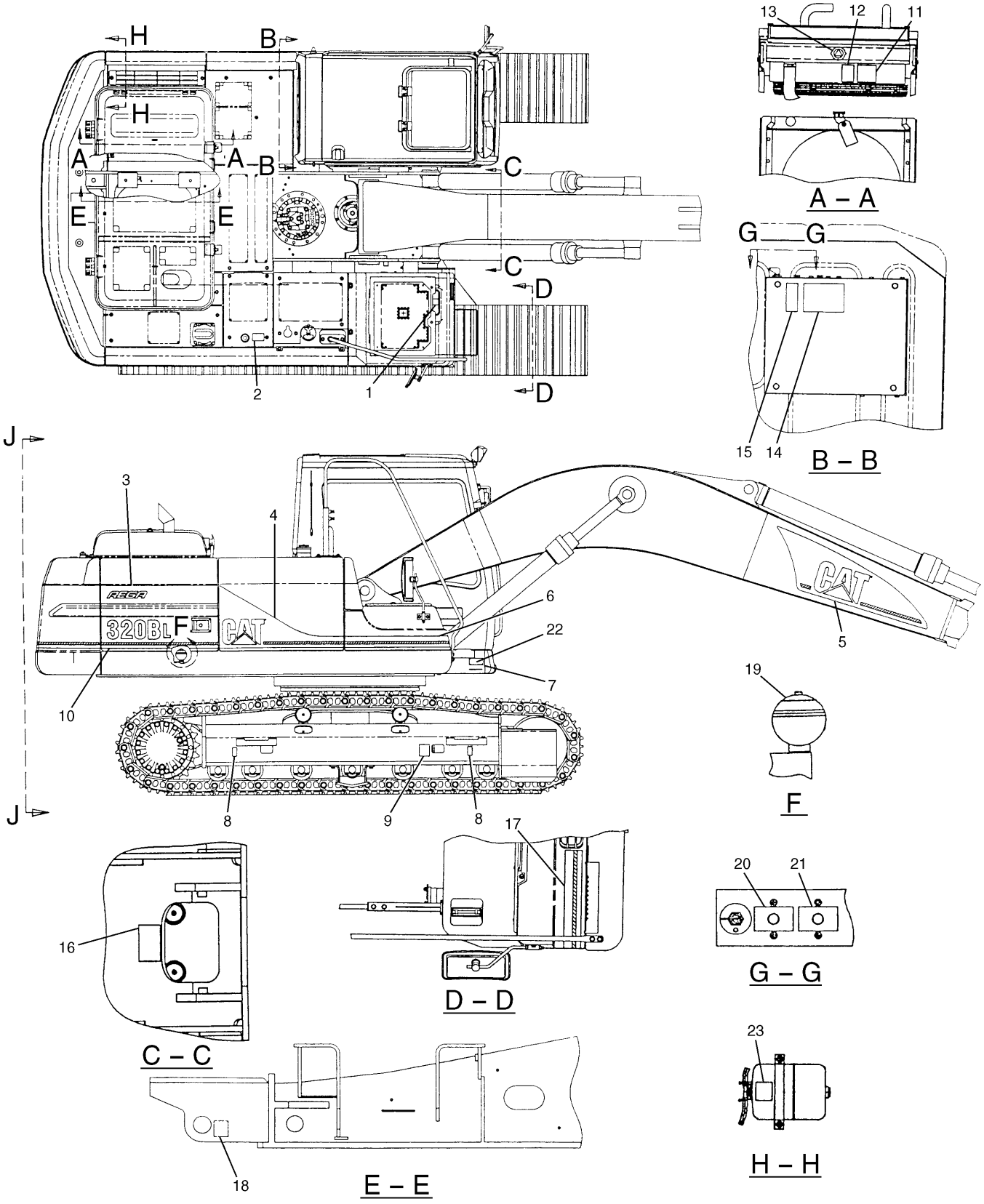

H65330E 07

116-1600 PLATE & FILM GP (1/3)
S/N 4MR 00141-00715

SERVICE EQUIPMENT AND SUPPLIES

NOTE	No.	PART No.	QTY	PART NAME	NOTE	No.	PART No.	QTY	PART NAME
	1	127-5286	1	FILM (INSTRUCTION)					
	2	120-5055	1	FILM (WARNING)					
	3	127-5298	1	FILM (REGA)					
	4	116-1550	1	FILM (CAT)					
	5	127-5282	1	FILM (CAT)					
	6	116-1551	1	FILM (STRIPE)					
	7	4B-4158	4	SCREW					
	8	1P-2807	2	FILM (LIFT)					
	9	120-5079	1	FILM (WARNING)					
	10	116-1549	1	FILM (320BL)					
	11	120-5059	1	FILM (WARNING)					
	12	120-5058	1	FILM (WARNING)					
	13	120-5107	1	FILM (INSTRUCTION)					
	14	3Y-8905	1	FILM (WARNING)					
	15	7I-6508	1	FILM (NOTICE)					
	16	116-1528	1	FILM (NOTICE)					
	17	116-1552	1	FILM (STRIPE)					
	18	7X-7644	2	FILM (TIE DOWN)					
	19	120-5063	1	FILM (WARNING)					
	20	4I-2927	1	FILM (CIRCUIT BREAKER)					
	21	127-5281	1	FILM (CIRCUIT BREAKER)					
Z	22		1	PLATE (PIN)					
	23	134-7258	1	FILM (ELC)					

Z—NOT SERVICED

H65330E 07

116-1600 PLATE & FILM GP (1/3)

S/N 4MR 00141-00715

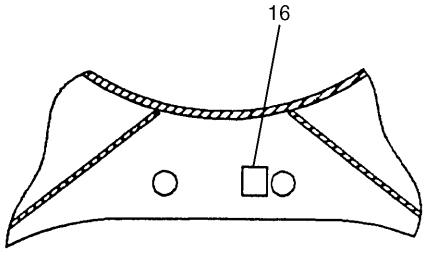

K – K

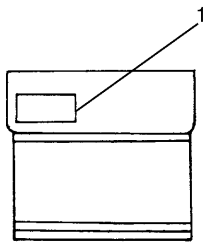

L – L

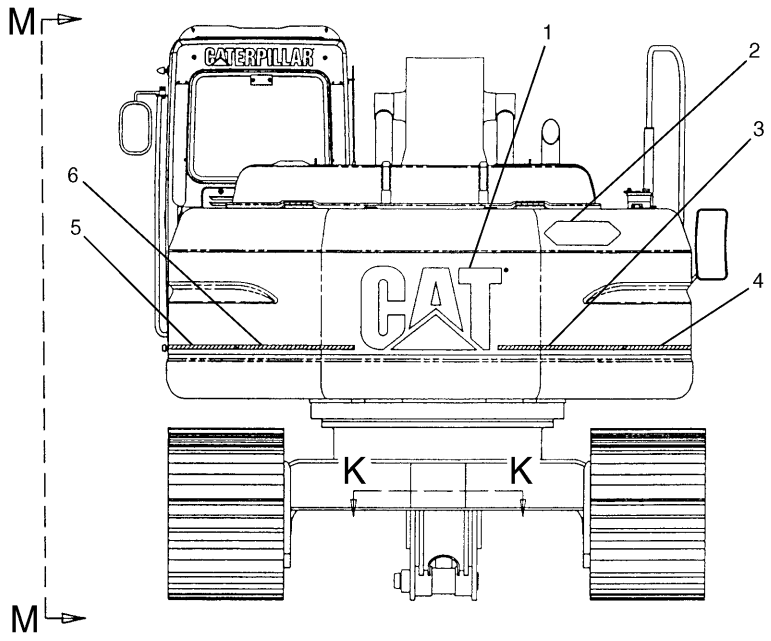

J – J

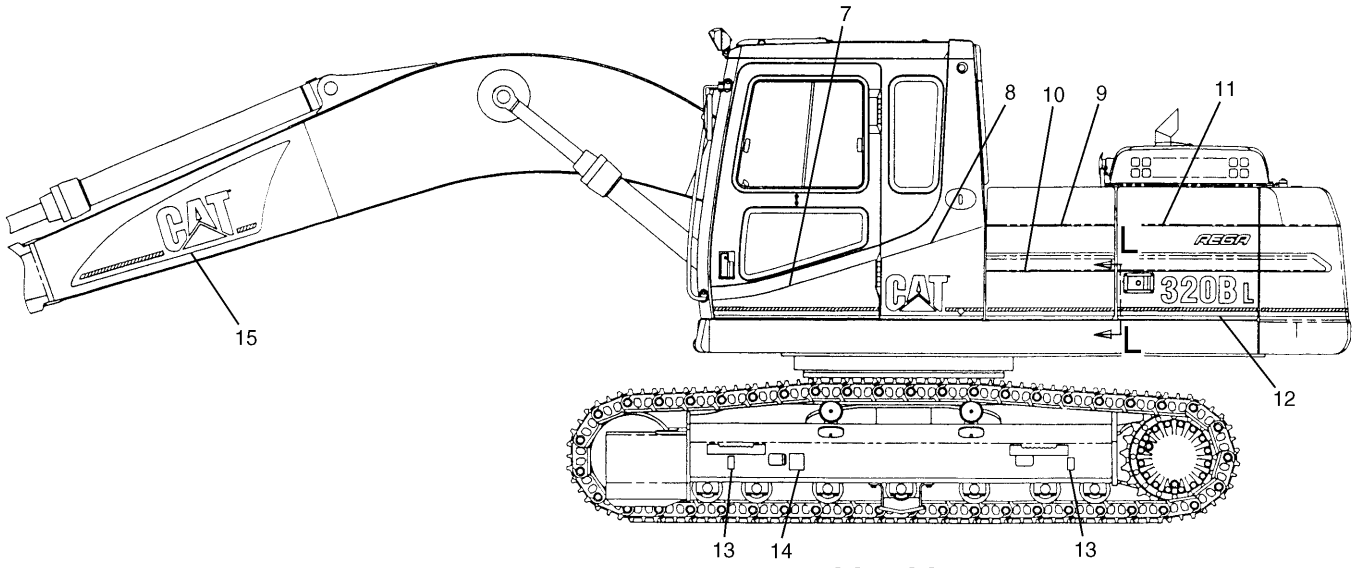

M – M

H65332E 07

116-1600 PLATE & FILM GP (2/3)
S/N 4MR 00141-00715

SERVICE EQUIPMENT AND SUPPLIES

NOTE	No.	PART No.	QTY	PART NAME	NOTE	No.	PART No.	QTY	PART NAME
	1	116-1545	1	FILM (CAT)					
	2	116-1529	1	FILM (DANGER)					
	3	120-5082	1	FILM (STRIPE)					
	4	117-8450	1	FILM (STRIPE)					
	5	116-1546	1	FILM (STRIPE)					
	6	116-1569	1	FILM (STRIPE)					
	7	127-5284	1	FILM (STRIPE)					
	8	127-5285	1	FILM (CAT)					
	9	116-1540	1	FILM (STRIPE)					
	10	116-1541	1	FILM (STRIPE)					
	11	127-5297	1	FILM (REGA)					
	12	116-1544	1	FILM (320BL)					
	13	1P-2807	2	FILM (LIFT)					
	14	120-5079	1	FILM (WARNING)					
	15	127-5283	1	FILM (CAT)					
	16	7X-7644	2	FILM (TIE DOWN)					
	17	4P-6422	1	FILM (WARNING)					

H65332E 07

116-1600 PLATE & FILM GP (2/3)

S/N 4MR 00141-00715

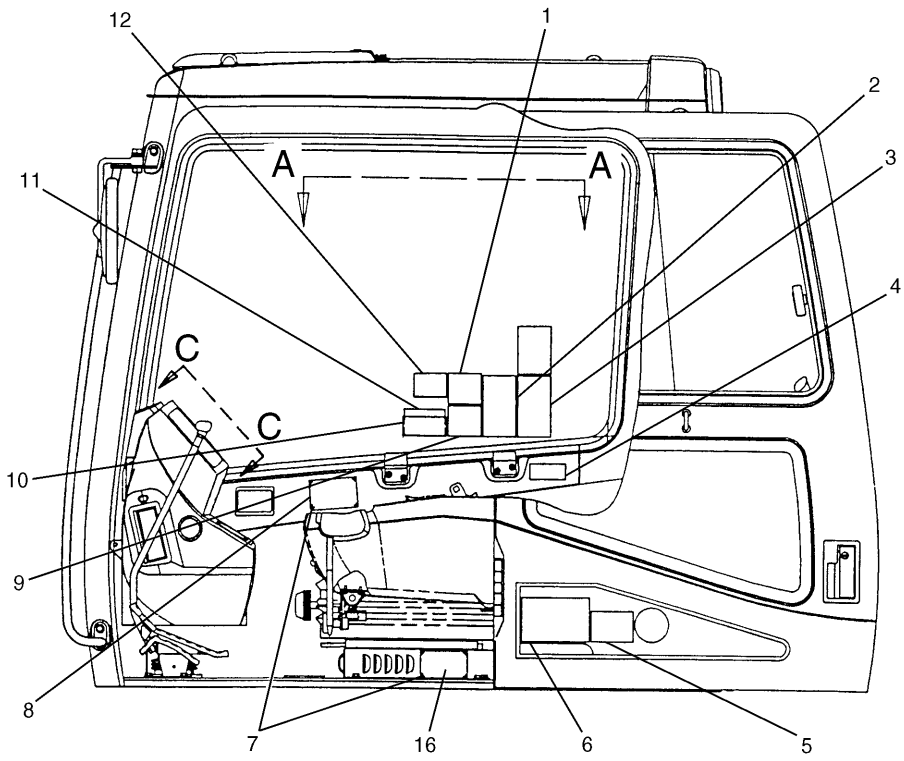

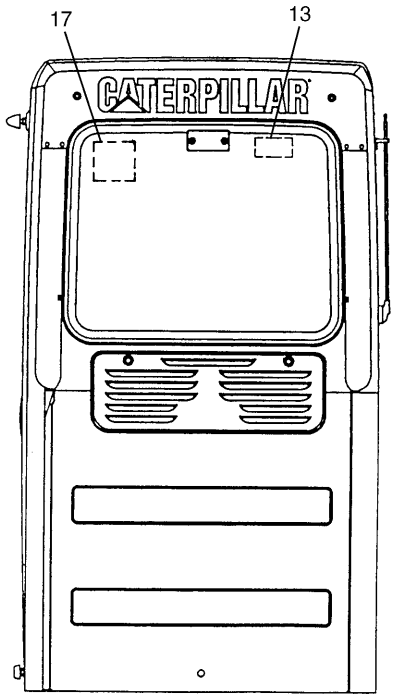

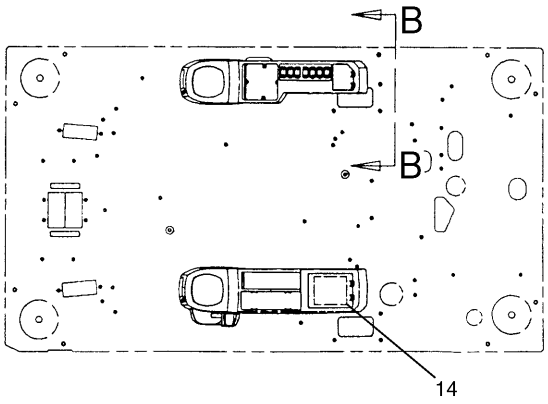

A – A

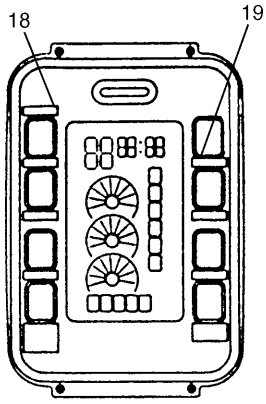

C – C

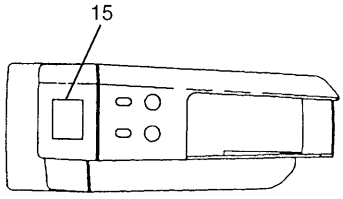

B – B

H65334E 07

116-1600 PLATE & FILM GP (3/3)
S/N 4MR 00141-00715

SERVICE EQUIPMENT AND SUPPLIES

NOTE	No.	PART No.	QTY	PART NAME	NOTE	No.	PART No.	QTY	PART NAME
	1	120-5060	1	FILM (WARNING)					
	2	120-5061	1	FILM (WARNING)					
	3	120-5057	1	FILM (WARNING)					
	4	71-1908	1	FILM (NOTICE)					
	5	137-0988	1	FILM					
	6	41-1987	1	FILM (LUBRICANT CHART)					
	7	4B-4158	8	SCREW					
	8	120-5052	1	PLATE (WARNING)					
	9	127-5295	1	FILM (WARNING)					
	10	41-2885	1	CASE					
	11	71-1533	1	PLATE (INSTRUCTION)					
	12	127-5272	1	FILM (WARNING)					
	13	101-2842	1	FILM (EMERGENCY EXIT)					
	14	134-6118	1	FILM (INSTRUCTION)					
	15	116-1523	1	FILM (INSTRUCTION)					
Z	16		1	PLATE (PIN)					
	17	134-6143	1	FILM (WARNING)					
	18	127-5304	1	FILM (INSTRUCTION)					
	19	127-5305	1	FILM (INSTRUCTION)					

Z—NOT SERVICED

H65334E 07

116-1600 PLATE & FILM GP (3/3)

S/N 4MR 00141-00175

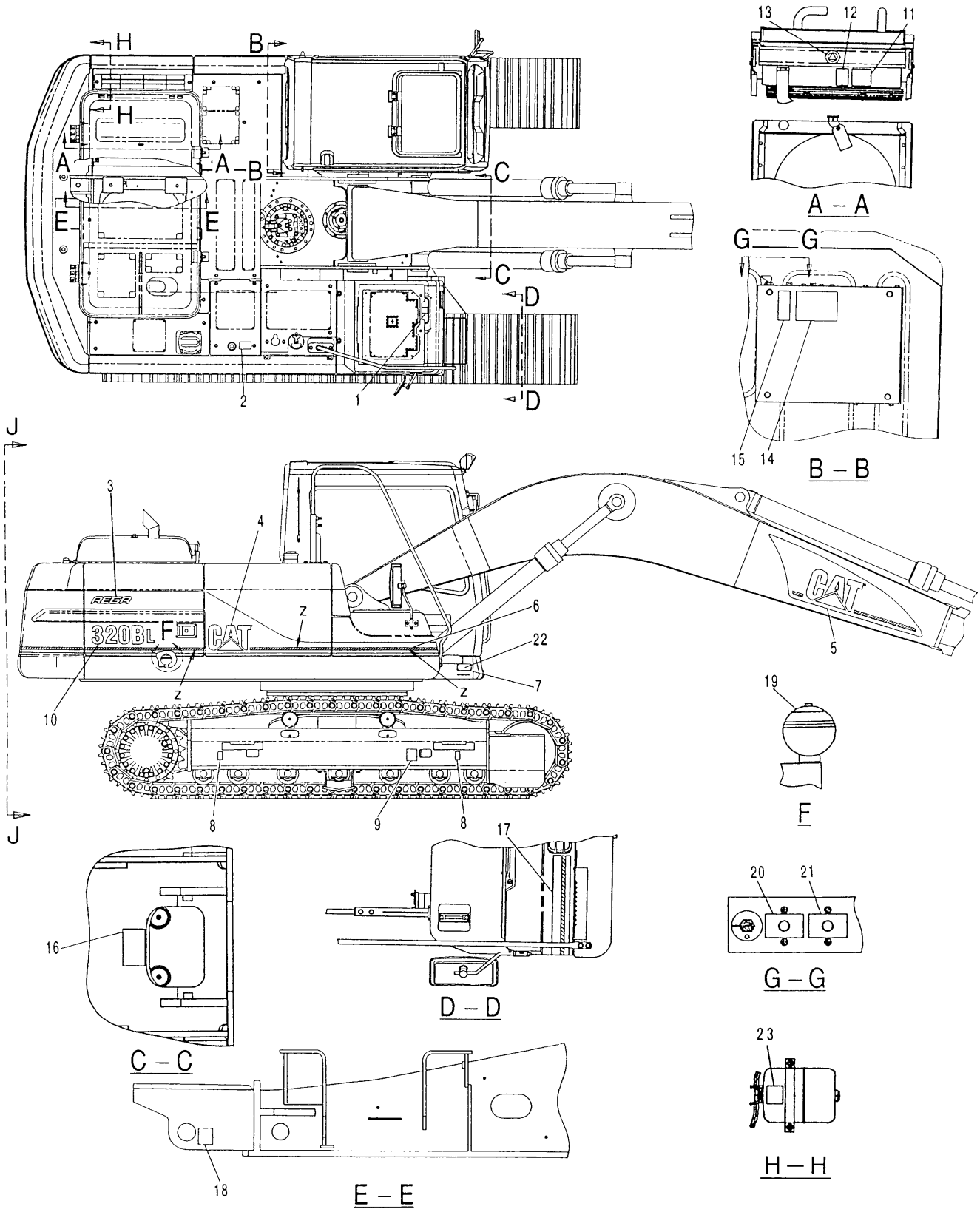

H60633E 09

116-1600 PLATE & FILM GP (1/3)
S/N 4MR 00716-00970

SERVICE EQUIPMENT AND SUPPLIES

NOTE	No.	PART No.	QTY	PART NAME	NOTE	No.	PART No.	QTY	PART NAME
	1	127-5286	1	FILM (INSTRUCTION)					
	2	120-5055	1	FILM (WARNING)					
	3	155-7177	1	FILM (REGA)					
	4	105-7545	1	FILM (CAT)					
	5	127-5282	1	FILM (CAT)					
E	6	134-6146		FILM (STRIPE)…(440cm)					
	7	4B-4158	4	SCREW					
	8	1P-2807	2	FILM (LIFT)					
	9	120-5079	1	FILM (WARNING)					
	10	134-6120	1	FILM (320BL)					
	11	120-5059	1	FILM (WARNING)					
	12	120-5058	1	FILM (WARNING)					
	13	120-5107	1	FILM (INSTRUCTION)					
	14	3Y-8905	1	FILM (WARNING)					
	15	7I-6508	1	FILM (NOTICE)					
	16	116-1528	1	FILM (NOTICE)					
	17	116-1552	1	FILM (STRIPE)					
	18	7X-7644	2	FILM (TIE DOWN)					
	19	120-5063	1	FILM (WARNING)					
	20	4I-2927	1	FILM (CIRCUIT BREAKER)					
	21	127-5281	1	FILM (CIRCUIT BREAKER)					
Z	22		1	PLATE (PIN)					
	23	134-7258	1	FILM (ELC)					

E—ORDER BY THE CENTIMETER

Z—NOT SERVICED

H60633E 09

116-1600 PLATE & FILM GP (1/3)

S/N 4MR 00716-00970

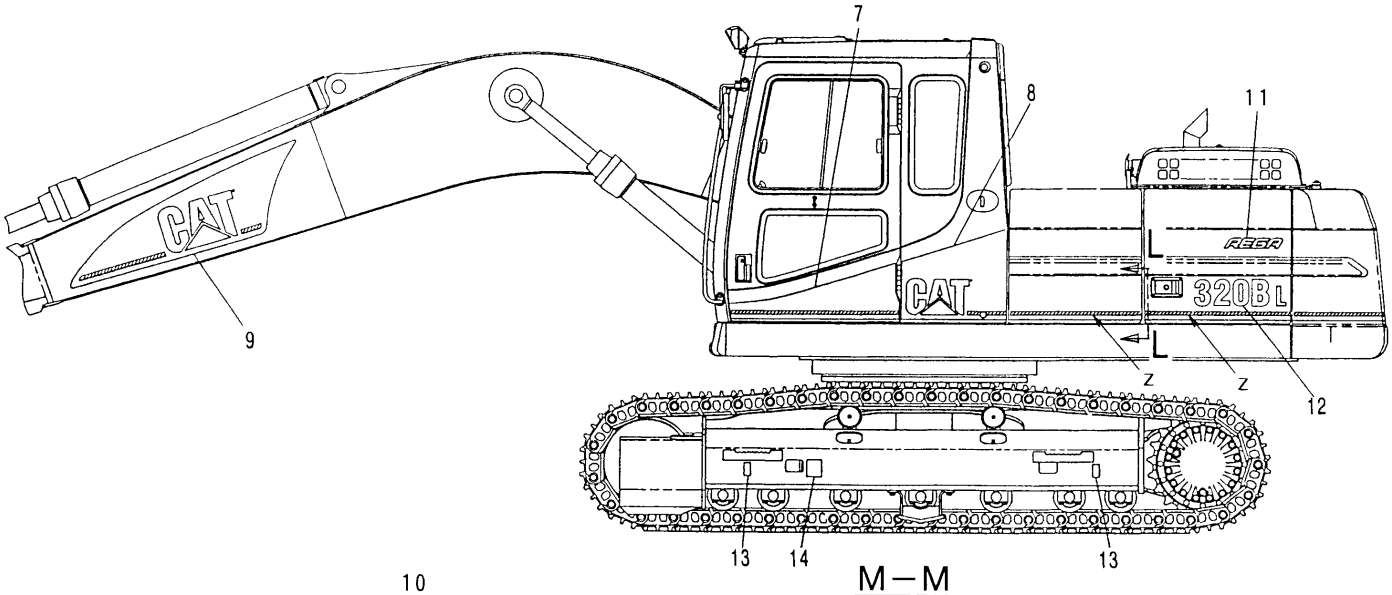

M – M

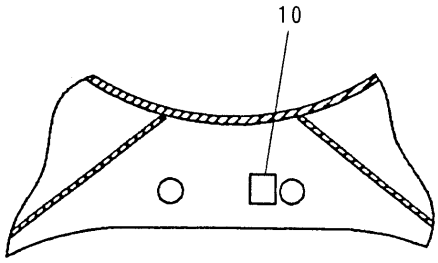

K – K

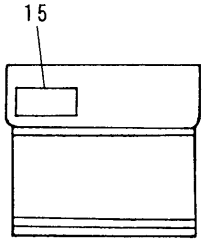

L – L

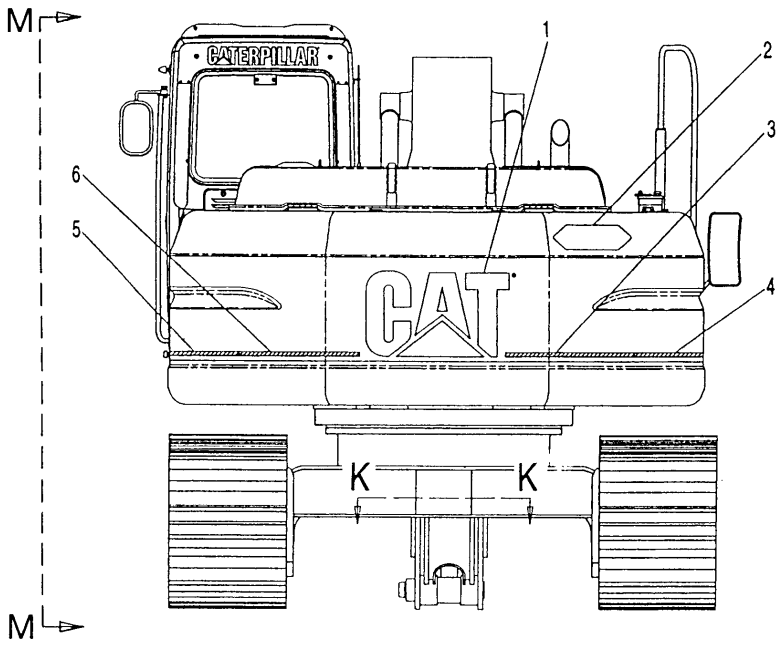

J – J

H60635E 09

116-1600 PLATE & FILM GP (2/3)
S/N 4MR 00716-00970

SERVICE EQUIPMENT AND SUPPLIES

NOTE	No.	PART No.	QTY	PART NAME	NOTE	No.	PART No.	QTY	PART NAME
	1	116-1545	1	FILM (CAT)					
	2	116-1529	1	FILM (DANGER)					
	3	120-5082	1	FILM (STRIPE)					
	4	117-8450	1	FILM (STRIPE)					
	5	116-1546	1	FILM (STRIPE)					
	6	116-1569	1	FILM (STRIPE)					
	7	127-5284	1	FILM (STRIPE)					
	8	127-5285	1	FILM (CAT)					
	9	127-5283	1	FILM (CAT)					
	10	7X-7644	2	FILM (TIE DOWN)					
	11	155-7177	1	FILM (REGA)					
	12	134-6120	1	FILM (320BL)					
	13	1P-2807	2	FILM (LIFT)					
	14	120-5079	1	FILM (WARNING)					
	15	4P-6422	1	FILM (WARNING)					

H60635E 09

116-1600 PLATE & FILM GP (2/3)

S/N 4MR 00716-00970

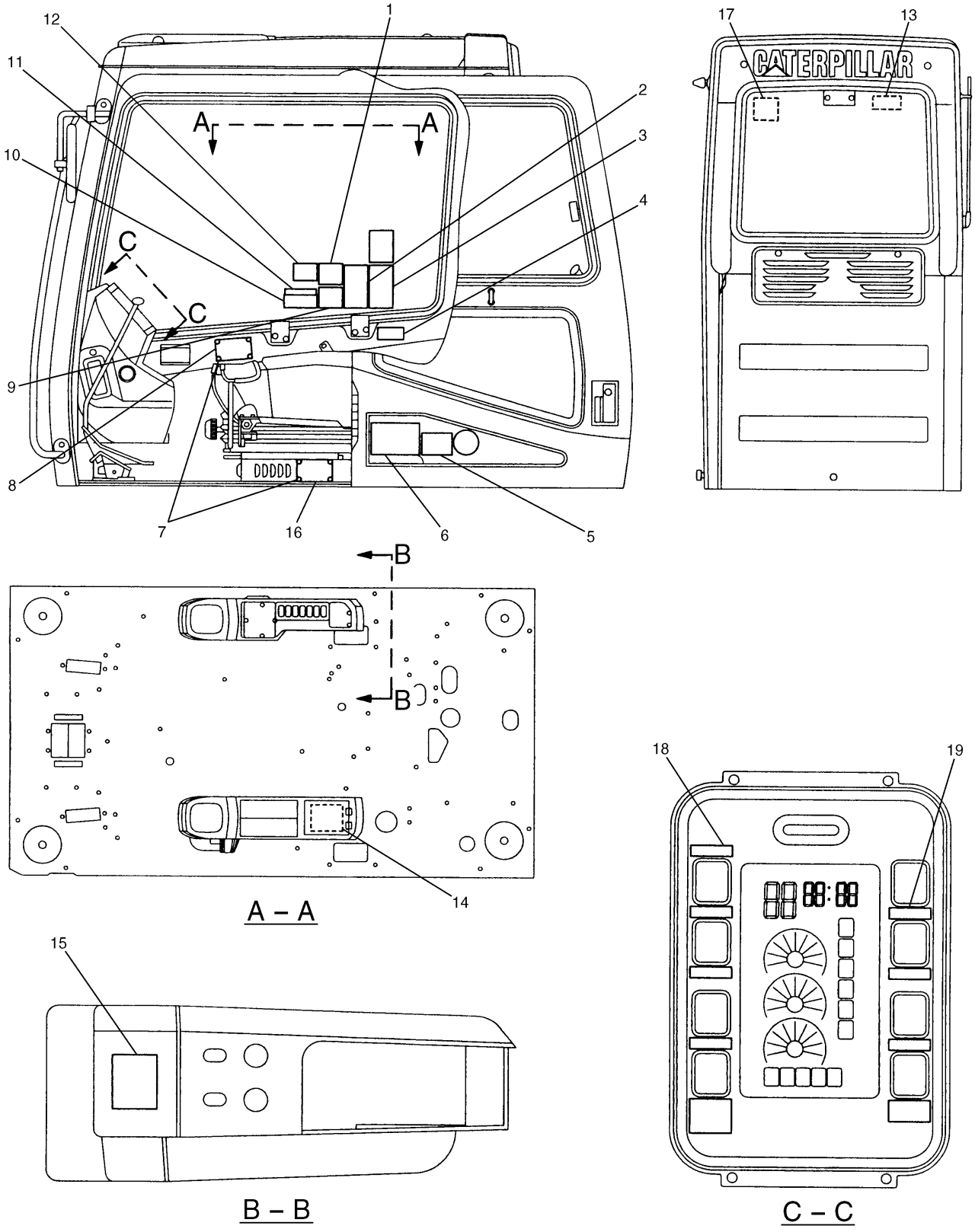

H60637E 09

116-1600 PLATE & FILM GP (3/3)
S/N 4MR 00716-00970

SERVICE EQUIPMENT AND SUPPLIES

NOTE	No.	PART No.	QTY	PART NAME	NOTE	No.	PART No.	QTY	PART NAME
	1	120-5060	1	FILM (WARNING)					
	2	120-5061	1	FILM (WARNING)					
	3	120-5057	1	FILM (WARNING)					
	4	71-1908	1	FILM (NOTICE)					
	5	137-0988	1	FILM					
	6	41-1987	1	FILM (LUBRICANT CHART)					
	7	4B-4158	8	SCREW					
	8	120-5052	1	PLATE (WARNING)					
	9	127-5295	1	FILM (WARNING)					
	10	41-2885	1	CASE					
	11	71-1533	1	PLATE (INSTRUCTION)					
	12	127-5272	1	FILM (WARNING)					
	13	101-2842	1	FILM (EMERGENCY EXIT)					
	14	155-7110	1	FILM (INSTRUCTION)					
	15	116-1523	1	FILM (INSTRUCTION)					
Z	16		1	PLATE (SIN)					
	17	134-6143	1	FILM (WARNING)					
	18	127-5304	1	FILM (INSTRUCTION)					
	19	127-5305	1	FILM (INSTRUCTION)					

Z—NOT SERVICED

H60637E 09

116-1600 PLATE & FILM GP (3/3)

S/N 4MR 00716-00970

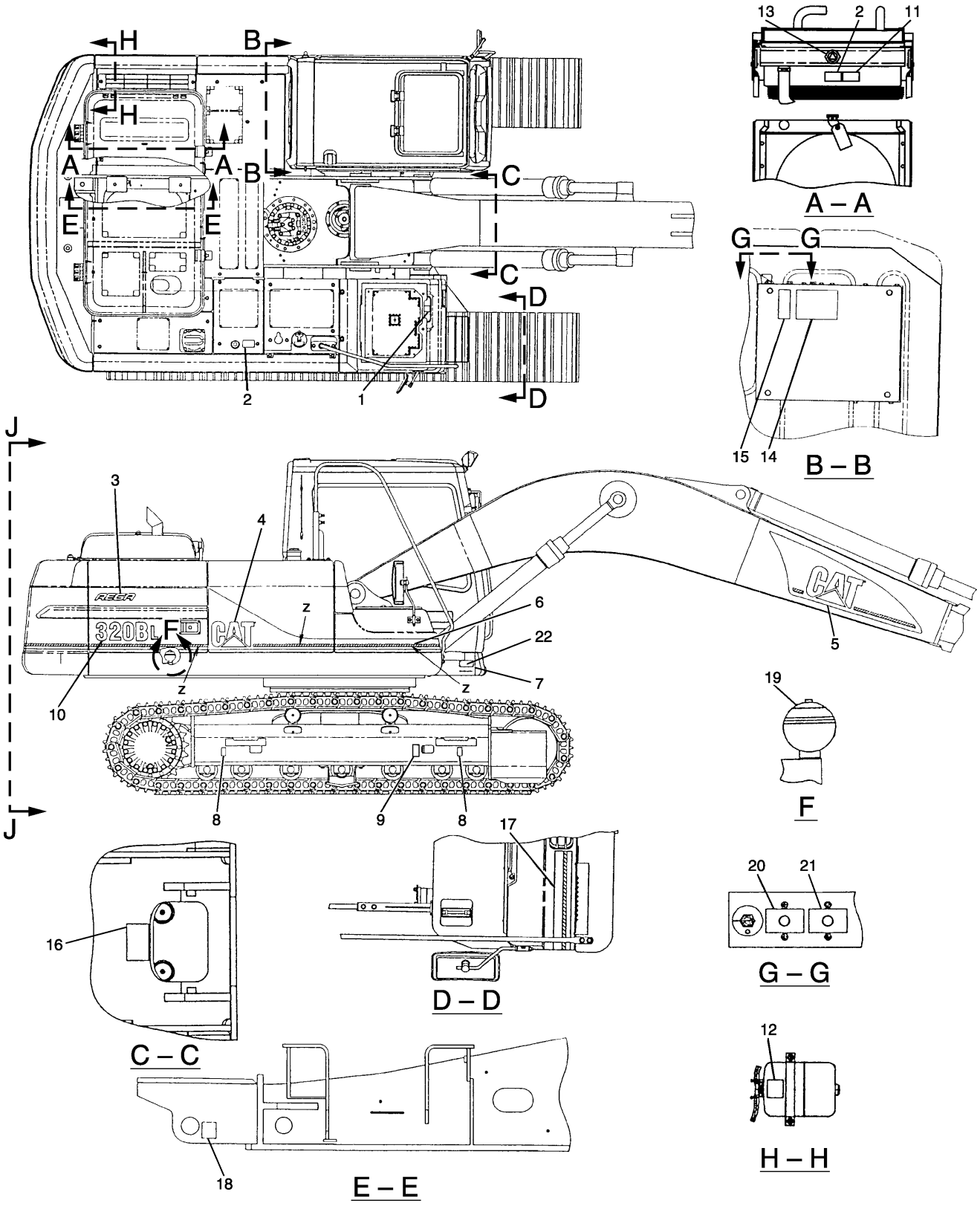

H82152E 10

116-1600 PLATE & FILM GP (1/3)
S/N 4MR 00971-Up

SERVICE EQUIPMENT AND SUPPLIES

NOTE	No.	PART No.	QTY	PART NAME	NOTE	No.	PART No.	QTY	PART NAME
	1	127-5286	1	FILM (INSTRUCTION)					
	2	160-6822	2	FILM (WARNING)					
	3	155-7177	1	FILM (REGA)					
	4	105-7545	1	FILM (CAT)					
	5	127-5282	1	FILM (CAT)					
E	6	134-6146		FILM (STRIPE)…(440cm)					
	7	4B-4158	4	SCREW					
	8	1P-2807	2	FILM (LIFT)					
	9	160-6832	1	FILM (WARNING)					
	10	134-6120	1	FILM (320BL)					
	11	160-6841	1	FILM (WARNING)					
	12	134-7258	1	FILM (ELC)					
	13	120-5107	1	FILM (INSTRUCTION)					
	14	3Y-8905	1	FILM (WARNING)					
	15	7I-6508	1	FILM (NOTICE)					
	16	116-1528	1	FILM (NOTICE)					
	17	116-1552	1	FILM (STRIPE)					
	18	7X-7644	2	FILM (TIE DOWN)					
	19	120-5063	1	FILM (WARNING)					
	20	4I-2927	1	FILM (CIRCUIT BREAKER)					
	21	127-5281	1	FILM (CIRCUIT BREAKER)					
Z	22		1	PLATE (PIN)					

E—ORDER BY THE CENTIMETER

Z—NOT SERVICED

H82152E 10

116-1600 PLATE & FILM GP (1/3)

S/N 4MR 00971-Up

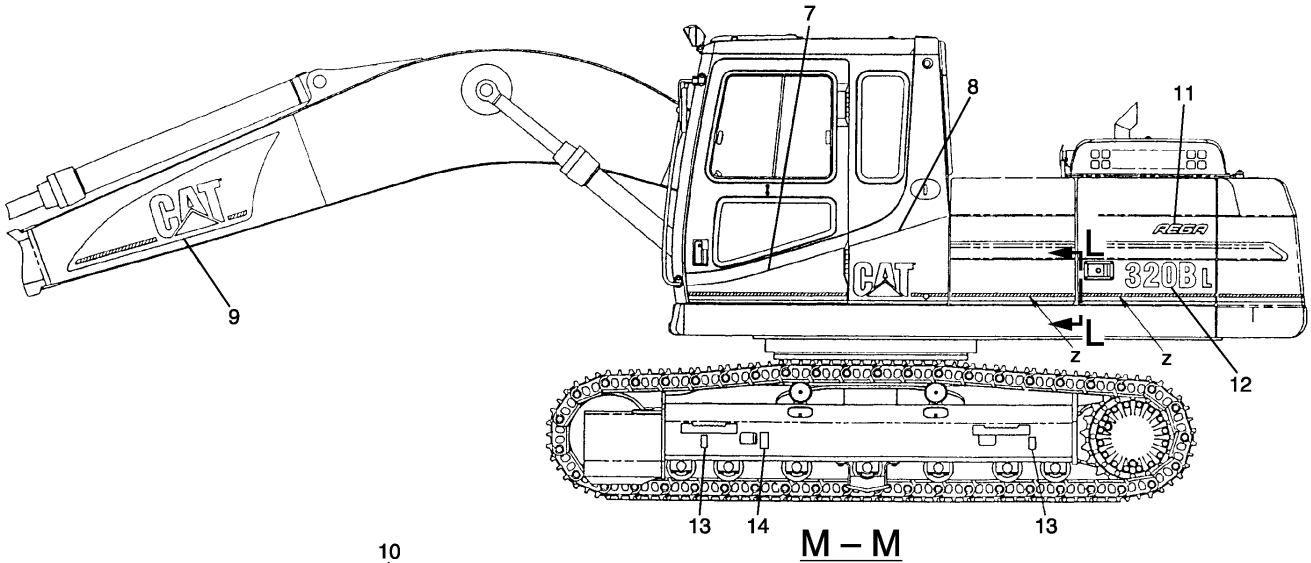

M – M

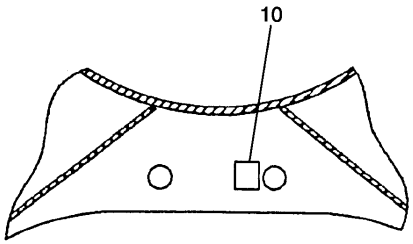

K – K

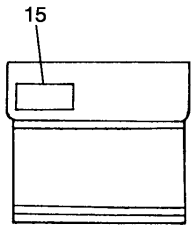

L – L

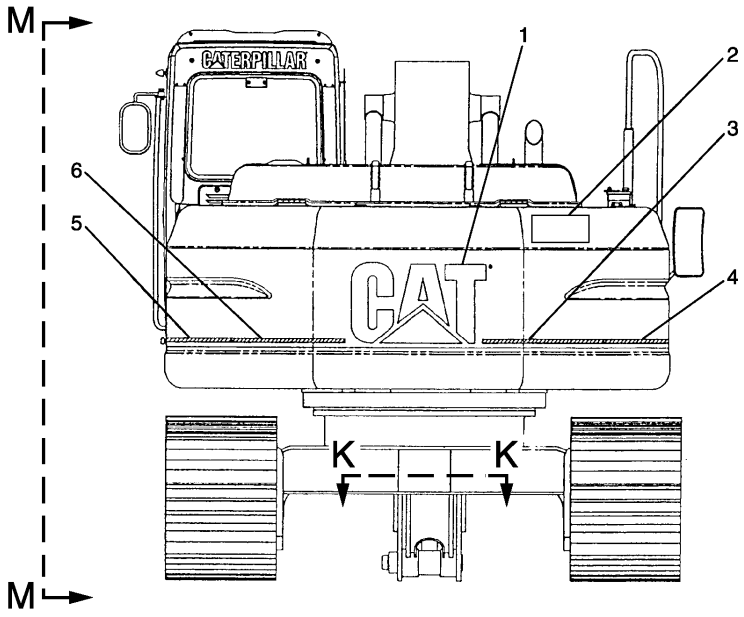

J – J

H82153E 10

116-1600 PLATE & FILM GP (2/3)
S/N 4MR 00971-Up

SERVICE EQUIPMENT AND SUPPLIES

NOTE	No.	PART No.	QTY	PART NAME	NOTE	No.	PART No.	QTY	PART NAME
	1	116-1545	1	FILM (CAT)					
	2	160-6871	1	FILM (DANGER)					
	3	120-5082	1	FILM (STRIPE)					
	4	117-8450	1	FILM (STRIPE)					
	5	116-1546	1	FILM (STRIPE)					
	6	116-1569	1	FILM (STRIPE)					
	7	127-5284	1	FILM (STRIPE)					
	8	127-5285	1	FILM (CAT)					
	9	127-5283	1	FILM (CAT)					
	10	7X-7644	2	FILM (TIE DOWN)					
	11	155-7177	1	FILM (REGA)					
	12	134-6120	1	FILM (320BL)					
	13	1P-2807	2	FILM (LIFT)					
	14	160-6832	1	FILM (WARNING)					
	15	4P-6422	1	FILM (WARNING)					

H82153E 10

116-1600 PLATE & FILM GP (2/3)
S/N 4MR 00971-Up

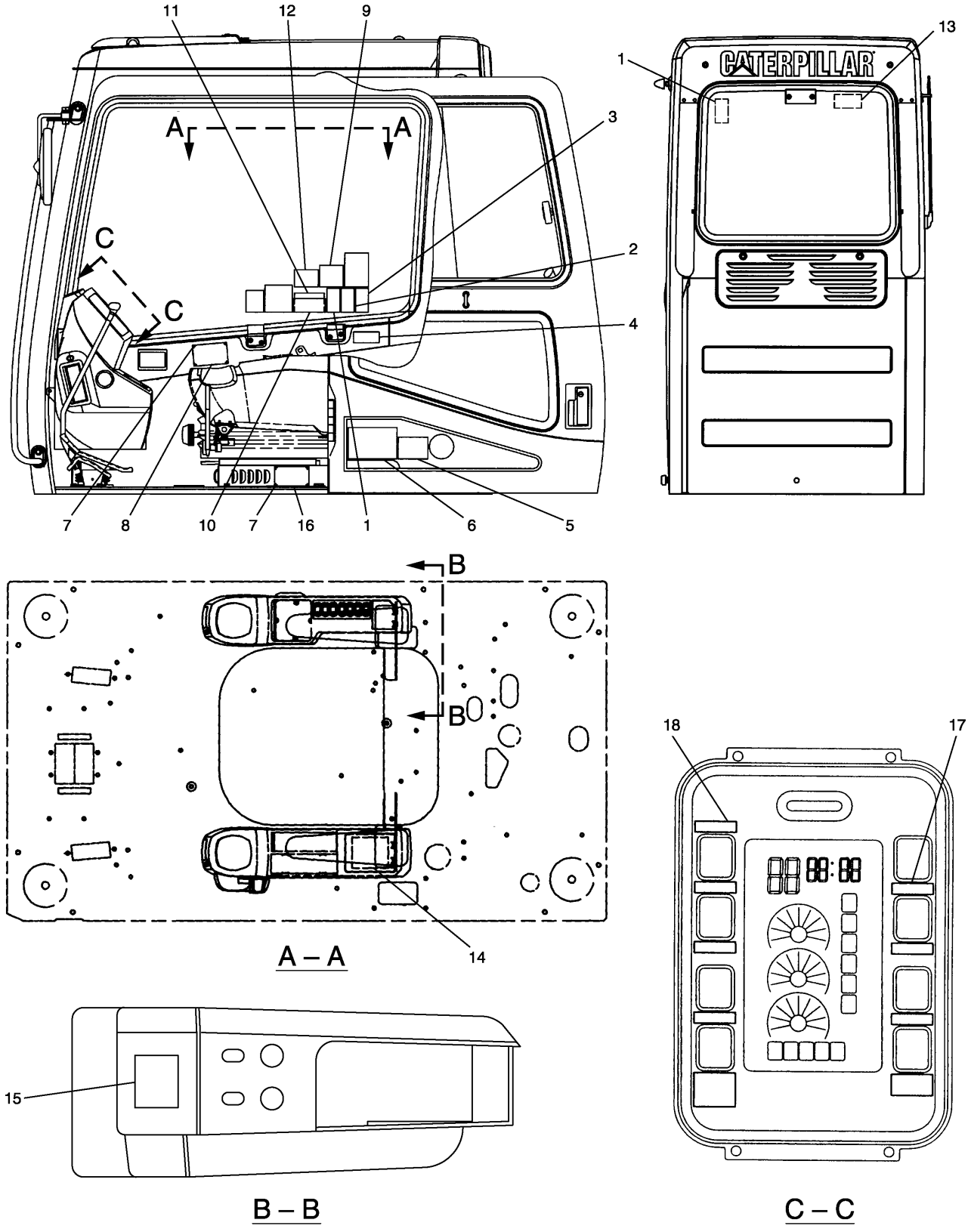

H82154E 10

116-1600 PLATE & FILM GP (3/3)
S/N 4MR 00971-Up

SERVICE EQUIPMENT AND SUPPLIES

NOTE	No.	PART No.	QTY	PART NAME	NOTE	No.	PART No.	QTY	PART NAME
	1	160-6848	2	FILM (WARNING)					
	2	160-6850	1	FILM (DANGER)					
	3	160-6845	1	FILM (WARNING)					
	4	7I-1908	1	FILM (NOTICE)					
	5	137-0988	1	FILM					
	6	4I-1987	1	FILM (LUBRICANT CHART)					
	7	4B-4158	8	SCREW					
	8	160-6870	1	PLATE (WARNING)					
	9	127-5295	1	FILM (WARNING)					
	10	4I-2885	1	CASE					
	11	7I-1533	1	PLATE (INSTRUCTION)					
	12	127-5272	1	FILM (WARNING)					
	13	101-2842	1	FILM (EMERGENCY EXIT)					
	14	155-7110	1	FILM (INSTRUCTION)					
	15	116-1523	1	FILM (INSTRUCTION)					
Z	16		1	PLATE (SIN)					
	17	127-5305	1	FILM (INSTRUCTION)					
	18	127-5304	1	FILM (INSTRUCTION)					

Z—NOT SERVICED

H82154E 10

116-1600 PLATE & FILM GP (3/3)

S/N 4MR 00971-Up

MEMORANDA

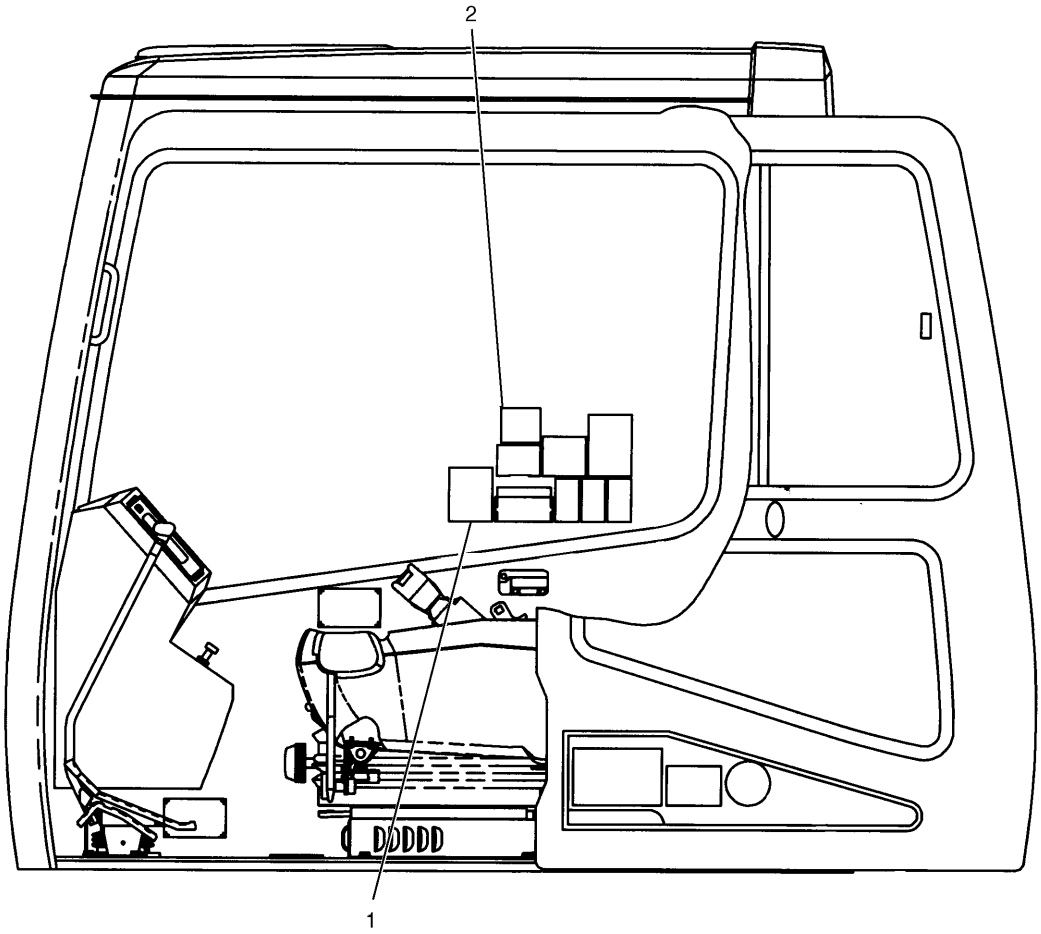

NOTE	No.	PART No.	QTY	PART NAME	NOTE	No.	PART No.	QTY	PART NAME
	1	118-6054	1	FILM (NOTICE)					
	2	127-5251	1	FILM (INSTRUCTION)					

H51478E 00

120-5115 FILM GP

Single Function
Part of 127-6676-Page229
An Attachment

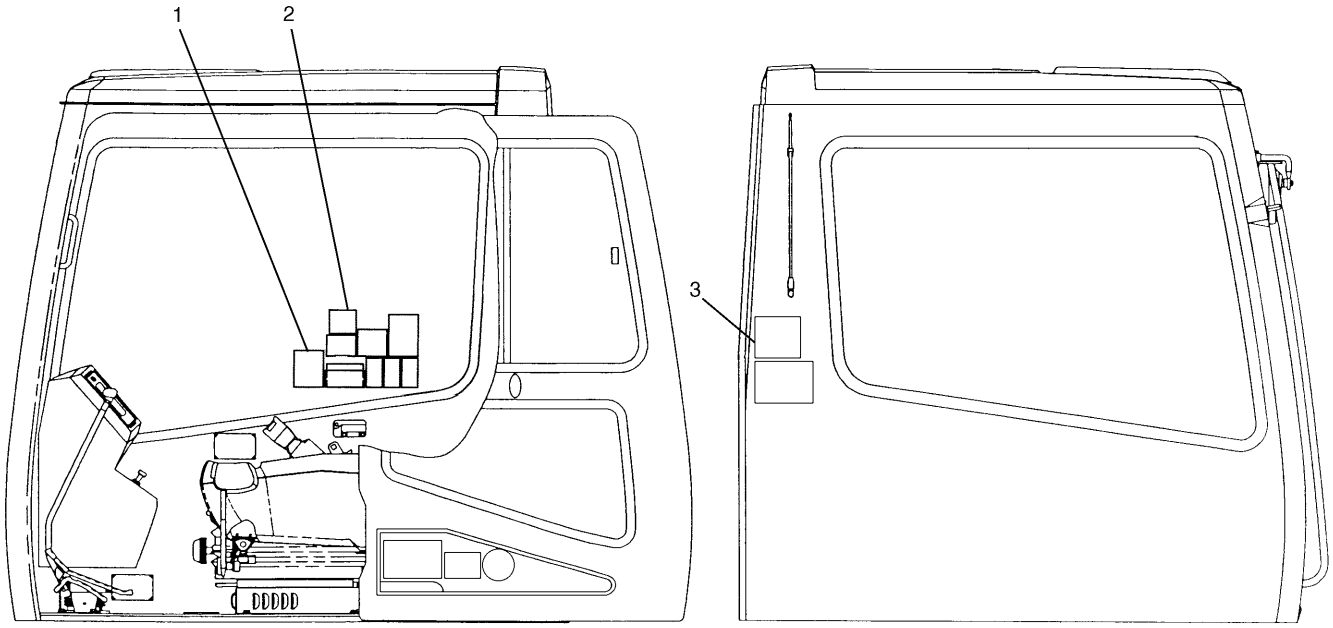

NOTE	No.	PART No.	QTY	PART NAME	NOTE	No.	PART No.	QTY	PART NAME
	1	118-6054	1	FILM (NOTICE)					
	2	127-5251	1	FILM (INSTRUCTION)					
	3	137-0997	1	FILM (INSTRUCTION)					

H82188E 02

120-5116 FILM GP
Part of 116-9035-Page229
An Attachment

SERVICE EQUIPMENT AND SUPPLIES

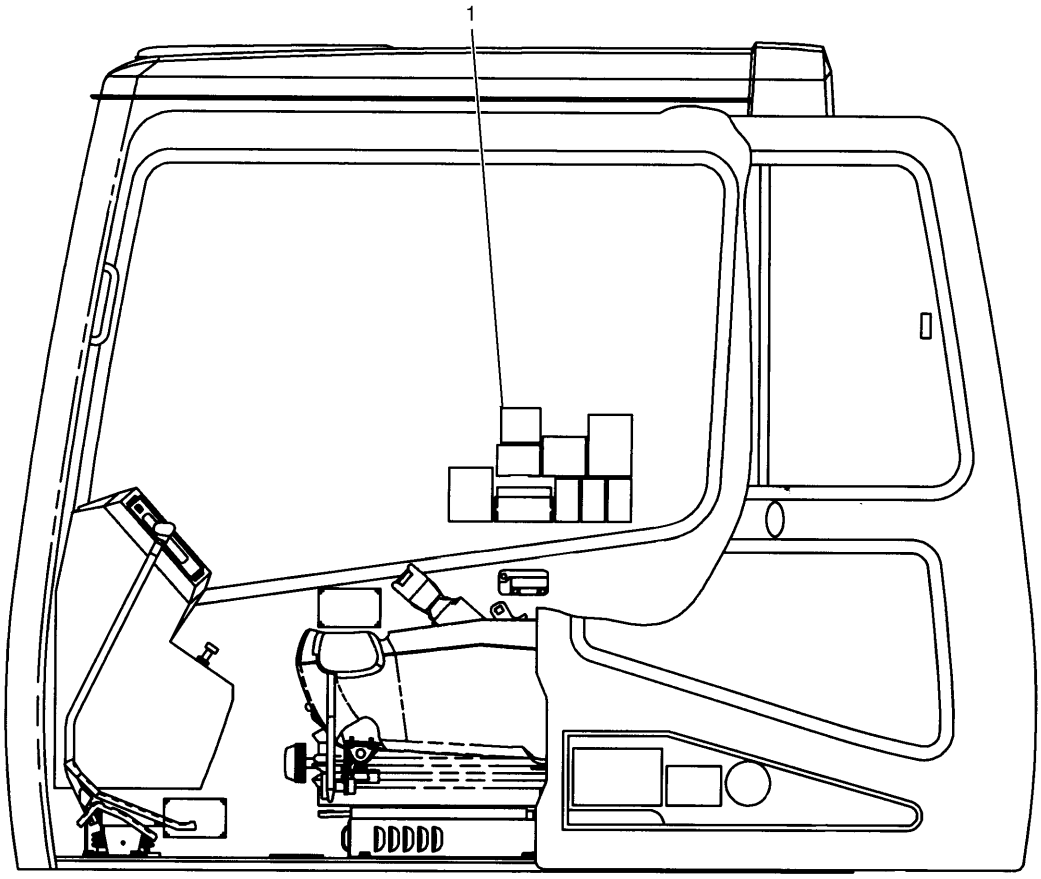

NOTE	No.	PART No.	QTY	PART NAME	NOTE	No.	PART No.	QTY	PART NAME
	1	127-5251	1	FILM (INSTRUCTION)					

H82155E 00

127-5248 FILM GP
Double Function
Part of 121-1969-Page230
An Attachment

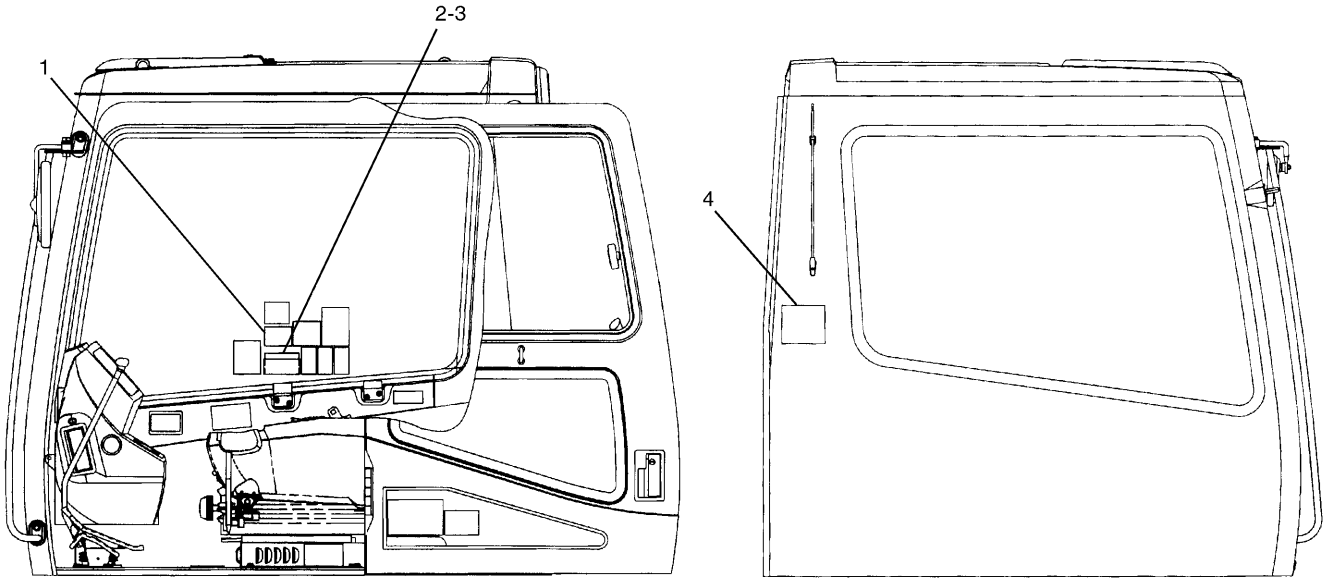

NOTE	No.	PART No.	QTY	PART NAME	NOTE	No.	PART No.	QTY	PART NAME
	1	120-5054	1	FILM (WARNING)					
	2	102-4861	1	PLATE					
	3	102-4862	1	PLATE (KOB,JIS/SCM)					
	4	102-4863	1	PLATE					

H80498E 04

120-5117 FILM GP
4 Way Valve
Part of 123-2466-Page292
An Attachment

MEMORANDA

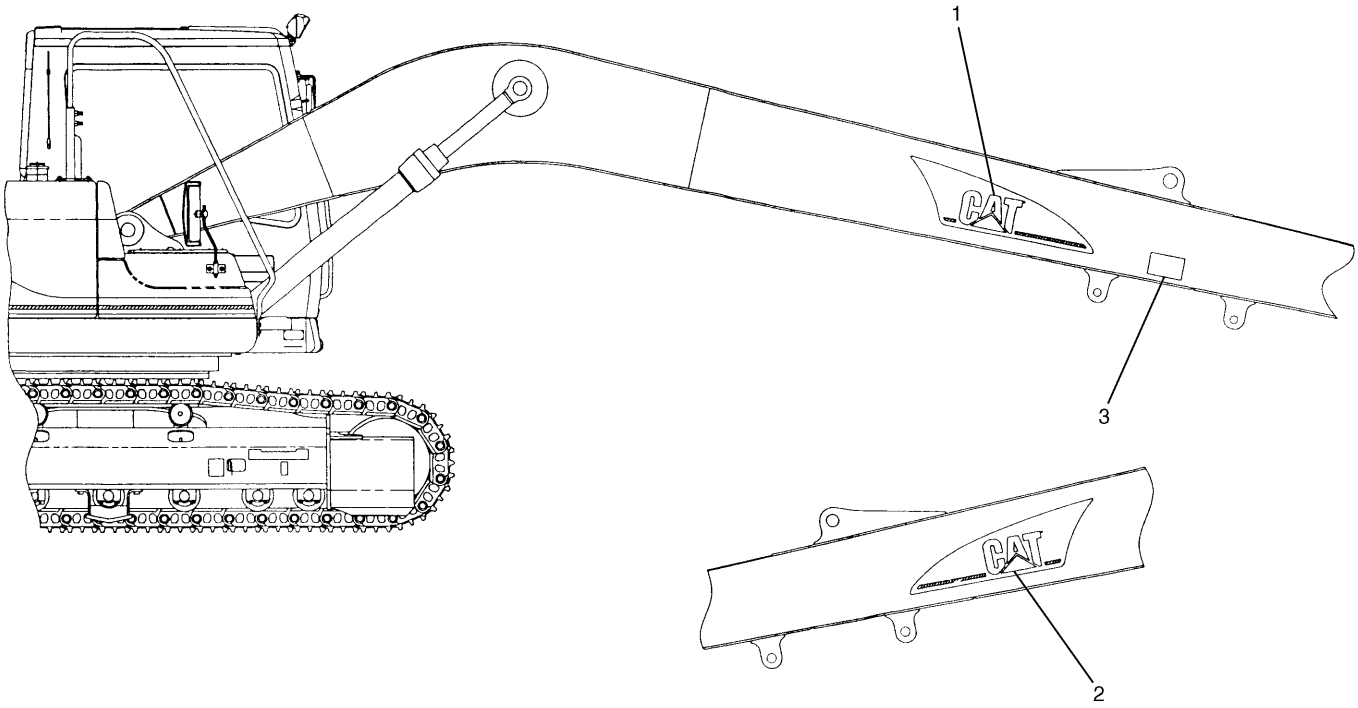

NOTE	No.	PART No.	QTY	PART NAME	NOTE	No.	PART No.	QTY	PART NAME
	1	132-4099	1	FILM (CAT)					
	2	132-4100	1	FILM (CAT)					
	3	116-9135	1	FILM (TRANSPORT)					

H82226E 01

127-5262 FILM GP (1/2)
S/N 4MR 1-Up
Part of 127-6615-Page383
An Attachment

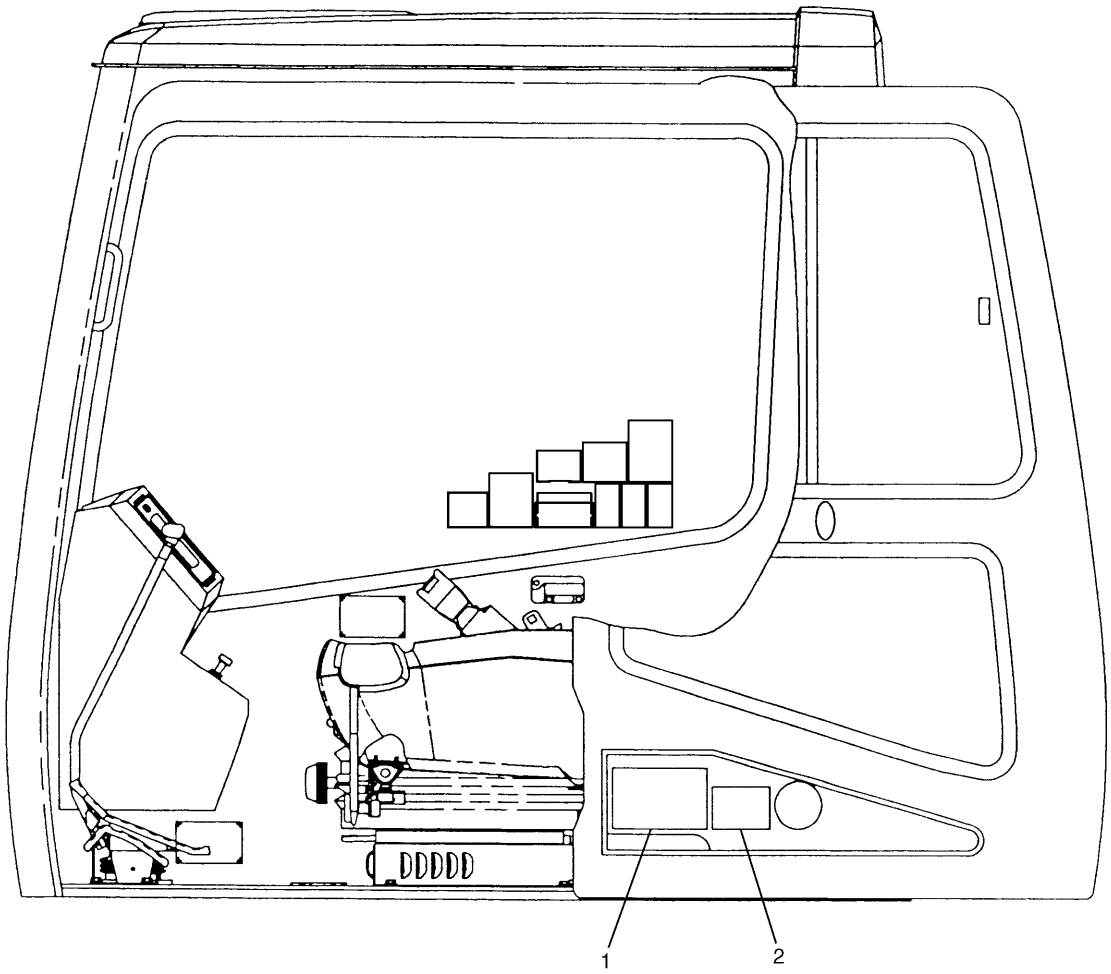

NOTE	No.	PART No.	QTY	PART NAME	NOTE	No.	PART No.	QTY	PART NAME
	1	7I-6571	1	FILM (LUBRICANT CHART)					
	2	134-6102	1	FILM					

H82227E 01

127-5262 FILM GP (2/2)

S/N 4MR 1-Up
Part of 127-6615-Page383
An Attachment

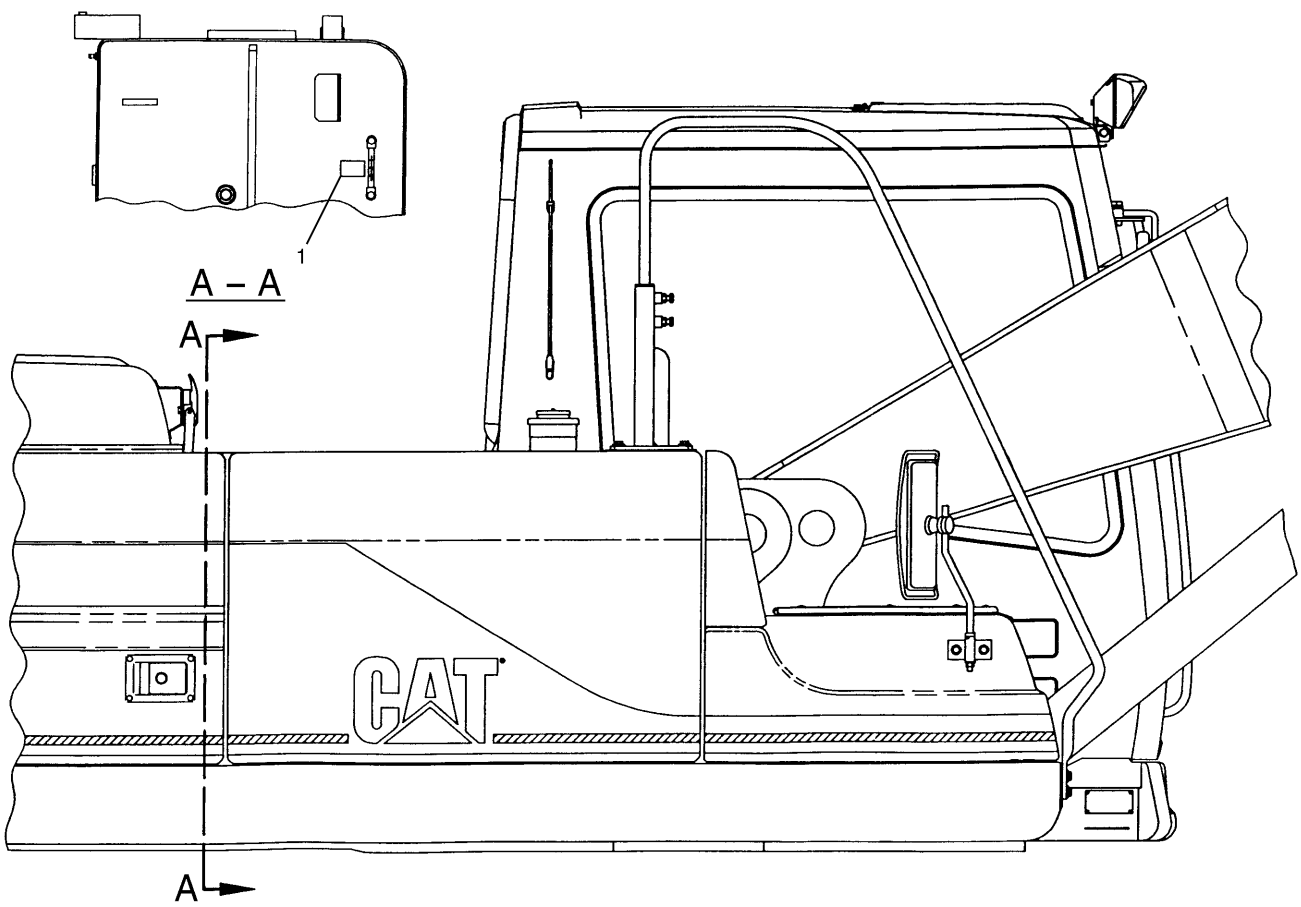

NOTE	No.	PART No.	QTY	PART NAME	NOTE	No.	PART No.	QTY	PART NAME
	1	154-0779	1	FILM					

H62699E 00

154-0778 FILM GP
An Attachment

MEMORANDA

Consists of :

			Page
1	135-2373	GASKET & SEAL KITS.....	447
1	135-2375	GASKET & SEAL KITS.....	448

H57598E 00

135-2371 GASKET & SEAL KITS

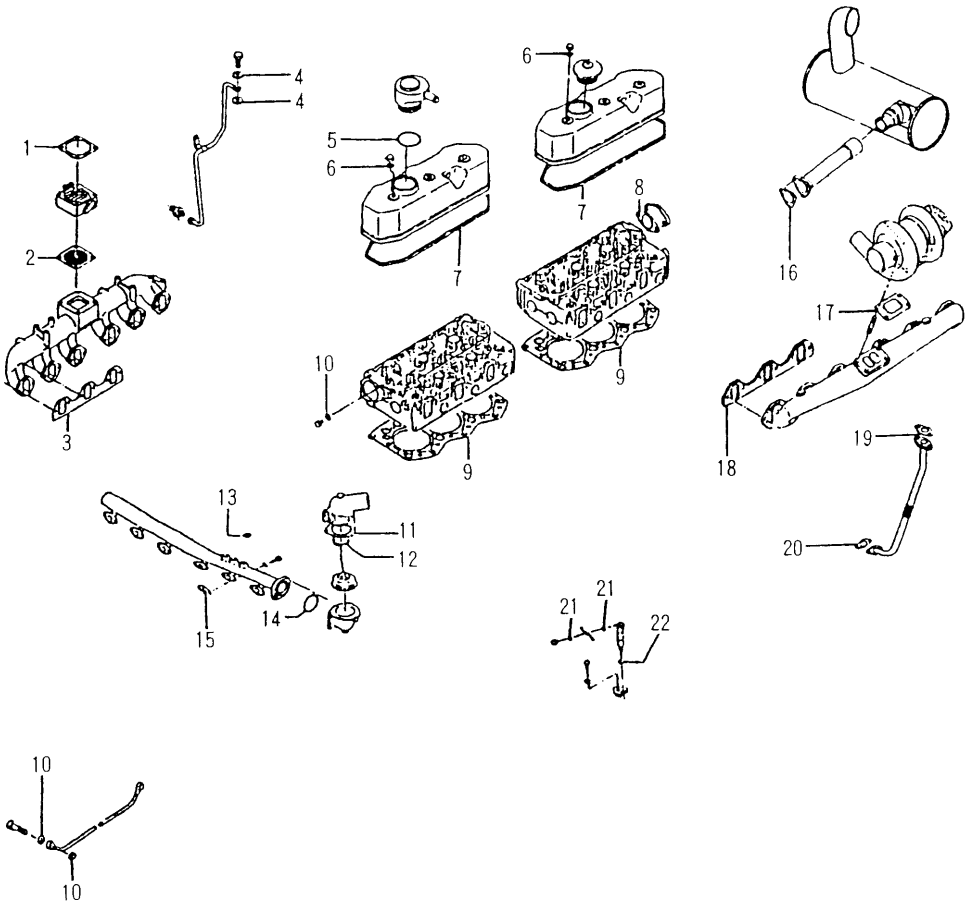

NOTE	No.	PART No.	QTY	PART NAME	NOTE	No.	PART No.	QTY	PART NAME
	1	5I-7678	1	GASKET		21	085-7269	12	WASHER
	2	5I-7677	1	GASKET		22	1R-6573	6	GASKET
	3	135-2367	2	GASKET					
	4	2A-5222	2	WASHER					
	5	094-9672	1	SEAL-O-RING (ID=41.20mm)					
	6	094-7471	6	GASKET					
	7	5I-8002	2	GASKET					
	8	5I-7728	1	GASKET					
	9	5I-7648	2	GASKET					
	10	095-2038	5	WASHER					
	11	5I-7572	1	GASKET					
	12	5I-7735	1	GASKET					
	13	096-9532	2	WASHER					
	14	095-1663	1	SEAL-O-RING (ID=54.40mm)					
	15	2M-5446	6	GASKET					
	16	5I-7679	1	GASKET					
	17	5I-7742	1	GASKET					
	18	5I-7681	2	GASKET					
	19	5I-7689	1	GASKET					
	20	5I-7561	1	GASKET					

H57599E 00

135-2373 GASKET & SEAL KITS

Upper

Part of 135-2371-Page446

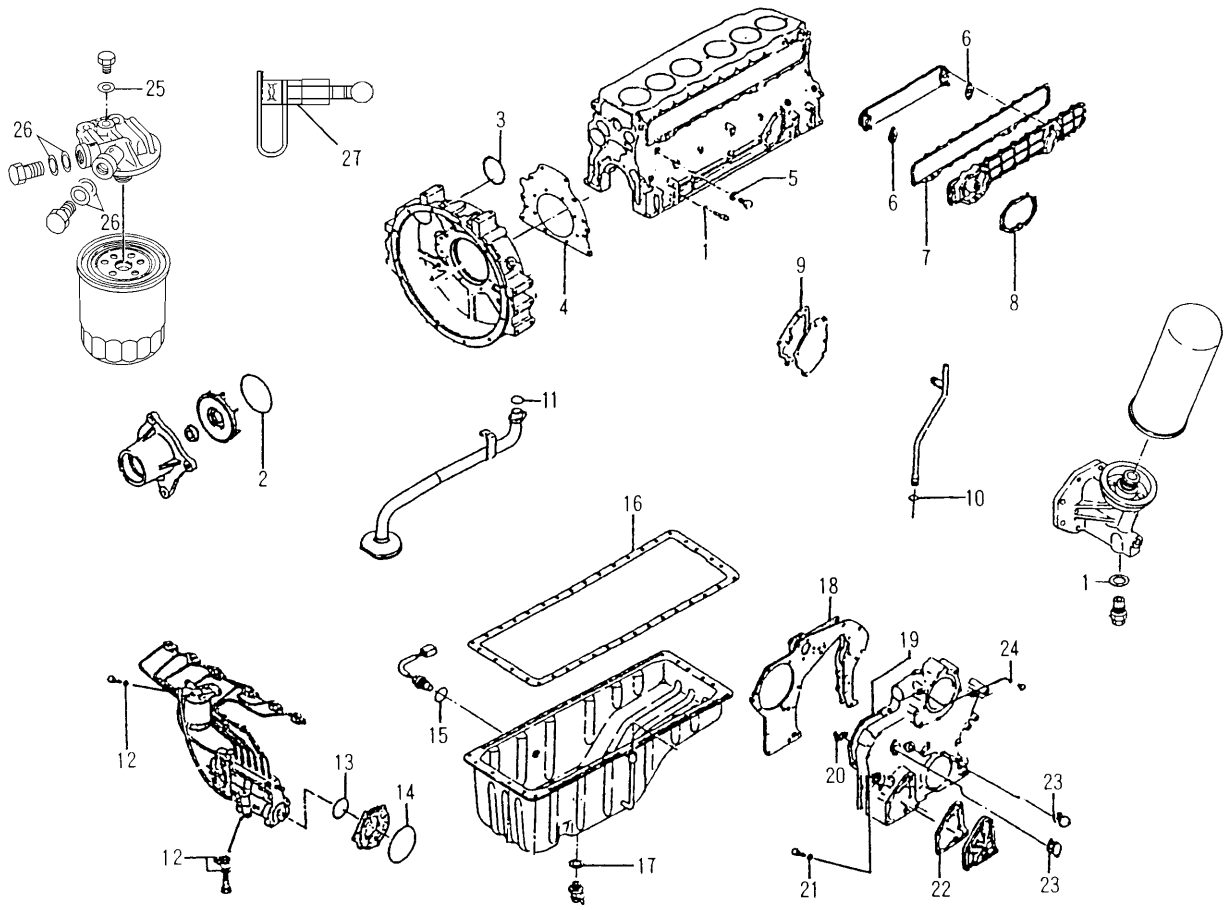

NOTE	No.	PART No.	QTY	PART NAME	NOTE	No.	PART No.	QTY	PART NAME
	1	5B-5947	2	GASKET		21	2Y-5872	1	GASKET
	2	096-9528	1	SEAL-O-RING (ID=109.50mm)		22	5I-7684	1	GASKET
	3	5I-7599	1	SEAL-O-RING (ID=79.50mm)		23	6F-7557	2	GASKET
	4	5I-7661	1	GASKET		24	096-9532	1	WASHER
	5	095-2039	1	WASHER		25	096-9014	1	GASKET
	6	5I-7691	2	GASKET		26	096-9013	4	GASKET
	7	5I-7690	1	GASKET		27	3J-7354	1	SEAL-O-RING (ID=8.92mm)
	8	125-2979	1	GASKET					
	9	125-2972	1	GASKET					
	10	5I-4993	1	SEAL					
	11	5I-5038	1	SEAL-O-RING (ID=24.40mm)					
	12	095-2040	6	WASHER					
	13	5I-7744	1	SEAL-O-RING (ID=74.50mm)					
	14	096-9529	1	SEAL-O-RING (ID=139.50mm)					
	15	125-2968	1	SEAL					
	16	5I-7666	1	GASKET					
	17	5I-8067	1	WASHER					
	18	5I-7534	1	GASKET					
	19	5I-7658	1	GASKET					
	20	5I-7657	1	GASKET					

H57600E 00

135-2375 GASKET & SEAL KITS

Lower

Part of 135-2371-Page446

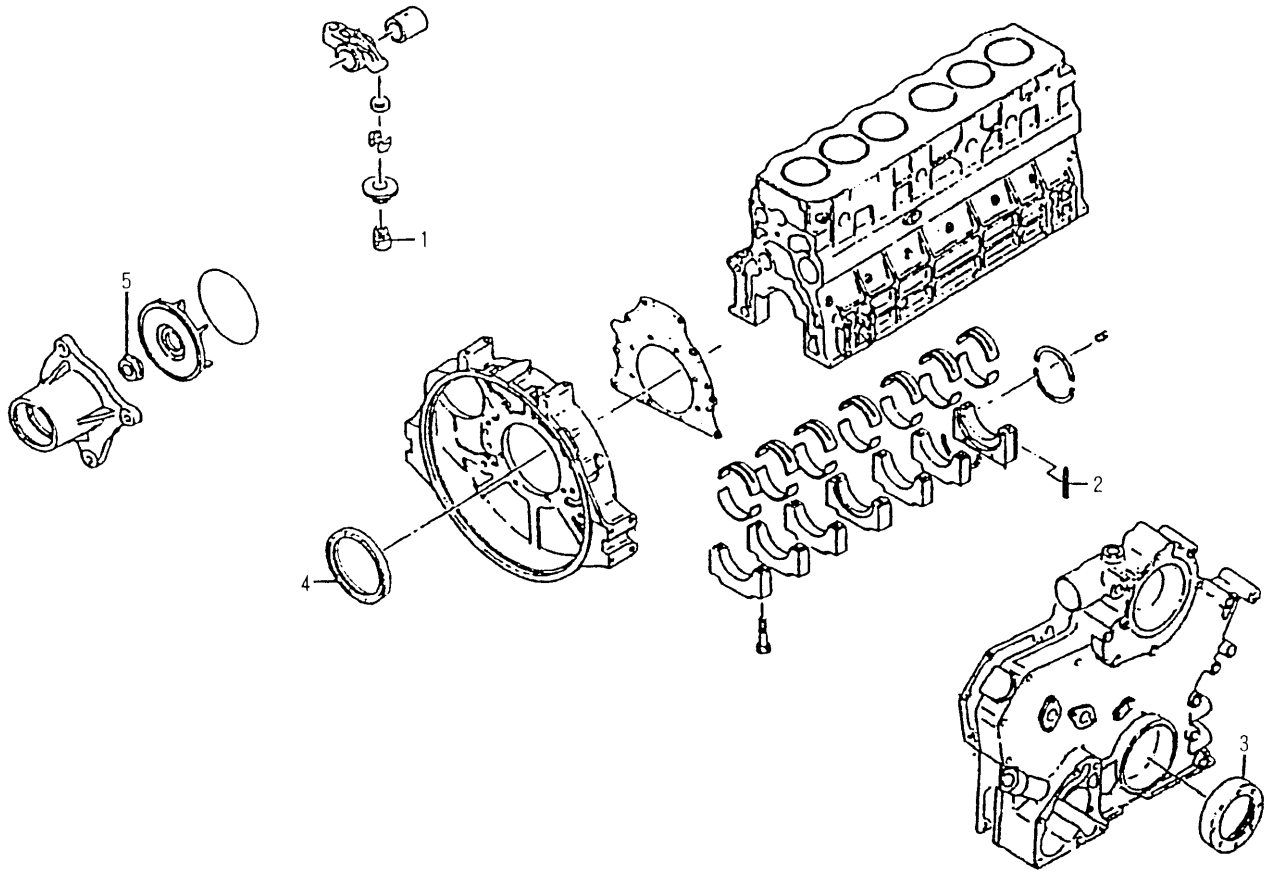

NOTE	No.	PART No.	QTY	PART NAME	NOTE	No.	PART No.	QTY	PART NAME
	1	5I-7624	12	SEAL					
	2	5I-7524	2	SEAL					
	3	5I-7656	1	SEAL					
	4	5I-7660	1	SEAL AS					
	5	125-2990	1	SEAL					

H57601E 00

135-2380 GASKET & SEAL KITS

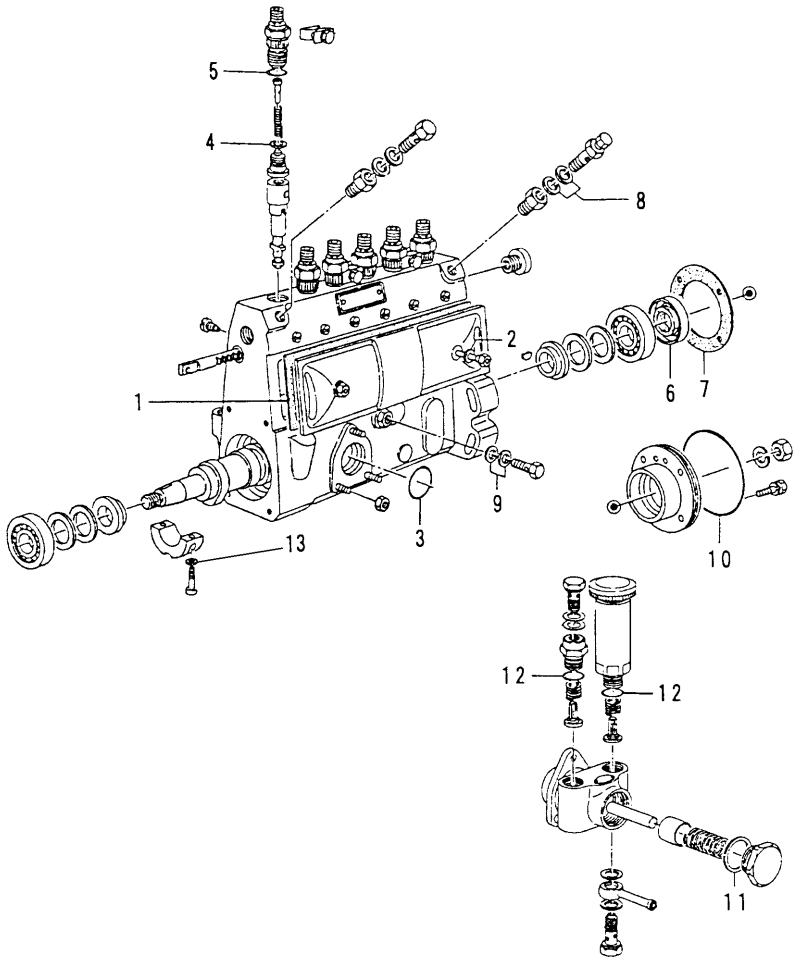

NOTE	No.	PART No.	QTY	PART NAME	NOTE	No.	PART No.	QTY	PART NAME
	1	5I-7508	1	GASKET					
	2	099-2389	2	GASKET					
	3	096-8294	1	SEAL-O-RING					
	4	096-8307	6	GASKET					
	5	096-8290	6	SEAL					
	6	096-7571	1	SEAL					
	7	125-2937	1	GASKET					
	8	5I-5148	2	GASKET					
	9	096-7632	2	GASKET					
	10	096-7570	1	SEAL-O-RING					
	11	125-2943	1	GASKET					
	12	096-8288	2	SEAL-O-RING					
	13	096-9385	2	GASKET					

H61650E 00

135-2378 GASKET & SEAL KITS
Pump, Emission Control

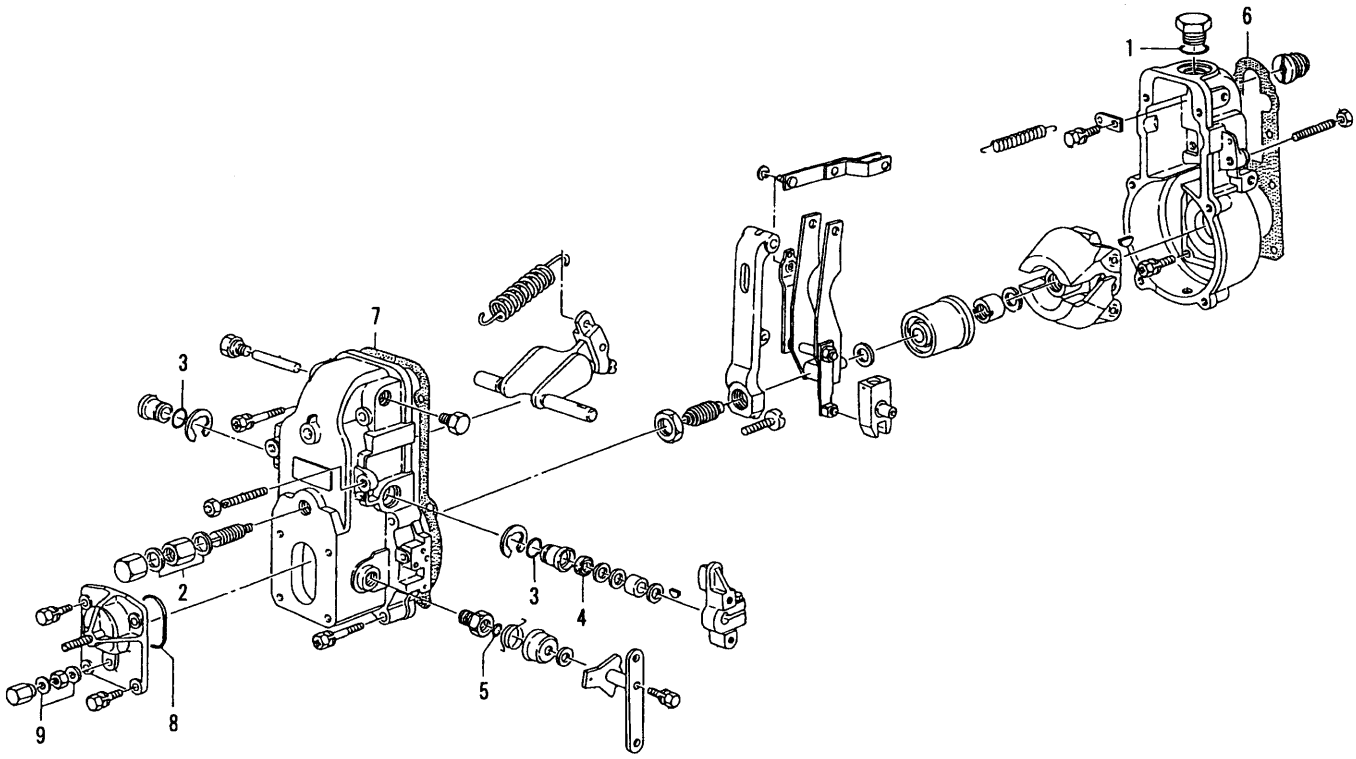

NOTE	No.	PART No.	QTY	PART NAME	NOTE	No.	PART No.	QTY	PART NAME
	1	096-8292	1	SEAL-O-RING					
	2	096-8274	2	GASKET					
	3	096-8289	2	SEAL-O-RING					
	4	096-7567	1	SEAL					
	5	096-8286	1	SEAL					
	6	125-2939	1	GASKET					
	7	1R-9210	1	GASKET					
	8	096-8297	1	SEAL-O-RING					
	9	085-7914	2	GASKET					

H60955E 00

135-2379 GASKET & SEAL KITS
Governor

PART NUMBER INDEX

Part.No	Page
0	
0S-1570	77.08
	77.09
1	
1H-3244	77
	77.02
	77.04
	77.06
	77.08
	77.09
1H-3338	363.01
	366.01
1J-8497	300
1M-6119	74
	75
	93
1M-6120	74
	75
	93
1P-0551	431
1P-0808	431
1P-1376	235
	235.02
	235.04
	235.06
	236
	237
	238
	239
	240
1P-2807	433
	435
	438.01
	438.03
	438.05B
	438.05D
	438.05H
	438.05J
	438.07
	438.09
	438.13
	438.15
	438.19
	438.21
	438.25
	438.27
1P-3702	255
	275
	275.01
	309.02
1P-3703	221
	221.02
	221.04
	221B
	223
	225
	226
	227
	227.02
	245
	245.04
	245.08
	247
	247.02
	247.06
	247.07
	249
	249.02
	251
	251.02
1P-3704	213
	214
	221
	221.02
	221.04
	221B
	247
	247.02
	247.04
	249
1P-3705	214
	221
	221.02
	247.02
	247.04
	247.06
	251
1P-4278	172
1P-4578	254
	254.02
1P-5767	214
	221
	221.02
	221.04
	221B
	247.02
	247.04
	251
1R-0739	32
	32A
1R-5708	50.05
1R-5998	321
	323
	323.02
	323.04
	323.06
	323.08
1R-6573	49
	447
1R-8903	414
1R-8962	177
	179.02
1R-9206	50
	50.07
1R-9210	50.04
	50.09
	451
1R-9958	119
	123.02
	123.06B
	123.08
	123.14
1S-0994	373.01
	373.04
1S-7251	61
	63
	63.02
	63.06

PART NUMBER INDEX

Part.No	Page
	63.08B
1S-7252	61
	63.02
	63.06
	63.08B
	74
	75
	93
1S-9593	94.04
	94.05
	94.05C
	94.05D
	94.05E
	94.05F
	94.05G
	94.05H
	301
1T-0936	279
	279.04
1U-2827	173
1U-3252	413
1U-3301	424
1U-3302	423
1U-3351	427
1U-3352	426
1U-7563	431
1U-7564	431
1U-8846	110.01
	110.03
	112
	113.02
	115
	147
	149
	149.02
	180
	180.01
	180.02
	223
	225
	269

Part.No	Page
2A-5222	32.01
	447
2B-7561	149.02
2D-1290	343
2D-6642	176
	179.01
	179.10
	265
2G-8767	61
	63
	63.02
	63.04
	63.06
	63.08
	63.08B
	63.08D
	63.10
	63.12
2H-3814	37
2H-3922	79
	93
2H-6338	227
2J-3507	422
2L-0704	78.05
2L-8049	67
	68.02
	68.05
2L-8050	67
	68.02
	68.05
	72
	72.03
	72.06
	72.09
	76
	77
	77.01
	77.02
	77.03
	77.04
	77.05
	77.06
	77.07
	77.08

Part.No	Page
	77.09
	77.10
2L-8051	76
	77
	77.01
	77.02
	77.03
	77.05
	77.06
	77.07
	77.08
	77.09
	77.10
	78
	78.01
	78.02
	78.03
	78.04
	78.05
2L-8058	67
	68
	68.02
	68.03
	68.05
	68.06
	76
	77
2L-8065	78.05
2L-8066	78
	78.01
	78.02
	78.03
	78.04
	94.04
	94.05
	94.05C
	94.05D
	94.05E
	94.05F
	94.05G
	94.05H
2L-8067	67
	68.02
	68.05

2

PART NUMBER INDEX

Part.No	Page
	78
	78.01
	78.02
	78.03
	78.04
2L-8075	66
	67
	68.01
	68.02
	68.04
	68.05
	73
	78.05
	87
	87.02
	87.04
	94.04
	94.05
	94.05C
	94.05D
	94.05E
	94.05F
	94.05G
	94.05H
	94.08
	107
	107.02
	107.04
	107B
	108
	109.02
2L-8076	78
	78.01
	78.02
	78.03
	78.04
	78.05
2L-8077	78.03
	78.04
	78.05
2L-8078	78
	78.01
	78.02
	78.03
	78.04
2M-0849	173
	353
2M-5446	447
2M-9780	235
	235.02
	235.04
	235.06
	241
	242.01
	265
	266
	276
	300
2P-1279	233
	233.02
	233.04
	233.06
2P-2975	303.02
2P-6732	221
	221.02
	221.04
	221B
2P-6733	221
	221.02
	221.04
	221B
	247.02
	251
2P-8250	431
2P-8253	431
2R-6806	227.02
	233
	233.02
	233.04
	233.06
	235
	235.02
	235.04
	235.06
	236
	237
	238
	239
	240
	241
	242.01
2S-2596	291
	291.01
	291.01A
	291.02
	291A
	291B
2S-3440	31
	38
	53
	56
	56.01
2S-4078	56
	56.01
	287
	287.04
	287.08
2S-5926	158.01
2W-6047	15
2Y-5503	110.01
	110.03
2Y-5685	328
2Y-5872	21
	448

3

Part.No	Page
3B-0551	56
	56.01
3B-4501	108.01
	108.01A
	109
	109.01
3B-4503	97
	97.01
3B-4505	14
3B-4509	195
	196
3B-4510	177
	179.02

PART NUMBER INDEX

Part.No	Page
	323
	323.04
	323.08
3B-4618	119
	121
	123.04
	123.06D
	123.08
	123.10
	123.14
	123.16
3B-4619	123.02
3B-8489	147
	149
	149.01
	187
	188
	189
	190
	191
	192
	193
	193.01
	384
	385
	386
	387
	388
	389
	390
	391
	392
	393
	394
	395
	396
	397.02
	397.04
	397.10
	397.10A
	397.12
	398
	399
	400
	401
3D-2824	172
	176
	179.01
	223
	225
	227.02
	235
	235.02
	235.04
	235.06
	245.08
	255
	279
	279.04
	282.01
	285
	289
	289.01
	308.03
3D-2891	178
	179.03
	179.14
3D-9143	137.02
	137.04
	139.02
	139.04
3E-2338	112
	113.01
	114
3E-3217	165.01
3E-3362	66
	67
	68
	68.01
	68.02
	68.03
	68.04
	68.05
	68.06
	71
	72
	72.02
	72.03
	72.05
	72.06
	72.08
	72.09
	73
	78
	78.01
	78.02
	78.03
	78.04
	78.05
	86
	87.01
	87.03
	92
	95
	96
	233
	233.02
	233.04
	233.06
3E-3365	63.10
	68
	68.01
	68.03
	68.04
	68.06
	72
	72.03
	72.06
	72.09
	85
	85.02
	85.02B
	85.04
	85B
	91.03
	91.04
	94.08
	100.01
	172
	233
	233.02
	233.04

PART NUMBER INDEX

Part.No	Page
	233.06
	237
	238
	240
	373.02
	373.04
3E-3368	66
	68.01
	68.04
	70
	72.01
	72.04
	72.07
	85
	85.02
	85.02B
	85.04
	85B
3E-3371	70
	72.01
	72.04
	72.07
	88
3E-3374	66
	68.01
	68.04
	71
	72
	72.02
	72.03
	72.05
	72.06
	72.08
	72.09
	78
	78.01
	78.02
	78.03
	78.04
	78.05
	86
	87.01
	87.03
3E-3377	71
	72.02
	72.05
	72.08
	73
	86
	87.01
	87.03
	349
3E-3380	67
	68.02
	68.05
	70
	71
	72
	72.01
	72.02
	72.03
	72.04
	72.05
	72.06
	72.07
	72.08
	72.09
	78
	78.01
	78.02
	87
	87.02
	87.04
	94.08
3E-3383	51.02
	70
	72
	72.01
	72.03
	72.04
	72.06
	72.07
	85
	85.02
	85.02B
	85.04
	85B
	89
	94.04
	94.05E
	94.05F
3E-3386	70
	71
	72.01
	72.02
	72.04
	72.05
	72.07
	72.08
	85
	85.02
	85.02B
	85.04
	85B
	86
	87.01
	87.03
	94.05
	94.05C
	94.05D
	94.05G
	94.05H
3E-3389	70
	71
	72.01
	72.02
	72.04
	72.05
	72.07
	72.08
	86
	87.01
	87.03
	94.04
	94.05
	94.05C
	94.05D
	94.05E
	94.05F
	94.05G
	94.05H
	94.07

PART NUMBER INDEX

Part.No	Page
	96.01
3E-3391	72.08
3E-4062	221
	221.02
	221.04
	221B
	247.02
	251
3E-4069	216.01
	221
	221.02
	221.04
	221B
	247.02
	251
3E-4297	182.01
3E-5136	78.01
	78.02
	78.03
	78.04
	78.05
3E-5165	77.02
	77.04
	77.06
	77.08
	77.10
3E-5177	68
	68.03
	68.06
	71
	72
	72.02
	72.03
	72.05
	72.06
	72.08
	72.09
	78
	78.01
	78.02
	78.03
	78.04
	78.05
	85
	85.02
	85.02B
	85.04
	85B
	86
	87.01
	87.03
3E-5180	68
	68.03
	68.06
	70
	71
	72
	72.01
	72.02
	72.03
	72.04
	72.05
	72.06
	72.07
	72.08
	72.09
	78
	78.01
	78.02
	78.03
	78.04
	78.05
	85
	85.02
	85.02B
	85.04
	85B
	86
	87.01
	87.03
3E-6647	321
	323
	323.02
	323.04
	323.06
	323.08
3E-7738	100
	100.01
3E-7739	100.01
3E-8020	323
	323.04
	323.08
3E-8024	158
3E-8083	323
	323.04
	323.08
3E-8268	358
3E-8297	324.01
	324.03
3E-8320	77
	77.02
	77.04
	77.06
	77.08
	77.09
3E-9873	333.04
3G-3236	428
3G-3237	425
3J-1907	176
	177
	179.01
	179.02
	179.10
	179.12
	182.02
	221.06
	221.07
	223
	225
	227.02
	233
	233.02
	233.04
	233.06
	235
	235.02
	235.04
	235.06
	236
	237
	238
	239

PART NUMBER INDEX

Part.No	Page	Part.No	Page	Part.No	Page
	240		281.01		63.08B
	241		288		63.08D
	242.01		291		63.10
	243		291.01		63.12
	249		291.01A		66
	260		291.02		68
	261.01		291A		68.01
	266		291B		68.03
	279		300		68.04
	279.04		305		68.06
	293		308		70
	300		308.03		72
	302		309.02		72.01
	303		311		72.03
	308	3K-8107	103		72.04
	308.03		103.01		72.06
	309.02	3L-8187	88		72.07
	315		89		72.08
3J-7354	32	3M-6018	85		72.09
	32A		85.02		76
	173		85.02B		77.01
	227		85.04		77.03
	227.02		85B		77.05
	235.02		94.05C		77.07
	235.04		94.05D		77.09
	235.06		94.05G		78
	448		94.05H		78.01
3K-0360	172	3N-3252	288		78.02
	179.06	3P-0647	284		78.03
	179.08		303.02		78.04
	179.10	3P-1896	16		78.05
	180.01	3P-2001	235		80.05
	180.02		235.02		80.06
	223		235.04		80.09
	225	3R-6789	221		80.11
	227.02		221.02		80.13
	235		221.04		80.15
	235.02		221B		80.15B
	235.04	3S-2093	61		80.15D
	235.06		63		82
	265		63.02		82.01
	280.01		63.04		82.02
	280.02		63.06		83
	281		63.08		83.01

PART NUMBER INDEX

Part.No	Page	Part.No	Page	Part.No	Page
	85		71		418
	85.02		72		433
	85.02B		72.02		437
	85.04		72.03		438.01
	85B		72.05		438.05
	86		72.06		438.05B
	87		72.08		438.05F
	87.01		72.09		438.05H
	87.02		95		438.05L
	87.03		96		438.07
	87.04	3T-5760	61		438.11
	88		63.02		438.13
	91.02		63.06		438.17
	94.01		63.08B		438.19
	94.03		63.10		438.23
	94.03B		65		438.25
	94.03D		65.02		438.29
	94.07	3V-9744	214	4B-4278	323
	95	3W-6398	344	4B-9783	315
	96.01		347	4B-9784	241
	102	3W-6399	344		242.01
	227.02		347	4D-7794	16
	368.05	3Y-7597	431	4D-8123	397.06
3S-6049	74	3Y-8905	433		397.08
	75		438.01		397.08B
3S-6050	74		438.05B		397.13
	93		438.05H	4F-2294	76
3T-0376	76		438.07		77.01
	77.01		438.13		77.03
	77.03		438.19		77.05
	77.05		438.25		77.07
3T-1815	100.01			4I-0050	55
3T-4692	67				55.01
	68.02	4			56
	68.05				56.01
	71	4B-4158	157	4I-0117	119
	72.02		275		123.02
	72.05		275.01		123.06B
3T-4696	66		308.03		123.08
	67		356.01		123.14
	68.01		414	4I-0118	119
	68.02		415		123.02
	68.04		416		123.06B
	68.05		417		123.08

PART NUMBER INDEX

Part.No	Page
	123.14
4I-0123	55
	55.01
	56
	56.01
4I-0232	121
	123.06D
	123.10
	123.16
4I-0378	55
	55.01
	56
	56.01
	58
4I-0379	55
	55.01
	56
	56.01
4I-0453	398
4I-0465	384
	385
	386
	387
4I-0498	378
	397.10A
4I-0507	387
4I-0559	343
	344
4I-0755	108
4I-0890	247
	249.02
	304
4I-0891	304
4I-0892	304
4I-0893	304
4I-0911	176
	179.01
	179.10
4I-0912	176
	179.01
4I-1014	176
	179.01
	179.10
4I-1022	176
	179.01
	179.02
	179.10
4I-1059	227
4I-1062	227
4I-1071	245
	245.04
	245.08
4I-1074	245
	245.04
4I-1077	245
4I-1083	223
	225
4I-1163	348.01
4I-1170	367
	369.01
4I-1185	324.01
4I-1186	321
	323.02
4I-1205	323
	323.04
	323.08
4I-1206	321
	323.02
	323.06
4I-1251	369.01
4I-1260	326
4I-1268	324.01
	324.03
4I-1271	333.02
	333.04
4I-1273	321
	323.02
	323.06
	326
4I-1278	369.01
	369.02
4I-1401	227.02
4I-1410	235
	235.02
	235.04
	235.06
	236
	243
4I-1413	225
	233.02
	233.04
	233.06
4I-1422	235
	235.02
	235.04
	235.06
	241
	242.01
4I-1428	235
	235.02
	235.04
	235.06
	241
	242.01
4I-1434	235.04
4I-1449	240
4I-1452	233
4I-1455	223
	233
	233.02
	233.04
	233.06
4I-1464	235
	235.02
	235.04
	235.06
4I-1470	235
	235.02
	235.04
4I-1473	235
	235.02
	235.04
	235.06
4I-1607	253
	253.02
4I-1674	210
	212
	213
	245
	245.04
	245.08
4I-1676	210

PART NUMBER INDEX

Part.No	Page
	212
	213
	245
	245.04
	245.08
4I-1683	245
	245.04
	245.08
4I-1694	233
	233.02
	233.04
	233.06
4I-1845	238
4I-1987	437
	438.05
	438.05F
	438.05L
	438.11
	438.17
	438.23
	438.29
4I-2187	137.02
	137.04
	139.02
	139.04
4I-2604	431
4I-2605	431
4I-2885	437
	438.05
	438.05F
	438.05L
	438.11
	438.17
	438.23
	438.29
4I-2927	433
	438.01
	438.05B
	438.05H
	438.07
	438.13
	438.19
	438.25
4I-3043	94.03
	94.03B
	94.03D
	321
	323
	323.02
	323.06
4I-3045	321
	323.02
4I-3053	321
	323.02
4I-3054	327
4I-3063	321
	323.02
	323.06
4I-3064	94.03
	94.03B
	94.03D
4I-3066	321
	323.02
	323.06
4I-3071	324.01
	327
	328
4I-3072	324.01
	327
	328
4I-3078	333.02
	333.04
4I-3081	329
4I-3087	321
	323
	323.02
	323.04
	323.08
4I-3089	321
	323.02
	323.06
	333.02
	333.04
	339.02
	339.04
4I-3090	321
	323
	323.02
	323.04
	323.06
	323.08
4I-3096	321
	323.02
	323.06
4I-3097	324.01
	324.03
4I-3123	103.01
4I-3124	324.01
	324.03
4I-3144	103
	103.01
	321
	323.02
	323.06
4I-3266	358.02
4I-3308	384
	385
	386
	387
4I-3309	384
	385
	386
	387
4I-3400	368.01
	368.05
4I-3503	61
	63.02
	63.06
	63.08B
	63.10
4I-3510	289
	289.01
4I-3569	291
	291.01
	291.01A
	291.02
	291A
	291B
4I-3611	187
	191
4I-3614	187
	191

PART NUMBER INDEX

Part.No	Page
4I-3615	187
	191
4I-3616	196
4I-3617	196
4I-3618	195
4I-3619	195
4I-3620	195
4I-3621	195
	196
4I-3626	188
	189
4I-3627	188
	189
4I-3628	188
	189
	192
4I-3631	188
	189
4I-3659	200
4I-3741	172
	181
4I-3743	173
4I-3745	173
4I-3820	210
	212
4I-3823	210
	212
4I-3873	289
4I-3948	181
4I-3964	216
	380
4I-3972	215
	378
4I-4204	326
	327
4I-4205	327
4I-4213	324.01
	324.03
4I-4224	333.02
	333.04
4I-4228	321
	323.02
	323.06
4I-4241	321
	323.02
	323.06
4I-4242	327
4I-4243	323
	323.04
	323.08
4I-4244	324.01
	324.03
4I-4250	324.01
	324.03
4I-4251	321
	323.02
4I-4253	323
	323.04
	323.08
4I-4254	324.01
	324.03
4I-4255	324.01
	324.03
4I-4273	321
	323.02
	323.06
4I-4280	333.02
	333.04
4I-4282	323
	323.04
	323.08
4I-4286	324.01
	324.03
4I-4287	323
	323.04
	323.08
4I-4300	325
	325.01
4I-4315	323
	323.04
	323.08
4I-4330	321
	323.02
	323.04
	323.06
	323.08
4I-4332	324.01
	324.03
4I-4334	323
	323.04
	323.08
	324.01
	324.03
4I-4353	321
	323.02
	323.06
4I-4357	324.01
	324.03
4I-4361	327
4I-4392	321
	323.02
	323.06
4I-4403	323
	323.04
	323.08
4I-4543	397.02
	397.04
	397.10
4I-4544	397.02
	397.04
	397.10
4I-4575	352
4I-4579	373.01
	373.06
	374.03
	374.05
4I-4618	387
	396
4I-4808	151
	152.01
	152.01B
	152.03
	152.05
	152.07
4I-4809	384
	385
	386
	388
	389
	390
	391
	392

PART NUMBER INDEX

Part.No	Page
	393
	394
	395
4I-4811	388
	389
	390
	391
	392
	393
4I-4812	151
	152.01
	152.01B
	152.03
	152.05
	152.07
4I-4813	384
	385
	386
	387
4I-4814	394
	395
4I-4872	373.01
	373.06
	374.03
	374.05
4I-5020	348.01
4I-5021	348.01
4I-5030	324.01
	324.03
4I-5034	137.04
	139.04
	321
	323.02
	323.06
4I-5039	358
4I-5040	358
4I-5041	358
4I-5043	323
	323.04
4I-5049	358
4I-5153	338
	338.01
4I-5216	420.01
4I-5394	172
4I-5396	107.02
	107.04
4I-5409	101
	101A
4I-5459	103
	103.01
4I-5461	103
	103.01
4I-5490	172
4I-5507	233
	233.02
	233.04
	233.06
4I-5520	303.01
4I-5546	223
	225
4I-5556	215.01
	218
4I-5657	305
4I-6141	247.04
	249.02
	251.02
4I-6233	233.02
	233.04
	233.06
	235
	235.02
	235.04
	235.06
	239
4I-6242	233
	237
	238
	240
4I-6245	233
	233.02
	233.04
	233.06
4I-6262	268
4I-6263	268
	269
4I-6264	249.02
4I-6287	242.01
4I-6301	249.02
	303.01
4I-6334	235.02
	235.04
	235.06
	241
	242.01
4I-6337	236
4I-6349	242.01
4I-6363	238
	239
	242.01
	318
4I-6365	310
	310.01
	310.02
	310.03
4I-6366	310
4I-6380	235
	235.02
	235.04
	235.06
4I-6397	287.02
	287.06
	287.10
4I-6495	239
4I-6600	368.01
	368.05
4I-6602	356.02
4I-6608	397.10
4I-6610	397.10
4I-6829	321
	323.02
	323.06
4I-6832	324.01
	324.03
4I-6833	324.01
	324.03
4I-6856	325
	325.01
4I-6912	383
	400
4I-6966	324.01
	325
4I-6967	325

PART NUMBER INDEX

Part.No	Page
	325.01
4I-6968	325
4I-6969	325
4I-6970	325
	325.01
4I-6971	325
	325.01
4I-6972	325
	325.01
4I-6973	321
	323.02
	324
4I-7032	357
4I-7077	151
	152.01
	152.01B
	152.03
	152.05
	152.07
	356.01
4I-7181	416
4I-7185	416
4I-7186	416
4I-7527	180
4I-7608	243
4I-7611	233
	233.02
	233.04
	233.06
	235
	235.02
	235.04
	235.06
	241
4I-7630	186
	193
	193.01
4I-7675	227.02
	237
	238
	240
4I-7684	236
	239
	241
	242.01
4I-7687	235
	235.02
	235.04
	235.06
4I-7714	289
	289.01
4I-7769	239
4I-7792	262
	262.01
4I-7793	262
	262.01
4I-7794	262
	262.01
4I-7795	262
4I-7822	251
4I-7837	262
	262.01
4I-7924	124.01
4I-8019	121
	123.04
	123.06D
	123.10
	123.16
4I-8135	358.01
4I-8384	126.01
4I-8789	213
	251.02
4I-8864	187
4I-8869	188
	189
4I-8881	200
4I-8889	210
	212
	245.08
4I-8891	210
	212
4I-8911	194
4I-8914	194
4I-8915	305
4I-8965	308
	308.03
	309.02
4I-9392	192
4I-9521	233
	233.02
	233.04
	233.06
	235
	235.02
	235.04
	235.06
	243
4I-9522	233
	233.02
	233.04
	233.06
	235
	235.02
	235.04
	235.06
	241
	242.01
	243
4I-9523	233
	233.02
	233.04
	233.06
	235
	235.02
	235.04
	235.06
	243
4I-9524	233
	233.02
	233.04
	233.06
	235
	235.02
	235.04
	235.06
	243
4I-9525	233
	233.02
	233.04
	233.06
	235
	235.02

PART NUMBER INDEX

Part.No	Page
	235.04
	235.06
	243
4I-9526	233
	233.02
	233.04
	233.06
	235
	235.02
	235.04
	235.06
	243
4I-9527	233
	233.02
	233.04
	233.06
	235
	235.02
	235.04
	235.06
	241
	242.01
	243
4I-9528	233
	233.02
	233.04
	233.06
	235
	235.02
	235.04
	235.06
	243
4I-9664	16
4J-0519	275
	275.01
4J-0520	245
	245.04
	245.08
	249.02
4J-0522	173
	254
	254.02
4J-0524	252
	253.01
	254
	254.02
4J-0526	252
	253.01
	254
	254.02
4J-0527	252
	253.01
	254
	254.02
4J-5267	202
	223
	225
	245
	245.04
	245.08
4J-5309	275
	275.01
	279
	279.04
	287.02
	287.06
	287.10
4J-5351	289
4J-7385	283.01
	288
4J-7386	283.01
	288
4J-7533	182.01
	276
	300
4J-9448	63
	63.04
	63.08
	63.08D
	63.12
4J-9535	275
	275.01
4K-1388	247
	249.02
	279
	279.02
	279.04
	279.06
	283.01
	287
	287.02
	287.04
	287.06
	287.08
	287.10
	288
4K-2039	295.01
4K-3026	397.11
4K-6177	51.02
4K-6297	235
	235.02
	235.04
4M-0189	173
4N-9170	147
	149
	149.02
4P-6422	17
	435
	438.03
	438.05D
	438.05J
	438.09
	438.15
	438.21
	438.27
4P-6445	17
4P-6464	40.04
4P-7582	247.02
	249
4T-2215	426.01
4T-3148	279.02
	279.06
	287
	287.02
	287.04
	287.06
	287.08
	287.10
4T-9905	241
	242.01
4W-8339	14
4Y-0426	431

PART NUMBER INDEX

Part.No	Page
5	
5B-5947	32
	32A
	448
5B-9304	42
	257
	259
	259.01
	259.02
	259.03
	266
	294.02
	297
	310
	310.01
	310.02
	310.03
5C-2874	63
	63.04
	63.08
	63.08D
	63.12
5C-2889	108.01A
	109.01
5C-2890	76
	77.01
	77.03
	77.05
	77.07
	77.10
	91.03
	91.04
	327
	334
	334A
	360
	360.01
	361
	361.01
	373.01
	373.04
5C-7261	25
	32
	32A
	36
	47
	51.02
	61
	63.02
	63.06
	63.08B
	63.10
	65
	65.02
	137.02
	137.04
	139.02
	139.04
	241
	242.01
	373.02
	373.04
	374.03
	374.05
	397.13
5C-8312	339.02
	339.04
	348.01
	368.03
	368.07
5C-9553	32.01
	49
	121
	123.04
	123.06D
	123.10
	123.16
	323
	323.04
	323.08
	348.01
	363.01
	365
	366.01
5D-1026	45.01
	110.01
	110.03
	373.01
	373.04
	373.06
	374.02
	374.03
	374.05
5D-1247	280.01
	281
	291
	291.01
5D-4822	326
	362
5F-5835	302
5G-2247	165.01
5H-5672	174
5H-8624	227.02
5H-8936	397.12
5I-3071	245.08
5I-3082	288
5I-3100	235
	235.02
	235.04
	235.06
	237
5I-3103	233
	233.02
	233.04
	233.06
5I-3109	227.02
	236
	239
5I-3124	235.04
	235.06
5I-3127	242.01
	243
5I-3136	235
	235.02
	235.04
	235.06
5I-3139	235
	235.02
	235.04
	235.06
5I-3142	243

PART NUMBER INDEX

Part.No	Page
5I-3178	242.01
5I-3179	247
	249
5I-3183	249.02
5I-3187	236
	239
5I-3335	411
	418
5I-3339	417
	418
5I-3353	418
5I-3425	400
	401
5I-3444	411
	417
5I-3452	417
5I-3534	134
5I-3707	323
	323.04
	323.08
5I-4010	233
	233.02
	233.04
	233.06
5I-4015	233
	233.02
	233.04
	233.06
	237
	238
	240
5I-4060	227.02
5I-4111	283.01
	288
5I-4371	233
	233.02
	233.04
	233.06
5I-4460	235
	235.02
	235.04
	235.06
5I-4487	243
5I-4915	14
5I-4916	14
5I-4921	15
5I-4936	22
5I-4940	31
5I-4969	21
5I-4983	24
5I-4993	25
	448
5I-5005	23
5I-5010	46
5I-5029	30
5I-5038	30
	448
5I-5108	49
5I-5111	49
5I-5146	50.02
	50.07
5I-5147	50
	50.07
5I-5148	50
	50.07
	450
5I-5151	50.03
5I-5152	50.03
	50.09
5I-5153	50.03
5I-5154	50.04
	50.09
5I-5159	50.05
	50.11
5I-5163	50.05
5I-5164	50.05
	50.11
5I-5175	48
5I-5591	14
5I-6024	47
5I-7090	273
5I-7215	387
5I-7216	383
	383.01
	387
5I-7223	213
5I-7225	213
5I-7228	213
5I-7229	213
5I-7230	213
5I-7231	213
5I-7233	218
5I-7235	383
	383.01
	397.09
5I-7236	397.10
5I-7238	397.12
5I-7239	397.12
5I-7503	31
5I-7505	14
	16
5I-7508	50
	50.07
	450
5I-7511	50.05
	50.11
5I-7512	50.04
	50.09
5I-7514	50.04
5I-7523	16
5I-7524	16
	449
5I-7525	16
5I-7526	16
5I-7528	16
5I-7529	16
5I-7533	21
5I-7534	21
	448
5I-7535	25
5I-7537	20
5I-7538	20
5I-7539	20
5I-7540	18
5I-7541	18
5I-7542	22
5I-7543	22
5I-7547	46
5I-7549	47
5I-7550	47
5I-7557	32.01
5I-7558	21

PART NUMBER INDEX

Part.No	Page
5I-7559	21
5I-7561	32.01
	447
5I-7572	38
	447
5I-7576	49
5I-7578	38
5I-7583	14
5I-7584	17
5I-7587	42
5I-7588	16
5I-7589	42
	43
5I-7590	15
5I-7595	39
5I-7596	21
5I-7598	28
5I-7599	97
	97.01
	448
5I-7601	47
5I-7602	42
5I-7603	16
5I-7607	24
5I-7610	21
5I-7611	22
5I-7622	15
5I-7623	32.01
5I-7624	15
	449
5I-7625	15
5I-7626	17
5I-7630	15
5I-7631	15
5I-7632	21
5I-7633	44
	47
5I-7636	16
5I-7637	20
5I-7640	30
5I-7642	30
5I-7643	30
5I-7644	30
5I-7645	31
5I-7646	38
5I-7647	49
5I-7648	14
	447
5I-7650	19
5I-7652	16
5I-7654	16
5I-7655	38
5I-7656	21
	449
5I-7657	21
	448
5I-7658	21
	448
5I-7659	21
5I-7660	449
5I-7661	24
	448
5I-7663	25
5I-7664	25
5I-7665	25
5I-7666	25
	448
5I-7667	20
5I-7668	20
5I-7672	16
5I-7673	22
5I-7674	18
5I-7677	46
	447
5I-7678	46
	447
5I-7679	44
	447
5I-7680	44
5I-7681	447
5I-7683	21
5I-7684	21
	448
5I-7685	21
5I-7686	21
5I-7687	30
5I-7689	32.01
	447
5I-7690	36
	448
5I-7691	36
	448
5I-7694	37
5I-7695	37
5I-7696	37
5I-7697	37
5I-7699	38
5I-7706	13
	13.02
	48
5I-7713	48
5I-7718	14
5I-7719	15
5I-7720	15
5I-7721	15
5I-7722	15
5I-7723	19
5I-7724	16
5I-7725	31
5I-7726	31
5I-7728	14
	447
5I-7730	15
5I-7731	15
5I-7734	30
5I-7735	38
	447
5I-7738	15
5I-7739	15
5I-7740	15
5I-7742	47
	447
5I-7743	49
5I-7744	49
	448
5I-7746	46
5I-7748	42
5I-7750	98
5I-7751	12
	13.01
	14
5I-7752	12

PART NUMBER INDEX

Part.No	Page
	13.01
	15
5I-7753	12
	13.01
	17
5I-7754	12
	13.01
	31
5I-7755	12
	13.01
	19
5I-7757	12
	13.01
	21
5I-7760	12
	13.01
	20
5I-7764	13
	13.02
	46
5I-7765	13
	13.02
	47
5I-7766	13
	13.02
	45
5I-7770	12
	13.01
	32.01
5I-7774	13
	13.02
	39
5I-7784	16
5I-7785	16
5I-7786	16
5I-7787	16
5I-7788	16
5I-7789	16
5I-7790	20
5I-7791	20
5I-7792	20
5I-7793	20
5I-7794	20
5I-7795	20
5I-7796	20
5I-7831	50.02
	50.07
5I-7832	50.04
	50.09
5I-7951	48
5I-7954	13
	13.02
	48
5I-7966	98
5I-7977	38
5I-7978	16
5I-7981	42
5I-8000	39
5I-8001	17
5I-8002	17
	447
5I-8005	16
5I-8009	16
5I-8010	38
5I-8011	14
5I-8012	14
5I-8013	47
5I-8015	25
5I-8018	13
	13.02
	42
5I-8019	98
5I-8021	46
5I-8022	46
5I-8023	46
5I-8026	32
	32A
5I-8027	12
	13.01
	23
5I-8032	12
	13.01
	22
5I-8033	13
	13.02
	44
5I-8034	12
	13.01
	30
5I-8038	22
5I-8040	44
5I-8041	42
5I-8043	49
5I-8044	49
5I-8045	49
5I-8046	49
5I-8047	49
5I-8048	49
5I-8049	49
5I-8053	45
5I-8054	47
5I-8056	38
5I-8058	30
	32.01
5I-8060	32.01
5I-8066	32
	32A
5I-8067	25
	448
5I-8068	19
5I-8070	30
5I-8071	13
	13.02
	99
5I-8072	99
5I-8073	99
5I-8074	99
5I-8075	99
5I-8076	99
5I-8077	99
5I-8078	99
5I-8079	99
5I-8080	99
5I-8081	99
5I-8082	99
5I-8083	99
5I-8084	99
5I-8250	101.01
	103
	104.01
	107
	107.02

PART NUMBER INDEX

Part.No	Page
	108.02
5I-8251	101
	108.01
5I-8273	104.01
	105.01
	107
	107.02
	107.04
	107B
5I-8304	61
	63.02
	63.06
	63.08B
	63.10
	65
	65.02
5I-8417	260
	261.01
5I-8418	260
	261.01
5I-8420	260
	261.01
5I-8421	260
	261.01
5I-8422	260
	261.01
5I-8426	260
	261.01
5I-8511	308
	308.03
	309.02
5I-8603	235
	235.02
	235.04
	235.06
5I-8621	260
5I-8623	260
	261.01
5I-8625	260
	261.01
5I-8628	260
	261.01
5I-8629	260
	261.01
5I-8630	260
	261.01
5I-8631	260
	261.01
5I-8632	260
	261.01
5I-8633	260
	261.01
5I-8634	260
	261.01
5I-8636	260
	261.01
5I-8637	260
	261.01
5I-8640	260
	261.01
5I-8748	123.08
	123.14
5I-8835	245
	245.04
5I-8913	151
	152.01
	152.03
5I-9155	99
5J-6153	303
5K-2298	397.10A
5K-8451	52
	373.02
	373.04
5K-9090	210
	212
	213
	214
	223
	225
	245
	245.04
	245.08
	247
	247.02
	247.04
	247.06
	247.07
	249
	249.02
	251
	251.02
	252
	253
	253.01
	253.02
	254
	254.01
	254.02
	254.03
	293
5K-9242	397.10A
	397.12
5K-9243	146
	147
	148
	149
	149.01
	397.02
	397.04
	397.10
	397.12
5L-3233	40.01
	40.02
5L-4758	182.02
	295.01
5L-6326	37
5M-2057	173
5M-7937	291
	291.01
	291.01A
	291.02
	291A
	291B
5P-0048	221
	221.02
5P-0200	210
	212
	215
	215.01
	216
	216.01
	217

PART NUMBER INDEX

Part.No	Page
	218
	245
	245.04
	245.08
5P-0201	210
	212
	213
	221
	221.02
	221.04
	221B
	223
	225
	245
	245.04
	245.08
	247.02
	251
5P-0202	221
	221.02
	221.04
	221B
	247.02
	251
5P-0477	221
	221.02
	221.04
	221B
	247.02
	251
5P-0597	33.02
	33.04
	35.02
	45
	253
	253.02
5P-0743	32.02
	53
5P-0767	45.01
	110.01
	110.03
	373.01
	373.06
	374.02
	374.05
5P-1010	210
	213
	221
	221.02
	221.04
	221B
	223
	225
	245
	245.04
	245.08
	247.02
	251
5P-1027	210
	212
	215
	215.01
	216
	216.01
	217
	218
	245
	245.04
	245.08
5P-1075	137.02
	137.04
	139.02
	139.04
5P-1076	55
	55.01
	56
	56.01
	119
	121
	123
	123.02
	123.04
	123.06
	123.06B
	123.06D
	123.06F
	123.08
	123.10
	123.12
	123.14
	123.16
	123.18
	130
	130.01
	132
	132.01
	133
	134
	134.01
	135
	135.01
	135.01A
	166
	166.01
	223
	225
	235
	235.02
	235.04
	235.06
	358.01A
	397.13
	398
	399
	401
5P-1125	223
	225
5P-1128	223
	225
5P-1130	221
	221.02
	221.04
	221B
	223
	225
5P-1442	52
5P-1475	100.01
5P-1717	41
	41.01
	41.02
5P-2321	86
	87.01

PART NUMBER INDEX

Part.No	Page
	87.03
	94.04
	94.05E
	94.05F
5P-3108	283.01
	288
5P-3166	223
	225
5P-4115	121
	123.04
	123.06D
	123.10
	123.16
5P-4116	63
	63.04
	63.08
	63.08D
	63.12
	137.02
	137.04
	139.02
	139.04
5P-4868	41
	41.01
	41.02
	45
	252
	253.01
	254
	254.02
5P-5148	247.02
	249
5P-5992	343
	346.01
5P-5995	108
5P-5998	88
5P-6006	94.05C
	94.05D
	94.05G
	94.05H
5P-6271	94.05
5P-6944	227.02
5P-7958	367
5P-8500	54
	367
5P-8502	54
5P-8874	177
5P-9085	397.08
	397.11
5P-9205	130.01
5P-9297	107
	107.02
	107.04
	107B
5P-9299	172
5P-9891	157
5Q-3560	149.02
5Q-3561	149.02
5S-0709	170
5S-0754	170
6	
6B-8692	55
	55.01
	56
	56.01
6C-6628	302
6C-6699	247.02
	247.04
	251
6C-6746	247.02
	247.04
	302
6C-8496	173
6D-0692	112
	113.02
	115
6D-1641	235
	235.02
	235.04
	235.06
	373.01
	373.02
	373.04
	373.06
	374.02
	374.05
6D-4246	227.02
6E-1547	302
	303
6E-2151	279
	279.04
	287.02
	287.06
	287.10
6E-2156	287.02
	287.06
	287.10
6E-2157	275
	275.01
6E-2158	287
	287.04
	287.08
6E-2161	287.02
	287.06
	287.10
6E-2163	291
	291.01
	291.01A
	291.02
	291A
	291B
6E-2271	280.01
	280.02
	281
	281.01
	291
	291.01
	291.01A
	291.02
	291A
	291B
6E-2273	279
	279.02
	279.04
	279.06
	287
	287.02
	287.04
	287.06

PART NUMBER INDEX

Part.No	Page
	287.08
	287.10
6E-2274	279
	279.02
	279.04
	279.06
	287
	287.02
	287.04
	287.06
	287.08
	287.10
6E-2745	282.02
6E-2746	282
	282.02
6E-2790	276
6E-3535	194
	194.01
6E-3539	287
	287.04
	287.08
6E-3541	287
	287.04
	287.08
6E-3653	291
	291.01
	291.01A
	291.02
	291A
	291B
6E-4280	276
6E-4281	275
	275.01
	276
6E-4793	282
	282.01
6E-4816	279
	279.04
	282
6E-5045	280.01
	280.02
	281
	281.01
6E-5122	281
	281.01
	291
	291A
	291B
6E-5168	287
	287.04
	287.08
6E-5169	287.02
	287.06
	287.10
6E-5234	303.01
	303.02
6E-5510	300
6E-5638	287.02
	287.06
	287.10
6E-5643	279.02
	279.06
	287
	287.02
	287.04
	287.06
	287.08
	287.10
6E-5644	279.02
	279.06
	287
	287.04
	287.08
6E-5730	279
	279.02
	279.04
	279.06
	287.02
	287.06
	287.10
6E-5731	279
	279.02
	279.04
	279.06
	287.02
	287.06
	287.10
6F-7045	79
	93
6F-7556	21
6F-7557	21
	448
6G-2256	61
	63
	63.02
	63.04
	63.06
	63.08
	63.08B
	63.08D
	63.10
	63.12
6G-2263	61
	63
	63.02
	63.04
	63.06
	63.08
	63.08B
	63.08D
	63.10
	63.12
6H-7378	431
6I-2501	40.04
6I-2502	40.04
6I-4464	40.04
6I-5008	404
	410
6I-5012	405
	411
6I-5013	406
	411
6I-5014	406
	412
6I-5121	357
6I-5123	357
6I-5126	357
6I-5133	397.10A
6I-5134	397.10A
6I-5135	397.10A
6I-5136	397.10A
6I-5137	397.10A

PART NUMBER INDEX

Part.No	Page
6I-5138	397.10A
6I-5185	416
6I-5186	416
6I-5187	416
6I-5196	417
	418
6I-5197	417
	418
6I-5198	418
6I-5202	418
6I-5203	418
6I-5204	418
6I-5248	417
6I-5298	271.02
6I-5331	336B
6I-5338	326
6I-5342	326
6I-5368	319.02
	319.04
6I-5387	358
6I-5388	358
6I-5409	323
	323.04
	323.08
6I-5410	323
	323.04
	323.08
6I-5432	327
6I-5440	323
	323.04
	323.08
	329
6I-5445	329
6I-5446	329
6I-5470	323
	323.04
	323.08
6I-5495	349
6I-5496	349
6I-5497	349
6I-6033	121
	123.04
	123.06D
	123.10
	123.16
6I-6123	54
6I-6167	123
	123.06
	123.06F
	123.12
	123.18
6I-6354	416
	417
	418
6I-6355	416
	417
	418
6I-6356	416
	417
	418
6I-6371	422
6I-6646	142
	144
6I-6721	213
6I-6750	179
	179.04
6I-6751	179
6I-6752	235
6I-6793	249.02
6I-6795	289
	289.01
6I-6804	289
6I-6904	313
	314
6I-6907	313
	314
6I-6908	313
	314
6I-6916	249.02
6I-6923	312
6I-6971	188
	189
6I-9454	167
	169
6J-2680	172
6J-8696	303
6K-0613	270
	271.02
6K-9194	227.02
	235
	235.02
	235.04
	235.06
	236
	239
6L-3616	397.02
	397.04
	397.10
	397.10A
	397.12
6M-5062	282.01
	295.01
6M-6853	233
	233.02
	233.04
	233.06
	235
	235.02
	235.04
	235.06
	236
	237
	239
	241
	242.01
6P-2216	123.10
	123.16
	124.01
6S-8620	32.02
6T-3631	88
	89
6T-3632	88
	89
6T-3633	88
	89
6T-6505	78
	78.01
	78.02

PART NUMBER INDEX

Part.No	Page
	78.03
	78.04
	94.05
	94.05C
	94.05D
	94.05G
	94.05H
	94.08
6T-6506	78
	78.01
	78.02
	78.03
	78.04
	94.05
	94.05C
	94.05D
	94.05G
	94.05H
	94.08
6V-0357	275
	275.01
	287
	287.04
	287.08
6V-0400	221
	221.02
	221.04
	221B
	223
	225
	226
	227
	227.02
6V-0745	215.01
	216.01
	218
6V-0746	221
	221.02
	221.04
	221B
	247.02
	251
6V-0756	215
	216
	217
6V-0852	227.02
	235
	235.02
	235.04
	235.06
6V-2679	343
	346.01
6V-3265	343
6V-3303	114
6V-3342	397.10A
	397.12
6V-3532	180.01
	180.02
6V-3582	41
	41.01
	41.02
	45.02
6V-3922	287.02
	287.06
	287.10
6V-3965	227.02
	235
	235.02
	235.04
	235.06
6V-5030	33.02
	33.04
	35.02
6V-5192	310
6V-5200	258
	258.01
6V-5210	83
	83.01
	108.01
	108.01A
	109
	109.01
6V-5556	245
	245.04
	245.08
	262.02
6V-5597	279
	279.02
	279.04
	279.06
	287
	287.02
	287.04
	287.06
	287.08
	287.10
6V-5645	77
	77.02
	77.04
	77.06
	77.08
	77.09
6V-5683	333.02
	333.04
	339.02
	339.04
6V-5686	112
	113.01
6V-5698	271
6V-6885	323
	323.04
	323.08
6V-7238	180.02
6V-7357	49
	137.02
	137.04
	233
	233.02
	233.04
	233.06
	358
	373.01
	373.04
6V-7611	358.01A
6V-7636	321
	323.02
	323.06
6V-7657	176
	179.01
6V-7658	52
	156
	182.01

PART NUMBER INDEX

Part.No	Page
	182.02
6V-7661	165
6V-7673	201
6V-8150	136
	138
6V-8186	76
	77.01
	77.03
	77.05
	77.07
6V-8200	179.12
	266
6V-8202	363
6V-8218	289
	289.01
6V-8231	21
	24
	44
	49
	335.01
6V-8236	16
	21
6V-8337	310.01
	310.02
	310.03
6V-8362	90
6V-8365	77
	77.02
	77.04
	77.06
6V-8374	88
	89
6V-8378	76
	77.01
	77.03
	77.05
	77.07
6V-8397	227.02
	233
	233.02
	233.04
	233.06
	235
	235.02
	235.04
	235.06
	236
	239
	241
	242.01
6V-8398	235
	235.02
	235.04
	235.06
	294.01
	295.02
6V-8400	306
6V-8467	194
	194.01
6V-8633	235
	235.02
	235.04
	235.06
6V-8635	213
	247.02
	247.04
	249
	249.02
	251
	252
	253
	253.01
	253.02
	254
	254.01
	254.02
	254.03
6V-8636	235
	235.02
	235.04
	235.06
	236
	239
	241
	242.01
	308
6V-8637	227.02
	235
	235.02
	235.04
	235.06
	236
	239
	241
6V-8640	235
	235.02
	235.04
	235.06
6V-8716	249.02
6V-8724	227.02
6V-8754	313
	314
6V-8781	235.06
6V-8928	321
	323.02
	323.06
6V-8950	77.02
	77.04
	77.06
	77.08
	77.10
6V-8978	289
	289.01
6V-9001	227.02
6V-9007	227.02
	235
	235.02
	235.04
	235.06
6V-9008	247
	247.02
	247.06
	249
6V-9326	77.02
	77.04
	77.06
	77.08
	77.10
6V-9491	80.05
	80.06
6V-9492	80.05
	80.06
6V-9672	348.01
6V-9673	80.16

PART NUMBER INDEX

Part.No	Page
6V-9746	210
	212
	213
	215
	215.01
	216
	216.01
	217
	218
	227.02
	235
	235.02
	235.04
	235.06
	245
	245.04
	245.08
	247
	249
	249.02
	251.02
	255
6V-9836	235
	235.02
6V-9850	227.02
	235.06
6V-9854	249.02
	252
	253.01
	254
	254.02
6W-3275	323
6W-6005	61
	63.02
	63.06
	63.08B
	63.10
	65
	65.02
6Y-0473	165.01
6Y-8186	170
	170.01
	170.02

7

Part.No	Page
7E-4761	180.01
7F-8268	165.01
7F-9223	140
7G-1060	61
	63.02
	63.06
	63.08B
	63.10
7G-5984	226
7G-5985	226
7G-5986	226
7H-3171	156
	165
7H-3937	352
	373.02
	373.06
7I-0172	233
	233.02
	233.04
	233.06
	243
7I-0181	243
7I-0184	235
	235.02
	235.04
	235.06
7I-0196	235
	235.02
	235.04
	235.06
7I-0323	356.01
7I-0375	373.01
	373.06
	374.03
	374.05
7I-0387	368.03
	368.07
	375.02
	375.04
7I-0388	368.03
	368.07
	375.02
	375.04
7I-0389	368.03
	368.07
	375.02
	375.04
7I-0390	368.03
	368.07
	375.02
	375.04
7I-0391	368.03
	368.07
	375.02
	375.04
7I-0392	368.03
	368.07
	375.02
	375.04
7I-0393	368.03
	368.07
	375.02
	375.04
7I-0394	368.03
	368.07
	375.02
	375.04
7I-0398	368.03
	368.07
7I-0717	143
	145
7I-0776	430
7I-0800	126.01
	430
7I-0966	262.02
7I-0986	299
7I-1018	194
	194.01
7I-1248	279
	279.02
	279.04
	279.06
	287.02
	287.06
	287.10
7I-1377	227.02

PART NUMBER INDEX

Part.No	Page	Part.No	Page	Part.No	Page
7I-1418	121		438.13		368.07
	123.04		438.19		375.02
	123.06D		438.25		375.04
	123.10	7I-6571	445	7I-6618	368.03
	123.16	7I-6601	368.03		368.07
7I-1533	437		368.07		375.02
	438.05		373.01		375.04
	438.05F		373.02	7I-6621	368.03
	438.05L		373.04		368.07
	438.11		373.06		375.02
	438.17	7I-6602	368.03		375.04
	438.23		368.07	7I-6623	368.03
	438.29		375.02		368.07
7I-1542	374.02		375.04		375.02
	374.05	7I-6603	368.03		375.04
7I-1660	333.02		375.02	7I-6624	368.03
	333.04		375.04		368.07
7I-1908	437	7I-6605	368.03		375.02
	438.05		368.07		375.04
	438.05F	7I-6607	368.03	7I-6625	368.03
	438.05L		368.07		368.07
	438.11		375.02		375.02
	438.17		375.04		375.04
	438.23	7I-6608	368.03	7I-6626	368.03
	438.29		368.07		368.07
7I-2272	293	7I-6609	368.03		375.02
	305		368.07		375.04
7I-2273	293	7I-6611	368.03	7I-6627	368.03
7I-2673	61		368.07		368.07
	63		375.02		375.02
	63.02		375.04		375.04
	63.04	7I-6612	368.03	7I-6628	368.03
	63.06		368.07		368.07
	63.08		375.02	7I-6629	368.03
	63.08B		375.04		368.07
	63.08D	7I-6613	368.03		375.02
	63.10		368.07		375.04
	63.12		375.02	7I-6634	368.03
7I-6395	431		375.04		368.07
7I-6508	433	7I-6614	368.03	7I-6635	368.03
	438.01		368.07		368.07
	438.05B		375.02		375.02
	438.05H		375.04		375.04
	438.07	7I-6617	368.03	7I-6636	368.03

PART NUMBER INDEX

Part.No	Page
	368.07
	375.02
	375.04
7I-6681	152.03
7I-6697	415
7I-6705	415
7I-6709	415
7I-6843	400
	401
7I-6881	151
	152.01
	152.01B
	152.05
	152.07
	356.01
7I-6921	375.02
	375.04
7I-6922	375.02
	375.04
7I-6929	373.01
	373.04
	374.02
	374.05
7I-6968	368.01
	368.05
7I-7131	268
7I-7152	236
	238
	239
	241
	242.01
7I-7322	216
	217
7I-7403	299
7I-7415	300
7I-7416	279.06
7I-7439	227.02
	373.04
	373.06
	374.05
7I-7733	158
7I-7734	158.01
7I-7965	262
	262.01
	262.02
7I-7968	259
	259.01
	262
7I-7970	262
	262.01
7I-7971	262
	262.01
7I-8102	299
7I-8136	287
	287.04
	287.08
	288
7I-8206	254
	254.02
7J-5925	123.06B
7J-9933	235
	235.02
	235.04
	235.06
	262.02
7K-1181	63.10
	63.12
	227.02
	233
	233.02
	233.04
	233.06
	235
	235.02
	235.04
	235.06
	236
	239
	240
	241
	242.01
	247.02
	249
	359
	359.01
	397.08B
	397.11
7M-8485	112
	113.01
	114
	179.10
	213
	247
	247.02
	247.04
	247.06
	249
	249.02
	251
	251.02
	252
	253
	253.01
	253.02
	254
	254.01
	254.02
	254.03
	287.02
	287.06
	287.10
	302
	304
7N-0718	77
	77.02
	77.04
	77.06
	77.08
	79
7N-0719	65
	77.09
	93
7N-3718	107
	107.02
	107.04
	107B
7N-5274	74
	93
7S-4244	346.01
7T-6799	90
7T-8890	344
	347

PART NUMBER INDEX

Part.No	Page
7T-9352	58
7X-0578	323.04
	323.08
7X-0579	41
7X-0618	123.02
	123.06B
	123.08
	123.14
7X-0796	21
	22
	24
	31
	32
	32A
	39
	44
	49
	98
7X-0818	41
	41.01
	63
	63.04
	63.08
	63.08D
	63.12
	352
	373.02
	373.06
7X-0851	422
7X-1451	210
	212
	215
	215.01
	216
	216.01
	217
	218
	245
	245.04
	245.08
7X-1452	210
	212
	213
	221
	221.02
	221.04
	221B
	245
	245.04
	245.08
	247.02
	251
7X-1467	215
	216
	217
7X-2532	27
7X-2533	63
	63.04
	63.08
	63.08D
	63.12
7X-2536	16
	21
	158
7X-2537	51.02
	373.02
	373.06
7X-2538	100
7X-2548	121
	123.04
	123.06D
	123.10
	123.16
7X-2549	319.02
	319.04
7X-2550	247.02
	247.06
7X-2553	33.02
	33.04
	35.02
	171
	356.01
	358.02
7X-2554	214
7X-2555	214
7X-2557	179.06
	258
	258.01
7X-2558	398
	399
7X-2562	111
7X-2563	110.01
	110.03
	174
7X-2565	164
7X-2568	112
	113.02
	115
7X-2585	142
	144
7X-2619	63
	63.04
	63.08
	63.08D
	63.12
	76
	77.01
	77.03
	77.05
	77.07
	77.09
	77.10
	94.01
7X-2621	61
	63
	63.02
	63.04
	63.06
	63.08
	63.08B
	63.08D
	63.10
	63.12
	94.01
	227.02
	373.01
	373.04
	373.06
	374.02
	374.05
7X-3182	77.08
7X-4803	384

PART NUMBER INDEX

Part.No	Page
	385
	386
	387
	388
	389
	390
	391
	392
	393
	394
	395
	396
7X-4814	223
	225
7X-4815	247.02
7X-7644	433
	435
	438.01
	438.03
	438.05B
	438.05D
	438.05H
	438.05J
	438.07
	438.09
	438.13
	438.15
	438.19
	438.21
	438.25
	438.27
7X-7700	55
	55.01
	56
	56.01
7X-7729	33.02
	33.04
	35.02
	247.02
	249
7X-8182	77.09
7Y-0059	367
7Y-0060	430
	431
7Y-0070	431
7Y-0223	113
	113.01
	114
7Y-0225	113
	113.01
	114
7Y-0254	419
7Y-0357	422
7Y-0358	422
7Y-0366	405
	406
	422
7Y-0423	147
	149
	149.02
7Y-0466	175
	179.15
7Y-0468	175
	179.15
	227.02
	310
	310.01
	310.02
	310.03
7Y-0633	151
	152.01
	152.01B
	152.03
	152.05
	152.07
	356.01
7Y-0682	158.01
7Y-0729	402
	403
	404
	422
7Y-1229	45.01
7Y-1426	112
	113.01
	114
7Y-1427	113
	113.02
	115
7Y-1428	112
	113.01
	114
7Y-1430	113
	113.02
	115
7Y-1431	113
	113.01
	114
7Y-1432	113
	113.02
	115
7Y-1433	113
	113.02
	115
7Y-1434	113
	113.01
	114
7Y-1436	112
	113.02
7Y-1437	112
7Y-1438	112
7Y-1558	113
	113.02
	115
7Y-1571	111
	112
	113
7Y-1596	174
	175
7Y-1605	111
7Y-1607	164
7Y-1608	164
7Y-1631	112
	113.02
	115
7Y-1643	180.01
	180.02
7Y-1644	180.01
	180.02
7Y-1645	180.01
7Y-1646	180.01
	180.02
7Y-1647	146

PART NUMBER INDEX

Part.No	Page
	148
	149.01
7Y-1648	146
	148
	149.01
7Y-1649	147
	149
	149.02
7Y-1650	147
	149
	149.02
7Y-1751	180.01
	180.02
7Y-1752	180.01
	180.02
7Y-1754	180.01
7Y-1755	180.01
	180.02
7Y-1756	180.01
	180.02
7Y-1758	180.01
	180.02
7Y-1759	180.01
	180.02
7Y-1760	180.01
	180.02
7Y-1761	180.01
	180.02
7Y-1762	180.01
	180.02
7Y-1764	180.01
7Y-1765	180.01
	180.02
7Y-1766	180.01
	180.02
7Y-1772	180.01
	180.02
7Y-1775	180.01
	180.02
7Y-1777	180.01
	180.02
7Y-1781	158
7Y-1863	147
	149
	149.02
7Y-1899	175
7Y-1900	175
	179.15
7Y-1901	175
	179.15
7Y-1902	175
	179.15
7Y-1903	175
7Y-1904	175
	179.15
7Y-1905	175
	227.02
7Y-1910	41.01
7Y-1916	41.01
7Y-1924	41.01
	63
	63.04
	63.08
	63.08D
	63.12
7Y-1938	33.02
	33.04
	35.02
7Y-1941	33.02
	33.04
	35.02
7Y-1945	33.02
	33.04
	35.02
7Y-1972	353
7Y-1976	33.02
	33.04
	34.01
	34.03
	35.02
	35.04
	172
7Y-2219	409
	410
	420.01
7Y-2262	56
	56.01
7Y-2292	143
	145
7Y-2296	131
	134
7Y-2348	399
7Y-2349	399
7Y-2357	399
7Y-2391	399
7Y-2395	388
	389
	390
	391
	392
	393
	394
	395
7Y-2398	55
	55.01
	56
	56.01
7Y-2496	390
	393
7Y-2497	387
7Y-2498	387
	390
	393
	396
7Y-2579	384
	386
	387
7Y-2580	387
7Y-2670	397.10A
7Y-2680	123.10
	123.16
7Y-2853	121
	123.04
	123.06D
	123.10
	123.16
7Y-2854	121
	123.02
	123.04
	123.06B
	123.06D
	123.08

PART NUMBER INDEX

Part.No	Page
	123.10
	123.14
	123.16
7Y-2881	128
7Y-3196	61
	63.02
	63.06
7Y-3281	137.02
	137.04
7Y-3428	398
	399
7Y-3431	153
	154
7Y-3470	335.01
7Y-3472	335.01
7Y-3474	343
	346.01
7Y-3475	411
	412
	421
7Y-3553	396
7Y-3721	245
	245.04
	245.08
7Y-3730	223
	225
7Y-3731	245
	245.04
	249.02
	251
7Y-3732	214
	221
	221.02
	221.04
	221B
	247.04
7Y-3813	354
7Y-3820	67
	68.02
	68.05
7Y-3821	67
	68.02
	68.05
7Y-3919	354
7Y-3920	354
7Y-3950	94.05E
	94.05F
7Y-3951	78
	78.01
	78.02
	78.03
	78.04
	78.05
	80.05
	80.06
	94.05C
	94.05D
	94.05E
	94.05F
	94.05G
	94.05H
7Y-3952	78
	78.01
	78.02
	78.03
	78.04
	78.05
	94.05E
	94.05F
7Y-3958	78
	78.01
	78.02
	78.03
	78.04
	78.05
	94.05
	94.05C
	94.05D
	94.05G
	94.05H
7Y-3962	68
	68.03
	68.06
	94.04
	94.05E
	94.05F
	96.01
	96.02
	108
7Y-3963	67
	68
	68.02
	68.03
	68.05
	68.06
	85
	85.02
	85.02B
	85.04
	85B
	86
	87.01
	87.03
	94.04
	94.05
	94.05C
	94.05D
	94.05E
	94.05F
	94.05G
	94.05H
	96.01
	96.02
	108
7Y-3964	68
	68.03
	68.06
	94.04
	94.05E
	94.05F
	96.01
	96.02
	108
7Y-3965	67
	68
	68.02
	68.03
	68.05
	68.06
	85
	85.02
	85.02B

PART NUMBER INDEX

Part.No	Page
	85.04
	85B
	86
	87.01
	87.03
	94.04
	94.05
	94.05C
	94.05D
	94.05E
	94.05F
	94.05G
	94.05H
	96.01
	96.02
	108
7Y-3993	78.01
7Y-3994	107
7Y-3995	67
	68.02
	68.05
7Y-3996	67
	68.02
	68.05
7Y-4202	265
7Y-4212	265
7Y-4213	265
7Y-4215	177
	179.02
	179.08
	265
7Y-4216	265
7Y-4217	265
7Y-4222	265
7Y-4224	265
7Y-4267	261
	261.02
7Y-4268	261
	261.02
7Y-4274	260
	261.01
7Y-4278	262
	262.01
7Y-4594	387
7Y-4754	55
	55.01
	56
	56.01
	172
7Y-4801	268
7Y-4803	269
7Y-4804	269
7Y-4817	268
7Y-4868	202
	210
	212
	213
	218
7Y-5009	305
7Y-5010	305
7Y-5011	305
7Y-5074	223
	225
	245.08
7Y-5128	399
7Y-5219	291
	291.01
	291.01A
	291.02
	291A
	291B
7Y-5221	261
	261.02
7Y-5227	398
	399
7Y-5237	252
	253.01
	254.01
	254.03
7Y-5247	252
	253.01
	254
	254.02
7Y-5267	260
	261.01
7Y-5272	182.02
7Y-5280	262
	262.01
7Y-5285	80.05
	80.06
7Y-5286	108.01
7Y-5288	108.01
	109
	371
7Y-5293	323
	323.04
	323.08
	360
	360.01
7Y-5295	360
	360.01
7Y-5458	89
7Y-5464	89
7Y-5475	85
	85.02
	85.02B
	85.04
	85B
7Y-5493	82
	82.01
	82.02
7Y-5494	85
	85.02
	85.02B
	85.04
	85B
7Y-5495	85
	85.02
	85.02B
	85.04
	85B
7Y-5496	85
	85.02
	85.02B
	85.04
	85B
7Y-5505	80.05
	80.06
7Y-6108	431
7Y-6402	413
7Y-6442	202
7Y-6510	202

PART NUMBER INDEX

Part.No	Page
7Y-6511	202
7Y-6601	419
7Y-6627	396
7Y-6641	397
7Y-6649	397
7Y-6660	413
	419
7Y-6664	419
7Y-6665	419
7Y-6666	419
7Y-6667	419
7Y-6668	419
7Y-6671	419
7Y-6673	419
7Y-6674	419
7Y-7364	323
	323.04
	323.08
7Y-7410	418
7Y-7592	412
	418
7Y-7599	418
7Y-7600	418
7Y-7685	420.01
	421
7Y-7686	421
7Y-7687	421
7Y-7688	421
7Y-7904	218
7Y-8036	213
7Y-8099	245
	245.04
	245.08
7Y-8109	91.02
7Y-8167	52
	61
	63
	63.02
	63.04
	63.08
	63.08D
	63.12
	91.02
	373.01
	373.06
7Y-8189	103
	103.01
7Y-8436	267
7Y-8437	267
7Y-8463	270
	270.01
	270.02
7Y-8561	323
	323.04
	323.08
7Y-8737	55
	55.01
	56.01
7Y-8763	391
7Y-9134	410
	416
7Y-9352	137.02
	137.04
	139.02
	139.04
7Y-9525	399

8

Part.No	Page
8C-0597	235
	235.02
	235.04
	235.06
8C-3445	32
	32A
8C-3446	32
	32A
	235.02
	235.04
	235.06
8C-3451	235.02
	235.04
	235.06
8C-7581	76
	77.01
	77.03
	77.05
	77.07
	77.09
	80.05
	80.06
	323
	323.04
	323.08
	333.02
	339.02
	339.04
8C-7585	325
	325.01
8C-8451	51.02
8C-8773	53
8C-8992	132
	132.01
	134.01
	135
	135.01
	135.01A
	166
	166.01
8C-9660	271
8C-9987	301
8D-0482	61
	63.02
	63.06
	63.08B
	63.10
8E-3751	423
8E-3752	427
8E-3756	424
8E-3757	428
8E-4359	156
8E-5031	165.01
8E-5032	165.01
8E-5035	165.01
8E-5037	165.01
8E-5599	165.01
8E-5600	164
	165
8E-5601	165
8E-5602	165
8E-5605	165

PART NUMBER INDEX

Part.No	Page
8E-5606	165
8E-5608	165
8E-6258	413
8E-6259	413
	423
	424
	425
	426
	426.01
8E-6358	427
	428
	429
8E-6359	427
	428
	429
8E-6792	165
8E-6793	165
8E-8585	170
	170.01
	170.02
8E-8586	170
	170.01
	170.02
8E-8587	170
	170.01
	170.02
8E-9490	414
	415
8E-9805	111
8F-8733	179.12
8H-3481	323
	323.04
	323.08
	348.01
8H-5303	79
	93
8H-5306	79
	93
8J-0322	303
8J-0323	300
	303
8J-0324	302
8J-0331	303
8J-0426	249
	302
8J-1256	63
	63.04
	63.08
	63.08D
	63.12
8J-4645	179.10
	287.02
	287.06
	287.10
8J-4953	429.01
8J-4954	427
8J-4955	404
	405
	406
	426
8J-6875	241
	242.01
8J-8783	173
8J-9208	56
	56.01
8L-2779	284
	303.02
8M-0505	223
	225
	235
	235.02
	235.04
	235.06
8M-2772	397.02
	397.04
	397.10
	397.10A
	397.12
8N-0869	75
8N-1725	74
	75
8R-1774	346.01
	347
8S-0934	366.12
8S-4724	366.12
8T-0075	227.02
	235
	235.02
	235.04
	235.06
8T-0078	245.08
8T-0114	273
8T-0198	247.02
	247.04
	249
8T-0211	179
	179.04
8T-0269	121
	123.04
	123.06D
	123.10
	123.16
8T-0272	245
	245.04
	245.08
8T-0286	63
	63.04
	63.08
	63.08D
	63.12
8T-0288	294.02
	297
8T-0289	182
8T-0328	55
	55.01
	56
	56.01
	58
	63
	63.04
	63.08
	63.08D
	63.12
	77
	77.02
	77.04
	77.06
	77.08
	77.10
	80.09
	80.11
	80.13

PART NUMBER INDEX

Part.No	Page	Part.No	Page	Part.No	Page
	80.15		179.01		76
	80.15B		179.08		77.01
	80.15D		179.10		77.03
	80.16	8T-3490	55		77.05
	97		55.01		77.07
	97.01		56		77.09
	124		56.01		80
	124.01	8T-3647	33.02		80.01
	182		33.04		80.09
	368.03		35.02		80.11
	368.07		241		80.13
8T-0337	109		242.01		80.15
8T-0343	197		373.01		80.15B
	198		373.06		80.15D
	199		374.03		91.02
	306		374.05		94.01
8T-0360	147	8T-3653	195		101.01
	149		196		101.02
8T-0362	147	8T-3844	80		102
	149		80.01		104.01
8T-0380	422		397.06		105.01
8T-0722	141	8T-4121	35.04		107
8T-0788	241		39		107.02
	242.01		40		107.04
8T-1158	363.01		41		107B
	365		41.01		110.01
	366.01		41.02		110.03
8T-1159	165		45.01		119
	312		45.02		121
8T-1160	195		49		123.02
	196		51.02		123.04
	197		52		123.06B
	198		61		123.06D
	245.08		63		123.08
8T-1447	187		63.02		123.10
	191		63.04		123.14
8T-1686	235.06		63.06		123.16
8T-1779	233		63.08		127
	233.02		63.08B		141.01
	233.04		63.08D		146
	233.06		63.10		147
8T-2637	308.03		63.12		148
8T-3282	149.02		65		149
8T-3338	176		65.02		149.01

PART NUMBER INDEX

Part.No	Page	Part.No	Page	Part.No	Page
	149.02		254.03		397.08
	151		255		397.08B
	152.01		268		397.10
	152.01B		272		397.10A
	152.03		272.02		397.11
	152.05		273		397.12
	152.07		279		397.13
	172		279.04	8T-4122	358.02
	173		287	8T-4123	27
	174		287.04		110.01
	202		287.08		110.03
	221		321		112
	221.02		323		113.02
	221.04		323.02		115
	221B		323.04		151
	223		323.06		152.01
	225		323.08		152.01B
	227.02		324.01		152.03
	233		324.03		152.05
	233.02		333.02		152.07
	233.04		333.04		159
	233.06		339.02		160
	235		339.04		161
	235.02		343		162
	235.04		348.01		163
	235.06		352		164
	238		353		174
	241		354		274
	242.01		358		304.01
	245		358.02		304.02
	245.02		359		384
	245.04		359.01		385
	245.06		362.01		386
	245.08		368.01		387
	245.10		368.05		388
	247		373.01		389
	249		373.02		390
	249.02		373.04		391
	251.02		373.06		392
	252		374.02		393
	253.01		374.05		394
	254		397.02		395
	254.01		397.04		396
	254.02		397.06	8T-4127	182

PART NUMBER INDEX

Part.No	Page
8T-4131	174
	178
	179.03
	179.14
8T-4132	177
	179.02
	308.03
	356.01
	398
	399
8T-4133	52
	61
	63.02
	63.06
	63.08B
	63.10
	65
	65.02
	104.01
	105.01
	107
	107.02
	107.04
	107B
	123.08
	123.14
	137.02
	137.04
	139.02
	139.04
	152.03
	152.05
	152.07
	172
	174
	178
	179.03
	238
	245.02
	245.06
	245.10
	247.02
	249
	305
	306
	307
	321
	323
	323.02
	323.04
	323.06
	323.08
	338
	338.01
	397
	397.02
	397.04
	397.06
	397.08
	397.08B
	397.10A
	397.11
8T-4134	76
	77.01
	77.03
	77.05
	77.07
	77.10
8T-4136	24
	32
	32A
	41
	41.01
	41.02
	49
	61
	63
	63.02
	63.04
	63.06
	63.08
	63.08B
	63.08D
	63.10
	63.12
	91.02
	123.08
	123.14
	127
	146
	147
	148
	149
	149.01
	149.02
	173
	176
	179
	179.01
	179.04
	179.08
	179.10
	179.12
	223
	225
	233
	233.02
	233.04
	233.06
	247
	249
	249.02
	268
	272
	272.02
	273
	308
	308.03
	309.02
	324.01
	324.03
	397.13
8T-4137	21
	31
	33.02
	33.04
	35.02
	35.04
	40
	44
	45.01
	51.02

PART NUMBER INDEX

Part.No	Page	Part.No	Page	Part.No	Page
	61		233.06		123.06F
	63		235		123.08
	63.02		235.02		123.10
	63.04		235.04		123.12
	63.06		235.06		123.14
	63.08		321		123.16
	63.08B		323		123.18
	63.08D		323.02		179.06
	63.10		323.04		179.08
	63.12		323.06		202
	65		323.08		210
	65.02		333.02		212
	80.09		333.04		213
	80.11		339.02		218
	80.13		339.04		221
	80.15		352		221.02
	80.15B		358		221.04
	80.15D		359		221B
	91.02		359.01		226
	98		368.01		245
	101.01		368.05		245.04
	101.02		373.01		245.08
	102		373.02		252
	103		373.04		253
	110.01		373.06		253.01
	110.03		397.06		253.02
	121		397.08		254
	123.04		397.08B		254.01
	123.06D	8T-4138	121		254.02
	123.10		123.04		254.03
	123.16		123.06D		269
	151		123.10		304.01
	152.01		123.16		304.02
	152.03		238		319.02
	157	8T-4139	27		319.04
	172		45.02		356.01
	173		119		397.13
	176		121	8T-4140	54
	179.01		123		155
	179.10		123.02		156
	227.02		123.04		179.06
	233		123.06		356.01
	233.02		123.06B	8T-4141	110.03
	233.04		123.06D	8T-4160	323

PART NUMBER INDEX

Part.No	Page
	323.04
8T-4171	61
	63.02
	63.06
	63.08B
	63.10
	121
	123.04
	123.06D
	123.10
	123.16
	239
8T-4172	21
	238
	252
	253.01
	254
	254.02
	353
8T-4175	179.06
	356.01
8T-4176	179.06
	263
8T-4177	21
	37
	38
	353
8T-4178	252
	253.01
	254
	254.02
	255
	279
	279.04
	287
	287.04
	287.08
8T-4179	16
	35.04
	49
	123.02
	123.06B
	123.08
	123.14
	126.01
	143
	158
	215
	396
8T-4182	61
	63
	63.02
	63.04
	63.06
	63.08
	63.08B
	63.08D
	63.10
	63.12
	245
	245.04
	245.08
	254
	254.02
	255
	353
8T-4183	27
	98
	119
	123.02
	123.06B
	123.08
	123.14
	173
	179
	179.04
	180.01
	180.02
	221
	221.02
	221.04
	221B
	226
	247.02
	247.06
	249.02
	251
	356.01
8T-4184	145
	182
	214
	221
	221.02
	221.04
	221B
	223
	225
	226
	227
	227.02
	247.02
	247.04
	251
8T-4185	63.06
	63.08B
	63.10
	202
8T-4186	236
	239
8T-4189	14
	15
	21
	25
	32.01
	36
	37
	41
	49
	63.04
	63.08
	63.08D
	63.12
	77.10
	108
	280.01
	280.02
	281
	281.01
	291.01
	291.01A
	291.02
	373.01

PART NUMBER INDEX

Part.No	Page
	373.04
8T-4190	104.01
	105.01
	107
	107.02
	107.04
	107B
8T-4191	16
	52
	61
	63
	63.02
	63.04
	63.06
	63.08B
	63.10
	76
	77.01
	77.03
	77.05
	77.07
	77.09
	80
	80.01
	227.02
	272
	272.02
	273
	319.02
	319.04
	343
	348.01
	354
	358.02
	362.01
	397.02
	397.04
	397.06
	397.08
	397.08B
	397.10
	397.12
8T-4192	33.02
	33.04
	34.01
	34.03
	35.02
	55
	55.01
	56
	56.01
	119
	121
	123
	123.02
	123.04
	123.06
	123.06B
	123.06D
	123.06F
	123.08
	123.10
	123.12
	123.14
	123.16
	123.18
	179.10
	245.02
	245.06
	245.10
	356.02
	398
	399
	401
8T-4193	275
	275.01
	323
	323.04
	323.08
	356.01
	420
	420.01
	421
8T-4194	214
	221
	221.02
	221.04
	221B
8T-4195	21
	24
	61
	63
	63.02
	63.04
	63.06
	63.08
	63.08B
	63.08D
	63.10
	63.12
	65
	65.02
	80.09
	80.11
	80.13
	80.15
	80.15B
	80.15D
	152.01B
	152.05
	152.07
	172
	174
	176
	179.01
	202
	227.02
	241
	242.01
	254
	254.02
	279
	279.04
	287
	287.04
	287.08
	343
	358.02
	397.11
8T-4196	49
	179.10
	179.12

PART NUMBER INDEX

Part.No	Page	Part.No	Page	Part.No	Page
	195		338.01		215
	196		339.02		218
	197		339.04		221
	198		368.01		221.02
	199		368.05		221.04
	200		373.02		221B
	201		373.04		223
	235		374.03		225
	235.02		374.05		226
	235.04	8T-4205	77.08		227
	235.06		77.09		227.02
8T-4198	39	8T-4223	27		235
	61		33.02		235.02
	63.02		33.04		235.04
	63.06		34.01		235.06
	63.08B		34.03		243
	63.10		35.02		245
	279		35.04		245.02
	279.04		45.02		245.04
	287		108		245.06
	287.04		108.01		245.08
	287.08		108.01A		245.10
8T-4199	147		109		247.02
	149		109.01		247.04
	149.02		123.06B		247.06
8T-4200	19		123.08		249.02
	21		123.12		251
	30		123.14		252
	33.02		123.18		253
	33.04		126.01		253.01
	34.01		143		253.02
	34.03		145		254
	35.02		172		254.01
	35.04		180.01		254.02
	119		180.02		254.03
	123.02		182		269
	123.06B		197		319.02
	123.08		198		319.04
	123.14		200		353
	172		202		356.01
	323		210		356.02
	323.04		212		358.01
	323.08		213		384
	338		214		385

PART NUMBER INDEX

Part.No	Page
	386
	387
	396
8T-4224	24
	25
	30
	33.02
	33.04
	34.01
	34.03
	35.02
	35.04
	41
	41.01
	51.02
	52
	77.10
	100
	108
	119
	123.02
	123.06B
	123.08
	123.14
	172
	241
	242.01
	323
	323.04
	323.08
	324.01
	324.03
	338
	338.01
	339.02
	339.04
	352
	353
	362
	368.01
	368.05
	373.01
	373.02
	373.04
	373.06
	374.03
	374.05
	397.13
8T-4226	61
	63.02
	63.06
	63.08B
	63.10
	65
	65.02
8T-4244	108.01A
	109
	109.01
	123
	123.06
	123.06F
	123.12
	123.18
	135.02
	135.03
	358.01
	358.01A
8T-4648	213
	214
	223
	225
	353
8T-4780	151
	152.01
	152.01B
	152.03
	152.05
	152.07
	384
	385
	386
	387
	388
	389
	390
	391
	392
	393
	394
	395
	396
8T-4908	32
	32A
	36
	38
	46
	52
8T-4910	197
	198
	199
	200
	243
	245
	245.04
	245.08
8T-4944	227
	227.02
	265
8T-4956	172
	177
	179.02
	214
	221
	221.02
	221.04
	221B
	243
	247.02
	247.04
	247.06
	249.02
	251
	252
	253
	253.01
	253.02
	254
	254.01
	254.02
	254.03
	384
	385

PART NUMBER INDEX

Part.No	Page
	386
	387
8T-4970	343
8T-4971	241
	242.01
8T-5004	140
8T-5005	21
	233
	233.02
	233.04
	233.06
	245.02
	245.06
	245.10
	275
	275.01
8T-5360	137.02
	137.04
	139.02
	139.04
8T-5413	137.02
	137.04
	139.02
	139.04
	152.03
	152.05
	152.07
8T-5460	159
	160
	161
	162
	163
	274
8T-5878	164
8T-5913	347
8T-5914	344
	347
8T-6408	249.02
8T-6411	76
	77
	77.01
	77.02
	77.03
	77.04
	77.05
	77.06
	77.07
	77.08
	77.09
	77.10
	321
	323.02
	323.06
	328
8T-6412	327
8T-6466	21
	397
8T-6685	21
	221
	221.02
	221.04
	221B
8T-6693	124
	124.01
8T-6726	226
8T-6757	308.03
8T-6759	176
	257
	265
	268
	279
	279.04
	287
	287.02
	287.04
	287.06
	287.08
	287.10
	293
	297
	305
	306
	308
	308.03
	309.02
8T-6764	316.02
	384
	385
	386
	387
8T-6868	319.02
	319.04
8T-6870	21
8T-6876	235.06
8T-6912	38
	63
	63.04
	63.08
	63.08D
	63.12
8T-6974	259
	259.01
	259.02
	259.03
8T-7329	32
	32A
8T-7338	214
	221
	221.02
	221.04
	221B
8T-7547	24
	46
	323
	323.04
	323.08
	397.13
8T-8729	55
	55.01
	56
	56.01
	63.10
	68
	68.01
	68.03
	70
	71
	72
	72.01
	72.02
	72.03
	72.04

PART NUMBER INDEX

Part.No	Page	Part.No	Page	Part.No	Page
	72.05		72.02		72.03
	72.06		72.03		72.04
	72.07		72.04		72.05
	73		72.05		72.06
	78		72.06		72.07
	78.01		78		72.08
	78.02		78.01		72.09
	78.03		78.02		78
	78.04		78.03		78.01
	78.05		78.04		78.02
	78.06		78.05		78.03
	85		85		78.04
	85.02		85.02		78.05
	85.02B		85.02B		85
	85.04		85.04		85.02
	85B		85B		85.02B
	86		86		85B
	88		87		86
	89		87.01		87
	94.04		87.02		87.01
	94.05		87.03		87.02
	94.05C		87.04		87.03
	94.05D		92		87.04
	94.05E		94.05		89
	94.05F		94.05C		94.04
	94.05G		94.05D		94.05
	94.05H		94.05G		94.05C
	94.07		94.05H		94.05D
	95		95		94.05E
	96.01		96		94.05F
	109.03		109.03		94.08
	172	8T-8737	66	8T-8799	67
	301		68		68.02
	349		68.01		68.05
8T-8730	66		68.02	8T-9403	255
	67		68.03	8T-9515	245
	68		68.04		245.04
	68.01		68.05		245.08
	68.02		68.06	8T-9598	37
	68.03		70	8T-9636	82
	70		71		82.01
	71		72		82.02
	72		72.01	8T-9850	78.01
	72.01		72.02	8Y-4501	324.01

PART NUMBER INDEX

Part.No	Page
	324.03
8Y-4820	324.01
	324.03
8Y-5728	321
	323.02
	323.06
8Y-5745	333.02
	333.04
8Y-6364	54
8Y-6967	370.01
9	
9B-7233	90
9F-2167	245
	245.04
	245.08
9F-4976	197
	198
	199
	200
	201
9F-5644	79
	93
9G-4336	67
	68.02
	68.05
9G-4343	67
	68
	68.02
	68.03
	68.05
	68.06
	77
	77.02
	77.04
	77.06
	77.08
	77.09
9G-5582	140
9G-7641	83
	83.01
	90
9G-8909	74
9J-0705	282.01
9J-0707	284
	303.02
9J-2089	30
9J-3167	402
	403
	423
9J-3175	424
9J-4309	425
9J-4359	428
9J-7031	173
9L-7816	366.12
9M-1091	353
9M-8406	52
9N-0869	280.01
	280.02
	281
	281.01
	291.01
	291.01A
	291.02
9N-4302	423
9N-4303	424
9N-4352	427
9N-4353	428
9P-7121	55
	55.01
	56
	56.01
9R-2821	385
9R-3924	55
	55.01
	56
	56.01
	385
9S-0174	77
	77.02
	77.04
	77.06
	77.08
	77.09
9S-4180	182.01
	276
9S-4181	247.02
	247.06
	252
	253.01
	254
	254.02
	302
9S-4182	173
	227
	227.02
9S-4183	279
	279.04
9S-4185	179.06
	179.08
	265
	308.03
	311
9S-4188	287.02
	287.06
	287.10
9S-4191	179.02
	179.10
	179.12
	221.07
	233
	233.02
	233.04
	233.06
	235
	235.02
	235.04
	235.06
	237
	241
	242.01
	249
	279
	279.04
	293
	302
9S-6130	56
	56.01
9S-8001	300
9S-8004	176

PART NUMBER INDEX

Part.No	Page
	179.01
	266
	300
9S-8005	291
	291.01
	291.01A
	291.02
	291A
	291B
	308
	308.03
	309.02
9S-8006	276
	300
9S-8008	176
	179.01
9S-8896	221
	221.02
	221.04
	221B
9T-4506	282.02
9W-0335	94.03
	94.03B
	94.03D
9W-0844	66
	68
	68.01
	68.03
	68.04
	68.06
	70
	71
	72
	72.01
	72.02
	72.03
	72.04
	72.05
	72.06
	72.07
	72.08
	72.09
	73
	78
	78.01
	78.02
	78.03
	78.04
	78.05
	85
	85.02
	85.02B
	85.04
	85B
	86
	87.01
	87.03
	94.05
	94.05C
	94.05D
	94.05G
	94.05H
	94.08
	233
	233.02
	233.04
	233.06
9W-0852	51.02
	68
	68.03
	68.06
	70
	71
	72
	72.01
	72.02
	72.03
	72.04
	72.05
	72.06
	72.07
	72.08
	72.09
	73
	78
	78.01
	78.02
	78.03
	78.04
	78.05
	85
	85.02
	85.02B
	85.04
	85B
	86
	87.01
	87.03
	94.04
	94.05C
	94.05D
	94.05E
	94.05F
	94.05G
	94.05H
	94.07
	94.08
	109.02
	233
	233.02
	233.04
	233.06
	237
	238
	240
	373.02
	373.04
9W-1441	82
	82.01
	82.02
9W-1442	82
	82.01
	82.02
9W-1446	82.02
9W-1494	336.01
9W-2142	165.01
9W-2201	156
9W-2358	429
9W-2359	429
9W-3137	170
	170.01
	170.02

PART NUMBER INDEX

Part.No	Page
9W-3138	170
	170.01
	170.02
9W-3361	167
	168
	169
	169.01
9W-3619	167
	168
	169
	169.01
9W-6472	429
9W-6473	429
9W-8308	426
9W-8309	425
9W-9188	425
9W-9189	426
9W-9350	169
9W-9351	168
	169.01
9W-9353	168
	169
	170
9W-9354	167
	168
	170
9W-9356	169
9W-9357	168
9W-9360	167
9W-9361	168
9W-9451	156
9W-9455	156
9X-0196	72
	72.03
	72.06
	72.09
	94.04
	94.05
	94.05C
	94.05D
	94.05G
	94.05H
9X-1386	91.04
9X-1813	91.03
9X-2026	368.03
	368.07
	375.02
	375.04
9X-2041	319.02
	319.04
	321
	323
	323.02
	323.04
	323.06
	323.08
	324.01
	324.03
	333.02
	333.04
	334
	334.01
	334A
	336
	336.01
	336B
	339.02
	339.04
9X-2042	333.02
	333.04
	334.02
	338
	338.01
	360
	360.01
	361
	361.01
9X-2043	359
	359.01
9X-2044	80.02
	319.02
	319.04
	321
	323
	323.02
	323.04
	323.06
	323.08
	324.01
	324.03
	333.02
	333.04
	334
	334.01
	334A
	336
	336.01
	336B
	339.02
	339.04
	357
	369A
	370.01
9X-2045	321
	323
	323.02
	323.04
	323.06
	323.08
	333.02
	333.04
	334
	334A
	359
	359.01
9X-2046	321
	323.02
	323.06
9X-2158	245.08
9X-2205	55
	55.01
	56
	56.01
9X-2206	55
	55.01
	56.01
9X-2404	190
9X-3463	108
	108.01
	108.01A
	109
	109.01
9X-6032	200
	201
	223
	225
	245
	245.04
	245.08
	247.02
	247.06
	249.02
	251
	251.02

PART NUMBER INDEX

Part.No	Page
	308.03
9X-6395	300
9X-7298	194
	194.01
9X-7381	368.03
	368.07
9X-8124	76
	77.01
	77.03
	77.05
	77.07
	77.10
9X-8256	51.02
	61
	63
	63.02
	63.04
	63.06
	63.08
	63.08B
	63.08D
	63.10
	63.12
	76
	77
	77.01
	77.02
	77.03
	77.04
	77.05
	77.06
	77.07
	77.08
	77.09
	77.10
	80
	80.01
	94.01
	121
	123.04
	123.06D
	123.10
	123.16
	233
	233.02
	233.04
	233.06
	233.02
	233.04
	233.06
	233.08
	327
	328
	343
	348.01
	358
	363.01
	365
	366.01
	373.01
	373.04
9X-8257	33.02
	33.04
	35.02
	104.01
	105.01
	107
	107.02
	107.04
	107B
	171
	214
	221
	221.02
	221.04
	221B
	233
	233.02
	233.04
	233.06
	258
	258.01
	274
	275
	275.01
	323
	323.04
	323.08
	348.01
	356.01
	420
	420.01
	421
9X-8488	108.01
	109
9X-8582	397.08B
9X-8600	55
	55.01
	56
	56.01

0

Part.No	Page
003-7764	55
	55.01
	56
	56.01
004-6683	55
	55.01
	56
	56.01
005-4362	235
	235.02
	235.04
	235.06
006-5707	53
030-0167	284
	303.02
030-7936	235
	235.02
	235.04
	235.06
	239

PART NUMBER INDEX

Part.No	Page
030-7937	235.02
	235.04
030-7942	235
	235.02
	235.04
	235.06
	237
	238
	241
	242.01
	243
030-7943	227.02
	235.02
	235.04
	235.06
030-7947	223
	225
	233
	233.02
	233.04
	233.06
	235
	235.02
	235.04
	235.06
	236
	237
	238
	239
	240
	241
	242.01
	243
030-7948	235
	235.02
	235.04
	235.06
030-7955	223
	225
	241
	242.01
030-8188	227.02
	235
	235.02
	235.04
	235.06
030-8189	223
	225
030-8194	235
	235.02
	235.04
	235.06
032-1267	235
	235.02
033-6036	284
	303.02
033-8248	397.02
	397.04
	397.06
	397.08
	397.08B
	397.10
053-0700	239
061-9258	235
	235.02
	235.04
	235.06
	241
	242.01
081-6344	145
085-4743	304
085-4792	303.01
085-5593	260
	261.01
085-5864	190
085-6444	325
	325.01
085-6445	325
	325.01
085-6446	325
	325.01
085-6447	325
	325.01
085-6448	325
	325.01
085-6449	325
	325.01
	327
085-6455	243
	312
085-6719	50.01
	50.07
085-6720	50.01
	50.07
085-6723	50.02
	50.07
085-7075	312
085-7076	312
085-7077	312
085-7078	312
085-7079	312
085-7080	312
085-7081	312
085-7082	312
085-7083	312
085-7084	312
085-7085	312
085-7269	49
	447
085-7329	41.01
	63
	63.04
	63.08
	63.08D
	63.12
085-7356	236
	239
085-7913	50.03
	50.09
085-7914	50.03
	50.09
	451
085-7916	50.04
	50.09
085-8037	323
	323.04
	323.08
085-8604	190
085-8605	190
085-8832	420
085-9195	50.01
	50.07

PART NUMBER INDEX

Part.No	Page	Part.No	Page	Part.No	Page
085-9197	50.02		50.07	085-9267	50.03
	50.07	085-9233	50.01		50.09
085-9199	50		50.07	085-9269	50.04
	50.07	085-9234	50.01		50.09
085-9205	50.03		50.07	085-9271	50.04
	50.09	085-9235	50.01		50.09
085-9206	50.04		50.07	085-9275	48
	50.09	085-9236	50.01	085-9277	50.03
085-9207	50.04		50.07		50.09
	50.09	085-9237	50.01	085-9311	110.01
085-9208	50.03		50.07		110.03
	50.09	085-9238	50.01	085-9429	99
085-9210	50.03		50.07	085-9492	353
	50.09	085-9239	50.01	085-9513	18
085-9211	50.03		50.07	085-9645	50.04
	50.09	085-9240	50.01		50.09
085-9212	50.04		50.07	085-9649	50.04
	50.09	085-9241	50.01	085-9652	50.04
085-9213	50.04		50.07		50.09
085-9215	50.03	085-9242	50.01	085-9653	50.03
	50.09		50.07		50.09
085-9218	50.03	085-9243	50.01	085-9658	50.03
	50.09		50.07		50.09
085-9222	50.05	085-9244	50.01	085-9659	50
	50.11		50.07		50.07
085-9223	50.01	085-9245	50.01	085-9677	50.03
	50.07		50.07		50.09
085-9224	50.01	085-9246	50.01	085-9678	50.03
	50.07		50.07		50.09
085-9225	50.01	085-9247	50.01	085-9679	50.03
	50.07		50.07		50.09
085-9226	50.01	085-9258	50.02	085-9680	50.03
	50.07		50.07		50.09
085-9227	50.01	085-9259	50.02	085-9681	50.04
	50.07		50.07	085-9682	50.02
085-9228	50.01	085-9260	50		50.07
	50.07	085-9261	50.03	085-9683	50.02
085-9229	50.01		50.09		50.07
	50.07	085-9264	50.03	085-9684	50.02
085-9230	50.01		50.09		50.07
	50.07	085-9265	50.03	085-9685	50.02
085-9231	50.01		50.09		50.07
	50.07	085-9266	50.03	085-9686	50.02
085-9232	50.01		50.09		50.07

PART NUMBER INDEX

Part.No	Page
085-9832	50
	50.07
085-9838	50.01
	50.07
085-9882	50.03
	50.09
085-9883	50.03
	50.09
085-9884	50.03
	50.09
085-9885	50.03
	50.09
085-9886	50.03
	50.09
085-9887	50.04
	50.09
085-9888	50
	50.05
	50.07
	50.11
085-9899	50.05
	50.11
085-9903	50.03
	50.09
085-9906	50.03
	50.09
085-9909	50.09
085-9910	50.03
085-9913	50.04
	50.09
085-9916	50.04
	50.09
085-9929	50.04
	50.09
085-9932	50.04
	50.09
085-9936	50.04
	50.09
086-0127	420
086-0255	187
	191
086-0320	420
086-0321	420
	420.01
086-0322	420
	420.01
086-0523	400
	401
086-0950	373.01
	373.04
086-0953	368.01
	368.05
086-1345	192
086-1346	192
086-2369	245
	245.04
	245.08
086-2746	195
	196
	197
	198
	200
	201
087-3832	56
	56.01
087-3908	121
	123.04
	123.06D
	123.10
	123.16
087-3909	121
	123.04
	123.06D
	123.10
	123.16
087-4448	307
087-4456	235
	235.02
	235.04
	235.06
087-4480	235
	235.02
	235.04
	235.06
087-4566	179.02
087-4587	61
	63.02
	63.06
	63.08B
	63.10
	235
	235.02
	235.04
	235.06
087-4628	265
087-4629	265
087-4703	307
087-4704	307
087-4707	306
087-4710	306
	307
087-4742	265
087-4743	265
087-4757	265
087-4786	265
087-4969	310
087-4970	270
	271.02
087-5166	308
	308.03
	309.02
087-5178	177
	179.02
087-5189	176
	179.01
087-5190	176
	179.01
087-5192	177
	179.02
087-5196	176
	179.01
087-5199	176
	179.01
087-5200	177
	179.02
087-5201	177
	179.02
087-5204	176
	179.01
087-5297	174
087-5466	215.01
	379

PART NUMBER INDEX

Part.No	Page
087-5707	307
087-5708	306
	307
087-5709	306
	307
087-5778	235.06
087-5803	398
087-5805	398
087-5806	398
087-5838	397.10A
087-5840	397.02
	397.04
	397.06
	397.08
	397.08B
	397.10
087-5841	152.03
	152.05
	152.07
	384
	386
	387
087-5845	398
087-5966	397.12
087-8484	321
	323.02
	323.06
087-8884	50.02
	50.07
091-3474	15
	47
091-9035	63
	63.02
	63.06
	63.08B
	63.10
093-0065	396
093-0083	151
	152.01
	152.01B
	152.03
	152.05
	152.07
	384
	385
	386
	387
	388
	389
	390
	391
	392
	393
	394
	395
	396
	398
	399
093-0084	151
	152.01
	152.01B
	152.03
	152.05
	152.07
	384
	385
	386
	387
093-0086	388
	389
	390
	391
	392
	393
	394
	395
093-0097	396
	401
093-0115	151
	152.01
	152.01B
	152.03
	152.05
	152.07
	384
	385
	386
	387
	388
	389
093-0116	151
	152.01
	152.01B
	152.03
	152.05
	152.07
	384
	385
	386
	387
093-0118	388
	389
	390
	391
	392
	393
	394
	395
093-0331	356.01
093-0332	356.01
093-0333	356.01
093-0334	356.01
093-0349	151
	152.01
	152.01B
	152.03
	152.05
	152.07
	384
	385
	386
	387
	388
	389
	390

PART NUMBER INDEX

Part.No	Page	Part.No	Page	Part.No	Page
	391		391	094-0723	192
	392		392	094-0747	187
	393		393		191
	394		394	094-0872	310
	395		395	094-0876	307
	396	093-1436	158.01		310
093-0352	396	093-1476	194		310.01
093-0357	396		194.01		310.02
093-0363	151	093-1482	194		310.03
	152.01		194.01	094-1399	265
	152.01B	093-1512	158.01	094-1509	180.02
	152.03	093-1571	192	094-1516	180.01
	152.05	093-1605	194		180.02
	152.07		194.01	094-1528	113
	384	093-1628	194		113.01
	385		194.01		114
	386	093-1729	180.01	094-1542	113
	387		180.02		113.01
	388	093-2063	52		114
	389	093-2064	53	094-1850	176
	390		373.01		179.01
	391		373.04	094-1875	176
	392	093-2068	63		177
	393		63.04		179.01
	394		63.08		179.02
	395		63.08D		179.10
	396		63.12		179.12
093-0543	147	093-5150	180		265
	149	093-5432	34.03	094-1881	176
	149.02	093-7521	181		179.01
093-1342	400	093-7638	431		179.12
	401	093-7828	112	094-1882	179.01
093-1344	398	093-9473	303.01		179.06
	399	094-0580	112		179.08
093-1425	112		113.01		179.10
093-1433	193		114		179.12
	193.01	094-0584	180.01	094-1883	177
	396		180.02	094-1900	261
	400	094-0611	113		261.02
	401		113.01	094-1902	257
093-1434	192		114		297
	388	094-0616	113	094-1920	195
	389		113.01		196
	390		114	094-1931	188

PART NUMBER INDEX

Part.No	Page
	189
094-2080	77
	77.02
	77.04
	77.06
	77.08
	77.10
094-2524	44
094-3245	172
094-3247	55
	55.01
	56
	56.01
	172
094-4628	18
	19
094-4696	15
094-6526	252
	253.01
	254
	254.02
094-7115	16
094-7134	20
094-7154	20
094-7471	447
094-7516	20
094-7583	44
094-7925	32
	32A
094-7998	48
094-9022	49
094-9034	49
094-9525	15
094-9581	49
094-9596	49
094-9597	49
094-9672	31
	447
094-9725	48
094-9726	48
094-9950	97.04
094-9980	97.04
095-0085	97.04
095-0410	97.04
095-0658	245.08
095-0673	247
	249
095-0707	263
095-0728	272.02
	303.01
	323
	323.04
	323.08
095-0735	77.10
	273
	323.04
	323.08
095-0736	55
	55.01
	56
	56.01
	58
	80.09
	80.11
	80.13
	80.15
	80.15B
	80.15D
	327
095-0742	77
	77.02
	77.04
	77.06
	77.08
	77.10
	324.01
	324.03
	327
	365
	369.01
	369.02
095-0843	137.02
	137.04
	139.02
	139.04
095-0844	176
	179.01
095-0863	170
	170.01
	170.02
095-0879	16
095-0882	260
	261.01
095-0891	113
	113.01
	114
095-0913	373.02
	373.04
	374.03
	374.05
095-0936	306
095-0946	179.08
095-0948	37
095-1022	180.01
	180.02
095-1056	431
095-1057	431
095-1064	431
095-1066	431
095-1070	431
095-1071	431
095-1080	431
095-1081	431
095-1082	431
095-1084	431
095-1260	306
	307
095-1270	112
	113.01
	114
095-1272	140
095-1321	119
	123.02
	123.06B

PART NUMBER INDEX

Part.No	Page
	123.08
	123.14
095-1386	52
095-1388	32.02
	55
	55.01
	56
	56.01
095-1510	182.01
095-1511	52
095-1514	55
	55.01
	56
	56.01
	172
095-1517	52
	55
	55.01
	56
	56.01
	172
095-1519	179.14
	299
095-1522	176
	179.01
095-1527	179.14
095-1528	179.14
095-1538	179.14
095-1572	265
095-1573	259
095-1574	259.01
	259.02
	259.03
	308.03
095-1575	265
095-1576	176
	179.01
	179.10
	257
	297
095-1578	176
	179.01
	179.06
	179.10
095-1579	260
	261.01
	289.01
	308.03
095-1582	305
	312
	313
	314
095-1584	289
095-1585	265
095-1586	257
	262
	262.01
	265
	267
	294.01
	295.01
	295.02
	297
	298
	307
	308.03
	310
	310.01
	310.02
	310.03
095-1587	289.01
	313
	314
095-1590	289.01
	312
095-1592	195
	196
	197
	198
	200
	201
	305
095-1593	261
	262
	262.01
095-1594	308
	308.03
	309.02
095-1595	261.02
095-1596	197
	198
	199
095-1597	195
	196
	197
	198
	200
	201
095-1600	179
	179.04
	197
	198
	199
	303.01
095-1601	267
095-1603	304.01
	304.02
095-1604	308.03
095-1606	177
	179.02
095-1608	146
	148
	149.01
	173
095-1619	158.01
095-1625	194
	194.01
	268
095-1657	178
	179.03
095-1658	178
	179.03
095-1663	38
	447
095-1681	182.01
095-1685	265
095-1698	257
	262
	262.01
	262.02

PART NUMBER INDEX

Part.No	Page
	297
095-1700	265
095-1701	266
095-1703	158.01
095-1710	312
095-1716	268
095-1717	187
	191
095-1719	192
095-1721	188
	189
095-1723	190
095-1730	173
095-1750	294.01
	295.02
095-1751	294.01
	295.02
095-1780	308.03
095-1785	257
	262
	262.01
	267
	297
095-1786	289.01
095-1787	312
095-1789	308
	308.03
	309.02
095-1833	431
095-1836	431
095-1852	431
095-1855	431
095-1857	431
095-2005	16
095-2011	16
095-2038	14
	30
	447
095-2039	16
	448
095-2040	50
	50.05
	50.07
	50.11
095-2489	50.11
095-2490	50.05
	50.11
095-2927	158.01
095-5600	190
095-6639	174
095-6641	174
095-7378	265
095-7380	265
095-7382	265
095-7383	177
	179.02
	265
095-7384	265
095-7386	265
095-7387	265
095-7419	177
	179.02
	179.10
	265
095-7424	176
	177
	179.01
	179.02
095-7930	354
	362
095-8638	15
	16
	19
	21
	24
	25
	30
	32
	32.01
	32A
	36
	37
	38
	46
	47
	49
095-9397	195
	196
	197
	198
	199
	200
	201
096-0061	32.02
	33.02
	33.04
	35.02
	45.01
	52
	223
	225
	233
	233.02
	233.04
	233.06
	237
	238
	243
	346.01
	348.01
	373.04
	397.13
096-0131	396
	400
	401
096-0721	321
	323.02
	323.06
096-0744	33.02
	33.04
	35.02
096-0854	190
	192
	388
	389
	390
	391
	392
	393
	394
	395

PART NUMBER INDEX

Part.No	Page
	398
	399
096-1055	194
	194.01
096-1331	245
	245.04
096-1421	221
	221.02
	221.04
	221B
096-1445	177
	179.02
096-1519	265
096-1521	265
096-1522	265
096-1523	265
096-1567	187
	191
096-1568	187
	191
096-1570	188
	189
096-1571	188
	189
096-1595	305
096-1598	305
096-1621	310
096-1622	310
096-1628	310
	310.01
	310.02
	310.03
096-1773	112
	113.01
	114
096-1774	112
	113.01
	114
096-1775	112
	113.01
	114
096-1776	112
	113.01
	114
096-1777	112
	113.01
	114
096-1778	112
	113.01
	114
096-1779	112
	113.01
	114
096-1780	112
	113.01
	114
096-1781	112
	113.01
	114
096-2500	32.01
	49
096-2501	16
	23
	49
	98
096-2617	271.01
096-2622	324.01
	324.03
096-2915	174
096-2966	178
	179.03
096-3044	279
	279.04
	287.02
	287.06
	287.10
096-3064	262
	262.01
096-3216	187
	191
	192
096-3375	311
096-3376	311
096-3741	16
096-3772	321
	323.02
	323.06
096-3773	309.02
096-3780	137.02
	137.04
	139.02
	139.04
096-3785	265
096-3786	265
096-3787	265
096-3788	265
096-3831	177
	179.02
096-3884	324.01
	324.03
096-3891	187
	191
	192
096-3943	176
	179.01
096-3944	176
	177
	179.01
	179.02
	179.10
096-3946	177
	179.02
096-3964	187
	191
096-3978	265
096-3983	177
	179.02
	179.10
096-3984	177
	179.02
096-3998	177
	179.02
096-4002	177
	179.02
096-4003	177
	179.02
	265
096-4007	176
	179.01
096-4008	176
	179.01
096-4009	178

PART NUMBER INDEX

Part.No	Page
	179.03
096-4010	178
	179.03
096-4011	178
	179.03
096-4012	178
	179.03
096-4014	179
	179.04
096-4015	179
	179.04
096-4016	176
	179.01
096-4017	176
	179.01
096-4020	179
	179.04
096-4034	34.01
	34.03
	35.04
096-4035	33.02
	33.04
	34.01
	34.03
	35.02
	35.04
096-4085	334.01
	334.02
096-4129	124
	124.01
096-4212	174
096-4339	180.01
	180.02
096-4376	265
096-4377	265
096-4378	265
096-4402	187
	191
096-4408	187
	191
096-4411	187
	188
	189
	191
096-4412	200
096-4441	192
096-4443	191
096-4445	197
	198
096-4447	199
096-4448	201
096-4449	201
096-4461	188
	189
096-4480	197
	198
	200
	201
096-4498	310
	310.01
	310.02
	310.03
096-4747	422
096-4748	422
096-4754	172
096-4755	110.01
	110.03
096-4837	180.01
	180.02
096-4876	400
	401
096-4883	247
	249
	252
	253.01
	254
	254.01
	254.02
	254.03
	323
	323.04
096-4902	146
	148
	149.02
096-4925	179
	179.04
096-5101	48
096-5400	179.14
096-5625	188
	189
096-5741	188
	189
096-5915	265
096-5916	265
096-5919	265
096-5962	82
	82.01
	82.02
096-6095	146
	148
	149.01
096-6166	76
	77.01
	77.03
	77.05
	77.07
	77.09
	83
	83.01
	272.02
	323
	323.04
	323.08
	348.01
096-6210	188
	189
	190
096-6211	188
	189
	190
096-6223	197
	198
	199
096-6331	272
096-6332	272
096-6333	272
096-6346	50.04
	50.09
096-6347	50.04
	50.09
096-6348	50.04
	50.09

PART NUMBER INDEX

Part.No	Page
096-6349	50.04
	50.09
096-6350	50.04
	50.09
096-6351	50.04
	50.09
096-6353	50.04
	50.09
096-6361	50.03
	50.09
096-6412	112
	113.02
096-6561	323
	323.04
	323.08
096-7567	50.04
	50.09
	451
096-7570	50.02
	50.07
	450
096-7571	50.02
	50.07
	450
096-7632	50
	50.07
	450
096-7803	187
	191
096-7928	48
096-8251	431
096-8273	50.02
	50.07
096-8274	50.04
	50.09
	451
096-8280	50.03
	50.09
096-8286	50.04
	50.09
	451
096-8288	50.05
	50.11
	450
096-8289	50.04
	50.09
	451
096-8290	50
	50.07
	450
096-8292	50.03
	50.09
	451
096-8294	50
	50.07
	450
096-8297	50.04
	50.09
	451
096-8307	50
	50.07
	450
096-8310	50.01
	50.07
096-8336	50.05
	50.11
096-8359	50.04
	50.09
096-9013	48
	448
096-9014	48
	448
096-9346	178
	179.03
096-9347	178
	179.03
096-9376	178
	179.03
096-9377	178
	179.03
096-9378	178
	179.03
096-9385	50.02
	50.07
	450
096-9408	50.01
	50.07
096-9409	50.01
	50.07
096-9410	50.02
	50.07
096-9411	50.02
	50.07
096-9412	50.02
	50.07
096-9435	21
096-9455	178
	179.03
096-9456	178
	179.03
096-9457	178
	179.03
096-9458	178
	179.03
096-9459	178
	179.03
096-9460	178
	179.03
096-9461	178
	179.03
096-9462	178
	179.03
096-9463	178
	179.03
096-9464	178
	179.03
096-9465	178
	179.03
096-9466	178
	179.03
096-9467	178
	179.03
096-9468	178
	179.03
096-9469	178
	179.03
096-9478	48
096-9481	48
096-9486	50
	50.07
096-9491	50
	50.07

PART NUMBER INDEX

Part.No	Page
096-9492	50
	50.07
096-9495	50
	50.07
096-9500	50.01
	50.07
096-9502	50.01
	50.07
096-9503	50.01
	50.07
096-9505	50.01
	50.07
096-9506	50.01
	50.07
096-9507	50.02
	50.07
096-9508	50.07
096-9528	37
	448
096-9529	49
	448
096-9532	21
	38
	447
	448
096-9585	50.03
	50.09
096-9587	50.04
	50.09
099-0059	50.04
	50.09
099-0139	325
	325.01
099-0365	313
	314
099-0367	314
099-0596	194
	194.01
099-0600	194
	194.01
099-0699	194
	194.01
099-0700	194
	194.01
099-0707	400
	401
099-0717	396
099-0718	396
	400
	401
099-0721	400
	401
099-0722	400
	401
099-0723	400
	401
099-0724	400
	401
099-0822	299
	334.01
	334.02
	338
	338.01
099-0823	321
	323.02
	323.06
099-0862	323
	323.04
	323.08
099-0864	321
	323.02
	323.06
099-0865	321
	323.02
	323.06
099-0866	321
	323.02
	323.06
099-1426	119
	123.02
	123.06B
	123.08
	123.14
099-2389	50
	50.07
	450
099-3245	431
099-3246	431
099-3248	431
099-3249	431
099-3250	431
099-3322	221
	221.02
	221.04
	221B
099-3502	134
099-3506	326
	328
099-3603	321
	323.02
	323.06
099-3645	367
099-3649	235
	235.02
	235.04
	235.06
099-3669	179
	179.04
	179.14
099-3670	179
	179.04
	179.14
099-3671	178
	179.03
	179.14
099-3913	99
099-4388	14
099-4420	16
099-4483	98
099-4691	130
	130.01
	133
	134
	235
	235.02
	235.04
	235.06
	358.01
099-5307	339.02
	339.04
099-5572	190
099-5573	190

PART NUMBER INDEX

Part.No	Page
099-5575	190
099-5845	221.06
099-6018	190
099-6019	190
099-6109	179
	179.04
	179.14
099-6110	179
	179.04
	179.14
099-6111	179
	179.04
	179.14
099-6112	179
	179.04
	179.14
099-6113	179
	179.04
	179.14
099-6115	179
	179.04
	179.14
099-6117	179
	179.04
	179.14
099-6118	179
	179.04
	179.14
099-6119	179
	179.04
	179.14
099-6120	179
	179.04
	179.14
099-6121	179
	179.04
	179.14
099-6122	179
	179.04
	179.14
099-6123	179
	179.04
	179.14
099-6124	179
	179.04
	179.14
099-6125	179
	179.04
	179.14
099-6126	179
	179.04
	179.14
099-6127	179
	179.04
	179.14
099-6128	179
	179.04
	179.14
099-6132	307
099-6135	307
099-6136	306
	307
	310
099-6137	306
	307
	310
	310.01
	310.02
	310.03
099-6140	307
099-6141	306
	307
099-6142	307
099-6144	306
	307
099-6145	306
	307
099-6418	125
	126
099-6495	50.03
	50.09
099-6607	33.02
	33.04
	35.02
099-6953	304
099-6954	304
099-7091	396
099-7127	80.05
	80.06
099-7464	431
099-7857	130
	130.01
	132
	132.01
099-8282	190
099-8485	50.03
100-2881	333.02
	333.04
100-3866	274
100-7689	336
	336B
100-7740	362
101-2260	356.01
101-2362	368.03
	368.07
	375.02
	375.04
101-2842	437
	438.05
	438.05F
	438.05L
	438.11
	438.17
	438.23
	438.29
101-2846	80.05
	80.06
101-9848	124
	124.01
102-0762	313
102-1119	388
102-1120	215
102-1174	243
102-1227	235
	235.02
	235.04
	235.06
102-1276	243

1

PART NUMBER INDEX

Part.No	Page
102-1279	215
102-1283	215
102-1291	215
102-4758	382
102-4861	442
102-4862	442
102-4863	442
102-6170	53
102-7688	333.02
	333.04
102-7880	63
	63.04
	63.08
	63.08D
	63.12
102-7886	61
	63.02
	63.06
	63.08B
	63.10
102-7964	85
	85.02
	85.02B
	85B
102-7965	85
	85.02
	85.02B
	85B
	87
	87.02
	87.04
	94.05
	94.05C
	94.05D
	94.05G
	94.05H
102-8016	77
	77.02
	77.04
	77.06
	77.08
	77.10
102-8287	408
	414
102-8288	414
102-8289	414
102-8800	68
	68.03
	71
	72
	72.02
	72.03
	72.05
	72.06
	78
	78.01
	78.02
	78.03
	78.04
	78.05
	85
	85.02
	85.02B
	85.04
	85B
	86
	87.01
	87.03
102-8801	68
	68.03
	68.06
	70
	71
	72
	72.01
	72.02
	72.03
	72.04
	72.05
	72.06
	72.07
	72.08
	72.09
	78
	78.01
	78.02
	78.03
	78.04
	78.05
	85
	85.02
	85.02B
	85.04
	85B
	86
	87.01
	87.03
	91.03
	91.04
	94.08
	100.01
	109.02
	172
	233
	233.02
	233.04
	233.06
102-8802	55
	55.01
	56
	56.01
	63.10
	66
	68
	68.01
	68.02
	68.03
	68.04
	68.05
	68.06
	72
	72.03
	72.06
	72.09
	85
	85.02
	85.02B
	85.04
	85B
	86
	87.01
	87.03
	91.03
	91.04
	94.08
	100.01
	109.02
	172
	233
	233.02
	233.04
	233.06

PART NUMBER INDEX

Part.No	Page
	237
	238
	240
	301
	373.02
	373.04
102-8803	68.04
	70
	72.01
	72.04
	72.07
	88
	109.03
102-8804	71
	72
	72.02
	72.03
	72.05
	72.06
	72.08
	72.09
	73
	78.06
	86
	87.01
	87.03
	349
102-8805	51.02
	70
	72
	72.01
	72.03
	72.04
	72.06
	72.07
	85
	85.02
	85.02B
	85.04
	85B
	89
	94.04
	94.05E
	94.05F
102-8806	70
	71
	72.01
	72.02
	72.04
	72.05
	72.07
	72.08
	86
	87.01
	87.03
	94.04
	94.05
	94.05C
	94.05D
	94.05E
	94.05F
	94.05G
	94.05H
	94.07
	96.01
102-8808	66
	68.01
	70
	72.01
	72.04
	72.07
	85
	85.02
	85.02B
	85.04
	85B
102-8809	66
	68.01
	71
	72
	72.02
	72.03
	72.05
	72.06
	78
	78.01
	78.02
	78.03
	78.04
	78.05
	86
	87.01
	87.03
102-8810	67
	68.02
	70
	71
	72
	72.01
	72.02
	72.03
	72.04
	72.05
	72.06
	78
	78.01
	78.02
	87
	87.02
	87.04
	94.08
102-8811	70
	71
	72.01
	72.02
	72.04
	72.05
	72.07
	72.08
	85
	85.02
	85.02B
	85.04
	85B
	86
	87.01
	87.03
	94.05
	94.05C
	94.05D
	94.05G
	94.05H

PART NUMBER INDEX

Part.No	Page
102-8812	68.04
	68.05
	68.06
	72.08
	72.09
102-8813	68.04
102-8814	68.04
	72.07
	72.08
	72.09
102-8815	68.05
	72.08
	72.09
102-8816	94.05C
	94.05D
	94.05G
	94.05H
102-8817	68.06
	72.08
	72.09
103-0468	125.01
	126
103-0469	125.01
	126
	128
103-2529	32.02
	55
	55.01
	56
	56.01
	73
	92
103-8236	181
103-8252	285
103-8253	285
103-8254	285
103-8255	285
103-8259	304.01
104-3204	76
	77.01
	77.03
	77.05
	77.07
	77.09
104-6573	78
	78.01
	78.02
	78.03
	78.04
	78.05
104-7293	280.01
	280.02
	281
	281.01
	291
	291.01
	291.01A
	291.02
	291A
	291B
104-7294	280.01
	280.02
	281
	281.01
	291
	291.01
	291.01A
	291.02
	291A
	291B
104-7296	280.01
	280.02
	281
	281.01
	291
	291.01
	291.01A
	291.02
	291A
	291B
104-9091	233
	233.02
	233.04
	233.06
105-2575	192
105-2576	192
105-2577	192
105-2578	192
105-2579	192
105-2582	192
105-2583	192
105-2584	192
105-2593	188
	189
105-2652	173
105-6431	397.02
	397.04
	397.08
	397.08B
	397.10A
	397.12
105-7266	236
	239
	314
105-7545	438.05B
	438.05H
	438.19
	438.25
105-9343	352
105-9344	373.02
	373.04
105-9409	373.02
	373.06
105-9410	373.01
	373.04
105-9525	323
	323.04
	323.08
105-9526	323
	323.04
	323.08
105-9527	323
	323.04
	323.08
105-9533	371
105-9534	371
105-9539	323
	323.04
	323.08
105-9911	55
	55.01
	56

PART NUMBER INDEX

Part.No	Page
	56.01
105-9981	76
	77.01
105-9982	77.01
	77.03
	77.05
	77.07
105-9983	77.01
	77.09
105-9984	77.03
	77.05
	77.07
105-9985	77.09
106-0001	108.01
	109
106-0002	108.01
	109
106-0003	108.01
	109
106-0004	108.01
	109
106-0005	108.01
	109
106-0035	80.05
	80.06
106-0036	80.05
	80.06
106-0054	94.02
	94.03A
	94.03C
	323
	323.04
	323.08
106-0056	81
106-0057	81
	82
	82.01
	82.02
106-0058	81
	83
	83.01
106-0107	83
	83.01
	89
106-0176	336.01
106-0178	227.02
	235
	235.02
	235.04
	235.06
106-0179	233
	233.02
	233.04
	233.06
106-0180	233
	233.02
	233.04
	233.06
106-0181	237
	238
	240
106-0191	80
	80.01
106-0210	89
106-0211	83
	83.01
107-1588	233
	233.02
	233.04
	233.06
	235
	235.02
	235.04
	235.06
107-3300	426.01
107-3308	423
	424
	425
	426
	426.01
107-3350	429.01
107-6370	283.01
	288
107-6371	283.01
	288
107-6540	289
	289.01
107-6541	289
	289.01
107-6630	233
	233.02
	233.04
	233.06
	235
	235.02
	235.04
	235.06
	237
	238
	240
107-6944	309.02
107-6947	280.01
	280.02
	281
	281.01
107-6948	280.01
	280.02
	281
	281.01
107-6949	280.01
	280.02
	281
	281.01
107-6950	280.01
	280.02
	281
	281.01
107-6954	265
107-6955	265
107-6969	265
107-6995	172
	182
107-7028	111
	111.01
	263
107-7029	263
	264
107-7037	274
107-7056	256
	297
107-7058	233
	233.02

PART NUMBER INDEX

Part.No	Page	Part.No	Page	Part.No	Page
	233.04	108-9839	136	110-5066	366.07
	233.06		137	110-5525	260
	293	108-9840	136		261.01
107-7062	293		137.01	110-7884	83
107-7063	293	108-9888	137.02		83.01
107-7064	293		137.04		89
107-7070	275	109-2667	287	110-9851	397.06
107-7071	275		287.04		397.08
	275.01		287.08		397.08B
	278		288		397.11
	279.01	109-4429	346.01	111-0343	301
	279.03	109-5152	279.02	111-1141	233
	279.05		279.06		233.02
107-7072	279		283.01		233.04
	279.04	109-7576	414		233.06
	280	109-7583	414		313
107-7073	280	109-7584	414	111-4693	351
	281	109-7589	402	111-4694	102
	281.01		408	111-4695	80.04
107-7074	275	109-8708	397.06		345
	286		397.08	111-4696	100
	287.01		397.08B	111-4718	77.03
107-7075	287		397.11		77.05
	290	109-9313	40		77.07
107-7076	290	109-9329	27		77.09
	291	109-9330	40.01	111-4760	25
	291A		40.04		172
108-6703	397.13	109-9349	27	111-4762	70
108-6705	397.13	109-9350	27		72.01
108-7118	223	109-9368	27		72.04
	225	109-9369	27		72.07
108-7159	243	109-9491	174	111-4763	70
108-7252	235	109-9495	33.01		72.01
	235.02		33.03		72.04
	235.04	109-9496	33.02		72.07
	235.06		34	111-4764	70
108-7507	237	109-9497	40		72.01
	238	109-9499	27		72.04
	240	109-9500	353		72.07
108-9139	52	109-9503	41	111-4765	70
108-9835	135		41.01		72.01
	135.01		41.02		72.04
	135.01A	110-5056	366		72.07
108-9836	358.01	110-5059	366	111-4766	70

PART NUMBER INDEX

Part.No	Page
	72.01
	72.04
	72.07
111-4783	364
111-4785	80.04
111-4786	80.04
111-4788	91.02
111-4789	80.03
111-4795	94.03
	94.04
111-4796	94.03
	94.05
111-4799	82
	82.01
	82.02
	88
111-4800	83
111-4812	85
	85.02
	85.02B
	85.04
	85B
111-4813	102
	108
111-4815	94.05
	94.05C
	94.05D
	94.05G
	94.05H
111-4816	94.05
	94.05C
	94.05D
	94.05G
	94.05H
111-4826	77
	77.02
	77.04
	77.06
	77.08
111-4829	77
	77.02
	77.04
	77.06
	77.08
	77.09
111-4830	77
	77.02
	77.04
	77.06
	77.08
	77.09
111-4831	77
	77.02
	77.04
	77.06
	77.08
	77.09
111-4836	61
	63
	63.02
	63.04
	63.06
	63.08
	63.08B
	63.08D
	63.10
	63.12
	80.09
	80.11
	80.13
	80.15
	80.15B
	80.15D
	91.02
	104.01
	105.01
	107
	107.02
	107.04
	107B
111-4837	61
	63
	63.02
	63.04
	63.06
	63.08
	63.08B
	63.08D
	63.10
111-4838	61
	63.02
	63.06
	63.08B
	63.10
111-4839	61
	63.02
	63.06
	63.08B
	63.10
111-4840	80.13
111-4841	80.09
	80.11
	80.13
	80.15
	80.15D
	94.06
111-4842	94.06
	94.07
111-4843	94.06
	94.07
111-4844	80.06
	350.02
	351
111-4845	80.12
	80.14
	351
111-4846	80.09
	80.11
	80.13
	80.15
	80.15D
111-4870	77
	77.02
	77.04
	77.06
	77.08

PART NUMBER INDEX

Part.No	Page	Part.No	Page	Part.No	Page
	77.10	111-6279	359		281.01
	78.06		361		291
111-4871	76	111-6280	359		291.01
	77.01		360		291.01A
	77.03	111-6281	362.01		291.02
	77.05	111-6282	363		291A
111-4874	76	111-6283	363		291B
	77.01		363.01		308
	77.03	111-6284	272		309.02
	77.05		272.01	112-0058	173
	77.07	111-6285	358.02	112-0065	173
	77.09	111-6289	367	112-9717	40.01
111-4875	78		367.01		40.02
	78.01		369A	113-0308	83
	78.02	111-6291	367		83.01
	78.03		367.01	113-0363	49
111-4881	61		370	113-2127	151
	63.02	111-6310	337		152.01
111-4883	61	111-6313	357		152.01B
	63.02	111-6314	345		152.03
	63.06	111-6315	345		152.05
	63.08B		348		152.07
	63.10	111-6316	345		384
111-6267	343		346		385
111-6270	319.01	111-6388	370		386
111-6271	319.02	111-6389	370	113-2204	151
	320	111-6391	363.01		152.01
	322		366.01		152.01B
	323.01		366.02		152.03
	323.03	111-6428	229		152.05
111-6272	323		230		152.07
	323.04		273		356.01
	334	111-6545	247.02	113-2276	384
111-6273	323		247.04		386
	323.04	111-9916	295.01	113-2877	128
	333.01		305	113-2907	155
111-6276	319.02	111-9950	235		156
	319.04		235.02	113-3015	403
111-6277	319.02		235.04		409
	336		235.06	113-3016	409
	336A		305		415
	336B	111-9959	280.01	113-3023	403
111-6278	359		280.02		409
	359.01		281	113-3024	409

PART NUMBER INDEX

Part.No	Page
	415
113-3407	270
	271
113-3408	270
	271
113-3409	271
113-3426	323
	323.04
113-3432	371
113-3438	373.01
	374.02
113-3439	348.01
113-3452	348.01
	349
113-3453	83
	83.01
113-3457	271
113-4012	360
113-4013	361
	361.01
113-4014	360
	360.01
113-4016	361
	361.01
113-4033	339.02
	339.04
113-6416	226
113-6477	245
	245.04
	245.08
113-6479	223
	225
113-6511	245.02
	245.06
	245.10
113-6512	245.02
	245.06
	245.10
113-6513	245.02
	245.06
	245.10
113-6666	253
	253.02
	254.01
	254.03
113-6699	235
	235.02
	235.04
	235.06
113-6700	233
	233.02
	233.04
	233.06
113-6755	235.06
113-6813	249.02
113-6814	249
114-0358	426
	429.01
114-0359	426
	429.01
114-0421	83
	83.01
	88
114-0491	177
	179.02
114-0514	267
114-0515	267
114-0516	267
114-0517	267
114-0518	267
114-0519	267
114-0550	257
	297
114-0623	294.01
	295.01
	295.02
114-0624	274
114-0704	190
114-0706	190
114-0709	190
114-0710	190
114-0711	190
114-0712	190
114-0713	190
114-0718	199
114-0726	201
114-0741	173
114-0746	177
	179.02
114-0747	177
	179.02
114-0748	177
	179.02
114-0754	194
	194.01
114-0771	304.01
	304.02
114-1319	180
114-1320	180
	180.01
	180.02
114-1333	111
114-1335	180.01
	180.02
114-1337	110
	110.02
114-1340	146
	147
114-1341	148
	149
114-1350	147
114-1352	146
	148
	149.01
114-1374	110.01
	110.03
114-1398	180
114-1399	180
114-1481	35
	149.01
	149.02
114-1483	111.01
114-1484	111.01
	113.01
	113.02
	114
	115
114-1485	113.02
114-1486	113.02
	115
114-1497	113.02
	115

PART NUMBER INDEX

Part.No	Page
114-1505	149
	149.02
114-1539	113.02
	115
114-1581	180.02
114-3350	363.04
	366.09
	366.11
114-6109	137.02
	139.02
114-6111	137.02
	137.04
114-6195	141
114-6214	57
	58
114-6222	53
	57
114-6223	137.02
	139.02
114-6260	121
	123.04
	123.06D
	123.10
	123.16
114-6285	119
	123.02
	123.06B
	123.08
	123.14
114-6289	124
	124.01
114-6291	358.01
114-6294	358.01
114-6300	141
114-6302	141
	141.01
114-8234	180
115-2677	397.06
	397.08
115-2678	397.04
115-3701	156
115-3739	223
	225
115-4926	156
115-6410	157
115-6419	155
115-6420	155
115-6421	155
	156
115-6422	155
	157
115-6423	156
	157
115-6424	157
	158
115-6425	158
	158.01
115-6426	158
115-6427	158
115-6428	158.01
115-6429	158.01
115-8645	235
	235.02
	235.04
	235.06
115-8646	172
115-8647	235
	235.02
	235.04
	235.06
115-8884	226
	227
115-8886	252
	253
	253.01
	253.02
115-8891	222
115-8892	224
115-8894	255
115-8895	244
	245.01
	245.03
	245.05
	245.07
	245.09
115-8896	232
	233.01
	233.03
	233.05
115-8897	234
	235.01
	235.03
	235.05
115-8907	229
	237
115-8911	229
	238
115-8912	229
	239
115-8918	243
	292
116-0068	61
	63.02
	63.06
	63.08B
	63.10
116-0080	61
	63.02
	63.06
	63.08B
	63.10
	65
	65.02
	74
116-0082	82
	82.01
	82.02
	83
	83.01
116-0086	87
	87.02
	87.04
116-0087	86
	87
	87.01
	87.02
	87.03
	87.04
116-0118	61
	63
	63.02
	63.04

PART NUMBER INDEX

Part.No	Page
	63.06
	63.08
	63.08B
	63.08D
	63.10
	63.12
	94.01
	104.01
	105.01
	227.02
	353
116-0126	78
	78.01
	78.02
	78.03
	78.04
	78.05
116-0128	78
	78.01
	78.02
	78.03
	78.04
	78.05
	78.06
116-0149	60
	62
	63.01
	63.03
	63.05
	63.07
	63.08A
	63.08C
	63.09
	63.11
116-0151	61
	63.02
	63.06
	63.08B
	63.10
	76
	77
	77.01
	77.02
	77.03
	77.04
	77.05
	77.06
	77.07
	77.08
116-0153	64
116-0157	104
	105
	376
	377
	383
	383.01
116-0158	351
116-0159	80.16
116-0173	80.03
	80.04
	83
	83.01
	91.02
	364
116-0174	80.03
	80.04
	83
	83.01
	91.02
	96.02
	364
116-0210	80.05
	80.06
116-0214	106
	107A
116-0215	107.01
	107.03
116-0217	80.08
	80.10
	351
116-0218	80.09
116-0226	61
	63.02
	66
	67
	68
	68.01
	68.02
	68.03
116-0227	104.01
	105.01
	109.02
116-0228	63
	63.04
	63.08
	63.08D
	63.12
	75
116-0229	61
	63.02
	63.06
	63.08B
	63.10
116-0230	61
	63.02
	63.06
	63.08B
	63.10
116-0233	77
	77.02
	77.04
	77.06
	77.08
	77.09
116-0234	77
	77.02
	77.04
	77.06
	77.08
	77.09
116-0236	80.05
	351
116-0237	83
	83.01
116-0242	65
	65.02
	93
116-0243	102
	103
	103.01
	108
116-0255	78

PART NUMBER INDEX

Part.No	Page
	78.01
	78.02
	78.03
	78.04
	78.05
116-0258	80.16
	94.06
116-0259	94.06
	94.08
116-0260	94.06
	94.08
116-1517	356.01
116-1523	437
	438.05
	438.05F
	438.05L
	438.11
	438.17
	438.23
	438.29
116-1526	437
116-1527	438.11
116-1528	433
	438.01
	438.05B
	438.05H
	438.07
	438.13
	438.19
	438.25
116-1529	435
	438.03
	438.05D
	438.09
	438.15
	438.21
116-1540	435
	438.03
	438.09
	438.15
116-1541	435
	438.03
	438.09
	438.15
116-1543	435
	438.03
116-1544	438.09
	438.15
116-1545	435
	438.03
	438.05D
	438.05J
	438.09
	438.15
	438.21
	438.27
116-1546	435
	438.03
	438.05D
	438.05J
	438.09
	438.15
	438.21
	438.27
116-1548	433
	438.01
116-1549	438.07
	438.13
116-1550	433
	438.01
	438.07
	438.13
116-1551	433
	438.01
	438.07
	438.13
116-1552	433
	438.01
	438.05B
	438.05H
	438.07
	438.13
	438.19
	438.25
116-1569	435
	438.03
	438.05D
	438.05J
	438.09
	438.15
116-1599	432
	434
	436
	438
	438.02
	438.04
	438.05A
	438.05C
	438.05E
	438.05G
	438.05I
	438.05K
116-1600	438.06
	438.08
	438.10
	438.12
	438.14
	438.16
	438.18
	438.20
	438.22
	438.24
	438.26
	438.28
116-1627	125
	125.01
	126
116-1658	123
	123.06
	123.06F
	123.12
	123.18
116-1703	142
116-1704	142
	143
116-1724	141
	141.01
116-3390	194
116-3411	201
116-3420	255

PART NUMBER INDEX

Part.No	Page
	257
116-3445	287
	287.04
	287.08
116-3451	280.01
	280.02
	281
	281.01
116-3470	280
	280.01
	280.02
116-3471	290
	291.01
	291.01A
116-3526	297
	298
116-3545	174
	176
	177
	178
	179
	179.01
	179.02
	179.03
	179.04
116-3549	180
	258
	258.01
116-3550	258
	259
	259.01
	259.02
116-3600	249.02
	251
	279.02
	279.06
	283
	287
	287.04
	287.08
	308
	308.03
	309.02
116-3601	283
	285
116-3653	182
	182.03
116-3654	182
116-9035	229
116-9102	214
116-9103	219
	220
116-9104	219
	221.01
116-9115	383
	383.01
	397
116-9129	202
116-9135	444
116-9188	214
116-9189	214
116-9190	214
116-9191	214
117-1371	170
117-1372	170
	170.01
	170.02
117-4136	131
	131.01
117-4140	376
117-4141	377
117-4143	377
	382
117-4264	130
117-4266	118
	120
	122
	123.01
	123.03
	123.05
	123.06A
	123.06C
	123.06E
117-4268	131
	132
117-4271	54
117-4272	54
	55
	55.01
117-4276	52
117-4286	119
	123.02
	123.06B
117-4290	119
	123.02
	123.06B
	123.08
	123.14
117-4292	119
	123.02
	123.06B
	123.08
	123.14
117-4295	119
	123.02
	123.06B
	123.08
	123.14
117-4297	119
	123.02
	123.06B
	123.08
	123.14
117-4300	121
	123.04
	123.06D
	123.10
	123.16
117-4304	121
	123.04
	123.06D
	123.10
	123.16
117-4307	121
	123.04
	123.06D
	123.10
	123.16
117-4308	121
	123.04
	123.06D
	123.10

PART NUMBER INDEX

Part.No	Page	Part.No	Page	Part.No	Page
	123.16		123.18		80.11
	126	117-4343	126		80.13
117-4311	121	117-4345	397.13		80.15
	123.04	117-4355	119	117-6262	337
	123.06D		123.08		338
	123.10	117-4356	125.01	117-6263	337
	123.16		128		339.01
	125.01	117-4373	143	117-6264	80.02
117-4314	121		145		337
	123.04	117-4375	143		337.01
	123.06D		145	117-6265	361
	123.10	117-4377	143		362
	123.16		145	117-6266	360
	125	117-4379	143		360.01
117-4317	121	117-4415	130	117-6267	361
	123.04	117-4416	130		361.01
	123.06D		130.01	117-6268	360
	123.10	117-5476	153		360.01
	123.16		153.01		361
117-4319	123	117-5483	154		361.01
	123.06		154.01	117-6269	362
	123.06F	117-5489	159	117-6270	362
	123.12	117-5490	166	117-6271	362
	123.18	117-5491	152	117-6272	362
117-4322	123		152.01A	117-6273	360
	123.06	117-5492	152.01		360.01
117-4325	123		152.01B		361
117-4327	123		356.01		361.01
	123.06	117-5496	376	117-6274	362
	123.06F		384	117-6305	80.02
	123.12	117-5497	376	117-6306	339.02
	123.18		397.01		339.04
117-4330	123	117-5498	377	117-6307	358.02
	123.06		386	117-6312	374
	123.06F	117-5499	377		374.02
	123.12		397.03		374.03
	123.18	117-5540	153		374.04
117-4332	123		153.01	117-6314	352
	123.06		154	117-6315	373.01
	123.06F		154.01		373.02
117-4336	123	117-6256	360		373.03
	123.06		360.01		373.05
	123.06F	117-6257	361	117-6320	336
	123.12	117-6259	80.09	117-6321	336

PART NUMBER INDEX

Part.No	Page
117-6325	374
	375
117-6326	375
	375.01
117-6327	367
	368
117-6332	368.01
	368.05
	371
117-6349	272
	272.02
117-6350	272
	272.02
117-6351	368.01
	368.02
117-6353	353
117-6356	272
	272.02
117-7120	167
117-7121	169
117-8450	435
	438.03
	438.05D
	438.05J
	438.09
	438.15
	438.21
	438.27
118-3917	245
	245.04
	308
118-3948	183
	376
	377
	383
	383.01
118-3949	183
	195
118-3950	184
	376
118-3951	184
	197
118-3952	184
	377
118-3953	184
	189
118-3954	184
	198
118-3955	184
	188
118-3956	183
	376
	377
	383
	383.01
118-3957	183
	196
118-3966	185
	382
118-3968	185
	200
118-3978	171
118-3979	171
	172
	173
118-4023	183
	187
118-4044	308
	308.03
	309.02
118-4057	177
	179.02
	179.08
	265
118-4082	310
118-4083	310
118-4085	310
118-4086	310
	310.01
	310.02
	310.03
118-4087	310
	310.01
	310.02
	310.03
118-4099	179
	179.04
118-4100	178
	179.03
118-4101	178
118-4102	178
118-5410	283
	284
118-5982	388
	389
	390
	391
	392
	393
	394
	395
118-6049	316
	316.01
	317
118-6050	316
	316.01
	317
118-6051	316
	397.06
	397.08
	397.08B
	397.11
118-6052	316
	397.06
	397.08
	397.08B
	397.11
118-6054	439
	440
118-6057	316
	316.01
	317
118-6058	316
	316.01
	317
118-9784	27
118-9785	27
118-9823	41
	41.01
	41.02
118-9827	41.01
118-9828	45.01

PART NUMBER INDEX

Part.No	Page
118-9847	41
	41.01
	41.02
118-9848	33.02
	33.04
	35.02
118-9849	33.02
	33.04
118-9862	353
118-9863	353
118-9864	353
118-9865	353
118-9867	353
118-9930	27
118-9953	34.01
118-9954	34.01
	34.03
118-9955	34.01
	34.03
119-0606	80
119-0607	80
119-0608	51.01
119-0627	51.02
119-0629	51.02
119-0633	51.02
119-1353	221.07
119-1733	80.16
119-2359	233
	233.02
	233.04
	233.06
119-2360	233
	233.02
	233.04
	233.06
119-2362	233
	233.02
	233.04
	233.06
119-2363	233
	233.02
	233.04
	233.06
119-2395	223
119-2399	225
119-2407	253
	253.02
119-2409	253
	253.02
119-2413	227
119-2415	252
	253.01
	254
	254.02
119-2417	252
	253.01
	254
	254.02
119-2418	252
	253.01
	254
	254.02
119-2419	253
	253.02
	254.01
	254.03
119-2501	233
	233.02
	233.04
	233.06
119-2502	226
119-2533	216.01
	380
119-2534	217
	381
119-2536	223
119-2539	225
119-2604	235
	235.02
	235.04
	235.06
119-2607	235
	235.02
	235.04
	235.06
119-2611	235
	235.02
	235.04
	235.06
119-2621	247.02
	247.06
	251
119-2629	247.02
	247.04
	249
	251
119-2646	235
	235.02
	235.04
	235.06
119-2652	235
	235.02
	235.04
	235.06
119-2655	235
	235.02
	235.04
	235.06
119-2658	237
	238
	240
119-2670	235
	235.02
119-2763	245.08
119-5026	80.09
	80.11
	80.13
	80.15
	80.15B
	80.15D
	82
	82.01
	82.02
	83
	83.01
	323
	323.04
	323.08
	336.02
	338.02
	360
	360.01

PART NUMBER INDEX

Part.No	Page
	361
	361.01
	368.01
	368.05
119-5195	191
119-5198	187
	191
119-5200	187
119-5203	187
119-5211	188
	189
119-5214	188
	189
119-5217	188
119-5219	236
	239
	311
119-5225	189
119-5228	191
119-5229	191
119-5279	230
	241
119-5280	231
	242
119-5324	192
119-5325	192
119-5341	289
119-5342	289
119-5360	266
119-5362	266
119-5364	266
119-5365	266
119-5385	306
119-5386	306
119-5387	306
119-5388	306
119-5389	306
119-5390	306
119-5391	306
119-5392	306
119-5393	306
119-5395	306
119-5398	289
	289.01
119-5448	194.01
119-5587	150
119-5588	151
119-6811	369A
119-6812	369A
119-6826	375
	375B
119-6828	368.01
	368.05
119-6832	373.02
	373.06
119-6833	373.01
	373.04
119-6834	373.02
	373.06
119-6837	373.01
	373.04
119-6838	373.02
	373.04
119-6852	365
119-6885	375
119-6886	371
	375
	375B
119-6887	371
	375
	375B
119-9447	221.06
120-4971	380
120-4972	381
120-4976	57
120-4983	230
120-4984	231
120-5012	376
	377
120-5013	377
	379
120-5052	437
	438.05
	438.05F
	438.11
	438.17
	438.23
120-5054	442
120-5055	433
	438.01
	438.05B
	438.07
	438.13
	438.19
120-5057	437
	438.05
	438.05F
	438.11
	438.17
	438.23
120-5058	433
	438.01
	438.05B
	438.07
	438.13
	438.19
120-5059	433
	438.01
	438.05B
	438.07
	438.13
	438.19
120-5060	437
	438.05
	438.05F
	438.11
	438.17
	438.23
120-5061	437
	438.05
	438.05F
	438.11
	438.17
	438.23
120-5063	433
	438.01
	438.05B
	438.05H
	438.07
	438.13
	438.19
	438.25

PART NUMBER INDEX

Part.No	Page
120-5079	433
	435
	438.01
	438.03
	438.05B
	438.05D
	438.07
	438.09
	438.13
	438.15
	438.19
	438.21
120-5082	435
	438.03
	438.05D
	438.05J
	438.09
	438.15
	438.21
	438.27
120-5107	433
	438.01
	438.05B
	438.05H
	438.07
	438.13
	438.19
	438.25
120-5110	377
	397.13
120-5115	229
	439
120-5116	229
	440
120-5117	292
	442
120-5143	130
120-5144	130
	130.01
120-5145	130
	130.01
120-5146	130
	130.01
120-5147	130
120-5149	130.01
120-5170	55
	55.01
	56
	56.01
120-5176	121
	123.04
	123.06D
	123.10
	123.16
120-5228	119
	123.02
	123.06B
	124
120-5234	124
	124.01
120-5235	124
	124.01
120-5236	124
	124.01
120-7164	160
120-7165	162
120-7166	160
	162
120-7167	161
120-7168	163
120-7169	161
	163
120-7187	166
120-7188	159
120-7215	153
	153.01
	154
	154.01
120-7224	397.02
	397.06
	397.08
	397.08B
120-7225	397.02
	397.06
	397.08
	397.08B
120-9027	82
121-0987	80.16
121-1000	94.03
	94.03B
	94.03D
121-1022	78.01
	78.02
	78.03
	78.04
	78.05
121-1023	77
	77.02
	77.04
	77.06
	77.08
	77.09
121-1029	55.01
	56.01
121-1033	94.01
	95
121-1038	78.06
121-1039	78.06
121-1045	94
	230
	231
121-1049	83
	83.01
121-1069	108
121-1072	108
121-1077	102
121-1099	80.03
	337
	337.01
121-1153	91.01
	292
121-1156	94.05
	94.05C
	94.05D
	94.05G
	94.05H
121-1157	94.05
	94.05C
	94.05D

PART NUMBER INDEX

Part.No	Page
	94.05G
	94.05H
121-1158	94.05
	94.05C
	94.05D
	94.05G
	94.05H
121-1159	94.05
	94.05C
	94.05D
	94.05G
	94.05H
121-1160	83
	83.01
121-1168	85
	85.02
	85.02B
	85B
121-1173	85
	85.02
	85.02B
	85B
121-1371	188
	189
121-1372	188
	189
121-1459	267
121-1490	295
	305
121-1491	293
	294
	294.02
	305
121-1547	190
121-1548	190
121-1549	190
121-1550	190
121-1558	265
121-1563	310
121-1565	259
	294.02
121-1570	294.02
121-1611	187
	191
121-1631	310
121-1674	214
121-1677	214
121-1759	393
121-1760	393
121-1769	247.02
	247.04
	251
121-1803	221
	221.02
121-1807	419
121-1809	419
121-1813	419
121-1872	219
	219.01
121-1873	219
	219.01
	390
121-1874	390
121-1876	219
	219.01
121-1877	219
	219.01
	393
121-1878	393
121-1903	221
	221B
121-1904	221
121-1905	393
121-1946	214
121-1965	221
	221.02
	221.04
	221B
121-1969	230
121-4906	127
121-4928	143
121-4930	35.02
121-4931	132
121-4933	132
	132.01
121-4935	132
121-4937	132
	132.01
121-4939	132
	132.01
121-4941	132
	132.01
121-4943	132
	132.01
121-4945	132
	132.01
121-4947	132
	132.01
121-4977	119
	123.02
	123.06B
	123.08
	123.14
121-5056	121
	123.04
	123.06D
	123.10
	123.16
121-5057	121
	123.04
	123.06D
	123.10
	123.16
121-6263	172
121-6270	247
	249
121-6303	241
	242.01
	299
121-6304	299
121-6356	247
	249
121-6415	241
	242.01
121-6461	247
	249
121-6500	255
121-6503	255
121-7057	362
121-7059	358.02
121-7102	343
121-8460	397.04

PART NUMBER INDEX

Part.No	Page
121-8654	355
	356
121-8678	376
	385
121-8679	376
	397.05
	397.07
	397.08A
121-8680	379
	391
121-8681	379
	397.11
121-8732	356.01
121-8742	356.01
121-8743	356.01
122-3850	130
122-3877	137.02
	137.04
	139.02
	139.04
	140
122-3878	140
122-3879	140
122-3880	140
122-3882	140
122-3917	132
	132.01
122-3944	121
	123.04
	123.06D
	123.10
	123.16
122-3948	123
	123.06
	123.06F
	123.12
	123.18
122-3951	123
	123.06
	123.06F
	123.12
	123.18
122-3955	123
122-3958	123
	123.06
	123.06F
	123.12
	123.18
122-3970	58
122-3979	121
	123.04
	123.06D
	123.10
	123.16
122-3980	121
	123.04
	123.06D
	123.10
	123.16
122-3996	54
	57
122-3997	54
	56
	56.01
122-4022	57
	138
	139
122-4023	138
	139.01
122-4024	139.02
	139.04
122-4026	136
	137
	138
	139
122-4035	127
	355
122-4037	137.02
	137.04
	139.02
	139.04
122-4049	121
	123.04
	123.06D
	123.10
	123.16
122-4070	144
	383
	383.01
122-4071	144
	145
122-4072	145
122-4093	121
	123.04
	123.06D
	123.10
	123.16
122-4101	126
122-4106	123.12
	123.18
122-4110	123.12
	123.18
122-4120	127
122-4459	241
	242.01
	300
122-5076	158.01
122-5114	177
	179.02
	265
122-5233	324.01
	324.03
122-5246	34.01
	34.03
122-5247	34.01
	34.03
122-5253	158
122-5273	235
	235.02
	235.04
	235.06
122-5312	324.01
	324.03
122-5318	260
	261.01
122-5319	260
	261.01
122-8705	247
	249
122-9597	336B
122-9599	358.02
122-9602	334

PART NUMBER INDEX

Part.No	Page
	334A
	335
122-9603	334
	334A
	335.01
122-9604	334
122-9608	272
	272.02
122-9609	272
	272.02
122-9610	272
	272.02
122-9611	273
122-9612	323
	323.04
122-9617	359
	359.01
122-9618	359
	359.01
122-9620	271
122-9621	271
122-9622	359
	359.01
122-9625	363
	366.12
122-9626	358.02
122-9627	321
	323.02
	323.06
122-9628	323
122-9629	323
	323.04
	323.08
122-9630	323
	323.04
	323.08
122-9631	323
	323.04
	323.08
122-9632	323
	323.04
122-9634	323
	323.04
	323.08
122-9635	333.02
	333.04
122-9636	321
	323.02
	323.06
122-9637	321
	323.02
	323.06
122-9638	321
122-9639	333.02
	333.04
122-9640	323
	323.04
	323.08
122-9646	339.02
	339.04
	340
122-9647	365
	365.01
122-9648	366
122-9655	359
	359.01
122-9683	367
123-2003	182
123-2008	265
123-2027	177
	179.02
123-2029	176
	179.01
123-2080	185
	383
	383.01
123-2081	185
	190
123-2082	185
	199
123-2083	186
	382
123-2084	186
	192
123-2085	186
	201
123-2119	190
123-2120	190
123-2123	192
123-2124	192
123-2125	192
123-2126	192
123-2146	233
	233.02
	233.04
	270
	270.01
123-2147	233
	233.02
	233.04
	270
	270.01
123-2148	233
	233.02
	233.04
	233.06
	306
123-2151	287
	287.04
	287.08
123-2419	245
	245.04
	245.08
	309.01
123-2423	309.02
123-2431	315
123-2443	235
	235.02
	235.04
	235.06
	315
123-2444	287
	287.04
	287.08
123-2445	287
	287.04
	287.08
123-2446	287
	287.04
	287.08
123-2466	292
123-2467	305

PART NUMBER INDEX

Part.No	Page
123-2479	308.03
123-2481	308.03
123-2482	308.03
123-2485	308.03
123-2486	308.03
123-2488	308.03
123-2489	308.03
123-2492	308.03
123-2496	235
	235.02
	235.04
	235.06
	315
123-2511	315
123-2512	315
123-2568	228
123-2604	273
	307
123-2605	307
123-2700	252
	253.01
	254
	254.02
123-5436	166
123-5469	402
123-5470	403
123-5471	403
123-5472	404
123-5473	405
123-5474	406
123-5575	385
123-5576	391
123-5578	317
123-5579	391
123-5580	316
	316.01
123-5581	385
123-5586	397.06
	397.08
	397.08B
123-5588	316
	397.06
	397.08
	397.08B
	397.11
123-5589	316
	397.06
	397.08
	397.08B
	397.11
123-5594	316
	316.02
	397.06
	397.08
	397.08B
123-5595	316
	316.02
123-5596	316
123-5597	397.06
	397.08
	397.08B
123-5615	406
124-0864	241
	242.01
124-0876	247.02
	247.04
124-0909	214
	221
	221.02
	221.04
	221B
124-0913	199
124-0914	199
124-0927	238
124-0928	238
124-0986	233
	233.02
124-1019	197
	198
124-1020	197
	198
124-1032	197
124-1033	198
124-1034	200
124-1035	233
	233.02
	233.04
	233.06
124-1044	210
	376
124-1045	212
	377
124-1047	245
	245.04
	245.08
124-1062	245.02
	245.06
	245.10
124-1063	245
	245.04
	245.08
124-1069	223
	225
124-1074	210
124-1076	210
124-1079	212
124-1081	212
124-1082	212
124-1084	212
124-1085	210
	212
124-1105	233
	233.02
	233.04
	233.06
124-1116	245
	245.04
	245.08
124-1122	243
124-1125	243
124-1212	235
	235.02
	235.04
	235.06
124-1239	243
124-1270	238
124-1318	236
	239
124-1321	235
	235.02
	235.04
	235.06

PART NUMBER INDEX

Part.No	Page
124-1324	235
	235.02
	235.04
	235.06
124-1327	235
	235.02
124-1574	34.01
	35.04
124-1586	34.01
	34.03
	35.04
124-1587	34.01
	34.03
	35.04
124-1588	34.01
	34.03
124-1600	41
124-1601	41
124-1613	34.01
	35.04
124-1654	45.01
124-1657	33.02
	33.04
	35.02
124-1658	32.02
124-1664	33.02
	33.04
	35.02
124-1696	12
	13
	13.01
	13.02
124-1698	34.01
	35.04
124-1711	40
	40.02
124-1736	40
	40.01
124-3917	370.01
124-3918	370.01
124-3920	335
124-3921	335
124-3922	335
124-3926	364
124-3927	364
124-3931	368.03
	368.07
124-3932	360
	360.01
	361
	361.01
124-3933	328
124-3938	321
	323.02
	323.06
124-3940	321
	323.02
	323.06
124-3943	321
	323.02
	323.06
124-3945	366.01
124-3952	335.01
124-3953	335.01
124-3955	334
	334A
124-3956	333.02
	333.04
124-3957	333.02
	333.04
124-3959	333.02
	333.04
124-3960	333.02
	333.04
	341
124-3961	333.02
	333.04
124-3963	333.02
	334.01
124-3964	333.02
	333.04
124-3965	333.02
	333.04
124-3966	333.02
	333.04
124-3967	334.01
	338
124-3968	334.01
	334.02
	338
	338.01
124-3969	334.01
	334.02
	338
	338.01
124-3970	334.01
	334.02
	338
	338.01
124-3971	334.01
	334.02
	338
	338.01
124-3972	334.01
	334.02
	338
	338.01
124-3973	334.01
	334.02
	338
	338.01
124-3974	333.02
	333.04
124-3975	334.01
	334.02
124-3976	334.01
	334.02
124-3978	321
	323.02
	323.06
124-3981	323
	323.04
	323.08
124-3982	370.01
	371
124-3983	371
124-3984	371
124-3985	367
	367.01
	370.01

PART NUMBER INDEX

Part.No	Page	Part.No	Page	Part.No	Page
124-3986	371	124-4060	352		50.07
124-3989	369A	124-7346	319.02	125-2937	50.02
124-3996	335		319.04		50.07
124-4002	83	125-1302	77		450
	83.01		77.02	125-2938	50.03
124-4003	83		77.04		50.09
	83.01		77.06	125-2939	50.04
124-4004	365.02		77.08		50.09
	366.03		77.10		451
	366.05		91	125-2940	50.05
124-4008	271.02	125-1547	193		50.11
124-4009	271.02		194	125-2941	50.05
124-4010	271.01	125-1552	194		50.11
124-4014	323		194.01	125-2942	50.05
	323.04	125-1586	194		50.11
	323.08	125-2922	50	125-2943	50.05
124-4015	323		50.07		50.11
	323.04	125-2923	50		450
124-4016	323		50.07	125-2945	44
	323.04	125-2924	50	125-2946	50.05
	323.08		50.07	125-2947	37
124-4017	323	125-2925	50	125-2950	21
	323.04		50.07	125-2951	21
	323.08	125-2926	50	125-2952	12
124-4018	323		50.07		13.01
	323.04	125-2927	50		16
	323.08		50.07	125-2953	12
124-4021	272	125-2928	50		13.01
124-4025	272		50.07		24
124-4026	323	125-2929	50	125-2954	12
	323.04		50.07		13.01
124-4027	323	125-2930	50		25
	323.04		50.07	125-2955	12
	323.08	125-2931	50		13.01
124-4028	323		50.07		18
	323.04	125-2932	50	125-2956	13
	323.08		50.07		13.02
124-4034	374	125-2933	50		36
124-4036	323		50.07	125-2957	12
	323.04	125-2934	50.02		13.01
	323.08		50.07		32
124-4054	333.02	125-2935	50.02		32A
	333.04		50.07	125-2958	12
124-4057	328	125-2936	50.02		13.01

PART NUMBER INDEX

Part.No	Page
	37
125-2959	12
	13.01
	38
125-2960	13
	13.02
	49
125-2961	13
	50
	50.01
	50.02
	50.03
	50.04
	50.05
125-2962	13
	13.02
	98
125-2963	13
	13.02
	97
	97.01
125-2964	16
125-2965	24
125-2966	24
125-2967	25
125-2968	25
	448
125-2969	18
125-2970	36
125-2971	36
125-2972	32
	32A
	448
125-2973	32
125-2974	32
	32A
125-2975	32
125-2976	32
	32A
125-2977	32
	32A
125-2979	32
	32A
	448
125-2980	37
125-2981	38
125-2983	49
125-2984	97
125-2985	97
125-2988	13
	13.02
	97.03
125-2989	37
125-2990	37
	449
125-3005	18
125-3006	48
125-3007	48
125-3008	48
125-3009	48
125-3010	48
125-3011	48
125-3012	48
125-3013	48
125-3014	48
125-4726	82
	82.01
	82.02
	83
	83.01
	102
125-4727	61
	63.02
	63.06
	63.08B
	63.10
	74
125-4774	57
	101.01
	101.02
125-4775	101.01
	101.02
125-4838	94.05
	94.05C
	94.05D
	94.05G
	94.05H
125-4839	87
	87.02
	87.04
125-4840	94.05
	94.05C
	94.05D
	94.05G
	94.05H
125-4841	85
	85.02
	85.02B
	85B
125-4873	61
	63.02
	63.06
	63.08B
	63.10
	73
125-7874	107B
126-1865	306
126-1866	306
126-1876	188
	189
126-1877	188
	189
126-1878	188
	189
126-1879	188
	189
126-1890	292
126-1919	176
	179.01
126-1935	187
126-1936	187
	191
126-1941	188
	189
126-1942	188
126-1945	189
126-1947	191
126-1948	191
126-2016	176
	179.01
	179.10
126-2023	256

PART NUMBER INDEX

Part.No	Page
	292
126-2026	260
	261.01
126-2027	260
	261.01
126-2028	259
	259.01
	259.02
	260
	261
126-2029	261
	261.02
126-2030	179
	179.04
126-2042	177
126-2050	172
126-2055	260
	261.01
126-2075	172
	181
126-2076	181
126-2080	182
	182.01
126-2081	182.01
126-2987	51.02
126-3780	377
126-3784	355
126-3792	378
126-3793	379
126-3794	380
126-3796	35
126-5062	167
	169.01
126-6514	298
126-6515	298
126-6516	298
127-0580	321
	323
	323.02
	323.04
	323.06
	323.08
127-1161	379
	389
127-1162	380
	392
127-1163	380
	394
127-1164	381
	395
127-1211	378
	388
127-1212	316
	316.02
	397.06
	397.11
127-1213	397.06
	397.11
127-1322	316
	397.06
127-1323	317
	397.11
127-1324	316
127-1426	131
	131.01
	166.01
127-1427	166.01
127-1428	166.01
127-3735	321
	323.02
	323.04
	323.06
	323.08
	339.02
127-5248	230
	441
127-5251	439
	440
	441
127-5262	383
	383.01
	444
	445
127-5264	397.13
	397.14
127-5266	397.13
127-5272	437
	438.05
	438.05F
	438.05L
	438.11
	438.17
	438.23
	438.29
127-5281	433
	438.01
	438.05B
	438.05H
	438.07
	438.13
	438.19
	438.25
127-5282	433
	438.01
	438.05B
	438.05H
	438.07
	438.13
	438.19
	438.25
127-5283	435
	438.03
	438.05D
	438.05J
	438.09
	438.15
	438.21
	438.27
127-5284	435
	438.03
	438.05D
	438.05J
	438.09
	438.15
	438.21
	438.27
127-5285	435
	438.03
	438.05D
	438.05J
	438.09
	438.15

PART NUMBER INDEX

Part.No	Page
	438.21
	438.27
127-5286	433
	438.01
	438.05B
	438.05H
	438.07
	438.13
	438.19
	438.25
127-5295	437
	438.05
	438.05F
	438.05L
	438.11
	438.17
	438.23
	438.29
127-5296	437
	438.11
127-5297	435
	438.03
	438.09
	438.15
127-5298	433
	438.01
	438.07
	438.13
127-5304	438.05
	438.05F
	438.05L
	438.17
	438.23
	438.29
127-5305	438.05
	438.05F
	438.05L
	438.17
	438.23
	438.29
127-5918	235.02
	235.04
	235.06
127-5937	97.04
127-5938	97.04
127-5939	97.04
127-5940	97.04
127-5941	97.04
127-5942	97.04
127-5943	97.04
127-5944	97.04
127-5947	97.04
127-5948	97.04
127-5949	97.04
127-5950	97.04
127-5952	97.04
127-5953	97.04
127-5955	97.04
127-5956	97.04
127-5969	180.02
127-5970	180.02
127-6021	408
	420
127-6065	416
127-6067	414
127-6068	415
127-6069	415
127-6615	383
	383.01
127-6616	186
	383
	383.01
127-6620	251.01
	383
	383.01
127-6621	213
	383
	383.01
127-6623	383
	383.01
	396
127-6624	218
	383
	383.01
127-6625	383
	383.01
	397.12
127-6676	229
127-6779	221.02
127-6780	221.02
	221.04
127-6792	419
127-6797	186
	202
127-6816	214
127-6817	214
127-6829	221
	221.02
	221.04
	221B
127-6838	251.02
127-6859	247.02
	247.04
	249
	251
128-2099	339.02
128-2102	338
	338.01
128-2104	338
	338.01
128-2106	338
	338.01
128-2108	338
	338.01
128-2111	339.02
	339.04
128-2112	338
	338.01
128-2113	339.02
	339.04
128-2115	339.02
	339.04
128-2116	339.02
	339.04
128-2117	339.02
	339.04
128-2118	339.02
	339.04
128-2119	339.02
	339.04
128-2120	339.02
	339.04

PART NUMBER INDEX

Part.No	Page
128-2121	340
128-2122	337
	337.01
	340
128-2123	340
	341
128-2124	341
128-2125	341
128-2126	341
128-2127	341
128-2128	341
128-2129	341
128-2130	341
128-2131	271.02
128-2132	271.01
	271.02
128-2133	271.01
	271.02
128-2134	271.02
128-2135	323
	323.04
	323.08
128-2136	323
	323.04
	323.08
128-2152	357
128-2154	339.02
	339.04
128-2155	338
	338.01
128-2156	356.02
128-2158	375
	375B
128-2160	357
128-2162	368.01
	368.05
128-2163	368.01
	368.05
128-2170	273
128-2172	273
128-2173	273
128-2175	356.02
128-2189	321
128-2190	321
128-2192	321
	323.02
	323.06
128-4411	55
	55.01
	56
	56.01
128-7479	230
	250
128-7480	230
	240
128-7482	228
	246
128-7483	228
	236
128-7510	251
128-8871	65
	65.02
	75
128-8872	91.02
	92
128-8879	94.01
	96
128-8936	77
	77.02
	77.04
	77.06
	77.08
	77.10
128-8937	76
	77.01
	77.03
	77.05
	77.07
128-8938	76
	77.01
	77.03
	77.05
	77.07
128-8943	61
	63.02
	63.06
	63.08B
	63.10
128-8963	82
	83.03
128-8964	83.03
	84
128-8965	83.03
	85A
128-8966	83
	86
	87
128-8969	61
	70
	71
	72
	72.01
	72.02
	72.03
128-9187	417
128-9189	418
128-9190	418
128-9251	397.14
128-9802	35
	152.02
	152.04
	152.06
128-9803	152.03
	152.05
	152.07
128-9863	388
	390
	391
	392
	393
	394
	395
128-9882	385
	387
128-9883	394
	395
128-9884	388
	390
	391
	392
	393
128-9971	385

PART NUMBER INDEX

Part.No	Page	Part.No	Page	Part.No	Page
128-9973	391	129-6030	254.01		366.05
129-3346	119		254.03		366.09
	123.02	129-6036	254.01		366.11
	123.06B		254.03	130-0331	366.09
	123.08	129-6064	235		366.11
	123.14		235.02	130-0332	366.09
129-3347	135		235.04		366.11
	135.02		235.06	130-0333	366.11
129-3348	135.02	129-7770	187	130-0335	363.04
	135.03	129-7771	187		366.09
129-3349	135.02	129-7854	179.10		366.11
129-3351	135.02	129-7855	179.08	130-0336	363.04
129-3358	125	129-7857	179.08		366.09
129-3375	133	129-7859	179.08		366.11
129-3377	57	129-7863	179.08	130-0337	363.04
	133	129-7921	179.08		366.09
129-3399	143	129-7925	179.10		366.11
129-3404	125	129-7927	179.08	130-0338	363.04
129-3405	125	129-7931	266		366.09
129-3410	135.02	129-7932	266		366.11
129-3415	119	129-7978	179.12	130-0339	366.05
	123.02	129-7979	179.08	130-0340	366.03
	123.06B	129-8030	266		366.05
129-3416	119		267		366.06
	123.02	129-8031	267	130-0342	366.05
	123.06B	129-8033	182	130-0343	366.05
	123.08		182.02	130-0344	365.02
	123.14	129-8034	182		366.03
129-3417	119	130-0275	336B	130-0345	365.02
	123.02	130-0287	368.01		366.03
	123.06B	130-0288	371	130-0347	366
	123.08	130-0318	368.03	130-0348	363.04
	123.14		368.07		366.09
129-3422	119	130-0319	368.03		366.11
	123.02		368.07	130-0350	363.04
	123.06B		375.02		366.09
	123.08		375.04		366.11
	123.14	130-0321	366.07	130-0351	363.04
129-5865	247	130-0322	366.07		366.09
129-5926	241	130-0323	366.07		366.11
	242.01	130-0324	366.11	130-0356	366
129-5982	241	130-0325	366.07	130-0360	368.03
	242.01	130-0328	363.04		368.07
129-5995	251		366.03	130-0361	368.03

PART NUMBER INDEX

Part.No	Page
	368.07
130-0362	368.03
	368.07
130-0363	368.03
	368.07
130-0364	368.03
	368.07
130-0365	368.03
	368.07
130-0366	368.03
	368.07
	375.02
	375.04
130-0368	368.03
	368.07
	375.02
	375.04
130-0369	368.03
	368.07
130-0370	368.03
	368.07
	375.02
	375.04
130-0371	368.03
130-0379	271.01
130-3279	45.02
130-4208	397.06
	397.08
	397.08B
130-4209	397.06
	397.08
	397.08B
130-4210	397.06
	397.08
	397.08B
130-4211	397.06
130-4212	397.06
130-4213	397.06
130-4214	397.06
130-4215	397.06
130-4216	397.06
130-4243	356.01
130-4312	397.06
130-7596	18
131-5744	295
	295.02
131-5745	294
	294.01
131-5759	295
	295.02
131-5760	294
	294.01
131-5818	306
131-5862	310
131-5863	310
131-5864	310
131-5914	270
	270.01
	310
131-5915	310
	310.01
	310.02
	310.03
131-7429	127
131-7431	127
131-7432	127
131-7434	127
	128
131-7481	124.01
131-7501	55
	55.01
	56.01
131-7518	397.13
131-7546	61
	63.02
	63.06
	63.08B
	63.10
131-7547	61
	63.02
	63.06
	63.08B
	63.10
131-7603	119
	123.02
	123.06B
	123.08
	123.14
131-7611	123.12
	123.18
131-8820	40.01
	40.02
131-8821	40.02
131-8822	40.01
	40.02
131-8824	40.01
131-8826	40.01
	40.02
131-8932	40.01
	40.02
131-8944	35.02
	35.03
131-8945	35.02
131-8947	35
	35.01
131-8952	35.04
131-9000	35.04
131-9001	35.04
131-9002	35.04
131-9003	35.04
131-9004	35.04
131-9005	35.04
131-9650	245.02
	245.06
	245.10
132-1531	397.12
132-1533	396
132-1536	251.02
132-1733	221
	221.02
132-1734	221
	221.02
132-1735	221
	221.02
132-1786	221
	221.02
132-1787	221
	221.02
132-1789	221
	221.02
	221.04
	221B

PART NUMBER INDEX

Part.No	Page
132-1805	63.06
	63.08B
	63.10
132-1806	63
	63.04
	63.08
	63.08D
	63.12
132-1863	77.02
	77.04
	77.06
	77.08
	77.10
132-1886	76
	78
132-1892	82.01
	83.03
132-1893	83.03
	85.01
132-1894	83.03
	85.02A
132-1900	76
132-1901	77.01
	78.01
132-1902	77.01
	77.03
	77.05
	77.07
132-1903	80.16
132-4099	444
132-4100	444
133-2424	388
	389
	391
	392
	394
	395
133-2425	151
	152.01
	152.01B
	152.03
	152.05
	152.07
	384
	385
	386
	388
	389
	391
	392
	394
	395
133-2429	398
	399
133-2432	382
	398
133-2434	382
	399
133-2436	398
	399
133-2437	398
133-2439	399
133-2446	398
	399
133-2476	398
	399
133-2602	397.11
133-2603	397.11
133-5691	233
	233.02
	233.04
	233.06
133-5706	235
	235.02
	235.04
	235.06
133-5717	245.02
	245.06
	245.10
133-5718	216.01
133-5762	254.01
	254.03
133-5765	254.01
	254.03
133-5779	35
	254
	254.01
	254.02
	254.03
133-5813	233
	233.02
	233.04
	233.06
133-6777	265
133-6788	297
133-6904	188
	189
133-6909	190
133-7882	363.04
133-7883	363.04
133-7884	363.04
	366.09
	366.11
133-7885	363.04
	366.09
	366.11
133-7886	363.04
	366.09
	366.11
133-7887	365.02
	366.03
	366.05
133-7899	270.01
	270.02
	271.01
133-7900	270.01
	270.02
	271.01
133-7903	366.03
133-7904	366.03
133-7937	368.03
	368.07
133-7938	368.03
	368.07
133-7951	375.02
	375.04
133-7952	375.02
	375.04
133-7953	375.02
133-7955	366.03
	366.05
133-8015	323.02

PART NUMBER INDEX

Part.No	Page	Part.No	Page	Part.No	Page
	323.06		438.05H	135-2184	361
133-8016	323.02		438.13		361.01
	323.06		438.19	135-2185	361
134-5555	323.08		438.25		361.01
134-6102	445	134-8861	383.01	135-2213	323.04
134-6118	438.05		401		323.08
	438.17	134-8863	401	135-2215	373.01
134-6119	438.05B	134-8865	401		373.06
	438.05D	134-8866	401		374.03
	438.05H	134-8867	401		374.05
	438.05J	134-8868	401	135-2313	365.02
134-6120	438.19	134-8875	131	135-2314	365.02
	438.21		131.01	135-2315	365.02
	438.25		134.01	135-2316	365.02
	438.27	134-8876	134.01	135-2326	368.03
134-6143	438.05	134-8878	134.01		368.07
	438.05F	134-8948	420.01		375.02
	438.17	134-8949	421		375.04
	438.23	134-9138	316.02	135-2331	323.04
134-6146	438.05B	134-9152	316.02		323.08
	438.05H	134-9153	316.01	135-2336	38
	438.19		316.02	135-2345	49
	438.25	134-9203	397.08	135-2346	43
134-6183	145		397.08B	135-2347	43
134-6192	123.08	134-9204	397.08	135-2348	43
	123.14		397.08B	135-2349	43
134-6197	35	134-9205	397.08	135-2350	43
	123.07		397.08B	135-2351	43
	123.09	134-9206	397.08	135-2352	43
	123.11		397.08B	135-2353	43
	123.13	134-9207	397.08	135-2354	43
	123.15		397.08B	135-2355	43
	123.17	134-9208	397.11	135-2356	43
134-6987	193.01	134-9210	397.11	135-2357	43
	194.01	134-9242	316.02	135-2358	43
134-7048	245.08	134-9244	316.02	135-2359	43
134-7049	245.08		397.08	135-2360	43
134-7053	245.08		397.08B	135-2363	97.04
134-7106	356.01		397.11	135-2364	97.04
134-7111	318	134-9245	397.08	135-2365	97.04
134-7113	318		397.08B	135-2366	97.04
134-7114	318		397.11	135-2367	46
134-7258	438.01	134-9247	316.01		447
	438.05B	134-9320	316.02	135-2368	32

PART NUMBER INDEX

Part.No	Page	Part.No	Page	Part.No	Page
	32A		123.06D		221.05
135-2369	97.01		123.10		221B
135-2370	97.01		123.16	137-2208	145
135-2371	446	135-7559	140	137-2218	137.02
135-2373	446	135-7567	123.08		137.04
	447		123.14		139.02
135-2375	446		124.01		139.04
	448	135-7589	124.01	137-2219	121
135-2378	450	135-7590	124.01		123.04
135-2379	451	135-7591	124.01		123.06D
135-2380	449	135-7594	121		123.10
135-4063	221.04		123.04		123.16
	221B		123.06D	137-2227	123.10
135-4064	221.04		123.10		123.16
	221B		123.16	137-2255	137.02
135-4065	221.04	135-7598	121		137.04
	221B		123.04		139.02
135-4066	221.04		123.06D		139.04
	221B	135-8573	227.02	137-2270	358.01A
135-4067	221.04	136-4006	80.11	137-2279	130.01
	221B	136-4056	63.02	137-2280	131.01
135-5620	34.01		63.06		132.01
	34.03		63.08B	137-2281	130.01
135-5632	35.04		72.04	137-2282	132.01
135-5702	28		72.05	137-2290	135.01
	35		72.06		135.01A
135-5789	41	136-4057	77.03		135.03
135-5790	41		78.02	137-2292	135.03
135-7500	123.12	137-0838	252	137-2294	135.03
	123.18		253.01	137-2295	135.03
135-7503	123.12		254	137-2819	384
	123.18		254.02		386
135-7505	123.08	137-0856	245.04		389
	123.14		245.08	137-2864	397.08
135-7510	123.06	137-0987	438.05	137-2887	384
	123.06F		438.05F	137-2889	386
	123.12		438.05L	137-2895	388
	123.18	137-0988	438.17	137-2897	389
135-7550	123.06		438.23	137-2899	392
	123.06F		438.29	137-2901	394
	123.12	137-0997	440	137-2903	395
	123.18	137-1003	397.14	137-2919	389
135-7551	121	137-1004	397.14	137-2939	397.11
	123.04	137-1594	221.04	137-2940	397.11

PART NUMBER INDEX

Part.No	Page	Part.No	Page	Part.No	Page
137-2944	397.08	138-4244	221.05	142-5476	123.04
	397.08B		221.07		123.06D
137-3057	385	138-5042	247.02	142-5515	265
137-3065	316.02	138-5043	229	142-5516	252
	397.08		247.01		254
	397.08B		247.03		304.01
137-3621	182.01		247.05	142-5517	304.01
137-3623	182.01	138-5044	247.02	142-5535	233.04
137-3624	182.01		247.06		233.06
137-3625	182.01	138-5048	229	142-5536	63.08B
137-3626	182.01		248		63.10
	182.02		249.01	142-5542	125
137-3627	182.01	138-5049	235.02		126
137-3628	182.01		235.04	142-5543	272.02
	182.02		235.06	142-5544	272.02
137-3630	182.02	138-5084	249	142-5546	272.02
137-3631	182.02	138-5103	249	142-6582	221.04
137-3632	182.02	138-5104	249.02	142-6583	221B
137-3634	182.03	138-5105	249	142-6661	219.01
137-3635	182.01	138-5134	63.06		221A
137-3637	259.01		63.08B	142-6662	219.01
	259.02		63.10		221.03
	259.03		68.04	143-7966	182
	294.02		68.05	143-7968	182.03
137-3638	294.02		68.06	144-2117	300
137-3639	294.02	139-7114	362.01	145-0556	109
137-3695	182	139-7119	323.04	145-3037	158
137-3700	194.01		323.08	145-3060	80.01
137-3706	172	139-7173	323.04	145-9278	149.02
	174		323.08	146-0506	129
137-3709	196	140-0614	130.01	146-0558	129
137-3718	263	140-0648	249	146-4963	137.04
	266	140-0649	308.03		139.04
137-3760	187	140-0650	308.03	146-4966	141.01
137-3763	187	140-0651	308.03	146-4967	141.01
137-3764	188	140-0708	279.06	147-4137	308.03
	189	140-0853	102	147-4138	308.03
137-3767	190	140-0923	107B	147-4184	308.03
137-3810	182.01	141-1278	249	147-4786	366.05
137-3813	182.01	141-6787	301	147-4787	366.05
137-3814	182.01	142-5465	40.03	147-4788	366.03
137-3818	182.01	142-5466	40.03	147-4791	366.03
138-4243	221.05		129		366.05
	221.06	142-5467	129	147-4792	366.03

PART NUMBER INDEX

Part.No	Page
	366.05
147-4793	366.03
	366.05
147-4869	366.05
147-4870	323.02
	323.06
147-4954	335
147-5860	265
148-1609	319.04
148-4715	115
148-4716	115
149-5050	77.07
	77.09
	77.10
	94.01
149-5051	78.04
	78.05
	95
149-5069	78.04
	78.05
	95
149-5070	78.04
	78.05
	95
149-5071	78.04
	78.05
150-2199	365
	366.01
	366.08
150-2202	364
	366.10
150-2821	397.14
150-2822	397.14
150-2823	397.14
150-5782	179.08
150-5785	179.08
150-5797	179.12
150-6978	108.02
	109
150-6989	94.03B
	94.03D
	94.05A
150-6990	94.05A
	94.05E
150-6991	94.05A
	94.05F
150-6992	94.03B
	94.05A
150-6993	94.05A
	94.05C
150-6994	94.05A
	94.05D
150-6998	63.10
	72.07
	72.08
	72.09
150-6999	83.01
	83.02
150-7000	83.02
	87.01
	87.02
150-7001	83.02
	87.03
	87.04
151-0606	397.08B
151-6703	324.03
151-6704	324.03
151-9293	80.01
151-9385	336.01
151-9617	363.01
	363.03
151-9680	375.03
	375B
151-9681	375.04
152-8338	301
152-8340	300
	301
153-2444	80.15
153-2452	108.02
	109
153-2491	82.02
	85.03
153-2492	63.10
153-2496	77.05
	78.03
153-2499	80.15B
	96.01
153-2500	83.01
153-2503	80.15B
	80.15D
153-2504	80.15B
153-2505	80.15A
	80.15C
	350.02
153-2506	350.02
153-2507	80.15B
	80.15D
153-2521	101.02
	103.01
	105.01
	107.04
	107B
	109.01
153-2523	101A
	108.01A
153-2540	96.01
	96.02
153-2541	96.01
	96.02
153-2555	94.03D
	94.05B
153-2556	94.05B
	94.05G
153-2557	94.05B
	94.05H
153-2602	78.05
153-2631	78.05
153-5223	306
153-8644	221.06
153-8645	221.06
153-8748	221.06
154-0401	259.02
	262.01
154-0451	123.06F
154-0472	130.01
154-0474	132.01
154-0489	49
154-0498	40.02
	40.04
154-0523	368.05
	368.06
154-0524	368.07

PART NUMBER INDEX

Part.No	Page
154-0525	368.07
154-0526	368.05
154-0529	275.01
154-0530	275.01
	287.03
	287.05
	287.07
	287.09
154-0531	287.04
	287.08
	290
154-0532	290
	291B
154-0533	290
	291.02
154-0551	152.01B
	152.05
	152.07
154-0566	137
	137.03
154-0567	137.04
	139.04
154-0568	272.01
154-0569	272.01
	272.02
154-0581	358.02
154-0587	367.01
	369.02
154-0588	369.02
154-0650	348.01
154-0654	139
	139.03
154-0666	273
154-0675	374
154-0676	374
	375A
154-0689	317
154-0774	366.11
154-0778	445.01
154-0779	445.01
154-0785	40.04
	45.02
154-0788	45.02
154-0795	40.03
	45.02
154-0796	45.02
154-0800	45.02
155-2255	68.06
	72.08
	72.09
155-2260	68.04
	109.03
155-2270	66
	67
	68
	68.01
	68.02
	68.03
	68.04
	68.05
	68.06
	71
	72
	72.02
	72.03
	72.05
	72.06
	72.08
	72.09
	73
	78
	78.01
	78.02
	78.03
	78.04
	78.05
	86
	87.01
	87.03
	92
	95
	96
	233
	233.02
	233.04
	233.06
155-2271	68.04
	72.08
	72.09
155-2274	68.05
	72.07
	72.08
	72.09
155-7001	358.01A
155-7004	358.01A
155-7007	361.01
155-7008	359.01
	361.01
155-7018	319.04
	323.05
	323.07
155-7024	373.01
	373.06
	374.05
155-7027	319.04
	336A
155-7028	336A
155-7031	323.06
155-7033	323.08
155-7035	323.08
155-7036	323.08
155-7039	323.08
	336.02
155-7040	336.02
155-7041	323.08
	334A
155-7042	334A
155-7043	323.08
	333.03
155-7045	333.04
	334.02
155-7046	334.02
	338.01
155-7049	336.02
	338.02
155-7053	323.06
	324.02
155-7056	324.03
155-7058	324.03
	325.01
155-7059	325.01
155-7060	325.01

PART NUMBER INDEX

Part.No	Page	Part.No	Page	Part.No	Page
155-7061	337.01		438.25	160-4405	210
155-7062	337.01		438.27	160-4407	38
	338.01	156-6617	323.08	160-4408	179.03
155-7063	337.01	156-6618	323.08	160-4409	179.02
	339.03	157-2022	397.14		179.08
155-7064	338.02	157-2023	397.14	160-6822	438.05H
	339.04	157-2024	397.14		438.25
155-7065	338.02	157-2042	397.14	160-6832	438.05H
155-7067	245.08	157-3122	336.01		438.05J
	308.02	157-3160	51.02		438.25
155-7076	367.01	158-4380	170.01		438.27
155-7077	367.01		170.02	160-6841	438.05H
	368.04	158-4381	170.01		438.25
155-7084	359.01		170.02	160-6845	438.05L
	360.01	158-9022	179.08		438.29
155-7085	360.01	158-9046	179.10	160-6848	438.05L
155-7086	360.01	159-0950	170.01		438.29
155-7099	360.01		170.02	160-6850	438.05L
155-7102	34.01	159-1519	169.01		438.29
	34.03		170.02	160-6870	438.05L
155-7110	438.05F	159-7658	279.06		438.29
	438.05L	159-7661	336B	160-6871	438.05J
	438.23	159-7663	336B		438.27
	438.29	159-7665	180	161-3728	361.01
155-7111	336B	159-7672	363.04	161-3729	361.01
155-7115	319.03		366	161-3730	361.01
155-7117	281.01		366.09	161-7632	141.01
155-7120	281	159-7673	366	162-6210	179.15
	281.01	159-7674	366		227.02
155-7122	281	159-7682	223	162-8284	137
	281.01		225		139
155-7124	281	159-7732	287.02	163-4143	164
	281.01		287.06		165.01
	291B		289	163-6616	77.10
155-7126	291B	159-7744	361.01	163-6675	65.02
155-7128	291B		362		77.09
155-7138	291B	159-7782	268		77.10
155-7168	262.01	159-7784	182	163-6684	77.09
155-7177	438.05B	159-7841	223	163-6691	77.09
	438.05D		225	163-6692	77.10
	438.05H		268	163-6693	77.10
	438.05J	159-7842	358.01A	163-6727	65.01
	438.19	159-9108	77.10	163-6769	77.10
	438.21	160-4404	210	164-6624	169.01

PART NUMBER INDEX

Part.No	Page	Part.No	Page	Part.No	Page
164-6627	169.01		96.02		50.08
164-6893	169.01	167-3486	96.02		50.10
	170.01	167-3494	77.07	171-3258	179.02
164-8294	80		78.04	171-3278	323.06
165-0830	415	167-3579	77.09	171-3369	33.02
165-0832	415		78.05		33.04
165-4026	77.07	167-3589	94.01		35.02
165-9282	194.01		95	171-3375	356.01
165-9431	310.01	168-0543	247.04	171-3379	185
	310.02	168-0582	32A		191
	310.03	168-0713	262.02	171-3380	191
165-9435	310.01	168-0761	397.14	171-3386	235.06
	310.02	168-0763	262.02	171-9066	179.15
	310.03	168-0764	262.02	173-3371	179.08
165-9436	310.01	168-0765	262.02	173-3384	179.14
	310.02	168-0766	262.02	173-3387	179.14
	310.03	168-0773	397.14	173-3389	179.14
165-9438	310.01	168-0776	397.14	173-3390	179.14
	310.02	168-0786	52	173-3391	179.10
	310.03	168-0787	310.01	173-3392	179.08
165-9439	310.01	168-0792	40.02	173-3394	179.14
	310.02	168-0794	310.01	173-3397	179.12
	310.03		310.02	173-3398	179.12
165-9442	310.01		310.03	173-3404	179.12
165-9443	310.01	168-0815	179.03	173-3405	179.12
165-9444	310.01	168-8451	115	173-3411	179.14
165-9448	310.01	169-7946	173	173-3413	179.12
	310.02	169-8154	182.01	173-3427	179.08
	310.03	170-6993	108.01A	173-3473	179.08
165-9460	310.01		109.01	173-3496	179.10
165-9461	310.01	170-9417	108.01A	173-3498	179.08
	310.02		109.01	173-3537	179.05
	310.03	170-9418	108.01A		179.07
166-3118	41.02		109.01		179.09
166-3121	247.02	171-0030	287.10		227.02
	247.06		289.01	173-3538	179.08
	249.02	171-0034	289.01	173-3539	179.10
	251	171-0035	289.01	174-5414	45.02
166-3152	397.02	171-0036	289.01	174-7791	108.01A
166-3175	247.04	171-0037	289.01		109.01
166-3206	247.04	171-2579	80.01	175-2313	91
166-3215	323.08	171-2655	336.01		91.03
167-3484	80.15D	171-3253	13.02	175-2314	91
167-3485	80.15D		50.06		91.04

PART NUMBER INDEX

Part.No	Page
176-4916	397.11
176-4935	194.01
176-4968	179.02
176-4983	17
176-4984	270.02
	310.01
176-4985	233.06
	270.02
176-4986	233.06
	270.02
176-5005	44
176-5006	98
176-5024	109.03
	227.02
176-5025	227.02
176-5044	227.01
176-5045	227.02
176-5046	227.02
176-5047	227.02
176-5051	227.02
176-5055	227.02
176-5058	227.02
176-5061	227.02
176-5063	227.02
176-5065	227.02
176-5104	258.01
	259.03
176-5105	259.03
	262.02
176-5107	259.03
	261.01
	261.02
176-5109	247.07
177-2470	179.06
177-2471	179.06
177-2583	179.08
177-2584	261.01
177-8740	179.08
178-6553	47
179-9619	179.06
	179.11
	179.13
179-9763	179.08
180-3861	108.01A
	109.01
183-8171	14
183-8172	14
183-8173	14
183-8174	14
184-3816	247.07
184-3831	253.01
	254.02
	304.02
184-3833	304.02
184-3841	304.02
184-3895	33.04
	34.02
184-3896	34.03
184-3899	270.02
	310.02
184-3900	270.02
	310.03
184-3901	34.03
184-3949	34.03
184-3983	40.02
184-5791	398
185-0169	179.04
	179.14
185-0172	179.14
185-0201	179.12
185-0347	179.14
185-0348	179.14
185-9110	24
186-3735	68.04
	68.06
	72.08
	72.09
	87.01
	87.03
	91.03
	91.04
	100.01
186-3736	68.04
	68.05
	68.06
	72.07
	72.09
189-9763	179.14
190-5859	50.07
190-5889	50.09
190-5893	50.04
	50.09
190-5894	50.09
190-5895	50.09
190-5903	50.09
190-5904	50.09
190-5911	50.09
190-5912	50.09
190-5913	50.09
190-5914	50.09
190-7673	179.14
190-7674	179.14
191-3131	50.07
191-3132	50.09
191-3139	50.09
191-5599	179.08
	179.14
191-5709	179.08
193-1736	179.08
194-8397	179.08
197-7701	301
199-7371	431
200-3244	179.14
200-3245	179.14
200-3246	179.14
200-3254	179.14
200-3255	179.14
205-6788	23
205-6793	23
222-8183	19

2