CATERPILLAR®

SEBP3884
March 2003

EXCELÊNCIA
Escavadeira
320 CL

CATÁLOGO: 1008

LOCAÇÃO: A

RUTHZIL TRATOR COMERCIAL DE PEÇAS LTDA 11 97083-6812 ROLANDO

Parts Manual

SIS

See "General Information" for New Parts Manual Features.

320C & 320C L Excavators

RAW1-Up (Machine)
SBN1-Up (Machine)
7JK1-Up (Engine)

Powered By 3066 Engine

Product and Dealer Information

Note: For product identification plate locations, see the section "Product Identification Information" in the Operation and Maintenance Manual.

Delivery Date: _____

Product Information

Model: _____

Product Identification Number: _____

Engine Serial Number: _____

Transmission Serial Number: _____

Generator Serial Number: _____

Attachment Serial Numbers: _____

Attachment Information: _____

Customer Equipment Number: _____

Dealer Equipment Number: _____

Dealer Information

Name: _____ Branch: _____

Address: _____

_____

_____

	Dealer Contact	Phone Number	Hours
Sales:	_____	_____	_____
Parts:	_____	_____	_____
Service:	_____	_____	_____

Informations produit et concessionnaire

Nota: Voir l'emplacement de la plaque signalétique du produit au chapitre "Informations produit" du guide d'utilisation et d'entretien.

Date de livraison: _____

Informations produit

Modèle: _____

Numéro d'identification produit: _____

Numéro de série du moteur: _____

Numéro de série de la boîte de vitesses: _____

Numéro de série de l'alternateur: _____

Numéros de série d'équipement: _____

Informations sur l'équipement: _____

Numéro matériel client: _____

Numéro matériel concessionnaire: _____

Informations concessionnaire

Nom: _____ Agence: _____

Adresse: _____

_____

_____

	Contact concessionnaire	Numéro de téléphone	Heures
Ventes:	_____	_____	_____
Pièces:	_____	_____	_____
Service:	_____	_____	_____

Información del Producto/Distribuidor

Nota: Para saber la ubicación de las placas de identificación del producto, ver la sección "Información sobre identificación del producto" en el Manual de Operación y Mantenimiento.

Fecha de entrega: _____

Información del producto

Modelo: _____

Número de identificación del producto: _____

Número de serie del motor: _____

Número de serie de la transmisión: _____

Número de serie del generador: _____

Números de serie de los accesorios: _____

Información sobre los accesorios: _____

Número del equipo del cliente: _____

Número del equipo del distribuidor: _____

Información del distribuidor

Nombre: _____ Sucursal: _____

Dirección: _____

_____

_____

Comunicación con el distribuidor	Número de teléfono	Horas
Ventas: _____	_____	_____
Piezas: _____	_____	_____
Servicio: _____	_____	_____

Informações Sobre Produto e Revendedor

Nota: Para localizações da placa de identificação do produto, consulte a seção, "Informações Sobre Identificação do Produto" no Manual de Operação e Manutenção.

Data de Entrega: _____

Informações Sobre o Produto

Modelo: _____

Número de Identificação do Produto: _____

Número de Série do Motor: _____

Número de Série da Transmissão: _____

Número de Série do Gerador: _____

Números de Série de Acessórios: _____

Informações Sobre Acessórios: _____

Número do Equipamento do Cliente: _____

Número do Equipamento do Revendedor: _____

Informações Sobre o Revendedor

Nome: _____ Filial: _____

Endereço: _____

_____

_____

	Contato do Revendedor	Telefone	Horas
Vendas:	_____	_____	_____
Peças:	_____	_____	_____
Serviço:	_____	_____	_____

Produkt- und Händlerinformation

Anmerkung: Für die Lage der Produkt-Identnummer und Seriennummern siehe Abschnitt "Produkt-Identinformation" im Betriebs- und Wartungshandbuch.

Lieferdatum: _____

Produkt-Identinformation

Modell: _____

Produkt-Identnummer: _____

Seriennummer des Motors: _____

Seriennummer des Getriebes: _____

Seriennummer des Generators: _____

Seriennummern der Arbeitsgeräte: _____

Arbeitsgeräteinformation: _____

Kundennummer: _____

Händlernummer: _____

Händlerinformation

Name: _____ Niederlassung: _____

Adresse: _____

_____

_____

	Kontaktperson beim Händler	Telefon	Dienststunden
Verkauf:	_____	_____	_____
Ersatzteile:	_____	_____	_____
Service:	_____	_____	_____

MEMORANDA

TABLE OF CONTENTS

Name	Page
GENERAL INFORMATION	A18
REPAIR ALTERNATIVES	A37
SUPPLEMENTAL COOLANT ADDITIVES	A42
ENGLISH-PORTUGUESE PARTS NOMENCLATURE	A47
MAINTENANCE PARTS	A55
INDEX	A73
MACHINE ARRANGEMENT	1
CHASSIS AR	1
GENERAL AR	2
ENGINE ARRANGEMENT	4
ENGINE AR	4
INSTALLATION AR-ENGINE	9
BASIC ENGINE	10
CAMSHAFT GP	10
COVER GP-VALVE MECHANISM	11
CRANKSHAFT GP	12
CYLINDER BLOCK GP	13
CYLINDER HEAD AS	17
CYLINDER HEAD GP	21
FLYWHEEL GP	23
GEAR GP-FRONT	24
HOUSING GP-FLYWHEEL	25
HOUSING GP-FRONT	26
MOUNTING GP-ALTERNATOR	28
MOUNTING GP-ENGINE	29
MOUNTING GP-STARTING MOTOR	30
PAN GP-OIL	31
PISTON & ROD GP	33
PULLEY GP	34
VALVE MECHANISM GP	36
LUBRICATION SYSTEM	38
BREATHER GP	38
FILTER GP-ENGINE OIL	39
LINES GP-ENGINE OIL	41
LINES GP-TURBOCHARGER OIL	42
COOLING SYSTEM	43
COOLER GP-ENGINE OIL	43
COOLING AR	44
FAN GP-SUCTION	45
LINES GP-WATER	47
PUMP GP-WATER	49
RADIATOR & HYD OIL COOLER GP	50

Name	Page
AIR INLET AND EXHAUST SYSTEM	54
AIR CLEANER AR	54
AIR CLEANER GP	55
CARTRIDGE AS-TURBOCHARGER	59
LINES GP-AIR	60
LINES GP-COOLING AIR	61
LINES GP-MUFFLER DRAIN	63
MANIFOLD GP-EXHAUST	65
MANIFOLD GP-INLET	67
MOUNTING GP-AIR CLEANER	68
MUFFLER GP	69
TURBOCHARGER GP	70
FUEL SYSTEM	71
FILTER GP-FUEL	71
LINES GP-FUEL	73
NOZZLE GP-UNIT INJECTOR	78
PUMP GP-FUEL INJECTION	80
SEPARATOR GP-WATER	87
TANK & MTG GP-FUEL	90
TANK GP-FUEL	91
ELECTRICAL AND STARTING SYSTEM	93
ALARM GP	93
ALARM GP-TRAVEL	94
ALTERNATOR GP-CHARGING	95
BATTERY & WIRING GP	97
CONTROL & MTG GP-IMPLEMENT	109
CONTROL & MTG GP-MACHINE	111
CONTROL GP-ENGINE ELECTRONIC	112
CONTROL GP-SWITCH	114
ELECTRONICS GP-ENGINE RATINGS	115
ELECTRONICS GP-IMPLEMENT	115
ELECTRONICS GP-MONITOR	115
LAMP GP-FLOOD	116
LIGHTING GP-BOOM	122
LIGHTING GP-CHASSIS	125
LIGHTING GP-FLOOD	126
PANEL GP-CIRCUIT BREAKER	128
STARTING MOTOR GP-ELECTRIC	132
SWITCH GP-DISCONNECT	133
SWITCH GP-START	135
WIRING GP-CAB	136
WIRING GP-CONSOLE	142
WIRING GP-CONVERTER	146
WIRING GP-HAMMER	148
WIRING GP-WINDOW WIPER	150
POWER TRAIN	151
FINAL DRIVE GP	151
POWER TRAIN AR	154
SPROCKET GP	155
FRAME AND BODY	156
BOX & MTG GP-STORAGE	156

TABLE OF CONTENTS

Name	Page
BOX GP-STORAGE	157
BUMPER GP	159
COUNTERWEIGHT GP	160
COVER GP-HOOD	162
DOOR GP-ACCESS	163
FENDER & COVER GP	166
FRAME GP-UPPER	167
GEAR & BEARING GP-SWING	169
GUARD AR-BOTTOM	171
GUARD GP-BOTTOM	172
GUARD GP-PLATFORM	175
GUARD GP-SWIVEL	176
HANDHOLD GP	177
HOOD & GUARD GP	178
HOOD GP	184
HOOD GP-ENGINE	185
UNDERCARRIAGE	188
FRAME AR-UNDERCARRIAGE	188
GUARD GP-TRACK GUIDE	189
GUARD GP-TRAVEL MOTOR	192
IDLER GP-FRONT	194
LINK AS-TRACK	198
ROLLER AR-TRACK & CARRIER	200
ROLLER GP-TRACK CARRIER	202
ROLLER GP-TRACK-SINGLE FLANGE	203
TRACK ADJUSTER & RECOIL GP	204
TRACK GP	208
HYDRAULIC SYSTEM	215
ACCUMULATOR GP-HYDRAULIC	215
BASE GP-OIL FILTER	216
CONTROL & MTG GP-JOYSTICK	217
CONTROL AR-AUXILIARY	218
CONTROL GP-HANDLE	219
CONTROL GP-HYDRAULIC PEDAL	220
CONTROL GP-JOYSTICK	222
COUPLING GP-FLEXIBLE	228
COUPLING GP-PUMP	229
CYLINDER & LINES GP-BOOM	230
CYLINDER & LINES GP-BUCKET	230
CYLINDER & LINES GP-STICK	231
CYLINDER & SEAL GP-BOOM	232
CYLINDER & SEAL GP-BUCKET	233
CYLINDER & SEAL GP-STICK	235
CYLINDER GP-BOOM	237
CYLINDER GP-BUCKET	239
CYLINDER GP-STICK	243
DRIVE GP-AUXILIARY PUMP	247
DRIVE GP-PUMP	249
DRIVE GP-SWING	250
FASTENER GP-SWING & FINAL DR	253
FILTER & VALVE GP-PILOT	255
FILTER GP-OIL	256
FITTING GP	261
HEAD GP-PUMP	262
HYDRAULIC AR	270
LEVER GP-CONTROL	271
LINES AR-AUXILIARY HYDRAULIC	275
LINES GP-AUXILIARY HYDRAULIC	277
LINES GP-BOOM	301
LINES GP-BOOM CYLINDER	305
LINES GP-BOOM DRAIN	307
LINES GP-BUCKET CYLINDER	311
LINES GP-FRONT	314
LINES GP-PILOT	327
LINES GP-PUMP	351
LINES GP-RETURN & FILTER	358
LINES GP-STICK	360
LINES GP-STICK CYLINDER	364
LINES GP-STICK DRAIN	366
LINES GP-SWING DRIVE DRAIN	370
LINES GP-SWING MOTOR	371
LINES GP-TRAVEL MOTOR	372
MOTOR & MTG GP-SWING	378
MOTOR & MTG GP-TRAVEL	379
MOTOR GP-SWING	380
MOTOR GP-TRAVEL	383
MOUNTING GP-MAIN CONTROL VALVE	386
PUMP & MOUNTING GP	387
PUMP GP-GEAR	389
PUMP GP-PISTON	390
SCREEN GP	395
SWIVEL GP	396
TANK & FILTER GP-HYDRAULIC	397
TANK & MTG GP-HYDRAULIC	401
VALVE & MTG GP-CONTROL	402
VALVE GP-BALL	403
VALVE GP-CHECK	404
VALVE GP-CONTROL	405
VALVE GP-MAIN CONTROL	420
VALVE GP-PILOT	421
VALVE GP-PILOT RELIEF	433
VALVE GP-PRESSURE REDUCING	435
VALVE GP-RELIEF	436
VALVE GP-SHUTTLE	450
VALVE GP-SOLENOID	452
VALVE GP-SOLENOID & RELIEF	458
VALVE GP-SWING CUSHION	461
VALVE GP-TRAVEL COUNTERBALANCE	462
IMPLEMENTS	463
BOOM AR-1 PIECE	463
BOOM AR-1 PIECE LONG	463
BOOM GP	464
LINES GP-GREASE	470
LINKAGE AR-BUCKET	475

TABLE OF CONTENTS

Name	Page
LINKAGE GP-BUCKET	476
STICK AR-HOE	480
STICK GP	482
STICK GP-HOE	488
WORK TOOLS	502
ADJUSTER GP-WORK TOOL	502
BUCKET & ADJUSTER GP	504
BUCKET AS-EXCAVATION	509
BUCKET AS-HEAVY DUTY	520
BUCKET AS-HEAVY DUTY ROCK	521
BUCKET AS-PENETRATION	525
BUCKET AS-ROCK	526
PROTECTOR GP-BUCKET	528
PROTECTOR GP-SIDE BAR	529
SIDECUTTER GP	530
TIP GP	532
TIP GP-ABRASION	537
TIP GP-LONG	539
TIP GP-PENETRATION	543
TIP GP-SHARP	545
TIP GP-SHORT	546
OPERATOR STATION	548
ADJUSTMENT GP-CONSOLE	548
AIR CONDITIONER & MOUNTING GP	550
AIR CONDITIONER GP	552
BLOWER GP-CAB	556
CAB GP	557
COMPRESSOR GP-REFRIGERANT	568
CONDENSER & MTG GP-REFRIGERANT	569
CONSOLE GP-INSTRUMENT	571
CONSOLE GP-LH	572
CONSOLE GP-OPERATOR	574
CONSOLE GP-RH	576
COVER GP-STORAGE	579
DOOR GP-CAB	581
DUCT GP-AIR	583
HATCH GP-ROOF	584
HEADREST AS	586
HORN GP-ELECTRIC	587
INSTALLATION GP-RADIO	588
LINES GP-AIR CONDITIONER	590
MIRROR GP-REAR VIEW	594
MONITOR GP-OPERATOR	595
OPERATOR AR	597
PLATFORM GP-OPERATOR	598
SEAT BELT GP	599
SEAT GP	600
SUPPORT GP-SEAT	602
SUSPENSION GP-SEAT	603
VISOR GP-CAB	604
WASHER GP-WINDOW	605
WINDOW GP-DOOR	608
WINDOW GP-FRONT	610
WIPER & WASHER GP-WINDOW	613
WIPER AR-WINDOW	615
WIPER GP-WINDOW	616
SERVICE EQUIPMENT AND SUPPLIES	617
FILM GP	617
PLATE & FILM GP	619
PART NUMBER INDEX	B1

TABLE DES MATIÈRES

Désignation	Page
GÉNÉRALITÉS	A21
OPTIONS DE RÉPARATION	A38
ADDITIFS POUR LIQUIDE DE REFROIDISSEMENT	A43
PIÈCES DE RECHANGE	A58
INDEX	A80
VERSION DE MACHINE	1
VERSION DE CHASSIS	1
VUE DU MODÈLE	2
MOTEUR (VERSION)	4
MOTEUR (VERSION)	4
MONTAGE DE MOTEUR (VERSION)	9
MOTEUR STANDARD	10
ARBRE A CAMES (ASS)	10
CACHE-SOUPAPES (ASS)	11
VILEBREQUIN (ASS)	12
BLOC-CYLINDRES (ASS)	13
CULASSE (ENS)	17
CULASSE (ASS)	21
VOLANT MOTEUR (ASS)	23
PIGNONNERIE AV (ASS)	24
CARTER DE VOLANT (ASS)	25
CARTER AV (ASS)	26
MONTAGE D'ALTERNATEUR (ASS)	28
MONTAGE DE MOTEUR (ASS)	29
DÉMARREUR - MONTAGE (ASS)	30
HUILE MOTEUR - CARTER (ASS)	31
PISTON ET BIELLE (ASS)	33
POULIE (ASS)	34
CULBUTERIE (ASS)	36
CIRCUIT DE GRAISSAGE	38
RENIFLARD (ASS)	38
FILTRE À HUILE MOTEUR (ASS)	39
CANALISATIONS D'HUILE MOTEUR (ASS)	41
CANALISATIONS D'HUILE DE TURBOCOMPRESSEUR (ASS)	42
CIRCUIT DE REFROIDISSEMENT	43
REFROIDISSEUR D'HUILE MOTEUR (ASS)	43
REFROIDISSEMENT (VERSION)	44
VENTILATEUR ASPIRANT (ASS)	45
CANALISATIONS D'EAU (ASS)	47
POMPE A EAU (ASS)	49
RADIATEUR ET REFROIDISSEUR D'HUILE HYDRAULIQUE (ASS)	50
CIRCUIT D'ADMISSION D'AIR ET D'ÉCHAPPEMENT	54
FILTRE À AIR (VERSION)	54
FILTRE A AIR (ASS)	55
CARTOUCHE - TURBOCOMPRESSEUR (ENS)	59
CANALISATIONS D'AIR (ASS)	60
CANALISATIONS DE REFROIDISSEMENT (ASS)	61
CANALISATIONS DE VIDANGE DE SILENCIEUX (ASS)	63
COLLECTEUR D'ÉCHAPPEMENT (ASS)	65
COLLECTEUR D'ADMISSION (ASS)	67
MONTAGE DE FILTRE À AIR (ASS)	68
SILENCIEUX (ASS)	69
TURBOCOMPRESSEUR (ASS)	70
CIRCUIT DE CARBURANT	71
FILTRE A CARBURANT (ASS)	71
CANALISATIONS DE CARBURANT (ASS)	73
TÊTE D'INJECTECTEURS- POMPES	78
POMPE D'INJECTION DE CARBURANT (ASS)	80
SÉPARATEUR D'EAU (ASS)	87
RÉSERVOIR DE CARBURANT ET MONTAGE (ASS)	90
RÉSERVOIR DE CARBURANT (ASS)	91
CIRCUIT ÉLECTRIQUE ET DE DÉMARRAGE	93
AVERTISSEUR (ASS)	93
AVERTISSEUR DE TRANSLATION (ASS)	94
ALTERNATEUR DE CHARGE (ASS)	95
BATTERIE ET CÂBLAGE	97
COMMANDE D'ÉQUIPEMENT	109
COMMANDE ET MONTAGE (ASS)-MACHINE	111
COMMANDE ELECTRONIQUE DE MOTEUR (ASS)	112
INTERRUPTEUR DE COMMANDE	114
RÉGLAGE ÉLECTRO. DE PUISSANCE DU MOTEUR	115
COMMANDE ÉLECTRONIQUE D'ÉQUIPEMENT (ASS)	115
ÉLECTRONIQUE-MONITEUR (ASS)	115
LAMPE - PHARE (ASS)	116
ÉCLAIRAGE DE FLÈCHE (ASS)	122
ÉCLAIRAGE DE CHÂSSIS (ASS)	125
ÉCLAIRAGE - PROJECTEURS (ASS)	126
DISJONCTEUR DU PANNEAU DE COMMANDE (ASS)	128
DÉMARREUR ÉLECTRIQUE (ASS)	132

TABLE DES MATIÈRES

Désignation	Page
ROBINET DE BATTERIE (ASS)	133
INTERRUPTEUR DE DÉMARRAGE (ASS)	135
CABLAGE DE CABINE (ASS)	136
CABLAGE DE CONSOLE (ASS)	142
CÂBLAGE-TRANSFORMATION (ASS)	146
CABLAGE DE MARTEAU (ASS)	148
CÂBLAGE D'ESSUIE-GLACE (ASS)	150
TRANSMISSION	151
RÉDUCTEURS (ASS)	151
TRANSMISSION (VERSION)	154
ROUE AV (ASS)	155
CHÂSSIS ET BENNE	156
COFFRE ET MONTAGE - RANGEMENT (ASS)	156
COFFRE DE RANGEMENT (ASS)	157
PARE-CHOCS (ASS)	159
CONTREPOIDS (ASS)	160
COUVERCLE - CAPOT (ASS)	162
PORTE DE VISITE (ASS)	163
GARDE-BOUE ET COUVERCLE (ASS)	166
CHASSIS DE TOURELLE (ASS)	167
ENGRENAGE ET PALIER D'ORIENTATION	169
BLINDAGE INFÉRIEUR (VERSION)	171
BLINDAGE INFÉRIEUR (ASS)	172
PROTECTION DE PLATE-FORME (ASS)	175
PROTECTION DE PIVOT (ASS)	176
POIGNÉE	177
CAPOT ET PROTECTION (ASS)	178
CAPOT (ASS)	184
CAPOT DU MOTEUR (ASS)	185
TRAIN DE ROULEMENT	188
CHÂSSIS PORTEUR (VERSION)	188
GUIDE PROTECTEUR DE CHAÎNE (ASS)	189
PROTECTION DE MOTEUR DE TRANSLATION (ASS)	192
ROUE AV (ASS)	194
MAILLON DE CHAINE (ENS)	198
GALET SUPÉRIEUR (VERSION)	200
GALET SUPERIEUR (ASS)	202
GALET A BOUDIN SIMPLE (ASS)	203
MECANISME AMORTISSEUR ET REGLAGE DE CHAINES (ASS)	204
CHAINES (ASS)	208
CIRCUIT HYDRAULIQUE	215
ACCUMULATEUR HYDRAULIQUE (ASS)	215
SUPPORT DE FILTRE À HUILE (ASS)	216
COMMANDE ET MONTAGE - LEVIER (ASS)	217
COMMANDE AUXILIAIRE (VERSION)	218
COMMANDE DE POIGNÉE (ASS)	219
COMMANDE HYDRAULIQUE DE PÉDALE (ASS)	220
PALONNIER - GROUPE DE COMMANDE (ASS)	222
ACCOUPLEMENT FLEXIBLE (ASS)	228
ACCOUPLEMENT DE POMPE (ASS)	229
VÉRIN ET CANALISATIONS DE FLÈCHE (ASS)	230
VÉRIN ET CANALISATIONS DE GODET (ASS)	230
VÉRIN ET CANALISATIONS DE BRAS (ASS)	231
VERIN DE FLECHE ET JOINT (ASS)	232
VÉRIN DE GODET ET JOINT (ASS)	233
VERIN DE BRAS ET JOINT (ASS)	235
VERIN DE FLECHE (ASS)	237
VERIN DE GODET (ASS)	239
VERIN DE BRAS (ASS)	243
ENTRAÎNEMENT DE POMPE AUXILIAIRE (ASS)	247
ENTRAÎNEMENT DE POMPE (ASS)	249
ENTRAINEMENT D'ORIENTATION (ASS)	250
BOULONNERIE DE BÂTI D'ORIENT. ET DE RÉDUCT. LAT.	253
FILTRE ET SOUPAPE PILOTE (ASS)	255
FILTRE A HUILE (ASS)	256
RACCORD (ASS)	261
TÊTE DE POMPE (ASS)	262
VERSION HYDRAULIQUE	270
LEVIER DE COMMANDE (ASS)	271
CANALISATIONS HYDRAULIQUES AUXILIAIRES (VERSION)	275
CANALISATIONS HYDRAULIQUES AUXILIAIRES (ASS)	277
FLECHE - CANALISATIONS	301
CANALISATIONS DE VERIN DE FLECHE (ASS)	305
CONDUITES DE RETOUR DE FLÈCHE (ASS)	307
CANALISATIONS DE VÉRIN DE GODET (ASS)	311
CANALISATIONS AV	314
CANALISATIONS A COMMANDE PILOTE (ASS)	327
CANALISATIONS DE POMPE (ASS)	351
CANALISATIONS DE RETOUR ET DE FILTRE (ASS)	358
CANALISATIONS DE BRAS (ASS)	360

TABLE DES MATIÈRES

Désignation	Page
CANALISATIONS DU VÉRIN DE BRAS (ASS)	364
CONDUITES DE RETOUR DE BRAS (ASS)	366
CANALISATIONS-VIDANGE D'ENTRAÎNEMENT DE TOURELLE	370
CANALISATIONS DU MOTEUR D'ORIENTATION	371
CANALISATIONS DE MOTEUR DE TRANSLATION	372
MOTEUR ET MONTAGE - BÂTI D'ORIENTATION (ASS)	378
MOTEUR DE TRANSLATION ET MONTAGE (ASS)	379
MOTEUR DE JOINT TOURNANT (ASS)	380
MOTEUR - TRANSLATION (ASS)	383
MONTAGE (ASS)-DISTRIBUTEUR PRINCIPAL	386
POMPE ET MONTAGE (ASS)	387
POMPE A ENGRENAGES (ASS)	389
POMPE A PISTONS (ASS)	390
ECRAN (ASS)	395
GROUPE D'ORIENTATION	396
RÉSERVOIR HYDRAULIQUE ET FILTRE (ASS)	397
RÉSERVOIR HYDRAULIQUE ET MONTAGE (ASS)	401
DISTRIBUTEUR ET MONTAGE (ASS)	402
SOUPAPE SPHÉRIQUE (ASS)	403
CLAPET DE RETENUE (ENS)	404
DISTRIBUTEUR (ASS)	405
SOUPAPE DE COMMANDE PRINCIPALE (ASS)	420
SOUPAPE PILOTE (ASS)	421
CLAPET DE DÉCHARGE PILOTE (ASS)	433
SOUPAPE RÉDUCTRICE DE PRESSION (ASS)	435
CLAPET DE DECHARGE (ASS)	436
VANNE PILOTE (ASS)	450
SOUPAPE - SOLÉNOÏDE (ASS)	452
SOUPAPE SOLENOIDE ET DE DECHARGE	458
DISTRIBUTEUR-AMORTISSEUR DE ROTATION	461
SOUPAPE D'EQUILIBRAGE DE TRANSLATION (ASS)	462
ÉQUIPEMENTS	463
FLECHE MONOBLOC (VERSION)	463
FLÈCHE MONOBLOC LONGUE (VERSION)	463
FLECHE (ASS)	464
CANALISATIONS DE GRAISSAGE (ASS)	470
TIMONERIE DU GODET (VERSION)	475
TRINGLERIE DE GODET (ASS)	476
PELLE RÉTRO - BRAS	480
BRAS (ASS)	482
BRAS DE PELLE RETRO (ASS)	488
OUTILS DE TRAVAIL	502
RÉGLAGE DE GODET (ASS)	502
GODET ET TENDEUR DE CHAÎNE (ASS)	504
GODET POUR CREUSAGE (ENS)	509
GODET EXTRA-ROBUSTE (ENS)	520
GODET ROCHE EXTRA-ROBUSTE (ENS)	521
GODET-PÉNÉTRATION (ENS)	525
GODET-ROCHE (ENS)	526
PROTECTEURS DE GODET (ASS)	528
PROTECTEUR DE LONGERON (ASS)	529
COUTEAUX LATÉRAUX (ASS)	530
POINTE (ASS)	532
POINTE ABRASION (ASS)	537
POINTE LONGUE (ASS)	539
POINTE PENETRATION	543
POINTE EFFILÉE (ASS)	545
POINTE COURTE (ASS)	546
POSTE DE CONDUITE	548
RÉGLAGE DE LA CONSOLE (ASS)	548
CLIMATISEUR ET MONTAGE (ASS)	550
CLIMATISEUR (ASS)	552
VENTILATEUR SOUFFLANT DE CABINE (ASS)	556
CABINE (ASS)	557
COMPRESSEUR DE REFRIGERANT (ASS)	568
CONDENSATEUR ET MONTAGE (RÉFRIGÉRANT)	569
CONSOLE DU TABLEAU DE BORD (ASS)	571
CONSOLE GAUCHE (ASS)	572
CONSOLE DE CONDUITE (ASS)	574
CONSOLE DROITE (ASS)	576
COUVERCLE DE BOÎTE DE RANGEMENT (ASS)	579
PORTIÈRE DE CABINE (ASS)	581
GAINE D'AIR (ASS)	583
TOIT OUVRANT (ASS)	584
APPUIE-TETE (ENS)	586
KLAXON ÉLECTRIQUE (ASS)	587
MONTAGE DE RADIO (ASS)	588
CANALISATIONS DE CLIMATISEUR (ASS)	590
RÉTROVISEUR (ASS)	594

TABLE DES MATIÈRES

Désignation	Page
ÉLECTROMODULE DE SURVEILLANCE (ASS)	595
POSTE DE CONDUITE (VERSION)	597
PLATE-FORME DE CABINE	598
CEINTURE DE SECURITE (ASS)	599
SIÈGE (ASS)	600
SUPPORT DE SIÈGE (ASS)	602
SIÈGE AVEC SUSPENSION (ASS)	603
RETROVISEUR - CABINE (ASS)	604
LAVE-GLACE - VITRE (ASS)	605
GLACE DE PORTIÈRE (ASS)	608
GLACE AV	610
ESSUIE-GLACE ET LAVE-GLACE	613
ESSUIE-GLACE (VERSION)	615
ESSUIE-GLACE (ASS)	616
MATÉRIEL ET FOURNITURES D'ENTRETIEN	617
PLAQUE SIGNALÉTIQUE (ASS)	617
PLAQUES SIGNALETIQUES ET AUTOCOLLANTS (ASS)	619
INDEX DE NUMÉROS DE PIÈCES	B1

CONTENIDO

Nombre	Página
INFORMACIÓN GENERAL	A25
ALTERNATIVAS DE REPARACIÓN	A39
ADITIVOS DE REFRIGERANTE SUPLEMENTARIOS	A44
PIEZAS DE MANTENIMIENTO	A62
INDICE	A88
CONFIGURACIÓN DE MÁQUINA	1
CHASIS (CONFIG)	1
CONFIGURACIÓN GENERAL	2
CONFIGURACIÓN DE MOTOR	4
CONFIGURACIÓN DE MOTORES	4
CONFIGURACIÓN DE INSTALACIÓN DEL MOTOR	9
MOTOR BÁSICO	10
ÁRBOL DE LEVAS (GR)	10
TAPA DEL MECANISMO DE VÁLVULAS (GR)	11
CIGÜEÑAL (GR)	12
BLOQUE MOTOR (GR)	13
CULATA DE CILINDROS (CONJ)	17
CULATA DE CILINDROS (GR)	21
VOLANTE (GR)	23
ENGRANAJE DELANTERO (GR)	24
VOLANTE - CAJA DE (GR)	25
CAJA DELANTERA (GR)	26
MONTAJE DEL ALTERNADOR (GR)	28
MONTAJE DEL MOTOR (GR)	29
MONTAJE DE MOTOR DE ARRANQUE (GR)	30
CÁRTER - COLECTOR DEL (GR)	31
PISTÓN Y BIELA (GR)	33
POLEA (GR)	34
MECANISMO DE VÁLVULAS (GR)	36
SISTEMA DE LUBRICACIÓN	38
RESPIRADERO (GR)	38
FILTRO DE ACEITE DEL MOTOR (GR)	39
TUBERÍAS DE ACEITE DEL MOTOR (GR)	41
TURBOCOMPRESOR - TUBERÍAS DE ACEITE DEL (GR)	42
SISTEMA DE ENFRIAMIENTO	43
ENFRIADOR DE ACEITE DEL MOTOR (GR)	43
CONFIGURACIÓN DE ENFRIAMIENTO	44
SUCCIÓN - VENTILADOR DE (GR)	45
TUBERÍAS DEL AGUA (GR)	47
BOMBA DE AGUA (GR)	49
RADIADOR Y ENFRIADOR DE ACEITE HIDRÁULICO (GR)	50
SISTEMA DE ADMISION Y ESCAPE DE AIRE	54
LIMPIADOR DE AIRE (CONFIG)	54
FILTRO DE AIRE (GR)	55
NÚCLEO DEL TURBOCOMPRESOR (CONJ)	59
AIRE - TUBERÍAS DE (GR)	60
TUBERIAS DE AIRE DE ENFRIAMIENTO (GR)	61
TUBERIAS DE DRENAJE DEL SILENCIADOR (GR)	63
MÚLTIPLE DE ESCAPE (GR)	65
MÚLTIPLE DE ADMISIÓN (GR)	67
MONTAJE DEL FILTRO DE AIRE (GR)	68
SILENCIADOR (GR)	69
TURBOCOMPRESOR (GR)	70
SISTEMA DE COMBUSTIBLE	71
FILTRO DE COMBUSTIBLE (GR)	71
TUBERÍAS DE COMBUSTIBLE (GR)	73
TOBERA DEL INYECTOR (GR)	78
BOMBA DE INYECCIÓN DE COMBUSTIBLE (GR)	80
SEPARADOR DE AGUA (GR)	87
TANQUE DE COMBUSTIBLE Y GRUPO DE MONTAJE	90
COMBUSTIBLE - TANQUE DE (GR)	91
SISTEMA ELÉCTRICO Y DE ARRANQUE	93
ALARMA (GR)	93
ALARMA DE DESPLAZAMIENTO (GR)	94
CARGA - ALTERNADOR DE (GR)	95
BATERÍA Y CABLES (GR)	97
CONTROL DE IMPLEMENTOS Y MONTAJE (GR)	109
CONTROL DE MAQUINA Y MONTAJE (GR)	111
CONTROL ELECTRÓNICO DEL MOTOR (GR)	112
CONTROL DE INTERRUPTOR (GR)	114
GRUPO ELECTRONICO DE CLASIFICACION DE MOTORES	115
IMPLEMENTOS (GR ELECTRÓNICO)	115
ELECTRONICA DE MONITOR (GR)	115
REFLECTOR (GR)	116
LUCES DE LA PLUMA	122
LUCES DEL CHASÍS (GR)	125
LUCES DE REFLECTOR (GR)	126
PANEL DE DISYUNTORES (GR)	128

CONTENIDO

Nombre	Página
MOTOR DE ARRANQUE ELÉCTRICO (GR)	132
DISYUNTOR (GR)	133
ARRANQUE - INTERRUPTOR DE (GR)	135
CABLES DE LA CABINA (GR)	136
CABLES DE LA CONSOLA (GR)	142
ALAMBRADO DE CONVERTIDOR (GR)	146
CABLES DEL MARTILLO (GR)	148
GRUPO DE CABLE, ESCOBILLAS DE VENTANAS	150
TREN DE FUERZA	151
MANDO FINAL (GR)	151
TREN DE FUERZA (CONFIG)	154
RUEDA MOTRIZ (GR)	155
BASTIDOR Y CARROCERIA	156
CAJA DE ALMACENAMIENTO Y MONTAJE (GR)	156
CAJA DE ALMACENAMIENTO	157
PARACHOQUES (GR)	159
CONTRAPESO (GR)	160
TAPA DEL CAPO (GR)	162
PUERTA DE ACCESO (GR)	163
GUARDABARROS Y CUBIERTA (GR)	166
BASTIDOR SUPERIOR (GR)	167
ENGRANAJE DE ROTACIÓN Y COJINETE (GR)	169
PROTECTOR INFERIOR (CONFIG)	171
PROTECTOR INFERIOR (GR)	172
PROTECTOR DE LA PLATAFORMA (GR)	175
PROTECTOR DE LA UNIÓN GIRATORIA (GR)	176
PASAMANOS (GR)	177
CAPO Y PROTECTOR (GR)	178
CAPÓ (GR)	184
CAPÓ DEL MOTOR (GR)	185
TREN DE RODAJE	188
BASTIDOR DEL TREN DE RODAJE (CONFIG)	188
PROTECTOR GUÍA DE CADENA (GR)	189
PROTECTOR DEL MOTOR DE DESPLAZAMIENTO (GR)	192
RUEDA GUÍA DELANTERA (GR)	194
ESLABÓN DE CADENA (CONJ)	198
RODILLO SUPERIOR (CONFIG)	200
RODILLO SUPERIOR DE CADENAS (GR)	202
RODILLOS DE PESTAÑA SIMPLE (GR)	203
RESORTE TENSOR Y AJUSTADOR DE LA CADENA (GR)	204
CADENAS (GR)	208
SISTEMA HIDRÁULICO	215
ACUMULADOR HIDRAULICO (GR)	215
FILTRO DE ACEITE - BASE DEL (GR)	216
PALANCA UNIVERSAL-CONTROL Y MONTAJE (GR)	217
CONTROL AUXILIAR (CONFIG)	218
CONTROL DE MANIJA (GR)	219
GRUPO DE CONTROL DE PEDAL HIDRÁULICO	220
PALANCA UNIVERSAL DE CONTROL (GR)	222
ACOPLAMIENTO FLEXIBLE (GR)	228
ACOPLAMIENTO DE BOMBA (GR)	229
CILINDRO DE LA PLUMA Y TUBERÍAS (GR)	230
CILINDRO DEL CUCHARÓN Y TUBERÍAS (GR)	230
CILINDRO DEL BRAZO Y TUBERÍAS (GR)	231
CILINDRO DE LA PLUMA Y SELLO (GR)	232
CILINDRO DEL CUCHARÓN Y SELLO (GR)	233
CILINDRO DEL BRAZO Y SELLO (GR)	235
CILINDRO DE LA PLUMA (GR)	237
CILINDRO DE CUCHARÓN (GR)	239
CILINDRO DEL BRAZO (GR)	243
MANDO DE BOMBA AUXILIAR (GR)	247
MANDO DE BOMBA (GR)	249
MANDO DE ROTACIÓN (GR)	250
SUJETADORES DEL ROTADOR Y DEL MANDO FINAL (GR)	253
GRUPO DE FILTRO Y VÁLVULA, PILOTO	255
FILTRO DE ACEITE (GR)	256
CONEXIÓN (GR)	261
CABEZA DE BOMBA (GR)	262
HIDRÁULICA (CONFIG)	270
PALANCA, CONTROL (GR)	271
TUBERÍAS HIDRÁULICAS AUXILIARES (CONFIG)	275
TUBERÍAS HIDRÁULICAS AUXILIARES (GR)	277
TUBERÍAS DE LA PLUMA (GR)	301
CILINDRO DE LA PLUMA - TUBERÍAS DEL	305
GRUPO DE TUBERIAS-DRENAJE DE LA PLUMA	307
TUBERÍAS DEL CILINDRO DEL CUCHARÓN (GR)	311
TUBERÍAS DELANTERAS (GR)	314

CONTENIDO

Nombre	Página
TUBERÍAS CON SERVOMANDO (GR)	327
BOMBA - TUBERÍAS DE (GR)	351
TUBERÍAS DEL FILTRO Y DE RETORNO (GR)	358
TUBERÍAS DEL BRAZO (GR)	360
TUBERÍAS DEL CILINDRO DEL BRAZO (GR)	364
GRUPO DE TUBERIAS-DRENAJE	366
TUBERIAS DE DRENAJE DE MANDO DE ROTACION (GR)	370
TUBERÍAS DEL MOTOR DE ROTACIÓN (GR)	371
TUBERÍAS DEL MOTOR DE DESPLAZAMIENTO (GR)	372
MOTOR Y MONTAJE DE ROTACIÓN (GR)	378
MOTOR DE DESPLAZAMIENTO Y MONTAJE (GR)	379
MOTOR DE LA ROTACIÓN (GR)	380
MOTOR DE DESPLAZAMIENTO (GR)	383
MONTAJE DE VALVULA DE CONTROL PRINCIPAL (GR)	386
BOMBA Y MONTAJE (GR)	387
BOMBA DE ENGRANAJES (GR)	389
BOMBA DE PISTONES (GR)	390
REJILLA (GR)	395
UNIÓN GIRATORIA (GR)	396
TANQUE Y FILTRO HIDRÁULICOS (GR)	397
TANQUE HIDRÁULICO Y MONTAJE (GR)	401
VÁLVULA DE CONTROL Y MONTAJE (GR)	402
BOLA DE VÁLVULA (GR)	403
VÁLVULA DE RETENCIÓN (GR)	404
VÁLVULA DE CONTROL (GR)	405
VÁLVULA DEL CONTROL PRINCIPAL (GR)	420
VÁLVULA PILOTO (GR)	421
VÁLVULA PILOTO DE ALIVIO (GR)	433
VÁLVULA REDUCTORA DE PRESIÓN (GR)	435
VÁLVULA DE ALIVIO (GR)	436
VÁLVULA DE LANZADERA (GR)	450
VÁLVULA DE SOLENOIDE (GR)	452
VÁLVULA DE ALIVIO Y SOLENOIDE (GR)	458
VALVULA AMORTIGUADORA DE ROTACION (GR)	461
VALV. COMPENSADORA DE EQUILIBRIO DE DESPLAZAMIENTO (GR)	462
IMPLEMENTOS	463
PLUMA DE UNA PIEZA (CONFIG)	463
PLUMA LARGA DE 1 PIEZA (CONFIG)	463
PLUMA (GR)	464
TUBERÍAS DE ENGRASE (GR)	470
VARILLAJE DEL CUCHARÓN (CONFIG)	475
VARILLAJE DEL CUCHARÓN (GR)	476
BRAZO DE RETROEXCAVADOR (CONFIG)	480
GRUPO ACCESORIO DE BRAZO	482
BRAZO DE RETROEXCAVADOR (GR)	488
HERRAMIENTAS	502
AJUSTADOR DEL CUCHARÓN (GR)	502
CUCHARÓN Y AJUSTADOR (GR)	504
CUCHARÓN PARA EXCAVACIÓN (CONJ)	509
CUCHARON DE SERVICIO PESADO (CONJ)	520
CUCHARON PARA ROCAS DE SERVICIO PESADO (CONJ)	521
CUCHARON PARA PENETRACIÓN (CONJ)	525
CUCHARÓN PARA ROCA (CONJ)	526
PROTECTOR DEL CUCHARÓN (GR)	528
GRUPO DE PROTECTOR DE BARRA LATERAL	529
OREJETAS (GR)	530
PUNTA (GR)	532
PUNTA RESISTENTE A LA ABRASIÓN (GR)	537
PUNTA LARGA (GR)	539
PUNTA PARA PENETRACIÓN (GR)	543
PUNTA AFILADA (GR)	545
PUNTA CORTA (GR)	546
COMPARTIMIENTO DEL OPERADOR	548
AJUSTE DE CONSOLA (GR)	548
ACONDICIONADOR DE AIRE Y MONTAJE (GR)	550
ACONDICIONADOR DE AIRE (GR)	552
VENTILADOR SOPLADOR DE LA CABINA (GR)	556
CABINA (GR)	557
COMPRESOR DE REFRIGERANTE (GR)	568
CONDENSADOR DEL REFRIGERANTE Y MONTAJE (GR)	569
CONSOLA DE INSTRUMENTOS (GR)	571
CONSOLA DEL LADO IZQUIERDO (GR)	572
CONSOLA DEL OPERADOR (GR)	574
CONSOLA DEL LADO DERECHO (GR)	576
TAPA DE COMPARTIMIENTO DE ALMACENAMIENTO (GR)	579
PUERTA DE CABINA	581

CONTENIDO

Nombre	Página	Nombre	Página
CONDUCTO DE AIRE (GR)	583		
COMPUERTA DE TECHO (GR)	584		
APOYACABEZA (CONJ)	586		
BOCINA ELÉCTRICA (GR)	587		
INSTALACIÓN DE RADIO (GR)	588		
TUBERÍAS DE ACONDICIONADOR DE AIRE (GR)	590		
RETROVISOR (GR)	594		
CONTROL ELECTRÓNICO DEL OPERADOR (GR)	595		
COMPARTIMIENTO DEL OPERADOR (CONFIG)	597		
PLATAFORMA DE LA CABINA	598		
CINTURÓN DE SEGURIDAD (GR)	599		
ASIENTO (GR)	600		
SOPORTE DEL ASIENTO (GR)	602		
ASIENTO CON SUSPENSIÓN (GR)	603		
VISERA (GR)	604		
LAVAPARABRISAS DE LA VENTANA (GR)	605		
VENTANA DE LA PUERTA (GR)	608		
VENTANA DELANTERA	610		
LIMPIA Y LAVAPARABRISAS (GR)	613		
LIMPIAPARABRISAS (CONFIG)	615		
LIMPIAPARABRISAS DE LA VENTANA (GR)	616		
HERRAMIENTAS Y EQUIPO DE SERVICIO	617		
ETIQUETA DE ADVERTENCIA (GR)	617		
CALCOMANÍAS Y PLACAS DE IDENTIFICACIÓN (GR)	619		
INDICE DE NUMEROS DE PIEZA	B1		

ÍNDICE

Designação	Página
INFORMAÇÃO GERAL	A29
ALTERNATIVAS DE REPARO	A40
ADITIVOS SUPLEMENTARES DO LÍQUIDO ARREFECEDOR	A45
NOMENCLATURA DE PEÇAS INGLÊS-PORTUGUÊS	A47
PEÇAS DE MANUTENÇÃO	A66
ÍNDICE	A96
MÁQUINA - ARRANJO	1
CHASSI	1
ARRANJO GERAL	2
MOTOR - ARRANJO	4
MOTOR	4
GRUPO DE INSTALAÇÃO - MOTOR	9
MOTOR BÁSICO	10
EIXO-COMANDO DE VÁLVULA	10
TAMPA - MECANISMO DAS VÁLVULAS	11
VIRABREQUIM	12
BLOCO DO MOTOR	13
CABEÇOTE DO MOTOR	17
VOLANTE DO MOTOR	23
ENGRENAGENS DE DISTRIBUIÇÃO	24
CAIXA DO VOLANTE DO MOTOR	25
CAIXA DIANTEIRA	26
MONTAGEM - ALTERNADOR	28
MONTAGEM - MOTOR	29
MONTAGEM - MOTOR DE ARRANQUE	30
CÁRTER DO ÓLEO DO MOTOR	31
PISTÃO E BIELA	33
POLIA	34
MECANISMO DAS VÁLVULAS	36
SISTEMA DE LUBRIFICAÇÃO	38
RESPIRO	38
FILTRO - ÓLEO DO MOTOR	39
TUBOS - ÓLEO DO MOTOR	41
TUBOS - ÓLEO DO TURBOALIMENTADOR	42
SISTEMA DE ARREFECIMENTO	43
ARREFECEDOR - ÓLEO DO MOTOR	43
ARREFECIMENTO	44
VENTILADOR DE SUCÇÃO	45
TUBOS - ÁGUA	47
BOMBA DE ÁGUA	49
RADIADOR E ARREFECEDOR DO ÓLEO HIDRÁULICO	50
SISTEMA DA ADMISSÃO DE AR E DE ESCAPE	54
PURIFICADOR DE AR	54
CARTUCHO - TURBOALIMENTADOR	59
TUBOS - AR	60
TUBOS - AR DE ARREFECIMENTO	61
TUBOS DE DRENAGEM DO SILENCIADOR	63
COLETOR DE ESCAPE	65
COLETOR DE ADMISSÃO	67
MONTAGEM - PURIFICADOR DE AR	68
SILENCIADOR	69
TURBOALIMENTADOR	70
SISTEMA DE COMBUSTÍVEL	71
FILTRO - COMBUSTÍVEL	71
TUBOS - COMBUSTÍVEL	73
BICO DA UNIDADE INJETORA	78
BOMBA DE INJEÇÃO DO COMBUSTÍVEL	80
SEPARADOR DE ÁGUA	87
TANQUE DE COMBUSTÍVEL E MONTAGEM	90
TANQUE DE COMBUSTÍVEL	91
SISTEMA ELÉTRICO E DE PARTIDA	93
ALARME	93
ALARME DE PERCURSO	94
ALTERNADOR DE CORRENTE	95
BATERIA E CABOS / FIOS ELÉTRICOS	97
CONTROLE DO ACESSÓRIO E MONTAGEM	109
CONTROLE & MONTAGEM-MÁQUINA	111
CONTROLE ELETRÔNICO - MOTOR	112
INTERRUPTOR - CONTROLE ELETRÔNICO	114
SISTEMA ELETRÔNICO - CLASSIFICAÇÕES DO MOTOR	115
SIST. ELETRÔNICO - ACESSÓRIO	115
SISTEMA ELETRÔNICO - MONITOR	115
LÂMPADA - FAROL	116
SISTEMA DE ILUMINAÇÃO - LANÇA	122
ILUMINAÇÃO - CHASSI	125
SISTEMA DE ILUMINAÇÃO - FARÓIS	126
PAINEL - DISJUNTOR ELÉTRICO AUTOMÁTICO	128
MOTOR ELÉTRICO DE PARTIDA	132
CHAVE GERAL	133
INTERRUPTOR - PARTIDA	135
CABOS/FIOS ELÉTRICOS - CABINE	136

ÍNDICE

Designação	Página
CABOS/FIOS ELÉTRICOS DO CONSOLE	142
CABOS/FIOS ELÉTRICOS - CONVERSOR	146
CABOS/FIOS ELÉTRICOS - APLICAÇÕES PESADAS DE LEVANTAMENTO	148
FIAÇÃO - LIMPADOR DE VIDROS	150
TREM DE FORÇA	151
COMANDO FINAL	151
TREM DE FORÇA	154
RODA MOTRIZ	155
CHASSI E CARROCERIA	156
CAIXA PARA ARMAZENAMENTO E MONTAGEM	156
CAIXA DE ARMAZENAMENTO	157
PÁRA-CHOQUE	159
CONTRAPESO	160
TAMPA DO CAPÔ	162
PORTA DE ACESSO	163
PÁRA-LAMA E TAMPA	166
CHASSI SUPERIOR	167
ENGRENAGEM E MANCAL DE GIRO	169
PROTETOR - INFERIOR	171
PROTETOR INFERIOR	172
PROTETOR - PLATAFORMA	175
PROTETOR - ARTICULAÇÃO GIRATÓRIA	176
PEGA-MÃO	177
CAPÔ E PROTETOR	178
CAPÔ	184
CAPÔ DO MOTOR	185
MATERIAL RODANTE	188
CHASSI - MATERIAL RODANTE	188
PROTETOR - GUIA DOS ROLETES DAS ESTEIRAS	189
PROTETOR - MOTOR DAS ESTEIRAS	192
RODA-GUIA DIANTEIRA	194
ELO DA ESTEIRA	198
ROLETE SUPERIOR E INFERIOR DAS ESTEIRAS	200
ROLETE SUPERIOR DA ESTEIRA	202
ROLETE DE ESTEIRA DE FLANGE SIMPLES	203
AJUSTADOR DE ESTEIRAS E MOLA TENSORA	204
ESTEIRA	208
SISTEMA HIDRÁULICO	215
ACUMULADOR HIDRÁULICO	215
BASE DO FILTRO DE ÓLEO	216
ALAVANCA DE CONTROLE E MONTAGEM	217
CONTROLE HIDRÁULICO AUXILIAR	218
CONTROLE-CABO	219
CONTROLE - PEDAL HIDRÁULICO	220
CONTROLE - ALAVANCA	222
ACOPLAMENTO FLEXÍVEL	228
ACOPLAMENTO DA BOMBA	229
CILINDRO E TUBOS - LANÇA	230
CILINDRO E TUBOS - CAÇAMBA	230
CILINDRO E TUBOS - BRAÇO	231
CILINDRO E RETENTOR - LANÇA	232
CILINDRO E RETENTOR - CAÇAMBA	233
CILINDRO E RETENTOR - BRAÇO	235
CILINDRO DA LANÇA	237
CILINDRO DA CAÇAMBA	239
CILINDRO DO BRAÇO	243
COMANDO AUXILIAR DA BOMBA	247
COMANDO DA BOMBA	249
COMANDO DE GIRO	250
FIXADORES - GIRO E COMANDO FINAL	253
FILTRO E VÁLVULA - PILOTO	255
FILTRO - ÓLEO	256
CONEXÃO	261
CABEÇA DA BOMBA	262
COMANDO HIDRÁULICO	270
ALAVANCA - CONTROLE	271
TUBOS HIDRÁULICOS AUXILIARES	275
TUBOS - LANÇA	301
TUBOS - CILINDRO DA LANÇA	305
ARTICULAÇÕES - DRENO DA LANÇA	307
TUBOS - CILINDRO DA CAÇAMBA	311
TUBOS - DIANTEIROS	314
TUBOS - CIRCUITO PILOTO	327
TUBOS - BOMBA	351
TUBOS DE RETORNO E DO FILTRO	358
TUBOS - BRAÇO	360
TUBOS - CILINDRO DO BRAÇO	364
TUBULAÇÕES - DRENO DA HASTE	366
TUBOS - DRENAGEM DO COMANDO DE GIRO	370
TUBOS - MOTOR DE GIRO	371
TUBOS - MOTOR DAS ESTEIRAS	372
MOTOR DE GIRO E MONTAGEM	378
MOTOR DE PERCURSO E MONTAGEM	379
MOTOR - GIRO	380
MOTOR DAS ESTEIRAS	383
MONTAGEM-VÁLVULA DE CONTROLE PRINCIPAL	386
BOMBA E MONTAGEM	387
BOMBA DE ENGRENAGENS	389
BOMBA DE PISTÃO	390
TELA FILTRANTE	395
ARTICULAÇÃO GIRATÓRIA	396
TANQUE HIDRÁULICO E FILTRO	397

ÍNDICE

Designação	Página
TANQUE DE ÓLEO HIDRÁULICO E MONTAGEM	401
VÁLVULA DE CONTROLE E MONTAGEM	402
VÁLVULA ESFÉRICA	403
VÁLVULA DE RETENÇÃO	404
VÁLVULA DE CONTROLE	405
VÁLVULA - CONTROLE PRINCIPAL	420
VÁLVULA DE CONTROLE PILOTO	421
VÁLVULA PILOTO DE ALÍVIO	433
VÁLVULA DE REDUÇÃO DE PRESSÃO	435
VÁLVULA DE ALÍVIO	436
VÁLVULA DE SEPARAÇÃO	450
VÁLVULA SOLENÓIDE	452
VÁLVULA SOLENÓIDE DE ALÍVIO	458
VÁLVULA-ESTOFAMENTO DE GIRO	461
VÁLVULA-CONTRAPESO DE PERCURSO	462
ACESSÓRIOS	463
LANÇA DE UMA PEÇA	463
LANÇA DE UMA PEÇA - COMPRIDA	463
LANÇA	464
TUBOS - GRAXA	470
ELOS DE ARTICULAÇÃO DA CAÇAMBA	475
BRAÇO - CAÇAMBA RETRO-ESCAVADORA	480
BRAÇO	482
BRAÇO - CAÇAMBA RETRO-ESCAVADORA	488
FERRAMENTAS DE TRABALHO	502
AJUSTADOR DA CAÇAMBA	502
CAÇAMBA E AJUSTADOR	504
CAÇAMBA PARA EXCAVAÇÃO	509
CAÇAMBA - SERVIÇO PESADO	520
CAÇAMBA - SERVIÇOS PESADOS PARA ROCHAS	521
CAÇAMBA PARA PENETRAÇÃO	525
CAÇAMBA PARA ROCHAS	526
PROTETOR DA CAÇAMBA	528
PROTETOR - BARRA LATERAL	529
CORTADOR LATERAL	530
PONTA	532
PONTA - ABRASÃO	537
PONTA LONGA	539
PONTA - PENETRAÇÃO	543
PONTA AFIADA	545
PONTA CURTA	546
POSTO DO OPERADOR	548
AJUSTE - CONSOLE	548
CONDICIONADOR DE AR E MONTAGEM	550
CONDICIONADOR DE AR	552
VENTILADOR DA CABINE	556
CABINE	557
COMPRESSOR DE REFRIGERANTE	568
CONDENSADOR DO REFRIGERANTE E MONTAGEM	569
CONSOLE DE INSTRUMENTOS	571
CONSOLE - LADO ESQUERDO	572
CONSOLE DO OPERADOR	574
CONSOLE - LADO DIREITO	576
TAMPA - ARMÁRIO	579
PORTA DA CABINE	581
DUCTO DE AR	583
ALÇAPÃO DO TETO	584
ENCOSTO PARA CABEÇA	586
BUZINA ELÉTRICA	587
INSTALAÇÃO DO RÁDIO	588
TUBOS - AR CONDICIONADO	590
ESPELHO RETROVISOR	594
MONITOR DO OPERADOR	595
CABINE	597
PLATAFORMA DO OPERADOR	598
CINTO DE SEGURANÇA	599
ASSENTO	600
SUPORTE - ASSENTO	602
SUSPENSÃO - ASSENTO	603
PÁRA-SOL DA CABINE	604
LAVADOR DO VIDRO	605
VIDRO DA PORTA	608
VIDRO DIANTEIRO	610
LIMPADOR E LAVADOR - JANELA	613
LIMPADOR DO VIDRO	615
EQUIPAMENTOS DE SERVIÇO E SUPRIMENTOS	617
DECALQUE	617
PLACA E DECALQUE	619
ÍNDICE DE NÚMERO DE PEÇA	B1

INHALTSVERZEICHNIS

Bezeichnung	Seite
ALLGEMEINE HINWEISE	A33
REPARATURALTERNATIVEN	A41
KÜHLMITTELZUSATZ	A46
WARTUNGSTEILE	A70
STICHWORTVERZEICHNIS	A103
MASCHINE	1
FAHRWERK	1
GRUNDAUSFÜHRUNG	2
MOTORAUSFÜHRUNG	4
MOTORAUSFÜHRUNG	4
MOTOR-EINBAUSATZ	9
MOTOR (GRUNDAUSFÜHRUNG)	10
NOCKENWELLE	10
VENTILDECKEL	11
KURBELWELLE	12
MOTORBLOCK	13
ZYLINDERKOPF	17
SCHWUNGRAD	23
STIRNRAD	24
SCHWUNGRADGEHÄUSE	25
STIRNRADGEHÄUSE	26
DREHSTROMGENERATOR - BEFESTIGUNG	28
MOTORAUFLAGER	29
STARTERMOTORAUFHÄNGUNG	30
ÖLWANNE	31
PLEUELSTANGE UND KOLBEN	33
RIEMENSCHEIBE	34
VENTILSTEUERUNG	36
SCHMIERSYSTEM	38
ENTLÜFTER	38
ÖLFILTER	39
MOTORÖLLEITUNGEN	41
TURBOLADERÖLLEITUNGEN	42
KÜHLSYSTEM	43
MOTORÖLKÜHLER	43
KÜHLSYSTEM	44
SAUGLÜFTER	45
KÜHLWASSERLEITUNGEN	47
KÜHLWASSERPUMPE	49
KÜHLER UND HYDRAULIKÖLKÜHLER	50
LUFTANSAUG - U. ABGASSYSTEM	54
LUFTREINIGER	54
TURBOLADEREINSATZ	59
DRUCKLUFTLEITUNGEN	60
KÜHLLUFTLEITUNGEN	61
SCHDÄMPFERABLASSLEITUNGEN	63
AUSPUFFKRÜMMER	65
ANSAUGKRÜMMER	67
LUFTREINIGER-ANBAUSATZ	68
SCHALLDÄMPFER	69
TURBOLADER	70
KRAFTSTOFFSYSTEM	71
KRAFTSTOFFILTER	71
KRAFTSTOFFLEITUNGEN	73
DÜSE - PUMPENDÜSE	78
KRAFTSTOFFEINSPRITZPUMPE	80
WASSERABSCHEIDER	87
KRAFTSTOFFTANK U. BEFESTIGUNG	90
KRAFTSTOFFTANK	91
ELEKTRISCHE ANLAGE U. STARTSYSTEM	93
WARNVORRICHTUNG	93
FAHRALARM	94
DREHSTROMGENERATOR	95
BATTERIE UND VERDRAHTUNG	97
ARBEITSGERÄTEHEBEL UND BEFESTIGUNGSTEILE	109
MASCHINENSTEUERUNG U. BEFESTIGUNG	111
MOTORSTEUERUNG, ELEKTRON.	112
SCHALTERSTEUERUNG	114
ELEKTRONIK - MOTORNENNLEISTUNG	115
ARBEITSGERÄTEELEKTRONIK	115
ELEKTRONIK - MONITOR	115
ARBEITSLEUCHTEN	116
AUSLEGERBELEUCHTUNG	122
FAHRWERKBELEUCHTUNG	125
ARBEITSLEUCHTEN	126
UNTERBRECHER - INSTRUMENTENTAFEL	128
STARTERMOTOR	132
TRENNSCHALTER	133
STARTSCHALTER	135
FAHRERHAUSVERDRAHTUNG	136
KONSOLENVERDRAHTUNG	142
UMFORMERVERDRAHTUNG	146
HYDRAULIKHAMMERVERDRAHTUNG	148
SCHEIBENWISCHERVERDRAHTUNG	150
KRAFTÜBERTRAGUNG	151
SEITENANTRIEB	151
KRAFTÜBERTRAGUNG	154

INHALTSVERZEICHNIS

Bezeichnung	Seite
ANTRIEBSRAD	155
FAHRGESTELL U. OBERWAGEN	156
AUFBEWAHRUNGSKASTEN U. BEFESTIGUNG	156
VERSTAUKASTEN	157
STOSSSTANGE	159
GEGENGEWICHT	160
MOTORHAUBENVERKLEIDUNG	162
ZUGANGSKLAPPE	163
SCHUTZBLECH UND DECKEL	166
OBERWAGENRAHMEN	167
SCHWENKGETRIEBELAGER	169
PANZERWANNE	171
FAHRERPLATTFORMVERKLEIDUNG	175
SCHWENKVERKLEIDUNG	176
HALTEGRIFF	177
MOTORHAUBE UND VERKLEIDUNG	178
MOTORHAUBE	184
UNTERWAGEN	188
LAUFWERKSRAHMEN	188
KETTENFÜHRUNGSSCHUTZ	189
FAHRMOTORSCHUTZ	192
LEITRAD, VORN	194
KETTENGLIEDER	198
TRAGROLLE	200
EINZELFLANSCHROLLEN	203
KETTENSPANNER UND -FEDERRÜCKLAUF	204
LAUFWERKSKETTE	208
HYDRAULIKSYSTEM	215
HYDRAULIKDRUCKSPEICHER	215
ÖLFILTERSOCKEL	216
JOYSTICKSTEUERUNG U. BEFESTIGUNG	217
ZUSATZSTEUERUNG	218
STEUERHEBEL	219
HYDRAULIKPEDALSTEUERUNG	220
JOYSTICK -STEUERUNG	222
ANSCHLUSS, ELAST.	228
PUMPENANSCHLUSS	229
AUSLEGERZYLINDER U. LEITUNGEN	230
LÖFFELZYLINDER U. LEITUNGEN	230
STIELZYLINDER UND LEITUNGEN	231
AUSLEGERZYLINDER UND DICHTUNG	232
LÖFFELZYLINDER UND DICHTUNG	233
STIELZYLINDER UND DICHTUNG	235
AUSLEGERZYLINDER	237
LÖFFELZYLINDER	239
LÖFFELSTIELZYLINDER	243
ZUSATZPUMPENANTRIEB	247
PUMPENANTRIEB	249
SCHWENKANTRIEB	250
DREHWERK- UND FAHRANTRIEB-HALTETEILE	253
FILTER U. VENTIL - VORSTEUERUNG	255
ÖLFILTER	256
FITTING	261
PUMPENKOPF	262
HYDRAULIKSYSTEM	270
STEUERHEBEL	271
ZUSATZHYDRAULIKLEITUNGEN	275
AUSLEGERLEITUNGEN	301
AUSLEGERZYLINDERLEITUNGEN	305
AUSLEGERABLASSLEITUNGEN	307
LÖFFELZYLINDERLEITUNGEN	311
LEITUNGEN, VORNE	314
VORSTEUERLEITUNGEN	327
HYDRAULIKPUMPE UND LEITUNGEN	351
RÜCKLAUF- UND FILTERLEITUNGEN	358
STIELZYLINDERLEITUNGEN	360
STIELABLASSLEITUNGEN	366
DREHWERKSABLAUFLEITUNGEN	370
SCHWENKMOTORLEITUNGEN	371
FAHRMOTORLEITUNGEN	372
SCHWENKMOTOR U. BEFESTIGUNGSTEILE	378
FAHRMOTOR U. BEFESTIGUNGSTEILE	379
DREHWERKMOTOR	380
FAHRMOTOR	383
HAUPTSTEUERVENTILBEFESTIGUNG	386
PUMPE UND BEFESTIGUNGSTEILE	387
ZAHNRADPUMPE	389
KOLBENPUMPE	390
FILTERSIEB	395
SCHWENKBLOCK	396
HYDRAULIKTANK UND SCHMIERFILTER	397
HYDRAULIKTANK UND BEFESTIGUNGSTEILE	401
STEUERVENTIL UND BEFESTIGUNGSTEILE	402
KUGELVENTIL	403
SPERRVENTIL	404
STEUERVENTIL	405
HAUPTSTEUERVENTIL	420
VORSTEUERVENTIL	421
VORSTEUERÜBERDRUCKVENTIL	433
DRUCKREDUZIERVENTIL	435
ÜBERDRUCKVENTIL	436
PENDELVENTIL	450
MAGNETVENTIL	452
MAGNET- UND ÜBERDRUCKVENTIL	458
SCHWENKDÄMPFUNGSVENTIL	461

INHALTSVERZEICHNIS

Bezeichnung	Seite
FAHRAUSGLEICHSVENTIL	462
ARBEITSGERÄTE	463
AUSLEGER, EINTEILIG	463
AUSLEGER, EINTEILIG (LANG)	463
AUSLEGER	464
SCHMIERLEITUNGEN	470
LÖFFELGESTÄNGE	475
LÖFFELSTIEL	480
STIEL	482
LÖFFELSTIEL	488
ARBEITSGERÄTE	502
ARBEITSGERÄTEEINSTELLER	502
LÖFFEL UND -EINSTELLER	504
AUSHUBLÖFFEL	509
HD-LÖFFEL	520
HD-FELSLÖFFEL	521
ERDBAUSCHAUFEL	525
FELSLÖFFEL	526
KANTENSCHUTZ	528
SEITENSCHNEIDENSCHUTZ	529
SEITENMESSER	530
ZAHNSPITZE	532
ZAHNSPITZE, VERSTÄRKT	537
ZAHNSPITZE, LANG	539
ZAHNSPITZE, SCHARF	543
ZAHNSPITZE (SCHARF)	545
ZAHNSPITZE, KURZ	546
FAHRERHAUS	548
KONSOLENEINSTELLER	548
KLIMAANLAGE UND AUFHÄNGUNG	550
KLIMAANLAGE	552
FAHRERHAUS-DRUCKLÜFTER	556
FAHRERHAUS	557
KÄLTEMITTELKOMPRESSOR	568
KÄLTEMITTELKONDENSATOR U. BEFESTIGUNGSTEILE	569
INSTRUMENTENTAFEL	571
KONSOLE, LINKS	572
STEUERKONSOLE	574
KONSOLE, RECHTS	576
STAUKASTENDECKEL	579
FAHRERHAUSTÜR	581
LUFTKANAL	583
DACHLUKE	584
KOPFSTÜTZE	586
WARNHORN, ELEKTR.	587
RADIOEINBAUSATZ	588
KLIMAANLAGENLEITUNGEN	590
RÜCKSPIEGEL	594
ELEKTR. ÜBERWACHUNGSSYSTEM	595
FAHRERHAUSAUSRÜSTUNG	597
FAHRERPLATTFORM	598
SICHERHEITSGURT	599
FAHRERSITZ	600
SITZUNTERBAU	602
FAHRERSITZFEDERUNG	603
FAHRERHAUS, SONNENBLENDE	604
SCHEIBENWASCHANLAGE	605
TÜRFENSTER	608
FENSTER, VORNE	610
SCHEIBENWISCHER UND -WASCHANLAGE	613
SCHEIBENWISCHER	615
WARTUNGSAUSRÜSTUNG	617
AUFKLEBER	617
SCHILD UND AUFKLEBER	619
ERSATZTEILNUMMERNINDEX	B1

GENERAL INFORMATION

1. MACHINE IDENTIFICATION

Caterpillar machines are identified by Product Identification Numbers (PIN). Some components included in a machine may be identified by Serial Numbers (S/N). Typical components that will be serialized include engines, transmissions, bulldozers, and rippers. The machine and engine are further identified by arrangement numbers and in some cases modification numbers. These numbers are shown on the product identification plate(s) and on the master plate in the operator's compartment.

Caterpillar dealers need all of these numbers to determine accurate parts identification.

SIS ***New Feature***

Effective First Quarter 2001 the Caterpillar Product Identification Number (PIN) changed from 8 to 17 characters. In an effort to provide uniform equipment identification, Caterpillar and other construction equipment manufacturers are moving to comply with the latest version of the product identification numbering standard. Non-road machine PINs are defined by ISO 10261. The new PIN format will apply to all Caterpillar machines and generator sets. The PIN plates and frame marking will display the 17 character PIN. The new format will look like the following:

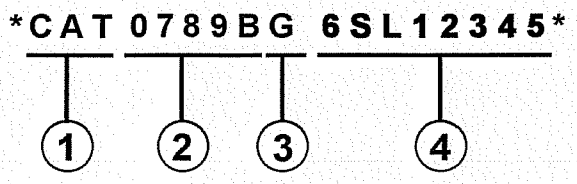

Where:

1. Caterpillar's World Manufacturing Code (characters 1-3)

2. Machine Descriptor (characters 4-8)

3. Check Character (character 9)

4. Machine Indicator Section (MIS) or Product Sequence Number (characters 10-17). These were previously referred to as the Serial Number.

Machines and generator sets produced before First Quarter 2001 will maintain their 8 character PIN format.

Components such as engines, transmissions, axles, etc. and work tools will continue to use an 8 character Serial Number (S/N).

2. ORDERING PARTS

⚠ WARNING

When replacement parts are required for this product Caterpillar recommends using Caterpillar replacement parts or parts with equivalent specifications including, but not limited to, physical dimensions, type, strength and material.

Failure to heed this warning can lead to premature failures, product damage, personal injury or death.

Quality Caterpillar replacement parts are available from Caterpillar dealers throughout the world. Their parts inventories are up to date and include all parts normally required to protect your investment in Caterpillar machines. Dealers may offer repair kits or remanufactured parts to allow selection of the most effective repair alternative for a particular situation. When ordering parts, your order should specify the quantity, part number, part name, and the serial number/product identification number of the machine for which the parts are needed.

3. PARTS MANUAL ORGANIZATION

Product information in this manual is presented as "information elements" that represent all of the components for the specific model. Engine Arrangement and Seat Group are examples of information elements. The information elements are organized alphabetically by part name and secondarily by part number within each major section of the manual.

4. TABLE OF CONTENTS

A table of contents (TOC) is found at the beginning of the manual. The TOC lists each section of the manual with a complete list of all information elements organized as they appear in the manual. Page numbers are provided for quick reference to detailed parts identification illustrations and serviceable consist lists.

5. MAINTENANCE PARTS INDEX

The Maintenance Parts Index, located near the beginning of the manual, references most frequently used maintenance part numbers, providing description, quantity, usage and page number. This information is organized alphabetically by part description.

6. INDEX

The index located near the front of the manual is an alphabetical listing of all information elements included in the manual. Page numbers are provided for quick reference to detailed parts identification illustrations and serviceable consist lists.

7. PART NUMBER INDEX

A numerical index listing all part numbers and the corresponding page number(s) appears at the back of the manual.

8. CAPTIONS

Captions located at the beginning of each information element identify the part number and part name along with additional descriptive information. PIN and S/N information found in each caption should be used to select correct information for a specific machine. Field replacement options, identification of optional attachment components, and where used ("part of") information is also provided.

The first line of a caption is shown in larger type font to indicate the beginning of an information element. Captions for additional pages that may be required to illustrate an information element will be shown in standard type font and will include the term *(contd.)*
.

9. NON-SERVICED PARTS

In some instances it is necessary to display non-serviced parts that are a link to a lower level serviceable consist lists. These non-serviced part numbers are shown in *italic* type indicating that they are not available.

10. PARTS LIST REFERENCE NUMBERS

Numbers shown in the Ref No column correspond to numbers used in the associated graphic(s). An alphabetic suffix may be added to a reference number to identify lower level consist items. Numbers shown in the Graphic Ref column refer to the graphic number identifier displayed in the lower left corner of each illustration. The Graphic Ref number may be used in combination with the item Ref No to determine the correct part number. There may be intentional omission of a Ref No in a consist list as information is updated to reflect the latest serviceable part numbers.

11. INDENTED PART NAMES

When a part name is indented in a parts list, it is part of (included in) the group or assembly under which it is indented.

12. ILLUSTRATION REFERENCE LETTERS

When necessary, illustrations contain reference letters (A, B, C etc.) that are intended to track lines and harnesses from one point to another. They are also used to show where to reconnect illustrations that have been separated.

13. ABBREVIATIONS AND SYMBOLS

O.D. – Outside Diameter
I.D. – Inside Diameter
A – Not Part Of This Group
B – Use As Required
C – Change From Previous Type
D – Order By The Meter
E – Order By The Centimeter
F – Not Shown
G – Order By The Inch
I – See Hose Fabrication Guide
M – Metric Part
R – Remfg Part May Be Available
Y – Separate Illustration
Z – Not Serviced Separately

SIS ***New Feature***

14.<END>

This symbol indicates the end of an information element.

NOTE:

Continuing improvement and advancement of product design may cause changes to your machine which may not be included in this publication. Whenever a question arises regarding your caterpillar product or this publication, please consult your caterpillar dealer for the latest available information.

FRAME AND BODY

8E-3299 PLATFORM GP-CAB

PIN 3SK1-00000

SMCS-7283 — 100090751

NOTE	REF NO	GRAPHIC REF	PART NUMBER	QTY	PART NAME (1 2 3 4 5 6 PRODUCT LEVEL)	SEE PAGE
	1	1	3T-3953	1	PLATE AS	
	2	1	6B-3982	25	BOLT (3/8-16X.750IN)	
	3	1	6P-1975	41	WASHER-HARD (3MM THK)	
	4	1	9P-1449	2	SUPPORT AS-FOOT	
	5	1	9P-2229	19	BOLT (1/2-13X1IN)	
		1	5C-	19	WASHER-HARD (4MM THK)	
	6	1	9E-8196	1	COVER AS-LH	
		1	9F-2978	5	NUT-WELD (3/8-16 THD)	
		1	1P-8189	1	CLIP	
	7	1	7B-3411	4	COVER	
	8	1	6J-8469	19	SCREW-HEAD (3/8-16X.875IN)	
	9	1	9E-8174	1	COVER	
		1	9E-8176	1	GASKET	
	10	1	9E-3249	1	NOZZLE	
		1	9E-3250	1	GASKET	
	11	1	3T-3835	1	HANDHOLD	
	12	1	9E-8178	1	COVER AS	
		1	9F-2978	8	NUT-WELD (3/8-16 THD)	
		1	9E-8179	1	GASKET	
	13	1	7T-0131	1	FLOORPLATE AS	
		1	1F-0749	4	NUT-WELD (1/2-13 THD)	
	14	1	7Y-8087	1	PLUG-BUTTON	
	15	1	7T-0136	1	PLATE AS	
		1	9F-2978	5	NUT-WELD (3/8-16 THD)	
	16	1	7T-8088	1	COVER	
		1	7T-8709	1	GASKET	
	17	1	3T-3861	1	PLATE AS	
	18	1	6T-8364	4	BOLT (1/4-20X.625IN)	
M		1	6T-4205	4	WASHER-HARD (2MM THK)	
	19	1	6T-8464	1	FLOOR MAT	
	20	1	9E-8845	1	MODULE AS-OPERATOR	
	21	1	3T-3834	1	HANDHOLD	
	22	1	9P-8671	2	PLUG	
	23	2	6T-8364	4	BOLT (1/4-20X.625IN)	
M		2	6T-4205	4	WASHER-HARD (2MM THK)	
	24	2	6B-3982	17	BOLT (3/8-16X.750IN)	
	25	2	6P-1975	21	WASHER-HARD (3MM THK)	
	26	2	7T-0126	1	SEAL	
	27	2	7X-0975	2	BOLT (3/4-10X5IN)	
		2	7X-0982	2	WASHER-HARD (6MM THK)	
	28	2	3T-3482	2	PLATE	
	29	2	3T-8280	1	PLATE AS	
		2	7B-4828	8	SPACER	
	30	2	3T-8281	1	SEAL	
	31	2	7B-8817	1	GASKET	
	32	2	7B-8818	1	COVER AS	
		2	2R-8378	2	WASHER	
		2	6P-8828	2	SCREW-KNURLED	
	33	2	9W-3428	1	COVER	
	34	2	8E-8807	1	COVER	
	35	2	9D-3921	8	SCREW-SOCKET HEAD	
	36	2	9W-3142	8	MOUNTING	
	37	2	9W-9027	2	PLATE	
	38	2	7X-0390	2	BOLT (7/8-9X8IN)	
		2	7X-0672	2	WASHER-HARD	
	39	2	4L-8454	4	BOLT (3/8-16X1.0IN)	
	40	2	3T-8788	1	COVER	

12 FRAME AND BODY — 1 of 4 — SELP4570-01

FRAME AND BODY

8E-3299 PLATFORM GP-CAB (contd.)

100090751

NOTE	REF NO	GRAPHIC REF	PART NUMBER	QTY	PART NAME (1 2 3 4 5 6 PRODUCT LEVEL)	SEE PAGE
	41	2	8E-2518	1	COVER	
	42	2	7T-0134	1	PLATE	
	43	2	7T-0138	1	GASKET	
	44	2	7B-8724	1	GASKET	
	45	2	7B-8723	1	COVER	
	46	2	8Y-1960	2	PLUG-BUTTON	

M-METRIC PART

SELP4570-01 — 2 of 4 — FRAME AND BODY 13

FRAME AND BODY

8E-3299 PLATFORM GP-CAB (contd.)

100090751

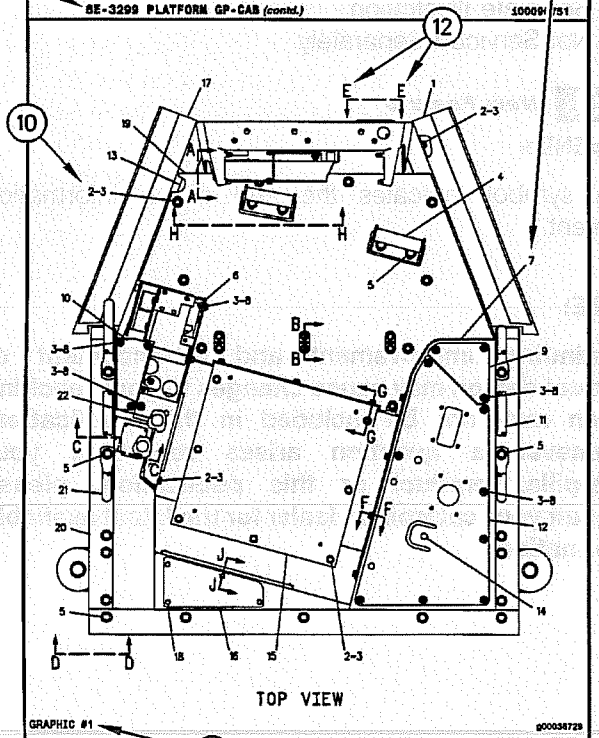

GRAPHIC #1 — g00038729

14 FRAME AND BODY — 3 of 4 — SELP4570-01

FRAME AND BODY

8E-3299 PLATFORM GP-CAB (contd.)

100090751

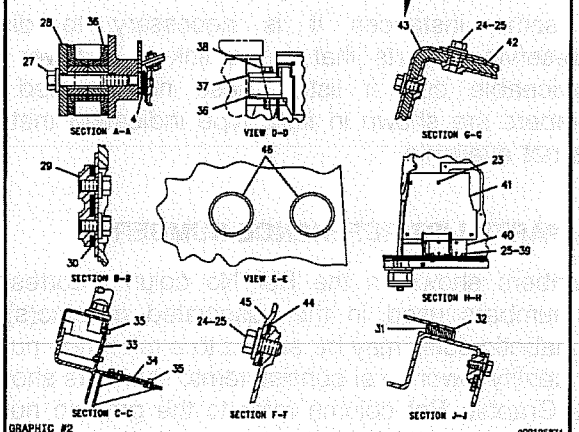

GRAPHIC #2 — g00105874

SELP4570-01 — 4 of 4 — FRAME AND BODY 15

GÉNÉRALITÉS

1. IDENTIFICATION DE LA MACHINE

Toutes les machines Caterpillar portent un numéro d'identification (PIN). Certains composants des machines peuvent porter des numéros de série (S/N). En général, parmi les composants qui portent des numéros de série il y a les moteurs, les transmissions, les bulldozers et les rippers. En plus, la machine et le moteur peuvent recevoir des numéros de version, et dans certains cas, de modification. Ces numéros figurent sur les plaques de numéro de série et sur la plaque signalétique principale qui se trouve dans le poste de conduite.

Les concessionnaires Caterpillar doivent connaître tous ces numéros pour identifier correctement les pièces.

SIS ***Nouvelle Caractéristique***

À partir du premier trimestre 2001, le numéro d'identification produit (PIN) Caterpillar passe de 8 à 17 caractères. Afin de permettre une identification uniforme des matériels, Caterpillar et d'autres constructeurs de machines de travaux publics s'efforcent de se conformer à la norme la plus récente portant sur les numéros d'identification des produits. Les numéros d'identification (PIN) de machines de chantier sont définis par la norme ISO 10261. Le nouveau format du numéro d'identification est valable pour toutes les machines et tous les groupes électrogènes Caterpillar. Le numéro d'identification produit (PIN) figurant sur la plaque et sur le châssis se composera de 17 caractères. Le nouveau format ressemblera à ceci:

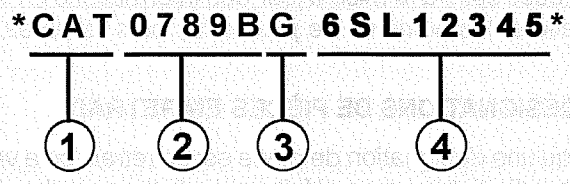

Il se décomposera de la façon suivante:

1. Code international de fabrication de Caterpillar (caractères 1 à 3)

2. Descriptif de la machine (caractères 4 à 8)

3. Contrôle (caractère 9)

4. Indicateur machine (MIS) ou numéro de séquence produit (caractères 10 à 17). Ceux-ci étaient auparavant désignés sous le terme de numéro de série.

Les machines et les groupes électrogènes construits avant le premier trimestre 2001 garderont le format à 8 caractères du numéro d'identification produit (PIN).

Les organes tels que les moteurs, les boîtes de vitesses, les essieux, etc., continueront d'être désignés par un numéro de série (S/N) à 8 caractères.

2. COMMANDE DE PIÈCES

⚠ DANGER

Lorsqu'il faut remplacer des pièces de rechange pour ce produit Caterpillar recommande d'utiliser les pièces de rechange Caterpillar ou les pièces qui ont des spécifications équivalentes dont les dimensions physiques, le type, la force et le matériau. Ces équivalences ne se limitent pas à l'énoncé précédent.

L'inobservation de cette mise en garde peut entraîner des défaillances prématurées, des dommages au produit, des blessures ou même la mort.

Les concessionnaires Caterpillar fournissent dans le monde entier des pièces de rechange de qualité Caterpillar. Leurs stocks de pièces sont constamment réapprovisionnés et comptent toutes les pièces nécessaires pour assurer la bonne marche de vos machines Caterpillar. Certains concessionnaires proposent également des kits de réparation ou des pièces rénovées, ce qui permet de choisir la solution la plus économique dans une situation donnée. Lors des commandes de pièces, mentionner la quantité, le numéro et la désignation des pièces ainsi que le numéro de série ou le numéro d'identification (PIN) de la machine pour laquelle ces pièces sont requises.

3. ORGANISATION DU CATALOGUE DE PIÈCES

Les renseignements sur les produits sont présentés sous forme de "Information element" (élément d'information) représentant tous les composants d'un modèle donné. "Engine Arrangement" (version de moteur) et "Seat Group" (assemblage de siège)" sont des exemples d'éléments d'information. Les éléments d'information sont classés par ordre alphabétique par la désignation standard des pièces et par numéros de pièces dans chaque partie importante du manuel.

4. TABLE DES MATIÈRES

SIS ***Nouvelle Caractéristique***

La table des matières se trouve au début du manuel. La table des matières fournit la liste de tous les chapitres du manuel avec une liste complète de tous les éléments d'information classés par ordre d'apparition dans le manuel. Les numéros de page sont fournis afin que l'utilisateur puisse trouver rapidement les illustrations détaillées concernant l'identification des pièces et les listes des pièces d'entretien.

5. INDEX DES PIÈCES D'ENTRETIEN

La rubrique "Index des pièces d'entretien" qui se trouve au début du manuel renvoie aux pièces d'entretien les plus fréquemment utilisées en précisant la désignation, la quantité, là où la pièce est utilisée et le numéro de page. Ces pièces sont classés par ordre alphabétique.

6. INDEX

L'index qui se trouve vers le début du manuel est une liste alphabétique de tous les éléments d'information du manuel. Les numéros de page sont fournis afin que l'utilisateur puisse trouver rapidement les illustrations détaillées concernant l'identification des pièces et les listes des pièces d'entretien.

7. INDEX DES NUMÉROS DE PIÈCES

Une liste numérique de tous les numéros de pièces et des pages correspondantes se trouve à la fin du manuel.

8. LÉGENDES

Les légendes qui se trouvent en haut de chaque page de chaque élément d'information fournissent le numéro de pièce, la désignation ainsi que des renseignements supplémentaires sur les pièces. Les renseignements concernant les numéros de série (S/N) qui se trouvent dans chaque légende doivent être utilisés pour sélectionner les informations correctes pour un moteur donné. Les informations concernant les options de remplacement sur le chantier, l'identification des composants des équipements offerts en option et les lieux d'application sont aussi fournies.

SIS ***Nouvelle Caractéristique***

Les lettres de la première ligne d'une légende sont présentées en police plus grande afin d'indiquer le début d'une unité d'information. Les légendes qui pourraient être requises pour des pages supplémentaires afin d'illustrer une unité d'information seront présentées en police standard et comprendront le terme (à suivre).

9. PIÈCES NON FOURNIES

SIS ***Nouvelle Caractéristique***

Dans certains cas, il est nécessaire d'indiquer les pièces non fournies qui sont en aval de la liste des pièces d'entretien. Les numéros des pièces non fournies dans la liste des pièces et les légendes seront en italique pour signaler qu'ils ne sont pas disponibles.

10. NUMÉROS DE RÉFÉRENCE DE LA LISTE DES PIÈCES

SIS ***Nouvelle Caractéristique***

Les numéros indiqués dans la colonne des numéros de références correspondent aux numéros utilisés dans les illustrations auxquelles ils sont associés. Un suffixe alphabétique peut être ajouté à un numéro de référence pour identifier la liste des articles en aval. Les numéros indiqués dans la colonne de référence de l'illustration renvoient à l'identification du numéro affiché dans le coin inférieur gauche de chaque illustration. Le numéro de référence de l'illustration pourrait être utilisé avec le numéro de référence de l'article pour déterminer le numéro de pièce correct. Il peut y avoir une omission intentionnelle d'un numéro de référence dans une liste de pièces suite à la mise à jour des informations en vue de refléter les numéros de pièces les plus récentes.

11. DÉSIGNATIONS DE PIÈCES EN RETRAIT

Lorsqu'une désignation de pièce est en retrait, cela veut dire que l'article en regard fait partie de l'ensemble sous lequel il figure.

12. LETTRES DE RÉFÉRENCE DES ILLUSTRATIONS

Quand cela est nécessaire, les illustrations comportent des lettres de référence (A, B, C, etc.) pour montrer le trajet des canalisations et faisceaux de câbles d'un point à l'autre. Elles sont utilisées également pour indiquer où relier les illustrations séparées auparavant.

13. ABRÉVIATIONS ET SYMBOLES

O.D. – Diamètre extérieur
I.D. – Diamètre intérieur
A – Ne fait pas partie de ce groupe
B – Utiliser selon besoin
C – Modification
D – Commander par mètre
E – Commander par centimètre
F – Non représenté
G – Commander par pouce
I – Voir "Hose Fabrication Guide"
M – Pièce métrique
R – Pièce rénovée éventuellement disponible
Y – Illustration séparée
Z – Non fourni séparément

NOTA:

En raison du progrès technique et des améliorations continuelles apportées au matériel, votre machine comporte peut-être des modifications qui n'apparaissent pas dans la présente publication. En cas de doute sur un détail de votre machine Caterpillar ou sur le texte de la présente publication, adressez-vous à votre concessionnaire Caterpillar.

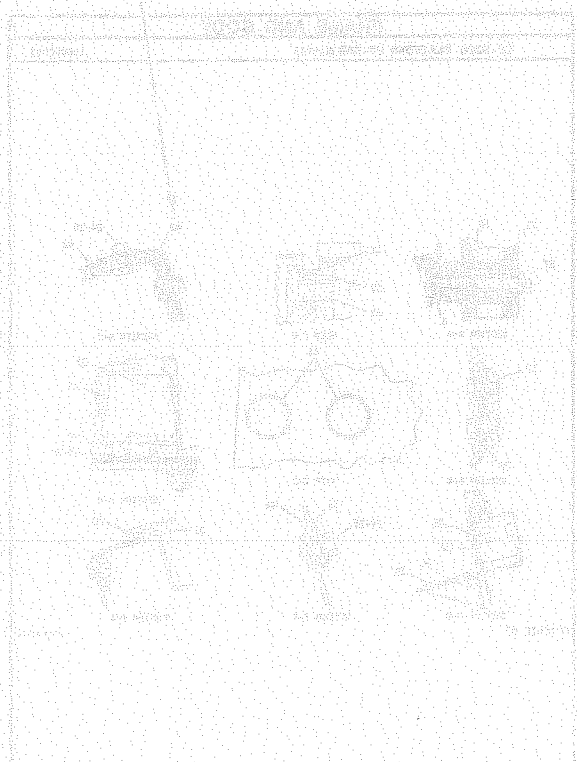

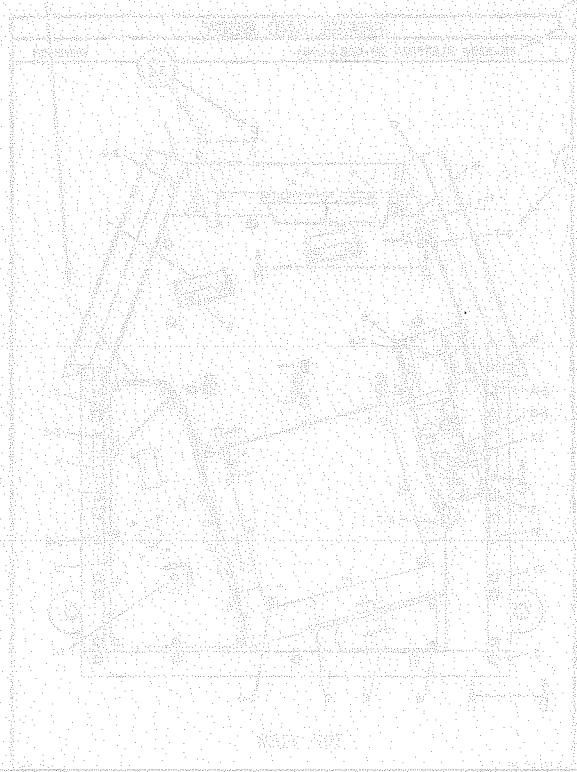

FRAME AND BODY

8E-3299 PLATFORM GP-CAB

PIN 3SK1-09999 —

SMCS-7283 — 100090751

NOTE	REF NO	GRAPHIC REF	PART NUMBER	QTY	PART NAME (1 2 3 4 5 6 (PRODUCT LEVEL))	SEE PAGE
	1	1	3T-2963	1	PLATE AS	
	2	1	5H-3092	25	BOLT (3/8-16X.75DIN)	
	3	1	5P-1075	41	WASHER-HARD (5MM THK)	
	4	1	9P-1444	2	SUPPORT AS-FOOT	
	5	1	9P-2228	18	BOLT (1/2-13X1IN)	
		1	5C-[illegible]	18	WASHER-HARD (4MM THK)	
	6	1	8E-8136	1	COVER AS-LH	
		1	9F-2979	6	NUT-WELD (3/8-16 THD)	
		1	1P-0169	1	CLIP	
	7	1	7S-3411	4	COVER	
	8	1	6J-0459	19	SCREW-HEAD (3/8-16X.875IN)	
	9	1	[illegible]-4474	1	COVER	
		1	9E-8972	1	GASKET	
	10	1	8E-3249	1	[illegible]	
		1	8E-3260	1	GASKET	
	11	1	3T-3635	1	HANDHOLD	
	12	1	8E-8678	1	COVER AS	
		1	9F-2979	8	NUT-WELD (3/8-16 THD)	
		1	8E-8678	1	GASKET	
	13	1	7T-0121	1	FLOORPLATE AS	
		1	1F-0748	4	NUT-WELD (1/2-13 THD)	
	14	1	7V-8067	1	PLUG-BUTTON	
	15	1	7T-0135	1	PLATE AS	
		1	9F-2978	5	NUT-WELD (3/8-16 THD)	
	16	1	7T-8068	1	COVER	
		1	7T-8779	1	GASKET	
	17	1	3T-3981	1	PLATE AS	
	18	1	6T-9384	4	BOLT (1/4-20X.625IN)	
M		1	6T-4295	4	WASHER-HARD (2MM THK)	
	19	1	6X-9484	1	FLOOR MAT	
	20	1	8E-8648	1	MODULE AS-OPERATOR	
	21	1	3T-3634	1	HANDHOLD	
	22	1	9P-8871	2	PLUG	
	23	2	6T-0384	4	BOLT (1/4-20X.625IN)	
M		2	6T-4295	4	WASHER-HARD (2MM THK)	
	24	2	5B-3062	17	BOLT (3/8-16X.75DIN)	
	25	2	5P-1078	21	WASHER-HARD (5MM THK)	
	26	2	7T-0136	1	SEAL	
	27	2	7S-0275	2	BOLT (3/4-10X5IN)	
		2	7X-0682	2	WASHER-HARD (8MM THK)	
	28	2	3T-3482	2	PLATE	
	29	2	3T-8280	1	PLATE AS	
		2	7S-4828	8	SPACER	
	30	2	3T-8281	1	SEAL	
	31	2	7S-8817	1	GASKET	
	32	2	7S-8918	1	COVER AS	
		2	2R-8278	2	WASHER	
		2	6P-8828	2	SCREW-KNURLED	
	33	2	9W-3428	1	COVER	
	34	2	8E-8607	1	COVER	
	35	2	9D-3031	6	SCREW-SOCKET HEAD	
	36	2	9W-3142	6	MOUNTING	
	37	2	9W-9527	2	PLATE	
	38	2	7X-0290	2	BOLT (7/8-9X8IN)	
		2	7X-0672	2	WASHER-HARD	
	39	2	4L-8484	4	BOLT (3/8-16X1.0IN)	
	40	2	3T-8788	1	COVER	

FRAME AND BODY

8E-3299 PLATFORM GP-CAB (contd.)

100090751

NOTE	REF NO	GRAPHIC REF	PART NUMBER	QTY	PART NAME (1 2 3 4 5 6 (PRODUCT LEVEL))	SEE PAGE
	41	2	8E-2516	1	COVER	
	42	2	7T-0134	1	PLATE	
	43	2	7T-0138	1	GASKET	
	44	2	7S-8724	1	GASKET	
	45	2	7S-8723	1	COVER	
	46	2	6V-1960	2	PLUG-BUTTON	

M-METRIC PART

FRAME AND BODY

8E-3299 PLATFORM GP-CAB (contd.)

100090751

TOP VIEW

GRAPHIC #1 — g00054729

FRAME AND BODY

8E-3299 PLATFORM GP-CAB (contd.)

100090751

SECTION A-A — VIEW D-D — SECTION G-G

SECTION B-B — VIEW E-E — SECTION H-H

SECTION C-C — SECTION F-F — SECTION J-J

GRAPHIC #2 — g00105874

INFORMACIÓN GENERAL

1. MÁQUINAS

Las máquinas Caterpillar se identifican con Números de Identificación del Producto (PIN). Algunos componentes incluídos en la máquina pueden estar identificados con Números de Serie (N/S). Los componentes que tienen típicamente esta identificación incluyen motores, transmisiones, hojas topadoras y desgarradores. La máquina y el motor se identifican además con Números de Configuración y en algunos casos, Números de Modificación. Estos números están en las placas de identificación del producto o en la placa principal en la cabina del operador.

Los distribuidores Caterpillar necesitan estos números para identificar con exactitud los números de piezas de repuesto.

SIS ***Nueva Característica***

A partir del primer trimestre del 2001, el Número de Identificación de Producto (PIN) de Caterpillar cambió de 8 a 17 caracteres. Para hacer más uniforme el método de identificación de equipos, Caterpillar y otros fabricantes de equipo de construcción han tomado medidas para cumplir con la versión más reciente de la norma de numeración de identificación de productos. Los Números de Identificación de Producto para máquinas que no se operan en carreteras son definidos por la norma ISO 10261. El nuevo formato PIN corresponderá a todas las máquinas y grupos electrógenos Caterpillar. Las placas y los caracteres PIN estampados en el bastidor mostrarán el PIN de 17 caracteres. El nuevo formato tendrá la apariencia siguiente:

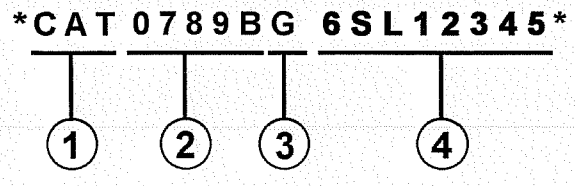

Significado de los caracteres:

1. Código de Fabricación Mundial de Caterpillar (caracteres 1-3)

2. Sección Descriptor de la Máquina (caracteres 4-8)

3. Carácter de Verificación (carácter 9)

4. Sección Indicador de la Máquina (MIS) o Número de Secuencia de Producto (caracteres 10-17). Anteriormente, estos caracteres constituían el Número de Serie.

Las máquinas y grupos electrógenos producidos antes del primer semestre del 2001 mantendrán su formato PIN de 8 caracteres.

Los componentes como motores, transmisiones, ejes, herramientas de trabajo, etc., continuarán usando un Número de Serie (S/N) de 8 caracteres.

2. COMO PEDIR REPUESTOS

⚠ ADVERTENCIA

Cuando se necesiten piezas de repuesto para este producto, Caterpillar recomienda usar piezas de repuesto Caterpillar o piezas que tengan especificaciones equivalentes incluyendo, pero sin estar limitadas a, dimensiones físicas, tipo, fortaleza y material.

El no hacer caso de esta advertencia puede llevar a fallas prematuras, daños al producto y lesiones graves o mortales.

Las piezas de repuesto Caterpillar de calidad están a la disposición de los distribuidores Caterpillar en todo el mundo. Sus existencias actualizadas incluyen todas las piezas normalmente requeridas para proteger su inversión en máquinas Caterpillar. Los distribuidores pueden tener juegos de reparación o piezas remanufacturadas para permitir la selección de la mejor alternativa de reparación en un caso en particular. Al pedir piezas de repuesto, especifique en su pedido la cantidad, el número de pieza, el nombre de la pieza y el número de serie/número de identificación del producto, de la máquina para la cual se necesitan estas piezas.

3. ORGANIZACION DEL MANUAL DE PIEZAS

La información sobre el producto, se presenta en este manual, como "elementos de información" que representan todos los componentes de un modelo específico. Las configuraciones de motores y los grupos de asientos son ejemplos de elementos de información. Los elementos de información están organizados primeramente por nombres de piezas en orden alfabético y en segundo lugar, por el número de pieza dentro de cada sección principal del manual.

4. CONTENIDO

La página de Contenido se encuentra al principio del manual. El Contenido indica cada sección del manual con una lista completa de todos los elementos de información organizados en el orden que aparecen en el manual. Los números de página proporcionan una referencia rápida a las ilustraciones detalladas de identificación de piezas y a las listas de componentes de repuesto de dichas piezas.

5. ÍNDICE DE PIEZAS DE MANTENIMIENTO

Al principio de este catálogo se encuentra un índice de los números de piezas utilizadas más frecuentemente para el mantenimiento, que incluye descripción, cantidad necesaria, lugar de utilización y número de página. Esta información está organizada alfabéticamente, por descripción de la pieza.

6. ÍNDICE

El Índice, ubicado cerca del principio del manual, es una lista en orden alfabético de todos los elementos de información incluídos en el manual. Los números de página proporcionan una referencia rápida a las ilustraciones detalladas de identificación de piezas y a las listas de componentes de repuesto de dichas piezas.

7. INDICE NUMÉRICO DE PIEZAS

Un índice numérico de piezas con el correspondiente número de página aparece al final de este catálogo.

8. TÍTULOS

Los títulos ubicados al principio de cada elemento de información identifican el número y el nombre de la pieza junto con información descriptiva. Se debe usar información sobre los Números de Identificación de Pieza (PIN) y los números de serie (S/N) para seleccionar la información que corresponda a una máquina en particular. También se suministra información sobre las opciones de reparación en el campo, la identificación de componentes de accesorios optativos y el lugar de ubicación de la pieza ("es parte de").

La primera línea del título se muestra con un tipo de letra más grande para indicar el comienzo de un elemento de información. Si se requieren páginas adicionales para ilustrar un elemento de información, los títulos se muestran con un tipo de letra normal y la continuación se indica entre paréntesis.

9. PIEZAS QUE NO SE SUMINISTRAN COMO REPUESTO

En algunos casos es necesario indicar piezas que no se suministran como repuesto pero que pueden estar conectadas a listas de componentes de otras piezas de repuesto. En tal caso, dichas piezas se muestran en cursiva para indicar que no son piezas disponibles.

10. NÚMEROS DE REFERENCIA

Los números en la columna de No. de Referencia corresponden a los números indicados en la ilustración que pertenece a ese número de pieza. Los números que tienen un sufijo alfabético identifican artículos de las listas de componentes de piezas. Los números en la columna de Referencia de la ilustración se identifican en la esquina inferior izquierda de cada ilustración. Para determinar el número de pieza correcto se puede utilizar tanto el No. de Referencia de la ilustración como el No. de Referencia del artículo. A medida que se actualiza la información para indicar los más recientes números de piezas de repuesto, puede omitirse intencionalmente un No. de Referencia en una lista de componentes de piezas.

11. NOMBRES DE PIEZA SANGRADOS

Cuando el nombre de una pieza está sangrado en una lista, significa que esta pieza forma parte del grupo o conjunto del renglón inmediatamente superior.

12. LETRAS DE REFERENCIA DE ILUSTRACIONES

Las ilustraciones contienen algunas veces letras de referencia (A, B, C etc.) cuyo propósito es seguir el trayecto de líneas y mazos de cables de un punto a otro. También se utilizan para mostrar dónde volver a unir ilustraciones que se habían separado.

13. ABREVIATURAS Y SIMBOLOS

O.D. – Diámetro exterior
I.D. – Diámetro interior
A – No es pieza de este grupo
B – Utilizado según la demanda
C – Indica cambio
D – Se pide por metro
E – Se pide por centímetro
F – No se muestra
G – Se pide por pulgada
I – Ver "Hose Fabrication Guide"
M – Pieza métrica
R – Puede estar disponible como pieza remanufacturada
Y – Ilustración separada
Z – No se suministra por separado

SIS *Nueva Característica*

14.<END>

Este símbolo indica el final de un elemento de información.

NOTA:

Las contínuas mejoras y adelantos en diseño podrían originar cambios a su máquina que no se incluyen en esta publicación. Cuando tenga alguna pregunta acerca de su producto Caterpillar o de esta publicación, consulte al distribuidor Caterpillar para obtener la información más reciente.

FRAME AND BODY

8E-3299 PLATFORM GP-CAB

PIN 3SKY-00999

8MCB-7283 — 100090751

NOTE	REF NO	GRAPHIC REF	PART NUMBER	QTY	PART NAME (1 2 3 4 5 6 PRODUCT LEVEL)	SEE PAGE
	1	1	3T-2952	1	PLATE AS	
	2	1	6H-3092	25	BOLT (3/8-16X.750IN)	
	3	1	6P-1975	41	WASHER-HARD (9MM THK)	
	4	1	9E-1444	2	SUPPORT AS-FOOT	
	5	1	6P-2228	19	BOLT (1/2-13X1IN)	
		1	6P-[illegible]	19	WASHER-HARD (4MM THK)	
	6	1	8E-8134	1	COVER AS-LH	
		1	9F-2978	5	NUT-WELD (3/8-16 THD)	
		1	1P-8188	1	CLIP	
	7	1	7S-2411	4	COVER	
	8	1	6J-0488	18	SCREW-HEAD (3/8-16X.875IN)	
	9	1	[illegible]4074	1	COVER	
		1	8E-8[illegible]	-	GASKET	
	10	1	8E-3249	1	[illegible]	
		1	8E-3250	1	GASKET	
	11	1	3T-3536	1	HANDHOLD	
	12	1	8E-8178	1	COVER AS	
		1	9F-2978	8	NUT-WELD (3/8-16 THD)	
		1	8E-3678	1	GASKET	
	13	1	7T-0131	1	FLOORPLATE AS	
		1	1P-0748	4	NUT-WELD (1/2-13 THD)	
	14	1	7V-8087	1	PLUG-BUTTON	
	15	1	7T-0136	1	PLATE AS	
		1	9F-2978	5	NUT-WELD (3/8-16 THD)	
	16	1	7T-8098	1	COVER	
		1	7T-0779	1	GASKET	
	17	1	3T-2951	1	PLATE AS	
	18	1	9T-9364	4	BOLT (1/4-20X.625IN)	
M		1	9T-4295	4	WASHER-HARD (28M THK)	
	19	1	9T-9484	1	FLOOR MAT	
	20	1	8E-8846	1	MODULE AS-OPERATOR	
	21	1	3T-3534	1	HANDHOLD	
	22	1	9P-8571	2	PLUG	
	23	2	9T-9364	4	BOLT (1/4-20X.625IN)	
M		2	9T-4295	4	WASHER-HARD (28M THK)	
	24	2	6H-3092	17	BOLT (3/8-16X.750IN)	
	25	2	6P-1978	21	WASHER-HARD (9MM THK)	
	26	2	7T-0136	1	SEAL	
	27	2	7X-0078	2	BOLT (3/4-10X5IN)	
		2	7X-0882	2	WASHER-HARD (6MM THK)	
	28	2	3T-3462	2	PLATE	
	29	2	3T-8280	1	PLATE AS	
		2	7S-4838	8	SPACER	
	30	2	3T-8281	1	SEAL	
	31	2	7S-8817	1	GASKET	
	32	2	7S-8816	1	COVER AS	
		2	2S-2376	2	WASHER	
		2	6P-8626	2	SCREW-KNURLED	
	33	2	9W-3429	1	COVER	
	34	2	8E-8697	1	COVER	
	35	2	9G-2021	8	SCREW-SOCKET HEAD	
	36	2	9W-3142	8	MOUNTING	
	37	2	9W-9027	2	PLATE	
	38	2	7X-0390	2	BOLT (7/8-9X5IN)	
		2	7X-0872	2	WASHER-HARD	
	39	2	4L-8454	4	BOLT (3/8-16X1.0IN)	
	40	2	3T-4788	1	COVER	

12 FRAME AND BODY — 1 of 4 — SELP4570-01

FRAME AND BODY

8E-3299 PLATFORM GP-CAB (contd.)

100090751

NOTE	REF NO	GRAPHIC REF	PART NUMBER	QTY	PART NAME (1 2 3 4 5 6 PRODUCT LEVEL)	SEE PAGE
	41	2	8E-2818	1	COVER	
	42	2	7T-0134	1	PLATE	
	43	2	7T-0138	1	GASKET	
	44	2	7S-8724	1	GASKET	
	45	2	7S-8723	1	COVER	
	46	*	6V-1960	2	PLUG-BUTTON	

M-METRIC PART

SELP4570-01 — 2 of 4 — FRAME AND BODY 13

FRAME AND BODY

8E-3299 PLATFORM GP-CAB (contd.)

100090751

TOP VIEW

GRAPHIC #1 — g000336729

14 FRAME AND BODY — 3 of 4 — SELP4570-01

FRAME AND BODY

8E-3299 PLATFORM GP-CAB (contd.)

100090751

SECTION A-A — VIEW D-D — SECTION G-G — SECTION B-B — VIEW E-E — SECTION H-H — SECTION C-C — SECTION F-F — SECTION J-J

GRAPHIC #2 — g001058874

SELP4570-01 — 4 of 4 — FRAME AND BODY 15

INFORMAÇÃO GERAL

1. IDENTIFICAÇÃO DA MÁQUINA

As máquinas Caterpillar são identificadas pelos Números de Informação do Produto (PIN). Alguns componentes incluídos numa máquina podem ser identificados por Números de Série (S/N). Componentes típicos que serão enumerados com números de série incluem motores, transmissões, lâminas e ríperes. Além do número de série, a máquina e o motor são ainda identificados por números de arranjo e, em alguns casos, números de modificações. Tais números encontram-se na(s) placa(s) de identificação do produto e na placa mestre no compartimento do operador.

Novidades

A partir do primeiro trimestre de 2001 o Número de Identificação de Produto da Caterpillar (PIN) precisa ser mudado de 8 para 17 caracteres. Esforçando-se para fornecer uma identificação uniforme de equipamentos, a Caterpillar e outros fabricantes de equipamento de construção estão mudando para atender a versão mais atualizada do padrão de identificação de produtos. Os números de PIN para produtos de aplicações não rodoviárias são definidos pela ISO 10261. O novo formato de número PIN será adotado em todas as máquinas e grupos geradores Caterpillar. As placas e as marcações do chassi mostrarão os 17 dígitos de PIN. O novo formato terá a seguinte disposição:

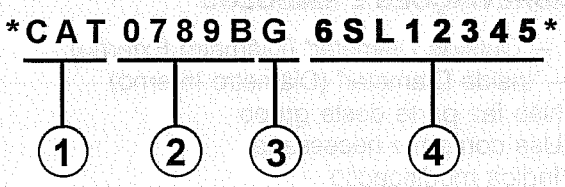

Onde:

1. Código de Fabricação Mundial da Caterpillar (dígitos 1-3)

2. Descrição da Máquina (dígitos 4-8)

3. Dígito de Verificação (dígito 9)

4. Seção de Indicador da Máquina (MIS) ou Número de Seqüência de Produto (dígitos 10-17). Estes eram anteriormente chamados de Número de Série.

Máquinas e grupos geradores produzidos antes do primeiro trimestre de 2001 manterão o formato de 8 caracteres de PIN.

Componentes como motores, transmissões, eixos, ferramentas de trabalho, etc. continuarão a usar Número de Série (S/N) com oito caracteres.

2. COMO OBTER PEÇAS

⚠ CUIDADO

Quando peças de substituição são exigidas para este produto, a Caterpillar recomenda a utilização de peças de substituição Caterpillar ou peças com as especificações equivalentes incluindo, mas não limitadas, à dimensões físicas, tipos, resistência e materiais.

A inobservância desta advertência poderá resultar em falhas prematuras, danos ao produto, ferimentos ou morte.

As Peças de Reposição de Qualidade Caterpillar encontram-se disponíveis nos revendedores Caterpillar no mundo inteiro. Seus estoques de peças são atualizados e incluem todas as peças normalmente necessárias para proteger seu investimento em máquinas Caterpillar. Alguns revendedores podem oferecer jogos de reparo ou peças de troca/remanufaturadas disponíveis como uma opção da alternativa de reparo mais eficaz para uma situação específica. Ao encomendar peças, seu pedido deve especificar a quantidade, o número e o nome da peça e o número de série/número de identificação do produto referentes à máquina para a qual as peças se destinam.

3. ORGANIZAÇÃO DO MANUAL DE PEÇAS

A informação do produto neste manual é apresentada em forma de "elementos de informação" que representam todos os componentes para o modelo específico. Arranjo de Motor e Grupo de Assento são exemplos de elementos de informação. Os elementos de informação são organizados em ordem alfabética por nome de peça ou secundariamente, por número de peça incluído em cada seção principal do manual.

4. LISTA DE CONTEÚDOS

A Lista de Conteúdos (TOC) se encontra no princípio do manual. A Lista de Conteúdos (TOC) relaciona em cada seção do manual uma lista completa com todos os elementos de informação organizados conforme aparecem no manual. Números de página são fornecidos para que se tenha referência rápida de ilustrações de peças detalhadas e listas de conteúdos que podem receber serviço de manutenção.

5. ÍNDICE DE PEÇAS DE MANUTENÇÃO

O Índice de Peças de Manutenção, localizado perto do princípio do manual, faz referência aos números de peça de manutenção usados com maior frequência, fornecendo uma descrição, a quantidade, o uso e o número de página. Esta informação é organizada com a descrição da peça em ordem alfabética.

6. ÍNDICE

O Índice localizado perto do princípio do manual, consiste de uma lista em ordem alfabética de todos os elementos de informação incluídos no manual. Números de página são fornecidos para que se tenha referência rápida de ilustrações de peças detalhadas e listas de conteúdos que podem receber serviço de manutenção.

7. ÍNDICE DE NÚMERO DE PEÇA

Um índice numérico relacionando todos os números de peça e a(s) página(s) correspondentes, aparece no final do manual.

8. LEGENDAS

As legendas localizadas no início de cada elemento de informação identificam o número e o nome de peça, juntamente com informação descritiva adicional. Informações sobre o Número de Informação do Produto (PIN) e o Número de Série (S/N) encontradas em cada legenda devem ser usadas para selecionar a informação correta sobre uma máquina específica. Opções de substituição no campo, identificação de componentes de acessórios opcionais e informações sobre onde são utilizados ("parte de") são também fornecidas.

A primeira linha de uma legenda é indicada em tipo maior para indicar o princípio de um elemento de informação. Legendas para páginas adicionais que podem ser necessárias para ilustrar um elemento de informação serão apresentadas em tipo padrão e incluirão o termo *(continua)* .

9. NÃO DISPONÍVEL SEPARADAMENTE

Em alguns casos, é necessário mostrar peças não disponíveis separadamente que têm uma ligação com listas de conteúdos de nível inferior que podem receber serviço de manutenção. Os números de peça destes componentes não disponíveis aparecerão em *itálico* , a fim de indicar que não estão disponíveis.

10. NÙMEROS DE REFERÊNCIA À LISTA DE PEÇAS

Os números indicados na coluna Ref No (No. de Referência) correspondem-se aos números usados no(s) gráfico(s) correspondente(s). Um sufixo com letras pode ser acrescentado a um número de referência para identificar itens de conteúdo de nível inferior. Os números indicados na coluna Graphic Ref (Referência de Gráfico) referem-se ao identificador de número de gráfico presente no canto esquerdo inferior de cada ilustração. O número de Referência de Gráfico pode ser usado em combinação com o item Ref No para determinar-se o número de peça correto. Poderá haver omissão intencional de um número de referência (Ref No) de uma lista de conteúdos uma vez que as informações são atualizadas para refletir os números de peça mais recentes que podem receber serviço de manutenção.

11. NOMES DE PEÇAS DESALINHADOS

Quando um nome de peça encontra-se desalinhado numa lista de peças, significa que tal item faz parte do (está incluído no) grupo ou conjunto sob o qual está relacionado.

12. LETRAS DE REFERÊNCIA NAS ILUSTRAÇÕES

Quando necessário, as ilustrações contêm letras de referência (A, B, C, etc.) que são utilizadas para seguir tubulações e cabos elétricos de um ponto a outro. Também foram utilizadas para indicar onde se pode reconectar as ilustrações que foram separadas.

13. ABREVIAÇÕES E SÍMBOLOS

O.D. – "Outside Diameter" (Diâmetro Externo)
I.D. – "Inside Diameter" (Diâmetro Interno)
A – Não faz parte deste grupo
B – Use conforme necessário
C – Indica modificação
D – Vendido por metro
E – Vendido por centímetro
F – Não ilustrado
G – Vendido por polegada
I – Consulte o seu revendedor quanto a mangueira
M – Peça métrica
R – Peça remanufaturada pode estar disponível; consulte o seu revendedor Cat
Y – Ilustração separada
Z – Não disponível separadamente

SIS ***Novidades***

14. <END>

Este símbolo indica o final de um elemento de informação.

NOTA:

Os contínuos aperfeiçoamentos e avanços no projeto do produto podem ocasionar modificações em sua máquina que talvez ainda não estejam incluídas nesta publicação. Sempre que surgirem dúvidas quanto a um produto Caterpillar ou quanto à presente publicação, consulte o seu revendedor Caterpillar para obter as informações mais recentes disponíveis.

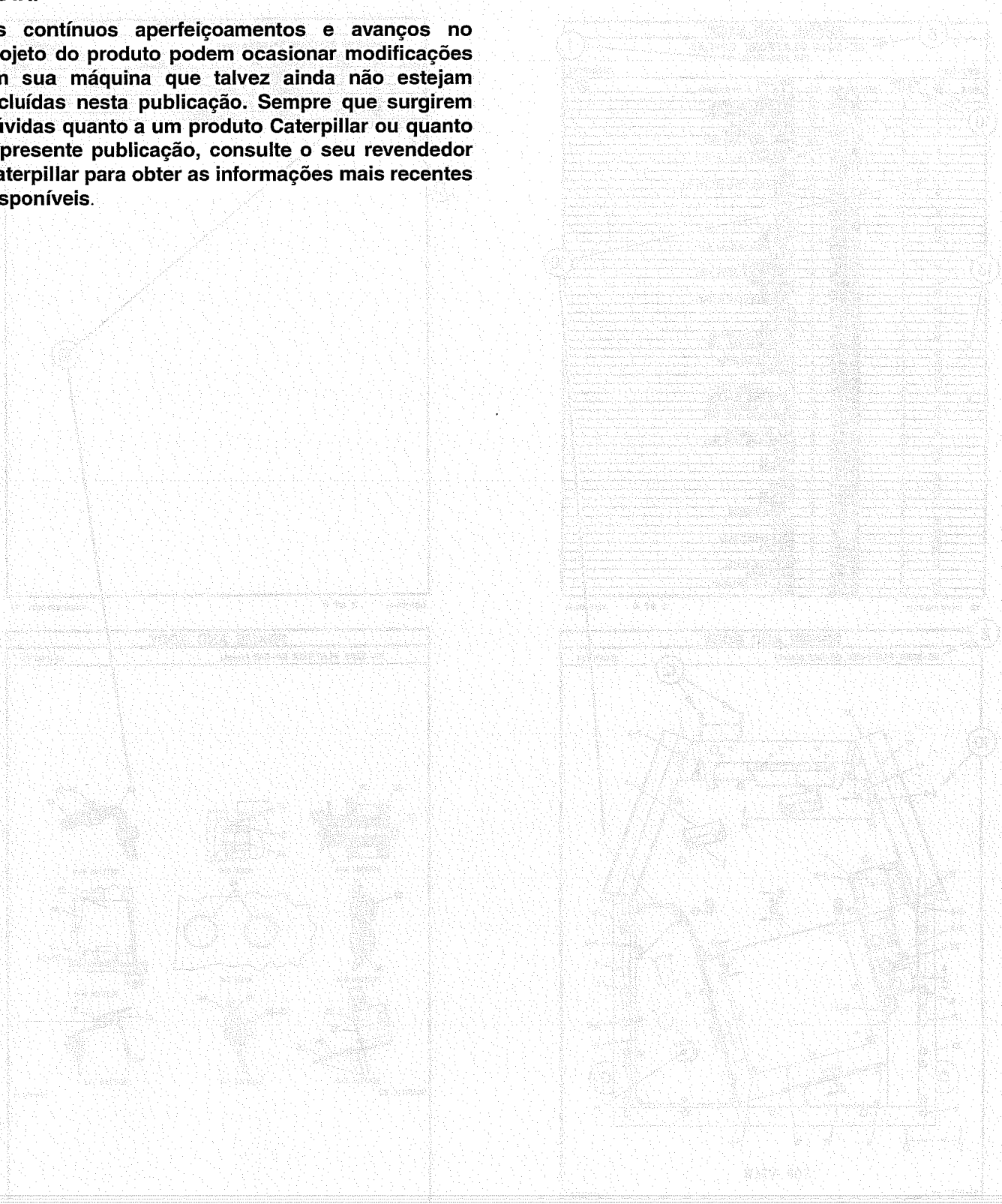

FRAME AND BODY

8E-3299 PLATFORM GP-CAB

PIN 35K1-00000

8MC8-7283 — 100090751

NOTE	REF NO	GRAPHIC REF	PART NUMBER	QTY	PART NAME (1 2 3 4 5 6 PRODUCT LEVEL)	SEE PAGE
	1	1	3T-2662	1	PLATE AS	
	2	1	5M-2062	25	BOLT (3/8-16X.750IN)	
	3	1	5P-1075	41	WASHER-HARD (9MM THK)	
	4	1	9F-1444	2	SUPPORT AS-FOOT	
	5	1	3P-2229	19	BOLT (1/2-13X1IN)	
		1	5P-	19	WASHER-HARD (4MM THK)	
	6	1	6E-8136	1	COVER AS-LH	
		1	9F-2078	5	NUT-WELD (3/8-16 THD)	
		1	1P-8199	1	CLIP	
	7	1	7S-2411	4	COVER	
	8	1	6J-8488	19	SCREW-HEAD (3/8-16X.875IN)	
	9	1	4474	1	COVER	
		1	6E-897		GASKET	
	10	1	6E-3249	1		
		1	6E-3250	1	GASKET	
	11	1	3T-2635	1	HANDHOLD	
	12	1	6E-8878	1	COVER AS	
		1	9F-2078	5	NUT-WELD (3/8-16 THD)	
		1	6E-8878	1	GASKET	
	13	1	7T-0131	1	FLOORPLATE AS	
		1	1F-0749	4	NUT-WELD (1/2-13 THD)	
	14	1	7V-8087	1	PLUG-BUTTON	
	15	1	7T-0136	1	PLATE AS	
		1	9F-2078	5	NUT-WELD (3/8-16 THD)	
	16	1	7T-8066	1	COVER	
		1	7T-8078	1	GASKET	
	17	1	3T-2661	1	PLATE AS	
	18	1	5T-8364	4	BOLT (1/4-20X.625IN)	
M		1	5T-4295	4	WASHER-HARD (2MM THK)	
	19	1	6I-8484	1	FLOOR MAT	
	20	1	5E-8846	1	MODULE AS-OPERATOR	
	21	1	3T-2634	1	HANDHOLD	
	22	1	9F-8871	2	PLUG	
	23	2	5T-0364	4	BOLT (1/4-20X.625IN)	
M		2	5T-4296	4	WASHER-HARD (2MM THK)	
	24	2	5M-2062	17	BOLT (3/8-16X.750IN)	
	25	2	5P-1078	21	WASHER-HARD (9MM THK)	
	26	2	7T-0135	1	SEAL	
	27	2	7X-0378	2	BOLT (3/4-10X6IN)	
		2	7X-0682	2	WASHER-HARD (6MM THK)	
	28	2	3T-2452	2	PLATE	
	29	2	3T-8290	1	PLATE AS	
		2	7S-4828	8	SPACER	
	30	2	3T-8291	1	SEAL	
	31	2	7S-8817	1	GASKET	
	32	2	7S-8818	1	COVER AS	
		2	2R-2376	2	WASHER	
		2	6P-8826	2	SCREW-KNURLED	
	33	2	9W-3428	1	COVER	
	34	2	8E-8897	1	COVER	
	35	2	8D-3051	8	SCREW-SOCKET HEAD	
	36	2	9W-3142	6	MOUNTING	
	37	2	9W-9027	2	PLATE	
	38	2	7X-0390	2	BOLT (7/8-9X8IN)	
		2	7X-0672	2	WASHER-HARD	
	39	2	4L-8454	4	BOLT (3/8-16X1.0IN)	
	40	2	3T-4788	1	COVER	

12 FRAME AND BODY — 1 of 4 — SELP4570-01

FRAME AND BODY

8E-3299 PLATFORM GP-CAB (contd.)

100090751

NOTE	REF NO	GRAPHIC REF	PART NUMBER	QTY	PART NAME (1 2 3 4 5 6 PRODUCT LEVEL)	SEE PAGE
	41	2	8E-2518	1	COVER	
	42	2	7T-0134	1	PLATE	
	43	2	7T-0139	1	GASKET	
	44	2	7S-8724	1	GASKET	
	45	2	7S-8723	1	COVER	
	46	2	6V-1960	2	PLUG-BUTTON	
M-METRIC PART						

SELP4570-01 — 2 of 4 — FRAME AND BODY 13

FRAME AND BODY

8E-3299 PLATFORM GP-CAB (contd.)

100090751

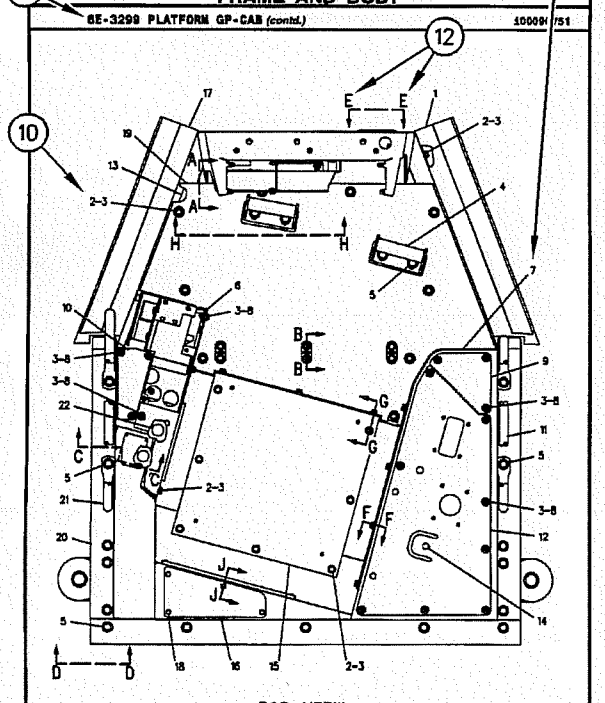

GRAPHIC #1 — g00036729

14 FRAME AND BODY — 3 of 4 — SELP4570-01

FRAME AND BODY

8E-3299 PLATFORM GP-CAB (contd.)

100090751

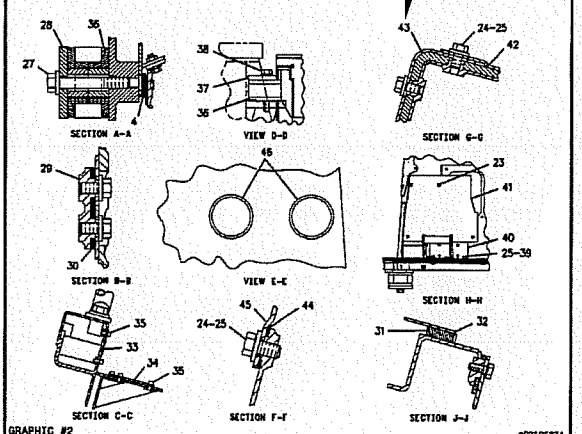

GRAPHIC #2 — g00105874

SELP4570-01 — 4 of 4 — FRAME AND BODY 16

ALLGEMEINE HINWEISE

1. MASCHINENKENNZEICHNUNG

Caterpillar-Maschinen sind mit PRODUCT IDENTIFICATION NUMBERS (PIN) (Produkt-Identnummern) gekennzeichnet. Einige Baugruppen, z.B. Motoren, Getriebe, Planierschilde und Aufreißer, sind mit SERIAL NUMBERS (S/N) (Seriennummern) gekennzeichnet. An der Maschine und am Motor befinden sich außerdem ARRANGEMENT NUMBERS (Ausrüstungsnummern) sowie in einigen Fällen MODIFICATION NUMBERS (Änderungsnummern). Sie befinden sich auf den PIN-Schildern und auf dem Typenschild im Fahrerhaus.

Bei Ersatzteilbestellungen müssen dem Händler alle diese Nummern zur Verfügung gestellt werden.

SIS ***Neu im Parts Manual***

Vom ersten Quartal 2001 ab wurde die Caterpillar Produkt-Identnummer (PIN) von 8 auf 17 Zeichen geändert. Um zur Standardisierung der Produkt-Identnummer beizutragen, sind Caterpillar und andere Baumaschinenhersteller bestrebt, die aktuellste Norm zur Produkt-Identnummerierung einzuführen. Produkt-Identnummern für Baumaschinen sind durch ISO 10261 definiert. Das neue Format der Produkt-Identnummern gilt für alle Caterpillar-Maschinen und -Stromaggregate. Die Produkt-Identschilder und -Identrahmenmarkierung enthalten die aus 17 Zeichen bestehende Identnummer. Das neue Format hat folgende Abschnitte:

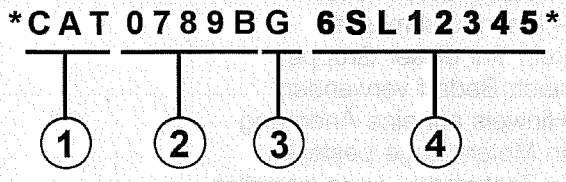

Abschnitte:

1. Caterpillars weltweiter Herstellungscode (Zeichen 1-3)

2. Modell (Zeichen 4-8)

3. Kontrollzeichen (Zeichen 9)

4. Maschinenspezifische Kennung (MIS) oder Produktsequenznummer (Zeichen 10-17). Diese wurde früher als Seriennummer bezeichnet.

Für vor dem ersten Quartal 2001 hergestellte Maschinen und Stromaggregate wird das aus 8 Zeichen bestehende PIN-Format beibehalten.

Bauteile wie z.B. Motoren, Getriebe, Achsen sowie Arbeitsgeräte werden weiterhin eine aus 8 Zeichen bestehende Seriennummer (S/N) aufweisen.

2. BESTELLEN VON ERSATZTEILEN

⚠ WARNUNG

Wenn für diese Maschine Ersatzteile benötigt werden, empfiehlt Caterpillar, ausschließlich Caterpillar-Ersatzteile oder solche zu verwenden, die die gleichen technischen Merkmale hinsichtlich Typ, Festigkeit, Werkzeugeigenschaften und die gleichen Maße aufweisen.

Bei Nichtbeachtung dieser Warnung besteht Verletzungs- oder sogar Lebensgefahr! Ferner kann Nichtbeachtung vorzeitige Ausfälle der Teile und Beschädigung der Maschine zur Folge haben.

Original Caterpillar-Ersatzteile können weltweit bei jedem Caterpillar-Händlern bestellt werden. Die umfangreichen Händlerlager enthalten normalerweise alle Teile, die Sie für Ihre Caterpillar-Maschine benötigen. Einige Händler bieten Reparatursätze, Austausch- oder werküberholte Teile an, so daß Sie eine Auswahl unter verschiedenen Reparaturmöglichkeiten treffen können. Ihre Bestellung muß folgende Angaben enthalten: Anzahl der benötigten Teile, Bestellnummer, Bezeichnung des Teils, Serien-Nr./Produkt-Ident-Nr., Ausrüstungs-Nr. und Änderungs-Nr. der Maschine, für die diese Teile benötigt werden.

3. AUFBAU DES PARTS MANUAL

Die Produktinformationen für alle Komponenten eines bestimmten Modells sind in INFORMATION ELEMENTS (Informationseinheiten) gegliedert. ENGINE ARRANGEMENT (Motorausführung) und SEAT GROUP (Fahrersitz) sind Beispiele für solche Informationseinheiten. Sie sind innerhalb jeder Gruppe alphabetisch, entsprechend der Ersatzteilbezeichnung, und zusätzlich numerisch, entsprechend der Ersatzteilnummer, geordnet.

4. INHALTSVERZEICHNIS

Das Inhaltsverzeichnis befindet sich am Anfang des Buches. Im Inhaltsverzeichnis werden die einzelnen Abschnitte des Buches aufgeführt. Die Abschnitte enthalten eine vollständige Aufstellung aller Informationseinheiten. Diese sind entsprechend ihrem Erscheinen im Buch geordnet. Das Inhaltsverzeichnis enthält Seitenangaben für Schnellverweise auf detaillierte Abbildungen und Teillisten.

5. INDEX FÜR WARTUNGSTEILE

Der Index für Wartungsteile vorn im Buch enthält die Bestellnummern, Seitenangaben, Mengenangaben und Informationen über den Einsatzbereich für die am häufigsten benötigten Ersatzteile. Die Angaben sind alphabetisch entsprechend der Teilebezeichnung geordnet.

6. INDEX

Der Index vorn im Buch enthält eine alphabetische Liste aller Informationseinheiten. Er enthält Seitenangaben für Schnellverweise auf detaillierte Abbildungen und Teillisten.

7. INDEX FÜR BESTELLNUMMERN

Hinten im Buch befindet sich ein numerischer Index, mit allen Bestellnummern und dem Hinweis auf die Seite, auf der sich die betreffende Abbildung befindet.

8. ÜBERSCHRIFTEN

Die Überschriften, die sich am Anfang jeder der Informationseinheiten befinden, enthalten Bestellnummern, Ersatzteilbezeichnungen und zusätzliche beschreibende Informationen. Produkt-Ident- und Seriennummern in den Überschriften sollten zur Auswahl der richtigen Informationen für die betreffende Maschine verwendet werden. Die Überschriften enthalten außerdem Informationen über möglichen Außendienstersatz, mögliche Baugerätekomponenten und die Baugruppe, zu der das Teil gehört.

Die erste Zeile einer Überschrift erscheint in einer größeren Schriftart, um den Anfang einer Informationseinheit zu kennzeichnen. Überschriften für zusätzliche Seiten, die zur Erläuterung einer Informationseinheit notwendig sind, erscheinen in normaler Schriftart und enthalten den Begriff "(contd.)".

9. NICHT EINZELN LIEFERBARE TEILE

In einigen Fällen ist es notwendig nicht lieferbare Teile, die selbst mit einer eigenen Teilliste im Buch vertreten sind, aufzuführen. Die Bestellnummern dieser nicht einzeln lieferbaren Teile erscheinen kursiv, wodurch angezeigt wird, daß sie nur in Verbindung mit anderen Teilen lieferbar sind.

10. REFERENZNUMMER FÜR ERSATZTEILE

Die Zahlen, die in der Spalte "Ref No" aufgeführt sind, stimmen mit den Zahlen in den beigefügten Abbildungen überein. Ein Buchstaben-Suffix kann zu einer Referenznummer hinzugefügt werden, um zu kennzeichnen, daß das Teil mit einer eigenen Teilliste im Buch aufgeführt ist. Die in der Spalte "Graphic Ref" angeführten Zahlen verweisen auf die Identifikationsnummer der Abbildung, die sich in der linken unteren Ecke der Abbildung befindet. Diese Nummer kann zusammen mit der Referenznummer des Teils angegeben werden, um die richtige Ersatzteilnummer zu ermitteln. Referenznummern können absichtlich weggelassen werden, da die Nummern der lieferbaren Ersatzteile ständig aktualisiert werden.

11. EINGERÜCKTE BEZEICHNUNGEN

Wenn eine Bezeichnung eingerückt ist, wird dadurch angezeigt, daß das Teil zu einer Baugruppe gehört, unter deren Bezeichnung es eingerückt ist.

12. REFERENZBUCHSTABEN

Falls erforderlich sind in den Abbildungen Referenzbuchstaben enthalten (z.B. A, B, C, usw.), die Leitungen und Kabelbäume von einem Punkt zum anderen verfolgen. Außerdem geben sie die Stelle an, an der getrennte Abbildungen fortgesetzt werden.

13. ABKÜRZUNGEN UND SYMBOLE

O.D. – Außendurchmesser
I.D. – Innendurchmesser
A – kein Teil dieser Gruppe
B – nach Bedarf verwenden
C – Hinweis auf eine Änderung
D – in Meter-Länge bestellen
E – in Zentimeter-Länge bestellen
F – nicht gezeigt
G – in Zoll-Länge bestellen
I – siehe "Hose Fabrication Guide"
M – metrisches Teil
R – werküberholtes Teil unter Umständen lieferbar
Y – separate Abbildung
Z – nicht einzeln lieferbar

SIS ***Neu im Parts Manual***

14. <END>

Dieses Symbol zeigt das Ende eines Informationselements an.

ANMERKUNG:

Ständig vorgenommene Verbesserungen und Weiterentwicklungen an Ihrer Maschine können Änderungen verursachen, die in der vorliegenden Ausgabe noch nicht berücksichtigt sind. Fragen zu Ihrer Caterpillar-Maschine oder diesem Ersatzteilbuch beantwortet Ihr Caterpillar-Händler.

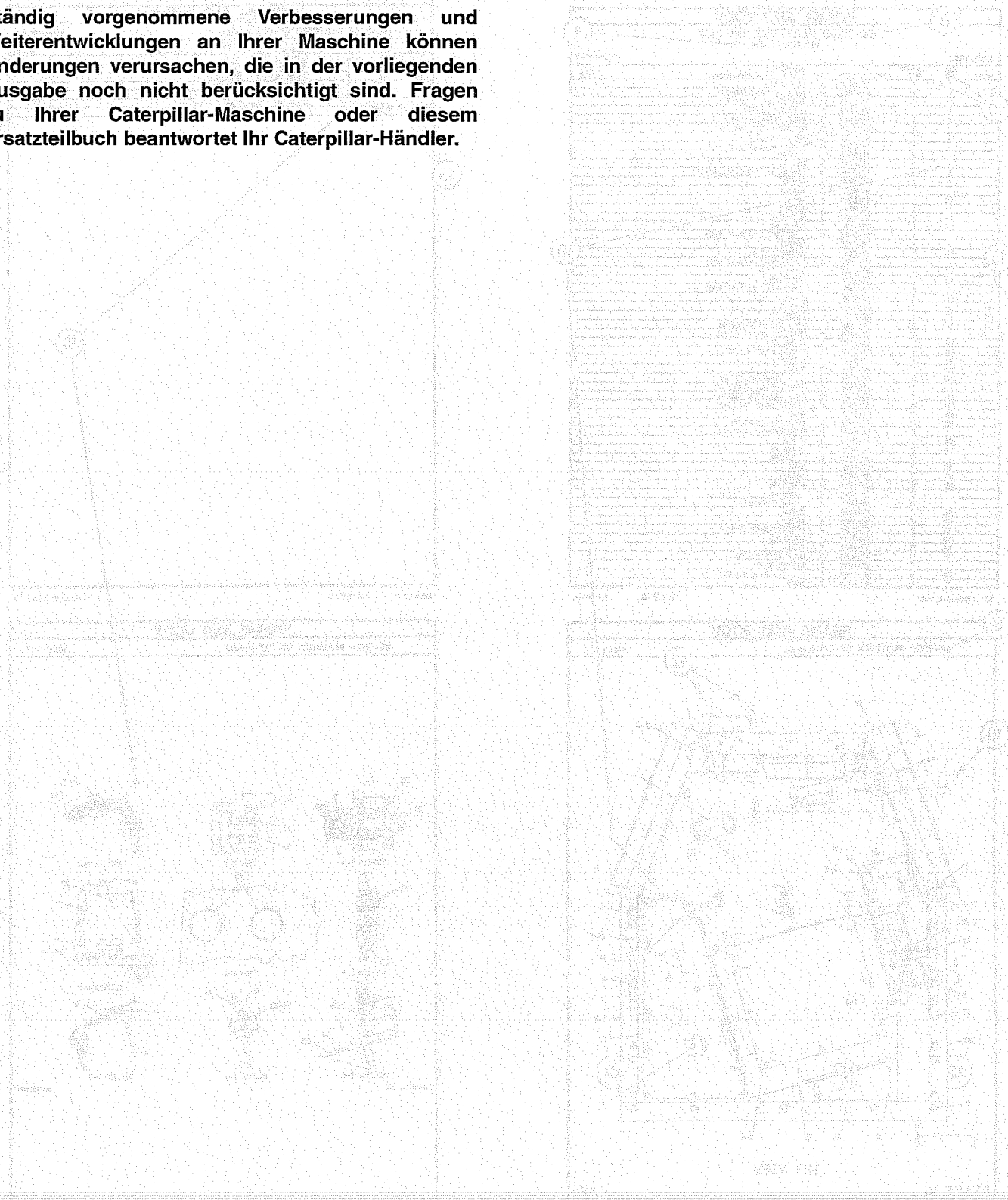

FRAME AND BODY

8E-3299 PLATFORM GP-CAB

PIN 33K1-99999

SMCS-7283 — 100090751

NOTE	REF NO	GRAPHIC REF	PART NUMBER	QTY	PART NAME (1 2 3 4 5 6 PRODUCT LEVEL)	SEE PAGE
	1	1	3T-2952	1	PLATE AS	
	2	1	6B-9992	25	BOLT (3/8-16X.750IN)	
	3	1	8P-1075	41	WASHER-HARD (3MM THK)	
	4	1	9P-1444	2	SUPPORT AS-FOOT	
	5	1	9P-2229	18	BOLT (1/2-13X1IN)	
		1	3T-[illegible]	18	WASHER-HARD (4MM THK)	
	6	1	9E-9138	1	COVER AS-LH	
		1	9F-2978	6	NUT-WELD (3/8-16 THD)	
		1	1P-9188	1	CLIP	
	7	1	7B-3411	4	COVER	
	8	1	6J-0488	18	SCREW-HEAD (3/8-16X.875IN)	
	9	1	[illegible]-0074	1	COVER	
		1	9E-9[illegible]	1	GASKET	
	10	1	9E-3248	1		
		1	9E-3290	1	GASKET	
	11	1	3T-3535	1	HANDHOLD	
	12	1	9E-9878	1	COVER AS	
		1	9F-2978	6	NUT-WELD (3/8-16 THD)	
		1	9E-9878	1	GASKET	
	13	1	7T-0131	1	FLOORPLATE AS	
		1	1F-0748	4	NUT-WELD (1/2-13 THD)	
	14	1	7V-8087	1	PLUG-BUTTON	
	15	1	7T-0138	1	PLATE AS	
		1	9F-2978	5	NUT-WELD (3/8-16 THD)	
	16	1	7T-8088	1	COVER	
		1	7T-8778	1	GASKET	
	17	1	3T-3981	1	PLATE AS	
	18	1	6T-9384	4	BOLT (1/4-20X.625IN)	
M		1	6T-4295	4	WASHER-HARD (2MM THK)	
	19	1	6I-9464	1	FLOOR MAT	
	20	1	9E-9848	1	MODULE AS-OPERATOR	
	21	1	3T-3534	1	HANDHOLD	
	22	1	9F-8871	2	PLUG	
	23	2	6T-9384	4	BOLT (1/4-20X.625IN)	
M		2	6T-4295	4	WASHER-HARD (2MM THK)	
	24	2	6B-3062	17	BOLT (3/8-16X.750IN)	
	25	2	8P-1075	21	WASHER-HARD (3MM THK)	
	26	2	7T-0136	1	SEAL	
	27	2	7X-9376	2	BOLT (3/4-10X5IN)	
		2	7X-0682	2	WASHER-HARD (6MM THK)	
	28	2	3T-3482	2	PLATE	
	29	2	3T-8290	1	PLATE AS	
		2	7B-4828	8	SPACER	
	30	2	3T-8281	1	SEAL	
	31	2	7B-9817	1	GASKET	
	32	2	7B-9816	1	COVER AS	
		2	2R-8276	2	WASHER	
		2	6P-9626	2	SCREW-KNURLED	
	33	2	9E-3428	1	COVER	
	34	2	8E-9697	1	COVER	
	35	2	8D-1031	8	SCREW-SOCKET HEAD	
	36	2	9E-3143	4	MOUNTING	
	37	2	9W-9027	2	PLATE	
	38	2	7X-0390	2	BOLT (7/8-9X5IN)	
		2	7X-0672	2	WASHER-HARD	
	39	2	4L-9454	4	BOLT (3/8-16X1.0IN)	
	40	2	3T-4788	1	COVER	

FRAME AND BODY

8E-3299 PLATFORM GP-CAB *(contd.)* — 100090751

NOTE	REF NO	GRAPHIC REF	PART NUMBER	QTY	PART NAME (1 2 3 4 5 6 PRODUCT LEVEL)	SEE PAGE
	41	2	8E-2515	1	COVER	
	42	2	7T-8134	1	PLATE	
	43	2	7T-0138	1	GASKET	
	44	2	7B-8724	1	GASKET	
	45	2	7B-8722	1	COVER	
	46	2	6V-1960	2	PLUG-BUTTON	

M-METRIC PART

FRAME AND BODY

8E-3299 PLATFORM GP-CAB *(contd.)* — 100090751

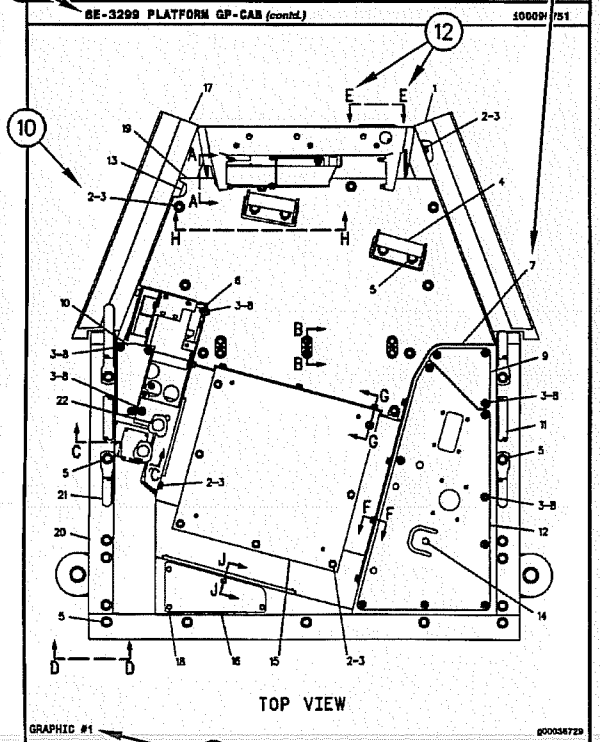

GRAPHIC #1 — g00036729

FRAME AND BODY

8E-3299 PLATFORM GP-CAB *(contd.)* — 100090751

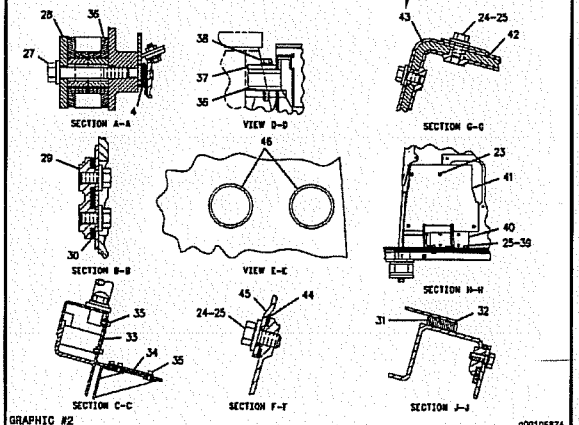

GRAPHIC #2 — g00105874

REMANUFACTURED COMPONENTS

As an option when making repairs consider Caterpillar Remanufactured Components. Components that are available through the Caterpillar Remanufactured Program are identified three ways in the parts book:

- with the letter R in the note field of the parts list
- with an R* at the beginning of the first line of the caption
- with an *R at the end of the first line of the caption

Typical components included in the Remanufacturing Program include:

ALTERNATORS
CONNECTING RODS
CRANKSHAFTS - UNDERSIZE
CRANKSHAFTS - UPGRADE TO NEW
CYLINDER HEADS
ELECTRONIC CONTROL MODULES (ECM)
ELECTRONIC SENSORS
FUEL INJECTORS
FUEL NOZZLES
FUEL PUMPS
GOVERNORS
OIL PUMPS
PISTONS
SHORT BLOCKS
STARTERS
TURBOCHARGERS - COMPLETE
TURBOCHARGER CARTRIDGES
WATER PUMPS

Caterpillar Remanufactured engines for many engine arrangements are also available.

OPTIONS DE RÉPARATION

COMPOSANTS RÉNOVÉS

Comme option de réparation, considérer les composants rénovés Caterpillar. Les composants disponibles dans le cadre du programme Caterpillar de composants rénovés sont identifiés de trois façons dans le catalogue de pièces:

- avec la lettre "R" dans l'espace note de la liste des pièces
- avec R* au début de la première ligne des légendes
- avec *R à la fin de la première ligne des légendes

Les composants suivants figurent parmi les composants typiques du programme de rénovation:

ALTERNATEURS
BIELLES
VILEBREQUINS - SOUS-DIMENSIONNÉS
VILEBREQUINS - REMIS À NEUF
CULASSES
MODULES DE COMMANDE ÉLECTRONIQUE (ECM)
CAPTEURS ÉLECTRONIQUES
INJECTEURS
TÊTES D'INJECTEURS
POMPES À CARBURANT
RÉGULATEURS
POMPES À HUILE
PISTONS
BLOCS EMBIELLÉS
DÉMARREURS
TURBOCOMPRESSEURS - COMPLETS
CARTOUCHES DE TURBOCOMPRESSEUR
POMPES À EAU

Des moteurs rénovés sont aussi disponibles pour plusieurs versions de moteur.

COMPONENTES REMANUFACTURADOS

Al hacer reparaciones, tenga en cuenta la opción de Componentes Remanufacturados Caterpillar. Los componentes que están disponibles por medio del programa de Productos Remanufacturados Caterpillar se identifican de tres maneras en el manual de piezas:

- con la letra R en el espacio de Nota de la lista de piezas
- con una R* al comienzo de la primera línea de la leyenda
- con una *R al final de la primera línea de la leyenda

Los componentes que se incluyen típicamente en el Programa de Productos Remanufacturados son:

ALTERNADORES
BIELAS
CIGÜEÑALES - BAJOMEDIDA
CIGÜEÑALES - REMANUFACTURADOS A NUEVO
CULATAS
MÓDULOS DE CONTROL ELECTRÓNICO (ECM)
SENSORES ELECTRONICOS
INYECTORES
BOQUILLAS
BOMBAS DE COMBUSTIBLE
REGULADORES
BOMBAS DE ACEITE
PISTONES
MONOBLOQUES
MOTORES DE ARRANQUE
TURBOCOMPRESORES - COMPLETOS
NÚCLEOS DE TURBOCOMPRESOR
BOMBAS DE AGUA

También hay disponibles motores Remanufacturados Caterpillar para muchas de las configuraciones de motores.

ALTERNATIVAS DE REPARO

COMPONENTES REMANUFATURADOS

Considere o uso de Componentes Remanufaturados Caterpillar ao efetuar reparos. Os componentes disponíveis através do Programa de Remanufatura Caterpillar são identificados de três formas no manual de peças:

- com um R na área da nota da lista de peças
- com um R* no princípio da primeira linha da legenda
- com um *R no final da primeira linha da legenda

Os componentes típicos que constam no Programa de Remanufatura incluem:

ALTERNADORES
BIELAS
VIRABREQUINS - SUBMEDIDAS
VIRABREQUINS - ATUALIZAÇÃO
CABEÇOTES
MÓDULOS DE CONTROLE ELETRÔNICO (ECM)
SENSORES ELETRÔNICOS
INJETORES DE COMBUSTÍVEL
BICOS DE ABASTECIMENTO DE COMBUSTÍVEL
BOMBAS DE COMBUSTÍVEL
GOVERNADORES
BOMBAS DE ÓLEO
PISTÕES
BLOCOS BÁSICOS DO MOTOR
MOTORES DE PARTIDA
TURBOALIMENTADORES - COMPLETOS
CARTUCHOS DE TURBOALIMENTADORES
BOMBAS D'ÁGUA

Motores Remanufaturados Caterpillar também encontram-se disponíveis para diversos arranjos de motor.

WERKÜBERHOLTE AT-PRODUKTE

Bei Reparaturen sollten werküberholte AT-Produkte von Caterpillar in Betracht gezogen werden. Die durch das AT-Programm von Caterpillar erhältlichen Teile sind im Parts Book auf drei verschiedene Arten gekennzeichnet:

- mit dem Buchstaben R in der Spalte NOTE der Ersatzteilliste
- mit einem R* am Anfang der ersten Zeile der Überschrift
- mit einem *R am Ende der ersten Zeile der Überschrift

Das AT-Programm umfaßt u.a. folgende Produkte:

DREHSTROMGENERATOREN
PLEUELSTANGEN
KURBELWELLEN - MIT UNTERMASS
KURBELWELLEN - MIT ORIGINALMASS
ZYLINDERKÖPFE
ELEKTRONISCHE STEUEREINHEITEN (EMC)
ELEKTRONISCHE SENSOREN
PUMPENDÜSEN
EINSPRITZDÜSEN
KRAFTSTOFFPUMPEN
DREHZAHLREGLER
ÖLPUMPEN
KOLBEN
TEILMOTOREN
ANLASSER
TURBOLADER - KOMPLETT
TURBOLADERLAUFZEUGE
KÜHLWASSERPUMPEN

Viele Motoren können durch werküberholte AT-Motoren von Caterpillar ersetzt werden.

SUPPLEMENTAL COOLANT ADDITIVES

CUSTOMER BENEFITS:

Protects against cavitation, foam, erosion, corrosion, and scale buildup in cooling systems.

- Provides measured coolant conditioner.

DESCRIPTION:

Additives deplete from the coolant with normal operation. For this reason, Supplemental Coolant Additives (SCA) must be added to all heavy duty coolants at regular intervals. In addition, when not using a fully formulated, pre-charged antifreeze, like Caterpillar's DEAC, an initial charge of SCA must be added to the cooling system. The amount of SCA added to the system is dependent on the capacity of the system.

The SCA for initial fill is provided as a liquid. SCA's for maintenance intervals are available in liquid form and as a spin-on element. (No Spin-on available for 3600 Family of Engines)

NOTE:

The amount of SCA added at initial fill is not the same as the amount added at maintenance intervals.

The coolant additive elements can be used with any ethylene or propylene glycol type antifreeze which meets ASTM D4985 or ASTM D5345 Specifications.

NOTE:

For use with standard heavy duty coolant only, not for use with Extended Life Coolant.

PARTS NEEDED:

Cooling System Capacity		Liquid SCA at Initial Fill	Liquid SCA at Maintenance*	Spin-on SCA Maintenance Element*
Liters	Gallons			
22-30	(6-8)	3P-2044 (1)	6V-3542 (1)	111-2370 (1)
30-38	(8-10)	3P-2044 (1) 6V-3542 (1)	111-2372 (1)	111-2369 (1)
38-49	(10-13)	3P-2044 (1) 8T-1589 (1)	111-2372 (1)	111-2369 (1)
49-64	(13-17)	3P-2044 (2)	8T-1589 (1)	9N-3368 (1)
64-83	(17-22)	3P-2044 (2) 8T-1589 (1)	111-2372 (1) 6V-3542 (1)	111-2371 (1)
83-114	(22-30)	3P-2044 (3) 8T-1589 (1)	3P-2044 (1)	9N-3718 (1)
114-163	(30-43)	3P-2044 (5)	3P-2044 (1) 6V-3542 (1)	111-2371 (2)
163-242	(43-64)	3P-2044 (8)	3P-2044 (2)	9N-3718 (2)

** Normal maintenance period is 250 hrs. See your Operation and Maintenance Manual for complete coolant maintenance instructions.*

( ) Indicates quantity required.

ADDITIFS POUR LIQUIDE DE REFROIDISSEMENT

AVANTAGES POUR LE CLIENT

L'additif protège contre la cavitation, la mousse, l'érosion, la corrosion et l'accumulation de dépôts dans le circuit de refroidissement.

- L'additif complémentaire fournit une quantité mesurée d'additif.

DESCRIPTION:

Les additifs s'épuisent pendant l'utilisation du moteur. C'est pourquoi l'on doit ajouter de l'additif au liquide de refroidissement/antigel pour moteurs diesel à intervalles réguliers. En plus, si l'on n'utilise pas de l'antigel entièrement formulé et pré-chargé comme le liquide de refroidissement/antigel Caterpillar pour moteurs diesel, une quantité initiale d'additif doit être ajoutée au circuit de refroidissement. La quantité d'additif à ajouter au circuit dépend de la contenance du circuit.

L'additif pour le remplissage initial est fourni sous forme liquide. L'additif pour l'entretien ultérieur est disponible sous forme liquide et sous forme d'élément à visser. (Il n'y a pas d'élément à visser pour les moteurs de la famille 3600).

NOTA:

La quantité d'additif à ajouter au remplissage initial diffère de la quantité à ajouter aux intervalles d'entretien.

Les éléments d'additif peuvent être utilisés avec tout antigel de type éthylène ou propylène-glycol conforme à la norme ASTM D4985 ou ASTM D5345.

NOTA:

A utiliser uniquement avec du liquide de refroidissement pour moteurs diesel et non avec le liquide de refroidissement longue durée.

PIÈCES NÉCESSAIRES:

Contenance du circuit de refroidissement		Additif liquide au remplissage initial	Additif liquide aux intervalles d'entretien*	Elément d'additif à visser aux intervalles d'entretien*
Litres	Gallons U.S.			
22-30	(6-8)	3P-2044 (1)	6V-3542 (1)	111-2370 (1)
30-38	(8-10)	3P-2044 (1) 6V-3542 (1)	111-2372 (1)	111-2369 (1)
38-49	(10-13)	3P-2044 (1) 8T-1589 (1)	111-2372 (1)	111-2369 (1)
49-64	(13-17)	3P-2044 (2)	8T-1589 (1)	9N-3368 (1)
64-83	(17-22)	3P-2044 (2) 8T-1589 (1)	111-2372 (1) 6V-3542 (1)	111-2371 (1)
83-114	(22-30)	3P-2044 (3) 8T-1589 (1)	3P-2044 (1)	9N-3718 (1)
114-163	(30-43)	3P-2044 (5)	3P-2044 (1) 6V-3542 (1)	111-2371 (2)
163-242	(43-64)	3P-2044 (8)	3P-2044 (2)	9N-3718 (2)

** L'intervalle d'entretien normal est de 250 heures-service. Voir le Guide d'utilisation et d'entretien pour de plus amples renseignements concernant l'entretien du circuit de refroidissement.*

( ) Indique la quantité exigée.

ADITIVOS DE REFRIGERANTE SUPLEMENTARIOS

VENTAJAS PARA EL USUARIO:

Protegen contra la cavitación, la formación de espuma, la corrosión y la acumulación de escamas en los sistemas de enfriamiento.

- Suministra un acondicionador dosificado de refrigerante.

DESCRIPCIÓN:

Los aditivos en el refrigerante se agotan con la operación normal. Por esta razón, se debe agregar Aditivo de refrigerante suplementario (SCA) a todos los refrigerantes para servicio pesado, a intervalos regulares. Además, cuando no se usa un anticongelante de precarga completo, tal como el DEAC de Caterpillar, es necesario agregar una cantidad de aditivo de refrigerante suplementario inicial al sistema de enfriamiento. La cantidad de aditivo que se debe agregar depende de la capacidad del sistema.

El SCA de llenado inicial es líquido. El que se usa para el mantenimiento está disponible tanto en líquido como en un elemento enroscable. (No hay elemento enroscable disponible para la Familia de Motores 3600).

NOTA:

La cantidad de aditivo de llenado inicial no es la misma que se agrega en los intervalos de mantenimiento.

Los elementos de aditivo de refrigerante se pueden usar con cualquier anticongelante de tipo glicol etilénico o propílico que esté de acuerdo con las especificaciones de las normas ASTM D4985 o ASTM D5345.

NOTA:

Se debe utilizar únicamente con refrigerante estándar para servicio pesado; no se debe usar con Refrigerante de Larga Duración.

PIEZAS NECESARIAS:

Capacidad del Sistema de Enfriamiento		SCA líquido de llenado inicial	SCA líquido de mantenimiento*	Elemento de mantenimiento enroscable*
litros	gal EE.UU.			
22-30	6-8	3P-2044 (1)	6V-3542 (1)	111-2370 (1)
30-38	8-10	3P-2044 (1) 6V-3542 (1)	111-2372 (1)	111-2369 (1)
38-49	10-13	3P-2044 (1) 8T-1589 (1)	111-2372 (1)	111-2369 (1)
49-64	13-17	3P-2044 (2)	8T-1589 (1)	9N-3368 (1)
64-83	17-22	3P-2044 (2) 8T-1589 (1)	111-2372 (1) 6V-3542 (1)	111-2371 (1)
83-114	22-30	3P-2044 (3) 8T-1589 (1)	3P-2044 (1)	9N-3718 (1)
114-163	30-43	3P-2044 (5)	3P-2044 (1) 6V-3542 (1)	111-2371 (2)
163-242	43-64	3P-2044 (8)	3P-2044 (2)	9N-3718 (2)

** El período normal de mantenimiento es de 250 horas. Para ver las instrucciones completas sobre el mantenimiento del refrigerante, consulte el Manual de Operación y Mantenimiento.*

( ) Indica la cantidad necesaria.

ADITIVOS SUPLEMENTARES DO LÍQUIDO ARREFECEDOR

BENEFÍCIOS PARA O CLIENTE:

Protege contra cavitação, espuma, erosão, corrosão e acúmulo de crostas nos sistemas de arrefecimento.

- Fornece uma quantidade pré-determinada de condicionador de arrefecimento.

DESCRIÇÃO:

Com a operação normal, os aditivos se esgotam do líquido arrefecedor. Por isso, Aditivos Suplementares do Líquido Arrefecedor (SCA) devem ser acrescentados a todos os líquidos arrefecedores para serviço pesado em intervalos regulares. Além disso, quando um anticongelante pré-carregado, totalmente formulado não for usado, como o DEAC Caterpillar, uma carga inicial de SCA deve ser acrescentada ao sistema de arrefecimento. A quantidade de SCA acrescentada ao sistema depende da capacidade do sistema.

O SCA para abastecimento inicial é fornecido em forma de líquido. Os aditivos suplementares (SCA) para intervalos de manutenção estão à disposição em forma líquida e como um elemento com roscas. (Exceto os Motores da Família 3600)

NOTA:

A quantidade de SCA adicionada no abastecimento inicial não é a mesma que a acrescentada nos intervalos de manutenção.

Os elementos do aditivo do líquido arrefecedor podem ser usados com qualquer tipo de anticongelante etileno ou propileno que satisfaz as Especificações ASTM D4985 ou ASTM D5345.

NOTA:

Para uso apenas com líquido arrefecedor para serviço pesado padrão, não deve ser usado com Líquido Arrefecedor de Vida Longa.

PEÇAS NECESSÁRIAS:

Capacidade do Sistema de Arrefecimento		Líquido SCA Durante Abastecimento Inicial	Líquido SCA Durante Manutenção*	Elemento de Manutenção de SCA com Roscas*
Litros	Galões			
22-30	6-8	3P-2044 (1)	6V-3542 (1)	111-2370 (1)
30-38	8-10	3P-2044 (1) 6V-3542 (1)	111-2372 (1)	111-2369 (1)
38-49	10-13	3P-2044 (1) 8T-1589 (1)	111-2372 (1)	111-2369 (1)
49-64	13-17	3P-2044 (2)	8T-1589 (1)	9N-3368 (1)
64-83	17-22	3P-2044 (2) 8T-1589 (1)	111-2372 (1) 6V-3542 (1)	111-2371 (1)
83-114	22-30	3P-2044 (3) 8T-1589 (1)	3P-2044 (1)	9N-3718 (1)
114-163	30-43	3P-2044 (5)	3P-2044 (1) 6V-3542 (1)	111-2371 (2)
163-242	43-64	3P-2044 (8)	3P-2044 (2)	9N-3718 (2)

** O período normal de manutenção é de 250 horas. Consulte o Manual de Operação e Manutenção para obter instruções completas quanto à manutenção do líquido arrefecedor.*

( ) Indica a quantidade exigida.

KÜHLMITTELZUSATZ

VORTEILE FÜR DEN KUNDEN:

Schutz gegen Kavitation, Schaumbildung, Erosion, Korrosion und Kesselsteinbildung in Kühlsystemen.

- Richtig dosierter Kühlmittelzusatz

BESCHREIBUNG:

Additive erschöpfen sich während des Motorbetriebs. Deshalb muß allen HD-Kühlmitteln regelmäßig Kühlmittelzusatz beigefügt werden. Wenn bei Erstfüllung kein vollwertiges Fertigkühlmittel, wie das Frostschutz- und Kühlmittel für Dieselmotoren von Caterpiller (DEAC), verwendet wird, muß bei Erstfüllung Kühlmittelzusatz beigefügt werden. Wieviel Kühlmittelzusatz beigefügt werden muß, hängt vom Inhalt des Kühlsystems ab.

Für Erstfüllung ist Kühlmittelzusatz nur in flüssiger Form erhältlich. Für Wartungsintervalle ist Kühlmittelzusatz in flüssiger Form und als Zusatzelement erhältlich. (Für die Motorbaureihe 3600 sind keine Zusatzelemente erhältlich.)

ANMERKUNG:

Die Kühlmittelmenge bei Erstfüllung ist nicht die gleiche Menge, die bei Wartungsintervallen beigefügt werden muß.

Die Kühlmittelzusatzelemente können mit allen Frostschutzmitteln auf Ethylen- oder Propylenglykolbasis verwendet werden, die den Standards nach ASTM D4985 oder ASTM D5345 entsprechen.

ANMERKUNG:

Den Kühlmittelzusatz nicht mit Langzeitkühlmittel (ELC) von Caterpillar verwenden. Der Kühlmittelzusatz ist nur für HD-Kühlmittel bestimmt.

TEILEBEZEICHNUNG:

Kühlsysteminhalt		Kühlmittelzusatz bei Erstfüllung	Flüssiger Kühlmittelzusatz bei Wartung*	Kühlmittelzusatzelement bei Wartung*
Liter	US-Gall.			
22-30	(6-8)	3P-2044 (1)	6V-3542 (1)	111-2370 (1)
30-38	(8-10)	3P-2044 (1) 6V-3542 (1)	111-2372 (1)	111-2369 (1)
38-49	(10-13)	3P-2044 (1) 8T-1589 (1)	111-2372 (1)	111-2369 (1)
49-64	(13-17)	3P-2044 (2)	8T-1589 (1)	9N-3368 (1)
64-83	(17-22)	3P-2044 (2) 8T-1589 (1)	111-2372 (1) 6V-3542 (1)	111-2371 (1)
83-114	(22-30)	3P-2044 (3) 8T-1589 (1)	3P-2044 (1)	9N-3718 (1)
114-163	(30-43)	3P-2044 (5)	3P-2044 (1) 6V-3542 (1)	111-2371 (2)
163-242	(43-64)	3P-2044 (8)	3P-2044 (2)	9N-3718 (2)

** Der normale Wartungsintervall beträgt 250 Betriebsstunden. Für vollständige Anweisungen zur Wartung des Kühlsystems, siehe Betriebs- und Wartungshandbuch.*

( ) Erforderliche Anzahl

NOMENCLATURA DE PEÇAS INGLÊS-PORTUGUÊS

INGLÊS	PORTUGUÊS
ABOVE	Acima
ABSORBER	Amortecedor
ACCESSORY	Acessório
ACTUATOR	Acionador
ADAPTER	Adaptador
ADHESIVE	Adesivo
ADJUSTER	Adjustador
AFTERCOOLER	Pós-resfriador
AIR	Ar
AIR CLEANER	Purificador de ar
AIR SYSTEM	Sistema de ar
ALARM	Alarme
ALTERNATOR	Alternador
AMMETER	Amperímetro
ANCHOR	Âncora, fixador
ANGLE	Ângulo, canto
ANVIL A.	Bigorna conj.
ARBOR	Mandril, eixo
ARM	Braço
ARMATURE	Armadura, Induzida
ARM REST	Apoio para braço
ARRESTER	Detentor
ASSEM. = ASSEMBLY	Conjunto
ATTACHMENT	Acessório
AVAILABLE	Disponível
AXLE	Eixo
AXLE SHAFT	Semi-eixo, ponta
BACK-UP ALARM	Alarme de marcha à ré
BACK-UP LIGHT	Luz da marcha à ré
BACK-UP SWITCH	Interruptor de marcha à ré
BACKBOARD	Prancha traseira
BACK CUSHION	Encosto
BACKHOE	Retroescavadeira
BAFFLE	Defletor
BAG	Saco, sacola
BAIL	Alça
BALANCER	Balanceador
BALL	Esfera
BALLCHECK ASSEMBLY	Conjunto de (válvula) de esfera de retenção
BALL JOINT	Junta esférica
BALLSTUD	Munhão esférica
BAND	Banda, cinta, tira
BAND & LINING	Banda e revestimento
BAR	Barra
BARREL	Cilindro
BARRIER	Barreira
BASE	Base
BASIN	Bacia, coletor
BATTERY	Bateria
BEAM	Barra, viga, trave
BEARING	Mancal, rolamento
BEARING BALL	Rolamento de esferas
BEARING-SLEEVE	Mancal tipo luva
BEARING-NEEDLE	Rolamento de agulha
BEARING-ROLLER	Rolamento tipo roletes
BELL	Campânula
BELLCRANK	Alavanca angular
BELLOWS	Fole
BELOW	Abaixo
BELT	Correia, cinto
BELT TIGHTENER	Ajustador de correia
BEVEL GEAR	Coroa
BIT-CUTTER	Broca, fresa
BLACK	Preto
BLADE	Lâmina
BLEEDER	Sangrador
BLOCK	Bloco, calço
BLOWER	Ventilador
BLUE	Azul
BOARD	Prancha, tábua
BODY	Corpo
BOLT	Parafuso
BONNET	Tampa
BOOM	Lança
BOOSTER	Reforçador
BOOT	Protetor contra poeira
BORE	Furo
BOSS	Ressalto
BOTH	Ambos (as)
BOTTOM	Fundo
BOWL	Caçamba
BOX	Caixa
BRACE	Tirante
BRACKET	Suporte
BRAKE	Freio
BREAKER	Interruptor
BREATHER	Respiro
BRIDGE	Braço
BROWN	Marrom
BRUSH	Escova
BUCKET	Caçamba
BULB	Bulbo
BULLDOZER	Bulldozer
BUMPER	Pára-choque
BUSHING	Bucha
BUTTON	Botão
BUZZER WARNING	Alarme sonoro
C = CHANGE	Alteração
CAB	Cabina
CABINET	Gabinete
CABLE	Cabo
CAGE	Alojamento
CALIPER	Calibrador
CAM	Excêntrico, ressalto
CAMSHAFT	Eixo-comando-de-válvulas
CANOPY	Coberta, toldo

NOMENCLATURA DE PEÇAS INGLÊS-PORTUGUÊS

INGLÊS	PORTUGUÊS
CAP	Tampa
CAPACITOR	Capacitor, condensador
CARBURETOR	Caburador
CARCASS	Carcaça
CARRIER	Suporte
CARTON	Caixa de papelão
CARTRIDGE	Cartucho
CASE	Caixa, alojamento
CASING	Invólucro, revestimento
CASTER	Rolete, roldana
CAST IRON	Ferro fundido
CATWALK	Passadiço
CENTER	Centro
CHAIN	Corrente
CHAMBER	Câmara
CHANGEOVER	Modificação
CHANNEL	Canal
CHASSIS	Chassi, armação
CHECK-VALVE	Válvula de retenção
CIRCUIT	Circuito
CIRCUIT BREAKER	Interruptor de circuito
CLAMP	Braçadeira
CLASP	Fecho, grampo
CLEANER	Purificador
CLEVIS	Forquilha, garfo
CLIP	Clipe, presilha, grampo
CLOSURE	Fecho
CLUTCH	Embreagem
COARSE	Grosso, áspero
COATING	Capa, revestimento
COCK	Torneira
COIL	Bobina, serpentina
COLLAR	Colar
COLLECTOR	Coletor
COLLET	Mandril
COLUMN	Coluna
COMPACTOR	Compactador
COMPARTMENT	Compartimento
COMPLETE	Completo
COMPOUND	Composto
COMPRESSOR	Compressor
CONCAVE	Côncavo
CONDITIONER	Condicionador
CONDUIT	Conduite, eletroduto
CONE	Cone
CONNECTING	Ligação
CONNECTED ROD	Biela
CONNECTION	Conexão
CONNECTOR	Conetor
CONSISTS OF	Consiste de
CONSOLE	Consolo
CONTACT	Contato, platinado
CONTACTOR	Contactador
CONTINUED FROM	Continuação de
CONTROL	Controle
CONVERSION	Conversão
CONVERTER	Conversor
COOLER	Arrefecedor
COOLING	Arrefecimento
CORK	Cortiça
CORE	Núcleo
CORNER	Canto
COTTER PIN	Contrapino
COUNTER	Contador, tacômetro
COUNTERWEIGHT	Contrapeso
COUPLER	Acoplador, engate
COUPLING	Acoplamento, conexão
COVER	Tampa
COWL	Capota
COWLING	Capota
CRADLE	Armação, suporte
CRANK	Manivela
CRANKCASE	Cárter
CRANKSHAFT	Virabrequim
CROSS UNION	Junta transversal
CROSSBAR	Barra transversal
CUP	Capa, anel externa
CURTAIN	Cortina
CUSHION	Almofada, amortecedor
CUTTER	Fresa, cortador
CUTTING EDGE	Borda cortante
CYLINDER	Cilindro
CYLINDER BLOCK	Bloco do motor
CYLINDER HEAD	Cabeçote
DAMPER	Amortecedor
DARK GREEN	Verde escuro
DASH	Painel
DASH PANEL	Painel de Instrumento
DECELERATOR	Desacelerador
DEFLECTOR	Defletor
DETENT	Retém, pino de trava
DIAGRAM-WIRING	Diagrama dos circuitos elétricos
DIAL	Medidor de dial
DIAPHRAGM	Diafragma
DIESEL ENGINE COMPLETE	Motor diesel completo
DIFFERENTIAL	Diferencial
DIFFUSER	Difusor
DIMMER	Redutor de luminosidade
DIODE	Diodo
DIRECTOR	Diretor
DISC	Disco
DISCONNECT	Desligar
DISPOSABLE	Disponível, substituível
DISSIPATOR	Dissipador de calor
DISTRIBUTOR	Distribuidor
DM = DECIMETER	dm = decímetro

NOMENCLATURA DE PEÇAS INGLÊS-PORTUGUÊS

INGLÊS	PORTUGUÊS
DOME LIGHT	Lâmpada do teto
DOOR	Porta
DOWEL	Pino-guia, cavilha
DOWNSHIFT	Mudança para marcha mais baixa
DOZER	Bulldozer (lâmina)
DRAIN	Dreno
DRAWBAR	Barra de tração
DRILL	Broca
DRILLED	Broqueado, perturado
DRIVE	Comando, acionamento, propulsão
DRIVER	Acionador, mecanismo propulsor
DRIVESHAFT	Eixo acionador, eixo de transmissão
DRUM	Tambor
DUCT	Conduto, canal
EACH	Cada
EDGE	Borda, canto
EFFECTIVE WITH	Efetivo a partir de
EJECTOR	Ejetor
ELBOW	Cotovelo
ELEMENT	Elemento
ENCLOSURE	Cobertura
END	Extremidade
END BIT	Canto de lâmina
END VIEW	Vista traseira
ENGINE	Motor
ENGINE ARRANGEMENT	Arranjo do motor
EXCEPT	Exceto
EXHAUST	Escape
EXHAUST PIPE	Cano de escape
EXPANDER	Expansor
EXPANSION PLUG	Bujão de expansão
EXTENSION	Extensão
EXTINGUISHER	Extintor
EXTRACTOR	Extrator
EYE	Olhal
EYEBOLT	Parafuso de olhal
FABRIC	Tecido, tela textura
FACING	Revestimento, forro
FAN	Ventilador
FASTENED	Fixo, preso
FASTENER	Fixador, prendedor
FENDER	Pára-lamas
FERRULE	Virola
FIELD COIL	Bobina indutora, ou de campo
FIELD REPLACEMENT	Reposicão ou substituicão no campo
FILLER	Bocal de enchimento

INGLÊS	PORTUGUÊS
FILM	Película
FILTER	Filtro
FINAL DRIVE	Comando final
FINGER	Dedo
FIREWALL	Parede contra fogo
FITTING	Graxeira, conexão
FIXTURE	Dispositivo, Aparelho
FLANGE	Flange
FLASHER	Luz intermitente
FLOAT	Flutuar, livre
FLOOD-LAMP	Farol
FLOOR	Piso
FLOORMAT	Tapete
FLOORPLATE	Chapa do piso
FLYWEIGHT	Peso volante
FLYWHEEL	Volante
FOLLOWER	Seguidor
FOOT	Pé
FORK	Garfo
FOR USE WITH	Para usar com
FOUNDATION	Assentamento, alicerce
FRAME	Armacão, chassi
FRONT	Frente, dianteiro
FT = FOOT	Pé
FUEL INJECTION	Injecão de combustível
FUEL PUMP	Bomba de combustível
FUEL RATIO	Limitador de combustível
FUEL SYSTEM	Sistema do combustível
FUEL TANK	Tanque do combustível
FUMES DISPOSAL	Eliminação de vapores do cárter
FUSE	Fusível
G = GROUP	Grupo
GAGE	Indicador, manômetro
GAP	Folga, lacuna, intervalo
GASKET	Junta
GASKET KIT	Jogo de junta
GATE	Entrada, trava
GAUGE	Indicador, manômetro
GEAR	Engrenagem, marcha
GEAR BOX	Caixa de engrenagem
GEAR PUMP	Bomba de engrenagem
GENERATOR	Gerador
GLAND	Junta, gaxeta, vedacão sobreposta
GLASS	Vidro
GLOW PLUG	Vela incandescente
GOVERNOR	Governador
GRAB IRON	Balaústre corrimão
GRATE	Grade, grelha
GRAY	Cinza
GRID	Grade, grelha
GRILL	Grade, grelha
GRIP	Pega, garra, cabo

NOMENCLATURA DE PEÇAS INGLÊS-PORTUGUÊS

INGLÊS	PORTUGUÊS
GROMMET	Ilhós
GROUND BRUSH	Escova-terra
GROUND (ELECTRIC)	Terra (eletricidade)
GROUSER	Garra (de sapata)
GUARD	Protetor
GUIDE	Guia
GUSSET	Cantoneira
HACKSAW	Serra para metais
HALF	Metade, meio (a)
HALF LINK	Semi-elo
HAMMER	Martelo
HAND CONTROL	Controle manual
HANDLE	Cabo, alça
HANDRAIL	Corrimão, balaústre
HANGER	Suporte, dispositivo de suspensão
HARDWARE	Ferragem
HARDWARE KIT	Jogo de ferragem
HARNESS	Chicote
HEAD = HD	Cabeça
HEADER	Coletor
HEADLAMP	Farol dianteiro
HEADLIGHT	Farol dianteiro
HEAT SINK	Difusor de calor
HEATER	Aquecedor
HIGH-IDLE	Marcha acelerada em vazio
HINGE	Dobradiça, articulacão
HITCH	Engate
HOIST	Guincho, talha
HOLD	Suporte, fixador
HOLD DOWN	Fixar, reter, manter abaixado
HOLDER	Fixador, suporte
HOLE	Furo, buraco
HOOD	Capô
HOOD & DASH	Capô e painel
HOOK	Gancho
HORN	Buzina
HOSE	Mangueira
HOUSING	Alojamento
HUB	Cubo
HYDRAULIC	Hidráulico
ID = INSIDE DIAMETER	Diâmetro interno
IDLER	Roda-guia
IDLER & SHAFT	Roda-guia e eixo
IDLER GEAR	Engrenagem intermediária
IDLER PULLEY	Polia intermediária
IMPELLER	Impulsor, rotor
IN = INCH	Polegada
INCLUDES	Inclui
INDICATE	Indicam
INDICATOR	Indicador
INLAY	Incrustação
INLET	Admissão, entrada
INPUT	Entrada
INSERT	Inserção
INSTALLATION	Instalação
INSTALLED ON MODEL	Instalação no modelo
INSTRUCTION	Instrução
INSTRUMENT	Instrumento
INSULATED BRUSH	Escova isolada
INSULATION	Isolação, isolamento
INSULATOR	Isolante, isolador
INTAKE	Admissão
INTERLOCK	Trava interna
INTERMEDIATE	Intermediário
INTERNAL	Interno
INVERTER	Inversor
IRON	Ferro
JACK	Macaco
JAW	Mandíbula, garra
JET	Jato, vaporizador
JOINT	Junta, articulação
JUNCTION	Junção
KEY	Chaveta
KINGBOLT	Pino de engate
KNIFE	Faca, lâmina
KNOB	Maçaneta, botão
LADDER	Escada
LAMP	Lâmpada
LARGE	Grande
LATCH	Trinco, lingüeta
LEAD	Condutor, cabo
LEG	Perna
LENS	Lente
LEVEL	Nível
LEVER	Alavanca
L.H. = LEFT HAND	Lado esquerdo
LID	Placa, tampa
LIFT	Levantar
LIFT CYLINDER	Cilindro de levantamento
LIFTER	Tucho
LIFTING EYE	Olhal de levantamento
LIGHT GREEN	Verde claro
LIGHTING	Sistema de iluminação
LINE	Tubulação
LINER	Camisa
LINES & PUMP	Tubulação e bomba
LINES & VALVE	Tubulação e válvula
LINING	Revestimento, lona
LINK	Elo
LINKAGE	Articulação
LIP	Lábio, borda
LISTED	Relacionamento
LITERATURE	Literatura
LOCATED	Localizado

NOMENCLATURA DE PEÇAS INGLÊS-PORTUGUÊS

INGLÊS	PORTUGUÊS
LOCATOR	Localizador
LOCK	Trava
LOCKNUT	Contraporca
LOCKWASHER	Arruela de pressão
LOCKWIRE	Arame de trava
LONG	Longo
LOOM	Tubo isolador
LOW IDLE	Marcha lenta
LOUVER	Persiana
LOWER	Abaixar, inferior
LUBRICANT	Lubrificante
LUG	Ressalto, orelha
MACHINE SCREW	Parafuso de fenda
MAGNET	Imã magneto
MAIN	Principal
MAINTENANCE	Manutenção
MANIFOLD	Coletor
MARKED	Marcado (a)
MARKER	Marcador
MASTER PIN	Pino mestre
MAT	Capacho, esteira
METER	Medidor, contador
MINOR	Menor
MIRROR	Espelho
MISCELLANEOUS	Miscelânea
MODIFICATION	Modificação
MOLDBOARD	Armação da lâmina
MOTOR	Motor
MOULDING	Moldura
MOUNT	Montar
MOUNTED	Montado (a)
MOUNTING	Montagem
MUFFLER	Silenciador
NAMEPLATE	Plaqueta de identificação
N.C. (THREAD)	Rosca grossa
NEEDLE	Agulha
N.F. (THREAD)	Rosca fina
NIB	Ponta, bico
NIPPLE	Conexão
NONE	Nenhum (a)
NORMALIZING	Normalização
NOT PART OF	Não faz parte de
NOZZLE	Bocal, bico injetor
N/S = NOT SERVICED	Não vendável
NUMBER (No)	Número (No)
NUT	Porca
NUT-WING	Porca borboleta
NUT-CASTLE	Porca acastelada
NUT-WELD	Porca-soldada
NUT-CAP	Porca cega
NUT-HEX	Porca sextavada
NUT-LOCK	Contraporca
NUT-IMPERIAL	Porca imperial
NUT-JAM	Porca de trava, contraporca
NUT-LOW CROWN	Porca de meia coroa
NUT-RETAINING	Porca de retenção
NUT-SELF LOCK	Porca de autotravamento
NUT-SLOTTED	Porca fendada
NUT-SPANNER	Porca para chaves
O.D. = OUTSIDE DIAMETER	Diâmetro externo
O-RING	Anel "O"
OIL	Óleo
OILPAN	Cárter
OIL PUMP	Bomba de óleo
OIL SYSTEM	Sistema de lubrificação
OILER	Almotolia, lubrificador
ORANGE	Laranja
TO ORDER	Para pedir
ORIFICE	Orifício
OUTER	Externo
OUTER RACE	Anel externo
OUTPUT	Saída
OVERALL	Geral, total
OVERHAUL	Revisão
OVER SIZE	Sobremedida
PACKING	Embalagem, gaxeta
PAD	Coxim, calço
PADLOCK	Cadeado
PAINT	Pintura
PAN	Cárter
PANEL	Painel
PARKING BRAKE	Freio de estacionamento
PARTITION	Separacão
PARTS G	Grupo de peças
PARTS OF	Peça de
PARTS OF ALL ENGINE ARRANGEMENTS	Peças de todos os arranjos do motor exceto
PAWL	Garra
PEDAL	Pedal
PEDESTAL	Pedestal
PERFORMANCE	Desempenho
PILOT	Piloto
PIN	Pino
PIN & BUSHING	Pino e bucha
PIN-COTTER	Contrapino
PINCH BAR	Pé de cabra
PINION	Pinhão
PIPE	Tubo
PISTON	Pistão
PIVOT	Articulação, pivô
PLANETARY	Planetário
PLATE	Placa
PLATFORM	Plataforma
PLUG	Bujão
PLUNGER	Pistão, êmbolo
POINT	Ponta, ponto

NOMENCLATURA DE PEÇAS INGLÊS-PORTUGUÊS

INGLÊS	PORTUGUÊS
POINTER	Ponteiro
POLE & COIL	Polo e bobina
POLE	Polo, lança, vara
POPPET	Gatilho
POST	Poste, coluna
POTENTIOMETER	Potenciômetro
POWER TAKE OFF	Tomada de força
POWER TRAIN	Trem de força
PRE-SCREENER	Tela protetora
PRECHAMBER	Câmara de pré-combustão
PRECLEANER	Pré-purificador
PRECOMBUSTION	Pré-combustão
PRESS	Prensa
PRESS = PRESSURE	Pressão
PREVIOUS	Prévio, anterior
PRIMARY	Primário, principal
PROBE	Prova
PROJECTOR	Projeter
PROTECTION	Proteção
PROTECTOR	Proteter
PULLER	Extrator, sacador
PULLEY	Polia
PUMP	Bomba
PURPLE	Roxo
PUSHROD	Haste de empuxo
QTY = QUANTITY	Quantidade
RACE	Pista
RACE & ROLLER	Pista e rolete
RACK	Cremalheira
RADIATOR	Radiador
RAIL	Trilho, guia
RANGE TRANSM	Transmissão manual
RATCHET	Catraca
REAR	Traseiro (a)
REBORED	Escareado, alargado
REBUILD KIT	Jogo de recondicionamento
RECEPTACLE	Recipiente
RECTIFIER	Retificador
RED	Vermelho
REDUCER	Redutor
REFER	Referir
REGULATOR	Regulador
RELATED REPAIR ITEMS	Itens de reparos relacionados
RELAY	Relé
RELIEF VALVE	Válvula de alívio
REPAIR G	Grupo de reparo
REPAIR KIT	Jogo de reparo
REPAIR ITEMS	Itens de reparo
REPLACEMENT	Reposição, substituição
REQUIRED	Necessário
RESERVOIR A	Reservatôrio
RESIN	Resina
RESISTOR	Resistência
RETAINER	Fixador
RETARDER	Retardador
REVERSIBLE	Reversível
R.H. = RIGHT HAND	Lado direito
RIM	Aro
RIM & TIRE	Aro e pneu
RING	Anel
RIVET	Rebite
ROCKET	Balancim
ROD	Haste
ROD END	Extremidade da haste
ROLLER	Rolete
ROPE-STARTING	Partida à corda
ROTATOR	Girador
ROTOCHAMBER	Càmara pneumática
ROTOCOIL	Girador de válvula
ROTOR	Rotor
RUST INHIBITOR	Antioxidante
SADDLE	Sela, assento
SAFETY	Segurança
SAFETY TREAD	Tiras antiderrapante
SCRAPER	Tampa
SCREEN	Tela
SCREW	Parafuso
SCREW-HEX HD	Parafuso de cabeça hexagonal
SCREW-KIT	Jogos de parafuso
SCREW-MACHINE	Parafuso de fenda
SCREW-ROUND HD	Parafuso de cabeça redonda
SCREW-FLANGED	Parafuso com flange
SCREW-LOCKING	Parafuso de trava
SCREW-THUMB	Parafuso de orelhas
SCREWDRIVER	Chave de fenda
SEAL	Retentor
SEALED UNIT	Unidade vedada
SEALER	Vedador isolante
SEAT	Assento
SECONDARY	Secundário
SECTION	Seção
SEGMENT	Segmento
SENDER	Emissor
SENSOR	Sensor
SEPARATE	Separar, separado
SEPARATOR	Separador
SERIAL NUMBER PLATE	Placa de número de série
SERVICE	Serviço, manutenção
SERVICE KIT	Jogo de manutenção
SERVICE METER	Horômetro
SETSCREW	Parafuso de fixação
SHACKLE	Grilheto, anel, manilha
SHAFT	Eixo
SHANK	Porta-ponta do escarificador

NOMENCLATURA DE PEÇAS INGLÊS-PORTUGUÊS

INGLÊS	PORTUGUÊS
SHEAVE	Polia, roldana
SHEET	Folha, lâmina
SHELL	Invólucro, cápsula, casquilho
SHIELD	Blindagem, protetor
SHIFT	Mudança
SHIM	Calço
SHIPPING	Embarque
SHOCK ABSORBER	Amortecedor de choques
SHOCKMOUNT	Montagem a prova de choques
SHOE	Sapata
SHORT	Curto
SHOWN	Ilustrado, mostrado
SHROUD	Tampa de proteção
SHUNT	Derivação
SHUT OFF	Desligar, parada
SHUTTLE	Pistão de vaivém
SIDE	Lateral
SIDE VIEW	Vista lateral
SILICONE	Silicone
SINK	Absorvente de calor
SKIVING	Desbaste
SLACK ADJUSTER	Adjustador de folga
SLEEVE	Luva, manga, camisa
SLIDER	Cursor, deslizador
SLIDE RAIL	Trilho deslizante
SLING	Cabos, amarras, linga
SLINGER	Defletor
SLUG	Pistão de reação, pistãozinho
SMALL	Pequeno
SNAP RING	Anel de retenção, anel de pressão
SNUBBER	Amortecedor
SOCKET	Soquete, tomada
SOLENOID	Solenóide
SPACER	Espaçador
SPARE	Sobressalente
SPARK PLUG	Vela de ignição
SPECIAL	Especial
SPEEDOMETER	Velocimetro
SPIDER	Cruzeta
SPINDLE	Ponta de eixo
SPLINE	Estria
SPOOL	Carretel
SPOUT	Calha, tubo
SPRING	Mola
SPROCKET	Roda motriz, roda dentada
STABILIZER	Estabilizador
STACK	Chaminé, cano de escapamento
STAND	Suporte, cavalete
STANDPIPE	Suporte vertical de sucção
STAPLE	Grampo
STARTER	Arranque motor de partida
STATOR	Estator
STEERING	Direção
STEM	Haste
STEP	Degrau
STICK	Vareta
STOP	Parar
STORAGE	Armazenagem
STRAINER	Tela filtrante
STRAP	Tira, cinta, suporte de fixação
STREET ELL	Conexão cotovelo
STRIP	Tira, fita, listra
STROKE	Curso do pistão
STUD	Prisioneiro
SUMP	Tanque, reservatório
SUPPLY VALVE	Válvula de suprimento
SUPPORT	Suporte
SUSPENSION	Suspensão
SWITCH	Interruptor
SWIVEL	Articulação giratória
TAB	Tira, aba, lingüeta
TABLE	Mesa
TACHOGRAPH	Tacógrafo
TACHOMETER	Tacômetro
TAG	Etiqueta
TAIL LAMP	Farol traseiro
TAN	Castanho
TANG	Lingüeta
TANK	Tanque
TAP	Macho
TAPE	Fita
TAPPET	Tucho
TEE	Conexão em "T"
TEMP. = TEMPERATURE	Temperatura
TERMINAL	Terminal
TEST UNIT	Unidade de teste
TESTER	Aparelho de teste
THERMISTOR	Termistor
THERMOCOUPLE	Termopar
THERMOMETER	Termômetro
THERMOSTAT	Termostato
THERMOSWITCH	Interruptor térmico
THICK	Grosso (a) espesso (a)
TIE	Ligação, tirante
THREAD (OF NUT)	Rosca (de porca)
THROTTLE	Acelerador de
THROWER	Defletor
THRU = THROUGH	Através de
TIGHTENER	Tensor
TILT CYLINDER	Cilindro de inclinação
TIMING	Sincronização, Distribuição
TIP	Ponta

NOMENCLATURA DE PEÇAS INGLÊS-PORTUGUÊS

INGLÊS	PORTUGUÊS
TIRE	Pneu
TIRE & RIM	Pneu e aro
TONGUE	Língua, lingueta
TOOL	Ferramenta
TOOLCABINET	Armário para ferramenta
TOOTH/TEETH	Dente/dentes
TOP	Topo, parte superior
TORQUE	Torque
TORQ. CONV.	Conversor de torque
TORQ. DIVIDER	Divisor de torque
TOWER	Torre
TRACK	Esteira
TRACK PIN	Pino de esteira
TRACTOR	Trator
TRAILING UNIT	Unidade rebocada
TRANSFER	Decalcomania
TRANSFORMER	Transformador
TRANSISTOR	Transistor
TRANSMISSION	Transmissão
TRANSMISSION OVERHAUL	Revisão da transmissão
TREAD	Piso, banda de rodagem
TREADLE	Pedal
TROLLY	Carrinho
TRUCK	Caminhão
TRUNNION	Munhão
TUBE	Tubo, cano
TUBING	Tubulagem canalização
TURBINE	Turbina
TURBOCHARGER	Turboalimentador
U-BOLT	Parafuso em "U"
U-JOINT	Junta universal
UNDERSIZE	Submedida
UNION	União
UPPER	Superior
USE AS REQUIRED	Usar conforme necessitar
VALUE	Valor
VALVE	Válvula
VALVE GRINDING	Retificação das válvulas
VEE BELT	Correia "V"
VEE BELT SET	Jogo de correia em "V"
VENT	Respiro
VIEW	Vista
VISE	Morsa, torno
VISOR	Pára-sol
WALKWAY	Passadiço, corredor
WARNING G.	Grupo de alarma
WASHER	Arruela
WATER PUMP	Bomba d'água
WEARPLATE	Placa de desgaste
WEDGE	Cunha
WEIGHT	Peso
WELD	Solda
WELDNUT	Porca soldada
WHEEL	Roda
WHITE	Branco
WICK	Mecha, pavio
WINCH	Guincho
WINDOW	Janela
WINDSHIELD	Pára-brisa
WIPER	Limpador
WIRE	Fio
WIRING	Sistema elétrico
WIRING DIAGRAM	Diagrama do sistema elétrico
WITH	Com
WRAPPER	Invólucro, envoltório
WRENCH	Chave
YELLOW	Amarelo
YOKE	Garfo

MAINTENANCE PARTS

DESCRIPTION	PART NUMBER	QTY	WHERE USED	PAGE
AIR INLET AND EXHAUST SYSTEM				
FILTER AS-PRIMARY	131-8822	1	AIR CLEANER GP	56
FILTER AS-SECONDARY	131-8821	1	AIR CLEANER GP	56
FILTER ELEMENT AS-AIR (PRIMARY)	6I-2501	1	AIR CLEANER GP	55
FILTER ELEMENT AS-AIR (SECONDARY)	6I-2502	1	AIR CLEANER GP	55
INDICATOR AS (AIR FILTER SERVICE)	154-0498	1	AIR CLEANER GP	55
PRECLEANER GP	130-3279	1	AIR CLEANER GP	57
BASIC ENGINE				
BELT (SERPENTINE)	212-8585	1	PULLEY GP	34
		1	PULLEY GP	35
CAP (OIL FILL)	5I-7584	1	COVER GP-VALVE MECHANISM	11
GASKET (VALVE COVER)	178-6533	2	COVER GP-VALVE MECHANISM	11
COOLING SYSTEM				
CAP AS	171-3369	1	RADIATOR & HYD OIL COOLER GP	50
CAP AS-RADIATOR	184-3949	1	RADIATOR & HYD OIL COOLER GP	52
CAP-DUST (COOLENT SAMPLING VALVE)	157-0670	1	LINES GP-WATER	47
GASKET	5I-7572	1	LINES GP-WATER	47
	5I-7735	1	LINES GP-WATER	47
REGULATOR (COOLANT)	5I-8010	1	LINES GP-WATER	47
ELECTRICAL AND STARTING SYSTEM				
BATTERY (12 VOLT)	3T-5760	2	BATTERY & WIRING GP	97
		2	BATTERY & WIRING GP	106
BOLT (M10X1.50X12MM)	7X-2621	1	WIRING GP-HAMMER	148
CIRCUIT BREAKER GP (60 AMP) (ALTERNATOR)	171-2208	1	PANEL GP-CIRCUIT BREAKER	128
FUSE (10 AMP)	113-8490	20	PANEL GP-CIRCUIT BREAKER	129
FUSE (15 AMP)	113-8491	6	PANEL GP-CIRCUIT BREAKER	129
FUSE (30 AMP)	124-3548	2	PANEL GP-CIRCUIT BREAKER	129
FUSE (5 AMP)	141-2759	10	PANEL GP-CIRCUIT BREAKER	129
KEY	8H-5306	1	SWITCH GP-DISCONNECT	134
KEY (BATTERY DISCONNECT)	8H-5306	1	SWITCH GP-DISCONNECT	133
LAMP	9X-3463	1	LAMP GP-FLOOD	117
		1	LAMP GP-FLOOD	118
		1	LAMP GP-FLOOD	119
LAMP-HEAD (24 VOLT)	9X-3463	1	LAMP GP-FLOOD	121
		1	LIGHTING GP-FLOOD	126
LAMP (24 VOLTS)(65 WATTS)	9X-3463	1	LAMP GP-FLOOD	120
PULLER-FUSE	170-6888	1	PANEL GP-CIRCUIT BREAKER	129
FRAME AND BODY				
FITTING-GREASE	3B-8489	1	GEAR & BEARING GP-SWING	169

MAINTENANCE PARTS

DESCRIPTION	PART NUMBER	QTY	WHERE USED	PAGE
FUEL SYSTEM				
CAP AS-FUEL TANK	7X-7700	1	TANK GP-FUEL	91
ELEMENT-WATER SEPARATOR	117-4089	1	SEPARATOR GP-WATER	87
		1	SEPARATOR GP-WATER	88
FILTER AS-FUEL	1R-0751	1	FILTER GP-FUEL	71
GASKET (FUEL PRIMING PUMP)	1P-0436	1	FILTER GP-FUEL	71
KEY	5P-8500	1	TANK & MTG GP-FUEL	90
KIT-BOWL SEAL	128-8614	1	SEPARATOR GP-WATER	87
KIT-WATER BASE	121-4480	1	SEPARATOR GP-WATER	87
PADLOCK GP	5P-8502	1	TANK & MTG GP-FUEL	90
STRAINER-FUEL TANK	9P-7121	1	TANK GP-FUEL	91
HYDRAULIC SYSTEM				
BOLT (M10X1.50X12MM)	7X-2621	1	VALVE GP-CONTROL	411
BREATHER AS	4I-7527	1	DRIVE GP-SWING	252
CAP-DUST	6V-0852	2	LINES GP-PILOT	327
		5	LINES GP-PILOT	335
		8	LINES GP-PILOT	346
		1	TANK & FILTER GP-HYDRAULIC	397
	8C-3451	1	TANK & FILTER GP-HYDRAULIC	397
CAP-PRESSURE VALVE (HYDRAULIC TANK)	4I-3745	1	TANK & FILTER GP-HYDRAULIC	397
CONNECTOR (FILTER)	107-6631	1	LINES GP-PILOT	329
FILTER	119-5398	1	VALVE GP-RELIEF	446
		1	VALVE GP-SOLENOID & RELIEF	458
FILTER AS-OIL (HYDRAULIC)	5I-8670	1	FILTER & VALVE GP-PILOT	255
FILTER ELEMENT-HYDRAULIC	126-2081	1	FILTER GP-OIL	259
FILTER-RETURN	093-7521	1	FILTER GP-OIL	256
FITTING-GREASE	3B-8489	1	CYLINDER & SEAL GP-BOOM	232
		2	CYLINDER & SEAL GP-BUCKET	233
		2	CYLINDER & SEAL GP-BUCKET	234
		1	CYLINDER & SEAL GP-STICK	235
		1	CYLINDER & SEAL GP-STICK	236
FITTING-GREASE (1/8-27 THD)	3B-8485	2	LINES GP-AUXILIARY HYDRAULIC	277
		2	LINES GP-AUXILIARY HYDRAULIC	291
PLUG-DRAIN	4B-7739	1	TANK & FILTER GP-HYDRAULIC	397
SCREEN AS	209-6000	1	SCREEN GP	395
SEAL-O-RING	2M-9780	1	FITTING GP	261
		1	LINES GP-PILOT	333
		1	LINES GP-PILOT	334
	2S-4078	1	LINES GP-FRONT	323
	123-2003	2	FILTER GP-OIL	257
WASHER-HARD (13.5X25.5X3MM THK)	8T-4223	8	LINES GP-STICK	362
		2	LINES GP-BUCKET CYLINDER	311

MAINTENANCE PARTS

DESCRIPTION	PART NUMBER	QTY	WHERE USED	PAGE
IMPLEMENTS				
FITTING-GREASE	3B-8489	5	LINES GP-GREASE	472
		5	LINES GP-GREASE	473
		5	LINKAGE GP-BUCKET	476
		5	LINKAGE GP-BUCKET	478
		3	STICK GP	482
		3	STICK GP	484
		3	STICK GP	486
		3	STICK GP-HOE	492
		3	STICK GP-HOE	496
		3	STICK GP-HOE	498
		1	STICK GP-HOE	500
FITTING-GREASE (1/8-27 NPTF)	3B-8489	3	LINES GP-GREASE	470
FITTING-GREASE (1/8-27 THD)	3B-8489	1	STICK GP-HOE	488
		3	STICK GP-HOE	490
		3	STICK GP-HOE	494
LUBRICATION SYSTEM				
BREATHER (CRANKCASE)	5I-7725	1	BREATHER GP	38
CAP-DUST	8C-3445	1	FILTER GP-ENGINE OIL	39
FILTER AS-ENGINE OIL	1R-0739	1	FILTER GP-ENGINE OIL	39
PIPE	5I-7645	1	BREATHER GP	38
TUBE (FUMES DISPOSAL)	5I-4940	1	BREATHER GP	38
OPERATOR STATION				
BLADE AS (LOWER)	4I-5021	1	WIPER & WASHER GP-WINDOW	613
BLADE AS (UPPER)	161-3670	1	WIPER GP-WINDOW	616
CAP AS	178-5431	1	WASHER GP-WINDOW	605
FILTER	4I-1278	1	DUCT GP-AIR	583
FILTER-RECIRCULATION	185-8154	1	AIR CONDITIONER GP	553
FUSE (5 AMP)	185-8294	1	AIR CONDITIONER GP	553
SEAT BELT GP	201-4436	1	SEAT GP	600
V-BELT	9L-2248	1	COMPRESSOR GP-REFRIGERANT	568

PIÈCES DE RECHANGE

DESCRIPTION	NUMÉRO DE PIECÈS	QTÉ	DOMAINE D'APPLICATION	PAGE
CHÂSSIS ET BENNE				
GRAISSEUR	3B-8489	1	ENGRENAGE ET PALIER D'ORIENTATION	169
CIRCUIT D'ADMISSION D'AIR ET D'ÉCHAPPEMENT				
ÉLÉMENT DE FILTRE À AIR (ENS) (PRINCIPAL)	6I-2501	1	FILTRE A AIR (ASS)	55
ÉLÉMENT DE FILTRE À AIR (ENS) (SECONDAIRE)	6I-2502	1	FILTRE A AIR (ASS)	55
FILTRE PRINCIPAL (ENS)	131-8822	1	FILTRE A AIR (ASS)	56
FILTRE SECONDAIRE (ENS)	131-8821	1	FILTRE A AIR (ASS)	56
INDICATEUR (ENS) (ENTRETIEN FILTRE À AIR)	154-0498	1	FILTRE A AIR (ASS)	55
PREFILTRE (ASS)	130-3279	1	FILTRE A AIR (ASS)	57
CIRCUIT DE CARBURANT				
BOUCHON DE RÉSERVOIR DE CARBURANT (ENS)	7X-7700	1	RÉSERVOIR DE CARBURANT (ASS)	91
CADENAS (ASS)	5P-8502	1	RÉSERVOIR DE CARBURANT ET MONTAGE (ASS)	90
CLÉ	5P-8500	1	RÉSERVOIR DE CARBURANT ET MONTAGE (ASS)	90
ÉLÉMENT DE SÉPARATEUR D'EAU	117-4089	1	SÉPARATEUR D'EAU (ASS)	87
		1	SÉPARATEUR D'EAU (ASS)	88
FILTRE A CARBURANT (ENS)	1R-0751	1	FILTRE A CARBURANT (ASS)	71
JOINT PLAT (POMPE D'AMORÇAGE DE CARBURANT)	1P-0436	1	FILTRE A CARBURANT (ASS)	71
KIT DE JOINT DE FILTRE	128-8614	1	SÉPARATEUR D'EAU (ASS)	87
SUPPORT DE SÉPARATEUR D'EAU	121-4480	1	SÉPARATEUR D'EAU (ASS)	87
TAMIS DE RÉSERVOIR DE CARBURANT	9P-7121	1	RÉSERVOIR DE CARBURANT (ASS)	91
CIRCUIT DE GRAISSAGE				
FILTRE A HUILE MOTEUR (ENS)	1R-0739	1	FILTRE À HUILE MOTEUR (ASS)	39
PARE-POUSSIERE	8C-3445	1	FILTRE À HUILE MOTEUR (ASS)	39
RENIFLARD (VILEBREQUIN)	5I-7725	1	RENIFLARD (ASS)	38
TUBE (ÉVACUATION DES GAZ DE CARTER)	5I-4940	1	RENIFLARD (ASS)	38
TUYAU	5I-7645	1	RENIFLARD (ASS)	38
CIRCUIT DE REFROIDISSEMENT				
BOUCHON DE RADIATEUR (ENS)	184-3949	1	RADIATEUR ET REFROIDISSEUR D'HUILE HYDRAULIQUE (ASS)	52
CHAPEAU (ENS)	171-3369	1	RADIATEUR ET REFROIDISSEUR D'HUILE HYDRAULIQUE (ASS)	50
JOINT PLAT	5I-7572	1	CANALISATIONS D'EAU (ASS)	47
	5I-7735	1	CANALISATIONS D'EAU (ASS)	47
PARE-POUSSIERE (ROBINET DE PRÉLÈVEMENT DE LIQUIDE DE REFROIDISSEMENT)	157-0670	1	CANALISATIONS D'EAU (ASS)	47
REGULATEUR (LIQUIDE DE REFROIDISSEMENT)	5I-8010	1	CANALISATIONS D'EAU (ASS)	47

PIÈCES DE RECHANGE

DESCRIPTION	NUMÉRO DE PIECÈS	QTÉ	DOMAINE D'APPLICATION	PAGE
CIRCUIT ÉLECTRIQUE ET DE DÉMARRAGE				
AMPOULE	9X-3463	1	LAMPE - PHARE (ASS)	117
		1	LAMPE - PHARE (ASS)	118
		1	LAMPE - PHARE (ASS)	119
AMPOULE (24 VOLTS) (65 WATTS)	9X-3463	1	LAMPE - PHARE (ASS)	120
BATTERIE (12 VOLTS)	3T-5760	2	BATTERIE ET CÂBLAGE	97
		2	BATTERIE ET CÂBLAGE	106
BOULON (M10X1,50X12MM)	7X-2621	1	CABLAGE DE MARTEAU (ASS)	148
CLÉ	8H-5306	1	ROBINET DE BATTERIE (ASS)	134
CLÉ (COUPE-BATTERIE)	8H-5306	1	ROBINET DE BATTERIE (ASS)	133
DISJONCTEUR (ASS) (60A) (ALTERNATEUR)	171-2208	1	DISJONCTEUR DU PANNEAU DE COMMANDE (ASS)	128
EXTRACTEUR DE FUSIBLE	170-6888	1	DISJONCTEUR DU PANNEAU DE COMMANDE (ASS)	129
FUSIBLE (10A)	113-8490	20	DISJONCTEUR DU PANNEAU DE COMMANDE (ASS)	129
FUSIBLE (15A)	113-8491	6	DISJONCTEUR DU PANNEAU DE COMMANDE (ASS)	129
FUSIBLE (30A)	124-3548	2	DISJONCTEUR DU PANNEAU DE COMMANDE (ASS)	129
FUSIBLE (5A)	141-2759	10	DISJONCTEUR DU PANNEAU DE COMMANDE (ASS)	129
LAMPE - FEUX AV (24 VOLTS)	9X-3463	1	ÉCLAIRAGE - PROJECTEURS (ASS)	126
		1	LAMPE - PHARE (ASS)	121

PIÈCES DE RECHANGE

DESCRIPTION	NUMÉRO DE PIECÈS	QTÉ	DOMAINE D'APPLICATION	PAGE
CIRCUIT HYDRAULIQUE				
BOUCHON DE VIDANGE	4B-7739	1	RÉSERVOIR HYDRAULIQUE ET FILTRE (ASS)	397
BOULON (M10X1,50X12MM)	7X-2621	1	DISTRIBUTEUR (ASS)	411
CHAPEAU - LIMITEUR DE PRESSION (RÉSERVOIR HYDRAULIQUE)	4I-3745	1	RÉSERVOIR HYDRAULIQUE ET FILTRE (ASS)	397
ÉCRAN (ENS)	209-6000	1	ECRAN (ASS)	395
ÉLÉMENT DE FILTRE-HYDRAULIQUE	126-2081	1	FILTRE A HUILE (ASS)	259
FILTRE	119-5398	1	CLAPET DE DECHARGE (ASS)	446
		1	SOUPAPE SOLENOIDE ET DE DECHARGE	458
FILTRE À HUILE (ENS) (HYDRAULIQUE)	5I-8670	1	FILTRE ET SOUPAPE PILOTE (ASS)	255
FILTRE DE RETOUR	093-7521	1	FILTRE A HUILE (ASS)	256
GRAISSEUR	3B-8489	1	VERIN DE BRAS ET JOINT (ASS)	235
		1	VERIN DE BRAS ET JOINT (ASS)	236
		1	VERIN DE FLECHE ET JOINT (ASS)	232
		2	VÉRIN DE GODET ET JOINT (ASS)	233
		2	VÉRIN DE GODET ET JOINT (ASS)	234
GRAISSEUR (FILET 1/8-27)	3B-8485	2	CANALISATIONS HYDRAULIQUES AUXILIAIRES (ASS)	277
		2	CANALISATIONS HYDRAULIQUES AUXILIAIRES (ASS)	291
JOINT TORIQUE	2M-9780	1	CANALISATIONS A COMMANDE PILOTE (ASS)	333
		1	CANALISATIONS A COMMANDE PILOTE (ASS)	334
		1	RACCORD (ASS)	261
	2S-4078	1	CANALISATIONS AV	323
	123-2003	2	FILTRE A HUILE (ASS)	257
PARE-POUSSIERE	6V-0852	2	CANALISATIONS A COMMANDE PILOTE (ASS)	327
		5	CANALISATIONS A COMMANDE PILOTE (ASS)	335
		8	CANALISATIONS A COMMANDE PILOTE (ASS)	346
		1	RÉSERVOIR HYDRAULIQUE ET FILTRE (ASS)	397
	8C-3451	1	RÉSERVOIR HYDRAULIQUE ET FILTRE (ASS)	397
PRISE (FILTRE)	107-6631	1	CANALISATIONS A COMMANDE PILOTE (ASS)	329
RENIFLARD (ENS)	4I-7527	1	ENTRAINEMENT D'ORIENTATION (ASS)	252
RONDELLE DURE (ÉPAISSEUR 13,5X25,5MM)	8T-4223	8	CANALISATIONS DE BRAS (ASS)	362
		2	CANALISATIONS DE VÉRIN DE GODET (ASS)	311

PIÈCES DE RECHANGE

DESCRIPTION	NUMÉRO DE PIECÈS	QTÉ	DOMAINE D'APPLICATION	PAGE
ÉQUIPEMENTS				
GRAISSEUR	3B-8489	3	BRAS (ASS)	482
		3	BRAS (ASS)	484
		3	BRAS (ASS)	486
		3	BRAS DE PELLE RETRO (ASS)	492
		3	BRAS DE PELLE RETRO (ASS)	496
		3	BRAS DE PELLE RETRO (ASS)	498
		1	BRAS DE PELLE RETRO (ASS)	500
		5	CANALISATIONS DE GRAISSAGE (ASS)	472
		5	CANALISATIONS DE GRAISSAGE (ASS)	473
		5	TRINGLERIE DE GODET (ASS)	476
		5	TRINGLERIE DE GODET (ASS)	478
GRAISSEUR (FILET 1/8-27)	3B-8489	1	BRAS DE PELLE RETRO (ASS)	488
		3	BRAS DE PELLE RETRO (ASS)	490
		3	BRAS DE PELLE RETRO (ASS)	494
GRAISSEUR (RACCORD AU PAS DU GAZ DE 1/8 - 27)	3B-8489	3	CANALISATIONS DE GRAISSAGE (ASS)	470
MOTEUR STANDARD				
CHAPEAU (REMPLISSAGE D'HUILE)	5I-7584	1	CACHE-SOUPAPES (ASS)	11
COURROIE (ENTRAÎNEMENTS MULTIPLES)	212-8585	1	POULIE (ASS)	34
		1	POULIE (ASS)	35
JOINT PLAT (CACHE-SOUPAPES)	178-6533	2	CACHE-SOUPAPES (ASS)	11
POSTE DE CONDUITE				
BALAI D'ESSUIE-GLACE (ENS) (INFÉRIEUR)	4I-5021	1	ESSUIE-GLACE ET LAVE-GLACE	613
BALAI D'ESSUIE-GLACE (ENS) (SUPERIEUR)	161-3670	1	ESSUIE-GLACE (ASS)	616
CEINTURE DE SECURITE (ASS)	201-4436	1	SIÈGE (ASS)	600
CHAPEAU (ENS)	178-5431	1	LAVE-GLACE - VITRE (ASS)	605
COURROIE TRAPEZOIDALE	9L-2248	1	COMPRESSEUR DE REFRIGERANT (ASS)	568
FILTRE	4I-1278	1	GAINE D'AIR (ASS)	583
FILTRE DE RECIRCULATION	185-8154	1	CLIMATISEUR (ASS)	553
FUSIBLE (5A)	185-8294	1	CLIMATISEUR (ASS)	553

PIEZAS DE MANTENIMIENTO

DESCRIPCION	NUMERO DE PIEZA	CANT	SE UTILIZA EN	PAGINA
BASTIDOR Y CARROCERIA				
CONEXIÓN DE ENGRASE	3B-8489	1	ENGRANAJE DE ROTACIÓN Y COJINETE (GR)	169
COMPARTIMIENTO DEL OPERADOR				
CINTURÓN DE SEGURIDAD (GR)	201-4436	1	ASIENTO (GR)	600
CORREA TRAPEZOIDAL	9L-2248	1	COMPRESOR DE REFRIGERANTE (GR)	568
FILTRO	4I-1278	1	CONDUCTO DE AIRE (GR)	583
FILTRO DE RECIRCULACIÓN	185-8154	1	ACONDICIONADOR DE AIRE (GR)	553
FUSIBLE (5 AMP)	185-8294	1	ACONDICIONADOR DE AIRE (GR)	553
HOJA DE LIMPIAPARABRISAS (CONJ) (INFERIOR)	4I-5021	1	LIMPIA Y LAVAPARABRISAS (GR)	613
HOJA DE LIMPIAPARABRISAS (CONJ) (SUPERIOR)	161-3670	1	LIMPIAPARABRISAS DE LA VENTANA (GR)	616
TAPÓN (CONJ)	178-5431	1	LAVAPARABRISAS DE LA VENTANA (GR)	605
IMPLEMENTOS				
CONEXIÓN DE ENGRASE	3B-8489	3	BRAZO DE RETROEXCAVADOR (GR)	492
		3	BRAZO DE RETROEXCAVADOR (GR)	496
		3	BRAZO DE RETROEXCAVADOR (GR)	498
		1	BRAZO DE RETROEXCAVADOR (GR)	500
		3	GRUPO ACCESORIO DE BRAZO	482
		3	GRUPO ACCESORIO DE BRAZO	484
		3	GRUPO ACCESORIO DE BRAZO	486
		5	TUBERÍAS DE ENGRASE (GR)	472
		5	TUBERÍAS DE ENGRASE (GR)	473
		5	VARILLAJE DEL CUCHARÓN (GR)	476
		5	VARILLAJE DEL CUCHARÓN (GR)	478
CONEXIÓN DE ENGRASE (ROSCA DE 1/8-27)	3B-8489	1	BRAZO DE RETROEXCAVADOR (GR)	488
		3	BRAZO DE RETROEXCAVADOR (GR)	490
		3	BRAZO DE RETROEXCAVADOR (GR)	494
CONEXIÓN DE ENGRASE (ROSCA 1/8-27 NPTF)	3B-8489	3	TUBERÍAS DE ENGRASE (GR)	470
MOTOR BÁSICO				
CORREA (SERPENTIN)	212-8585	1	POLEA (GR)	34
		1	POLEA (GR)	35
EMPAQUETADURA (TAPA DE VÁLVULA)	178-6533	2	TAPA DEL MECANISMO DE VÁLVULAS (GR)	11
TAPA (LLENADO DE ACEITE)	5I-7584	1	TAPA DEL MECANISMO DE VÁLVULAS (GR)	11

PIEZAS DE MANTENIMIENTO

DESCRIPCION	NUMERO DE PIEZA	CANT	SE UTILIZA EN	PAGINA
SISTEMA DE ADMISION Y ESCAPE DE AIRE				
ANTEFILTRO (GR)	130-3279	1	FILTRO DE AIRE (GR)	57
ELEMENTO DEL FILTRO DE AIRE (CONJ) (PRIMARIO)	6I-2501	1	FILTRO DE AIRE (GR)	55
ELEMENTO DEL FILTRO DE AIRE (CONJ) (SECUNDARIO)	6I-2502	1	FILTRO DE AIRE (GR)	55
FILTRO PRIMARIO (CONJ)	131-8822	1	FILTRO DE AIRE (GR)	56
FILTRO SECUNDARIO (CONJ)	131-8821	1	FILTRO DE AIRE (GR)	56
INDICADOR (CONJ) (SERVICIO DE FILTRO DE AIRE)	154-0498	1	FILTRO DE AIRE (GR)	55
SISTEMA DE COMBUSTIBLE				
CANDADO (GR)	5P-8502	1	TANQUE DE COMBUSTIBLE Y GRUPO DE MONTAJE	90
COLADOR DEL TANQUE DE COMBUSTIBLE	9P-7121	1	COMBUSTIBLE - TANQUE DE (GR)	91
ELEMENTO DEL SEPARADOR DE AGUA	117-4089	1	SEPARADOR DE AGUA (GR)	87
		1	SEPARADOR DE AGUA (GR)	88
EMPAQUETADURA (BOMBA DE CEBADO DE COMBUSTIBLE)	1P-0436	1	FILTRO DE COMBUSTIBLE (GR)	71
FILTRO DE COMBUSTIBLE (CONJ)	1R-0751	1	FILTRO DE COMBUSTIBLE (GR)	71
JUEGO DE BASE DEL SEPARADOR DE AGUA	121-4480	1	SEPARADOR DE AGUA (GR)	87
JUEGO DE SELLO DE TAZA	128-8614	1	SEPARADOR DE AGUA (GR)	87
LLAVE	5P-8500	1	TANQUE DE COMBUSTIBLE Y GRUPO DE MONTAJE	90
TAPA DEL TANQUE DE COMBUSTIBLE (CONJ)	7X-7700	1	COMBUSTIBLE - TANQUE DE (GR)	91
SISTEMA DE ENFRIAMIENTO				
EMPAQUETADURA	5I-7572	1	TUBERÍAS DEL AGUA (GR)	47
	5I-7735	1	TUBERÍAS DEL AGUA (GR)	47
REGULADOR (REFRIGERANTE)	5I-8010	1	TUBERÍAS DEL AGUA (GR)	47
TAPA CONTRA EL POLVO (VÁLVULA DE MUESTREO DE REFRIGERANTE)	157-0670	1	TUBERÍAS DEL AGUA (GR)	47
TAPA DE RADIADOR (CONJ)	184-3949	1	RADIADOR Y ENFRIADOR DE ACEITE HIDRÁULICO (GR)	52
TAPÓN (CONJ)	171-3369	1	RADIADOR Y ENFRIADOR DE ACEITE HIDRÁULICO (GR)	50
SISTEMA DE LUBRICACIÓN				
FILTRO DE ACEITE DEL MOTOR (CONJ)	1R-0739	1	FILTRO DE ACEITE DEL MOTOR (GR)	39
RESPIRADERO (CÁRTER DEL MOTOR)	5I-7725	1	RESPIRADERO (GR)	38
TAPA CONTRA EL POLVO	8C-3445	1	FILTRO DE ACEITE DEL MOTOR (GR)	39
TUBERIA (ELIMINACION DE GASES)	5I-4940	1	RESPIRADERO (GR)	38
TUBO	5I-7645	1	RESPIRADERO (GR)	38

PIEZAS DE MANTENIMIENTO

DESCRIPCION	NUMERO DE PIEZA	CANT	SE UTILIZA EN	PAGINA
SISTEMA ELÉCTRICO Y DE ARRANQUE				
BATERÍA (12 VOLTIOS)	3T-5760	2	BATERÍA Y CABLES (GR)	97
		2	BATERÍA Y CABLES (GR)	106
DISYUNTOR DE CIRCUITO (GR) (60 AMP) (ALTERNADOR)	171-2208	1	PANEL DE DISYUNTORES (GR)	128
EXTRACTOR DE FUSIBLES	170-6888	1	PANEL DE DISYUNTORES (GR)	129
FUSIBLE (10 A)	113-8490	20	PANEL DE DISYUNTORES (GR)	129
FUSIBLE (15 A)	113-8491	6	PANEL DE DISYUNTORES (GR)	129
FUSIBLE (30 A)	124-3548	2	PANEL DE DISYUNTORES (GR)	129
FUSIBLE (5 AMP)	141-2759	10	PANEL DE DISYUNTORES (GR)	129
LÁMPARA	9X-3463	1	REFLECTOR (GR)	117
		1	REFLECTOR (GR)	118
		1	REFLECTOR (GR)	119
LÁMPARA DE FARO DELANTERO (24 VOLTIOS)	9X-3463	1	LUCES DE REFLECTOR (GR)	126
		1	REFLECTOR (GR)	121
LÁMPARA ((24 VOLTIOS)(65 VATIOS))	9X-3463	1	REFLECTOR (GR)	120
LLAVE	8H-5306	1	DISYUNTOR (GR)	134
LLAVE (DESCONECTAR BATERIA)	8H-5306	1	DISYUNTOR (GR)	133
PERNO (M10X1,50X12MM)	7X-2621	1	CABLES DEL MARTILLO (GR)	148

PIEZAS DE MANTENIMIENTO

DESCRIPCION	NUMERO DE PIEZA	CANT	SE UTILIZA EN	PAGINA
SISTEMA HIDRÁULICO				
ARANDELA DURA (13,5X25,5X3MM DE GROSOR)	8T-4223	8	TUBERÍAS DEL BRAZO (GR)	362
		2	TUBERÍAS DEL CILINDRO DEL CUCHARÓN (GR)	311
CONECTOR (FILTRO)	107-6631	1	TUBERÍAS CON SERVOMANDO (GR)	329
CONEXIÓN DE ENGRASE	3B-8489	1	CILINDRO DE LA PLUMA Y SELLO (GR)	232
		1	CILINDRO DEL BRAZO Y SELLO (GR)	235
		1	CILINDRO DEL BRAZO Y SELLO (GR)	236
		2	CILINDRO DEL CUCHARÓN Y SELLO (GR)	233
		2	CILINDRO DEL CUCHARÓN Y SELLO (GR)	234
CONEXIÓN DE ENGRASE (ROSCA DE 1/8-27)	3B-8485	2	TUBERÍAS HIDRÁULICAS AUXILIARES (GR)	277
		2	TUBERÍAS HIDRÁULICAS AUXILIARES (GR)	291
ELEMENTO DE FILTRO HIDRÁULICO	126-2081	1	FILTRO DE ACEITE (GR)	259
FILTRO	119-5398	1	VÁLVULA DE ALIVIO (GR)	446
		1	VÁLVULA DE ALIVIO Y SOLENOIDE (GR)	458
FILTRO DE ACEITE (CONJ) (HIDRAULICO)	5I-8670	1	GRUPO DE FILTRO Y VÁLVULA, PILOTO	255
FILTRO DE RETORNO	093-7521	1	FILTRO DE ACEITE (GR)	256
PANTALLA (CONJ)	209-6000	1	REJILLA (GR)	395
PERNO (M10X1,50X12MM)	7X-2621	1	VÁLVULA DE CONTROL (GR)	411
RESPIRADERO (CONJ)	4I-7527	1	MANDO DE ROTACIÓN (GR)	252
SELLO ANULAR	2M-9780	1	CONEXIÓN (GR)	261
		1	TUBERÍAS CON SERVOMANDO (GR)	333
		1	TUBERÍAS CON SERVOMANDO (GR)	334
	2S-4078	1	TUBERÍAS DELANTERAS (GR)	323
	123-2003	2	FILTRO DE ACEITE (GR)	257
TAPA CONTRA EL POLVO	6V-0852	1	TANQUE Y FILTRO HIDRÁULICOS (GR)	397
		5	TUBERÍAS CON SERVOMANDO (GR)	335
		8	TUBERÍAS CON SERVOMANDO (GR)	346
		2	TUBERÍAS CON SERVOMANDO (GR)	327
	8C-3451	1	TANQUE Y FILTRO HIDRÁULICOS (GR)	397
TAPA DE VALVULA DE PRESIÓN (TANQUE HIDRÁULICO)	4I-3745	1	TANQUE Y FILTRO HIDRÁULICOS (GR)	397
TAPÓN DE DRENAJE	4B-7739	1	TANQUE Y FILTRO HIDRÁULICOS (GR)	397

PEÇAS DE MANUTENÇÃO

DESCRIÇÃO	NÚMERO DE PEÇA	QUANT	UTILIZADA EM	PÁGINA
ACESSÓRIOS				
GRAXEIRA	3B-8489	3	BRAÇO	482
		3	BRAÇO	484
		3	BRAÇO	486
		3	BRAÇO - CAÇAMBA RETRO-ESCAVADORA	492
		3	BRAÇO - CAÇAMBA RETRO-ESCAVADORA	496
		3	BRAÇO - CAÇAMBA RETRO-ESCAVADORA	498
		1	BRAÇO - CAÇAMBA RETRO-ESCAVADORA	500
		5	ELOS DE ARTICULAÇÃO DA CAÇAMBA	476
		5	ELOS DE ARTICULAÇÃO DA CAÇAMBA	478
		5	TUBOS - GRAXA	472
		5	TUBOS - GRAXA	473
GRAXEIRA (ROSCA DE 1/8-27 DO PADRÃO AMERICANO NPTF)	3B-8489	3	TUBOS - GRAXA	470
GRAXEIRA (ROSCA 1/8-27 POL)	3B-8489	1	BRAÇO - CAÇAMBA RETRO-ESCAVADORA	488
		3	BRAÇO - CAÇAMBA RETRO-ESCAVADORA	490
		3	BRAÇO - CAÇAMBA RETRO-ESCAVADORA	494
CHASSI E CARROCERIA				
GRAXEIRA	3B-8489	1	ENGRENAGEM E MANCAL DE GIRO	169
MOTOR BÁSICO				
CORREIA (SERPENTINA)	212-8585	1	POLIA	34
		1	POLIA	35
JUNTA (TAMPA DA VÁLVULA)	178-6533	2	TAMPA - MECANISMO DAS VÁLVULAS	11
TAMPA (ENCHIMENTO DE ÓLEO)	5I-7584	1	TAMPA - MECANISMO DAS VÁLVULAS	11
POSTO DO OPERADOR				
CINTO DE SEGURANÇA	201-4436	1	ASSENTO	600
CORREIA EM V	9L-2248	1	COMPRESSOR DE REFRIGERANTE	568
FILTRO	4I-1278	1	DUCTO DE AR	583
FILTRO DE CIRCULAÇÃO	185-8154	1	CONDICIONADOR DE AR	553
FUSÍVEL (5 AMP)	185-8294	1	CONDICIONADOR DE AR	553
LÂMINA (INFERIOR)	4I-5021	1	LIMPADOR E LAVADOR - JANELA	613
LÂMINA (SUPERIOR)	161-3670	1	LIMPADOR DO VIDRO	616
TAMPA	178-5431	1	LAVADOR DO VIDRO	605

PEÇAS DE MANUTENÇÃO

DESCRIÇÃO	NÚMERO DE PEÇA	QUANT	UTILIZADA EM	PÁGINA
SISTEMA DA ADMISSÃO DE AR E DE ESCAPE				
ELEMENTO DO FILTRO DE AR (PRIMÁRIO)	6I-2501	1	PURIFICADOR DE AR	55
ELEMENTO DO FILTRO DE AR (SECUNDÁRIO)	6I-2502	1	PURIFICADOR DE AR	55
FILTRO PRIMÁRIO	131-8822	1	PURIFICADOR DE AR	56
FILTRO SECUNDÁRIO	131-8821	1	PURIFICADOR DE AR	56
INDICADOR (SERVIÇO DO FILTRO DE AR)	154-0498	1	PURIFICADOR DE AR	55
PRÉ-PURIFICADOR	130-3279	1	PURIFICADOR DE AR	57
SISTEMA DE ARREFECIMENTO				
JUNTA	5I-7572	1	TUBOS - ÁGUA	47
	5I-7735	1	TUBOS - ÁGUA	47
REGULADOR (LÍQUIDO ARREFECEDOR)	5I-8010	1	TUBOS - ÁGUA	47
TAMPA	171-3369	1	RADIADOR E ARREFECEDOR DO ÓLEO HIDRÁULICO	50
TAMPA - RADIADOR	184-3949	1	RADIADOR E ARREFECEDOR DO ÓLEO HIDRÁULICO	52
TAMPA CONTRA POEIRA (VÁLVULA DE AMOSTRAGEM DO LÍQUIDO ARREFECEDOR)	157-0670	1	TUBOS - ÁGUA	47
SISTEMA DE COMBUSTÍVEL				
CADEADO	5P-8502	1	TANQUE DE COMBUSTÍVEL E MONTAGEM	90
CHAVE	5P-8500	1	TANQUE DE COMBUSTÍVEL E MONTAGEM	90
ELEMENTO - SEPARADOR DE ÁGUA	117-4089	1	SEPARADOR DE ÁGUA	87
		1	SEPARADOR DE ÁGUA	88
FILTRO - COMBUSTÍVEL	1R-0751	1	FILTRO - COMBUSTÍVEL	71
JOGO DE BASE DO SEPARADOR DE ÁGUA	121-4480	1	SEPARADOR DE ÁGUA	87
JOGO DE VEDADOR DA CAÇAMBA	128-8614	1	SEPARADOR DE ÁGUA	87
JUNTA (BOMBA DE ESCORVA DE COMBUSTÍVEL)	1P-0436	1	FILTRO - COMBUSTÍVEL	71
PENEIRA DO TANQUE DE COMBUSTÍVEL	9P-7121	1	TANQUE DE COMBUSTÍVEL	91
TAMPA DO TANQUE DE COMBUSTÍVEL	7X-7700	1	TANQUE DE COMBUSTÍVEL	91
SISTEMA DE LUBRIFICAÇÃO				
CANO/TUBO	5I-7645	1	RESPIRO	38
FILTRO - ÓLEO DO MOTOR	1R-0739	1	FILTRO - ÓLEO DO MOTOR	39
RESPIRO (CÁRTER)	5I-7725	1	RESPIRO	38
TAMPA CONTRA POEIRA	8C-3445	1	FILTRO - ÓLEO DO MOTOR	39
TUBO (ELIMINAÇÃO DE VAPORES)	5I-4940	1	RESPIRO	38

PEÇAS DE MANUTENÇÃO

DESCRIÇÃO	NÚMERO DE PEÇA	QUANT	UTILIZADA EM	PÁGINA
SISTEMA ELÉTRICO E DE PARTIDA				
BATERIA (12 V)	3T-5760	2	BATERIA E CABOS / FIOS ELÉTRICOS	97
		2	BATERIA E CABOS / FIOS ELÉTRICOS	106
CHAVE	8H-5306	1	CHAVE GERAL	134
CHAVE (DESCONECTAR A BATERIA)	8H-5306	1	CHAVE GERAL	133
FAROL DIANTEIRO (24 V)	9X-3463	1	LÂMPADA - FAROL	121
		1	SISTEMA DE ILUMINAÇÃO - FARÓIS	126
FUSÍVEL (10 A)	113-8490	20	PAINEL - DISJUNTOR ELÉTRICO AUTOMÁTICO	129
FUSÍVEL (15 A)	113-8491	6	PAINEL - DISJUNTOR ELÉTRICO AUTOMÁTICO	129
FUSÍVEL (30 A)	124-3548	2	PAINEL - DISJUNTOR ELÉTRICO AUTOMÁTICO	129
FUSÍVEL (5 AMP)	141-2759	10	PAINEL - DISJUNTOR ELÉTRICO AUTOMÁTICO	129
INTERRUPTOR - CIRCUITO (60 A) (ALTERNADOR)	171-2208	1	PAINEL - DISJUNTOR ELÉTRICO AUTOMÁTICO	128
LÂMPADA	9X-3463	1	LÂMPADA - FAROL	117
		1	LÂMPADA - FAROL	118
		1	LÂMPADA - FAROL	119
LÂMPADA (24 VOLTS)(65 WATTS)	9X-3463	1	LÂMPADA - FAROL	120
PARAFUSO (M10X1,50X12MM)	7X-2621	1	CABOS/FIOS ELÉTRICOS - APLICAÇÕES PESADAS DE LEVANTAMENTO	148
SACADOR - FUSÍVEL	170-6888	1	PAINEL - DISJUNTOR ELÉTRICO AUTOMÁTICO	129

PEÇAS DE MANUTENÇÃO

DESCRIÇÃO	NÚMERO DE PEÇA	QUANT	UTILIZADA EM	PÁGINA
SISTEMA HIDRÁULICO				
ARRUELA DURA (13,5X25,5X3MM DE ESPESSURA)	8T-4223	8	TUBOS - BRAÇO	362
		2	TUBOS - CILINDRO DA CAÇAMBA	311
BUJÃO DO DRENO	4B-7739	1	TANQUE HIDRÁULICO E FILTRO	397
CONECTOR (FILTRO)	107-6631	1	TUBOS - CIRCUITO PILOTO	329
FILTRO	119-5398	1	VÁLVULA DE ALÍVIO	446
		1	VÁLVULA SOLENÓIDE DE ALÍVIO	458
FILTRO - ELEMENTO HIDRÁULICO	126-2081	1	FILTRO - ÓLEO	259
FILTRO - ÓLEO (HIDRÁULICO)	5I-8670	1	FILTRO E VÁLVULA - PILOTO	255
FILTRO - RETORNO	093-7521	1	FILTRO - ÓLEO	256
GRAXEIRA	3B-8489	1	CILINDRO E RETENTOR - BRAÇO	235
		1	CILINDRO E RETENTOR - BRAÇO	236
		2	CILINDRO E RETENTOR - CAÇAMBA	233
		2	CILINDRO E RETENTOR - CAÇAMBA	234
		1	CILINDRO E RETENTOR - LANÇA	232
GRAXEIRA (ROSCA 1/8-27 POL)	3B-8485	2	TUBOS HIDRÁULICOS AUXILIARES	277
		2	TUBOS HIDRÁULICOS AUXILIARES	291
PARAFUSO (M10X1,50X12MM)	7X-2621	1	VÁLVULA DE CONTROLE	411
RESPIRO	4I-7527	1	COMANDO DE GIRO	252
RETENTOR DE ANEL-O	2M-9780	1	CONEXÃO	261
		1	TUBOS - CIRCUITO PILOTO	333
		1	TUBOS - CIRCUITO PILOTO	334
	2S-4078	1	TUBOS - DIANTEIROS	323
	123-2003	2	FILTRO - ÓLEO	257
TAMPA - ALÍVIO DE PRESSÃO (TANQUE HIDRÁULICO)	4I-3745	1	TANQUE HIDRÁULICO E FILTRO	397
TAMPA CONTRA POEIRA	6V-0852	1	TANQUE HIDRÁULICO E FILTRO	397
		2	TUBOS - CIRCUITO PILOTO	327
		5	TUBOS - CIRCUITO PILOTO	335
		8	TUBOS - CIRCUITO PILOTO	346
	8C-3451	1	TANQUE HIDRÁULICO E FILTRO	397
TELA FILTRANTE	209-6000	1	TELA FILTRANTE	395

WARTUNGSTEILE

BESCHREIBUNG	ERSATZTEIL-NUMMER	MENGE	VERWENDET IN	SEITE
ARBEITSGERÄTE				
SCHMIERNIPPEL	3B-8489	5	LÖFFELGESTÄNGE	476
		5	LÖFFELGESTÄNGE	478
		3	LÖFFELSTIEL	492
		3	LÖFFELSTIEL	496
		3	LÖFFELSTIEL	498
		1	LÖFFELSTIEL	500
		5	SCHMIERLEITUNGEN	472
		5	SCHMIERLEITUNGEN	473
		3	STIEL	482
		3	STIEL	484
		3	STIEL	486
SCHMIERNIPPEL (1/8-27 GEWINDE)	3B-8489	3	SCHMIERLEITUNGEN	470
SCHMIERNIPPEL (1/8-27-GEWINDE)	3B-8489	1	LÖFFELSTIEL	488
		3	LÖFFELSTIEL	490
		3	LÖFFELSTIEL	494
ELEKTRISCHE ANLAGE U. STARTSYSTEM				
BATTERIE (12 V)	3T-5760	2	BATTERIE UND VERDRAHTUNG	97
		2	BATTERIE UND VERDRAHTUNG	106
LEUCHTE	9X-3463	1	ARBEITSLEUCHTEN	117
		1	ARBEITSLEUCHTEN	118
		1	ARBEITSLEUCHTEN	119
LEUCHTE (24 V)(65 W)	9X-3463	1	ARBEITSLEUCHTEN	120
SCHEINWERFER (24 V)	9X-3463	1	ARBEITSLEUCHTEN	121
		1	ARBEITSLEUCHTEN	126
SCHLÜSSEL	8H-5306	1	TRENNSCHALTER	134
SCHLÜSSEL (HAUPTSCHALTER)	8H-5306	1	TRENNSCHALTER	133
SCHRAUBE (M10X1,50X12MM)	7X-2621	1	HYDRAULIKHAMMERVERDRAHTUNG	148
SICHERUNG (10 A)	113-8490	20	UNTERBRECHER - INSTRUMENTENTAFEL	129
SICHERUNG (15 A)	113-8491	6	UNTERBRECHER - INSTRUMENTENTAFEL	129
SICHERUNG (30 A)	124-3548	2	UNTERBRECHER - INSTRUMENTENTAFEL	129
SICHERUNG (5 A)	141-2759	10	UNTERBRECHER - INSTRUMENTENTAFEL	129
SICHERUNGSZIEHER	170-6888	1	UNTERBRECHER - INSTRUMENTENTAFEL	129
UNTERBRECHER (60 A) (DREHSTROMGENERATOR)	171-2208	1	UNTERBRECHER - INSTRUMENTENTAFEL	128
FAHRERHAUS				
FILTER	4I-1278	1	LUFTKANAL	583
KAPPE	178-5431	1	SCHEIBENWASCHANLAGE	605
KEILRIEMEN	9L-2248	1	KÄLTEMITTELKOMPRESSOR	568
SCHEIBENWISCHERBLATT (OBEN)	161-3670	1	SCHEIBENWISCHER	616
SCHEIBENWISCHERBLATT (UNTEN)	4I-5021	1	SCHEIBENWISCHER UND -WASCHANLAGE	613
SICHERHEITSGURT	201-4436	1	FAHRERSITZ	600
SICHERUNG (5 A)	185-8294	1	KLIMAANLAGE	553
UMLAUFLUFT-FILTER	185-8154	1	KLIMAANLAGE	553

WARTUNGSTEILE

BESCHREIBUNG	ERSATZTEIL-NUMMER	MENGE	VERWENDET IN	SEITE
FAHRGESTELL U. OBERWAGEN				
SCHMIERNIPPEL	3B-8489	1	SCHWENKGETRIEBELAGER	169
HYDRAULIKSYSTEM				
ABLASSSTOPFEN	4B-7739	1	HYDRAULIKTANK UND SCHMIERFILTER	397
BEILEGSCHEIBE, HART (ABM:13,5X25,5X3MM)	8T-4223	2	LÖFFELZYLINDERLEITUNGEN	311
		8	STIELZYLINDERLEITUNGEN	362
DRUCKVENTILDECKEL (HYDRAULIKTANK)	4I-3745	1	HYDRAULIKTANK UND SCHMIERFILTER	397
ENTLÜFTER	4I-7527	1	SCHWENKANTRIEB	252
FILTER	119-5398	1	MAGNET- UND ÜBERDRUCKVENTIL	458
		1	ÜBERDRUCKVENTIL	446
FILTERELEMENT - HYDRAULIK	126-2081	1	ÖLFILTER	259
O-RING-DICHTUNG	2M-9780	1	FITTING	261
		1	VORSTEUERLEITUNGEN	333
		1	VORSTEUERLEITUNGEN	334
	2S-4078	1	LEITUNGEN, VORNE	323
	123-2003	2	ÖLFILTER	257
ÖLFILTER (HYDRAULISCH)	5I-8670	1	FILTER U. VENTIL - VORSTEUERUNG	255
RÜCKSTROMFILTER	093-7521	1	ÖLFILTER	256
SCHMIERNIPPEL	3B-8489	1	AUSLEGERZYLINDER UND DICHTUNG	232
		2	LÖFFELZYLINDER UND DICHTUNG	233
		2	LÖFFELZYLINDER UND DICHTUNG	234
		1	STIELZYLINDER UND DICHTUNG	235
		1	STIELZYLINDER UND DICHTUNG	236
SCHMIERNIPPEL (1/8-27-GEWINDE)	3B-8485	2	ZUSATZHYDRAULIKLEITUNGEN	277
		2	ZUSATZHYDRAULIKLEITUNGEN	291
SCHRAUBE (M10X1,50X12MM)	7X-2621	1	STEUERVENTIL	411
SIEB	209-6000	1	FILTERSIEB	395
STAUBKAPPE	6V-0852	1	HYDRAULIKTANK UND SCHMIERFILTER	397
		2	VORSTEUERLEITUNGEN	327
		5	VORSTEUERLEITUNGEN	335
		8	VORSTEUERLEITUNGEN	346
	8C-3451	1	HYDRAULIKTANK UND SCHMIERFILTER	397
VERBINDER (FILTER)	107-6631	1	VORSTEUERLEITUNGEN	329
KRAFTSTOFFSYSTEM				
DICHTUNG (KRAFTSTOFFENTLÜFTUNGSPUMPE)	1P-0436	1	KRAFTSTOFFILTER	71
KRAFTSTOFFILTER	1R-0751	1	KRAFTSTOFFILTER	71
KRAFTSTOFFTANK-SIEBEINSATZ	9P-7121	1	KRAFTSTOFFTANK	91
KRAFTSTOFFTANKKAPPE	7X-7700	1	KRAFTSTOFFTANK	91
SCHALENDICHTUNGSSATZ	128-8614	1	WASSERABSCHEIDER	87
SCHLÜSSEL	5P-8500	1	KRAFTSTOFFTANK U. BEFESTIGUNG	90
VORHÄNGESCHLOSS	5P-8502	1	KRAFTSTOFFTANK U. BEFESTIGUNG	90
WASSERABSCHEIDER - EINBAUSATZ	121-4480	1	WASSERABSCHEIDER	87
WASSERABSCHEIDERELEMENT	117-4089	1	WASSERABSCHEIDER	87
		1	WASSERABSCHEIDER	88

WARTUNGSTEILE

BESCHREIBUNG	ERSATZTEIL-NUMMER	MENGE	VERWENDET IN	SEITE
KÜHLSYSTEM				
DICHTUNG	5I-7572	1	KÜHLWASSERLEITUNGEN	47
	5I-7735	1	KÜHLWASSERLEITUNGEN	47
KAPPE	171-3369	1	KÜHLER UND HYDRAULIKÖLKÜHLER	50
KÜHLERKAPPE	184-3949	1	KÜHLER UND HYDRAULIKÖLKÜHLER	52
REGULATOR (KÜHLMITTEL)	5I-8010	1	KÜHLWASSERLEITUNGEN	47
STAUBKAPPE (KÜHLMITTELPROBE-ENTNAHMEVENTIL)	157-0670	1	KÜHLWASSERLEITUNGEN	47
LUFTANSAUG - U. ABGASSYSTEM				
ANZEIGE (LUFTFILTERWARTUNG)	154-0498	1	LUFTREINIGER	55
HAUPTFILTER	131-8822	1	LUFTREINIGER	56
LUFTFILTER (HAUPTELEMENT)	6I-2501	1	LUFTREINIGER	55
LUFTFILTER (SICHERHEITSELEMENT)	6I-2502	1	LUFTREINIGER	55
SICHERHEITSFILTER	131-8821	1	LUFTREINIGER	56
VORREINIGER	130-3279	1	LUFTREINIGER	57
MOTOR (GRUNDAUSFÜHRUNG)				
DICHTUNG (VENTILDECKEL)	178-6533	2	VENTILDECKEL	11
KAPPE (ÖLEINFÜLLUNG)	5I-7584	1	VENTILDECKEL	11
KEILRIEMEN (SERPENTINENFÖRMIG)	212-8585	1	RIEMENSCHEIBE	34
		1	RIEMENSCHEIBE	35
SCHMIERSYSTEM				
ENTLÜFTER (KURBELGEHÄUSE)	5I-7725	1	ENTLÜFTER	38
ÖLFILTER	1R-0739	1	ÖLFILTER	39
ROHR	5I-7645	1	ENTLÜFTER	38
STAUBKAPPE	8C-3445	1	ÖLFILTER	39
VERBINDUNGSROHR (ENTDUNSTER)	5I-4940	1	ENTLÜFTER	38

INDEX

Name	Page
A	
ACCUMULATOR GP-HYDRAULIC	215
ADJUSTER GP-WORK TOOL	502
	503
ADJUSTMENT GP-CONSOLE	548
AIR CLEANER AR	54
AIR CLEANER GP	55
	56
	57
AIR CONDITIONER & MOUNTING GP	550
AIR CONDITIONER GP	552
	553
	554
ALARM GP	93
ALARM GP-TRAVEL	94
ALTERNATOR GP-CHARGING	95
B	
BASE GP-OIL FILTER	216
BATTERY & WIRING GP	97
BATTERY & WIRING GP–COLD WEATHER	106
BATTERY (12 VOLT)	97
	106
BELT (SERPENTINE)	34
	35
BLADE AS (LOWER)	613
BLADE AS (UPPER)	616
BLOWER GP-CAB	556
BOLT (M10X1.50X12MM)	148
	411
BOOM AR-1 PIECE	463
BOOM AR-1 PIECE LONG	463
BOOM GP	464
	466
	468
BOX & MTG GP-STORAGE	156
BOX GP-STORAGE	157
BREATHER AS	252
BREATHER (CRANKCASE)	38
BREATHER GP	38
BUCKET & ADJUSTER GP	504
	505
	506
	507
	508
BUCKET AS-EXCAVATION	509
	510
	511
	512
	513
	514
	515
	516
	517
	518
	519
BUCKET AS-HEAVY DUTY	520
BUCKET AS-HEAVY DUTY ROCK	521
	522
	523
	524
BUCKET AS-PENETRATION	525
BUCKET AS-ROCK	526
	527
BUMPER GP–SIDE PROTECTION	159
C	
CAB GP	557
	559
	565
CAB GP–INTERIOR	561
CAMSHAFT GP	10
CAP AS	50
	605
CAP AS-FUEL TANK	91
CAP AS-RADIATOR	52
CAP-DUST	39
	327
	335
	346
	397
CAP-DUST (COOLENT SAMPLING VALVE)	47
CAP (OIL FILL)	11
CAP-PRESSURE VALVE (HYDRAULIC TANK)	397
CARTRIDGE AS-TURBOCHARGER	59
CHASSIS AR	1
	2
CIRCUIT BREAKER GP (60 AMP) (ALTERNATOR)	128
COCK AS-WATER	52
COMPRESSOR GP-REFRIGERANT	568
CONDENSER & MTG GP-REFRIGERANT	569
CONNECTOR (FILTER)	329
CONSOLE GP-INSTRUMENT	571
CONSOLE GP-LH	572
CONSOLE GP-OPERATOR	574
CONSOLE GP-RH	576
CONTROL & MTG GP-IMPLEMENT	109
CONTROL & MTG GP-JOYSTICK	217
CONTROL & MTG GP-MACHINE	111
CONTROL AR-AUXILIARY	218
CONTROL GP-ENGINE ELECTRONIC	112
CONTROL GP-HANDLE	219
CONTROL GP-HYDRAULIC PEDAL	220
CONTROL GP-IMPLEMENT (WORK TOOL)	115
CONTROL GP-JOYSTICK–LH	223
	224

INDEX

Name	Page
	227
CONTROL GP-JOYSTICK–RH	222
	225
	226
CONTROL GP-SWITCH	114
CONTROLLER-AIR	129
COOLER GP-ENGINE OIL	43
COOLING AR	44
COUNTERWEIGHT GP	160
	161
COUPLING GP-FLEXIBLE	228
COUPLING GP-PUMP	229
COVER GP-HOOD	162
COVER GP-STORAGE	579
	580
COVER GP-VALVE MECHANISM	11
CRANKSHAFT GP	12
CYLINDER & LINES GP-BOOM	230
CYLINDER & LINES GP-BUCKET	230
CYLINDER & LINES GP-STICK	231
CYLINDER & SEAL GP-BOOM	232
CYLINDER & SEAL GP-BUCKET	233
	234
CYLINDER & SEAL GP-STICK	235
	236
CYLINDER BLOCK GP	13
	15
CYLINDER GP-BOOM	237
CYLINDER GP-BUCKET	239
	241
CYLINDER GP-STICK	243
	245
CYLINDER HEAD AS	17
	19
CYLINDER HEAD GP	21

D

Name	Page
DOOR GP-ACCESS	163
	164
	165
DOOR GP-CAB	581
DRIVE GP-AUXILIARY PUMP	247
DRIVE GP-PUMP	249
DRIVE GP-SWING	250
	252
DUCT GP-AIR	583

E

Name	Page
ELECTRONICS GP-ENGINE RATINGS	115
ELECTRONICS GP-IMPLEMENT	115
ELECTRONICS GP-MONITOR	115
ELEMENT-WATER SEPARATOR	87
	88
ENGINE AR	4
	5
	6
	7
	8

F

Name	Page
FAN GP-SUCTION	45
	46
FASTENER GP-SWING & FINAL DR	253
FENDER & COVER GP	166
FILM GP	617
	618
FILM-INSTRUCTION (ALTERNATE EXIT)	619
	623
FILM-INSTRUCTION (HOT SURFACE)	619
	623
FILM-INSTRUCTION (HYD OIL LEVEL)	630
FILM-NOTICE (WINDOW CLEANING)	619
	623
FILM-WARNING (HYDRAULIC TANK)	630
FILM-WARNING (JUMPER CABLE)	619
	623
FILM-WARNING (NO ETHER/AIR INTAKE)	619
	623
FILTER	446
	458
	583
FILTER & VALVE GP-PILOT	255
FILTER AS-ENGINE OIL	39
FILTER AS-FUEL	71
FILTER AS-OIL (HYDRAULIC)	255
FILTER AS-PRIMARY	56
FILTER AS-SECONDARY	56
FILTER ELEMENT AS-AIR (PRIMARY)	55
FILTER ELEMENT AS-AIR (SECONDARY)	55
FILTER ELEMENT-HYDRAULIC	259
FILTER GP-ENGINE OIL	39
FILTER GP-FUEL	71
FILTER GP-OIL	256
	257
	259
FILTER-RECIRCULATION	553
FILTER-RETURN	256
FINAL DRIVE GP	151
	152
FITTING GP	261
FITTING-GREASE	169
	232
	233
	234
	235
	236
	472

INDEX

Name	Page
	473
	476
	478
	482
	484
	486
	492
	496
	498
	500
FITTING-GREASE (1/8-27 NPTF)	470
FITTING-GREASE (1/8-27 THD)	277
	291
	488
	490
	494
FLOOR MAT	114
	598
FLOOR MAT (WITH THIRD PEDAL)	220
FLOOR MAT (WITHOUT THIRD PEDAL)	220
FLYWHEEL GP	23
FRAME AR-UNDERCARRIAGE	188
FRAME GP-UPPER	167
FUSE (10 AMP)	129
FUSE (15 AMP)	129
FUSE (30 AMP)	129
FUSE (5 AMP)	129
	553

G

GASKET	47
GASKET (FUEL PRIMING PUMP)	71
GASKET (VALVE COVER)	11
GAUGE AS	91
GAUGE AS (HYD OIL LEVEL)	397
GEAR & BEARING GP-SWING	169
GEAR GP-FRONT	24
GENERAL AR	2
	3
GUARD AR-BOTTOM	171
GUARD GP-BOTTOM	172
	173
GUARD GP-PLATFORM	175
GUARD GP-SWIVEL	176
GUARD GP-TRACK GUIDE	189
	190
	191
GUARD GP-TRAVEL MOTOR	192
	193

H

HANDHOLD GP	177
HATCH GP-ROOF	584
	585
HEAD GP-PUMP	262
	266
HEADREST AS	586
HOOD & GUARD GP	178
HOOD GP	184
HOOD GP-ENGINE	185
	186
HORN GP-ELECTRIC	587
HOUSING GP-FLYWHEEL	25
HOUSING GP-FRONT	26
HYDRAULIC AR	270

I

IDLER GP-FRONT	194
	195
	196
	197
INDICATOR AS (AIR FILTER SERVICE)	55
INSTALLATION AR-ENGINE	9
INSTALLATION GP-RADIO	588

K

KEY	90
	134
KEY (BATTERY DISCONNECT)	133
KIT-ALARM (OPERATOR MONITOR)	595
KIT-AUXILIARY CONTROL	218
KIT-BOWL SEAL	87
	88
KIT-CAP FILTER (FUEL TANK)	91
KIT-CONNECTING PLUG (12 PIN)	98
	128
KIT-CONNECTING PLUG (2 PIN)	98
	114
	128
	138
KIT-CONNECTING PLUG (2 PIN)	97
KIT-CONNECTING PLUG (3 PIN)	98
	128
	138
KIT-CONNECTING PLUG (3 PIN)	97
KIT-CONNECTING PLUG (4 PIN)	98
	128
KIT-CONNECTING PLUG (6 PIN)	98
	138
	143
	146
KIT-CONNECTING PLUG (6 PIN)	97
KIT-CONNECTING PLUG (8 PIN)	97
KIT-COVER (OPERATOR MONITOR)	595
KIT-HANDLE (RECLINER CONTROL)	601
KIT-RECEPTACLE (12 PIN)	97

INDEX

Name	Page
	98
	128
	146
KIT-RECEPTACLE (2 PIN)	31
	91
	93
	97
	98
	128
	129
	138
	143
	148
	329
	331
	341
	397
	568
KIT-RECEPTACLE (2 PIN)	148
KIT-RECEPTACLE (3 PIN)	97
	128
	138
	148
	273
KIT-RECEPTACLE (3 PIN)	148
KIT-RECEPTACLE (4 PIN)	98
	128
	138
KIT-RECEPTACLE (6 PIN)	97
	128
	138
	143
	148
	224
	225
KIT-RECEPTACLE (6 PIN)	144
KIT-RECEPTACLE (8 PIN)	112
KIT-REPAIR (HYDRAULIC PUMP)	389
KIT-SEAL	237
	239
KIT-SERVICE METER	136
KIT-WATER BASE	87
	88

L

LAMP	117
	118
	119
LAMP GP-FLOOD	116
	117
	118
	119
	120
	121
LAMP-HEAD (24 VOLT)	121
	126
LAMP (24 VOLTS)(65 WATTS)	120
LEVER GP-CONTROL	271
	273
LIGHTING GP-BOOM	122
	123
	124
LIGHTING GP-CHASSIS	125
LIGHTING GP-FLOOD	126
LINES AR-AUXILIARY HYDRAULIC	275
	276
LINES GP-AIR	60
LINES GP-AIR CONDITIONER	590
LINES GP-AUXILIARY HYDRAULIC	277
	279
	281
	283
	285
	289
	291
	293
	295
	297
	299
LINES GP-AUXILIARY HYDRAULIC–MASS BOOM	287
LINES GP-BOOM	301
	303
LINES GP-BOOM CYLINDER	305
	306
LINES GP-BOOM DRAIN	307
	309
LINES GP-BUCKET CYLINDER	311
	312
	313
LINES GP-COOLING AIR	61
LINES GP-ENGINE OIL	41
LINES GP-FRONT	314
	316
	317
	321
	323
LINES GP-FUEL	73
	76
LINES GP-GREASE	470
	472
	473
LINES GP-MUFFLER DRAIN	63
	64
LINES GP-PILOT	327
	329
	331
	333
	341

INDEX

Name	Page
	346
LINES GP-PUMP	351
	353
	355
	356
	357
LINES GP-RETURN & FILTER	358
LINES GP-STICK	360
	361
	362
LINES GP-STICK CYLINDER	364
	365
LINES GP-STICK DRAIN	366
	367
	368
	369
LINES GP-SWING DRIVE DRAIN	370
LINES GP-SWING MOTOR	371
LINES GP-TRAVEL MOTOR	372
	375
LINES GP-TURBOCHARGER OIL	42
LINES GP-WATER	47
LINK AS-TRACK	198
	199
LINKAGE AR-BUCKET	475
LINKAGE GP-BUCKET	476
	478

M

MANIFOLD GP-EXHAUST	65
MANIFOLD GP-INLET	67
MIRROR GP-REAR VIEW	594
MONITOR GP-OPERATOR	595
	596
MOTOR & MTG GP-SWING	378
MOTOR & MTG GP-TRAVEL	379
MOTOR GP-SWING	380
	381
MOTOR GP-TRAVEL	383
MOUNTING GP-AIR CLEANER	68
MOUNTING GP-ALTERNATOR	28
MOUNTING GP-ENGINE	29
MOUNTING GP-MAIN CONTROL VALVE	386
MOUNTING GP-STARTING MOTOR	30
MUFFLER GP	69

N

NOZZLE GP-UNIT INJECTOR	78

O

OPERATOR AR	597

P

PADLOCK GP	90
PAN GP-OIL	31
PANEL GP-CIRCUIT BREAKER	128
PIPE	38
PISTON & ROD GP	33
PLATE & FILM GP	619
	623
	627
	630
PLATE-WARNING (HIGH PRESSURE CYLINDER)	207
PLATFORM GP-OPERATOR	598
PLUG-DRAIN	397
POWER TRAIN AR	154
PRECLEANER GP	57
PROTECTOR GP-BUCKET	528
PROTECTOR GP-SIDE BAR	529
PULLER-FUSE	129
PULLEY GP	34
	35
PUMP & MOUNTING GP	387
	388
PUMP GP-FUEL INJECTION	80
PUMP GP-FUEL PRIMING	71
PUMP GP-GEAR	389
PUMP GP-PISTON	390
PUMP GP-WATER	49

R

RADIATOR & HYD OIL COOLER GP	50
	52
REGULATOR (COOLANT)	47
RELAY (24 VOLT)	129
ROLLER AR-TRACK & CARRIER	200
	201
ROLLER GP-TRACK CARRIER	202
ROLLER GP-TRACK-SINGLE FLANGE	203

S

SCREEN AS	395
SCREEN GP	395
SEAL-O-RING	257
	261
	323
	333
	334
SEALANT	169
	253
SEALANT (2ML)	375
SEAT BELT GP	599
	600

INDEX

Name	Page
SEAT GP	600
	601
SENDER AS-TEMPERATURE	397
SENDER-TEMPERATURE (WATER)	47
SENSOR AS-PRESSURE (MAIN PUMP)	335
SENSOR AS-PRESSURE (WORK TOOL)	323
SENSOR GP-TEMPERATURE (OUT SIDE AIR)	47
SEPARATOR GP-WATER	87
	88
	89
SIDECUTTER GP	530
	531
SOFTWARE GP-IMPLEMENT	115
SOFTWARE GP-IMPLEMENT (WORK TOOL)	115
SOFTWARE GP-MONITOR	596
SPROCKET GP	155
STARTING MOTOR GP-ELECTRIC	132
STICK AR-HOE	480
	481
STICK GP	482
	484
	486
STICK GP-HOE	488
	490
	492
	494
	496
	498
	500
STRAINER-FUEL TANK	91
SUN VISOR	604
SUPPORT GP-SEAT	602
SUSPENSION GP-SEAT	603
SWITCH AS (HEATER RELAY)	128
SWITCH AS-LIQUID LEVEL (HYDRAULIC TANK)	397
SWITCH AS-MAGNETIC (24 VOLT) (MAIN RELAY)	128
SWITCH AS-ROCKER (LOWER WASHER)	150
SWITCH AS-ROCKER (LOWER WIPER)	150
SWITCH AS-ROLLER (POSITION SENSOR)	613
SWITCH AS-ROTARY	144
SWITCH GP-DISCONNECT	134
SWITCH GP-DISCONNECT–BATTERY	133
SWITCH GP-DISCONNECT (BATTERY)	106
SWITCH GP-PRESSURE (ELECTRONIC CONTROL)	329
SWITCH GP-PRESSURE (IMPLEMENT)	341
SWITCH GP-START–KEY	135
SWITCH GP-START (KEY)	144
SWITCH (POSITION SENSOR)	610
SWITCH (PRESSURE)	13
SWIVEL GP	396

T

Name	Page
TANK & FILTER GP-HYDRAULIC	397
TANK & MTG GP-FUEL	90
TANK & MTG GP-HYDRAULIC	401
TANK GP-FUEL	91
TIMER AS-OFF DELAY	128
TIP GP	532
	533
	534
	535
	536
TIP GP-ABRASION	537
	538
TIP GP-LONG	539
	540
	541
	542
TIP GP-PENETRATION	543
	544
TIP GP-SHARP	545
TIP GP-SHORT	546
	547
TRACK ADJUSTER & RECOIL GP	204
	205
	206
	207
TRACK GP	208
	209
	210
	211
	212
	213
	214
TUBE (FUMES DISPOSAL)	38
TURBOCHARGER GP	70

V

Name	Page
V-BELT	568
VALVE	410
VALVE & MTG GP-CONTROL	402
VALVE AS	39
VALVE GP-BALL	403
VALVE GP-CHECK	404
VALVE GP-CONTROL	405
	406
	407
	410
	414
	416
	419
VALVE GP-FLUID SAMPLING	39
	397
VALVE GP-FLUID SAMPLING (COOLENT)	47

INDEX

Name	Page
VALVE GP-MAIN CONTROL	420
VALVE GP-PILOT	421
	423
	425
	427
	428
	429
VALVE GP-PILOT–LH	431
VALVE GP-PILOT–RH	432
VALVE GP-PILOT RELIEF	433
	434
VALVE GP-PILOT (WORKTOOL)	220
VALVE GP-PRESSURE REDUCING	435
VALVE GP-RELIEF	436
	437
	438
	439
	440
	441
	442
	443
	444
	445
	446
	448
	449
VALVE GP-SHUTTLE	450
	451
VALVE GP-SOLENOID	452
	453
	454
	455
	456
	457
VALVE GP-SOLENOID & RELIEF	458
	460
VALVE GP-SWING CUSHION	461
VALVE GP-TRAVEL COUNTERBALANCE	462
VALVE MECHANISM GP	36
VALVE (RELIEF)	206
VALVE-SHUTOFF	250
VISOR GP-CAB	604

W

Name	Page
WASHER GP-WINDOW	605
WASHER GP-WINDOW–LOWER	606
WASHER-HARD (13.5X25.5X3MM THK)	311
	362
WINDOW GP-DOOR	608
WINDOW GP-FRONT	610
WIPER & WASHER GP-WINDOW–LOWER	613
WIPER AR-WINDOW	615
WIPER GP-WINDOW–UPPER	616
WIRING GP-CAB	136
	138
WIRING GP-CONSOLE	142
	144
WIRING GP-CONSOLE–LH	143
WIRING GP-CONVERTER	146
WIRING GP-HAMMER	148
WIRING GP-WINDOW WIPER–LOWER	150

INDEX

Désignation	Page

A

ACCOUPLEMENT DE POMPE (ASS)	229
ACCOUPLEMENT FLEXIBLE (ASS)	228
ACCUMULATEUR HYDRAULIQUE (ASS)	215
ALTERNATEUR DE CHARGE (ASS)	95
AMPOULE	117
	118
	119
AMPOULE (24 VOLTS) (65 WATTS)	120
APPUIE-TETE (ENS)	586
ARBRE A CAMES (ASS)	10
AUTOCOLLANT DE MISE EN GARDE (CÂBLES VOLANTS)	619
	623
AUTOCOLLANT DE MISE EN GARDE (PAS D'ÉTHER/ADMISSION D'AIR)	619
	623
AUTOCOLLANT DE MISE EN GARDE (RÉSERVOIR HYDRAULIQUE)	630
AVERTISSEUR (ASS)	93
AVERTISSEUR DE TRANSLATION (ASS)	94

B

BALAI D'ESSUIE-GLACE (ENS) (INFÉRIEUR)	613
BALAI D'ESSUIE-GLACE (ENS) (SUPERIEUR)	616
BATTERIE ET CÂBLAGE	97
	106
BATTERIE (12 VOLTS)	97
	106
BLINDAGE INFÉRIEUR (ASS)	172
	173
BLINDAGE INFÉRIEUR (VERSION)	171
BLOC-CYLINDRES (ASS)	13
	15
BOUCHON DE RADIATEUR (ENS)	52
BOUCHON DE RÉSERVOIR DE CARBURANT (ENS)	91
BOUCHON DE VIDANGE	397
BOULON (M10X1,50X12MM)	148
BOULON (M10X1,50X12MM)	411
BOULONNERIE DE BÂTI D'ORIENT. ET DE RÉDUCT. LAT.	253
BRAS (ASS)	482
	484
	486
BRAS DE PELLE RETRO (ASS)	488
BRAS DE PELLE RETRO (ASS)	490
	492
	494
	496
	498
	500

C

CABINE (ASS)	557
	559
	561
	565
CABLAGE DE CABINE (ASS)	136
CABLAGE DE CABINE (ASS)	138
CABLAGE DE CONSOLE (ASS)	142
	143
	144
CABLAGE DE MARTEAU (ASS)	148
CÂBLAGE D'ESSUIE-GLACE (ASS)	150
CÂBLAGE-TRANSFORMATION (ASS)	146
CACHE-SOUPAPES (ASS)	11
CADENAS (ASS)	90
CANALISATIONS A COMMANDE PILOTE (ASS)	327
	329
	331
	333
	341
	346
CANALISATIONS AV	314
	316
	317
	321
	323
CANALISATIONS D'AIR (ASS)	60
CANALISATIONS DE BRAS (ASS)	360
	361
	362
CANALISATIONS DE CARBURANT (ASS)	73
	76
CANALISATIONS DE CLIMATISEUR (ASS)	590
CANALISATIONS DE GRAISSAGE (ASS)	470
	472
	473
CANALISATIONS DE MOTEUR DE TRANSLATION	372
	375
CANALISATIONS DE POMPE (ASS)	351
	353
	355
	356
	357
CANALISATIONS DE REFROIDISSEMENT (ASS)	61
CANALISATIONS DE RETOUR ET DE FILTRE (ASS)	358

* TRADUCTION NON DISPONIBLE AU MOMENT DE LA PUBLICATION

INDEX

Désignation	Page
CANALISATIONS DE VERIN DE FLECHE (ASS)	305
	306
CANALISATIONS DE VÉRIN DE GODET (ASS)	311
	312
	313
CANALISATIONS DE VIDANGE DE SILENCIEUX (ASS)	63
	64
CANALISATIONS D'EAU (ASS)	47
CANALISATIONS D'HUILE DE TURBOCOMPRESSEUR (ASS)	42
CANALISATIONS D'HUILE MOTEUR (ASS)	41
CANALISATIONS DU MOTEUR D'ORIENTATION	371
CANALISATIONS DU VÉRIN DE BRAS (ASS)	364
	365
CANALISATIONS HYDRAULIQUES AUXILIAIRES (ASS)	277
	279
	281
	283
	285
	287
	289
	291
	293
	295
	297
	299
CANALISATIONS HYDRAULIQUES AUXILIAIRES (VERSION)	275
	276
CANALISATIONS-VIDANGE D'ENTRAÎNEMENT DE TOURELLE	370
CAPOT (ASS)	184
CAPOT DU MOTEUR (ASS)	185
	186
CAPOT ET PROTECTION (ASS)	178
CAPTEUR DE PRESSION (ENS) (OUTIL DE TRAVAIL)	323
CAPTEUR DE PRESSION (ENS) (POMPE PRINCIPALE)	335
CAPTEUR DE TEMPERATURE (ASS) (AIR AMBIANT)	47
CAPTEUR DE TEMPÉRATURE (ENS)	397
CARTER AV (ASS)	26
CARTER DE VOLANT (ASS)	25
CARTOUCHE - TURBOCOMPRESSEUR (ENS)	59
CEINTURE DE SECURITE (ASS)	599
	600
CHAINES (ASS)	208
	209
	210
	211
	212
	213
	214
CHAPEAU - LIMITEUR DE PRESSION (RÉSERVOIR HYDRAULIQUE)	397
CHAPEAU (ENS)	50
	605
CHAPEAU (REMPLISSAGE D'HUILE)	11
CHASSIS DE TOURELLE (ASS)	167
CHÂSSIS PORTEUR (VERSION)	188
CLAPET	410
CLAPET DE DECHARGE (ASS)	436
	437
	438
	439
	440
	441
	442
	443
	444
	445
	446
	448
	449
CLAPET DE DÉCHARGE PILOTE (ASS)	433
	434
CLAPET DE RETENUE (ENS)	404
CLAPET (DÉTENTE)	206
CLAPET (ENS)	39
CLÉ	90
	134
CLÉ (COUPE-BATTERIE)	133
CLIMATISEUR (ASS)	552
	553
	554
CLIMATISEUR ET MONTAGE (ASS)	550
COFFRE DE RANGEMENT (ASS)	157
COFFRE ET MONTAGE - RANGEMENT (ASS)	156
COLLECTEUR D'ADMISSION (ASS)	67
COLLECTEUR D'ÉCHAPPEMENT (ASS)	65
COMMANDE AUXILIAIRE (VERSION)	218
COMMANDE DE POIGNÉE (ASS)	219
COMMANDE D'ÉQUIPEMENT	109
COMMANDE D'EQUIPEMENT (ASS) (OUTIL DE TRAVAIL)	115
COMMANDE ELECTRONIQUE DE MOTEUR (ASS)	112

* TRADUCTION NON DISPONIBLE AU MOMENT DE LA PUBLICATION

INDEX

Désignation	Page
COMMANDE ÉLECTRONIQUE D'ÉQUIPEMENT (ASS)	115
COMMANDE ET MONTAGE - LEVIER (ASS)	217
COMMANDE ET MONTAGE (ASS)-MACHINE	111
COMMANDE HYDRAULIQUE DE PÉDALE (ASS)	220
COMPRESSEUR DE REFRIGERANT (ASS)	568
CONDENSATEUR ET MONTAGE (RÉFRIGÉRANT)	569
CONDUITES DE RETOUR DE BRAS (ASS)	366
	367
	368
	369
CONDUITES DE RETOUR DE FLÈCHE (ASS)	307
	309
CONSOLE DE CONDUITE (ASS)	574
CONSOLE DROITE (ASS)	576
CONSOLE DU TABLEAU DE BORD (ASS)	571
CONSOLE GAUCHE (ASS)	572
CONTACTEUR (ENS) (RELAIS DE RÉCHAUFFEUR)	128
CONTACTEUR MAGNETIQUE (ENS) (24 VOLTS) (RELAIS PRINCIPAL)	128
CONTREPOIDS (ASS)	160
	161
CONTRÔLEUR D'AIR	129
COURROIE (ENTRAÎNEMENTS MULTIPLES)	34
	35
COURROIE TRAPEZOIDALE	568
COUTEAUX LATÉRAUX (ASS)	530
	531
COUVERCLE - CAPOT (ASS)	162
COUVERCLE DE BOÎTE DE RANGEMENT (ASS)	579
	580
CULASSE (ASS)	21
CULASSE (ENS)	17
	19
CULBUTERIE (ASS)	36

D

Désignation	Page
DÉMARREUR - MONTAGE (ASS)	30
DÉMARREUR ÉLECTRIQUE (ASS)	132
DISJONCTEUR (ASS) (60A) (ALTERNATEUR)	128
DISJONCTEUR DU PANNEAU DE COMMANDE (ASS)	128
DISTRIBUTEUR-AMORTISSEUR DE ROTATION	461
DISTRIBUTEUR (ASS)	405
	406
	407
	410
	414
	416
	419
DISTRIBUTEUR ET MONTAGE (ASS)	402

E

Désignation	Page
ÉCLAIRAGE - PROJECTEURS (ASS)	126
ÉCLAIRAGE DE CHÂSSIS (ASS)	125
ÉCLAIRAGE DE FLÈCHE (ASS)	122
	123
	124
ECRAN (ASS)	395
ÉCRAN (ENS)	395
ÉLECTROMODULE DE SURVEILLANCE (ASS)	596
ÉLECTROMODULE DE SURVEILLANCE (ASS)	595
ÉLECTRONIQUE-MONITEUR (ASS)	115
ÉLÉMENT DE FILTRE À AIR (ENS) (PRINCIPAL)	55
ÉLÉMENT DE FILTRE À AIR (ENS) (SECONDAIRE)	55
ÉLÉMENT DE FILTRE-HYDRAULIQUE	259
ÉLÉMENT DE SÉPARATEUR D'EAU	87
	88
ENGRENAGE ET PALIER D'ORIENTATION	169
ENTRAÎNEMENT DE POMPE (ASS)	249
ENTRAÎNEMENT DE POMPE AUXILIAIRE (ASS)	247
ENTRAINEMENT D'ORIENTATION (ASS)	250
	252
ESSUIE-GLACE (ASS)	616
ESSUIE-GLACE ET LAVE-GLACE	613
ESSUIE-GLACE (VERSION)	615
EXTRACTEUR DE FUSIBLE	129

F

Désignation	Page
FILTRE	446
	458
	583
FILTRE A AIR (ASS)	55
	56
FILTRE A AIR (ASS)	57
FILTRE À AIR (VERSION)	54
FILTRE A CARBURANT (ASS)	71
FILTRE A CARBURANT (ENS)	71
FILTRE A HUILE (ASS)	256
	257
	259
FILTRE À HUILE (ENS) (HYDRAULIQUE)	255
FILTRE À HUILE MOTEUR (ASS)	39

* TRADUCTION NON DISPONIBLE AU MOMENT DE LA PUBLICATION

INDEX

Désignation	Page
FILTRE A HUILE MOTEUR (ENS)	39
FILTRE DE RECIRCULATION	553
FILTRE DE RETOUR	256
FILTRE ET SOUPAPE PILOTE (ASS)	255
FILTRE PRINCIPAL (ENS)	56
FILTRE SECONDAIRE (ENS)	56
FLECHE - CANALISATIONS	301
	303
FLECHE (ASS)	464
	466
	468
FLÈCHE MONOBLOC LONGUE (VERSION)	463
FLECHE MONOBLOC (VERSION)	463
FUSIBLE (10A)	129
FUSIBLE (15A)	129
FUSIBLE (30A)	129
FUSIBLE (5A)	553
FUSIBLE (5A)	129

G

GAINE D'AIR (ASS)	583
GALET A BOUDIN SIMPLE (ASS)	203
GALET SUPERIEUR (ASS)	202
GALET SUPÉRIEUR (VERSION)	200
	201
GARDE-BOUE ET COUVERCLE (ASS)	166
GLACE AV	610
GLACE DE PORTIÈRE (ASS)	608
GODET ET TENDEUR DE CHAÎNE (ASS)	504
	505
	506
	507
	508
GODET EXTRA-ROBUSTE (ENS)	520
GODET-PÉNÉTRATION (ENS)	525
GODET POUR CREUSAGE (ENS)	509
	510
	511
	512
	513
	514
	515
	516
	517
	518
	519
GODET-ROCHE (ENS)	526
	527
GODET ROCHE EXTRA-ROBUSTE (ENS)	521
	522
	523
	524

Désignation	Page
GRAISSEUR	169
	232
	233
	234
	235
	236
	472
	473
	476
	478
	482
	484
	486
	492
	496
	498
	500
GRAISSEUR (FILET 1/8-27)	277
	291
	488
	490
	494
GRAISSEUR (RACCORD AU PAS DU GAZ DE 1/8 - 27)	470
GROUPE D'ORIENTATION	396
GUIDE PROTECTEUR DE CHAÎNE (ASS)	189
	190
	191

H

HUILE MOTEUR - CARTER (ASS)	31

I

INDICATEUR (ENS) (ENTRETIEN FILTRE À AIR)	55
INSTRUMENTS	91
INSTRUMENTS (NIVEAU D'HUILE HYDRAULIQUE)	397
INTERRUPTEUR - CONTACTEUR (CAPTEUR - POSITION)	610
INTERRUPTEUR - CONTACTEUR (PRESSION)	13
INTERRUPTEUR BALANCIER (ENS) (ESSUIE-GLACE INFÉRIEUR)	150
INTERRUPTEUR BALANCIER (ENS) (LONDELLE INFÉRIOR)	150
INTERRUPTEUR DE COMMANDE	114
INTERRUPTEUR DE DÉMARRAGE (ASS)	135
INTERRUPTEUR DE DÉMARRAGE (ASS) (CLÉ)	144

* TRADUCTION NON DISPONIBLE AU MOMENT DE LA PUBLICATION

INDEX

Désignation	Page
INTERRUPTEUR DE NIVEAU - LIQUIDE (ENS) (RÉSERVOIR HYDRAULIQUE)	397
INTERRUPTEUR ROTATIF (CAPTEUR - POSITION)	613
INTERRUPTEUR ROTATIF (ENS)	144
J	
JOINT PLAT	47
JOINT PLAT (CACHE-SOUPAPES)	11
JOINT PLAT (POMPE D'AMORÇAGE DE CARBURANT)	71
JOINT TORIQUE	257
	261
	323
	333
	334
K	
KIT D'AVERTISSEUR (TABLEAU DE SURVEILLANCE)	595
KIT DE BOUGIE (12 BROCHES)	98
	128
KIT DE BOUGIE (2 BROCHES)	97
	98
	114
	128
	138
KIT DE BOUGIE (3 BROCHES)	97
	98
	128
	138
KIT DE BOUGIE (4 BROCHES)	98
	128
KIT DE BOUGIE (6 BROCHES)	97
	98
	138
	143
	146
KIT DE BOUGIE (8 BROCHES)	97
KIT DE CHAPEAU DE FILTRE (RÉSERVOIR DE CARBURANT)	91
KIT DE COMMANDE AUXILIAIRE	218
KIT DE COMPTEUR D'ENTRETIEN	136
KIT DE COUVERCLES (TABLEAU DE SURVEILLANCE)	595
KIT DE JOINT DE FILTRE	87
	88
KIT DE JOINTS	237
	239
KIT DE POIGNÉE (COMMANDE D'INCLINAISON)	601

Désignation	Page
KIT DE PRISE FEMELLE (12 BROCHES)	97
	98
	128
	146
KIT DE PRISE FEMELLE (2 BROCHES)	31
	91
	93
	97
	98
	128
	129
	148
	329
	331
	341
	397
KIT DE PRISE FEMELLE (2 BROCHES)	138
	143
	568
KIT DE PRISE FEMELLE (3 BROCHES)	97
	128
	148
	273
KIT DE PRISE FEMELLE (3 BROCHES)	138
KIT DE PRISE FEMELLE (4 BROCHES)	98
	128
KIT DE PRISE FEMELLE (4 BROCHES)	138
KIT DE PRISE FEMELLE (6 BROCHES)	97
	128
	148
KIT DE PRISE FEMELLE (6 BROCHES)	224
	225
KIT DE PRISE FEMELLE (6 BROCHES)	138
	143
	144
KIT DE PRISE FEMELLE (8 BROCHES)	112
KIT DE RÉPARATION (POMPE HYDRAULIQUE)	389
KLAXON ÉLECTRIQUE (ASS)	587
L	
LAMPE - FEUX AV (24 VOLTS)	121
	126
LAMPE - PHARE (ASS)	116
	117
	118
	119
	120
LAMPE - PHARE (ASS)	121
LAVE-GLACE - VITRE (ASS)	605
	606
LEVIER DE COMMANDE (ASS)	271

* TRADUCTION NON DISPONIBLE AU MOMENT DE LA PUBLICATION

INDEX

Désignation	Page
	273
LOGICIEL - ÉLECTROMODULE (ASS)	596
LOGICIEL-ÉQUIPEMENT (ASS)	115
LOGICIEL-ÉQUIPEMENT (ASS) (OUTIL DE TRAVAIL)	115

M

MAILLON DE CHAINE (ENS)	198
	199
MANOCONTACT (COMMANDE ÉLECTRONIQUE)	329
MANOCONTACT (ÉQUIPEMENT)	341
MECANISME AMORTISSEUR ET REGLAGE DE CHAINES (ASS)	204
	205
	206
	207
MONTAGE (ASS)-DISTRIBUTEUR PRINCIPAL	386
MONTAGE D'ALTERNATEUR (ASS)	28
MONTAGE DE FILTRE À AIR (ASS)	68
MONTAGE DE MOTEUR (ASS)	29
MONTAGE DE MOTEUR (VERSION)	9
MONTAGE DE RADIO (ASS)	588
MOTEUR - TRANSLATION (ASS)	383
MOTEUR DE JOINT TOURNANT (ASS)	380
	381
MOTEUR DE TRANSLATION ET MONTAGE (ASS)	379
MOTEUR ET MONTAGE - BÂTI D'ORIENTATION (ASS)	378
MOTEUR (VERSION)	4
	5
	6
	7
	8

P

PALONNIER - GROUPE DE COMMANDE (ASS)	222
	223
	224
	225
	226
	227
PARE-CHOCS (ASS)	159
PARE-POUSSIERE	39
	327
	335
	346
	397
PARE-POUSSIERE (ROBINET DE PRÉLÈVEMENT DE LIQUIDE DE REFROIDISSEMENT)	47
PARE-SOLEIL	604
PELLE RÉTRO - BRAS	480
	481
PIGNONNERIE AV (ASS)	24
PISTON ET BIELLE (ASS)	33
PLAQUE - AVERTISSEMENT (VÉRIN HAUTE PRESSION)	207
PLAQUE SIGNALÉTIQUE (ASS)	617
	618
PLAQUE SIGNALÉTIQUE (REMARQUE) (NETTOYAGE DE VITRE)	619
	623
PLAQUES SIGNALETIQUES ET AUTOCOLLANTS (ASS)	619
	623
	627
	630
PLATE-FORME DE CABINE	598
POIGNÉE	177
POINTE ABRASION (ASS)	537
	538
POINTE (ASS)	532
	533
	534
	535
	536
POINTE COURTE (ASS)	546
	547
POINTE EFFILÉE (ASS)	545
POINTE LONGUE (ASS)	539
	540
	541
	542
POINTE PENETRATION	543
	544
POMPE A EAU (ASS)	49
POMPE A ENGRENAGES (ASS)	389
POMPE A PISTONS (ASS)	390
POMPE D'AMORÇAGE DE CARBURANT (ASS)	71
POMPE D'INJECTION DE CARBURANT (ASS)	80
POMPE ET MONTAGE (ASS)	387
	388
PORTE DE VISITE (ASS)	163
	164
	165
PORTIÈRE DE CABINE (ASS)	581
POSTE DE CONDUITE (VERSION)	597
POULIE (ASS)	34

* TRADUCTION NON DISPONIBLE AU MOMENT DE LA PUBLICATION

INDEX

Désignation	Page
	35
PREFILTRE (ASS)	57
PRISE (FILTRE)	329
PRODUIT D'ETANCHEITE	169
	253
PRODUIT D'ETANCHEITE (2ML)	375
PROTECTEUR DE LONGERON (ASS)	529
PROTECTEURS DE GODET (ASS)	528
PROTECTION DE MOTEUR DE TRANSLATION (ASS)	192
	193
PROTECTION DE PIVOT (ASS)	176
PROTECTION DE PLATE-FORME (ASS)	175

R

RACCORD (ASS)	261
RADIATEUR ET REFROIDISSEUR D'HUILE HYDRAULIQUE (ASS)	50
	52
RÉDUCTEURS (ASS)	151
	152
REFROIDISSEMENT (VERSION)	44
REFROIDISSEUR D'HUILE MOTEUR (ASS)	43
RÉGLAGE DE GODET (ASS)	502
	503
RÉGLAGE DE LA CONSOLE (ASS)	548
RÉGLAGE ÉLECTRO. DE PUISSANCE DU MOTEUR	115
REGULATEUR (LIQUIDE DE REFROIDISSEMENT)	47
RELAIS (24 VOLTS)	129
RENIFLARD (ASS)	38
RENIFLARD (ENS)	252
RENIFLARD (VILEBREQUIN)	38
RÉSERVOIR DE CARBURANT (ASS)	91
RÉSERVOIR DE CARBURANT ET MONTAGE (ASS)	90
RÉSERVOIR HYDRAULIQUE ET FILTRE (ASS)	397
RÉSERVOIR HYDRAULIQUE ET MONTAGE (ASS)	401
RETROVISEUR - CABINE (ASS)	604
RÉTROVISEUR (ASS)	594
ROBINET DE BATTERIE (ASS)	133
	134
ROBINET DE BATTERIE (ASS) (BATTERIE)	106
ROBINET D'EAU (ENS)	52
ROBINET-PRÉLÈVEMENT D'ÉCHANTILLON DE LIQUIDE (ASS)	39
ROBINET-PRÉLÈVEMENT D'ÉCHANTILLON DE LIQUIDE (ASS)	397
ROBINET-PRÉLÈVEMENT D'ÉCHANTILLON DE LIQUIDE (ASS) (LIQUIDE DE REFROIDISSEMENT)	47
RONDELLE DURE (ÉPAISSEUR 13,5X25,5MM)	311
RONDELLE DURE (ÉPAISSEUR 13,5X25,5MM)	362
ROTATION DE LA ROUE DU VENTILATEUR SOUFFLANT (ISSUE DE SECOURS)	619
	623
ROTATION DE LA ROUE DU VENTILATEUR SOUFFLANT (NIVEAU D'HUILE HYDRAULIQUE)	630
ROTATION DE LA ROUE DU VENTILATEUR SOUFFLANT (SURFACE CHAUDE)	619
	623
ROUE AV (ASS)	155
	194
	195
	196
	197

S

SÉPARATEUR D'EAU (ASS)	87
	88
	89
SIÈGE (ASS)	600
	601
SIÈGE AVEC SUSPENSION (ASS)	603
SILENCIEUX (ASS)	69
SONDE THERMIQUE (EAU)	47
SOUPAPE - SOLÉNOÏDE (ASS)	452
	453
	454
	455
	456
	457
SOUPAPE D'ARRÊT	250
SOUPAPE DE COMMANDE PRINCIPALE (ASS)	420
SOUPAPE D'EQUILIBRAGE DE TRANSLATION (ASS)	462
SOUPAPE PILOTE (ASS)	421
	423
	425
	427
	428
	429
	431
	432
SOUPAPE PILOTE (ASS) (OUTIL DE TRAVAIL)	220

* TRADUCTION NON DISPONIBLE AU MOMENT DE LA PUBLICATION

INDEX

Désignation	Page
SOUPAPE RÉDUCTRICE DE PRESSION (ASS)	435
SOUPAPE SOLENOIDE ET DE DECHARGE	458 460
SOUPAPE SPHÉRIQUE (ASS)	403
SUPPORT DE FILTRE À HUILE (ASS)	216
SUPPORT DE SÉPARATEUR D'EAU	87 88
SUPPORT DE SIÈGE (ASS)	602

T

TAMIS DE RÉSERVOIR DE CARBURANT	91
TAPIS DE PLANCHER	114 598
TAPIS DE PLANCHER (*WITH THIRD PEDAL)	220
TAPIS DE PLANCHER (*WITHOUT THIRD PEDAL)	220
TEMPORISATEUR D'ARRÊT (ENS)	128
TÊTE DE POMPE (ASS)	262 266
TÊTE D'INJECTECTEURS- POMPES	78
TIMONERIE DU GODET (VERSION)	475
TOIT OUVRANT (ASS)	584 585
TRANSMISSION (VERSION)	154
TRINGLERIE DE GODET (ASS)	476 478
TUBE (ÉVACUATION DES GAZ DE CARTER)	38
TURBOCOMPRESSEUR (ASS)	70
TUYAU	38

V

VANNE PILOTE (ASS)	450 451
VENTILATEUR ASPIRANT (ASS)	45 46
VENTILATEUR SOUFFLANT DE CABINE (ASS)	556
VERIN DE BRAS (ASS)	243 245
VERIN DE BRAS ET JOINT (ASS)	235 236
VERIN DE FLECHE (ASS)	237
VERIN DE FLECHE ET JOINT (ASS)	232
VERIN DE GODET (ASS)	239 241
VÉRIN DE GODET ET JOINT (ASS)	233 234
VÉRIN ET CANALISATIONS DE BRAS (ASS)	231
VÉRIN ET CANALISATIONS DE FLÈCHE (ASS)	230
VÉRIN ET CANALISATIONS DE GODET (ASS)	230
VERSION DE CHASSIS	1 2
VERSION HYDRAULIQUE	270
VILEBREQUIN (ASS)	12
VOLANT MOTEUR (ASS)	23
VUE DU MODÈLE	2 3

* TRADUCTION NON DISPONIBLE AU MOMENT DE LA PUBLICATION

INDICE

Nombre	Página
A	
ACONDICIONADOR DE AIRE (GR)	552
	553
	554
ACONDICIONADOR DE AIRE Y MONTAJE (GR)	550
ACOPLAMIENTO DE BOMBA (GR)	229
ACOPLAMIENTO FLEXIBLE (GR)	228
ACUMULADOR HIDRAULICO (GR)	215
AIRE - TUBERÍAS DE (GR)	60
AJUSTADOR DEL CUCHARÓN (GR)	502
	503
AJUSTE DE CONSOLA (GR)	548
ALAMBRADO DE CONVERTIDOR (GR)	146
ALARMA DE DESPLAZAMIENTO (GR)	94
ALARMA (GR)	93
ALFOMBRILLA DEL PISO	114
	598
ALFOMBRILLA DEL PISO (*WITH THIRD PEDAL)	220
ALFOMBRILLA DEL PISO (*WITHOUT THIRD PEDAL)	220
ANTEFILTRO (GR)	57
APOYACABEZA (CONJ)	586
ARANDELA DURA (13,5X25,5X3MM DE GROSOR)	311
ARANDELA DURA (13,5X25,5X3MM DE GROSOR)	362
ÁRBOL DE LEVAS (GR)	10
ARRANQUE - INTERRUPTOR DE (GR)	135
ARRANQUE - INTERRUPTOR DE (GR) (LLAVE)	144
ASIENTO CON SUSPENSIÓN (GR)	603
ASIENTO (GR)	600
	601
B	
BASTIDOR DEL TREN DE RODAJE (CONFIG)	188
BASTIDOR SUPERIOR (GR)	167
BATERÍA Y CABLES (GR)	97
	106
BATERÍA (12 VOLTIOS)	97
	106
BLOQUE MOTOR (GR)	13
BLOQUE MOTOR (GR)	15
BOCINA ELÉCTRICA (GR)	587
BOLA DE VÁLVULA (GR)	403
BOMBA - TUBERÍAS DE (GR)	351
	353
	355
	356
	357
BOMBA DE AGUA (GR)	49
BOMBA DE CEBADO DE COMBUSTIBLE (GR)	71
BOMBA DE ENGRANAJES (GR)	389
BOMBA DE INYECCIÓN DE COMBUSTIBLE (GR)	80
BOMBA DE PISTONES (GR)	390
BOMBA Y MONTAJE (GR)	387
	388
BRAZO DE RETROEXCAVADOR (CONFIG)	480
	481
BRAZO DE RETROEXCAVADOR (GR)	490
	492
	494
	496
	498
	500
BRAZO DE RETROEXCAVADOR (GR)	488
C	
CABEZA DE BOMBA (GR)	262
	266
CABINA (GR)	557
	559
	561
	565
CABLES DE LA CABINA (GR)	136
	138
CABLES DE LA CONSOLA (GR)	142
	143
	144
CABLES DEL MARTILLO (GR)	148
CADENAS (GR)	208
	209
	210
	211
	212
	213
	214
CAJA DE ALMACENAMIENTO	157
CAJA DE ALMACENAMIENTO Y MONTAJE (GR)	156
CAJA DELANTERA (GR)	26
CALCOMANÍA DE ADVERTENCIA (CABLES AUXILIARES DE ARRANQUE)	619
	623
CALCOMANÍA DE ADVERTENCIA (LIMPIEZA DE VENTANAS)	619
	623
CALCOMANÍA DE ADVERTENCIA (NIVEL DE ACEITE)	630

* NO HAY TRADUCCION DISPONIBLE EN EL MOMENTO DE LA IMPRESION

INDICE

Nombre	Página
CALCOMANÍA DE ADVERTENCIA (NO ETER/ENTRADA DE AIRE)	619, 623
CALCOMANÍA DE ADVERTENCIA (SALIDA ALTERNATIVA)	619, 623
CALCOMANÍA DE ADVERTENCIA (SUPERFICIE CALIENTE)	619, 623
CALCOMANÍA DE ADVERTENCIA (TANQUE HIDRAULICO)	630
CALCOMANÍAS Y PLACAS DE IDENTIFICACIÓN (GR)	619, 623, 627, 630
CANDADO (GR)	90
CAPÓ DEL MOTOR (GR)	185, 186
CAPÓ (GR)	184
CAPO Y PROTECTOR (GR)	178
CAPTADOR DE TEMPERATURA	397
CARGA - ALTERNADOR DE (GR)	95
CÁRTER - COLECTOR DEL (GR)	31
CHASIS (CONFIG)	1, 2
CIGÜEÑAL (GR)	12
CILINDRO DE CUCHARÓN (GR)	239, 241
CILINDRO DE LA PLUMA - TUBERÍAS DEL	305, 306
CILINDRO DE LA PLUMA (GR)	237
CILINDRO DE LA PLUMA Y SELLO (GR)	232
CILINDRO DE LA PLUMA Y TUBERÍAS (GR)	230
CILINDRO DEL BRAZO (GR)	243, 245
CILINDRO DEL BRAZO Y SELLO (GR)	235, 236
CILINDRO DEL BRAZO Y TUBERÍAS (GR)	231
CILINDRO DEL CUCHARÓN Y SELLO (GR)	233, 234
CILINDRO DEL CUCHARÓN Y TUBERÍAS (GR)	230
CINTURÓN DE SEGURIDAD (GR)	599, 600
COLADOR DEL TANQUE DE COMBUSTIBLE	91
COMBUSTIBLE - TANQUE DE (GR)	91
COMPARTIMIENTO DEL OPERADOR (CONFIG)	597
COMPRESOR DE REFRIGERANTE (GR)	568
COMPUERTA DE TECHO (GR)	584, 585
CONDENSADOR DEL REFRIGERANTE Y MONTAJE (GR)	569
CONDUCTO DE AIRE (GR)	583
CONECTOR (FILTRO)	329
CONEXIÓN DE ENGRASE	169, 232, 233, 234, 235, 236, 472, 473, 476, 478, 482, 484, 486, 492, 496, 498, 500
CONEXIÓN DE ENGRASE (ROSCA DE 1/8-27)	277, 291
CONEXIÓN DE ENGRASE (ROSCA DE 1/8-27)	488, 490, 494
CONEXIÓN DE ENGRASE (ROSCA 1/8-27 NPTF)	470
CONEXIÓN (GR)	261
CONFIGURACIÓN DE ENFRIAMIENTO	44
CONFIGURACIÓN DE INSTALACIÓN DEL MOTOR	9
CONFIGURACIÓN DE MOTORES	4, 5, 6, 7, 8
CONFIGURACIÓN GENERAL	2, 3
CONJUNTO DE TEMPORIZADOR, RETARDADOR APAGADO	128
CONSOLA DE INSTRUMENTOS (GR)	571
CONSOLA DEL LADO DERECHO (GR)	576
CONSOLA DEL LADO IZQUIERDO (GR)	572
CONSOLA DEL OPERADOR (GR)	574
CONTRAPESO (GR)	160, 161
CONTROL AUXILIAR (CONFIG)	218
CONTROL DE IMPLEMENTOS (GR) (HERRAMIENTA)	115

* NO HAY TRADUCCION DISPONIBLE EN EL MOMENTO DE LA IMPRESION

INDICE

Nombre	Página
CONTROL DE IMPLEMENTOS Y MONTAJE (GR)	109
CONTROL DE INTERRUPTOR (GR)	114
CONTROL DE MANIJA (GR)	219
CONTROL DE MAQUINA Y MONTAJE (GR)	111
CONTROL ELECTRÓNICO DEL MOTOR (GR)	112
CONTROL ELECTRÓNICO DEL OPERADOR (GR)	595
	596
CONTROLADOR, AIRE	129
CORREA (SERPENTIN)	34
	35
CORREA TRAPEZOIDAL	568
CUCHARON DE SERVICIO PESADO (CONJ)	520
CUCHARÓN PARA EXCAVACIÓN (CONJ)	509
	510
	511
	512
	513
	514
	515
	516
	517
	518
	519
CUCHARON PARA PENETRACIÓN (CONJ)	525
CUCHARÓN PARA ROCA (CONJ)	526
	527
CUCHARON PARA ROCAS DE SERVICIO PESADO (CONJ)	521
	522
	523
	524
CUCHARÓN Y AJUSTADOR (GR)	504
	505
	506
	507
	508
CULATA DE CILINDROS (CONJ)	17
	19
CULATA DE CILINDROS (GR)	21

D

DETECTOR DE PRESIÓN (CONJ) (BOMBA PRINCIPAL)	335
DETECTOR DE PRESIÓN (CONJ) (HERRAMIENTA)	323
DETECTOR DE TEMPERATURA (AGUA)	47
DISYUNTOR DE CIRCUITO (GR) (60 AMP) (ALTERNADOR)	128
DISYUNTOR (GR)	133
	134
DISYUNTOR (GR) (BATERÍA)	106

E

ELECTRONICA DE MONITOR (GR)	115
ELEMENTO DE FILTRO HIDRÁULICO	259
ELEMENTO DEL FILTRO DE AIRE (CONJ) (PRIMARIO)	55
ELEMENTO DEL FILTRO DE AIRE (CONJ) (SECUNDARIO)	55
ELEMENTO DEL SEPARADOR DE AGUA	87
	88
EMPAQUETADURA	47
EMPAQUETADURA (BOMBA DE CEBADO DE COMBUSTIBLE)	71
EMPAQUETADURA (TAPA DE VÁLVULA)	11
ENFRIADOR DE ACEITE DEL MOTOR (GR)	43
ENGRANAJE DE ROTACIÓN Y COJINETE (GR)	169
ENGRANAJE DELANTERO (GR)	24
ESLABÓN DE CADENA (CONJ)	198
	199
ETIQUETA DE ADVERTENCIA (GR)	617
	618
EXTRACTOR DE FUSIBLES	129

F

FILTRO	446
	458
	583
FILTRO DE ACEITE - BASE DEL (GR)	216
FILTRO DE ACEITE (CONJ) (HIDRAULICO)	255
FILTRO DE ACEITE DEL MOTOR (CONJ)	39
FILTRO DE ACEITE DEL MOTOR (GR)	39
FILTRO DE ACEITE (GR)	256
	257
	259
FILTRO DE AIRE (GR)	56
	57
FILTRO DE AIRE (GR)	55
FILTRO DE COMBUSTIBLE (CONJ)	71
FILTRO DE COMBUSTIBLE (GR)	71
FILTRO DE RECIRCULACIÓN	553
FILTRO DE RETORNO	256
FILTRO PRIMARIO (CONJ)	56
FILTRO SECUNDARIO (CONJ)	56
FUSIBLE (10 A)	129
FUSIBLE (15 A)	129
FUSIBLE (30 A)	129
FUSIBLE (5 AMP)	553
FUSIBLE (5 AMP)	129

* NO HAY TRADUCCION DISPONIBLE EN EL MOMENTO DE LA IMPRESION

INDICE

Nombre	Página
G	
GRIFO, AGUA (CONJ)	52
GRUPO ACCESORIO DE BRAZO	482
	484
	486
GRUPO DE CABLE, ESCOBILLAS DE VENTANAS	150
GRUPO DE CONTROL DE PEDAL HIDRÁULICO	220
GRUPO DE FILTRO Y VÁLVULA, PILOTO	255
GRUPO DE PROTECTOR DE BARRA LATERAL	529
GRUPO DE TUBERIAS-DRENAJE	366
	367
	368
	369
GRUPO DE TUBERIAS-DRENAJE DE LA PLUMA	307
	309
GRUPO ELECTRONICO DE CLASIFICACION DE MOTORES	115
GUARDABARROS Y CUBIERTA (GR)	166
H	
HIDRÁULICA (CONFIG)	270
HOJA DE LIMPIAPARABRISAS (CONJ) (INFERIOR)	613
HOJA DE LIMPIAPARABRISAS (CONJ) (SUPERIOR)	616
I	
IMPLEMENTOS (GR ELECTRÓNICO)	115
INDICADOR (CONJ)	91
INDICADOR (CONJ) (NIVEL DE ACEITE)	397
INDICADOR (CONJ) (SERVICIO DE FILTRO DE AIRE)	55
INSTALACIÓN DE RADIO (GR)	588
INTERRUPTOR (CONJ) (RELE DEL CALENTADOR)	128
INTERRUPTOR DE NIVEL DE LÍQUIDOS (CONJ) (ACEITE HIDRÁULICO) (TANQUE HIDRÁULICO)	397
INTERRUPTOR DE PRESIÓN (GR) (CONTROL ELECTRONICO)	329
INTERRUPTOR DE PRESIÓN (GR) (IMPLEMENTO)	341
INTERRUPTOR DE RODILLO (CONJ) (SENSOR DE POSICIÓN)	613
INTERRUPTOR DE VOLQUETE (CONJ) (ARANDELA INFERIOR)	150
INTERRUPTOR DE VOLQUETE (CONJ) (LIMPIADOR INFERIOR)	150
INTERRUPTOR MAGNÉTICO (CONJ) (24 VOLTIOS) (RELE PRINCIPAL)	128
INTERRUPTOR (PRESIÓN)	13
INTERRUPTOR ROTATIVO (CONJ)	144
INTERRUPTOR (SENSOR DE POSICIÓN)	610
J	
JUEGO DE ALARMA (MONITOR DE OPERADOR)	595
JUEGO DE BASE DEL SEPARADOR DE AGUA	87
	88
JUEGO DE CONTROL AUXILIAR	218
JUEGO DE ENCHUFE (12 CLAVIJAS)	98
	128
JUEGO DE ENCHUFE (2 CLAVIJAS)	97
	98
	114
	128
	138
JUEGO DE ENCHUFE (3 CLAVIJAS)	97
	98
	128
	138
JUEGO DE ENCHUFE (4 CLAVIJAS)	98
	128
JUEGO DE ENCHUFE (6 CLAVIJAS)	97
	98
	138
	143
	146
JUEGO DE ENCHUFE (8 CLAVIJAS)	97
JUEGO DE FILTRO DE TAPA (TANQUE DE COMBUSTIBLE)	91
JUEGO DE MANIJA (CONTROL DE RECLINACION)	601
JUEGO DE MEDIDOR DE SERVICIO	136
JUEGO DE RECEPTÁCULO (12 CLAVIJAS)	97
	128
	146
JUEGO DE RECEPTÁCULO (12 CLAVIJAS)	98
JUEGO DE RECEPTÁCULO (2 CLAVIJAS)	31
	91
	93
	97
	128
	129
	148
	329
	331

* NO HAY TRADUCCION DISPONIBLE EN EL MOMENTO DE LA IMPRESION

INDICE

Nombre	Página
	341
	397
	568
JUEGO DE RECEPTÁCULO (2 CLAVIJAS)	143
JUEGO DE RECEPTÁCULO (2 CLAVIJAS)	148
JUEGO DE RECEPTÁCULO (2 CLAVIJAS)	138
JUEGO DE RECEPTÁCULO (2 CLAVIJAS)	98
JUEGO DE RECEPTÁCULO (3 CLAVIJAS)	97
	128
	148
	273
JUEGO DE RECEPTÁCULO (3 CLAVIJAS)	138
JUEGO DE RECEPTÁCULO (3 CLAVIJAS)	148
JUEGO DE RECEPTÁCULO (3 CLAVIJAS)	138
JUEGO DE RECEPTÁCULO (4 CLAVIJAS)	128
JUEGO DE RECEPTÁCULO (4 CLAVIJAS)	138
JUEGO DE RECEPTÁCULO (4 CLAVIJAS)	98
JUEGO DE RECEPTÁCULO (6 CLAVIJAS)	97
	128
	224
	225
JUEGO DE RECEPTÁCULO (6 CLAVIJAS)	138
	143
	144
JUEGO DE RECEPTÁCULO (6 CLAVIJAS)	148
JUEGO DE RECEPTÁCULO (8 CLAVIJAS)	112
JUEGO DE REPARACIÓN (TUBERÍAS DEL FRENO) (BOMBA HIDRÁUILICA)	389
JUEGO DE SELLO DE TAZA	87
	88
JUEGO DE SELLOS	237
	239
JUEGO DE TAPA (MONITOR DE OPERADOR)	595

L

LÁMPARA	117
	118
	119
LÁMPARA DE FARO DELANTERO (24 VOLTIOS)	121
	126
LÁMPARA ((24 VOLTIOS)(65 VATIOS))	120
LAVAPARABRISAS DE LA VENTANA (GR)	605
	606
LIMPIA Y LAVAPARABRISAS (GR)	613
LIMPIADOR DE AIRE (CONFIG)	54
LIMPIAPARABRISAS (CONFIG)	615
LIMPIAPARABRISAS DE LA VENTANA (GR)	616
LLAVE	90
	134
LLAVE (DESCONECTAR BATERIA)	133
LUCES DE LA PLUMA	122
	123
	124
LUCES DE REFLECTOR (GR)	126
LUCES DEL CHASÍS (GR)	125

M

MANDO DE BOMBA AUXILIAR (GR)	247
MANDO DE BOMBA (GR)	249
MANDO DE ROTACIÓN (GR)	250
	252
MANDO FINAL (GR)	151
	152
MECANISMO DE VÁLVULAS (GR)	36
MONTAJE DE MOTOR DE ARRANQUE (GR)	30
MONTAJE DE VALVULA DE CONTROL PRINCIPAL (GR)	386
MONTAJE DEL ALTERNADOR (GR)	28
MONTAJE DEL FILTRO DE AIRE (GR)	68
MONTAJE DEL MOTOR (GR)	29
MOTOR DE ARRANQUE ELÉCTRICO (GR)	132
MOTOR DE DESPLAZAMIENTO (GR)	383
MOTOR DE DESPLAZAMIENTO Y MONTAJE (GR)	379
MOTOR DE LA ROTACIÓN (GR)	380
	381
MOTOR Y MONTAJE DE ROTACIÓN (GR)	378
MÚLTIPLE DE ADMISIÓN (GR)	67
MÚLTIPLE DE ESCAPE (GR)	65

N

N	115
NÚCLEO DEL TURBOCOMPRESOR (CONJ)	59

O

OREJETAS (GR)	530
	531

P

PALANCA, CONTROL (GR)	271
	273
PALANCA UNIVERSAL-CONTROL Y MONTAJE (GR)	217
PALANCA UNIVERSAL DE CONTROL (GR)	222
	223
	224
	225
	226
	227

* NO HAY TRADUCCION DISPONIBLE EN EL MOMENTO DE LA IMPRESION

INDICE

Nombre	Página
PANEL DE DISYUNTORES (GR)	128
PANTALLA (CONJ)	395
PARACHOQUES (GR)	159
PASAMANOS (GR)	177
PERNO (M10X1,50X12MM)	411
PERNO (M10X1,50X12MM)	148
PISTÓN Y BIELA (GR)	33
PLACA DE ADVERTENCIA (CILINDRO PARA ALTA PRESION)	207
PLATAFORMA DE LA CABINA	598
PLUMA DE UNA PIEZA (CONFIG)	463
PLUMA (GR)	464
	466
	468
PLUMA LARGA DE 1 PIEZA (CONFIG)	463
POLEA (GR)	34
	35
PROTECTOR DE LA PLATAFORMA (GR)	175
PROTECTOR DE LA UNIÓN GIRATORIA (GR)	176
PROTECTOR DEL CUCHARÓN (GR)	528
PROTECTOR DEL MOTOR DE DESPLAZAMIENTO (GR)	192
	193
PROTECTOR GUÍA DE CADENA (GR)	189
	190
	191
PROTECTOR INFERIOR (CONFIG)	171
PROTECTOR INFERIOR (GR)	172
	173
PUERTA DE ACCESO (GR)	163
	164
	165
PUERTA DE CABINA	581
PUNTA AFILADA (GR)	545
PUNTA CORTA (GR)	546
	547
PUNTA (GR)	532
	533
	534
	535
	536
PUNTA LARGA (GR)	539
	540
	541
	542
PUNTA PARA PENETRACIÓN (GR)	543
	544
PUNTA RESISTENTE A LA ABRASIÓN (GR)	537
	538

R

Nombre	Página
RADIADOR Y ENFRIADOR DE ACEITE HIDRÁULICO (GR)	50
	52
REFLECTOR (GR)	116
	117
	118
	119
	120
	121
REGULADOR (REFRIGERANTE)	47
REJILLA (GR)	395
RELE (24 VOLTIOS)	129
RESORTE TENSOR Y AJUSTADOR DE LA CADENA (GR)	204
	205
	206
	207
RESPIRADERO (CÁRTER DEL MOTOR)	38
RESPIRADERO (CONJ)	252
RESPIRADERO (GR)	38
RETROVISOR (GR)	594
RODILLO SUPERIOR (CONFIG)	200
	201
RODILLO SUPERIOR DE CADENAS (GR)	202
RODILLOS DE PESTAÑA SIMPLE (GR)	203
RUEDA GUÍA DELANTERA (GR)	194
	195
	196
	197
RUEDA MOTRIZ (GR)	155

S

Nombre	Página
SELLANTE	169
	253
SELLANTE (2ML)	375
SELLO ANULAR	257
	261
	323
	333
	334
SENSOR DE TEMPERATURA (GR) (AIRE EXTERIOR)	47
SEPARADOR DE AGUA (GR)	87
	88
	89
SILENCIADOR (GR)	69
SOFTWARE DE IMPLEMENTO (GR) (HERRAMIENTA)	115
SOFTWARE DEL MONITOR (GR)	596
SOPORTE DEL ASIENTO (GR)	602
SUCCIÓN - VENTILADOR DE (GR)	45

* NO HAY TRADUCCION DISPONIBLE EN EL MOMENTO DE LA IMPRESION

INDICE

Nombre	Página
	46
SUJETADORES DEL ROTADOR Y DEL MANDO FINAL (GR)	253

T

TANQUE DE COMBUSTIBLE Y GRUPO DE MONTAJE	90
TANQUE HIDRÁULICO Y MONTAJE (GR)	401
TANQUE Y FILTRO HIDRÁULICOS (GR)	397
TAPA CONTRA EL POLVO	39
	327
	335
	346
	397
TAPA CONTRA EL POLVO (VÁLVULA DE MUESTREO DE REFRIGERANTE)	47
TAPA DE COMPARTIMIENTO DE ALMACENAMIENTO (GR)	579
	580
TAPA DE RADIADOR (CONJ)	52
TAPA DE VALVULA DE PRESIÓN (TANQUE HIDRÁULICO)	397
TAPA DEL CAPO (GR)	162
TAPA DEL MECANISMO DE VÁLVULAS (GR)	11
TAPA DEL TANQUE DE COMBUSTIBLE (CONJ)	91
TAPA (LLENADO DE ACEITE)	11
TAPÓN (CONJ)	50
	605
TAPÓN DE DRENAJE	397
TOBERA DEL INYECTOR (GR)	78
TREN DE FUERZA (CONFIG)	154
TUBERIA (ELIMINACION DE GASES)	38
TUBERÍAS CON SERVOMANDO (GR)	327
	329
	331
	333
	341
	346
TUBERÍAS DE ACEITE DEL MOTOR (GR)	41
TUBERÍAS DE ACONDICIONADOR DE AIRE (GR)	590
TUBERIAS DE AIRE DE ENFRIAMIENTO (GR)	61
TUBERÍAS DE COMBUSTIBLE (GR)	73
	76
TUBERIAS DE DRENAJE DE MANDO DE ROTACION (GR)	370
TUBERIAS DE DRENAJE DEL SILENCIADOR (GR)	63
	64
TUBERÍAS DE ENGRASE (GR)	472
	473
TUBERÍAS DE ENGRASE (GR)	470
TUBERÍAS DE LA PLUMA (GR)	301
	303
TUBERÍAS DEL AGUA (GR)	47
TUBERÍAS DEL BRAZO (GR)	360
	361
	362
TUBERÍAS DEL CILINDRO DEL BRAZO (GR)	364
	365
TUBERÍAS DEL CILINDRO DEL CUCHARÓN (GR)	312
	313
TUBERÍAS DEL CILINDRO DEL CUCHARÓN (GR)	311
TUBERÍAS DEL FILTRO Y DE RETORNO (GR)	358
TUBERÍAS DEL MOTOR DE DESPLAZAMIENTO (GR)	372
	375
TUBERÍAS DEL MOTOR DE ROTACIÓN (GR)	371
TUBERÍAS DELANTERAS (GR)	314
	316
	317
	321
	323
TUBERÍAS HIDRÁULICAS AUXILIARES (CONFIG)	275
	276
TUBERÍAS HIDRÁULICAS AUXILIARES (GR)	277
	279
	281
	283
	285
	287
	289
	291
	293
	295
	297
	299
TUBO	38
TURBOCOMPRESOR - TUBERÍAS DE ACEITE DEL (GR)	42
TURBOCOMPRESOR (GR)	70

U

UNIÓN GIRATORIA (GR)	396

* NO HAY TRADUCCION DISPONIBLE EN EL MOMENTO DE LA IMPRESION

INDICE

Nombre	Página
V	
VALV. COMPENSADORA DE EQUILIBRIO DE DESPLAZAMIENTO (GR)	462
VÁLVULA	410
VALVULA AMORTIGUADORA DE ROTACION (GR)	461
VÁLVULA (CONJ)	39
VÁLVULA DE ALIVIO (GR)	436
	437
	438
	439
	440
	441
	442
	443
	444
	445
	446
	448
	449
VÁLVULA DE ALIVIO Y SOLENOIDE (GR)	458
	460
VÁLVULA DE CONTROL (GR)	405
	406
	407
	410
VÁLVULA DE CONTROL (GR)	414
	416
	419
VÁLVULA DE CONTROL Y MONTAJE (GR)	402
VÁLVULA DE CORTE	250
VÁLVULA DE LANZADERA (GR)	450
	451
VÁLVULA DE MUESTREO (GR)	39
	397
VÁLVULA DE MUESTREO (GR) (REFRIGERANTE)	47
VÁLVULA DE RETENCIÓN (GR)	404
VÁLVULA DE SOLENOIDE (GR)	452
	453
	454
	455
	456
	457
VÁLVULA DEL CONTROL PRINCIPAL (GR)	420
VÁLVULA PILOTO DE ALIVIO (GR)	433
	434
VÁLVULA PILOTO (GR)	421
	423
	425
	427
	428
	429
	431
	432
VÁLVULA PILOTO (GR) (HERRAMIENTA DE PRESIÓN)	220
VÁLVULA REDUCTORA DE PRESIÓN (GR)	435
VÁLVULA (VACIADO)	206
VARILLAJE DEL CUCHARÓN (CONFIG)	475
VARILLAJE DEL CUCHARÓN (GR)	476
	478
VENTANA DE LA PUERTA (GR)	608
VENTANA DELANTERA	610
VENTILADOR SOPLADOR DE LA CABINA (GR)	556
VISERA	604
VISERA (GR)	604
VOLANTE - CAJA DE (GR)	25
VOLANTE (GR)	23

* NO HAY TRADUCCION DISPONIBLE EN EL MOMENTO DE LA IMPRESION

ÍNDICE

Designação	Página
A	
ACOPLAMENTO DA BOMBA	229
ACOPLAMENTO FLEXÍVEL	228
ACUMULADOR HIDRÁULICO	215
AJUSTADOR DA CAÇAMBA	502
	503
AJUSTADOR DE ESTEIRAS E MOLA TENSORA	204
	205
	206
	207
AJUSTE - CONSOLE	548
ALARME	93
ALARME DE PERCURSO	94
ALAVANCA - CONTROLE	271
	273
ALAVANCA DE CONTROLE E MONTAGEM	217
ALÇAPÃO DO TETO	584
	585
ALTERNADOR DE CORRENTE	95
ARRANJO GERAL	2
	3
ARREFECEDOR - ÓLEO DO MOTOR	43
ARREFECIMENTO	44
ARRUELA DURA (13,5X25,5X3MM DE ESPESSURA)	311
ARRUELA DURA (13,5X25,5X3MM DE ESPESSURA)	362
ARTICULAÇÃO GIRATÓRIA	396
ARTICULAÇÕES - DRENO DA LANÇA	307
	309
ASSENTO	600
	601
B	
BASE DO FILTRO DE ÓLEO	216
BATERIA E CABOS / FIOS ELÉTRICOS	97
	106
BATERIA (12 V)	97
	106
BICO DA UNIDADE INJETORA	78
BLOCO DO MOTOR	13
	15
BOMBA DE ÁGUA	49
BOMBA DE ENGRENAGENS	389
BOMBA DE ESCORVA DO COMBUSTÍVEL	71
BOMBA DE INJEÇÃO DO COMBUSTÍVEL	80
BOMBA DE PISTÃO	390
BOMBA E MONTAGEM	387
	388
BRAÇO	482
	484
	486

Designação	Página
BRAÇO - CAÇAMBA RETRO-ESCAVADORA	480
	481
	488
	490
	492
	494
	496
	498
	500
BUJÃO DO DRENO	397
BUZINA ELÉTRICA	587
C	
CABEÇA DA BOMBA	262
	266
CABEÇOTE DO MOTOR	17
	19
	21
CABINE	557
	559
	561
	565
	597
CABOS/FIOS ELÉTRICOS - APLICAÇÕES PESADAS DE LEVANTAMENTO	148
CABOS/FIOS ELÉTRICOS - CABINE	136
	138
CABOS/FIOS ELÉTRICOS - CONVERSOR	146
CABOS/FIOS ELÉTRICOS DO CONSOLE	142
	143
	144
CAÇAMBA - SERVIÇO PESADO	520
CAÇAMBA - SERVIÇOS PESADOS PARA ROCHAS	521
	522
	523
	524
CAÇAMBA E AJUSTADOR	504
	505
	506
	507
	508
CAÇAMBA PARA EXCAVAÇÃO	509
	510
	511
	512
	513
	514
	515
	516
	517
	518
	519
CAÇAMBA PARA PENETRAÇÃO	525

ÍNDICE

Designação	Página
CAÇAMBA PARA ROCHAS	526
	527
CADEADO	90
CAIXA DE ARMAZENAMENTO	157
CAIXA DIANTEIRA	26
CAIXA DO VOLANTE DO MOTOR	25
CAIXA PARA ARMAZENAMENTO E MONTAGEM	156
CANO/TUBO	38
CAPÔ	184
CAPÔ DO MOTOR	185
	186
CAPÔ E PROTETOR	178
CÁRTER DO ÓLEO DO MOTOR	31
CARTUCHO - TURBOALIMENTADOR	59
CHASSI	1
	2
CHASSI - MATERIAL RODANTE	188
CHASSI SUPERIOR	167
CHAVE	90
	134
CHAVE (DESCONECTAR A BATERIA)	133
CHAVE GERAL	133
	134
CHAVE GERAL (BATERIA)	106
CILINDRO DA CAÇAMBA	239
	241
CILINDRO DA LANÇA	237
CILINDRO DO BRAÇO	243
	245
CILINDRO E RETENTOR - BRAÇO	235
	236
CILINDRO E RETENTOR - CAÇAMBA	233
	234
CILINDRO E RETENTOR - LANÇA	232
CILINDRO E TUBOS - BRAÇO	231
CILINDRO E TUBOS - CAÇAMBA	230
CILINDRO E TUBOS - LANÇA	230
CINTO DE SEGURANÇA	599
	600
COLETOR DE ADMISSÃO	67
COLETOR DE ESCAPE	65
COMANDO AUXILIAR DA BOMBA	247
COMANDO DA BOMBA	249
COMANDO DE GIRO	250
	252
COMANDO FINAL	151
	152
COMANDO HIDRÁULICO	270
COMPRESSOR DE REFRIGERANTE	568
CONDENSADOR DO REFRIGERANTE E MONTAGEM	569
CONDICIONADOR DE AR	552
	553
	554
CONDICIONADOR DE AR E MONTAGEM	550
CONECTOR (FILTRO)	329
CONEXÃO	261
CONSOLE - LADO DIREITO	576
CONSOLE - LADO ESQUERDO	572
CONSOLE DE INSTRUMENTOS	571
CONSOLE DO OPERADOR	574
CONTRAPESO	160
	161
CONTROLADOR - AR	129
CONTROLE - ALAVANCA	222
	223
	224
	225
	226
	227
CONTROLE - PEDAL HIDRÁULICO	220
CONTROLE & MONTAGEM-MÁQUINA	111
CONTROLE-CABO	219
CONTROLE DO ACESSÓRIO E MONTAGEM	109
CONTROLE DO ACESSÓRIO (FERRAMENTA DE TRABALHO)	115
CONTROLE ELETRÔNICO - MOTOR	112
CONTROLE HIDRÁULICO AUXILIAR	218
CORREIA EM V	568
CORREIA (SERPENTINA)	34
	35
CORTADOR LATERAL	530
	531

D

DECALQUE	617
	618
DECALQUE - ADVERTÊNCIA (CABO AUXILIAR DE PARTIDA)	623
DECALQUE - ADVERTÊNCIA (CABO AUXILIAR DE PARTIDA)	619
DECALQUE - ADVERTÊNCIA (SEM ÉTER - ADMISSÃO DE AR)	623
DECALQUE - ADVERTÊNCIA (SEM ÉTER - ADMISSÃO DE AR)	619
DECALQUE - ADVERTÊNCIA (TANQUE HIDRÁULICO)	630
DECALQUE - AVISO (LIMPEZA DA JANELA)	619
	623
DECALQUE - INSTRUÇÃO (NÍVEL DO ÓLEO HIDRÁUILCO)	630
DECALQUE - INSTRUÇÃO (SAÍDA DE EMERGÊNCIA)	619
	623
DECALQUE - INSTRUÇÃO (SUPERFÍCIE QUENTE)	619
	623
DUCTO DE AR	583

ÍNDICE

Designação	Página

E

EIXO-COMANDO DE VÁLVULA 10
ELEMENTO - SEPARADOR DE ÁGUA 87
88
ELEMENTO DO FILTRO DE AR (PRIMÁRIO) ... 55
ELEMENTO DO FILTRO DE AR (SECUNDÁRIO) 55
ELO DA ESTEIRA 198
199
ELOS DE ARTICULAÇÃO DA CAÇAMBA 475
476
478
EMISSOR - TEMPERATURA (ÁGUA) 47
EMISSOR DE TEMPERATURA 397
ENCOSTO PARA CABEÇA 586
ENGRENAGEM E MANCAL DE GIRO 169
ENGRENAGENS DE DISTRIBUIÇÃO 24
ESPELHO RETROVISOR 594
ESTEIRA 208
209
210
211
212
213
214

F

FAROL DIANTEIRO (24 V) 121
126
FIAÇÃO - LIMPADOR DE VIDROS 150
FILTRO 446
458
583
FILTRO - COMBUSTÍVEL 71
FILTRO - ELEMENTO HIDRÁULICO 259
FILTRO - ÓLEO 256
257
259
FILTRO - ÓLEO DO MOTOR 39
FILTRO - ÓLEO (HIDRÁULICO) 255
FILTRO - RETORNO 256
FILTRO DE CIRCULAÇÃO 553
FILTRO E VÁLVULA - PILOTO 255
FILTRO PRIMÁRIO 56
FILTRO SECUNDÁRIO 56
FIXADORES - GIRO E COMANDO FINAL 253
FUSÍVEL (10 A) 129
FUSÍVEL (15 A) 129
FUSÍVEL (30 A) 129
FUSÍVEL (5 AMP) 553
FUSÍVEL (5 AMP) 129

Designação	Página

G

GRAXEIRA 169
232
233
234
235
236
472
473
476
478
482
484
486
492
496
498
500
GRAXEIRA (ROSCA DE 1/8-27 DO PADRÃO AMERICANO NPTF) 470
GRAXEIRA (ROSCA 1/8-27 POL) 277
291
488
490
494
GRUPO DE INSTALAÇÃO - MOTOR 9

I

ILUMINAÇÃO - CHASSI 125
INDICADOR (SERVIÇO DO FILTRO DE AR) 55
INDICADOR/MEDIDOR 91
INDICADOR/MEDIDOR (NÍVEL DO ÓLEO HIDRÁUILCO) 397
INSTALAÇÃO DO RÁDIO 588
INTERRUPTOR - BALANCIM (LIMPADOR INFERIOR) 150
INTERRUPTOR - CIRCUITO (60 A) (ALTERNADOR) 128
INTERRUPTOR - CONTROLE ELETRÔNICO ... 114
INTERRUPTOR - MAGNÉTICO (24 V) (RELÉ PRINCIPAL) 128
INTERRUPTOR - NÍVEL DE FLUIDO (TANQUE HIDRÁULICO) 397
INTERRUPTOR - PARTIDA 135
INTERRUPTOR - PARTIDA (CHAVE) 144
INTERRUPTOR - PRESSÃO (CONTROLE ELETRÔNICO) 329
INTERRUPTOR - PRESSÃO (IMPLEMENTO) ... 341
INTERRUPTOR - ROLETAS (SENSOR DE POSIÇÃO) 613
INTERRUPTOR - ROTATIVO 144
INTERRUPTOR (PRESSÃO) 13
INTERRUPTOR (RELÉ DO AQUECEDOR) 128

ÍNDICE

Designação	Página
INTERRUPTOR (SENSOR DE POSIÇÃO)	610
J	
JOGO - ALARME (MONITOR DO OPERADOR)	595
JOGO DE ALAVANCA (CONTROLE DE RECLINAÇÃO)	601
JOGO DE BASE DO SEPARADOR DE ÁGUA	87, 88
JOGO DE FILTRO DA TAMPA (TANQUE DE COMBUSTÍVEL)	91
JOGO DE MARCADOR DE HORAS DE SERVIÇO	136
JOGO DE RECEPTÁCULO (12 PINOS)	146
JOGO DE RECEPTÁCULO (12 PINOS)	97, 98, 128
JOGO DE RECEPTÁCULO (2 PINOS)	31, 91, 93, 97, 98, 128, 129, 138, 143, 148, 329, 331, 341, 397, 568
JOGO DE RECEPTÁCULO (3 PINOS)	97, 128, 138, 148, 273
JOGO DE RECEPTÁCULO (4 PINOS)	98, 128, 138
JOGO DE RECEPTÁCULO (6 PINOS)	97, 128, 138, 143, 144, 148, 224, 225
JOGO DE RECEPTÁCULO (8 PINOS)	112
JOGO DE REPARO (BOMBA HIDRÁULICA)	389
JOGO DE RETENTOR	237, 239
JOGO DE TAMPA (MONITOR DO OPERADOR)	595
JOGO DE TOMADA DE CONEXÃO (12 PINOS)	128
JOGO DE TOMADA DE CONEXÃO (12 PINOS)	98
JOGO DE TOMADA DE CONEXÃO (2 PINOS)	97, 98, 114, 128, 138
JOGO DE TOMADA DE CONEXÃO (3 PINOS)	97, 98, 128, 138
JOGO DE TOMADA DE CONEXÃO (4 PINOS)	98, 128
JOGO DE TOMADA DE CONEXÃO (6 PINOS)	97, 98, 138, 143, 146
JOGO DE TOMADA DE CONEXÃO (8 PINOS)	97
JOGO DE VEDADOR DA CAÇAMBA	87, 88
JUNTA	47
JUNTA (BOMBA DE ESCORVA DE COMBUSTÍVEL)	71
JUNTA (TAMPA DA VÁLVULA)	11
K	
KIT - CONTROLE AUXILIAR	218
L	
LÂMINA (INFERIOR)	613
LÂMINA (SUPERIOR)	616
LÂMPADA	117, 118, 119
LÂMPADA - FAROL	116, 117, 118, 119, 120, 121
LÂMPADA (24 VOLTS)(65 WATTS)	120
LANÇA	464, 466, 468
LANÇA DE UMA PEÇA	463
LANÇA DE UMA PEÇA - COMPRIDA	463
LAVADOR DO VIDRO	605, 606
LIMPADOR DO VIDRO	615, 616

ÍNDICE

Designação	Página
LIMPADOR E LAVADOR - JANELA	613

M

MECANISMO DAS VÁLVULAS	36
MONITOR DO OPERADOR	595
	596
MONTAGEM - ALTERNADOR	28
MONTAGEM - MOTOR	29
MONTAGEM - MOTOR DE ARRANQUE	30
MONTAGEM - PURIFICADOR DE AR	68
MONTAGEM-VÁLVULA DE CONTROLE PRINCIPAL	386
MOTOR	4
	5
	6
	7
	8
MOTOR - GIRO	380
	381
MOTOR DAS ESTEIRAS	383
MOTOR DE GIRO E MONTAGEM	378
MOTOR DE PERCURSO E MONTAGEM	379
MOTOR ELÉTRICO DE PARTIDA	132

P

PAINEL - DISJUNTOR ELÉTRICO AUTOMÁTICO	128
PÁRA-CHOQUE	159
PÁRA-LAMA E TAMPA	166
PÁRA-SOL	604
PÁRA-SOL DA CABINE	604
PARAFUSO (M10X1,50X12MM)	148
	411
PEGA-MÃO	177
PENEIRA DO TANQUE DE COMBUSTÍVEL	91
PISTÃO E BIELA	33
PLACA DE ADVERTÊNCIA (CILINDRO DE ALTA PRESSÃO)	207
PLACA E DECALQUE	619
	623
	627
	630
PLATAFORMA DO OPERADOR	598
POLIA	34
	35
PONTA	532
	533
	534
	535
	536
PONTA - ABRASÃO	537
	538
PONTA - PENETRAÇÃO	543
	544
PONTA AFIADA	545
PONTA CURTA	546
	547
PONTA LONGA	539
	540
	541
	542
PORTA DA CABINE	581
PORTA DE ACESSO	163
	164
	165
PRÉ-PURIFICADOR	57
PROTETOR - ARTICULAÇÃO GIRATÓRIA	176
PROTETOR - BARRA LATERAL	529
PROTETOR - GUIA DOS ROLETES DAS ESTEIRAS	189
	190
	191
PROTETOR - INFERIOR	171
PROTETOR - MOTOR DAS ESTEIRAS	192
	193
PROTETOR - PLATAFORMA	175
PROTETOR DA CAÇAMBA	528
PROTETOR INFERIOR	172
	173
PURIFICADOR DE AR	54
	55
	56
	57

R

RADIADOR E ARREFECEDOR DO ÓLEO HIDRÁULICO	50
	52
REGULADOR (LÍQUIDO ARREFECEDOR)	47
RELÉ (24 V)	129
RESPIRO	38
	252
RESPIRO (CÁRTER)	38
RETENTOR DE ANEL-O	257
	261
	323
	333
	334
RODA-GUIA DIANTEIRA	194
	195
	196
	197
RODA MOTRIZ	155
ROLETE DE ESTEIRA DE FLANGE SIMPLES	203
ROLETE SUPERIOR DA ESTEIRA	202
ROLETE SUPERIOR E INFERIOR DAS ESTEIRAS	200

ÍNDICE

Designação	Página
	201

S

SACADOR - FUSÍVEL	129
SENSOR - TEMPERATURA (AR EXTERNO)	47
SENSOR DE PRESSÃO (BOMBA PRINCIPAL)	335
SENSOR DE PRESSÃO (FERRAMENTA DE TRABALHO)	323
SEPARADOR DE ÁGUA	87
	88
	89
SILENCIADOR	69
SIST. ELETRÔNICO - ACESSÓRIO	115
SISTEMA DE ILUMINAÇÃO - FARÓIS	126
SISTEMA DE ILUMINAÇÃO - LANÇA	122
	123
	124
SISTEMA ELETRÔNICO - CLASSIFICAÇÕES DO MOTOR	115
SISTEMA ELETRÔNICO - MONITOR	115
SOFTWARE - ACESSÓRIO (FERRAMENTA DE TRABALHO)	115
SOFTWARE - IMPLEMENTO	115
SOFTWARE - MONITOR	596
SUPORTE - ASSENTO	602
SUSPENSÃO - ASSENTO	603

T

TAMPA	50
	605
TAMPA - ALÍVIO DE PRESSÃO (TANQUE HIDRÁULICO)	397
TAMPA - ARMÁRIO	579
	580
TAMPA - MECANISMO DAS VÁLVULAS	11
TAMPA - RADIADOR	52
TAMPA CONTRA POEIRA	39
	327
	335
	346
	397
TAMPA CONTRA POEIRA (VÁLVULA DE AMOSTRAGEM DO LÍQUIDO ARREFECEDOR)	47
TAMPA DO CAPÔ	162
TAMPA DO TANQUE DE COMBUSTÍVEL	91
TAMPA (ENCHIMENTO DE ÓLEO)	11
TANQUE DE COMBUSTÍVEL	91
TANQUE DE COMBUSTÍVEL E MONTAGEM	90
TANQUE DE ÓLEO HIDRÁULICO E MONTAGEM	401
TANQUE HIDRÁULICO E FILTRO	397
TAPETE	114
	598
TAPETE (COM TERCEIRO PEDAL)	220
TAPETE (SEM TERCEIRO PEDAL)	220
TELA FILTRANTE	395
TIMER - RETARDADOR DESLIGADO	128
TORNEIRA - ÁGUA	52
TREM DE FORÇA	154
TUBO (ELIMINAÇÃO DE VAPORES)	38
TUBOS - ÁGUA	47
TUBOS - AR	60
TUBOS - AR CONDICIONADO	590
TUBOS - AR DE ARREFECIMENTO	61
TUBOS - BOMBA	351
	353
	355
	356
	357
TUBOS - BRAÇO	360
	361
	362
TUBOS - CILINDRO DA CAÇAMBA	311
	312
	313
TUBOS - CILINDRO DA LANÇA	305
	306
TUBOS - CILINDRO DO BRAÇO	364
	365
TUBOS - CIRCUITO PILOTO	327
	329
	331
	333
	341
	346
TUBOS - COMBUSTÍVEL	73
	76
TUBOS - DIANTEIROS	314
	316
	317
	321
	323
TUBOS - DRENAGEM DO COMANDO DE GIRO	370
TUBOS - GRAXA	470
	472
	473
TUBOS - LANÇA	301
	303
TUBOS - MOTOR DAS ESTEIRAS	372
	375
TUBOS - MOTOR DE GIRO	371
TUBOS - ÓLEO DO MOTOR	41
TUBOS - ÓLEO DO TURBOALIMENTADOR	42
TUBOS DE DRENAGEM DO SILENCIADOR	63
	64

ÍNDICE

Designação	Página
TUBOS DE RETORNO E DO FILTRO	358
TUBOS HIDRÁULICOS AUXILIARES	275
	276
	277
	279
	281
	283
	285
	287
	289
	291
	293
	295
	297
	299
TUBULAÇÕES - DRENO DA HASTE	366
	367
	368
	369
TURBOALIMENTADOR	70

V

VÁLVULA	39
	410
VÁLVULA - CONTROLE PRINCIPAL	420
VÁLVULA (ALÍVIO)	206
VÁLVULA-CONTRAPESO DE PERCURSO	462
VÁLVULA DE ALÍVIO	436
	437
	438
	439
	440
	441
	442
	443
	444
	445
	446
	448
	449
VÁLVULA DE CONTROLE	405
	406
	407
	410
	414
	416
	419
VÁLVULA DE CONTROLE E MONTAGEM	402
VÁLVULA DE CONTROLE PILOTO	421
	423
	425
	427
	428
	429
	431
	432
VÁLVULA DE CONTROLE PILOTO (FERRAMENTA DE TRABALHO)	220
VÁLVULA DE PARADA	250
VÁLVULA DE REDUÇÃO DE PRESSÃO	435
VÁLVULA DE RETENÇÃO	404
VÁLVULA DE SEPARAÇÃO	450
	451
VÁLVULA ESFÉRICA	403
VÁLVULA-ESTOFAMENTO DE GIRO	461
VÁLVULA PARA TIRAR AMOSTRAS DE FLUIDOS	39
	397
VÁLVULA PARA TIRAR AMOSTRAS DE FLUIDOS (LÍQUIDO ARREFECEDOR)	47
VÁLVULA PILOTO DE ALÍVIO	433
	434
VÁLVULA SOLENÓIDE	452
	453
	454
	455
	456
	457
VÁLVULA SOLENÓIDE DE ALÍVIO	458
	460
VEDADOR ADESIVO ISOLANTE	169
	253
VEDADOR ADESIVO ISOLANTE (2 ML)	375
VENTILADOR DA CABINE	556
VENTILADOR DE SUCÇÃO	45
	46
VIDRO DA PORTA	608
VIDRO DIANTEIRO	610
VIRABREQUIM	12
VOLANTE DO MOTOR	23

STICHWORTVERZEICHNIS

Bezeichnung	Seite
A	
ABLASSSTOPFEN	397
ABSPERRVENTIL	250
ALARMSATZ (MONITOR - BEDIENUNGSPERSONAL)	595
ANSAUGKRÜMMER	67
ANSCHLUSS, ELAST.	228
ANTRIEBSRAD	155
ANZEIGE (LUFTFILTERWARTUNG)	55
ANZEIGENSATZ	91
ANZEIGENSATZ (HYDRAULIKÖLSTAND)	397
ARBEITSGERÄTE-SOFTWARE	115
ARBEITSGERÄTE-SOFTWARE (ARBEITSGERÄT)	115
ARBEITSGERÄTEEINSTELLER	502
	503
ARBEITSGERÄTEELEKTRONIK	115
ARBEITSGERÄTEHEBEL UND BEFESTIGUNGSTEILE	109
ARBEITSGERÄTESTEUERUNG (ARBEITSGERÄT)	115
ARBEITSLEUCHTEN	116
	117
	118
	119
	120
	121
	126
AUFBEWAHRUNGSKASTEN U. BEFESTIGUNG	156
AUFKLEBER	617
	618
AUFKLEBER (FENSTERREINIGUNG)	619
	623
AUSHUBLÖFFEL	509
	510
	511
	512
	513
	514
	515
	516
	517
	518
	519
AUSLEGER	464
	466
	468
AUSLEGER, EINTEILIG	463
AUSLEGER, EINTEILIG (LANG)	463
AUSLEGERABLASSLEITUNGEN	307
	309
AUSLEGERBELEUCHTUNG	122
	123
	124
AUSLEGERLEITUNGEN	301
	303
AUSLEGERZYLINDER	237
AUSLEGERZYLINDER U. LEITUNGEN	230
AUSLEGERZYLINDER UND DICHTUNG	232
AUSLEGERZYLINDERLEITUNGEN	305
	306
AUSPUFFKRÜMMER	65
B	
BATTERIE UND VERDRAHTUNG	97
	106
BATTERIE (12 V)	97
	106
BEILEGSCHEIBE, HART (ABM:13,5X25,5X3MM)	311
BEILEGSCHEIBE, HART (ABM:13,5X25,5X3MM)	362
D	
DACHLUKE	584
	585
DECKELSATZ (MONITOR - BEDIENUNGSPERSONAL)	595
DICHTMITTEL	169
	253
DICHTMITTEL (2 ML)	375
DICHTUNG	47
DICHTUNG (KRAFTSTOFFENTLÜFTUNGSPUMPE)	71
DICHTUNG (VENTILDECKEL)	11
DICHTUNGSSATZ	237
	239
DREHKNOPFSCHALTER	144
DREHSTROMGENERATOR	95
DREHSTROMGENERATOR - BEFESTIGUNG	28
DREHWERK- UND FAHRANTRIEBHALTETEILE	253
DREHWERKMOTOR	380
	381
DREHWERKSABLAUFLEITUNGEN	370
DRUCKLUFTLEITUNGEN	60
DRUCKREDUZIERVENTIL	435
DRUCKSCHALTER (ARBEITSGERÄT)	341
DRUCKSCHALTER (ELEKTRONIKSTEUERUNG)	329
DRUCKSENSOR (ARBEITSGERÄT)	323
DRUCKSENSOR (HAUPTPUMPE)	335
DRUCKVENTILDECKEL (HYDRAULIKTANK)	397

* ÜBERSETZUNG ZUM ZEITPUNKT DER DRUCKLEGUNG NICHT VORHANDEN

STICHWORTVERZEICHNIS

Bezeichnung	Seite
DÜSE - PUMPENDÜSE	78
E	
EINZELFLANSCHROLLEN	203
ELEKTR. ÜBERWACHUNGSSYSTEM	595
	596
ELEKTRONIK - MONITOR	115
ELEKTRONIK - MOTORNENNLEISTUNG	115
ENTLÜFTER	38
	252
ENTLÜFTER (KURBELGEHÄUSE)	38
ERDBAUSCHAUFEL	525
F	
FAHRALARM	94
FAHRAUSGLEICHSVENTIL	462
FAHRERHAUS	557
	559
	561
	565
FAHRERHAUS-DRUCKLÜFTER	556
FAHRERHAUS, SONNENBLENDE	604
FAHRERHAUSAUSRÜSTUNG	597
FAHRERHAUSTÜR	581
FAHRERHAUSVERDRAHTUNG	136
	138
FAHRERPLATTFORM	598
FAHRERPLATTFORMVERKLEIDUNG	175
FAHRERSITZ	600
	601
FAHRERSITZFEDERUNG	603
FAHRMOTOR	383
FAHRMOTOR U. BEFESTIGUNGSTEILE	379
FAHRMOTORLEITUNGEN	372
	375
FAHRMOTORSCHUTZ	192
	193
FAHRWERK	1
	2
FAHRWERKBELEUCHTUNG	125
FELSLÖFFEL	526
	527
FENSTER, VORNE	610
FILTER	446
	458
	583
FILTER U. VENTIL - VORSTEUERUNG	255
FILTERELEMENT - HYDRAULIK	259
FILTERSIEB	395

Bezeichnung	Seite
FITTING	261
FLÜSSIGKEITSTANDSSCHALTER (HYDRAULIKTANK)	397
FUSSMATTE	114
	598
FUSSMATTE (*WITH THIRD PEDAL)	220
FUSSMATTE (*WITHOUT THIRD PEDAL)	220
G	
GEGENGEWICHT	160
	161
GRUNDAUSFÜHRUNG	2
	3
H	
HALTEGRIFF	177
HANDGRIFF-EINBAUSATZ (RÜCKENLEHNEN-VERSTELLUNG)	601
HAUPTFILTER	56
HAUPTSTEUERVENTIL	420
HAUPTSTEUERVENTILBEFESTIGUNG	386
HD-FELSLÖFFEL	521
	522
	523
	524
HD-LÖFFEL	520
HYDRAULIKDRUCKSPEICHER	215
HYDRAULIKHAMMERVERDRAHTUNG	148
HYDRAULIKPEDALSTEUERUNG	220
HYDRAULIKPUMPE UND LEITUNGEN	351
	353
	355
	356
	357
HYDRAULIKSYSTEM	270
HYDRAULIKTANK UND BEFESTIGUNGSTEILE	401
HYDRAULIKTANK UND SCHMIERFILTER	397
I	
INSTRUKTIONS-AUFKLEBER (HEISSSE OBERFLÄCHE)	619
	623
INSTRUKTIONS-AUFKLEBER (HYDRAULIKÖL-STAND)	630
INSTRUKTIONS-AUFKLEBER (NOTAUS-GANG)	619
	623
INSTRUMENTENTAFEL	571

* ÜBERSETZUNG ZUM ZEITPUNKT DER DRUCKLEGUNG NICHT VORHANDEN

STICHWORTVERZEICHNIS

Bezeichnung	Seite
J	
JOYSTICK -STEUERUNG	222
	223
	224
	225
	226
	227
JOYSTICKSTEUERUNG U. BEFESTIGUNG	217
K	
KÄLTEMITTELKOMPRESSOR	568
KÄLTEMITTELKONDENSATOR U. BEFESTIGUNGSTEILE	569
KANTENSCHUTZ	528
KAPPE	50
	605
KAPPE (ÖLEINFÜLLUNG)	11
KAPPENFILTERSATZ (KRAFTSTOFFTANK)	91
KEILRIEMEN	568
KEILRIEMEN (SERPENTINENFÖRMIG)	34
	35
KETTENFÜHRUNGSSCHUTZ	189
	190
	191
KETTENGLIEDER	198
	199
KETTENSPANNER UND -FEDERRÜCKLAUF	204
	205
	206
	207
KIPPSCHALTER (SCHEIBENWISCHER)	150
KIPPSCHALTER (SCHEIBENWISCHER (UNTEN))	150
KLIMAANLAGE	552
	553
	554
KLIMAANLAGE UND AUFHÄNGUNG	550
KLIMAANLAGENLEITUNGEN	590
KOLBENPUMPE	390
KONSOLE, LINKS	572
KONSOLE, RECHTS	576
KONSOLENEINSTELLER	548
KONSOLENVERDRAHTUNG	142
	143
	144
KOPFSTÜTZE	586
KRAFTSTOFF-ENTLÜFTUNGSPUMPE	71
KRAFTSTOFFEINSPRITZPUMPE	80
KRAFTSTOFFILTER	71
KRAFTSTOFFLEITUNGEN	73
	76
KRAFTSTOFFTANK	91
KRAFTSTOFFTANK-SIEBEINSATZ	91
KRAFTSTOFFTANK U. BEFESTIGUNG	90
KRAFTSTOFFTANKKAPPE	91
KRAFTÜBERTRAGUNG	154
KUGELVENTIL	403
KÜHLER UND HYDRAULIKÖLKÜHLER	50
	52
KÜHLERKAPPE	52
KÜHLLUFTLEITUNGEN	61
KÜHLSYSTEM	44
KÜHLWASSERLEITUNGEN	47
KÜHLWASSERPUMPE	49
KURBELWELLE	12
L	
LAUFROLLENSCHALTER (STELLUNGSSENSOR)	613
LAUFWERKSKETTE	208
	209
	210
	211
	212
	213
	214
LAUFWERKSRAHMEN	188
LEITRAD, VORN	194
	195
	196
	197
LEITUNGEN, VORNE	314
	316
	317
	321
	323
LEUCHTE	117
	118
	119
LEUCHTE (24 V)(65 W)	120
LÖFFEL UND -EINSTELLER	504
	505
	506
	507
	508
LÖFFELGESTÄNGE	475
	476
	478
LÖFFELSTIEL	480
	481
	488
	490
	492
	494

* ÜBERSETZUNG ZUM ZEITPUNKT DER DRUCKLEGUNG NICHT VORHANDEN

STICHWORTVERZEICHNIS

Bezeichnung	Seite
	496
	498
	500
LÖFFELSTIELZYLINDER	243
	245
LÖFFELZYLINDER	239
	241
LÖFFELZYLINDER U. LEITUNGEN	230
LÖFFELZYLINDER UND DICHTUNG	233
	234
LÖFFELZYLINDERLEITUNGEN	311
	312
	313
LUFTFILTER (HAUPTELEMENT)	55
LUFTFILTER (SICHERHEITSELEMENT)	55
LUFTKANAL	583
LUFTREINIGER	54
	55
	56
	57
LUFTREINIGER-ANBAUSATZ	68
LUFTSTEUERUNG	129

M

MAGNET- UND ÜBERDRUCKVENTIL	458
	460
MAGNETSCHALTER (24 V) (HAUPTRELAIS)	128
MAGNETVENTIL	452
	453
	454
	455
	456
	457
MASCHINENSTEUERUNG U. BEFESTIGUNG	111
MONITOR - SOFTWARE	596
MOTOR-EINBAUSATZ	9
MOTORAUFLAGER	29
MOTORAUSFÜHRUNG	4
	5
	6
	7
	8
MOTORBLOCK	13
	15
MOTORHAUBE	184
	185
	186
MOTORHAUBE UND VERKLEIDUNG	178
MOTORHAUBENVERKLEIDUNG	162
MOTORÖLKÜHLER	43
MOTORÖLLEITUNGEN	41
MOTORSTEUERUNG, ELEKTRON.	112

N

NOCKENWELLE	10

O

O-RING-DICHTUNG	257
	261
	323
	333
	334
OBERWAGENRAHMEN	167
ÖLFILTER	39
	256
	257
	259
ÖLFILTER (HYDRAULISCH)	255
ÖLFILTERSOCKEL	216
ÖLWANNE	31

P

PANZERWANNE	171
	172
	173
PENDELVENTIL	450
	451
PLEUELSTANGE UND KOLBEN	33
PROBEENTNAHMEVENTIL	39
	397
PROBEENTNAHMEVENTIL (KÜHLMITTEL)	47
PUMPE UND BEFESTIGUNGSTEILE	387
	388
PUMPENANSCHLUSS	229
PUMPENANTRIEB	249
PUMPENKOPF	262
	266

R

RADIOEINBAUSATZ	588
REGULATOR (KÜHLMITTEL)	47
RELAIS (24 V)	129
REPARATURSATZ (HYDRAULIKPUMPE)	389
RIEMENSCHEIBE	34
	35
ROHR	38
RÜCKLAUF- UND FILTERLEITUNGEN	358
RÜCKSPIEGEL	594
RÜCKSTROMFILTER	256

* ÜBERSETZUNG ZUM ZEITPUNKT DER DRUCKLEGUNG NICHT VORHANDEN

STICHWORTVERZEICHNIS

Bezeichnung	Seite
S	
SAUGLÜFTER	45
	46
SCHALENDICHTUNGSSATZ	87
	88
SCHALLDÄMPFER	69
SCHALTER (DRUCK)	13
SCHALTER (FÜR HEIZUNGSRELAIS)	128
SCHALTER (STELLUNGSSENSOR)	610
SCHALTERSTEUERUNG	114
SCHDÄMPFERABLASSLEITUNGEN	63
	64
SCHEIBENWASCHANLAGE	605
	606
SCHEIBENWISCHER	615
	616
SCHEIBENWISCHER UND -WASCHANLAGE	613
SCHEIBENWISCHERBLATT (OBEN)	616
SCHEIBENWISCHERBLATT (UNTEN)	613
SCHEIBENWISCHERVERDRAHTUNG	150
SCHEINWERFER (24 V)	121
	126
SCHILD UND AUFKLEBER	619
	623
	627
	630
SCHLÜSSEL	90
	134
SCHLÜSSEL (HAUPTSCHALTER)	133
SCHMIERLEITUNGEN	470
	472
	473
SCHMIERNIPPEL	169
	232
	233
	234
	235
	236
	472
	473
	476
	478
	482
	484
	486
	492
	496
	498
	500
SCHMIERNIPPEL (1/8-27 GEWINDE)	470
SCHMIERNIPPEL (1/8-27-GEWINDE)	277
	291
	488
	490
	494
SCHRAUBE (M10X1,50X12MM)	411
SCHRAUBE (M10X1,50X12MM)	148
SCHUTZBLECH UND DECKEL	166
SCHWENKANTRIEB	250
	252
SCHWENKBLOCK	396
SCHWENKDÄMPFUNGSVENTIL	461
SCHWENKGETRIEBELAGER	169
SCHWENKMOTOR U. BEFESTIGUNGSTEILE	378
SCHWENKMOTORLEITUNGEN	371
SCHWENKVERKLEIDUNG	176
SCHWUNGRAD	23
SCHWUNGRADGEHÄUSE	25
SEITENANTRIEB	151
	152
SEITENMESSER	530
	531
SEITENSCHNEIDENSCHUTZ	529
SENSORANSCHLUSSSATZ (12POLIG)	98
	128
SENSORANSCHLUSSSATZ (2POLIG)	97
	98
	114
	128
	138
SENSORANSCHLUSSSATZ (3POLIG)	97
	98
	128
	138
SENSORANSCHLUSSSATZ (4 POLIG)	98
	128
SENSORANSCHLUSSSATZ (6POLIG)	97
	98
	138
	143
	146
SENSORANSCHLUSSSATZ (8POLIG)	97
SICHERHEITSFILTER	56
SICHERHEITSGURT	599
	600
SICHERUNG (10 A)	129
SICHERUNG (15 A)	129
SICHERUNG (30 A)	129
SICHERUNG (5 A)	129
	553
SICHERUNGSZIEHER	129
SIEB	395
SITZUNTERBAU	602
SONNENBLENDE	604
SPERRVENTIL	404

* ÜBERSETZUNG ZUM ZEITPUNKT DER DRUCKLEGUNG NICHT VORHANDEN

STICHWORTVERZEICHNIS

Bezeichnung	Seite
STARTERMOTOR	132
STARTERMOTORAUFHÄNGUNG	30
STARTSCHALTER	135
STARTSCHALTER (SCHLÜSSEL)	144
STAUBKAPPE	39
	327
	335
	346
	397
STAUBKAPPE (KÜHLMITTELPROBEENTNAHMEVENTIL)	47
STAUKASTENDECKEL	579
	580
STECKDOSEN - EINBAUSATZ (12POLIG)	97
	98
	128
	146
STECKDOSEN - EINBAUSATZ (2POLIG)	31
	91
	93
	97
	98
	128
	129
	138
	143
	148
	329
	331
	341
	397
STECKDOSEN - EINBAUSATZ (2POLIG)	568
STECKDOSEN - EINBAUSATZ (3POLIG)	97
	128
	138
	148
	273
STECKDOSEN - EINBAUSATZ (4 POLIG)	128
STECKDOSEN - EINBAUSATZ (4 POLIG)	98
	138
STECKDOSEN - EINBAUSATZ (6POLIG)	97
	128
	138
	143
	144
	148
STECKDOSEN - EINBAUSATZ (6POLIG)	224
	225
STECKDOSEN - EINBAUSATZ (8POLIG)	112
STEUERHEBEL	219
	271
	273
STEUERKONSOLE	574
STEUERVENTIL	405
	406
	407
	410
	414
	416
	419
STEUERVENTIL UND BEFESTIGUNGSTEILE	402
STIEL	482
	484
	486
STIELABLASSLEITUNGEN	366
	367
	368
	369
STIELZYLINDER UND DICHTUNG	235
	236
STIELZYLINDER UND LEITUNGEN	231
STIELZYLINDERLEITUNGEN	360
	361
	362
	364
	365
STIRNRAD	24
STIRNRADGEHÄUSE	26
STOSSSTANGE	159

T

Bezeichnung	Seite
TEMPERATURGEBER	397
TEMPERATURGEBER (WASSER)	47
TEMPERATURSENSOR (AUSSENLUFT)	47
TRAGROLLE	200
	201
	202
TRENNSCHALTER	133
	134
TRENNSCHALTER (BATTERIE)	106
TURBOLADER	70
TURBOLADEREINSATZ	59
TURBOLADERÖLLEITUNGEN	42
TÜRFENSTER	608

U

Bezeichnung	Seite
ÜBERDRUCKVENTIL	436
	437
	438
	439
	440
	441
	442

* ÜBERSETZUNG ZUM ZEITPUNKT DER DRUCKLEGUNG NICHT VORHANDEN

STICHWORTVERZEICHNIS

Bezeichnung	Seite
	443
	444
	445
	446
	448
	449
UMFORMERVERDRAHTUNG	146
UMLAUFLUFT-FILTER	553
UNTERBRECHER - INSTRUMENTENTAFEL	128
UNTERBRECHER (60 A) (DREHSTROMGENERATOR)	128

V

VENTIL	39
	410
VENTIL (DRUCKBEGRENZUNG)	206
VENTILDECKEL	11
VENTILSTEUERUNG	36
VERBINDER (FILTER)	329
VERBINDUNGSROHR (ENTDUNSTER)	38
VERSTAUKASTEN	157
VORHÄNGESCHLOSS	90
VORREINIGER	57
VORSTEUERLEITUNGEN	327
	329
	331
	333
	341
	346
VORSTEUERÜBERDRUCKVENTIL	433
	434
VORSTEUERVENTIL	421
	423
	425
	427
	428
	429
	431
	432
VORSTEUERVENTIL (ARBEITSGERÄT)	220

W

WARNAUFKLEBER (HYDRAULIKTANK)	630
WARNAUFKLEBER (KEINEN ÄTHER - ANSAUGSTUTZEN)	619
WARNAUFKLEBER (KEINEN ÄTHER - ANSAUGSTUTZEN)	623
WARNAUFKLEBER (ÜBERBRÜCKUNGSKABEL)	619
	623
WARNHORN, ELEKTR.	587
WARNSCHILD (HOCHDRUCKZYLINDER)	207
WARNVORRICHTUNG	93
WARTUNGSMESSER	136
WASSERABSCHEIDER	87
	88
	89
WASSERABSCHEIDER - EINBAUSATZ	87
	88
WASSERABSCHEIDERELEMENT	87
	88
WASSERHAHN	52

Z

ZAHNRADPUMPE	389
ZAHNSPITZE	532
	533
	534
	535
	536
ZAHNSPITZE, KURZ	546
	547
ZAHNSPITZE, LANG	539
	540
	541
	542
ZAHNSPITZE, SCHARF	543
	544
ZAHNSPITZE (SCHARF)	545
ZAHNSPITZE, VERSTÄRKT	537
	538
ZEITGEBER - AUS VERZÖGERUNG	128
ZUGANGSKLAPPE	163
	164
	165
ZUSATZHYDRAULIKLEITUNGEN	275
	276
	277
	279
	281
	283
	285
	287
	289
	291
	293
	295
	297
	299
ZUSATZPUMPENANTRIEB	247
ZUSATZSTEUERSATZ	218
ZUSATZSTEUERUNG	218
ZYLINDERKOPF	17

* ÜBERSETZUNG ZUM ZEITPUNKT DER DRUCKLEGUNG NICHT VORHANDEN

STICHWORTVERZEICHNIS

Bezeichnung	Seite	Bezeichnung	Seite
	19		
	21		

* ÜBERSETZUNG ZUM ZEITPUNKT DER DRUCKLEGUNG NICHT VORHANDEN

MACHINE ARRANGEMENT

193-6848 CHASSIS AR

S/N: RAW1-UP

PART OF 193-6840 GENERAL AR

SMCS-7051 **i01884886**

NOTE	PART NUMBER	QTY	PART NAME 1 2 3 4 5 6 (PRODUCT LEVEL)	SEE PAGE
Y	*204-1586*	1	BATTERY & WIRING GP	97
Y	*142-3839*	1	BOX & MTG GP-STORAGE	156
Y	*157-3164*	1	CONTROL & MTG GP-MACHINE (ENGINE & HYDRAULIC)	111
Y	*157-3168*	1	CONTROL GP-ENGINE ELECTRONIC	112
Y	*199-7287*	1	COUNTERWEIGHT GP	160
Y	*170-2966*	1	FENDER & COVER GP	166
Y	*201-3014*	1	FRAME GP-UPPER	167
Y	*204-3710*	1	GUARD GP-BOTTOM	172
Y	*142-3835*	1	HANDHOLD GP	177
Y	*199-7291*	1	HOOD & GUARD GP	178
Y	*7Y-3813*	1	HORN GP-ELECTRIC	587
Y	*4I-5409*	1	LIGHTING GP-CHASSIS	125
Y	*217-9405*	1	LINES GP-AIR CONDITIONER	590
Y	*142-3845*	1	LINES GP-FUEL	73
	7Y-0059	1	LITERATURE GP	
Y	*142-3836*	1	MIRROR GP-REAR VIEW	594
Y	*161-3738*	1	OPERATOR AR	597
Y	*150-8101*	1	PLATE & FILM GP	619
Y	*142-3837*	1	TANK & MTG GP-FUEL	90
Y	*201-4477*	1	WASHER GP-WINDOW	605

Y-SEPARATE ILLUSTRATION

<END>

MACHINE ARRANGEMENT

193-6849 CHASSIS AR

S/N: SBN1-UP

PART OF 193-6841 GENERAL AR

SMCS-7051 **i01889906**

NOTE	PART NUMBER	QTY	PART NAME 1 2 3 4 5 6 (PRODUCT LEVEL)	SEE PAGE
Y	*204-1586*	1	BATTERY & WIRING GP	97
Y	*142-3839*	1	BOX & MTG GP-STORAGE	156
Y	*157-3164*	1	CONTROL & MTG GP-MACHINE (ENGINE & HYDRAULIC)	111
Y	*157-3168*	1	CONTROL GP-ENGINE ELECTRONIC	112
Y	*199-7287*	1	COUNTERWEIGHT GP	160
Y	*170-2966*	1	FENDER & COVER GP	166
Y	*201-3014*	1	FRAME GP-UPPER	167
Y	*204-3710*	1	GUARD GP-BOTTOM	172
Y	*142-3835*	1	HANDHOLD GP	177
Y	*199-7291*	1	HOOD & GUARD GP	178
Y	*7Y-3813*	1	HORN GP-ELECTRIC	587
Y	*4I-5409*	1	LIGHTING GP-CHASSIS	125
Y	*217-9405*	1	LINES GP-AIR CONDITIONER	590
Y	*142-3845*	1	LINES GP-FUEL	73
	7Y-0059	1	LITERATURE GP	
Y	*142-3836*	1	MIRROR GP-REAR VIEW	594
Y	*161-3738*	1	OPERATOR AR	597
Y	*150-8102*	1	PLATE & FILM GP	623
Y	*142-3837*	1	TANK & MTG GP-FUEL	90
Y	*201-4477*	1	WASHER GP-WINDOW	605

Y-SEPARATE ILLUSTRATION

<END>

193-6840 GENERAL AR

S/N: RAW1-UP

STANDARD UNDERCARRIAGE

SMCS-7000 **i01883760**

NOTE	PART NUMBER	QTY	PART NAME 1 2 3 4 5 6 (PRODUCT LEVEL)	SEE PAGE
Y	*193-6848*	1	CHASSIS AR	1
Y	*171-2613*	1	ELECTRONICS GP-ENGINE RATINGS	115
Y	*201-3835*	1	ENGINE AR	4
Y	*167-7267*	1	FRAME AR-UNDERCARRIAGE	188
Y	*201-9323*	1	HYDRAULIC AR	270
Y	*201-3836*	1	INSTALLATION AR-ENGINE	9
Y	*148-4681*	1	POWER TRAIN AR	154

Y-SEPARATE ILLUSTRATION

<END>

MACHINE ARRANGEMENT

193-6841 GENERAL AR

S/N: SBN1-UP

LONG UNDERCARRIAGE

SMCS-7000 **i01888545**

NOTE	PART NUMBER	QTY	PART NAME 1 2 3 4 5 6 (PRODUCT LEVEL)	SEE PAGE
Y	*193-6849*	1	CHASSIS AR	2
Y	*171-2613*	1	ELECTRONICS GP-ENGINE RATINGS	115
Y	*201-3835*	1	ENGINE AR	4
Y	*163-7721*	1	FRAME AR-UNDERCARRIAGE	188
Y	*201-9324*	1	HYDRAULIC AR	270
Y	*201-3836*	1	INSTALLATION AR-ENGINE	9
Y	*148-4681*	1	POWER TRAIN AR	154

Y-SEPARATE ILLUSTRATION

<END>

ENGINE ARRANGEMENT

201-3835 ENGINE AR

S/N: SBN1-UP; RAW1-UP

PART OF 193-6840, 193-6841 GENERAL AR

SMCS-1000 **i01848880**

NOTE	PART NUMBER	QTY	PART NAME 1 2 3 4 5 6 (PRODUCT LEVEL)	SEE PAGE
Y	*222-8188*	1	ENGINE AR	8
Y	*205-6683*	1	FAN GP-SUCTION	45

Y-SEPARATE ILLUSTRATION

ENGINE ARRANGEMENT

201-3878 ENGINE AR

S/N: 7JK1-UP

PART OF 217-5472, 222-8188 ENGINE AR

ALSO AN ATTACHMENT

SMCS-1000 **i01848915**

NOTE	PART NUMBER	QTY	PART NAME 1 2 3 4 5 6 (PRODUCT LEVEL)	SEE PAGE
Y	**212-8561**	1	ALTERNATOR GP-CHARGING	95
Y	*178-6502*	1	BREATHER GP	38
Y	*178-6512*	1	CAMSHAFT GP	10
Y	*178-6584*	1	COOLER GP-ENGINE OIL	43
Y	*212-8545*	1	COVER GP-VALVE MECHANISM	11
Y	*212-8549*	1	CRANKSHAFT GP	12
Y	*212-8546*	1	CYLINDER BLOCK GP	13
Y	*212-8543*	1	CYLINDER HEAD GP	21
Y	*212-8556*	1	FAN GP-SUCTION	46
Y	*212-8554*	1	FILTER GP-ENGINE OIL	39
Y	*212-8560*	1	FILTER GP-FUEL	71
Y	*205-6792*	1	FLYWHEEL GP	23
Y	*212-8550*	1	GEAR GP-FRONT	24
Y	*196-7972*	1	HOUSING GP-FLYWHEEL	25
Y	*212-8547*	1	HOUSING GP-FRONT	26
Y	*178-6524*	1	LINES GP-ENGINE OIL	41
Y	*212-8558*	1	LINES GP-FUEL	76
Y	*5I-7770*	1	LINES GP-TURBOCHARGER OIL	42
Y	*212-8614*	1	LINES GP-WATER	47
Y	*212-8552*	1	MANIFOLD GP-EXHAUST	65
Y	*212-8551*	1	MANIFOLD GP-INLET	67
Y	*178-6531*	1	MOUNTING GP-ALTERNATOR	28
Y	*125-2963*	1	MOUNTING GP-STARTING MOTOR	30
Y	*212-8553*	1	MUFFLER GP	69
Y	**212-8470**	6	NOZZLE GP-UNIT INJECTOR	78
Y	*178-6516*	1	PAN GP-OIL	31
Y	*212-8548*	1	PISTON & ROD GP	33
Y	**212-8559**	1	PUMP GP-FUEL INJECTION	80
Y	*212-8555*	1	PUMP GP-WATER	49
Y	**125-2988**	1	STARTING MOTOR GP-ELECTRIC	132
Y	**205-6741**	1	TURBOCHARGER GP	70
Y	*212-8544*	1	VALVE MECHANISM GP	36

Y-SEPARATE ILLUSTRATION

ENGINE ARRANGEMENT

217-5470 ENGINE AR

S/N: SBN1-UP; RAW1-UP
PART OF 214-4411 COOLING AR
AN ATTACHMENT

SMCS-1000 **i01860463**

NOTE	PART NUMBER	QTY	PART NAME 1 2 3 4 5 6 (PRODUCT LEVEL)	SEE PAGE
Y	*217-5472*	1	ENGINE AR	7
Y	*205-6683*	1	FAN GP-SUCTION	45

Y-SEPARATE ILLUSTRATION

ENGINE ARRANGEMENT

217-5472 ENGINE AR

S/N: SBN1-UP; RAW1-UP
PART OF 217-5470 ENGINE AR
AN ATTACHMENT

SMCS-1000 **i01860542**

NOTE	PART NUMBER	QTY	PART NAME 1 2 3 4 5 6 (PRODUCT LEVEL)	SEE PAGE
Y	**201-3878**	1	ENGINE AR	5
Y	*222-8200*	1	PULLEY GP	35

Y-SEPARATE ILLUSTRATION

ENGINE ARRANGEMENT

222-8188 ENGINE AR

S/N: SBN1-UP; RAW1-UP

PART OF 201-3835 ENGINE AR

SMCS-1000 **i01848881**

NOTE	PART NUMBER	QTY	PART NAME 1 2 3 4 5 6 (PRODUCT LEVEL)	SEE PAGE
Y	**201-3878**	1	ENGINE AR	5
Y	*222-8199*	1	PULLEY GP	34

Y-SEPARATE ILLUSTRATION

ENGINE ARRANGEMENT

201-3836 INSTALLATION AR-ENGINE

S/N: SBN1-UP; RAW1-UP

PART OF 193-6840, 193-6841 GENERAL AR

SMCS-1000 **i01889120**

NOTE	PART NUMBER	QTY	PART NAME 1 2 3 4 5 6 (PRODUCT LEVEL)	SEE PAGE
Y	*201-3837*	1	COMPRESSOR GP-REFRIGERANT	568
Y	*217-9385*	1	CONDENSER & MTG GP-REFRIGERANT	569
Y	*201-3833*	1	LINES GP-AIR	60
Y	*204-0875*	1	LINES GP-COOLING AIR	61
Y	*162-6184*	1	LINES GP-MUFFLER DRAIN	63
Y	*162-6185*	1	LINES GP-MUFFLER DRAIN	64
Y	*162-6232*	1	MOUNTING GP-AIR CLEANER	68
Y	*162-6256*	1	MOUNTING GP-ENGINE	29
Y	*204-0873*	1	RADIATOR & HYD OIL COOLER GP	50

Y-SEPARATE ILLUSTRATION

BASIC ENGINE

178-6512 CAMSHAFT GP

S/N: 7JK1-UP
PART OF 201-3878 ENGINE AR
ALSO AN ATTACHMENT

SMCS-1210 **i01797317**

NOTE	REF NO	GRAPHIC REF	PART NUMBER	QTY	PART NAME 1 2 3 4 5 6 (PRODUCT LEVEL)	SEE PAGE
M	1	1	**8T-4200**	2	BOLT (M8X1.25X16MM)	
	2	1	**3B-4505**	2	LOCKWASHER	
	3	1	**5I-7650**	1	PLATE	
	4	1	**094-4628**	1	KEY	
	5	1	**178-6535**	1	CAMSHAFT	
	6	1	**222-8183**	12	TAPPET	
	7	1	**5I-7723**	12	PUSHROD	

M-METRIC PART

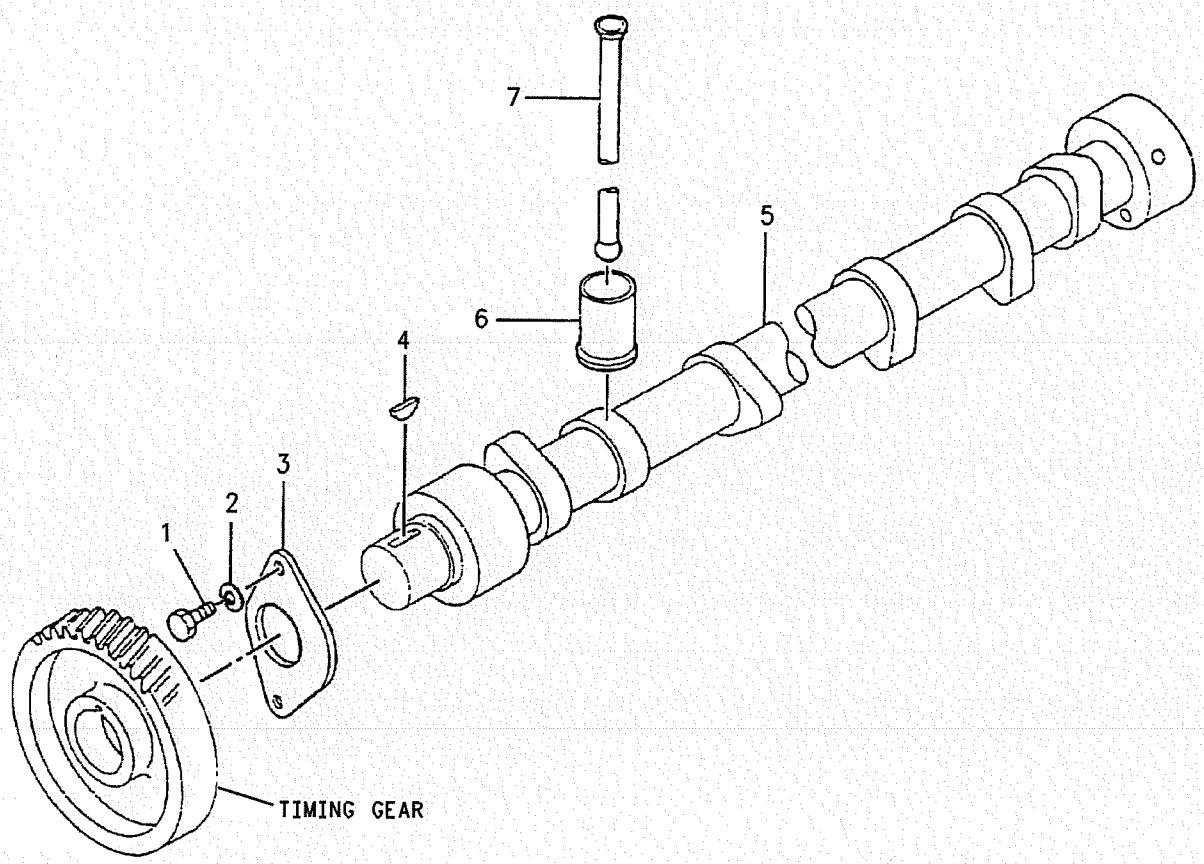

GRAPHIC #1 **<END>** g00680522

BASIC ENGINE

212-8545 COVER GP-VALVE MECHANISM

S/N: 7JK1-UP
PART OF 201-3878 ENGINE AR
ALSO AN ATTACHMENT

SMCS-1107 **i01889318**

NOTE	REF NO	GRAPHIC REF	PART NUMBER	QTY	PART NAME 1 2 3 4 5 6 (PRODUCT LEVEL)	SEE PAGE
	1	1	**5I-7626**	6	NUT	
	2	1	**176-4983**	6	GASKET	
	3	1	**5I-7584**	1	CAP (OIL FILL)	
	4	1	**5I-8001**	2	COVER	
	5	1	**178-6533**	2	GASKET (VALVE COVER)	
	6	1	**4P-6445**	1	PLATE-CATERPILLAR	

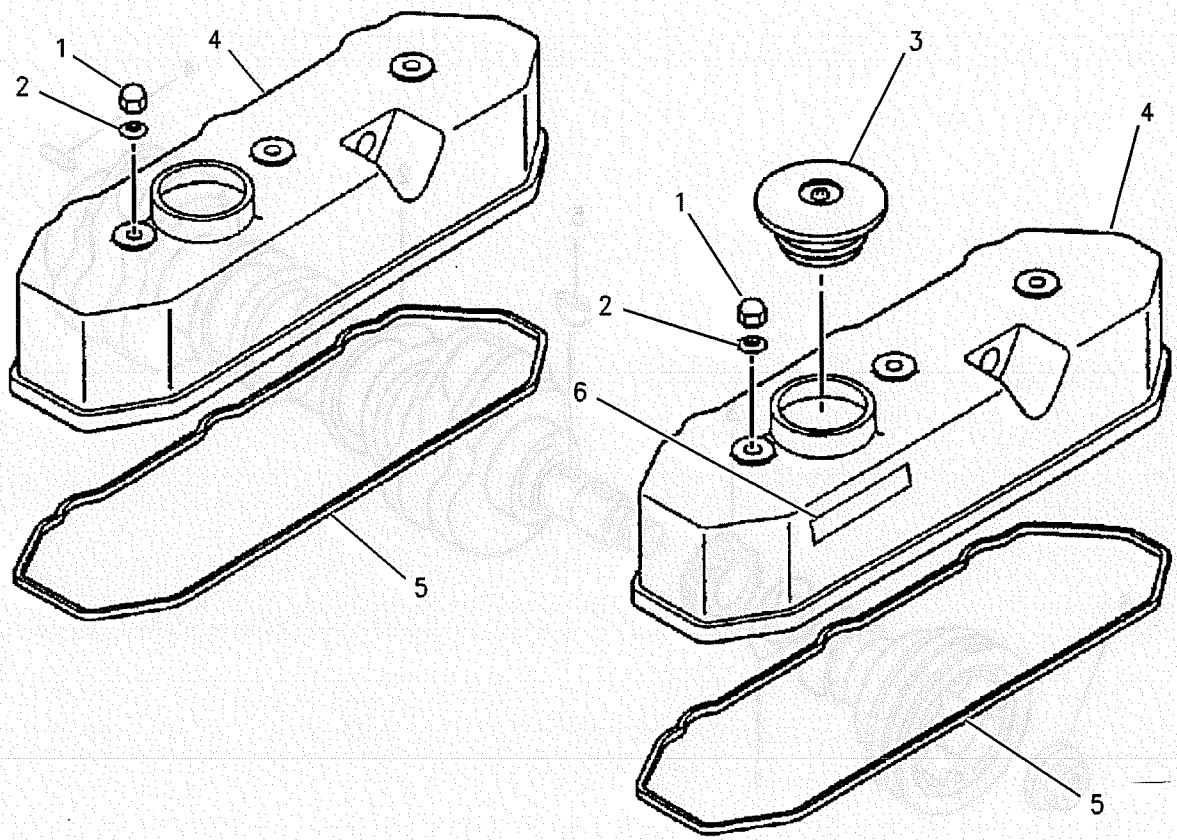

GRAPHIC #1 **<END>** g00879248

BASIC ENGINE

212-8549 CRANKSHAFT GP

S/N: 7JK1-UP
PART OF 201-3878 ENGINE AR
ALSO AN ATTACHMENT

SMCS-1202 **i01889306**

NOTE	REF NO	GRAPHIC REF	PART NUMBER	QTY	PART NAME 1 2 3 4 5 6 (PRODUCT LEVEL)	SEE PAGE
	1	1	**5I-7541**	1	PLATE	
R	2	1	**125-3005**	1	CRANKSHAFT GP	
	3	1	**5I-7674**	1	GEAR	
	4	1	**085-9513**	2	PIN	
	5	1	**094-4628**	2	KEY	
	6	1	**130-7596**	1	NUT	

R-REMFG PART MAY BE AVAILABLE

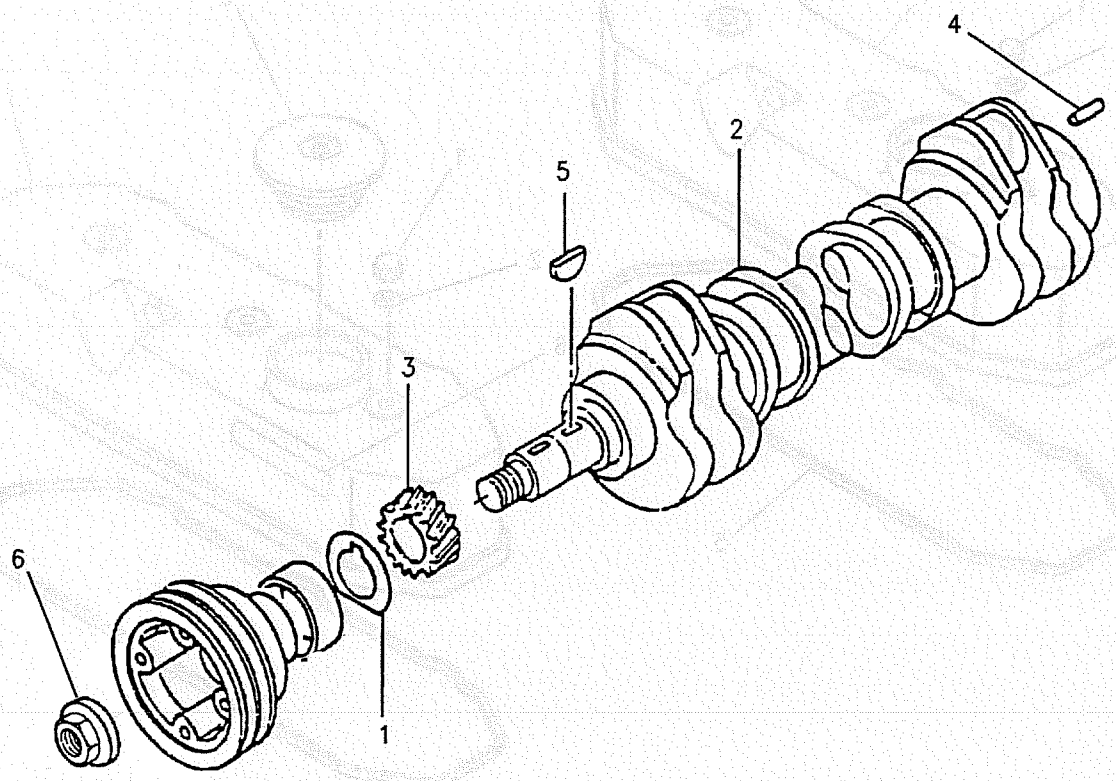

GRAPHIC #1 **<END>** g00923006

BASIC ENGINE

212-8546 CYLINDER BLOCK GP

S/N: 7JK1-UP
PART OF 201-3878 ENGINE AR
ALSO AN ATTACHMENT

SMCS-1201 **i01889317**

NOTE	REF NO	GRAPHIC REF	PART NUMBER	QTY	PART NAME 1 2 3 4 5 6 (PRODUCT LEVEL)	SEE PAGE
Y	1	1	**212-8566**	1	CYLINDER BLOCK GP	15
	2	1	**212-8567**	1	EYE	
	3	1	**5I-7603**	1	EYE	
M	4	1	**8T-4179**	2	BOLT (M12X1.75X20MM)	
	5	1	**096-2501**	2	WASHER (3MM THK)	
B	6	1	**5I-7588**	7	SET-BEARING (STANDARD)	
AB		1	**5I-7784**	7	SET-BEARING (US=0.25MM ID)	
AB		1	**5I-7785**	7	SET-BEARING (US=0.50MM ID)	
AB		1	**5I-7786**	7	SET-BEARING (US=0.75MM ID)	
B	7	1	**5I-7654**	3	PLATE (STANDARD)	
AB		1	**5I-7787**	3	PLATE (OS=0.15MM)	
AB		1	**5I-7788**	3	PLATE (OS=0.30MM)	
AB		1	**5I-7789**	3	PLATE (OS=0.45MM)	
	8	1	**5I-8005**	1	SWITCH (PRESSURE)	
	9	1	**4D-7794**	1	CLIP	
	10	1	**5I-7978**	1	SHEET	
M	11	1	**7X-2536**	1	BOLT (M8X1.25X14MM)	
	12	1	**3B-4505**	1	LOCKWASHER	
M	13	1	**8T-4137**	2	BOLT (M10X1.5X20MM)	
	14	1	**7X-0796**	2	LOCKWASHER	

A-NOT PART OF THIS GROUP
B-USE AS REQUIRED
M-METRIC PART
Y-SEPARATE ILLUSTRATION

212-8546 CYLINDER BLOCK GP *(contd.)*

i01889317

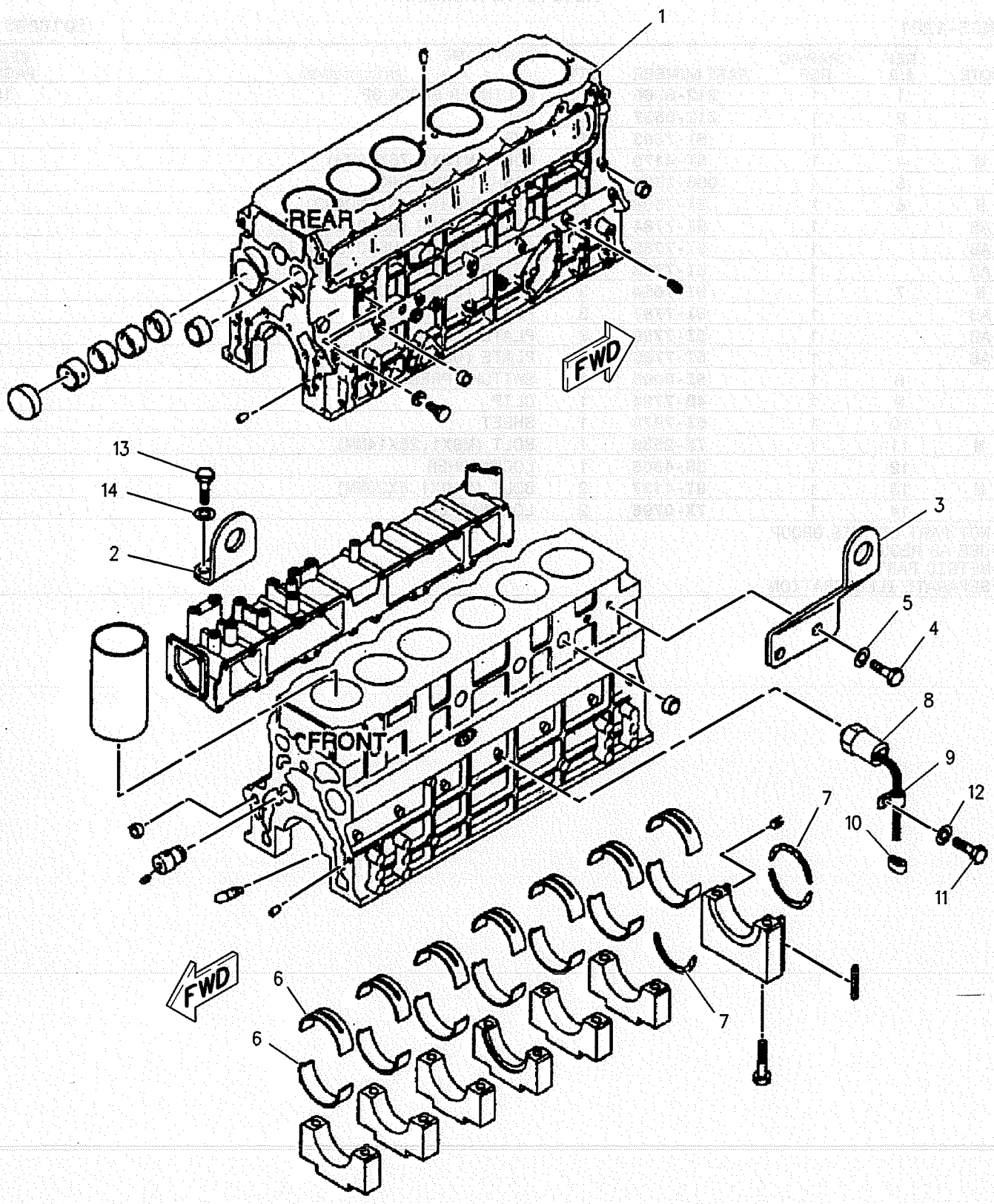

GRAPHIC #1

<END>

g00941296

BASIC ENGINE

212-8566 CYLINDER BLOCK GP

S/N: 7JK1-UP

PART OF 212-8546 CYLINDER BLOCK GP

ALSO AN ATTACHMENT

SMCS-1201 **i01893376**

NOTE	REF NO	GRAPHIC REF	PART NUMBER	QTY	PART NAME 1 2 3 4 5 6 (PRODUCT LEVEL)	SEE PAGE
	1	1	**5I-7505**	9	PLUG	
	2	1	**095-2039**	1	WASHER	
M	3	1	**8T-4191**	1	BOLT (M10X1.5X16MM)	
	4	1	**5I-7523**	6	SLEEVE	
	5	1	**5I-7724**	2	PIN	
	6	1	**095-2005**	2	CAP	
	7	1	**222-8201**	1	SHAFT	
	8	1	**095-2011**	1	CAP	
	9	1	**5I-7652**	1	BEARING CAP SET	
	10	1	**094-7115**	14	BOLT	
	11	1	**096-3741**	5	CAP	
	12	1	**3P-1896**	6	PLUG-CUP	
	13	1	**5I-8009**	1	BUSHING	
	14	1	**5I-7526**	12	VALVE	
	15	1	**5I-7528**	2	BUSHING	
	16	1	**4I-9664**	4	PIN	
	17	1	**5I-7529**	1	BUSHING	
	18	1	**5I-7525**	1	PLUG	
	19	1	**099-4420**	2	PIN	
	20	1	**6V-8236**	6	PIN-SPRING	
	21	1	**5I-7524**	2	SEAL	

M-METRIC PART

212-8566 CYLINDER BLOCK GP *(contd.)* i01893376

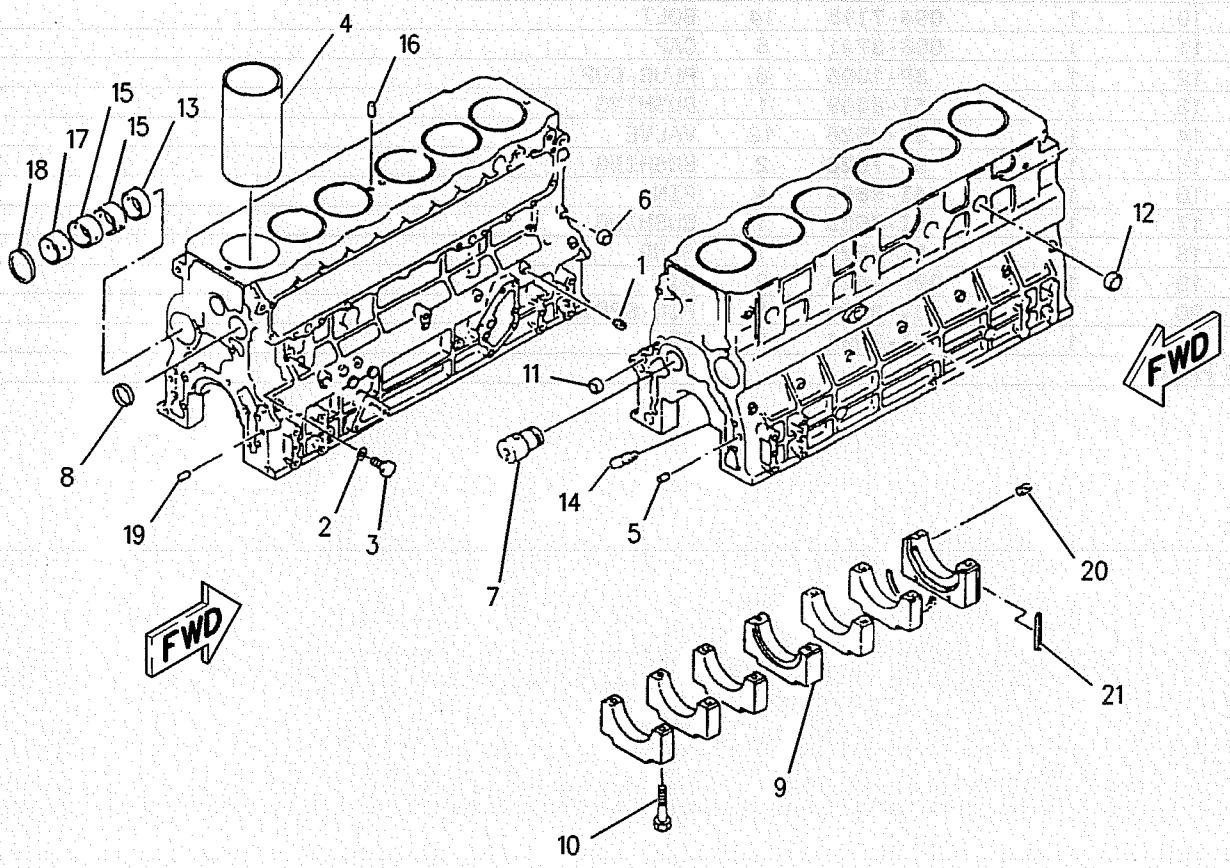

GRAPHIC #1 **<END>** g00885288

BASIC ENGINE

212-8562 CYLINDER HEAD AS

S/N: 7JK1-UP

PART OF 212-8543 CYLINDER HEAD GP

ALSO AN ATTACHMENT

SMCS-1100 **i01893426**

NOTE	REF NO	GRAPHIC REF	PART NUMBER	QTY	PART NAME 1 2 3 4 5 6 (PRODUCT LEVEL)	SEE PAGE
	1	1	**5I-5591**	1	PLUG-DRAIN (CYLINDER HEAD COOLENT)	
	2	1	**095-2038**	1	WASHER (2MM THK)	
	3	1	**212-8475**	3	CAP	
	4	1	**212-8563**	1	CAP	
	5	1	**5I-4915**	8	CAP	
	6	1	**5I-7583**	2	CAP	
	7	1	**212-8476**	2	CAP	
	8	1	**5I-7505**	3	PLUG	
	9	1	**099-4388**	3	CAP	
	10	1	**212-8474**	3	INSERT	
	11	1	**212-8473**	3	PLATE	
	12	1	**183-8172**	3	GUIDE	
	13	1	**183-8173**	3	GUIDE	
	14	1	**5I-8012**	3	INSERT	

212-8562 **CYLINDER HEAD AS** *(contd.)* **i01893426**

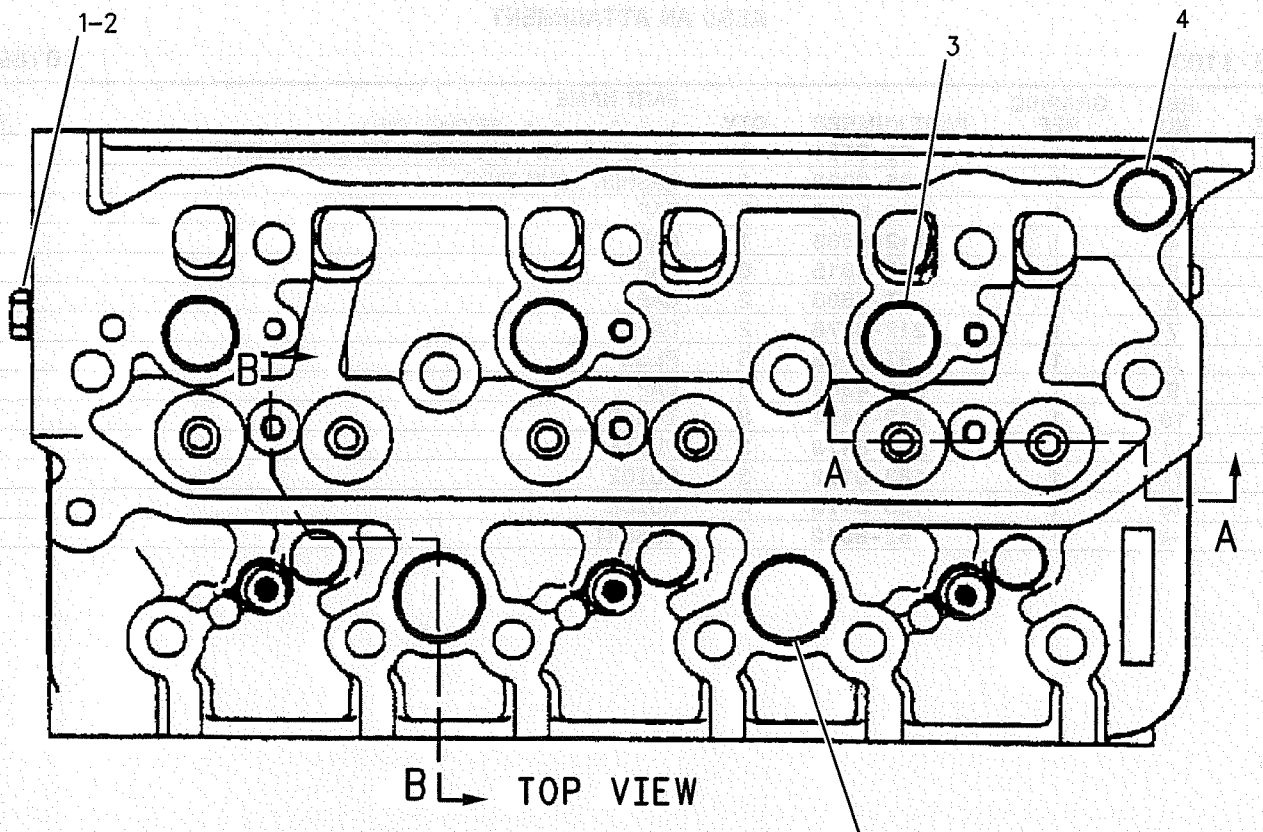

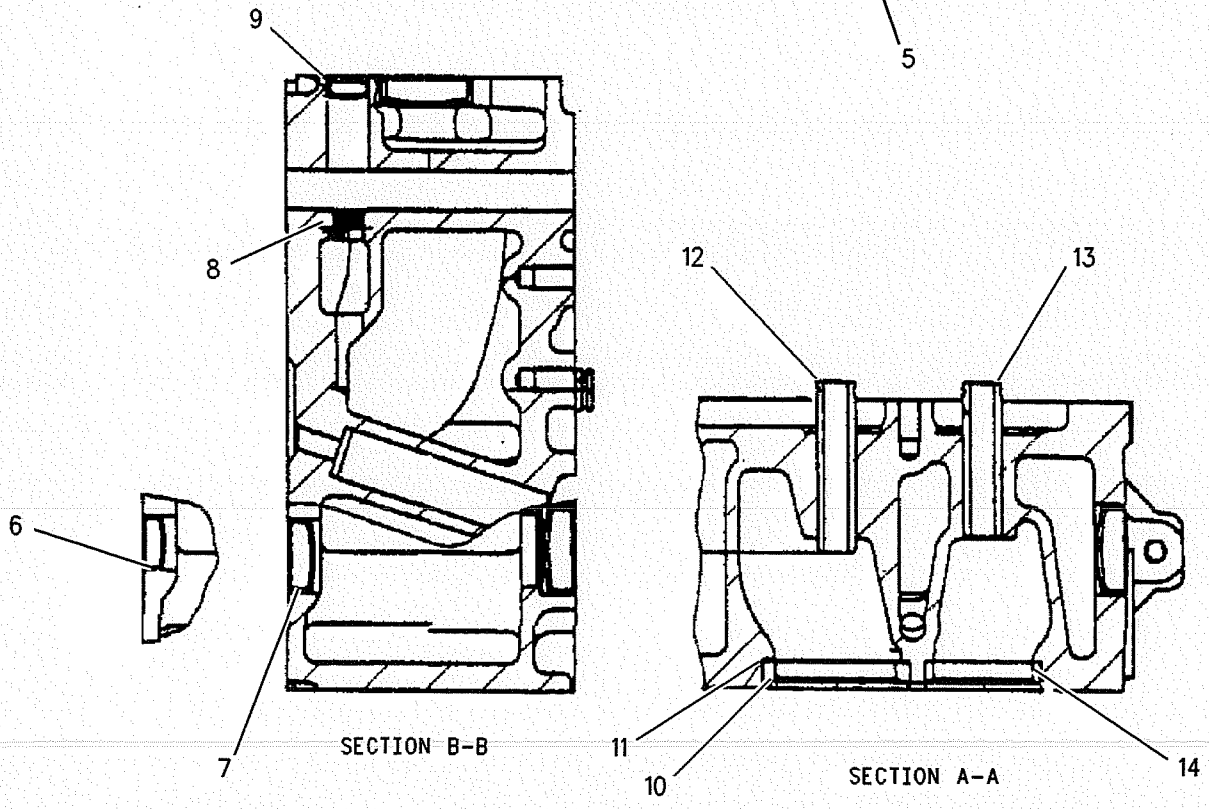

GRAPHIC #1 **<END>** g00880421

BASIC ENGINE

212-8564 CYLINDER HEAD AS

S/N: 7JK1-UP

PART OF 212-8543 CYLINDER HEAD GP

ALSO AN ATTACHMENT

SMCS-1100 **i01893399**

NOTE	REF NO	GRAPHIC REF	PART NUMBER	QTY	PART NAME 1 2 3 4 5 6 (PRODUCT LEVEL)	SEE PAGE
	1	1	**212-8475**	3	CAP	
	2	1	**212-8563**	1	CAP	
	3	1	**5I-4915**	8	CAP	
	4	1	**5I-7583**	2	CAP	
	5	1	**212-8476**	2	CAP	
	6	1	**5I-7505**	3	PLUG	
	7	1	**099-4388**	3	CAP	
	8	1	**212-8474**	3	INSERT	
	9	1	**212-8473**	3	PLATE	
	10	1	**183-8172**	3	GUIDE	
	11	1	**183-8173**	3	GUIDE	
	12	1	**5I-8012**	3	INSERT	

212-8564 **CYLINDER HEAD AS** *(contd.)* **i01893399**

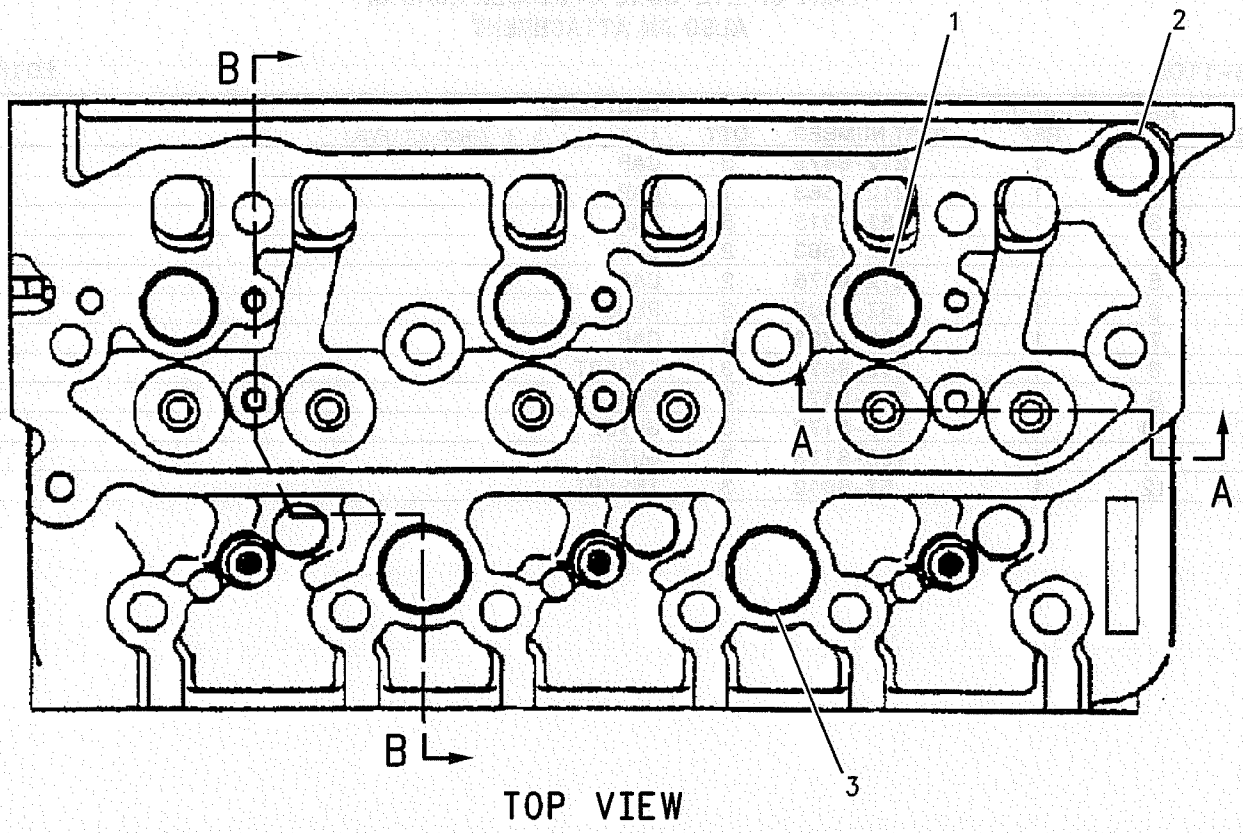

TOP VIEW

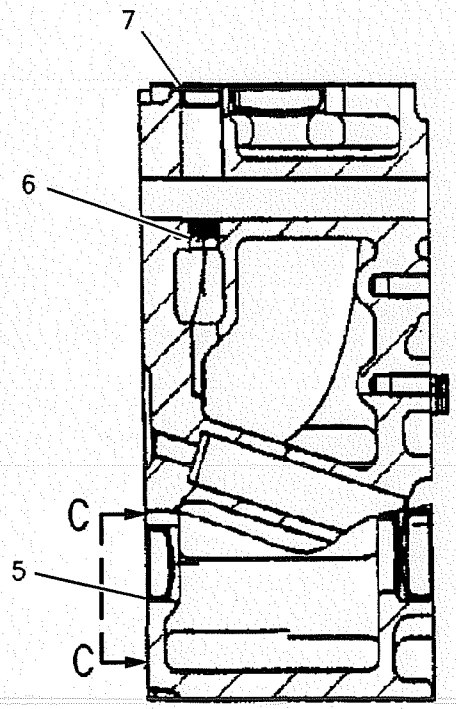

SECTION B-B

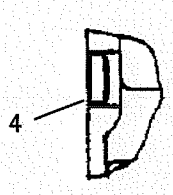

VIEW C-C

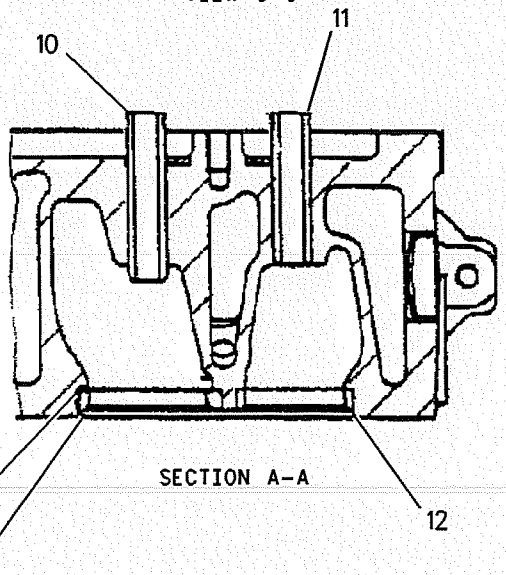

SECTION A-A

GRAPHIC #1 **<END>** g00880319

BASIC ENGINE

212-8543 CYLINDER HEAD GP

S/N: 7JK1-UP
PART OF 201-3878 ENGINE AR
ALSO AN ATTACHMENT

SMCS-1100 **i01889322**

NOTE	REF NO	GRAPHIC REF	PART NUMBER	QTY	PART NAME 1 2 3 4 5 6 (PRODUCT LEVEL)	SEE PAGE
Y	1	1	**212-8562**	1	CYLINDER HEAD AS	17
Y	2	1	**212-8564**	1	CYLINDER HEAD AS	19
C	3	1	**222-8331**	2	GASKET	
	4	1	**5I-7718**	26	BOLT	
	5	1	**183-8215**	1	PIPE	
	6	1	**5I-5029**	2	BOLT	
	7	1	**095-2038**	4	WASHER (2MM THK)	

C-CHANGE FROM PREVIOUS TYPE
Y-SEPARATE ILLUSTRATION

212-8543 CYLINDER HEAD GP *(contd.)*

i01889322

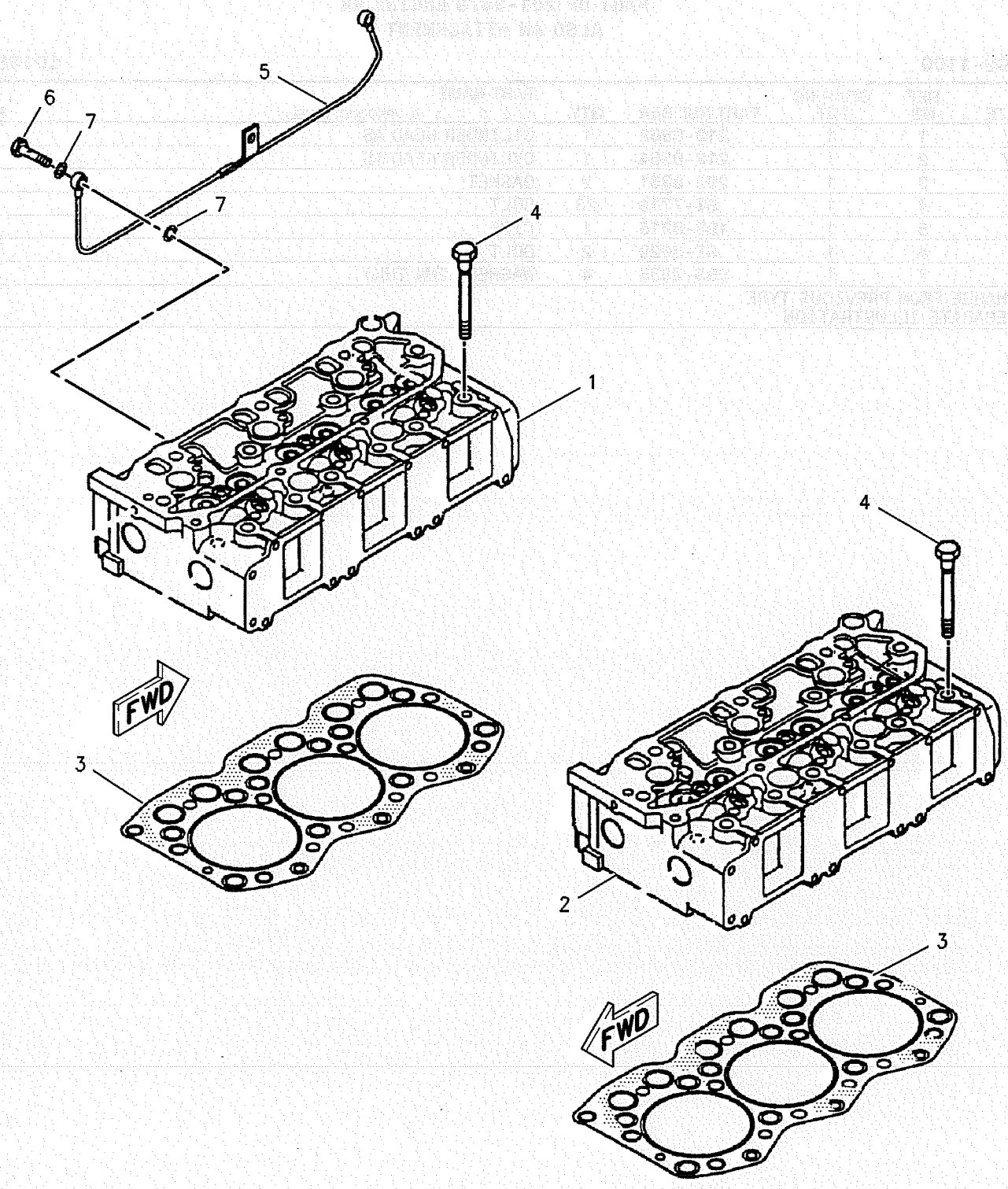

GRAPHIC #1

<END>

g00880182

BASIC ENGINE

205-6792 FLYWHEEL GP

S/N: 7JK1-UP
PART OF 201-3878 ENGINE AR
ALSO AN ATTACHMENT

SMCS-1156 **i01744892**

NOTE	REF NO	GRAPHIC REF	PART NUMBER	QTY	PART NAME 1 2 3 4 5 6 (PRODUCT LEVEL)	SEE PAGE
	1	1	**205-6793**	1	FLYWHEEL AS	
	2	1	**205-6788**	1	GEAR (127 TEETH)	
	3	1	**096-2501**	6	WASHER (3MM THK)	
	4	1	**5I-5005**	6	BOLT (M12 X 1.25 X 35MM)	

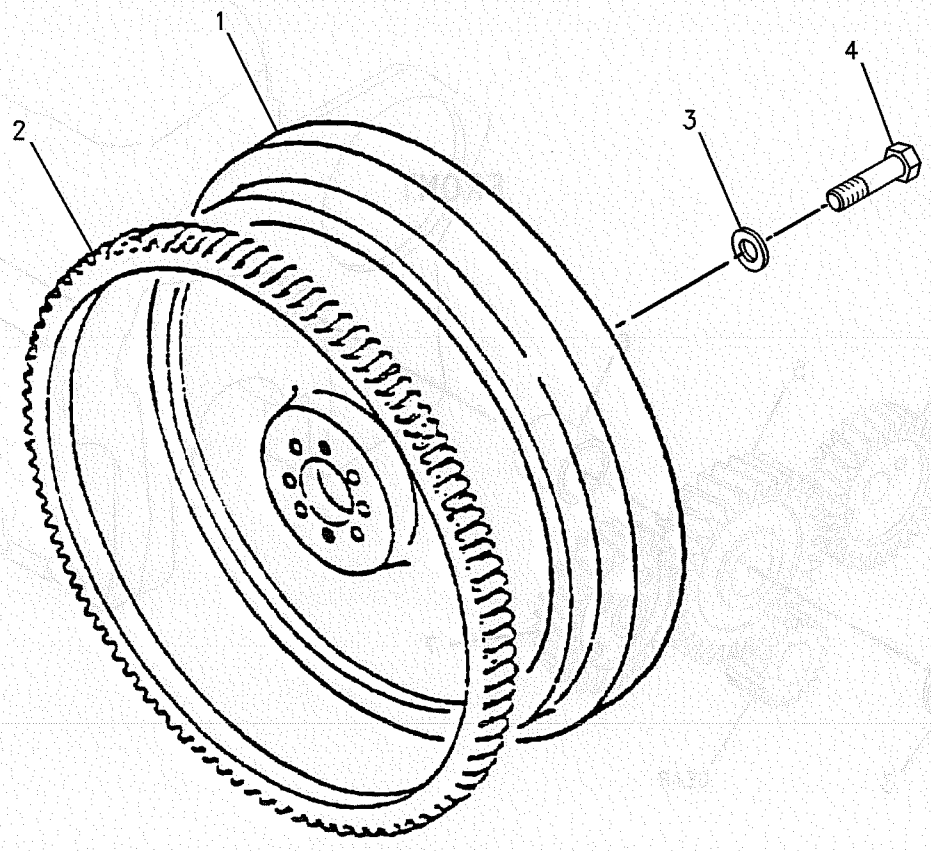

GRAPHIC #1 **<END>** g00702621

BASIC ENGINE

212-8550 GEAR GP-FRONT

S/N: 7JK1-UP
PART OF 201-3878 ENGINE AR
ALSO AN ATTACHMENT

SMCS-1206 **i01889304**

NOTE	REF NO	GRAPHIC REF	PART NUMBER	QTY	PART NAME 1 2 3 4 5 6 (PRODUCT LEVEL)	SEE PAGE
C	1	1	**222-8212**	1	BOLT	
C	3	1	**222-8202**	1	PLATE	
	4	1	**212-8576**	1	GEAR (137.79MM OD)	
	5	1	**5I-7611**	1	IDLER AS (146.45MM OD)	
	6	1	**5I-7542**	1	BUSHING	
	7	1	**5I-7673**	1	GEAR (136.79MM OD)	

C-CHANGE FROM PREVIOUS TYPE

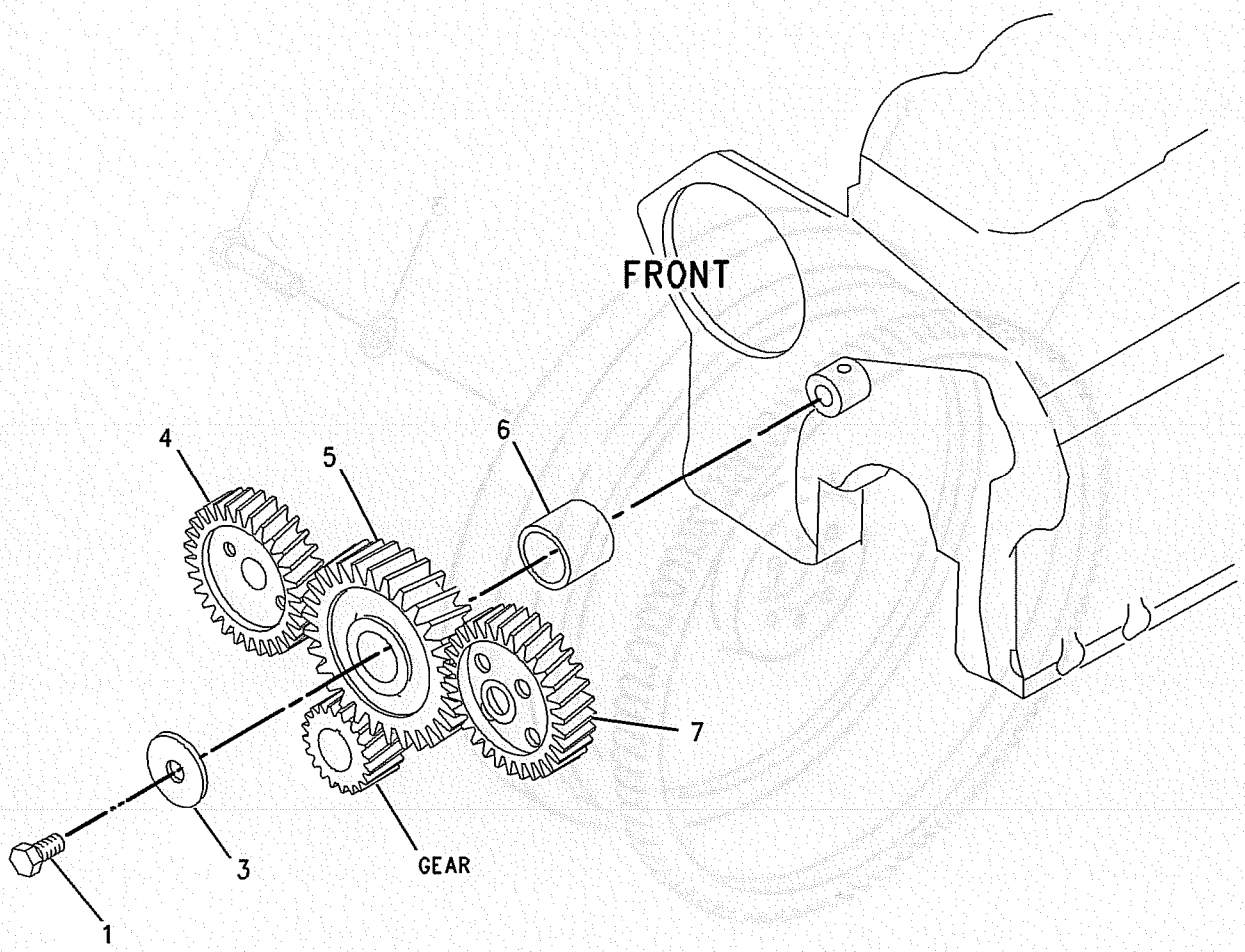

GRAPHIC #1 **<END>** g00920652

BASIC ENGINE

196-7972 HOUSING GP-FLYWHEEL

S/N: 7JK1-UP
PART OF 201-3878 ENGINE AR
ALSO AN ATTACHMENT

SMCS-1157 **i01666971**

NOTE	REF NO	GRAPHIC REF	PART NUMBER	QTY	PART NAME 1 2 3 4 5 6 (PRODUCT LEVEL)	SEE PAGE
M	1	1	**8T-4136**	2	BOLT (M10X1.5X25MM)	
	2	1	**7X-0796**	12	LOCKWASHER	
	3	1	**5I-7660**	1	SEAL AS	
	4	1	**8T-4224**	4	WASHER-HARD (8.8X16X2MM THK)	
	5	1	**5I-4983**	2	STUD (M10X1.5X15MM/M10X1.25X25MM)	
	6	1	**196-7973**	1	SENSOR GP-SPEED	
M	7	1	**6V-8231**	2	NUT (M10 X 1.25 THD)	
	8	1	**5I-7661**	1	GASKET	
M	9	1	**8T-7547**	4	BOLT (M8X1.25X30MM)	
	10	1	**3B-4505**	4	LOCKWASHER	
M	11	1	**8T-4195**	8	BOLT (M10X1.5X30MM)	
	12	1	**125-2965**	1	HOUSING	
	13	1	**5I-7607**	1	PLUG	

M-METRIC PART

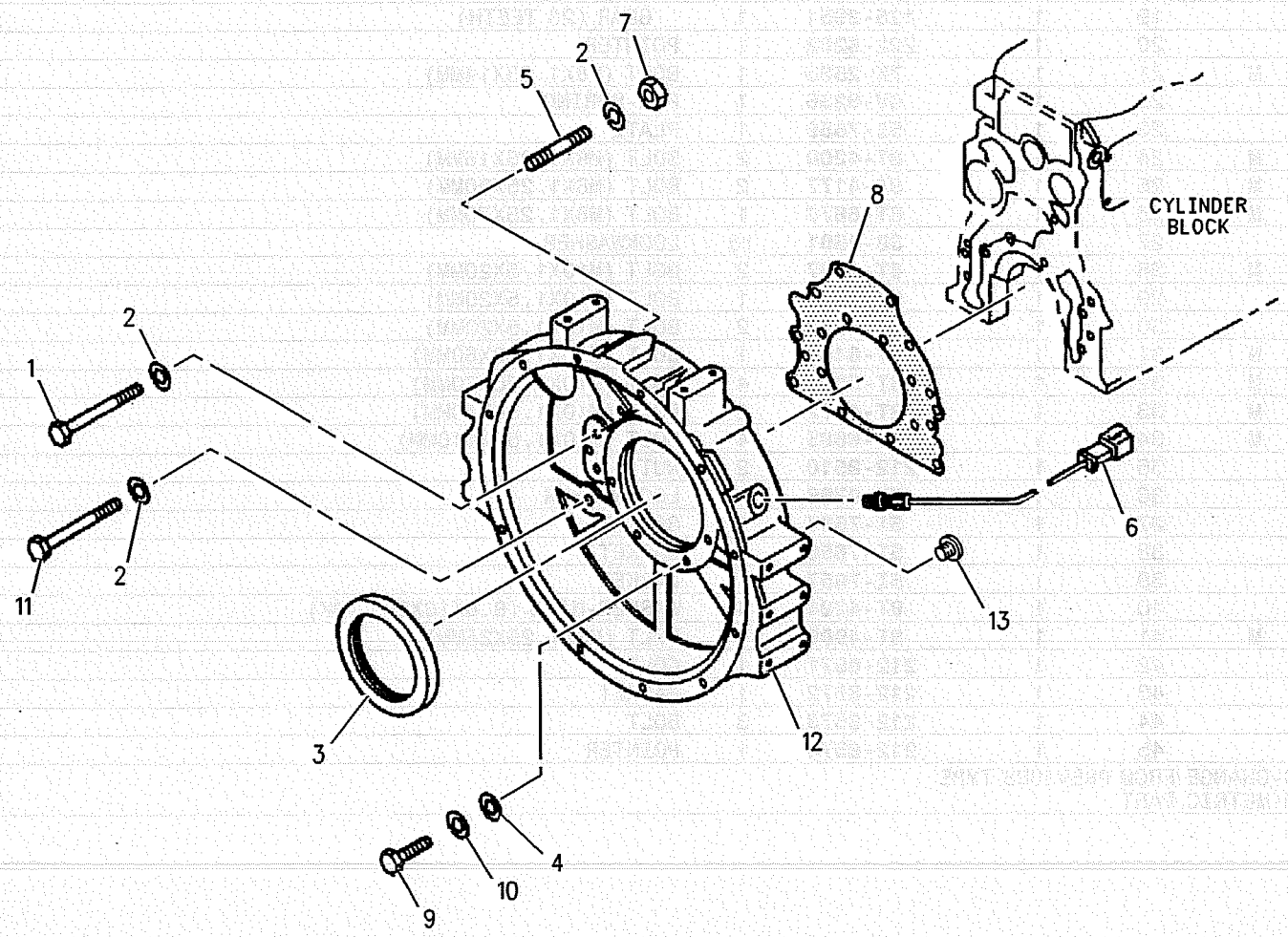

GRAPHIC #1 **<END>** g00869965

BASIC ENGINE

212-8547 HOUSING GP-FRONT

S/N: 7JK1-UP
PART OF 201-3878 ENGINE AR
ALSO AN ATTACHMENT

SMCS-1151 **i01889316**

NOTE	REF NO	GRAPHIC REF	PART NUMBER		QTY	PART NAME 1 2 3 4 5 6 (PRODUCT LEVEL)	SEE PAGE
M	1	1	8T-4189		6	BOLT (M8X1.25X20MM)	
M	2	1	8T-4195		4	BOLT (M10X1.5X30MM)	
	3	1	096-9435		1	PLUG	
	4	1	096-9532		1	WASHER (2MM THK)	
	5	1	096-9528		1	SEAL-O-RING	
	6	1	6F-7556		2	COVER	
	7	1	5I-7632		1	PIPE	
	8	1	5I-7656		1	SEAL	
	9	1	6F-7557		2	GASKET	
	10	1	5I-7683	*	1	SPINDLE EIXO	
	11	1	178-6537		1	GASKET	
	12	1	5I-7558	*	1	GEAR AS (9 TEETH)	
	13	1	5I-7559	*	1	VALVE AS	
	14	1	2Y-5872		1	GASKET	
C	15	1	178-6538	*	1	COVER AS TAMPA PEQUENA	
	16	1	5I-7686	*	1	GEAR AS (24 TEETH)	
	17	1	212-8569	*	1	BODY AS TAMPA GRANDE	
	18	1	125-2950	*	1	GEAR AS (9 TEETH)	
	19	1	125-2951	*	1	GEAR (23 TEETH)	
	20	1	222-8292		1	POINTER	
M	21	1	7X-2536		1	BOLT (M8X1.25X14MM)	
	22	1	6V-8236		1	PIN-SPRING	
	23	1	5I-7659		1	PLATE	
M	24	1	8T-4200		2	BOLT (M8X1.25X16MM)	
M	25	1	8T-4177		2	BOLT (M8X1.25X90MM)	
M	26	1	8T-6870		1	BOLT (M8X1.25X70MM)	
	27	1	3B-4501		16	LOCKWASHER	
M	28	1	8T-4137		2	BOLT (M10X1.5X20MM)	
	29	1	5I-7610		1	BOLT (M10X1.5X20MM)	
	30	1	5I-4969		2	BOLT (M10X1.5X20MM)	
M	31	1	8T-6466		1	BOLT (M10X1.50X60MM)	
M	32	1	8T-5005		4	BOLT (M10X1.50X70MM)	
M	33	1	8T-4172		2	BOLT (M10X1.50X80MM)	
M	34	1	8T-6685		4	BOLT (M10X1.50X110MM)	
	35	1	212-8510		2	NUT	
	36	1	7X-0796		17	LOCKWASHER	
	37	1	5I-7534		1	GASKET	
	38	1	5I-7658		1	GASKET	
	39	1	5I-7657		1	GASKET	
	40	1	8T-4224		4	WASHER-HARD (8.8X16X2MM THK)	
M	41	1	8T-4908		1	BOLT (M8X1.25X25MM)	
	42	1	212-8571		1	COVER	
	43	1	212-8572		1	GASKET	
	44	1	212-8573		3	BOLT	
	45	1	212-8574		1	POINTER	

C-CHANGE FROM PREVIOUS TYPE
M-METRIC PART

2128547/BOMBA BOMBA LUBRIFICANTE MONTAGEM INCLUI *

212-8547 **HOUSING GP-FRONT** *(contd.)* i01889316

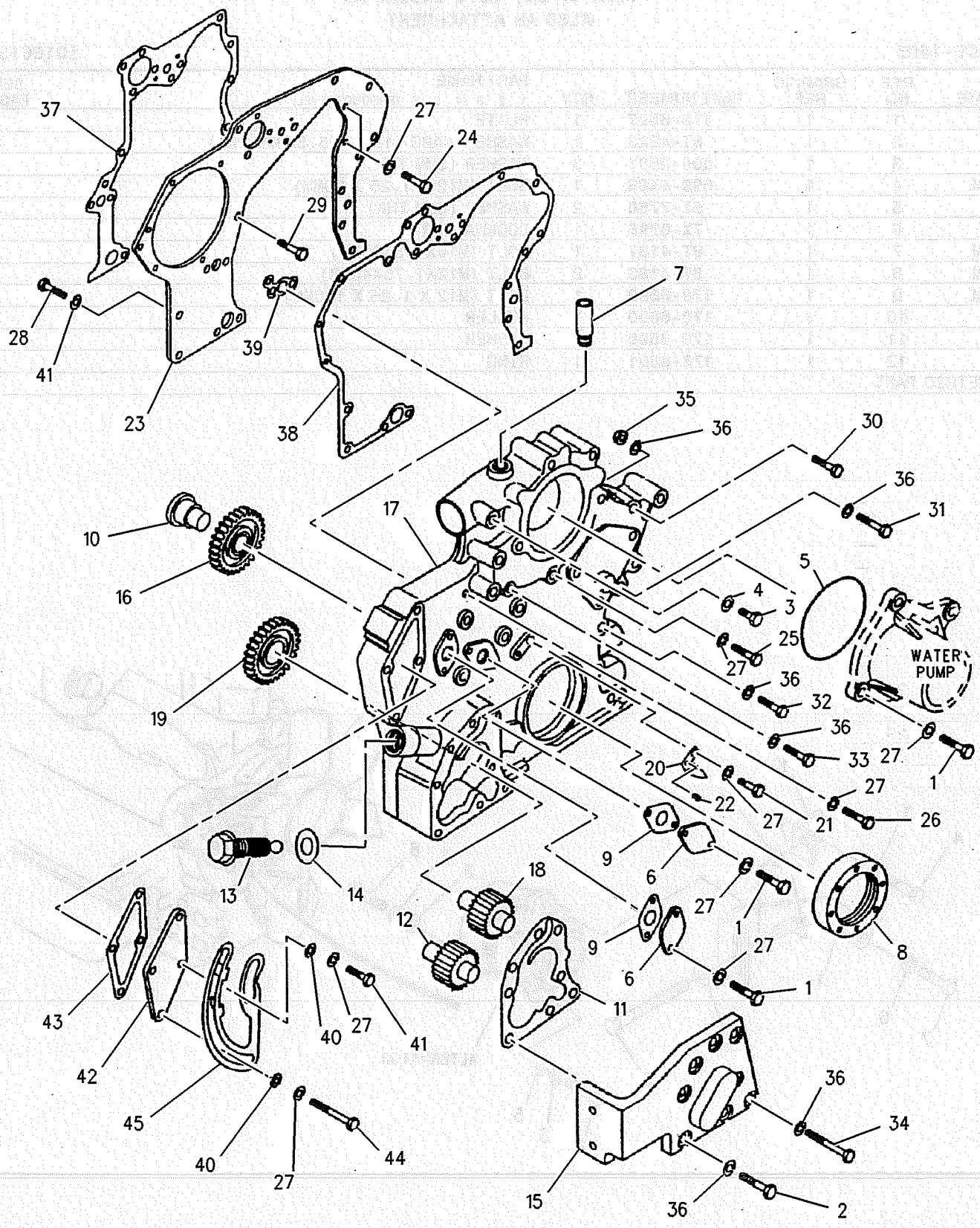

GRAPHIC #1 **<END>** g00923356

BASIC ENGINE

178-6531 MOUNTING GP-ALTERNATOR

S/N: 7JK1-UP
PART OF 201-3878 ENGINE AR
ALSO AN ATTACHMENT

SMCS-1405 **i01661307**

NOTE	REF NO	GRAPHIC REF	PART NUMBER	QTY	PART NAME 1 2 3 4 5 6 (PRODUCT LEVEL)	SEE PAGE
	1	1	**178-6597**	1	PLATE	
	2	1	**8T-4223**	1	WASHER-HARD (13.5X25.5X3MM THK)	
	3	1	**096-2501**	3	WASHER (3MM THK)	
M	4	1	**099-4483**	1	BOLT (M12 X 1.25 X 30MM)	
	5	1	**5I-7750**	2	WASHER (8MM THK)	
	6	1	**7X-0796**	1	LOCKWASHER	
M	7	1	**8T-4137**	1	BOLT (M10X1.5X20MM)	
M	8	1	**8T-4183**	2	BOLT (M12X1.75X40MM)	
M	9	1	**178-6598**	1	BOLT (M12 X 1.25 X 135MM)	
	10	1	**178-6600**	1	PULLER	
	11	1	**178-6599**	1	WASHER	
	12	1	**178-6601**	1	RING	

M-METRIC PART

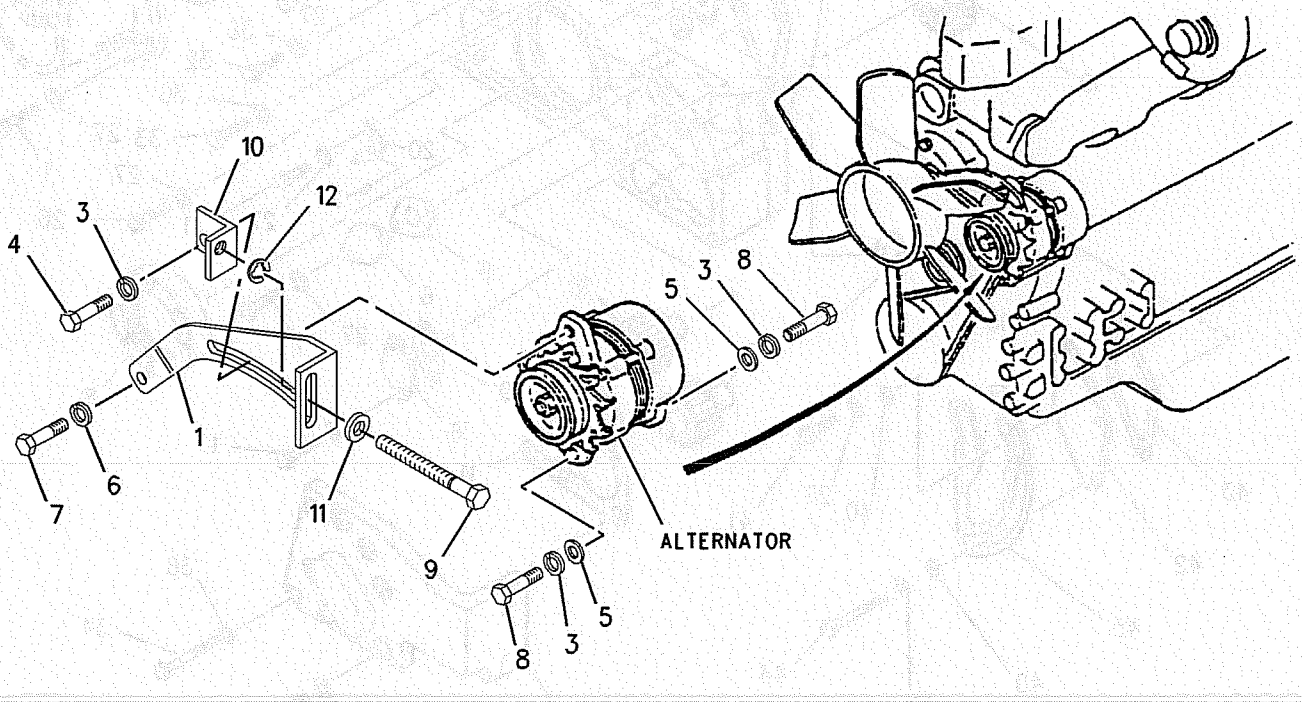

GRAPHIC #1 **<END>** g00820440

162-6256 MOUNTING GP-ENGINE

S/N: SBN1-UP; RAW1-UP

PART OF 201-3836 INSTALLATION AR-ENGINE

SMCS-1152 **i01386044**

NOTE	REF NO	GRAPHIC REF	PART NUMBER	QTY	PART NAME 1 2 3 4 5 6 (PRODUCT LEVEL)	SEE PAGE
	1	1	**118-9785**	2	BRACKET-FRONT	
	2	1	**8T-4223**	16	WASHER-HARD (13.5X25.5X3MM THK)	
M	3	1	**8T-4183**	8	BOLT (M12X1.75X40 MM)	
	4	1	**118-9784**	2	BRACKET-REAR	
M	5	1	**8T-4139**	8	BOLT (M12X1.75X30MM)	
	6	1	**8T-4123**	8	WASHER-PLATED (22X35X3.5MM THK)	
M	7	1	**7X-2532**	4	BOLT (M20X2.5X130MM)	
	8	1	**109-9329**	4	WASHER	
	9	1	**118-9930**	4	SUPPORT AS	
M		1	**8T-4131**	1	NUT (M20X2.5 THD)	
	10	1	**109-9369**	4	MOUNT-RUBBER	
	11	1	**109-9350**	4	MOUNT-RUBBER	

M-METRIC PART

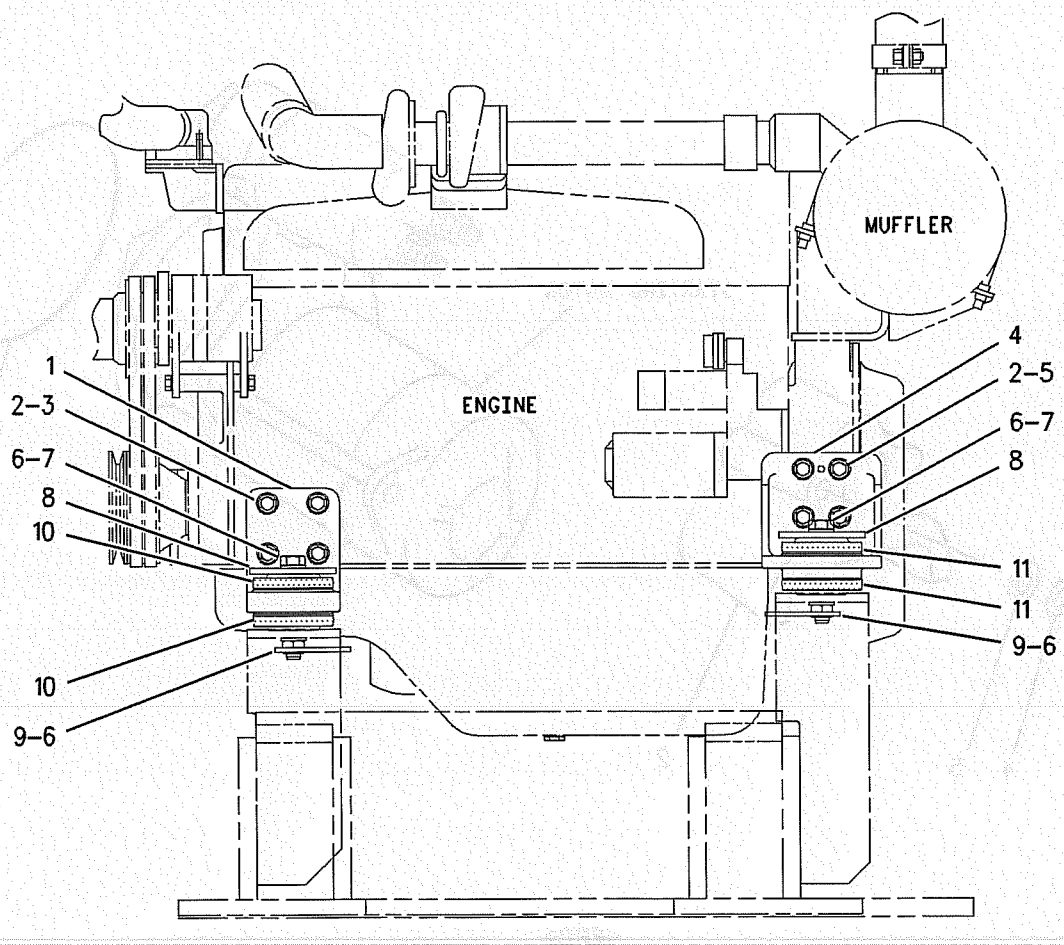

REAR VIEW

GRAPHIC #1 **<END>** g00685358

BASIC ENGINE

125-2963 MOUNTING GP-STARTING MOTOR

S/N: 7JK1-UP
PART OF 201-3878 ENGINE AR
ALSO AN ATTACHMENT

SMCS-1453 **i01385595**

NOTE	REF NO	GRAPHIC REF	PART NUMBER	QTY	PART NAME 1 2 3 4 5 6 (PRODUCT LEVEL)	SEE PAGE
	1	1	**5I-7599**	1	SEAL-O-RING (79.55MM ID)	
	2	1	**135-2369**	1	COVER	
M	3	1	**135-2370**	1	BOLT (M5 X 0.8 X 25MM)	
	4	1	**3B-4503**	1	LOCKWASHER (NO.12)	
	5	1	**8T-0328**	1	WASHER-HARD (5.5 X 10 X 1MM THK)	

M-METRIC PART

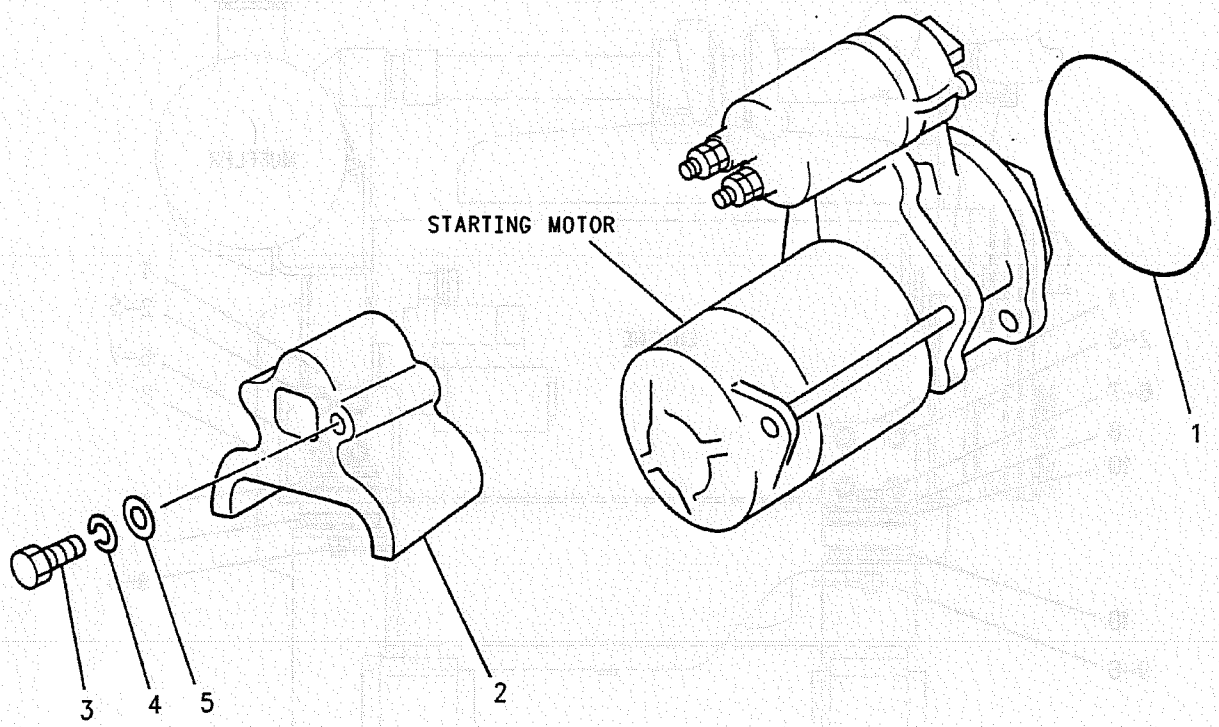

GRAPHIC #1 **<END>** g00680181

BASIC ENGINE

178-6516 PAN GP-OIL

S/N: 7JK1-UP

PART OF 201-3878 ENGINE AR

ALSO AN ATTACHMENT

SMCS-1302 **i01748434**

NOTE	REF NO	GRAPHIC REF	PART NUMBER	QTY	PART NAME 1 2 3 4 5 6 (PRODUCT LEVEL)	SEE PAGE
	1	1	**125-2968**	1	SEAL	
	2	1	**5I-8067**	1	WASHER	
	3	1	**7W-3556**	1	WASHER (146.03X213X8MM THK)	
	4	1	**183-8177**	1	PLUG	
	5	1	**183-8176**	1	VALVE	
	6	1	**183-8175**	1	PAN	
	7	1	**213-0677**	1	SWITCH AS (OIL LEVEL)	
		1	**102-8802**	1	KIT-RECEPTACLE (2 PIN)	
					(INCLUDES RECEPTACLE AS & WEDGE)	
		1	**3E-3365**	1	WEDGE-RECEPTACLE LOCK (2 PIN)	
		1	**144-1636**	2	PIN-CONNECTOR	
	8	1	**135-2402**	1	GAUGE	
	9	1	**178-6542**	1	GUIDE	
	10	1	**5I-4993**	1	SEAL	
M	11	1	**8T-4189**	38	BOLT (M8X1.25X20MM)	
	12	1	**5I-7666**	1	GASKET	
M	13	1	**8T-4200**	1	BOLT (M8X1.25X16MM)	
	14	1	**5I-8110**	1	ELBOW	
	15	1	**3B-4505**	39	LOCKWASHER	
	16	1	**8T-4224**	2	WASHER-HARD (8.8X16X2MM THK)	

M-METRIC PART

178-6516 **PAN GP-OIL** *(contd.)* **i01748434**

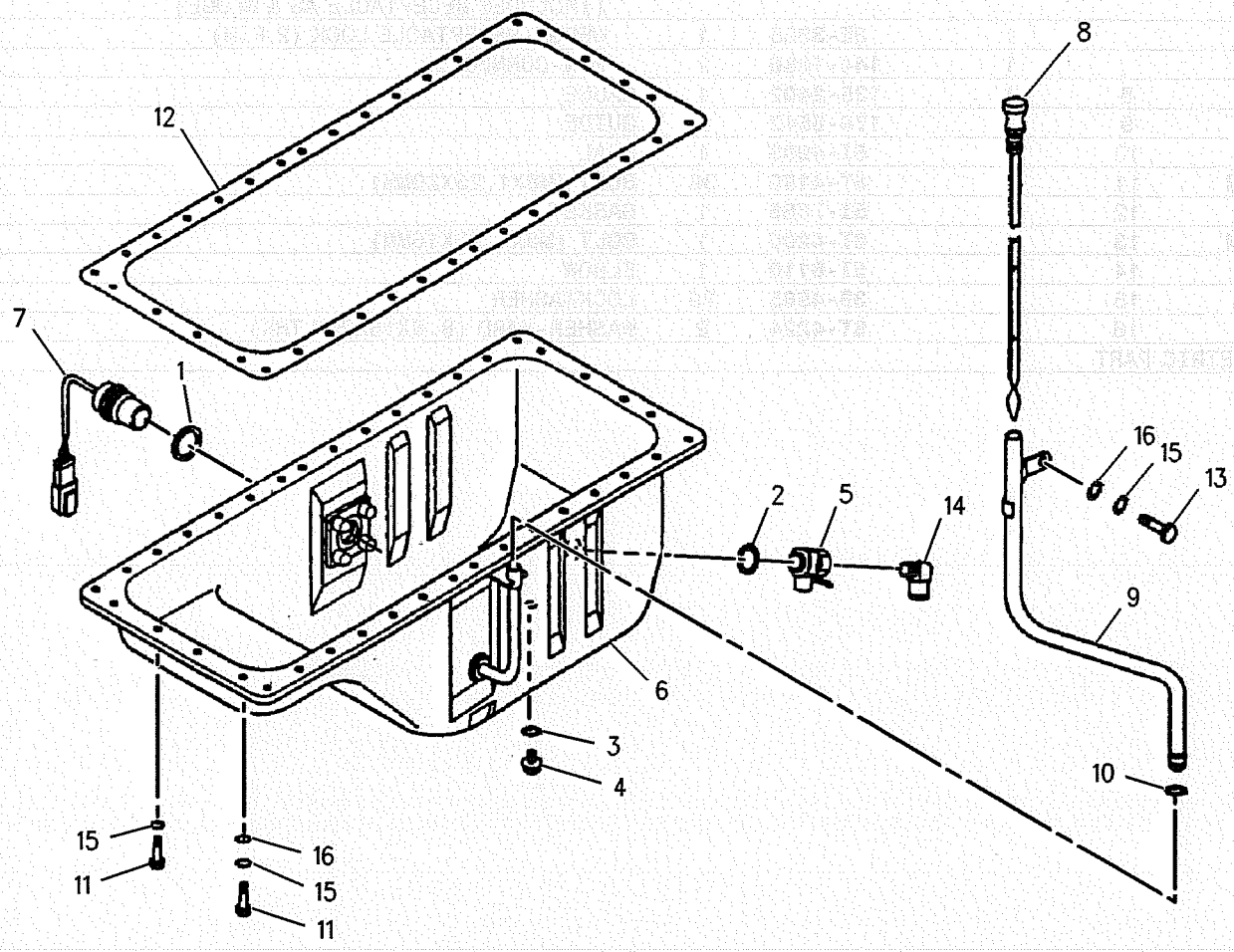

GRAPHIC #1 **<END>** g00895534

BASIC ENGINE

212-8548 PISTON & ROD GP

S/N: 7JK1-UP
PART OF 201-3878 ENGINE AR
ALSO AN ATTACHMENT

SMCS-1225 **i01889315**

NOTE	REF NO	GRAPHIC REF	PART NUMBER	QTY	PART NAME 1 2 3 4 5 6 (PRODUCT LEVEL)	SEE PAGE
J	1	1	**178-6543**	6	SET-PISTON RING (STANDARD)	
J		1	**178-6544**	6	SET-PISTON RING (0.25MM OS)	
J		1	**178-6545**	6	SET-PISTON RING (0.50MM OS)	
	2	1	**212-8484**	6	PISTON	
		1	**212-8485**	6	PISTON (0.25MM OS)	
		1	**212-8486**	6	PISTON (0.50MM OS)	
	3	1	**094-7134**	6	PIN	
	4	1	**5I-7667**	12	RING	
	5	1	**5I-7668**	6	ROD AS	
					(EACH INCLUDES)	
	6	1	**5I-7539**	1	BUSHING	
	7	1	**094-7154**	2	BOLT (M12 X 1.25-1 X 85MM)	
	8	1	**094-7516**	2	NUT (M12 X 1.25)	
	9	1	**5I-7637**	12	BEARING	
		1	**5I-7794**	12	BEARING (0.25MM US)	
		1	**5I-7795**	12	BEARING (0.50MM US)	
		1	**5I-7796**	12	BEARING (0.75MM US)	

J-INCLUDES A COMPLETE SET OF RINGS FOR ONE PISTON

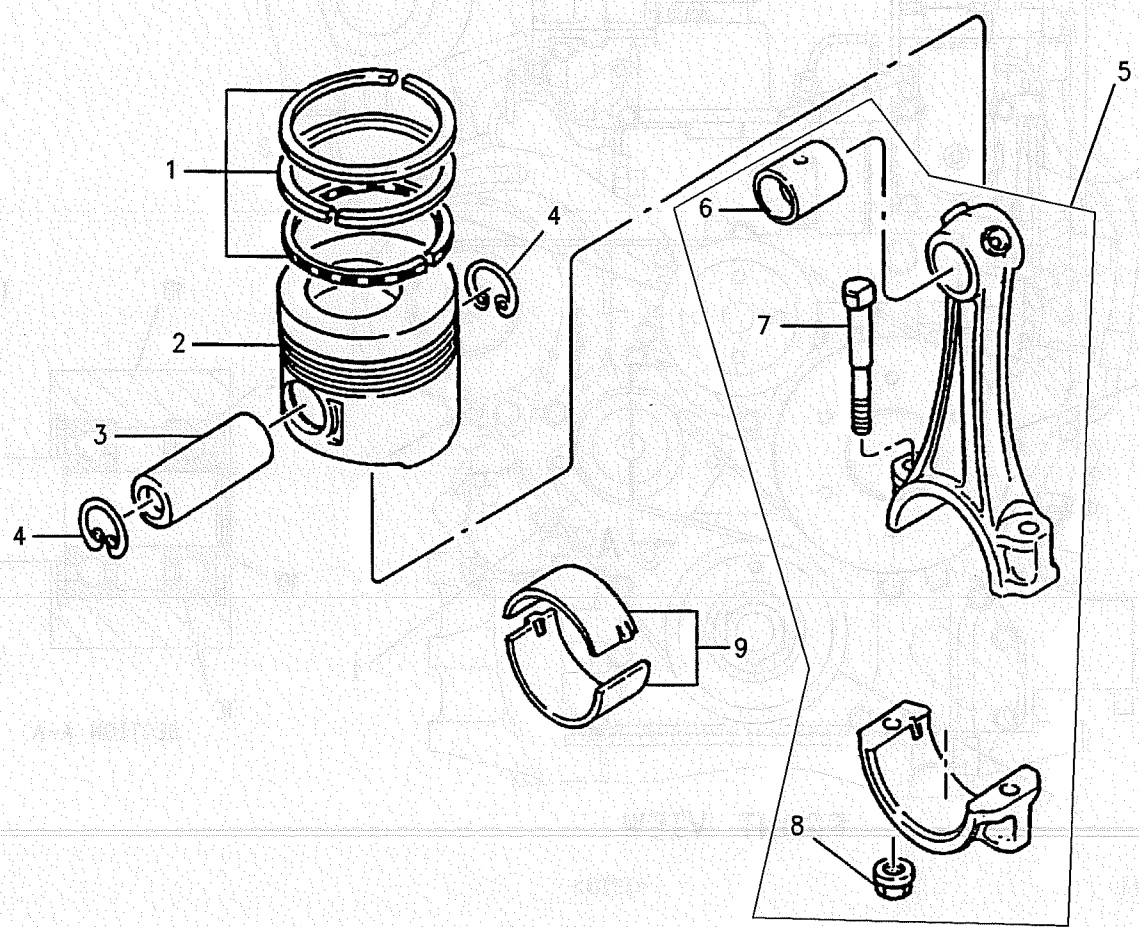

GRAPHIC #1 **<END>** g00681189

BASIC ENGINE

222-8199 PULLEY GP

S/N: SBN1-UP; RAW1-UP

PART OF 222-8188 ENGINE AR

SMCS-1205, 1207, 1358, 1384, 1425 **i01889331**

NOTE	REF NO	GRAPHIC REF	PART NUMBER	QTY	PART NAME 1 2 3 4 5 6 (PRODUCT LEVEL)	SEE PAGE
	1	1	183-8236	1	PULLEY AS (BELT TENSIONING)	
	1A	1	183-8237	1	BRACKET	
	1B	1	183-8238	1	PULLEY	
	1C	1	212-8586	2	BEARING	
	1D	1	183-8240	1	RING	
	1E	1	183-8241	2	RING	
	2	1	212-8575	1	PULLEY AS	
		1	5I-7540	1	SLEEVE	
	3	1	212-8584	1	PULLEY	
	4	1	212-8585	1	BELT (SERPENTINE)	
	5	1	212-8591	1	PULLEY	

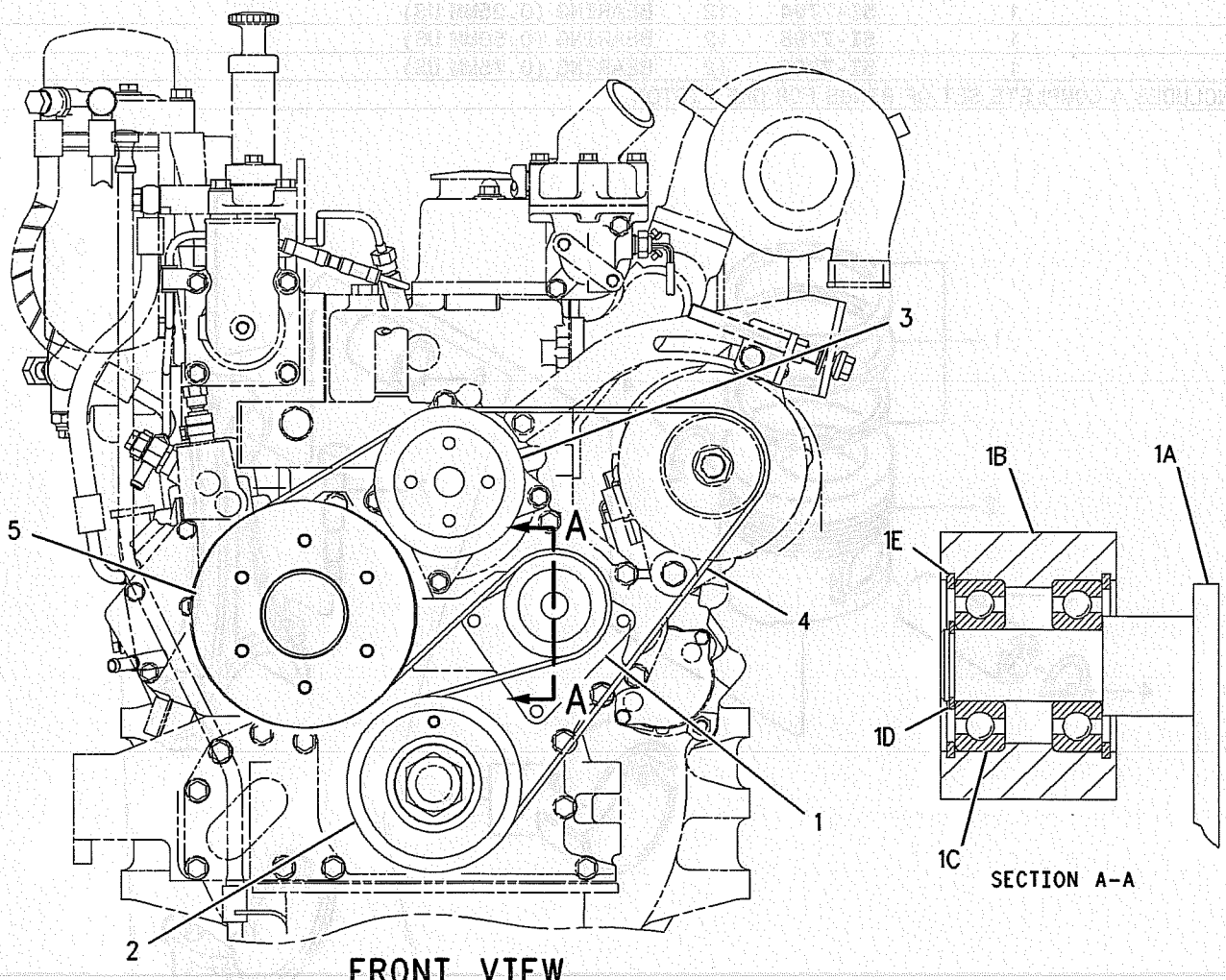

GRAPHIC #1 **<END>** g00926714

BASIC ENGINE

222-8200 PULLEY GP

S/N: SBN1-UP; RAW1-UP
PART OF 217-5472 ENGINE AR
AN ATTACHMENT

SMCS-1205, 1207, 1358, 1384, 1425 **i01860581**

NOTE	REF NO	GRAPHIC REF	PART NUMBER	QTY	PART NAME 1 2 3 4 5 6 (PRODUCT LEVEL)	SEE PAGE
	1	1	**183-8236**	1	PULLEY AS (BELT TENSIONING)	
	1A	1	**183-8237**	1	BRACKET	
	1B	1	**183-8238**	1	PULLEY	
	1C	1	**183-8240**	1	RING	
	1D	1	**183-8241**	2	RING	
	1E	1	**212-8586**	2	BEARING	
	2	1	**212-8584**	1	PULLEY	
	3	1	**212-8585**	1	BELT (SERPENTINE)	
	4	1	**222-8293**	1	PULLEY AS	
	4A	1	**5I-7540**	1	SLEEVE	
	5	1	**222-8294**	1	PULLEY	

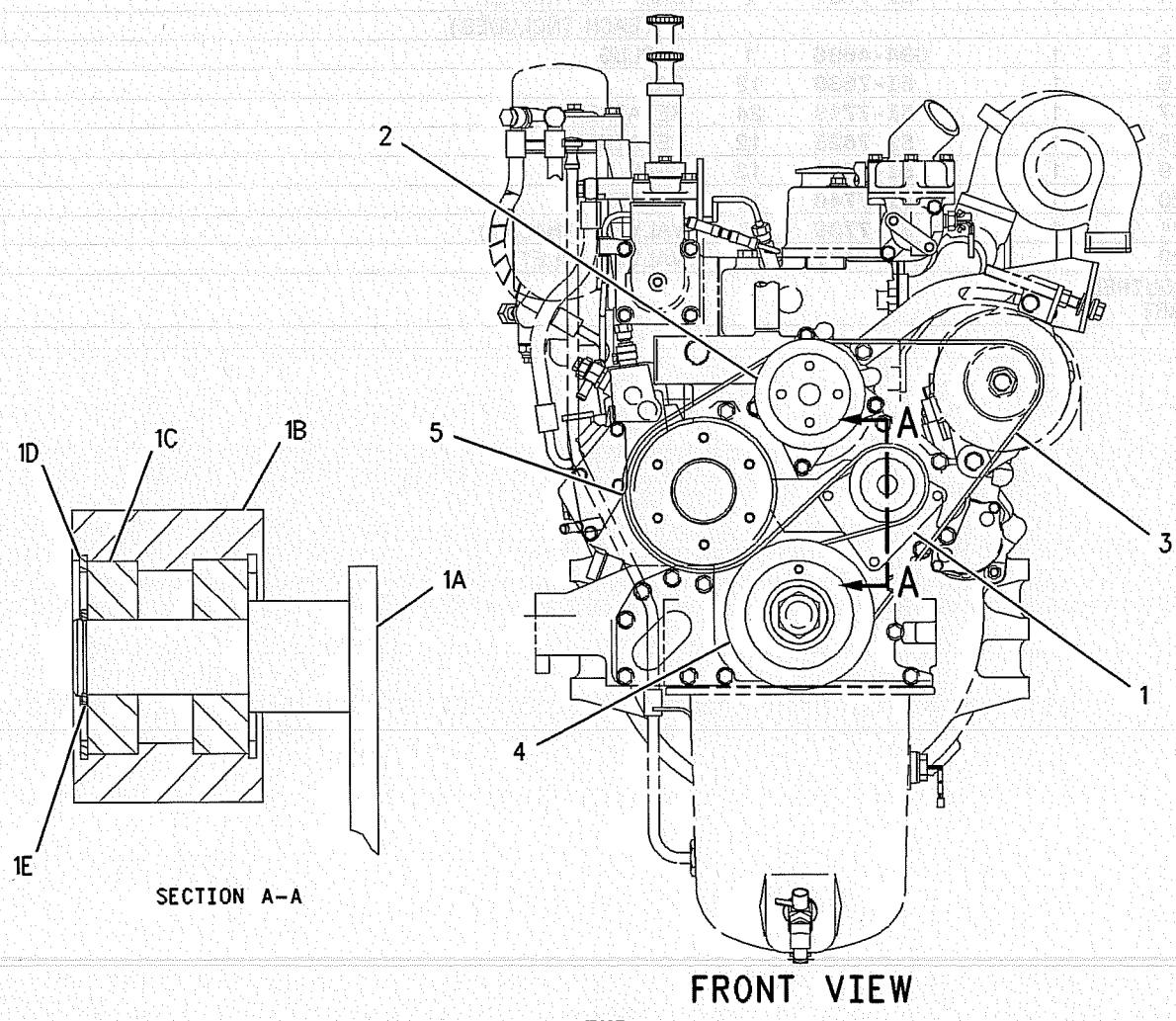

GRAPHIC #1 **<END>** g00950087

BASIC ENGINE

212-8544 VALVE MECHANISM GP

S/N: 7JK1-UP
PART OF 201-3878 ENGINE AR
ALSO AN ATTACHMENT

SMCS-1209 **i01889319**

NOTE	REF NO	GRAPHIC REF	PART NUMBER	QTY	PART NAME 1 2 3 4 5 6 (PRODUCT LEVEL)	SEE PAGE
	1	1	**5I-4921**	2	BOLT (M12 X 1.25 X 21MM)	
	2	1	**5I-7720**	2	PIPE	
	3	1	**5I-7622**	4	RING	
	4	1	**2W-6047**	4	WASHER (22.05X31.75X.89 MM THK)	
B	5	1	**5I-7590**	6	ROCKER AS	
B		1	**5I-7590**	6	ROCKER AS	
					(EACH ROCKER AS INCLUDES)	
	6	1	**5I-7631**	1	BUSHING	
M	7	1	**091-3474**	1	NUT (M8 X 1.25-6H THD)	
	8	1	**094-9525**	1	SCREW	
	9	1	**5I-7722**	6	BRACKET	
	10	1	**3B-4505**	12	LOCKWASHER	
	11	1	**5I-7730**	6	BOLT (M8 X 1.25 X 103MM)	
M	12	1	**8T-4189**	6	BOLT (M8X1.25X20MM)	
	13	1	**5I-7721**	4	SPRING	
	14	1	**5I-7731**	2	SHAFT AS-ROCKER	
					(EACH INCLUDES)	
	15	1	**094-4696**	1	PLUG	
	16	1	**5I-7630**	12	CAP	
	17	1	**5I-7719**	24	RETAINER	
	18	1	**5I-7625**	12	RETAINER	
	19	1	**5I-7624**	12	SEAL	
	20	1	**5I-7740**	12	SPRING	
	21	1	**5I-7739**	6	VALVE (EXHAUST)	
	22	1	**212-8477**	6	VALVE (INLET)	

B-USE AS REQUIRED
M-METRIC PART

212-8544 VALVE MECHANISM GP *(contd.)* i01889319

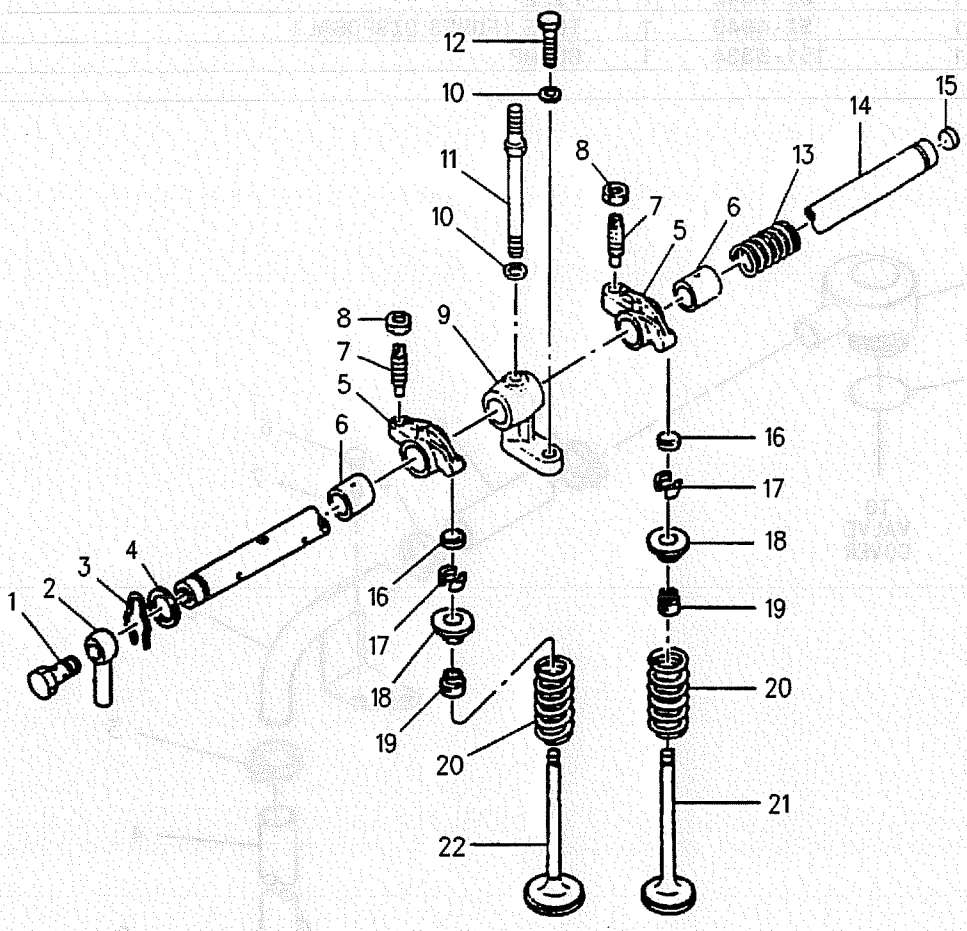

GRAPHIC #1 **<END>** g00680795

LUBRICATION SYSTEM

178-6502 BREATHER GP

S/N: 7JK1-UP
PART OF 201-3878 ENGINE AR
ALSO AN ATTACHMENT

SMCS-1317, 5056 **i01744827**

NOTE	REF NO	GRAPHIC REF	PART NUMBER	QTY	PART NAME 1 2 3 4 5 6 (PRODUCT LEVEL)	SEE PAGE
	1	1	**5I-7725**	1	BREATHER (CRANKCASE)	
	2	1	**094-9672**	1	SEAL-O-RING	
	3	1	**2S-3440**	3	CLAMP-HOSE	
	4	1	**212-8621**	1	TUBE	
	5	1	**178-6534**	1	SUPPORT	
M	6	1	**8T-4137**	2	BOLT (M10X1.5X20MM)	
	7	1	**7X-0796**	2	LOCKWASHER	
	8	1	**5I-7645**	1	PIPE	
	9	1	**5I-4940**	1	TUBE (FUMES DISPOSAL)	
	10	1	**151-5334**	1	CLAMP	

M-METRIC PART

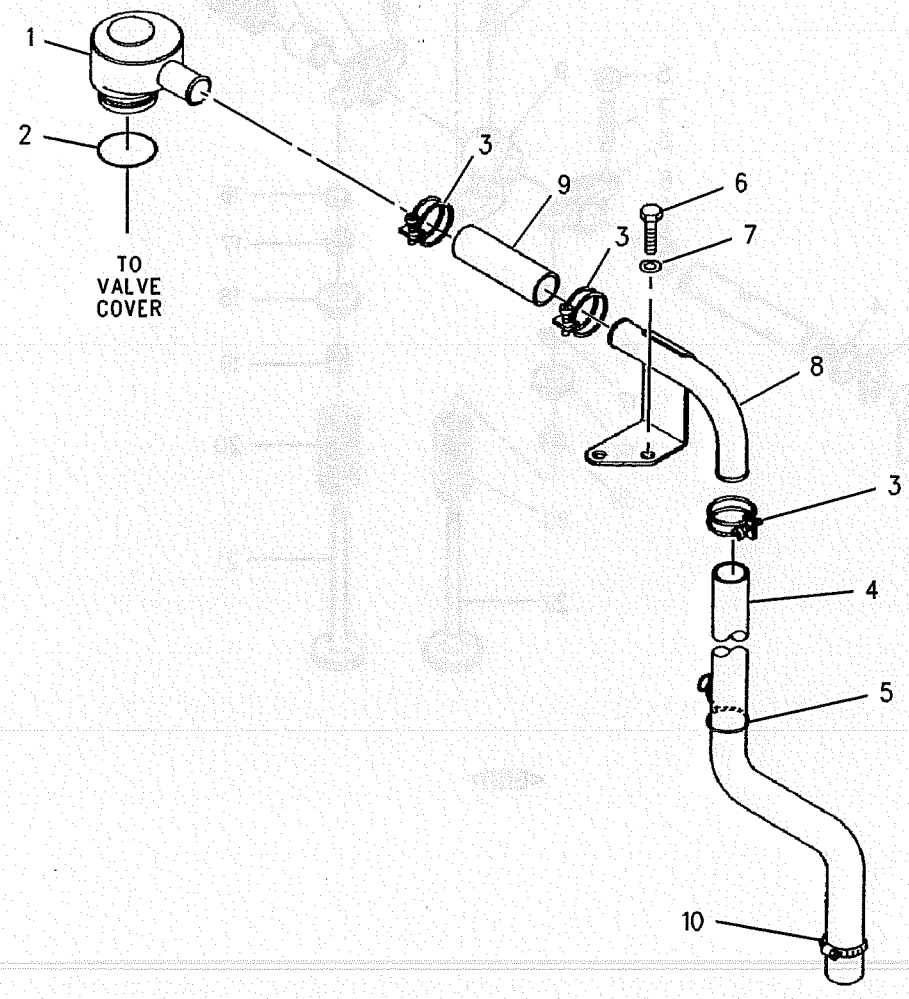

GRAPHIC #1 **<END>** g00941045

LUBRICATION SYSTEM

212-8554 FILTER GP-ENGINE OIL

S/N: 7JK1-UP
PART OF 201-3878 ENGINE AR
ALSO AN ATTACHMENT

SMCS-1308 **i01889293**

NOTE	REF NO	GRAPHIC REF	PART NUMBER	QTY	PART NAME 1 2 3 4 5 6 (PRODUCT LEVEL)	SEE PAGE
	1	1	**1R-0739**	1	FILTER AS-ENGINE OIL	
	2	1	**183-8179**	1	BASE AS	
	2A	1	**096-3321**	2	PLUG	
	3	1	**178-6569**	1	PLUG	
	4	1	**5I-8026**	1	VALVE AS	
	5	1	**5B-5947**	2	GASKET	
	6	1	**8C-3446**	1	VALVE GP-FLUID SAMPLING	
	7	1	**178-6567**	1	SEAL-O-RING	
	8	1	**196-8192**	1	BOLT	
M	9	1	**178-6566**	1	NUT (M16 X 1.5)	
	10	1	**4I-9404**	2	SEAL-O-RING	
	11	1	**168-0582**	1	COVER	
	12	1	**125-2972**	1	GASKET	
	13	1	**5I-8066**	1	VALVE AS-RELIEF	
	14	1	**196-8226**	1	HOSE	
	15	1	**196-8227**	1	CLAMP	
M	16	1	**8T-4908**	2	BOLT (M8X1.25X25MM)	
	17	1	**3B-4505**	6	LOCKWASHER	
	18	1	**5I-7505**	1	PLUG	
M	19	1	**178-6576**	1	BOLT (M8 X 1.25 X 75MM)	
M	20	1	**178-6577**	2	BOLT (M8 X 1.25 X 100MM)	
	21	1	**196-8191**	1	BRACKET AS	
M	22	1	**8T-4136**	10	BOLT (M10X1.5X25MM)	
	23	1	**7X-0796**	12	LOCKWASHER	
M	24	1	**8T-4195**	1	BOLT (M10X1.5X30MM)	
	25	1	**8T-4121**	3	WASHER-HARD (11X21X2.5MM THK)	
M	26	1	**8T-4137**	1	BOLT (M10X1.5X20MM)	
	27	1	**178-6571**	1	GASKET	
	28	1	**125-2979**	1	GASKET	
M	29	1	**8T-7329**	1	BOLT (M8X1.25X55MM)	
	30	1	**8C-3445**	1	CAP-DUST	

M-METRIC PART

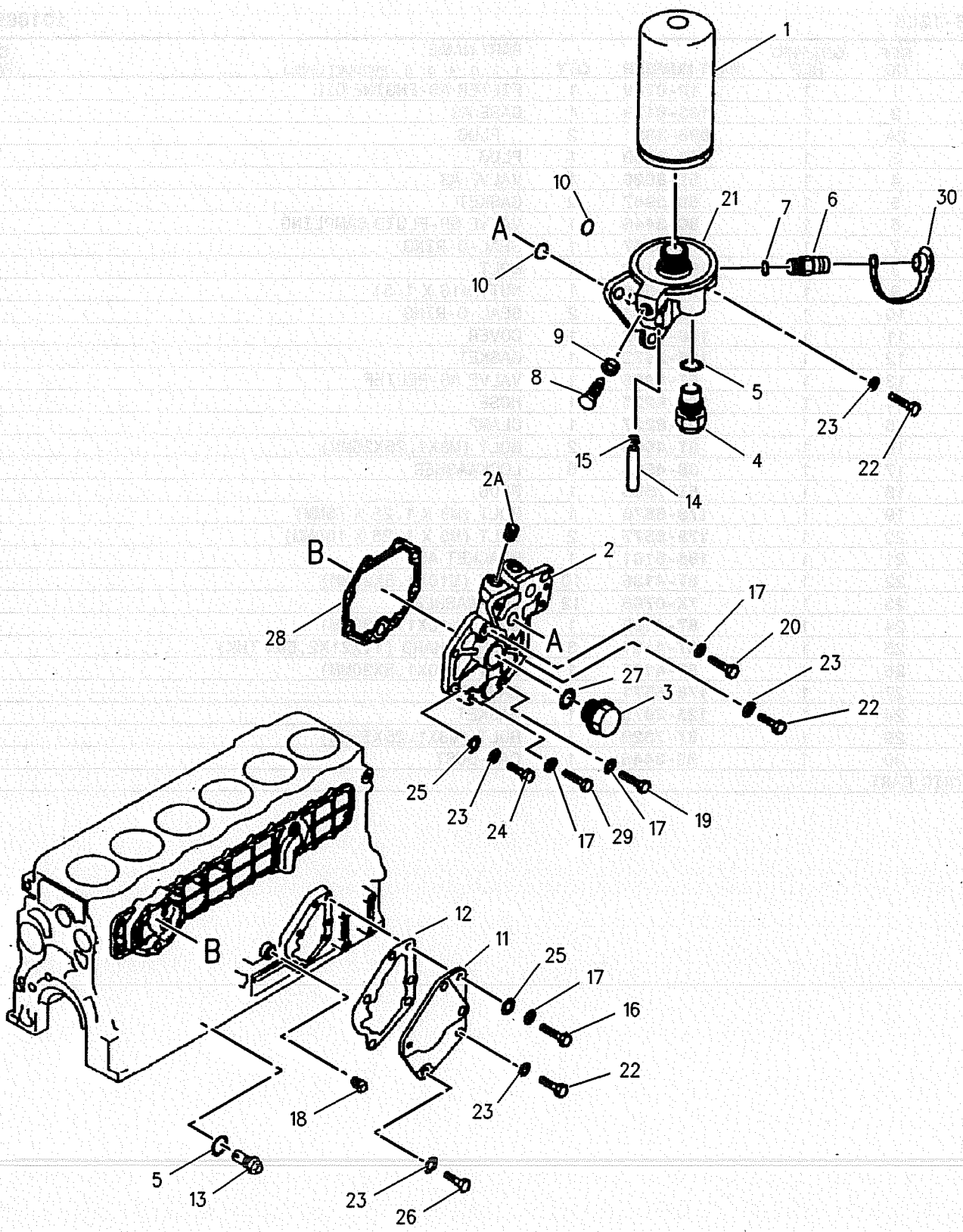

GRAPHIC #1 **<END>** g00865482

LUBRICATION SYSTEM

178-6524 LINES GP-ENGINE OIL

S/N: 7JK1-UP
PART OF 201-3878 ENGINE AR
ALSO AN ATTACHMENT

SMCS-1307 **i01385733**

NOTE	REF NO	GRAPHIC REF	PART NUMBER	QTY	PART NAME 1 2 3 4 5 6 (PRODUCT LEVEL)	SEE PAGE
	1	1	**5I-5038**	1	SEAL-O-RING	
	2	1	**5I-7640**	1	SPRING	
	3	1	**5I-7642**	1	PLATE	
	4	1	**5I-7643**	1	VALVE	
	5	1	**5I-7644**	1	PLUG	
	6	1	**178-6563**	1	STRAINER	
M	7	1	**8T-4200**	4	BOLT (M8X1.25X16MM)	
	8	1	**8T-4224**	3	WASHER-HARD (8.8X16X2MM THK)	
	9	1	**9J-2089**	1	WASHER	
	10	1	**095-8638**	4	WASHER-SPRING	

M-METRIC PART

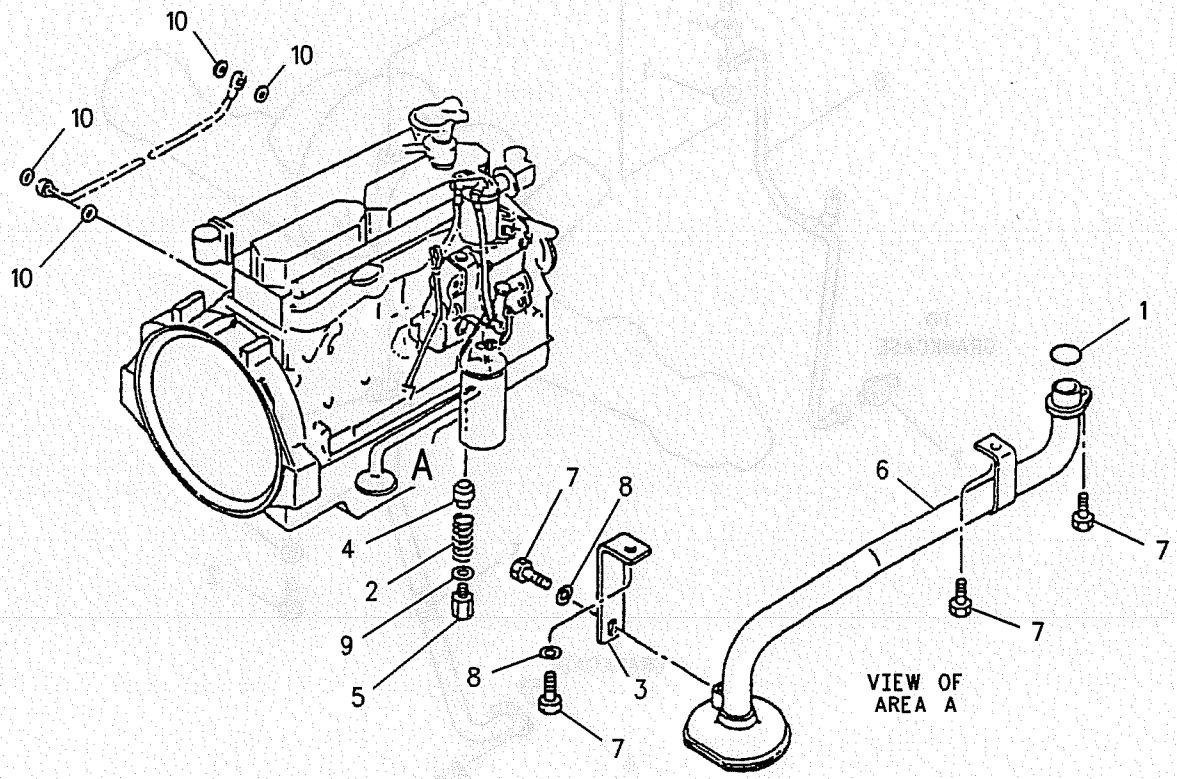

GRAPHIC #1 **<END>** g00692941

LUBRICATION SYSTEM

5I-7770 LINES GP-TURBOCHARGER OIL

S/N: 7JK1-UP
PART OF 201-3878 ENGINE AR
ALSO AN ATTACHMENT

SMCS-1052 **i01463678**

NOTE	REF NO	GRAPHIC REF	PART NUMBER	QTY	PART NAME 1 2 3 4 5 6 (PRODUCT LEVEL)	SEE PAGE
	1	1	**2A-5222**	2	GASKET	
M	2	1	**5C-9553**	2	BOLT (M6X1X16MM)	
	3	1	**5I-7557**	1	PIPE	
	4	1	**5I-7561**	1	GASKET	
	5	1	**5I-7623**	1	BOLT	
	6	1	**5I-7689**	1	GASKET	
	7	1	**5I-8058**	1	CONNECTOR	
	8	1	**5I-8060**	1	PIPE	
M	9	1	**8T-4189**	2	BOLT (M8X1.25X20MM)	
	10	1	**3B-4505**	2	LOCKWASHER	
	11	1	**096-2500**	2	WASHER (1.5MM THK)	

M-METRIC PART

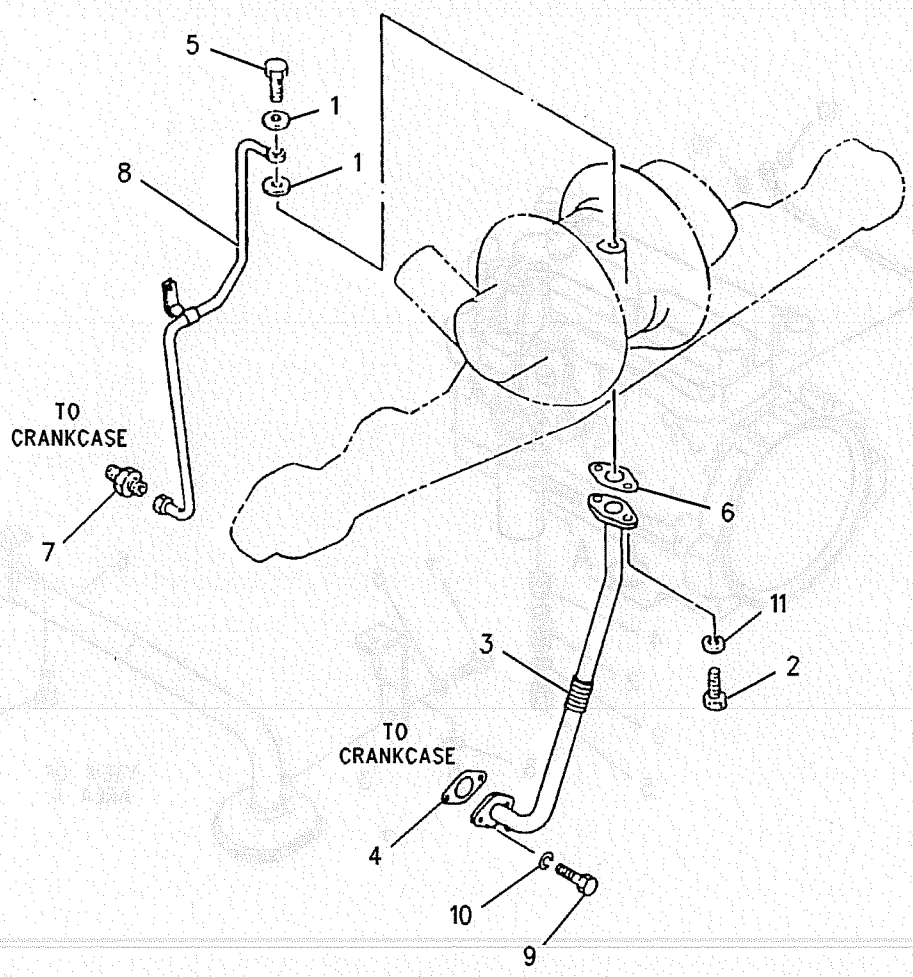

GRAPHIC #1 **<END>** g00764924

178-6584 COOLER GP-ENGINE OIL

S/N: 7JK1-UP
PART OF 201-3878 ENGINE AR
ALSO AN ATTACHMENT

SMCS-1378 **i01880982**

NOTE	REF NO	GRAPHIC REF	PART NUMBER	QTY	PART NAME 1 2 3 4 5 6 (PRODUCT LEVEL)	SEE PAGE
	1	1	**183-8265**	1	COVER	
R	2	1	**125-2970**	1	ELEMENT (OIL COOLER)	
M	3	1	**8T-4189**	6	BOLT (M8X1.25X20MM)	
M	4	1	**8T-4908**	14	BOLT (M8X1.25X25MM)	
M	5	1	**5C-7261**	4	NUT (M8X1.25 THD)	
	6	1	**095-8638**	24	WASHER-SPRING	
	7	1	**5I-7690**	1	GASKET	
	8	1	**5I-7691**	2	GASKET	

M-METRIC PART
R-REMFG PART MAY BE AVAILABLE

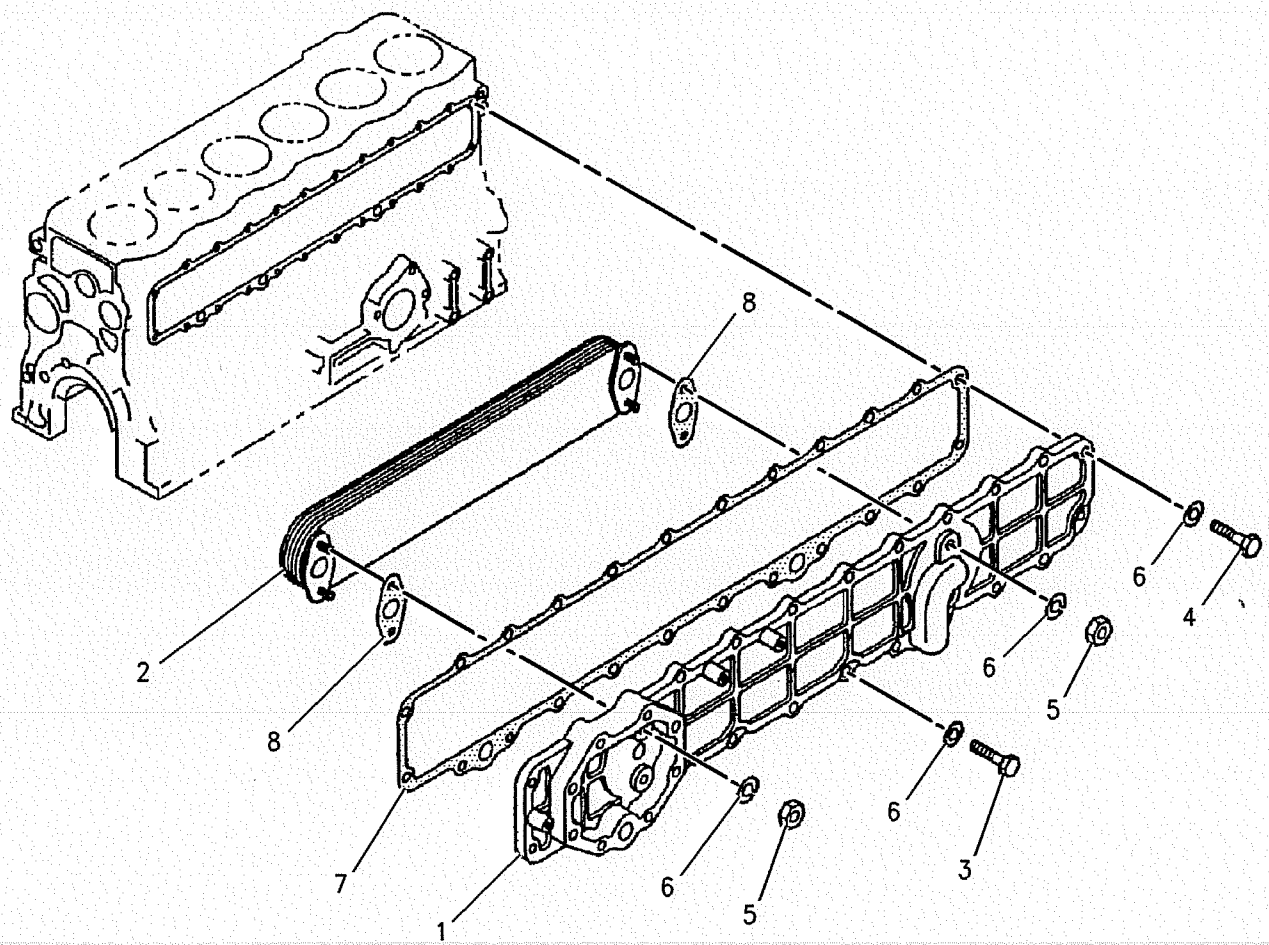

GRAPHIC #1 **<END>** g00877339

COOLING SYSTEM

214-4411 COOLING AR

S/N: SBN1-UP; RAW1-UP

AN ATTACHMENT

SMCS-1350 **i01888796**

NOTE	PART NUMBER	QTY	PART NAME 1 2 3 4 5 6 (PRODUCT LEVEL)	SEE PAGE
Y	*217-5470*	1	ENGINE AR	6
Y	*142-3864*	1	HOOD GP-ENGINE (PERFORATED)	185

Y-SEPARATE ILLUSTRATION

<END>

205-6683 FAN GP-SUCTION

S/N: SBN1-UP; RAW1-UP
PART OF 201-3835, 217-5470 ENGINE AR
ALSO AN ATTACHMENT

SMCS-1356 **i01860526**

NOTE	REF NO	GRAPHIC REF	PART NUMBER	QTY	PART NAME 1 2 3 4 5 6 (PRODUCT LEVEL)	SEE PAGE
	1	1	**204-0910**	1	FAN AS	
M	2	1	**8T-4189**	6	BOLT (M8X1.25X20MM)	
	3	1	**8T-4224**	6	WASHER-HARD (8.8X16X2MM THK)	

M-METRIC PART

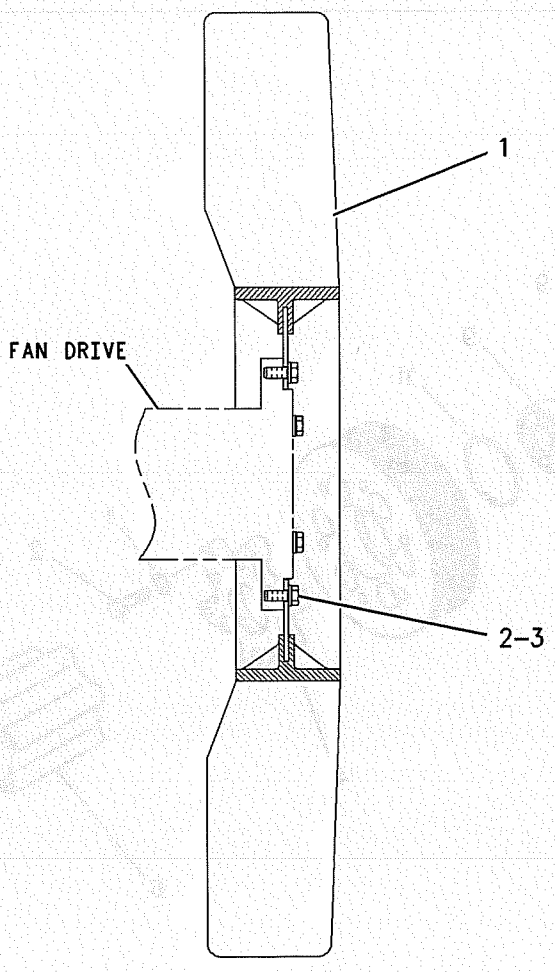

RIGHT SIDE VIEW

GRAPHIC #1 **<END>** g00926849

COOLING SYSTEM

212-8556 FAN GP-SUCTION

S/N: 7JK1-UP
PART OF 201-3878 ENGINE AR
ALSO AN ATTACHMENT

SMCS-1356 **i01889288**

NOTE	REF NO	GRAPHIC REF	PART NUMBER	QTY	PART NAME 1 2 3 4 5 6 (PRODUCT LEVEL)	SEE PAGE
	1	1	**7X-0796**	17	LOCKWASHER	
M	2	1	**8T-4196**	11	BOLT (M10X1.5X35MM)	
	3	1	**212-8589**	1	BRACKET	
	4	1	**212-8590**	1	COVER	
	6	1	**212-8592**	1	SPACER	
	7	1	**212-8593**	1	PLATE	
	8	1	**212-8594**	6	BOLT	
	9	1	**212-8595**	2	BEARING	
	10	1	**212-8596**	2	BUSHING	
	11	1	**212-8597**	1	RING	
	12	1	**212-8598**	1	RING	

M-METRIC PART

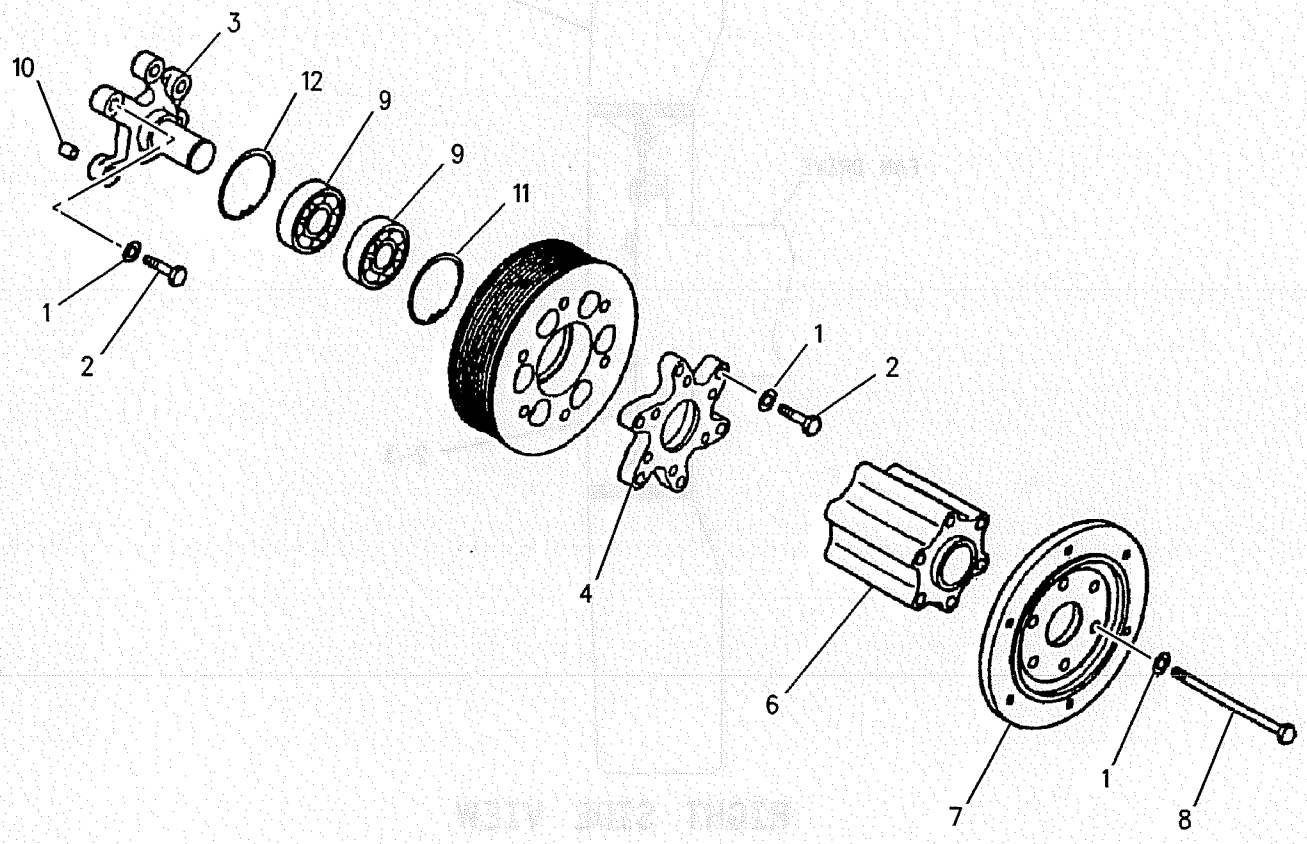

GRAPHIC #1 **<END>** g00923401

COOLING SYSTEM

212-8614 LINES GP-WATER

S/N: 7JK1-UP
PART OF 201-3878 ENGINE AR
ALSO AN ATTACHMENT

SMCS-1355, 1380 **i01889235**

NOTE	REF NO	GRAPHIC REF	PART NUMBER	QTY	PART NAME 1 2 3 4 5 6 (PRODUCT LEVEL)	SEE PAGE
M	1	1	**8T-6912**	3	BOLT (M8X1.25X50MM)	
	2	1	**5I-7578**	1	SENDER-TEMPERATURE (WATER)	
	3	1	**5I-7572**	1	GASKET	
	4	1	**5I-7735**	1	GASKET	
	5	1	**5I-8010**	1	REGULATOR (COOLANT)	
	6	1	**5I-8056**	1	PLUG	
	7	1	**095-8638**	5	WASHER-SPRING	
	8	1	**222-8214**	6	GASKET	
	9	1	**222-8216**	1	PIPE AS	
	10	1	**125-2981**	1	COVER AS	
	10A	1	**5I-7655**	1	PIPE	
	11	1	**154-9024**	1	VALVE GP-FLUID SAMPLING (COOLENT)	
	12	1	**212-8587**	1	ELBOW	
	13	1	**2S-3440**	2	CLAMP-HOSE	
	14	1	**5I-7699**	1	HOSE	
	15	1	**095-1663**	1	SEAL-O-RING	
M	16	1	**8T-4908**	1	BOLT (M8X1.25X25MM)	
	17	1	**096-9532**	1	WASHER (2MM THK)	
M	18	1	**8T-4177**	1	BOLT (M8X1.25X90MM)	
	19	1	**196-7975**	1	SENSOR GP-TEMPERATURE (OUT SIDE AIR)	
	20	1	**157-0670**	1	CAP-DUST (COOLENT SAMPLING VALVE)	
	21	1	**183-8222**	1	PLUG	
C	22	1	**096-9438**	12	STUD	
	23	1	**212-8489**	12	NUT	

C-CHANGE FROM PREVIOUS TYPE
M-METRIC PART

212-8614 **LINES GP-WATER** *(contd.)* **i01889235**

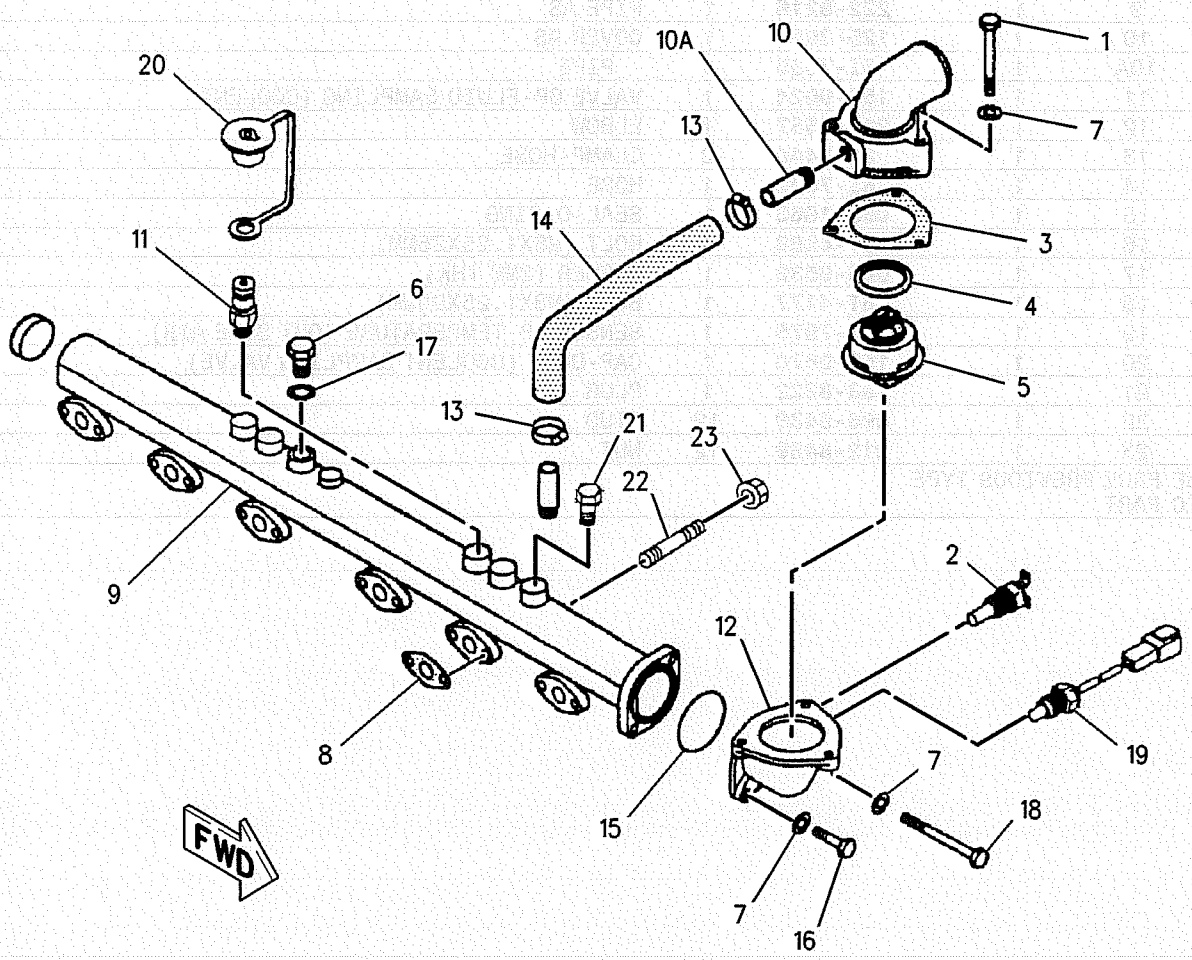

GRAPHIC #1 **<END>** g00941335

COOLING SYSTEM

212-8555 PUMP GP-WATER

S/N: 7JK1-UP
PART OF 201-3878 ENGINE AR
ALSO AN ATTACHMENT

SMCS-1361 **i01889290**

NOTE	REF NO	GRAPHIC REF	PART NUMBER	QTY	PART NAME 1 2 3 4 5 6 (PRODUCT LEVEL)	SEE PAGE
	1	1	**178-6633**	1	PUMP GP-WATER	
	2	1	**5I-7696**	1	FLANGE	
	3	1	**178-6635**	1	SHAFT	
	4	1	**8T-9598**	1	RING-RETAINING	
	6	1	**178-6634**	1	IMPELLER	
	7	1	**5I-7697**	1	SPACER (28MM)	
	8	1	**178-6636**	1	SEAL	
	9	1	**5L-6326**	1	BALL BEARING (62MM OD)	
	10	1	**125-2947**	1	WASHER (1MM THK)	
	11	1	**2H-3814**	1	BALL BEARING (52MM OD)	
M	12	1	**8T-4136**	7	BOLT (M10X1.5X25MM)	
	13	1	**7X-0796**	7	LOCKWASHER	
	14	1	**8T-4121**	4	WASHER-HARD (11X21X2.5MM THK)	

M-METRIC PART

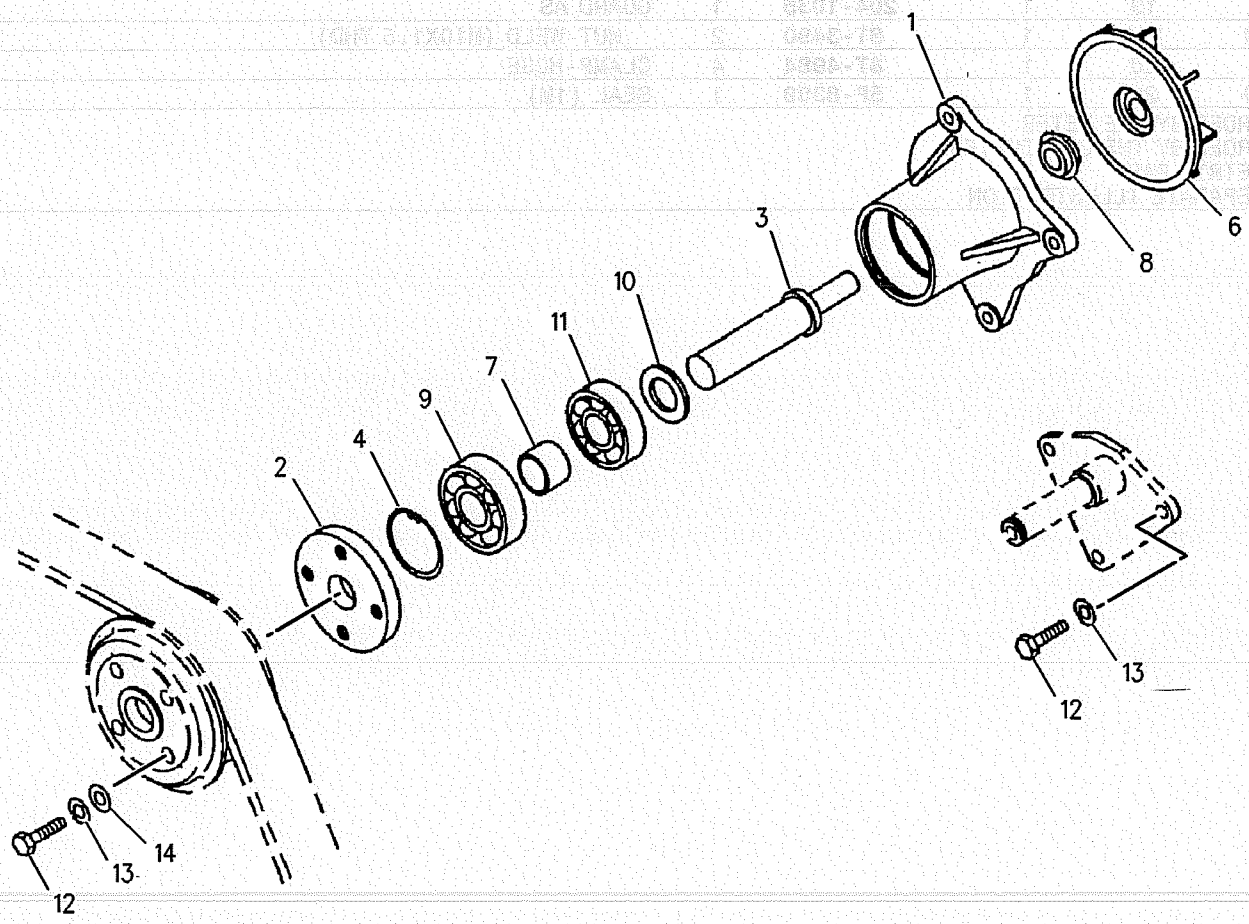

GRAPHIC #1 **<END>** g00923415

COOLING SYSTEM

204-0873 RADIATOR & HYD OIL COOLER GP

S/N: SBN1-UP; RAW1-UP

PART OF 201-3836 INSTALLATION AR-ENGINE

SMCS-1353, 1374 **i01847745**

NOTE	REF NO	GRAPHIC REF	PART NUMBER	QTY	PART NAME 1 2 3 4 5 6 (PRODUCT LEVEL)	SEE PAGE
	1	1	**204-0951**	1	HOSE	
	2	1	**204-0952**	1	HOSE	
Y	3	1	**210-8105**	1	RADIATOR & HYD OIL COOLER GP	52
E	4	1	**7Y-1976**		HOSE (40CM)	
M	5	1	**7X-2554**	4	BOLT (M16X2X70MM)	
	6	1	**178-6450**	4	SPACER	
	7	1	**096-4035**	1	CLIP	
	8	1	**171-9077**	1	BAND	
M	9	1	**8T-4200**	2	BOLT (M8X1.25X16MM)	
	10	1	**8T-4224**	2	WASHER-HARD (8.8X16X2MM THK)	
	11	1	**096-0061**	3	STRAP-CABLE	
	12	1	**096-0744**	1	TANK AS-RESERVE	
	12A	1	**171-3369**	1	CAP AS	
M	13	1	**8T-4137**	10	BOLT (M10X1.5X20MM)	
	14	1	**8T-4121**	1	WASHER-HARD (11X21X2.5MM THK)	
	15	1	**3P-9847**	1	CLIP	
D	16	1	**5P-9909**	1	SEAL (1M)	
	17	1	**204-0953**	1	GUARD AS	
	18	1	**7X-7729**	9	WASHER (11X25X3MM THK)	
	19	1	**204-1035**	1	GUARD AS	
M	19A	1	**8T-3490**	2	NUT-WELD (M10X1.5 THD)	
	20	1	**8T-4984**	4	CLAMP-HOSE	
D	21	1	**5P-8309**	1	SEAL (1M)	

D-ORDER BY THE METER
E-ORDER BY THE CENTIMETER
M-METRIC PART
Y-SEPARATE ILLUSTRATION

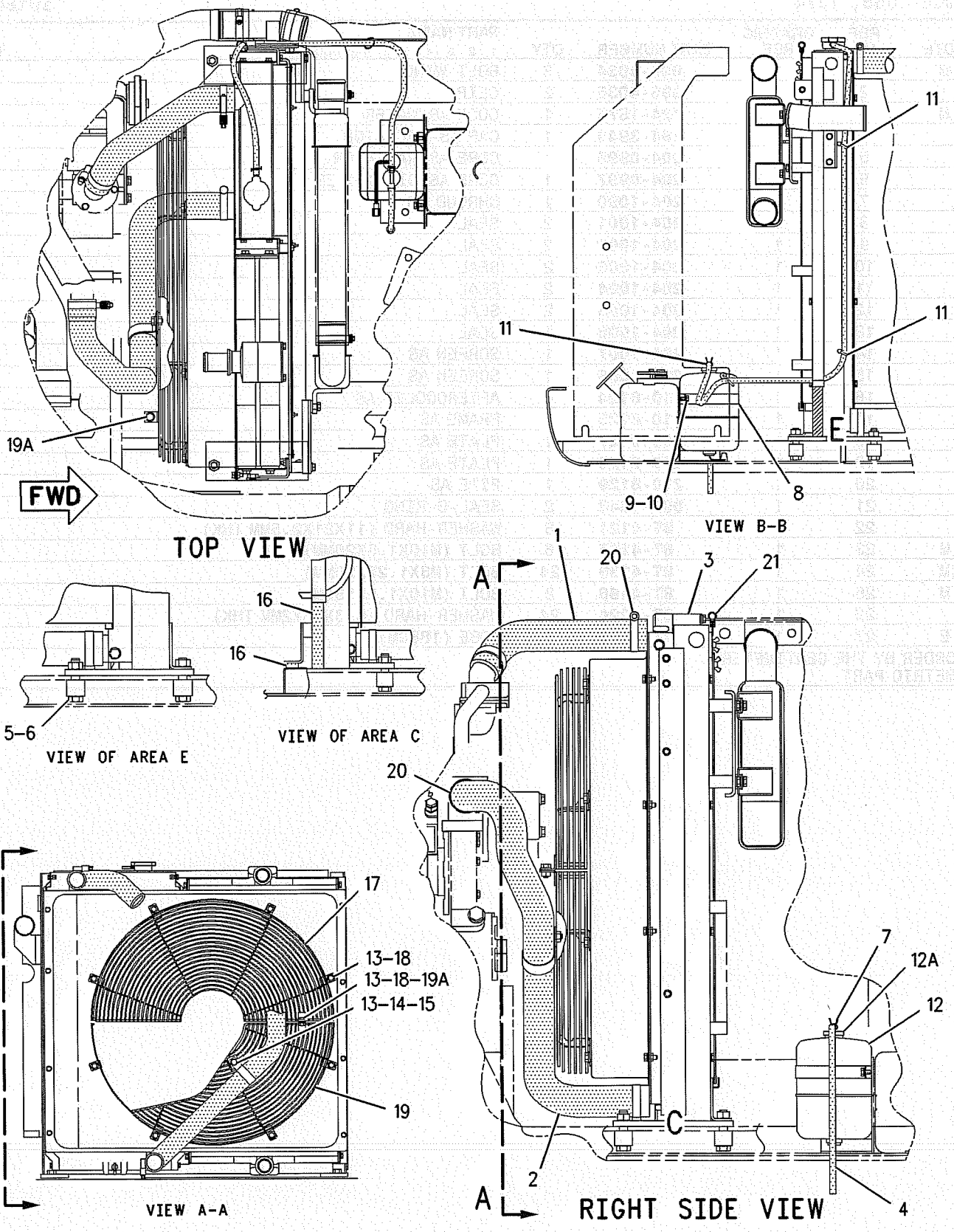

GRAPHIC #1

<END>

g00941644

COOLING SYSTEM

210-8105 RADIATOR & HYD OIL COOLER GP

S/N: SBN1-UP; RAW1-UP

PART OF 204-0873 RADIATOR & HYD OIL COOLER GP

SMCS-1353, 1374 **i01848368**

NOTE	REF NO	GRAPHIC REF	PART NUMBER	QTY	PART NAME 1 2 3 4 5 6 (PRODUCT LEVEL)	SEE PAGE
M	1	1	**096-4034**	3	BOLT-WING	
	2	1	**096-4035**	2	CLIP	
M	3	1	**124-1574**	1	COCK AS-WATER	
	4	1	**184-3949**	1	CAP AS-RADIATOR	
	5	1	**204-0996**	1	CORE AS-RADIATOR	
	6	1	**204-0997**	1	CORE AS-OIL COOLER	
	7	1	**204-1000**	1	SHROUD AS	
	8	1	**204-1001**	2	SEAL	
	9	1	**204-1002**	2	SEAL	
	10	1	**204-1003**	2	SEAL	
	11	1	**204-1004**	2	SEAL	
	12	1	**204-1005**	2	SEAL	
	13	1	**204-1006**	1	SEAL	
	14	1	**204-1007**	1	SCREEN AS	
	15	1	**204-1008**	1	SCREEN AS	
	16	1	**210-8124**	1	AFTERCOOLER AS	
	17	1	**210-8125**	1	FRAME AS	
	18	1	**210-8127**	1	PLATE AS	
	19	1	**210-8128**	1	PLATE AS	
	20	1	**210-8129**	1	PIPE AS	
	21	1	**095-1543**	2	SEAL-O-RING	
	22	1	**8T-4121**	8	WASHER-HARD (11X21X2.5MM THK)	
M	23	1	**8T-4137**	6	BOLT (M10X1.5X20MM)	
M	24	1	**8T-4189**	24	BOLT (M8X1.25X20MM)	
M	25	1	**8T-4196**	2	BOLT (M10X1.5X35MM)	
	26	1	**8T-4224**	24	WASHER-HARD (8.8X16X2MM THK)	
E	27	1	**7Y-1976**		HOSE (188CM)	

E-ORDER BY THE CENTIMETER
M-METRIC PART

210-8105 RADIATOR & HYD OIL COOLER GP *(contd.)* i01848368

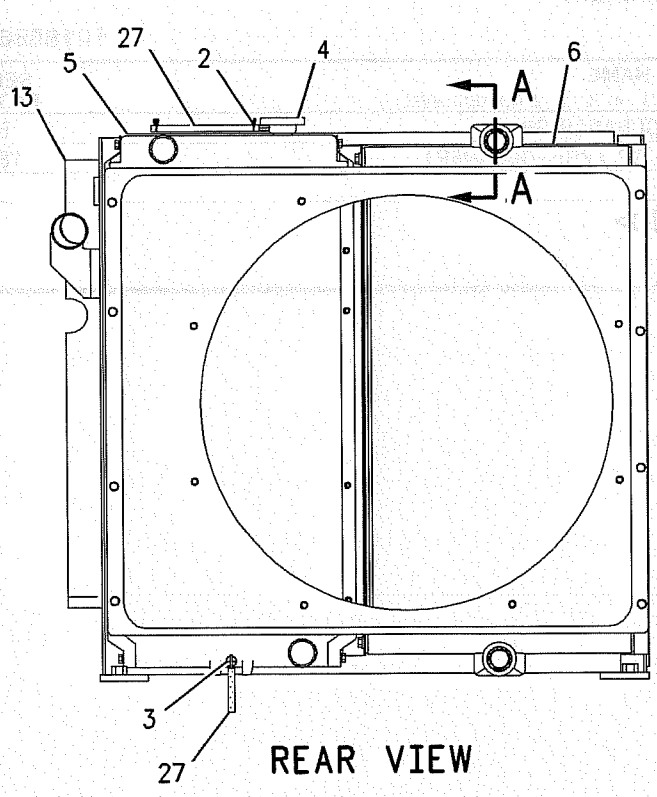

REAR VIEW

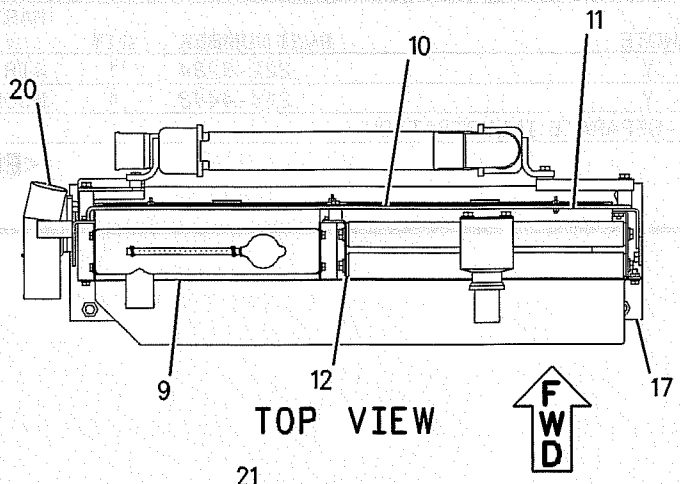

TOP VIEW

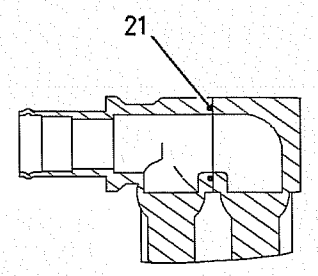

SECTION A-A

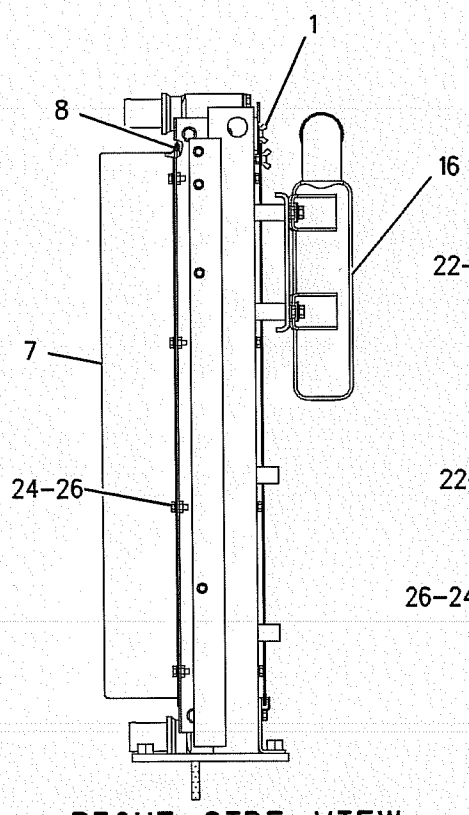

RIGHT SIDE VIEW

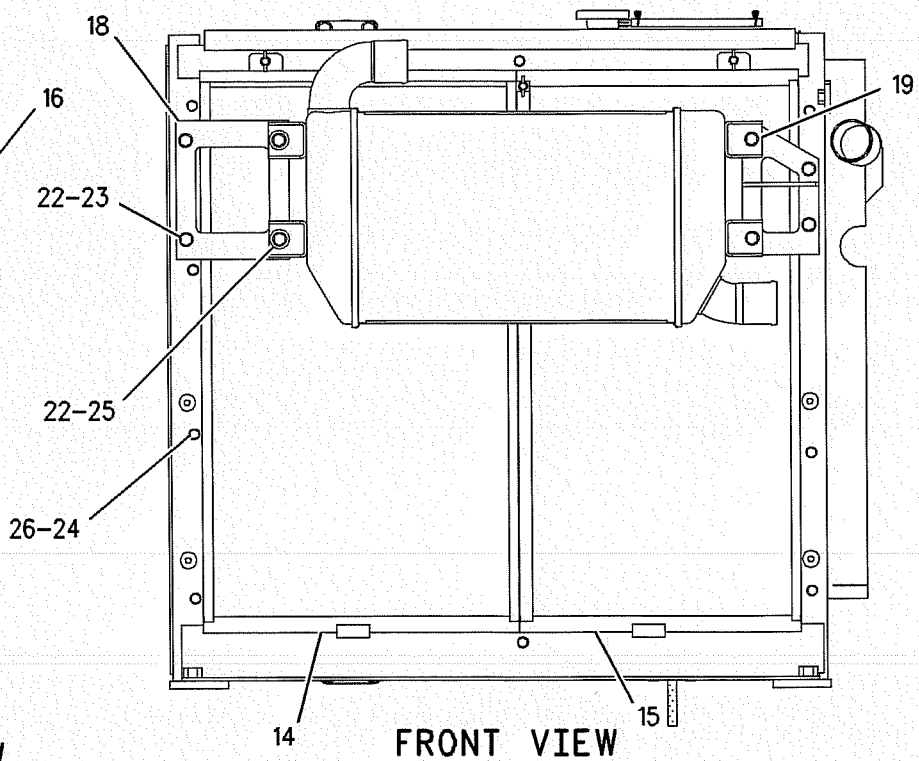

FRONT VIEW

GRAPHIC #1

<END>

g00942295

AIR INLET AND EXHAUST SYSTEM

214-4442 AIR CLEANER AR

S/N: SBN1-UP; RAW1-UP
AIR PREFILTER
AN ATTACHMENT

SMCS-1051 **i01888686**

NOTE	PART NUMBER	QTY	PART NAME 1 2 3 4 5 6 (PRODUCT LEVEL)	SEE PAGE
Y	*222-8284*	1	AIR CLEANER GP	57
Y	*214-4443*	1	HOOD GP (PRE-CLEANER)	184

Y-SEPARATE ILLUSTRATION

<END>

AIR INLET AND EXHAUST SYSTEM

154-0785 AIR CLEANER GP

S/N: SBN1-UP; RAW1-UP
PART OF 222-8284 AIR CLEANER GP
AN ATTACHMENT

SMCS-1051 **i01890847**

NOTE	REF NO	GRAPHIC REF	PART NUMBER	QTY	PART NAME 1 2 3 4 5 6 (PRODUCT LEVEL)	SEE PAGE
	1	1	**6I-2502**	1	FILTER ELEMENT AS-AIR (SECONDARY)	
	2	1	**6I-2501**	1	FILTER ELEMENT AS-AIR (PRIMARY)	
	3	1	**6I-4464**	1	COVER AS-AIR CLEANER	
		1	**4P-5524**	1	SEAL-O-RING	
	4	1	**154-0498**	1	INDICATOR AS (AIR FILTER SERVICE)	

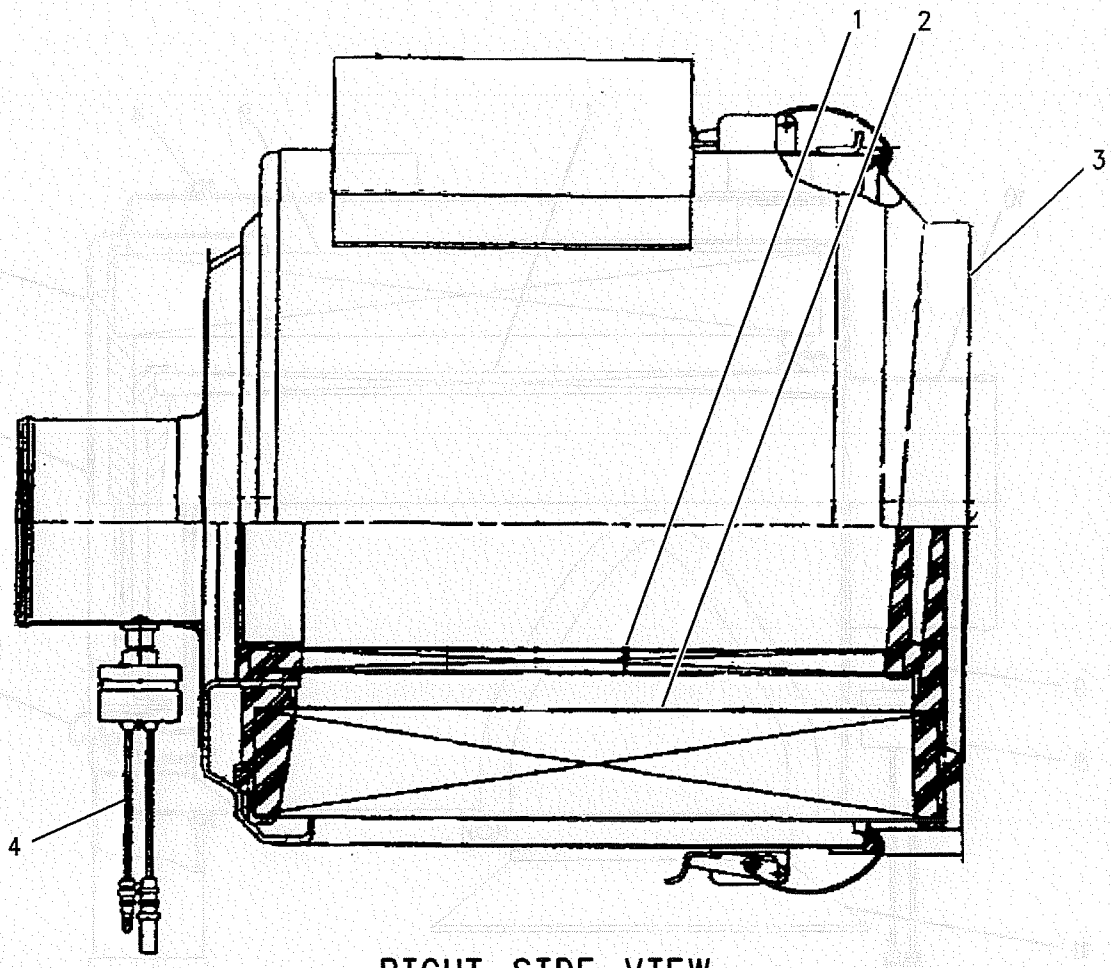

RIGHT SIDE VIEW

GRAPHIC #1 **<END>** g00984567

AIR INLET AND EXHAUST SYSTEM

162-6201 AIR CLEANER GP

S/N: SBN1-UP; RAW1-UP

PART OF 162-6232 MOUNTING GP-AIR CLEANER

SMCS-1051 **i01405890**

NOTE	REF NO	GRAPHIC REF	PART NUMBER	QTY	PART NAME 1 2 3 4 5 6 (PRODUCT LEVEL)	SEE PAGE
	1	1	**131-8821**	1	FILTER AS-SECONDARY	
	2	1	**131-8822**	1	FILTER AS-PRIMARY	
	3	1	**184-3983**	1	COVER AS	
J	4	1	**168-0792**	1	SEAL (280.1MM ID X 5.0MM TH)	
					–OR–	
J		1	**131-8824**	1	SEAL (266.7MM ID X 6.9MM TH)	
	5	1	**131-8826**	1	FILM-CAT (TOP)	
	6	1	**131-8932**	1	LATCH	
	7	1	**131-8901**	1	VALVE-VACUATOR	
	8	1	**154-0498**	1	INDICATOR AS	
	9	1	**5L-3233**	1	FITTING	
	10	1	**183-8169**	1	BODY AS	
	11	1	**183-8170**	1	HOOD AS	

J-ENSURE CORRECT SEAL IS FITTED

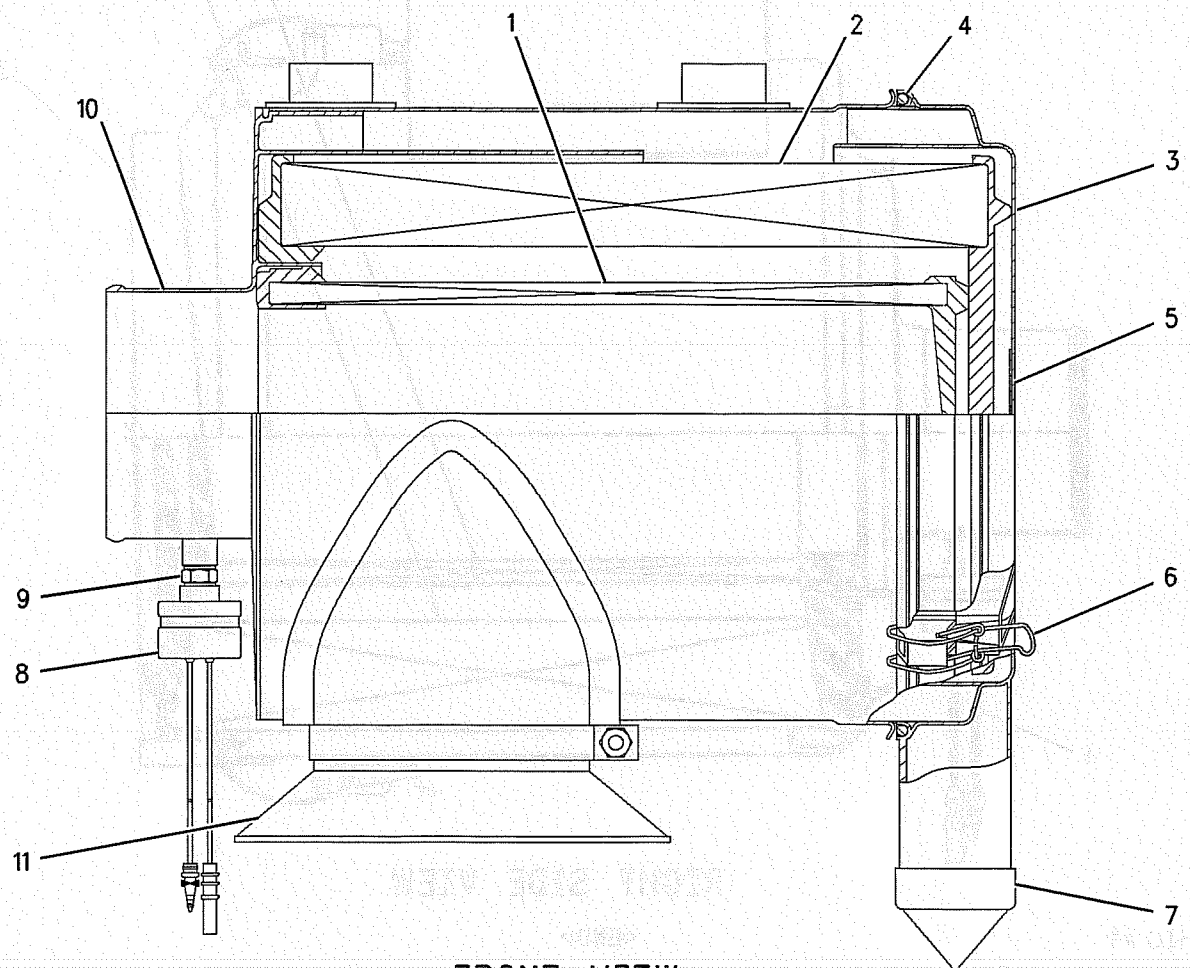

FRONT VIEW

GRAPHIC #1 **<END>** g00740096

AIR INLET AND EXHAUST SYSTEM

222-8284 AIR CLEANER GP

S/N: SBN1-UP; RAW1-UP
PART OF 214-4442 AIR CLEANER AR
AN ATTACHMENT

SMCS-1051 **i01888718**

NOTE	REF NO	GRAPHIC REF	PART NUMBER	QTY	PART NAME 1 2 3 4 5 6 (PRODUCT LEVEL)	SEE PAGE
	1	1	**9X-2201**	1	CLAMP-HOSE	
	2	1	**222-8285**	1	HOSE-AIR	
	3	1	**130-3279**	1	PRECLEANER GP	
		1	**174-5414**	1	CLAMP	
M	4	1	**8T-4139**	4	BOLT (M12X1.75X30MM)	
	5	1	**8T-4223**	4	WASHER-HARD (13.5X25.5X3MM THK)	
	6	1	**154-0788**	1	CLAMP	
Y	7	1	**154-0785**	1	AIR CLEANER GP	55
	8	1	**193-2762**	1	PIPE AS	

M-METRIC PART
Y-SEPARATE ILLUSTRATION

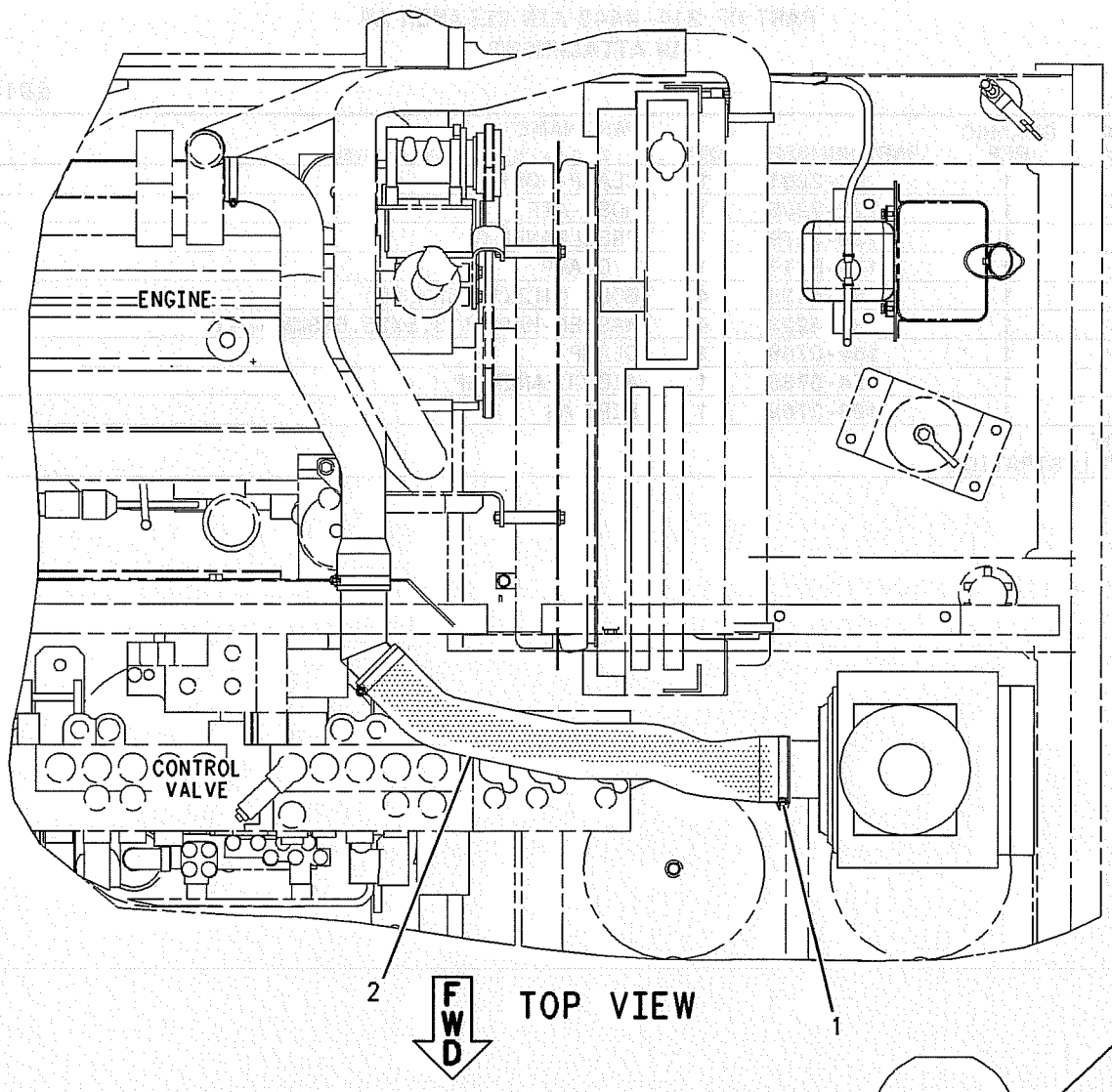

TOP VIEW

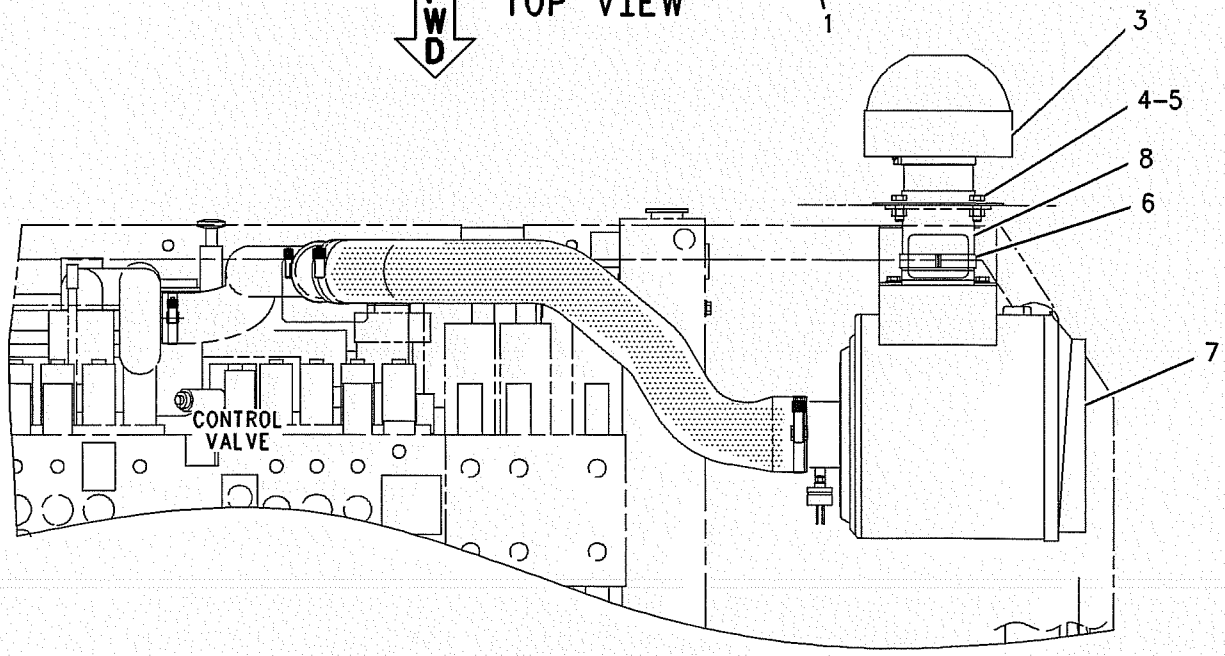

FRONT VIEW

GRAPHIC #1

<END>

g00946013

AIR INLET AND EXHAUST SYSTEM

5I-7589 CARTRIDGE AS-TURBOCHARGER

S/N: 7JK1-UP
PART OF 205-6741 TURBOCHARGER GP
ALSO AN ATTACHMENT

SMCS-1053 **i00755836**

NOTE	REF NO	GRAPHIC REF	PART NUMBER	QTY	PART NAME 1 2 3 4 5 6 (PRODUCT LEVEL)	SEE PAGE
	1	1	**135-2351**	1	INSERT	
	2	1	**135-2352**	1	RING-RETAINING	
	3	1	**135-2355**	1	SEAL-O-RING	
	4	1	**135-2347**	1	BEARING-THRUST	
	5	1	**135-2356**	1	RING-THRUST	
	6	1	**135-2359**	1	HOUSING	
	7	1	**135-2346**	1	PLATE	
	8	1	**135-2354**	1	RING-PISTON	
	9	1	**135-2357**	1	WHEEL AS	
	10	1	**135-2358**	2	BEARING	
	11	1	**135-2348**	1	DEFLECTOR-OIL	
	12	1	**135-2349**	1	SLEEVE	
	13	1	**135-2350**	1	RING-PISTON	
	14	1	**135-2360**	1	WHEEL-COMPRESSOR	
	15	1	**135-2353**	1	NUT	

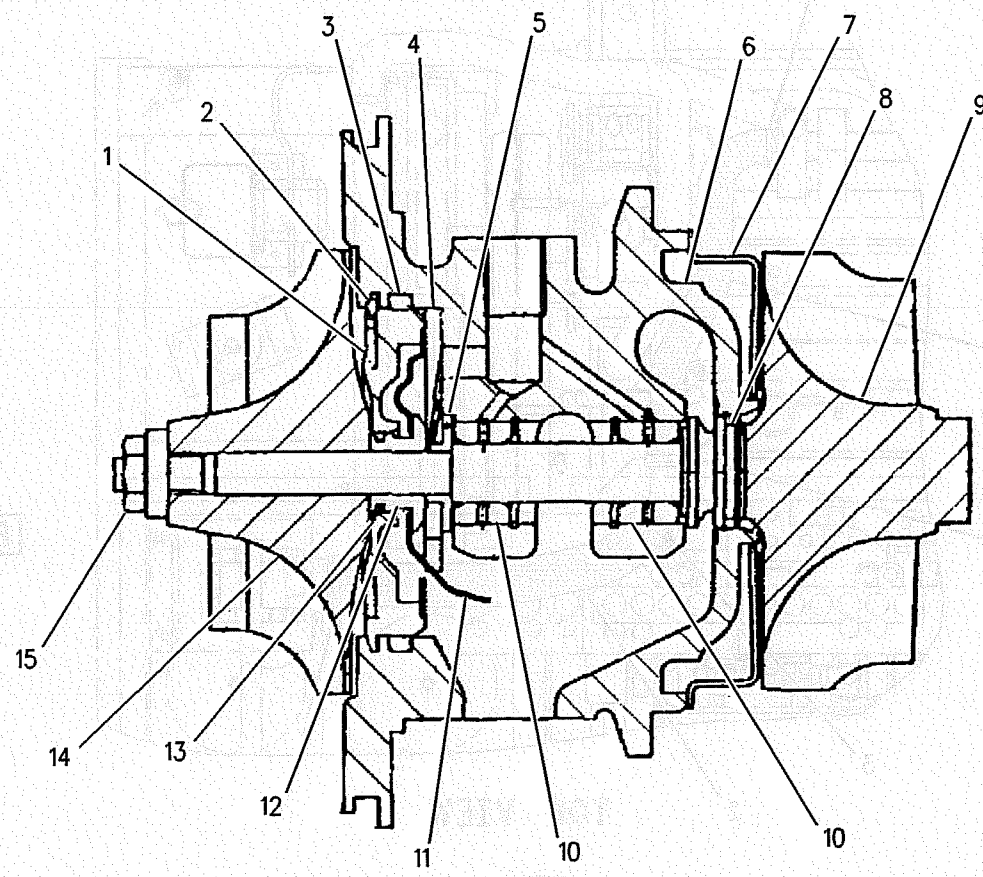

GRAPHIC #1 **<END>** g00315677

AIR INLET AND EXHAUST SYSTEM

201-3833 LINES GP-AIR

S/N: SBN1-UP; RAW1-UP

PART OF 201-3836 INSTALLATION AR-ENGINE

SMCS-1058 **i01847712**

NOTE	REF NO	GRAPHIC REF	PART NUMBER	QTY	PART NAME 1 2 3 4 5 6 (PRODUCT LEVEL)	SEE PAGE
	1	1	**8T-4986**	1	CLAMP-HOSE	
	2	1	**205-6686**	1	HOSE-AIR	
	3	1	**8T-4985**	2	CLAMP-HOSE	
	4	1	**8T-4984**	1	CLAMP-HOSE	
	5	1	**205-6687**	1	HOSE-AIR	

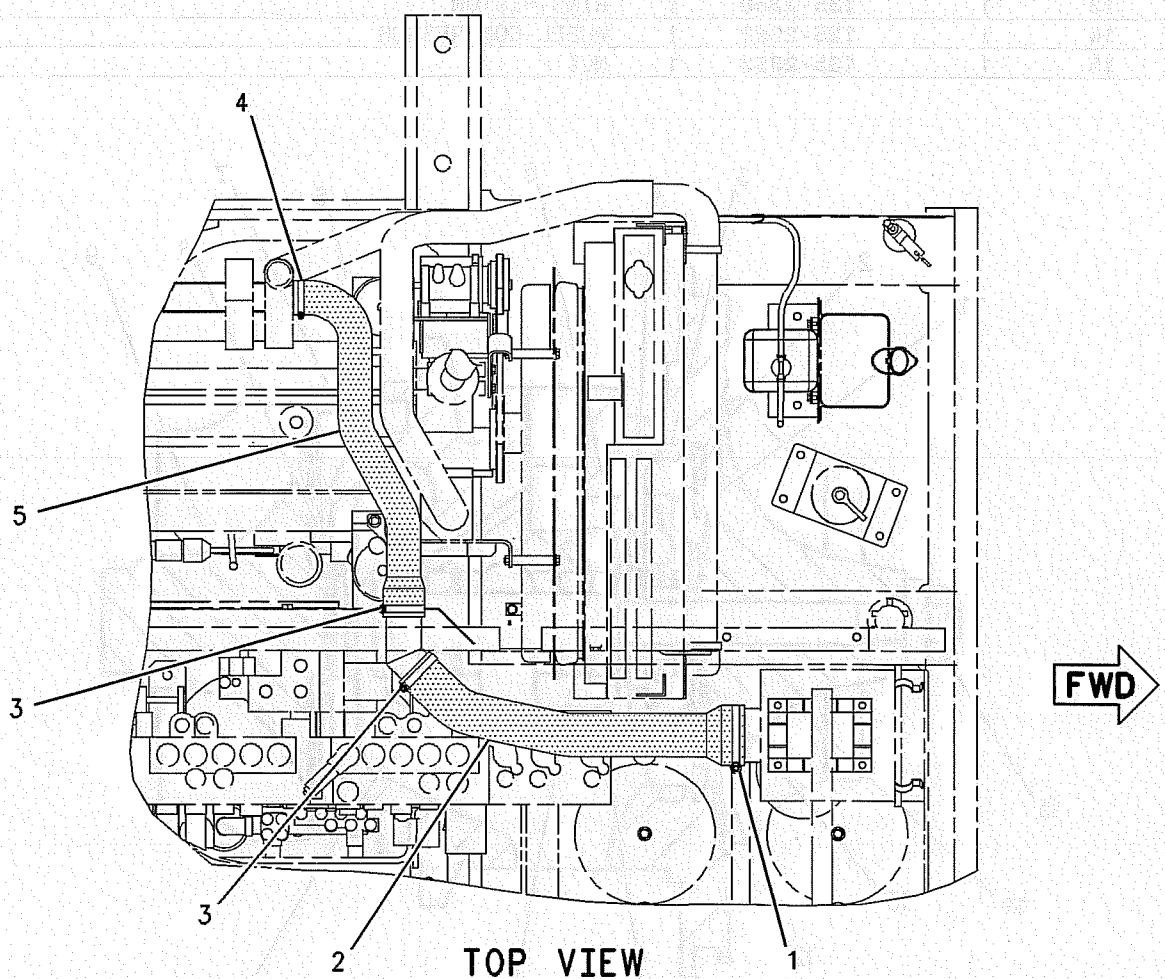

GRAPHIC #1 **<END>** g00941692

AIR INLET AND EXHAUST SYSTEM

204-0875 LINES GP-COOLING AIR

S/N: SBN1-UP; RAW1-UP

PART OF 201-3836 INSTALLATION AR-ENGINE

SMCS-1087 **i01847752**

NOTE	REF NO	GRAPHIC REF	PART NUMBER	QTY	PART NAME 1 2 3 4 5 6 (PRODUCT LEVEL)	SEE PAGE
	1	1	**204-0941**	1	PIPE AS	
	2	1	**210-8107**	1	HOSE	
	3	1	**204-0946**	1	HOSE	
	4	1	**204-0947**	1	HOSE	
	5	1	**8T-4984**	7	CLAMP-HOSE	
	6	1	**8T-6703**	3	CLAMP-HOSE	
M	7	1	**8T-4136**	4	BOLT (M10X1.5X25MM)	
	8	1	**8T-4121**	6	WASHER-HARD (11X21X2.5MM THK)	
	9	1	**210-8011**	1	HOSE	
	10	1	**210-8013**	1	PIPE AS	
M	10A	1	**8T-3490**	2	NUT-WELD (M10X1.5 THD)	
	11	1	**210-8012**	1	SUPPORT	
M	12	1	**8T-4137**	2	BOLT (M10X1.5X20MM)	
	13	1	**210-8108**	1	HOSE	

M-METRIC PART

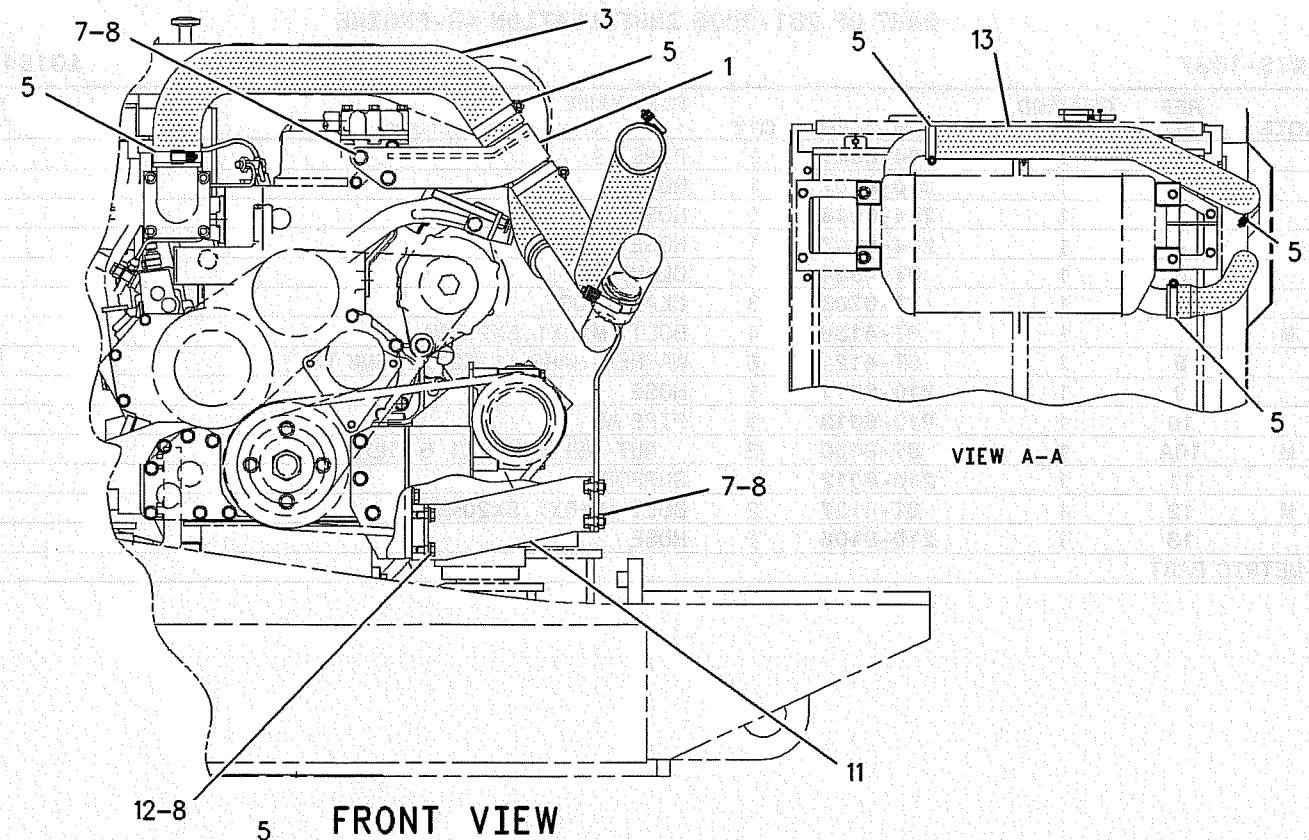

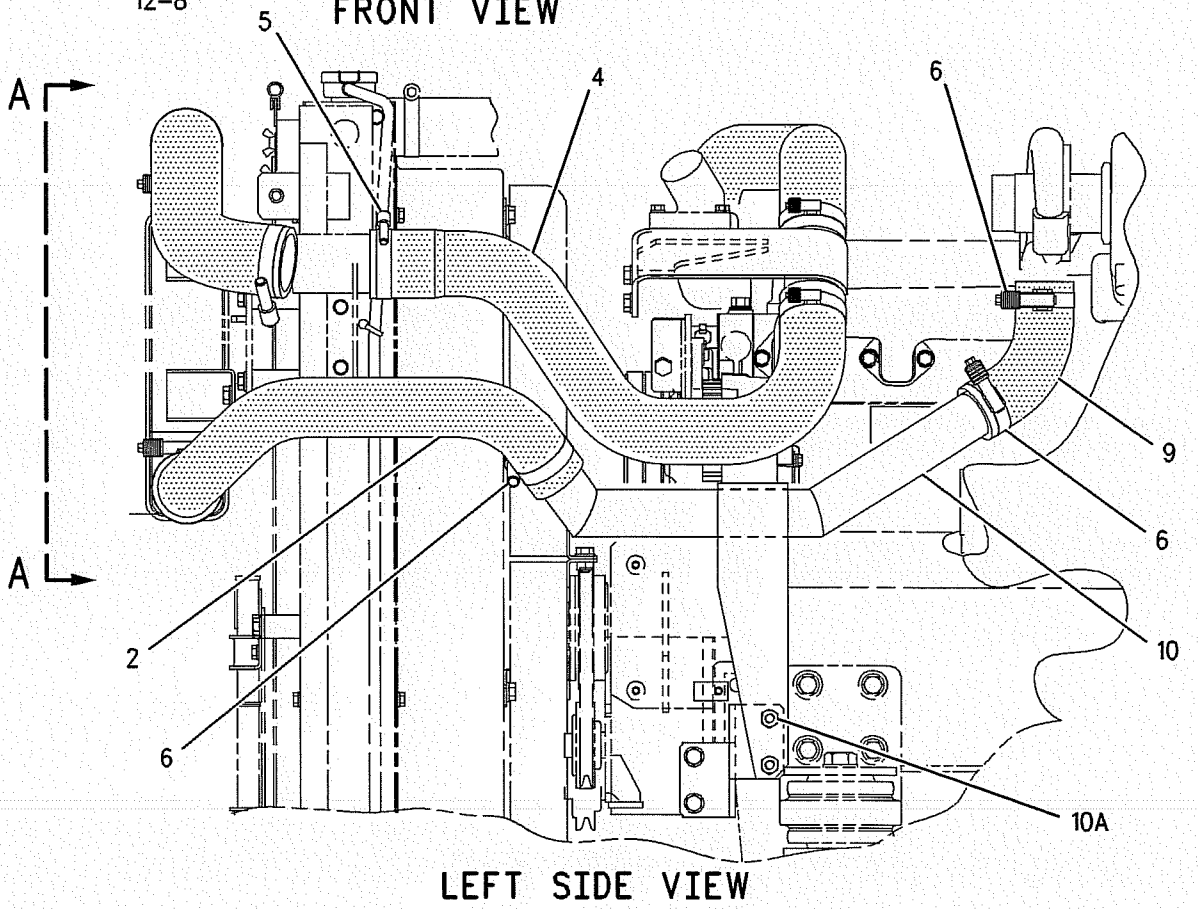

GRAPHIC #1

<END>

g00941561

AIR INLET AND EXHAUST SYSTEM

162-6184 LINES GP-MUFFLER DRAIN

S/N: SBN1-UP; RAW1-UP

PART OF 201-3836 INSTALLATION AR-ENGINE

SMCS-1062 **i01386037**

NOTE	REF NO	GRAPHIC REF	PART NUMBER	QTY	PART NAME 1 2 3 4 5 6 (PRODUCT LEVEL)	SEE PAGE
	1	1	**8T-4121**	1	WASHER-HARD (11X21X2.5MM THK)	
M	2	1	**8T-4191**	1	BOLT (M10X1.50X16MM)	
	3	1	**171-9072**	1	PIPE AS	
	4	1	**5P-4961**	1	CLAMP-HOSE	
	5	1	**096-0061**	1	STRAP-CABLE	
E	6	1	**5P-1442**		HOSE (69CM)	
	7	1	**171-9073**	1	CLIP	

E-ORDER BY THE CENTIMETER
M-METRIC PART

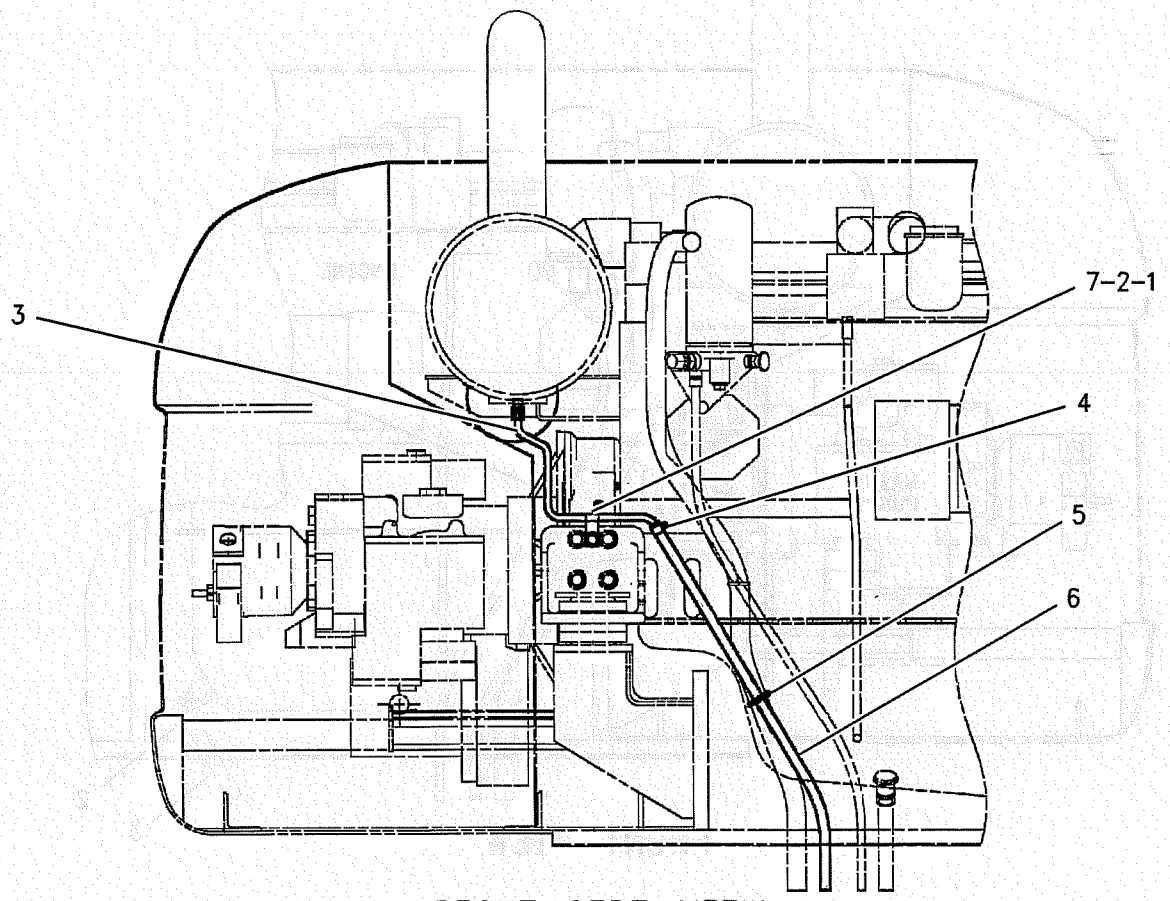

RIGHT SIDE VIEW

GRAPHIC #1 **<END>** g00682825

AIR INLET AND EXHAUST SYSTEM

162-6185 LINES GP-MUFFLER DRAIN

S/N: SBN1-UP; RAW1-UP

PART OF 201-3836 INSTALLATION AR-ENGINE

SMCS-1062 **i01494060**

NOTE	REF NO	GRAPHIC REF	PART NUMBER	QTY	PART NAME 1 2 3 4 5 6 (PRODUCT LEVEL)	SEE PAGE
	1	1	**096-0061**	1	STRAP-CABLE	
	2	1	**095-1388**	1	CLAMP-HOSE	
E	3	1	**5P-0743**		HOSE (17CM)	

E-ORDER BY THE CENTIMETER

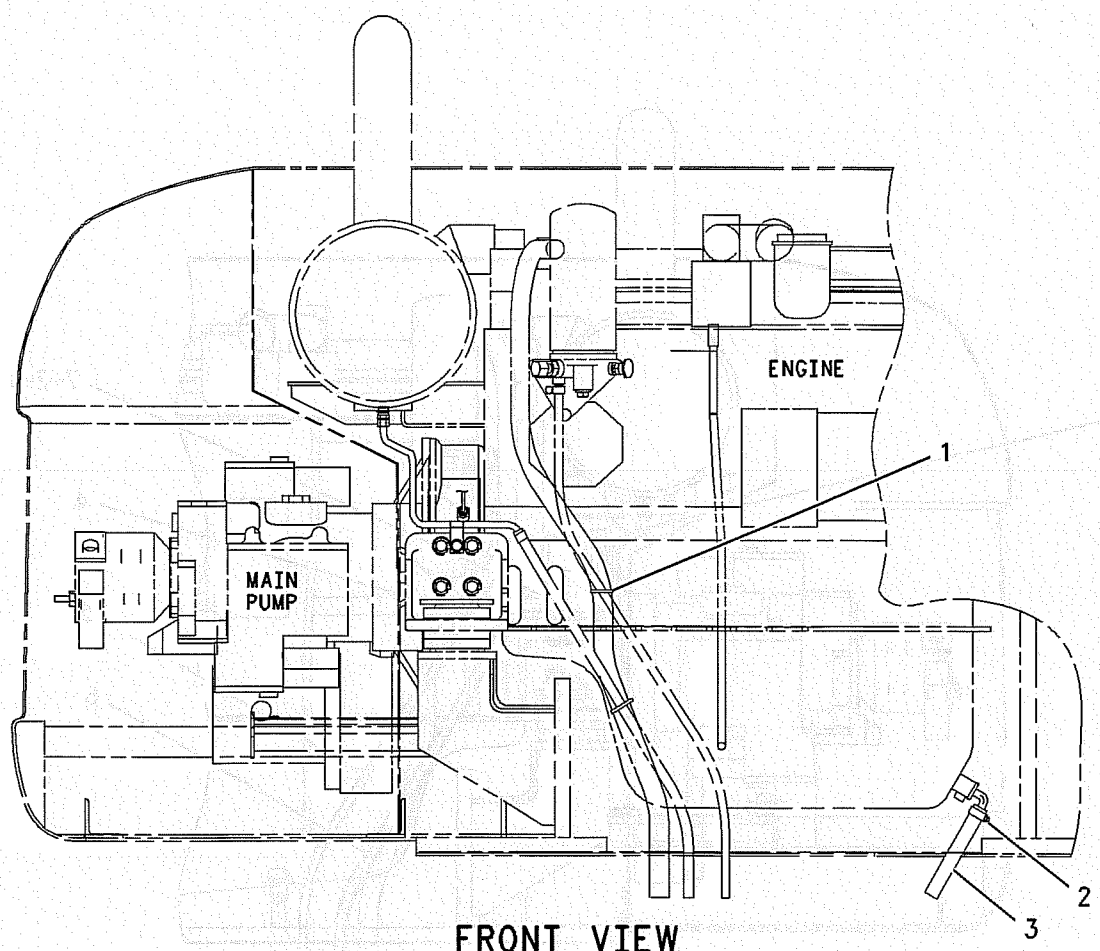

FRONT VIEW

GRAPHIC #1 **<END>** g00775815

AIR INLET AND EXHAUST SYSTEM

212-8552 MANIFOLD GP-EXHAUST

S/N: 7JK1-UP
PART OF 201-3878 ENGINE AR
ALSO AN ATTACHMENT

SMCS-1059 **i01889302**

NOTE	REF NO	GRAPHIC REF	PART NUMBER	QTY	PART NAME 1 2 3 4 5 6 (PRODUCT LEVEL)	SEE PAGE
	1	1	**178-6552**	1	MANIFOLD	
	2	1	**178-6553**	2	GASKET	
M	3	1	**178-6554**	4	STUD (M10X1.5X15MM/M10X1.25X20MM)	
	4	1	**5I-7742**	1	GASKET	
	5	1	**5I-7633**	8	NUT (M10 X 1.25 THD)	
	6	1	**5I-7549**	12	STUD (M8 X 1.25 X 86MM)	
	7	1	**5I-7550**	10	SPACER	
	8	1	**5I-8013**	12	WASHER (6MM THK)	
	9	1	**212-8489**	12	NUT	
	10	1	**3B-4505**	2	LOCKWASHER	
	11	1	**5I-7601**	2	SPACER	
M	12	1	**091-3474**	2	NUT (M8 X 1.25-6H THD)	

M-METRIC PART

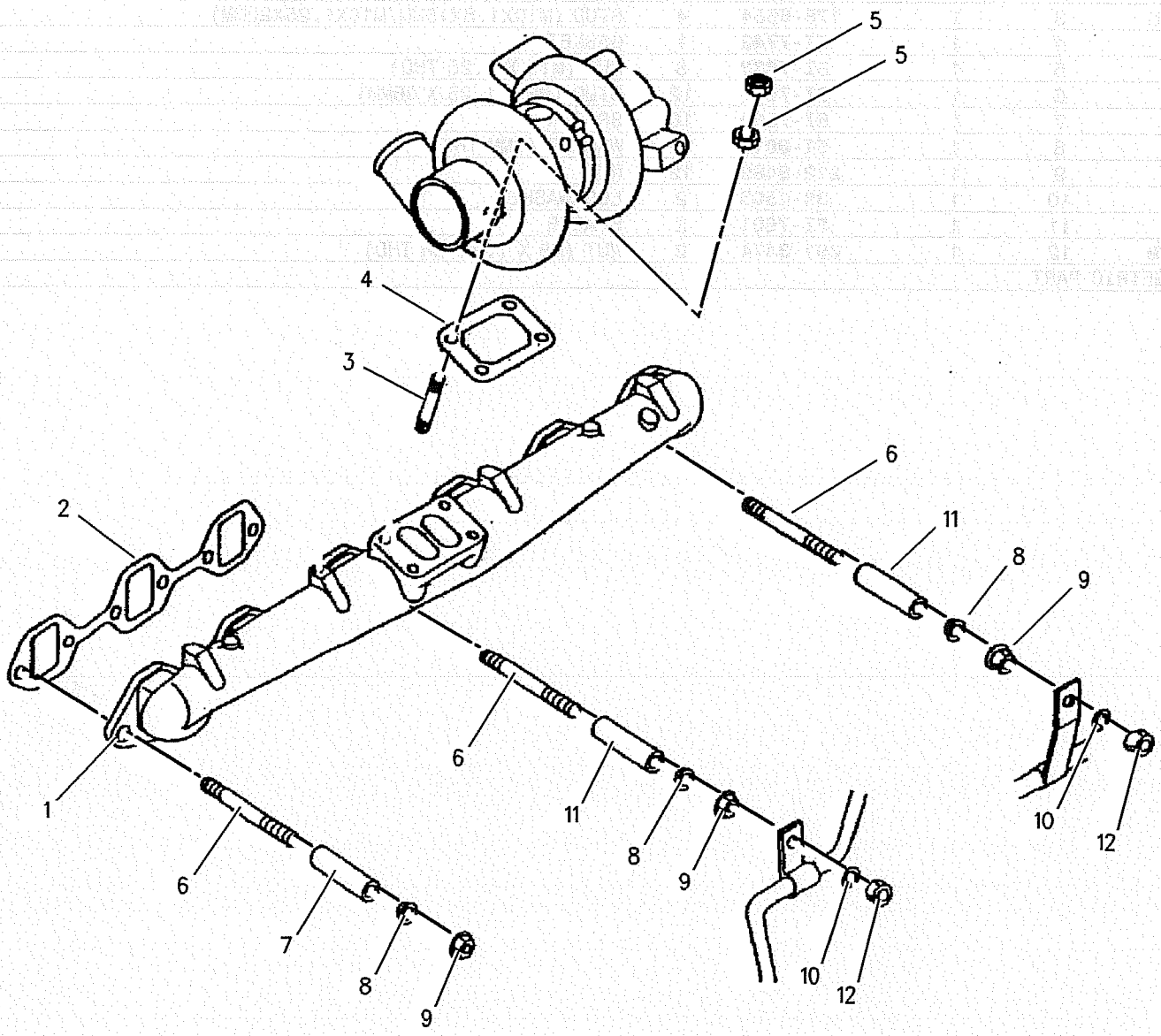

GRAPHIC #1 **<END>** g00923030

AIR INLET AND EXHAUST SYSTEM

212-8551 MANIFOLD GP-INLET

S/N: 7JK1-UP
PART OF 201-3878 ENGINE AR
ALSO AN ATTACHMENT

SMCS-1058 **i01889303**

NOTE	REF NO	GRAPHIC REF	PART NUMBER	QTY	PART NAME 1 2 3 4 5 6 (PRODUCT LEVEL)	SEE PAGE
	1	1	**5I-5010**	4	BOLT (M8 X 1.25 X 65MM)	
M	2	1	**7X-2537**	12	BOLT (M8X1.25X35MM)	
	3	1	**5I-7678**	1	GASKET	
	4	1	**168-5057**	1	HEATER AS	
	5	1	**212-8579**	12	BOLT	
	6	1	**3B-4505**	16	LOCKWASHER	
	7	1	**5I-7677**	1	GASKET	
	8	1	**212-8577**	1	MANIFOLD	
	9	1	**212-8578**	2	GASKET	
	10	1	**5I-8021**	1	ELBOW AS	
	10A	1	**5I-8023**	1	PLUG	

M-METRIC PART

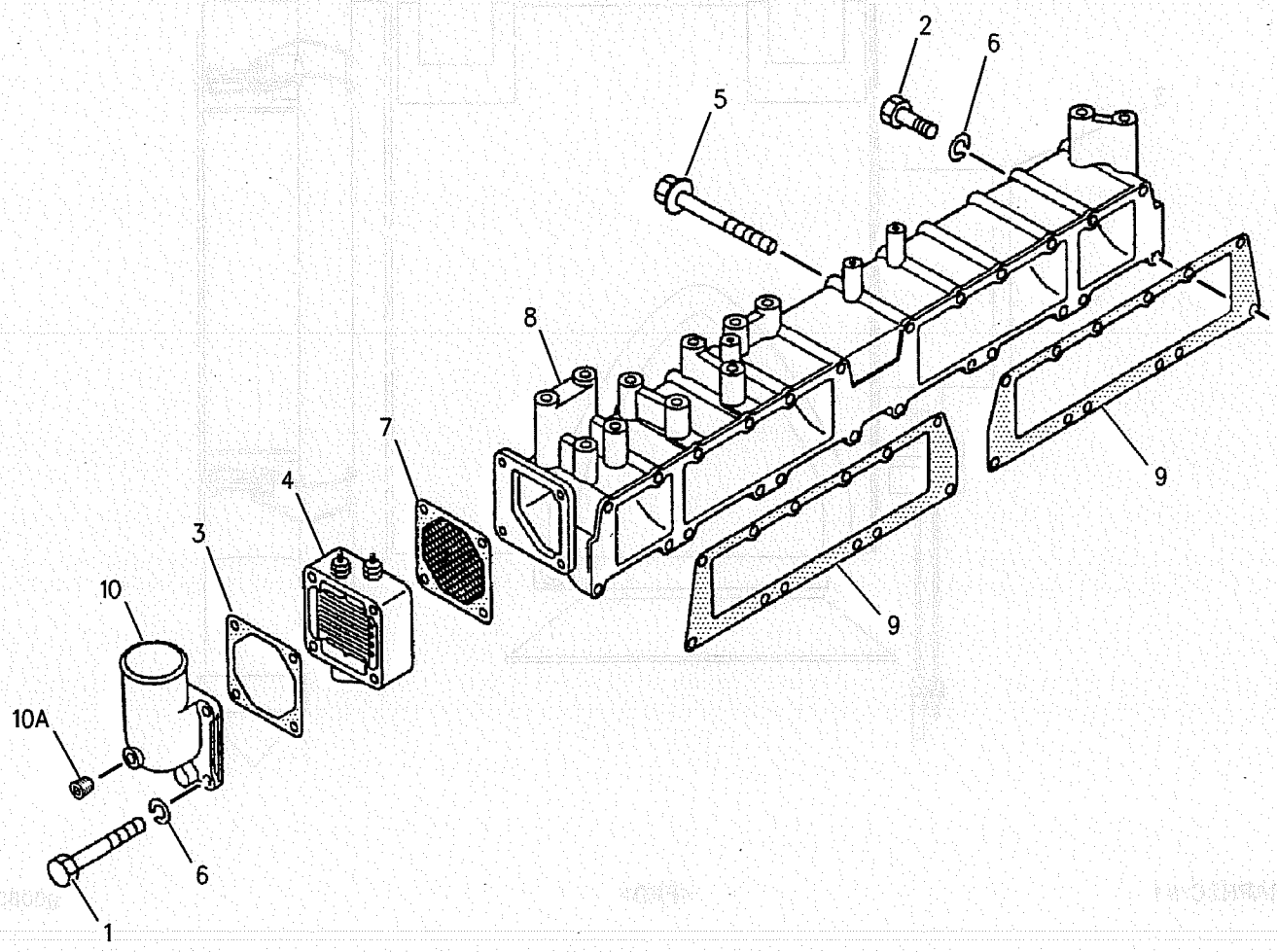

GRAPHIC #1 **<END>** g00923445

AIR INLET AND EXHAUST SYSTEM

162-6232 MOUNTING GP-AIR CLEANER

S/N: SBN1-UP; RAW1-UP

PART OF 201-3836 INSTALLATION AR-ENGINE

SMCS-1051 **i01386042**

NOTE	REF NO	GRAPHIC REF	PART NUMBER	QTY	PART NAME 1 2 3 4 5 6 (PRODUCT LEVEL)	SEE PAGE
	1	1	**8T-4121**	4	WASHER-HARD (11X21X2.5MM THK)	
M	2	1	**8T-4137**	4	BOLT (M10X1.5X20MM)	
Y	3	1	*162-6201*	1	AIR CLEANER GP	56

M-METRIC PART
Y-SEPARATE ILLUSTRATION

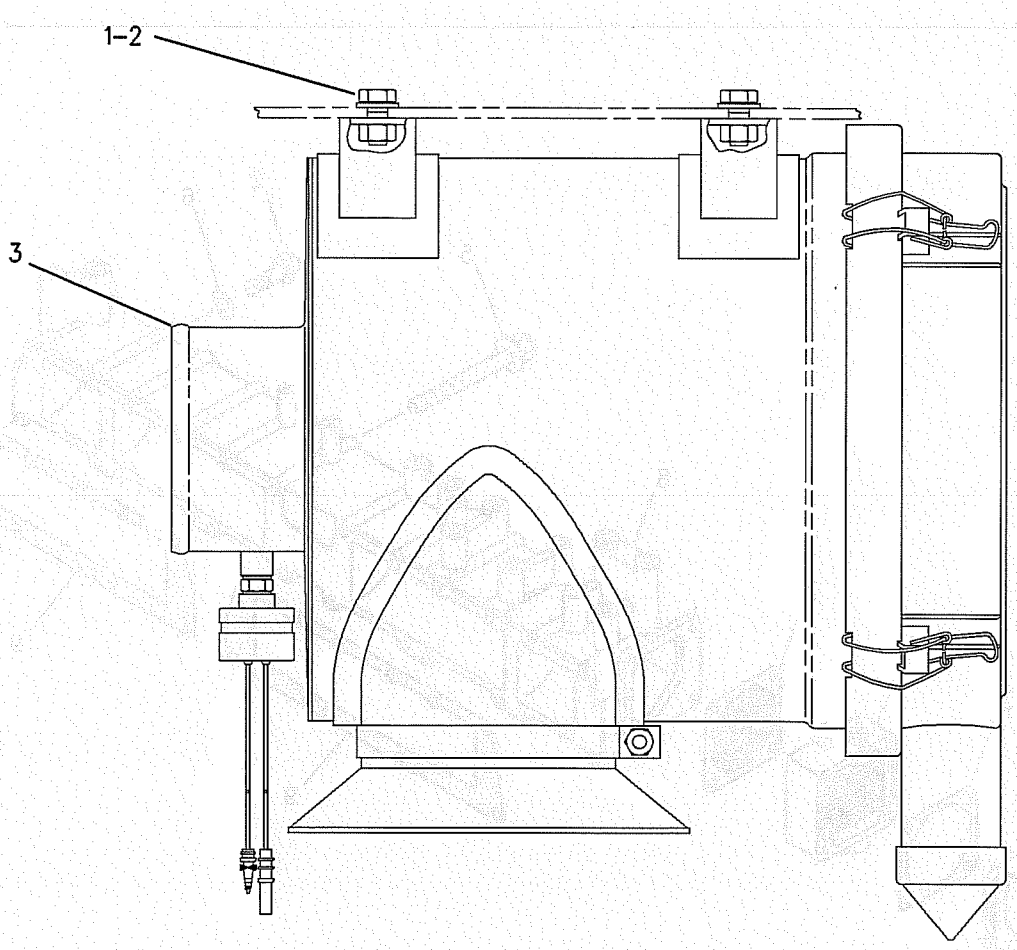

GRAPHIC #1 **<END>** g00684040

AIR INLET AND EXHAUST SYSTEM

212-8553 MUFFLER GP

S/N: 7JK1-UP
PART OF 201-3878 ENGINE AR
ALSO AN ATTACHMENT

SMCS-1062 **i01889294**

NOTE	REF NO	GRAPHIC REF	PART NUMBER	QTY	PART NAME 1 2 3 4 5 6 (PRODUCT LEVEL)	SEE PAGE
	1	1	**212-8580**	1	MUFFLER	
	2	1	**212-8581**	1	BRACKET	
	3	1	**212-8582**	1	BRACKET	
	4	1	**212-8583**	2	U-BOLT	
M	5	1	**8T-4136**	4	BOLT (M10X1.5X25MM)	
M	6	1	**6V-8231**	8	NUT (M10 X 1.25 THD)	
	7	1	**5I-8040**	1	PIPE	
	8	1	**5I-7679**	1	GASKET	
M	9	1	**178-6554**	3	STUD (M10X1.5X15MM/M10X1.25X20MM)	
	10	1	**5I-7633**	6	NUT (M10 X 1.25 THD)	
	11	1	**094-7583**	1	CLAMP AS	
	12	1	**7X-0796**	4	LOCKWASHER	

M-METRIC PART

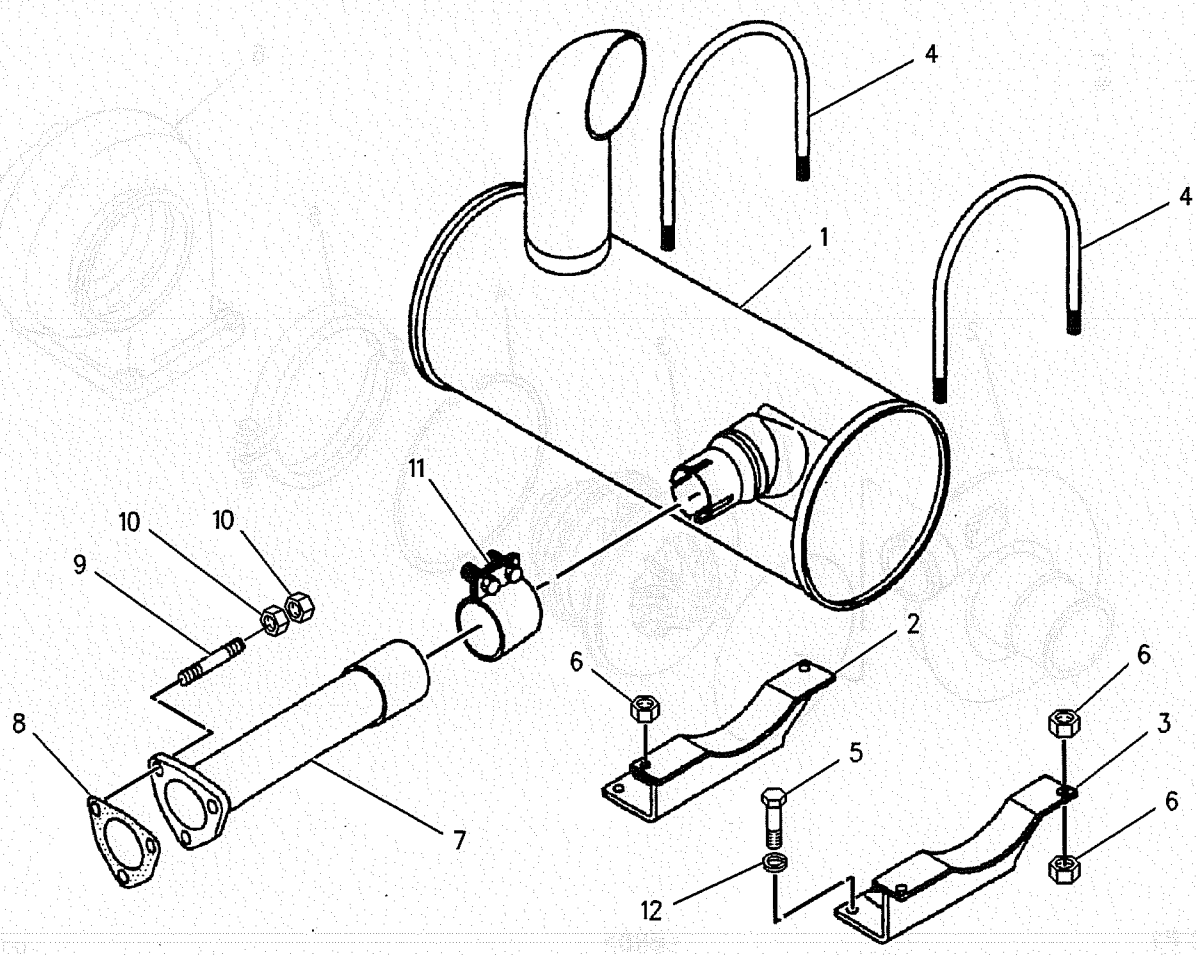

GRAPHIC #1 **<END>** g00878150

AIR INLET AND EXHAUST SYSTEM

205-6741 TURBOCHARGER GP

S/N: 7JK1-UP
PART OF 201-3878 ENGINE AR
ALSO AN ATTACHMENT

SMCS-1052 **i01891537**

NOTE	REF NO	GRAPHIC REF	PART NUMBER	QTY	PART NAME 1 2 3 4 5 6 (PRODUCT LEVEL)	SEE PAGE
	2	1	**5I-7587**	1	COVER	
Y	3	1	**5I-7589**	1	CARTRIDGE AS-TURBOCHARGER	59
	4	1	**5I-7748**	1	RING	
	5	1	**5I-7602**	1	COUPLING AS	
	6	1	**5I-8041**	1	HOUSING	
	7	1	**5I-7981**	1	SEAL	

Y-SEPARATE ILLUSTRATION

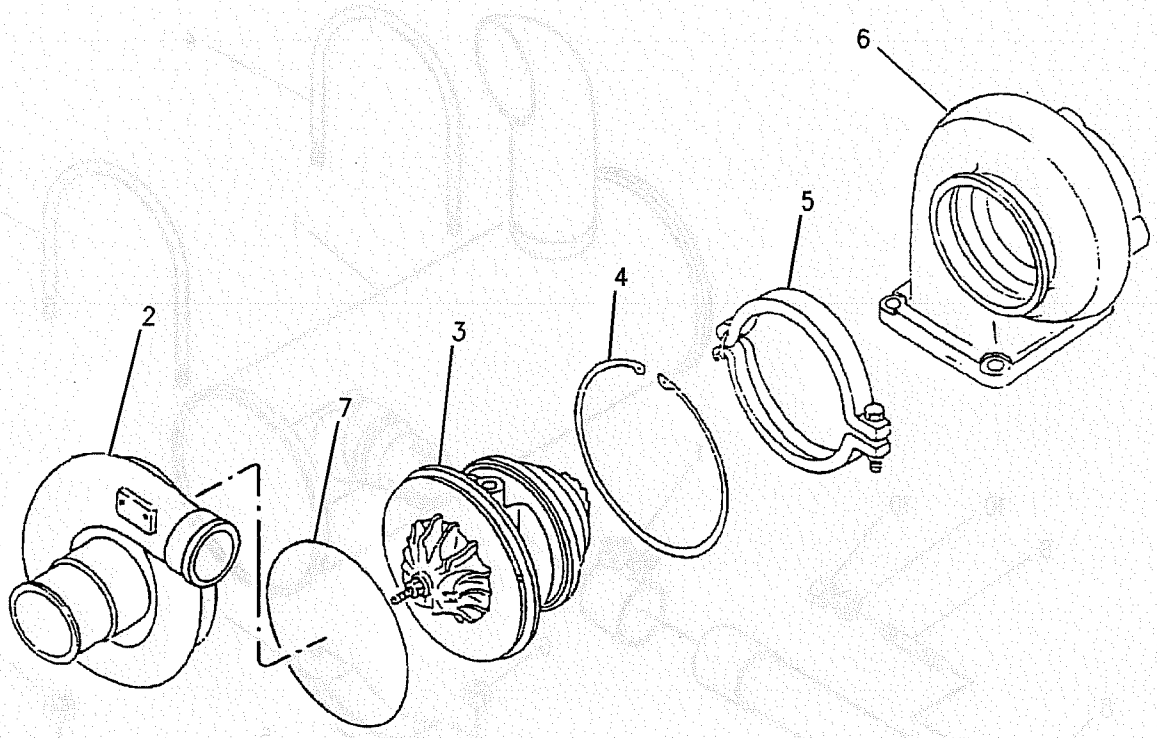

GRAPHIC #1 **<END>** g00680292

FUEL SYSTEM

212-8560 FILTER GP-FUEL

S/N: 7JK1-UP
PART OF 201-3878 ENGINE AR
ALSO AN ATTACHMENT

SMCS-1261 **i01889282**

NOTE	REF NO	GRAPHIC REF	PART NUMBER	QTY	PART NAME 1 2 3 4 5 6 (PRODUCT LEVEL)	SEE PAGE
	1	1	**196-8219**	1	FILTER AS	
	1A	1	**094-9726**	2	BOLT (M14 X 1.5 X 26MM)	
	1B	1	**095-2040**	4	WASHER	
	1C	1	**094-9725**	1	PLUG	
	1D	1	**095-2038**	1	WASHER (2MM THK)	
	1E	1	**196-8220**	1	BRACKET	
	1F	1	**1R-0751**	1	FILTER AS-FUEL	
	2	1	**212-8610**	1	BRACKET	
	3	1	**212-8612**	1	BRACKET	
M	4	1	**8T-4196**	4	BOLT (M10X1.5X35MM)	
	5	1	**190-5830**	1	TUBE	
	6	1	**183-8224**	2	TUBE	
	7	1	**7X-0796**	8	LOCKWASHER	
	8	1	**190-5828**	1	HOSE	
	9	1	**190-5829**	1	HOSE	
	10	1	**117-6430**	1	HOSE	
	11	1	**099-5041**	2	BOLT (M14 X 1.5 X 27MM)	
	12	1	**095-2040**	4	WASHER	
	13	1	**137-5541**	1	PUMP GP-FUEL PRIMING	
	13A	1	**1H-8171**	1	SEAL-O-RING	
	13B	1	**6V-1903**	1	SEAL-O-RING	
	13C	1	**7E-2985**	2	VALVE AS	
	14	1	**1P-0436**	1	GASKET (FUEL PRIMING PUMP)	
M	15	1	**8T-6466**	2	BOLT (M10X1.50X60MM)	
M	16	1	**178-6595**	1	BOLT (M6 X 1 X 30MM)	
M	17	1	**8T-7547**	1	BOLT (M8X1.25X30MM)	
CM	18	1	**8T-4182**	1	BOLT (M10X1.5X45MM)	
	19	1	**096-2500**	1	WASHER (1.5MM THK)	
	20	1	**3B-4505**	1	LOCKWASHER	

C-CHANGE FROM PREVIOUS TYPE
M-METRIC PART

212-8560 FILTER GP-FUEL (contd.)

i01889282

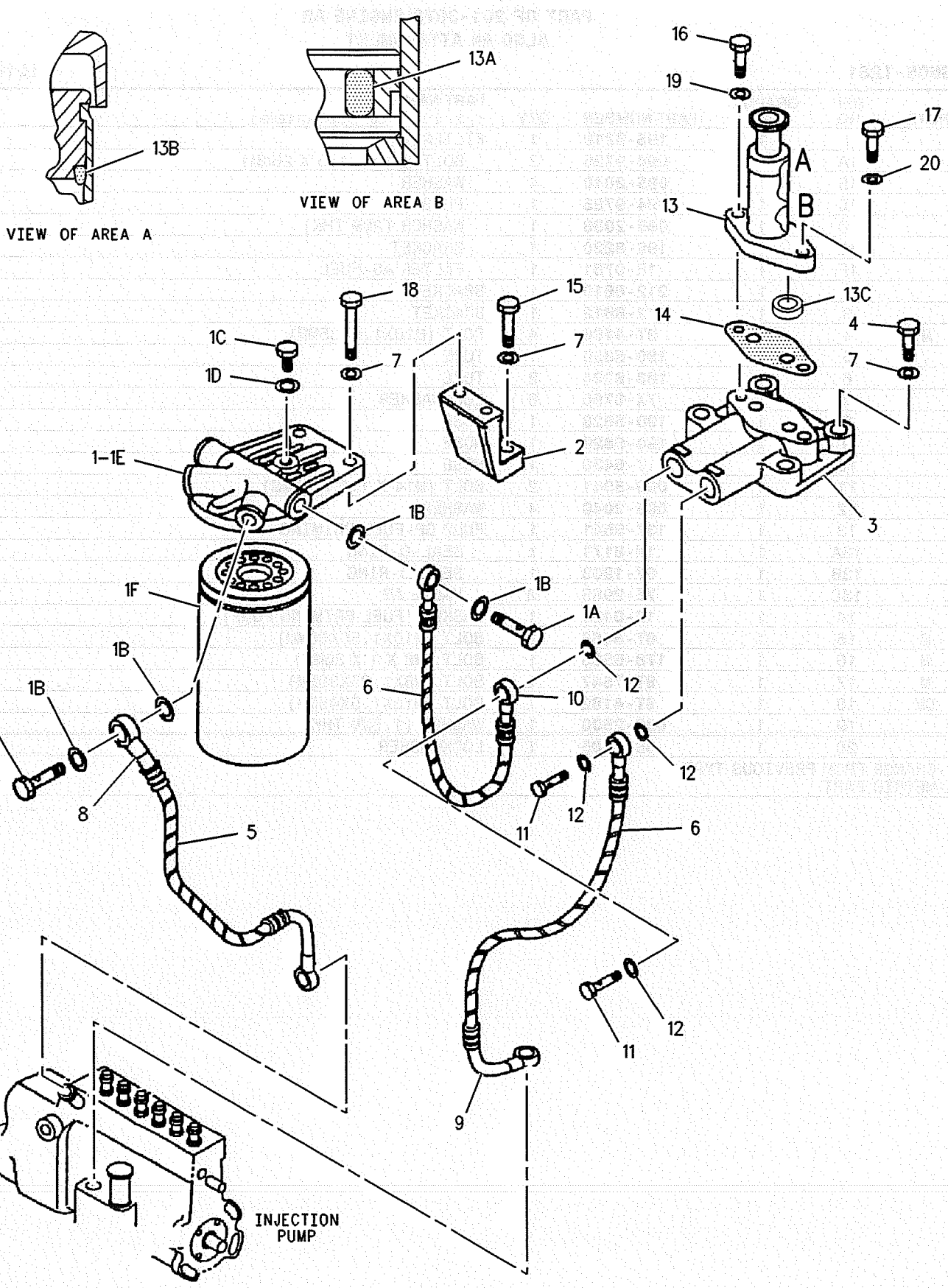

GRAPHIC #1

<END>

g00923253

FUEL SYSTEM

142-3845 LINES GP-FUEL

S/N: SBN1-UP; RAW1-UP

PART OF 193-6848, 193-6849 CHASSIS AR

SMCS-1274 **i01888524**

NOTE	REF NO	GRAPHIC REF	PART NUMBER	QTY	PART NAME 1 2 3 4 5 6 (PRODUCT LEVEL)	SEE PAGE
E	1	1	**5P-1442**		HOSE (380CM)	
E	1A	1	**5P-1442**		HOSE (440CM)	
E	1B	1	**5P-1442**		HOSE (245CM)	
E	2	1	**5P-1420**		HOSE (40CM)	
Y	3	2	**145-8862**	1	SEPARATOR GP-WATER	87
	4	2	**177-5830**	1	BRACKET AS	
	5	1,2	**095-1386**	7	CLAMP-HOSE	
M	6	2	**8T-4137**	5	BOLT (M10X1.5X20MM)	
M	7	2	**8T-4185**	1	BOLT (M10X1.5X50MM)	
M	8	2	**8T-4196**	2	BOLT (M10X1.5X35MM)	
M	9	1	*135-8573*	2	BOLT AS	
					(EACH INCLUDES)	
		1	**5P-1076**	1	WASHER-HARD (13.5X30X4MM THK)	
M		1	**8T-4192**	1	BOLT (M12X1.75X25MM)	
	10	1,2	**8T-4121**	11	WASHER-HARD (11X21X2.5MM THK)	
M	11	2	**8T-4133**	2	NUT (M10X1.5 THD)	
	12	1	**7Y-8167**	1	GROMMET	
	13	1	**134-3299**	1	GROMMET	
	14	1	**170-2901**	1	GROMMET	
	15	2	**6Y-9571**	1	SPACER	
	16	1,2	**5K-8451**	6	CLIP	
	17	2	**9M-8406**	3	CLIP	
	18	1,2	**096-0061**	2	STRAP-CABLE	
	19	2	**1J-9671**	4	SEAL-O-RING	
	20	2	**6V-9027**	2	SEAL-O-RING	
	21	2	**177-5852**	1	ADAPTER	
	22	2	**8T-9357**	1	ADAPTER	
	23	2	**3E-4091**	2	ELBOW	
	24	2	**3K-8460**	2	PLUG (1/2-20 THD)	
M	25	1	**8T-4191**	1	BOLT (M10X1.5X16MM)	

E-ORDER BY THE CENTIMETER
M-METRIC PART
Y-SEPARATE ILLUSTRATION

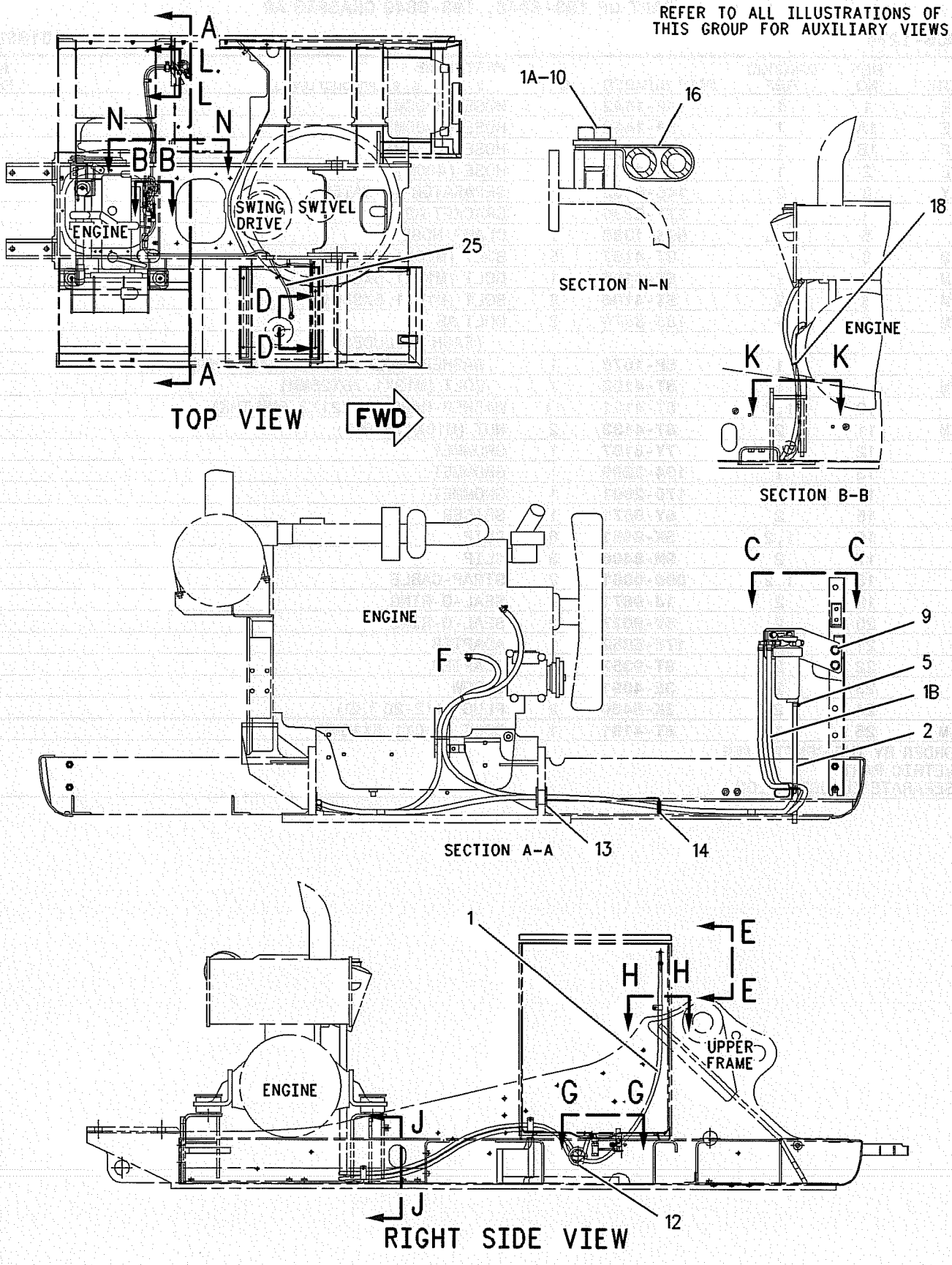

GRAPHIC #1

g00948060

142-3845 LINES GP-FUEL (contd.) i01888524

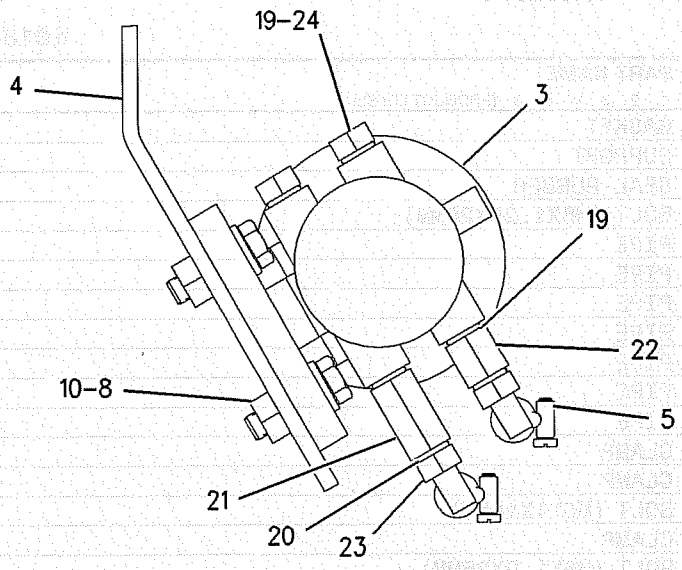

VIEW C-C

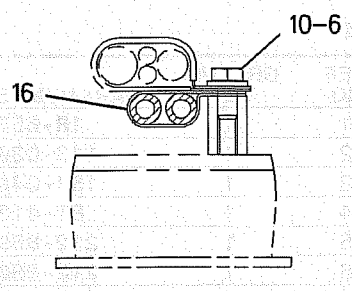

VIEW L-L

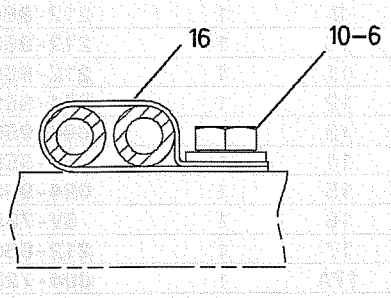

SECTION J-J

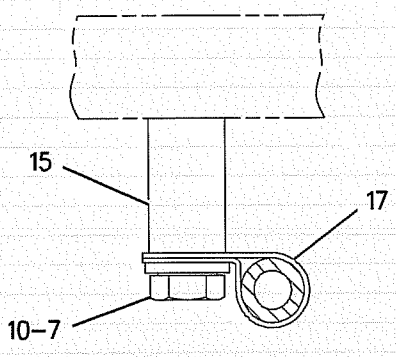

SECTION G-G

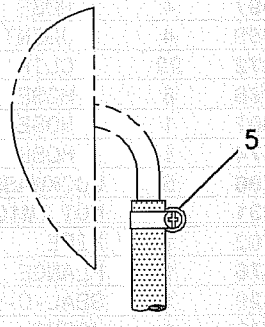

VIEW E-E

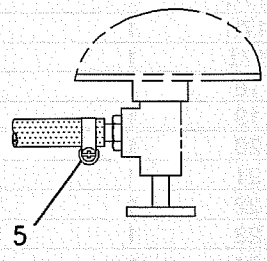

VIEW D-D

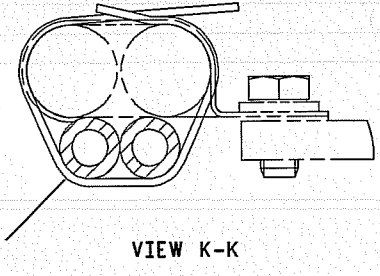

VIEW K-K

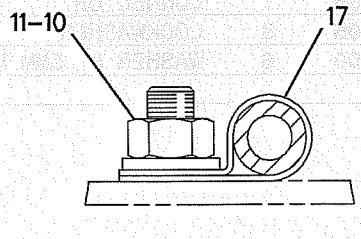

SECTION H-H

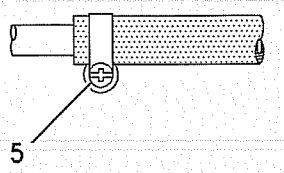

VIEW OF AREA F

GRAPHIC #2 **<END>** g00949144

FUEL SYSTEM

212-8558 LINES GP-FUEL

S/N: 7JK1-UP
PART OF 201-3878 ENGINE AR
ALSO AN ATTACHMENT

SMCS-1274 **i01889286**

NOTE	REF NO	GRAPHIC REF	PART NUMBER	QTY	PART NAME 1 2 3 4 5 6 (PRODUCT LEVEL)	SEE PAGE
	1	1	**1R-6573**	6	GASKET	
	2	1	**113-0363**	6	SUPPORT	
	3	1	**154-0489**	6	SEAL-RUBBER	
M	4	1	**8T-4189**	6	BOLT (M8X1.25X20MM)	
	5	1	**212-8599**	1	PIPE	
	6	1	**212-8600**	1	PIPE	
	7	1	**212-8601**	1	PIPE	
	8	1	**212-8602**	1	PIPE	
	9	1	**212-8603**	1	PIPE	
	10	1	**212-8604**	1	PIPE	
	11	1	**212-8605**	1	PIPE	
	12	1	**094-9596**	3	CLAMP	
	13	1	**094-9597**	3	CLAMP	
M	14	1	**5C-9553**	3	BOLT (M6X1X16MM)	
	15	1	**094-9581**	6	CLAMP	
M	16	1	**6V-7357**	3	BOLT (M6X1.0X25MM)	
	17	1	**212-8606**	1	HOSE AS	
	17A	1	**094-7235**	1	CAP	
	17B	1	**096-0174**	3	CLIP-HOSE	
	17C	1	**195-8366**	2	JOINT	
	17D	1	**212-8497**	4	HOSE	
	17E	1	**195-8369**	4	JOINT	
	17F	1	**195-8372**	22	CLIP	
	17G	1	**195-8368**	6	HOSE	
	17H	1	**212-8607**	1	HOSE	
	17I	1	**217-5474**	1	HOSE	
	18	1	**7X-0796**	5	LOCKWASHER	
M	19	1	**6V-8231**	5	NUT (M10 X 1.25 THD)	
	20	1	**193-2702**	1	PIPE	
	21	1	**5I-7576**	1	FLANGE	
	22	1	**096-9529**	1	SEAL-O-RING	
	23	1	**5I-7743**	1	JOINT	
	24	1	**125-2983**	1	JOINT	
	25	1	**8T-4121**	4	WASHER-HARD (11X21X2.5MM THK)	
	26	1	**5I-5108**	2	BOLT (M8 X 1.25 X 18MM)	
	27	1	**212-8509**	1	BRACKET	
M	28	1	**8T-4179**	1	BOLT (M12X1.75X20MM)	
	29	1	**096-2501**	1	WASHER (3MM THK)	
	30	1	**212-8499**	4	STUD	
	31	1	**5I-8070**	1	PIPE	
	32	1	**5I-8058**	1	CONNECTOR	
	33	1	**3B-4505**	8	LOCKWASHER	
	34	1	**096-2500**	6	WASHER (1.5MM THK)	

M-METRIC PART

212-8558 LINES GP-FUEL (contd.) i01889286

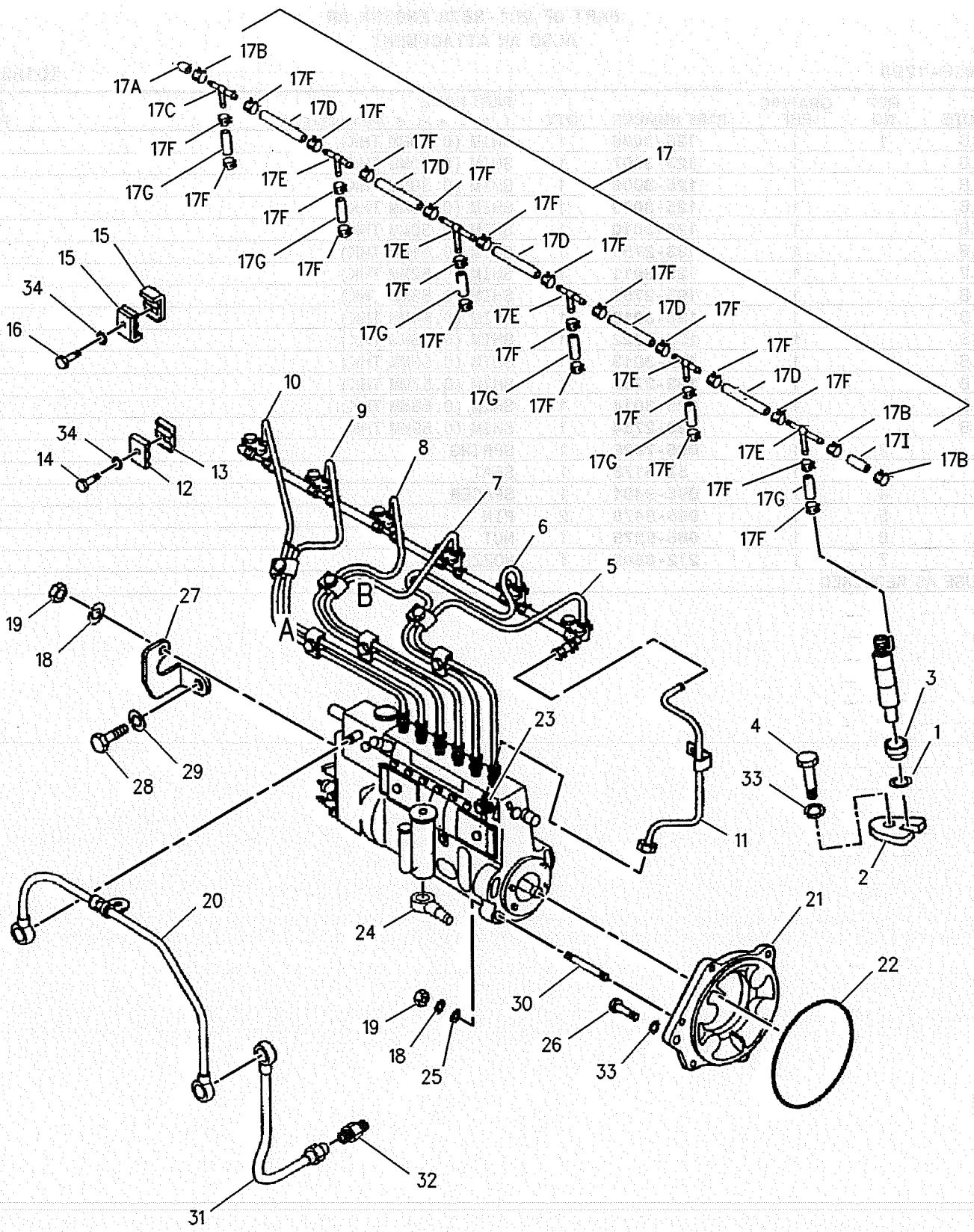

GRAPHIC #1 <END> g00923055

212-8470 NOZZLE GP-UNIT INJECTOR

S/N: 7JK1-UP
PART OF 201-3878 ENGINE AR
ALSO AN ATTACHMENT

SMCS-1290 i01889323

NOTE	REF NO	GRAPHIC REF	PART NUMBER	QTY	PART NAME 1 2 3 4 5 6 (PRODUCT LEVEL)	SEE PAGE
B	1	1	125-3006	1	SHIM (0.10MM THK)	
B		1	125-3007	1	SHIM (0.20MM THK)	
B		1	125-3008	1	SHIM (0.30MM THK)	
B		1	125-3009	1	SHIM (0.40MM THK)	
B		1	125-3010	1	SHIM (0.50MM THK)	
B		1	193-2751	1	SHIM (0.51MM THK)	
B		1	125-3011	1	SHIM (0.52MM THK)	
B		1	193-2752	1	SHIM (0.53MM THK)	
B		1	125-3012	1	SHIM (0.54MM THK)	
B		1	159-6722	1	SHIM (0.55MM THK)	
B		1	125-3013	1	SHIM (0.56MM THK)	
B		1	193-2753	1	SHIM (0.57MM THK)	
B		1	125-3014	1	SHIM (0.58MM THK)	
B		1	193-2754	1	SHIM (0.59MM THK)	
	2	1	096-7928	1	SPRING	
	3	1	5I-5175	1	SEAT	
	4	1	096-9481	1	SPACER	
	5	1	096-9478	2	PIN	
	6	1	085-9275	1	NUT	
	7	1	212-8609	1	NOZZLE AS	

B-USE AS REQUIRED

212-8470 NOZZLE GP-UNIT INJECTOR *(contd.)* i01889323

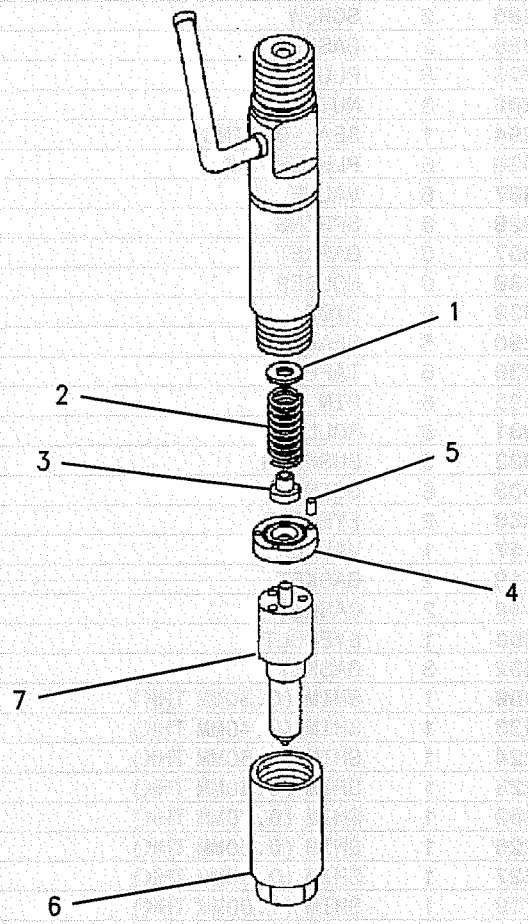

GRAPHIC #1 **<END>** g00879137

FUEL SYSTEM

212-8559 PUMP GP-FUEL INJECTION

S/N: 7JK1-UP
PART OF 201-3878 ENGINE AR
ALSO AN ATTACHMENT

SMCS-1251 **i01889283**

NOTE	REF NO	GRAPHIC REF	PART NUMBER	QTY	PART NAME 1 2 3 4 5 6 (PRODUCT LEVEL)	SEE PAGE
	1	1	096-9492	3	PLATE	
	2	1	125-2922	1	HOUSING	
	3	1	5I-7508	1	GASKET	
	4	1	085-9659	3	STUD	
	5	1	085-9199	1	PLUG	
	6	1	125-2923	1	ADAPTER	
	7	1	125-2924	1	ADAPTER	
	8	1	085-9832	1	COVER	
	9	1	096-9486	2	SCREW	
	10	1	099-2389	2	GASKET	
	11	1	125-2925	6	PLUG	
	12	1	1R-9206	3	NUT	
	13	1	096-8294	1	SEAL-O-RING	
	14	1	217-5436	6	PLUNGER AS	
	15	1	217-5437	6	VALVE	
	16	1	125-2928	6	SPRING	
	17	1	096-8307	6	GASKET	
	18	1	217-5438	6	HOLDER	
	19	1	217-5439	6	STOP	
	20	1	096-8290	6	SEAL	
	21	1	125-2930	6	TAPPET	
	22	1	096-9495	6	PIN	
	23	1	125-2931	6	ROLLER	
	24	1	125-2932	6	BUSHING	
	25	1	125-2933	6	GUIDE	
	26	1,3	085-9888	2	EYEBOLT	
	27	1	5I-5147	1	VALVE	
	28	1	096-1118	2	GASKET	
	29	1	5I-5148	2	GASKET	
	30	1	190-5859	1	EYEBOLT	
	31	1	096-7632	3	GASKET	
B	32	1	096-9408	1	SHIM (0.30MM THK)	
B		1	085-9223	1	SHIM (0.40MM THK)	
B		1	085-9224	1	SHIM (0.50MM THK)	
B		1	085-9225	1	SHIM (0.60MM THK)	
B		1	096-9409	1	SHIM (0.70MM THK)	
B		1	085-9226	1	SHIM (0.80MM THK)	
B		1	085-9227	1	SHIM (0.90MM THK)	
B		1	085-6719	1	SHIM (1.00MM THK)	
B		1	085-9228	1	SHIM (1.10MM THK)	
B		1	085-9229	1	SHIM (1.20MM THK)	
B		1	085-9230	1	SHIM (1.30MM THK)	
B		1	085-6720	1	SHIM (1.40MM THK)	
B		1	085-9231	1	SHIM (0.55MM THK)	
B		1	085-9232	1	SHIM (0.65MM THK)	
B		1	085-9233	1	SHIM (0.75MM THK)	
B		1	085-9234	1	SHIM (0.85MM THK)	
B		1	085-9235	1	SHIM (0.95MM THK)	
B		1	085-9236	1	SHIM (1.05MM THK)	
B		1	085-9237	1	SHIM (1.15MM THK)	
B		1	085-9238	1	SHIM (1.25MM THK)	
B		1	085-9239	1	SHIM (1.50MM THK)	
B		1	085-9240	1	SHIM (1.60MM THK)	
B		1	085-9241	1	SHIM (0.20MM THK)	
B		1	085-9242	1	SHIM (0.25MM THK)	

212-8559 PUMP GP-FUEL INJECTION *(contd.)* i01889283

NOTE	REF NO	GRAPHIC REF	PART NUMBER	QTY	PART NAME 1 2 3 4 5 6 (PRODUCT LEVEL)	SEE PAGE
B		1	085-9243	1	SHIM (0.35MM THK)	
B		1	085-9244	1	SHIM (0.45MM THK)	
B		1	085-9245	1	SHIM (1.35MM THK)	
B		1	085-9246	1	SHIM (1.45MM THK)	
B		1	085-9247	1	SHIM (1.55MM THK)	
	33	1	096-8310	6	SPRING	
	34	1	096-9500	6	SEAT	
	35	1	096-9502	6	SEAT	
	36	1	096-9506	1	CONTROL	
	37	1	085-9838	1	SCREW	
	38	1	096-9503	6	PINION	
	39	1	096-9505	6	SLEEVE	
	40	1	085-9195	6	SCREW	
	41	1	217-5440	1	CAMSHAFT	
	42	1	096-8273	2	BEARING	
		1	085-6723	2	BEARING	
	43	1	5I-5146	1	NUT	
	44	1	087-8884	1	WASHER	
	45	1	085-9259	1	KEY	
	46	1	096-9507	2	RING	
	47	1	096-9508	1	RING	
B	48	1	096-9410	2	SHIM (0.10MM THK)	
B		1	085-9682	2	SHIM (0.12MM THK)	
B		1	085-9683	2	SHIM (0.14MM THK)	
B		1	085-9684	2	SHIM (0.16MM THK)	
B		1	085-9685	2	SHIM (0.18MM THK)	
B		1	085-9686	2	SHIM (0.30MM THK)	
B		1	096-9411	2	SHIM (0.50MM THK)	
B		1	096-9412	2	SHIM (1.00MM THK)	
B		1	5I-7831	2	SHIM (0.70MM THK)	
	49	1	096-7570	1	SEAL-O-RING	
	50	1	125-2935	1	BEARING	
	51	1,2	125-2936	2	SCREW	
	52	1	096-9385	2	GASKET	
	53	1	096-7571	1	SEAL	
	54	1	085-9197	1	COVER	
	55	1	085-9258	4	BOLT	
	56	1	125-2937	1	GASKET	
	57	2	190-5860	1	HOUSING	
	58	2	085-9211	1	PLUG	
	59	2	190-5861	1	GASKET	
	60	2	190-5862	1	COVER	
	61	2	085-7913	8	BOLT	
	62	2	096-9585	1	ADAPTER	
	63	2	085-9261	1	BOLT	
	64	2	096-8292	1	SEAL-O-RING	
	65	2	190-5863	1	PLATE	
	66	2	190-5864	1	BOLT	
	67	2	217-5441	1	SCREW	
	68	2	190-5887	1	NUT	
B	69	2	190-5909	1	SHIM	
	70	2	190-5871	1	PIN	
	71	2	190-5880	2	SEAL-O-RING	
	72	2	085-9906	1	LIMITER	
	73	2	190-5890	1	SPRING	
	74	2	222-8218	1	LINK	
	75	2	190-5899	1	CONNECTOR	
	76	2	190-5900	1	PIN	
	77	2	190-5901	1	RING	

212-8559 PUMP GP-FUEL INJECTION *(contd.)* i01889283

NOTE	REF NO	GRAPHIC REF	PART NUMBER	QTY	PART NAME 1 2 3 4 5 6 (PRODUCT LEVEL)	SEE PAGE
	78	2	190-5904	1	SEAL-OIL	
	79	2	125-2939	1	GASKET	
	80	2	190-5906	1	BRACKET	
	81	2	190-5907	1	BOLT	
	82	2	190-5908	1	NUT	
	83	2	085-9658	5	BOLT	
	84	2	190-5881	1	COVER	
	85	2	190-5885	1	SCREW	
	86	2	085-9865	1	NUT	
	87	2	190-5886	2	BOLT	
	88	2	085-9209	1	SCREW	
	89	2	085-9205	1	NUT	
	90	2	085-9265	4	BOLT	
	91	2	190-5888	1	COVER	
	92	2	085-9909	1	FLYWEIGHT AS	
	93	2	085-9653	1	KEY	
	94	2	096-8280	1	WASHER	
	95	2	085-9267	1	NUT	
	96	2	190-5889	1	SLEEVE	
	97	2	5I-5154	1	CAPSULE	
	98	2	217-5442	1	SPRING	
	99	2	085-9914	1	SPRING	
	100	2	196-8125	1	NUT	
	101	2	096-8274	2	GASKET	
	102	2	085-9206	1	NUT	
B	103	2	085-9677	1	SHIM (0.20MM THK)	
B		2	085-9678	1	SHIM (0.30MM THK)	
B		2	085-9679	1	SHIM (0.40MM THK)	
B		2	085-9680	1	SHIM (1.00MM THK)	
B		2	085-9882	1	SHIM (0.50MM THK)	
B		2	085-9883	1	SHIM (1.50MM THK)	
B		2	085-9884	1	SHIM (2.00MM THK)	
B		2	085-9885	1	SHIM (3.00MM THK)	
B		2	085-9886	1	SHIM (4.00MM THK)	
	104	2	085-9269	1	NUT	
	105	2	217-5443	1	LEVER	
	106	2	190-5896	1	LEVER AS	
	107	2	085-9645	1	RING	
	109	2	217-5444	1	LEVER	
	110	2	1R-9210	1	GASKET	
	111	2	190-5905	1	GASKET	
	112	2	085-9655	2	GASKET	
	113	2	190-5910	1	NUT	
	114	2	190-5866	1	SHAFT	
	115	2	190-5867	1	LEVER	
	116	2	190-5868	1	BOLT	
	117	2	190-5869	1	WASHER	
	118	2	190-5872	1	COLLAR	
	119	2	190-5873	1	SPRING	
	120	2	190-5874	1	LEVER	
	121	2	190-5875	1	WASHER	
	122	2	190-5876	1	NUT	
B	123	2	190-5877	1	SHIM	
B		2	190-5878	1	SHIM	
	124	2	099-6495	1	PLUG	
	125	2	190-5893	1	BUSHING	
	126	2	096-8289	2	SEAL-O-RING	
	127	2	085-9271	2	RING	
	128	2	096-7567	1	SEAL	

212-8559 PUMP GP-FUEL INJECTION *(contd.)*

i01889283

NOTE	REF NO	GRAPHIC REF	PART NUMBER	QTY	PART NAME 1 2 3 4 5 6 (PRODUCT LEVEL)	SEE PAGE
B	129	2	**085-9887**	1	SHIM	
B	130	2	**190-5894**	1	SHIM	
	131	2	**190-5895**	1	BUSHING	
	132	2	**085-9652**	1	KEY	
	133	2	**085-7916**	1	COLLAR	
	134	2	**085-9207**	1	WASHER	
	135	2	**190-5903**	1	PIN	
	136	2	**085-9936**	1	LEVER	
	137	2	**190-5911**	1	ADAPTER	
	138	2	**190-5912**	1	EYEBOLT	
	139	2	**190-5913**	2	GASKET	
	140	2	**190-5914**	1	GASKET	
	141	2	**190-5870**	1	WASHER	
	142	2	**190-5883**	1	SCREW	
	143	2	**190-5884**	1	WASHER	
	144	3	**125-2940**	1	HOUSING	
	145	3	**125-2942**	1	PISTON	
	146	3	**096-8336**	1	SPRING	
	147	3	**5I-5159**	1	PLUG	
	148	3	**125-2943**	1	GASKET	
	149	3	**5I-7511**	1	PUMP-FUEL PRIMING	
	150	3	**085-9899**	1	EYEBOLT	
	151	3	**125-2941**	1	PUSHROD	
	152	3	**095-2489**	2	VALVE	
	153	3	**095-2490**	2	SPRING	
	154	3	**085-9222**	1	ADAPTER	
	155	3	**096-8288**	2	SEAL-O-RING	
	156	3	**095-2040**	6	WASHER	

B-USE AS REQUIRED

212-8559 PUMP GP-FUEL INJECTION *(contd.)* i01889283

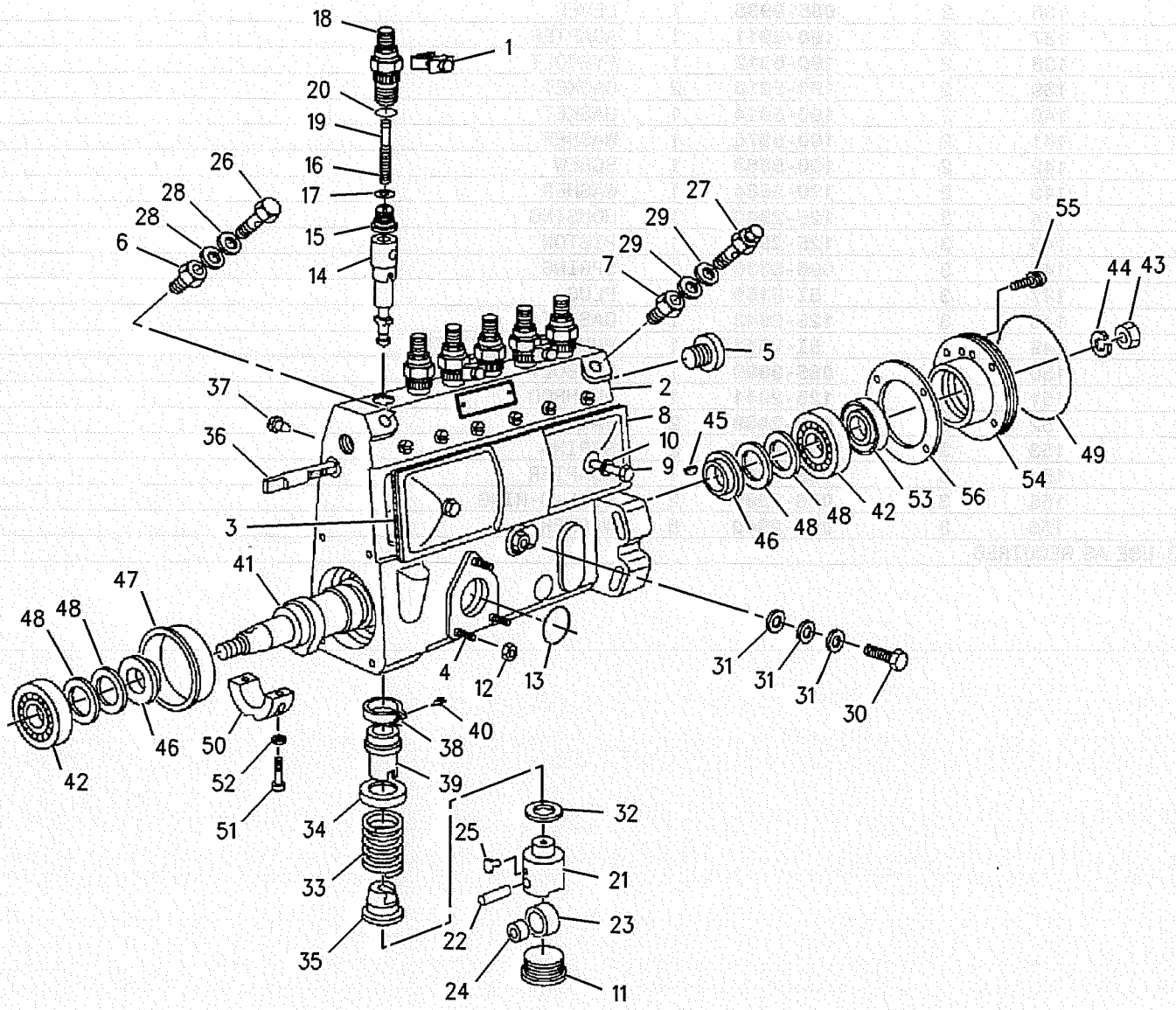

GRAPHIC #1 g00788497

212-8559 **PUMP GP-FUEL INJECTION** *(contd.)* **i01889283**

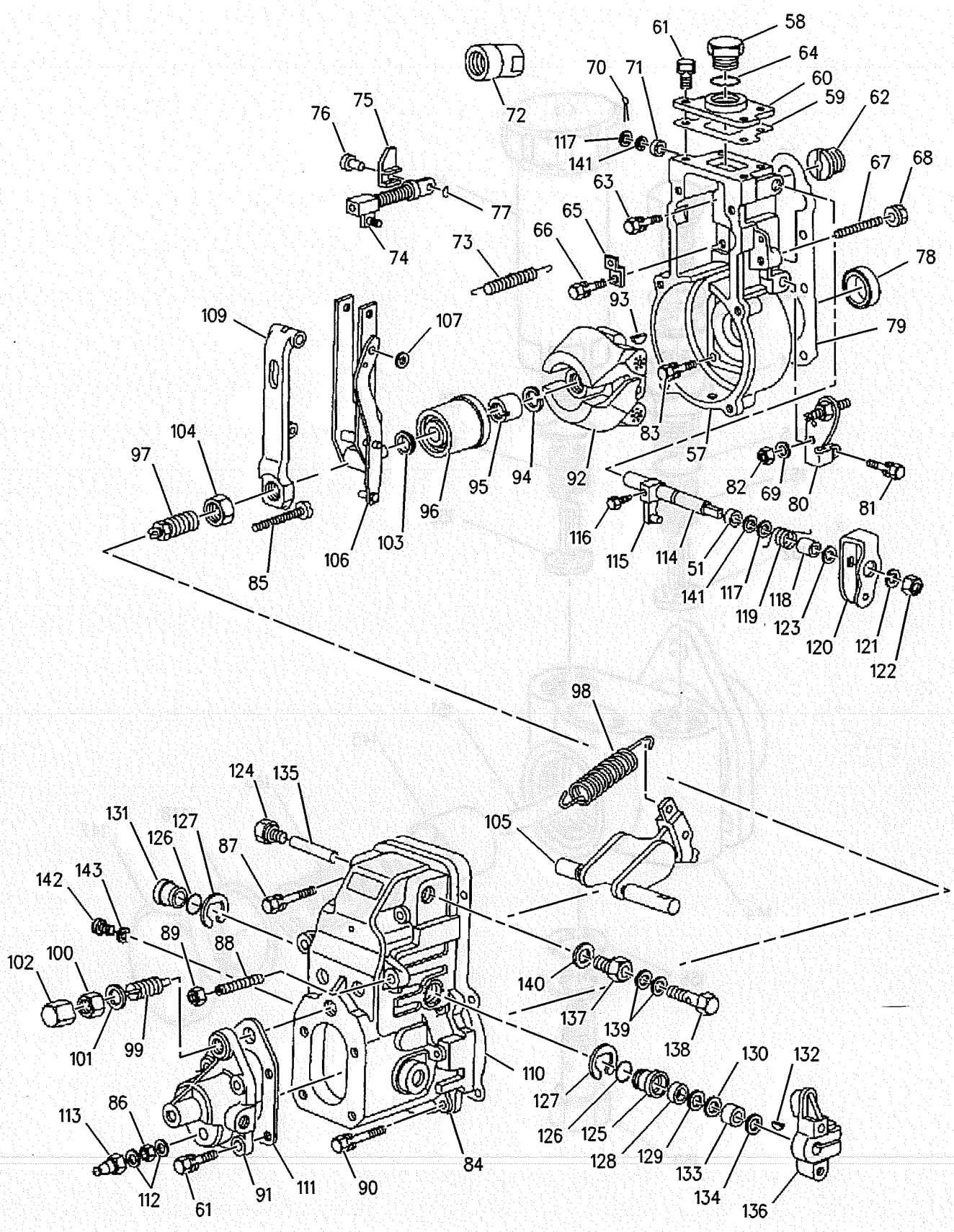

GRAPHIC #2 g00926722

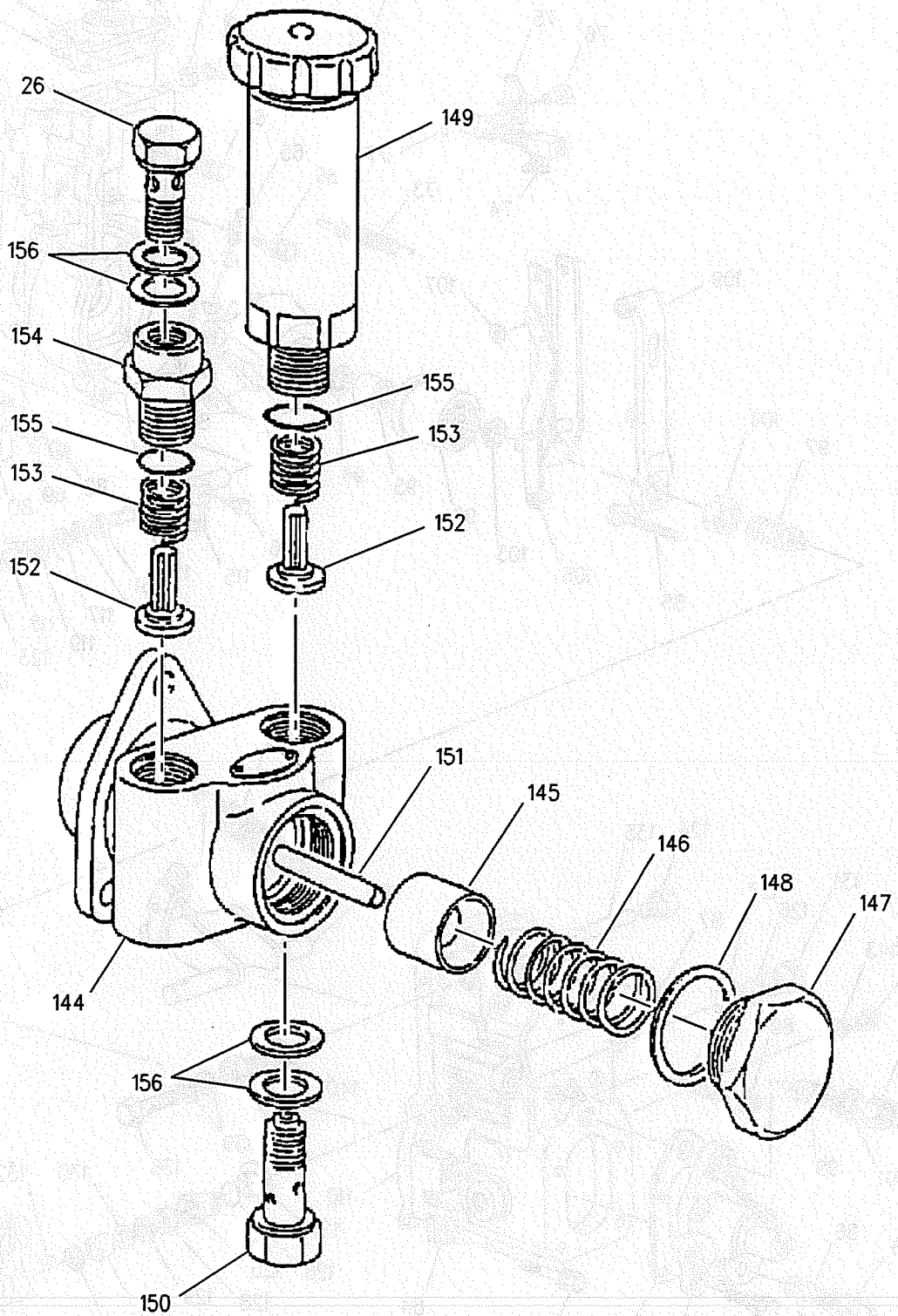

GRAPHIC #3 **<END>** g00788499

FUEL SYSTEM

145-8862 SEPARATOR GP-WATER

S/N: SBN1-UP; RAW1-UP

PART OF 142-3845 LINES GP-FUEL

SMCS-1263 **i01354197**

NOTE	REF NO	GRAPHIC REF	PART NUMBER	QTY	PART NAME 1 2 3 4 5 6 (PRODUCT LEVEL)	SEE PAGE
	1	1	**117-4089**	1	ELEMENT-WATER SEPARATOR	
	2	1	**118-1461**	1	BASE AS	
	3	1	**118-8118**	1	RING-RETAINING	
	4	1	**118-8119**	1	NUT	
	5	1	**112-9401**	1	BOWL AS-WATER COLLECTION	
		1	**128-8614**	1	KIT-BOWL SEAL	
					AVAILABLE REPAIR KIT(S):	
			121-4480	1	KIT-WATER BASE	

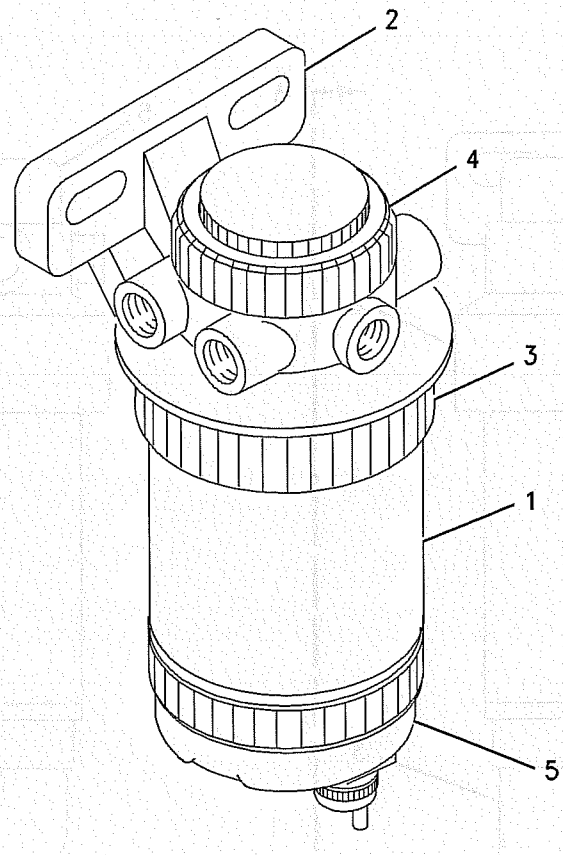

GRAPHIC #1 **<END>** g00690507

171-9091 SEPARATOR GP-WATER

S/N: SBN1-UP; RAW1-UP
PART OF 178-6606 SEPARATOR GP-WATER
AN ATTACHMENT

SMCS-1263 **i01492636**

NOTE	REF NO	GRAPHIC REF	PART NUMBER	QTY	PART NAME 1 2 3 4 5 6 (PRODUCT LEVEL)	SEE PAGE
	1	1	**118-1461**	1	BASE AS	
	2	1	**118-8118**	1	RING-RETAINING	
	3	1	**112-9401**	1	BOWL AS-WATER COLLECTION	
		1	**128-8614**	1	KIT-BOWL SEAL	
	4	1	**117-4089**	1	ELEMENT-WATER SEPARATOR	
	5	1	**118-8119**	1	NUT	
	6	1	**178-6640**	1	HARNESS AS	
	7	1	**149-9954**	1	DRAIN AS-SENSOR	
					AVAILABLE REPAIR KIT(S):	
			121-4480	1	KIT-WATER BASE	
					(INCLUDES NUT-CAP, SEAL-CAP,CAP-HEADER,PLUG-VENT,SEAL-O-RING,RIN-RETAINING,SEAL-DUST AND PLUG-VOLUME)	

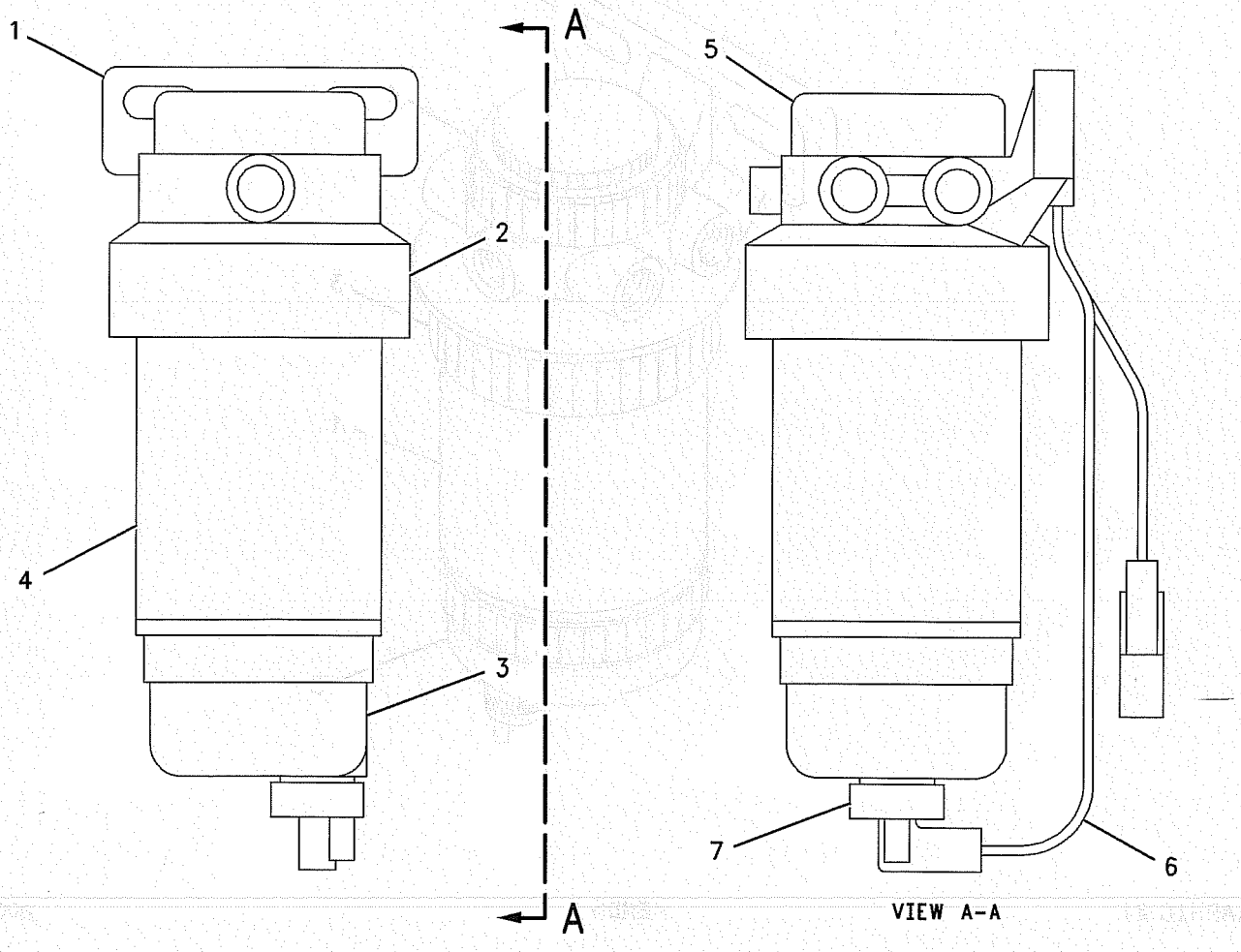

GRAPHIC #1

<END>

g00776554

FUEL SYSTEM

178-6606 SEPARATOR GP-WATER

S/N: SBN1-UP; RAW1-UP

AN ATTACHMENT

SMCS-1263 **i01533027**

NOTE	REF NO	GRAPHIC REF	PART NUMBER	QTY	PART NAME 1 2 3 4 5 6 (PRODUCT LEVEL)	SEE PAGE
Y	1	1	**171-9091**	1	SEPARATOR GP-WATER	88
	2	1	**178-6460**	1	HOSE	

Y-SEPARATE ILLUSTRATION

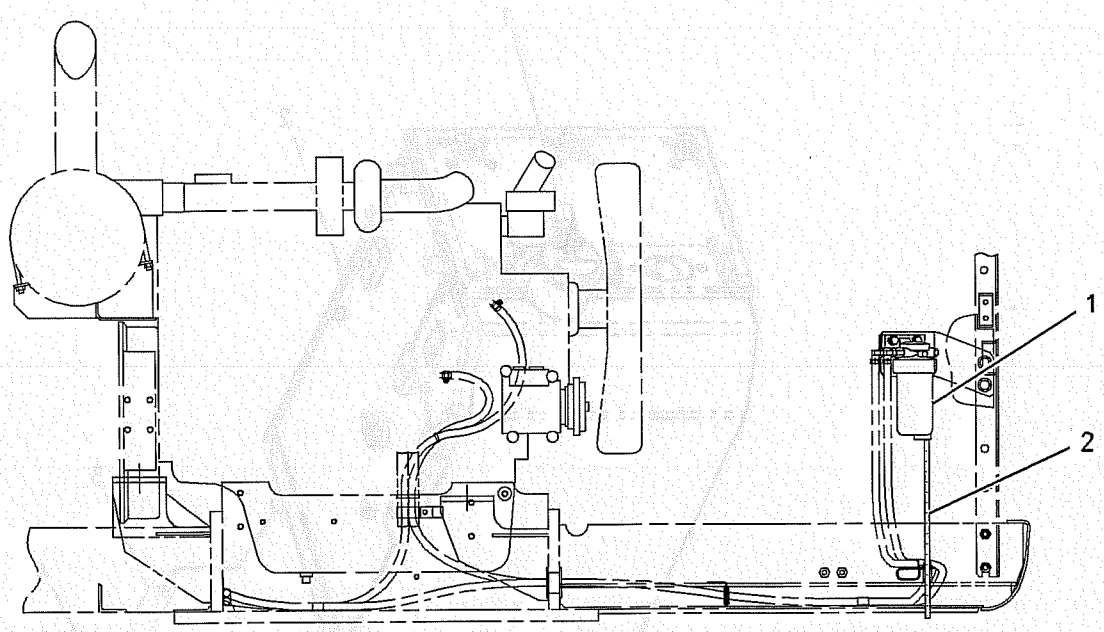

FRONT VIEW

GRAPHIC #1 **<END>** g00796427

FUEL SYSTEM

142-3837 TANK & MTG GP-FUEL

S/N: SBN1-UP; RAW1-UP

PART OF 193-6848, 193-6849 CHASSIS AR

SMCS-1273 **i01355555**

NOTE	REF NO	GRAPHIC REF	PART NUMBER	QTY	PART NAME 1 2 3 4 5 6 (PRODUCT LEVEL)	SEE PAGE
	1	1	*5P-8502*	1	PADLOCK GP	
		1	**5P-8500**	1	KEY	
		1	**8Y-6364**	1	SLEEVE	
Y	2	1	**142-3838**	1	TANK GP-FUEL	91
	3	1	**177-5886**	4	SPACER	
M	4	1	**8T-4174**	4	BOLT (M16X2.0X120MM)	

M-METRIC PART
Y-SEPARATE ILLUSTRATION

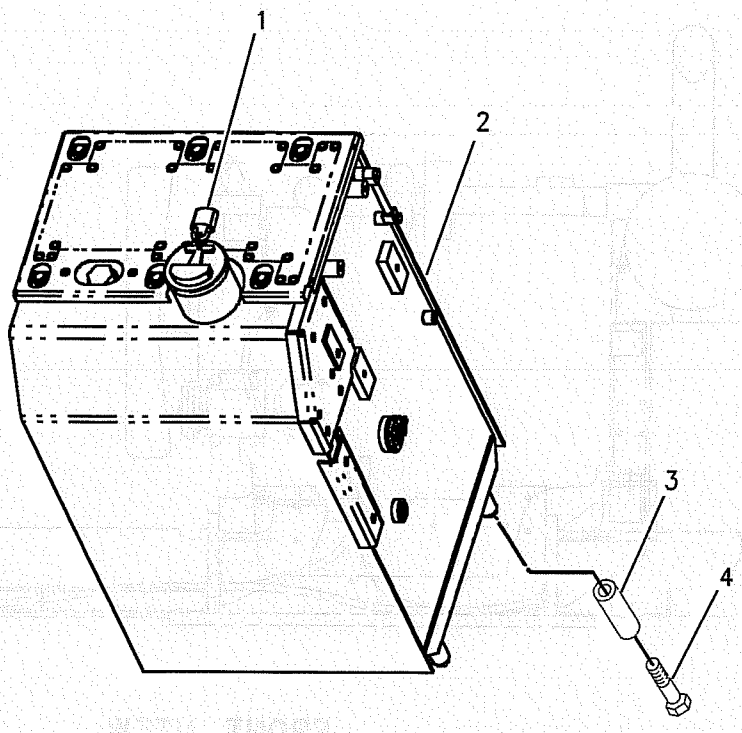

GRAPHIC #1 **<END>** g00679677

FUEL SYSTEM

142-3838 TANK GP-FUEL

S/N: SBN1-UP; RAW1-UP

PART OF 142-3837 TANK & MTG GP-FUEL

SMCS-1273 **i01463824**

NOTE	REF NO	GRAPHIC REF	PART NUMBER	QTY	PART NAME 1 2 3 4 5 6 (PRODUCT LEVEL)	SEE PAGE
	1	1	**4I-0378**	1	PACKING	
	2	1	**7X-7700**	1	CAP AS-FUEL TANK	
		1	**9X-2205**	1	KIT-CAP FILTER (FUEL TANK)	
		1	**9X-8600**	1	SEAL-O-RING	
	3	1	**7Y-2398**	1	GAUGE AS	
		1	**4I-0123**	1	PIPE	
		1	**7Y-4754**	2	BLOCK	
M		1	**094-3247**	2	BOLT (M10X1.5X36MM)	
		1	**095-1514**	4	SEAL-O-RING	
		1	**095-1517**	4	SEAL-O-RING	
	4	1	**9P-7121**	1	STRAINER-FUEL TANK	
	5	1	**003-7764**	1	END-HOSE	
	6	1	**128-4411**	1	VALVE AS	
	7	1	*135-8573*	6	BOLT AS-SPECIAL (M12)	
					(EACH INCLUDES)	
		1	**5P-1076**	1	WASHER-HARD (13.5X30X4MM THK)	
M		1	**8T-4192**	1	BOLT (M12X1.75X25MM)	
	8	1	**163-6700**	1	SENSOR GP-FUEL LEVEL	
		1	**8T-8729**	2	PIN-CONNECTOR	
		1	**102-8802**	1	KIT-RECEPTACLE (2 PIN)	
	9	1	*165-2829*	1	TANK AS-FUEL	
		1	**4I-0050**	1	PIPE	
		1	**7T-1099**	1	LINK	
M		1	**8T-3597**	9	NUT-WELD (M12X1.75 THD)	
		1	**9R-3924**	2	BOSS (M10X1.5X20.0MM)	
		1	**117-5604**	2	STUD	
		1	**131-7501**	1	ADAPTER AS	
	10	1	**165-2835**	1	COVER AS	
	11	1	**165-2881**	1	VALVE-BALL	
	12	1	**193-9696**	1	HOSE-DRAIN	
M	13	1	**095-0736**	5	SCREW-MACHINE (M5X0.8X10MM)	
	14	1	**8T-0328**	5	WASHER-HARD (5.5X10X1MM THK)	

M-METRIC PART

142-3838 TANK GP-FUEL *(contd.)* i01463824

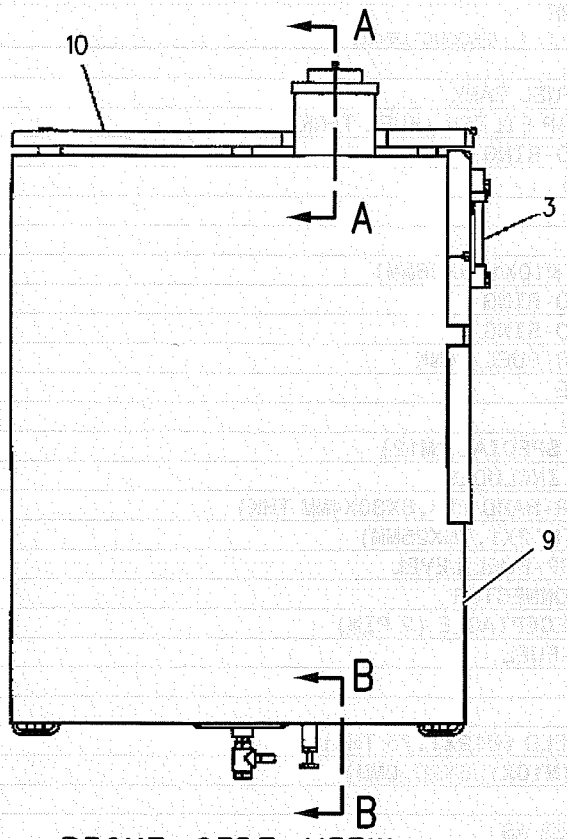

RIGHT SIDE VIEW

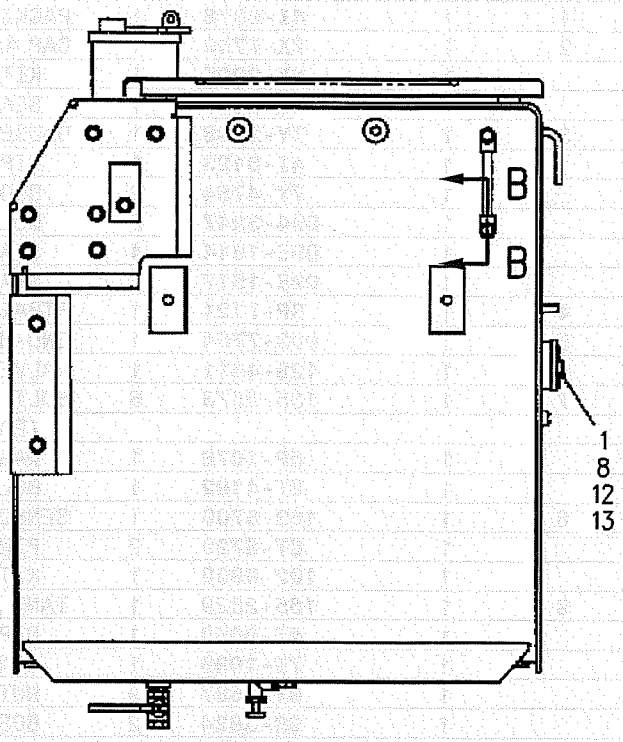

FRONT VIEW

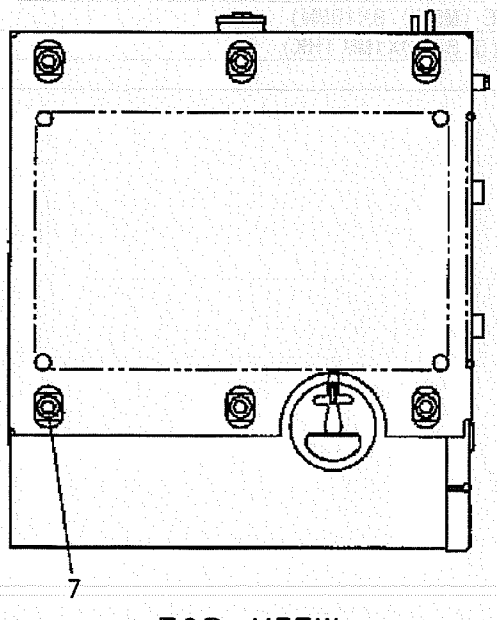

TOP VIEW

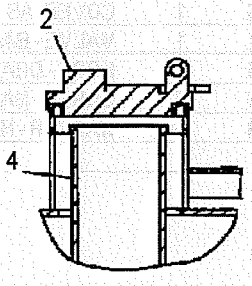

SECTION A-A

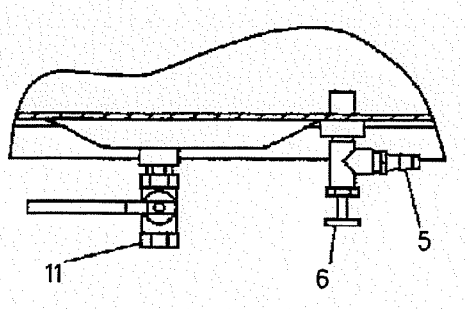

SECTION B-B

GRAPHIC #1 **<END>** g00680418

132-1829 ALARM GP

S/N: SBN1-UP; RAW1-UP

PART OF 163-6623 WIRING GP-CAB

SMCS-7400 **i01356809**

NOTE	REF NO	GRAPHIC REF	PART NUMBER	QTY	PART NAME 1 2 3 4 5 6 (PRODUCT LEVEL)	SEE PAGE
	1	1	**102-8802**	1	KIT-RECEPTACLE (2 PIN)	
		1	**3E-3365**	1	WEDGE-RECEPTACLE LOCK (2 PIN)	
	2	1	**186-3735**	2	PIN-CONNECTOR	

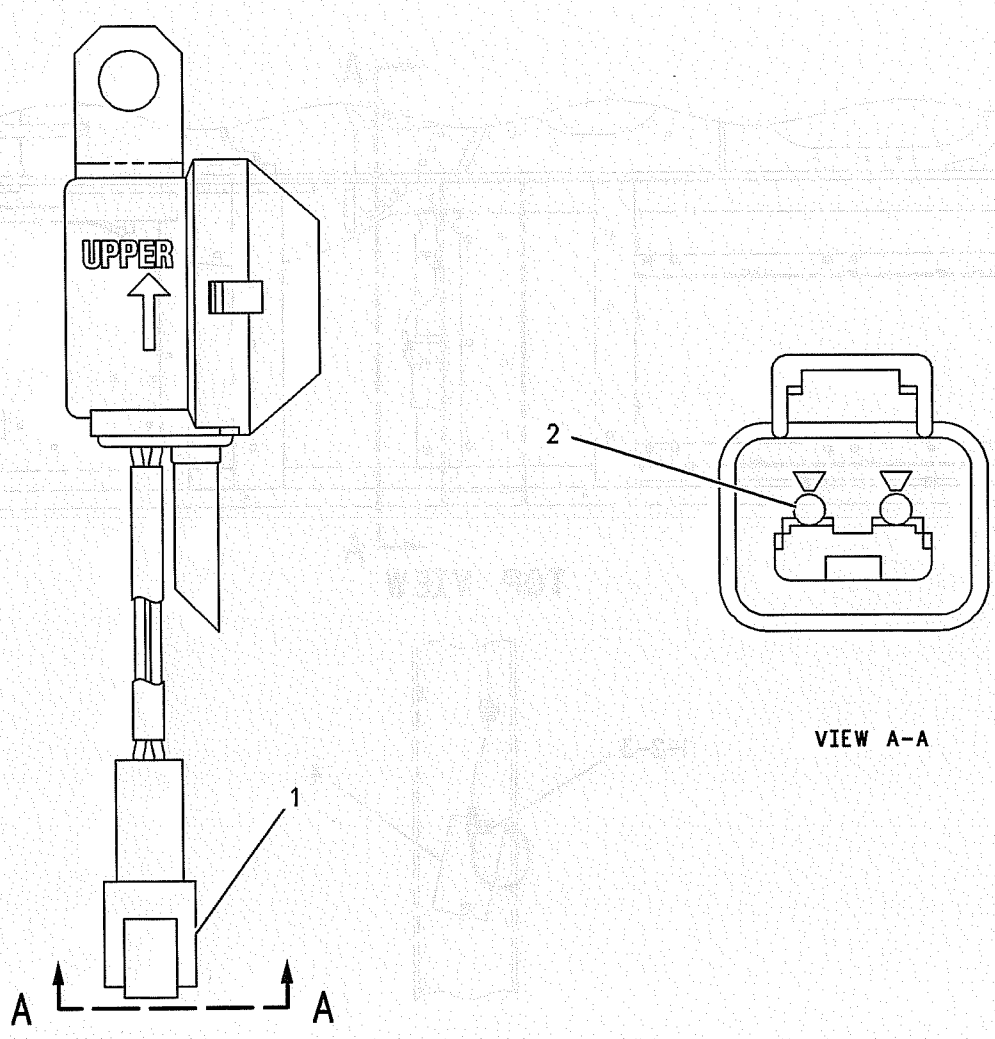

VIEW A-A

GRAPHIC #1

<END>

g00272185

183-1037 ALARM GP-TRAVEL

S/N: SBN1-UP; RAW1-UP

AN ATTACHMENT

SMCS-7429 **i01681237**

NOTE	REF NO	GRAPHIC REF	PART NUMBER	QTY	PART NAME 1 2 3 4 5 6 (PRODUCT LEVEL)	SEE PAGE
M	1	1	**7X-2538**	2	BOLT (M8X1.25X100MM)	
	2	1	**5P-4116**	2	WASHER-HARD (8.8X20.5X2MM THK)	
	3	1	**116-0118**	1	CLIP	
	4	1	**3E-7738**	1	ALARM AS-BACKUP	

M-METRIC PART

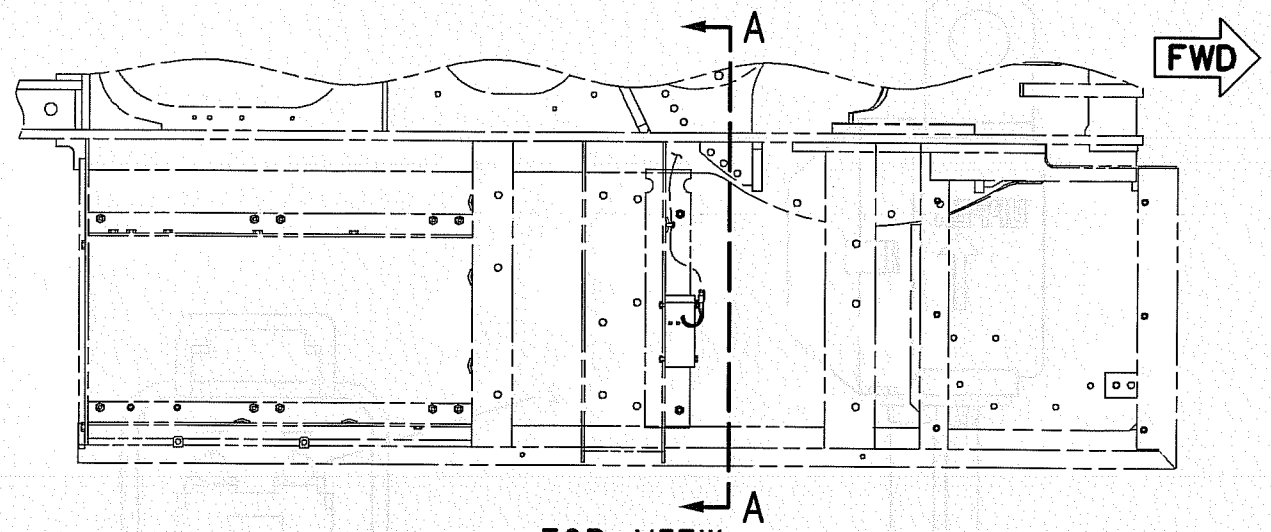

TOP VIEW

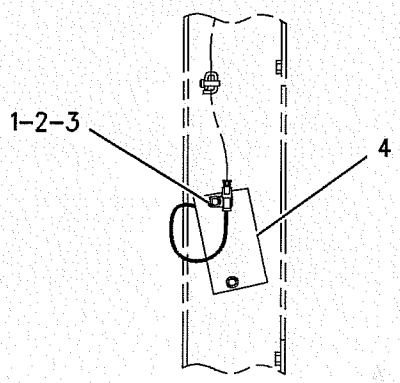

VIEW A-A

GRAPHIC #1

<END>

g00738743

ELECTRICAL AND STARTING SYSTEM

212-8561 ALTERNATOR GP-CHARGING

S/N: 7JK1-UP
PART OF 201-3878 ENGINE AR
ALSO AN ATTACHMENT

SMCS-1405 **i01889280**

NOTE	REF NO	GRAPHIC REF	PART NUMBER	QTY	PART NAME 1 2 3 4 5 6 (PRODUCT LEVEL)	SEE PAGE
	1	1	**099-3913**	1	NUT SET	
	2	1	**212-8613**	1	PULLEY AS	
	3	1	**5I-7985**	1	SETSCREW	
	4	1	**5I-8086**	1	BRACKET AS	
	5	1	**5I-7987**	1	SETSCREW	
	6	1	**5I-8087**	1	BEARING	
	7	1	**5I-8088**	1	ROTOR AS	
	8	1	**5I-8089**	1	BEARING	
	9	1	**5I-8098**	1	COIL AS	
	10	1	**5I-8090**	1	STATOR	
	11	1	**5I-7997**	1	SETSCREW	
	12	1	**135-2381**	1	PLATE	
	13	1	**5I-8096**	1	REGULATOR AS-VOLTAGE	
	14	1	**5I-8095**	1	RECTIFIER AS	
	15	1	**212-8521**	1	BRACKET	
	16	1	**085-9429**	1	NUT SET	
	17	1	**5I-8080**	1	CONNECTOR AS	
	18	1	**5I-8094**	1	BOLT	
	19	1	**5I-8097**	1	SETSCREW	

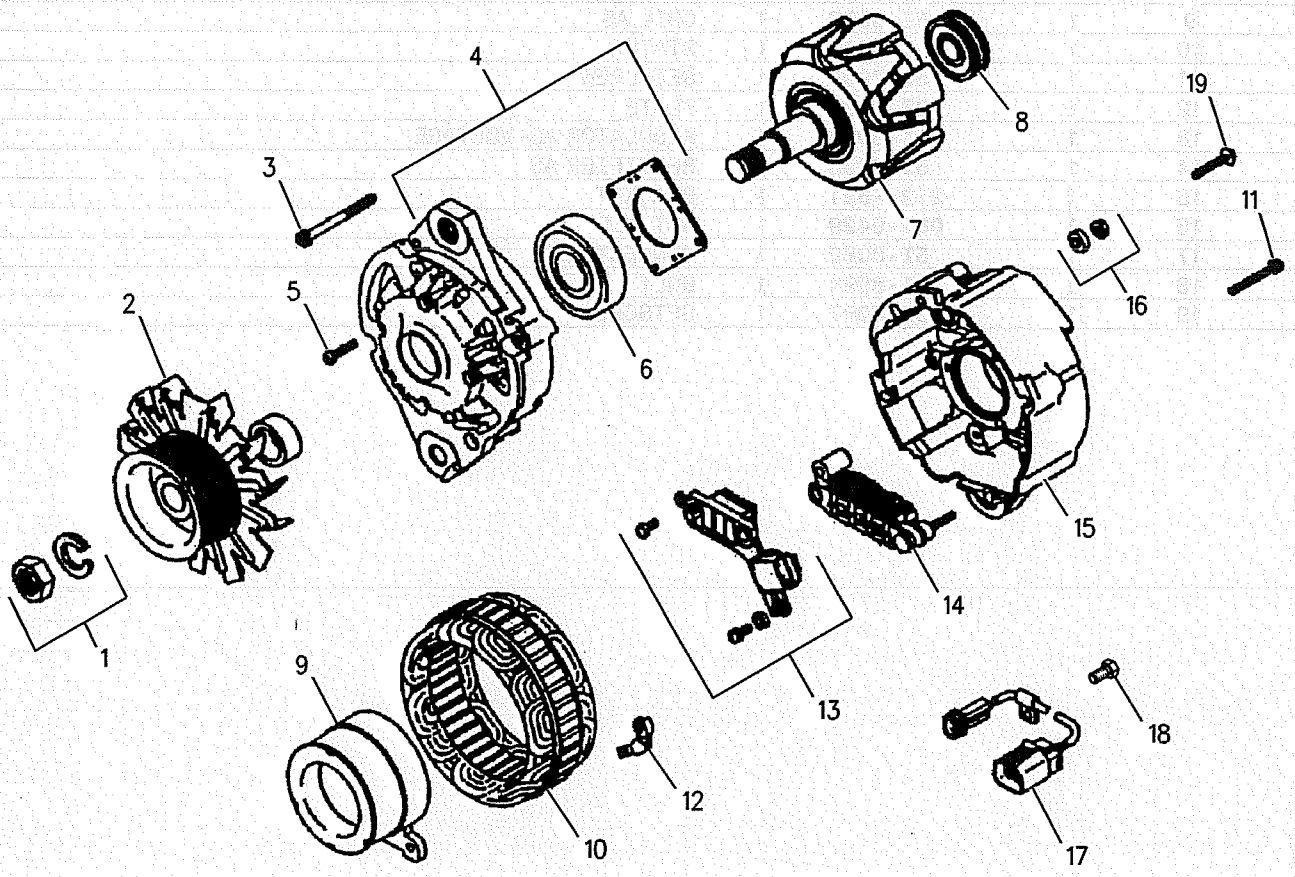

GRAPHIC #1 **<END>** g00923464

ELECTRICAL AND STARTING SYSTEM

204-1586 BATTERY & WIRING GP

S/N: SBN1-UP; RAW1-UP

PART OF 193-6848, 193-6849 CHASSIS AR

SMCS-1401, 1402 **i01886548**

NOTE	REF NO	GRAPHIC REF	PART NUMBER	QTY	PART NAME 1 2 3 4 5 6 (PRODUCT LEVEL)	SEE PAGE
M	1	2,4	**8T-4195**	4	BOLT (M10X1.5X30MM)	
	2	1,2,3, 4,5,6	**8T-4121**	85	WASHER-HARD (11X21X2.5MM THK)	
	3	1,2,3, 4,5,6	**111-4837**	22	CLIP	
	4	2	**4K-8864**	3	CLIP	
	5	2	**204-1863**	1	HARNESS AS	
		2	**102-8802**	6	KIT-RECEPTACLE (2 PIN)	
		2	**102-8803**	2	KIT-RECEPTACLE (3 PIN)	
		2	**102-8805**	2	KIT-RECEPTACLE (6 PIN)	
		2	**102-8801**	1	KIT-RECEPTACLE (12 PIN)	
					(EACH RECEPTACLE KIT INCLUDES RECEPTACLE AS & WEDGE)	
		2	**155-2265**	1	KIT-CONNECTING PLUG (8 PIN)	
		2	**155-2260**	4	KIT-CONNECTING PLUG (3 PIN)	
		2	**155-2270**	18	KIT-CONNECTING PLUG (2 PIN)	
		2	**155-2274**	3	KIT-CONNECTING PLUG (6 PIN)	
					(EACH PLUG KIT INCLUDES PLUG AS & WEDGE & INTERFACE SEAL)	
M	6	1,2,3, 4,5,6	**8T-4137**	45	BOLT (M10X1.5X20MM)	
	7	1,2,3, 4,5,6	**3S-2093**	27	STRAP-CABLE	
M	8	1,2,5	**8T-4191**	16	BOLT (M10X1.5X16MM)	
	9	1	**4D-8123**	2	CLIP	
	10	1	**6D-4244**	2	CLIP	
	11	1	**7Y-8167**	1	GROMMET	
	12	1,3	**9M-8406**	5	CLIP	
	13	1	**7Y-8165**	1	GROMMET	
	14	2	**3T-5760**	2	BATTERY (12 VOLT)	
	15	2	**6W-6005**	1	HOLD-DOWN-BATTERY	
	16	2	**5I-8270**	1	COVER-BATTERY	
	17	2	**163-6775**	1	CABLE AS	
		2	**5P-0747**		CABLE (00GA)(BLACK) (64CM)	
		2	**1S-7252**	1	TERMINAL-RING (FOR 3/8 IN BOLT)	
		2	**7N-5274**	1	COVER-TERMINAL (BLACK)	
		2	**8L-8413**	1	STRAP-CABLE	
		2	**9G-8909**	1	COVER-TERMINAL (BLACK)	
		2	**3S-6050**	1	TERMINAL AS-BATTERY (NEGATIVE)	
		2	**1M-6119**	1	BOLT (5/16-18X1.375 IN)	
		2	**1M-6120**	1	NUT (5/16-18 THD)	
	18	2	**204-1685**	1	CABLE AS	
		2	**5P-0761**		CABLE (00GA)(RED) (408CM)	
		2	**1S-7252**	1	TERMINAL-RING (FOR 3/8 IN BOLT)	
		2	**8N-0869**	1	COVER-TERMINAL (RED)	
		2	**8N-1725**	1	COVER-TERMINAL (RED)	
		2	**8L-8413**	1	STRAP-CABLE	
		2	**3S-6049**	1	TERMINAL AS-BATTERY (POSITIVE)	
		2	**1M-6119**	1	BOLT (5/16-18X1.375 IN)	
		2	**1M-6120**	1	NUT (5/16-18 THD)	
	19	2	**170-6929**	1	CABLE AS	
		2	**5P-0761**		CABLE (00GA)(RED) (31CM)	
		2	**9G-0002**	1	COVER-TERMINAL	
		2	**8L-8413**	1	STRAP-CABLE	
		2	**9G-0005**	1	COVER-TERMINAL (BLACK)	
		2	**8L-8413**	1	STRAP-CABLE	
		2	**8C-5918**	1	TERMINAL AS (NEG)	

ELECTRICAL AND STARTING SYSTEM

204-1586 BATTERY & WIRING GP *(contd.)* i01886548

NOTE	REF NO	GRAPHIC REF	PART NUMBER	QTY	PART NAME 1 2 3 4 5 6 (PRODUCT LEVEL)	SEE PAGE
		2	**1M-6119**	1	BOLT (5/16-18X1.375 IN)	
		2	**1M-6120**	1	NUT (5/16-18 THD)	
		2	**8T-9756**	1	TERMINAL AS (POS)	
	20	2,3,4	**6K-8178**	6	CLIP	
Y	21	2	*213-0671*	1	PANEL GP-CIRCUIT BREAKER	128
	22	2	**111-4838**	6	CLIP	
	23	2	**111-4839**	6	STRAP	
M	24	2,3,4	**8T-4136**	6	BOLT (M10X1.5X25MM)	
M	25	2,5,6	**7X-2621**	10	BOLT (M10X1.50X12MM)	
	26	2,3,4, 5,6	**116-0118**	22	CLIP	
	27	2,4,5,6	**111-4836**	16	CLIP	
	28	2	**186-4582**	1	HARNESS AS	
		2	**102-8802**	4	KIT-RECEPTACLE (2 PIN)	
		2	**102-8804**	1	KIT-RECEPTACLE (4 PIN)	
		2	**102-8801**	2	KIT-RECEPTACLE (12 PIN)	
					(EACH RECEPTACLE KIT INCLUDES RECEPTACLE AS & WEDGE)	
		2	**155-2255**	3	KIT-CONNECTING PLUG (12 PIN)	
		2	**155-2260**	1	KIT-CONNECTING PLUG (3 PIN)	
		2	**155-2270**	9	KIT-CONNECTING PLUG (2 PIN)	
		2	**155-2271**	1	KIT-CONNECTING PLUG (4 PIN)	
		2	**155-2274**	1	KIT-CONNECTING PLUG (6 PIN)	
					(EACH PLUG KIT INCLUDES PLUG AS & WEDGE & INTERFACE SEAL)	
	29	2	**7G-1060**	1	STRAP AS-GROUND	
	30	2,3	**8M-2773**	2	CLIP	
	31	2,3	**033-8248**	2	CLIP	
M	32	3	**8T-4172**	1	BOLT (M10X1.50X80MM)	
	33	3,5,6	**4I-7889**	4	SPACER (11X25X45MM THK)	
	34	3	**163-6786**	1	BRACKET	
M	35	3	**6V-5683**	4	BOLT (M6X1X16MM)	
	36	3,6	**9X-8256**	6	WASHER (6.6X12X2MM THK)	
	37	3	**163-6779**	1	BRACKET AS	
	38	1,3,5	**7K-1181**	7	STRAP-CABLE	
M	39	2	**5C-7261**	1	NUT (M8X1.25 THD)	
M	40	2	**8T-4133**	2	NUT (M10X1.5 THD)	
	41	2	**8T-4226**	1	WASHER-PLATED (10.5X45X3MM THK)	
	42	2	**5I-8304**	1	ROD	
	43	2	**167-3583**	1	STRAP AS-GROUND	
	44	3,5,6	**7I-2673**	8	STRAP-CABLE	
	45	4	**116-0068**	1	BRACKET	
	46	4	**163-6750**	1	HARNESS AS	
		4	**155-2270**	1	KIT-CONNECTING PLUG (2 PIN)	
					(INCLUDES PLUG AS & WEDGE & INTERFACE SEAL)	
	47	4	**124-0986**	1	GROMMET	
M	48	4	**8T-4185**	1	BOLT (M10X1.5X50MM)	
	49	4,6	**2G-8767**	2	WASHER (10.5X60X3MM THK)	
	50	4,6	**6G-2256**	2	CLAMP	
	51	4,6	**6G-2263**	2	SPACER (10.5X19X28.5MM THK)	
	52	5	**132-1806**	1	STRAP AS-GROUND	
M	53	5	**8T-5005**	2	BOLT (M10X1.50X70MM)	
	54	5	**3V-4791**	1	GROMMET	
	55	5	**170-9336**	1	BRACKET AS	
M	56	6	**7X-2533**	1	BOLT (M6X1X35MM)	
	57	6	**4J-9448**	1	LUG	
	58	6	**8J-1256**	1	CLIP	
M	59	6	**7Y-5226**	1	NUT (M5X0.8 THD)	
	60	6	**8T-0328**	2	WASHER-HARD (5.5X10X1MM THK)	
M	61	6	**7X-0818**	3	BOLT (M8X1.25X45MM)	

204-1586 BATTERY & WIRING GP *(contd.)*

i01886548

NOTE	REF NO	GRAPHIC REF	PART NUMBER	QTY	PART NAME 1 2 3 4 5 6 (PRODUCT LEVEL)	SEE PAGE
	62	6	**5P-4116**	5	WASHER-HARD (8.8X20.5X2MM THK)	
	63	6	**7Y-1924**	2	SPACER (9X19X23MM THK)	
M	64	6	**8T-6912**	1	BOLT (M8X1.25X50MM)	
	65	6	**085-7329**	2	SPACER	
M	66	6	**8T-0286**	1	BOLT (M5X0.8X8MM)	
	67	6	**4P-7581**	1	CLIP	
	68	6	**132-5789**	2	CLIP	
	69	6	**204-1882**	1	BRACKET AS	
M	70	6	**8T-4200**	2	BOLT (M8X1.25X16MM)	
	71	6	**8T-4224**	2	WASHER-HARD (8.8X16X2MM THK)	
M	72	6	**7X-2619**	1	BOLT (M6X1.0X20MM)	
M	73	6	**8T-6870**	1	BOLT (M8X1.25X70MM)	
M	74	6	**8T-4182**	1	BOLT (M10X1.5X45MM)	
	75	6	**102-7880**	1	BRACKET	

M-METRIC PART
Y-SEPARATE ILLUSTRATION

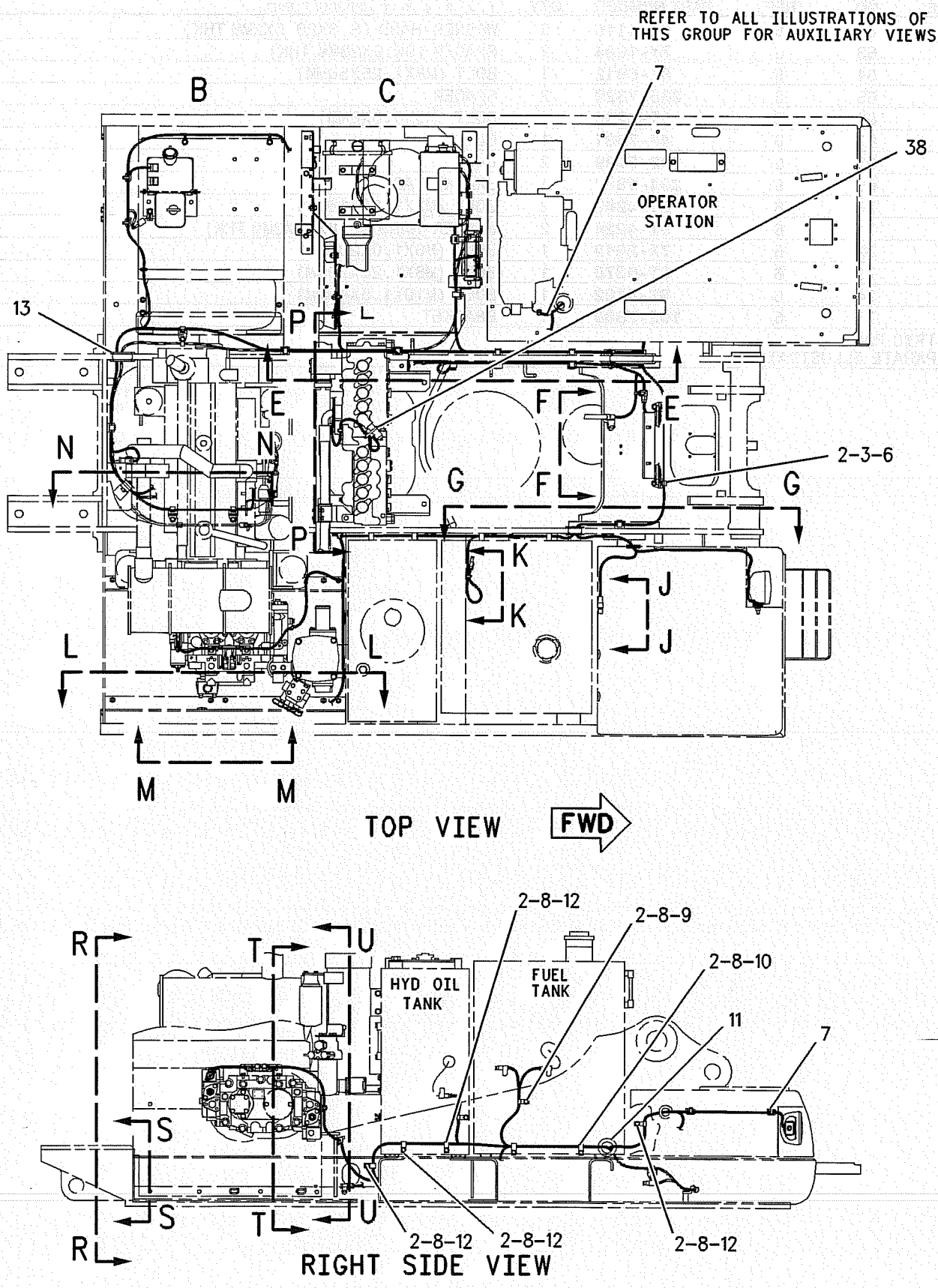

GRAPHIC #1

g00949074

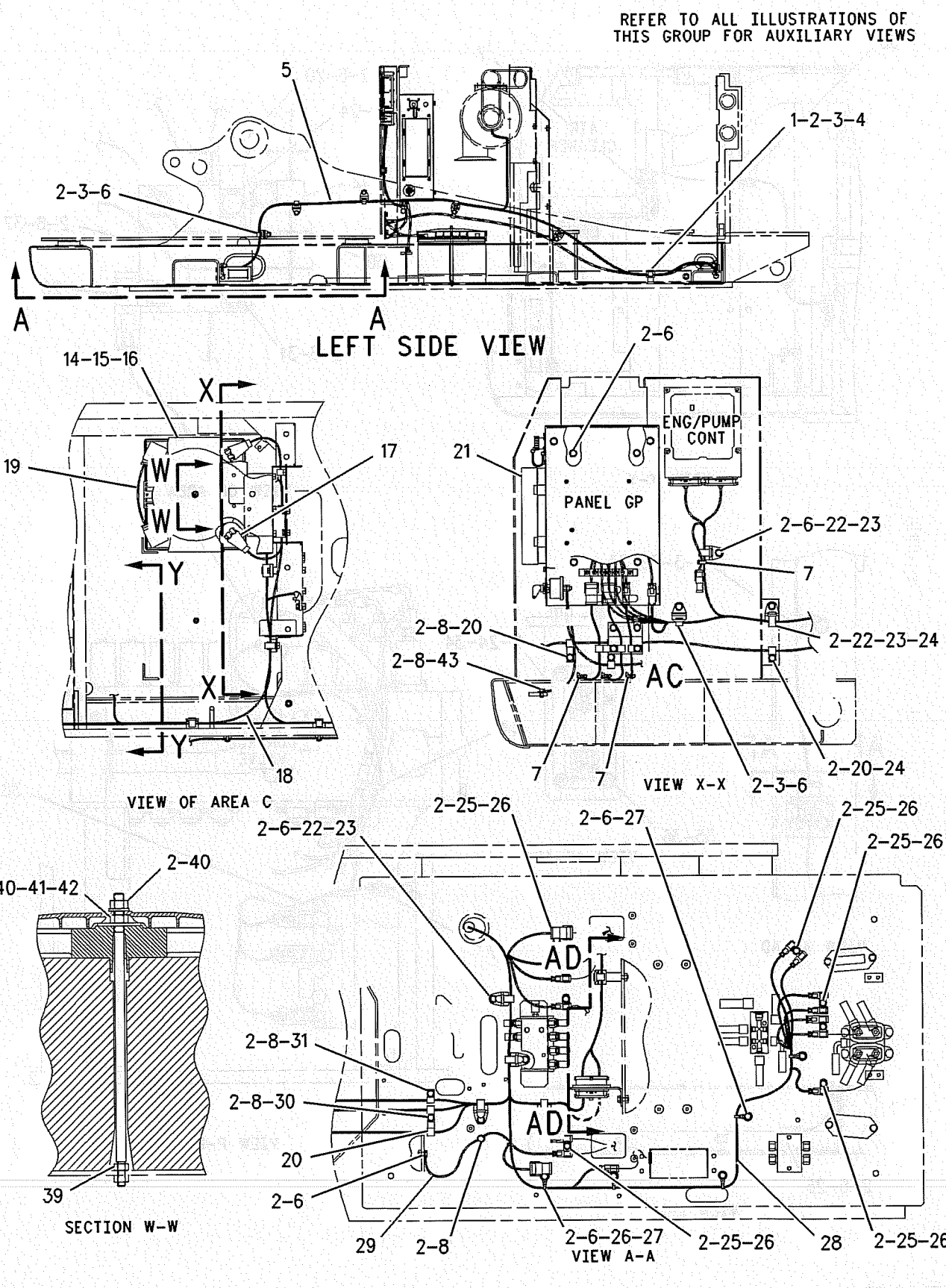

GRAPHIC #2 g00949075

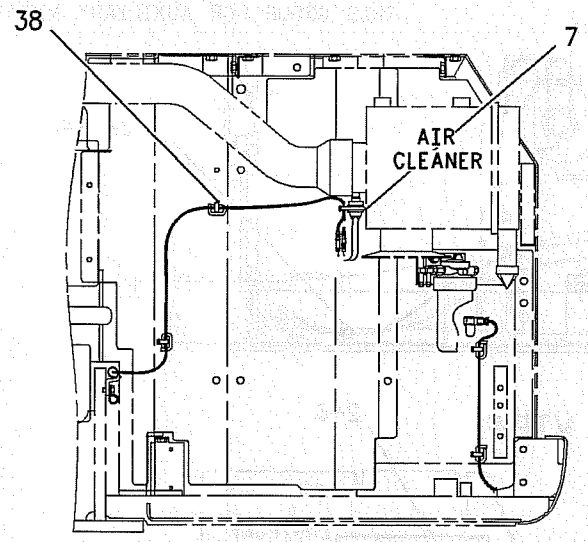

VIEW Y-Y

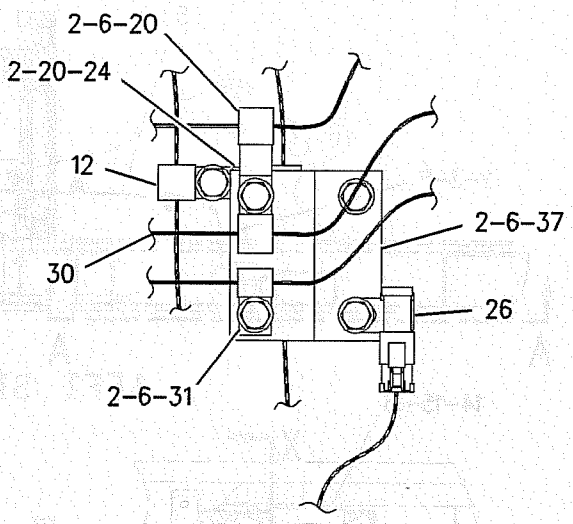

VIEW OF AREA AC

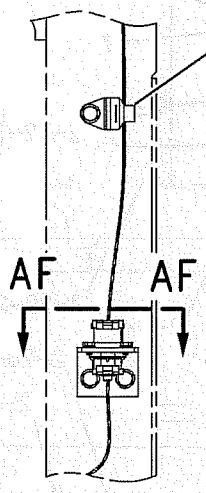

VIEW AD-AD

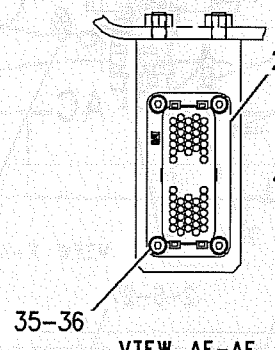

VIEW AF-AF

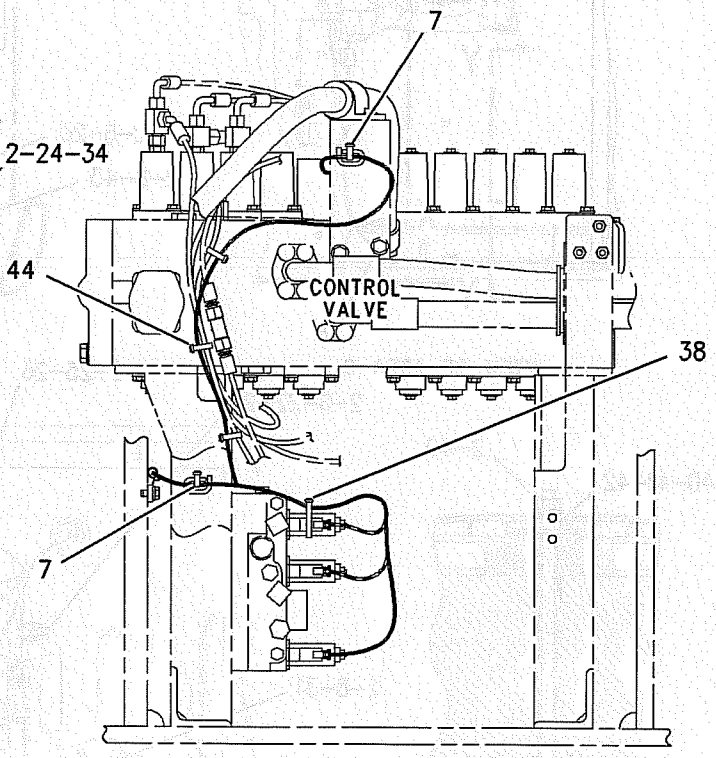

VIEW P-P

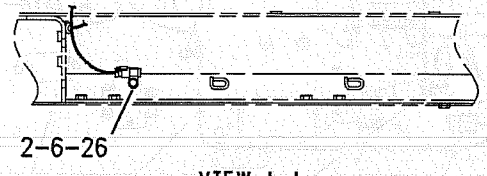

VIEW L-L

GRAPHIC #3

g00949077

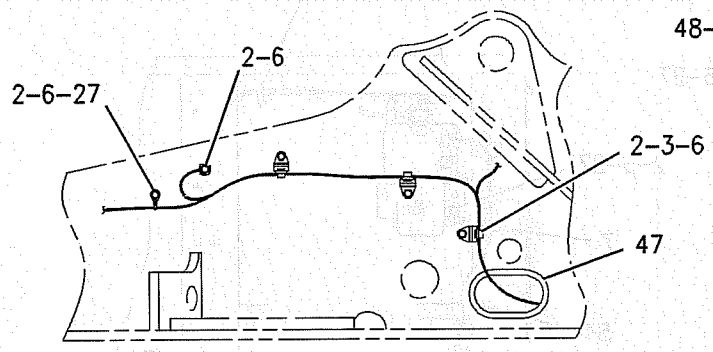

VIEW E-E

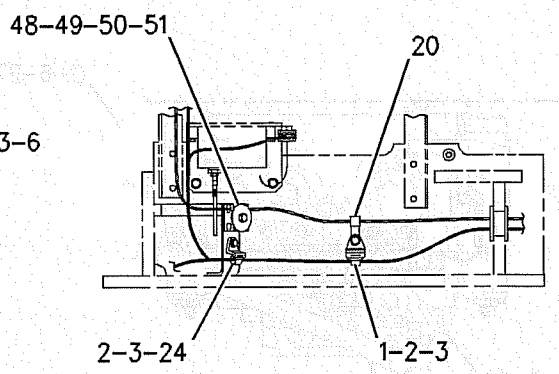

VIEW S-S

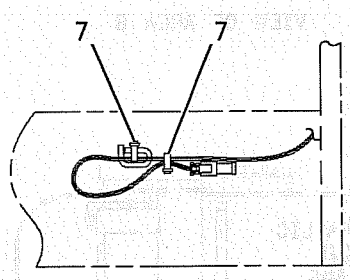

VIEW K-K

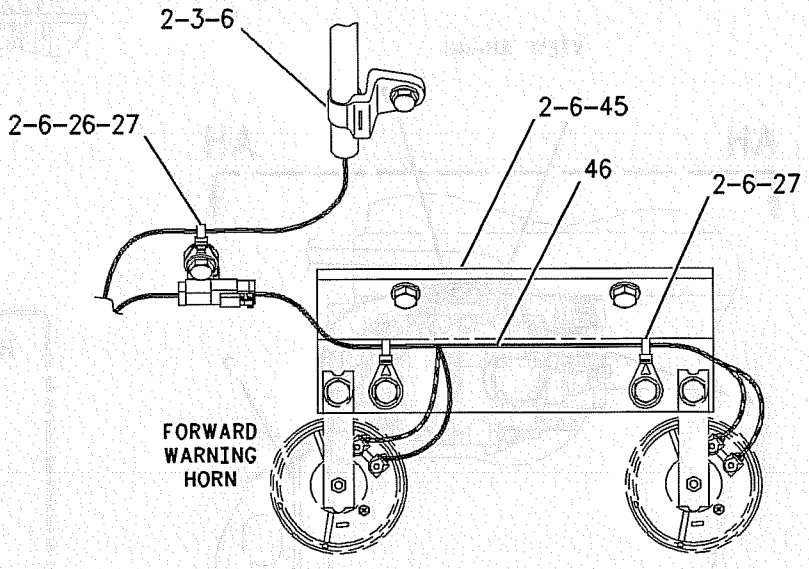

VIEW F-F

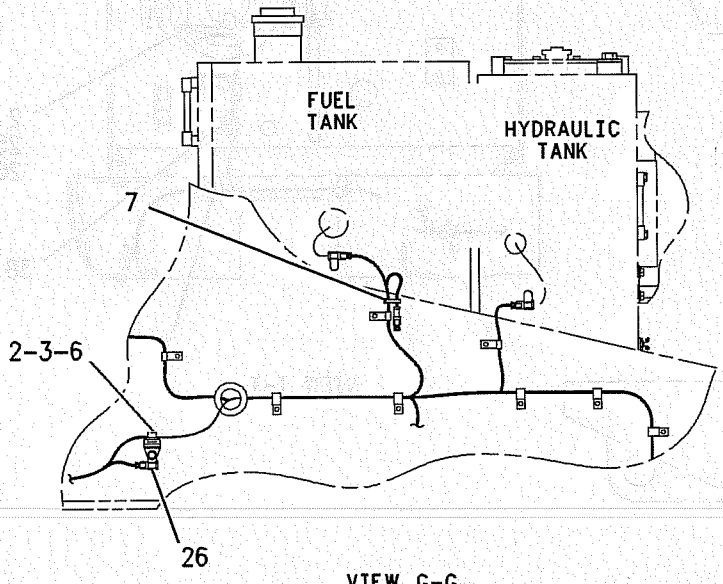

VIEW G-G

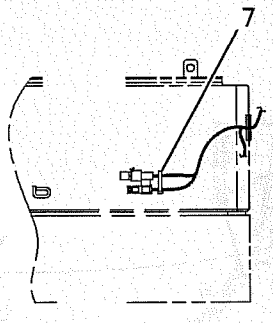

VIEW J-J

GRAPHIC #4 g00949078

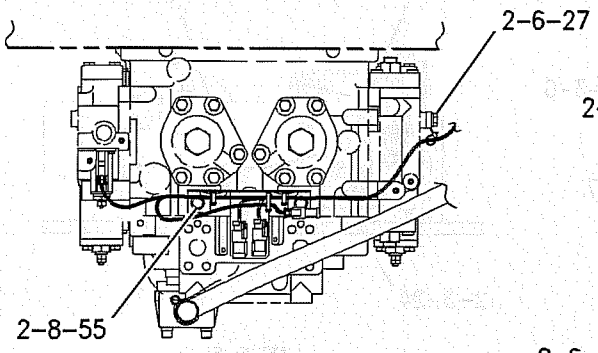

VIEW AH-AH

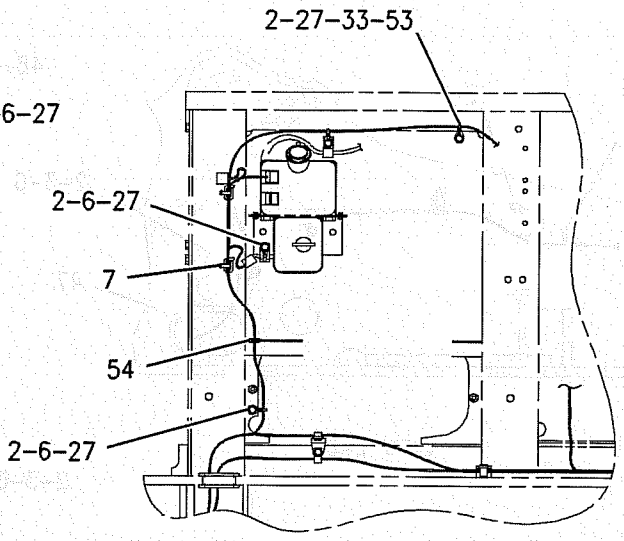

VIEW OF AREA B

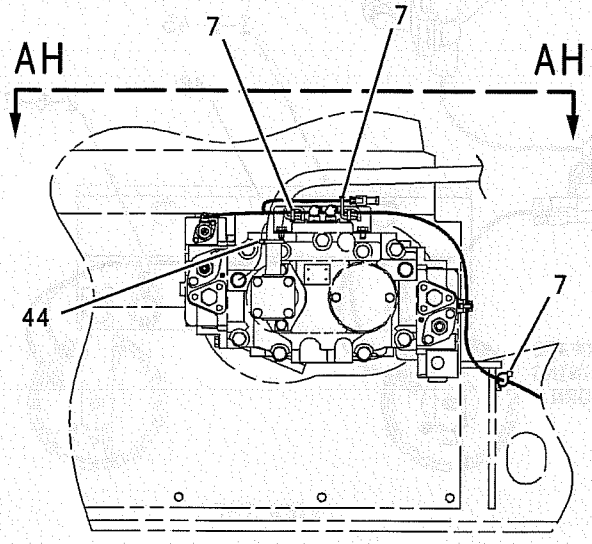

VIEW M-M

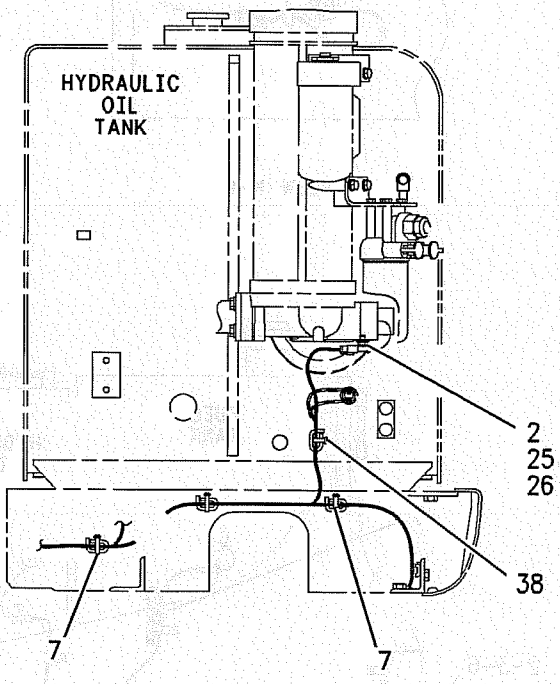

VIEW T-T

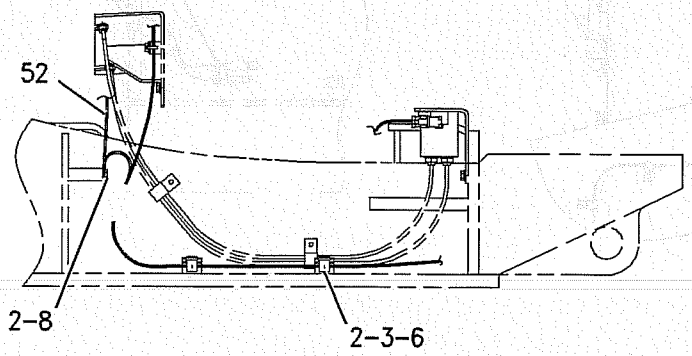

VIEW N-N

GRAPHIC #5

g00949079

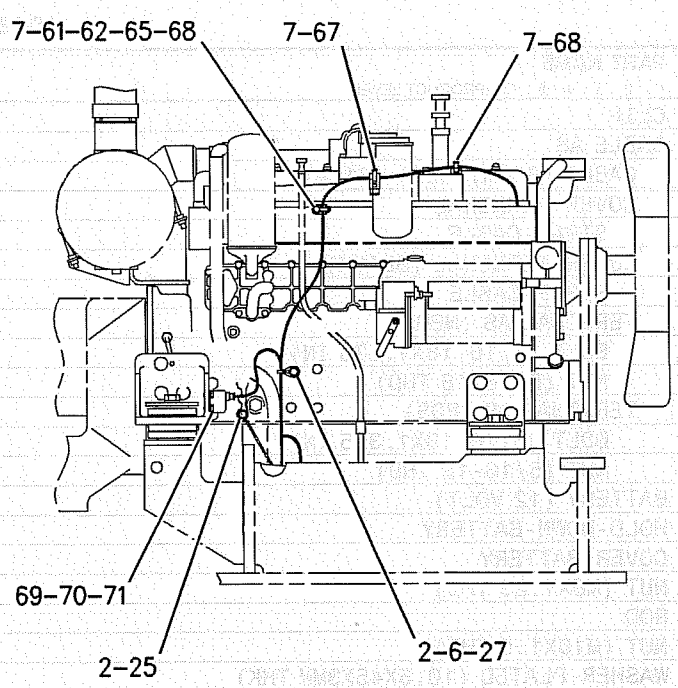

VIEW U-U

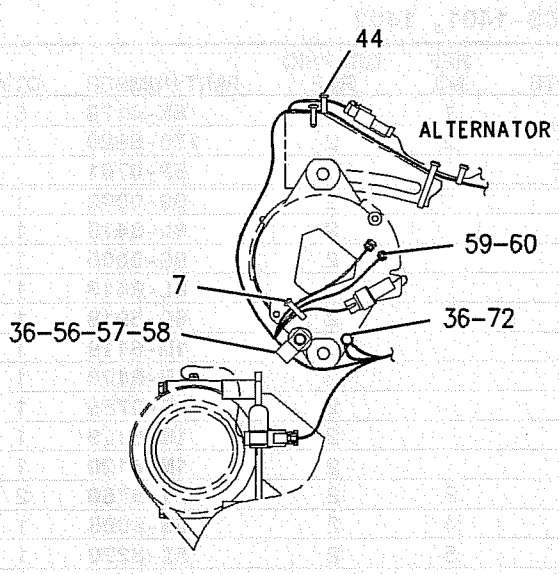

VIEW AW-AW

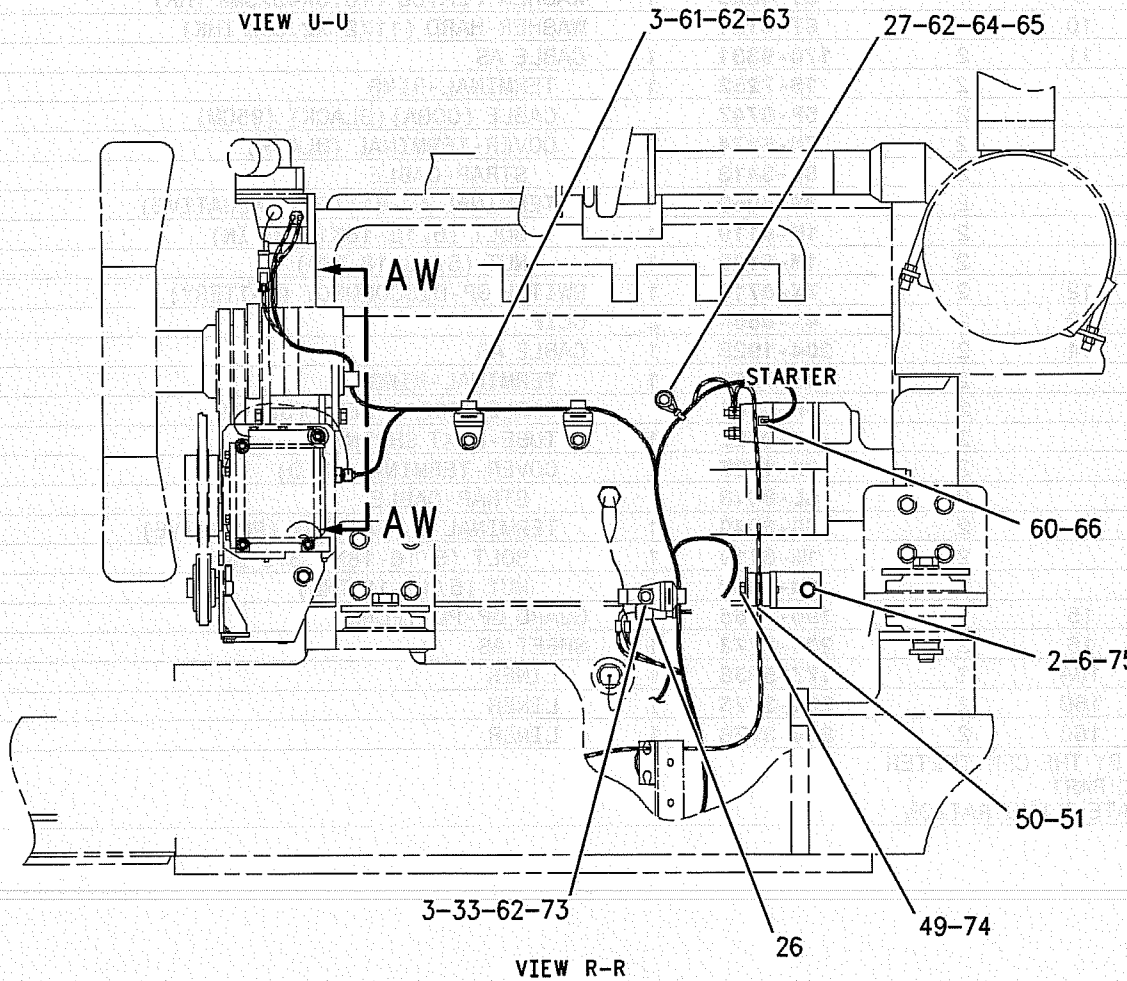

VIEW R-R

GRAPHIC #6 **<END>** g00949080

ELECTRICAL AND STARTING SYSTEM

213-0914 BATTERY & WIRING GP–COLD WEATHER

S/N: SBN1-UP; RAW1-UP
AN ATTACHMENT

SMCS-1401, 1402 **i01888926**

NOTE	REF NO	GRAPHIC REF	PART NUMBER	QTY	PART NAME 1 2 3 4 5 6 (PRODUCT LEVEL)	SEE PAGE
	1	1,2	**6K-8178**	5	CLIP	
	2	2	**170-6929**	1	CABLE AS	
E		2	**5P-0761**		CABLE (00GA)(RED) (31CM)	
		2	**9G-0002**	1	COVER-TERMINAL	
		2	**8L-8413**	1	STRAP-CABLE	
		2	**9G-0005**	1	COVER-TERMINAL (BLACK)	
		2	**8L-8413**	1	STRAP-CABLE	
		2	**8C-5918**	1	TERMINAL AS (NEG)	
		2	**1M-6119**	1	BOLT (5/16-18X1.375 IN)	
		2	**1M-6120**	1	NUT (5/16-18 THD)	
		2	**8T-9756**	1	TERMINAL AS (POS)	
		2	**1M-6119**	1	BOLT (5/16-18X1.375 IN)	
		2	**1M-6120**	1	NUT (5/16-18 THD)	
	3	2	**3T-5760**	2	BATTERY (12 VOLT)	
	4	2	**6W-6005**	1	HOLD-DOWN-BATTERY	
	5	2	**5I-8270**	1	COVER-BATTERY	
M	6	1	**5C-7261**	1	NUT (M8X1.25 THD)	
	7	1	**5I-8304**	1	ROD	
M	8	1	**8T-4133**	2	NUT (M10X1.5 THD)	
	9	1	**8T-4226**	1	WASHER-PLATED (10.5X45X3MM THK)	
	10	1	**8T-4121**	1	WASHER-HARD (11X21X2.5MM THK)	
	11	2	**170-9331**	1	CABLE AS	
		2	**1S-7252**	1	TERMINAL-RING	
E		2	**5P-0747**		CABLE (00GA)(BLACK) (95CM)	
		2	**7N-5274**	1	COVER-TERMINAL (BLACK)	
		2	**8L-8413**	1	STRAP-CABLE	
		2	**3S-6050**	1	TERMINAL AS-BATTERY (NEGATIVE)	
		2	**1M-6119**	1	BOLT (5/16-18X1.375 IN)	
		2	**1M-6120**	1	NUT (5/16-18 THD)	
Y	12	2	**7N-0719**	1	SWITCH GP-DISCONNECT (BATTERY)	134
	13	2	**4K-8864**	2	CLIP	
	14	2	**204-1925**	1	CABLE AS	
		2	**1S-7252**	1	TERMINAL-RING	
E		2	**5P-0761**		CABLE (00GA)(RED) (362CM)	
		2	**6V-2722**	1	TUBE-HEAT SHRINK	
		2	**8N-1725**	1	COVER-TERMINAL (RED)	
		2	**8L-8413**	1	STRAP-CABLE	
		2	**3S-6049**	1	TERMINAL AS-BATTERY (POSITIVE)	
		2	**1M-6119**	1	BOLT (5/16-18X1.375 IN)	
		2	**1M-6120**	1	NUT (5/16-18 THD)	
Y	15	1	*190-7165*	1	GUARD GP-PLATFORM	175
	16	2	**204-3773**	1	SHEET AS	
	16A	2	**177-5936**	1	LINER	
	16B	2	**204-3775**	1	LINER	
	16C	2	**204-3776**	1	LINER	

E-ORDER BY THE CENTIMETER
M-METRIC PART
Y-SEPARATE ILLUSTRATION

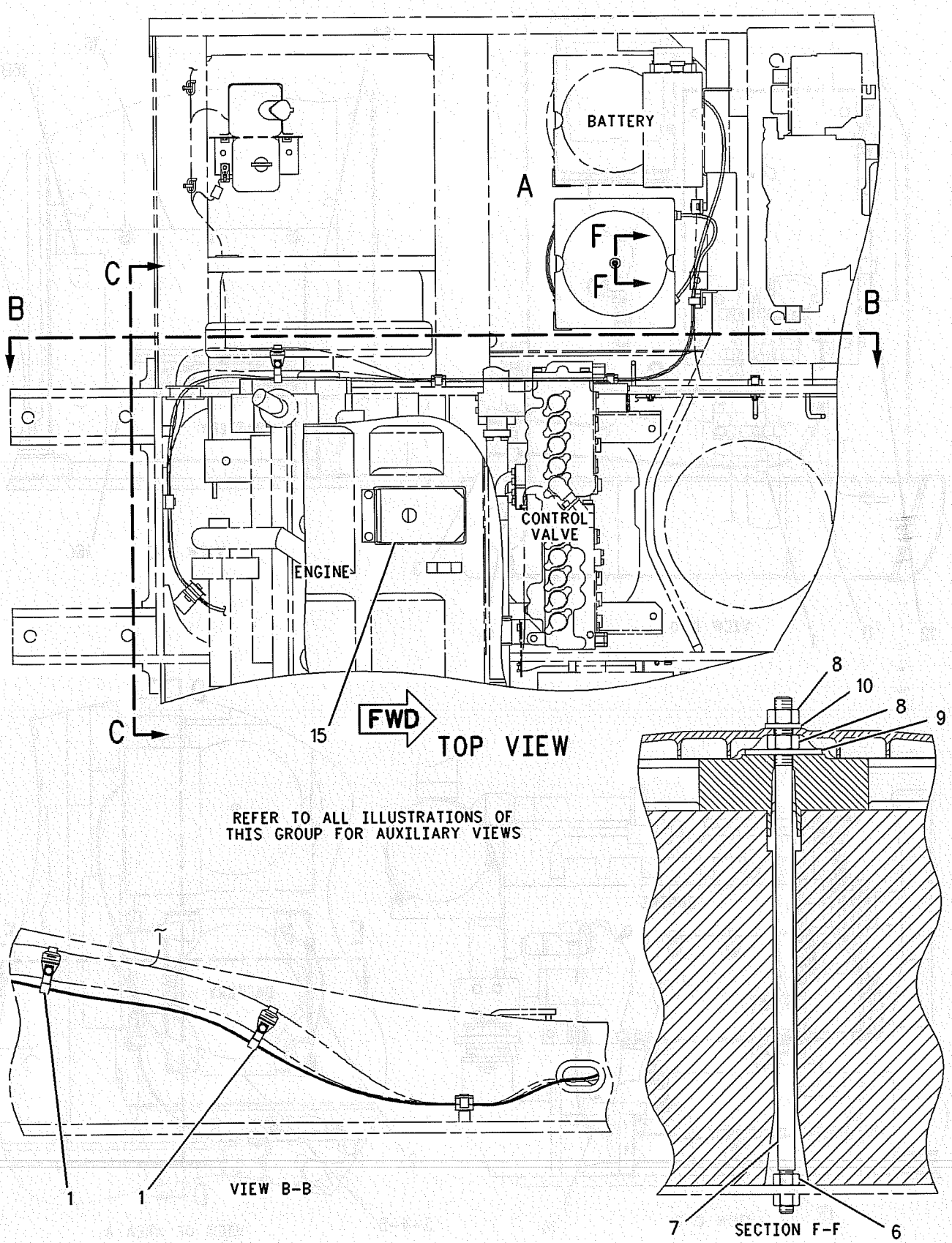

GRAPHIC #1

g00949927

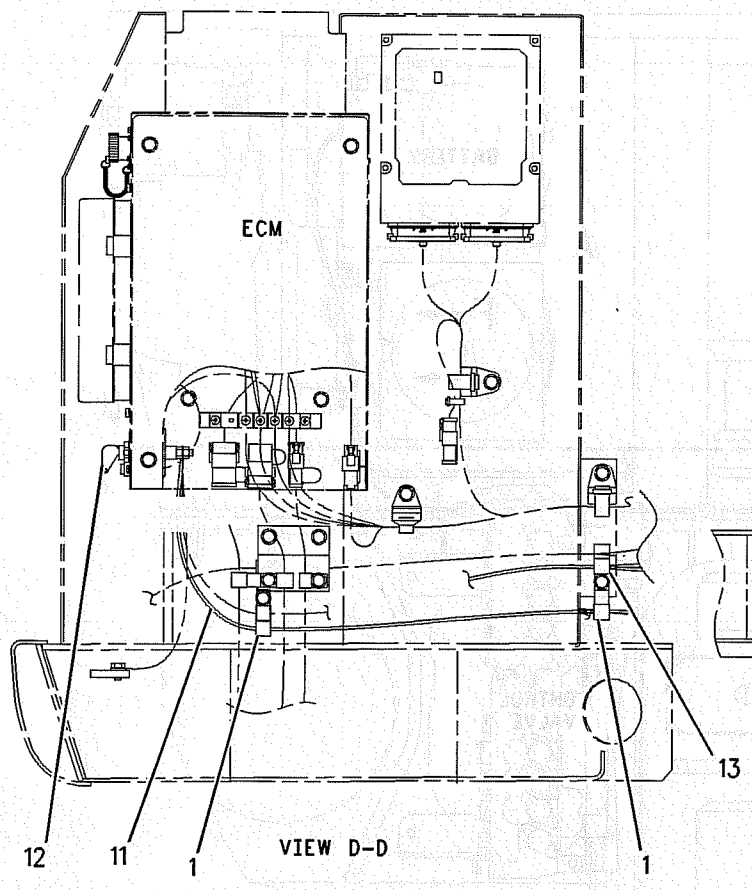

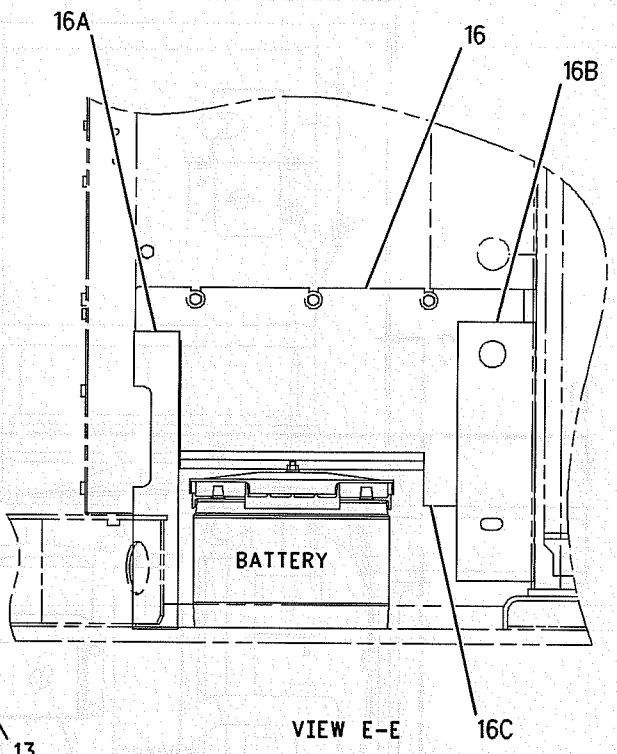

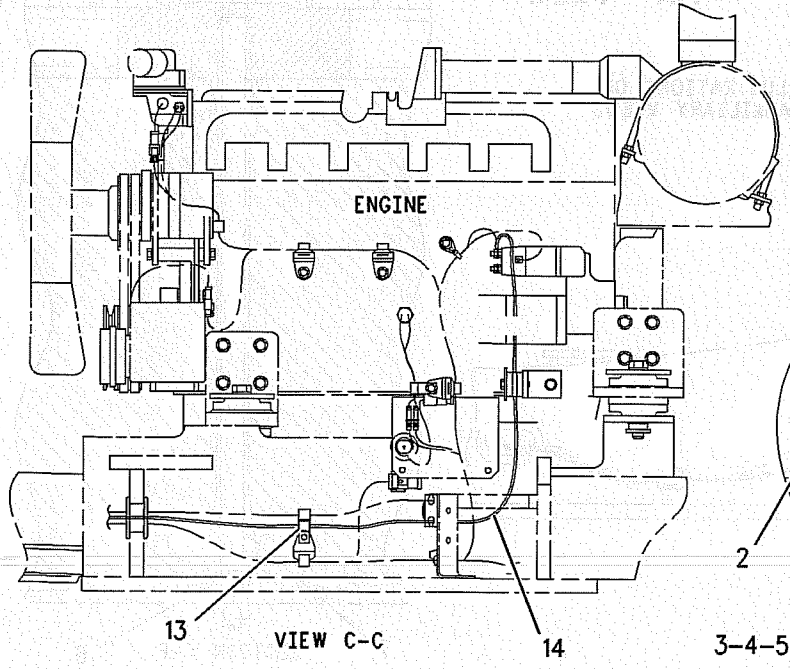

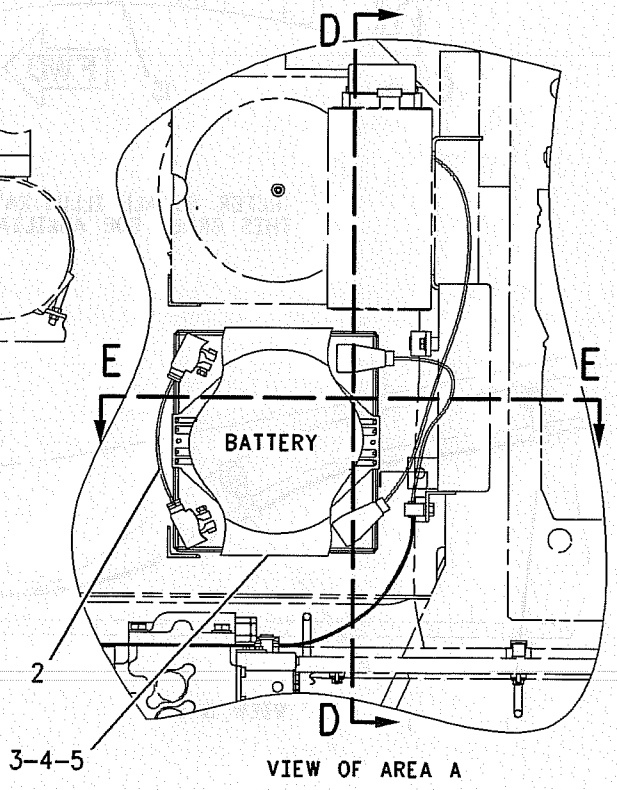

GRAPHIC #2

<END>

g00949929

ELECTRICAL AND STARTING SYSTEM

164-8199 CONTROL & MTG GP-IMPLEMENT

S/N: SBN1-UP; RAW1-UP
PART OF 202-6855 CONTROL AR-AUXILIARY
AN ATTACHMENT

SMCS-5700 **i01889920**

NOTE	REF NO	GRAPHIC REF	PART NUMBER	QTY	PART NAME 1 2 3 4 5 6 (PRODUCT LEVEL)	SEE PAGE
	1	1	**157-3200**	1	CONTROL GP-IMPLEMENT (WORK TOOL)	
M	2	1	**095-0645**	4	BOLT-SOCKET HEAD (M6X1.00X55MM)	
	3	1	**9X-8256**	4	WASHER (6.6X12X2MM THK)	
M	4	1	**8T-4177**	2	BOLT (M8X1.25X90MM)	
	5	1	**8T-4224**	4	WASHER-HARD (8.8X16X2MM THK)	
	6	1	**171-2584**	1	BRACKET AS	
M		1	**6V-9632**	4	NUT-WELD (M6X1 THD)	
M	7	1	**7X-2536**	2	BOLT (M8X1.25X14MM)	

M-METRIC PART

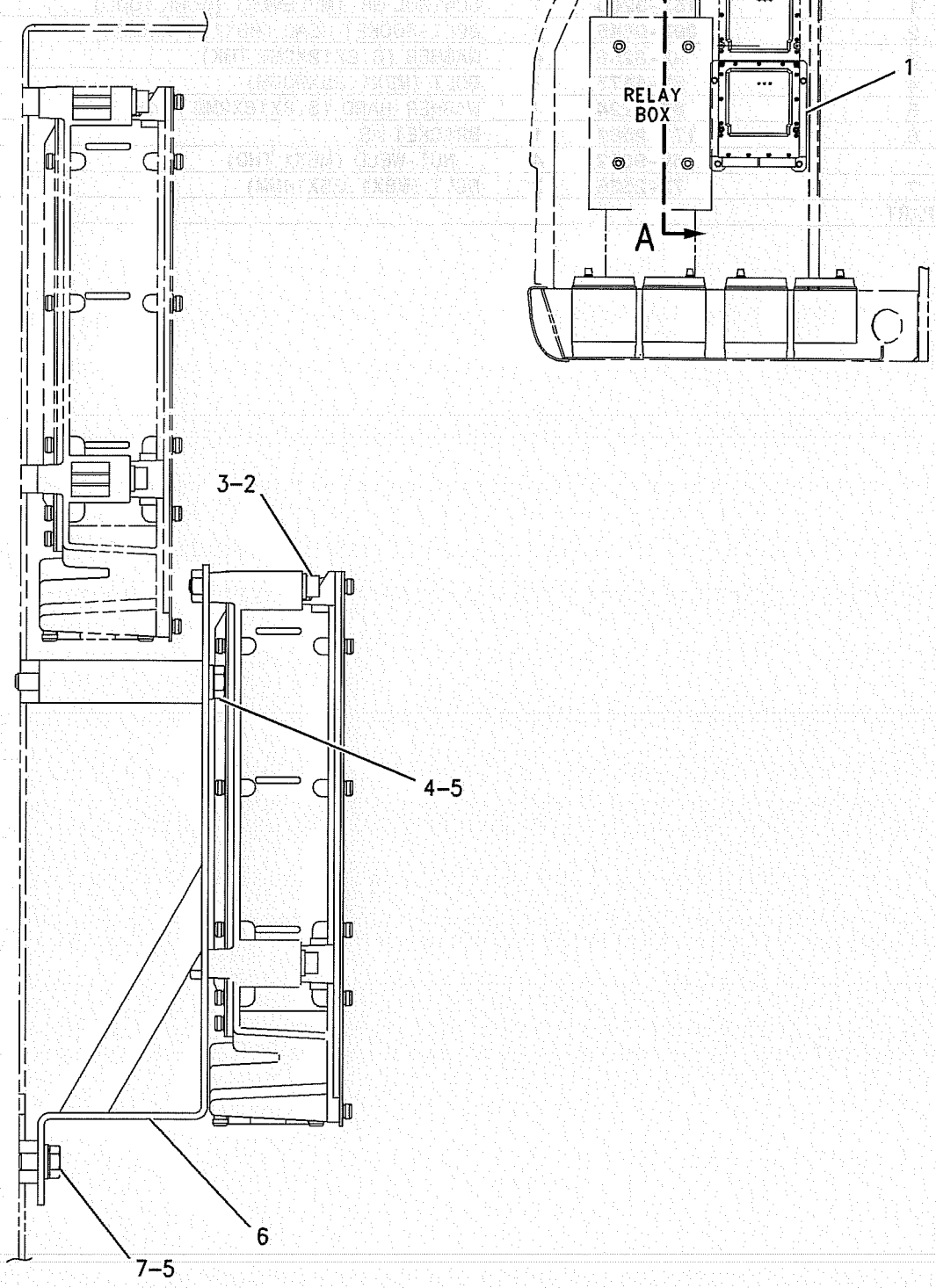

VIEW A-A

GRAPHIC #1 **<END>** g00692506

ELECTRICAL AND STARTING SYSTEM

157-3164 CONTROL & MTG GP-MACHINE

S/N: SBN1-UP; RAW1-UP

PART OF 193-6848, 193-6849 CHASSIS AR

SMCS-1931, 7600 **i01355844**

NOTE	REF NO	GRAPHIC REF	PART NUMBER	QTY	PART NAME 1 2 3 4 5 6 (PRODUCT LEVEL)	SEE PAGE
	1	1	**157-3165**	1	CONTROL GP-ENGINE & HYD PUMP	
		1	**157-3167**		CONTROL AS-ELECTRONIC	
		1	**157-3173**		SOFTWARE GP-ELECTRONIC	
M	2	1	**095-0645**	4	BOLT-SOCKET HEAD (M6X1.00X55MM)	
	3	1	**9X-8256**	4	WASHER (2MM THK)	

M-METRIC PART

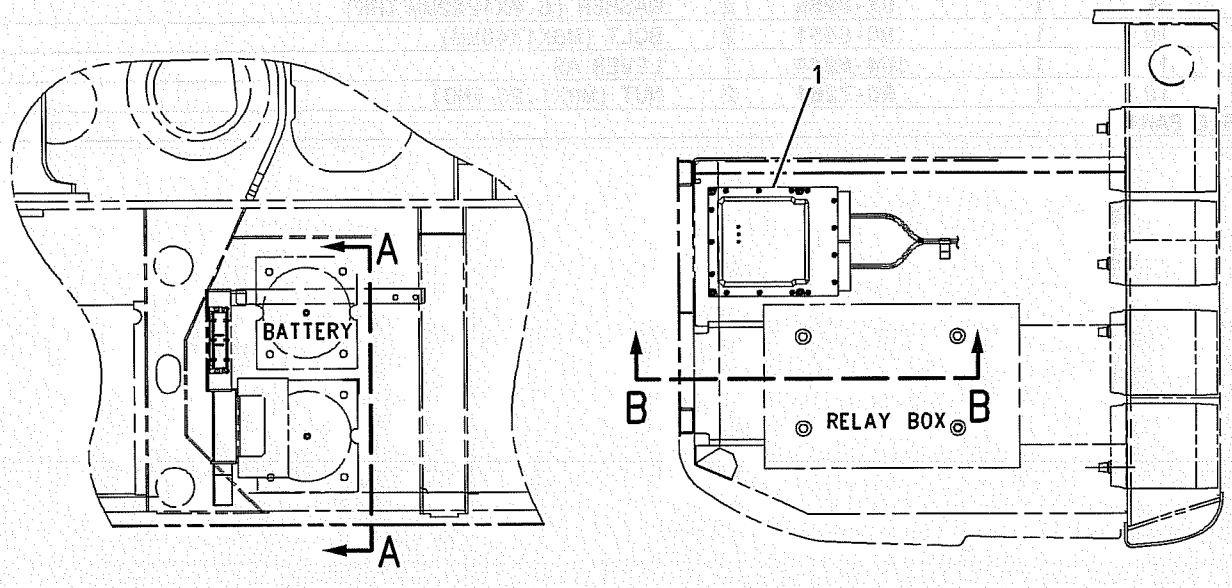

VIEW A-A

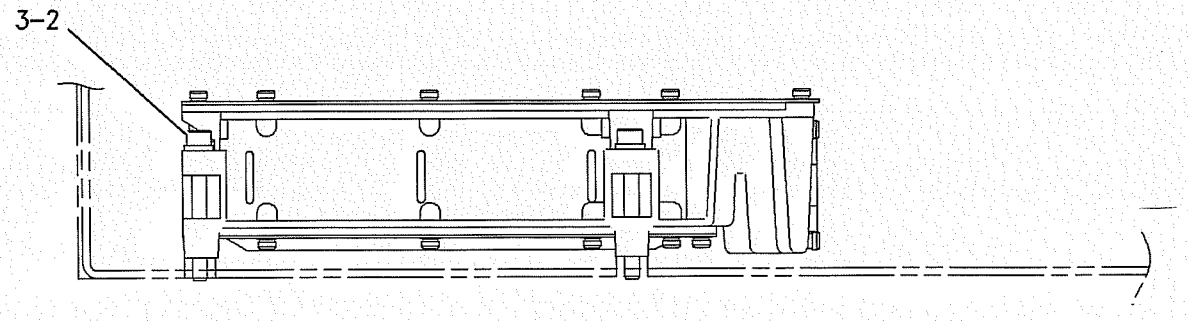

VIEW B-B

GRAPHIC #1 **<END>** g00681492

ELECTRICAL AND STARTING SYSTEM

157-3168 CONTROL GP-ENGINE ELECTRONIC

S/N: SBN1-UP; RAW1-UP

PART OF 193-6848, 193-6849 CHASSIS AR

SMCS-1901 **i01872014**

NOTE	REF NO	GRAPHIC REF	PART NUMBER	QTY	PART NAME 1 2 3 4 5 6 (PRODUCT LEVEL)	SEE PAGE
	1	1	**221-8760**	1	MOTOR AS-GOVERNOR	
		1	**102-8806**	1	KIT-RECEPTACLE (8 PIN)	
					(INCLUDES RECEPTACLE AS AND WEDGE)	
		1	**8T-8737**	1	PLUG-SEAL	
		1	**157-3160**	2	JOINT	
		1	**144-1636**	8	PIN-CONNECTOR	
	2	1	**177-7727**	1	BRACKET AS	
	3	1	**4K-6177**	2	CLIP	
	4	1	**8T-4121**	7	WASHER-HARD (11X21X2.5MM THK)	
M	5	1	**8T-4137**	7	BOLT (M10X1.5X20MM)	
	6	1	**157-3149**	1	BRACKET AS	
M	7	1	**7X-2537**	2	BOLT (M8X1.25X35MM)	
	8	1	**8T-4224**	6	WASHER-HARD (8.8X16X2MM THK)	
	9	1	**9X-8256**	2	WASHER (6.6X12X2MM THK)	
M	10	1	**8C-8451**	2	BOLT (M6X1X40MM)	
	11	1	**164-8244**	1	LEVER AS	
M	12	1	**5C-7261**	2	NUT (M8X1.25 THD)	

M-METRIC PART

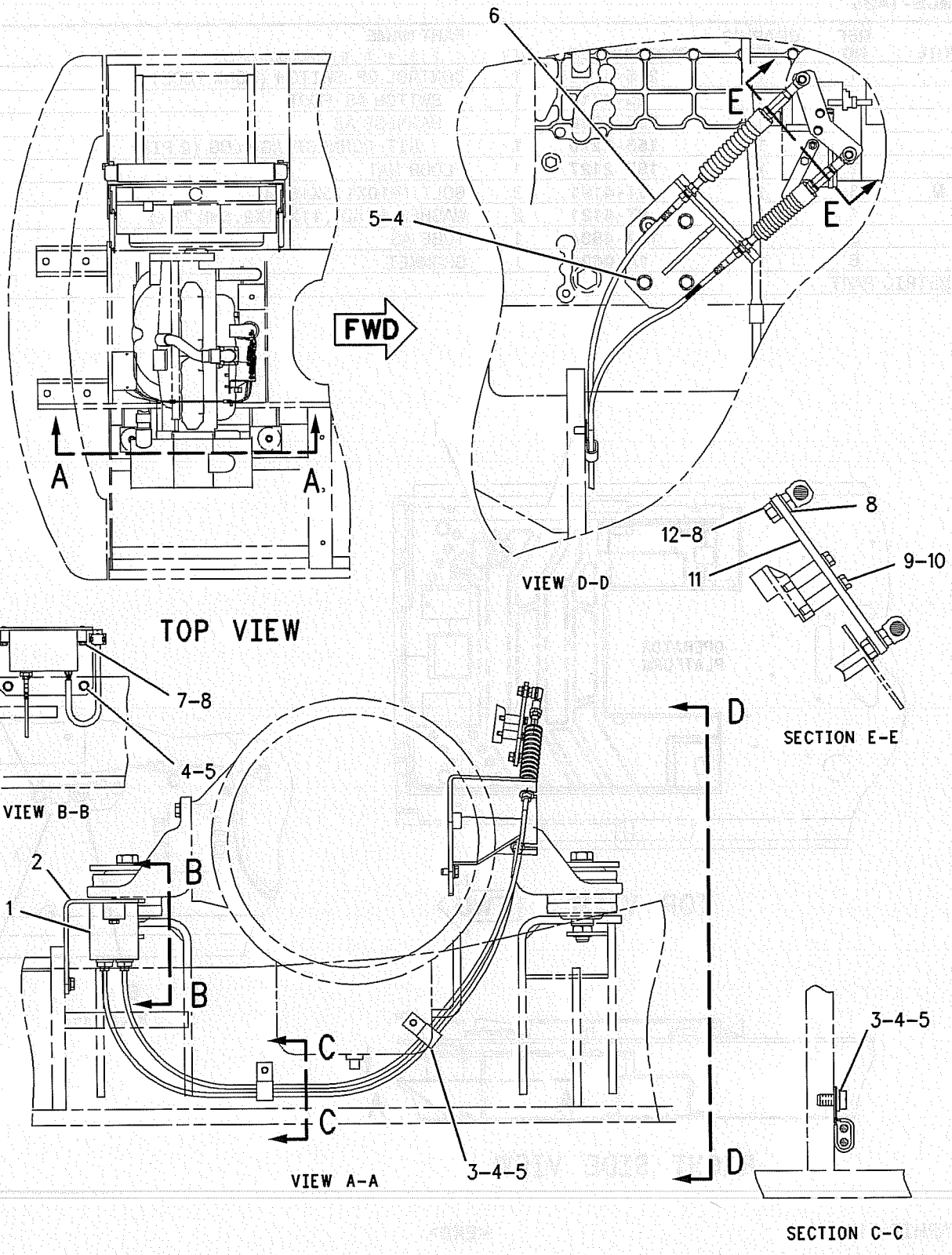

GRAPHIC #1 **<END>** g00683266

153-8766 CONTROL GP-SWITCH

S/N: RAW1-UP

PART OF 173-7975 CONTROL AR-AUXILIARY

AN ATTACHMENT

SMCS-1435 **i01893730**

NOTE	REF NO	GRAPHIC REF	PART NUMBER	QTY	PART NAME 1 2 3 4 5 6 (PRODUCT LEVEL)	SEE PAGE
	1	1	**205-1339**	1	CONTROL GP-SWITCH (WORK TOOL)	
		1	**2Q-4710**	1	SWITCH AS-FOOT	
		1	**205-1340**	1	HARNESS AS	
		1	**155-2270**	1	KIT-CONNECTING PLUG (2 PIN)	
	2	1	**197-2127**	1	FLOOR MAT	
M	3	1	**8T-4191**	2	BOLT (M10X1.5X16MM)	
	4	1	**8T-4121**	2	WASHER-HARD (11X21X2.5MM THK)	
	5	1	**142-4834**	1	TUBE AS	
	6	1	**1A-0621**	1	GROMMET	

M-METRIC PART

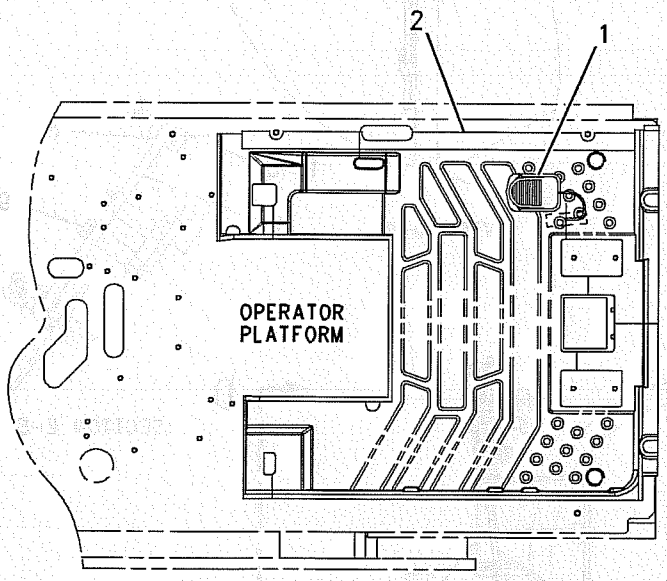

TOP VIEW FWD

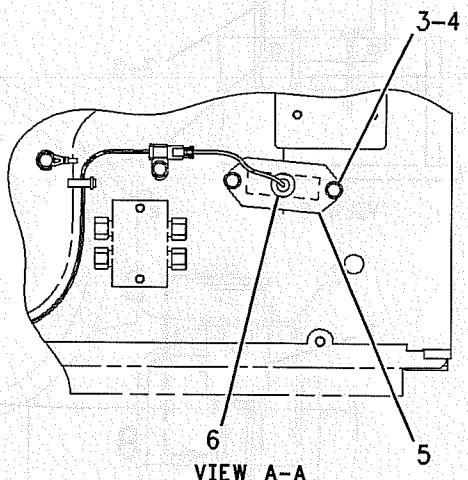

VIEW A-A

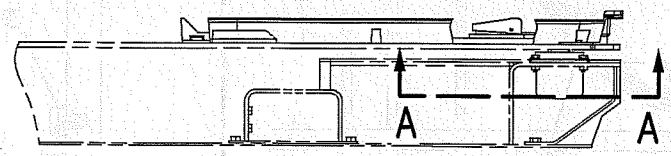

RIGHT SIDE VIEW

GRAPHIC #1 **<END>** g00986198

ELECTRICAL AND STARTING SYSTEM

171-2613 ELECTRONICS GP-ENGINE RATINGS

S/N: SBN1-UP; RAW1-UP
PART OF 193-6840, 193-6841 GENERAL AR

SMCS-1902 **i01889067**

NOTE	PART NUMBER	QTY	PART NAME 1 2 3 4 5 6 (PRODUCT LEVEL)	SEE PAGE
	211-5557	1	SOFTWARE GP-MACHINE (ENGINE & HYDRAULIC)	
			(SOFTWARE ONLY)	
			—OR—	
	211-5558	1	CONTROL GP-MACHINE (ENGINE & HYDRAULIC) (INCLUDES SOFTWARE)	
			(OPTIONAL SERVICE REPLACEMENT)	

<END>

171-2619 ELECTRONICS GP-IMPLEMENT

S/N: SBN1-UP; RAW1-UP
PART OF 202-6855 CONTROL AR-AUXILIARY
AN ATTACHMENT

SMCS-7610 **i01889856**

NOTE	PART NUMBER	QTY	PART NAME 1 2 3 4 5 6 (PRODUCT LEVEL)	SEE PAGE
	211-5559	1	SOFTWARE GP-IMPLEMENT (WORK TOOL)	
			(SOFTWARE ONLY)	
			—OR—	
	211-5560	1	CONTROL GP-IMPLEMENT (WORK TOOL)	
			(INCLUDES SOFTWARE) (OPTIONAL SERVICE REPLACEMENT)	

<END>

177-7689 ELECTRONICS GP-MONITOR

S/N: SBN1-UP; RAW1-UP
AN ATTACHMENT

SMCS-7490, 7601, 7603, 7610 **i01890928**

NOTE	PART NUMBER	QTY	PART NAME 1 2 3 4 5 6 (PRODUCT LEVEL)	SEE PAGE
	221-8750	1	SOFTWARE GP-MONITOR (SOFTWARE ONLY)	
			—OR—	
Y	221-8751	1	MONITOR GP-OPERATOR (INCLUDES SOFTWARE)	596
			(OPTIONAL SERVICE REPLACEMENT)	

Y-SEPARATE ILLUSTRATION

<END>

5I-8250 LAMP GP-FLOOD

S/N: SBN1-UP; RAW1-UP
PART OF 116-0157 LIGHTING GP-BOOM
AN ATTACHMENT

SMCS-1434 **i00862465**

NOTE	REF NO	GRAPHIC REF	PART NUMBER	QTY	PART NAME 1 2 3 4 5 6 (PRODUCT LEVEL)	SEE PAGE
Y	1	1	**150-6978**	1	LAMP GP-FLOOD	118
					–OR–	
Y	2	1	**153-2452**	1	LAMP GP-FLOOD	119

Y-SEPARATE ILLUSTRATION

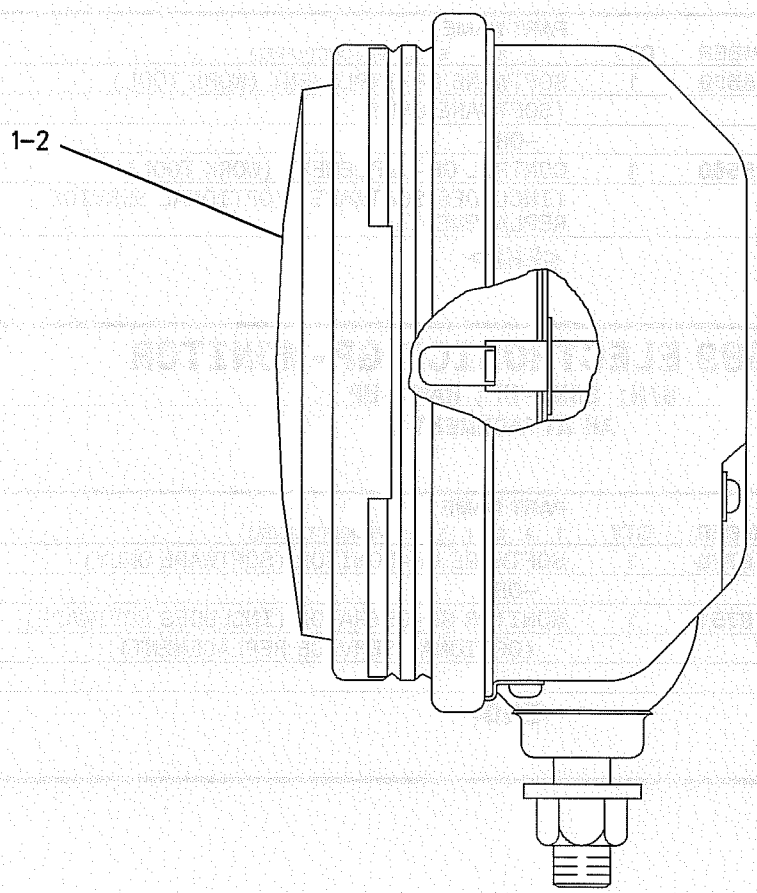

GRAPHIC #1 **<END>** g00506971

5I-8251 LAMP GP-FLOOD

S/N: SBN1-UP; RAW1-UP

PART OF 4I-5409 LIGHTING GP-CHASSIS

SMCS-1434 **i00827883**

NOTE	REF NO	GRAPHIC REF	PART NUMBER	QTY	PART NAME 1 2 3 4 5 6 (PRODUCT LEVEL)	SEE PAGE
M	1	1	**9X-8488**	1	NUT-HEX THIN (M12X1.5 THD)	
	2	1	**8T-4223**	1	WASHER-HARD (3MM THK)	
	3	1	**9X-3463**	1	LAMP	
M	4	1	**6V-5210**	2	SCREW-MACHINE (M4X0.7 THD)	
	5	1	**3B-4501**	2	LOCKWASHER (1.02MM THK) (#8)	
	6	1	**106-0001**	1	LENS AS	
	7	1	**106-0002**	1	BAND	
	8	1	**106-0003**	1	RING-RUBBER	
	9	1	**106-0004**	1	RING-FITTING	
	10	1	**106-0005**	1	SEAT	
M	11	1	**7Y-5286**	1	BOLT-SQUARE NECK	
M	12	1	**7Y-5288**	2	SCREW-PAN HEAD	

M-METRIC PART

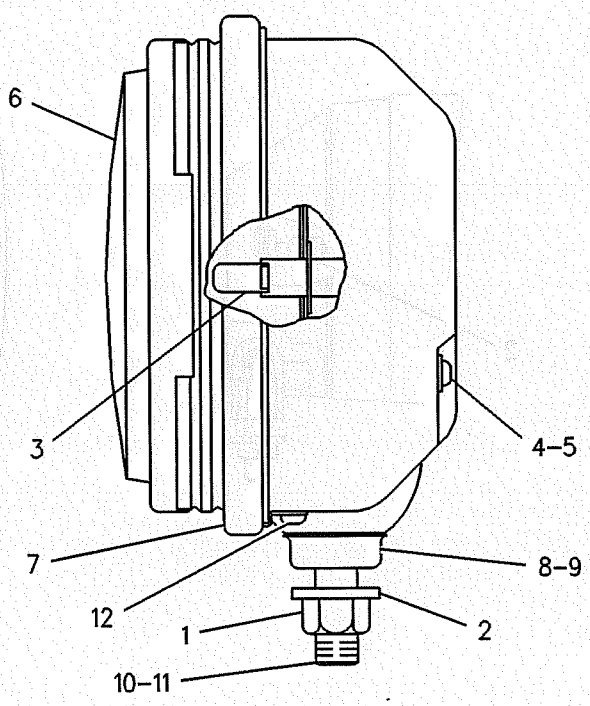

GRAPHIC #1

<END>

g00252247

150-6978 LAMP GP-FLOOD

S/N: SBN1-UP; RAW1-UP
PART OF 5I-8250 LAMP GP-FLOOD
FIELD REPLACEMENT FOR 5I-8250 LAMP GP-FLOOD
AN ATTACHMENT

SMCS-1434 **i00858646**

NOTE	REF NO	GRAPHIC REF	PART NUMBER	QTY	PART NAME 1 2 3 4 5 6 (PRODUCT LEVEL)	SEE PAGE
M	1	1	**8T-0337**	2	SCREW-MACHINE (M4X0.7X12MM)	
	2	1	**9X-3463**	1	LAMP	
	3	1	**8T-4223**	1	WASHER-HARD (3MM THK)	
M	4	1	**8T-4244**	1	NUT (M12X1.75 THD)	

M-METRIC PART

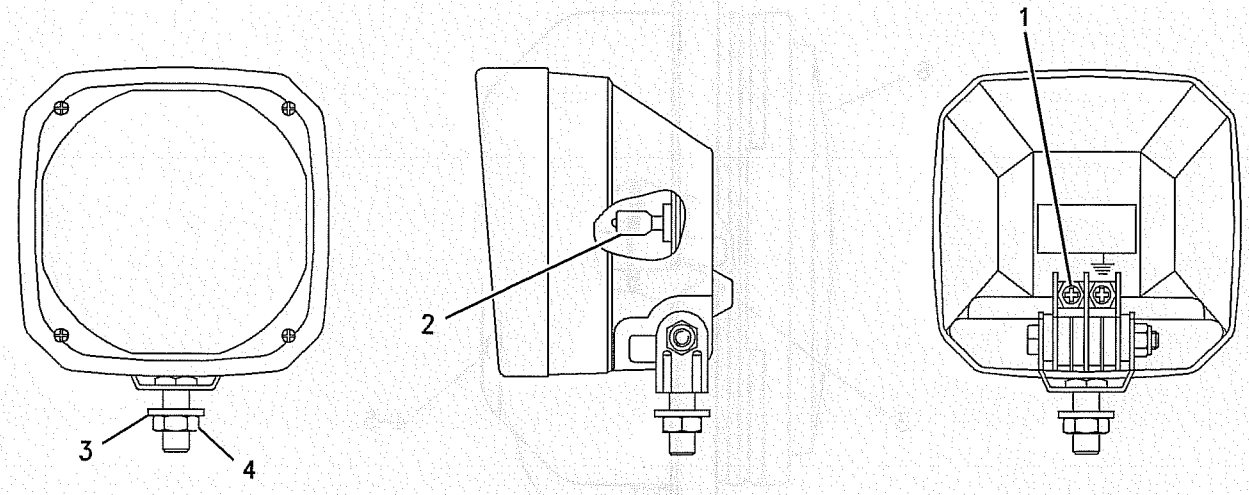

GRAPHIC #1 **<END>** g00491622

153-2452 LAMP GP-FLOOD

S/N: SBN1-UP; RAW1-UP
PART OF 5I-8250 LAMP GP-FLOOD
FIELD REPLACEMENT FOR 5I-8250 LAMP GP-FLOOD
AN ATTACHMENT

SMCS-1434 **i00858665**

NOTE	REF NO	GRAPHIC REF	PART NUMBER	QTY	PART NAME 1 2 3 4 5 6 (PRODUCT LEVEL)	SEE PAGE
	1	1	**8T-4223**	1	WASHER-HARD (3MM THK)	
	2	1	**9X-3463**	1	LAMP	
M	3	1	**6V-5210**	2	SCREW-MACHINE (M4X0.7 THD)	
	4	1	**3B-4501**	2	LOCKWASHER (1.02MM THK)	
	5	1	**106-0001**	1	LENS AS	
	6	1	**106-0002**	1	BAND	
	7	1	**106-0003**	1	RING-RUBBER	
	8	1	**106-0004**	1	RING-FITTING	
	9	1	**106-0005**	1	SEAT	
M	10	1	**145-0556**	1	BOLT-FLAT HEAD	
M	11	1	**7Y-5288**	2	SCREW-PAN HEAD	
M	12	1	**9X-8488**	1	NUT-HEX THIN (M12X1.5 THD)	

M-METRIC PART

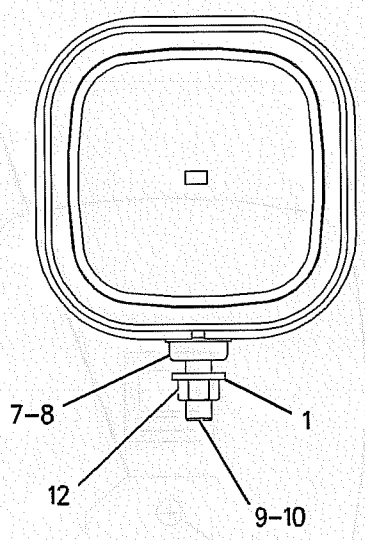

FRONT VIEW

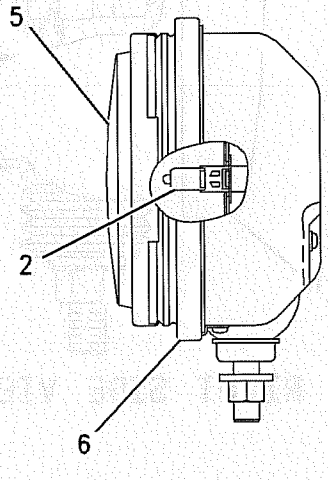

RIGHT SIDE VIEW

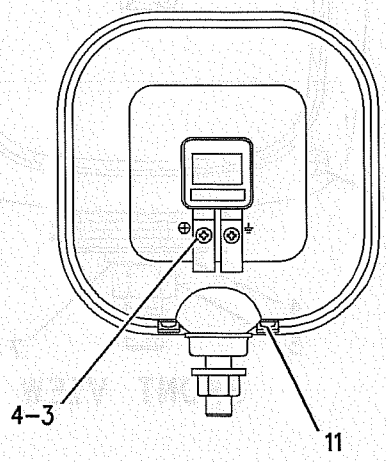

REAR VIEW

GRAPHIC #1 **<END>** g00491623

ELECTRICAL AND STARTING SYSTEM

153-2521 LAMP GP-FLOOD

S/N: SBN1-UP; RAW1-UP
24 VOLT. VERTICAL
PART OF 116-0157, 116-0214, 116-0215 LIGHTING GP-BOOM
AN ATTACHMENT

SMCS-1434 **i01207430**

NOTE	REF NO	GRAPHIC REF	PART NUMBER	QTY	PART NAME 1 2 3 4 5 6 (PRODUCT LEVEL)	SEE PAGE
M	1	1	**6V-5210**	2	SCREW-MACHINE (M4X0.7 THD)	
	2	1	**3B-4501**	2	LOCKWASHER (1.02MM THK)	
	3	1	**9X-3463**	1	LAMP (24 VOLTS)(65 WATTS)	
	4	1	**8T-4223**	1	WASHER-HARD (3MM THK)	
M	5	1	**8T-4244**	1	NUT (M12X1.75 THD)	
	6	1	**174-7791**	1	SCREW	
	7	1	**5C-2889**	1	LOCKWASHER	
	8	1	**170-6993**	1	COVER	
	9	1	**180-3861**	4	SCREW	
	10	1	**170-9417**	1	LAMP AS	
	11	1	**170-9418**	1	BAND	

M-METRIC PART

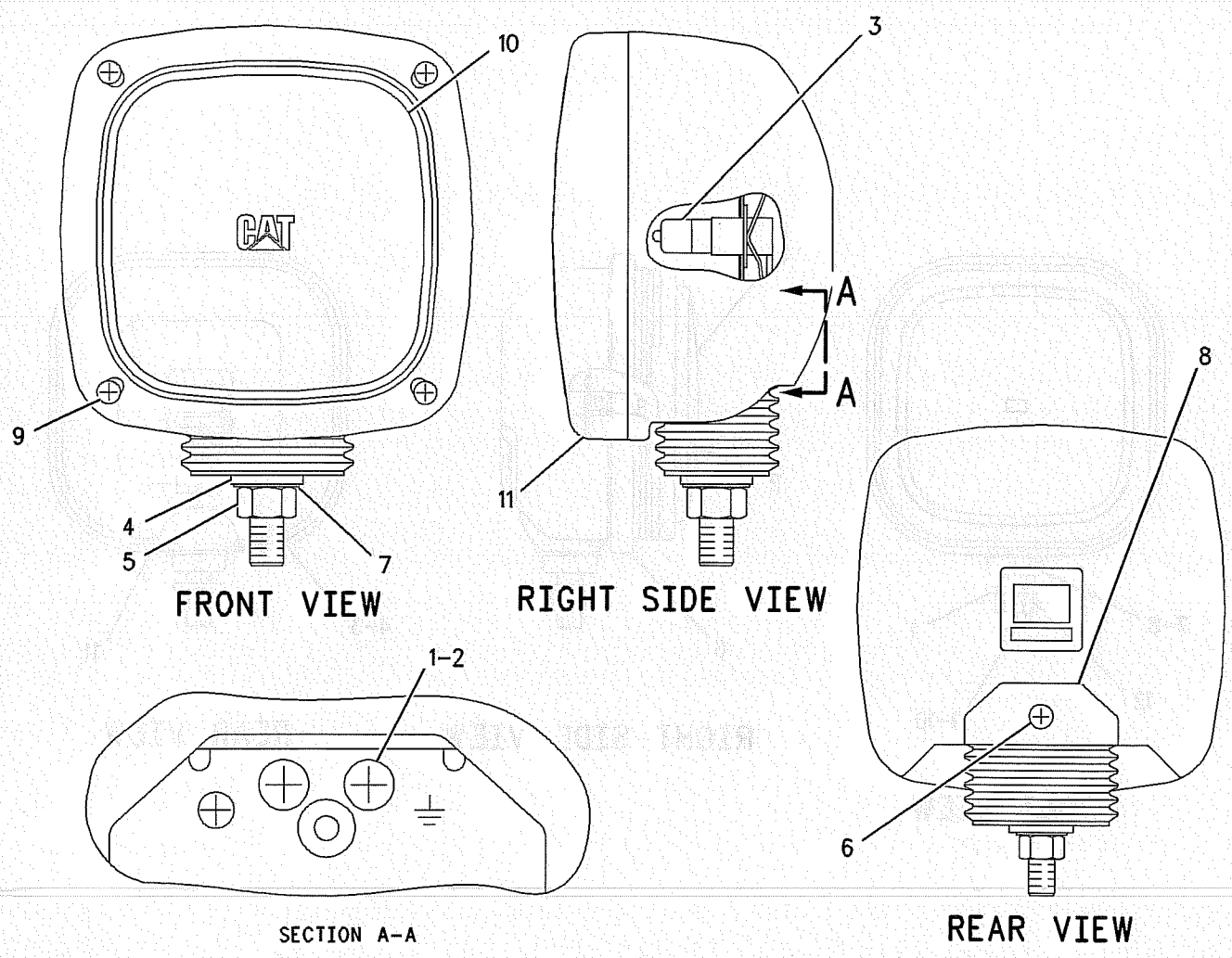

GRAPHIC #1 **<END>** g00645979

153-2523 LAMP GP-FLOOD

S/N: SBN1-UP; RAW1-UP
24V. HORIZONTAL
PART OF 4I-5409 LIGHTING GP-CHASSIS

SMCS-1434 **i01694989**

NOTE	REF NO	GRAPHIC REF	PART NUMBER	QTY	PART NAME 1 2 3 4 5 6 (PRODUCT LEVEL)	SEE PAGE
M	1	1	**6V-5210**	2	SCREW-MACHINE (M4X0.7X10MM)	
	2	1	**3B-4501**	2	LOCKWASHER	
	3	1	**9X-3463**	1	LAMP-HEAD (24 VOLT)	
	4	1	**8T-4223**	1	WASHER-HARD (13.5X25.5X3MM THK)	
M	5	1	**8T-4244**	1	NUT (M12X1.75 THD)	
M	6	1	**174-7791**	1	SCREW	
	7	1	**5C-2889**	1	LOCKWASHER	
	8	1	**170-6993**	1	COVER	
	9	1	**170-9417**	1	LAMP AS	
M	10	1	**180-3861**	4	SCREW	
	11	1	**170-9418**	1	BAND	

M-METRIC PART

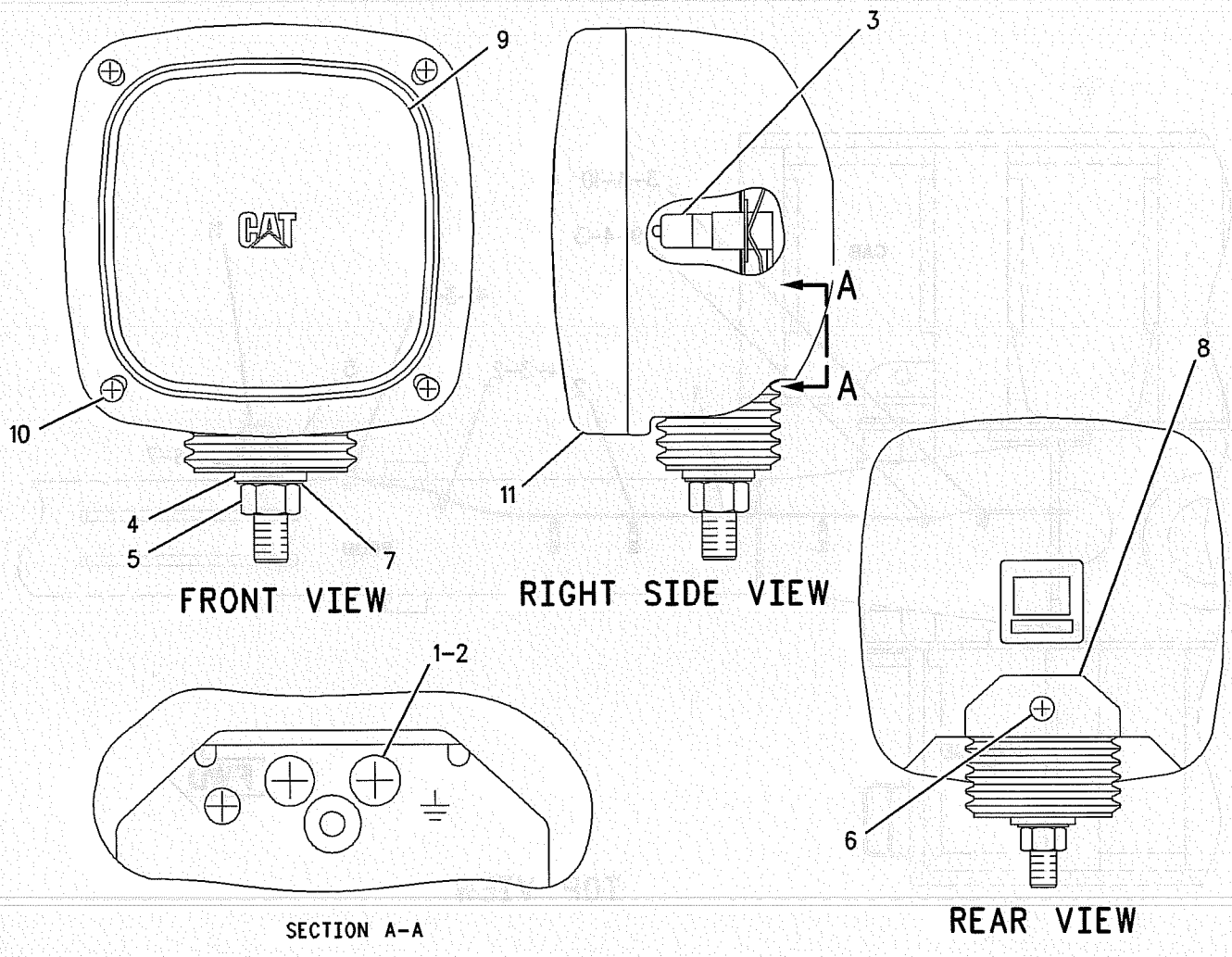

GRAPHIC #1 **<END>** g00872744

ELECTRICAL AND STARTING SYSTEM

116-0157 LIGHTING GP-BOOM

S/N: SBN1-UP; RAW1-UP
LONG OR SHORT BOOM
PART OF 167-7245 BOOM AR-1 PIECE, 167-7244, 176-2714 BOOM AR-1 PIECE LONG
AN ATTACHMENT

SMCS-1434 **i01334482**

NOTE	REF NO	GRAPHIC REF	PART NUMBER	QTY	PART NAME 1 2 3 4 5 6 (PRODUCT LEVEL)	SEE PAGE
	1	1	**116-0227**	1	HARNESS AS	
	2	1	**5P-9297**	4	CLIP (9.52MM ID)	
M	3	1	**8T-4133**	5	NUT (M10X1.50 THD)	
	4	1	**8T-4121**	5	WASHER-HARD (2.5MM THK)	
	5	1	**5I-8273**	1	BRACKET	
M	6	1	**8T-4190**	1	BOLT (M16X2.0X25MM)	
	7	1	**9X-8257**	1	WASHER (3.50MM THK)	
	8	1	**7N-3718**	2	CLIP (9.52MM ID)	
	9	1	**116-0118**	1	CLIP (10.5MMX17.0MM ID)	
	10	1	**111-4837**	1	CLIP	
Y	11	1	**5I-8250**	1	LAMP GP-FLOOD	116
					–OR–	
Y		1	**153-2521**	1	LAMP GP-FLOOD	120

M-METRIC PART
Y-SEPARATE ILLUSTRATION

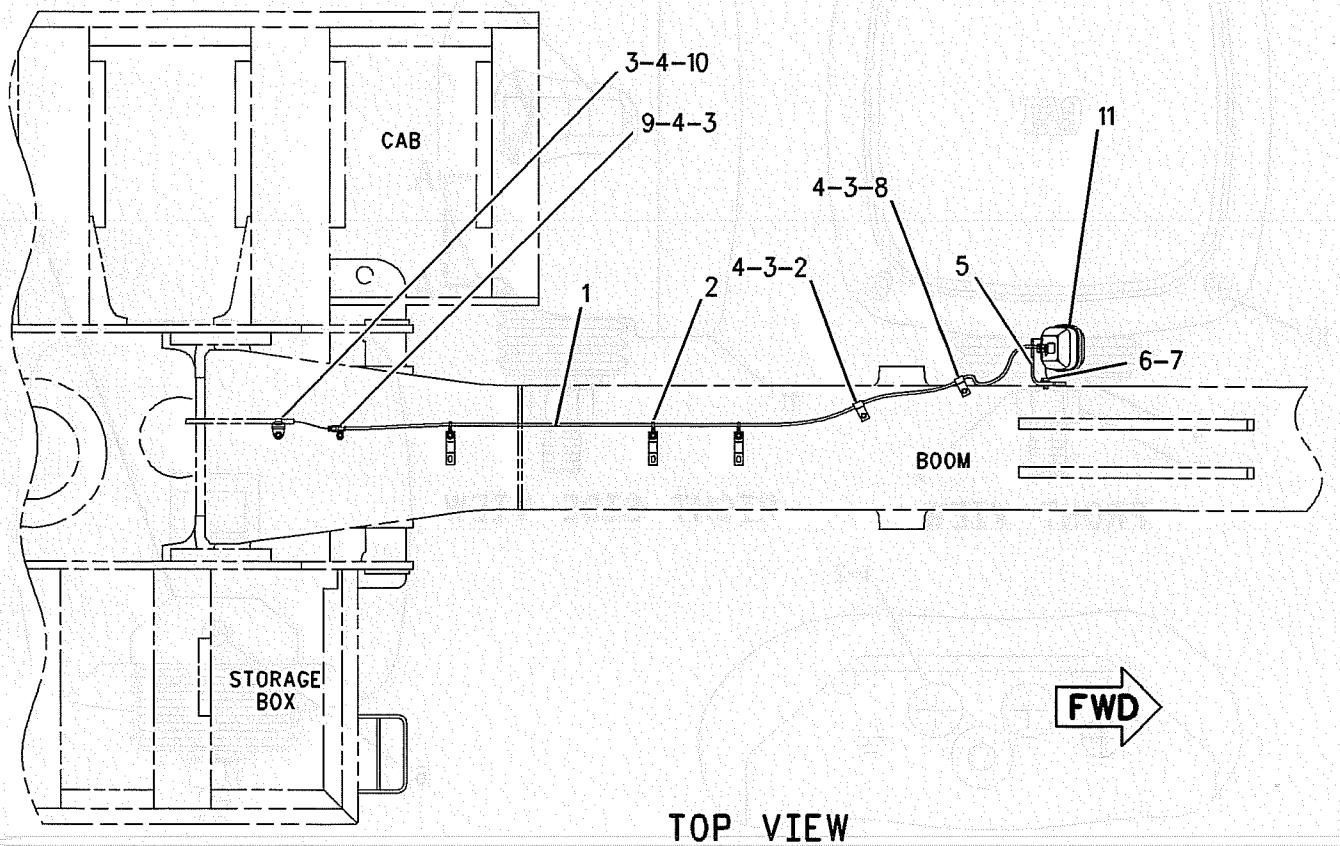

TOP VIEW

GRAPHIC #1 **<END>** g00705733

116-0214 LIGHTING GP-BOOM

S/N: SBN1-UP; RAW1-UP
LONG BOOM - RH
AN ATTACHMENT

SMCS-1434 **i01356506**

NOTE	REF NO	GRAPHIC REF	PART NUMBER	QTY	PART NAME 1 2 3 4 5 6 (PRODUCT LEVEL)	SEE PAGE
	1	1	**140-0923**	1	HARNESS AS	
Y	2	1	**153-2521**	1	LAMP GP-FLOOD	120
M	3	1	**8T-4133**	2	NUT (M10X1.50 THD)	
	4	1	**8T-4121**	2	WASHER-HARD (2.5MM THK)	
	5	1	**5P-9297**	4	CLIP (9.52MM ID)	
M	6	1	**8T-4190**	1	BOLT (M16X2.0X25MM)	
	7	1	**9X-8257**	1	WASHER (3.50MM THK)	
	8	1	**5I-8273**	1	BRACKET	

M-METRIC PART
Y-SEPARATE ILLUSTRATION

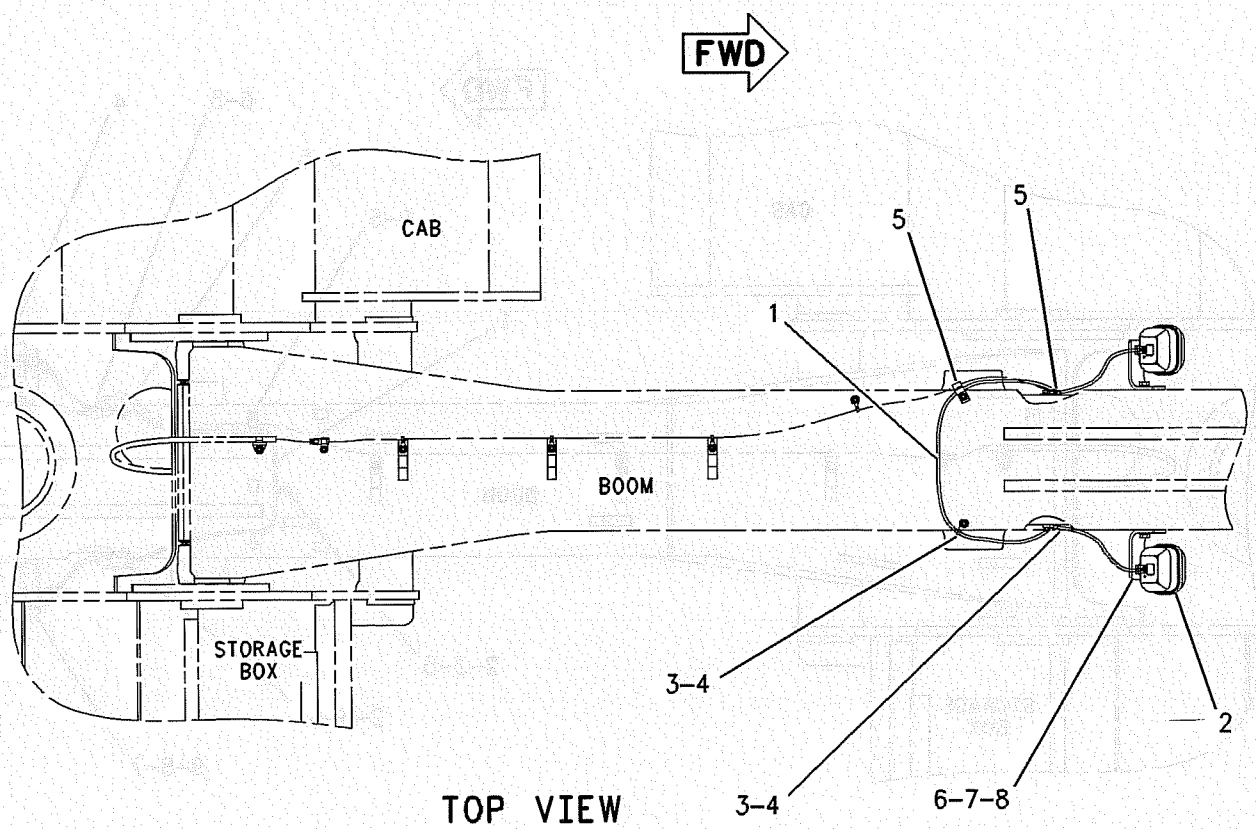

TOP VIEW

GRAPHIC #1 **<END>** g00711535

ELECTRICAL AND STARTING SYSTEM

116-0215 LIGHTING GP-BOOM

S/N: SBN1-UP; RAW1-UP
SHORT BOOM - RH
AN ATTACHMENT

SMCS-1434 **i01349132**

NOTE	REF NO	GRAPHIC REF	PART NUMBER	QTY	PART NAME 1 2 3 4 5 6 (PRODUCT LEVEL)	SEE PAGE
	1	1	**4I-5396**	1	HARNESS AS	
M	2	1	**8T-4133**	4	NUT (M10X1.50 THD)	
	3	1	**8T-4121**	4	WASHER-HARD (2.5MM THK)	
Y	4	1	**153-2521**	1	LAMP GP-FLOOD	120
	5	1	**5P-9297**	6	CLIP (9.52MM ID)	
	6	1	**7N-3718**	3	CLIP (9.52MM ID)	
M	7	1	**8T-4190**	1	BOLT (M16X2.0X25MM)	
	8	1	**9X-8257**	1	WASHER (3.50MM THK)	
	9	1	**5I-8273**	1	BRACKET	

M-METRIC PART
Y-SEPARATE ILLUSTRATION

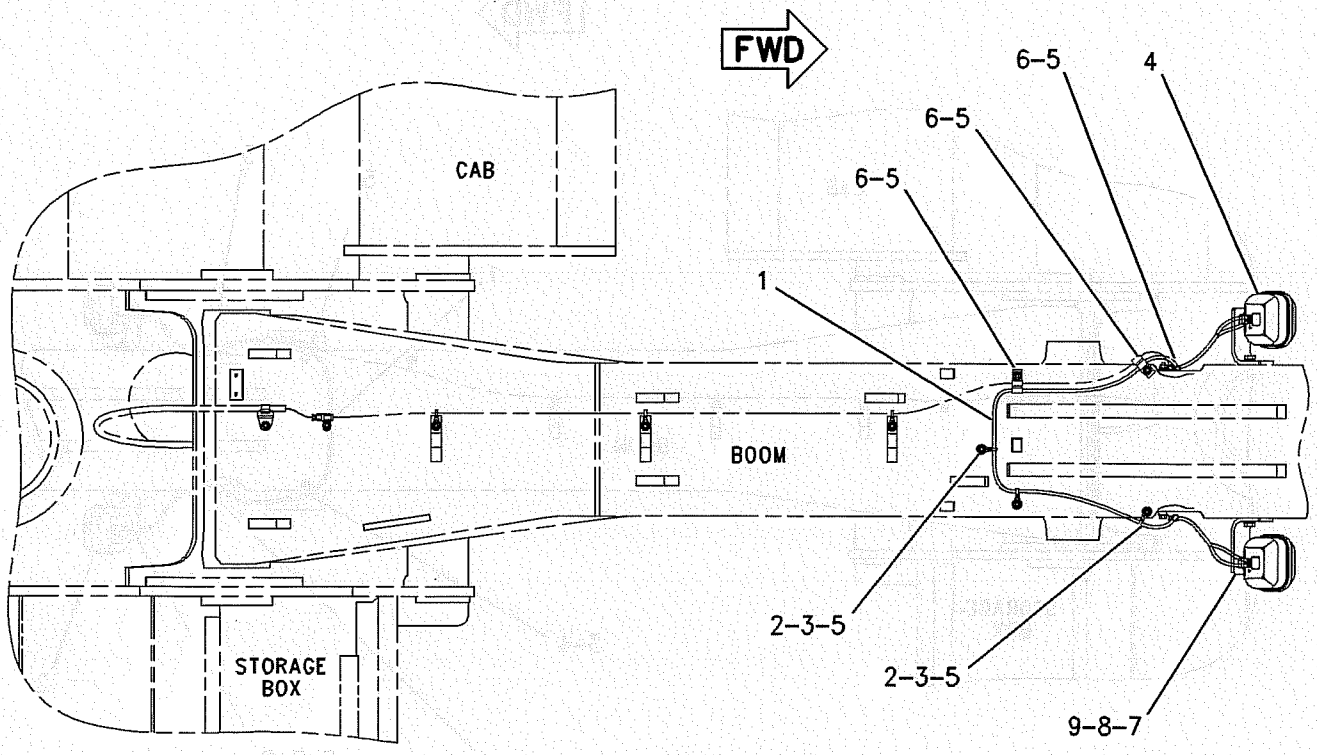

TOP VIEW

GRAPHIC #1 **<END>** g00712071

ELECTRICAL AND STARTING SYSTEM

4I-5409 LIGHTING GP-CHASSIS

S/N: SBN1-UP; RAW1-UP

PART OF 193-6848, 193-6849 CHASSIS AR

SMCS-1429 **i01054417**

NOTE	REF NO	GRAPHIC REF	PART NUMBER	QTY	PART NAME 1 2 3 4 5 6 (PRODUCT LEVEL)	SEE PAGE
Y	1	1	**5I-8251**	1	LAMP GP-FLOOD	117
					–OR–	
Y		1	**153-2523**	1	LAMP GP-FLOOD	121

Y-SEPARATE ILLUSTRATION

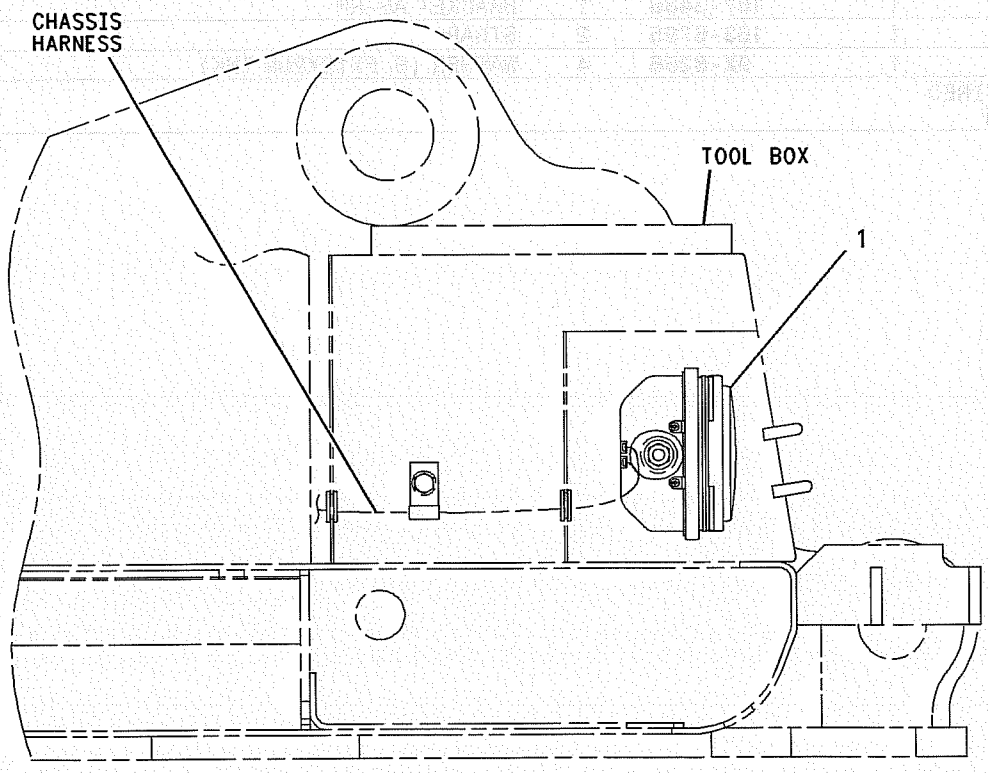

RIGHT SIDE VIEW

GRAPHIC #1 **<END>** g00547389

ELECTRICAL AND STARTING SYSTEM

163-6772 LIGHTING GP-FLOOD

S/N: SBN1-UP; RAW1-UP

CAB

AN ATTACHMENT

SMCS-1434 **i01686229**

NOTE	REF NO	GRAPHIC REF	PART NUMBER	QTY	PART NAME 1 2 3 4 5 6 (PRODUCT LEVEL)	SEE PAGE
	1	1	**163-6814**	1	COVER-RH	
	2	1	**163-6813**	1	COVER-LH	
M	3	1	**8T-4970**	4	BOLT (M6X1X14MM)	
	4	1	**9X-8256**	12	WASHER (6.6X12X2MM THK)	
	5	1	**167-3441**	2	LAMP GP-FLOOD	
					(EACH INCLUDES)	
		1	**9X-3463**	1	LAMP-HEAD (24 VOLT)	
M	6	1	**8T-4190**	2	BOLT (M16X2X25MM)	
	7	1	**9X-8257**	2	WASHER (17.5X30X3.5MM THK)	
	8	1	**167-3437**	1	BRACKET AS-LH	
M	9	1	**8T-6411**	8	SCREW-MACHINE (M6X1X12MM)	
M	10	1	**8T-4199**	2	BOLT (M8X1.25X12MM)	
	11	1	**8T-4224**	2	WASHER-HARD (8.8X16X2MM THK)	
	12	1	**167-3456**	2	HARNESS AS	
	13	1	**167-3438**	1	BRACKET AS-RH	
	14	1	**163-6795**	2	STRAP	
B	15	1	**9X-8256**	4	WASHER (6.6X12X2MM THK)	

B-USE AS REQUIRED
M-METRIC PART

163-6772 **LIGHTING GP-FLOOD** *(contd.)* **i01686229**

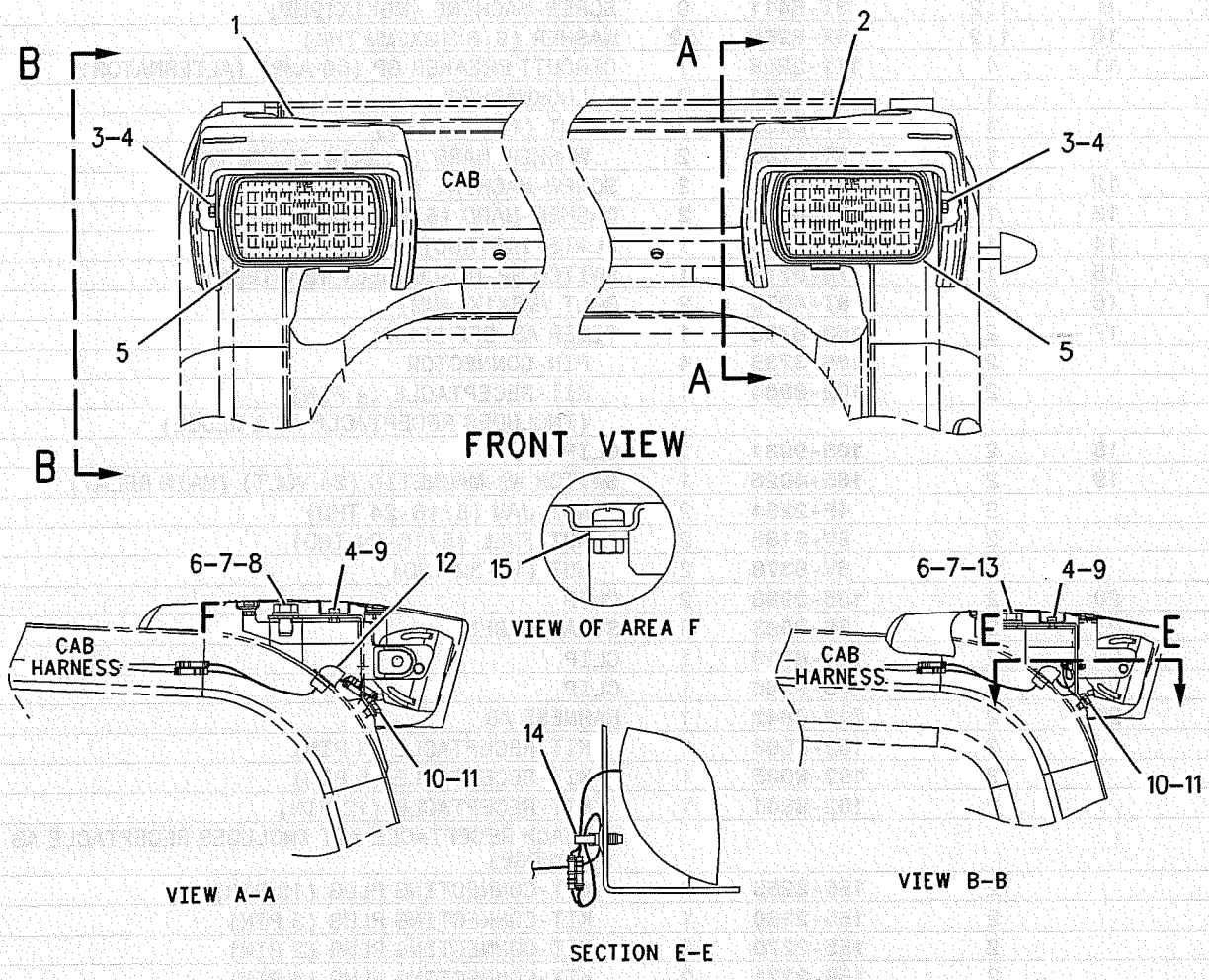

GRAPHIC #1

<END>

g00869291

ELECTRICAL AND STARTING SYSTEM

213-0671 PANEL GP-CIRCUIT BREAKER

S/N: SBN1-UP; RAW1-UP

PART OF 204-1586 BATTERY & WIRING GP

SMCS-1417 **i01886563**

NOTE	REF NO	GRAPHIC REF	PART NUMBER	QTY	PART NAME 1 2 3 4 5 6 (PRODUCT LEVEL)	SEE PAGE
	1	1	**163-6741**	1	BRACKET AS	
M	2	1	**8T-4191**	4	BOLT (M10X1.5X16MM)	
	3	1	**8T-4121**	4	WASHER-HARD (11X21X2.5MM THK)	
M	4	1,2	**7X-2619**	20	BOLT (M6X1.0X20MM)	
	5	1	**204-1640**	1	COVER AS	
	6	1	**170-6887**	1	COVER	
M	7	1,2	**8C-7581**	9	SCREW-MACHINE (M4X0.7X8MM)	
	8	1,2	**096-6166**	9	WASHER-HARD (4.5X9X1MM THK)	
M	9	1,2	**8T-6411**	9	SCREW-MACHINE (M6X1X12MM)	
	10	1,2	**9X-8256**	32	WASHER (6.6X12X2MM THK)	
	11	1	**171-2208**	1	CIRCUIT BREAKER GP (60 AMP) (ALTERNATOR)	
		1	**1H-3244**	2	LOCKWASHER	
		1	**6V-8187**	2	NUT (1/4-28 THD)	
		1	**8T-4205**	2	WASHER-HARD (7.2X14.5X2MM THK)	
	12	1	**6V-5645**	2	SCREW-MACHINE (10-32X0.87 IN)	
	13	1	**8T-0328**	2	WASHER-HARD (5.5X10X1MM THK)	
	14	1	**3E-8320**	1	PLATE-INSTRUCTION (BATTERY)	
Y	15	1	**7N-0718**	1	SWITCH GP-DISCONNECT (BATTERY)	133
M	16	2	**8T-4970**	2	BOLT (M6X1X14MM)	
	17	2	**163-6703**	1	TIMER AS-OFF DELAY	
		2	**186-3735**	4	PIN-CONNECTOR	
		2	**102-8804**	1	KIT-RECEPTACLE (4 PIN)	
					(INCLUDES RECEPTACLE AS & WEDGE)	
	18	2	**105-9981**	1	CLIP	
	19	2	**165-4026**	1	SWITCH AS-MAGNETIC (24 VOLT) (MAIN RELAY)	
		2	**4F-2294**	2	NUT-JAM (5/16-24 THD)	
		2	**6V-8186**	2	NUT-FULL (5/16-24 THD)	
		2	**6V-8378**	2	NUT (10-32 THD)	
	20	2	**105-9983**	2	CLIP	
	21	2	**3S-2093**	3	STRAP-CABLE	
	22	2	**111-4719**	1	CLIP	
	23	2	**105-9986**	1	CLIP	
	24	2	**213-0842**	1	HARNESS AS	
		2	**102-8803**	1	KIT-RECEPTACLE (3 PIN)	
		2	**102-8805**	1	KIT-RECEPTACLE (6 PIN)	
		2	**102-8801**	1	KIT-RECEPTACLE (12 PIN)	
					(EACH RECEPTACLE KIT INCLUDES RECEPTACLE AS & WEDGE)	
		2	**155-2255**	2	KIT-CONNECTING PLUG (12 PIN)	
		2	**155-2260**	1	KIT-CONNECTING PLUG (3 PIN)	
		2	**155-2270**	2	KIT-CONNECTING PLUG (2 PIN)	
		2	**155-2271**	2	KIT-CONNECTING PLUG (4 PIN)	
					(EACH PLUG KIT INCLUDES PLUG AS & WEDGE & INTERFACE SEAL)	
	25	2	**167-3593**	1	STRAP	
	26	2	**163-6780**	1	WIRE AS	
	27	2	**163-6753**	1	WIRE AS	
M	28	2	**5C-2890**	2	NUT (M6X1 THD)	
	29	2	**116-0114**	1	SWITCH AS (HEATER RELAY)	
		2	**186-3735**	2	PIN-CONNECTOR	
		2	**102-8802**	1	KIT-RECEPTACLE (2 PIN)	
					(INCLUDES RECEPTACLE AS & WEDGE)	
M	30	2	**3E-8048**	4	SCREW-MACHINE (M3X0.5X6MM)	
	31	2	**096-5962**	4	WASHER-HARD (3.4X7X0.8MM THK)	
	32	2	**136-4055**	1	STRIP	
	33	2	**163-6755**	1	WIRE AS	

213-0671 PANEL GP-CIRCUIT BREAKER *(contd.)* i01886563

NOTE	REF NO	GRAPHIC REF	PART NUMBER	QTY	PART NAME 1 2 3 4 5 6 (PRODUCT LEVEL)	SEE PAGE
	34	2	**163-6752**	1	CABLE AS	
D		2	**6V-2369**	1	WIRE (4 GA)(BLACK) (300MM)	
		2	**9G-4343**	1	TERMINAL-CRIMP (FOR 1/4 IN SCREW)	
BE		2	**125-7876**		TUBE-HEAT SHRINK	
	35	2	**163-6751**	1	CABLE AS	
D		2	**6V-2369**	3	WIRE (4 GA)(BLACK) (300MM)	
		2	**9G-4343**	1	TERMINAL-CRIMP (FOR 1/4 IN SCREW)	
BE		2	**125-7876**		TUBE-HEAT SHRINK	
	36	2	**163-6754**	1	WIRE AS	
	37	2	**163-6757**	1	WIRE AS	
	38	2	**111-4829**	1	WIRE AS	
M	39	2	**095-0742**	5	SCREW-MACHINE (M6X1.0X16MM)	
	40	2	**121-1023**	1	BLOCK-TERMINAL	
	41	1	**161-3128**	6	RELAY (24 VOLT)	
	42	1	**113-8491**	6	FUSE (15 AMP)	
	43	1	**141-2759**	10	FUSE (5 AMP)	
	44	1	**113-8490**	20	FUSE (10 AMP)	
	45	1	**170-6888**	1	PULLER-FUSE	
	46	1	**149-5051**	2	CONNECTOR	
	47	1	**124-3548**	2	FUSE (30 AMP)	
	48	2	**094-2080**	1	RELAY	
	49	2	**102-8016**	1	RESISTOR AS	
	50	2	**197-4330**	1	CONTROLLER-AIR	
	51	2	**125-1302**	1	SWITCH GP-MAGNETIC (START RELAY)	
		2	**1H-3338**	2	LOCKWASHER	
M		2	**5C-2890**	2	NUT (M6X1 THD)	
		2	**102-8802**	1	KIT-RECEPTACLE (2 PIN)	
		2	**186-3735**	2	PIN-CONNECTOR	
BE		2	**9X-1813**		SLEEVE	
	52	2	**170-9478**	1	WIRE AS	

B-USE AS REQUIRED
D-ORDER BY THE METER
E-ORDER BY THE CENTIMETER
M-METRIC PART
Y-SEPARATE ILLUSTRATION

213-0671 PANEL GP-CIRCUIT BREAKER *(contd.)*

i01886563

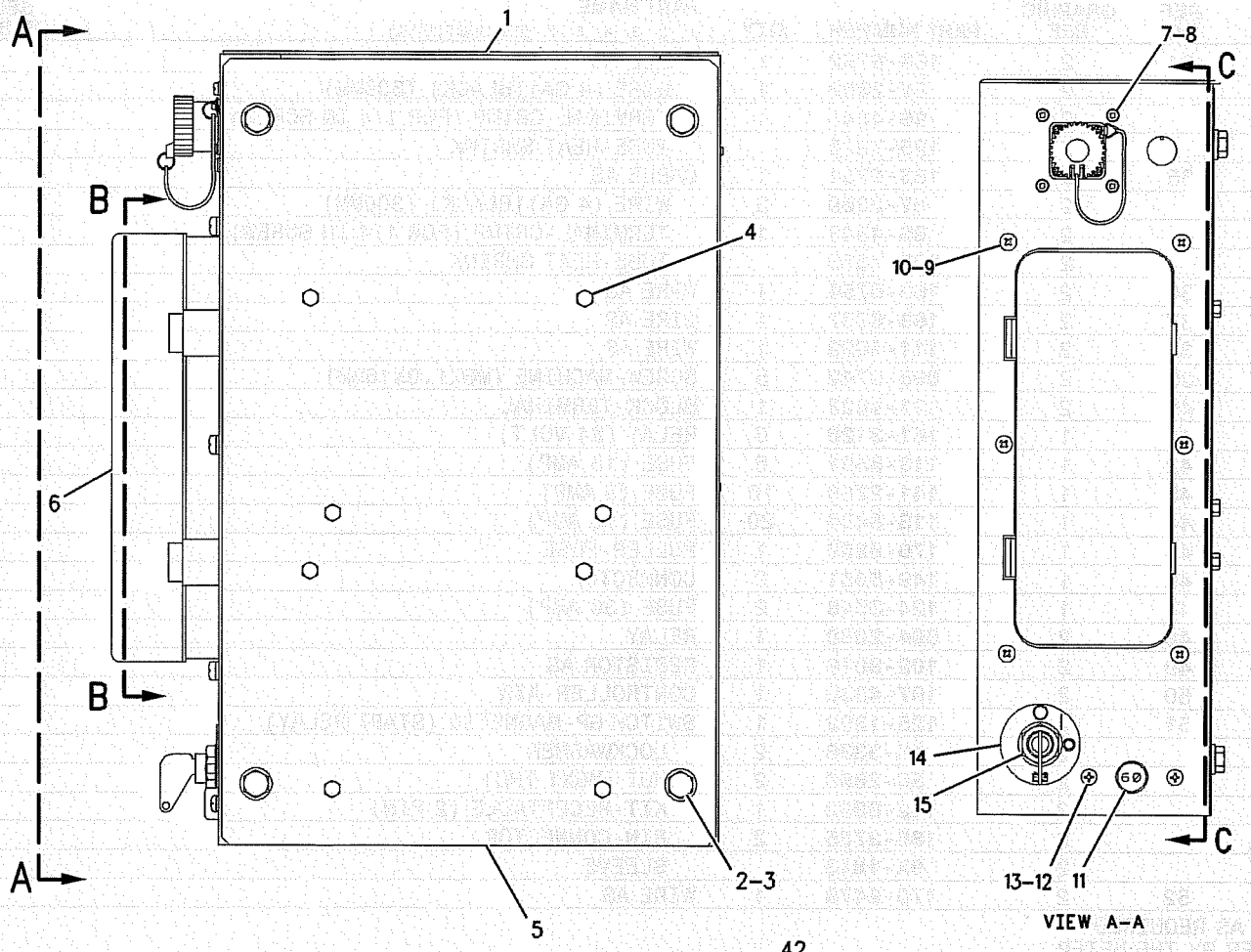

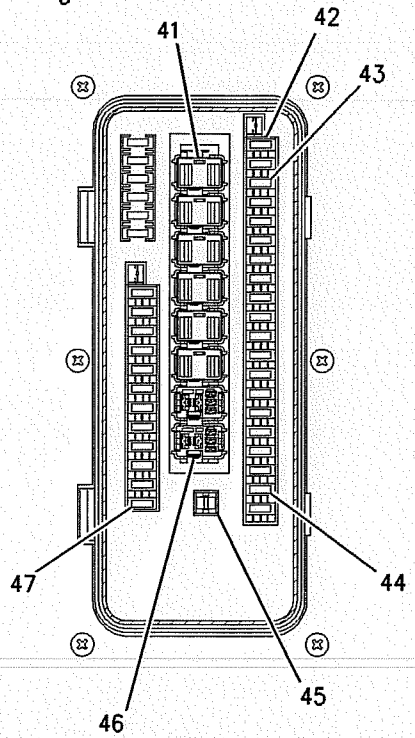

REFER TO ALL ILLUSTRATIONS OF THIS GROUP FOR AUXILIARY VIEWS

GRAPHIC #1

g00947536

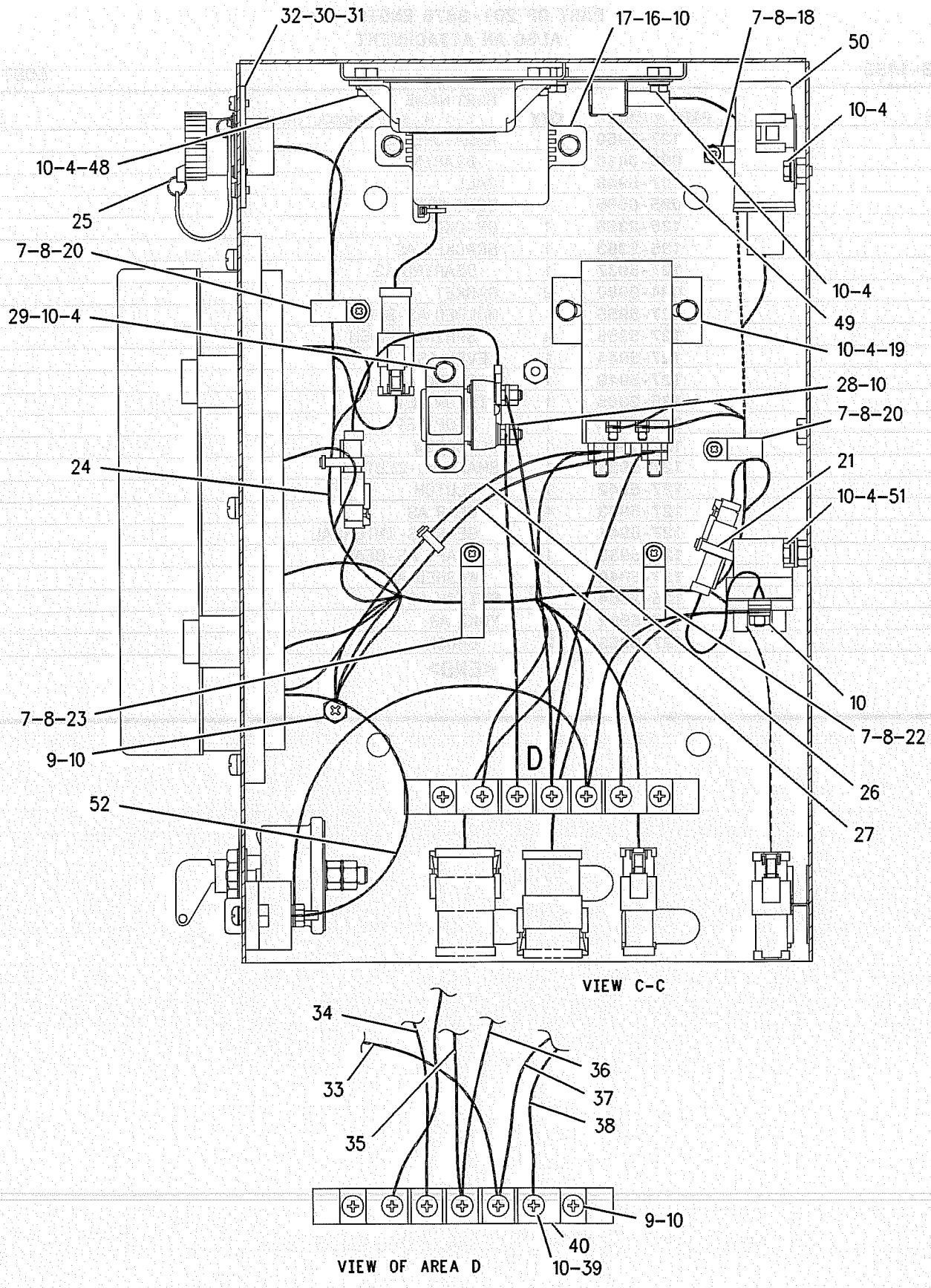

GRAPHIC #2

<END>

g00947537

ELECTRICAL AND STARTING SYSTEM

125-2988 STARTING MOTOR GP-ELECTRIC

S/N: 7JK1-UP

PART OF 201-3878 ENGINE AR

ALSO AN ATTACHMENT

SMCS-1453 **i00752415**

NOTE	PART NUMBER	QTY	PART NAME 1 2 3 4 5 6 (PRODUCT LEVEL)	SEE PAGE
	127-5950	1	ARMATURE AS	
	095-0410	1	BEARING	
	127-5948	1	BALL	
	095-0085	1	BOLT SET	
	135-2366	1	BRACKET	
	135-2363	1	BRACKET AS	
	127-5937	1	BEARING AS	
	094-9980	2	GASKET	
	127-5955	1	HOLDER AS-BRUSH	
	127-5956	4	SPRING-BRUSH	
	127-5944	1	LEVER AS	
	127-5949	1	PACKING AS	
	135-2365	1	PINION SET	
	094-9950	1	STOP SET	
	127-5947	1	SETSCREW	
	127-5938	1	SHAFT AS-CLUTCH	
	127-5942	1	CLUTCH	
	127-5943	4	GEAR AS	
	127-5941	1	GEAR AS-INTERNAL	
	127-5939	1	SHAFT AS-GEAR	
	127-5940	1	WASHER AS	
	135-2364	1	SWITCH AS	
	127-5952	1	YOKE AS	
	127-5953	2	BRUSH	

<END>

7N-0718 SWITCH GP-DISCONNECT–BATTERY

S/N: SBN1-UP; RAW1-UP

PART OF 213-0671 PANEL GP-CIRCUIT BREAKER

SMCS-1411 **i01810002**

NOTE	REF NO	GRAPHIC REF	PART NUMBER	QTY	PART NAME 1 2 3 4 5 6 (PRODUCT LEVEL)	SEE PAGE
	1	1	**8H-5306**	1	KEY (BATTERY DISCONNECT)	
	2	1	**8H-5303**	1	NUT (3/4-16 THD)	
	3	1	**2H-3922**	2	LOCKWASHER	
	4	1	**9F-5644**	2	LOCKWASHER	
	5	1	**6F-7045**	2	NUT-FULL (3/8X24 THD)	

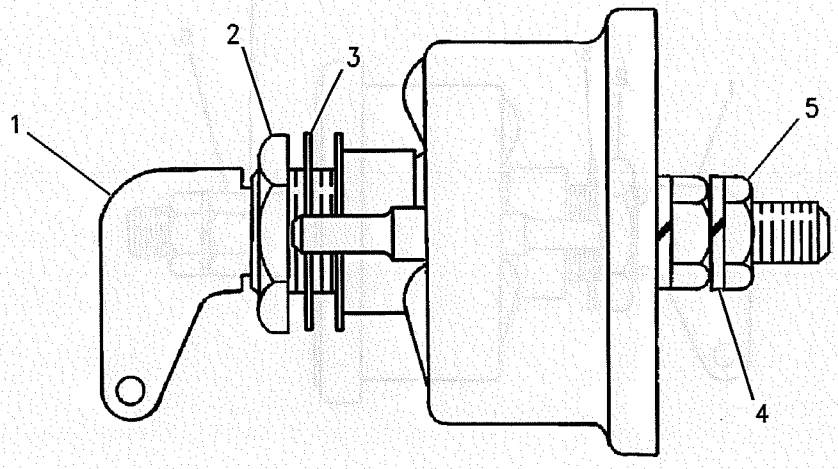

GRAPHIC #1 **<END>** g00715584

7N-0719 SWITCH GP-DISCONNECT

S/N: SBN1-UP; RAW1-UP
PART OF 213-0914 BATTERY & WIRING GP
AN ATTACHMENT

SMCS-1411 **i01087971**

NOTE	REF NO	GRAPHIC REF	PART NUMBER	QTY	PART NAME 1 2 3 4 5 6 (PRODUCT LEVEL)	SEE PAGE
	1	1	**8H-5306**	1	KEY	
	2	1	**8H-5303**	1	NUT (3/4-16-2A THD)	
	3	1	**2H-3922**	1	LOCKWASHER (1.27MM THK)	
	4	1	**7F-7259**	4	LOCKWASHER	
	5	1	**6F-7045**	4	NUT-FULL (3/8X24 THD)	

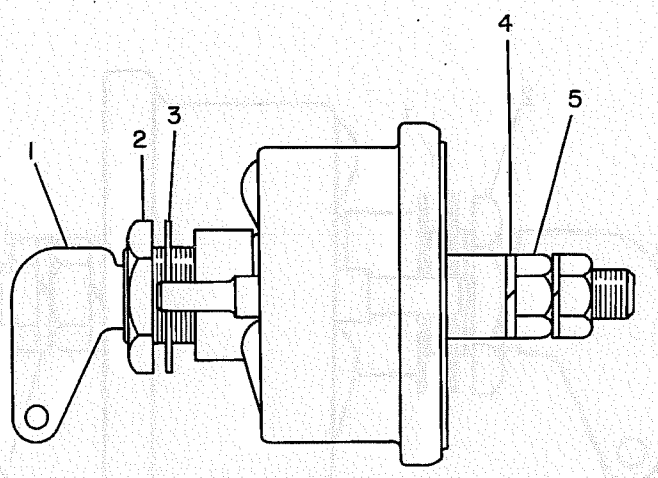

GRAPHIC #1 **<END>** g00136161

9G-7641 SWITCH GP-START–KEY

S/N: SBN1-UP; RAW1-UP

PART OF 170-6910 WIRING GP-CONSOLE

SMCS-1416 **i01336684**

NOTE	REF NO	GRAPHIC REF	PART NUMBER	QTY	PART NAME 1 2 3 4 5 6 (PRODUCT LEVEL)	SEE PAGE
	1	1	*6V-3324*	1	LOCK AS-CYLINDER	
	2	1	**6V-8362**	4	SCREW-MACHINE (8-32X.31 IN)	
	3	1	**9B-7233**	4	LOCKWASHER (NO.8)	
	4	1	**7T-6799**	1	NUT-MOUNTING	

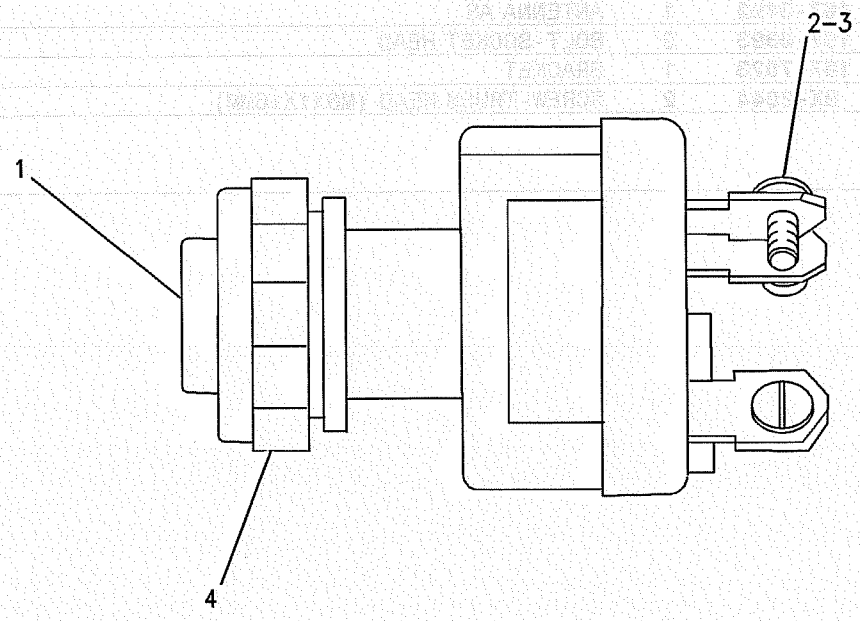

GRAPHIC #1 **<END>** g00706809

ELECTRICAL AND STARTING SYSTEM

163-6623 WIRING GP-CAB

S/N: SBN1-UP; RAW1-UP

PART OF 161-3738 OPERATOR AR

SMCS-7301 **i01888795**

NOTE	REF NO	GRAPHIC REF	PART NUMBER	QTY	PART NAME 1 2 3 4 5 6 (PRODUCT LEVEL)	SEE PAGE
	1	1	**9W-1494**	1	KIT-SERVICE METER	
	2	1	**9W-0335**	1	LIGHTER AS (CIGAR)(24 VOLT)	
E	3	1	**101-2846**		GUARD (19CM)	
	4	1	**163-6795**	12	STRAP-CABLE	
	5	1	**163-6787**	1	HARNESS AS	
M	6	1	**8T-6693**	2	SCREW-MACHINE (M5X0.8X16MM)	
	7	1	**8T-0328**	2	WASHER-HARD (5.5X10X1MM THK)	
	8	1	**163-6810**	1	HARNESS AS	
M	9	1	**5C-8312**	2	NUT (M4X0.7 THD)	
M	10	1	**8C-7581**	2	SCREW-MACHINE (M4X0.7X8MM)	
	11	1	**3S-2093**	2	STRAP-CABLE	
	12	1	**163-6701**	1	PANEL AS-CONTROL	
Y	13	1	**132-1829**	1	ALARM GP (24 VOLT)	93
M	14	1	**9X-2042**	1	SCREW-TRUSS HEAD (M6X1X12MM)	
	16	1	**7K-1181**	2	STRAP-CABLE	
M	17	1	**6V-9669**	2	SCREW-MACHINE (M3X0.5X8MM)	
M	18	1	**3C-6969**	2	NUT (M3X0.5 THD)	
	19	1	**167-3492**	1	ANTENNA AS	
M	20	1	**197-0393**	2	BOLT-SOCKET HEAD	
	21	1	**167-7023**	1	BRACKET	
M	22	1	**9X-2044**	2	SCREW-TRUSS HEAD (M6X1X16MM)	

E-ORDER BY THE CENTIMETER
M-METRIC PART
Y-SEPARATE ILLUSTRATION

163-6623 **WIRING GP-CAB** *(contd.)* **i01888795**

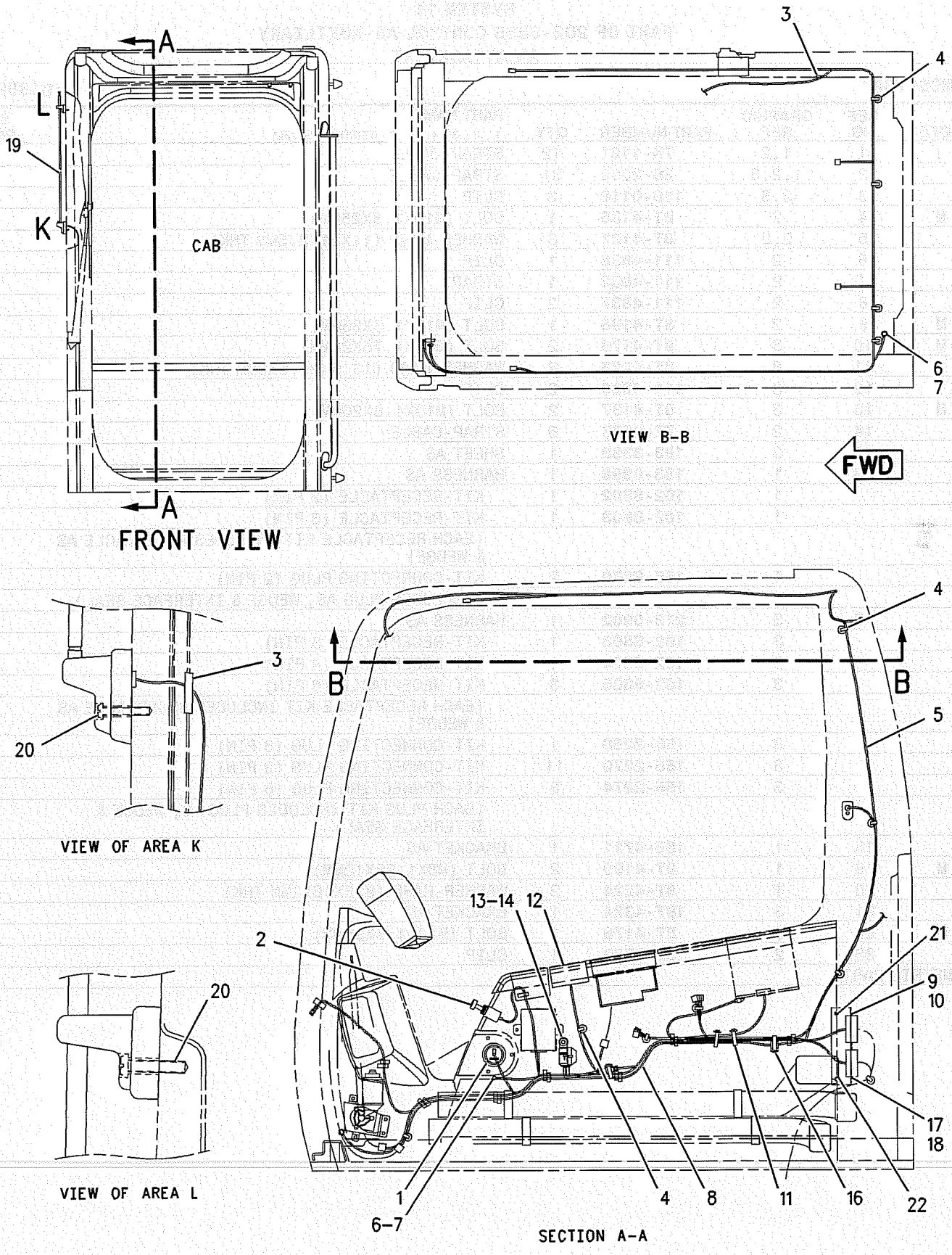

GRAPHIC #1 **<END>** g00830807

ELECTRICAL AND STARTING SYSTEM

193-3373 WIRING GP-CAB

S/N: SBN1-UP; RAW1-UP
SYSTEM 14
PART OF 202-6855 CONTROL AR-AUXILIARY AN ATTACHMENT

SMCS-7301 **i01889747**

NOTE	REF NO	GRAPHIC REF	PART NUMBER	QTY	PART NAME 1 2 3 4 5 6 (PRODUCT LEVEL)	SEE PAGE
	1	1,2	**7K-1181**	12	STRAP-CABLE	
	2	1,2,3	**3S-2093**	31	STRAP-CABLE	
	3	2,3	**116-0118**	3	CLIP	
M	4	2	**8T-4136**	1	BOLT (M10X1.5X25MM)	
	5	2,3	**8T-4121**	3	WASHER-HARD (11X21X2.5MM THK)	
	6	2	**111-4838**	1	CLIP	
	7	2	**111-4839**	1	STRAP	
	8	2	**111-4837**	2	CLIP	
M	9	2	**8T-4196**	1	BOLT (M10X1.5X35MM)	
M	10	3	**8T-4179**	2	BOLT (M12X1.75X20MM)	
	11	3	**8T-4223**	2	WASHER-HARD (13.5X25.5X3MM THK)	
	12	3	**111-4836**	2	CLIP	
M	13	3	**8T-4137**	2	BOLT (M10X1.5X20MM)	
	14	2	**7I-2673**	6	STRAP-CABLE	
	15	3	**193-3383**	1	SHEET AS	
	16	1	**183-0998**	1	HARNESS AS	
		1	**102-8802**	1	KIT-RECEPTACLE (2 PIN)	
		1	**102-8803**	1	KIT-RECEPTACLE (3 PIN)	
					(EACH RECEPTACLE KIT INCLUDES RECEPTACLE AS & WEDGE)	
		1	**155-2270**	2	KIT-CONNECTING PLUG (2 PIN)	
					(INCLUDES PLUG AS, WEDGE & INTERFACE SEAL)	
	17	3	**213-0902**	1	HARNESS AS	
		3	**102-8803**	1	KIT-RECEPTACLE (3 PIN)	
		3	**102-8804**	1	KIT-RECEPTACLE (4 PIN)	
		3	**102-8805**	3	KIT-RECEPTACLE (6 PIN)	
					(EACH RECEPTACLE KIT INCLUDES RECEPTACLE AS & WEDGE)	
		3	**155-2260**	1	KIT-CONNECTING PLUG (3 PIN)	
		3	**155-2270**	11	KIT-CONNECTING PLUG (2 PIN)	
		3	**155-2274**	3	KIT-CONNECTING PLUG (6 PIN)	
					(EACH PLUG KIT INCLUDES PLUG AS, WEDGE & INTERFACE SEAL)	
	18	1	**186-4711**	1	BRACKET AS	
M	19	1	**8T-4199**	2	BOLT (M8X1.25X12MM)	
	20	1	**8T-4224**	2	WASHER-HARD (8.8X16X2MM THK)	
	21	3	**197-4324**	1	BRACKET AS	
M	22	2	**8T-4178**	1	BOLT (M10X1.5X90MM)	
	23	2	**132-5789**	1	CLIP	

M-METRIC PART

193-3373 **WIRING GP-CAB** *(contd.)* **i01889747**

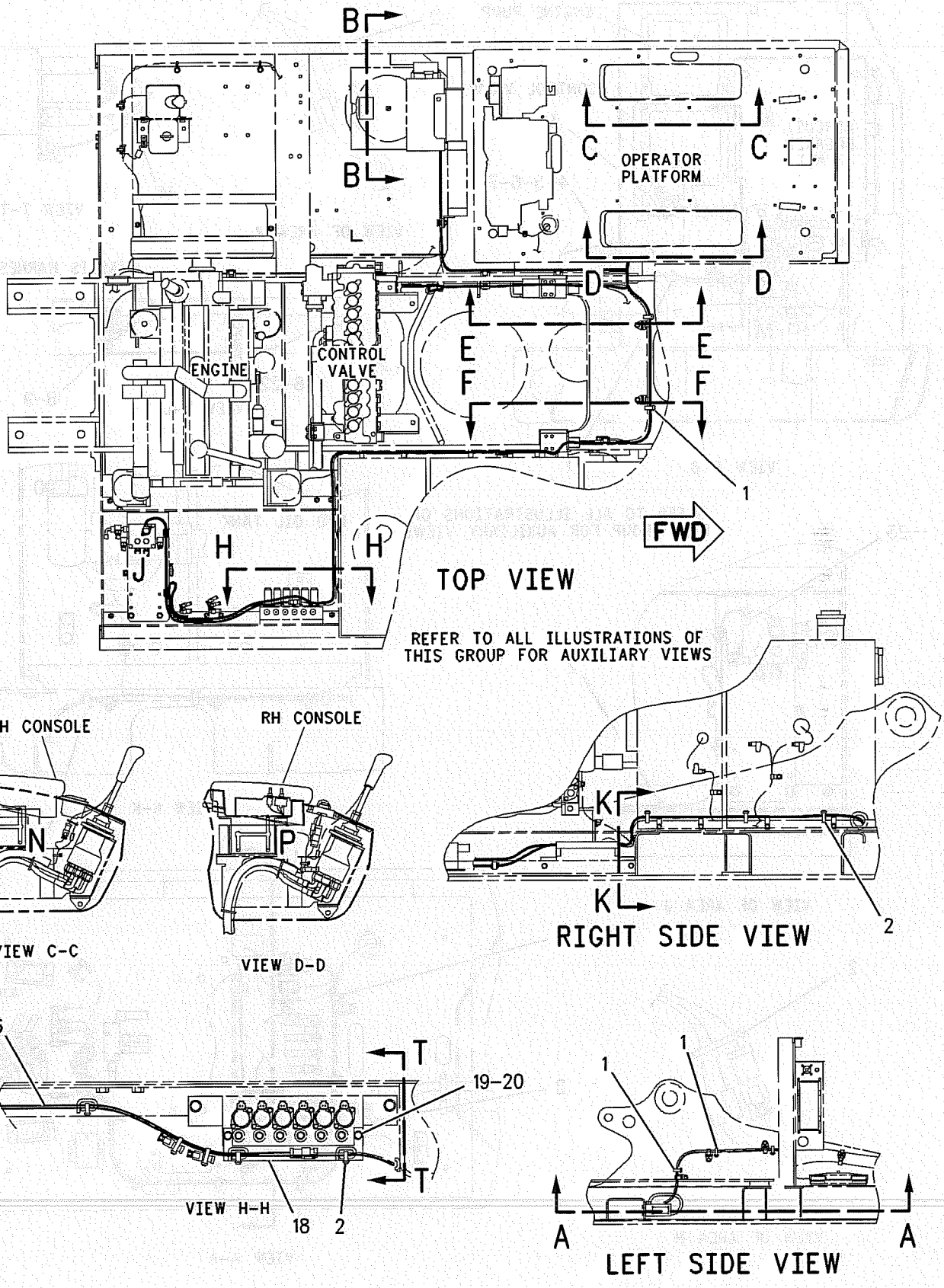

GRAPHIC #1 g00983977

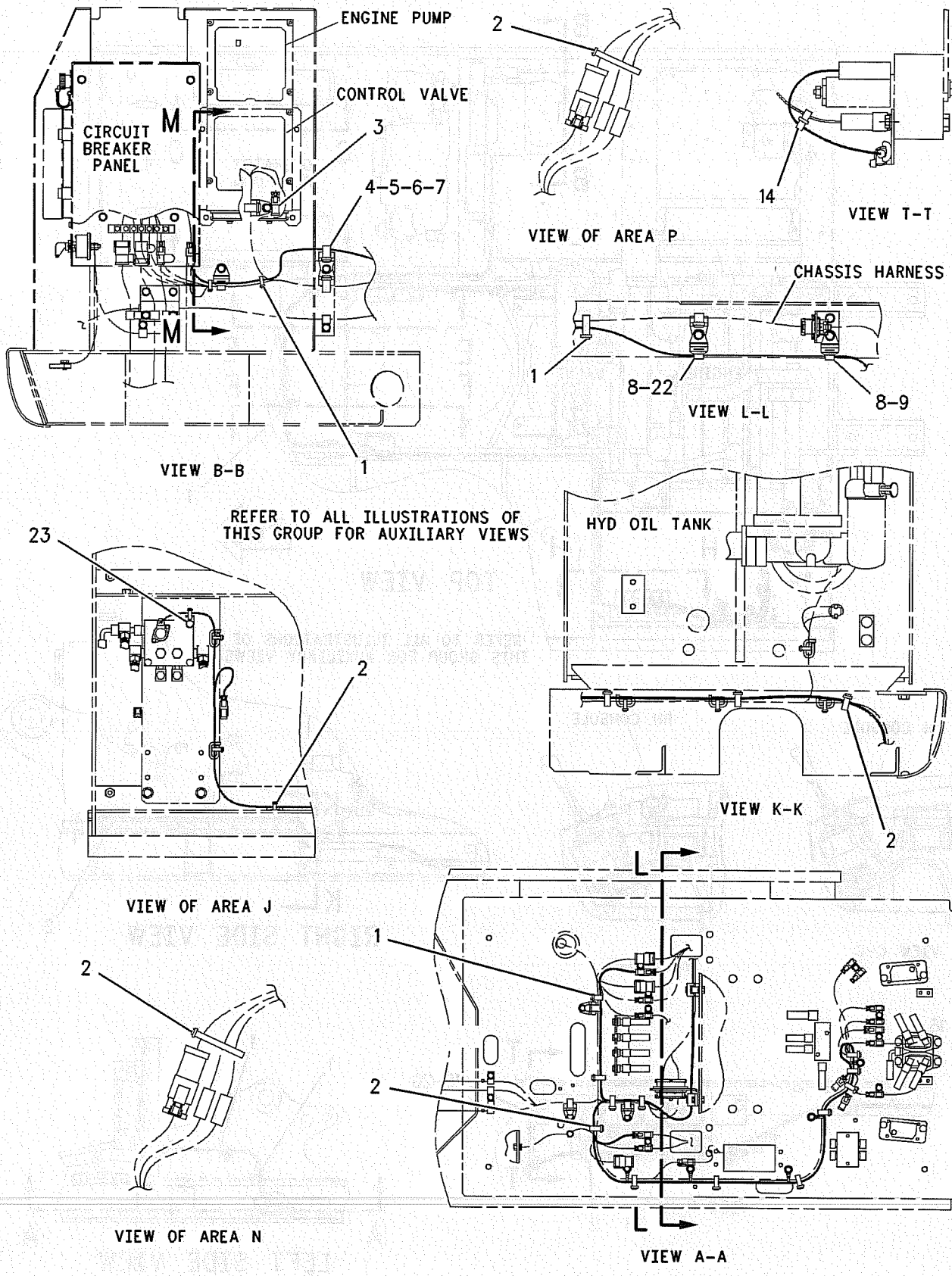

GRAPHIC #2

g00983979

193-3373 **WIRING GP-CAB** *(contd.)* **i01889747**

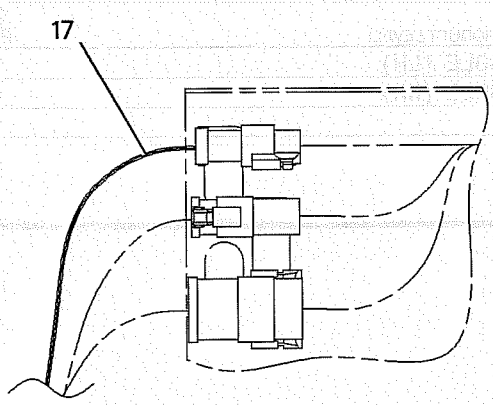

VIEW M-M

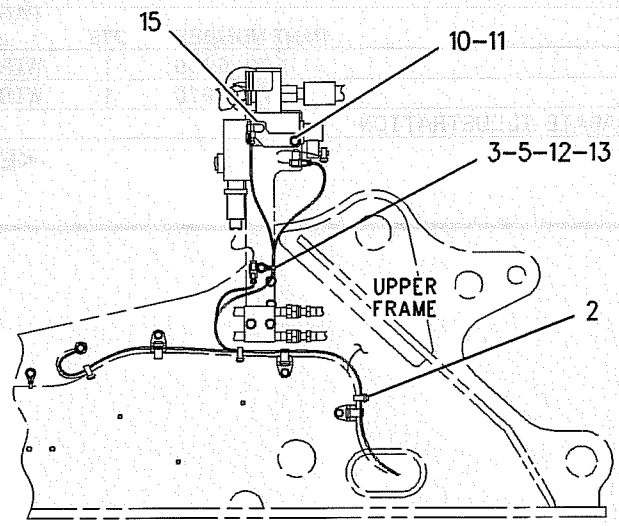

VIEW E-E

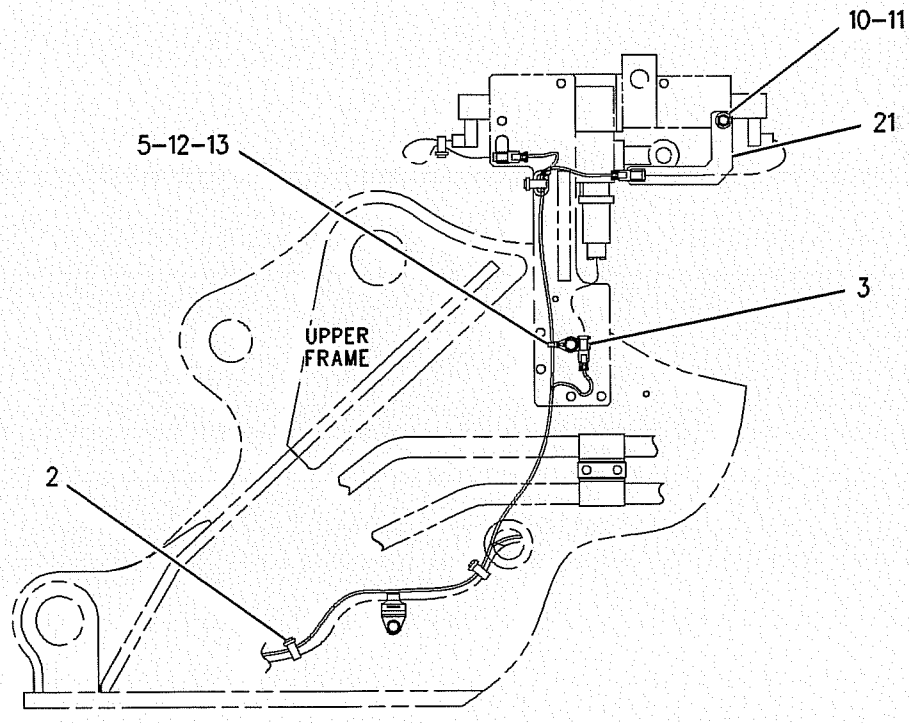

VIEW F-F

GRAPHIC #3 **<END>** g00983980

170-6908 WIRING GP-CONSOLE

S/N: SBN1-UP; RAW1-UP

PART OF 161-3738 OPERATOR AR

SMCS-1408 **i01355557**

NOTE	PART NUMBER	QTY	PART NAME 1 2 3 4 5 6 (PRODUCT LEVEL)	SEE PAGE
Y	*170-6909*	1	WIRING GP-CONSOLE (LH)	143
Y	*170-6910*	1	WIRING GP-CONSOLE (RH)	144

Y-SEPARATE ILLUSTRATION

<END>

170-6909 WIRING GP-CONSOLE–LH

S/N: SBN1-UP; RAW1-UP

PART OF 170-6908 WIRING GP-CONSOLE

SMCS-1408 **i01694686**

NOTE	REF NO	GRAPHIC REF	PART NUMBER	QTY	PART NAME 1 2 3 4 5 6 (PRODUCT LEVEL)	SEE PAGE
	1	1	**170-6959**	1	HARNESS AS	
		1	**102-8802**	1	KIT-RECEPTACLE (2 PIN)	
		1	**102-8805**	2	KIT-RECEPTACLE (6 PIN)	
		1	**155-2274**	2	KIT-CONNECTING PLUG (6 PIN)	
	2	1	**7K-1181**	1	STRAP-CABLE	
	3	1	**163-6795**	1	STRAP	
	4	1	**3S-2093**	2	STRAP-CABLE	

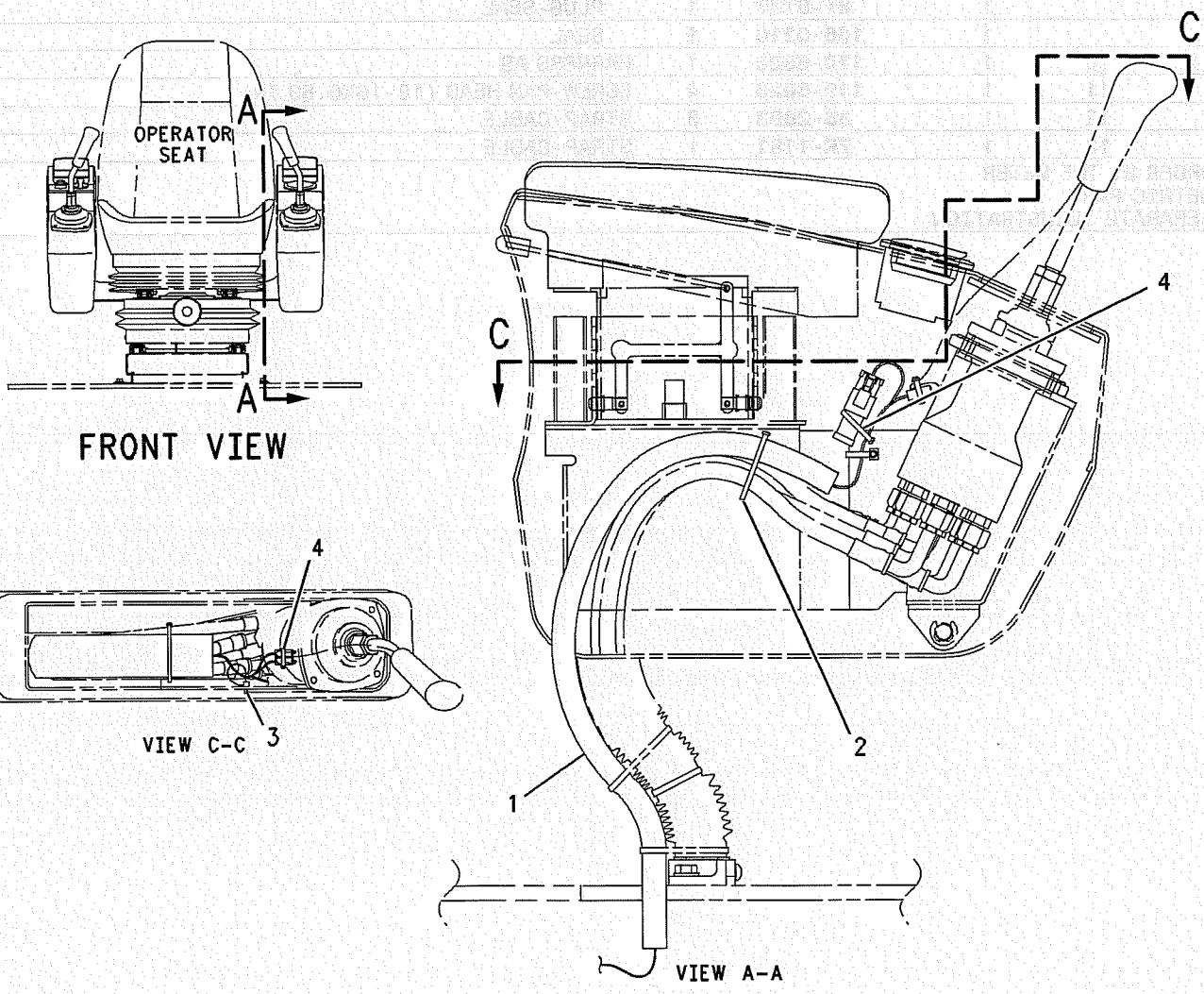

GRAPHIC #1 **<END>** g00672906

170-6910 WIRING GP-CONSOLE

S/N: SBN1-UP; RAW1-UP

PART OF 170-6908 WIRING GP-CONSOLE

SMCS-1408 **i01533624**

NOTE	REF NO	GRAPHIC REF	PART NUMBER	QTY	PART NAME 1 2 3 4 5 6 (PRODUCT LEVEL)	SEE PAGE
	1	1	**163-6795**	1	STRAP	
D	2	1	**6V-5738**		TRIM-EDGE (.2M)	
	3	1	**163-6710**	1	SWITCH AS (BACK-UP EPR VALVE)	
	4	1	**163-6711**	1	SWITCH AS (BACK-UP THROTTLE)	
	5	1	**197-4279**	1	HARNESS AS	
Y	6	1	**9G-7641**	1	SWITCH GP-START (KEY)	135
	7	1	**163-6702**	1	PANEL AS	
	8	1	**185-9208**	1	KNOB AS (THROTTLE POSITION)	
	9	1	**106-0107**	1	SWITCH AS-ROTARY	
		1	**102-8805**	1	KIT-RECEPTACLE (6 PIN)	
		1	**3E-3383**	1	WEDGE-RECEPTACLE LOCK	
M		1	**7Y-5458**	1	NUT (M12X1.0)	
		1	**7Y-5464**	1	WASHER (M12.2X15.4X.5)	
		1	**8T-8737**	1	PLUG-SEAL	
		1	**106-0210**	1	SEAL	
	10	1	**170-6828**	1	HARNESS AS	
	11	1	**119-5026**	4	SCREW-PAN HEAD (10-16X0.63 IN)	
	12	1	**3S-2093**	3	STRAP-CABLE	
	13	1	**7K-1181**	1	STRAP-CABLE	

D-ORDER BY THE METER
M-METRIC PART
Y-SEPARATE ILLUSTRATION

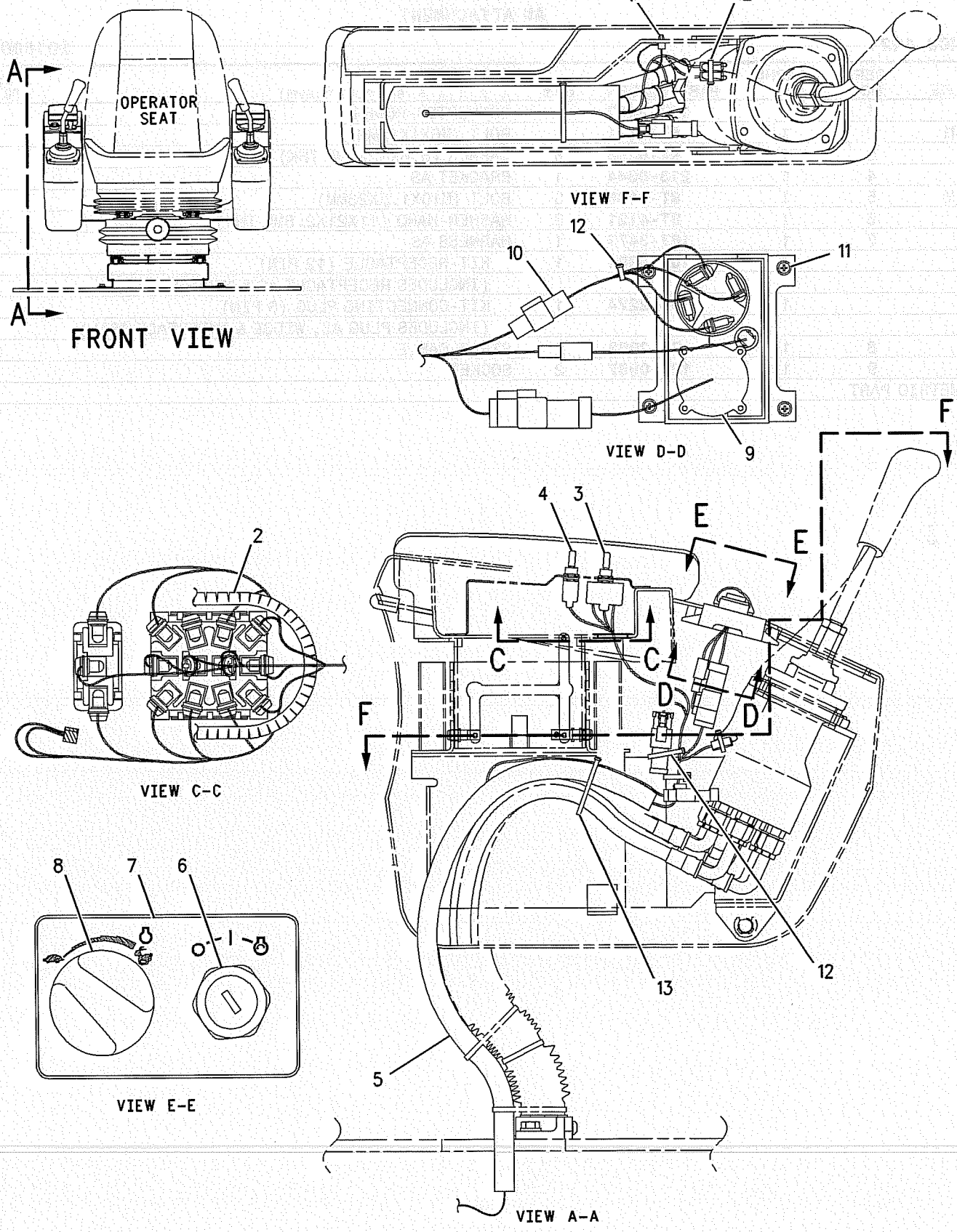

GRAPHIC #1

<END>

g00672881

163-6698 WIRING GP-CONVERTER

S/N: SBN1-UP; RAW1-UP
12 VOLT/7 AMP POWER SUPPLY
AN ATTACHMENT

SMCS-1421 **i01890687**

NOTE	REF NO	GRAPHIC REF	PART NUMBER	QTY	PART NAME 1 2 3 4 5 6 (PRODUCT LEVEL)	SEE PAGE
	1	1	**167-3467**	2	CONVERTER-POWER	
M	2	1	**8T-4171**	8	BOLT (M6X1X12MM)	
	3	1	**9X-8256**	8	WASHER (6.6X12X2MM THK)	
	4	1	**213-0644**	1	BRACKET AS	
M	5	1	**8T-4136**	3	BOLT (M10X1.5X25MM)	
	6	1	**8T-4121**	3	WASHER-HARD (11X21X2.5MM THK)	
	7	1	**167-3473**	1	HARNESS AS	
		1	**102-8801**	1	KIT-RECEPTACLE (12 PIN)	
					(INCLUDES RECEPTACLE AS & WEDGE)	
		1	**155-2274**	1	KIT-CONNECTING PLUG (6 PIN)	
					(INCLUDES PLUG AS, WEDGE & INTERFACE SEAL)	
	8	1	**3S-2093**	2	STRAP-CABLE	
	9	1	**121-0987**	2	SOCKET	

M-METRIC PART

163-6698 **WIRING GP-CONVERTER** *(contd.)* **i01890687**

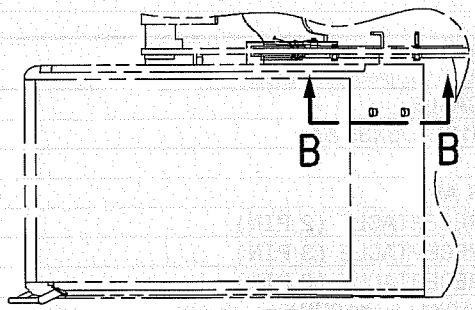

TOP VIEW

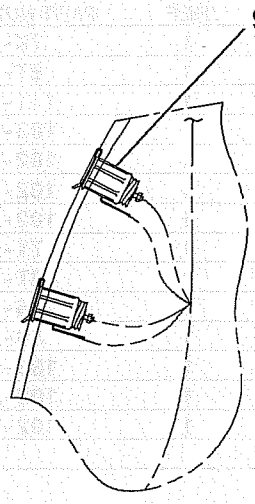

VIEW B-B

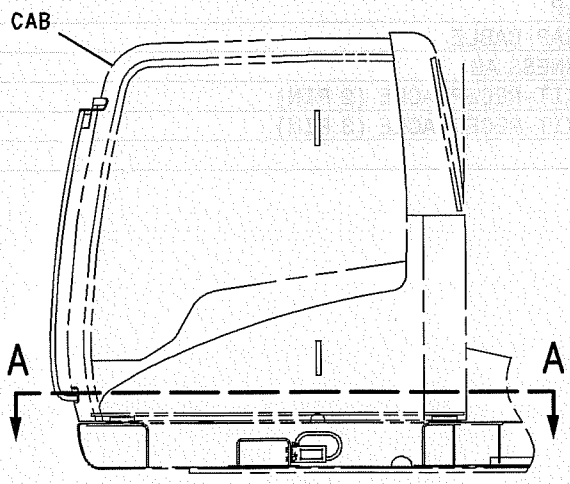

LEFT SIDE VIEW

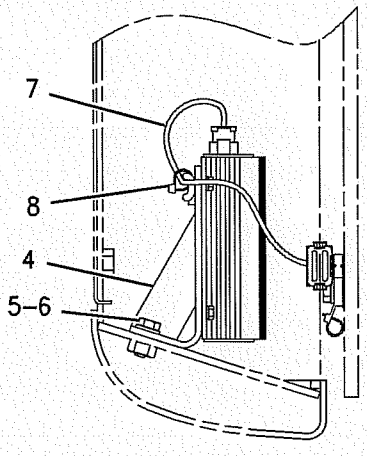

VIEW C-C

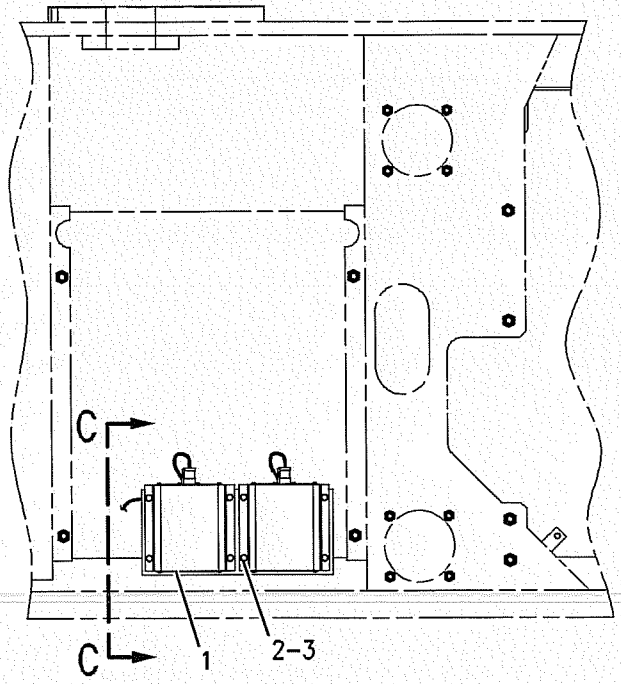

VIEW A-A

GRAPHIC #1 **<END>** g00681121

ELECTRICAL AND STARTING SYSTEM

183-0993 WIRING GP-HAMMER

S/N: RAW1-UP

PART OF 173-7975 CONTROL AR-AUXILIARY

AN ATTACHMENT

SMCS-1408 **i01404568**

NOTE	REF NO	GRAPHIC REF	PART NUMBER	QTY	PART NAME 1 2 3 4 5 6 (PRODUCT LEVEL)	SEE PAGE
	1	1	**7K-1181**	8	STRAP-CABLE	
M	2	1	**8T-4196**	2	BOLT (M10X1.5X35MM)	
	3	1	**111-4836**	2	CLIP	
	4	1	**183-1061**	1	HARNESS AS	
		1	**102-8802**	1	KIT-RECEPTACLE (2 PIN)	
		1	**102-8803**	1	KIT-RECEPTACLE (3 PIN)	
		1	**102-8805**	1	KIT-RECEPTACLE (6 PIN)	
M	5	1	**7X-2621**	1	BOLT (M10X1.50X12MM)	
	6	1	**8T-4121**	1	WASHER-HARD (11X21X2.5MM THK)	
	7	1	**116-0118**	3	CLIP	
	8	1	**3S-2093**	15	STRAP-CABLE	
	9	1	**183-0998**	1	HARNESS AS	
		1	**102-8802**	1	KIT-RECEPTACLE (2 PIN)	
		1	**102-8803**	1	KIT-RECEPTACLE (3 PIN)	

M-METRIC PART

183-0993 **WIRING GP-HAMMER** *(contd.)* **i01404568**

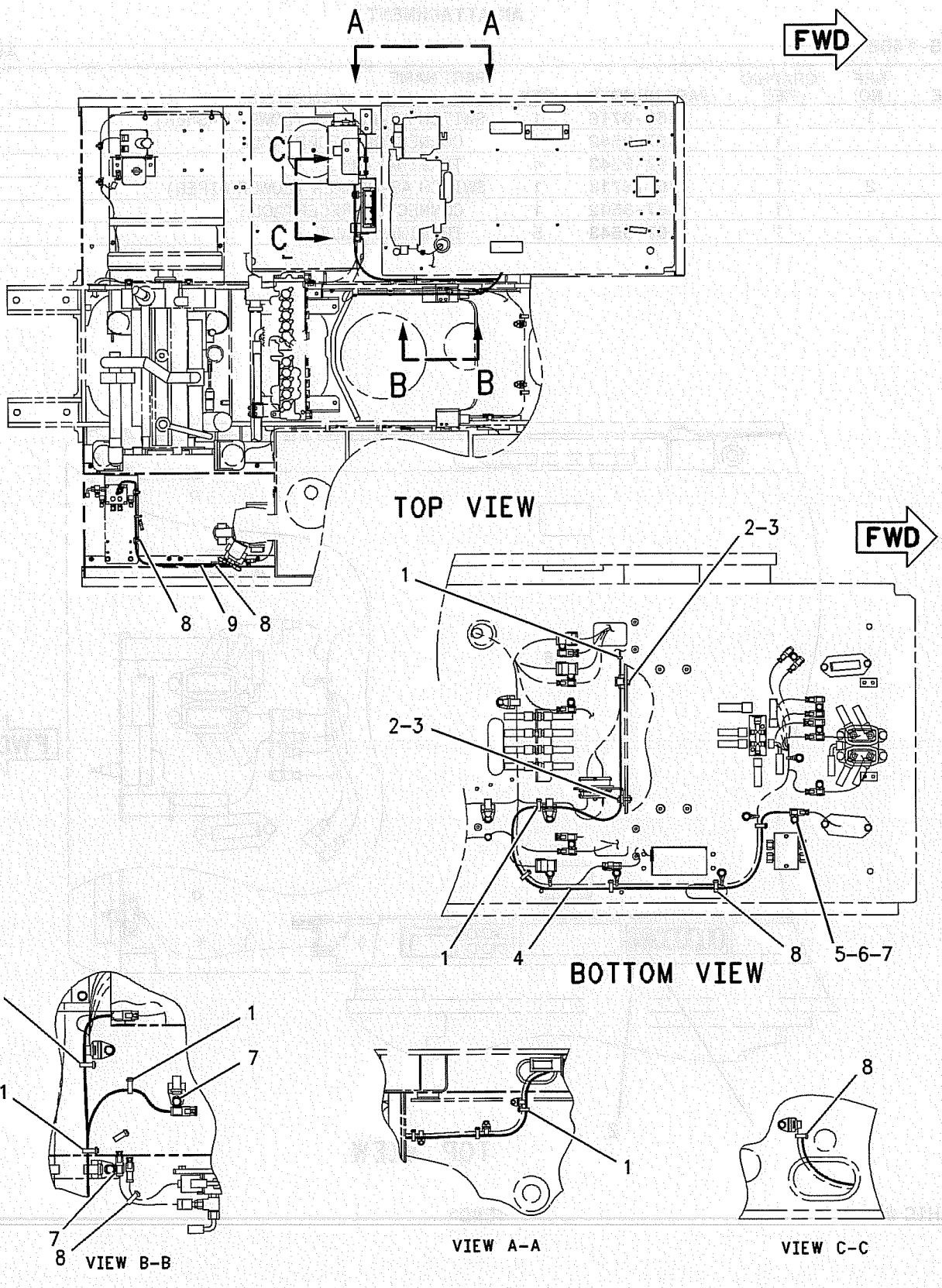

GRAPHIC #1 **<END>** g00724461

163-6632 WIRING GP-WINDOW WIPER–LOWER

S/N: SBN1-UP; RAW1-UP
PART OF 217-9429 WIPER AR-WINDOW
AN ATTACHMENT

SMCS-1408 **i01888769**

NOTE	REF NO	GRAPHIC REF	PART NUMBER	QTY	PART NAME 1 2 3 4 5 6 (PRODUCT LEVEL)	SEE PAGE
	1	1	**163-6719**	1	SWITCH AS-ROCKER (LOWER WASHER)	
		1	**167-3542**	1	CONNECTOR-RECEPTACLE	
		1	**167-3543**	4	TERMINAL-MALE	
	2	1	**163-6718**	1	SWITCH AS-ROCKER (LOWER WIPER)	
		1	**167-3542**	1	CONNECTOR-RECEPTACLE	
		1	**167-3543**	5	TERMINAL-MALE	

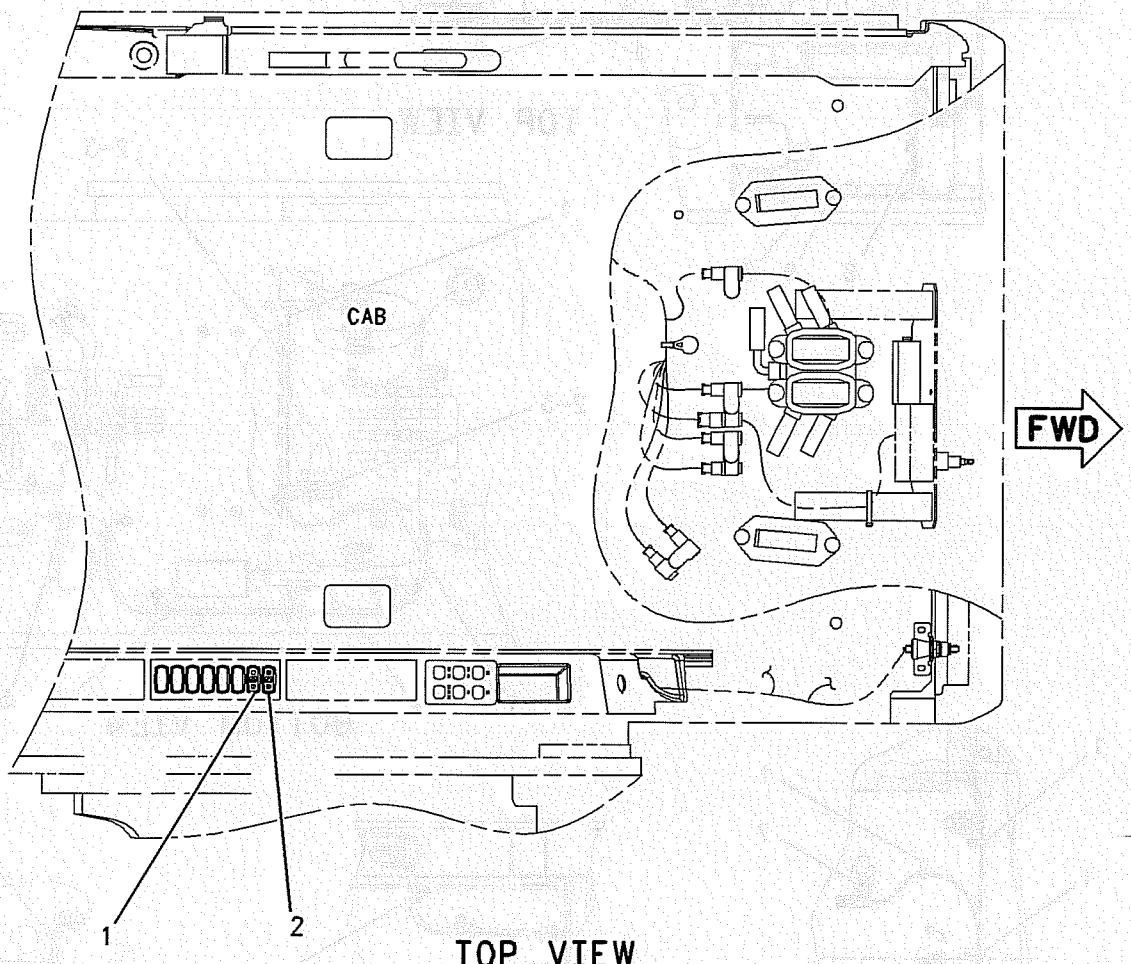

TOP VIEW

GRAPHIC #1 **<END>** g00690653

148-4696 FINAL DRIVE GP

S/N: SBN1-UP; RAW1-UP

PART OF 148-4681 POWER TRAIN AR

SMCS-4050 **i01890915**

NOTE	REF NO	GRAPHIC REF	PART NUMBER	QTY	PART NAME 1 2 3 4 5 6 (PRODUCT LEVEL)	SEE PAGE
Y	1	1	**227-6035**	1	FINAL DRIVE GP	152
Y	2	1	*107-7028*	1	MOTOR & MTG GP-TRAVEL	379

Y-SEPARATE ILLUSTRATION

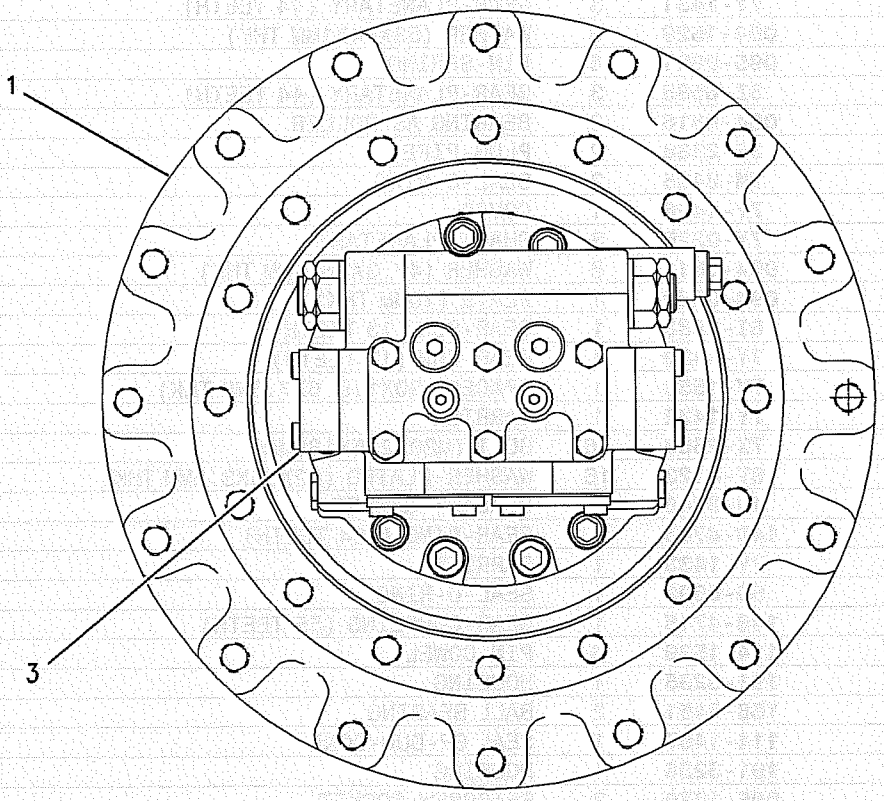

GRAPHIC #1 **<END>** g00882989

POWER TRAIN

227-6035 FINAL DRIVE GP

S/N: SBN1-UP; RAW1-UP
WITHOUT MOTOR
PART OF 148-4696 FINAL DRIVE GP

SMCS-4050 **i01891358**

NOTE	REF NO	GRAPHIC REF	PART NUMBER	QTY	PART NAME 1 2 3 4 5 6 (PRODUCT LEVEL)	SEE PAGE
	1	1	7Y-1434	1	SPACER (40X69.5X6MM THK)	
B	2	1	096-1773	1	SHIM (0.15MM THK)	
B		1	096-1774	1	SHIM (0.3MM THK)	
B		1	096-1775	1	SHIM (0.4MM THK)	
B		1	096-1776	1	SHIM (0.5MM THK)	
B		1	096-1777	1	SHIM (0.6MM THK)	
B		1	096-1778	1	SHIM (0.7MM THK)	
B		1	096-1779	1	SHIM (0.8MM THK)	
B		1	096-1780	1	SHIM (1.0MM THK)	
B		1	096-1781	1	SHIM (1.6MM THK)	
	11	1	227-6034	14	BOLT-FLANGE HEAD	
	12	1	7Y-0223	3	SHAFT-PLANETARY	
	13	1	094-1542	6	BEARING-ROLLER	
	14	1	7Y-1431	3	GEAR-PLANETARY (44 TEETH)	
	15	1	094-1528	6	WASHER (53X84X1MM THK)	
	16	1	095-0891	6	PIN-SPRING	
	17	1	6I-6585	3	GEAR-PLANETARY (44 TEETH)	
	18	1	094-0616	3	BEARING AS-ROLLER	
	19	1	3E-2338	2	PLUG-PIPE	
	20	1	7M-8485	2	SEAL-O-RING	
	21	1	7Y-1426	1	COVER	
	22	1	7Y-0225	3	SHAFT-PLANETARY	
	23	1	094-0611	6	WASHER (47.3X76X1MM THK)	
	24	1	094-0580	1	PLATE (10MM THK)	
	25	1	6I-6583	1	GEAR-SUN (13 TEETH)	
	26	1	7Y-1430	1	GEAR-SUN (17 TEETH)	
	27	1	7Y-1558	1	SPACER (90X119.6X7.5MM THK)	
	28	1	7Y-1432	1	CARRIER	
M	29	1	7X-2568	16	BOLT (M20X2.5X180MM)	
	30	1	8T-4123	16	WASHER-PLATED (22X35X3.5MM THK)	
B	31	1	1U-8846		SEALANT-GASKET	
	33	1	148-4705	1	GEAR-RING (104 TEETH)	
	34	1	7Y-1433	1	CARRIER	
	35	1	6D-0692	1	SEAL-O-RING	
	36	1	148-4715	1	GEAR-COUPLING (55 TEETH)	
	37	1	114-1539	6	PIN-DOWEL	
	38	1	191-3235	1	HOUSING	
	39	1	168-8451	2	BALL BEARING	
	40	1	114-1497	1	SEAL GP-DUO-CONE	
	41	1	191-3236	1	HOUSING	
M	42	1	095-1270	2	SETSCREW-SOCKET	
B	43	1	148-4708	1	GEAR-RING (79 TEETH)	

B-USE AS REQUIRED
M-METRIC PART

227-6035 **FINAL DRIVE GP** *(contd.)* i01891358

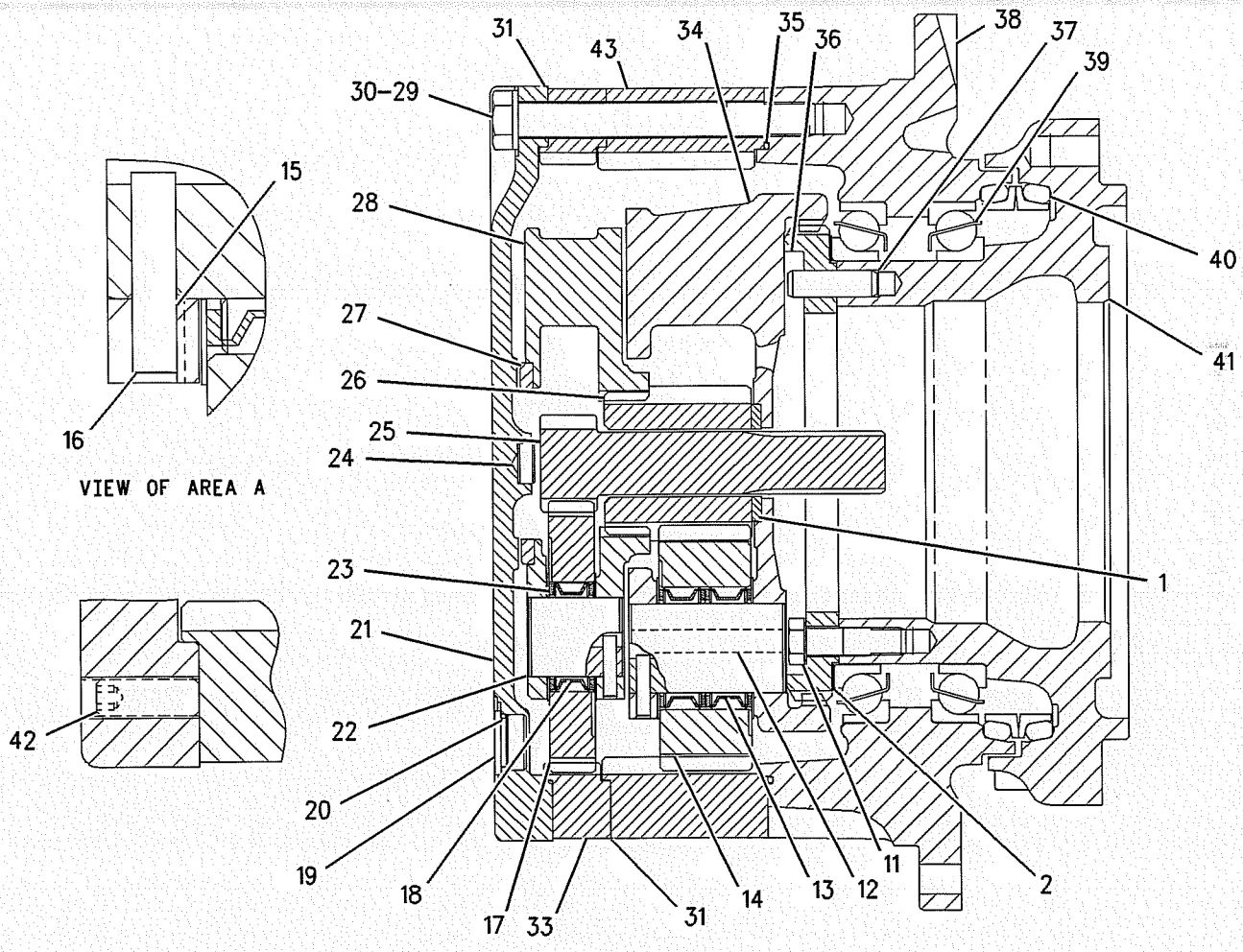

GRAPHIC #1 **<END>** g00880483

POWER TRAIN

148-4681 POWER TRAIN AR

S/N: SBN1-UP; RAW1-UP

PART OF 193-6840, 193-6841 GENERAL AR

SMCS-3000, 4351 **i01375226**

NOTE	PART NUMBER	QTY	PART NAME 1 2 3 4 5 6 (PRODUCT LEVEL)	SEE PAGE
Y	*148-4679*	1	DRIVE GP-SWING	252
Y	*148-4682*	1	FASTENER GP-SWING & FINAL DR	253
Y	*148-4696*	2	FINAL DRIVE GP	151
Y	*145-3042*	2	SPROCKET GP	155

Y-SEPARATE ILLUSTRATION

<END>

145-3042 SPROCKET GP

S/N: SBN1-UP; RAW1-UP

PART OF 148-4681 POWER TRAIN AR

SMCS-4164 **i01891385**

NOTE	REF NO	GRAPHIC REF	PART NUMBER	QTY	PART NAME 1 2 3 4 5 6 (PRODUCT LEVEL)	SEE PAGE
	1	1	**8E-9805**	1	SPROCKET-TRACK	
M	2	1	**7X-2562**	16	BOLT (M20X2.5X45MM)	

M-METRIC PART

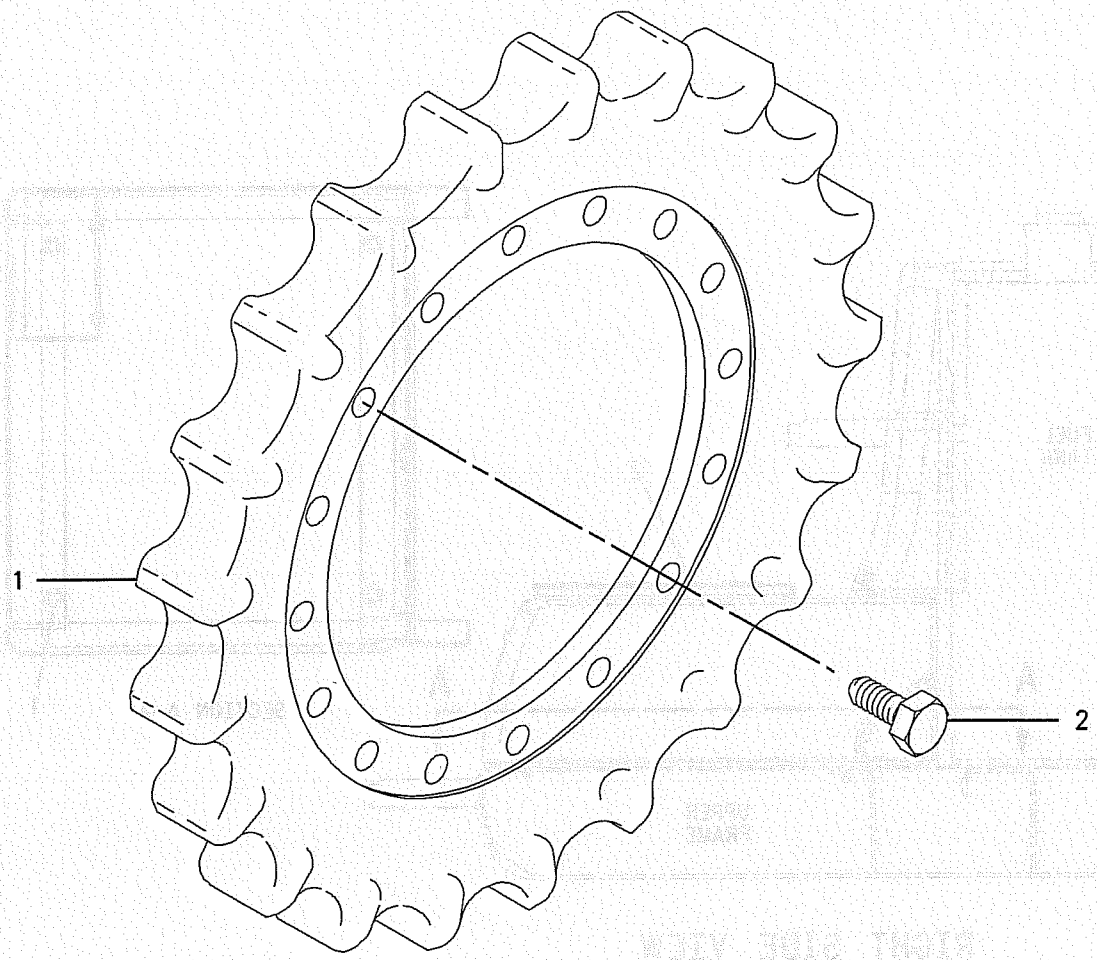

GRAPHIC #1

<END>

g00935714

FRAME AND BODY

142-3839 BOX & MTG GP-STORAGE

S/N: SBN1-UP; RAW1-UP

PART OF 193-6848, 193-6849 CHASSIS AR

SMCS-7268 **i01526029**

NOTE	REF NO	GRAPHIC REF	PART NUMBER	QTY	PART NAME 1 2 3 4 5 6 (PRODUCT LEVEL)	SEE PAGE
	1	1	*135-8577*	4	BOLT AS-SPECIAL	
					(EACH INCLUDES)	
		1	**5P-1076**	1	WASHER-HARD (13.5X30X4MM THK)	
M		1	**8T-4956**	1	BOLT (M12X1.75X35MM)	
Y	2	1	*142-3840*	1	BOX GP-STORAGE	157

M-METRIC PART
Y-SEPARATE ILLUSTRATION

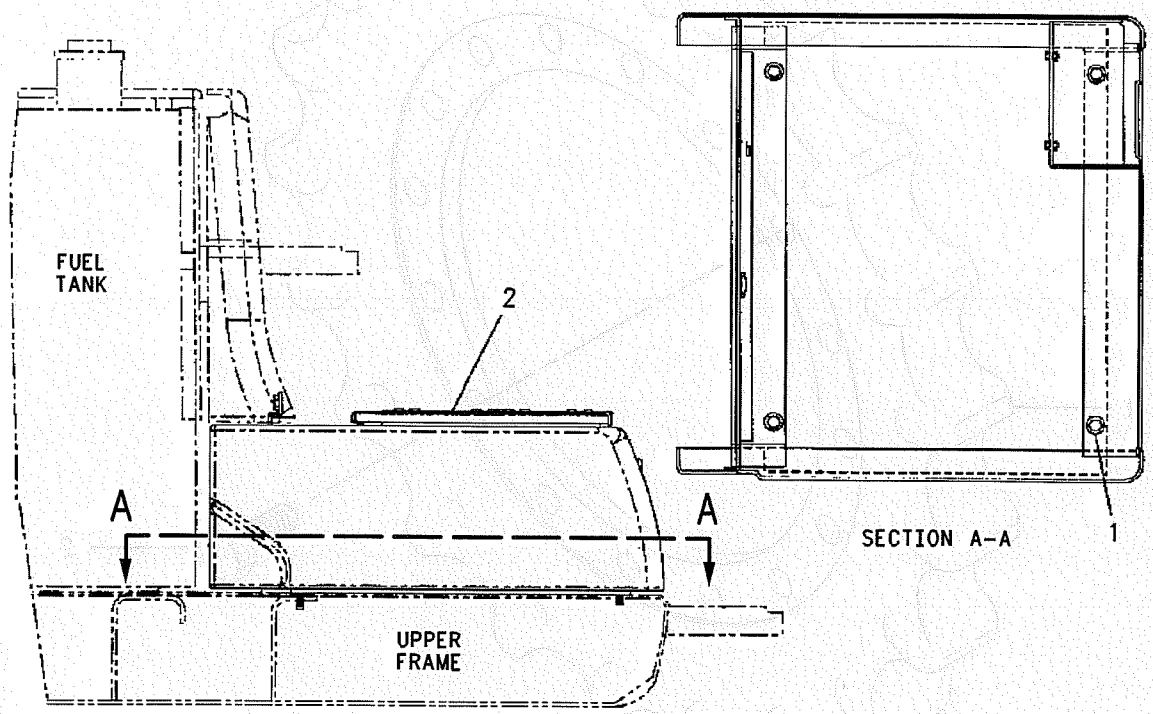

RIGHT SIDE VIEW

GRAPHIC #1 **<END>** g00680464

FRAME AND BODY

142-3840 BOX GP-STORAGE

S/N: SBN1-UP; RAW1-UP

PART OF 142-3839 BOX & MTG GP-STORAGE

SMCS-7268 **i01669895**

NOTE	REF NO	GRAPHIC REF	PART NUMBER	QTY	PART NAME 1 2 3 4 5 6 (PRODUCT LEVEL)	SEE PAGE
	1	1	**4I-2187**	1	SUPPORT AS	
		1	**4B-4278**	1	WASHER (10.2X20.5X1.6MM THK)	
	2	1	**095-0843**	1	PIN-COTTER	
	3	1	**096-3780**	1	PIN-CLEVIS	
	4	1	**168-1533**	1	BODY AS	
Y	5	1	**168-1550**	1	COVER GP-HOOD	162
	6	1	**170-2755**	1	HOOK AS	
	7	1	**170-2982**	1	LOCK AS	
	8	1	**170-2983**	1	SEAL	
	9	1	**170-2984**	1	SHEET	
	10	1	**177-6152**	1	SPRING	
B	11	1	**184-8850**	2	SHIM (0.5MM THK)	
	12	1	**170-9360**	1	GROMMET	
M	13	1	**5C-9553**	3	BOLT (M6X1X16MM)	
	14	1	**5P-1075**	4	WASHER-HARD (10.2X22.5X3MM THK)	
	15	1	**5P-4116**	1	WASHER-HARD (8.8X20.5X2MM THK)	
M	16	1	**105-3487**	4	BOLT-HEX SOCKET (M6X1.0X20.0MM)	
M	17	1	**8T-4133**	4	NUT (M10X1.5 THD)	
	18	1	**9X-8256**	7	WASHER (6.6X12X2MM THK)	

B-USE AS REQUIRED
M-METRIC PART
Y-SEPARATE ILLUSTRATION

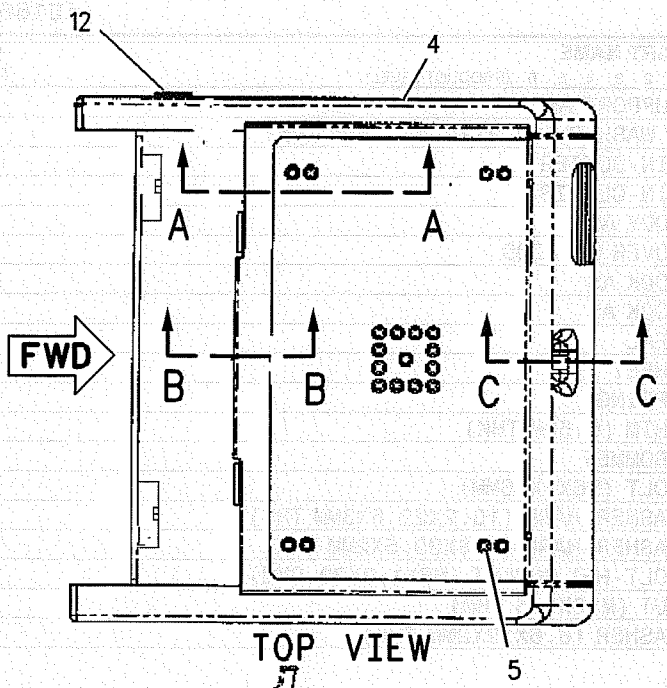

TOP VIEW

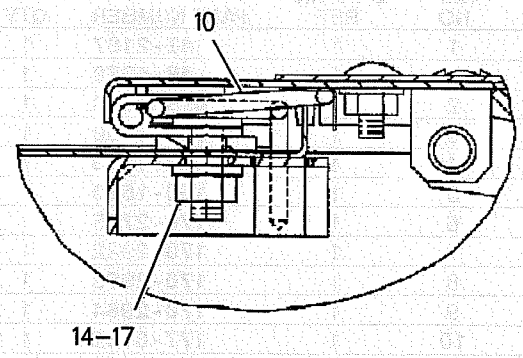

SECTION B-B

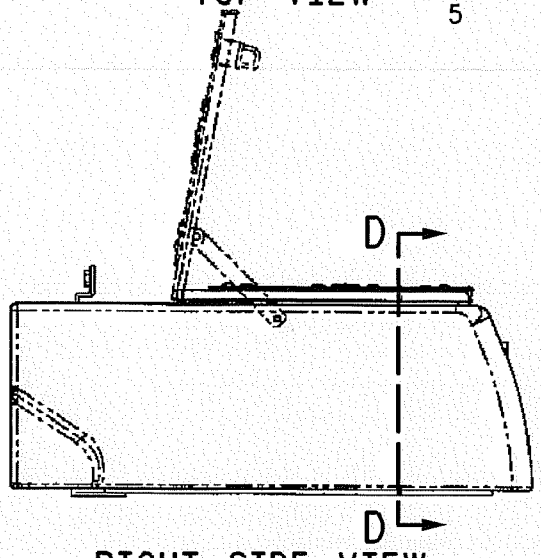

RIGHT SIDE VIEW

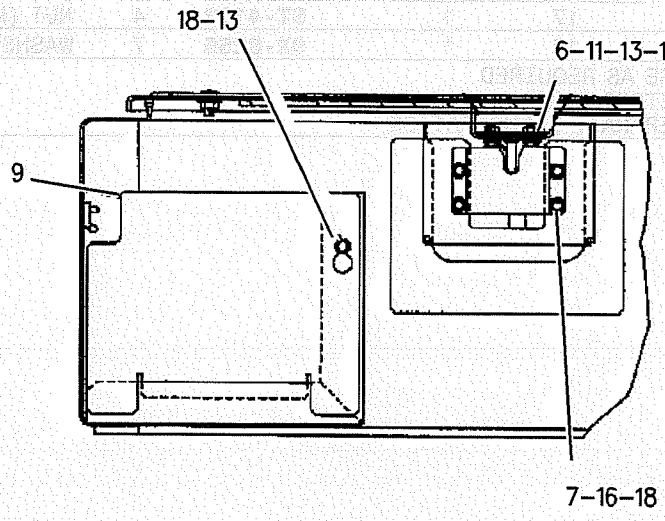

SECTION D-D

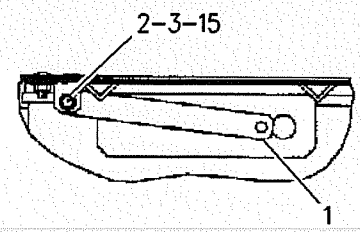

SECTION A-A

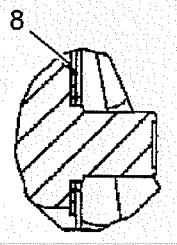

SECTION C-C

GRAPHIC #1 **<END>** g00778412

201-3035 BUMPER GP–SIDE PROTECTION

S/N: SBN1-UP; RAW1-UP

AN ATTACHMENT

SMCS-7156 **i01891437**

NOTE	REF NO	GRAPHIC REF	PART NUMBER	QTY	PART NAME 1 2 3 4 5 6 (PRODUCT LEVEL)	SEE PAGE
	1	1	**180-7521**	2	BUMPER AS	
	2	1	**180-7525**	2	BUMPER AS	
	3	1	**180-7529**	1	BUMPER AS	
	4	1	**180-7533**	1	BUMPER AS	
	5	1	**180-7537**	1	BUMPER AS	
	6	1	**8T-4223**	15	WASHER-HARD (13.5X25.5X3MM THK)	
M	7	1	**8T-4244**	15	NUT (M12X1.75 THD)	
	8	1	**201-3015**	1	FRAME AS-UPPER	

M-METRIC PART

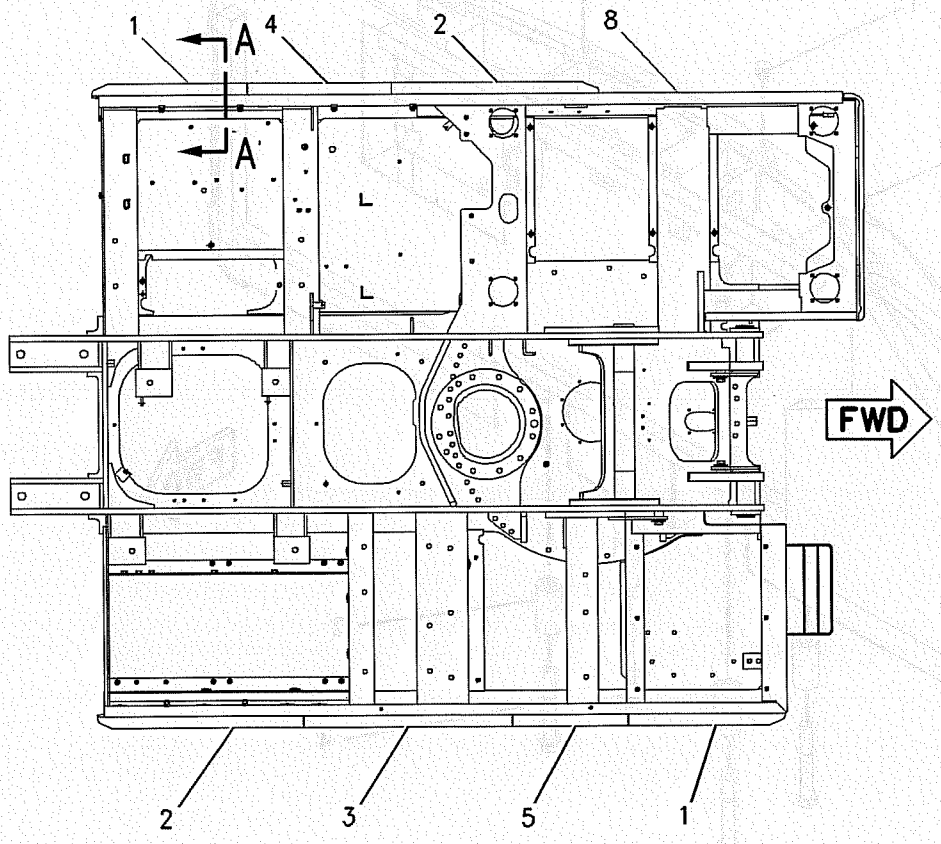

TOP VIEW

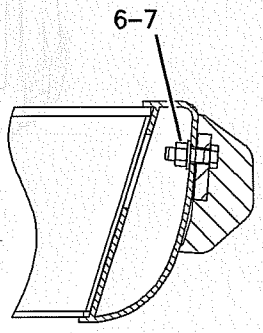

SECTION A-A

GRAPHIC #1 **<END>** g00953779

FRAME AND BODY

199-7287 COUNTERWEIGHT GP

S/N: SBN1-UP; RAW1-UP

PART OF 193-6848, 193-6849 CHASSIS AR

SMCS-7056 **i01886633**

NOTE	REF NO	GRAPHIC REF	PART NUMBER	QTY	PART NAME 1 2 3 4 5 6 (PRODUCT LEVEL)	SEE PAGE
	1	1	**4I-0006**	2	CAP	
	2	1	**177-5905**	4	SPACER (32X65X130MM THK)	
Y	3	1	**199-7288**	1	COUNTERWEIGHT GP	161
M	4	1	**3E-9850**	4	BOLT (M30X3.5X220MM)	

M-METRIC PART
Y-SEPARATE ILLUSTRATION

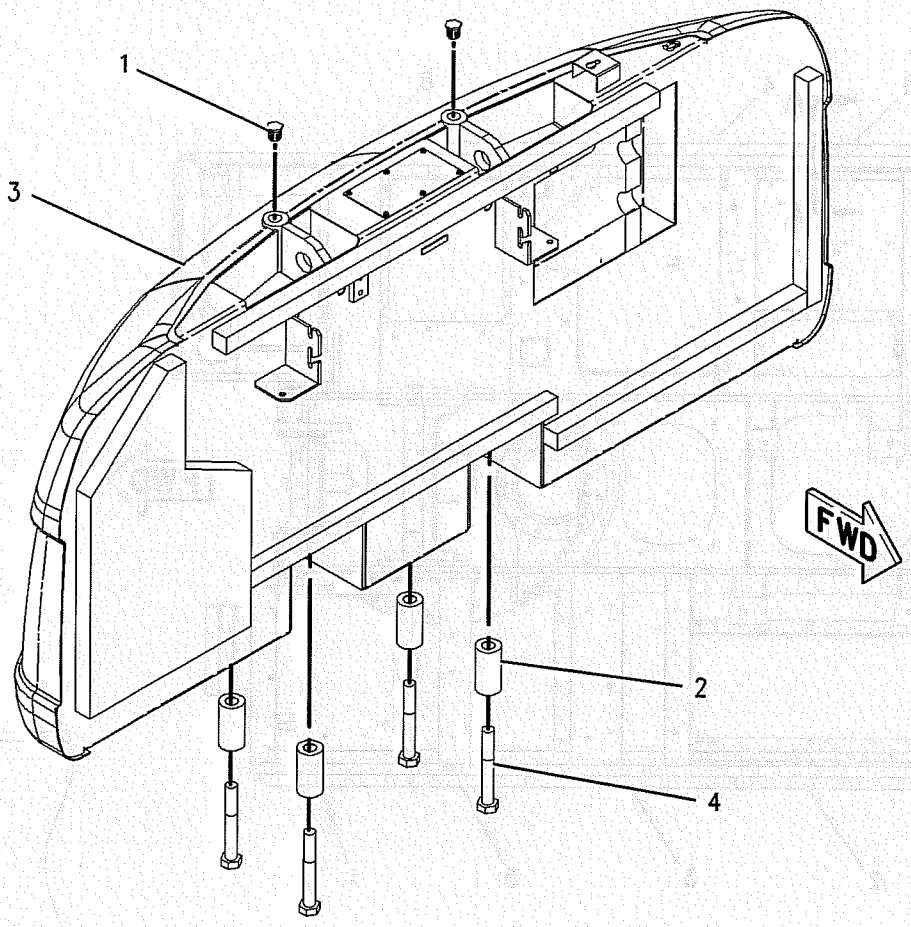

GRAPHIC #1 **<END>** g00931973

FRAME AND BODY

199-7288 COUNTERWEIGHT GP

S/N: SBN1-UP; RAW1-UP

PART OF 199-7287 COUNTERWEIGHT GP

SMCS-7056 **i01886919**

NOTE	REF NO	GRAPHIC REF	PART NUMBER	QTY	PART NAME 1 2 3 4 5 6 (PRODUCT LEVEL)	SEE PAGE
	1	1	**7I-0717**	1	LINER	
	2	1	**165-3101**	1	LINER	
	3	1	**165-3102**	1	LINER	
	4	1	**165-3103**	1	LINER	
	5	1	**199-0254**	1	LINER	
	6	1	**199-0255**	1	LINER	
	7	1	**199-0256**	1	COUNTERWEIGHT AS	

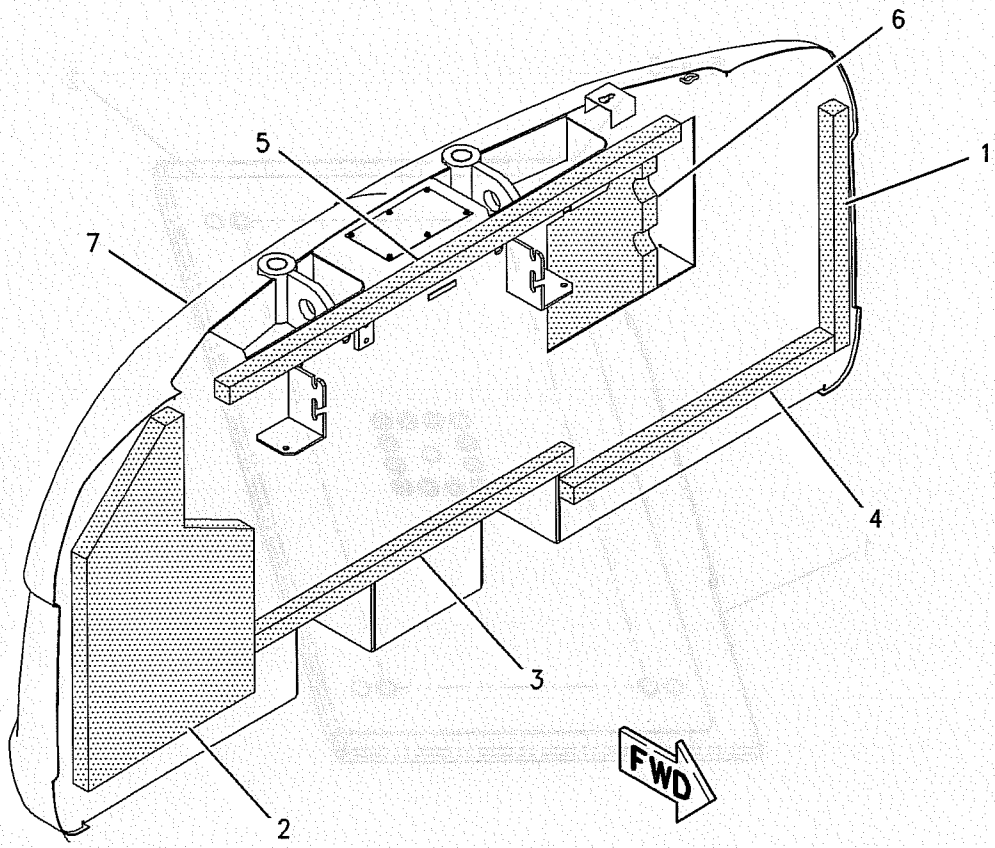

GRAPHIC #1 **<END>** g00953826

168-1550 COVER GP-HOOD

S/N: SBN1-UP; RAW1-UP

PART OF 142-3840 BOX GP-STORAGE

SMCS-7251 **i01375711**

NOTE	REF NO	GRAPHIC REF	PART NUMBER	QTY	PART NAME 1 2 3 4 5 6 (PRODUCT LEVEL)	SEE PAGE
	1	1	**168-1551**	1	COVER AS	
		1	**3D-9143**	2	HINGE-BUTT	
M		1	**6V-9632**	2	NUT-WELD (M6X1 THD)	
		1	**170-2985**	1	SHEET	
	2	1	**168-1555**	1	SHEET	
M	3	1	**137-2255**	5	BOLT	
M	4	1	**5C-7261**	5	NUT (M8X1.25 THD)	
	5	1	**5P-4116**	5	WASHER (8.8X20.5X2MM THK)	

M-METRIC PART

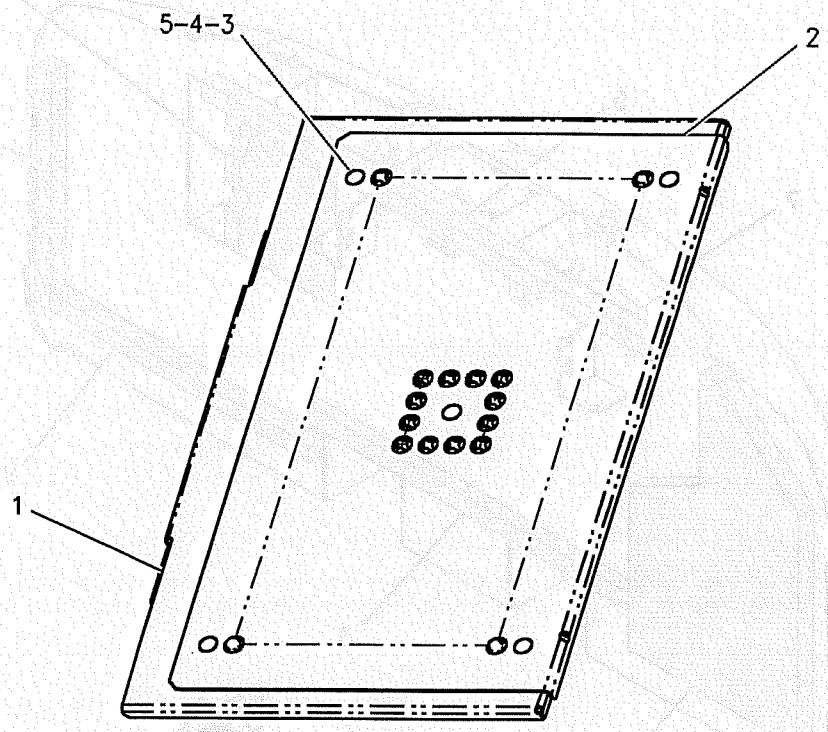

GRAPHIC #1 **<END>** g00688208

203-5267 DOOR GP-ACCESS

S/N: SBN1-UP; RAW1-UP

PART OF 199-7291 HOOD & GUARD GP

SMCS-7273 **i01887922**

NOTE	REF NO	GRAPHIC REF	PART NUMBER	QTY	PART NAME 1 2 3 4 5 6 (PRODUCT LEVEL)	SEE PAGE
M	1	1	**099-6418**	4	NUT (M6X1 THD)	
	2	1	**122-4101**	1	RUBBER	
	3	1	**142-5542**	1	LOCK AS	
	4	1	*165-2888*	1	DOOR AS-SIDE	
	4A	1	**190-6992**	2	HINGE	
	5	1	**165-2978**	1	LINER	
	6	1	**203-5268**	1	INSULATION	
	7	1	**203-5269**	1	INSULATION	

M-METRIC PART

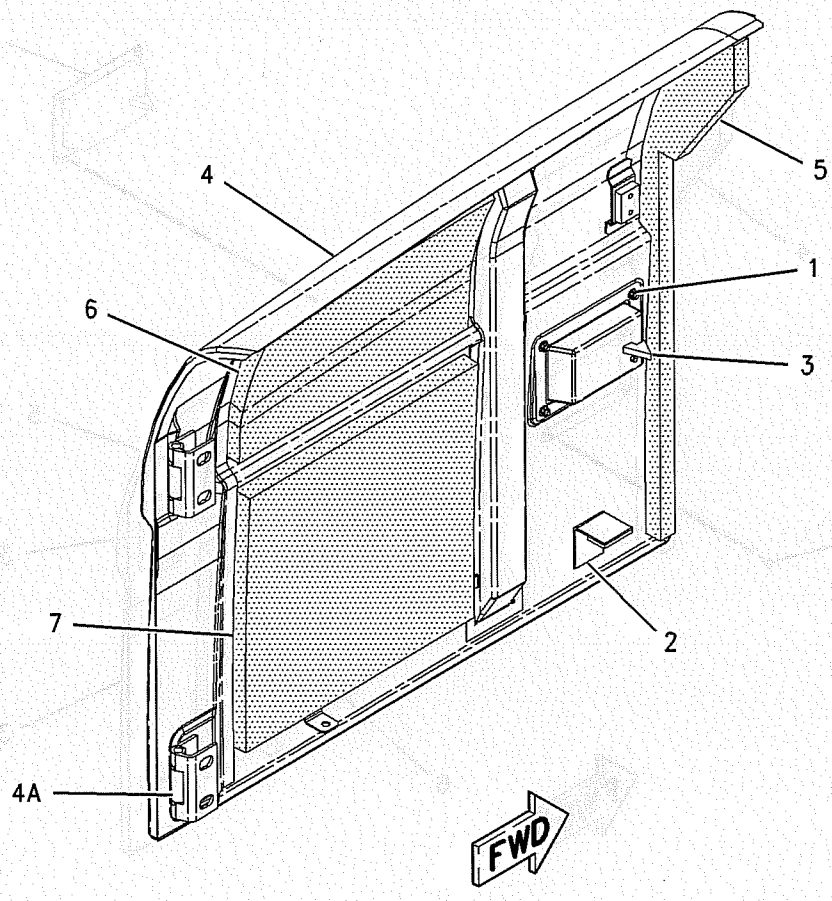

GRAPHIC #1 **<END>** g00895115

FRAME AND BODY

203-5271 DOOR GP-ACCESS

S/N: SBN1-UP; RAW1-UP

PART OF 199-7291 HOOD & GUARD GP

SMCS-7273 **i01887973**

NOTE	REF NO	GRAPHIC REF	PART NUMBER	QTY	PART NAME 1 2 3 4 5 6 (PRODUCT LEVEL)	SEE PAGE
M	1	1	**099-6418**	4	NUT (M6X1 THD)	
J	2	1	**142-5542**	1	LOCK AS	
Z	3	1		1	DOOR AS-SIDE	
	3A	1	**190-6992**	2	HINGE	
	4	1	**165-2985**	1	LINER	
	5	1	**203-5272**	1	INSULATION	
	6	1	**203-5273**	1	INSULATION	

J-REQUIRES 5P8500 KEY
M-METRIC PART
Z-NOT SERVICED SEPARATELY

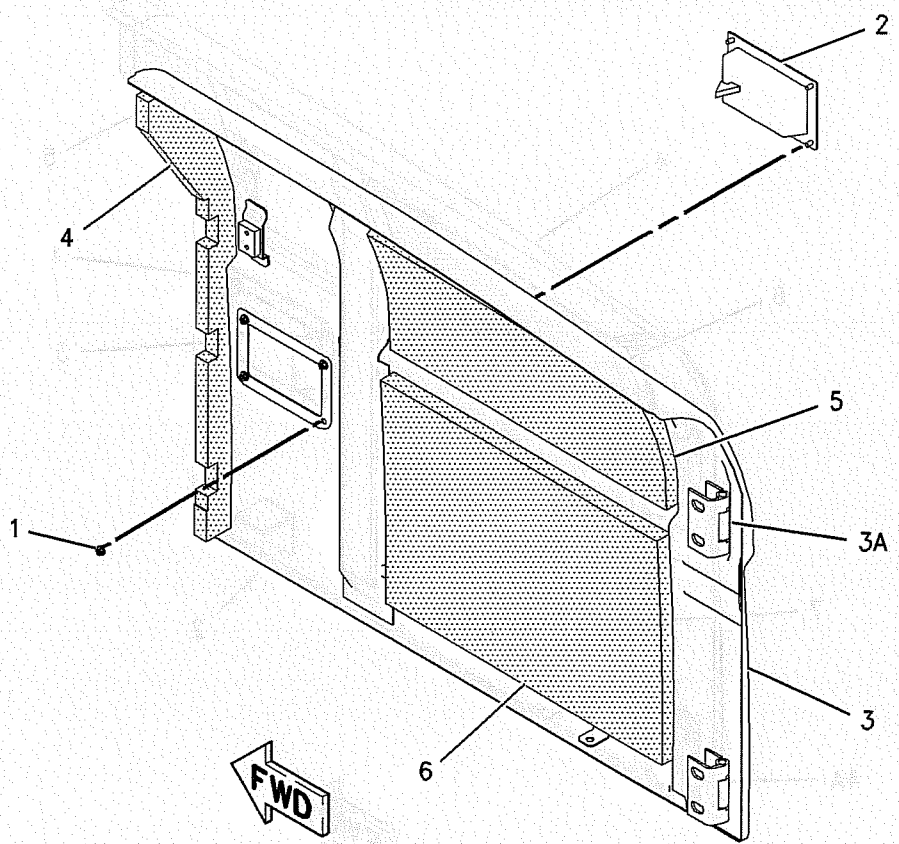

GRAPHIC #1 **<END>** g00953862

FRAME AND BODY

208-4108 DOOR GP-ACCESS

S/N: SBN1-UP; RAW1-UP
PART OF 142-3864 HOOD GP-ENGINE
AN ATTACHMENT

SMCS-7273 **i01888875**

NOTE	REF NO	GRAPHIC REF	PART NUMBER	QTY	PART NAME 1 2 3 4 5 6 (PRODUCT LEVEL)	SEE PAGE
	1	1	*170-2805*	1	DOOR AS-SIDE	
		1	**190-6992**	2	HINGE	
	2	1	**165-2978**	1	LINER	
	3	1	**142-5542**	1	LOCK AS	
	4	1	**122-4101**	1	RUBBER	
M	5	1	**099-6418**	4	NUT (M6X1 THD)	

M-METRIC PART

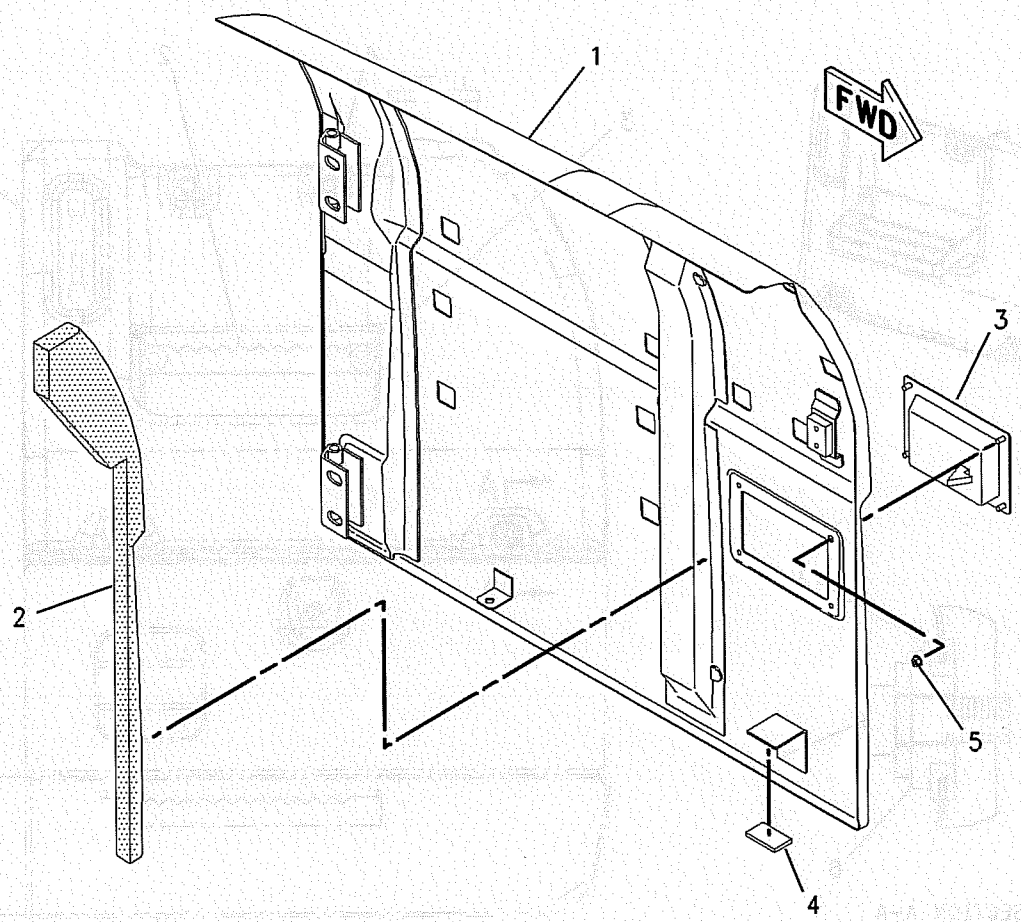

GRAPHIC #1 **<END>** g00949983

FRAME AND BODY

170-2966 FENDER & COVER GP

S/N: SBN1-UP; RAW1-UP

PART OF 193-6848, 193-6849 CHASSIS AR

SMCS-7252 **i01464886**

NOTE	REF NO	GRAPHIC REF	PART NUMBER	QTY	PART NAME 1 2 3 4 5 6 (PRODUCT LEVEL)	SEE PAGE
	1	1	**170-2986**	2	GROMMET	
	2	1	**193-9763**	1	STEP AS	
	3	1	*135-8573*	2	BOLT AS-SPECIAL (M12)	
					(EACH INCLUDES)	
		1	**5P-1076**	1	WASHER-HARD (13.5X30X4MM THK)	
M		1	**8T-4192**	1	BOLT (M12X1.75X25MM)	
	4	1	*135-8575*	4	BOLT AS-SPECIAL (M12)	
					(EACH INCLUDES)	
		1	**5P-1076**	1	WASHER-HARD (13.5X30X4MM THK)	
M		1	**8T-4139**	1	BOLT (M12X1.75X30MM)	
	5	1	**177-5839**	1	COVER	
	6	1	**7Y-2853**	2	SPACER (5MM THK)	

M-METRIC PART

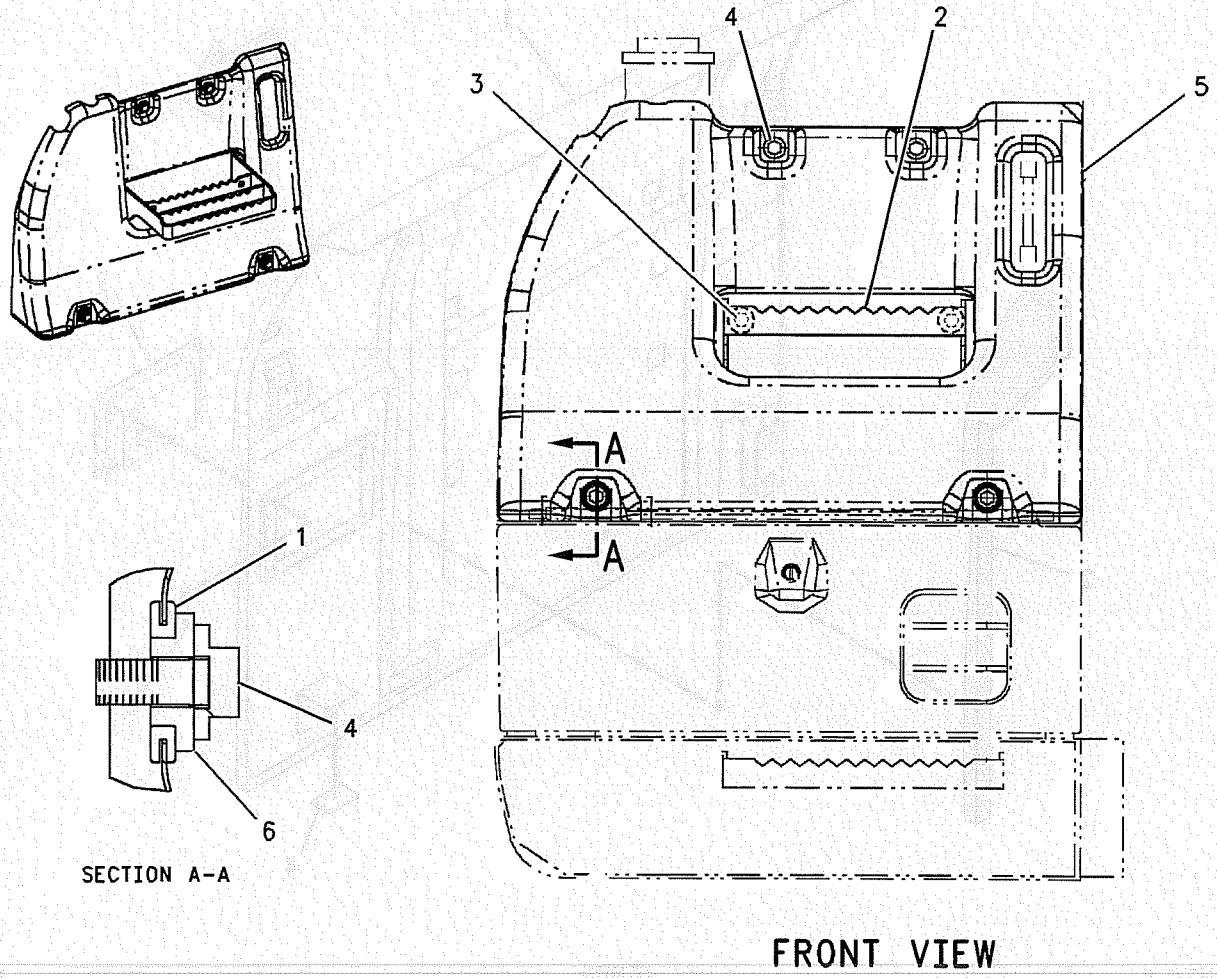

SECTION A-A

FRONT VIEW

GRAPHIC #1 **<END>** g00793151

FRAME AND BODY

201-3014 FRAME GP-UPPER

S/N: SBN1-UP; RAW1-UP

PART OF 193-6848, 193-6849 CHASSIS AR

SMCS-6506, 7051 **i01887588**

NOTE	REF NO	GRAPHIC REF	PART NUMBER	QTY	PART NAME 1 2 3 4 5 6 (PRODUCT LEVEL)	SEE PAGE
	1	1	**201-3015**	1	FRAME AS-UPPER	
	2	1	**164-0586**	1	BUMPER AS	
	3	1	**4I-4808**	1	PIN AS	
	4	1	**4I-4812**	2	PIN AS	
M	5	1	**8T-4780**	3	BOLT (M20X2.5X30MM)	
	6	1	**093-0349**	3	WASHER (22X60X6MM THK)	
	7	1	**8T-4123**	3	WASHER-PLATED (22X35X3.5MM THK)	
	8	1	**093-0363**	2	SPACER (83X120X12MM THK)	
	9	1	**212-2838**	2	SHIM (2.0MM THK)	
B	10	1	**093-0084**	2	SHIM (1.0MM THK)	
B	11	1	**093-0116**	1	SHIM (2MM THK)	
B	12	1	**113-2127**	1	SHIM (0.5MM THK)	
M	13	1	**8T-4136**	4	BOLT (M10X1.5X25MM)	
	14	1	**8T-4121**	4	WASHER-HARD (11X21X2.5MM THK)	
B	15	1	**093-0083**	4	SHIM (1.0MM THK)	
B	16	1	**133-2425**	2	SHIM (0.5MM THK)	
B	17	1	**093-0115**	2	SHIM (2.0MM THK)	
M	18	1	**8T-4191**	1	BOLT (M10X1.5X16MM)	

B-USE AS REQUIRED
M-METRIC PART

201-3014 FRAME GP-UPPER *(contd.)*

i01887588

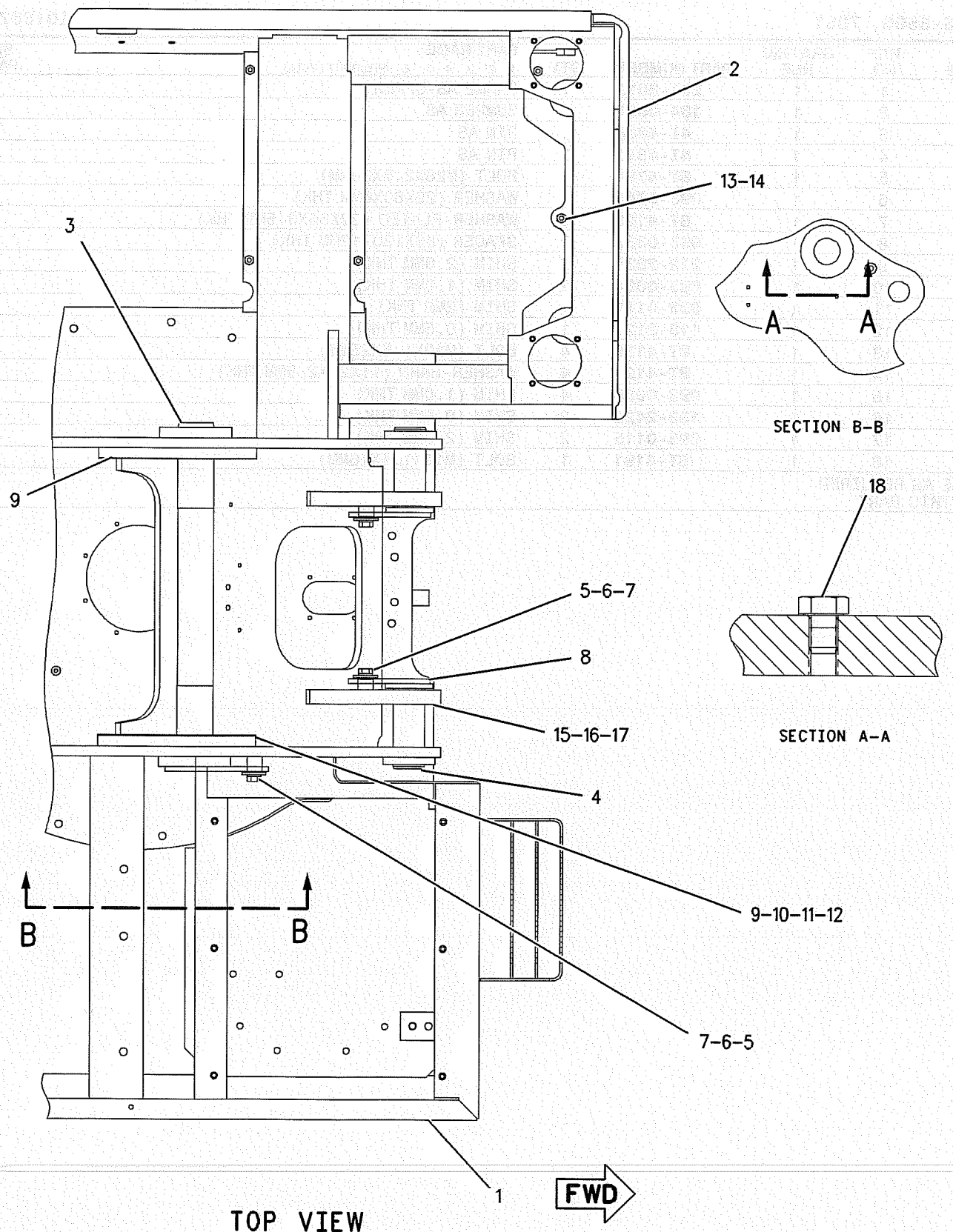

GRAPHIC #1

<END>

g00946561

FRAME AND BODY

148-4671 GEAR & BEARING GP-SWING

S/N: SBN1-UP; RAW1-UP

PART OF 163-7721, 167-7267 FRAME AR-UNDERCARRIAGE

SMCS-7063 **i01389038**

NOTE	REF NO	GRAPHIC REF	PART NUMBER	QTY	PART NAME 1 2 3 4 5 6 (PRODUCT LEVEL)	SEE PAGE
	1	1	**7Y-1650**	1	CLAMP-HOSE	
	2	1	**093-0543**	1	RETAINER	
	3	1	**8T-4121**	14	WASHER-HARD (11X21X2.5MM THK)	
M	4	1	**8T-4136**	12	BOLT (M10X1.5X25MM)	
	5	1	**7Y-1649**	1	BOOT	
	6	1	**7Y-1647**	1	GASKET	
	7	1	**7Y-1648**	1	STRIP	
	8	1	**148-4704**	1	GASKET	
	9	1	**148-4703**	1	COVER	
	10	1	**5K-9243**	2	ELBOW-FLARED (90 DEGREES)	
	11	1	**148-4689**	1	TUBE AS	
B	12	1	**1U-8846**		SEALANT	
	14	1	**148-4672**	1	GEAR & BEARING GP-SWING	
		1	**3B-8489**	1	FITTING-GREASE	
		1	**148-4685**		SEAL (755CM)	
M	15	1	**8T-0362**	37	BOLT (M20X2.5X110MM)	
	16	1	**7Y-1863**	40	SPACER	
M	17	1	**8T-0360**	40	BOLT (M20X2.5X90 MM)	
	18	1	**096-4902**	1	DOWEL	
	19	1	**4N-9170**	2	CLIP	
M	20	1	**8T-4199**	2	BOLT (M8X1.25X12MM)	
	21	1	**3B-8489**	1	FITTING-GREASE	
M	22	1	**8T-4137**	2	BOLT (M10X1.5X20MM)	
	23	1	**171-9464**	37	SPACER	

B-USE AS REQUIRED
M-METRIC PART

148-4671 **GEAR & BEARING GP-SWING** *(contd.)* **i01389038**

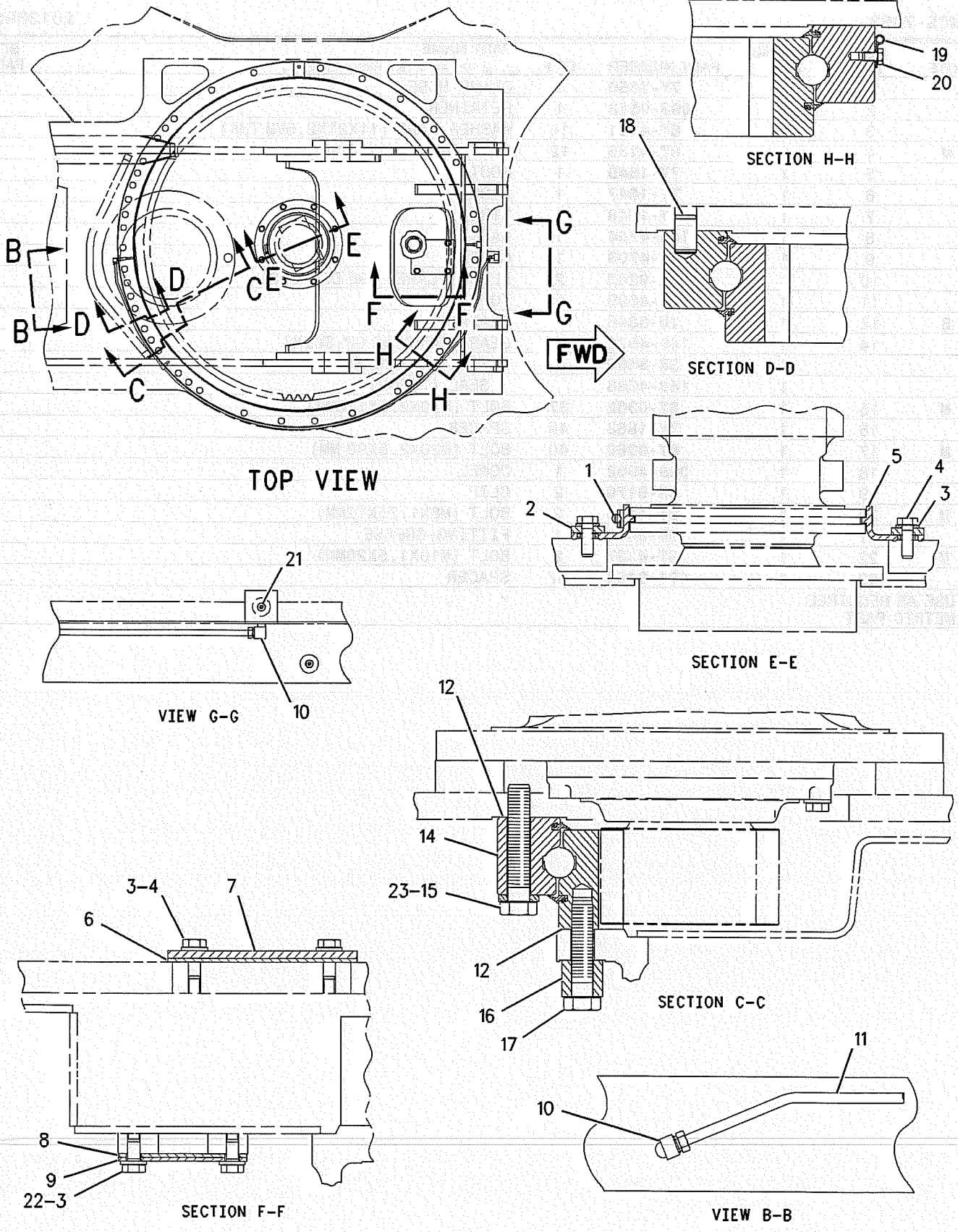

GRAPHIC #1

<END>

g00678944

FRAME AND BODY

204-3760 GUARD AR-BOTTOM

S/N: SBN1-UP; RAW1-UP
HEAVY DUTY
AN ATTACHMENT

SMCS-7153 **i01888943**

NOTE	PART NUMBER	QTY	PART NAME 1 2 3 4 5 6 (PRODUCT LEVEL)	SEE PAGE
Y	*204-3712*	1	GUARD GP-BOTTOM	173
Y	*134-8850*	1	GUARD GP-SWIVEL	176
Y	*166-1478*	1	GUARD GP-TRAVEL MOTOR	193

Y-SEPARATE ILLUSTRATION

<END>

FRAME AND BODY

204-3710 GUARD GP-BOTTOM

S/N: SBN1-UP; RAW1-UP

PART OF 193-6848, 193-6849 CHASSIS AR

SMCS-7153 **i01887680**

NOTE	REF NO	GRAPHIC REF	PART NUMBER	QTY	PART NAME 1 2 3 4 5 6 (PRODUCT LEVEL)	SEE PAGE
	1	1	**204-3711**	1	SHEET	
	2	1	**165-2823**	1	SHEET	
	3	1	**165-2816**	1	SHEET	
	4	1	**165-2815**	1	SHEET	
	5	1	**170-2963**	1	SHEET	
	6	1	**170-2962**	1	SHEET	
	7	1	**199-0068**	1	SHEET	
	8	1	**204-3722**	1	SHEET	
	9	1	**208-4006**	1	SHEET AS	
	10	1	*135-8574*	35	BOLT AS (M12)	
					(EACH INCLUDES)	
		1	**5P-1076**	1	WASHER-HARD (13.5X30X4MM THK)	
M		1	**099-4691**	1	BOLT-LOCKING (M12X1.75X25MM)	

M-METRIC PART

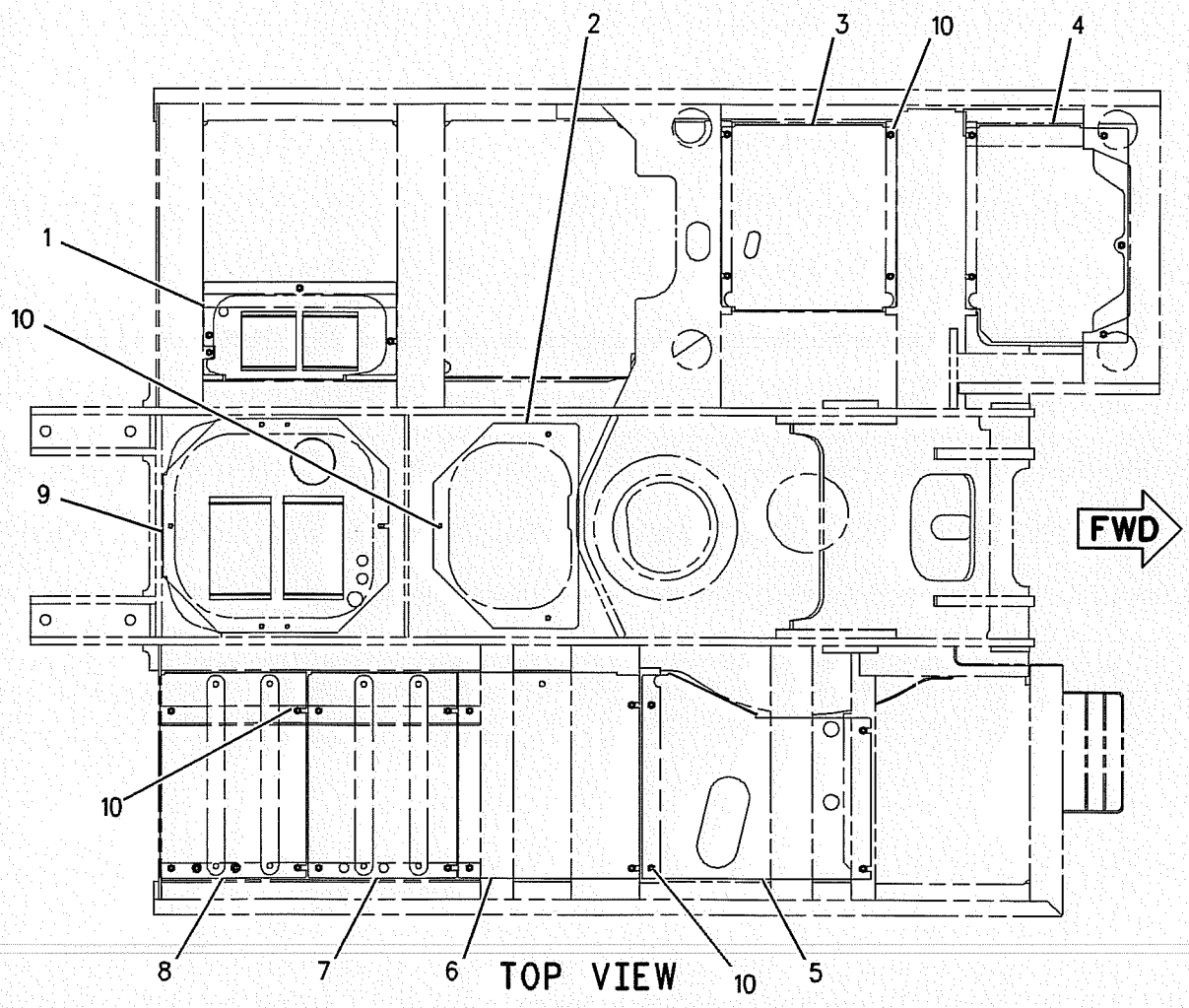

GRAPHIC #1 **<END>** g00946525

204-3712 GUARD GP-BOTTOM

S/N: SBN1-UP; RAW1-UP
PART OF 204-3760 GUARD AR-BOTTOM
AN ATTACHMENT

SMCS-7153 i01888953

NOTE	REF NO	GRAPHIC REF	PART NUMBER	QTY	PART NAME 1 2 3 4 5 6 (PRODUCT LEVEL)	SEE PAGE
	1	1	**204-3723**	1	PLATE AS	
	2	1	**165-2854**	1	PLATE AS	
	3	1	**165-2852**	1	PLATE AS	
	4	1	**165-2850**	1	PLATE AS	
	5	1	**165-2860**	1	PLATE AS	
	6	1	**165-2862**	1	PLATE AS	
	7	1	**199-0069**	1	PLATE AS	
	8	1	**204-3728**	1	PLATE AS	
	9	1	**208-4010**	1	PLATE AS	
	10	1	**199-0120**	1	PLATE AS	
		1	**099-7857**	1	HINGE	
	11	1	**135-8576**	39	BOLT AS	

204-3712 **GUARD GP-BOTTOM** *(contd.)* **i01888953**

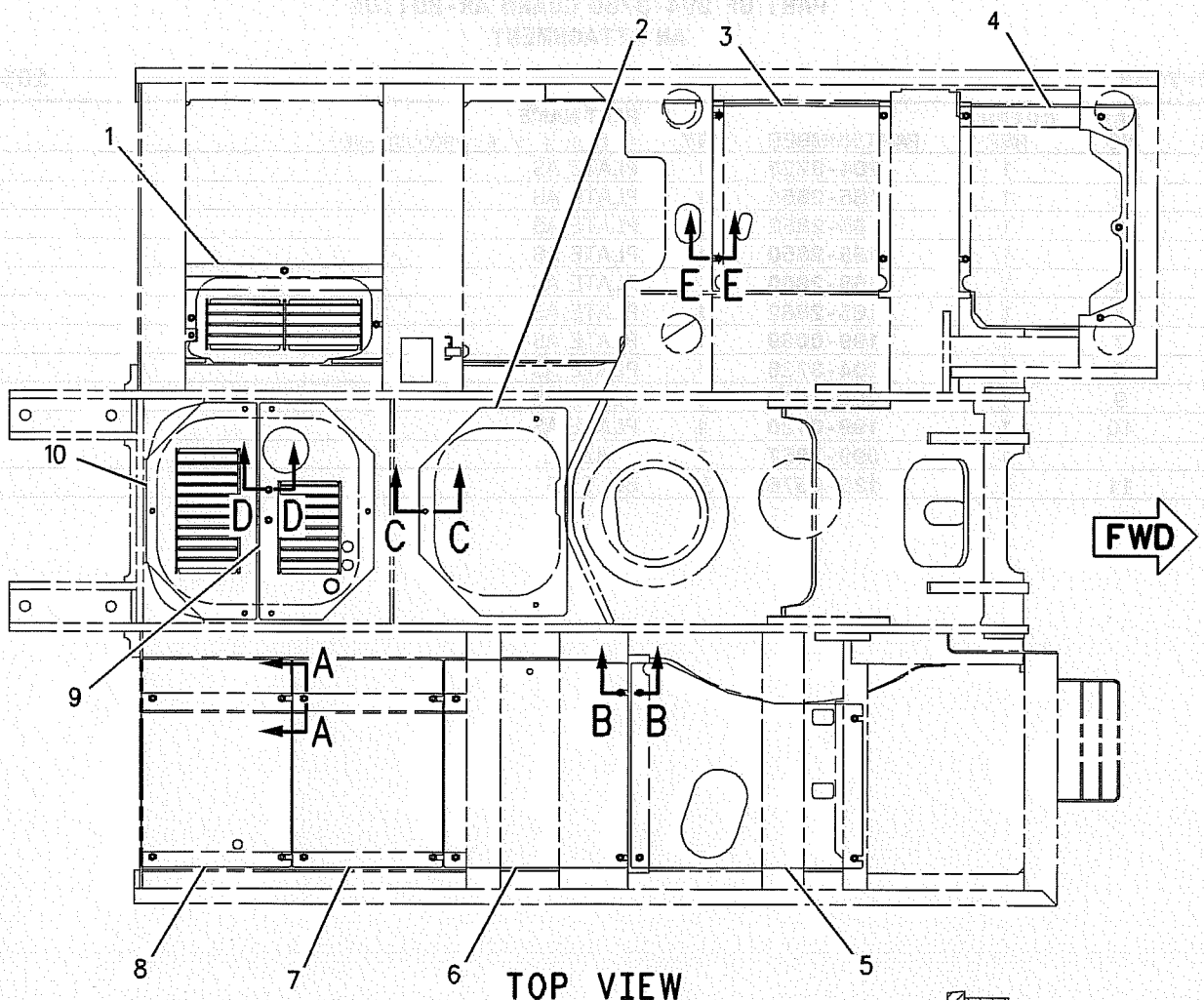

TOP VIEW

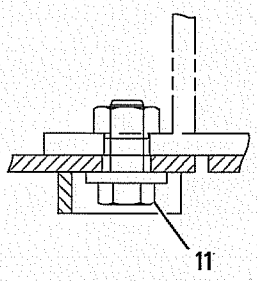

SECTION B-B

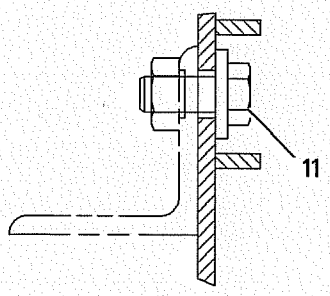

SECTION A-A

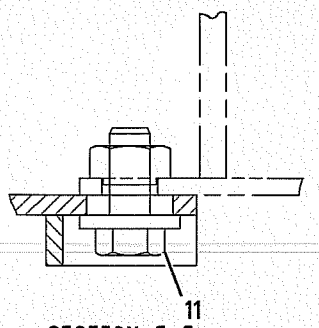

SECTION E-E

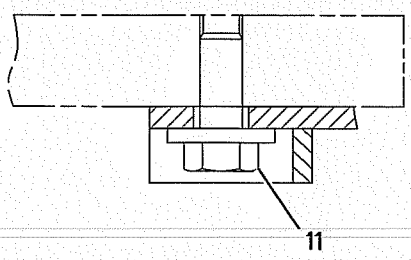

SECTION C-C

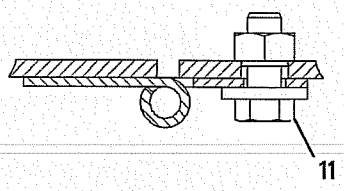

SECTION D-D

GRAPHIC #1 **<END>** g00951085

190-7165 GUARD GP-PLATFORM

S/N: SBN1-UP; RAW1-UP
PART OF 213-0914 BATTERY & WIRING GP
AN ATTACHMENT

SMCS-7253 **i01397279**

NOTE	REF NO	GRAPHIC REF	PART NUMBER	QTY	PART NAME 1 2 3 4 5 6 (PRODUCT LEVEL)	SEE PAGE
	1	1	170-2972	1	DOOR AS	
		1	4K-8501	1	CLIP	
M		1	8T-5413	2	STUD-WELD (M10X1.5X25MM OAL)	
		1	9V-3659	1	HINGE	
M	2	1	8T-4133	2	NUT (M10X1.5 THD)	
	3	1	8T-4121	2	WASHER-HARD (11X21X2.5MM THK)	
	4	1	1K-8850	1	SPRING	

M-METRIC PART

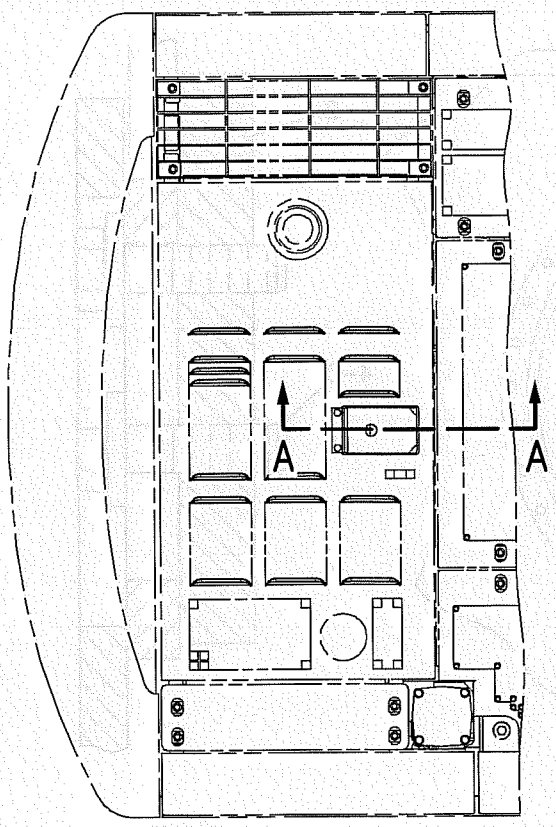

TOP VIEW

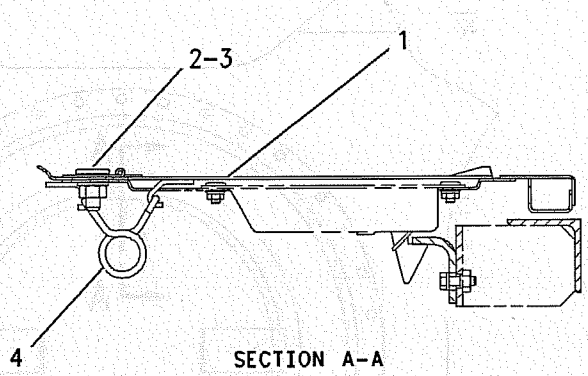

SECTION A-A



GRAPHIC #1 **<END>** g00737224

FRAME AND BODY

134-8850 GUARD GP-SWIVEL

S/N: SBN1-UP; RAW1-UP
PART OF 204-3760 GUARD AR-BOTTOM
AN ATTACHMENT

SMCS-7183 **i01362454**

NOTE	REF NO	GRAPHIC REF	PART NUMBER	QTY	PART NAME 1 2 3 4 5 6 (PRODUCT LEVEL)	SEE PAGE
	1	1	**134-8851**	1	PLATE AS	
	2	1	**130-4276**	4	PLATE	
M	3	1	**8T-4140**	8	BOLT (M16X2.0X60MM)	
	4	1	**3E-9411**	8	WASHER-HARD (6MM THK)	

M-METRIC PART

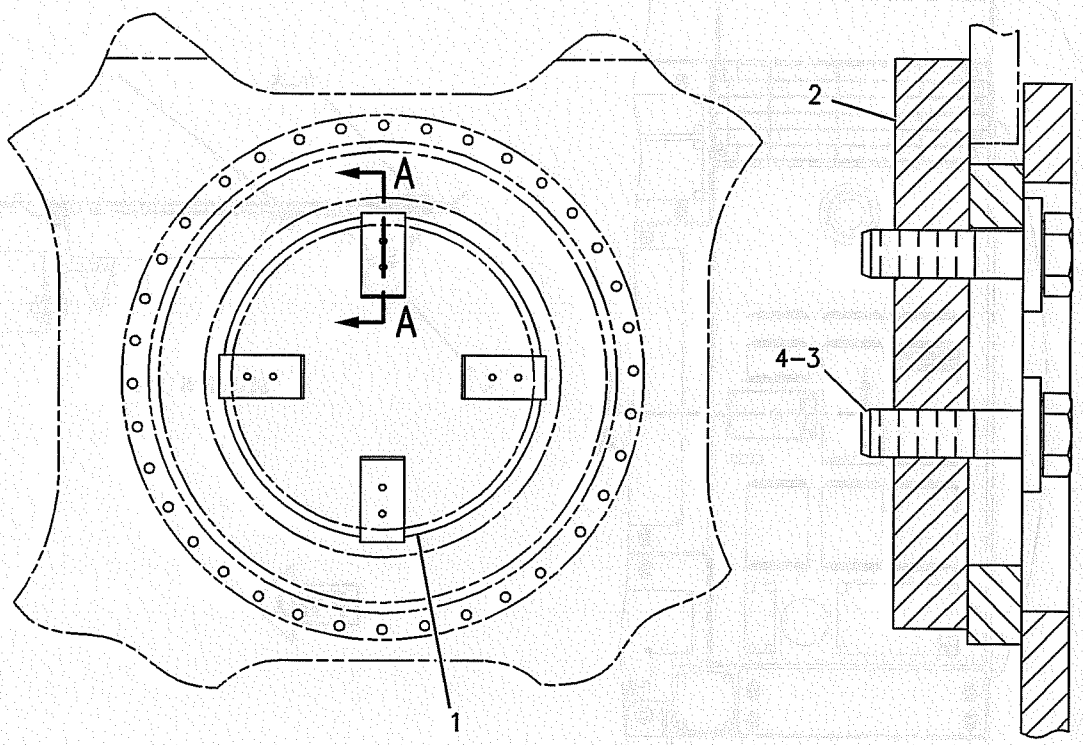

TOP VIEW SECTION A-A

GRAPHIC #1 **<END>** g00264950

FRAME AND BODY

142-3835 HANDHOLD GP

S/N: SBN1-UP; RAW1-UP

PART OF 193-6848, 193-6849 CHASSIS AR

SMCS-7256 **i01362466**

NOTE	REF NO	GRAPHIC REF	PART NUMBER	QTY	PART NAME 1 2 3 4 5 6 (PRODUCT LEVEL)	SEE PAGE
	1	1	**8T-4223**	2	WASHER-HARD (3MM THK)	
M	2	1	**8T-4192**	2	BOLT (M12X1.75X25MM)	
	3	1	**177-5880**	2	SLEEVE	
	4	1	**177-5879**	1	CLAMP	
	5	1	**177-5877**	1	HANDHOLD AS	
	6	1	*135-8578*	3	BOLT AS-SPECIAL	
					(EACH INCLUDES)	
		1	**5P-1076**	1	WASHER-HARD (4MM THK)	
M		1	**8T-4183**	1	BOLT (M12X1.75X40 MM)	

M-METRIC PART

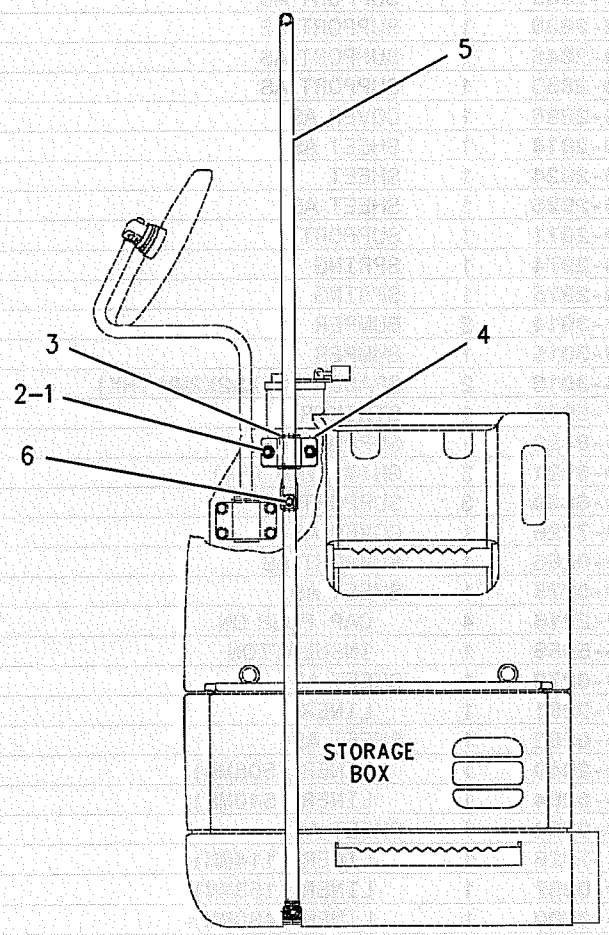

FRONT VIEW

GRAPHIC #1 **<END>** g00678707

FRAME AND BODY

199-7291 HOOD & GUARD GP

S/N: SBN1-UP; RAW1-UP

PART OF 193-6848, 193-6849 CHASSIS AR

SMCS-7251 **i01887760**

NOTE	REF NO	GRAPHIC REF	PART NUMBER	QTY	PART NAME 1 2 3 4 5 6 (PRODUCT LEVEL)	SEE PAGE
	1	1,3	4I-0232	2	STRIKER	
	2	3	4I-8019	3	SUPPORT	
	3	3	6I-6033	3	STOP	
	4	3	7Y-2853	3	SPACER (13X38X5MM THK)	
B	5	1,3	087-3908	4	SHIM (1MM THK)	
B	6	1,3	087-3909	4	SHIM (2MM THK)	
	7	1	122-3979	1	BAND	
	8	1	122-3980	1	ROD	
	9	3	122-4120	3	ROD	
M	10	1,2,3,4	135-8573	93	BOLT AS	
M	11	2,3	135-8575	21	BOLT AS	
M	12	2	135-8577	4	BOLT AS	
	13	1	165-2943	1	COVER AS	
	14	2	170-2822	1	SUPPORT AS	
	15	2	170-2826	1	SUPPORT AS	
	16	2	170-2833	1	SUPPORT AS	
	17	4	170-2838	1	SUPPORT AS	
	18	2	170-2846	1	SUPPORT AS	
	19	2	170-2855	1	SUPPORT AS	
	20	1	170-2886	1	COVER AS	
	21	2	170-2914	1	SHEET AS	
	22	4	170-2924	1	SHEET	
	23	4	170-2926	1	SHEET AS	
	24	4	170-2971	1	SUPPORT	
	25	2	170-2974	1	SPRING	
	26	2	170-2975	1	SPRING	
	27	3	170-3014	2	BUMPER	
	28	3	170-3015	1	BUMPER	
	29	3	170-3016	2	SPACER (19X32X2MM THK)	
	30	3	177-5916	1	STRIKER	
	31	4	184-8423	1	SUPPORT AS	
B	32	3	190-6821	3	SHIM (1MM THK)	
	33	3	190-6880	3	SUPPORT AS	
	34	1	190-7226	1	COVER AS	
	35	2	199-0266	1	SUPPORT AS	
	36	2	199-0275	1	SHEET AS	
		2	6P-2216	4	CAP-PUSH ON	
		2	175-5658	1	INSULATION	
	37	4	199-0278	1	SHEET AS	
		4	199-0281	1	LINER	
	38	4	199-0282	1	SHEET AS	
		4	170-2940	1	LINER (505MM)	
		4	199-0284	1	LINER (540MM)	
	39	2	199-0294	1	SHEET AS	
		2	127-7826	1	LINER (114MM)	
		2	199-0297	1	LINER (153MM)	
		2	204-3700	1	LINER (430MM)	
	40	2	199-0301	1	STRIP	
	41	2	199-7406	1	SUPPORT AS	
		2	184-8551	1	LINER (100MM)	
		2	199-0261	1	LINER (260MM)	
Y	42	1	199-7408	1	HOOD GP-ENGINE	186
	43	1	199-7414	1	COVER AS	
Y	44	2	203-5267	1	DOOR GP-ACCESS	163
	45	2	203-5270	1	DOOR AS	
		2	165-2969	1	LINER	

199-7291 HOOD & GUARD GP *(contd.)*

i01887760

NOTE	REF NO	GRAPHIC REF	PART NUMBER	QTY	PART NAME 1 2 3 4 5 6 (PRODUCT LEVEL)	SEE PAGE
Y	46	3	**203-5271**	1	DOOR GP-ACCESS	164
	47	3	**203-5274**	1	DOOR AS	
	47A	3	**177-5738**	1	LINER	
	47B	3	**177-5739**	1	LINER	
	47C	3	**203-4926**	1	LINER	
	48	2	**204-3671**	1	SUPPORT AS	
		2	**184-8551**	1	LINER	
	49	2	**214-4392**	1	SHEET AS	
		2	**199-7398**	1	LINER	
		2	**204-3663**	1	LINER	
	50	2	**222-0093**	1	SUPPORT AS	
		2	**222-0099**	1	LINER	
	51	4	**095-1321**	1	PIN-CLEVIS	
	52	3,4	**3B-4618**	5	PIN-COTTER	
M	53	3	**105-3487**	6	BOLT-HEX SOCKET (M6X1.0X20.0MM)	
	54	2	**170-2866**	1	SUPPORT AS	
	55	1	**170-2873**	1	SUPPORT AS	
	56	2	**214-4396**	1	SHEET AS	
M	57	1	**5C-9553**	2	BOLT (M6X1X16MM)	
	58	1,3	**5P-4115**	16	WASHER-HARD (7.2X19X2MM THK)	
	59	4	**7X-0618**	2	WASHER-HARD (13.5X40X5MM THK)	
	60	3	**7Y-2854**	3	SPACER (24X38X3MM THK)	
	61	3	**8T-4121**	5	WASHER-HARD (11X21X2.5MM THK)	
M	62	3	**8T-4136**	2	BOLT (M10X1.5X25MM)	
M	63	1,3	**8T-4138**	10	BOLT (M6X1X20MM)	
M	64	3	**8T-4171**	6	BOLT (M6X1X12MM)	
	65	4	**8T-4223**	3	WASHER-HARD (13.5X25.5X3MM THK)	
	66	1,3	**9X-8256**	8	WASHER (6.6X12X2MM THK)	

B-USE AS REQUIRED
M-METRIC PART
Y-SEPARATE ILLUSTRATION

199-7291 **HOOD & GUARD GP** *(contd.)* i01887760

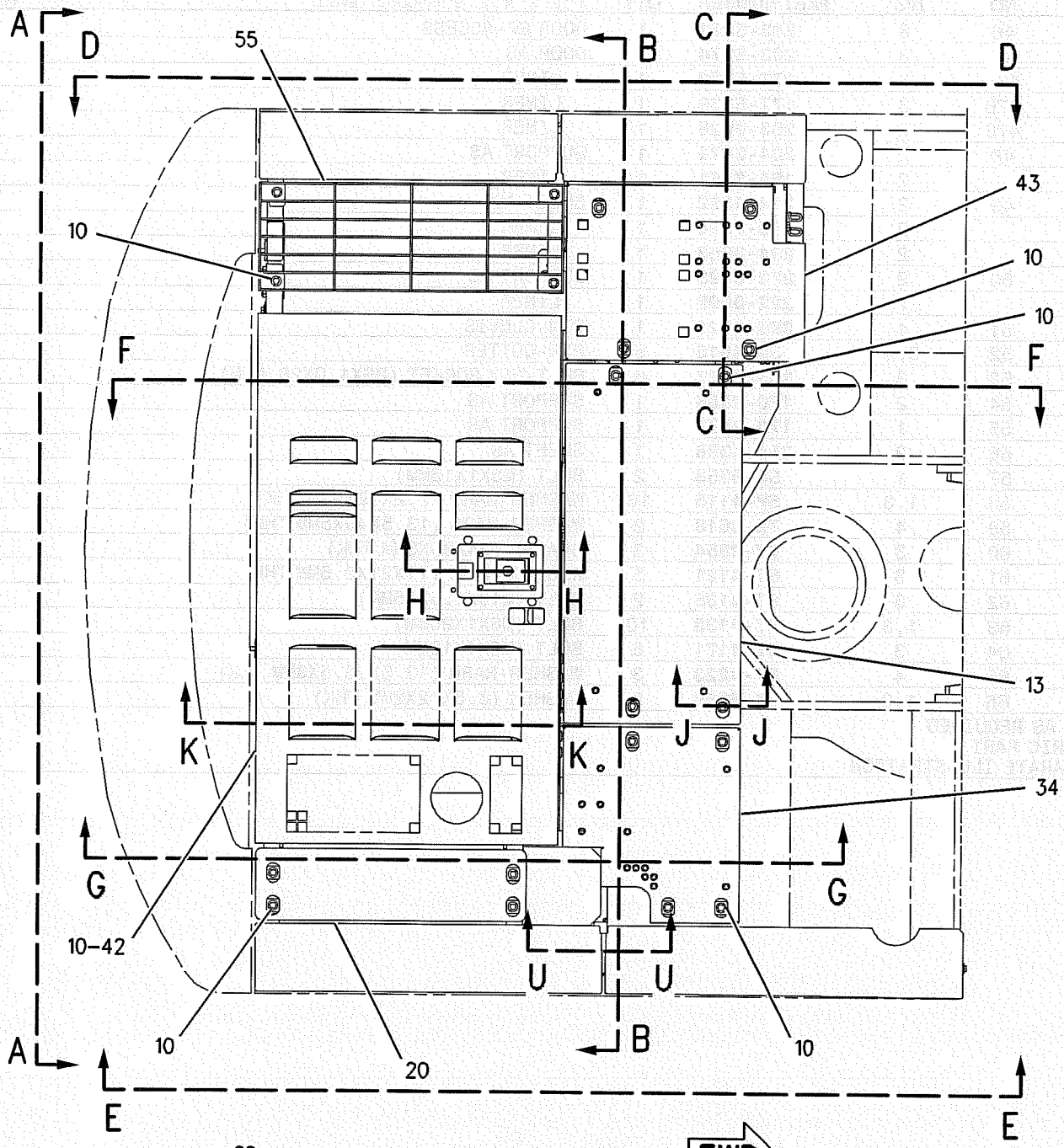

TOP VIEW FWD

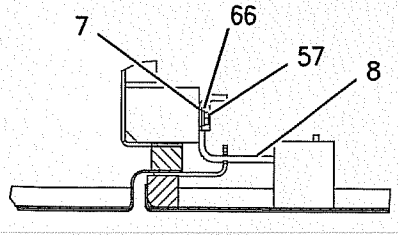

SECTION N-N

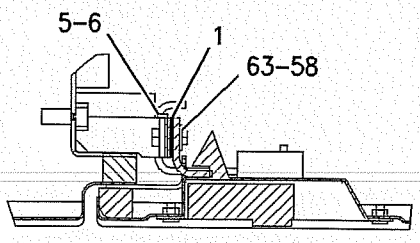

SECTION M-M

REFER TO ALL ILLUSTRATIONS OF THIS GROUP FOR AUXILIARY VIEWS

GRAPHIC #1

g00952840

199-7291 HOOD & GUARD GP *(contd.)*

i01887760

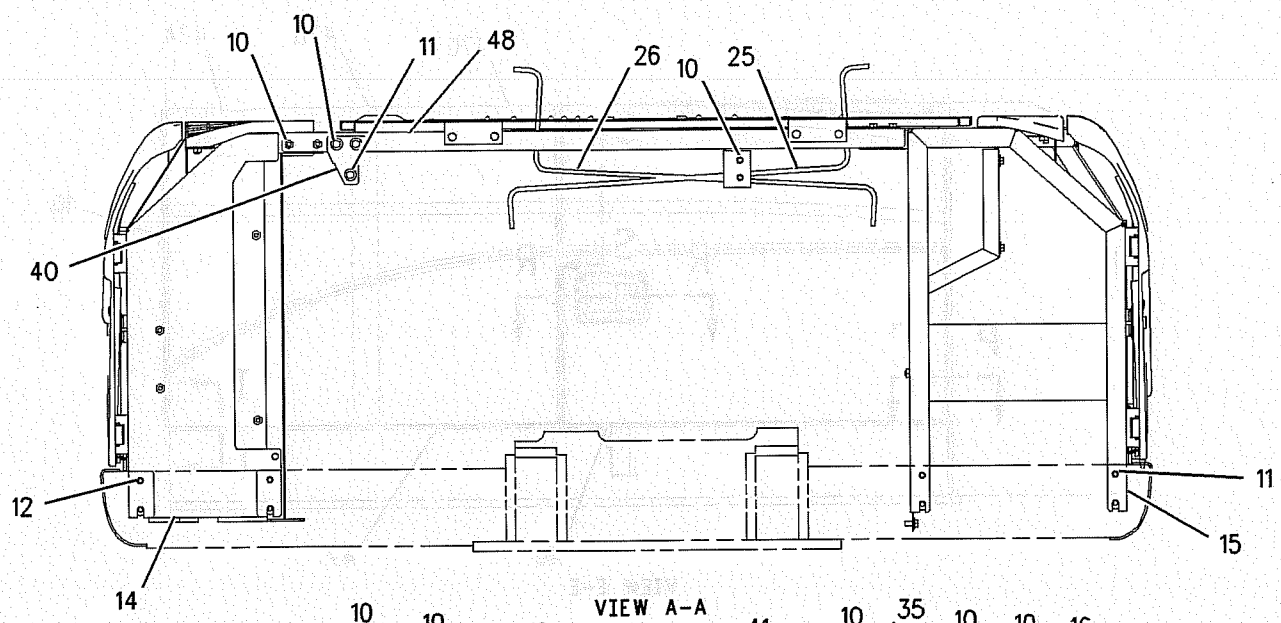

VIEW A-A

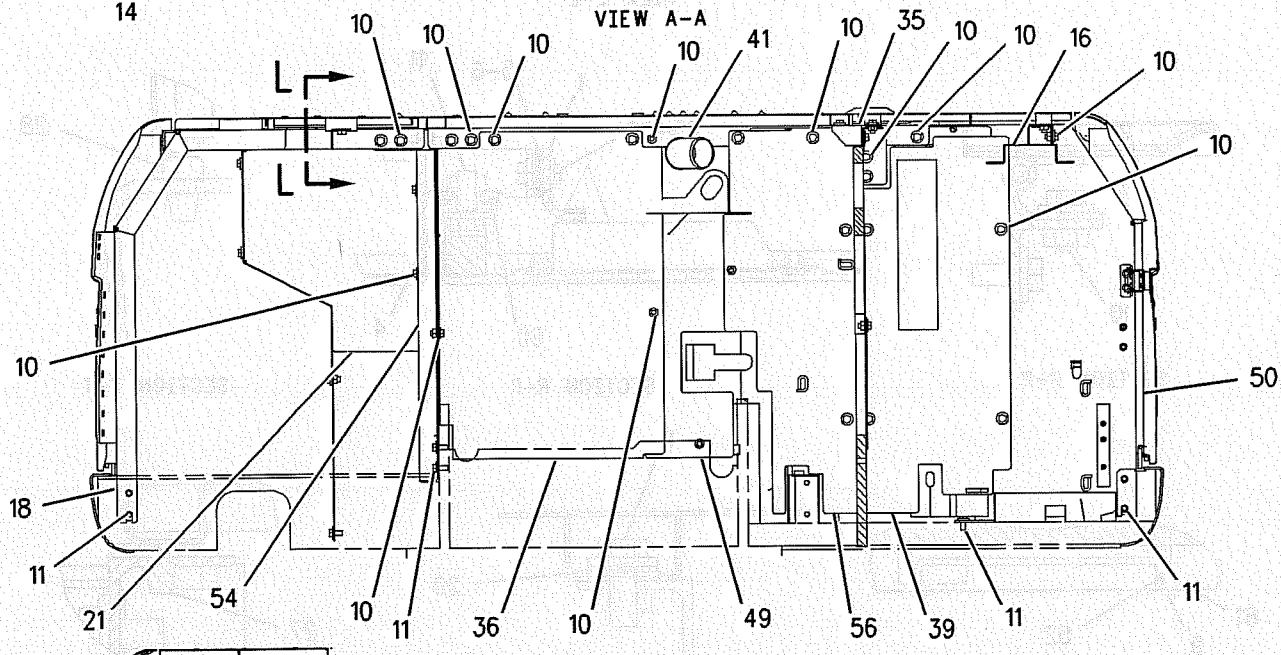

SECTION B-B

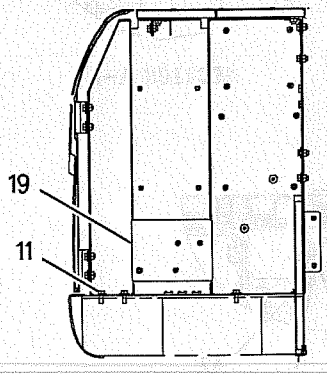

SECTION C-C

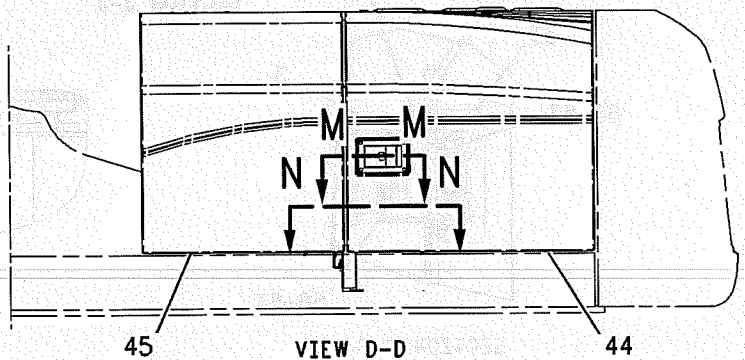

VIEW D-D

REFER TO ALL ILLUSTRATIONS OF THIS GROUP FOR AUXILIARY VIEWS

GRAPHIC #2

g00952841

199-7291 **HOOD & GUARD GP** *(contd.)* i01887760

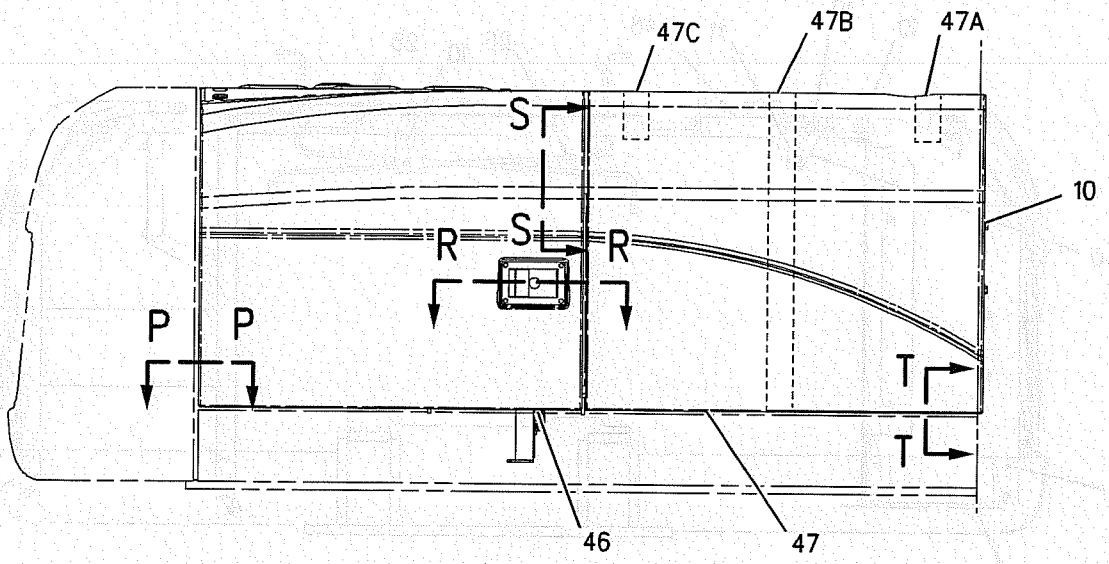

VIEW E-E

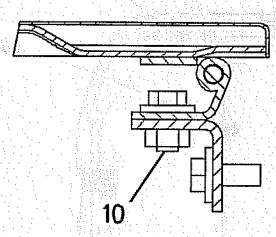

SECTION P-P

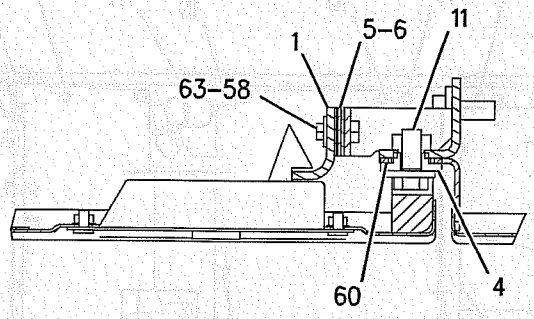

SECTION R-R

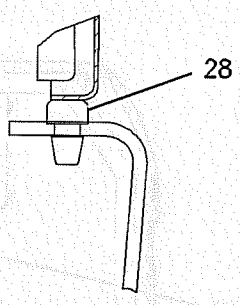

SECTION T-T

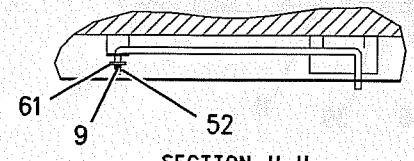

SECTION U-U

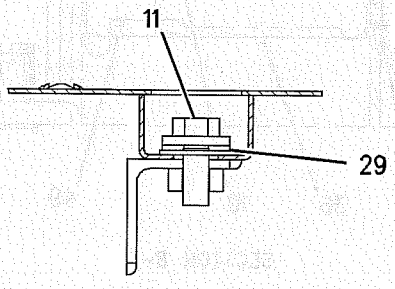

SECTION J-J

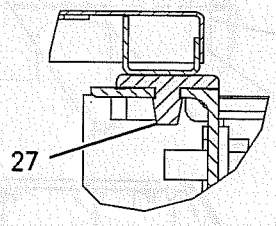

SECTION L-L

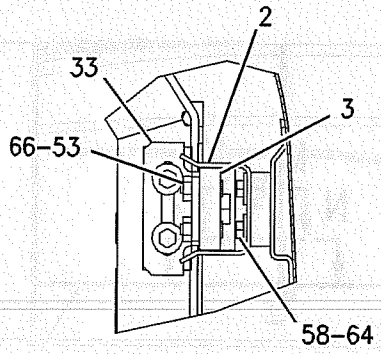

SECTION S-S

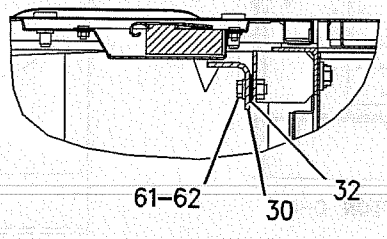

SECTION H-H

GRAPHIC #3

g00952842

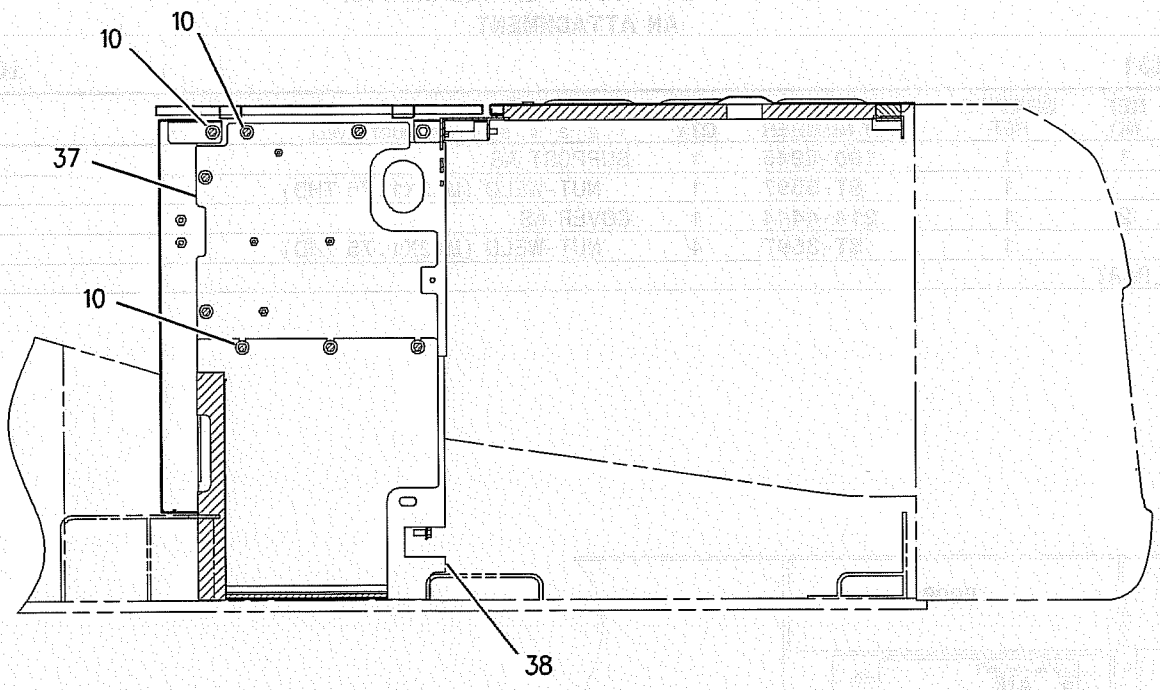

SECTION F-F

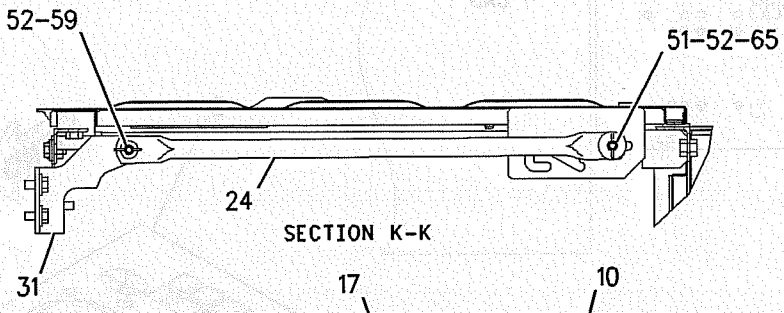

SECTION K-K

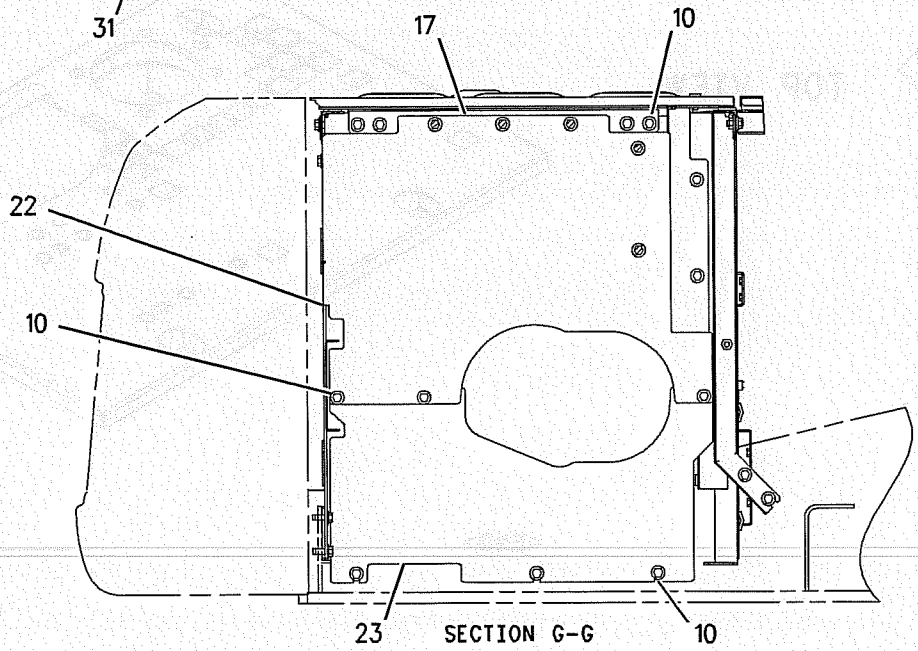

SECTION G-G

GRAPHIC #4 **<END>** g00952843

FRAME AND BODY

214-4443 HOOD GP

S/N: SBN1-UP; RAW1-UP
PRE-CLEANER
PART OF 214-4442 AIR CLEANER AR
AN ATTACHMENT

SMCS-7251 **i01888848**

NOTE	REF NO	GRAPHIC REF	PART NUMBER	QTY	PART NAME 1 2 3 4 5 6 (PRODUCT LEVEL)	SEE PAGE
	1	1	**190-6945**	1	SUPPORT AS	
M		1	**8T-3597**	1	NUT-WELD (M12X1.75 THD)	
	2	1	**214-4444**	1	COVER AS	
M		1	**8T-3597**	4	NUT-WELD (M12X1.75 THD)	

M-METRIC PART

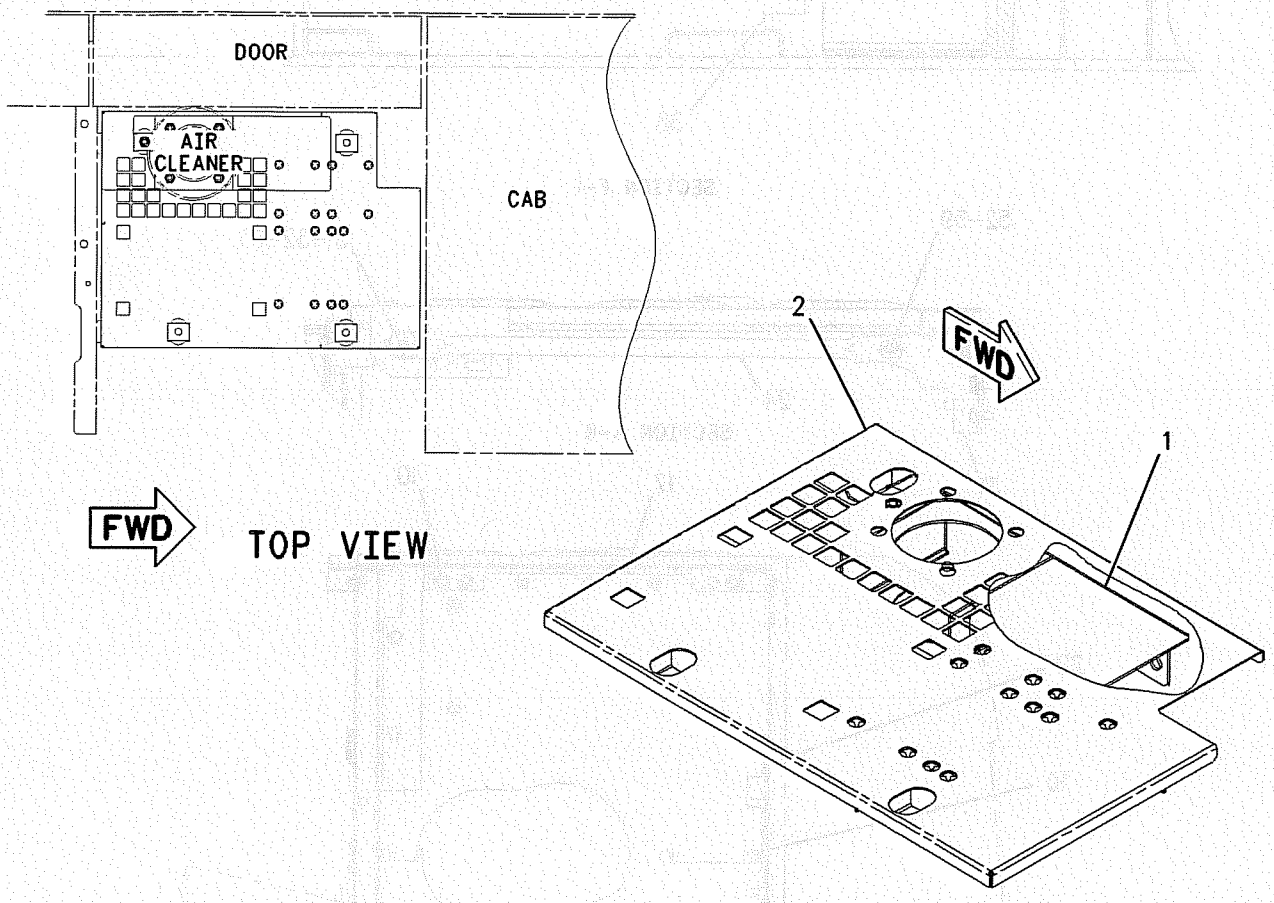

GRAPHIC #1 **<END>** g00946108

142-3864 HOOD GP-ENGINE

S/N: SBN1-UP; RAW1-UP
PART OF 214-4411 COOLING AR
AN ATTACHMENT

SMCS-7251 **i01676330**

NOTE	PART NUMBER	QTY	PART NAME 1 2 3 4 5 6 (PRODUCT LEVEL)	SEE PAGE
Y	*208-4108*	1	DOOR GP-ACCESS	165

Y-SEPARATE ILLUSTRATION

<END>

FRAME AND BODY

199-7408 HOOD GP-ENGINE

S/N: SBN1-UP; RAW1-UP

PART OF 199-7291 HOOD & GUARD GP

SMCS-7251 **i01888387**

NOTE	REF NO	GRAPHIC REF	PART NUMBER	QTY	PART NAME 1 2 3 4 5 6 (PRODUCT LEVEL)	SEE PAGE
M	1	1	**099-6418**	4	NUT (M6X1 THD)	
	2	1	**177-6101**	1	GUARD	
	3	1	**184-8862**	1	COVER	
	4	1	**199-7409**	1	LINER	
	5	1	**199-7410**	1	HOOD AS-ENGINE	
	6	1	**199-7441**	1	SHEET AS	
	7	1	**204-3668**	1	LINER	
	8	1	**204-3669**	1	SHEET	
	9	1	**142-5542**	1	LOCK AS	
	10	1	**8T-4223**	4	WASHER-HARD (13.5X25.5X3MM THK)	
M	11	1	**8T-4244**	4	NUT (M12X1.75 THD)	

M-METRIC PART

199-7408 HOOD GP-ENGINE *(contd.)*

i01888387

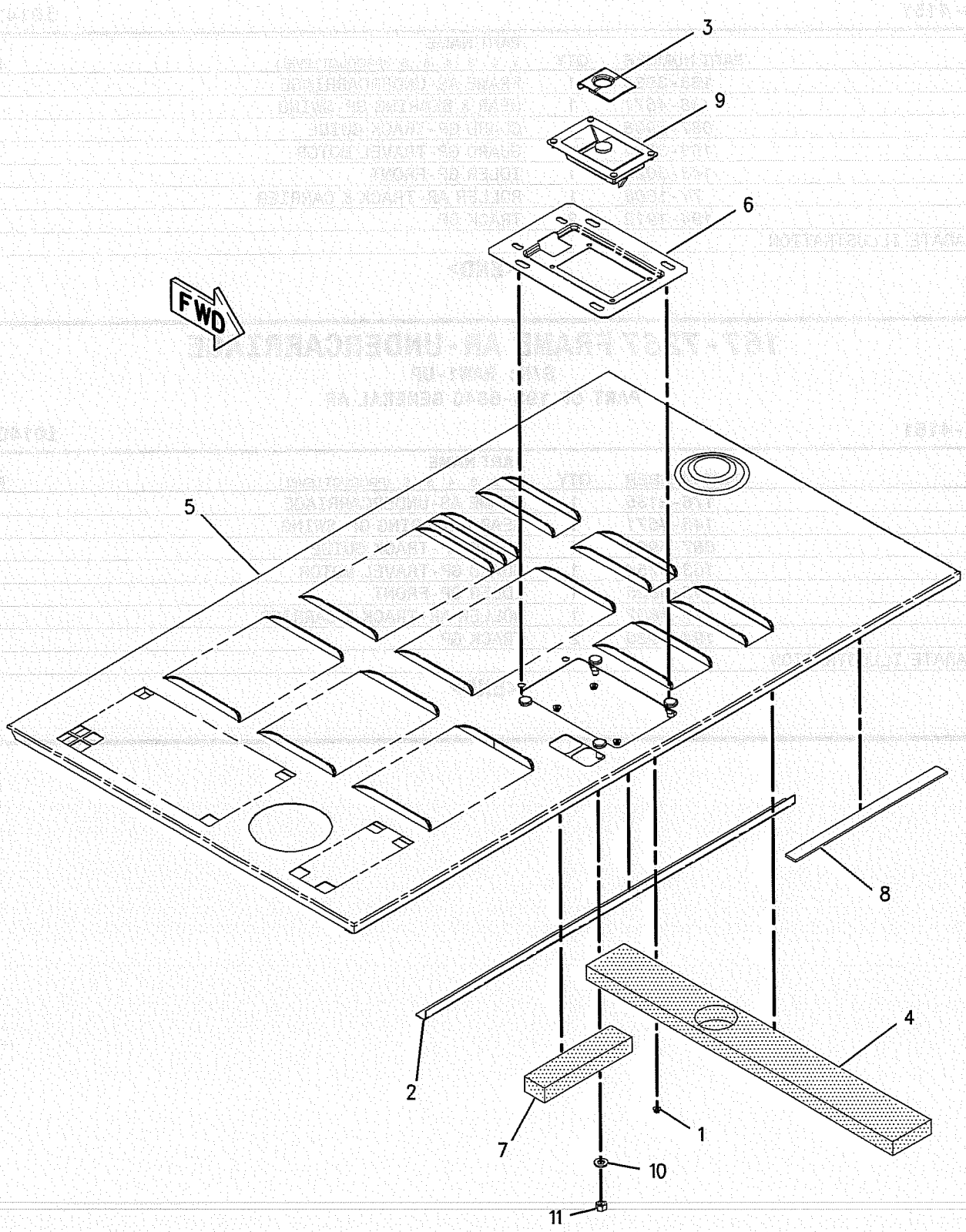

GRAPHIC #1

<END>

g00945955

UNDERCARRIAGE

163-7721 FRAME AR-UNDERCARRIAGE

S/N: SBN1-UP

PART OF 193-6841 GENERAL AR

SMCS-4151 **i01412666**

NOTE	PART NUMBER	QTY	PART NAME 1 2 3 4 5 6 (PRODUCT LEVEL)	SEE PAGE
	163-3534	1	FRAME AS-UNDERCARRIAGE	
Y	*148-4671*	1	GEAR & BEARING GP-SWING	169
Y	*087-5908*	1	GUARD GP-TRACK GUIDE	189
Y	*163-3754*	1	GUARD GP-TRAVEL MOTOR	192
Y	*145-3025*	1	IDLER GP-FRONT	195
Y	*7Y-1608*	1	ROLLER AR-TRACK & CARRIER	201
Y	*194-1912*	2	TRACK GP	210

Y-SEPARATE ILLUSTRATION

<END>

167-7267 FRAME AR-UNDERCARRIAGE

S/N: RAW1-UP

PART OF 193-6840 GENERAL AR

SMCS-4151 **i01402942**

NOTE	PART NUMBER	QTY	PART NAME 1 2 3 4 5 6 (PRODUCT LEVEL)	SEE PAGE
	176-2135	1	FRAME AS-UNDERCARRIAGE	
Y	*148-4671*	1	GEAR & BEARING GP-SWING	169
Y	*087-5908*	1	GUARD GP-TRACK GUIDE	189
Y	*163-3754*	1	GUARD GP-TRAVEL MOTOR	192
Y	*145-3025*	1	IDLER GP-FRONT	195
Y	*7Y-1607*	1	ROLLER AR-TRACK & CARRIER	200
Y	*194-1920*	2	TRACK GP	213

Y-SEPARATE ILLUSTRATION

<END>

UNDERCARRIAGE

087-5908 GUARD GP-TRACK GUIDE

S/N: SBN1-UP; RAW1-UP

PART OF 163-7721, 167-7267 FRAME AR-UNDERCARRIAGE

SMCS-4177 **i01889070**

NOTE	REF NO	GRAPHIC REF	PART NUMBER	QTY	PART NAME 1 2 3 4 5 6 (PRODUCT LEVEL)	SEE PAGE
	1	1	**219-8467**	1	GUARD AS-TRACK GUIDE	
M	2	1	**8T-5460**	4	BOLT (M20X2.5X40MM)	
	3	1	**8T-4123**	4	WASHER-PLATED (22X35X3.5MM THK)	

M-METRIC PART

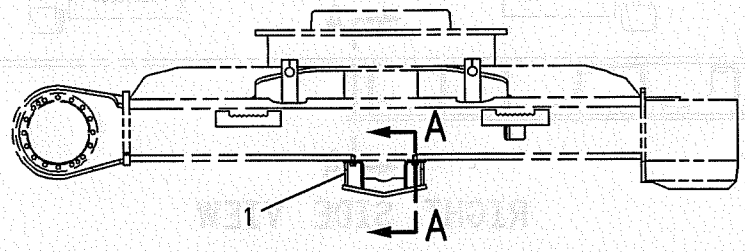

RIGHT SIDE VIEW

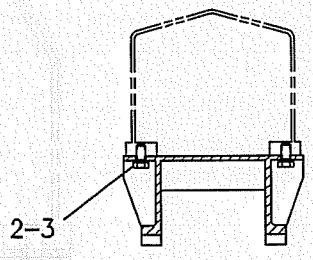

SECTION A-A

GRAPHIC #1 **<END>** g00257014

UNDERCARRIAGE

120-7167 GUARD GP-TRACK GUIDE

S/N: SBN1-UP
SPROCKET
AN ATTACHMENT

SMCS-4177 **i01892247**

NOTE	REF NO	GRAPHIC REF	PART NUMBER	QTY	PART NAME 1 2 3 4 5 6 (PRODUCT LEVEL)	SEE PAGE
	1	1	**219-8469**	2	GUARD AS-TRACK GUIDE	
M	2	1	**8T-5460**	16	BOLT (M20X2.5X40MM)	
	3	1	**8T-4123**	16	WASHER-PLATED (22X35X3.5MM THK)	

QUANTITIES SHOWN ARE THOSE REQUIRED FOR BOTH LH AND RH SIDES
M-METRIC PART

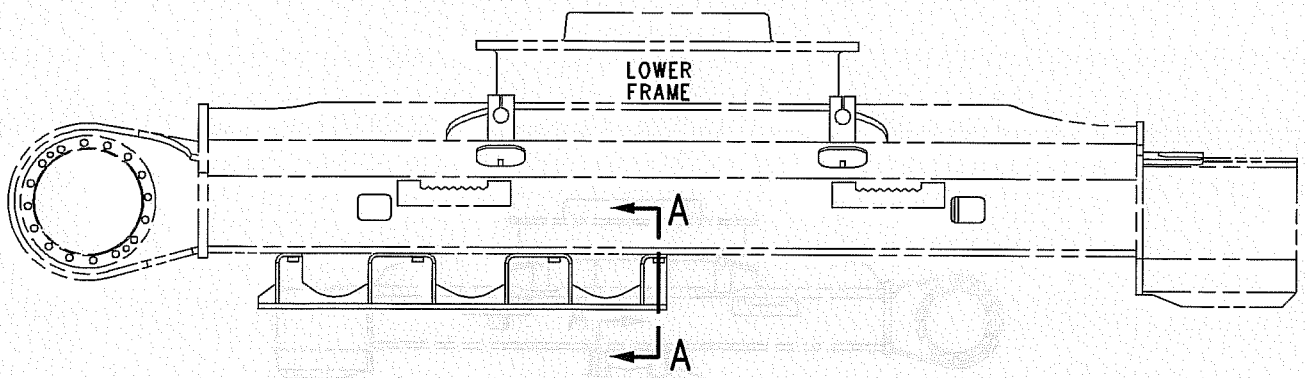

RIGHT SIDE VIEW

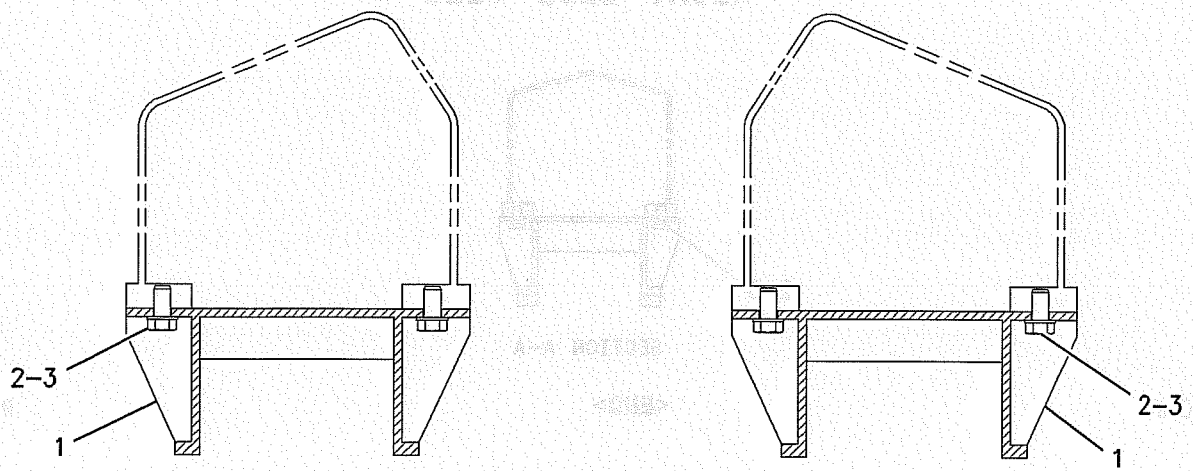

SECTION A-A

GRAPHIC #1 **<END>** g00492462

120-7168 GUARD GP-TRACK GUIDE

S/N: SBN1-UP
FULL LENGTH
AN ATTACHMENT

SMCS-4177 **i01890078**

NOTE	REF NO	GRAPHIC REF	PART NUMBER	QTY	PART NAME 1 2 3 4 5 6 (PRODUCT LEVEL)	SEE PAGE
	1	1	**219-8469**	4	GUARD AS-TRACK GUIDE	
M	2	1	**8T-5460**	32	BOLT (M20X2.5X40MM)	
	3	1	**8T-4123**	32	WASHER-PLATED (22X35X3.5MM THK)	

QUANTITIES SHOWN ARE THOSE REQUIRED FOR BOTH LH AND RH SIDES
M-METRIC PART

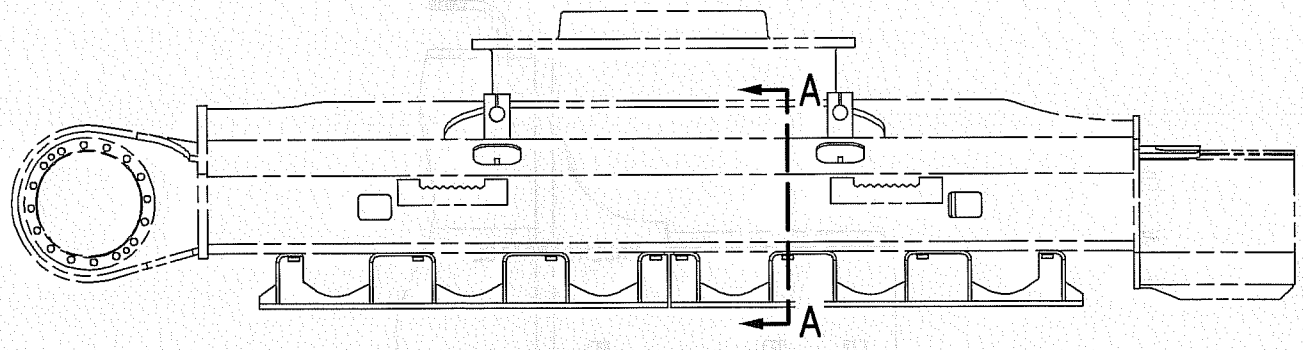

RIGHT SIDE VIEW

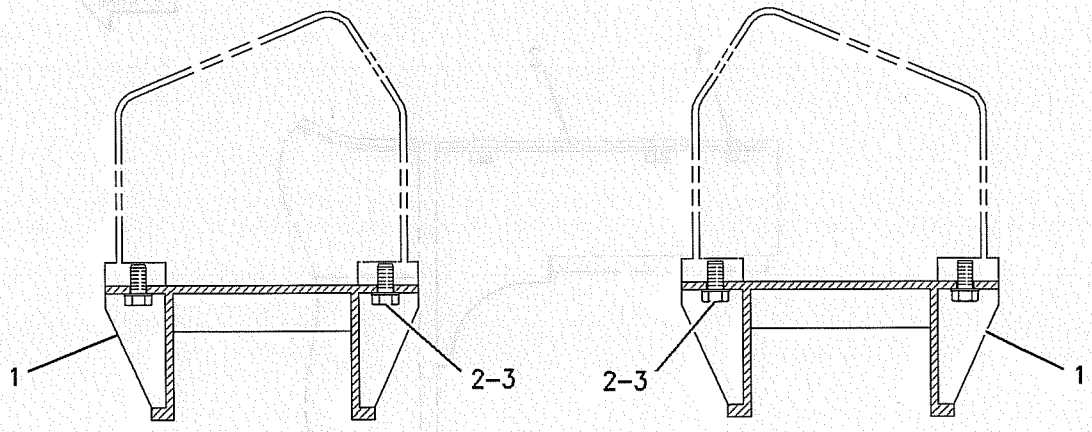

SECTION A-A

GRAPHIC #1 **<END>** g00736329

UNDERCARRIAGE

163-3754 GUARD GP-TRAVEL MOTOR

S/N: SBN1-UP; RAW1-UP

PART OF 163-7721, 167-7267 FRAME AR-UNDERCARRIAGE

SMCS-7163 **i01389079**

NOTE	REF NO	GRAPHIC REF	PART NUMBER	QTY	PART NAME 1 2 3 4 5 6 (PRODUCT LEVEL)	SEE PAGE
	1	1	**135-8576**	8	BOLT AS (M12)	
					(EACH INCLUDES)	
		1	**5P-1076**	1	WASHER-HARD (13.5X30X4MM THK)	
M		1	**8C-8992**	1	BOLT-LOCKING (M12X1.75X30MM)	
	2	1	**163-3755**	2	COVER	

M-METRIC PART

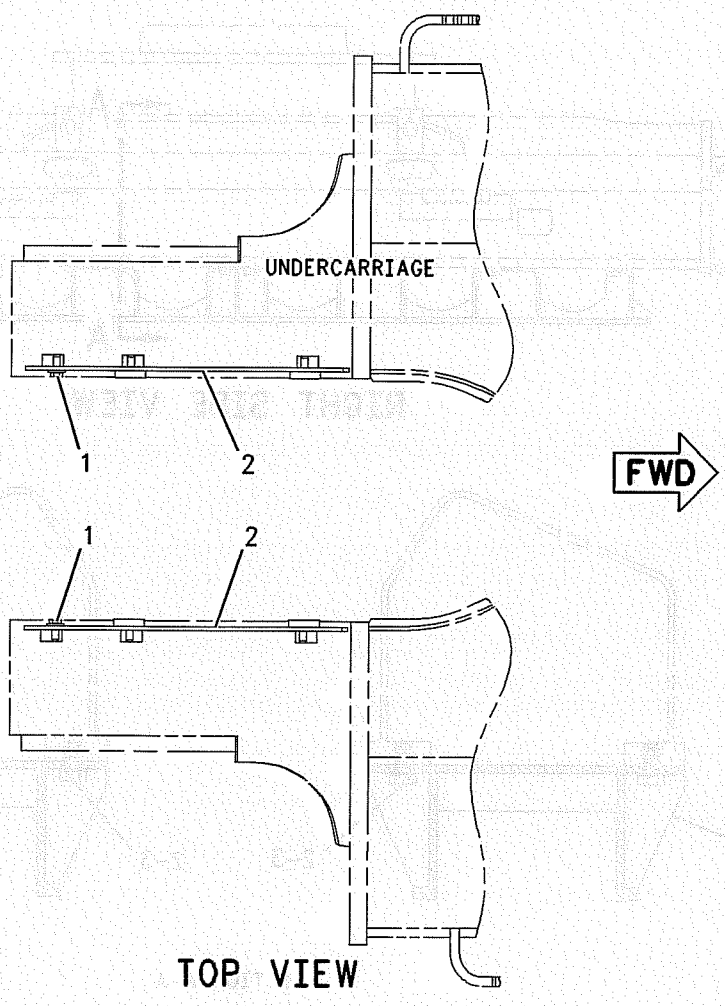

GRAPHIC #1

<END>

g00678898

166-1478 GUARD GP-TRAVEL MOTOR

S/N: SBN1-UP; RAW1-UP
PART OF 204-3760 GUARD AR-BOTTOM
AN ATTACHMENT

SMCS-7163 **i01404298**

NOTE	REF NO	GRAPHIC REF	PART NUMBER	QTY	PART NAME 1 2 3 4 5 6 (PRODUCT LEVEL)	SEE PAGE
	1	1	*135-8576*	8	BOLT AS (M12)	
					(EACH INCLUDES)	
		1	**5P-1076**	1	WASHER-HARD (13.5X30X4MM THK)	
M		1	**8C-8992**	1	BOLT-LOCKING (M12X1.75X30MM)	
	2	1	**166-1479**	1	COVER AS	
	3	1	**166-1512**	1	COVER AS	

M-METRIC PART

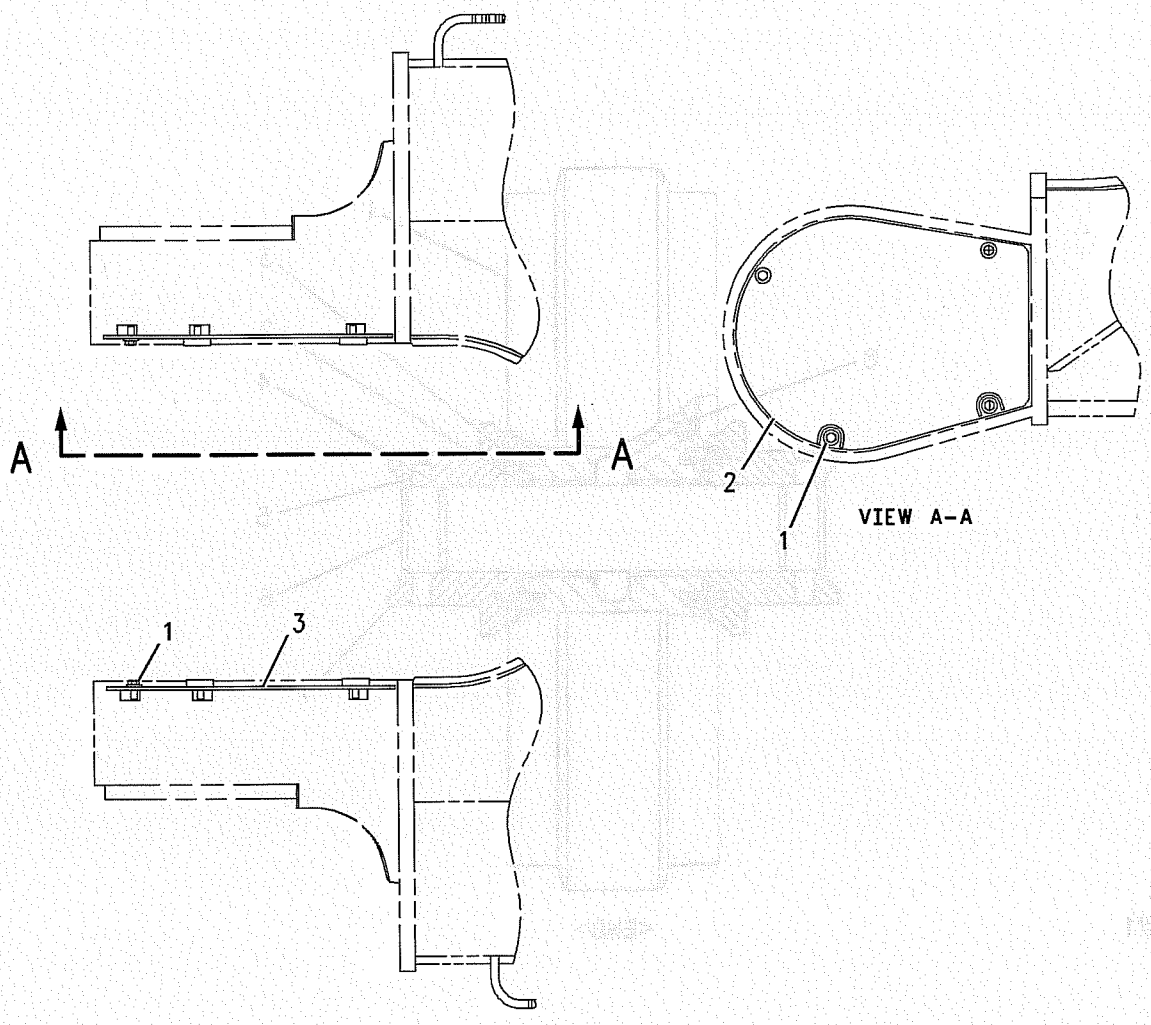

GRAPHIC #1 **<END>** g00691665

UNDERCARRIAGE

113-2907 IDLER GP-FRONT

S/N: SBN1-UP; RAW1-UP

PART OF 145-3026, 145-3038 IDLER GP-FRONT

SMCS-4159 **i00827895**

NOTE	REF NO	GRAPHIC REF	PART NUMBER	QTY	PART NAME 1 2 3 4 5 6 (PRODUCT LEVEL)	SEE PAGE
	1	1	**115-4926**	1	IDLER & BEARING AS	
	2	1	**8E-4359**	2	BEARING	
R	3	1	**9W-7225**	2	SEAL GP-DUO-CONE	
	4	1	**6V-7658**	2	SEAL-O-RING (59.4MM ID)	
	5	1	**9W-9455**	2	PIN	
	6	1	**9W-9451**	1	SHAFT-TRACK IDLER	
	7	1	**115-3701**	2	BEARING-FRONT IDLER	
	8	1	**7H-3171**	1	PLUG-PIPE (1/4-18 NPTF)	

R-REMFG PART MAY BE AVAILABLE

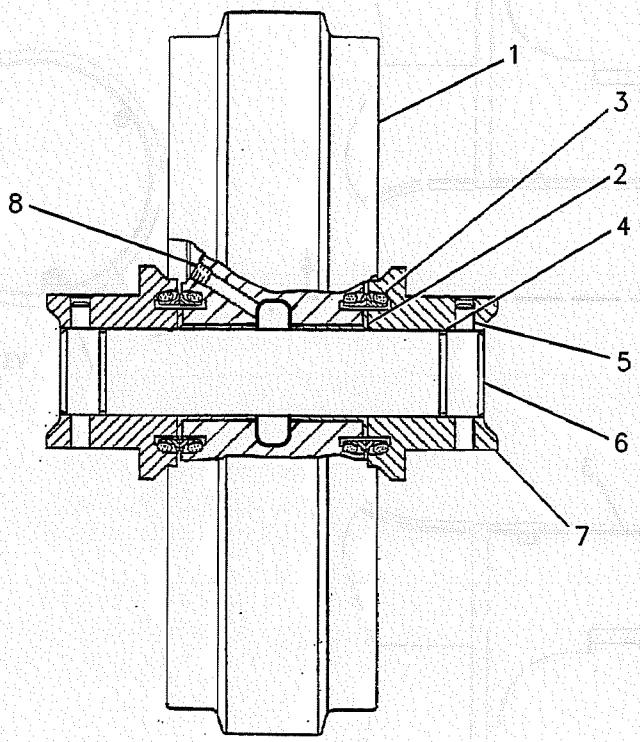

GRAPHIC #1

<END>

g00248149

145-3025 IDLER GP-FRONT

S/N: SBN1-UP; RAW1-UP

PART OF 163-7721, 167-7267 FRAME AR-UNDERCARRIAGE

SMCS-4159 **i01389068**

NOTE	REF NO	GRAPHIC REF	PART NUMBER	QTY	PART NAME 1 2 3 4 5 6 (PRODUCT LEVEL)	SEE PAGE
Y	1	1	*145-3026*	1	IDLER GP-FRONT (RH)	196
Y	2	1	*145-3038*	1	IDLER GP-FRONT (LH)	197

Y-SEPARATE ILLUSTRATION

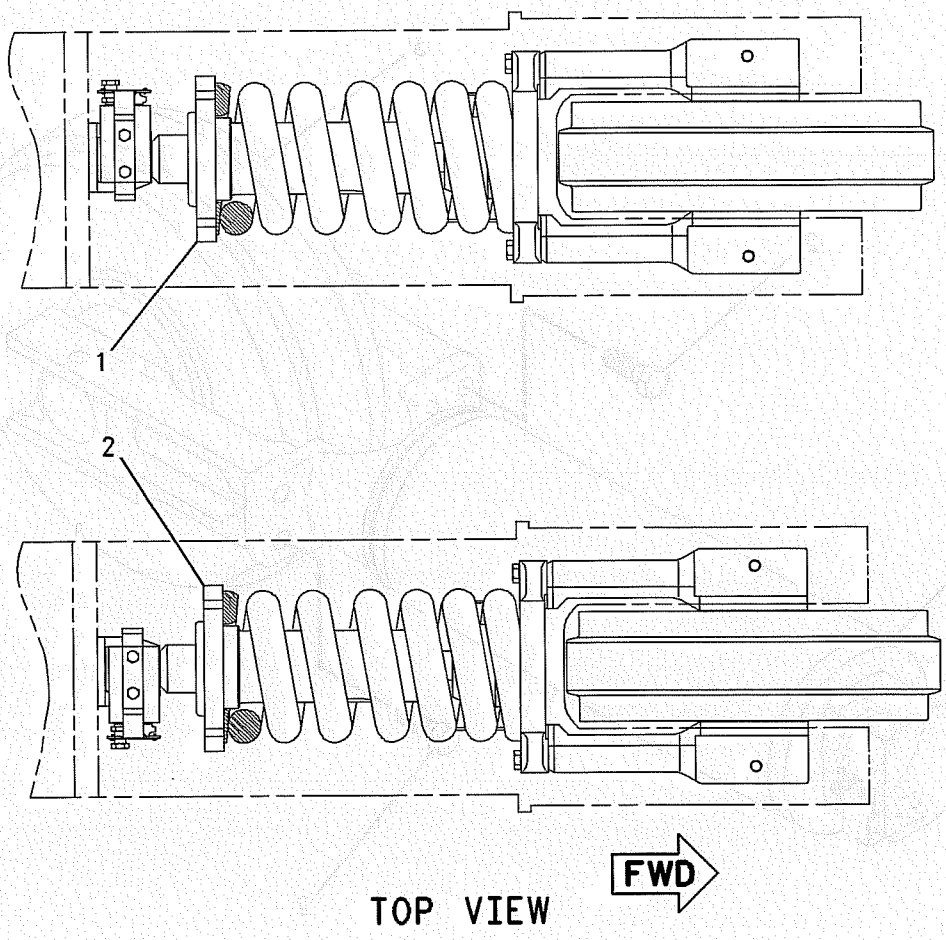

TOP VIEW

GRAPHIC #1 **<END>** g00668350

UNDERCARRIAGE

145-3026 IDLER GP-FRONT

S/N: SBN1-UP; RAW1-UP

PART OF 145-3025 IDLER GP-FRONT

SMCS-4159 **i01389277**

NOTE	REF NO	GRAPHIC REF	PART NUMBER	QTY	PART NAME 1 2 3 4 5 6 (PRODUCT LEVEL)	SEE PAGE
Y	1	1	*145-3027*	1	TRACK ADJUSTER & RECOIL GP (RH)	204
M	2	1	**8T-4140**	4	BOLT (M16X2.0X60MM)	
Y	3	1	**113-2907**	1	IDLER GP-FRONT	194

M-METRIC PART
Y-SEPARATE ILLUSTRATION

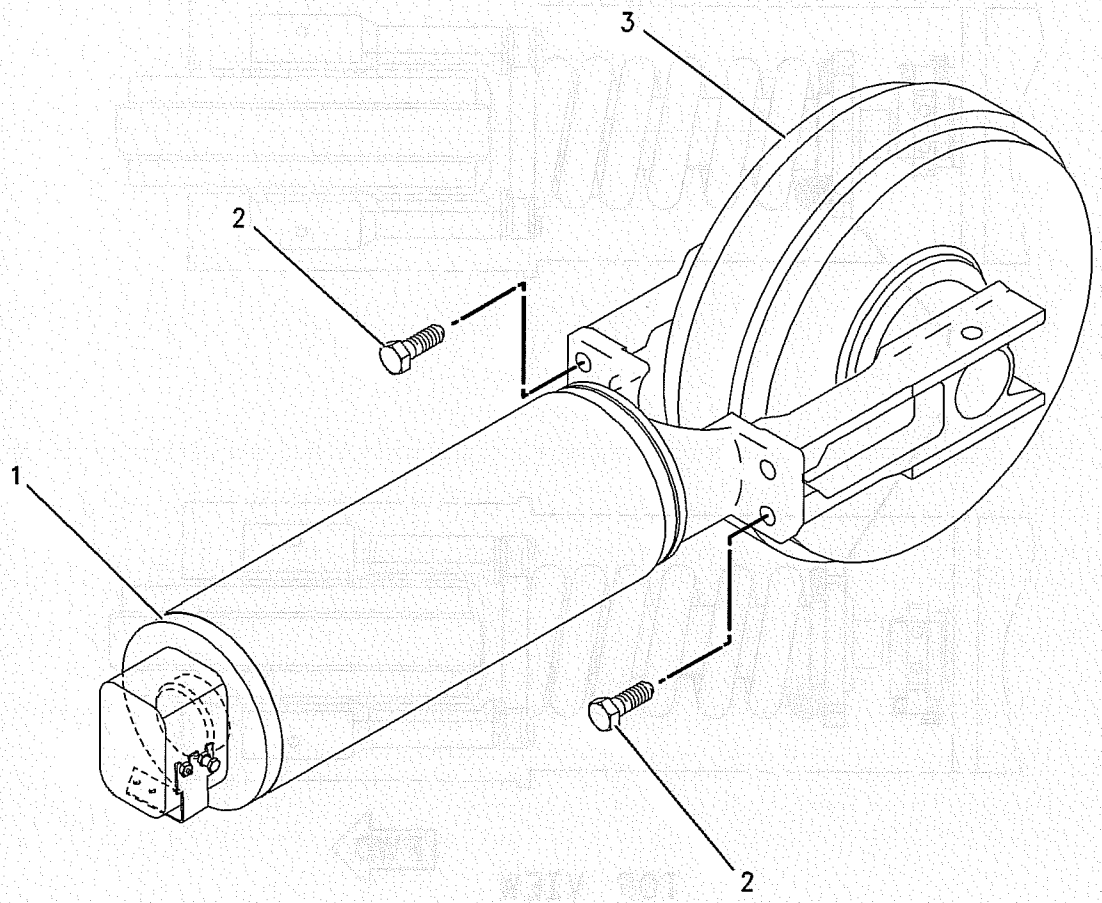

GRAPHIC #1 **<END>** g00668529

UNDERCARRIAGE

145-3038 IDLER GP-FRONT

S/N: SBN1-UP; RAW1-UP

PART OF 145-3025 IDLER GP-FRONT

SMCS-4159 **i01389250**

NOTE	REF NO	GRAPHIC REF	PART NUMBER	QTY	PART NAME 1 2 3 4 5 6 (PRODUCT LEVEL)	SEE PAGE
Y	1	1	*145-3039*	1	TRACK ADJUSTER & RECOIL GP (LH)	207
M	2	1	**8T-4140**	4	BOLT (M16X2.0X60MM)	
Y	3	1	**113-2907**	1	IDLER GP-FRONT	194

M-METRIC PART
Y-SEPARATE ILLUSTRATION

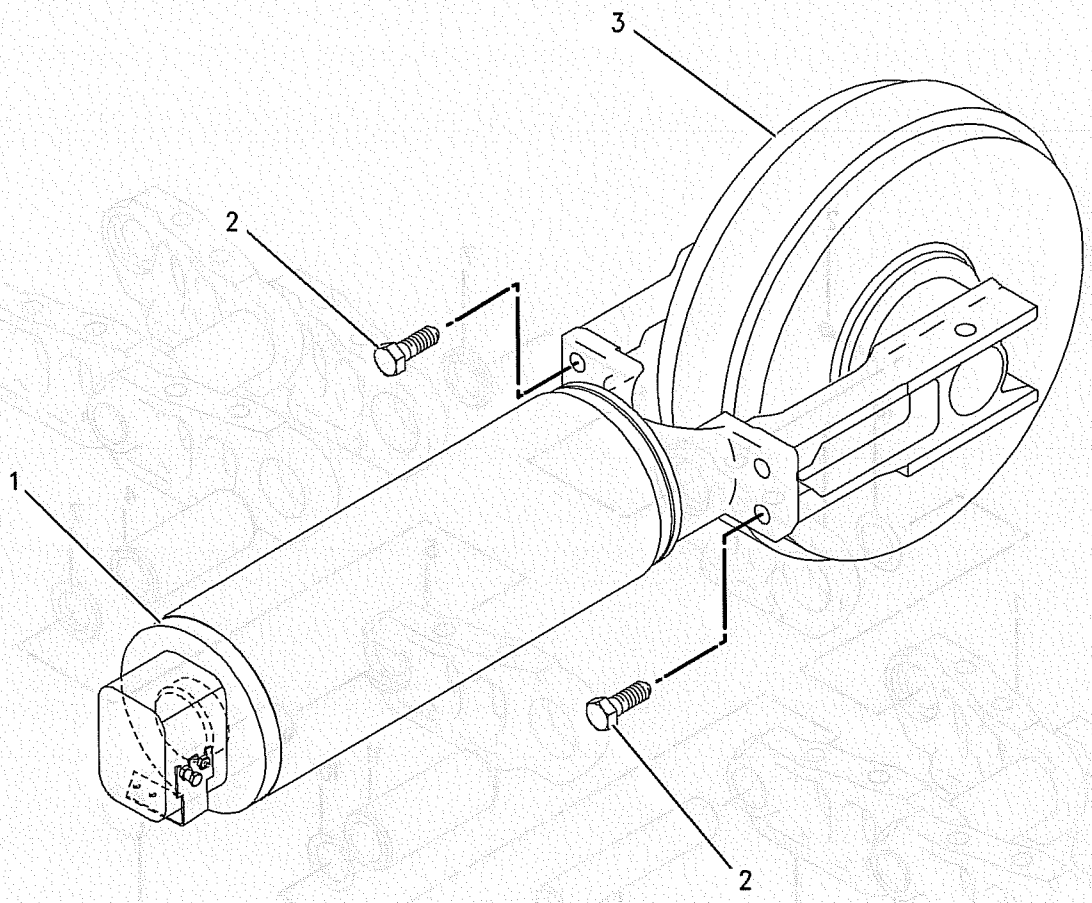

GRAPHIC #1 **<END>** g00675279

UNDERCARRIAGE

194-1608 LINK AS-TRACK

S/N: SBN1-UP

PART OF 194-1910, 194-1911, 194-1912, 194-1914 TRACK GP

ALSO AN ATTACHMENT

SMCS-4169, 4171 **i01399428**

NOTE	REF NO	GRAPHIC REF	PART NUMBER	QTY	PART NAME 1 2 3 4 5 6 (PRODUCT LEVEL)	SEE PAGE
	1	1	**9W-3138**	48	LINK-TRACK-LH	
	2	1	**095-0863**	1	COTTER	
	3	1	**8E-8586**	1	LINK-MASTER-LH	
	4	1	**190-3524**	1	BUSHING-MASTER	
	5	1	**8E-8585**	1	LINK-MASTER-RH	
	6	1	**188-3064**	1	PIN-TRACK MASTER	
	7	1	**158-4381**	2	SEAL-TRACK MASTER	
	8	1	**9W-3137**	48	LINK-TRACK-RH	
	9	1	**6Y-8186**	48	PIN-TRACK	
	10	1	**158-4380**	96	SEAL-TRACK	
	11	1	**190-3523**	48	BUSHING-TRACK	

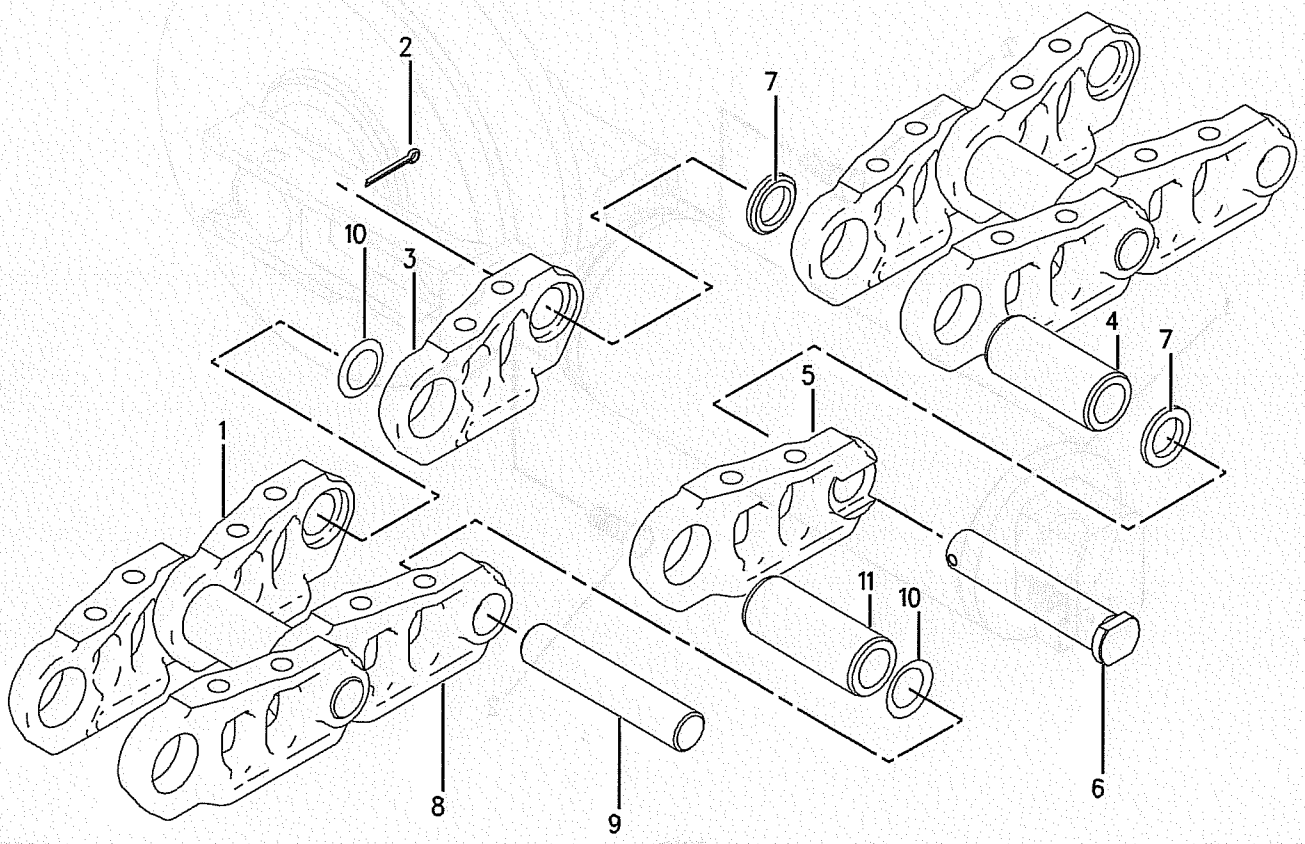

GRAPHIC #1 **<END>** g00739993

UNDERCARRIAGE

194-1609 LINK AS-TRACK

S/N: RAW1-UP

PART OF 194-1917, 194-1920, 194-1921 TRACK GP

ALSO AN ATTACHMENT

SMCS-4169, 4171 **i01389283**

NOTE	REF NO	GRAPHIC REF	PART NUMBER	QTY	PART NAME 1 2 3 4 5 6 (PRODUCT LEVEL)	SEE PAGE
	1	1	**9W-3138**	44	LINK-TRACK-LH	
	2	1	**095-0863**	1	COTTER	
	3	1	**8E-8586**	1	LINK-MASTER-LH	
		1	**9W-3138**	1	LINK-TRACK-LH	
	4	1	**190-3524**	1	BUSHING-MASTER	
	5	1	**8E-8585**	1	LINK-MASTER-RH	
		1	**9W-3137**	1	LINK-TRACK-RH	
	6	1	**188-3064**	1	PIN-TRACK MASTER	
	7	1	**9W-3137**	44	LINK-TRACK-RH	
	8	1	**6Y-8186**	44	PIN-TRACK	
	10	1	**158-4380**	88	SEAL-TRACK	
	11	1	**190-3523**	44	BUSHING-TRACK	
	12	1	**158-4381**	2	SEAL-TRACK MASTER	

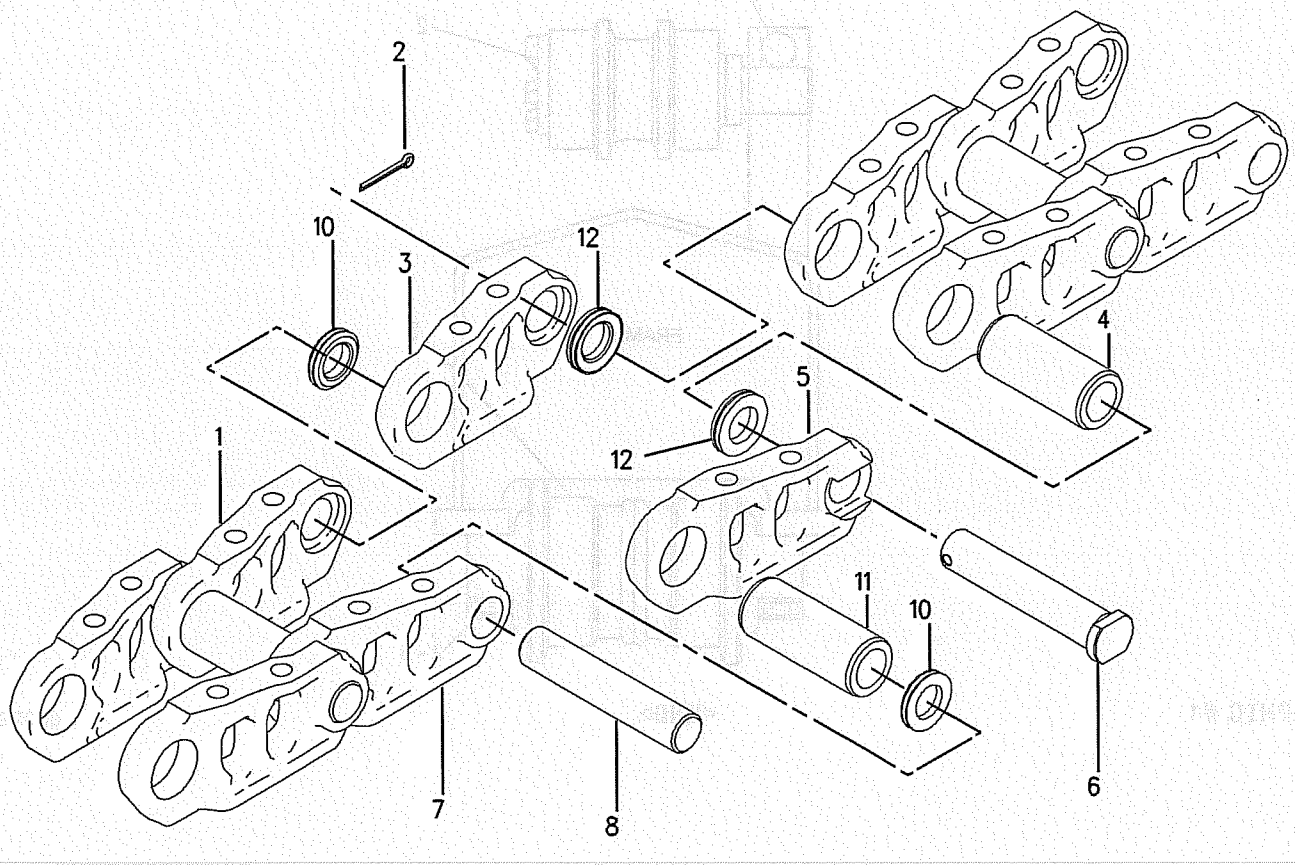

GRAPHIC #1 **<END>** g00668766

UNDERCARRIAGE

7Y-1607 ROLLER AR-TRACK & CARRIER

S/N: RAW1-UP

PART OF 167-7267 FRAME AR-UNDERCARRIAGE

SMCS-4154, 4180 **i01334542**

NOTE	REF NO	GRAPHIC REF	PART NUMBER	QTY	PART NAME 1 2 3 4 5 6 (PRODUCT LEVEL)	SEE PAGE
M	1	1	**8T-5878**	4	BOLT (M24X3X80MM)	
Y	2	1	**8E-5600**	4	ROLLER GP-TRACK CARRIER	202
Y	3	1	**163-4143**	14	ROLLER GP-TRACK-SINGLE FLANGE	203
M	4	1	**7X-2565**	56	BOLT (M20X2.5X100MM)	
	5	1	**8T-4123**	56	WASHER-PLATED (3.5MM THK)	

M-METRIC PART
Y-SEPARATE ILLUSTRATION

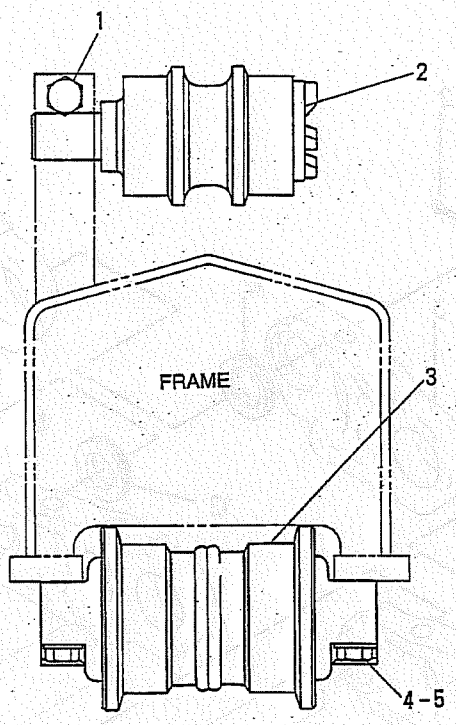

GRAPHIC #1

<END>

g00225056

UNDERCARRIAGE

7Y-1608 ROLLER AR-TRACK & CARRIER

S/N: SBN1-UP

PART OF 163-7721 FRAME AR-UNDERCARRIAGE

SMCS-4154, 4180 **i01040121**

NOTE	REF NO	GRAPHIC REF	PART NUMBER	QTY	PART NAME 1 2 3 4 5 6 (PRODUCT LEVEL)	SEE PAGE
M	1	1	**8T-5878**	4	BOLT (M24X3X80MM)	
Y	2	1	**8E-5600**	4	ROLLER GP-TRACK CARRIER	202
Y	3	1	**163-4143**	16	ROLLER GP-TRACK-SINGLE FLANGE	203
M	4	1	**7X-2565**	64	BOLT (M20X2.5X100MM)	
	5	1	**8T-4123**	64	WASHER-PLATED (3.5MM THK)	

M-METRIC PART
Y-SEPARATE ILLUSTRATION

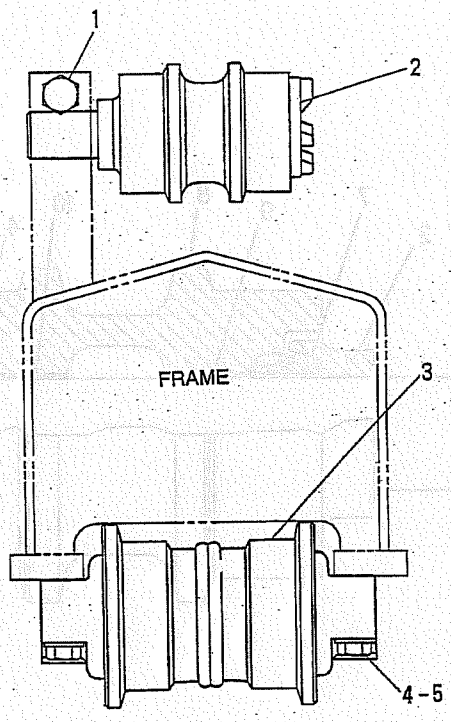

GRAPHIC #1

<END>

g00225056

UNDERCARRIAGE

8E-5600 ROLLER GP-TRACK CARRIER

S/N: SBN1-UP; RAW1-UP

PART OF 7Y-1607, 7Y-1608 ROLLER AR-TRACK & CARRIER

SMCS-4154 **i00827931**

NOTE	REF NO	GRAPHIC REF	PART NUMBER	QTY	PART NAME 1 2 3 4 5 6 (PRODUCT LEVEL)	SEE PAGE
	1	1	**8E-5601**	1	SHAFT AS-TRACK ROLLER	
	2	1	**8E-5604**	1	COLLAR-ROLLER END	
	3	1	**8E-5605**	1	COVER-CARRIER ROLLER	
	4	1	**8E-5606**	1	RETAINER	
	5	1	**6V-7661**	1	SEAL-O-RING	
M	6	1	**8T-1159**	5	BOLT-SOCKET HEAD (M10X1.5X25MM)	
	7	1	**8E-5608**	1	SEAL GP-DUO-CONE	
	8	1	**8E-5602**	1	ROLLER & BEARING AS	
	9	1	**8E-6792**	1	BEARING-TRACK ROLLER	
	10	1	**8E-6793**	1	BEARING-TRACK ROLLER	
	11	1	**7H-3171**	1	PLUG-PIPE (1/4-18 NPTF)	

M-METRIC PART

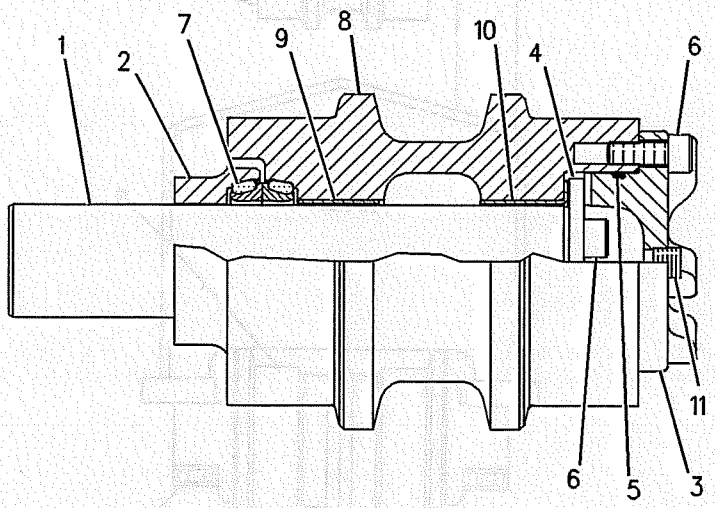

GRAPHIC #1 **<END>** g00239936

UNDERCARRIAGE

163-4143 ROLLER GP-TRACK-SINGLE FLANGE

S/N: SBN1-UP; RAW1-UP

PART OF 7Y-1607, 7Y-1608 ROLLER AR-TRACK & CARRIER

SMCS-4180 **i01040115**

NOTE	REF NO	GRAPHIC REF	PART NUMBER	QTY	PART NAME 1 2 3 4 5 6 (PRODUCT LEVEL)	SEE PAGE
	1	1	**8E-5031**	2	RING-RETAINING	
	2	1	**7F-8268**	2	SEAL-O-RING (53.57MM ID)	
	3	1	**5G-2247**	1	STOPPER-RUBBER	
	4	1	**6Y-0473**	1	PLUG	
	5	1	**8E-5032**	1	ROLLER & BEARING AS	
		1	**8E-5599**	2	BEARING-TRACK ROLLER	
	6	1	**8E-5035**	1	SHAFT-TRACK ROLLER	
	7	1	**8E-5037**	2	COLLAR-TRACK ROLLER	
R	8	1	**9W-7220**	2	SEAL GP-DUO-CONE	
	9	1	**3E-3217**	1	DOWEL	

R-REMFG PART MAY BE AVAILABLE

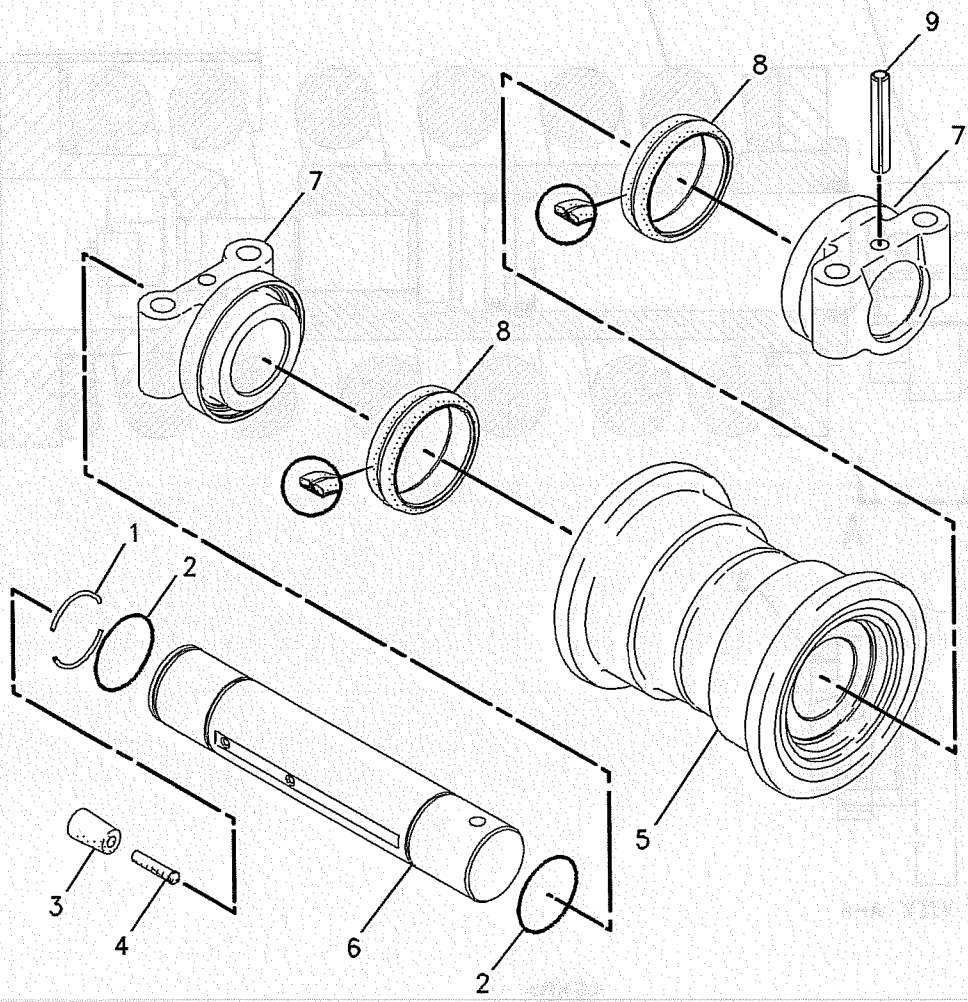

GRAPHIC #1 **<END>** g00534097

145-3027 TRACK ADJUSTER & RECOIL GP

S/N: SBN1-UP; RAW1-UP

PART OF 145-3026 IDLER GP-FRONT

SMCS-4157 **i01389280**

NOTE	REF NO	GRAPHIC REF	PART NUMBER	QTY	PART NAME 1 2 3 4 5 6 (PRODUCT LEVEL)	SEE PAGE
	1	1	**168-6761**	1	PLATE AS	
	1A	1	**4B-4158**	4	SCREW-DRIVE (3/16 X 1/4 IN)	
Y	2	1	*145-3028*	1	TRACK ADJUSTER & RECOIL GP	205
M	3	1	**8T-4137**	2	BOLT (M10X1.5X20MM)	
	4	1	**7Y-1746**	1	PLATE	

M-METRIC PART
Y-SEPARATE ILLUSTRATION

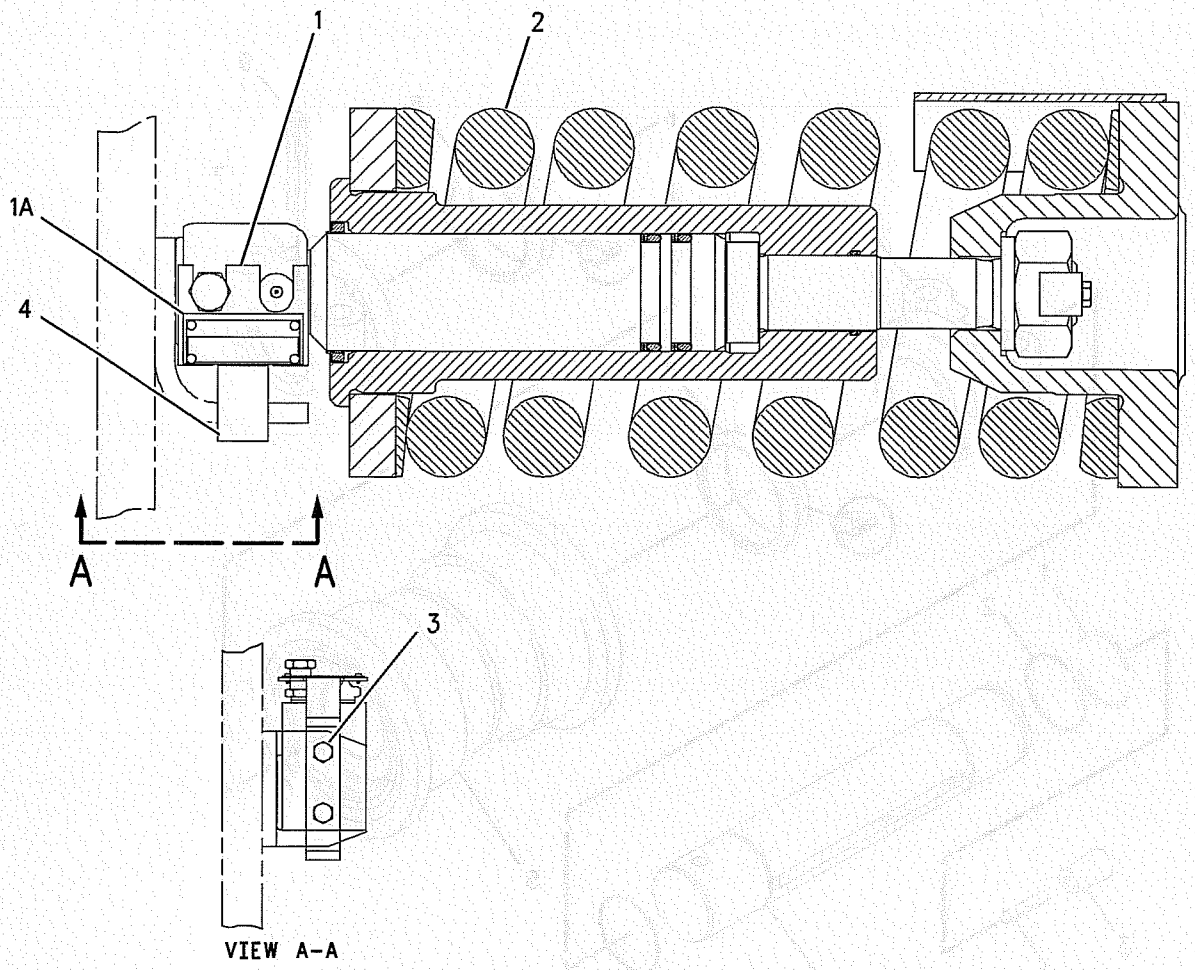

VIEW A-A

GRAPHIC #1 **<END>** g00668753

UNDERCARRIAGE

145-3028 TRACK ADJUSTER & RECOIL GP

S/N: SBN1-UP; RAW1-UP

PART OF 145-3027, 145-3039 TRACK ADJUSTER & RECOIL GP

SMCS-4157 **i01389282**

NOTE	REF NO	GRAPHIC REF	PART NUMBER	QTY	PART NAME 1 2 3 4 5 6 (PRODUCT LEVEL)	SEE PAGE
Y	1	1	*145-3029*	1	TRACK ADJUSTER & RECOIL GP	206
	2	1	**145-3035**	1	PLATE	
	3	1	**145-3036**	1	SPRING	
	4	1	**7Y-1781**	1	COVER	
	5	1	**7I-7733**	1	WASHER	
M	6	1	**3E-8024**	1	NUT-HEX	
	7	1	**122-5253**	1	STRIP	
M	8	1	**7X-2536**	2	BOLT (M8X1.25X14MM)	
	9	1	**145-3037**	1	SUPPORT	
M	10	1	**8T-4179**	2	BOLT (M12X1.75X20MM)	

M-METRIC PART
Y-SEPARATE ILLUSTRATION

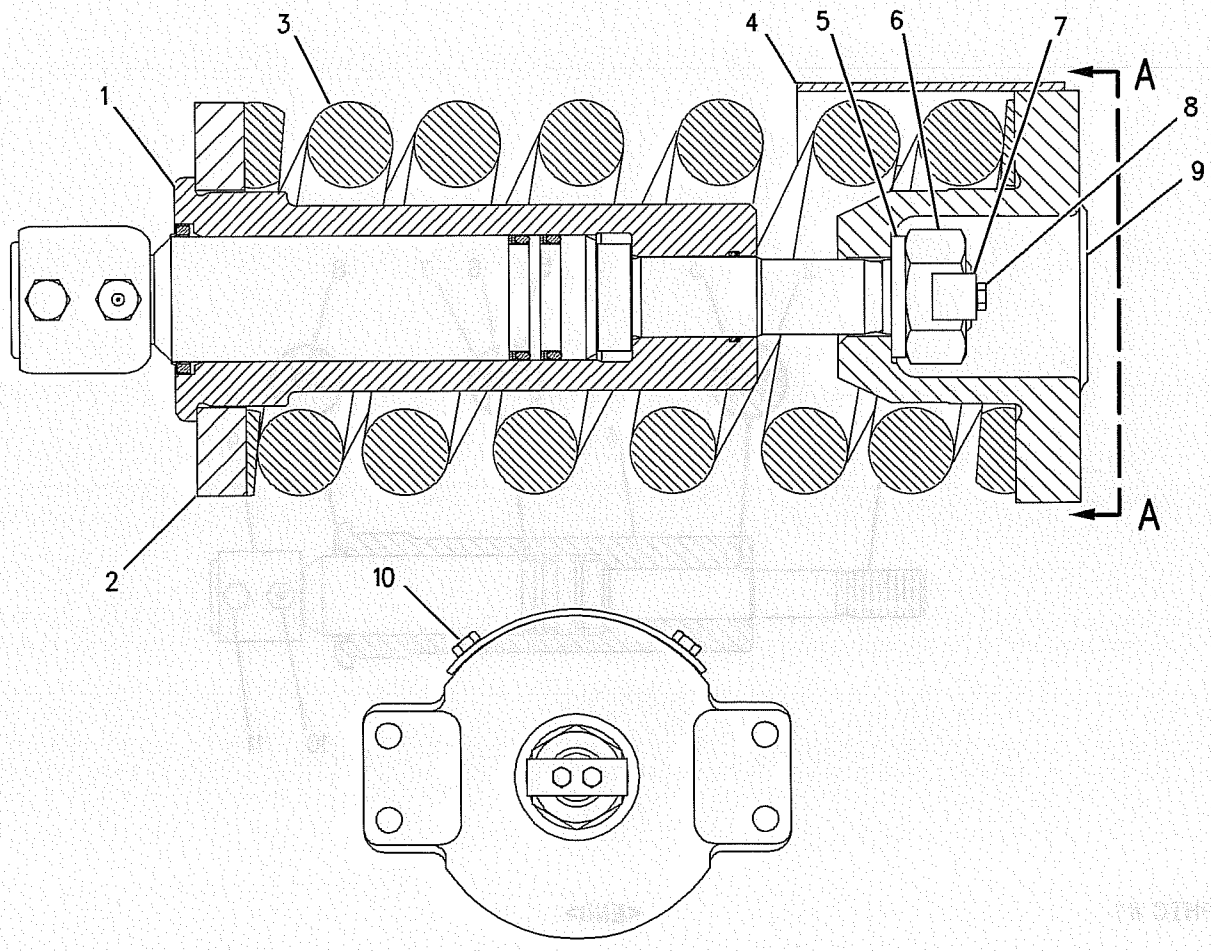

VIEW A-A

GRAPHIC #1 **<END>** g00668768

UNDERCARRIAGE

145-3029 TRACK ADJUSTER & RECOIL GP

S/N: SBN1-UP; RAW1-UP

PART OF 145-3028 TRACK ADJUSTER & RECOIL GP

SMCS-4157 **i01389279**

NOTE	REF NO	GRAPHIC REF	PART NUMBER	QTY	PART NAME 1 2 3 4 5 6 (PRODUCT LEVEL)	SEE PAGE
	1	1	**122-5076**	1	ROD	
	2	1	**7I-7734**	1	RING-BACKUP	
	3	1	**095-1703**	1	SEAL-O-RING	
	4	1	**145-3030**	1	CYLINDER	
	5	1	**095-1619**	2	SEAL-O-RING (59.6MM ID)	
	6	1	**093-1512**	2	RING	
	7	1	**7Y-0682**	2	RING	
	8	1	**093-1436**	1	SEAL-LIP	
	9	1	**145-3031**	1	PISTON AS	
	10	1	**095-2927**	1	VALVE-FILL	
	11	1	**2S-5926**	1	VALVE (RELIEF)	

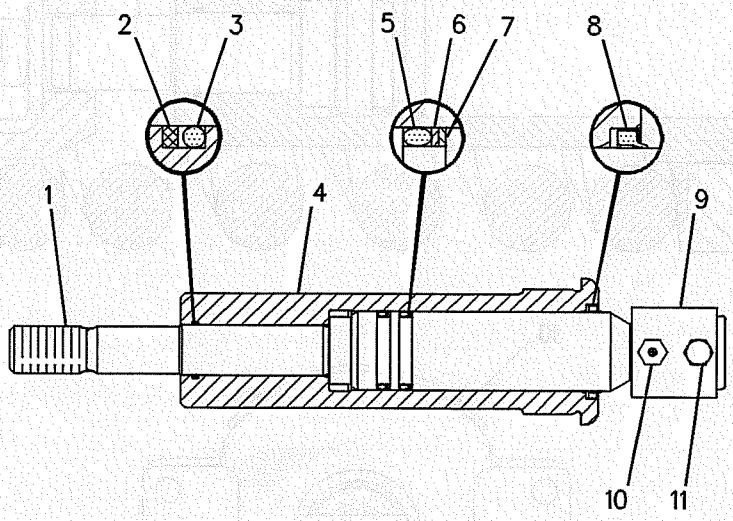

GRAPHIC #1

<END>

g00242697

145-3039 TRACK ADJUSTER & RECOIL GP

S/N: SBN1-UP; RAW1-UP

PART OF 145-3038 IDLER GP-FRONT

SMCS-4157 **i01389241**

NOTE	REF NO	GRAPHIC REF	PART NUMBER	QTY	PART NAME 1 2 3 4 5 6 (PRODUCT LEVEL)	SEE PAGE
Y	1	1	*145-3028*	1	TRACK ADJUSTER & RECOIL GP	205
	2	1	**168-6761**	1	PLATE AS	
		1	**4B-4158**	4	SCREW-DRIVE (3/16 X 1/4 IN)	
		1	**5P-9891**	1	PLATE-WARNING (HIGH PRESSURE CYLINDER)	
M	3	1	**8T-4137**	2	BOLT (M10X1.5X20MM)	
	4	1	**7Y-1746**	1	PLATE	

M-METRIC PART
Y-SEPARATE ILLUSTRATION

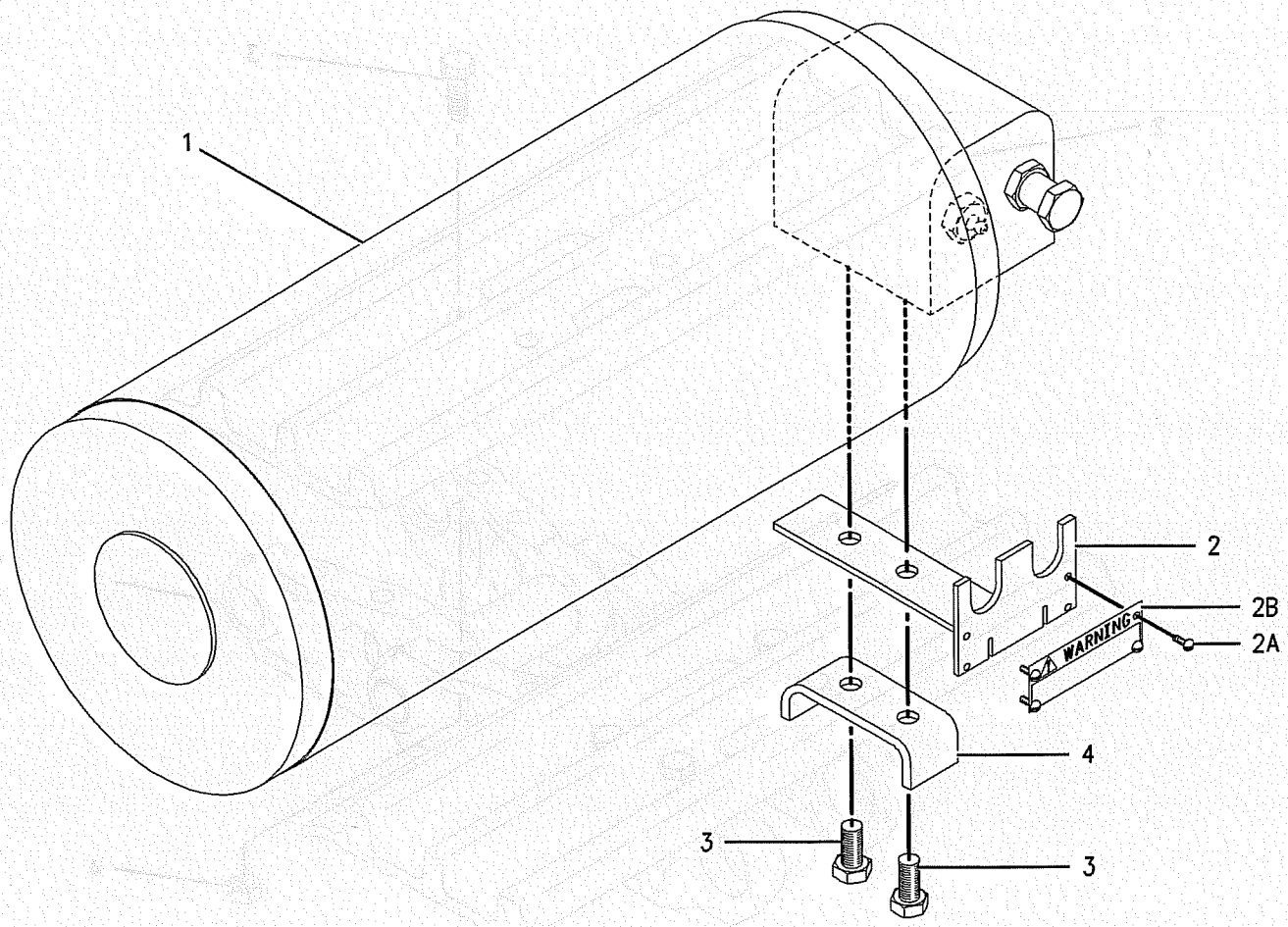

GRAPHIC #1 **<END>** g00668891

UNDERCARRIAGE

194-1910 TRACK GP

S/N: SBN1-UP

600MM (23IN) TRIPLE GROUSER SHOE. GREASED LUBRICATED TRACK AN ATTACHMENT

SMCS-4170 **i01412775**

NOTE	REF NO	GRAPHIC REF	PART NUMBER	QTY	PART NAME 1 2 3 4 5 6 (PRODUCT LEVEL)	SEE PAGE
Y	1	1	**194-1608**	1	LINK AS-TRACK	198
	2	1	**126-5062**	49	SHOE-TRACK	
M	3	1	**9W-3619**	196	BOLT-TRACK (M20X1.5X55MM)	
M	4	1	**9W-3361**	196	NUT-TRACK (M20X1.5 THD)	

M-METRIC PART
Y-SEPARATE ILLUSTRATION

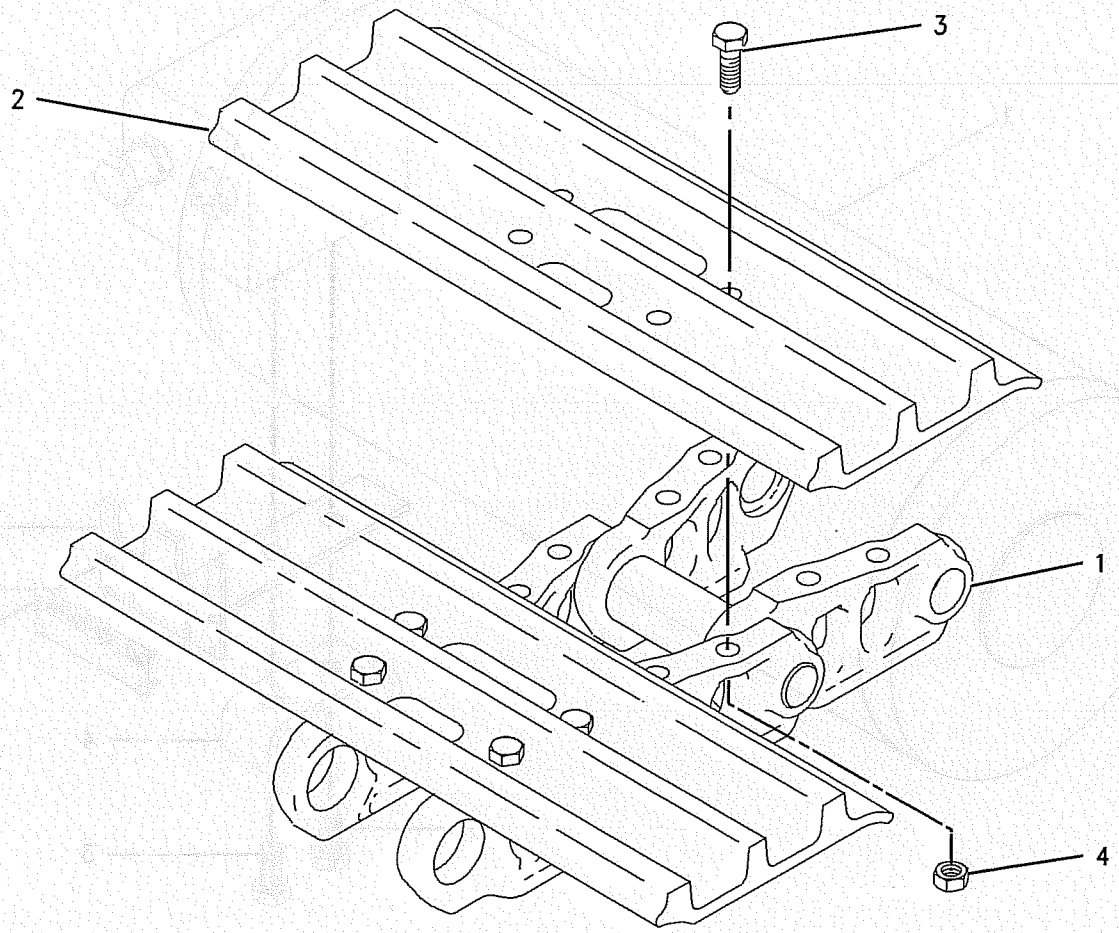

GRAPHIC #1 **<END>** g00731630

UNDERCARRIAGE

194-1911 TRACK GP

S/N: SBN1-UP

700MM (27IN). TRIPLE GROUSER SHOE, GREASED LUBRICATED TRACK AN ATTACHMENT

SMCS-4170 **i01412859**

NOTE	REF NO	GRAPHIC REF	PART NUMBER	QTY	PART NAME 1 2 3 4 5 6 (PRODUCT LEVEL)	SEE PAGE
Y	1	1	**194-1608**	1	LINK AS-TRACK	198
	2	1	**6I-9454**	49	SHOE-TRACK	
M	3	1	**9W-3619**	196	BOLT-TRACK (M20X1.5X55MM)	
M	4	1	**9W-3361**	196	NUT-TRACK (M20X1.5 THD)	

M-METRIC PART
Y-SEPARATE ILLUSTRATION

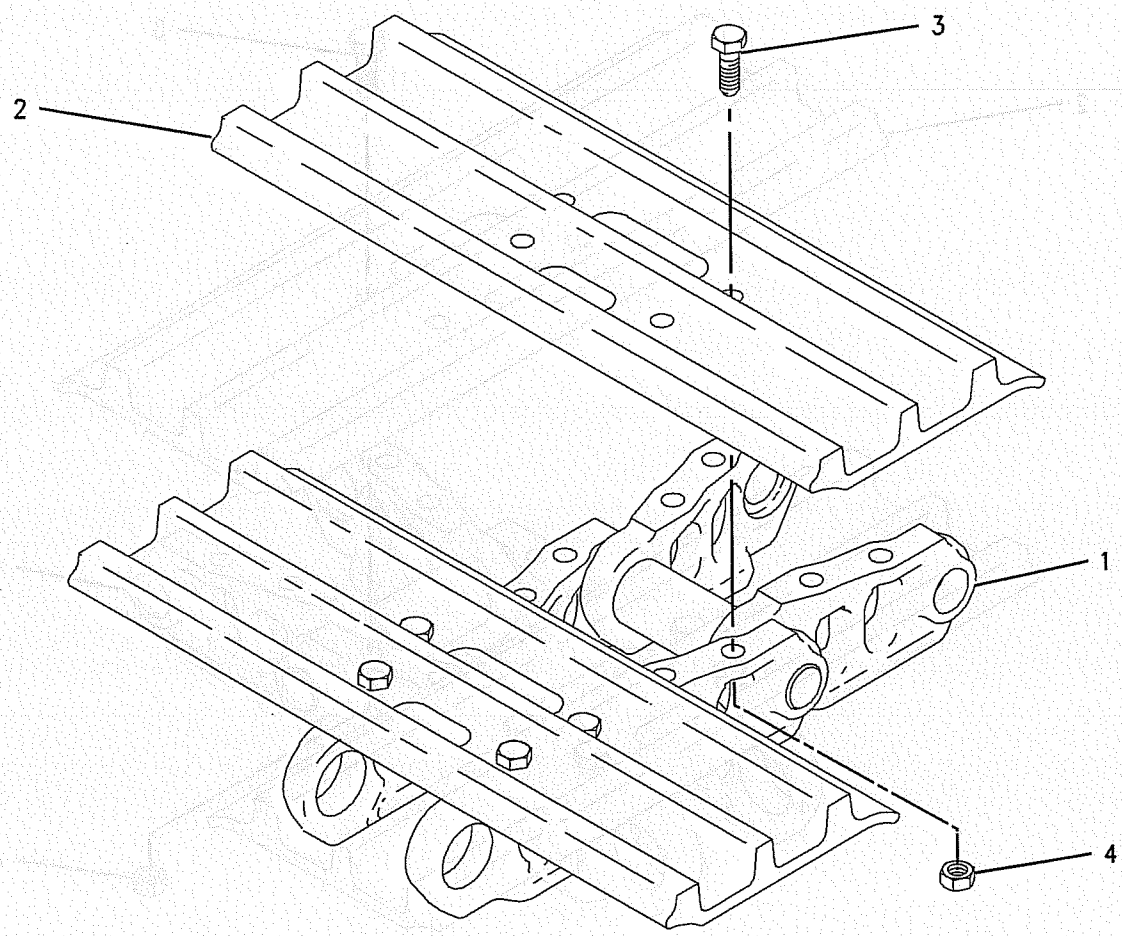

GRAPHIC #1 **<END>** g00731630

UNDERCARRIAGE

194-1912 TRACK GP

S/N: SBN1-UP

800MM (31.4IN) TRIPLE GROUSER SHOE. GREASED LUBRICATED TRACK

PART OF 163-7721 FRAME AR-UNDERCARRIAGE

SMCS-4170 **i01403394**

NOTE	REF NO	GRAPHIC REF	PART NUMBER	QTY	PART NAME 1 2 3 4 5 6 (PRODUCT LEVEL)	SEE PAGE
Y	1	1	**194-1608**	1	LINK AS-TRACK	198
	2	1	**9W-9351**	49	SHOE-TRACK	
M	3	1	**9W-3619**	196	BOLT-TRACK (M20X1.5X55MM)	
M	4	1	**9W-3361**	196	NUT-TRACK (M20X1.5 THD)	

M-METRIC PART
Y-SEPARATE ILLUSTRATION

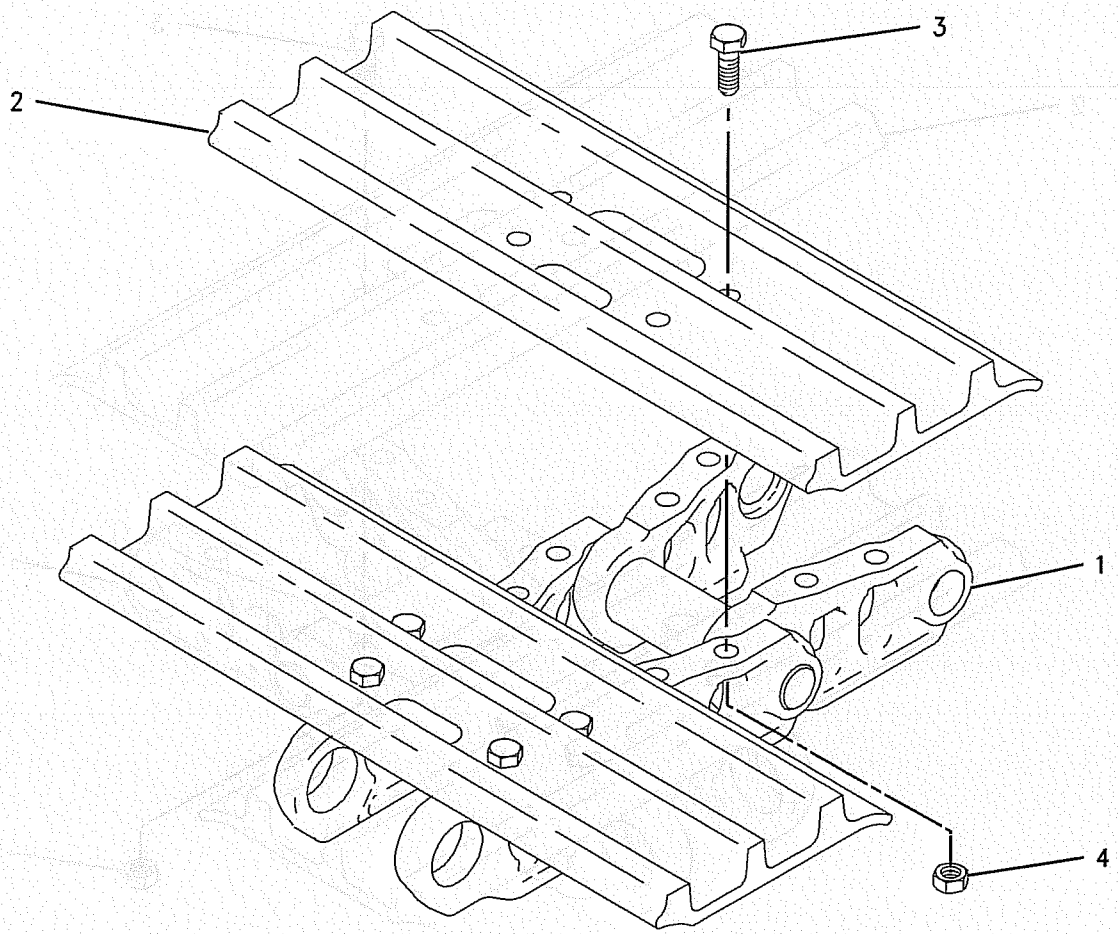

GRAPHIC #1 **<END>** g00731630

UNDERCARRIAGE

194-1914 TRACK GP

S/N: SBN1-UP

600MM (23IN)DOUBLE GROUSER SHOE. GREASED LUBRICATED TRACK AN ATTACHMENT

SMCS-4170 **i01896037**

NOTE	REF NO	GRAPHIC REF	PART NUMBER	QTY	PART NAME 1 2 3 4 5 6 (PRODUCT LEVEL)	SEE PAGE
Y	1	1	**194-1608**	1	LINK AS-TRACK	198
	2	1	**106-0615**	49	SHOE-TRACK	
M	3	1	**6Y-0846**	196	BOLT-TRACK (M20X1.75X63MM)	
M	4	1	**9W-3361**	196	NUT-TRACK (M20X1.5 THD)	

M-METRIC PART
Y-SEPARATE ILLUSTRATION

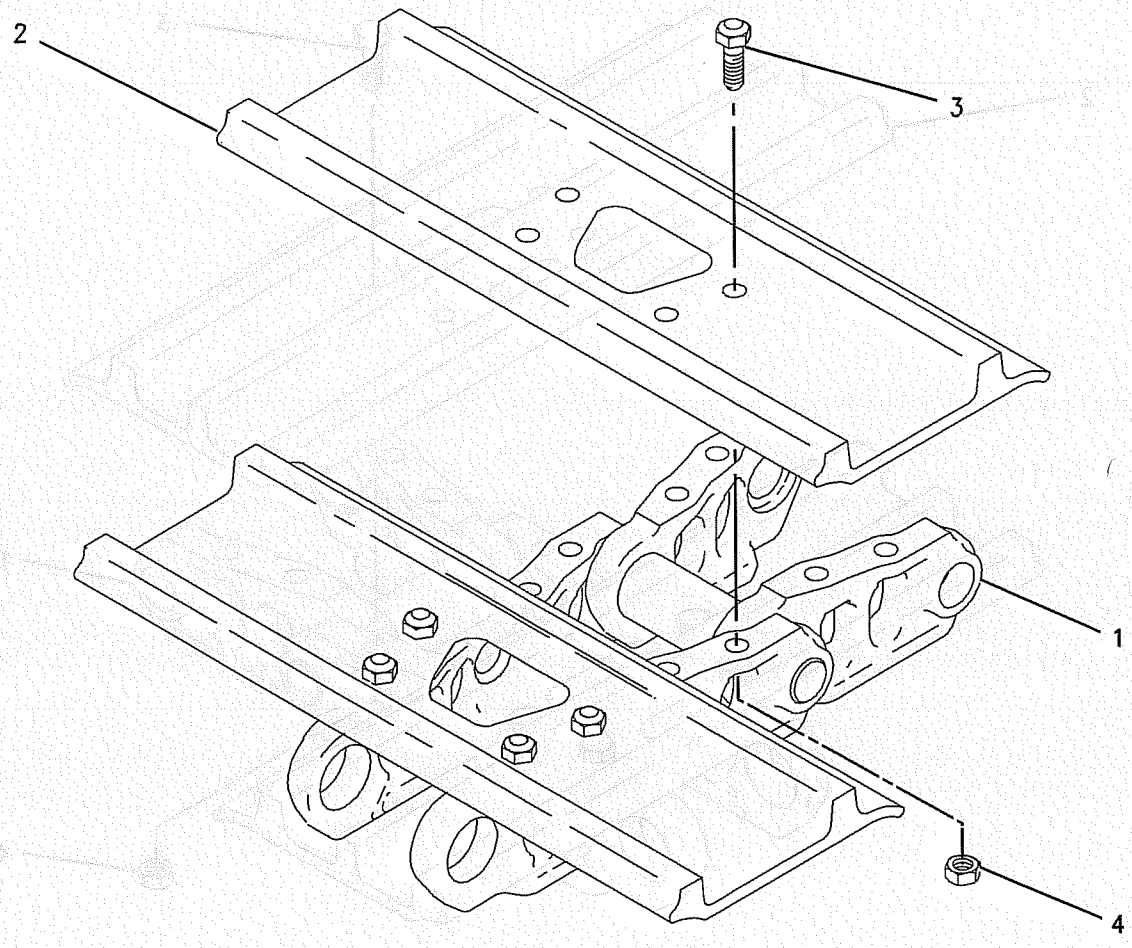

GRAPHIC #1 **<END>** g00941391

UNDERCARRIAGE

194-1917 TRACK GP

S/N: RAW1-UP

700MM (27IN) TRIPLE GROUSER SHOE . GREASED LUBRICATED TRACK AN ATTACHMENT

SMCS-4170 **i01412822**

NOTE	REF NO	GRAPHIC REF	PART NUMBER	QTY	PART NAME 1 2 3 4 5 6 (PRODUCT LEVEL)	SEE PAGE
Y	1	1	**194-1609**	1	LINK AS-TRACK	199
	2	1	**6I-9454**	45	SHOE-TRACK	
M	3	1	**9W-3619**	180	BOLT-TRACK (M20X1.5X55MM)	
M	4	1	**9W-3361**	180	NUT-TRACK (M20X1.5 THD)	

M-METRIC PART
Y-SEPARATE ILLUSTRATION

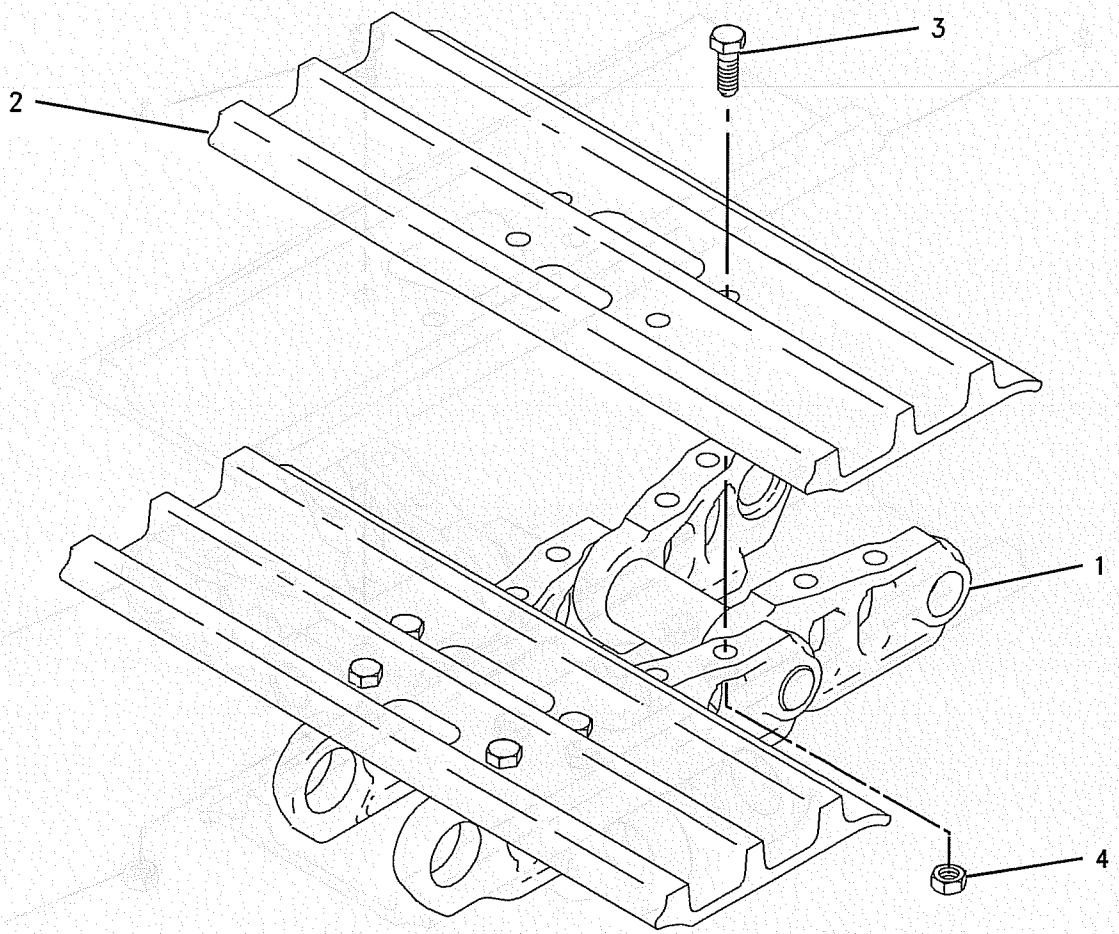

GRAPHIC #1 **<END>** g00731630

UNDERCARRIAGE

194-1920 TRACK GP

S/N: RAW1-UP

600MM (24IN) TRIPLE GROUSER SHOE. GREASE LUBRICATED TRACK

PART OF 167-7267 FRAME AR-UNDERCARRIAGE

SMCS-4170 **i01397313**

NOTE	REF NO	GRAPHIC REF	PART NUMBER	QTY	PART NAME 1 2 3 4 5 6 (PRODUCT LEVEL)	SEE PAGE
Y	1	1	**194-1609**	1	LINK AS-TRACK	199
	2	1	**126-5062**	45	SHOE-TRACK	
M	3	1	**9W-3619**	180	BOLT-TRACK (M20X1.5X55MM)	
M	4	1	**9W-3361**	180	NUT-TRACK (M20X1.5 THD)	

M-METRIC PART
Y-SEPARATE ILLUSTRATION

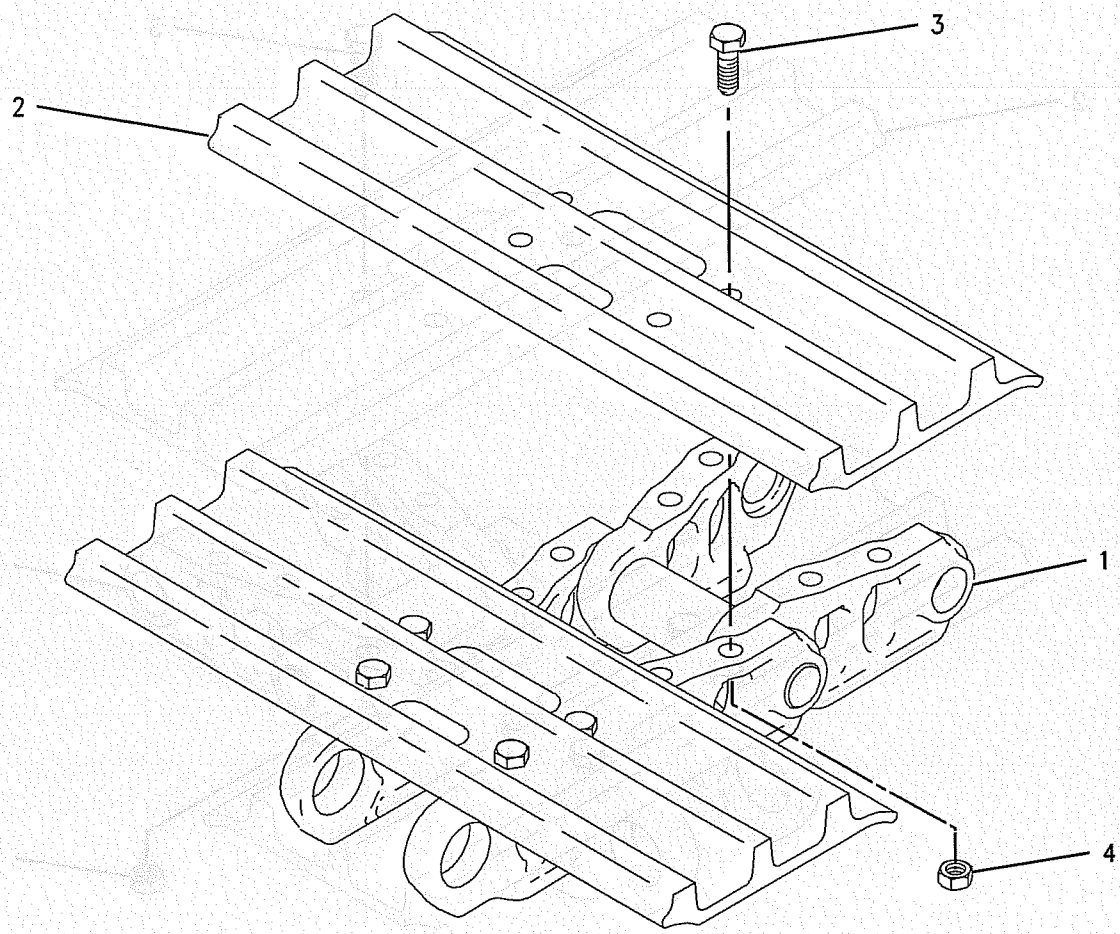

GRAPHIC #1 **<END>** g00731630

UNDERCARRIAGE

194-1921 TRACK GP

S/N: RAW1-UP

800MM (31IN) TRIPLE GROUSE SHOE. GREASED LUBRICATED TRACK

AN ATTACHMENT

SMCS-4170 **i01412860**

NOTE	REF NO	GRAPHIC REF	PART NUMBER	QTY	PART NAME 1 2 3 4 5 6 (PRODUCT LEVEL)	SEE PAGE
Y	1	1	**194-1609**	1	LINK AS-TRACK	199
	2	1	**9W-9351**	45	SHOE-TRACK	
M	3	1	**9W-3619**	180	BOLT-TRACK (M20X1.5X55MM)	
M	4	1	**9W-3361**	180	NUT-TRACK (M20X1.5 THD)	

M-METRIC PART
Y-SEPARATE ILLUSTRATION

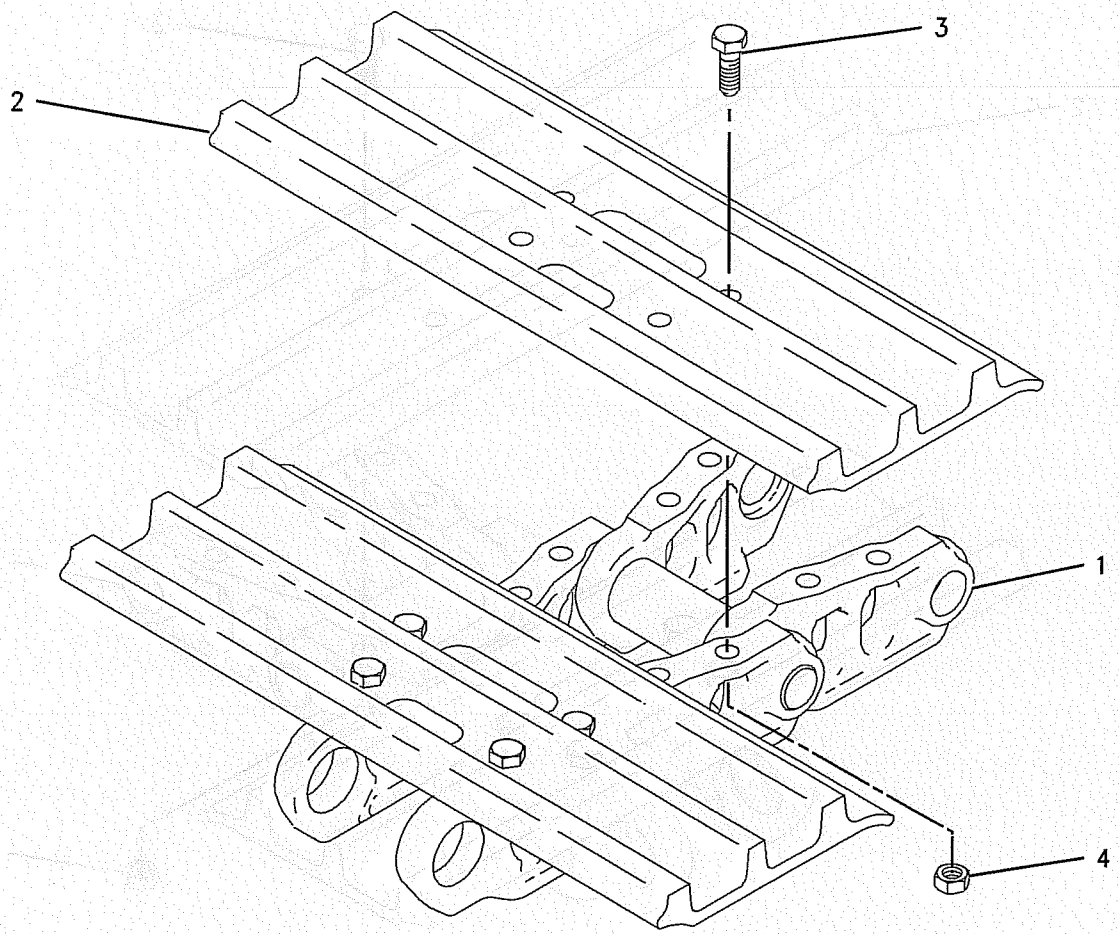

GRAPHIC #1 **<END>** g00731630

HYDRAULIC SYSTEM

199-7447 ACCUMULATOR GP-HYDRAULIC

S/N: SBN1-UP; RAW1-UP

PART OF 199-7293 LINES GP-PILOT

SMCS-5077 **i01889586**

NOTE	REF NO	GRAPHIC REF	PART NUMBER	QTY	PART NAME 1 2 3 4 5 6 (PRODUCT LEVEL)	SEE PAGE
	1	1	**4I-5862**	1	CAP	
	2	1	**4I-1539**	1	CORE	

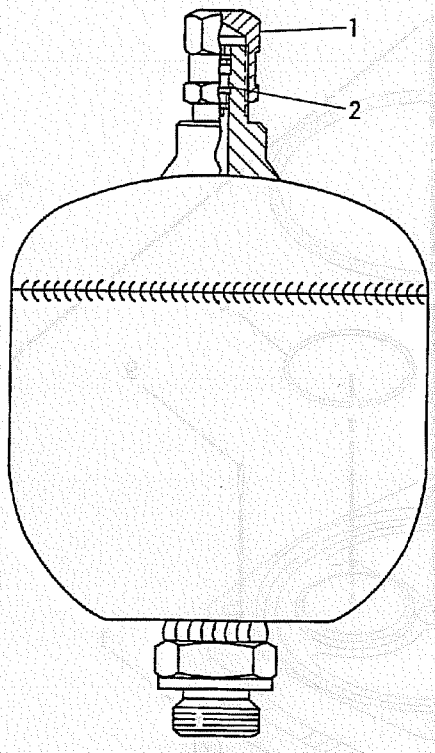

GRAPHIC #1 **<END>** g00222004

HYDRAULIC SYSTEM

173-3503 BASE GP-OIL FILTER

S/N: SBN1-UP; RAW1-UP

PART OF 158-9005 FILTER GP-OIL

SMCS-1306 **i01394471**

NOTE	REF NO	GRAPHIC REF	PART NUMBER	QTY	PART NAME 1 2 3 4 5 6 (PRODUCT LEVEL)	SEE PAGE
	1	1	*173-3504*	1	BLOCK	
	2	1	**5L-4758**	1	SEAL-O-RING (14.0MM ID)	
	3	1	**6V-7658**	2	SEAL-O-RING (59.4 ID)	
	4	1	**173-3505**	1	PLATE-SLIDE	
	5	1	**137-3631**	1	PACKING	
M	6	1	**137-3626**	1	BOLT-SHOULDER (M6X1X28.75MM)	
	7	1	**173-3506**	1	PLUG AS	
	8	1	**3J-1907**	1	SEAL-O-RING (11.89MM ID)	
	9	1	**7Y-5272**	2	PIN-SPRING	
	10	1	**137-3628**	1	SHIM (0.1MM THK)	

M-METRIC PART

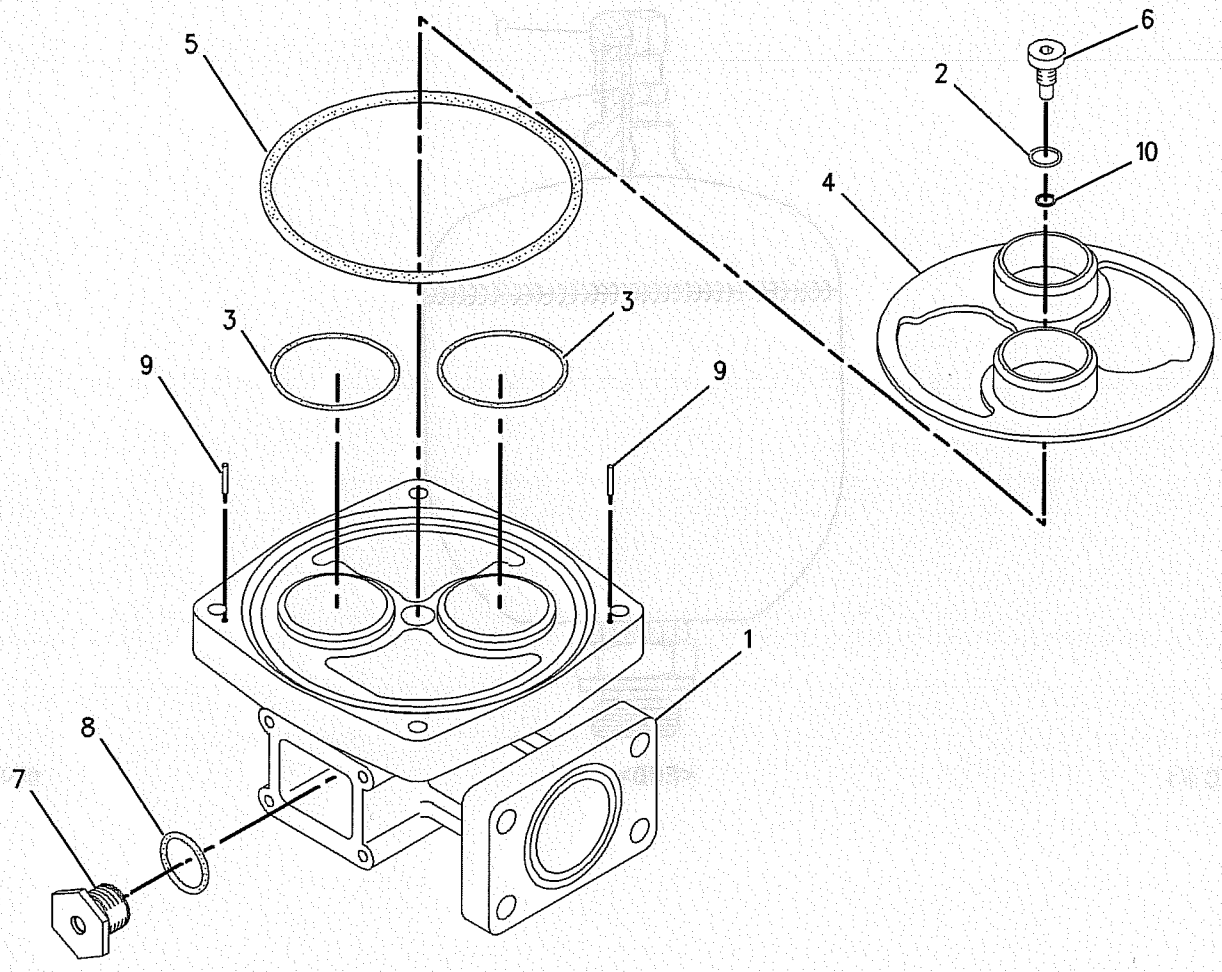

GRAPHIC #1 **<END>** g00735012

HYDRAULIC SYSTEM

153-8733 CONTROL & MTG GP-JOYSTICK

S/N: SBN1-UP; RAW1-UP
PART OF 202-6855 CONTROL AR-AUXILIARY
AN ATTACHMENT

SMCS-5705 **i01888970**

NOTE	REF NO	GRAPHIC REF	PART NUMBER	QTY	PART NAME 1 2 3 4 5 6 (PRODUCT LEVEL)	SEE PAGE
CY	1	1	**216-6750**	1	VALVE GP-PILOT (STICK/SWING)	431
CY	2	1	**216-6751**	1	VALVE GP-PILOT (BOOM/BUCKET)	432
M	3	1	**6V-7357**	6	BOLT (M6X1.0X25MM)	
	4	1	**9X-8256**	6	WASHER (6.6X12X2MM THK)	

C-CHANGE FROM PREVIOUS TYPE
M-METRIC PART
Y-SEPARATE ILLUSTRATION

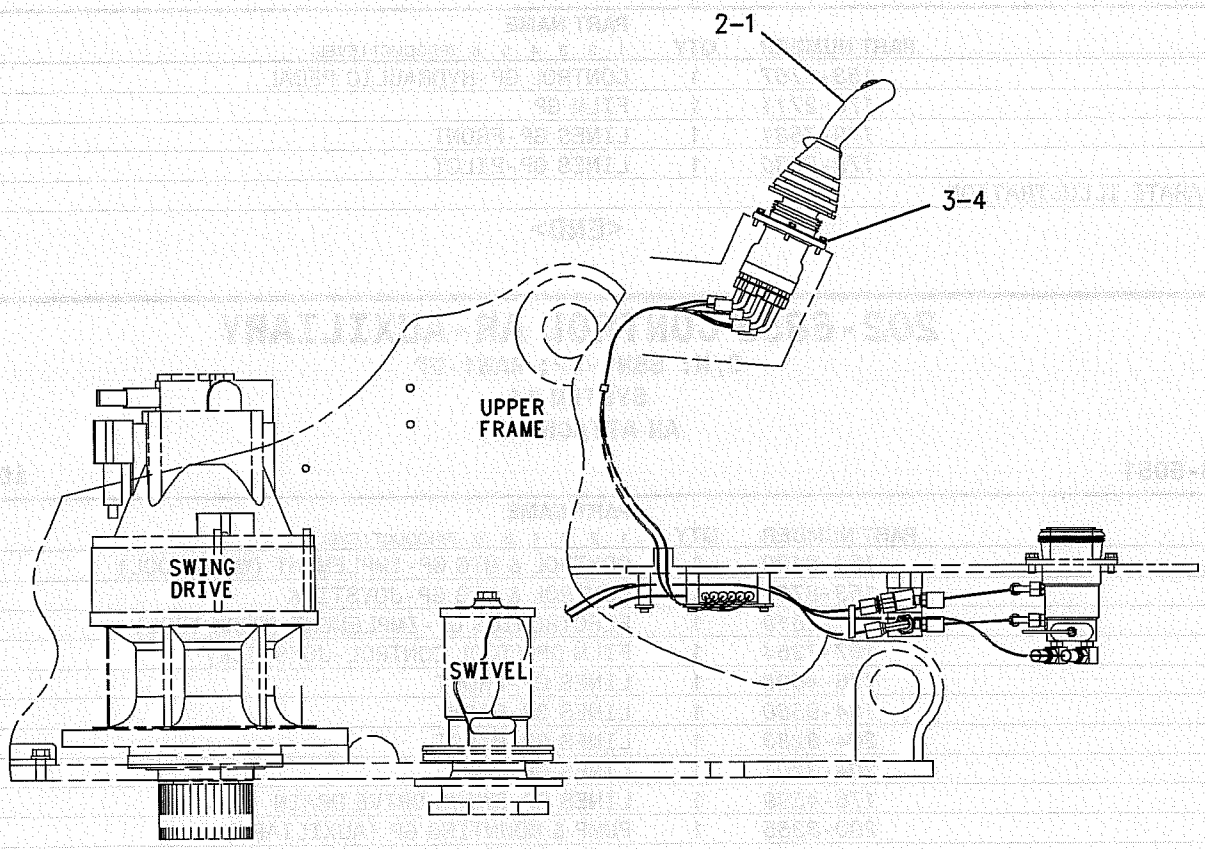

RIGHT SIDE VIEW

GRAPHIC #1 **<END>** g00769869

HYDRAULIC SYSTEM

173-7975 CONTROL AR-AUXILIARY

S/N: RAW1-UP
AN ATTACHMENT

SMCS-5051 **i01403257**

NOTE	PART NUMBER	QTY	PART NAME 1 2 3 4 5 6 (PRODUCT LEVEL)	SEE PAGE
Y	*153-8766*	1	CONTROL GP-SWITCH	114
Y	*176-2710*	1	FILM GP	617
Y	*179-7519*	1	LINES GP-FRONT	317
Y	*179-7518*	1	LINES GP-PILOT	327
Y	*179-7520*	1	LINES GP-PILOT	329
Y	*173-7984*	1	VALVE & MTG GP-CONTROL	402
Y	*183-0993*	1	WIRING GP-HAMMER	148

Y-SEPARATE ILLUSTRATION

<END>

173-7977 CONTROL AR-AUXILIARY

S/N: SBN1-UP; RAW1-UP
AN ATTACHMENT

SMCS-5051 **i01403335**

NOTE	PART NUMBER	QTY	PART NAME 1 2 3 4 5 6 (PRODUCT LEVEL)	SEE PAGE
Y	*153-8767*	1	CONTROL GP-HYDRAULIC PEDAL	220
Y	*176-2711*	1	FILM GP	617
Y	*179-7531*	1	LINES GP-FRONT	321
Y	*179-7530*	1	LINES GP-PILOT	331

Y-SEPARATE ILLUSTRATION

<END>

202-6855 CONTROL AR-AUXILIARY

S/N: SBN1-UP; RAW1-UP
SYSTEM 14
AN ATTACHMENT

SMCS-5051 **i01888965**

NOTE	PART NUMBER	QTY	PART NAME 1 2 3 4 5 6 (PRODUCT LEVEL)	SEE PAGE
Y	*164-8199*	1	CONTROL & MTG GP-IMPLEMENT (WORK TOOL)	109
Y	*153-8733*	1	CONTROL & MTG GP-JOYSTICK	217
Y	*171-2619*	1	ELECTRONICS GP-IMPLEMENT (WORK TOOL)	115
Y	*167-7264*	1	FILM GP (TOOL CONTROL-JOYSTICK)	617
Y	*176-4598*	1	LINES GP-FRONT	316
Y	*184-9560*	1	LINES GP-FRONT	323
Y	*204-8283*	1	LINES GP-PILOT	346
Y	*204-3701*	1	LINES GP-PUMP	353
Y	*176-4599*	1	LINES GP-SWING DRIVE DRAIN	370
Y	*200-3365*	1	PUMP & MOUNTING GP (AUXILIARY)	388
Y	*202-6856*	1	VALVE GP-MAIN CONTROL	420
Y	*193-3373*	1	WIRING GP-CAB	138

Y-SEPARATE ILLUSTRATION

<END>

HYDRAULIC SYSTEM

170-9497 CONTROL GP-HANDLE

S/N: SBN1-UP; RAW1-UP

PART OF 161-3738 OPERATOR AR

SMCS-5051 **i01364060**

NOTE	REF NO	GRAPHIC REF	PART NUMBER	QTY	PART NAME 1 2 3 4 5 6 (PRODUCT LEVEL)	SEE PAGE
	1	1	**096-6166**	1	WASHER-HARD (1MM THK)	
M	2	1	**095-0728**	2	SCREW-MACHINE (M4X0.7X12MM)	
	3	1	**8T-4121**	12	WASHER-HARD (2.5MM THK)	
M	4	1	**8T-4136**	4	BOLT (M10X1.50X25MM)	
M	5	1	**8T-4191**	8	BOLT (M10X1.50X16MM)	
	6	1	**142-5546**	2	KNOB	
	7	1	**117-6356**	2	STEP AS	
	8	1	**122-9610**	2	STEP-RUBBER	
	9	1	**170-9499**	1	LEVER AS-LH	
	10	1	**170-9498**	1	LEVER AS-RH	
	11	1	**122-9608**	1	PEDAL-RUBBER	
	12	1	**117-6350**	1	PEDAL AS-RH	
M		1	**8T-3490**	2	NUT-WELD (M10X1.5 THD)	
	13	1	**122-9609**	1	PEDAL-RUBBER	
	14	1	**117-6349**	1	PEDAL AS-LH	
M		1	**8T-3490**	2	NUT-WELD (M10X1.5 THD)	

M-METRIC PART

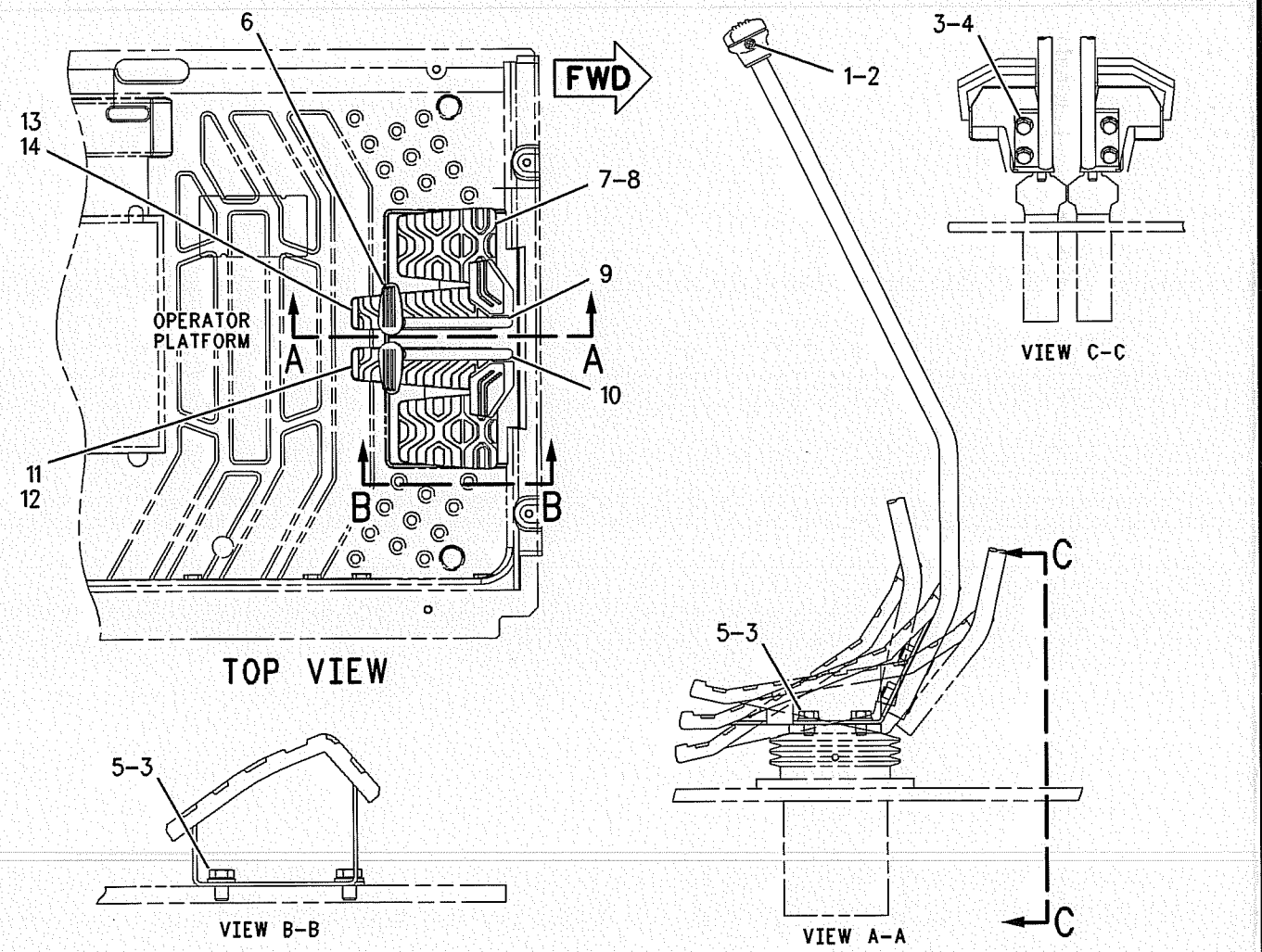

GRAPHIC #1 **<END>** g00672963

HYDRAULIC SYSTEM

153-8767 CONTROL GP-HYDRAULIC PEDAL

S/N: SBN1-UP; RAW1-UP
PART OF 173-7977 CONTROL AR-AUXILIARY
AN ATTACHMENT

SMCS-5059, 5063 **i01890776**

NOTE	REF NO	GRAPHIC REF	PART NUMBER	QTY	PART NAME 1 2 3 4 5 6 (PRODUCT LEVEL)	SEE PAGE
	1	1	**121-1865**	1	PEDAL-RUBBER	
	2	1	**153-8753**	1	PEDAL AS	
	3	1	**179-5194**	1	FLOOR MAT (WITHOUT THIRD PEDAL)	
					–OR–	
		1	**179-5046**	1	FLOOR MAT (WITH THIRD PEDAL)	
	4	1	**179-5044**	1	SUPPORT AS	
C	5	1	**206-3336**	1	VALVE GP-PILOT (WORKTOOL)	
	6	1	**5I-7090**	1	CHAIN AS	
	7	1	**8T-0114**	1	PIN-SPRING	
M	8	1	**095-0735**	2	SCREW-MACHINE (M5X0.8X8MM)	
	9	1	**128-2173**	1	PIN	
M	10	1	**7X-2536**	2	BOLT (M8X1.25X14MM)	
M	11	1	**8T-4136**	2	BOLT (M10X1.5X25MM)	
M	12	1	**8T-4137**	1	BOLT (M10X1.5X20MM)	
	13	1	**8T-4224**	2	WASHER-HARD (8.8X16X2MM THK)	
	14	1	**8T-4121**	3	WASHER-HARD (11X21X2.5MM THK)	

C-CHANGE FROM PREVIOUS TYPE
M-METRIC PART

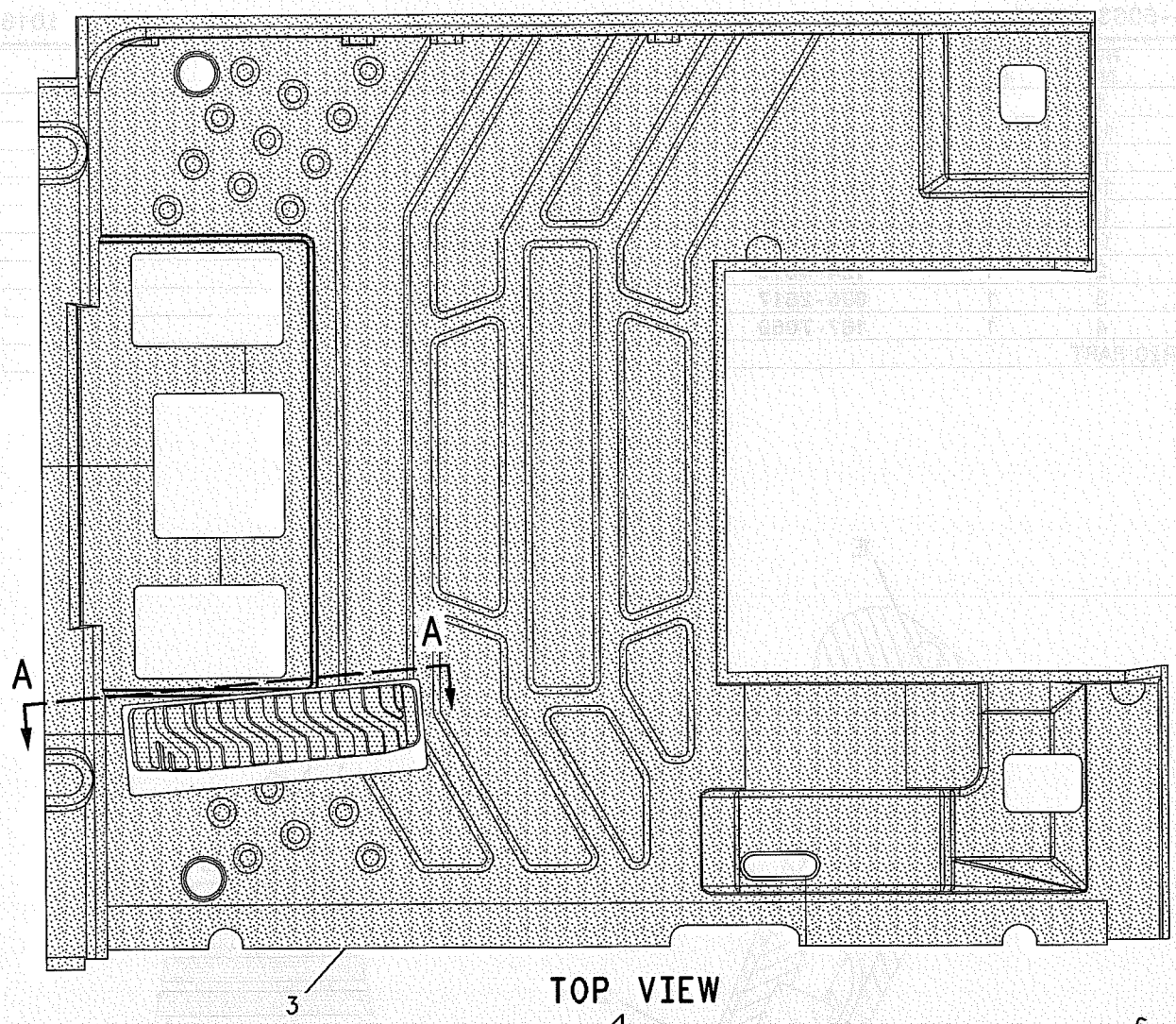

TOP VIEW

FWD

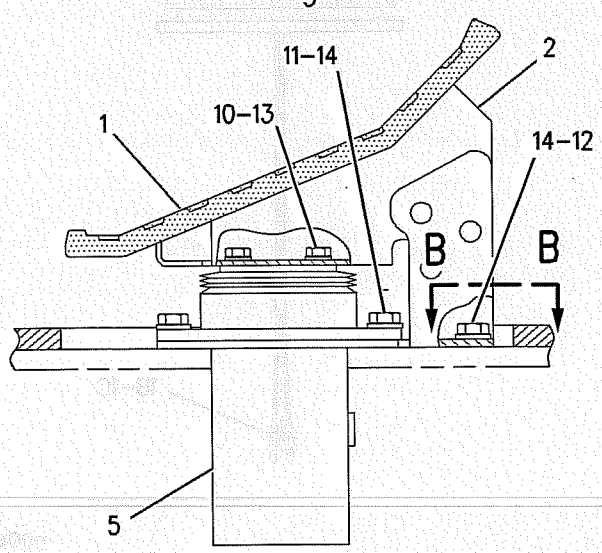

SECTION A-A

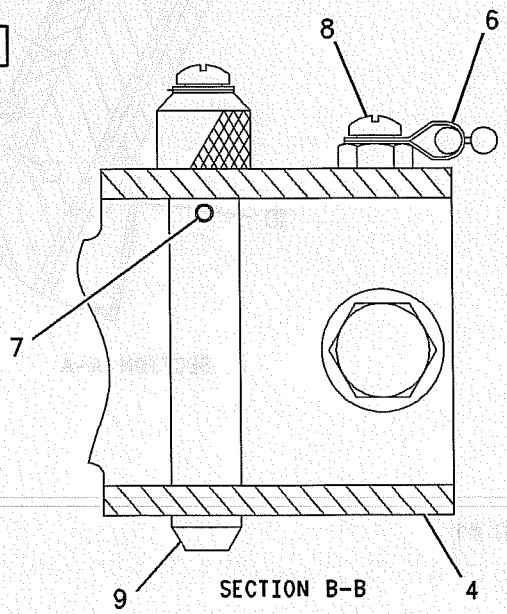

SECTION B-B

GRAPHIC #1

<END>

g00984675

164-0532 CONTROL GP-JOYSTICK–RH

S/N: SBN1-UP; RAW1-UP

PART OF 206-3303 CONTROL GP-JOYSTICK

SMCS-5063, 5705 **i01683240**

NOTE	REF NO	GRAPHIC REF	PART NUMBER	QTY	PART NAME 1 2 3 4 5 6 (PRODUCT LEVEL)	SEE PAGE
	1	1	**167-7052**	1	KNOB AS	
M	1A	1	**6I-5298**	1	SCREW	
	1B	1	**6K-0613**	2	TERMINAL	
	1C	1	**087-4970**	2	SLEEVE	
	1D	1	**124-4009**	1	SHAFT	
	1E	1	**128-2134**	1	SWITCH AS-PUSH	
	2	1	**124-4010**	1	LEVER	
M	3	1	**096-2617**	2	SCREW-MACHINE (M5)	
	4	1	**167-7050**	1	BOOT	

M-METRIC PART

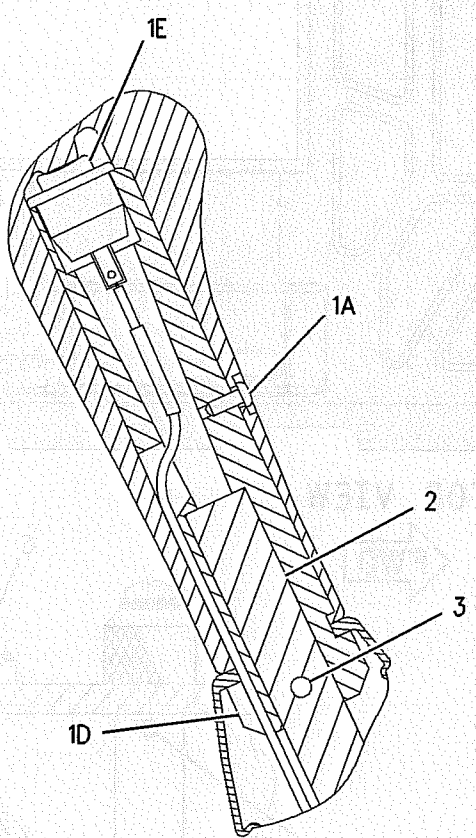

SECTION A-A

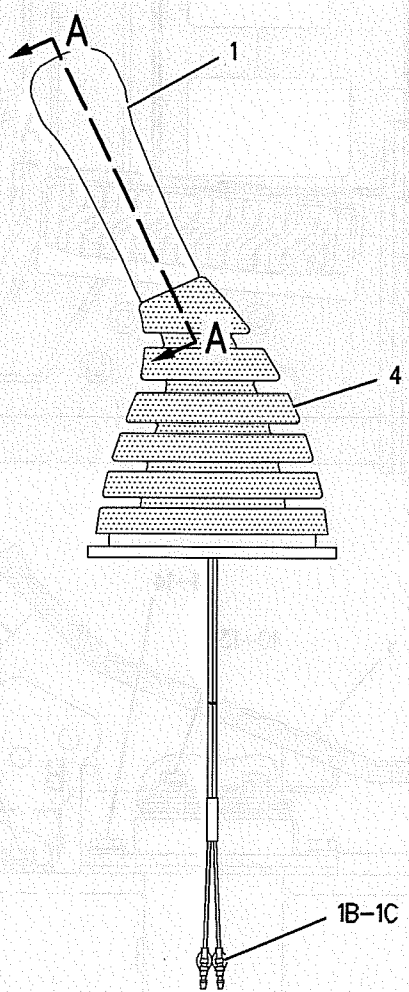

GRAPHIC #1 **<END>** g00672020

HYDRAULIC SYSTEM

164-0533 CONTROL GP-JOYSTICK–LH

S/N: SBN1-UP; RAW1-UP

PART OF 206-3304 CONTROL GP-JOYSTICK

SMCS-5063, 5705 **i01375684**

NOTE	REF NO	GRAPHIC REF	PART NUMBER	QTY	PART NAME 1 2 3 4 5 6 (PRODUCT LEVEL)	SEE PAGE
	1	1	**167-7051**	1	KNOB AS	
M	1A	1	**6I-5298**	1	SCREW	
	1B	1	**6K-0613**	2	TERMINAL	
	1C	1	**087-4970**	2	SLEEVE	
	1D	1	**124-4009**	1	SHAFT	
	1E	1	**128-2134**	1	SWITCH AS-PUSH (HORN)	
	2	1	**124-4010**	1	LEVER	
M	3	1	**096-2617**	2	SCREW-MACHINE (M5)	
	4	1	**167-7050**	1	BOOT	

M-METRIC PART

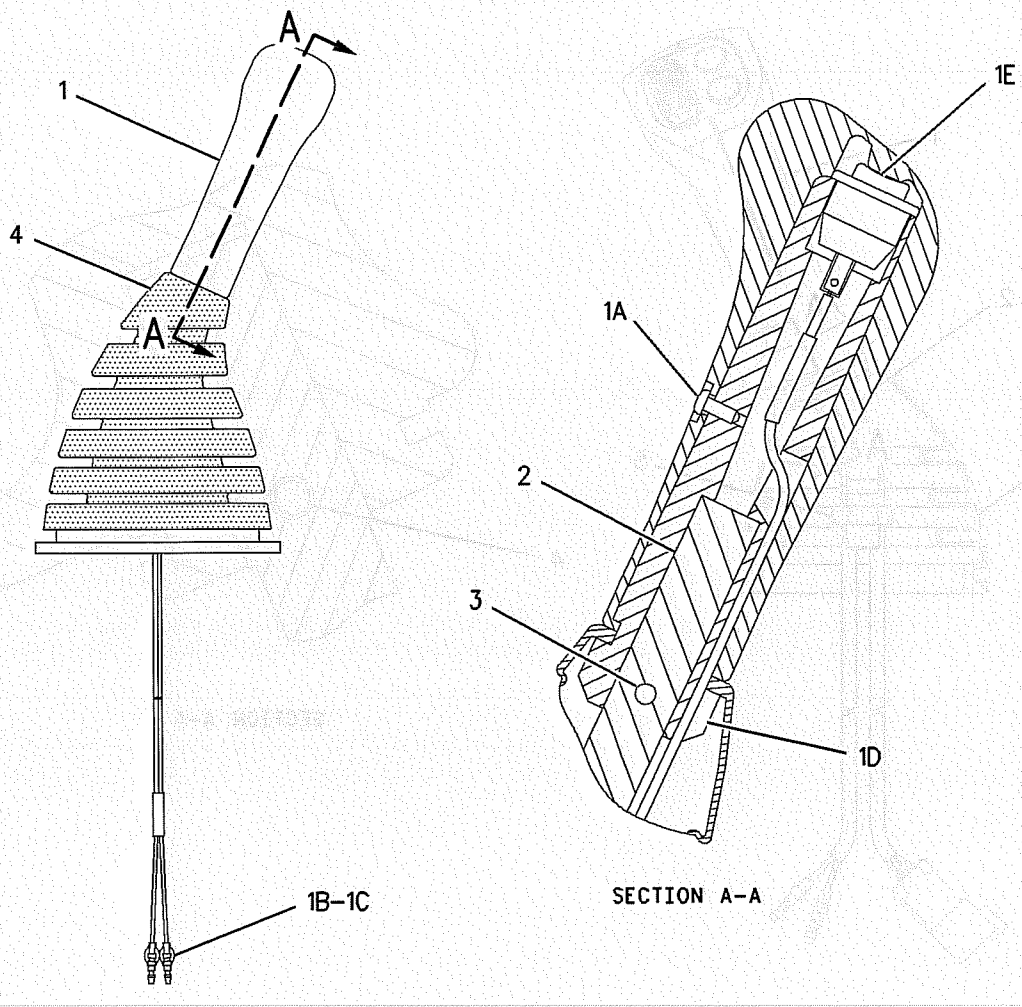

GRAPHIC #1 **<END>** g00672718

HYDRAULIC SYSTEM

187-9905 CONTROL GP-JOYSTICK–LH

S/N: SBN1-UP; RAW1-UP
PART OF 216-6750 VALVE GP-PILOT
AN ATTACHMENT

SMCS-5063, 5705 **i01412501**

NOTE	REF NO	GRAPHIC REF	PART NUMBER	QTY	PART NAME 1 2 3 4 5 6 (PRODUCT LEVEL)	SEE PAGE
	1	1	**177-7712**	1	HANDLE & SWITCH GP-JOYSTICK (LH)	
		1	**102-8805**	1	KIT-RECEPTACLE (6 PIN)	
		1	**3E-3383**	1	WEDGE-RECEPTACLE LOCK	
		1	**8T-8729**	6	PIN-CONNECTOR	
	2	1	**187-9907**	1	LEVER	
	3	1	**187-9908**	1	BOOT	
	4	1	**113-2532**	1	PIN	
M	5	1	**7Y-8463**	1	NUT (M14)	

M-METRIC PART

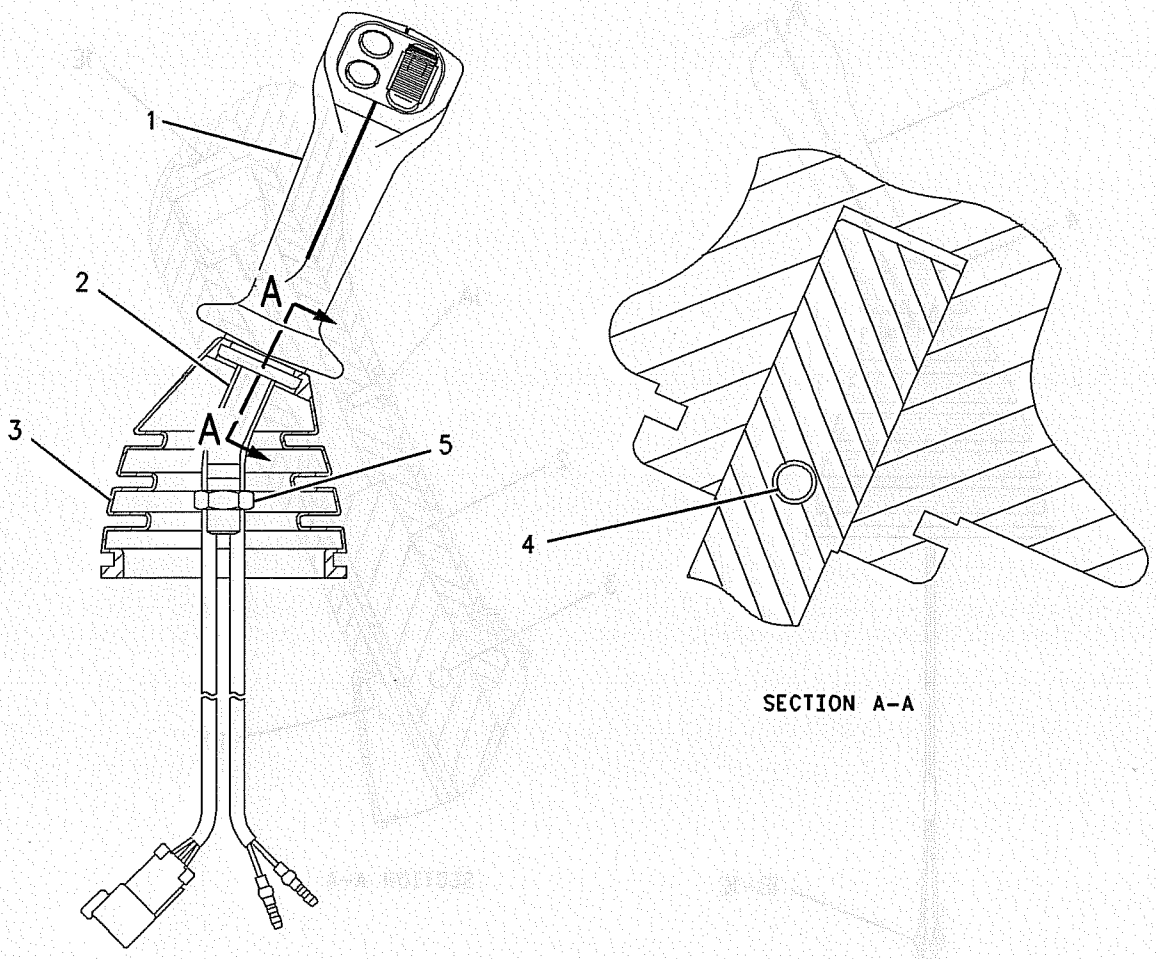

GRAPHIC #1 **<END>** g00699354

187-9906 CONTROL GP-JOYSTICK-RH

S/N: SBN1-UP; RAW1-UP
PART OF 216-6751 VALVE GP-PILOT
AN ATTACHMENT

SMCS-5063, 5705 i01412504

NOTE	REF NO	GRAPHIC REF	PART NUMBER	QTY	PART NAME 1 2 3 4 5 6 (PRODUCT LEVEL)	SEE PAGE
	1	1	177-7711	1	HANDLE & SWITCH GP-JOYSTICK (RH)	
		1	102-8805	1	KIT-RECEPTACLE (6 PIN)	
		1	3E-3383	1	WEDGE-RECEPTACLE LOCK	
		1	8T-8729	6	PIN-CONNECTOR	
	2	1	187-9907	1	LEVER	
	3	1	187-9908	1	BOOT	
	4	1	113-2532	1	PIN	
M	5	1	7Y-8463	1	NUT (M14)	

M-METRIC PART

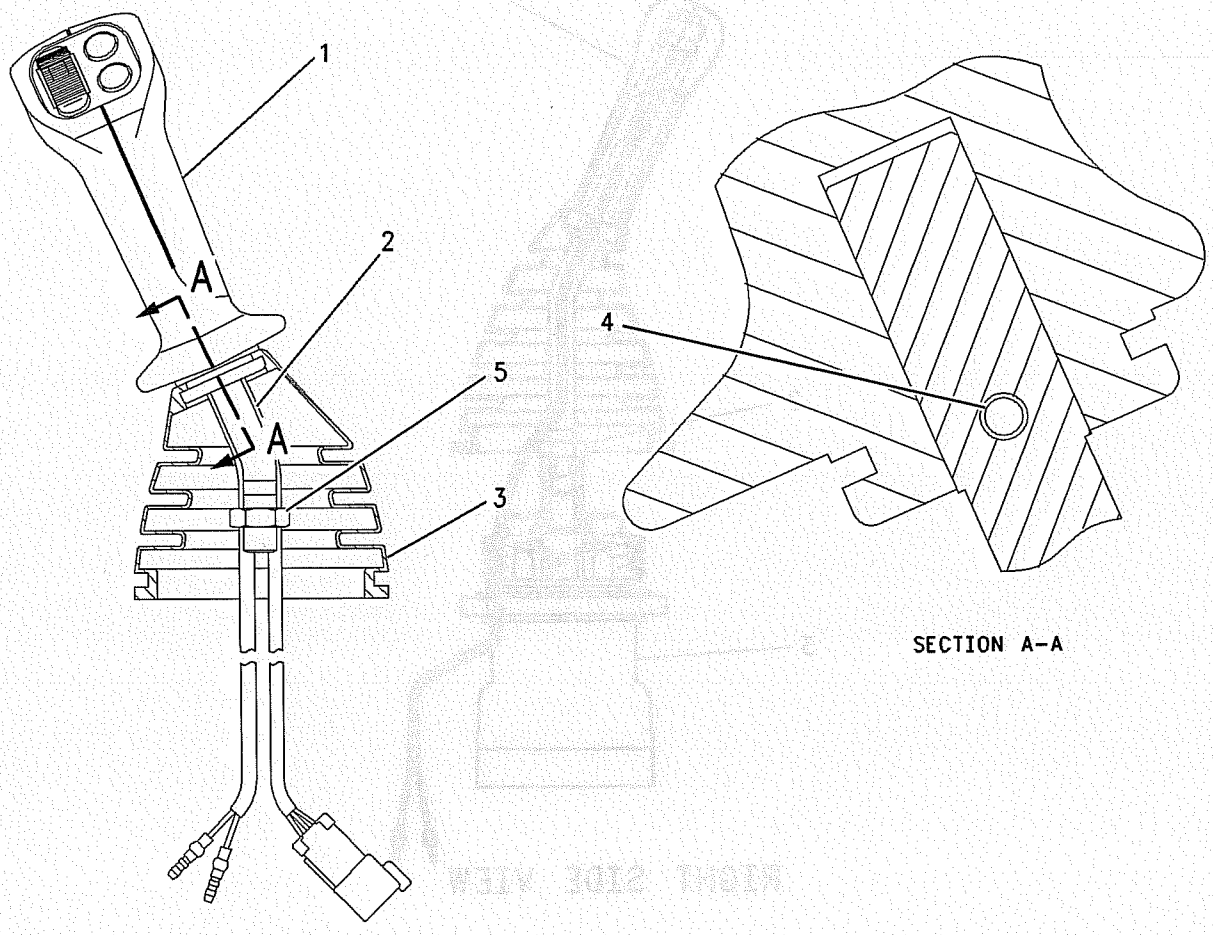

SECTION A-A

GRAPHIC #1 <END> g00699448

HYDRAULIC SYSTEM

206-3303 CONTROL GP-JOYSTICK–RH

S/N: SBN1-UP; RAW1-UP

PART OF 199-7428 LINES GP-PILOT

SMCS-5063, 5705 **i01681303**

NOTE	REF NO	GRAPHIC REF	PART NUMBER	QTY	PART NAME 1 2 3 4 5 6 (PRODUCT LEVEL)	SEE PAGE
Y	1	1	*164-0532*	1	CONTROL GP-JOYSTICK (RH)	222
M	2	1	**7Y-8463**	1	NUT (M14)	
Y	3	1	**206-3305**	1	VALVE GP-PILOT	429

M-METRIC PART
Y-SEPARATE ILLUSTRATION

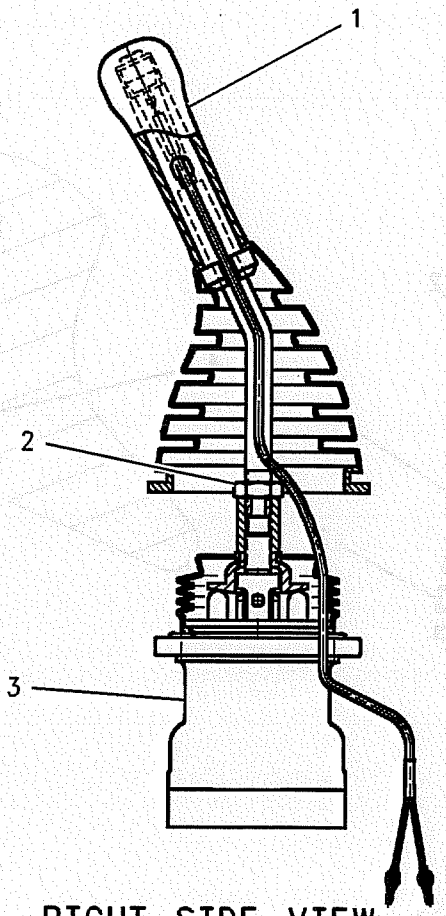

RIGHT SIDE VIEW

GRAPHIC #1

<END>

g00858428

HYDRAULIC SYSTEM

206-3304 CONTROL GP-JOYSTICK–LH

S/N: SBN1-UP; RAW1-UP

PART OF 199-7428 LINES GP-PILOT

SMCS-5063, 5705 **i01681309**

NOTE	REF NO	GRAPHIC REF	PART NUMBER	QTY	PART NAME 1 2 3 4 5 6 (PRODUCT LEVEL)	SEE PAGE
Y	1	1	*164-0533*	1	CONTROL GP-JOYSTICK (LH)	223
M	2	1	**7Y-8463**	1	NUT (M14)	
Y	3	1	**206-3305**	1	VALVE GP-PILOT	429

M-METRIC PART
Y-SEPARATE ILLUSTRATION

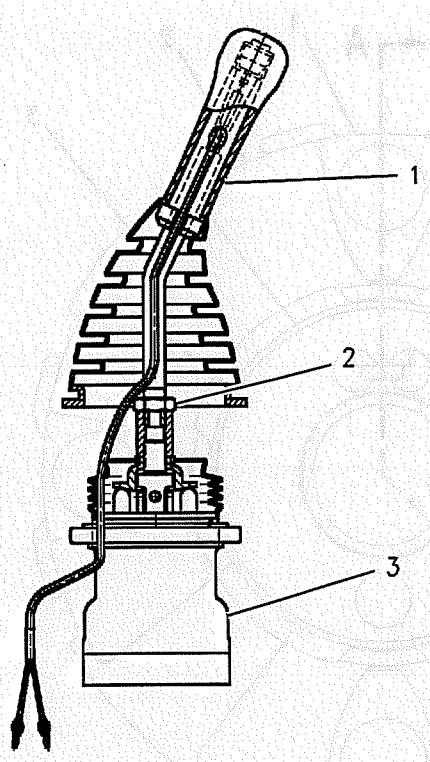

LEFT SIDE VIEW

GRAPHIC #1 **<END>** g00858409

162-6210 COUPLING GP-FLEXIBLE

S/N: SBN1-UP; RAW1-UP

PART OF 162-6177 COUPLING GP-PUMP

SMCS-3252 **i01889834**

NOTE	REF NO	GRAPHIC REF	PART NUMBER	QTY	PART NAME 1 2 3 4 5 6 (PRODUCT LEVEL)	SEE PAGE
	1	1	**7Y-1900**	4	INSERT-COUPLING	
	2	1	**7Y-1901**	1	ELEMENT	
	3	1	**7Y-1902**	4	INSERT-COUPLING	
M	4	1	**7Y-0466**	2	SETSCREW-SOCKET (M16X2X20MM)	
	5	1	**171-9066**	1	HUB	
	6	1	**7Y-0468**	8	PIN-SPRING	
M	7	1	**7Y-1904**	4	BOLT-SOCKET HEAD (M16X2X50MM)	

M-METRIC PART

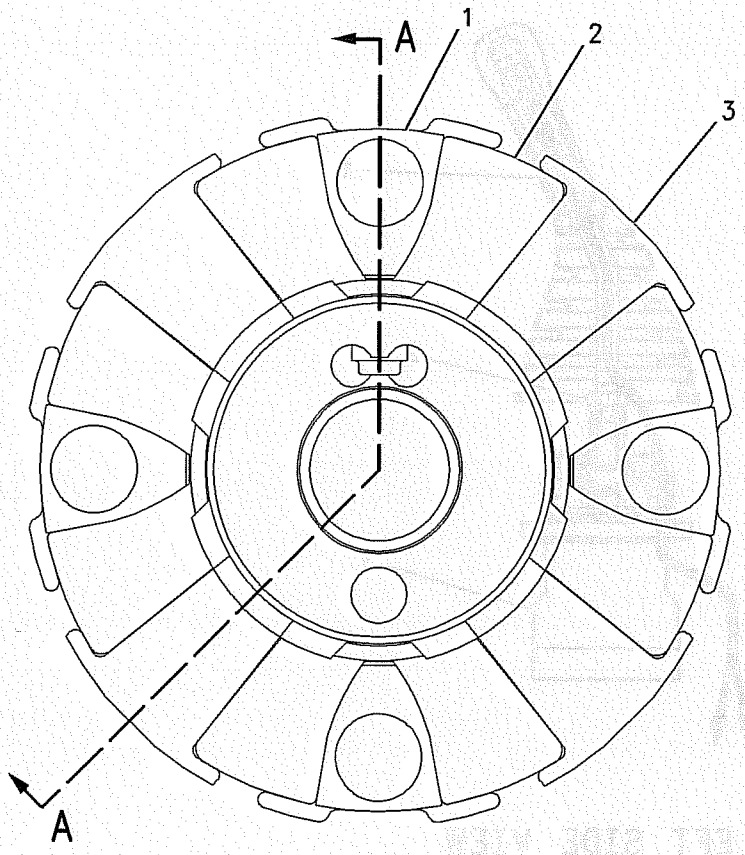

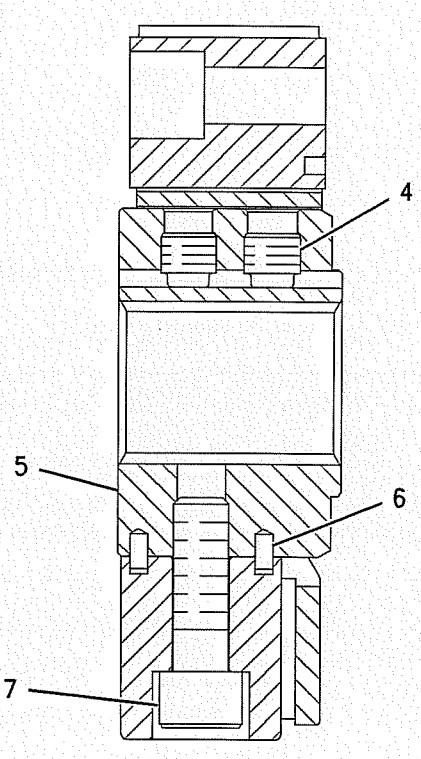

SECTION A-A

GRAPHIC #1 **<END>** g00693542

HYDRAULIC SYSTEM

162-6177 COUPLING GP-PUMP

S/N: SBN1-UP; RAW1-UP

PART OF 162-6176 PUMP & MOUNTING GP

SMCS-5062 **i01889771**

NOTE	REF NO	GRAPHIC REF	PART NUMBER	QTY	PART NAME 1 2 3 4 5 6 (PRODUCT LEVEL)	SEE PAGE
M	1	1	**7Y-1905**	4	BOLT-SOCKET HEAD (M16X2X60MM)(LOCKING)	
	2	1	**7Y-0468**	4	PIN-SPRING	
Y	3	1	**162-6210**	1	COUPLING GP-FLEXIBLE	228

M-METRIC PART
Y-SEPARATE ILLUSTRATION

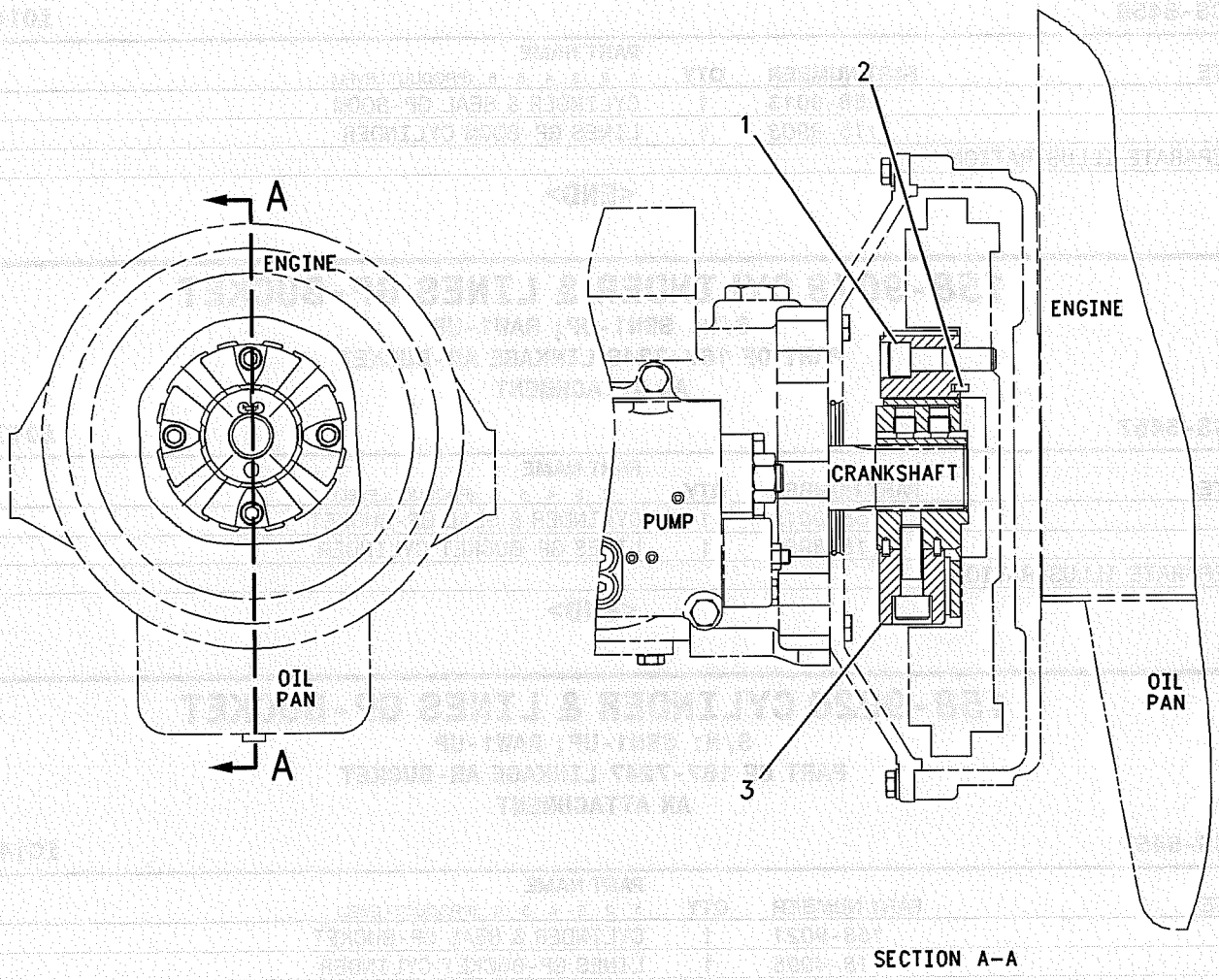

GRAPHIC #1 **<END>** g00675593

HYDRAULIC SYSTEM

158-9011 CYLINDER & LINES GP-BOOM

S/N: SBN1-UP; RAW1-UP
PART OF 167-7245 BOOM AR-1 PIECE, 167-7244, 176-2714 BOOM AR-1 PIECE LONG AN ATTACHMENT

SMCS-5456 **i01402003**

NOTE	PART NUMBER	QTY	PART NAME 1 2 3 4 5 6 (PRODUCT LEVEL)	SEE PAGE
Y	**158-9013**	1	CYLINDER & SEAL GP-BOOM	232
Y	*115-8902*	1	LINES GP-BOOM CYLINDER	305
Y-SEPARATE ILLUSTRATION				

<END>

158-9012 CYLINDER & LINES GP-BOOM

S/N: SBN1-UP; RAW1-UP
PART OF 167-7245 BOOM AR-1 PIECE, 167-7244, 176-2714 BOOM AR-1 PIECE LONG AN ATTACHMENT

SMCS-5456 **i01402200**

NOTE	PART NUMBER	QTY	PART NAME 1 2 3 4 5 6 (PRODUCT LEVEL)	SEE PAGE
Y	**158-9013**	1	CYLINDER & SEAL GP-BOOM	232
Y	*115-8903*	1	LINES GP-BOOM CYLINDER	306
Y-SEPARATE ILLUSTRATION				

<END>

158-9018 CYLINDER & LINES GP-BUCKET

S/N: SBN1-UP; RAW1-UP
PART OF 167-7246 LINKAGE AR-BUCKET AN ATTACHMENT

SMCS-5457 **i01389165**

NOTE	PART NUMBER	QTY	PART NAME 1 2 3 4 5 6 (PRODUCT LEVEL)	SEE PAGE
Y	*158-9019*	1	CYLINDER & SEAL GP-BUCKET	233
Y	*115-8906*	1	LINES GP-BUCKET CYLINDER	311
Y-SEPARATE ILLUSTRATION				

<END>

158-9020 CYLINDER & LINES GP-BUCKET

S/N: SBN1-UP; RAW1-UP
PART OF 167-7247 LINKAGE AR-BUCKET AN ATTACHMENT

SMCS-5457 **i01402855**

NOTE	PART NUMBER	QTY	PART NAME 1 2 3 4 5 6 (PRODUCT LEVEL)	SEE PAGE
Y	*158-9021*	1	CYLINDER & SEAL GP-BUCKET	234
Y	*118-4095*	1	LINES GP-BUCKET CYLINDER	312
Y-SEPARATE ILLUSTRATION				

<END>

HYDRAULIC SYSTEM

158-9014 CYLINDER & LINES GP-STICK

S/N: SBN1-UP; RAW1-UP
PART OF 167-7244, 176-2714 BOOM AR-1 PIECE LONG
AN ATTACHMENT

SMCS-5458 **i01404286**

NOTE	PART NUMBER	QTY	PART NAME 1 2 3 4 5 6 (PRODUCT LEVEL)	SEE PAGE
Y	**158-9015**	1	CYLINDER & SEAL GP-STICK	235
Y	**179-7457**	1	LINES GP-STICK CYLINDER	364

Y-SEPARATE ILLUSTRATION

<END>

158-9016 CYLINDER & LINES GP-STICK

S/N: SBN1-UP; RAW1-UP
PART OF 167-7245 BOOM AR-1 PIECE
AN ATTACHMENT

SMCS-5458 **i01402220**

NOTE	PART NUMBER	QTY	PART NAME 1 2 3 4 5 6 (PRODUCT LEVEL)	SEE PAGE
Y	**158-9017**	1	CYLINDER & SEAL GP-STICK	236
Y	**179-7458**	1	LINES GP-STICK CYLINDER	365

Y-SEPARATE ILLUSTRATION

<END>

HYDRAULIC SYSTEM

158-9013 CYLINDER & SEAL GP-BOOM

S/N: SBN1-UP; RAW1-UP

PART OF 158-9011, 158-9012 CYLINDER & LINES GP-BOOM

AN ATTACHMENT

SMCS-5456 **i01402494**

NOTE	REF NO	GRAPHIC REF	PART NUMBER	QTY	PART NAME 1 2 3 4 5 6 (PRODUCT LEVEL)	SEE PAGE
	1	1	**3B-8489**	1	FITTING-GREASE	
	2	1	**096-0854**	2	SEAL-LIP TYPE	
Y	3	1	**158-9058**	1	CYLINDER GP-BOOM	237
	4	1	**166-1494**	2	SEAL-LIP TYPE	

Y-SEPARATE ILLUSTRATION

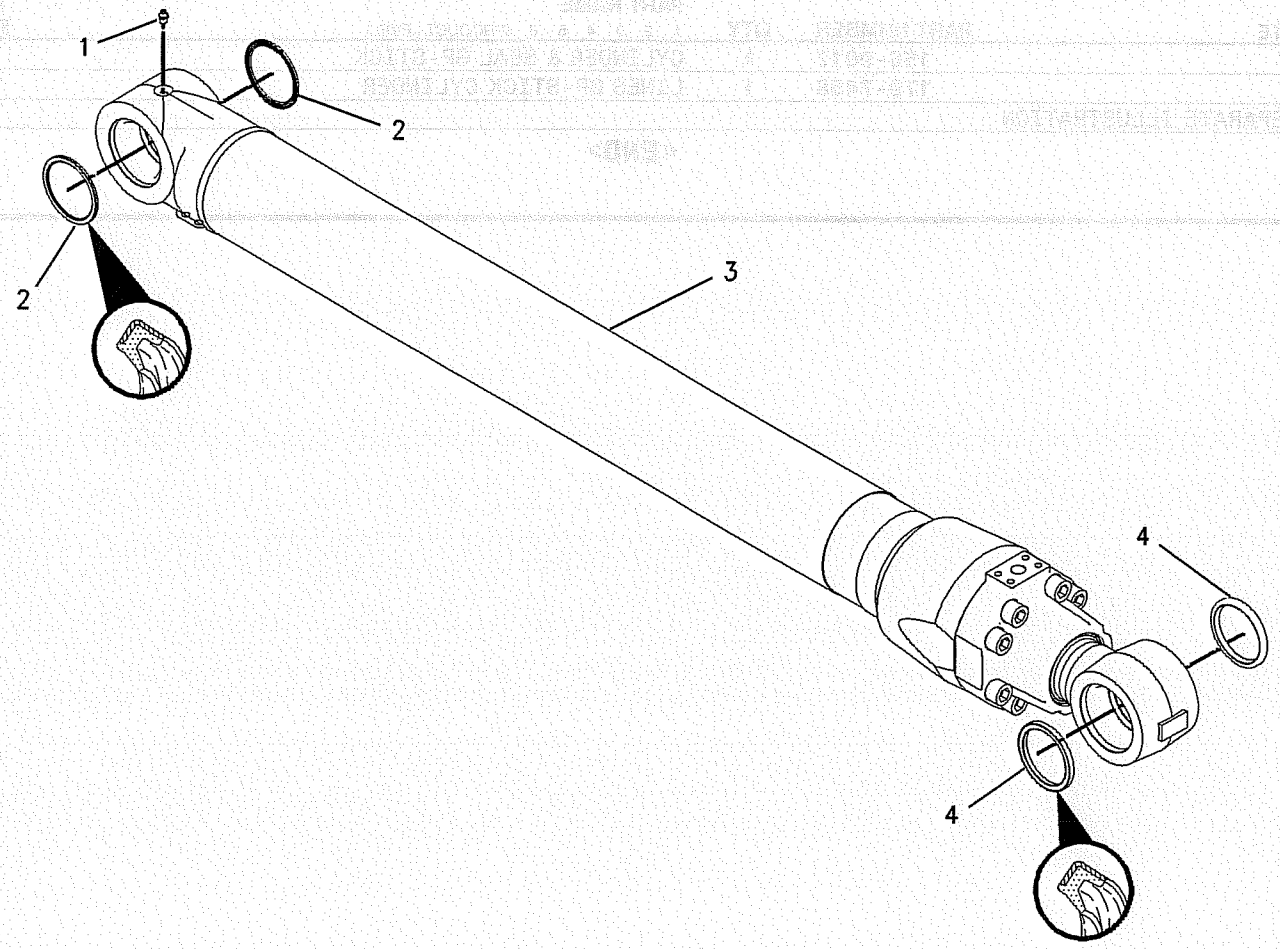

GRAPHIC #1 **<END>** g00739033

158-9019 CYLINDER & SEAL GP-BUCKET

S/N: SBN1-UP; RAW1-UP
PART OF 158-9018 CYLINDER & LINES GP-BUCKET
AN ATTACHMENT

SMCS-5457 **i01389176**

NOTE	REF NO	GRAPHIC REF	PART NUMBER	QTY	PART NAME 1 2 3 4 5 6 (PRODUCT LEVEL)	SEE PAGE
	1	1	**3B-8489**	2	FITTING-GREASE	
	2	1	**093-1434**	2	SEAL-LIP	
	3	1	**096-0854**	2	SEAL-LIP TYPE	
Y	4	1	**158-9061**	1	CYLINDER GP-BUCKET	239

Y-SEPARATE ILLUSTRATION

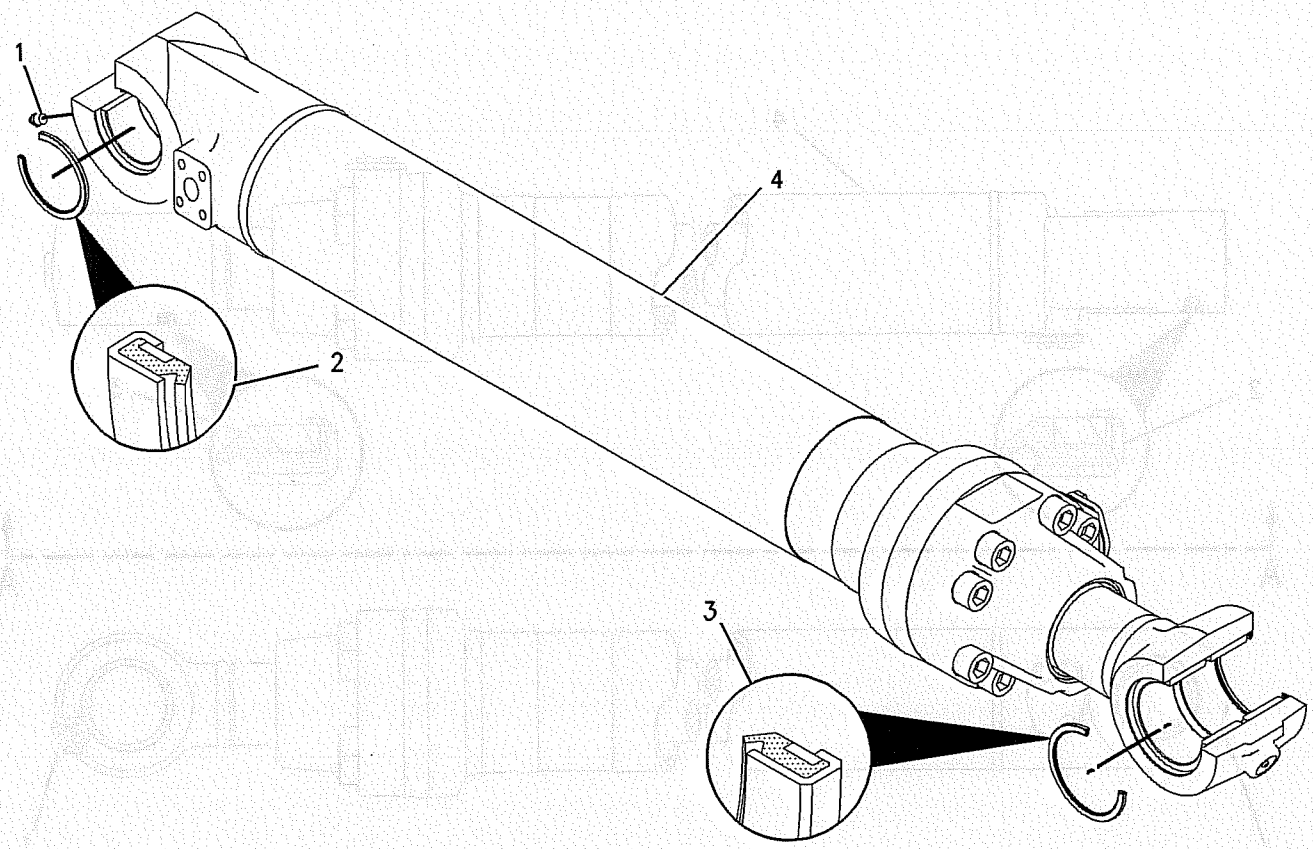

GRAPHIC #1 **<END>** g00708481

HYDRAULIC SYSTEM

158-9021 CYLINDER & SEAL GP-BUCKET

S/N: SBN1-UP; RAW1-UP

PART OF 158-9020 CYLINDER & LINES GP-BUCKET

AN ATTACHMENT

SMCS-5457 **i01402144**

NOTE	REF NO	GRAPHIC REF	PART NUMBER	QTY	PART NAME 1 2 3 4 5 6 (PRODUCT LEVEL)	SEE PAGE
	1	1	**3B-8489**	2	FITTING-GREASE	
	2	1	**093-1434**	2	SEAL-LIP	
	3	1	**096-0854**	2	SEAL-LIP TYPE	
Y	4	1	**179-9764**	1	CYLINDER GP-BUCKET	241

Y-SEPARATE ILLUSTRATION

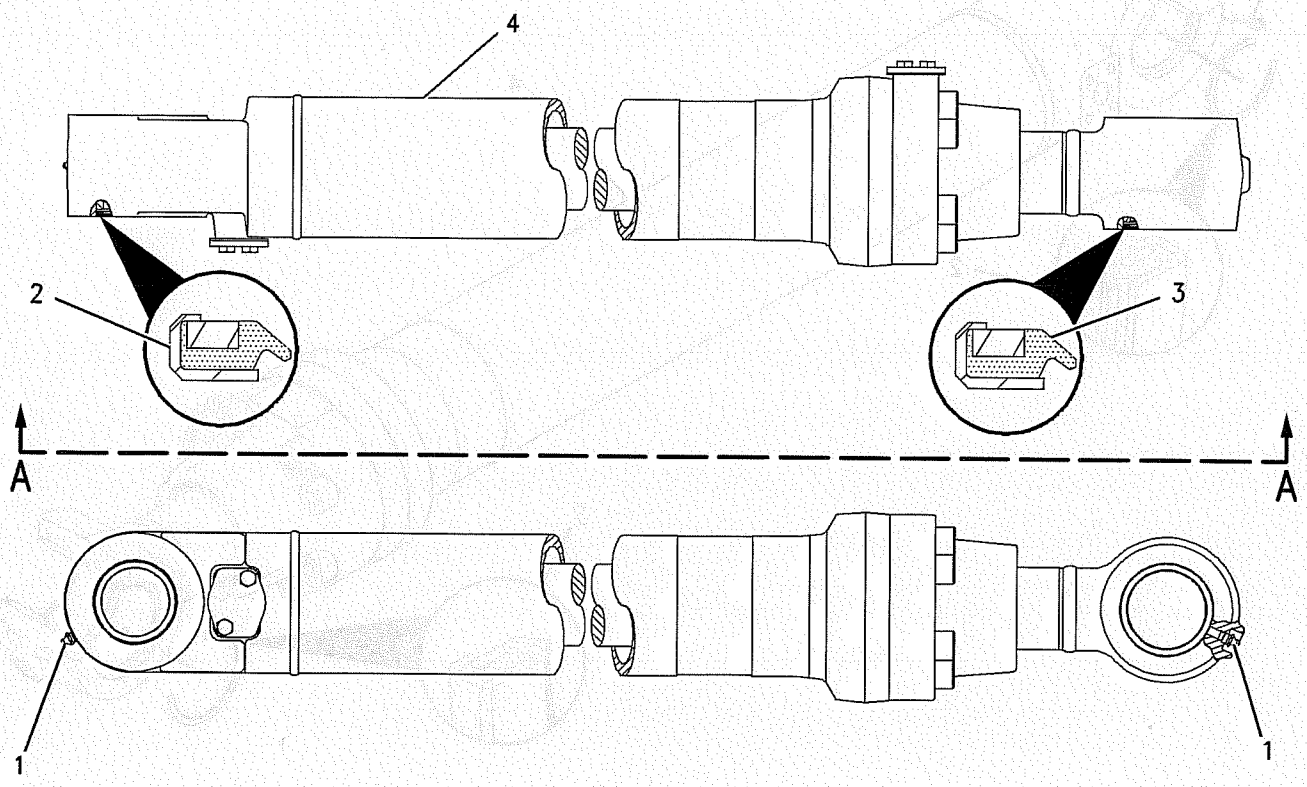

VIEW A-A

GRAPHIC #1 **<END>** g00675934

158-9015 CYLINDER & SEAL GP-STICK

S/N: SBN1-UP; RAW1-UP

PART OF 158-9014 CYLINDER & LINES GP-STICK

AN ATTACHMENT

SMCS-5458 **i01404718**

NOTE	REF NO	GRAPHIC REF	PART NUMBER	QTY	PART NAME 1 2 3 4 5 6 (PRODUCT LEVEL)	SEE PAGE
	1	1	**3B-8489**	1	FITTING-GREASE	
	2	1	**096-0854**	4	SEAL-LIP TYPE	
Y	3	1	**158-9059**	1	CYLINDER GP-STICK	243

Y-SEPARATE ILLUSTRATION

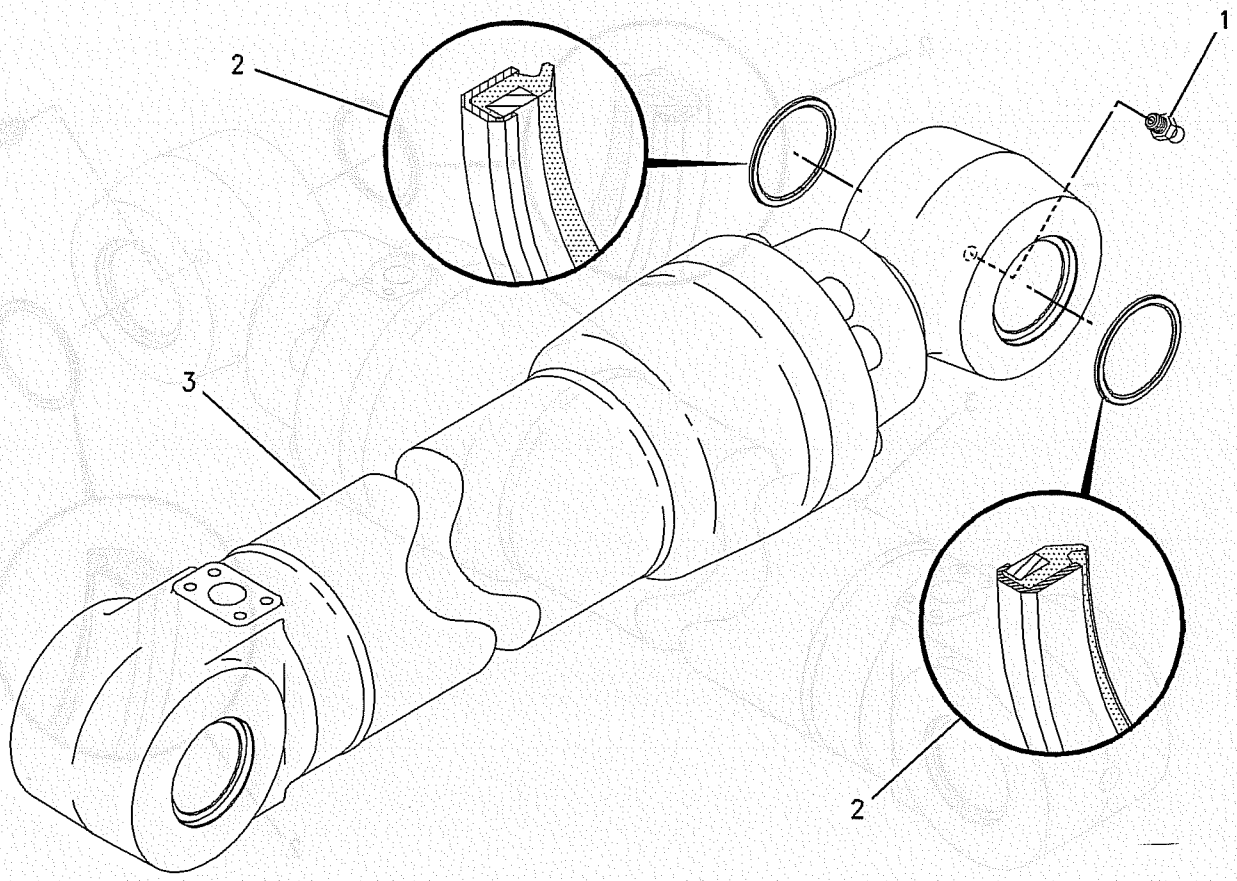

GRAPHIC #1 **<END>** g00676990

HYDRAULIC SYSTEM

158-9017 CYLINDER & SEAL GP-STICK

S/N: SBN1-UP; RAW1-UP

PART OF 158-9016 CYLINDER & LINES GP-STICK

AN ATTACHMENT

SMCS-5458 **i01402975**

NOTE	REF NO	GRAPHIC REF	PART NUMBER	QTY	PART NAME 1 2 3 4 5 6 (PRODUCT LEVEL)	SEE PAGE
	1	1	**3B-8489**	1	FITTING-GREASE	
	2	1	**096-0854**	4	SEAL-LIP TYPE	
Y	3	1	**158-9060**	1	CYLINDER GP-STICK	245

Y-SEPARATE ILLUSTRATION

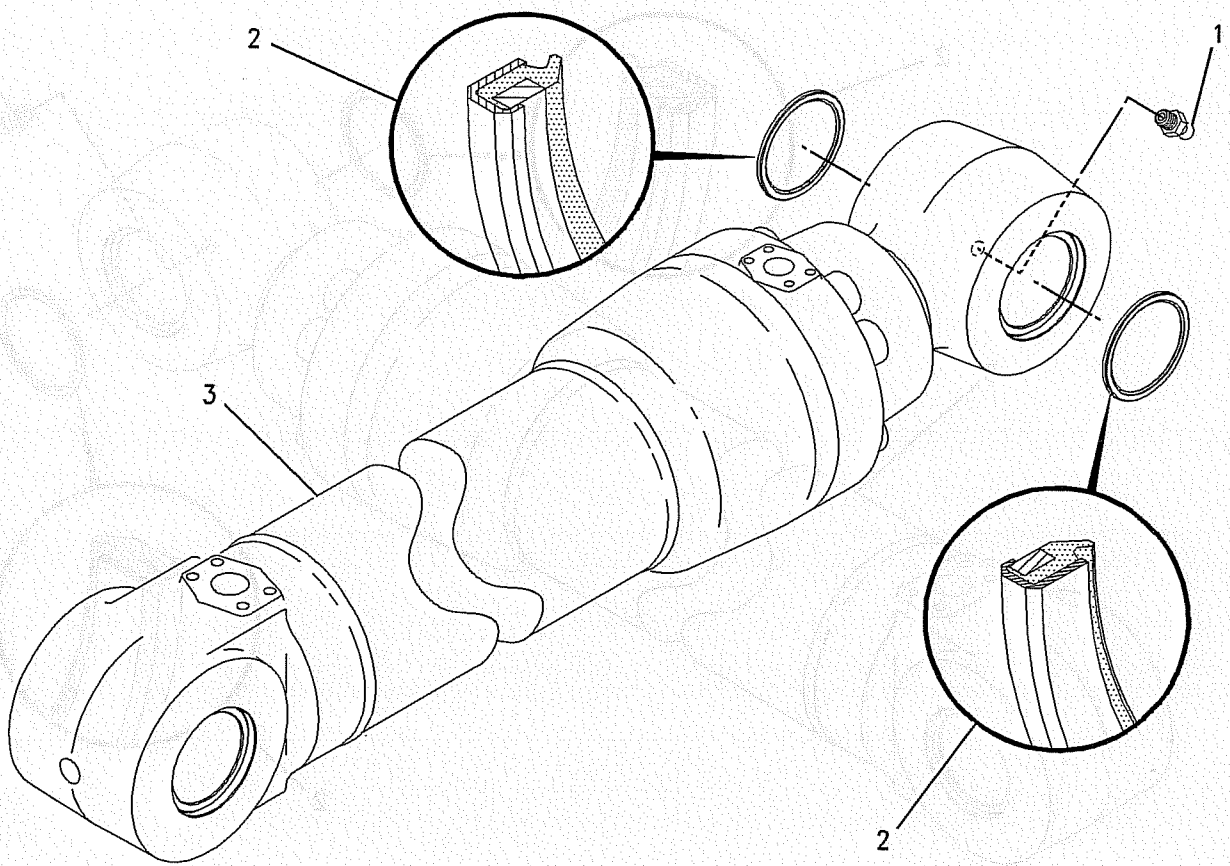

GRAPHIC #1 **<END>** g00676999

HYDRAULIC SYSTEM

158-9058 CYLINDER GP-BOOM

S/N: SBN1-UP; RAW1-UP
120MM (4.8 IN) BORE X 1260MM (50.4 IN) STROKE
PART OF 158-9013 CYLINDER & SEAL GP-BOOM
AN ATTACHMENT

SMCS-5456 **i01889846**

NOTE	REF NO	GRAPHIC REF	PART NUMBER	QTY	PART NAME 1 2 3 4 5 6 (PRODUCT LEVEL)	SEE PAGE
J	1	1	**6I-6786**	1	RING-SEAL	
J	2	1	**7Y-5116**	1	RING	
J	3	1	**7Y-5117**	1	SEAL-U-CUP	
	4	1	**7Y-5119**	1	RING-RETAINING	
J	5	1	**9X-3592**	1	SEAL AS	
M	6	1	**087-5504**	1	LOCKNUT	
	7	1	**087-5507**	1	STOP	
J	8	1	**170-9844**	1	SEAL-BUFFER	
	9	1	**126-2043**	1	HEAD	
	10	1	**158-9062**	1	PISTON	
	11	1	**158-9120**	1	CYLINDER AS	
	11A	1	**163-3753**	1	BEARING-SLEEVE	
	12	1	**158-9122**	1	ROD AS	
	12A	1	**163-3746**	1	BEARING-SLEEVE	
J	13	1	**165-9286**	1	SEAL-LIP	
J	14	1	**179-9674**	1	RING	
J	15	1	**087-5510**	1	RING	
J	16	1	**095-1717**	1	SEAL-O-RING	
	17	1	**114-0756**	1	BEARING-SLEEVE	
J	18	1	**158-9063**	2	RING	
M	19	1	**7Y-5216**	8	BOLT-SOCKET HEAD (M20X2.5X80MM)	
					AVAILABLE REPAIR KIT(S):	
J			**158-9092**	1	KIT-SEAL	

F-NOT SHOWN
J-KIT MARKED J SERVICES PART(S) MARKED J
M-METRIC PART

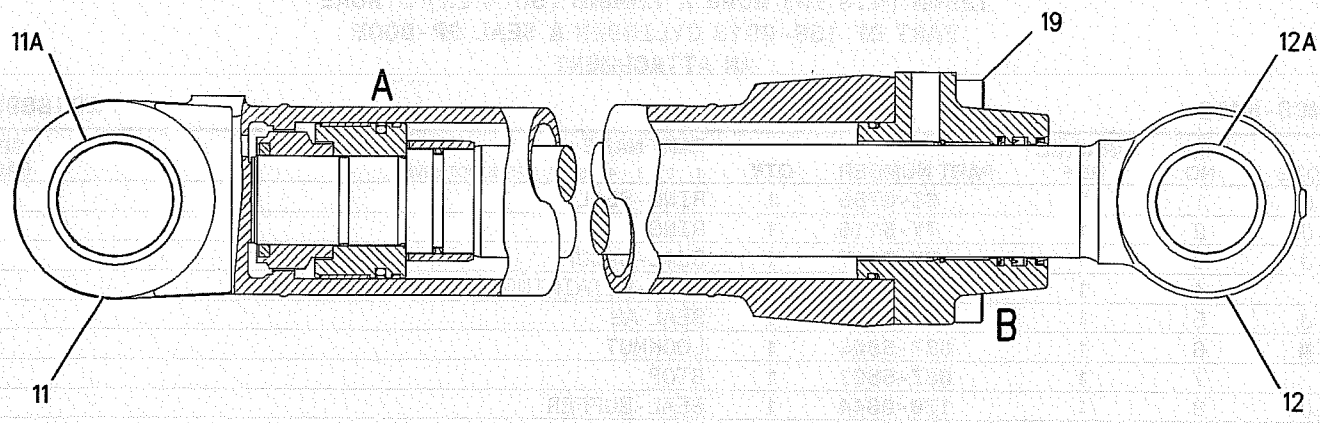

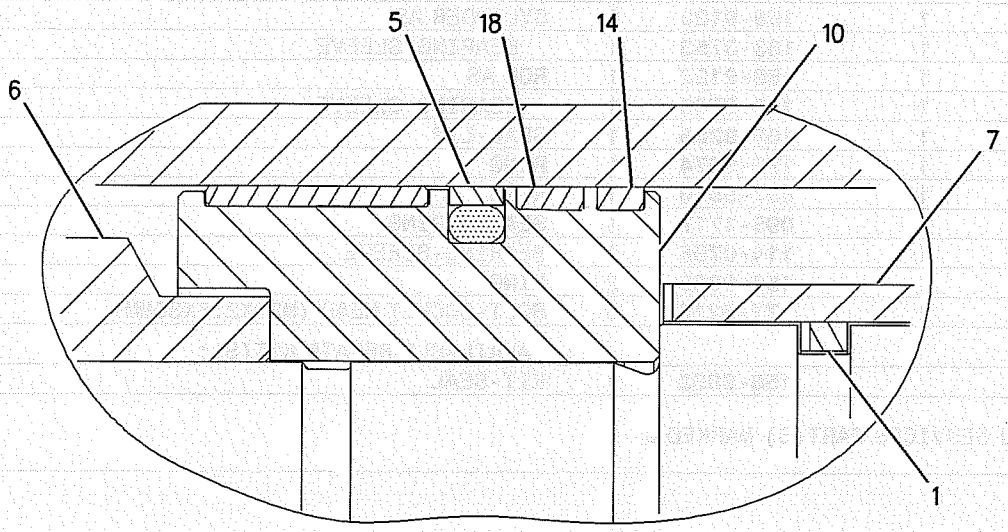

VIEW OF AREA A

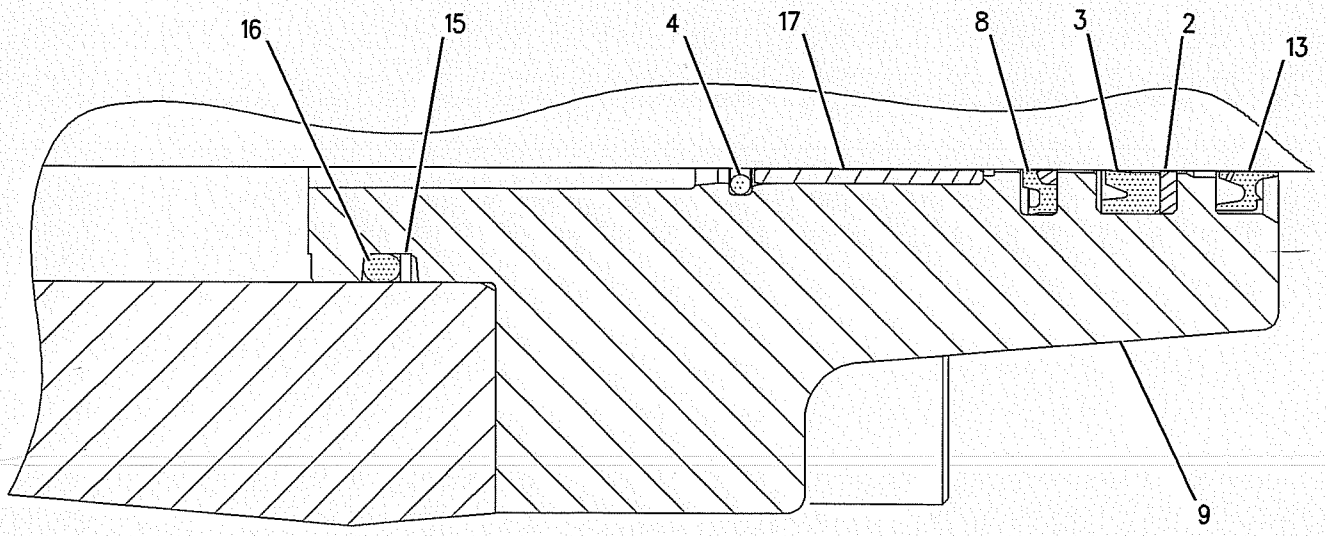

VIEW OF AREA B

GRAPHIC #1

<END>

g00677009

158-9061 CYLINDER GP-BUCKET

S/N: SBN1-UP; RAW1-UP
120MM (4.72IN) BORE X 1030MM (40.55IN) STROKE
PART OF 158-9019 CYLINDER & SEAL GP-BUCKET
AN ATTACHMENT

SMCS-5457 **i01891505**

NOTE	REF NO	GRAPHIC REF	PART NUMBER	QTY	PART NAME 1 2 3 4 5 6 (PRODUCT LEVEL)	SEE PAGE
J	1	1	**7Y-5116**	1	RING	
J	2	1	**7Y-5117**	1	SEAL-U-CUP	
	3	1	**7Y-5119**	1	RING-RETAINING	
J	4	1	**9X-3592**	1	SEAL AS	
M	5	1	**087-5504**	1	LOCKNUT	
J	6	1	**170-9844**	1	SEAL-BUFFER	
	7	1	**126-2043**	1	HEAD	
	8	1	**158-9062**	1	PISTON	
	9	1	**165-9231**	1	CYLINDER AS	
	9A	1	**163-3748**	1	BEARING-SLEEVE	
	10	1	**165-9233**	1	ROD AS	
	10A	1	**163-3751**	1	BEARING-SLEEVE	
J	11	1	**165-9286**	1	SEAL-LIP	
J	12	1	**179-9674**	1	RING	
J	13	1	**087-5510**	1	RING	
J	14	1	**095-1717**	1	SEAL-O-RING	
	15	1	**114-0756**	1	BEARING-SLEEVE	
J	16	1	**158-9063**	2	RING	
M	17	1	**7Y-5216**	8	BOLT-SOCKET HEAD (M20X2.5X80MM)	
					AVAILABLE REPAIR KIT(S):	
J			**158-9092**	1	KIT-SEAL	

J-KIT MARKED J SERVICES PART(S) MARKED J
M-METRIC PART

158-9061 **CYLINDER GP-BUCKET** ***(contd.)*** **i01891505**

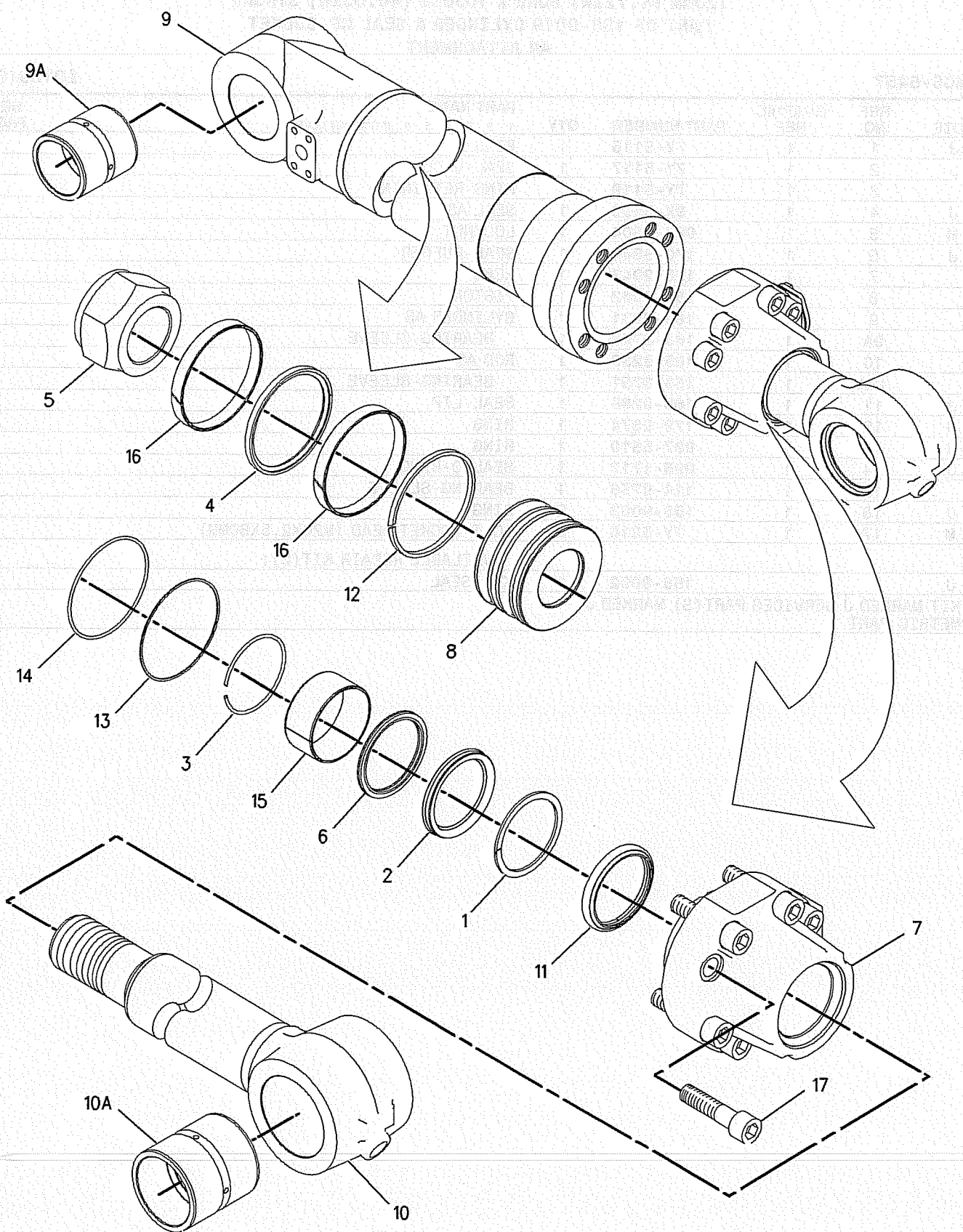

GRAPHIC #1

<END>

g00708590

HYDRAULIC SYSTEM

179-9764 CYLINDER GP-BUCKET

S/N: SBN1-UP; RAW1-UP
PART OF 158-9021 CYLINDER & SEAL GP-BUCKET
AN ATTACHMENT

SMCS-5457 **i01402222**

NOTE	REF NO	GRAPHIC REF	PART NUMBER	QTY	PART NAME 1 2 3 4 5 6 (PRODUCT LEVEL)	SEE PAGE
	1	1	**7I-1353**	1	HEAD	
M	2	1	**7Y-4622**	1	LOCKNUT	
J	3	1	**9X-3595**	1	SEAL AS	
	4	1	**093-1571**	1	RING-RETAINING	
J	5	1	**096-1587**	1	SEAL-U-CUP	
J	6	1	**096-1588**	1	RING-BACKUP	
J	7	1	**123-2048**	1	SEAL-BUFFER	
J	8	1	**150-5884**	1	RING	
J	9	1	**165-9287**	1	SEAL-LIP TYPE	
	10	1	**179-9765**	1	CYLINDER AS	
	10A	1	**163-3748**	1	BEARING-SLEEVE	
	11	1	**179-9768**	1	ROD AS	
	11A	1	**137-2820**	1	BEARING-SLEEVE (95.18MM OD)	
	12	1	**179-9770**	1	PISTON	
J	13	1	**179-9771**	2	RING	
J	14	1	**095-1631**	1	SEAL-O-RING (119.6MM ID)	
	15	1	**114-0758**	1	BEARING-SLEEVE	
J	16	1	**7Y-4633**	1	RING	
M	17	1	**7Y-5216**	8	BOLT-SOCKET HEAD (M20X2.5X80MM)	
					AVAILABLE REPAIR KIT(S):	
J			**179-9772**	1	KIT-SEAL	

J-KIT MARKED J SERVICES PARTS MARKED J
M-METRIC PART

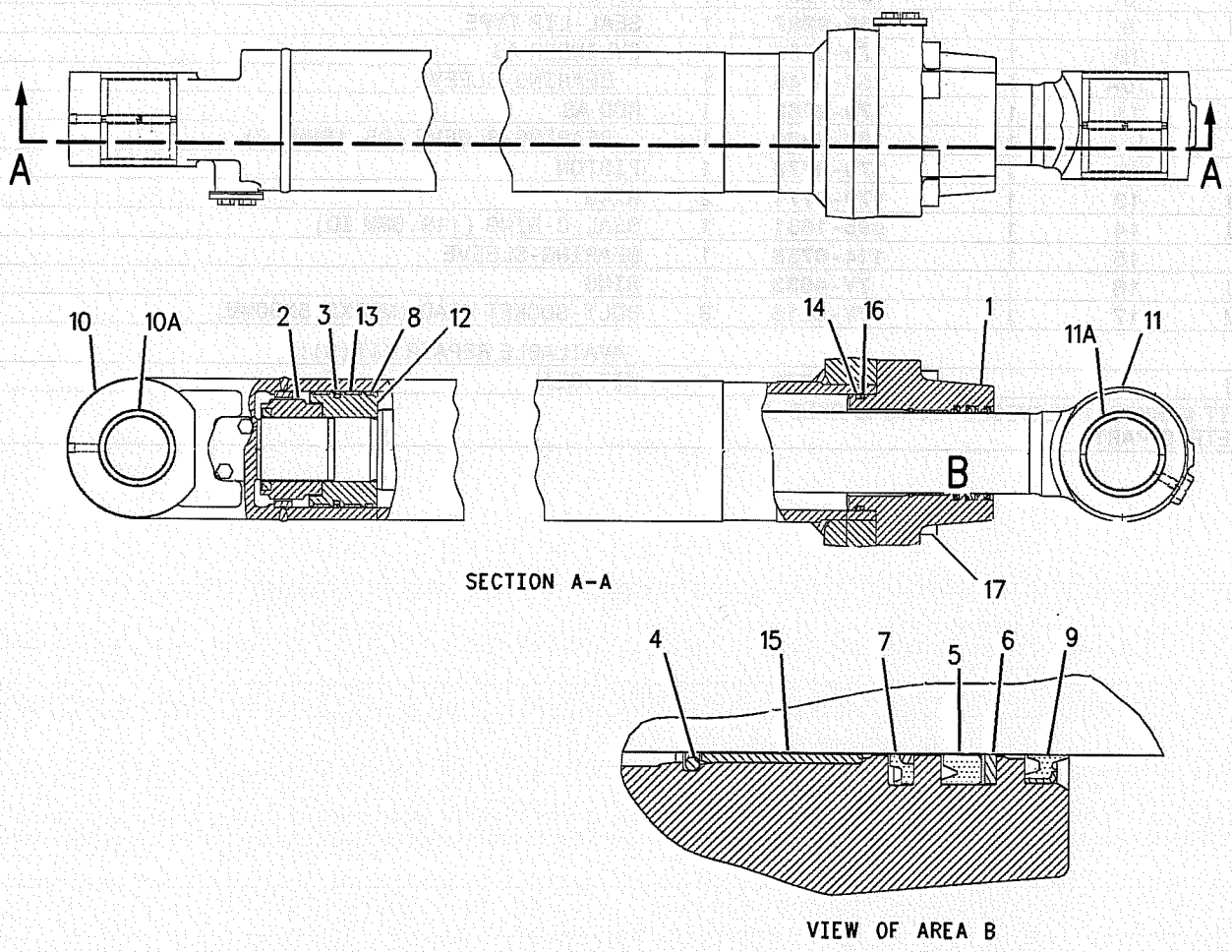

GRAPHIC #1

<END>

g00680821

158-9059 CYLINDER GP-STICK

S/N: SBN1-UP; RAW1-UP
140MM (5.60 IN) BORE X 1430MM (57.20 IN) STROKE
PART OF 158-9015 CYLINDER & SEAL GP-STICK
AN ATTACHMENT

SMCS-5458 **i01892252**

NOTE	REF NO	GRAPHIC REF	PART NUMBER	QTY	PART NAME 1 2 3 4 5 6 (PRODUCT LEVEL)	SEE PAGE
M	1	1	**123-2060**	1	LOCKNUT	
	2	1	**158-9064**	1	PISTON	
J	3	1	**158-9065**	2	RING	
	4	1	**165-9226**	1	CYLINDER AS	
	4A	1	**163-3747**	1	BEARING-SLEEVE	
	5	1	**165-9228**	1	ROD AS	
	5A	1	**163-3747**	1	BEARING-SLEEVE	
J	6	1	**179-9667**	1	RING	
	7	1	**087-5431**	1	STOP	
	8	1	**087-5434**	1	HEAD	
J	9	1	**087-5436**	1	RING	
	10	1	**093-1572**	1	RING-RETAINING	
	11	1	**095-0929**	2	RING-RETAINING	
J	12	1	**095-1632**	1	SEAL-O-RING	
J	13	1	**096-2664**	1	SEAL-U-CUP	
J	14	1	**096-2665**	1	RING	
	15	1	**103-8378**	1	RING-RETAINING	
	16	1	**103-8379**	1	RING	
	17	1	**103-8380**	1	STOP	
	18	1	**114-0757**	1	BEARING-SLEEVE	
J	19	1	**170-9847**	1	SEAL-BUFFER	
J	20	1	**165-9289**	1	SEAL-LIP TYPE	
J	21	1	**6I-6787**	1	RING-SEAL	
M	22	1	**7Y-5215**	8	BOLT-SOCKET HEAD (M24X3X90MM)	
J	23	1	**9X-3598**	1	SEAL AS	
					AVAILABLE REPAIR KIT(S):	
J			**209-5874**	1	KIT-SEAL	

J-KIT MARKED J SERVICES PART(S) MARKED J
M-METRIC PART

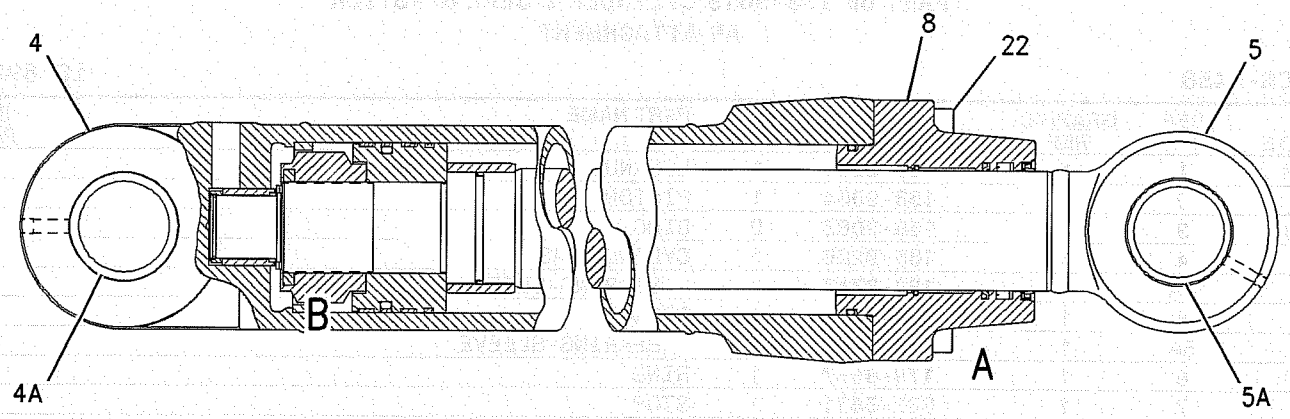

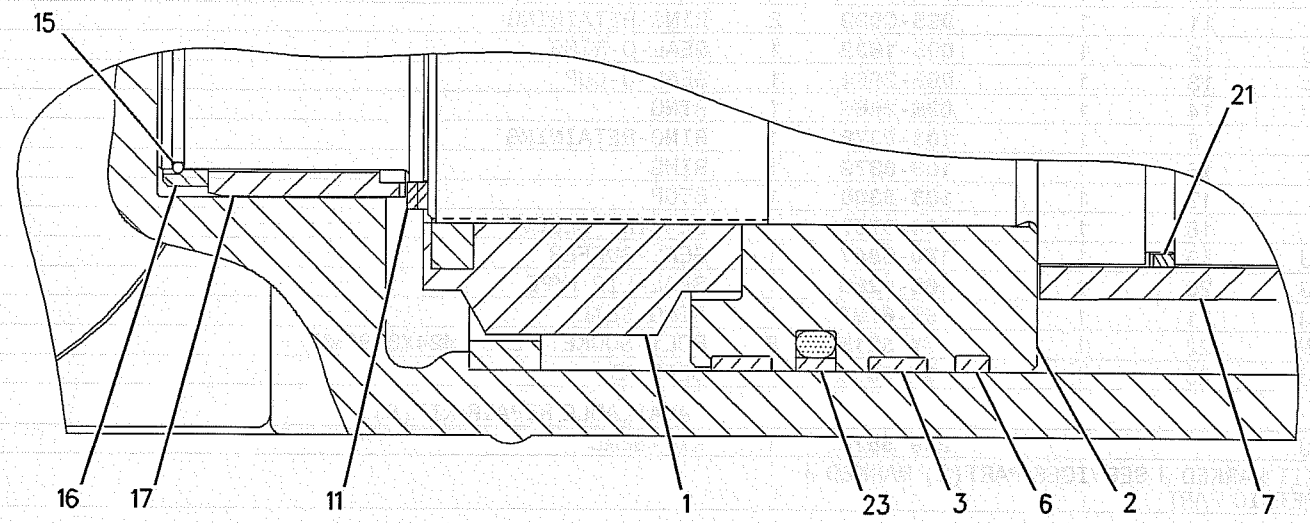

VIEW OF AREA B

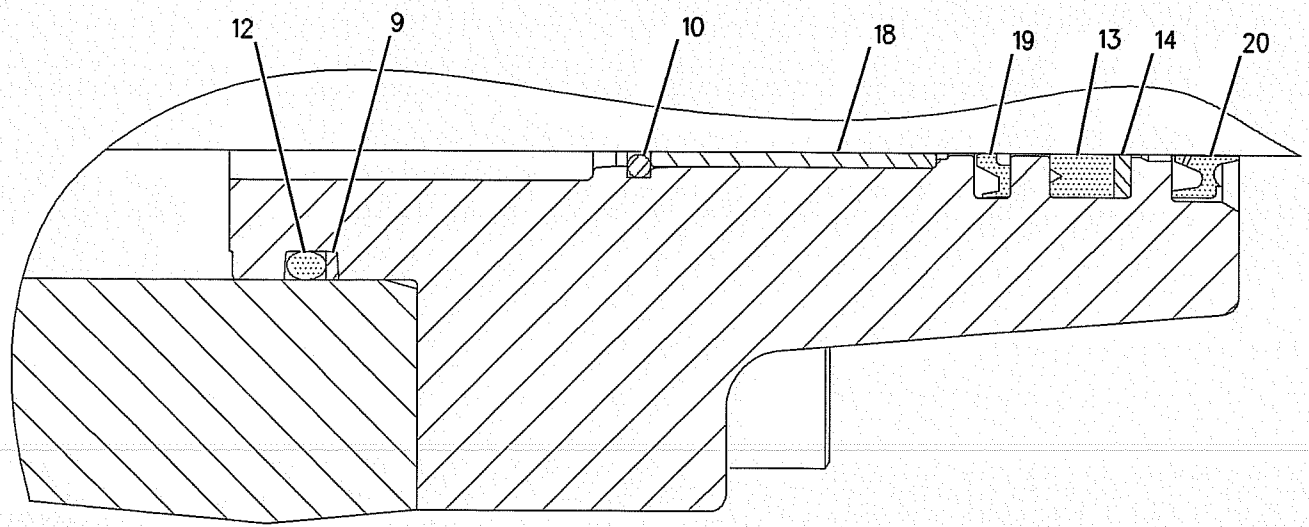

VIEW OF AREA A

GRAPHIC #1

<END>

g00984963

HYDRAULIC SYSTEM

158-9060 CYLINDER GP-STICK

S/N: SBN1-UP; RAW1-UP
140MM (5.60 IN) BORE X 1518MM (60.72 IN) STROKE
PART OF 158-9017 CYLINDER & SEAL GP-STICK
AN ATTACHMENT

SMCS-5458 **i01889808**

NOTE	REF NO	GRAPHIC REF	PART NUMBER	QTY	PART NAME 1 2 3 4 5 6 (PRODUCT LEVEL)	SEE PAGE
M	1	1	**123-2060**	1	LOCKNUT	
	2	1	**158-9064**	1	PISTON	
J	3	1	**158-9065**	2	RING	
	4	1	**165-9229**	1	CYLINDER AS	
	4A	1	**163-3747**	1	BEARING-SLEEVE	
	5	1	**165-9230**	1	ROD AS	
	5A	1	**163-3747**	1	BEARING-SLEEVE	
J	6	1	**179-9667**	1	RING	
	7	1	**087-5431**	1	STOP	
	8	1	**087-5434**	1	HEAD	
J	9	1	**087-5436**	1	RING	
	10	1	**093-1572**	1	RING-RETAINING	
	11	1	**095-0929**	2	RING-RETAINING	
J	12	1	**095-1632**	1	SEAL-O-RING	
J	13	1	**096-2664**	1	SEAL-U-CUP	
J	14	1	**096-2665**	1	RING	
	15	1	**103-8378**	1	RING-RETAINING	
	16	1	**103-8379**	1	RING	
	17	1	**103-8380**	1	STOP	
	18	1	**114-0757**	1	BEARING-SLEEVE	
J	19	1	**170-9847**	1	SEAL-BUFFER	
J	20	1	**165-9289**	1	SEAL-LIP TYPE	
J	21	1	**6I-6787**	1	RING-SEAL	
M	22	1	**7Y-5215**	8	BOLT-SOCKET HEAD (M24X3X90MM)	
J	23	1	**9X-3598**	1	SEAL AS	
					AVAILABLE REPAIR KIT(S):	
J			**209-5874**	1	KIT-SEAL	

J-KIT MARKED J SERVICES PART(S) MARKED J
M-METRIC PART

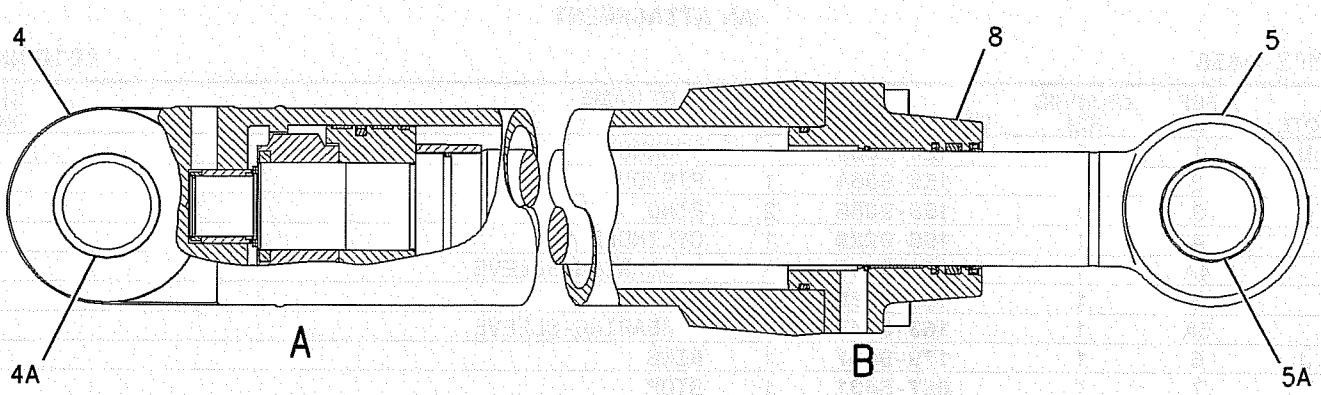

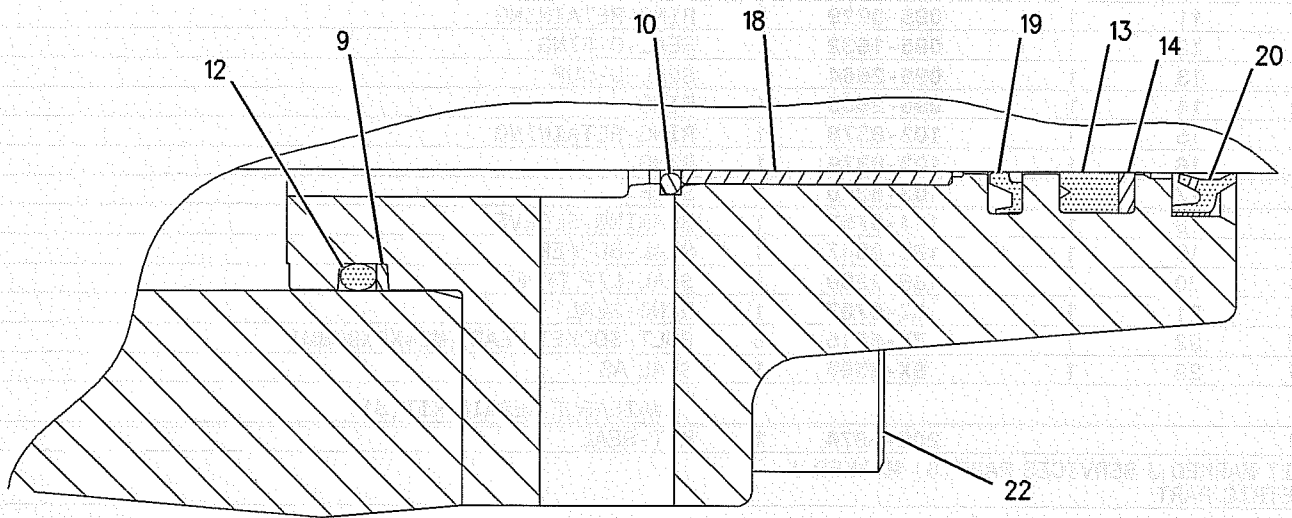

VIEW OF AREA B

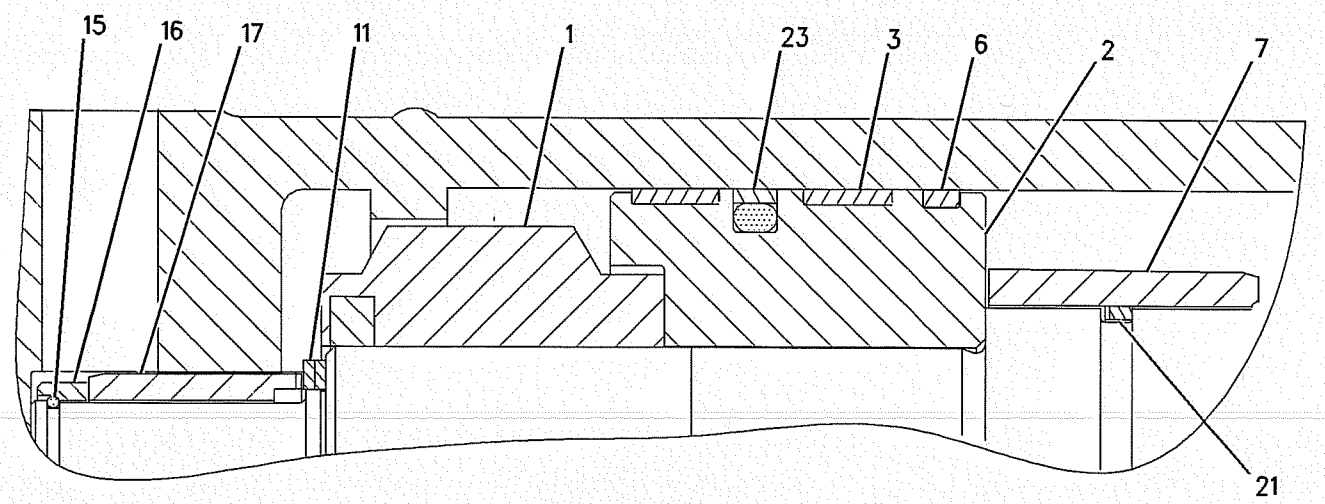

VIEW OF AREA A

GRAPHIC #1

<END>

g00677436

HYDRAULIC SYSTEM

191-5537 DRIVE GP-AUXILIARY PUMP

S/N: SBN1-UP; RAW1-UP
PART OF 179-9614 DRIVE GP-PUMP
AN ATTACHMENT

SMCS-3108 **i01400972**

NOTE	REF NO	GRAPHIC REF	PART NUMBER	QTY	PART NAME 1 2 3 4 5 6 (PRODUCT LEVEL)	SEE PAGE
M	1	1	**8T-3957**	8	BOLT-HEX SOCKET (M12X1.75X30MM)	
M	2	1	**8T-4189**	2	BOLT (M8X1.25X20MM)	
M	3	1	**8T-4192**	2	BOLT (M12X1.75X25MM)	
	4	1	**191-5601**	2	BEARING	
	5	1	**096-0121**	1	SEAL-O-RING	
	6	1	**191-5541**	1	COVER	
	7	1	**8T-5049**	1	SEAL-O-RING (101.27MM ID)	
	8	1	**177-2585**	1	COVER	
	9	1	**173-3436**	1	COVER	
	10	1	**095-1680**	1	SEAL-O-RING	
	11	1	**9S-4191**	1	PLUG-O-RING	
	12	1	**3J-1907**	1	SEAL-O-RING (11.89MM ID)	
	13	1	*191-5538*	1	BODY	
	14	1	**099-2096**	2	BALL BEARING	
	15	1	**173-3406**	1	SHAFT	
	16	1	**191-5540**	1	GEAR	
	17	1	**191-5539**	1	SHAFT	
	18	1	**129-7857**	1	GASKET	
	19	1	**094-1875**	2	DOWEL	

M-METRIC PART

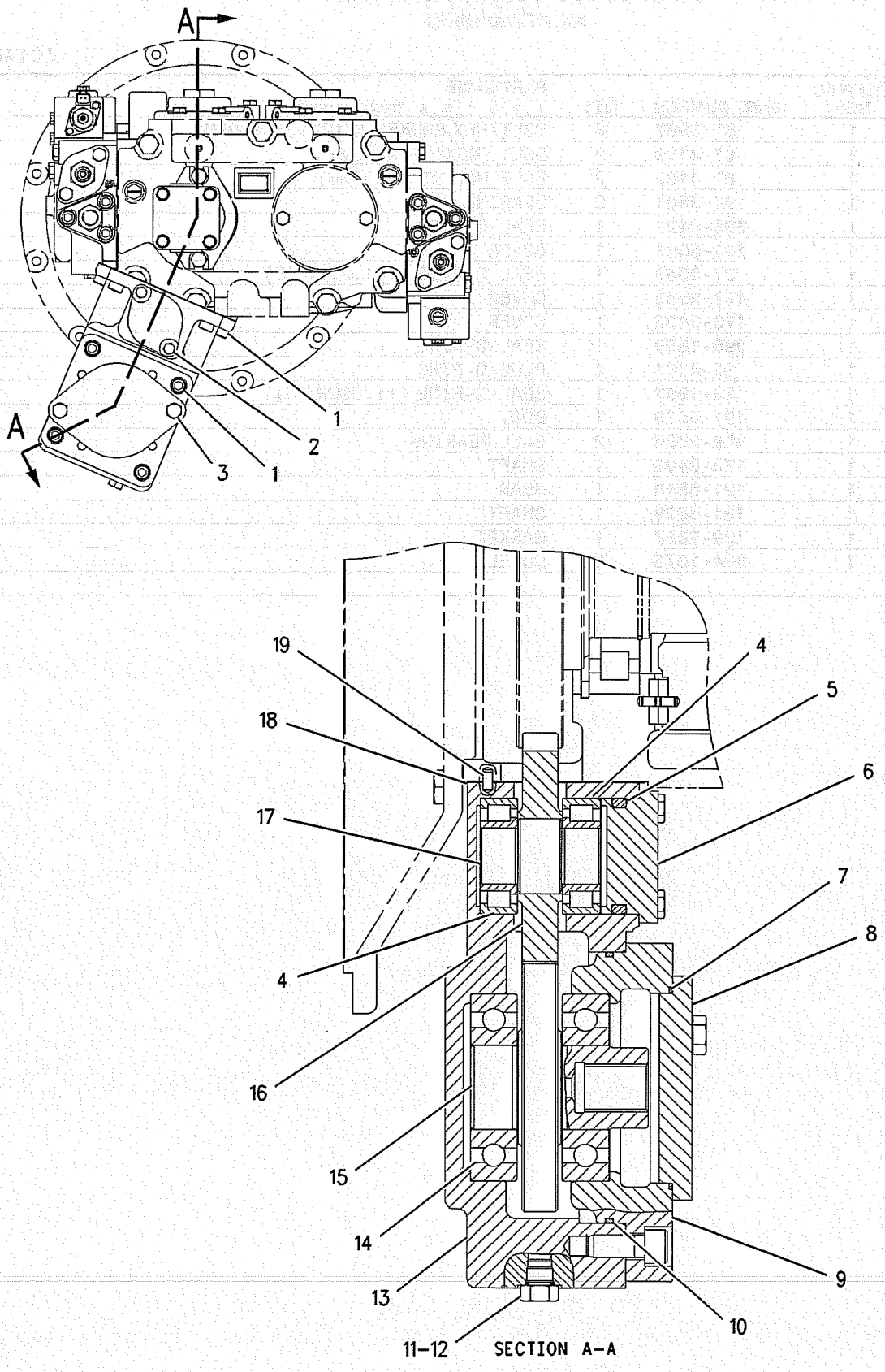

GRAPHIC #1

<END>

g00739997

HYDRAULIC SYSTEM

179-9614 DRIVE GP-PUMP

S/N: SBN1-UP; RAW1-UP
AN ATTACHMENT

SMCS-3108 **i01399757**

NOTE	PART NUMBER	QTY	PART NAME 1 2 3 4 5 6 (PRODUCT LEVEL)	SEE PAGE
Y	**191-5537**	1	DRIVE GP-AUXILIARY PUMP	247
	177-5940	1	SHEET AS	
M	**8T-3597**	2	NUT-WELD (M12X1.75 THD)	

M-METRIC PART
Y-SEPARATE ILLUSTRATION

<END>

HYDRAULIC SYSTEM

148-4644 DRIVE GP-SWING

S/N: SBN1-UP; RAW1-UP

PART OF 148-4679 DRIVE GP-SWING

SMCS-5459 **i01375366**

NOTE	REF NO	GRAPHIC REF	PART NUMBER	QTY	PART NAME 1 2 3 4 5 6 (PRODUCT LEVEL)	SEE PAGE
	1	1	**094-0584**	6	WASHER	
	2	1	**094-1509**	3	SHAFT-PLANETARY	
	3	1	**148-4733**	3	GEAR-PLANET	
	4	1	**114-1581**	1	SPACER	
	5	1	**148-4732**	1	GEAR-SUN	
	6	1	**093-1729**	2	RING-RETAINING	
	7	1	**148-4632**	1	GEAR-SUN	
	8	1	**191-2578**	1	CARRIER-PLANETARY	
	9	1	**7Y-1434**	1	SPACER	
	10	1	**148-4637**	1	CARRIER-PLANETARY	
	11	1	**148-4640**	1	RING-RETAINING	
	12	1	**148-4643**	1	BEARING	
	13	1	**095-1022**	1	BEARING-ROLLER	
	14	1	**148-4642**	1	SEAL-O-RING	
	15	1	**148-4639**	1	CAGE	
M	16	1	**8T-4183**	6	BOLT (M12X1.75X40 MM)	
	17	1	**8T-4223**	6	WASHER-HARD (13.5X25.5X3MM THK)	
	18	1	**148-4641**	2	SEAL-LIP TYPE	
	19	1	**148-4636**	1	SHAFT-PINION	
	20	1	**148-4638**	1	HOUSING	
	21	1	**3K-0360**	1	SEAL-O-RING (16.36MM ID)	
	22	1	**6V-7238**	1	VALVE-SHUTOFF	
	23	1	**148-4634**	3	SHAFT-PLANETARY	
	24	1	**095-0891**	3	PIN-SPRING	
	25	1	**148-4635**	1	GEAR-RING	
	26	1	**148-4633**	3	GEAR-PLANET	
	27	1	**7Y-0252**	6	BEARING AS-ROLLER	
	28	1	**094-0611**	6	WASHER	
	29	1	**096-4837**	3	PIN-SPRING	
	30	1	**094-1516**	3	BEARING-ROLLER	
	31	1	**171-9383**	1	SPACER	

M-METRIC PART

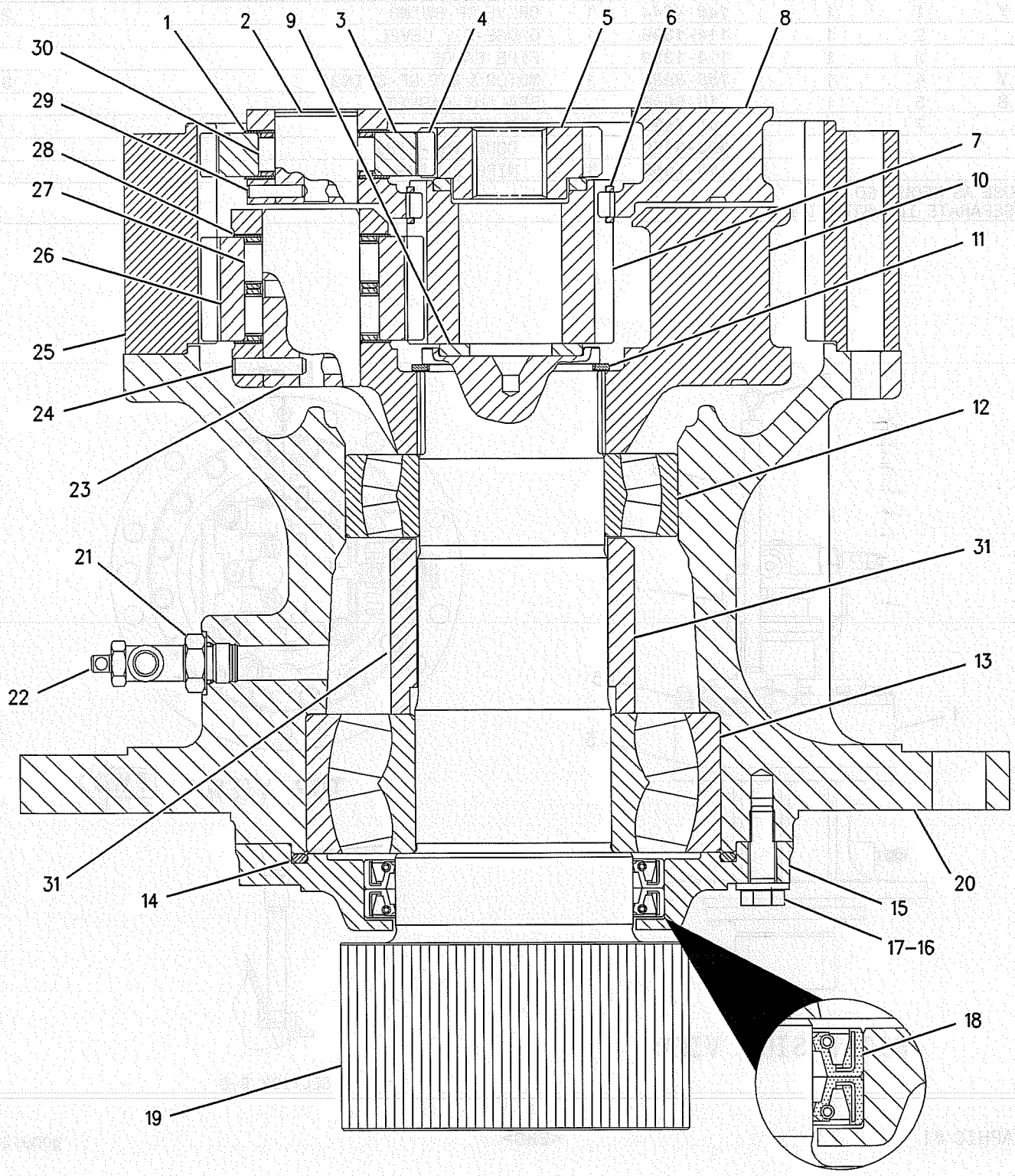

GRAPHIC #1 **<END>** g00726231

HYDRAULIC SYSTEM

148-4679 DRIVE GP-SWING

S/N: SBN1-UP; RAW1-UP
WITH MOTOR
PART OF 148-4681 POWER TRAIN AR

SMCS-5459 **i01784554**

NOTE	REF NO	GRAPHIC REF	PART NUMBER	QTY	PART NAME 1 2 3 4 5 6 (PRODUCT LEVEL)	SEE PAGE
Y	1	1	*148-4644*	1	DRIVE GP-SWING	250
	2	1	**114-1398**	1	GAUGE-OIL LEVEL	
	3	1	**114-1399**	1	PIPE-GAUGE	
Y	4	1	*158-8985*	1	MOTOR & MTG GP-SWING	378
B	5	1	**1U-8846**		SEALANT-GASKET	
	7	1	**4I-7527**	1	BREATHER AS	
		1	**093-5150**	1	COUPLING-PIPE	
		1	**159-7665**	1	NIPPLE-PIPE	

B-USE AS REQUIRED
Y-SEPARATE ILLUSTRATION

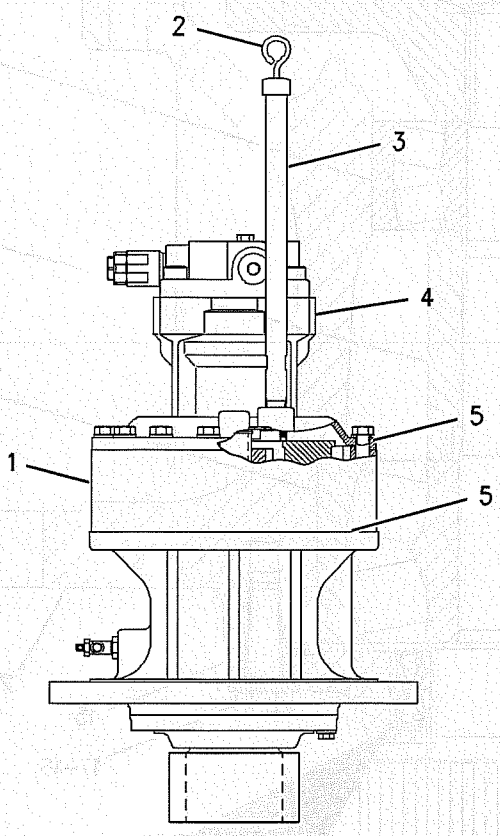

RIGHT SIDE VIEW

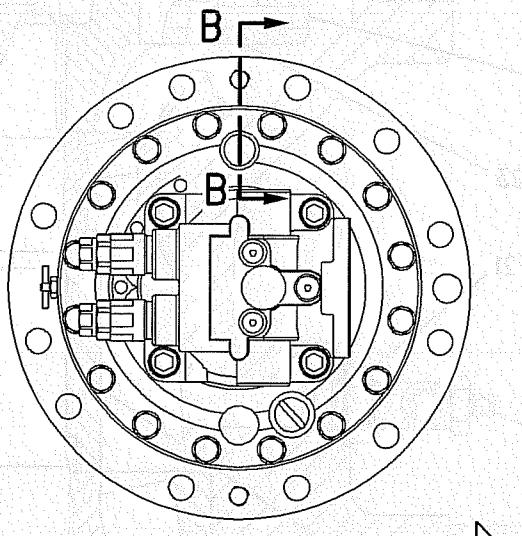

TOP VIEW FWD

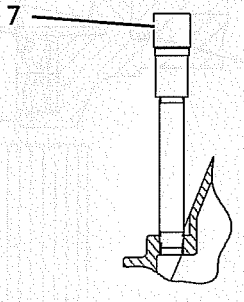

SECTION B-B

GRAPHIC #1 **<END>** g00912825

HYDRAULIC SYSTEM

148-4682 FASTENER GP-SWING & FINAL DR

S/N: SBN1-UP; RAW1-UP

PART OF 148-4681 POWER TRAIN AR

SMCS-4050, 5459 **i01375700**

NOTE	REF NO	GRAPHIC REF	PART NUMBER	QTY	PART NAME 1 2 3 4 5 6 (PRODUCT LEVEL)	SEE PAGE
M	1	1	**7X-2563**	32	BOLT (M20X2.5X60MM)	
M	2	1	**7X-2576**	12	BOLT (M24X3X70MM)	
	3	1	**8T-4123**	32	WASHER-PLATED (3.5MM THK)	
	4	1	**8T-4167**	12	WASHER-HARD (4MM THK)	
	5	1	**096-4755**	1	PIN	
B	6	1	**1U-8846**		SEALANT	
	7	1	**2Y-5503**	2	CORK	
E	8	1	**5P-0767**		HOSE (67CM)	
	9	1	**5D-1026**	1	CLAMP-HOSE	
	10	1	**114-1374**	1	SUPPORT	
M	11	1	**8T-4191**	1	BOLT (M10X1.50X16MM)	
	12	1	**8T-4121**	1	WASHER-HARD (11X21X2.5MM THK)	

B-USE AS REQUIRED
E-ORDER BY THE CENTIMETER
M-METRIC PART

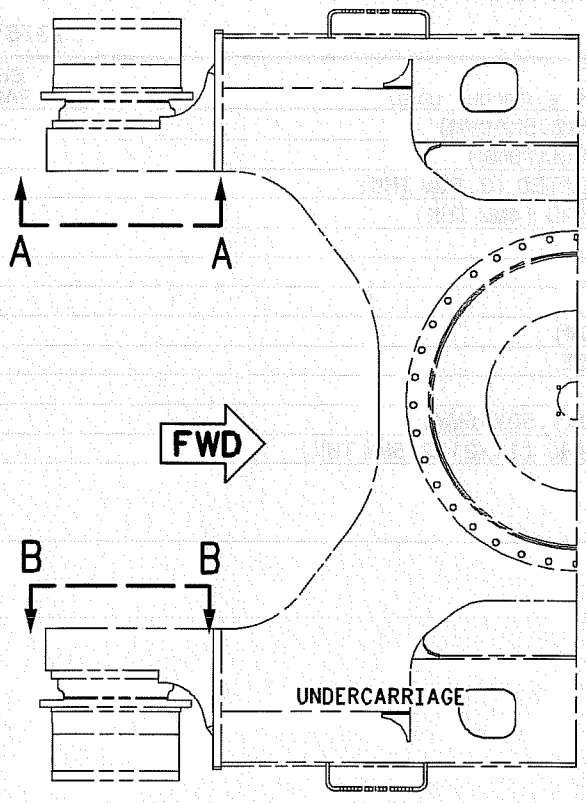

TOP VIEW

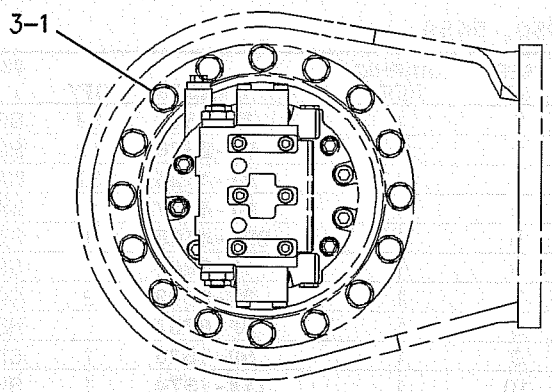

VIEW A-A

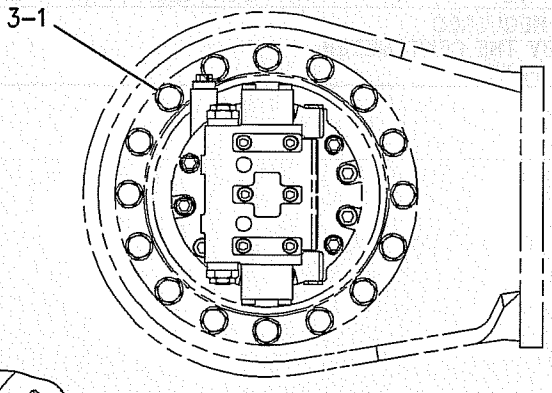

VIEW B-B

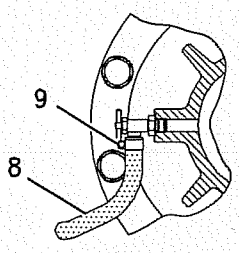

VIEW D-D

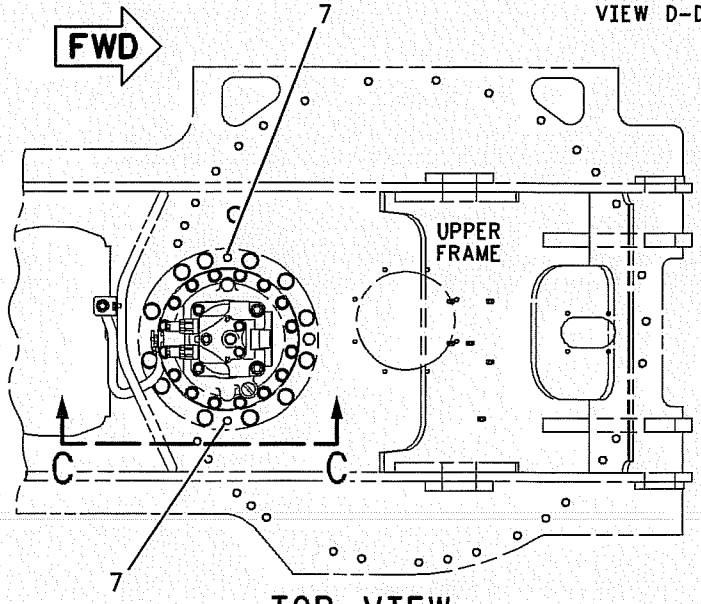

TOP VIEW

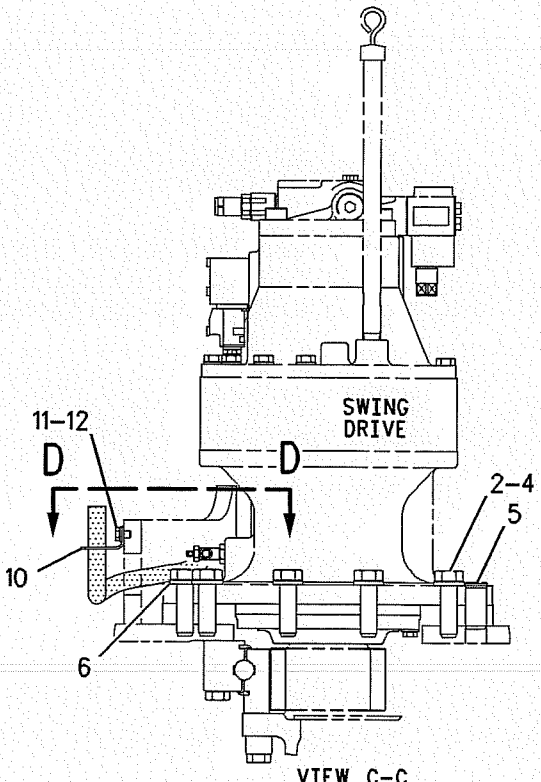

VIEW C-C

GRAPHIC #1 **<END>** g00670764

158-8987 FILTER & VALVE GP-PILOT

S/N: SBN1-UP; RAW1-UP

PART OF 142-7671 TANK & FILTER GP-HYDRAULIC

SMCS-5072, 5092 **i01889858**

NOTE	REF NO	GRAPHIC REF	PART NUMBER	QTY	PART NAME 1 2 3 4 5 6 (PRODUCT LEVEL)	SEE PAGE
	1	1	**5I-8670**	1	FILTER AS-OIL (HYDRAULIC)	
	2	1	**215-4909**	1	VALVE GP-PILOT RELIEF	
	2A	1	**095-1584**	1	SEAL-O-RING	
	2B	1	**095-1590**	1	SEAL-O-RING	
	2C	1	**095-1596**	1	SEAL-O-RING	

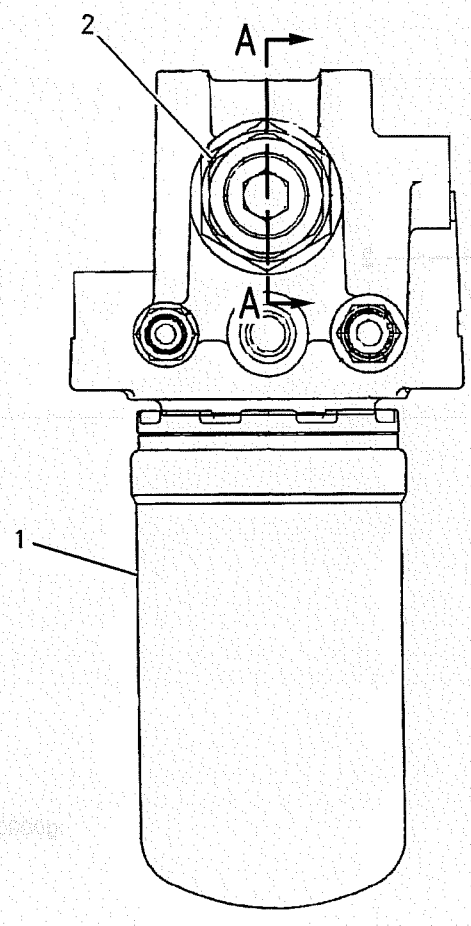

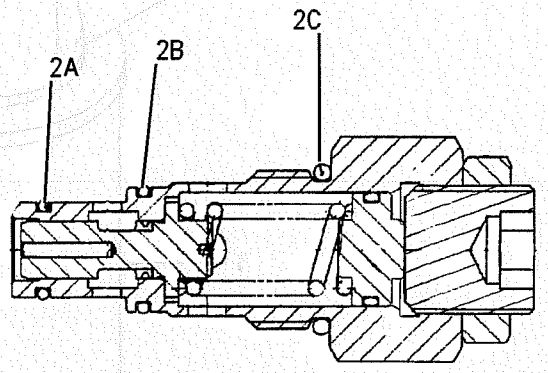

SECTION A-A

GRAPHIC #1 **<END>** g00842119

HYDRAULIC SYSTEM

126-2075 FILTER GP-OIL

S/N: SBN1-UP; RAW1-UP

PART OF 142-7671 TANK & FILTER GP-HYDRAULIC

SMCS-3004, 3067, 4295, 431F, 5068, 5092 **i01336815**

NOTE	REF NO	GRAPHIC REF	PART NUMBER	QTY	PART NAME 1 2 3 4 5 6 (PRODUCT LEVEL)	SEE PAGE
	1	1	**093-7521**	1	FILTER-RETURN	
	2	1	**126-2076**	1	HEAD AS	

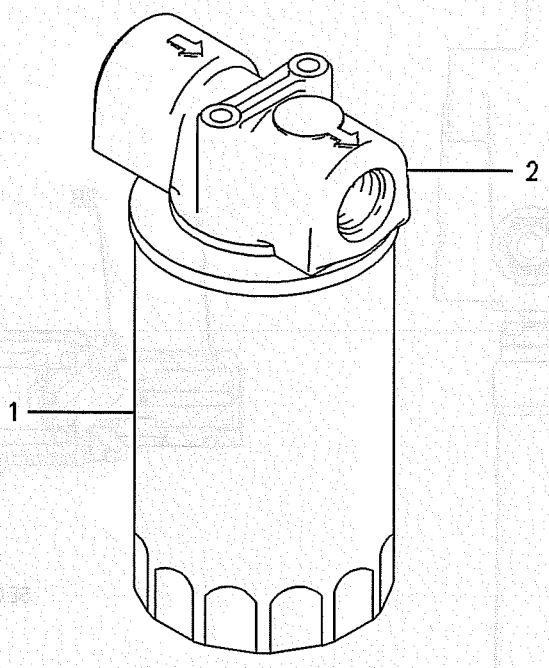

GRAPHIC #1 **<END>** g00258224

HYDRAULIC SYSTEM

158-9005 FILTER GP-OIL

S/N: SBN1-UP; RAW1-UP

PART OF 142-7671 TANK & FILTER GP-HYDRAULIC

SMCS-3004, 3067, 4295, 431F, 5068, 5092 **i01356936**

NOTE	REF NO	GRAPHIC REF	PART NUMBER	QTY	PART NAME 1 2 3 4 5 6 (PRODUCT LEVEL)	SEE PAGE
Y	1	1	**173-3503**	1	BASE GP-OIL FILTER	216
	2	1	**129-8034**	1	VALVE AS	
	3	1	**123-2003**	2	SEAL-O-RING	
	4	1	**173-3507**	1	HOUSING AS	
M	5	1	**8T-4194**	8	BOLT (M12X1.75X50MM)	
	6	1	**8T-4223**	8	WASHER-HARD (3MM THK)	
Y	7	1	**173-3511**	1	FILTER GP-OIL	259
	8	1	**173-3510**	1	COVER	
	9	1	**173-3518**	1	INDICATOR AS	
	10	1	**159-7784**	1	SEAL-O-RING	
M	11	1	**6V-4298**	4	BOLT (M5X0.8X16MM)	
	12	1	**8T-0328**	4	WASHER-HARD (1MM THK)	
M	13	1	**8T-6693**	4	SCREW-MACHINE (M5X0.8X16MM)	
	14	1	**173-3509**	1	NAMEPLATE	
	15	1	**116-3522**	2	SCREW-DRIVE	

M-METRIC PART
Y-SEPARATE ILLUSTRATION

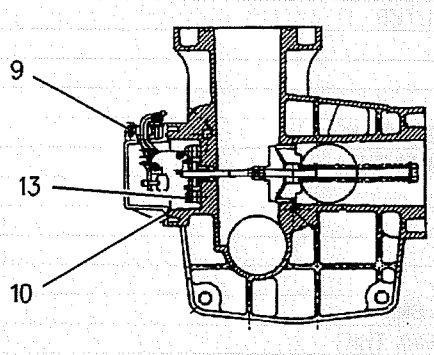

SECTION A-A

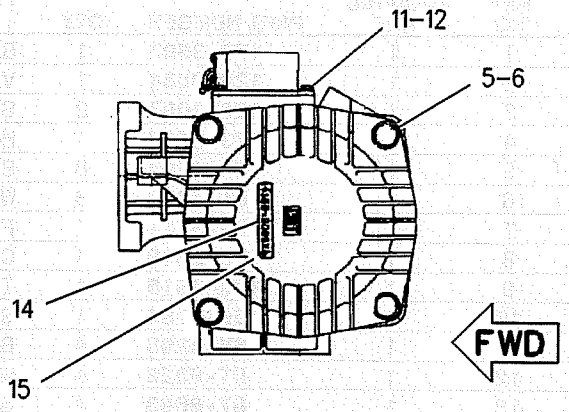

TOP VIEW

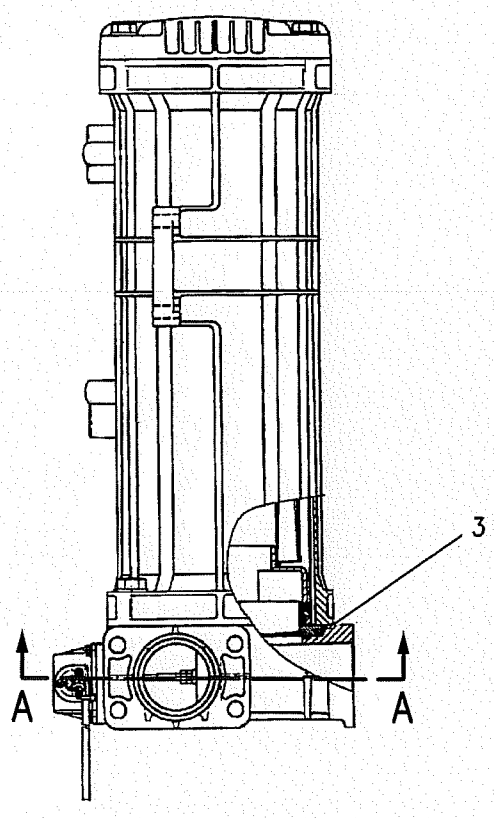

FRONT VIEW

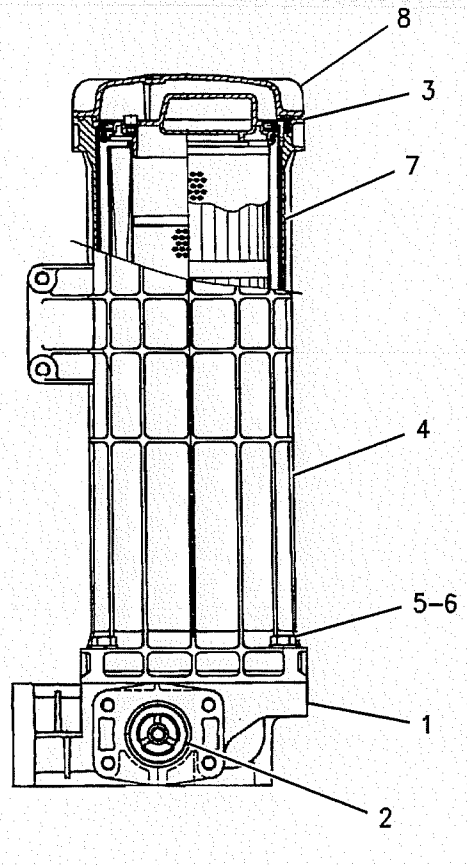

LEFT SIDE VIEW

GRAPHIC #1 **<END>** g00670851

HYDRAULIC SYSTEM

173-3511 FILTER GP-OIL

S/N: SBN1-UP; RAW1-UP

PART OF 158-9005 FILTER GP-OIL

SMCS-3004, 3067, 4295, 431F, 5068, 5092 **i01394483**

NOTE	REF NO	GRAPHIC REF	PART NUMBER	QTY	PART NAME 1 2 3 4 5 6 (PRODUCT LEVEL)	SEE PAGE
	1	1	**173-3512**	1	PLATE-SLIDE	
M	2	1	**173-3529**	6	BOLT	
	3	1	**3T-7528**	6	SEAL-O-RING (5.8MM ID)	
	4	1	**173-3513**	1	BASE-ELEMENT	
	5	1	**3E-4297**	2	SEAL-O-RING	
M	6	1	**137-3626**	1	BOLT-SHOULDER (M6X1X28.75MM)	
	7	1	*173-3514*	1	SHELL AS	
	8	1	**126-2081**	1	FILTER ELEMENT-HYDRAULIC	
	9	1	**137-3623**	4	SEAL-O-RING	
	10	1	**6V-7658**	2	SEAL-O-RING (59.4 ID)	
	11	1	**177-2553**	1	SEAL	
	12	1	**095-1681**	1	SEAL-O-RING	
	13	1	**173-3515**	1	RING-RETAINING	
	14	1	**173-3516**	1	HANDLE	
	15	1	**4J-7533**	1	SEAL-O-RING (6.07MM ID)	
	16	1	**9S-4180**	1	PLUG-O-RING	
	18	1	**137-3625**	2	PAD	
	19	1	**173-3517**	1	PLATE	
B	20	1	**137-3628**	1	SHIM (0.1MM THK)	
	21	1	**173-3508**	1	FILM-INSTRUCTION	

B-USE AS REQUIRED
M-METRIC PART

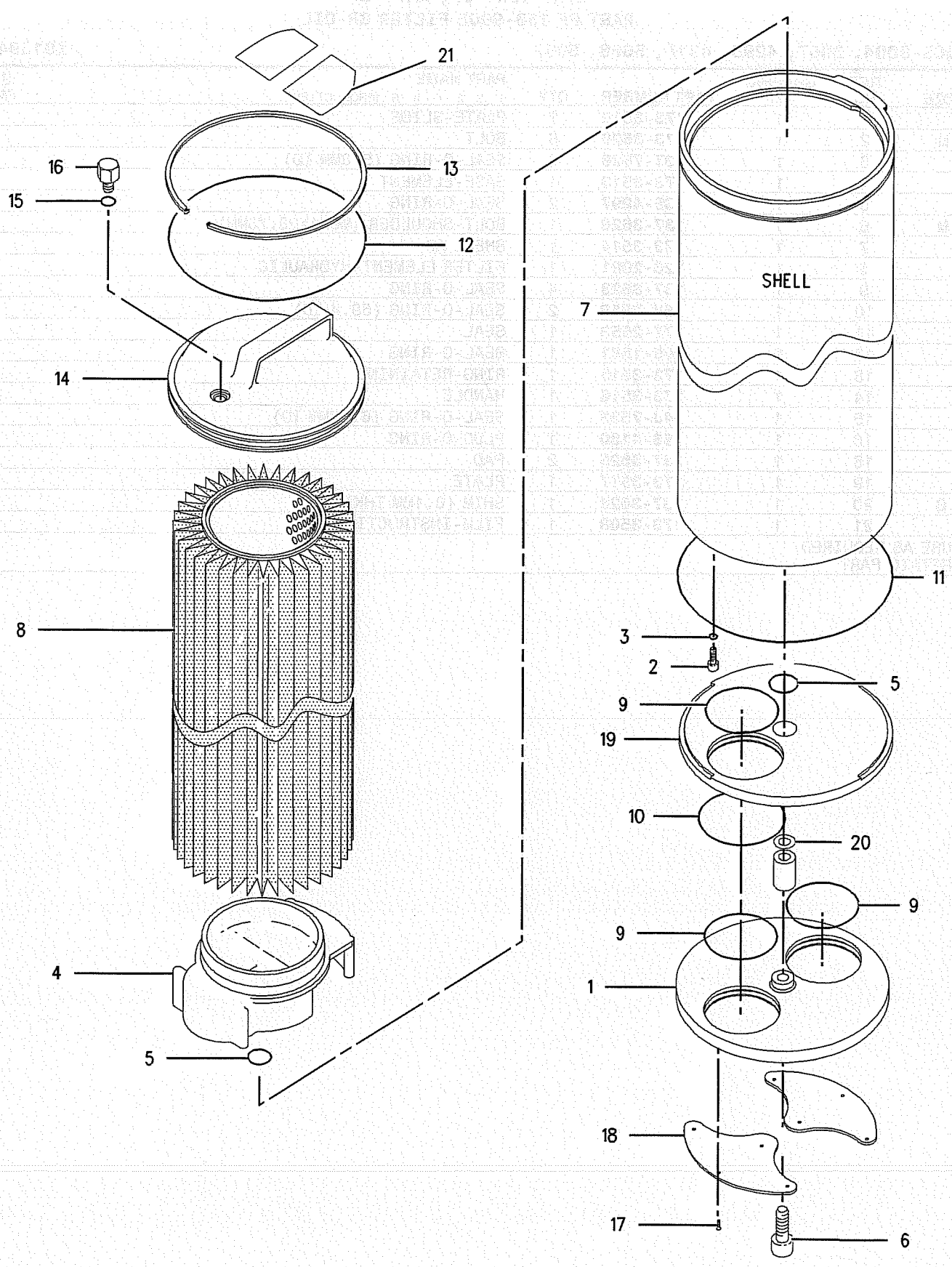

GRAPHIC #1

<END>

g00708375

HYDRAULIC SYSTEM

214-4512 FITTING GP

S/N: SBN1-UP; RAW1-UP

PART OF 199-7293 LINES GP-PILOT

SMCS-5057 **i01889590**

NOTE	PART NUMBER	QTY	PART NAME 1 2 3 4 5 6 (PRODUCT LEVEL)	SEE PAGE
	214-4401	1	TEE AS (FABRICATED TEE)	
Z		1	TEE	
	2M-9780	1	SEAL-O-RING	
	6V-8397	1	SEAL-O-RING	
	6V-8398	1	SEAL-O-RING	
			-OR-	
	214-4519	1	CONNECTOR AS (TEE & REDUCER)	
			(ALTERNATE DESIGN)	
	115-8634	1	TEE-O-RING	
	6V-8398	2	SEAL-O-RING	
	2M-9780	1	SEAL-O-RING	
	6V-8936	1	REDUCER	
	6V-8397	1	SEAL-O-RING	

Z-NOT SERVICED SEPARATELY

<END>

HYDRAULIC SYSTEM

204-2683 HEAD GP-PUMP

S/N: SBN1-UP; RAW1-UP

PART OF 200-3366 PUMP GP-PISTON

i01642071

NOTE	REF NO	GRAPHIC REF	PART NUMBER	QTY	PART NAME 1 2 3 4 5 6 (PRODUCT LEVEL)	SEE PAGE
	1	1	179-9681	1	BODY AS (DRIVE)	
	2	1	094-1882	11	PLUG	
	3	1,2	9S-4191	2	PLUG	
	4	1,2	3J-1907	3	SEAL-O-RING	
M	5	1,2	6V-8200	6	BOLT-HEX SOCKET (M12X1.75X35MM)	
	6	1	173-3405	1	COVER	
	7	1	173-3413	1	COVER	
M	8	1	8T-4196	2	BOLT (M10X1.5X35MM)	
	9	2	173-3404	1	COVER	
M	10	2	8T-4136	2	BOLT (M10X1.5X25MM)	
	11	2	173-3398	1	COVER	
M	12	2	7I-2272	2	BOLT (M5X0.8X12MM)	
Y	13	2	111-9916	1	VALVE GP-SOLENOID	452
M	14	1	096-5400	2	SETSCREW-SOCKET	
M	15	1	096-4878	2	NUT	
	16	1	173-3389	1	STOP	
	17	1	185-0347	1	RING-BACKUP	
	18	1	190-7674	1	SEAL-O-RING	
	19	1	191-5599	1	PLUG	
	20	1	173-3384	1	PISTON (PUMP HEAD AC)	
	21	1	190-7673	1	SEAL-O-RING	
	22	1	185-0348	1	RING-BACKUP	
	23	1	173-3390	1	STOP	
	24	2	8F-8733	1	SEAL-O-RING	
	25	2	185-0201	1	PIN AS	
		2	129-7978	1	DOWEL	
	26	2	094-1875	1	DOWEL	
B	27	2	094-1881	1	PLATE-SLIDE	
	28	2	150-5797	1	PIN	
	29	2	173-3397	1	LEVER	
	30	2	095-1528	1	SEAL-O-RING	
	31	2	200-3246	1	SPRING	
	32	2	189-9763	3	SEAL-O-RING	
	33	2	099-3671	1	SPRING	
	34	2	3D-2891	1	BALL	
	35	2	200-3244	1	SPRING	
	36	2	200-3245	1	SPRING	
	37	2	095-1538	1	SEAL-O-RING	
	38	2	095-1527	1	SEAL-O-RING	
	39	2	200-3255	1	NUT	
	40	2	173-3387	1	ADJUSTER	
M	41	2	173-3411	1	SETSCREW (M8X1-6G THD)	
	42	2	200-3254	1	NUT	
	43	2	185-0172	1	RETAINER	
	44	2	095-1519	1	SEAL-O-RING	
	45	2	185-0169	1	GUIDE	
	46	2	191-5707	1	SPOOL AS	
B	47	2	099-6128	2	SHIM (1.90 MM THK)	
B		2	099-6126	2	SHIM (1.80 MM THK)	
B		2	099-6127	2	SHIM (1.85 MM THK)	
B		2	099-3670	2	SHIM (1.95 MM THK)	
B		2	099-6125	2	SHIM (1.75 MM THK)	
B		2	099-6123	2	SHIM (1.65 MM THK)	
B		2	099-6124	2	SHIM (1.70 MM THK)	
B		2	099-6122	2	SHIM (1.60 MM THK)	
B		2	099-6121	2	SHIM (1.55 MM THK)	

204-2683 HEAD GP-PUMP *(contd.)*

i01642071

NOTE	REF NO	GRAPHIC REF	PART NUMBER	QTY	PART NAME 1 2 3 4 5 6 (PRODUCT LEVEL)	SEE PAGE
B		2	**099-6119**	2	SHIM (1.45 MM THK)	
B		2	**099-6118**	2	SHIM (1.40 MM THK)	
B		2	**099-6117**	2	SHIM (1.35 MM THK)	
B		2	**099-6113**	2	SHIM (1.25 MM THK)	
B		2	**099-6115**	2	SHIM (1.30 MM THK)	
B		2	**099-6111**	2	SHIM (1.15 MM THK)	
B		2	**099-6112**	2	SHIM (1.20 MM THK)	
B		2	**099-6109**	2	SHIM (1.05 MM THK)	
B		2	**099-6110**	2	SHIM (1.10 MM THK)	
B		2	**099-6120**	2	SHIM (1.50 MM THK)	
B		2	**099-3669**	2	SHIM (1 MM THK)	

B-USE AS REQUIRED
M-METRIC PART
Y-SEPARATE ILLUSTRATION

204-2683 **HEAD GP-PUMP** *(contd.)* **i01642071**

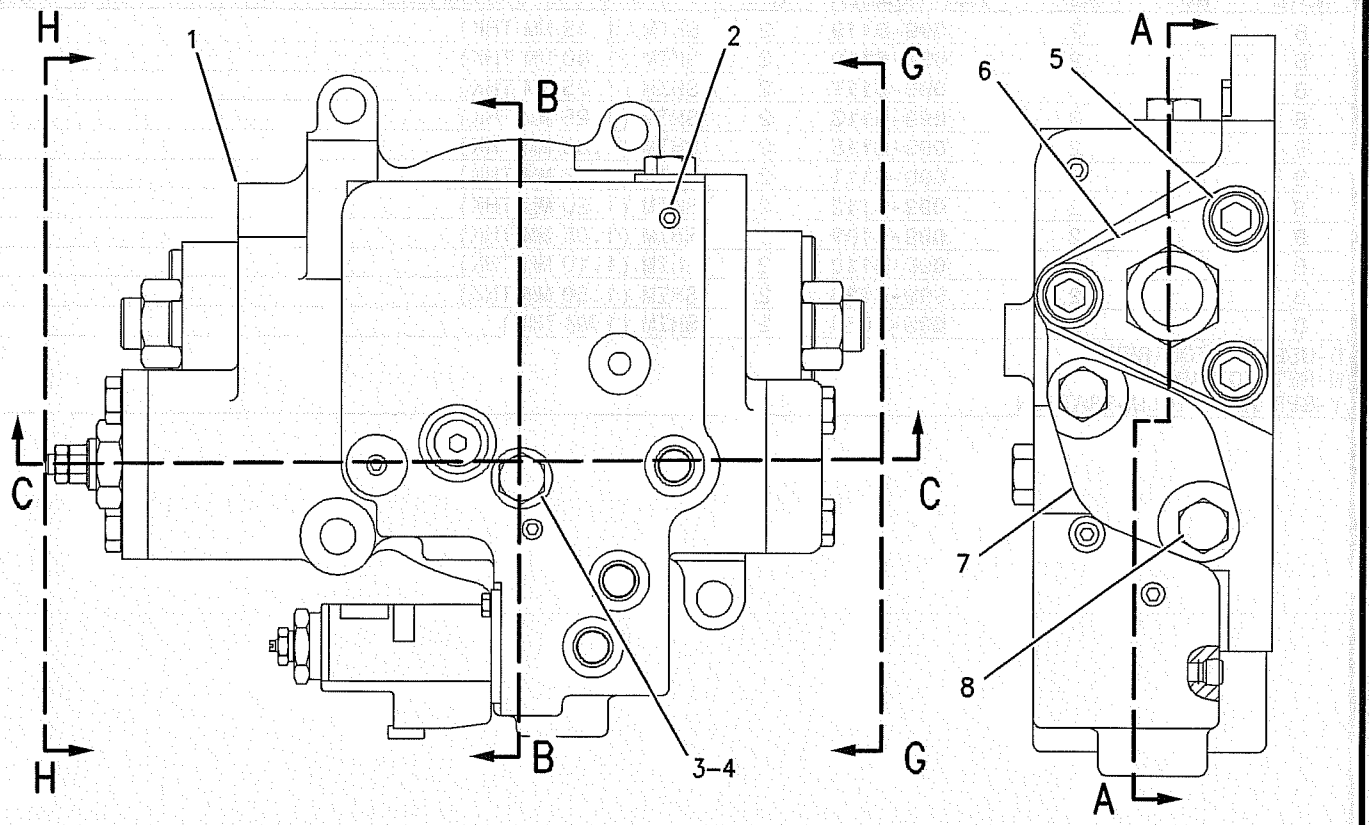

REFER TO ALL ILLUSTRATIONS OF THIS GROUP FOR AUXILIARY VIEWS

VIEWQ G-G

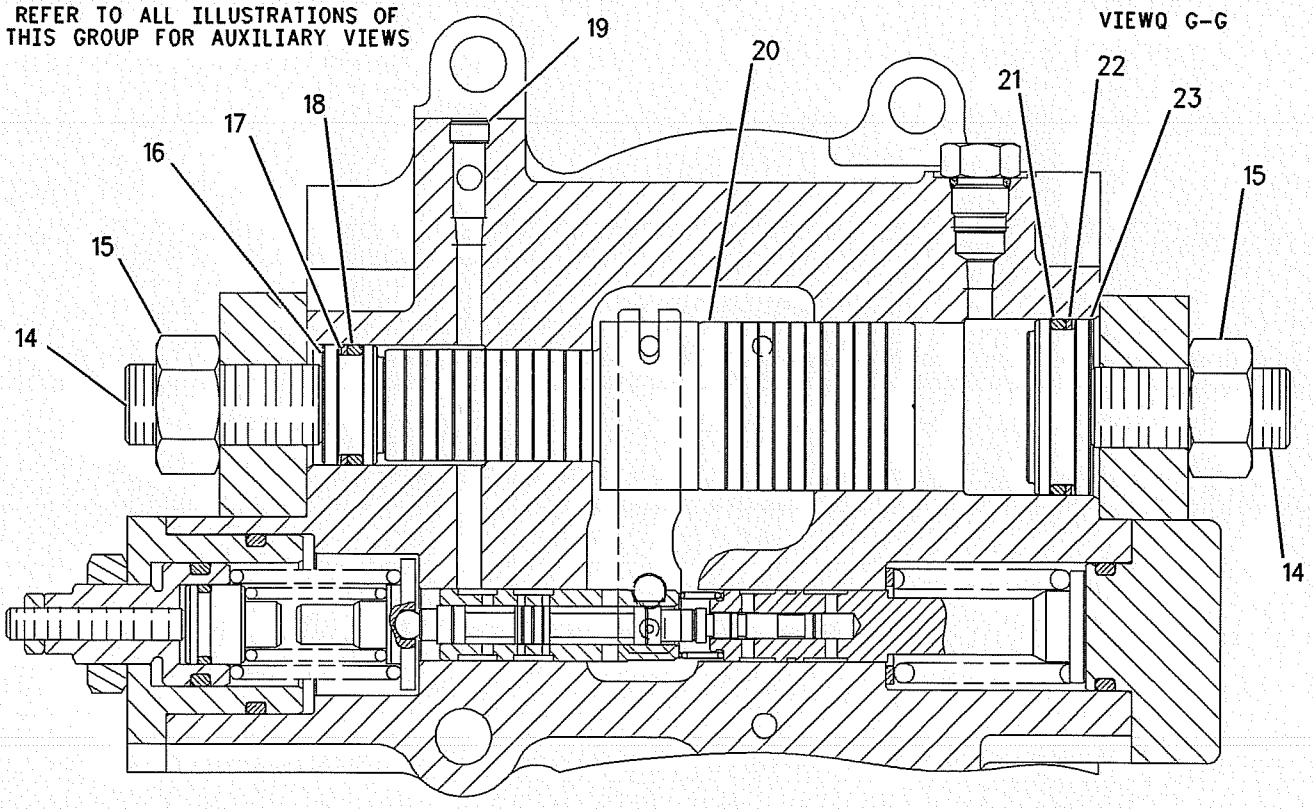

SECTION A-A

GRAPHIC #1

g00806115

204-2683 **HEAD GP-PUMP** *(contd.)* **i01642071**

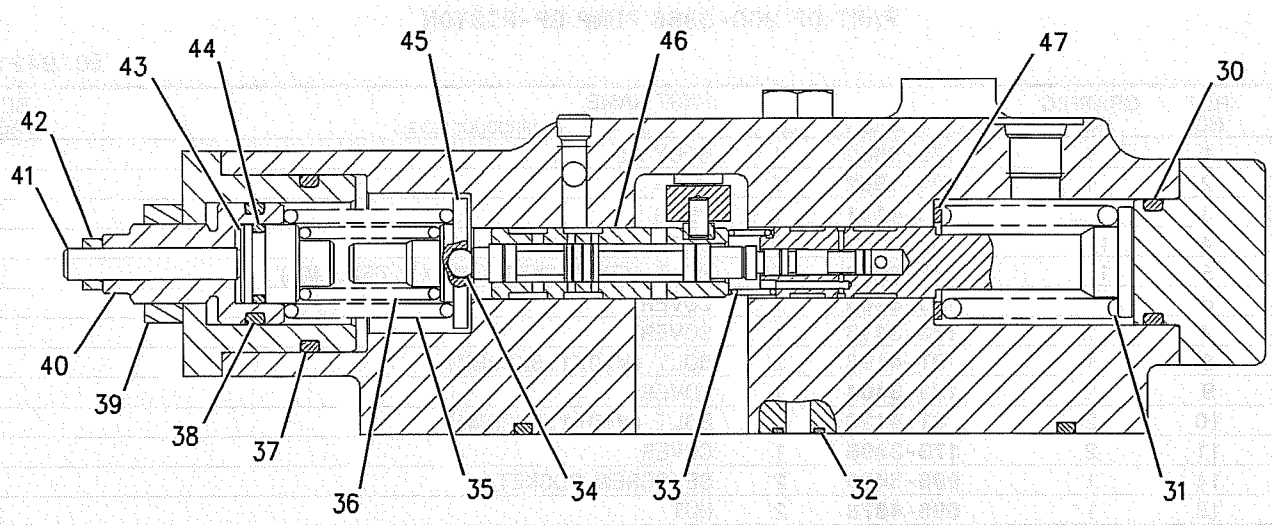

SECTION C-C

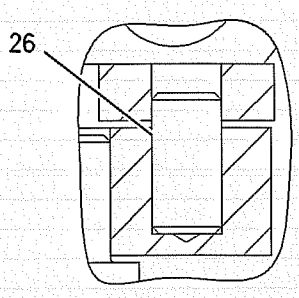

VIEW OF AREA D

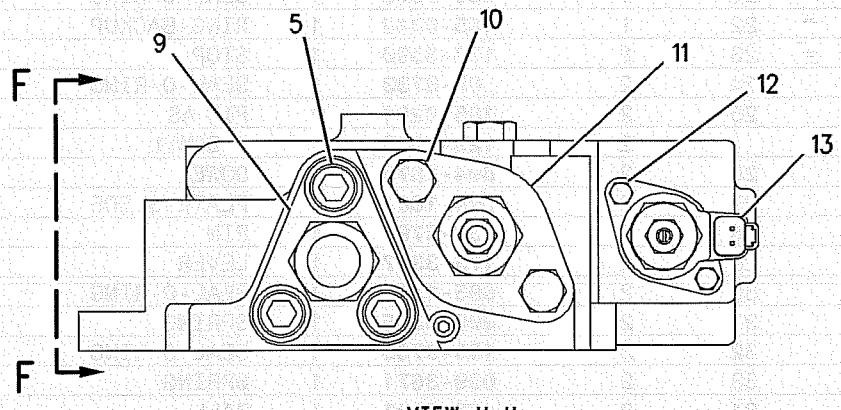

VIEW H-H

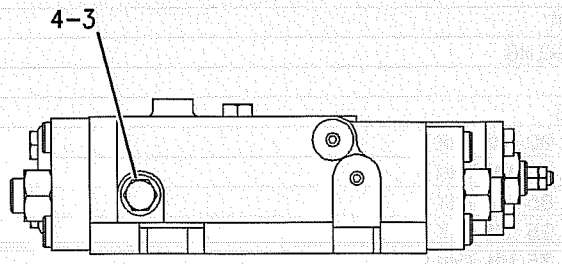

VIEW F-F

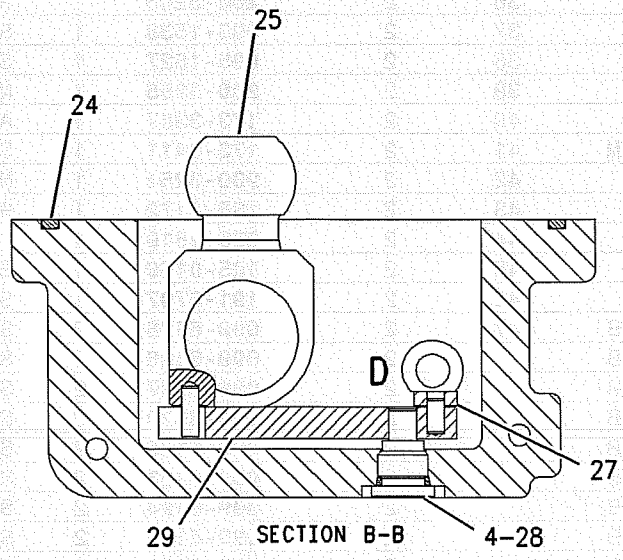

SECTION B-B

GRAPHIC #2 **<END>** g00806166

HYDRAULIC SYSTEM

204-2684 HEAD GP-PUMP

S/N: SBN1-UP; RAW1-UP

PART OF 200-3366 PUMP GP-PISTON

i01642102

NOTE	REF NO	GRAPHIC REF	PART NUMBER	QTY	PART NAME 1 2 3 4 5 6 (PRODUCT LEVEL)	SEE PAGE
	1	1	179-9682	1	BODY AS	
	2	1	094-1882	7	PLUG	
	3	1,2	9S-4191	1	PLUG	
	4	1,2	3J-1907	2	SEAL-O-RING	
M	5	1,2	6V-8200	6	BOLT-HEX SOCKET (M12X1.75X35MM)	
	6	1	173-3405	1	COVER	
	7	1	173-3413	1	COVER	
M	8	1	8T-4196	2	BOLT (M10X1.5X35MM)	
	9	2	173-3404	1	COVER	
M	10	2	8T-4136	2	BOLT (M10X1.5X25MM)	
	11	2	173-3398	1	COVER	
M	14	1	096-5400	2	SETSCREW-SOCKET	
M	15	1	096-4878	2	NUT	
	16	1	173-3389	1	STOP	
	17	1	185-0347	1	RING-BACKUP	
	18	1	190-7674	1	SEAL-O-RING	
	19	1	191-5599	1	PLUG	
	20	1	173-3384	1	PISTON (PUMP HEAD AC)	
	21	1	190-7673	1	SEAL-O-RING	
	22	1	185-0348	1	RING-BACKUP	
	23	1	173-3390	1	STOP	
	24	2	8F-8733	1	SEAL-O-RING	
	25	2	185-0201	1	PIN AS	
		2	129-7978	1	DOWEL	
	26	2	094-1875	1	DOWEL	
	27	2	094-1881	1	PLATE-SLIDE	
	28	2	150-5797	1	PIN	
	29	2	173-3397	1	LEVER	
	30	2	095-1528	1	SEAL-O-RING	
	31	2	200-3246	1	SPRING	
	32	2	189-9763	1	SEAL-O-RING	
	33	2	099-3671	1	SPRING	
	34	2	3D-2891	1	BALL	
	35	2	200-3244	1	SPRING	
	36	2	200-3245	1	SPRING	
	37	2	095-1538	1	SEAL-O-RING	
	38	2	095-1527	1	SEAL-O-RING	
	39	2	200-3255	1	NUT	
	40	2	173-3387	1	ADJUSTER	
M	41	2	173-3411	1	SETSCREW (M8X1-6G THD)	
	42	2	200-3254	1	NUT	
	43	2	185-0172	1	RETAINER	
	44	2	095-1519	1	SEAL-O-RING	
	45	2	185-0169	1	GUIDE	
	46	2	191-5707	1	SPOOL AS	
B	47	2	099-6128	2	SHIM (1.90 MM THK)	
B		2	099-6126	2	SHIM (1.80 MM THK)	
B		2	099-6127	2	SHIM (1.85 MM THK)	
B		2	099-3670	2	SHIM (1.95 MM THK)	
B		2	099-6125	2	SHIM (1.75 MM THK)	
B		2	099-6123	2	SHIM (1.65 MM THK)	
B		2	099-6124	2	SHIM (1.70 MM THK)	
B		2	099-6122	2	SHIM (1.60 MM THK)	
B		2	099-6121	2	SHIM (1.55 MM THK)	
B		2	099-6119	2	SHIM (1.45 MM THK)	
B		2	099-6118	2	SHIM (1.40 MM THK)	

204-2684 HEAD GP-PUMP *(contd.)*

i01642102

NOTE	REF NO	GRAPHIC REF	PART NUMBER	QTY	PART NAME 1 2 3 4 5 6 (PRODUCT LEVEL)	SEE PAGE
B		2	**099-6117**	2	SHIM (1.35 MM THK)	
B		2	**099-6113**	2	SHIM (1.25 MM THK)	
B		2	**099-6115**	2	SHIM (1.30 MM THK)	
B		2	**099-6111**	2	SHIM (1.15 MM THK)	
B		2	**099-6112**	2	SHIM (1.20 MM THK)	
B		2	**099-6109**	2	SHIM (1.05 MM THK)	
B		2	**099-6110**	2	SHIM (1.10 MM THK)	
B		2	**099-6120**	2	SHIM (1.50 MM THK)	
B		2	**099-3669**	2	SHIM (1 MM THK)	

B-USE AS REQUIRED
M-METRIC PART

204-2684 **HEAD GP-PUMP** *(contd.)* **i01642102**

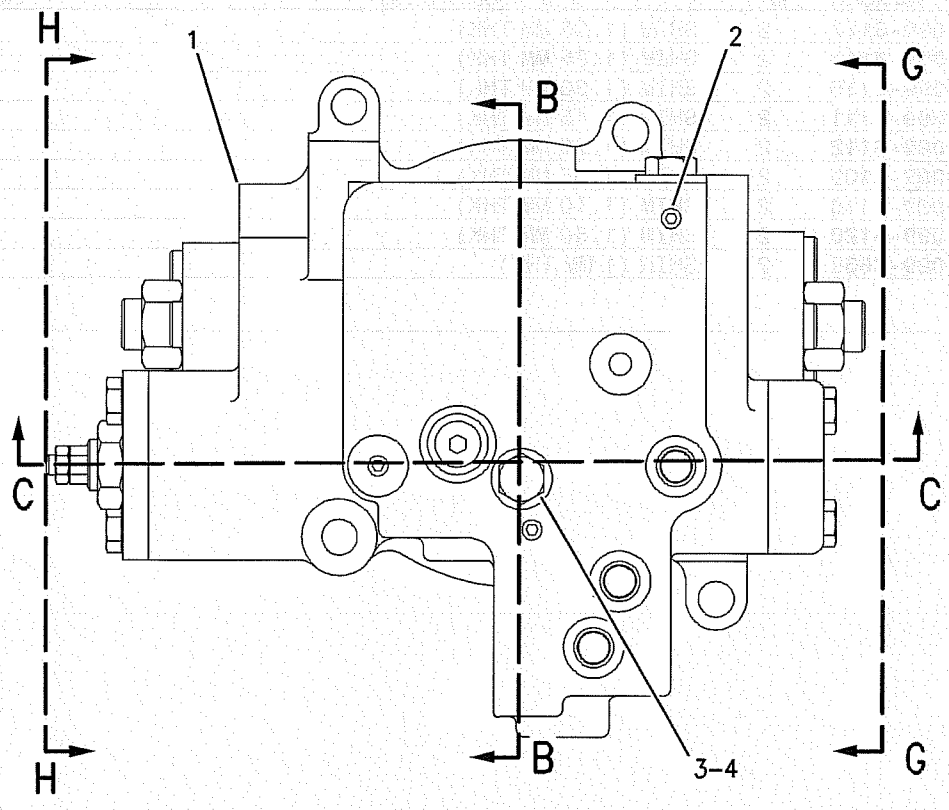

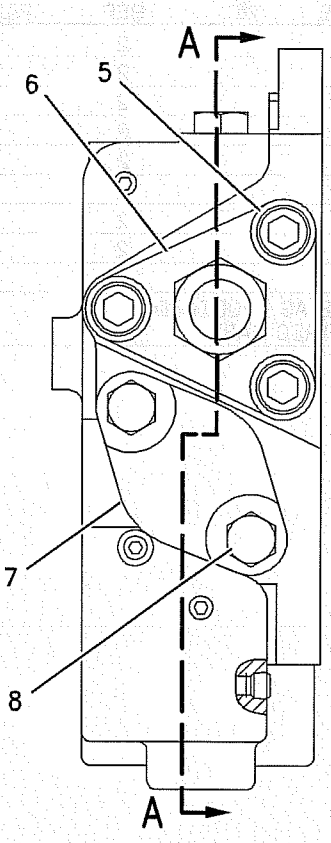

REFER TO ALL ILLUSTRATIONS OF THIS GROUP FOR AUXILIARY VIEWS

VIEW G-G

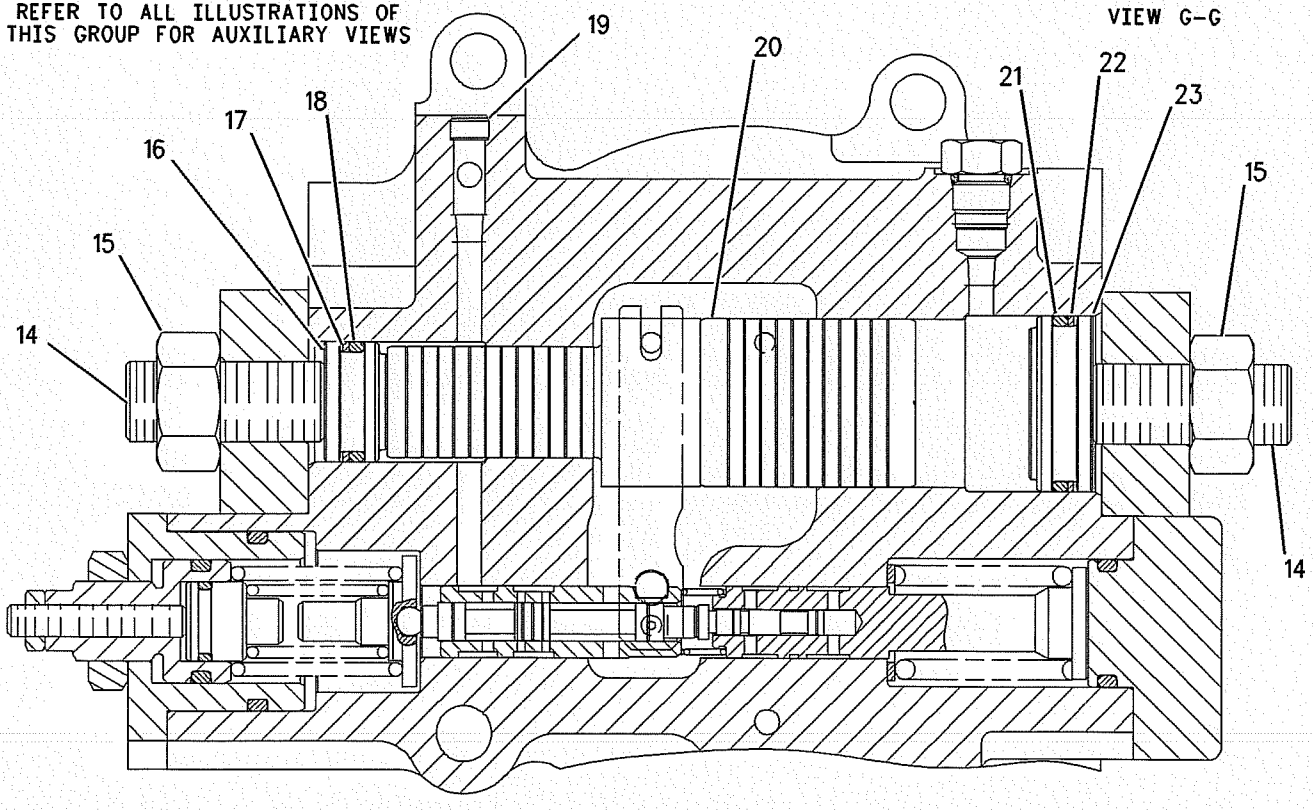

SECTION A-A

GRAPHIC #1

g00806238

204-2684 **HEAD GP-PUMP** *(contd.)* **i01642102**

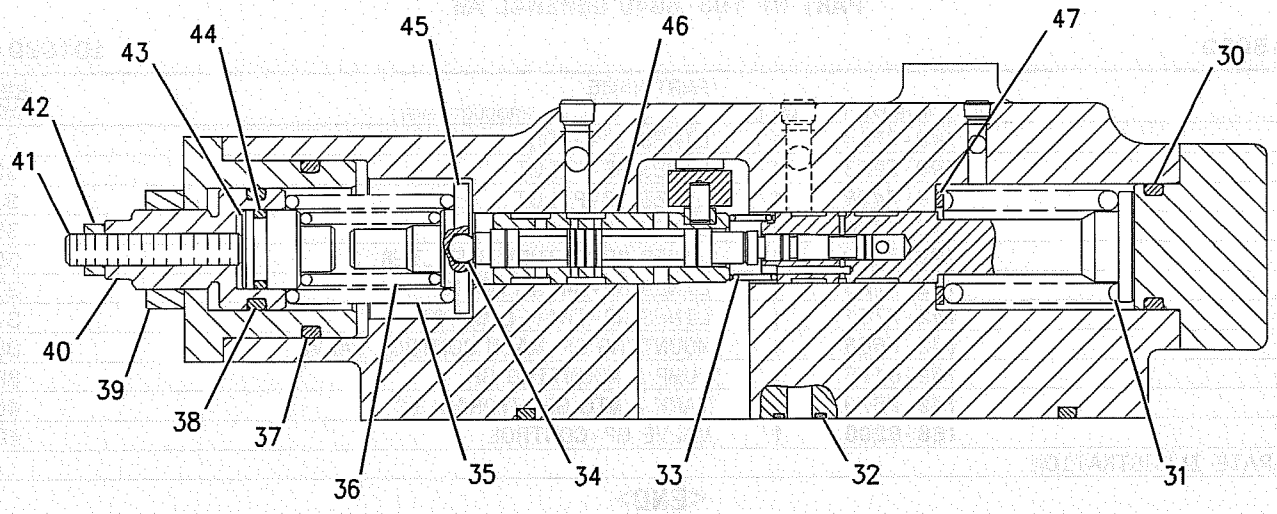

SECTION C-C

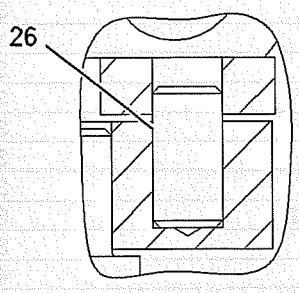

VIEW OF AREA D

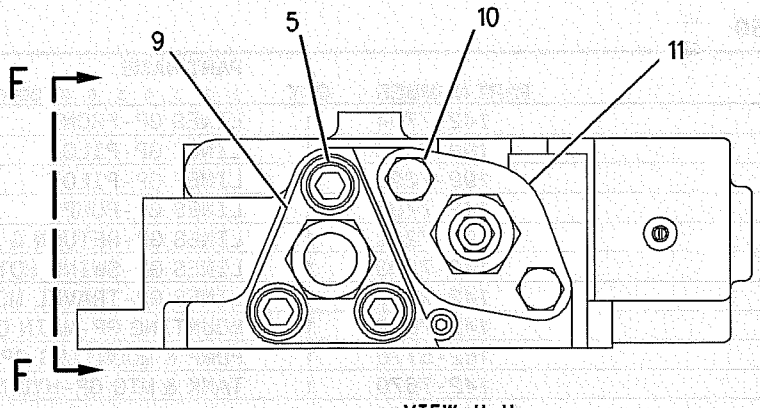

VIEW H-H

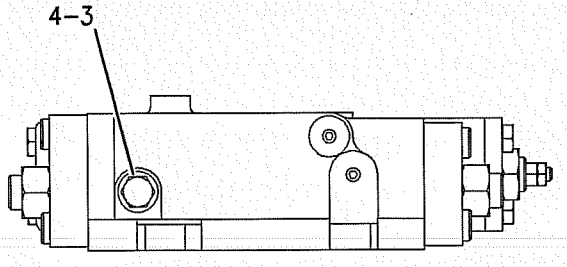

VIEW F-F

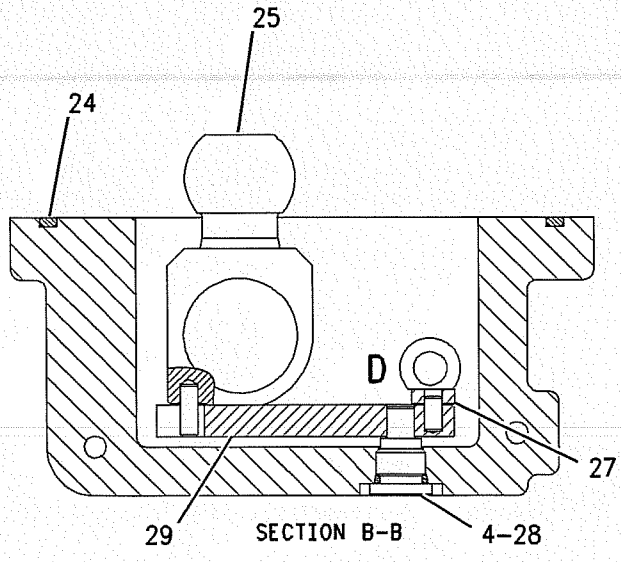

SECTION B-B

GRAPHIC #2 **<END>** g00806241

HYDRAULIC SYSTEM

201-9323 HYDRAULIC AR

S/N: RAW1-UP

PART OF 193-6840 GENERAL AR

SMCS-5050 **i01889132**

NOTE	PART NUMBER	QTY	PART NAME 1 2 3 4 5 6 (PRODUCT LEVEL)	SEE PAGE
Y	*142-7704*	1	LINES GP-FRONT	314
Y	*199-7293*	1	LINES GP-PILOT	333
Y	*199-7428*	1	LINES GP-PILOT	341
Y	*142-7706*	1	LINES GP-PUMP	351
Y	*199-7292*	1	LINES GP-RETURN & FILTER	358
Y	*142-7703*	1	LINES GP-SWING MOTOR	371
Y	*142-7701*	1	LINES GP-TRAVEL MOTOR	372
Y	*142-7668*	1	MOUNTING GP-MAIN CONTROL VALVE	386
Y	*162-6176*	1	PUMP & MOUNTING GP	387
Y	*142-7670*	1	TANK & MTG GP-HYDRAULIC	401
Y	**158-8200**	1	VALVE GP-CONTROL	406

Y-SEPARATE ILLUSTRATION

<END>

201-9324 HYDRAULIC AR

S/N: SBN1-UP

PART OF 193-6841 GENERAL AR

SMCS-5050 **i01890696**

NOTE	PART NUMBER	QTY	PART NAME 1 2 3 4 5 6 (PRODUCT LEVEL)	SEE PAGE
Y	*142-7704*	1	LINES GP-FRONT	314
Y	*199-7428*	1	LINES GP-PILOT	341
Y	*199-7293*	1	LINES GP-PILOT	333
Y	*142-7706*	1	LINES GP-PUMP	351
Y	*199-7292*	1	LINES GP-RETURN & FILTER	358
Y	*142-7703*	1	LINES GP-SWING MOTOR	371
Y	*142-7702*	1	LINES GP-TRAVEL MOTOR	375
Y	*142-7668*	1	MOUNTING GP-MAIN CONTROL VALVE	386
Y	*162-6176*	1	PUMP & MOUNTING GP	387
Y	*142-7670*	1	TANK & MTG GP-HYDRAULIC	401
Y	**158-8200**	1	VALVE GP-CONTROL	406

Y-SEPARATE ILLUSTRATION

<END>

HYDRAULIC SYSTEM

161-3752 LEVER GP-CONTROL

S/N: SBN1-UP; RAW1-UP

PART OF 161-3738 OPERATOR AR

SMCS-4805, 5063 **i01355801**

NOTE	REF NO	GRAPHIC REF	PART NUMBER	QTY	PART NAME 1 2 3 4 5 6 (PRODUCT LEVEL)	SEE PAGE
M	1	1	**8T-4137**	4	BOLT (M10X1.50X20MM)	
	2	1	**8T-4121**	4	WASHER-HARD (2.5MM THK)	
Y	3	1	*167-7080*	1	LEVER GP-CONTROL	273
	4	1	**178-5508**	1	COVER	

M-METRIC PART
Y-SEPARATE ILLUSTRATION

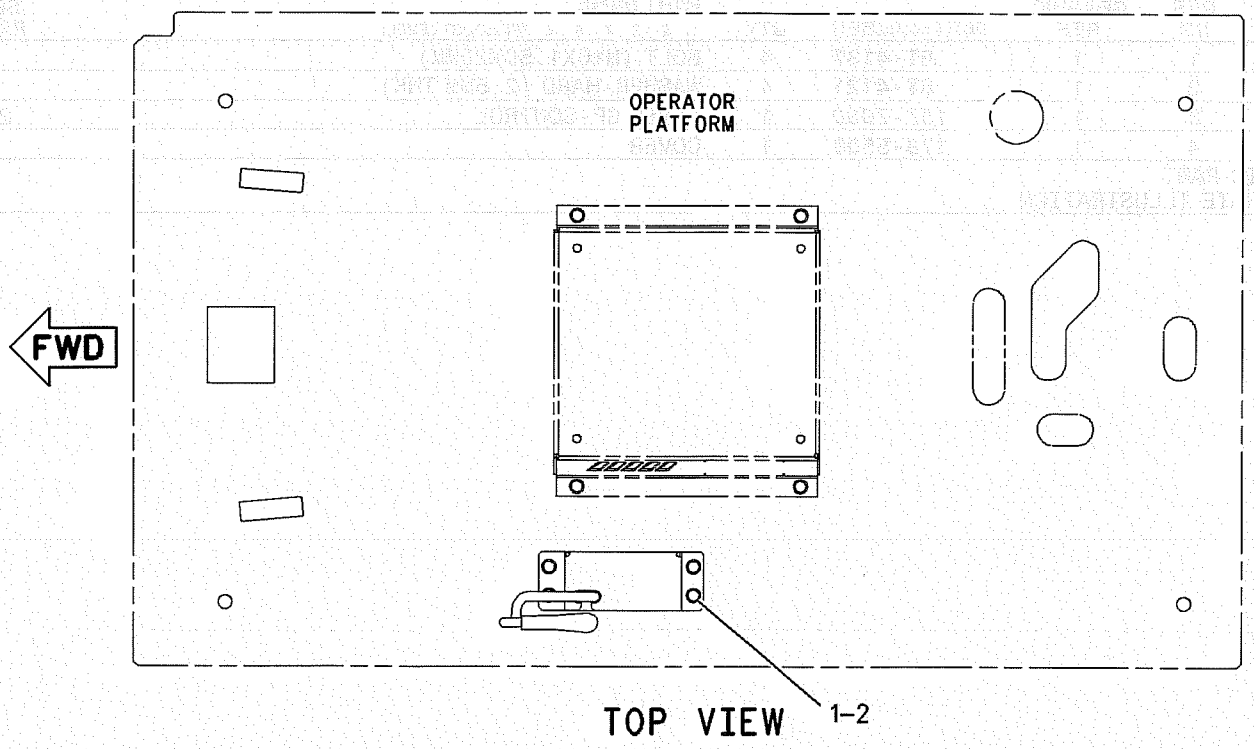

TOP VIEW

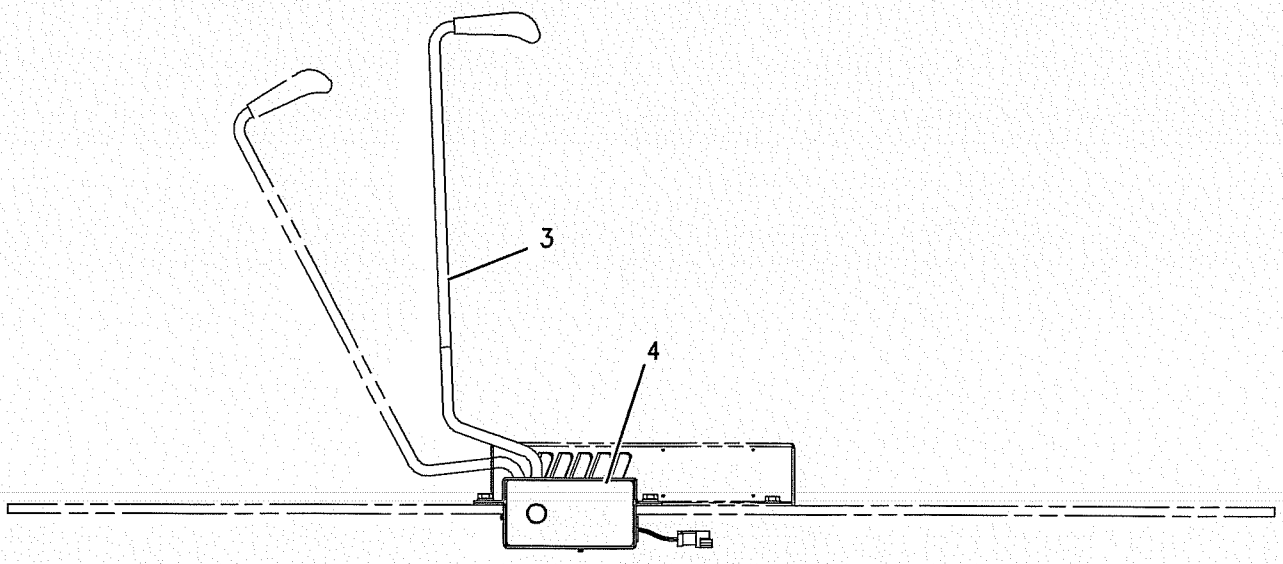

LEFT SIDE VIEW

GRAPHIC #1

<END>

g00676398

HYDRAULIC SYSTEM

167-7080 LEVER GP-CONTROL

S/N: SBN1-UP; RAW1-UP

PART OF 161-3752 LEVER GP-CONTROL

SMCS-4805, 5063 **i01533713**

NOTE	REF NO	GRAPHIC REF	PART NUMBER	QTY	PART NAME 1 2 3 4 5 6 (PRODUCT LEVEL)	SEE PAGE
	1	1	**178-5517**	1	SPRING	
	2	1	**163-6785**	1	SWITCH AS-LIMIT (BLADE CONTROL)	
		1	**102-8803**	1	KIT-RECEPTACLE (3 PIN)	
		1	**3E-3371**	1	WEDGE-RECEPTACLE LOCK (3 PIN)	
		1	**3S-2093**	2	STRAP-CABLE	
		1	**5P-5998**	3	TUBE	
		1	**163-6761**	1	GROMMET	
M	3	1	**120-9027**	2	SCREW-PAN HEAD	
	4	1	**096-5962**	2	WASHER-HARD (3.4X7X0.8MM THK)	
	5	1	**3S-2093**	2	STRAP-CABLE	
	6	1	**178-5504**	1	PLATE AS	
	7	1	**178-5651**	2	STOP	
	8	1	**5D-4822**	1	RING-RETAINING	
	9	1	**178-5649**	2	SPACER	
M	10	1	**9X-6032**	1	BOLT-SOCKET HEAD (M10X1.5X30MM)	
	11	1	**178-5518**	2	BUSHING	
	12	1	**178-5528**	1	KNOB	
	13	1	**196-1703**	1	LEVER AS	
	14	1	**178-5509**	1	BOX AS	

M-METRIC PART

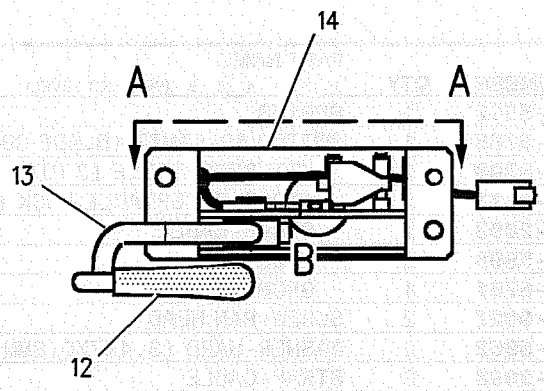

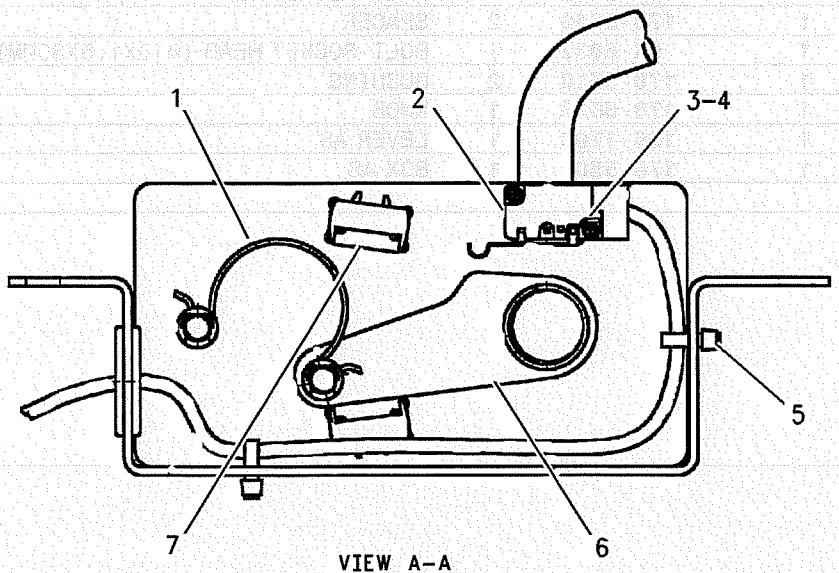

VIEW A-A

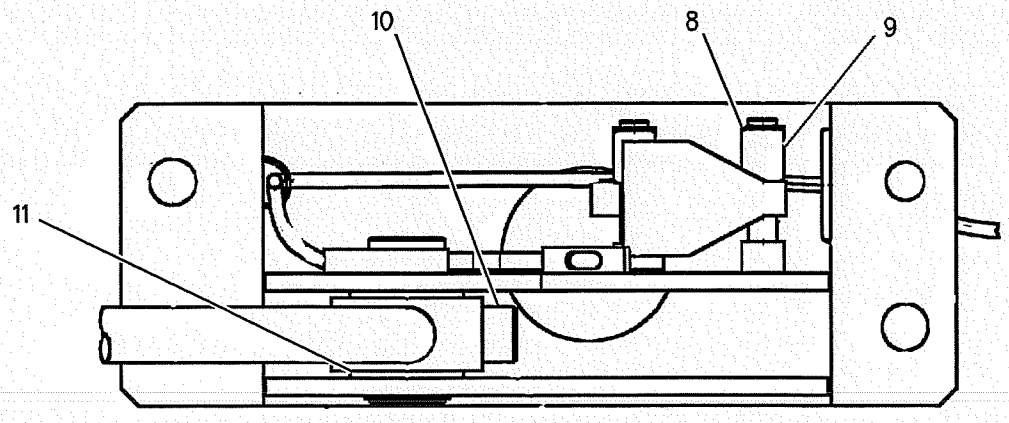

VIEW OF AREA B

GRAPHIC #1 **<END>** g00680396

HYDRAULIC SYSTEM

173-7955 LINES AR-AUXILIARY HYDRAULIC

S/N: SBN1-UP; RAW1-UP
2.5M (8.1FT), B-FAMILY
AN ATTACHMENT

SMCS-5057 **i01403231**

NOTE	PART NUMBER	QTY	PART NAME 1 2 3 4 5 6 (PRODUCT LEVEL)	SEE PAGE
Y	*173-7956*	1	LINES GP-AUXILIARY HYDRAULIC	289
Y	*173-7957*	1	STICK GP	482

Y-SEPARATE ILLUSTRATION

<END>

173-7962 LINES AR-AUXILIARY HYDRAULIC

S/N: SBN1-UP; RAW1-UP
2.4M (7.8FT). C-FAMILY
FOR USE WITH 173-7959—PAGE 291
AN ATTACHMENT

SMCS-5057 **i01890925**

NOTE	PART NUMBER	QTY	PART NAME 1 2 3 4 5 6 (PRODUCT LEVEL)	SEE PAGE
Y	*173-7963*	1	LINES GP-AUXILIARY HYDRAULIC	293
Y	*187-5973*	1	LINES GP-STICK	361
Y	*173-7964*	1	STICK GP	484

Y-SEPARATE ILLUSTRATION

<END>

173-7968 LINES AR-AUXILIARY HYDRAULIC

S/N: SBN1-UP; RAW1-UP
3.9M (12.6FT), B-FAMILY
AN ATTACHMENT

SMCS-5057 **i01549922**

NOTE	PART NUMBER	QTY	PART NAME 1 2 3 4 5 6 (PRODUCT LEVEL)	SEE PAGE
Y	*173-7969*	1	LINES GP-AUXILIARY HYDRAULIC	295
Y	**187-5976**	1	LINES GP-STICK	362
Y	*173-7970*	1	STICK GP-HOE	500

Y-SEPARATE ILLUSTRATION

<END>

HYDRAULIC SYSTEM

173-8027 LINES AR-AUXILIARY HYDRAULIC

S/N: SBN1-UP; RAW1-UP
2.9M (9.4FT), B-FAMILY
AN ATTACHMENT

SMCS-5057 **i01549951**

NOTE	PART NUMBER	QTY	PART NAME 1 2 3 4 5 6 (PRODUCT LEVEL)	SEE PAGE
Y	*153-8862*	1	LINES GP-AUXILIARY HYDRAULIC	281
Y	*173-8023*	1	STICK GP	486

Y-SEPARATE ILLUSTRATION

<END>

HYDRAULIC SYSTEM

153-8793 LINES GP-AUXILIARY HYDRAULIC

S/N: SBN1-UP; RAW1-UP
HIGH PRESSURE
FOR USE WITH REACH BOOM
AN ATTACHMENT

SMCS-5057 **i01891951**

NOTE	REF NO	GRAPHIC REF	PART NUMBER	QTY	PART NAME 1 2 3 4 5 6 (PRODUCT LEVEL)	SEE PAGE
	1	1	**226-3057**	1	LINES GP-BOOM	
		1	**5K-9090**	1	SEAL-O-RING	
		1	**153-8795**	1	TUBE AS	
		1	**202-7129**	1	TUBE AS	
	2	1	**226-3055**	1	LINES GP-BOOM	
		1	**1P-3705**	1	SEAL-RECTANGULAR	
M		1	**8T-4183**	4	BOLT (M12X1.75X40MM)	
		1	**153-8797**	1	TUBE AS	
		1	**173-8031**	1	TUBE AS	
C	3	1	**153-8801**	1	SUPPORT AS	
C	4	1	**153-8799**	2	PLATE	
	5	1	**153-8798**	2	PLATE	
	6	1	**5K-9090**	2	SEAL-O-RING	
C	7	1	**7Y-4538**	6	CLAMP-HALF	
C	8	1	**173-7916**	6	CLAMP-HALF	
CM	9	1	**8T-4910**	4	BOLT (M12X1.75X60MM)	
M	10	1	**8T-4184**	14	BOLT (M12X1.75X45MM)	
CM	11	1	**8T-4139**	10	BOLT (M12X1.75X30MM)	
C	12	1	**8T-4223**	34	WASHER-HARD (13.5X25.5X3MM THK)	
M	13	1	**8T-4194**	2	BOLT (M12X1.75X50MM)	
	14	1	**173-7995**	1	PLATE	
I	15	1	**216-6585**	1	HOSE AS	
I	16	1	**216-6589**	1	HOSE AS	
	17	1	**1P-5767**	4	FLANGE-HALF	
	18	1	**1P-3704**	2	SEAL-RECTANGULAR	
C	19	1	**202-7127**	1	PLATE	
C	20	1	**202-7128**	2	PLATE	
C	21	1	**138-5708**	2	CLIP-HALF	
C	22	1	**124-1107**	1	GROMMET	
C	23	1	**124-1108**	2	CLIP	
C	24	1	**129-5874**	1	GROMMET	
CM	25	1	**7X-2553**	2	BOLT (M16X2X40MM)	
C	26	1	**9X-8257**	2	WASHER (17.5X30X3.5MM THK)	
CM	27	1	**7X-2549**	4	BOLT (M12X1.75X100MM)	
C	28	1	**3B-8485**	2	FITTING-GREASE (1/8-27 THD)	

C-CHANGE FROM PREVIOUS TYPE
I-SEE HOSE FABRICATION GUIDE
M-METRIC PART

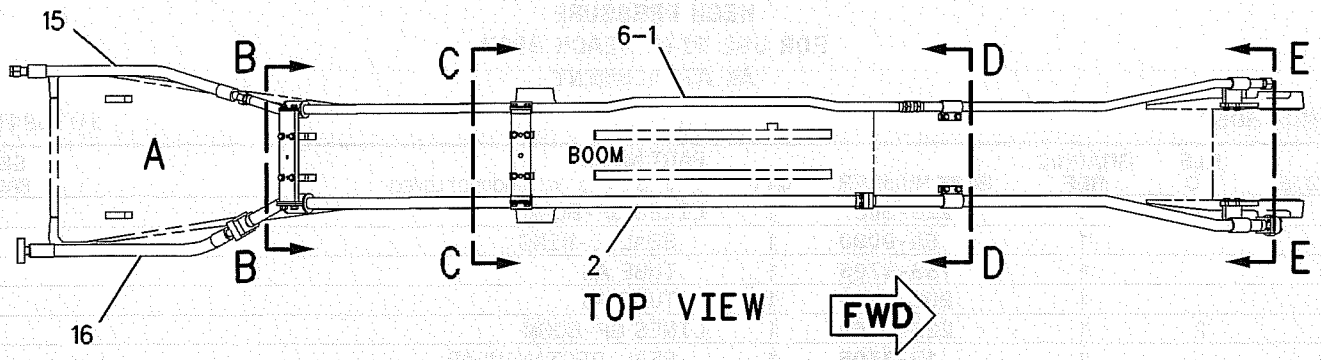

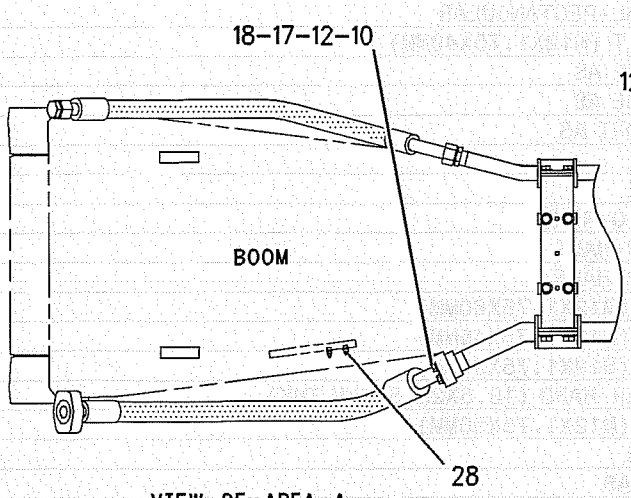

VIEW OF AREA A

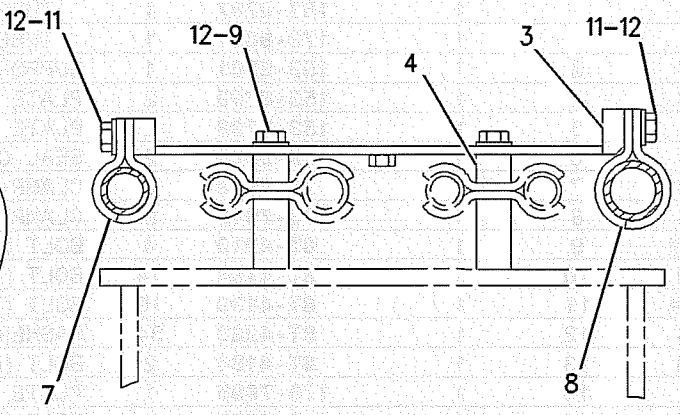

SECTION C-C

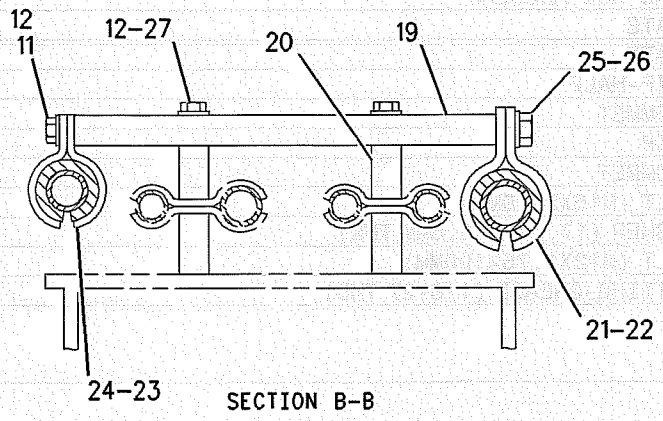

SECTION B-B

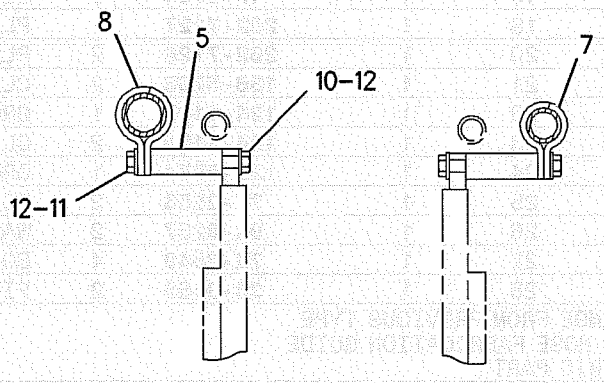

SECTION E-E

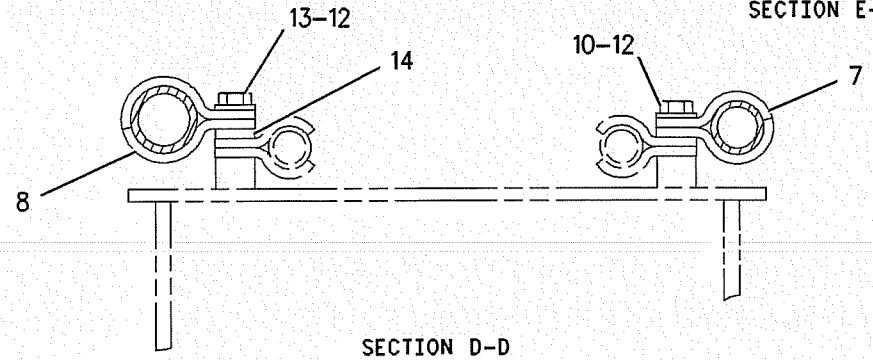

SECTION D-D

GRAPHIC #1

<END>

g00955576

HYDRAULIC SYSTEM

153-8828 LINES GP-AUXILIARY HYDRAULIC

S/N: SBN1-UP; RAW1-UP
MEDIUM PRESSURE
FOR USE WITH REACH BOOM
AN ATTACHMENT

SMCS-5057 **i01894878**

NOTE	REF NO	GRAPHIC REF	PART NUMBER	QTY	PART NAME 1 2 3 4 5 6 (PRODUCT LEVEL)	SEE PAGE
C	1	1	**202-7130**	1	TUBE AS	
	2	1	**226-3059**	1	LINES GP-BOOM	
	2A	1	**187-9939**	1	TUBE AS	
	2B	1	**153-8830**	1	TUBE AS	
	2C	1	**4I-8888**	1	SEAL-RECTANGULAR	
	3	1	**226-3061**	1	LINES GP-BOOM	
	3A	1	**153-8837**	1	TUBE AS	
	3B	1	**153-8836**	1	TUBE AS	
	3C	1	**4I-8888**	1	SEAL-RECTANGULAR	
C	4	1	**202-7131**	1	TUBE AS	
CM	5	1	**8T-4185**	3	BOLT (M10X1.5X50MM)	
	6	1	**153-8867**	2	CLIP	
	7	1	**6V-8398**	4	SEAL-O-RING	
	8	1	**096-5766**	2	CLAMP	
	9	1	**8T-4121**	4	WASHER-HARD (11X21X2.5MM THK)	
	10	1	**153-8839**	1	PLATE	
	11	1	**173-7997**	2	SUPPORT AS	
	12	1	**173-7971**	2	CLIP	
	13	1	**149-1738**	4	CLIP	
	14	1	**7Y-4868**	2	CLIP	
M	15	1	**8T-4139**	8	BOLT (M12X1.75X30MM)	
	16	1	**093-1291**	2	CLAMP	
M	17	1	**8T-6868**	2	BOLT (M12X1.75X80MM)	
	18	1	**8T-4223**	14	WASHER-HARD (13.5X25.5X3MM THK)	
	19	1	**4I-8888**	2	SEAL-RECTANGULAR	
M	20	1	**8T-4184**	4	BOLT (M12X1.75X45MM)	
M	21	1	**8T-4244**	4	NUT (M12X1.75 THD)	
CM	22	1	**085-8091**	1	BOLT (M10X1.5X55MM)	
M	23	1	**8T-4133**	2	NUT (M10X1.5 THD)	

C-CHANGE FROM PREVIOUS TYPE
M-METRIC PART

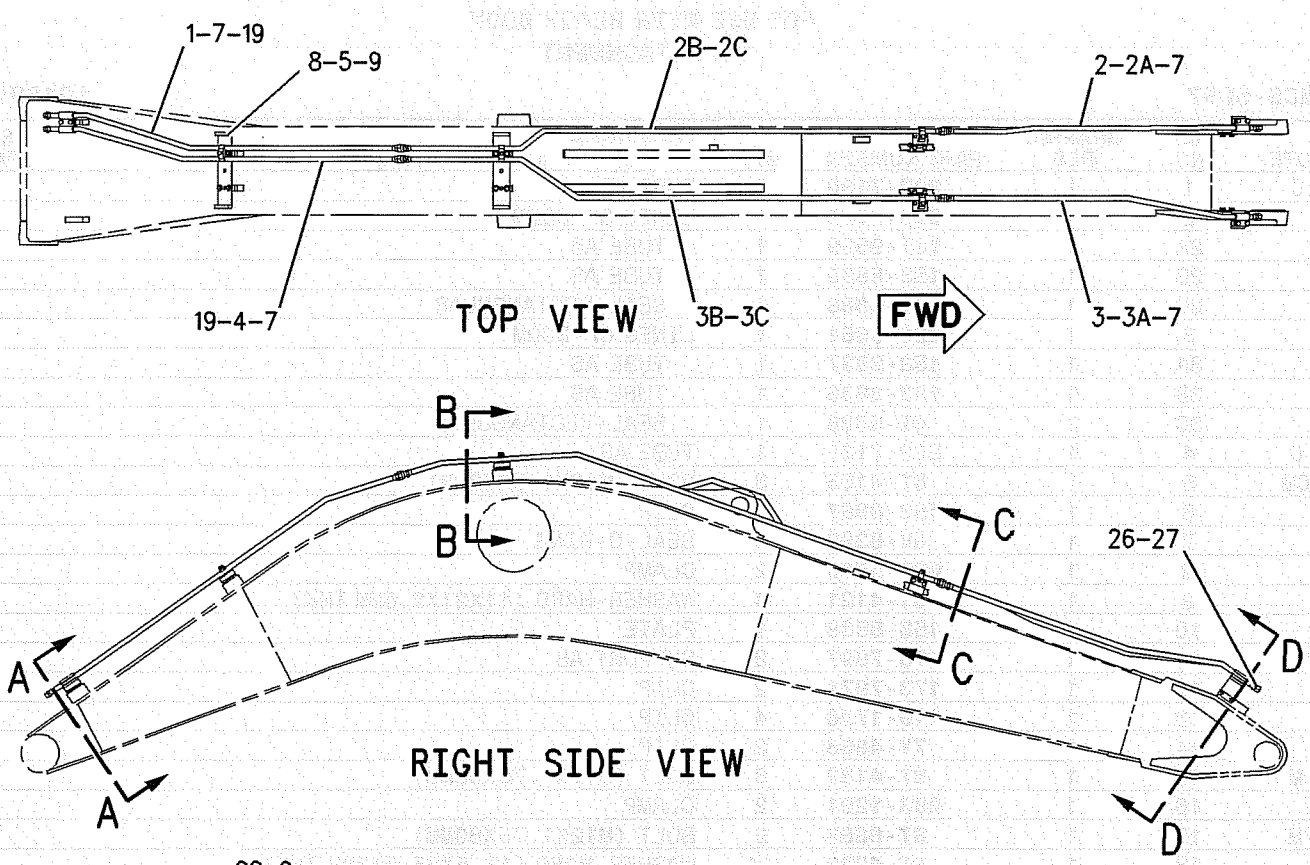

GRAPHIC #1 **<END>** g00986184

HYDRAULIC SYSTEM

153-8862 LINES GP-AUXILIARY HYDRAULIC

S/N: SBN1-UP; RAW1-UP
2.9M(9.5 FT). MEDIUM PRESSURE
PART OF 173-8027 LINES AR-AUXILIARY HYDRAULIC
AN ATTACHMENT

SMCS-5057 **i01398262**

NOTE	REF NO	GRAPHIC REF	PART NUMBER	QTY	PART NAME 1 2 3 4 5 6 (PRODUCT LEVEL)	SEE PAGE
	1	1	**121-1903**	1	TUBE AS	
	2	1	**142-6583**	1	TUBE AS	
I	3	1	**127-6829**	1	HOSE AS	
I	4	1	**121-1965**	1	HOSE AS	
Y	5	1	**173-7992**	2	VALVE GP-BALL	403
	6	1	**1P-5767**	4	FLANGE-HALF	
	7	1	**6V-0400**	2	FLANGE-HALF	
	8	1	**7Y-4538**	4	CLAMP-HALF	
	9	1	**173-7916**	4	CLAMP-HALF	
M	10	1	**8T-4139**	8	BOLT (M12X1.75X30MM)	
M	11	1	**8T-4183**	4	BOLT (M12X1.75X40 MM)	
M	12	1	**8T-4184**	4	BOLT (M12X1.75X45MM)	
M	13	1	**8T-4194**	8	BOLT (M12X1.75X50MM)	
M	14	1	**8T-4956**	12	BOLT (M12X1.75X35MM)	
M	15	1	**8T-6685**	4	BOLT (M10X1.50X110MM)	
	16	1	**8T-4121**	4	WASHER-HARD (11X21X2.5MM THK)	
	17	1	**8T-4223**	20	WASHER-HARD (13.5X25.5X3MM THK)	
	18	1	**1P-3703**	2	SEAL-RECTANGULAR (31.86MM ID)	
	19	1	**1P-3704**	4	SEAL-RECTANGULAR	
	20	1	**1P-3705**	1	SEAL-RECTANGULAR	
	21	1	**135-4063**	2	FLANGE	

I-SEE HOSE FABRICATION GUIDE
M-METRIC PART
Y-SEPARATE ILLUSTRATION

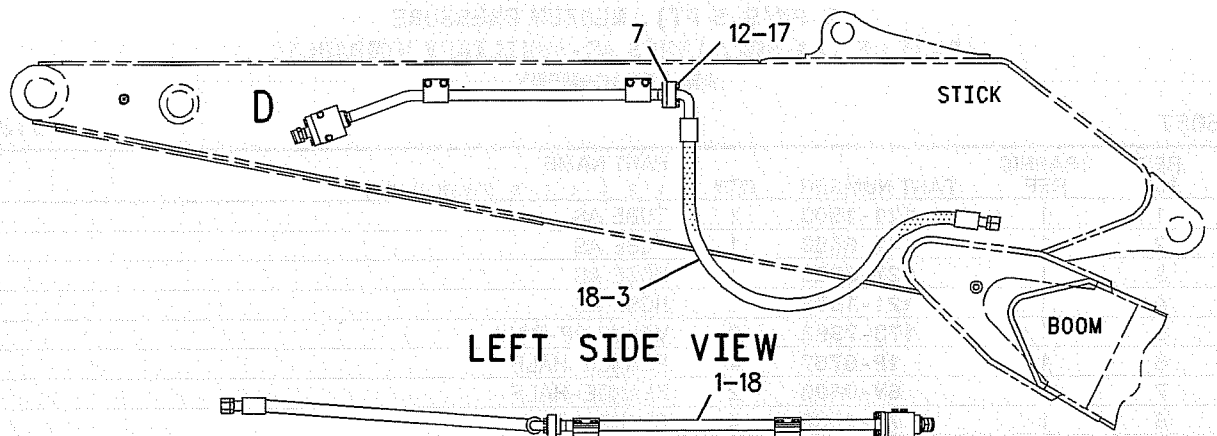

LEFT SIDE VIEW

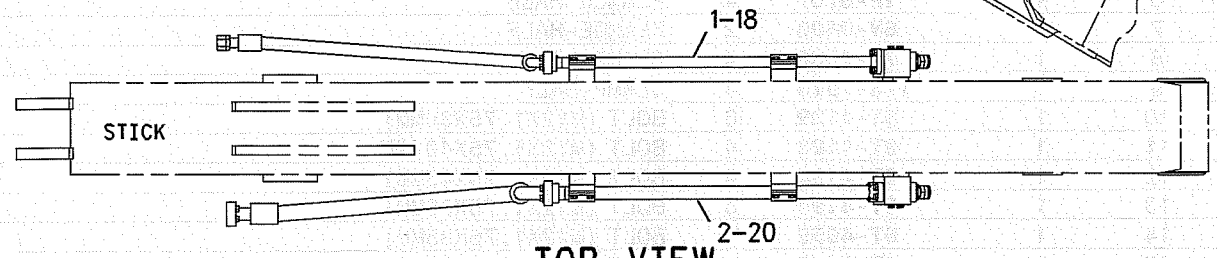

TOP VIEW

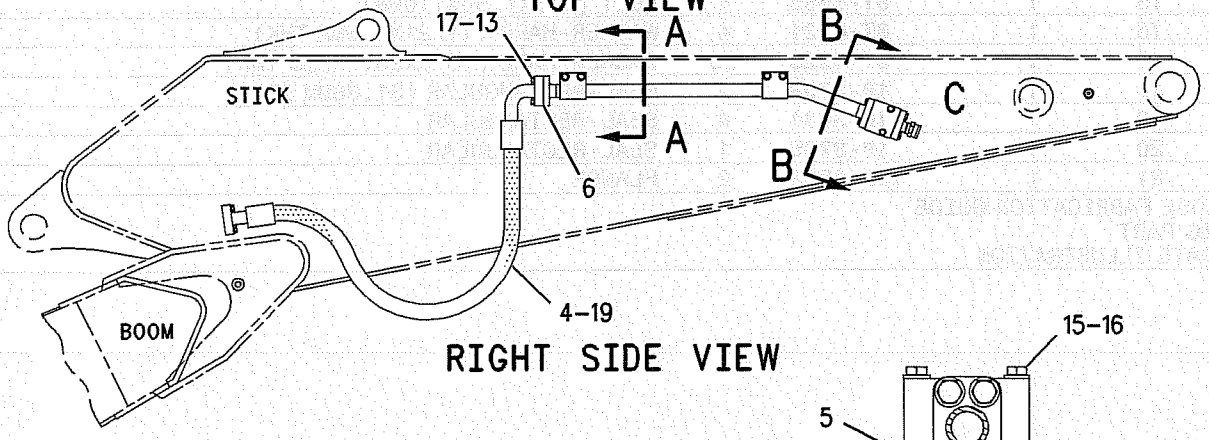

RIGHT SIDE VIEW

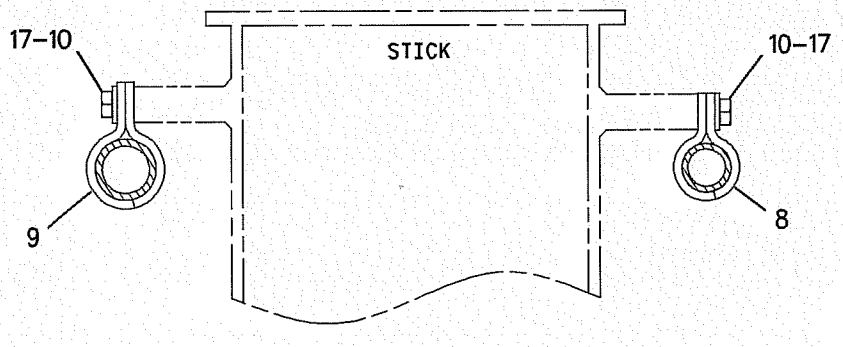

SECTION A-A

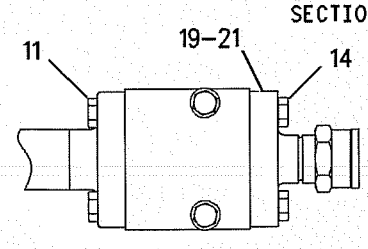

VIEW OF AREA C

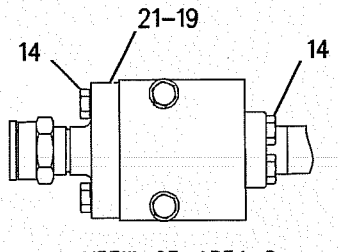

VIEW OF AREA D

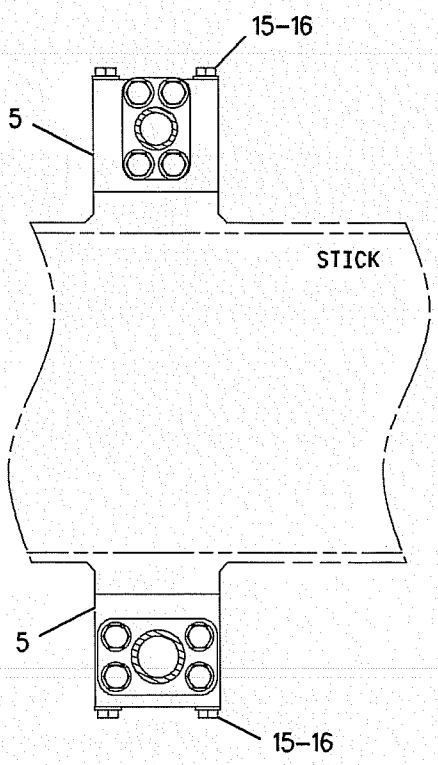

SECTION B-B

GRAPHIC #1

<END>

g00737273

HYDRAULIC SYSTEM

153-8864 LINES GP-AUXILIARY HYDRAULIC

S/N: SBN1-UP; RAW1-UP
2.9M (9.5 FT) STICK. MEDIUM PRESSURE, B-FAMILY
AN ATTACHMENT

SMCS-5057 **i01890770**

NOTE	REF NO	GRAPHIC REF	PART NUMBER	QTY	PART NAME 1 2 3 4 5 6 (PRODUCT LEVEL)	SEE PAGE
	1	1	**173-7868**	2	TUBE AS	
I	2	1	**173-7864**	2	HOSE AS	
	3	1	**8T-4121**	4	WASHER-HARD (11X21X2.5MM THK)	
	4	1	**8T-4223**	12	WASHER-HARD (13.5X25.5X3MM THK)	
	5	1	**173-7872**	2	SUPPORT AS	
	6	1	**173-7875**	1	SUPPORT AS	
M		1	**8T-4244**	2	NUT (M12X1.75 THD)	
	7	1	**173-7877**	1	SUPPORT AS	
M		1	**8T-4244**	2	NUT (M12X1.75 THD)	
	8	1	**6V-8398**	4	SEAL-O-RING	
	9	1	**149-1738**	8	CLIP	
M	10	1	**8T-4139**	8	BOLT (M12X1.75X30MM)	
M	11	1	**8T-4194**	4	BOLT (M12X1.75X50MM)	
M	12	1	**8T-4137**	4	BOLT (M10X1.5X20MM)	

I-SEE HOSE FABRICATION GUIDE
M-METRIC PART

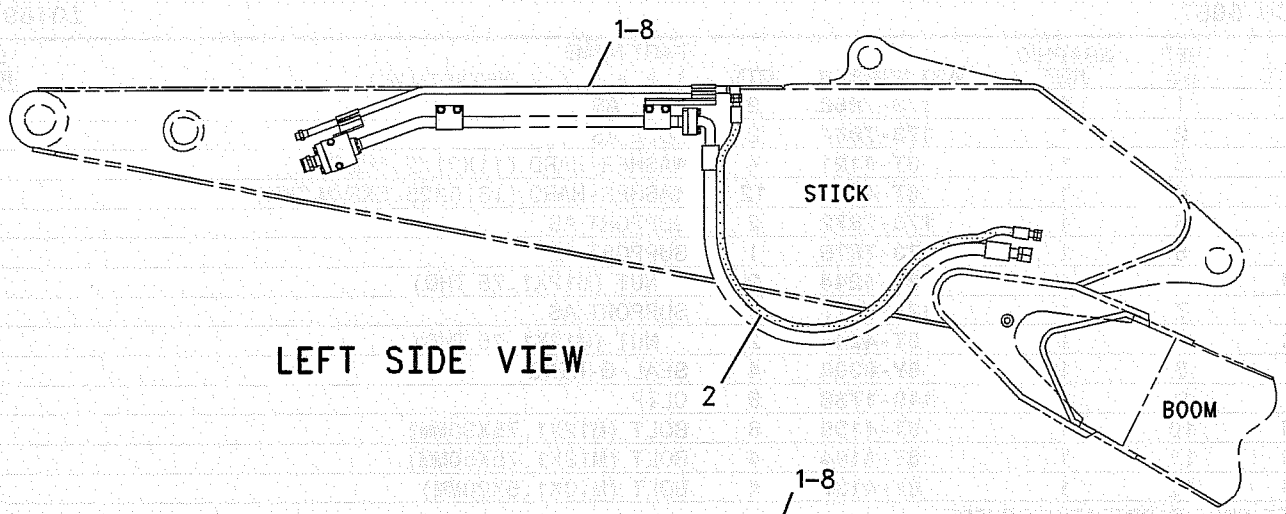

LEFT SIDE VIEW

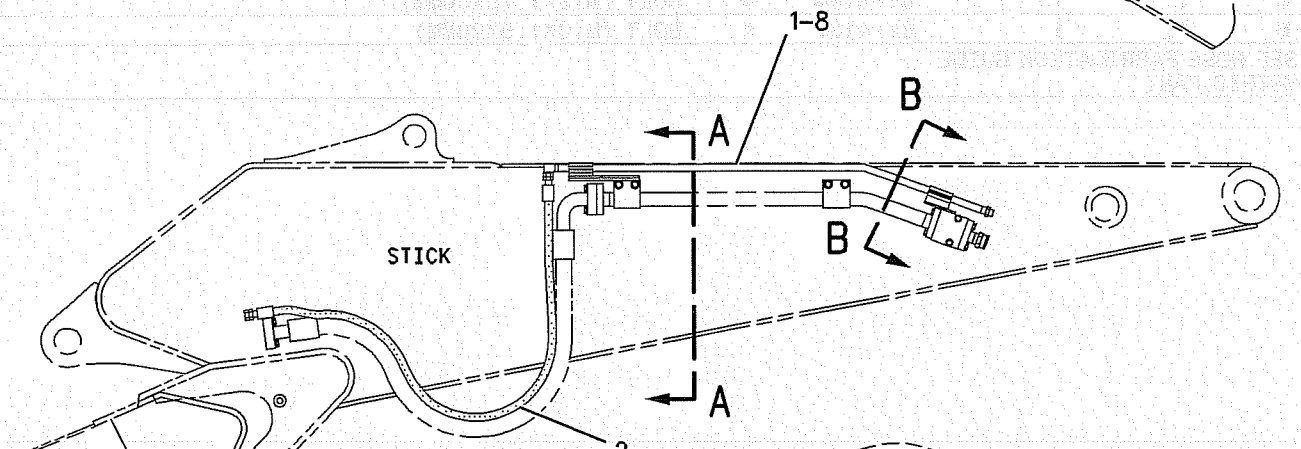

RIGHT SIDE VIEW

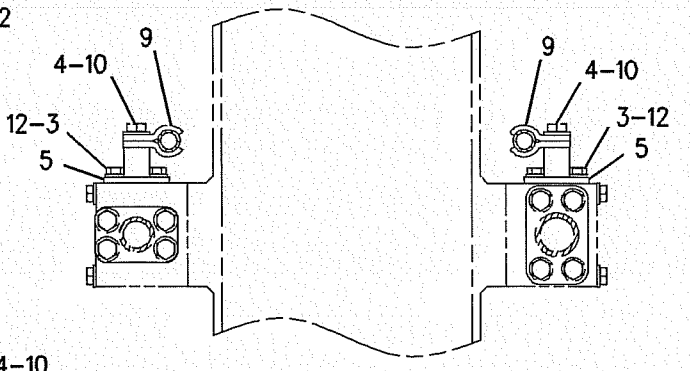

SECTION B-B

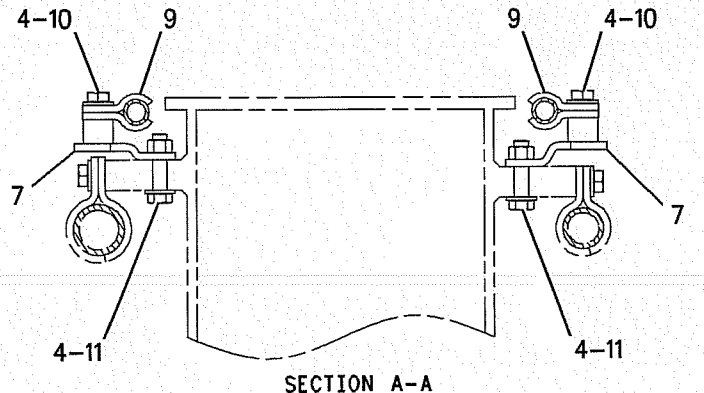

SECTION A-A

GRAPHIC #1

<END>

g00984094

HYDRAULIC SYSTEM

173-7948 LINES GP-AUXILIARY HYDRAULIC

S/N: SBN1-UP; RAW1-UP

AN ATTACHMENT

SMCS-5057 **i01403245**

NOTE	REF NO	GRAPHIC REF	PART NUMBER	QTY	PART NAME 1 2 3 4 5 6 (PRODUCT LEVEL)	SEE PAGE
	1	1	**179-5033**	2	TUBE AS	
	2	1	**173-7864**	2	HOSE AS	
	3	1	**8T-4121**	4	WASHER-HARD (11X21X2.5MM THK)	
	4	1	**6K-0806**	6	STRAP-CABLE	
	5	1	**173-7872**	2	SUPPORT AS	
	6	1	**173-7875**	1	SUPPORT AS	
M		1	**8T-4244**	2	NUT (M12X1.75 THD)	
	7	1	**173-7877**	1	SUPPORT AS	
M		1	**8T-4244**	2	NUT (M12X1.75 THD)	
	8	1	**6V-8398**	4	SEAL-O-RING (12.47MM ID)	
	9	1	**8T-4223**	12	WASHER-HARD (13.5X25.5X3MM THK)	
	10	1	**149-1738**	8	CLIP	
M	11	1	**8T-4139**	8	BOLT (M12X1.75X30MM)	
M	12	1	**8T-4194**	4	BOLT (M12X1.75X50MM)	
M	13	1	**8T-4137**	4	BOLT (M10X1.5X20MM)	

M-METRIC PART

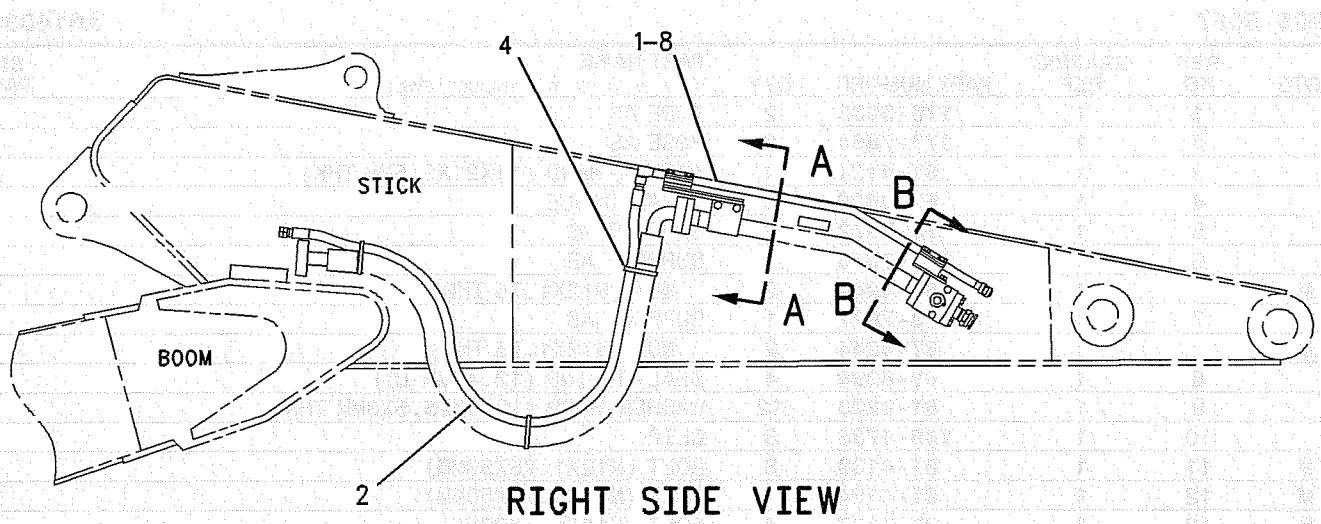

RIGHT SIDE VIEW

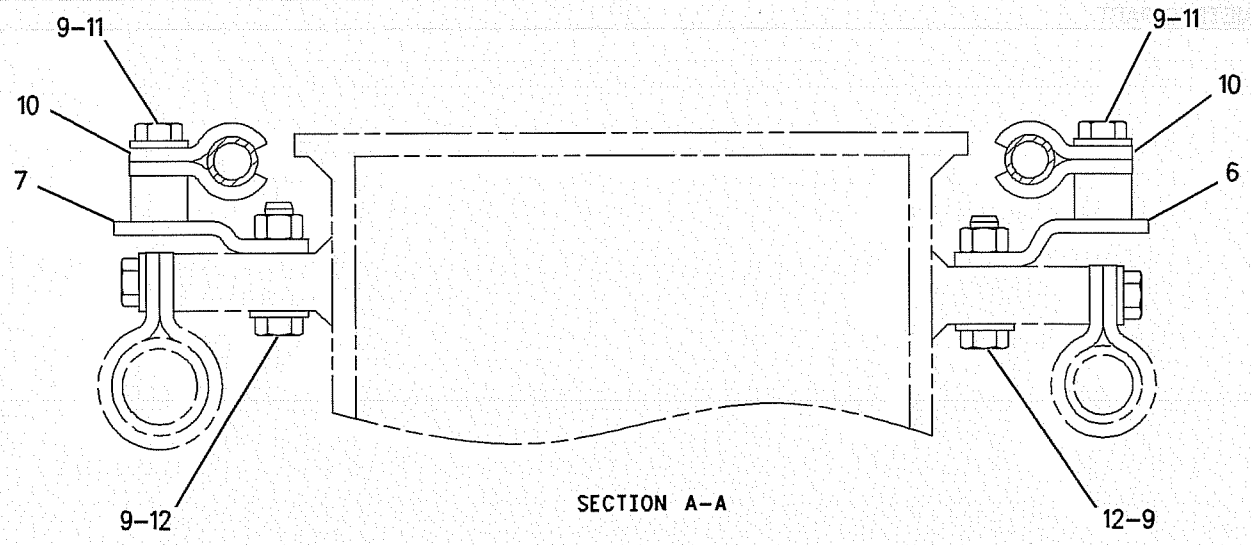

SECTION A–A

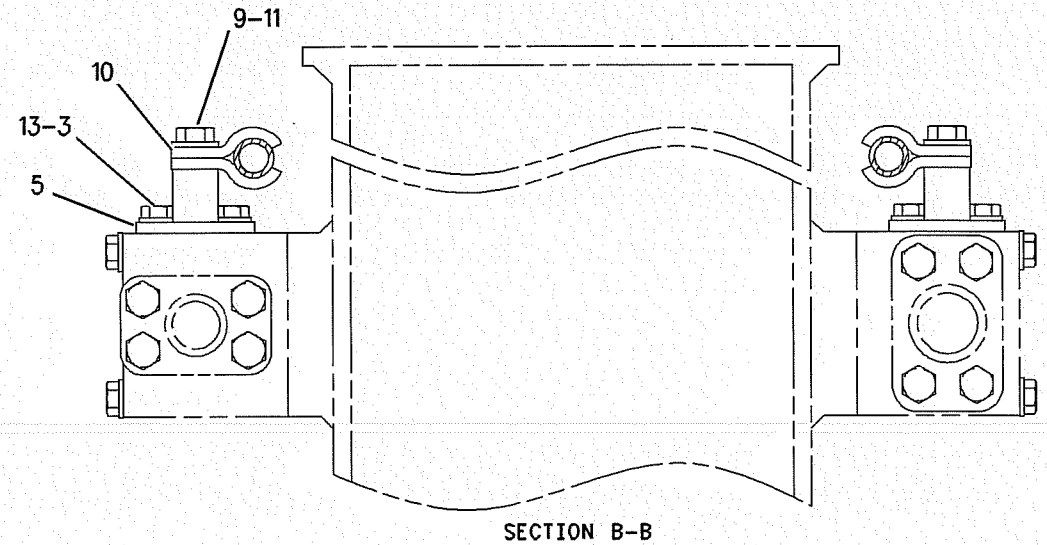

SECTION B–B

GRAPHIC #1 **<END>** g00708782

HYDRAULIC SYSTEM

173-7951 LINES GP-AUXILIARY HYDRAULIC–MASS BOOM

S/N: SBN1-UP; RAW1-UP
MEDIUM PRESSURE
AN ATTACHMENT

SMCS-5057 **i01896238**

NOTE	REF NO	GRAPHIC REF	PART NUMBER	QTY	PART NAME 1 2 3 4 5 6 (PRODUCT LEVEL)	SEE PAGE
C	1	1	**202-7135**	1	TUBE AS	
	2	1	**226-3069**	1	LINES GP-BOOM	
		1	**4I-8888**	1	SEAL-RECTANGULAR	
	2A	1	**179-5009**	1	TUBE AS	
	2B	1	**179-5008**	1	TUBE AS	
	3	1	**226-3071**	1	LINES GP-BOOM	
		1	**4I-8888**	1	SEAL-RECTANGULAR	
	3A	1	**179-5017**	1	TUBE AS	
	3B	1	**179-5016**	1	TUBE AS	
CM	4	1	**8T-4185**	1	BOLT (M10X1.5X50MM)	
	5	1	**096-5766**	2	CLAMP	
	6	1	**179-5012**	1	CLIP AS	
	7	1	**6V-8398**	4	SEAL-O-RING	
M	8	1	**8T-6466**	1	BOLT (M10X1.50X60MM)	
	9	1	**8T-4121**	3	WASHER-HARD (11X21X2.5MM THK)	
	10	1	**153-8839**	1	PLATE	
	11	1	**173-7997**	2	SUPPORT AS	
	12	1	**173-7971**	1	CLIP	
	13	1	**149-1738**	6	CLIP	
	14	1	**7Y-4868**	2	CLIP	
M	15	1	**8T-4139**	10	BOLT (M12X1.75X30MM)	
	16	1	**093-1291**	1	CLAMP	
M	17	1	**8T-6868**	2	BOLT (M12X1.75X80MM)	
	18	1	**8T-4223**	16	WASHER-HARD (13.5X25.5X3MM THK)	
	19	1	**4I-8888**	2	SEAL-RECTANGULAR	
M	20	1	**8T-4184**	4	BOLT (M12X1.75X45MM)	
M	21	1	**8T-4244**	4	NUT (M12X1.75 THD)	
CM	22	1	**085-8091**	1	BOLT (M10X1.5X55MM)	
M	23	1	**8T-4133**	1	NUT (M10X1.5 THD)	
C	24	1	**202-7136**	1	TUBE AS	
	25	1	**153-8867**	2	CLIP	

C-CHANGE FROM PREVIOUS TYPE
M-METRIC PART

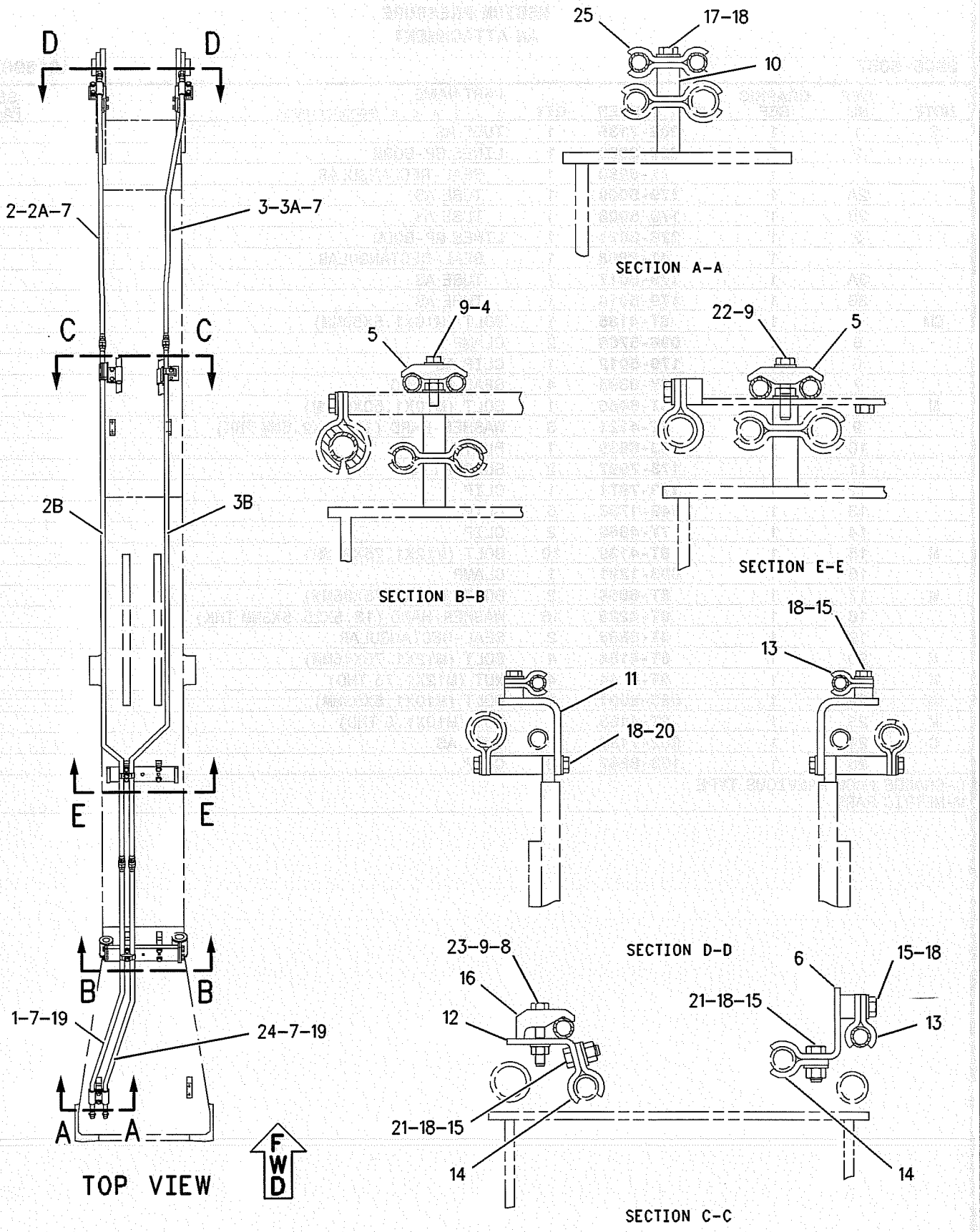

GRAPHIC #1

<END>

g00985232

HYDRAULIC SYSTEM

173-7956 LINES GP-AUXILIARY HYDRAULIC

S/N: SBN1-UP; RAW1-UP
2.5M (8.1FT)STICK. B-FAMILY
PART OF 173-7955 LINES AR-AUXILIARY HYDRAULIC
AN ATTACHMENT

SMCS-5057 **i01404325**

NOTE	REF NO	GRAPHIC REF	PART NUMBER	QTY	PART NAME 1 2 3 4 5 6 (PRODUCT LEVEL)	SEE PAGE
	1	1	**127-6780**	1	TUBE AS	
	2	1	**142-6582**	1	TUBE AS	
I	3	1	**127-6829**	1	HOSE AS	
I	4	1	**121-1965**	1	HOSE AS	
Y	5	1	**173-7992**	2	VALVE GP-BALL	403
	6	1	**1P-5767**	4	FLANGE-HALF	
	7	1	**6V-0400**	2	FLANGE-HALF	
	8	1	**7Y-4538**	2	CLAMP-HALF	
	9	1	**173-7916**	2	CLAMP-HALF	
M	10	1	**8T-4139**	4	BOLT (M12X1.75X30MM)	
M	11	1	**8T-4183**	4	BOLT (M12X1.75X40 MM)	
M	12	1	**8T-4184**	4	BOLT (M12X1.75X45MM)	
M	13	1	**8T-4194**	8	BOLT (M12X1.75X50MM)	
M	14	1	**8T-4956**	12	BOLT (M12X1.75X35MM)	
M	15	1	**8T-6685**	4	BOLT (M10X1.50X110MM)	
	16	1	**135-4063**	2	FLANGE	
	17	1	**8T-4121**	4	WASHER-HARD (11X21X2.5MM THK)	
	18	1	**8T-4223**	16	WASHER-HARD (13.5X25.5X3MM THK)	
	19	1	**1P-3705**	1	SEAL-RECTANGULAR	
	20	1	**1P-3703**	2	SEAL-RECTANGULAR	
	21	1	**1P-3704**	4	SEAL-RECTANGULAR	

I-SEE HOSE FABRICATION GUIDE
M-METRIC PART
Y-SEPARATE ILLUSTRATION

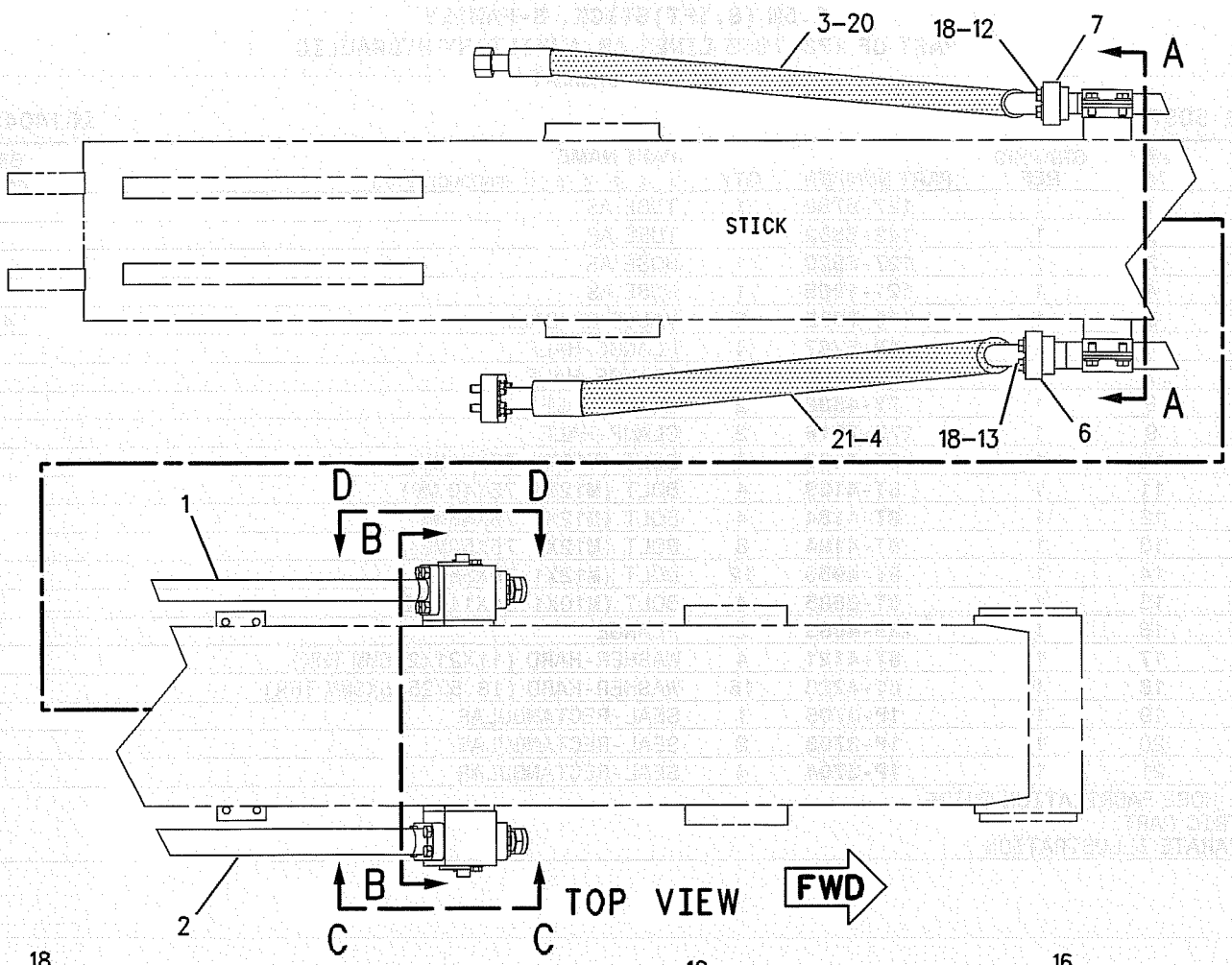

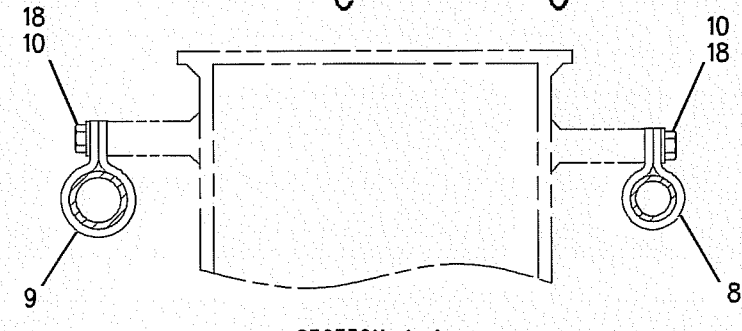

SECTION A-A

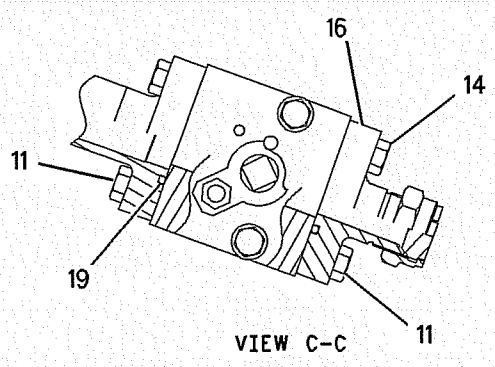

VIEW C-C

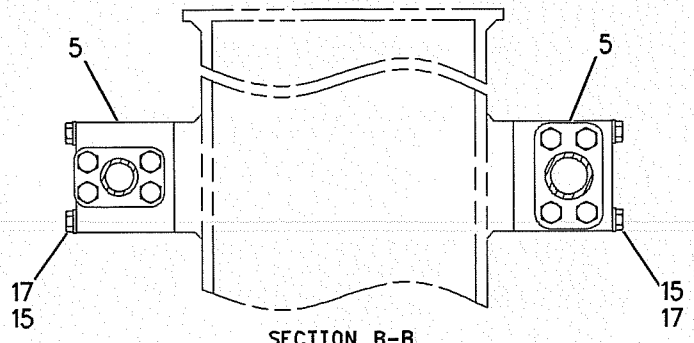

SECTION B-B

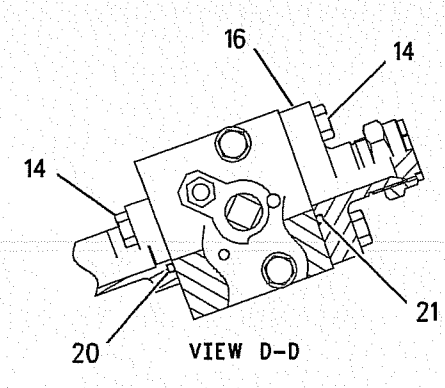

VIEW D-D

GRAPHIC #1 **<END>** g00709212

HYDRAULIC SYSTEM

173-7959 LINES GP-AUXILIARY HYDRAULIC

S/N: SBN1-UP; RAW1-UP
AN ATTACHMENT

SMCS-5057 **i01738007**

NOTE	REF NO	GRAPHIC REF	PART NUMBER	QTY	PART NAME 1 2 3 4 5 6 (PRODUCT LEVEL)	SEE PAGE
C	1	1	**202-7134**	1	TUBE AS	
	2	1	**179-5004**	1	TUBE AS	
	3	1	**179-5005**	1	TUBE AS	
	4	1	**179-5006**	1	TUBE AS	
C	5	1	**153-8801**	1	SUPPORT AS	
C	6	1	**153-8799**	2	PLATE	
	7	1	**153-8798**	2	PLATE	
	8	1	**1P-3705**	1	SEAL-RECTANGULAR	
	9	1	**5K-9090**	3	SEAL-O-RING	
C	10	1	**7Y-4538**	6	CLAMP-HALF	
C	11	1	**173-7916**	6	CLAMP-HALF	
CM	12	1	**8T-4910**	4	BOLT (M12X1.75X60MM)	
M	13	1	**8T-4184**	14	BOLT (M12X1.75X45MM)	
CM	14	1	**8T-4139**	10	BOLT (M12X1.75X30MM)	
M	15	1	**8T-4183**	4	BOLT (M12X1.75X40MM)	
C	16	1	**8T-4223**	34	WASHER-HARD (13.5X25.5X3MM THK)	
M	17	1	**8T-4194**	2	BOLT (M12X1.75X50MM)	
	18	1	**173-7995**	1	PLATE	
I	19	1	**187-9928**	1	HOSE AS	
I	20	1	**187-9983**	1	HOSE AS	
	21	1	**1P-5767**	4	FLANGE-HALF	
	22	1	**1P-3704**	2	SEAL-RECTANGULAR	
C	23	1	**202-7127**	1	PLATE	
C	24	1	**202-7128**	2	PLATE	
C	25	1	**138-5708**	2	CLIP-HALF	
C	26	1	**124-1107**	1	GROMMET	
C	27	1	**124-1108**	2	CLIP	
C	28	1	**129-5874**	1	GROMMET	
CM	29	1	**7X-2553**	2	BOLT (M16X2X40MM)	
C	30	1	**9X-8257**	2	WASHER (17.5X30X3.5MM THK)	
CM	31	1	**7X-2549**	4	BOLT (M12X1.75X100MM)	
C	32	1	**3B-8485**	2	FITTING-GREASE (1/8-27 THD)	

C-CHANGE FROM PREVIOUS TYPE
I-SEE HOSE FABRICATION GUIDE
M-METRIC PART

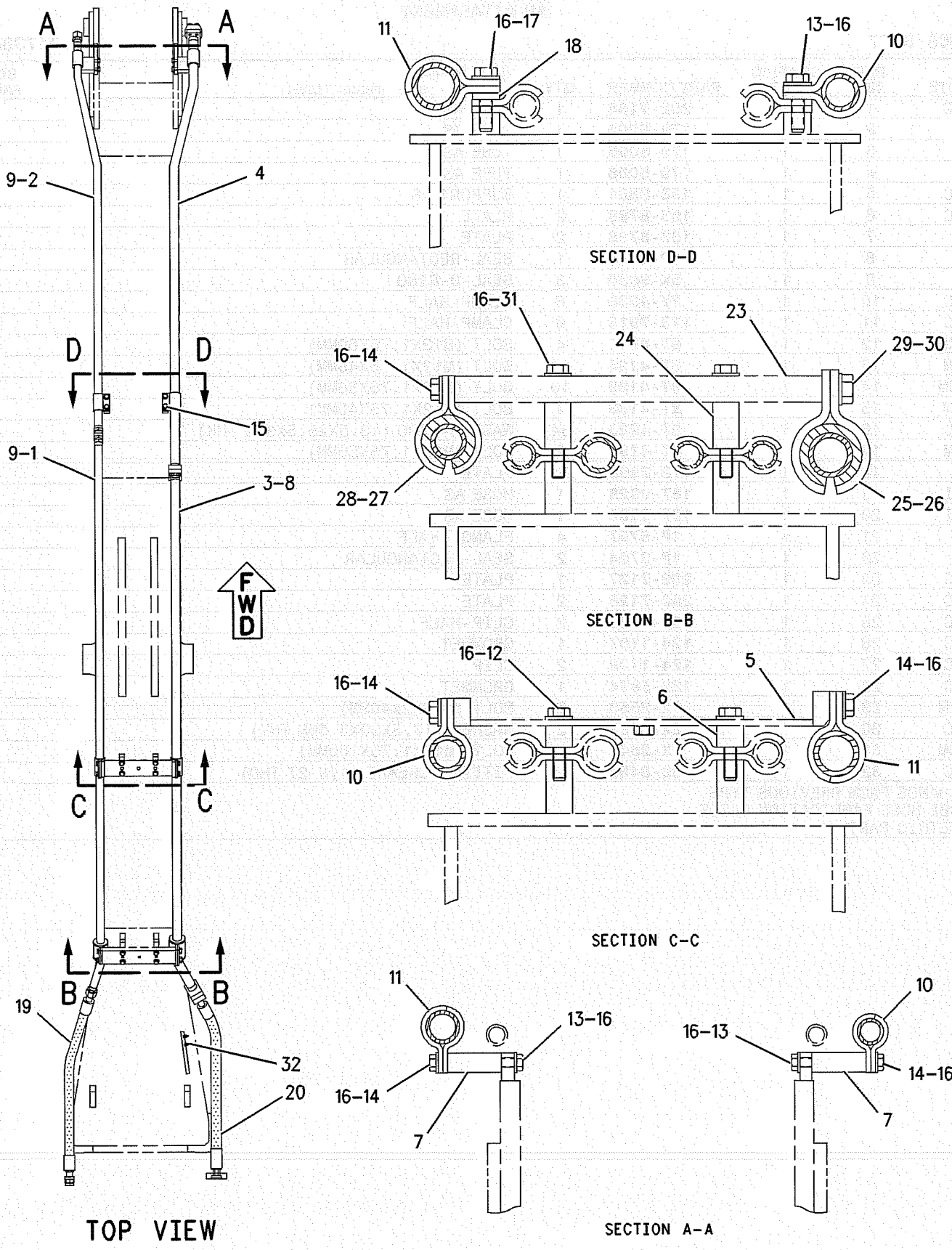

GRAPHIC #1

<END>

g00940487

HYDRAULIC SYSTEM

173-7963 LINES GP-AUXILIARY HYDRAULIC

S/N: SBN1-UP; RAW1-UP
2.4M (7.8FT)STICK. C-FAMILY
PART OF 173-7962 LINES AR-AUXILIARY HYDRAULIC
AN ATTACHMENT

SMCS-5057 **i01404333**

NOTE	REF NO	GRAPHIC REF	PART NUMBER	QTY	PART NAME 1 2 3 4 5 6 (PRODUCT LEVEL)	SEE PAGE
	1	1	**127-6780**	1	TUBE AS	
	2	1	**142-6582**	1	TUBE AS	
I	3	1	**127-6826**	1	HOSE AS	
I	4	1	**127-6823**	1	HOSE AS	
Y	5	1	**173-7992**	2	VALVE GP-BALL	403
	6	1	**1P-5767**	4	FLANGE-HALF	
	7	1	**6V-0400**	2	FLANGE-HALF	
	8	1	**7Y-4538**	2	CLAMP-HALF	
	9	1	**173-7916**	2	CLAMP-HALF	
M	10	1	**8T-4139**	4	BOLT (M12X1.75X30MM)	
M	11	1	**8T-4183**	4	BOLT (M12X1.75X40 MM)	
M	12	1	**8T-4184**	4	BOLT (M12X1.75X45MM)	
M	13	1	**8T-4194**	8	BOLT (M12X1.75X50MM)	
M	14	1	**8T-4956**	12	BOLT (M12X1.75X35MM)	
M	15	1	**8T-6685**	4	BOLT (M10X1.50X110MM)	
	16	1	**135-4063**	2	FLANGE	
	17	1	**8T-4121**	4	WASHER-HARD (11X21X2.5MM THK)	
	18	1	**8T-4223**	16	WASHER-HARD (13.5X25.5X3MM THK)	
	19	1	**1P-3705**	1	SEAL-RECTANGULAR	
	20	1	**1P-3703**	2	SEAL-RECTANGULAR	
	21	1	**1P-3704**	4	SEAL-RECTANGULAR	

I-SEE HOSE FABRICATION GUIDE
M-METRIC PART
Y-SEPARATE ILLUSTRATION

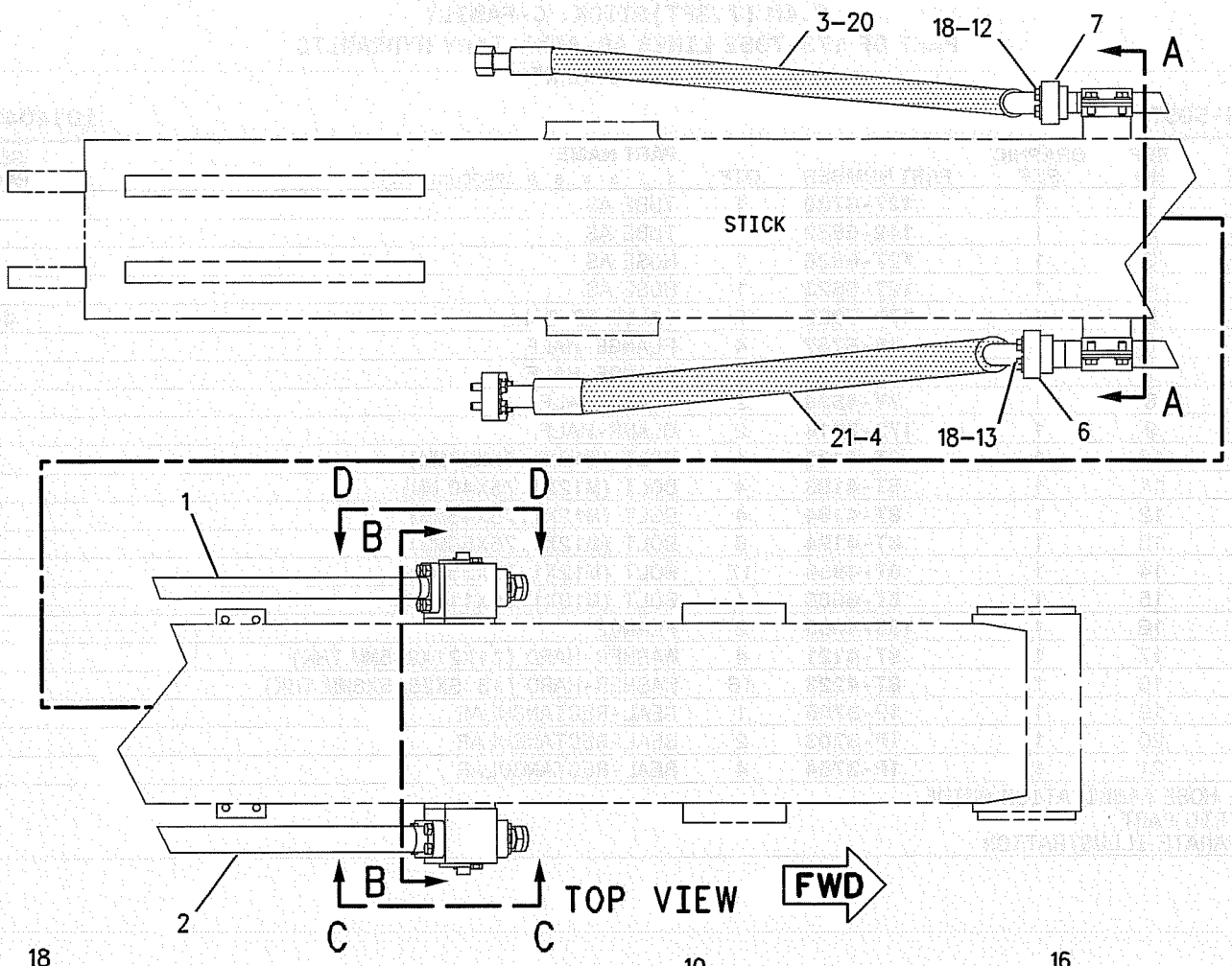

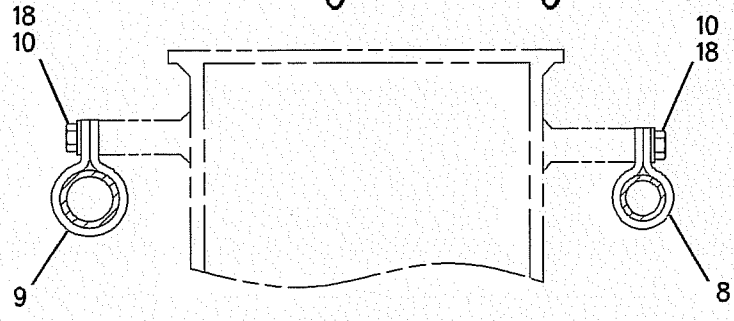

SECTION A-A

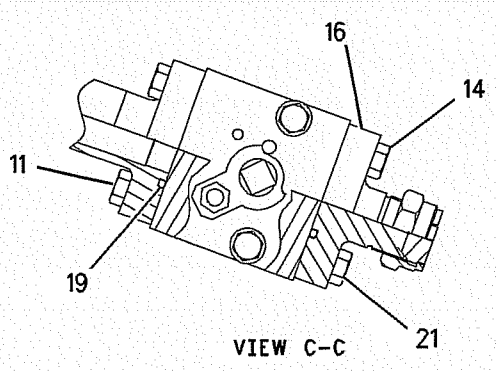

VIEW C-C

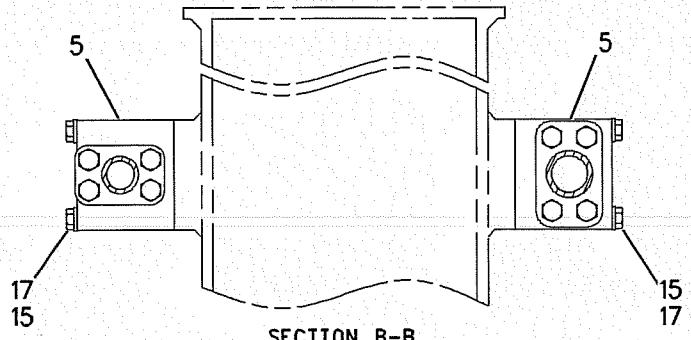

SECTION B-B

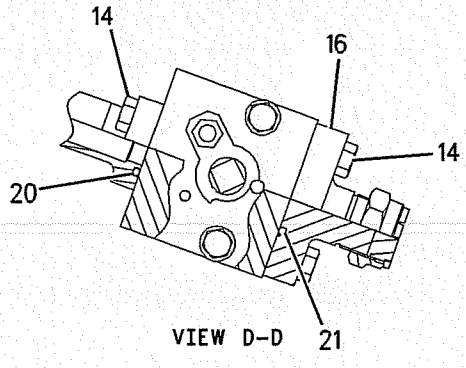

VIEW D-D

GRAPHIC #1

<END>

g00709187

HYDRAULIC SYSTEM

173-7969 LINES GP-AUXILIARY HYDRAULIC

S/N: SBN1-UP; RAW1-UP
3.9M (12.6FT). B-FAMILY
PART OF 173-7968 LINES AR-AUXILIARY HYDRAULIC
AN ATTACHMENT

SMCS-5057 **i01406653**

NOTE	REF NO	GRAPHIC REF	PART NUMBER	QTY	PART NAME 1 2 3 4 5 6 (PRODUCT LEVEL)	SEE PAGE
	1	1	**179-5178**	1	TUBE AS	
	2	1	**179-5179**	1	TUBE AS	
I	3	1	**109-6214**	1	HOSE AS	
I	4	1	**104-8750**	1	HOSE AS	
Y	5	1	**173-7992**	2	VALVE GP-BALL	403
	6	1	**1P-5767**	4	FLANGE-HALF	
	7	1	**6V-0400**	2	FLANGE-HALF	
	8	1	**7Y-4538**	6	CLAMP-HALF	
	9	1	**173-7916**	6	CLAMP-HALF	
M	10	1	**8T-4139**	12	BOLT (M12X1.75X30MM)	
M	11	1	**8T-4183**	4	BOLT (M12X1.75X40 MM)	
M	12	1	**8T-4184**	4	BOLT (M12X1.75X45MM)	
M	13	1	**8T-4194**	8	BOLT (M12X1.75X50MM)	
M	14	1	**8T-4956**	12	BOLT (M12X1.75X35MM)	
M	15	1	**8T-6685**	4	BOLT (M10X1.50X110MM)	
	16	1	**135-4063**	2	FLANGE	
	17	1	**8T-4121**	4	WASHER-HARD (11X21X2.5MM THK)	
	18	1	**8T-4223**	24	WASHER-HARD (13.5X25.5X3MM THK)	
	19	1	**1P-3705**	1	SEAL-RECTANGULAR	
	20	1	**1P-3703**	2	SEAL-RECTANGULAR	
	21	1	**1P-3704**	4	SEAL-RECTANGULAR	

I-SEE HOSE FABRICATION GUIDE
M-METRIC PART
Y-SEPARATE ILLUSTRATION

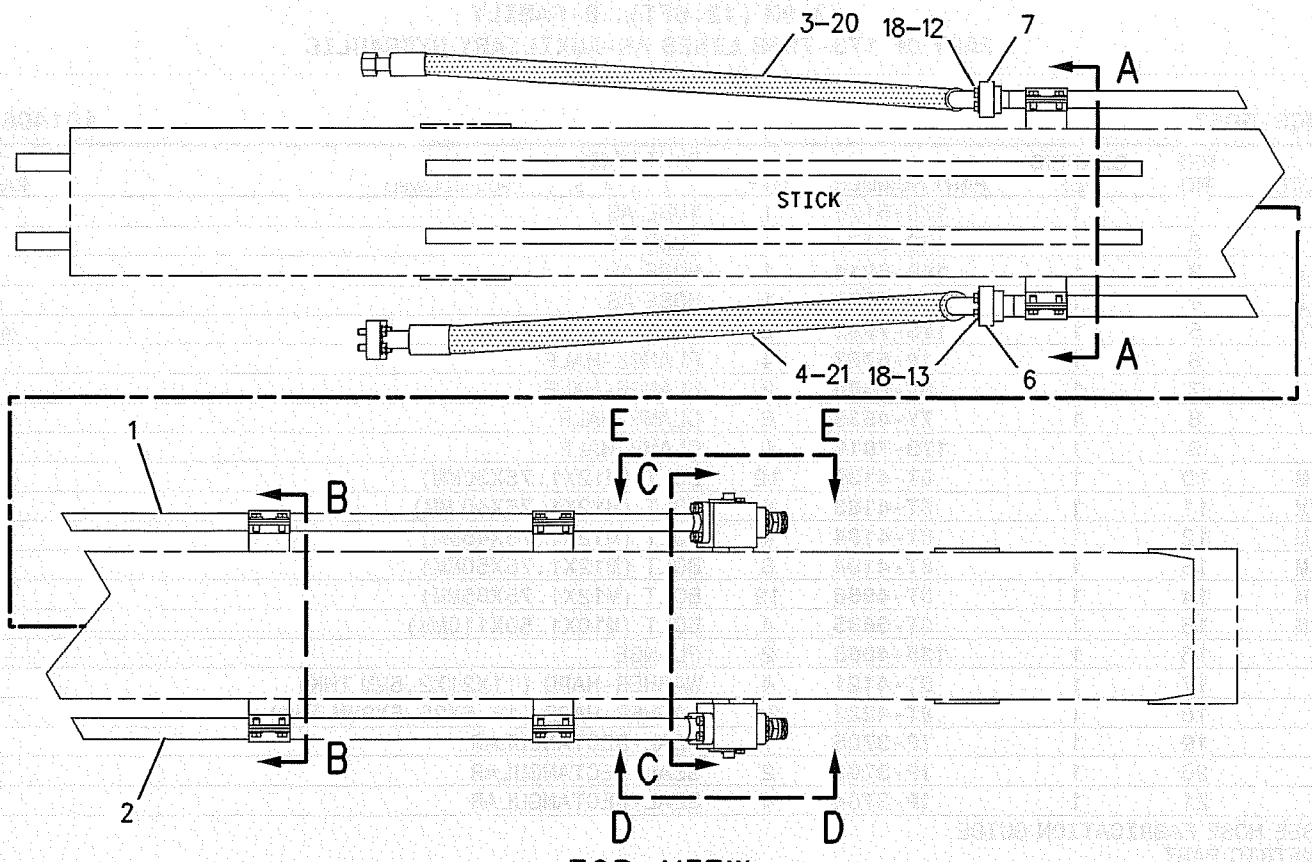

TOP VIEW

FWD

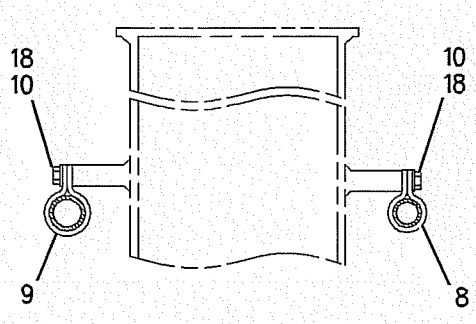

SECTION A-A

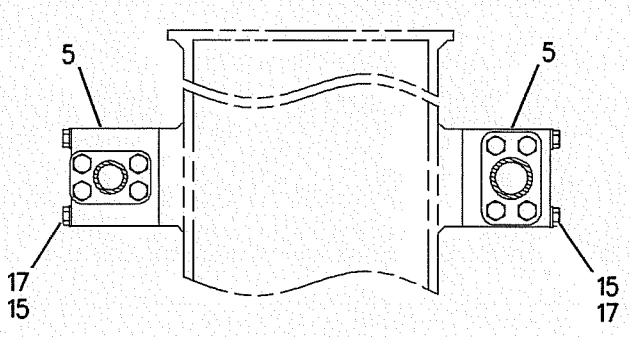

SECTION C-C

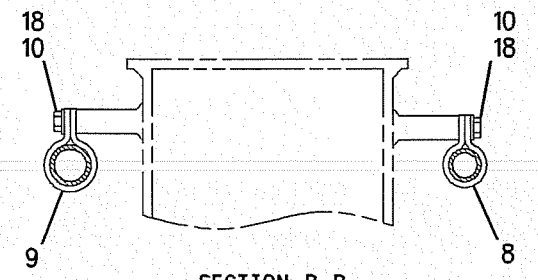

SECTION B-B

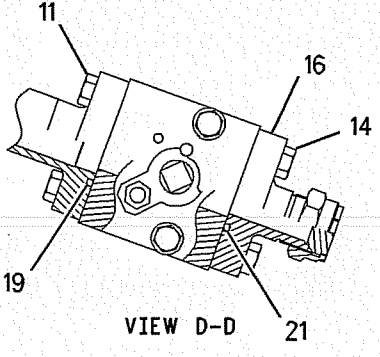

VIEW D-D

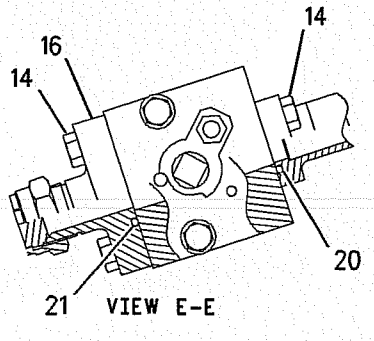

VIEW E-E

GRAPHIC #1

<END>

g00708968

HYDRAULIC SYSTEM

173-8075 LINES GP-AUXILIARY HYDRAULIC

S/N: SBN1-UP; RAW1-UP

AN ATTACHMENT

SMCS-5057 **i01403387**

NOTE	REF NO	GRAPHIC REF	PART NUMBER	QTY	PART NAME 1 2 3 4 5 6 (PRODUCT LEVEL)	SEE PAGE
	1	1	**179-5182**	2	TUBE AS	
	2	1	**179-5183**	2	HOSE AS	
	3	1	**8T-4121**	4	WASHER-HARD (11X21X2.5MM THK)	
	4	1	**6K-0806**	6	STRAP-CABLE	
	5	1	**173-7872**	2	SUPPORT AS	
	6	1	**173-7875**	1	SUPPORT AS	
M		1	**8T-4244**	2	NUT (M12X1.75 THD)	
	7	1	**173-7877**	1	SUPPORT AS	
M		1	**8T-4244**	2	NUT (M12X1.75 THD)	
	8	1	**6V-8398**	4	SEAL-O-RING (12.47MM ID)	
	9	1	**8T-4223**	20	WASHER-HARD (13.5X25.5X3MM THK)	
	10	1	**149-1738**	12	CLIP	
M	11	1	**8T-4139**	12	BOLT (M12X1.75X30MM)	
M	12	1	**8T-4194**	8	BOLT (M12X1.75X50MM)	
M	13	1	**8T-4137**	4	BOLT (M10X1.5X20MM)	
	14	1	**179-5190**	1	SUPPORT AS	
M		1	**8T-4244**	2	NUT (M12X1.75 THD)	
		1	**179-5191**	1	PLATE	
	15	1	**179-5192**	1	SUPPORT AS	
M		1	**8T-4244**	2	NUT (M12X1.75 THD)	
		1	**179-5193**	1	PLATE	

M-METRIC PART

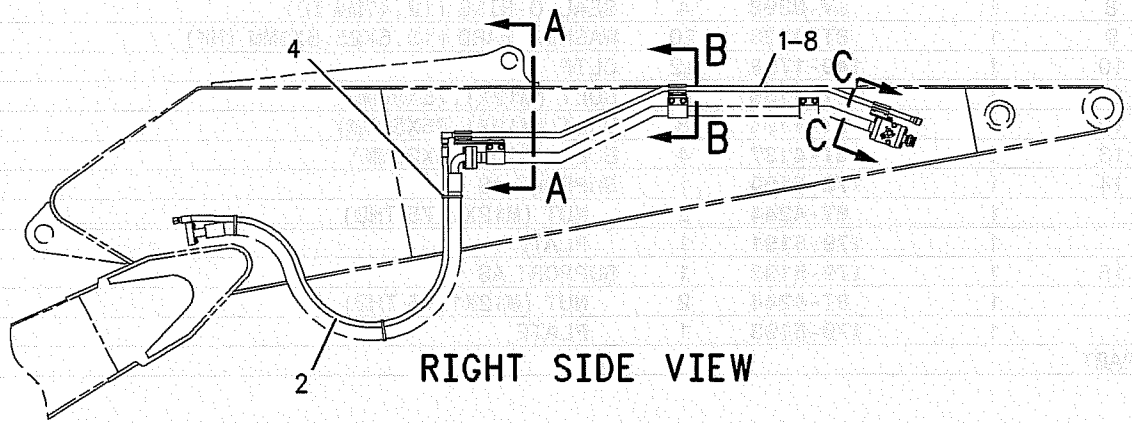

RIGHT SIDE VIEW

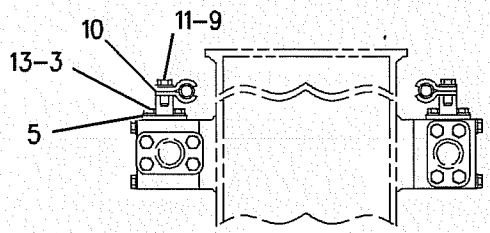

SECTION C-C

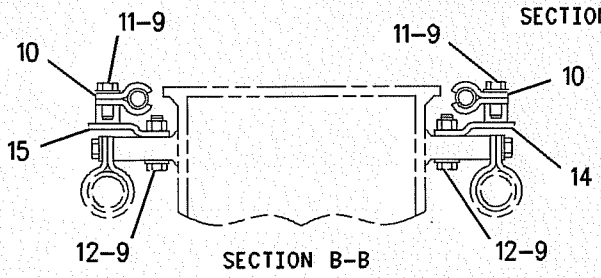

SECTION B-B

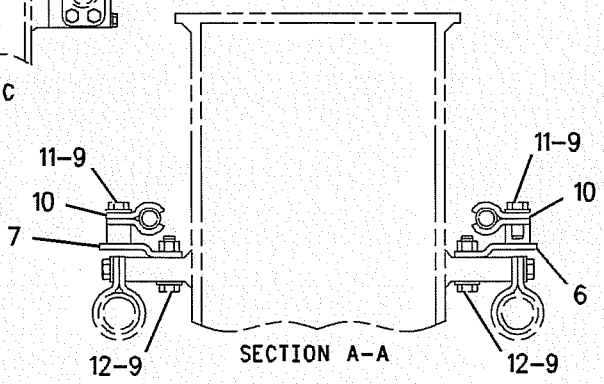

SECTION A-A

GRAPHIC #1 **<END>** g00709167

HYDRAULIC SYSTEM

173-8081 LINES GP-AUXILIARY HYDRAULIC

S/N: SBN1-UP; RAW1-UP

AN ATTACHMENT

SMCS-5057 **i01403268**

NOTE	REF NO	GRAPHIC REF	PART NUMBER	QTY	PART NAME 1 2 3 4 5 6 (PRODUCT LEVEL)	SEE PAGE
	1	1	**179-5033**	2	TUBE AS	
	2	1	**179-5034**	2	HOSE AS	
	3	1	**8T-4121**	4	WASHER-HARD (11X21X2.5MM THK)	
	4	1	**6K-0806**	6	STRAP-CABLE	
	5	1	**173-7872**	2	SUPPORT AS	
	6	1	**173-7875**	1	SUPPORT AS	
M		1	**8T-4244**	2	NUT (M12X1.75 THD)	
	7	1	**173-7877**	1	SUPPORT AS	
M		1	**8T-4244**	2	NUT (M12X1.75 THD)	
	8	1	**6V-8398**	4	SEAL-O-RING (12.47MM ID)	
	9	1	**8T-4223**	12	WASHER-HARD (13.5X25.5X3MM THK)	
	10	1	**149-1738**	8	CLIP	
M	11	1	**8T-4139**	8	BOLT (M12X1.75X30MM)	
M	12	1	**8T-4194**	4	BOLT (M12X1.75X50MM)	
M	13	1	**8T-4137**	4	BOLT (M10X1.5X20MM)	

M-METRIC PART

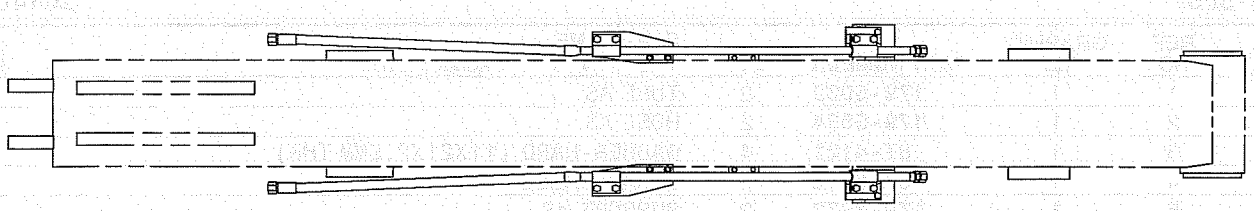

TOP VIEW

FWD

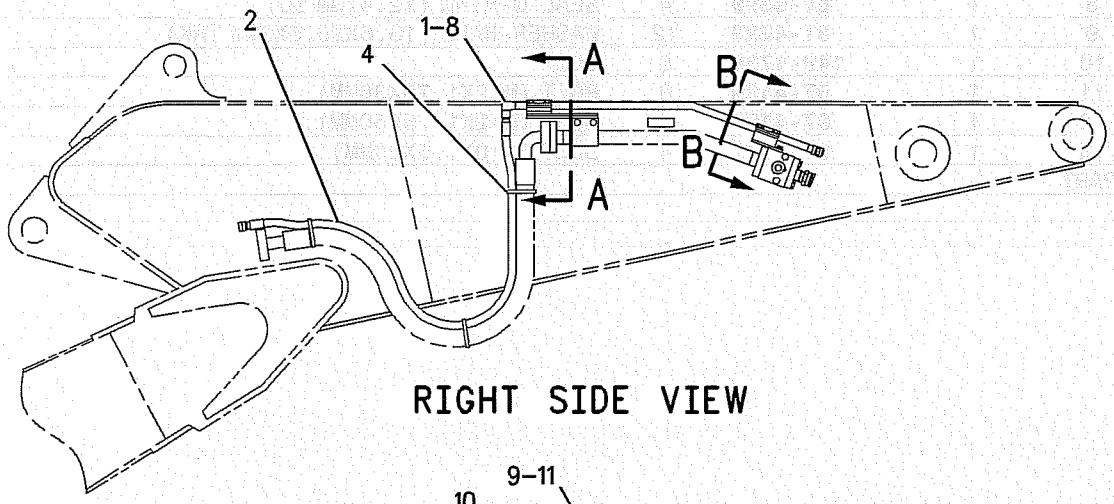

RIGHT SIDE VIEW

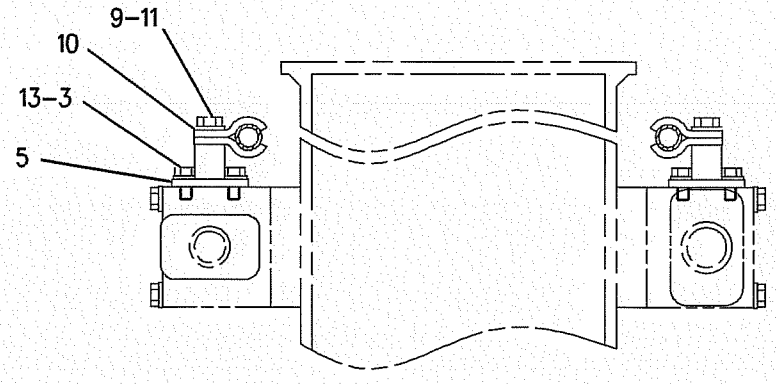

SECTION B-B

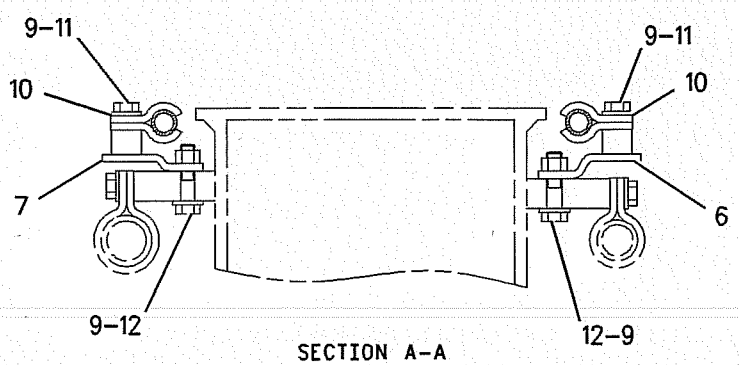

SECTION A-A

GRAPHIC #1 **<END>** g00709145

HYDRAULIC SYSTEM

142-7759 LINES GP-BOOM

S/N: SBN1-UP; RAW1-UP
PART OF 167-7245 BOOM AR-1 PIECE
AN ATTACHMENT

SMCS-5057 **i01401797**

NOTE	REF NO	GRAPHIC REF	PART NUMBER	QTY	PART NAME 1 2 3 4 5 6 (PRODUCT LEVEL)	SEE PAGE
	1	1	**184-9251**	1	TUBE AS	
	2	1	**6V-9746**	11	SEAL-O-RING (18.94MM ID)	
	3	1	**184-9252**	1	TUBE AS	
	4	1	**5K-9090**	3	SEAL-O-RING (23.52MM ID)	
	5	1	**184-9253**	2	TUBE AS	
	6	1	**184-9254**	1	TUBE AS	
	7	1	**184-9256**	1	TUBE AS	
I	8	1	**151-1846**	1	HOSE AS	
I	9	1	**5I-7290**	1	HOSE AS	
	10	1	**184-9255**	1	TUBE AS	
	11	1	**184-9257**	1	TUBE AS	
	12	1	**4I-1674**	6	CLIP	
	13	1	**8T-4223**	20	WASHER-HARD (13.5X25.5X3MM THK)	
M	14	1	**8T-4139**	20	BOLT (M12X1.75X30MM)	
	15	1	**4I-1676**	6	CLIP	
	16	1	**7Y-4868**	8	CLIP	

I-SEE HOSE FABRICATION GUIDE
M-METRIC PART

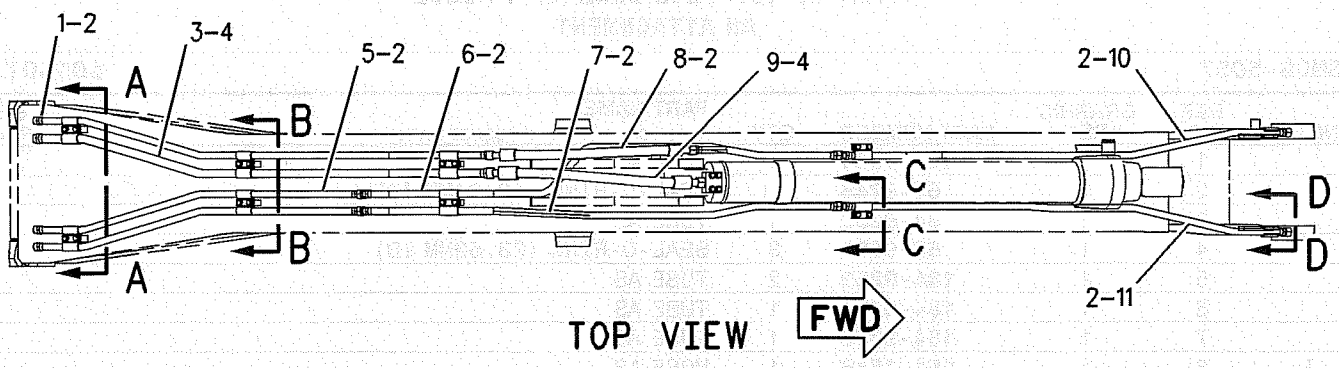

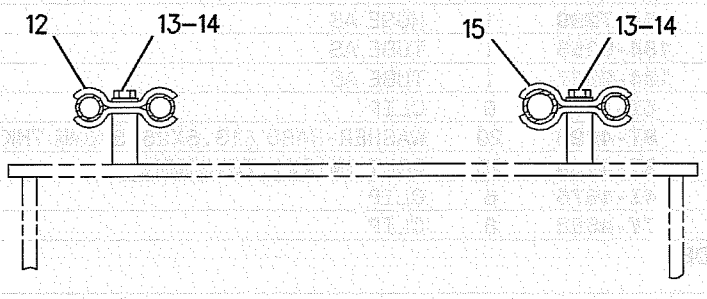

SECTION A-A

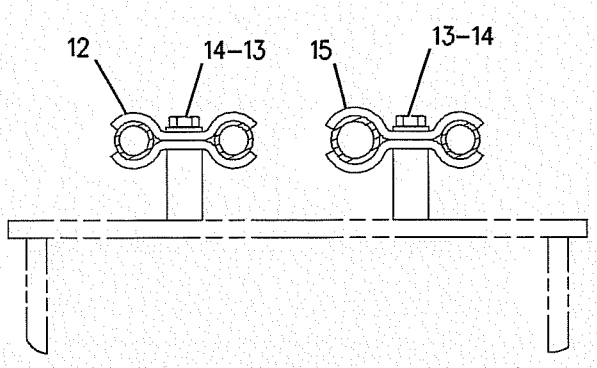

SECTION B-B

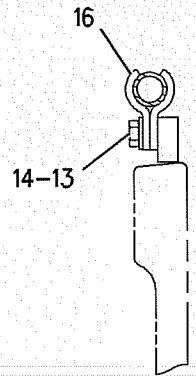

VIEW D-D

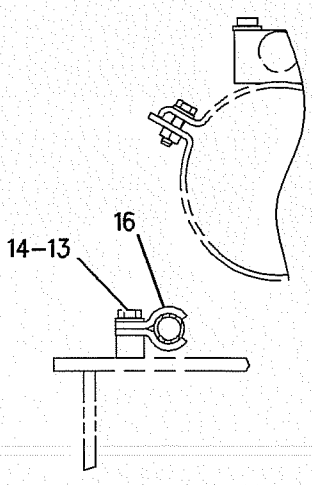

SECTION C-C

GRAPHIC #1 **<END>** g00675060

153-8786 LINES GP-BOOM

S/N: SBN1-UP; RAW1-UP
PART OF 167-7244, 176-2714 BOOM AR-1 PIECE LONG
AN ATTACHMENT

SMCS-5057 **i01889791**

NOTE	REF NO	GRAPHIC REF	PART NUMBER	QTY	PART NAME 1 2 3 4 5 6 (PRODUCT LEVEL)	SEE PAGE
	1	1	**184-9405**	1	TUBE AS	
	2	1	**6V-9746**	9	SEAL-O-RING	
	3	1	**184-9406**	1	TUBE AS	
	4	1	**5K-9090**	3	SEAL-O-RING	
	5	1	**202-3855**	1	TUBE AS	
	6	1	**202-3856**	1	TUBE AS	
I	7	1	**192-6940**	1	HOSE AS	
I	8	1	**192-6936**	1	HOSE AS	
	9	1	**202-3857**	1	TUBE AS	
	10	1	**202-3858**	1	TUBE AS	
	11	1	**4I-1674**	6	CLIP	
	12	1	**8T-4223**	20	WASHER-HARD (13.5X25.5X3MM THK)	
M	13	1	**8T-4139**	20	BOLT (M12X1.75X30MM)	
	14	1	**4I-1676**	6	CLIP	
	15	1	**7Y-4868**	8	CLIP	

I-SEE HOSE FABRICATION GUIDE
M-METRIC PART

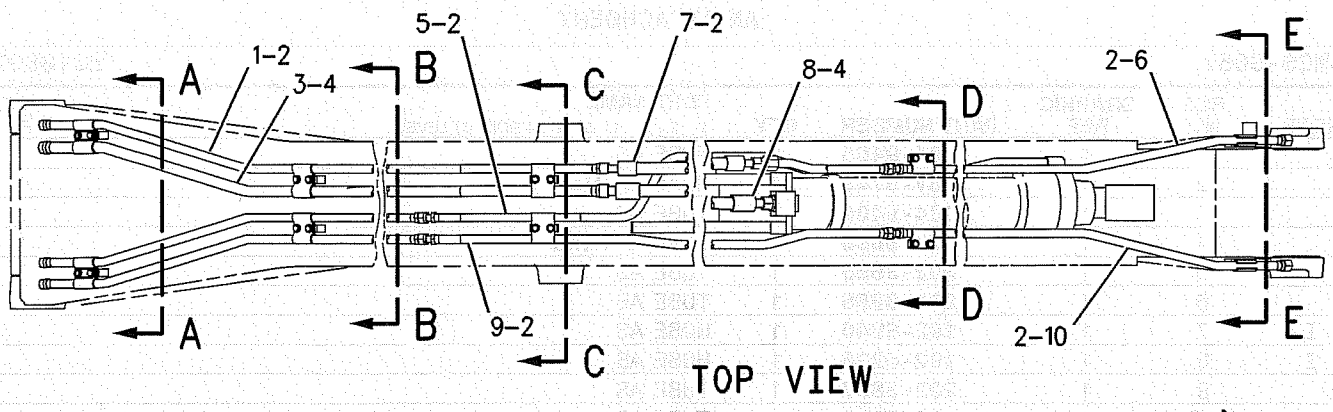

TOP VIEW

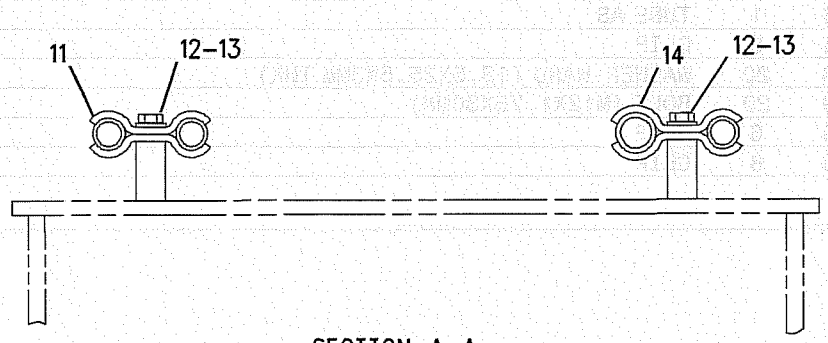

SECTION A-A

FWD

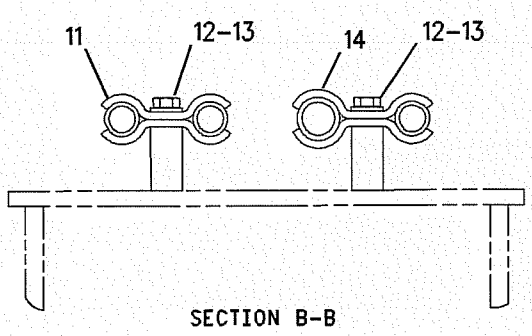

SECTION B-B

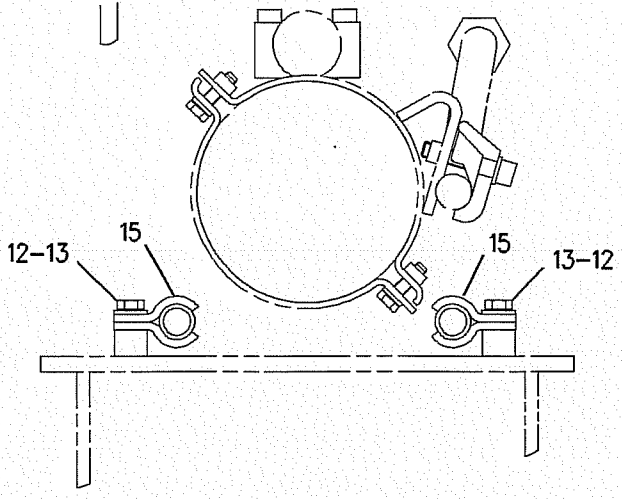

SECTION D-D

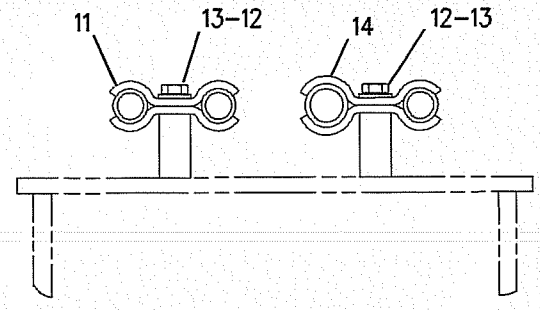

SECTION C-C

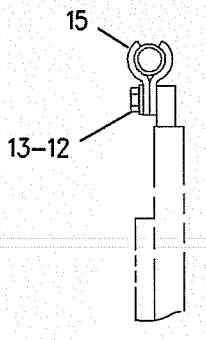

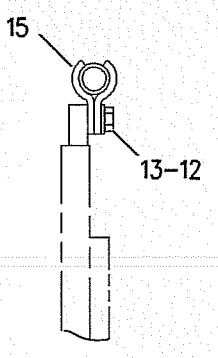

SECTION E-E

GRAPHIC #1 **<END>** g00739683

115-8902 LINES GP-BOOM CYLINDER

S/N: SBN1-UP; RAW1-UP
PART OF 158-9011 CYLINDER & LINES GP-BOOM
AN ATTACHMENT

SMCS-5456 **i01402626**

NOTE	REF NO	GRAPHIC REF	PART NUMBER	QTY	PART NAME 1 2 3 4 5 6 (PRODUCT LEVEL)	SEE PAGE
M	1	1	**8T-4185**	8	BOLT (M10X1.5X50MM)	
	2	1	**119-2434**	1	TUBE AS	
	3	1	**6V-9746**	2	SEAL-O-RING (18.94MM ID)	
	4	1	**119-2435**	1	TUBE AS	
	5	1	**1P-3703**	2	SEAL-RECTANGULAR	
	6	1	**119-2321**	1	SUPPORT AS	
M		1	**8T-3490**	2	NUT-WELD (M10X1.5 THD)	
M	7	1	**8T-4196**	4	BOLT (M10X1.5X35MM)	
	8	1	**8T-4121**	4	WASHER-HARD (11X21X2.5MM THK)	
	9	1	**119-2320**	1	SUPPORT AS	
M		1	**8T-3490**	2	NUT-WELD (M10X1.5 THD)	
	10	1	**4I-1674**	2	CLIP	
M	11	1	**8T-4139**	2	BOLT (M12X1.75X30MM)	
	12	1	**8T-4223**	2	WASHER-HARD (13.5X25.5X3MM THK)	

M-METRIC PART

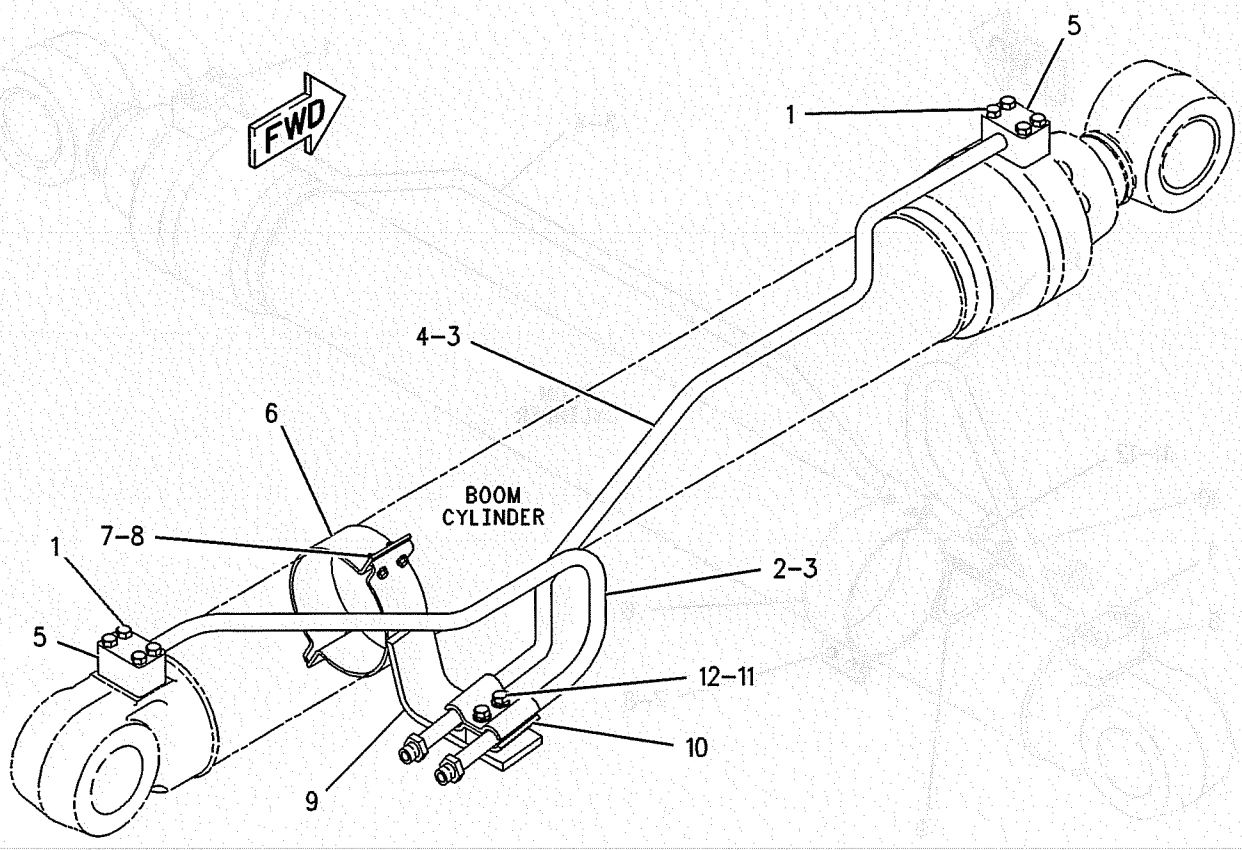

GRAPHIC #1 **<END>** g00266106

HYDRAULIC SYSTEM

115-8903 LINES GP-BOOM CYLINDER

S/N: SBN1-UP; RAW1-UP
PART OF 158-9012 CYLINDER & LINES GP-BOOM
AN ATTACHMENT

SMCS-5456 **i01402903**

NOTE	REF NO	GRAPHIC REF	PART NUMBER	QTY	PART NAME 1 2 3 4 5 6 (PRODUCT LEVEL)	SEE PAGE
M	1	1	**8T-4185**	8	BOLT (M10X1.5X50MM)	
	2	1	**119-2436**	1	TUBE AS	
	3	1	**6V-9746**	2	SEAL-O-RING (18.94MM ID)	
	4	1	**119-2437**	1	TUBE AS	
	5	1	**1P-3703**	2	SEAL-RECTANGULAR	
	6	1	**119-2321**	1	SUPPORT AS	
M		1	**8T-3490**	2	NUT-WELD (M10X1.5 THD)	
M	7	1	**8T-4196**	4	BOLT (M10X1.5X35MM)	
	8	1	**8T-4121**	4	WASHER-HARD (11X21X2.5MM THK)	
	9	1	**119-2320**	1	SUPPORT AS	
	10	1	**4I-1674**	2	CLIP	
M	11	1	**8T-4139**	2	BOLT (M12X1.75X30MM)	
	12	1	**8T-4223**	2	WASHER-HARD (13.5X25.5X3MM THK)	

M-METRIC PART

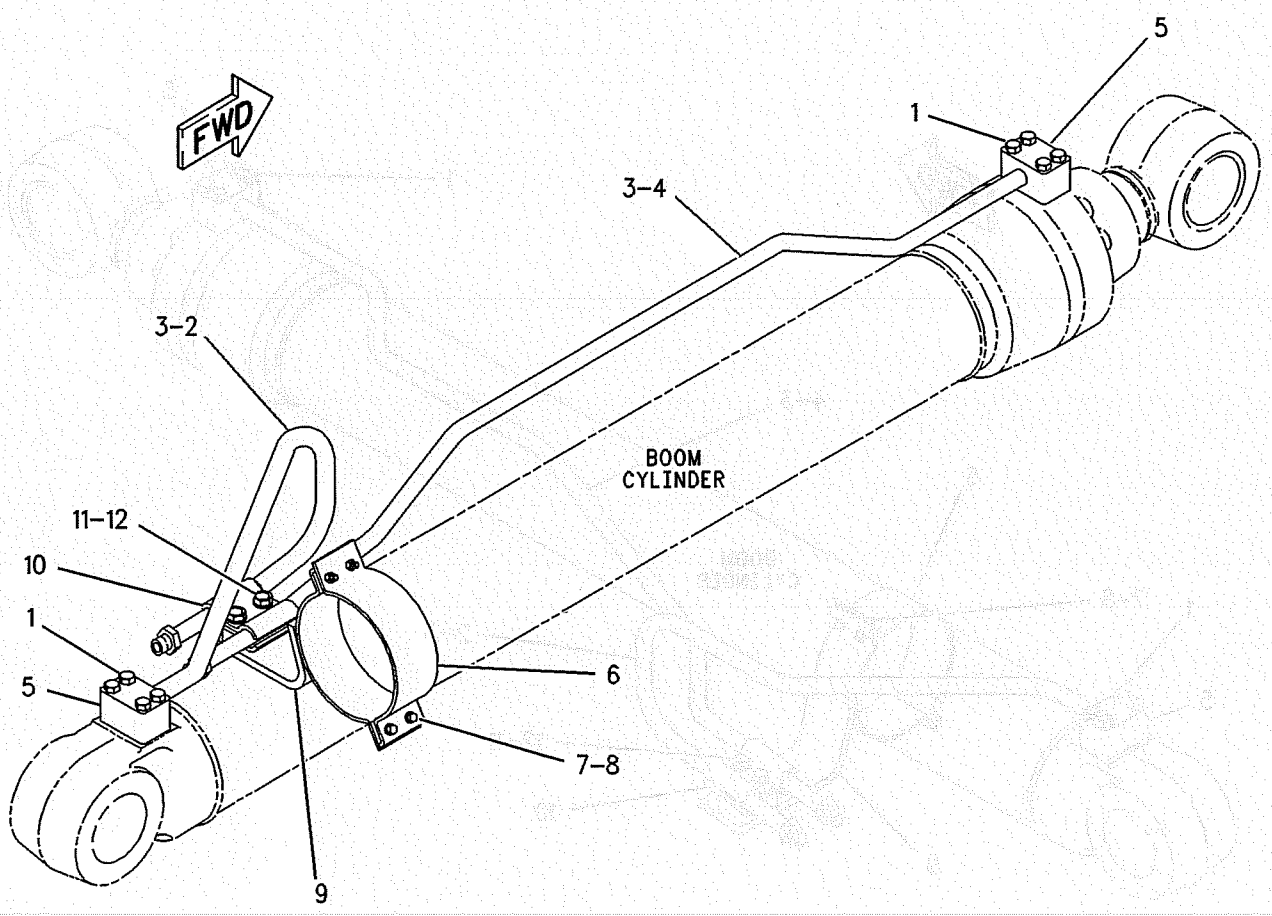

GRAPHIC #1 **<END>** g00266093

HYDRAULIC SYSTEM

173-7952 LINES GP-BOOM DRAIN

S/N: SBN1-UP; RAW1-UP
MASS BOOM
AN ATTACHMENT

SMCS-5057 **i01896237**

NOTE	REF NO	GRAPHIC REF	PART NUMBER	QTY	PART NAME 1 2 3 4 5 6 (PRODUCT LEVEL)	SEE PAGE
C	1	1	**202-7137**	1	TUBE AS	
	2	1	**226-3073**	1	LINES GP-BOOM	
		1	**4I-8888**	1	SEAL-RECTANGULAR	
	2A	1	**179-5011**	1	TUBE AS	
	2B	1	**179-5010**	1	TUBE AS	
CM	3	1	**8T-4185**	1	BOLT (M10X1.5X50MM)	
	4	1	**153-8867**	2	CLIP	
	5	1	**096-5766**	1	CLAMP	
M	6	1	**8T-6868**	2	BOLT (M12X1.75X80MM)	
M	7	1	**8T-4139**	2	BOLT (M12X1.75X30MM)	
	8	1	**4I-8888**	2	SEAL-RECTANGULAR	
	9	1	**8T-4223**	4	WASHER-HARD (13.5X25.5X3MM THK)	
CM	10	1	**085-8091**	1	BOLT (M10X1.5X55MM)	
M	11	1	**8T-6466**	1	BOLT (M10X1.50X60MM)	
M	12	1	**8T-4133**	1	NUT (M10X1.5 THD)	
	13	1	**8T-4121**	3	WASHER-HARD (11X21X2.5MM THK)	
	14	1	**6V-8398**	2	SEAL-O-RING	
	15	1	**149-1738**	2	CLIP	
	16	1	**093-1291**	2	CLAMP	
	17	1	**153-8839**	1	PLATE	

C-CHANGE FROM PREVIOUS TYPE
M-METRIC PART

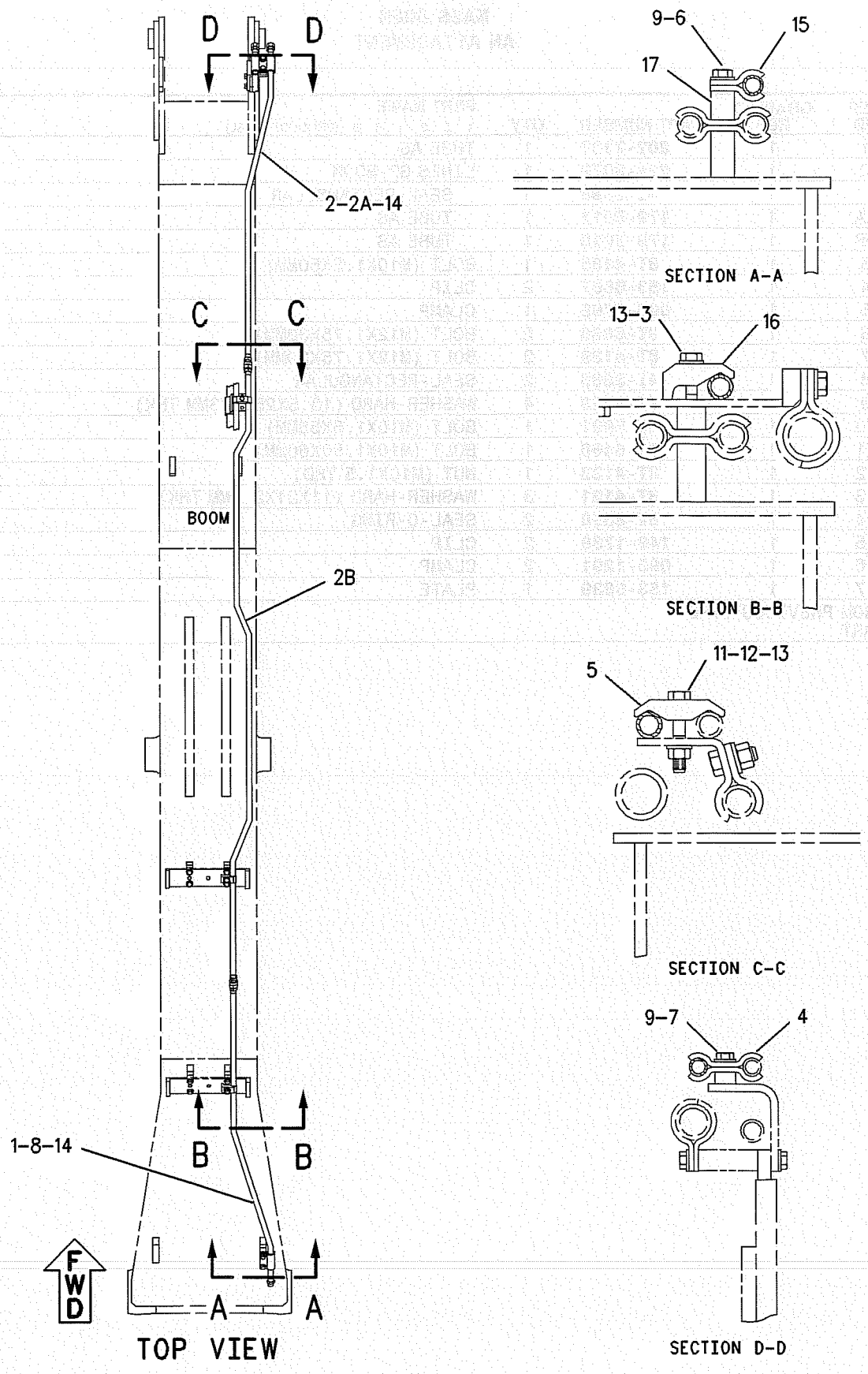

GRAPHIC #1

<END>

g00985965

HYDRAULIC SYSTEM

173-7993 LINES GP-BOOM DRAIN

S/N: SBN1-UP; RAW1-UP
REACH BOOM
AN ATTACHMENT

SMCS-5057 **i01896654**

NOTE	REF NO	GRAPHIC REF	PART NUMBER	QTY	PART NAME 1 2 3 4 5 6 (PRODUCT LEVEL)	SEE PAGE
C	1	1	**202-7133**	1	TUBE AS	
	2	1	**226-3063**	1	LINES GP-BOOM	
		1	**4I-8888**	1	SEAL-RECTANGULAR	
	2A	1	**153-8834**	1	TUBE AS	
	2B	1	**153-8833**	1	TUBE AS	
CM	3	1	**8T-4185**	1	BOLT (M10X1.5X50MM)	
	4	1	**153-8867**	2	CLIP	
	5	1	**096-5766**	1	CLAMP	
M	6	1	**8T-6868**	2	BOLT (M12X1.75X80MM)	
M	7	1	**8T-4139**	2	BOLT (M12X1.75X30MM)	
	8	1	**4I-8888**	1	SEAL-RECTANGULAR	
	9	1	**8T-4223**	4	WASHER-HARD (13.5X25.5X3MM THK)	
CM	10	1	**085-8091**	1	BOLT (M10X1.5X55MM)	
M	11	1	**8T-6466**	1	BOLT (M10X1.50X60MM)	
M	12	1	**8T-4133**	1	NUT (M10X1.5 THD)	
	13	1	**8T-4121**	3	WASHER-HARD (11X21X2.5MM THK)	
	14	1	**6V-8398**	2	SEAL-O-RING	
	15	1	**149-1738**	2	CLIP	
	16	1	**093-1291**	2	CLAMP	
	17	1	**153-8839**	1	PLATE	

C-CHANGE FROM PREVIOUS TYPE
M-METRIC PART

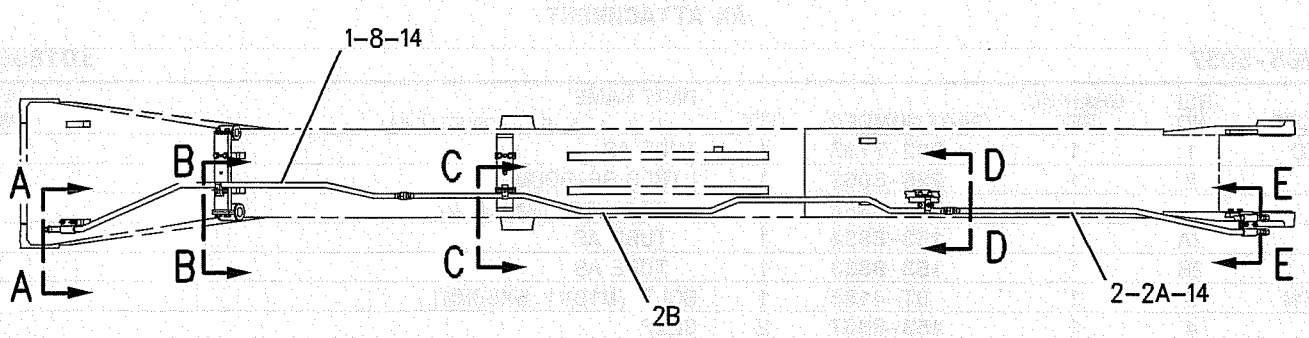

TOP VIEW FWD

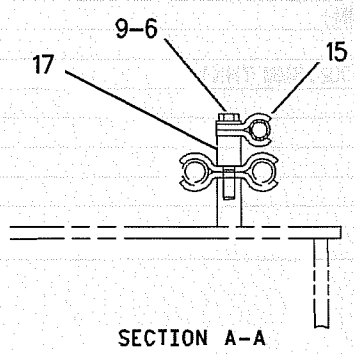

SECTION A-A

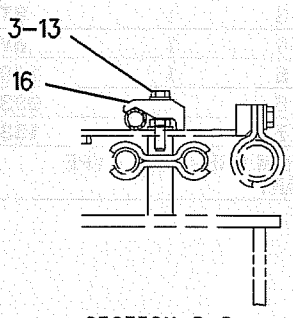

SECTION B-B

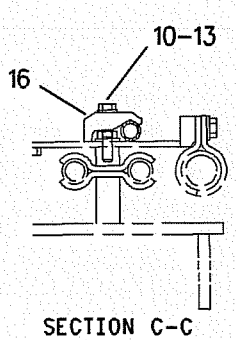

SECTION C-C

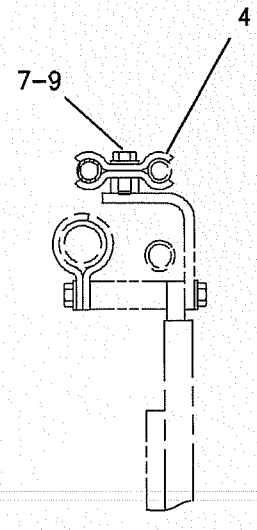

SECTION E-E

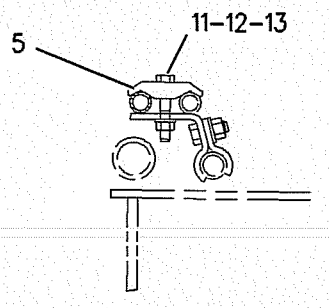

SECTION D-D

GRAPHIC #1 **<END>** g00984917

HYDRAULIC SYSTEM

115-8906 LINES GP-BUCKET CYLINDER

S/N: SBN1-UP; RAW1-UP
B-FAMILY
PART OF 158-9018 CYLINDER & LINES GP-BUCKET
AN ATTACHMENT

SMCS-5057, 5457 **i01389202**

NOTE	REF NO	GRAPHIC REF	PART NUMBER	QTY	PART NAME 1 2 3 4 5 6 (PRODUCT LEVEL)	SEE PAGE
	1	1	**119-2354**	1	TUBE AS	
M	2	1	**8T-4185**	4	BOLT (M10X1.5X50MM)	
	3	1	**1P-3703**	1	SEAL-RECTANGULAR (31.86MM ID)	
M	4	1	**8T-4196**	4	BOLT (M10X1.50X35MM)	
	5	1	**8T-4121**	4	WASHER-HARD (11X21X2.5MM THK)	
	6	1	**119-2323**	1	SUPPORT AS	
	7	1	**119-2321**	1	SUPPORT AS	
M		1	**8T-3490**	2	NUT-WELD (M10X1.5 THD)	
	8	1	**7Y-4868**	2	CLIP	
M	9	1	**8T-4139**	2	BOLT (M12X1.75X30MM)	
	10	1	**8T-4223**	2	WASHER-HARD (13.5X25.5X3MM THK)	

M-METRIC PART

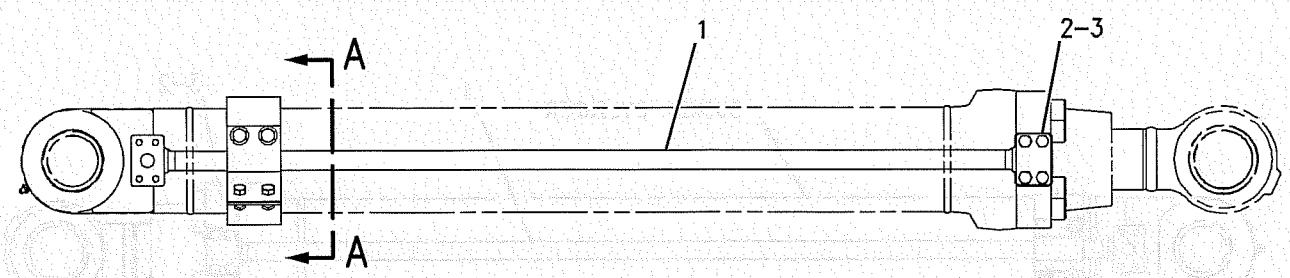

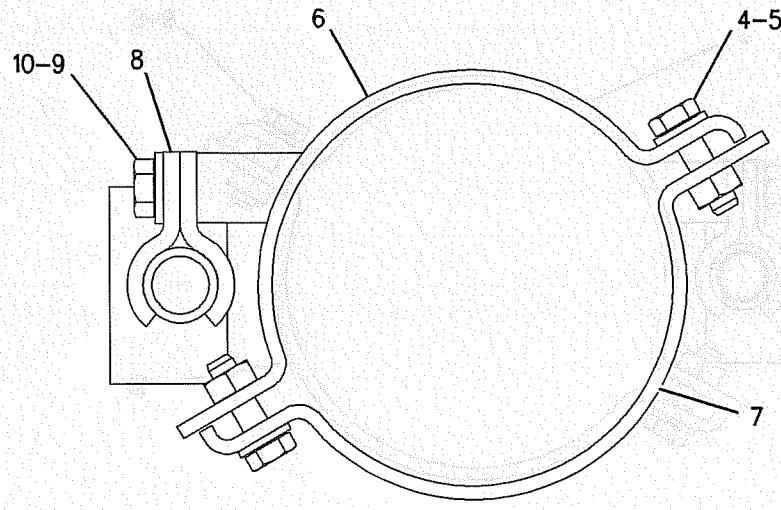

SECTION A-A

GRAPHIC #1 **<END>** g00386919

HYDRAULIC SYSTEM

118-4095 LINES GP-BUCKET CYLINDER

S/N: SBN1-UP; RAW1-UP
PART OF 158-9020 CYLINDER & LINES GP-BUCKET
AN ATTACHMENT

SMCS-5057, 5457 **i01402060**

NOTE	REF NO	GRAPHIC REF	PART NUMBER	QTY	PART NAME 1 2 3 4 5 6 (PRODUCT LEVEL)	SEE PAGE
	1	1	**119-2377**	1	TUBE AS	
	2	1	**1P-3703**	1	SEAL-RECTANGULAR	
M	3	1	**8T-4185**	4	BOLT (M10X1.5X50MM)	
M	4	1	**8T-4139**	2	BOLT (M12X1.75X30MM)	
	5	1	**8T-4223**	2	WASHER-HARD (13.5X25.5X3MM THK)	
	6	1	**7Y-4868**	2	CLIP	
	7	1	**119-2381**	1	SUPPORT AS	
	8	1	**8T-4121**	4	WASHER-HARD (11X21X2.5MM THK)	
M	9	1	**8T-4196**	4	BOLT (M10X1.5X35MM)	
	10	1	**119-2382**	1	SUPPORT AS	

M-METRIC PART

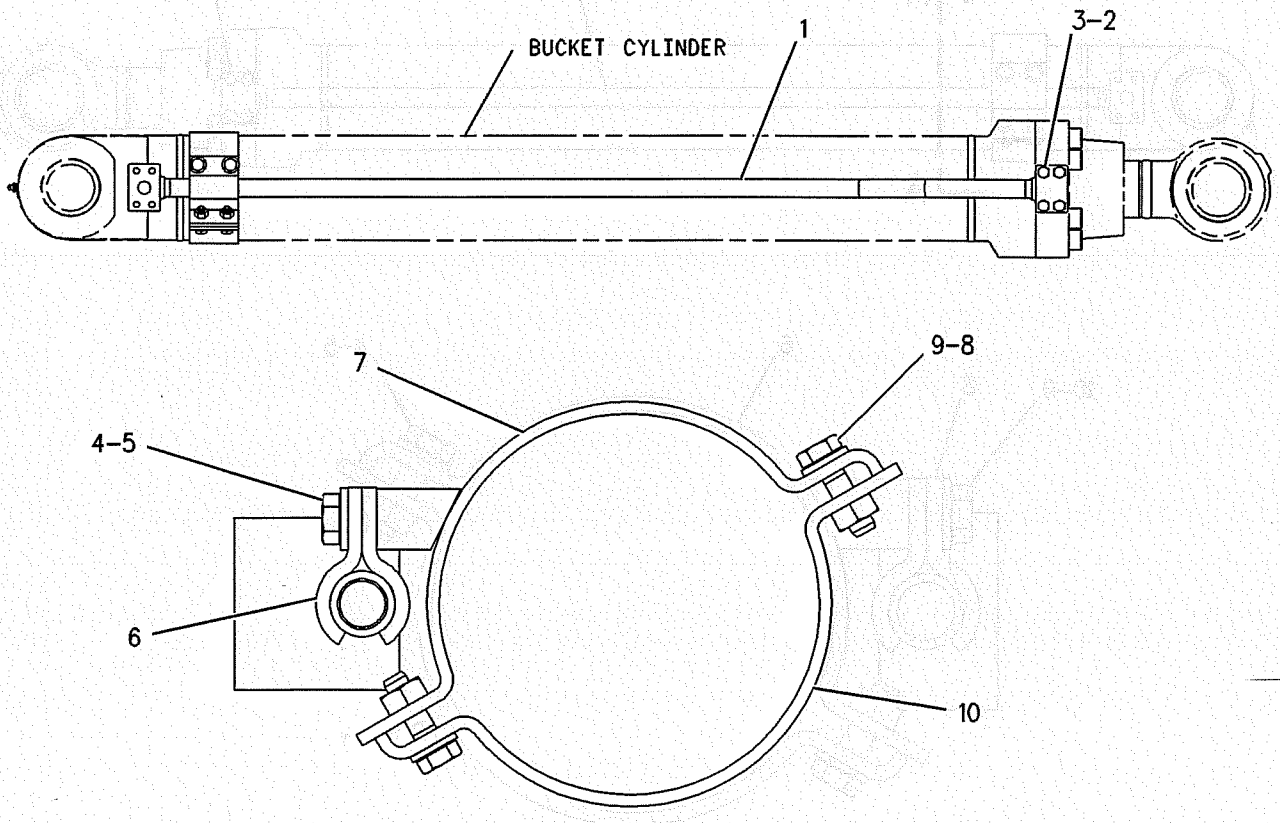

SECTION A-A

GRAPHIC #1 **<END>** g00259084

HYDRAULIC SYSTEM

119-2606 LINES GP-BUCKET CYLINDER

S/N: SBN1-UP; RAW1-UP

PART OF 186-1191, 186-1194 STICK AR-HOE

AN ATTACHMENT

SMCS-5057, 5457 **i01389033**

NOTE	REF NO	GRAPHIC REF	PART NUMBER	QTY	PART NAME 1 2 3 4 5 6 (PRODUCT LEVEL)	SEE PAGE
I	1	1	**5I-4494**	2	HOSE AS	
	2	1	**5I-4174**	1	BLOCK	
M	3	1	**8T-4198**	4	BOLT (M10X1.50X100MM)	
	4	1	**8T-4121**	8	WASHER-HARD (11X21X2.5MM THK)	
	5	1	**1P-5765**	4	FLANGE-HALF	
	6	1	**1P-3702**	2	SEAL-RECTANGULAR	
	7	1	**1P-3703**	1	SEAL-RECTANGULAR (31.86MM ID)	
M	8	1	**8T-4182**	4	BOLT (M10X1.5X45MM)	

I-SEE HOSE FABRICATION GUIDE
M-METRIC PART

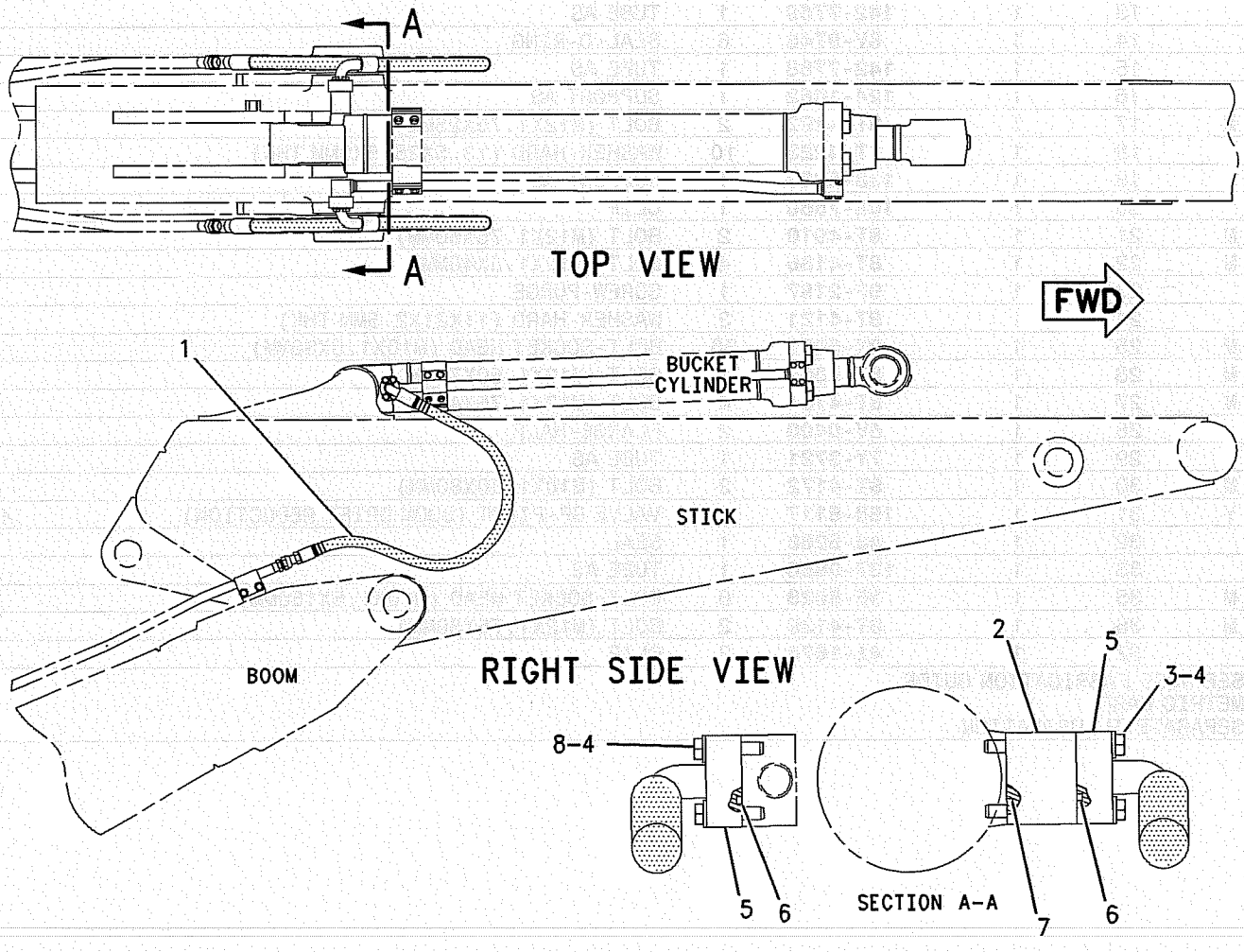

GRAPHIC #1 **<END>** g00712058

HYDRAULIC SYSTEM

142-7704 LINES GP-FRONT

S/N: SBN1-UP; RAW1-UP

PART OF 201-9323, 201-9324 HYDRAULIC AR

SMCS-5057 **i01889168**

NOTE	REF NO	GRAPHIC REF	PART NUMBER	QTY	PART NAME 1 2 3 4 5 6 (PRODUCT LEVEL)	SEE PAGE
I	1	1	**187-6710**	1	HOSE AS	
I	2	1	**124-1047**	4	HOSE AS	
I	3	1	**165-3185**	1	HOSE AS	
	4	1	**1P-3703**	6	SEAL-RECTANGULAR	
	5	1	**194-0174**	1	HOSE GP	
	6	1	**194-0177**	1	HOSE GP	
I	7	1	**187-5954**	2	HOSE AS	
	8	1	**4J-5267**	6	SEAL-O-RING	
	9	1	**5K-9090**	1	SEAL-O-RING	
	10	1	**194-0180**	1	HOSE GP	
	11	1	*214-4511*	1	FLANGE AS	
		1	**5K-9090**	1	SEAL-O-RING	
		1	**6V-8635**	1	CONNECTOR	
		1	**7M-8485**	1	SEAL-O-RING	
		1	**5K-9090**	1	SEAL-O-RING	
Y	12	1	**158-8160**	1	VALVE GP-PILOT (STICK DRIFT REDUCTION)	423
	13	1	**142-7769**	1	TUBE AS	
	14	1	**6V-9746**	6	SEAL-O-RING	
	15	1	**142-7768**	1	TUBE AS	
	16	1	**124-1062**	1	SUPPORT AS	
M	17	1	**8T-4192**	2	BOLT (M12X1.75X25MM)	
	18	1	**8T-4223**	10	WASHER-HARD (13.5X25.5X3MM THK)	
	19	1	**133-5828**	1	SUPPORT AS	
	20	1	**108-7550**	1	CLIP	
M	21	1	**8T-4910**	2	BOLT (M12X1.75X60MM)	
M	22	1	**8T-4186**	4	BOLT (M10X1.5X40MM)	
	23	1	**9F-2167**	1	SCREW-PURGE	
	24	1	**8T-4121**	3	WASHER-HARD (11X21X2.5MM THK)	
M	25	1	**9X-6032**	30	BOLT-SOCKET HEAD (M10X1.5X30MM)	
M	26	1	**8T-5005**	2	BOLT (M10X1.50X70MM)	
M	27	1	**8T-4184**	4	BOLT (M12X1.75X45MM)	
	28	1	**6V-0400**	2	FLANGE-HALF	
	29	1	**7Y-3721**	1	TUBE AS	
M	30	1	**8T-4172**	2	BOLT (M10X1.50X80MM)	
Y	31	1	**158-8117**	1	VALVE GP-PILOT (BOOM DRIFT REDUCTION)	421
	32	1	**4J-5268**	1	SEAL	
	33	1	**137-0856**	1	TUBE AS	
M	35	1	**3E-8028**	6	BOLT-SOCKET HEAD (M10X1.5X150MM)	
M	36	1	**8T-4139**	2	BOLT (M12X1.75X30MM)	
	37	1	**4I-1674**	2	CLIP	

I-SEE HOSE FABRICATION GUIDE
M-METRIC PART
Y-SEPARATE ILLUSTRATION

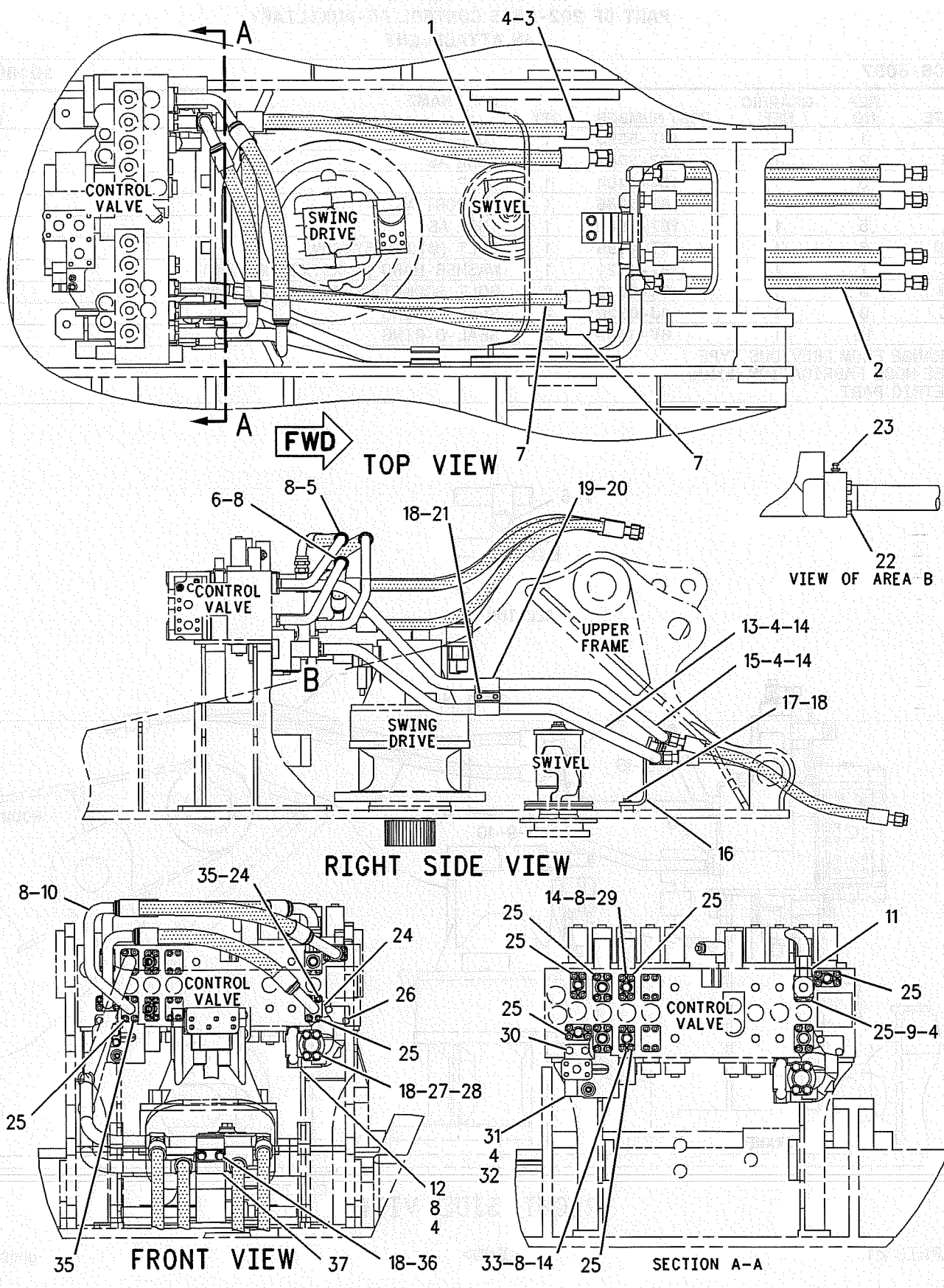

GRAPHIC #1

<END>

g00943036

HYDRAULIC SYSTEM

176-4598 LINES GP-FRONT

S/N: SBN1-UP; RAW1-UP
PART OF 202-6855 CONTROL AR-AUXILIARY
AN ATTACHMENT

SMCS-5057 **i01892065**

NOTE	REF NO	GRAPHIC REF	PART NUMBER	QTY	PART NAME 1 2 3 4 5 6 (PRODUCT LEVEL)	SEE PAGE
	1	1	**187-5583**	1	TUBE AS	
I	2	1	**187-5589**	2	HOSE AS	
	3	1	**184-9404**	1	CLIP	
	4	1	**187-5586**	1	SUPPORT AS	
	5	1	**187-5582**	1	TUBE AS	
CM	6	1	**8T-4195**	1	BOLT (M10X1.5X30MM)	
C	7	1	**8T-4121**	1	WASHER-HARD (11X21X2.5MM THK)	
M	8	1	**9X-6032**	8	BOLT-SOCKET HEAD (M10X1.5X30MM)	
C	9	1	**4J-0520**	2	SEAL-O-RING	
	10	1	**6V-8398**	2	SEAL-O-RING	

C-CHANGE FROM PREVIOUS TYPE
I-SEE HOSE FABRICATION GUIDE
M-METRIC PART

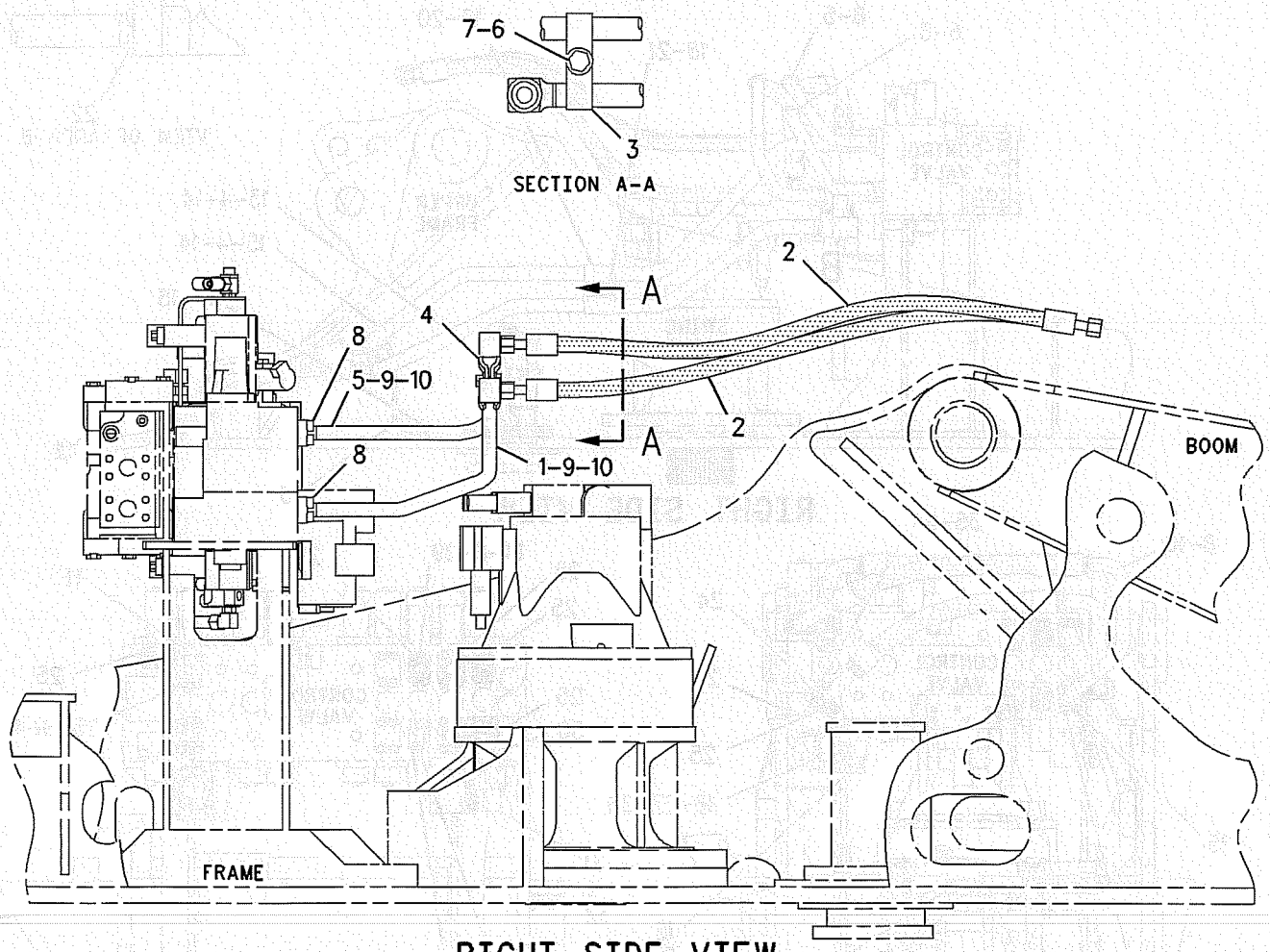

RIGHT SIDE VIEW

GRAPHIC #1 **<END>** g00985334

HYDRAULIC SYSTEM

179-7519 LINES GP-FRONT

S/N: RAW1-UP
SYSTEM 3
PART OF 173-7975 CONTROL AR-AUXILIARY
AN ATTACHMENT

SMCS-5057 **i01893637**

NOTE	REF NO	GRAPHIC REF	PART NUMBER	QTY	PART NAME 1 2 3 4 5 6 (PRODUCT LEVEL)	SEE PAGE
	1	2	*148-8323*	1	CONNECTOR GP	
		2	**6V-9875**	1	CONNECTOR	
		2	**2S-4078**	1	SEAL-O-RING	
		2	**5K-9090**	1	SEAL-O-RING	
	2	1	**184-3906**	1	HOSE AS	
I	3	1	**165-3219**	1	HOSE AS	
	4	1,2	**179-7612**	2	BLOCK	
I	5	1	**138-5111**	1	HOSE AS	
I	6	1	**102-1248**	1	HOSE AS	
	7	1	*164-4180*	1	PLUG GP	
		1	**9S-4181**	1	PLUG	
		1	**7M-8485**	1	SEAL-O-RING	
	8	2	*148-8335*	2	CONNECTOR AS	
					(EACH INCLUDES)	
		2	**6V-8635**	1	CONNECTOR	
		2	**5K-9090**	1	SEAL-O-RING	
		2	**7M-8485**	1	SEAL-O-RING	
	9	2	**168-9666**	1	BLOCK	
	10	1,2	**1P-3703**	7	SEAL-RECTANGULAR	
M	11	1,2	**8T-4956**	9	BOLT (M12X1.75X35MM)	
	12	1,2	**8T-4223**	22	WASHER-HARD (13.5X25.5X3MM THK)	
	13	1	**204-8190**	1	TUBE AS	
	14	2	**099-8232**	2	SEAL-O-RING	
	15	2	**207-6222**	1	BLOCK	
	16	2	**7Y-3731**	1	FLANGE	
M	17	2	**9X-6032**	12	BOLT-SOCKET HEAD (M10X1.5X30MM)	
	18	1,2	**8T-4121**	9	WASHER-HARD (11X21X2.5MM THK)	
	19	1,2	**5K-9090**	3	SEAL-O-RING	
	20	1	*148-8429*	1	TEE AS	
		1	**6V-9840**	1	TEE-SWIVEL	
		1	**5K-9090**	2	SEAL-O-RING	
	21	1	**218-1139**	1	BLOCK	
	22	1	**6V-9746**	1	SEAL-O-RING	
	23	2	*148-8347*	1	ELBOW GP	
		2	**3D-2824**	1	SEAL-O-RING	
		2	**6V-9746**	1	SEAL-O-RING	
		2	**6V-9007**	1	ELBOW	
	24	2	**142-7781**	1	BLOCK	
	25	2	**7Y-3730**	1	FLANGE	
	26	2	**1P-3702**	1	SEAL-RECTANGULAR	
M	27	2	**8T-7586**	4	BOLT (M10X1.5X100MM)	
	28	2	**168-9678**	1	PLATE	
	29	2	**176-4713**	1	SUPPORT AS	
M	30	2	**8T-4136**	4	BOLT (M10X1.5X25MM)	
M	31	2	**8T-4196**	2	BOLT (M10X1.5X35MM)	
M	32	2	**8T-5412**	4	BOLT (M12X1.75X140MM)	
Y	33	2	**177-2653**	1	VALVE GP-RELIEF	445
	34	2	**176-4790**	1	SUPPORT AS	
	35	2	**176-4789**	1	SUPPORT AS	
	36	1	**173-4664**	1	FLANGE	
M	37	1	**8T-3957**	4	BOLT-HEX SOCKET (M12X1.75X30MM)	
	38	1	**5P-7468**	2	CLIP (SLOT)	
	39	1	**5P-7469**	2	CLIP (TAB)	
	40	1	**6V-1874**	2	GROMMET	

179-7519 LINES GP-FRONT *(contd.)*

i01893637

NOTE	REF NO	GRAPHIC REF	PART NUMBER	QTY	PART NAME 1 2 3 4 5 6 (PRODUCT LEVEL)	SEE PAGE
M	41	1	**8T-4192**	1	BOLT (M12X1.75X25MM)	
	42	2	*148-8352*	1	ELBOW GP	
		2	**6V-9854**	1	ELBOW-SWIVEL	
		2	**5K-9090**	1	SEAL-O-RING	
M	43	1	**8T-5092**	4	BOLT (M12X1.75X150MM)	
	44	1	**204-8178**	1	SUPPORT AS	
	45	1	**204-8182**	2	GROMMET	
	46	1	**204-8183**	1	PLATE	
	47	1	**204-8184**	1	PLATE AS	
M	48	1	**8T-5005**	3	BOLT (M10X1.50X70MM)	
M	49	2	**8T-7811**	4	BOLT-SOCKET HEAD (M12X1.75X50MM)	
M	50	2	**8T-4176**	4	BOLT (M12X1.75X90MM)	
	51	1	**212-5420**	1	SUPPORT AS	
	52	1	*148-8411*	1	PLUG AS	
		1	**3K-0360**	1	SEAL-O-RING	
		1	**9S-4185**	1	PLUG	

I-SEE HOSE FABRICATION GUIDE
M-METRIC PART
Y-SEPARATE ILLUSTRATION

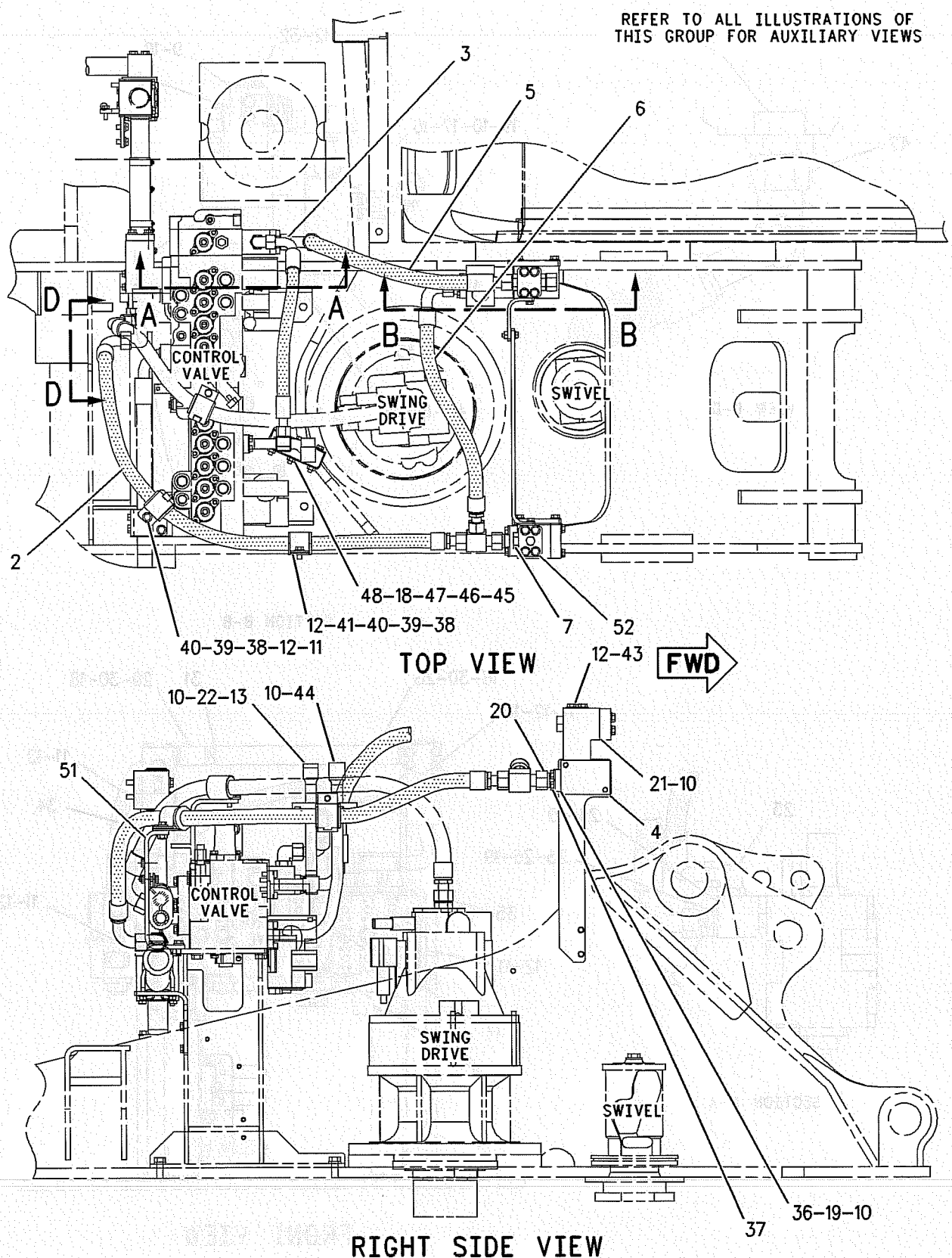

GRAPHIC #1 g00986226

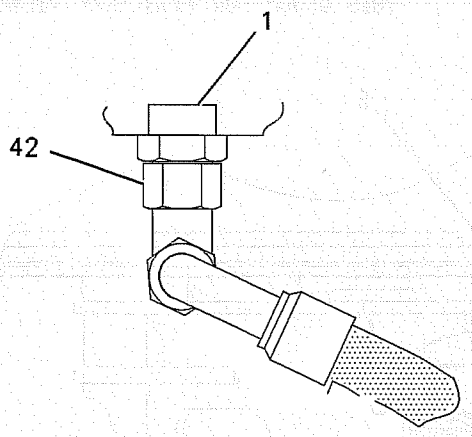

VIEW D-D

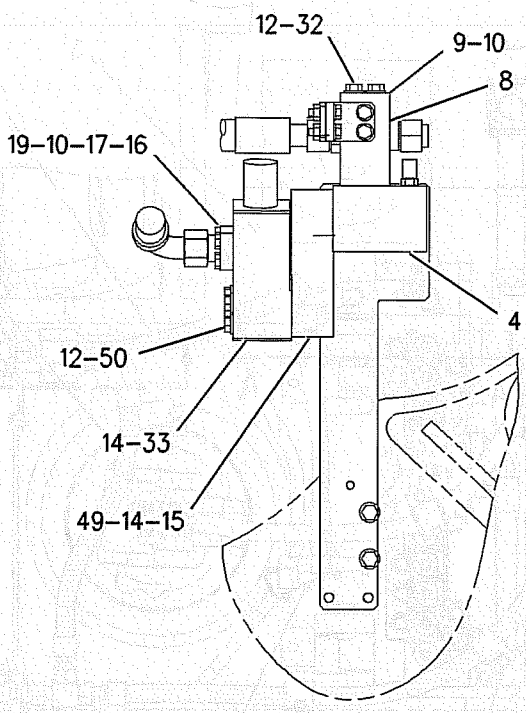

SECTION B-B

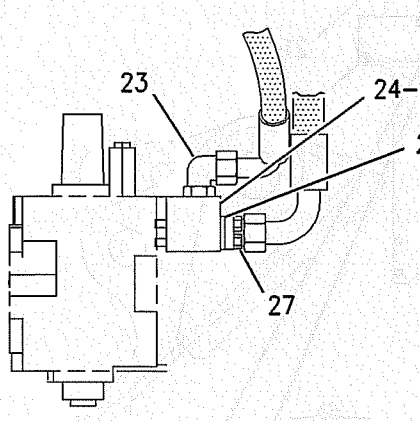

SECTION A-A

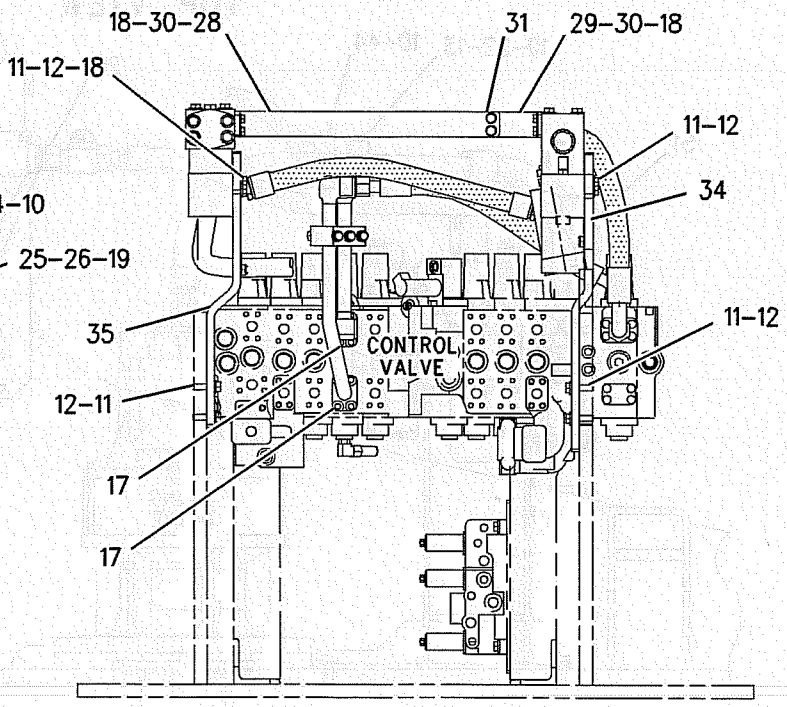

FRONT VIEW

GRAPHIC #2 **<END>** g00986227

HYDRAULIC SYSTEM

179-7531 LINES GP-FRONT

S/N: SBN1-UP; RAW1-UP
DOUBLE ACTION
PART OF 173-7977 CONTROL AR-AUXILIARY
AN ATTACHMENT

SMCS-5057 **i01879088**

NOTE	REF NO	GRAPHIC REF	PART NUMBER	QTY	PART NAME 1 2 3 4 5 6 (PRODUCT LEVEL)	SEE PAGE
	1	1	**179-7612**	2	BLOCK	
M	2	1	**8T-4139**	8	BOLT (M12X1.75X30MM)	
	3	1	**204-8177**	1	TUBE AS	
	4	1	**179-7639**	1	TUBE AS	
	5	1	*148-8335*	3	CONNECTOR AS	
					(EACH INCLUDES)	
		1	**5K-9090**	1	SEAL-O-RING	
		1	**6V-8635**	1	CONNECTOR	
		1	**7M-8485**	1	SEAL-O-RING	
	6	1	**168-9666**	1	BLOCK	
	7	1	**1P-3703**	6	SEAL-RECTANGULAR	
M	8	1	**8T-4956**	8	BOLT (M12X1.75X35MM)	
	9	1	**8T-4223**	24	WASHER-HARD (13.5X25.5X3MM THK)	
I	10	1	**187-6701**	1	HOSE AS	
I	11	1	**194-0196**	1	HOSE AS	
M	12	1	**9X-6032**	8	BOLT-SOCKET HEAD (M10X1.5X30MM)	
	13	1	**8T-4121**	9	WASHER-HARD (11X21X2.5MM THK)	
	14	1	**168-9678**	1	PLATE	
	15	1	**176-4713**	1	SUPPORT AS	
M	16	1	**8T-4136**	4	BOLT (M10X1.5X25MM)	
M	17	1	**8T-4196**	2	BOLT (M10X1.5X35MM)	
M	18	1	**8T-5412**	4	BOLT (M12X1.75X140MM)	
	19	1	**176-4790**	1	SUPPORT AS	
	20	1	**176-4789**	1	SUPPORT AS	
	21	1	**179-7662**	2	COVER	
	22	1	**5K-9090**	2	SEAL-O-RING	
Y	23	1	**116-3600**	2	VALVE GP-RELIEF	438
	24	1	**187-5853**	1	BLOCK	
M	25	1	**8T-5092**	4	BOLT (M12X1.75X150MM)	
	26	1	**204-8182**	2	GROMMET	
	27	1	**204-8183**	1	PLATE	
	28	1	**204-8184**	1	PLATE AS	
M	29	1	**8T-5005**	3	BOLT (M10X1.50X70MM)	

I-SEE HOSE FABRICATION GUIDE
M-METRIC PART
Y-SEPARATE ILLUSTRATION

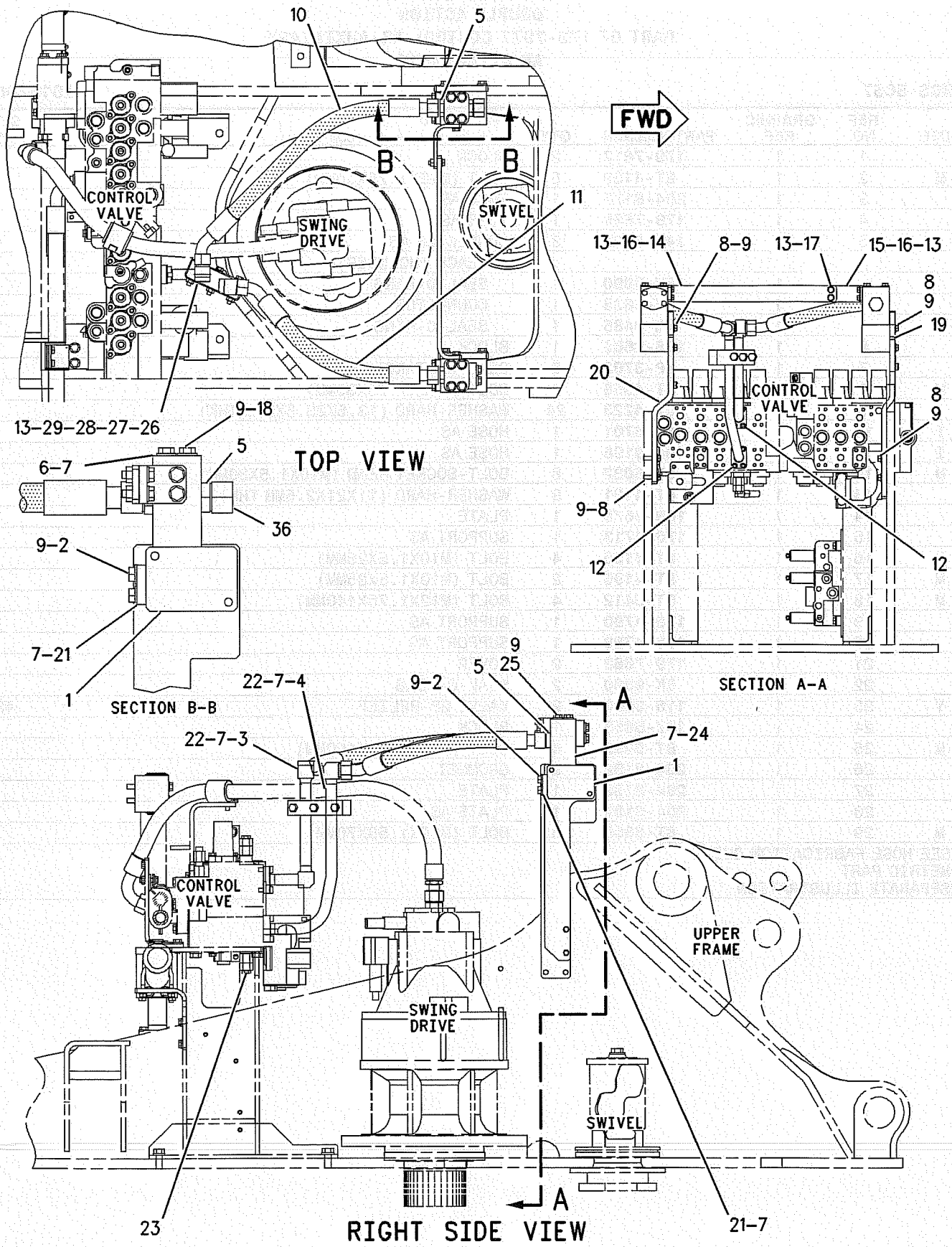

GRAPHIC #1

<END>

g00986463

HYDRAULIC SYSTEM

184-9560 LINES GP-FRONT

S/N: SBN1-UP; RAW1-UP
SYSTEM 14
PART OF 202-6855 CONTROL AR-AUXILIARY
AN ATTACHMENT

SMCS-5057 **i01892173**

NOTE	REF NO	GRAPHIC REF	PART NUMBER	QTY	PART NAME 1 2 3 4 5 6 (PRODUCT LEVEL)	SEE PAGE
	1	2	**168-9675**	1	TUBE AS	
I	2	1	**138-5111**	1	HOSE AS	
	3	2	**142-7781**	2	BLOCK	
	4	2	**157-3182**	1	SENSOR AS-PRESSURE (WORK TOOL)	
		2	**3E-3371**	1	WEDGE-RECEPTACLE LOCK (3 PIN)	
		2	**3K-0360**	1	SEAL-O-RING	
		2	**9X-3401**	3	PIN-CONNECTOR	
					(16-18 GA WIRE)	
					–OR–	
		2	**126-1767**	3	PIN-CONNECTOR	
					(14 GA WIRE)	
I	5	1	**165-3219**	1	HOSE AS	
C	6	2	**215-4890**	3	VALVE GP-CHECK (WORK TOOL)	
I	7	1	**173-4868**	1	HOSE AS	
	8	2	**227-6793**	1	SUPPORT AS	
	9	2	**227-6795**	1	SUPPORT AS	
	10	1	**187-6719**	1	BLOCK	
	11	2	**187-6720**	1	BLOCK	
	12	2	**187-6850**	1	PLATE	
	13	1	**187-6851**	1	PLATE	
	14	2	**187-6970**	1	PLATE	
	15	1	**187-6974**	1	HOSE AS	
	16	1	**187-7051**	1	HOSE AS	
I	17	1	**187-7054**	1	HOSE AS	
	18	2	**187-7058**	1	SUPPORT AS	
	19	2	**187-7064**	1	PLATE	
	20	2	**187-7077**	1	BLOCK	
	21	2	**196-0826**	2	BLOCK	
	22	2	**196-0827**	1	PLATE	
	23	1	**204-8183**	1	PLATE	
	24	1	**204-8184**	1	PLATE AS	
	25	1	**212-5420**	1	SUPPORT AS	
M	26	2	**095-0658**	4	BOLT-SOCKET HEAD (M10X1.5X70MM)	
M	27	2	**095-0673**	4	BOLT-SOCKET HEAD (M12X1.75X60MM)	
	28	2	**099-8232**	2	SEAL-O-RING	
	29	2	*148-8334*	1	CONNECTOR GP	
		2	**8T-3611**	1	CONNECTOR	
		2	**2S-4078**	1	SEAL-O-RING	
		2	**6V-8400**	1	SEAL-O-RING	
	30	1,2	*148-8335*	5	CONNECTOR AS	
					(EACH INCLUDES)	
		1,2	**6V-8635**	1	CONNECTOR	
		1,2	**5K-9090**	1	SEAL-O-RING	
		1,2	**7M-8485**	1	SEAL-O-RING	
	31	2	*148-8347*	1	ELBOW GP	
		2	**6V-9007**	1	ELBOW	
		2	**3D-2824**	1	SEAL-O-RING	
		2	**6V-9746**	1	SEAL-O-RING	
	32	2	*148-8357*	1	ELBOW GP	
		2	**6V-9008**	1	ELBOW	
		2	**5K-9090**	1	SEAL-O-RING	
		2	**7M-8485**	1	SEAL-O-RING	
	33	2	*148-8362*	1	ELBOW GP	
		2	**3D-2824**	1	SEAL-O-RING	

HYDRAULIC SYSTEM

184-9560 LINES GP-FRONT *(contd.)*

i01892173

NOTE	REF NO	GRAPHIC REF	PART NUMBER	QTY	PART NAME 1 2 3 4 5 6 (PRODUCT LEVEL)	SEE PAGE
		2	**8T-6684**	1	ELBOW	
		2	**5K-9090**	1	SEAL-O-RING	
	34	2	*148-8387*	1	ELBOW GP	
		2	**6V-9855**	1	ELBOW	
		2	**6V-8400**	1	SEAL-O-RING	
	35	2	*164-4180*	1	PLUG GP	
		2	**9S-4181**	1	PLUG	
		2	**7M-8485**	1	SEAL-O-RING	
Y	36	2	**165-9629**	2	VALVE GP-SOLENOID & RELIEF (WORK TOOL)	460
	37	2	**1P-3702**	2	SEAL-RECTANGULAR	
	38	2	**1P-3703**	7	SEAL-RECTANGULAR	
	39	1,2	**1P-3704**	3	SEAL-RECTANGULAR	
	40	2	**1P-4578**	2	FLANGE-HALF	
	41	1	**204-8182**	2	GROMMET	
	42	2	**204-8190**	1	TUBE AS	
	43	2	**214-4421**	1	HOSE AS	
	44	2	**4J-0522**	1	SEAL-O-RING	
	45	2	**5K-9090**	2	SEAL-O-RING	
	46	1	**5P-7470**	2	CLIP (SLOT)	
	47	1	**5P-7471**	2	CLIP (TAB)	
	48	1	**5P-8182**	2	GROMMET	
	49	2	**6V-9746**	3	SEAL-O-RING	
	50	2	**7Y-3729**	1	FLANGE	
	51	2	**7Y-3730**	1	FLANGE	
	52	2	**7Y-3731**	1	FLANGE	
	53	1,2	**8T-4121**	13	WASHER-HARD (11X21X2.5MM THK)	
M	54	2	**8T-4136**	4	BOLT (M10X1.5X25MM)	
M	55	1,2	**8T-4139**	6	BOLT (M12X1.75X30MM)	
M	56	2	**8T-4176**	8	BOLT (M12X1.75X90MM)	
M	57	2	**8T-4184**	2	BOLT (M12X1.75X45MM)	
M	58	1	**8T-4192**	1	BOLT (M12X1.75X25MM)	
M	59	2	**8T-4194**	1	BOLT (M12X1.75X50MM)	
M	60	2	**8T-4196**	6	BOLT (M10X1.5X35MM)	
	61	1,2	**8T-4223**	39	WASHER-HARD (13.5X25.5X3MM THK)	
M	62	1,2	**8T-4956**	9	BOLT (M12X1.75X35MM)	
M	63	1	**8T-5005**	3	BOLT (M10X1.50X70MM)	
M	64	2	**8T-5092**	8	BOLT (M12X1.75X150MM)	
M	65	1	**8T-5412**	4	BOLT (M12X1.75X140MM)	
M	66	2	**8T-7586**	8	BOLT (M10X1.5X100MM)	
M	67	2	**9X-6032**	12	BOLT-SOCKET HEAD (M10X1.5X30MM)	
	68	2	**204-1611**	2	STRAP-CABLE	

C-CHANGE FROM PREVIOUS TYPE
I-SEE HOSE FABRICATION GUIDE
M-METRIC PART
Y-SEPARATE ILLUSTRATION

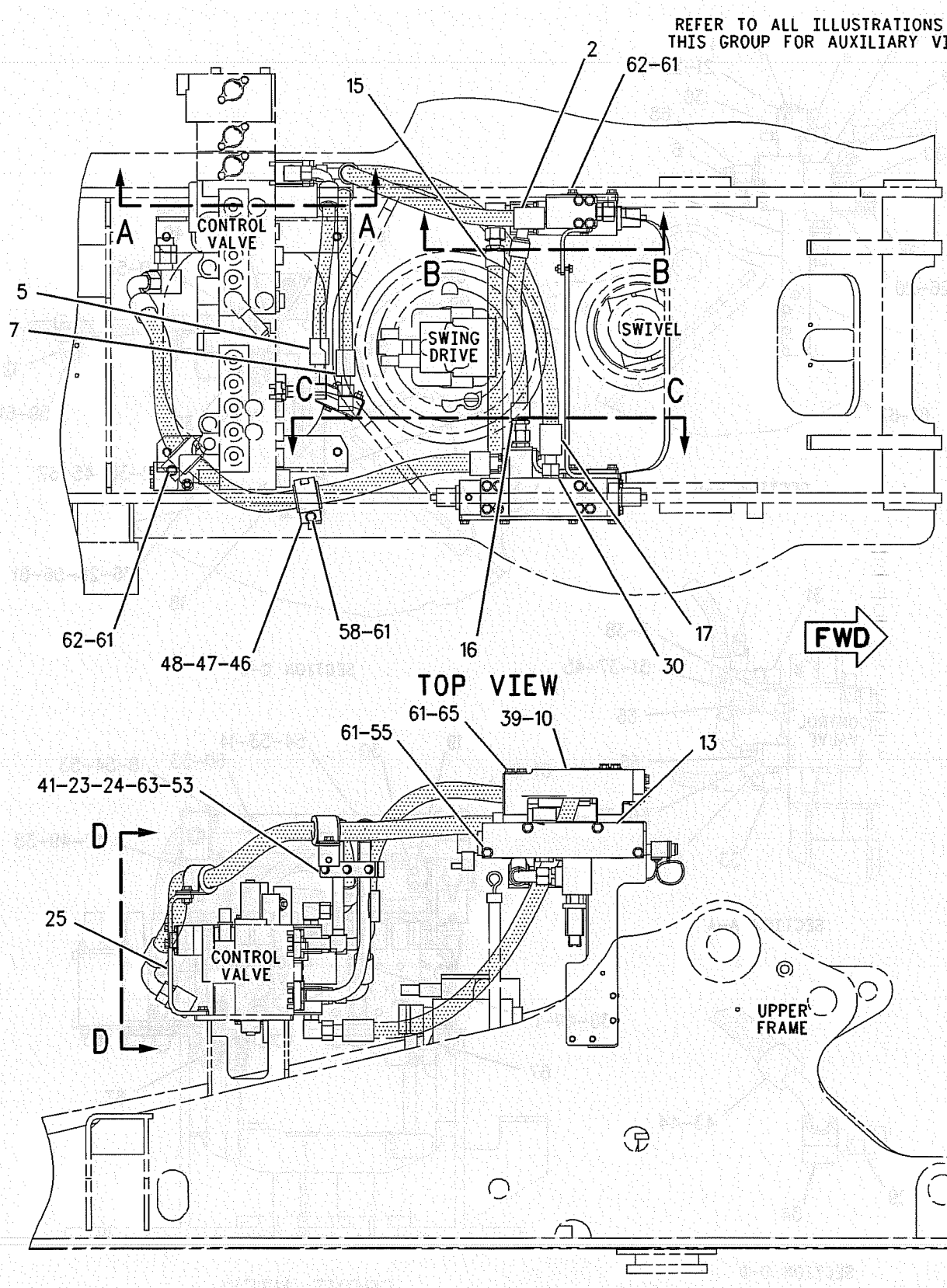

GRAPHIC #1 g00986415

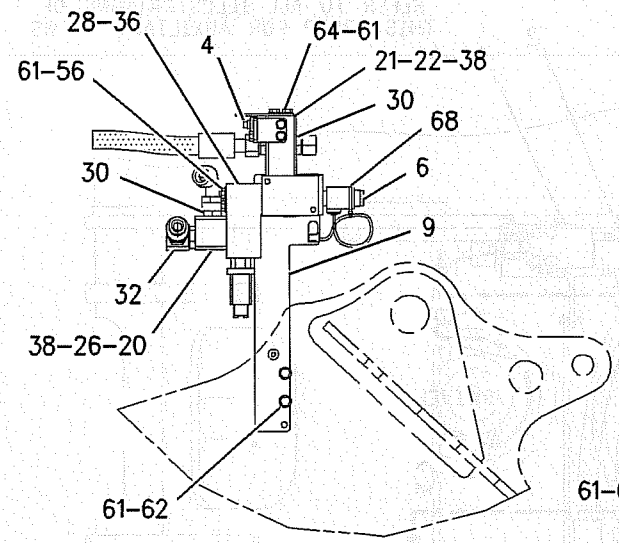

SECTION B-B

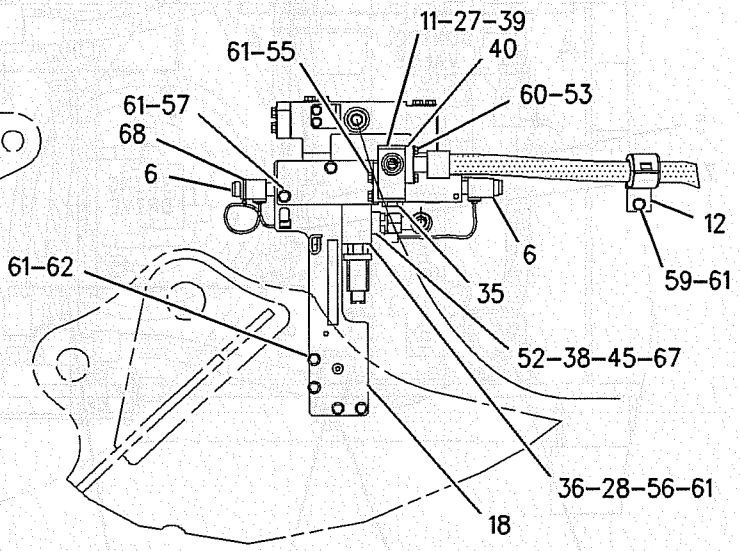

SECTION C-C

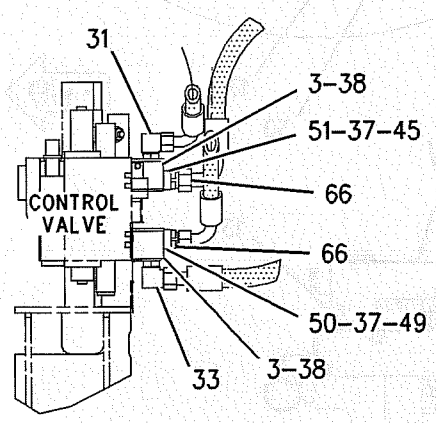

SECTION A-A

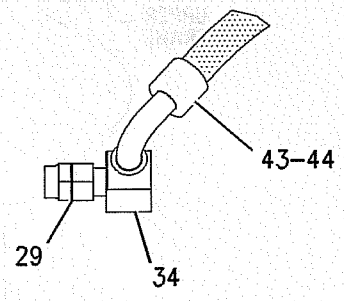

SECTION D-D

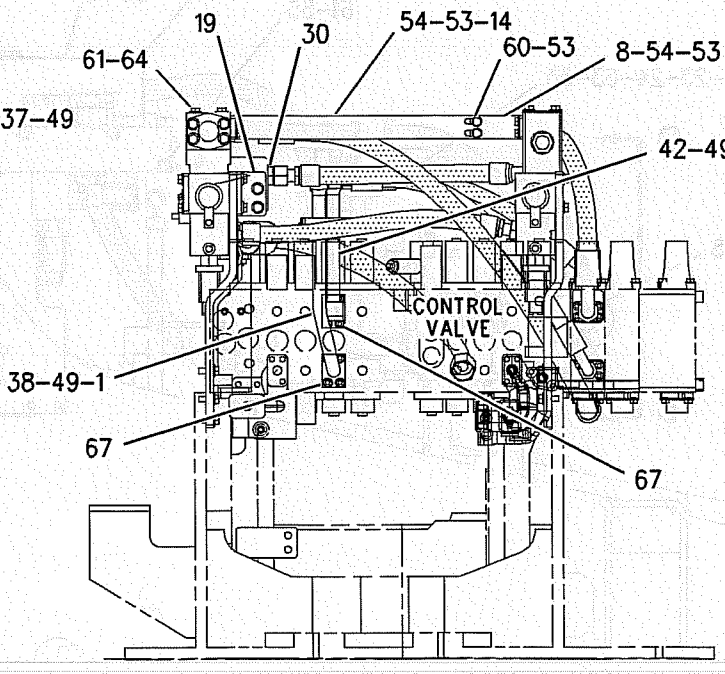

FRONT VIEW

GRAPHIC #2 **<END>** g00986416

HYDRAULIC SYSTEM

179-7518 LINES GP-PILOT

S/N: RAW1-UP
SYSTEM 3
PART OF 173-7975 CONTROL AR-AUXILIARY
AN ATTACHMENT

SMCS-5057, 5059 **i01895041**

NOTE	REF NO	GRAPHIC REF	PART NUMBER	QTY	PART NAME 1 2 3 4 5 6 (PRODUCT LEVEL)	SEE PAGE
I	1	1	**176-4760**	1	HOSE AS	
I	2	1	**104-9048**	1	HOSE AS	
I	3	1	**184-9209**	1	HOSE AS	
I	4	1	**184-9208**	1	HOSE AS	
I	5	1	**5I-8853**	1	HOSE AS	
I	6	1	**087-5780**	1	HOSE AS	
	7	1	*148-8353*	2	ELBOW GP	
					(EACH INCLUDES)	
		1	**6V-9001**	1	ELBOW	
		1	**3J-1907**	1	SEAL-O-RING	
		1	**6V-8397**	1	SEAL-O-RING	
	8	1	*148-8336*	2	CONNECTOR AS	
					(EACH INCLUDES)	
		1	**3J-1907**	1	SEAL-O-RING	
		1	**6V-8397**	1	SEAL-O-RING	
		1	**6V-8636**	1	CONNECTOR	
Y	9	1	**171-0188**	1	VALVE GP-PILOT (PROPORTIONAL REDUCING SOLENOID)	428
	10	1	*148-8378*	3	ELBOW AS	
					(EACH INCLUDES)	
		1	**6V-8724**	1	ELBOW	
		1	**3J-1907**	1	SEAL-O-RING	
		1	**6V-8397**	1	SEAL-O-RING	
	11	1	**194-0095**	1	SUPPORT AS	
	12	1	**8T-4223**	4	WASHER-HARD (13.5X25.5X3MM THK)	
M	13	1	**8T-4192**	4	BOLT (M12X1.75X25MM)	
M	14	1	**8T-4177**	4	BOLT (M8X1.25X90MM)	
	15	1	**8T-4224**	4	WASHER-HARD (8.8X16X2MM THK)	
	16	1	**7K-1181**	3	STRAP-CABLE	
	17	1	*150-3036*	1	ELBOW GP	
		1	**8T-1905**	1	ELBOW	
		1	**3J-1907**	1	SEAL-O-RING	
		1	**6V-8397**	1	SEAL-O-RING	
	18	1	*150-4027*	2	TEE GP	
					(EACH INCLUDES)	
		1	**3E-2310**	1	TEE	
		1	**3J-1907**	1	SEAL-O-RING	
		1	**6V-8397**	1	SEAL-O-RING	
	19	1	**6V-3965**	2	FITTING AS	
	20	1	**3J-1907**	2	SEAL-O-RING	
	21	1	**6V-0852**	2	CAP-DUST	
	22	1	**6D-1641**	2	CLIP	

I-SEE HOSE FABRICATION GUIDE
M-METRIC PART
Y-SEPARATE ILLUSTRATION

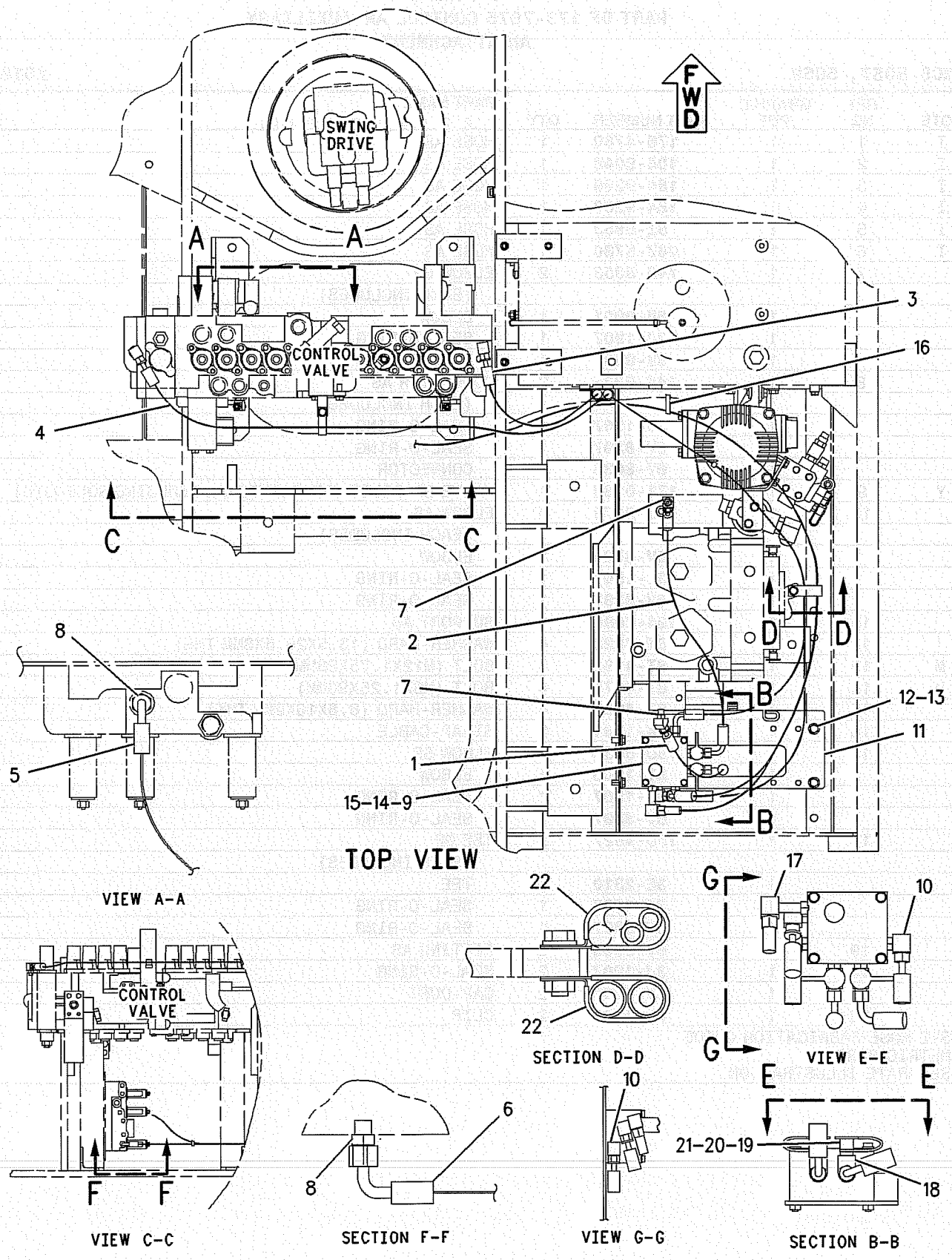

GRAPHIC #1

<END>

g00986209

HYDRAULIC SYSTEM

179-7520 LINES GP-PILOT

S/N: RAW1-UP

PART OF 173-7975 CONTROL AR-AUXILIARY

AN ATTACHMENT

SMCS-5057, 5059 **i01737995**

NOTE	REF NO	GRAPHIC REF	PART NUMBER	QTY	PART NAME 1 2 3 4 5 6 (PRODUCT LEVEL)	SEE PAGE
I	1	1	**087-5303**	1	HOSE AS	
	2	1	*148-8338*	1	CONNECTOR GP	
		1	**8T-0075**	1	CONNECTOR	
		1	**3J-1907**	1	SEAL-O-RING	
		1	**6V-8397**	1	SEAL-O-RING	
I	3	1	**087-5766**	1	HOSE AS	
M	4	1	**8T-4138**	2	BOLT (M6X1X20MM)	
	5	1	**9X-8256**	2	WASHER (6.6X12X2MM THK)	
	6	1	*148-8433*	2	TEE GP	
					(EACH INCLUDES)	
		1	**6V-9836**	1	TEE-SWIVEL	
		1	**6V-8397**	2	SEAL-O-RING	
Y	7	1	**121-6303**	1	VALVE GP-SOLENOID	454
	8	1	*148-8378*	5	ELBOW AS	
					(EACH INCLUDES)	
		1	**6V-8724**	1	ELBOW	
		1	**3J-1907**	1	SEAL-O-RING	
		1	**6V-8397**	1	SEAL-O-RING	
	9	1	*148-8336*	2	CONNECTOR AS	
					(EACH INCLUDES)	
		1	**6V-8636**	1	CONNECTOR	
		1	**3J-1907**	1	SEAL-O-RING	
		1	**6V-8397**	1	SEAL-O-RING	
I	10	1	**087-5760**	1	HOSE AS	
I	11	1	**5I-8825**	1	HOSE AS	
	12	1	**7K-1181**	9	STRAP-CABLE	
I	13	1	**179-7616**	1	HOSE AS	
	14	1	**173-4925**	1	SUPPORT AS	
M	15	1	**8T-4956**	2	BOLT (M12X1.75X35MM)	
	16	1	**8T-4223**	2	WASHER-HARD (13.5X25.5X3MM THK)	
	17	1	*164-5628*	1	CONNECTOR GP	
		1	**107-6631**	1	CONNECTOR (FILTER)	
		1	**3J-1907**	1	SEAL-O-RING	
		1	**6V-8397**	1	SEAL-O-RING	
	19	1	*150-3036*	1	ELBOW GP	
		1	**3J-1907**	1	SEAL-O-RING	
		1	**6V-8397**	1	SEAL-O-RING	
		1	**8T-1905**	1	ELBOW	
I	20	1	**7Y-4390**	1	HOSE AS	
	21	1	*150-4027*	1	FITTING GP	
		1	**3E-2310**	1	TEE	
		1	**3J-1907**	1	SEAL-O-RING	
		1	**6V-8397**	1	SEAL-O-RING	
	22	1	**167-3466**	1	SWITCH GP-PRESSURE (ELECTRONIC CONTROL)	
		1	**102-8802**	1	KIT-RECEPTACLE (2 PIN)	
					(INCLUDES RECEPTACLE AND WEDGE)	
		1	**3E-3365**	1	WEDGE-RECEPTACLE LOCK (2 PIN)	
	23	1	**3J-1907**	1	SEAL-O-RING	
	24	1	**108-7516**	1	FITTING	

I-SEE HOSE FABRICATION GUIDE
M-METRIC PART
Y-SEPARATE ILLUSTRATION

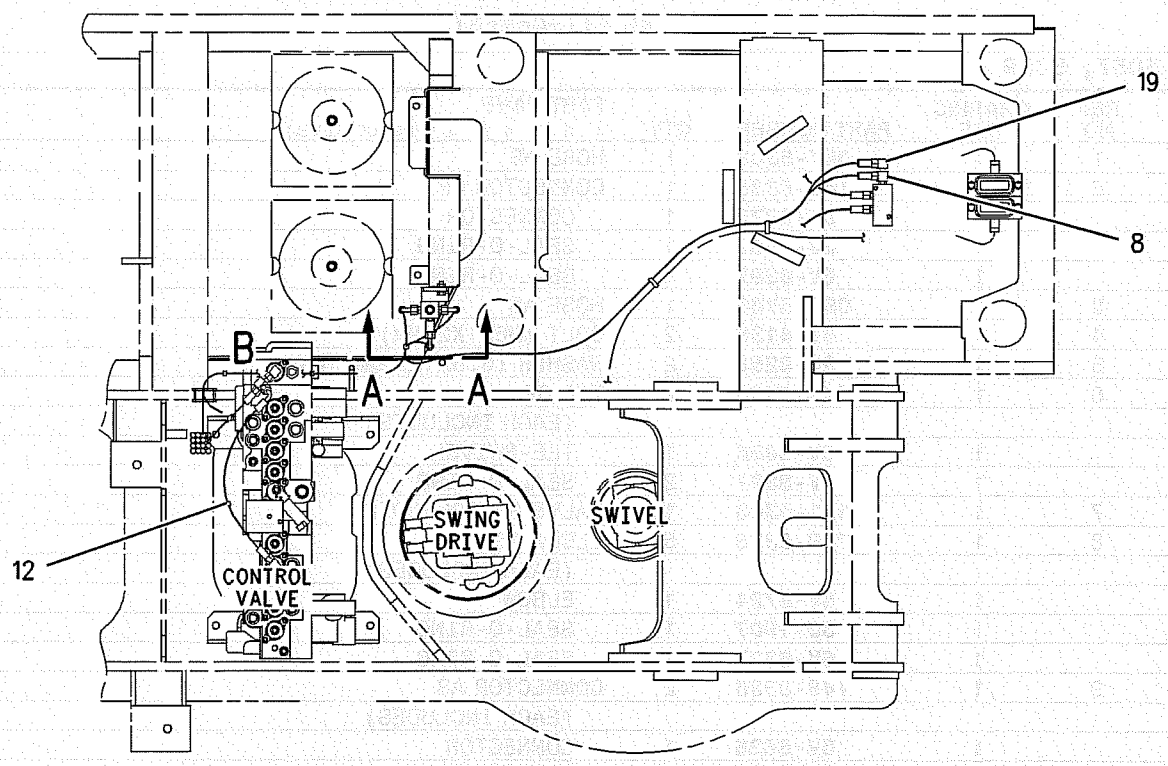

TOP VIEW

FWD

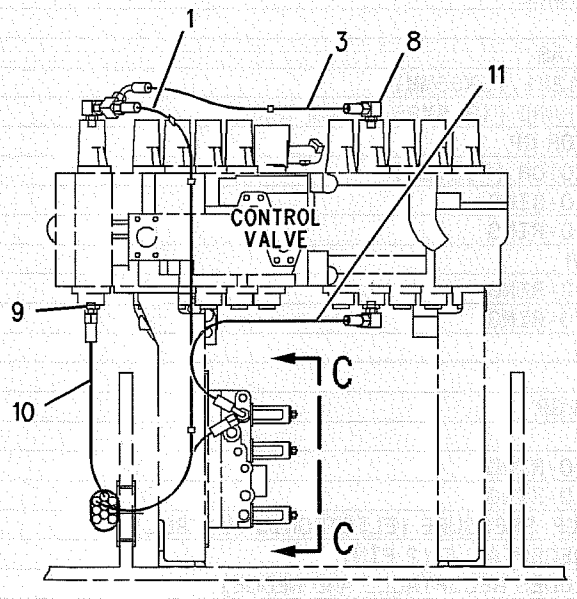

REAR VIEW

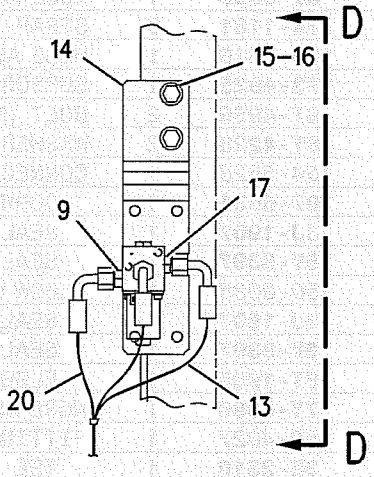

SECTION A-A

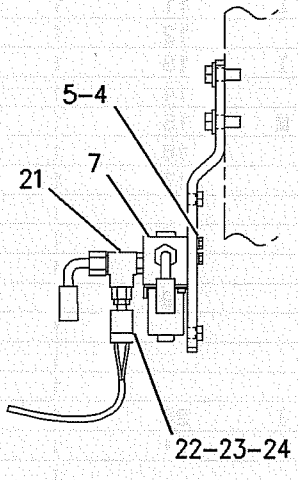

VIEW D-D

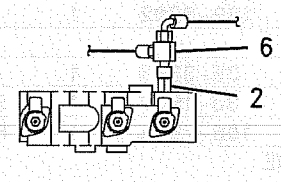

SECTION C-C

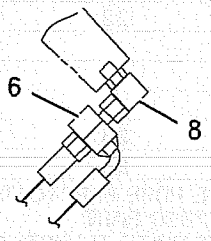

VIEW OF AREA B

GRAPHIC #1 **<END>** g00924088

HYDRAULIC SYSTEM

179-7530 LINES GP-PILOT

S/N: SBN1-UP; RAW1-UP
DOUBLE ACTION
PART OF 173-7977 CONTROL AR-AUXILIARY
AN ATTACHMENT

SMCS-5057, 5059 **i01556072**

NOTE	REF NO	GRAPHIC REF	PART NUMBER	QTY	PART NAME 1 2 3 4 5 6 (PRODUCT LEVEL)	SEE PAGE
I	1	1	**184-9210**	1	HOSE AS	
	2	1	**179-7782**	1	HOSE AS	
	3	1	*150-3036*	1	ELBOW GP	
		1	**8T-1905**	1	ELBOW	
		1	**3J-1907**	1	SEAL-O-RING	
		1	**6V-8397**	1	SEAL-O-RING	
	4	1	**184-9420**	1	HOSE AS	
I	5	1	**087-5766**	1	HOSE AS	
	6	1	*148-8378*	5	ELBOW GP	
					(EACH INCLUDES)	
		1	**6V-8724**	1	ELBOW	
		1	**3J-1907**	1	SEAL-O-RING	
		1	**6V-8397**	1	SEAL-O-RING	
	7	1	*148-8336*	3	CONNECTOR GP	
					(EACH INCLUDES)	
		1	**6V-8638**	1	CONNECTOR-SEAL	
		1	**3J-1907**	1	SEAL-O-RING	
		1	**6V-8397**	1	SEAL-O-RING	
		1	**6V-8636**	1	CONNECTOR	
	8	1	*164-5628*	1	CONNECTOR AS	
		1	**6V-8636**	1	CONNECTOR	
		1	**3J-1907**	1	SEAL-O-RING	
		1	**6V-8397**	1	SEAL-O-RING	
	9	1	**167-3466**	1	SWITCH GP-PRESSURE (PILOT PRESSURE)	
		1	**102-8802**	1	KIT-RECEPTACLE (2 PIN)	
	13	1	*164-5629*	1	FITTING AS	
		1	**108-7516**	1	FITTING	
		1	**3J-1907**	1	SEAL-O-RING	
	14	1	**7K-1181**	8	STRAP-CABLE	
	15	1	*148-8367*	1	ELBOW GP	
		1	**6V-9850**	1	ELBOW-SWIVEL	
		1	**6V-8397**	1	SEAL-O-RING	

I-SEE HOSE FABRICATION GUIDE

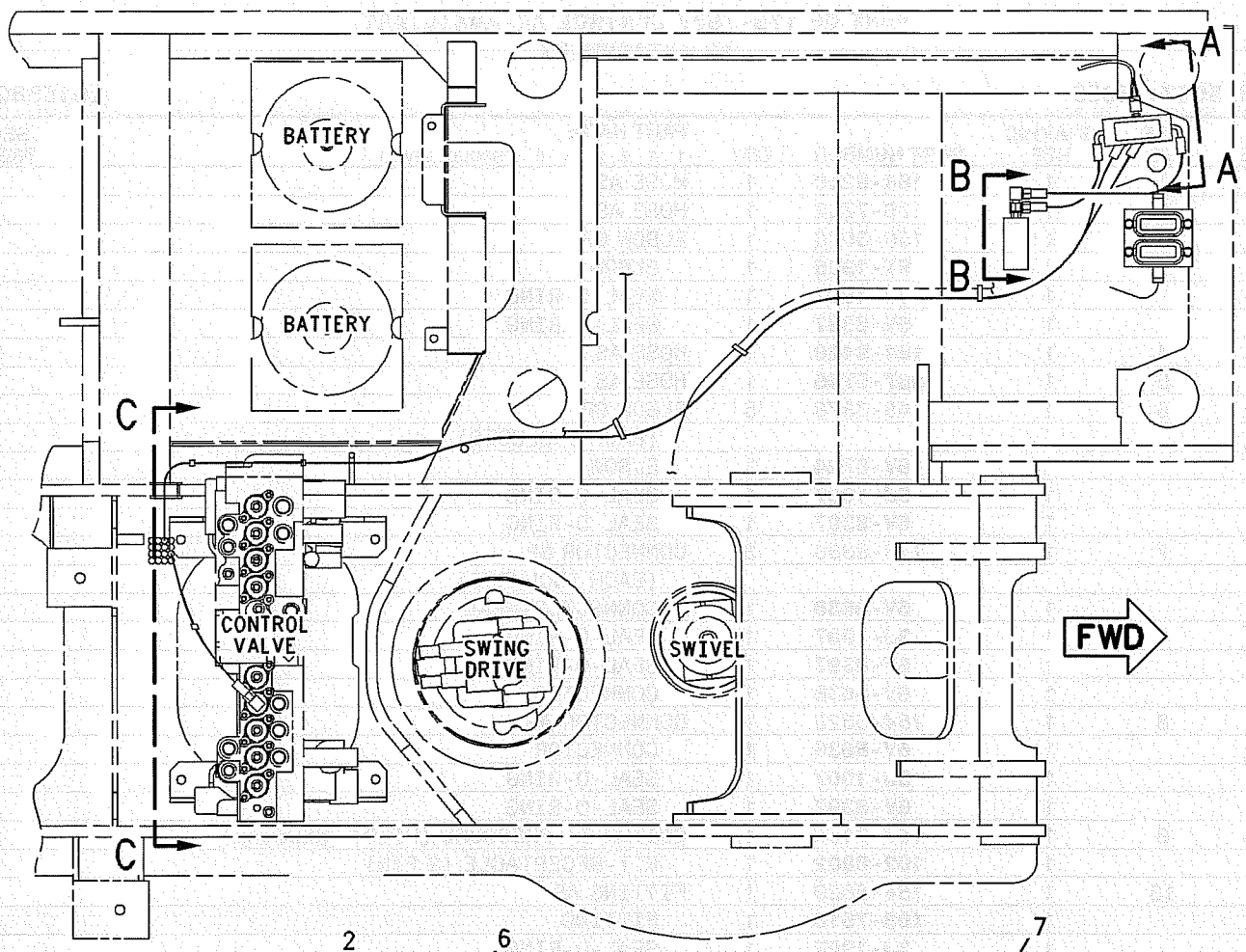

TOP VIEW

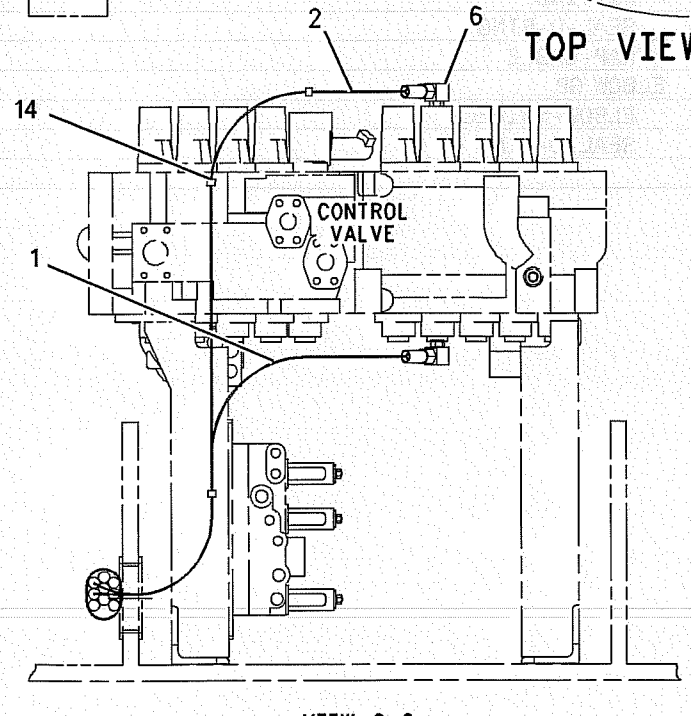

VIEW C-C

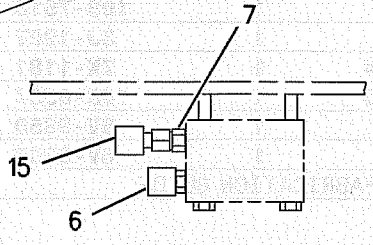

SECTION B-B

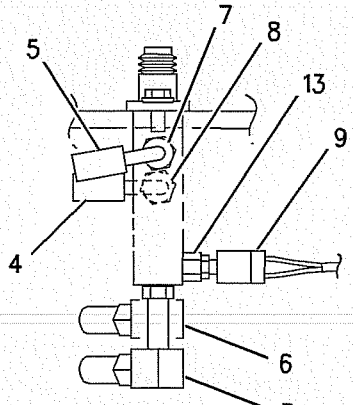

SECTION A-A

GRAPHIC #1 **<END>** g00695857

HYDRAULIC SYSTEM

199-7293 LINES GP-PILOT

S/N: SBN1-UP; RAW1-UP

PART OF 201-9323, 201-9324 HYDRAULIC AR

SMCS-5057, 5059 **i01889242**

NOTE	REF NO	GRAPHIC REF	PART NUMBER	QTY	PART NAME 1 2 3 4 5 6 (PRODUCT LEVEL)	SEE PAGE
	1	1,2,4	*148-8364*	5	ELBOW AS	
					(EACH INCLUDES)	
		1,2,4	**3K-0360**	1	SEAL-O-RING	
		1,2,4	**6V-8398**	1	SEAL-O-RING	
		1,2,4	**6V-8625**	1	ELBOW	
	2	1	**4K-8864**	1	CLIP	
Y	3	3	**214-4512**	1	FITTING GP	261
	4	1,2,3,4	*148-8353*	9	ELBOW GP	
					(EACH INCLUDES)	
		1,2,3,4	**3J-1907**	1	SEAL-O-RING	
		1,2,3,4	**6V-8397**	1	SEAL-O-RING	
		1,2,3,4	**6V-9001**	1	ELBOW	
	5	3,4	**3J-1907**	5	SEAL-O-RING	
	6	2,4	**6V-8397**	4	SEAL-O-RING	
	7	2,3,4	*148-8378*	12	ELBOW AS	
					(EACH INCLUDES)	
		2,3,4	**3J-1907**	1	SEAL-O-RING	
		2,3,4	**6V-8397**	1	SEAL-O-RING	
		2,3,4	**6V-8724**	1	ELBOW	
	8	2,4	*148-8407*	6	PLUG GP	
					(EACH INCLUDES)	
		2,4	**3J-1907**	1	SEAL-O-RING	
		2,4	**9S-4191**	1	PLUG	
	9	1,3,4	*148-8336*	9	CONNECTOR AS	
					(EACH INCLUDES)	
		1,3,4	**3J-1907**	1	SEAL-O-RING	
		1,3,4	**6V-8397**	1	SEAL-O-RING	
		1,3,4	**6V-8636**	1	CONNECTOR	
	10	1,3,4	*148-8340*	6	CONNECTOR GP	
					(EACH INCLUDES)	
		1,3,4	**3K-0360**	1	SEAL-O-RING	
		1,3,4	**6V-8398**	1	SEAL-O-RING	
		1,3,4	**6V-8639**	1	CONNECTOR	
	11	2,3	*148-8433*	3	TEE GP	
					(EACH INCLUDES)	
		2,3	**6V-8397**	2	SEAL-O-RING	
		2,3	**6V-9836**	1	TEE-SWIVEL	
	12	2	*164-5608*	1	CONNECTOR GP	
		2	**3K-0360**	1	SEAL-O-RING	
		2	**6V-8398**	1	SEAL-O-RING	
		2	**8T-1687**	1	CONNECTOR	
	13	2,3,4	*148-8435*	4	TEE AS	
					(EACH INCLUDES)	
		2,3,4	**3J-1907**	1	SEAL-O-RING	
		2,3,4	**6V-8397**	2	SEAL-O-RING	
		2,3,4	**6V-8781**	1	TEE-FACE SEAL	
	14	3	*148-8358*	1	ELBOW AS	
		3	**2M-9780**	1	SEAL-O-RING	
		3	**6V-8398**	1	SEAL-O-RING	
		3	**6V-8624**	1	ELBOW	
	15	1	**3D-2824**	1	SEAL-O-RING	
	16	1	**6V-9746**	1	SEAL-O-RING	
	17	4	*153-6237*	1	ELBOW GP	
		4	**3D-2824**	1	SEAL-O-RING	
		4	**6V-9004**	1	ELBOW	
		4	**6V-9746**	1	SEAL-O-RING	

HYDRAULIC SYSTEM

199-7293 LINES GP-PILOT *(contd.)* i01889242

NOTE	REF NO	GRAPHIC REF	PART NUMBER	QTY	PART NAME 1 2 3 4 5 6 (PRODUCT LEVEL)	SEE PAGE
	18	1	**168-9759**	1	BLOCK	
	19	2	*148-8439*	2	TEE AS	
					(EACH INCLUDES)	
		2	**3J-1907**	1	SEAL-O-RING	
		2	**6V-8397**	2	SEAL-O-RING	
		2	**6V-8774**	1	TEE	
	20	1,4	*148-8327*	2	CONNECTOR AS	
					(EACH INCLUDES)	
		1,4	**3D-2824**	1	SEAL-O-RING	
		1,4	**6V-8637**	1	CONNECTOR-SEAL	
		1,4	**6V-9746**	1	SEAL-O-RING	
	21	1	*164-6872*	1	TEE AS	
		1	**2M-9780**	1	SEAL-O-RING	
		1	**6V-8398**	2	SEAL-O-RING	
		1	**115-8634**	1	TEE-O-RING	
I	22	2	**113-6758**	1	HOSE AS	
	23	1,3,4	**148-8354**	4	ELBOW GP	
					(EACH INCLUDES)	
		1,3,4	**3K-0360**	1	SEAL-O-RING	
		1,3,4	**6V-8398**	1	SEAL-O-RING	
		1,3,4	**6V-9002**	1	ELBOW	
	24	1	**124-1212**	1	FITTING	
	25	1	*148-8338*	1	CONNECTOR GP	
		1	**3J-1907**	1	SEAL-O-RING	
		1	**6V-8397**	1	SEAL-O-RING	
		1	**8T-0075**	1	CONNECTOR	
	26	2,3	*148-8347*	2	ELBOW GP	
					(EACH INCLUDES)	
		2,3	**3D-2824**	1	SEAL-O-RING	
		2,3	**6V-9007**	1	ELBOW	
		2,3	**6V-9746**	1	SEAL-O-RING	
I	27	1	**176-4770**	1	HOSE AS	
I	29	1	**7I-8249**	1	HOSE AS	
I	30	1	**4I-3573**	1	HOSE AS	
M	31	4	**8T-1159**	2	BOLT-SOCKET HEAD (M10X1.5X25MM)	
	32	3,4	**6V-3965**	5	FITTING AS	
	33	2	**103-1384**	1	GUARD	
M	34	1	**8T-4198**	2	BOLT (M10X1.5X100MM)	
I	35	3	**176-4471**	1	HOSE AS	
I	36	1	**108-7354**	1	HOSE AS	
I	37	2	**176-4768**	1	HOSE AS	
I	38	1	**176-4578**	1	HOSE AS	
I	39	1	**194-0349**	1	HOSE AS	
I	40	3	**104-8973**	1	HOSE AS	
I	41	1	**176-4743**	1	HOSE AS	
	42	4	*150-4044*	2	CONNECTOR GP	
					(EACH INCLUDES)	
		4	**3J-1907**	1	SEAL-O-RING	
		4	**6V-8397**	1	SEAL-O-RING	
		4	**8T-1779**	1	CONNECTOR	
I	43	1	**184-9594**	1	HOSE AS	
	44	1,2	**7K-1181**	17	STRAP-CABLE	
	45	1,2,3,4	**8T-4121**	12	WASHER-HARD (11X21X2.5MM THK)	
I	46	3	**4I-1739**	1	HOSE AS	
I	47	2,3	**087-4531**	2	HOSE AS	
M	48	1	**8T-4136**	1	BOLT (M10X1.5X25MM)	
	49	1,2	**6D-1641**	3	CLIP	
M	50	2	**8T-4191**	2	BOLT (M10X1.5X16MM)	

199-7293 LINES GP-PILOT *(contd.)* i01889242

NOTE	REF NO	GRAPHIC REF	PART NUMBER	QTY	PART NAME 1 2 3 4 5 6 (PRODUCT LEVEL)	SEE PAGE
	51	3	**157-3182**	2	SENSOR AS-PRESSURE (MAIN PUMP)	
					(EACH INCLUDES)	
		3	**3E-3371**	1	WEDGE-RECEPTACLE LOCK (3 PIN)	
		3	**3K-0360**	1	SEAL-O-RING	
		3	**9X-3401**	3	PIN-CONNECTOR	
		3	**126-1767**	3	PIN-CONNECTOR	
		3	**171-0596**	1	RECEPTACLE AS	
I	52	2	**087-5760**	1	HOSE AS	
I	53	2	**5I-8708**	1	HOSE AS	
I	54	2	**110-5496**	1	HOSE AS	
	55	3,4	**6V-0852**	5	CAP-DUST	
	56	4	*148-8371*	1	ELBOW AS	
		4	**6V-8397**	1	SEAL-O-RING	
		4	**8C-8988**	1	ELBOW	
M	57	2	**8T-4139**	1	BOLT (M12X1.75X30MM)	
	58	2,4	**8T-4223**	4	WASHER-HARD (13.5X25.5X3MM THK)	
	59	2	**202-4004**	1	GROMMET	
I	60	1	**184-9596**	1	HOSE AS	
	61	4	**176-4469**	1	BLOCK	
Y	62	4	**199-7447**	1	ACCUMULATOR GP-HYDRAULIC	215
	63	2	**5P-7464**	1	CLIP (SLOT)	
	64	2	**5P-7465**	1	CLIP (TAB)	
	65	2	**6V-7359**	1	GROMMET	
I	66	2	**104-8838**	1	HOSE AS	
I	67	2	**176-4472**	1	HOSE AS	
Y	68	4	**158-8251**	1	VALVE GP-PILOT (OIL MANIFOLD)	427
	69	4	**176-4463**	1	PLATE	
Y	70	4	**123-2430**	1	VALVE GP-SHUTTLE	450
M	71	4	**099-3649**	2	BOLT (M8X1.25X40MM)	
Y	72	4	**158-8274**	1	VALVE GP-PRESSURE REDUCING (BOOM PRIORITY/SWING PRIORITY)	435
M	73	4	**8T-4172**	2	BOLT (M10X1.50X80MM)	
M	74	4	**8T-4192**	3	BOLT (M12X1.75X25MM)	
I	75	2	**4I-0836**	1	HOSE AS	
I	76	2	**087-5774**	1	HOSE AS	
I	77	2	**087-4534**	1	HOSE AS	
I	78	2	**143-4254**	1	HOSE AS	
I	79	2	**087-5772**	1	HOSE AS	
I	80	2	**164-8977**	1	HOSE AS	
I	81	3	**176-4769**	1	HOSE AS	
I	82	2	**5I-4396**	1	HOSE AS	
	83	2	*164-5558*	1	STOP AS	
		2	**3J-1907**	1	SEAL-O-RING	
		2	**5I-4371**	1	STOPPER	
		2	**6V-8397**	1	SEAL-O-RING	
I	84	3	**184-9595**	1	HOSE AS	
I	85	2	**7Y-8487**	1	HOSE AS	
I	86	2	**087-4411**	1	HOSE AS	
I	87	3	**087-5771**	1	HOSE AS	
I	88	2	**164-8983**	1	HOSE AS	
I	89	3	**087-5762**	1	HOSE AS	
I	90	3	**104-8950**	1	HOSE AS	
I	91	3	**176-4774**	1	HOSE AS	
I	92	2	**087-5776**	1	HOSE AS	
I	93	2	**176-4569**	1	HOSE AS	
	94	1,3	**6D-4246**	2	CLIP	
	95	1,2	**4I-9527**	6	BAND-HOSE (R3-GREEN)	
	96	2,3	**4I-9528**	4	BAND-HOSE (R4-PURPLE)	
	97	2	**4I-9521**	2	BAND-HOSE (L1-RED)	
	98	1	**4I-9524**	2	BAND-HOSE (L4-BROWN)	

199-7293 LINES GP-PILOT *(contd.)* i01889242

NOTE	REF NO	GRAPHIC REF	PART NUMBER	QTY	PART NAME 1 2 3 4 5 6 (PRODUCT LEVEL)	SEE PAGE
	99	1	**4I-9523**	4	BAND-HOSE (L3-BLUE)	
	100	1	**4I-9522**	2	BAND-HOSE (L2-YELLOW)	
	101	3	**4I-9525**	2	BAND-HOSE (R1-ORANGE)	
M	102	1,4	**8T-4137**	5	BOLT (M10X1.5X20MM)	
I	103	2	**4I-5906**	1	HOSE AS	
I	104	1	**7Y-8379**	1	HOSE AS	
M	105	3	**8T-4133**	1	NUT (M10X1.5 THD)	
	106	3	**5K-8451**	1	CLIP	
M	107	3	**8T-4196**	1	BOLT (M10X1.5X35MM)	
I	108	3	**184-9593**	1	HOSE AS	
I	109	3	**4I-0794**	1	HOSE AS	
	110	4	**3K-0360**	1	SEAL-O-RING	
	111	2	*148-8367*	1	ELBOW GP	
		2	**6V-8397**	1	SEAL-O-RING	
		2	**6V-9850**	1	ELBOW-SWIVEL	
F			**6V-8398**	1	SEAL-O-RING	

F-NOT SHOWN
I-SEE HOSE FABRICATION GUIDE
M-METRIC PART
Y-SEPARATE ILLUSTRATION

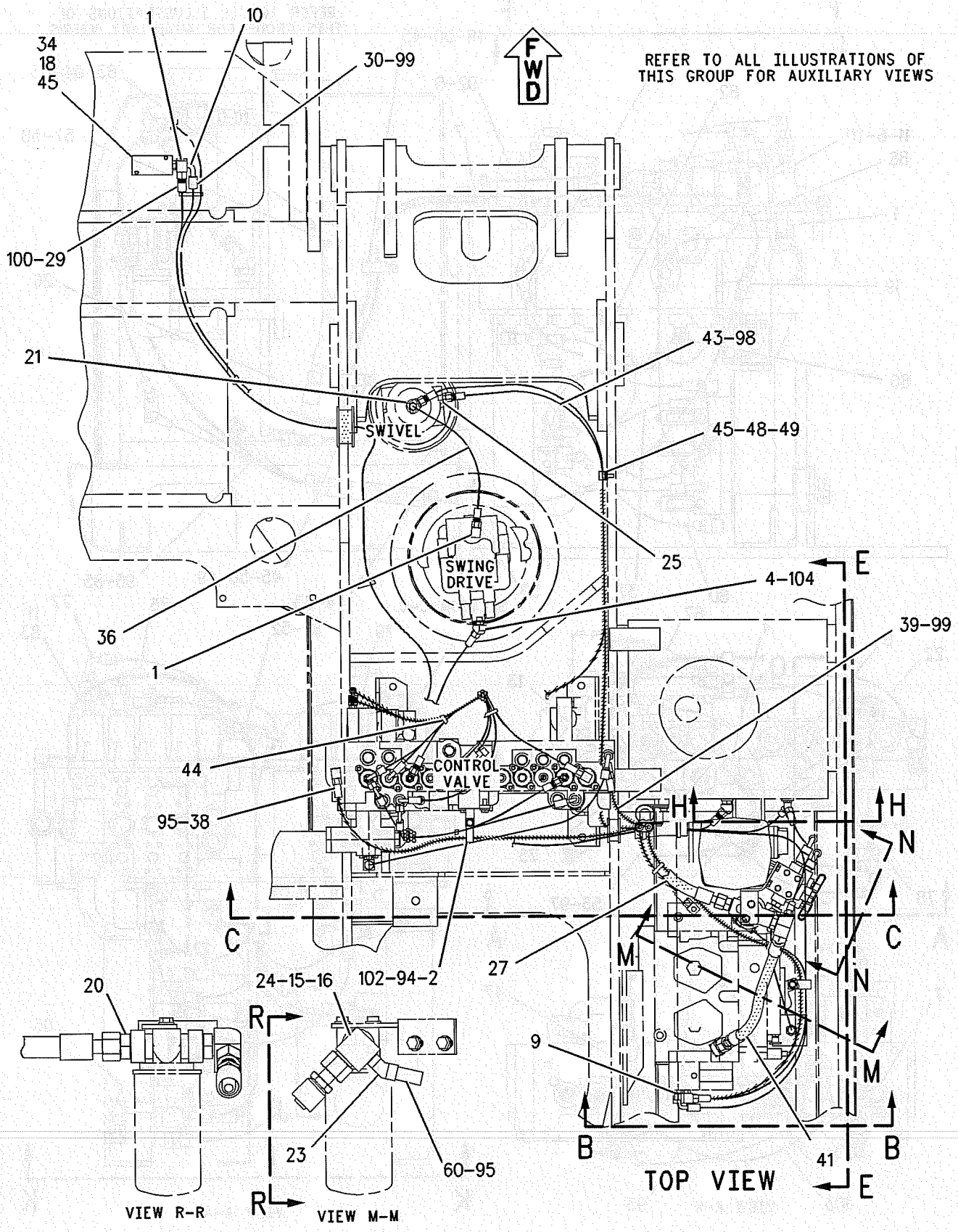

GRAPHIC #1 g00948134

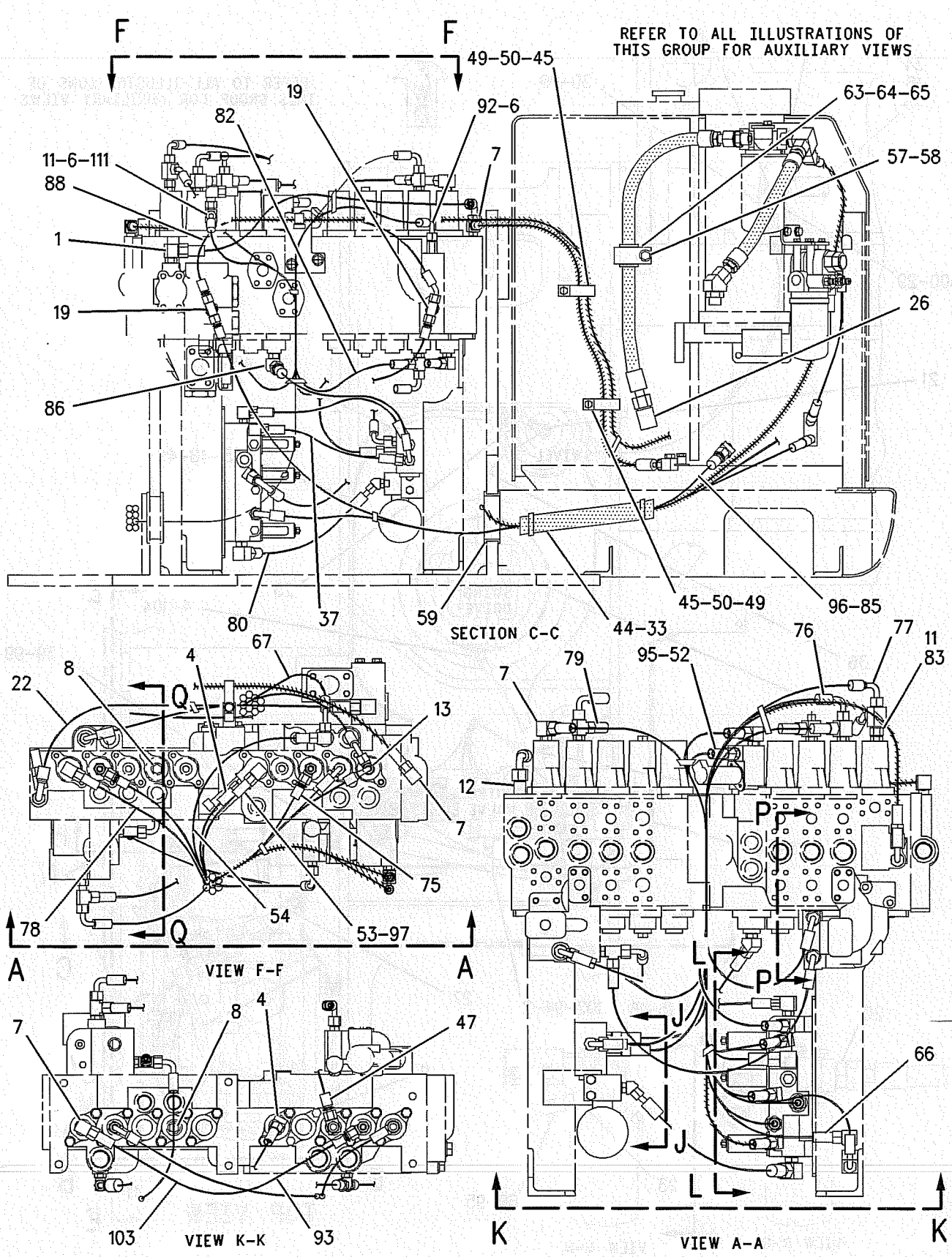

GRAPHIC #2

g00948135

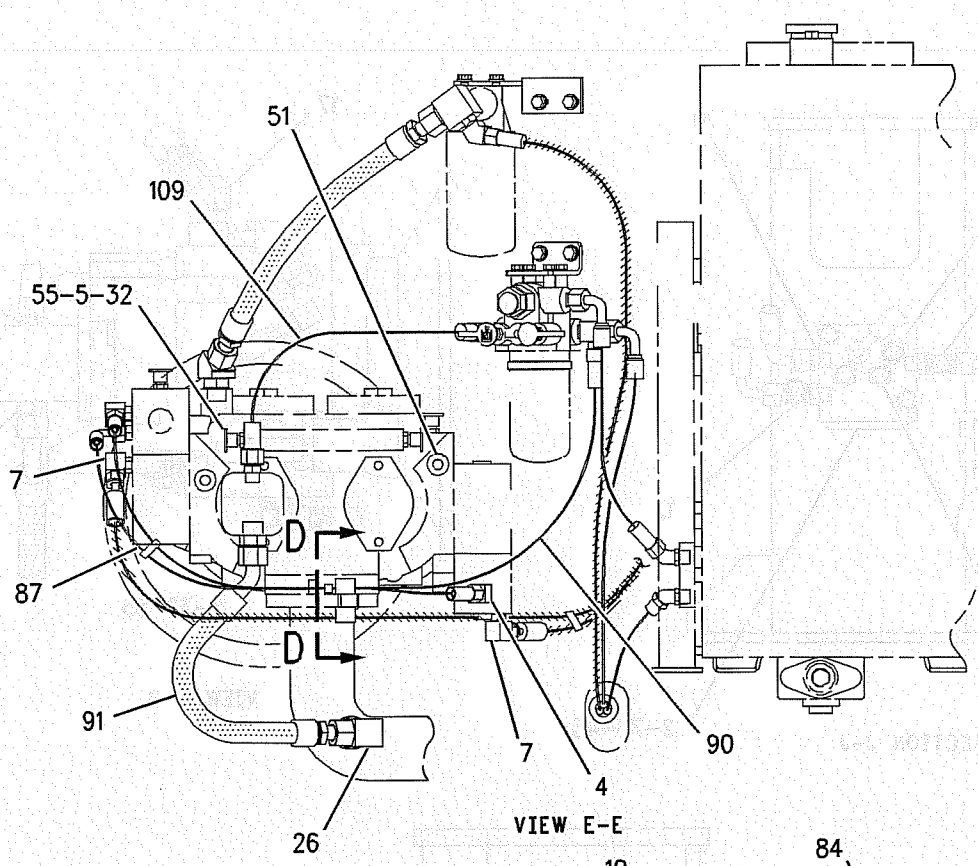

VIEW E-E

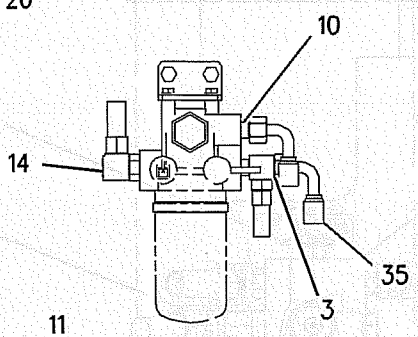

VIEW N-N

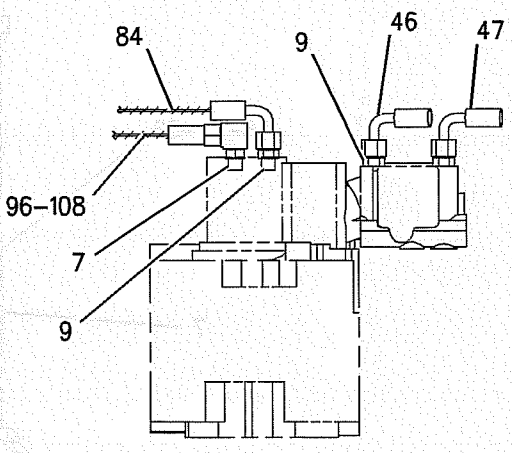

SECTION P-P

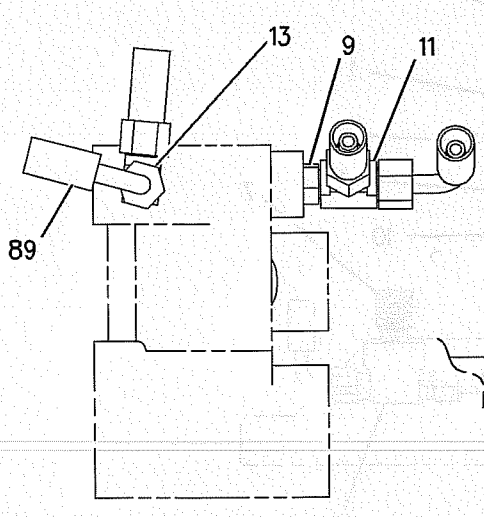

VIEW Q-Q

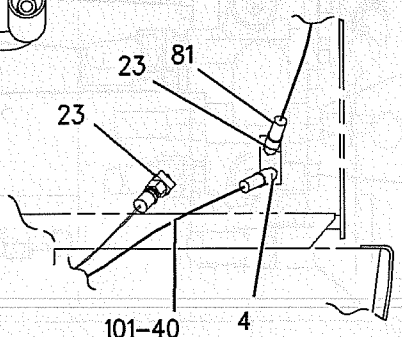

VIEW H-H

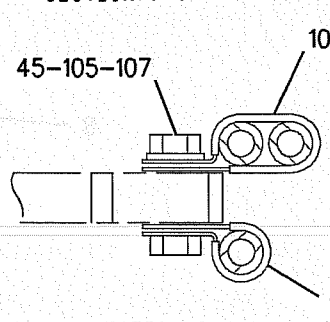

SECTION D-D

GRAPHIC #3

g00948137

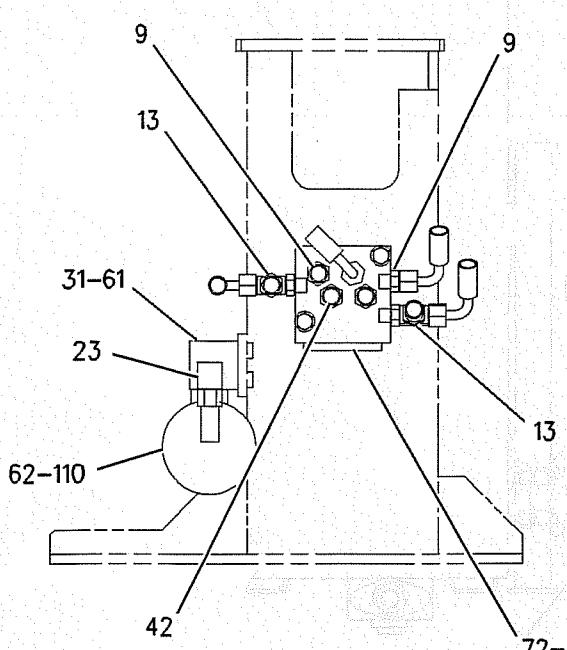

SECTION J-J

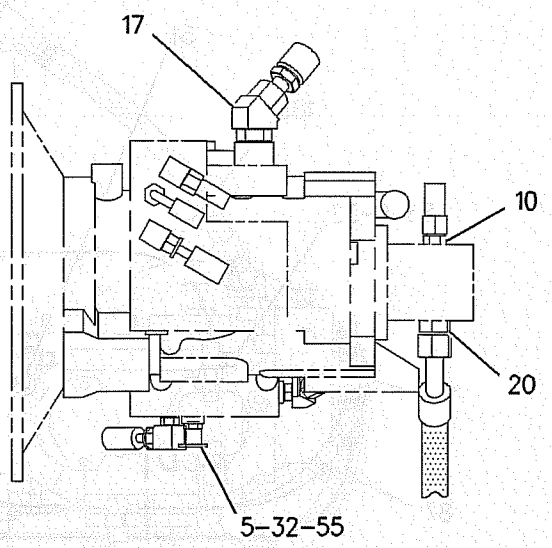

VIEW B-B

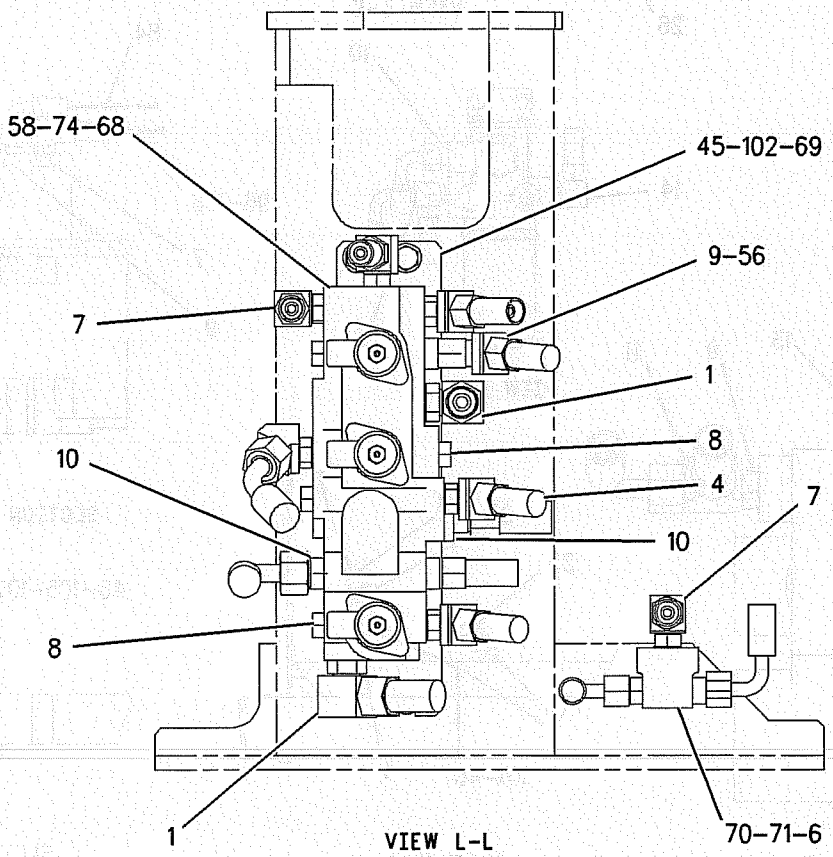

VIEW L-L

GRAPHIC #4

<END>

g00948138

HYDRAULIC SYSTEM

199-7428 LINES GP-PILOT

S/N: SBN1-UP; RAW1-UP

PART OF 201-9323, 201-9324 HYDRAULIC AR

SMCS-5057, 5059 **i01889245**

NOTE	REF NO	GRAPHIC REF	PART NUMBER	QTY	PART NAME 1 2 3 4 5 6 (PRODUCT LEVEL)	SEE PAGE
	1	3	**176-4556**	1	HOSE AS	
	2	3	**184-9284**	1	HOSE AS	
I	3	1	**113-6738**	1	HOSE AS	
I	4	1	**108-7203**	2	HOSE AS	
	5	3	**176-4557**	1	HOSE AS	
I	6	1	**102-7685**	1	HOSE AS	
I	7	1	**087-4402**	2	HOSE AS	
	8	2	*164-5628*	3	CONNECTOR GP	
					(EACH INCLUDES)	
		2	**3J-1907**	1	SEAL-O-RING	
		2	**6V-8397**	1	SEAL-O-RING	
		2	**107-6631**	1	CONNECTOR	
	9	2	**176-4558**	2	HOSE AS	
I	10	1	**104-8768**	1	HOSE AS	
I	11	1	**5I-8853**	2	HOSE AS	
I	12	3	**108-7387**	1	HOSE AS	
I	13	3	**4I-3988**	1	HOSE AS	
	14	3	*148-8435*	6	TEE AS	
					(EACH INCLUDES)	
		3	**3J-1907**	1	SEAL-O-RING	
		3	**6V-8397**	2	SEAL-O-RING	
		3	**6V-8781**	1	TEE-FACE SEAL	
	15	2	**167-3466**	3	SWITCH GP-PRESSURE (IMPLEMENT)	
					(EACH INCLUDES)	
		2	**102-8802**	1	KIT-RECEPTACLE (2 PIN)	
					(INCLUDES RECEPTACLE AS & WEDGE)	
		2	**9X-3401**	1	PIN-CONNECTOR	
					(16-18 GA)	
					–OR–	
		2	**126-1767**	1	PIN-CONNECTOR	
					(14 GA)	
	16	2,3	**148-8378**	12	ELBOW AS	
					(EACH INCLUDES)	
		2,3	**3J-1907**	1	SEAL-O-RING	
		2,3	**6V-8397**	1	SEAL-O-RING	
		2,3	**6V-8724**	1	ELBOW	
	17	2,3	**176-4561**	2	HOSE AS	
	18	1	**107-1677**	1	GROMMET	
	19	2,3	*148-8336*	31	CONNECTOR AS	
					(EACH INCLUDES)	
		2,3	**3J-1907**	1	SEAL-O-RING	
		2,3	**6V-8397**	1	SEAL-O-RING	
		2,3	**6V-8636**	1	CONNECTOR	
	20	2	**184-9285**	2	HOSE AS	
	21	2	**176-4559**	1	HOSE AS	
	22	3	*148-8407*	4	PLUG GP	
					(EACH INCLUDES)	
		3	**3J-1907**	1	SEAL-O-RING	
		3	**9S-4191**	1	PLUG	
	23	2	**184-9283**	1	HOSE AS	
	24	2	**184-9336**	3	SUPPORT	
CY	25	1	**206-3303**	1	CONTROL GP-JOYSTICK (RH) (JOYSTICK)	226
CY	26	1	**206-3304**	1	CONTROL GP-JOYSTICK (LH) (JOYSTICK)	227
Y	27	2	**158-8250**	1	VALVE GP-PILOT (TRAVEL)	425
	28	1	**176-4746**	1	GROMMET	
I	29	3	**087-5303**	2	HOSE AS	

199-7428 LINES GP-PILOT *(contd.)*

i01889245

NOTE	REF NO	GRAPHIC REF	PART NUMBER	QTY	PART NAME 1 2 3 4 5 6 (PRODUCT LEVEL)	SEE PAGE
	30	1	**4I-3953**	2	GROMMET	
I	31	3	**4I-6054**	1	HOSE AS	
	32	2	**184-9286**	1	HOSE AS	
M	33	2	**8T-4137**	13	BOLT (M10X1.5X20MM)	
M	34	1	**6V-7357**	6	BOLT (M6X1.0X25MM)	
M	35	2	**8T-4136**	4	BOLT (M10X1.5X25MM)	
	36	2	**8T-4121**	17	WASHER-HARD (11X21X2.5MM THK)	
Y	37	2	**185-0462**	1	VALVE GP-SHUTTLE	451
	38	1	**9X-8256**	6	WASHER (6.6X12X2MM THK)	
	39	1,2,3	**4I-9521**	8	BAND-HOSE (L1-RED)	
	40	1,2,3	**4I-9522**	8	BAND-HOSE (L2-YELLOW)	
	41	2,3	**4I-9523**	4	BAND-HOSE (L3-BLUE)	
	42	1,2	**4I-9524**	4	BAND-HOSE (L4-BROWN)	
	43	1,2,3	**4I-9525**	8	BAND-HOSE (R1-ORANGE)	
	44	1,2	**4I-9526**	8	BAND-HOSE (R2-WHITE)	
	45	1,2	**4I-9527**	4	BAND-HOSE (R3-GREEN)	
	46	2,3	**4I-9528**	4	BAND-HOSE (R4-PURPLE)	
	47	3	**133-5813**	4	BAND-HOSE (P-GRAY)	
	48	1	**7K-1181**	13	STRAP-CABLE	
	49	2	**185-0383**	1	BRACKET	

C-CHANGE FROM PREVIOUS TYPE
I-SEE HOSE FABRICATION GUIDE
M-METRIC PART
Y-SEPARATE ILLUSTRATION

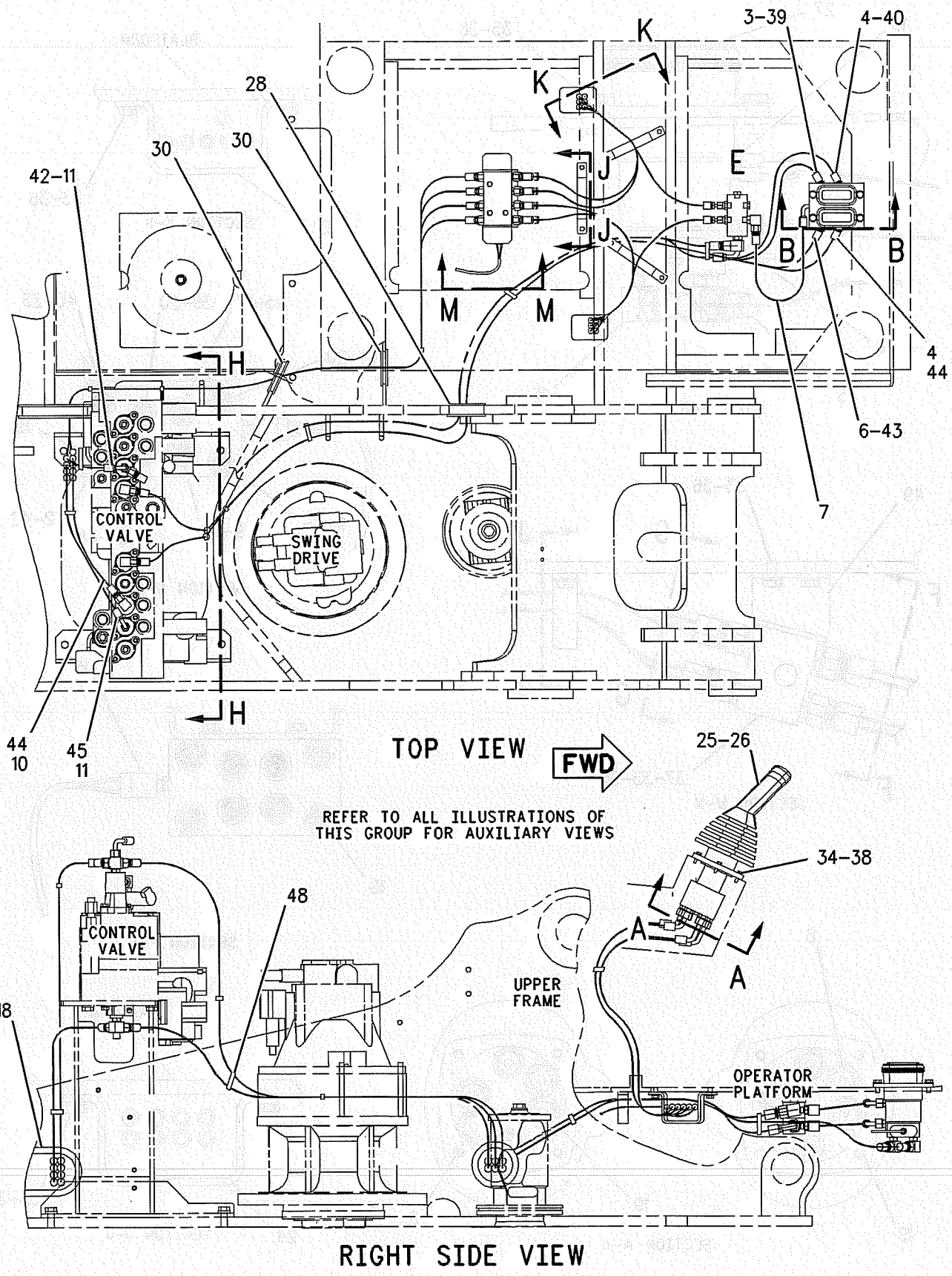

GRAPHIC #1 g00955908

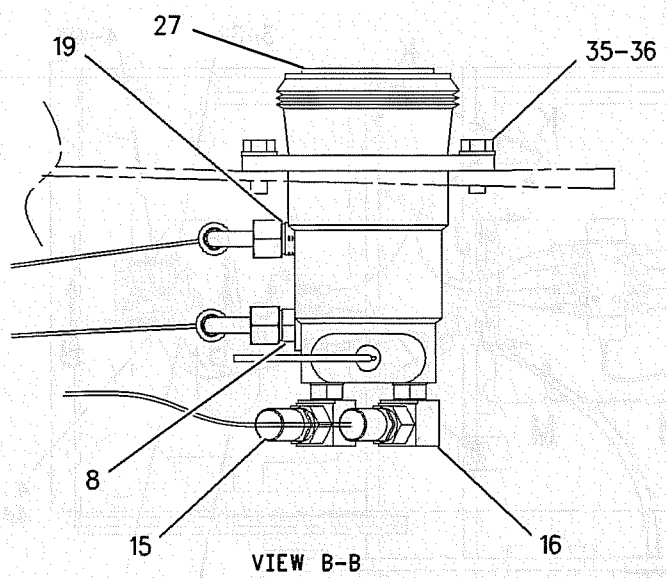

VIEW B-B

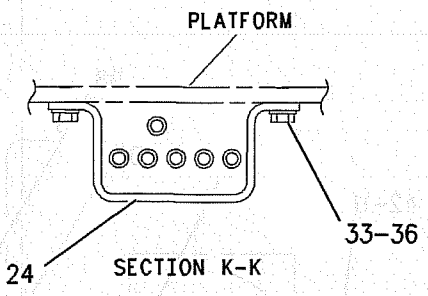

SECTION K-K

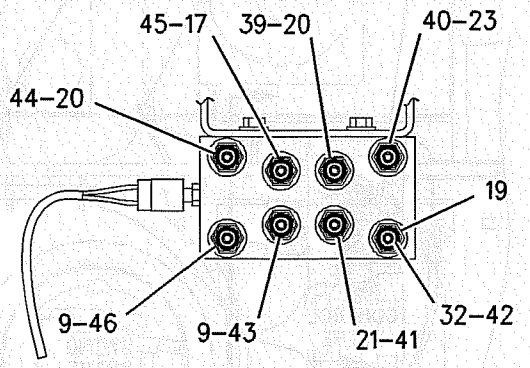

SECTION G-G

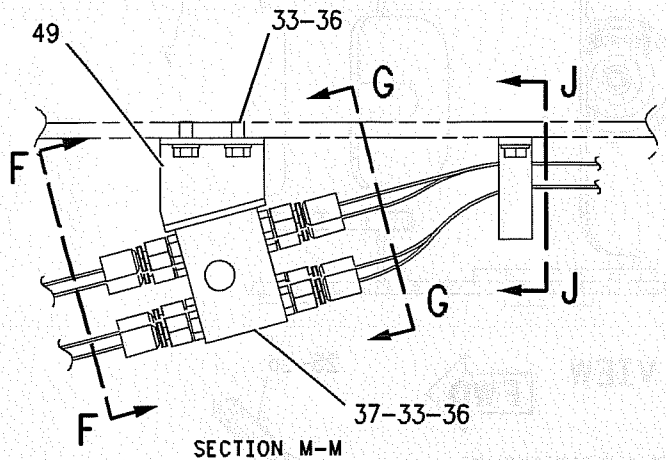

SECTION M-M

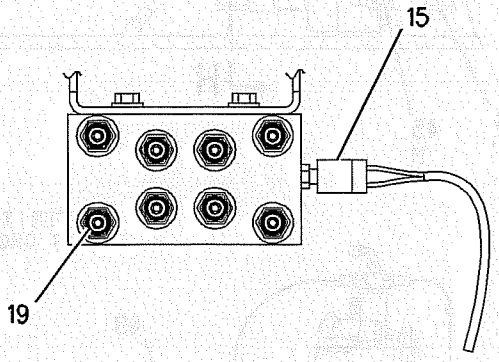

SECTION F-F

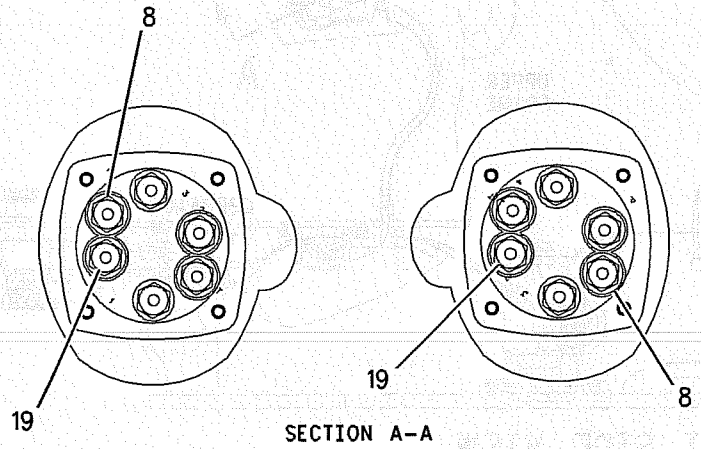

SECTION A-A

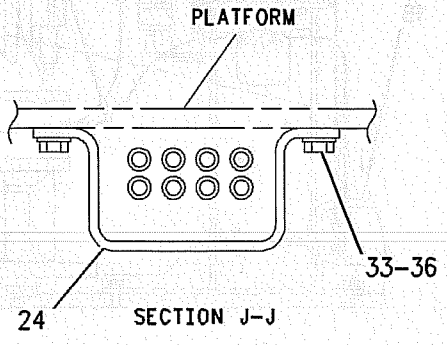

SECTION J-J

GRAPHIC #2

g00955909

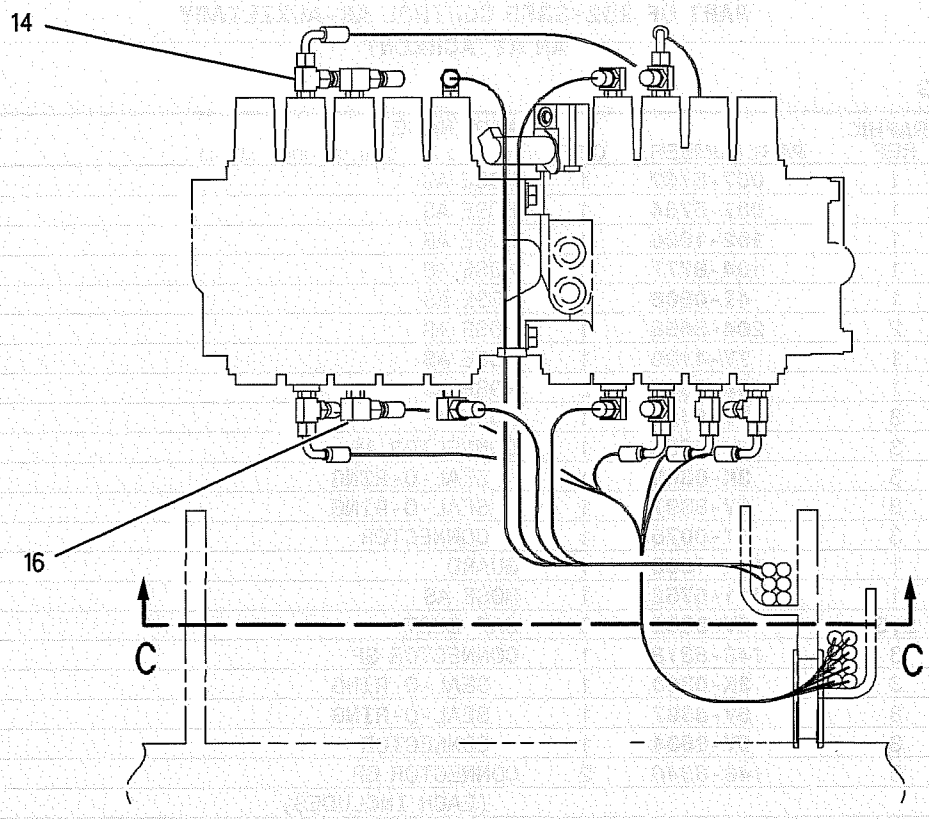

SECTION H-H

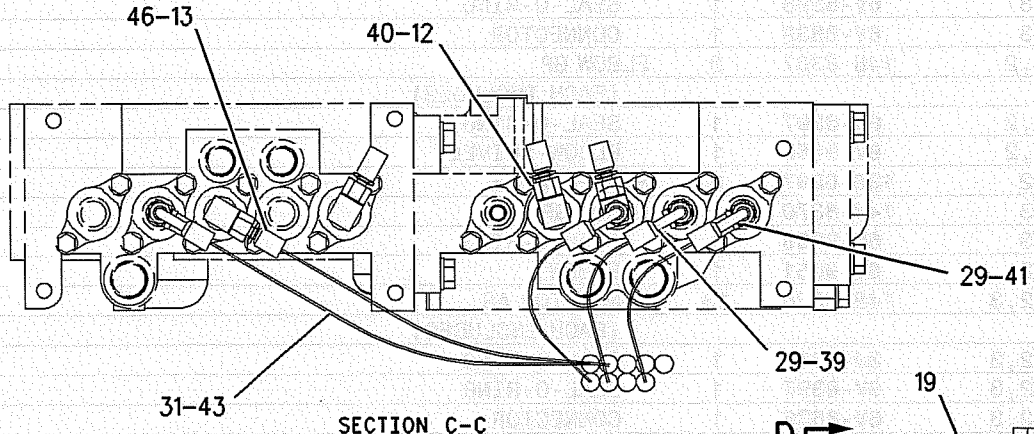

SECTION C-C

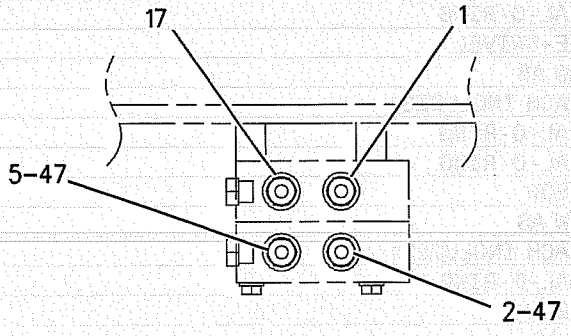

VIEW D-D

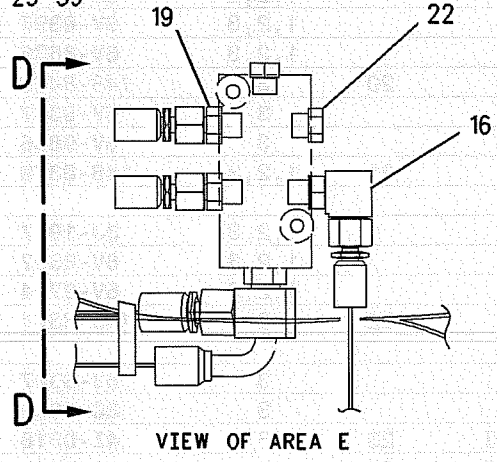

VIEW OF AREA E

GRAPHIC #3 **<END>** g00955910

HYDRAULIC SYSTEM

204-8283 LINES GP-PILOT

S/N: SBN1-UP; RAW1-UP
SYSTEM 14
PART OF 202-6855 CONTROL AR-AUXILIARY
AN ATTACHMENT

SMCS-5057, 5059 **i01889335**

NOTE	REF NO	GRAPHIC REF	PART NUMBER	QTY	PART NAME 1 2 3 4 5 6 (PRODUCT LEVEL)	SEE PAGE
I	1	1	**087-5762**	1	HOSE AS	
I	2	1	**087-5764**	1	HOSE AS	
I	3	1	**102-1026**	1	HOSE AS	
I	4	1	**104-8777**	1	HOSE AS	
I	5	1	**4I-0806**	1	HOSE AS	
I	6	2	**204-8458**	1	HOSE AS	
I	7	1	**7Y-4190**	1	HOSE AS	
I	8	1	**108-7387**	2	HOSE AS	
I	9	3	**7Y-8493**	1	HOSE AS	
	10	3	*164-5605*	1	CONNECTOR AS	
		3	**3K-0360**	1	SEAL-O-RING	
		3	**6V-8397**	1	SEAL-O-RING	
		3	**8T-0076**	1	CONNECTOR	
	11	1	**124-1008**	1	GUARD	
I	12	1	**111-6752**	1	HOSE AS	
	13	2,3	**6V-0852**	8	CAP-DUST	
	14	3	*148-8318*	1	CONNECTOR GP	
		3	**3K-0360**	1	SEAL-O-RING	
		3	**6V-8397**	1	SEAL-O-RING	
		3	**6V-8634**	1	CONNECTOR	
	15	3	*148-8340*	2	CONNECTOR GP	
					(EACH INCLUDES)	
		3	**3K-0360**	1	SEAL-O-RING	
		3	**6V-8398**	1	SEAL-O-RING	
		3	**6V-8639**	1	CONNECTOR	
	16	1,2	*148-8367*	3	ELBOW GP	
					(EACH INCLUDES)	
		1,2	**6V-8397**	1	SEAL-O-RING	
		1,2	**6V-9850**	1	ELBOW-SWIVEL	
	17	2	**136-0207**	3	STRAP-CABLE	
	18	3	*148-8370*	1	ELBOW GP	
		3	**6V-8398**	1	SEAL-O-RING	
		3	**6V-9851**	1	ELBOW	
	19	1,2,3	*148-8336*	13	CONNECTOR AS	
					(EACH INCLUDES)	
		1,2,3	**3J-1907**	1	SEAL-O-RING	
		1,2,3	**6V-8397**	1	SEAL-O-RING	
		1,2,3	**6V-8636**	1	CONNECTOR	
	20	3	*148-8433*	1	TEE GP	
		3	**6V-8397**	2	SEAL-O-RING	
		3	**6V-9836**	1	TEE-SWIVEL	
	21	1,2,3	**148-8378**	13	ELBOW AS	
					(EACH INCLUDES)	
		1,2,3	**3J-1907**	1	SEAL-O-RING	
		1,2,3	**6V-8397**	1	SEAL-O-RING	
		1,2,3	**6V-8724**	1	ELBOW	
	22	3	*148-8371*	6	ELBOW AS	
					(EACH INCLUDES)	
		3	**6V-8397**	1	SEAL-O-RING	
		3	**8C-8988**	1	ELBOW	
I	23	3	**4I-0818**	1	HOSE AS	
I	24	3	**110-5496**	1	HOSE AS	
	25	2	*148-8428*	1	TEE GP	
		2	**3K-0360**	1	SEAL-O-RING	

204-8283 LINES GP-PILOT *(contd.)* i01889335

NOTE	REF NO	GRAPHIC REF	PART NUMBER	QTY	PART NAME 1 2 3 4 5 6 (PRODUCT LEVEL)	SEE PAGE
		2	**6V-8398**	2	SEAL-O-RING	
		2	**6V-8782**	1	TEE-FACE SEAL	
	26	2,3	**3J-1907**	8	SEAL-O-RING	
	27	1	**5K-8451**	1	CLIP	
	28	2,3	**6D-3479**	2	CLIP	
	29	1,2,3	**8T-4121**	7	WASHER-HARD (11X21X2.5MM THK)	
M	30	2,3	**8T-4191**	2	BOLT (M10X1.5X16MM)	
	31	2,3	**6V-3965**	8	FITTING AS	
Y	32	2	**171-0188**	1	VALVE GP-PILOT (PROPORTIONAL REDUCING SOLENOID)	428
M	33	2	**8T-4177**	4	BOLT (M8X1.25X90MM)	
	34	2	**8T-4224**	4	WASHER-HARD (8.8X16X2MM THK)	
	35	2	*150-4027*	2	TEE GP	
					(EACH INCLUDES)	
		2	**3E-2310**	1	TEE	
		2	**3J-1907**	1	SEAL-O-RING	
		2	**6V-8397**	1	SEAL-O-RING	
	36	1	**8T-4223**	4	WASHER-HARD (13.5X25.5X3MM THK)	
	37	1	**204-8452**	1	SUPPORT AS	
M	38	1	**8T-4192**	2	BOLT (M12X1.75X25MM)	
	39	1	*148-8434*	1	TEE AS	
		1	**6V-8397**	2	SEAL-O-RING	
		1	**6V-9843**	1	TEE-SWIVEL	
	40	3	*150-4043*	1	CONNECTOR GP	
		3	**3J-1907**	1	SEAL-O-RING	
		3	**6V-8398**	1	SEAL-O-RING	
		3	**6V-9873**	1	CONNECTOR-SEAL	
	41	1	*164-5589*	1	CONNECTOR AS	
		1	**3J-1907**	1	SEAL-O-RING	
		1	**6V-8397**	1	SEAL-O-RING	
		1	**8C-0597**	1	CONNECTOR	
I	42	1	**204-8454**	1	HOSE AS	
I	43	1	**187-5707**	1	HOSE AS	
Y	44	3	**185-0497**	1	VALVE GP-SOLENOID (PROPORTIONAL REDUCING MANIFOLD)	457
	45	1	**187-7023**	1	PLATE	
I	46	3	**115-3780**	1	HOSE AS	
I	47	2	**104-9136**	1	HOSE AS	
I	48	1	**4I-6391**	2	HOSE AS	
	49	1	**4I-9521**	2	BAND-HOSE (L1-RED)	
	50	1	**4I-9522**	2	BAND-HOSE (L2-YELLOW)	
	51	1	**4I-9523**	2	BAND-HOSE (L3-BLUE)	
	52	1	**4I-9524**	2	BAND-HOSE (L4-BROWN)	
	53	1	**4I-9526**	2	BAND-HOSE (R2-WHITE)	
	54	1	**4I-9525**	2	BAND-HOSE (R1-ORANGE)	
M	55	1	**8T-4136**	2	BOLT (M10X1.5X25MM)	
M	56	1,3	**8T-4137**	3	BOLT (M10X1.5X20MM)	
	57	1	**7K-1181**	14	STRAP-CABLE	
M	58	1	**8T-4139**	2	BOLT (M12X1.75X30MM)	

I-SEE HOSE FABRICATION GUIDE
M-METRIC PART
Y-SEPARATE ILLUSTRATION

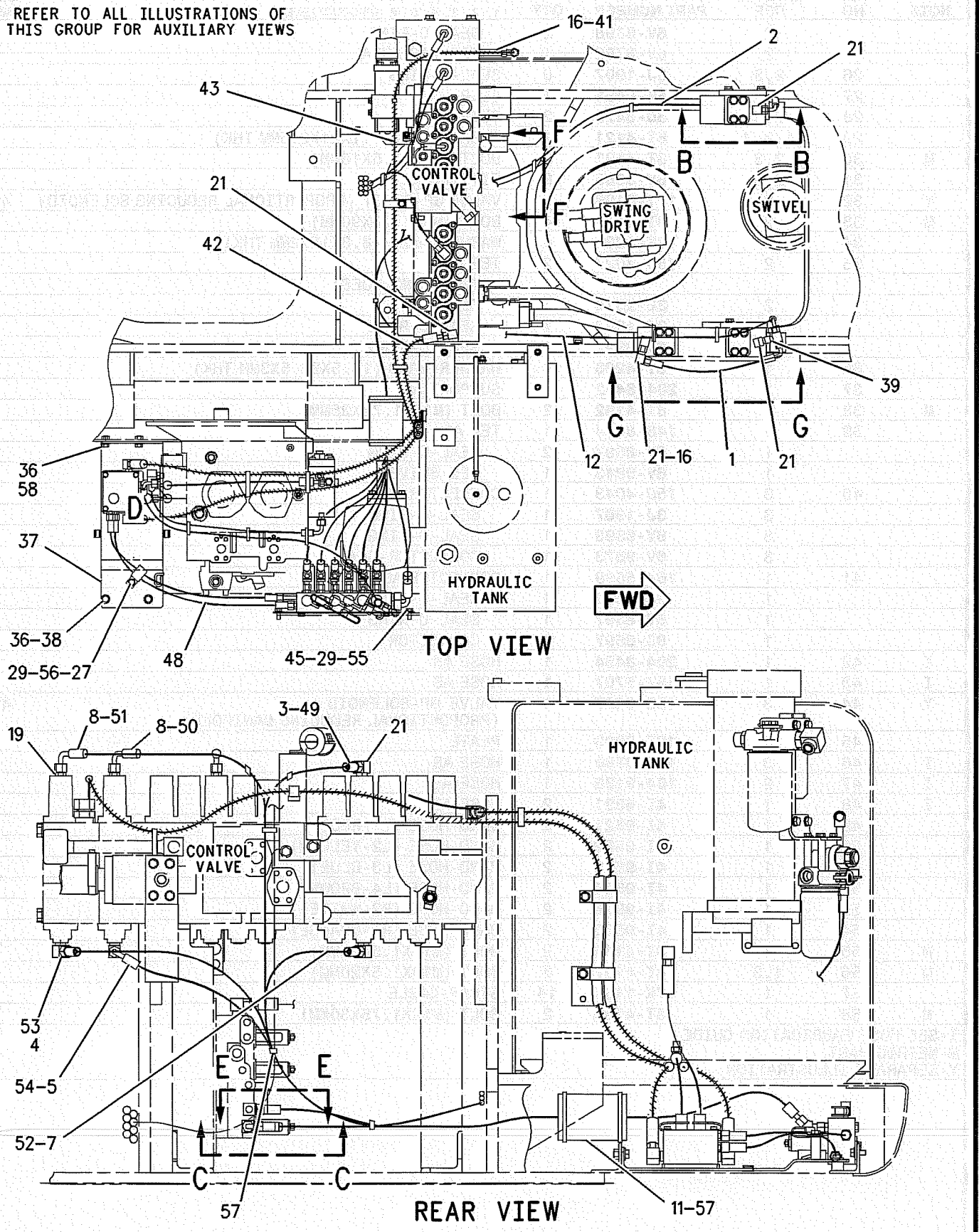

GRAPHIC #1 g00964589

REFER TO ALL ILLUSTRATIONS OF
THIS GROUP FOR AUXILIARY VIEWS

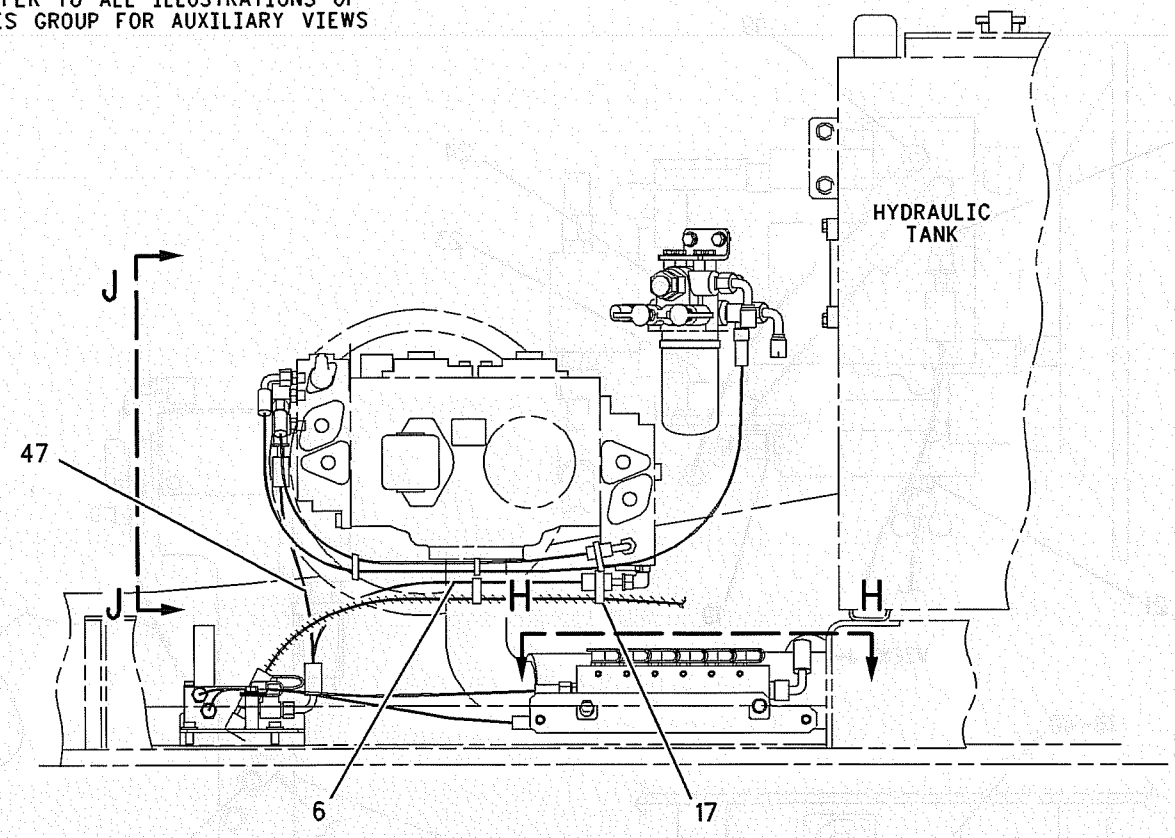

RIGHT SIDE VIEW

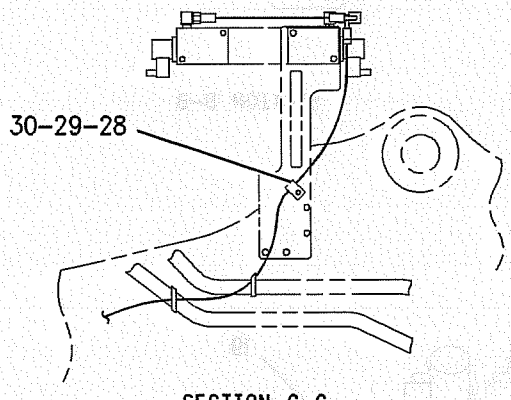

SECTION G-G

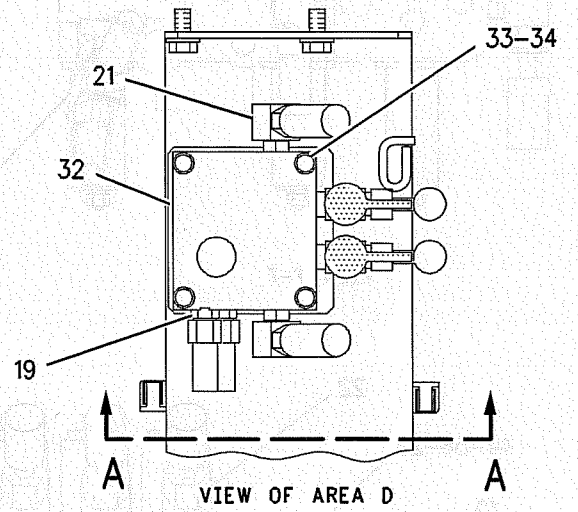

VIEW OF AREA D

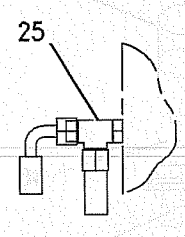

SECTION E-E

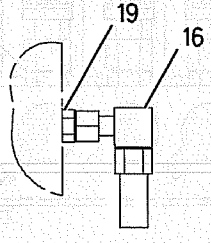

SECTION C-C

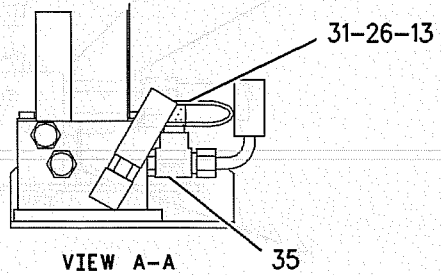

VIEW A-A

GRAPHIC #2

g00964590

204-8283 LINES GP-PILOT *(contd.)*

i01889335

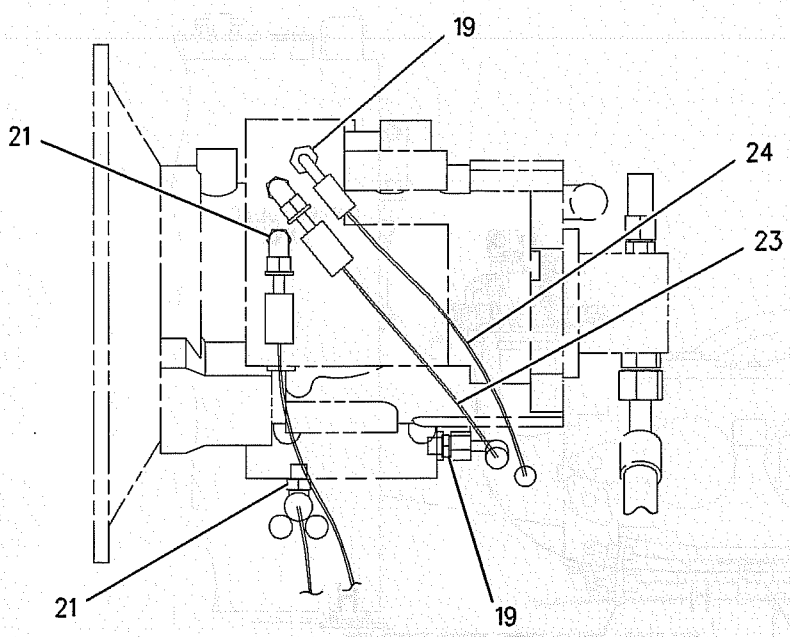

VIEW J-J

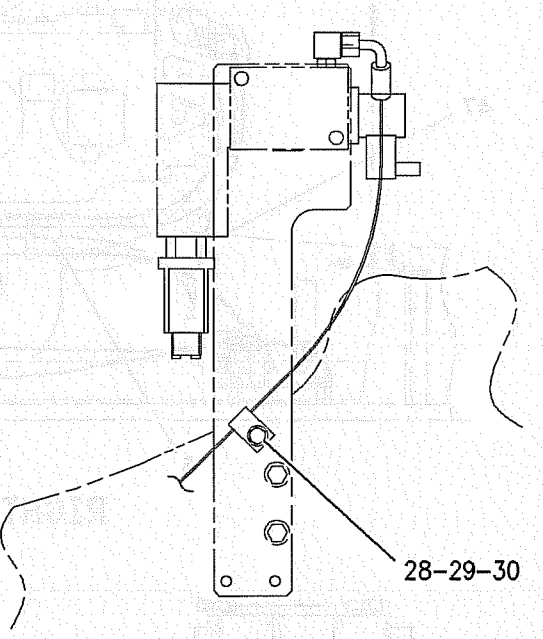

SECTION B-B

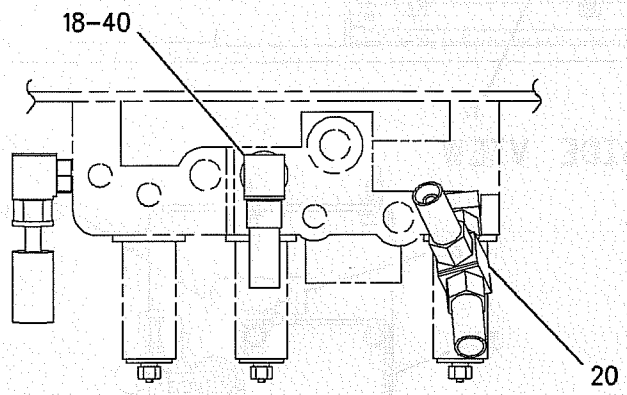

VIEW F-F

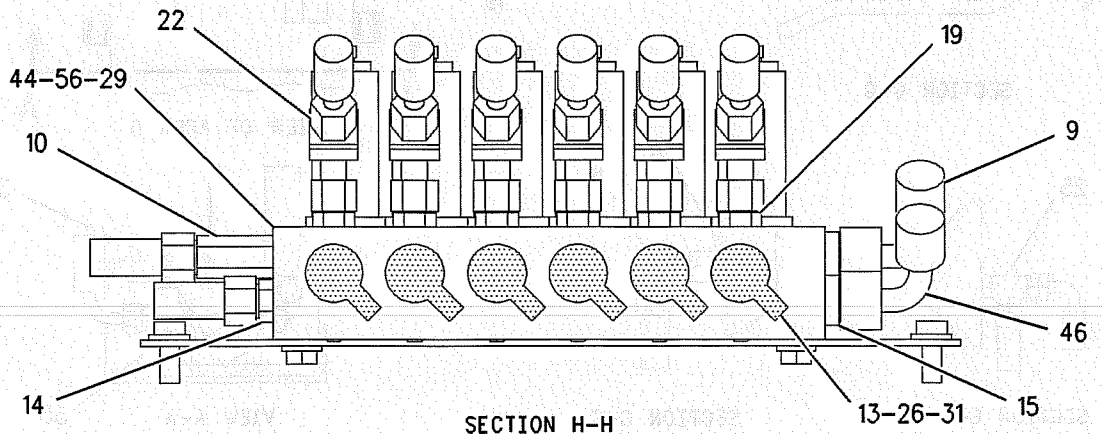

SECTION H-H

GRAPHIC #3

<END>

g00964591

HYDRAULIC SYSTEM

142-7706 LINES GP-PUMP

S/N: SBN1-UP; RAW1-UP

PART OF 201-9323, 201-9324 HYDRAULIC AR

SMCS-5057, 5070 **i01889735**

NOTE	REF NO	GRAPHIC REF	PART NUMBER	QTY	PART NAME 1 2 3 4 5 6 (PRODUCT LEVEL)	SEE PAGE
	1	1	*173-4834*	1	HOSE	
	2	1	**9X-2201**	4	CLAMP-HOSE	
	3	1	**173-4831**	1	SUPPORT AS	
	5	1	**7G-5984**	1	CLIP (TAB)	
	6	1	**7G-5985**	1	CLIP (SLOT)	
	7	1	**7G-5986**	1	GROMMET	
	8	1	**8T-4223**	18	WASHER-HARD (13.5X25.5X3MM THK)	
	9	1	**1P-3703**	4	SEAL-RECTANGULAR	
M	10	1	**8T-4184**	16	BOLT (M12X1.75X45MM)	
	11	1	**6V-0400**	8	FLANGE-HALF	
M	12	1	**8T-4139**	2	BOLT (M12X1.75X30MM)	
	13	1	**5H-8624**	1	SEAL-O-RING	
I	14	1	**179-7863**	1	HOSE AS	
	15	1	**179-7867**	1	HOSE AS	
	16	1	**173-4828**	1	PIPE AS	
	17	1	**9S-4182**	1	PLUG	
	18	1	**3J-7354**	1	SEAL-O-RING	
	19	1	**173-4848**	1	PIPE AS	
M	20	1	**8T-4186**	2	BOLT (M10X1.5X40MM)	
M	21	1	**7X-2553**	8	BOLT (M16X2X40MM)	
	22	1	**9X-8257**	4	WASHER (17.5X30X3.5MM THK)	
	23	1	**6D-9157**	1	SEAL-O-RING	
	24	1	**7X-7729**	2	WASHER (11X25X3MM THK)	

I-SEE HOSE FABRICATION GUIDE
M-METRIC PART

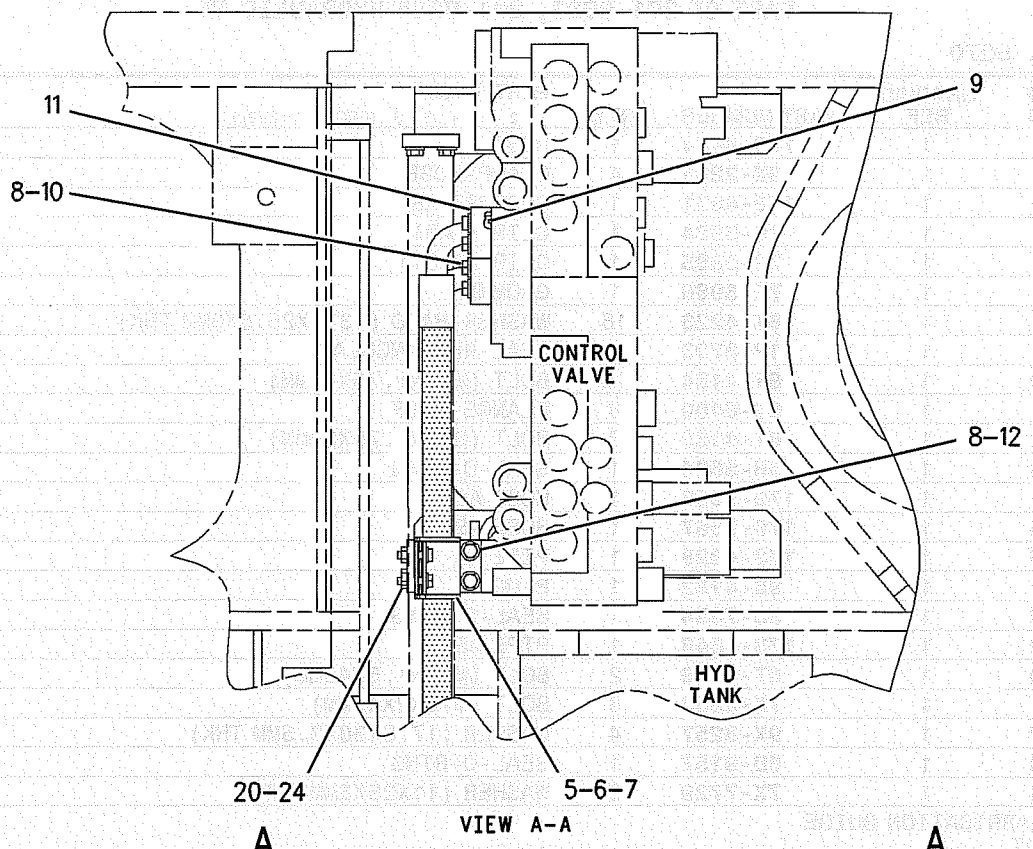

VIEW A-A

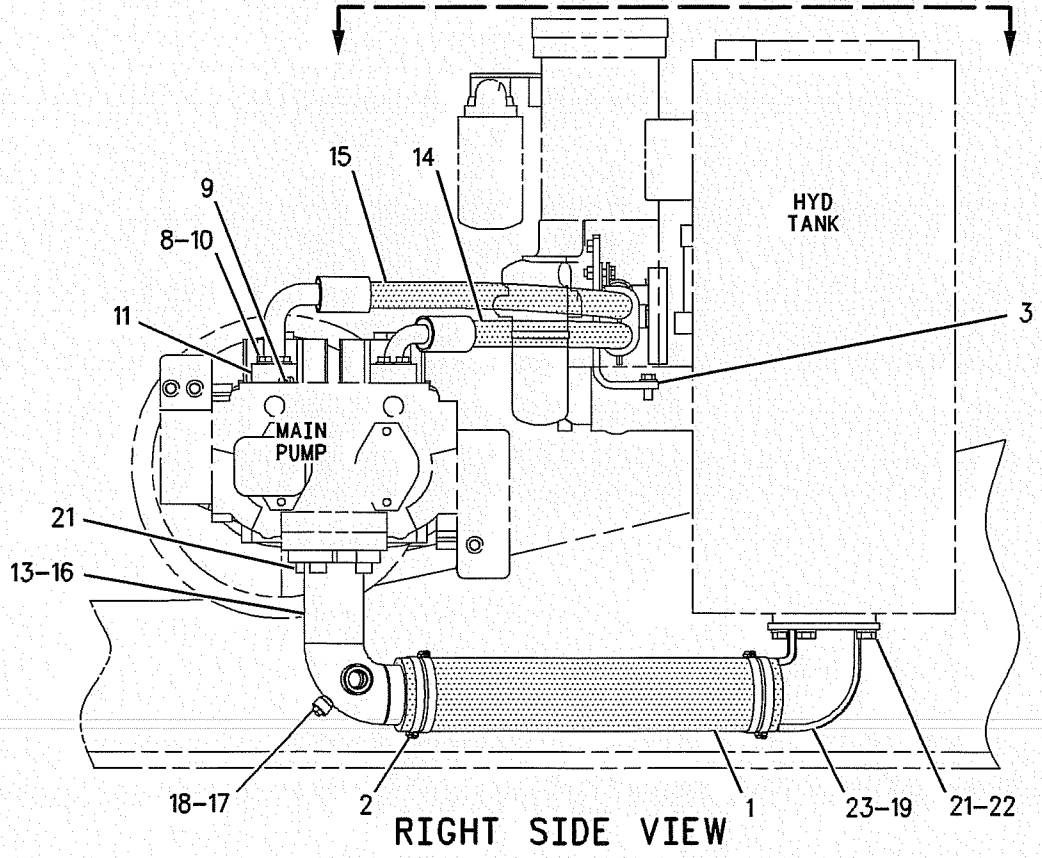

RIGHT SIDE VIEW

GRAPHIC #1

<END>

g00671974

HYDRAULIC SYSTEM

204-3701 LINES GP-PUMP

S/N: SBN1-UP; RAW1-UP
SYSTEM 14
PART OF 202-6855 CONTROL AR-AUXILIARY
AN ATTACHMENT

SMCS-5057, 5070 **i01889362**

NOTE	REF NO	GRAPHIC REF	PART NUMBER	QTY	PART NAME 1 2 3 4 5 6 (PRODUCT LEVEL)	SEE PAGE
	1	1	**222-0076**	1	HOSE AS	
	2	1	**222-0257**	1	SHEET AS	
		1	**204-3670**	1	LINER (TOP)	
		1	**222-0260**	1	LINER (BOTTOM)	
I	3	1	**222-0261**	1	HOSE AS	
	4	1	**222-0265**	1	TUBE AS	
Y	5	1	**223-6749**	1	LINES GP-PUMP	355
E	6	1	**7Y-4562**		HOSE (33CM)	
	7	1	*148-8362*	1	ELBOW GP	
		1	**3D-2824**	1	SEAL-O-RING	
		1	**5K-9090**	1	SEAL-O-RING	
		1	**8T-6684**	1	ELBOW	
	8	1	*177-1061*	1	ELBOW GP	
		1	**5K-9090**	1	SEAL-O-RING	
		1	**142-0038**	1	ELBOW	
	9	1	**199-2045**	1	SPACER (13X85X25MM THK)	
	10	1	**1P-3703**	1	SEAL-RECTANGULAR	
	11	1	**1P-4578**	2	FLANGE-HALF	
	12	1	**1P-4579**	2	FLANGE-HALF	
	13	1	**4J-0522**	1	SEAL-O-RING	
	14	1	**4J-0524**	1	SEAL-O-RING	
	15	1	**5K-9090**	1	SEAL-O-RING	
	16	1	**5P-7468**	1	CLIP (SLOT)	
	17	1	**5P-7469**	1	CLIP (TAB)	
	18	1	**6V-0545**	1	GROMMET	
M	19	1	**7X-2550**	1	BOLT (M12X1.75X110MM)	
	20	1	**8T-4121**	4	WASHER-HARD (11X21X2.5MM THK)	
M	21	1	**8T-4136**	4	BOLT (M10X1.5X25MM)	
M	22	1	**8T-4183**	4	BOLT (M12X1.75X40MM)	
M	23	1	**8T-4196**	4	BOLT (M10X1.5X35MM)	
	24	1	**8T-4223**	5	WASHER-HARD (13.5X25.5X3MM THK)	
	25	1	**9X-2201**	4	CLAMP-HOSE	

E-ORDER BY THE CENTIMETER
I-SEE HOSE FABRICATION GUIDE
M-METRIC PART
Y-SEPARATE ILLUSTRATION

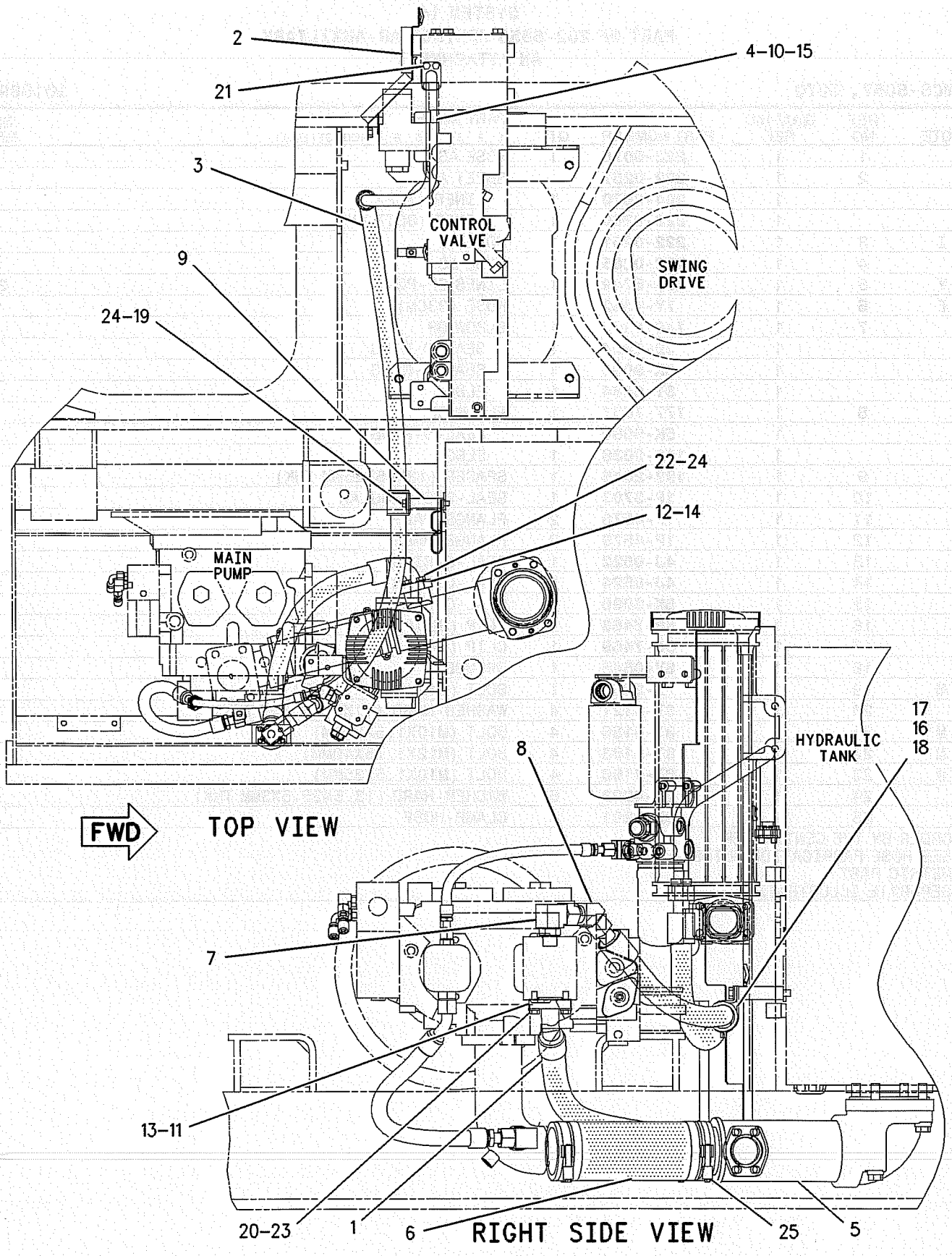

GRAPHIC #1

<END>

g00960240

HYDRAULIC SYSTEM

223-6749 LINES GP-PUMP

S/N: SBN1-UP; RAW1-UP
SYSTEM 14
PART OF 204-3701 LINES GP-PUMP
AN ATTACHMENT

SMCS-5057, 5070 **i01889411**

NOTE	PART NUMBER	QTY	PART NAME 1 2 3 4 5 6 (PRODUCT LEVEL)	SEE PAGE
Y	*223-6750*	1	LINES GP-PUMP	356
			—OR—	
Y	*223-6751*	1	LINES GP-PUMP	357

Y-SEPARATE ILLUSTRATION

<END>

HYDRAULIC SYSTEM

223-6750 LINES GP-PUMP

S/N: SBN1-UP; RAW1-UP
SYSTEM 14
PART OF 223-6749 LINES GP-PUMP
AN ATTACHMENT

SMCS-5057, 5070 **i01889413**

NOTE	REF NO	GRAPHIC REF	PART NUMBER	QTY	PART NAME 1 2 3 4 5 6 (PRODUCT LEVEL)	SEE PAGE
	1	1	**176-4703**	4	WASHER (17X30X8MM THK)	
	2	1	**199-2019**	1	FLANGE	
	3	1	**199-2035**	1	PIPE AS	
M	4	1	**3T-0849**	2	BOLT-SOCKET HEAD (M6X1X25MM)	
M	5	1	**7X-2555**	2	BOLT (M16X2X80MM)	
M	6	1	**8T-6384**	2	BOLT (M16X2X170MM)	
	7	1	**9M-3786**	2	SEAL-O-RING	

M-METRIC PART

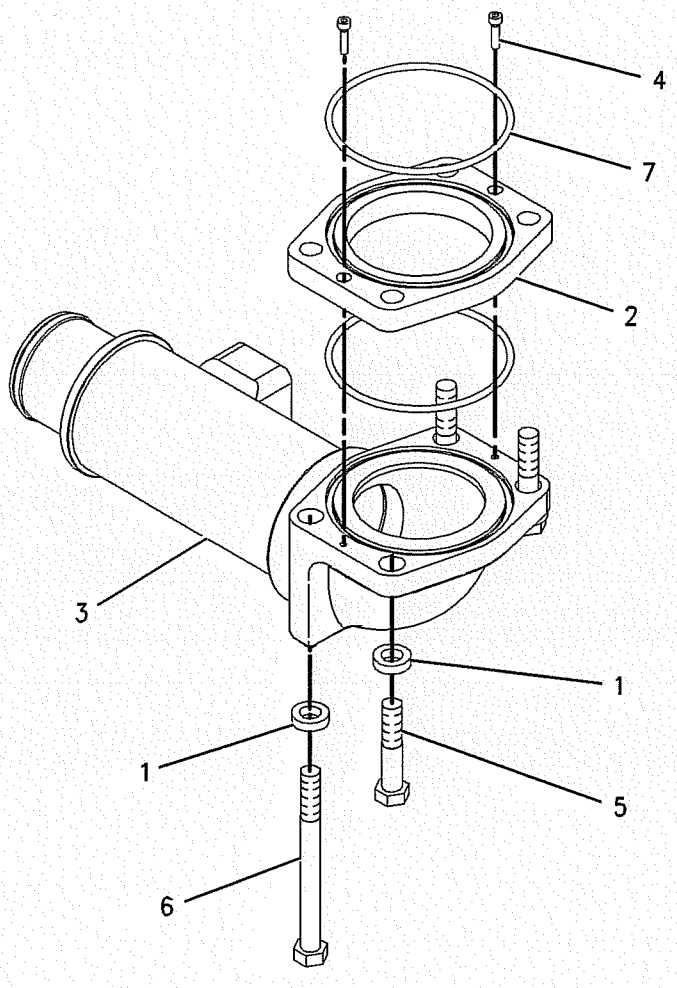

GRAPHIC #1 **<END>** g00943332

HYDRAULIC SYSTEM

223-6751 LINES GP-PUMP

S/N: SBN1-UP; RAW1-UP
SYSTEM 14
PART OF 223-6749 LINES GP-PUMP
AN ATTACHMENT

SMCS-5057, 5070 **i01889414**

NOTE	REF NO	GRAPHIC REF	PART NUMBER	QTY	PART NAME 1 2 3 4 5 6 (PRODUCT LEVEL)	SEE PAGE
	1	1	**223-6752**	1	PIPE AS	
M	2	1	**8T-7338**	4	BOLT (M16X2.0X45MM)	
	3	1	**9M-3786**	1	SEAL-O-RING	
	4	1	**9X-8257**	4	WASHER (17.5X30X3.5MM THK)	

M-METRIC PART

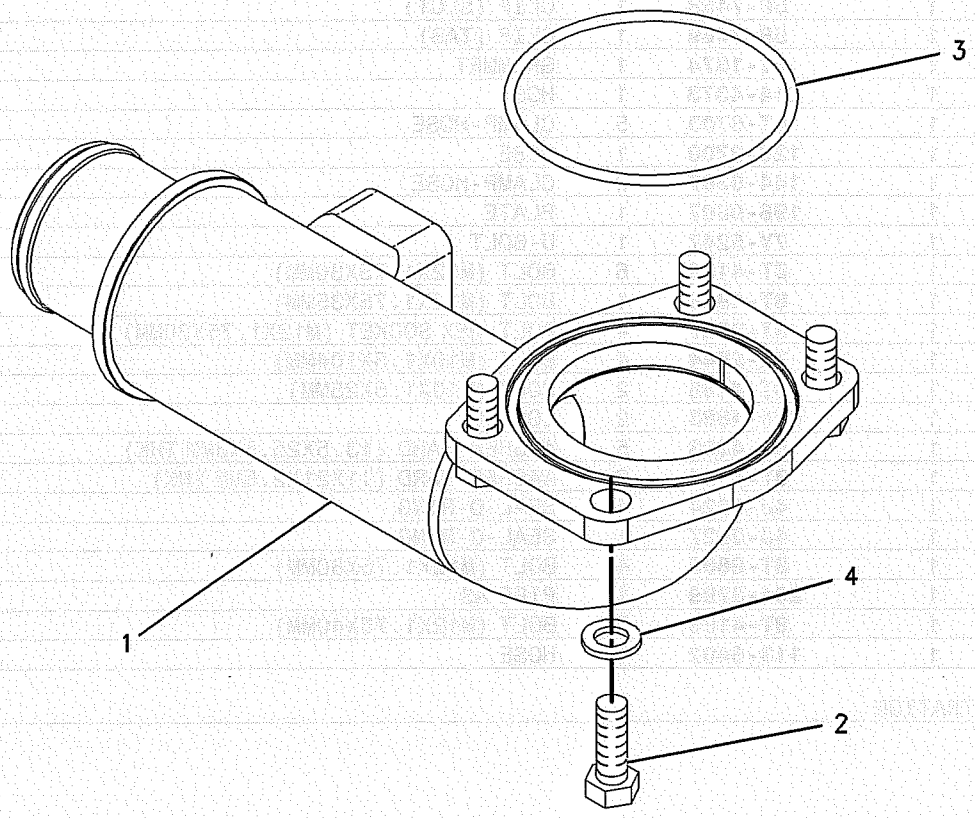

GRAPHIC #1 **<END>** g00943265

HYDRAULIC SYSTEM

199-7292 LINES GP-RETURN & FILTER

S/N: SBN1-UP; RAW1-UP

PART OF 201-9323, 201-9324 HYDRAULIC AR

SMCS-5057 **i01889740**

NOTE	REF NO	GRAPHIC REF	PART NUMBER	QTY	PART NAME 1 2 3 4 5 6 (PRODUCT LEVEL)	SEE PAGE
Y	1	1	**201-9329**	1	VALVE GP-CHECK (SWING MOTOR)	404
	2	1	**199-7388**	1	PIPE AS	
	3	1	**204-3796**	1	PIPE AS	
	4	1	**199-7394**	1	PIPE AS	
	5	1	**199-7403**	1	HOSE AS	
	6	1	*148-8357*	1	ELBOW GP	
		1	**5K-9090**	1	SEAL-O-RING	
		1	**6V-9008**	1	ELBOW	
		1	**7M-8485**	1	SEAL-O-RING	
	7	1	*148-8335*	1	CONNECTOR AS	
		1	**5K-9090**	1	SEAL-O-RING	
		1	**6V-8635**	1	CONNECTOR	
		1	**7M-8485**	1	SEAL-O-RING	
	8	1	**173-4816**	1	SUPPORT AS	
		1	**7T-1099**	1	LINK	
M		1	**8T-3597**	1	NUT-WELD (M12X1.75 THD)	
	9	1	**5P-7468**	1	CLIP (SLOT)	
	10	1	**5P-7469**	1	CLIP (TAB)	
	11	1	**6V-1874**	1	GROMMET	
	12	1	**214-4373**	1	HOSE	
	13	1	**8T-6703**	5	CLAMP-HOSE	
	14	1	**123-2700**	1	HOSE	
	15	1	**144-0367**	2	CLAMP-HOSE	
	16	1	**196-0807**	1	PLATE	
	17	1	**7Y-5247**	1	U-BOLT	
M	18	1	**8T-4139**	6	BOLT (M12X1.75X30MM)	
M	19	1	**8T-4956**	1	BOLT (M12X1.75X35MM)	
M	20	1	**8T-3957**	4	BOLT-HEX SOCKET (M12X1.75X30MM)	
M	21	1	**7X-2544**	4	BOLT (M10X1.5X104MM)	
M	22	1	**8T-4136**	2	BOLT (M10X1.5X25MM)	
M	23	1	**096-4883**	2	LOCKNUT	
	24	1	**8T-4223**	5	WASHER-HARD (13.5X25.5X3MM THK)	
	25	1	**8T-4121**	8	WASHER-HARD (11X21X2.5MM THK)	
	26	1	**4J-0524**	4	SEAL-O-RING	
	27	1	**4J-0527**	1	SEAL-O-RING	
M	28	1	**8T-6868**	4	BOLT (M12X1.75X80MM)	
	29	1	**204-3799**	1	PIPE AS	
M	30	1	**8T-4183**	2	BOLT (M12X1.75X40MM)	
	31	1	**113-6402**	1	HOSE	

M-METRIC PART
Y-SEPARATE ILLUSTRATION

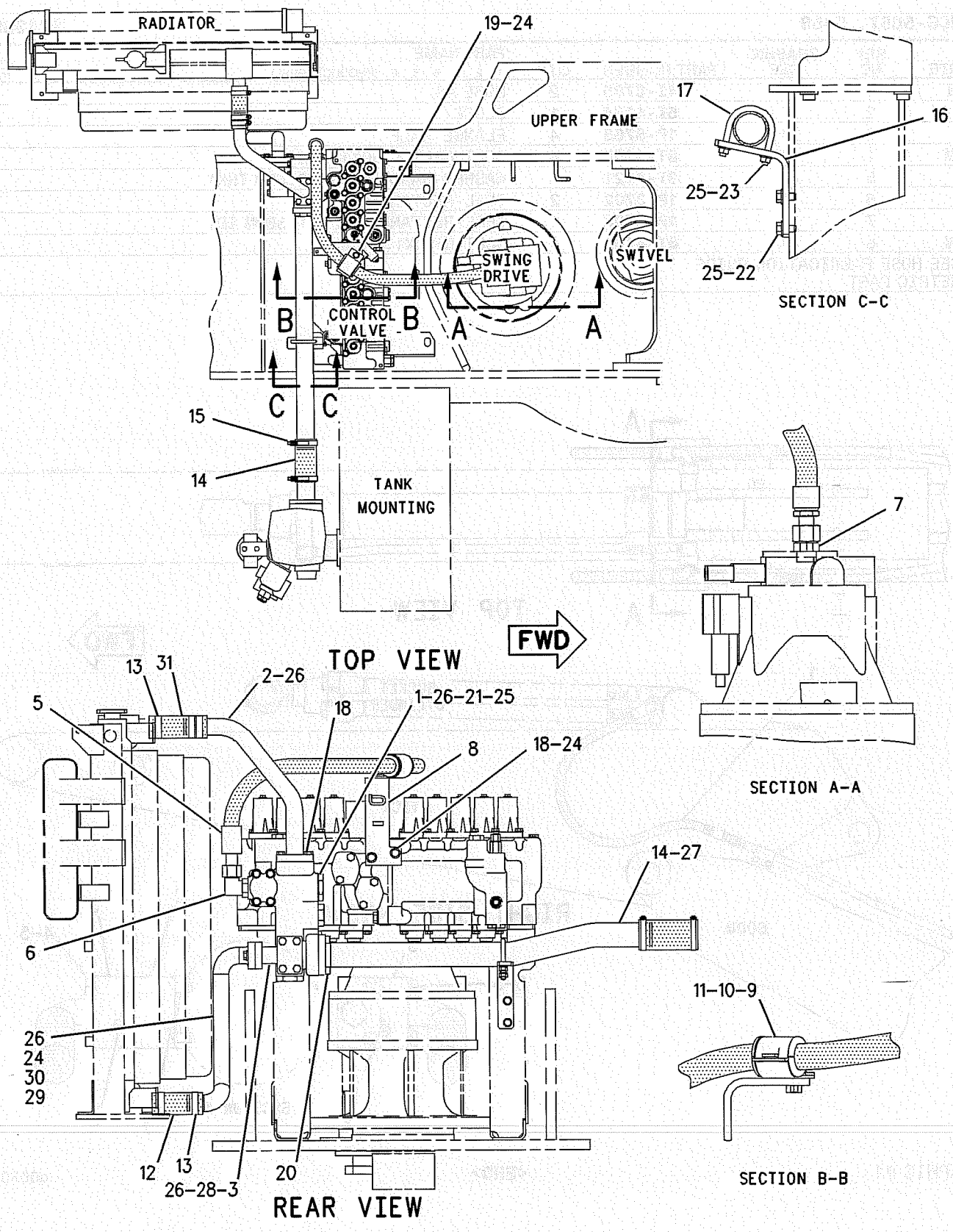

GRAPHIC #1

<END>

g00929631

HYDRAULIC SYSTEM

187-5693 LINES GP-STICK

S/N: SBN1-UP; RAW1-UP
PART OF 186-1148, 186-1192 STICK AR-HOE
AN ATTACHMENT

SMCS-5057, 5458 **i01389036**

NOTE	REF NO	GRAPHIC REF	PART NUMBER	QTY	PART NAME 1 2 3 4 5 6 (PRODUCT LEVEL)	SEE PAGE
I	1	1	**4I-8785**	2	HOSE AS	
	2	1	**5I-4174**	1	BLOCK	
	3	1	**1P-5765**	4	FLANGE-HALF	
M	4	1	**8T-4198**	4	BOLT (M10X1.50X100MM)	
	5	1	**8T-4121**	8	WASHER-HARD (11X21X2.5MM THK)	
	6	1	**1P-3702**	2	SEAL-RECTANGULAR	
	7	1	**1P-3703**	1	SEAL-RECTANGULAR (31.86MM ID)	
M	8	1	**8T-4182**	4	BOLT (M10X1.5X45MM)	

I-SEE HOSE FABRICATION GUIDE
M-METRIC PART

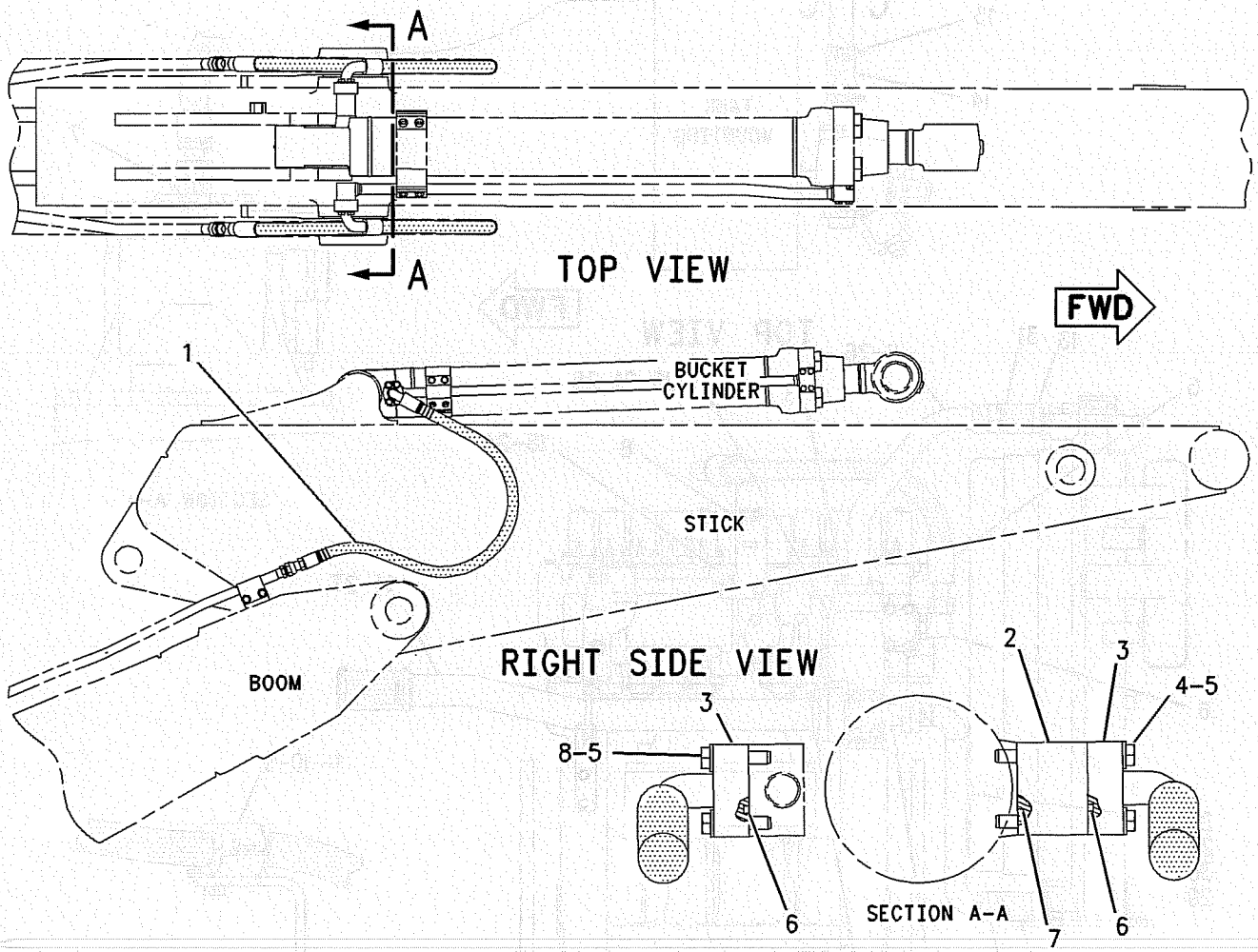

GRAPHIC #1 **<END>** g00708137

HYDRAULIC SYSTEM

187-5973 LINES GP-STICK

S/N: SBN1-UP; RAW1-UP

PART OF 173-7962 LINES AR-AUXILIARY HYDRAULIC, 186-1193 STICK AR-HOE AN ATTACHMENT

SMCS-5057, 5458 **i01389014**

NOTE	REF NO	GRAPHIC REF	PART NUMBER	QTY	PART NAME 1 2 3 4 5 6 (PRODUCT LEVEL)	SEE PAGE
	1	1	**5I-4174**	1	BLOCK	
	2	1	**187-6058**	2	HOSE AS	
M	3	1	**8T-4198**	4	BOLT (M10X1.50X100MM)	
	4	1	**8T-4121**	8	WASHER-HARD (11X21X2.5MM THK)	
	5	1	**1P-3703**	1	SEAL-RECTANGULAR (31.86MM ID)	
	6	1	**1P-5765**	4	FLANGE-HALF	
	7	1	**1P-3702**	2	SEAL-RECTANGULAR	
M	8	1	**8T-4182**	4	BOLT (M10X1.5X45MM)	

M-METRIC PART

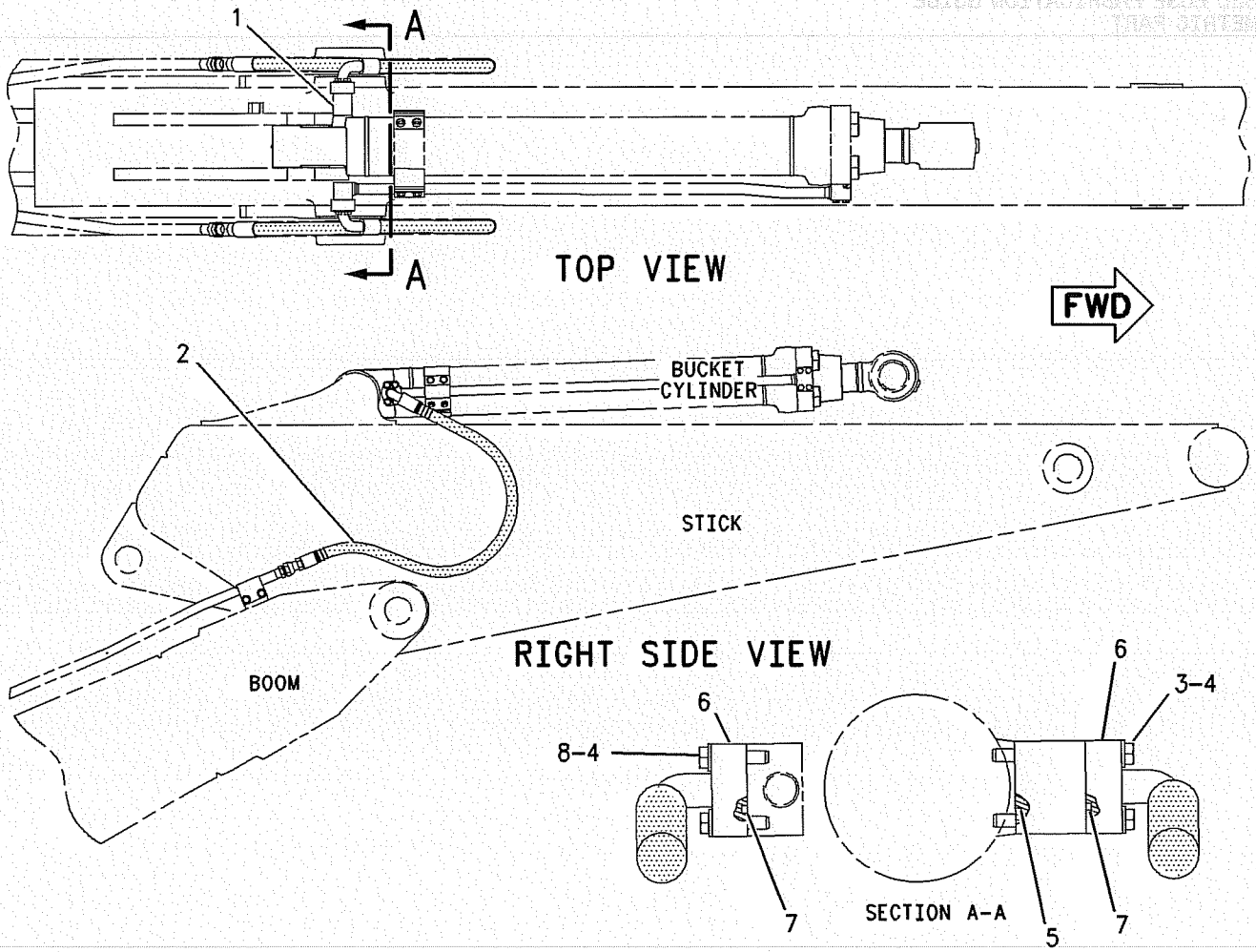

GRAPHIC #1 **<END>** g00708338

HYDRAULIC SYSTEM

187-5976 LINES GP-STICK

S/N: SBN1-UP; RAW1-UP

PART OF 173-7968 LINES AR-AUXILIARY HYDRAULIC, 186-1197 STICK AR-HOE AN ATTACHMENT

SMCS-5057, 5458 **i01388994**

NOTE	REF NO	GRAPHIC REF	PART NUMBER	QTY	PART NAME 1 2 3 4 5 6 (PRODUCT LEVEL)	SEE PAGE
I	1	1	**102-1279**	2	HOSE AS	
	2	1	**6V-9746**	4	SEAL-O-RING (18.94MM ID)	
	3	1	**187-6696**	2	HOSE AS	
	4	1	**8T-4223**	8	WASHER-HARD (13.5X25.5X3MM THK)	
M	5	1	**8T-4179**	8	BOLT (M12X1.75X20MM)	
	6	1	**102-1291**	1	ELBOW AS	
	7	1	**102-1120**	1	ELBOW AS	
M	8	1	**8T-4198**	4	BOLT (M10X1.50X100MM)	
	9	1	**8T-4121**	8	WASHER-HARD (11X21X2.5MM THK)	
	10	1	**5I-4174**	1	BLOCK	
	11	1	**1P-5765**	4	FLANGE-HALF	
	12	1	**1P-3702**	2	SEAL-RECTANGULAR	
	13	1	**1P-3703**	1	SEAL-RECTANGULAR (31.86MM ID)	
M	14	1	**8T-4182**	4	BOLT (M10X1.5X45MM)	

I-SEE HOSE FABRICATION GUIDE
M-METRIC PART

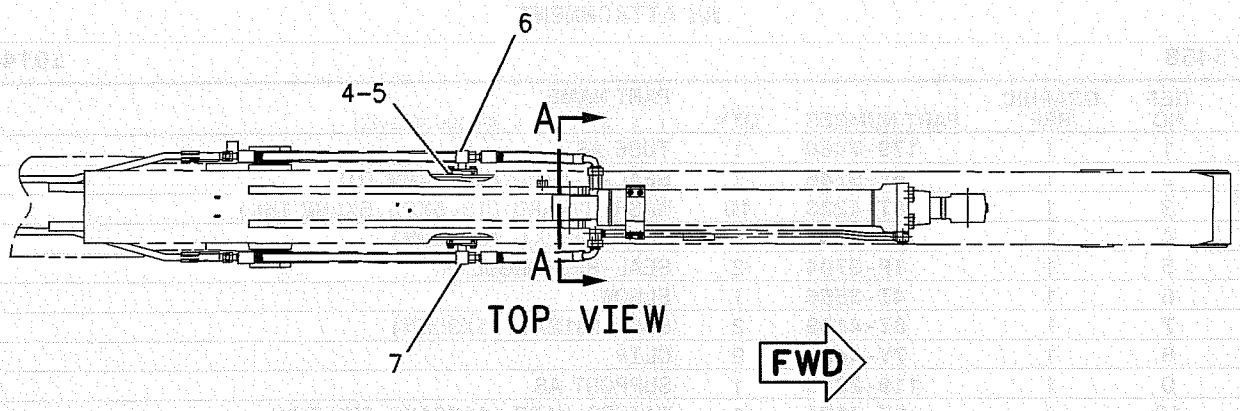

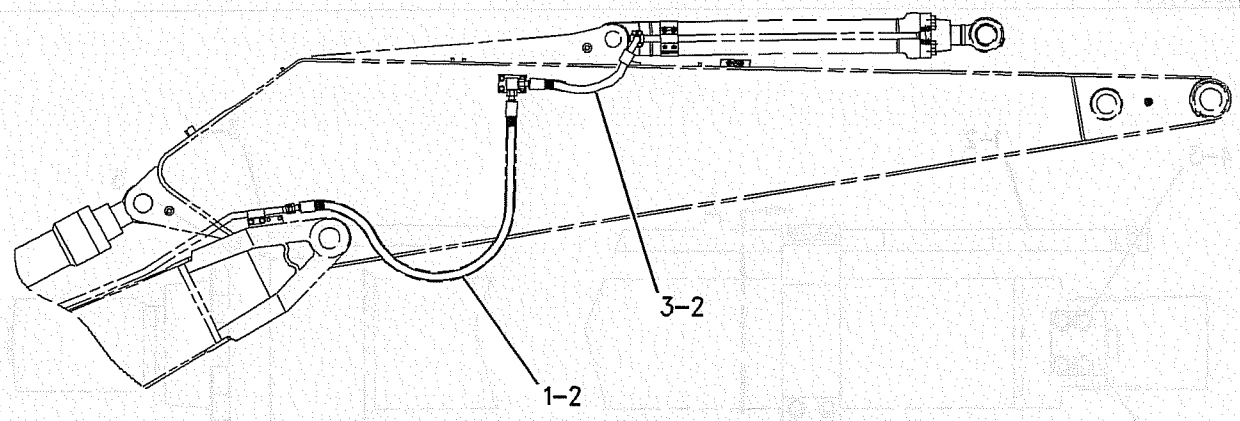

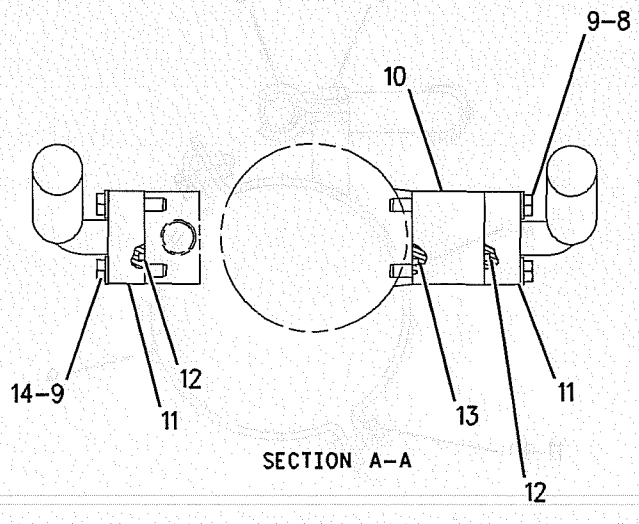

GRAPHIC #1 **<END>** g00708361

HYDRAULIC SYSTEM

179-7457 LINES GP-STICK CYLINDER

S/N: SBN1-UP; RAW1-UP

PART OF 158-9014 CYLINDER & LINES GP-STICK

AN ATTACHMENT

SMCS-5458 **i01404714**

NOTE	REF NO	GRAPHIC REF	PART NUMBER	QTY	PART NAME 1 2 3 4 5 6 (PRODUCT LEVEL)	SEE PAGE
	1	1	**179-7460**	1	TUBE AS	
	2	1	**6V-9746**	1	SEAL-O-RING (18.94MM ID)	
	3	1	**8T-4223**	10	WASHER-HARD (13.5X25.5X3MM THK)	
M	4	1	**8T-4648**	8	BOLT (M12X1.75X70MM)	
	5	1	**1P-3704**	2	SEAL-RECTANGULAR	
	6	1	**4I-3556**	1	ELBOW	
M	7	1	**8T-4139**	2	BOLT (M12X1.75X30MM)	
	8	1	**7Y-4868**	2	CLIP	
	9	1	**119-2325**	1	SUPPORT AS	
	10	1	**8T-4121**	4	WASHER-HARD (11X21X2.5MM THK)	
M	11	1	**8T-4196**	4	BOLT (M10X1.5X35MM)	
	12	1	**119-2324**	1	SUPPORT AS	

M-METRIC PART

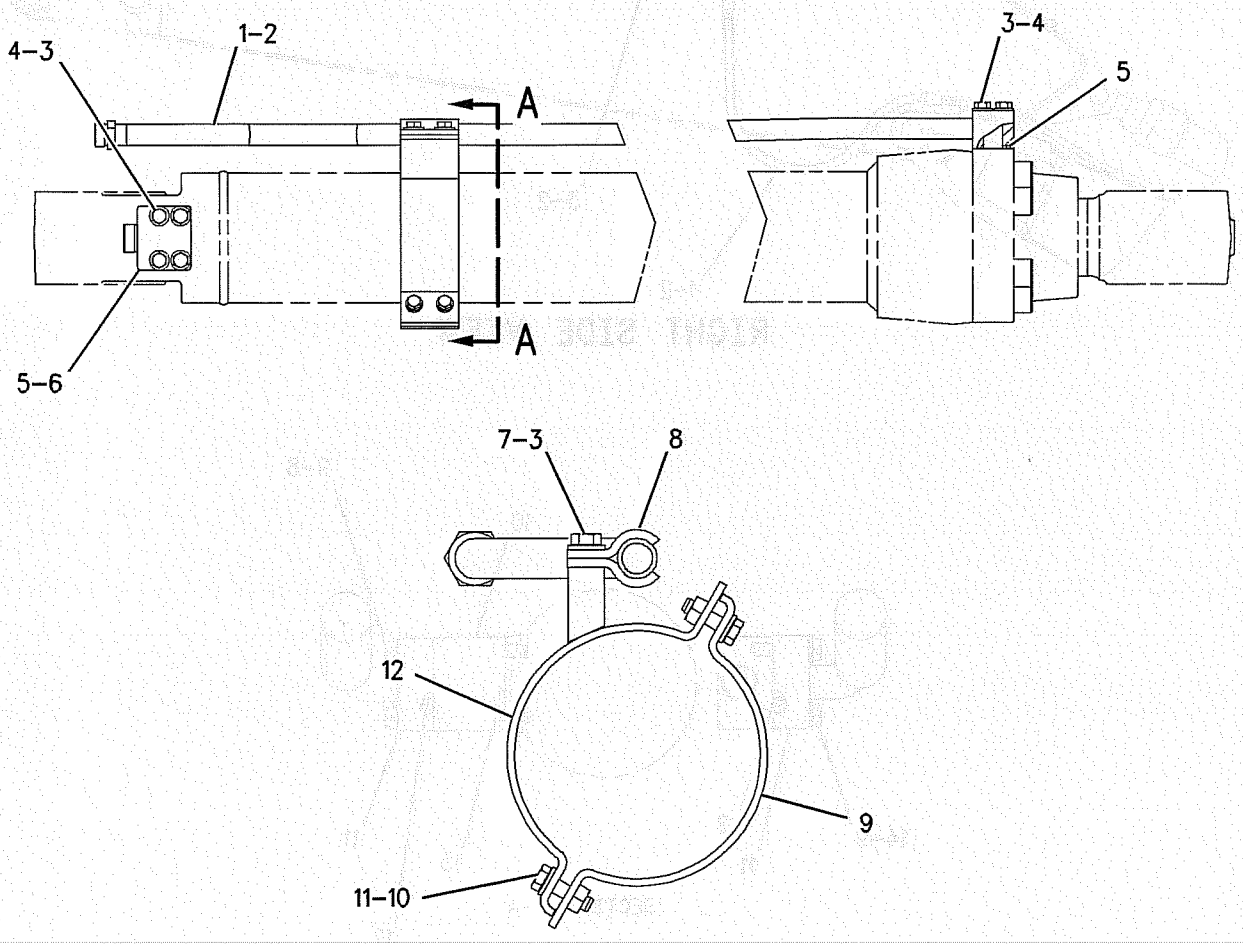

SECTION A-A

GRAPHIC #1 **<END>** g00676114

HYDRAULIC SYSTEM

179-7458 LINES GP-STICK CYLINDER

S/N: SBN1-UP; RAW1-UP

PART OF 158-9016 CYLINDER & LINES GP-STICK

AN ATTACHMENT

SMCS-5458 **i01403003**

NOTE	REF NO	GRAPHIC REF	PART NUMBER	QTY	PART NAME 1 2 3 4 5 6 (PRODUCT LEVEL)	SEE PAGE
	1	1	**179-7467**	1	TUBE AS	
	2	1	**6V-9746**	1	SEAL-O-RING (18.94MM ID)	
	3	1	**8T-4223**	10	WASHER-HARD (13.5X25.5X3MM THK)	
M	4	1	**8T-4648**	8	BOLT (M12X1.75X70MM)	
	5	1	**1P-3704**	2	SEAL-RECTANGULAR	
	6	1	**4I-3556**	1	ELBOW	
M	7	1	**8T-4139**	2	BOLT (M12X1.75X30MM)	
	8	1	**7Y-4868**	2	CLIP	
	9	1	**119-2325**	1	SUPPORT AS	
	10	1	**8T-4121**	4	WASHER-HARD (11X21X2.5MM THK)	
M	11	1	**8T-4196**	4	BOLT (M10X1.5X35MM)	
	12	1	**119-2324**	1	SUPPORT AS	

M-METRIC PART

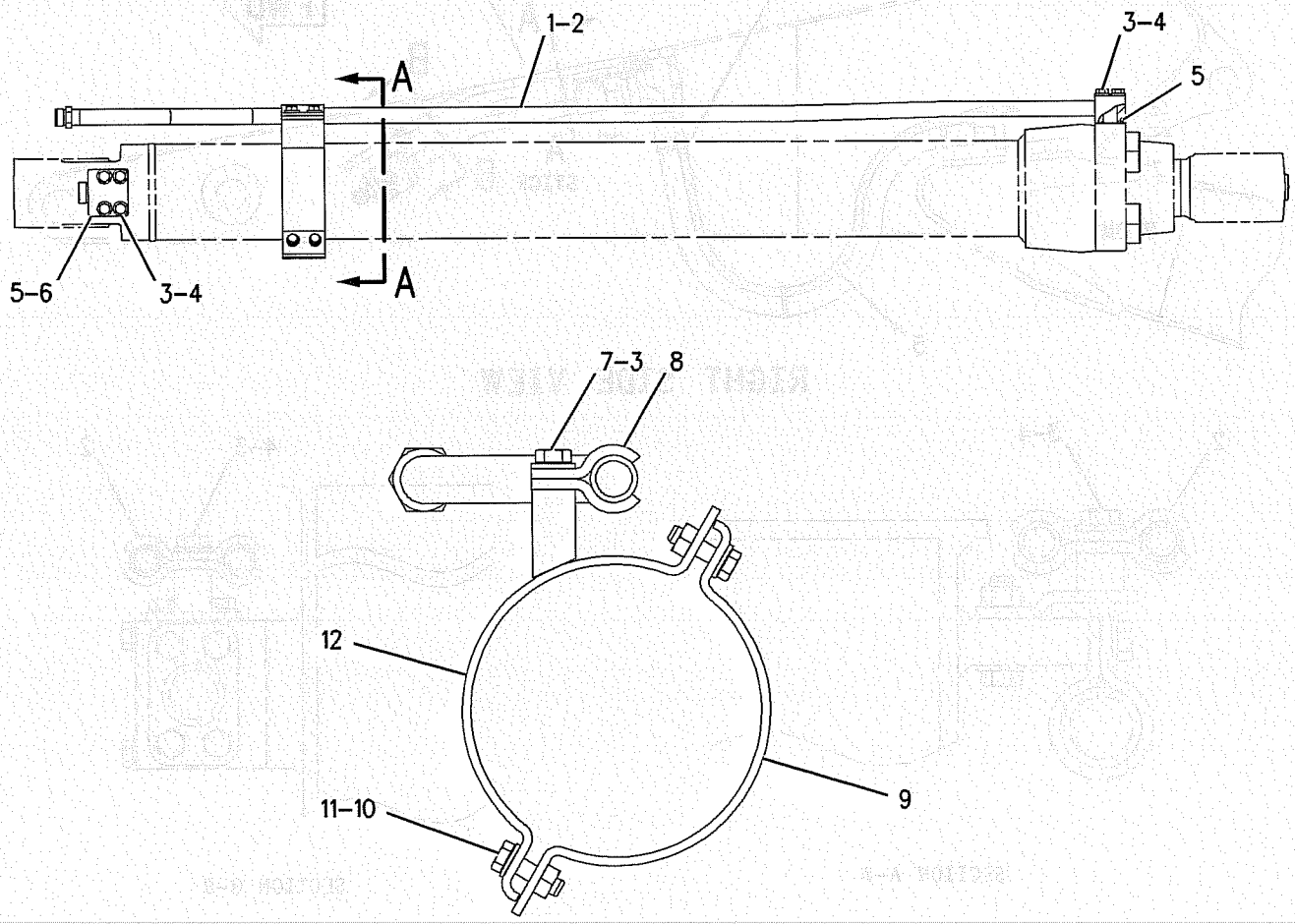

SECTION A-A

GRAPHIC #1 **<END>** g00676820

HYDRAULIC SYSTEM

173-7954 LINES GP-STICK DRAIN

S/N: SBN1-UP; RAW1-UP
AN ATTACHMENT

SMCS-5057 **i01403383**

NOTE	REF NO	GRAPHIC REF	PART NUMBER	QTY	PART NAME 1 2 3 4 5 6 (PRODUCT LEVEL)	SEE PAGE
	1	1	**179-5033**	1	TUBE AS	
	2	1	**153-8867**	4	CLIP	
	3	1	**8T-4223**	4	WASHER-HARD (13.5X25.5X3MM THK)	
M	4	1	**8T-4139**	4	BOLT (M12X1.75X30MM)	
	5	1	**173-7864**	1	HOSE AS	
	6	1	**6V-8398**	2	SEAL-O-RING (12.47MM ID)	
	7	1	**6K-0806**	3	STRAP-CABLE	

M-METRIC PART

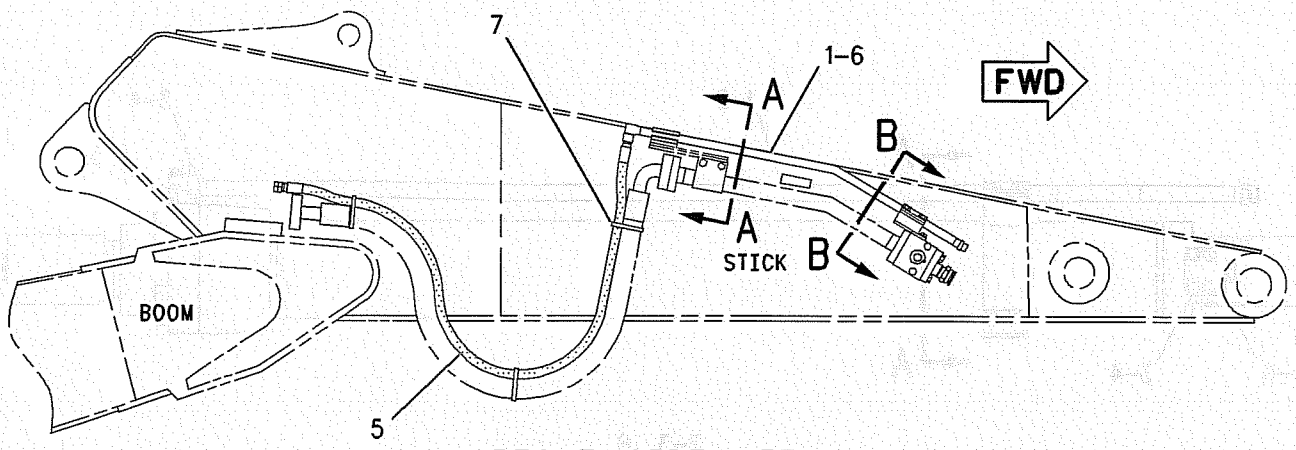

RIGHT SIDE VIEW

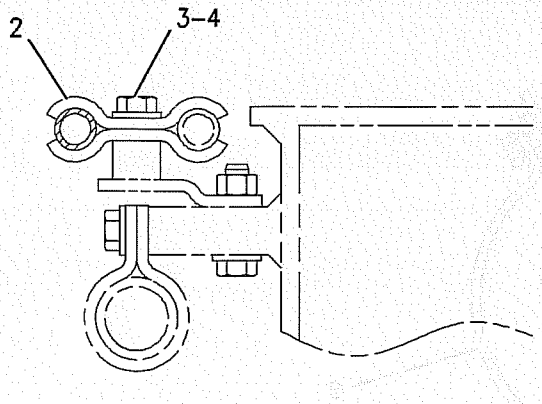

SECTION A-A

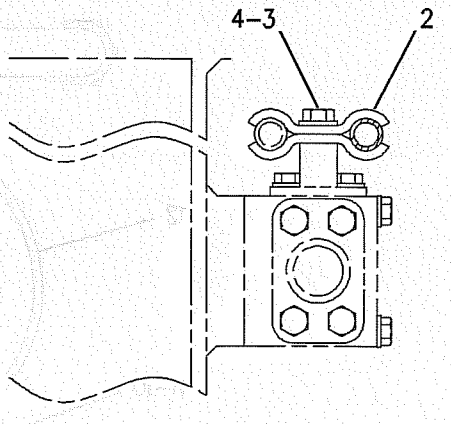

SECTION B-B

GRAPHIC #1 **<END>** g00708997

173-8033 LINES GP-STICK DRAIN

S/N: SBN1-UP; RAW1-UP
B-FAMILY
FOR USE WITH 2.9M (9.5 FT) STICK
AN ATTACHMENT

SMCS-5057 **i01889923**

NOTE	REF NO	GRAPHIC REF	PART NUMBER	QTY	PART NAME 1 2 3 4 5 6 (PRODUCT LEVEL)	SEE PAGE
	1	1	**173-7868**	1	TUBE AS	
I	2	1	**173-7864**	1	HOSE AS	
	3	1	**153-8867**	4	CLIP	
	4	1	**8T-4223**	4	WASHER-HARD (13.5X25.5X3MM THK)	
	5	1	**6V-8398**	2	SEAL-O-RING	
M	6	1	**8T-4139**	4	BOLT (M12X1.75X30MM)	

I-SEE HOSE FABRICATION GUIDE
M-METRIC PART

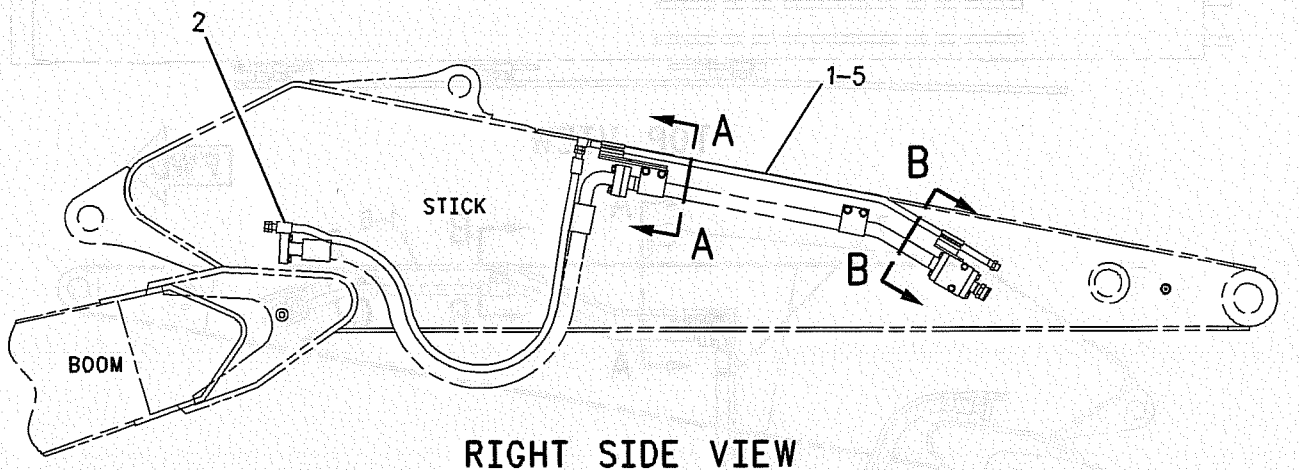

RIGHT SIDE VIEW

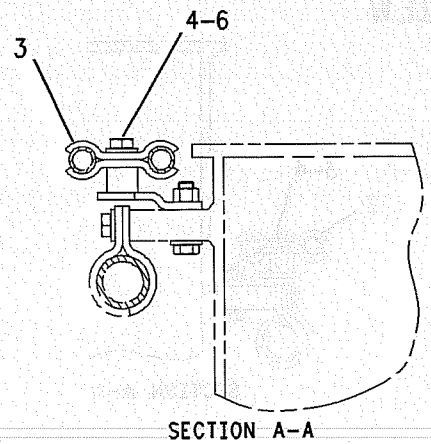

SECTION A-A

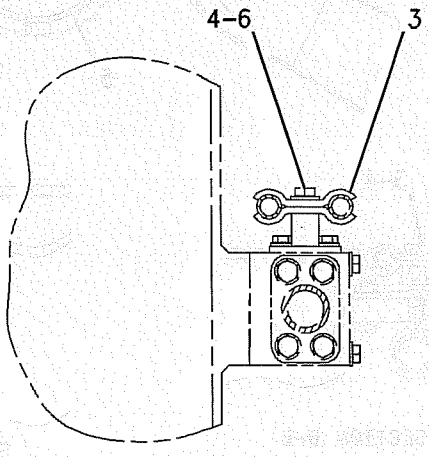

SECTION B-B

GRAPHIC #1 **<END>** g00983880

HYDRAULIC SYSTEM

173-8076 LINES GP-STICK DRAIN

S/N: SBN1-UP; RAW1-UP
AN ATTACHMENT

SMCS-5057 **i01403397**

NOTE	REF NO	GRAPHIC REF	PART NUMBER	QTY	PART NAME 1 2 3 4 5 6 (PRODUCT LEVEL)	SEE PAGE
	1	1	**179-5182**	1	TUBE AS	
	2	1	**153-8867**	6	CLIP	
	3	1	**8T-4223**	6	WASHER-HARD (13.5X25.5X3MM THK)	
M	4	1	**8T-4139**	6	BOLT (M12X1.75X30MM)	
	5	1	**179-5183**	1	HOSE AS	
	6	1	**6V-8398**	2	SEAL-O-RING (12.47MM ID)	
	7	1	**6K-0806**	3	STRAP-CABLE	

M-METRIC PART

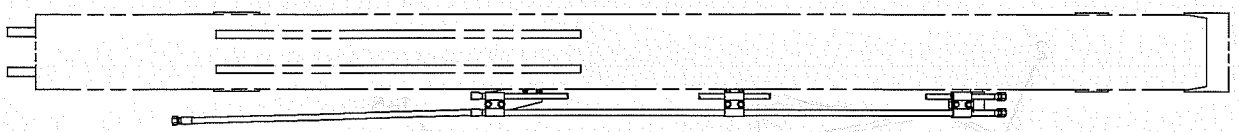

TOP VIEW

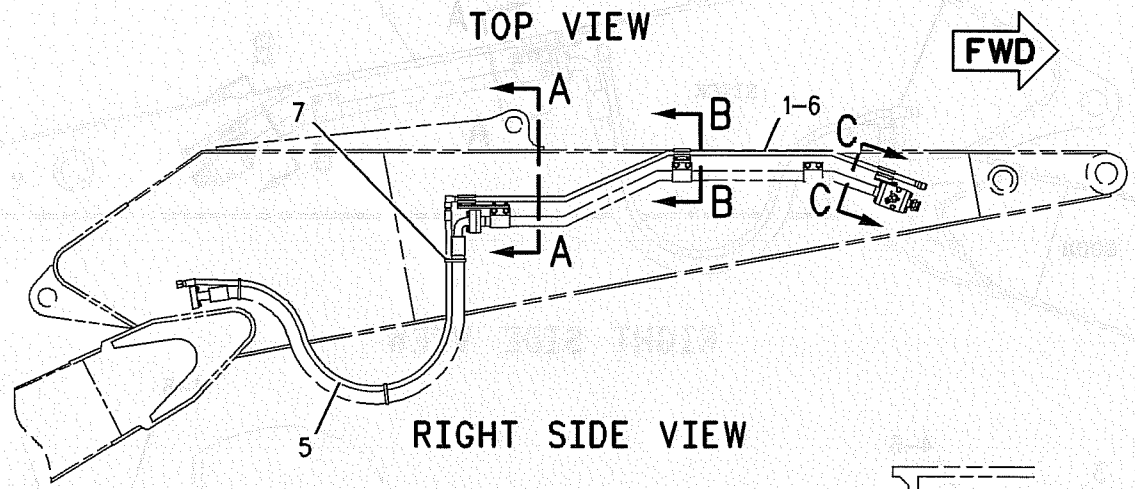

RIGHT SIDE VIEW

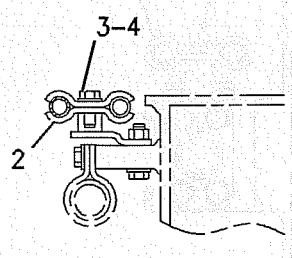

SECTION B-B

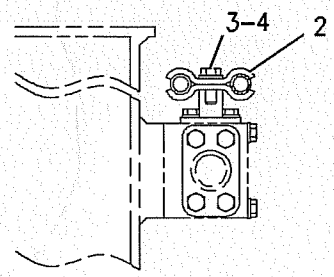

SECTION C-C

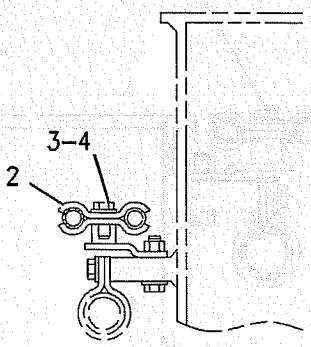

SECTION A-A

GRAPHIC #1 **<END>** g00710275

173-8082 LINES GP-STICK DRAIN

S/N: SBN1-UP; RAW1-UP
2.4M (7.8FT). C-FAMILY
AN ATTACHMENT

SMCS-5057 **i01403534**

NOTE	REF NO	GRAPHIC REF	PART NUMBER	QTY	PART NAME 1 2 3 4 5 6 (PRODUCT LEVEL)	SEE PAGE
	1	1	**179-5033**	1	TUBE AS	
	2	1	**153-8867**	4	CLIP	
	3	1	**8T-4223**	4	WASHER-HARD (13.5X25.5X3MM THK)	
M	4	1	**8T-4139**	4	BOLT (M12X1.75X30MM)	
	5	1	**179-5034**	1	HOSE AS	
	6	1	**6V-8398**	2	SEAL-O-RING (12.47MM ID)	
	7	1	**6K-0806**	3	STRAP-CABLE	

M-METRIC PART

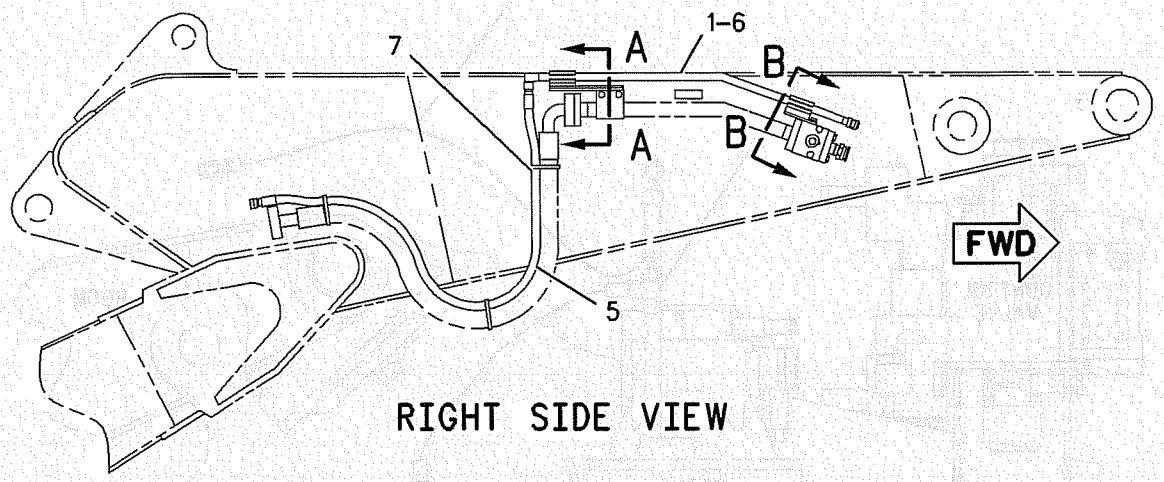

RIGHT SIDE VIEW

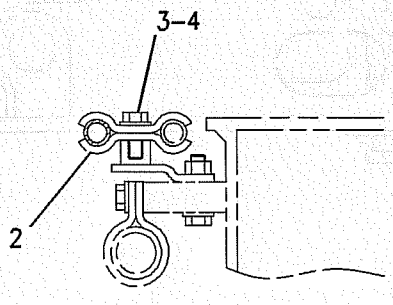

SECTION A-A

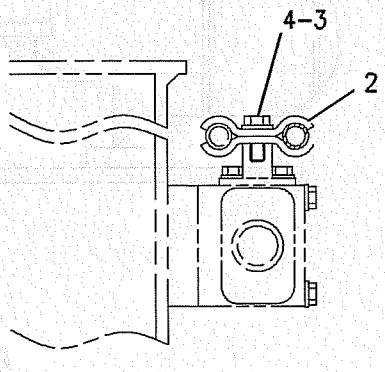

SECTION B-B

GRAPHIC #1 **<END>** g00709210

HYDRAULIC SYSTEM

176-4599 LINES GP-SWING DRIVE DRAIN

S/N: SBN1-UP; RAW1-UP
PART OF 202-6855 CONTROL AR-AUXILIARY
AN ATTACHMENT

SMCS-5057, 5459 **i01399753**

NOTE	REF NO	GRAPHIC REF	PART NUMBER	QTY	PART NAME 1 2 3 4 5 6 (PRODUCT LEVEL)	SEE PAGE
I	1	1	**187-5642**	1	HOSE AS	

I-SEE HOSE FABRICATION GUIDE

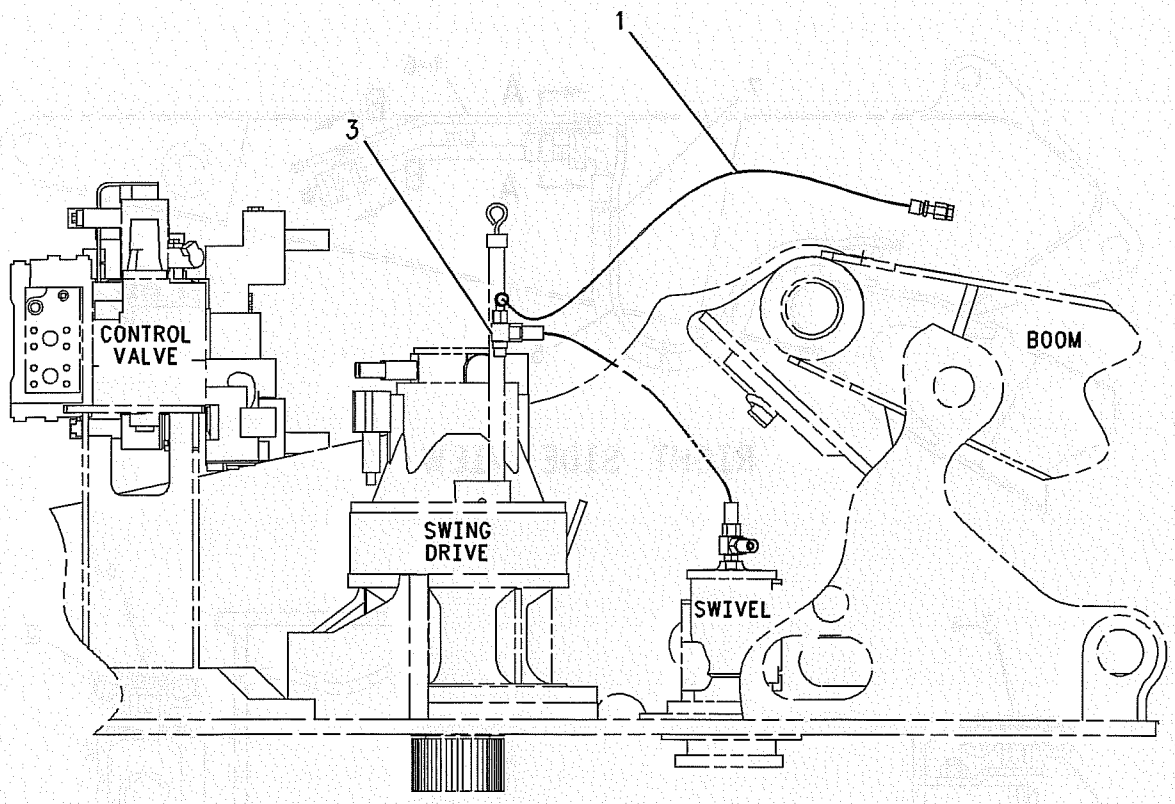

RIGHT SIDE VIEW

GRAPHIC #1 **<END>** g00696886

HYDRAULIC SYSTEM

142-7703 LINES GP-SWING MOTOR

S/N: SBN1-UP; RAW1-UP

PART OF 201-9323, 201-9324 HYDRAULIC AR

SMCS-5057 **i01378109**

NOTE	REF NO	GRAPHIC REF	PART NUMBER	QTY	PART NAME 1 2 3 4 5 6 (PRODUCT LEVEL)	SEE PAGE
	1	1	**8T-9403**	8	FLANGE-HALF	
M	2	1	**8T-4182**	16	BOLT (M10X1.5X45MM)	
	3	1	**8T-4121**	16	WASHER-HARD (11X21X2.5MM THK)	
	4	1	**1P-3702**	4	SEAL-RECTANGULAR (28.83MM ID)	
M	5	1	**8T-4178**	6	BOLT (M10X1.5X90MM)	
Y	6	1	**158-9085**	1	VALVE GP-SWING CUSHION	461
I	7	1	**165-3194**	1	HOSE AS	
I	8	1	**165-3190**	1	HOSE AS	

I-SEE HOSE FABRICATION GUIDE
M-METRIC PART
Y-SEPARATE ILLUSTRATION

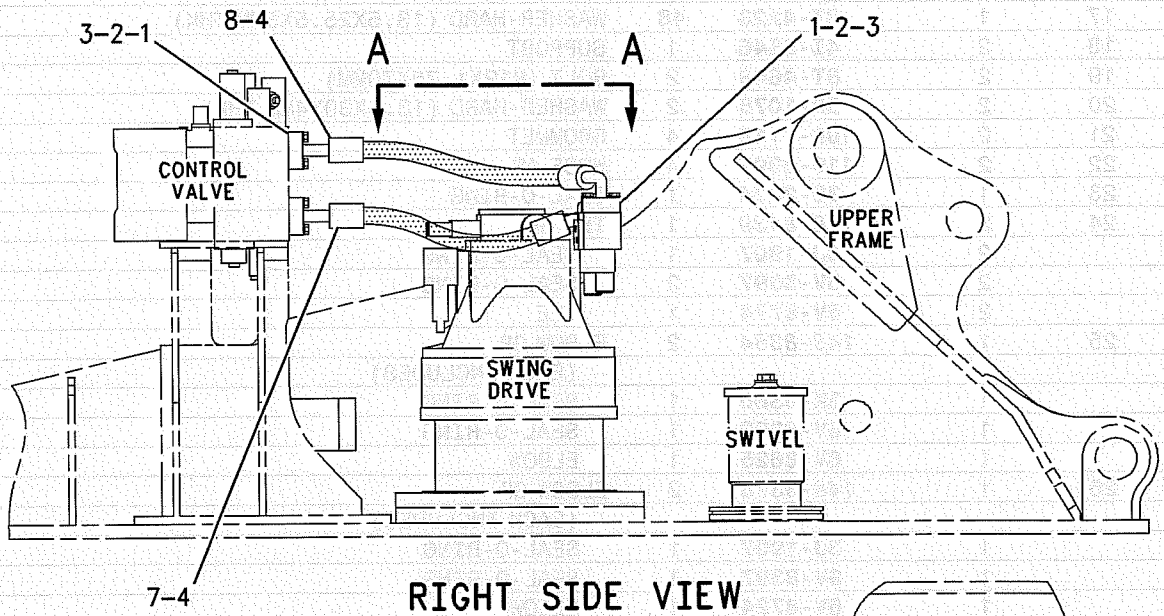

RIGHT SIDE VIEW

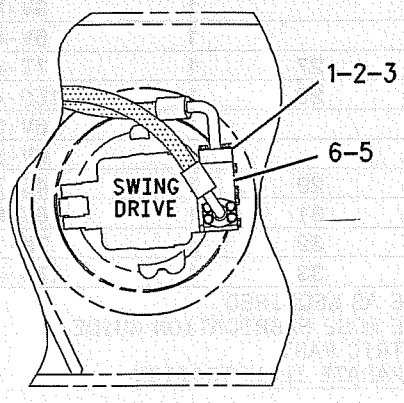

VIEW A-A

GRAPHIC #1 **<END>** g00681258

HYDRAULIC SYSTEM

142-7701 LINES GP-TRAVEL MOTOR

S/N: RAW1-UP

PART OF 201-9323 HYDRAULIC AR

SMCS-3218 **i01454703**

NOTE	REF NO	GRAPHIC REF	PART NUMBER	QTY	PART NAME 1 2 3 4 5 6 (PRODUCT LEVEL)	SEE PAGE
Y	1	1	**159-7841**	1	SWIVEL GP	396
M	2	1	**8T-4136**	6	BOLT (M10X1.5X25MM)	
	3	1	**8T-4121**	6	WASHER-HARD (11X21X2.5MM THK)	
B	4	1	**1U-8846**		SEALANT-GASKET	
I	5	1	**165-3198**	1	HOSE AS	
I	6	1	**173-4776**	1	HOSE AS	
M	7	1	**9X-6032**	16	BOLT-SOCKET HEAD (M10X1.5X30MM)	
	8	1	**5K-9090**	4	SEAL-O-RING	
	9	1	**113-6479**	2	FLANGE	
	10	1	**4J-5267**	4	SEAL-O-RING	
	11	1	**7Y-3730**	2	FLANGE	
I	12	1	**173-4784**	1	HOSE AS	
I	13	1	**176-4680**	1	HOSE AS	
M	14	1	**8T-4184**	48	BOLT (M12X1.75X45MM)	
	15	1	**6V-0400**	24	FLANGE-HALF	
	16	1	**1P-3703**	12	SEAL-RECTANGULAR	
	17	1	**8T-4223**	48	WASHER-HARD (13.5X25.5X3MM THK)	
	18	2	**4I-5546**	1	SUPPORT	
M	19	2	**8T-4648**	2	BOLT (M12X1.75X70MM)	
	20	2	**5P-1076**	2	WASHER-HARD (13.5X30X4MM THK)	
	21	2	**108-7118**	4	GROMMET	
I	22	2	**119-2395**	4	HOSE AS	
	23	1	**3D-2824**	1	SEAL-O-RING	
	24	2	*148-8439*	1	TEE GP	
		2	**3J-1907**	1	SEAL-O-RING	
		2	**6V-8397**	2	SEAL-O-RING	
		2	**6V-8774**	1	TEE	
	25	1	*148-8364*	2	ELBOW GP	
					(EACH INCLUDES)	
		1	**3K-0360**	1	SEAL-O-RING	
		1	**6V-8398**	1	SEAL-O-RING	
		1	**6V-8625**	1	ELBOW	
	26	1	*148-8378*	2	ELBOW GP	
					(EACH INCLUDES)	
		1	**3J-1907**	1	SEAL-O-RING	
		1	**6V-8397**	1	SEAL-O-RING	
		1	**6V-8724**	1	ELBOW	
I	27	1	**7I-8252**	2	HOSE AS	
	28	1	*150-4037*	1	TEE GP	
		1	**6V-8398**	2	SEAL-O-RING	
		1	**6V-9844**	1	TEE-SWIVEL	
	29	1	**4I-7745**	1	CONNECTOR	
	31	1	**6V-8398**	1	SEAL-O-RING	
B	32	2	**7K-1181**	4	STRAP-CABLE	
I	33	1	**173-4675**	2	HOSE AS	

B-USE AS REQUIRED
I-SEE HOSE FABRICATION GUIDE
M-METRIC PART
Y-SEPARATE ILLUSTRATION

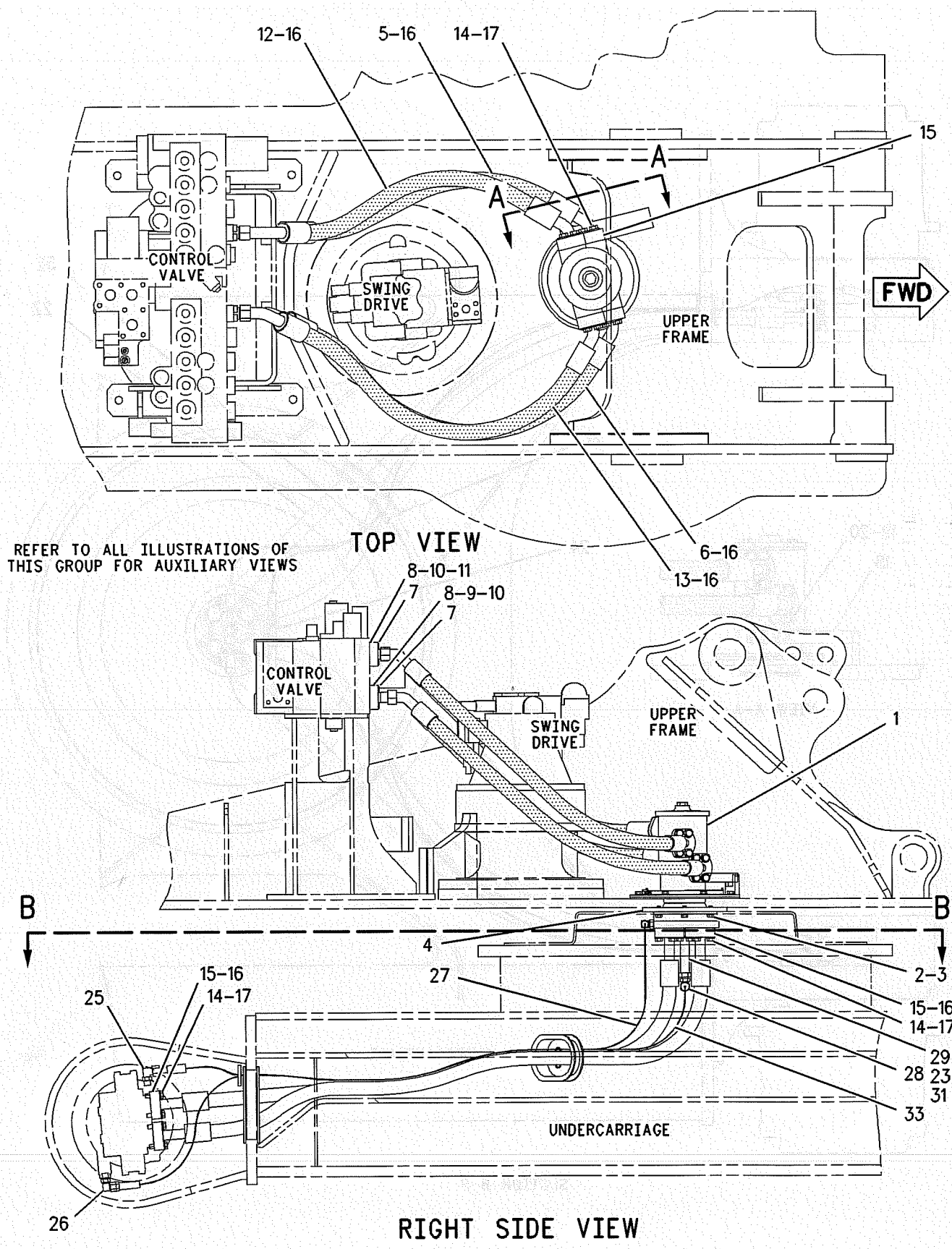

GRAPHIC #1 g00670164

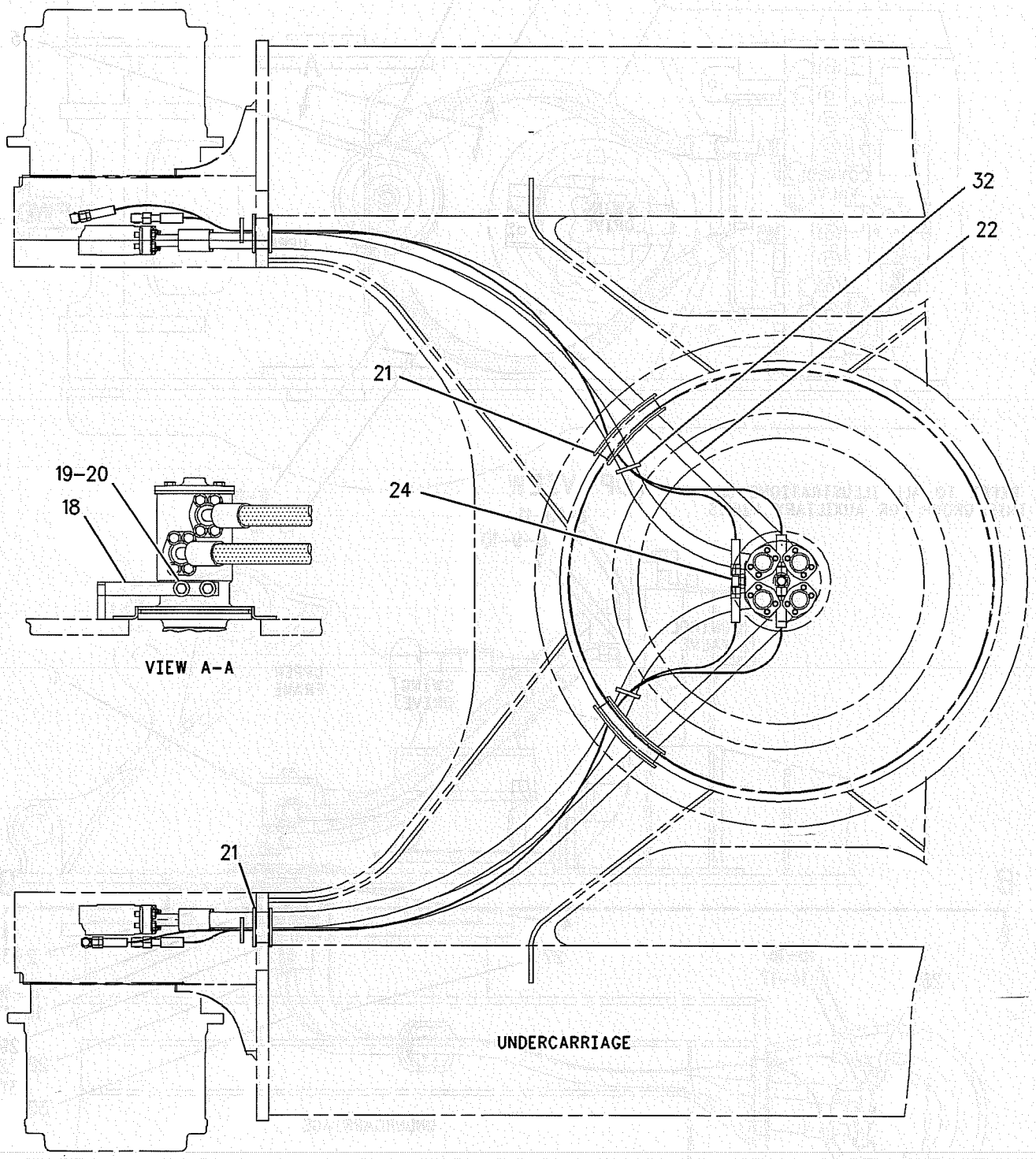

SECTION B-B

GRAPHIC #2 **<END>** g00670165

HYDRAULIC SYSTEM

142-7702 LINES GP-TRAVEL MOTOR

S/N: SBN1-UP

PART OF 201-9324 HYDRAULIC AR

SMCS-3218 **i01398684**

NOTE	REF NO	GRAPHIC REF	PART NUMBER	QTY	PART NAME 1 2 3 4 5 6 (PRODUCT LEVEL)	SEE PAGE
Y	1	1	**159-7841**	1	SWIVEL GP	396
M	2	1	**8T-4136**	6	BOLT (M10X1.5X25MM)	
	3	1	**8T-4121**	6	WASHER-HARD (11X21X2.5MM THK)	
	4	1	**1U-8846**		SEALANT (2ML)	
	5	1	**173-4776**	1	HOSE AS	
	6	1	**176-4680**	1	HOSE AS	
M	7	1	**9X-6032**	16	BOLT-SOCKET HEAD (M10X1.5X30MM)	
	8	1	**5K-9090**	4	SEAL-O-RING (23.52MM ID)	
	9	1	**113-6479**	2	FLANGE	
	10	1	**4J-5267**	4	SEAL-O-RING (24.99MM ID)	
	11	1	**7Y-3730**	2	FLANGE	
	12	1	**173-4784**	1	HOSE AS	
I	13	1	**165-3198**	1	HOSE AS	
M	14	1	**8T-4184**	48	BOLT (M12X1.75X45MM)	
	15	1	**6V-0400**	24	FLANGE-HALF	
	16	1	**1P-3703**	12	SEAL-RECTANGULAR	
	17	1	**8T-4223**	48	WASHER-HARD (13.5X25.5X3MM THK)	
	18	2	**4I-5546**	1	SUPPORT	
M	19	2	**8T-4648**	2	BOLT (M12X1.75X70MM)	
	20	2	**5P-1076**	2	WASHER-HARD (13.5X30X4MM THK)	
	21	2	**108-7118**	4	GROMMET	
I	22	2	**119-2399**	4	HOSE AS	
	23	1	**3D-2824**	1	SEAL-O-RING (23.47MM ID)	
	24	2	*148-8439*	1	TEE AS-ORFS	
		2	**3J-1907**	1	SEAL-O-RING (11.89MM ID)	
		2	**6V-8397**	2	SEAL-O-RING (9.27MM ID)	
		2	**6V-8774**	1	TEE	
	25	1	*148-8378*	2	ELBOW AS	
					(EACH INCLUDES)	
		1	**3J-1907**	1	SEAL-O-RING (11.89MM ID)	
		1	**6V-8397**	1	SEAL-O-RING (9.27MM ID)	
		1	**6V-8724**	1	ELBOW	
	26	1	*148-8364*	2	ELBOW AS	
					(EACH INCLUDES)	
		1	**3K-0360**	1	SEAL-O-RING (16.36MM ID)	
		1	**6V-8398**	1	SEAL-O-RING (12.47MM ID)	
		1	**6V-8625**	1	ELBOW	
	27	1	*150-4037*	1	TEE AS	
		1	**6V-8398**	2	SEAL-O-RING (12.47MM ID)	
		1	**6V-9844**	1	TEE-SWIVEL	
	28	1	**7K-1181**	4	STRAP-CABLE	
	29	1	**6V-8398**	1	SEAL-O-RING (12.47MM ID)	
I	30	1	**104-8771**	2	HOSE AS	
I	31	1	**173-4676**	2	HOSE AS	
	32	1	**4I-7745**	1	CONNECTOR	

I-SEE HOSE FABRICATION GUIDE
M-METRIC PART
Y-SEPARATE ILLUSTRATION

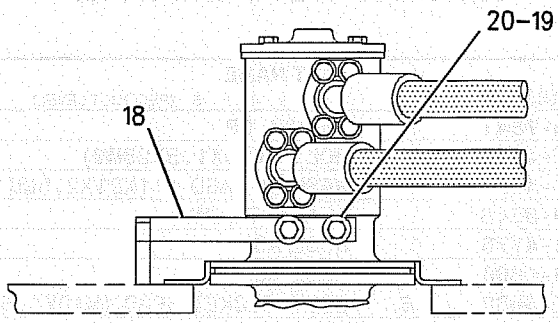

VIEW A–A

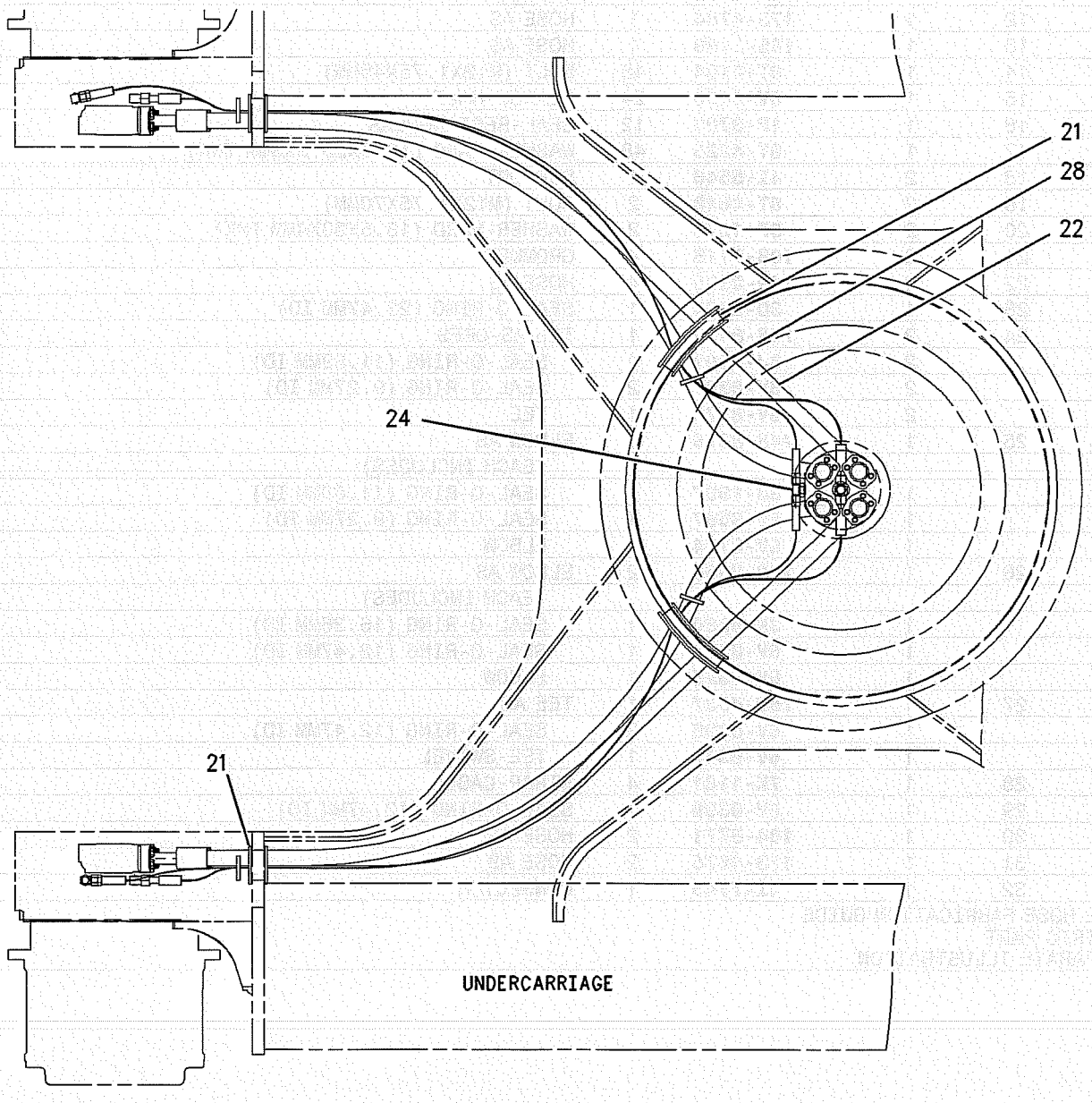

SECTION B–B

GRAPHIC #1

g00740031

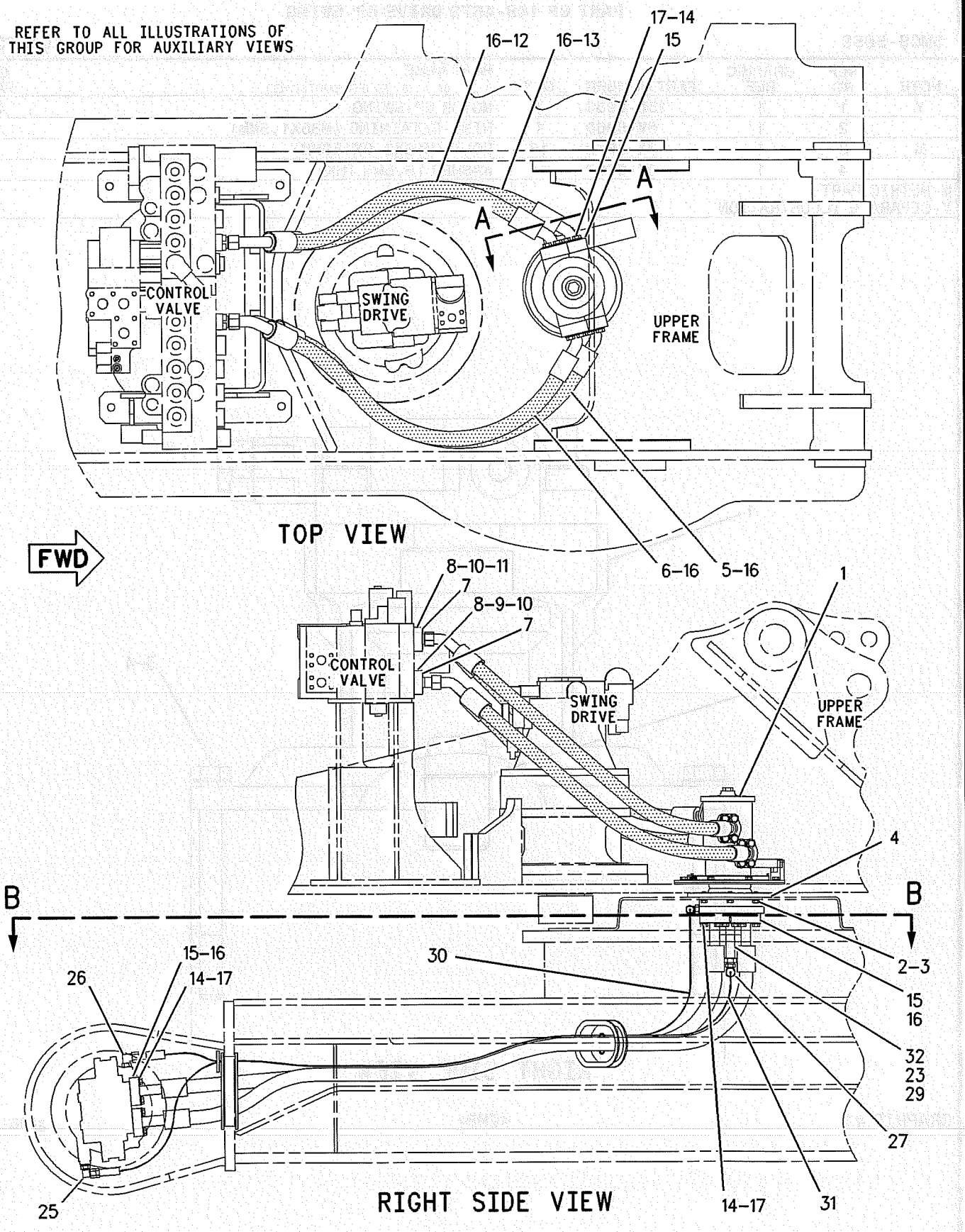

GRAPHIC #2

<END>

g00740030

HYDRAULIC SYSTEM

158-8985 MOTOR & MTG GP-SWING

S/N: SBN1-UP; RAW1-UP

PART OF 148-4679 DRIVE GP-SWING

SMCS-5058 **i01375371**

NOTE	REF NO	GRAPHIC REF	PART NUMBER	QTY	PART NAME 1 2 3 4 5 6 (PRODUCT LEVEL)	SEE PAGE
Y	1	1	**158-8986**	1	MOTOR GP-SWING	380
	2	1	**6V-5200**	1	RING-RETAINING (M35X1.5MM)	
M	3	1	**7X-2558**	16	BOLT (M16X2.0X150MM)	
	4	1	**9X-8257**	16	WASHER (3.5MM THK)	

M-METRIC PART
Y-SEPARATE ILLUSTRATION

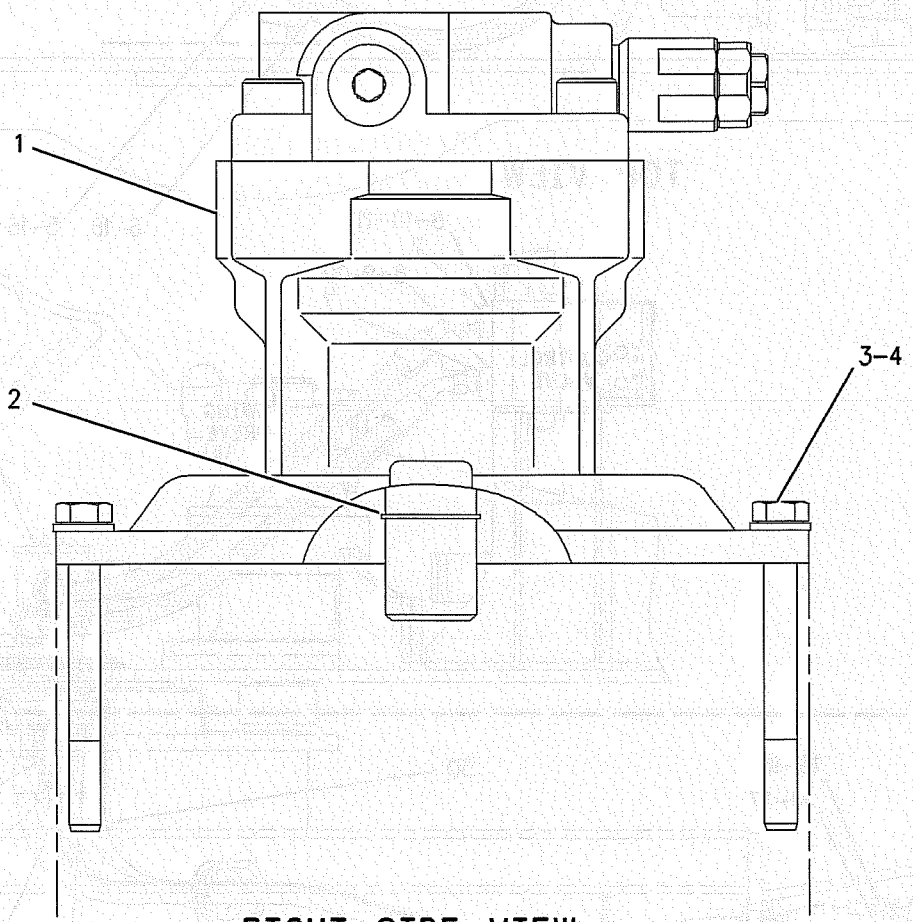

RIGHT SIDE VIEW

GRAPHIC #1 **<END>** g00670538

HYDRAULIC SYSTEM

107-7028 MOTOR & MTG GP-TRAVEL

S/N: SBN1-UP; RAW1-UP
FINAL DRIVE, WITH MOTOR
PART OF 148-4696 FINAL DRIVE GP

SMCS-4351 **i01891368**

NOTE	REF NO	GRAPHIC REF	PART NUMBER	QTY	PART NAME 1 2 3 4 5 6 (PRODUCT LEVEL)	SEE PAGE
Y	1	1	**209-5992**	1	MOTOR GP-TRAVEL	383
Y	2	1	**137-3718**	1	VALVE GP-TRAVEL COUNTERBALANCE	462
M	3	1	**095-0707**	3	BOLT (M16X2X120MM)	
M	4	1	**8T-4176**	6	BOLT (M12X1.75X90MM)	

M-METRIC PART
Y-SEPARATE ILLUSTRATION

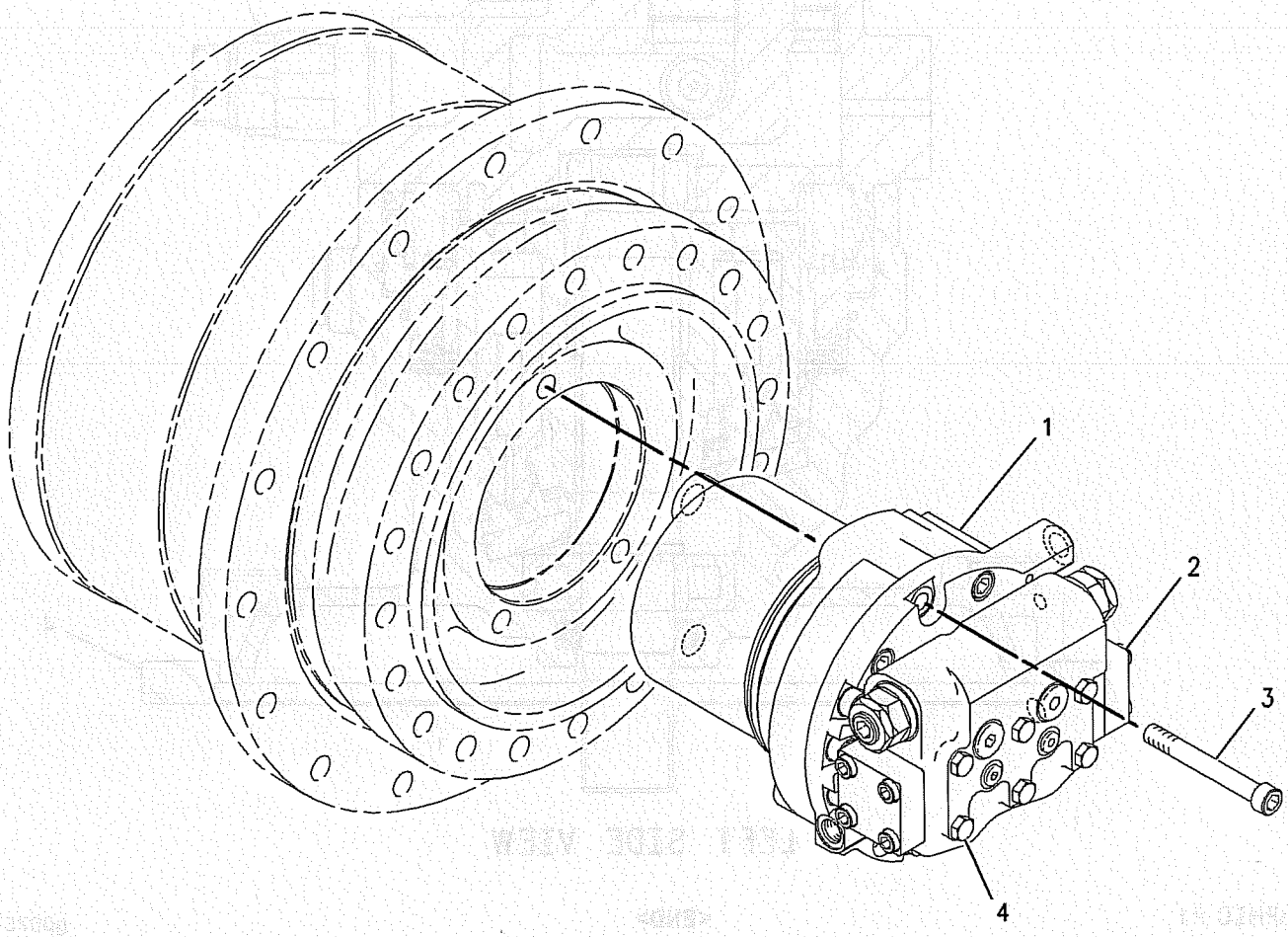

GRAPHIC #1 **<END>** g00591624

HYDRAULIC SYSTEM

158-8986 MOTOR GP-SWING

S/N: SBN1-UP; RAW1-UP

PART OF 158-8985 MOTOR & MTG GP-SWING

SMCS-5058 **i01890875**

NOTE	REF NO	GRAPHIC REF	PART NUMBER	QTY	PART NAME 1 2 3 4 5 6 (PRODUCT LEVEL)	SEE PAGE
Y	3	1	**173-3452**	2	VALVE GP-RELIEF	444
Y	4	1	**191-5542**	1	MOTOR GP-SWING	381

Y-SEPARATE ILLUSTRATION

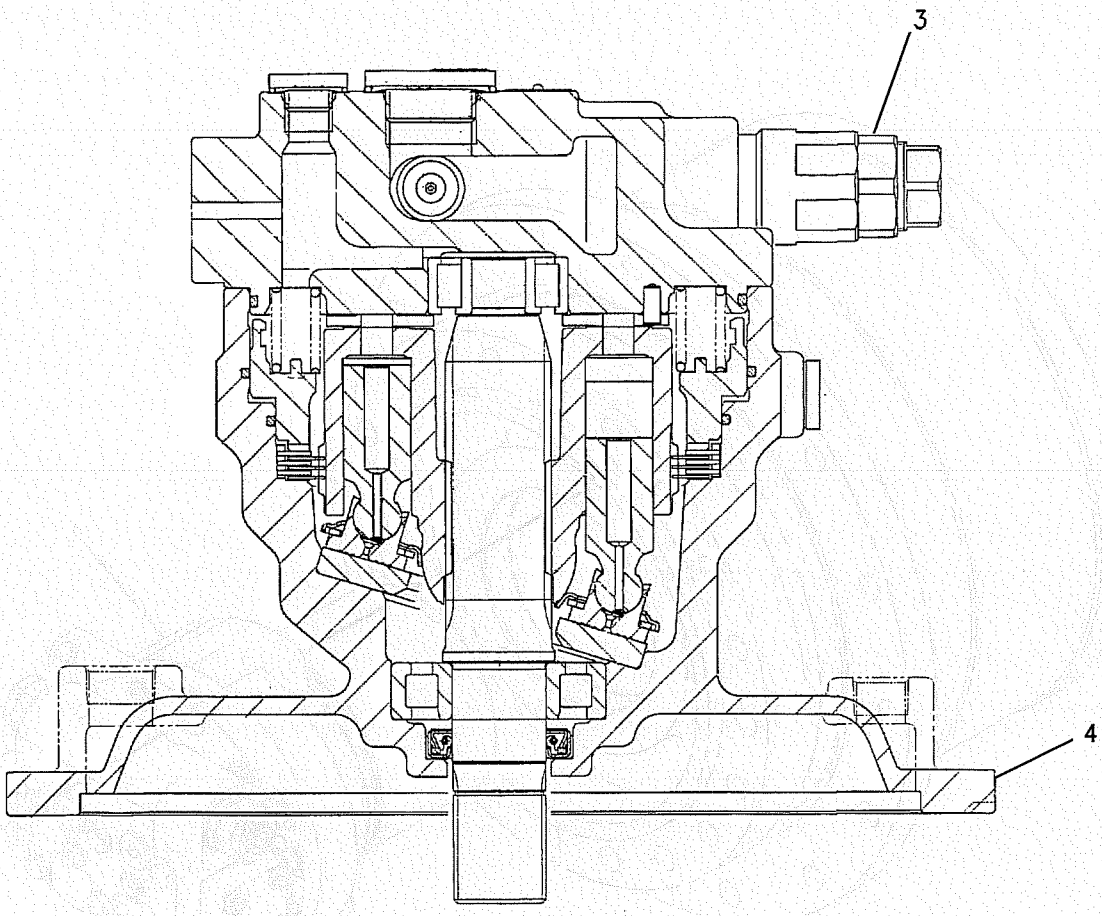

LEFT SIDE VIEW

GRAPHIC #1 **<END>** g00757516

HYDRAULIC SYSTEM

191-5542 MOTOR GP-SWING

S/N: SBN1-UP; RAW1-UP

PART OF 158-8986 MOTOR GP-SWING

SMCS-5058 **i01890882**

NOTE	REF NO	GRAPHIC REF	PART NUMBER	QTY	PART NAME 1 2 3 4 5 6 (PRODUCT LEVEL)	SEE PAGE
	1	1	**122-5318**	1	BEARING	
	2	1	**173-3444**	1	PLATE	
	3	1	**173-3472**	1	PISTON AS	
	4	1	**173-3443**	1	PLATE	
	5	1	**173-3441**	1	BARREL	
J	6	1	**5I-8426**	1	SEAL-O-RING	
J	7	1	**5I-8417**	1	SEAL-O-RING	
	8	1	**177-2584**	1	PISTON-BRAKE	
J	9	1	**5I-8623**	1	SEAL-O-RING	
	10	1	**126-2055**	20	SPRING	
	11	1	**173-3439**	1	HEAD GP-MOTOR	
		1	**095-0882**	2	PIN-SPRING	
	12	1	**173-3445**	1	PLATE-VALVE	
	13	1	**110-5525**	2	PLUG	
J	14	1	**3J-1907**	2	SEAL-O-RING	
	15	1	**5I-8625**	1	BEARING	
	16	1	**173-3451**	4	PLATE-SEPARATOR	
	17	1	**173-3450**	3	PLATE-FRICTION	
	18	1	**173-3442**	1	SPRING	
	19	1	**191-5543**	1	BODY	
	20	1	**173-3440**	1	SHAFT	
J	21	1	**173-3447**	1	SEAL-OIL	
	22	1	**094-1900**	2	PLUG	
J	23	1	**095-1595**	2	SEAL-O-RING	
	24	1	**7Y-4268**	2	SPRING	
	25	1	**7Y-4267**	2	VALVE	
M	26	1	**7Y-5221**	4	BOLT-SOCKET HEAD (M20X2.5X45MM)	
					AVAILABLE REPAIR KIT(S):	
J			**173-3454**	1	KIT-SEAL	

J-KIT MARKED J SERVICES PART(S) MARKED J
M-METRIC PART

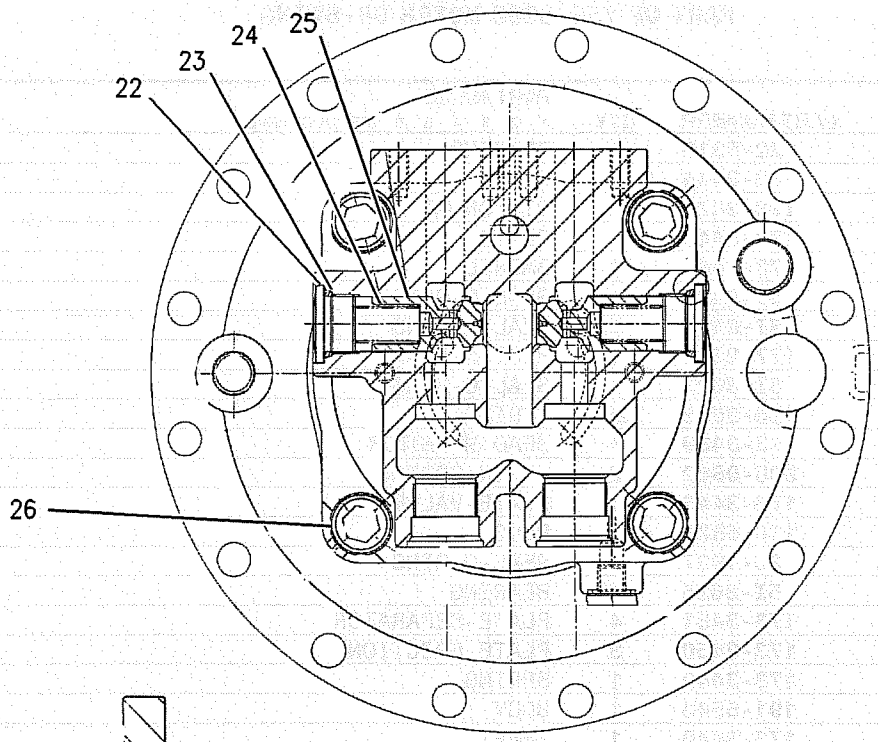

VIEW A-A

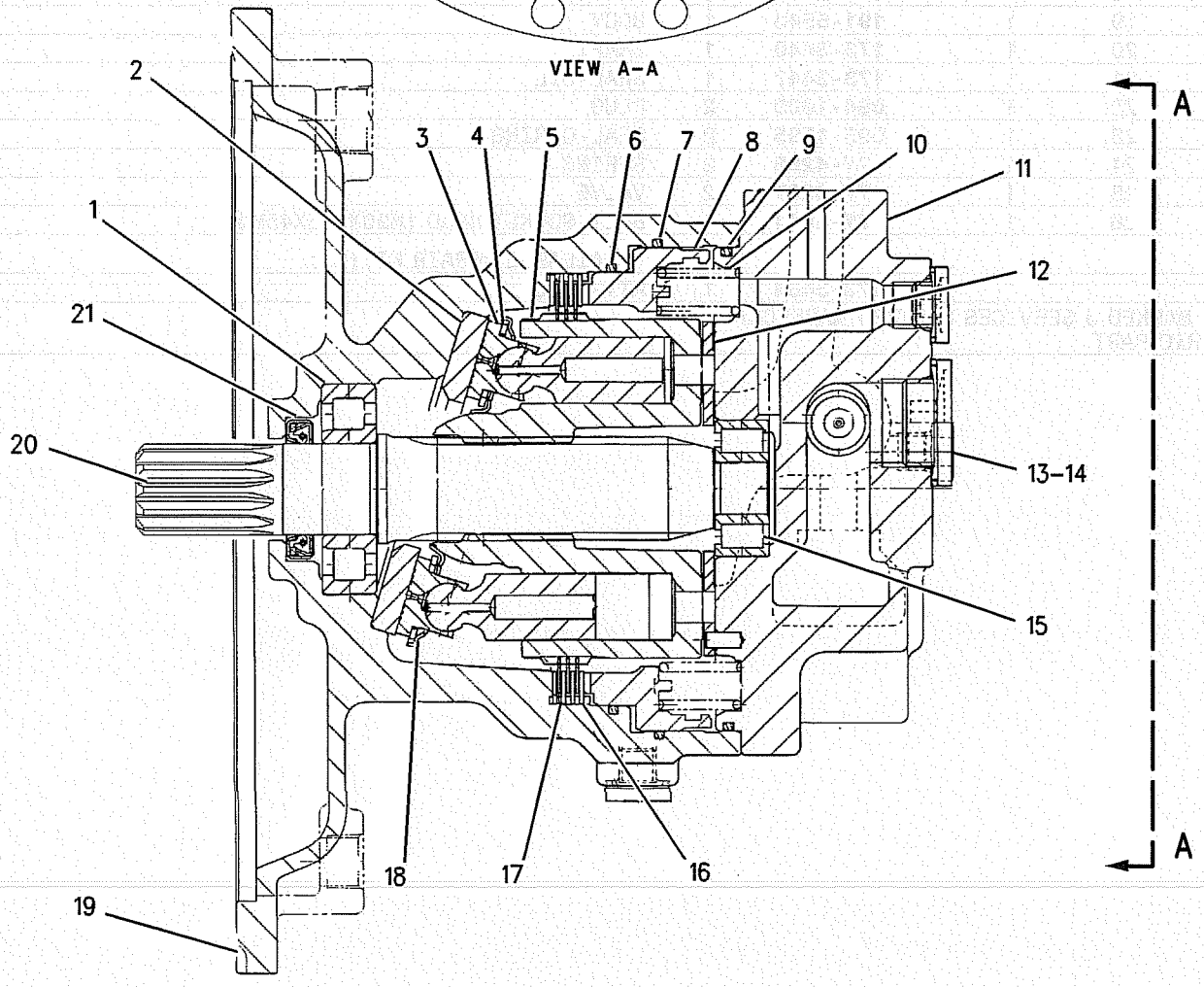

GRAPHIC #1 **<END>** g00881256

HYDRAULIC SYSTEM

209-5992 MOTOR GP-TRAVEL

S/N: SBN1-UP; RAW1-UP

PART OF 107-7028 MOTOR & MTG GP-TRAVEL

SMCS-5058 **i01891487**

NOTE	REF NO	GRAPHIC REF	PART NUMBER	QTY	PART NAME 1 2 3 4 5 6 (PRODUCT LEVEL)	SEE PAGE
	1	1	209-5894	1	SHAFT	
	2	1	087-4743	2	STOP	
	3	1	094-1399	2	RING-RETAINING	
	4	1	7Y-4212	1	BEARING	
	5	1	087-4757	2	PISTON	
	6	1	107-6969	1	BODY	
	7	1	122-5114	1	GUIDE-BALL	
	8	1	209-5909	1	PLATE-CAM	
	9	1	147-5860	1	PISTON AS	
	10	1	133-6777	1	BARREL AS	
	11	1	107-6954	4	PLATE-FRICTION	
	12	1	107-6955	5	PLATE-SEPARATOR	
	13	1	096-1523	1	GUIDE-PISTON	
	14	1	7Y-4213	1	PISTON-BRAKE	
	15	1	7Y-4202	1	HEAD	
M	16	1	8T-4944	10	BOLT-SOCKET HEAD (M16X2X40MM)	
B	17	1	096-1521	1	SHIM (1.0MM THK)	
B	18	1	096-3785	1	SHIM (1.2MM THK)	
B	19	1	096-3786	1	SHIM (1.4MM THK)	
B	20	1	096-3787	1	SHIM (1.6MM THK)	
B	21	1	096-1522	1	SHIM (2.0MM THK)	
B	22	1	096-3788	1	SHIM (1.8MM THK)	
	23	1	096-5916	2	SEAT	
	24	1	2D-6642	2	BALL	
J	25	1	095-1572	2	SEAL-O-RING	
J	26	1	096-5919	2	RING	
	27	1	096-5915	2	RETAINER	
	28	1	096-4003	1	SET-BEARING	
		1	7Y-4234	1	RACE-NEEDLE ROLLER	
J	29	1	095-1585	1	SEAL-O-RING	
	30	1	087-4742	1	VALVE	
	31	1	096-1519	1	SEAT	
	32	1	095-7380	1	SPRING	
	33	1	095-7382	1	RETAINER	
	34	1	094-1875	1	DOWEL	
	35	1	095-7378	1	WASHER SET	
	36	1	8T-6759	10	PLUG-PIPE	
J	37	1	095-1575	3	SEAL-O-RING	
J	38	1	096-4378	1	RING	
J	39	1	096-4377	2	SEAL-O-RING	
	40	1	8T-6759	1	PLUG-PIPE	
J	41	1	095-7384	1	SEAL-O-RING	
J	42	1	095-7383	1	SEAL-O-RING	
J	43	1	095-7386	1	RING	
J	44	1	095-7387	1	RING	
J	45	1	095-1685	1	SEAL-O-RING	
	46	1	118-4057	9	SPRING	
	47	1	7Y-4215	1	SPACER	
J	48	1	095-1586	2	SEAL-O-RING	
J	49	1	7Y-4217	2	RING	
J	50	1	096-4376	1	SEAL-LIP	
	51	1	123-2008	2	KEY	
J	54	1	3K-0360	1	SEAL-O-RING	
	55	1	9S-4185	1	PLUG	
J	56	1	095-1700	2	SEAL-O-RING	
	57	1	7Y-4224	2	ORIFICE	

209-5992 MOTOR GP-TRAVEL *(contd.)*

i01891487

NOTE	REF NO	GRAPHIC REF	PART NUMBER	QTY	PART NAME 1 2 3 4 5 6 (PRODUCT LEVEL)	SEE PAGE
	58	1	**096-3978**	1	SPRING	
	59	1	**7Y-4216**	1	SPOOL	
J	60	1	**2M-9780**	1	SEAL-O-RING	
	61	1	**087-4786**	1	ADAPTER	
	62	1	**121-1558**	2	PIN	
B	64	1	**094-1882**	11	PLUG	
					AVAILABLE REPAIR KIT(S):	
J			**7Y-4222**	1	KIT-SEAL	

B-USE AS REQUIRED
J-KIT MARKED J SERVICES PARTS MARKED J
M-METRIC PART

209-5992 MOTOR GP-TRAVEL *(contd.)*

i01891487

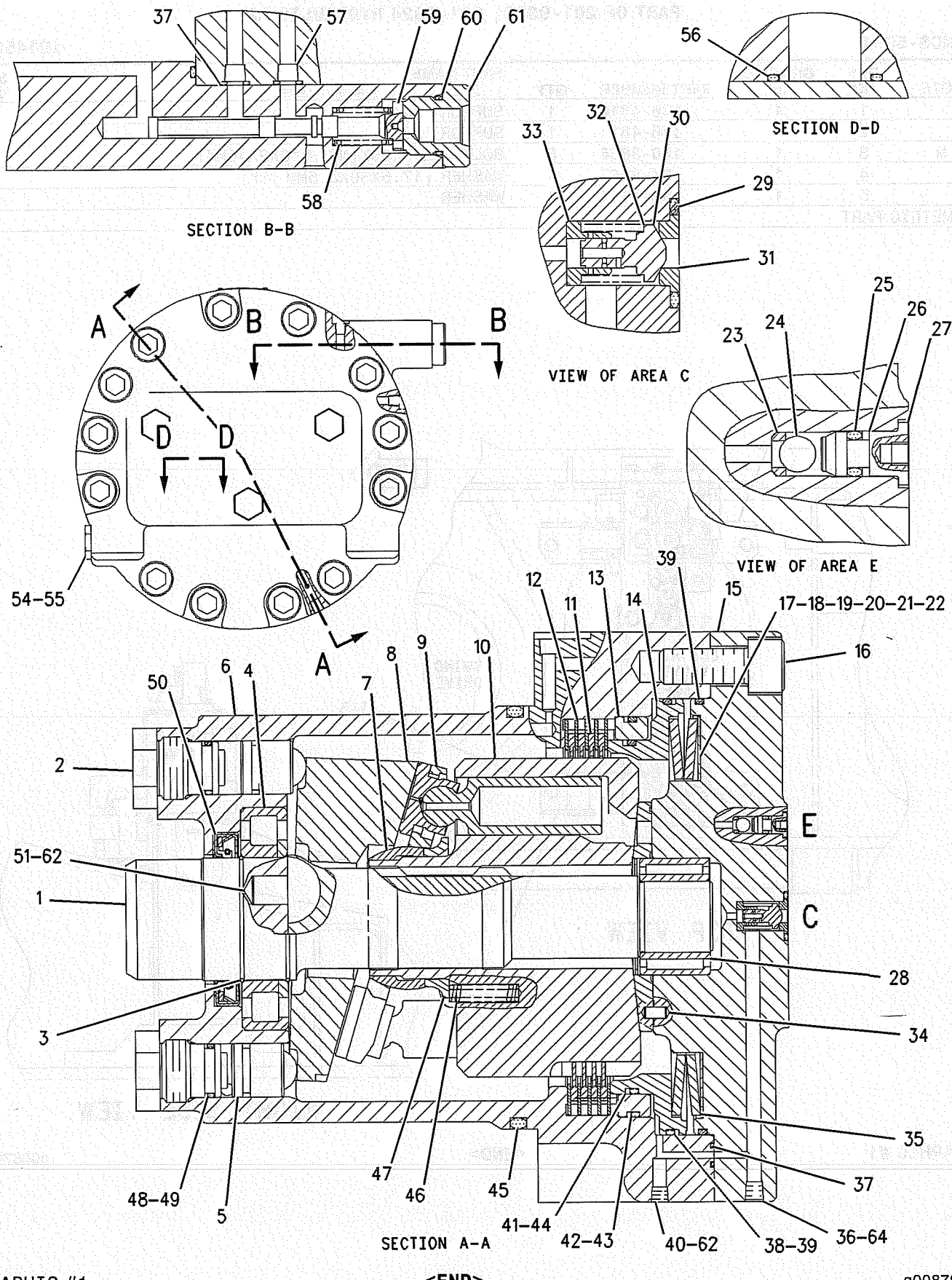

GRAPHIC #1

<END>

g00879895

142-7668 MOUNTING GP-MAIN CONTROL VALVE

S/N: SBN1-UP; RAW1-UP

PART OF 201-9323, 201-9324 HYDRAULIC AR

SMCS-5051 **i01453615**

NOTE	REF NO	GRAPHIC REF	PART NUMBER	QTY	PART NAME 1 2 3 4 5 6 (PRODUCT LEVEL)	SEE PAGE
	1	1	176-4810	1	SUPPORT AS	
	2	1	176-4811	1	SUPPORT AS	
M	3	1	100-3866	8	BOLT-SELF LOCKING (M16X2X40MM)	
	4	1	9X-8257	4	WASHER (17.5X30X3.5MM THK)	
	5	1	196-0711	4	WASHER	

M-METRIC PART

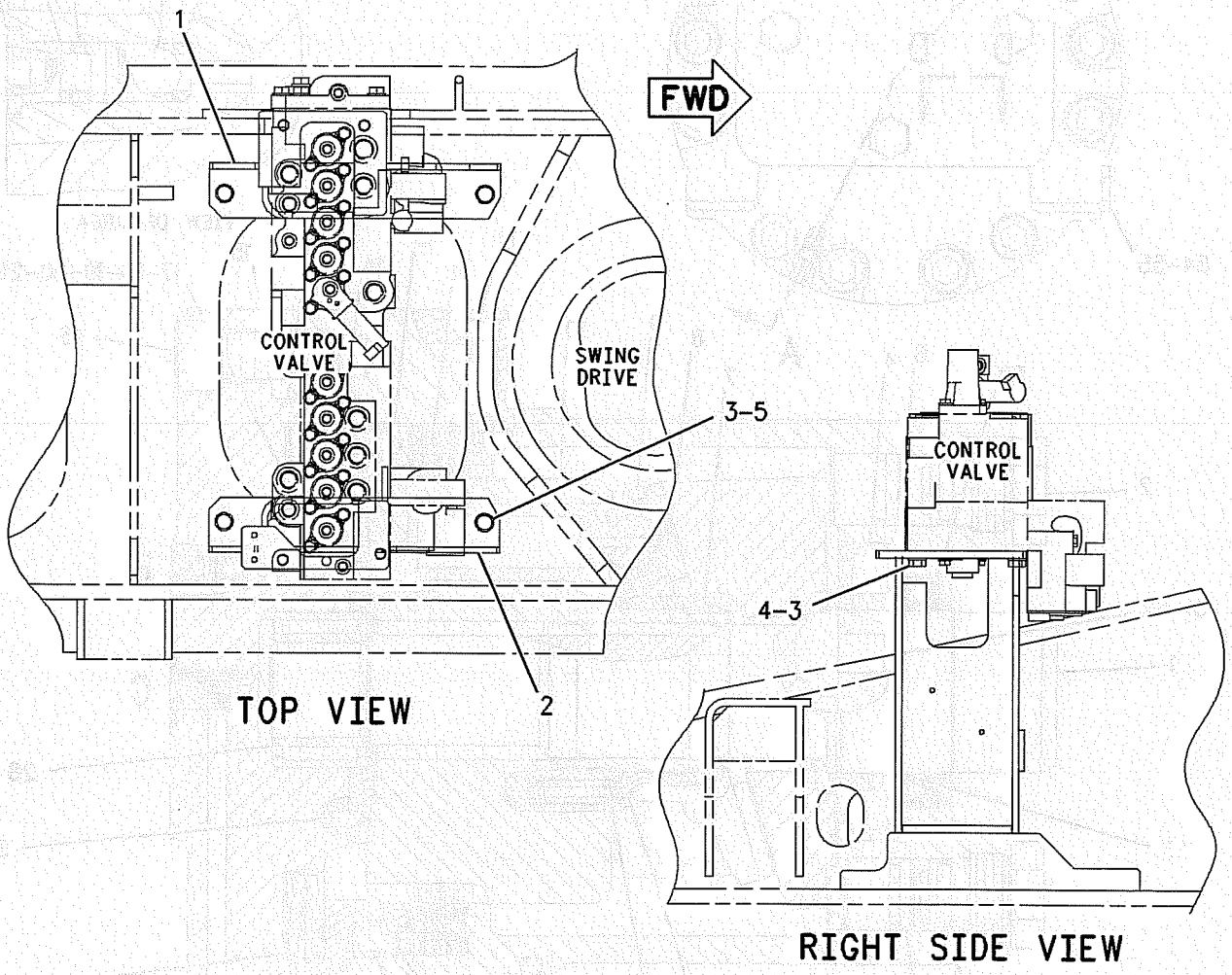

GRAPHIC #1 **<END>** g00676425

HYDRAULIC SYSTEM

162-6176 PUMP & MOUNTING GP

S/N: SBN1-UP; RAW1-UP

PART OF 201-9323, 201-9324 HYDRAULIC AR

SMCS-5070 **i01646525**

NOTE	REF NO	GRAPHIC REF	PART NUMBER	QTY	PART NAME 1 2 3 4 5 6 (PRODUCT LEVEL)	SEE PAGE
Y	1	1	**200-3366**	1	PUMP GP-PISTON	390
Y	2	1	*162-6177*	1	COUPLING GP-PUMP	229
M	3	1	**8T-4195**	12	BOLT (M10X1.5X30MM)	
	4	1	**8T-4121**	12	WASHER-HARD (11X21X2.5MM THK)	

M-METRIC PART
Y-SEPARATE ILLUSTRATION

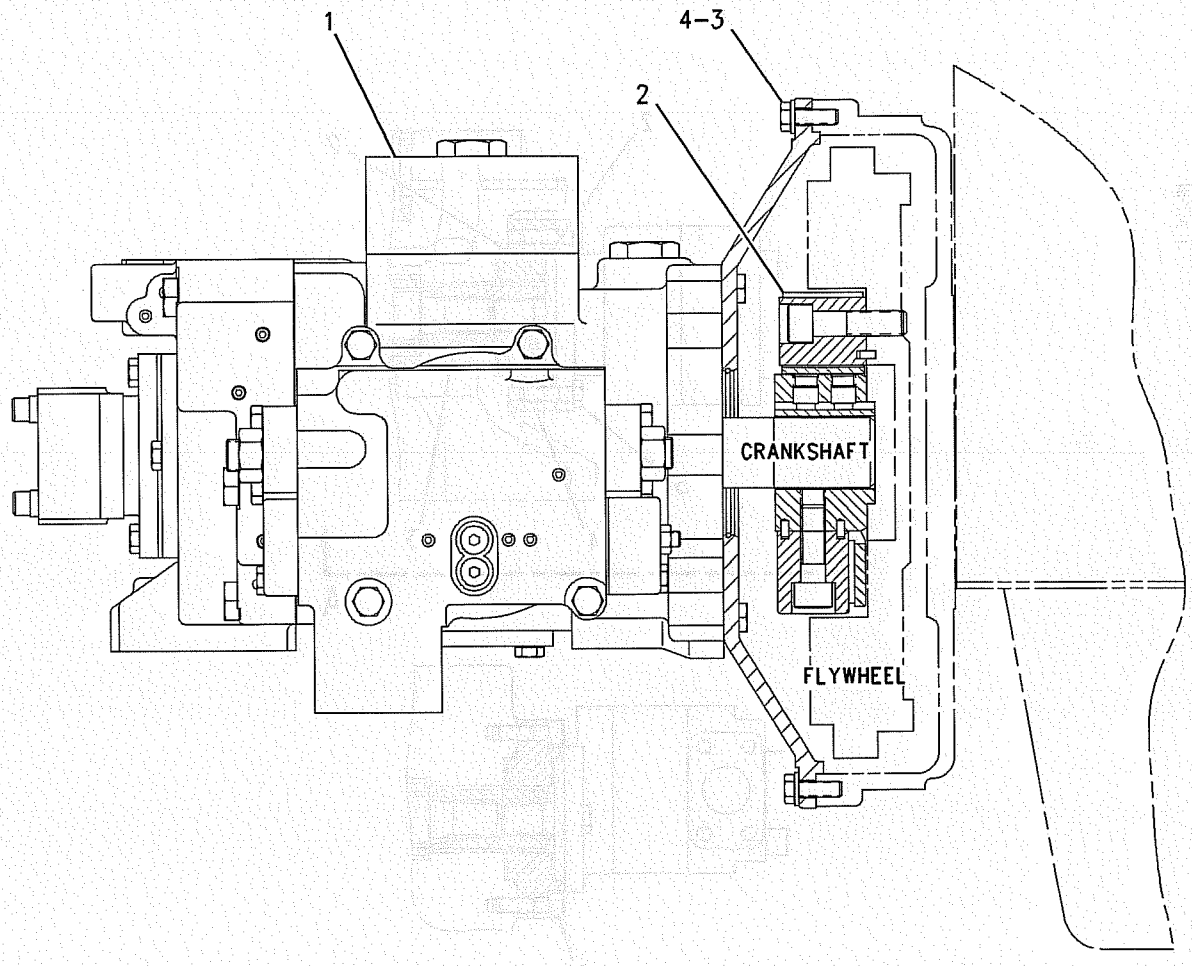

GRAPHIC #1 **<END>** g00675784

200-3365 PUMP & MOUNTING GP

S/N: SBN1-UP; RAW1-UP
30CC. AUXILIARY
PART OF 202-6855 CONTROL AR-AUXILIARY
AN ATTACHMENT

SMCS-5070 **i01889487**

NOTE	REF NO	GRAPHIC REF	PART NUMBER	QTY	PART NAME 1 2 3 4 5 6 (PRODUCT LEVEL)	SEE PAGE
Y	1	1	**209-6057**	1	PUMP GP-GEAR (WORK TOOL)	389
	2	1	**8T-3338**	2	SEAL-O-RING	
	3	1	**200-3327**	1	COUPLING	
	4	1	**200-3326**	1	SPACER	
M	5	1	**8T-4136**	2	BOLT (M10X1.5X25MM)	
M	6	1	**8T-0271**	2	BOLT-SOCKET HEAD (M10X1.5X35MM)	

M-METRIC PART
Y-SEPARATE ILLUSTRATION

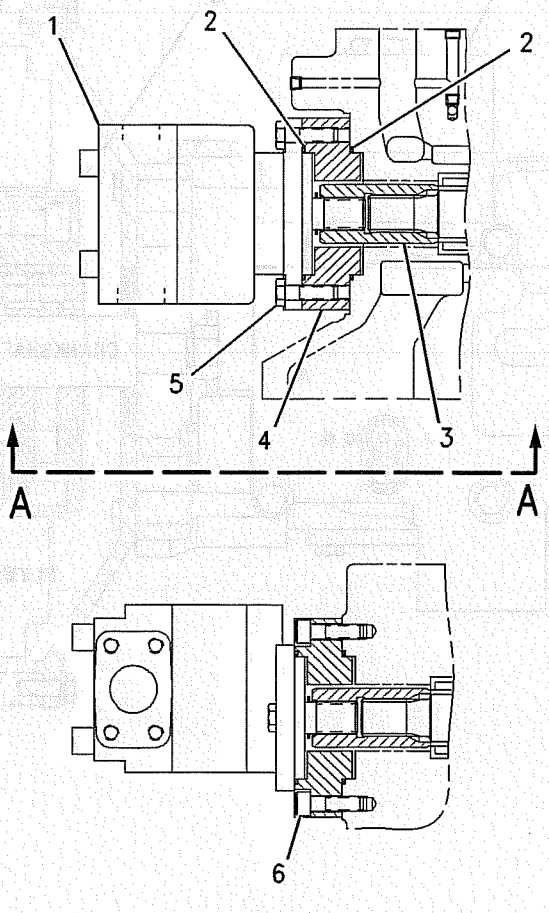

VIEW A-A

GRAPHIC #1 **<END>** g00808757

HYDRAULIC SYSTEM

209-6057 PUMP GP-GEAR

S/N: SBN1-UP; RAW1-UP
PART OF 200-3365 PUMP & MOUNTING GP
AN ATTACHMENT

SMCS-5073, 5084 **i01889497**

NOTE	REF NO	GRAPHIC REF	PART NUMBER	QTY	PART NAME 1 2 3 4 5 6 (PRODUCT LEVEL)	SEE PAGE
J	1	1	**9T-0836**	1	RING-RETAINING	
J	2	1	**3G-5083**	1	SEAL-LIP	
					AVAILABLE REPAIR KIT(S):	
J			**204-2800**	1	KIT-REPAIR (HYDRAULIC PUMP)	
					(INCLUDES GASKETS, STRIPS & PARTS MARKED J)	

J-KIT MARKED J SERVICES PART(S) MARKED J

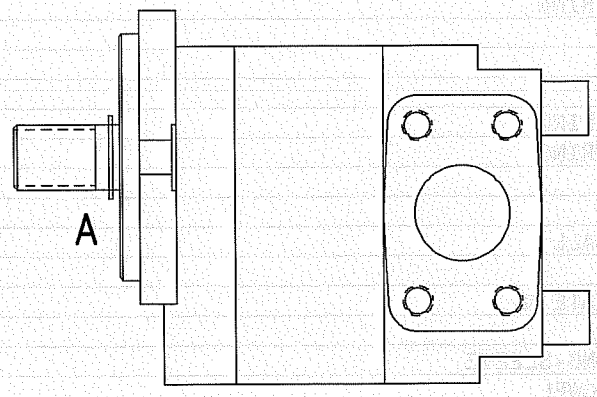

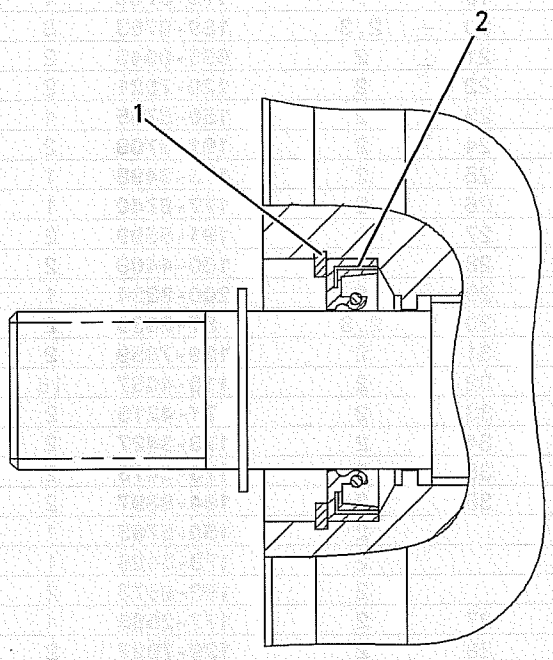

VIEW OF AREA A

GRAPHIC #1 **<END>** g00880819

HYDRAULIC SYSTEM

200-3366 PUMP GP-PISTON

S/N: SBN1-UP; RAW1-UP

PART OF 162-6176 PUMP & MOUNTING GP

SMCS-5070 **i01642057**

NOTE	REF NO	GRAPHIC REF	PART NUMBER	QTY	PART NAME 1 2 3 4 5 6 (PRODUCT LEVEL)	SEE PAGE
Y	1	1	204-2683	1	HEAD GP-PUMP	262
	2	1	177-2470	1	COVER	
M	3	1	7X-2557	1	BOLT (M16X2X140MM)	
	4	1	177-2471	1	COVER	
Y	5	1	204-2684	1	HEAD GP-PUMP	266
M	6	1,2	8T-4176	2	BOLT (M12X1.75X90MM)	
M	7	1	8T-4140	4	BOLT (M16X2X60MM)	
	8	1,2,3	094-1882	16	PLUG	
	9	1	200-3333	1	BLOCK-PORT	
	10	1	129-7979	4	DOWEL	
	11	1,2	9S-4185	3	PLUG	
	12	2	3K-0360	3	SEAL-O-RING	
M	13	1,2,3	8T-4136	18	BOLT (M10X1.5X25MM)	
	14	1	173-3371	1	BODY	
	15	1	150-5782	2	COVER	
M	16	1,2	8T-4139	10	BOLT (M12X1.75X30MM)	
	17	1	129-7863	1	COVER	
	18	1	129-7857	1	GASKET	
	19	1	179-9763	1	FLANGE	
	20	2,3	189-9763	8	SEAL-O-RING	
	21	2	095-0946	2	RING-RETAINING	
	22	2	129-7921	2	RING-RETAINING	
	23	2	150-5785	4	DOWEL	
	24	2	191-5709	2	PISTON AS	
	25	2	173-3498	1	BARREL AS-IDLE	
	26	2	177-8740	1	SEAL-O-RING	
	27	2	191-5599	2	PLUG	
	28	2	160-4409	2	ORIFICE	
	29	2	200-3334	1	COVER	
	30	2,3	8T-3338	2	SEAL-O-RING	
	31	2	129-7859	2	SET-BEARING	
	32	2	118-4057	18	SPRING	
	33	2	7Y-4215	2	SPACER	
	34	2	173-3427	2	GUIDE-BALL	
	35	2	173-3473	2	PLATE	
	36	2	194-8397	2	SWASHPLATE AS	
		2	150-5785	1	DOWEL	
		2	173-3428	1	BEARING-SLEEVE	
		2	192-0573	2	PIN-DOWEL	
	37	2	177-2583	4	BEARING	
	38	2	129-7927	2	BEARING	
	39	2	129-7855	1	GASKET	
	40	2	200-3368	1	SHAFT	
	41	3	7M-8485	2	SEAL-O-RING	
	42	3	8J-4645	2	PLUG	
M	43	3	8T-4196	2	BOLT (M10X1.5X35MM)	
	44	3	4I-1022	2	ORIFICE	
	45	3	094-1875	6	DOWEL	
M	46	3	8T-4137	2	BOLT (M10X1.5X20MM)	
	47	3	126-2016	1	PUMP GP-GEAR	
	48	3	173-3496	1	BARREL AS-DRIVE	
M	49	3	8T-4192	10	BOLT (M12X1.75X25MM)	
	50	3	129-7854	1	CASE	
	51	3	173-3391	1	SHAFT-DRIVE	
	52	3	129-7925	1	SEAL-LIP TYPE	
	53	3	096-3983	1	RING-RETAINING	

200-3366 PUMP GP-PISTON *(contd.)* i01642057

NOTE	REF NO	GRAPHIC REF	PART NUMBER	QTY	PART NAME 1 2 3 4 5 6 (PRODUCT LEVEL)	SEE PAGE
	54	3	**096-3944**	1	SEAL-O-RING	
M	57	1	**8T-4175**	2	BOLT (M16X2.0X90MM)	
	58	2	**193-1736**	4	SEAL-O-RING	

M-METRIC PART
Y-SEPARATE ILLUSTRATION

200-3366 PUMP GP-PISTON *(contd.)*

i01642057

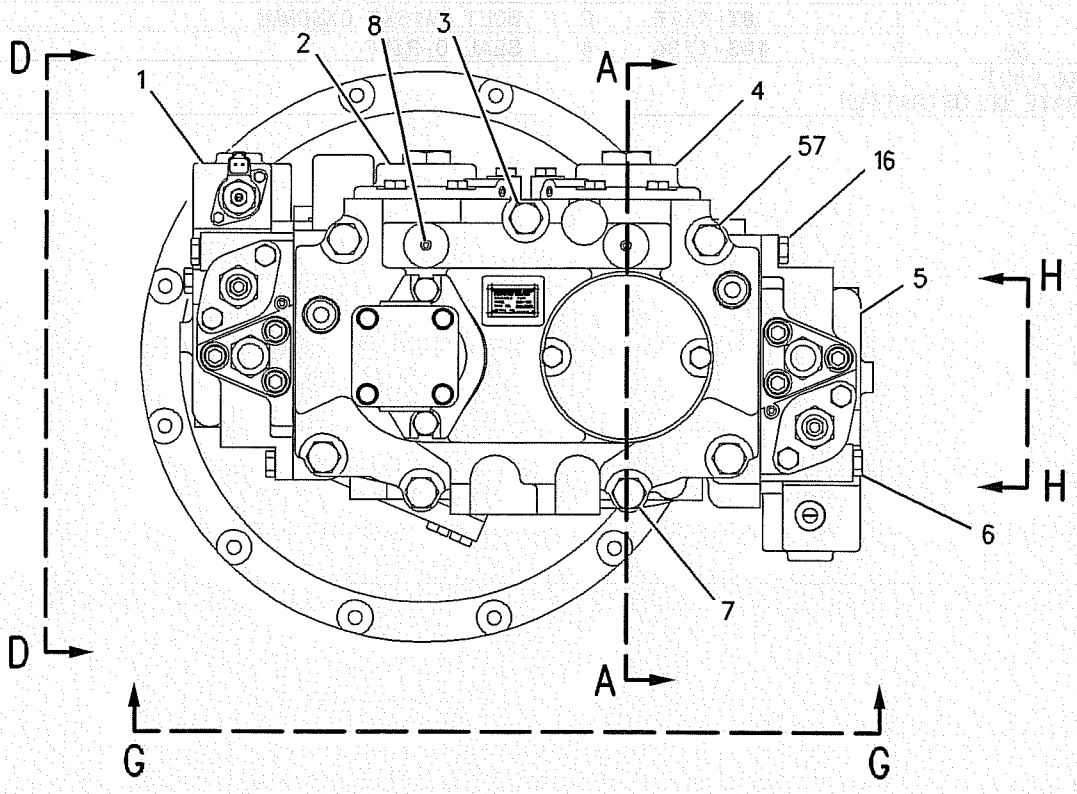

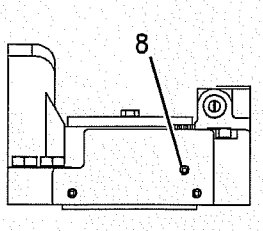

VIEW H-H

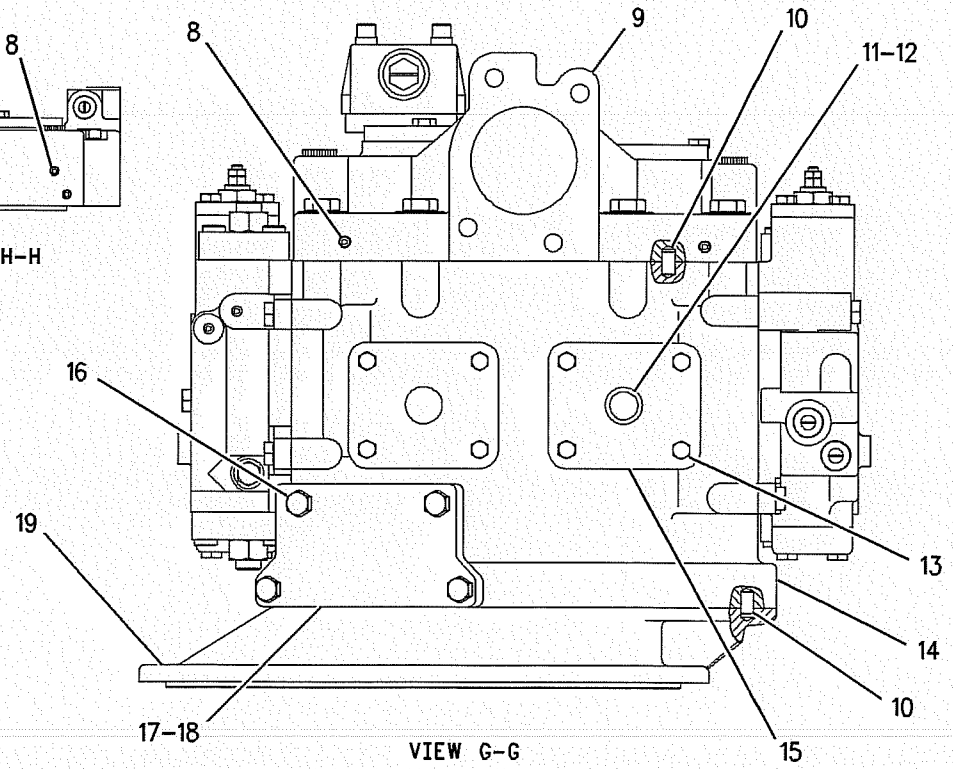

VIEW G-G

REFER TO ALL ILLUSTRATIONS OF THIS GROUP FOR AUXILIARY VIEWS

GRAPHIC #1

g00806236

200-3366 PUMP GP-PISTON *(contd.)*

i01642057

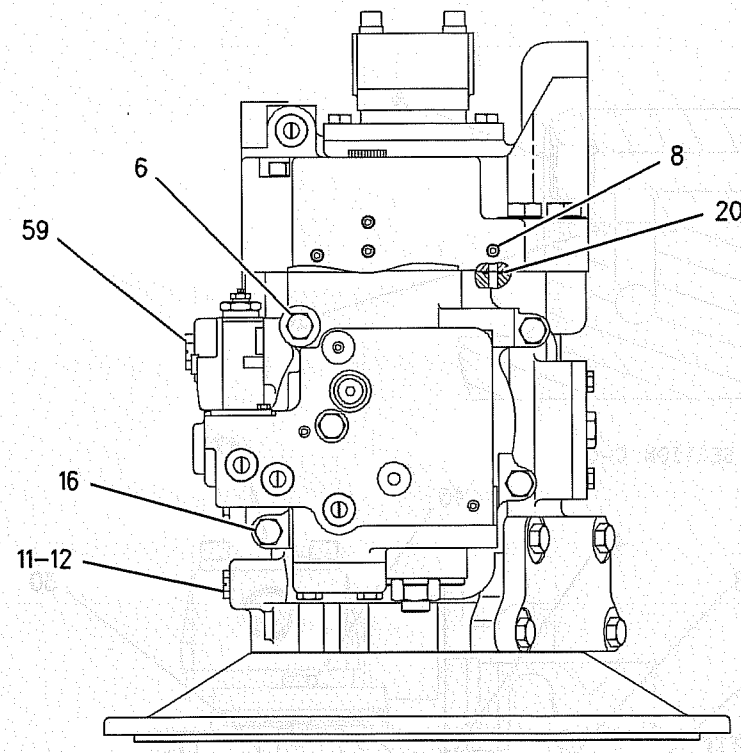

VIEW D-D

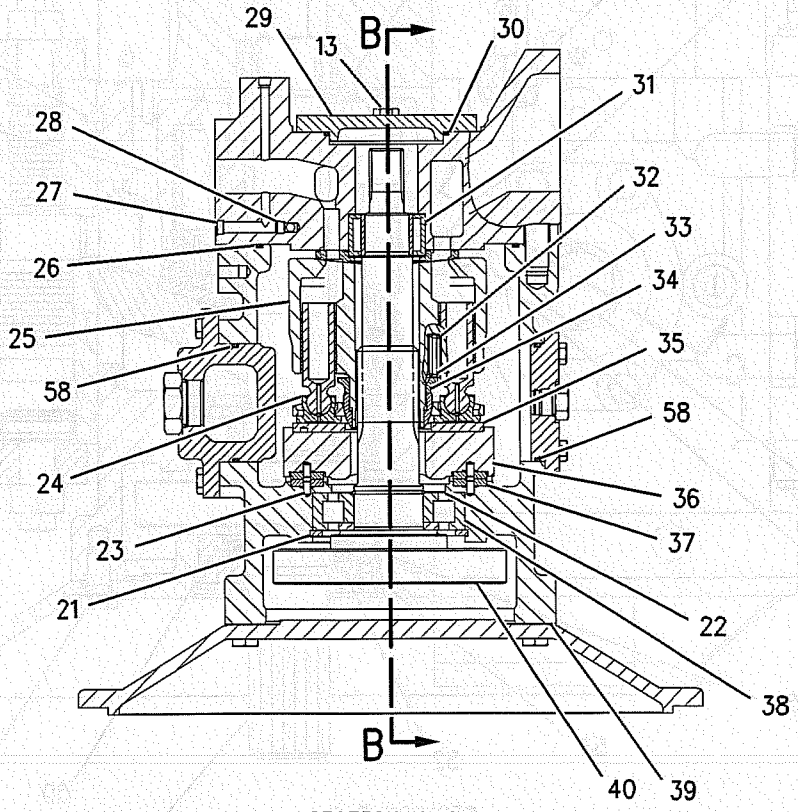

SECTION A-A

REFER TO ALL ILLUSTRATIONS OF THIS GROUP FOR AUXILIARY VIEWS

GRAPHIC #2

g00806239

200-3366 PUMP GP-PISTON *(contd.)*

i01642057

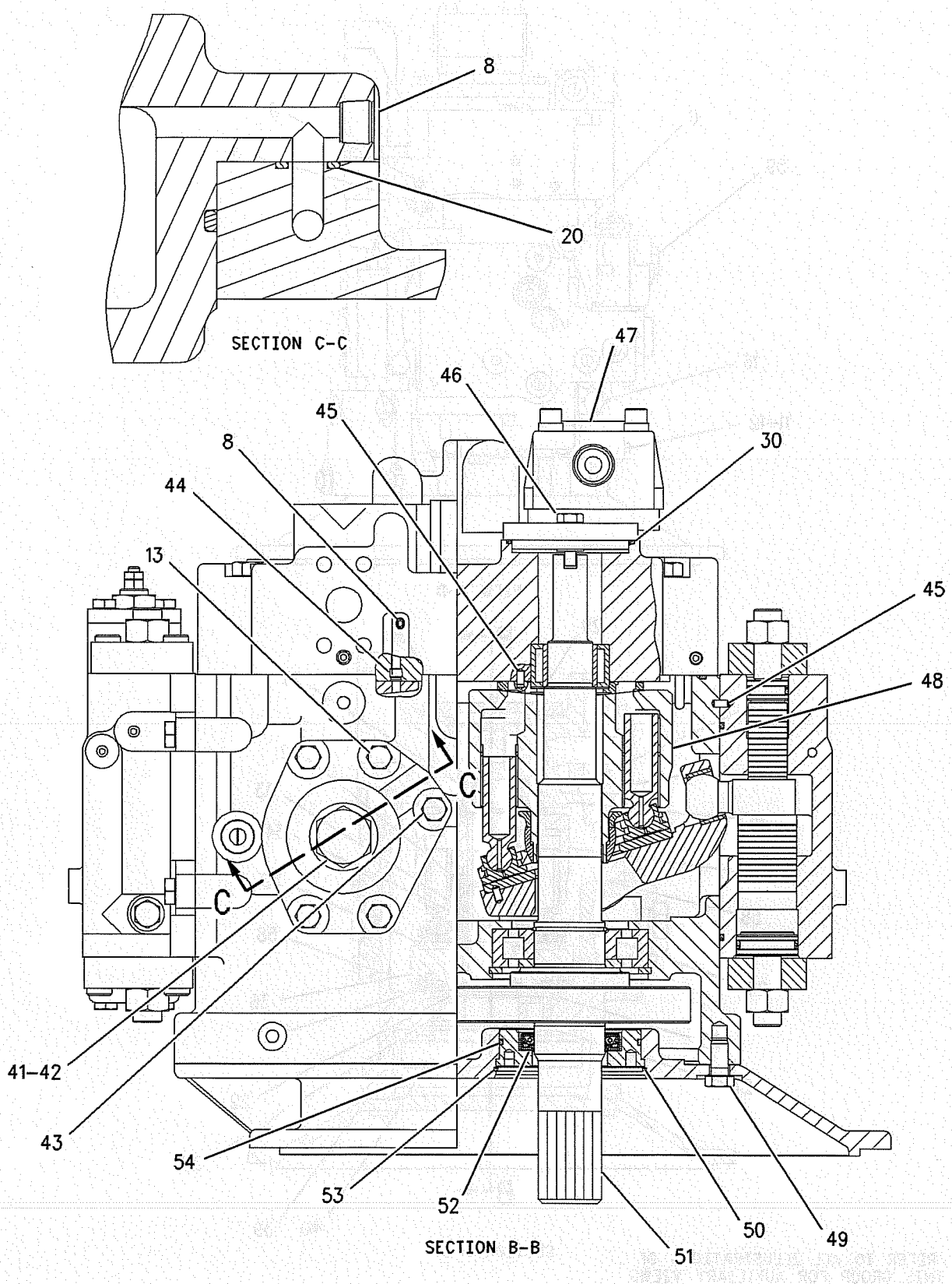

GRAPHIC #3

<END>

g00806240

HYDRAULIC SYSTEM

158-8988 SCREEN GP

S/N: SBN1-UP; RAW1-UP

PART OF 142-7671 TANK & FILTER GP-HYDRAULIC

SMCS-5068 **i01889868**

NOTE	REF NO	GRAPHIC REF	PART NUMBER	QTY	PART NAME 1 2 3 4 5 6 (PRODUCT LEVEL)	SEE PAGE
	1	1	**095-6641**	1	GUIDE	
	2	1	**095-6639**	1	SPRING	
M	3	1	**8T-4133**	2	NUT (M10X1.5 THD)	
	4	1	**129-7784**	1	ROD	
	5	1	**209-6000**	1	SCREEN AS	
	6	1	**5H-5672**	1	SEAL-O-RING	

M-METRIC PART

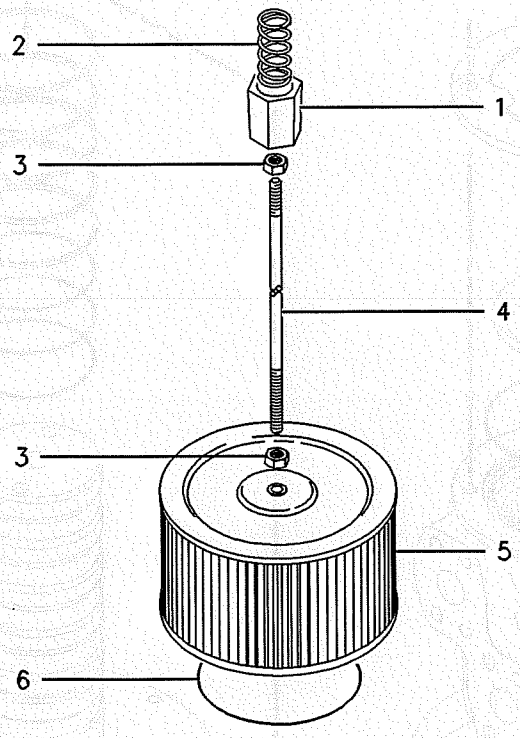

GRAPHIC #1

<END>

g00267878

HYDRAULIC SYSTEM

159-7841 SWIVEL GP

S/N: SBN1-UP; RAW1-UP

PART OF 142-7701, 142-7702 LINES GP-TRAVEL MOTOR

SMCS-5060 **i01366263**

NOTE	REF NO	GRAPHIC REF	PART NUMBER	QTY	PART NAME 1 2 3 4 5 6 (PRODUCT LEVEL)	SEE PAGE
M	1	1	**8T-4136**	6	BOLT (M10X1.50X25MM)	
	2	1	**8T-4121**	2	WASHER-HARD (2.5MM THK)	
	3	1	**7Y-4817**	1	COVER	
	4	1	**095-1716**	1	SEAL-O-RING (109.4MM ID)	
	5	1	**7I-7131**	1	RETAINER	
	6	1	**7Y-4801**	1	HOUSING	
	7	1	**159-7782**	5	SEAL	
	8	1	**095-1625**	3	SEAL-O-RING (89.6MM ID)	
	9	1	**4I-6262**	1	ROTOR	
	10	1	**8T-6759**	1	PLUG-PIPE (1/16-27 THD)	

M-METRIC PART

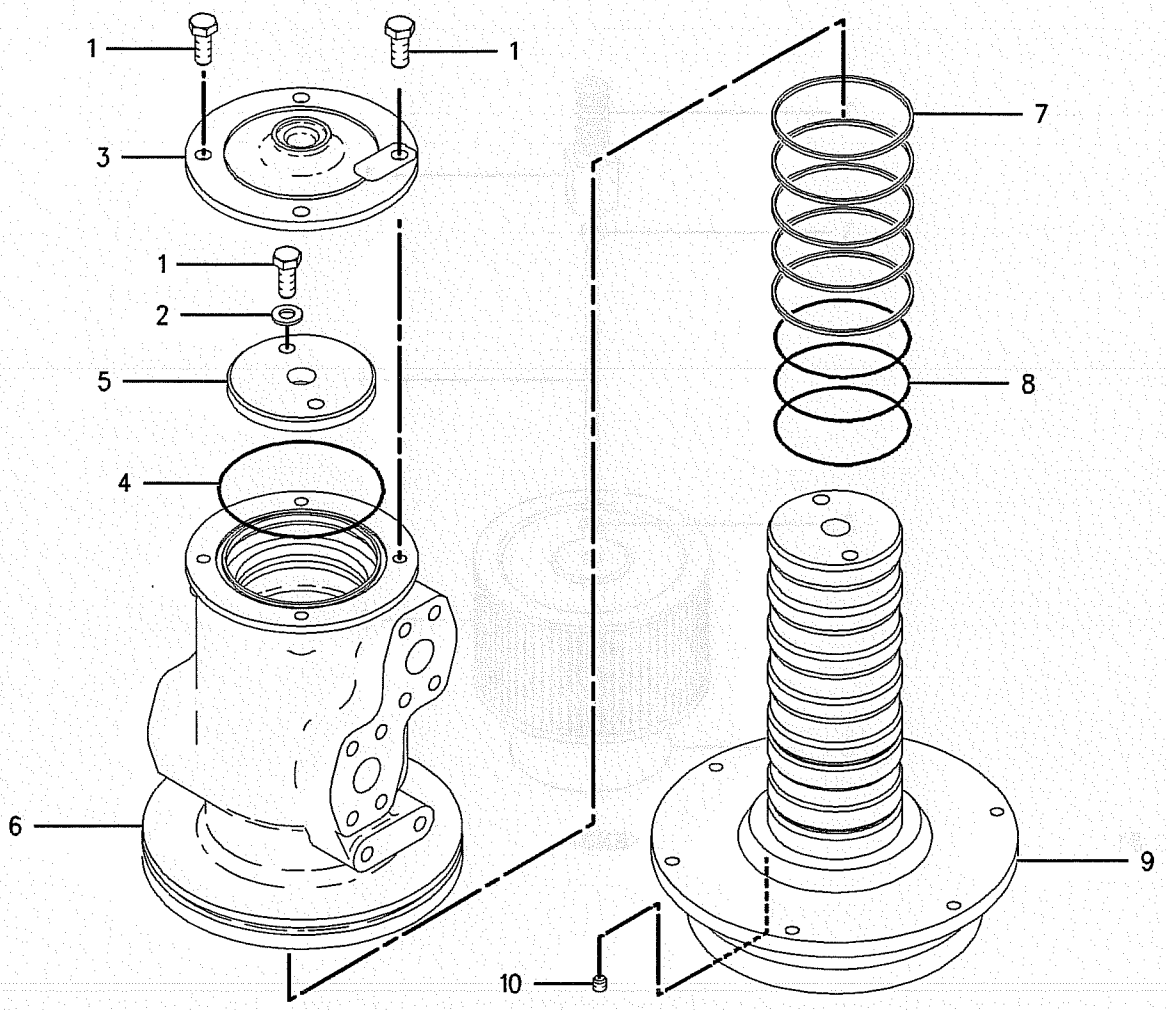

GRAPHIC #1

<END>

g00557544

HYDRAULIC SYSTEM

142-7671 TANK & FILTER GP-HYDRAULIC

S/N: SBN1-UP; RAW1-UP

PART OF 142-7670 TANK & MTG GP-HYDRAULIC

SMCS-5056, 5068 **i01889757**

NOTE	REF NO	GRAPHIC REF	PART NUMBER	QTY	PART NAME 1 2 3 4 5 6 (PRODUCT LEVEL)	SEE PAGE
Y	1	1	**158-8988**	1	SCREEN GP	395
Z	2	1		1	TANK AS-HYDRAULIC	
	3	1	**165-3256**	1	PIPE AS	
	4	2	**165-3260**	1	PIPE AS	
E	5	1	**7Y-1976**		HOSE (146 CM)	
	6	2	**168-9697**	1	SUPPORT AS	
	7	1	**173-5020**	1	COVER AS	
	8	1	**094-3245**	1	GAUGE AS (HYD OIL LEVEL)	
		1	**7Y-4754**	2	BLOCK	
M		1	**094-3247**	2	BOLT (M10X1.5X36MM)	
		1	**095-1514**	4	SEAL-O-RING	
		1	**095-1517**	4	SEAL-O-RING	
		1	**096-4754**	1	PIPE	
	9	1	**095-1608**	1	SEAL-O-RING	
	10	1	**095-1730**	1	SEAL-O-RING	
	11	1	**207-6403**	1	PLUG	
	12	2	**112-0065**	1	BRACKET	
Y	13	2	*126-2075*	1	FILTER GP-OIL (HYDRAULIC)	256
Y	14	2	**158-8987**	1	FILTER & VALVE GP-PILOT (HYDRAULIC)	255
Y	15	2	**158-9005**	1	FILTER GP-OIL	257
	16	1	**213-0677**	1	SWITCH AS-LIQUID LEVEL (HYDRAULIC TANK)	
		1	**102-8802**	1	KIT-RECEPTACLE (2 PIN)	
					(INCLUDES RECEPTACLE AS & WEDGE)	
		1	**9X-3401**	2	PIN-CONNECTOR	
					(16-18 GA)	
					—OR—	
		1	**126-1767**	2	PIN-CONNECTOR	
					(14 GA)	
	17	1	**1P-4278**	1	CLAMP-HOSE	
	18	1	**2B-0858**	1	PLUG-PIPE	
	19	2	**2M-0849**	2	WASHER-HARD (13.5X25.5X5MM THK)	
	20	1	**3D-2824**	1	SEAL-O-RING	
	21	2	**3J-1907**	1	SEAL-O-RING	
	22	2	**3J-7354**	1	SEAL-O-RING	
	23	1	**3K-0360**	1	SEAL-O-RING	
	24	1	**4B-7739**	1	PLUG-DRAIN	
	25	1	**4I-3745**	1	CAP-PRESSURE VALVE (HYDRAULIC TANK)	
	26	1	**4I-5394**	1	SENDER AS-TEMPERATURE	
M		1	**4I-5490**	2	SCREW-MACHINE	
		1	**095-0826**	2	LOCKWASHER	
	27	1	**4J-5267**	1	SEAL-O-RING	
	28	1	**207-6404**	1	WASHER (49.5X60.5X1.5MM THK)	
	29	1	**6D-9157**	1	SEAL-O-RING	
	30	2	**6J-2680**	2	SEAL-O-RING	
	31	2	**6V-0852**	1	CAP-DUST	
	32	2	**6V-3965**	1	FITTING AS	
	33	2	**8C-3446**	1	VALVE GP-FLUID SAMPLING	
	34	2	**8C-3451**	1	CAP-DUST	
	35	1	**8H-9819**	1	ADAPTER-PLUG	
	36	1	**8M-2770**	2	CLIP	
M	37	1	**8T-0267**	2	BOLT-SOCKET HEAD (M6X1X12MM)	
	38	1,2	**8T-4121**	16	WASHER-HARD (11X21X2.5MM THK)	
M	39	1	**8T-4133**	2	NUT (M10X1.5 THD)	
M	40	1,2	**8T-4136**	4	BOLT (M10X1.5X25MM)	
M	41	1	**8T-4137**	6	BOLT (M10X1.5X20MM)	
M	42	2	**8T-4183**	2	BOLT (M12X1.75X40MM)	

HYDRAULIC SYSTEM

142-7671 TANK & FILTER GP-HYDRAULIC *(contd.)* i01889757

NOTE	REF NO	GRAPHIC REF	PART NUMBER	QTY	PART NAME 1 2 3 4 5 6 (PRODUCT LEVEL)	SEE PAGE
M	43	2	**8T-4195**	4	BOLT (M10X1.5X30MM)	
	44	2	**8T-4223**	8	WASHER-HARD (13.5X25.5X3MM THK)	
	45	2	**8T-4224**	4	WASHER-HARD (8.8X16X2MM THK)	
M	46	2	**8T-4908**	4	BOLT (M8X1.25X25MM)	
M	47	2	**8T-4956**	8	BOLT (M12X1.75X35MM)	
	48	1	*148-8411*	1	PLUG AS	
		1	**3K-0360**	1	SEAL-O-RING	
		1	**9S-4185**	1	PLUG	

E-ORDER BY THE CENTIMETER
M-METRIC PART
Y-SEPARATE ILLUSTRATION
Z-NOT SERVICED SEPARATELY

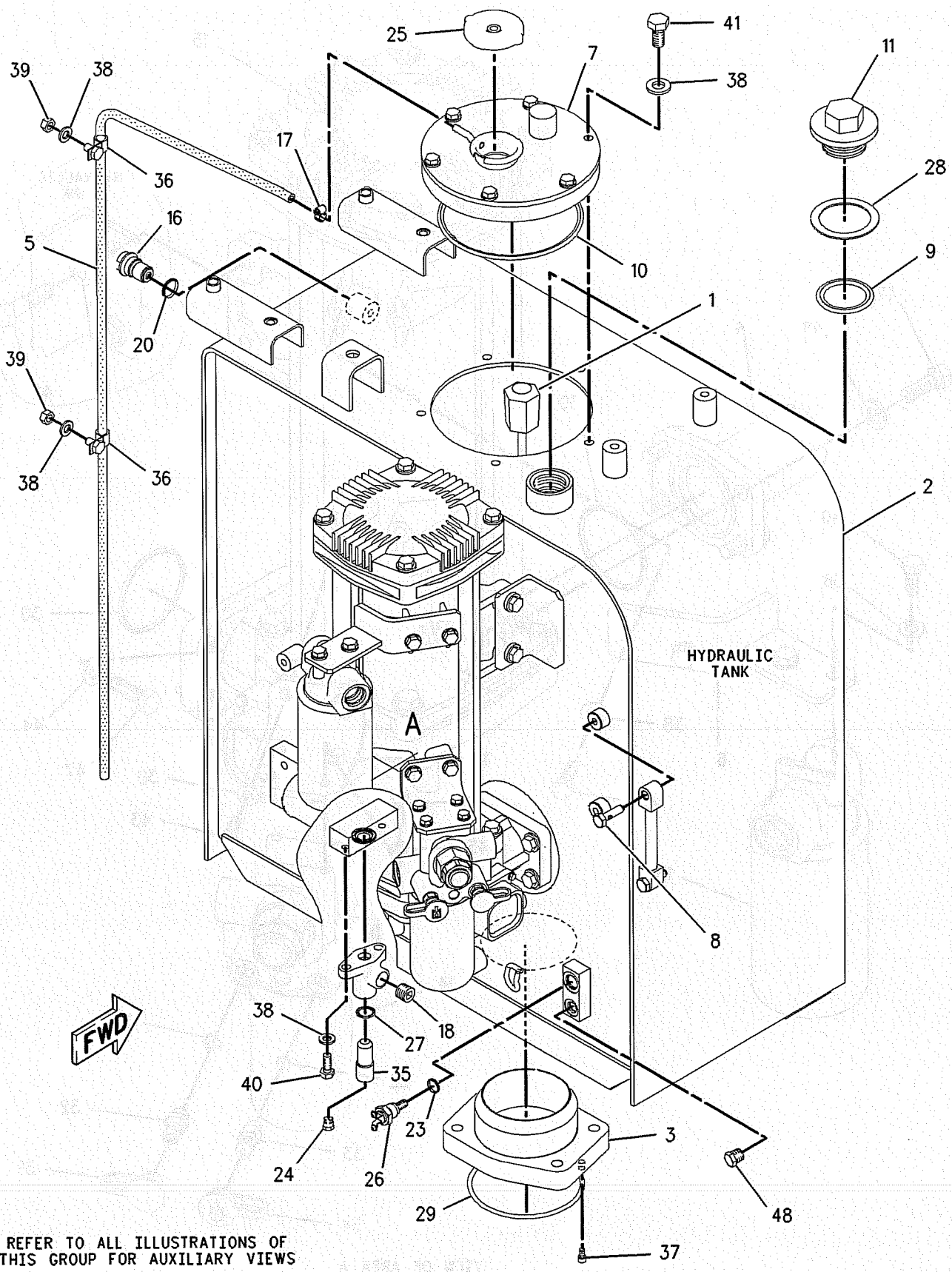

REFER TO ALL ILLUSTRATIONS OF
THIS GROUP FOR AUXILIARY VIEWS

GRAPHIC #1 g00955760

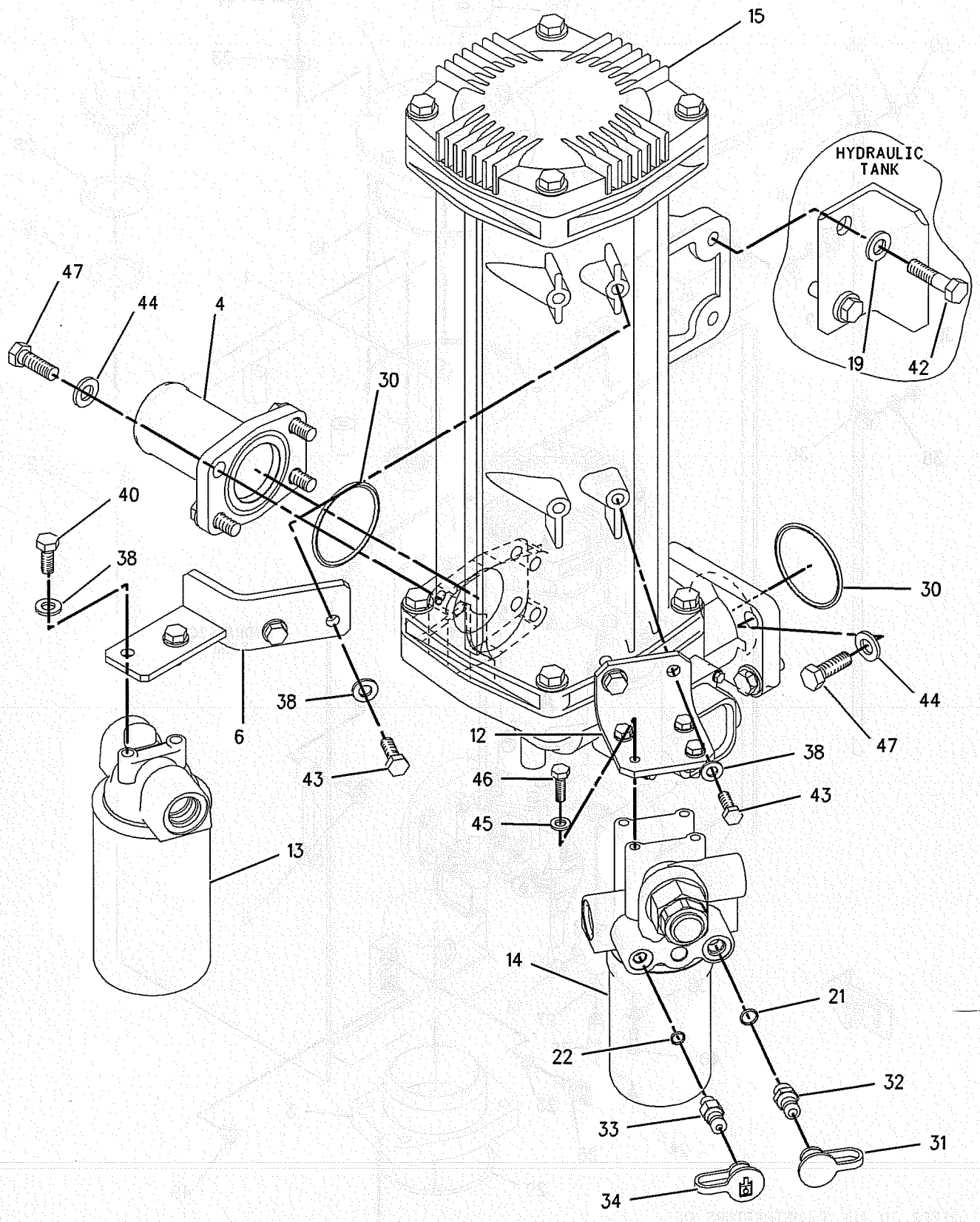

VIEW OF AREA A

GRAPHIC #2 **<END>** g00692046

HYDRAULIC SYSTEM

142-7670 TANK & MTG GP-HYDRAULIC

S/N: SBN1-UP; RAW1-UP

PART OF 201-9323, 201-9324 HYDRAULIC AR

SMCS-5056 **i01354209**

NOTE	REF NO	GRAPHIC REF	PART NUMBER	QTY	PART NAME 1 2 3 4 5 6 (PRODUCT LEVEL)	SEE PAGE
Y	1	1	**142-7671**	1	TANK & FILTER GP-HYDRAULIC	397
	2	1	**177-5886**	6	SPACER	
M	3	1	**8T-4174**	6	BOLT (M16X2.0X120MM)	

M-METRIC PART
Y-SEPARATE ILLUSTRATION

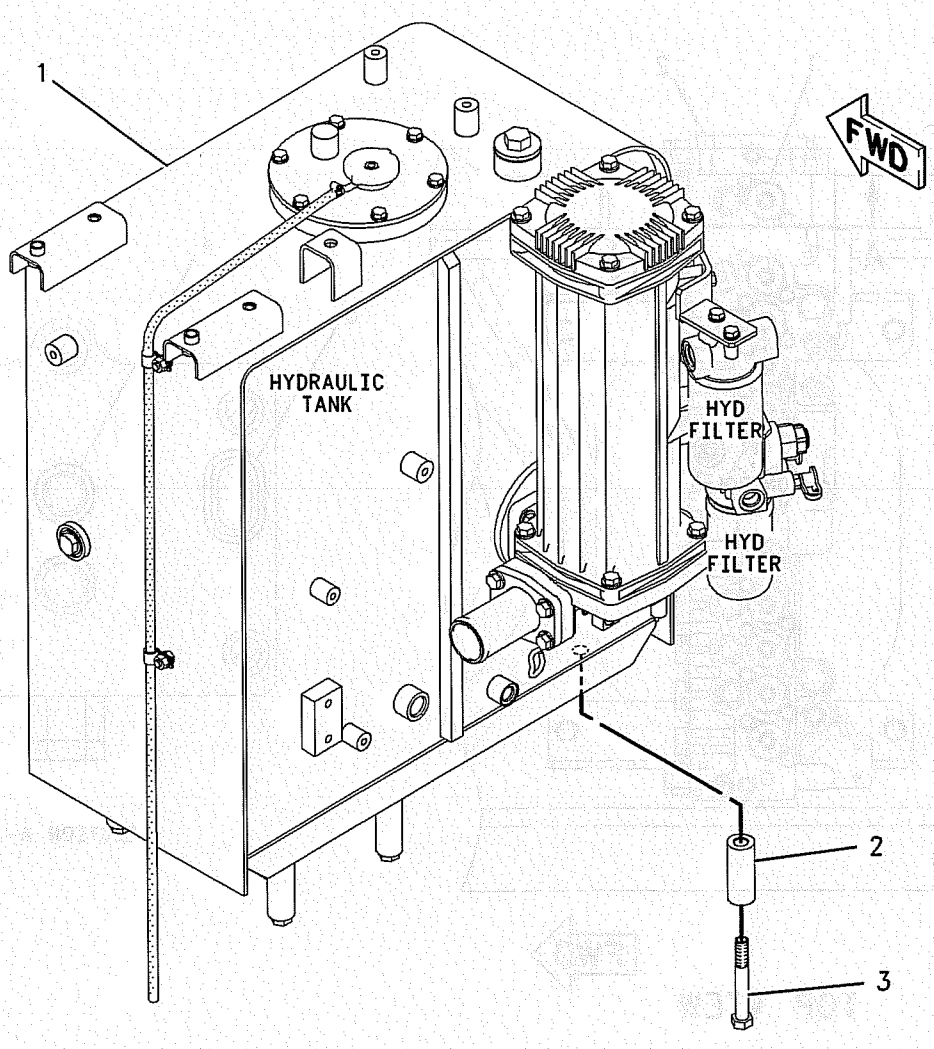

GRAPHIC #1 **<END>** g00690954

HYDRAULIC SYSTEM

173-7984 VALVE & MTG GP-CONTROL

S/N: RAW1-UP

PART OF 173-7975 CONTROL AR-AUXILIARY

AN ATTACHMENT

SMCS-5051 **i01404336**

NOTE	REF NO	GRAPHIC REF	PART NUMBER	QTY	PART NAME 1 2 3 4 5 6 (PRODUCT LEVEL)	SEE PAGE
Y	1	1	**171-0146**	1	VALVE GP-CONTROL	414
M	2	1	**7I-1026**	5	BOLT-SOCKET HEAD (M16X2X130MM)	
	4	1	**1P-3702**	2	SEAL-RECTANGULAR	
	5	1	**4J-8998**	2	SEAL-O-RING (36.09MM ID)	

M-METRIC PART
Y-SEPARATE ILLUSTRATION

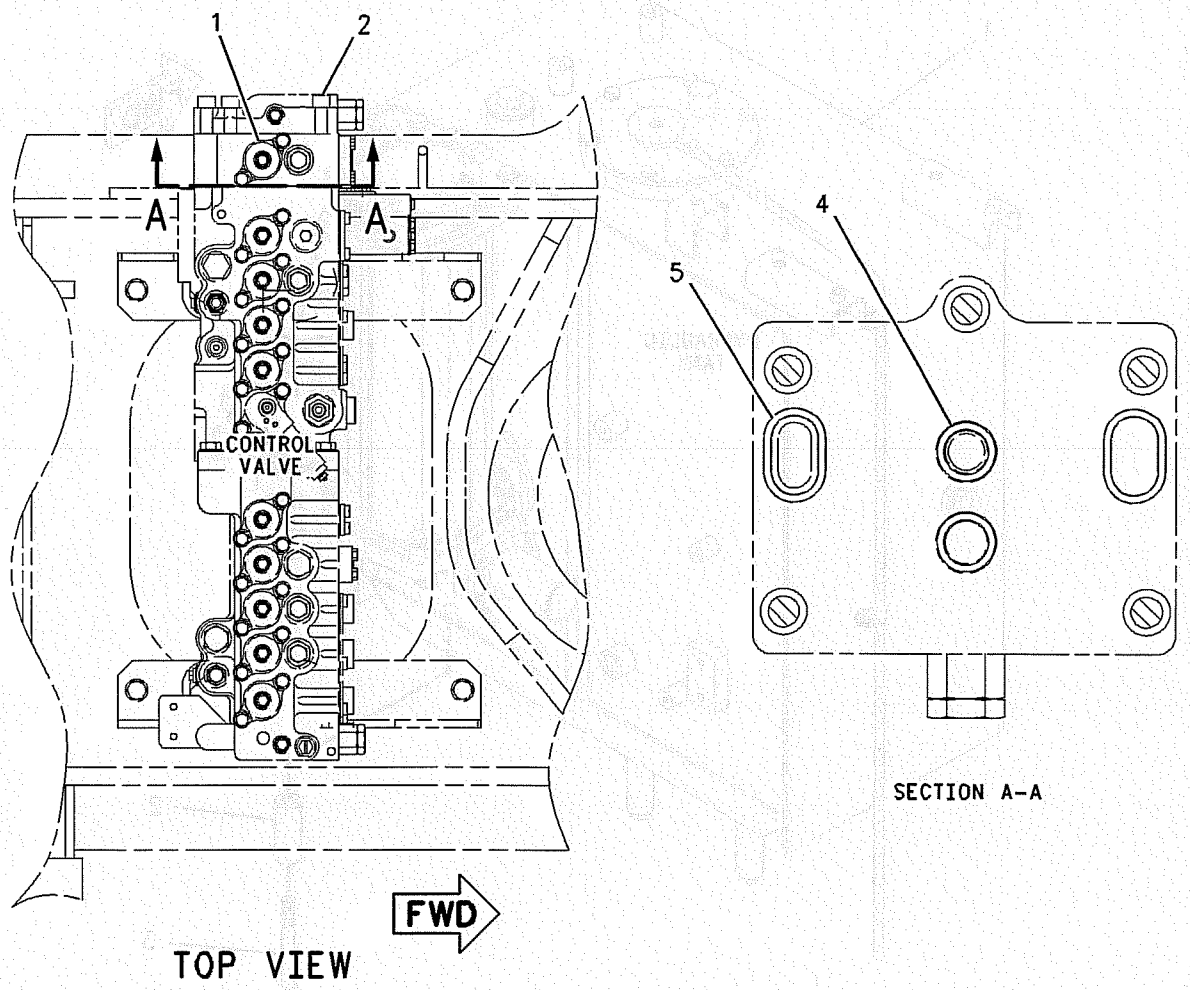

TOP VIEW

SECTION A-A

GRAPHIC #1 **<END>** g00684325

173-7992 VALVE GP-BALL

S/N: SBN1-UP; RAW1-UP

PART OF 153-8862, 173-7956, 173-7963, 173-7969 LINES GP-AUXILIARY HYDRAULIC AN ATTACHMENT

SMCS-1329 **i01403471**

NOTE	REF NO	GRAPHIC REF	PART NUMBER	QTY	PART NAME 1 2 3 4 5 6 (PRODUCT LEVEL)	SEE PAGE
	1	1	**119-9447**	1	HANDLE (45MM HIGH/160MM LONG)	
	2	1	**3J-1907**	1	SEAL-O-RING (11.89MM ID)	
	3	1	**099-5845**	1	PLUG-HEX	
	4	1	**153-8644**	1	STOP	
		1	**153-8645**	1	PLUNGER	
	5	1	**153-8748**	1	SEAL-BALL	
	6	1	**5J-2974**	1	SEAL-O-RING (15.54MM ID)	
	7	1	**8T-0706**	1	RING-RETAINING (18 X 1.2)	
	8	1	**095-1783**	1	RING-BACKUP	
	9	1	**142-6742**	1	SEAL-O-RING	

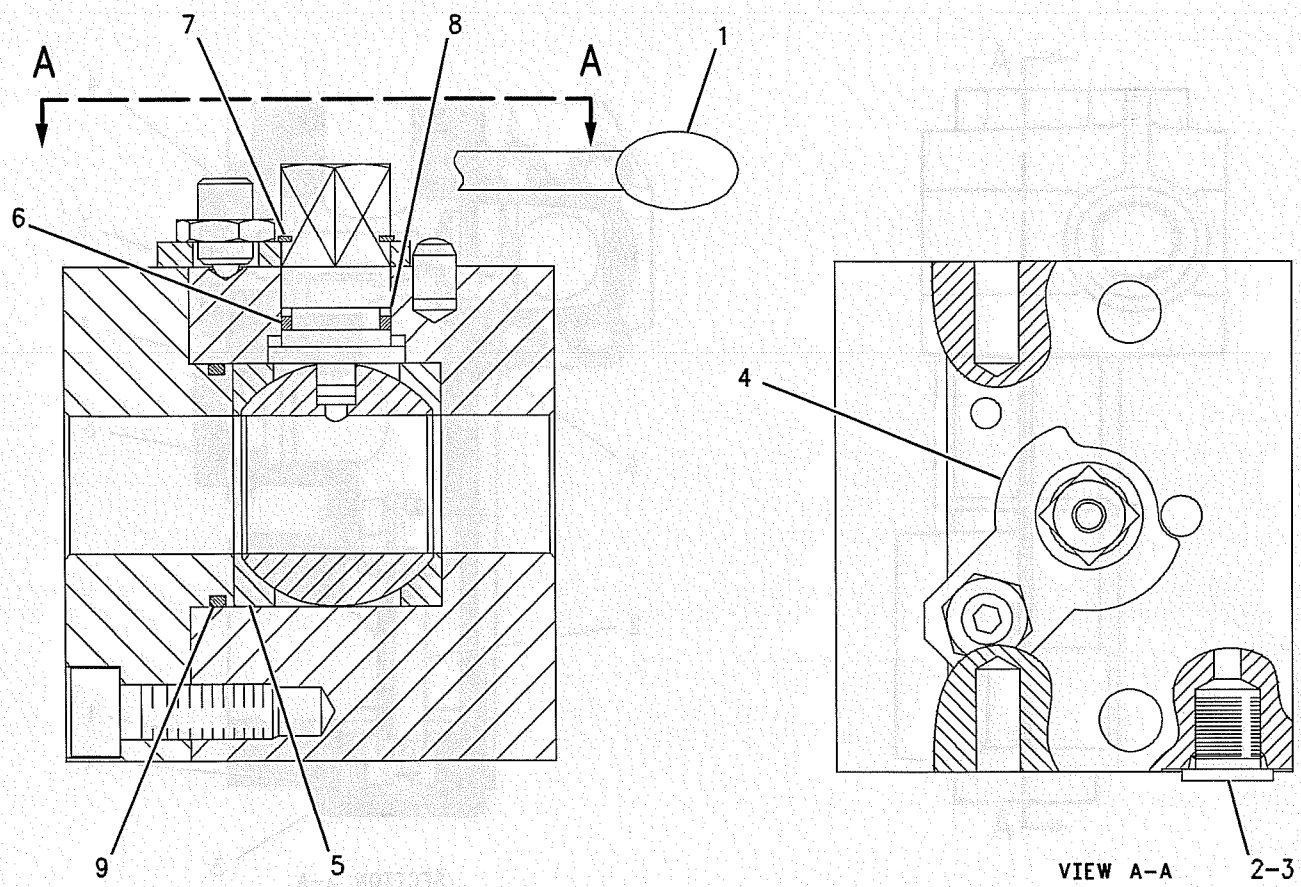

GRAPHIC #1 **<END>** g00709011

HYDRAULIC SYSTEM

201-9329 VALVE GP-CHECK

S/N: SBN1-UP; RAW1-UP

PART OF 199-7292 LINES GP-RETURN & FILTER

SMCS-5067 **i01889745**

NOTE	REF NO	GRAPHIC REF	PART NUMBER	QTY	PART NAME 1 2 3 4 5 6 (PRODUCT LEVEL)	SEE PAGE
Z	1	1		1	BODY-VALVE	
	2	1	**184-3833**	1	VALVE AS	
	3	1	**190-7826**	2	PLUG	
	4	1	**095-1547**	2	SEAL-O-RING	
	5	1	**177-2713**	1	VALVE AS	
	6	1	**9S-6130**	1	PLUG	
	7	1	**2S-4078**	1	SEAL-O-RING	

Z-NOT SERVICED SEPARATELY

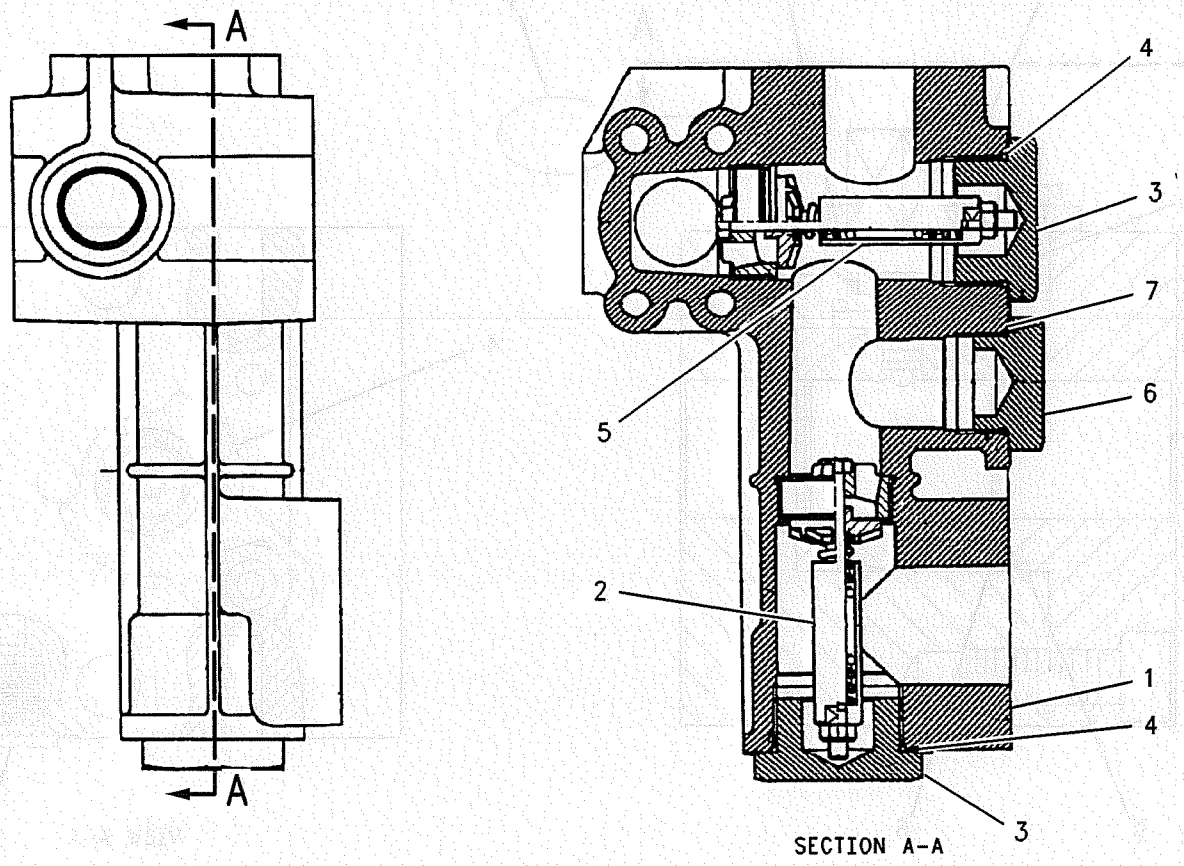

GRAPHIC #1 **<END>** g00932225

HYDRAULIC SYSTEM

153-5295 VALVE GP-CONTROL

S/N: SBN1-UP; RAW1-UP

PART OF 158-8202 VALVE GP-CONTROL

SMCS-5051 **i01381098**

NOTE	REF NO	GRAPHIC REF	PART NUMBER	QTY	PART NAME 1 2 3 4 5 6 (PRODUCT LEVEL)	SEE PAGE
	1	1	**185-0471**	1	SLEEVE	
	2	1	**158-8186**	1	SPRING	
	3	1	**102-0889**	2	SEAL-O-RING	
	4	1	*153-5308*	1	SLEEVE	
	5	1	*158-8177*	1	SPRING	
	6	1	*158-8109*	1	STEM	
	7	1	**103-8173**	2	SEAL-O-RING (31.7MM ID)	
	8	1	**140-0677**	1	PIN	
	9	1	*147-4194*	1	ROD	
	10	1	**140-0674**	1	VALVE	

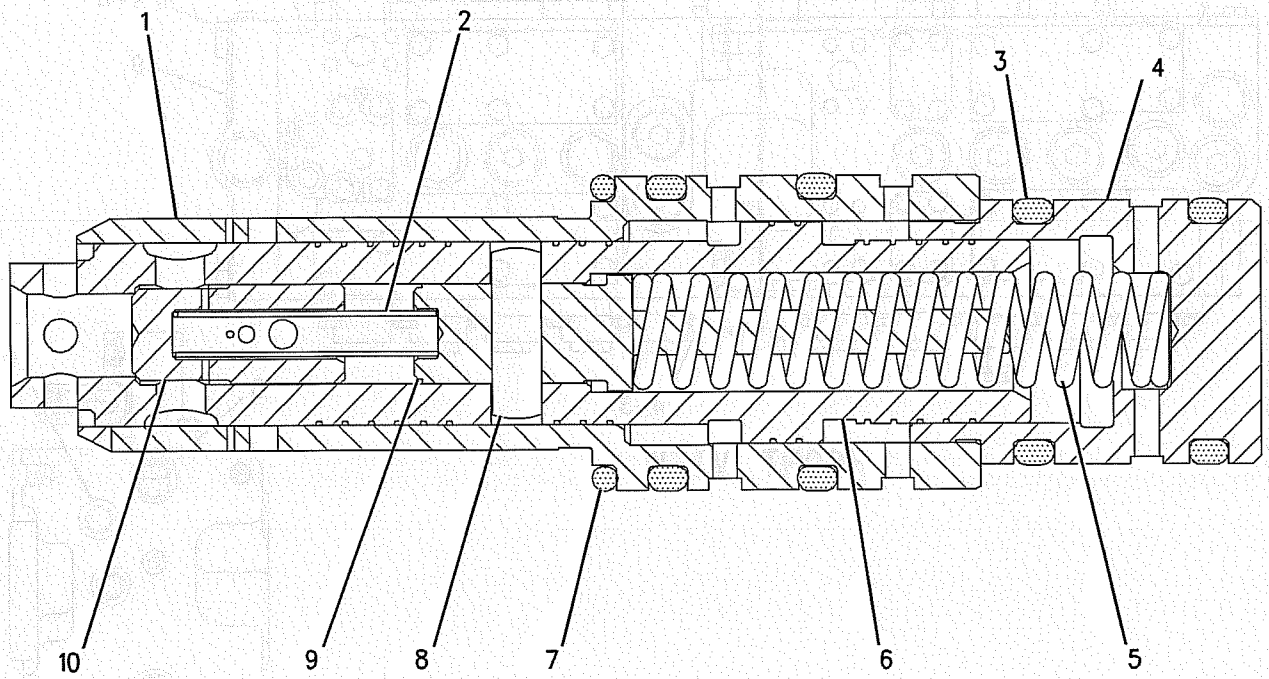

GRAPHIC #1 **<END>** g00705397

HYDRAULIC SYSTEM

158-8200 VALVE GP-CONTROL

S/N: SBN1-UP; RAW1-UP

PART OF 201-9323, 201-9324 HYDRAULIC AR

SMCS-5051 **i01378177**

NOTE	REF NO	GRAPHIC REF	PART NUMBER	QTY	PART NAME 1 2 3 4 5 6 (PRODUCT LEVEL)	SEE PAGE
Y	1	1	**158-8201**	1	VALVE GP-CONTROL	407
Y	2	1	**158-8202**	1	VALVE GP-CONTROL	410
M	3	1	**8T-4193**	4	BOLT (M16X2X50MM)	
	4	1	**9X-8257**	9	WASHER (3.5MM THK)	
	5	1	**4J-0519**	2	SEAL-O-RING (31.34MM ID)	
	6	1	**1P-3702**	2	SEAL-RECTANGULAR (28.83MM ID)	
Y	9	1	**153-5313**	1	VALVE GP-RELIEF	442
M	11	1	**8T-4140**	5	BOLT (M16X2.0X60MM)	

M-METRIC PART
Y-SEPARATE ILLUSTRATION

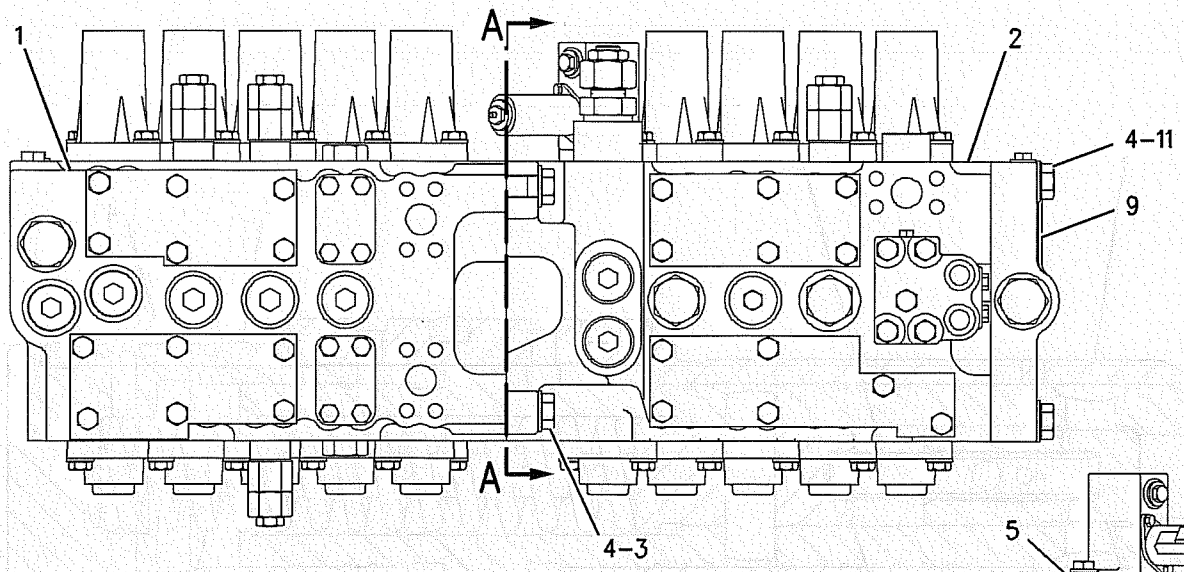

FRONT VIEW

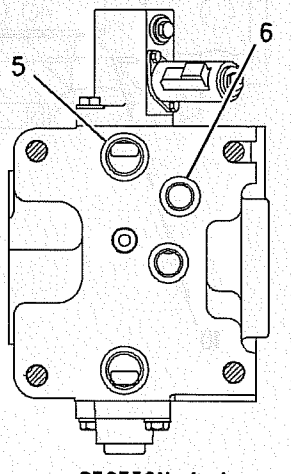

SECTION A-A

GRAPHIC #1 **<END>** g00672170

HYDRAULIC SYSTEM

158-8201 VALVE GP-CONTROL

S/N: SBN1-UP; RAW1-UP

PART OF 158-8200 VALVE GP-CONTROL

SMCS-5051 **i01382172**

NOTE	REF NO	GRAPHIC REF	PART NUMBER	QTY	PART NAME 1 2 3 4 5 6 (PRODUCT LEVEL)	SEE PAGE
	1	1	*153-5126*	1	VALVE GP-CONTROL	
		1	**6E-2271**	10	RETAINER	
		1	**104-7293**	3	SPRING	
		1	**104-7294**	1	SPRING	
		1	**104-7296**	1	SPRING	
M		1	**153-5276**	5	BOLT	
	2	1	**158-8159**	5	HOUSING	
	3	1	**6E-2274**	5	COVER	
	4	1	**111-9959**	1	PLUG-PIPE (3/8-18 THD)	
	5	1	**8T-4121**	20	WASHER-HARD (11X21X2.5MM THK)	
M	6	1,2	**8T-4195**	28	BOLT (M10X1.5X30MM)	
	7	2	**6V-5597**	10	SEAL-O-RING (40.94MM ID)	
	8	2	**6E-4816**	2	PLUG GP	
					(EACH INCLUDES)	
		2	**6E-2745**	1	SEAL-O-RING	
		2	**9T-4506**	1	PLUG	
		2	**6E-4815**	1	PLUG	
		2	**9J-0705**	1	RING-BACKUP	
		2	**033-5879**	1	SEAL-O-RING (11.12MM ID)	
		2	**033-6036**	1	SEAL-O-RING (23.47MM ID)	
		2	**6E-2745**	1	SEAL-O-RING	
		2	**9T-4506**	1	PLUG	
	9	2	**6E-5731**	4	VALVE	
	10	1,2	**6E-5730**	5	PLUG	
	11	1,2	**4K-1388**	5	SEAL-O-RING (26.59MM ID)	
	12	1,2	**7I-1248**	5	SPRING	
	13	2	**7Y-8099**	2	COVER	
	14	2	**4J-0519**	2	SEAL-O-RING (31.34MM ID)	
Y	15	2	**116-3600**	3	VALVE GP-RELIEF	438
	16	2	**153-5286**	1	VALVE	
	17	1	**153-5291**	1	CONNECTOR	
	18	1	**153-5294**	1	PLUG	
	19	1	**3D-2824**	1	SEAL-O-RING (23.47MM ID)	
	20	1	**153-5293**	1	SPRING	
	21	1	**153-5292**	1	VALVE	
	22	1	**153-5290**	1	PLUG	
	23	1	**7M-8485**	1	SEAL-O-RING (29.74MM ID)	
	24	1	**153-5288**	1	SPRING	
	25	1	**153-5289**	1	GUIDE	
	26	1	**2M-9780**	1	SEAL-O-RING (19.18MM ID)	
Y	27	1	**109-5152**	1	VALVE GP-RELIEF	437

M-METRIC PART
Y-SEPARATE ILLUSTRATION

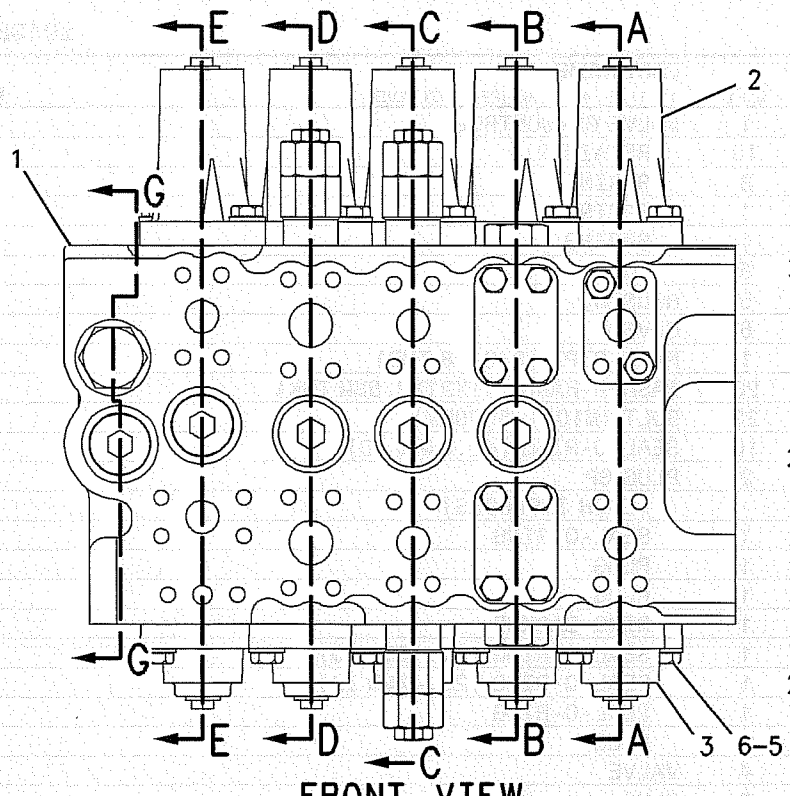

FRONT VIEW

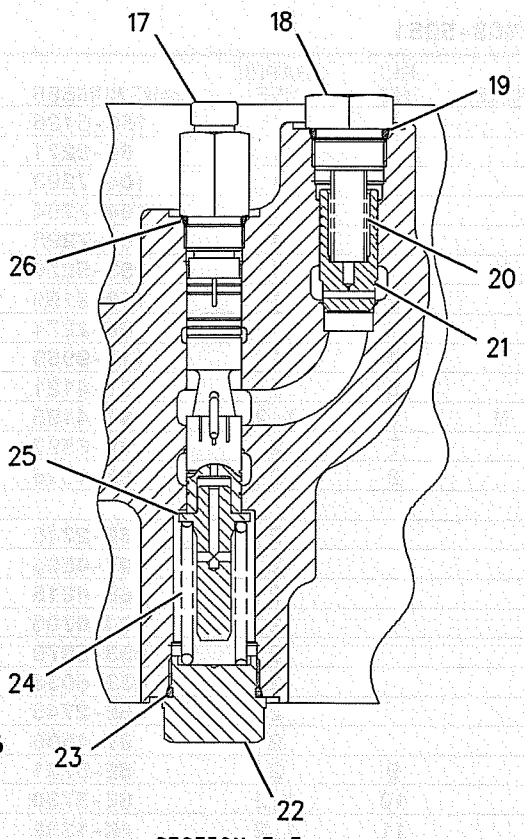

SECTION F-F

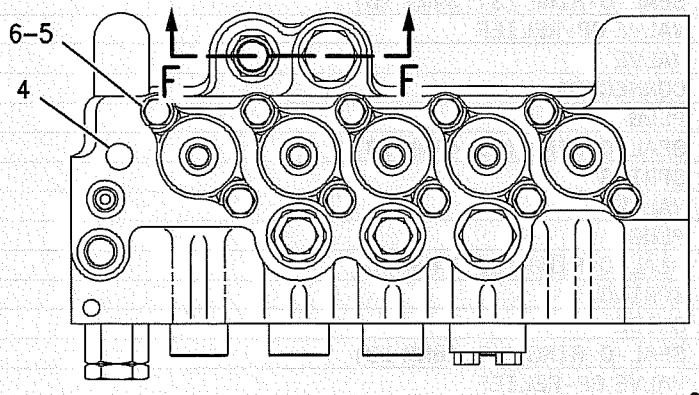

TOP VIEW



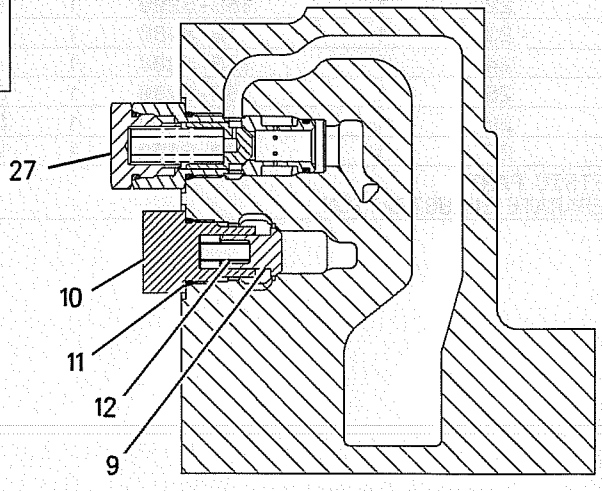

SECTION G-G

REFER TO ALL ILLUSTRATIONS OF THIS GROUP FOR AUXILIARY VIEWS

GRAPHIC #1 g00673586

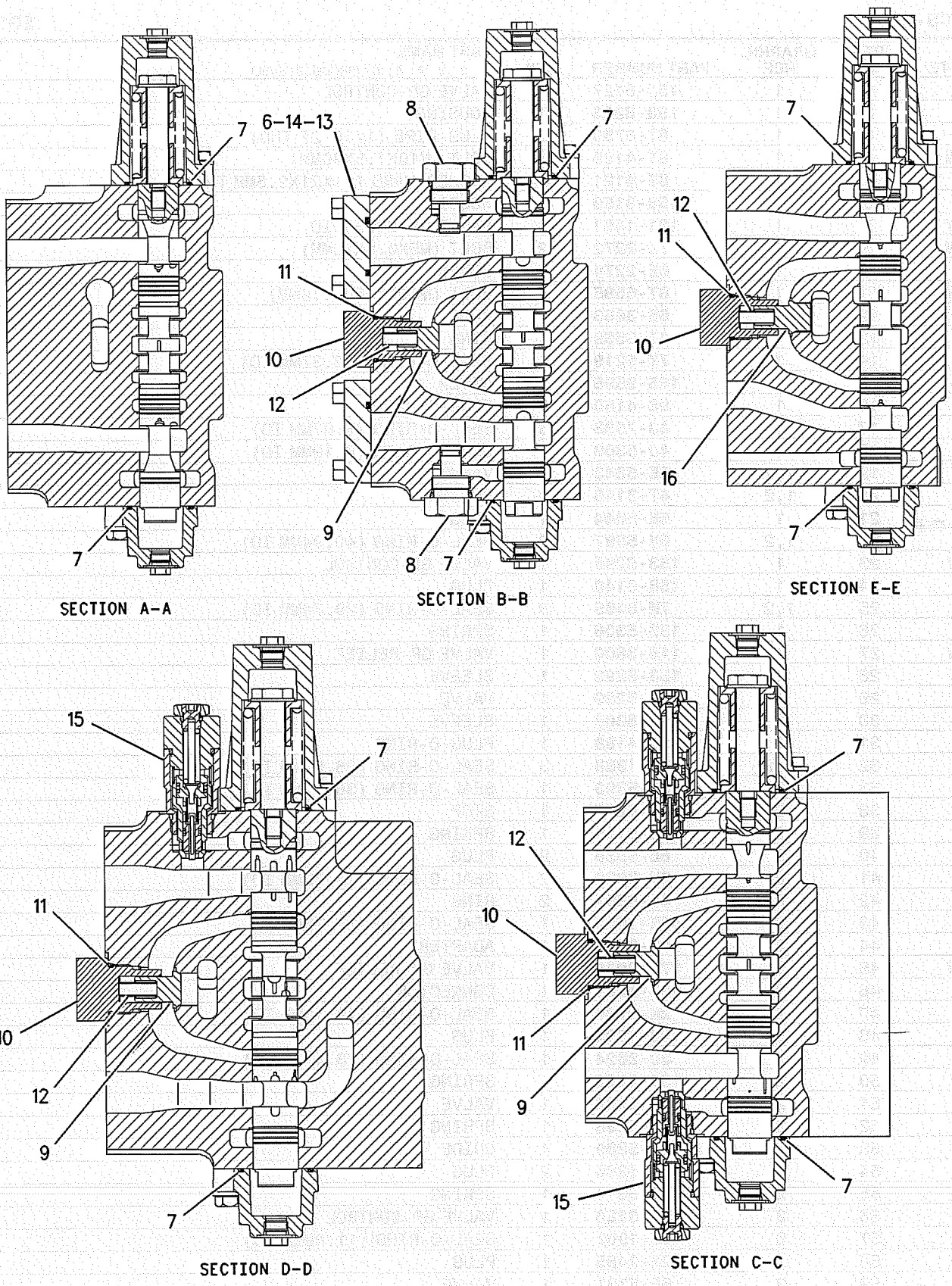

GRAPHIC #2

<END>

g00673589

HYDRAULIC SYSTEM

158-8202 VALVE GP-CONTROL

S/N: SBN1-UP; RAW1-UP

PART OF 158-8200 VALVE GP-CONTROL

SMCS-5051 **i01394764**

NOTE	REF NO	GRAPHIC REF	PART NUMBER	QTY	PART NAME 1 2 3 4 5 6 (PRODUCT LEVEL)	SEE PAGE
	1	1	*153-5127*	1	VALVE GP-CONTROL	
	2	1	**158-8206**	1	HOUSING	
	3	1	**8T-6759**	2	PLUG-PIPE (1/16-27 THD)	
M	4	1	**8T-4195**	20	BOLT (M10X1.5X30MM)	
	5	1	**8T-4121**	24	WASHER-HARD (11X21X2.5MM THK)	
	6	1	**158-8159**	4	HOUSING	
Y	7	1	**121-1491**	1	VALVE GP-SOLENOID	453
M	8	1	**7I-2272**	2	BOLT (M5X0.8X12MM)	
	10	1	**6E-2274**	5	COVER	
M	11	1	**8T-6685**	4	BOLT (M10X1.50X110MM)	
	12	1	**6E-3653**	1	PLUG	
	13	1	**4I-3569**	1	RING	
	14	1	**7Y-5219**	1	SEAL-O-RING (12.37MM ID)	
	15	1	**165-9595**	1	COVER	
	16	1	**9S-4180**	3	PLUG-O-RING	
	17	1	**4J-7533**	3	SEAL-O-RING (6.07MM ID)	
	18	1	**4J-5309**	1	SEAL-O-RING (9.19MM ID)	
	19	1,2	**6E-5643**	3	VALVE	
	20	1,2	**4T-3148**	3	SPRING	
	21	1	**6E-5644**	1	PLUG	
	22	1,2	**6V-5597**	9	SEAL-O-RING (40.94MM ID)	
Y	23	1	**153-5295**	1	VALVE GP-CONTROL	405
	24	1	**158-8140**	1	PLUG	
	25	1,2	**7M-8485**	3	SEAL-O-RING (29.74MM ID)	
	26	1	**153-5306**	1	SPRING	
Y	27	1	**116-3600**	1	VALVE GP-RELIEF	438
	28	1	**153-5298**	1	SLEEVE	
	29	1	**153-5299**	1	VALVE	
	30	2	**153-5309**	1	SLEEVE	
	31	2	**9S-4188**	1	PLUG-O-RING	
	32	1,2	**4K-1388**	3	SEAL-O-RING (26.59MM ID)	
	33	2	**6V-5393**	1	SEAL-O-RING (36.17MM ID)	
	38	2	**158-8207**	1	STOP	
	39	2	**6E-5169**	1	SPRING	
	40	2	**6E-5638**	2	PLUG	
	41	2	**6V-3922**	2	SEAL-O-RING (18.72MM ID)	
	42	2	**4I-6397**	2	RING	
	43	2	**095-1603**	1	SEAL-O-RING (37.7MM ID)	
	44	2	**103-8177**	1	ADAPTER	
Y	45	2	**171-0030**	1	VALVE GP-RELIEF	443
	46	2	**153-5291**	1	CONNECTOR	
	47	2	**2M-9780**	1	SEAL-O-RING (19.18MM ID)	
	48	2	**153-5294**	1	PLUG	
	49	2	**3D-2824**	1	SEAL-O-RING (23.47MM ID)	
	50	2	**153-5293**	1	SPRING	
	51	2	**153-5292**	1	VALVE	
	52	2	**153-5288**	1	SPRING	
	53	2	**153-5289**	1	GUIDE	
	54	2	**153-5290**	2	PLUG	
	55	2	**153-5311**	1	SPRING	
	56	2	**158-8150**	1	VALVE GP-CONTROL	
	57	2	**3J-1907**	1	SEAL-O-RING (11.89MM ID)	
	58	2	**123-2485**	1	PLUG	
	59	2	**6E-5731**	1	VALVE	
	60	2	**6E-5730**	1	PLUG	
	61	2	**7I-1248**	1	SPRING	

158-8202 VALVE GP-CONTROL *(contd.)*

i01394764

NOTE	REF NO	GRAPHIC REF	PART NUMBER	QTY	PART NAME 1 2 3 4 5 6 (PRODUCT LEVEL)	SEE PAGE
	62	2	**095-1575**	1	SEAL-O-RING (7.80MM ID)	
	63	2	**095-1778**	1	RING-BACKUP	
M	64	1	**7X-2621**	1	BOLT (M10X1.50X12MM)	
	65	1	**103-8173**	1	SEAL-O-RING (31.7MM ID)	

M-METRIC PART
Y-SEPARATE ILLUSTRATION

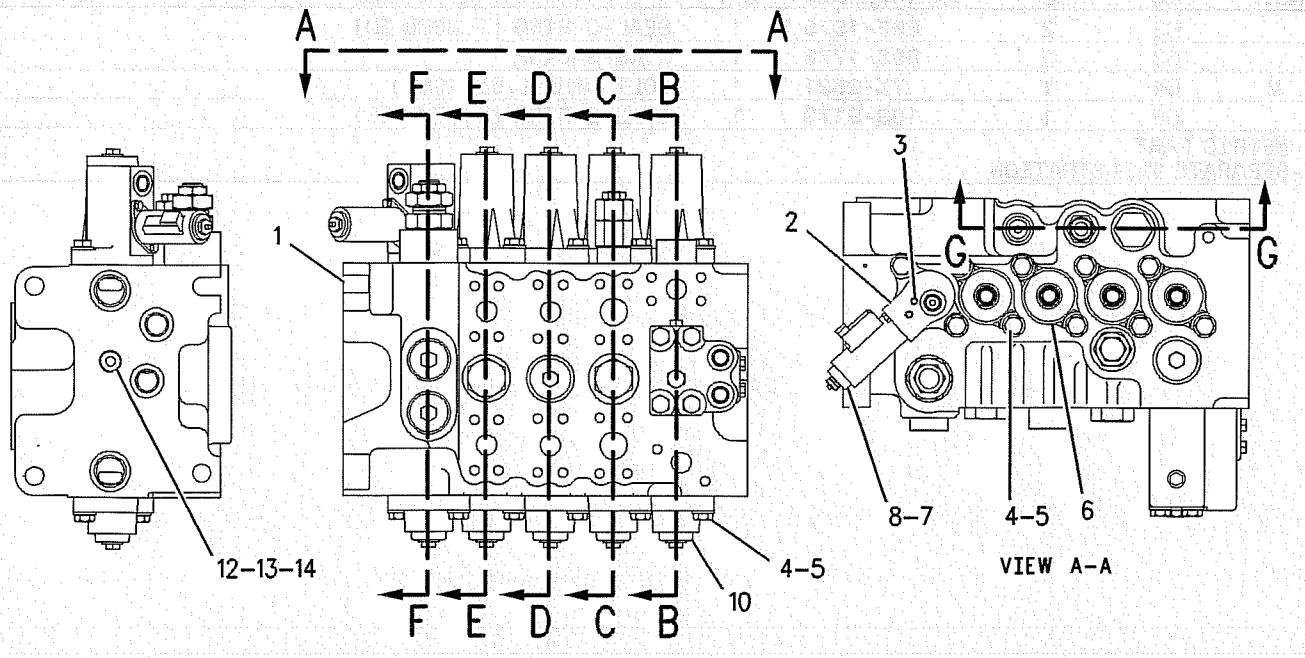

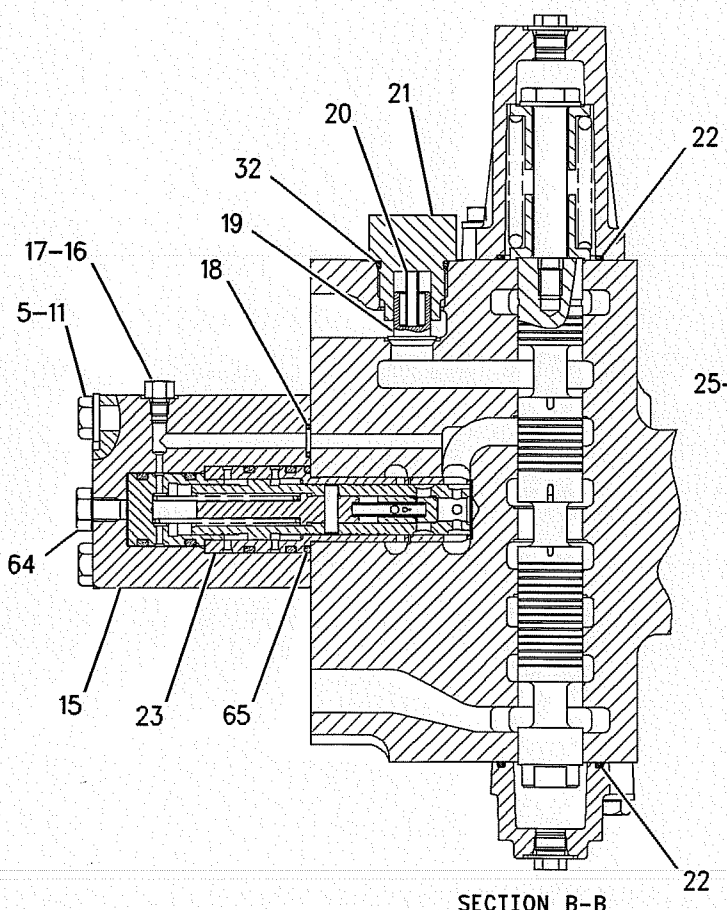

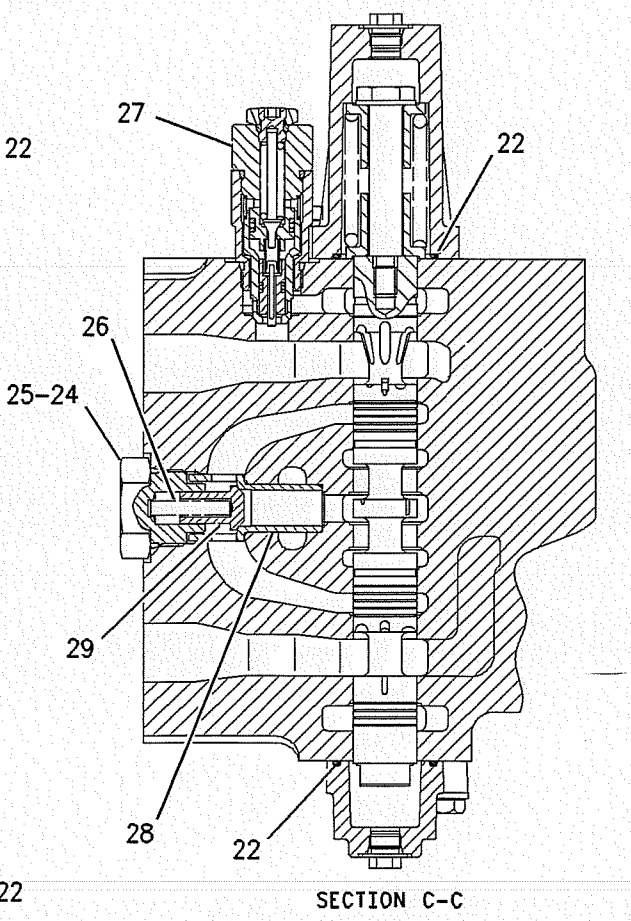

REFER TO ALL ILLUSTRATIONS OF THIS GROUP FOR AUXILIARY VIEWS

GRAPHIC #1

g00705086

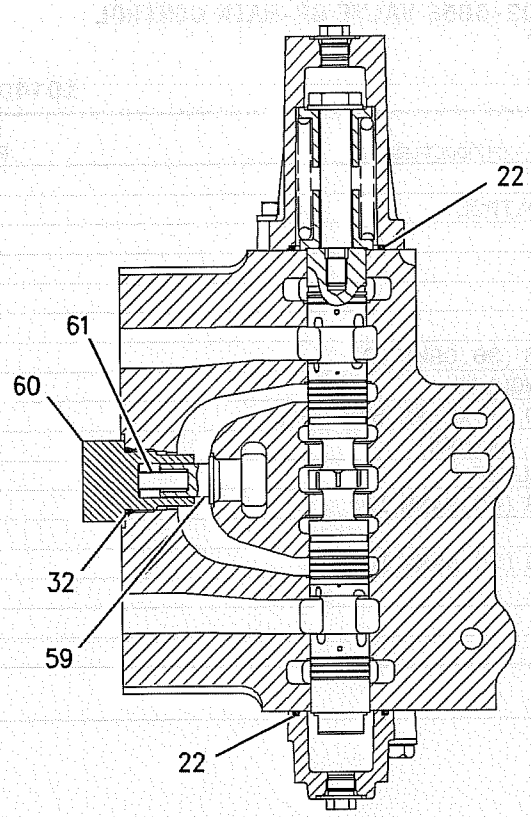

SECTION D-D

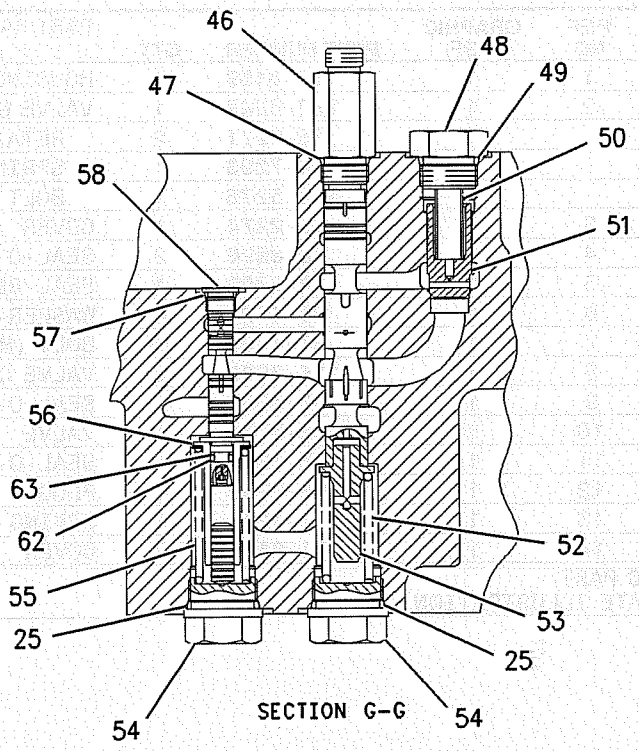

SECTION G-G

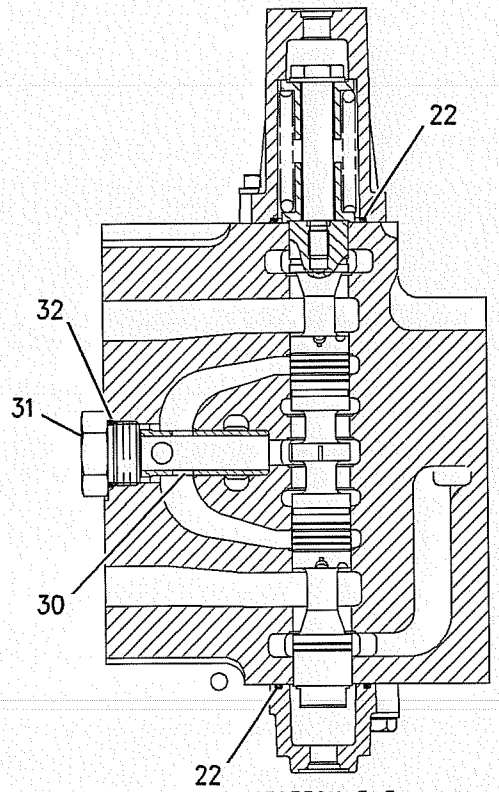

SECTION E-E

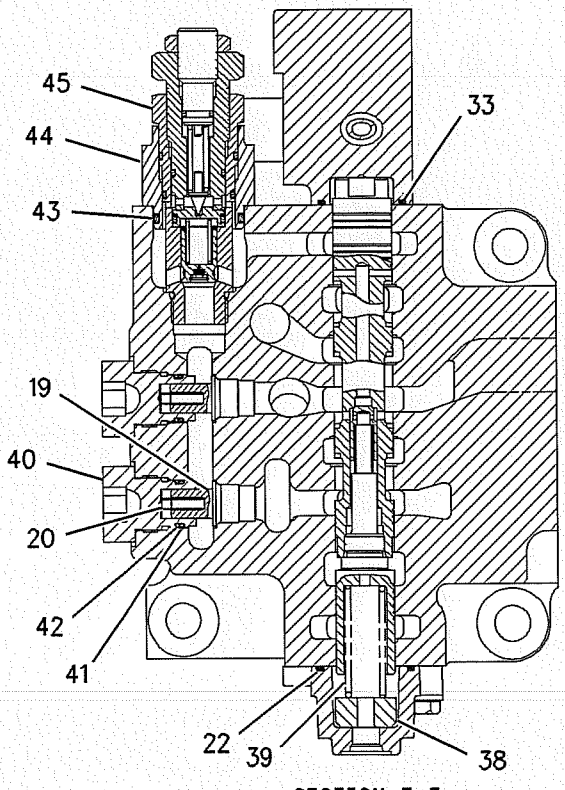

SECTION F-F

GRAPHIC #2

<END>

g00705085

HYDRAULIC SYSTEM

171-0146 VALVE GP-CONTROL

S/N: SBN1-UP; RAW1-UP

PART OF 173-7984 VALVE & MTG GP-CONTROL, 202-6856 VALVE GP-MAIN CONTROL AN ATTACHMENT

SMCS-5051 **i01400996**

NOTE	REF NO	GRAPHIC REF	PART NUMBER	QTY	PART NAME 1 2 3 4 5 6 (PRODUCT LEVEL)	SEE PAGE
	1	1	**158-8159**	1	HOUSING	
	2	1	**153-5242**	1	VALVE GP-CONTROL	
		1	**6E-2271**	2	RETAINER	
		1	**104-7293**	1	SPRING	
M		1	**153-5276**	1	BOLT	
	3	1	**6E-2274**	1	COVER	
	4	1	**4J-8998**	2	SEAL-O-RING (36.09MM ID)	
	5	1	**1P-3702**	4	SEAL-RECTANGULAR	
	6	1	**8T-4121**	4	WASHER-HARD (11X21X2.5MM THK)	
M	7	1	**8T-4195**	12	BOLT (M10X1.5X30MM)	
Y	8	1	**116-3600**	2	VALVE GP-RELIEF	438
	9	1	**6V-5597**	2	SEAL-O-RING (40.94MM ID)	
	10	1	**6E-5731**	1	VALVE	
	11	1	**4K-1388**	1	SEAL-O-RING (26.59MM ID)	
	12	1	**6E-5730**	1	PLUG	
	13	1	**7I-1248**	1	SPRING	
	14	1	**171-0150**	2	COVER	

M-METRIC PART
Y-SEPARATE ILLUSTRATION

171-0146 **VALVE GP-CONTROL** *(contd.)* **i01400996**

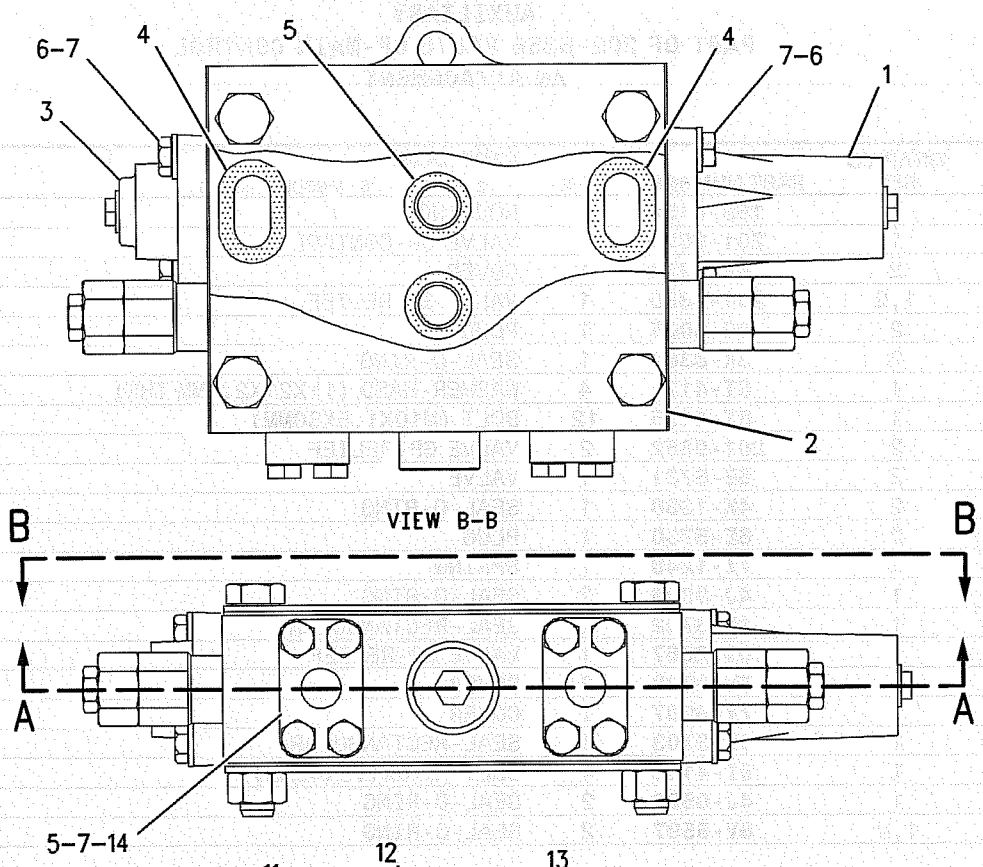

SECTION A-A

GRAPHIC #1 **<END>** g00738171

HYDRAULIC SYSTEM

201-9358 VALVE GP-CONTROL

S/N: SBN1-UP; RAW1-UP
AUXILIARY
PART OF 202-6856 VALVE GP-MAIN CONTROL
AN ATTACHMENT

SMCS-5051 **i01889467**

NOTE	REF NO	GRAPHIC REF	PART NUMBER	QTY	PART NAME 1 2 3 4 5 6 (PRODUCT LEVEL)	SEE PAGE
	1	1	**158-8159**	1	HOUSING	
Y	2	1	**201-9359**	1	VALVE GP-CONTROL	419
	3	2	**6E-2274**	1	COVER	
Y	4	1,2	**201-9350**	1	VALVE GP-RELIEF	446
	5	2	**9S-8005**	1	PLUG	
	6	2	**3K-0360**	1	SEAL-O-RING	
	7	1	**8T-4121**	4	WASHER-HARD (11X21X2.5MM THK)	
M	8	1	**8T-4195**	12	BOLT (M10X1.5X30MM)	
Y	9	2	**201-9352**	2	VALVE GP-RELIEF	448
	10	2	**6E-5731**	1	VALVE	
	11	2	**4K-1388**	1	SEAL-O-RING	
	12	2	**6E-5730**	1	PLUG	
	13	2	**7I-1248**	1	SPRING	
	14	1	**4J-8998**	2	SEAL-O-RING	
	15	1	**1P-3702**	2	SEAL-RECTANGULAR	
Y	16	1	**109-2667**	1	VALVE GP-RELIEF	436
	17	1	**7Y-8099**	2	COVER	
	18	1	**7Y-6007**	1	COVER	
	19	1	**1P-3703**	1	SEAL-RECTANGULAR	
M	20	1	**8T-4186**	4	BOLT (M10X1.5X40MM)	
	21	1	**4J-0520**	2	SEAL-O-RING	
	22	1,2	**6V-5597**	2	SEAL-O-RING	

M-METRIC PART
Y-SEPARATE ILLUSTRATION

201-9358 **VALVE GP-CONTROL** ***(contd.)*** **i01889467**

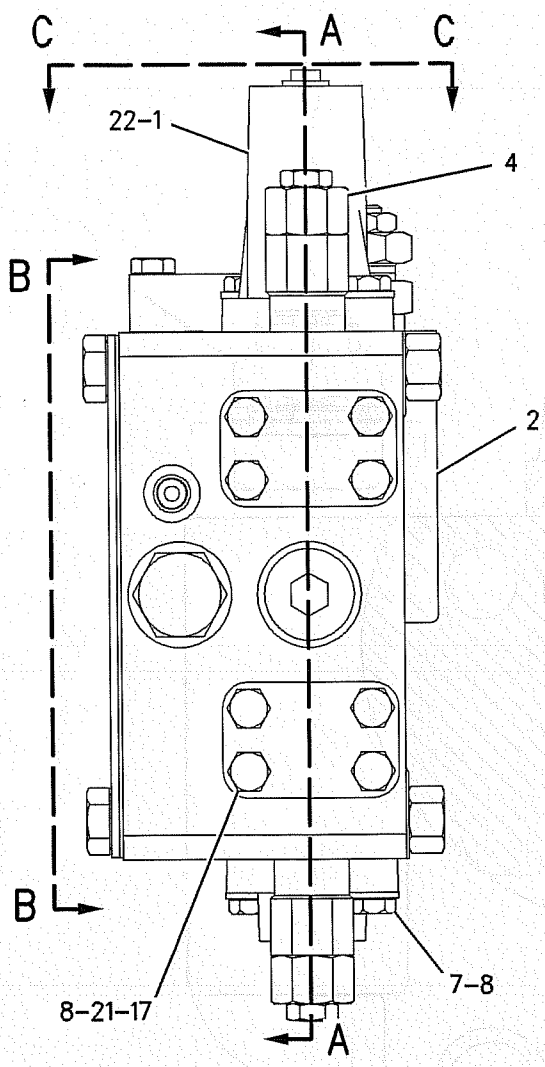

REFER TO ALL ILLUSTRATIONS OF THIS GROUP FOR AUXILIARY VIEWS

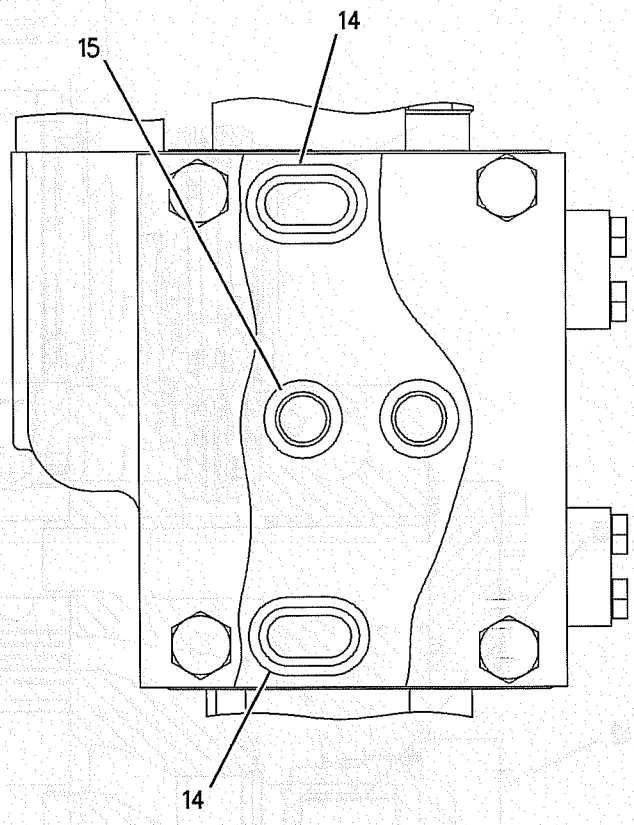

VIEW B-B

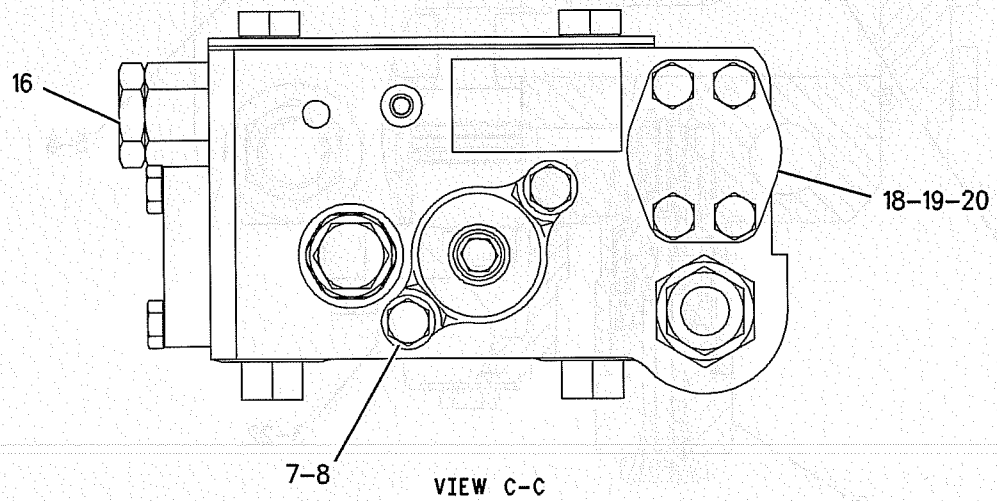

VIEW C-C

GRAPHIC #1 g00953123

201-9358 **VALVE GP-CONTROL** ***(contd.)*** **i01889467**

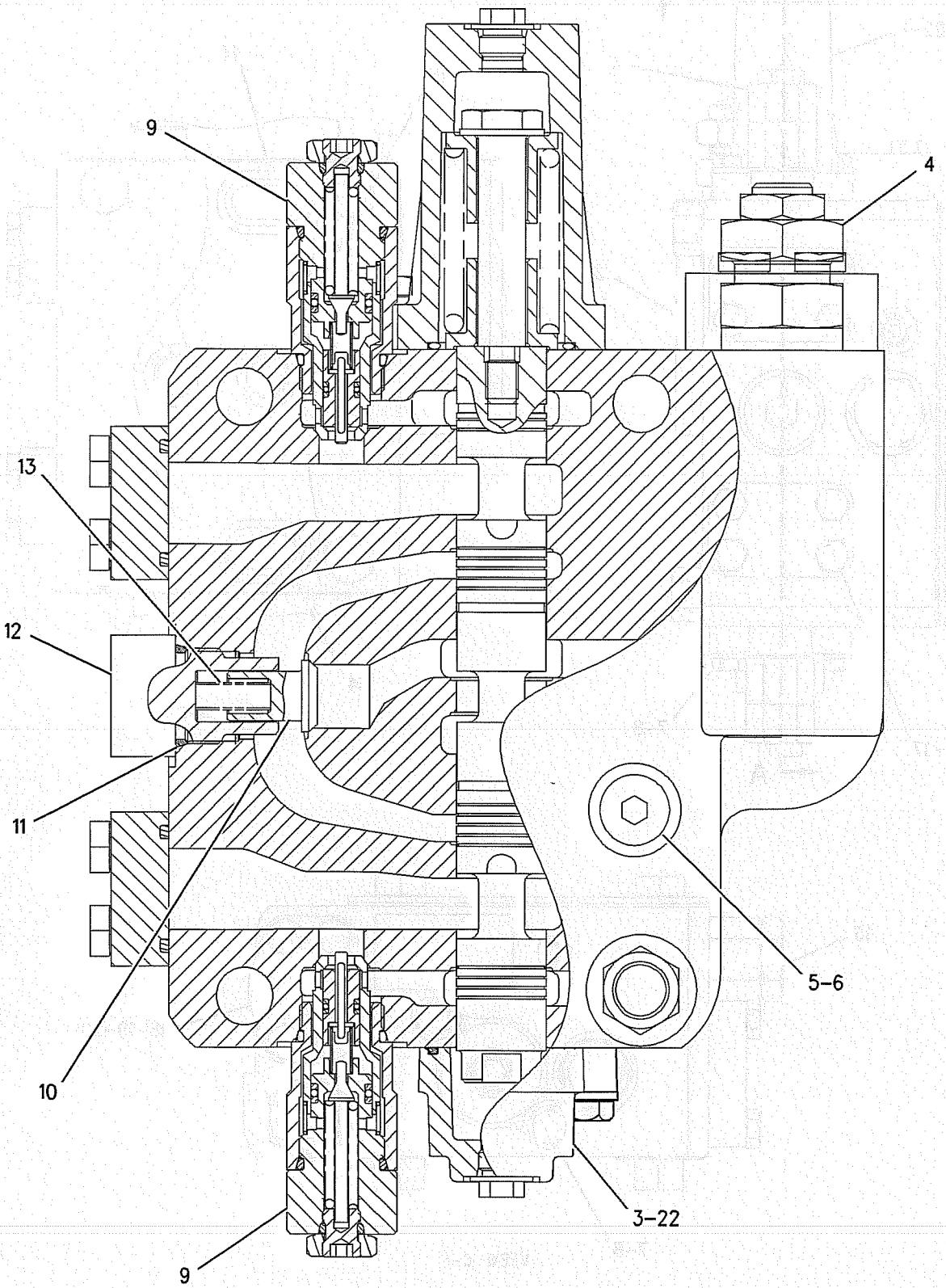

SECTION A-A

GRAPHIC #2 **<END>** g00953124

HYDRAULIC SYSTEM

201-9359 VALVE GP-CONTROL

S/N: SBN1-UP; RAW1-UP
PART OF 201-9358 VALVE GP-CONTROL
AN ATTACHMENT

SMCS-5051 **i01889472**

NOTE	REF NO	GRAPHIC REF	PART NUMBER	QTY	PART NAME 1 2 3 4 5 6 (PRODUCT LEVEL)	SEE PAGE
Z	1	1		1	BLOCK	
	2	1	**6E-2271**	2	RETAINER	
M	3	1	**153-5276**	1	BOLT	
	4	1	**104-7293**	1	SPRING	
Z	5	1		1	STEM-AUXILIARY	

M-METRIC PART
Z-NOT SERVICED SEPARATELY

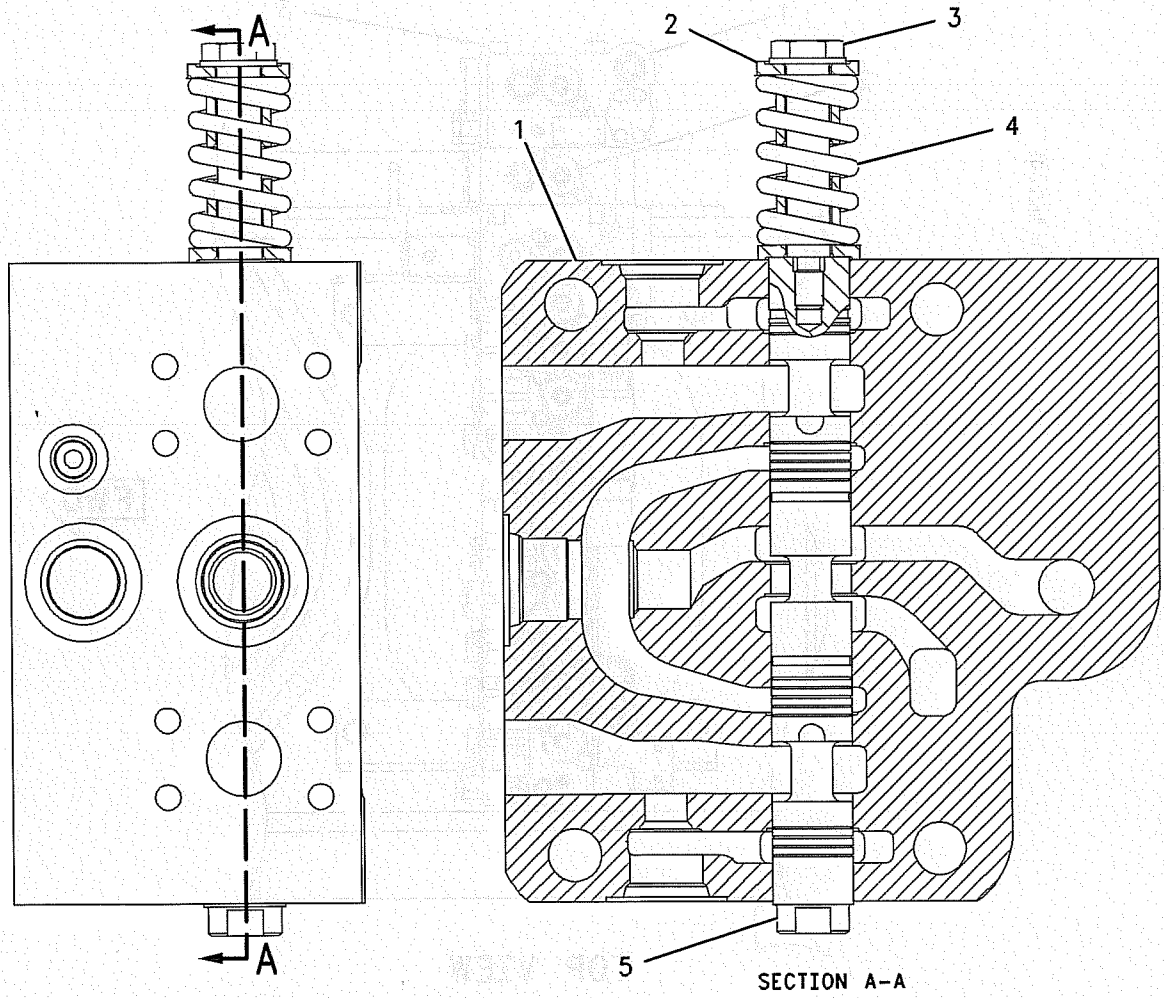

GRAPHIC #1 **<END>** g00956105

HYDRAULIC SYSTEM

202-6856 VALVE GP-MAIN CONTROL

S/N: SBN1-UP; RAW1-UP
SYSTEM 14
PART OF 202-6855 CONTROL AR-AUXILIARY
AN ATTACHMENT

SMCS-5051 **i01889416**

NOTE	REF NO	GRAPHIC REF	PART NUMBER	QTY	PART NAME 1 2 3 4 5 6 (PRODUCT LEVEL)	SEE PAGE
Y	1	1	**201-9358**	1	VALVE GP-CONTROL (AUXILIARY MEDIUM PRESSURE)	416
Y	2	1	**171-0146**	1	VALVE GP-CONTROL (AUXILIARY)	414
M	3	1	**179-5107**	4	BOLT (M16X2X220MM))	

M-METRIC PART
Y-SEPARATE ILLUSTRATION

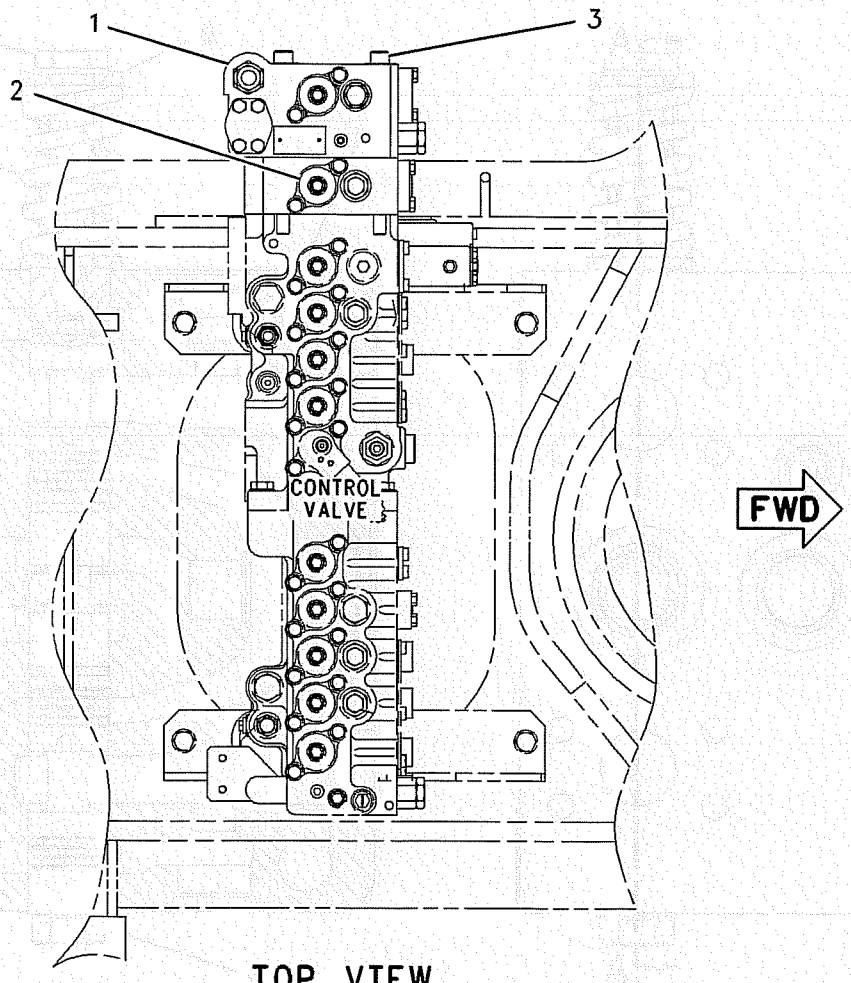

TOP VIEW

GRAPHIC #1 **<END>** g00959579

HYDRAULIC SYSTEM

158-8117 VALVE GP-PILOT

S/N: SBN1-UP; RAW1-UP

PART OF 142-7704 LINES GP-FRONT

SMCS-5059 **i01889381**

NOTE	REF NO	GRAPHIC REF	PART NUMBER	QTY	PART NAME 1 2 3 4 5 6 (PRODUCT LEVEL)	SEE PAGE
	1	1	**3K-0360**	1	SEAL-O-RING	
	2	1	**9S-8005**	1	PLUG	
	3	1	**4I-8965**	1	GUIDE	
	4	1	**4J-7533**	2	SEAL-O-RING	
	5	1	**5I-8511**	1	SPRING	
	6	1	**087-5166**	1	SPRING	
	7	1	**095-1594**	1	SEAL-O-RING	
	8	1	**095-1789**	1	RING	
Y	9	1	**116-3600**	1	VALVE GP-RELIEF	438
	10	1	**118-4044**	1	COVER	
	11	1	**9S-8001**	2	PLUG	
Z	12	1		1	VALVE GP-CHECK (DRIFT REDUCTION)	
C	13	1	**190-7865**	1	CONNECTOR	
	14	1	**3J-1907**	2	SEAL-O-RING	
C	15	1	**6V-8397**	1	SEAL-O-RING	
M	16	1	**8T-4136**	4	BOLT (M10X1.5X25MM)	
	17	1	**9S-4191**	1	PLUG	

C-CHANGE FROM PREVIOUS TYPE
M-METRIC PART
Y-SEPARATE ILLUSTRATION
Z-NOT SERVICED SEPARATELY

158-8117 VALVE GP-PILOT *(contd.)*

i01889381

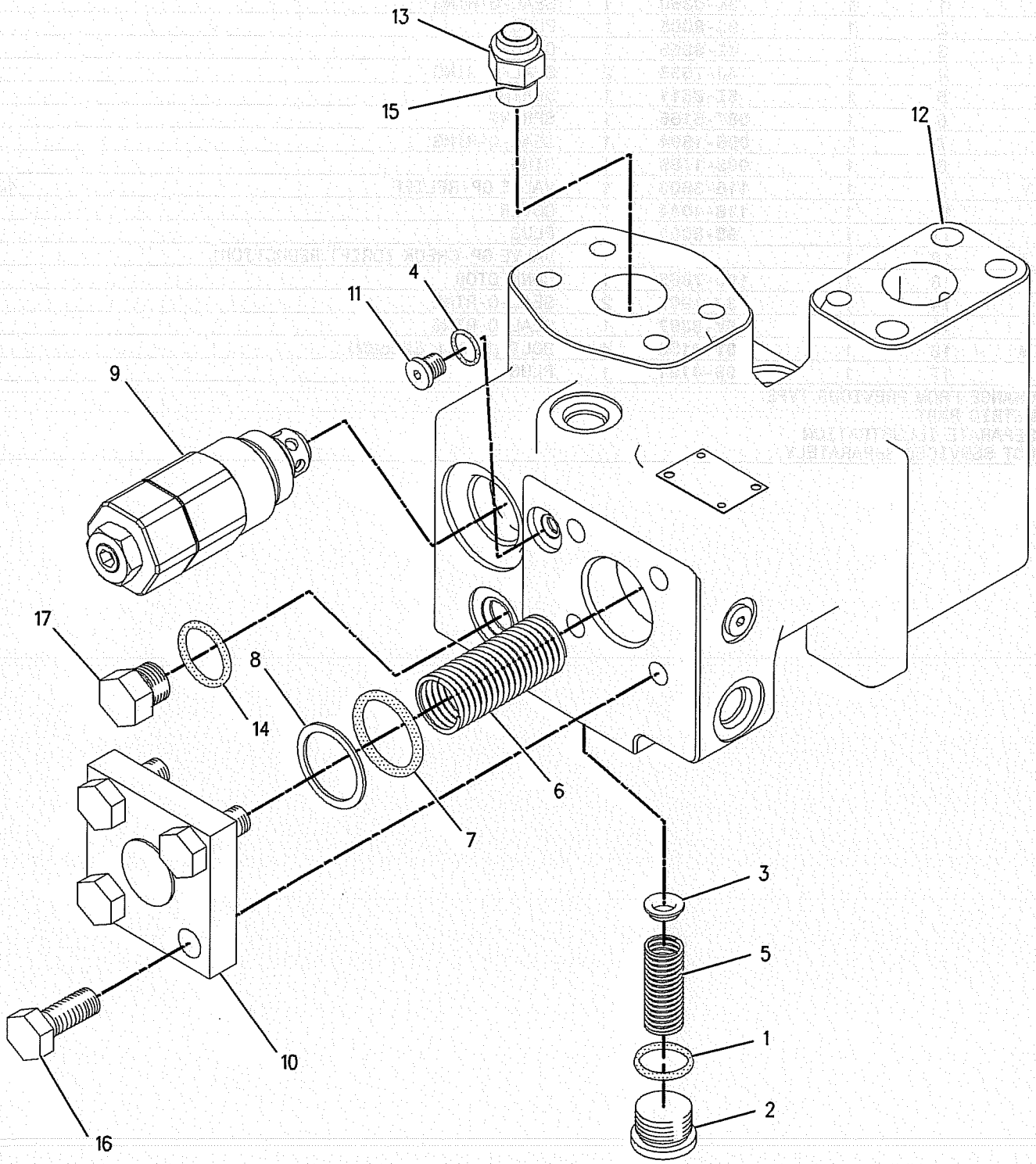

GRAPHIC #1

<END>

g00983587

HYDRAULIC SYSTEM

158-8160 VALVE GP-PILOT

S/N: SBN1-UP; RAW1-UP

PART OF 142-7704 LINES GP-FRONT

SMCS-5059 **i01356219**

NOTE	REF NO	GRAPHIC REF	PART NUMBER	QTY	PART NAME 1 2 3 4 5 6 (PRODUCT LEVEL)	SEE PAGE
	1	1	**4B-4158**	2	SCREW-DRIVE (3/16 X 1/4 IN)	
	2	1	**4I-8965**	1	GUIDE	
	3	1	**5I-8511**	1	SPRING	
	4	1	**087-5166**	1	SPRING	
	5	1	**095-1789**	1	RING	
Y	6	1	**116-3600**	1	VALVE GP-RELIEF	438
	7	1	**118-4044**	1	COVER	
	8	1	*123-2498*	1	PLATE	
	9	1	**147-4184**	1	PLUG	
	10	1	*158-8161*	1	VALVE GP-CONTROL	
	11	1	**095-1594**	1	SEAL-O-RING (25.70MM ID)	
	12	1	**3J-1907**	1	SEAL-O-RING (11.89MM ID)	
	13	1	**3K-0360**	1	SEAL-O-RING (16.36MM ID)	
	14	1	**4J-7533**	2	SEAL-O-RING (6.07MM ID)	
M	15	1	**8T-4136**	4	BOLT (M10X1.50X25MM)	
	16	1	**9S-8001**	2	PLUG-O-RING (5/16-24 THD)	
	17	1	**9S-8004**	1	PLUG-O-RING (9/16-18 THD)	
	18	1	**9S-8005**	1	PLUG-O-RING (3/4-16 THD)	

M-METRIC PART
Y-SEPARATE ILLUSTRATION

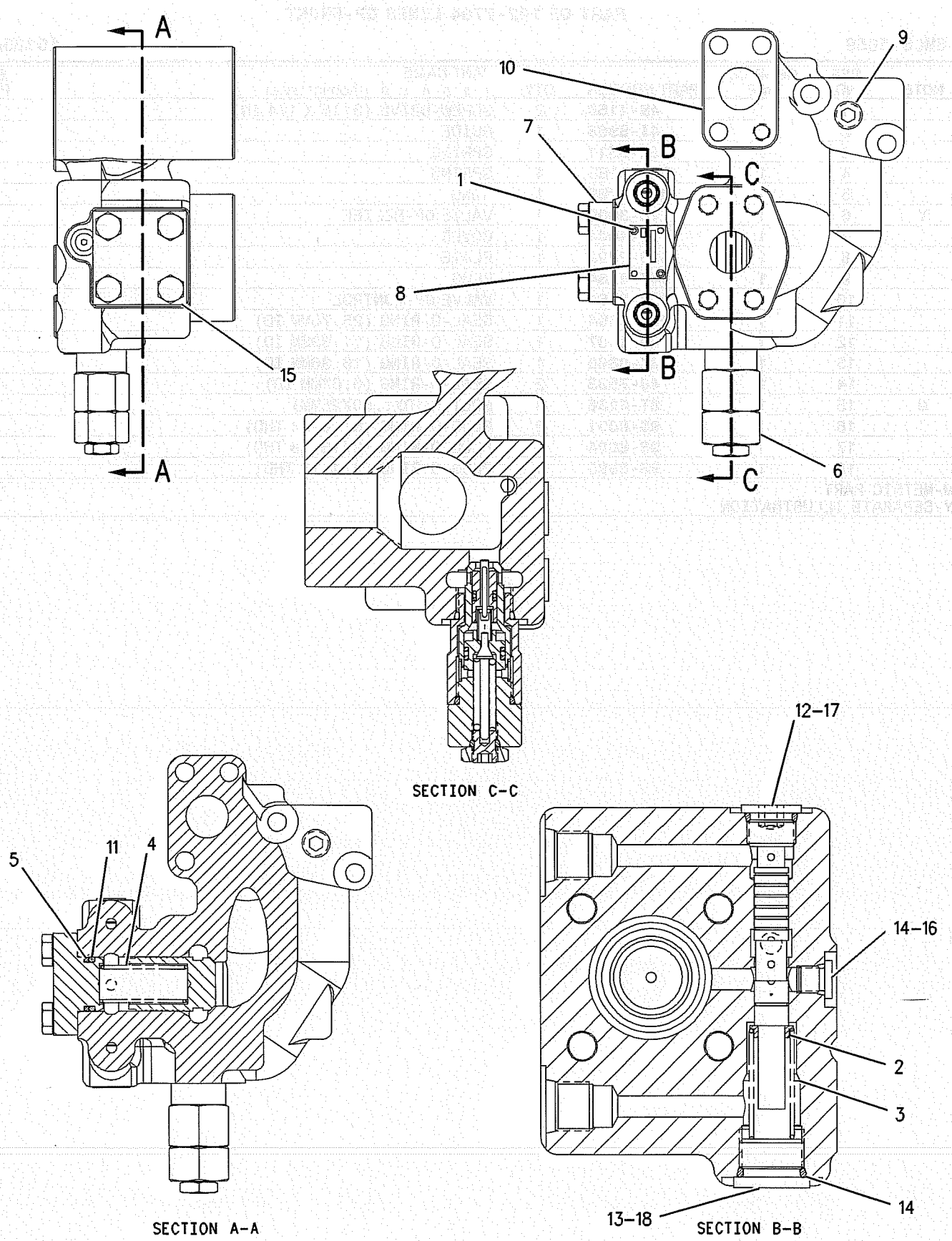

GRAPHIC #1 **<END>** g00715723

HYDRAULIC SYSTEM

158-8250 VALVE GP-PILOT

S/N: SBN1-UP; RAW1-UP

PART OF 199-7428 LINES GP-PILOT

SMCS-5059 **i01374411**

NOTE	REF NO	GRAPHIC REF	PART NUMBER	QTY	PART NAME 1 2 3 4 5 6 (PRODUCT LEVEL)	SEE PAGE
	1	1	**087-4707**	4	SPRING	
	2	1	**131-5818**	4	SPRING	
	3	1	**099-6136**	8	WASHER	
	4	1	**095-0936**	4	RING-RETAINING	
	5	1	**126-1865**	4	SPRING	
	6	1	**126-1866**	4	SPRING	
	7	1	**147-4221**	4	SPOOL-VALVE	
	8	1	**6V-8400**	4	SEAL-O-RING (29.9MM ID)	
	9	1	**165-9554**	4	PLUG	
	10	1	**119-5389**	4	PACKING	
	11	1	**165-9552**	4	PUSHROD	
M	12	1	**087-4710**	4	SETSCREW	
M	13	1	**8T-4133**	4	NUT (M10X1.5 THD)	
	14	1	**087-5709**	2	BELLOWS	
	15	1	**087-5708**	2	PEDAL	
M	16	1	**8T-0343**	2	BOLT-SOCKET HEAD	
	17	1	**119-5388**	4	CAP	
	18	1	**165-9463**	2	COVER	
	19	1	**119-5391**	4	SEAT	
	20	1	**119-5392**	4	BUSHING	
	21	1	**153-5223**	12	BALL	
	22	1	**165-9551**	4	SEAT	
	23	1	**099-6137**	4	WASHER	
	24	1	**099-6141**	4	WASHER	
	25	1	**165-9462**	1	BODY AS	
Z	25A	1		4	SPOOL	
	26	1	**099-6145**	2	CAMSHAFT	
	27	1	**099-6144**	4	BUSHING-TERMINAL	
M	28	1	**095-1260**	2	SETSCREW-SOCKET (M6X1.0X6MM)	
	29	1	**8T-6759**	6	PLUG-PIPE (1/16-27 THD)	
	30	1	**9M-5590**	2	BALL	
	31	1	**107-6479**	2	PLUG	
	32	1	**095-1578**	2	SEAL-O-RING (9.80MM ID)	
	33	1	**165-9464**	2	SEAT	
	34	1	**165-9553**	1	COVER	
M	35	1	**8T-1158**	2	BOLT-SOCKET HEAD (M8X1.25X20MM)	

M-METRIC PART
Z-NOT SERVICED SEPARATELY

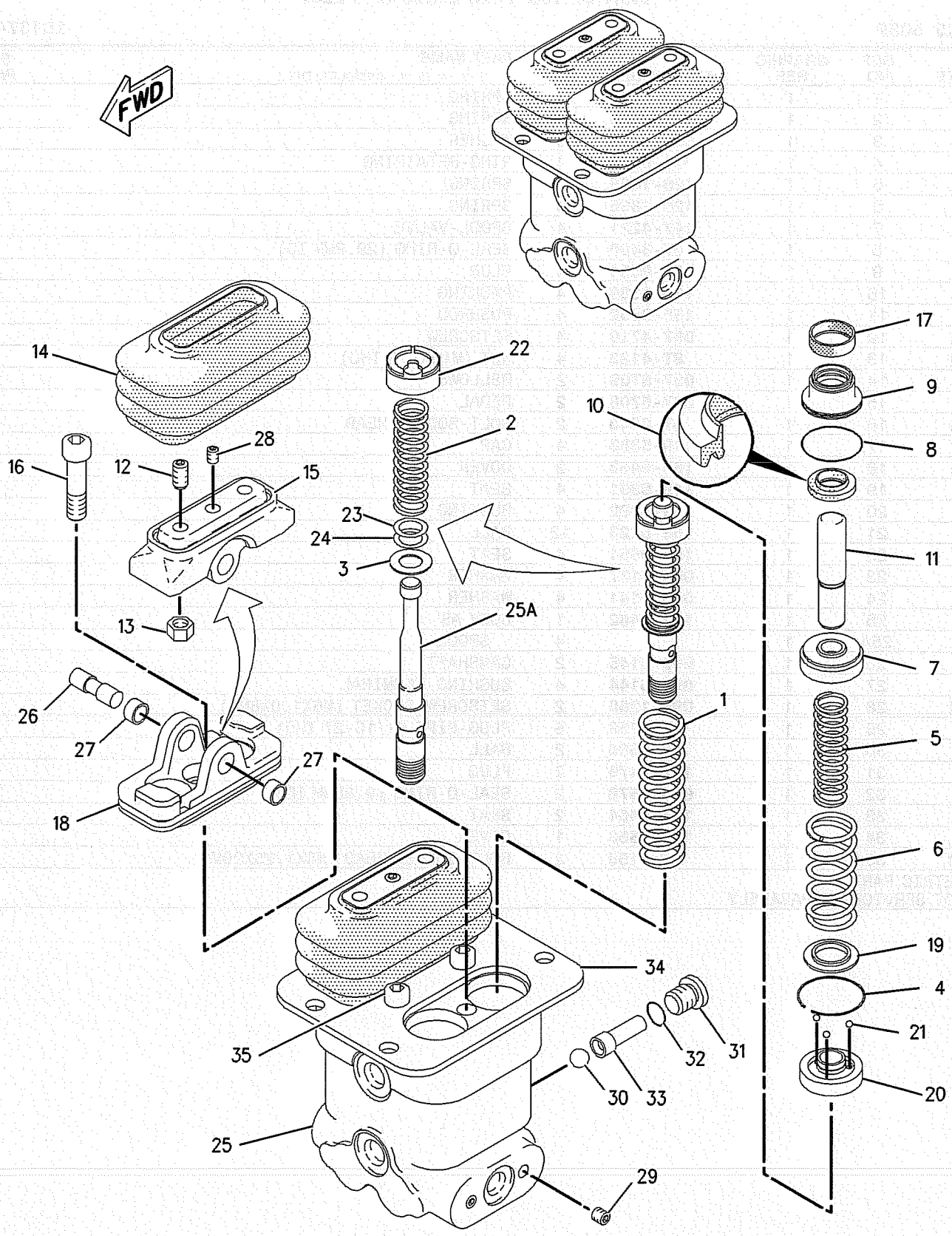

GRAPHIC #1 **<END>** g00711448

158-8251 VALVE GP-PILOT

S/N: SBN1-UP; RAW1-UP

PART OF 199-7293 LINES GP-PILOT

SMCS-5059 **i01889604**

NOTE	REF NO	GRAPHIC REF	PART NUMBER	QTY	PART NAME 1 2 3 4 5 6 (PRODUCT LEVEL)	SEE PAGE
	1	1	**4B-4158**	2	SCREW-DRIVE (3/16X0.25 IN)	
	2	1	**123-2498**	1	PLATE	
	3	1	**197-0196**	1	VALVE	
Z	4	1		1	VALVE GP-CONTROL	
	5	1	**197-0199**	1	SPRING	
	6	1	**197-0273**	1	SPRING	
Y	7A	1	**121-1491**	1	VALVE GP-SOLENOID (HYDRAULIC ACTIVATION)	453
Y	7B	1	**121-1491**	1	VALVE GP-SOLENOID (SWING PARKING BRAKE)	453
Y	7C	1	**121-1491**	1	VALVE GP-SOLENOID (TRAVEL SPEED)	453
	8	1	**3K-0360**	3	SEAL-O-RING	
M	9	1	**7I-2272**	6	BOLT (M5X0.8X12MM)	
	10	1	**7M-7410**	2	PLUG	
	11	1	**8T-6759**	6	PLUG-PIPE	
	12	1	**9S-8005**	3	PLUG	

M-METRIC PART
Y-SEPARATE ILLUSTRATION
Z-NOT SERVICED SEPARATELY

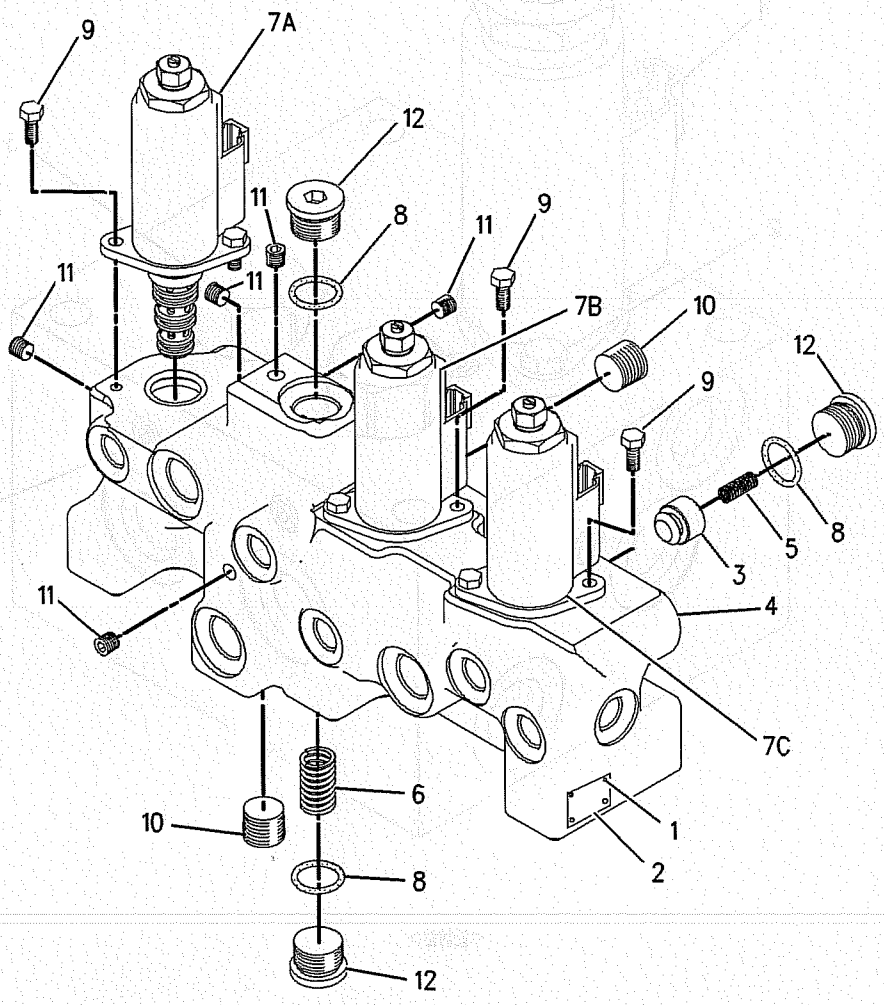

GRAPHIC #1 **<END>** g00805770

HYDRAULIC SYSTEM

171-0188 VALVE GP-PILOT

S/N: SBN1-UP; RAW1-UP
PART OF 179-7518, 204-8283 LINES GP-PILOT
AN ATTACHMENT

SMCS-5059 **i01694827**

NOTE	REF NO	GRAPHIC REF	PART NUMBER	QTY	PART NAME 1 2 3 4 5 6 (PRODUCT LEVEL)	SEE PAGE
Y	1	1	**111-9916**	1	VALVE GP-SOLENOID	452
M	2	1	**8T-0288**	2	BOLT (M5X0.8X12MM)	
	3	1	**171-0198**	2	VALVE GP-SHUTTLE	
					(EACH INCLUDES)	
		1	**185-0407**	1	KIT-SEAL	
	4	1	**7I-8084**	6	PLUG	

M-METRIC PART
Y-SEPARATE ILLUSTRATION

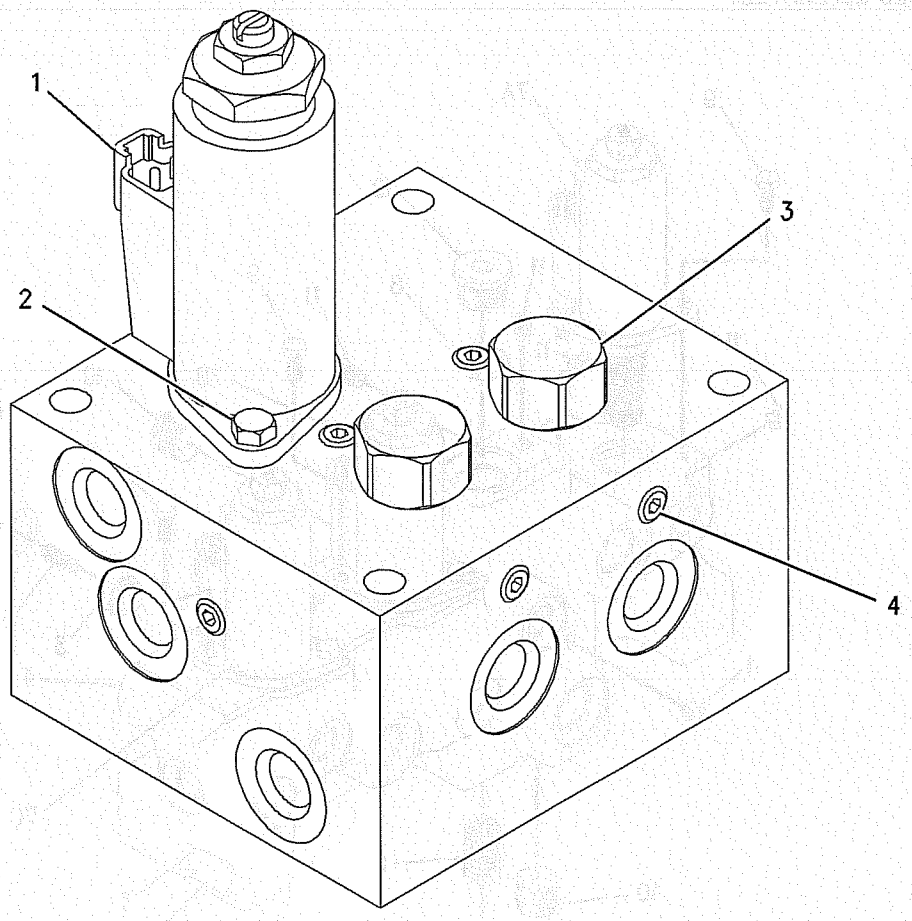

GRAPHIC #1 **<END>** g00681111

206-3305 VALVE GP-PILOT

S/N: SBN1-UP; RAW1-UP

PART OF 206-3303, 206-3304 CONTROL GP-JOYSTICK, 216-6750, 216-6751 VALVE GP-PILOT

ALSO AN ATTACHMENT

SMCS-5059 **i01897283**

NOTE	REF NO	GRAPHIC REF	PART NUMBER	QTY	PART NAME 1 2 3 4 5 6 (PRODUCT LEVEL)	SEE PAGE
	1	1	**165-9431**	1	PLATE	
	2	1	**4I-6365**	1	JOINT	
	3	1	**118-4087**	4	SPRING	
	4	1	**165-9444**	2	SEAT-SPRING	
	5	1	**096-1628**	4	SLEEVE	
	6	1	**165-9436**	2	SEAT	
	7	1	**165-9460**	2	SPRING (STANDARD)	
					—OR—	
		1	**225-4815**	2	SPRING (OPTIONAL)	
					(REDUCES OPERATING FORCE FOR BETTER INCHING CONTROL)	
	8	1	**165-9461**	4	SPRING (STANDARD)	
					—OR—	
		1	**190-7750**	4	SPRING (OPTIONAL)	
					(REDUCES OPERATING FORCE BY 70%)	
					—OR—	
		1	**190-7751**	4	SPRING (OPTIONAL)	
					(REDUCES OPERATING FORCE BY 80%)	
	9	1	**165-9439**	1	BUSHING	
	10	1	**165-9448**	1	SEAL-O-RING	
	11	1	**168-0794**	1	PLATE	
	12	1	**096-4498**	2	WASHER	
M	13	1	**6V-8337**	2	BOLT-SOCKET HEAD (M8X1.25X35MM)	
	14	1	**171-0087**	1	BOOT	
	15	1	**131-5915**	1	NUT	
	16	1	**7Y-0468**	1	PIN-SPRING	
	17	1	**094-0876**	4	SEAL	
B	18	1	**099-6137**	4	WASHER	
	19	1	**165-9442**	2	SPRING (STANDARD)	
					—OR—	
		1	**225-4816**	2	SPRING (OPTIONAL)	
					(REDUCES OPERATING FORCE FOR BETTER INCHING CONTROL)	
	20	1	**165-9435**	2	SEAT	
	21	1	**095-1586**	4	SEAL-O-RING	
	22	1	**165-9443**	2	SEAT-SPRING	
	23	1	**165-9438**	1	PLATE	
	24	1	**118-4086**	4	ROD	

B-USE AS REQUIRED
M-METRIC PART

206-3305 **VALVE GP-PILOT** *(contd.)* **i01897283**

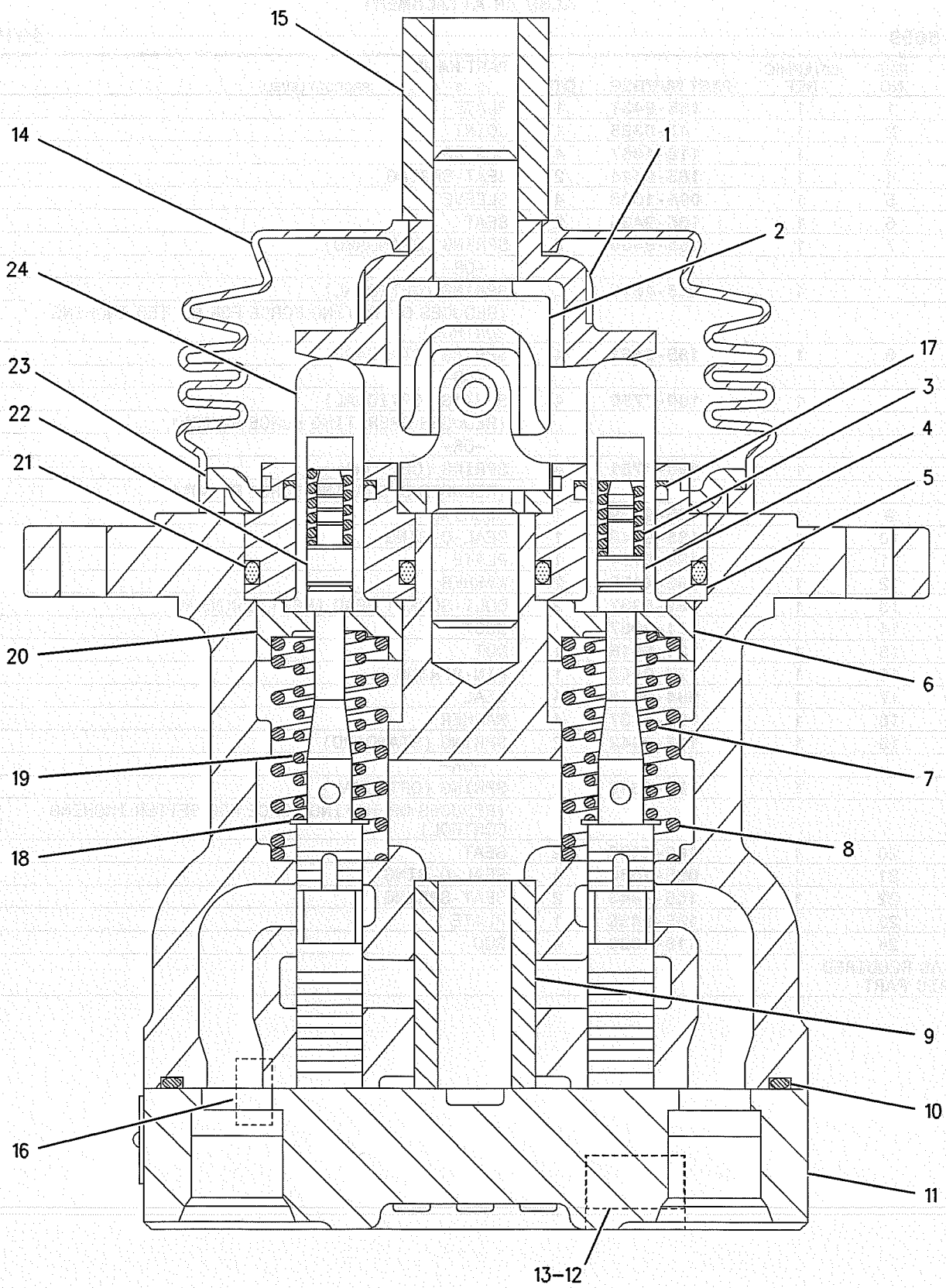

GRAPHIC #1 **<END>** g00950292

216-6750 VALVE GP-PILOT–LH

S/N: SBN1-UP; RAW1-UP
PART OF 153-8733 CONTROL & MTG GP-JOYSTICK
AN ATTACHMENT

SMCS-5059 **i01888989**

NOTE	REF NO	GRAPHIC REF	PART NUMBER	QTY	PART NAME 1 2 3 4 5 6 (PRODUCT LEVEL)	SEE PAGE
Y	1	1	*187-9905*	1	CONTROL GP-JOYSTICK (LH)	224
Y	2	1	**206-3305**	1	VALVE GP-PILOT (STICK/SWING)	429

Y-SEPARATE ILLUSTRATION

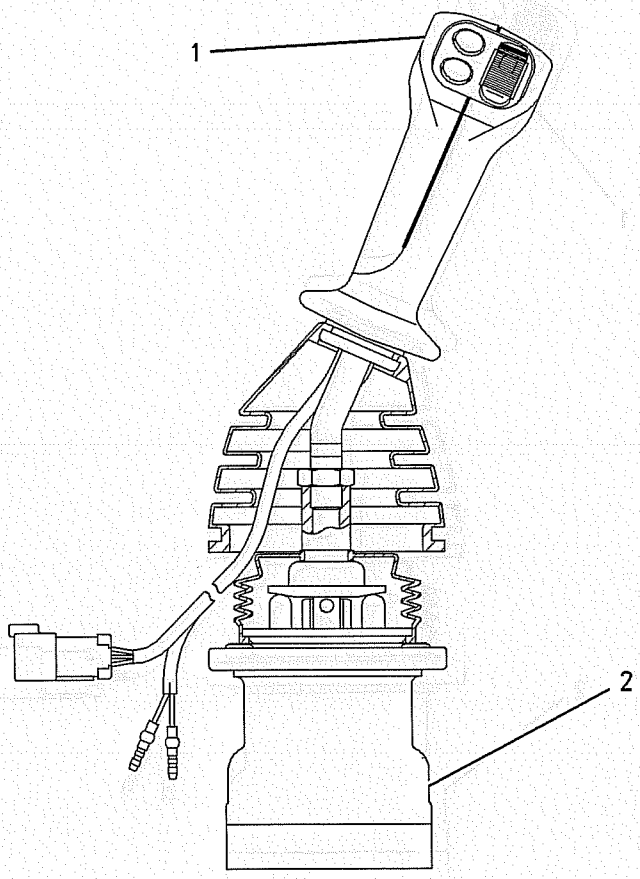

REAR VIEW

GRAPHIC #1 **<END>** g00699361

HYDRAULIC SYSTEM

216-6751 VALVE GP-PILOT–RH

S/N: SBN1-UP; RAW1-UP
PART OF 153-8733 CONTROL & MTG GP-JOYSTICK
AN ATTACHMENT

SMCS-5059 **i01888991**

NOTE	REF NO	GRAPHIC REF	PART NUMBER	QTY	PART NAME 1 2 3 4 5 6 (PRODUCT LEVEL)	SEE PAGE
Y	1	1	*187-9906*	1	CONTROL GP-JOYSTICK (RH)	225
Y	2	1	**206-3305**	1	VALVE GP-PILOT (BOOM/BUCKET)	429

Y-SEPARATE ILLUSTRATION

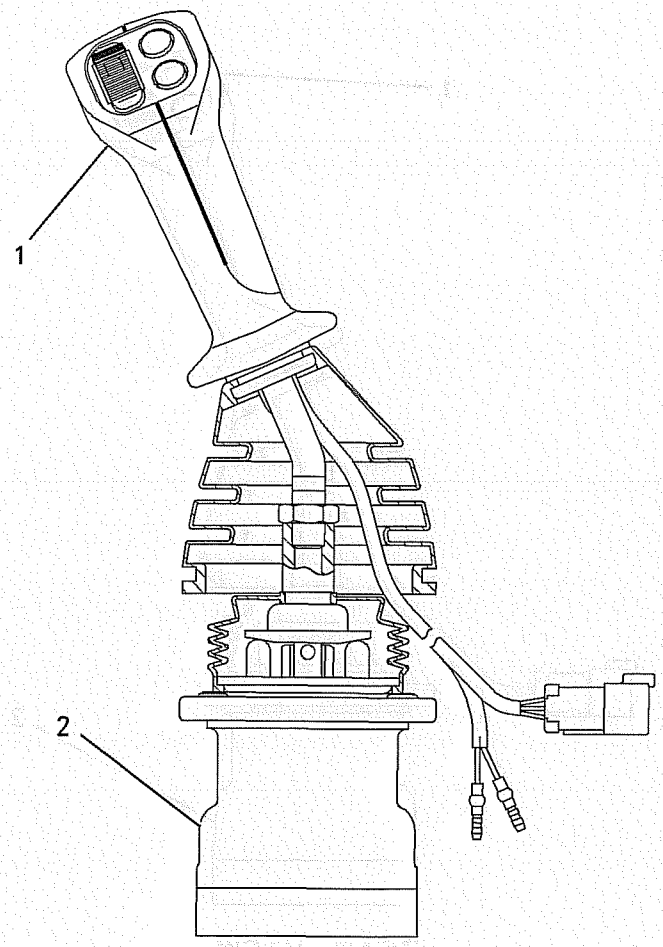

REAR VIEW

GRAPHIC #1

<END>

g00948720

HYDRAULIC SYSTEM

105-1321 VALVE GP-PILOT RELIEF

S/N: SBN1-UP; RAW1-UP
PART OF 201-9352 VALVE GP-RELIEF
AN ATTACHMENT

SMCS-5072 **i01889480**

NOTE	REF NO	GRAPHIC REF	PART NUMBER	QTY	PART NAME 1 2 3 4 5 6 (PRODUCT LEVEL)	SEE PAGE
	1	1	**030-0167**	1	RING-BACKUP	
	2	1	**8L-2779**	1	SEAL-O-RING	
	3	1	**033-6036**	2	SEAL-O-RING	
	4	1	**3P-0647**	1	SEAL-O-RING	
	5	1	**9J-0707**	1	RING-BACKUP	
	6	1	**8T-7877**	1	SEAL-O-RING	

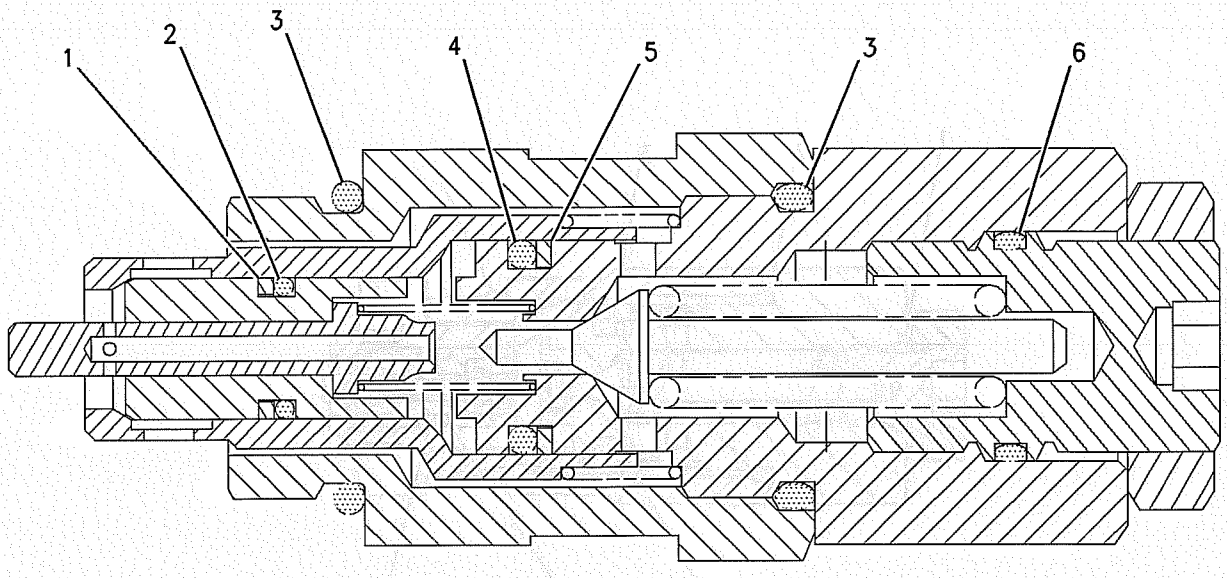

GRAPHIC #1 **<END>** g00826154

HYDRAULIC SYSTEM

201-9353 VALVE GP-PILOT RELIEF

S/N: SBN1-UP; RAW1-UP
PART OF 201-9352 VALVE GP-RELIEF
AN ATTACHMENT

SMCS-5072 **i01889481**

NOTE	REF NO	GRAPHIC REF	PART NUMBER	QTY	PART NAME 1 2 3 4 5 6 (PRODUCT LEVEL)	SEE PAGE
	1	1	**095-1578**	1	SEAL-O-RING	
	2	1	**3D-2824**	2	SEAL-O-RING	
	3	1	**103-8255**	1	SEAL-O-RING	
	4	1	**103-8252**	2	RING	
	5	1	**103-8254**	1	SEAL-O-RING	
	6	1	**103-8253**	2	RING	

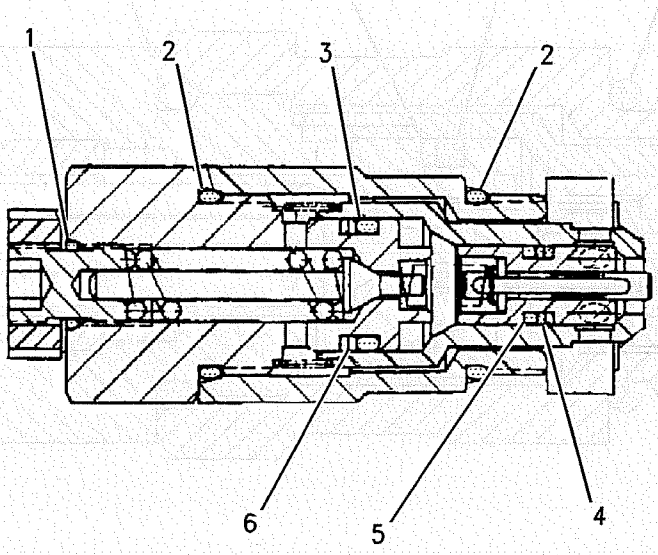

GRAPHIC #1 **<END>** g00831254

158-8274 VALVE GP-PRESSURE REDUCING

S/N: SBN1-UP; RAW1-UP

PART OF 199-7293 LINES GP-PILOT

SMCS-5117 **i01452045**

NOTE	REF NO	GRAPHIC REF	PART NUMBER	QTY	PART NAME 1 2 3 4 5 6 (PRODUCT LEVEL)	SEE PAGE
	1	1	**111-9998**	2	PLUG	
	2	1	**095-1582**	2	SEAL-O-RING (13.8MM ID)	
	3	1	**171-0127**	2	SEAT-SPRING	
	4	1	**185-0423**	2	STOP	
	5	1	**171-0126**	2	SEAT-SPRING	
	6	1	**171-0123**	2	PLUG	
M	7	1	**5C-7261**	2	NUT (M8X1.25 THD)	
M	8	1	**171-0124**	2	SETSCREW	
	9	1	**095-1580**	2	SEAL-O-RING (11.80MM ID)	
	10	1	**095-1590**	2	SEAL-O-RING (21.80MM ID)	
	11	1	**171-0128**	2	SPRING	

M-METRIC PART

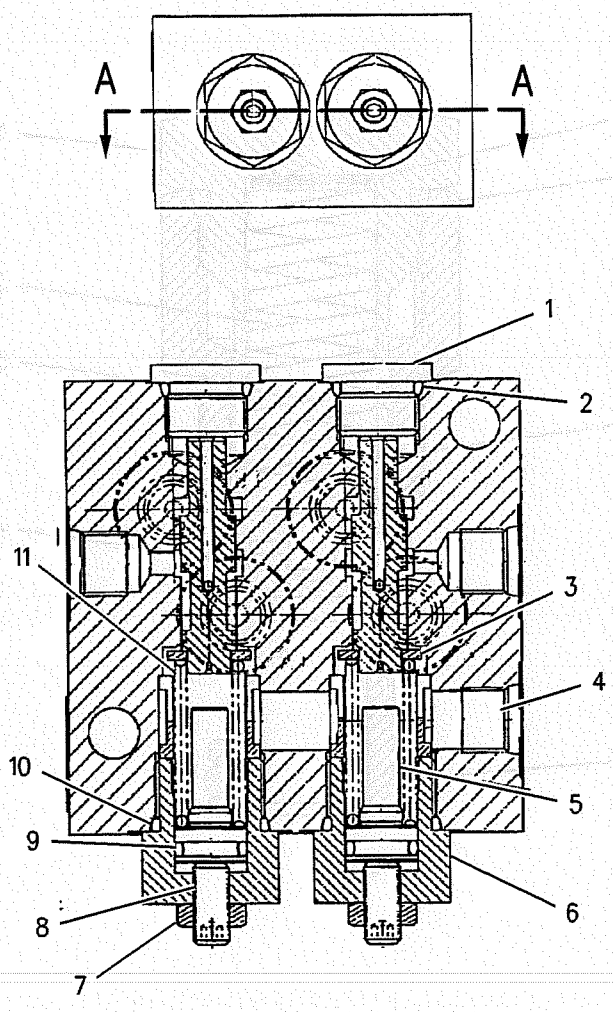

GRAPHIC #1 **<END>** g00732512

HYDRAULIC SYSTEM

109-2667 VALVE GP-RELIEF

S/N: SBN1-UP; RAW1-UP

PART OF 201-9358 VALVE GP-CONTROL, 153-5313 VALVE GP-RELIEF

ALSO AN ATTACHMENT

SMCS-5069, 5117 **i01401638**

NOTE	REF NO	GRAPHIC REF	PART NUMBER	QTY	PART NAME 1 2 3 4 5 6 (PRODUCT LEVEL)	SEE PAGE
	1	1	**5I-4111**	1	PLUG-STRAIGHT THREAD	
	2	1	**109-2665**	1	BODY-VALVE	
	3	1	**107-6370**	1	SPRING	
	4	1	**107-6371**	1	VALVE	
	5	1	**4K-1388**	2	SEAL-O-RING (26.59MM ID)	
B	6	1	**4J-7385**	1	SHIM (.048IN THK)	
B	7	1	**4J-7386**	5	SHIM (.010IN THK)	
	8	1	**5P-3108**	1	SEAL-O-RING (20.30MM ID)	

B-USE AS REQUIRED

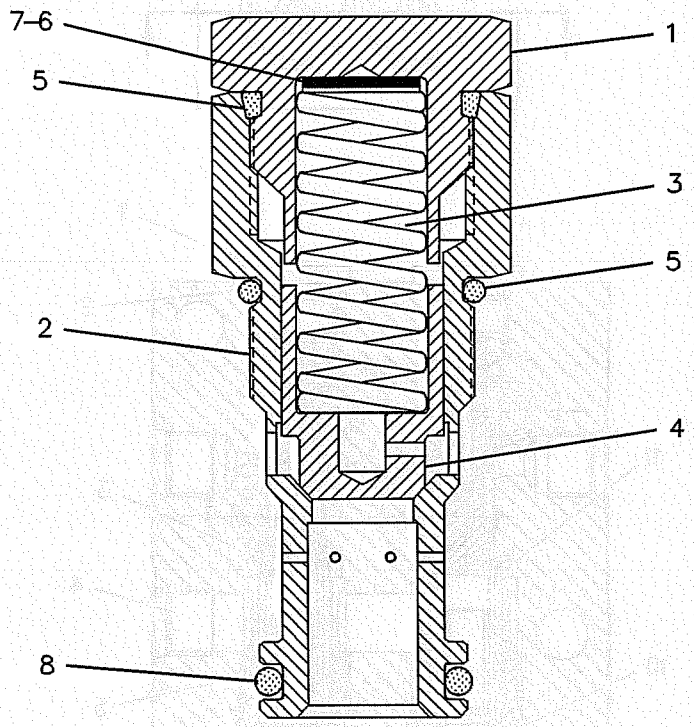

GRAPHIC #1

<END>

g00242585

HYDRAULIC SYSTEM

109-5152 VALVE GP-RELIEF

S/N: SBN1-UP; RAW1-UP

PART OF 158-8201 VALVE GP-CONTROL

SMCS-5069, 5117 **i00831419**

NOTE	REF NO	GRAPHIC REF	PART NUMBER	QTY	PART NAME 1 2 3 4 5 6 (PRODUCT LEVEL)	SEE PAGE
	1	1	**5I-4111**	1	PLUG-STRAIGHT THREAD	
	2	1	**5P-3108**	1	SEAL-O-RING (20.30MM ID)	
	3	1	**107-6370**	1	SPRING	
	4	1	**4K-1388**	2	SEAL-O-RING (26.59MM ID)	
	5	1	**107-6371**	1	VALVE	
B	6	1	**4J-7386**	1	SHIM (.010IN THK)	
B	7	1	**4J-7385**	1	SHIM (.048IN THK)	

B-USE AS REQUIRED

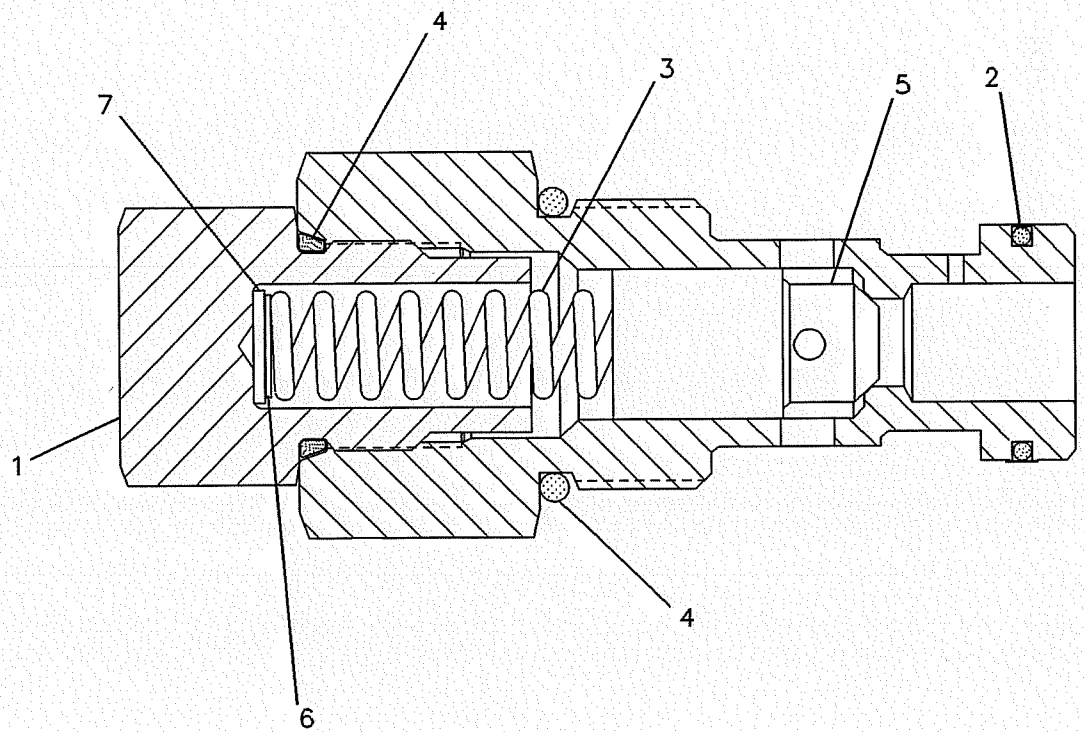

GRAPHIC #1 **<END>** g00243325

HYDRAULIC SYSTEM

116-3600 VALVE GP-RELIEF

S/N: SBN1-UP; RAW1-UP

PART OF 179-7531 LINES GP-FRONT, 158-8201, 158-8202, 171-0146 VALVE GP-CONTROL, 158-8117, 158-8160 VALVE GP-PILOT

ALSO AN ATTACHMENT

SMCS-5069, 5117 **i00754305**

NOTE	PART NUMBER	QTY	PART NAME 1 2 3 4 5 6 (PRODUCT LEVEL)	SEE PAGE
Y	*116-3601*	1	VALVE GP-RELIEF	439
Y	*118-5410*	1	VALVE GP-RELIEF	440

Y-SEPARATE ILLUSTRATION

<END>

HYDRAULIC SYSTEM

116-3601 VALVE GP-RELIEF

S/N: SBN1-UP; RAW1-UP
PART OF 116-3600 VALVE GP-RELIEF
ALSO AN ATTACHMENT

SMCS-5069, 5117 **i00823589**

NOTE	REF NO	GRAPHIC REF	PART NUMBER	QTY	PART NAME 1 2 3 4 5 6 (PRODUCT LEVEL)	SEE PAGE
	1	1	**095-1578**	1	SEAL-O-RING (9.80MM ID)	
	2	1	**3D-2824**	2	SEAL-O-RING (23.47MM ID)	
	3	1	**103-8255**	1	SEAL-O-RING	
	4	1	**103-8252**	2	RING	
	5	1	**103-8254**	1	SEAL-O-RING	
	6	1	**103-8253**	2	RING	

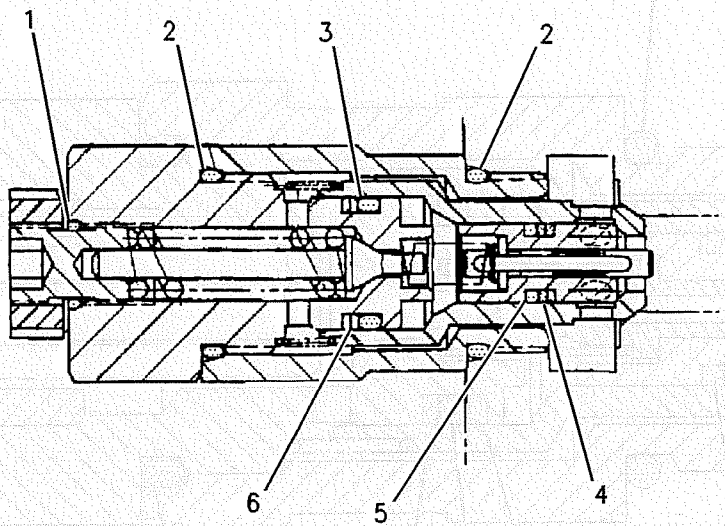

GRAPHIC #1 **<END>** g00258255

HYDRAULIC SYSTEM

118-5410 VALVE GP-RELIEF

S/N: SBN1-UP; RAW1-UP
PILOT OPERATED
PART OF 116-3600 VALVE GP-RELIEF
ALSO AN ATTACHMENT

SMCS-5069, 5117 **i01889625**

NOTE	REF NO	GRAPHIC REF	PART NUMBER	QTY	PART NAME 1 2 3 4 5 6 (PRODUCT LEVEL)	SEE PAGE
	1	1	**030-0167**	1	RING-BACKUP	
	2	1	**8L-2779**	1	SEAL-O-RING	
	3	1	**033-6036**	2	SEAL-O-RING	
	4	1	**3P-0647**	1	SEAL-O-RING	
	5	1	**9J-0707**	2	RING-BACKUP	
	6	1	**2P-2975**	1	SEAL-O-RING	

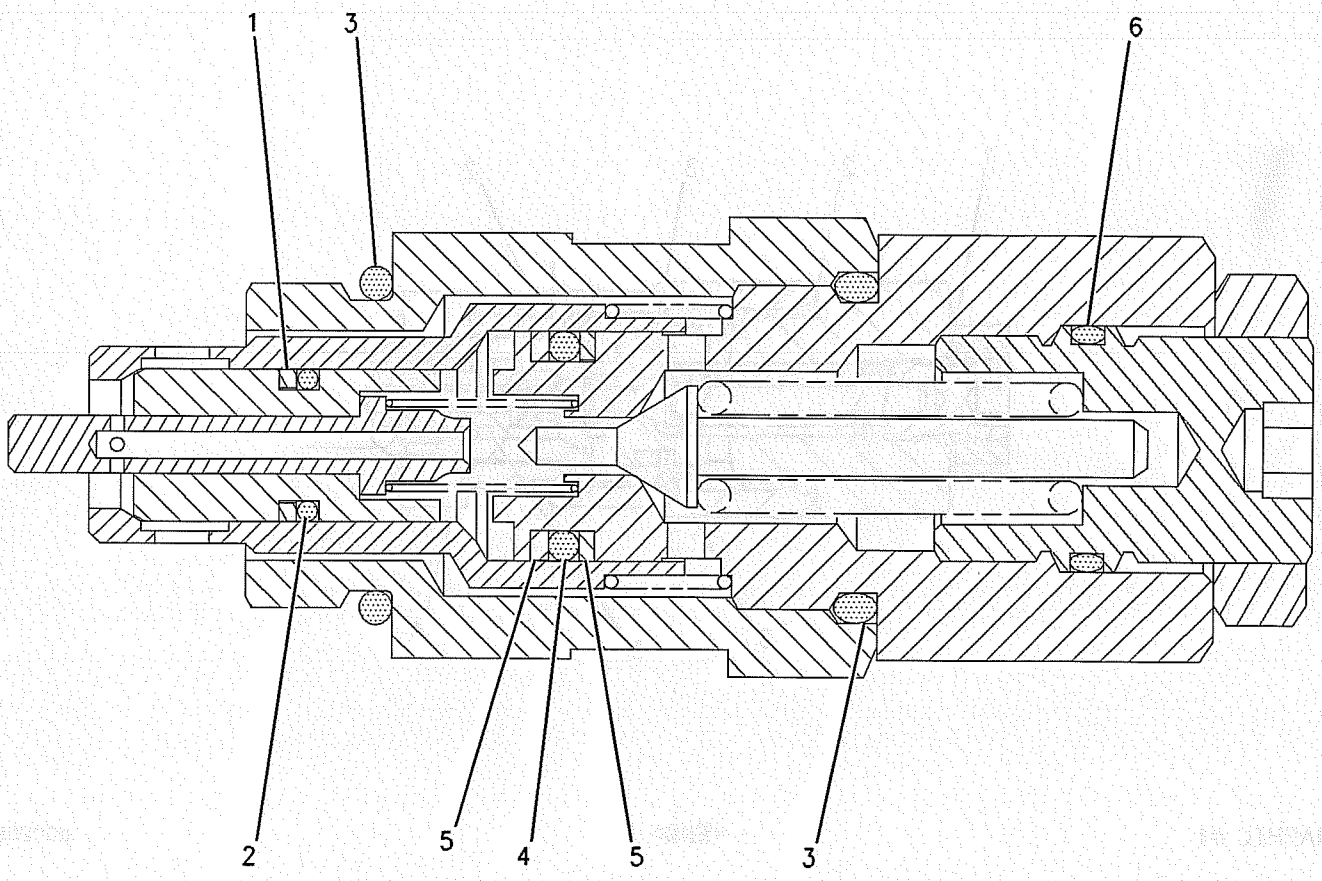

GRAPHIC #1 **<END>** g00946330

HYDRAULIC SYSTEM

129-8030 VALVE GP-RELIEF

S/N: SBN1-UP; RAW1-UP

PART OF 137-3718 VALVE GP-TRAVEL COUNTERBALANCE

SMCS-5069, 5117 **i00823796**

NOTE	REF NO	GRAPHIC REF	PART NUMBER	QTY	PART NAME 1 2 3 4 5 6 (PRODUCT LEVEL)	SEE PAGE
	1	1	**114-0515**	1	SEAT	
	2	1	**095-1785**	3	RING	
	3	1	**095-1586**	3	SEAL-O-RING (19.80MM ID)	
	4	1	**114-0516**	1	SPRING	
	5	1	**114-0519**	1	STOP	
M	6	1	**7Y-8436**	1	SCREW	
M	7	1	**7Y-8437**	1	NUT	
	8	1	**114-0518**	1	BODY	
	9	1	**095-1601**	1	SEAL-O-RING (34.7MM ID)	
	10	1	**121-1459**	2	RING-BACKUP	
	11	1	**114-0517**	1	PISTON	
	12	1	**114-0514**	1	SPRING	
	13	1	**129-8031**	1	VALVE GP	

M-METRIC PART

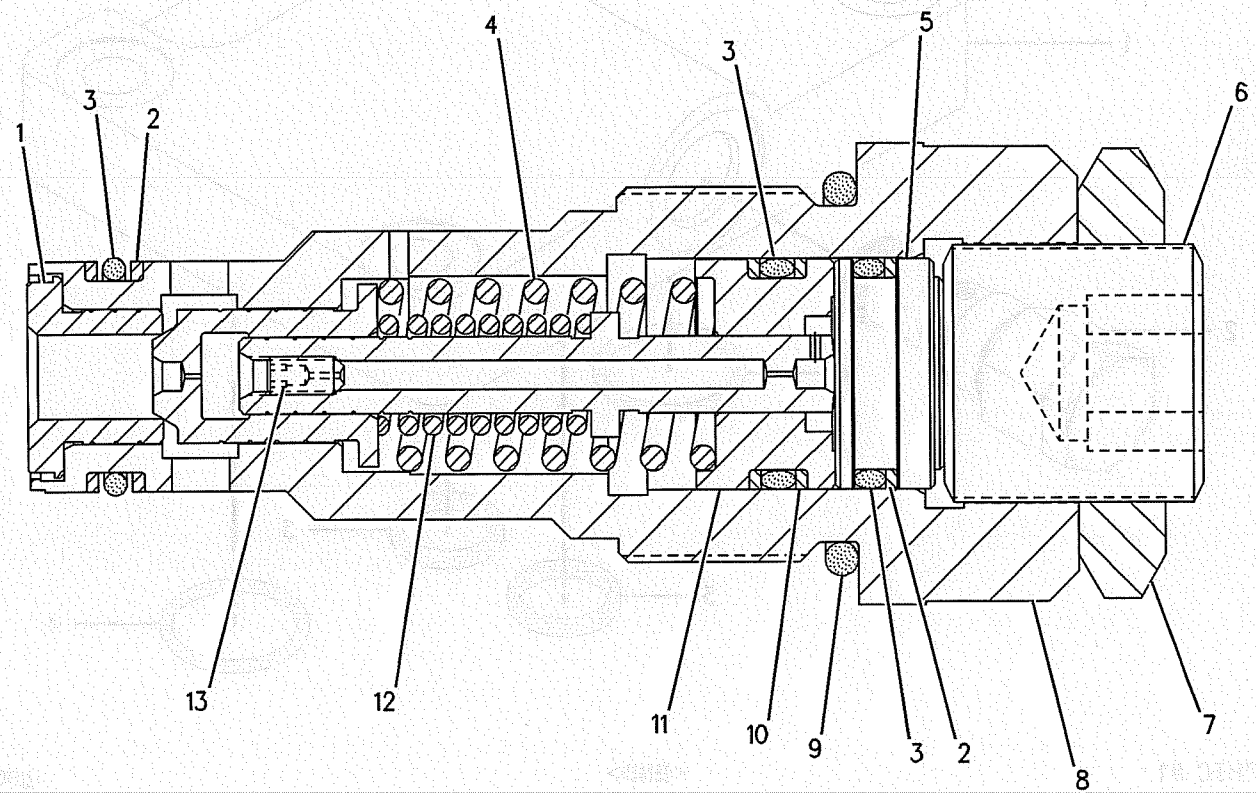

GRAPHIC #1 **<END>** g00258401

HYDRAULIC SYSTEM

153-5313 VALVE GP-RELIEF

S/N: SBN1-UP; RAW1-UP

PART OF 158-8200 VALVE GP-CONTROL

SMCS-5069, 5117 **i01378440**

NOTE	REF NO	GRAPHIC REF	PART NUMBER	QTY	PART NAME 1 2 3 4 5 6 (PRODUCT LEVEL)	SEE PAGE
	1	1	**4J-8998**	2	SEAL-O-RING (36.09MM ID)	
Y	2	1	**109-2667**	1	VALVE GP-RELIEF	436
	3	1	*153-5239*	1	COVER	
	4	1	**1P-3702**	2	SEAL-RECTANGULAR (28.83MM ID)	

Y-SEPARATE ILLUSTRATION

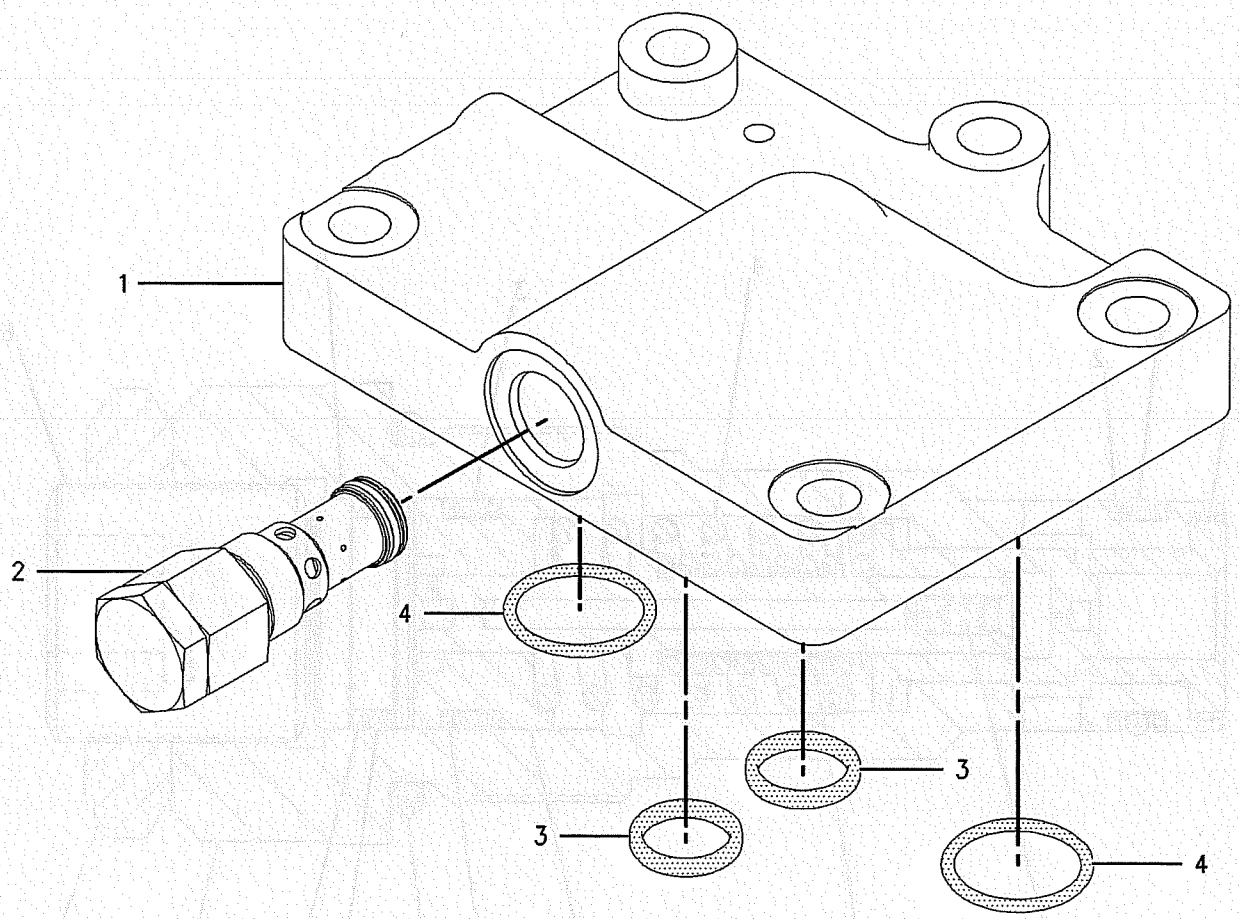

GRAPHIC #1 **<END>** g00672555

HYDRAULIC SYSTEM

171-0030 VALVE GP-RELIEF

S/N: SBN1-UP; RAW1-UP

PART OF 158-8202 VALVE GP-CONTROL

SMCS-5069, 5117 **i01381107**

NOTE	REF NO	GRAPHIC REF	PART NUMBER	QTY	PART NAME 1 2 3 4 5 6 (PRODUCT LEVEL)	SEE PAGE
	1	1	*171-0031*	1	VALVE GP-RELIEF	
	2	1	**6I-6795**	1	SPRING	
	3	1	**171-0034**	1	SEAT	
	4	1	**171-0037**	1	VALVE	
	5	1	**4I-3510**	1	SPRING	
	6	1	**171-0035**	1	HOLDER	
	7	1	**4I-7714**	1	NUT (3/4-16 THD)	
	8	1	**171-0036**	1	ADJUSTER	
	9	1	**095-1579**	1	SEAL-O-RING (10.8MM ID)	
	10	1	**6V-8218**	1	SEAL-O-RING (32.99MM ID)	
	11	1	**095-1590**	1	SEAL-O-RING (21.80MM ID)	
	12	1	**6V-8978**	1	SEAL-O-RING (29.82MM ID)	
	13	1	**095-1786**	1	RING-BACKUP	
	14	1	**095-1587**	1	SEAL-O-RING (20.8MM ID)	
	15	1	**3D-2824**	1	SEAL-O-RING (23.47MM ID)	
	16	1	**107-6541**	1	RING-RETAINING	
	17	1	**107-6540**	1	COLLAR	
	18	1	**119-5398**	1	FILTER	

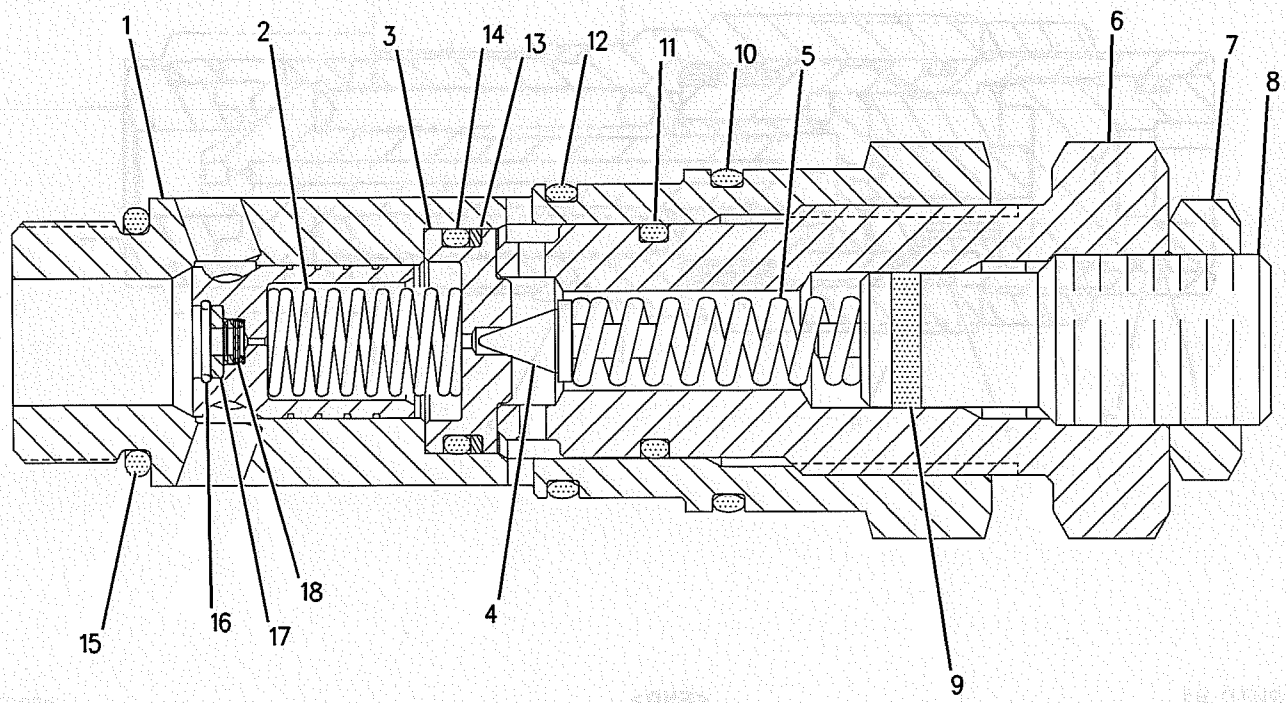

GRAPHIC #1 **<END>** g00680513

HYDRAULIC SYSTEM

173-3452 VALVE GP-RELIEF

S/N: SBN1-UP; RAW1-UP

PART OF 158-8986 MOTOR GP-SWING

SMCS-5069, 5117 **i01375454**

NOTE	REF NO	GRAPHIC REF	PART NUMBER	QTY	PART NAME 1 2 3 4 5 6 (PRODUCT LEVEL)	SEE PAGE
	1	1	**168-0765**	1	RING-BACKUP	
	2	1	**7J-9933**	1	SEAL-O-RING (21.89MM ID)	
	3	1	**7I-0966**	1	RING-BACKUP	
	4	1	**6V-5556**	1	SEAL-O-RING (25.07MM ID)	
	5	1	**095-1698**	1	SEAL-O-RING (29.40MM ID)	

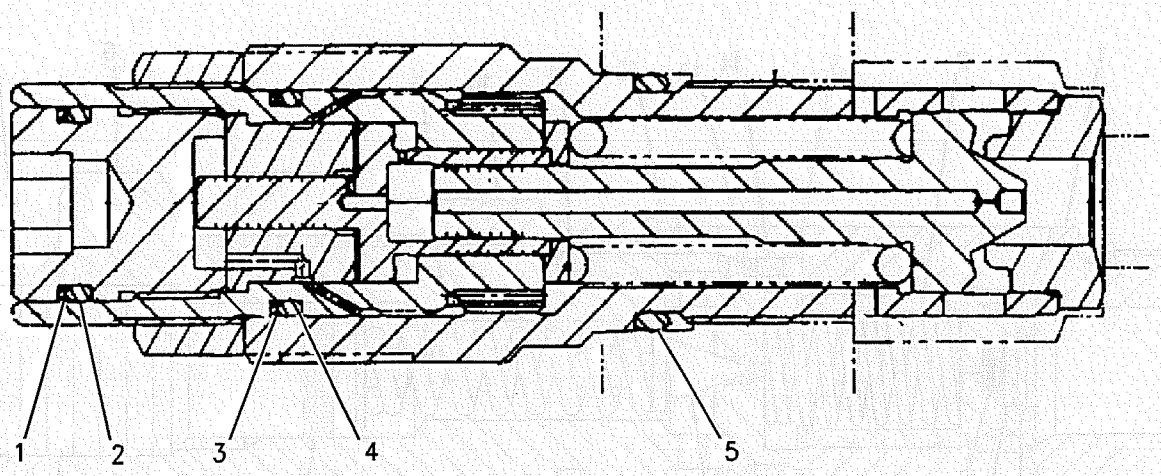

GRAPHIC #1 **<END>** g00671043

HYDRAULIC SYSTEM

177-2653 VALVE GP-RELIEF

S/N: RAW1-UP

PART OF 179-7519 LINES GP-FRONT

AN ATTACHMENT

SMCS-5069, 5117 **i01893642**

NOTE	REF NO	GRAPHIC REF	PART NUMBER	QTY	PART NAME 1 2 3 4 5 6 (PRODUCT LEVEL)	SEE PAGE
CY	1	1	**222-0084**	1	VALVE GP-RELIEF	449
Z	2	1			BLOCK	

C-CHANGE FROM PREVIOUS TYPE
Y-SEPARATE ILLUSTRATION
Z-NOT SERVICED SEPARATELY

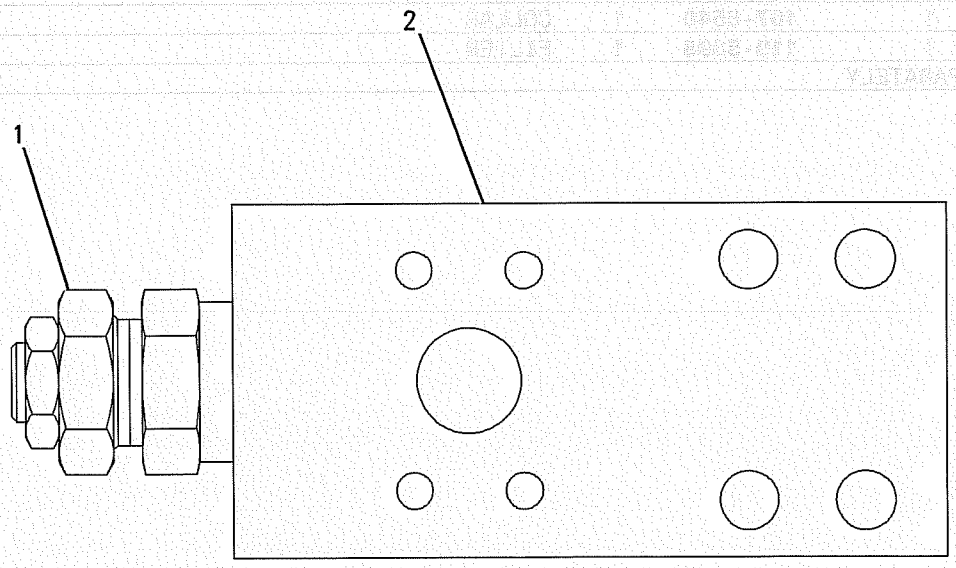

GRAPHIC #1 **<END>** g00684155

HYDRAULIC SYSTEM

201-9350 VALVE GP-RELIEF

S/N: SBN1-UP; RAW1-UP
PILOT OPERATED
PART OF 201-9358 VALVE GP-CONTROL
AN ATTACHMENT

SMCS-5069, 5117 **i01889471**

NOTE	REF NO	GRAPHIC REF	PART NUMBER	QTY	PART NAME 1 2 3 4 5 6 (PRODUCT LEVEL)	SEE PAGE
Z	1	1		1	VALVE GP-RELIEF	
	2	1	**6I-6795**	1	SPRING	
	3	1	**171-0034**	1	SEAT	
	4	1	**171-0037**	1	VALVE	
	5	1	**4I-3510**	1	SPRING	
	6	1	**171-0035**	1	HOLDER	
	7	1	**4I-7714**	1	NUT (3/4-16 THD)	
	8	1	**171-0036**	1	ADJUSTER	
	9	1	**095-1579**	1	SEAL-O-RING	
	10	1	**6V-8218**	1	SEAL-O-RING	
	11	1	**095-1590**	1	SEAL-O-RING	
	12	1	**6V-8978**	1	SEAL-O-RING	
	13	1	**095-1786**	1	RING-BACKUP	
	14	1	**095-1587**	1	SEAL-O-RING	
	15	1	**3D-2824**	1	SEAL-O-RING	
	16	1	**107-6541**	1	RING-RETAINING	
	17	1	**107-6540**	1	COLLAR	
	18	1	**119-5398**	1	FILTER	

Z-NOT SERVICED SEPARATELY

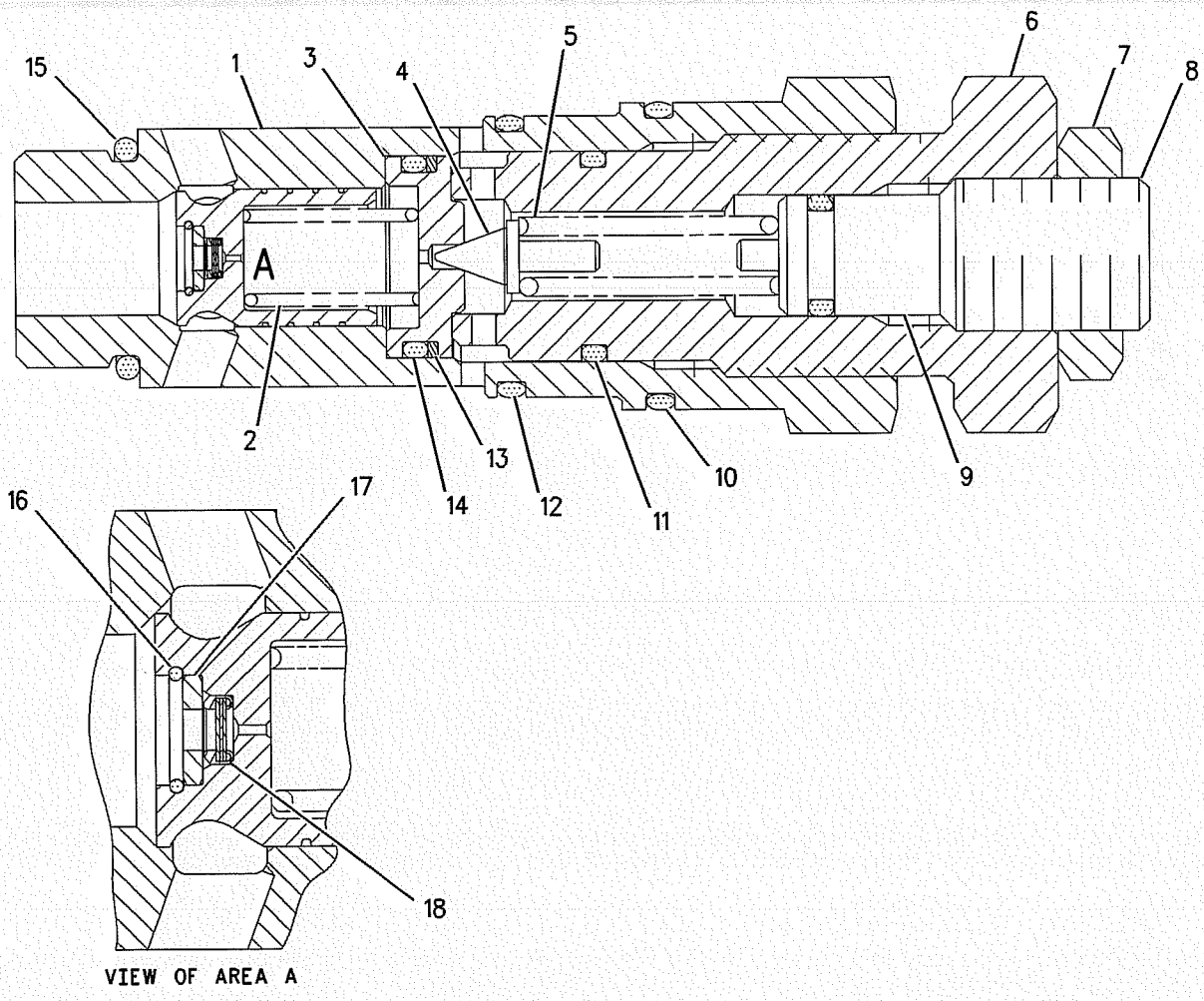

GRAPHIC #1 **<END>** g00831152

HYDRAULIC SYSTEM

201-9352 VALVE GP-RELIEF

S/N: SBN1-UP; RAW1-UP
PART OF 201-9358 VALVE GP-CONTROL
AN ATTACHMENT

SMCS-5069, 5117 **i01889473**

NOTE	PART NUMBER	QTY	PART NAME 1 2 3 4 5 6 (PRODUCT LEVEL)	SEE PAGE
Y	**201-9353**	1	VALVE GP-PILOT RELIEF	434
			-OR-	
Y	**105-1321**	1	VALVE GP-PILOT RELIEF	433

Y-SEPARATE ILLUSTRATION

<END>

222-0084 VALVE GP-RELIEF

S/N: RAW1-UP
PART OF 177-2653 VALVE GP-RELIEF
AN ATTACHMENT

SMCS-5069, 5117 **i01893639**

NOTE	REF NO	GRAPHIC REF	PART NUMBER	QTY	PART NAME 1 2 3 4 5 6 (PRODUCT LEVEL)	SEE PAGE
Z	1	1		1	VALVE GP-RELIEF	
	2	1	**6I-6795**	1	SPRING	
	3	1	**171-0034**	1	SEAT	
	4	1	**171-0037**	1	VALVE	
	5	1	**4I-3510**	1	SPRING	
	6	1	**171-0035**	1	HOLDER	
	7	1	**222-0085**	1	NUT (3/4-16 THD)	
	8	1	**171-0036**	1	ADJUSTER	
	9	1	**095-1579**	1	SEAL-O-RING	
	10	1	**6V-8218**	1	SEAL-O-RING	
	11	1	**095-1590**	1	SEAL-O-RING	
	12	1	**6V-8978**	1	SEAL-O-RING	
	13	1	**095-1786**	1	RING-BACKUP	
	14	1	**095-1587**	1	SEAL-O-RING	
	15	1	**3D-2824**	1	SEAL-O-RING	

Z-NOT SERVICED SEPARATELY

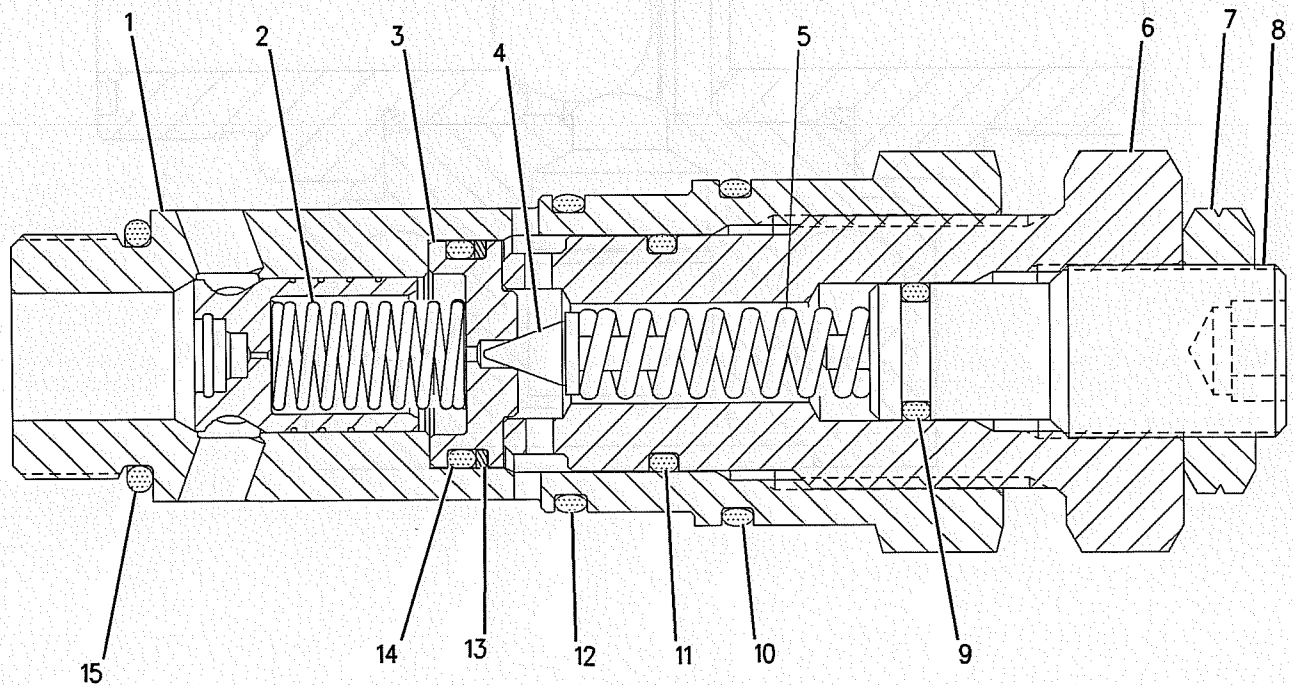

GRAPHIC #1 **<END>** g00927977

HYDRAULIC SYSTEM

123-2430 VALVE GP-SHUTTLE

S/N: SBN1-UP; RAW1-UP

PART OF 199-7293 LINES GP-PILOT

SMCS-5079 **i01374203**

NOTE	REF NO	GRAPHIC REF	PART NUMBER	QTY	PART NAME 1 2 3 4 5 6 (PRODUCT LEVEL)	SEE PAGE
	1	1	*123-2431*	1	BODY-VALVE	
	2	1	**4B-9783**	1	BALL (11.11MM DIA)	
	3	1	**3J-1907**	2	SEAL-O-RING (11.89MM ID)	
	4	1	**123-2552**	2	CONNECTOR	

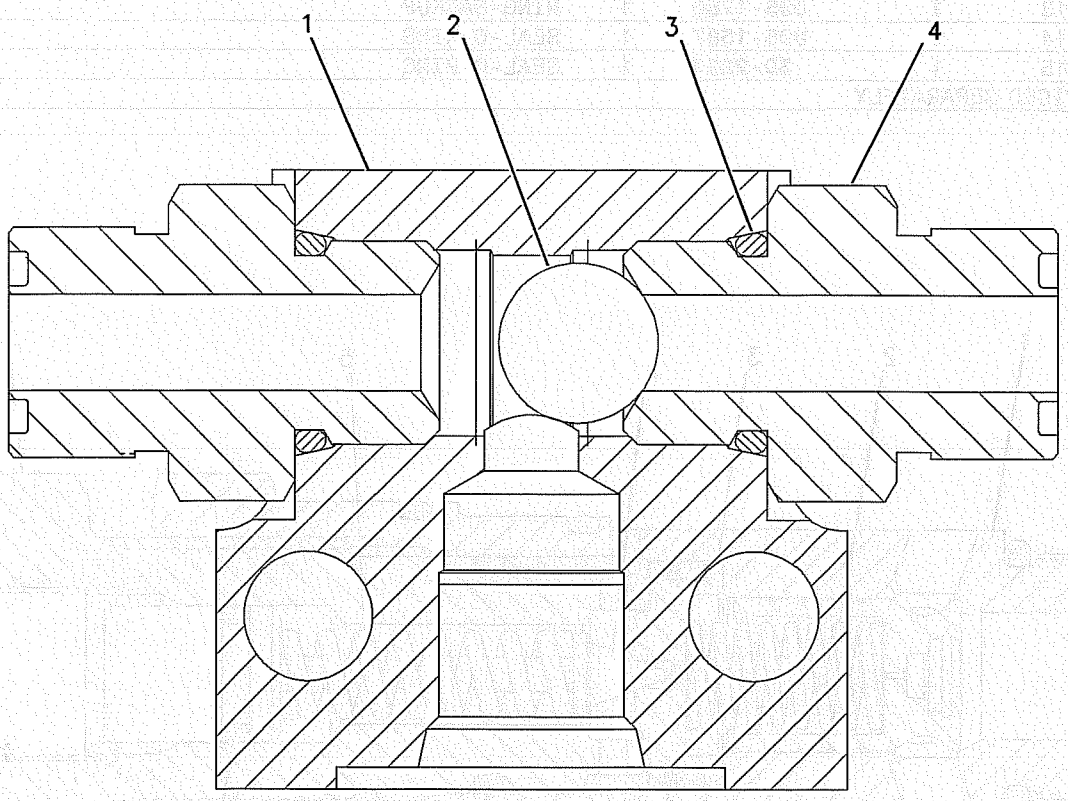

GRAPHIC #1 **<END>** g00652899

185-0462 VALVE GP-SHUTTLE

S/N: SBN1-UP; RAW1-UP

PART OF 199-7428 LINES GP-PILOT

SMCS-5079 **i01375688**

NOTE	REF NO	GRAPHIC REF	PART NUMBER	QTY	PART NAME 1 2 3 4 5 6 (PRODUCT LEVEL)	SEE PAGE
	1	1	**7I-8084**	4	PLUG	
	2	1	**185-0463**	1	SEAT	
	3	1	**4B-9880**	7	BALL (7.94MM DIA)	
	4	1	**165-9464**	6	SEAT	
	5	1	**095-1578**	7	SEAL-O-RING (9.80MM ID)	
	6	1	**107-6479**	7	PLUG	

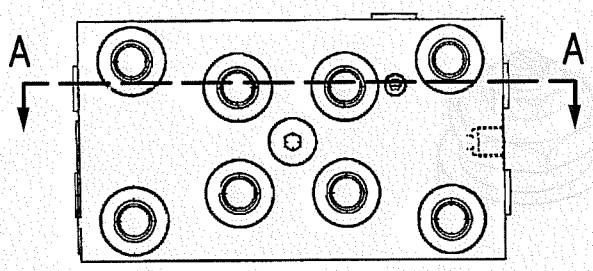

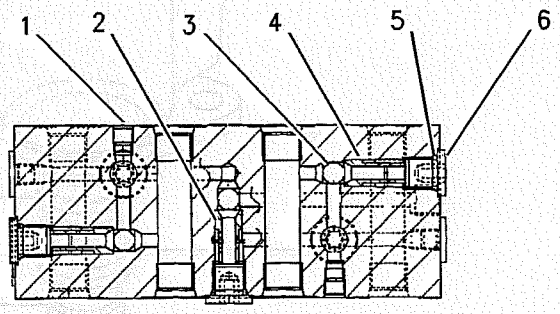

SECTION A-A

GRAPHIC #1 **<END>** g00699270

HYDRAULIC SYSTEM

111-9916 VALVE GP-SOLENOID

S/N: SBN1-UP; RAW1-UP

PART OF 204-2683 HEAD GP-PUMP, 171-0188 VALVE GP-PILOT, 185-0497 VALVE GP-SOLENOID

ALSO AN ATTACHMENT

SMCS-1259, 5051, 5479 **i01401641**

NOTE	REF NO	GRAPHIC REF	PART NUMBER	QTY	PART NAME 1 2 3 4 5 6 (PRODUCT LEVEL)	SEE PAGE
	1	1	**6M-5062**	1	SEAL-O-RING (10.82MM ID)	
	2	1	**4K-2039**	1	SEAL-O-RING (12.42MM ID)	
	3	1	**5L-4758**	1	SEAL-O-RING (14.0MM ID)	
	4	1	**095-1586**	1	SEAL-O-RING (19.80MM ID)	
	5	1	**114-0623**	1	NUT AS	

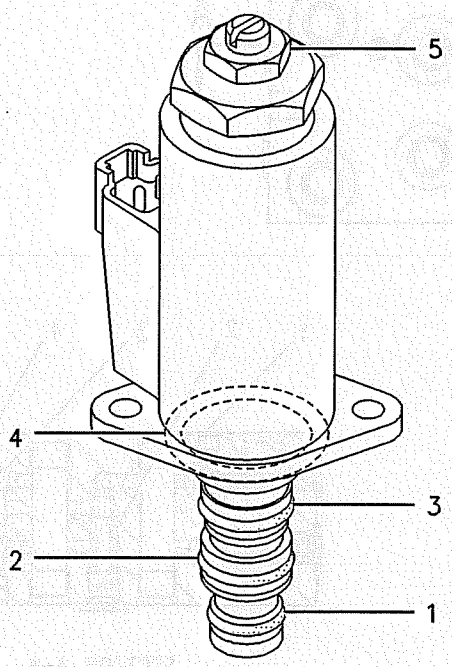

GRAPHIC #1

<END>

g00258219

HYDRAULIC SYSTEM

121-1491 VALVE GP-SOLENOID

S/N: SBN1-UP; RAW1-UP

PART OF 158-8202 VALVE GP-CONTROL, 158-8251 VALVE GP-PILOT

SMCS-1259, 5051, 5479 **i00831400**

NOTE	PART NUMBER	QTY	PART NAME 1 2 3 4 5 6 (PRODUCT LEVEL)	SEE PAGE
Y	*131-5745*	1	VALVE GP-SOLENOID	455
Y	*131-5760*	1	VALVE GP-SOLENOID	456

Y-SEPARATE ILLUSTRATION

<END>

HYDRAULIC SYSTEM

121-6303 VALVE GP-SOLENOID

S/N: RAW1-UP
PART OF 179-7520 LINES GP-PILOT
AN ATTACHMENT

SMCS-1259, 5051, 5479 **i01404813**

NOTE	REF NO	GRAPHIC REF	PART NUMBER	QTY	PART NAME 1 2 3 4 5 6 (PRODUCT LEVEL)	SEE PAGE
	1	1	*7I-8102*	1	VALVE AS	
	2	1	**121-6304**	1	COIL GP	
M	3	1	**099-0822**	2	BOLT-SOCKET HEAD (M5X.8X10MM)	
	4	1	**095-1519**	1	SEAL-O-RING (15.80MM ID)	
	5	1	**7I-0986**	1	PLUG (M12X1.25 THD)	
	6	1	**7I-7403**	1	SPRING	
	7	1	**095-1578**	1	SEAL-O-RING (9.80MM ID)	

M-METRIC PART

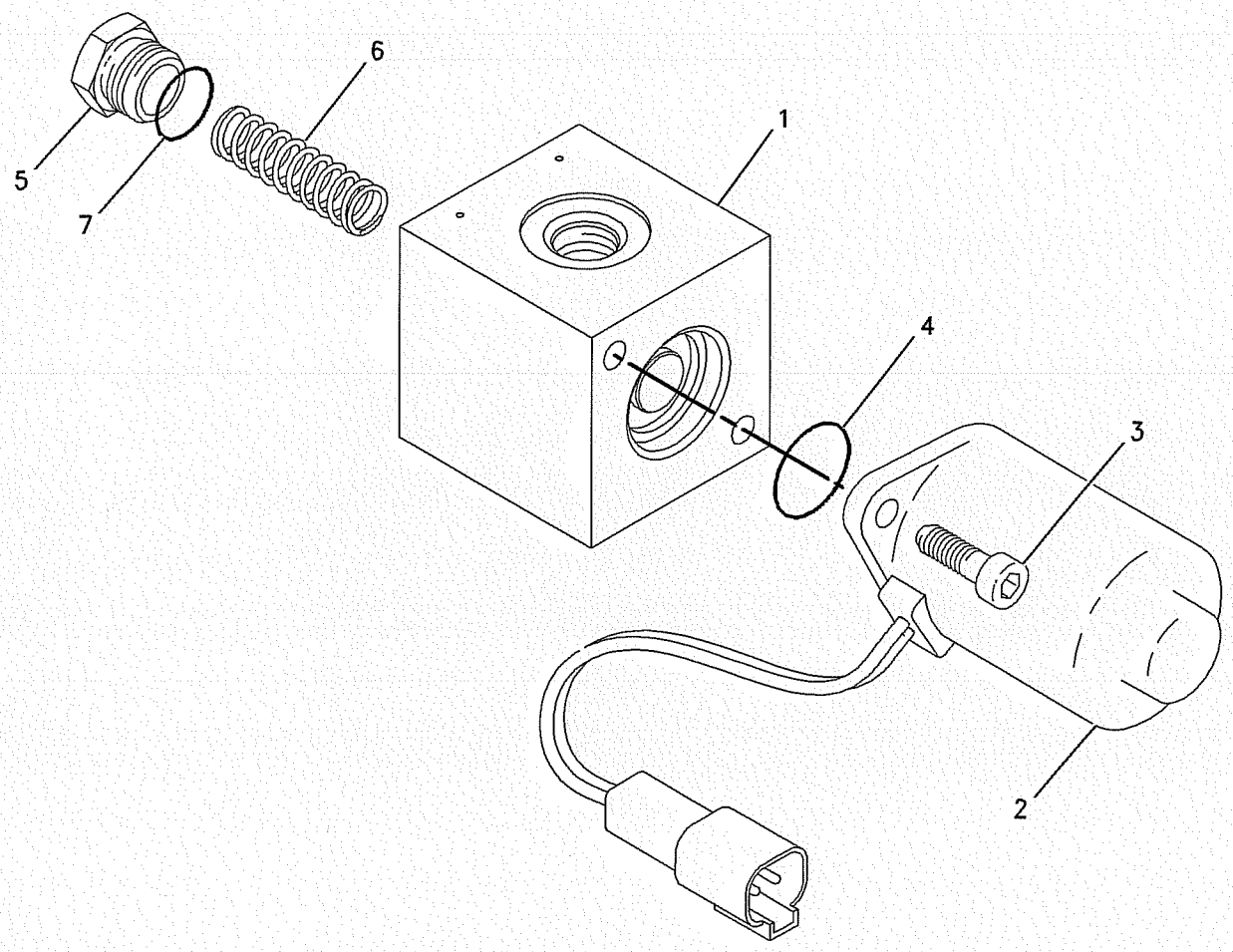

GRAPHIC #1 **<END>** g00685554

HYDRAULIC SYSTEM

131-5745 VALVE GP-SOLENOID

S/N: SBN1-UP; RAW1-UP

PART OF 121-1491 VALVE GP-SOLENOID

SMCS-1259, 5051, 5479 **i00823558**

NOTE	REF NO	GRAPHIC REF	PART NUMBER	QTY	PART NAME 1 2 3 4 5 6 (PRODUCT LEVEL)	SEE PAGE
	1	1	**095-1750**	1	SEAL-O-RING (10.82MM ID)	
	2	1	**6V-8398**	1	SEAL-O-RING (12.47MM ID)	
	3	1	**095-1751**	1	SEAL-O-RING (14.00MM ID)	
	4	1	**095-1586**	1	SEAL-O-RING (19.80MM ID)	

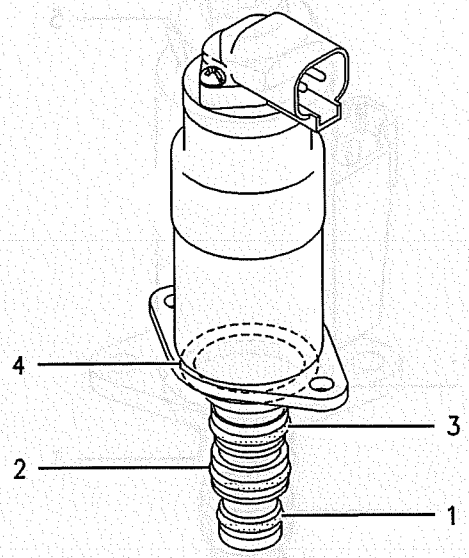

GRAPHIC #1

<END>

g00261061

HYDRAULIC SYSTEM

131-5760 VALVE GP-SOLENOID

S/N: SBN1-UP; RAW1-UP

PART OF 121-1491 VALVE GP-SOLENOID

SMCS-1259, 5051, 5479 **i00823559**

NOTE	REF NO	GRAPHIC REF	PART NUMBER	QTY	PART NAME 1 2 3 4 5 6 (PRODUCT LEVEL)	SEE PAGE
	1	1	**095-1750**	1	SEAL-O-RING (10.82MM ID)	
	2	1	**6V-8398**	1	SEAL-O-RING (12.47MM ID)	
	3	1	**095-1751**	1	SEAL-O-RING (14.00MM ID)	
	4	1	**095-1586**	1	SEAL-O-RING (19.80MM ID)	
	5	1	**114-0623**	1	NUT AS	

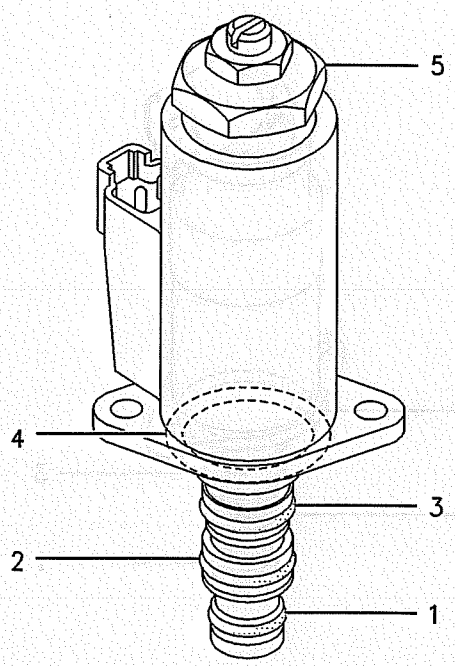

GRAPHIC #1

<END>

g00258220

HYDRAULIC SYSTEM

185-0497 VALVE GP-SOLENOID

S/N: SBN1-UP; RAW1-UP
PART OF 204-8283 LINES GP-PILOT
AN ATTACHMENT

SMCS-1259, 5051, 5479 **i01453660**

NOTE	REF NO	GRAPHIC REF	PART NUMBER	QTY	PART NAME 1 2 3 4 5 6 (PRODUCT LEVEL)	SEE PAGE
Y	1	1	**111-9916**	6	VALVE GP-SOLENOID	452
M	2	1	**7I-2272**	12	BOLT (M5X0.8X12MM)	
	3	1	*185-0465*	1	BODY-VALVE	
	4	1	**8T-6759**	12	PLUG-PIPE	

M-METRIC PART
Y-SEPARATE ILLUSTRATION

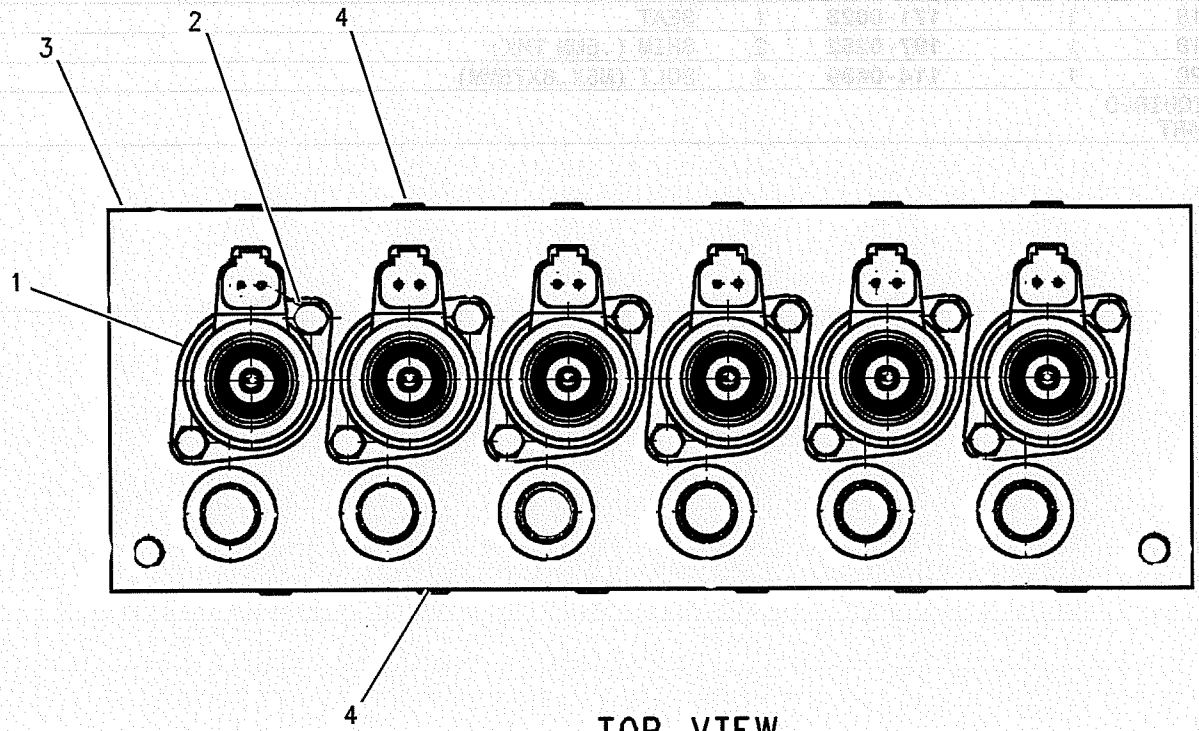

TOP VIEW

GRAPHIC #1 **<END>** g00734014

HYDRAULIC SYSTEM

165-9555 VALVE GP-SOLENOID & RELIEF

S/N: SBN1-UP; RAW1-UP
PART OF 165-9629 VALVE GP-SOLENOID & RELIEF
AN ATTACHMENT

SMCS-5571 **i01892682**

NOTE	REF NO	GRAPHIC REF	PART NUMBER	QTY	PART NAME 1 2 3 4 5 6 (PRODUCT LEVEL)	SEE PAGE
	1	1	**3D-2824**	1	SEAL-O-RING	
	2	1	**6V-9746**	1	SEAL-O-RING	
	3	1	**085-7538**	1	SEAL-O-RING	
	4	1	**107-6540**	1	COLLAR	
	5	1	**107-6541**	1	RING-RETAINING	
	6	1	**107-7017**	1	SPRING	
	7	1	**107-7018**	1	RING-BACKUP	
B	8	1	**111-9977**	2	SHIM (.1MM THK)	
	9	1	**111-9985**	1	RING	
	10	1	**111-9986**	1	SEAL-O-RING	
	11	1	**112-0090**	1	VALVE GP-SOLENOID	
	12	1	**119-5259**	1	VALVE	
	13	1	**119-5260**	1	ADAPTER	
B	14	1	**119-5262**	2	SHIM (.2MM THK)	
	15	1	**119-5398**	1	FILTER	
B	16	1	**123-2516**	2	SHIM (.15MM THK)	
	17	1	**165-9556**	1	VALVE AS	
	18	1	**171-0023**	1	SEAT	
B	19	1	**197-0252**	2	SHIM (.5MM THK)	
M	20	1	**114-0489**	4	BOLT (M5X.8X75MM)	

B-USE AS REQUIRED
M-METRIC PART

165-9555 VALVE GP-SOLENOID & RELIEF *(contd.)*

i01892682

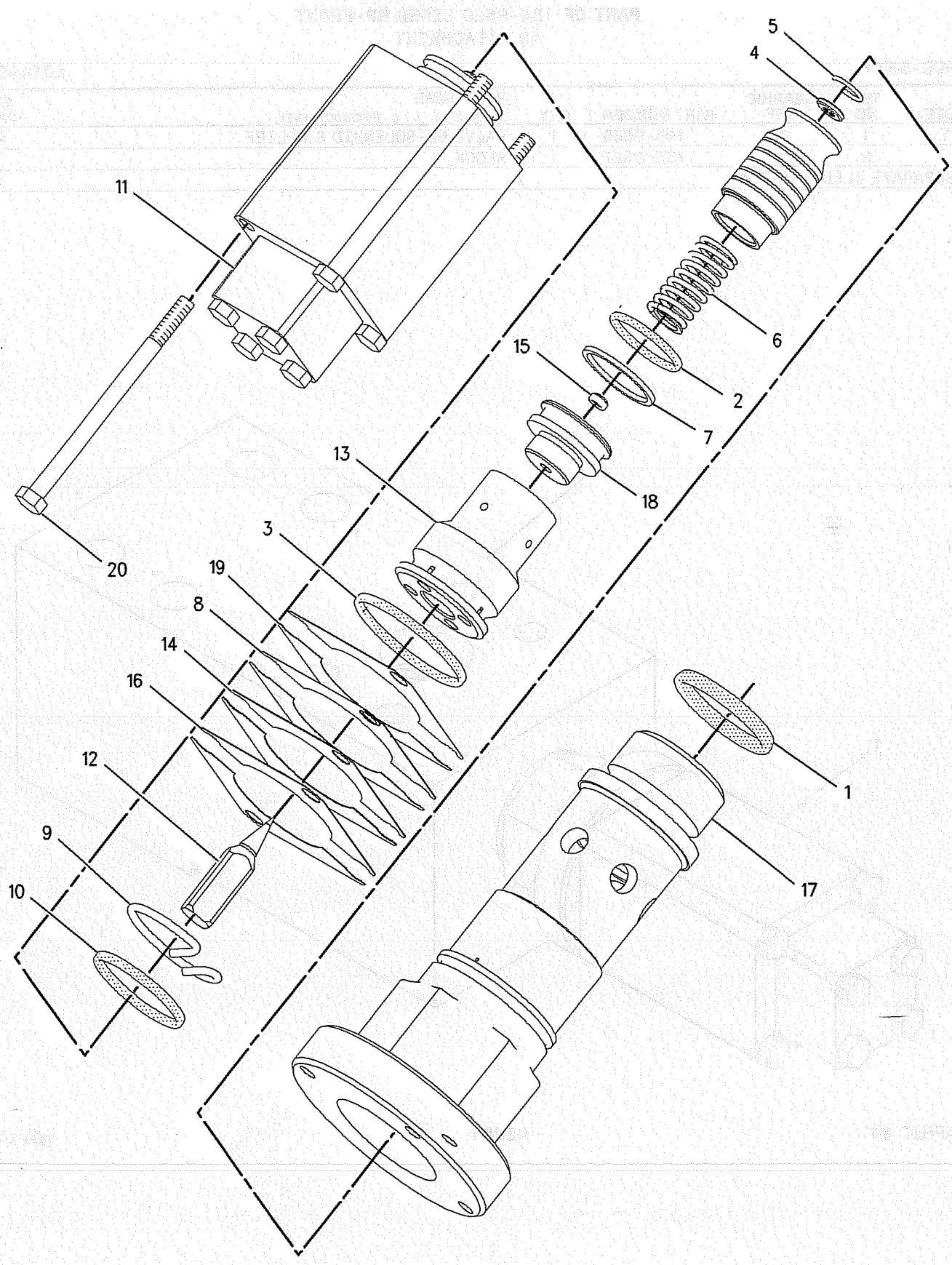

GRAPHIC #1

<END>

g00947035

HYDRAULIC SYSTEM

165-9629 VALVE GP-SOLENOID & RELIEF

S/N: SBN1-UP; RAW1-UP
PART OF 184-9560 LINES GP-FRONT
AN ATTACHMENT

SMCS-5571 **i01400878**

NOTE	REF NO	GRAPHIC REF	PART NUMBER	QTY	PART NAME 1 2 3 4 5 6 (PRODUCT LEVEL)	SEE PAGE
Y	1	1	**165-9555**	1	VALVE GP-SOLENOID & RELIEF	458
	2	1	*165-9627*	1	BLOCK	

Y-SEPARATE ILLUSTRATION

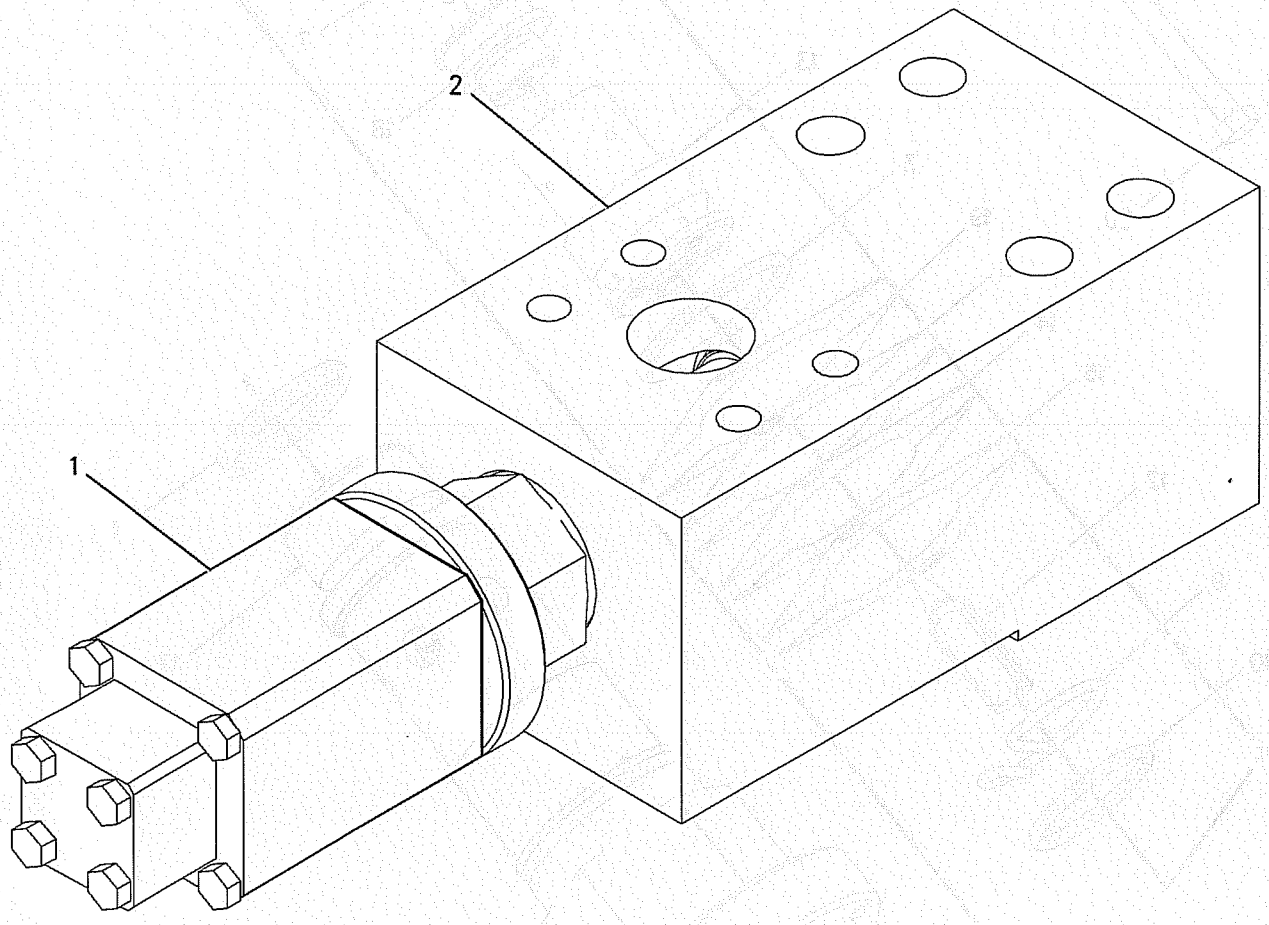

GRAPHIC #1 **<END>** g00701188

HYDRAULIC SYSTEM

158-9085 VALVE GP-SWING CUSHION

S/N: SBN1-UP; RAW1-UP

PART OF 142-7703 LINES GP-SWING MOTOR

SMCS-5480 **i01694828**

NOTE	REF NO	GRAPHIC REF	PART NUMBER	QTY	PART NAME 1 2 3 4 5 6 (PRODUCT LEVEL)	SEE PAGE
	1	1	*173-3535*	1	BODY	
	2	1	**095-1576**	1	SEAL-O-RING	
	3	1	**173-3536**	2	VALVE GP-SWING CUSHION	
					(EACH INCLUDES)	
		1	**095-1785**	1	RING-BACKUP	
		1	**095-1586**	1	SEAL-O-RING	
	4	1	**095-1698**	2	SEAL-O-RING	
	5	1	**8T-6759**	4	PLUG-PIPE	

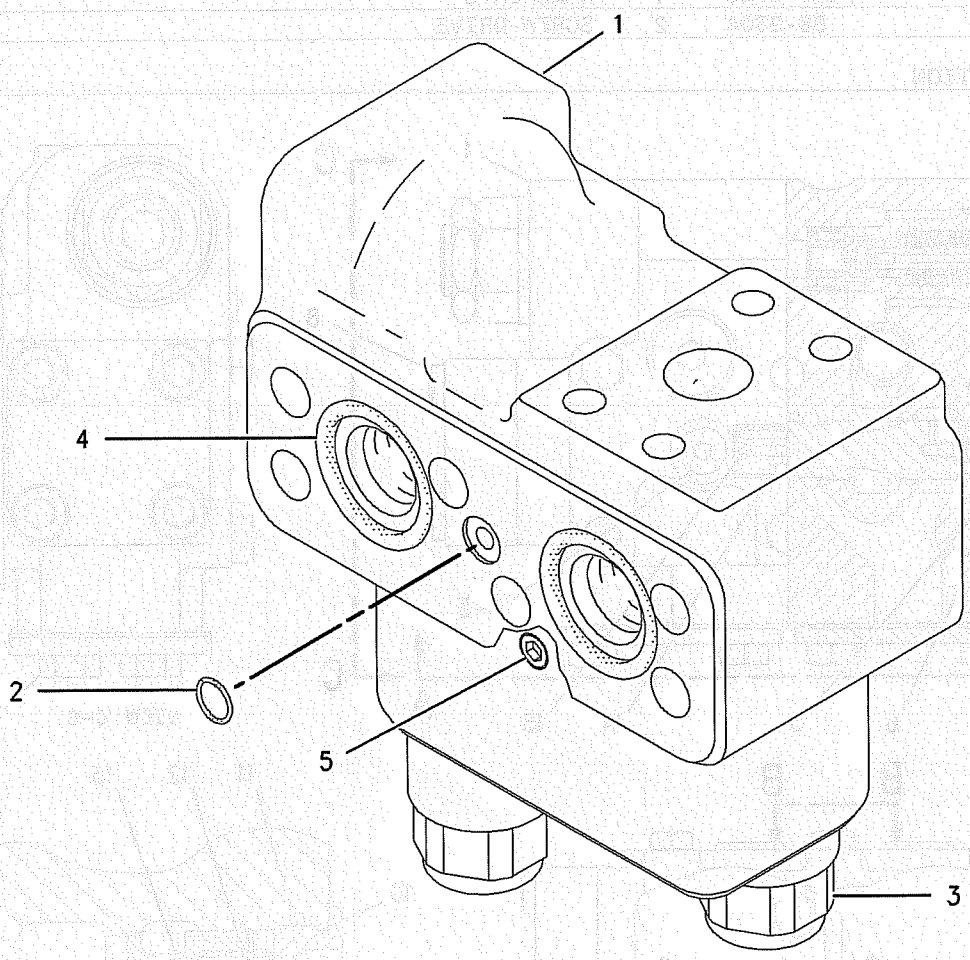

GRAPHIC #1 **<END>** g00729313

137-3718 VALVE GP-TRAVEL COUNTERBALANCE

S/N: SBN1-UP; RAW1-UP
TRAVEL BRAKE VALVE
PART OF 107-7028 MOTOR & MTG GP-TRAVEL

SMCS-5051 **i01337223**

NOTE	REF NO	GRAPHIC REF	PART NUMBER	QTY	PART NAME 1 2 3 4 5 6 (PRODUCT LEVEL)	SEE PAGE
	1	1	*137-3725*	1	VALVE GP-PILOT	
M	2	1	**6V-8200**	8	BOLT-HEX SOCKET (M12X1.75X35MM)	
	3	1	**9S-8004**	2	PLUG-O-RING (9/16-18 THD)	
	4	1	**3J-1907**	2	SEAL-O-RING (11.89MM ID)	
	5	1	**129-7932**	2	GUIDE	
	6	1	**129-7931**	2	SPRING	
	7	1	**095-1701**	2	SEAL-O-RING (39.4MM ID)	
	8	1	**119-5360**	2	COVER	
Y	9	1	**129-8030**	2	VALVE GP-RELIEF	441
	10	1	**2M-9780**	2	SEAL-O-RING (19.18MM ID)	
	11	1	**119-5364**	2	PLUG (7/8)	
	12	1	**119-5362**	2	SPRING	
	13	1	**119-5365**	2	VALVE	
	14	1	**137-3728**	1	NAMEPLATE	
	15	1	**5B-9304**	2	SCREW-DRIVE	

M-METRIC PART
Y-SEPARATE ILLUSTRATION

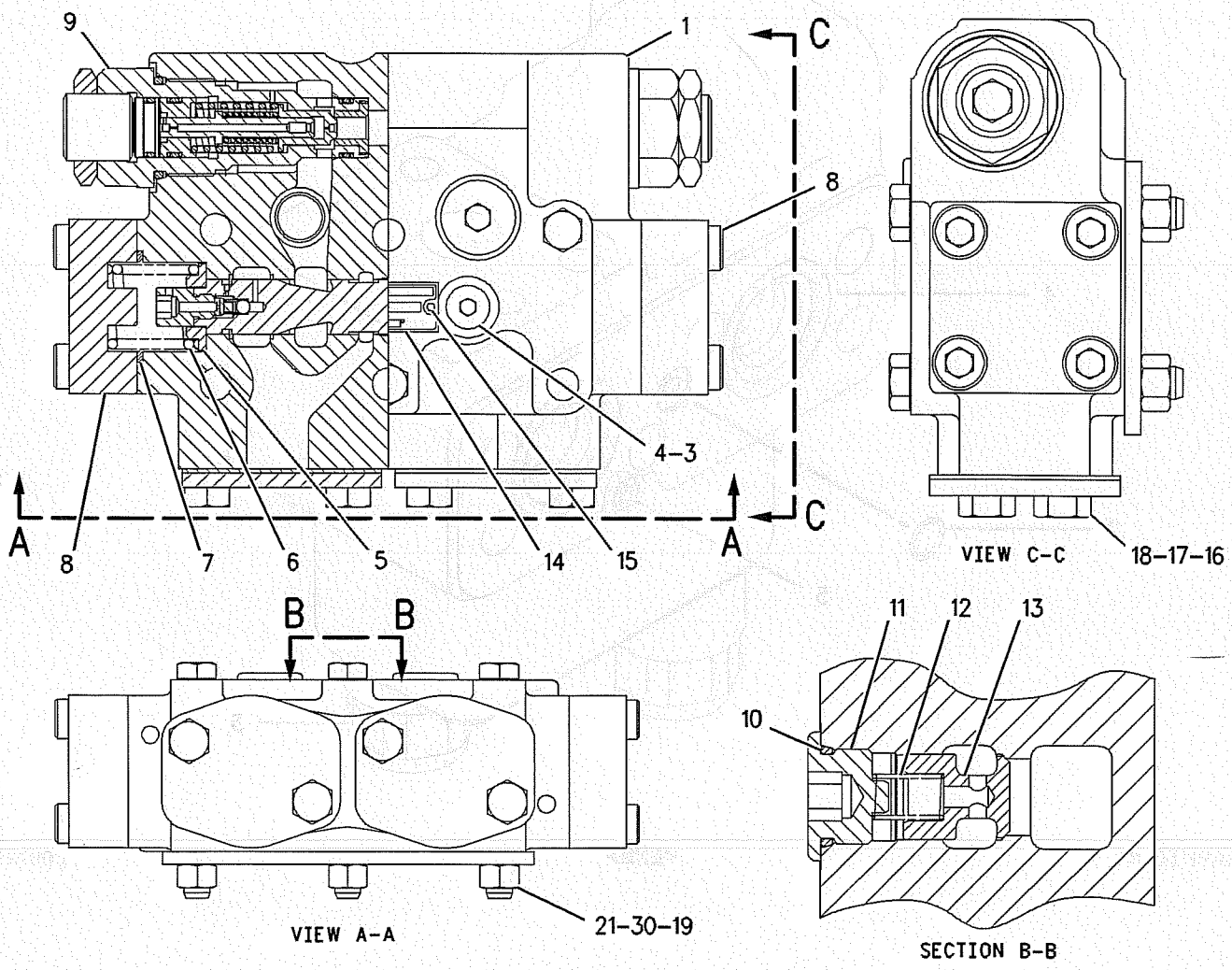

GRAPHIC #1 **<END>** g00304713

IMPLEMENTS

167-7245 BOOM AR-1 PIECE

S/N: SBN1-UP; RAW1-UP
1PC SHORT
AN ATTACHMENT

SMCS-6501 **i01401682**

NOTE	PART NUMBER	QTY	PART NAME 1 2 3 4 5 6 (PRODUCT LEVEL)	SEE PAGE
Y	*163-3537*	1	BOOM GP	466
Y	*158-9011*	1	CYLINDER & LINES GP-BOOM	230
Y	*158-9012*	1	CYLINDER & LINES GP-BOOM	230
Y	*158-9016*	1	CYLINDER & LINES GP-STICK	231
Y	*116-0157*	1	LIGHTING GP-BOOM (LH)	122
Y	*142-7759*	1	LINES GP-BOOM	301
Y	*172-2939*	1	LINES GP-GREASE	473

Y-SEPARATE ILLUSTRATION

<END>

167-7244 BOOM AR-1 PIECE LONG

S/N: SBN1-UP; RAW1-UP
AN ATTACHMENT

SMCS-6000 **i01403712**

NOTE	PART NUMBER	QTY	PART NAME 1 2 3 4 5 6 (PRODUCT LEVEL)	SEE PAGE
Y	*163-3536*	1	BOOM GP	464
Y	*158-9011*	1	CYLINDER & LINES GP-BOOM (LH)	230
Y	*158-9012*	1	CYLINDER & LINES GP-BOOM (RH)	230
Y	*158-9014*	1	CYLINDER & LINES GP-STICK	231
Y	*116-0157*	1	LIGHTING GP-BOOM (LH)	122
Y	*153-8786*	1	LINES GP-BOOM	303
Y	*166-1578*	1	LINES GP-GREASE	472

Y-SEPARATE ILLUSTRATION

<END>

176-2714 BOOM AR-1 PIECE LONG

S/N: SBN1-UP; RAW1-UP
AN ATTACHMENT

SMCS-6000 **i01403544**

NOTE	PART NUMBER	QTY	PART NAME 1 2 3 4 5 6 (PRODUCT LEVEL)	SEE PAGE
Y	*166-1617*	1	BOOM GP	468
Y	**158-9011**	1	CYLINDER & LINES GP-BOOM (LH)	230
Y	**158-9012**	1	CYLINDER & LINES GP-BOOM (RH)	230
Y	**158-9014**	1	CYLINDER & LINES GP-STICK	231
Y	*116-0157*	1	LIGHTING GP-BOOM (LH)	122
Y	*153-8786*	1	LINES GP-BOOM	303
Y	*166-1578*	1	LINES GP-GREASE	472

Y-SEPARATE ILLUSTRATION

<END>

163-3536 BOOM GP

S/N: SBN1-UP; RAW1-UP
5675MM (223 IN)
PART OF 167-7244 BOOM AR-1 PIECE LONG
AN ATTACHMENT

SMCS-6460, 6501, 6516, 6521, 6535, 6536 **i01376127**

NOTE	REF NO	GRAPHIC REF	PART NUMBER	QTY	PART NAME 1 2 3 4 5 6 (PRODUCT LEVEL)	SEE PAGE
	1	1	**4I-3308**	2	PLATE	
	2	1	**4I-3309**	2	SPACER	
	3	1	**4I-4809**	1	PIN AS	
	4	1	**4I-4813**	1	PIN AS	
B	5	1	**093-0116**	1	SHIM (2.0MM THK)	
	6	1	**093-0349**	2	WASHER (6.0MM THK)	
	7	1	**093-0363**	1	SPACER (12MM THK)	
B	8	1	**113-2127**	1	SHIM (0.5MM THK)	
	9	1	**163-3756**	1	BOOM & BEARING AS	
	9A	1	**163-3744**	2	BEARING-SLEEVE	
	10	1	**166-1486**	2	SHIM (2.0MM THK)	
	11	1	**166-1487**	2	SHIM (2.0MM THK)	
	12	1	**176-2278**	1	PIN	
	13	1	**166-1495**	2	SEAL-LIP TYPE	
	14	1	**8T-4123**	2	WASHER-PLATED (3.5MM THK)	
	15	1	**8T-4223**	6	WASHER-HARD (13.5X25.5X3MM THK)	
M	16	1	**8T-4780**	2	BOLT (M20X2.5X30MM)	
M	17	1	**8T-4956**	6	BOLT (M12X1.75X35MM)	

B-USE AS REQUIRED
M-METRIC PART

163-3536 **BOOM GP** *(contd.)* **i01376127**

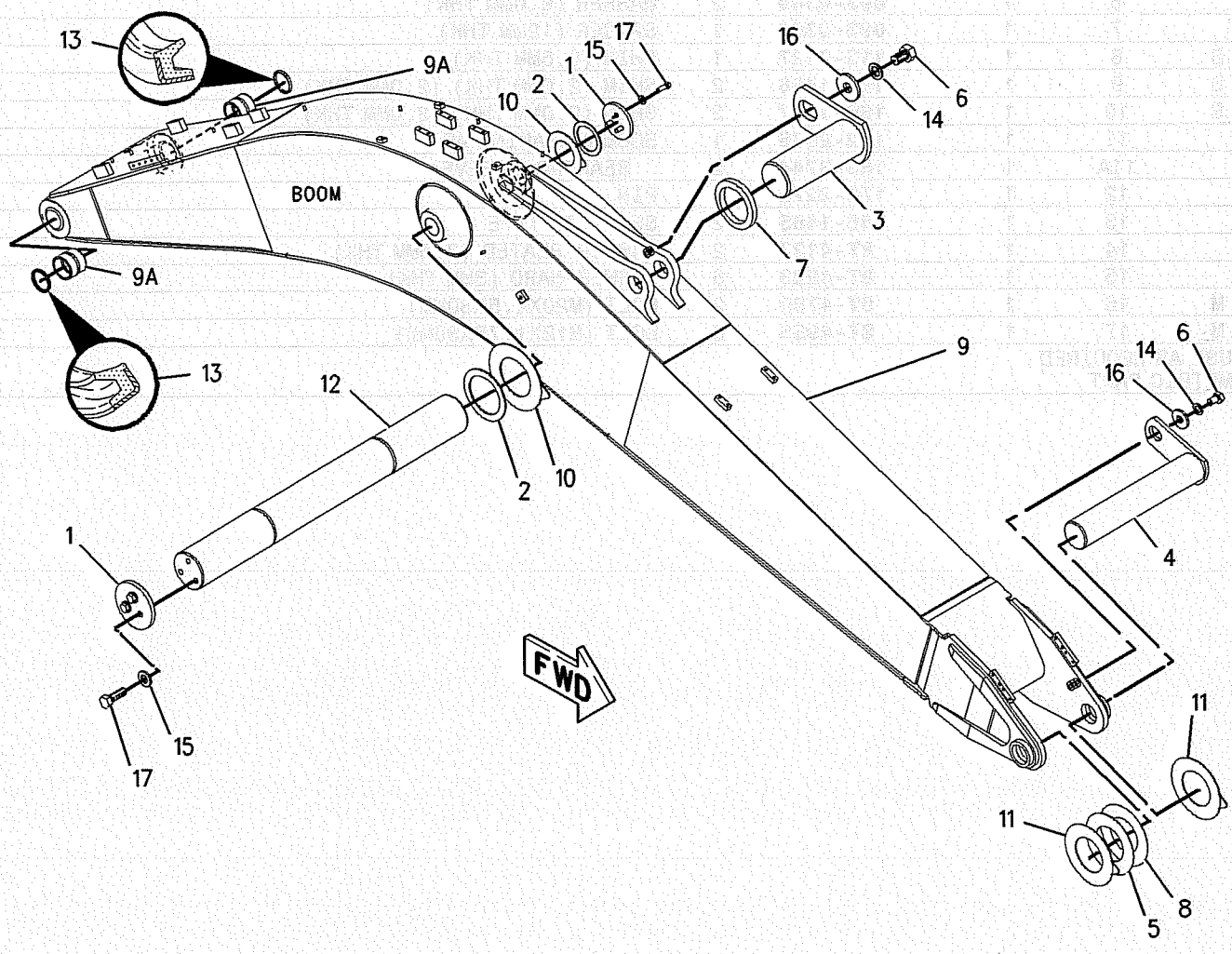

GRAPHIC #1 **<END>** g00727475

163-3537 BOOM GP

S/N: SBN1-UP; RAW1-UP
5200MM BOOM
PART OF 167-7245 BOOM AR-1 PIECE
AN ATTACHMENT

SMCS-6460, 6501, 6516, 6521, 6535, 6536 i01364155

NOTE	REF NO	GRAPHIC REF	PART NUMBER	QTY	PART NAME 1 2 3 4 5 6 (PRODUCT LEVEL)	SEE PAGE
	1	1	4I-3308	2	PLATE	
	2	1	4I-3309	2	SPACER	
	3	1	4I-4809	1	PIN AS	
	4	1	4I-4813	1	PIN AS	
B	5	1	093-0116	1	SHIM (2.0MM THK)	
	6	1	093-0349	2	WASHER (6.0MM THK)	
	7	1	093-0363	1	SPACER (12MM THK)	
B	8	1	113-2127	1	SHIM (0.5MM THK)	
B	9	1	166-1486	2	SHIM (2.0MM THK) (2.0MM THK)	
B	10	1	166-1487	2	SHIM (2.0MM THK) (2.0MM THK)	
	11	1	172-2976	1	BOOM & BEARING AS	
	11A	1	163-3744	2	BEARING-SLEEVE	
	12	1	176-2278	1	PIN	
	13	1	166-1495	2	SEAL-LIP TYPE	
	14	1	8T-4123	2	WASHER-PLATED (3.5MM THK)	
	15	1	8T-4223	6	WASHER-HARD (3MM THK)	
M	16	1	8T-4780	2	BOLT (M20X2.5X30MM)	
M	17	1	8T-4956	6	BOLT (M12X1.75X35MM)	

B-USE AS REQUIRED
M-METRIC PART

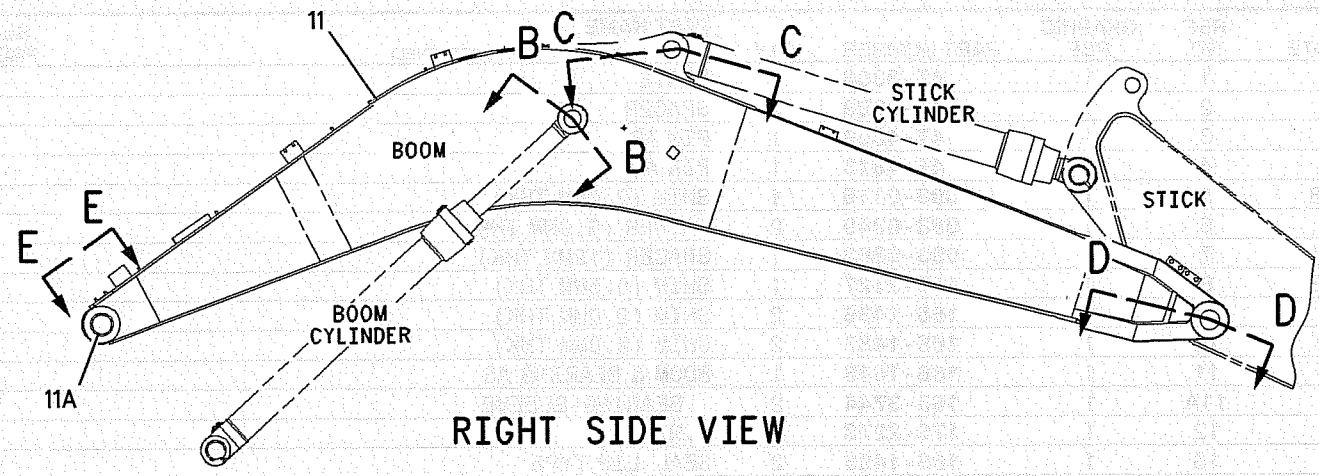

RIGHT SIDE VIEW

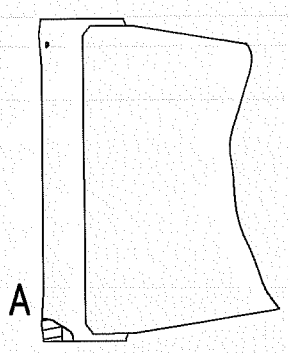

VIEW E-E

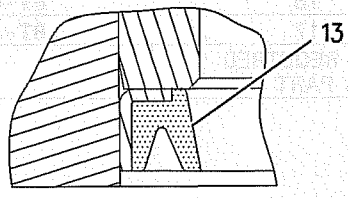

VIEW OF AREA A

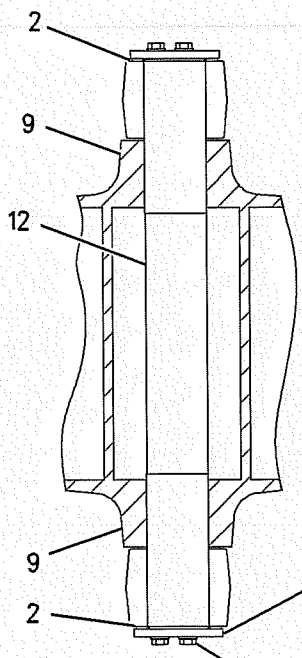

SECTION B-B

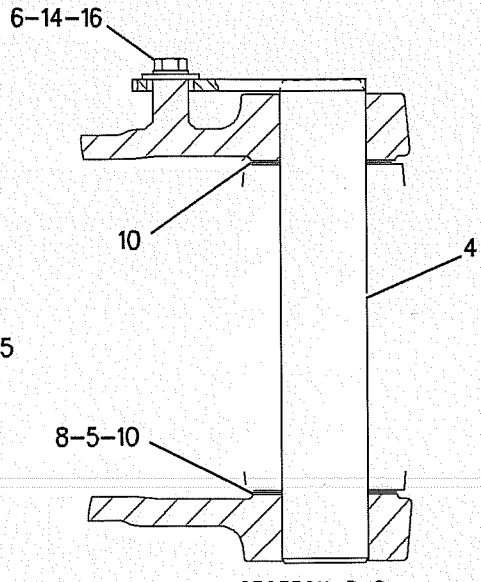

SECTION D-D

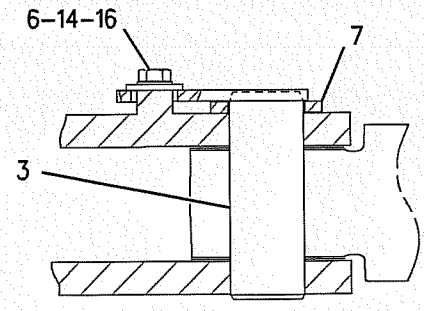

SECTION C-C

GRAPHIC #1 **<END>** g00677388

IMPLEMENTS

166-1617 BOOM GP

S/N: SBN1-UP; RAW1-UP
5675MM (223 IN)
PART OF 176-2714 BOOM AR-1 PIECE LONG
AN ATTACHMENT

SMCS-6460, 6501, 6516, 6521, 6535, 6536 **i01378705**

NOTE	REF NO	GRAPHIC REF	PART NUMBER	QTY	PART NAME 1 2 3 4 5 6 (PRODUCT LEVEL)	SEE PAGE
	1	1	**4I-3308**	2	PLATE	
	2	1	**4I-3309**	2	SPACER	
	3	1	**4I-4809**	1	PIN AS	
	4	1	**4I-4813**	1	PIN AS	
B	5	1	**093-0116**	1	SHIM (2.0MM THK)	
	6	1	**093-0349**	2	WASHER (6.0MM THK)	
	7	1	**093-0363**	1	SPACER (12MM THK)	
B	8	1	**113-2127**	1	SHIM (0.5MM THK)	
	9	1	**166-1486**	2	SHIM (2.0MM THK)	
	10	1	**166-1487**	2	SHIM (2.0MM THK)	
	11	1	**166-1618**	1	BOOM & BEARING AS	
	11A	1	**163-3744**	2	BEARING-SLEEVE	
	12	1	**176-2278**	1	PIN	
	13	1	**166-1495**	2	SEAL-LIP TYPE	
	14	1	**8T-4123**	2	WASHER-PLATED (3.5MM THK)	
	15	1	**8T-4223**	6	WASHER-HARD (13.5X25.5X3MM THK)	
M	16	1	**8T-4780**	2	BOLT (M20X2.5X30MM)	
M	17	1	**8T-4956**	6	BOLT (M12X1.75X35MM)	

B-USE AS REQUIRED
M-METRIC PART

166-1617 **BOOM GP** *(contd.)* i01378705

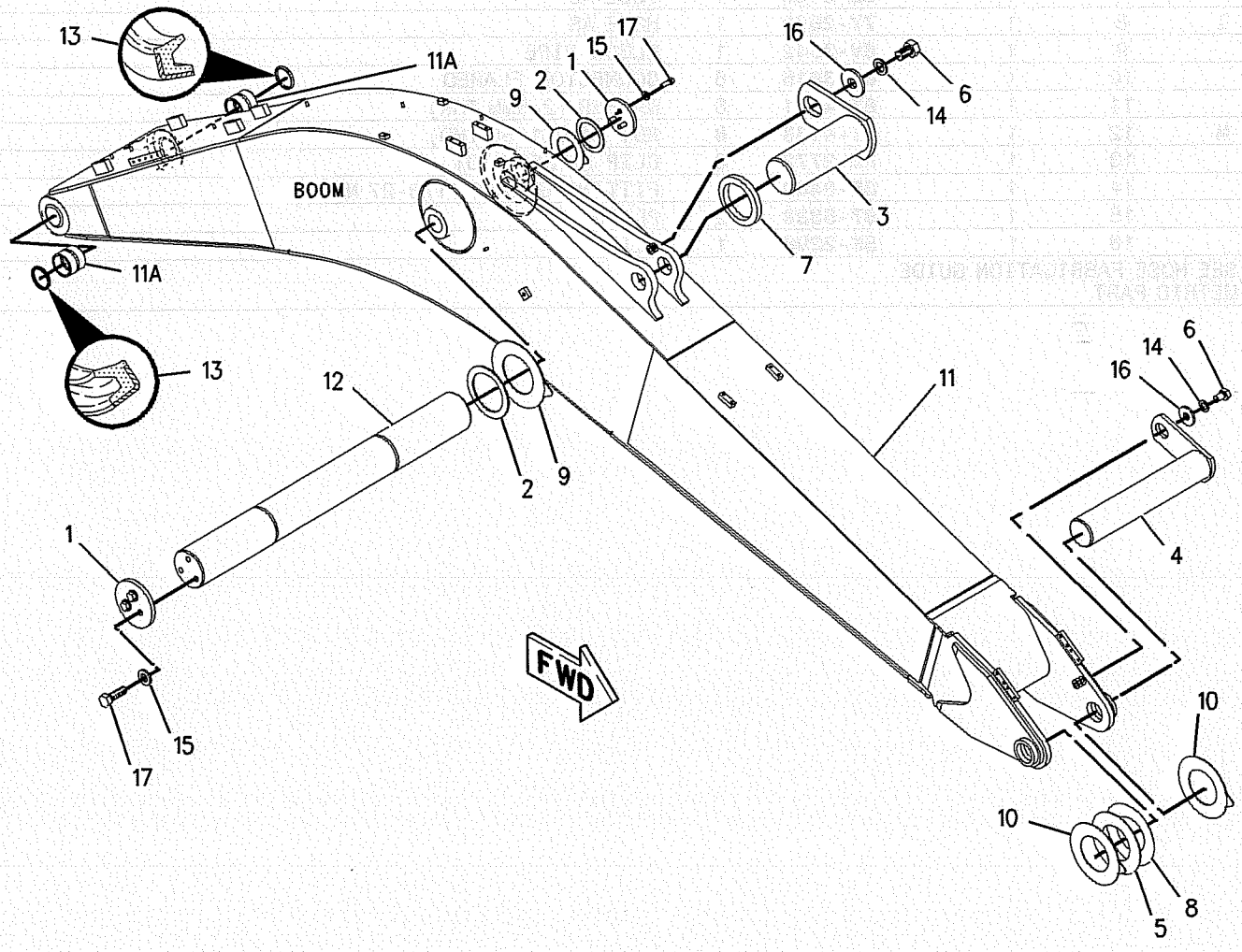

GRAPHIC #1 **<END>** g00727928

IMPLEMENTS

4I-0498 LINES GP-GREASE

S/N: SBN1-UP; RAW1-UP
PART OF 186-1197 STICK AR-HOE
AN ATTACHMENT

SMCS-7510 **i00965647**

NOTE	REF NO	GRAPHIC REF	PART NUMBER	QTY	PART NAME 1 2 3 4 5 6 (PRODUCT LEVEL)	SEE PAGE
	1	1	**6I-5133**	1	TUBE AS	
	2	1	**6I-5134**	1	TUBE AS	
	3	1	**6I-5135**	1	TUBE AS	
	4	1	**6I-5136**	1	TUBE AS	
	5	1	**5K-9242**	3	UNION-FLARED	
	6	1	**6I-5137**	1	TUBE AS	
	7	1	**6I-5138**	1	TUBE AS	
I	8	1	**7Y-2670**	1	HOSE AS	
	9	1	**6V-3342**	1	ELBOW-PIPE	
	10	1	**6L-3616**	6	CONNECTOR-FLARED	
	11	1	**8T-4121**	8	WASHER (2.5MM THK)	
M	12	1	**8T-4133**	8	NUT (M10X1.50 THD)	
	13	1	**8M-2772**	3	CLIP (6.35MM ID)	
	14	1	**3B-8489**	3	FITTING-GREASE (1/8-27 NPTF)	
	15	1	**087-5838**	2	PLATE	
	16	1	**5K-2298**	1	CLIP	

I-SEE HOSE FABRICATION GUIDE
M-METRIC PART

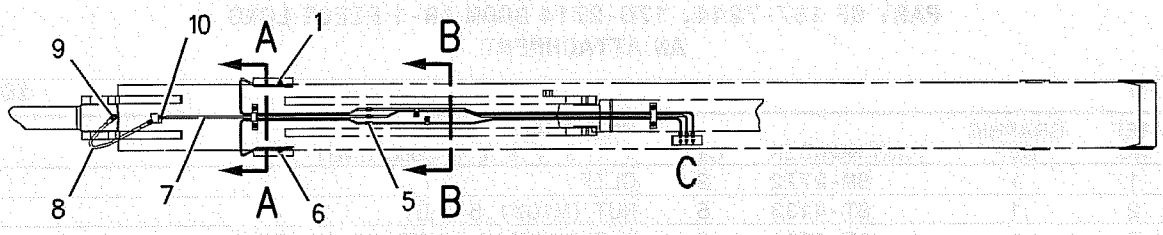

TOP VIEW

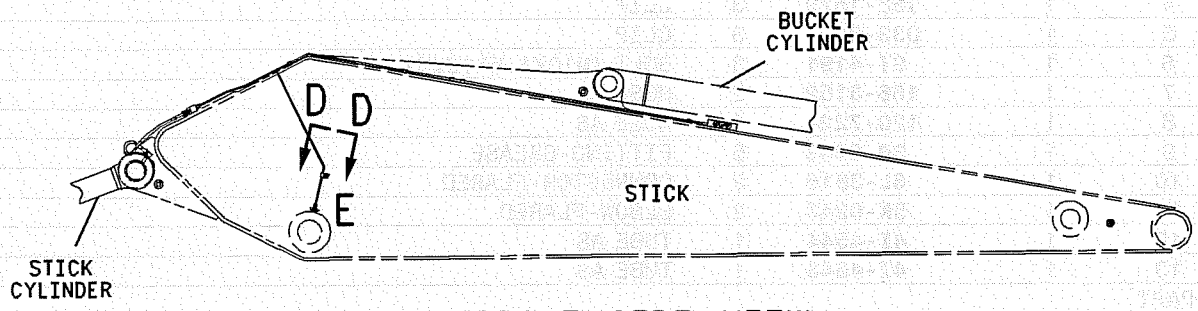

RIGHT SIDE VIEW

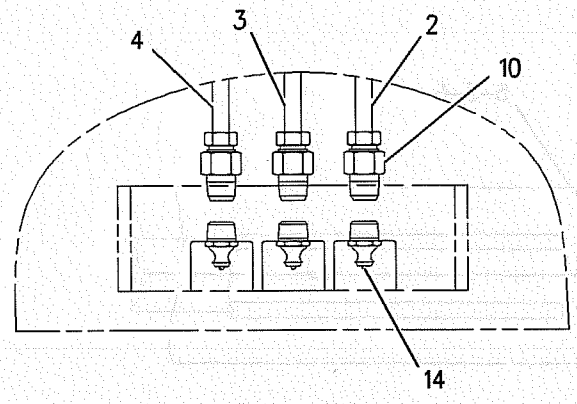

VIEW OF AREA C

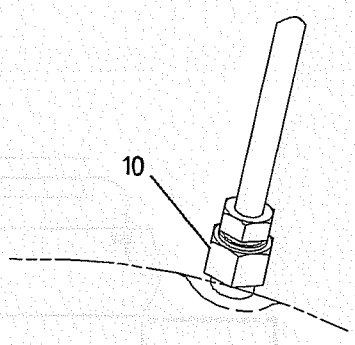

VIEW OF AREA E

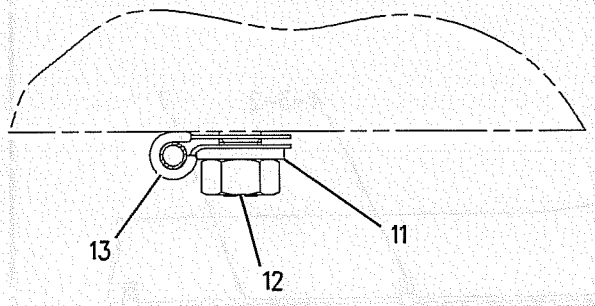

SECTION D-D

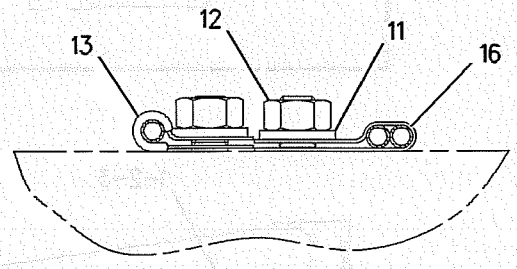

SECTION B-B

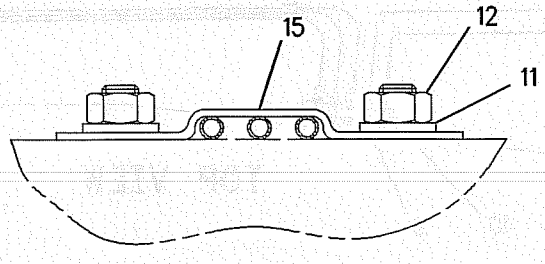

SECTION A-A

GRAPHIC #1 **<END>** g00513303

166-1578 LINES GP-GREASE

S/N: SBN1-UP; RAW1-UP
PART OF 167-7244, 176-2714 BOOM AR-1 PIECE LONG
AN ATTACHMENT

SMCS-7510 **i01549679**

NOTE	REF NO	GRAPHIC REF	PART NUMBER	QTY	PART NAME 1 2 3 4 5 6 (PRODUCT LEVEL)	SEE PAGE
	1	1	**8M-2772**	2	CLIP	
M	2	1	**8T-4133**	5	NUT (M10X1.5 THD)	
	3	1	**8T-4121**	8	WASHER-HARD (11X21X2.5MM THK)	
	4	1	**166-1579**	3	CLIP	
	5	1	**033-8248**	3	CLIP	
M	6	1	**8T-4191**	3	BOLT (M10X1.5X16MM)	
	7	1	**166-3152**	2	HOSE AS	
	8	1	**120-7224**	1	HOSE AS	
	9	1	**3B-8489**	5	FITTING-GREASE	
	10	1	**6L-3616**	2	CONNECTOR-FLARED	
	11	1	**5K-9243**	2	ELBOW-FLARED	
	12	1	**4I-4544**	1	TUBE AS	
	13	1	**4I-4543**	1	TUBE AS	

M-METRIC PART

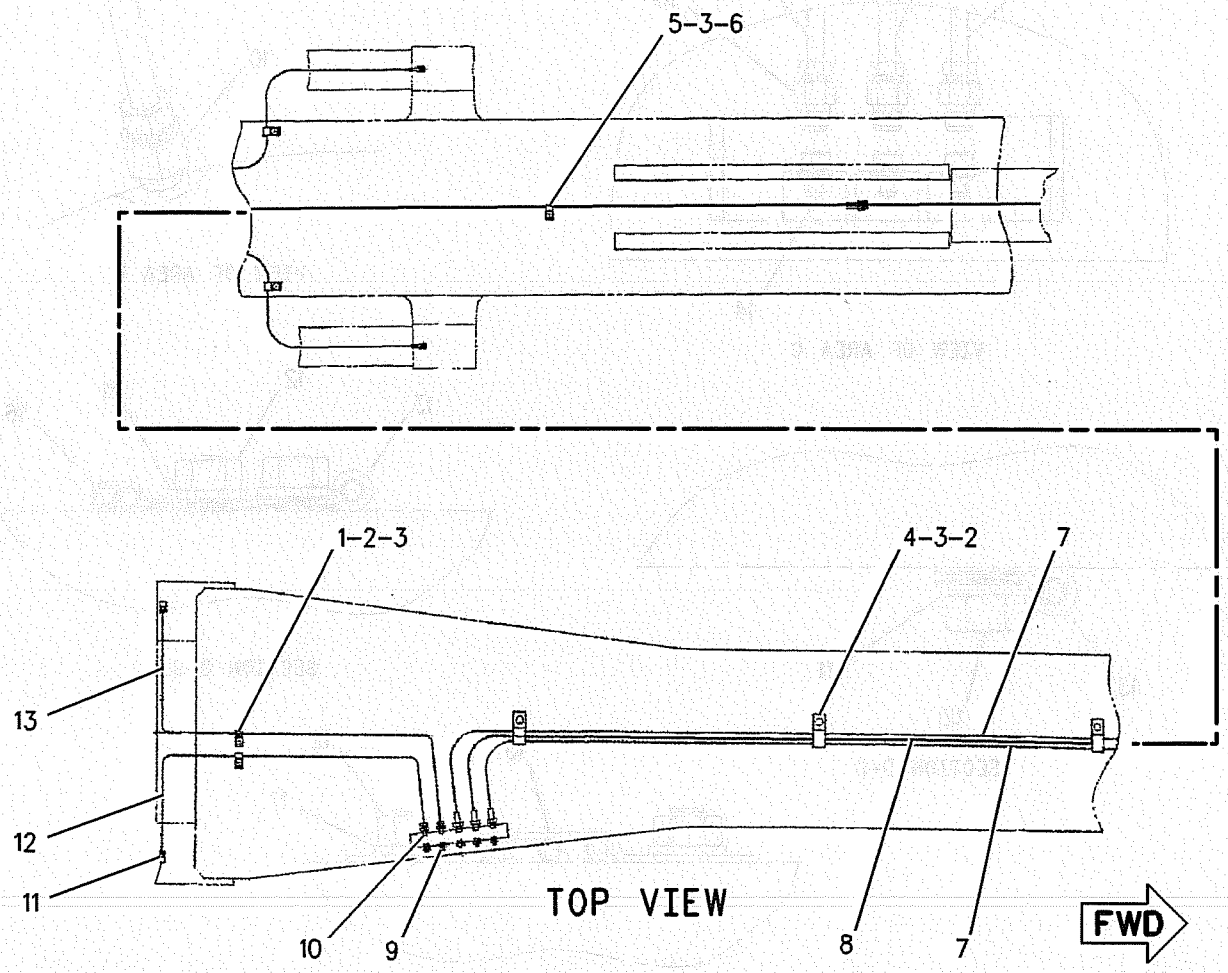

GRAPHIC #1 **<END>** g00886637

IMPLEMENTS

172-2939 LINES GP-GREASE

S/N: SBN1-UP; RAW1-UP
PART OF 167-7245 BOOM AR-1 PIECE
AN ATTACHMENT

SMCS-7510 **i01401870**

NOTE	REF NO	GRAPHIC REF	PART NUMBER	QTY	PART NAME 1 2 3 4 5 6 (PRODUCT LEVEL)	SEE PAGE
	1	1	**8M-2772**	2	CLIP	
M	2	1	**8T-4133**	5	NUT (M10X1.5 THD)	
	3	1	**8T-4121**	8	WASHER-HARD (11X21X2.5MM THK)	
	4	1	**166-1579**	3	CLIP	
	5	1	**033-8248**	3	CLIP (SLOT)	
M	6	1	**8T-4191**	3	BOLT (M10X1.50X16MM)	
	7	1	**166-3152**	1	HOSE AS	
I	8	1	**115-2678**	1	HOSE AS	
	9	1	**3B-8489**	5	FITTING-GREASE	
	10	1	**6L-3616**	2	CONNECTOR-FLARED	
	11	1	**5K-9243**	2	ELBOW-FLARED (90 DEGREES)	
	12	1	**4I-4544**	1	TUBE AS	
	13	1	**4I-4543**	1	TUBE AS	
I	14	1	**115-2677**	1	HOSE AS	

I-SEE HOSE FABRICATION GUIDE
M-METRIC PART

172-2939 **LINES GP-GREASE** *(contd.)* i01401870

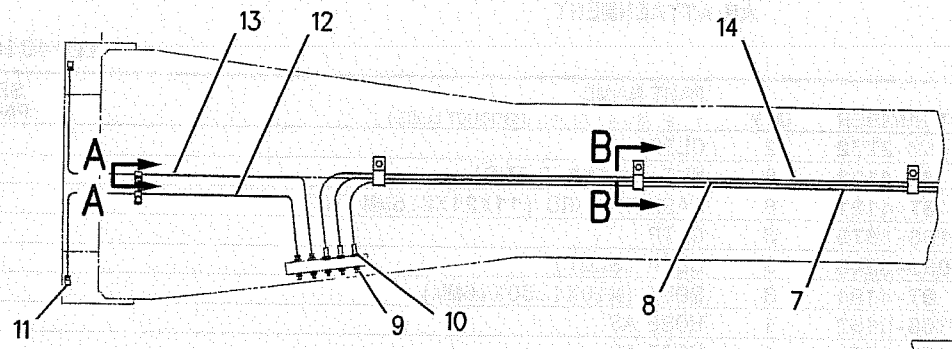

VIEW D-D

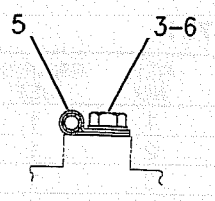

SECTION C-C

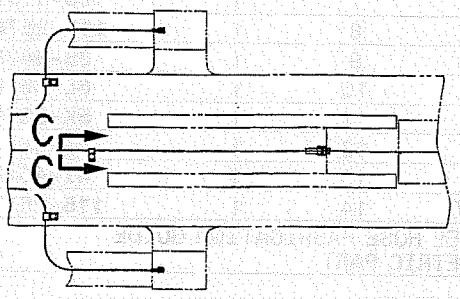

VIEW E-E

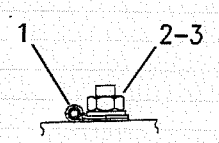

SECTION A-A

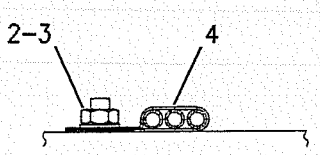

SECTION B-B

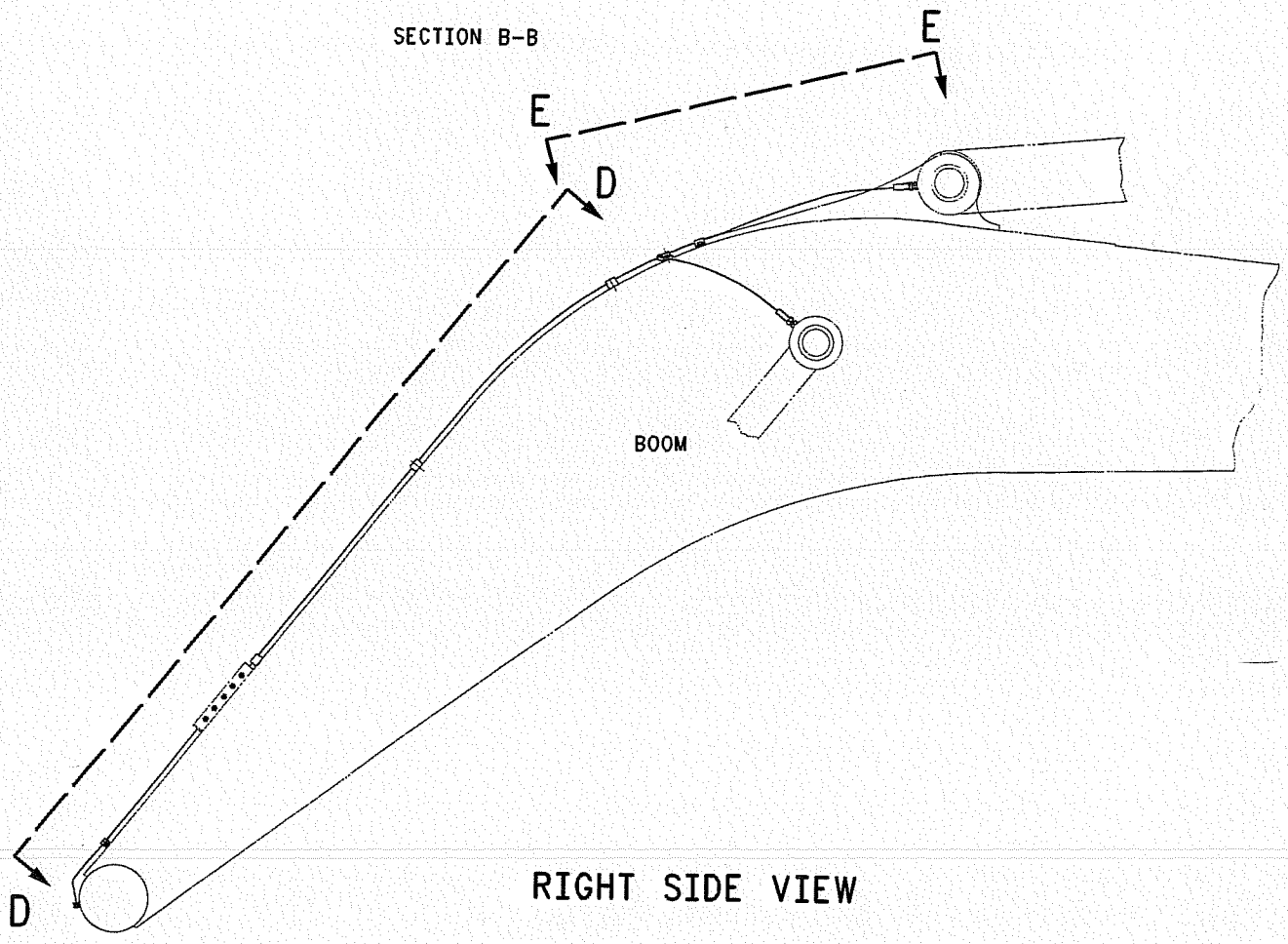

RIGHT SIDE VIEW

GRAPHIC #1

<END>

g00675837

167-7246 LINKAGE AR-BUCKET

S/N: SBN1-UP; RAW1-UP
B-FAMILY, WITH HOOK
AN ATTACHMENT

SMCS-6513 **i01388051**

NOTE	PART NUMBER	QTY	PART NAME 1 2 3 4 5 6 (PRODUCT LEVEL)	SEE PAGE
Y	**158-9018**	1	CYLINDER & LINES GP-BUCKET	230
Y	*166-1438*	1	LINKAGE GP-BUCKET	476

Y-SEPARATE ILLUSTRATION

<END>

167-7247 LINKAGE AR-BUCKET

S/N: SBN1-UP; RAW1-UP
C-FAMILY
AN ATTACHMENT

SMCS-6513 **i01388060**

NOTE	PART NUMBER	QTY	PART NAME 1 2 3 4 5 6 (PRODUCT LEVEL)	SEE PAGE
Y	*158-9020*	1	CYLINDER & LINES GP-BUCKET	230
Y	*166-1442*	1	LINKAGE GP-BUCKET	478

Y-SEPARATE ILLUSTRATION

<END>

IMPLEMENTS

166-1438 LINKAGE GP-BUCKET

S/N: SBN1-UP; RAW1-UP
B-FAMILY
PART OF 167-7246 LINKAGE AR-BUCKET
AN ATTACHMENT

SMCS-6513

i01389088

NOTE	REF NO	GRAPHIC REF	PART NUMBER	QTY	PART NAME 1 2 3 4 5 6 (PRODUCT LEVEL)	SEE PAGE
	1	1	**087-5845**	1	PIN	
	2	1	**087-5802**	1	LINK (RH)	
	3	1	**174-8255**	1	LINK & BEARING AS	
	3A	1	**137-2919**	2	BEARING (95.18MM OD) (80.25MM ID)	
	4	1	**087-5803**	1	LINK AS	
M	5	1	**186-5644**	2	BOLT	
M	6	1	**8T-4132**	8	NUT (M16X2 THD)	
	7	1	**096-0854**	6	SEAL-LIP TYPE	
	8	1	**087-5805**	2	PIN	
M	9	1	**188-2315**	2	BOLT	
	10	1	**093-1344**	4	SEAL-O-RING (140MM ID)	
	11	1	**3B-8489**	5	FITTING-GREASE	
	12	1	**087-5806**	1	PIN	
B	19	1	**166-1486**	2	SHIM (2.0MM THK)	

B-USE AS REQUIRED
M-METRIC PART

166-1438 LINKAGE GP-BUCKET *(contd.)*

i01389088

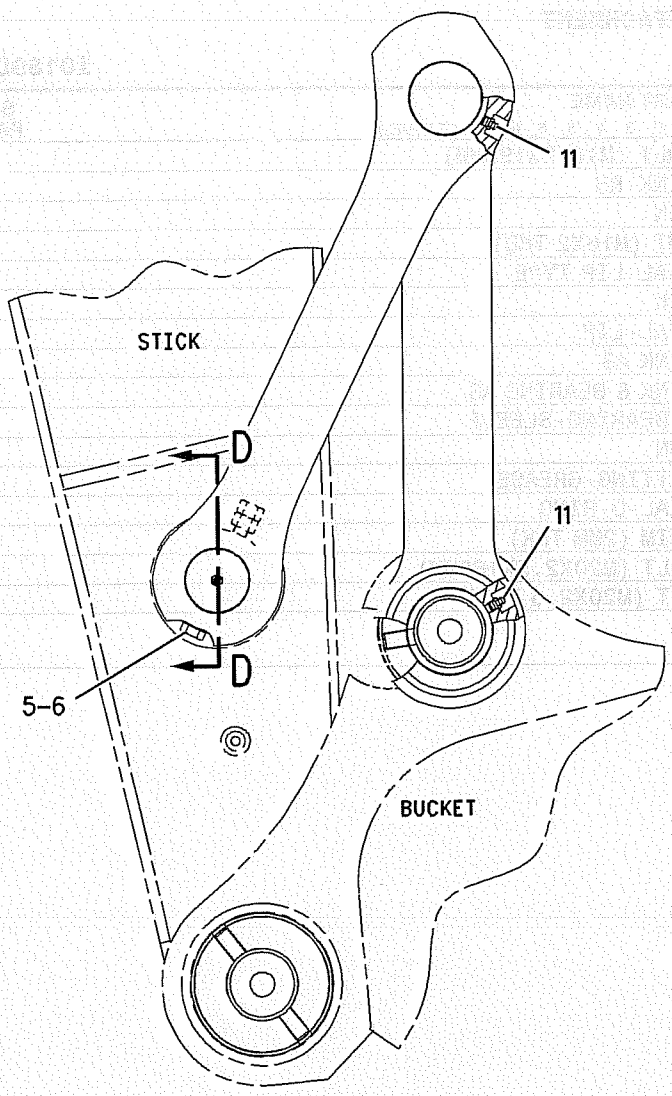

RIGHT SIDE VIEW

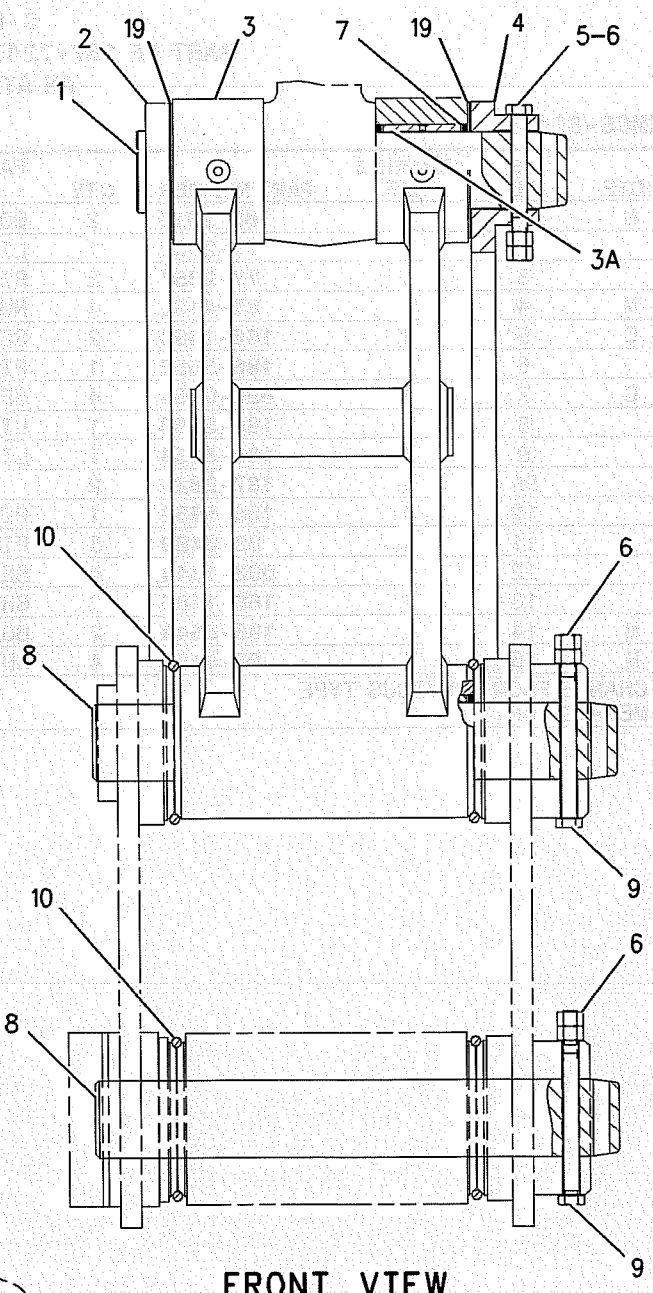

FRONT VIEW

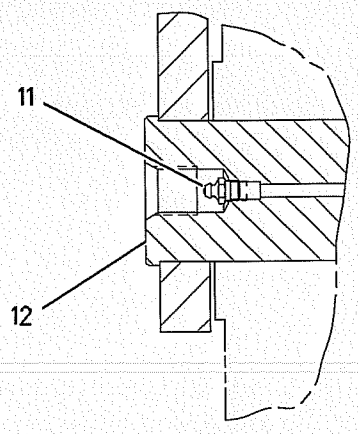

SECTION D-D

GRAPHIC #1

<END>

g00675943

IMPLEMENTS

166-1442 LINKAGE GP-BUCKET

S/N: SBN1-UP; RAW1-UP
C-FAMILY
PART OF 167-7247 LINKAGE AR-BUCKET
AN ATTACHMENT

SMCS-6513 **i01890874**

NOTE	REF NO	GRAPHIC REF	PART NUMBER	QTY	PART NAME 1 2 3 4 5 6 (PRODUCT LEVEL)	SEE PAGE
M	1	1	**188-2315**	2	BOLT (M16X2X195MM)	
	2	1	**7Y-2392**	1	LINK-RH	
	3	1	**7Y-2357**	2	PIN	
M	4	1	**8T-4132**	4	NUT (M16X2 THD)	
C	5	1	**166-1494**	2	SEAL-LIP TYPE	
	6	1	**186-5662**	1	PIN	
C	7	1	**096-0854**	4	SEAL-LIP	
	8	1	**186-5650**	1	LINK AS	
	9	1	**186-5653**	1	LINK & BEARING AS	
	9A	1	**137-2820**	2	BEARING-SLEEVE	
	10	1	**186-5652**	1	PIN	
	11	1	**3B-8489**	5	FITTING-GREASE	
	12	1	**093-1344**	4	SEAL-O-RING	
	13	1	**166-1486**	2	SHIM (2MM THK)	
M	14	1	**186-5649**	2	BOLT (M20X2.5X160MM)	
M	15	1	**8T-4131**	4	NUT (M20X2.5 THD)	

C-CHANGE FROM PREVIOUS TYPE
M-METRIC PART

166-1442 LINKAGE GP-BUCKET *(contd.)*

i01890874

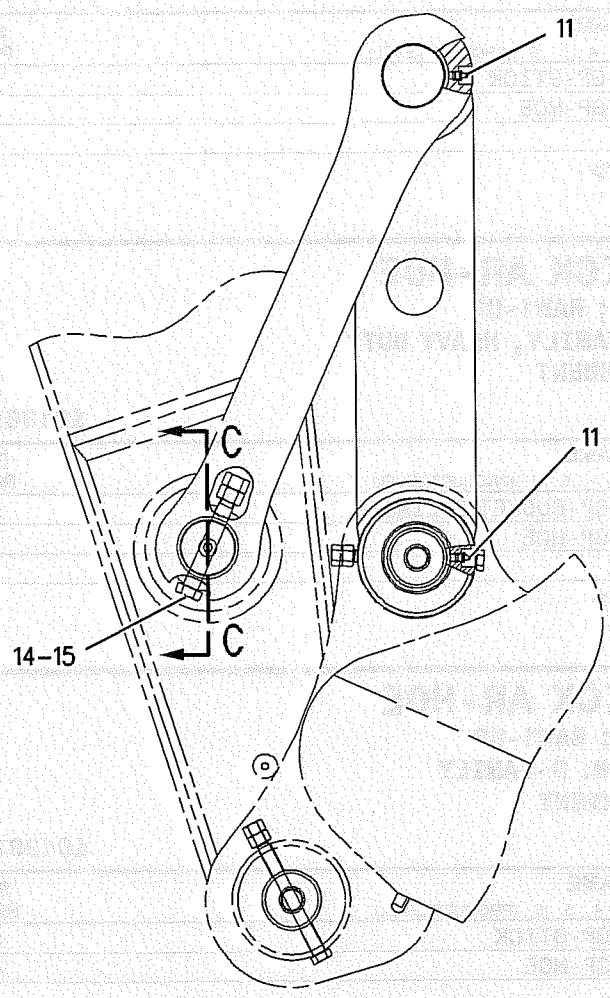

RIGHT SIDE VIEW

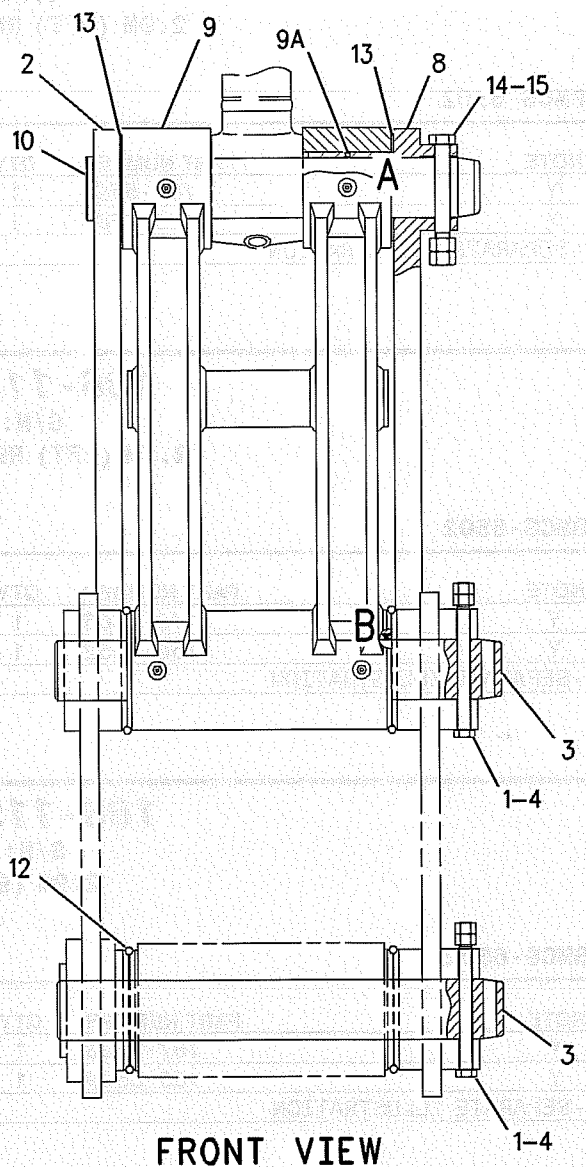

FRONT VIEW

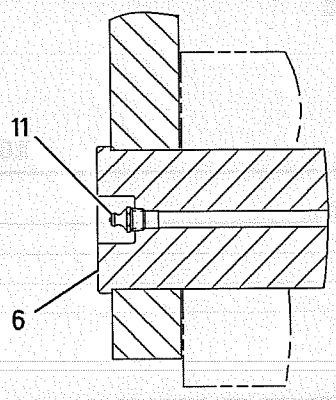

SECTION C-C

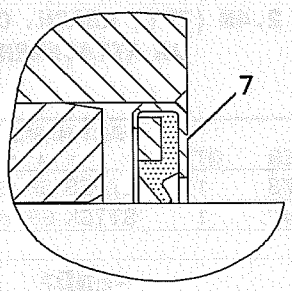

VIEW OF AREA A

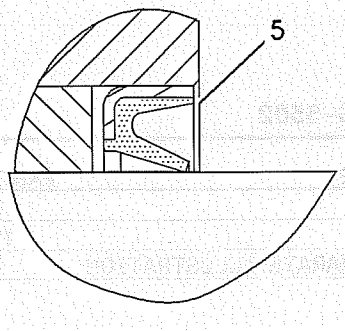

VIEW OF AREA B

GRAPHIC #1

<END>

g00984536

IMPLEMENTS

186-1148 STICK AR-HOE

S/N: SBN1-UP; RAW1-UP
2.9M (9FT) REACH. B-FAMILY, HEAVY DUTY
AN ATTACHMENT

SMCS-6502 **i01387998**

NOTE	PART NUMBER	QTY	PART NAME 1 2 3 4 5 6 (PRODUCT LEVEL)	SEE PAGE
Y	*187-5693*	1	LINES GP-STICK	360
Y	*166-1605*	1	STICK GP-HOE	496
Y-SEPARATE ILLUSTRATION				

<END>

186-1191 STICK AR-HOE

S/N: SBN1-UP; RAW1-UP
2.5M (8FT) REACH. B-FAMILY, HEAVY DUTY
AN ATTACHMENT

SMCS-6502 **i01387979**

NOTE	PART NUMBER	QTY	PART NAME 1 2 3 4 5 6 (PRODUCT LEVEL)	SEE PAGE
Y	*119-2606*	1	LINES GP-BUCKET CYLINDER	313
Y	*166-1652*	1	STICK GP-HOE	498
Y-SEPARATE ILLUSTRATION				

<END>

186-1192 STICK AR-HOE

S/N: SBN1-UP; RAW1-UP
2.9M (9FT) REACH. B-FAMILY
AN ATTACHMENT

SMCS-6502 **i01387991**

NOTE	PART NUMBER	QTY	PART NAME 1 2 3 4 5 6 (PRODUCT LEVEL)	SEE PAGE
Y	*187-5693*	1	LINES GP-STICK	360
Y	*163-3539*	1	STICK GP-HOE	490
Y-SEPARATE ILLUSTRATION				

<END>

186-1193 STICK AR-HOE

S/N: SBN1-UP; RAW1-UP
2.4M (7FT) REACH. C-FAMILY
AN ATTACHMENT

SMCS-6502 **i01388016**

NOTE	PART NUMBER	QTY	PART NAME 1 2 3 4 5 6 (PRODUCT LEVEL)	SEE PAGE
Y	*187-5973*	1	LINES GP-STICK	361
Y	*163-3542*	1	STICK GP-HOE	494
Y-SEPARATE ILLUSTRATION				

<END>

IMPLEMENTS

186-1194 STICK AR-HOE

S/N: SBN1-UP; RAW1-UP
2.5M (8FT) REACH. B-FAMILY
AN ATTACHMENT

SMCS-6502 **i01388009**

NOTE	PART NUMBER	QTY	PART NAME 1 2 3 4 5 6 (PRODUCT LEVEL)	SEE PAGE
Y	*119-2606*	1	LINES GP-BUCKET CYLINDER	313
Y	*163-3540*	1	STICK GP-HOE	492

Y-SEPARATE ILLUSTRATION

<END>

186-1197 STICK AR-HOE

S/N: SBN1-UP; RAW1-UP
3.9M (12FT) REACH. B-FAMILY
AN ATTACHMENT

SMCS-6502 **i01388005**

NOTE	PART NUMBER	QTY	PART NAME 1 2 3 4 5 6 (PRODUCT LEVEL)	SEE PAGE
Y	*4I-0498*	1	LINES GP-GREASE	470
Y	*187-5976*	1	LINES GP-STICK	362
Y	*163-3538*	1	STICK GP-HOE	488

Y-SEPARATE ILLUSTRATION

<END>

IMPLEMENTS

173-7957 STICK GP

S/N: SBN1-UP; RAW1-UP
2.5M (8.1FT) STICK. B-FAMILY
PART OF 173-7955 LINES AR-AUXILIARY HYDRAULIC
AN ATTACHMENT

SMCS-6502 **i01404329**

NOTE	REF NO	GRAPHIC REF	PART NUMBER	QTY	PART NAME 1 2 3 4 5 6 (PRODUCT LEVEL)	SEE PAGE
	1	1	**173-7949**	1	STICK & BEARING AS	
	1A	1	**137-2919**	2	BEARING (95.18MM OD) (80.25MM ID)	
	1B	1	**163-3744**	2	BEARING-SLEEVE	
	1C	1	**163-3749**	2	BEARING-SLEEVE	
	2	1	**3B-8489**	3	FITTING-GREASE	
	3	1	**096-0854**	2	SEAL-LIP TYPE	
	4	1	**093-1434**	2	SEAL-LIP	
	5	1	**4I-4809**	1	PIN AS	
	6	1	**4I-4811**	1	PIN AS	
M	7	1	**8T-4780**	2	BOLT (M20X2.5X30MM)	
	8	1	**093-0349**	2	WASHER (6.0MM THK)	
	9	1	**8T-4123**	2	WASHER-PLATED (22X35X3.5MM THK)	
	10	1	**118-5982**	1	SPACER (14MM THK)	
	11	1	**093-0363**	1	SPACER (12MM THK)	
	12	1	**166-1495**	2	SEAL-LIP TYPE	
B	13	1	**166-1486**	2	SHIM (2.0MM THK)	

B-USE AS REQUIRED
M-METRIC PART

173-7957 **STICK GP** *(contd.)* **i01404329**

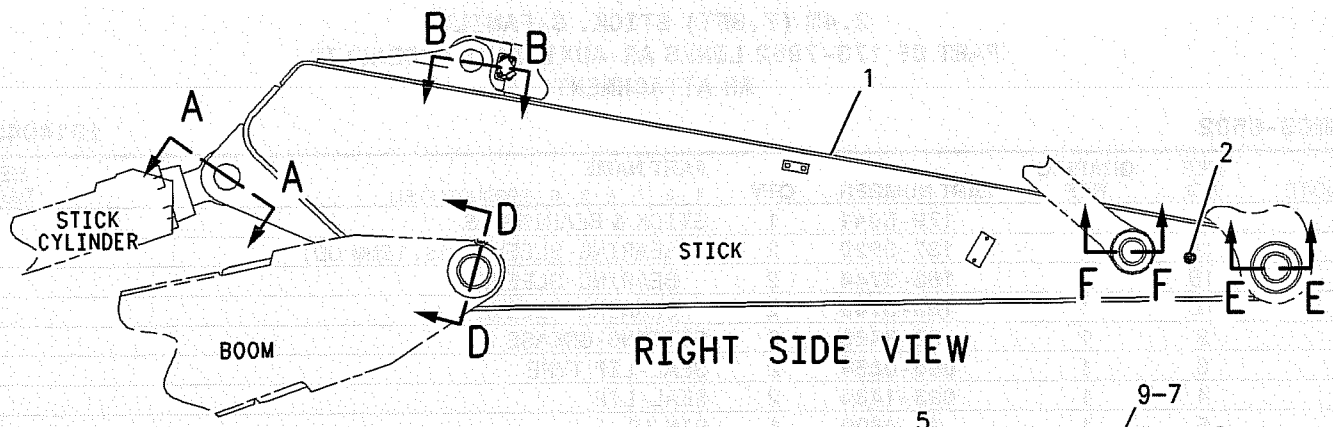

RIGHT SIDE VIEW

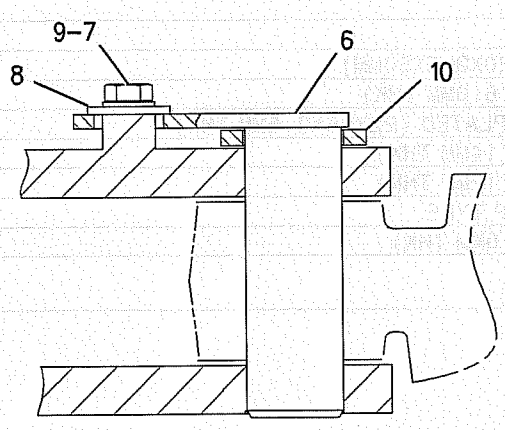

SECTION B-B

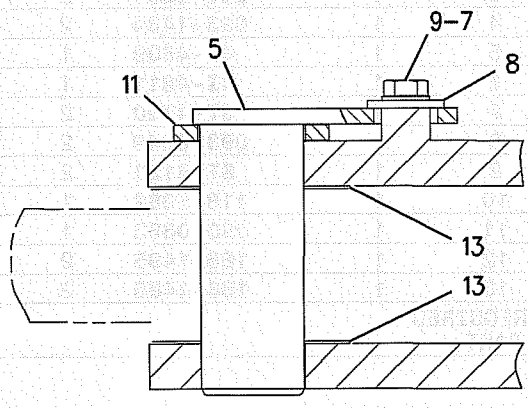

SECTION A-A

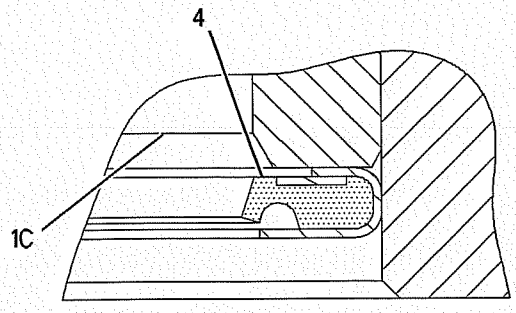

SECTION F-F

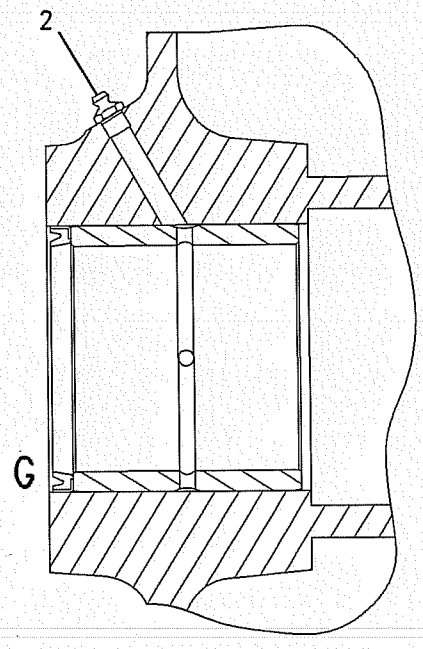

SECTION D-D

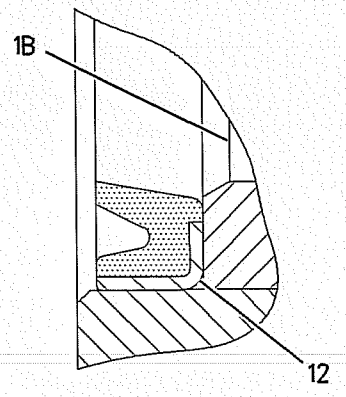

VIEW OF AREA G

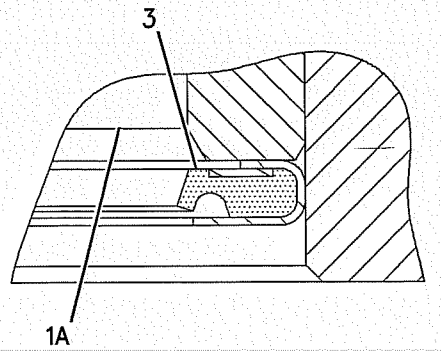

SECTION E-E

GRAPHIC #1

<END>

g00708936

IMPLEMENTS

173-7964 STICK GP

S/N: SBN1-UP; RAW1-UP
2.4M (7.8FT) STICK. C-FAMILY
PART OF 173-7962 LINES AR-AUXILIARY HYDRAULIC
AN ATTACHMENT

SMCS-6502 **i01404335**

NOTE	REF NO	GRAPHIC REF	PART NUMBER	QTY	PART NAME 1 2 3 4 5 6 (PRODUCT LEVEL)	SEE PAGE
	1	1	**179-5041**	1	STICK & BEARING AS	
	1A	1	**137-2820**	2	BEARING-SLEEVE (95.18MM OD)	
	1B	1	**163-3744**	2	BEARING-SLEEVE	
	1C	1	**163-3749**	2	BEARING-SLEEVE	
	2	1	**3B-8489**	3	FITTING-GREASE	
	3	1	**096-0854**	2	SEAL-LIP TYPE	
	4	1	**093-1434**	2	SEAL-LIP	
	5	1	**4I-4809**	1	PIN AS	
	6	1	**4I-4811**	1	PIN AS	
M	7	1	**8T-4780**	2	BOLT (M20X2.5X30MM)	
	8	1	**093-0349**	2	WASHER (6.0MM THK)	
	9	1	**8T-4123**	2	WASHER-PLATED (22X35X3.5MM THK)	
	10	1	**118-5982**	1	SPACER (14MM THK)	
	11	1	**093-0363**	1	SPACER (12MM THK)	
	12	1	**166-1495**	2	SEAL-LIP TYPE	
B	13	1	**166-1486**	2	SHIM (2.0MM THK)	

B-USE AS REQUIRED
M-METRIC PART

173-7964 **STICK GP** *(contd.)* **i01404335**

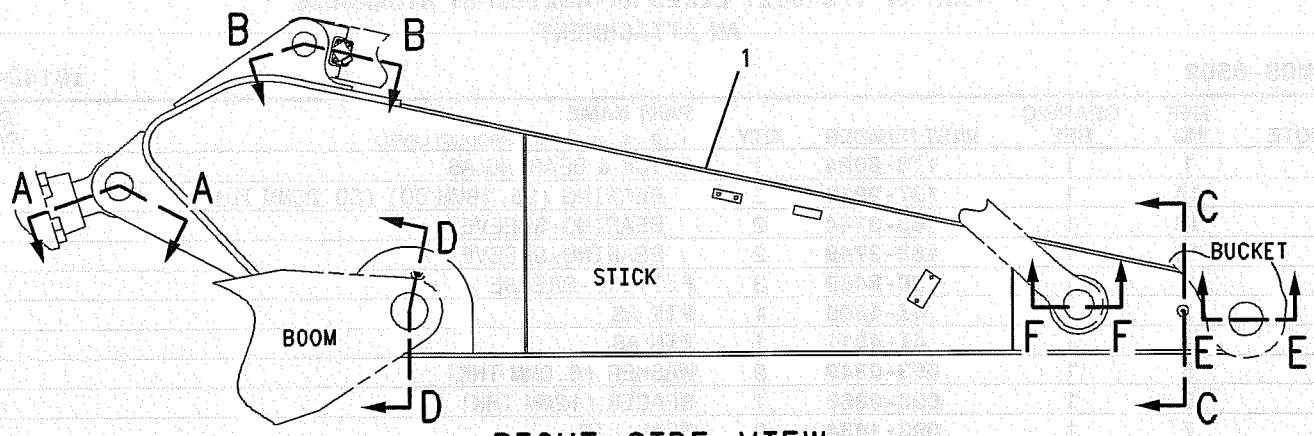

RIGHT SIDE VIEW

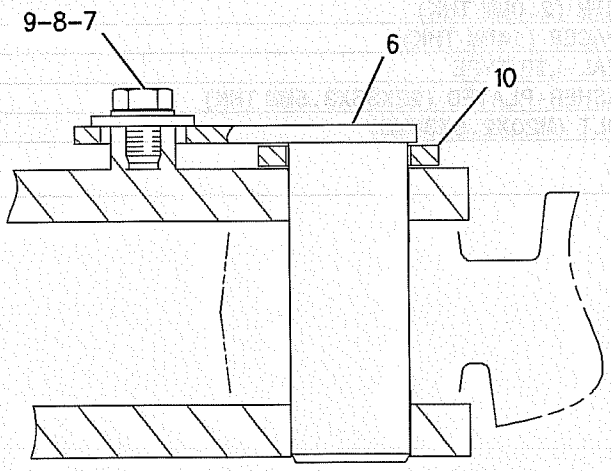

SECTION B-B

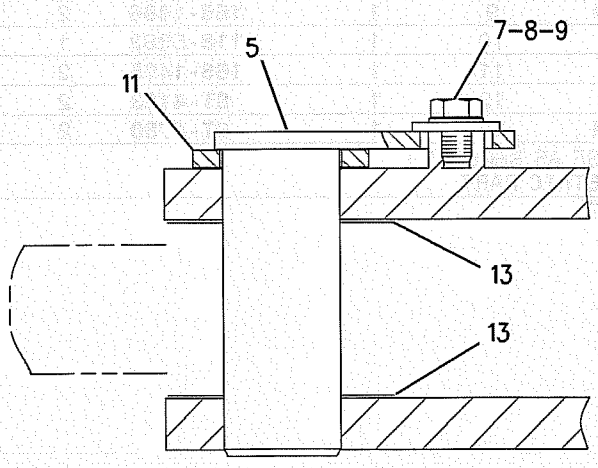

SECTION A-A

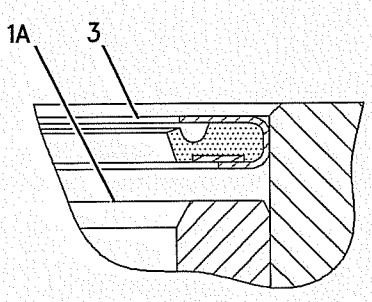

SECTION E-E

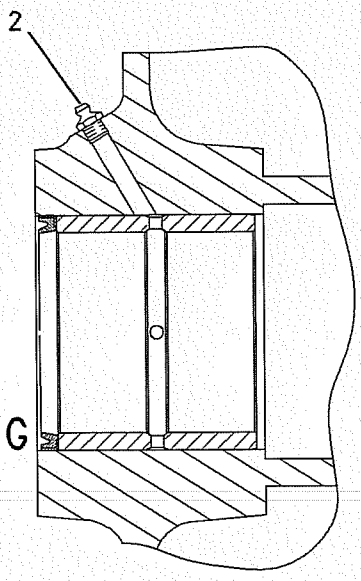

SECTION D-D

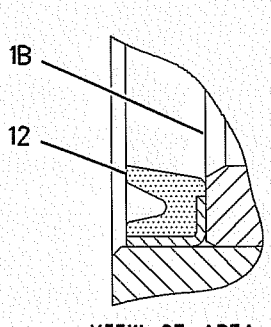

VIEW OF AREA G

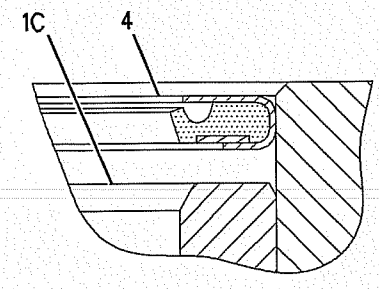

SECTION F-F

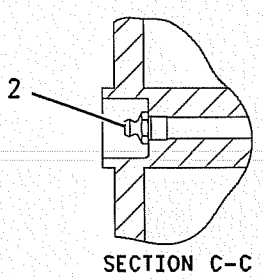

SECTION C-C

GRAPHIC #1

<END>

g00709053

173-8023 STICK GP

S/N: SBN1-UP; RAW1-UP
2.9M (9FT) STICK. B-FAMILY
PART OF 173-8027 LINES AR-AUXILIARY HYDRAULIC
AN ATTACHMENT

SMCS-6502 **i01404319**

NOTE	REF NO	GRAPHIC REF	PART NUMBER	QTY	PART NAME 1 2 3 4 5 6 (PRODUCT LEVEL)	SEE PAGE
	1	1	**173-8024**	1	STICK & BEARING AS	
	1A	1	**137-2919**	2	BEARING (95.18MM OD) (80.25MM ID)	
	1B	1	**163-3744**	2	BEARING-SLEEVE	
	1C	1	**163-3749**	2	BEARING-SLEEVE	
	2	1	**3B-8489**	3	FITTING-GREASE	
	3	1	**4I-4809**	1	PIN AS	
	4	1	**4I-4811**	1	PIN AS	
	5	1	**093-0349**	2	WASHER (6.0MM THK)	
	6	1	**093-0363**	1	SPACER (12MM THK)	
	7	1	**093-1434**	2	SEAL-LIP	
	8	1	**096-0854**	2	SEAL-LIP TYPE	
B	9	1	**166-1486**	2	SHIM (2.0MM THK)	
	10	1	**118-5982**	1	SPACER (14MM THK)	
	11	1	**166-1495**	2	SEAL-LIP TYPE	
	12	1	**8T-4123**	2	WASHER-PLATED (22X35X3.5MM THK)	
M	13	1	**8T-4780**	2	BOLT (M20X2.5X30MM)	

B-USE AS REQUIRED
M-METRIC PART

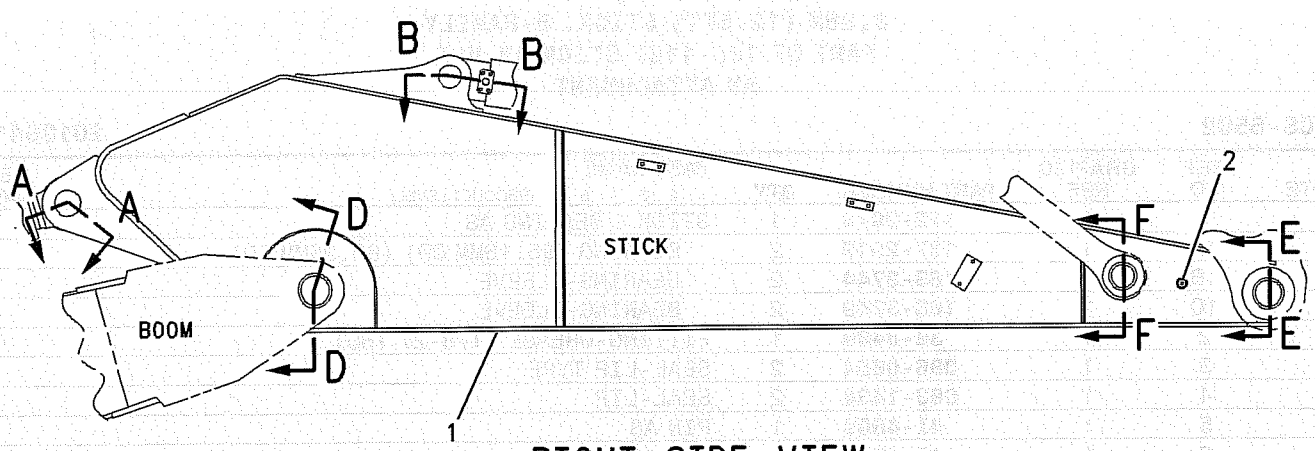

RIGHT SIDE VIEW

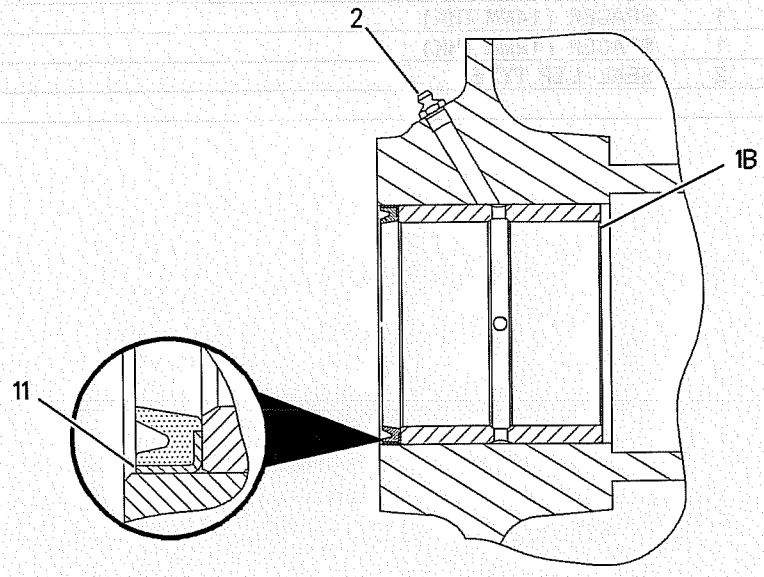

SECTION D-D

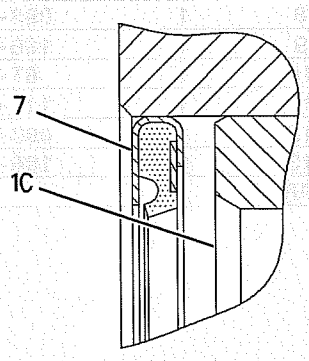

SECTION F-F

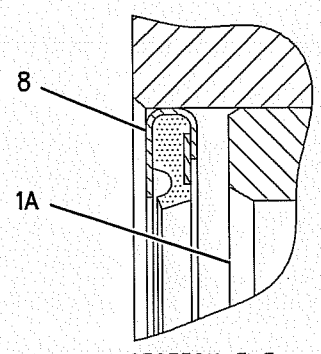

SECTION E-E

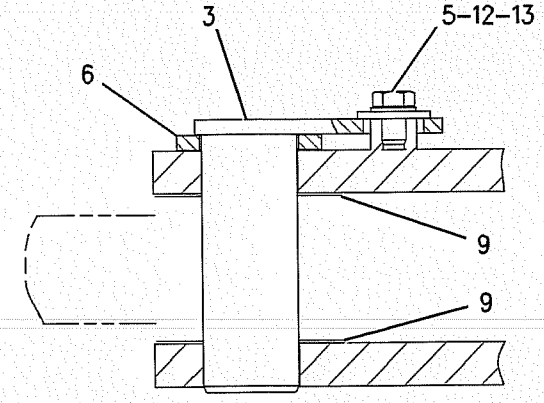

SECTION A-A

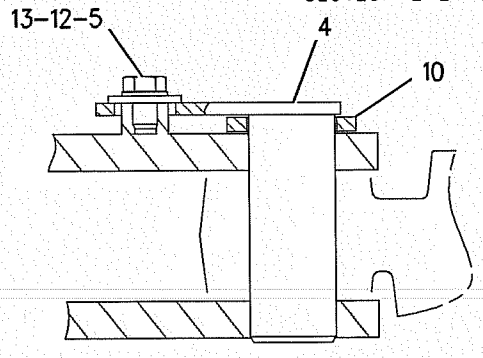

SECTION B-B

GRAPHIC #1 **<END>** g00696015

163-3538 STICK GP-HOE

S/N: SBN1-UP; RAW1-UP
3.86M (12.5FT) STICK. B-FAMILY
PART OF 186-1197 STICK AR-HOE
AN ATTACHMENT

SMCS-6502 **i01364166**

NOTE	REF NO	GRAPHIC REF	PART NUMBER	QTY	PART NAME 1 2 3 4 5 6 (PRODUCT LEVEL)	SEE PAGE
	1	1	**172-2978**	1	STICK & BEARING AS	
	1A	1	**137-2919**	2	BEARING (95.18MM OD) (80.25MM ID)	
	1B	1	**163-3744**	2	BEARING-SLEEVE	
	1C	1	**163-3749**	2	BEARING-SLEEVE	
	2	1	**3B-8489**	1	FITTING-GREASE (1/8-27 THD)	
	3	1	**096-0854**	2	SEAL-LIP TYPE	
	4	1	**093-1434**	2	SEAL-LIP	
	5	1	**4I-4809**	1	PIN AS	
	6	1	**4I-4811**	1	PIN AS	
M	7	1	**8T-4780**	2	BOLT (M20X2.5X30MM)	
	8	1	**093-0349**	2	WASHER (6.0MM THK)	
	9	1	**166-1486**	2	SHIM (2.0MM THK)	
	10	1	**8T-4123**	2	WASHER-PLATED (3.5MM THK)	
	11	1	**118-5982**	1	SPACER (14MM THK)	
	12	1	**093-0363**	1	SPACER (12MM THK)	
	13	1	**166-1495**	2	SEAL-LIP TYPE	

M-METRIC PART

163-3538 **STICK GP-HOE** *(contd.)* i01364166

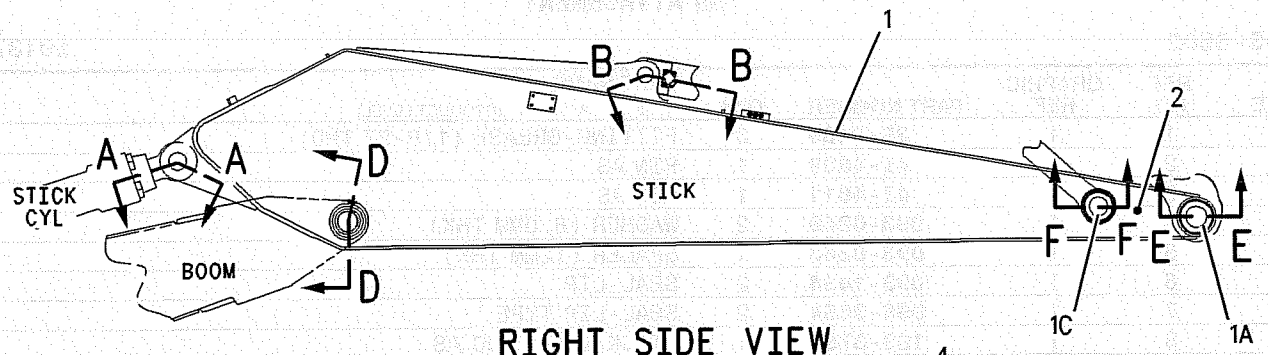

RIGHT SIDE VIEW

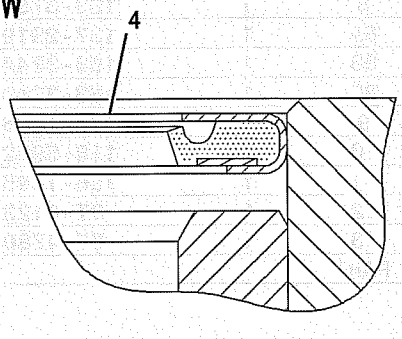

SECTION F-F

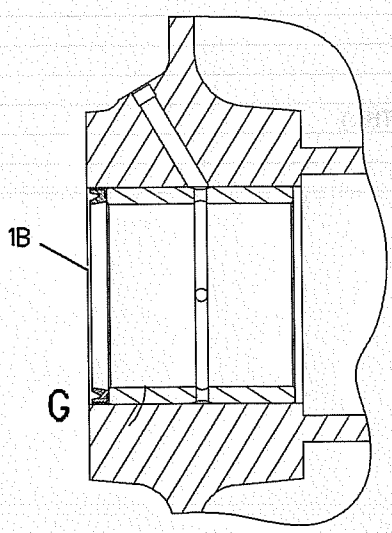

SECION D-D

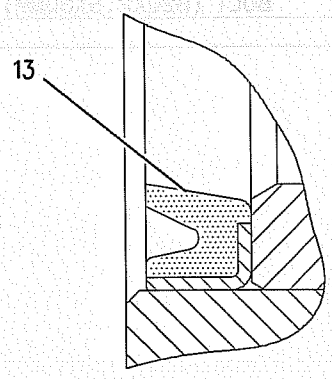

VIEW OF AREA G

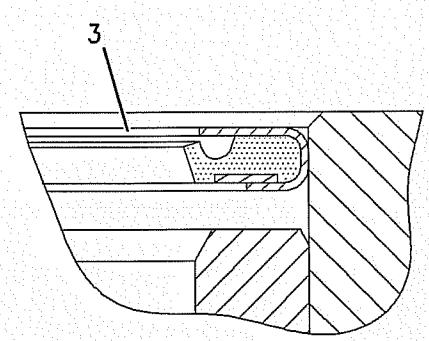

SECTION E-E

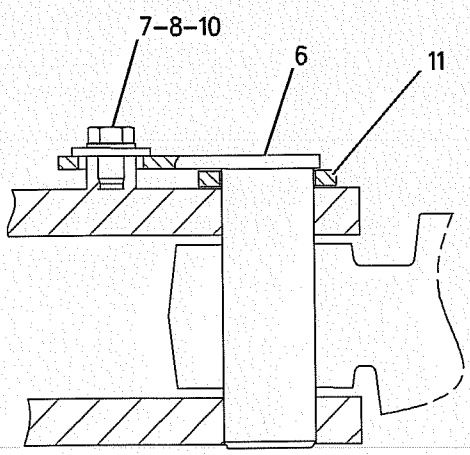

SECTION B-B

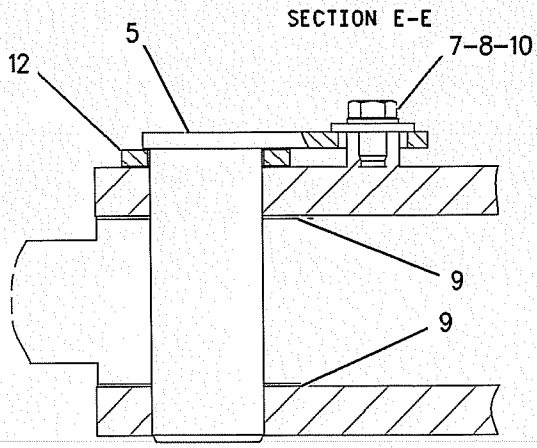

SECTION A-A

GRAPHIC #1 **<END>** g00674091

IMPLEMENTS

163-3539 STICK GP-HOE

S/N: SBN1-UP; RAW1-UP
PART OF 186-1192 STICK AR-HOE
AN ATTACHMENT

SMCS-6502 **i01377720**

NOTE	REF NO	GRAPHIC REF	PART NUMBER	QTY	PART NAME 1 2 3 4 5 6 (PRODUCT LEVEL)	SEE PAGE
	1	1	**3B-8489**	3	FITTING-GREASE (1/8-27 THD)	
	2	1	**4I-4809**	1	PIN AS	
	3	1	**4I-4811**	1	PIN AS	
	4	1	**093-0349**	2	WASHER (6.0MM THK)	
	5	1	**093-0363**	1	SPACER (12MM THK)	
	6	1	**093-1434**	2	SEAL-LIP	
	7	1	**096-0854**	2	SEAL-LIP TYPE	
	8	1	**163-3757**	1	STICK & BEARING AS	
	8A	1	**137-2919**	2	BEARING (95.18MM OD) (80.25MM ID)	
	8B	1	**163-3744**	2	BEARING-SLEEVE	
	8C	1	**163-3749**	2	BEARING-SLEEVE	
	9	1	**166-1486**	2	SHIM (2.0MM THK)	
	10	1	**118-5982**	1	SPACER (14MM THK)	
	11	1	**166-1495**	2	SEAL-LIP TYPE	
	12	1	**8T-4123**	2	WASHER-PLATED (3.5MM THK)	
M	13	1	**8T-4780**	2	BOLT (M20X2.5X30MM)	

M-METRIC PART

163-3539 **STICK GP-HOE** *(contd.)* i01377720

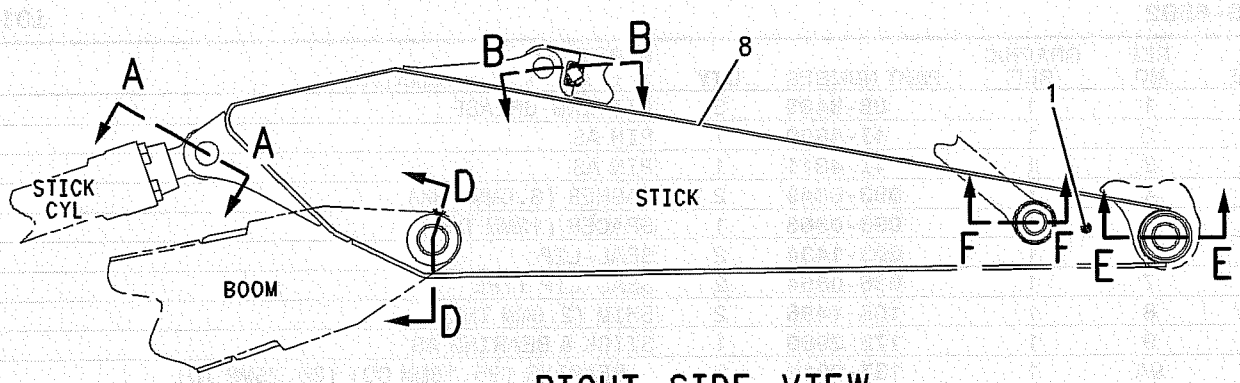

RIGHT SIDE VIEW

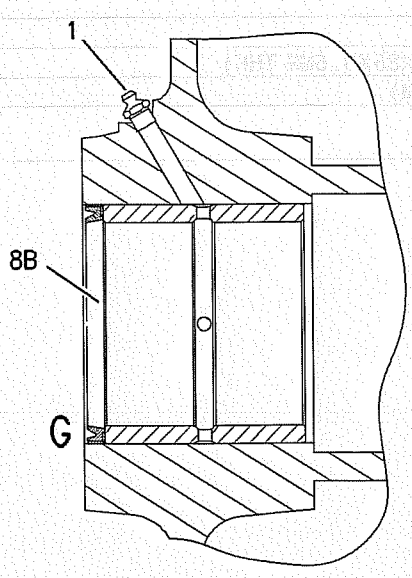

SECTION D-D

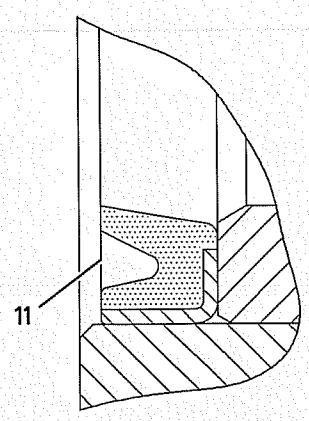

VIEW OF AREA G

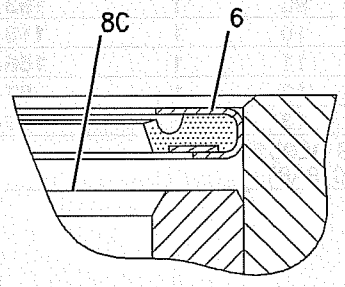

SECTION F-F

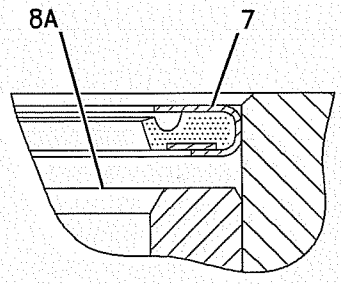

SECTION E-E

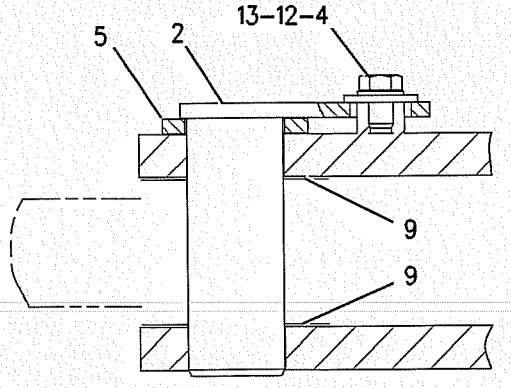

SECTION A-A

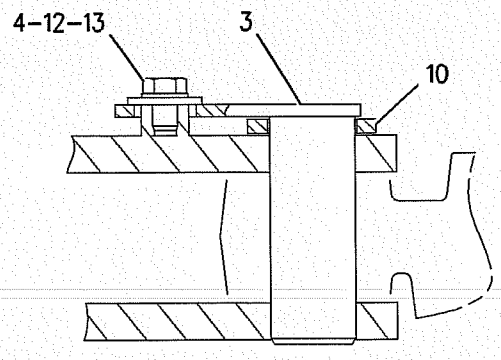

SECTION B-B

GRAPHIC #1 **<END>** g00687854

163-3540 STICK GP-HOE

S/N: SBN1-UP; RAW1-UP
2.5M (8.1FT). B-FAMILY
PART OF 186-1194 STICK AR-HOE
AN ATTACHMENT

SMCS-6502 **i01389011**

NOTE	REF NO	GRAPHIC REF	PART NUMBER	QTY	PART NAME 1 2 3 4 5 6 (PRODUCT LEVEL)	SEE PAGE
	1	1	**3B-8489**	3	FITTING-GREASE	
	2	1	**4I-4809**	1	PIN AS	
	3	1	**4I-4811**	1	PIN AS	
	4	1	**093-0349**	2	WASHER (6.0MM THK)	
	5	1	**093-0363**	1	SPACER (12MM THK)	
	6	1	**093-1434**	2	SEAL-LIP	
	7	1	**096-0854**	2	SEAL-LIP TYPE	
B	8	1	**166-1486**	2	SHIM (2.0MM THK)	
	9	1	**172-2980**	1	STICK & BEARING AS	
	9A	1	**137-2919**	2	BEARING (95.18MM OD) (80.25MM ID)	
	9B	1	**163-3744**	2	BEARING-SLEEVE	
	9C	1	**163-3749**	2	BEARING-SLEEVE	
	10	1	**118-5982**	1	SPACER (14MM THK)	
	11	1	**166-1495**	2	SEAL-LIP TYPE	
	12	1	**8T-4123**	2	WASHER-PLATED (22X35X3.5MM THK)	
M	13	1	**8T-4780**	2	BOLT (M20X2.5X30MM)	

B-USE AS REQUIRED
M-METRIC PART

163-3540 STICK GP-HOE *(contd.)* i01389011

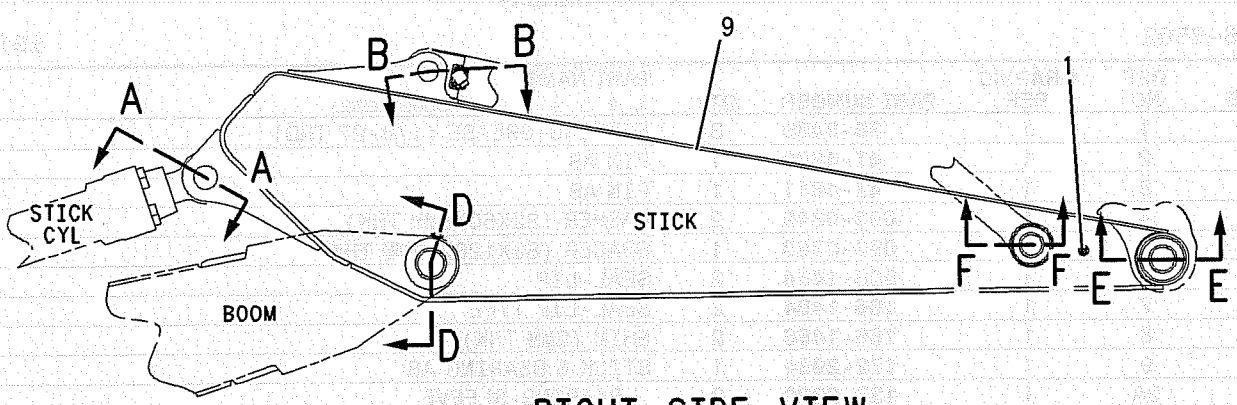

RIGHT SIDE VIEW

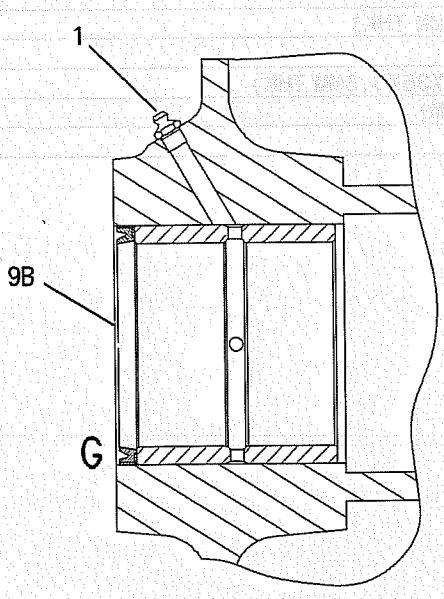

SECTION D-D

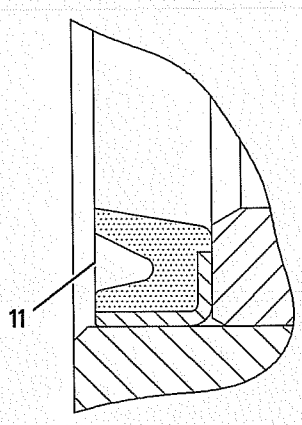

VIEW OF AREA G

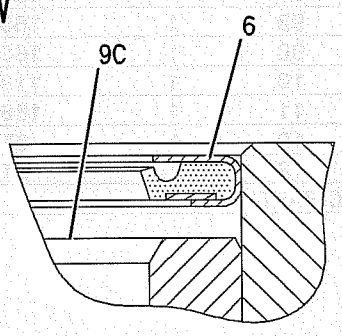

SECTION F-F

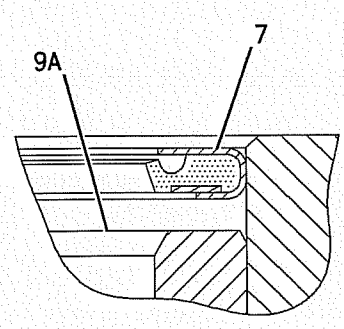

SECTION E-E

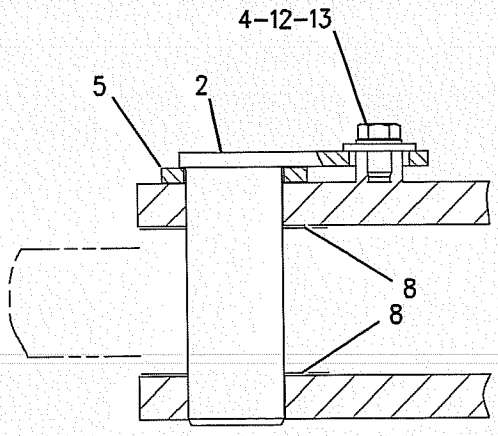

SECTION A-A

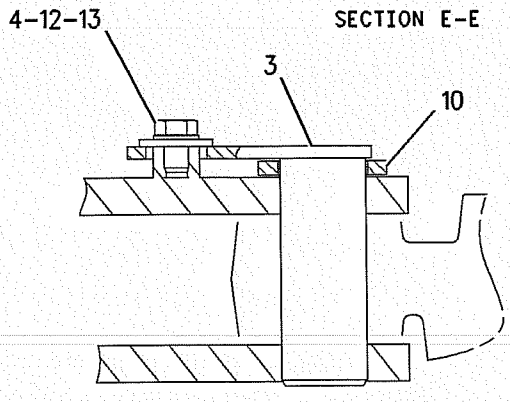

SECTION B-B

GRAPHIC #1

<END>

g00674901

IMPLEMENTS

163-3542 STICK GP-HOE

S/N: SBN1-UP; RAW1-UP
2400MM (94.4IN)
PART OF 186-1193 STICK AR-HOE
AN ATTACHMENT

SMCS-6502 **i01892300**

NOTE	REF NO	GRAPHIC REF	PART NUMBER	QTY	PART NAME 1 2 3 4 5 6 (PRODUCT LEVEL)	SEE PAGE
	1	1	**3B-8489**	3	FITTING-GREASE (1/8-27 THD)	
	2	1	**4I-4809**	1	PIN AS	
	3	1	**4I-4811**	1	PIN AS	
	4	1	**093-0349**	2	WASHER (22X60X6MM THK)	
	5	1	**093-0363**	1	SPACER (83X120X12MM THK)	
	6	1	**093-1434**	2	SEAL-LIP	
	7	1	**166-1494**	2	SEAL-LIP TYPE	
	8	1	**166-1486**	2	SHIM (2MM THK)	
	9	1	**172-2984**	1	STICK & BEARING AS	
	9A	1	**137-2820**	2	BEARING-SLEEVE	
	9B	1	**163-3749**	2	BEARING-SLEEVE	
	9C	1	**163-3744**	2	BEARING-SLEEVE	
	10	1	**118-5982**	1	SPACER (73X105X14MM THK)	
	11	1	**166-1495**	2	SEAL-LIP TYPE	
	12	1	**8T-4123**	2	WASHER-PLATED (22X35X3.5MM THK)	
M	13	1	**8T-4780**	2	BOLT (M20X2.5X30MM)	

M-METRIC PART

163-3542 **STICK GP-HOE** *(contd.)* i01892300

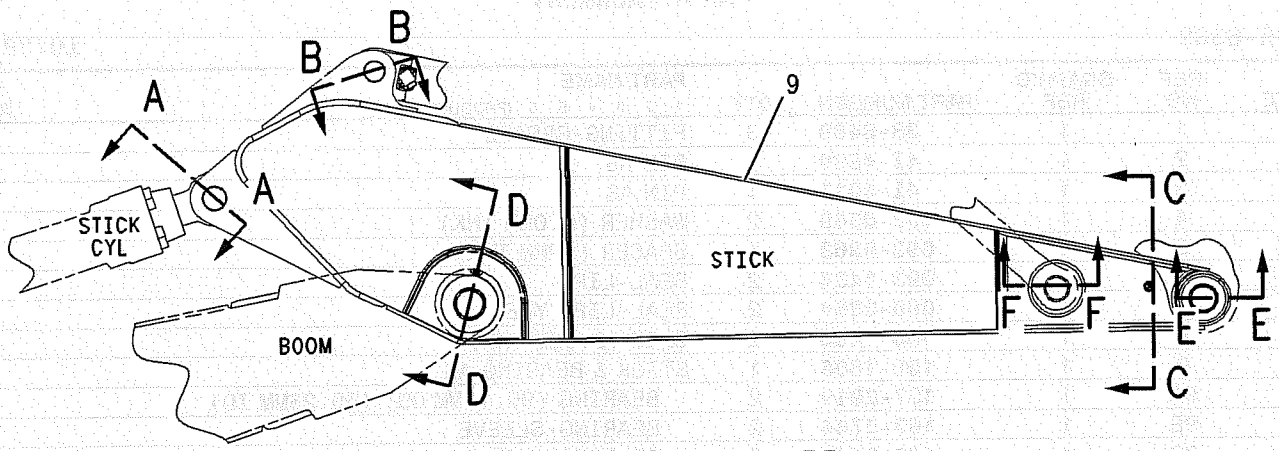

RIGHT SIDE VIEW

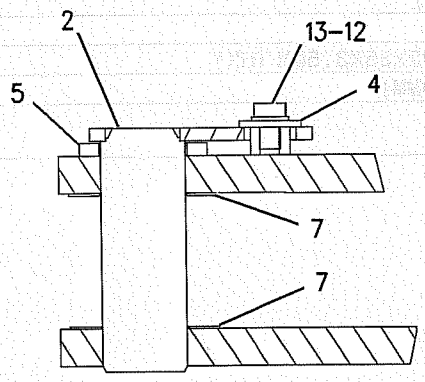

SECTION A-A

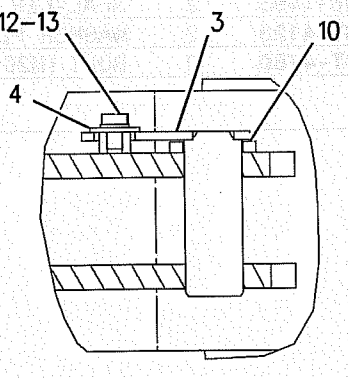

SECTION B-B

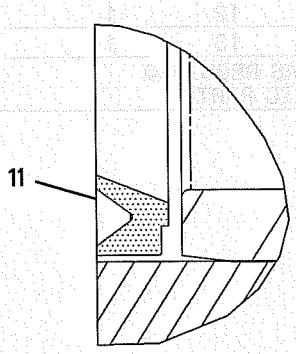

VIEW OF AREA G

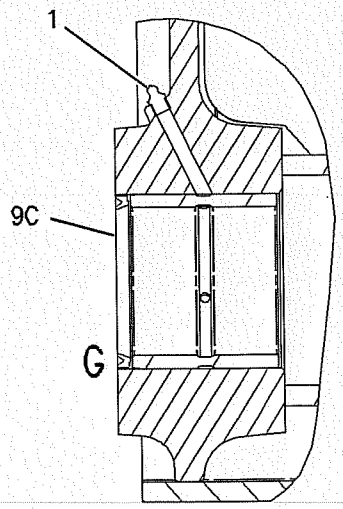

SECTION D-D

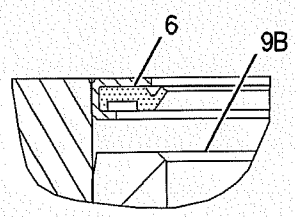

SECTION F-F

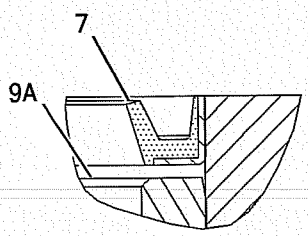

SECTION E-E

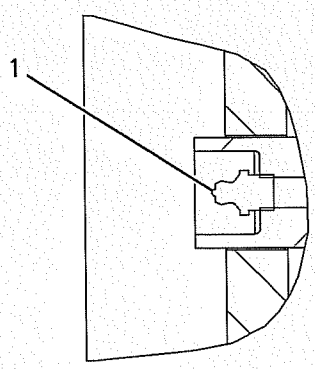

SECTION C-C

GRAPHIC #1

<END>

g00986302

IMPLEMENTS

166-1605 STICK GP-HOE

S/N: SBN1-UP; RAW1-UP
PART OF 186-1148 STICK AR-HOE
AN ATTACHMENT

SMCS-6502 **i01389037**

NOTE	REF NO	GRAPHIC REF	PART NUMBER	QTY	PART NAME 1 2 3 4 5 6 (PRODUCT LEVEL)	SEE PAGE
	1	1	**3B-8489**	3	FITTING-GREASE	
	2	1	**4I-4809**	1	PIN AS	
	3	1	**4I-4811**	1	PIN AS	
	4	1	**093-0349**	2	WASHER (6.0MM THK)	
	5	1	**093-0363**	1	SPACER (12MM THK)	
	6	1	**093-1434**	2	SEAL-LIP	
	7	1	**096-0854**	2	SEAL-LIP TYPE	
B	8	1	**166-1486**	2	SHIM (2.0MM THK)	
	9	1	**166-1606**	1	STICK & BEARING AS	
	9A	1	**137-2919**	2	BEARING (95.18MM OD) (80.25MM ID)	
	9B	1	**163-3744**	2	BEARING-SLEEVE	
	9C	1	**163-3749**	2	BEARING-SLEEVE	
	10	1	**118-5982**	1	SPACER (14MM THK)	
	11	1	**166-1495**	2	SEAL-LIP TYPE	
	12	1	**8T-4123**	2	WASHER-PLATED (22X35X3.5MM THK)	
M	13	1	**8T-4780**	2	BOLT (M20X2.5X30MM)	

B-USE AS REQUIRED
M-METRIC PART

166-1605 **STICK GP-HOE** *(contd.)* i01389037

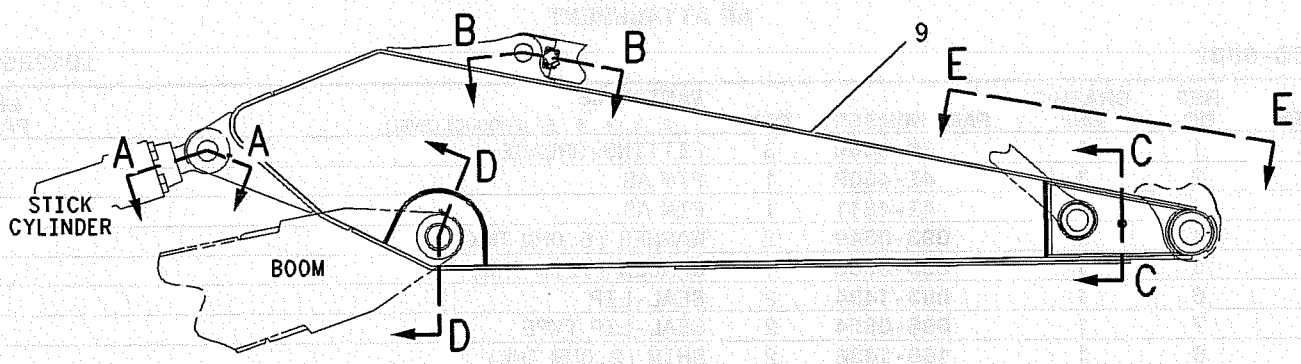

RIGHT SIDE VIEW

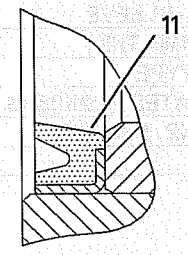

VIEW OF AREA G

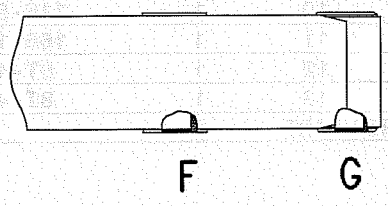

SECTION E-E

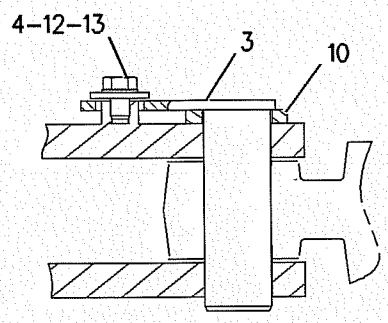

SECTION B-B

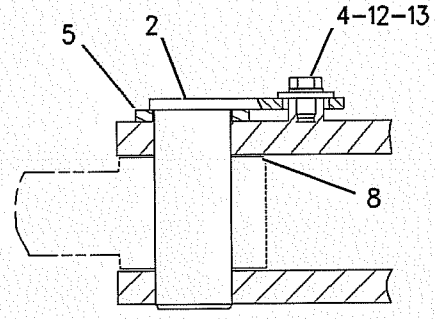

SECTION A-A

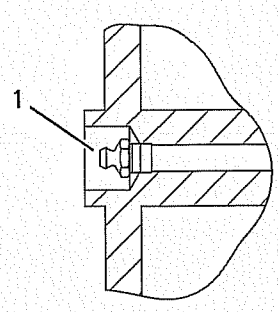

SECTION C-C

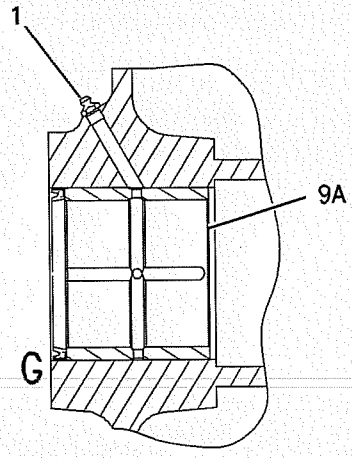

SECTION D-D

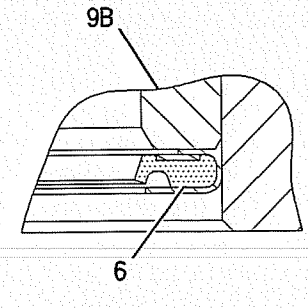

VIEW OF AREA F

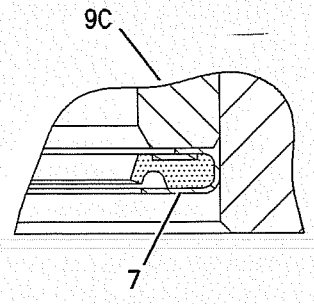

VIEW OF AREA G

GRAPHIC #1

<END>

g00680060

IMPLEMENTS

166-1652 STICK GP-HOE

S/N: SBN1-UP; RAW1-UP
PART OF 186-1191 STICK AR-HOE
AN ATTACHMENT

SMCS-6502 **i01389030**

NOTE	REF NO	GRAPHIC REF	PART NUMBER	QTY	PART NAME 1 2 3 4 5 6 (PRODUCT LEVEL)	SEE PAGE
	1	1	**3B-8489**	3	FITTING-GREASE	
	2	1	**4I-4809**	1	PIN AS	
	3	1	**4I-4811**	1	PIN AS	
	4	1	**093-0349**	2	WASHER (6.0MM THK)	
	5	1	**093-0363**	1	SPACER (12MM THK)	
	6	1	**093-1434**	2	SEAL-LIP	
	7	1	**096-0854**	2	SEAL-LIP TYPE	
	8	1	**166-1486**	2	SHIM (2.0MM THK)	
	9	1	**166-1653**	1	STICK & BEARING AS	
	9A	1	**137-2919**	2	BEARING (95.18MM OD) (80.25MM ID)	
	9B	1	**163-3744**	2	BEARING-SLEEVE	
	9C	1	**163-3749**	2	BEARING-SLEEVE	
	10	1	**118-5982**	1	SPACER (14MM THK)	
	11	1	**166-1495**	2	SEAL-LIP TYPE	
	12	1	**8T-4123**	2	WASHER-PLATED (22X35X3.5MM THK)	
M	13	1	**8T-4780**	2	BOLT (M20X2.5X30MM)	

M-METRIC PART

166-1652 **STICK GP-HOE** *(contd.)* i01389030

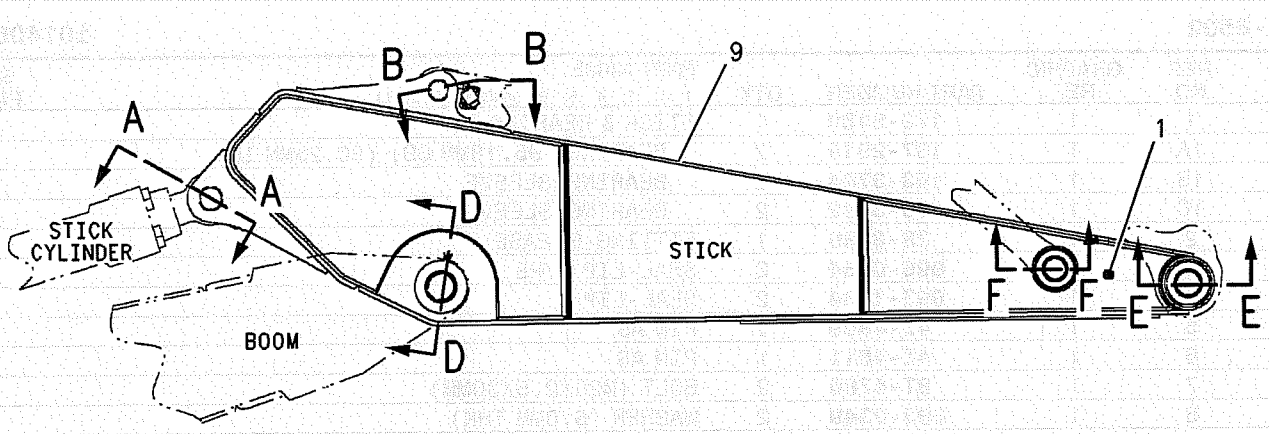

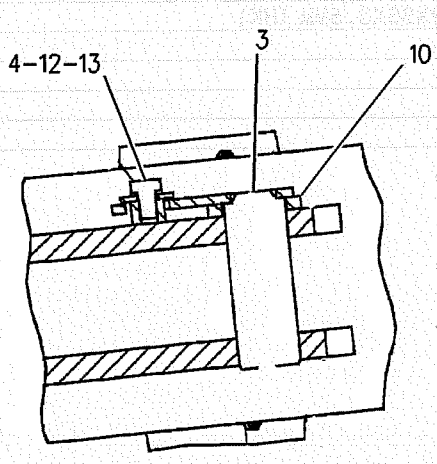

SECTION B-B

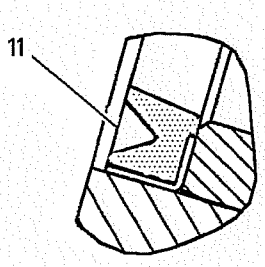

VIEW OF AREA G

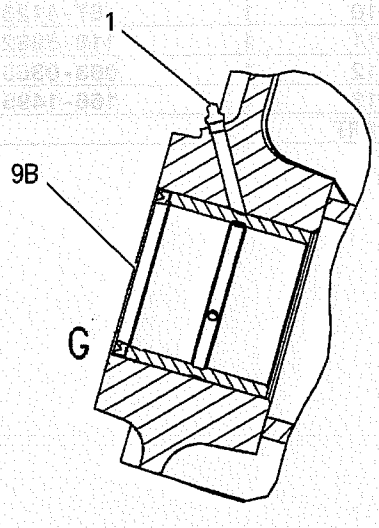

SECTION D-D

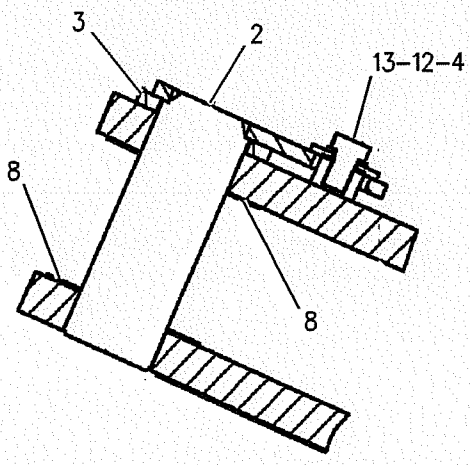

SECTION A-A

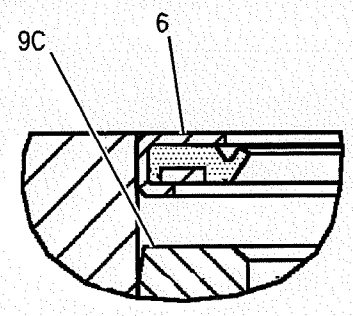

SECTION F-F

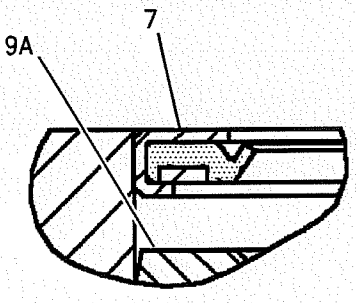

SECTION E-E

GRAPHIC #1

<END>

g00682197

173-7970 STICK GP-HOE

S/N: SBN1-UP; RAW1-UP
3.9M (12.6FT), B-FAMILY
PART OF 173-7968 LINES AR-AUXILIARY HYDRAULIC
AN ATTACHMENT

SMCS-6502 **i01406637**

NOTE	REF NO	GRAPHIC REF	PART NUMBER	QTY	PART NAME 1 2 3 4 5 6 (PRODUCT LEVEL)	SEE PAGE
	1	1	**179-5180**	1	STICK & BEARING AS	
	1A	1	**137-2919**	2	BEARING (95.18MM OD) (80.25MM ID)	
	1B	1	**163-3744**	2	BEARING-SLEEVE	
	1C	1	**163-3749**	2	BEARING-SLEEVE	
	2	1	**3B-8489**	1	FITTING-GREASE	
	3	1	**096-0854**	2	SEAL-LIP TYPE	
	4	1	**093-1434**	2	SEAL-LIP	
	5	1	**4I-4809**	1	PIN AS	
	6	1	**4I-4811**	1	PIN AS	
M	7	1	**8T-4780**	2	BOLT (M20X2.5X30MM)	
	8	1	**093-0349**	2	WASHER (6.0MM THK)	
	9	1	**166-1486**	2	SHIM (2.0MM THK)	
	10	1	**8T-4123**	2	WASHER-PLATED (22X35X3.5MM THK)	
	11	1	**118-5982**	1	SPACER (14MM THK)	
	12	1	**093-0363**	1	SPACER (12MM THK)	
	13	1	**166-1495**	2	SEAL-LIP TYPE	

M-METRIC PART

173-7970 **STICK GP-HOE** *(contd.)* **i01406637**

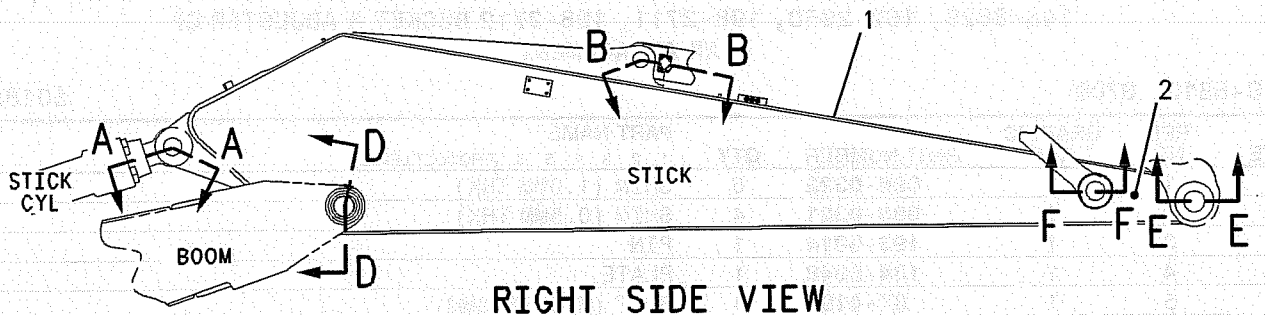

RIGHT SIDE VIEW

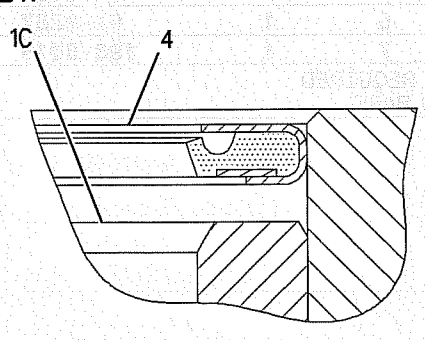

SECTION F-F

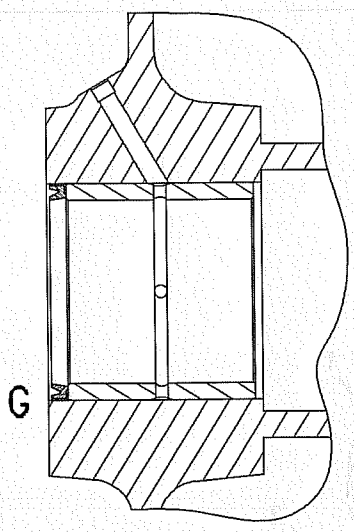

SECION D-D

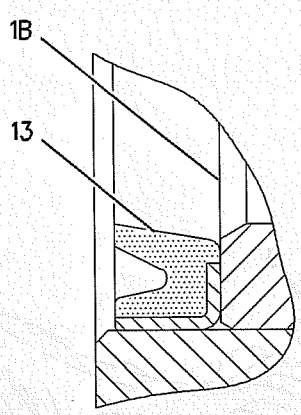

VIEW OF AREA G

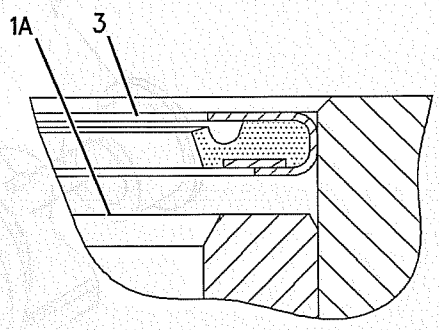

SECTION E-E

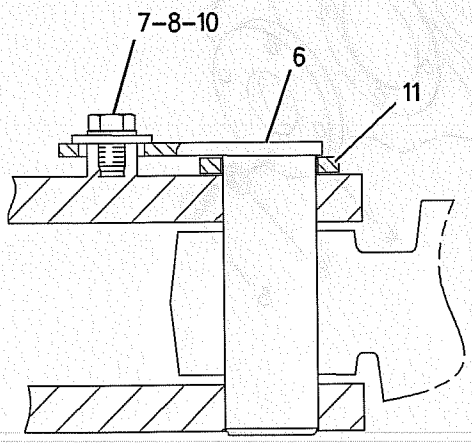

SECTION B-B

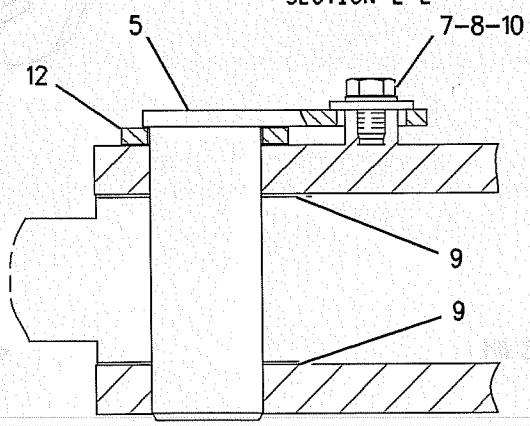

SECTION A-A

GRAPHIC #1

<END>

g00708944

WORK TOOLS

7Y-2219 ADJUSTER GP-WORK TOOL

S/N: SBN1-UP; RAW1-UP
B-FAMILY
PART OF 132-5063, 132-5064, 142-2542, 142-2544, 142-2545, 142-2546, 148-8828, 148-8829, 162-2950, 198-2711, 198-2712 BUCKET & ADJUSTER GP
AN ATTACHMENT

SMCS-6513, 6700 **i01892711**

NOTE	REF NO	GRAPHIC REF	PART NUMBER	QTY	PART NAME 1 2 3 4 5 6 (PRODUCT LEVEL)	SEE PAGE
B	1	1	**086-0322**	6	SHIM (1.0MM THK)	
B	2	1	**086-0321**	4	SHIM (0.5MM THK)	
	3	1	**193-5014**	1	PIN	
	4	1	**134-8948**	1	PLATE	
M	5	1	**8T-4193**	4	BOLT (M16X2X50MM)	
	6	1	**9X-8257**	4	WASHER (17.5X30X3.5MM THK)	
	7	1	**193-5015**	1	FLANGE	

B-USE AS REQUIRED
M-METRIC PART

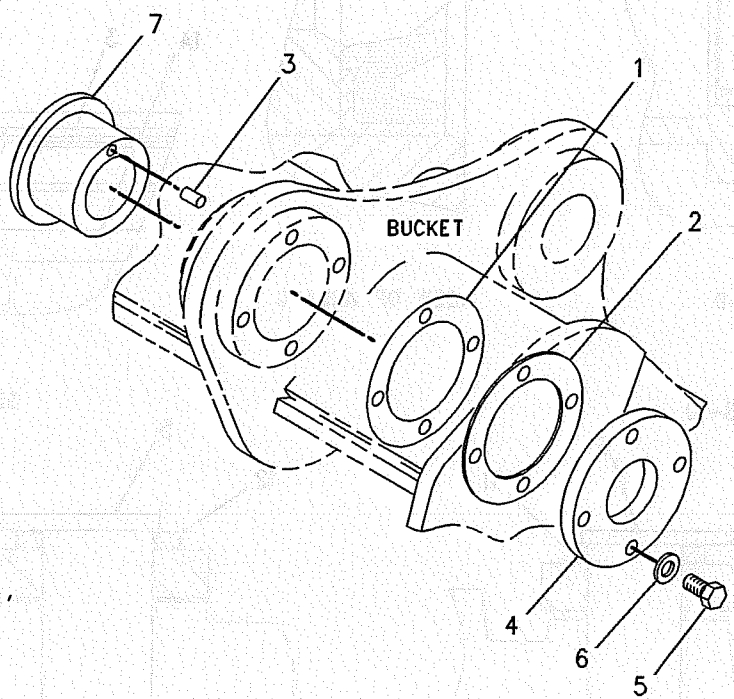

GRAPHIC #1 **<END>** g00255457

WORK TOOLS

7Y-3475 ADJUSTER GP-WORK TOOL

S/N: SBN1-UP; RAW1-UP
C-FAMILY
PART OF 127-2291, 142-2570, 142-2573, 142-2574, 150-4589, 150-4599, 162-3088, 198-2737, 198-2738 BUCKET & ADJUSTER GP
AN ATTACHMENT

SMCS-6513, 6700 **i01888742**

NOTE	REF NO	GRAPHIC REF	PART NUMBER	QTY	PART NAME 1 2 3 4 5 6 (PRODUCT LEVEL)	SEE PAGE
B	1	1	**7Y-7687**	6	SHIM (1.0MM THK)	
B	2	1	**7Y-7686**	4	SHIM (0.5MM THK)	
	3	1	**193-5014**	1	PIN	
	4	1	**134-8949**	1	PLATE	
M	5	1	**8T-4193**	5	BOLT (M16X2X50MM)	
	6	1	**9X-8257**	5	WASHER (17.5X30X3.5MM THK)	
	7	1	**193-5016**	1	FLANGE	

B-USE AS REQUIRED
M-METRIC PART

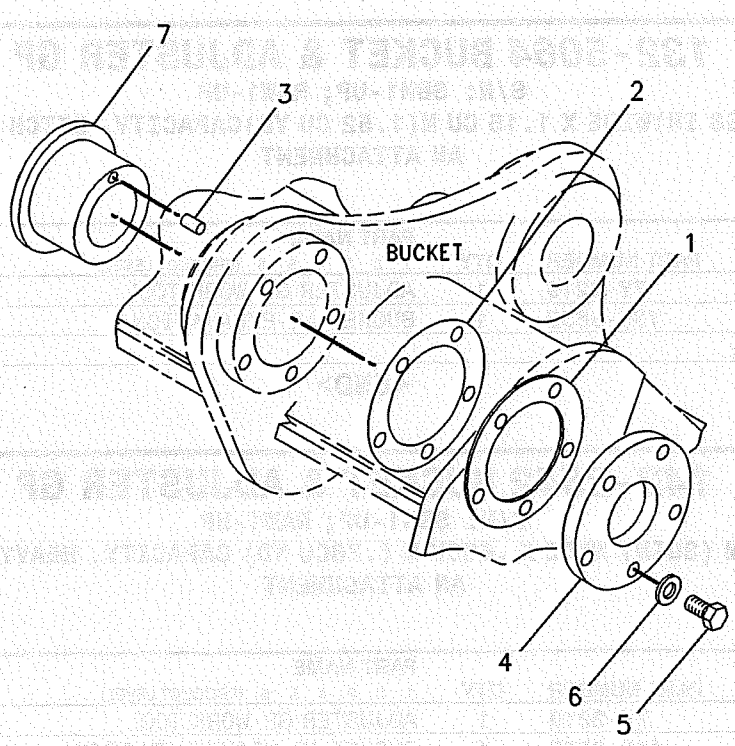

GRAPHIC #1 **<END>** g00264317

WORK TOOLS

127-2291 BUCKET & ADJUSTER GP

S/N: SBN1-UP; RAW1-UP
1372MM (54IN) WIDE X 1.5 CU M (2 CU YD) CAPACITY. EXTREME SERVICE, C-FAMILY
AN ATTACHMENT

SMCS-6503, 6513 **i01367841**

NOTE	PART NUMBER	QTY	PART NAME 1 2 3 4 5 6 (PRODUCT LEVEL)	SEE PAGE
Y	**7Y-3475**	1	ADJUSTER GP-WORK TOOL	503
	142-2572	1	BUCKET & ADJUSTER GP	
Y-SEPARATE ILLUSTRATION				

<END>

132-5063 BUCKET & ADJUSTER GP

S/N: SBN1-UP; RAW1-UP
1422MM(56 IN)WIDE X .86 CU M(1.14 CU YD)CAPACITY. DITCH CLEANING
AN ATTACHMENT

SMCS-6503, 6513 **i01397546**

NOTE	PART NUMBER	QTY	PART NAME 1 2 3 4 5 6 (PRODUCT LEVEL)	SEE PAGE
Y	**7Y-2219**	1	ADJUSTER GP-WORK TOOL	502
Y	*135-8632*	1	BUCKET AS-EXCAVATION	509
Y-SEPARATE ILLUSTRATION				

<END>

132-5064 BUCKET & ADJUSTER GP

S/N: SBN1-UP; RAW1-UP
1727MM(68 IN)WIDE X 1.15 CU M(1.52 CU YD)CAPACITY. DITCH CLEANING
AN ATTACHMENT

SMCS-6503, 6513 **i01397556**

NOTE	PART NUMBER	QTY	PART NAME 1 2 3 4 5 6 (PRODUCT LEVEL)	SEE PAGE
Y	**7Y-2219**	1	ADJUSTER GP-WORK TOOL	502
Y	*135-8633*	1	BUCKET AS-EXCAVATION	510
Y-SEPARATE ILLUSTRATION				

<END>

142-2542 BUCKET & ADJUSTER GP

S/N: SBN1-UP; RAW1-UP
775MM (30IN) WIDE X .60CU M (.78CU YD) CAPACITY. HEAVY DUTY
AN ATTACHMENT

SMCS-6503, 6513 **i01397849**

NOTE	PART NUMBER	QTY	PART NAME 1 2 3 4 5 6 (PRODUCT LEVEL)	SEE PAGE
Y	**7Y-2219**	1	ADJUSTER GP-WORK TOOL	502
Y	**142-2549**	1	BUCKET AS-HEAVY DUTY ROCK	521
Y-SEPARATE ILLUSTRATION				

<END>

WORK TOOLS

142-2544 BUCKET & ADJUSTER GP

S/N: SBN1-UP; RAW1-UP
932MM (36IN) WIDE X .80CU M (1.0CU YD) CAPACITY, HEAVY DUTY
AN ATTACHMENT

SMCS-6503, 6513 **i01398228**

NOTE	PART NUMBER	QTY	PART NAME 1 2 3 4 5 6 (PRODUCT LEVEL)	SEE PAGE
Y	7Y-2219	1	ADJUSTER GP-WORK TOOL	502
Y	142-2551	1	BUCKET AS-HEAVY DUTY ROCK	522

Y-SEPARATE ILLUSTRATION

<END>

142-2545 BUCKET & ADJUSTER GP

S/N: SBN1-UP; RAW1-UP
1082MM (42IN) WIDE X 1.2CU M (1.5CU YD) CAPACITY. HEAVY DUTY, B-FAMILY
AN ATTACHMENT

SMCS-6503, 6513 **i01358378**

NOTE	PART NUMBER	QTY	PART NAME 1 2 3 4 5 6 (PRODUCT LEVEL)	SEE PAGE
Y	7Y-2219	1	ADJUSTER GP-WORK TOOL	502
Y	142-2552	1	BUCKET AS-EXCAVATION	511

Y-SEPARATE ILLUSTRATION

<END>

142-2546 BUCKET & ADJUSTER GP

S/N: SBN1-UP; RAW1-UP
1075MM (42IN) WIDE X 1.0CU M (1.3CU YD) CAPACITY
AN ATTACHMENT

SMCS-6503, 6513 **i01398251**

NOTE	PART NUMBER	QTY	PART NAME 1 2 3 4 5 6 (PRODUCT LEVEL)	SEE PAGE
Y	7Y-2219	1	ADJUSTER GP-WORK TOOL	502
Y	142-2553	1	BUCKET AS-HEAVY DUTY ROCK	523

Y-SEPARATE ILLUSTRATION

<END>

142-2570 BUCKET & ADJUSTER GP

S/N: SBN1-UP; RAW1-UP
1098MM (43IN) WIDE X 1.1CU M (1.4CU YD) CAPACITY. HEAVY DUTY
AN ATTACHMENT

SMCS-6503, 6513 **i01398269**

NOTE	PART NUMBER	QTY	PART NAME 1 2 3 4 5 6 (PRODUCT LEVEL)	SEE PAGE
Y	7Y-3475	1	ADJUSTER GP-WORK TOOL	503
Y	142-2577	1	BUCKET AS-EXCAVATION	512

Y-SEPARATE ILLUSTRATION

<END>

WORK TOOLS

142-2573 BUCKET & ADJUSTER GP

S/N: SBN1-UP; RAW1-UP
1522MM (59IN) WIDE X 1.70CU M (2.2CU YD) CAPACITY. HEAVY DUTY
AN ATTACHMENT

SMCS-6503, 6513 **i01398274**

NOTE	PART NUMBER	QTY	PART NAME 1 2 3 4 5 6 (PRODUCT LEVEL)	SEE PAGE
Y	7Y-3475	1	ADJUSTER GP-WORK TOOL	503
Y	142-2580	1	BUCKET AS-EXCAVATION	513
Y-SEPARATE ILLUSTRATION				

<END>

142-2574 BUCKET & ADJUSTER GP

S/N: SBN1-UP; RAW1-UP
1680MM(66.14 IN)WIDE X 1.9 CU M(2.5 CU YD)CAPACITY. HEAVY DUTY
AN ATTACHMENT

SMCS-6503, 6513 **i01398172**

NOTE	PART NUMBER	QTY	PART NAME 1 2 3 4 5 6 (PRODUCT LEVEL)	SEE PAGE
Y	7Y-3475	1	ADJUSTER GP-WORK TOOL	503
Y	142-2581	1	BUCKET AS-HEAVY DUTY ROCK	524
Y-SEPARATE ILLUSTRATION				

<END>

148-8828 BUCKET & ADJUSTER GP

S/N: SBN1-UP; RAW1-UP
1230MM(48.43 IN)WIDE X 1.2 CU M(1.6 CU YD)CAPACITY. HEAVY DUTY B-FAMILY
AN ATTACHMENT

SMCS-6503, 6513 **i01398176**

NOTE	PART NUMBER	QTY	PART NAME 1 2 3 4 5 6 (PRODUCT LEVEL)	SEE PAGE
Y	7Y-2219	1	ADJUSTER GP-WORK TOOL	502
Y	148-8831	1	BUCKET AS-EXCAVATION	514
Y-SEPARATE ILLUSTRATION				

<END>

148-8829 BUCKET & ADJUSTER GP

S/N: SBN1-UP; RAW1-UP
1377MM (54IN) WIDE X 1.4 CU M (1.75 CU.YD.) CAPACITY. HEAVY DUTY BUCKET, B-FAMILY
AN ATTACHMENT

SMCS-6503, 6513 **i01370565**

NOTE	PART NUMBER	QTY	PART NAME 1 2 3 4 5 6 (PRODUCT LEVEL)	SEE PAGE
Y	7Y-2219	1	ADJUSTER GP-WORK TOOL	502
Y	148-8832	1	BUCKET AS-EXCAVATION	515
Y-SEPARATE ILLUSTRATION				

<END>

WORK TOOLS

150-4589 BUCKET & ADJUSTER GP

S/N: SBN1-UP; RAW1-UP
948MM(37.32 IN)WIDE X 0.90 CU M(1.2 CU YD)CAPACITY. HEAVY DUTY
AN ATTACHMENT

SMCS-6503, 6513 **i01398180**

NOTE	PART NUMBER	QTY	PART NAME 1 2 3 4 5 6 (PRODUCT LEVEL)	SEE PAGE
Y	7Y-3475	1	ADJUSTER GP-WORK TOOL	503
Y	150-4590	1	BUCKET AS-EXCAVATION	516
Y-SEPARATE ILLUSTRATION				

<END>

150-4599 BUCKET & ADJUSTER GP

S/N: SBN1-UP; RAW1-UP
1248MM(49.13 IN)WIDE X 1.30 CU M(1.7 CU YD)CAPACITY. HEAVY DUTY
AN ATTACHMENT

SMCS-6503, 6513 **i01398183**

NOTE	PART NUMBER	QTY	PART NAME 1 2 3 4 5 6 (PRODUCT LEVEL)	SEE PAGE
Y	7Y-3475	1	ADJUSTER GP-WORK TOOL	503
Y	150-4600	1	BUCKET AS-EXCAVATION	517
Y-SEPARATE ILLUSTRATION				

<END>

162-2950 BUCKET & ADJUSTER GP

S/N: SBN1-UP; RAW1-UP
625MM(24.6 IN)WIDE X 0.45 CU M(0.59 CU YD)CAPACITY. HEAVY DUTY
AN ATTACHMENT

SMCS-6503, 6513 **i01399167**

NOTE	PART NUMBER	QTY	PART NAME 1 2 3 4 5 6 (PRODUCT LEVEL)	SEE PAGE
Y	7Y-2219	1	ADJUSTER GP-WORK TOOL	502
Y	162-2948	1	BUCKET AS-ROCK	526
Y-SEPARATE ILLUSTRATION				

<END>

162-3088 BUCKET & ADJUSTER GP

S/N: SBN1-UP; RAW1-UP
775MM (30.5IN) WIDE X .7CU M (.924 CU YD) CAPACITY . HEAVY DUTY
AN ATTACHMENT

SMCS-6503, 6513 **i01399174**

NOTE	PART NUMBER	QTY	PART NAME 1 2 3 4 5 6 (PRODUCT LEVEL)	SEE PAGE
Y	7Y-3475	1	ADJUSTER GP-WORK TOOL	503
Y	162-3090	1	BUCKET AS-ROCK	527
Y-SEPARATE ILLUSTRATION				

<END>

WORK TOOLS

198-2711 BUCKET & ADJUSTER GP

S/N: SBN1-UP; RAW1-UP
1082MM (42 IN) WIDE X 1.0CU M (1.3CU YD) CAPACITY. HEAVY DUTY, B-FAMILY
AN ATTACHMENT

SMCS-6503, 6513 **i01889515**

NOTE	PART NUMBER	QTY	PART NAME 1 2 3 4 5 6 (PRODUCT LEVEL)	SEE PAGE
Y	**7Y-2219**	1	ADJUSTER GP-WORK TOOL	502
Y	*198-2730*	1	BUCKET AS-HEAVY DUTY	520

Y-SEPARATE ILLUSTRATION

<END>

198-2712 BUCKET & ADJUSTER GP

S/N: SBN1-UP; RAW1-UP
1230MM (48 IN) WIDE X 1.2 CU M (1.5 CU YD) CAPACITY. HEAVY DUTY, B-FAMILY
AN ATTACHMENT

SMCS-6503, 6513 **i01889523**

NOTE	PART NUMBER	QTY	PART NAME 1 2 3 4 5 6 (PRODUCT LEVEL)	SEE PAGE
Y	**7Y-2219**	1	ADJUSTER GP-WORK TOOL	502
Y	*198-2732*	1	BUCKET AS-PENETRATION	525

Y-SEPARATE ILLUSTRATION

<END>

198-2737 BUCKET & ADJUSTER GP

S/N: SBN1-UP; RAW1-UP
1220MM (48 IN) X 1.4 CU M (1.8 CU YD) . HEAVY DUTY, C-FAMILY
AN ATTACHMENT

SMCS-6503, 6513 **i01889530**

NOTE	PART NUMBER	QTY	PART NAME 1 2 3 4 5 6 (PRODUCT LEVEL)	SEE PAGE
Y	**7Y-3475**	1	ADJUSTER GP-WORK TOOL	503
Y	*198-2755*	1	BUCKET AS-EXCAVATION	518

Y-SEPARATE ILLUSTRATION

<END>

198-2738 BUCKET & ADJUSTER GP

S/N: SBN1-UP; RAW1-UP
1368MM (54 IN) WIDE X 1.6 CU M (2.1 CU YD) CAPACITY. HEAVY DUTY, C-FAMILY
AN ATTACHMENT

SMCS-6503, 6513 **i01889596**

NOTE	PART NUMBER	QTY	PART NAME 1 2 3 4 5 6 (PRODUCT LEVEL)	SEE PAGE
Y	**7Y-3475**	1	ADJUSTER GP-WORK TOOL	503
Y	*198-2757*	1	BUCKET AS-EXCAVATION	519

Y-SEPARATE ILLUSTRATION

<END>

135-8632 BUCKET AS-EXCAVATION

S/N: SBN1-UP; RAW1-UP
DITCH CLEANING
PART OF 132-5063 BUCKET & ADJUSTER GP
AN ATTACHMENT

SMCS-6523 **i01399532**

NOTE	REF NO	GRAPHIC REF	PART NUMBER	QTY	PART NAME 1 2 3 4 5 6 (PRODUCT LEVEL)	SEE PAGE
	1	1	135-8636	1	EDGE	

BUCKET ASSEMBLY MAY NOT BE EXACTLY AS PORTRAYED

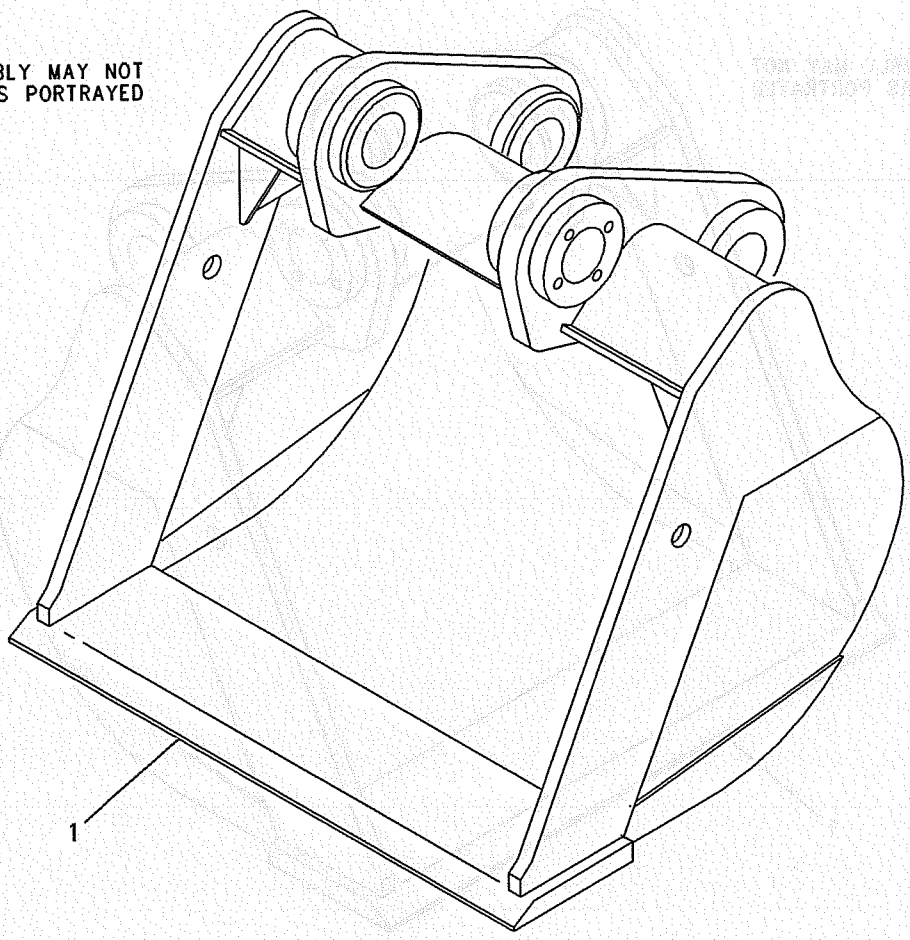

GRAPHIC #1 **<END>** g00264473

WORK TOOLS

135-8633 BUCKET AS-EXCAVATION

S/N: SBN1-UP; RAW1-UP
DITCH CLEANING
PART OF 132-5064 BUCKET & ADJUSTER GP
AN ATTACHMENT

SMCS-6523 **i01399572**

NOTE	REF NO	GRAPHIC REF	PART NUMBER	QTY	PART NAME 1 2 3 4 5 6 (PRODUCT LEVEL)	SEE PAGE
	1	1	135-8637	1	EDGE	

BUCKET ASSEMBLY MAY NOT BE EXACTLY AS PORTRAYED

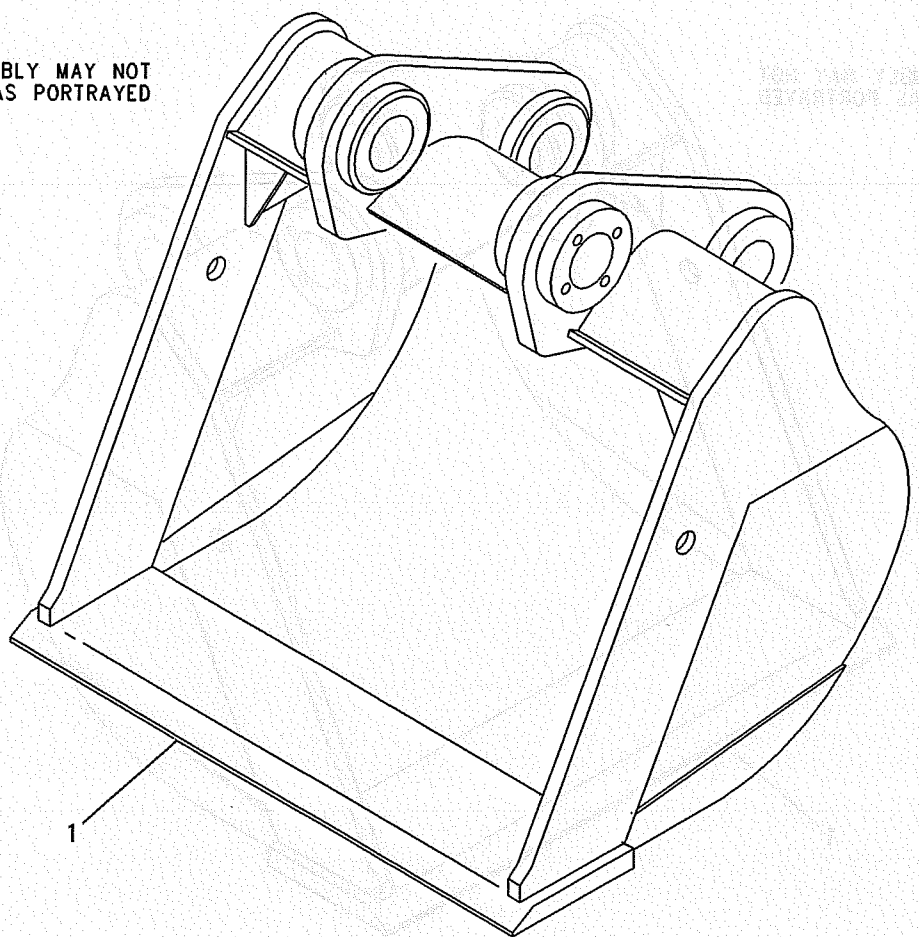

GRAPHIC #1 **<END>** g00264473

142-2552 BUCKET AS-EXCAVATION

S/N: SBN1-UP; RAW1-UP
1082MM (43IN) WIDE X 1.2 CU M (1.5 CU YD) CAPACITY. B-FAMILY, HEAVY DUTY
PART OF 142-2545 BUCKET & ADJUSTER GP
AN ATTACHMENT

SMCS-6523 **i01043991**

NOTE	REF NO	GRAPHIC REF	PART NUMBER	QTY	PART NAME 1 2 3 4 5 6 (PRODUCT LEVEL)	SEE PAGE
	1	1	**137-9526**	1	EDGE AS	
	2	1	**6I-6354**	3	ADAPTER-2 STRAP	
	3	1	**6I-6355**	1	ADAPTER-2 STRAP	
	4	1	**6I-6356**	1	ADAPTER-2 STRAP	
	5	1	**8P-9770**	1	PLATE	
	6	1	**100-4143**	1	PLATE AS	
		1	**109-6574**	6	BOSS	
	7	1	**123-3212**	3	PLATE	
	8	1	**127-5089**	1	PLATE	

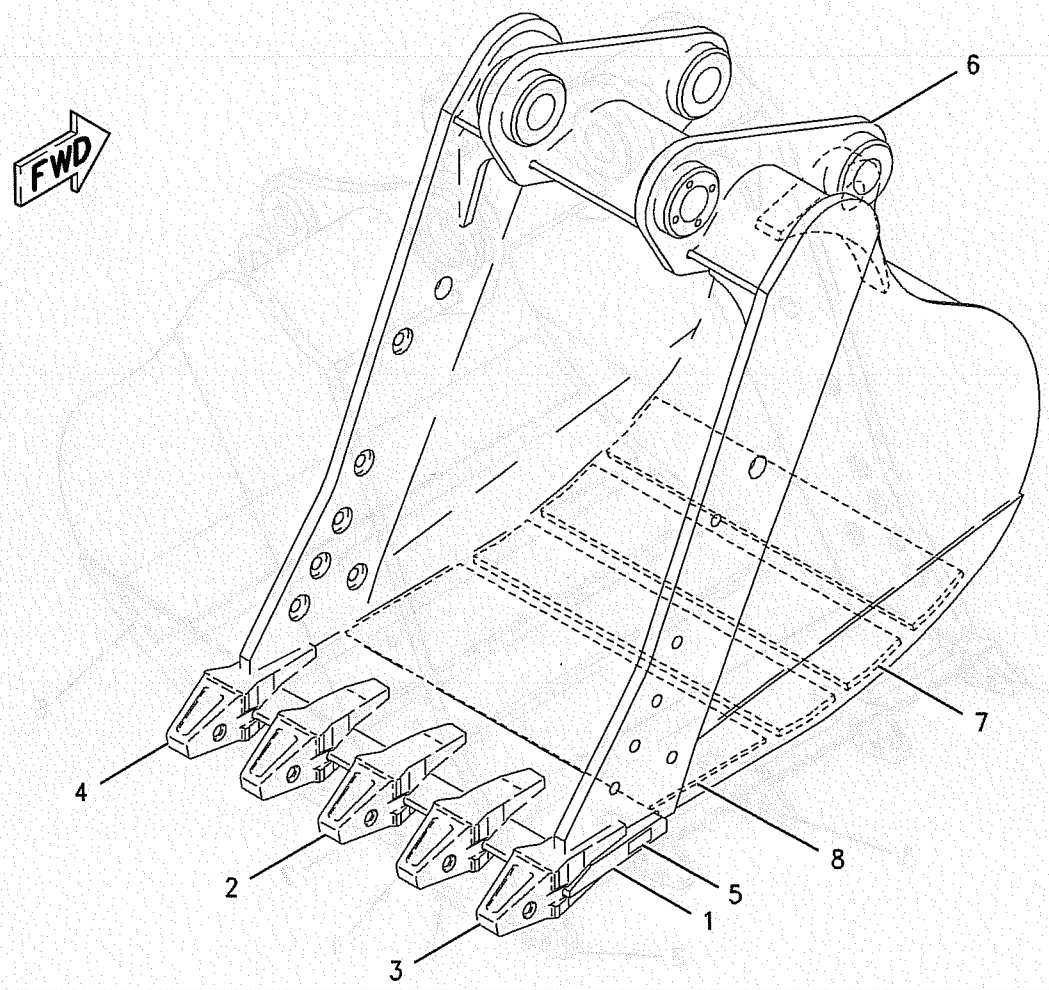

GRAPHIC #1 **<END>** g00541520

WORK TOOLS

142-2577 BUCKET AS-EXCAVATION

S/N: SBN1-UP; RAW1-UP
1098MM (43.23 IN) WIDE X 1.1 CU M (1.5 CU YD) CAPACITY. HEAVY DUTY
PART OF 142-2570 BUCKET & ADJUSTER GP
AN ATTACHMENT

SMCS-6523 **i01400905**

NOTE	REF NO	GRAPHIC REF	PART NUMBER	QTY	PART NAME 1 2 3 4 5 6 (PRODUCT LEVEL)	SEE PAGE
	1	1	**126-3718**	1	EDGE AS	
	2	1	**6I-6405**	1	ADAPTER-2 STRAP	
	3	1	**6I-6404**	3	ADAPTER-2 STRAP	
	4	1	**6I-6406**	1	ADAPTER-2 STRAP	
	5	1	**8P-9770**	1	PLATE	
	6	1	**123-3212**	4	PLATE	
	7	1	**127-5089**	1	PLATE	

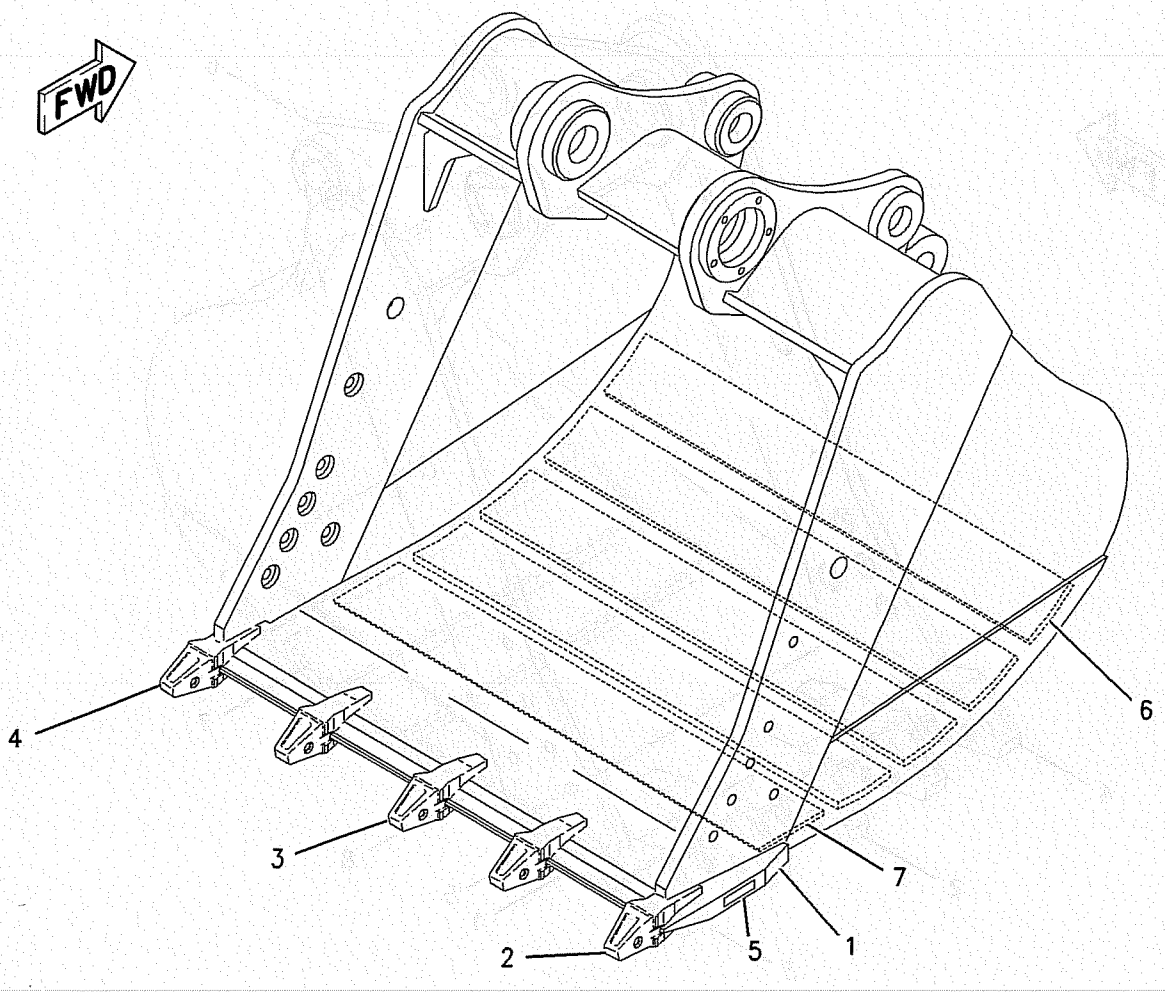

GRAPHIC #1 **<END>** g00738113

142-2580 BUCKET AS-EXCAVATION

S/N: SBN1-UP; RAW1-UP
1522MM(59.92 IN) WIDE X 1.70 CU M (2.24 CU YD) CAPACITY. HEAVY DUTY, C-FAMILY
PART OF 142-2573 BUCKET & ADJUSTER GP
AN ATTACHMENT

SMCS-6523 i01400944

NOTE	REF NO	GRAPHIC REF	PART NUMBER	QTY	PART NAME 1 2 3 4 5 6 (PRODUCT LEVEL)	SEE PAGE
	1	1	153-4869	1	PLATE AS	
	2	1	127-2304	1	EDGE AS	
	3	1	6I-6404	5	ADAPTER-2 STRAP	
	4	1	6I-6405	1	ADAPTER-2 STRAP	
	5	1	6I-6406	1	ADAPTER-2 STRAP	
	6	1	8P-9770	1	PLATE	
	7	1	127-2303	4	PLATE	
	8	1	127-2302	1	PLATE	

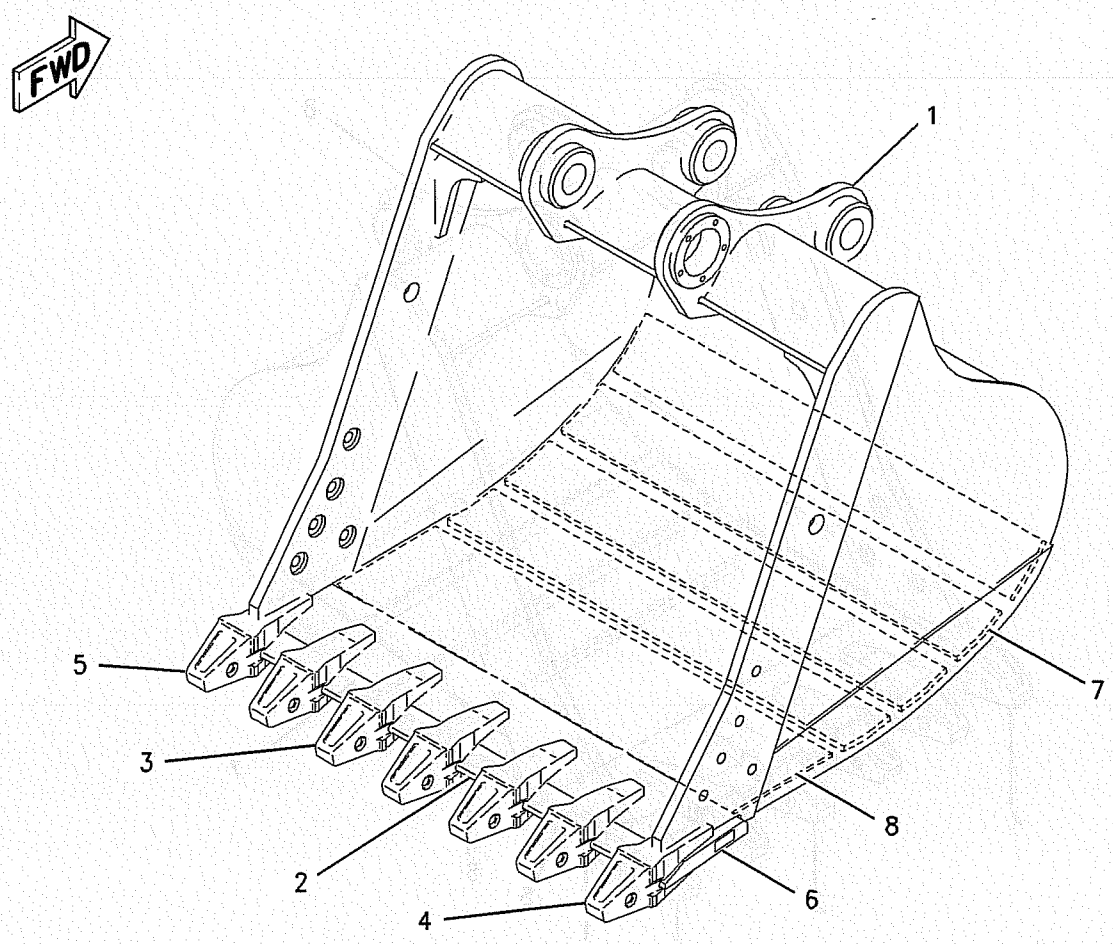

GRAPHIC #1 <END> g00738198

WORK TOOLS

148-8831 BUCKET AS-EXCAVATION

S/N: SBN1-UP; RAW1-UP
1230MM(48.43 IN)WIDE X 1.2 CU M(1.6 CU YD)CAPACITY. HEAVY DUTY
PART OF 148-8828 BUCKET & ADJUSTER GP
AN ATTACHMENT

SMCS-6523 **i01401373**

NOTE	REF NO	GRAPHIC REF	PART NUMBER	QTY	PART NAME 1 2 3 4 5 6 (PRODUCT LEVEL)	SEE PAGE
	1	1	**129-5714**	1	EDGE AS	
	2	1	**6I-6354**	4	ADAPTER-2 STRAP	
	3	1	**6I-6355**	1	ADAPTER-2 STRAP	
	4	1	**6I-6356**	1	ADAPTER-2 STRAP	
	5	1	**8P-9770**	1	PLATE	
	6	1	**127-2287**	1	PLATE	
	7	1	**127-2288**	3	PLATE	
	8	1	**129-5708**	1	PLATE AS	

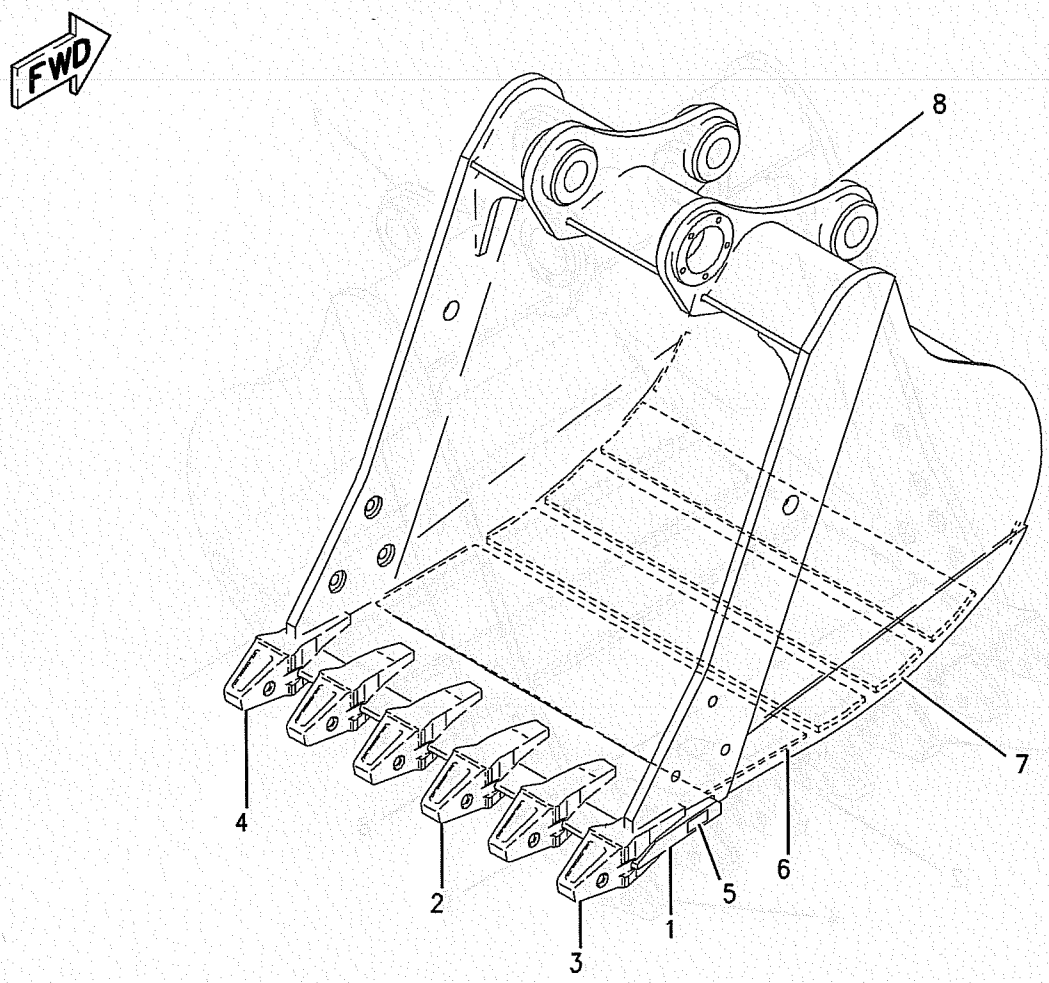

GRAPHIC #1 **<END>** g00738347

WORK TOOLS

148-8832 BUCKET AS-EXCAVATION

S/N: SBN1-UP; RAW1-UP
1377MM (54.2 IN)WIDE X 1.4 CU M(1.75 CU YD)CAPACITY, HEAVY DUTY, B-FAMILY
PART OF 148-8829 BUCKET & ADJUSTER GP
AN ATTACHMENT

SMCS-6523 **i01394783**

NOTE	REF NO	GRAPHIC REF	PART NUMBER	QTY	PART NAME 1 2 3 4 5 6 (PRODUCT LEVEL)	SEE PAGE
	1	1	129-5719	1	EDGE AS	
	2	1	6I-6354	5	ADAPTER-2 STRAP	
	3	1	6I-6355	1	ADAPTER-2 STRAP	
	4	1	6I-6356	1	ADAPTER-2 STRAP	
	5	1	8P-9770	1	PLATE	
	6	1	127-2295	3	PLATE	
	7	1	127-2294	1	PLATE	

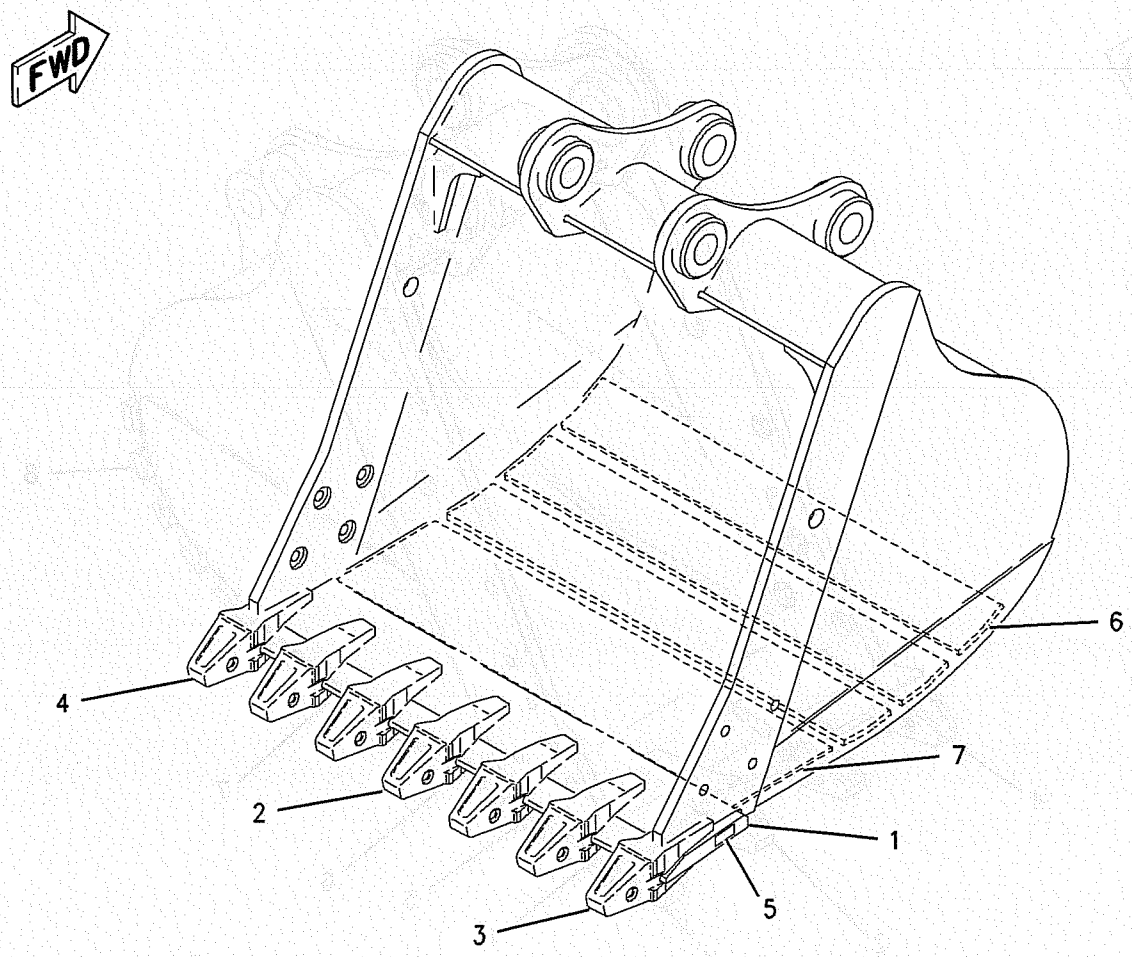

GRAPHIC #1 **<END>** g00735752

WORK TOOLS

150-4590 BUCKET AS-EXCAVATION

S/N: SBN1-UP; RAW1-UP
948MM(37.32 IN)WIDE X 0.90 CU M(1.20 CU YD)CAPACITY. HEAVY DUTY ROCK, C-FAMILY
PART OF 150-4589 BUCKET & ADJUSTER GP
AN ATTACHMENT

SMCS-6523 **i01401441**

NOTE	REF NO	GRAPHIC REF	PART NUMBER	QTY	PART NAME 1 2 3 4 5 6 (PRODUCT LEVEL)	SEE PAGE
	1	1	**127-2282**	1	EDGE AS	
	2	1	**6I-6404**	2	ADAPTER-2 STRAP	
	3	1	**6I-6405**	1	ADAPTER-2 STRAP	
	4	1	**6I-6406**	1	ADAPTER-2 STRAP	
	5	1	**8P-9770**	1	PLATE	
	6	1	**150-4595**	1	PLATE	
	7	1	**134-1914**	4	PLATE	
	8	1	**134-1915**	4	PLATE	

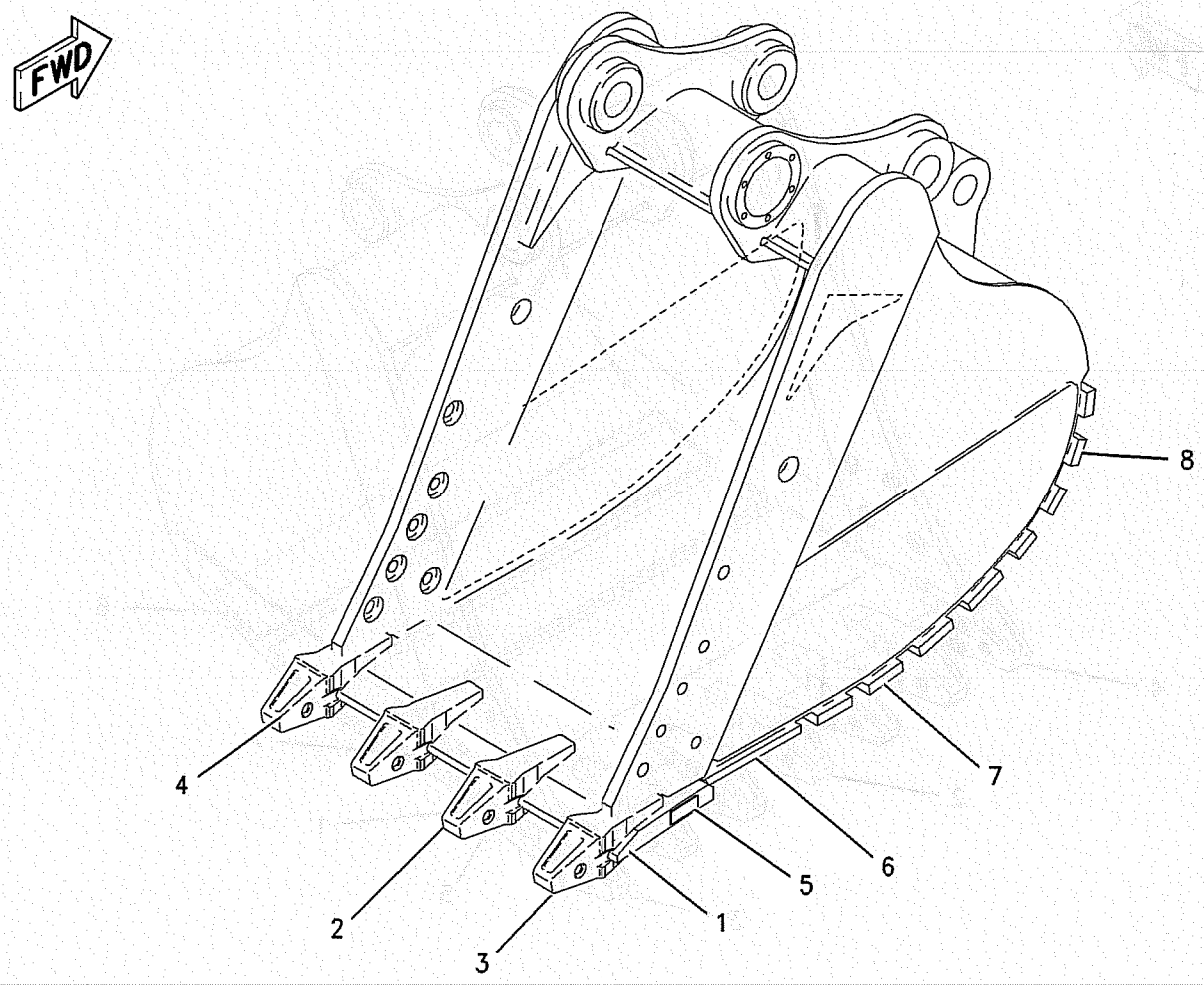

GRAPHIC #1

<END>

g00738381

150-4600 BUCKET AS-EXCAVATION

S/N: SBN1-UP; RAW1-UP
1248MM(49.13 IN)WIDE X 1.30 CU M(1.72 CU YD)CAPACITY. HEAVY DUTY ROCK, C-FAMILY
PART OF 150-4599 BUCKET & ADJUSTER GP
AN ATTACHMENT

SMCS-6523 i01401515

NOTE	REF NO	GRAPHIC REF	PART NUMBER	QTY	PART NAME 1 2 3 4 5 6 (PRODUCT LEVEL)	SEE PAGE
	1	1	7I-3352	1	PLATE AS	
	2	1	127-2289	1	EDGE AS	
	3	1	6I-6404	3	ADAPTER-2 STRAP	
	4	1	6I-6405	1	ADAPTER-2 STRAP	
	5	1	6I-6406	1	ADAPTER-2 STRAP	
	6	1	8P-9770	1	PLATE	
	7	1	150-4601	1	PLATE	

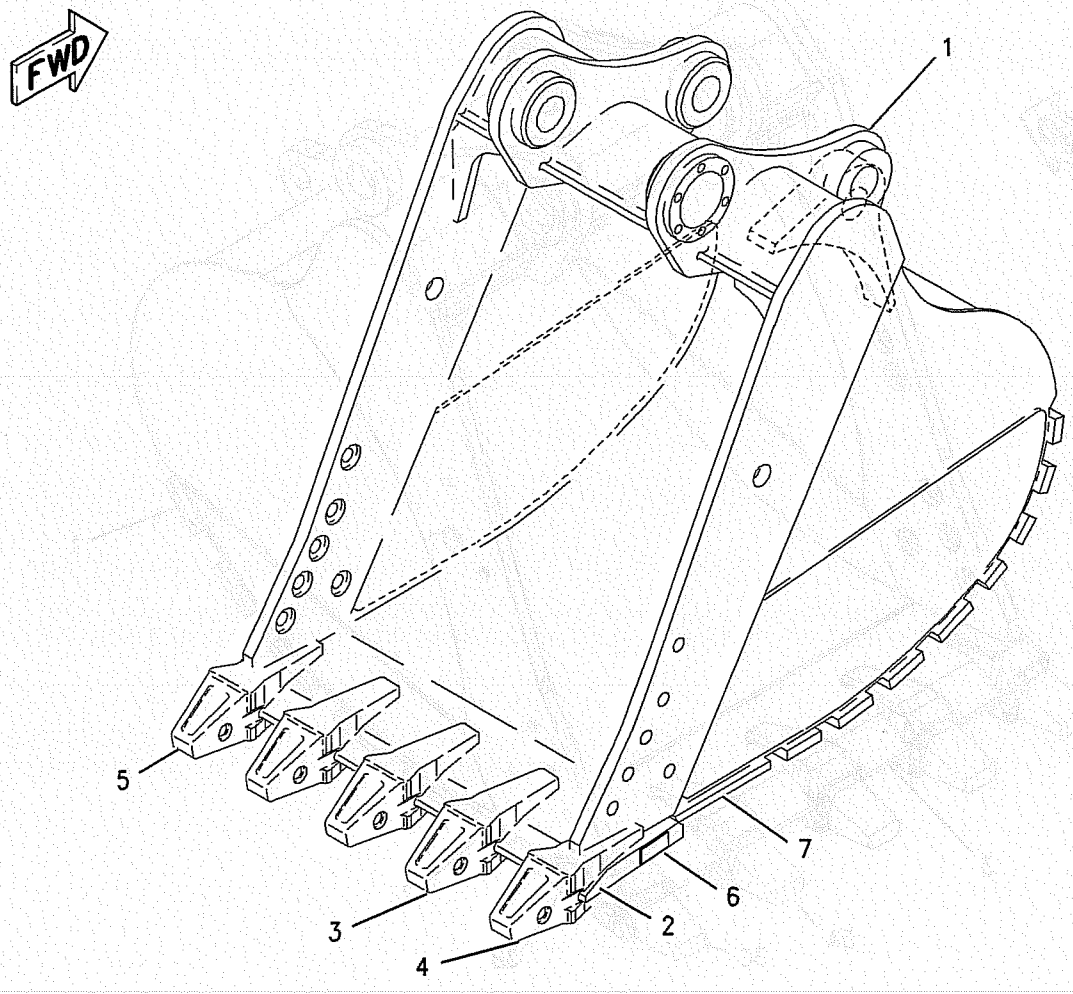

GRAPHIC #1 <END> g00738406

WORK TOOLS

198-2755 BUCKET AS-EXCAVATION

S/N: SBN1-UP; RAW1-UP
1220MM (48 IN) X 1.4 CU M (1.8 CU YD) . POWER BUCKET, C-FAMILY
PART OF 198-2737 BUCKET & ADJUSTER GP
AN ATTACHMENT

SMCS-6523 **i01897290**

NOTE	REF NO	GRAPHIC REF	PART NUMBER	QTY	PART NAME 1 2 3 4 5 6 (PRODUCT LEVEL)	SEE PAGE
	1	1	**198-2768**	5	PLATE-WEAR	
	2	1	**198-8730**	1	PLATE-WEAR	
	3	1	**198-8620**	1	EDGE AS	
	3A	1	**6I-6404**	3	ADAPTER-2 STRAP	
	3B	1	**8P-9770**	1	PLATE	
	3C	1	**168-1407**	1	ADAPTER (RH)	
	3D	1	**168-1408**	1	ADAPTER (LH)	

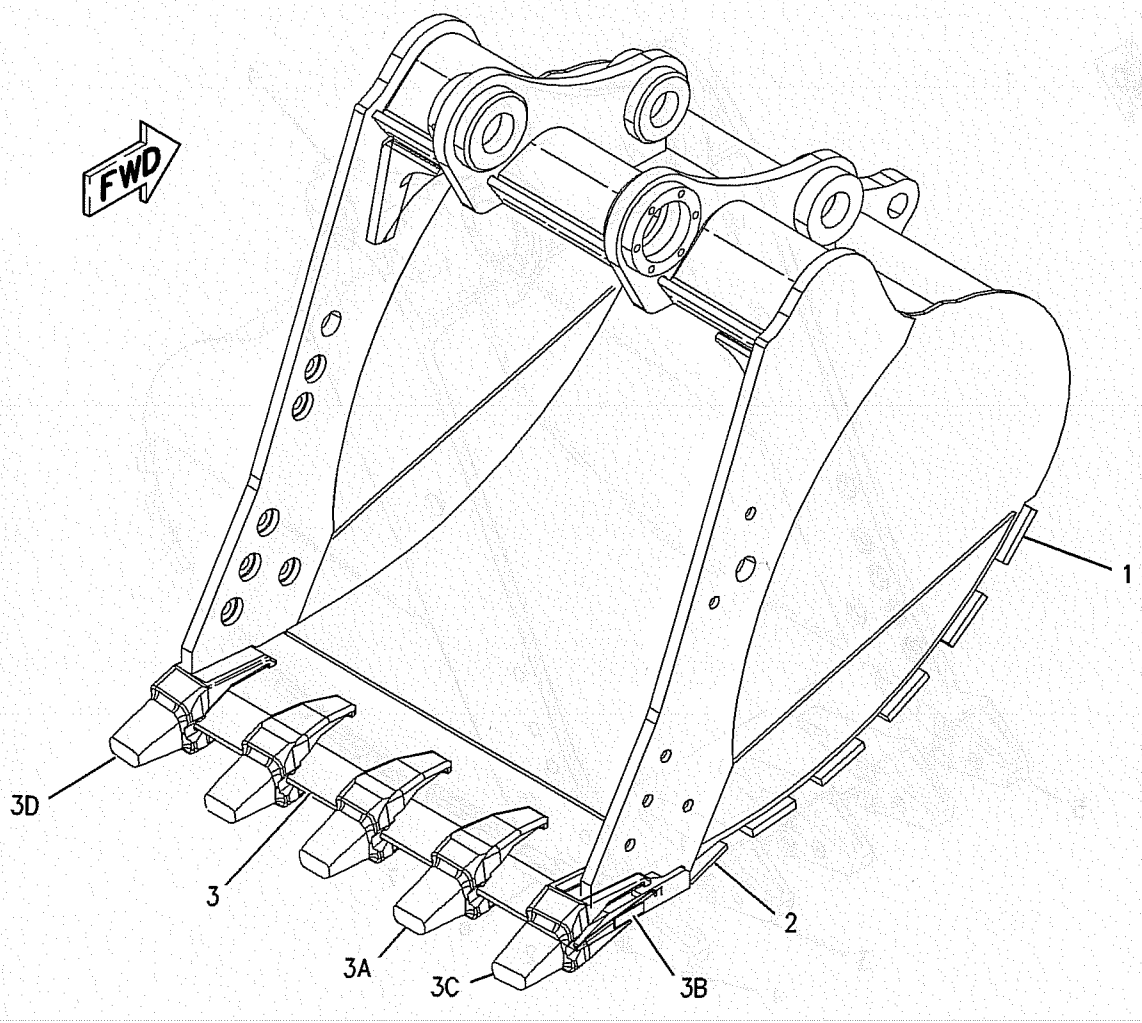

GRAPHIC #1

<END>

g00987053

198-2757 BUCKET AS-EXCAVATION

S/N: SBN1-UP; RAW1-UP
1368MM (54 IN) WIDE X 1.6 CU M (2.1 CU YD) CAPACITY. POWER BUCKET, C-FAMILY
PART OF 198-2738 BUCKET & ADJUSTER GP
AN ATTACHMENT

SMCS-6523 **i01890532**

NOTE	REF NO	GRAPHIC REF	PART NUMBER	QTY	PART NAME 1 2 3 4 5 6 (PRODUCT LEVEL)	SEE PAGE
	1	1	**198-8621**	1	EDGE AS	
	1A	1	**6I-6404**	4	ADAPTER-2 STRAP	
	1B	1	**8P-9770**	1	PLATE	
	1C	1	**168-1407**	1	ADAPTER (RH)	
	1D	1	**168-1408**	1	ADAPTER (LH)	
	2	1	**199-6282**	1	PLATE-WEAR	
	3	1	**199-6293**	5	PLATE-WEAR	

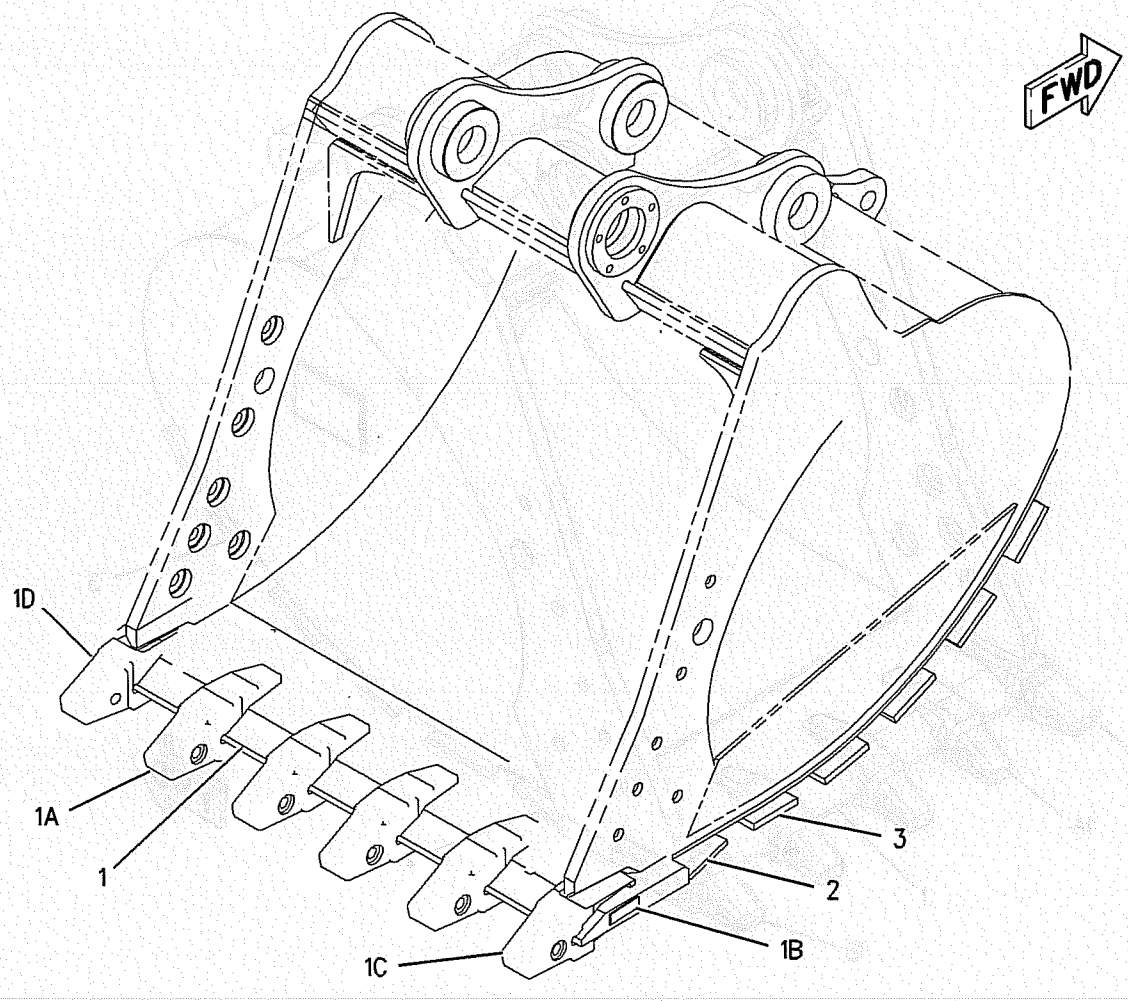

GRAPHIC #1 **<END>** g00813859

WORK TOOLS

198-2730 BUCKET AS-HEAVY DUTY

S/N: SBN1-UP; RAW1-UP
1082MM (42 IN) WIDE X 1.0 CU M (1.3 CU YD) CAPACITY. POWER,B-FAMILY
PART OF 198-2711 BUCKET & ADJUSTER GP
AN ATTACHMENT

SMCS-6531 **i01889812**

NOTE	REF NO	GRAPHIC REF	PART NUMBER	QTY	PART NAME 1 2 3 4 5 6 (PRODUCT LEVEL)	SEE PAGE
	1	1	**198-2765**	1	EDGE AS	
	1A	1	**6I-6354**	3	ADAPTER-2 STRAP	
	1B	1	**168-1355**	1	ADAPTER-TIP (RH)	
	1C	1	**168-1356**	1	ADAPTER-TIP (LH)	
	2	1	**198-2767**	1	PLATE-WEAR	
	3	1	**198-5212**	5	PLATE-WEAR	

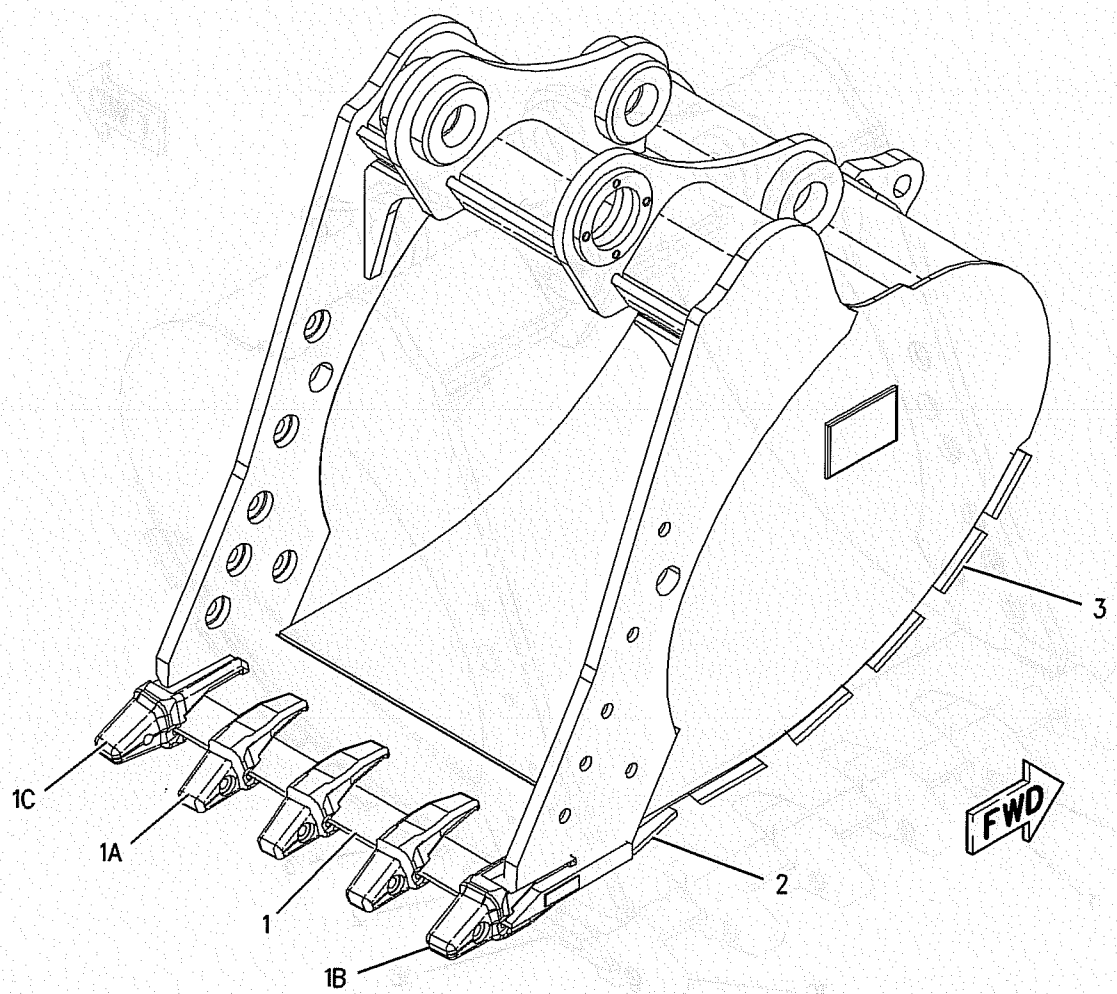

GRAPHIC #1 **<END>** g00984783

142-2549 BUCKET AS-HEAVY DUTY ROCK

S/N: SBN1-UP; RAW1-UP
775MM (30.5 IN) WIDE X 0.60 CU M (0.80 CU YD) CAPACITY. HEAVY DUTY, B-FAMILY
PART OF 142-2542 BUCKET & ADJUSTER GP
AN ATTACHMENT

SMCS-6102 **i01400034**

NOTE	REF NO	GRAPHIC REF	PART NUMBER	QTY	PART NAME 1 2 3 4 5 6 (PRODUCT LEVEL)	SEE PAGE
	1	1	**104-2097**	1	EDGE AS	
	2	1	**6I-6354**	2	ADAPTER-2 STRAP	
	3	1	**6I-6355**	1	ADAPTER-2 STRAP	
	4	1	**6I-6356**	1	ADAPTER-2 STRAP	
	5	1	**8P-9770**	1	PLATE	
	6	1	**134-1910**	4	PLATE	
	7	1	**134-1911**	3	PLATE	
	8	1	**148-8849**	1	PLATE	

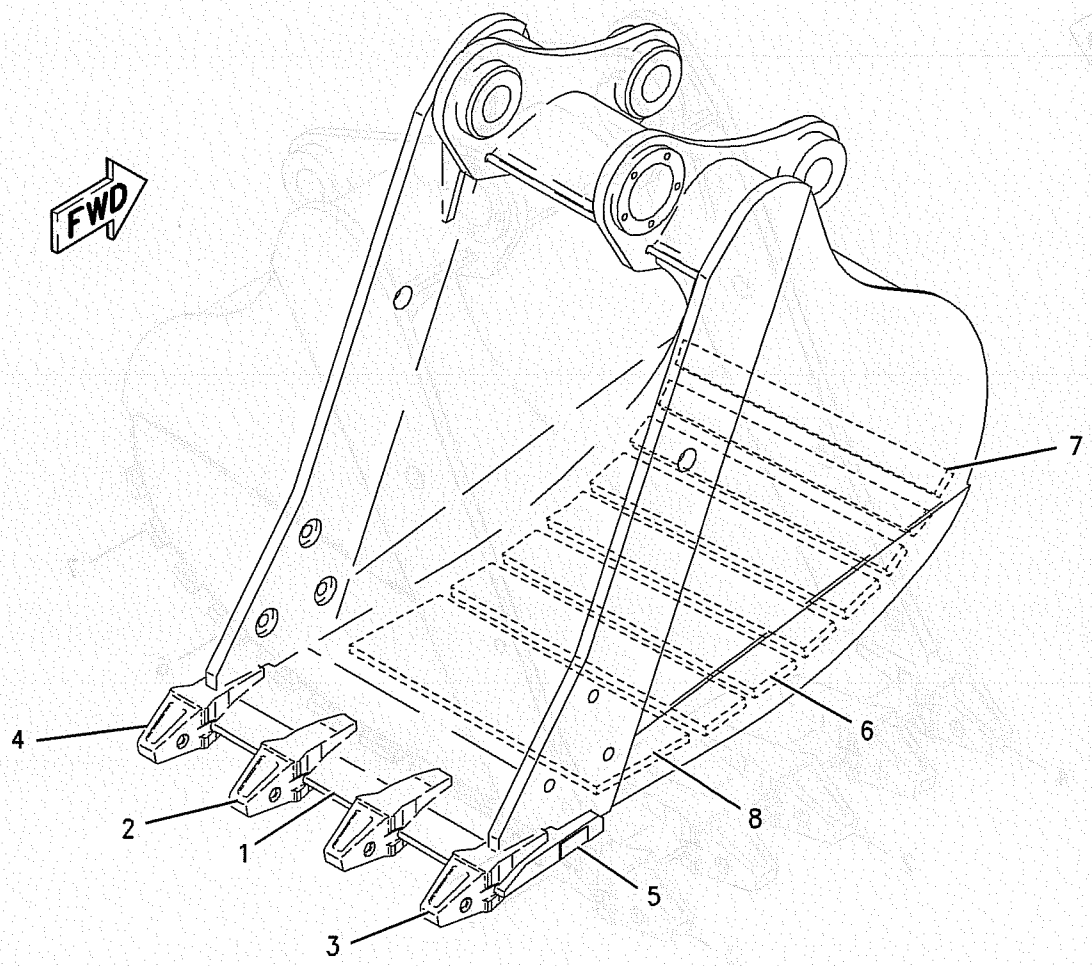

GRAPHIC #1 **<END>** g00738070

WORK TOOLS

142-2551 BUCKET AS-HEAVY DUTY ROCK

S/N: SBN1-UP; RAW1-UP
932MM (36.70 IN) WIDE X 0.80 CU M (1.1 CU YD) CAPACITY. HEAVY DUTY, B-FAMILY
PART OF 142-2544 BUCKET & ADJUSTER GP
AN ATTACHMENT

SMCS-6102 i01400144

NOTE	REF NO	GRAPHIC REF	PART NUMBER	QTY	PART NAME 1 2 3 4 5 6 (PRODUCT LEVEL)	SEE PAGE
	1	1	**127-8633**	1	EDGE AS	
	2	1	**6I-6355**	1	ADAPTER-2 STRAP	
	3	1	**6I-6354**	3	ADAPTER-2 STRAP	
	4	1	**6I-6356**	1	ADAPTER-2 STRAP	
	5	1	**8P-9770**	1	PLATE	
	6	1	**134-1914**	4	PLATE	
	7	1	**134-1915**	3	PLATE	

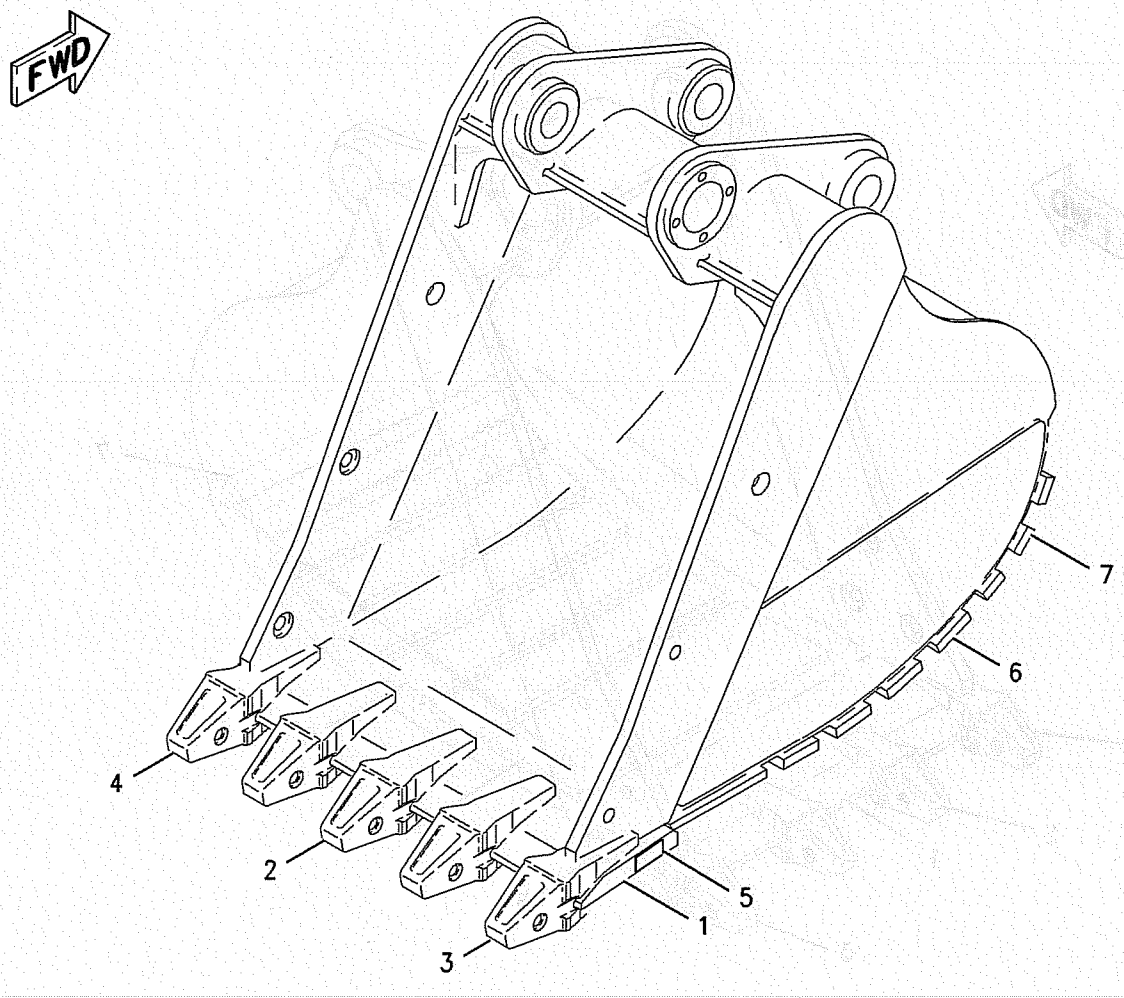

GRAPHIC #1 **<END>** g00737867

WORK TOOLS

142-2553 BUCKET AS-HEAVY DUTY ROCK

S/N: SBN1-UP; RAW1-UP

1075MM (42.32 IN) WIDE X 1.0 CU M (1.32 CU YD) CAPACITY. HEAVY DUTY, B-FAMILY

PART OF 142-2546 BUCKET & ADJUSTER GP

AN ATTACHMENT

SMCS-6102 **i01400185**

NOTE	REF NO	GRAPHIC REF	PART NUMBER	QTY	PART NAME 1 2 3 4 5 6 (PRODUCT LEVEL)	SEE PAGE
	1	1	**137-9526**	1	EDGE AS	
	2	1	**6I-6354**	3	ADAPTER-2 STRAP	
	3	1	**6I-6355**	1	ADAPTER-2 STRAP	
	4	1	**6I-6356**	1	ADAPTER-2 STRAP	
	5	1	**8P-9770**	1	PLATE	
	6	1	**134-1917**	4	PLATE	
	7	1	**134-1918**	3	PLATE	
	8	1	**100-4143**	1	PLATE AS	

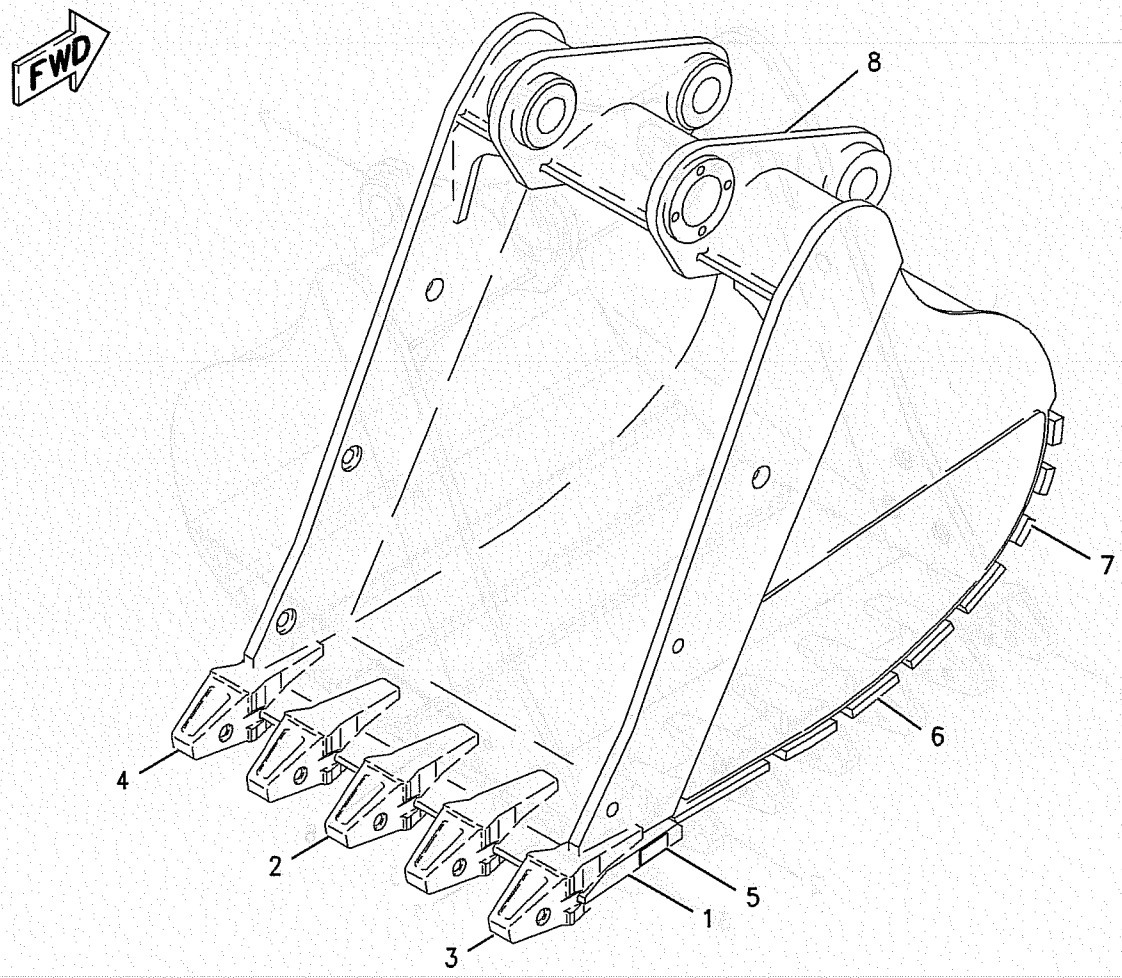

GRAPHIC #1 **<END>** g00737883

142-2581 BUCKET AS-HEAVY DUTY ROCK

S/N: SBN1-UP; RAW1-UP
1680MM (66.14 IN)WIDE X 1.9 CU M (2.51 CU YD) CAPACITY. HEAVY DUTY, C-FAMILY
PART OF 142-2574 BUCKET & ADJUSTER GP
AN ATTACHMENT

SMCS-6102 **i01401154**

NOTE	REF NO	GRAPHIC REF	PART NUMBER	QTY	PART NAME 1 2 3 4 5 6 (PRODUCT LEVEL)	SEE PAGE
	1	1	**127-2316**	1	EDGE AS	
	2	1	**6I-6404**	5	ADAPTER-2 STRAP	
	3	1	**6I-6405**	1	ADAPTER-2 STRAP	
	4	1	**6I-6406**	1	ADAPTER-2 STRAP	
	5	1	**8P-9770**	1	PLATE	
	6	1	**127-2314**	1	PLATE	
	7	1	**153-4870**	1	PLATE AS	

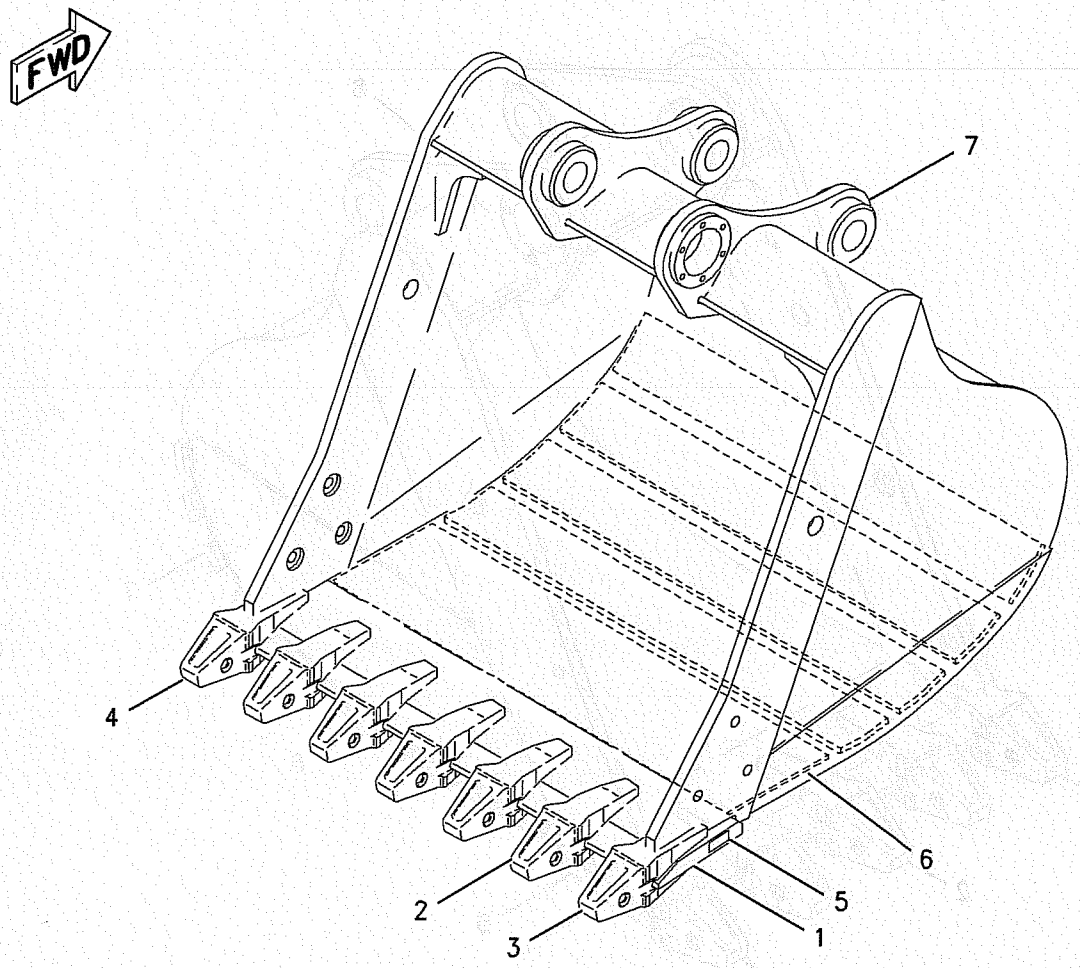

GRAPHIC #1

<END>

g00738260

198-2732 BUCKET AS-PENETRATION

S/N: SBN1-UP; RAW1-UP
1230MM (48 IN) WIDE X 1.2 CU M (1.5 CU YD) CAPACITY. POWER BUCKET, B-FAMILY
PART OF 198-2712 BUCKET & ADJUSTER GP
AN ATTACHMENT

SMCS-6131 **i01889836**

NOTE	REF NO	GRAPHIC REF	PART NUMBER	QTY	PART NAME 1 2 3 4 5 6 (PRODUCT LEVEL)	SEE PAGE
	1	1	**198-8618**	1	EDGE AS	
	1A	1	**168-1356**	1	ADAPTER-TIP (LH)	
	1B	1	**6I-6354**	4	ADAPTER-2 STRAP	
	1C	1	**168-1355**	1	ADAPTER-TIP (RH)	
	2	1	**198-2768**	5	PLATE-WEAR	
	3	1	**198-8730**	1	PLATE-WEAR	

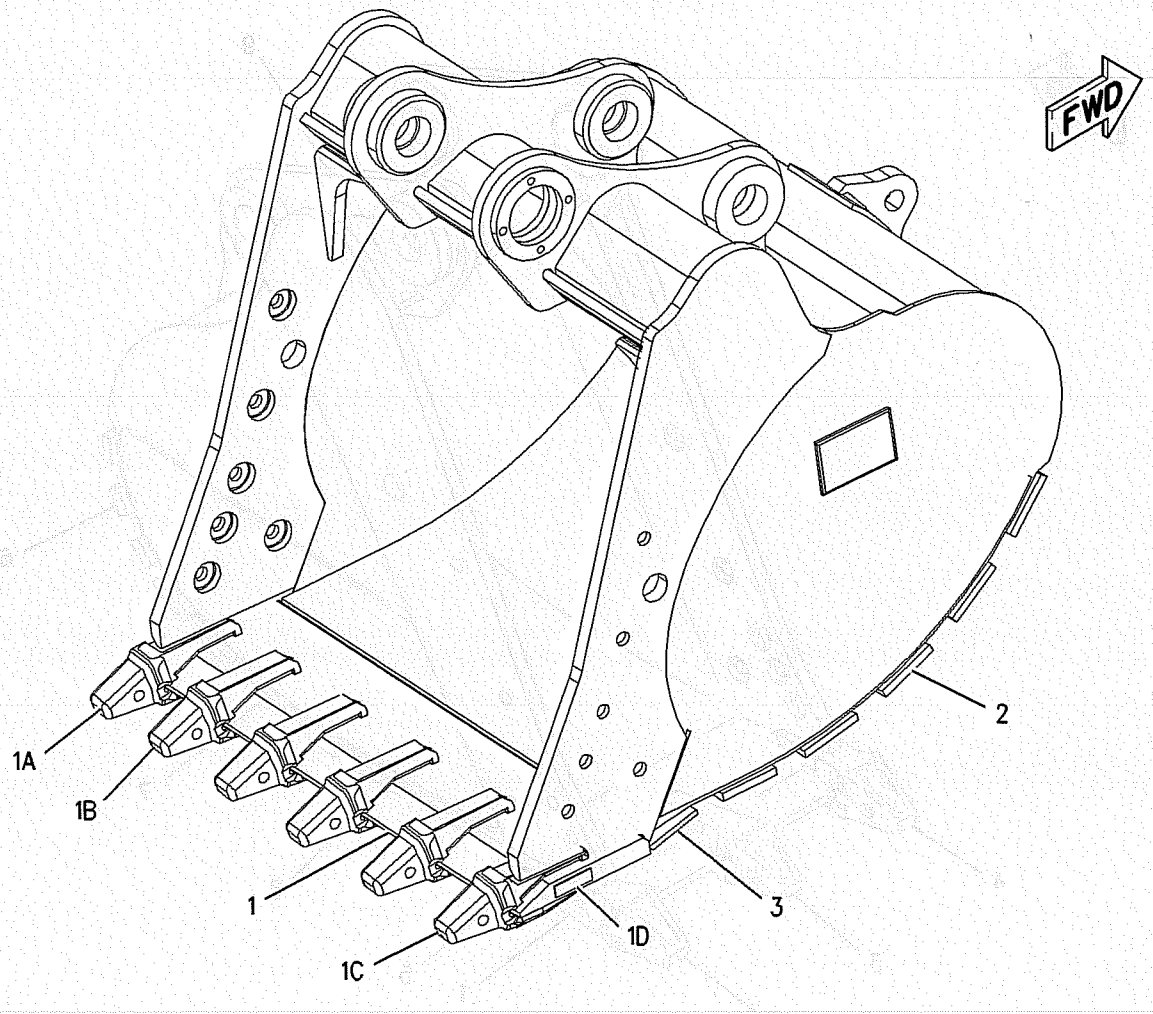

GRAPHIC #1 **<END>** g00984800

WORK TOOLS

162-2948 BUCKET AS-ROCK

S/N: SBN1-UP; RAW1-UP
625MM (24.61 IN) WIDE X 0.45 CU M (0.63 CU YD) CAPACITY. HEAVY DUTY ROCK, B-FAMILY
PART OF 162-2950 BUCKET & ADJUSTER GP
AN ATTACHMENT

SMCS-6102 **i01403767**

NOTE	REF NO	GRAPHIC REF	PART NUMBER	QTY	PART NAME 1 2 3 4 5 6 (PRODUCT LEVEL)	SEE PAGE
	1	1	**104-2096**	1	EDGE AS	
	2	1	**6I-6354**	1	ADAPTER-2 STRAP	
	3	1	**6I-6355**	1	ADAPTER-2 STRAP	
	4	1	**6I-6356**	1	ADAPTER-2 STRAP	
	5	1	**8P-9770**	1	PLATE	
	6	1	**149-5218**	3	PLATE-WEAR	
	7	1	**149-5219**	4	PLATE-WEAR	
	8	1	**162-2946**	1	PLATE-WEAR	
	9	1	**100-6474**	1	PLATE AS	

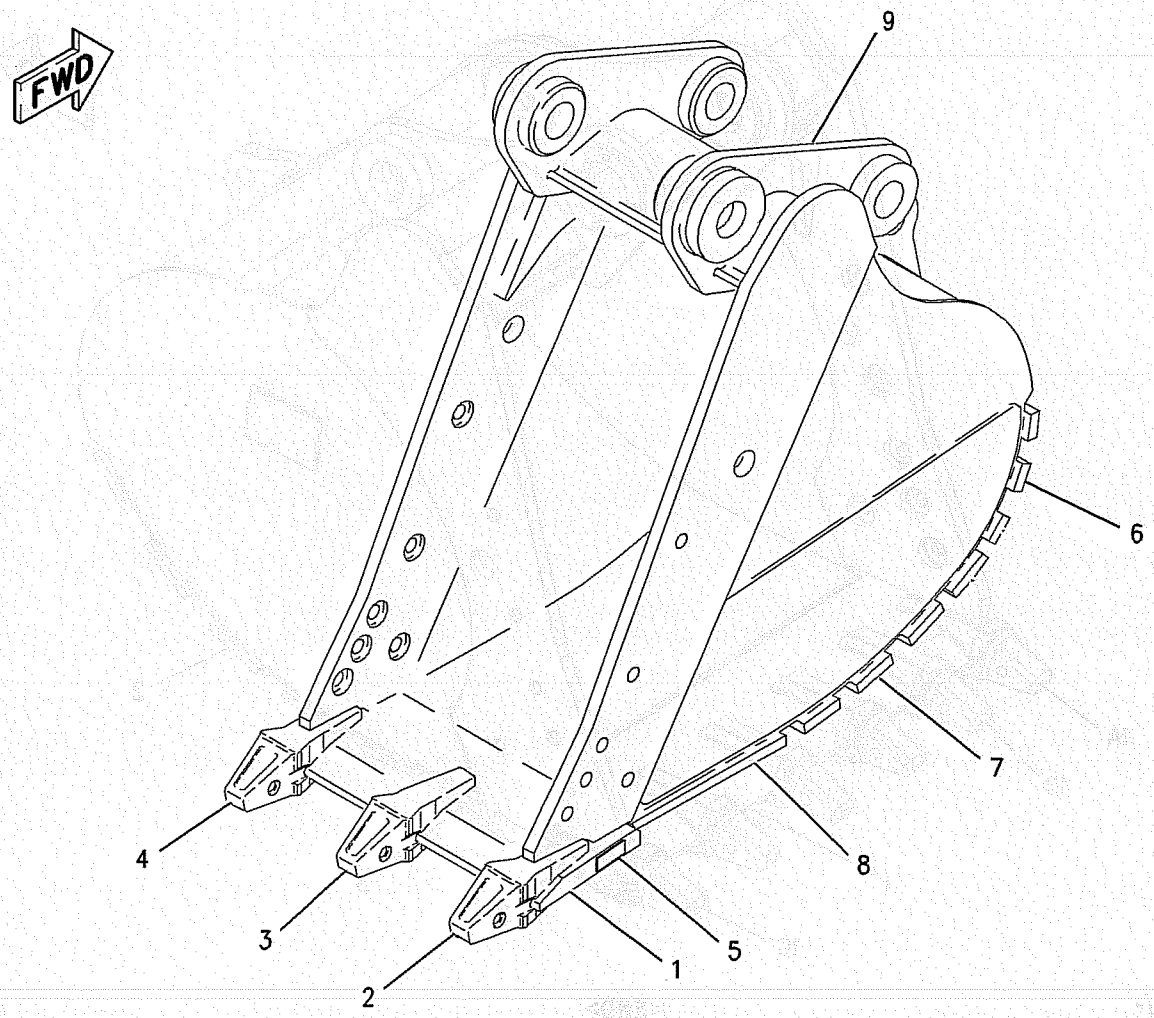

GRAPHIC #1

<END>

g00739167

WORK TOOLS

162-3090 BUCKET AS-ROCK

S/N: SBN1-UP; RAW1-UP

775MM(30.51 IN)WIDE X 0.70 CU M(0.90 CU YD)CAPACITY. HEAVY DUTY ROCK, C-FAMILY

PART OF 162-3088 BUCKET & ADJUSTER GP

AN ATTACHMENT

SMCS-6102 **i01401609**

NOTE	REF NO	GRAPHIC REF	PART NUMBER	QTY	PART NAME 1 2 3 4 5 6 (PRODUCT LEVEL)	SEE PAGE
	1	1	**105-2761**	1	EDGE AS	
	2	1	**6I-6404**	1	ADAPTER-2 STRAP	
	3	1	**6I-6405**	1	ADAPTER-2 STRAP	
	4	1	**6I-6406**	1	ADAPTER-2 STRAP	
	5	1	**8P-9770**	1	PLATE	
	6	1	**162-6895**	4	PLATE-WEAR	
	7	1	**162-6894**	4	PLATE-WEAR	
	8	1	**100-4340**	1	PLATE AS	

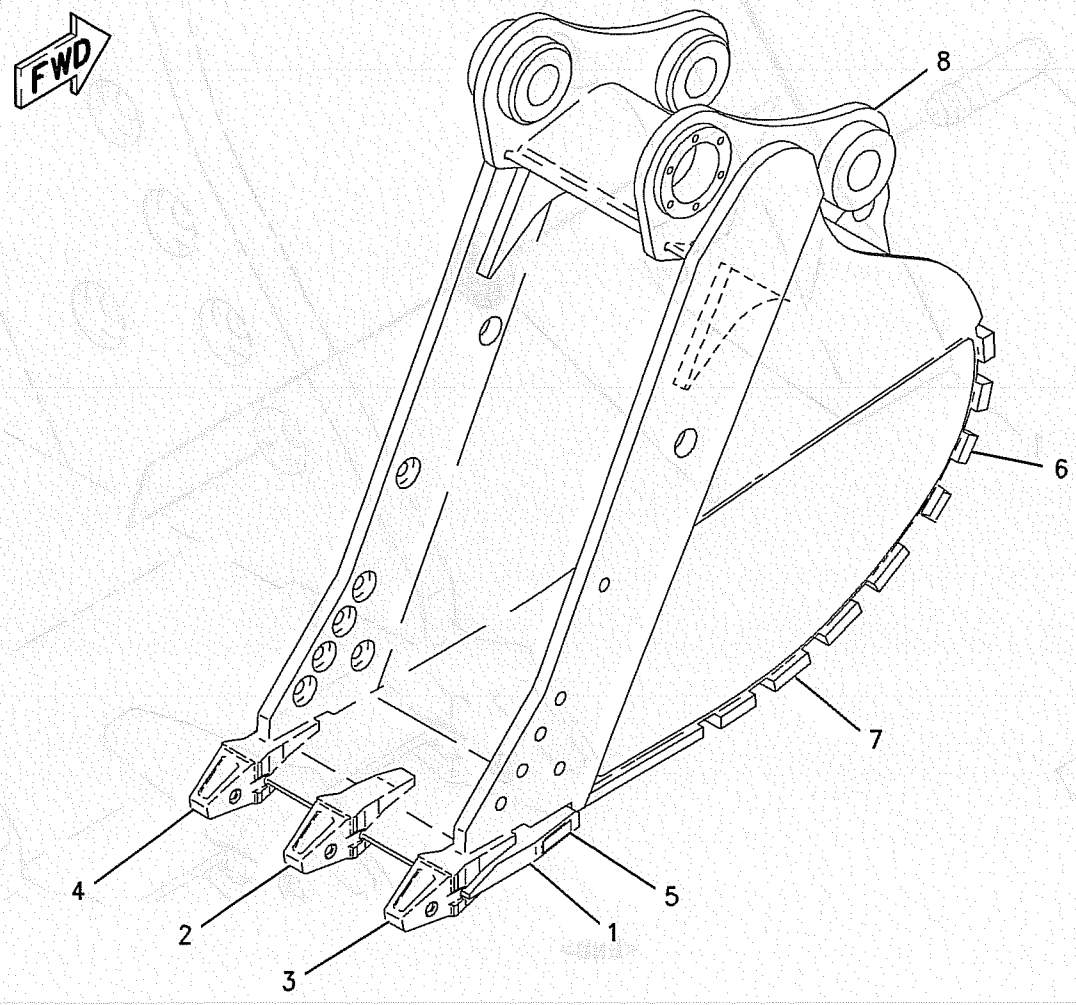

GRAPHIC #1 **<END>** g00738460

WORK TOOLS

112-2482 PROTECTOR GP-BUCKET

S/N: SBN1-UP; RAW1-UP

AN ATTACHMENT

SMCS-6817 **i01397422**

NOTE	REF NO	GRAPHIC REF	PART NUMBER	QTY	PART NAME 1 2 3 4 5 6 (PRODUCT LEVEL)	SEE PAGE
	1	1	**112-2489**	2	PROTECTOR-SIDEBAR	
	2	1	**112-2490**	4	PIN-G.E.T.	
	3	1	**132-0999**	4	RETAINER AS-G.E.T.	

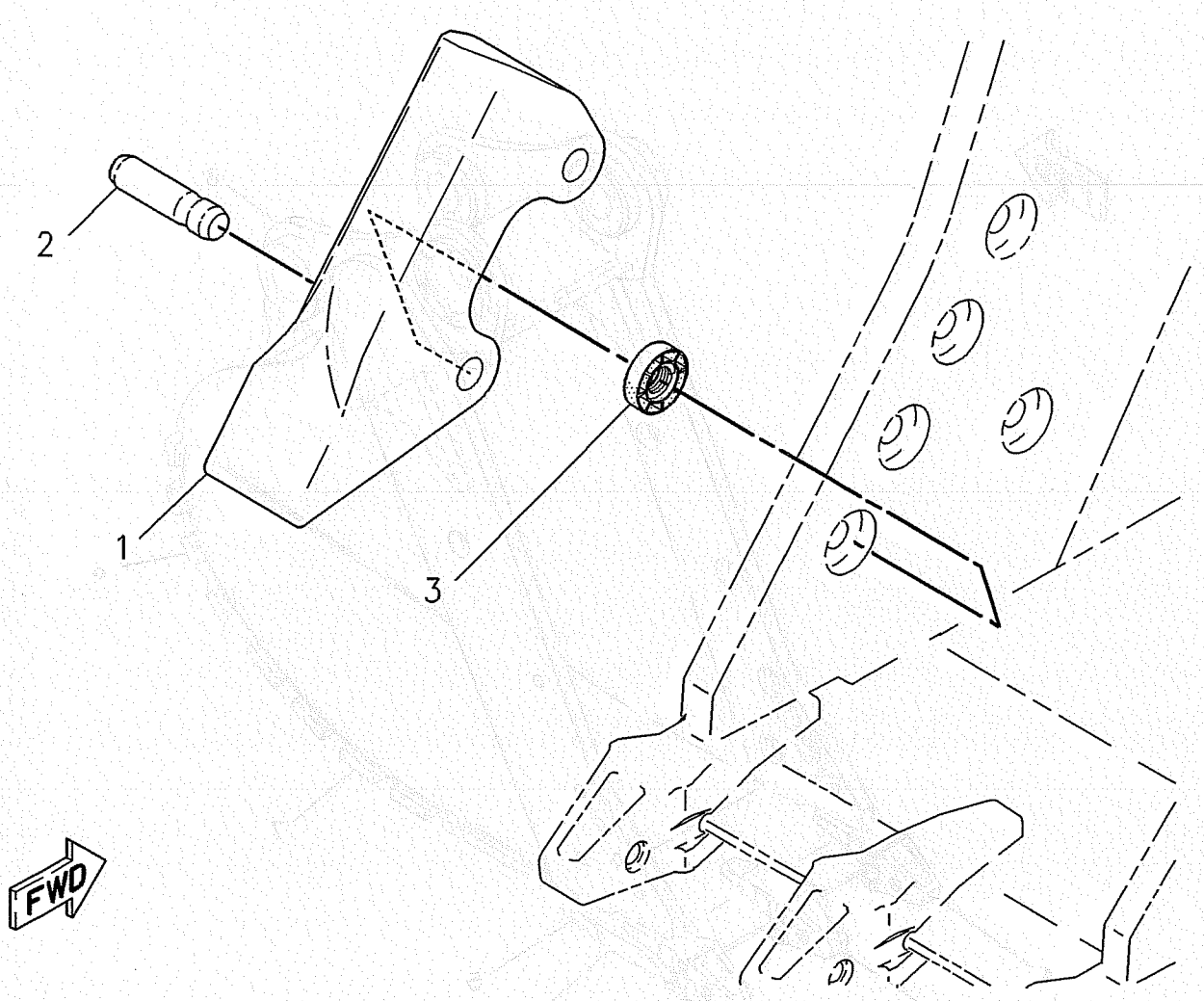

GRAPHIC #1 **<END>** g00276568

195-7216 PROTECTOR GP-SIDE BAR

S/N: SBN1-UP; RAW1-UP

FOR USE WITH B AND C FAMILY HEAVY DUTY, HEAVY DUTY ROCK, AND HEAVY DUTY POWER BUCKETS

AN ATTACHMENT

SMCS-6817 **i01891528**

NOTE	REF NO	GRAPHIC REF	PART NUMBER	QTY	PART NAME 1 2 3 4 5 6 (PRODUCT LEVEL)	SEE PAGE
	1	1	**112-2489**	4	PROTECTOR-SIDE BAR	
	2	1	**112-2490**	8	PIN-G.E.T.	
	3	1	**132-0999**	8	RETAINER AS-G.E.T.	

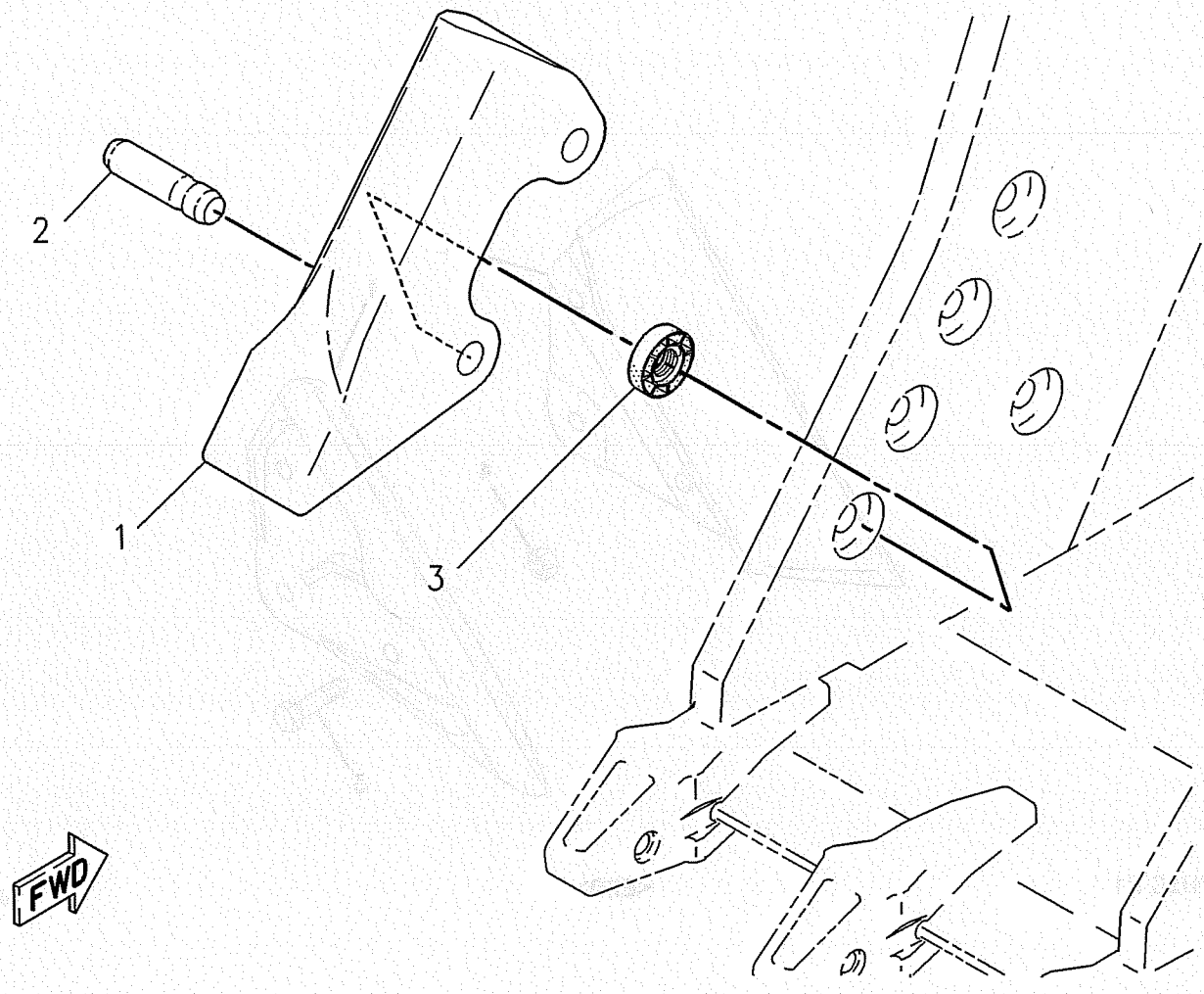

GRAPHIC #1

<END>

g00276568

WORK TOOLS

7Y-0366 SIDECUTTER GP

S/N: SBN1-UP; RAW1-UP
FOR USE WITH C & D FAMILY BUCKETS
AN ATTACHMENT

SMCS-6813 **i00751506**

NOTE	REF NO	GRAPHIC REF	PART NUMBER	QTY	PART NAME 1 2 3 4 5 6 (PRODUCT LEVEL)	SEE PAGE
	1	1	**7Y-0357**		SIDECUTTER-RH	
	2	1	**7Y-0358**		SIDECUTTER-LH	
	3	1	**2J-3507**		NUT-FULL (1-8 THD)	
	4	1	**6I-6371**		BOLT (1-8X2.5IN)	

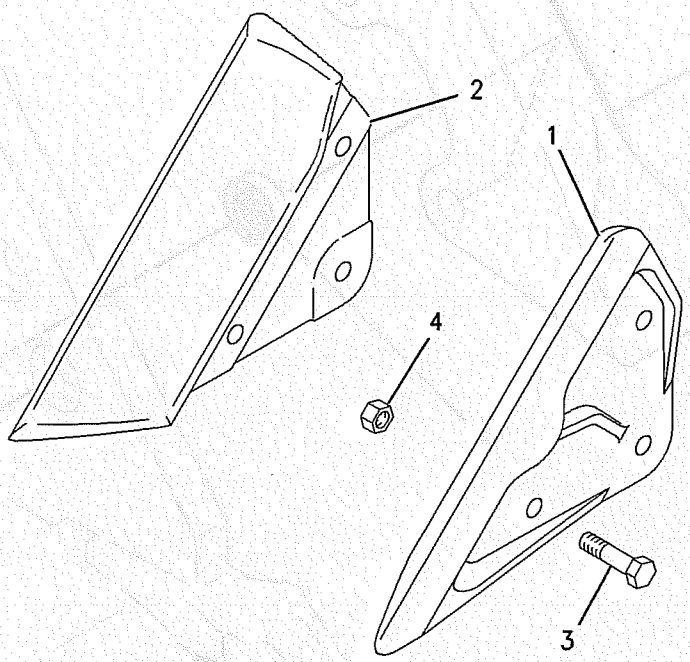

GRAPHIC #1 **<END>** g00312593

WORK TOOLS

112-2481 SIDECUTTER GP

S/N: SBN1-UP; RAW1-UP

AN ATTACHMENT

SMCS-6813 **i01450975**

NOTE	REF NO	GRAPHIC REF	PART NUMBER	QTY	PART NAME 1 2 3 4 5 6 (PRODUCT LEVEL)	SEE PAGE
	1	1	**112-2487**	1	SIDECUTTER-RH	
	2	1	**112-2488**	1	SIDECUTTER-LH	
	3	1	**1D-4635**	8	BOLT (1-8X2.5IN)	
	4	1	**2J-3507**	8	NUT-FULL (1-8 X38.1 THD)	
	5	1	**3K-5234**	8	WASHER-HARD (28X49X6MM THK)	

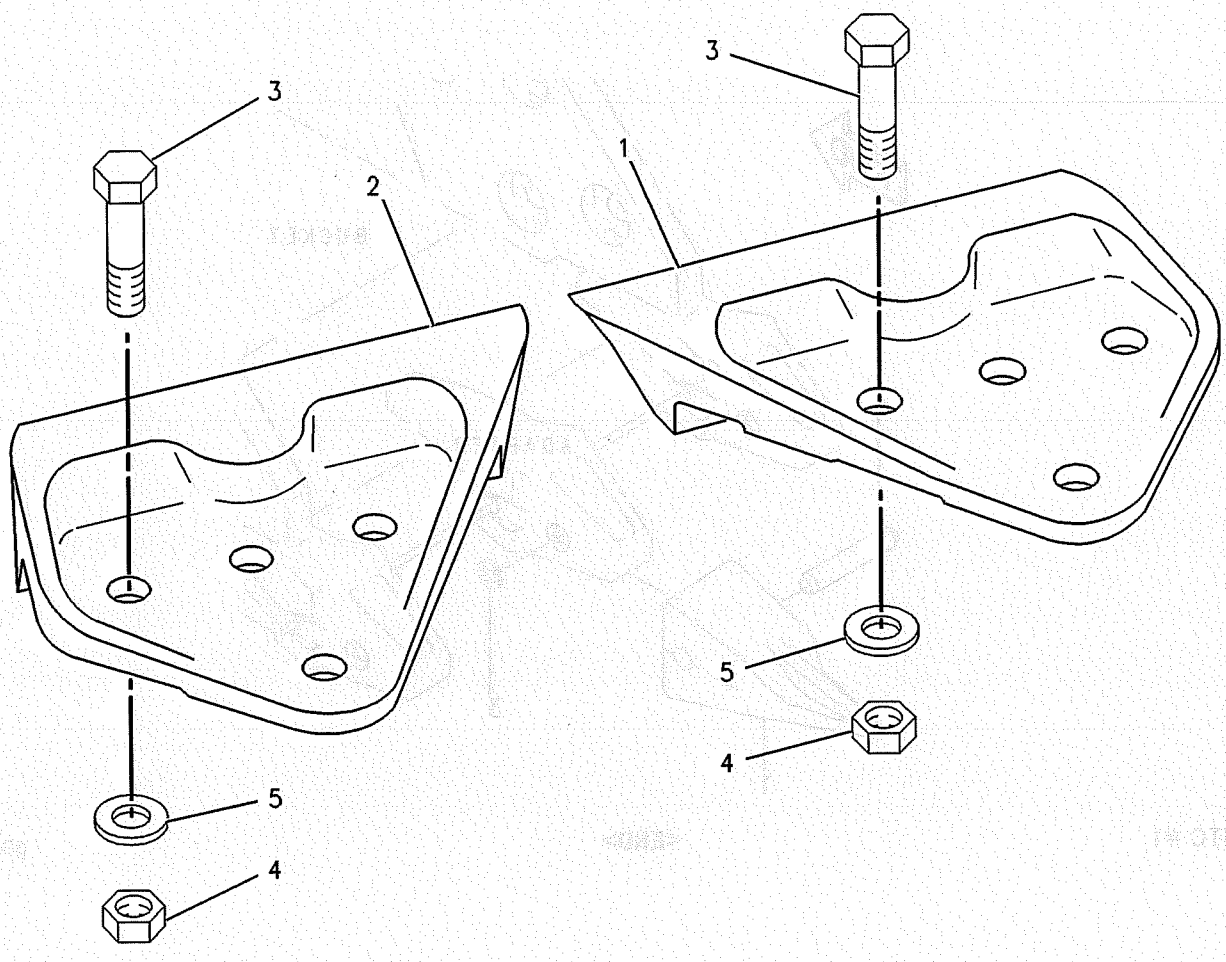

GRAPHIC #1 **<END>** g00276567

WORK TOOLS

8E-0839 TIP GP

S/N: SBN1-UP; RAW1-UP
AN ATTACHMENT

SMCS-6805 **i01396923**

NOTE	REF NO	GRAPHIC REF	PART NUMBER	QTY	PART NAME 1 2 3 4 5 6 (PRODUCT LEVEL)	SEE PAGE
	1	1	**6Y-5408**	1	TIP-SHARP	
	2	1	**116-7408**	1	PIN-G.E.T.	
	3	1	**116-7409**	1	RETAINER AS-G.E.T.	

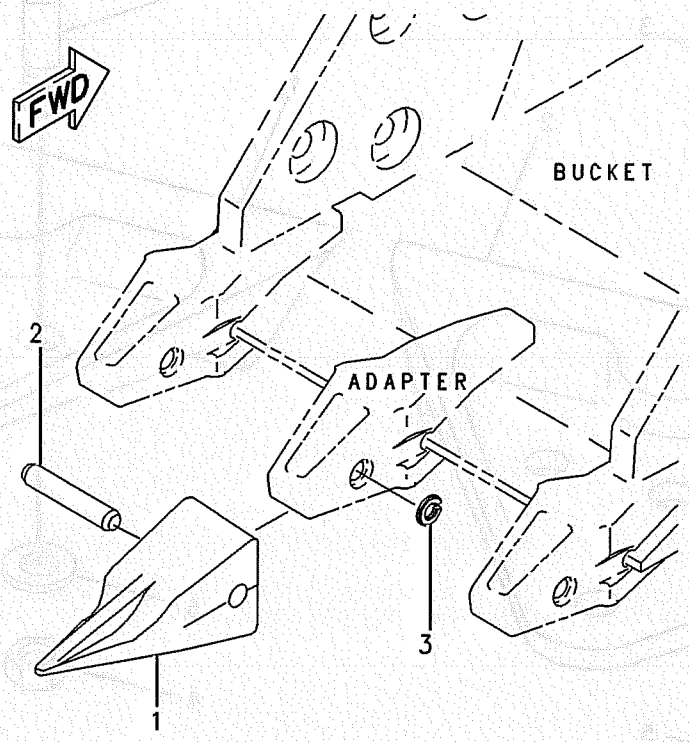

GRAPHIC #1

<END>

g00258475

WORK TOOLS

9W-6472 TIP GP

S/N: SBN1-UP; RAW1-UP

AN ATTACHMENT

SMCS-6805 **i01397563**

NOTE	REF NO	GRAPHIC REF	PART NUMBER	QTY	PART NAME 1 2 3 4 5 6 (PRODUCT LEVEL)	SEE PAGE
	1	1	**114-0358**	1	PIN-G.E.T.	
	2	1	**9W-2359**	1	TIP-PENETRATION	
	3	1	**114-0359**	1	RETAINER AS-G.E.T.	

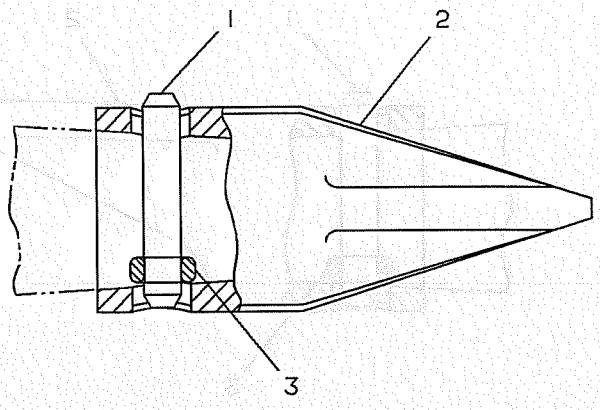

GRAPHIC #1 **<END>** g00187846

WORK TOOLS

9W-6473 TIP GP

S/N: SBN1-UP; RAW1-UP

AN ATTACHMENT

SMCS-6805 **i01397570**

NOTE	REF NO	GRAPHIC REF	PART NUMBER	QTY	PART NAME 1 2 3 4 5 6 (PRODUCT LEVEL)	SEE PAGE
	1	1	**114-0358**	1	PIN-G.E.T.	
	2	1	**9W-2358**	1	TIP-PENETRATION	
	3	1	**114-0359**	1	RETAINER AS-G.E.T.	

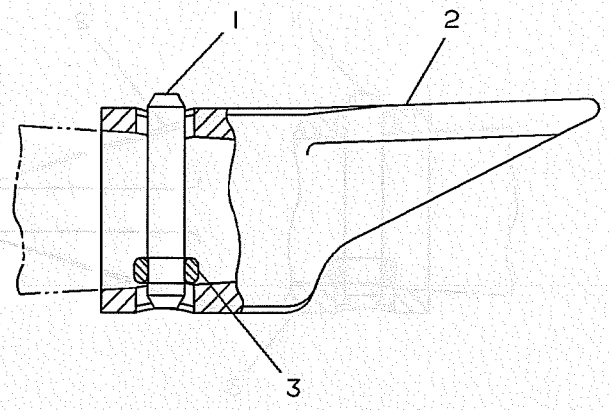

GRAPHIC #1 **<END>** g00187845

WORK TOOLS

195-9181 TIP GP

S/N: SBN1-UP; RAW1-UP
PENETRATION PLUS
FOR USE WITH J350 ADAPTER
AN ATTACHMENT

SMCS-6805 **i01890931**

NOTE	REF NO	GRAPHIC REF	PART NUMBER	QTY	PART NAME 1 2 3 4 5 6 (PRODUCT LEVEL)	SEE PAGE
	1	1	**114-0358**	1	PIN-G.E.T.	
	2	1	**114-0359**	1	RETAINER AS-G.E.T.	
	3	1	**168-1359**	1	TIP-PENETRATION	

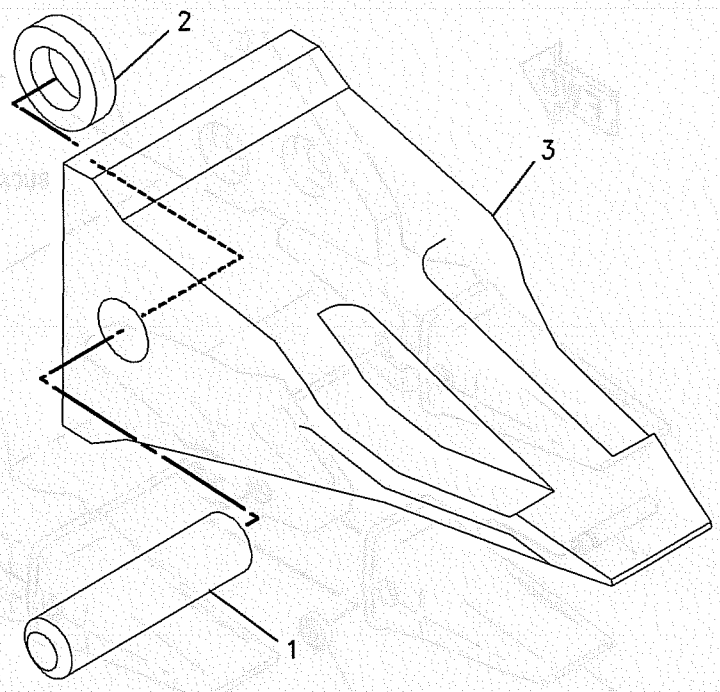

GRAPHIC #1 **<END>** g00794479

WORK TOOLS

195-9182 TIP GP

S/N: SBN1-UP; RAW1-UP
PENETRATION PLUS
FOR USE WITH J400 ADAPTER
AN ATTACHMENT

SMCS-6805 **i01891427**

NOTE	REF NO	GRAPHIC REF	PART NUMBER	QTY	PART NAME 1 2 3 4 5 6 (PRODUCT LEVEL)	SEE PAGE
	1	1	**116-7408**	1	PIN-G.E.T.	
	2	1	**116-7409**	1	RETAINER AS-G.E.T.	
	3	1	**168-1409**	1	TIP-PENETRATION	

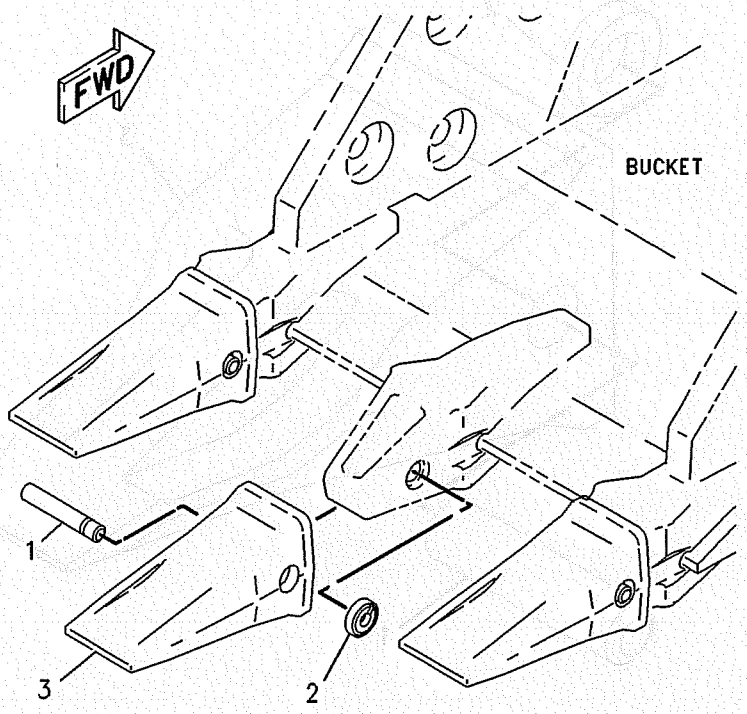

GRAPHIC #1

<END>

g00117668

WORK TOOLS

8E-0837 TIP GP-ABRASION

S/N: SBN1-UP; RAW1-UP
HEAVY DUTY
AN ATTACHMENT

SMCS-6805 **i01396891**

NOTE	REF NO	GRAPHIC REF	PART NUMBER	QTY	PART NAME 1 2 3 4 5 6 (PRODUCT LEVEL)	SEE PAGE
	1	1	**7T-3403**	1	TIP-ABRASION	
	2	1	**116-7408**	1	PIN-G.E.T.	
	3	1	**116-7409**	1	RETAINER AS-G.E.T.	

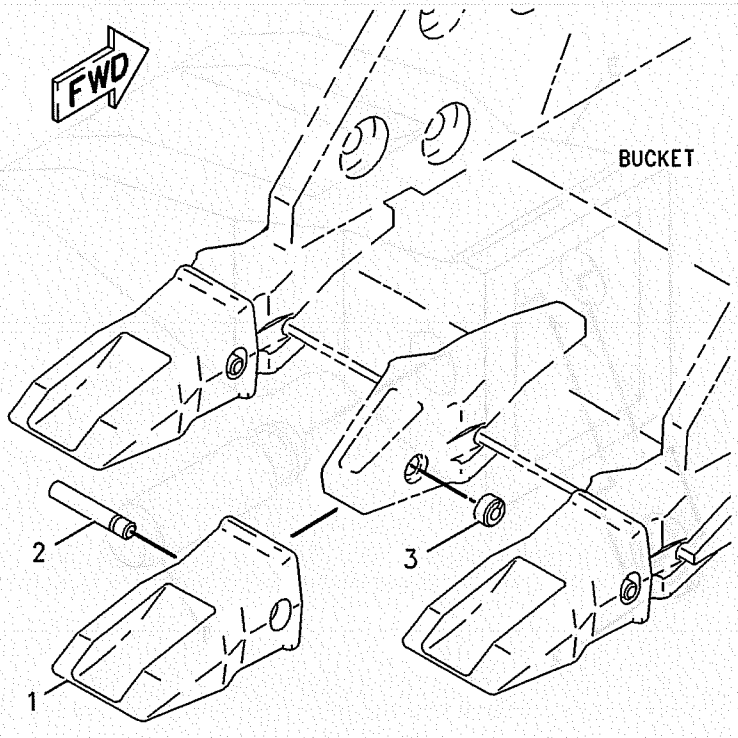

GRAPHIC #1

<END>

g00258478

WORK TOOLS

8E-3757 TIP GP-ABRASION

S/N: SBN1-UP; RAW1-UP
HEAVY DUTY
AN ATTACHMENT

SMCS-6805 **i01380770**

NOTE	REF NO	GRAPHIC REF	PART NUMBER	QTY	PART NAME 1 2 3 4 5 6 (PRODUCT LEVEL)	SEE PAGE
	1	1	**114-0358**	1	PIN-G.E.T.	
	2	1	**114-0359**	1	RETAINER AS-G.E.T.	
	3	1	**9N-4353**	1	TIP-ABRASION	

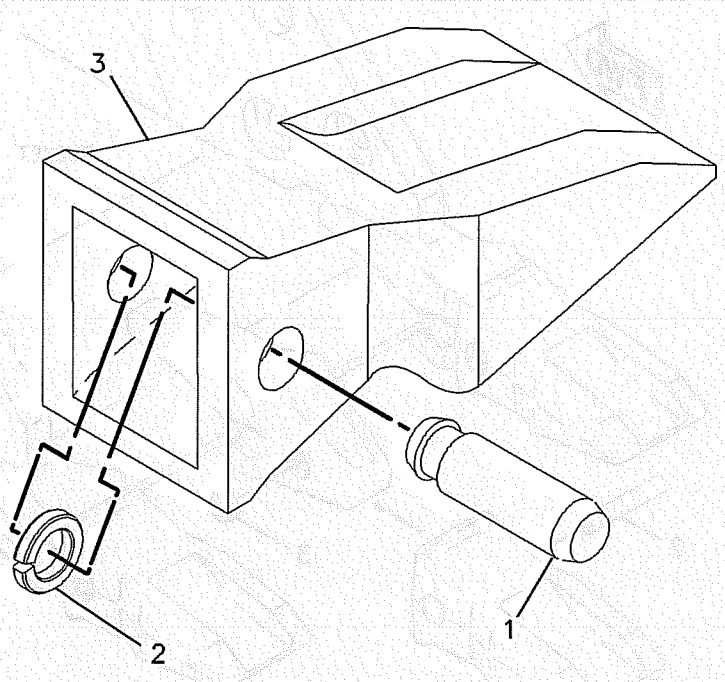

GRAPHIC #1 **<END>** g00119017

WORK TOOLS

6Y-5472 TIP GP-LONG

S/N: SBN1-UP; RAW1-UP

AN ATTACHMENT

SMCS-6805 **i01396752**

NOTE	REF NO	GRAPHIC REF	PART NUMBER	QTY	PART NAME 1 2 3 4 5 6 (PRODUCT LEVEL)	SEE PAGE
	1	1	**116-7408**	1	PIN-G.E.T.	
	2	1	**116-7409**	1	RETAINER AS-G.E.T.	
	3	1	**8E-4402**	1	TIP-LONG	

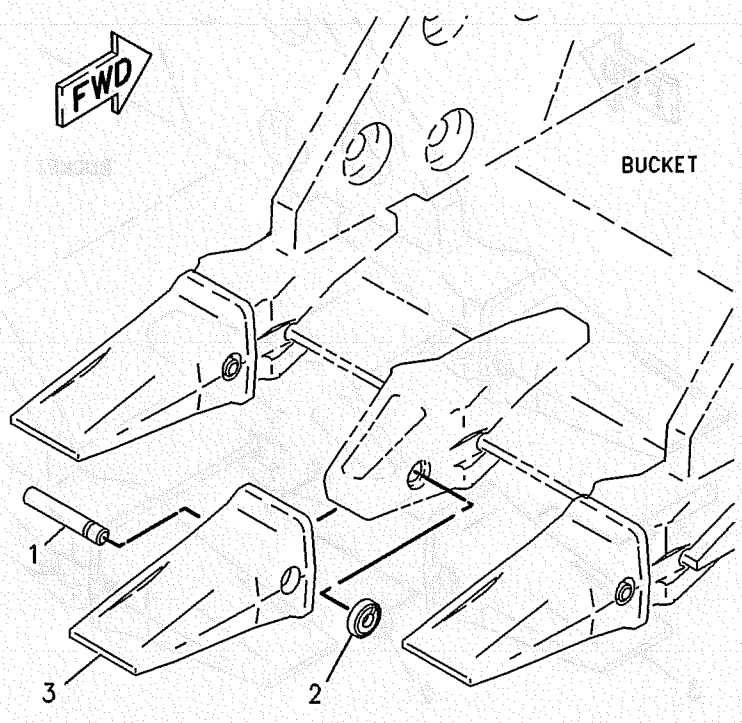

GRAPHIC #1

<END>

g00117668

WORK TOOLS

8E-0834 TIP GP-LONG

S/N: SBN1-UP; RAW1-UP

AN ATTACHMENT

SMCS-6805 **i01388791**

NOTE	REF NO	GRAPHIC REF	PART NUMBER	QTY	PART NAME 1 2 3 4 5 6 (PRODUCT LEVEL)	SEE PAGE
	1	1	**116-7408**	1	PIN-G.E.T.	
	2	1	**8E-8409**	1	RETAINER AS	
	3	1	**7T-3402**	1	TIP-LONG	

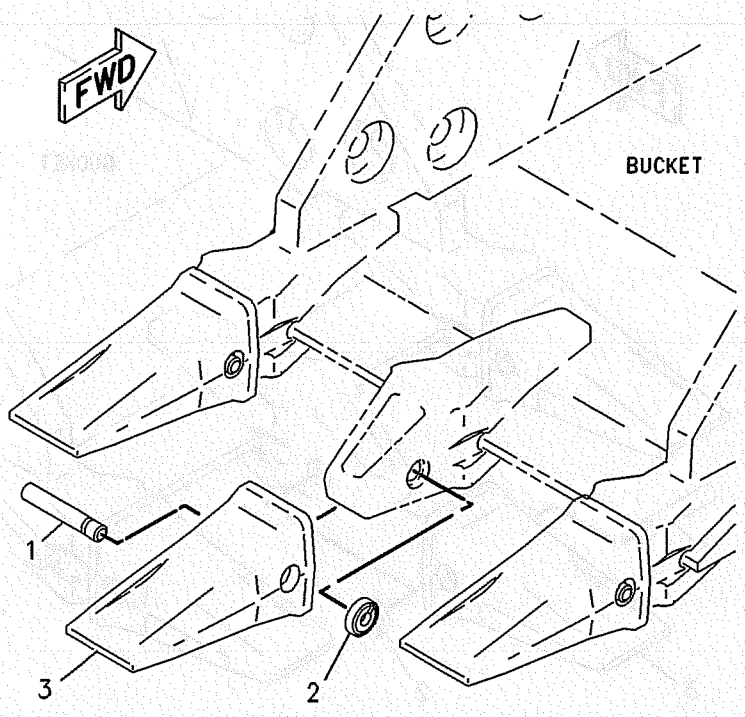

GRAPHIC #1

<END>

g00117668

WORK TOOLS

8E-3752 TIP GP-LONG

S/N: SBN1-UP; RAW1-UP

AN ATTACHMENT

SMCS-6805 **i01397004**

NOTE	REF NO	GRAPHIC REF	PART NUMBER	QTY	PART NAME 1 2 3 4 5 6 (PRODUCT LEVEL)	SEE PAGE
	1	1	**114-0358**	1	PIN-G.E.T.	
	2	1	**114-0359**	1	RETAINER AS-G.E.T.	
	3	1	**9N-4352**	1	TIP-LONG	

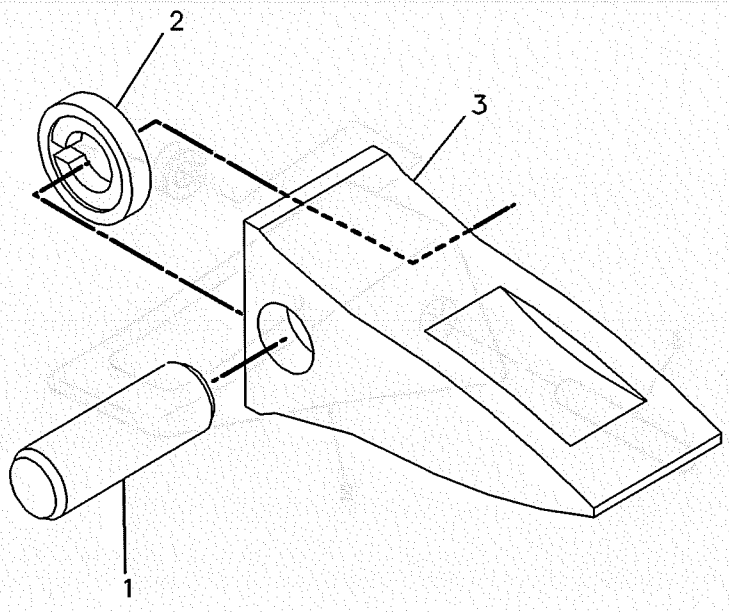

GRAPHIC #1 **<END>** g00117239

WORK TOOLS

8J-4955 TIP GP-LONG

S/N: SBN1-UP; RAW1-UP

AN ATTACHMENT

SMCS-6805 **i00899137**

NOTE	REF NO	GRAPHIC REF	PART NUMBER	QTY	PART NAME 1 2 3 4 5 6 (PRODUCT LEVEL)	SEE PAGE
	1	1	**114-0359**	1	RETAINER AS-G.E.T.	
	2	1	**1U-3352**	1	TIP-LONG	
	3	1	**114-0358**	1	PIN-G.E.T.	

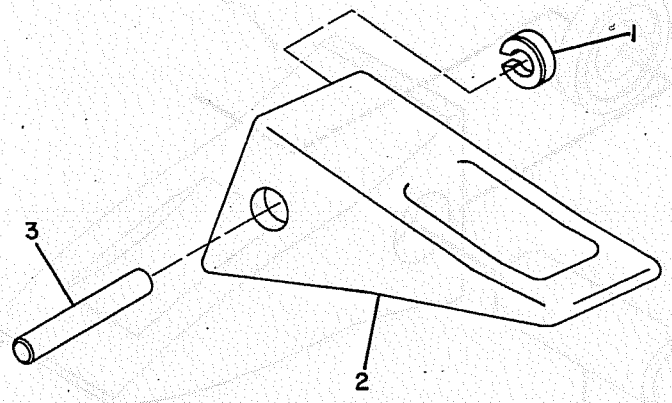

GRAPHIC #1 **<END>** g00112122

WORK TOOLS

3G-3236 TIP GP-PENETRATION

S/N: SBN1-UP; RAW1-UP
PENETRATION
AN ATTACHMENT

SMCS-6805 **i01396716**

NOTE	REF NO	GRAPHIC REF	PART NUMBER	QTY	PART NAME 1 2 3 4 5 6 (PRODUCT LEVEL)	SEE PAGE
	1	1	**114-0358**	1	PIN-G.E.T.	
	2	1	**9J-4359**	1	TIP-PENETRATION	
	3	1	**114-0359**	1	RETAINER AS-G.E.T.	

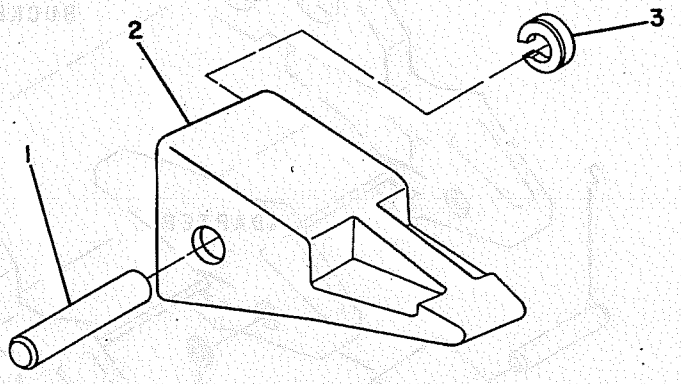

GRAPHIC #1 **<END>** g00145636

WORK TOOLS

8E-0838 TIP GP-PENETRATION

S/N: SBN1-UP; RAW1-UP

AN ATTACHMENT

SMCS-6805 **i01396915**

NOTE	REF NO	GRAPHIC REF	PART NUMBER	QTY	PART NAME 1 2 3 4 5 6 (PRODUCT LEVEL)	SEE PAGE
	1	1	**6Y-7409**	1	TIP-PENETRATION	
	2	1	**116-7408**	1	PIN-G.E.T.	
	3	1	**116-7409**	1	RETAINER AS-G.E.T.	

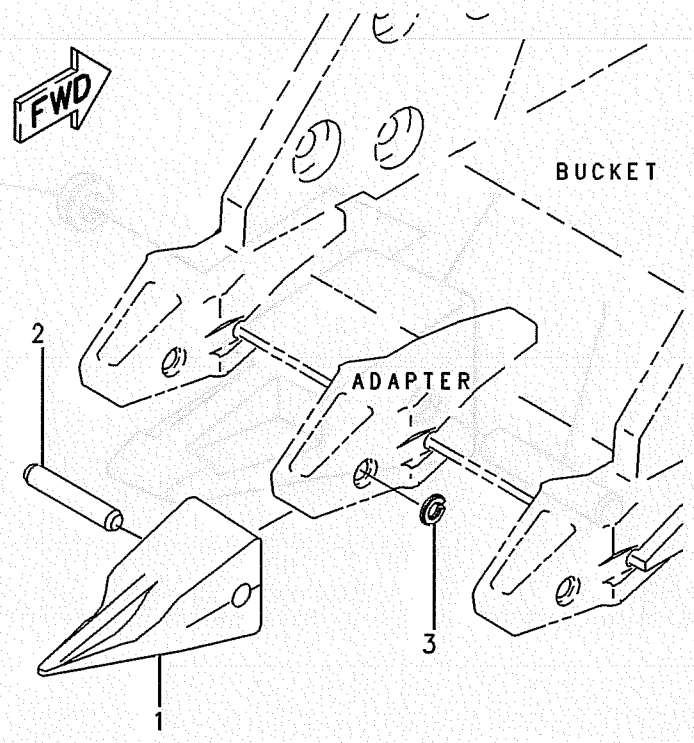

GRAPHIC #1 **<END>** g00258475

WORK TOOLS

8E-0840 TIP GP-SHARP

S/N: SBN1-UP; RAW1-UP
CENTER
AN ATTACHMENT

SMCS-6805 **i01396973**

NOTE	REF NO	GRAPHIC REF	PART NUMBER	QTY	PART NAME 1 2 3 4 5 6 (PRODUCT LEVEL)	SEE PAGE
	1	1	**6Y-5409**	1	TIP-SHARP	
	2	1	**116-7408**	1	PIN-G.E.T.	
	3	1	**116-7409**	1	RETAINER AS-G.E.T.	

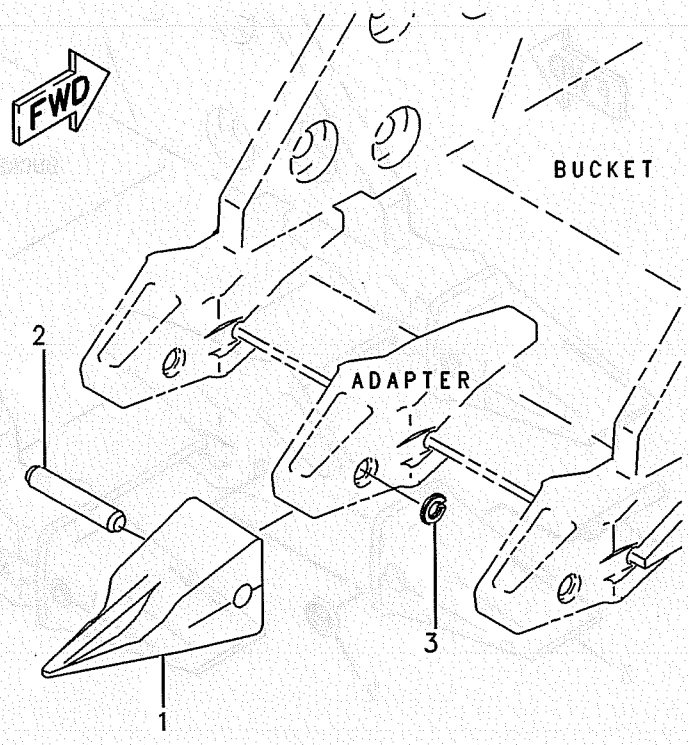

GRAPHIC #1

<END>

g00258475

WORK TOOLS

8E-0835 TIP GP-SHORT

S/N: SBN1-UP; RAW1-UP

AN ATTACHMENT

SMCS-6805 **i01380899**

NOTE	REF NO	GRAPHIC REF	PART NUMBER	QTY	PART NAME 1 2 3 4 5 6 (PRODUCT LEVEL)	SEE PAGE
	1	1	**116-7408**	1	PIN-G.E.T.	
	2	1	**8E-8409**	1	RETAINER AS	
	3	1	**7T-3401**	1	TIP-SHORT	

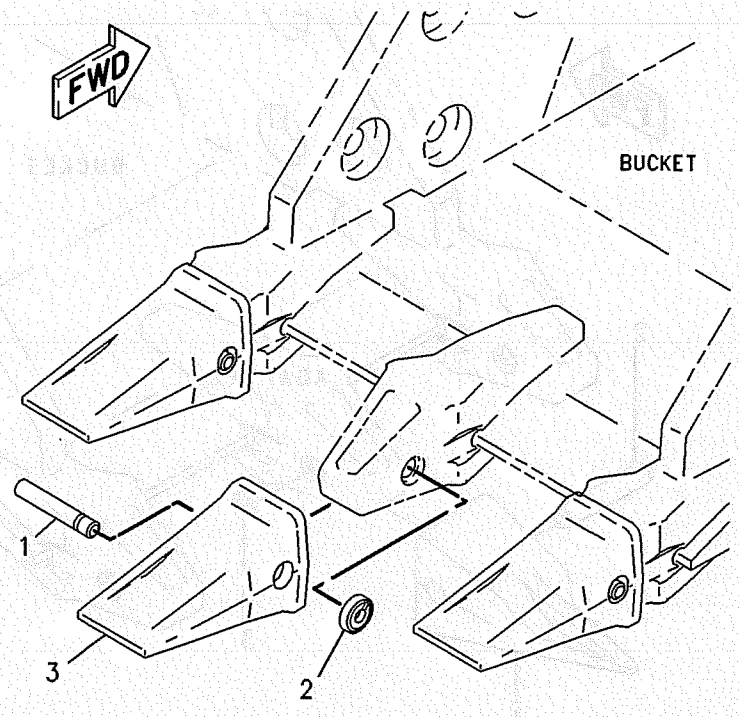

GRAPHIC #1

<END>

g00122079

WORK TOOLS

8J-4954 TIP GP-SHORT

S/N: SBN1-UP; RAW1-UP

AN ATTACHMENT

SMCS-6805 **i00897853**

NOTE	REF NO	GRAPHIC REF	PART NUMBER	QTY	PART NAME 1 2 3 4 5 6 (PRODUCT LEVEL)	SEE PAGE
	1	1	**114-0358**	1	PIN-G.E.T.	
C	2	1	**114-0359**	1	RETAINER AS-G.E.T.	
C	3	1	**1U-3351**	1	TIP-SHORT	

C-CHANGE FROM PREVIOUS TYPE

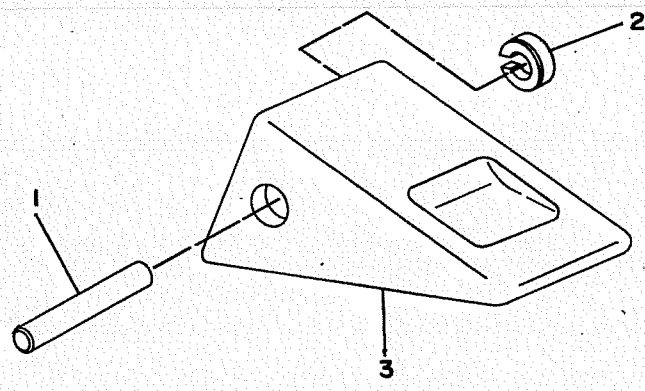

GRAPHIC #1 **<END>** g00118345

OPERATOR STATION

178-5524 ADJUSTMENT GP-CONSOLE

S/N: SBN1-UP; RAW1-UP

PART OF 161-3759 CONSOLE GP-LH, 161-3760 CONSOLE GP-RH

SMCS-5258 **i01510178**

NOTE	REF NO	GRAPHIC REF	PART NUMBER	QTY	PART NAME 1 2 3 4 5 6 (PRODUCT LEVEL)	SEE PAGE
	1	1	**178-5532**	1	KNOB	
	2	1	**178-5630**	1	SUPPORT AS	
	3	1	**178-5633**	1	GROMMET	
	4	1	**178-5634**	1	SUPPORT	
	5	1	**185-8169**	1	SHAFT	
	6	1	**185-8257**	1	SUPPORT AS	
	7	1	**185-8260**	1	PIN	
	8	1	**185-8261**	1	LEVER	
	9	1	**185-8262**	1	SPACER	
	10	1	**185-8263**	1	SPRING	
	11	1	**185-8264**	1	SPRING	
	12	1	**185-8265**	1	BEARING	
	13	1	**185-8266**	1	SHEET	
	14	1	**185-8285**	1	NUT	
	15	1	**185-8286**	1	SCREW-MACHINE	
	16	1	**185-8287**	1	SCREW-PAN HEAD	
M	17	1	**095-0736**	1	SCREW-MACHINE (M5X0.8X10MM)	
	18	1	**096-0015**	1	RING-RETAINING	
	19	1	**119-5026**	1	SCREW-PAN HEAD (10-16X0.63 IN)	
M	20	1	**6V-5210**	3	SCREW-MACHINE (M4X0.7X10MM)	
	21	1	**8C-5899**	1	PIN-SPRING	
	22	1	**8T-0328**	1	WASHER-HARD (5.5X10X1MM THK)	
M	23	1	**9X-2042**	1	SCREW-TRUSS HEAD (M6X1X12MM)	

M-METRIC PART

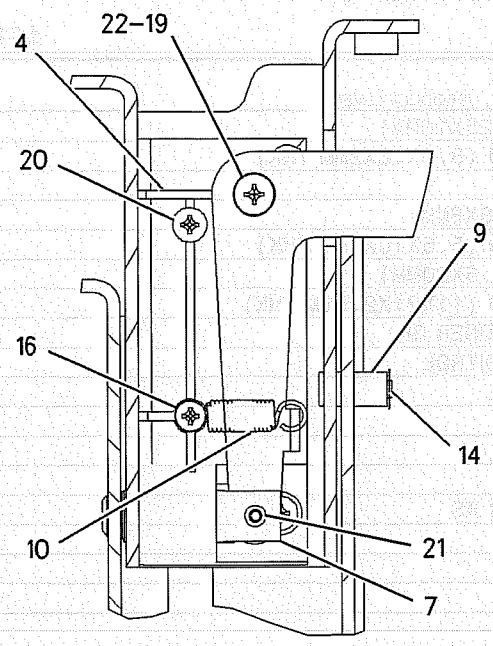

SECTION A-A

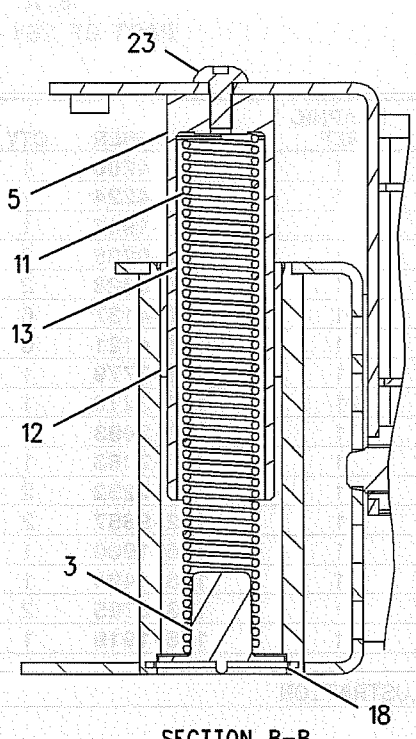

SECTION B-B

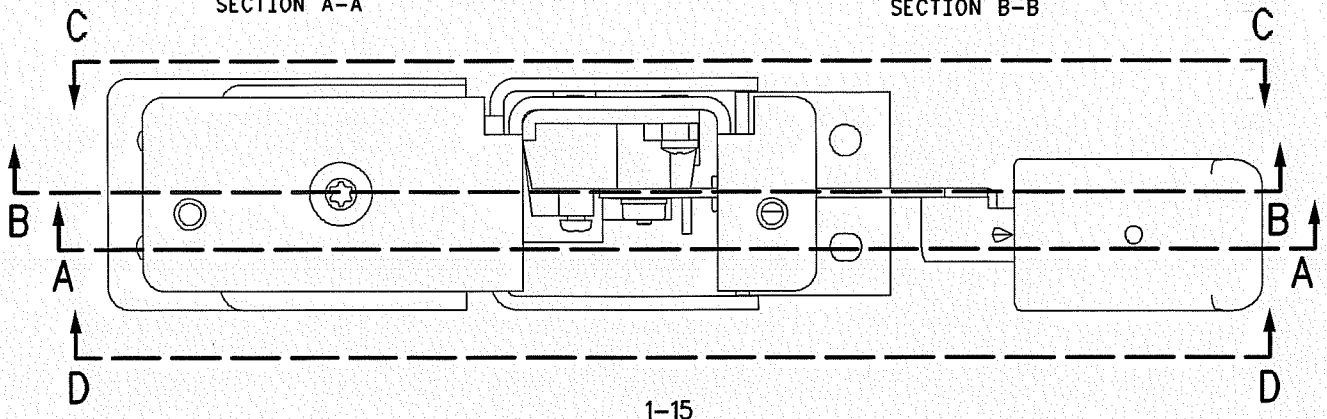

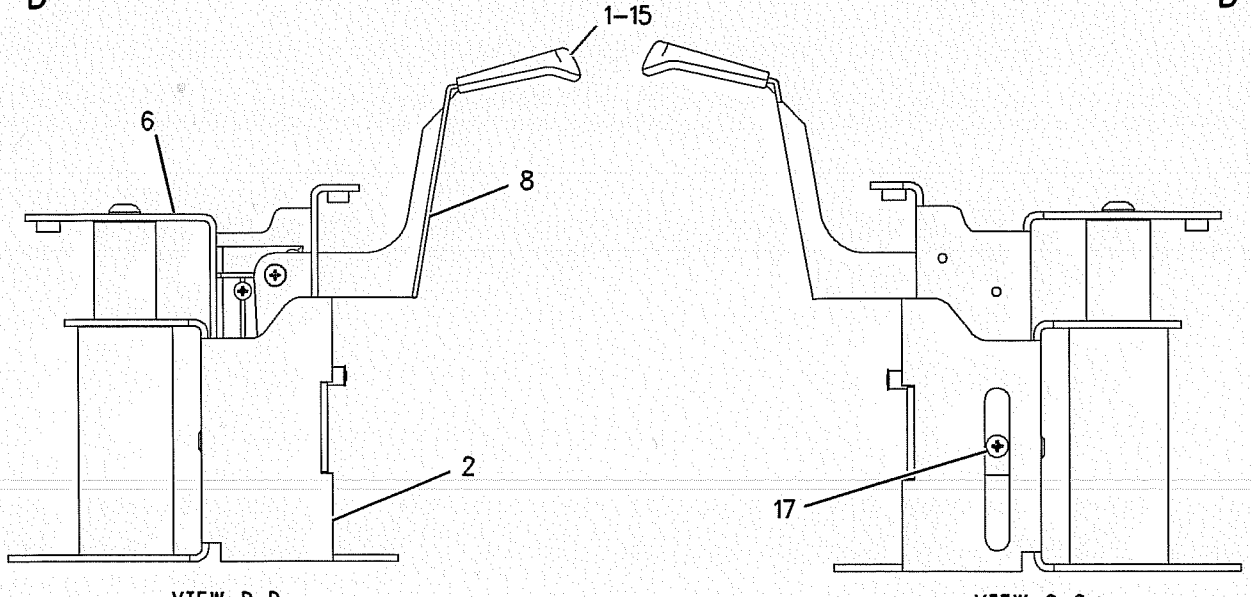

VIEW D-D

VIEW C-C

GRAPHIC #1 **<END>** g00803312

OPERATOR STATION

161-3777 AIR CONDITIONER & MOUNTING GP

S/N: SBN1-UP; RAW1-UP

PART OF 161-3773 AIR CONDITIONER GP

SMCS-7320 **i01463795**

NOTE	REF NO	GRAPHIC REF	PART NUMBER	QTY	PART NAME 1 2 3 4 5 6 (PRODUCT LEVEL)	SEE PAGE
M	1	1	**8T-4200**	1	BOLT (M8X1.25X16MM)	
	2	1	**8T-4224**	1	WASHER-HARD (8.8X16X2MM THK)	
	3	1	**176-1917**	1	SENSOR	
M	4	1	**8T-0286**	2	BOLT (M5X0.8X8MM)	
	5	1	**8T-0328**	2	WASHER-HARD (5.5X10X1MM THK)	
M	8	1	**8T-4137**	6	BOLT (M10X1.5X20MM)	
	9	1	**8T-4121**	6	WASHER-HARD (11X21X2.5MM THK)	
Y	10	1	**161-3779**	1	AIR CONDITIONER GP	553
	11	1	**157-3210**	1	PANEL AS-CONTROL	
	12	1	**3S-2093**	2	STRAP-CABLE	
	13	1	**167-7083**	1	SENSOR AS	
	14	1	**130-0252**	2	HOSE-DRAIN	
	15	1	**122-9657**	2	CLAMP	
	16	1	**176-1900**	1	DISTRIBUTOR AS	
		1	**196-1424**	1	CAP	
	17	1	**163-6795**	2	STRAP	
	18	1	**176-1919**	1	HARNESS AS	

M-METRIC PART
Y-SEPARATE ILLUSTRATION

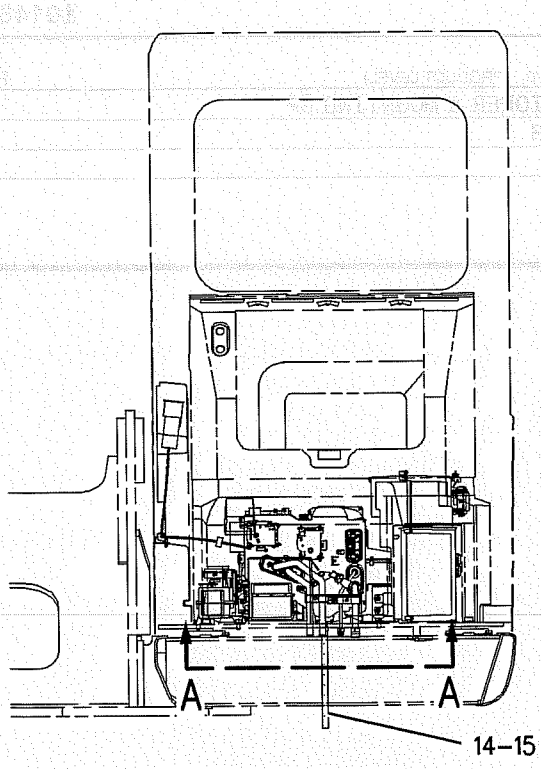

REAR VIEW

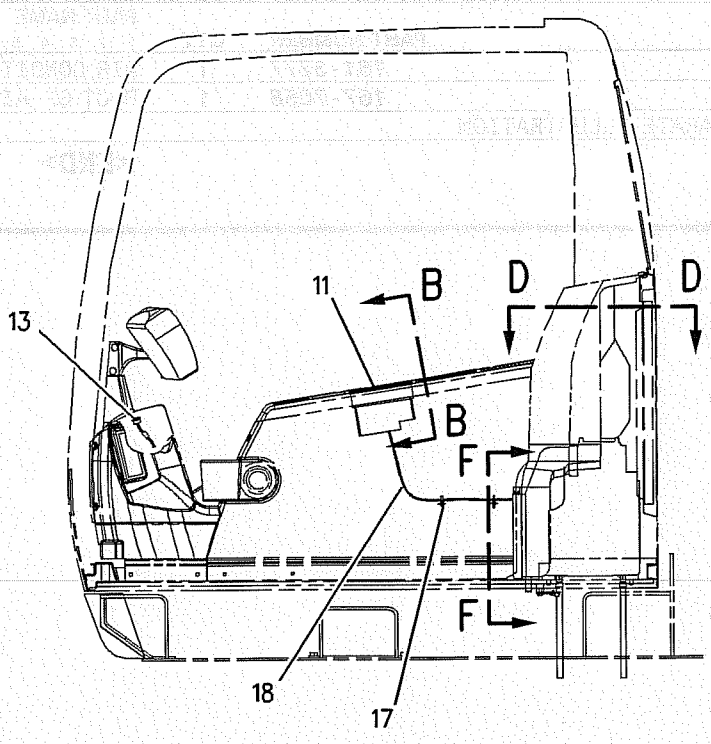

LEFT SIDE VIEW

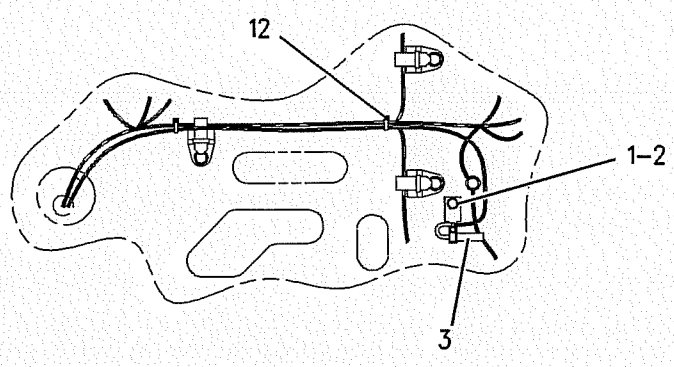

VIEW A-A

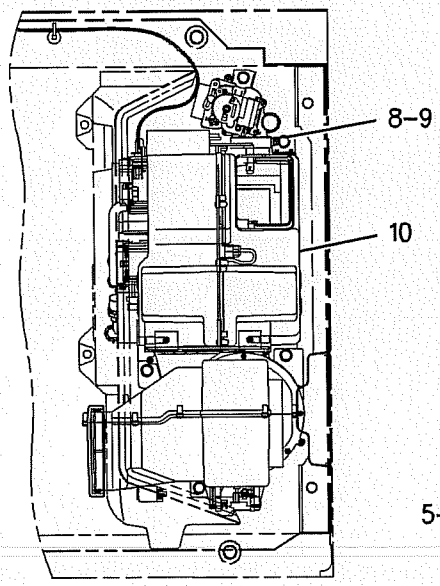

VIEW D-D

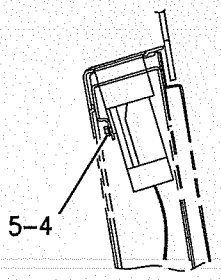

SECTION B-B

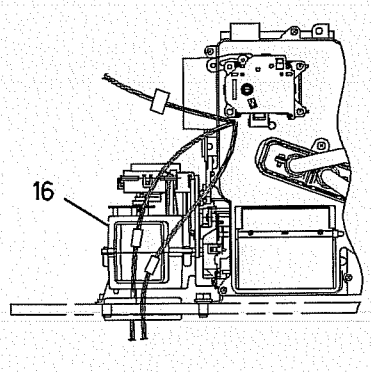

VIEW F-F

GRAPHIC #1

<END>

g00784048

OPERATOR STATION

161-3773 AIR CONDITIONER GP

S/N: SBN1-UP; RAW1-UP

PART OF 161-3738 OPERATOR AR

SMCS-1807, 7320, 7322 **i01463739**

NOTE	PART NUMBER	QTY	PART NAME 1 2 3 4 5 6 (PRODUCT LEVEL)	SEE PAGE
Y	*161-3777*	1	AIR CONDITIONER & MOUNTING GP	550
Y	*167-7058*	1	DUCT GP-AIR	583

Y-SEPARATE ILLUSTRATION

<END>

OPERATOR STATION

161-3779 AIR CONDITIONER GP

S/N: SBN1-UP; RAW1-UP

PART OF 161-3777 AIR CONDITIONER & MOUNTING GP

SMCS-1807, 7320, 7322 **i01888540**

NOTE	REF NO	GRAPHIC REF	PART NUMBER	QTY	PART NAME 1 2 3 4 5 6 (PRODUCT LEVEL)	SEE PAGE
	1	1	**135-2296**	1	RELAY (CLUTCH SOLENOID)	
	2	1	**147-4845**	1	PACKING	
Y	3	1	**178-5526**	1	AIR CONDITIONER GP	554
Y	4	1	**178-5527**	1	BLOWER GP-CAB	556
	5	1	**185-8153**	1	SEAL	
	6	1	**185-8154**	1	FILTER-RECIRCULATION	
	7	1	**185-8292**	2	BRACKET	
	8	1	**185-8294**	1	FUSE (5 AMP)	
	9	1	**185-8297**	6	SCREW-TAPPING	
	10	1	**196-1424**	1	CAP	
	11	1	**196-1666**	1	RELAY	
	12	1	**222-0100**	1	HARNESS AS	

Y-SEPARATE ILLUSTRATION

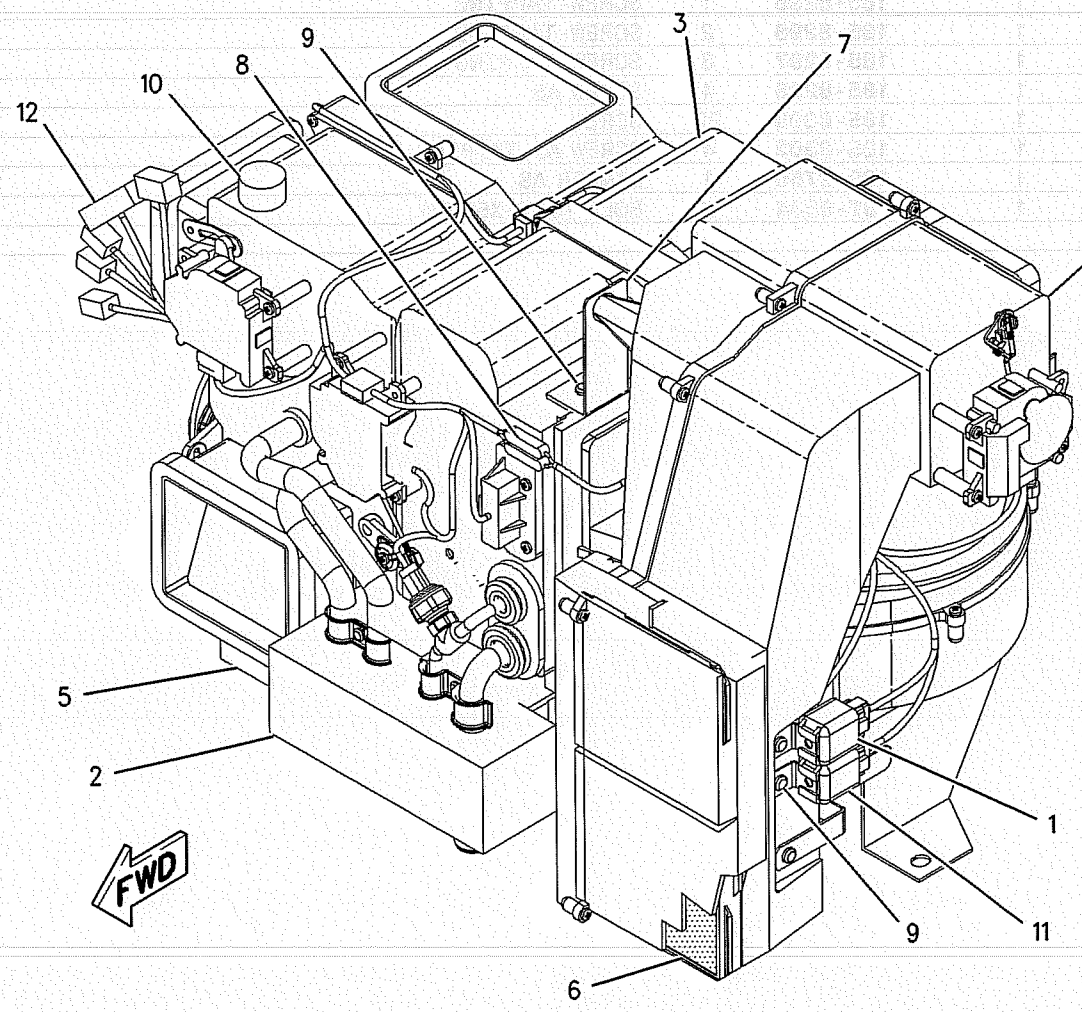

GRAPHIC #1 **<END>** g00932902

OPERATOR STATION

178-5526 AIR CONDITIONER GP

S/N: SBN1-UP; RAW1-UP

PART OF 161-3779 AIR CONDITIONER GP

SMCS-1807, 7320, 7322 **i01463806**

NOTE	REF NO	GRAPHIC REF	PART NUMBER	QTY	PART NAME 1 2 3 4 5 6 (PRODUCT LEVEL)	SEE PAGE
	1	1	**130-0270**	1	SWITCH AS-PRESSURE	
		1	**185-8293**	1	SEAL-O-RING	
	2	1	**147-4812**	1	CORE AS-EVAPORATOR	
	3	1	**147-4815**	1	THERMISTOR	
	4	1	**147-4816**	2	CLIP	
	5	1	**147-4819**	1	GROMMET	
	6	1	**147-4821**	1	CLIP	
	7	1	**147-4822**	1	BRACKET	
	8	1	**147-4823**	1	SENSOR AS	
	9	1	**147-4825**	2	MOTOR AS	
	10	1	**147-4826**	1	MOTOR AS	
	11	1	**147-4831**	2	CLAMP	
	12	1	**159-7739**	1	DOOR AS	
	13	1	**159-7740**	1	DOOR AS	
	14	1	**159-7858**	1	CONTROLLER AS	
	15	1	**185-8155**	1	CORE AS-HEATER	
	16	1	**185-8156**	1	CLIP	
	17	1	**185-8295**	1	SCREW-TAPPING	
	18	1	**185-8296**	2	SCREW-TAPPING	
	19	1	**185-8297**	8	SCREW-TAPPING	
	20	1	**185-8298**	4	SCREW AS	
	21	1	**185-8300**	22	SCREW	
	22	1	**185-8302**	4	SCREW AS-TAPPING	
	23	1	**189-2750**	1	DAMPER AS	
M	24	1	**8T-9534**	2	BOLT (M6X1X50MM)	

M-METRIC PART

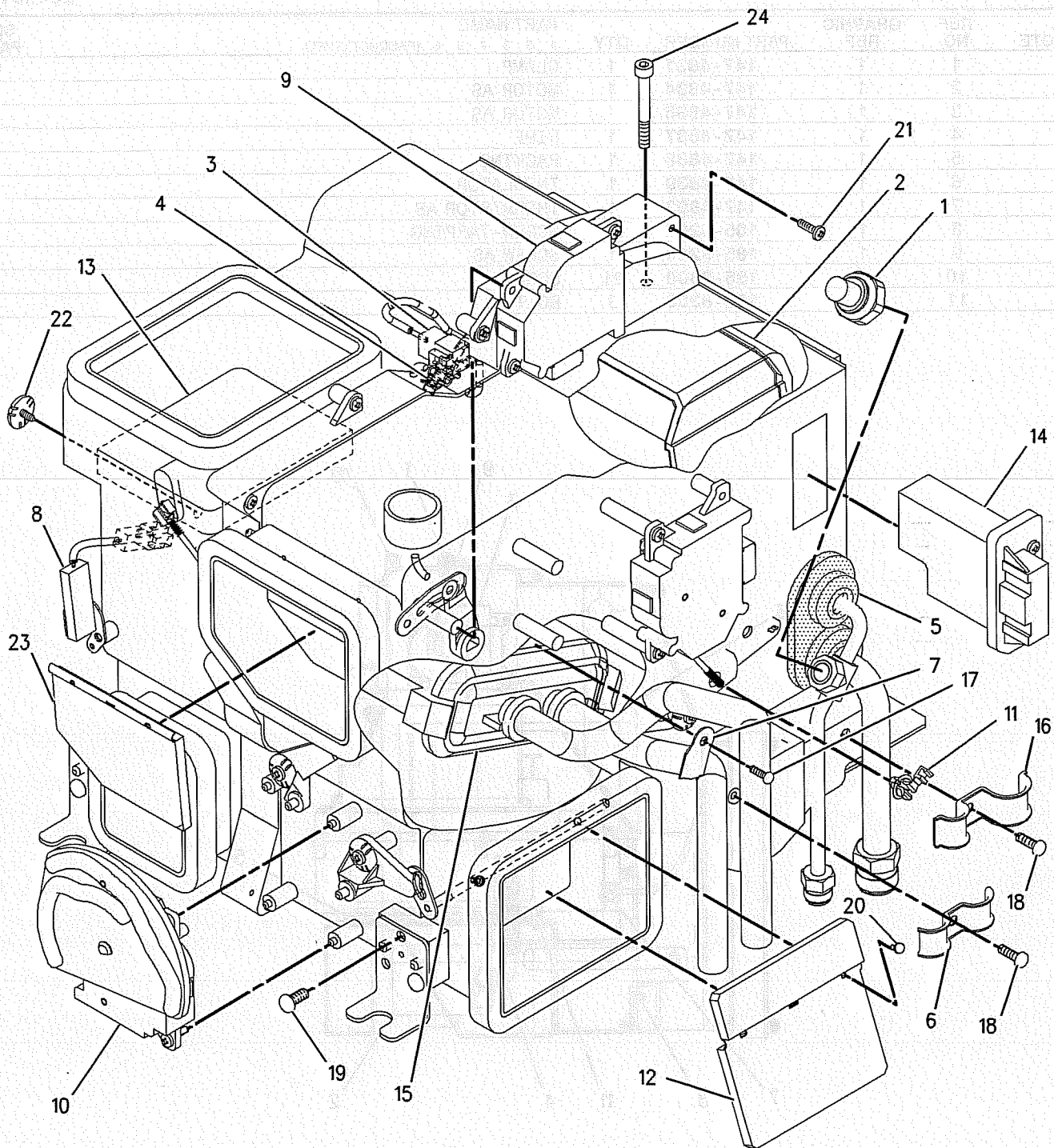

GRAPHIC #1 **<END>** g00735438

OPERATOR STATION

178-5527 BLOWER GP-CAB

S/N: SBN1-UP; RAW1-UP

PART OF 161-3779 AIR CONDITIONER GP

SMCS-7316 **i01681326**

NOTE	REF NO	GRAPHIC REF	PART NUMBER	QTY	PART NAME 1 2 3 4 5 6 (PRODUCT LEVEL)	SEE PAGE
	1	1	**147-4831**	1	CLAMP	
	2	1	**147-4834**	1	MOTOR AS	
	3	1	**147-4835**	1	MOTOR AS	
	4	1	**147-4837**	1	PIPE	
	5	1	**147-4838**	1	PACKING	
	6	1	**147-4839**	1	INSULATOR	
	7	1	**147-4852**	1	THERMISTOR AS	
	8	1	**185-8297**	2	SCREW-TAPPING	
	9	1	**185-8299**	1	SCREW AS	
	10	1	**185-8300**	21	SCREW	
	11	1	**185-8303**	3	BOLT AS	

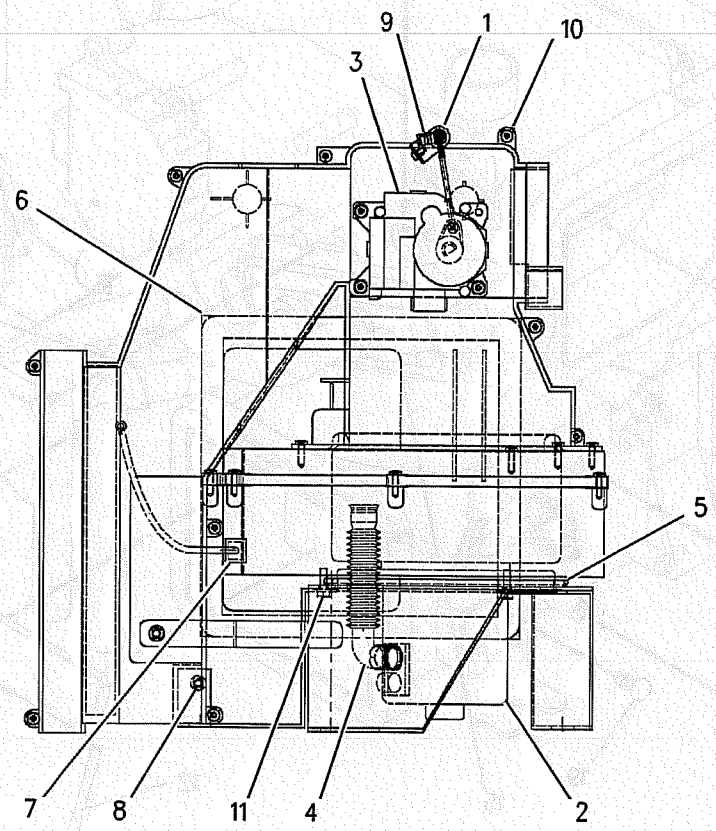

GRAPHIC #1

<END>

g00722476

OPERATOR STATION

164-0493 CAB GP

S/N: SBN1-UP; RAW1-UP

AN ATTACHMENT

SMCS-7301 **i01464870**

NOTE	REF NO	GRAPHIC REF	PART NUMBER	QTY	PART NAME 1 2 3 4 5 6 (PRODUCT LEVEL)	SEE PAGE
Y	1	1	**164-0494**	1	CAB GP	559
M	2	1	**8T-4179**	2	BOLT (M12X1.75X20MM)	
	3	1	**8T-4223**	10	WASHER-HARD (13.5X25.5X3MM THK)	
M	4	1	**8T-4910**	6	BOLT (M12X1.75X60MM)	
M	5	1	**8T-6868**	2	BOLT (M12X1.75X80MM)	
	6	1	**196-1427**	1	COVER GP	
		1	**176-2002**	2	CAP	
		1	**196-1423**	2	CAP	
	7	1	**171-7336**	1	COVER	
M	8	1	**128-2135**	2	SCREW-TRUSS HEAD (M6)	
M	9	1	**128-2136**	4	SCREW-TRUSS HEAD	
M	10	1	**8T-4191**	2	BOLT (M10X1.5X16MM)	
	11	1	**124-7346**	2	LOCKWASHER	
I	12	1	**8Y-6867**	4	HOSE AS	
M	13	1	**8T-4190**	4	BOLT (M16X2X25MM)	
	14	1	**9X-8257**	6	WASHER (17.5X30X3.5MM THK)	
	15	1	**191-6905**	1	COVER	
M	16	1	**9X-2045**	1	SCREW-TRUSS HEAD (M6X1X20MM)	

I-SEE HOSE FABRICATION GUIDE
M-METRIC PART
Y-SEPARATE ILLUSTRATION

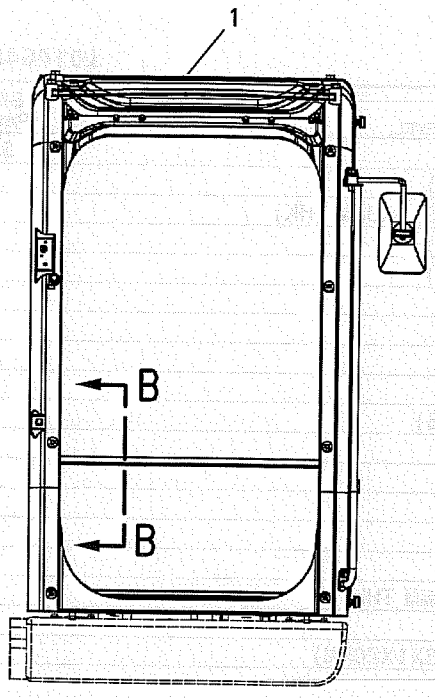

FRONT VIEW

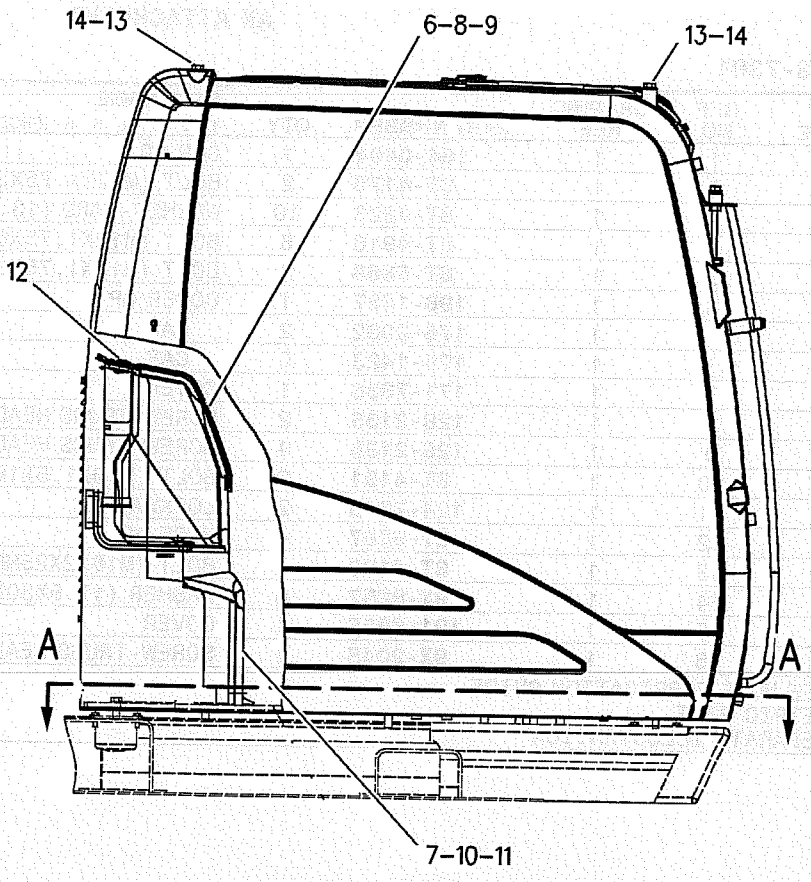

RIGHT SIDE VIEW

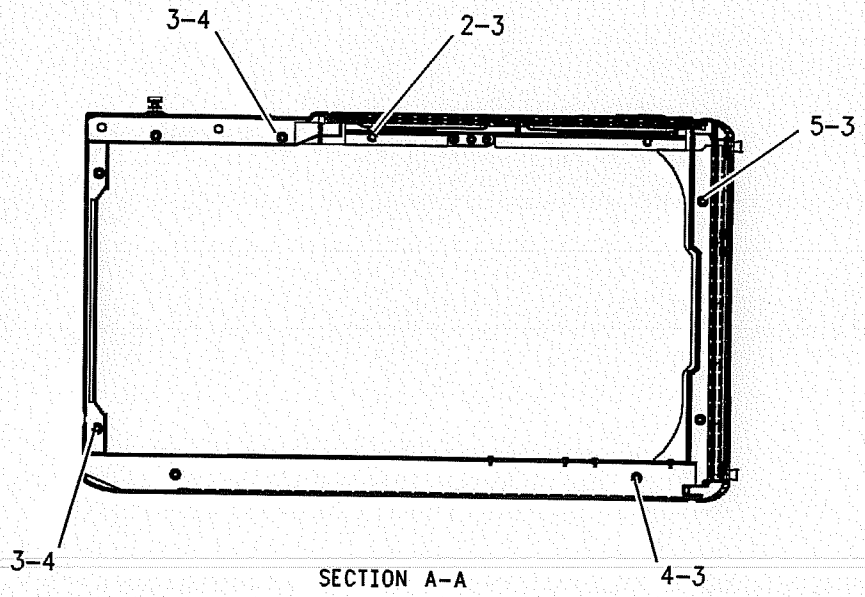

SECTION A-A

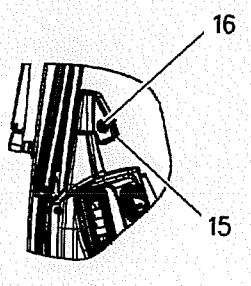

SECTION B-B

GRAPHIC #1

<END>

g00762452

OPERATOR STATION

164-0494 CAB GP

S/N: SBN1-UP; RAW1-UP
PART OF 164-0493 CAB GP
AN ATTACHMENT

SMCS-7301 **i01694973**

NOTE	REF NO	GRAPHIC REF	PART NUMBER	QTY	PART NAME 1 2 3 4 5 6 (PRODUCT LEVEL)	SEE PAGE
Y	1	1	*139-7099*	1	HATCH GP-ROOF	584
Y	2	1	**139-7100**	1	DOOR GP-CAB	581
Y	3	1	*139-7101*	1	WINDOW GP-FRONT	610
	4	1	*185-8178*	1	CAB AS	
Y	5	1	*171-7408*	1	WIPER GP-WINDOW	616
	6	1	*176-1958*	1	WINDOW GP-FRONT (LOWER)	
		1	**139-7119**	2	PLUG	
		1	**156-6473**	1	GLASS (LOWER FRONT)	
		1	**156-6631**	2	STOP	
		1	**161-3683**	1	SEAL	
		1	**164-0670**	2	SEAL	
Y	7	1	*185-8277*	1	CAB GP (EXTERIOR)	565
Y	8	1	*176-1970*	1	CAB GP (INTERIOR)	561
	9	1	*185-8279*	1	WINDOW GP-CAB	
		1	**099-3629**	1	RING	
		1	**151-6789**	1	GLASS	
		1	**151-6790**	11	GLASS	
		1	**156-6469**	1	GLASS	
		1	**164-0666**	1	SEAL	

Y-SEPARATE ILLUSTRATION

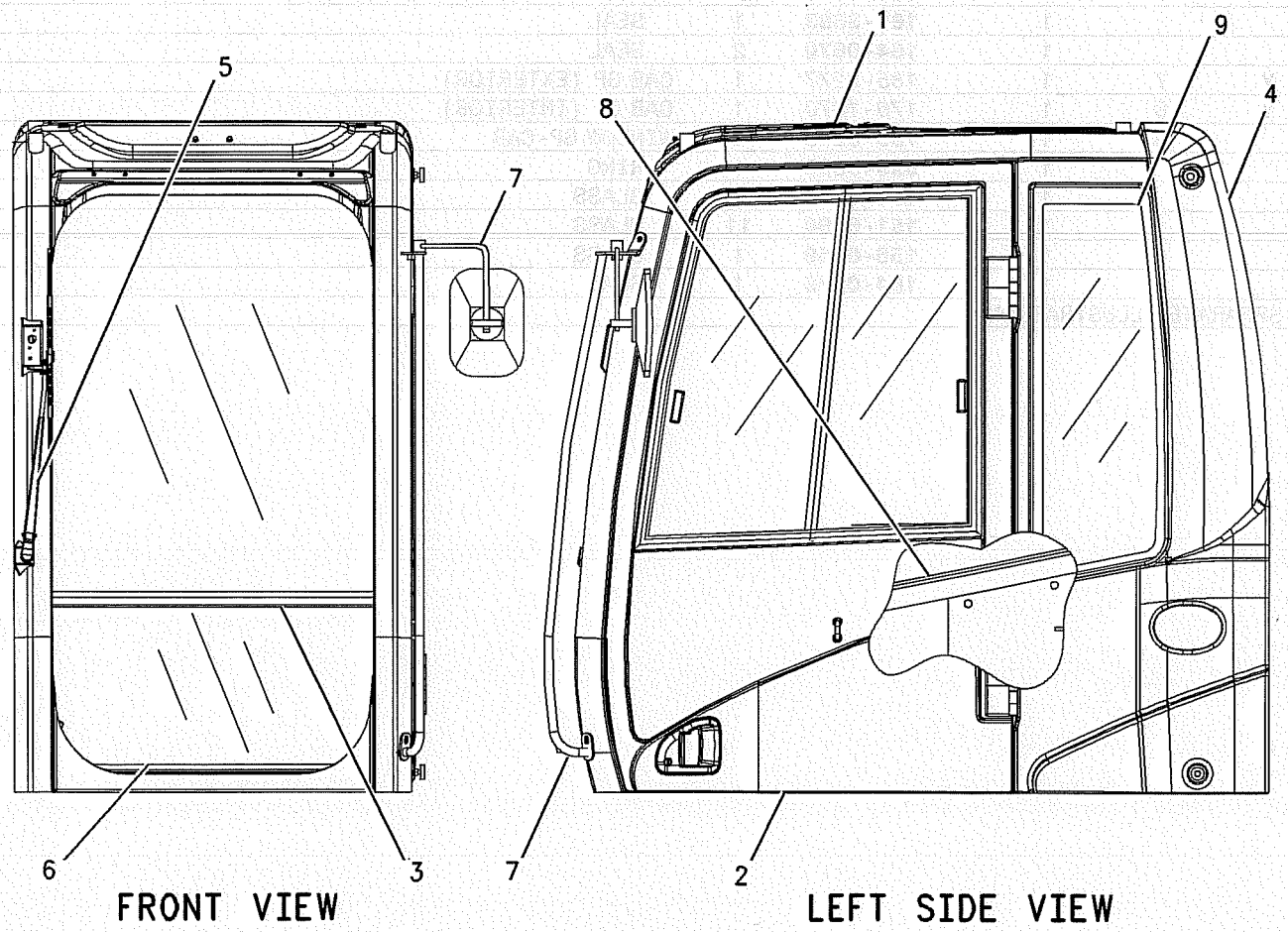

GRAPHIC #1

<END>

g00737246

OPERATOR STATION

176-1970 CAB GP–INTERIOR

S/N: SBN1-UP; RAW1-UP
PART OF 164-0494 CAB GP
AN ATTACHMENT

SMCS-7301 **i01891818**

NOTE	REF NO	GRAPHIC REF	PART NUMBER	QTY	PART NAME 1 2 3 4 5 6 (PRODUCT LEVEL)	SEE PAGE
	1	1	**156-6565**	1	COVER	
	2	2	**156-6566**	1	COVER	
	3	1	**156-6567**	1	COVER	
	4	3	**156-6568**	1	COVER	
	5	1	**156-6574**	1	COVER	
	6	2	**156-6576**	1	LINER	
	7	2	**156-6578**	1	VISOR AS	
	8	3	**156-6593**	1	DUCT	
	9	2	**156-6656**	1	RAIL	
	10	2	**156-6657**	1	RAIL	
	11	3	**164-0522**	1	HOLDER-DRINK	
	12	3	**164-0646**	1	CUP	
	13	1	**164-0647**	1	BRACKET AS	
	14	3	**164-0655**	1	PANEL-SWITCH	
	15	2	**164-0675**	1	COVER	
	16	3	**167-7033**	1	RUBBER	
	17	2	*170-9723*	1	COVER GP	
		2	**156-6564**	1	COVER	
		2	**156-6595**	1	HOUSING	
		2	**164-0673**	1	LOUVER	
	18	3	**170-9724**	5	CLIP	
	19	1,2	**171-7323**	12	CLIP	
	20	3	**171-7325**	16	SCREW-TAPPING	
	21	3	**171-7377**	1	SUPPORT AS	
	22	2	**171-7386**	1	COVER	
	23	2	**171-7400**	1	COVER	
	24	3	*171-7405*	1	DUCT AS	
		3	**156-6594**	1	DUCT	
		3	**171-7406**	1	DUCT	
		3	**099-0139**	4	RIVET	
	25	2	**171-7415**	1	LOUVER	
	26	2	**171-7418**	2	CLIP	
	27	1,2	**171-7420**	6	CLIP	
	28	3	**171-7423**	1	BRACKET AS	
	29	2	**176-1946**	1	PLATE	
	30	2	**176-1947**	1	PLATE	
	31	1	**176-1972**	1	COVER	
	32	2	**185-8205**	5	CLIP	
	33	1	**185-8214**	1	BRACKET AS	
	34	1	**185-8218**	1	COVER	
	35	1	**185-8223**	1	COVER	
	36	3	**185-8284**	1	COVER	
	37	3	**189-2678**	3	SPACER	
	38	2	**189-2855**	1	COVER	
	39	3	**210-5809**	1	COVER	
	40	3	**124-3940**	2	HANDLE	
M	41	2,3	**128-2135**	11	SCREW-TRUSS HEAD (M6X1X13MM)	
M	42	2	**128-2136**	1	SCREW-TRUSS HEAD (M6X1X16MM)	
	43	2	**5I-3707**	1	LOUVER	
M	44	3	**8T-4134**	5	NUT (M6X1 THD)	
M	45	1,3	**9X-2042**	10	SCREW-TRUSS HEAD (M6X1X12MM)	
M	46	1,2	**9X-2044**	12	SCREW-TRUSS HEAD (M6X1X16MM)	

M-METRIC PART

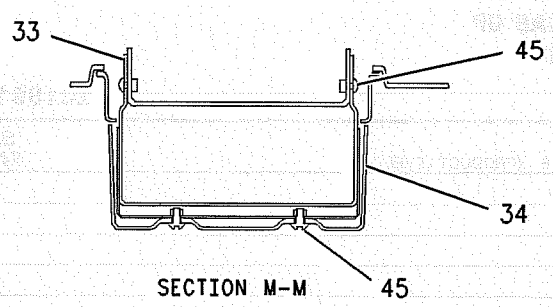

SECTION M-M

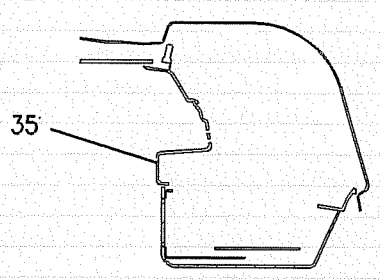

SECTION L-L

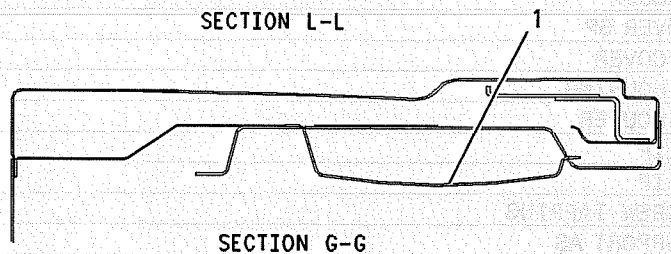

SECTION G-G

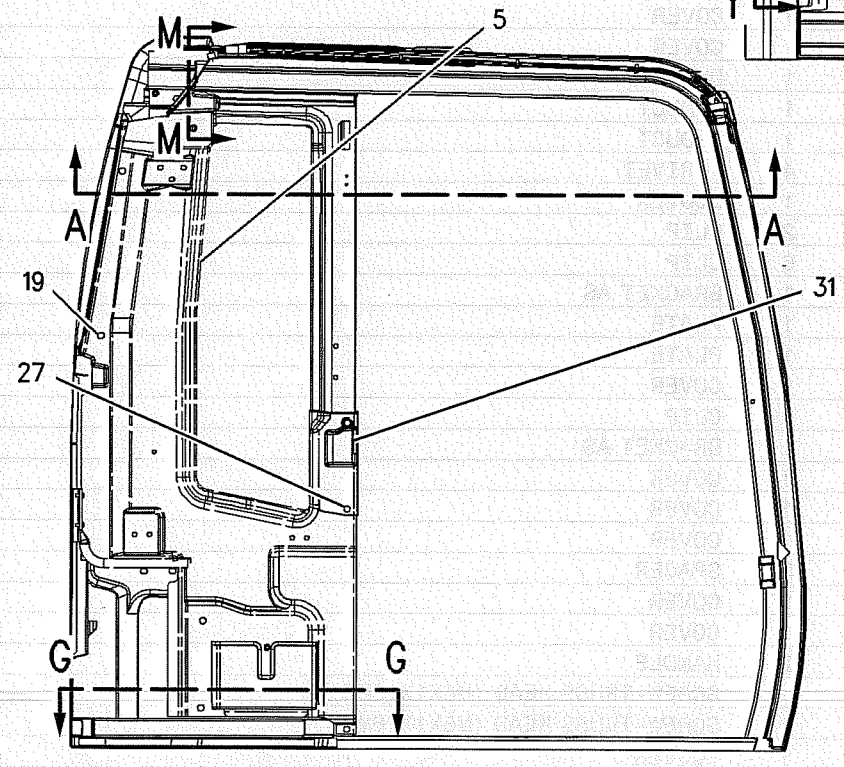

RIGHT SIDE VIEW

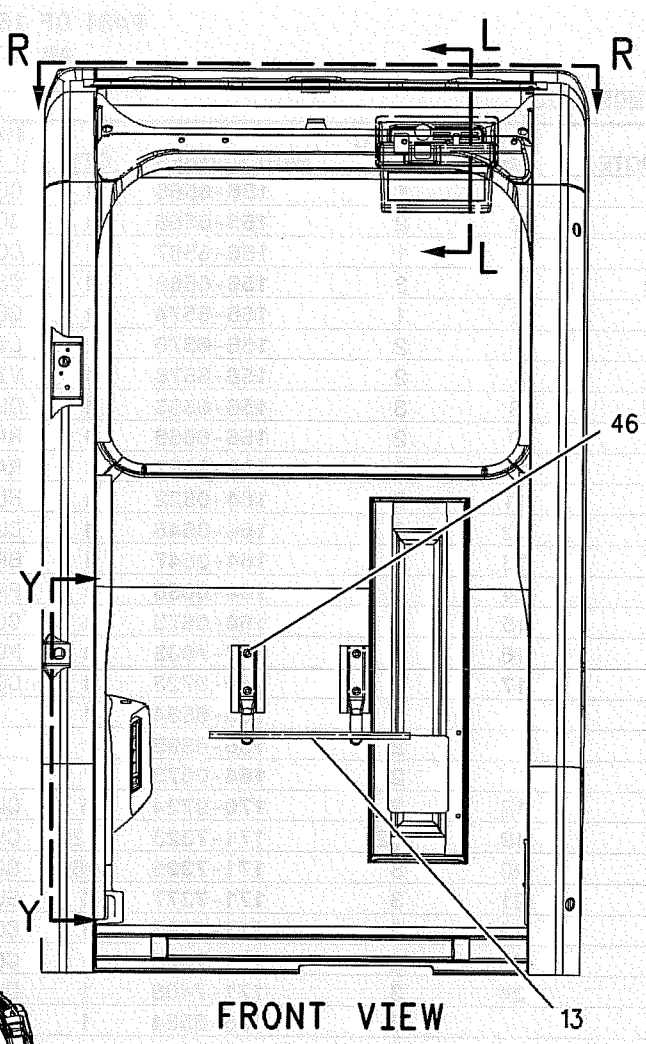

FRONT VIEW

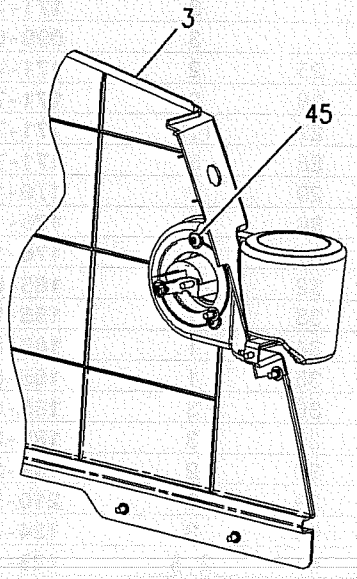

SECTION S-S

REFER TO ALL ILLUSTRATIONS OF THIS GROUP FOR AUXILIARY VIEWS

GRAPHIC #1

g00984734

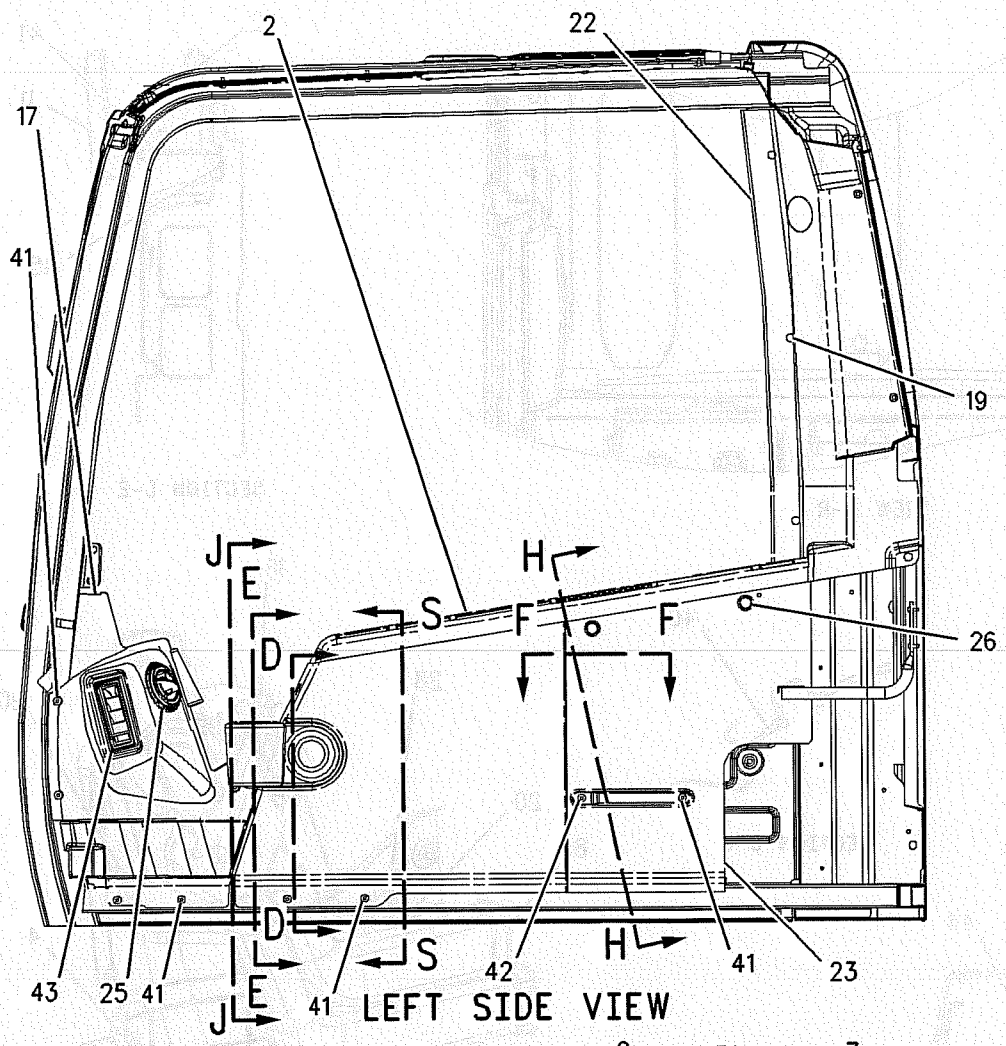

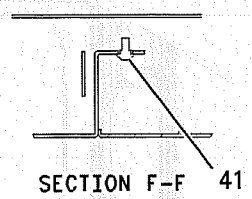

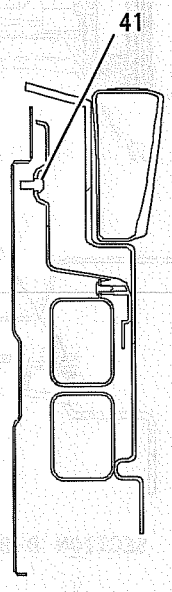

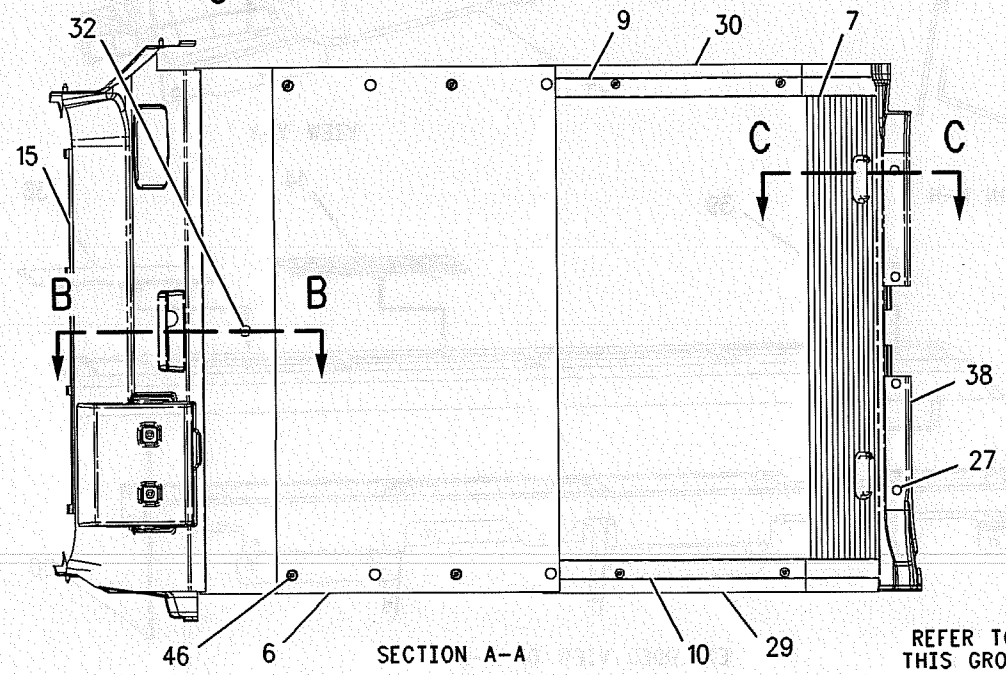

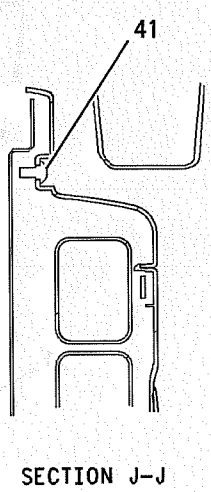

REFER TO ALL ILLUSTRATIONS OF THIS GROUP FOR AUXILIARY VIEWS

GRAPHIC #2

g00986538

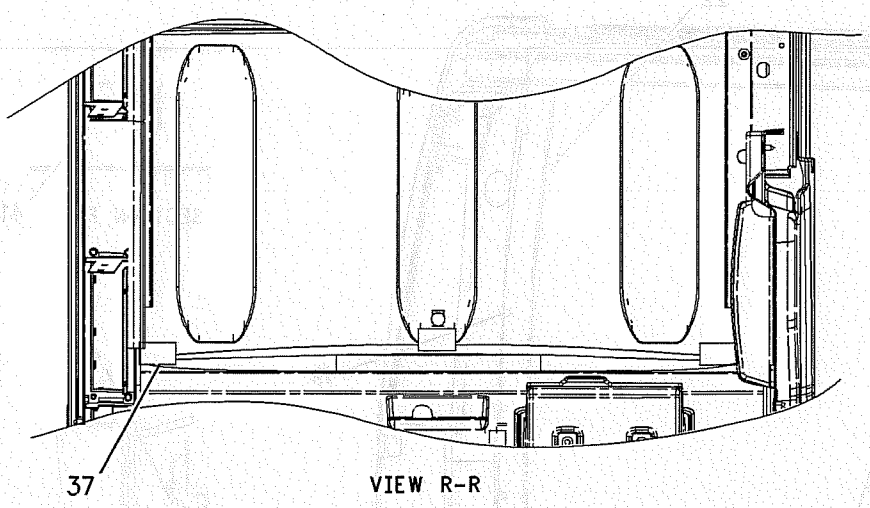

VIEW R-R

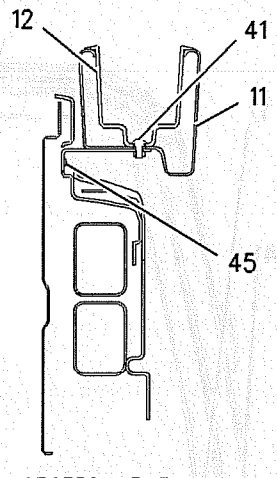

SECTION E-E

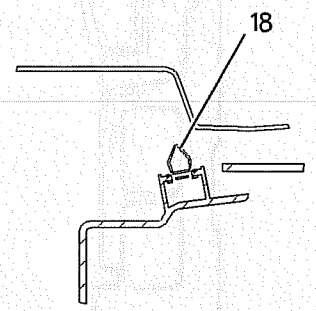

SECTION B-B

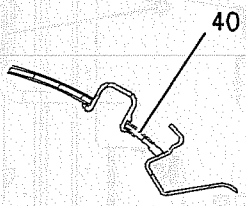

SECTION C-C

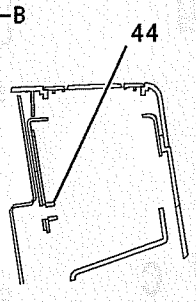

SECTION H-H

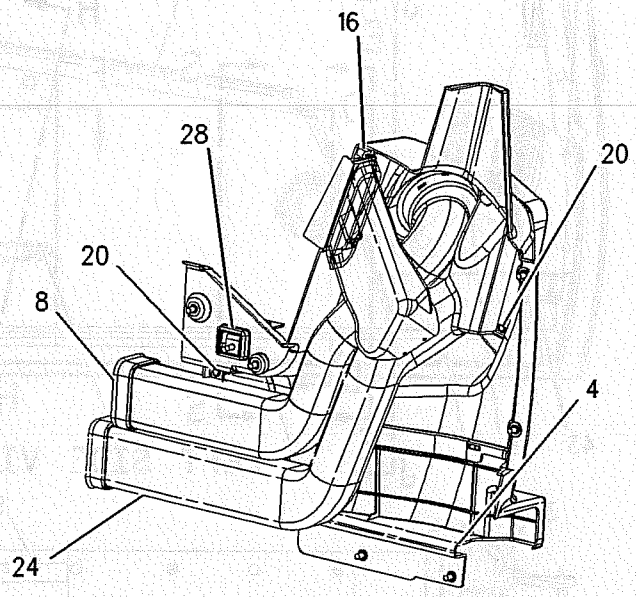

VIEW Y-Y

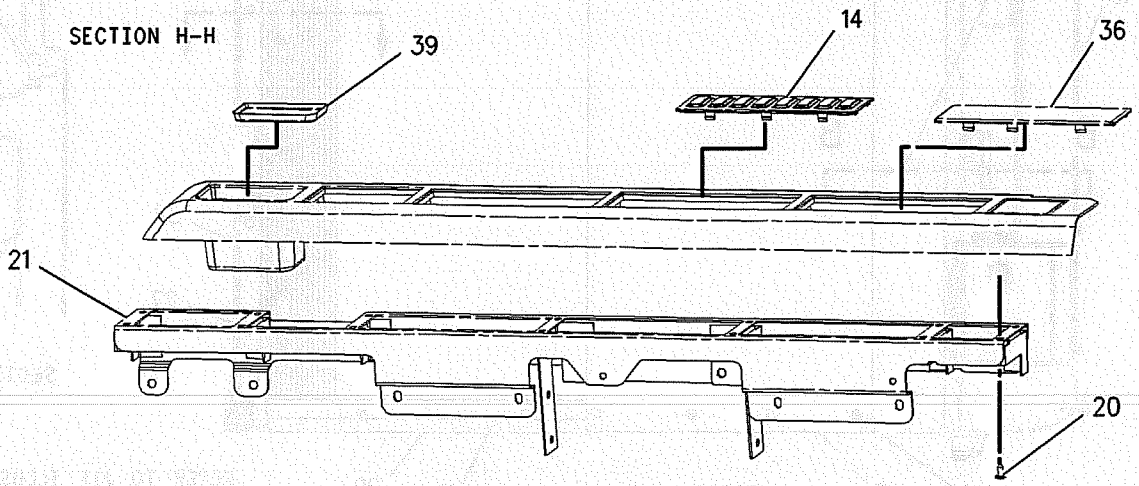

EXPLODED VIEW OF X-X

GRAPHIC #3

<END>

g00986539

OPERATOR STATION

185-8277 CAB GP

S/N: SBN1-UP; RAW1-UP
EXTERIOR
PART OF 164-0494 CAB GP
AN ATTACHMENT

SMCS-7301 **i01895513**

NOTE	REF NO	GRAPHIC REF	PART NUMBER	QTY	PART NAME 1 2 3 4 5 6 (PRODUCT LEVEL)	SEE PAGE
	1	1	**139-7126**	1	HOLDER	
	2	1	**139-7127**	1	HOLDER	
	3	1	**156-6599**	1	STRIKER	
C	4	1	**201-4530**	1	BRACKET AS	
	5	1	**161-3685**	1	ROD	
	6	1	**161-3690**	1	HANDLE AS	
M		1	**8T-4132**	1	NUT (M16X2 THD)	
	7	1	**161-3697**	1	GUARD	
	8	1	**164-0523**	1	LEVER AS	
	9	1	**164-0527**	1	ROD	
	10	1	*164-0528*	1	LEVER AS	
		1	**156-6642**	1	LEVER AS	
		1	**164-0664**	1	BRACKET	
		1	**176-1941**	1	PIN	
		1	**185-8280**	1	WASHER-WAVE	
		1	**185-8281**	1	SPRING	
	11	1	**167-7042**	2	SEAL	
	12	1	**171-7396**	1	COVER AS	
	13	1	**171-7426**	1	CABLE AS	
	14	1	*176-1939*	1	LEVER AS	
M		1	**9X-2044**	1	SCREW-TRUSS HEAD (M6X1X16MM)	
		1	**176-1937**	1	BRACKET AS	
		1	**176-1938**	1	LEVER	
	15	1	**176-1942**	1	COVER	
C	16	1	**205-6295**	1	LATCH AS	
	17	1	**176-1986**	1	LIGHT	
	18	1	**178-5570**	2	GROMMET	
	19	1	**185-8196**	1	GROMMET	
	20	1	**189-2864**	2	SCREW-FLAT HEAD	
	21	1	**196-1675**	1	HANDLE AS	
E	22	1	**6I-5470**		SEAL (150CM)	
M	23	1	**099-0823**	3	SCREW-MACHINE (M6X1X6MM)	
	24	1	**105-2169**	3	BOLT AS	
M	25	1	**127-0580**	2	SCREW-FLAT HEAD (M8X1.25X20MM)	
	26	1	**133-8016**	1	PACKING	
	27	1	**156-6617**	1	MIRROR	
	28	1	**156-6618**	1	SUPPORT AS	
	29	1	**189-3396**	5	NUT (M10X1.5 THD)	
	30	1	**1R-5998**	4	LOCKWASHER	
	31	1	**3B-4510**	1	LOCKWASHER	
CM	32	1	**3E-8020**	6	SCREW-TRUSS HEAD (M6X1X25MM)	
M	33	1	**3E-9874**	2	SCREW-OVAL HEAD	
	34	1	**189-3409**	3	WASHER	
	35	1	**4I-1205**	2	BUMPER	
	36	1	**4I-1206**	2	GUIDE	
	37	1	**4I-3063**	1	SPRING	
M	38	1	**4I-3123**	2	BOLT (M10X1.5X20MM)	
	39	1	**4I-3144**	2	WASHER-HARD (10.2X22X3.2MM THK)	
	40	1	**4I-4270**	1	HOLDER-GLASS	
	41	1	**4I-4392**	3	CLIP	
	42	1	**5C-7793**	1	HOOK-COAT	
	43	1	**6V-7636**	4	PIN AS-SPRING	
	44	1	**7X-0578**	2	WASHER-HARD (10.2X32X2.5MM THK)	
	45	1	**8T-8193**	1	CLIP (TAB)	

OPERATOR STATION

185-8277 **CAB GP** *(contd.)*

i01895513

NOTE	REF NO	GRAPHIC REF	PART NUMBER	QTY	PART NAME 1 2 3 4 5 6 (PRODUCT LEVEL)	SEE PAGE
M	46	1	**9X-2041**	3	SCREW-TRUSS HEAD (M10X1.5X20MM)	
M	47	1	**9X-2042**	5	SCREW-TRUSS HEAD (M6X1X12MM)	
M	48	1	**9X-2044**	5	SCREW-TRUSS HEAD (M6X1X16MM)	
M	49	1	**9X-2045**	2	SCREW-TRUSS HEAD (M6X1X20MM)	
CE	50	1	**210-5808**		SEAL (150CM)	
	51	1	**9X-8257**	1	WASHER (17.5X30X3.5MM THK)	

C-CHANGE FROM PREVIOUS TYPE
E-ORDER BY THE CENTIMETER
M-METRIC PART

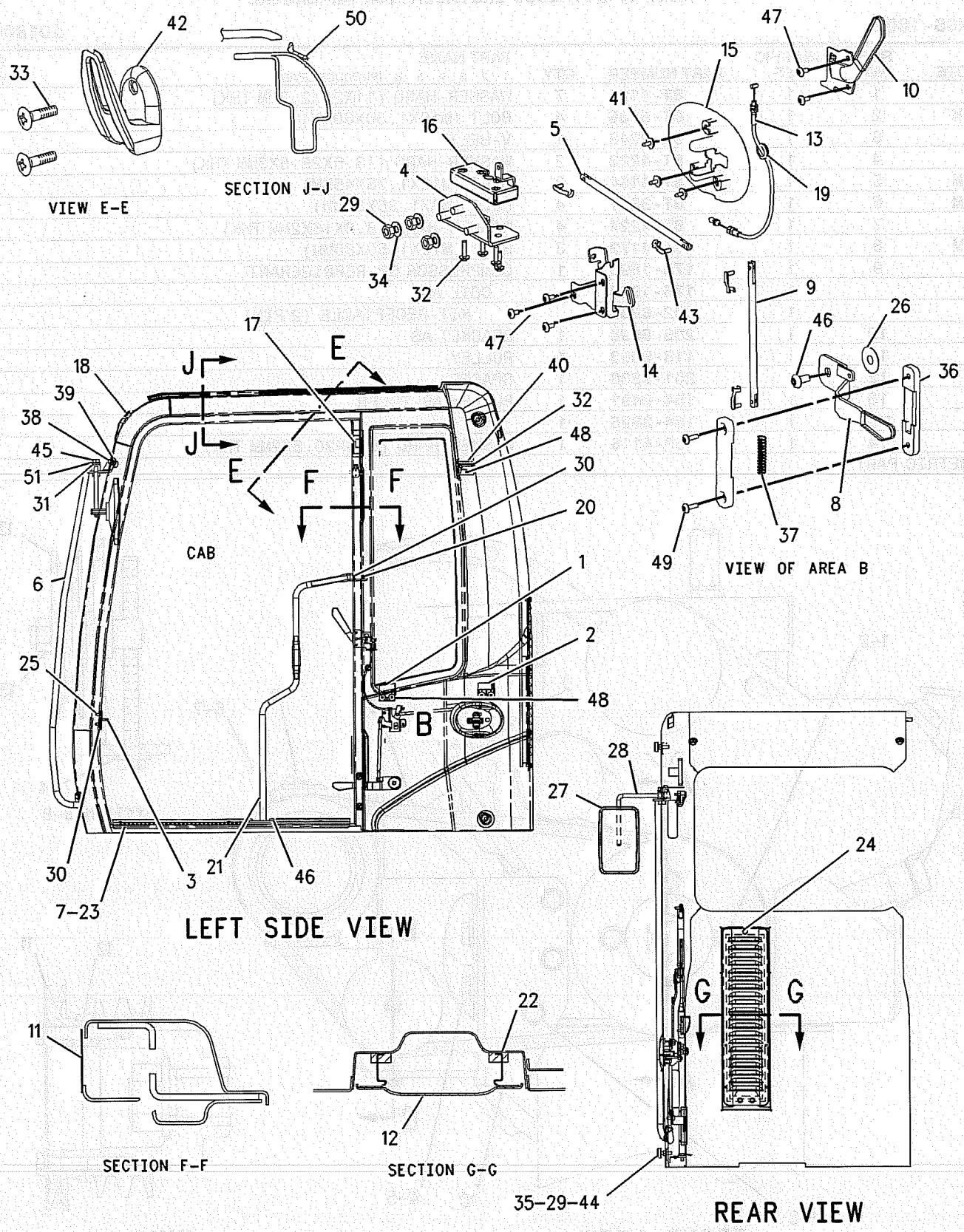

GRAPHIC #1

<END>

g00986563

OPERATOR STATION

201-3837 COMPRESSOR GP-REFRIGERANT

S/N: SBN1-UP; RAW1-UP

PART OF 201-3836 INSTALLATION AR-ENGINE

SMCS-1802 **i01889141**

NOTE	REF NO	GRAPHIC REF	PART NUMBER	QTY	PART NAME 1 2 3 4 5 6 (PRODUCT LEVEL)	SEE PAGE
	1	1	**8T-4121**	7	WASHER-HARD (11X21X2.5MM THK)	
M	2	1	**8T-6466**	4	BOLT (M10X1.50X60MM)	
	3	1	**9L-2248**	1	V-BELT	
	4	1	**8T-4223**	2	WASHER-HARD (13.5X25.5X3MM THK)	
M	5	1	**8T-4184**	2	BOLT (M12X1.75X45MM)	
M	6	1	**8T-3647**	4	BOLT (M8X1.25X80MM)	
	7	1	**8T-4224**	4	WASHER-HARD (8.8X16X2MM THK)	
M	8	1	**8T-4172**	3	BOLT (M10X1.50X80MM)	
	9	1	**176-1895**	1	COMPRESSOR GP-REFRIGERANT	
		1	**176-1920**		COIL AS	
		1	**102-8802**		KIT-RECEPTACLE (2 PIN)	
	10	1	**205-6698**	1	BRACKET AS	
	11	1	**118-9863**	1	PULLEY	
	12	1	**201-3888**	1	SPACER	
	13	1	**154-0491**	1	PULLEY AS-IDLER	
	13A	1	**184-3825**	1	NUT	
	14	1	**5P-4116**	1	WASHER-HARD (8.8X20.5X2MM THK)	

M-METRIC PART

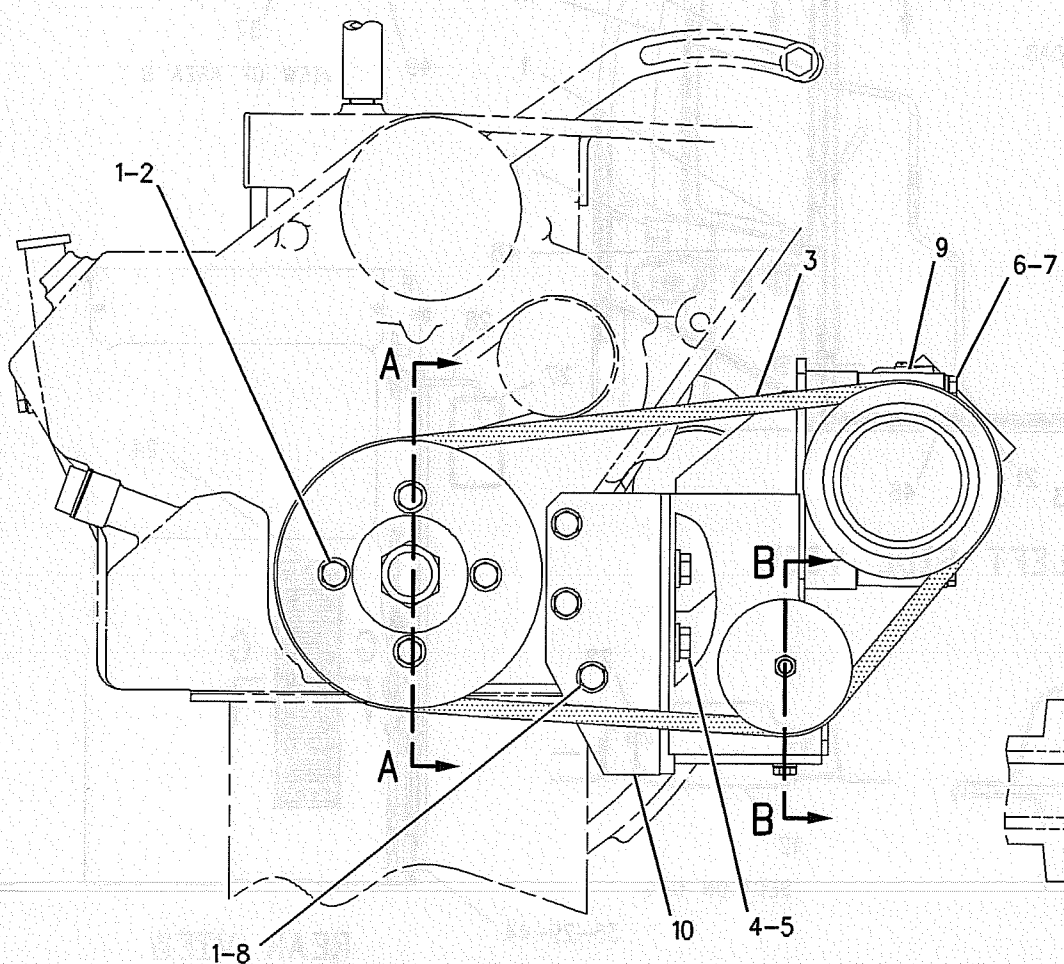

FRONT VIEW

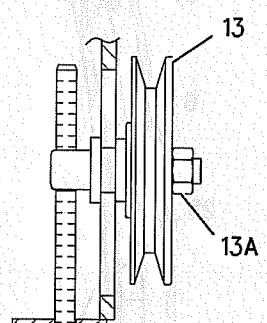

SECTION B-B

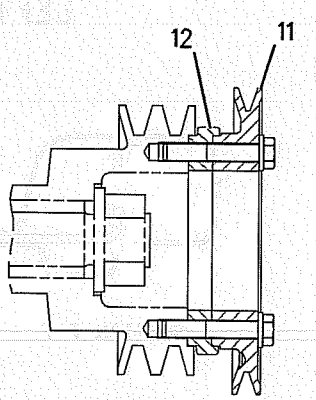

SECTION A-A

GRAPHIC #1 **<END>** g00897511

OPERATOR STATION

217-9385 CONDENSER & MTG GP-REFRIGERANT

S/N: SBN1-UP; RAW1-UP

PART OF 201-3836 INSTALLATION AR-ENGINE

SMCS-1805 **i01847756**

NOTE	REF NO	GRAPHIC REF	PART NUMBER	QTY	PART NAME 1 2 3 4 5 6 (PRODUCT LEVEL)	SEE PAGE
	1	1	**164-0588**	1	CONDENSER AS	
	2	1	**217-9386**	1	SUPPORT AS	
M	2A	1	**8T-3490**	1	NUT-WELD (M10X1.5 THD)	
	2B	1	**9R-2821**	2	BOSS (M10X15MM)	
	2C	1	*099-7857*	2	HINGE	
	3	1	**222-0228**	2	SUPPORT AS	
M	3A	1	**8T-3597**	4	NUT-WELD (M12X1.75 THD)	
	4	1	**222-0235**	1	SUPPORT AS	
M	4A	1	**8T-3490**	3	NUT-WELD (M10X1.5 THD)	
	5	1	**222-0232**	1	SUPPORT AS	
	6	1	**193-2764**	1	HANDLE AS	
	7	1	**193-2765**	2	SUPPORT AS	
M	8	1	**8T-4189**	4	BOLT (M8X1.25X20MM)	
	9	1	**5P-4116**	4	WASHER-HARD (8.8X20.5X2MM THK)	
M	10	1	**8T-4200**	4	BOLT (M8X1.25X16MM)	
	11	1	**8T-4224**	4	WASHER-HARD (8.8X16X2MM THK)	
M	12	1	**8T-4137**	8	BOLT (M10X1.5X20MM)	
	13	1	**8T-4121**	9	WASHER-HARD (11X21X2.5MM THK)	
M	14	1	**8T-4192**	4	BOLT (M12X1.75X25MM)	
	15	1	**8T-4223**	4	WASHER-HARD (13.5X25.5X3MM THK)	
	16	1	**7Y-8561**	1	BUMPER	
M	17	1	**8T-4133**	1	NUT (M10X1.5 THD)	

M-METRIC PART

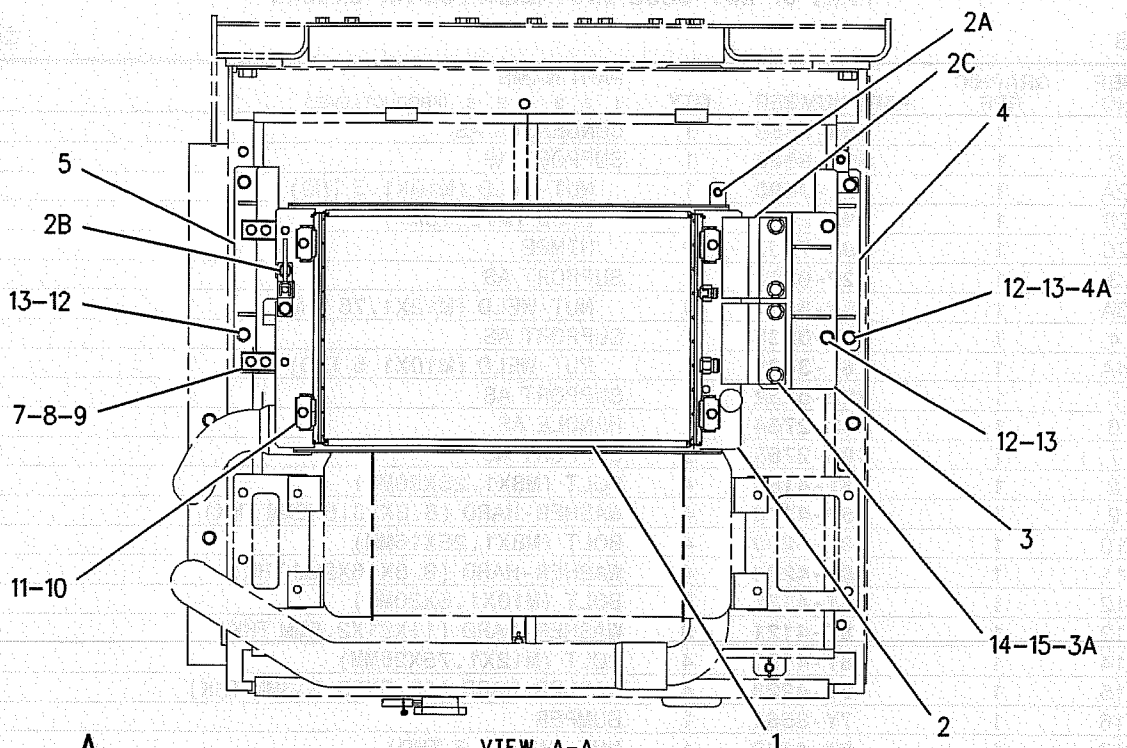

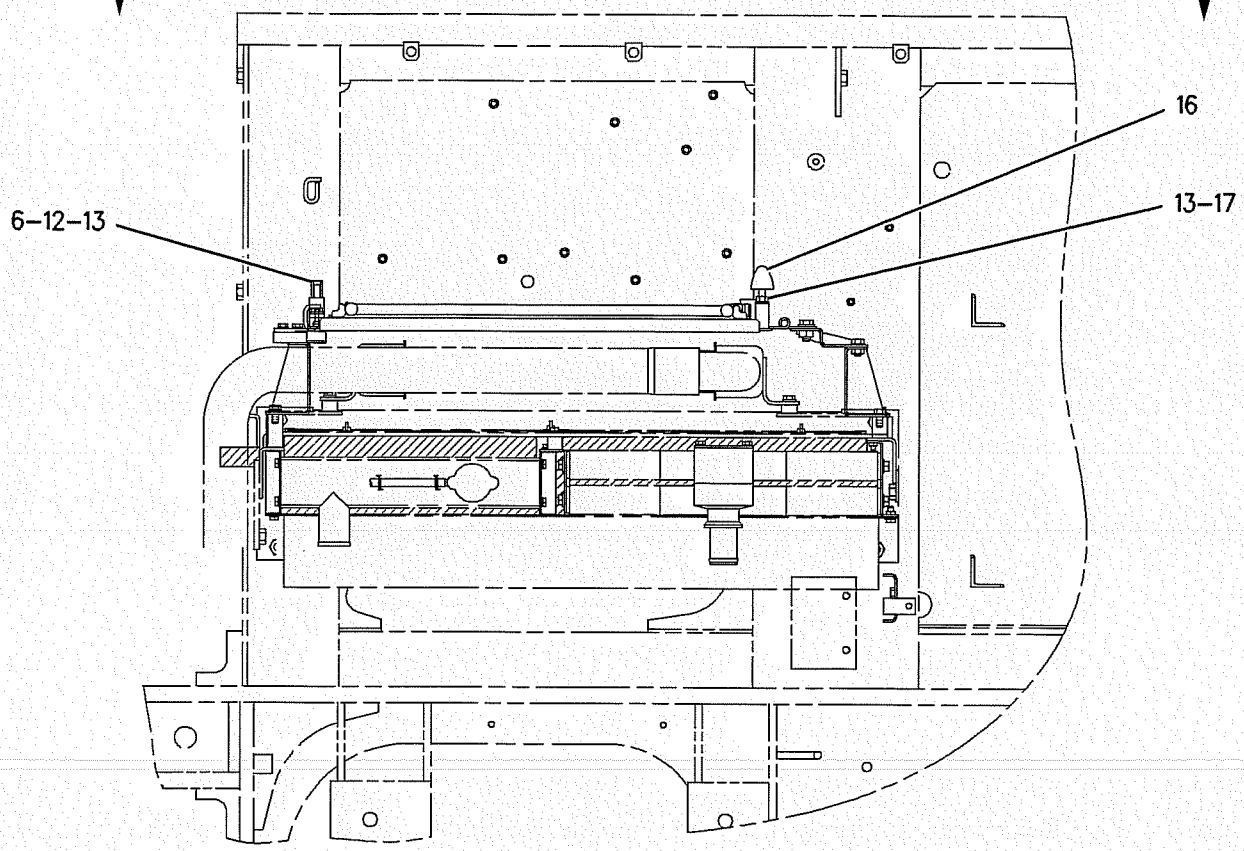

GRAPHIC #1

<END>

g00942130

OPERATOR STATION

157-3170 CONSOLE GP-INSTRUMENT

S/N: SBN1-UP; RAW1-UP

PART OF 161-3738 OPERATOR AR

SMCS-4284, 7451 **i01392532**

NOTE	REF NO	GRAPHIC REF	PART NUMBER	QTY	PART NAME 1 2 3 4 5 6 (PRODUCT LEVEL)	SEE PAGE
Y	1	1	*157-3198*	1	MONITOR GP-OPERATOR	595
M	2	1	**9X-2040**	2	SCREW-TRUSS HEAD (M10X1.5X25MM)	
	3	1	**163-6795**	2	STRAP	

M-METRIC PART
Y-SEPARATE ILLUSTRATION

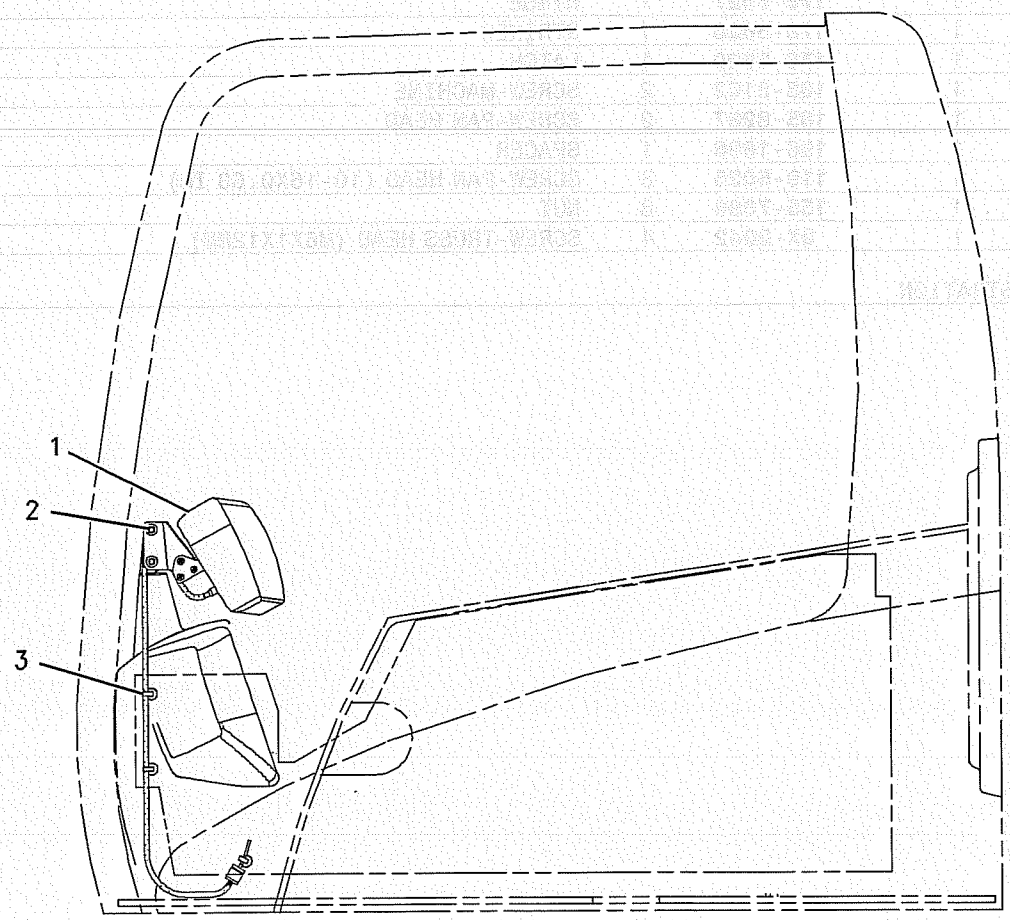

LEFT SIDE VIEW

GRAPHIC #1 **<END>** g00685704

OPERATOR STATION

161-3759 CONSOLE GP-LH

S/N: SBN1-UP; RAW1-UP

PART OF 161-3758 CONSOLE GP-OPERATOR

SMCS-5258 **i01503822**

NOTE	REF NO	GRAPHIC REF	PART NUMBER	QTY	PART NAME 1 2 3 4 5 6 (PRODUCT LEVEL)	SEE PAGE
M	1	1	**7Y-9096**	1	SCREW-TRUSS HEAD	
M	2	1	**128-2135**	6	SCREW-TRUSS HEAD (M6)	
	3	1	**178-5401**	1	SUPPORT AS	
	4	1	**178-5408**	1	CUSHION AS	
	5	1	**178-5426**	9	SCREW-TAPPING	
	6	1	**178-5519**	1	COVER	
	7	1	**178-5520**	1	COVER	
	8	1	**178-5521**	1	COVER	
	9	1	**178-5522**	1	COVER	
Y	10	1	**178-5524**	1	ADJUSTMENT GP-CONSOLE	548
	11	1	**178-5530**	1	ASHTRAY	
	12	1	**178-5531**	1	CASE	
	13	1	**178-5534**	1	CASE	
	14	1	**178-5627**	1	HINGE	
	15	1	**178-5628**	1	STRIKER	
	16	1	**178-5629**	1	LATCH	
	17	1	**185-8162**	2	SCREW-MACHINE	
	18	1	**185-8287**	2	SCREW-PAN HEAD	
	19	1	**196-1696**	1	SPACER	
	20	1	**119-5026**	8	SCREW-PAN HEAD (10-16X0.63 IN)	
	21	1	**155-7099**	8	NUT	
M	22	1	**9X-2042**	4	SCREW-TRUSS HEAD (M6X1X12MM)	

M-METRIC PART
Y-SEPARATE ILLUSTRATION

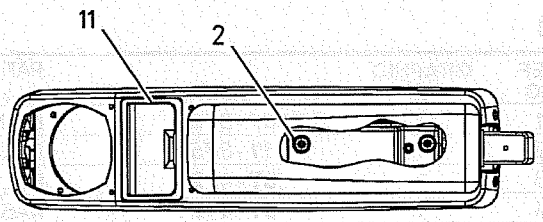

TOP VIEW

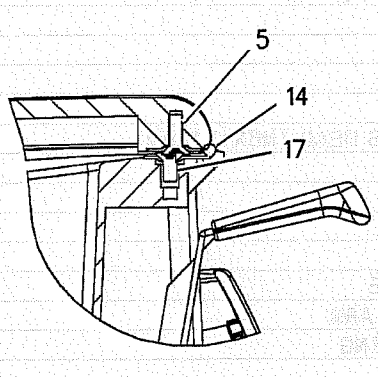

SECTION A-A

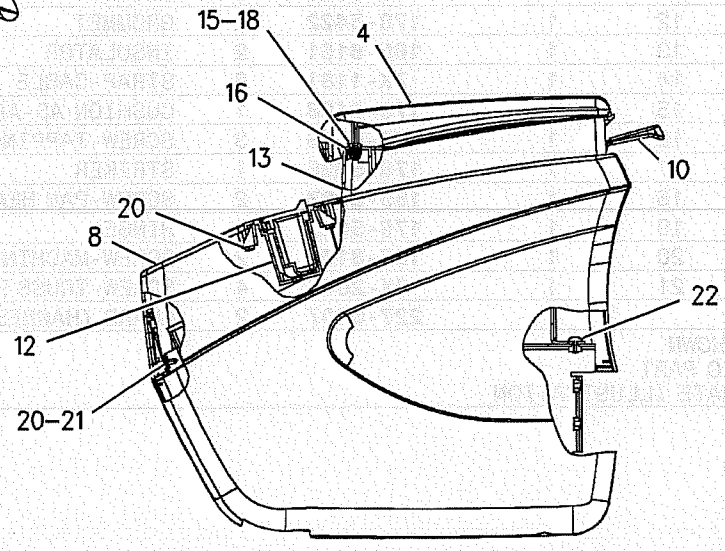

RIGHT SIDE VIEW

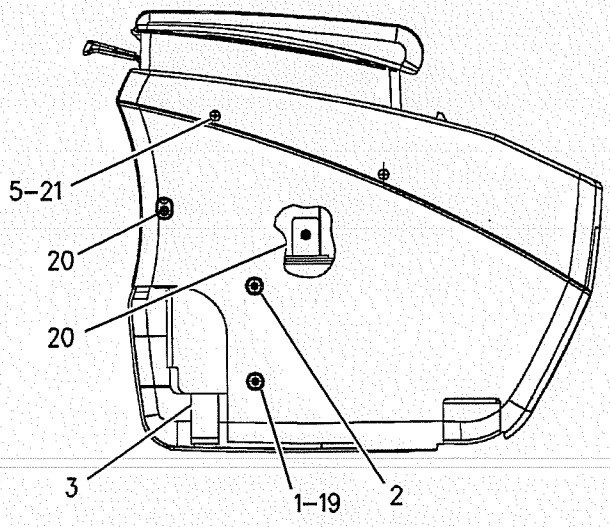

LEFT SIDE VIEW

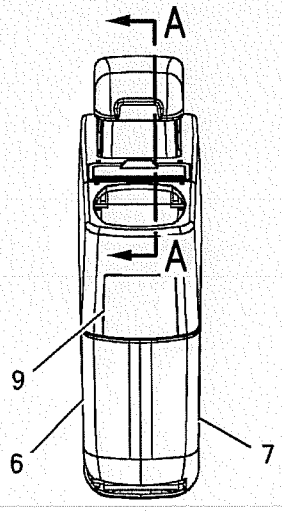

FRONT VIEW

GRAPHIC #1 **<END>** g00788661

OPERATOR STATION

161-3758 CONSOLE GP-OPERATOR

S/N: SBN1-UP; RAW1-UP

PART OF 161-3738 OPERATOR AR

SMCS-5258 **i01888548**

NOTE	REF NO	GRAPHIC REF	PART NUMBER	QTY	PART NAME 1 2 3 4 5 6 (PRODUCT LEVEL)	SEE PAGE
Y	1	1	*161-3760*	1	CONSOLE GP-RH	576
Y	2	1	*161-3759*	1	CONSOLE GP-LH	572
M	3	1	**8T-4195**	4	BOLT (M10X1.5X30MM)	
	4	1	**8T-4121**	4	WASHER-HARD (11X21X2.5MM THK)	
	5	1	**178-5523**	2	COVER	
	6	1	**176-1914**	2	SUPPORT	
	7	1	**176-1913**	2	GUARD	
	8	1	**176-1915**	2	SUPPORT	
M	9	1	**9X-2043**	16	SCREW-TRUSS HEAD (M6X1X14MM)	
	10	1	**176-1916**	2	GROMMET	
	11	1	**178-5423**	2	GROMMET	
	12	1	**178-5422**	2	GROMMET	
	13	1	**185-8161**	2	INSULATOR	
	14	1	**7K-1181**	6	STRAP-CABLE	
	15	1	**178-5408**	1	CUSHION AS-ARM	
	16	1	**178-5426**	3	SCREW-TAPPING	
	17	1	**178-5628**	1	STRIKER	
	18	1	**185-8287**	2	SCREW-PAN HEAD (M4X0.7X12MM)	
	19	1	**178-5627**	1	HINGE	
	20	1	**185-8162**	2	SCREW-MACHINE (M5X0.8X10MM)	
M	21	1	**9X-2045**	4	SCREW-TRUSS HEAD (M6X1X20MM)	
F		1	**227-6807**	2	GUARD (HARNESS)	

F-NOT SHOWN
M-METRIC PART
Y-SEPARATE ILLUSTRATION

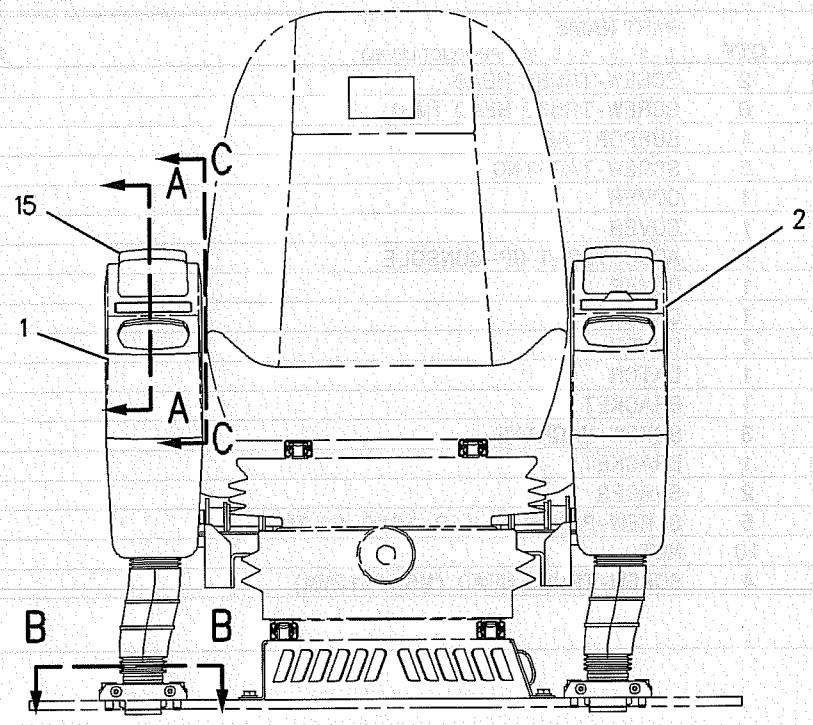

FRONT VIEW

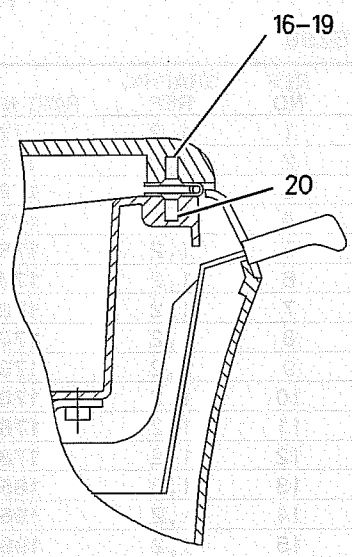

SECTION A-A

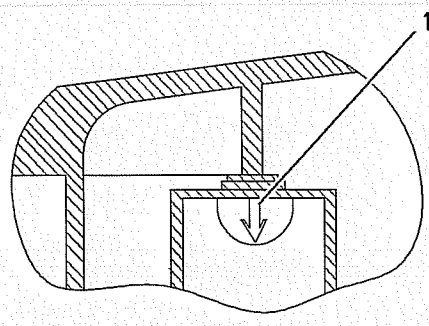

SECTION C-C

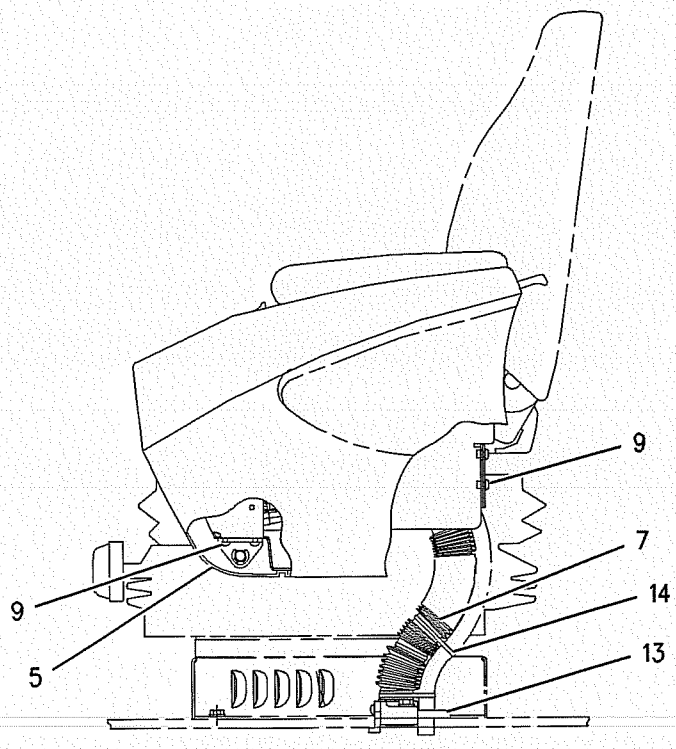

RIGHT SIDE VIEW

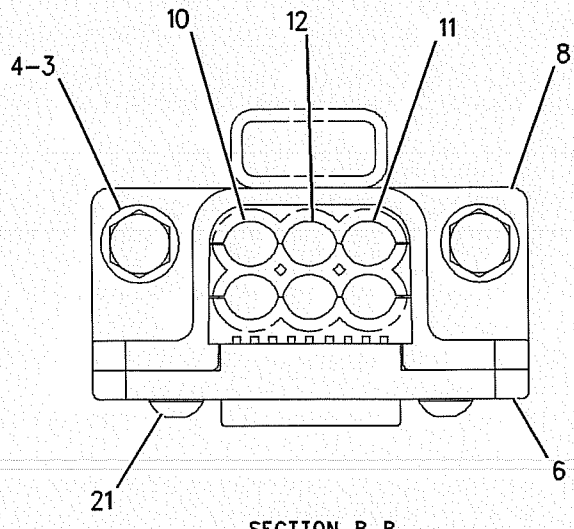

SECTION B-B

GRAPHIC #1 **<END>** g00777018

OPERATOR STATION

161-3760 CONSOLE GP-RH

S/N: SBN1-UP; RAW1-UP

PART OF 161-3758 CONSOLE GP-OPERATOR

SMCS-5258 **i01694975**

NOTE	REF NO	GRAPHIC REF	PART NUMBER	QTY	PART NAME 1 2 3 4 5 6 (PRODUCT LEVEL)	SEE PAGE
M	1	1,2	**7Y-9096**	2	SCREW-TRUSS HEAD	
M	2	1,2	**128-2135**	6	SCREW-TRUSS HEAD (M6)	
	3	1,2	**178-5400**	1	SUPPORT AS	
	4	1,2	**178-5426**	8	SCREW-TAPPING	
	5	1,2	**178-5519**	1	COVER	
	6	1,2	**178-5522**	1	COVER	
Y	7	1,2	**178-5524**	1	ADJUSTMENT GP-CONSOLE	548
	8	1,2	**178-5529**	1	COVER	
	9	1,2	**178-5533**	1	CASE	
	10	1,2	**178-5548**	1	COVER	
	11	1,2	**178-5629**	1	LATCH	
	12	1,2	**178-5632**	1	BRACKET	
	13	1,2	**185-8163**	3	SCREW-MACHINE	
	14	1,2	**196-1565**	1	BRACKET	
	15	1,2	**196-1696**	2	SPACER	
	16	1,2	**119-5026**	5	SCREW-PAN HEAD (10-16X0.63 IN)	
	17	1	**155-7099**	10	NUT	
M	18	1	**9X-2042**	4	SCREW-TRUSS HEAD (M6X1X12MM)	

M-METRIC PART
Y-SEPARATE ILLUSTRATION

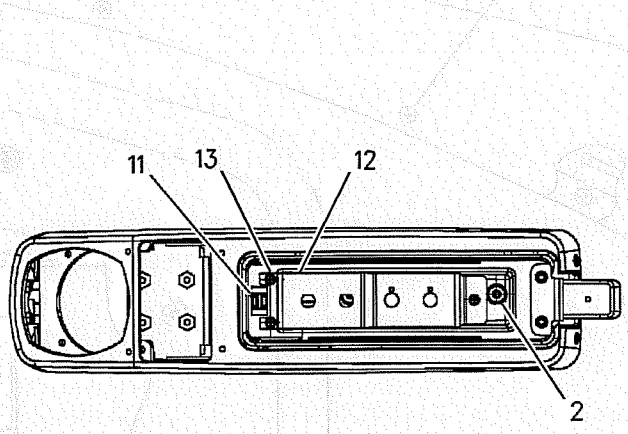

TOP VIEW

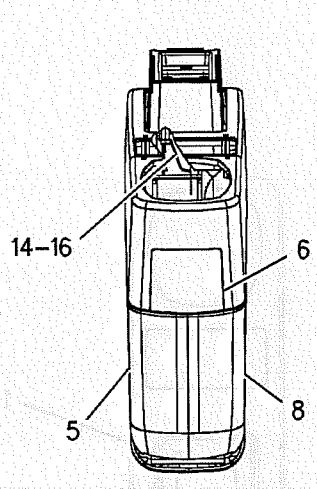

FRONT VIEW

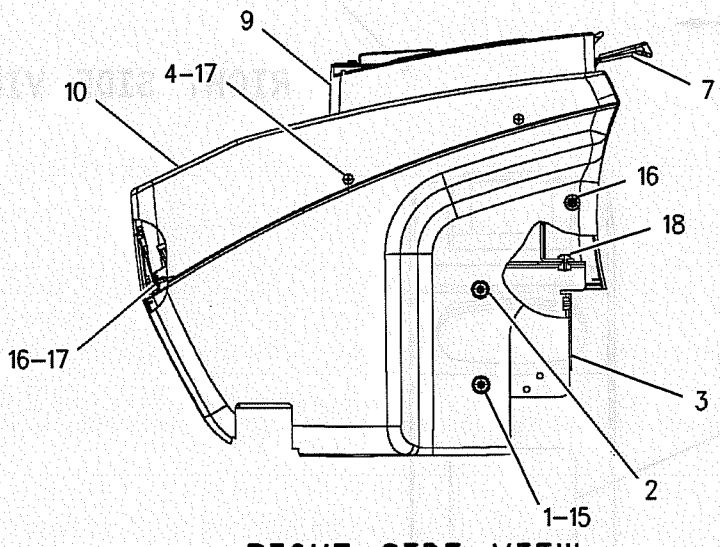

RIGHT SIDE VIEW

GRAPHIC #1 g00779287

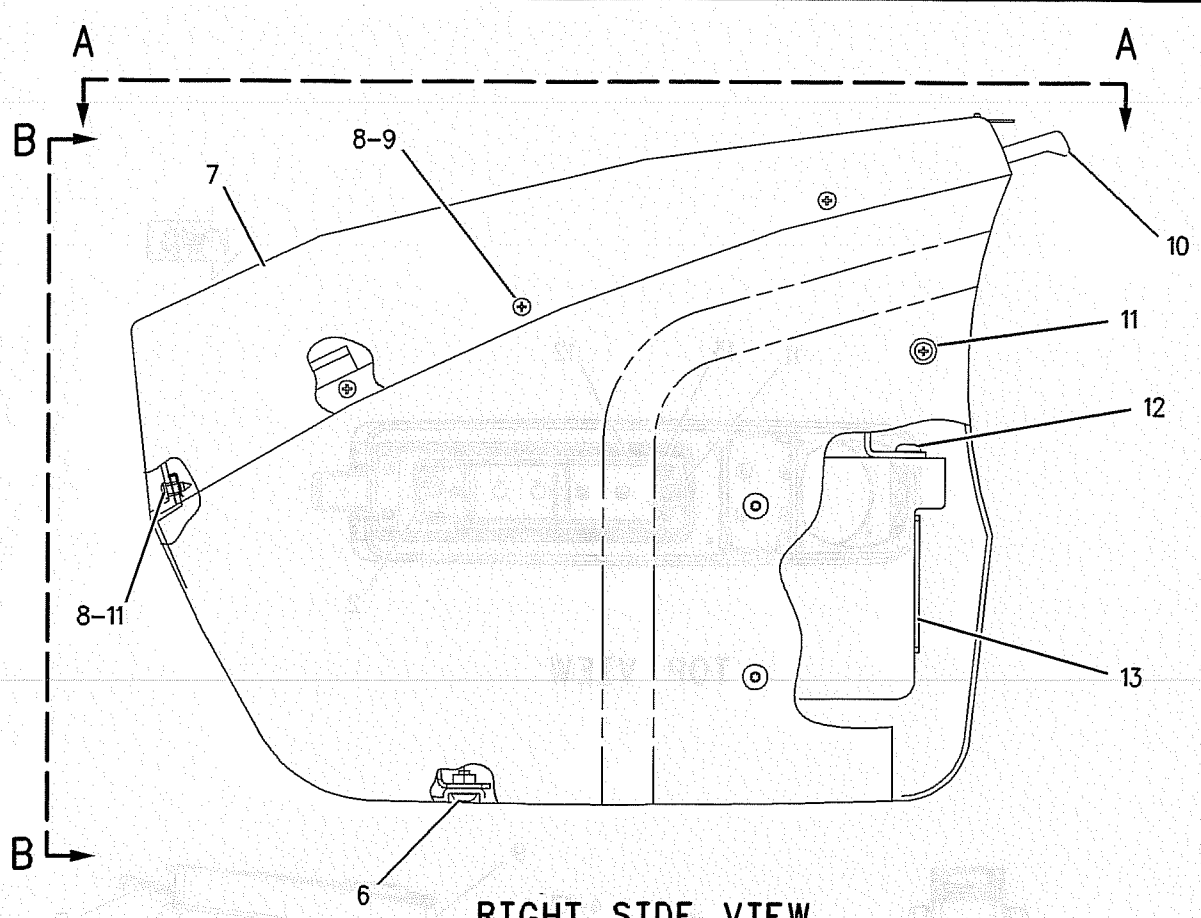

RIGHT SIDE VIEW

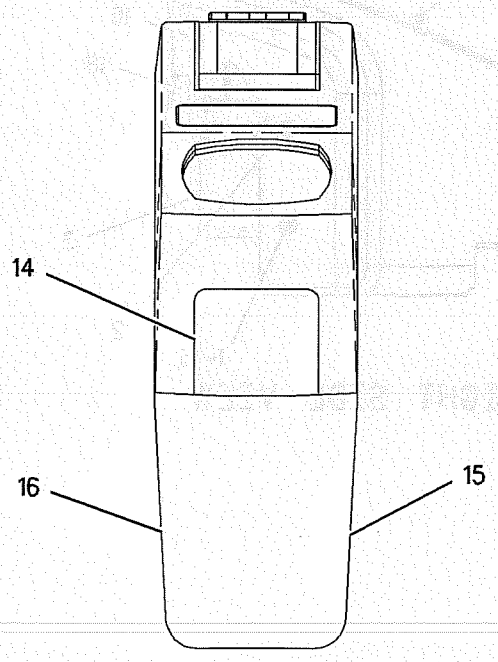

VIEW B-B

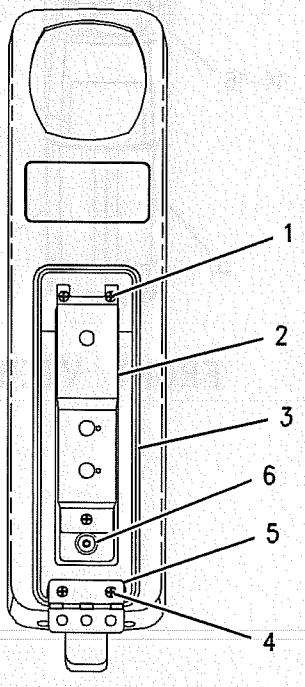

VIEW A-A

GRAPHIC #2 **<END>** g00674132

OPERATOR STATION

196-1421 COVER GP-STORAGE

S/N: SBN1-UP; RAW1-UP

AN ATTACHMENT

SMCS-7300 **i01681240**

NOTE	REF NO	GRAPHIC REF	PART NUMBER	QTY	PART NAME 1 2 3 4 5 6 (PRODUCT LEVEL)	SEE PAGE
Y	1	1	**196-1422**	1	COVER GP-STORAGE	580
	2	1	**196-1582**	1	HOSE	
	3	1	**167-7110**	1	HOSE	
	4	1	**167-7114**	4	CLAMP	

Y-SEPARATE ILLUSTRATION

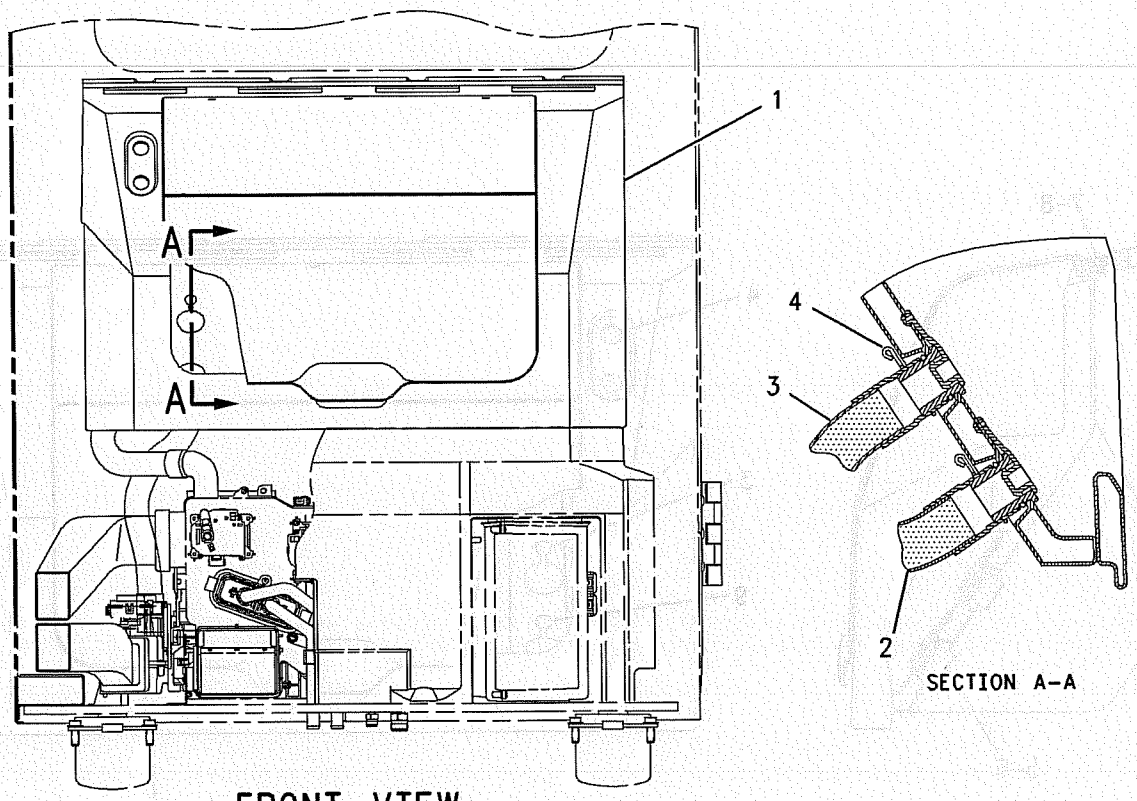

GRAPHIC #1 **<END>** g00793276

OPERATOR STATION

196-1422 COVER GP-STORAGE

S/N: SBN1-UP; RAW1-UP
PART OF 196-1421 COVER GP-STORAGE
AN ATTACHMENT

SMCS-7300 **i01670137**

NOTE	REF NO	GRAPHIC REF	PART NUMBER	QTY	PART NAME 1 2 3 4 5 6 (PRODUCT LEVEL)	SEE PAGE
	1	1	*196-1426*	1	COVER AS	
	2	1	**171-7339**	1	COVER	
	3	1	**196-1668**	1	CAP	
	4	1	**176-2002**	2	CAP	
	5	1	**189-3463**	2	PIPE	
	6	1	**095-1531**	2	SEAL-O-RING	
M	7	1	**9X-2044**	3	SCREW-TRUSS HEAD (M6X1X16MM)	
	8	1	**100-7689**	3	NUT AS	
	9	1	**196-1669**	1	CAP	

M-METRIC PART

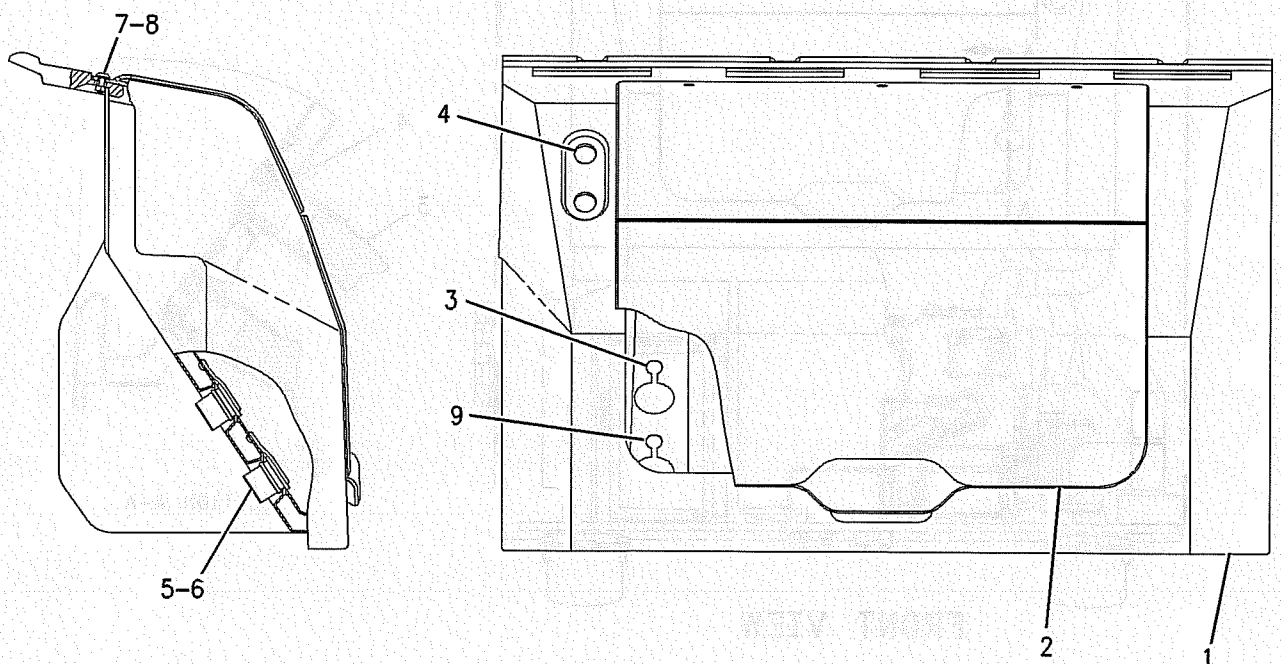

GRAPHIC #1 **<END>** g00866520

OPERATOR STATION

139-7100 DOOR GP-CAB

S/N: SBN1-UP; RAW1-UP
PART OF 164-0494 CAB GP
AN ATTACHMENT

SMCS-7308 **i01895781**

NOTE	REF NO	GRAPHIC REF	PART NUMBER	QTY	PART NAME 1 2 3 4 5 6 (PRODUCT LEVEL)	SEE PAGE
Y	1	1	**151-6792**	1	WINDOW GP-DOOR	608
	2	1	**151-9461**	4	SPACER	
	3	1	**156-6600**	1	LOCK AS	
		1	**164-0514**	1	CLIP	
		1	**164-0519**	1	CLIP	
	4	1	**156-6645**	1	HANDLE AS	
		1	**201-4391**	1	CLIP	
	5	1	**161-3639**	1	HANDLE AS	
	6	1	**161-3650**	1	COVER AS	
	7	1	**161-3663**	1	SEAL AS	
		1	**151-9497**	45	CLIP	
	8	1	**161-3665**	1	SEAL	
	9	1	**189-2690**	1	HANDLE AS	
M	10	1	**096-2622**	2	SCREW-MACHINE (M4X0.7X8MM)	
	11	1	**096-3884**	2	NUT-SPRING	
M	12	1	**101-8899**	2	SCREW AS	
M	13	1	**101-8900**	2	SCREW AS	
	14	1	**151-6703**	1	HANDLE-PULL	
	15	1	**151-6704**	2	CAP	
	16	1	**156-6471**	1	GLASS	
	17	1	**156-6598**	1	HOOK	
	18	1	**156-6643**	1	COVER	
	19	1	**156-6644**	1	COVER	
	20	1	**161-3699**	1	COVER	
	21	1	**164-0515**	1	JOINT	
	22	1	**167-7039**	1	GROMMET	
	23	1	**4I-4286**	1	KNOB	
	24	1	**185-8180**	3	SCREW (M6X1X16MM)	
	25	1	**189-2711**	2	WASHER (8.5X16X2.3MM THK)	
M	26	1	**9X-2042**	10	SCREW-TRUSS HEAD (M6X1X12MM)	
	27	1	**178-5574**	2	SPACER	
	28	1	**178-5573**	4	SPACER	

M-METRIC PART
Y-SEPARATE ILLUSTRATION

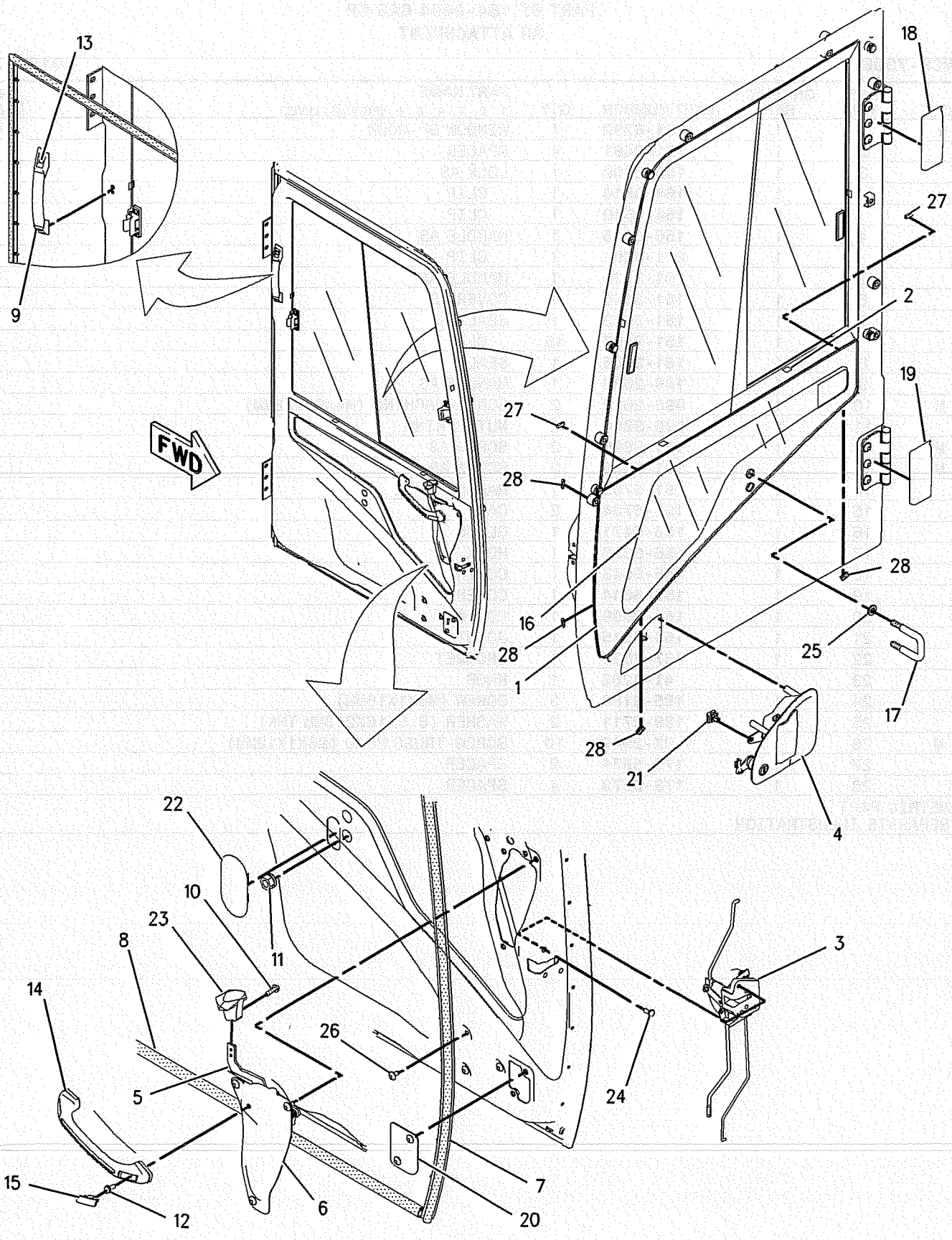

GRAPHIC #1 **<END>** g00986674

OPERATOR STATION

167-7058 DUCT GP-AIR

S/N: SBN1-UP; RAW1-UP

PART OF 161-3773 AIR CONDITIONER GP

SMCS-7304, 7320, 7337 **i01463349**

NOTE	REF NO	GRAPHIC REF	PART NUMBER	QTY	PART NAME 1 2 3 4 5 6 (PRODUCT LEVEL)	SEE PAGE
M	1	1	*101-8899*	5	SCREW AS	
					(EACH INCLUDES)	
M		1	**095-0742**	1	SCREW-MACHINE (M6X1.0X16MM)	
		1	**095-0827**	1	LOCKWASHER	
	2	1	**4I-1278**	1	FILTER	
	3	1	**164-0592**	1	DUCT AS	
	4	1	**164-0633**	1	DUCT AS	
	5	1	**167-7059**	1	DUCT AS	
	6	1	**164-0635**	1	DUCT AS	
	7	1	**164-0636**	1	DUCT AS	
	8	1	**176-1996**	2	CLIP	
	9	1	**9X-8256**	1	WASHER (6.6X12X2MM THK)	
M	10	1	**8T-4171**	1	BOLT (M6X1X12MM)	
	11	1	**164-0637**	1	DUCT AS	

M-METRIC PART

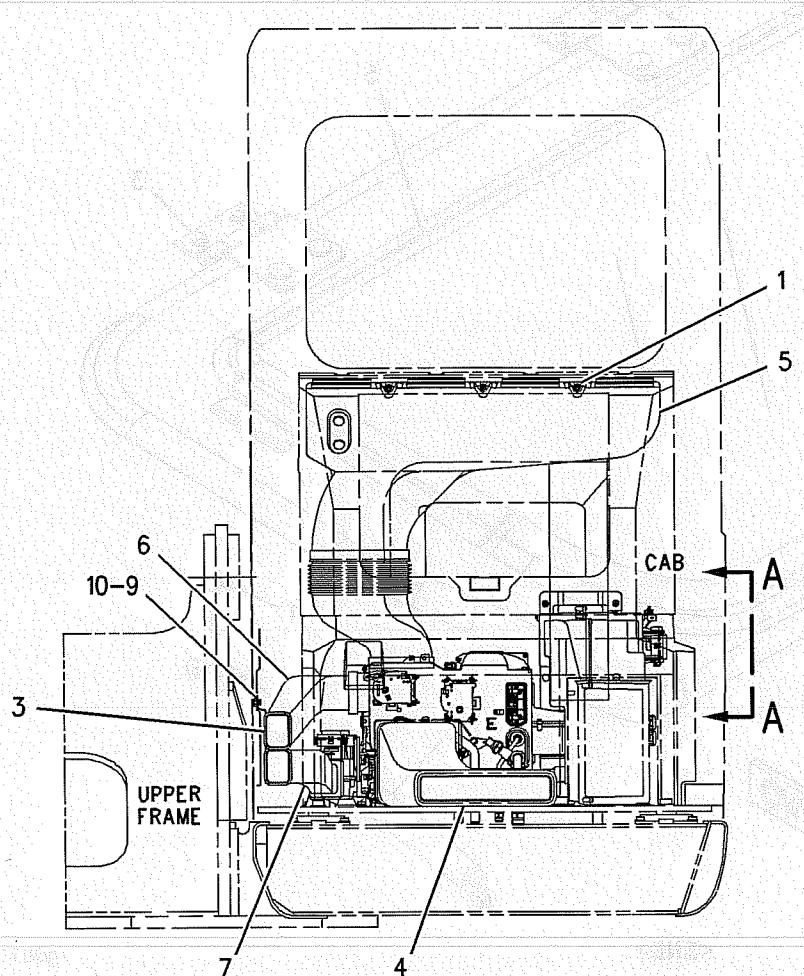

FRONT VIEW

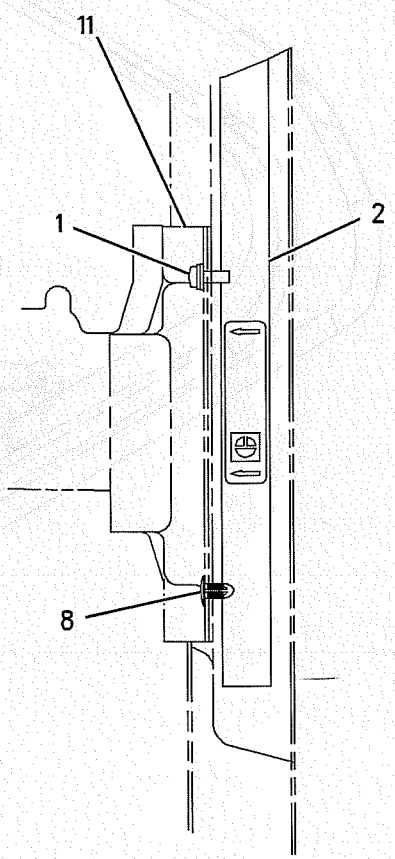

VIEW A-A

GRAPHIC #1 **<END>** g00728859

OPERATOR STATION

139-7099 HATCH GP-ROOF

S/N: SBN1-UP; RAW1-UP
PART OF 164-0494 CAB GP
AN ATTACHMENT

SMCS-7303 **i01891973**

NOTE	REF NO	GRAPHIC REF	PART NUMBER	QTY	PART NAME 1 2 3 4 5 6 (PRODUCT LEVEL)	SEE PAGE
	1	1	**2Y-5685**	4	RING-RETAINING	
	2	1	**099-3506**	2	SPRING AS-GAS	
	3	1	**105-2169**	4	BOLT AS	
CY	4	1	**189-2849**	1	HATCH GP-ROOF	585
C	5	1	**189-2847**	1	SEAL	

C-CHANGE FROM PREVIOUS TYPE
Y-SEPARATE ILLUSTRATION

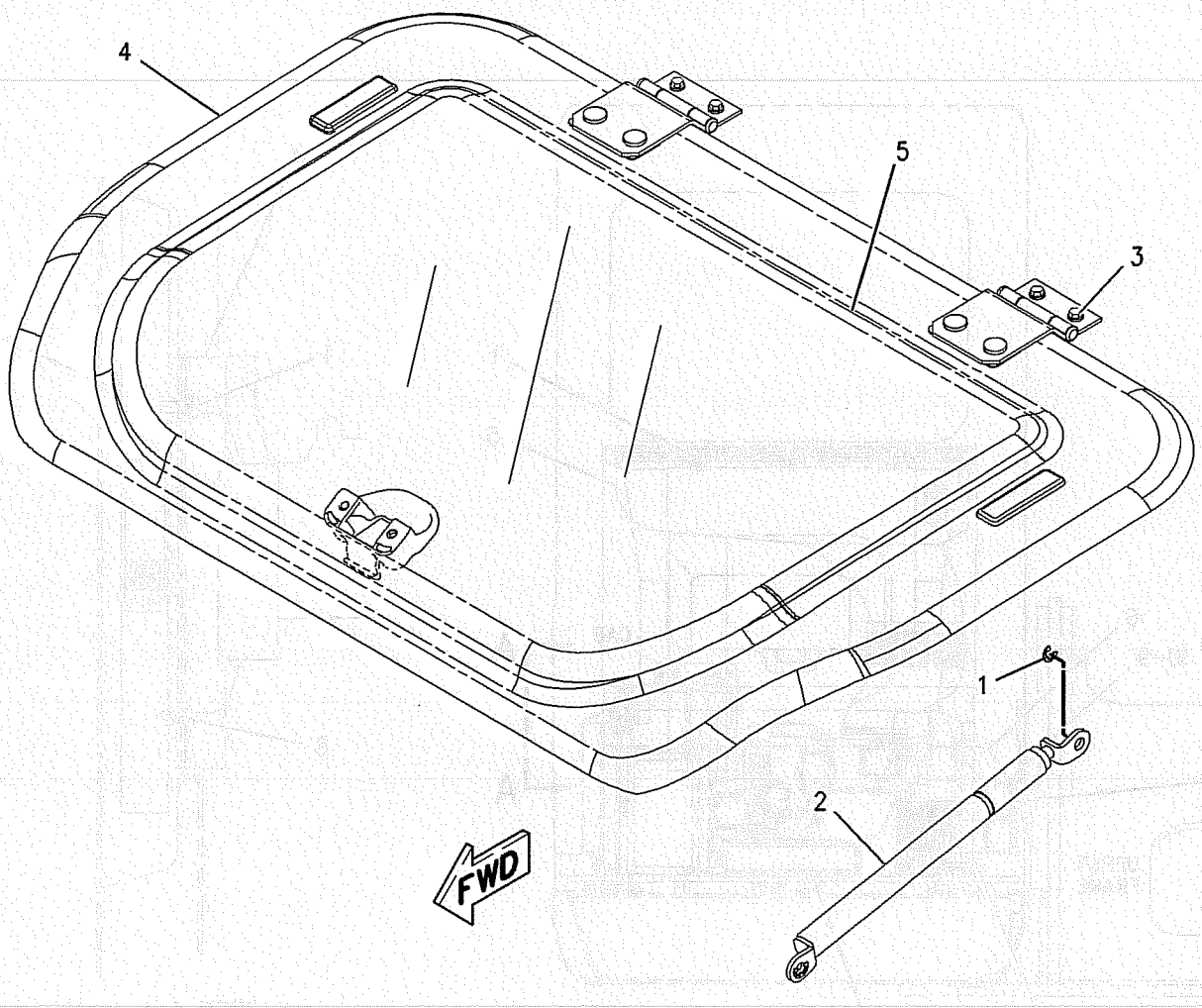

GRAPHIC #1 **<END>** g00737364

OPERATOR STATION

189-2849 HATCH GP-ROOF

S/N: SBN1-UP; RAW1-UP
PART OF 139-7099 HATCH GP-ROOF
AN ATTACHMENT

SMCS-7303 **i01891991**

NOTE	REF NO	GRAPHIC REF	PART NUMBER	QTY	PART NAME 1 2 3 4 5 6 (PRODUCT LEVEL)	SEE PAGE
	1	1	**161-3694**	1	CATCH	
	2	1	**189-2693**	1	BRACKET AS (RH)	
	3	1	**189-2694**	1	BRACKET AS (LH)	
	4	1	**189-2716**	2	HINGE AS	
Z	5	1		1	COVER	
	6	1	**085-6449**	2	PACKING	
M	7	1	**100-2881**	4	SCREW-TRUSS HEAD (M5X0.8X10MM)	
	8	1	**171-7477**	2	NUT	
	9	1	**4I-1260**	2	PACKING	
	10	1	**4I-4361**	2	RETAINER	
M	11	1	**6I-5342**	4	NUT (M8X1.25 THD)	
M	12	1	**9X-2045**	2	SCREW-TRUSS HEAD (M6X1X20MM)	

M-METRIC PART
Z-NOT SERVICED SEPARATELY

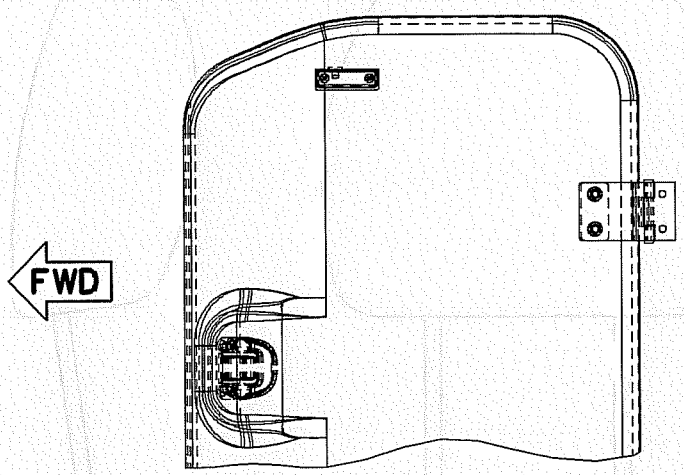

TOP VIEW

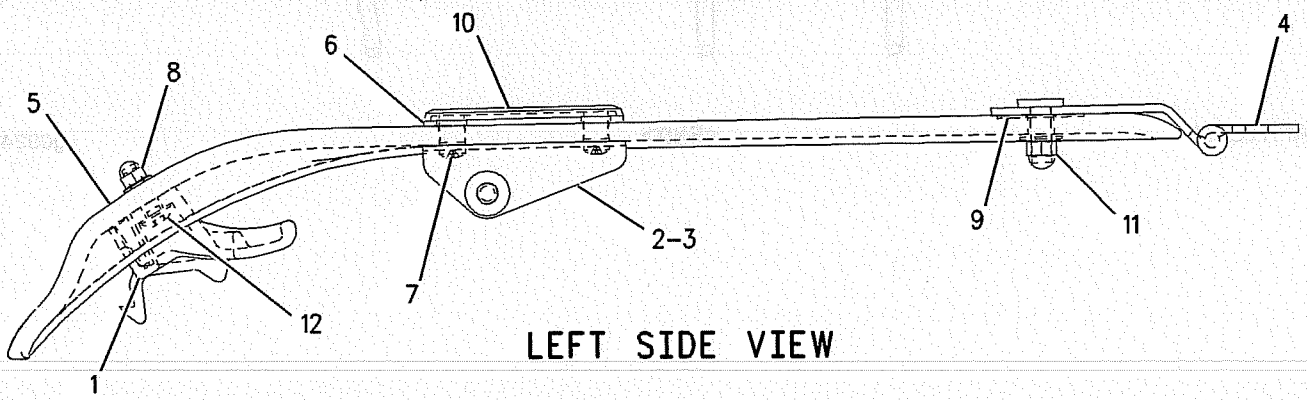

LEFT SIDE VIEW

GRAPHIC #1 **<END>** g00986370

OPERATOR STATION

164-0477 HEADREST AS

S/N: SBN1-UP; RAW1-UP

AN ATTACHMENT

SMCS-7312 **i01388066**

NOTE	REF NO	GRAPHIC REF	PART NUMBER	QTY	PART NAME 1 2 3 4 5 6 (PRODUCT LEVEL)	SEE PAGE
					INDIVIDUAL PARTS ARE NOT SERVICED SEPARATELY	

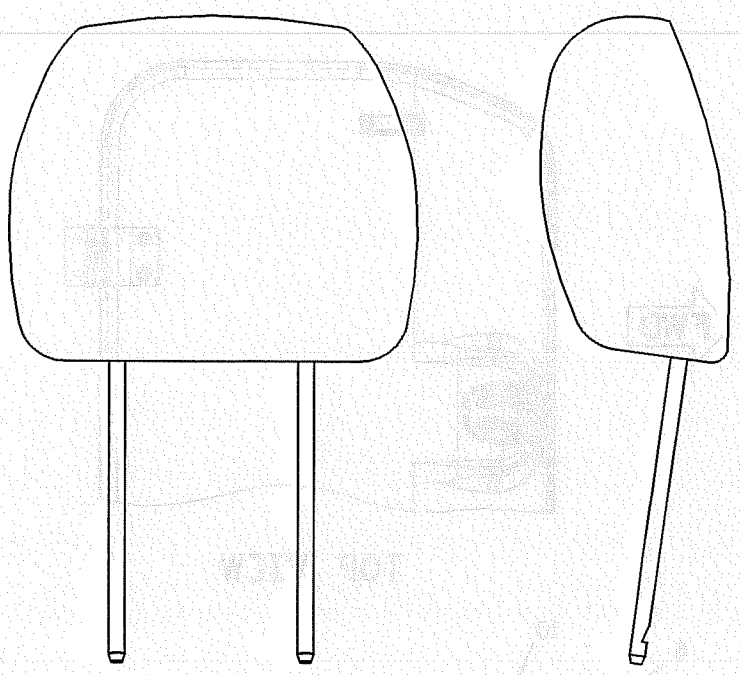

GRAPHIC #1 **<END>** g00242379

OPERATOR STATION

7Y-3813 HORN GP-ELECTRIC

S/N: SBN1-UP; RAW1-UP

PART OF 193-6848, 193-6849 CHASSIS AR

SMCS-7402 **i00751508**

NOTE	REF NO	GRAPHIC REF	PART NUMBER	QTY	PART NAME 1 2 3 4 5 6 (PRODUCT LEVEL)	SEE PAGE
	1	1	**7Y-3919**	1	HORN AS	
		1	**095-0826**	2	LOCKWASHER-TOOTH	
M		1	**095-7930**	2	SCREW-MACHINE	
	2	1	**7Y-3920**	1	HORN AS	
		1	**095-0826**	2	LOCKWASHER-TOOTH	
M		1	**095-7930**	2	SCREW-MACHINE	
M	3	1	**8T-4191**	2	BOLT (M10X1.50X16MM)	
	4	1	**8T-4121**	2	WASHER (2.5MM THK)	

M-METRIC PART

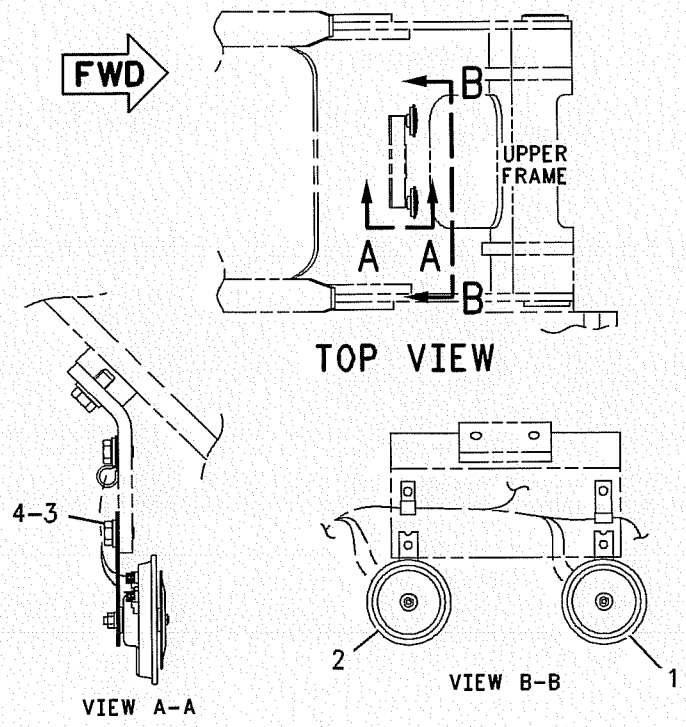

GRAPHIC #1 **<END>** g00304720

OPERATOR STATION

170-6826 INSTALLATION GP-RADIO

S/N: SBN1-UP; RAW1-UP

PART OF 161-3738 OPERATOR AR

SMCS-7338 **i01888551**

NOTE	REF NO	GRAPHIC REF	PART NUMBER	QTY	PART NAME 1 2 3 4 5 6 (PRODUCT LEVEL)	SEE PAGE
	1	1	**7Y-5505**	2	SPEAKER AS	
					(EACH INCLUDES)	
		1	**7Y-3951**	2	TERMINAL-FEMALE	
		1	**7Y-3954**	1	CONNECTOR-PLUG	
M	2	1	**099-7127**	8	SCREW-MACHINE	
	3	1	**116-0210**	4	BRACKET AS	
E	4	1	**101-2846**		GUARD (18CM)	
M	5	1	**8C-7581**	8	SCREW-MACHINE (M4X0.7X8MM)	
M	6	1	**095-0736**	2	SCREW-MACHINE (M5X0.8X10MM)	
	7	1	**8T-0328**	2	WASHER-HARD (5.5X10X1MM THK)	
	8	1	**163-6708**	1	RADIO GP (AM/FM)	

E-ORDER BY THE CENTIMETER
M-METRIC PART

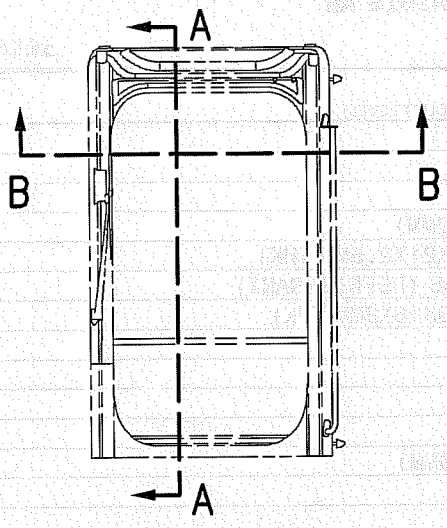

REAR VIEW

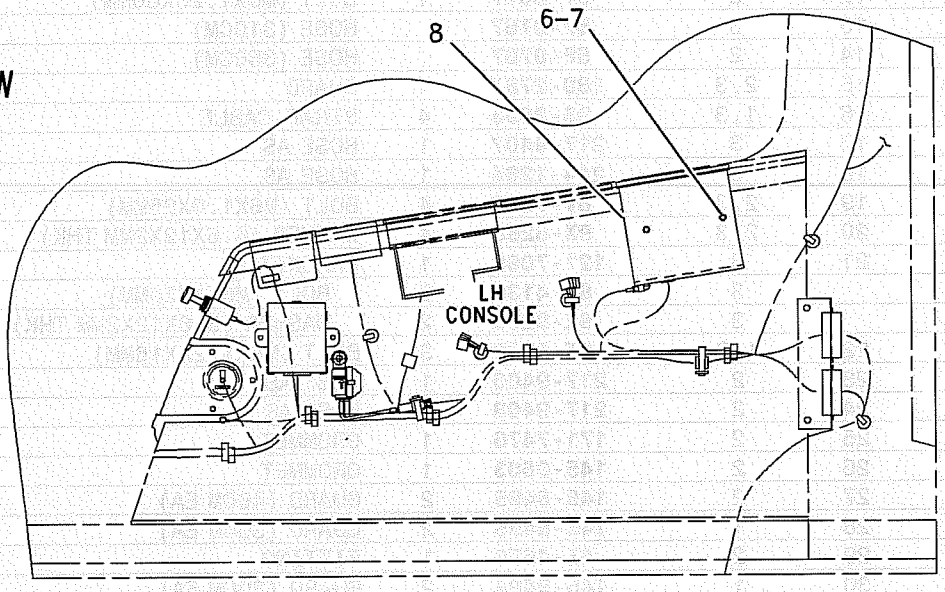

SECTION A-A

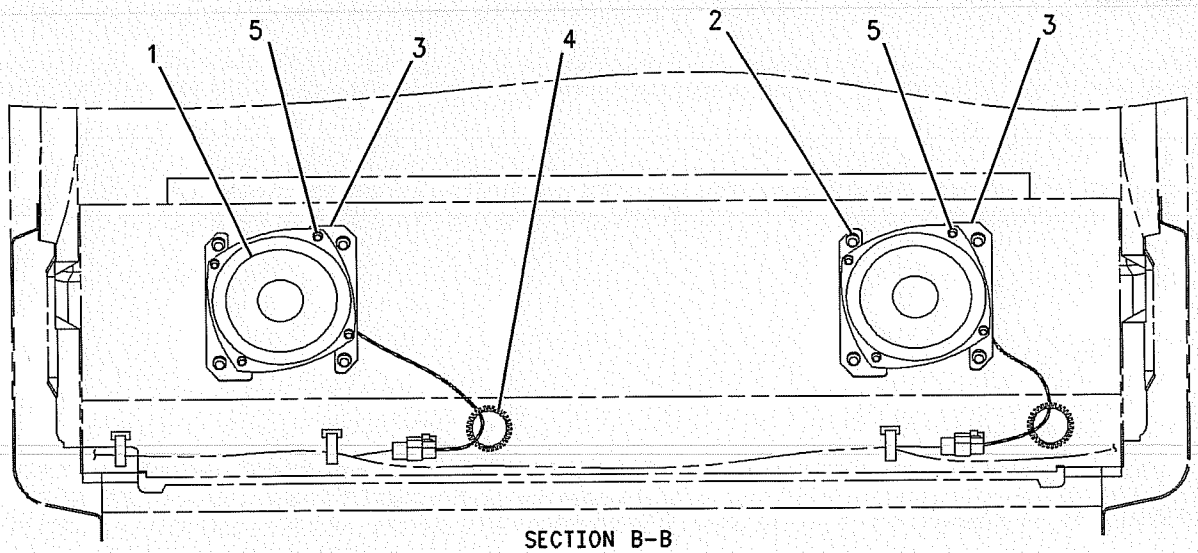

SECTION B-B

GRAPHIC #1

<END>

g00689352

OPERATOR STATION

217-9405 LINES GP-AIR CONDITIONER

S/N: SBN1-UP; RAW1-UP

PART OF 193-6848, 193-6849 CHASSIS AR

SMCS-1808 **i01888517**

NOTE	REF NO	GRAPHIC REF	PART NUMBER	QTY	PART NAME 1 2 3 4 5 6 (PRODUCT LEVEL)	SEE PAGE
	1	2	**139-7235**	2	HOSE	
	2	2	**122-9605**	2	JOINT	
	3	1,2,3	**6D-1641**	14	CLIP	
M	4	1,2,3	**8T-4137**	14	BOLT (M10X1.5X20MM)	
	5	1,2,3	**8T-4121**	14	WASHER-HARD (11X21X2.5MM THK)	
	6	3	**176-1902**	1	RECEIVER DRYER AS (REFRIGERANT)	
	7	1,3	**8T-4224**	4	WASHER-HARD (8.8X16X2MM THK)	
	8	2	**155-7024**	2	SPACER-SPECIAL	
	9	2	**178-5425**	1	ELBOW	
	10	2	**5D-1026**	8	CLAMP-HOSE	
	11	1,3	**095-0913**	2	CLIP	
M	12	3	**8T-3647**	1	BOLT (M8X1.25X80MM)	
E	13	3	**5P-0767**		HOSE (310CM)	
E	14	2	**5P-0767**		HOSE (350CM)	
	15	2,3	**189-2787**	4	GUARD	
	16	1,3	**3S-2093**	4	STRAP-CABLE	
	17	3	**217-9407**	1	HOSE AS	
	18	3	**214-1284**	1	HOSE AS	
M	19	2,3	**6V-7357**	4	BOLT (M6X1.0X25MM)	
	20	2,3	**9X-8256**	4	WASHER (6.6X12X2MM THK)	
	21	3	**121-7098**	1	BRACKET AS	
M		3	**8T-4138**	2	BOLT (M6X1X20MM)	
		3	**9X-8256**	2	WASHER (6.6X12X2MM THK)	
M	22	1,3	**8T-4200**	3	BOLT (M8X1.25X16MM)	
	23	2	**217-9406**	1	HOSE AS	
	24	2	**217-9408**	1	HOSE AS	
	25	2	**171-7476**	1	GROMMET	
	26	2	**145-0603**	1	GROMMET	
E	27	2	**145-8495**	2	GUARD (40CM EA)	
E	28	1	**145-8495**	2	GUARD (36CM EA)	
	29	2	**4I-4579**	1	FITTING	
E	30	1	**145-8494**	2	GUARD (30CM EA)	
	31	1	**201-4434**	1	SUPPORT AS	

E-ORDER BY THE CENTIMETER
M-METRIC PART

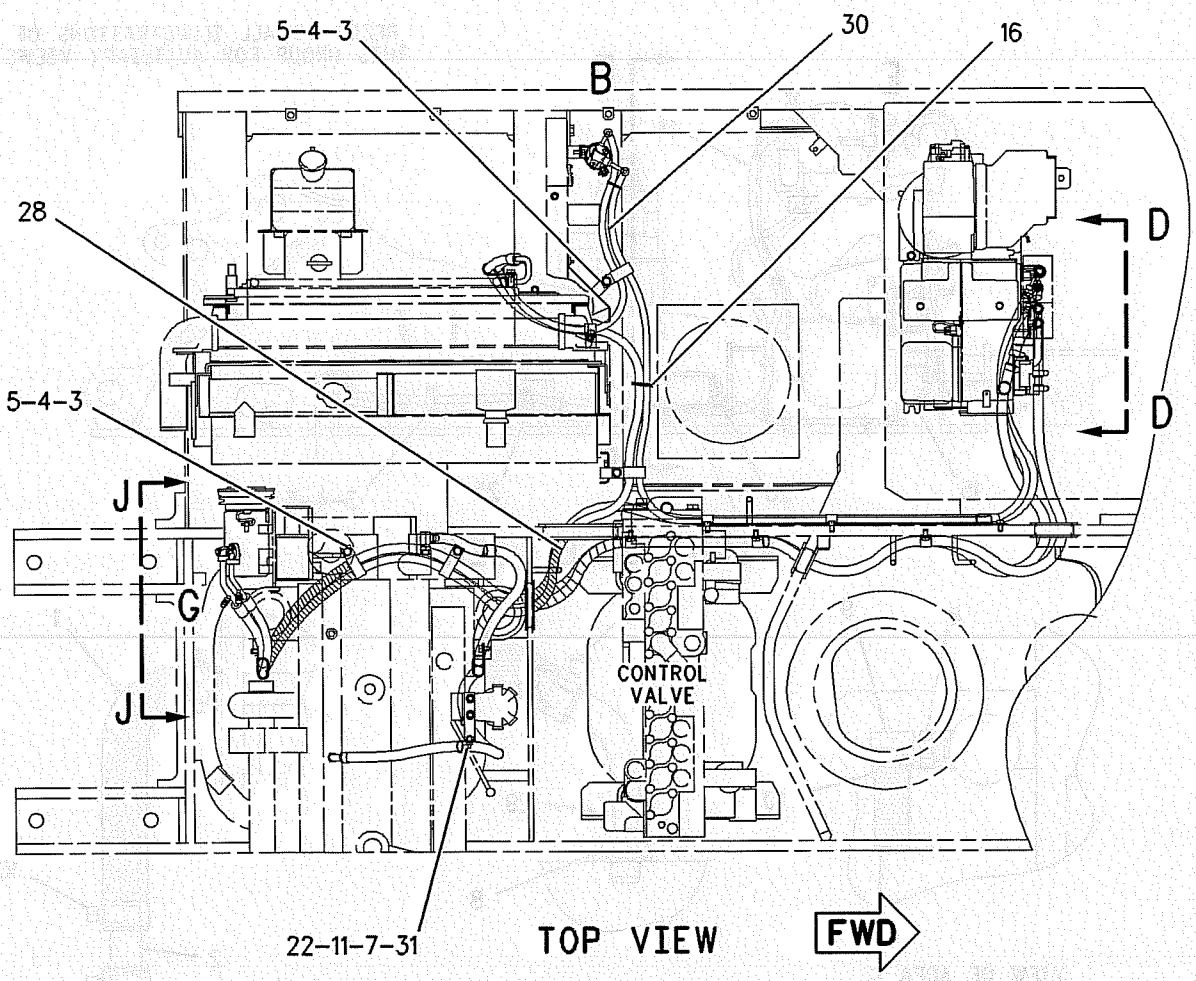

REFER TO ALL ILLUSTRATIONS OF THIS GROUP FOR AUXILIARY VIEWS

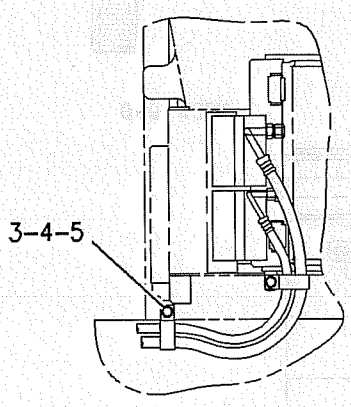

VIEW OF AREA A

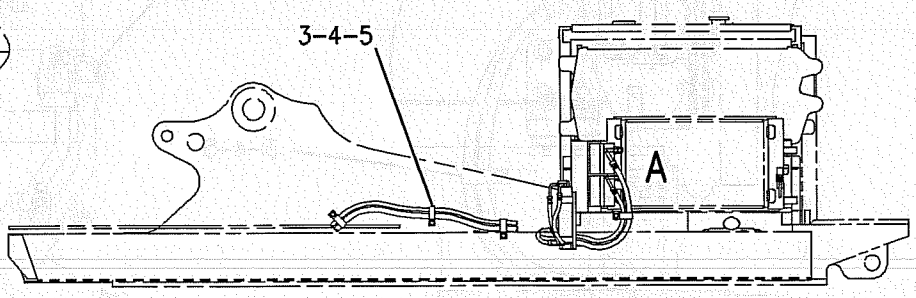

LEFT SIDE VIEW

GRAPHIC #1 g00946932

REFER TO ALL ILLUSTRATIONS OF THIS GROUP FOR AUXILIARY VIEWS

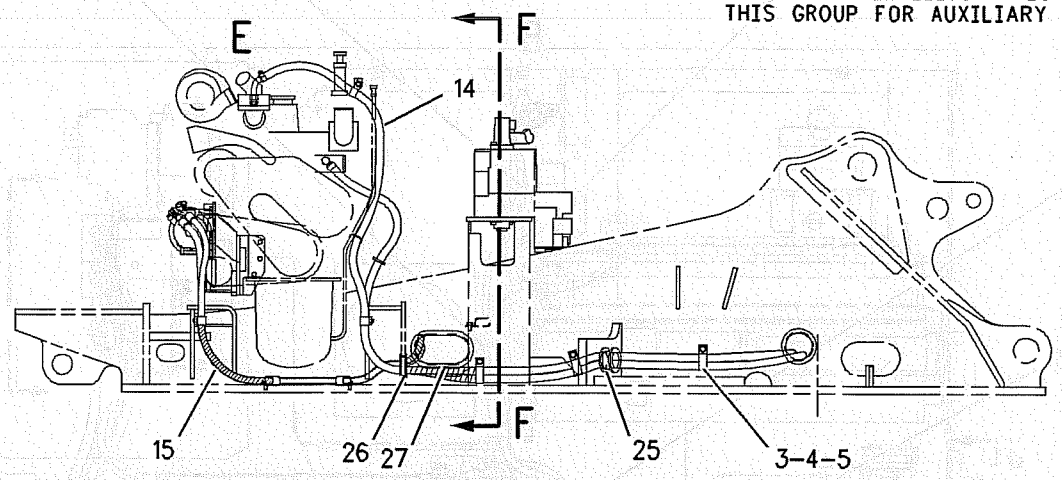

RIGHT SIDE VIEW

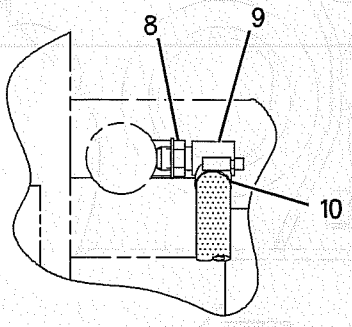

VIEW OF AREA C

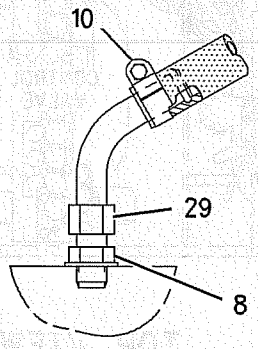

VIEW OF AREA E

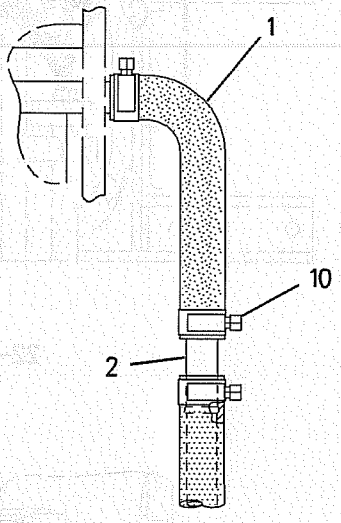

VIEW D-D

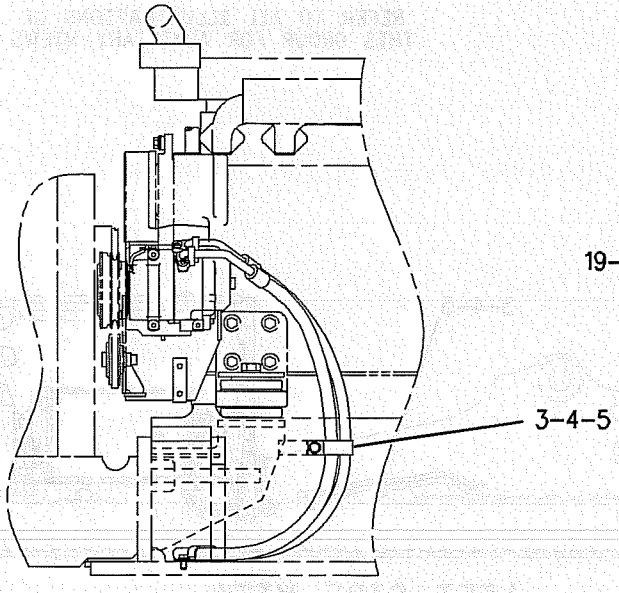

VIEW J-J

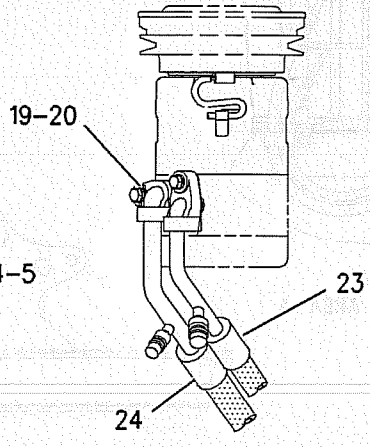

VIEW OF AREA G

GRAPHIC #2

g00946933

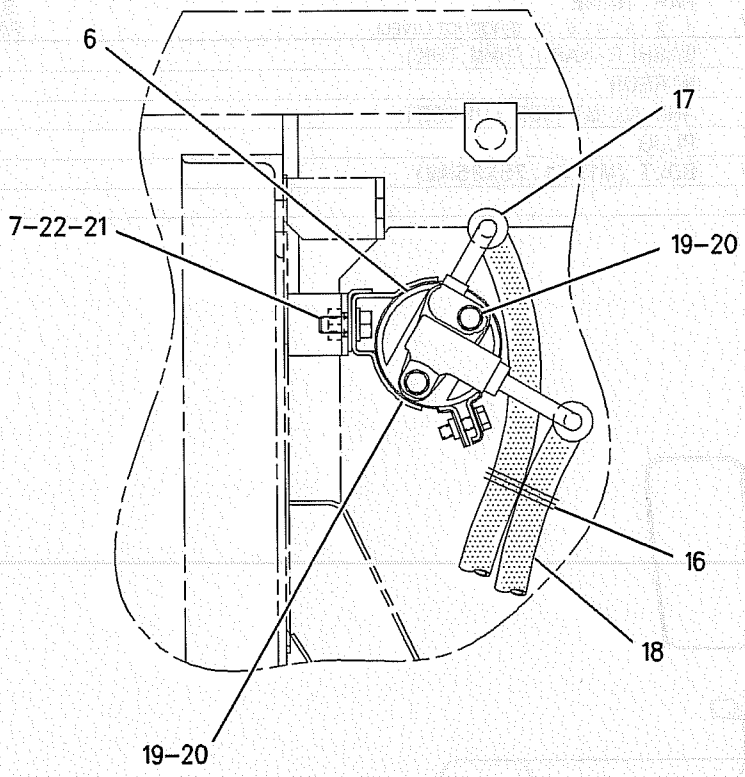

VIEW OF AREA B

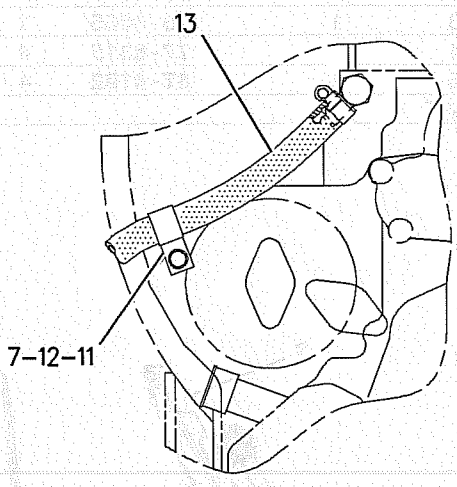

VIEW H-H

REFER TO ALL ILLUSTRATIONS OF THIS GROUP FOR AUXILIARY VIEWS

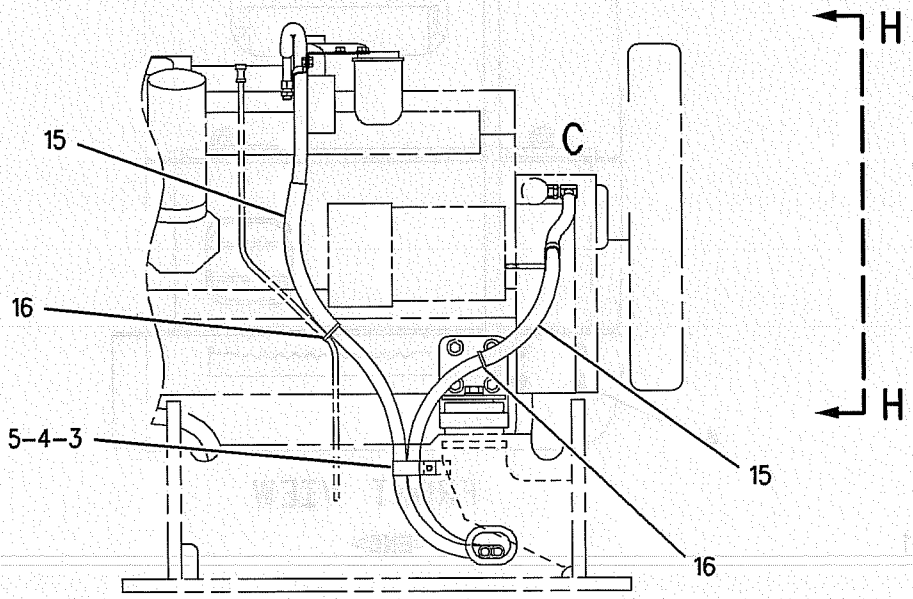

SECTION F-F

GRAPHIC #3 **<END>** g00946935

OPERATOR STATION

142-3836 MIRROR GP-REAR VIEW

S/N: SBN1-UP; RAW1-UP

PART OF 193-6848, 193-6849 CHASSIS AR

SMCS-7319 **i01355553**

NOTE	REF NO	GRAPHIC REF	PART NUMBER	QTY	PART NAME 1 2 3 4 5 6 (PRODUCT LEVEL)	SEE PAGE
	1	1	**2M-0849**	4	WASHER-HARD (5MM THK)	
	2	1	**137-2270**	1	MIRROR	
	3	1	**165-3065**	1	ARM AS-MIRROR SUPPORT	
	4	1	**177-6315**	4	PLUG	
M	5	1	**8T-4192**	4	BOLT (M12X1.75X25MM)	

M-METRIC PART

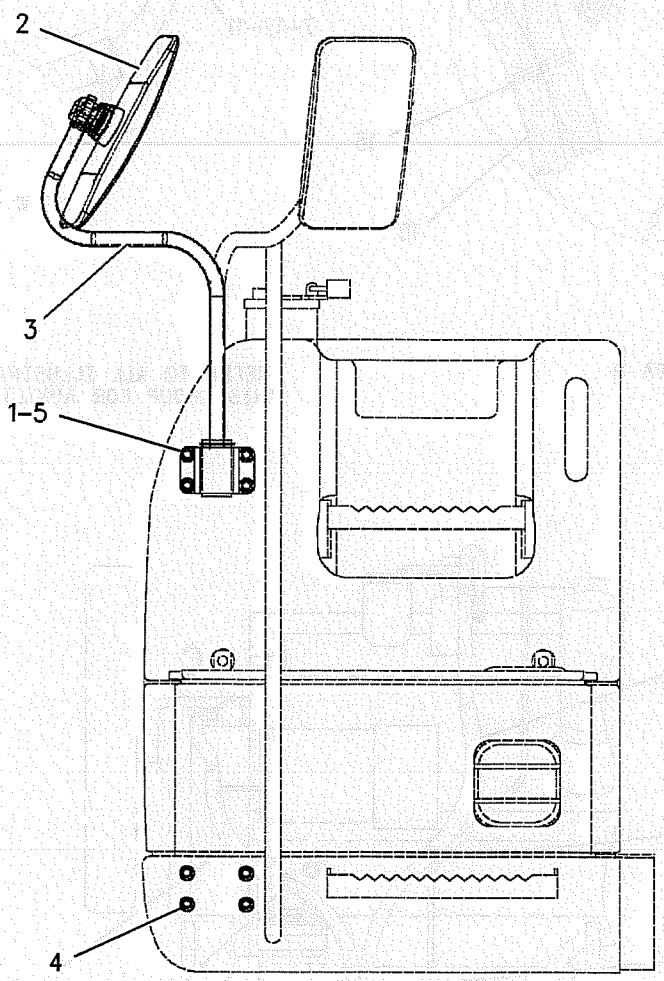

FRONT VIEW

GRAPHIC #1 **<END>** g00682738

OPERATOR STATION

157-3198 MONITOR GP-OPERATOR

S/N: SBN1-UP; RAW1-UP

PART OF 157-3170 CONSOLE GP-INSTRUMENT, 221-8751 MONITOR GP-OPERATOR

ALSO AN ATTACHMENT

SMCS-7490 **i01893712**

NOTE	REF NO	GRAPHIC REF	PART NUMBER	QTY	PART NAME 1 2 3 4 5 6 (PRODUCT LEVEL)	SEE PAGE
	1	1	**163-6801**	3	TERMINAL	
	2	1	**163-6805**	1	CONNECTOR-RECEPTACLE	
	3	1	**170-6827**	3	TERMINAL	
	4	1	**177-7701**	1	BRACKET AS	
Z	5	1		1	MONITOR AS	
	6	1	**177-7715**	1	KIT-ALARM (OPERATOR MONITOR)	
					(INCLUDES ALARM AS AND 2 SCREWS)	
	7	1	**177-7716**	1	KIT-COVER (OPERATOR MONITOR)	
					(INCLUDES COVER AS AND 6 SCREWS)	

Z-NOT SERVICED SEPARATELY

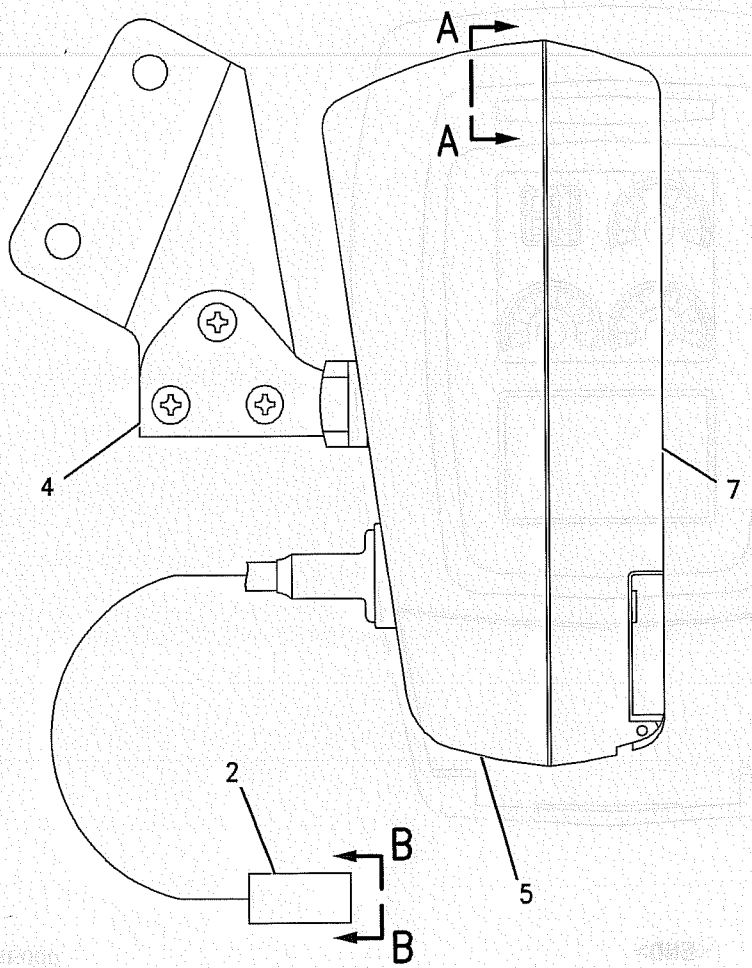

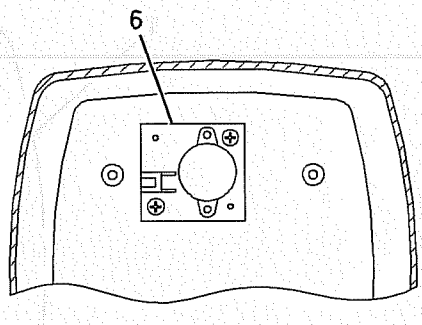

SECTION A-A

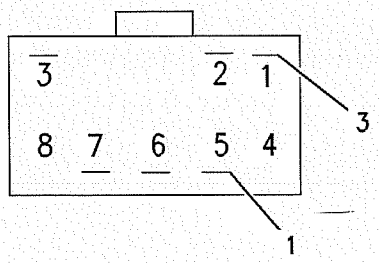

VIEW B-B

GRAPHIC #1 **<END>** g00935411

OPERATOR STATION

221-8751 MONITOR GP-OPERATOR

S/N: SBN1-UP; RAW1-UP
PART OF 177-7689 ELECTRONICS GP-MONITOR
AN ATTACHMENT

SMCS-7490 **i01897301**

NOTE	REF NO	GRAPHIC REF	PART NUMBER	QTY	PART NAME 1 2 3 4 5 6 (PRODUCT LEVEL)	SEE PAGE
Y	1	1	**157-3198**	1	MONITOR GP-OPERATOR	595
		1	**221-8840**	1	SOFTWARE GP-MONITOR	

Y-SEPARATE ILLUSTRATION

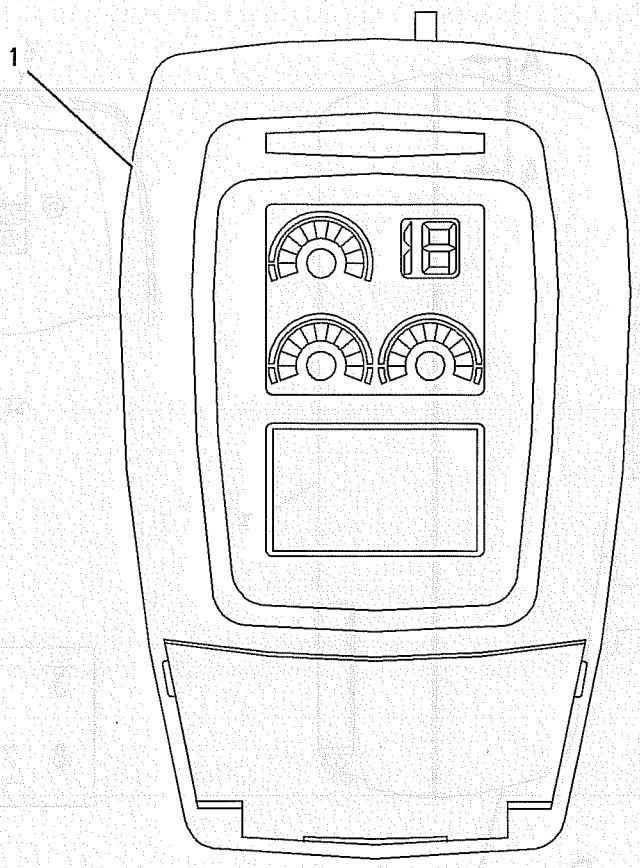

GRAPHIC #1 **<END>** g00987056

OPERATOR STATION

161-3738 OPERATOR AR

S/N: SBN1-UP; RAW1-UP

PART OF 193-6848, 193-6849 CHASSIS AR

SMCS-7301 **i01888530**

NOTE	PART NUMBER	QTY	PART NAME 1 2 3 4 5 6 (PRODUCT LEVEL)	SEE PAGE
Y	*161-3773*	1	AIR CONDITIONER GP	552
Y	*157-3170*	1	CONSOLE GP-INSTRUMENT	571
Y	*161-3758*	1	CONSOLE GP-OPERATOR	574
Y	*170-9497*	1	CONTROL GP-HANDLE	219
Y	*170-6826*	1	INSTALLATION GP-RADIO	588
Y	*161-3752*	1	LEVER GP-CONTROL	271
Y	*161-3741*	1	PLATFORM GP-OPERATOR	598
Y	*161-3771*	1	SEAT GP	600
Y	*161-3757*	1	SUPPORT GP-SEAT	602
Y	*163-6623*	1	WIRING GP-CAB	136
Y	*170-6908*	1	WIRING GP-CONSOLE	142

Y-SEPARATE ILLUSTRATION

<END>

OPERATOR STATION

161-3741 PLATFORM GP-OPERATOR

S/N: SBN1-UP; RAW1-UP

PART OF 161-3738 OPERATOR AR

SMCS-7253 **i01888552**

NOTE	REF NO	GRAPHIC REF	PART NUMBER	QTY	PART NAME 1 2 3 4 5 6 (PRODUCT LEVEL)	SEE PAGE
	1	1	**164-0572**	1	PLATFORM AS	
		1	**9R-5271**	2	BOSS	
	2	1	**164-0576**	1	FLOOR MAT	
M	3	1	**7X-2553**	4	BOLT (M16X2X40MM)	
	4	1	**9X-8257**	4	WASHER (17.5X30X3.5MM THK)	
M	5	1	**8T-4195**	16	BOLT (M10X1.5X30MM)	
	6	1	**8T-4121**	22	WASHER-HARD (11X21X2.5MM THK)	
	7	1	**164-0574**	4	MOUNT AS	
	8	1	**4I-3266**	1	STRIP	
M	9	1	**8T-4191**	6	BOLT (M10X1.5X16MM)	
	10	1	**164-0616**	1	GROMMET	
	11	1	**161-3717**	1	STRIP	
	12	1	**201-4398**	1	STRIP	

M-METRIC PART

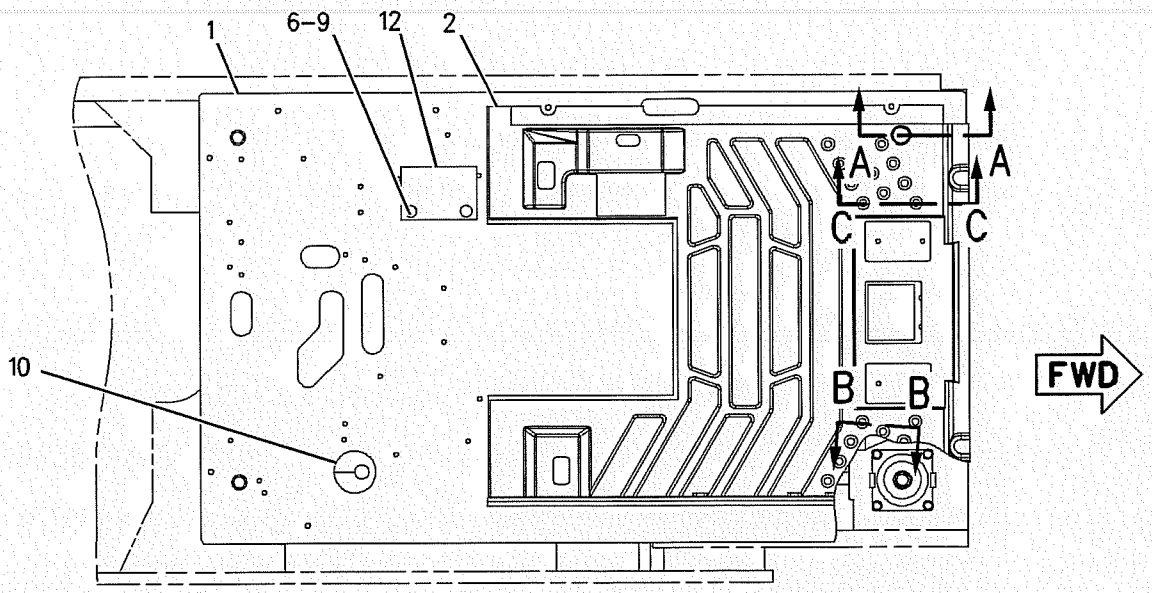

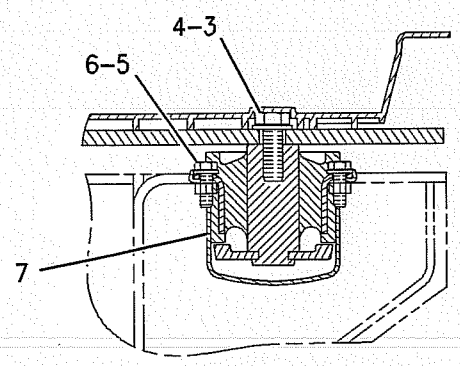

SECTION A-A

TOP VIEW

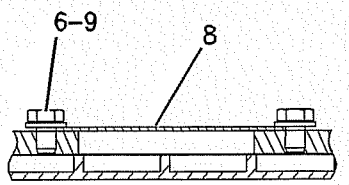

SECTION B-B

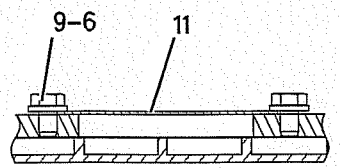

SECTION C-C

GRAPHIC #1

<END>

g00777936

OPERATOR STATION

201-4436 SEAT BELT GP

S/N: SBN1-UP; RAW1-UP
RETRACTABLE
PART OF 161-3771 SEAT GP

SMCS-7327 **i01888762**

NOTE	REF NO	GRAPHIC REF	PART NUMBER	QTY	PART NAME 1 2 3 4 5 6 (PRODUCT LEVEL)	SEE PAGE
	1	1	**8S-4724**	1	BOLT (7/16-20X2.25IN)	
	2	1	**9L-7816**	1	BOLT (7/16-20X1.72IN)	
	3	1	**8S-0934**	1	LOCKNUT-FLANGE (7/16-20 THD)	

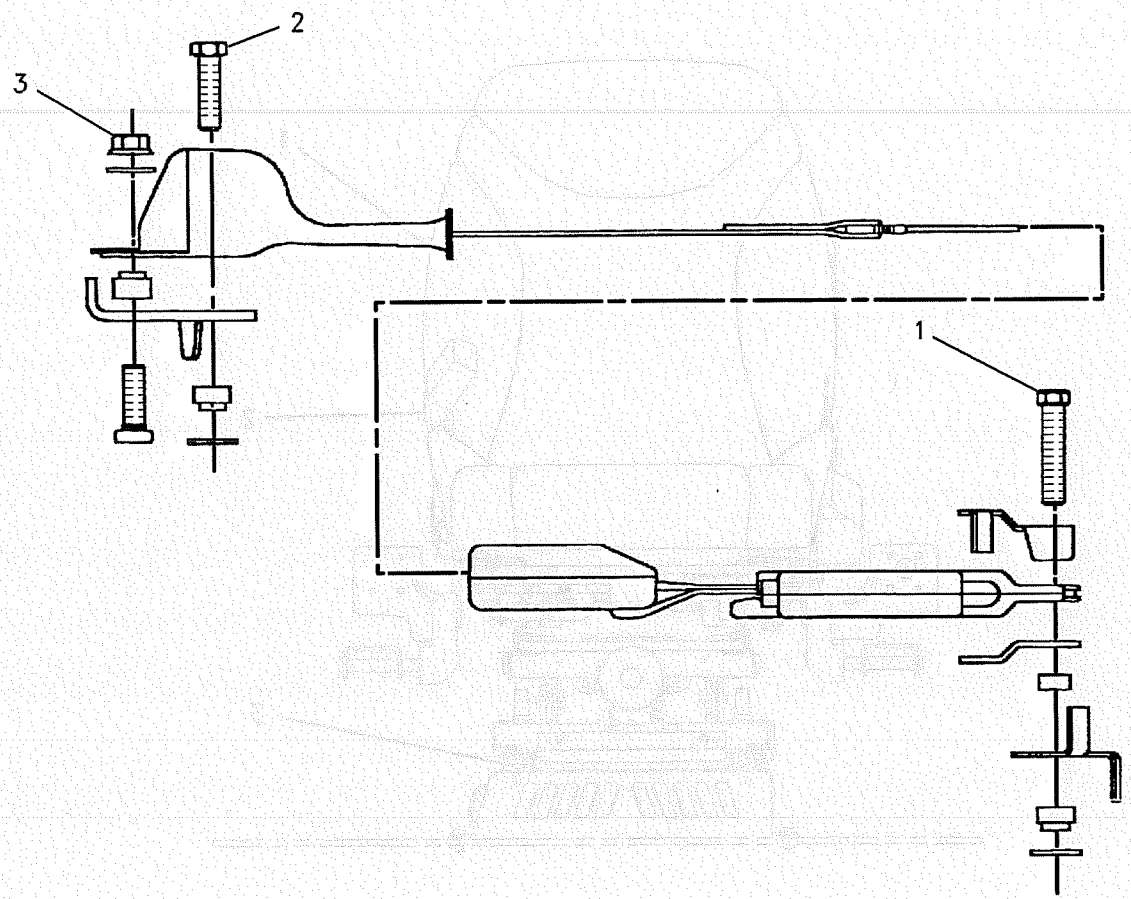

GRAPHIC #1 **<END>** g00868549

OPERATOR STATION

161-3771 SEAT GP

S/N: SBN1-UP; RAW1-UP
RETRACTABLE
PART OF 161-3738 OPERATOR AR

SMCS-7312 **i01888716**

NOTE	REF NO	GRAPHIC REF	PART NUMBER	QTY	PART NAME 1 2 3 4 5 6 (PRODUCT LEVEL)	SEE PAGE
Y	1	1	*161-3772*	1	SEAT GP	601
Y	2	1	**201-4436**	1	SEAT BELT GP	599
M	3	1	**6V-8202**	4	BOLT-HEX SOCKET (M8X1.25X16MM)	

M-METRIC PART
Y-SEPARATE ILLUSTRATION

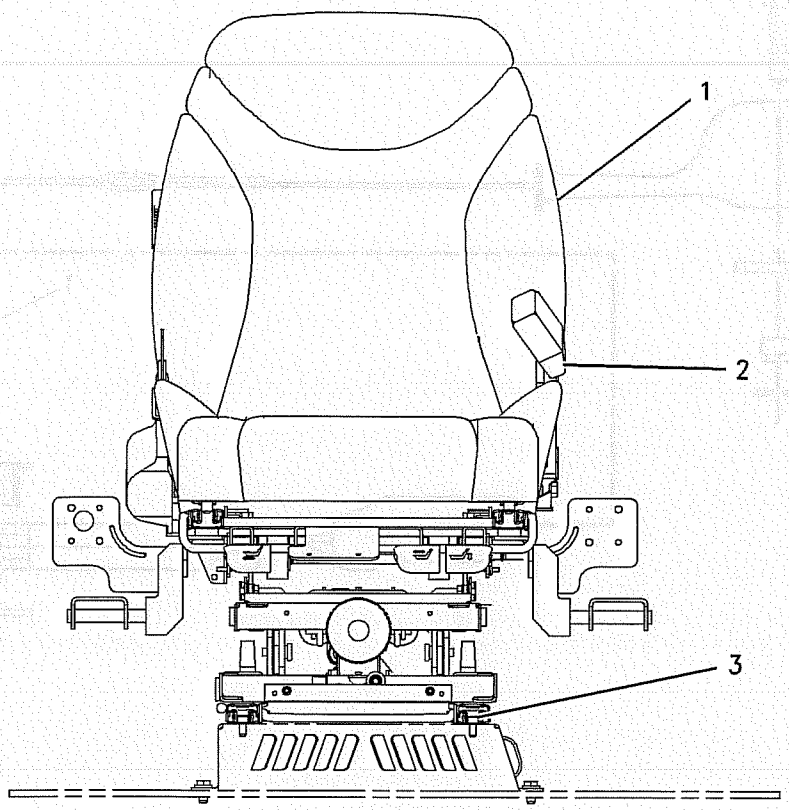

FRONT VIEW

GRAPHIC #1 **<END>** g00674136

OPERATOR STATION

161-3772 SEAT GP

S/N: SBN1-UP; RAW1-UP

PART OF 161-3771 SEAT GP

SMCS-7312 **i01549833**

NOTE	REF NO	GRAPHIC REF	PART NUMBER	QTY	PART NAME 1 2 3 4 5 6 (PRODUCT LEVEL)	SEE PAGE
Y	1	1	**164-0478**	1	SUSPENSION GP-SEAT	603
	2	1	**164-0504**	1	SEAT GP	
		1	**178-5660**	1	KIT-HANDLE (RECLINER CONTROL)	
M	3	1	**178-5565**	4	SCREW-TRUSS HEAD	

M-METRIC PART
Y-SEPARATE ILLUSTRATION

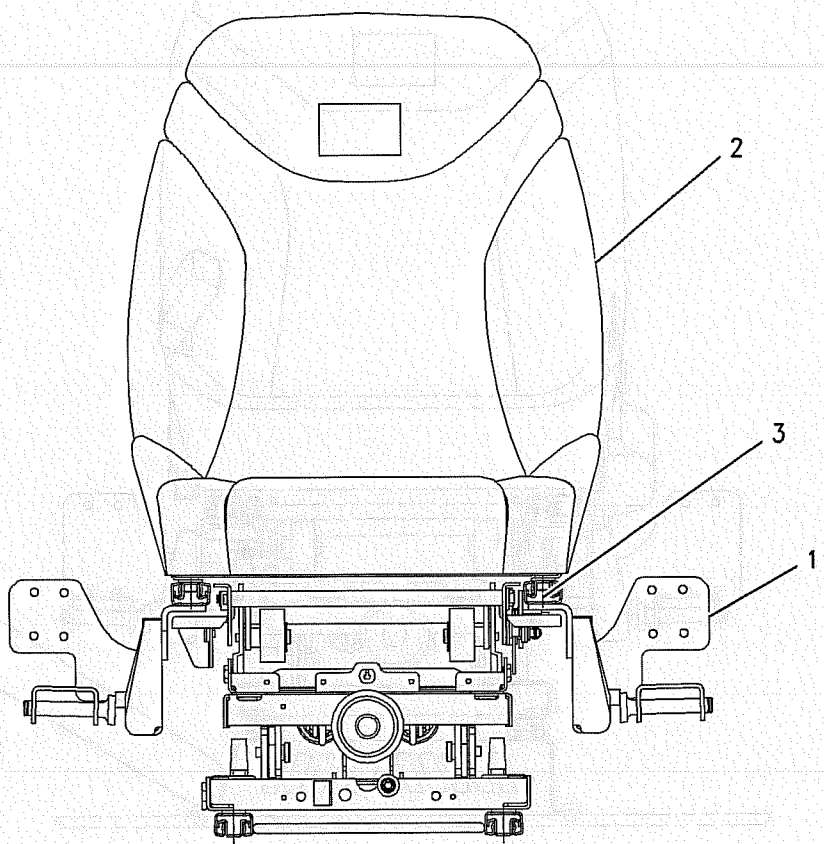

FRONT VIEW

GRAPHIC #1 **<END>** g00674897

OPERATOR STATION

161-3757 SUPPORT GP-SEAT

S/N: SBN1-UP; RAW1-UP

PART OF 161-3738 OPERATOR AR

SMCS-7321 **i01355563**

NOTE	REF NO	GRAPHIC REF	PART NUMBER	QTY	PART NAME 1 2 3 4 5 6 (PRODUCT LEVEL)	SEE PAGE
	1	1	**167-7043**	1	SUPPORT AS-SEAT	
M		1	**8T-3612**	4	NUT-WELD (M8X1.25 THD)	
	2	1	**8T-4121**	4	WASHER-HARD (2.5MM THK)	
M	3	1	**8T-4191**	4	BOLT (M10X1.50X16MM)	

M-METRIC PART

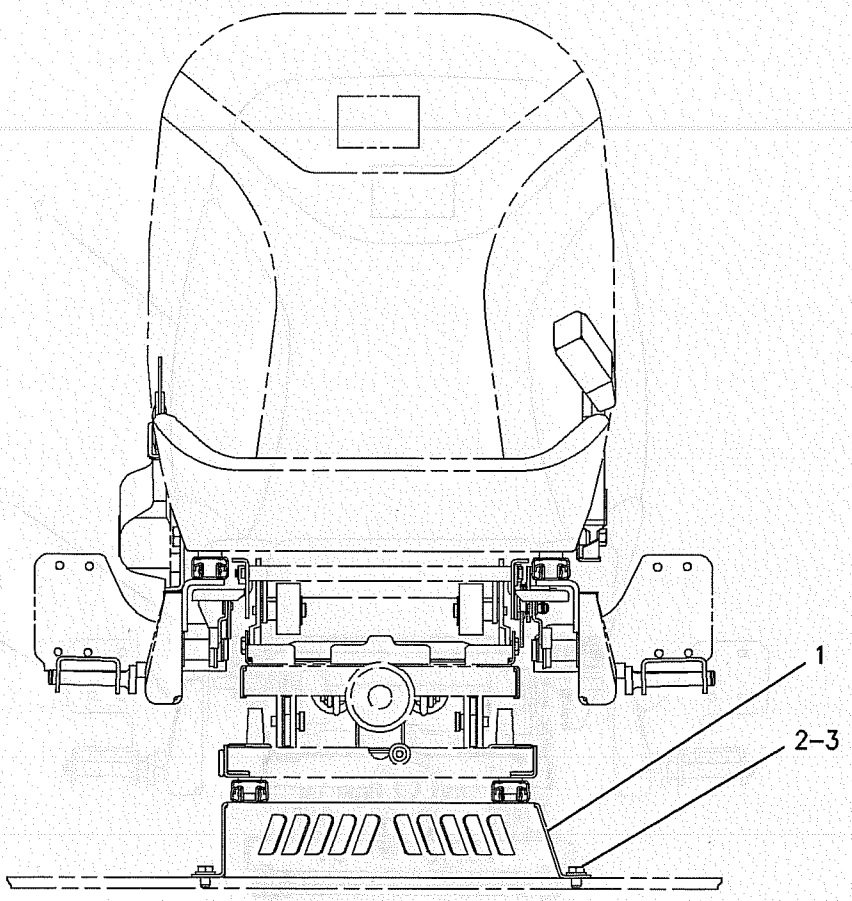

FRONT VIEW

GRAPHIC #1 **<END>** g00674903

OPERATOR STATION

164-0478 SUSPENSION GP-SEAT

S/N: SBN1-UP; RAW1-UP
PART OF 161-3772 SEAT GP

SMCS-7324 **i01356712**

NOTE	REF NO	GRAPHIC REF	PART NUMBER	QTY	PART NAME 1 2 3 4 5 6 (PRODUCT LEVEL)	SEE PAGE
	1	1	**178-5655**	1	KIT-ADJUSTER	
	2	1	**185-8122**	1	KIT-SUPPORT	
	3	1	**185-8124**	1	KIT-SEAT	
	4	1	**178-5653**	1	KIT-SUSPENSION COVER	
	5	1	**178-5656**	1	KIT-ADJUSTER	
	6	1	**178-5657**	1	KIT-CABLE ADJUSTER	
	7	1	**185-8126**	1	KIT-SEAT SUSPENSION	

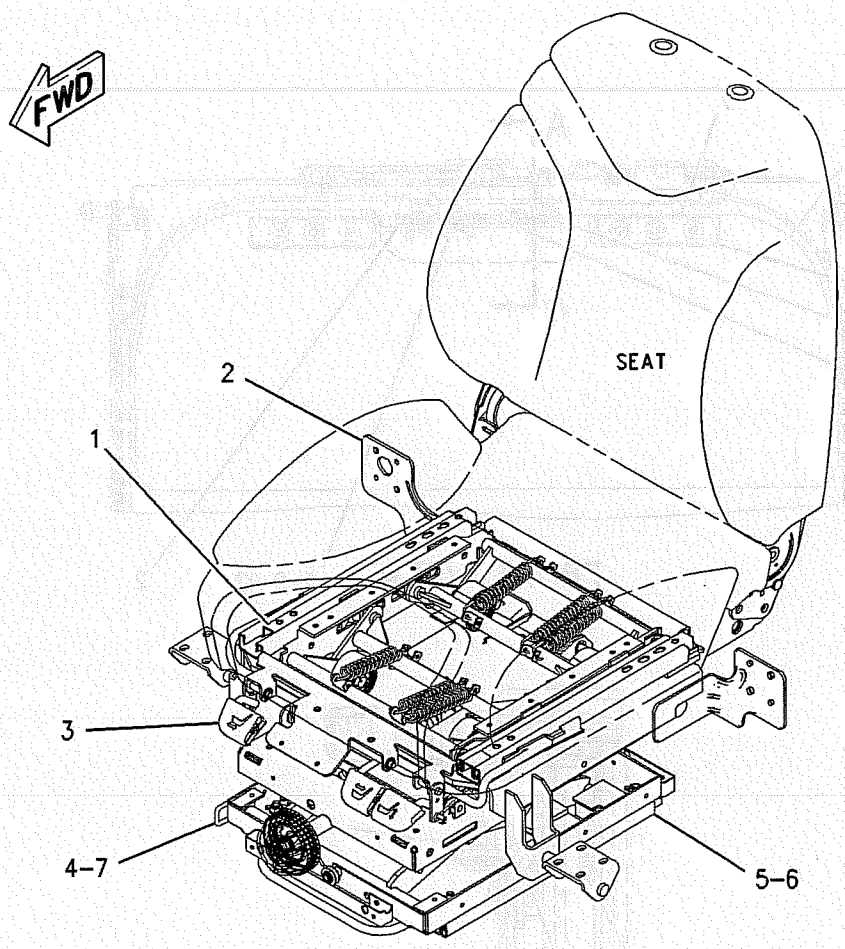

GRAPHIC #1 **<END>** g00692660

OPERATOR STATION

161-3751 VISOR GP-CAB

S/N: SBN1-UP; RAW1-UP
SUN
AN ATTACHMENT

SMCS-7301, 7325, 7335 **i01453625**

NOTE	REF NO	GRAPHIC REF	PART NUMBER	QTY	PART NAME 1 2 3 4 5 6 (PRODUCT LEVEL)	SEE PAGE
	1	1	**164-0639**	1	BRACKET AS	
	2	1	**210-5827**	1	PLATE	
	3	1	**210-5828**	1	PLATE	
	4	1	**210-5829**	2	BOLT	
	5	1	**210-5834**	1	BRACKET AS	
	6	1	**210-5836**	1	VISOR	
	7	1	**210-5837**	2	STRIP	
	8	1	**210-5838**	4	PACKING	
	9	1	**8H-3481**	2	LOCKWASHER	
M	10	1	**9X-2044**	8	SCREW-TRUSS HEAD (M6X1X16MM)	
M	11	1	**9X-2046**	2	SCREW-TRUSS HEAD (M6X1X35MM)	
	12	1	**9X-8256**	2	WASHER (6.6X12X2MM THK)	

M-METRIC PART

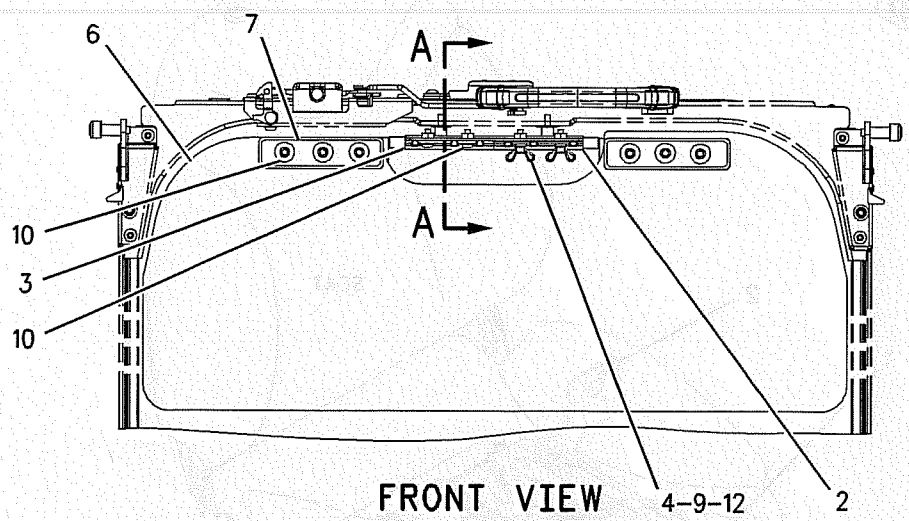

FRONT VIEW

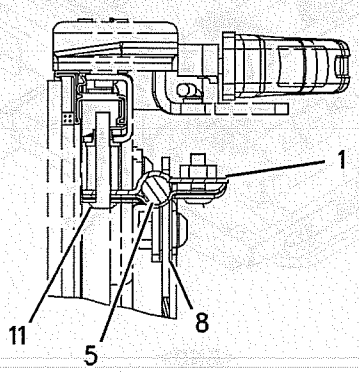

SECTION A–A

GRAPHIC #1 **<END>** g00869692

OPERATOR STATION

201-4477 WASHER GP-WINDOW

S/N: SBN1-UP; RAW1-UP

PART OF 193-6848, 193-6849 CHASSIS AR

SMCS-7306 **i01889026**

NOTE	REF NO	GRAPHIC REF	PART NUMBER	QTY	PART NAME 1 2 3 4 5 6 (PRODUCT LEVEL)	SEE PAGE
E	1	1	**144-0195**		HOSE (270CM)	
	2	1	**7Y-3474**	1	VALVE AS (WASHER)	
	3	1	**176-1995**	1	SUPPORT	
M	4	1	**8T-4970**	2	BOLT (M6X1X14MM)	
	5	1	**9X-8256**	2	WASHER (6.6X12X2MM THK)	
M	6	1	**8T-4136**	2	BOLT (M10X1.5X25MM)	
	7	1	**8T-4121**	5	WASHER-HARD (11X21X2.5MM THK)	
	8	1	**171-7450**	1	BRACKET AS	
	9	1	**176-1931**	1	TANK AS-WINDOW WASHER	
		1	**5C-8138**	1	GROMMET	
		1	**7T-8890**	1	PUMP AS-WASHER	
		1	**178-5431**	1	CAP AS	
		1	**3W-6399**	1	PACKING	
M	10	1	**8T-4137**	3	BOLT (M10X1.5X20MM)	
	11	1	**6V-3265**	3	CLIP	

E-ORDER BY THE CENTIMETER
M-METRIC PART

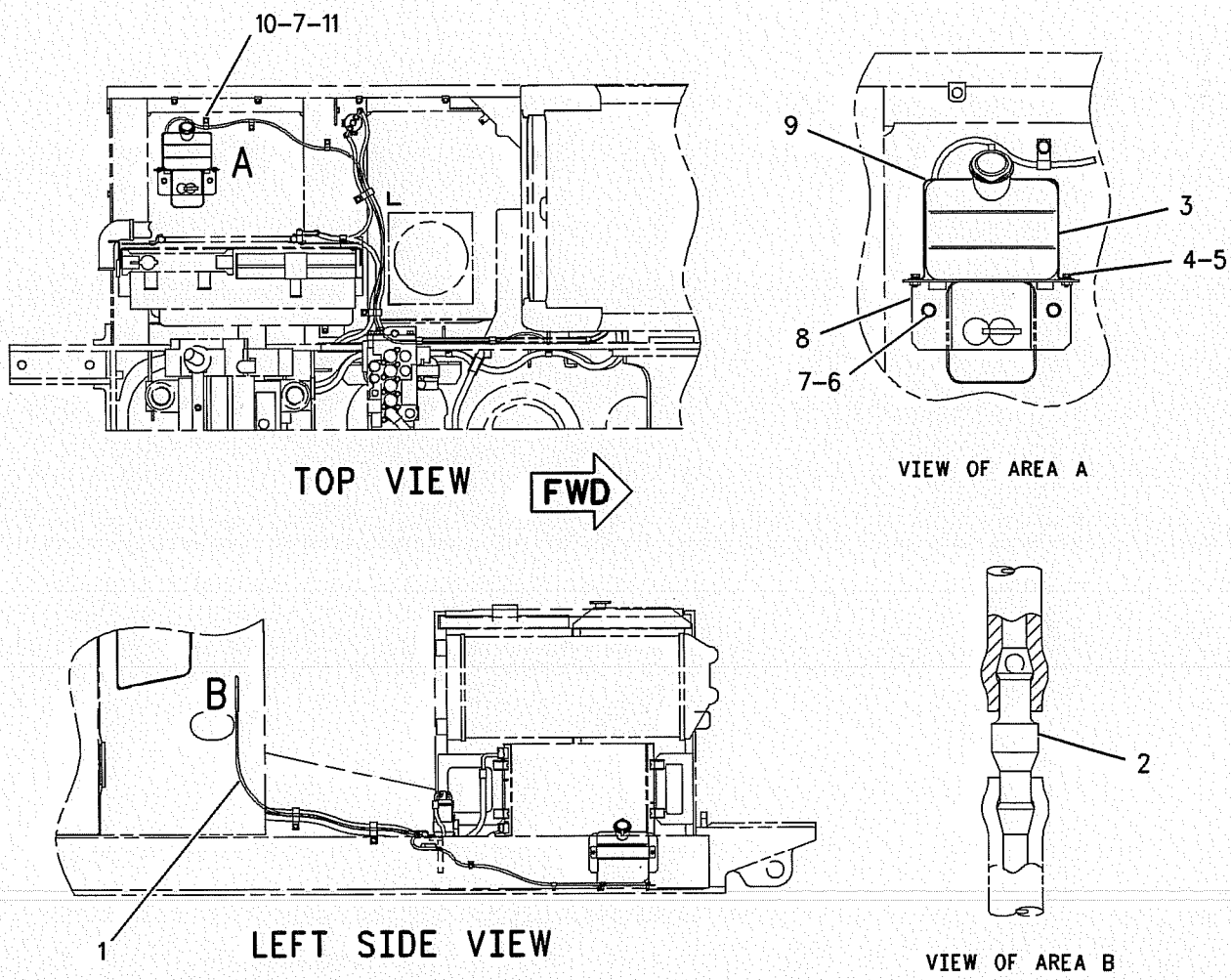

GRAPHIC #1 **<END>** g00946439

OPERATOR STATION

217-9367 WASHER GP-WINDOW–LOWER

S/N: SBN1-UP; RAW1-UP

PART OF 217-9429 WIPER AR-WINDOW

AN ATTACHMENT

SMCS-7306 **i01888782**

NOTE	REF NO	GRAPHIC REF	PART NUMBER	QTY	PART NAME 1 2 3 4 5 6 (PRODUCT LEVEL)	SEE PAGE
	1	1	**176-1932**	1	TANK GP-WINDOW WASHER	
	2	1	**178-5500**	1	NOZZLE AS	
		1	**085-8037**	1	NOZZLE	
		1	**105-9526**	1	ADAPTER	
		1	**105-9527**	1	GASKET	
E	3	1	**144-0195**		HOSE (450CM)	
	4	1	**096-0061**	3	STRAP-CABLE	
	5	1	**7S-4244**	3	CLIP	
M	6	1	**3E-9872**	2	SCREW AS (M4X0.7X12MM)	
	7	1	**7Y-3474**	1	VALVE AS (CHECK)	

E-ORDER BY THE CENTIMETER
M-METRIC PART

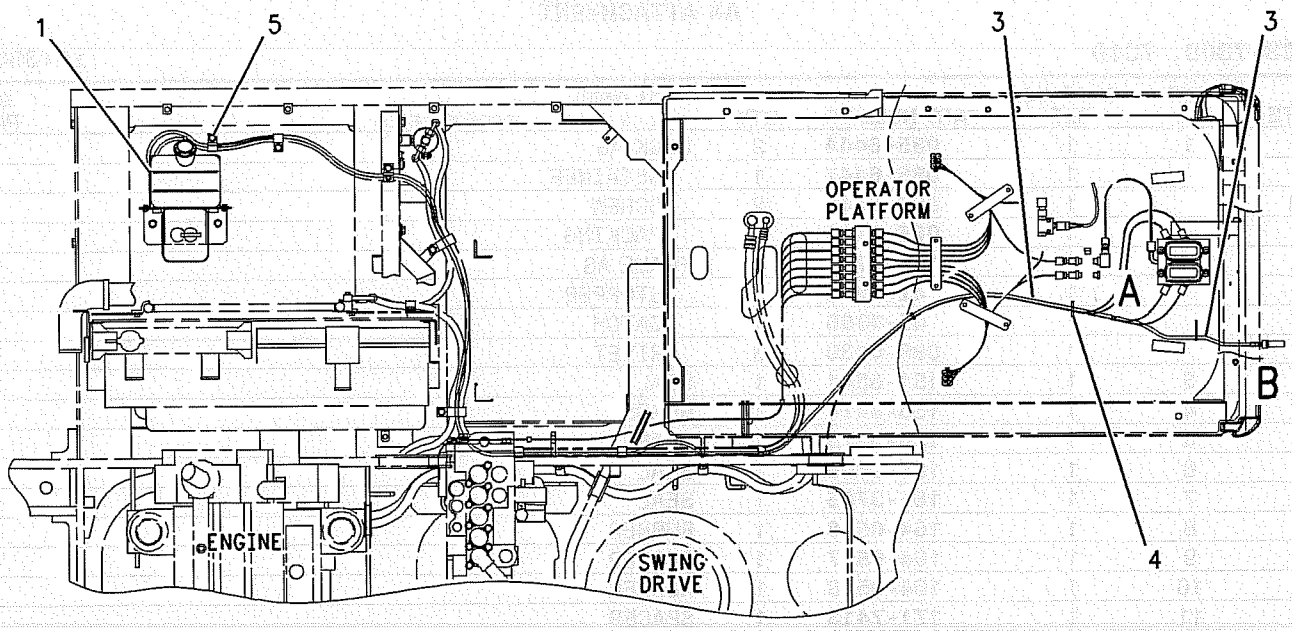

TOP VIEW FWD

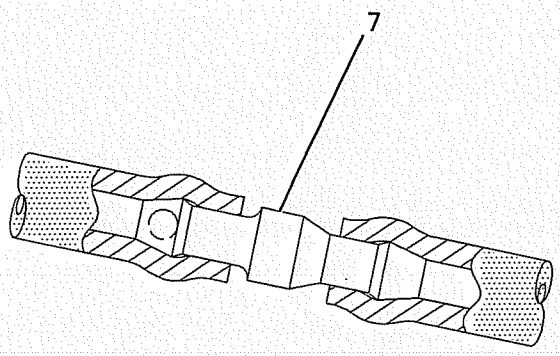

VIEW OF AREA A

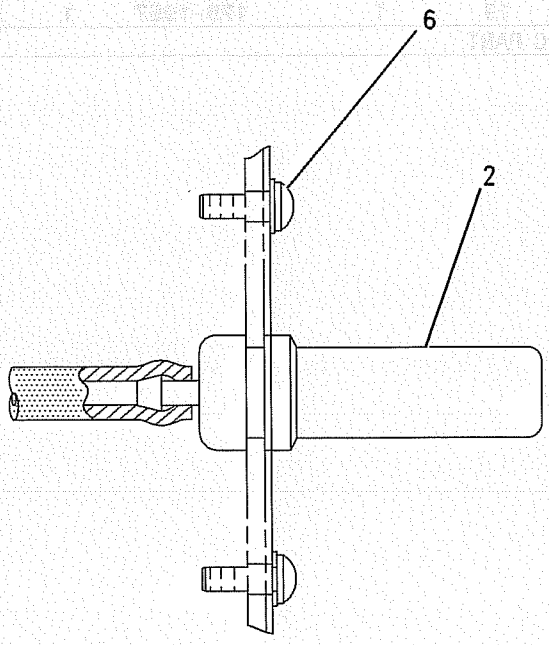

VIEW OF AREA B

GRAPHIC #1 **<END>** g00945984

OPERATOR STATION

151-6792 WINDOW GP-DOOR

S/N: SBN1-UP; RAW1-UP
PART OF 139-7100 DOOR GP-CAB
AN ATTACHMENT

SMCS-7308, 7310 **i01398178**

NOTE	REF NO	GRAPHIC REF	PART NUMBER	QTY	PART NAME 1 2 3 4 5 6 (PRODUCT LEVEL)	SEE PAGE
	1	1	085-6444	2	LOCK AS	
		1	085-6447	1	RETAINER	
M		1	085-6448	2	SCREW	
		1	085-6449	1	PACKING	
	2	1	151-6793	1	FRAME AS	
		1	4I-4298	1	STOPPER	
		1	4I-4300	1	CATCH	
		1	099-0139	3	RIVET	
	3	1	151-6841	1	SEAL	
	4	1	156-6474	1	GLASS	
	5	1	156-6475	1	GLASS	
	6	1	161-3695	1	SEAL	
	7	1	161-3705	1	SEAL	
	8	1	164-0516	1	RUBBER	
	9	1	164-0517	1	RUBBER	
	10	1	164-0518	1	RUBBER	
	11	1	171-7413	1	SPACER	
	12	1	171-7414	1	SPACER	
	13	1	176-1951	1	SPACER	
	14	1	176-1952	1	SPACER	
	15	1	176-1953	1	STOP	
	16	1	176-1954	1	SEAL	
	17	1	176-1955	1	SEAL	
	18	1	176-1956	1	SEAL	
	19	1	176-1957	1	SEAL	

M-METRIC PART

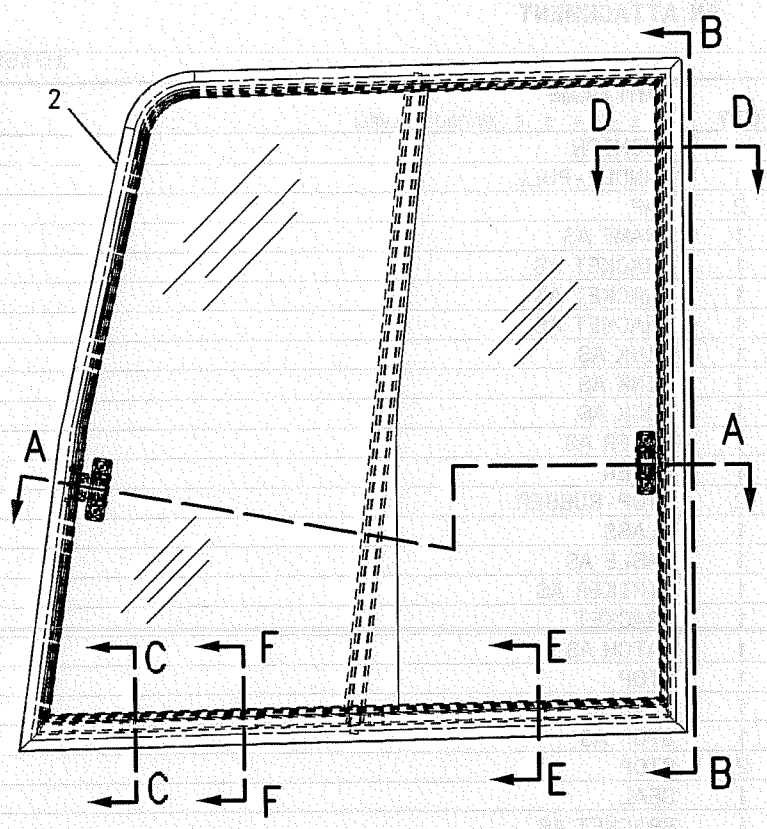

LEFT SIDE VIEW

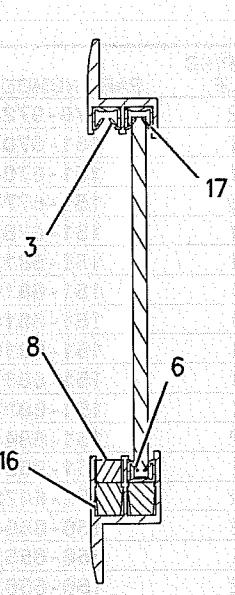

SECTION B-B

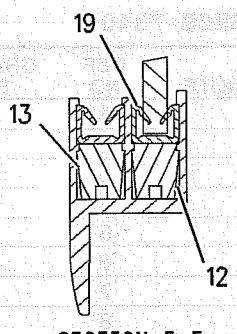

SECTION E-E

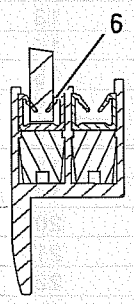

SECTION F-F

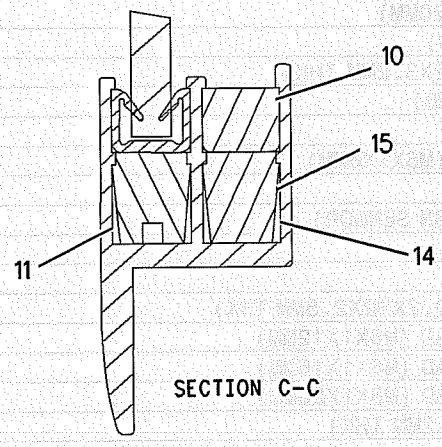

SECTION C-C

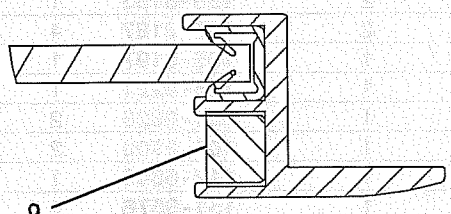

SECTION D-D

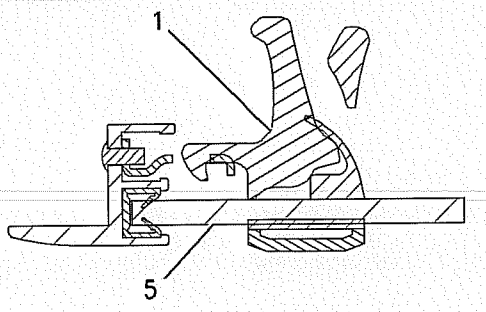

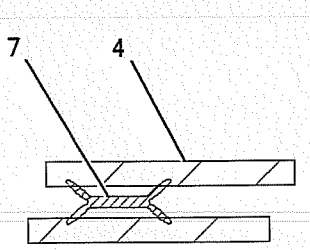

SECTION A-A

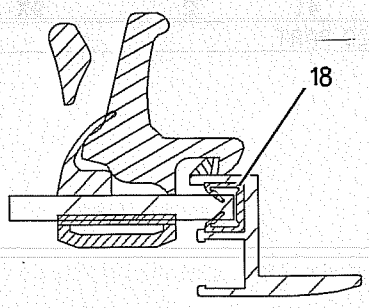

GRAPHIC #1

<END>

g00722948

OPERATOR STATION

139-7101 WINDOW GP-FRONT

S/N: SBN1-UP; RAW1-UP
PART OF 164-0494 CAB GP
AN ATTACHMENT

SMCS-7340 **i01891889**

NOTE	REF NO	GRAPHIC REF	PART NUMBER	QTY	PART NAME 1 2 3 4 5 6 (PRODUCT LEVEL)	SEE PAGE
	1	2	**170-9722**	1	CUSHION	
	2	1	**151-6703**	1	HANDLE-PULL	
	3	1	**151-6704**	2	CAP	
	4	2	**151-6778**	1	FRAME AS	
	5	1	**151-6785**	1	BRACKET AS	
	6	1	**151-6813**	1	BRACKET AS	
	7	1	**151-6815**	1	BRACKET AS	
	8	1	**151-6818**	1	LINK AS	
	9	1	**151-6819**	1	LINK AS	
	10	1	**151-6831**	1	LOCK AS	
	11	1	**151-6832**	1	LEVER AS	
	12	2	**151-6844**	1	COVER	
	13	1	**151-9557**	2	STOP-RUBBER	
	14	2	**156-6472**	1	GLASS	
	15	2	**156-6554**	1	CABLE AS	
	16	1	**156-6555**	1	STRIKER AS	
	17	2	**156-6562**	1	BRACKET	
	18	2	**156-6563**	1	CATCH AS	
	19	2	**156-6579**	1	STOP	
	20	2	**156-6601**	1	SEAL AS	
	21	2	**156-6627**	1	STOP AS	
	22	1	**161-3684**	2	STOP	
	23	1	**161-3698**	1	SEAL	
	24	2	**164-0648**	1	BRACKET AS	
	25	1	**178-5576**	1	STOP	
	26	2	**185-8181**	2	SCREW (M4X0.7X10MM)	
	27	2	**185-8182**	4	BOLT (M10X1.5X20MM)	
	28	2	**185-8183**	1	NUT (M4X0.7 THD)	
	29	2	**185-8187**	4	WASHER (10.2X22X3.2MM THK)	
	30	1	**185-8197**	1	NUT (M10X1.5 THD)	
	31	1	**185-8221**	1	STOP	
M	32	1	**099-0823**	2	SCREW-MACHINE (M6X1X6MM)	
M	33	1	**101-8900**	2	SCREW AS	
	34	1	**117-6306**	1	SWITCH (POSITION SENSOR)	
	35	1	**151-9576**	4	ROLLER	
	36	1	**4I-0420**	1	STRIP	
	37	1	**7X-0578**	1	WASHER-HARD (10.2X32X2.5MM THK)	
M	38	2	**9X-2042**	20	SCREW-TRUSS HEAD (M6X1X12MM)	
M	39	1,2	**9X-2044**	5	SCREW-TRUSS HEAD (M6X1X16MM)	
M	40	2	**9X-2045**	4	SCREW-TRUSS HEAD (M6X1X20MM)	
	41	2	**9X-8256**	2	WASHER (6.6X12X2MM THK)	

M-METRIC PART

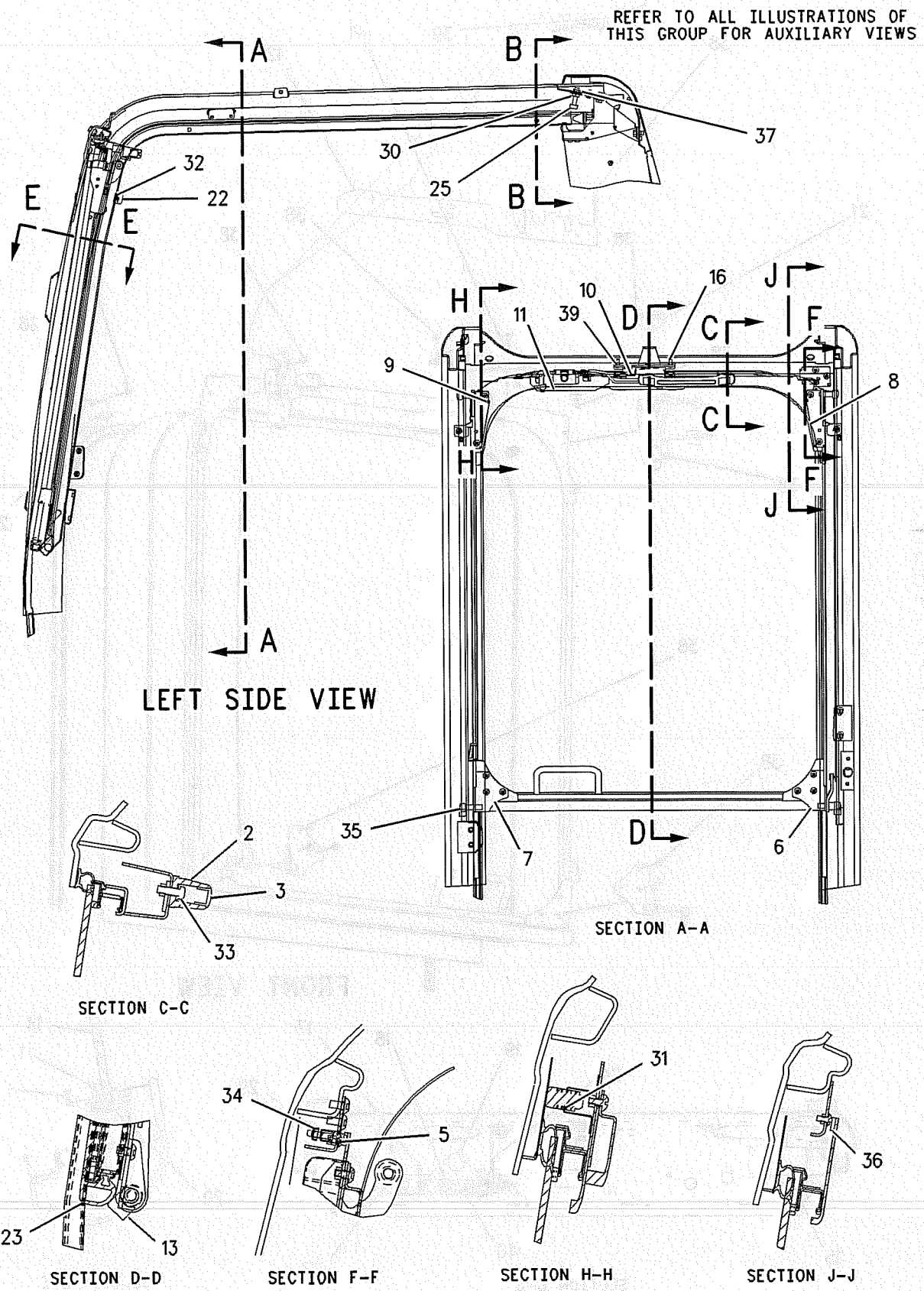

GRAPHIC #1 g00986340

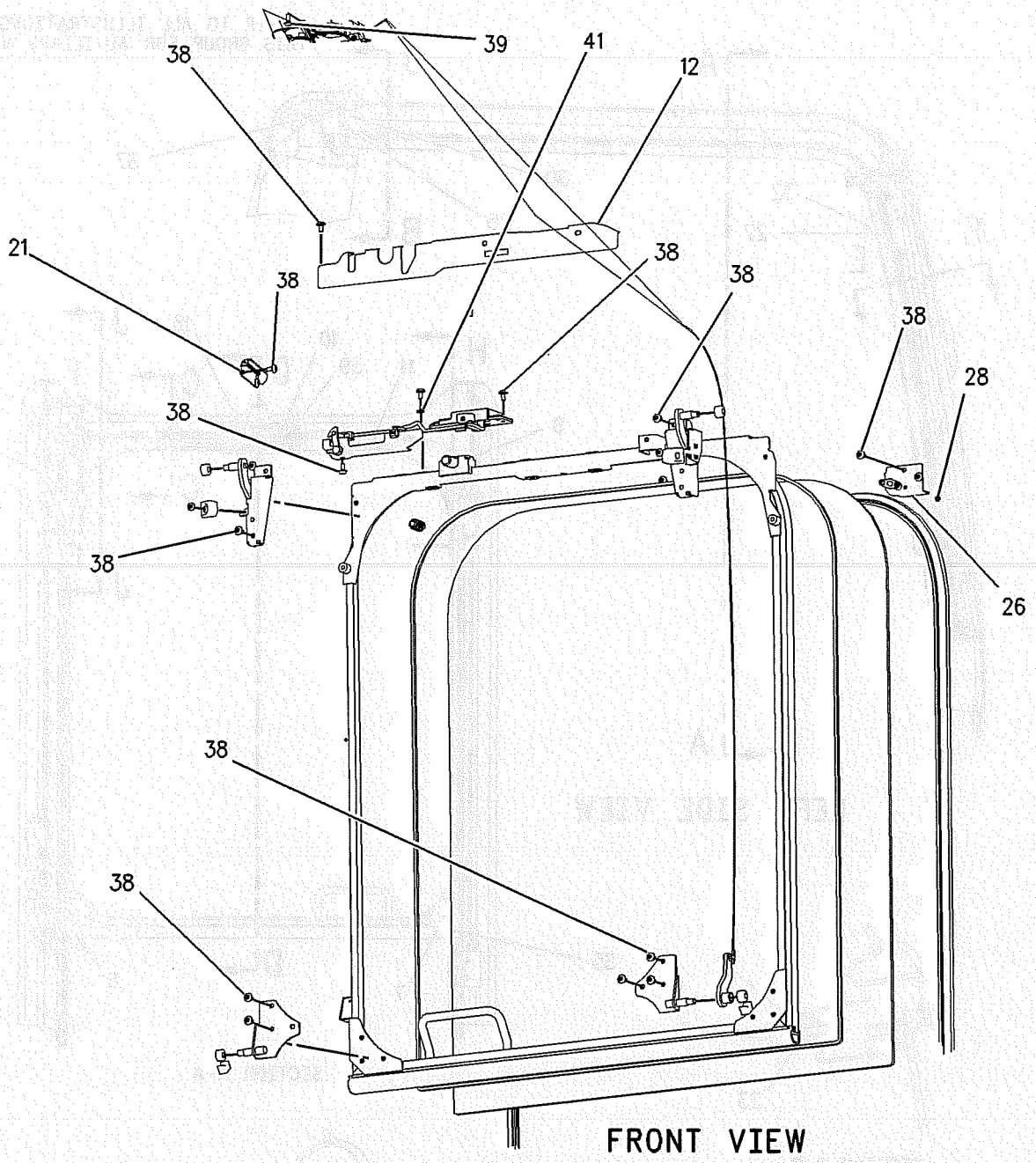

FRONT VIEW

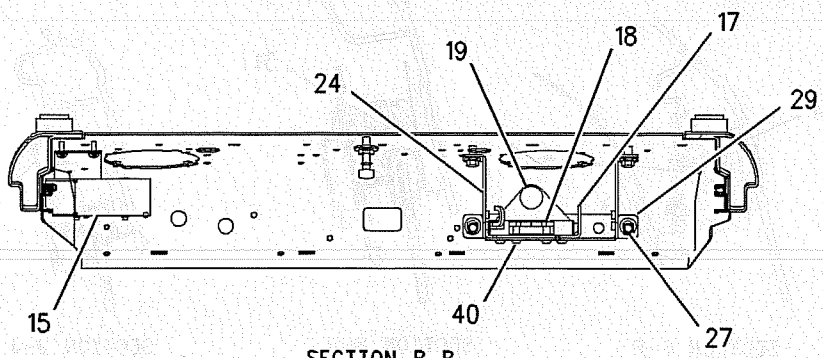

SECTION B-B

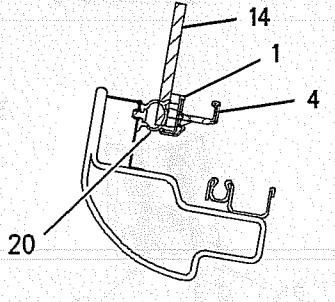

SECTION E-E

GRAPHIC #2

<END>

g00986341

OPERATOR STATION

161-3748 WIPER & WASHER GP-WINDOW—LOWER

S/N: SBN1-UP; RAW1-UP
PART OF 217-9429 WIPER AR-WINDOW
AN ATTACHMENT

SMCS-7305, 7306 **i01888763**

NOTE	REF NO	GRAPHIC REF	PART NUMBER	QTY	PART NAME 1 2 3 4 5 6 (PRODUCT LEVEL)	SEE PAGE
	1	1	**4I-5021**	1	BLADE AS (LOWER)	
	2	1	**167-7074**	1	BRACKET AS	
	3	1	**167-7079**	1	MOTOR AS-WINDOW WIPER (LOWER)	
M	4	1	**6V-7357**	3	BOLT (M6X1.0X25MM)	
	5	1	**9X-8256**	3	WASHER (6.6X12X2MM THK)	
M	6	1	**8T-4134**	3	NUT (M6X1 THD)	
	7	1	**167-7062**	1	BUMPER AS	
M	8	1	**8T-4136**	4	BOLT (M10X1.5X25MM)	
	9	1	**8T-4121**	8	WASHER-HARD (11X21X2.5MM THK)	
	10	1	**4I-5020**	1	ARM AS-WIPER (LOWER)	
M	11	1	**8T-4191**	4	BOLT (M10X1.5X16MM)	
	12	1	**4I-1163**	1	BRACKET	
	13	1	**3E-9871**	2	BOLT AS	
	14	1	**156-6647**	1	WINDOW AS (LOWER)	
M		1	**9X-2042**	2	SCREW-TRUSS HEAD (M6X1X12MM)	
		1	**124-3966**	1	STOP	
		1	**144-9691**	2	PACKING	
		1	**144-9692**	2	RETAINER	
		1	**151-6705**	1	PACKING	
	15	1	**129-6466**	1	SWITCH AS-ROLLER (POSITION SENSOR)	
		1	**2H-3922**	1	LOCKWASHER	
		1	**6V-8363**	2	SCREW (10-32X0.312 IN)	
		1	**6V-8370**	1	NUT-HEX (3/4-32 THD)	
		1	**8F-1434**	2	LOCKWASHER	
		1	**9X-0199**	1	BOOT-SWITCH	
	16	1	**156-6646**	1	BRACKET	
M	17	1	**9X-2044**	2	SCREW-TRUSS HEAD (M6X1X16MM)	

M-METRIC PART

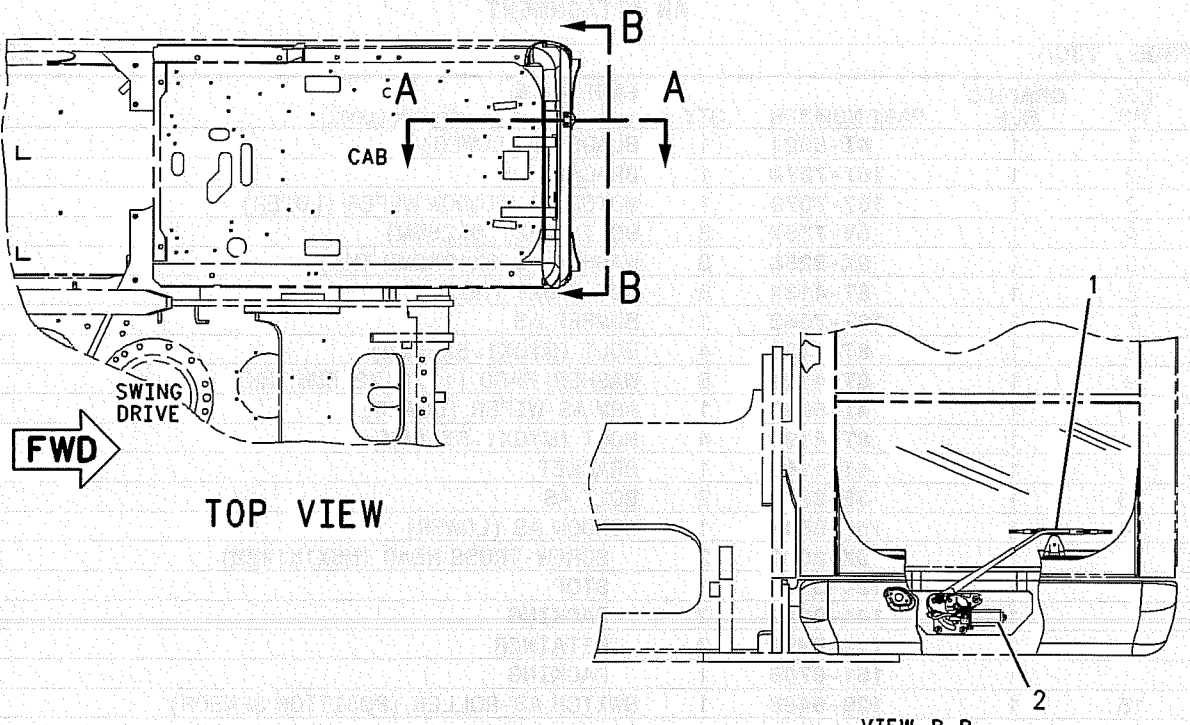

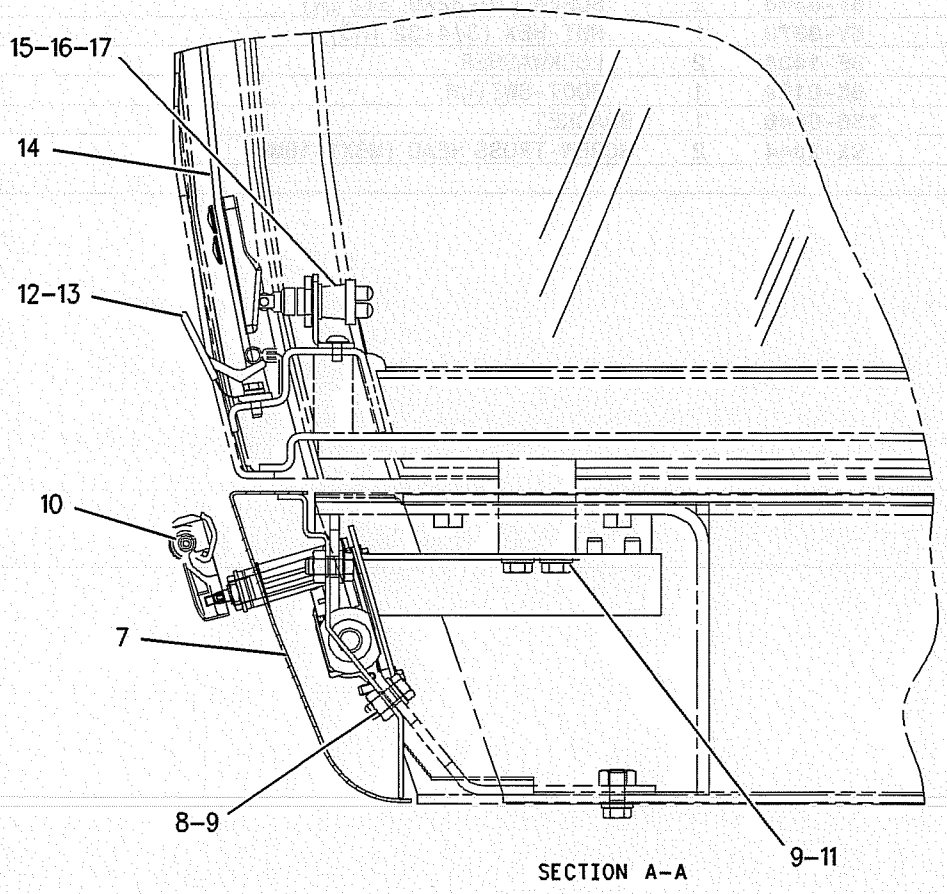

GRAPHIC #1 **<END>** g00959596

OPERATOR STATION

217-9429 WIPER AR-WINDOW

S/N: SBN1-UP; RAW1-UP

LOWER

AN ATTACHMENT

SMCS-7305 **i01888747**

NOTE	PART NUMBER	QTY	PART NAME 1 2 3 4 5 6 (PRODUCT LEVEL)	SEE PAGE
Y	*217-9367*	1	WASHER GP-WINDOW	606
Y	*161-3748*	1	WIPER & WASHER GP-WINDOW	613
Y	*163-6632*	1	WIRING GP-WINDOW WIPER	150

Y-SEPARATE ILLUSTRATION

<END>

OPERATOR STATION

171-7408 WIPER GP-WINDOW–UPPER

S/N: SBN1-UP; RAW1-UP
PART OF 164-0494 CAB GP
AN ATTACHMENT

SMCS-7305 **i01891799**

NOTE	REF NO	GRAPHIC REF	PART NUMBER	QTY	PART NAME 1 2 3 4 5 6 (PRODUCT LEVEL)	SEE PAGE
	1	1	**7Y-7364**	1	GROMMET	
	2	1	**155-7042**	1	RELAY AS	
	3	1	**189-3424**	1	MOTOR AS	
M		1	**6V-8231**	1	NUT (M10 X 1.25 THD)	
M		1	**7Y-3470**	1	NUT (M20X1 THD)	
		1	**7Y-3472**	1	CAP	
		1	**124-3953**	1	WASHER (20.5X30X2MM THK)	
	4	1	**161-3668**	1	ARM AS	
		1	**185-8290**	1	SCREW AS	
		1	**161-3669**	1	GUIDE	
		1	**161-3670**	1	BLADE AS (UPPER)	
	5	1	**161-3677**	1	HOLDER	
	6	1	**163-6795**	3	STRAP-CABLE	
	7	1	**176-1948**	1	NOZZLE AS	
M	8	1	**3E-9872**	2	SCREW AS (M4X0.7X12MM)	
M	9	1	**8T-4134**	6	NUT (M6X1 THD)	
M	10	1	**9X-2044**	3	SCREW-TRUSS HEAD (M6X1X16MM)	

M-METRIC PART

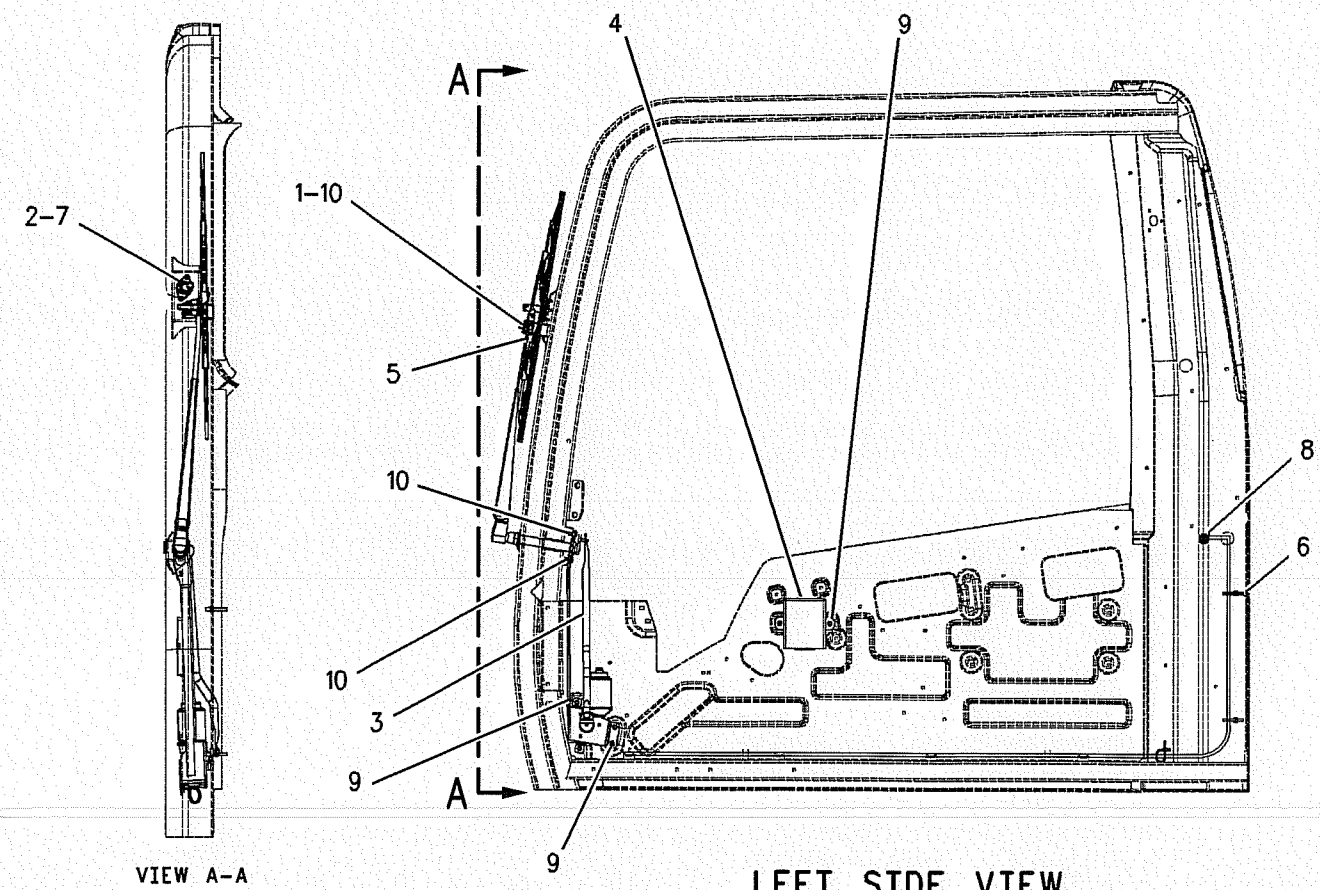

GRAPHIC #1

<END>

g00832420

SERVICE EQUIPMENT AND SUPPLIES

167-7264 FILM GP

S/N: SBN1-UP; RAW1-UP
PART OF 202-6855 CONTROL AR-AUXILIARY
AN ATTACHMENT

SMCS-7405, 7557 **i01399719**

NOTE	PART NUMBER	QTY	PART NAME 1 2 3 4 5 6 (PRODUCT LEVEL)	SEE PAGE
	186-1252	1	FILM-CONTROLS	
	7I-1565	1	FILM-NOTICE (HYD HAMMER)	

<END>

176-2710 FILM GP

S/N: RAW1-UP
PART OF 173-7975 CONTROL AR-AUXILIARY
AN ATTACHMENT

SMCS-7405, 7557 **i01404438**

NOTE	PART NUMBER	QTY	PART NAME 1 2 3 4 5 6 (PRODUCT LEVEL)	SEE PAGE
	176-2815	1	FILM-CONTROL	
	7I-1565	1	FILM-NOTICE (HYD HAMMER)	

<END>

176-2711 FILM GP

S/N: SBN1-UP; RAW1-UP
PART OF 173-7977 CONTROL AR-AUXILIARY
AN ATTACHMENT

SMCS-7405, 7557 **i01404322**

NOTE	PART NUMBER	QTY	PART NAME 1 2 3 4 5 6 (PRODUCT LEVEL)	SEE PAGE
	127-5252	1	FILM-INSTRUCTION (OPERATOR CONTROLS)	
	139-3068	1	FILM-INSTRUCTION (BUCKET/ATTACH CONTROLS)	

<END>

176-2747 FILM GP

S/N: RAW1-UP
AN ATTACHMENT

SMCS-7405, 7557 **i01406625**

NOTE	PART NUMBER	QTY	PART NAME 1 2 3 4 5 6 (PRODUCT LEVEL)	SEE PAGE
	176-2737	1	FILM	

<END>

SERVICE EQUIPMENT AND SUPPLIES

176-2748 FILM GP

S/N: SBN1-UP

AN ATTACHMENT

SMCS-7405, 7557 **i01403539**

NOTE	PART NUMBER	QTY	PART NAME 1 2 3 4 5 6 (PRODUCT LEVEL)	SEE PAGE
	176-2738	1	FILM	

<END>

SERVICE EQUIPMENT AND SUPPLIES

150-8101 PLATE & FILM GP

S/N: RAW1-UP

PART OF 193-6848 CHASSIS AR

SMCS-7405, 7557 **i01533706**

NOTE	REF NO	GRAPHIC REF	PART NUMBER	QTY	PART NAME 1 2 3 4 5 6 (PRODUCT LEVEL)	SEE PAGE
	1	1	**1P-2807**	4	FILM (LIFT EYE LOCATION)	
	2	3	**1R-6245**	1	FILM-WARNING (TRAVEL CONTROL)	
	3	3	**4B-4158**	6	SCREW-DRIVE (3/16X0.25 IN)	
	4	3	**4I-8088**	1	FILM-NOTICE (ENGINE START SWITCH)	
	6	3	**4I-8472**	1	FILM-INSTRUCTION (IMPLEMENT CONTROLS)	
	7	2	**4P-6422**	1	FILM-WARNING (NO ETHER/AIR INTAKE)	
	8	2	**4P-6464**	1	FILM-AIR CLEANER (RADIAL SEAL)	
	9	2	**6V-4611**	1	FILM-WARNING (JUMPER CABLE)	
	10	2	**7X-7644**	4	FILM-TIE DOWN	
	11	3	**7Y-0003**	1	FILM-WARNING (CLEARANCE)	
	12	3	**7Y-0005**	1	FILM-WARNING (ENGINE SPEED CONTROL)	
	13	1	**7Y-0012**	2	FILM-WARNING (TANK LIFTING)	
	14	1	**7Y-0013**	1	FILM-WARNING (HYDRAULIC TANK)	
	15	1	**7Y-0014**	1	FILM-INSTRUCTION (HYD OIL LEVEL)	
	16	3	**8T-1915**	1	FILM-NOTICE (WINDOW CLEANING)	
	17	3	**8T-6842**	1	FILM-INSTRUCTION (ALTERNATE EXIT)	
	18	1	**9X-1878**	1	PLATE (PRODUCT IDENTIFICATION)	
	21	1,2	**105-7545**	2	FILM-CAT	
	22	1	**156-3846**	1	HOSE AS	
	23	2	**120-5107**	1	FILM-INSTRUCTION (HOT SURFACE)	
	24	1	**120-5129**	1	FILM-WARNING (ACCUMULATOR)	
	25	1	**127-5282**	1	FILM-CAT (RH)	
	26	2	**127-5283**	1	FILM-CAT (LH)	
E	27	1,2	**134-6146**		FILM-STRIPE (640CM)	
	28	2	**134-7258**	1	FILM-IDENTIFICATION (EXTENDED LIFE COOLANT)	
	29	2	**144-9126**	1	FILM-INSTRUCTION (OIL) (OIL)	
	30	1,2	**150-8106**	2	FILM (320C) (320C)	
	31	2	**150-8108**	1	FILM (CAT) (CAT)	
	34	1	**167-7218**	1	FILM (NOTICE) (SHIPPING)	
	35	3	**167-7223**	1	FILM-WARNING (UNIVERSAL) (UNIVERSAL)	
	36	1	**167-7270**	1	FILM-INSTRUCTION (NO STEP) (NO STEP)	
	37	2	**167-7271**	1	FILM (INSTRUCTION) (FUSE PANEL)	
	38	2	**167-7272**	1	FILM (CAT)	
	39	3	**176-2666**	1	FILM-WARNING (WINSHIELD) (WINDSHIELD AUTO LOCK)	
	40	2	**188-7268**	2	FILM-WARNING (CRUSHING SWING MACHINE CTWT)	
	41	2	**190-5386**	2	FILM-REFLECTOR (RED)	
F			**202-9824**	1	PLATE-INFORMATION	
F			**167-7219**	1	FILM (LIFTING CAPACITY)	
F			**169-7659**	1	FILM-CIRCUIT BREAKER	
F			**176-2753**	1	FILM (THROTTLE CONTROL SWITCH)	
F			**187-0661**	1	FILM (ALTERNATE EXIT)	

E-ORDER BY THE CENTIMETER
F-NOT SHOWN

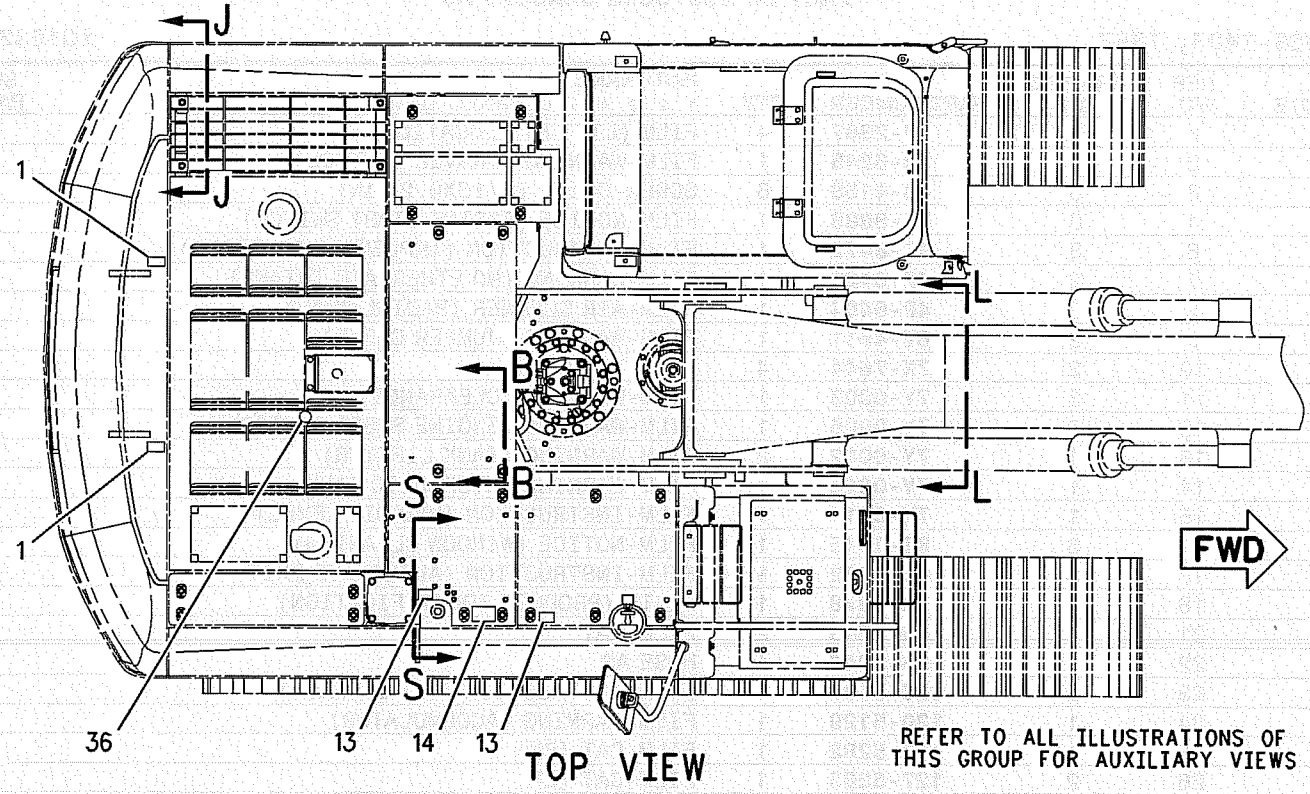

TOP VIEW

REFER TO ALL ILLUSTRATIONS OF THIS GROUP FOR AUXILIARY VIEWS

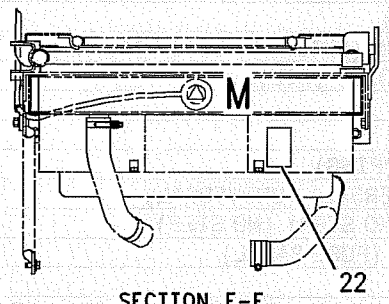

SECTION F-F

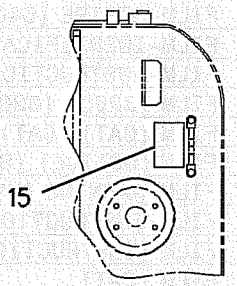

SECTION S-S

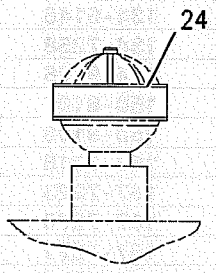

SECTION B-B

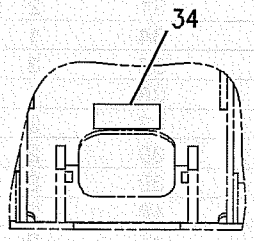

VIEW L-L

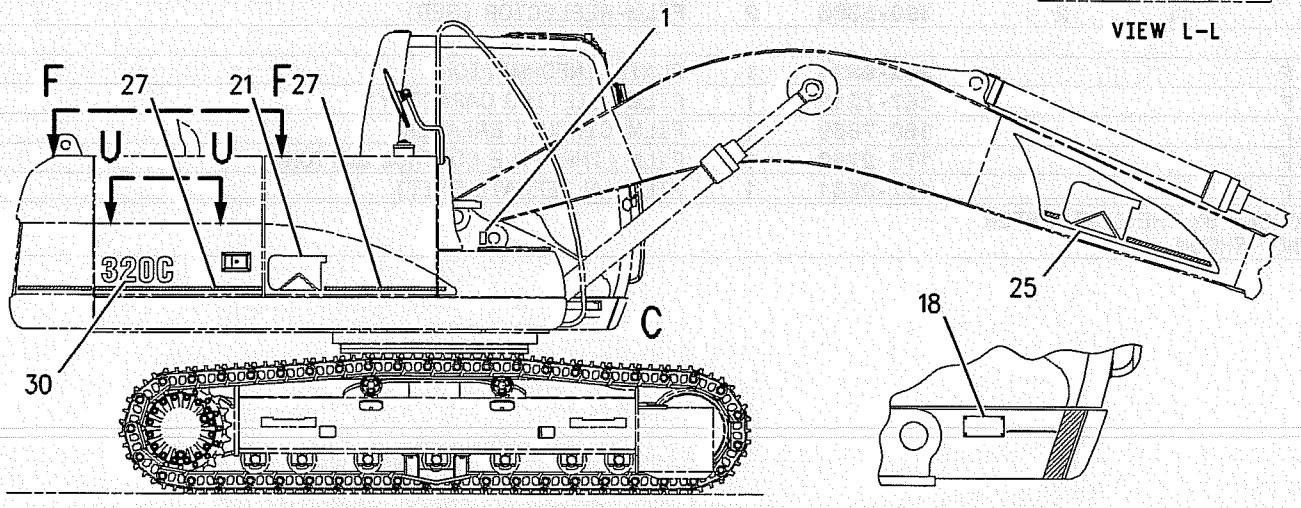

RIGHT SIDE VIEW

VIEW OF AREA C

GRAPHIC #1

g00802464

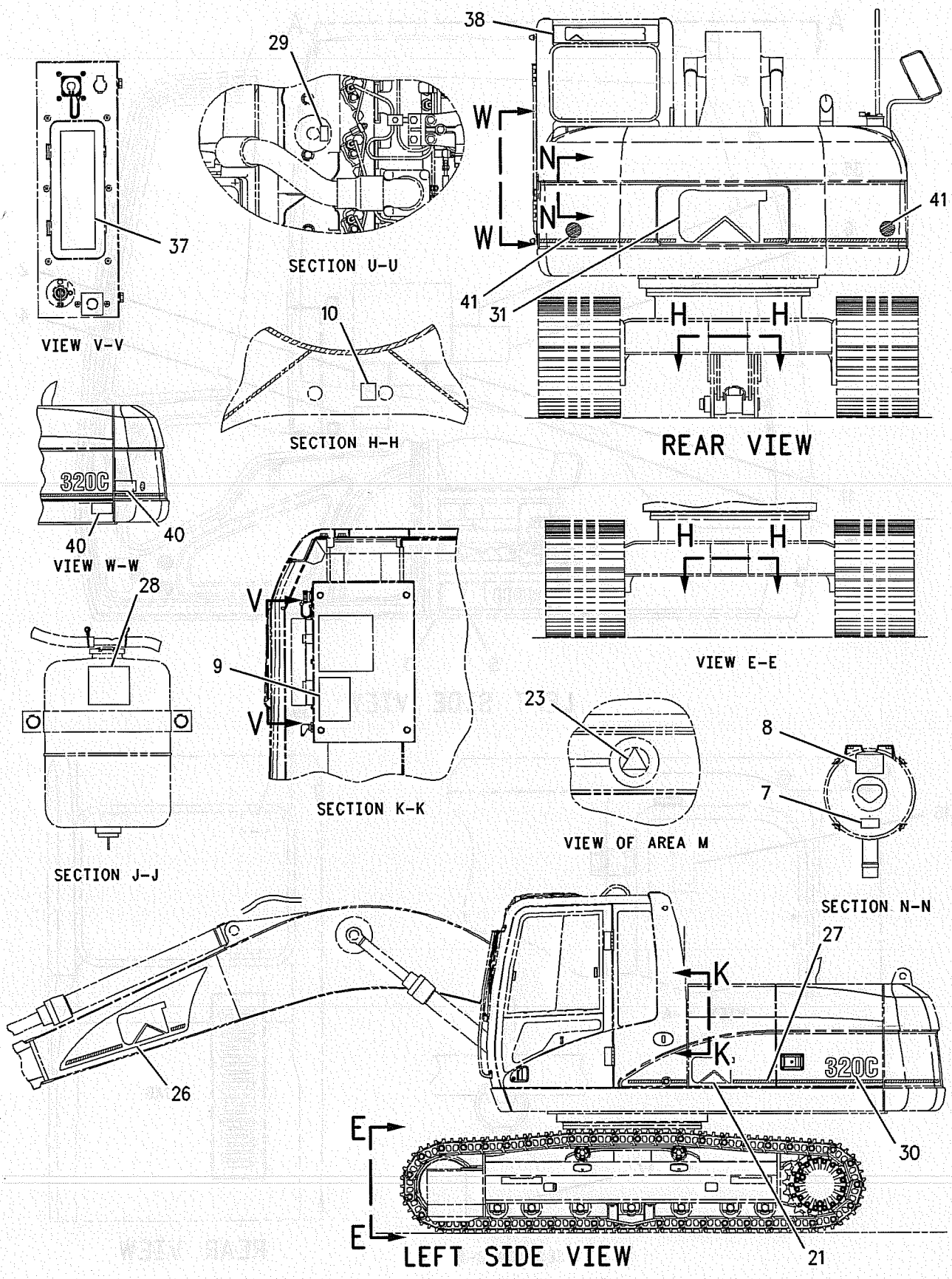

GRAPHIC #2 g00802472

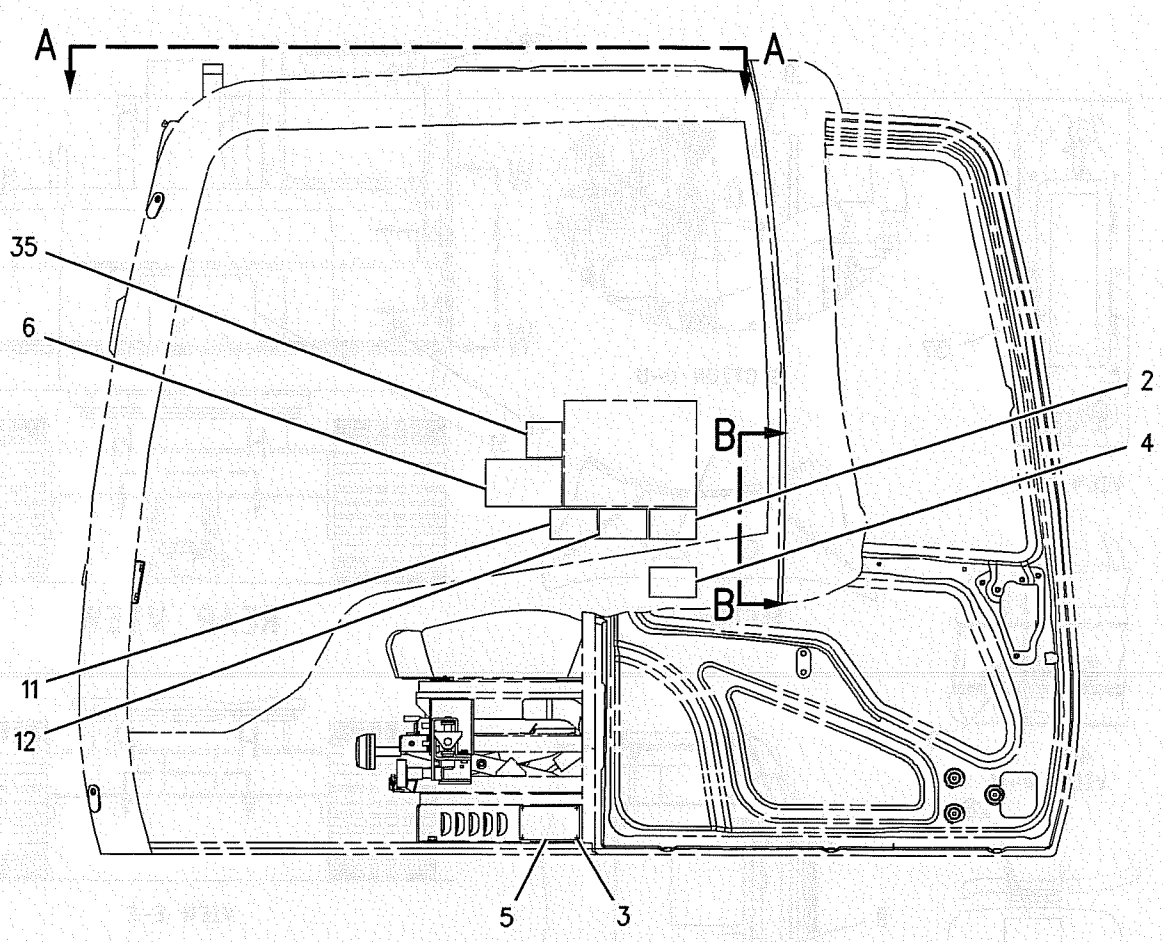

LEFT SIDE VIEW

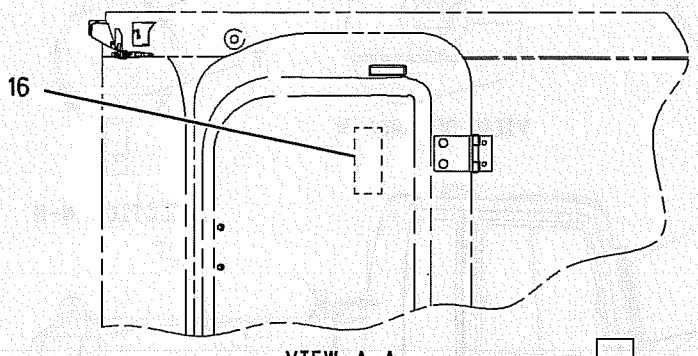

VIEW A-A

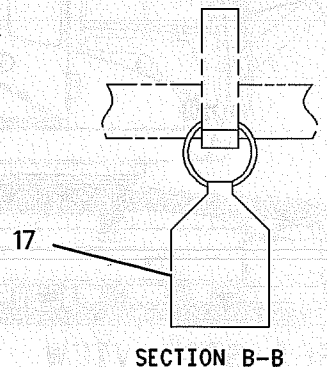

SECTION B-B

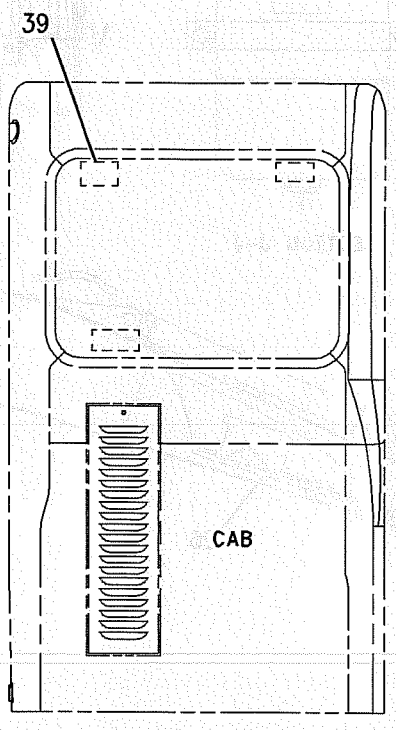

REAR VIEW

GRAPHIC #3

<END>

g00725676

SERVICE EQUIPMENT AND SUPPLIES

150-8102 PLATE & FILM GP

S/N: SBN1-UP

PART OF 193-6849 CHASSIS AR

SMCS-7405, 7557 **i01533974**

NOTE	REF NO	GRAPHIC REF	PART NUMBER	QTY	PART NAME 1 2 3 4 5 6 (PRODUCT LEVEL)	SEE PAGE
	1	1	**1P-2807**	4	FILM (LIFT EYE LOCATION)	
	2	3	**1R-6245**	1	FILM-WARNING (TRAVEL CONTROL)	
	3	3	**4B-4158**	6	SCREW-DRIVE (3/16X0.25 IN)	
	4	3	**4I-8088**	1	FILM-NOTICE (ENGINE START SWITCH)	
	6	3	**4I-8472**	1	FILM-INSTRUCTION (IMPLEMENT CONTROLS)	
	7	2	**4P-6422**	1	FILM-WARNING (NO ETHER/AIR INTAKE)	
	8	2	**4P-6464**	1	FILM-AIR CLEANER (RADIAL SEAL)	
	9	2	**6V-4611**	1	FILM-WARNING (JUMPER CABLE)	
	10	2	**7X-7644**	4	FILM-TIE DOWN	
	11	3	**7Y-0003**	1	FILM-WARNING (CLEARANCE)	
	12	3	**7Y-0005**	1	FILM-WARNING (ENGINE SPEED CONTROL)	
	13	1	**7Y-0012**	2	FILM-WARNING (TANK LIFTING)	
	14	1	**7Y-0013**	1	FILM-WARNING (HYDRAULIC TANK)	
	15	1	**7Y-0014**	1	FILM-INSTRUCTION (HYD OIL LEVEL)	
	16	3	**8T-1915**	1	FILM-NOTICE (WINDOW CLEANING)	
	17	3	**8T-6842**	1	FILM-INSTRUCTION (ALTERNATE EXIT)	
	21	1,2	**105-7545**	2	FILM-CAT	
	22	1	**156-3849**	1	FILM-WARNING (RADIATOR)	
	23	2	**120-5107**	1	FILM-INSTRUCTION (HOT SURFACE)	
	24	1	**120-5129**	1	FILM-WARNING (ACCUMULATOR)	
	25	1	**127-5282**	1	FILM-CAT (RH)	
	26	2	**127-5283**	1	FILM-CAT (LH)	
E	27	1,2	**134-6146**		FILM-STRIPE (590CM)	
	28	2	**134-7258**	1	FILM-IDENTIFICATION (EXTENDED LIFE COOLANT)	
	29	2	**144-9126**	1	FILM-INSTRUCTION (OIL) (OIL)	
	30	1,2	**167-7214**	2	FILM (320CL)	
	31	2	**150-8108**	1	FILM (CAT) (CAT)	
	34	1	**167-7218**	1	FILM (NOTICE) (SHIPPING)	
	35	3	**167-7223**	1	FILM-WARNING (UNIVERSAL) (UNIVERSAL)	
	36	1	**167-7270**	1	FILM-INSTRUCTION (NO STEP) (NO STEP)	
	37	2	**167-7271**	1	FILM (INSTRUCTION) (FUSE PANEL)	
	38	2	**167-7272**	1	FILM (CAT) (CAT)	
	39	3	**176-2666**	1	FILM-WARNING (WINSHIELD) (WINDSHIELD AUTO LOCK)	
	40	2	**188-7268**	2	FILM-WARNING (CRUSHING SWING MACHINE CTWT)	
	41	2	**190-5386**	2	FILM-REFLECTOR (RED)	
F			**202-9824**	1	PLATE-INFORMATION	
F			**167-7220**	1	FILM (LIFTING CAPACITY)	
F			**9X-6198**	1	PLATE-PRODUCT IDENT NUMBER (STANDARD) (PRODUCT ID)	
F			**8T-6843**	1	FILM-SECONDARY EXIT	
F			**101-2842**	1	FILM-INSTRUCTION (ALTERNATE EXIT)	
F			**167-7215**	1	FILM-STRIPE	
F			**167-7216**	1	FILM-STRIPE	

E-ORDER BY THE CENTIMETER
F-NOT SHOWN

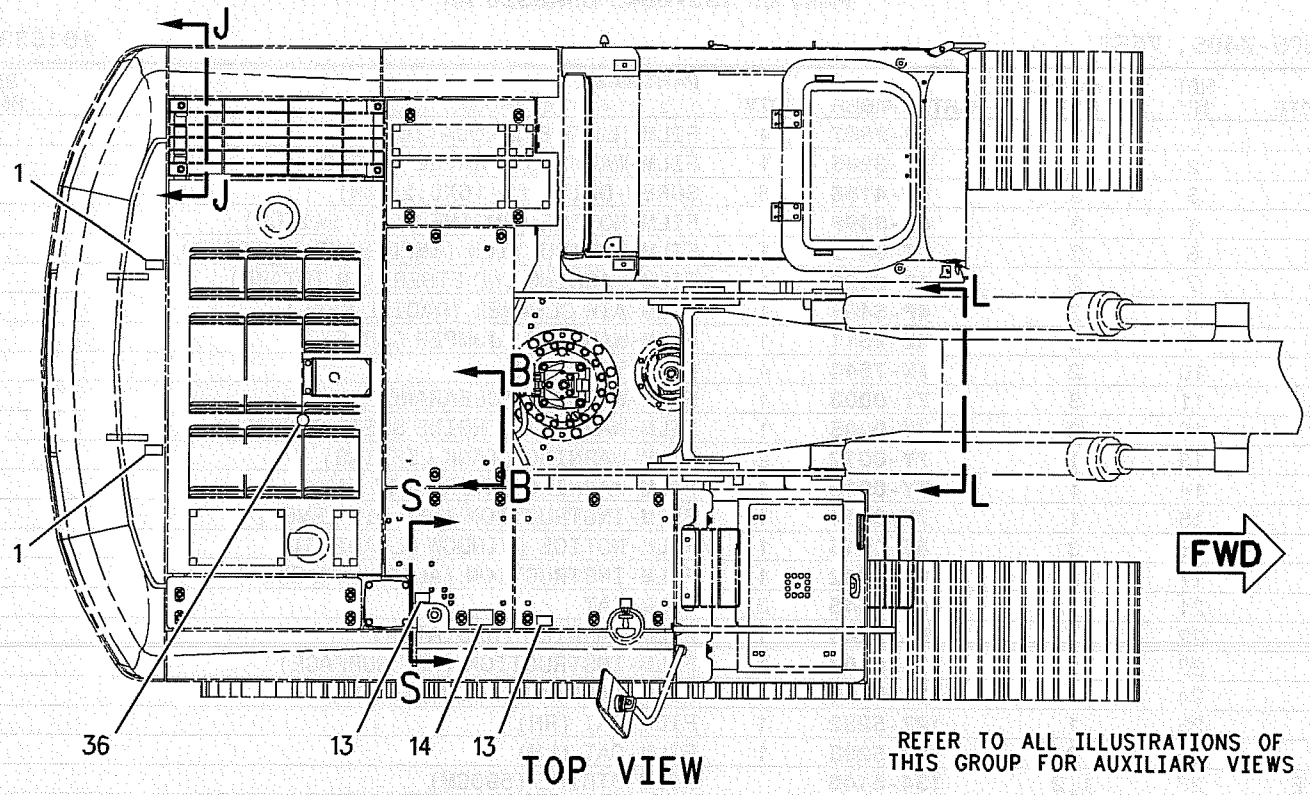

TOP VIEW

REFER TO ALL ILLUSTRATIONS OF THIS GROUP FOR AUXILIARY VIEWS

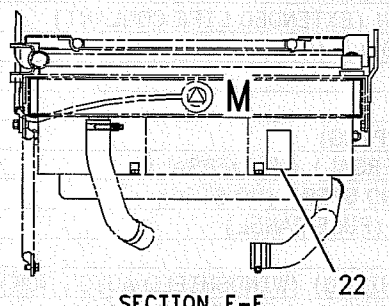

SECTION F-F

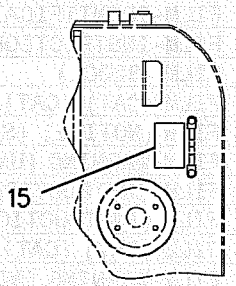

SECTION S-S

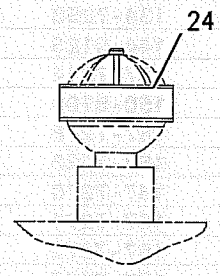

SECTION B-B

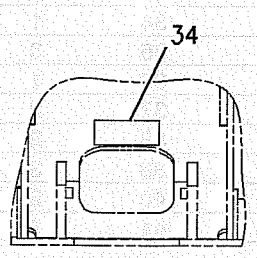

VIEW L-L

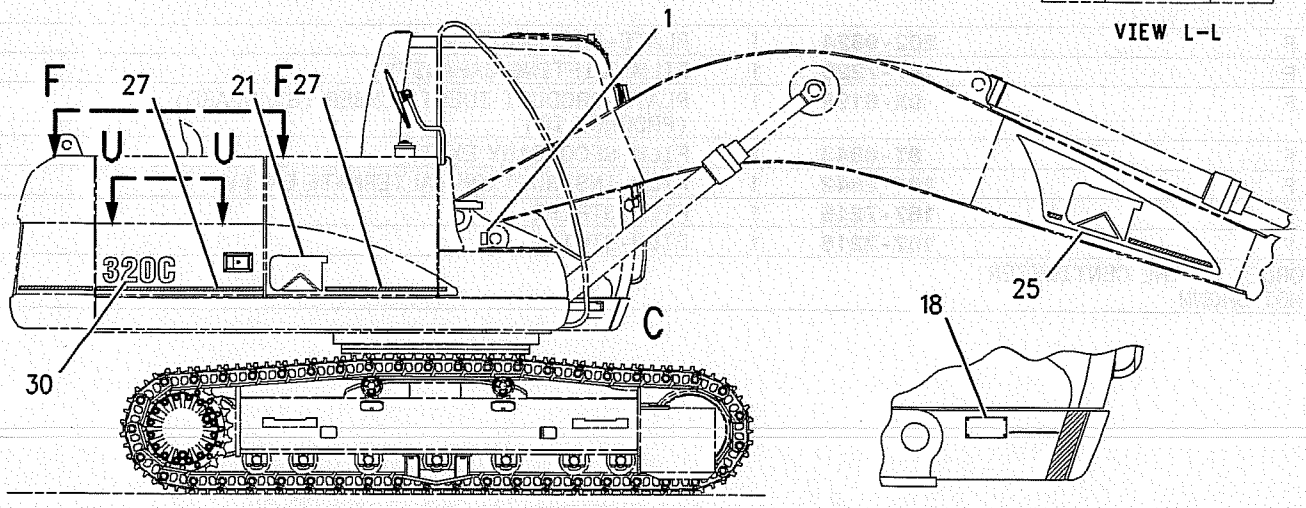

RIGHT SIDE VIEW

VIEW OF AREA C

GRAPHIC #1

g00802517

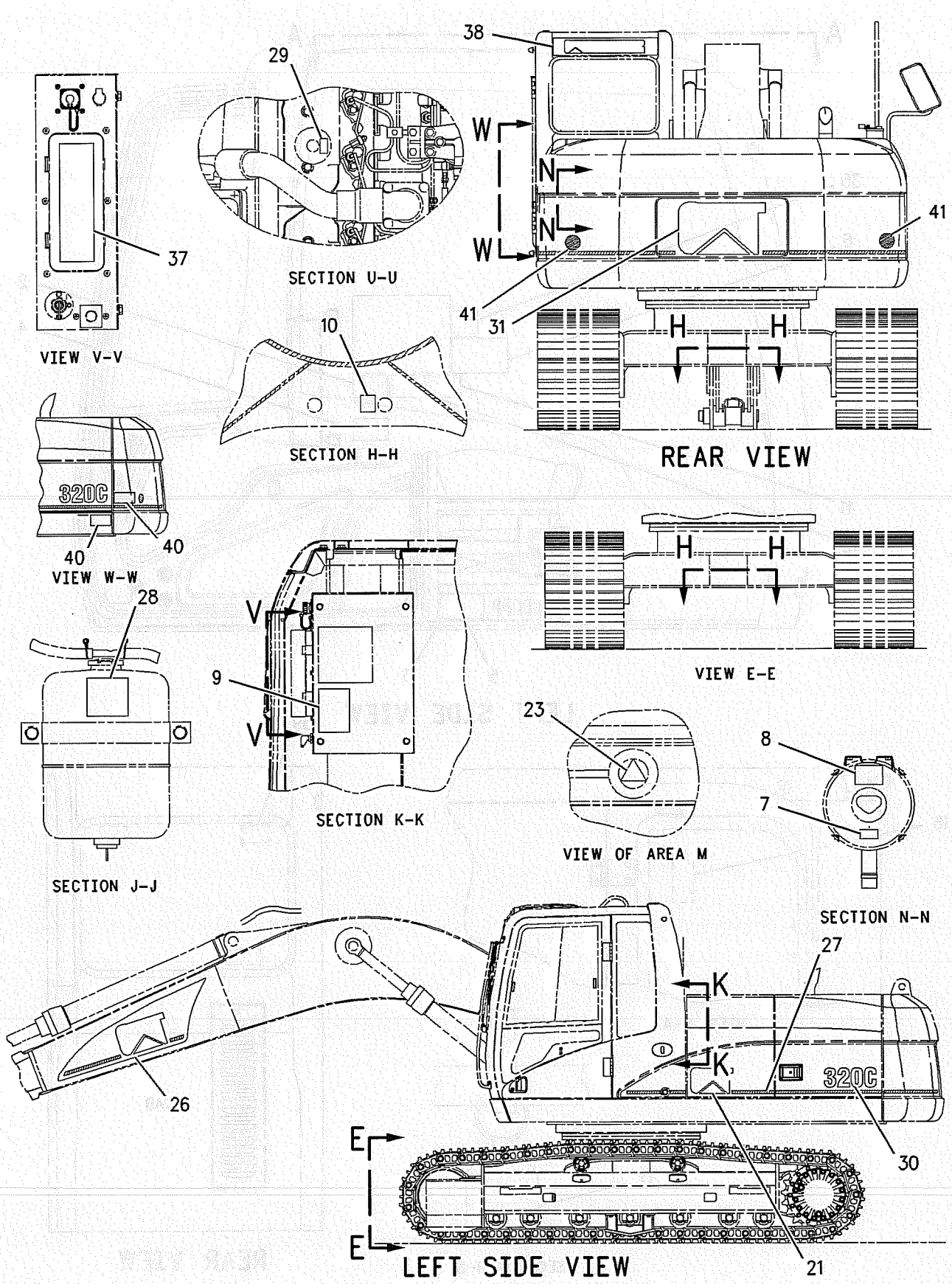

GRAPHIC #2 g00802518

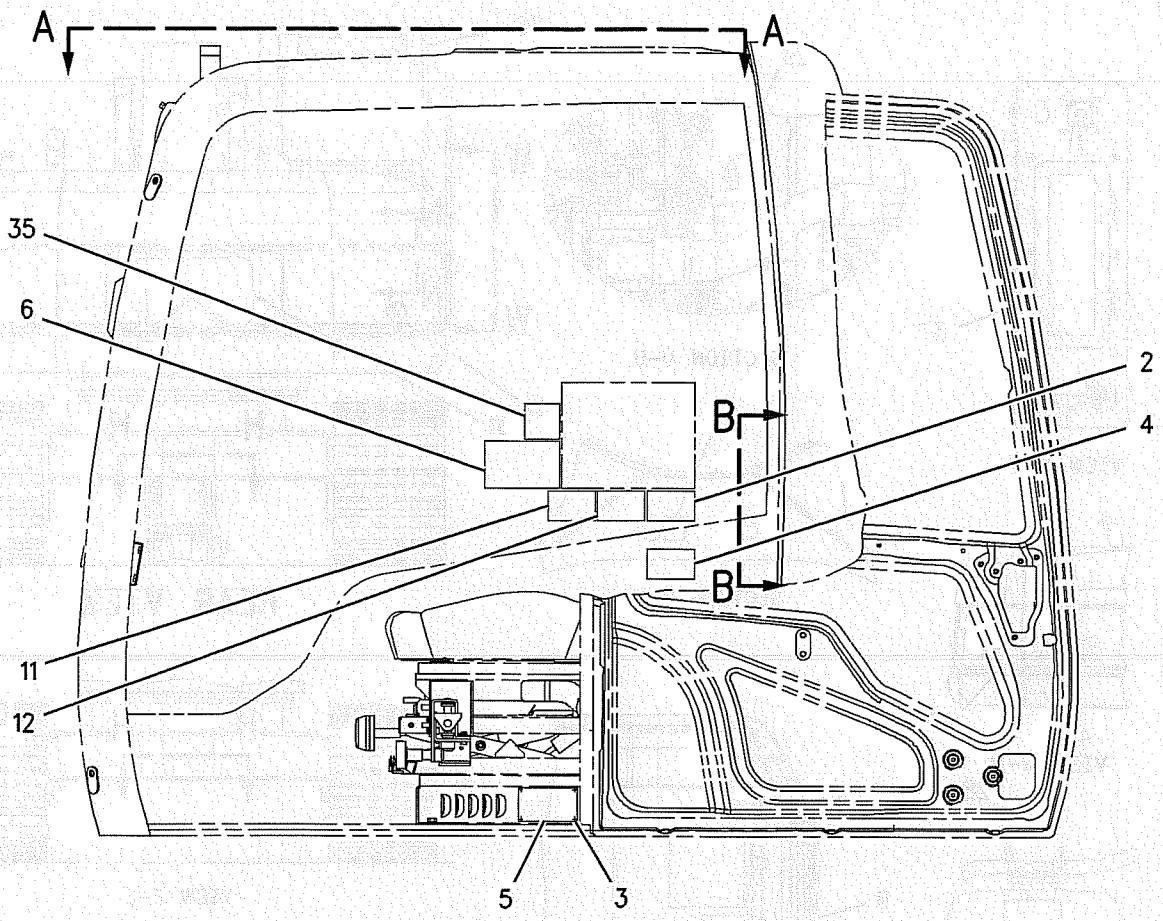

LEFT SIDE VIEW

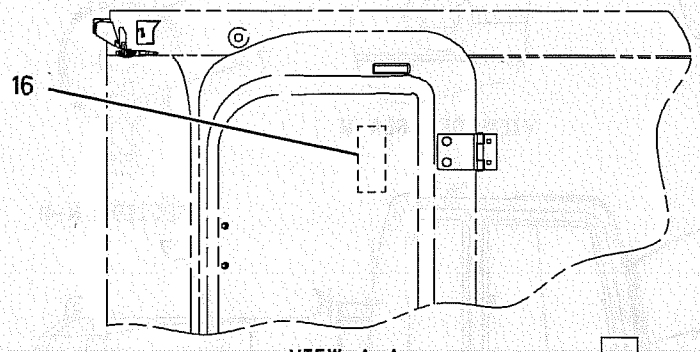

VIEW A-A

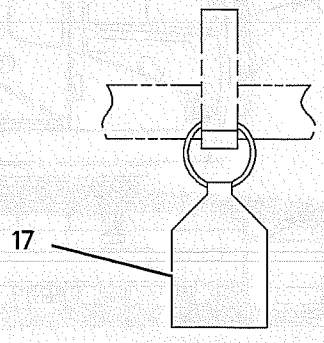

SECTION B-B

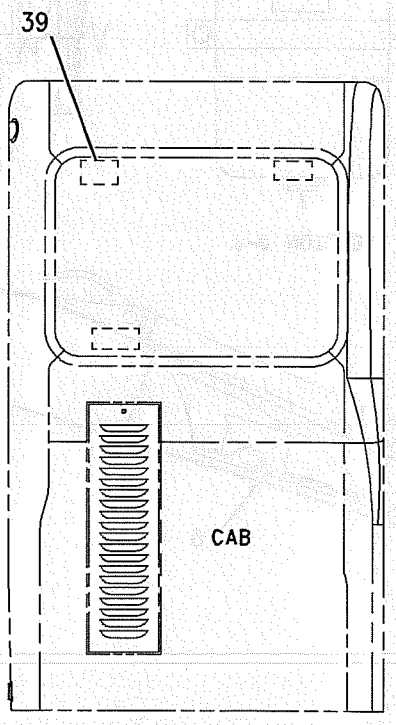

REAR VIEW

GRAPHIC #3

<END>

g00725676

SERVICE EQUIPMENT AND SUPPLIES

176-2722 PLATE & FILM GP

S/N: SBN1-UP; RAW1-UP
SPANISH
AN ATTACHMENT

SMCS-7405, 7557 **i01802540**

NOTE	REF NO	GRAPHIC REF	PART NUMBER	QTY	PART NAME 1 2 3 4 5 6 (PRODUCT LEVEL)	SEE PAGE
	1	1	**120-5131**	1	FILM-WARNING (ACCUMULATOR)	
	2	2	**167-7274**	1	FILM (FUSE PANEL)	
	3	2	**176-2668**	1	FILM-WARNING (WINDOW LOCK)	
	4	1	**114-6461**	1	FILM-AIR CLEANER (RADIAL SEAL)	
	5	1	**7Y-0028**	1	FILM-INSTRUCTION (HYD OIL LEVEL)	
	6	2	**4I-8460**	1	FILM-NOTICE (ENGINE START SWITCH)	
	7	1	**8T-1963**	1	FILM-NOTICE (WINDOW CLEANING)	
	8	2	**1R-6247**	1	FILM-WARNING (TRAVEL CONTROL)	
	9	2	**6V-4613**	1	FILM-WARNING (CABLE CONNECTION)	
	10	2	**7Y-0019**	1	FILM-WARNING (CLEARANCE)	
	11	2	**7Y-0021**	1	FILM-WARNING (ENGINE SPEED CONTROL)	
	12	1	**7Y-0026**	2	FILM-WARNING (TANK LIFTING)	
	13	1	**7Y-0027**	1	FILM-WARNING (HYDRAULIC TANK)	
	14	2	**167-7225**	1	FILM-WARNING (UNIVERSAL)	

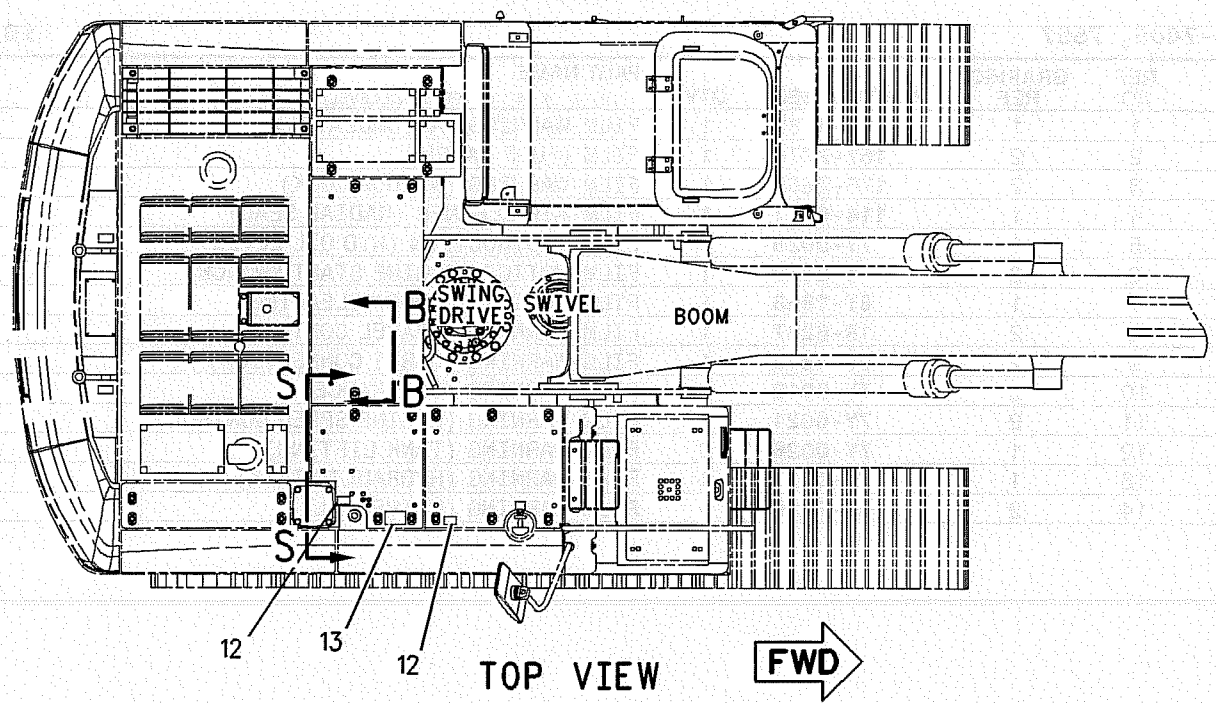

TOP VIEW

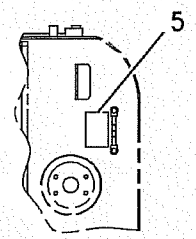

SECTION S-S

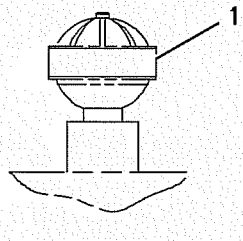

SECTION B-B

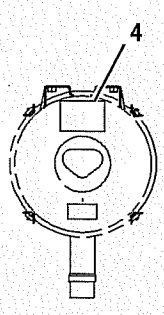

SECTION N-N

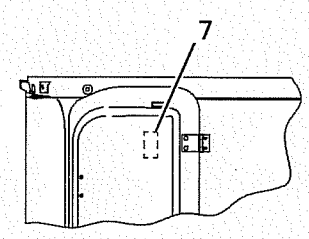

VIEW A-A

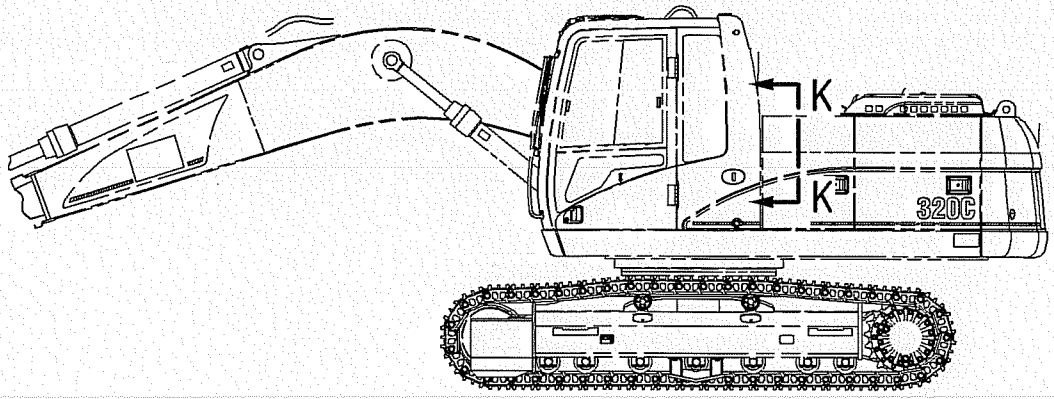

LEFT SIDE VIEW

REFER TO ALL ILLUSTRATIONS OF THIS GROUP FOR AUXILIARY VIEWS

GRAPHIC #1

g00986496

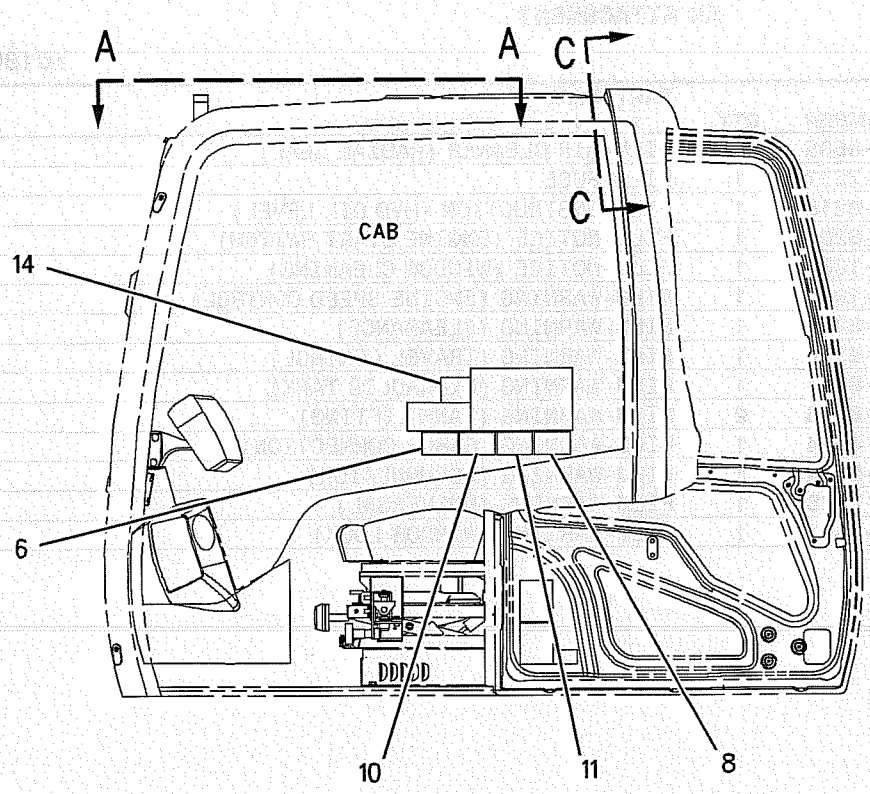

LEFT SIDE VIEW

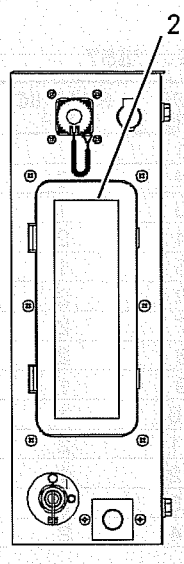

VIEW V-V

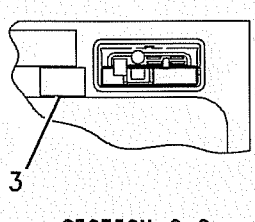

SECTION C-C

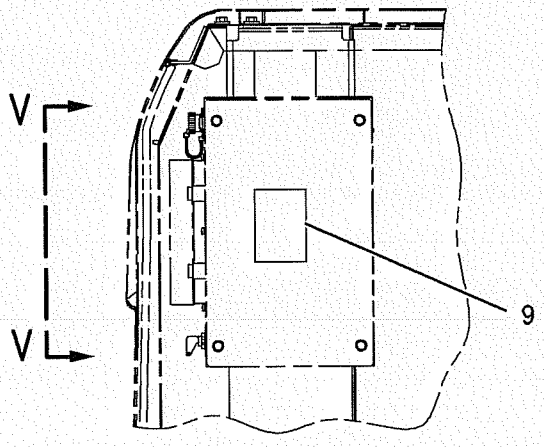

SECTION K-K

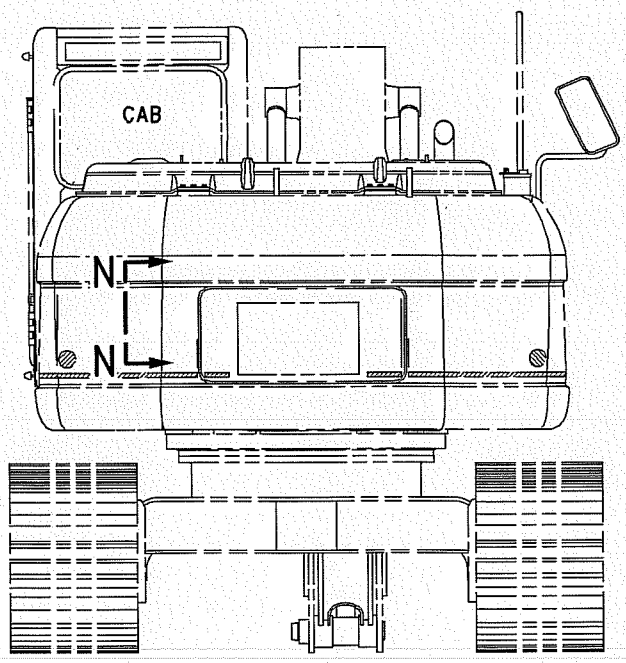

REAR VIEW

REFER TO ALL ILLUSTRATIONS OF THIS GROUP FOR AUXILIARY VIEWS

GRAPHIC #2 **<END>** g00986498

SERVICE EQUIPMENT AND SUPPLIES

176-2723 PLATE & FILM GP

S/N: SBN1-UP; RAW1-UP
PORTUGUESE
AN ATTACHMENT

SMCS-7405, 7557 **i01802591**

NOTE	REF NO	GRAPHIC REF	PART NUMBER	QTY	PART NAME 1 2 3 4 5 6 (PRODUCT LEVEL)	SEE PAGE
	1	1	**4P-8685**	1	FILM-AIR CLEANER (RADIAL SEAL)	
	2	2	**167-7277**	1	FILM-FUSE	
	3	1	**4I-8215**	1	FILM-INSTRUCTION (HYD OIL LEVEL)	
	4	2	**4I-8204**	1	FILM-NOTICE (ENGINE START SWITCH)	
	5	1	**8T-1964**	1	FILM-NOTICE (WINDOW CLEANING)	
	6	2	**4I-1998**	1	FILM-WARNING (ENGINE SPEED CONTROL)	
	7	2	**4I-8205**	1	FILM-WARNING (CLEARANCE)	
	8	2	**4I-8206**	1	FILM-WARNING (TRAVEL CONTROL)	
	9	1	**4I-8214**	1	FILM-WARNING (HYDRAULIC TANK)	
	10	1	**4I-8216**	2	FILM-WARNING (TANK LIFTING)	
	11	2	**6V-4614**	1	FILM-WARNING (CABLE CONNECTION)	
	12	1	**120-5134**	1	FILM-WARNING (ACCUMULATOR)	
	13	2	**167-7228**	1	FILM-WARNING (UNIVERSAL)	
	14	2	**176-2671**	1	FILM-WARNING (WINDOW LOCK)	

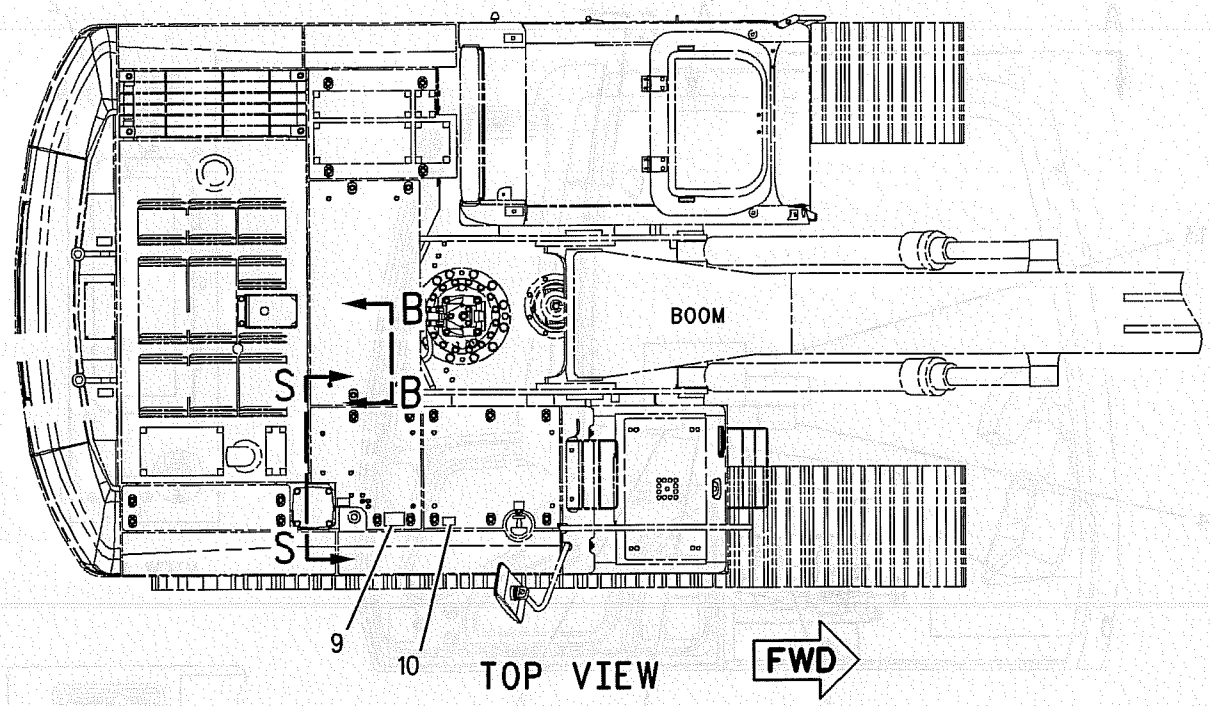

TOP VIEW

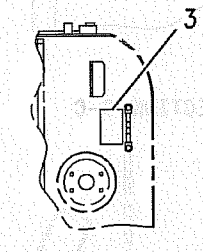

SECTION S-S

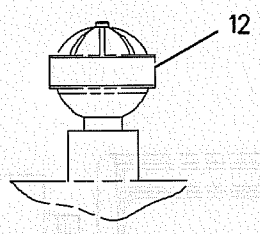

SECTION B-B

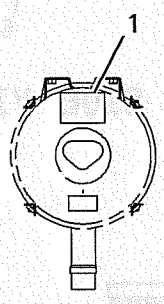

SECTION N-N

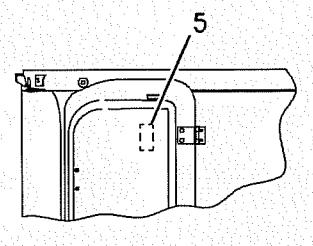

VIEW A-A

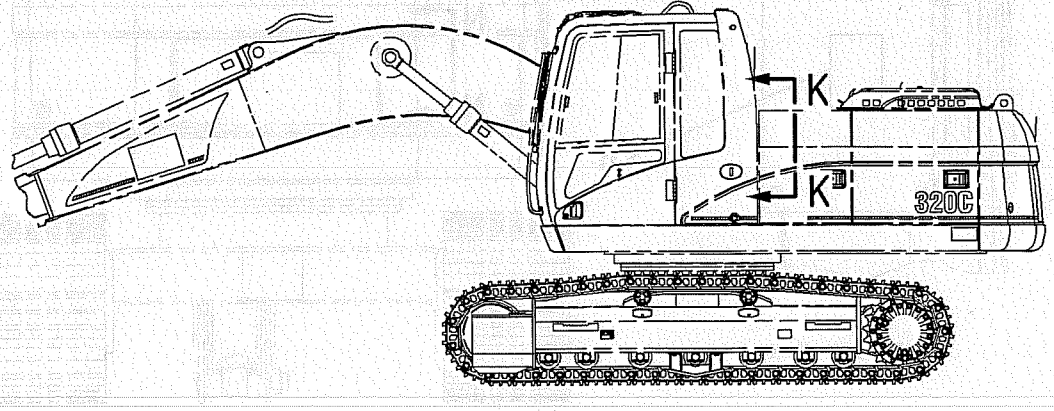

LEFT SIDE VIEW

REFER TO ALL ILLUSTRATIONS OF THIS GROUP FOR AUXILIARY VIEWS

GRAPHIC #1 g00973893

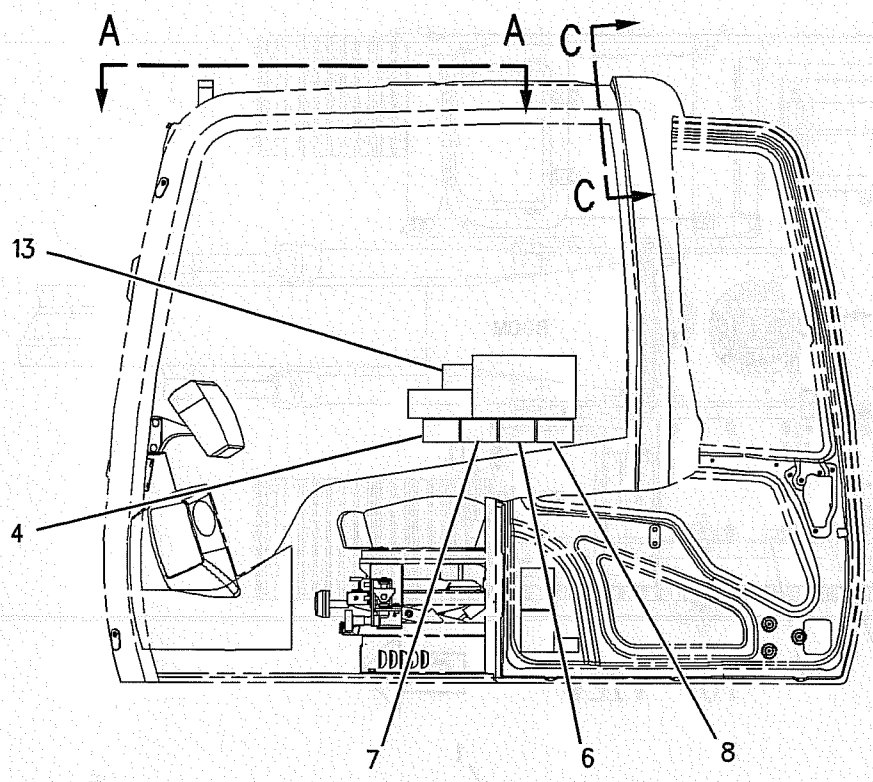

LEFT SIDE VIEW

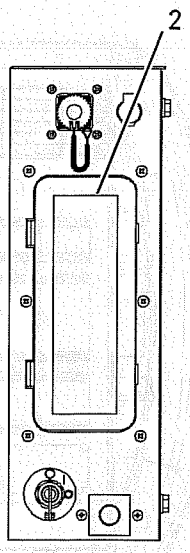

VIEW V-V

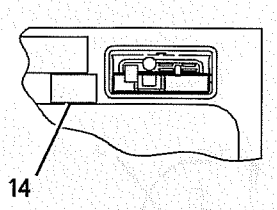

SECTION C-C

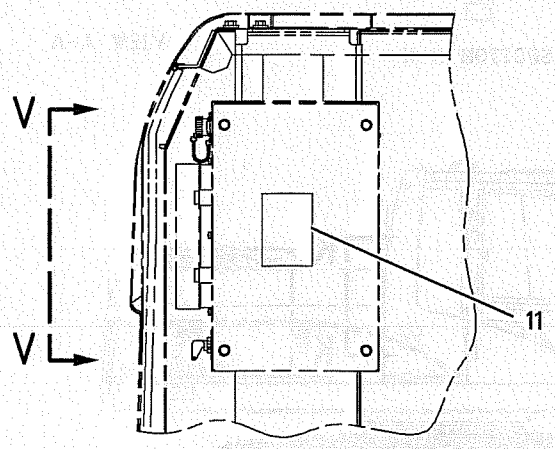

SECTION K-K

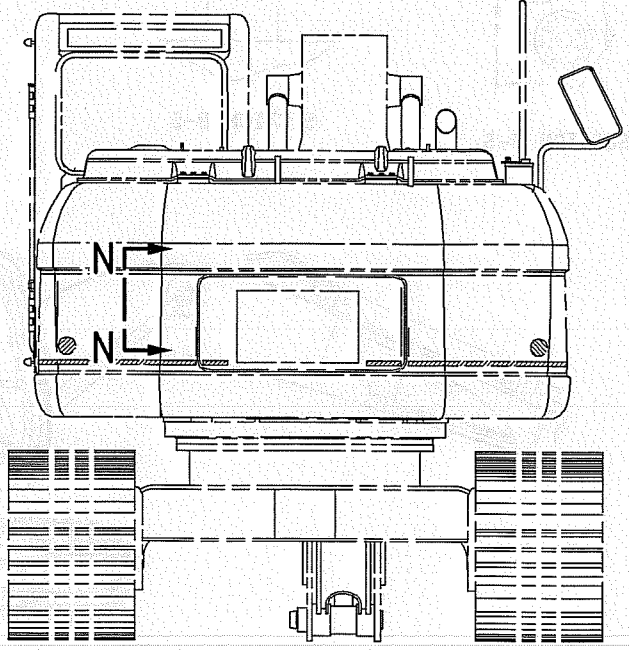

REAR VIEW

REFER TO ALL ILLUSTRATIONS OF THIS GROUP FOR AUXILIARY VIEWS

GRAPHIC #2

<END>

g00973894

PART NUMBER INDEX

Part	Page
1	
1A-0621	114
1D-4635	531
1H-3244	128
1H-3338	129
1H-8171	71
1J-9671	73
1K-8850	175
1M-6119	97
	98
	106
1M-6120	97
	98
	106
1P-0436	71
1P-2807	619
	623
1P-3702	313
	317
	324
	360
	361
	362
	371
	402
	406
	414
	416
	442
1P-3703	281
	289
	293
	295
	305
	306
	311
	312
	313
	314
	317
	321
	324
	351
	353
	360
	361
	362
	372
	375
	416
1P-3704	277
	281
	289
	291
	293
	295
	324
	364
	365
1P-3705	277
	281
	289
	291
	293
	295
1P-4278	397
1P-4578	324
	353
1P-4579	353
1P-5765	313
	360
	361
	362
1P-5767	277
	281
	289
	291
	293
	295
1R-0739	39
1R-0751	71
1R-5998	565
1R-6245	619
	623
1R-6247	627
1R-6573	76
1R-9206	80
1R-9210	82
1S-7252	97
	106
1U-3351	547
1U-3352	542
1U-8846	152
	169
	252
	253
	372
	375
2	
2A-5222	42
2B-0858	397
2D-6642	383
2G-8767	98
2H-3814	49
2H-3922	133
	134
	613
2J-3507	530
	531
2M-0849	397
	594
2M-9780	261
	333
	334
	384
	407
	410
	462
2P-2975	440
2Q-4710	114
2S-3440	38
	47
2S-4078	317
	323
	404
2S-5926	206
2W-6047	36
2Y-5503	253
2Y-5685	584
2Y-5872	26
3	
3B-4501	26
	117
	119
	120
	121
3B-4503	30
3B-4505	10
	13
	25
	31
	36
	39
	42
	65
	67
	71
	76
3B-4510	565
3B-4618	179
3B-8485	277
	291
3B-8489	169
	232
	233
	234
	235
	236
	470
	472
	473
	476
	478
	482
	484
	486
	488
	490
	492
	494
	496
	498
	500
3C-6969	136
3D-2824	317
	323
	333
	334
	353
	372
	375
	397
	407
	410
	434
	439
	443
	446
	449
	458
3D-2891	262
	266
3D-9143	162
3E-2310	327
	329
	347
3E-2338	152
3E-3217	203
3E-3365	31
	93
	329
3E-3371	273
	323
	335
3E-3383	144
	224
	225
3E-4091	73
3E-4297	259
3E-7738	94
3E-8020	565
3E-8024	205
3E-8028	314
3E-8048	128
3E-8320	128
3E-9411	176
3E-9850	160
3E-9871	613
3E-9872	606
	616
3E-9874	565
3G-3236	▶543
3G-5083	389
3J-1907	216
	247
	262
	266
	327
	329
	331
	333
	334
	335
	341
	346
	347
	372
	375
	381
	397
	403
	410
	421
	423
	450
	462
3J-7354	351
	397
3K-0360	250
	318
	323
	333
	334

▶ **PRIMARY REFERENCE**

PART NUMBER INDEX

Part	Page
	335
	336
	346
	372
	375
	383
	390
	397
	398
	416
	421
	423
	427
3K-5234	531
3K-8460	73
3P-0647	433
	440
3P-1896	15
3P-9847	50
3S-2093	97
	128
	136
	138
	143
	144
	146
	148
	273
	550
	590
3S-6049	97
	106
3S-6050	97
	106
3T-0849	356
3T-5760	97
	106
3T-7528	259
3V-4791	98
3W-6399	605
4	
4B-4158	204
	207
	423
	427
	619
	623
4B-4278	157
4B-7739	397
4B-9783	450
4B-9880	451
4D-7794	13
4D-8123	97
4F-2294	128
4I-0006	160
4I-0050	91
4I-0123	91
4I-0232	178
4I-0378	91
4I-0420	610
4I-0498	▶470
	481
4I-0794	336
4I-0806	346
4I-0818	346
4I-0836	335
4I-1022	390
4I-1163	613
4I-1205	565
4I-1206	565
4I-1260	585
4I-1278	583
4I-1539	215
4I-1674	301
	303
	305
	306
	314
4I-1676	301
	303
4I-1739	334
4I-1998	630
4I-2187	157
4I-3063	565
4I-3123	565
4I-3144	565
4I-3266	598
4I-3308	464
	466
	468
4I-3309	464
	466
4I-3510	443
	446
	449
4I-3556	364
	365
4I-3569	410
4I-3573	334
4I-3745	397
4I-3953	342
4I-3988	341
4I-4270	565
4I-4286	581
4I-4298	608
4I-4300	608
4I-4361	585
4I-4392	565
4I-4543	472
	473
4I-4544	472
	473
4I-4579	590
4I-4808	167
4I-4809	464
	466
	468
	482
	484
	486
	488
	490
	492
	494
	496
	498
	500
4I-4812	167
4I-4813	464
	466
	468
4I-5020	613
4I-5021	613
4I-5394	397
4I-5396	124
4I-5409	1
	2
	▶125
4I-5490	397
4I-5546	372
	375
4I-5862	215
4I-5906	336
4I-6054	342
4I-6262	396
4I-6365	429
4I-6391	347
4I-6397	410
4I-7527	252
4I-7714	443
	446
4I-7745	372
	375
4I-7889	98
4I-8019	178
4I-8088	619
	623
4I-8204	630
4I-8205	630
4I-8206	630
4I-8214	630
4I-8215	630
4I-8216	630
4I-8460	627
4I-8472	619
	623
4I-8785	360
4I-8888	279
	287
	307
	309
4I-8965	421
	423
4I-9404	39
4I-9521	335
	342
	347
4I-9522	336
	342
	347
4I-9523	336
	342
4I-9524	335
	342
	347
4I-9525	336
	342
	347
4I-9526	342
	347
4I-9527	335
	342
4I-9528	335
	342
4I-9664	15
4J-0519	406
	407
4J-0520	316
	416
4J-0522	324
	353
4J-0524	353
	358
4J-0527	358
4J-5267	314
	372
	375
	397
4J-5268	314
4J-5309	410
4J-7385	436
	437
4J-7386	436
	437
4J-7533	259
	410
	421
	423
4J-8998	402
	414
	416
	442
4J-9448	98
4K-1388	407
	410
	414
	416
	436
	437
4K-2039	452
4K-6177	112
4K-8501	175
4K-8864	97
	106
	333
4N-9170	169
4P-5524	55
4P-6422	619
	623
4P-6445	11
4P-6464	619
	623
4P-7581	99
4P-8685	630
4T-3148	410

▶ PRIMARY REFERENCE

PART NUMBER INDEX

Part	Page
5	
5B-5947	39
5B-9304	462
5C-2889	120
	121
5C-2890	128
	129
5C-7261	43
	98
	106
	112
	162
	435
5C-7793	565
5C-8138	605
5C-8312	136
5C-9553	42
	76
	157
	179
5D-1026	253
	590
5D-4822	273
5G-2247	203
5H-5672	395
5H-8624	351
5I-3707	561
5I-4111	436
	437
5I-4174	313
	360
	361
	362
5I-4371	335
5I-4396	335
5I-4494	313
5I-4915	17
	19
5I-4921	36
5I-4940	38
5I-4969	26
5I-4983	25
5I-4993	31
5I-5005	23
5I-5010	67
5I-5029	21
5I-5038	41
5I-5108	76
5I-5146	81
5I-5147	80
5I-5148	80
5I-5154	82
5I-5159	83
5I-5175	78
5I-5591	17
5I-7090	220
5I-7290	301
5I-7505	15
	17
	19
	39
5I-7508	80
5I-7511	83
5I-7523	15
5I-7524	15
5I-7525	15
5I-7526	15
5I-7528	15
5I-7529	15
5I-7534	26
5I-7539	33
5I-7540	34
	35
5I-7541	12
5I-7542	24
5I-7549	65
5I-7550	65
5I-7557	42
5I-7558	26
5I-7559	26
5I-7561	42
5I-7572	47
5I-7576	76
5I-7578	47
5I-7583	17
	19
5I-7584	11
5I-7587	70
5I-7588	13
5I-7589	▶59
	70
5I-7590	36
5I-7599	30
5I-7601	65
5I-7602	70
5I-7603	13
5I-7607	25
5I-7610	26
5I-7611	24
5I-7622	36
5I-7623	42
5I-7624	36
5I-7625	36
5I-7626	11
5I-7630	36
5I-7631	36
5I-7632	26
5I-7633	65
	69
5I-7637	33
5I-7640	41
5I-7642	41
5I-7643	41
5I-7644	41
5I-7645	38
5I-7650	10
5I-7652	15
5I-7654	13
5I-7655	47
5I-7656	26
5I-7657	26
5I-7658	26
5I-7659	26
5I-7660	25
5I-7661	25
5I-7666	31
5I-7667	33
5I-7668	33
5I-7673	24
5I-7674	12
5I-7677	67
5I-7678	67
5I-7679	69
5I-7683	26
5I-7686	26
5I-7689	42
5I-7690	43
5I-7691	43
5I-7696	49
5I-7697	49
5I-7699	47
5I-7718	21
5I-7719	36
5I-7720	36
5I-7721	36
5I-7722	36
5I-7723	10
5I-7724	15
5I-7725	38
5I-7730	36
5I-7731	36
5I-7735	47
5I-7739	36
5I-7740	36
5I-7742	65
5I-7743	76
5I-7748	70
5I-7750	28
5I-7770	5
	▶42
5I-7784	13
5I-7785	13
5I-7786	13
5I-7787	13
5I-7788	13
5I-7789	13
5I-7794	33
5I-7795	33
5I-7796	33
5I-7831	81
5I-7978	13
5I-7981	70
5I-7985	95
5I-7987	95
5I-7997	95
5I-8001	11
5I-8005	13
5I-8009	15
5I-8010	47
5I-8012	17
	19
5I-8013	65
5I-8021	67
5I-8023	67
5I-8026	39
5I-8040	69
5I-8041	70
5I-8056	47
5I-8058	42
	76
5I-8060	42
5I-8066	39
5I-8067	31
5I-8070	76
5I-8080	95
5I-8086	95
5I-8087	95
5I-8088	95
5I-8089	95
5I-8090	95
5I-8094	95
5I-8095	95
5I-8096	95
5I-8097	95
5I-8098	95
5I-8110	31
5I-8250	▶116
	122
5I-8251	▶117
	125
5I-8270	97
	106
5I-8273	122
	123
	124
5I-8304	98
	106
5I-8417	381
5I-8426	381
5I-8511	421
	423
5I-8623	381
5I-8625	381
5I-8670	255
5I-8708	335
5I-8825	329
5I-8853	327
	341
5J-2974	403
5K-2298	470
5K-8451	73
	336
	347
5K-9090	277
	291
	301
	303
	314
	317
	318
	321
	323
	324
	353
	358
	372
	375
5K-9242	470
5K-9243	169
	472
	473
5L-3233	56
5L-4758	216
	452
5L-6326	49
5P-0743	64
5P-0747	97
	106
5P-0761	97

▶ PRIMARY REFERENCE

PART NUMBER INDEX

Part	Page
	106
5P-0767	253
	590
5P-1075	157
5P-1076	73
	91
	156
	166
	172
	177
	192
	193
	372
	375
5P-1420	73
5P-1442	63
	73
5P-3108	436
	437
5P-4115	179
5P-4116	94
	99
	157
	162
	568
	569
5P-4961	63
5P-5998	273
5P-7464	335
5P-7465	335
5P-7468	317
	353
	358
5P-7469	317
	353
	358
5P-7470	324
5P-7471	324
5P-8182	324
5P-8309	50
5P-8500	90
5P-8502	90
5P-9297	122
	123
	124
5P-9891	207
5P-9909	50

6

Part	Page
6D-0692	152
6D-1641	327
	334
	590
6D-3479	347
6D-4244	97
6D-4246	335
6D-9157	351
	397
6E-2271	407
	414
	419
6E-2274	407
	410
	414
	416
6E-2745	407
6E-3653	410
6E-4815	407
6E-4816	407
6E-5169	410
6E-5638	410
6E-5643	410
6E-5644	410
6E-5730	407
	410
	414
	416
6E-5731	407
	410
	414
	416
6F-7045	133
	134
6F-7556	26
6F-7557	26
6G-2256	98
6G-2263	98
6I-2501	55
6I-2502	55
6I-4464	55
6I-5133	470
6I-5134	470
6I-5135	470
6I-5136	470
6I-5137	470
6I-5138	470
6I-5298	222
	223
6I-5342	585
6I-5470	565
6I-6033	178
6I-6354	511
	514
	515
	520
	521
	522
	523
	525
	526
6I-6355	511
	514
	515
	521
	522
	523
	526
6I-6356	511
	514
	515
	521
	522
	523
	526
6I-6371	530
6I-6404	512
	513
	516
	517
	518
	519
	524
	527
6I-6405	512
	513
	516
	517
	524
	527
6I-6406	512
	513
	516
	517
	524
	527
6I-6583	152
6I-6585	152
6I-6786	237
6I-6787	243
	245
6I-6795	443
	446
	449
6I-9454	209
	212
6J-2680	397
6K-0613	222
	223
6K-0806	285
	297
	299
	366
	368
	369
6K-8178	98
	106
6L-3616	470
	472
	473
6M-5062	452
6P-2216	178
6V-0400	281
	289
	293
	295
	314
	351
	372
	375
6V-0545	353
6V-0852	327
	335
	346
	397
6V-1874	317
	358
6V-1903	71
6V-2369	129
6V-2722	106
6V-3265	605
6V-3324	135
6V-3342	470
6V-3922	410
6V-3965	327
	334
	347
	397
6V-4298	257
6V-4611	619
	623
6V-4613	627
6V-4614	630
6V-5200	378
6V-5210	117
	119
	120
	121
	548
6V-5393	410
6V-5556	444
6V-5597	407
	410
	414
	416
6V-5645	128
6V-5683	98
6V-5738	144
6V-7238	250
6V-7357	76
	217
	342
	590
	613
6V-7359	335
6V-7636	565
6V-7658	194
	216
	259
6V-7661	202
6V-8186	128
6V-8187	128
6V-8200	262
	266
	462
6V-8202	600
6V-8218	443
	446
	449
6V-8231	25
	69
	76
	616
6V-8236	15
	26
6V-8337	429
6V-8362	135
6V-8363	613
6V-8370	613
6V-8378	128
6V-8397	261
	327
	329
	331
	333
	334
	335
	336
	341

PART NUMBER INDEX

Part	Page
	346
	347
	372
	375
	421
6V-8398	261
	279
	283
	285
	287
	297
	299
	307
	309
	316
	333
	334
	336
	346
	347
	366
	367
	368
	369
	372
	375
	455
	456
6V-8400	323
	324
	425
6V-8624	333
6V-8625	333
	372
	375
6V-8634	346
6V-8635	314
	317
	321
	323
	358
6V-8636	327
	329
	331
	333
	341
	346
6V-8637	334
6V-8638	331
6V-8639	333
	346
6V-8724	327
	329
	331
	333
	341
	346
	372
	375
6V-8774	334
	372
	375
6V-8781	333
	341
6V-8782	347

Part	Page
6V-8936	261
6V-8978	443
	446
	449
6V-9001	327
	333
6V-9002	334
6V-9004	333
6V-9007	317
	323
	334
6V-9008	323
	358
6V-9027	73
6V-9632	109
	162
6V-9669	136
6V-9746	301
	303
	305
	306
	314
	317
	323
	324
	333
	334
	362
	364
	365
	458
6V-9836	329
	333
	346
6V-9840	317
6V-9843	347
6V-9844	372
	375
6V-9850	331
	336
	346
6V-9851	346
6V-9854	318
6V-9855	324
6V-9873	347
6V-9875	317
6W-6005	97
	106
6Y-0473	203
6Y-0846	211
6Y-5408	532
6Y-5409	545
6Y-5472	▶539
6Y-7409	544
6Y-8186	198
	199
6Y-9571	73
7E-2985	71
7F-7259	134
7F-8268	203
7G-1060	98

Part	Page
7G-5984	351
7G-5985	351
7G-5986	351
7H-3171	194
	202
7I-0717	161
7I-0966	444
7I-0986	454
7I-1026	402
7I-1248	407
	410
	414
	416
7I-1353	241
7I-1565	617
7I-2272	262
	410
	427
	457
7I-2673	98
	138
7I-3352	517
7I-7131	396
7I-7403	454
7I-7733	205
7I-7734	206
7I-8084	428
	451
7I-8102	454
7I-8249	334
7I-8252	372
7J-9933	444
7K-1181	98
	136
	138
	143
	144
	148
	327
	329
	331
	334
	342
	347
	372
	375
	574
7M-7410	427
7M-8485	152
	314
	317
	321
	323
	324
	358
	390
	407
	410
7N-0718	128
	▶133
7N-0719	106
	▶134
7N-3718	122
	124
7N-5274	97

Part	Page
	106
7S-4244	606
7T-1099	91
	358
7T-3401	546
7T-3402	540
7T-3403	537
7T-6799	135
7T-8890	605
7W-3556	31
7X-0578	565
	610
7X-0618	179
7X-0796	13
	25
	26
	28
	38
	39
	46
	49
	69
	71
	76
7X-0818	98
7X-2532	29
7X-2533	98
7X-2536	13
	26
	109
	205
	220
7X-2537	67
	112
7X-2538	94
7X-2544	358
7X-2549	277
	291
7X-2550	353
7X-2553	277
	291
	351
	598
7X-2554	50
7X-2555	356
7X-2557	390
7X-2558	378
7X-2562	155
7X-2563	253
7X-2565	200
	201
7X-2568	152
7X-2576	253
7X-2619	99
	128
7X-2621	98
	148
	411
7X-7644	619
	623
7X-7700	91
7X-7729	50
	351
7Y-0003	619
	623

7

▶ PRIMARY REFERENCE

PART NUMBER INDEX

Part	Page
7Y-0005	619
	623
7Y-0012	619
	623
7Y-0013	619
	623
7Y-0014	619
	623
7Y-0019	627
7Y-0021	627
7Y-0026	627
7Y-0027	627
7Y-0028	627
7Y-0059	1
	2
7Y-0223	152
7Y-0225	152
7Y-0252	250
7Y-0357	530
7Y-0358	530
7Y-0366	▶530
7Y-0466	228
7Y-0468	228
	229
	429
7Y-0682	206
7Y-1426	152
7Y-1430	152
7Y-1431	152
7Y-1432	152
7Y-1433	152
7Y-1434	152
	250
7Y-1558	152
7Y-1607	188
	▶200
7Y-1608	188
	▶201
7Y-1647	169
7Y-1648	169
7Y-1649	169
7Y-1650	169
7Y-1746	204
	207
7Y-1781	205
7Y-1863	169
7Y-1900	228
7Y-1901	228
7Y-1902	228
7Y-1904	228
7Y-1905	229
7Y-1924	99
7Y-1976	50
	52
	397
7Y-2219	▶502
	504
	505
	506
	507
	508
7Y-2357	478
7Y-2392	478
7Y-2398	91
7Y-2670	470
7Y-2853	166
	178
7Y-2854	179
7Y-3470	616
7Y-3472	616
7Y-3474	605
	606
7Y-3475	▶503
	504
	505
	506
	507
	508
7Y-3721	314
7Y-3729	324
7Y-3730	317
	324
	372
	375
7Y-3731	317
	324
7Y-3813	1
	2
	▶587
7Y-3919	587
7Y-3920	587
7Y-3951	588
7Y-3954	588
7Y-4190	346
7Y-4202	383
7Y-4212	383
7Y-4213	383
7Y-4215	383
	390
7Y-4216	384
7Y-4217	383
7Y-4222	384
7Y-4224	383
7Y-4234	383
7Y-4267	381
7Y-4268	381
7Y-4390	329
7Y-4538	277
	281
	289
	291
	293
	295
7Y-4562	353
7Y-4622	241
7Y-4633	241
7Y-4754	91
	397
7Y-4801	396
7Y-4817	396
7Y-4868	279
	287
	301
	303
	311
	312
	364
	365
7Y-5116	237
	239
7Y-5117	237
	239
7Y-5119	237
	239
7Y-5215	243
	245
7Y-5216	237
	239
	241
7Y-5219	410
7Y-5221	381
7Y-5226	98
7Y-5247	358
7Y-5272	216
7Y-5286	117
7Y-5288	117
	119
7Y-5458	144
7Y-5464	144
7Y-5505	588
7Y-6007	416
7Y-7364	616
7Y-7686	503
7Y-7687	503
7Y-8099	407
	416
7Y-8165	97
7Y-8167	73
	97
7Y-8379	336
7Y-8436	441
7Y-8437	441
7Y-8463	224
	225
	226
	227
7Y-8487	335
7Y-8493	346
7Y-8561	569
7Y-9096	572
	576
8	
8C-0597	347
8C-3445	39
8C-3446	39
	397
8C-3451	397
8C-5899	548
8C-5918	97
	106
8C-7581	128
	136
	588
8C-8451	112
8C-8988	335
	346
8C-8992	192
	193
8E-0834	▶540
8E-0835	▶546
8E-0837	▶537
8E-0838	▶544
8E-0839	▶532
8E-0840	▶545
8E-3752	▶541
8E-3757	▶538
8E-4359	194
8E-4402	539
8E-5031	203
8E-5032	203
8E-5035	203
8E-5037	203
8E-5599	203
8E-5600	200
	201
	▶202
8E-5601	202
8E-5602	202
8E-5604	202
8E-5605	202
8E-5606	202
8E-5608	202
8E-6792	202
8E-6793	202
8E-8409	540
	546
8E-8585	198
	199
8E-8586	198
	199
8E-9805	155
8F-1434	613
8F-8733	262
	266
8H-3481	604
8H-5303	133
	134
8H-5306	133
	134
8H-9819	397
8J-1256	98
8J-4645	390
8J-4954	▶547
8J-4955	▶542
8L-2779	433
	440
8L-8413	97
	106
8M-2770	397
8M-2772	470
	472
	473
8M-2773	98
8N-0869	97
8N-1725	97
	106
8P-9770	511
	512
	513
	514
	515
	516
	517
	518
	519
	521
	522

▶ PRIMARY REFERENCE

PART NUMBER INDEX

Part	Page
	523
	524
	526
	527
8S-0934	599
8S-4724	599
8T-0075	329
	334
8T-0076	346
8T-0114	220
8T-0267	397
8T-0271	388
8T-0286	99
	550
8T-0288	428
8T-0328	30
	91
	98
	128
	136
	257
	548
	550
	588
8T-0337	118
8T-0343	425
8T-0360	169
8T-0362	169
8T-0706	403
8T-1158	425
8T-1159	202
	334
8T-1687	333
8T-1779	334
8T-1905	327
	329
	331
8T-1915	619
	623
8T-1963	627
8T-1964	630
8T-3338	388
	390
8T-3490	50
	61
	219
	305
	306
	311
	569
8T-3597	91
	184
	249
	358
	569
8T-3611	323
8T-3612	602
8T-3647	568
	590
8T-3957	247
	317
	358
8T-4121	39
	49
	50
	52
	61
	63
	68
	73
	76
	97
	106
	112
	114
	122
	123
	124
	128
	138
	146
	148
	167
	169
	175
	179
	219
	220
	253
	271
	279
	281
	283
	285
	287
	289
	293
	295
	297
	299
	305
	306
	307
	309
	311
	312
	313
	314
	316
	317
	321
	324
	334
	342
	347
	353
	358
	360
	361
	362
	364
	365
	371
	372
	375
	387
	396
	397
	407
	410
	414
	416
	470
	472
	473
	550
	568
	569
	574
	587
	590
	598
	602
	605
	613
8T-4123	29
	152
	167
	189
	190
	191
	200
	201
	253
	464
	466
	468
	482
	484
	486
	488
	490
	492
	494
	496
	498
	500
8T-4131	29
	478
8T-4132	476
	478
	565
8T-4133	73
	98
	106
	122
	123
	124
	157
	175
	279
	287
	307
	309
	336
	395
	397
	425
	470
	472
	473
	569
8T-4134	561
	613
	616
8T-4136	25
	39
	49
	61
	69
	98
	138
	146
	167
	169
	179
	219
	220
	262
	266
	317
	321
	324
	334
	342
	347
	353
	358
	372
	375
	388
	390
	396
	397
	421
	423
	605
	613
8T-4137	13
	26
	28
	38
	39
	50
	52
	61
	68
	73
	97
	112
	138
	169
	204
	207
	220
	271
	283
	285
	297
	299
	336
	342
	347
	390
	397
	550
	569
	590
	605
8T-4138	179

► PRIMARY REFERENCE

PART NUMBER INDEX

Part	Page
	329
	590
8T-4139	29
	57
	166
	277
	279
	281
	283
	285
	287
	289
	291
	293
	295
	297
	299
	301
	303
	305
	306
	307
	309
	311
	312
	314
	321
	324
	335
	347
	351
	358
	364
	365
	366
	367
	368
	369
	390
8T-4140	176
	196
	197
	390
	406
8T-4167	253
8T-4171	146
	179
	583
8T-4172	26
	98
	314
	335
	568
8T-4174	90
	401
8T-4175	391
8T-4176	318
	324
	379
	390
8T-4177	26
	47
	109
	327
	347
8T-4178	138
	371
8T-4179	13
	76
	138
	205
	362
	557
8T-4182	71
	99
	313
	360
	361
	362
	371
8T-4183	28
	29
	177
	250
	277
	281
	289
	291
	293
	295
	353
	358
	397
8T-4184	277
	279
	281
	287
	289
	291
	293
	295
	314
	324
	351
	372
	375
	568
8T-4185	73
	98
	279
	287
	305
	306
	307
	309
	311
	312
8T-4186	314
	351
	416
8T-4189	26
	31
	36
	42
	43
	45
	52
	76
	247
	569
8T-4190	122
	123
	124
	126
	557
8T-4191	15
	63
	73
	97
	114
	128
	167
	219
	253
	334
	347
	472
	473
	557
	587
	598
	602
	613
8T-4192	73
	91
	166
	177
	247
	314
	318
	324
	327
	335
	347
	390
	569
	594
8T-4193	406
	502
	503
8T-4194	257
	277
	281
	283
	285
	289
	291
	293
	295
	297
	299
	324
8T-4195	25
	26
	39
	97
	316
	387
	398
	407
	410
	414
	416
	574
	598
8T-4196	46
	52
	71
	73
	138
	148
	262
	266
	305
	306
	311
	312
	317
	321
	324
	336
	353
	364
	365
	390
8T-4198	313
	334
	360
	361
	362
8T-4199	126
	138
	169
8T-4200	10
	26
	31
	41
	50
	99
	550
	569
	590
8T-4205	128
8T-4223	28
	29
	57
	117
	118
	119
	120
	121
	138
	159
	177
	179
	186
	250
	257
	277
	279
	281
	283
	285
	287
	289
	291
	293
	295
	297
	299

▶ PRIMARY REFERENCE

PART NUMBER INDEX

Part	Page
	301
	303
	305
	306
	307
	309
	311
	312
	314
	317
	321
	324
	327
	329
	335
	347
	351
	353
	358
	362
	364
	365
	366
	367
	368
	369
	372
	375
	398
	464
	466
	468
	557
	568
	569
8T-4224	25
	26
	31
	41
	45
	50
	52
	99
	109
	112
	126
	138
	220
	327
	347
	398
	550
	568
	569
	590
8T-4226	98
	106
8T-4244	118
	120
	121
	159
	186
	279
	283
	285
	287
	297
	299
8T-4648	364
	365
	372
	375
8T-4780	167
	464
	466
	468
	482
	484
	486
	488
	490
	492
	494
	496
	498
	500
8T-4908	26
	39
	43
	47
	398
8T-4910	277
	291
	314
	557
8T-4944	383
8T-4956	156
	281
	289
	293
	295
	317
	321
	324
	329
	358
	398
	464
	466
	468
8T-4970	126
	128
	605
8T-4984	50
	60
	61
8T-4985	60
8T-4986	60
8T-5005	26
	98
	314
	318
	321
	324
8T-5049	247
8T-5092	318
	321
	324
8T-5412	317
	321
	324
8T-5413	175
8T-5460	189
	190
	191
8T-5878	200
	201
8T-6384	356
8T-6411	126
	128
8T-6466	26
	71
	287
	307
	309
	568
8T-6684	324
	353
8T-6685	26
	281
	289
	293
	295
8T-6693	136
	257
8T-6703	61
	358
8T-6759	383
	396
	410
	425
	427
	457
	461
8T-6842	619
	623
8T-6843	623
8T-6868	279
	287
	307
	309
	358
	557
8T-6870	26
	99
8T-6912	47
	99
8T-7329	39
8T-7338	357
8T-7547	25
	71
8T-7586	317
	324
8T-7811	318
8T-7877	433
8T-8193	565
8T-8729	91
	224
	225
8T-8737	112
	144
8T-9357	73
8T-9403	371
8T-9534	554
8T-9598	49
8T-9756	98
	106
8Y-6364	90
8Y-6867	557
	9
9B-7233	135
9F-2167	314
9F-5644	133
9G-0002	97
	106
9G-0005	97
	106
9G-4343	129
9G-7641	▶135
	144
9G-8909	97
9J-0705	407
9J-0707	433
	440
9J-2089	41
9J-4359	543
9L-2248	568
9L-7816	599
9M-3786	356
	357
9M-5590	425
9M-8406	73
	97
9N-4352	541
9N-4353	538
9P-7121	91
9R-2821	569
9R-3924	91
9R-5271	598
9S-4180	259
	410
9S-4181	317
	324
9S-4182	351
9S-4185	318
	383
	390
	398
9S-4188	410
9S-4191	247
	262
	266
	333
	341
	421
9S-6130	404
9S-8001	421
	423
9S-8004	423
	462
9S-8005	416
	421
	423
	427
9T-0836	389
9T-4506	407

▶ PRIMARY REFERENCE

PART NUMBER INDEX

Part	Page
9V-3659	175
9W-0335	136
9W-1494	136
9W-2358	534
9W-2359	533
9W-3137	198
	199
9W-3138	198
	199
9W-3361	208
	209
	210
	211
	212
	213
	214
9W-3619	208
	209
	210
	212
	213
	214
9W-6472	▶533
9W-6473	▶534
9W-7220	203
9W-7225	194
9W-9351	210
	214
9W-9451	194
9W-9455	194
9X-0199	613
9X-1813	129
9X-1878	619
9X-2040	571
9X-2041	566
9X-2042	136
	548
	561
	566
	572
	576
	581
	610
	613
9X-2043	574
9X-2044	136
	561
	565
	566
	580
	604
	610
	613
	616
9X-2045	557
	566
	574
	585
	610
9X-2046	604
9X-2201	57
	351
	353
9X-2205	91
9X-3401	323
	335
	341
	397
9X-3463	117
	118
	119
	120
	121
	126
9X-3592	237
	239
9X-3595	241
9X-3598	243
	245
9X-6032	273
	314
	316
	317
	321
	324
	372
	375
9X-6198	623
9X-8256	98
	109
	111
	112
	126
	128
	146
	157
	179
	217
	329
	342
	583
	590
	604
	605
	610
	613
9X-8257	122
	123
	124
	126
	277
	291
	351
	357
	378
	386
	406
	502
	503
	557
	566
	598
9X-8488	117
	119
9X-8600	91

0

Part	Page
003-7764	91
030-0167	433
	440
033-5879	407
033-6036	407
	433
	440
033-8248	98
	472
	473
085-6444	608
085-6447	608
085-6448	608
085-6449	585
	608
085-6719	80
085-6720	80
085-6723	81
085-7329	99
085-7538	458
085-7913	81
085-7916	83
085-8037	606
085-8091	279
	287
	307
	309
085-9195	81
085-9197	81
085-9199	80
085-9205	82
085-9206	82
085-9207	83
085-9209	82
085-9211	81
085-9222	83
085-9223	80
085-9224	80
085-9225	80
085-9226	80
085-9227	80
085-9228	80
085-9229	80
085-9230	80
085-9231	80
085-9232	80
085-9233	80
085-9234	80
085-9235	80
085-9236	80
085-9237	80
085-9238	80
085-9239	80
085-9240	80
085-9241	80
085-9242	80
085-9243	81
085-9244	81
085-9245	81
085-9246	81
085-9247	81
085-9258	81
085-9259	81
085-9261	81
085-9265	82
085-9267	82
085-9269	82
085-9271	82
085-9275	78
085-9429	95
085-9513	12
085-9645	82
085-9652	83
085-9653	82
085-9655	82
085-9658	82
085-9659	80
085-9677	82
085-9678	82
085-9679	82
085-9680	82
085-9682	81
085-9683	81
085-9684	81
085-9685	81
085-9686	81
085-9832	80
085-9838	81
085-9865	82
085-9882	82
085-9883	82
085-9884	82
085-9885	82
085-9886	82
085-9887	83
085-9888	80
085-9899	83
085-9906	81
085-9909	82
085-9914	82
085-9936	83
086-0321	502
086-0322	502
087-3908	178
087-3909	178
087-4402	341
087-4411	335
087-4531	334
087-4534	335
087-4707	425
087-4710	425
087-4742	383
087-4743	383
087-4757	383
087-4786	384
087-4970	222
	223
087-5166	421
	423
087-5303	329
	341
087-5431	243
	245
087-5434	243
	245
087-5436	243
	245
087-5504	237
	239
087-5507	237
087-5510	237

▶ PRIMARY REFERENCE

PART NUMBER INDEX

Part	Page
	239
087-5708	425
087-5709	425
087-5760	329
	335
087-5762	335
	346
087-5764	346
087-5766	329
	331
087-5771	335
087-5772	335
087-5774	335
087-5776	335
087-5780	327
087-5802	476
087-5803	476
087-5805	476
087-5806	476
087-5838	470
087-5845	476
087-5908	188
	▶189
087-8884	81
091-3474	36
	65
093-0083	167
093-0084	167
093-0115	167
093-0116	167
	464
	466
	468
093-0349	167
	464
	466
	468
	482
	484
	486
	488
	490
	492
	494
	496
	498
	500
093-0363	167
	464
	466
	468
	482
	484
	486
	488
	490
	492
	494
	496
	498
	500
093-0543	169
093-1291	279
	287
	307
	309
093-1344	476
	478
093-1434	233
	234
	482
	484
	486
	488
	490
	492
	494
	496
	498
	500
093-1436	206
093-1512	206
093-1571	241
093-1572	243
	245
093-1729	250
093-5150	252
093-7521	256
094-0580	152
094-0584	250
094-0611	152
	250
094-0616	152
094-0876	429
094-1399	383
094-1509	250
094-1516	250
094-1528	152
094-1542	152
094-1875	247
	262
	266
	383
	390
094-1881	262
	266
094-1882	262
	266
	384
	390
094-1900	381
094-2080	129
094-3245	397
094-3247	91
	397
094-4628	10
	12
094-4696	36
094-7115	15
094-7134	33
094-7154	33
094-7235	76
094-7516	33
094-7583	69
094-9525	36
094-9581	76
094-9596	76
094-9597	76
094-9672	38
094-9725	71
094-9726	71
094-9950	132
094-9980	132
095-0085	132
095-0410	132
095-0645	109
	111
095-0658	323
095-0673	323
095-0707	379
095-0728	219
095-0735	220
095-0736	91
	548
	588
095-0742	129
	583
095-0826	397
	587
095-0827	583
095-0843	157
095-0863	198
	199
095-0882	381
095-0891	152
	250
095-0913	590
095-0929	243
	245
095-0936	425
095-0946	390
095-1022	250
095-1260	425
095-1270	152
095-1321	179
095-1386	73
095-1388	64
095-1514	91
	397
095-1517	91
	397
095-1519	262
	266
	454
095-1527	262
	266
095-1528	262
	266
095-1531	580
095-1538	262
	266
095-1543	52
095-1547	404
095-1572	383
095-1575	383
	411
095-1576	461
095-1578	425
	434
	439
	451
	454
095-1579	443
	446
	449
095-1580	435
095-1582	435
095-1584	255
095-1585	383
095-1586	383
	429
	441
	452
	455
	456
	461
095-1587	443
	446
	449
095-1590	255
	435
	443
	446
	449
095-1594	421
	423
095-1595	381
095-1596	255
095-1601	441
095-1603	410
095-1608	397
095-1619	206
095-1625	396
095-1631	241
095-1632	243
	245
095-1663	47
095-1680	247
095-1681	259
095-1685	383
095-1698	444
	461
095-1700	383
095-1701	462
095-1703	206
095-1716	396
095-1717	237
	239
095-1730	397
095-1750	455
	456
095-1751	455
	456
095-1778	411
095-1783	403
095-1785	441
	461
095-1786	443
	446
	449
095-1789	421
	423
095-2005	15
095-2011	15
095-2038	17
	21
	71
095-2039	15
095-2040	71
	83

▶ PRIMARY REFERENCE

PART NUMBER INDEX

Part	Page
095-2489	83
095-2490	83
095-2927	206
095-6639	395
095-6641	395
095-7378	383
095-7380	383
095-7382	383
095-7383	383
095-7384	383
095-7386	383
095-7387	383
095-7930	587
095-8638	41
	43
	47
096-0015	548
096-0061	50
	63
	64
	73
	606
096-0121	247
096-0174	76
096-0744	50
096-0854	232
	233
	234
	235
	236
	476
	478
	482
	484
	486
	488
	490
	492
	496
	498
	500
096-1118	80
096-1519	383
096-1521	383
096-1522	383
096-1523	383
096-1587	241
096-1588	241
096-1628	429
096-1773	152
096-1774	152
096-1775	152
096-1776	152
096-1777	152
096-1778	152
096-1779	152
096-1780	152
096-1781	152
096-2500	42
	71
	76
096-2501	13
	23
	28
	76
096-2617	222
	223
096-2622	581
096-2664	243
	245
096-2665	243
	245
096-3321	39
096-3741	15
096-3780	157
096-3785	383
096-3786	383
096-3787	383
096-3788	383
096-3884	581
096-3944	391
096-3978	384
096-3983	390
096-4003	383
096-4034	52
096-4035	50
	52
096-4376	383
096-4377	383
096-4378	383
096-4498	429
096-4754	397
096-4755	253
096-4837	250
096-4878	262
	266
096-4883	358
096-4902	169
096-5400	262
	266
096-5766	279
	287
	307
	309
096-5915	383
096-5916	383
096-5919	383
096-5962	128
	273
096-6166	128
	219
096-7567	82
096-7570	81
096-7571	81
096-7632	80
096-7928	78
096-8273	81
096-8274	82
096-8280	82
096-8288	83
096-8289	82
096-8290	80
096-8292	81
096-8294	80
096-8307	80
096-8310	81
096-8336	83
096-9385	81
096-9408	80
096-9409	80
096-9410	81
096-9411	81
096-9412	81
096-9435	26
096-9438	47
096-9478	78
096-9481	78
096-9486	80
096-9492	80
096-9495	80
096-9500	81
096-9502	81
096-9503	81
096-9505	81
096-9506	81
096-9507	81
096-9508	81
096-9528	26
096-9529	76
096-9532	26
	47
096-9585	81
099-0139	561
	608
099-0822	454
099-0823	565
	610
099-2096	247
099-2389	80
099-3506	584
099-3629	559
099-3649	335
099-3669	263
	267
099-3670	262
	266
099-3671	262
	266
099-3913	95
099-4388	17
	19
099-4420	15
099-4483	28
099-4691	172
099-5041	71
099-5845	403
099-6109	263
	267
099-6110	263
	267
099-6111	263
	267
099-6112	263
	267
099-6113	263
	267
099-6115	263
	267
099-6117	263
	267
099-6118	263
	266
099-6119	263
	266
099-6120	263
	267
099-6121	262
	266
099-6122	262
	266
099-6123	262
	266
099-6124	262
	266
099-6125	262
	266
099-6126	262
	266
099-6127	262
	266
099-6128	262
	266
099-6136	425
099-6137	425
	429
099-6141	425
099-6144	425
099-6145	425
099-6418	163
	164
	165
	186
099-6495	82
099-7127	588
099-7857	173
	569
099-8232	317
	323
	1
100-2881	585
100-3866	386
100-4143	511
	523
100-4340	527
100-6474	526
100-7689	580
101-2842	623
101-2846	136
	588
101-8899	581
	583
101-8900	581
	610
102-0889	405
102-1026	346
102-1120	362
102-1248	317
102-1279	362
102-1291	362
102-7685	341
102-7880	99
102-8016	129
102-8801	97
	98
	128
	146
102-8802	31

PART NUMBER INDEX

Part	Page
	91
	93
	97
	98
	128
	129
	138
	143
	148
	329
	331
	341
	397
	568
102-8803	97
	128
	138
	148
	273
102-8804	98
	128
	138
102-8805	97
	128
	138
	143
	144
	148
	224
	225
102-8806	112
103-1384	334
103-8173	405
	411
103-8177	410
103-8252	434
	439
103-8253	434
	439
103-8254	434
	439
103-8255	434
	439
103-8378	243
	245
103-8379	243
	245
103-8380	243
	245
104-2096	526
104-2097	521
104-7293	407
	414
	419
104-7294	407
104-7296	407
104-8750	295
104-8768	341
104-8771	375
104-8777	346
104-8838	335
104-8950	335
104-8973	334
104-9048	327
104-9136	347
105-1321	▶433
	448
105-2169	565
	584
105-2761	527
105-3487	157
	179
105-7545	619
	623
105-9526	606
105-9527	606
105-9981	128
105-9983	128
105-9986	128
106-0001	117
	119
106-0002	117
	119
106-0003	117
	119
106-0004	117
	119
106-0005	117
	119
106-0107	144
106-0210	144
106-0615	211
107-1677	341
107-6370	436
	437
107-6371	436
	437
107-6479	425
	451
107-6540	443
	446
	458
107-6541	443
	446
	458
107-6631	329
	341
107-6954	383
107-6955	383
107-6969	383
107-7017	458
107-7018	458
107-7028	151
	▶379
108-7118	372
	375
108-7203	341
108-7354	334
108-7387	341
	346
108-7516	329
	331
108-7550	314
109-2665	436
109-2667	416
	▶436
	442
109-5152	407
	▶437
109-6214	295
109-6574	511
109-9329	29
109-9350	29
109-9369	29
110-5496	335
	346
110-5525	381
111-4719	128
111-4829	129
111-4836	98
	138
	148
111-4837	97
	122
	138
111-4838	98
	138
111-4839	98
	138
111-6752	346
111-9916	262
	428
	▶452
	457
111-9959	407
111-9977	458
111-9985	458
111-9986	458
111-9998	435
112-0065	397
112-0090	458
112-2481	▶531
112-2482	▶528
112-2487	531
112-2488	531
112-2489	528
	529
112-2490	528
	529
112-9401	87
	88
113-0363	76
113-2127	167
	464
	466
	468
113-2532	224
	225
113-2907	▶194
	196
	197
113-6402	358
113-6479	372
	375
113-6738	341
113-6758	334
113-8490	129
113-8491	129
114-0358	533
	534
	535
	538
	541
	543
	547
114-0359	533
	534
	535
	538
	541
	542
	543
	547
114-0489	458
114-0514	441
114-0515	441
114-0516	441
114-0517	441
114-0518	441
114-0519	441
114-0623	452
	456
114-0756	237
	239
114-0757	243
	245
114-0758	241
114-1374	253
114-1398	252
114-1399	252
114-1497	152
114-1539	152
114-1581	250
114-6461	627
115-2677	473
115-2678	473
115-3701	194
115-3780	347
115-4926	194
115-8634	261
	334
115-8902	230
	▶305
115-8903	230
	▶306
115-8906	230
	▶311
116-0068	98
116-0114	128
116-0118	94
	98
	122
	138
	148
116-0157	▶122
	463
116-0210	588
116-0214	▶123
116-0215	▶124
116-0227	122
116-3522	257
116-3600	321
	407
	410
	414
	421
	423
	▶438
116-3601	438

▶ **PRIMARY REFERENCE**

PART NUMBER INDEX

Part	Page
	▶439
116-7408	532
	536
	537
	539
	540
	544
	545
	546
116-7409	532
	536
	537
	539
	544
	545
117-4089	87
	88
117-5604	91
117-6306	610
117-6349	219
117-6350	219
117-6356	219
117-6430	71
118-1461	87
	88
118-4044	421
	423
118-4057	383
	390
118-4086	429
118-4087	429
118-4095	230
	▶312
118-5410	438
	▶440
118-5982	482
	484
	486
	488
	490
	492
	494
	496
	498
	500
118-8118	87
	88
118-8119	87
	88
118-9784	29
118-9785	29
118-9863	568
118-9930	29
119-2320	305
	306
119-2321	305
	306
	311
119-2323	311
119-2324	364
	365
119-2325	364
	365
119-2354	311
119-2377	312
119-2381	312
119-2382	312
119-2395	372
119-2399	375
119-2434	305
119-2435	305
119-2436	306
119-2437	306
119-2606	▶313
	480
	481
119-5026	144
	548
	572
	576
119-5259	458
119-5260	458
119-5262	458
119-5360	462
119-5362	462
119-5364	462
119-5365	462
119-5388	425
119-5389	425
119-5391	425
119-5392	425
119-5398	443
	446
	458
119-9447	403
120-5107	619
	623
120-5129	619
	623
120-5131	627
120-5134	630
120-7167	▶190
120-7168	▶191
120-7224	472
120-9027	273
121-0987	146
121-1023	129
121-1459	441
121-1491	410
	427
	▶453
121-1558	384
121-1865	220
121-1903	281
121-1965	281
	289
121-4480	87
	88
121-6303	329
	▶454
121-6304	454
121-7098	590
122-3979	178
122-3980	178
122-4101	163
	165
122-4120	178
122-5076	206
122-5114	383
122-5253	205
122-5318	381
122-9605	590
122-9608	219
122-9609	219
122-9610	219
122-9657	550
123-2003	257
123-2008	383
123-2048	241
123-2060	243
	245
123-2430	335
	▶450
123-2431	450
123-2485	410
123-2498	423
	427
123-2516	458
123-2552	450
123-2700	358
123-3212	511
	512
124-0986	98
124-1008	346
124-1047	314
124-1062	314
124-1107	277
	291
124-1108	277
	291
124-1212	334
124-1574	52
124-3548	129
124-3940	561
124-3953	616
124-3966	613
124-4009	222
	223
124-4010	222
	223
124-7346	557
125-1302	129
125-2922	80
125-2923	80
125-2924	80
125-2925	80
125-2928	80
125-2930	80
125-2931	80
125-2932	80
125-2933	80
125-2935	81
125-2936	81
125-2937	81
125-2939	82
125-2940	83
125-2941	83
125-2942	83
125-2943	83
125-2947	49
125-2950	26
125-2951	26
125-2963	5
	▶30
125-2965	25
125-2968	31
125-2970	43
125-2972	39
125-2979	39
125-2981	47
125-2983	76
125-2988	5
	▶132
125-3005	12
125-3006	78
125-3007	78
125-3008	78
125-3009	78
125-3010	78
125-3011	78
125-3012	78
125-3013	78
125-3014	78
125-7876	129
126-1767	323
	335
	341
	397
126-1865	425
126-1866	425
126-2016	390
126-2043	237
	239
126-2055	381
126-2075	▶256
	397
126-2076	256
126-2081	259
126-3718	512
126-5062	208
	213
127-0580	565
127-2282	516
127-2287	514
127-2288	514
127-2289	517
127-2291	▶504
127-2294	515
127-2295	515
127-2302	513
127-2303	513
127-2304	513
127-2314	524
127-2316	524
127-5089	511
	512
127-5252	617
127-5282	619
	623
127-5283	619
	623
127-5937	132
127-5938	132
127-5939	132
127-5940	132
127-5941	132
127-5942	132
127-5943	132
127-5944	132
127-5947	132

▶ PRIMARY REFERENCE

PART NUMBER INDEX

Part	Page
127-5948	132
127-5949	132
127-5950	132
127-5952	132
127-5953	132
127-5955	132
127-5956	132
127-6780	289
	293
127-6823	293
127-6826	293
127-6829	281
	289
127-7826	178
127-8633	522
128-2134	222
	223
128-2135	557
	561
	572
	576
128-2136	557
	561
128-2173	220
128-4411	91
128-8614	87
	88
129-5708	514
129-5714	514
129-5719	515
129-5874	277
	291
129-6466	613
129-7784	395
129-7854	390
129-7855	390
129-7857	247
	390
129-7859	390
129-7863	390
129-7921	390
129-7925	390
129-7927	390
129-7931	462
129-7932	462
129-7978	262
	266
129-7979	390
129-8030	▶441
	462
129-8031	441
129-8034	257
130-0252	550
130-0270	554
130-3279	57
130-4276	176
130-7596	12
131-5745	453
	▶455
131-5760	453
	▶456
131-5818	425
131-5915	429
131-7501	91
131-8821	56
131-8822	56
131-8824	56
131-8826	56
131-8901	56
131-8932	56
132-0999	528
	529
132-1806	98
132-1829	▶93
	136
132-5063	▶504
132-5064	▶504
132-5789	99
	138
133-2425	167
133-5813	342
133-5828	314
133-6777	383
133-8016	565
134-1910	521
134-1911	521
134-1914	516
	522
134-1915	516
	522
134-1917	523
134-1918	523
134-3299	73
134-6146	619
	623
134-7258	619
	623
134-8850	171
	▶176
134-8851	176
134-8948	502
134-8949	503
135-2296	553
135-2346	59
135-2347	59
135-2348	59
135-2349	59
135-2350	59
135-2351	59
135-2352	59
135-2353	59
135-2354	59
135-2355	59
135-2356	59
135-2357	59
135-2358	59
135-2359	59
135-2360	59
135-2363	132
135-2364	132
135-2365	132
135-2366	132
135-2369	30
135-2370	30
135-2381	95
135-2402	31
135-4063	281
	289
	293
	295
135-8573	73
	91
	166
	178
135-8574	172
135-8575	166
	178
135-8576	173
	192
	193
135-8577	156
	178
135-8578	177
135-8632	504
	▶509
135-8633	504
	▶510
135-8636	509
135-8637	510
136-0207	346
136-4055	128
137-0856	314
137-2255	162
137-2270	594
137-2820	241
	478
	484
	494
137-2919	476
	482
	486
	488
	490
	492
	496
	498
	500
137-3623	259
137-3625	259
137-3626	216
	259
137-3628	216
	259
137-3631	216
137-3718	379
	▶462
137-3725	462
137-3728	462
137-5541	71
137-9526	511
	523
138-5111	317
	323
138-5708	277
	291
139-3068	617
139-7099	559
	▶584
139-7100	559
	▶581
139-7101	559
	▶610
139-7119	559
139-7126	565
139-7127	565
139-7235	590
140-0674	405
140-0677	405
140-0923	123
141-2759	129
142-0038	353
142-2542	▶504
142-2544	▶505
142-2545	▶505
142-2546	▶505
142-2549	504
	▶521
142-2551	505
	▶522
142-2552	505
	▶511
142-2553	505
	▶523
142-2570	▶505
142-2572	504
142-2573	▶506
142-2574	▶506
142-2577	505
	▶512
142-2580	506
	▶513
142-2581	506
	▶524
142-3835	1
	2
	▶177
142-3836	1
	2
	▶594
142-3837	1
	2
	▶90
142-3838	90
	▶91
142-3839	1
	2
	▶156
142-3840	156
	▶157
142-3845	1
	2
	▶73
142-3864	44
	▶185
142-4834	114
142-5542	163
	164
	165
	186
142-5546	219
142-6582	289
	293
142-6583	281
142-6742	403
142-7668	270
	▶386
142-7670	270
	▶401
142-7671	▶397
	401

▶ **PRIMARY REFERENCE**

PART NUMBER INDEX

Part	Page
142-7701	270
	▶372
142-7702	270
	▶375
142-7703	270
	▶371
142-7704	270
	▶314
142-7706	270
	▶351
142-7759	▶301
	463
142-7768	314
142-7769	314
142-7781	317
	323
143-4254	335
144-0195	605
	606
144-0367	358
144-1636	31
	112
144-9126	619
	623
144-9691	613
144-9692	613
145-0556	119
145-0603	590
145-3025	188
	▶195
145-3026	195
	▶196
145-3027	196
	▶204
145-3028	204
	▶205
	207
145-3029	205
	▶206
145-3030	206
145-3031	206
145-3035	205
145-3036	205
145-3037	205
145-3038	195
	▶197
145-3039	197
	▶207
145-3042	154
	▶155
145-8494	590
145-8495	590
145-8862	73
	▶87
147-4184	423
147-4194	405
147-4221	425
147-4812	554
147-4815	554
147-4816	554
147-4819	554
147-4821	554
147-4822	554
147-4823	554
147-4825	554
147-4826	554
147-4831	554
	556
147-4834	556
147-4835	556
147-4837	556
147-4838	556
147-4839	556
147-4845	553
147-4852	556
147-5860	383
148-4632	250
148-4633	250
148-4634	250
148-4635	250
148-4636	250
148-4637	250
148-4638	250
148-4639	250
148-4640	250
148-4641	250
148-4642	250
148-4643	250
148-4644	▶250
	252
148-4671	▶169
	188
148-4672	169
148-4679	154
	▶252
148-4681	2
	3
	▶154
148-4682	154
	▶253
148-4685	169
148-4689	169
148-4696	▶151
	154
148-4703	169
148-4704	169
148-4705	152
148-4708	152
148-4715	152
148-4732	250
148-4733	250
148-8318	346
148-8323	317
148-8327	334
148-8334	323
148-8335	317
	321
	323
	358
148-8336	327
	329
	331
	333
	341
	346
148-8338	329
	334
148-8340	333
	346
148-8347	317
	323
	334
148-8352	318
148-8353	327
	333
148-8354	334
148-8357	323
	358
148-8358	333
148-8362	323
	353
148-8364	333
	372
	375
148-8367	331
	336
	346
148-8370	346
148-8371	335
	346
148-8378	327
	329
	331
	333
	341
	346
	372
	375
148-8387	324
148-8407	333
	341
148-8411	318
	398
148-8428	346
148-8429	317
148-8433	329
	333
	346
148-8434	347
148-8435	333
	341
148-8439	334
	372
	375
148-8828	▶506
148-8829	▶506
148-8831	506
	▶514
148-8832	506
	▶515
148-8849	521
149-1738	279
	283
	285
	287
	297
	299
	307
	309
149-5051	129
149-5218	526
149-5219	526
149-9954	88
150-3036	327
	329
	331
150-4027	327
	329
	347
150-4037	372
	375
150-4043	347
150-4044	334
150-4589	▶507
150-4590	507
	▶516
150-4595	516
150-4599	▶507
150-4600	507
	▶517
150-4601	517
150-5782	390
150-5785	390
150-5797	262
	266
150-5884	241
150-6978	116
	▶118
150-8101	1
	▶619
150-8102	2
	▶623
150-8106	619
150-8108	619
	623
151-1846	301
151-5334	38
151-6703	581
	610
151-6704	581
	610
151-6705	613
151-6778	610
151-6785	610
151-6789	559
151-6790	559
151-6792	581
	▶608
151-6793	608
151-6813	610
151-6815	610
151-6818	610
151-6819	610
151-6831	610
151-6832	610
151-6841	608
151-6844	610
151-9461	581
151-9497	581
151-9557	610
151-9576	610
153-2452	116
	▶119
153-2521	▶120
	122
	123
	124
153-2523	▶121
	125
153-4869	513

▶ PRIMARY REFERENCE

PART NUMBER INDEX

Part	Page
153-4870	524
153-5126	407
153-5127	410
153-5223	425
153-5239	442
153-5242	414
153-5276	407
	414
	419
153-5286	407
153-5288	407
	410
153-5289	407
	410
153-5290	407
	410
153-5291	407
	410
153-5292	407
	410
153-5293	407
	410
153-5294	407
	410
153-5295	▶405
	410
153-5298	410
153-5299	410
153-5306	410
153-5308	405
153-5309	410
153-5311	410
153-5313	406
	▶442
153-6237	333
153-8644	403
153-8645	403
153-8733	▶217
	218
153-8748	403
153-8753	220
153-8766	▶114
	218
153-8767	218
	▶220
153-8786	▶303
	463
153-8793	▶277
153-8795	277
153-8797	277
153-8798	277
	291
153-8799	277
	291
153-8801	277
	291
153-8828	▶279
153-8830	279
153-8833	309
153-8834	309
153-8836	279
153-8837	279
153-8839	279
	287
	307
	309
153-8862	276
	▶281
153-8864	▶283
153-8867	279
	287
	307
	309
	366
	367
	368
	369
154-0489	76
154-0491	568
154-0498	55
	56
154-0785	▶55
	57
154-0788	57
154-9024	47
155-2255	98
	128
155-2260	97
	98
	128
	138
155-2265	97
155-2270	97
	98
	114
	128
	138
155-2271	98
	128
155-2274	97
	98
	138
	143
	146
155-7024	590
155-7042	616
155-7099	572
	576
156-3846	619
156-3849	623
156-6469	559
156-6471	581
156-6472	610
156-6473	559
156-6474	608
156-6475	608
156-6554	610
156-6555	610
156-6562	610
156-6563	610
156-6564	561
156-6565	561
156-6566	561
156-6567	561
156-6568	561
156-6574	561
156-6576	561
156-6578	561
156-6579	610
156-6593	561
156-6594	561
156-6595	561
156-6598	581
156-6599	565
156-6600	581
156-6601	610
156-6617	565
156-6618	565
156-6627	610
156-6631	559
156-6642	565
156-6643	581
156-6644	581
156-6645	581
156-6646	613
156-6647	613
156-6656	561
156-6657	561
157-0670	47
157-3149	112
157-3160	112
157-3164	1
	2
	▶111
157-3165	111
157-3167	111
157-3168	1
	2
	▶112
157-3170	▶571
	597
157-3173	111
157-3182	323
	335
157-3198	571
	▶595
	596
157-3200	109
157-3210	550
158-4380	198
	199
158-4381	198
	199
158-8109	405
158-8117	314
	▶421
158-8140	410
158-8150	410
158-8159	407
	410
	414
	416
158-8160	314
	▶423
158-8161	423
158-8177	405
158-8186	405
158-8200	270
	▶406
158-8201	406
	▶407
158-8202	406
	▶410
158-8206	410
158-8207	410
158-8250	341
	▶425
158-8251	335
	▶427
158-8274	335
	▶435
158-8985	252
	▶378
158-8986	378
	▶380
158-8987	▶255
	397
158-8988	▶395
	397
158-9005	▶257
	397
158-9011	▶230
	463
158-9012	▶230
	463
158-9013	230
	▶232
158-9014	▶231
	463
158-9015	231
	▶235
158-9016	▶231
	463
158-9017	231
	▶236
158-9018	▶230
	475
158-9019	230
	▶233
158-9020	▶230
	475
158-9021	230
	▶234
158-9058	232
	▶237
158-9059	235
	▶243
158-9060	236
	▶245
158-9061	233
	▶239
158-9062	237
	239
158-9063	237
	239
158-9064	243
	245
158-9065	243
	245
158-9085	371
	▶461
158-9092	237
	239
158-9120	237
158-9122	237
159-6722	78
159-7665	252
159-7739	554
159-7740	554
159-7782	396

▶ PRIMARY REFERENCE

PART NUMBER INDEX

Part	Page
159-7784	257
159-7841	372
	375
	▶396
159-7858	554
160-4409	390
161-3128	129
161-3639	581
161-3650	581
161-3663	581
161-3665	581
161-3668	616
161-3669	616
161-3670	616
161-3677	616
161-3683	559
161-3684	610
161-3685	565
161-3690	565
161-3694	585
161-3695	608
161-3697	565
161-3698	610
161-3699	581
161-3705	608
161-3717	598
161-3738	1
	2
	▶597
161-3741	597
	▶598
161-3748	▶613
	615
161-3751	▶604
161-3752	▶271
	597
161-3757	597
	▶602
161-3758	▶574
	597
161-3759	▶572
	574
161-3760	574
	▶576
161-3771	597
	▶600
161-3772	600
	▶601
161-3773	▶552
	597
161-3777	▶550
	552
161-3779	550
	▶553
162-2946	526
162-2948	507
	▶526
162-2950	▶507
162-3088	▶507
162-3090	507
	▶527
162-6176	270
	▶387
162-6177	▶229
	387
162-6184	9
	▶63
162-6185	9
	▶64
162-6201	▶56
	68
162-6210	▶228
	229
162-6232	9
	▶68
162-6256	9
	▶29
162-6894	527
162-6895	527
163-3534	188
163-3536	463
	▶464
163-3537	463
	▶466
163-3538	481
	▶488
163-3539	480
	▶490
163-3540	481
	▶492
163-3542	480
	▶494
163-3744	464
	466
	468
	482
	484
	486
	488
	490
	492
	494
	496
	498
	500
163-3746	237
163-3747	243
	245
163-3748	239
	241
163-3749	482
	484
	486
	488
	490
	492
	494
	496
	498
	500
163-3751	239
163-3753	237
163-3754	188
	▶192
163-3755	192
163-3756	464
163-3757	490
163-4143	200
	201
	▶203
163-6623	▶136
	597
163-6632	▶150
	615
163-6698	▶146
163-6700	91
163-6701	136
163-6702	144
163-6703	128
163-6708	588
163-6710	144
163-6711	144
163-6718	150
163-6719	150
163-6741	128
163-6750	98
163-6751	129
163-6752	129
163-6753	128
163-6754	129
163-6755	128
163-6757	129
163-6761	273
163-6772	▶126
163-6775	97
163-6779	98
163-6780	128
163-6785	273
163-6786	98
163-6787	136
163-6795	126
	136
	143
	144
	550
	571
	616
163-6801	595
163-6805	595
163-6810	136
163-6813	126
163-6814	126
163-7721	3
	▶188
164-0477	▶586
164-0478	601
	▶603
164-0493	▶557
164-0494	557
	▶559
164-0504	601
164-0514	581
164-0515	581
164-0516	608
164-0517	608
164-0518	608
164-0519	581
164-0522	561
164-0523	565
164-0527	565
164-0528	565
164-0532	▶222
	226
164-0533	▶223
	227
164-0572	598
164-0574	598
164-0576	598
164-0586	167
164-0588	569
164-0592	583
164-0616	598
164-0633	583
164-0635	583
164-0636	583
164-0637	583
164-0639	604
164-0646	561
164-0647	561
164-0648	610
164-0655	561
164-0664	565
164-0666	559
164-0670	559
164-0673	561
164-0675	561
164-4180	317
	324
164-5558	335
164-5589	347
164-5605	346
164-5608	333
164-5628	329
	331
	341
164-5629	331
164-6872	334
164-8199	▶109
	218
164-8244	112
164-8977	335
164-8983	335
165-2815	172
165-2816	172
165-2823	172
165-2829	91
165-2835	91
165-2850	173
165-2852	173
165-2854	173
165-2860	173
165-2862	173
165-2881	91
165-2888	163
165-2943	178
165-2969	178
165-2978	163
	165
165-2985	164
165-3065	594
165-3101	161
165-3102	161
165-3103	161
165-3185	314
165-3190	371
165-3194	371
165-3198	372
	375
165-3219	317
	323

▶ PRIMARY REFERENCE

PART NUMBER INDEX

Part	Page
165-3256	397
165-3260	397
165-4026	128
165-9226	243
165-9228	243
165-9229	245
165-9230	245
165-9231	239
165-9233	239
165-9286	237
	239
165-9287	241
165-9289	243
	245
165-9431	429
165-9435	429
165-9436	429
165-9438	429
165-9439	429
165-9442	429
165-9443	429
165-9444	429
165-9448	429
165-9460	429
165-9461	429
165-9462	425
165-9463	425
165-9464	425
	451
165-9551	425
165-9552	425
165-9553	425
165-9554	425
165-9555	▶458
	460
165-9556	458
165-9595	410
165-9627	460
165-9629	324
	▶460
166-1438	475
	▶476
166-1442	475
	▶478
166-1478	171
	▶193
166-1479	193
166-1486	464
	466
	468
	476
	478
	482
	484
	486
	488
	490
	492
	494
	496
	498
	500
166-1487	464
	466
	468
166-1494	232
	478
	494
166-1495	464
	466
	468
	482
	484
	486
	488
	490
	492
	494
	496
	498
	500
166-1512	193
166-1578	463
	▶472
166-1579	472
	473
166-1605	480
	▶496
166-1606	496
166-1617	463
	▶468
166-1618	468
166-1652	480
	▶498
166-1653	498
166-3152	472
	473
167-3437	126
167-3438	126
167-3441	126
167-3456	126
167-3466	329
	331
	341
167-3467	146
167-3473	146
167-3492	136
167-3542	150
167-3543	150
167-3583	98
167-3593	128
167-7023	136
167-7033	561
167-7039	581
167-7042	565
167-7043	602
167-7050	222
	223
167-7051	223
167-7052	222
167-7058	552
	▶583
167-7059	583
167-7062	613
167-7074	613
167-7079	613
167-7080	271
	▶273
167-7083	550
167-7110	579
167-7114	579
167-7214	623
167-7215	623
167-7216	623
167-7218	619
	623
167-7219	619
167-7220	623
167-7223	619
	623
167-7225	627
167-7228	630
167-7244	▶463
167-7245	▶463
167-7246	▶475
167-7247	▶475
167-7264	218
	▶617
167-7267	2
	▶188
167-7270	619
	623
167-7271	619
	623
167-7272	619
	623
167-7274	627
167-7277	630
168-0582	39
168-0765	444
168-0792	56
168-0794	429
168-1355	520
	525
168-1356	520
	525
168-1359	535
168-1407	518
	519
168-1408	518
	519
168-1409	536
168-1533	157
168-1550	157
	▶162
168-1551	162
168-1555	162
168-5057	67
168-6761	204
	207
168-8451	152
168-9666	317
	321
168-9675	323
168-9678	317
	321
168-9697	397
168-9759	334
169-7659	619
170-2755	157
170-2805	165
170-2822	178
170-2826	178
170-2833	178
170-2838	178
170-2846	178
170-2855	178
170-2866	179
170-2873	179
170-2886	178
170-2901	73
170-2914	178
170-2924	178
170-2926	178
170-2940	178
170-2962	172
170-2963	172
170-2966	1
	2
	▶166
170-2971	178
170-2972	175
170-2974	178
170-2975	178
170-2982	157
170-2983	157
170-2984	157
170-2985	162
170-2986	166
170-3014	178
170-3015	178
170-3016	178
170-6826	▶588
	597
170-6827	595
170-6828	144
170-6887	128
170-6888	129
170-6908	▶142
	597
170-6909	142
	▶143
170-6910	142
	▶144
170-6929	97
	106
170-6959	143
170-6993	120
	121
170-9331	106
170-9336	98
170-9360	157
170-9417	120
	121
170-9418	120
	121
170-9478	129
170-9497	▶219
	597
170-9498	219
170-9499	219
170-9722	610
170-9723	561
170-9724	561
170-9844	237
	239
170-9847	243
	245
171-0023	458
171-0030	410

▶ PRIMARY REFERENCE

PART NUMBER INDEX

Part	Page
	▶443
171-0031	443
171-0034	443
	446
	449
171-0035	443
	446
	449
171-0036	443
	446
	449
171-0037	443
	446
	449
171-0087	429
171-0123	435
171-0124	435
171-0126	435
171-0127	435
171-0128	435
171-0146	402
	▶414
	420
171-0150	414
171-0188	327
	347
	▶428
171-0198	428
171-0596	335
171-2208	128
171-2584	109
171-2613	2
	3
	▶115
171-2619	▶115
	218
171-3369	50
171-7323	561
171-7325	561
171-7336	557
171-7339	580
171-7377	561
171-7386	561
171-7396	565
171-7400	561
171-7405	561
171-7406	561
171-7408	559
	▶616
171-7413	608
171-7414	608
171-7415	561
171-7418	561
171-7420	561
171-7423	561
171-7426	565
171-7450	605
171-7476	590
171-7477	585
171-9066	228
171-9072	63
171-9073	63
171-9077	50
171-9091	▶88
	89
171-9383	250
171-9464	169
172-2939	463
	▶473
172-2976	466
172-2978	488
172-2980	492
172-2984	494
173-3371	390
173-3384	262
	266
173-3387	262
	266
173-3389	262
	266
173-3390	262
	266
173-3391	390
173-3397	262
	266
173-3398	262
	266
173-3404	262
	266
173-3405	262
	266
173-3406	247
173-3411	262
	266
173-3413	262
	266
173-3427	390
173-3428	390
173-3436	247
173-3439	381
173-3440	381
173-3441	381
173-3442	381
173-3443	381
173-3444	381
173-3445	381
173-3447	381
173-3450	381
173-3451	381
173-3452	380
	▶444
173-3454	381
173-3472	381
173-3473	390
173-3496	390
173-3498	390
173-3503	▶216
	257
173-3504	216
173-3505	216
173-3506	216
173-3507	257
173-3508	259
173-3509	257
173-3510	257
173-3511	257
	▶259
173-3512	259
173-3513	259
173-3514	259
173-3515	259
173-3516	259
173-3517	259
173-3518	257
173-3529	259
173-3535	461
173-3536	461
173-4664	317
173-4675	372
173-4676	375
173-4776	372
	375
173-4784	372
	375
173-4816	358
173-4828	351
173-4831	351
173-4834	351
173-4848	351
173-4868	323
173-4925	329
173-5020	397
173-7864	283
	285
	366
	367
173-7868	283
	367
173-7872	283
	285
	297
	299
173-7875	283
	285
	297
	299
173-7877	283
	285
	297
	299
173-7916	277
	281
	289
	291
	293
	295
173-7948	▶285
173-7949	482
173-7951	▶287
173-7952	▶307
173-7954	▶366
173-7955	▶275
173-7956	275
	▶289
173-7957	275
	▶482
173-7959	▶291
173-7962	▶275
173-7963	275
	▶293
173-7964	275
	▶484
173-7968	▶275
173-7969	275
	▶295
173-7970	275
	▶500
173-7971	279
	287
173-7975	▶218
173-7977	▶218
173-7984	218
	▶402
173-7992	281
	289
	293
	295
	▶403
173-7993	▶309
173-7995	277
	291
173-7997	279
	287
173-8023	276
	▶486
173-8024	486
173-8027	▶276
173-8031	277
173-8033	▶367
173-8075	▶297
173-8076	▶368
173-8081	▶299
173-8082	▶369
174-5414	57
174-7791	120
	121
174-8255	476
175-5658	178
176-1895	568
176-1900	550
176-1902	590
176-1913	574
176-1914	574
176-1915	574
176-1916	574
176-1917	550
176-1919	550
176-1920	568
176-1931	605
176-1932	606
176-1937	565
176-1938	565
176-1939	565
176-1941	565
176-1942	565
176-1946	561
176-1947	561
176-1948	616
176-1951	608
176-1952	608
176-1953	608
176-1954	608
176-1955	608
176-1956	608
176-1957	608
176-1958	559
176-1970	559
	▶561
176-1972	561
176-1986	565

▶ PRIMARY REFERENCE

PART NUMBER INDEX

Part	Page
176-1995	605
176-1996	583
176-2002	557
	580
176-2135	188
176-2278	464
	466
	468
176-2666	619
	623
176-2668	627
176-2671	630
176-2710	218
	▶617
176-2711	218
	▶617
176-2714	▶463
176-2722	▶627
176-2723	▶630
176-2737	617
176-2738	618
176-2747	▶617
176-2748	▶618
176-2753	619
176-2815	617
176-4463	335
176-4469	335
176-4471	334
176-4472	335
176-4556	341
176-4557	341
176-4558	341
176-4559	341
176-4561	341
176-4569	335
176-4578	334
176-4598	218
	▶316
176-4599	218
	▶370
176-4680	372
	375
176-4703	356
176-4713	317
	321
176-4743	334
176-4746	341
176-4760	327
176-4768	334
176-4769	335
176-4770	334
176-4774	335
176-4789	317
	321
176-4790	317
	321
176-4810	386
176-4811	386
176-4983	11
177-1061	353
177-2470	390
177-2471	390
177-2553	259
177-2583	390
177-2584	381
177-2585	247
177-2653	317
	▶445
177-2713	404
177-5738	179
177-5739	179
177-5830	73
177-5839	166
177-5852	73
177-5877	177
177-5879	177
177-5880	177
177-5886	90
	401
177-5905	160
177-5916	178
177-5936	106
177-5940	249
177-6101	186
177-6152	157
177-6315	594
177-7689	▶115
177-7701	595
177-7711	225
177-7712	224
177-7715	595
177-7716	595
177-7727	112
177-8740	390
178-5400	576
178-5401	572
178-5408	572
	574
178-5422	574
178-5423	574
178-5425	590
178-5426	572
	574
	576
178-5431	605
178-5500	606
178-5504	273
178-5508	271
178-5509	273
178-5517	273
178-5518	273
178-5519	572
	576
178-5520	572
178-5521	572
178-5522	572
	576
178-5523	574
178-5524	▶548
	572
	576
178-5526	553
	▶554
178-5527	553
	▶556
178-5528	273
178-5529	576
178-5530	572
178-5531	572
178-5532	548
178-5533	576
178-5534	572
178-5548	576
178-5565	601
178-5570	565
178-5573	581
178-5574	581
178-5576	610
178-5627	572
	574
178-5628	572
	574
178-5629	572
	576
178-5630	548
178-5632	576
178-5633	548
178-5634	548
178-5649	273
178-5651	273
178-5653	603
178-5655	603
178-5656	603
178-5657	603
178-5660	601
178-6450	50
178-6460	89
178-6502	5
	▶38
178-6512	5
	▶10
178-6516	5
	▶31
178-6524	5
	▶41
178-6531	5
	▶28
178-6533	11
178-6534	38
178-6535	10
178-6537	26
178-6538	26
178-6542	31
178-6543	33
178-6544	33
178-6545	33
178-6552	65
178-6553	65
178-6554	65
	69
178-6563	41
178-6566	39
178-6567	39
178-6569	39
178-6571	39
178-6576	39
178-6577	39
178-6584	5
	▶43
178-6595	71
178-6597	28
178-6598	28
178-6599	28
178-6600	28
178-6601	28
178-6606	▶89
178-6633	49
178-6634	49
178-6635	49
178-6636	49
178-6640	88
179-5004	291
179-5005	291
179-5006	291
179-5008	287
179-5009	287
179-5010	307
179-5011	307
179-5012	287
179-5016	287
179-5017	287
179-5033	285
	299
	366
	369
179-5034	299
	369
179-5041	484
179-5044	220
179-5046	220
179-5107	420
179-5178	295
179-5179	295
179-5180	500
179-5182	297
	368
179-5183	297
	368
179-5190	297
179-5191	297
179-5192	297
179-5193	297
179-5194	220
179-7457	231
	▶364
179-7458	231
	▶365
179-7460	364
179-7467	365
179-7518	218
	▶327
179-7519	218
	▶317
179-7520	218
	▶329
179-7530	218
	▶331
179-7531	218
	▶321
179-7612	317
	321
179-7616	329
179-7639	321
179-7662	321
179-7782	331
179-7863	351
179-7867	351
179-9614	▶249
179-9667	243
	245

▶ **PRIMARY REFERENCE**

PART NUMBER INDEX

Part	Page	Part	Page	Part	Page	Part	Page
179-9674	237	184-9254	301	185-8260	548		480
	239	184-9255	301	185-8261	548	187-5976	275
179-9681	262	184-9256	301	185-8262	548		▶362
179-9682	266	184-9257	301	185-8263	548		481
179-9763	390	184-9283	341	185-8264	548	187-6058	361
179-9764	234	184-9284	341	185-8265	548	187-6696	362
	▶241	184-9285	341	185-8266	548	187-6701	321
179-9765	241	184-9286	342	185-8277	559	187-6710	314
179-9768	241	184-9336	341		▶565	187-6719	323
179-9770	241	184-9404	316	185-8279	559	187-6720	323
179-9771	241	184-9405	303	185-8280	565	187-6850	323
179-9772	241	184-9406	303	185-8281	565	187-6851	323
180-3861	120	184-9420	331	185-8284	561	187-6970	323
	121	184-9560	218	185-8285	548	187-6974	323
180-7521	159		▶323	185-8286	548	187-7023	347
180-7525	159	184-9593	336	185-8287	548	187-7051	323
180-7529	159	184-9594	334		572	187-7054	323
180-7533	159	184-9595	335		574	187-7058	323
180-7537	159	184-9596	335	185-8290	616	187-7064	323
183-0993	▶148	185-0169	262	185-8292	553	187-7077	323
	218		266	185-8293	554	187-9905	▶224
183-0998	138	185-0172	262	185-8294	553		431
	148		266	185-8295	554	187-9906	▶225
183-1037	▶94	185-0201	262	185-8296	554		432
183-1061	148		266	185-8297	553	187-9907	224
183-8169	56	185-0347	262		554		225
183-8170	56		266		556	187-9908	224
183-8172	17	185-0348	262	185-8298	554		225
	19		266	185-8299	556	187-9928	291
183-8173	17	185-0383	342	185-8300	554	187-9939	279
	19	185-0407	428		556	187-9983	291
183-8175	31	185-0423	435	185-8302	554	188-2315	476
183-8176	31	185-0462	342	185-8303	556		478
183-8177	31		▶451	185-9208	144	188-3064	198
183-8179	39	185-0463	451	186-1148	▶480		199
183-8215	21	185-0465	457	186-1191	▶480	188-7268	619
183-8222	47	185-0471	405	186-1192	▶480		623
183-8224	71	185-0497	347	186-1193	▶480	189-2678	561
183-8236	34		▶457	186-1194	▶481	189-2690	581
	35	185-8122	603	186-1197	▶481	189-2693	585
183-8237	34	185-8124	603	186-1252	617	189-2694	585
	35	185-8126	603	186-3735	93	189-2711	581
183-8238	34	185-8153	553		128	189-2716	585
	35	185-8154	553		129	189-2750	554
183-8240	34	185-8155	554	186-4582	98	189-2787	590
	35	185-8156	554	186-4711	138	189-2847	584
183-8241	34	185-8161	574	186-5644	476	189-2849	584
	35	185-8162	572	186-5649	478		▶585
183-8265	43		574	186-5650	478	189-2855	561
184-3825	568	185-8163	576	186-5652	478	189-2864	565
184-3833	404	185-8169	548	186-5653	478	189-3396	565
184-3906	317	185-8178	559	186-5662	478	189-3409	565
184-3949	52	185-8180	581	187-0661	619	189-3424	616
184-3983	56	185-8181	610	187-5582	316	189-3463	580
184-8423	178	185-8182	610	187-5583	316	189-9763	262
184-8551	178	185-8183	610	187-5586	316		266
	179	185-8187	610	187-5589	316		390
184-8850	157	185-8196	565	187-5642	370	190-3523	198
184-8862	186	185-8197	610	187-5693	▶360		199
184-9208	327	185-8205	561		480	190-3524	198
184-9209	327	185-8214	561	187-5707	347		199
184-9210	331	185-8218	561	187-5853	321	190-5386	619
184-9251	301	185-8221	610	187-5954	314		623
184-9252	301	185-8223	561	187-5973	275	190-5828	71
184-9253	301	185-8257	548		▶361	190-5829	71

▶ PRIMARY REFERENCE

PART NUMBER INDEX

Part	Page
190-5830	71
190-5859	80
190-5860	81
190-5861	81
190-5862	81
190-5863	81
190-5864	81
190-5866	82
190-5867	82
190-5868	82
190-5869	82
190-5870	83
190-5871	81
190-5872	82
190-5873	82
190-5874	82
190-5875	82
190-5876	82
190-5877	82
190-5878	82
190-5880	81
190-5881	82
190-5883	83
190-5884	83
190-5885	82
190-5886	82
190-5887	81
190-5888	82
190-5889	82
190-5890	81
190-5893	82
190-5894	83
190-5895	83
190-5896	82
190-5899	81
190-5900	81
190-5901	81
190-5903	83
190-5904	82
190-5905	82
190-5906	82
190-5907	82
190-5908	82
190-5909	81
190-5910	82
190-5911	83
190-5912	83
190-5913	83
190-5914	83
190-6821	178
190-6880	178
190-6945	184
190-6992	163
	164
	165
190-7165	106
	▶175
190-7226	178
190-7673	262
	266
190-7674	262
	266
190-7750	429
190-7751	429
190-7826	404
190-7865	421
191-2578	250
191-3235	152
191-3236	152
191-5537	▶247
	249
191-5538	247
191-5539	247
191-5540	247
191-5541	247
191-5542	380
	▶381
191-5543	381
191-5599	262
	266
	390
191-5601	247
191-5707	262
	266
191-5709	390
191-6905	557
192-0573	390
192-6936	303
192-6940	303
193-1736	391
193-2702	76
193-2751	78
193-2752	78
193-2753	78
193-2754	78
193-2762	57
193-2764	569
193-2765	569
193-3373	▶138
	218
193-3383	138
193-5014	502
	503
193-5015	502
193-5016	503
193-6840	▶2
193-6841	▶3
193-6848	▶1
	2
193-6849	▶2
	3
193-9696	91
193-9763	166
194-0095	327
194-0174	314
194-0177	314
194-0180	314
194-0196	321
194-0349	334
194-1608	▶198
	208
	209
	210
	211
194-1609	▶199
	212
	213
	214
194-1910	▶208
194-1911	▶209
194-1912	188
	▶210
194-1914	▶211
194-1917	▶212
194-1920	188
	▶213
194-1921	▶214
194-8397	390
195-7216	▶529
195-8366	76
195-8368	76
195-8369	76
195-8372	76
195-9181	▶535
195-9182	▶536
196-0711	386
196-0807	358
196-0826	323
196-0827	323
196-1421	▶579
196-1422	579
	▶580
196-1423	557
196-1424	550
	553
196-1426	580
196-1427	557
196-1565	576
196-1582	579
196-1666	553
196-1668	580
196-1669	580
196-1675	565
196-1696	572
	576
196-1703	273
196-7972	5
	▶25
196-7973	25
196-7975	47
196-8125	82
196-8191	39
196-8192	39
196-8219	71
196-8220	71
196-8226	39
196-8227	39
197-0196	427
197-0199	427
197-0252	458
197-0273	427
197-0393	136
197-2127	114
197-4279	144
197-4324	138
197-4330	129
198-2711	▶508
198-2712	▶508
198-2730	508
	▶520
198-2732	508
	▶525
198-2737	▶508
198-2738	▶508
198-2755	508
	▶518
198-2757	508
	▶519
198-2765	520
198-2767	520
198-2768	518
	525
198-5212	520
198-8618	525
198-8620	518
198-8621	519
198-8730	518
	525
199-0068	172
199-0069	173
199-0120	173
199-0254	161
199-0255	161
199-0256	161
199-0261	178
199-0266	178
199-0275	178
199-0278	178
199-0281	178
199-0282	178
199-0284	178
199-0294	178
199-0297	178
199-0301	178
199-2019	356
199-2035	356
199-2045	353
199-6282	519
199-6293	519
199-7287	1
	2
	▶160
199-7288	160
	▶161
199-7291	1
	2
	▶178
199-7292	270
	▶358
199-7293	270
	▶333
199-7388	358
199-7394	358
199-7398	179
199-7403	358
199-7406	178
199-7408	178
	▶186
199-7409	186
199-7410	186
199-7414	178
199-7428	270
	▶341
199-7441	186
199-7447	▶215
	335

▶ PRIMARY REFERENCE

PART NUMBER INDEX

Part	Page
2	
200-3244	262
	266
200-3245	262
	266
200-3246	262
	266
200-3254	262
	266
200-3255	262
	266
200-3326	388
200-3327	388
200-3333	390
200-3334	390
200-3365	218
	▶388
200-3366	387
	▶390
200-3368	390
201-3014	1
	2
	▶167
201-3015	159
	167
201-3035	▶159
201-3833	9
	▶60
201-3835	2
	3
	▶4
201-3836	2
	3
	▶9
201-3837	9
	▶568
201-3878	▶5
	7
	8
201-3888	568
201-4391	581
201-4398	598
201-4434	590
201-4436	▶599
	600
201-4477	1
	2
	▶605
201-4530	565
201-9323	2
	▶270
201-9324	3
	▶270
201-9329	358
	▶404
201-9350	416
	▶446
201-9352	416
	▶448
201-9353	▶434
	448
201-9358	▶416
	420
201-9359	416
	▶419
202-3855	303
202-3856	303
202-3857	303
202-3858	303
202-4004	335
202-6855	▶218
202-6856	218
	▶420
202-7127	277
	291
202-7128	277
	291
202-7129	277
202-7130	279
202-7131	279
202-7133	309
202-7134	291
202-7135	287
202-7136	287
202-7137	307
202-9824	619
	623
203-4926	179
203-5267	▶163
	178
203-5268	163
203-5269	163
203-5270	178
203-5271	▶164
	179
203-5272	164
203-5273	164
203-5274	179
204-0873	9
	▶50
204-0875	9
	▶61
204-0910	45
204-0941	61
204-0946	61
204-0947	61
204-0951	50
204-0952	50
204-0953	50
204-0996	52
204-0997	52
204-1000	52
204-1001	52
204-1002	52
204-1003	52
204-1004	52
204-1005	52
204-1006	52
204-1007	52
204-1008	52
204-1035	50
204-1586	1
	2
	▶97
204-1611	324
204-1640	128
204-1685	97
204-1863	97
204-1882	99
204-1925	106
204-2683	▶262
	390
204-2684	▶266
	390
204-2800	389
204-3663	179
204-3668	186
204-3669	186
204-3670	353
204-3671	179
204-3700	178
204-3701	218
	▶353
204-3710	1
	2
	▶172
204-3711	172
204-3712	171
	▶173
204-3722	172
204-3723	173
204-3728	173
204-3760	▶171
204-3773	106
204-3775	106
204-3776	106
204-3796	358
204-3799	358
204-8177	321
204-8178	318
204-8182	318
	321
	324
204-8183	318
	321
	323
204-8184	318
	321
	323
204-8190	317
	324
204-8283	218
	▶346
204-8452	347
204-8454	347
204-8458	346
205-1339	114
205-1340	114
205-6295	565
205-6683	4
	6
	▶45
205-6686	60
205-6687	60
205-6698	568
205-6741	5
	▶70
205-6788	23
205-6792	5
	▶23
205-6793	23
206-3303	▶226
	341
206-3304	▶227
206-3305	226
	227
	▶429
	431
	432
206-3336	220
207-6222	317
207-6403	397
207-6404	397
208-4006	172
208-4010	173
208-4108	▶165
	185
209-5874	243
	245
209-5894	383
209-5909	383
209-5992	379
	▶383
209-6000	395
209-6057	388
	▶389
210-5808	566
210-5809	561
210-5827	604
210-5828	604
210-5829	604
210-5834	604
210-5836	604
210-5837	604
210-5838	604
210-8011	61
210-8012	61
210-8013	61
210-8105	50
	▶52
210-8107	61
210-8108	61
210-8124	52
210-8125	52
210-8127	52
210-8128	52
210-8129	52
211-5557	115
211-5558	115
211-5559	115
211-5560	115
212-2838	167
212-5420	318
	323
212-8470	5
	▶78
212-8473	17
	19
212-8474	17
	19
212-8475	17
	19
212-8476	17
	19
212-8477	36
212-8484	33
212-8485	33
212-8486	33

▶ PRIMARY REFERENCE

PART NUMBER INDEX

Part	Page
212-8489	47
	65
212-8497	76
212-8499	76
212-8509	76
212-8510	26
212-8521	95
212-8543	5
	▶21
212-8544	5
	▶36
212-8545	5
	▶11
212-8546	5
	▶13
212-8547	5
	▶26
212-8548	5
	▶33
212-8549	5
	▶12
212-8550	5
	▶24
212-8551	5
	▶67
212-8552	5
	▶65
212-8553	5
	▶69
212-8554	5
	▶39
212-8555	5
	▶49
212-8556	5
	▶46
212-8558	5
	▶76
212-8559	5
	▶80
212-8560	5
	▶71
212-8561	5
	▶95
212-8562	▶17
	21
212-8563	17
	19
212-8564	▶19
	21
212-8566	13
	▶15
212-8567	13
212-8569	26
212-8571	26
212-8572	26
212-8573	26
212-8574	26
212-8575	34
212-8576	24
212-8577	67
212-8578	67
212-8579	67
212-8580	69
212-8581	69
212-8582	69
212-8583	69
212-8584	34
	35
212-8585	34
	35
212-8586	34
	35
212-8587	47
212-8589	46
212-8590	46
212-8591	34
212-8592	46
212-8593	46
212-8594	46
212-8595	46
212-8596	46
212-8597	46
212-8598	46
212-8599	76
212-8600	76
212-8601	76
212-8602	76
212-8603	76
212-8604	76
212-8605	76
212-8606	76
212-8607	76
212-8609	78
212-8610	71
212-8612	71
212-8613	95
212-8614	5
	▶47
212-8621	38
213-0644	146
213-0671	98
	▶128
213-0677	31
	397
213-0842	128
213-0902	138
213-0914	▶106
214-1284	590
214-4373	358
214-4392	179
214-4396	179
214-4401	261
214-4411	▶44
214-4421	324
214-4442	▶54
214-4443	54
	▶184
214-4444	184
214-4511	314
214-4512	▶261
	333
214-4519	261
215-4890	323
215-4909	255
216-6585	277
216-6589	277
216-6750	217
	▶431
216-6751	217
	▶432
217-5436	80
217-5437	80
217-5438	80
217-5439	80
217-5440	81
217-5441	81
217-5442	82
217-5443	82
217-5444	82
217-5470	▶6
	44
217-5472	6
	▶7
217-5474	76
217-9367	▶606
	615
217-9385	9
	▶569
217-9386	569
217-9405	1
	2
	▶590
217-9406	590
217-9407	590
217-9408	590
217-9429	▶615
218-1139	317
219-8467	189
219-8469	190
	191
221-8750	115
221-8751	115
	▶596
221-8760	112
221-8840	596
222-0076	353
222-0084	445
	▶449
222-0085	449
222-0093	179
222-0099	179
222-0100	553
222-0228	569
222-0232	569
222-0235	569
222-0257	353
222-0260	353
222-0261	353
222-0265	353
222-8183	10
222-8188	4
	▶8
222-8199	8
	▶34
222-8200	7
	▶35
222-8201	15
222-8202	24
222-8212	24
222-8214	47
222-8216	47
222-8218	81
222-8284	54
	▶57
222-8285	57
222-8292	26
222-8293	35
222-8294	35
222-8331	21
223-6749	353
	▶355
223-6750	355
	▶356
223-6751	355
	▶357
223-6752	357
225-4815	429
225-4816	429
226-3055	277
226-3057	277
226-3059	279
226-3061	279
226-3063	309
226-3069	287
226-3071	287
226-3073	307
227-6034	152
227-6035	151
	▶152
227-6793	323
227-6795	323
227-6807	574

▶ PRIMARY REFERENCE

MEMORANDA

CATERPILLAR®

© 2003 Caterpillar
All Rights Reserved

Printed in U.S.A.