RUTHZIL TRATOR COMERCIAL DE PEÇAS LTDA 11 97083-6812 ROLANDO CITRANGULO

SEBP4874-24
April 2013

VOLUME I
Pages 1-854

Parts Manual

320D & 320D L Excavators

FAL1-Up (Machine)
KGF1-Up (Machine)
GDC1-Up (Engine)

Powered By C6.4 Engine

Product and Dealer Information

Note: For product identification plate locations, see the section “Product Identification Information” in the Operation and Maintenance Manual.

Delivery Date: _____

Product Information

Model: _____

Product Identification Number: _____

Engine Serial Number: _____

Transmission Serial Number: _____

Generator Serial Number: _____

Attachment Serial Numbers: _____

Attachment Information: _____

Customer Equipment Number: _____

Dealer Equipment Number: _____

Dealer Information

Name: _____ Branch: _____

Address: _____

_____

_____

	Dealer Contact	Phone Number	Hours
Sales:	_____	_____	_____
Parts:	_____	_____	_____
Service:	_____	_____	_____

MEMORANDA

TABLE OF CONTENTS

NAME	PAGE
GENERAL INFORMATION	**A6**
REPAIR ALTERNATIVES	**A9**
SUPPLEMENTAL COOLANT ADDITIVES	A10
MAINTENANCE PARTS	**A11**
INDEX	**A17**
MACHINE ARRANGEMENT	**1**
CHASSIS AR	1
CONVERSION AR-MACHINE	2
DISTRIBUTION AR	4
GENERAL AR	73
MACHINE AR	74
OPTION AR-CAB	75
OPTION AR-COLD WEATHER	77
OPTION AR-COUPLER	79
OPTION AR-ELECTRICAL	81
OPTION AR-GUARD	81
OPTION AR-HYDRAULIC	81
OPTION AR-CONTROL	82
OPTION AR-HYDRAULIC	83
OPTION AR-VALVE	84
OPTION AR-LIGHTING	84
OPTION AR-LINKAGE	85
OPTION AR-REGIONAL	89
OPTION AR-CONFIGURATION	90
OPTION AR-REGIONAL	90
SPECIAL AR	101
ENGINE ARRANGEMENT	**105**
ENGINE AR	105
ENGINE AR-COMPLETE	112
ENGINE AR-PRIMARY	119
INSTALLATION AR-ENGINE	120
BASIC ENGINE	**121**
CAMSHAFT GP	121
COVER GP-VALVE MECHANISM	123
CRANKSHAFT GP	125
CYLINDER BLOCK GP	126
CYLINDER HEAD AS	130
CYLINDER HEAD GP	131
FLYWHEEL GP	132
GEAR GP-FRONT	133
HOUSING GP-FLYWHEEL	134
HOUSING GP-FRONT	135
MOUNTING GP-ALTERNATOR	138
MOUNTING GP-ENGINE	139
MOUNTING GP-FAN DRIVE	140
MOUNTING GP-STARTING MOTOR	141
PAN GP-OIL	142
PISTON & ROD GP	146
PULLEY GP-ENGINE	148
PULLEY GP-FAN	167
PULLEY GP-IDLER	170
VALVE MECHANISM GP	173
LUBRICATION SYSTEM	**177**
ADAPTER GP-REMOTE OIL FILTER	177
BREATHER GP	179
FILTER & MTG GP-ENGINE OIL	180
KIT-HIGH SPEED OIL CHANGE	182
LINES GP-ENGINE OIL	186
LINES GP-ENGINE OIL DRAIN	187
LINES GP-TURBOCHARGER OIL	189
COOLING SYSTEM	**190**
COOLER GP-ENGINE OIL	190
COOLING AR-HIGH AMBIENT TEMP	191
FAN GP-SUCTION	195
HOUSING & REGULATOR GP	203
PUMP GP-WATER	204
RADIATOR & HYD OIL COOLER GP	206
AIR INLET AND EXHAUST SYSTEM	**253**
AIR CLEANER & MOUNTING GP	253
AIR CLEANER AR	255
AIR CLEANER GP	256
CARTRIDGE AS-TURBOCHARGER	265
DRAIN GP-MUFFLER	266
EXTENSION GP-EXHAUST	267
LINES GP-AIR	268
LINES GP-MUFFLER DRAIN	272
MANIFOLD GP-EXHAUST	273
MANIFOLD GP-INLET	275
MUFFLER	279
MUFFLER GP	280
TURBOCHARGER GP	286
FUEL SYSTEM	**289**
CAP GP-FUEL FILLER	289
FILTER GP-FUEL	290
FILTER GP-WATER SEP & FUEL	295
INJECTOR GP-FUEL	296
KIT-FUEL PRIMING PUMP	300
LINES GP-FUEL	301
MOUNTING GP-FUEL FILTER	329
MOUNTING GP-PUMP	333
PUMP & MOTOR GP-REFUELING	334
PUMP AR-FUEL TRANSFER	335
PUMP AR-REFUELING	335
PUMP GP-FUEL INJECTION	337
PUMP GP-FUEL PRIMING	338
PUMP GP-REFUELING	339
RAIL GP-FUEL	343

TABLE OF CONTENTS

NAME	PAGE
STRAINER GP-FUEL	344
TANK & MTG GP-FUEL	345
TANK GP-FUEL	356
VALVE GP-FUEL SHUTOFF	398
ELECTRICAL AND STARTING SYSTEM	399
ALARM GP	399
ALARM GP-TRAVEL	400
ALTERNATOR GP-CHARGING	401
BATTERY & WIRING GP	403
BLOCK GP-JUNCTION	437
CAMERA & MOUNTING GP	439
CAMERA AR	441
CAMERA GP	442
CONTROL & MTG GP-COMMUNICATION	443
CONTROL & MTG GP-ENGINE ELEK	449
CONTROL & MTG GP-MACHINE	450
CONTROL AR-COMMUNICATION	451
CONTROL GP-COMMUNICATION	451
CONTROL GP-UNPROGRAMMED	453
ELECTRONICS GP-COMMUNICATION	456
ELECTRONICS GP-MACHINE	456
ELECTRONICS GP-MONITOR	457
FASTENER GP-WIRING HARNESS	458
GRADE CONTROL AR	465
GRADE CONTROL AR-LASER	465
GRADE CONTROL AR-SATELLITE	466
GRADE CONTROL GP-LASER	467
HARNESS AS-CONTROL	467
HARNESS AS-PUMP	468
INSTALLATION AR-COMMUNICATION	469
INSTALLATION GP-COMMUNICATION	471
INSTALLATION GP-SECURITY	472
KIT-BRACKET	474
LAMP GP-FLOOD	475
LIGHTING GP-FLOOD	478
MAST GP	497
MOUNTING GP-CAMERA	498
MOUNTING GP-MAST	499
MOUNTING GP-RECEIVER	500
MOUNTING GP-SENSOR	501
MOUNTING GP-WIRING	502
PANEL & MTG GP-CIRCUIT BREAKER	503
PANEL GP-CIRCUIT BREAKER	506
PANEL GP-SWITCH	513
RADIO GP-COMMUNICATION	525
RECEIVER GP-SATELLITE	525
SENSOR & MOUNTING GP	526
SENSOR GP-ENGINE	527
SENSOR GP-LIQUID LEVEL	528
SENSOR GP-PRESSURE	530
STARTING AR-COLD WEATHER	532
STARTING MOTOR GP-ELECTRIC	533
SWITCH GP-DISCONNECT	537
SWITCH GP-LIMIT	538
SWITCH GP-MAGNETIC	539
SWITCH GP-PUSH BUTTON	542
SWITCH GP-REFUELING	544
SWITCH GP-ROTARY	545
SWITCH GP-START	547
SWITCH GP-TOGGLE	549
SWITCH GP-WIPER	552
TARGET GP-LASER	553
WARNING AR-OVERLOAD	553
WARNING GP-OVERLOAD	553
WIRING GP-AUXILIARY CONTROL	554
WIRING GP-CAB	560
WIRING GP-CAB RISER	583
WIRING GP-CAMERA	584
WIRING GP-CHASSIS	585
WIRING GP-COMBINED FLOW	589
WIRING GP-COMMUNICATION	592
WIRING GP-CONSOLE	606
WIRING GP-CONVERTER	611
WIRING GP-ELECTRONIC CONTROL	615
WIRING GP-ENGINE	617
WIRING GP-FAN	619
WIRING GP-FINE SWING	625
WIRING GP-GRADE CONTROL	626
WIRING GP-HEATER	628
WIRING GP-HYDRAULIC CONTROL	631
WIRING GP-MEDIUM PRESSURE	633
WIRING GP-OVERLOAD WARNING	634
WIRING GP-PLATFORM	636
WIRING GP-QUICK COUPLER	639
WIRING GP-RADIO	643
WIRING GP-REFUELING PUMP	645
POWER TRAIN	**649**
DRIVE GP-FINAL	649
GEAR GP-RING	668
GEAR GP-TRANSFER	671
KIT-HOUSING	672
POWER TRAIN AR	673
SPROCKET GP	674
FRAME AND BODY	**675**
BOX & MTG GP-STORAGE	675
BOX GP-STORAGE	676
BUMPER GP	678
COUNTERWEIGHT & MOUNTING GP	683
COUNTERWEIGHT AR	701
COUNTERWEIGHT GP	702
COVER AS-ACCESS	721

TABLE OF CONTENTS

NAME	PAGE
COVER AS-SOUND SUPPRESSION	725
COVER GP-HOOD	729
DOOR GP-ACCESS	734
DOOR GP-HOOD	746
FENDER & COVER GP	747
FRAME GP-UPPER	749
GEAR & BEARING GP-SWING	753
GUARD AR	756
GUARD GP-BOTTOM	757
GUARD GP-SWIVEL	760
HANDRAIL GP	762
HOOD & GUARD GP	763
HOOD GP	825
HOOD GP-ENGINE	826
KIT-PLATE	831
SHEET AS-SOUND SUPPRESSION	832
STEP GP	844
STORAGE GP-VANDALISM GUARD	846
SUPPORT AS-ENCLOSURE	847
UNDERCARRIAGE	**856**
FRAME AR-UNDERCARRIAGE	856
FRAME AS-UNDERCARRIAGE	857
GUARD GP-TRACK GUIDE	859
GUARD GP-TRAVEL MOTOR	865
IDLER GP-FRONT	869
LINK AS-TRACK	873
ROLLER AR-TRACK & CARRIER	875
ROLLER GP-TRACK CARRIER	881
ROLLER GP-TRACK-DOUBLE FLANGE	882
ROLLER GP-TRACK-SINGLE FLANGE	884
TRACK ADJUSTER & RECOIL GP	888
TRACK AR	892
TRACK GP	893
HYDRAULIC SYSTEM	**897**
ACCUMULATOR GP-HYDRAULIC	897
BLOCK GP-HYDRAULIC	905
CONTROL AR-AUXILIARY	906
CONTROL AR-COUPLER	912
COUPLING GP-FLEXIBLE	913
COUPLING GP-PUMP	914
CYLINDER & LINES GP-BOOM	915
CYLINDER & LINES GP-BUCKET	918
CYLINDER & LINES GP-STICK	922
CYLINDER & SEAL GP-BOOM	927
CYLINDER & SEAL GP-BUCKET	940
CYLINDER & SEAL GP-STICK	969
CYLINDER AR-HYDRAULIC	1006
CYLINDER GP-BOOM	1007
CYLINDER GP-BUCKET	1009
CYLINDER GP-COUPLER	1019
CYLINDER GP-HYDRAULIC	1022
DRIVE GP-AUXILIARY PUMP	1024
DRIVE GP-PUMP	1025
DRIVE GP-SWING	1026
FASTENER GP-SWING & FINAL DR	1031
FILTER & VALVE GP-PILOT	1033
FILTER AR-HYDRAULIC	1034
FILTER GP-OIL	1035
FITTING GP-HYDRAULIC	1041
GAUGE GP-SIGHT	1043
HEAD GP-PUMP	1045
HOSE GP-HYDRAULIC	1068
HYDRAULIC AR	1077
LINES GP-AUXILIARY HYDRAULIC	1078
LINES GP-BOOM	1108
LINES GP-BOOM CYLINDER	1121
LINES GP-BUCKET CYLINDER	1134
LINES GP-COUPLER	1153
LINES GP-FRONT	1167
LINES GP-HYDRAULIC OIL COOLER	1262
LINES GP-PILOT	1269
LINES GP-PUMP	1403
LINES GP-QUICK COUPLER	1411
LINES GP-RETURN	1420
LINES GP-RETURN & FILTER	1427
LINES GP-SENSOR	1433
LINES GP-STICK CYLINDER	1436
LINES GP-TRAVEL MOTOR	1447
MANIFOLD GP-CONTROL	1458
MOTOR & MTG GP-SWING	1461
MOTOR & MTG GP-TRAVEL	1465
MOTOR GP-SWING	1468
MOTOR GP-TRAVEL	1480
MOUNTING GP-MAIN CONTROL VALVE	1491
PLUG GP-CONTROL VALVE	1492
PUMP & MTG GP-AUXILIARY	1495
PUMP & MTG GP-MAIN HYDRAULIC	1497
PUMP GP-GEAR	1498
PUMP GP-MAIN HYDRAULIC	1500
SCREEN GP-HYDRAULIC	1505
SWIVEL GP	1506
TANK & FILTER GP-HYDRAULIC	1508
TANK & MTG GP-HYDRAULIC	1510
VALVE & LINES GP-HEAVY LIFT	1511
VALVE & MTG GP-CONTROL	1512
VALVE AR-ALT PATTERN CONTROL	1514
VALVE AR-CHECK & RELIEF	1514
VALVE AR-LOAD CONTROL	1515
VALVE AR-SWING	1516
VALVE AS-MANUAL	1517
VALVE GP-CHECK	1518
VALVE GP-CHECK & RELIEF	1526
VALVE GP-CONTROL	1528

TABLE OF CONTENTS

NAME	PAGE
VALVE GP-FLOW CONTROL & RELIEF	1593
VALVE GP-LOAD CONTROL	1595
VALVE GP-MAIN CONTROL	1613
VALVE GP-MANUAL	1617
VALVE GP-PILOT	1619
VALVE GP-PILOT RELIEF	1639
VALVE GP-PRESSURE REDUCING	1641
VALVE GP-PRIORITY	1644
VALVE GP-RELIEF	1646
VALVE GP-SELECTOR	1677
VALVE GP-SHUTTLE	1679
VALVE GP-SOLENOID	1687
VALVE GP-SOLENOID & MANIFOLD	1699
VALVE GP-SOLENOID & RELIEF	1701
VALVE GP-SWING CUSHION	1709
VALVE GP-TRAVEL COUNTERBALANCE	1714
IMPLEMENTS	**1718**
BOOM AR	1718
BOOM AR-1 PIECE LONG	1719
BOOM AR-1 PIECE SHORT	1723
BOOM GP	1724
BOOM GP-1 PIECE	1734
BOOM GP	1740
CONVERSION GP-LINKAGE	1744
LINES GP-GREASE	1745
LINKAGE AR-BUCKET	1753
LINKAGE AR-FRONT	1758
LINKAGE GP-BUCKET	1759
LOCK GP-TRANSPORT	1769
PIN GP	1770
STICK & BEARING AS	1771
STICK AR	1775
STICK AR-HOE	1775
STICK GP-HOE	1781
WORK TOOLS	**1817**
ADJUSTER GP-BUCKET	1817
BUCKET & ADJUSTER GP	1820
BUCKET AR-EXCAVATION	1835
BUCKET AR-EXTREME EXCAVATION	1838
BUCKET AR-GENERAL PURPOSE	1840
BUCKET AR-HEAVY DUTY	1842
BUCKET AR-HEAVY DUTY ROCK	1842
BUCKET AS-DITCH CLEANING	1843
BUCKET AS-EXCAVATION	1845
BUCKET AS-GENERAL PURPOSE	1847
BUCKET AS-HEAVY DUTY	1856
BUCKET AS-HEAVY DUTY ROCK	1868
BUCKET GP-HEAVY DUTY SPADE	1869
BUCKET AS-SEVERE SERVICE ROCK	1870
BUCKET GP-DITCH CLEANING	1871
BUCKET GP-EXCAVATION	1872
BUCKET GP-EXTREME EXCAVATION	1874
BUCKET GP-GENERAL PURPOSE	1876
BUCKET GP-HEAVY DUTY	1880
BUCKET GP-HEAVY DUTY ROCK	1890
BUCKET GP-SEVERE SERVICE ROCK	1891
COUPLER AR-QUICK	1892
COUPLER GP-QUICK	1894
EDGE GP-CUTTING	1903
PIN GP-BUCKET	1904
PIN GP-COUPLER	1904
PROTECTOR GP-SIDE BAR	1905
SIDECUTTER GP	1907
TIP GP-ABRASION	1910
TIP GP-DOUBLE SPIKE	1911
TIP GP-EXTRA-DUTY	1912
TIP GP-GENERAL PURPOSE	1914
TIP GP-LONG	1915
TIP GP-PENETRATION	1920
TIP GP-PENETRATION PLUS	1923
TIP GP-SHARP	1927
TIP GP-SHORT	1928
TIP GP-SPIKE	1929
TIP GP-WIDE	1930
TIP-LEVELING EDGE	1932
OPERATOR STATION	**1933**
ADJUSTER GP-SEAT	1933
AIR CONDITIONER & MOUNTING GP	1935
AIR CONDITIONER AR	1943
AIR CONDITIONER GP	1944
ARMREST GP	1952
BRACKET GP-MIRROR	1954
BRACKET GP-MOUNTING	1956
CAB GP	1957
COIL GP-EVAPORATOR	2010
COMPRESSOR GP-REFRIGERANT	2014
CONDENSER & LINES GP-RFGT	2019
CONDENSER & MTG GP-REFRIGERANT	2020
CONDENSER GP-REFRIGERANT	2027
CONSOLE GP-OPERATOR	2028
CONTROL & MTG GP-JOYSTICK	2038
CONTROL & MTG GP-PEDAL	2046
CONTROL GP-FOOT	2048
CONTROL GP-HANDLE	2051
CONTROL GP-HEAT & AIR COND	2059
CONTROL GP-HYDRAULIC PEDAL	2060
CONTROL GP-JOYSTICK	2064
CONTROL GP-PEDAL	2078

TABLE OF CONTENTS

NAME	PAGE
CONTROL GP-PILOT OPERATED HYD	2080
COVER GP-CAB	2081
COVER GP-STORAGE	2082
DISPLAY GP-MONITOR	2083
DOOR & MTG GP-CAB	2084
DOOR GP-CAB	2088
DUCT GP-CAB AIR	2101
FLOOR MAT	2102
FLOOR MAT GP	2109
GUARD AR-OVERHEAD	2110
GUARD AR-VANDALISM	2110
GUARD GP-FRONT WINDOW	2111
GUARD GP-OVERHEAD	2118
GUARD GP-VANDALISM	2122
HATCH GP-ROOF	2124
HEADREST AS-SEAT	2127
HEATER & MTG GP-CAB	2130
HEATER AR-CAB	2136
HORN GP-ELECTRIC	2137
INSTALLATION AR	2143
INSTALLATION GP-RADIO	2144
KIT-CONSOLE ADJUSTMENT	2146
KIT-SEAT	2147
KIT-SEAT SUPPORT	2148
LATCH GP-WINDOW	2150
LEVER GP-CAB DOOR	2151
LINES GP-AIR CONDITIONER	2152
LINES GP-HEATER	2159
LITERATURE GP	2162
MIRROR GP-DOWN VIEW	2163
MIRROR GP-REAR VIEW	2166
MONITOR & MTG GP-OPERATOR	2171
MONITOR GP-OPERATOR	2173
MOUNTING GP-ANTENNA	2176
MOUNTING GP-MONITOR	2184
MOUNTING GP-PLATFORM	2185
OPERATOR AR	2187
PEDAL AR-AUXILIARY	2187
PLATFORM GP-OPERATOR	2189
RADIO GP	2190
SCREEN GP-SUN	2191
SEAT & MOUNTING GP	2192
SEAT BELT GP	2209
SEAT GP	2219
SEAT GP-SUSPENSION	2228
SUPPORT GP-SEAT	2240
SUSPENSION GP-SEAT	2242
VISOR GP-CAB	2253
VISOR GP-PROTECTION	2254
WASHER GP-WINDOW	2255
WINDOW AS-FRONT	2258
WINDOW GP-CAB	2259
WINDOW GP-DOOR	2267
WINDOW GP-FRONT	2269
WIPER & WASHER GP-WINDOW	2271
WIPER AR-WINDOW	2273
WIPER GP-WINDOW	2274
SERVICE EQUIPMENT AND SUPPLIES	2276
CASE GP-CARRYING	2276
FILM GP	2277
PLATE & FILM GP	2301
PLATE GP-INFORMATION	2341
PART NUMBER INDEX	**B1**

1. MACHINE IDENTIFICATION

Cat machines are identified by Product Identification Numbers (PIN). Some components included in a machine may be identified by Serial Numbers (S/N). Typical components that will be serialized include engines, transmissions, bulldozers, and rippers. The machine and engine are further identified by arrangement numbers and in some cases modification numbers. These numbers are shown on the product identification plate(s) and on the master plate in the operator's compartment.

Cat dealers need all of these numbers to determine accurate parts identification.

Effective First Quarter 2001 the Cat Product Identification Number (PIN) changed from 8 to 17 characters. In an effort to provide uniform equipment identification, Caterpillar and other construction equipment manufacturers are moving to comply with the latest version of the product identification numbering standard. Non-road machine PINs are defined by ISO 10261. The new PIN format will apply to all Cat machines and generator sets. The PIN plates and frame marking will display the 17 character PIN. The new format will look like the following:

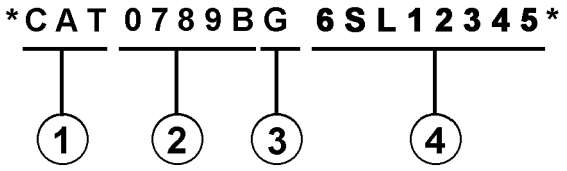

Where:

1. Caterpillar's World Manufacturing Code (characters 1-3)

2. Machine Descriptor (characters 4-8)

3. Check Character (character 9)

4. Machine Indicator Section (MIS) or Product Sequence Number (characters 10-17). These were previously referred to as the Serial Number.

Machines and generator sets produced before First Quarter 2001 will maintain their 8 character PIN format.

Components such as engines, transmissions, axles, etc. and work tools will continue to use an 8 character Serial Number (S/N).

2. ORDERING PARTS

⚠ WARNING

When replacement parts are required for this product Caterpillar recommends using Caterpillar replacement parts or parts with equivalent specifications including, but not limited to, physical dimensions, type, strength and material.

Failure to heed this warning can lead to premature failures, product damage, personal injury or death.

Quality Cat replacement parts are available from Cat dealers throughout the world. Their parts inventories are up to date and include all parts normally required to protect your investment in Cat machines. Dealers may offer repair kits or remanufactured parts to allow selection of the most effective repair alternative for a particular situation. When ordering parts, your order should specify the quantity, part number, part name, and the serial number/product identification number of the machine for which the parts are needed.

3. PARTS MANUAL ORGANIZATION

Product information in this manual is presented as "information elements" that represent all of the components for the specific model. Engine Arrangement and Seat Group are examples of information elements. The information elements are organized alphabetically by part name and secondarily by part number within each major section of the manual.

4. TABLE OF CONTENTS

A table of contents (TOC) is found at the beginning of the manual. The TOC lists each section of the manual with a complete list of all information elements organized as they appear in the manual. Page numbers are provided for quick reference to detailed parts identification illustrations and serviceable consist lists.

5. MAINTENANCE PARTS INDEX

The Maintenance Parts Index, located near the beginning of the manual, references most frequently used maintenance part numbers, providing description, quantity, usage and page number. This information is organized alphabetically by part description.

6. INDEX

The index located near the front of the manual is an alphabetical listing of all information elements included in the manual. Page numbers are provided for quick reference to detailed parts identification illustrations and serviceable consist lists.

7. PART NUMBER INDEX

A numerical index listing all part numbers and the corresponding page number(s) appears at the back of the manual.

8. CAPTIONS

Captions located at the beginning of each information element identify the part number and part name along with additional descriptive information. PIN and S/N information found in each caption should be used to select correct information for a specific machine. Field replacement options, identification of optional attachment components, and where used ("part of") information is also provided.

The first line of a caption is shown in larger type font to indicate the beginning of an information element. Captions for additional pages that may be required to illustrate an information element will be shown in standard type font and will include the term *(contd.)* .

9. NON-SERVICED PARTS

In some instances it is necessary to display non-serviced parts that are a link to a lower level serviceable consist lists. These non-serviced part numbers are shown in *italic* type indicating that they are not available.

10. PARTS LIST REFERENCE NUMBERS

Numbers shown in the Ref No column correspond to numbers used in the associated graphic(s). An alphabetic suffix may be added to a reference number to identify lower level consist items. Numbers shown in the Graphic Ref column refer to the graphic number identifier displayed in the lower left corner of each illustration. The Graphic Ref number may be used in combination with the item Ref No to determine the correct part number. There may be intentional omission of a Ref No in a consist list as information is updated to reflect the latest serviceable part numbers.

11. INDENTED PART NAMES

When a part name is indented in a parts list, it is part of (included in) the group or assembly under which it is indented.

12. ILLUSTRATION REFERENCE LETTERS

When necessary, illustrations contain reference letters (A, B, C etc.) that are intended to track lines and harnesses from one point to another. They are also used to show where to reconnect illustrations that have been separated.

13. ABBREVIATIONS AND SYMBOLS

O.D. – Outside Diameter
I.D. – Inside Diameter
A – Not Part Of This Group
B – Use As Required
C – Change From Previous Type
D – Order By The Meter
E – Order By The Centimeter
F – Not Shown
G – Order By The Inch
I – Refer To Hydraulic Information System
M – Metric Part
R – Remfg Part May Be Available
Y – Separate Illustration
Z – Not Serviced Separately

14. DESCRIPTION OF TYPE CHANGES

Type - A type is defined as any configuration change that requires an additional Information Element for an Arrangement, Group, or Assembly. If serial number breaks for types are not available, a type # (Type 1, Type 2, etc.) will be displayed in the caption. These "type" changes are identified with a "C" note (change from previous type) in the Parts List. Only the "types" that apply to this Parts Manual will be included. Additional types may exist causing "C" notes to appear on an Information Element when no other types are shown.

15.<END>

This symbol indicates the end of an information element.

NOTE:

Continuing improvement and advancement of product design may cause changes to your machine which may not be included in this publication. Whenever a question arises regarding your Cat product or this publication, please consult your Cat dealer for the latest available information.

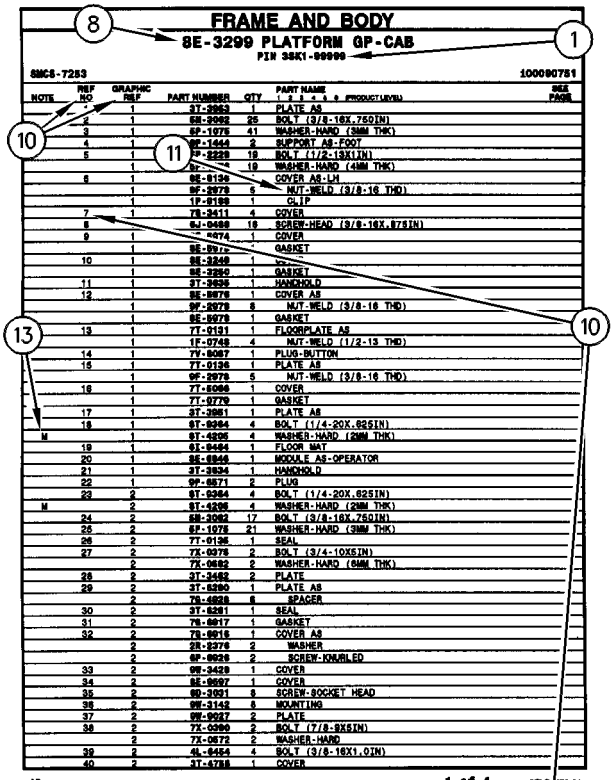

FRAME AND BODY

8E-3299 PLATFORM GP-CAB

PIN 3SK1-99999

SMCS-7283 100090751

NOTE	REF NO	GRAPHIC REF	PART NUMBER	QTY	PART NAME (1 2 3 4 5 6 PRODUCT LEVEL)	SEE PAGE
	-	1	3T-3963	1	PLATE AS	
	2	1	6M-3982	25	BOLT (3/8-16X.75DIN)	
	3	1	5P-1078	41	WASHER-HARD (3MM THK)	
	4	1	9F-1444	2	SUPPORT AS-FOOT	
	5	1	7P-2229	18	BOLT (1/2-13X1IN)	
		1	5P-[illegible]	18	WASHER-HARD (4MM THK)	
	6	1	8E-8136	-	COVER AS-LH	
		1	9F-2979	6	NUT-WELD (3/8-16 THD)	
		1	1F-8188	1	CLIP	
	7	1	7S-3411	4	COVER	
	8		6J-0488	18	SCREW-HEAD (3/8-16X.875IN)	
	9	1	[illegible]-4974	1	COVER	
		1	8E-8976	-	GASKET	
	10	1	8E-3249	1	[illegible]	
		1	8E-3250	1	GASKET	
	11	1	3T-3935	1	HANDHOLD	
	12	1	8E-8978	1	COVER AS	
		1	9F-2979	6	NUT-WELD (3/8-16 THD)	
		1	8E-8979	1	GASKET	
	13	1	7T-0131	1	FLOORPLATE AS	
		1	1F-0748	4	NUT-WELD (1/2-13 THD)	
	14	1	7V-8067	1	PLUG-BUTTON	
	15	1	7T-0136	1	PLATE AS	
		1	9F-2979	5	NUT-WELD (3/8-16 THD)	
	16	1	7T-8066	1	COVER	
		1	7T-0779	1	GASKET	
	17	1	3T-3951	1	PLATE AS	
	18	1	6T-9364	4	BOLT (1/4-20X.625IN)	
M		1	6T-4236	4	WASHER-HARD (2MM THK)	
	19	1	6T-9494	1	FLOOR MAT	
	20	1	8E-8946	1	MODULE AS-OPERATOR	
	21	1	3T-3934	1	HANDHOLD	
	22	1	9F-8571	2	PLUG	
	23	2	6T-9364	4	BOLT (1/4-20X.625IN)	
M		2	6T-4236	4	WASHER-HARD (2MM THK)	
	24	2	6M-3982	17	BOLT (3/8-16X.75DIN)	
	25	2	5P-1078	21	WASHER-HARD (3MM THK)	
	26	2	7T-0136	1	SEAL	
	27	2	7X-0378	2	BOLT (3/4-10X5IN)	
		2	7X-0682	2	WASHER-HARD (6MM THK)	
	28	2	3T-3482	2	PLATE	
	29	2	3T-8280	1	PLATE AS	
		2	7S-4828	6	SPACER	
	30	2	3T-8281	1	SEAL	
	31	2	7S-8817	1	GASKET	
	32	2	7S-8816	1	COVER AS	
		2	2S-2376	2	WASHER	
		2	9F-8628	2	SCREW-KNURLED	
	33	2	9W-3429	1	COVER	
	34	2	8E-8697	1	COVER	
	35	2	9D-3931	8	SCREW-SOCKET HEAD	
	36	2	9W-3142	8	MOUNTING	
	37	2	9W-8927	2	PLATE	
	38	2	7X-0290	2	BOLT (7/8-9X5IN)	
		2	7X-0572	2	WASHER-HARD	
	39	2	4L-6454	4	BOLT (3/8-16X1.0IN)	
	40	2	3T-4788	1	COVER	

12 FRAME AND BODY 1 of 4 SELP[illegible]70-01

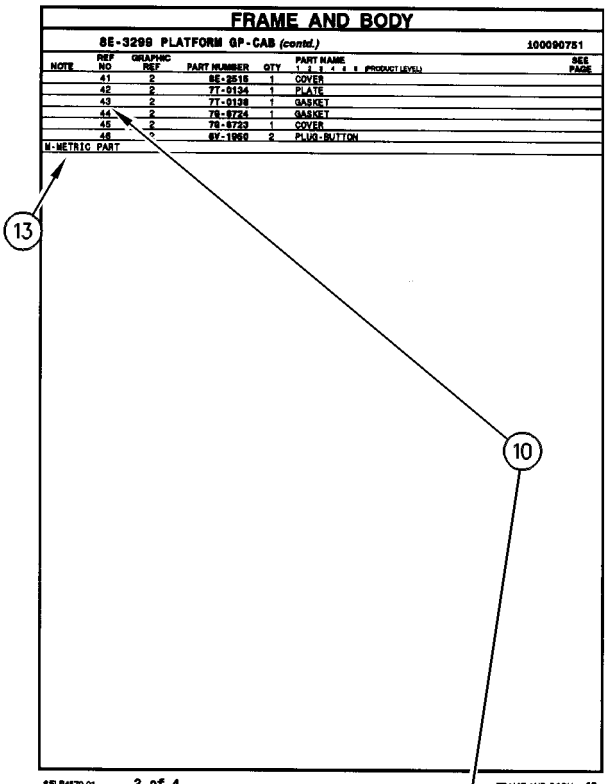

FRAME AND BODY

8E-3299 PLATFORM GP-CAB (contd.) 100090751

NOTE	REF NO	GRAPHIC REF	PART NUMBER	QTY	PART NAME (1 2 3 4 5 6 PRODUCT LEVEL)	SEE PAGE
	41	2	8E-2516	1	COVER	
	42	2	7T-0134	1	PLATE	
	43	2	7T-0138	1	GASKET	
	44	2	7S-8724	1	GASKET	
	45	2	7S-8723	1	COVER	
	46	-	6V-1960	2	PLUG-BUTTON	

M-METRIC PART

SELP4570-01 2 of 4 FRAME AND BODY 13

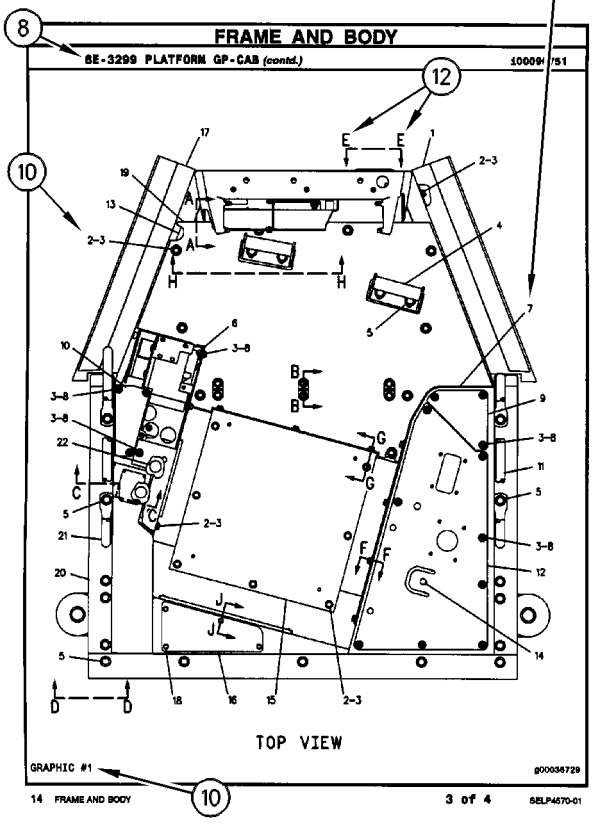

FRAME AND BODY

8E-3299 PLATFORM GP-CAB (contd.) 100090751

TOP VIEW

GRAPHIC #1 g00036729

14 FRAME AND BODY 3 of 4 SELP4570-01

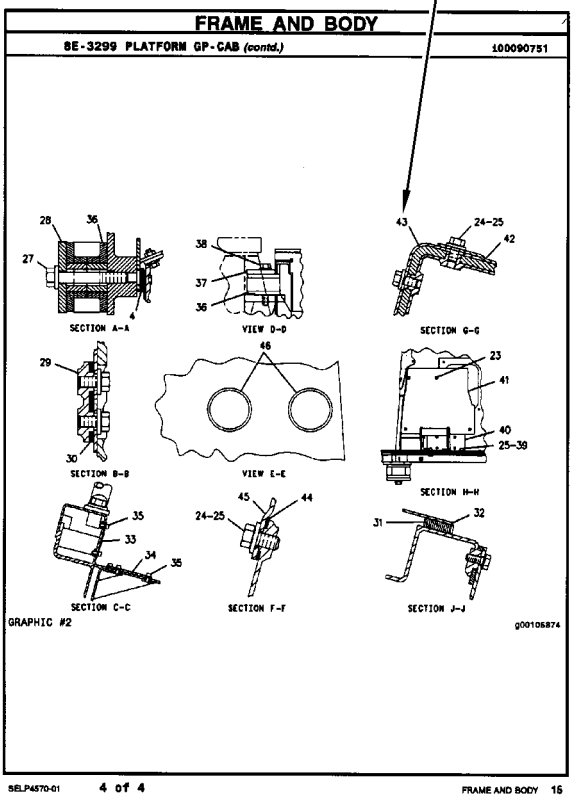

FRAME AND BODY

8E-3299 PLATFORM GP-CAB (contd.) 100090751

SECTION A-A

VIEW D-D

SECTION G-G

SECTION B-B

VIEW E-E

SECTION H-H

SECTION C-C

SECTION F-F

SECTION J-J

GRAPHIC #2 g00105874

SELP4570-01 4 of 4 FRAME AND BODY 15

REMANUFACTURED COMPONENTS

As an option when making repairs consider Cat Remanufactured Components. Components that are available through the Cat Remanufactured Program are identified three ways in the parts book:

- with the letter R in the note field of the parts list
- with an R* at the beginning of the first line of the caption
- with an *R at the end of the first line of the caption

Typical components included in the Remanufacturing Program include:

ALTERNATORS
CONNECTING RODS
CRANKSHAFTS - UNDERSIZE
CRANKSHAFTS - UPGRADE TO NEW
CYLINDER HEADS
ELECTRONIC CONTROL MODULES (ECM)
ELECTRONIC SENSORS
FUEL INJECTORS
FUEL NOZZLES
FUEL PUMPS
GOVERNORS
OIL PUMPS
PISTONS
SHORT BLOCKS
STARTERS
TURBOCHARGERS - COMPLETE
TURBOCHARGER CARTRIDGES
WATER PUMPS

Cat Remanufactured engines for many engine arrangements are also available.

SUPPLEMENTAL COOLANT ADDITIVES

CUSTOMER BENEFITS:

Protects against cavitation, foam, erosion, corrosion, and scale buildup in cooling systems.

- Provides measured coolant conditioner.

DESCRIPTION:

Additives deplete from the coolant with normal operation. For this reason, Supplemental Coolant Additives (SCA) must be added to all heavy duty coolants at regular intervals. In addition, when not using a fully formulated, pre-charged antifreeze, like Cat DEAC, an initial charge of SCA must be added to the cooling system. The amount of SCA added to the system is dependent on the capacity of the system.

The SCA for initial fill is provided as a liquid. SCA's for maintenance intervals are available in liquid form and as a spin-on element. (No Spin-on available for 3600 Family of Engines)

NOTE:

The amount of SCA added at initial fill is not the same as the amount added at maintenance intervals.

The coolant additive elements can be used with any ethylene or propylene glycol type antifreeze which meets ASTM D4985 or ASTM D5345 Specifications.

NOTE:

For use with standard heavy duty coolant only, not for use with Extended Life Coolant.

PARTS NEEDED:

Cooling System Capacity		Liquid SCA at Initial Fill	Liquid SCA at Maintenance*	Spin-on SCA Maintenance Element*
Liters	Gallons			
22-30	(6-8)	3P-2044 (1)	6V-3542 (1)	111-2370 (1)
30-38	(8-10)	3P-2044 (1) 6V-3542 (1)	111-2372 (1)	111-2369 (1)
38-49	(10-13)	3P-2044 (1) 8T-1589 (1)	111-2372 (1)	111-2369 (1)
49-64	(13-17)	3P-2044 (2)	8T-1589 (1)	9N-3368 (1)
64-83	(17-22)	3P-2044 (2) 8T-1589 (1)	111-2372 (1) 6V-3542 (1)	111-2371 (1)
83-114	(22-30)	3P-2044 (3) 8T-1589 (1)	3P-2044 (1)	9N-3718 (1)
114-163	(30-43)	3P-2044 (5)	3P-2044 (1) 6V-3542 (1)	111-2371 (2)
163-242	(43-64)	3P-2044 (8)	3P-2044 (2)	9N-3718 (2)

** Normal maintenance period is 250 hrs. See your Operation and Maintenance Manual for complete coolant maintenance instructions.*

( ) Indicates quantity required.

MAINTENANCE PARTS

DESCRIPTION	PART NUMBER	QTY	WHERE USED	PAGE
AIR INLET AND EXHAUST SYSTEM				
FILTER ELEMENT AS-AIR (PRIMARY, STANDARD EFFICIENCY)	6I-2501	1	AIR CLEANER GP	257
		1	AIR CLEANER GP	264
FILTER ELEMENT AS-AIR (PRIMARY, ULTRA HIGH EFFICIENCY)	128-2686	1	AIR CLEANER GP	264
FILTER ELEMENT AS-AIR (PRIMARY)	131-8822	1	AIR CLEANER GP	256
		1	AIR CLEANER GP	263
FILTER ELEMENT AS-AIR (SECONDARY)	131-8821	1	AIR CLEANER GP	256
		1	AIR CLEANER GP	263
	6I-2502	1	AIR CLEANER GP	257
		1	AIR CLEANER GP	264
FILTER ELEMENT AS-AIR (ULTRA HIGH EFFICIENCY) (PRIMARY)	134-0685	1	AIR CLEANER GP	263
BASIC ENGINE				
BELT-SERPENTINE	212-8585	1	PULLEY GP-ENGINE	148
		1	PULLEY GP-ENGINE	157
		1	PULLEY GP-ENGINE	159
		1	PULLEY GP-ENGINE	165
	294-1781	1	PULLEY GP-ENGINE	151
		1	PULLEY GP-ENGINE	163
	297-7825	1	PULLEY GP-ENGINE	153
		1	PULLEY GP-ENGINE	155
CAP (ENGINE OIL FILLER)	294-1708	1	COVER GP-VALVE MECHANISM	123
GASKET (VALVE COVER)	294-1706	1	COVER GP-VALVE MECHANISM	123
COOLING SYSTEM				
CAP AS (COOLANT RECOVERY)	171-3369	1	RADIATOR & HYD OIL COOLER GP	206
		1	RADIATOR & HYD OIL COOLER GP	208
		1	RADIATOR & HYD OIL COOLER GP	210
		1	RADIATOR & HYD OIL COOLER GP	212
		1	RADIATOR & HYD OIL COOLER GP	214
		1	RADIATOR & HYD OIL COOLER GP	216
		1	RADIATOR & HYD OIL COOLER GP	218
		1	RADIATOR & HYD OIL COOLER GP	222
		1	RADIATOR & HYD OIL COOLER GP	225
		1	RADIATOR & HYD OIL COOLER GP	227
CAP AS-PRESSURE (RADIATOR)	245-9212	1	RADIATOR & HYD OIL COOLER GP	220
		1	RADIATOR & HYD OIL COOLER GP	231
		1	RADIATOR & HYD OIL COOLER GP	234
		1	RADIATOR & HYD OIL COOLER GP	236
		1	RADIATOR & HYD OIL COOLER GP	241
		1	RADIATOR & HYD OIL COOLER GP	243
		1	RADIATOR & HYD OIL COOLER GP	246
CAP-RADIATOR	341-2143	1	RADIATOR & HYD OIL COOLER GP	249
	360-9274	1	RADIATOR & HYD OIL COOLER GP	238

MAINTENANCE PARTS

DESCRIPTION	PART NUMBER	QTY	WHERE USED	PAGE
		1	RADIATOR & HYD OIL COOLER GP	251
GASKET (WATER TEMPERATURE REGULATOR)	294-1780	1	HOUSING & REGULATOR GP	203
	5I-7735	1	HOUSING & REGULATOR GP	203
HOSE-RADIATOR (LOWER)	245-9178	1	RADIATOR & HYD OIL COOLER GP	206
		1	RADIATOR & HYD OIL COOLER GP	208
		1	RADIATOR & HYD OIL COOLER GP	210
		1	RADIATOR & HYD OIL COOLER GP	212
		1	RADIATOR & HYD OIL COOLER GP	214
		1	RADIATOR & HYD OIL COOLER GP	216
		1	RADIATOR & HYD OIL COOLER GP	218
		1	RADIATOR & HYD OIL COOLER GP	222
		1	RADIATOR & HYD OIL COOLER GP	225
		1	RADIATOR & HYD OIL COOLER GP	227
		1	RADIATOR & HYD OIL COOLER GP	229
HOSE-RADIATOR (UPPER)	265-3602	1	RADIATOR & HYD OIL COOLER GP	206
		1	RADIATOR & HYD OIL COOLER GP	208
		1	RADIATOR & HYD OIL COOLER GP	210
		1	RADIATOR & HYD OIL COOLER GP	212
		1	RADIATOR & HYD OIL COOLER GP	214
		1	RADIATOR & HYD OIL COOLER GP	216
		1	RADIATOR & HYD OIL COOLER GP	218
		1	RADIATOR & HYD OIL COOLER GP	222
		1	RADIATOR & HYD OIL COOLER GP	225
		1	RADIATOR & HYD OIL COOLER GP	227
		1	RADIATOR & HYD OIL COOLER GP	229
ELECTRICAL AND STARTING SYSTEM				
BATTERY GP (12-VOLT, MAINTENANCE FREE)	263-9574	4	BATTERY & WIRING GP	435
CIRCUIT BREAKER AS (120-AMPERE) (HEATER)	216-4970	1	PANEL GP-CIRCUIT BREAKER	506
		1	PANEL GP-CIRCUIT BREAKER	508
		1	PANEL GP-CIRCUIT BREAKER	510
CIRCUIT BREAKER AS (60-AMPERE) (ALTERNATOR)	171-2208	1	PANEL GP-CIRCUIT BREAKER	506
		1	PANEL GP-CIRCUIT BREAKER	508
		1	PANEL GP-CIRCUIT BREAKER	510
CIRCUIT BREAKER AS (80-AMPERE) (MAIN)	171-2210	1	PANEL GP-CIRCUIT BREAKER	506
		1	PANEL GP-CIRCUIT BREAKER	508
		1	PANEL GP-CIRCUIT BREAKER	510
FUSE (10-AMPERE)	113-8490	20	WIRING GP-CAB	564
		20	WIRING GP-CAB	570
FUSE (15-AMPERE)	113-8491	5	WIRING GP-CAB	564
		5	WIRING GP-CAB	570
		1	WIRING GP-CAB	579
		1	WIRING GP-CAB	580
		1	WIRING GP-CAB	581
FUSE (20-AMPERE)	113-8492	3	WIRING GP-CAB	564

DESCRIPTION	PART NUMBER	QTY	WHERE USED	PAGE
		3	WIRING GP-CAB	570
FUSE (25-AMPERE)	113-8493	3	WIRING GP-CAB	564
		3	WIRING GP-CAB	570
FUSE (30-AMPERE)	124-3548	2	WIRING GP-CAB	564
		2	WIRING GP-CAB	570
FUSE (5-AMPERE)	141-2759	1	PANEL GP-CIRCUIT BREAKER	510
		7	WIRING GP-CAB	564
		7	WIRING GP-CAB	570
KEY (BATTERY DISCONNECT)	8H-5306	1	SWITCH GP-DISCONNECT	537
LAMP AS (24-VOLT, 3-WATT)	170-9324	1	PANEL GP-SWITCH	513
		1	PANEL GP-SWITCH	515
		1	PANEL GP-SWITCH	517
LAMP-HALOGEN (24-VOLT, 70-WATT)	351-9918	1	LAMP GP-FLOOD	475
	9X-3463	1	LAMP GP-FLOOD	476
		1	LAMP GP-FLOOD	477
		1	LIGHTING GP-FLOOD	481
		1	LIGHTING GP-FLOOD	484
ENGINE ARRANGEMENT				
FILTER AS-ENGINE OIL (STANDARD EFFICIENCY)	1R-0739	1	ENGINE AR-COMPLETE	112
FUEL SYSTEM				
CAP AS-FUEL (DEBRIS BOOT, LOCKABLE)	349-7059	1	TANK GP-FUEL	394
		1	TANK GP-FUEL	396
CAP AS-FUEL (DEBRIS BOOT, LOCKABLE) (EXTREME SERVICE, LOCKABLE)	349-7059	1	TANK GP-FUEL	390
		1	TANK GP-FUEL	392
CAP GP-FUEL FILLER (EXTREME SERVICE, LOCKABLE)	164-4858	1	TANK GP-FUEL	357
		1	TANK GP-FUEL	358
		1	TANK GP-FUEL	360
		1	TANK GP-FUEL	361
		1	TANK GP-FUEL	364
		1	TANK GP-FUEL	366
		1	TANK GP-FUEL	368
		1	TANK GP-FUEL	370
		1	TANK GP-FUEL	373
		1	TANK GP-FUEL	375
		1	TANK GP-FUEL	377
		1	TANK GP-FUEL	379
		1	TANK GP-FUEL	381
		1	TANK GP-FUEL	383
		1	TANK GP-FUEL	385
		1	TANK GP-FUEL	386
		1	TANK GP-FUEL	388
FILTER AS-WATER SEP & FUEL	326-1643	1	LINES GP-FUEL	307

MAINTENANCE PARTS

DESCRIPTION	PART NUMBER	QTY	WHERE USED	PAGE
		1	LINES GP-FUEL	310
		1	LINES GP-FUEL	313
		1	LINES GP-FUEL	316
		1	LINES GP-FUEL	319
FILTER AS-WATER SEP & FUEL (PRIMARY)	326-1644	1	FILTER GP-WATER SEP & FUEL	295
FILTER AS-WATER SEP & FUEL (ULTRA HIGH EFFICIENCY)	382-0664	1	LINES GP-FUEL	323
		1	LINES GP-FUEL	326
FILTER-FUEL (ADVANCED EFFICIENCY)	1R-0751	3	FILTER GP-FUEL	293
FILTER-FUEL (ADVANCED EFFICIENCY) (SECONDARY)	1R-0751	2	FILTER GP-FUEL	290
GASKET (FUEL PRIMING PUMP)	294-1820	1	FILTER GP-FUEL	290
	9Y-8389	2	LINES GP-FUEL	307
		2	LINES GP-FUEL	310
		2	LINES GP-FUEL	313
		2	LINES GP-FUEL	316
		2	LINES GP-FUEL	319
GASKET-RUBBER	4I-0378	1	TANK GP-FUEL	358
STRAINER AS-FUEL	229-1860	1	PUMP GP-REFUELING	339
		1	PUMP GP-REFUELING	341
STRAINER AS-FUEL (FLOAT GAUGE)	303-9933	1	TANK GP-FUEL	358
		1	TANK GP-FUEL	361
		1	TANK GP-FUEL	366
		1	TANK GP-FUEL	370
		1	TANK GP-FUEL	373
		1	TANK GP-FUEL	375
		1	TANK GP-FUEL	377
		1	TANK GP-FUEL	379
		1	TANK GP-FUEL	381
		1	TANK GP-FUEL	383
		1	TANK GP-FUEL	385
		1	TANK GP-FUEL	386
		1	TANK GP-FUEL	388
		1	TANK GP-FUEL	390
		1	TANK GP-FUEL	392
		1	TANK GP-FUEL	394
		1	TANK GP-FUEL	396
HYDRAULIC SYSTEM				
BREATHER (HYDRAULIC TANK)	227-0590	1	TANK & FILTER GP-HYDRAULIC	1508
BREATHER (SWING DRIVE)	4H-6112	1	DRIVE GP-SWING	1028
		1	DRIVE GP-SWING	1029
BREATHER AS (SWING DRIVE)	227-6221	1	DRIVE GP-SWING	1028
		1	DRIVE GP-SWING	1029
FILTER ELEMENT AS-OIL (ADVANCED EFFICIENCY) (HYDRAULIC RETURN)	179-9806	1	FILTER GP-OIL	1037
FILTER ELEMENT AS-OIL (HYDRAULIC)	216-6676	1	FILTER GP-OIL	1039
FILTER-OIL (ADVANCED EFFICIENCY) (HYDRAULIC, CASE DRAIN)	093-7521	1	FILTER GP-OIL	1040

MAINTENANCE PARTS

DESCRIPTION	PART NUMBER	QTY	WHERE USED	PAGE
FILTER-OIL (ADVANCED EFFICIENCY) (HYDRAULIC, PILOT)	5I-8670	1	FILTER & VALVE GP-PILOT	1033
PLUG-DRAIN (HYDRAULIC OIL)	4B-7739	1	TANK & FILTER GP-HYDRAULIC	1508
SCREEN AS (HYDRAULIC TANK)	209-6000	1	SCREEN GP-HYDRAULIC	1505
LUBRICATION SYSTEM				
BREATHER (CRANKCASE)	5I-7725	1	BREATHER GP	179
CAP-DUST	8C-3445	1	FILTER & MTG GP-ENGINE OIL	180
FILTER AS-ENGINE OIL (STANDARD EFFICIENCY)	1R-0739	1	FILTER & MTG GP-ENGINE OIL	180
PLUG-DRAIN	321-8665	1	KIT-HIGH SPEED OIL CHANGE	182
MACHINE ARRANGEMENT				
SEAT & MOUNTING GP (HIGH BACK, WITH HEATER)	327-6503	1	DISTRIBUTION AR	4
		1	DISTRIBUTION AR	5
		1	DISTRIBUTION AR	7
		1	DISTRIBUTION AR	10
		1	OPTION AR-CAB	75
		1	OPTION AR-CAB	76
SEAT BELT GP (RETRACTABLE, 76-MM (3-IN))	305-0466	1	DISTRIBUTION AR	28
		1	DISTRIBUTION AR	29
		1	DISTRIBUTION AR	36
		1	DISTRIBUTION AR	57
		1	DISTRIBUTION AR	58
		1	DISTRIBUTION AR	59
		1	DISTRIBUTION AR	71
		1	DISTRIBUTION AR	72
		1	DISTRIBUTION AR	73
		1	OPTION AR-CAB	75
		1	OPTION AR-CAB	76
SEAT BELT GP (RETRACTABLE)	305-0467	1	DISTRIBUTION AR	13
		1	DISTRIBUTION AR	25
		1	DISTRIBUTION AR	30
		1	DISTRIBUTION AR	37
		1	DISTRIBUTION AR	50
		1	DISTRIBUTION AR	53
		1	DISTRIBUTION AR	61
		1	DISTRIBUTION AR	69
OPERATOR STATION				
BLADE AS-WIPER (275-MM) (LOWER)	4I-5021	1	WIPER & WASHER GP-WINDOW	2271
BLADE AS-WIPER (600-MM)	161-3670	1	WIPER GP-WINDOW	2274
CAP AS (WINDOW WASHER)	178-5431	1	WASHER GP-WINDOW	2255
DRYER-REFRIGERANT (RECEIVER)	176-1902	1	LINES GP-AIR CONDITIONER	2152
		1	LINES GP-AIR CONDITIONER	2156
FILTER ELEMENT-CAB AIR	245-7823	1	AIR CONDITIONER GP	1944

MAINTENANCE PARTS

DESCRIPTION	PART NUMBER	QTY	WHERE USED	PAGE
		1	AIR CONDITIONER GP	1947
		1	AIR CONDITIONER GP	1950
	293-1184	1	DUCT GP-CAB AIR	2101
LAMP (24-VOLT, 10-WATT)	201-4417	1	CAB GP	2007
LAMP (24-VOLT, 10-WATT) (DOME)	201-4417	1	CAB GP	1977
		1	CAB GP	1981
LAMP AS-DOME	176-1986	1	CAB GP	1981
		1	CAB GP	2007
SEAT BELT GP (RETRACTABLE, 3-IN)	258-4096	1	SEAT BELT GP	2215
SEAT BELT GP (RETRACTABLE, 43-MM)	327-6541	1	SEAT BELT GP	2216
SEAT BELT GP (RETRACTABLE, 46-MM)	273-5446	1	SEAT BELT GP	2210
SEAT BELT GP (RETRACTABLE, 51-MM (2-IN))	258-4095	1	SEAT BELT GP	2217
SEAT BELT GP (RETRACTABLE, 76-MM (3-IN))	235-9020	1	SEAT BELT GP	2211
	327-6540	1	SEAT BELT GP	2214
V-BELT (AIR CONDITIONER COMPRESSOR)	255-2927	1	COMPRESSOR GP-REFRIGERANT	2014
		1	COMPRESSOR GP-REFRIGERANT	2016

INDEX

NAME PAGE

A

ACCUMULATOR GP-HYDRAULIC–CHARGED . . . 897 898 899 900 901 902 903
ACCUMULATOR GP-HYDRAULIC–UNCHARGED . . . 904
ADAPTER GP-REMOTE OIL FILTER–ENGINE . . . 177
ADJUSTER GP-BUCKET . . . 1817
ADJUSTER GP-BUCKET–B-FAMILY . . . 1818
ADJUSTER GP-BUCKET–CB-FAMILY . . . 1819
ADJUSTER GP-SEAT . . . 2252
ADJUSTER GP-SEAT (UPPER SLIDE) . . . 2242 2243 2244 2245
ADJUSTER GP-SEAT–LOWER SLIDE . . . 1934
ADJUSTER GP-SEAT–UPPER SLIDE . . . 1933
AFTERCOOLER AS . . . 249
AIR CLEANER & MOUNTING GP . . . 253 254
AIR CLEANER AR–PRECLEANER . . . 255
AIR CLEANER GP . . . 256 257 259 261 263 264
AIR CONDITIONER & MOUNTING GP . . . 1935 1937 1939 1941
AIR CONDITIONER AR . . . 1943
AIR CONDITIONER GP . . . 1944 1947 1950
ALARM GP-TRAVEL–BACKUP . . . 400
ALARM GP–ACTION . . . 399
ALTERNATOR GP-CHARGING . . . 401
ARM GP-WINDOW WIPER . . . 2274
ARMREST GP–LH . . . 1953
ARMREST GP–RH . . . 1952

B

BATTERY & WIRING GP . . . 405 412 419 427
BATTERY & WIRING GP–COLD WEATHER . . . 403 435
BATTERY GP (12-VOLT, 750-CCA) . . . 403 405 412 419 427
BATTERY GP (12-VOLT, MAINTENANCE FREE) . . . 435
BELT-SERPENTINE . . . 148 151 153 155 157 159 163 165
BLADE AS-WIPER (275-MM) (LOWER) . . . 2271
BLADE AS-WIPER (600-MM) . . . 2274
BLOCK GP-HYDRAULIC . . . 905
BLOCK GP-JUNCTION–BATTERY . . . 437 438
BOOM AR-1 PIECE LONG . . . 1719 1720 1721 1722
BOOM AR-1 PIECE LONG–AUXILAIRY, GRADE CONTROL . . . 1723
BOOM AR-1 PIECE LONG–AUXILIARY . . . 1722
BOOM AR-1 PIECE LONG–AUXILIARY, HEAVY-DUTY . . . 1723
BOOM AR-1 PIECE LONG–HEAVY-DUTY . . . 1719 1720 1722
BOOM AR-1 PIECE SHORT . . . 1723
BOOM AR–1-PIECE SHORT BOOM . . . 1718
BOOM AR–1-PIECE SHORT, AUXILIARY . . . 1718
BOOM GP . . . 1724 1726 1728 1730 1740 1742
BOOM GP-1 PIECE . . . 1734 1736 1738
BOOM GP–ACCUGRADE . . . 1732
BOX & MTG GP-STORAGE . . . 675
BOX GP-STORAGE . . . 676
BRACKET GP-MIRROR . . . 1954 1955
BRACKET GP-MOUNTING–SUSPENSION SEAT . . . 1956
BREATHER (CRANKCASE) . . . 179
BREATHER (HYDRAULIC TANK) . . . 1508
BREATHER (SWING DRIVE) . . . 1028 1029
BREATHER AS (SWING DRIVE) . . . 1028 1029
BREATHER GP–CRANKCASE . . . 179

INDEX

NAME	PAGE
BUCKET & ADJUSTER GP–B-FAMILY	1828, 1829, 1831, 1834
BUCKET & ADJUSTER GP–B-FAMILY, GENERAL PURPOSE	1834
BUCKET & ADJUSTER GP–B-FAMILY, HEAVY-DUTY	1829, 1835
BUCKET & ADJUSTER GP–CB-FAMILY	1828
BUCKET & ADJUSTER GP–EXCAVATION, B-FAMILY	1820, 1821, 1822, 1823, 1824
BUCKET & ADJUSTER GP–GENERAL PURPOSE	1833
BUCKET & ADJUSTER GP–GENERAL PURPOSE, B-FAMILY	1828, 1831, 1832
BUCKET & ADJUSTER GP–HEAVY-DUTY ROCK, B-FAMILY	1827
BUCKET & ADJUSTER GP–HEAVY-DUTY SPADE, B-FAMILY	1831
BUCKET & ADJUSTER GP–HEAVY-DUTY, B-FAMILY	1826, 1828
BUCKET & ADJUSTER GP–SEVERE SERVICE ROCK, B-FAMILY	1830
BUCKET AR-EXCAVATION–B-FAMILY	1835, 1836
BUCKET AR-EXCAVATION–QUICK COUPLER	1836, 1837
BUCKET AR-EXTREME EXCAVATION–QUICK COUPLER	1838, 1839
BUCKET AR-GENERAL PURPOSE–B-FAMILY	1840, 1841
BUCKET AR-GENERAL PURPOSE–CB-FAMILY	1840
BUCKET AR-HEAVY DUTY ROCK–HEAVY-DUTY ROCK, B-FAMILY	1842
BUCKET AR-HEAVY DUTY–B-FAMILY	1842
BUCKET AR-HEAVY DUTY–HEAVY-DUTY, B-FAMILY	1842
BUCKET AS-DITCH CLEANING	1843
BUCKET AS-DITCH CLEANING–B-FAMILY	1844
BUCKET AS-EXCAVATION–B-FAMILY	1845, 1846
BUCKET AS-GENERAL PURPOSE	1847, 1851
BUCKET AS-GENERAL PURPOSE–B-FAMILY	1848, 1850, 1852, 1853, 1854, 1855
BUCKET AS-GENERAL PURPOSE–CB-FAMILY	1849
BUCKET AS-HEAVY DUTY ROCK–B-FAMILY	1868
BUCKET AS-HEAVY DUTY–B-FAMILY	1856, 1857, 1858, 1859, 1860, 1861, 1862, 1863, 1864, 1865, 1866, 1867
BUCKET AS-SEVERE SERVICE ROCK–B-FAMILY	1870
BUCKET GP-DITCH CLEANING–B-FAMILY	1871
BUCKET GP-EXCAVATION–QUICK COUPLER	1872, 1873
BUCKET GP-EXTREME EXCAVATION–QUICK COUPLER	1874, 1875
BUCKET GP-GENERAL PURPOSE	1876
BUCKET GP-GENERAL PURPOSE–B-FAMILY	1877, 1878, 1879
BUCKET GP-HEAVY DUTY ROCK–B-FAMILY	1890
BUCKET GP-HEAVY DUTY SPADE–B-FAMILY	1869
BUCKET GP-HEAVY DUTY–B-FAMILY	1880, 1881, 1882
BUCKET GP-HEAVY DUTY–B-FAMILY, HEAVY-DUTY	1883, 1884, 1885, 1886, 1887, 1888, 1889
BUCKET GP-SEVERE SERVICE ROCK–B-FAMILY, SEVERE DUTY	1891
BUMPER GP	678, 679, 681

INDEX

NAME PAGE

C

CAB GP 1957
1959
1961
1963
1965
1967
1969
1971
1989
1991
1993
1995
1997
1999
2001
2003
2005
CAB GP–EXTERIOR 1977
1981
2007
CAB GP–INTERIOR. 1973
1975
1985
1987
CAMERA & MOUNTING GP–WORK AREA VISUAL SYSTEM, REAR 439
CAMERA AR 441
CAMERA AR–WORK AREA VISUAL SYSTEM 441
CAMERA GP–WORK AREA VISUAL SYSTEM, REAR. 442
CAMSHAFT GP 121
122
CAP (ENGINE OIL FILLER) 123
CAP AS (COOLANT RECOVERY) 206
208
210
212
214
216
218
222
225
227
CAP AS (WINDOW WASHER). 2255
CAP AS-FUEL (DEBRIS BOOT, LOCKABLE) . . . 394
396
CAP AS-FUEL (DEBRIS BOOT, LOCKABLE) (EXTREME SERVICE, LOCKABLE) 390
392
CAP AS-PRESSURE (RADIATOR) 220
231
234
236
241
243
246

NAME PAGE

CAP GP-FUEL FILLER (EXTREME SERVICE, LOCKABLE) 357
358
360
361
364
366
368
370
373
375
377
379
381
383
385
386
388
CAP GP-FUEL FILLER–EXTREME SERVICE, LOCKABLE. 289
CAP-DUST 180
CAP-RADIATOR 238
249
251
CARTRIDGE AS-TURBOCHARGER 265
CASE GP-CARRYING. 2276
CHASSIS AR. 1
2
CIRCUIT BREAKER AS (120-AMPERE) (HEATER). 506
508
510
CIRCUIT BREAKER AS (60-AMPERE) (ALTERNATOR) 506
508
510
CIRCUIT BREAKER AS (80-AMPERE) (MAIN). 506
508
510
CLAMP GP-HYDRAULIC LINES 1296
COIL AS (1-WAY/2-WAY FLOW). 1702
COIL GP-EVAPORATOR 2010
2012
COMPRESSOR GP-REFRIGERANT 2014
2016
2018
CONDENSER & LINES GP-RFGT–CHASSIS. . . 2019
CONDENSER & MTG GP-REFRIGERANT 2020
2021
2023
2025
CONDENSER GP-REFRIGERANT. 2027
CONSOLE GP-OPERATOR. 2028
2030
2032
CONSOLE GP-OPERATOR–LH 2036
CONSOLE GP-OPERATOR–RH. 2034
CONTROL & MTG GP-COMMUNICATION–PRODUCT LINK. 443

INDEX

NAME	PAGE
CONTROL & MTG GP-COMMUNICATION–PRODUCT LINK 121SR	445
CONTROL & MTG GP-COMMUNICATION–PRODUCT LINK 321SR	444
CONTROL & MTG GP-COMMUNICATION–PRODUCT LINK CELLULAR	447 448
CONTROL & MTG GP-ENGINE ELEK	449
CONTROL & MTG GP-JOYSTICK	2042 2045
CONTROL & MTG GP-JOYSTICK–3-BUTTON, TRIGGER SWITCH	2040 2041 2043 2044
CONTROL & MTG GP-JOYSTICK–WITH MODULATION SWITCH	2038 2039
CONTROL & MTG GP-MACHINE	450
CONTROL & MTG GP-PEDAL–LH	2046 2047
CONTROL AR-AUXILIARY–1-PUMP, 1-WAY, PEDAL	907
CONTROL AR-AUXILIARY–2-PUMP, 1-WAY, 1-HYD PEDAL	908
CONTROL AR-AUXILIARY–COMBINED FUNC, MEDIUM PRESSURE	908
CONTROL AR-AUXILIARY–FOOT SWITCH, ON/OFF, LH	910
CONTROL AR-AUXILIARY–HAMMER, FOOT SWITCH	906
CONTROL AR-AUXILIARY–JOYSTICK, 3-BUTTON, TRIGGER SWITCH	906
CONTROL AR-AUXILIARY–JOYSTICK, MODULATION SWITCH	906
CONTROL AR-AUXILIARY–MEDIUM PRESSURE	910
CONTROL AR-AUXILIARY–SYSTEM 13, COMBINED FUNCTION	911
CONTROL AR-AUXILIARY–SYSTEM 14, COMBINED FUNCTION	909
CONTROL AR-AUXILIARY–SYSTEM 2, COMBINED FUNCTION	907
CONTROL AR-AUXILIARY–SYSTEM 3, 1-WAY, 2-PUMP	909 910
CONTROL AR-AUXILIARY–SYSTEM 5, 2-WAY, 1-PUMP	909 911
CONTROL AR-COMMUNICATION–PRODUCT LINK CELLULAR	451
CONTROL AR-COUPLER	912
CONTROL GP-COMMUNICATION–PRODUCT LINK	451
CONTROL GP-COMMUNICATION–PRODUCT LINK 522	452
CONTROL GP-FOOT–LEFT ON/OFF SWITCH	2050
CONTROL GP-FOOT–WORK TOOL	2048
CONTROL GP-HANDLE (LH)	2055 2056
CONTROL GP-HANDLE (RH)	2054
CONTROL GP-HANDLE–JOYSTICK, LH	2051 2055 2056 2058
CONTROL GP-HANDLE–JOYSTICK, RH	2053 2054 2057
CONTROL GP-HEAT & AIR COND–AIR INLET	2059
CONTROL GP-HYDRAULIC PEDAL	2060 2061 2062
CONTROL GP-JOYSTICK–LH	2065 2067 2068 2071 2073 2075 2077
CONTROL GP-JOYSTICK–RH	2064 2066 2069 2070 2072 2074 2076
CONTROL GP-PEDAL–ELECTRIC	2078 2079
CONTROL GP-PILOT OPERATED HYD–TRAVEL	2080
CONTROL GP-UNPROGRAMMED	449 450
CONTROL GP-UNPROGRAMMED–PRODUCT LINK 300	453
CONTROL GP-UNPROGRAMMED–PRODUCT LINK 522	454 455
CONVERSION AR-MACHINE	2 3
CONVERSION AR-MACHINE–ACCUGRADE READY	3
CONVERSION GP-LINKAGE	1744
CONVERTER-POWER (24-VOLT TO 12-VOLT)	611 612
COOLER GP-ENGINE OIL	190
COOLING AR-HIGH AMBIENT TEMP	191 192 193 194
COOLING AR-HIGH AMBIENT TEMP–VARIABLE FAN SPEED	193
CORE AS-HEATER	1944 1947 1950
CORE AS-OIL COOLER (ENGINE)	190

INDEX

NAME	PAGE
CORE AS-OIL COOLER (HYDRAULIC)	220
	231
	234
	236
CORE AS-OIL COOLER (HYDRAULIC)	238
CORE AS-OIL COOLER (HYDRAULIC)	241
	243
	246
CORE AS-OIL COOLER (HYDRAULIC)	249
	251
CORE AS-RADIATOR	220
	231
	234
	236
	238
	241
	243
	246
	249
	251
COUNTERWEIGHT & MOUNTING GP	683
	684
	685
	686
	687
	688
	689
	690
	691
	692
	693
	694
	695
	696
	697
	698
	699
	700
COUNTERWEIGHT AR	701
COUNTERWEIGHT GP	702
	703
	704
	705
	706
	707
	708
	709
	710
	711
	712
	713
	714
	715
	716
	717
	718
	719
	720
COUPLER AR-QUICK–B-LINKAGE	1893
COUPLER AR-QUICK–B1-FAMILY	1892
COUPLER AR-QUICK–CB-LINKAGE	1893
COUPLER AR-QUICK–CB-LINKAGE, CENTER LOCK	1893
COUPLER AR-QUICK–WITHOUT LINKAGE	1892
COUPLER GP-QUICK–B-LINKAGE	1895
	1897
COUPLER GP-QUICK–B1-LINKAGE	1894
COUPLER GP-QUICK–CB-LINKAGE	1899
	1901
COUPLING GP-FLEXIBLE	913
COUPLING GP-PUMP	914
COVER AS-ACCESS	721
COVER AS-ACCESS–FUEL, HYDRAULIC TANKS	722
	723
	724
COVER AS-SOUND SUPPRESSION	725
	726
	727
	728
COVER GP-CAB–REAR	2081
COVER GP-HOOD–PRECLEANER	729
	730
	732
	733
COVER GP-STORAGE	2082
COVER GP-STORAGE (CAB, REAR)	13
	25
	30
	36
	50
	59
	73
COVER GP-VALVE MECHANISM	123
CRANKSHAFT GP	125
CYLINDER & LINES GP-BOOM–LH	915
	916
	917
	918
CYLINDER & LINES GP-BOOM–RH	915
	916
	917
	918
CYLINDER & LINES GP-BUCKET	918
	919
	920
	921
	922
CYLINDER & LINES GP-BUCKET–B1-FAMILY	922
CYLINDER & LINES GP-STICK	922
	923
	924
	925
	926
CYLINDER & SEAL GP-BOOM	927
	929
	931
	933
	935
	937
	938

INDEX

NAME	PAGE
CYLINDER & SEAL GP-BUCKET	940
	942
	944
	946
	948
	949
	951
	953
	954
	955
	957
	959
	961
	963
	965
	966
	967
CYLINDER & SEAL GP-STICK	969
	972
	974
	976
	978
	980
	982
	984
	986
	989
	991
	993
	995
	997
	999
	1001
	1003
	1004
CYLINDER AR-HYDRAULIC	1006
CYLINDER AR-HYDRAULIC–COLD WEATHER, B1-FAM	1006
CYLINDER AR-HYDRAULIC–COLD WEATHER, CB2-FAM, SRT STK	1006
CYLINDER BLOCK GP	126
	129
CYLINDER GP-BOOM	1007
CYLINDER GP-BUCKET	1009
	1011
	1013
	1015
	1017
CYLINDER GP-COUPLER	1019
	1020
CYLINDER GP-HYDRAULIC	1022
CYLINDER HEAD AS	130
CYLINDER HEAD GP	131

D

DISPLAY GP-MONITOR (CD700C)	2083
DISPLAY GP-MONITOR–CB410	2083
DISPLAY GP-MONITOR–CD700	2083
DISTRIBUTION AR	4-73
DOOR & MTG GP-CAB	2084
	2085
	2086
	2087
DOOR GP-ACCESS–AIR CLEANER, BATTERY	734
DOOR GP-ACCESS–LEFT SIDE, FRONT	741
DOOR GP-ACCESS–PUMP COMPARTMENT	738
DOOR GP-ACCESS–RADIATOR	735
	736
	739
	740
	742
	743
	744
	745
DOOR GP-ACCESS–RADIATOR, AFTCLR, HYD COOLER	737
DOOR GP-CAB	2088
	2090
	2092
	2095
	2098
	2100
DOOR GP-HOOD–RADIATOR	746
DRAIN GP-MUFFLER	266
DRIVE GP-AUXILIARY PUMP	1024
DRIVE GP-FINAL–WITH MOTOR	651
	652
	658
	661
	667
DRIVE GP-FINAL–WITH MOTOR, SPROCKET	656
	657
	665
	666
DRIVE GP-FINAL–WITHOUT MOTOR	649
	653
	659
	662
DRIVE GP-PUMP	1025
DRIVE GP-SWING–WITH MOTOR	1028
	1029
	1030
DRIVE GP-SWING–WITHOUT MOTOR	1026
DRYER-REFRIGERANT (RECEIVER)	2152
	2156
DUCT GP-CAB AIR	2101

E

EDGE GP-CUTTING	1903
ELECTRONICS GP-COMMUNICATION–PRODUCT LINK 300	456
ELECTRONICS GP-ENGINE RATINGS	107
	111
	119
ELECTRONICS GP-MACHINE	456
	457

INDEX

NAME PAGE

ELECTRONICS GP-MACHINE–HIGH POWER... 457
ELECTRONICS GP-MONITOR 457
ENGINE AR..... 105
106
107
108
109
110
111
112
ENGINE AR-COMPLETE 112
113
114
115
116
117
118
ENGINE AR-PRIMARY 119
EXTENSION GP-EXHAUST..... 267

F

FAN GP-SUCTION..... 195
197
199
200
201
FASTENER GP-SWING & FINAL DR 1031
FASTENER GP-WIRING HARNESS 458
FASTENER GP-WIRING HARNESS–FOOT SWITCH 463
FASTENER GP-WIRING HARNESS–HEAVY LIFT 461
FASTENER GP-WIRING HARNESS–JOYSTICK 464
FASTENER GP-WIRING HARNESS–PEDAL CONTROL 462
FASTENER GP-WIRING HARNESS–STRAIGHT TRAVEL 460
FENDER & COVER GP..... 747
748
FILM GP..... 2277
2278
2292
2293
2298
2299
FILM GP–ALT PATTERN CONTROL, WARNING 2286
2287
2300
FILM GP–FUEL TRANSFER PUMP 2291
FILM GP–HAMMER CONTROL, FOOT SWITCH 2285
FILM GP–LONG REACH 2294
2295
FILM GP–OPERATOR CONTROLS, NOTICE .. 2279
2281
2282
2284

NAME PAGE

FILM GP–OVERLOAD WARNING DEVICE..... 2297
FILM GP–QUICK COUPLER..... 2289
2290
FILM GP–TOOL CONTROL..... 2283
FILM GP–WORK AREA VISUAL SYSTEM, REAR..... 2296
FILM-CERTIFICATION (OPS GUARD, READ OMM, ENGLISH)..... 2116
FILM-CERTIFICATION (OPS GUARD, READ OMM)..... 2118
2120
FILM-IDENTIFICATION (320D GC) 3
FILM-IDENTIFICATION (320D LME) 87
2278
FILM-IDENTIFICATION (CAT)..... 455
2301
2306
2311
2316
2321
2326
2331
2336
FILM-IDENTIFICATION (CATERPILLAR) 2301
2306
2321
2326
FILM-IDENTIFICATION (ELECTRONIC CONTROL MODULE)..... 456
FILM-IDENTIFICATION (HYDRAULIC OIL) 2298
FILM-INFORMATION (24-VOLT)..... 2301
2306
2311
2316
2321
2326
2331
2336
FILM-INFORMATION (DO NOT LIFT) 685
686
689
692
693
694
697
700
FILM-INFORMATION (HYDO ADVANCED 10) 2306
2311
2316
2326
2331
2336
FILM-INFORMATION (PRODUCT LINK, READ OMM)..... 445
447
448

INDEX

NAME	PAGE
FILM-INSTRUCTION (COUPLER OPERATION)	1895, 1897, 1899, 1901
FILM-INSTRUCTION (HYDRAULIC OIL RETURN FILTER)	1037
FILM-INSTRUCTION (MACHINE SECURITY, CONSOLE)	472, 519, 521, 523
FILM-INSTRUCTION (OPERATOR CONTROLS, READ OMM)	2188, 2300
FILM-INSTRUCTION (PULL RING, ALTERNATE EXIT)	2301, 2306, 2311, 2316, 2321, 2326, 2331, 2336
FILM-INSTRUCTION (REFUELING PUMP)	339, 341
FILM-INSTRUCTION (TOP, AIR CLEANER COVER)	256, 257, 263, 264
FILM-WARNING (CRUSH HAZARD, READ OMM, U.S.)	2286, 2300
FILM-WARNING (CRUSH HAZARD, STAY BACK)	1895, 1897, 1899, 1901
FILM-WARNING (HIGH PRESSURE CYLINDER)	902
FILM-WARNING (NO WELD, NO DRILL, READ OMM)	2116, 2118, 2120
FILM-WARNING (PRODUCT LINK RADIO, INTL)	445, 447, 448, 471
FILM-WARNING (PRODUCT LINK RADIO, U. S.)	445, 448, 471
FILM-WARNING (READ OMM)	1895, 1897, 1899, 1901
FILTER & MTG GP-ENGINE OIL	180
FILTER & VALVE GP-PILOT–HYDRAULIC OIL	1033
FILTER AR-HYDRAULIC–HAMMER	1034
FILTER AS-ENGINE OIL (STANDARD EFFICIENCY)	112, 180
FILTER AS-WATER SEP & FUEL	307, 310, 313, 316, 319
FILTER AS-WATER SEP & FUEL (PRIMARY)	295
FILTER AS-WATER SEP & FUEL (ULTRA HIGH EFFICIENCY)	323, 326
FILTER ELEMENT AS-AIR (PRIMARY, STANDARD EFFICIENCY)	257, 264
FILTER ELEMENT AS-AIR (PRIMARY, ULTRA HIGH EFFICIENCY)	264
FILTER ELEMENT AS-AIR (PRIMARY)	256, 263
FILTER ELEMENT AS-AIR (SECONDARY)	256, 257, 263, 264
FILTER ELEMENT AS-AIR (ULTRA HIGH EFFICIENCY) (PRIMARY)	263
FILTER ELEMENT AS-OIL (ADVANCED EFFICIENCY) (HYDRAULIC RETURN)	1037
FILTER ELEMENT AS-OIL (HYDRAULIC)	1039
FILTER ELEMENT-CAB AIR	1944, 1947, 1950, 2101
FILTER GP-CAB AIR	2101
FILTER GP-FUEL	290, 293
FILTER GP-OIL–HYDRAULIC	1039
FILTER GP-OIL–HYDRAULIC RETURN	1035, 1037
FILTER GP-OIL–HYDRAULIC, CASE DRAIN	1040
FILTER GP-WATER SEP & FUEL	295
FILTER-FUEL (ADVANCED EFFICIENCY)	293
FILTER-FUEL (ADVANCED EFFICIENCY) (SECONDARY)	290
FILTER-OIL (ADVANCED EFFICIENCY) (HYDRAULIC, CASE DRAIN)	1040
FILTER-OIL (ADVANCED EFFICIENCY) (HYDRAULIC, PILOT)	1033

INDEX

NAME	PAGE
FINAL DRIVE GP	649
	651
	652
	653
	656
	657
	658
	659
	661
	662
	665
	666
	667
FITTING GP-HYDRAULIC	1041
	1042

NAME	PAGE
FLOOR MAT	4
	5
	6
	7
	8
	9
	10
	11
	12
	13
	14
	15
	16
	17
	18
	19
	21
	22
	23
	24
	25
	26
	27
	28
	29
	30
	31
	32
	34
-55	
	57
	58
	59
	60
	61
	62
	63
	65
	66
	67
	68
	69
	70
	71
	72
	73
	77
	78
	79
	82
	89
	91
	93
	94
	95
	96
	97
	98
	99
	2102
	2103

INDEX

NAME	PAGE
	2104
	2105
	2106
	2107
	2108
FLOOR MAT GP–GRADE CONTROL	2109
FLYWHEEL GP	132
FRAME AR-UNDERCARRIAGE–LONG	856
FRAME AR-UNDERCARRIAGE–STANDARD	856
FRAME AS-UNDERCARRIAGE	857
	858
FRAME GP-UPPER	749
	751
FUSE (10-AMPERE)	564
	570
FUSE (15-AMPERE)	564
	570
	579
	580
	581
FUSE (20-AMPERE)	564
	570
FUSE (25-AMPERE)	564
	570
FUSE (30-AMPERE)	564
	570
FUSE (5-AMPERE)	510
	564
	570

G

GASKET (FUEL PRIMING PUMP)	290
GASKET (FUEL PRIMING PUMP)	307
	310
	313
	316
	319
GASKET (VALVE COVER)	123
GASKET (WATER TEMPERATURE REGULATOR)	203
GASKET-RUBBER	358
GAUGE AS-OIL LEVEL (DIPSTICK) (ENGINE)	142
GAUGE GP-SIGHT–HYDRAULIC OIL LEVEL	1043
	1044
GAUGE-OIL LEVEL (PAN)	144
GAUGE-OIL LEVEL (SWING DRIVE)	1028
	1029
GEAR & BEARING GP-SWING	753
	754
GEAR GP-FRONT	133
GEAR GP-RING	668
	669
	670
GEAR GP-TRANSFER	671
GENERAL AR	73
	74
GRADE CONTROL AR-LASER	465
GRADE CONTROL AR-SATELLITE–DUAL GNSS	466
GRADE CONTROL AR-SATELLITE–SINGLE GNSS	466
GRADE CONTROL AR–ACCUGRADE READY	465
GRADE CONTROL GP-LASER	467
GUARD AR-OVERHEAD–FALLING OBJECTS GUARD SYSTEM	2110
GUARD AR-VANDALISM	2110
GUARD AR–HEAVY-DUTY	756
GUARD GP-BOTTOM	757
GUARD GP-BOTTOM–HEAVY-DUTY	758
	759
GUARD GP-FRONT WINDOW	2116
GUARD GP-FRONT WINDOW–FULL	2111
	2113
GUARD GP-FRONT WINDOW–LOWER	2115
GUARD GP-OVERHEAD	2118
	2120
GUARD GP-SWIVEL	760
GUARD GP-SWIVEL–HEAVY-DUTY	761
GUARD GP-TRACK GUIDE–CENTER	859
GUARD GP-TRACK GUIDE–FULL LENGTH	861
	863
GUARD GP-TRACK GUIDE–REAR	860
	862
GUARD GP-TRACK GUIDE–SEGMENTED	864
GUARD GP-TRAVEL MOTOR	865
	868
GUARD GP-TRAVEL MOTOR–HEAVY-DUTY	866
	867
GUARD GP-VANDALISM–CAB	2122
	2123

H

HANDRAIL GP	762
HARNESS AS-AUXILIARY	554
	556
	558
	589
HARNESS AS-AUXILIARY (WORK AREA VISUAL SYSTEM, REAR)	583
HARNESS AS-CAB	564
	570
	581
HARNESS AS-CHASSIS	405
	412
	419
	427
	2142
HARNESS AS-CHASSIS (HORN)	2139

INDEX

NAME	PAGE
HARNESS AS-CONSOLE	513, 515, 517, 519, 521, 523, 606, 609
HARNESS AS-CONTROL	558, 600
HARNESS AS-CONTROL (BLADE)	585
HARNESS AS-CONTROL (BODY TILT SENSOR, GPS RECEIVER)	585, 586
HARNESS AS-CONTROL (DISPLAY, GPS RADIO)	585, 586
HARNESS AS-CONTROL (DISPLAY)	579, 580
HARNESS AS-CONTROL (ENGINE START, PUMP CONTROL)	588
HARNESS AS-CONTROL (ENGINE START, PUMP CONTROL) (HEATER)	629
HARNESS AS-CONTROL (PRODUCT LINK 121SR)	592, 594, 596, 598
HARNESS AS-CONTROL (PRODUCT LINK)	604
HARNESS AS-CONTROL–PRODUCT LINK	467
HARNESS AS-ENGINE (ELECTRONIC CONTROL MODULE)	615
HARNESS AS-ENGINE (FUEL INJECTION)	615
HARNESS AS-HEATER	2130, 2132, 2134
HARNESS AS-HEATER & AIR COND	1944, 1947, 1950
HARNESS AS-HEATER & AIR COND (CONTROL PANEL SWITCHES)	1935, 1937, 1939, 2130, 2132, 2134
HARNESS AS-HEATER & AIR COND (LOW SIDE)	1935, 1937, 1939, 1941
HARNESS AS-LIGHTING	493
HARNESS AS-LIGHTING (BOOM, LH)	486
HARNESS AS-LIGHTING (BOOM)	488
HARNESS AS-LIGHTING (CAB FLOODLIGHT)	479, 482, 494, 496
HARNESS AS-LIGHTING (CAB FLOODLIGHTS, FRONT)	481, 484
HARNESS AS-LIGHTING (SHORT BOOM, LH)	491
HARNESS AS-LIGHTING (SHORT BOOM, RH)	489
HARNESS AS-MONITOR (GRADE CONTROL)	465
HARNESS AS-MONITOR (HIGH MOUNT)	627
HARNESS AS-MONITOR (LOW MOUNT)	627
HARNESS AS-OPERATOR CONTROLS	2048, 2050
HARNESS AS-PLATFORM	636
HARNESS AS-PUMP	300, 468
HARNESS AS-PUMP (FAN CONTROL)	620, 623
HARNESS AS-PUMP (REFUELING)	645, 647
HARNESS AS-QUICK COUPLER	577
HARNESS AS-RADIO	643, 2144
HARNESS AS-SENSOR	530, 531, 634, 635
HARNESS AS-SOLENOID	558, 622, 625, 633
HARNESS AS-SOLENOID (1-WAY, 2-WAY FLOW)	560
HARNESS AS-SOLENOID (COUPLER)	641
HARNESS AS-SOLENOID (FAN)	621
HARNESS AS-SOLENOID (HEATER)	628
HARNESS AS-SOLENOID (QUICK COUPLER DISENGAGE)	639
HARNESS AS-SOLENOID (QUICK COUPLER)	640
HARNESS AS-SWITCH	542, 543
HARNESS AS-SWITCH (SECONDARY SHUTDOWN)	636
HARNESS AS-WIRING	647
HARNESS AS-WIRING (CAB)	577
HARNESS AS-WIRING (LIGHT BAR)	627
HARNESS AS-WIRING (PRODUCT LINK)	474, 592, 594
HARNESS AS-WIRING (QUICK COUPLER SWITCH)	550
HARNESS AS-WIRING (SERVICE CONNECTOR)	592, 594, 596, 598
HARNESS AS-WIRING (WORK AREA VISUAL SYSTEM, REAR)	583

INDEX

NAME	PAGE
HATCH GP-ROOF	2124
	2125
	2126
HEAD GP-MOTOR	1469
	1472
	1476
	1478
HEAD GP-PUMP–DRIVE	1045
	1049
	1053
HEAD GP-PUMP–DRIVEN	1056
	1060
	1064
HEADREST AS-SEAT–CLOTH	2127
	2129
HEADREST AS-SEAT–VINYL	2128
HEATER & MTG GP-CAB	2130
	2132
	2134
HEATER AR-CAB	2136
HOOD & GUARD GP	763
	768
	773
	779
	785
	791
	797
	803
	809
	813
	817
	821
	823
HOOD GP-ENGINE	826
	827
	829
	830
HOOD GP-ENGINE–ACCUGRADE READY	828
HOOD GP–ACCUGRADE READY	825
HORN GP-ELECTRIC	2137
	2138
	2139
	2142
	2143
HORN GP-ELECTRIC–HIGH TONE	2141
HORN GP-ELECTRIC–LOW TONE	2140
HOSE GP-HYDRAULIC–CONTROL VALVE, BOOM	1070
	1071
	1072
HOSE GP-HYDRAULIC–CONTROL VALVE, STICK	1068
	1069
HOSE GP-HYDRAULIC–FRONT	1073
	1074
	1075
	1076
HOSE-RADIATOR (LOWER)	206
	208
	210
	212
	214
	216
	218
	222
	225
	227
	229
HOSE-RADIATOR (UPPER)	206
	208
	210
	212
	214
	216
	218
	222
	225
	227
	229
HOUSING & REGULATOR GP	203
HOUSING GP-FLYWHEEL	134
HOUSING GP-FRONT	135
HYDRAULIC AR	1077

I

IDLER GP-FRONT	869
	872
IDLER GP-FRONT–LH	871
IDLER GP-FRONT–RH	870
INDICATOR AS (HYDRAULIC RETURN FILTER)	1035
INDICATOR AS-AIR FILTER CHANGE (AIR RESTRICTION)	256
	257
	263
	264
INDICATOR-FUEL FILTER CHANGE	323
	326
INJECTOR GP-FUEL	296
	297
	298
	299
INSTALLATION AR-COMMUNICATION–PRODUCT LINK 121SR	469
	470
INSTALLATION AR-COMMUNICATION–PRODUCT LINK 321SR	469
INSTALLATION AR-ENGINE	120
INSTALLATION AR–ACCUGRADE READY	2143
INSTALLATION GP-COMMUNICATION–PRODUCT LINK 121SR	471
INSTALLATION GP-RADIO	2144
INSTALLATION GP-SECURITY	472

INDEX

NAME PAGE

K

KEY (BATTERY DISCONNECT) 537
KIT-BRACKET–PRODUCT LINK 121SR, 321SR 474
KIT-CONSOLE ADJUSTMENT 2146
KIT-FUEL PRIMING PUMP 300
KIT-HIGH SPEED OIL CHANGE–ENGINE, HYDRAULIC. 182
KIT-HOUSING–FINAL DRIVE 672
KIT-PLATE–UNDERCARRIAGE FRAME. 831
KIT-SEAT SUPPORT 2148
2149
KIT-SEAT SUSPENSION (AIR) 2251
KIT-SEAT SUSPENSION (MECHANICAL). 2250
KIT-SEAT–LOW BACK, VINYL 2147

L

LAMP (24-VOLT, 10-WATT) 2007
LAMP (24-VOLT, 10-WATT) (DOME) 1977
1981
LAMP AS (24-VOLT, 3-WATT). 513
515
517
LAMP AS-DOME 1981
2007
LAMP GP-FLOOD 475
476
477
LAMP GP-FLOOD (24-VOLT) 481
484
LAMP-HALOGEN (24-VOLT, 70-WATT) 475
476
477
481
484
LATCH GP-WINDOW 2150
LEVER GP-CAB DOOR 1977
2151
LIGHTING GP-FLOOD–BOOM, LH 486
LIGHTING GP-FLOOD–BOOM, RH 488
LIGHTING GP-FLOOD–CAB 479
482
493
494
496
LIGHTING GP-FLOOD–CAB GUARD 481
484
LIGHTING GP-FLOOD–CHASSIS, RH 478
LIGHTING GP-FLOOD–SHORT BOOM, LH 491
LIGHTING GP-FLOOD–SHORT BOOM, RH 489
LINES GP-AIR 268
LINES GP-AIR CONDITIONER. 2152
2156
LINES GP-AIR–AIR CLEANER TO TURBOCHARGER 271
LINES GP-AUXILIARY HYDRAULIC–BOOM, HIGH PRESSURE 1082
LINES GP-AUXILIARY HYDRAULIC–BOOM, MEDIUM PRESSURE 1084
LINES GP-AUXILIARY HYDRAULIC–MASS BOOM, HIGH PRESSURE 1086
LINES GP-AUXILIARY HYDRAULIC–MASS BOOM, MEDIUM PRESSURE 1089
LINES GP-AUXILIARY HYDRAULIC–MEDIUM PRESSURE 1105
1106
LINES GP-AUXILIARY HYDRAULIC–STICK, HIGH PRESSURE 1078
1080
1091
1093
1097
1099
LINES GP-AUXILIARY HYDRAULIC–STICK, MEDIUM PRESSURE 1095
1101
1103
LINES GP-BOOM. 1108
1117
1119
LINES GP-BOOM CYLINDER. 1123
1125
LINES GP-BOOM CYLINDER–BOOM LOWERING CONTROL 1131
LINES GP-BOOM CYLINDER–LH 1121
1127
1129
LINES GP-BOOM CYLINDER–RH. 1122
1128
1130
LINES GP-BOOM–MASS BOOM, MEDIUM PRESSURE 1115
LINES GP-BOOM–STICK LOAD CONTROL. . . . 1109
1111
1113
LINES GP-BUCKET CYLINDER. 1134
1137
1138
1140
1141
1142
1143
1144
1145
1146
1147
1148
1149
1150
1151
1152
LINES GP-BUCKET CYLINDER–REACH. 1136
LINES GP-BUCKET CYLINDER–SUPER LONG REACH 1135
LINES GP-COUPLER 1156
1158
LINES GP-COUPLER–B-LINKAGE. 1165

INDEX

NAME	PAGE
LINES GP-COUPLER–B1-FAMILY LINKAGE	1159, 1160
LINES GP-COUPLER–CB-LINKAGE	1166
LINES GP-COUPLER–KIT, PIN GRABBER	1161
LINES GP-COUPLER–MASS BOOM	1154
LINES GP-COUPLER–REACH BOOM	1153
LINES GP-COUPLER–STICK	1157
LINES GP-ENGINE OIL	186
LINES GP-ENGINE OIL DRAIN	187, 188
LINES GP-FRONT	1167, 1206
LINES GP-FRONT–1-PUMP/2-PUMP, 1-WAY FLOW	1178, 1182
LINES GP-FRONT–AUXILIARY	1169, 1172, 1175
LINES GP-FRONT–MEDIUM PRESSURE	1202, 1204
LINES GP-FRONT–QUICK COUPLER	1233, 1237, 1241, 1244, 1247
LINES GP-FRONT–SYSTEM 11, COMBINED FN, MED PR	1198, 1200
LINES GP-FRONT–SYSTEM 13, COMBINED FUNCTION	1250, 1254, 1258
LINES GP-FRONT–SYSTEM 14, COMBINED FUNCTION	1213, 1217, 1221, 1225, 1229
LINES GP-FRONT–SYSTEM 2, COMBINED FUNCTION	1186, 1190, 1194
LINES GP-FRONT–SYSTEM 5, 2-WAY, 1-PUMP	1207, 1210
LINES GP-FUEL	301, 303, 305, 307, 310, 313, 316, 319, 323, 326
LINES GP-GREASE–BOOM	1745, 1748, 1750
LINES GP-GREASE–STICK	1747, 1751
LINES GP-HEATER	2159
LINES GP-HYDRAULIC OIL COOLER	1268
LINES GP-HYDRAULIC OIL COOLER–CONTROL VALVE, PUMP	1262, 1265
LINES GP-MUFFLER DRAIN	272
LINES GP-PILOT	1367, 1371
LINES GP-PILOT–1-WAY FLOW	1360, 1364
LINES GP-PILOT–2-WAY PATTERN	1331, 1401
LINES GP-PILOT–4-WAY PATTERN	1325, 1328
LINES GP-PILOT–AUXILIARY SYSTEM	1381, 1386
LINES GP-PILOT–BOOM LOWERING CONTROL VALVE	1392, 1394
LINES GP-PILOT–DRAIN, HEAVY LIFT	1396
LINES GP-PILOT–FILTER, PILOT PUMP	1299, 1301, 1303
LINES GP-PILOT–HEAVY LIFT	1305, 1307, 1309
LINES GP-PILOT–JOYSTICK, PEDALS	1269, 1273, 1277, 1281
LINES GP-PILOT–MAIN CONTROL VALVE	1285, 1287, 1291, 1295
LINES GP-PILOT–MEDIUM PRESSURE	1377
LINES GP-PILOT–PEDAL CONTROLS	1311, 1313, 1317, 1319
LINES GP-PILOT–PEDAL, RH	1315
LINES GP-PILOT–PILOT OIL PRESSURE	1379
LINES GP-PILOT–STICK LOWERING CONTROL VALVE	1333, 1336
LINES GP-PILOT–SYSTEM 1, 1-WAY, 1-PUMP	1339, 1342
LINES GP-PILOT–SYSTEM 13, COMBINED FUNCTION	1397
LINES GP-PILOT–SYSTEM 2, COMBINED FUNCTION	1352, 1356
LINES GP-PILOT–SYSTEM 3 PRIME, 1-WAY, 2-PUMP	1346, 1349
LINES GP-PILOT–SYSTEM 5, 2-WAY, 1-PUMP	1375
LINES GP-PILOT–THIRD PEDAL	1323
LINES GP-PILOT–THIRD PEDAL, PILOT VALVE	1321

INDEX

NAME PAGE

LINES GP-PUMP–HYD OIL COOLER, PILOT SYSTEM . . . 1404, 1407
LINES GP-PUMP–SUPPLY, MAIN PUMP . . . 1403
LINES GP-QUICK COUPLER . . . 1411, 1414, 1417
LINES GP-RETURN & FILTER–HAMMER . . . 1427, 1429, 1431
LINES GP-RETURN–BOOM LOWERING CONTROL . . . 1424, 1425, 1426
LINES GP-RETURN–HYDRAULIC TANK . . . 1420, 1422
LINES GP-SENSOR–OVERLOAD WARNING DEVICE . . . 1433, 1434, 1435
LINES GP-STICK CYLINDER . . . 1436, 1437, 1442, 1443, 1444
LINES GP-STICK CYLINDER–STICK LOWERING CONTROL . . . 1438, 1440, 1445
LINES GP-TRAVEL MOTOR . . . 1447, 1449
LINES GP-TRAVEL MOTOR–LONG UNDERCARRIAGE . . . 1452, 1455
LINES GP-TURBOCHARGER OIL . . . 189
LINK AS-TRACK . . . 873, 874
LINKAGE AR-BUCKET–B1-FAMILY . . . 1755, 1757
LINKAGE AR-BUCKET–B1-FAMILY, WITH LIFTING EYE . . . 1753, 1754, 1755, 1756
LINKAGE AR-BUCKET–B1-FAMILY, WITHOUT LIFTING EYE . . . 1755, 1756, 1757
LINKAGE AR-BUCKET–CB2-FAMILY . . . 1753, 1754, 1755
LINKAGE AR-BUCKET–DEMOLITION . . . 1756
LINKAGE AR-FRONT–LONG REACH . . . 1758
LINKAGE GP-BUCKET . . . 1760
LINKAGE GP-BUCKET–B1-FAMILY . . . 1766, 1768
LINKAGE GP-BUCKET–B1-FAMILY, QUICK COUPLER . . . 1765
LINKAGE GP-BUCKET–B1-FAMILY, WITH LIFTING EYE . . . 1764
LINKAGE GP-BUCKET–B1-FAMILY, WITHOUT LIFTING EYE . . . 1767
LINKAGE GP-BUCKET–CB2-FAMILY . . . 1762
LINKAGE GP-BUCKET–DEMOLITION . . . 1759
LITERATURE GP . . . 1, 2, 2162
LOCK GP-TRANSPORT . . . 1769

M

MACHINE AR . . . 74
MACHINE AR–HIGH AMBIENT, HIGH POWER . . . 74
MANIFOLD GP-CONTROL–PILOT OIL SUPPLY . . . 1458, 1459, 1460
MANIFOLD GP-EXHAUST . . . 273
MANIFOLD GP-INLET . . . 275, 277, 278
MAST GP–DUAL GNSS . . . 497
MAST GP–SINGLE GNSS . . . 497
MAST GP–UNIVERSAL TOTAL STATION . . . 497
MIRROR GP-DOWN VIEW–FUEL TANK, RH . . . 2163, 2164, 2165
MIRROR GP-REAR VIEW . . . 2165, 2168, 2169, 2170
MIRROR GP-REAR VIEW–FRONT, RH . . . 2166, 2167
MIRROR GP-SIDE VIEW (FUEL TANK) . . . 2164
MIRROR GP-SIDE VIEW (SIDE, RH) . . . 2164
MODULE GP-INTERFACE (KEY) . . . 472
MONITOR & MTG GP-OPERATOR . . . 2171, 2172
MONITOR GP (LIGHT BAR) . . . 466
MONITOR GP-OPERATOR . . . 2173, 2174, 2175
MOTOR & MTG GP-SWING . . . 1461, 1462, 1463, 1464
MOTOR & MTG GP-TRAVEL . . . 1465, 1466, 1467
MOTOR AS-WINDOW WIPER . . . 2274
MOTOR GP-SWING . . . 1468, 1469, 1474, 1475, 1476, 1478
MOTOR GP-SWING–SWING . . . 1471, 1472

INDEX

NAME PAGE

MOTOR GP-TRAVEL 1480
1484
1488
MOUNTING GP-ALTERNATOR 138
MOUNTING GP-ANTENNA 2178
MOUNTING GP-ANTENNA–GRADE CONTROL 2176
MOUNTING GP-ANTENNA–PRODUCT LINK . . . 2180
2181
2182
MOUNTING GP-CAMERA–REAR. 498
MOUNTING GP-ENGINE 139
MOUNTING GP-FAN DRIVE. 140
MOUNTING GP-FUEL FILTER. 329
330
MOUNTING GP-MAIN CONTROL VALVE. 1491
MOUNTING GP-MAST–ACCUGRADE 499
MOUNTING GP-MONITOR 2184
MOUNTING GP-PLATFORM 2185
MOUNTING GP-PUMP–FUEL INJECTION 333
MOUNTING GP-RECEIVER–TARGET 500
MOUNTING GP-SENSOR (CHASSIS) 465
466
MOUNTING GP-SENSOR–LINKAGE. 501
MOUNTING GP-STARTING MOTOR 141
MOUNTING GP-WIRING 502
MUFFLER. 279
MUFFLER GP 280
282
284

O

OPERATOR AR 2187
OPTION AR-CAB 75
76
OPTION AR-COLD WEATHER. 77
78
79
OPTION AR-CONFIGURATION 90
OPTION AR-CONTROL 82
OPTION AR-COUPLER 79
80
OPTION AR-ELECTRICAL. 81
OPTION AR-GUARD 81
OPTION AR-HYDRAULIC. 81
83
84
OPTION AR-LIGHTING. 84
85
OPTION AR-LINKAGE 85
86
87
88
89
OPTION AR-REGIONAL. 89
90
91
92
93
94
95
96
97
98
99
100
101
OPTION AR-VALVE. 84

P

PADLOCK GP. 345
346
347
348
349
350
351
352
353
354
355
PAN GP-OIL 142
144
PANEL & MTG GP-CIRCUIT BREAKER. 503
504
505
PANEL GP-CIRCUIT BREAKER 506
508
510
PANEL GP-SWITCH–ENGINE SPEED, START. 513
515
517
519
521
523
PEDAL AR-AUXILIARY–HIGH PRESSURE, LH. 2187
PEDAL AR-AUXILIARY–THIRD PEDAL, STRAIGHT TRAVEL 2188
PIN GP-BUCKET 1904
PIN GP-COUPLER–CB-LINKAGE. 1904
PIN GP–COUPLER 1770
PISTON & ROD GP 146
PLATE & FILM GP 2301
2306
2311
2316
2321
2326
2331
2336
PLATE GP-INFORMATION 2341

INDEX

NAME	PAGE
PLATE-IDENTIFICATION (CAT)	1824, 1844
PLATE-WARNING (HIGH PRESSURE CYLINDER)	888, 889
PLATFORM GP-OPERATOR	2189
PLUG GP-CONTROL VALVE	1492, 1493, 1494
PLUG-DRAIN	182
PLUG-DRAIN (HYDRAULIC OIL)	1508
POWER TRAIN AR	673
PROTECTOR GP-SIDE BAR	1905, 1906
PULLEY GP-ENGINE	148, 149, 151, 153, 155, 157, 159, 161, 163, 165
PULLEY GP-FAN	167, 169
PULLEY GP-IDLER	170, 171, 172
PUMP & MOTOR GP-REFUELING	334
PUMP & MTG GP-AUXILIARY	1495, 1496
PUMP & MTG GP-MAIN HYDRAULIC	1497
PUMP AR-FUEL TRANSFER	335
PUMP AR-REFUELING	335, 336
PUMP GP-FUEL INJECTION	337
PUMP GP-FUEL PRIMING	307, 310, 313, 316, 319
PUMP GP-FUEL PRIMING (HAND)	290
PUMP GP-FUEL PRIMING–FUEL	338
PUMP GP-FUEL TRANSFER	337
PUMP GP-GEAR (PILOT)	1500
PUMP GP-GEAR–AUXILIARY HYDRAULIC	1498, 1499
PUMP GP-MAIN HYDRAULIC	1500
PUMP GP-REFUELING	339, 341
PUMP GP-WATER	204

R

NAME	PAGE
RADIATOR & HYD OIL COOLER GP	206, 208, 210, 212, 214, 216, 218, 220, 222, 225, 227, 229, 231, 234, 236, 238, 241, 243, 245, 246, 248, 249, 251
RADIO GP-COMMUNICATION–PRODUCT LINK 121SR	525
RADIO GP–AM/FM	2190
RAIL GP-FUEL–6-CYLINDER ENGINE	343
RECEIVER GP-SATELLITE–DUAL GNSS, MS992	525
RECEIVER GP-SATELLITE–SINGLE GNSS, MS992	525
RECEPTACLE GP-CONNECTOR (8-PIN)	2144
RELAY (24-VOLT) (1-WAY/2-WAY SOLENOID)	560
RELAY (24-VOLT) (BOOM FLOODLIGHT)	564, 570
RELAY (24-VOLT) (CAB FLOODLIGHT)	564, 570
RELAY (24-VOLT) (CHASSIS LIGHT)	564, 570
RELAY (24-VOLT) (GPS)	600
RELAY (24-VOLT) (HORN)	564, 570
RELAY (24-VOLT) (NEUTRAL START)	564, 570
RELAY (24-VOLT) (QUICK COUPLER LOCK ON)	577
RELAY (24-VOLT) (QUICK COUPLER LOCK PRIORITY)	577
RELAY (24-VOLT) (QUICK COUPLER LOCK)	577
RELAY (24-VOLT) (REFUELING PUMP, START)	645, 647
RELAY (24-VOLT) (REFUELING PUMP, STOP)	645, 647
RELAY (24-VOLT) (SPEAKERS)	643
RELAY (24-VOLT) (TRAVEL ALARM)	564, 570

INDEX

NAME	PAGE
RELAY (BLOWER)	2059
RELAY (COMPRESSOR CLUTCH)	2059
RELAY AS (WIPER)	2274
ROCKER ARM GP (LH)	1895
	1897
	1899
	1901
ROCKER ARM GP (RH)	1895
	1897
	1899
	1901
ROLLER AR-TRACK & CARRIER	875
	876
	877
	878
	879
	880
ROLLER GP-TRACK CARRIER	881
ROLLER GP-TRACK-DOUBLE FLANGE	882
	883
ROLLER GP-TRACK-SINGLE FLANGE	884
	885
	886
	887

S

SCREEN AS (HYDRAULIC TANK)	1505
SCREEN GP-HYDRAULIC–TANK	1505
SCREEN GP-SUN	2191
SEAT & MOUNTING GP (HIGH BACK, WITH HEATER)	4
	5
	7
	10
	75
	76
SEAT & MOUNTING GP–AIR SUSP, HIGH BACK, TILT	2196
SEAT & MOUNTING GP–AIR SUSP, HIGH BACK, WITH HTR	2197
SEAT & MOUNTING GP–HIGH BACK, TILT	2194
	2201
	2202
	2203
	2204
SEAT & MOUNTING GP–HIGH BACK, WITH HEATER	2205
	2206
SEAT & MOUNTING GP–LOW BACK, TILT	2192
	2193
	2195
	2199
	2200
	2207
	2208
SEAT BELT GP (RETRACTABLE, 3-IN)	2215
SEAT BELT GP (RETRACTABLE, 43-MM)	2216
SEAT BELT GP (RETRACTABLE, 46-MM)	2210
SEAT BELT GP (RETRACTABLE, 51-MM (2-IN))	2217
SEAT BELT GP (RETRACTABLE, 76-MM (3-IN))	28
	29
	36
	57
	58
	59
	71
	72
	73
	75
	76
	2211
	2214
SEAT BELT GP (RETRACTABLE)	13
	25
	30
	37
	50
	53
	61
	69
SEAT BELT GP–RETRACTABLE	2212
	2214
	2215
	2216
	2217
SEAT BELT GP–RETRACTABLE, 46-MM	2210
	2213
SEAT BELT GP–RETRACTABLE, 76-MM (3-IN)	2209
	2211
SEAT GP (HIGH BACK, TILT)	2235
	2236
SEAT GP-SUSPENSION–AIR SUSP, HIGH BACK, TILT	2232
SEAT GP-SUSPENSION–AIR SUSP, HIGH BACK, WITH HTR	2233
SEAT GP-SUSPENSION–HIGH BACK, TILT	2229
	2235
	2236
SEAT GP-SUSPENSION–HIGH BACK, WITH HEATER	2237
SEAT GP-SUSPENSION–LOW BACK, TILT	2228
	2230
	2231
	2234
	2238
	2239
SEAT GP–HIGH BACK, TILT	2220
	2224
SEAT GP–HIGH BACK, WITH HEATER	2221
	2225
SEAT GP–LOW BACK, TILT	2219
	2222
	2223
	2226
	2227

INDEX

NAME	PAGE
SENDER AS-FUEL LEVEL	358
	361
	366
	370
	373
	375
	379
	381
	383
	385
	386
	388
	390
	392
	394
	396
SENDER AS-TEMPERATURE (HYDRAULIC OIL)	1508
SENSOR & MOUNTING GP	526
SENSOR & MOUNTING GP (LINKAGE)	465
	466
SENSOR & MOUNTING GP (ROLL)	466
SENSOR & MOUNTING GP–GRADE CONTROL	526
SENSOR AS-ANGLE (AS400TC)	466
	526
SENSOR AS-ANGLE (AS450C)	465
	466
SENSOR AS-ANGLE (AS460)	526
SENSOR AS-LIQUID LEVEL (WATER SEPARATOR)	528
SENSOR AS-PRESSURE	530
SENSOR AS-PRESSURE (BOOM CYLINDER)	531
SENSOR AS-PRESSURE (DRIVE PUMP)	1303
SENSOR AS-PRESSURE (DRIVEN PUMP)	1303
SENSOR AS-PRESSURE (MAIN PUMP)	1299
	1301
SENSOR AS-PRESSURE (OVERLOAD WARNING)	1433
SENSOR AS-PRESSURE (WORK TOOL)	1213
	1217
	1221
	1225
SENSOR AS-PRESSURE (WORKTOOL)	1250
SENSOR AS-TEMPERATURE (AIR)	2059
SENSOR AS-TEMPERATURE (AMBIENT AIR TEMP)	1944
	1947
	1950
SENSOR AS-TEMPERATURE (COOLANT)	1944
	1947
	1950
SENSOR GP-ENGINE	106
	107
	109
	110
	111
	119
	527
SENSOR GP-FUEL LEVEL	357
	360
	364
	368
	377

INDEX

NAME	PAGE
SENSOR GP-LIQUID LEVEL (WATER SEPARATOR)	4
	5
	6
	7
	8
	9
	10
	11
	12
	13
	14
	15
	16
	17
	18
	19
	21
	22
	23
	24
	25
	26
	27
	28
	29
	30
	31
	32
	34
-55	
	57
	58
	59
	60
	61
	62
	63
	65
	66
	67
	68
	69
	70
	71
	72
	73
	77
	78
	79
	89
	90
	91
	92
	93
	94
	95
	96
	97
	98
	99
	100
	101
SENSOR GP-LIQUID LEVEL (WATER SEPARATOR)	529
SENSOR GP-LIQUID LEVEL–WATER IN FUEL	528
SENSOR GP-LIQUID LEVEL–WATER SEPARATOR	529
SENSOR GP-PRESSURE	530
	531
SENSOR GP-PRESSURE (AIR INLET MANIFOLD)	527
SENSOR GP-PRESSURE (DIFFERENTIAL) (FUEL)	527
SENSOR GP-PRESSURE (ENGINE OIL)	449
SENSOR GP-PRESSURE (FUEL MANIFOLD)	527
SENSOR GP-PRESSURE (FUEL)	527
SENSOR GP-PRESSURE (OVERLOAD WARNING)	1434
	1435
SENSOR GP-PRESSURE (WORK TOOL)	1229
	1254
	1258
SENSOR GP-SPEED (ENGINE)	134
	527
SENSOR GP-SPEED (INJECTION PUMP)	337
SENSOR GP-TEMPERATURE (AIR INLET MANIFOLD)	527
SENSOR GP-TEMPERATURE (AMBIENT AIR, RAD FAN CLUTCH)	623
SENSOR GP-TEMPERATURE (ENGINE COOLANT)	527
SENSOR GP-TEMPERATURE (FUEL)	527
SENSOR GP-TEMPERATURE (INLET AIR)	620
SENSOR-ANGLE (AS21C)	526
SENSOR-TEMPERATURE (AMBIENT AIR)	1935
	1937
	1939
	1941
	2130
	2132
	2134
SERVICE GP-COMMUNICATION (PRODUCT LINK 300)	456
SHAFT GP-MOTOR	535
SHEET AS-SOUND SUPPRESSION	832
	833
	834
	835
	836
	837
	838
	839
	840
	841
	842
	843
SIDECUTTER GP	1909
SIDECUTTER GP–B-FAMILY	1908
SIDECUTTER GP–C, D-FAMILY	1907

INDEX

NAME	PAGE
SOFTWARE GP-COMMUNICATION (PRODUCT LINK 121SR)	525
SOFTWARE GP-COMMUNICATION (PRODUCT LINK 300)	456
SOFTWARE GP-COMMUNICATION (PRODUCT LINK 522, CHINA)	451
SOFTWARE GP-COMMUNICATION (PRODUCT LINK 522)	452
SOFTWARE GP-ELECTRONIC	454
	455
SOFTWARE GP-ENG RATINGS ELEK	457
SOFTWARE GP-MACHINE	456
	457
SOFTWARE GP-MONITOR	457
	2175
SPECIAL AR	102
	103
	104
SPECIAL AR–TIER II SOUND, TIER III ENGINE	101
SPRING AS-GAS	2111
	2113
	2116
SPRING AS-GAS (CAB ROOF)	2124
	2126
SPROCKET GP	674
STARTING AR-COLD WEATHER	532
STARTING MOTOR GP-ELECTRIC	533
	535
STEP GP	844
	845
STICK & BEARING AS	1771
	1772
	1773
	1774
STICK AR-HOE	1778
STICK AR-HOE–HEAVY DUTY, REACH	1777
STICK AR-HOE–MASS	1775
STICK AR-HOE–REACH	1775
	1776
	1777
	1778
	1779
	1780
STICK AR–REACH	1775
STICK GP-HOE	1800
	1801
	1803
	1807
STICK GP-HOE–ACCUGRADE READY	1808
STICK GP-HOE–AUXILIARY, COUPLER	1785
STICK GP-HOE–LONG REACH	1781
	1795
	1797
STICK GP-HOE–MASS	1792
STICK GP-HOE–REACH	1783
	1784
	1786
	1787
	1789
	1791
	1794
	1799
	1805
	1810
	1811
	1812
	1813
	1814
	1815
	1816
STORAGE GP-VANDALISM GUARD	846
STRAINER AS-FUEL	339
	341
STRAINER AS-FUEL (FLOAT GAUGE)	358
	361
	366
	370
	373
	375
	377
	379
	381
	383
	385
	386
	388
	390
	392
	394
	396
STRAINER GP-FUEL–FLOAT GAUGE	344
SUN VISOR	2253
SUPPORT AS-ENCLOSURE	847
	848
	849
	850
	851
	852
	853
	854
	855
SUPPORT GP-SEAT	2240
	2241
SUSPENSION GP-SEAT (AIR)	2236
	2237
SUSPENSION GP-SEAT–AIR	2244
	2245
	2248
	2249
	2251

INDEX

NAME	PAGE
SUSPENSION GP-SEAT–MECHANICAL	2242, 2243, 2246, 2247, 2250, 2252
SWITCH (LIQUID LEVEL) (FUEL)	544
SWITCH (WINDOW LOWER LIMIT)	2259
SWITCH AS (HYDRAULIC FILTER BYPASS)	1039
SWITCH AS (STARTING MOTOR)	533
SWITCH AS-FOOT (WORK TOOL)	2050
SWITCH AS-LIMIT (HYDRAULIC LOCKOUT)	538
SWITCH AS-LIQUID LEVEL	144
SWITCH AS-LIQUID LEVEL (ENGINE OIL)	142
SWITCH AS-LIQUID LEVEL (FUEL TANK SHUTOFF)	341
SWITCH AS-LIQUID LEVEL (HYDRAULIC OIL)	1508
SWITCH AS-MAGNETIC (24-VOLT) (HEATER RELAY)	508, 629
SWITCH AS-MAGNETIC (24-VOLT) (MAIN RELAY)	564, 570
SWITCH AS-MAGNETIC (24-VOLT) (REFUELING PUMP RELAY)	645, 647
SWITCH AS-PRESSURE (ACTION INPUT, MEDIUM PRESSURE)	1313
SWITCH AS-PRESSURE (ACTION INPUT, WORK TOOL)	1315
SWITCH AS-PRESSURE (AUXILIARY, COMBINED FUNCTION)	1313
SWITCH AS-PRESSURE (COMBINED FUNC, MEDIUM PRESSURE)	1311
SWITCH AS-PRESSURE (IMPLEMENT, SWING)	1269, 1273, 1277, 1281
SWITCH AS-PRESSURE (PILOT, BOOM UP)	1317, 1319, 1353, 1357, 1382, 1387
SWITCH AS-PRESSURE (REFRIGERANT)	2152, 2156
SWITCH AS-PRESSURE (THIRD PEDAL, STRAIGHT TRAVEL)	1321
SWITCH AS-PRESSURE (TRAVEL, LH)	1269, 1273, 1277, 1281
SWITCH AS-PRESSURE (TRAVEL, RH)	1269, 1273, 1277, 1281
SWITCH AS-PUSH BUTTON (HORN)	2051
SWITCH AS-PUSH BUTTON (MANUAL LOW IDLE)	2053
SWITCH AS-PUSH BUTTON (REFUELING PUMP, START)	542
SWITCH AS-ROCKER (FINE SWING)	564, 570
SWITCH AS-ROCKER (HEATED SEAT)	2197, 2205, 2206
SWITCH AS-ROCKER (LEVELING)	565, 572
SWITCH AS-ROCKER (OVERLOAD WARNING)	634, 635
SWITCH AS-ROCKER (RADIO MUTE)	2144
SWITCH AS-ROCKER (WASHER, LOWER)	552
SWITCH AS-ROCKER (WIPER, LOWER)	552
SWITCH AS-ROLLER (WIPER, LOWER)	2271
SWITCH AS-TOGGLE (AUTO/MANUAL ENG SPEED CONTROL)	609
SWITCH AS-TOGGLE (MANUAL ENGINE SPEED CONTROL)	609
SWITCH AS-TOGGLE (QUICK COUPLER LOCK)	550
SWITCH AS-TOGGLE (QUICK COUPLER)	577
SWITCH AS-TOGGLE (SECONDARY SHUTDOWN)	637
SWITCH GP-DISCONNECT–BATTERY	537
SWITCH GP-LIMIT–HYDRAULIC LOCKOUT	538
SWITCH GP-MAGNETIC (24-VOLT) (AIR INLET HEATER RELAY)	510
SWITCH GP-MAGNETIC–AIR INLET HEATER RELAY	539
SWITCH GP-MAGNETIC–START RELAY	541
SWITCH GP-MAGNETIC–STARTING AID HEATER	540
SWITCH GP-PEDAL (WORK TOOL)	2048, 2050
SWITCH GP-PUSH BUTTON (REFUELING PUMP, STOP)	543
SWITCH GP-PUSH BUTTON–REFUELING PUMP, START	542
SWITCH GP-PUSH BUTTON–REFUELING PUMP, STOP	543
SWITCH GP-PUSHBUTTON (REFUELING PUMP, START)	542
SWITCH GP-REFUELING–FUEL TANK SHUTOFF	544
SWITCH GP-ROTARY (THROTTLE POSITION)	513, 515, 517, 519, 521, 523
SWITCH GP-ROTARY–THROTTLE POSITION	545, 546
SWITCH GP-START (ENGINE, KEY)	517, 523

INDEX

NAME	PAGE
SWITCH GP-START–ENGINE, KEY	547 548
SWITCH GP-TOGGLE	549
SWITCH GP-TOGGLE (12-VOLT, 24-VOLT SPEAKER)	643
SWITCH GP-TOGGLE (QUICK COUPLER)	577
SWITCH GP-TOGGLE–QUICK COUPLER	550
SWITCH GP-TOGGLE–QUICK COUPLER LOCK	551
SWITCH GP-WIPER–LOWER	552
SWITCH-MAGNETIC (24-VOLT) (START RELAY)	564 570
SWITCH-PUSH BUTTON (REFUELING PUMP, STOP)	543
SWIVEL GP	1506

T

TANK & FILTER GP-HYDRAULIC	1508
TANK & MTG GP-FUEL	345 346 347 348 349 350 351 352 353 354 355
TANK & MTG GP-HYDRAULIC	1510
TANK GP-FUEL	356 357 358 360 361 363 364 366 368 370 372 373 375 376 377 379 381 383 385 386 388 390 392 394 396
TARGET GP-LASER	553
TIMER AS (TIME DELAY LIGHTING)	482 484
TIP GP-ABRASION–J-350, HEAVY-DUTY	1910
TIP GP-DOUBLE SPIKE–K-90	1911
TIP GP-EXTRA-DUTY–K-80	1913
TIP GP-EXTRA-DUTY–K-90	1912
TIP GP-GENERAL PURPOSE–K-90	1914
TIP GP-LONG–HEAVY DUTY	1919
TIP GP-LONG–J-250	1917
TIP GP-LONG–J-350	1915 1916 1918
TIP GP-PENETRATION PLUS–J-350	1923
TIP GP-PENETRATION PLUS–K-100	1926
TIP GP-PENETRATION PLUS–K-80	1925
TIP GP-PENETRATION PLUS–K-90	1924
TIP GP-PENETRATION–J-350	1920 1921
TIP GP-PENETRATION–K-90	1922
TIP GP-SHARP–CENTER, J-350	1927
TIP GP-SHORT–J-350	1928
TIP GP-SPIKE–K-90	1929
TIP GP-WIDE–J-350	1930
TIP GP-WIDE–K-90	1931
TIP-LEVELING EDGE–K-90	1932
TRACK ADJUSTER & RECOIL GP	890 891
TRACK ADJUSTER & RECOIL GP–LH	889
TRACK ADJUSTER & RECOIL GP–RH	888
TRACK AR–2-REQUIRED	892
TRACK GP–2-REQUIRED	893 894 895 896
TUBE GP	1082
TURBOCHARGER GP	286 288

V

V-BELT (AIR CONDITIONER COMPRESSOR)	2014 2016
VALVE (PRESSURE RELIEF) (ENGINE OIL, SECONDARY)	186
VALVE & LINES GP-HEAVY LIFT	1511
VALVE & MTG GP-CONTROL–AUXILIARY	1512 1513
VALVE AR-ALT PATTERN CONTROL–2-WAY	1514
VALVE AR-ALT PATTERN CONTROL–4-WAY	1514
VALVE AR-CHECK & RELIEF–BOOM LOWERING CONTROL VALVE	1514
VALVE AR-CHECK & RELIEF–STICK LOWER CONT, REACH BOOM	1515
VALVE AR-LOAD CONTROL–STICK CYLINDER, MASS BOOM	1515
VALVE AR-LOAD CONTROL–STICK CYLINDER, REACH BOOM	1515
VALVE AR-SWING–WITHOUT FINE SWING	1516
VALVE AS-MANUAL	1517

INDEX

NAME	PAGE
VALVE AS-RELIEF (ENGINE OIL PRESSURE)	177
VALVE AS-RELIEF (FUEL RAIL)	343
VALVE AS-RELIEF (MAIN)	1582
VALVE GP-CHECK	1518 1519 1520 1521 1523 1524 1525
VALVE GP-CHECK (HYD CYLINDER, QUICK COUPLER)	1019
VALVE GP-CHECK & RELIEF–STICK LOWERING CONTROL VALVE	1526
VALVE GP-CONTROL	1568 1588
VALVE GP-CONTROL–AUXILIARY	1534 1536
VALVE GP-CONTROL–BOOM, STICK, BUCKET–RH	1538 1541 1544
VALVE GP-CONTROL–HEAVY LIFT	1583
VALVE GP-CONTROL–LH	1547 1552 1557 1562
VALVE GP-CONTROL–MEDIUM FLOW	1530
VALVE GP-CONTROL–MEDIUM PRESSURE	1528 1582
VALVE GP-CONTROL–QUICK COUPLER	1532
VALVE GP-CONTROL–TRAVEL, SWING, STICK, BOOM–LH	1570 1574 1578
VALVE GP-CONTROL–WITHOUT COVERS, HOUSINGS	1529 1567
VALVE GP-FLOW CONTROL (MEDIUM PRESSURE)	1593
VALVE GP-FLOW CONTROL & RELIEF–MEDIUM FLOW, ROTATOR MOTOR	1593
VALVE GP-FLUID SAMPLING (ENGINE COOLANT)	203
VALVE GP-FUEL SHUTOFF	398
VALVE GP-LOAD CONTROL–BOOM CYLINDER	1595 1598
VALVE GP-LOAD CONTROL–BOOM DRIFT RED, LINE RELIEF	1609 1611
VALVE GP-LOAD CONTROL–STICK CYLINDER	1601 1603
VALVE GP-LOAD CONTROL–STICK DRIFT RED, LINE RELIEF	1605 1607
VALVE GP-MAIN CONTROL	1613 1614
VALVE GP-MAIN CONTROL–HEAVY LIFT	1615 1616
VALVE GP-MANUAL–AUXILIARY, SHUTOFF	1617 1618
VALVE GP-PILOT	1622 2060
VALVE GP-PILOT RELIEF	1639 1640
VALVE GP-PILOT RELIEF (HYDRAULIC FILTER)	1033
VALVE GP-PILOT–ALT PATTERN CONTROL, 2-WAY	1628
VALVE GP-PILOT–JOYSTICK	1619 1625 1630 1634
VALVE GP-PILOT–JOYSTICK, LH	1633
VALVE GP-PILOT–JOYSTICK, RH	1632
VALVE GP-PILOT–TRAVEL	1623 1635 1637
VALVE GP-PRESSURE REDUCING (QUICK COUPLER)	1532
VALVE GP-PRESSURE REDUCING–BOOM, SWING PRIORITY	1641 1642
VALVE GP-PRIORITY–SWING	1644 1645
VALVE GP-RELIEF	1646 1649 1654 1655 1656 1657 1659 1660 1663 1664 1666 1671 1672 1673 1675 1676 1714
VALVE GP-RELIEF (160-BAR (2321-PSI))	1582
VALVE GP-RELIEF (230-BAR (3336-PSI))	1582
VALVE GP-RELIEF (80-BAR (1160-PSI))	1582
VALVE GP-RELIEF (LINE)	1536 1544 1583
VALVE GP-RELIEF (LINE) (STICK 1)	1588
VALVE GP-RELIEF (MAIN, HEAVY LIFT)	1574 1578
VALVE GP-RELIEF–CUSHION CROSSOVER	1650

INDEX

NAME	PAGE
VALVE GP-RELIEF–LINE	1651 1652 1653 1661 1662 1674
VALVE GP-RELIEF–MAIN	1660 1665
VALVE GP-RELIEF–NEGATIVE FLOW CONTROL	1647 1648
VALVE GP-RELIEF–PILOT OPERATED	1668 1669
VALVE GP-SELECTOR (2-WAY)	1401
VALVE GP-SELECTOR–ALT PATTERN CONTROL, 4-WAY	1677
VALVE GP-SHUTTLE	1679 1680 1681 1682 1683 1684 1685 1686
VALVE GP-SOLENOID	1045 1049 1053 1687 1688 1689 1690 1691 1692 1693 1694 1695 1696 1697 1698
VALVE GP-SOLENOID (AUXILIARY, COMBINED FUNCTION)	1353 1357
VALVE GP-SOLENOID (AUXILIARY, COMBINED FUNCTION) (1-PUMP/2-PUMP, 1-WAY/2-WAY FLW)	1382 1387
VALVE GP-SOLENOID (AUXILIARY)	1691
VALVE GP-SOLENOID (HEAVY LIFT)	1305 1307 1309
VALVE GP-SOLENOID (HYDRAULIC LOCKOUT)	1459 1460
VALVE GP-SOLENOID (NEG FLOW CONT, PROPN RED VALVE)	1339 1342 1346 1349 1353 1357 1361 1365 1368 1372 1382 1387 1397
VALVE GP-SOLENOID (PRESSURE REDUCING)	1377
VALVE GP-SOLENOID (PRESSURE REDUCING) (PUMP FLOW CONTROL, PILOT)	1360 1364 1375
VALVE GP-SOLENOID (PROPORTIONAL REDUCING)	1694
VALVE GP-SOLENOID (QUICK COUPLER)	1233 1237 1532 1700
VALVE GP-SOLENOID (STRAIGHT TRAVEL)	1547 1552 1557 1562 1570 1574 1578 1583 1588
VALVE GP-SOLENOID (SWING BRAKE RELEASE)	1459 1460
VALVE GP-SOLENOID (TRAVEL SPEED)	1459 1460
VALVE GP-SOLENOID (WORK TOOL, 4-FUNCTION)	1367 1371 1397
VALVE GP-SOLENOID & MANIFOLD (QUICK COUPLER)	1161
VALVE GP-SOLENOID & MANIFOLD (QUICK COUPLER)	1241 1244
VALVE GP-SOLENOID & MANIFOLD (QUICK COUPLER)	1247 1411 1414 1417
VALVE GP-SOLENOID & MANIFOLD–QUICK COUPLER	1699 1700

INDEX

NAME PAGE

VALVE GP-SOLENOID & RELIEF. 1701 1702 1703 1704 1705 1707 1708
VALVE GP-SOLENOID & RELIEF (1-WAY, 2-WAY FLOW) (LH) 1250 1254 1258
VALVE GP-SOLENOID & RELIEF (1-WAY, 2-WAY FLOW) (RH). 1250 1254 1258
VALVE GP-SWING CUSHION 1709 1711
VALVE GP-SWING CUSHION–FINE SWING . . . 1710 1712
VALVE GP-TRAVEL COUNTERBALANCE 1714 1715 1717
VALVE MECHANISM GP. 173 175
VISOR GP-CAB–SUN 2253
VISOR GP-PROTECTION–RAIN. 2254

W

WARNING AR-OVERLOAD–BOOM LOWERING CONTROL VALVE 553
WARNING GP-OVERLOAD–OVERLOAD WARNING DEVICE. 553
WASHER GP-WINDOW 2255
WASHER GP-WINDOW–LOWER. 2257
WINDOW AS-FRONT–UPPER 2258
WINDOW GP-CAB–FRONT, LOWER 2262 2263
WINDOW GP-CAB–FRONT, UPPER 2259
WINDOW GP-CAB–SIDE, REAR 2265 2266
WINDOW GP-DOOR 2267
WINDOW GP-FRONT–UPPER 2269
WIPER & WASHER GP-WINDOW–LOWER 2271
WIPER AR-WINDOW–LOWER 2273
WIPER GP-WINDOW–FRONT, UPPER 2274
WIRING GP-AUXILIARY CONTROL 554 558
WIRING GP-AUXILIARY CONTROL–SYSTEMS 3, 5 556
WIRING GP-CAB 564 570 579 580
WIRING GP-CAB RISER–WORK AREA VISUAL SYSTEM, REAR 583
WIRING GP-CAB–1-WAY/2-WAY FLOW 560
WIRING GP-CAB–COUPLER 577
WIRING GP-CAB–GRADE CONTROL 581
WIRING GP-CAMERA–REAR VISION CAMERA. 584
WIRING GP-CHASSIS 588
WIRING GP-CHASSIS–ACCUGRADE READY . . . 585 586
WIRING GP-COMBINED FLOW. 589
WIRING GP-COMMUNICATION 600
WIRING GP-COMMUNICATION–PRODUCT LINK. 604
WIRING GP-COMMUNICATION–PRODUCT LINK 121SR 596 598
WIRING GP-COMMUNICATION–PRODUCT LINK 321SR 592 594
WIRING GP-COMMUNICATION–PRODUCT LINK 522. 602
WIRING GP-CONSOLE 608
WIRING GP-CONSOLE–LH. 606
WIRING GP-CONSOLE–RH. 609
WIRING GP-CONVERTER. 611 612
WIRING GP-CONVERTER–12-VOLT, 10-AMPERE. 613
WIRING GP-ELECTRONIC CONTROL. 615
WIRING GP-ENGINE–JUMP START. 617
WIRING GP-FAN–FAN CLUTCH 621 622
WIRING GP-FAN–FLUID CLUTCH 619 624
WIRING GP-FAN–HYD FAN CTL, AIR TEMP CTL 620 623
WIRING GP-FINE SWING 625
WIRING GP-GRADE CONTROL 626 627
WIRING GP-HEATER 628 629
WIRING GP-HYDRAULIC CONTROL–RETURN FILTER 631
WIRING GP-MEDIUM PRESSURE 633
WIRING GP-OVERLOAD WARNING 634 635
WIRING GP-PLATFORM 636
WIRING GP-QUICK COUPLER 639 640 641
WIRING GP-RADIO 643
WIRING GP-REFUELING PUMP 645 647

MACHINE ARRANGEMENT

264-8638 CHASSIS AR

S/N: FAL1-UP

PART OF 264-8626 GENERAL AR

SMCS-7000 **i04775738**

NOTE	PART NUMBER	QTY	PART NAME 1 2 3 4 5 6 (PRODUCT LEVEL)	SEE PAGE
Y	*267-8000*	1	BATTERY & WIRING GP	405
Y	*223-3040*	1	BOX & MTG GP-STORAGE	675
Y	*262-2607*	1	COUNTERWEIGHT & MOUNTING GP	690
Y	*223-3042*	1	FENDER & COVER GP (WITH STEP)	747
Y	*273-6716*	1	FRAME GP-UPPER	749
Y	*289-6424*	1	GUARD GP-BOTTOM	757
Y	*142-3835*	1	HANDRAIL GP	762
Y	*273-7726*	1	HOOD & GUARD GP	773
Y	*267-8071*	1	HORN GP-ELECTRIC	2137
Y	*4I-5409*	1	LIGHTING GP-FLOOD (FRONT, RH)	478
Y	*284-4386*	1	LINES GP-AIR CONDITIONER	2156
Y	*273-7735*	1	LINES GP-FUEL	301
			S/N: FAL1-9016	
Y	*375-3089*	1	LINES GP-FUEL	323
			S/N: FAL9017-UP	
Y	*7Y-0059*	1	LITERATURE GP	2162
Y	*142-3836*	1	MIRROR GP-REAR VIEW (FRONT, RH)	2166
Y	*245-7811*	1	MOUNTING GP-PLATFORM	2185
Y	*273-5387*	1	OPERATOR AR	2187
			S/N: FAL1-2991	
Y	*327-6568*	1	OPERATOR AR	2187
			S/N: FAL2992-UP	
Y	*275-3683*	1	PLATE & FILM GP	2301
Y	*278-3896*	1	TANK & MTG GP-FUEL	345
Y	*319-1387*	1	WIRING GP-CHASSIS (CAB, REAR)	588
			S/N: FAL842-2991	
Y	*259-5052*	1	WIRING GP-FINE SWING	625
Y	*306-8690*	1	WIRING GP-HEATER (SOLENOID)	628
			S/N: FAL1-2991	

Y - SEPARATE ILLUSTRATION

<END>

MACHINE ARRANGEMENT

264-8639 CHASSIS AR

S/N: KGF1-UP

PART OF 264-8627 GENERAL AR

SMCS-7000 **i04789690**

NOTE	PART NUMBER	QTY	PART NAME 1 2 3 4 5 6 (PRODUCT LEVEL)	SEE PAGE
Y	*267-8000*	1	BATTERY & WIRING GP	405
Y	*223-3040*	1	BOX & MTG GP-STORAGE	675
Y	*262-2607*	1	COUNTERWEIGHT & MOUNTING GP	690
Y	*223-3042*	1	FENDER & COVER GP (WITH STEP)	747
Y	*273-6716*	1	FRAME GP-UPPER	749
Y	*289-6424*	1	GUARD GP-BOTTOM	757
Y	*142-3835*	1	HANDRAIL GP	762
Y	*273-7726*	1	HOOD & GUARD GP	773
Y	*267-8071*	1	HORN GP-ELECTRIC	2137
Y	*4I-5409*	1	LIGHTING GP-FLOOD (FRONT, RH)	478
Y	*284-4386*	1	LINES GP-AIR CONDITIONER	2156
Y	*273-7735*	1	LINES GP-FUEL	301
			S/N: KGF1-7705	
Y	*375-3089*	1	LINES GP-FUEL	323
			S/N: KGF7706-UP	
Y	*7Y-0059*	1	LITERATURE GP	2162
Y	*142-3836*	1	MIRROR GP-REAR VIEW (FRONT, RH)	2166
Y	*245-7811*	1	MOUNTING GP-PLATFORM	2185
Y	*273-5387*	1	OPERATOR AR	2187
			S/N: KGF1-3940	
Y	*327-6568*	1	OPERATOR AR	2187
			S/N: KGF3941-UP	
Y	*275-3684*	1	PLATE & FILM GP	2321
Y	*278-3896*	1	TANK & MTG GP-FUEL	345
Y	*319-1387*	1	WIRING GP-CHASSIS (CAB, REAR)	588
			S/N: KGF1258-3940	
Y	*259-5052*	1	WIRING GP-FINE SWING	625
Y	*306-8690*	1	WIRING GP-HEATER (SOLENOID)	628
			S/N: KGF1-3940	

Y - SEPARATE ILLUSTRATION

<END>

290-1774 CONVERSION AR-MACHINE

S/N: KGF1-UP; FAL1-UP

AN ATTACHMENT

SMCS-7000 **i03022382**

NOTE	PART NUMBER	QTY	PART NAME 1 2 3 4 5 6 (PRODUCT LEVEL)	SEE PAGE
Y	*273-5358*	1	FLOOR MAT GP (ACCUGRADE READY)	2109
Y	*303-9859*	1	HOOD GP (ACCUGRADE READY)	825
Y	*270-5603*	1	MOUNTING GP-ANTENNA (GRADE CONTROL)	2176
Y	*306-8349*	1	WIRING GP-CAB (GRADE CONTROL)	581
Y	*299-2954*	1	WIRING GP-CHASSIS (ACCUGRADE READY)	585

Y - SEPARATE ILLUSTRATION

<END>

MACHINE ARRANGEMENT

290-1775 CONVERSION AR-MACHINE–ACCUGRADE READY

S/N: KGF1-UP

AN ATTACHMENT

SMCS-7000 **i02889074**

NOTE	PART NUMBER	QTY	PART NAME 1 2 3 4 5 6 (PRODUCT LEVEL)	SEE PAGE
Y	*273-5358*	1	FLOOR MAT GP (ACCUGRADE READY)	2109
Y	*303-9860*	1	HOOD GP-ENGINE (ACCUGRADE READY)	828
Y	*270-5603*	1	MOUNTING GP-ANTENNA (GRADE CONTROL)	2176
Y	*299-2792*	1	WIRING GP-CAB	579
			–OR–	
Y	*306-8349*	1	WIRING GP-CAB (GRADE CONTROL)	581
Y	*299-2954*	1	WIRING GP-CHASSIS (ACCUGRADE READY)	585

Y - SEPARATE ILLUSTRATION

<END>

354-1114 CONVERSION AR-MACHINE

S/N: FAL1-UP

PART OF 354-1112, 354-1113, 359-2500, 359-2501 DISTRIBUTION AR

AN ATTACHMENT

SMCS-7000 **i03897474**

NOTE	PART NUMBER	QTY	PART NAME 1 2 3 4 5 6 (PRODUCT LEVEL)	SEE PAGE
Y	*349-5473*	1	ELECTRONICS GP-MACHINE	457
	351-9705	2	FILM-IDENTIFICATION (320D GC)	

Y - SEPARATE ILLUSTRATION

<END>

MACHINE ARRANGEMENT

314-3859 DISTRIBUTION AR

S/N: KGF1-UP

AN ATTACHMENT

SMCS-7000 **i03855846**

NOTE	PART NUMBER	QTY	PART NAME 1 2 3 4 5 6 (PRODUCT LEVEL)	SEE PAGE
Y	*264-8671*	1	AIR CLEANER AR (PRECLEANER)	255
Y	*235-9003*	1	AIR CONDITIONER AR	1943
Y	*240-3828*	1	BOOM AR-1 PIECE LONG	1719
Y	*229-9098*	1	CAB GP	1961
Y	*314-3735*	1	CAMERA AR	441
Y	*284-4442*	1	CONDENSER & LINES GP-RFGT (CHASSIS)	2019
Y	*310-0078*	1	CONTROL & MTG GP-JOYSTICK	2045
Y	*259-7495*	1	CONTROL AR-AUXILIARY (COMBINED FCTN, MEDIUM PRESSURE)	908
Y	*244-8503*	1	CONVERSION GP-LINKAGE (B1-FAMILY)	1744
Y	**234-6500**	1	COVER GP-STORAGE (CAB, REAR)	2082
Y	*134-8875*	1	GUARD GP-SWIVEL (HEAVY-DUTY)	761
Y	*298-4115*	1	INSTALLATION AR-COMMUNICATION (PRODUCT LINK 321SR)	469
Y	*163-6772*	1	LIGHTING GP-FLOOD (CAB)	479
Y	*259-5047*	1	LIGHTING GP-FLOOD (BOOM, RH)	488
Y	*242-6475*	1	LINES GP-AUXILIARY HYDRAULIC (BOOM, HIGH PRESSURE) (HIGH PRESSURE)	1082
Y	*242-6476*	1	LINES GP-AUXILIARY HYDRAULIC (BOOM, MEDIUM PRESSURE) (MEDIUM PRESSURE)	1084
Y	*242-6487*	1	LINES GP-AUXILIARY HYDRAULIC (STICK, HIGH PRESSURE) (STICK, HIGH PRESSURE)	1097
Y	*242-6488*	1	LINES GP-AUXILIARY HYDRAULIC (STICK, MEDIUM PRESSURE) (STICK, MEDIUM PRESSURE)	1101
Y	*314-3851*	1	LINKAGE AR-BUCKET (B1-FAMILY, WITHOUT LIFTING EYE)	1755
Y	*327-6552*	1	MIRROR GP-REAR VIEW	2169
Y	*251-0542*	1	PANEL GP-SWITCH (ENGINE SPEED, START)	513
Y	*314-3785*	1	PUMP AR-FUEL TRANSFER	335
Y	*327-6503*	1	SEAT & MOUNTING GP (HIGH BACK, WITH HEATER)	2205
Y	*305-0467*	1	SEAT BELT GP (RETRACTABLE)	2216
Y	*272-4772*	1	SENSOR GP-LIQUID LEVEL (WATER SEPARATOR)	529
Y	*290-1892*	1	SPECIAL AR	101
Y	*240-3849*	1	STICK AR-HOE (REACH)	1776
Y	**194-1910**	2	TRACK GP	893
Y	*270-5974*	1	VALVE AR-CHECK & RELIEF (BOOM LOWERING CONTROL VALVE)	1514
Y	*239-8677*	1	VALVE AR-LOAD CONTROL	1515
Y	*247-7457*	1	VALVE AR-SWING (WITHOUT FINE SWING)	1516
Y	*161-3750*	1	VISOR GP-PROTECTION (RAIN)	2254
Y	*314-3765*	1	WARNING AR-OVERLOAD	553
Y	*229-9086*	1	WIPER AR-WINDOW (LOWER)	2273
Y	*251-0485*	1	WIRING GP-CONVERTER (12-VOLT, 7-AMPERE)	612
	245-7794	1	FLOOR MAT	

Y - SEPARATE ILLUSTRATION

<END>

MACHINE ARRANGEMENT

314-3860 DISTRIBUTION AR

S/N: KGF1-UP

AN ATTACHMENT

SMCS-7000 **i03855847**

NOTE	PART NUMBER	QTY	PART NAME 1 2 3 4 5 6 (PRODUCT LEVEL)	SEE PAGE
Y	*264-8671*	1	AIR CLEANER AR (PRECLEANER)	255
Y	*235-9003*	1	AIR CONDITIONER AR	1943
Y	*240-3828*	1	BOOM AR-1 PIECE LONG	1719
Y	*229-9098*	1	CAB GP	1961
Y	*314-3735*	1	CAMERA AR	441
Y	*284-4442*	1	CONDENSER & LINES GP-RFGT (CHASSIS)	2019
Y	*310-0078*	1	CONTROL & MTG GP-JOYSTICK	2045
Y	*259-7495*	1	CONTROL AR-AUXILIARY (COMBINED FCTN, MEDIUM PRESSURE)	908
Y	*244-8503*	1	CONVERSION GP-LINKAGE (B1-FAMILY)	1744
Y	**234-6500**	1	COVER GP-STORAGE (CAB, REAR)	2082
Y	*134-8875*	1	GUARD GP-SWIVEL (HEAVY-DUTY)	761
Y	*298-4115*	1	INSTALLATION AR-COMMUNICATION (PRODUCT LINK 321SR)	469
Y	*163-6772*	1	LIGHTING GP-FLOOD (CAB)	479
Y	*259-5047*	1	LIGHTING GP-FLOOD (BOOM, RH)	488
Y	*242-6475*	1	LINES GP-AUXILIARY HYDRAULIC (BOOM, HIGH PRESSURE) (HIGH PRESSURE)	1082
Y	*242-6476*	1	LINES GP-AUXILIARY HYDRAULIC (BOOM, MEDIUM PRESSURE) (MEDIUM PRESSURE)	1084
Y	*242-6487*	1	LINES GP-AUXILIARY HYDRAULIC (STICK, HIGH PRESSURE) (STICK, HIGH PRESSURE)	1097
Y	*242-6488*	1	LINES GP-AUXILIARY HYDRAULIC (STICK, MEDIUM PRESSURE) (STICK, MEDIUM PRESSURE)	1101
Y	*314-3851*	1	LINKAGE AR-BUCKET (B1-FAMILY, WITHOUT LIFTING EYE)	1755
Y	*327-6552*	1	MIRROR GP-REAR VIEW	2169
Y	*251-0542*	1	PANEL GP-SWITCH (ENGINE SPEED, START)	513
Y	*314-3785*	1	PUMP AR-FUEL TRANSFER	335
Y	*327-6503*	1	SEAT & MOUNTING GP (HIGH BACK, WITH HEATER)	2205
Y	*305-0467*	1	SEAT BELT GP (RETRACTABLE)	2216
Y	*272-4772*	1	SENSOR GP-LIQUID LEVEL (WATER SEPARATOR)	529
Y	*290-1892*	1	SPECIAL AR (TIER II SOUND, TIER III ENGINE)	101
Y	*240-3849*	1	STICK AR-HOE (REACH)	1776
Y	*194-1911*	2	TRACK GP	893
Y	*270-5974*	1	VALVE AR-CHECK & RELIEF (BOOM LOWERING CONTROL VALVE)	1514
Y	*247-7457*	1	VALVE AR-SWING (WITHOUT FINE SWING)	1516
Y	*161-3750*	1	VISOR GP-PROTECTION (RAIN)	2254
Y	*314-3765*	1	WARNING AR-OVERLOAD	553
Y	*229-9086*	1	WIPER AR-WINDOW (LOWER)	2273
Y	*251-0485*	1	WIRING GP-CONVERTER (12-VOLT, 7-AMPERE)	612
	245-7794	1	FLOOR MAT	

Y - SEPARATE ILLUSTRATION

<END>

MACHINE ARRANGEMENT

314-3861 DISTRIBUTION AR

S/N: KGF1-UP

AN ATTACHMENT

SMCS-7000 **i03615106**

NOTE	PART NUMBER	QTY	PART NAME 1 2 3 4 5 6 (PRODUCT LEVEL)	SEE PAGE
Y	*264-8671*	1	AIR CLEANER AR (PRECLEANER)	255
Y	*235-9003*	1	AIR CONDITIONER AR	1943
Y	*240-3828*	1	BOOM AR-1 PIECE LONG	1719
Y	*229-9098*	1	CAB GP	1961
Y	*314-3735*	1	CAMERA AR	441
Y	*284-4442*	1	CONDENSER & LINES GP-RFGT (CHASSIS)	2019
Y	*310-0078*	1	CONTROL & MTG GP-JOYSTICK	2045
Y	*259-7496*	1	CONTROL AR-AUXILIARY (SYSTEM 3, 1-WAY, 2-PUMP)	909
Y	*270-6106*	1	CONTROL AR-AUXILIARY (FLOOR, SWITCH)	910
Y	*244-8503*	1	CONVERSION GP-LINKAGE (B1-FAMILY)	1744
Y	**234-6500**	1	COVER GP-STORAGE (CAB, REAR)	2082
Y	*134-8875*	1	GUARD GP-SWIVEL (HEAVY-DUTY)	761
Y	*298-4115*	1	INSTALLATION AR-COMMUNICATION (PRODUCT LINK 321SR)	469
Y	*163-6772*	1	LIGHTING GP-FLOOD (CAB)	479
Y	*259-5047*	1	LIGHTING GP-FLOOD (BOOM, RH)	488
Y	*237-3184*	1	LINES GP-AUXILIARY HYDRAULIC (STICK, HIGH PRESSURE) (STICK, HIGH PRESSURE)	1078
Y	*242-6475*	1	LINES GP-AUXILIARY HYDRAULIC (BOOM, HIGH PRESSURE)	1082
Y	*260-7984*	1	LINES GP-PILOT (PILOT OIL PRESSURE)	1379
Y	*314-3851*	1	LINKAGE AR-BUCKET (B1-FAMILY, WITHOUT LIFTING EYE)	1755
Y	*327-6552*	1	MIRROR GP-REAR VIEW	2169
Y	*251-0542*	1	PANEL GP-SWITCH (ENGINE SPEED, START)	513
Y	*314-3785*	1	PUMP AR-FUEL TRANSFER	335
Y	*327-6501*	1	SEAT & MOUNTING GP (HIGH BACK, TILT)	2201
Y	*305-0467*	1	SEAT BELT GP (RETRACTABLE)	2216
Y	*272-4772*	1	SENSOR GP-LIQUID LEVEL (WATER SEPARATOR)	529
Y	*290-1892*	1	SPECIAL AR (TIER II SOUND, TIER III ENGINE)	101
Y	*240-3882*	1	STICK AR-HOE (REACH)	1777
Y	**194-1910**	2	TRACK GP	893
Y	*270-5974*	1	VALVE AR-CHECK & RELIEF (BOOM LOWERING CONTROL VALVE)	1514
Y	*247-7457*	1	VALVE AR-SWING (WITHOUT FINE SWING)	1516
Y	*161-3750*	1	VISOR GP-PROTECTION (RAIN)	2254
Y	*314-3765*	1	WARNING AR-OVERLOAD	553
Y	*229-9086*	1	WIPER AR-WINDOW (LOWER)	2273
Y	*251-0485*	1	WIRING GP-CONVERTER (12-VOLT, 7-AMPERE)	612
	293-1168	1	FLOOR MAT	

Y - SEPARATE ILLUSTRATION

<END>

MACHINE ARRANGEMENT

314-3862 DISTRIBUTION AR

S/N: KGF1-UP

AN ATTACHMENT

SMCS-7000 **i03615107**

NOTE	PART NUMBER	QTY	PART NAME 1 2 3 4 5 6 (PRODUCT LEVEL)	SEE PAGE
Y	*264-8671*	1	AIR CLEANER AR (PRECLEANER)	255
Y	*235-9003*	1	AIR CONDITIONER AR	1943
Y	*240-3828*	1	BOOM AR-1 PIECE LONG	1719
Y	*229-9098*	1	CAB GP	1961
Y	*314-3735*	1	CAMERA AR	441
Y	*284-4442*	1	CONDENSER & LINES GP-RFGT (CHASSIS)	2019
Y	*310-0078*	1	CONTROL & MTG GP-JOYSTICK	2045
Y	*259-7496*	1	CONTROL AR-AUXILIARY (SYSTEM 3, 1-WAY, 2-PUMP)	909
Y	*270-6106*	1	CONTROL AR-AUXILIARY (FLOOR, SWITCH)	910
Y	*288-7608*	1	CONTROL AR-COUPLER	912
Y	*244-8503*	1	CONVERSION GP-LINKAGE (B1-FAMILY)	1744
Y	**234-6500**	1	COVER GP-STORAGE (CAB, REAR)	2082
Y	*134-8875*	1	GUARD GP-SWIVEL (HEAVY-DUTY)	761
Y	*298-4115*	1	INSTALLATION AR-COMMUNICATION (PRODUCT LINK 321SR)	469
Y	*163-6772*	1	LIGHTING GP-FLOOD (CAB)	479
Y	*259-5047*	1	LIGHTING GP-FLOOD (BOOM, RH)	488
Y	*242-6475*	1	LINES GP-AUXILIARY HYDRAULIC (BOOM, HIGH PRESSURE) (HIGH PRESSURE)	1082
Y	*242-6487*	1	LINES GP-AUXILIARY HYDRAULIC (STICK, HIGH PRESSURE) (STICK, HIGH PRESSURE)	1097
Y	*242-6478*	1	LINES GP-COUPLER (REACH BOOM) (REACH BOOM)	1153
Y	*242-6490*	1	LINES GP-COUPLER (STICK) (STICK)	1157
Y	*260-7984*	1	LINES GP-PILOT (PILOT OIL PRESSURE)	1379
Y	*314-3851*	1	LINKAGE AR-BUCKET (B1-FAMILY, WITHOUT LIFTING EYE)	1755
Y	*327-6552*	1	MIRROR GP-REAR VIEW	2169
Y	*251-0542*	1	PANEL GP-SWITCH (ENGINE SPEED, START)	513
Y	*314-3785*	1	PUMP AR-FUEL TRANSFER	335
Y	*327-6503*	1	SEAT & MOUNTING GP (HIGH BACK, WITH HEATER)	2205
Y	*305-0467*	1	SEAT BELT GP (RETRACTABLE)	2216
Y	*272-4772*	1	SENSOR GP-LIQUID LEVEL (WATER SEPARATOR)	529
Y	*290-1892*	1	SPECIAL AR	101
Y	*240-3849*	1	STICK AR-HOE (REACH)	1776
Y	*194-1911*	2	TRACK GP	893
Y	*270-5974*	1	VALVE AR-CHECK & RELIEF (BOOM LOWERING CONTROL VALVE)	1514
Y	*247-7457*	1	VALVE AR-SWING (WITHOUT FINE SWING)	1516
Y	*161-3750*	1	VISOR GP-PROTECTION (RAIN)	2254
Y	*314-3765*	1	WARNING AR-OVERLOAD	553
Y	*229-9086*	1	WIPER AR-WINDOW (LOWER)	2273
Y	*251-0485*	1	WIRING GP-CONVERTER (12-VOLT, 7-AMPERE)	612
	293-1168	1	FLOOR MAT	

Y - SEPARATE ILLUSTRATION

<END>

MACHINE ARRANGEMENT

314-3864 DISTRIBUTION AR

S/N: KGF1-UP

AN ATTACHMENT

SMCS-7000 **i04038014**

NOTE	PART NUMBER	QTY	PART NAME 1 2 3 4 5 6 (PRODUCT LEVEL)	SEE PAGE
Y	*264-8671*	1	AIR CLEANER AR (PRECLEANER)	255
Y	*235-9003*	1	AIR CONDITIONER AR	1943
Y	*240-3836*	1	BOOM AR-1 PIECE LONG (HEAVY-DUTY)	1720
Y	*229-9108*	1	CAB GP	1969
Y	*310-0078*	1	CONTROL & MTG GP-JOYSTICK	2045
Y	*290-1911*	1	COOLING AR-HIGH AMBIENT TEMP	191
Y	**234-6500**	1	COVER GP-STORAGE (CAB, REAR)	2082
Y	*134-8875*	1	GUARD GP-SWIVEL (HEAVY-DUTY)	761
Y	**327-6515**	1	HEADREST AS-SEAT (CLOTH)	2129
Y	*163-6772*	1	LIGHTING GP-FLOOD (CAB)	479
Y	*259-5047*	1	LIGHTING GP-FLOOD (BOOM, RH)	488
Y	*240-3861*	1	LINKAGE AR-BUCKET (B1-FAMILY, WITH LIFTING EYE)	1753
Y	*251-0542*	1	PANEL GP-SWITCH (ENGINE SPEED, START)	513
Y	*314-3785*	1	PUMP AR-FUEL TRANSFER	335
Y	*327-6500*	1	SEAT & MOUNTING GP (LOW BACK, TILT)	2199
Y	*305-0467*	1	SEAT BELT GP (RETRACTABLE)	2216
Y	*272-4772*	1	SENSOR GP-LIQUID LEVEL (WATER SEPARATOR)	529
Y	*240-3854*	1	STICK AR-HOE (HEAVY-DUTY, B-FAMILY)	1776
Y	**194-1910**	2	TRACK GP (2-REQUIRED)	893
Y	*247-7457*	1	VALVE AR-SWING (WITHOUT FINE SWING)	1516
Y	*161-3751*	1	VISOR GP-CAB (SUN)	2253
Y	*229-9086*	1	WIPER AR-WINDOW (LOWER)	2273
Y	*251-0482*	1	WIRING GP-CONVERTER (12-VOLT, 7-AMPERE)	611
	240-5071	1	FLOOR MAT	

Y - SEPARATE ILLUSTRATION

<END>

MACHINE ARRANGEMENT

314-3865 DISTRIBUTION AR

S/N: KGF1-UP

AN ATTACHMENT

SMCS-7000 **i04109895**

NOTE	PART NUMBER	QTY	PART NAME 1 2 3 4 5 6 (PRODUCT LEVEL)	SEE PAGE
Y	*264-8671*	1	AIR CLEANER AR (PRECLEANER)	255
Y	*235-9003*	1	AIR CONDITIONER AR	1943
Y	*240-3836*	1	BOOM AR-1 PIECE LONG (HEAVY-DUTY)	1720
Y	**229-9108**	1	CAB GP	1969
Y	*310-0078*	1	CONTROL & MTG GP-JOYSTICK	2045
Y	*259-7494*	1	CONTROL AR-AUXILIARY (SYSTEM 3, 1-WAY, 2-PUMP)	908
Y	*244-8503*	1	CONVERSION GP-LINKAGE (B1-FAMILY)	1744
Y	*290-1911*	1	COOLING AR-HIGH AMBIENT TEMP	191
Y	**234-6500**	1	COVER GP-STORAGE (CAB, REAR)	2082
Y	*134-8875*	1	GUARD GP-SWIVEL (HEAVY-DUTY)	761
Y	**327-6515**	1	HEADREST AS-SEAT (CLOTH)	2129
Y	*163-6772*	1	LIGHTING GP-FLOOD (CAB)	479
Y	*259-5047*	1	LIGHTING GP-FLOOD (BOOM, RH)	488
Y	*242-6475*	1	LINES GP-AUXILIARY HYDRAULIC (BOOM, HIGH PRESSURE) (HIGH PRESSURE)	1082
Y	*242-6487*	1	LINES GP-AUXILIARY HYDRAULIC (STICK, HIGH PRESSURE) (STICK, HIGH PRESSURE)	1097
Y	*240-3861*	1	LINKAGE AR-BUCKET (B1-FAMILY, WITH LIFTING EYE)	1753
Y	*251-0542*	1	PANEL GP-SWITCH (ENGINE SPEED, START)	513
Y	*314-3785*	1	PUMP AR-FUEL TRANSFER	335
Y	*327-6500*	1	SEAT & MOUNTING GP (LOW BACK, TILT)	2199
Y	*305-0467*	1	SEAT BELT GP (RETRACTABLE)	2216
Y	*272-4772*	1	SENSOR GP-LIQUID LEVEL (WATER SEPARATOR)	529
Y	*314-3727*	1	STICK AR-HOE (HEAVY-DUTY, REACH)	1779
Y	**194-1910**	2	TRACK GP (2-REQUIRED)	893
Y	*247-7457*	1	VALVE AR-SWING (WITHOUT FINE SWING)	1516
Y	*161-3751*	1	VISOR GP-CAB (SUN)	2253
Y	*229-9086*	1	WIPER AR-WINDOW (LOWER)	2273
Y	*251-0482*	1	WIRING GP-CONVERTER (12-VOLT, 7-AMPERE)	611
	240-5073	1	FLOOR MAT	

Y - SEPARATE ILLUSTRATION

<END>

MACHINE ARRANGEMENT

314-3905 DISTRIBUTION AR

S/N: KGF1-UP

AN ATTACHMENT

SMCS-7000 **i03855848**

NOTE	PART NUMBER	QTY	PART NAME 1 2 3 4 5 6 (PRODUCT LEVEL)	SEE PAGE
Y	*264-8671*	1	AIR CLEANER AR (PRECLEANER)	255
Y	*235-9003*	1	AIR CONDITIONER AR	1943
Y	*240-3828*	1	BOOM AR-1 PIECE LONG	1719
Y	*229-9098*	1	CAB GP	1961
Y	*314-3735*	1	CAMERA AR	441
Y	*284-4442*	1	CONDENSER & LINES GP-RFGT (CHASSIS)	2019
Y	*310-0078*	1	CONTROL & MTG GP-JOYSTICK	2045
Y	*259-7495*	1	CONTROL AR-AUXILIARY (COMBINED FCTN, MEDIUM PRESSURE)	908
Y	*244-8503*	1	CONVERSION GP-LINKAGE (B1-FAMILY)	1744
Y	**234-6500**	1	COVER GP-STORAGE (CAB, REAR)	2082
Y	*134-8875*	1	GUARD GP-SWIVEL (HEAVY-DUTY)	761
Y	*298-4115*	1	INSTALLATION AR-COMMUNICATION (PRODUCT LINK 321SR)	469
Y	*227-7581*	1	INSTALLATION GP-SECURITY	472
Y	*163-6772*	1	LIGHTING GP-FLOOD (CAB)	479
Y	*259-5047*	1	LIGHTING GP-FLOOD (BOOM, RH)	488
Y	*242-6475*	1	LINES GP-AUXILIARY HYDRAULIC (BOOM, HIGH PRESSURE) (HIGH PRESSURE)	1082
Y	*242-6476*	1	LINES GP-AUXILIARY HYDRAULIC (BOOM, MEDIUM PRESSURE) (MEDIUM PRESSURE)	1084
Y	*242-6487*	1	LINES GP-AUXILIARY HYDRAULIC (STICK, HIGH PRESSURE) (STICK, HIGH PRESSURE)	1097
Y	*242-6488*	1	LINES GP-AUXILIARY HYDRAULIC (STICK, MEDIUM PRESSURE) (STICK, MEDIUM PRESSURE)	1101
Y	*314-3851*	1	LINKAGE AR-BUCKET (B1-FAMILY, WITHOUT LIFTING EYE)	1755
Y	*327-6552*	1	MIRROR GP-REAR VIEW	2169
Y	*314-3785*	1	PUMP AR-FUEL TRANSFER	335
Y	*327-6503*	1	SEAT & MOUNTING GP (HIGH BACK, WITH HEATER)	2205
Y	*305-0467*	1	SEAT BELT GP (RETRACTABLE)	2216
Y	*272-4772*	1	SENSOR GP-LIQUID LEVEL (WATER SEPARATOR)	529
Y	*290-1892*	1	SPECIAL AR	101
Y	*240-3849*	1	STICK AR-HOE (REACH)	1776
Y	*314-3798*	2	TRACK AR	892
Y	*270-5974*	1	VALVE AR-CHECK & RELIEF (BOOM LOWERING CONTROL VALVE)	1514
Y	*247-7457*	1	VALVE AR-SWING (WITHOUT FINE SWING)	1516
Y	*161-3750*	1	VISOR GP-PROTECTION (RAIN)	2254
Y	*314-3765*	1	WARNING AR-OVERLOAD	553
Y	*229-9086*	1	WIPER AR-WINDOW (LOWER)	2273
Y	*251-0485*	1	WIRING GP-CONVERTER (12-VOLT, 7-AMPERE)	612
	245-7794	1	FLOOR MAT	

Y - SEPARATE ILLUSTRATION

<END>

MACHINE ARRANGEMENT

338-9908 DISTRIBUTION AR

S/N: KGF1-UP

AN ATTACHMENT

SMCS-7000 **i04057818**

NOTE	PART NUMBER	QTY	PART NAME 1 2 3 4 5 6 (PRODUCT LEVEL)	SEE PAGE
Y	*264-8671*	1	AIR CLEANER AR (PRECLEANER)	255
Y	*235-9003*	1	AIR CONDITIONER AR	1943
Y	*299-2783*	1	BATTERY & WIRING GP (COLD WEATHER)	435
Y	*240-3830*	1	BOOM AR-1 PIECE LONG (HEAVY-DUTY)	1719
Y	*346-8037*	1	CAB GP	1993
Y	*284-4442*	1	CONDENSER & LINES GP-RFGT (CHASSIS)	2019
Y	*310-0078*	1	CONTROL & MTG GP-JOYSTICK	2045
Y	*259-7495*	1	CONTROL AR-AUXILIARY (COMBINED FCTN, MEDIUM PRESSURE)	908
Y	*290-1911*	1	COOLING AR-HIGH AMBIENT TEMP	191
Y	**234-6500**	1	COVER GP-STORAGE (CAB, REAR)	2082
Y	*314-3786*	1	PLATE GP-INFORMATION	2341
Y	*134-8875*	1	GUARD GP-SWIVEL (HEAVY-DUTY)	761
Y	*238-1627*	1	LIGHTING GP-FLOOD (CAB)	482
Y	*314-3851*	1	LINKAGE AR-BUCKET (B1-FAMILY, WITHOUT LIFTING EYE)	1755
Y	*251-0542*	1	PANEL GP-SWITCH (ENGINE SPEED, START)	513
Y	*314-3785*	1	PUMP AR-FUEL TRANSFER	335
Y	*327-6501*	1	SEAT & MOUNTING GP (HIGH BACK, TILT)	2201
Y	*305-0467*	1	SEAT BELT GP (RETRACTABLE)	2216
Y	*272-4772*	1	SENSOR GP-LIQUID LEVEL (WATER SEPARATOR)	529
Y	*314-3727*	1	STICK AR-HOE (HEAVY-DUTY, REACH)	1779
Y	**194-1910**	2	TRACK GP	893
Y	*247-7457*	1	VALVE AR-SWING (WITHOUT FINE SWING)	1516
Y	*161-3751*	1	VISOR GP-CAB (SUN)	2253
Y	*229-9070*	1	WASHER GP-WINDOW	2255
Y	*251-0482*	1	WIRING GP-CONVERTER (12-VOLT, 7-AMPERE)	611
	240-5071	1	FLOOR MAT	

Y - SEPARATE ILLUSTRATION

<END>

MACHINE ARRANGEMENT

338-9923 DISTRIBUTION AR

S/N: KGF1-UP

AN ATTACHMENT

SMCS-7000 **i04057815**

NOTE	PART NUMBER	QTY	PART NAME 1 2 3 4 5 6 (PRODUCT LEVEL)	SEE PAGE
Y	*264-8671*	1	AIR CLEANER AR (PRECLEANER)	255
Y	*235-9003*	1	AIR CONDITIONER AR	1943
Y	*299-2783*	1	BATTERY & WIRING GP (COLD WEATHER)	435
Y	*240-3830*	1	BOOM AR-1 PIECE LONG (HEAVY-DUTY)	1719
Y	*346-8037*	1	CAB GP	1993
Y	*284-4442*	1	CONDENSER & LINES GP-RFGT (CHASSIS)	2019
Y	*310-0078*	1	CONTROL & MTG GP-JOYSTICK	2045
Y	*259-7495*	1	CONTROL AR-AUXILIARY (COMBINED FCTN, MEDIUM PRESSURE)	908
Y	*290-1911*	1	COOLING AR-HIGH AMBIENT TEMP	191
Y	**234-6500**	1	COVER GP-STORAGE (CAB, REAR)	2082
Y	*134-8875*	1	GUARD GP-SWIVEL (HEAVY-DUTY)	761
Y	*238-1627*	1	LIGHTING GP-FLOOD (CAB)	482
Y	*314-3851*	1	LINKAGE AR-BUCKET (B1-FAMILY, WITHOUT LIFTING EYE)	1755
Y	*251-0542*	1	PANEL GP-SWITCH (ENGINE SPEED, START)	513
Y	*314-3785*	1	PUMP AR-FUEL TRANSFER	335
Y	*327-6501*	1	SEAT & MOUNTING GP (HIGH BACK, TILT)	2201
Y	*305-0467*	1	SEAT BELT GP (RETRACTABLE)	2216
Y	*272-4772*	1	SENSOR GP-LIQUID LEVEL (WATER SEPARATOR)	529
Y	*314-3727*	1	STICK AR-HOE (HEAVY-DUTY, REACH)	1779
Y	**194-1910**	2	TRACK GP	893
Y	*247-7457*	1	VALVE AR-SWING (WITHOUT FINE SWING)	1516
Y	*161-3751*	1	VISOR GP-CAB (SUN)	2253
Y	*229-9070*	1	WASHER GP-WINDOW	2255
Y	*251-0482*	1	WIRING GP-CONVERTER (12-VOLT, 7-AMPERE)	611
	240-5071	1	FLOOR MAT	

Y - SEPARATE ILLUSTRATION

<END>

347-3338 DISTRIBUTION AR

S/N: FAL1-UP

AN ATTACHMENT

SMCS-7000 **i03838189**

NOTE	PART NUMBER	QTY	PART NAME 1 2 3 4 5 6 (PRODUCT LEVEL)	SEE PAGE
Y	*231-1771*	1	ALARM GP-TRAVEL (BACKUP)	400
Y	*163-6772*	1	LIGHTING GP-FLOOD (CAB)	479
Y	*347-3344*	1	OPTION AR-CAB	75
Y	*347-3342*	1	OPTION AR-REGIONAL	90
Y	*314-3868*	1	OPTION AR-HYDRAULIC	82
Y	*347-3349*	1	OPTION AR-LINKAGE	86
Y	*194-1920*	2	TRACK GP	895

Y - SEPARATE ILLUSTRATION

<END>

MACHINE ARRANGEMENT

347-3339 DISTRIBUTION AR

S/N: KGF1-UP

AN ATTACHMENT

SMCS-7000 **i03904045**

NOTE	PART NUMBER	QTY	PART NAME 1 2 3 4 5 6 (PRODUCT LEVEL)	SEE PAGE
Y	*298-4099*	1	GUARD AR (HEAVY-DUTY)	756
Y	*120-7167*	1	GUARD GP-TRACK GUIDE	862
Y	*347-3344*	1	OPTION AR-CAB	75
Y	*314-3868*	1	OPTION AR-HYDRAULIC	82
Y	*314-3900*	1	OPTION AR-LIGHTING	84
Y	*347-3353*	1	OPTION AR-LINKAGE	87
Y	*347-3342*	1	OPTION AR-REGIONAL	90
Y	*194-1914*	2	TRACK GP	894

Y - SEPARATE ILLUSTRATION

<END>

347-3340 DISTRIBUTION AR

S/N: KGF1-UP

AN ATTACHMENT

SMCS-7000 **i03905858**

NOTE	PART NUMBER	QTY	PART NAME 1 2 3 4 5 6 (PRODUCT LEVEL)	SEE PAGE
Y	*264-8671*	1	AIR CLEANER AR (PRECLEANER)	255
Y	*235-9003*	1	AIR CONDITIONER AR	1943
Y	*346-8037*	1	CAB GP	1993
Y	*270-5688*	1	CONTROL & MTG GP-JOYSTICK (3-BUTTON, TRIGGER SWITCH)	2043
Y	*259-7501*	1	CONTROL AR-AUXILIARY (MEDIUM PRESSURE)	910
Y	*290-1911*	1	COOLING AR-HIGH AMBIENT TEMP	191
Y	**234-6500**	1	COVER GP-STORAGE (CAB, REAR)	2082
Y	*134-8875*	1	GUARD GP-SWIVEL (HEAVY-DUTY)	761
Y	*163-6772*	1	LIGHTING GP-FLOOD (CAB)	479
Y	*260-7984*	1	LINES GP-PILOT (PILOT OIL PRESSURE)	1379
Y	*302-9208*	1	LINKAGE AR-FRONT	1758
Y	*253-2866*	1	OPTION AR-HYDRAULIC	81
Y	*251-0542*	1	PANEL GP-SWITCH (ENGINE SPEED, START)	513
Y	*314-3785*	1	PUMP AR-FUEL TRANSFER	335
Y	*327-6501*	1	SEAT & MOUNTING GP (HIGH BACK, TILT)	2201
Y	*305-0467*	1	SEAT BELT GP (RETRACTABLE)	2216
Y	*272-4772*	1	SENSOR GP-LIQUID LEVEL (WATER SEPARATOR)	529
Y	*314-3798*	2	TRACK AR	892
Y	*247-7457*	1	VALVE AR-SWING (WITHOUT FINE SWING)	1516
Y	*161-3751*	1	VISOR GP-CAB (SUN)	2253
Y	*161-3750*	1	VISOR GP-PROTECTION (RAIN)	2254
Y	*229-9086*	1	WIPER AR-WINDOW (LOWER)	2273
Y	*251-0485*	1	WIRING GP-CONVERTER (12-VOLT, 7-AMPERE)	612
	240-5071	1	FLOOR MAT	

Y - SEPARATE ILLUSTRATION

<END>

MACHINE ARRANGEMENT

354-1018 DISTRIBUTION AR

S/N: KGF1-UP

AN ATTACHMENT

SMCS-7000 **i03906254**

NOTE	PART NUMBER	QTY	PART NAME 1 2 3 4 5 6 (PRODUCT LEVEL)	SEE PAGE
Y	*264-8671*	1	AIR CLEANER AR (PRECLEANER)	255
Y	*235-9003*	1	AIR CONDITIONER AR	1943
Y	*240-3836*	1	BOOM AR-1 PIECE LONG (HEAVY-DUTY)	1720
Y	*346-8039*	1	CAB GP	1997
Y	*310-0078*	1	CONTROL & MTG GP-JOYSTICK	2045
Y	*290-1911*	1	COOLING AR-HIGH AMBIENT TEMP	191
Y	**234-6500**	1	COVER GP-STORAGE (CAB, REAR)	2082
Y	*134-8875*	1	GUARD GP-SWIVEL (HEAVY-DUTY)	761
Y	**327-6515**	1	HEADREST AS-SEAT (CLOTH)	2129
Y	*163-6772*	1	LIGHTING GP-FLOOD (CAB)	479
Y	*259-5047*	1	LIGHTING GP-FLOOD (BOOM, RH)	488
Y	*240-3861*	1	LINKAGE AR-BUCKET (B1-FAMILY, WITH LIFTING EYE)	1753
Y	*251-0542*	1	PANEL GP-SWITCH (ENGINE SPEED, START)	513
Y	*314-3785*	1	PUMP AR-FUEL TRANSFER	335
Y	*327-6500*	1	SEAT & MOUNTING GP (LOW BACK, TILT)	2199
Y	*305-0467*	1	SEAT BELT GP (RETRACTABLE)	2216
Y	*272-4772*	1	SENSOR GP-LIQUID LEVEL (WATER SEPARATOR)	529
Y	*240-3854*	1	STICK AR-HOE (HEAVY-DUTY, B-FAMILY)	1776
Y	**194-1910**	2	TRACK GP	893
Y	*247-7457*	1	VALVE AR-SWING (WITHOUT FINE SWING)	1516
Y	*161-3751*	1	VISOR GP-CAB (SUN)	2253
Y	*229-9086*	1	WIPER AR-WINDOW (LOWER)	2273
Y	*251-0482*	1	WIRING GP-CONVERTER (12-VOLT, 7-AMPERE)	611
	240-5071	1	FLOOR MAT	

Y - SEPARATE ILLUSTRATION

<END>

MACHINE ARRANGEMENT

354-1019 DISTRIBUTION AR

S/N: KGF1-UP

AN ATTACHMENT

SMCS-7000 **i03906307**

NOTE	PART NUMBER	QTY	PART NAME 1 2 3 4 5 6 (PRODUCT LEVEL)	SEE PAGE
Y	*264-8671*	1	AIR CLEANER AR (PRECLEANER)	255
Y	*235-9003*	1	AIR CONDITIONER AR	1943
Y	*240-3836*	1	BOOM AR-1 PIECE LONG (HEAVY-DUTY)	1720
Y	*346-8039*	1	CAB GP	1997
Y	*310-0078*	1	CONTROL & MTG GP-JOYSTICK	2045
Y	*259-7494*	1	CONTROL AR-AUXILIARY (SYSTEM 3, 1-WAY, 2-PUMP)	908
Y	*244-8503*	1	CONVERSION GP-LINKAGE (B1-FAMILY)	1744
Y	*290-1911*	1	COOLING AR-HIGH AMBIENT TEMP	191
Y	**234-6500**	1	COVER GP-STORAGE (CAB, REAR)	2082
Y	*134-8875*	1	GUARD GP-SWIVEL (HEAVY-DUTY)	761
Y	**327-6515**	1	HEADREST AS-SEAT (CLOTH)	2129
Y	*163-6772*	1	LIGHTING GP-FLOOD (CAB)	479
Y	*259-5047*	1	LIGHTING GP-FLOOD (BOOM, RH)	488
Y	*242-6475*	1	LINES GP-AUXILIARY HYDRAULIC (BOOM, HIGH PRESSURE)	1082
Y	*242-6487*	1	LINES GP-AUXILIARY HYDRAULIC (STICK, HIGH PRESSURE)	1097
Y	*240-3861*	1	LINKAGE AR-BUCKET (B1-FAMILY, WITH LIFTING EYE)	1753
Y	*251-0542*	1	PANEL GP-SWITCH (ENGINE SPEED, START)	513
Y	*314-3785*	1	PUMP AR-FUEL TRANSFER	335
Y	*327-6500*	1	SEAT & MOUNTING GP (LOW BACK, TILT)	2199
Y	*305-0467*	1	SEAT BELT GP (RETRACTABLE)	2216
Y	*272-4772*	1	SENSOR GP-LIQUID LEVEL (WATER SEPARATOR)	529
Y	*314-3727*	1	STICK AR-HOE (HEAVY-DUTY, REACH)	1779
Y	**194-1910**	2	TRACK GP	893
Y	*247-7457*	1	VALVE AR-SWING (WITHOUT FINE SWING)	1516
Y	*161-3751*	1	VISOR GP-CAB (SUN)	2253
Y	*229-9086*	1	WIPER AR-WINDOW (LOWER)	2273
Y	*251-0482*	1	WIRING GP-CONVERTER (12-VOLT, 7-AMPERE)	611
	240-5073	1	FLOOR MAT	

Y - SEPARATE ILLUSTRATION

<END>

MACHINE ARRANGEMENT

354-1047 DISTRIBUTION AR

S/N: KGF1-UP

AN ATTACHMENT

SMCS-7000 **i03900845**

NOTE	PART NUMBER	QTY	PART NAME 1 2 3 4 5 6 (PRODUCT LEVEL)	SEE PAGE
Y	*235-9003*	1	AIR CONDITIONER AR	1943
Y	*240-3830*	1	BOOM AR-1 PIECE LONG (HEAVY-DUTY)	1719
Y	*346-8037*	1	CAB GP	1993
Y	*310-0078*	1	CONTROL & MTG GP-JOYSTICK	2045
Y	*298-4271*	1	COOLING AR-HIGH AMBIENT TEMP	192
Y	*290-1902*	1	COUNTERWEIGHT AR	701
Y	**234-6500**	1	COVER GP-STORAGE (CAB, REAR)	2082
Y	*314-3848*	1	FILM GP	2298
Y	*240-3858*	1	LINKAGE AR-BUCKET (B1-FAMILY, WITH LIFTING EYE)	1753
Y	*251-0542*	1	PANEL GP-SWITCH (ENGINE SPEED, START)	513
Y	*327-6501*	1	SEAT & MOUNTING GP (HIGH BACK, TILT)	2201
Y	*305-0467*	1	SEAT BELT GP (RETRACTABLE)	2216
Y	*272-4772*	1	SENSOR GP-LIQUID LEVEL (WATER SEPARATOR)	529
Y	*314-3727*	1	STICK AR-HOE (HEAVY-DUTY, REACH)	1779
Y	*194-1920*	2	TRACK GP	895
Y	*247-7457*	1	VALVE AR-SWING (WITHOUT FINE SWING)	1516
Y	*229-9070*	1	WASHER GP-WINDOW	2255
Y	*283-2761*	1	WIRING GP-COMMUNICATION (GLOBAL POSITIONING SYSTEM)	600
	240-5071	1	FLOOR MAT	

Y - SEPARATE ILLUSTRATION

<END>

MACHINE ARRANGEMENT

354-1054 DISTRIBUTION AR

S/N: FAL1-UP

AN ATTACHMENT

SMCS-7000 **i03897549**

NOTE	PART NUMBER	QTY	PART NAME 1 2 3 4 5 6 (PRODUCT LEVEL)	SEE PAGE
Y	*235-9003*	1	AIR CONDITIONER AR	1943
Y	*240-3830*	1	BOOM AR-1 PIECE LONG (HEAVY-DUTY)	1719
Y	*346-8037*	1	CAB GP	1993
Y	*310-0078*	1	CONTROL & MTG GP-JOYSTICK	2045
Y	*298-4271*	1	COOLING AR-HIGH AMBIENT TEMP	192
Y	*290-1902*	1	COUNTERWEIGHT AR	701
Y	**234-6500**	1	COVER GP-STORAGE (CAB, REAR)	2082
Y	*314-3848*	1	FILM GP	2298
Y	*240-3858*	1	LINKAGE AR-BUCKET (B1-FAMILY, WITH LIFTING EYE)	1753
Y	*251-0542*	1	PANEL GP-SWITCH (ENGINE SPEED, START)	513
Y	*327-6501*	1	SEAT & MOUNTING GP (HIGH BACK, TILT)	2201
Y	*305-0467*	1	SEAT BELT GP (RETRACTABLE)	2216
Y	*272-4772*	1	SENSOR GP-LIQUID LEVEL (WATER SEPARATOR)	529
Y	*298-4102*	1	STARTING AR-COLD WEATHER	532
Y	*314-3727*	1	STICK AR-HOE (HEAVY-DUTY, REACH)	1779
Y	*194-1920*	2	TRACK GP	895
Y	*247-7457*	1	VALVE AR-SWING (WITHOUT FINE SWING)	1516
Y	*229-9070*	1	WASHER GP-WINDOW	2255
Y	*283-2761*	1	WIRING GP-COMMUNICATION (GLOBAL POSITIONING SYSTEM)	600
	240-5071	1	FLOOR MAT	

Y - SEPARATE ILLUSTRATION

<END>

354-1062 DISTRIBUTION AR

S/N: FAL1-UP

AN ATTACHMENT

SMCS-7000 **i03895882**

NOTE	PART NUMBER	QTY	PART NAME 1 2 3 4 5 6 (PRODUCT LEVEL)	SEE PAGE
Y	*231-1771*	1	ALARM GP-TRAVEL (BACKUP)	400
Y	*163-6772*	1	LIGHTING GP-FLOOD (CAB)	479
Y	*347-3344*	1	OPTION AR-CAB	75
Y	*314-3868*	1	OPTION AR-HYDRAULIC	82
Y	*347-3349*	1	OPTION AR-LINKAGE	86
Y	*354-1065*	1	OPTION AR-REGIONAL	91
Y	*194-1920*	2	TRACK GP	895

Y - SEPARATE ILLUSTRATION

<END>

MACHINE ARRANGEMENT

354-1063 DISTRIBUTION AR

S/N: KGF1-UP

AN ATTACHMENT

SMCS-7000 **i03900838**

NOTE	PART NUMBER	QTY	PART NAME 1 2 3 4 5 6 (PRODUCT LEVEL)	SEE PAGE
Y	*298-4099*	1	GUARD AR (HEAVY-DUTY)	756
Y	*120-7167*	1	GUARD GP-TRACK GUIDE	862
Y	*347-3344*	1	OPTION AR-CAB	75
Y	*314-3868*	1	OPTION AR-HYDRAULIC	82
Y	*314-3900*	1	OPTION AR-LIGHTING	84
Y	*347-3353*	1	OPTION AR-LINKAGE	87
Y	*354-1065*	1	OPTION AR-REGIONAL	91
Y	*194-1914*	2	TRACK GP	894

Y - SEPARATE ILLUSTRATION

<END>

354-1112 DISTRIBUTION AR

S/N: FAL1-UP

AN ATTACHMENT

SMCS-7000 **i04007658**

NOTE	PART NUMBER	QTY	PART NAME 1 2 3 4 5 6 (PRODUCT LEVEL)	SEE PAGE
Y	*240-3832*	1	BOOM AR-1 PIECE LONG	1720
Y	*346-8039*	1	CAB GP	1997
Y	*310-0078*	1	CONTROL & MTG GP-JOYSTICK	2045
Y	*354-1114*	1	CONVERSION AR-MACHINE	3
Y	*354-1056*	1	COOLING AR-HIGH AMBIENT TEMP	193
Y	*273-5168*	1	HEATER AR-CAB	2136
Y	*240-3861*	1	LINKAGE AR-BUCKET (B1-FAMILY, WITH LIFTING EYE)	1753
Y	*251-0542*	1	PANEL GP-SWITCH (ENGINE SPEED, START)	513
Y	*340-6478*	1	SEAT & MOUNTING GP (LOW BACK, TILT)	2208
Y	*305-0467*	1	SEAT BELT GP (RETRACTABLE)	2216
Y	*272-4772*	1	SENSOR GP-LIQUID LEVEL (WATER SEPARATOR)	529
Y	*240-3882*	1	STICK AR-HOE (REACH)	1777
Y	*194-1920*	2	TRACK GP	895
Y	*247-7457*	1	VALVE AR-SWING (WITHOUT FINE SWING)	1516
Y	*229-9070*	1	WASHER GP-WINDOW	2255
	240-5071	1	FLOOR MAT	

Y - SEPARATE ILLUSTRATION

<END>

MACHINE ARRANGEMENT

354-1113 DISTRIBUTION AR

S/N: FAL1-UP

AN ATTACHMENT

SMCS-7000 **i04016399**

NOTE	PART NUMBER	QTY	PART NAME 1 2 3 4 5 6 (PRODUCT LEVEL)	SEE PAGE
Y	*240-3836*	1	BOOM AR-1 PIECE LONG (HEAVY-DUTY)	1720
Y	*346-8039*	1	CAB GP	1997
Y	*310-0078*	1	CONTROL & MTG GP-JOYSTICK	2045
Y	*354-1114*	1	CONVERSION AR-MACHINE	3
Y	*354-1056*	1	COOLING AR-HIGH AMBIENT TEMP	193
Y	*273-5168*	1	HEATER AR-CAB	2136
Y	*240-3861*	1	LINKAGE AR-BUCKET (B1-FAMILY, WITH LIFTING EYE)	1753
Y	*251-0542*	1	PANEL GP-SWITCH (ENGINE SPEED, START)	513
Y	*340-6478*	1	SEAT & MOUNTING GP (LOW BACK, TILT)	2208
Y	*305-0467*	1	SEAT BELT GP (RETRACTABLE)	2216
Y	*272-4772*	1	SENSOR GP-LIQUID LEVEL (WATER SEPARATOR)	529
Y	*240-3854*	1	STICK AR-HOE (HEAVY-DUTY, B-FAMILY)	1776
Y	*194-1920*	2	TRACK GP	895
Y	*247-7457*	1	VALVE AR-SWING (WITHOUT FINE SWING)	1516
Y	*229-9070*	1	WASHER GP-WINDOW	2255
	240-5071	1	FLOOR MAT	

Y - SEPARATE ILLUSTRATION

<END>

354-1141 DISTRIBUTION AR

S/N: FAL1-UP

AN ATTACHMENT

SMCS-7000 **i03898271**

NOTE	PART NUMBER	QTY	PART NAME 1 2 3 4 5 6 (PRODUCT LEVEL)	SEE PAGE
Y	*231-1771*	1	ALARM GP-TRAVEL (BACKUP)	400
Y	*163-6772*	1	LIGHTING GP-FLOOD (CAB)	479
Y	*347-3344*	1	OPTION AR-CAB	75
Y	*314-3868*	1	OPTION AR-HYDRAULIC	82
Y	*347-3349*	1	OPTION AR-LINKAGE	86
Y	*354-1151*	1	OPTION AR-REGIONAL	92
Y	*194-1920*	2	TRACK GP	895

Y - SEPARATE ILLUSTRATION

<END>

MACHINE ARRANGEMENT

354-1142 DISTRIBUTION AR

S/N: KGF1-UP

AN ATTACHMENT

SMCS-7000 **i03900835**

NOTE	PART NUMBER	QTY	PART NAME 1 2 3 4 5 6 (PRODUCT LEVEL)	SEE PAGE
Y	*298-4099*	1	GUARD AR (HEAVY-DUTY)	756
Y	*120-7167*	1	GUARD GP-TRACK GUIDE	862
Y	*347-3344*	1	OPTION AR-CAB	75
Y	*314-3868*	1	OPTION AR-HYDRAULIC	82
Y	*314-3900*	1	OPTION AR-LIGHTING	84
Y	*347-3353*	1	OPTION AR-LINKAGE	87
Y	*354-1151*	1	OPTION AR-REGIONAL	92
Y	*194-1914*	2	TRACK GP	894

Y - SEPARATE ILLUSTRATION

<END>

354-1145 DISTRIBUTION AR

S/N: FAL1-UP

AN ATTACHMENT

SMCS-7000 **i03898272**

NOTE	PART NUMBER	QTY	PART NAME 1 2 3 4 5 6 (PRODUCT LEVEL)	SEE PAGE
Y	*231-1771*	1	ALARM GP-TRAVEL (BACKUP)	400
Y	*163-6772*	1	LIGHTING GP-FLOOD (CAB)	479
Y	*354-1154*	1	OPTION AR-CAB	76
Y	*314-3868*	1	OPTION AR-HYDRAULIC	82
Y	*347-3349*	1	OPTION AR-LINKAGE	86
Y	*354-1151*	1	OPTION AR-REGIONAL	92
Y	*194-1920*	2	TRACK GP	895

Y - SEPARATE ILLUSTRATION

<END>

354-1146 DISTRIBUTION AR

S/N: KGF1-UP

AN ATTACHMENT

SMCS-7000 **i03900367**

NOTE	PART NUMBER	QTY	PART NAME 1 2 3 4 5 6 (PRODUCT LEVEL)	SEE PAGE
Y	*298-4099*	1	GUARD AR (HEAVY-DUTY)	756
Y	*352-9554*	1	GUARD GP-TRACK GUIDE	864
Y	*354-1154*	1	OPTION AR-CAB	76
Y	*314-3868*	1	OPTION AR-HYDRAULIC	82
Y	*314-3900*	1	OPTION AR-LIGHTING	84
Y	*347-3353*	1	OPTION AR-LINKAGE	87
Y	*354-1151*	1	OPTION AR-REGIONAL	92
Y	*194-1914*	2	TRACK GP	894

Y - SEPARATE ILLUSTRATION

<END>

MACHINE ARRANGEMENT

354-1147 DISTRIBUTION AR

S/N: FAL1-UP

AN ATTACHMENT

SMCS-7000 **i03898415**

NOTE	PART NUMBER	QTY	PART NAME 1 2 3 4 5 6 (PRODUCT LEVEL)	SEE PAGE
Y	*235-9003*	1	AIR CONDITIONER AR	1943
Y	*240-3830*	1	BOOM AR-1 PIECE LONG (HEAVY-DUTY)	1719
Y	*346-8037*	1	CAB GP	1993
Y	*310-0078*	1	CONTROL & MTG GP-JOYSTICK	2045
Y	*298-4271*	1	COOLING AR-HIGH AMBIENT TEMP	192
Y	**234-6500**	1	COVER GP-STORAGE (CAB, REAR)	2082
Y	*314-3848*	1	FILM GP	2298
Y	*240-3858*	1	LINKAGE AR-BUCKET (B1-FAMILY, WITH LIFTING EYE)	1753
Y	*251-0542*	1	PANEL GP-SWITCH (ENGINE SPEED, START)	513
Y	*327-6501*	1	SEAT & MOUNTING GP (HIGH BACK, TILT)	2201
Y	*305-0467*	1	SEAT BELT GP (RETRACTABLE)	2216
Y	*272-4772*	1	SENSOR GP-LIQUID LEVEL (WATER SEPARATOR)	529
Y	*298-4102*	1	STARTING AR-COLD WEATHER	532
Y	*314-3727*	1	STICK AR-HOE (HEAVY-DUTY, REACH)	1779
Y	*194-1920*	2	TRACK GP	895
Y	*247-7457*	1	VALVE AR-SWING (WITHOUT FINE SWING)	1516
Y	*229-9070*	1	WASHER GP-WINDOW	2255
Y	*283-2761*	1	WIRING GP-COMMUNICATION (GLOBAL POSITIONING SYSTEM)	600
	240-5071	1	FLOOR MAT	

Y - SEPARATE ILLUSTRATION

<END>

354-1148 DISTRIBUTION AR

S/N: FAL1-UP

AN ATTACHMENT

SMCS-7000 **i03898419**

NOTE	PART NUMBER	QTY	PART NAME 1 2 3 4 5 6 (PRODUCT LEVEL)	SEE PAGE
Y	*235-9003*	1	AIR CONDITIONER AR	1943
Y	*240-3830*	1	BOOM AR-1 PIECE LONG (HEAVY-DUTY)	1719
Y	*346-8037*	1	CAB GP	1993
Y	*310-0078*	1	CONTROL & MTG GP-JOYSTICK	2045
Y	*298-4271*	1	COOLING AR-HIGH AMBIENT TEMP	192
Y	**234-6500**	1	COVER GP-STORAGE (CAB, REAR)	2082
Y	*314-3848*	1	FILM GP	2298
Y	*240-3858*	1	LINKAGE AR-BUCKET (B1-FAMILY, WITH LIFTING EYE)	1753
Y	*251-0542*	1	PANEL GP-SWITCH (ENGINE SPEED, START)	513
Y	*327-6501*	1	SEAT & MOUNTING GP (HIGH BACK, TILT)	2201
Y	*305-0467*	1	SEAT BELT GP (RETRACTABLE)	2216
Y	*272-4772*	1	SENSOR GP-LIQUID LEVEL (WATER SEPARATOR)	529
Y	*314-3727*	1	STICK AR-HOE (HEAVY-DUTY, REACH)	1779
Y	*194-1920*	2	TRACK GP	895
Y	*247-7457*	1	VALVE AR-SWING (WITHOUT FINE SWING)	1516
Y	*229-9070*	1	WASHER GP-WINDOW	2255
Y	*283-2761*	1	WIRING GP-COMMUNICATION (GLOBAL POSITIONING SYSTEM)	600
	240-5071	1	FLOOR MAT	

Y - SEPARATE ILLUSTRATION

<END>

MACHINE ARRANGEMENT

354-1149 DISTRIBUTION AR

S/N: FAL1-UP

AN ATTACHMENT

SMCS-7000 **i03898422**

NOTE	PART NUMBER	QTY	PART NAME 1 2 3 4 5 6 (PRODUCT LEVEL)	SEE PAGE
Y	*235-9003*	1	AIR CONDITIONER AR	1943
Y	*240-3830*	1	BOOM AR-1 PIECE LONG (HEAVY-DUTY)	1719
Y	*346-8037*	1	CAB GP	1993
Y	*310-0078*	1	CONTROL & MTG GP-JOYSTICK	2045
Y	*354-1057*	1	COOLING AR-HIGH AMBIENT TEMP (VARIABLE FAN SPEED)	193
Y	**234-6500**	1	COVER GP-STORAGE (CAB, REAR)	2082
Y	*314-3848*	1	FILM GP	2298
Y	*240-3858*	1	LINKAGE AR-BUCKET (B1-FAMILY, WITH LIFTING EYE)	1753
Y	*251-0542*	1	PANEL GP-SWITCH (ENGINE SPEED, START)	513
Y	*327-6501*	1	SEAT & MOUNTING GP (HIGH BACK, TILT)	2201
Y	*305-0467*	1	SEAT BELT GP (RETRACTABLE)	2216
Y	*272-4772*	1	SENSOR GP-LIQUID LEVEL (WATER SEPARATOR)	529
Y	*298-4102*	1	STARTING AR-COLD WEATHER	532
Y	*314-3727*	1	STICK AR-HOE (HEAVY-DUTY, REACH) (B1-FAMILY)	1779
Y	*194-1920*	2	TRACK GP	895
Y	*247-7457*	1	VALVE AR-SWING (WITHOUT FINE SWING)	1516
Y	*229-9070*	1	WASHER GP-WINDOW	2255
Y	*283-2761*	1	WIRING GP-COMMUNICATION (GLOBAL POSITIONING SYSTEM)	600
	240-5071	1	FLOOR MAT	

Y - SEPARATE ILLUSTRATION

<END>

354-1150 DISTRIBUTION AR

S/N: FAL1-UP

AN ATTACHMENT

SMCS-7000 **i03898103**

NOTE	PART NUMBER	QTY	PART NAME 1 2 3 4 5 6 (PRODUCT LEVEL)	SEE PAGE
Y	*235-9003*	1	AIR CONDITIONER AR	1943
Y	*240-3830*	1	BOOM AR-1 PIECE LONG (HEAVY-DUTY)	1719
Y	*346-8037*	1	CAB GP	1993
Y	*310-0078*	1	CONTROL & MTG GP-JOYSTICK	2045
Y	*354-1057*	1	COOLING AR-HIGH AMBIENT TEMP (VARIABLE FAN SPEED)	193
Y	**234-6500**	1	COVER GP-STORAGE (CAB, REAR)	2082
Y	*314-3848*	1	FILM GP	2298
Y	*240-3858*	1	LINKAGE AR-BUCKET (B1-FAMILY, WITH LIFTING EYE)	1753
Y	*251-0542*	1	PANEL GP-SWITCH (ENGINE SPEED, START)	513
Y	*327-6501*	1	SEAT & MOUNTING GP (HIGH BACK, TILT)	2201
Y	*305-0467*	1	SEAT BELT GP (RETRACTABLE)	2216
Y	*272-4772*	1	SENSOR GP-LIQUID LEVEL (WATER SEPARATOR)	529
Y	*314-3727*	1	STICK AR-HOE (HEAVY-DUTY, REACH) (B1-FAMILY)	1779
Y	*194-1920*	2	TRACK GP	895
Y	*247-7457*	1	VALVE AR-SWING (WITHOUT FINE SWING)	1516
Y	*229-9070*	1	WASHER GP-WINDOW	2255
Y	*283-2761*	1	WIRING GP-COMMUNICATION (GLOBAL POSITIONING SYSTEM)	600
	240-5071	1	FLOOR MAT	

Y - SEPARATE ILLUSTRATION

<END>

MACHINE ARRANGEMENT

359-2298 DISTRIBUTION AR

S/N: KGF1-UP

AN ATTACHMENT

SMCS-7000 **i03900747**

NOTE	PART NUMBER	QTY	PART NAME 1 2 3 4 5 6 (PRODUCT LEVEL)	SEE PAGE
Y	*264-8671*	1	AIR CLEANER AR (PRECLEANER)	255
Y	*235-9003*	1	AIR CONDITIONER AR	1943
Y	*299-2783*	1	BATTERY & WIRING GP (COLD WEATHER)	435
Y	*240-3830*	1	BOOM AR-1 PIECE LONG (HEAVY-DUTY)	1719
Y	*346-8037*	1	CAB GP	1993
Y	*284-4442*	1	CONDENSER & LINES GP-RFGT (CHASSIS)	2019
Y	*310-0078*	1	CONTROL & MTG GP-JOYSTICK	2045
Y	*259-7495*	1	CONTROL AR-AUXILIARY (COMBINED FCTN, MEDIUM PRESSURE)	908
Y	*290-1911*	1	COOLING AR-HIGH AMBIENT TEMP	191
Y	**234-6500**	1	COVER GP-STORAGE (CAB, REAR)	2082
Y	*314-3786*	1	PLATE GP-INFORMATION	2341
Y	*134-8875*	1	GUARD GP-SWIVEL (HEAVY-DUTY)	761
Y	*238-1627*	1	LIGHTING GP-FLOOD (CAB)	482
Y	*314-3851*	1	LINKAGE AR-BUCKET (B1-FAMILY, WITHOUT LIFTING EYE)	1755
Y	*251-0542*	1	PANEL GP-SWITCH (ENGINE SPEED, START)	513
Y	*314-3785*	1	PUMP AR-FUEL TRANSFER	335
Y	*327-6501*	1	SEAT & MOUNTING GP (HIGH BACK, TILT)	2201
Y	*305-0467*	1	SEAT BELT GP (RETRACTABLE)	2216
Y	*272-4772*	1	SENSOR GP-LIQUID LEVEL (WATER SEPARATOR)	529
Y	*314-3727*	1	STICK AR-HOE (HEAVY-DUTY, REACH)	1779
Y	**194-1910**	2	TRACK GP	893
Y	*247-7457*	1	VALVE AR-SWING (WITHOUT FINE SWING)	1516
Y	*161-3751*	1	VISOR GP-CAB (SUN)	2253
Y	*229-9070*	1	WASHER GP-WINDOW	2255
Y	*350-8250*	1	WIRING GP-CONVERTER (12-VOLT, 10-AMPERE)	613
	245-7794	1	FLOOR MAT	

Y - SEPARATE ILLUSTRATION

<END>

MACHINE ARRANGEMENT

359-2299 DISTRIBUTION AR

S/N: KGF1-UP

AN ATTACHMENT

SMCS-7000 **i03900459**

NOTE	PART NUMBER	QTY	PART NAME 1 2 3 4 5 6 (PRODUCT LEVEL)	SEE PAGE
Y	*264-8671*	1	AIR CLEANER AR (PRECLEANER)	255
Y	*235-9003*	1	AIR CONDITIONER AR	1943
Y	*299-2783*	1	BATTERY & WIRING GP (COLD WEATHER)	435
Y	*240-3830*	1	BOOM AR-1 PIECE LONG (HEAVY-DUTY)	1719
Y	*346-8037*	1	CAB GP	1993
Y	*284-4442*	1	CONDENSER & LINES GP-RFGT (CHASSIS)	2019
Y	*310-0078*	1	CONTROL & MTG GP-JOYSTICK	2045
Y	*259-7495*	1	CONTROL AR-AUXILIARY (COMBINED FCTN, MEDIUM PRESSURE)	908
Y	*290-1911*	1	COOLING AR-HIGH AMBIENT TEMP	191
Y	**234-6500**	1	COVER GP-STORAGE (CAB, REAR)	2082
Y	*134-8875*	1	GUARD GP-SWIVEL (HEAVY-DUTY)	761
Y	*238-1627*	1	LIGHTING GP-FLOOD (CAB)	482
Y	*314-3851*	1	LINKAGE AR-BUCKET (B1-FAMILY, WITHOUT LIFTING EYE)	1755
Y	*251-0542*	1	PANEL GP-SWITCH (ENGINE SPEED, START)	513
Y	*314-3785*	1	PUMP AR-FUEL TRANSFER	335
Y	*327-6501*	1	SEAT & MOUNTING GP (HIGH BACK, TILT)	2201
Y	*305-0467*	1	SEAT BELT GP (RETRACTABLE)	2216
Y	*272-4772*	1	SENSOR GP-LIQUID LEVEL (WATER SEPARATOR)	529
Y	*314-3727*	1	STICK AR-HOE (HEAVY-DUTY, REACH)	1779
Y	**194-1910**	2	TRACK GP	893
Y	*247-7457*	1	VALVE AR-SWING (WITHOUT FINE SWING)	1516
Y	*161-3751*	1	VISOR GP-CAB (SUN)	2253
Y	*229-9070*	1	WASHER GP-WINDOW	2255
Y	*350-8250*	1	WIRING GP-CONVERTER (12-VOLT, 10-AMPERE)	613
	245-7794	1	FLOOR MAT	

Y - SEPARATE ILLUSTRATION

<END>

MACHINE ARRANGEMENT

359-2300 DISTRIBUTION AR

S/N: KGF1-UP

AN ATTACHMENT

SMCS-7000 **i03900404**

NOTE	PART NUMBER	QTY	PART NAME 1 2 3 4 5 6 (PRODUCT LEVEL)	SEE PAGE
Y	*264-8671*	1	AIR CLEANER AR (PRECLEANER)	255
Y	*235-9003*	1	AIR CONDITIONER AR	1943
Y	*346-8037*	1	CAB GP	1993
Y	*270-5688*	1	CONTROL & MTG GP-JOYSTICK (3-BUTTON, TRIGGER SWITCH)	2043
Y	*259-7501*	1	CONTROL AR-AUXILIARY (MEDIUM PRESSURE)	910
Y	*290-1911*	1	COOLING AR-HIGH AMBIENT TEMP	191
Y	**234-6500**	1	COVER GP-STORAGE (CAB, REAR)	2082
Y	*134-8875*	1	GUARD GP-SWIVEL (HEAVY-DUTY)	761
Y	*163-6772*	1	LIGHTING GP-FLOOD (CAB)	479
Y	*260-7984*	1	LINES GP-PILOT (PILOT OIL PRESSURE)	1379
Y	*302-9208*	1	LINKAGE AR-FRONT	1758
Y	*253-2866*	1	OPTION AR-HYDRAULIC	81
Y	*251-0542*	1	PANEL GP-SWITCH (ENGINE SPEED, START)	513
Y	*314-3785*	1	PUMP AR-FUEL TRANSFER	335
Y	*327-6501*	1	SEAT & MOUNTING GP (HIGH BACK, TILT)	2201
Y	*305-0467*	1	SEAT BELT GP (RETRACTABLE)	2216
Y	*272-4772*	1	SENSOR GP-LIQUID LEVEL (WATER SEPARATOR)	529
Y	*314-3798*	2	TRACK AR	892
Y	*247-7457*	1	VALVE AR-SWING (WITHOUT FINE SWING)	1516
Y	*161-3751*	1	VISOR GP-CAB (SUN)	2253
Y	*161-3750*	1	VISOR GP-PROTECTION (RAIN)	2254
Y	*229-9086*	1	WIPER AR-WINDOW (LOWER)	2273
Y	*350-8250*	1	WIRING GP-CONVERTER (12-VOLT, 10-AMPERE)	613
	240-5071	1	FLOOR MAT	

Y - SEPARATE ILLUSTRATION

<END>

MACHINE ARRANGEMENT

359-2309 DISTRIBUTION AR

S/N: KGF1-UP

AN ATTACHMENT

SMCS-7000 **i03900394**

NOTE	PART NUMBER	QTY	PART NAME 1 2 3 4 5 6 (PRODUCT LEVEL)	SEE PAGE
Y	*264-8671*	1	AIR CLEANER AR (PRECLEANER)	255
Y	*235-9003*	1	AIR CONDITIONER AR	1943
Y	*240-3836*	1	BOOM AR-1 PIECE LONG (HEAVY-DUTY)	1720
Y	*346-8039*	1	CAB GP	1997
Y	*310-0078*	1	CONTROL & MTG GP-JOYSTICK	2045
Y	*290-1911*	1	COOLING AR-HIGH AMBIENT TEMP	191
Y	**234-6500**	1	COVER GP-STORAGE (CAB, REAR)	2082
Y	*134-8875*	1	GUARD GP-SWIVEL (HEAVY-DUTY)	761
Y	**327-6515**	1	HEADREST AS-SEAT (CLOTH)	2129
Y	*163-6772*	1	LIGHTING GP-FLOOD (CAB)	479
Y	*259-5047*	1	LIGHTING GP-FLOOD (BOOM, RH)	488
Y	*240-3861*	1	LINKAGE AR-BUCKET (B1-FAMILY, WITH LIFTING EYE)	1753
Y	*251-0542*	1	PANEL GP-SWITCH (ENGINE SPEED, START)	513
Y	*314-3785*	1	PUMP AR-FUEL TRANSFER	335
Y	*327-6500*	1	SEAT & MOUNTING GP (LOW BACK, TILT)	2199
Y	*305-0467*	1	SEAT BELT GP (RETRACTABLE)	2216
Y	*272-4772*	1	SENSOR GP-LIQUID LEVEL (WATER SEPARATOR)	529
Y	*240-3854*	1	STICK AR-HOE (HEAVY-DUTY, B-FAMILY)	1776
Y	**194-1910**	2	TRACK GP	893
Y	*247-7457*	1	VALVE AR-SWING (WITHOUT FINE SWING)	1516
Y	*161-3751*	1	VISOR GP-CAB (SUN)	2253
Y	*229-9086*	1	WIPER AR-WINDOW (LOWER)	2273
Y	*350-8250*	1	WIRING GP-CONVERTER (12-VOLT, 10-AMPERE)	613
	240-5071	1	FLOOR MAT	

Y - SEPARATE ILLUSTRATION

<END>

MACHINE ARRANGEMENT

359-2310 DISTRIBUTION AR

S/N: KGF1-UP

AN ATTACHMENT

SMCS-7000 **i03900378**

NOTE	PART NUMBER	QTY	PART NAME 1 2 3 4 5 6 (PRODUCT LEVEL)	SEE PAGE
Y	*264-8671*	1	AIR CLEANER AR (PRECLEANER)	255
Y	*235-9003*	1	AIR CONDITIONER AR	1943
Y	*240-3836*	1	BOOM AR-1 PIECE LONG (HEAVY-DUTY)	1720
Y	*346-8039*	1	CAB GP	1997
Y	*310-0078*	1	CONTROL & MTG GP-JOYSTICK	2045
Y	*259-7494*	1	CONTROL AR-AUXILIARY (SYSTEM 3, 1-WAY, 2-PUMP)	908
Y	*244-8503*	1	CONVERSION GP-LINKAGE (B1-FAMILY)	1744
Y	*290-1911*	1	COOLING AR-HIGH AMBIENT TEMP	191
Y	**234-6500**	1	COVER GP-STORAGE (CAB, REAR)	2082
Y	*134-8875*	1	GUARD GP-SWIVEL (HEAVY-DUTY)	761
Y	**327-6515**	1	HEADREST AS-SEAT (CLOTH)	2129
Y	*163-6772*	1	LIGHTING GP-FLOOD (CAB)	479
Y	*259-5047*	1	LIGHTING GP-FLOOD (BOOM, RH)	488
Y	*242-6475*	1	LINES GP-AUXILIARY HYDRAULIC (BOOM, HIGH PRESSURE)	1082
Y	*242-6487*	1	LINES GP-AUXILIARY HYDRAULIC (STICK, HIGH PRESSURE)	1097
Y	*240-3861*	1	LINKAGE AR-BUCKET (B1-FAMILY, WITH LIFTING EYE)	1753
Y	*251-0542*	1	PANEL GP-SWITCH (ENGINE SPEED, START)	513
Y	*314-3785*	1	PUMP AR-FUEL TRANSFER	335
Y	*327-6500*	1	SEAT & MOUNTING GP (LOW BACK, TILT)	2199
Y	*305-0467*	1	SEAT BELT GP (RETRACTABLE)	2216
Y	*272-4772*	1	SENSOR GP-LIQUID LEVEL (WATER SEPARATOR)	529
Y	*314-3727*	1	STICK AR-HOE (HEAVY-DUTY, REACH)	1779
Y	**194-1910**	2	TRACK GP	893
Y	*247-7457*	1	VALVE AR-SWING (WITHOUT FINE SWING)	1516
Y	*161-3751*	1	VISOR GP-CAB (SUN)	2253
Y	*229-9086*	1	WIPER AR-WINDOW (LOWER)	2273
Y	*350-8250*	1	WIRING GP-CONVERTER (12-VOLT, 10-AMPERE)	613
	240-5073	1	FLOOR MAT	

Y - SEPARATE ILLUSTRATION

<END>

MACHINE ARRANGEMENT

359-2404 DISTRIBUTION AR

S/N: FAL1-UP

AN ATTACHMENT

SMCS-7000 **i03955950**

NOTE	PART NUMBER	QTY	PART NAME 1 2 3 4 5 6 (PRODUCT LEVEL)	SEE PAGE
Y	*235-9003*	1	AIR CONDITIONER AR	1943
Y	*231-1771*	1	ALARM GP-TRAVEL (BACKUP)	400
Y	*299-2783*	1	BATTERY & WIRING GP (COLD WEATHER)	435
Y	*240-3830*	1	BOOM AR-1 PIECE LONG (HEAVY-DUTY)	1719
Y	*346-8037*	1	CAB GP	1993
Y	*310-0078*	1	CONTROL & MTG GP-JOYSTICK	2045
Y	*290-1911*	1	COOLING AR-HIGH AMBIENT TEMP	191
Y	**234-6500**	1	COVER GP-STORAGE (CAB, REAR)	2082
Y	*298-4115*	1	INSTALLATION AR-COMMUNICATION (PRODUCT LINK 321SR)	469
Y	*163-6772*	1	LIGHTING GP-FLOOD (CAB)	479
Y	*259-5047*	1	LIGHTING GP-FLOOD (BOOM, RH)	488
Y	*240-3858*	1	LINKAGE AR-BUCKET (B1-FAMILY, WITH LIFTING EYE)	1753
Y	*251-0542*	1	PANEL GP-SWITCH (ENGINE SPEED, START)	513
Y	*251-0538*	1	RADIO GP (AM/FM)	2190
Y	*327-6501*	1	SEAT & MOUNTING GP (HIGH BACK, TILT)	2201
Y	*305-0466*	1	SEAT BELT GP (RETRACTABLE, 76-MM (3-IN))	2214
Y	*272-4772*	1	SENSOR GP-LIQUID LEVEL (WATER SEPARATOR)	529
Y	*240-3854*	1	STICK AR-HOE (HEAVY-DUTY, B-FAMILY)	1776
Y	*194-1920*	2	TRACK GP	895
Y	*240-3881*	1	VALVE & LINES GP-HEAVY LIFT	1511
Y	*229-9070*	1	WASHER GP-WINDOW	2255
Y	*350-8250*	1	WIRING GP-CONVERTER (12-VOLT, 10-AMPERE)	613
Y	*259-5051*	1	WIRING GP-ENGINE (JUMP START)	617
	240-5071	1	FLOOR MAT	

Y - SEPARATE ILLUSTRATION

<END>

MACHINE ARRANGEMENT

359-2405 DISTRIBUTION AR

S/N: KGF1-UP

AN ATTACHMENT

SMCS-7000 **i04130311**

NOTE	PART NUMBER	QTY	PART NAME 1 2 3 4 5 6 (PRODUCT LEVEL)	SEE PAGE
Y	*235-9003*	1	AIR CONDITIONER AR	1943
Y	*231-1771*	1	ALARM GP-TRAVEL (BACKUP)	400
Y	*299-2783*	1	BATTERY & WIRING GP (COLD WEATHER)	435
Y	*240-3830*	1	BOOM AR-1 PIECE LONG (HEAVY-DUTY)	1719
Y	*346-8037*	1	CAB GP	1993
Y	*310-0078*	1	CONTROL & MTG GP-JOYSTICK	2045
Y	*290-1911*	1	COOLING AR-HIGH AMBIENT TEMP	191
Y	*298-4115*	1	INSTALLATION AR-COMMUNICATION (PRODUCT LINK 321SR)	469
Y	*163-6772*	1	LIGHTING GP-FLOOD (CAB)	479
Y	*259-5047*	1	LIGHTING GP-FLOOD (BOOM, RH)	488
Y	*240-3858*	1	LINKAGE AR-BUCKET (B1-FAMILY, WITH LIFTING EYE)	1753
Y	*251-0542*	1	PANEL GP-SWITCH (ENGINE SPEED, START)	513
Y	*251-0538*	1	RADIO GP (AM/FM)	2190
Y	*327-6501*	1	SEAT & MOUNTING GP (HIGH BACK, TILT)	2201
Y	*305-0466*	1	SEAT BELT GP (RETRACTABLE, 76-MM (3-IN))	2214
Y	*272-4772*	1	SENSOR GP-LIQUID LEVEL (WATER SEPARATOR)	529
Y	*314-3727*	1	STICK AR-HOE (HEAVY-DUTY, REACH)	1779
Y	*194-1911*	2	TRACK GP	893
Y	*240-3881*	1	VALVE & LINES GP-HEAVY LIFT	1511
Y	*229-9070*	1	WASHER GP-WINDOW	2255
Y	*350-8250*	1	WIRING GP-CONVERTER (12-VOLT, 10-AMPERE)	613
Y	*259-5051*	1	WIRING GP-ENGINE (JUMP START)	617
	234-6500	1	COVER GP-STORAGE (CAB, REAR)	
	240-5071	1	FLOOR MAT	

Y - SEPARATE ILLUSTRATION

<END>

MACHINE ARRANGEMENT

359-2421 DISTRIBUTION AR

S/N: KGF1-UP

AN ATTACHMENT

SMCS-7000 **i04003927**

NOTE	PART NUMBER	QTY	PART NAME 1 2 3 4 5 6 (PRODUCT LEVEL)	SEE PAGE
Y	*264-8671*	1	AIR CLEANER AR (PRECLEANER)	255
Y	*235-9003*	1	AIR CONDITIONER AR	1943
Y	*346-8037*	1	CAB GP	1993
Y	*270-5688*	1	CONTROL & MTG GP-JOYSTICK (3-BUTTON, TRIGGER SWITCH)	2043
Y	*259-7501*	1	CONTROL AR-AUXILIARY (MEDIUM PRESSURE)	910
Y	*359-2423*	1	COOLING AR-HIGH AMBIENT TEMP	194
Y	**234-6500**	1	COVER GP-STORAGE (CAB, REAR)	2082
Y	*134-8875*	1	GUARD GP-SWIVEL (HEAVY-DUTY) (HEAVY-DUTY)	761
Y	*163-6772*	1	LIGHTING GP-FLOOD (CAB)	479
Y	*260-7984*	1	LINES GP-PILOT (PILOT OIL PRESSURE)	1379
Y	*302-9208*	1	LINKAGE AR-FRONT	1758
Y	*253-2866*	1	OPTION AR-HYDRAULIC	81
Y	*251-0542*	1	PANEL GP-SWITCH (ENGINE SPEED, START)	513
Y	*314-3785*	1	PUMP AR-FUEL TRANSFER	335
Y	*327-6501*	1	SEAT & MOUNTING GP (HIGH BACK, TILT)	2201
Y	*305-0467*	1	SEAT BELT GP (RETRACTABLE)	2216
Y	*272-4772*	1	SENSOR GP-LIQUID LEVEL (WATER SEPARATOR)	529
Y	*247-7346*	2	TRACK AR	892
Y	*247-7457*	1	VALVE AR-SWING (WITHOUT FINE SWING)	1516
Y	*161-3751*	1	VISOR GP-CAB (SUN)	2253
Y	*161-3750*	1	VISOR GP-PROTECTION (RAIN)	2254
Y	*229-9086*	1	WIPER AR-WINDOW (LOWER)	2273
Y	*350-8250*	1	WIRING GP-CONVERTER (12-VOLT, 10-AMPERE)	613
	240-5071	1	FLOOR MAT	

Y - SEPARATE ILLUSTRATION

<END>

MACHINE ARRANGEMENT

359-2481 DISTRIBUTION AR

S/N: FAL1-UP

AN ATTACHMENT

SMCS-7000 **i04381723**

NOTE	PART NUMBER	QTY	PART NAME 1 2 3 4 5 6 (PRODUCT LEVEL)	SEE PAGE
Y	*235-9003*	1	AIR CONDITIONER AR	1943
Y	*240-3830*	1	BOOM AR-1 PIECE LONG (HEAVY-DUTY)	1719
Y	*346-8037*	1	CAB GP	1993
Y	*310-0078*	1	CONTROL & MTG GP-JOYSTICK	2045
Y	*354-1057*	1	COOLING AR-HIGH AMBIENT TEMP (VARIABLE FAN SPEED)	193
Y	**234-6500**	1	COVER GP-STORAGE (CAB, REAR)	2082
Y	*314-3848*	1	FILM GP (CHINA)	2298
Y	*240-3858*	1	LINKAGE AR-BUCKET (B1-FAMILY, WITH LIFTING EYE)	1753
Y	*251-0542*	1	PANEL GP-SWITCH (ENGINE SPEED, START)	513
Y	*327-6501*	1	SEAT & MOUNTING GP (HIGH BACK, TILT)	2201
Y	*305-0467*	1	SEAT BELT GP (RETRACTABLE)	2216
Y	*272-4772*	1	SENSOR GP-LIQUID LEVEL (WATER SEPARATOR)	529
Y	*314-3727*	1	STICK AR-HOE (HEAVY-DUTY, REACH)	1779
Y	*194-1920*	2	TRACK GP	895
Y	*247-7457*	1	VALVE AR-SWING (WITHOUT FINE SWING)	1516
Y	*229-9070*	1	WASHER GP-WINDOW	2255
Y	*369-0033*	1	WIRING GP-COMMUNICATION (PRODUCT LINK)	604
	240-5071	1	FLOOR MAT	

Y - SEPARATE ILLUSTRATION

<END>

359-2482 DISTRIBUTION AR

S/N: FAL1-UP

AN ATTACHMENT

SMCS-7000 **i04388554**

NOTE	PART NUMBER	QTY	PART NAME 1 2 3 4 5 6 (PRODUCT LEVEL)	SEE PAGE
Y	*235-9003*	1	AIR CONDITIONER AR	1943
Y	*240-3830*	1	BOOM AR-1 PIECE LONG (HEAVY-DUTY)	1719
Y	*346-8037*	1	CAB GP	1993
Y	*310-0078*	1	CONTROL & MTG GP-JOYSTICK	2045
Y	*354-1057*	1	COOLING AR-HIGH AMBIENT TEMP (VARIABLE FAN SPEED)	193
Y	**234-6500**	1	COVER GP-STORAGE (CAB, REAR)	2082
Y	*314-3848*	1	FILM GP	2298
Y	*240-3858*	1	LINKAGE AR-BUCKET (B1-FAMILY, WITH LIFTING EYE)	1753
Y	*251-0542*	1	PANEL GP-SWITCH (ENGINE SPEED, START)	513
Y	*327-6501*	1	SEAT & MOUNTING GP (HIGH BACK, TILT)	2201
Y	*305-0467*	1	SEAT BELT GP (RETRACTABLE)	2216
Y	*272-4772*	1	SENSOR GP-LIQUID LEVEL (WATER SEPARATOR)	529
Y	*298-4102*	1	STARTING AR-COLD WEATHER	532
Y	*314-3727*	1	STICK AR-HOE (HEAVY-DUTY, REACH)	1779
Y	*194-1920*	2	TRACK GP	895
Y	*247-7457*	1	VALVE AR-SWING (WITHOUT FINE SWING)	1516
Y	*229-9070*	1	WASHER GP-WINDOW	2255
Y	*369-0033*	1	WIRING GP-COMMUNICATION (PRODUCT LINK)	604
	240-5071	1	FLOOR MAT	

Y - SEPARATE ILLUSTRATION

<END>

MACHINE ARRANGEMENT

359-2500 DISTRIBUTION AR

S/N: FAL1-UP

AN ATTACHMENT

SMCS-7000 **i04388604**

NOTE	PART NUMBER	QTY	PART NAME 1 2 3 4 5 6 (PRODUCT LEVEL)	SEE PAGE
Y	*240-3828*	1	BOOM AR-1 PIECE LONG	1719
Y	*346-8039*	1	CAB GP	1997
Y	*310-0078*	1	CONTROL & MTG GP-JOYSTICK	2045
Y	*354-1114*	1	CONVERSION AR-MACHINE	3
Y	*354-1056*	1	COOLING AR-HIGH AMBIENT TEMP	193
Y	*273-5168*	1	HEATER AR-CAB	2136
Y	*240-3858*	1	LINKAGE AR-BUCKET (B1-FAMILY, WITH LIFTING EYE)	1753
Y	*251-0542*	1	PANEL GP-SWITCH (ENGINE SPEED, START)	513
Y	*340-6478*	1	SEAT & MOUNTING GP (LOW BACK, TILT)	2208
Y	*305-0467*	1	SEAT BELT GP (RETRACTABLE)	2216
Y	*272-4772*	1	SENSOR GP-LIQUID LEVEL (WATER SEPARATOR)	529
Y	*240-3882*	1	STICK AR-HOE (REACH)	1777
Y	*194-1920*	2	TRACK GP	895
Y	*247-7457*	1	VALVE AR-SWING (WITHOUT FINE SWING)	1516
Y	*229-9070*	1	WASHER GP-WINDOW	2255
	240-5071	1	FLOOR MAT	

Y - SEPARATE ILLUSTRATION

<END>

359-2501 DISTRIBUTION AR

S/N: FAL1-UP

AN ATTACHMENT

SMCS-7000 **i04388613**

NOTE	PART NUMBER	QTY	PART NAME 1 2 3 4 5 6 (PRODUCT LEVEL)	SEE PAGE
Y	*240-3830*	1	BOOM AR-1 PIECE LONG (HEAVY-DUTY)	1719
Y	*346-8039*	1	CAB GP	1997
Y	*310-0078*	1	CONTROL & MTG GP-JOYSTICK	2045
Y	*354-1114*	1	CONVERSION AR-MACHINE	3
Y	*354-1056*	1	COOLING AR-HIGH AMBIENT TEMP	193
Y	*273-5168*	1	HEATER AR-CAB	2136
Y	*240-3858*	1	LINKAGE AR-BUCKET (B1-FAMILY, WITH LIFTING EYE)	1753
Y	*251-0542*	1	PANEL GP-SWITCH (ENGINE SPEED, START)	513
Y	*340-6478*	1	SEAT & MOUNTING GP (LOW BACK, TILT)	2208
Y	*305-0467*	1	SEAT BELT GP (RETRACTABLE)	2216
Y	*272-4772*	1	SENSOR GP-LIQUID LEVEL (WATER SEPARATOR)	529
Y	*240-3854*	1	STICK AR-HOE (HEAVY-DUTY, B-FAMILY)	1776
Y	*194-1920*	2	TRACK GP	895
Y	*247-7457*	1	VALVE AR-SWING (WITHOUT FINE SWING)	1516
Y	*229-9070*	1	WASHER GP-WINDOW	2255
	240-5071	1	FLOOR MAT	

Y - SEPARATE ILLUSTRATION

<END>

MACHINE ARRANGEMENT

359-2504 DISTRIBUTION AR

S/N: FAL1-UP

AN ATTACHMENT

SMCS-7000 **i04388643**

NOTE	PART NUMBER	QTY	PART NAME 1 2 3 4 5 6 (PRODUCT LEVEL)	SEE PAGE
Y	*231-1771*	1	ALARM GP-TRAVEL (BACKUP)	400
Y	*163-6772*	1	LIGHTING GP-FLOOD (CAB)	479
Y	*354-1154*	1	OPTION AR-CAB	76
Y	*314-3868*	1	OPTION AR-HYDRAULIC	82
Y	*359-2525*	1	OPTION AR-LINKAGE	88
Y	*354-1151*	1	OPTION AR-REGIONAL	92
Y	*194-1920*	2	TRACK GP	895

Y - SEPARATE ILLUSTRATION

<END>

359-2505 DISTRIBUTION AR

S/N: KGF1-UP

AN ATTACHMENT

SMCS-7000 **i04124050**

NOTE	PART NUMBER	QTY	PART NAME 1 2 3 4 5 6 (PRODUCT LEVEL)	SEE PAGE
Y	*298-4099*	1	GUARD AR (HEAVY-DUTY)	756
Y	*352-9554*	1	GUARD GP-TRACK GUIDE	864
Y	*354-1154*	1	OPTION AR-CAB	76
Y	*314-3868*	1	OPTION AR-HYDRAULIC	82
Y	*314-3900*	1	OPTION AR-LIGHTING	84
Y	*359-2526*	1	OPTION AR-LINKAGE	88
Y	*354-1151*	1	OPTION AR-REGIONAL	92
Y	*194-1914*	2	TRACK GP	894

Y - SEPARATE ILLUSTRATION

<END>

MACHINE ARRANGEMENT

359-2506 DISTRIBUTION AR

S/N: KGF1-UP

AN ATTACHMENT

SMCS-7000 **i04450130**

NOTE	PART NUMBER	QTY	PART NAME 1 2 3 4 5 6 (PRODUCT LEVEL)	SEE PAGE
Y	*264-8671*	1	AIR CLEANER AR (PRECLEANER)	255
Y	*235-9003*	1	AIR CONDITIONER AR	1943
Y	*240-3830*	1	BOOM AR-1 PIECE LONG (HEAVY-DUTY)	1719
Y	*346-8039*	1	CAB GP	1997
Y	*310-0078*	1	CONTROL & MTG GP-JOYSTICK	2045
Y	*290-1911*	1	COOLING AR-HIGH AMBIENT TEMP	191
Y	*134-8875*	1	GUARD GP-SWIVEL (HEAVY-DUTY)	761
Y	**327-6515**	1	HEADREST AS-SEAT (CLOTH)	2129
Y	*163-6772*	1	LIGHTING GP-FLOOD (CAB)	479
Y	*259-5047*	1	LIGHTING GP-FLOOD (BOOM, RH)	488
Y	*240-3858*	1	LINKAGE AR-BUCKET (B1-FAMILY, WITH LIFTING EYE)	1753
Y	*251-0542*	1	PANEL GP-SWITCH (ENGINE SPEED, START)	513
Y	*367-8698*	1	PUMP AR-REFUELING	335
Y	*327-6500*	1	SEAT & MOUNTING GP (LOW BACK, TILT) (CLOTH)	2199
Y	*305-0467*	1	SEAT BELT GP (RETRACTABLE)	2216
Y	*272-4772*	1	SENSOR GP-LIQUID LEVEL (WATER SEPARATOR)	529
Y	*240-3854*	1	STICK AR-HOE (HEAVY-DUTY, B-FAMILY)	1776
Y	**194-1910**	2	TRACK GP	893
Y	*247-7457*	1	VALVE AR-SWING (WITHOUT FINE SWING)	1516
Y	*161-3751*	1	VISOR GP-CAB (SUN)	2253
Y	*229-9070*	1	WASHER GP-WINDOW (LOWER)	2255
Y	*350-8250*	1	WIRING GP-CONVERTER (12-VOLT, 10-AMPERE)	613
	240-5071	1	FLOOR MAT	

Y - SEPARATE ILLUSTRATION

<END>

MACHINE ARRANGEMENT

359-2507 DISTRIBUTION AR

S/N: KGF1-UP

AN ATTACHMENT

SMCS-7000 **i04450131**

NOTE	PART NUMBER	QTY	PART NAME 1 2 3 4 5 6 (PRODUCT LEVEL)	SEE PAGE
Y	*264-8671*	1	AIR CLEANER AR (PRECLEANER)	255
Y	*235-9003*	1	AIR CONDITIONER AR	1943
Y	*240-3830*	1	BOOM AR-1 PIECE LONG (HEAVY-DUTY)	1719
Y	*346-8039*	1	CAB GP	1997
Y	*310-0078*	1	CONTROL & MTG GP-JOYSTICK	2045
Y	*259-7494*	1	CONTROL AR-AUXILIARY (SYSTEM 3, 1-WAY, 2-PUMP)	908
Y	*290-1911*	1	COOLING AR-HIGH AMBIENT TEMP	191
Y	*134-8875*	1	GUARD GP-SWIVEL (HEAVY-DUTY)	761
Y	**327-6515**	1	HEADREST AS-SEAT (CLOTH)	2129
Y	*163-6772*	1	LIGHTING GP-FLOOD (CAB)	479
Y	*259-5047*	1	LIGHTING GP-FLOOD (BOOM, RH)	488
Y	*242-6475*	1	LINES GP-AUXILIARY HYDRAULIC (BOOM, HIGH PRESSURE)	1082
Y	*242-6487*	1	LINES GP-AUXILIARY HYDRAULIC (STICK, HIGH PRESSURE)	1097
Y	*240-3858*	1	LINKAGE AR-BUCKET (B1-FAMILY, WITH LIFTING EYE)	1753
Y	*251-0542*	1	PANEL GP-SWITCH (ENGINE SPEED, START)	513
Y	*367-8698*	1	PUMP AR-REFUELING	335
Y	*327-6500*	1	SEAT & MOUNTING GP (LOW BACK, TILT) (CLOTH)	2199
Y	*305-0467*	1	SEAT BELT GP (RETRACTABLE)	2216
Y	*272-4772*	1	SENSOR GP-LIQUID LEVEL (WATER SEPARATOR)	529
Y	*314-3727*	1	STICK AR-HOE (HEAVY-DUTY, REACH)	1779
Y	**194-1910**	2	TRACK GP	893
Y	*247-7457*	1	VALVE AR-SWING (WITHOUT FINE SWING)	1516
Y	*161-3751*	1	VISOR GP-CAB (SUN)	2253
Y	*229-9070*	1	WASHER GP-WINDOW	2255
Y	*350-8250*	1	WIRING GP-CONVERTER (12-VOLT, 10-AMPERE)	613
	240-5073	1	FLOOR MAT	

Y - SEPARATE ILLUSTRATION

<END>

MACHINE ARRANGEMENT

367-8686 DISTRIBUTION AR

S/N: KGF1-UP

AN ATTACHMENT

SMCS-7000 **i04450685**

NOTE	PART NUMBER	QTY	PART NAME 1 2 3 4 5 6 (PRODUCT LEVEL)	SEE PAGE
Y	*235-9003*	1	AIR CONDITIONER AR	1943
Y	*231-1771*	1	ALARM GP-TRAVEL (BACKUP)	400
Y	*299-2783*	1	BATTERY & WIRING GP (COLD WEATHER)	435
Y	*346-8037*	1	CAB GP	1993
Y	*310-0078*	1	CONTROL & MTG GP-JOYSTICK	2045
Y	*290-1911*	1	COOLING AR-HIGH AMBIENT TEMP	191
Y	**234-6500**	1	COVER GP-STORAGE (CAB, REAR)	2082
Y	*298-4115*	1	INSTALLATION AR-COMMUNICATION (PRODUCT LINK 321SR)	469
Y	*163-6772*	1	LIGHTING GP-FLOOD (CAB)	479
Y	*302-9208*	1	LINKAGE AR-FRONT	1758
Y	*251-0542*	1	PANEL GP-SWITCH (ENGINE SPEED, START)	513
Y	*251-0538*	1	RADIO GP (AM/FM)	2190
Y	*327-6501*	1	SEAT & MOUNTING GP (HIGH BACK, TILT)	2201
Y	*305-0466*	1	SEAT BELT GP (RETRACTABLE, 76-MM (3-IN))	2214
Y	*272-4772*	1	SENSOR GP-LIQUID LEVEL (WATER SEPARATOR)	529
Y	*194-1911*	2	TRACK GP	893
Y	*229-9070*	1	WASHER GP-WINDOW (LOWER)	2255
Y	*350-8250*	1	WIRING GP-CONVERTER (12-VOLT, 10-AMPERE)	613
Y	*259-5051*	1	WIRING GP-ENGINE (JUMP START)	617
	240-5071	1	FLOOR MAT	

Y - SEPARATE ILLUSTRATION

<END>

MACHINE ARRANGEMENT

367-8697 DISTRIBUTION AR

S/N: KGF1-UP

AN ATTACHMENT

SMCS-7000 **i04450668**

NOTE	PART NUMBER	QTY	PART NAME 1 2 3 4 5 6 (PRODUCT LEVEL)	SEE PAGE
Y	*264-8671*	1	AIR CLEANER AR (PRECLEANER)	255
Y	*235-9003*	1	AIR CONDITIONER AR	1943
Y	*346-8037*	1	CAB GP	1993
Y	*270-5688*	1	CONTROL & MTG GP-JOYSTICK (3-BUTTON, TRIGGER SWITCH)	2043
Y	*259-7501*	1	CONTROL AR-AUXILIARY (MEDIUM PRESSURE)	910
Y	*290-1911*	1	COOLING AR-HIGH AMBIENT TEMP	191
Y	*134-8875*	1	GUARD GP-SWIVEL (HEAVY-DUTY) (HEAVY-DUTY)	761
Y	*163-6772*	1	LIGHTING GP-FLOOD (CAB)	479
Y	*260-7984*	1	LINES GP-PILOT (PILOT OIL PRESSURE)	1379
Y	*302-9208*	1	LINKAGE AR-FRONT	1758
Y	*253-2866*	1	OPTION AR-HYDRAULIC	81
Y	*251-0542*	1	PANEL GP-SWITCH (ENGINE SPEED, START)	513
Y	*367-8698*	1	PUMP AR-REFUELING	335
Y	*327-6501*	1	SEAT & MOUNTING GP (HIGH BACK, TILT)	2201
Y	*305-0467*	1	SEAT BELT GP (RETRACTABLE)	2216
Y	*272-4772*	1	SENSOR GP-LIQUID LEVEL (WATER SEPARATOR)	529
Y	*314-3798*	2	TRACK AR	892
Y	*247-7457*	1	VALVE AR-SWING (WITHOUT FINE SWING)	1516
Y	*161-3751*	1	VISOR GP-CAB (SUN)	2253
Y	*161-3750*	1	VISOR GP-PROTECTION (RAIN)	2254
Y	*229-9070*	1	WASHER GP-WINDOW (LOWER)	2255
Y	*350-8250*	1	WIRING GP-CONVERTER (12-VOLT, 10-AMPERE)	613
	240-5071	1	FLOOR MAT	

Y - SEPARATE ILLUSTRATION

<END>

MACHINE ARRANGEMENT

367-8738 DISTRIBUTION AR

S/N: FAL1-UP

AN ATTACHMENT

SMCS-7000 **i04388564**

NOTE	PART NUMBER	QTY	PART NAME 1 2 3 4 5 6 (PRODUCT LEVEL)	SEE PAGE
Y	*235-9003*	1	AIR CONDITIONER AR	1943
Y	*240-3830*	1	BOOM AR-1 PIECE LONG (HEAVY-DUTY)	1719
Y	*346-8037*	1	CAB GP	1993
Y	*310-0078*	1	CONTROL & MTG GP-JOYSTICK	2045
Y	*354-1057*	1	COOLING AR-HIGH AMBIENT TEMP (VARIABLE FAN SPEED)	193
Y	**234-6500**	1	COVER GP-STORAGE (CAB, REAR)	2082
Y	*314-3848*	1	FILM GP (CHINA)	2298
Y	*240-3858*	1	LINKAGE AR-BUCKET (B1-FAMILY, WITH LIFTING EYE)	1753
Y	*251-0542*	1	PANEL GP-SWITCH (ENGINE SPEED, START)	513
Y	*327-6501*	1	SEAT & MOUNTING GP (HIGH BACK, TILT)	2201
Y	*305-0467*	1	SEAT BELT GP (RETRACTABLE)	2216
Y	*272-4772*	1	SENSOR GP-LIQUID LEVEL (WATER SEPARATOR)	529
Y	*314-3727*	1	STICK AR-HOE (HEAVY-DUTY, REACH)	1779
Y	*194-1920*	2	TRACK GP	895
Y	*247-7457*	1	VALVE AR-SWING (WITHOUT FINE SWING)	1516
Y	*229-9070*	1	WASHER GP-WINDOW	2255
Y	*369-0033*	1	WIRING GP-COMMUNICATION (PRODUCT LINK)	604
	240-5071	1	FLOOR MAT	

Y - SEPARATE ILLUSTRATION

<END>

367-8739 DISTRIBUTION AR

S/N: FAL1-UP

AN ATTACHMENT

SMCS-7000 **i04388617**

NOTE	PART NUMBER	QTY	PART NAME 1 2 3 4 5 6 (PRODUCT LEVEL)	SEE PAGE
Y	*235-9003*	1	AIR CONDITIONER AR	1943
Y	*240-3830*	1	BOOM AR-1 PIECE LONG (HEAVY-DUTY)	1719
Y	*346-8037*	1	CAB GP	1993
Y	*310-0078*	1	CONTROL & MTG GP-JOYSTICK	2045
Y	*354-1057*	1	COOLING AR-HIGH AMBIENT TEMP (VARIABLE FAN SPEED)	193
Y	**234-6500**	1	COVER GP-STORAGE (CAB, REAR)	2082
Y	*314-3848*	1	FILM GP (CHINA)	2298
Y	*240-3858*	1	LINKAGE AR-BUCKET (B1-FAMILY, WITH LIFTING EYE)	1753
Y	*251-0542*	1	PANEL GP-SWITCH (ENGINE SPEED, START)	513
Y	*327-6501*	1	SEAT & MOUNTING GP (HIGH BACK, TILT)	2201
Y	*305-0467*	1	SEAT BELT GP (RETRACTABLE)	2216
Y	*272-4772*	1	SENSOR GP-LIQUID LEVEL (WATER SEPARATOR)	529
Y	*298-4102*	1	STARTING AR-COLD WEATHER	532
Y	*314-3727*	1	STICK AR-HOE (HEAVY-DUTY, REACH)	1779
Y	*194-1920*	2	TRACK GP	895
Y	*247-7457*	1	VALVE AR-SWING (WITHOUT FINE SWING)	1516
Y	*229-9070*	1	WASHER GP-WINDOW	2255
Y	*369-0033*	1	WIRING GP-COMMUNICATION (PRODUCT LINK)	604
	240-5071	1	FLOOR MAT	

Y - SEPARATE ILLUSTRATION

<END>

MACHINE ARRANGEMENT

367-8798 DISTRIBUTION AR

S/N: FAL1-UP

AN ATTACHMENT

SMCS-7000 **i04450613**

NOTE	PART NUMBER	QTY	PART NAME 1 2 3 4 5 6 (PRODUCT LEVEL)	SEE PAGE
Y	*235-9003*	1	AIR CONDITIONER AR	1943
Y	*240-3830*	1	BOOM AR-1 PIECE LONG (HEAVY-DUTY)	1719
Y	*346-8037*	1	CAB GP	1993
Y	*310-0078*	1	CONTROL & MTG GP-JOYSTICK	2045
Y	*367-8780*	1	CONTROL AR-COMMUNICATION (PRODUCT LINK CELLULAR)	451
Y	*354-1057*	1	COOLING AR-HIGH AMBIENT TEMP (VARIABLE FAN SPEED)	193
Y	**234-6500**	1	COVER GP-STORAGE (CAB, REAR)	2082
Y	*314-3848*	1	FILM GP (CHINA)	2298
Y	*314-3851*	1	LINKAGE AR-BUCKET (B1-FAMILY, WITHOUT LIFTING EYE)	1755
Y	*251-0542*	1	PANEL GP-SWITCH (ENGINE SPEED, START)	513
Y	*327-6501*	1	SEAT & MOUNTING GP (HIGH BACK, TILT)	2201
Y	*305-0467*	1	SEAT BELT GP (RETRACTABLE)	2216
Y	*272-4772*	1	SENSOR GP-LIQUID LEVEL (WATER SEPARATOR)	529
Y	*314-3727*	1	STICK AR-HOE (HEAVY-DUTY, REACH)	1779
Y	*194-1920*	2	TRACK GP	895
Y	*247-7457*	1	VALVE AR-SWING (WITHOUT FINE SWING)	1516
Y	*229-9070*	1	WASHER GP-WINDOW (LOWER)	2255
	240-5071	1	FLOOR MAT	

Y - SEPARATE ILLUSTRATION

<END>

MACHINE ARRANGEMENT

367-8799 DISTRIBUTION AR

S/N: FAL1-UP

AN ATTACHMENT

SMCS-7000 **i04450580**

NOTE	PART NUMBER	QTY	PART NAME 1 2 3 4 5 6 (PRODUCT LEVEL)	SEE PAGE
Y	*235-9003*	1	AIR CONDITIONER AR	1943
Y	*240-3830*	1	BOOM AR-1 PIECE LONG (HEAVY-DUTY)	1719
Y	*346-8037*	1	CAB GP	1993
Y	*310-0078*	1	CONTROL & MTG GP-JOYSTICK	2045
Y	*367-8780*	1	CONTROL AR-COMMUNICATION (PRODUCT LINK CELLULAR)	451
Y	*354-1057*	1	COOLING AR-HIGH AMBIENT TEMP (VARIABLE FAN SPEED)	193
Y	**234-6500**	1	COVER GP-STORAGE (CAB, REAR)	2082
Y	*314-3848*	1	FILM GP (CHINA)	2298
Y	*314-3851*	1	LINKAGE AR-BUCKET (B1-FAMILY, WITHOUT LIFTING EYE)	1755
Y	*251-0542*	1	PANEL GP-SWITCH (ENGINE SPEED, START)	513
Y	*327-6501*	1	SEAT & MOUNTING GP (HIGH BACK, TILT)	2201
Y	*305-0467*	1	SEAT BELT GP (RETRACTABLE)	2216
Y	*272-4772*	1	SENSOR GP-LIQUID LEVEL (WATER SEPARATOR)	529
Y	*314-3727*	1	STICK AR-HOE (HEAVY-DUTY, REACH)	1779
Y	*194-1920*	2	TRACK GP	895
Y	*247-7457*	1	VALVE AR-SWING (WITHOUT FINE SWING)	1516
Y	*229-9070*	1	WASHER GP-WINDOW (LOWER)	2255
	240-5071	1	FLOOR MAT	

Y - SEPARATE ILLUSTRATION

<END>

MACHINE ARRANGEMENT

367-8800 DISTRIBUTION AR

S/N: FAL1-UP

AN ATTACHMENT

SMCS-7000 **i04450576**

NOTE	PART NUMBER	QTY	PART NAME 1 2 3 4 5 6 (PRODUCT LEVEL)	SEE PAGE
Y	*235-9003*	1	AIR CONDITIONER AR	1943
Y	*240-3830*	1	BOOM AR-1 PIECE LONG (HEAVY-DUTY)	1719
Y	*346-8037*	1	CAB GP	1993
Y	*310-0078*	1	CONTROL & MTG GP-JOYSTICK	2045
Y	*367-8780*	1	CONTROL AR-COMMUNICATION (PRODUCT LINK CELLULAR)	451
Y	*354-1057*	1	COOLING AR-HIGH AMBIENT TEMP (VARIABLE FAN SPEED)	193
Y	**234-6500**	1	COVER GP-STORAGE (CAB, REAR)	2082
Y	*314-3848*	1	FILM GP (CHINA)	2298
Y	*314-3851*	1	LINKAGE AR-BUCKET (B1-FAMILY, WITHOUT LIFTING EYE)	1755
Y	*251-0542*	1	PANEL GP-SWITCH (ENGINE SPEED, START)	513
Y	*327-6501*	1	SEAT & MOUNTING GP (HIGH BACK, TILT)	2201
Y	*305-0467*	1	SEAT BELT GP (RETRACTABLE)	2216
Y	*272-4772*	1	SENSOR GP-LIQUID LEVEL (WATER SEPARATOR)	529
Y	*298-4102*	1	STARTING AR-COLD WEATHER	532
Y	*314-3727*	1	STICK AR-HOE (HEAVY-DUTY, REACH)	1779
Y	*194-1920*	2	TRACK GP	895
Y	*247-7457*	1	VALVE AR-SWING (WITHOUT FINE SWING)	1516
Y	*229-9070*	1	WASHER GP-WINDOW (LOWER)	2255
	240-5071	1	FLOOR MAT	

Y - SEPARATE ILLUSTRATION

<END>

MACHINE ARRANGEMENT

367-8807 DISTRIBUTION AR

S/N: FAL1-UP

AN ATTACHMENT

SMCS-7000 **i04450573**

NOTE	PART NUMBER	QTY	PART NAME 1 2 3 4 5 6 (PRODUCT LEVEL)	SEE PAGE
Y	*235-9003*	1	AIR CONDITIONER AR	1943
Y	*240-3830*	1	BOOM AR-1 PIECE LONG (HEAVY-DUTY)	1719
Y	*346-8037*	1	CAB GP	1993
Y	*310-0078*	1	CONTROL & MTG GP-JOYSTICK	2045
Y	*367-8780*	1	CONTROL AR-COMMUNICATION (PRODUCT LINK CELLULAR)	451
Y	*354-1057*	1	COOLING AR-HIGH AMBIENT TEMP (VARIABLE FAN SPEED)	193
Y	**234-6500**	1	COVER GP-STORAGE (CAB, REAR)	2082
Y	*314-3848*	1	FILM GP (CHINA)	2298
Y	*314-3851*	1	LINKAGE AR-BUCKET (B1-FAMILY, WITHOUT LIFTING EYE)	1755
Y	*251-0542*	1	PANEL GP-SWITCH (ENGINE SPEED, START)	513
Y	*327-6501*	1	SEAT & MOUNTING GP (HIGH BACK, TILT)	2201
Y	*305-0467*	1	SEAT BELT GP (RETRACTABLE)	2216
Y	*272-4772*	1	SENSOR GP-LIQUID LEVEL (WATER SEPARATOR)	529
Y	*298-4102*	1	STARTING AR-COLD WEATHER	532
Y	*314-3727*	1	STICK AR-HOE (HEAVY-DUTY, REACH)	1779
Y	*194-1920*	2	TRACK GP	895
Y	*247-7457*	1	VALVE AR-SWING (WITHOUT FINE SWING)	1516
Y	*229-9070*	1	WASHER GP-WINDOW (LOWER)	2255
	240-5071	1	FLOOR MAT	

Y - SEPARATE ILLUSTRATION

<END>

MACHINE ARRANGEMENT

367-8809 DISTRIBUTION AR

S/N: KGF1-UP

AN ATTACHMENT

SMCS-7000 **i04450560**

NOTE	PART NUMBER	QTY	PART NAME 1 2 3 4 5 6 (PRODUCT LEVEL)	SEE PAGE
Y	*264-8671*	1	AIR CLEANER AR (PRECLEANER)	255
Y	*235-9003*	1	AIR CONDITIONER AR	1943
Y	*299-2783*	1	BATTERY & WIRING GP (COLD WEATHER)	435
Y	*240-3830*	1	BOOM AR-1 PIECE LONG (HEAVY-DUTY)	1719
Y	*346-8037*	1	CAB GP	1993
Y	*310-0078*	1	CONTROL & MTG GP-JOYSTICK	2045
Y	*259-7495*	1	CONTROL AR-AUXILIARY (COMBINED FCTN, MEDIUM PRESSURE)	908
Y	*290-1911*	1	COOLING AR-HIGH AMBIENT TEMP	191
Y	**234-6500**	1	COVER GP-STORAGE (CAB, REAR)	2082
Y	*314-3786*	1	PLATE GP-INFORMATION (TOSNO)	2341
Y	*134-8875*	1	GUARD GP-SWIVEL (HEAVY-DUTY) (HEAVY-DUTY)	761
Y	*238-1627*	1	LIGHTING GP-FLOOD (CAB)	482
Y	*314-3851*	1	LINKAGE AR-BUCKET (B1-FAMILY, WITHOUT LIFTING EYE)	1755
Y	*251-0542*	1	PANEL GP-SWITCH (ENGINE SPEED, START)	513
Y	*367-8698*	1	PUMP AR-REFUELING	335
Y	*327-6501*	1	SEAT & MOUNTING GP (HIGH BACK, TILT)	2201
Y	*305-0467*	1	SEAT BELT GP (RETRACTABLE)	2216
Y	*272-4772*	1	SENSOR GP-LIQUID LEVEL (WATER SEPARATOR)	529
Y	*314-3727*	1	STICK AR-HOE (HEAVY-DUTY, REACH)	1779
Y	**194-1910**	2	TRACK GP	893
Y	*247-7457*	1	VALVE AR-SWING (WITHOUT FINE SWING)	1516
Y	*161-3751*	1	VISOR GP-CAB (SUN)	2253
Y	*229-9070*	1	WASHER GP-WINDOW (LOWER)	2255
Y	*350-8250*	1	WIRING GP-CONVERTER (12-VOLT, 10-AMPERE)	613
	245-7794		FLOOR MAT	

Y - SEPARATE ILLUSTRATION

<END>

MACHINE ARRANGEMENT

367-8810 DISTRIBUTION AR

S/N: KGF1-UP

AN ATTACHMENT

SMCS-7000 **i04450556**

NOTE	PART NUMBER	QTY	PART NAME 1 2 3 4 5 6 (PRODUCT LEVEL)	SEE PAGE
Y	*264-8671*	1	AIR CLEANER AR (PRECLEANER)	255
Y	*235-9003*	1	AIR CONDITIONER AR	1943
Y	*299-2783*	1	BATTERY & WIRING GP (COLD WEATHER)	435
Y	*240-3830*	1	BOOM AR-1 PIECE LONG (HEAVY-DUTY)	1719
Y	*346-8037*	1	CAB GP	1993
Y	*310-0078*	1	CONTROL & MTG GP-JOYSTICK	2045
Y	*290-1911*	1	COOLING AR-HIGH AMBIENT TEMP	191
Y	**234-6500**	1	COVER GP-STORAGE (CAB, REAR)	2082
Y	*314-3786*	1	PLATE GP-INFORMATION (TOSNO)	2341
Y	*134-8875*	1	GUARD GP-SWIVEL (HEAVY-DUTY) (HEAVY-DUTY)	761
Y	*238-1627*	1	LIGHTING GP-FLOOD (CAB)	482
Y	*314-3851*	1	LINKAGE AR-BUCKET (B1-FAMILY, WITHOUT LIFTING EYE)	1755
Y	*251-0542*	1	PANEL GP-SWITCH (ENGINE SPEED, START)	513
Y	*367-8698*	1	PUMP AR-REFUELING	335
Y	*327-6501*	1	SEAT & MOUNTING GP (HIGH BACK, TILT)	2201
Y	*305-0467*	1	SEAT BELT GP (RETRACTABLE)	2216
Y	*272-4772*	1	SENSOR GP-LIQUID LEVEL (WATER SEPARATOR)	529
Y	*314-3727*	1	STICK AR-HOE (HEAVY-DUTY, REACH)	1779
Y	**194-1910**	2	TRACK GP	893
Y	*247-7457*	1	VALVE AR-SWING (WITHOUT FINE SWING)	1516
Y	*161-3751*	1	VISOR GP-CAB (SUN)	2253
Y	*229-9070*	1	WASHER GP-WINDOW (LOWER)	2255
Y	*350-8250*	1	WIRING GP-CONVERTER (12-VOLT, 10-AMPERE)	613
	240-5071	1	FLOOR MAT	

Y - SEPARATE ILLUSTRATION

<END>

367-8811 DISTRIBUTION AR

S/N: KGF1-UP

AN ATTACHMENT

SMCS-7000 **i04450412**

NOTE	PART NUMBER	QTY	PART NAME 1 2 3 4 5 6 (PRODUCT LEVEL)	SEE PAGE
Y	*238-1627*	1	LIGHTING GP-FLOOD (CAB)	482
Y	*338-9911*	1	OPTION AR-LINKAGE (HEAVY-DUTY, REACH)	86
Y	*367-8812*	1	OPTION AR-REGIONAL	94

Y - SEPARATE ILLUSTRATION

<END>

MACHINE ARRANGEMENT

367-8813 DISTRIBUTION AR

S/N: KGF1-UP

AN ATTACHMENT

SMCS-7000 **i04450410**

NOTE	PART NUMBER	QTY	PART NAME 1 2 3 4 5 6 (PRODUCT LEVEL)	SEE PAGE
Y	*274-2467*	1	CYLINDER AR-HYDRAULIC (COLD WEATHER, B1-FAM, LONG STK)	1006
Y	*238-1627*	1	LIGHTING GP-FLOOD (CAB)	482
Y	*338-9911*	1	OPTION AR-LINKAGE (HEAVY-DUTY, REACH)	86
Y	*367-8814*	1	OPTION AR-REGIONAL (ARCTIC)	95

Y - SEPARATE ILLUSTRATION

<END>

367-8817 DISTRIBUTION AR

S/N: KGF1-UP

AN ATTACHMENT

SMCS-7000 **i04450557**

NOTE	PART NUMBER	QTY	PART NAME 1 2 3 4 5 6 (PRODUCT LEVEL)	SEE PAGE
Y	*264-8671*	1	AIR CLEANER AR (PRECLEANER)	255
Y	*235-9003*	1	AIR CONDITIONER AR	1943
Y	*240-3830*	1	BOOM AR-1 PIECE LONG (HEAVY-DUTY)	1719
Y	*346-8039*	1	CAB GP	1997
Y	*310-0078*	1	CONTROL & MTG GP-JOYSTICK	2045
Y	*290-1911*	1	COOLING AR-HIGH AMBIENT TEMP	191
Y	*134-8875*	1	GUARD GP-SWIVEL (HEAVY-DUTY) (HEAVY-DUTY)	761
Y	**327-6515**	1	HEADREST AS-SEAT (CLOTH)	2129
Y	*298-4115*	1	INSTALLATION AR-COMMUNICATION (PRODUCT LINK 321SR)	469
Y	*163-6772*	1	LIGHTING GP-FLOOD (CAB)	479
Y	*259-5047*	1	LIGHTING GP-FLOOD (BOOM, RH)	488
Y	*240-3858*	1	LINKAGE AR-BUCKET (B1-FAMILY, WITH LIFTING EYE)	1753
Y	*251-0542*	1	PANEL GP-SWITCH (ENGINE SPEED, START)	513
Y	*367-8698*	1	PUMP AR-REFUELING	335
Y	*327-6500*	1	SEAT & MOUNTING GP (LOW BACK, TILT)	2199
Y	*305-0467*	1	SEAT BELT GP (RETRACTABLE)	2216
Y	*272-4772*	1	SENSOR GP-LIQUID LEVEL (WATER SEPARATOR)	529
Y	*240-3854*	1	STICK AR-HOE (HEAVY-DUTY, B-FAMILY)	1776
Y	**194-1910**	2	TRACK GP	893
Y	*247-7457*	1	VALVE AR-SWING (WITHOUT FINE SWING)	1516
Y	*161-3751*	1	VISOR GP-CAB (SUN)	2253
Y	*229-9070*	1	WASHER GP-WINDOW (LOWER)	2255
Y	*350-8250*	1	WIRING GP-CONVERTER (12-VOLT, 10-AMPERE)	613
	240-5071	1	FLOOR MAT	

Y - SEPARATE ILLUSTRATION

<END>

MACHINE ARRANGEMENT

379-7095 DISTRIBUTION AR

S/N: FAL1-UP

AN ATTACHMENT

SMCS-7000 **i04450555**

NOTE	PART NUMBER	QTY	PART NAME 1 2 3 4 5 6 (PRODUCT LEVEL)	SEE PAGE
Y	*235-9003*	1	AIR CONDITIONER AR	1943
Y	*240-3830*	1	BOOM AR-1 PIECE LONG (HEAVY-DUTY)	1719
Y	*346-8037*	1	CAB GP	1993
Y	*310-0078*	1	CONTROL & MTG GP-JOYSTICK	2045
Y	*354-1057*	1	COOLING AR-HIGH AMBIENT TEMP (VARIABLE FAN SPEED)	193
Y	**234-6500**	1	COVER GP-STORAGE (CAB, REAR)	2082
Y	*314-3848*	1	FILM GP (CHINA)	2298
Y	*314-3851*	1	LINKAGE AR-BUCKET (B1-FAMILY, WITHOUT LIFTING EYE)	1755
Y	*251-0542*	1	PANEL GP-SWITCH (ENGINE SPEED, START)	513
Y	*327-6501*	1	SEAT & MOUNTING GP (HIGH BACK, TILT)	2201
Y	*305-0467*	1	SEAT BELT GP (RETRACTABLE)	2216
Y	*272-4772*	1	SENSOR GP-LIQUID LEVEL (WATER SEPARATOR)	529
Y	*314-3727*	1	STICK AR-HOE (HEAVY-DUTY, REACH)	1779
Y	*194-1920*	2	TRACK GP	895
Y	*247-7457*	1	VALVE AR-SWING (WITHOUT FINE SWING)	1516
Y	*229-9070*	1	WASHER GP-WINDOW (LOWER)	2255
Y	*369-0033*	1	WIRING GP-COMMUNICATION (PRODUCT LINK)	604
	240-5071	1	FLOOR MAT	

Y - SEPARATE ILLUSTRATION

<END>

MACHINE ARRANGEMENT

379-7096 DISTRIBUTION AR

S/N: FAL1-UP

AN ATTACHMENT

SMCS-7000 **i04450563**

NOTE	PART NUMBER	QTY	PART NAME 1 2 3 4 5 6 (PRODUCT LEVEL)	SEE PAGE
Y	*235-9003*	1	AIR CONDITIONER AR	1943
Y	*240-3830*	1	BOOM AR-1 PIECE LONG (HEAVY-DUTY)	1719
Y	*346-8037*	1	CAB GP	1993
Y	*310-0078*	1	CONTROL & MTG GP-JOYSTICK	2045
Y	*354-1057*	1	COOLING AR-HIGH AMBIENT TEMP (VARIABLE FAN SPEED)	193
Y	**234-6500**	1	COVER GP-STORAGE (CAB, REAR)	2082
Y	*314-3848*	1	FILM GP (CHINA)	2298
Y	*314-3851*	1	LINKAGE AR-BUCKET (B1-FAMILY, WITHOUT LIFTING EYE)	1755
Y	*251-0542*	1	PANEL GP-SWITCH (ENGINE SPEED, START)	513
Y	*327-6501*	1	SEAT & MOUNTING GP (HIGH BACK, TILT)	2201
Y	*305-0467*	1	SEAT BELT GP (RETRACTABLE)	2216
Y	*272-4772*	1	SENSOR GP-LIQUID LEVEL (WATER SEPARATOR)	529
Y	*298-4102*	1	STARTING AR-COLD WEATHER	532
Y	*314-3727*	1	STICK AR-HOE (HEAVY-DUTY, REACH)	1779
Y	*194-1920*	2	TRACK GP	895
Y	*247-7457*	1	VALVE AR-SWING (WITHOUT FINE SWING)	1516
Y	*229-9070*	1	WASHER GP-WINDOW (LOWER)	2255
Y	*369-0033*	1	WIRING GP-COMMUNICATION (PRODUCT LINK)	604
	240-5071	1	FLOOR MAT	

Y - SEPARATE ILLUSTRATION

<END>

MACHINE ARRANGEMENT

379-7097 DISTRIBUTION AR

S/N: FAL1-UP

AN ATTACHMENT

SMCS-7000 **i04450564**

NOTE	PART NUMBER	QTY	PART NAME 1 2 3 4 5 6 (PRODUCT LEVEL)	SEE PAGE
Y	*235-9003*	1	AIR CONDITIONER AR	1943
Y	*240-3830*	1	BOOM AR-1 PIECE LONG (HEAVY-DUTY)	1719
Y	*346-8037*	1	CAB GP	1993
Y	*310-0078*	1	CONTROL & MTG GP-JOYSTICK	2045
Y	*354-1057*	1	COOLING AR-HIGH AMBIENT TEMP (VARIABLE FAN SPEED)	193
Y	**234-6500**	1	COVER GP-STORAGE (CAB, REAR)	2082
Y	*314-3848*	1	FILM GP (CHINA)	2298
Y	*314-3851*	1	LINKAGE AR-BUCKET (B1-FAMILY, WITHOUT LIFTING EYE)	1755
Y	*251-0542*	1	PANEL GP-SWITCH (ENGINE SPEED, START)	513
Y	*327-6501*	1	SEAT & MOUNTING GP (HIGH BACK, TILT)	2201
Y	*305-0467*	1	SEAT BELT GP (RETRACTABLE)	2216
Y	*272-4772*	1	SENSOR GP-LIQUID LEVEL (WATER SEPARATOR)	529
Y	*314-3727*	1	STICK AR-HOE (HEAVY-DUTY, REACH)	1779
Y	*194-1920*	2	TRACK GP	895
Y	*247-7457*	1	VALVE AR-SWING (WITHOUT FINE SWING)	1516
Y	*229-9070*	1	WASHER GP-WINDOW (LOWER)	2255
Y	*369-0033*	1	WIRING GP-COMMUNICATION (PRODUCT LINK)	604
	240-5071	1	FLOOR MAT	

Y - SEPARATE ILLUSTRATION

<END>

MACHINE ARRANGEMENT

379-7098 DISTRIBUTION AR

S/N: FAL1-UP

AN ATTACHMENT

SMCS-7000 **i04446780**

NOTE	PART NUMBER	QTY	PART NAME 1 2 3 4 5 6 (PRODUCT LEVEL)	SEE PAGE
Y	*235-9003*	1	AIR CONDITIONER AR	1943
Y	*240-3830*	1	BOOM AR-1 PIECE LONG (HEAVY-DUTY)	1719
Y	*346-8037*	1	CAB GP	1993
Y	*310-0078*	1	CONTROL & MTG GP-JOYSTICK	2045
Y	*354-1057*	1	COOLING AR-HIGH AMBIENT TEMP (VARIABLE FAN SPEED)	193
Y	**234-6500**	1	COVER GP-STORAGE (CAB, REAR)	2082
Y	*314-3848*	1	FILM GP (CHINA)	2298
Y	*314-3851*	1	LINKAGE AR-BUCKET (B1-FAMILY, WITHOUT LIFTING EYE)	1755
Y	*251-0542*	1	PANEL GP-SWITCH (ENGINE SPEED, START)	513
Y	*327-6501*	1	SEAT & MOUNTING GP (HIGH BACK, TILT)	2201
Y	*305-0467*	1	SEAT BELT GP (RETRACTABLE)	2216
Y	*272-4772*	1	SENSOR GP-LIQUID LEVEL (WATER SEPARATOR)	529
Y	*298-4102*	1	STARTING AR-COLD WEATHER	532
Y	*314-3727*	1	STICK AR-HOE (HEAVY-DUTY, REACH)	1779
Y	*194-1920*	2	TRACK GP	895
Y	*247-7457*	1	VALVE AR-SWING (WITHOUT FINE SWING)	1516
Y	*229-9070*	1	WASHER GP-WINDOW (LOWER)	2255
Y	*369-0033*	1	WIRING GP-COMMUNICATION (PRODUCT LINK)	604
	240-5071	1	FLOOR MAT	

Y - SEPARATE ILLUSTRATION

<END>

MACHINE ARRANGEMENT

379-7118 DISTRIBUTION AR

S/N: KGF1-UP

AN ATTACHMENT

SMCS-7000 **i04554022**

NOTE	PART NUMBER	QTY	PART NAME 1 2 3 4 5 6 (PRODUCT LEVEL)	SEE PAGE
Y	*264-8671*	1	AIR CLEANER AR (PRECLEANER)	255
Y	*235-9003*	1	AIR CONDITIONER AR	1943
Y	*240-3830*	1	BOOM AR-1 PIECE LONG (HEAVY-DUTY)	1719
Y	*346-8039*	1	CAB GP	1997
Y	*310-0078*	1	CONTROL & MTG GP-JOYSTICK	2045
Y	*244-8503*	1	CONVERSION GP-LINKAGE (B1-FAMILY)	1744
Y	*290-1911*	1	COOLING AR-HIGH AMBIENT TEMP	191
Y	**234-6500**	1	COVER GP-STORAGE (CAB, REAR)	2082
Y	*134-8875*	1	GUARD GP-SWIVEL (HEAVY-DUTY)	761
Y	*163-6772*	1	LIGHTING GP-FLOOD (CAB)	479
Y	*259-5047*	1	LIGHTING GP-FLOOD (BOOM, RH)	488
Y	*240-3858*	1	LINKAGE AR-BUCKET (B1-FAMILY, WITH LIFTING EYE)	1753
Y	*251-0542*	1	PANEL GP-SWITCH (ENGINE SPEED, START)	513
Y	*327-6501*	1	SEAT & MOUNTING GP (HIGH BACK, TILT)	2201
Y	*305-0467*	1	SEAT BELT GP (RETRACTABLE)	2216
Y	*272-4772*	1	SENSOR GP-LIQUID LEVEL (WATER SEPARATOR)	529
Y	*314-3727*	1	STICK AR-HOE (HEAVY-DUTY, REACH)	1779
Y	**194-1910**	2	TRACK GP	893
Y	*247-7457*	1	VALVE AR-SWING (WITHOUT FINE SWING)	1516
Y	*229-9070*	1	WASHER GP-WINDOW (LOWER)	2255
Y	*350-8250*	1	WIRING GP-CONVERTER (12-VOLT, 10-AMPERE)	613
	240-5071	1	FLOOR MAT	

Y - SEPARATE ILLUSTRATION

<END>

379-7119 DISTRIBUTION AR

S/N: KGF1-UP

AN ATTACHMENT

SMCS-7000 **i04554021**

NOTE	PART NUMBER	QTY	PART NAME 1 2 3 4 5 6 (PRODUCT LEVEL)	SEE PAGE
Y	*264-8671*	1	AIR CLEANER AR (PRECLEANER)	255
Y	*235-9003*	1	AIR CONDITIONER AR	1943
Y	*346-8037*	1	CAB GP	1993
Y	*310-0078*	1	CONTROL & MTG GP-JOYSTICK	2045
Y	*290-1911*	1	COOLING AR-HIGH AMBIENT TEMP	191
Y	**234-6500**	1	COVER GP-STORAGE (CAB, REAR)	2082
Y	*134-8875*	1	GUARD GP-SWIVEL (HEAVY-DUTY)	761
Y	*163-6772*	1	LIGHTING GP-FLOOD (CAB)	479
Y	*302-9208*	1	LINKAGE AR-FRONT	1758
Y	*251-0542*	1	PANEL GP-SWITCH (ENGINE SPEED, START)	513
Y	*327-6501*	1	SEAT & MOUNTING GP (HIGH BACK, TILT)	2201
Y	*305-0467*	1	SEAT BELT GP (RETRACTABLE)	2216
Y	*272-4772*	1	SENSOR GP-LIQUID LEVEL (WATER SEPARATOR)	529
Y	*314-3798*	2	TRACK AR	892
Y	*247-7457*	1	VALVE AR-SWING (WITHOUT FINE SWING)	1516
Y	*229-9070*	1	WASHER GP-WINDOW (LOWER)	2255
Y	*350-8250*	1	WIRING GP-CONVERTER (12-VOLT, 10-AMPERE)	613
	240-5071	1	FLOOR MAT	

Y - SEPARATE ILLUSTRATION

<END>

MACHINE ARRANGEMENT

379-7216 DISTRIBUTION AR

S/N: KGF1-UP

AN ATTACHMENT

SMCS-7000 **i04554019**

NOTE	PART NUMBER	QTY	PART NAME 1 2 3 4 5 6 (PRODUCT LEVEL)	SEE PAGE
Y	*264-8671*	1	AIR CLEANER AR (PRECLEANER)	255
Y	*235-9003*	1	AIR CONDITIONER AR	1943
Y	*240-3830*	1	BOOM AR-1 PIECE LONG (HEAVY-DUTY)	1719
Y	*346-8039*	1	CAB GP	1997
Y	*310-0078*	1	CONTROL & MTG GP-JOYSTICK	2045
Y	*290-1911*	1	COOLING AR-HIGH AMBIENT TEMP	191
Y	*134-8875*	1	GUARD GP-SWIVEL (HEAVY-DUTY)	761
Y	**327-6515**	1	HEADREST AS-SEAT (CLOTH)	2129
Y	*298-4115*	1	INSTALLATION AR-COMMUNICATION (PRODUCT LINK 321SR)	469
Y	*259-5047*	1	LIGHTING GP-FLOOD (BOOM, RH)	488
Y	*366-9343*	1	LIGHTING GP-FLOOD (CAB)	496
Y	*240-3858*	1	LINKAGE AR-BUCKET (B1-FAMILY, WITH LIFTING EYE)	1753
Y	*251-0542*	1	PANEL GP-SWITCH (ENGINE SPEED, START)	513
Y	*367-8698*	1	PUMP AR-REFUELING	335
Y	*327-6500*	1	SEAT & MOUNTING GP (LOW BACK, TILT)	2199
Y	*305-0467*	1	SEAT BELT GP (RETRACTABLE)	2216
Y	*272-4772*	1	SENSOR GP-LIQUID LEVEL (WATER SEPARATOR)	529
Y	*240-3854*	1	STICK AR-HOE (HEAVY-DUTY, B-FAMILY)	1776
Y	**194-1910**	2	TRACK GP	893
Y	*247-7457*	1	VALVE AR-SWING (WITHOUT FINE SWING)	1516
Y	*161-3751*	1	VISOR GP-CAB (SUN)	2253
Y	*229-9070*	1	WASHER GP-WINDOW (LOWER)	2255
Y	*350-8250*	1	WIRING GP-CONVERTER (12-VOLT, 10-AMPERE)	613
	240-5071	1	FLOOR MAT	

Y - SEPARATE ILLUSTRATION

<END>

MACHINE ARRANGEMENT

379-7217 DISTRIBUTION AR

S/N: KGF1-UP

AN ATTACHMENT

SMCS-7000 **i04554018**

NOTE	PART NUMBER	QTY	PART NAME 1 2 3 4 5 6 (PRODUCT LEVEL)	SEE PAGE
Y	*264-8671*	1	AIR CLEANER AR (PRECLEANER)	255
Y	*235-9003*	1	AIR CONDITIONER AR	1943
Y	*240-3830*	1	BOOM AR-1 PIECE LONG (HEAVY-DUTY)	1719
Y	*346-8039*	1	CAB GP	1997
Y	*310-0078*	1	CONTROL & MTG GP-JOYSTICK	2045
Y	*259-7494*	1	CONTROL AR-AUXILIARY (SYSTEM 3, 1-WAY, 2-PUMP)	908
Y	*379-7062*	1	CONTROL AR-COMMUNICATION (PRODUCT LINK CELLULAR)	451
Y	*290-1911*	1	COOLING AR-HIGH AMBIENT TEMP	191
Y	*134-8875*	1	GUARD GP-SWIVEL (HEAVY-DUTY)	761
Y	**327-6515**	1	HEADREST AS-SEAT (CLOTH)	2129
Y	*259-5047*	1	LIGHTING GP-FLOOD (BOOM, RH)	488
Y	*366-9343*	1	LIGHTING GP-FLOOD (CAB)	496
Y	*242-6475*	1	LINES GP-AUXILIARY HYDRAULIC (BOOM, HIGH PRESSURE)	1082
Y	*242-6487*	1	LINES GP-AUXILIARY HYDRAULIC (STICK, HIGH PRESSURE)	1097
Y	*240-3858*	1	LINKAGE AR-BUCKET (B1-FAMILY, WITH LIFTING EYE)	1753
Y	*251-0542*	1	PANEL GP-SWITCH (ENGINE SPEED, START)	513
Y	*367-8698*	1	PUMP AR-REFUELING	335
Y	*327-6500*	1	SEAT & MOUNTING GP (LOW BACK, TILT)	2199
Y	*305-0467*	1	SEAT BELT GP (RETRACTABLE)	2216
Y	*272-4772*	1	SENSOR GP-LIQUID LEVEL (WATER SEPARATOR)	529
Y	*314-3727*	1	STICK AR-HOE (HEAVY-DUTY, REACH)	1779
Y	**194-1910**	2	TRACK GP	893
Y	*247-7457*	1	VALVE AR-SWING (WITHOUT FINE SWING)	1516
Y	*161-3751*	1	VISOR GP-CAB (SUN)	2253
Y	*229-9070*	1	WASHER GP-WINDOW (LOWER)	2255
Y	*350-8250*	1	WIRING GP-CONVERTER (12-VOLT, 10-AMPERE)	613
	240-5073	1	FLOOR MAT	

Y - SEPARATE ILLUSTRATION

<END>

MACHINE ARRANGEMENT

379-7218 DISTRIBUTION AR

S/N: KGF1-UP

AN ATTACHMENT

SMCS-7000 **i04554015**

NOTE	PART NUMBER	QTY	PART NAME 1 2 3 4 5 6 (PRODUCT LEVEL)	SEE PAGE
Y	*264-8671*	1	AIR CLEANER AR (PRECLEANER)	255
Y	*235-9003*	1	AIR CONDITIONER AR	1943
Y	*346-8037*	1	CAB GP	1993
Y	*270-5688*	1	CONTROL & MTG GP-JOYSTICK (3-BUTTON, TRIGGER SWITCH)	2043
Y	*259-7501*	1	CONTROL AR-AUXILIARY (MEDIUM PRESSURE)	910
Y	*290-1911*	1	COOLING AR-HIGH AMBIENT TEMP	191
Y	*134-8875*	1	GUARD GP-SWIVEL (HEAVY-DUTY)	761
Y	*298-4115*	1	INSTALLATION AR-COMMUNICATION (PRODUCT LINK 321SR)	469
Y	*366-9343*	1	LIGHTING GP-FLOOD (CAB)	496
Y	*260-7984*	1	LINES GP-PILOT (PILOT OIL PRESSURE)	1379
Y	*302-9208*	1	LINKAGE AR-FRONT	1758
Y	*253-2866*	1	OPTION AR-HYDRAULIC	81
Y	*251-0542*	1	PANEL GP-SWITCH (ENGINE SPEED, START)	513
Y	*367-8698*	1	PUMP AR-REFUELING	335
Y	*327-6501*	1	SEAT & MOUNTING GP (HIGH BACK, TILT)	2201
Y	*305-0467*	1	SEAT BELT GP (RETRACTABLE)	2216
Y	*272-4772*	1	SENSOR GP-LIQUID LEVEL (WATER SEPARATOR)	529
Y	*314-3798*	2	TRACK AR	892
Y	*247-7457*	1	VALVE AR-SWING (WITHOUT FINE SWING)	1516
Y	*161-3751*	1	VISOR GP-CAB (SUN)	2253
Y	*161-3750*	1	VISOR GP-PROTECTION (RAIN)	2254
Y	*229-9070*	1	WASHER GP-WINDOW (LOWER)	2255
Y	*350-8250*	1	WIRING GP-CONVERTER (12-VOLT, 10-AMPERE)	613
	240-5071	1	FLOOR MAT	

Y - SEPARATE ILLUSTRATION

<END>

MACHINE ARRANGEMENT

379-7219 DISTRIBUTION AR

S/N: KGF1-UP

AN ATTACHMENT

SMCS-7000 **i04554014**

NOTE	PART NUMBER	QTY	PART NAME 1 2 3 4 5 6 (PRODUCT LEVEL)	SEE PAGE
Y	*264-8671*	1	AIR CLEANER AR (PRECLEANER)	255
Y	*235-9003*	1	AIR CONDITIONER AR	1943
Y	*299-2783*	1	BATTERY & WIRING GP (COLD WEATHER)	435
Y	*240-3830*	1	BOOM AR-1 PIECE LONG (HEAVY-DUTY)	1719
Y	*346-8037*	1	CAB GP	1993
Y	*310-0078*	1	CONTROL & MTG GP-JOYSTICK	2045
Y	*259-7495*	1	CONTROL AR-AUXILIARY (COMBINED FCTN, MEDIUM PRESSURE)	908
Y	*290-1911*	1	COOLING AR-HIGH AMBIENT TEMP	191
Y	**234-6500**	1	COVER GP-STORAGE (CAB, REAR)	2082
Y	*134-8875*	1	GUARD GP-SWIVEL (HEAVY-DUTY)	761
Y	*298-4115*	1	INSTALLATION AR-COMMUNICATION (PRODUCT LINK 321SR)	469
Y	*366-9342*	1	LIGHTING GP-FLOOD (CAB)	494
Y	*314-3851*	1	LINKAGE AR-BUCKET (B1-FAMILY, WITHOUT LIFTING EYE)	1755
Y	*251-0542*	1	PANEL GP-SWITCH (ENGINE SPEED, START)	513
Y	*314-3786*	1	PLATE GP-INFORMATION	2341
Y	*367-8698*	1	PUMP AR-REFUELING	335
Y	*327-6501*	1	SEAT & MOUNTING GP (HIGH BACK, TILT)	2201
Y	*305-0467*	1	SEAT BELT GP (RETRACTABLE)	2216
Y	*272-4772*	1	SENSOR GP-LIQUID LEVEL (WATER SEPARATOR)	529
Y	*314-3727*	1	STICK AR-HOE (HEAVY-DUTY, REACH)	1779
Y	**194-1910**	2	TRACK GP	893
Y	*247-7457*	1	VALVE AR-SWING (WITHOUT FINE SWING)	1516
Y	*161-3751*	1	VISOR GP-CAB (SUN)	2253
Y	*229-9070*	1	WASHER GP-WINDOW (LOWER)	2255
Y	*350-8250*	1	WIRING GP-CONVERTER (12-VOLT, 10-AMPERE)	613
	245-7794	1	FLOOR MAT	

Y - SEPARATE ILLUSTRATION

<END>

MACHINE ARRANGEMENT

379-7220 DISTRIBUTION AR

S/N: KGF1-UP

AN ATTACHMENT

SMCS-7000 **i04554013**

NOTE	PART NUMBER	QTY	PART NAME 1 2 3 4 5 6 (PRODUCT LEVEL)	SEE PAGE
Y	*264-8671*	1	AIR CLEANER AR (PRECLEANER)	255
Y	*235-9003*	1	AIR CONDITIONER AR	1943
Y	*299-2783*	1	BATTERY & WIRING GP (COLD WEATHER)	435
Y	*240-3830*	1	BOOM AR-1 PIECE LONG (HEAVY-DUTY)	1719
Y	*346-8037*	1	CAB GP	1993
Y	*310-0078*	1	CONTROL & MTG GP-JOYSTICK	2045
Y	*290-1911*	1	COOLING AR-HIGH AMBIENT TEMP	191
Y	**234-6500**	1	COVER GP-STORAGE (CAB, REAR)	2082
Y	*134-8875*	1	GUARD GP-SWIVEL (HEAVY-DUTY)	761
Y	*298-4115*	1	INSTALLATION AR-COMMUNICATION (PRODUCT LINK 321SR)	469
Y	*366-9342*	1	LIGHTING GP-FLOOD (CAB)	494
Y	*314-3851*	1	LINKAGE AR-BUCKET (B1-FAMILY, WITHOUT LIFTING EYE)	1755
Y	*251-0542*	1	PANEL GP-SWITCH (ENGINE SPEED, START)	513
Y	*314-3786*	1	PLATE GP-INFORMATION	2341
Y	*367-8698*	1	PUMP AR-REFUELING	335
Y	*327-6501*	1	SEAT & MOUNTING GP (HIGH BACK, TILT)	2201
Y	*305-0467*	1	SEAT BELT GP (RETRACTABLE)	2216
Y	*272-4772*	1	SENSOR GP-LIQUID LEVEL (WATER SEPARATOR)	529
Y	*314-3727*	1	STICK AR-HOE (HEAVY-DUTY, REACH)	1779
Y	**194-1910**	2	TRACK GP	893
Y	*247-7457*	1	VALVE AR-SWING (WITHOUT FINE SWING)	1516
Y	*161-3751*	1	VISOR GP-CAB (SUN)	2253
Y	*229-9070*	1	WASHER GP-WINDOW (LOWER)	2255
Y	*350-8250*	1	WIRING GP-CONVERTER (12-VOLT, 10-AMPERE)	613
	240-5071	1	FLOOR MAT	

Y - SEPARATE ILLUSTRATION

<END>

379-7221 DISTRIBUTION AR

S/N: KGF1-UP

AN ATTACHMENT

SMCS-7000 **i04566035**

NOTE	PART NUMBER	QTY	PART NAME 1 2 3 4 5 6 (PRODUCT LEVEL)	SEE PAGE
Y	*298-4115*	1	INSTALLATION AR-COMMUNICATION (PRODUCT LINK 321SR)	469
Y	*366-9342*	1	LIGHTING GP-FLOOD (CAB)	494
Y	*338-9911*	1	OPTION AR-LINKAGE	86
Y	*367-8812*	1	OPTION AR-REGIONAL	94
			—OR—	
Y	*379-7297*	1	OPTION AR-REGIONAL	96

Y - SEPARATE ILLUSTRATION

<END>

MACHINE ARRANGEMENT

379-7222 DISTRIBUTION AR

S/N: KGF1-UP

AN ATTACHMENT

SMCS-7000 **i04566036**

NOTE	PART NUMBER	QTY	PART NAME 1 2 3 4 5 6 (PRODUCT LEVEL)	SEE PAGE
Y	*274-2467*	1	CYLINDER AR-HYDRAULIC (COLD WEATHER, B1-FAM, LONG STK)	1006
Y	*298-4115*	1	INSTALLATION AR-COMMUNICATION (PRODUCT LINK 321SR)	469
Y	*366-9342*	1	LIGHTING GP-FLOOD (CAB)	494
Y	*338-9911*	1	OPTION AR-LINKAGE	86
Y	*367-8814*	1	OPTION AR-REGIONAL	95
			—OR—	
Y	*379-7299*	1	OPTION AR-REGIONAL	98

Y - SEPARATE ILLUSTRATION

<END>

379-7223 DISTRIBUTION AR

S/N: FAL1-UP

AN ATTACHMENT

SMCS-7000 **i04569713**

NOTE	PART NUMBER	QTY	PART NAME 1 2 3 4 5 6 (PRODUCT LEVEL)	SEE PAGE
Y	*231-1771*	1	ALARM GP-TRAVEL (BACKUP)	400
Y	*379-7062*	1	CONTROL AR-COMMUNICATION (PRODUCT LINK CELLULAR)	451
Y	*366-9343*	1	LIGHTING GP-FLOOD (CAB)	496
Y	*354-1154*	1	OPTION AR-CAB	76
Y	*314-3868*	1	OPTION AR-HYDRAULIC	82
Y	*359-2525*	1	OPTION AR-LINKAGE	88
Y	*354-1151*	1	OPTION AR-REGIONAL	92
			—OR—	
Y	*379-7305*	1	OPTION AR-REGIONAL	99
Y	*194-1920*	2	TRACK GP	895

Y - SEPARATE ILLUSTRATION

<END>

379-7224 DISTRIBUTION AR

S/N: KGF1-UP

AN ATTACHMENT

SMCS-7000 **i04569708**

NOTE	PART NUMBER	QTY	PART NAME 1 2 3 4 5 6 (PRODUCT LEVEL)	SEE PAGE
Y	*379-7062*	1	CONTROL AR-COMMUNICATION (PRODUCT LINK CELLULAR)	451
Y	*298-4099*	1	GUARD AR (HEAVY-DUTY)	756
Y	*352-9554*	1	GUARD GP-TRACK GUIDE (SEGMENTED)	864
Y	*354-1154*	1	OPTION AR-CAB	76
Y	*314-3868*	1	OPTION AR-HYDRAULIC	82
Y	*314-3900*	1	OPTION AR-LIGHTING	84
Y	*359-2526*	1	OPTION AR-LINKAGE	88
Y	*354-1151*	1	OPTION AR-REGIONAL	92
			—OR—	
Y	*379-7305*	1	OPTION AR-REGIONAL	99
Y	*194-1914*	2	TRACK GP	894

Y - SEPARATE ILLUSTRATION

<END>

MACHINE ARRANGEMENT

379-7226 DISTRIBUTION AR

S/N: FAL1-UP

AN ATTACHMENT

SMCS-7000 **i04553996**

NOTE	PART NUMBER	QTY	PART NAME 1 2 3 4 5 6 (PRODUCT LEVEL)	SEE PAGE
Y	*235-9003*	1	AIR CONDITIONER AR	1943
Y	*231-1771*	1	ALARM GP-TRAVEL (BACKUP)	400
Y	*299-2783*	1	BATTERY & WIRING GP (COLD WEATHER)	435
Y	*240-3830*	1	BOOM AR-1 PIECE LONG (HEAVY-DUTY)	1719
Y	*346-8037*	1	CAB GP	1993
Y	*310-0078*	1	CONTROL & MTG GP-JOYSTICK	2045
Y	*379-7062*	1	CONTROL AR-COMMUNICATION (PRODUCT LINK CELLULAR)	451
Y	*290-1911*	1	COOLING AR-HIGH AMBIENT TEMP	191
Y	**234-6500**	1	COVER GP-STORAGE (CAB, REAR)	2082
Y	*259-5047*	1	LIGHTING GP-FLOOD (BOOM, RH)	488
Y	*366-9343*	1	LIGHTING GP-FLOOD (CAB)	496
Y	*240-3858*	1	LINKAGE AR-BUCKET (B1-FAMILY, WITH LIFTING EYE)	1753
Y	*251-0542*	1	PANEL GP-SWITCH (ENGINE SPEED, START)	513
Y	*251-0538*	1	RADIO GP (AM/FM)	2190
Y	*327-6501*	1	SEAT & MOUNTING GP (HIGH BACK, TILT)	2201
Y	*305-0466*	1	SEAT BELT GP (RETRACTABLE, 76-MM (3-IN))	2214
Y	*272-4772*	1	SENSOR GP-LIQUID LEVEL (WATER SEPARATOR)	529
Y	*240-3854*	1	STICK AR-HOE (HEAVY-DUTY, B-FAMILY)	1776
Y	*194-1920*	2	TRACK GP	895
Y	*240-3881*	1	VALVE & LINES GP-HEAVY LIFT	1511
Y	*229-9070*	1	WASHER GP-WINDOW (LOWER)	2255
Y	*350-8250*	1	WIRING GP-CONVERTER (12-VOLT, 10-AMPERE)	613
Y	*259-5051*	1	WIRING GP-ENGINE (JUMP START)	617
	240-5071	1	FLOOR MAT	

Y - SEPARATE ILLUSTRATION

<END>

MACHINE ARRANGEMENT

379-7227 DISTRIBUTION AR

S/N: KGF1-UP

AN ATTACHMENT

SMCS-7000 **i04553994**

NOTE	PART NUMBER	QTY	PART NAME 1 2 3 4 5 6 (PRODUCT LEVEL)	SEE PAGE
Y	*235-9003*	1	AIR CONDITIONER AR	1943
Y	*231-1771*	1	ALARM GP-TRAVEL (BACKUP)	400
Y	*299-2783*	1	BATTERY & WIRING GP (COLD WEATHER)	435
Y	*240-3830*	1	BOOM AR-1 PIECE LONG (HEAVY-DUTY)	1719
Y	*346-8037*	1	CAB GP	1993
Y	*310-0078*	1	CONTROL & MTG GP-JOYSTICK	2045
Y	*379-7062*	1	CONTROL AR-COMMUNICATION (PRODUCT LINK CELLULAR)	451
Y	*290-1911*	1	COOLING AR-HIGH AMBIENT TEMP	191
Y	**234-6500**	1	COVER GP-STORAGE (CAB, REAR)	2082
Y	*259-5047*	1	LIGHTING GP-FLOOD (BOOM, RH)	488
Y	*366-9343*	1	LIGHTING GP-FLOOD (CAB)	496
Y	*240-3858*	1	LINKAGE AR-BUCKET (B1-FAMILY, WITH LIFTING EYE)	1753
Y	*251-0542*	1	PANEL GP-SWITCH (ENGINE SPEED, START)	513
Y	*251-0538*	1	RADIO GP (AM/FM)	2190
Y	*327-6501*	1	SEAT & MOUNTING GP (HIGH BACK, TILT)	2201
Y	*305-0466*	1	SEAT BELT GP (RETRACTABLE, 76-MM (3-IN))	2214
Y	*272-4772*	1	SENSOR GP-LIQUID LEVEL (WATER SEPARATOR)	529
Y	*314-3727*	1	STICK AR-HOE (HEAVY-DUTY, REACH)	1779
Y	*194-1911*	2	TRACK GP	893
Y	*240-3881*	1	VALVE & LINES GP-HEAVY LIFT	1511
Y	*229-9070*	1	WASHER GP-WINDOW (LOWER)	2255
Y	*350-8250*	1	WIRING GP-CONVERTER (12-VOLT, 10-AMPERE)	613
Y	*259-5051*	1	WIRING GP-ENGINE (JUMP START)	617
	240-5071	1	FLOOR MAT	

Y - SEPARATE ILLUSTRATION

<END>

MACHINE ARRANGEMENT

379-7228 DISTRIBUTION AR

S/N: KGF1-UP

AN ATTACHMENT

SMCS-7000 **i04553993**

NOTE	PART NUMBER	QTY	PART NAME 1 2 3 4 5 6 (PRODUCT LEVEL)	SEE PAGE
Y	*235-9003*	1	AIR CONDITIONER AR	1943
Y	*231-1771*	1	ALARM GP-TRAVEL (BACKUP)	400
Y	*299-2783*	1	BATTERY & WIRING GP (COLD WEATHER)	435
Y	*346-8037*	1	CAB GP	1993
Y	*310-0078*	1	CONTROL & MTG GP-JOYSTICK	2045
Y	*379-7062*	1	CONTROL AR-COMMUNICATION (PRODUCT LINK CELLULAR)	451
Y	*290-1911*	1	COOLING AR-HIGH AMBIENT TEMP	191
Y	**234-6500**	1	COVER GP-STORAGE (CAB, REAR)	2082
Y	*366-9343*	1	LIGHTING GP-FLOOD (CAB)	496
Y	*302-9208*	1	LINKAGE AR-FRONT	1758
Y	*251-0542*	1	PANEL GP-SWITCH (ENGINE SPEED, START)	513
Y	*251-0538*	1	RADIO GP (AM/FM)	2190
Y	*327-6501*	1	SEAT & MOUNTING GP (HIGH BACK, TILT)	2201
Y	*305-0466*	1	SEAT BELT GP (RETRACTABLE, 76-MM (3-IN))	2214
Y	*272-4772*	1	SENSOR GP-LIQUID LEVEL (WATER SEPARATOR)	529
Y	*194-1911*	2	TRACK GP	893
Y	*229-9070*	1	WASHER GP-WINDOW (LOWER)	2255
Y	*350-8250*	1	WIRING GP-CONVERTER (12-VOLT, 10-AMPERE)	613
Y	*259-5051*	1	WIRING GP-ENGINE (JUMP START)	617
	240-5071	1	FLOOR MAT	

Y - SEPARATE ILLUSTRATION

<END>

MACHINE ARRANGEMENT

379-7267 DISTRIBUTION AR

S/N: KGF1-UP

AN ATTACHMENT

SMCS-7000 **i04558758**

NOTE	PART NUMBER	QTY	PART NAME 1 2 3 4 5 6 (PRODUCT LEVEL)	SEE PAGE
Y	*264-8671*	1	AIR CLEANER AR (PRECLEANER)	255
Y	*235-9003*	1	AIR CONDITIONER AR	1943
Y	*240-3830*	1	BOOM AR-1 PIECE LONG (HEAVY-DUTY)	1719
Y	*346-8039*	1	CAB GP	1997
Y	*310-0078*	1	CONTROL & MTG GP-JOYSTICK	2045
Y	*379-7062*	1	CONTROL AR-COMMUNICATION (PRODUCT LINK CELLULAR)	451
Y	*290-1911*	1	COOLING AR-HIGH AMBIENT TEMP	191
Y	*134-8875*	1	GUARD GP-SWIVEL (HEAVY-DUTY)	761
Y	**327-6515**	1	HEADREST AS-SEAT (CLOTH)	2129
Y	*259-5047*	1	LIGHTING GP-FLOOD (BOOM, RH)	488
Y	*366-9343*	1	LIGHTING GP-FLOOD (CAB)	496
Y	*240-3858*	1	LINKAGE AR-BUCKET (B1-FAMILY, WITH LIFTING EYE)	1753
Y	*251-0542*	1	PANEL GP-SWITCH (ENGINE SPEED, START)	513
Y	*367-8698*	1	PUMP AR-REFUELING	335
Y	*327-6500*	1	SEAT & MOUNTING GP (LOW BACK, TILT)	2199
Y	*305-0467*	1	SEAT BELT GP (RETRACTABLE)	2216
Y	*272-4772*	1	SENSOR GP-LIQUID LEVEL (WATER SEPARATOR)	529
Y	*240-3854*	1	STICK AR-HOE (HEAVY-DUTY, B-FAMILY)	1776
Y	**194-1910**	2	TRACK GP	893
Y	*247-7457*	1	VALVE AR-SWING (WITHOUT FINE SWING)	1516
Y	*161-3751*	1	VISOR GP-CAB (SUN)	2253
Y	*229-9070*	1	WASHER GP-WINDOW (LOWER)	2255
Y	*350-8250*	1	WIRING GP-CONVERTER (12-VOLT, 10-AMPERE)	613
	240-5071	1	FLOOR MAT	

Y - SEPARATE ILLUSTRATION

<END>

MACHINE ARRANGEMENT

379-7268 DISTRIBUTION AR

S/N: KGF1-UP

AN ATTACHMENT

SMCS-7000 **i04558852**

NOTE	PART NUMBER	QTY	PART NAME 1 2 3 4 5 6 (PRODUCT LEVEL)	SEE PAGE
Y	*264-8671*	1	AIR CLEANER AR (PRECLEANER)	255
Y	*235-9003*	1	AIR CONDITIONER AR	1943
Y	*346-8037*	1	CAB GP	1993
Y	*270-5688*	1	CONTROL & MTG GP-JOYSTICK (3-BUTTON, TRIGGER SWITCH)	2043
Y	*259-7501*	1	CONTROL AR-AUXILIARY (MEDIUM PRESSURE)	910
Y	*379-7062*	1	CONTROL AR-COMMUNICATION (PRODUCT LINK CELLULAR)	451
Y	*290-1911*	1	COOLING AR-HIGH AMBIENT TEMP	191
Y	*134-8875*	1	GUARD GP-SWIVEL (HEAVY-DUTY)	761
Y	*366-9343*	1	LIGHTING GP-FLOOD (CAB)	496
Y	*260-7984*	1	LINES GP-PILOT (PILOT OIL PRESSURE)	1379
Y	*302-9208*	1	LINKAGE AR-FRONT	1758
Y	*253-2866*	1	OPTION AR-HYDRAULIC	81
Y	*251-0542*	1	PANEL GP-SWITCH (ENGINE SPEED, START)	513
Y	*367-8698*	1	PUMP AR-REFUELING	335
Y	*327-6501*	1	SEAT & MOUNTING GP (HIGH BACK, TILT)	2201
Y	*305-0467*	1	SEAT BELT GP (RETRACTABLE)	2216
Y	*272-4772*	1	SENSOR GP-LIQUID LEVEL (WATER SEPARATOR)	529
Y	*314-3798*	2	TRACK AR (2-REQUIRED)	892
Y	*247-7457*	1	VALVE AR-SWING (WITHOUT FINE SWING)	1516
Y	*161-3751*	1	VISOR GP-CAB (SUN)	2253
Y	*161-3750*	1	VISOR GP-PROTECTION (RAIN)	2254
Y	*229-9070*	1	WASHER GP-WINDOW	2255
Y	*350-8250*	1	WIRING GP-CONVERTER (12-VOLT, 10-AMPERE)	613
	240-5071	1	FLOOR MAT	

Y - SEPARATE ILLUSTRATION

<END>

MACHINE ARRANGEMENT

379-7269 DISTRIBUTION AR

S/N: KGF1-UP

AN ATTACHMENT

SMCS-7000 **i04562087**

NOTE	PART NUMBER	QTY	PART NAME 1 2 3 4 5 6 (PRODUCT LEVEL)	SEE PAGE
Y	*264-8671*	1	AIR CLEANER AR (PRECLEANER)	255
Y	*235-9003*	1	AIR CONDITIONER AR	1943
Y	*299-2783*	1	BATTERY & WIRING GP (COLD WEATHER)	435
Y	*240-3830*	1	BOOM AR-1 PIECE LONG (HEAVY-DUTY)	1719
Y	*346-8037*	1	CAB GP	1993
Y	*310-0078*	1	CONTROL & MTG GP-JOYSTICK	2045
Y	*259-7495*	1	CONTROL AR-AUXILIARY (COMBINED FCTN, MEDIUM PRESSURE)	908
Y	*379-7062*	1	CONTROL AR-COMMUNICATION (PRODUCT LINK CELLULAR)	451
Y	*290-1911*	1	COOLING AR-HIGH AMBIENT TEMP	191
Y	**234-6500**	1	COVER GP-STORAGE (CAB, REAR)	2082
Y	*134-8875*	1	GUARD GP-SWIVEL (HEAVY-DUTY)	761
Y	*366-9342*	1	LIGHTING GP-FLOOD (CAB)	494
Y	*314-3851*	1	LINKAGE AR-BUCKET (B1-FAMILY, WITHOUT LIFTING EYE)	1755
Y	*251-0542*	1	PANEL GP-SWITCH (ENGINE SPEED, START)	513
Y	*314-3786*	1	PLATE GP-INFORMATION	2341
Y	*367-8698*	1	PUMP AR-REFUELING	335
Y	*327-6501*	1	SEAT & MOUNTING GP (HIGH BACK, TILT)	2201
Y	*305-0467*	1	SEAT BELT GP (RETRACTABLE)	2216
Y	*272-4772*	1	SENSOR GP-LIQUID LEVEL (WATER SEPARATOR)	529
Y	*314-3727*	1	STICK AR-HOE (HEAVY-DUTY, REACH)	1779
Y	**194-1910**	2	TRACK GP	893
Y	*247-7457*	1	VALVE AR-SWING (WITHOUT FINE SWING)	1516
Y	*161-3751*	1	VISOR GP-CAB (SUN)	2253
Y	*229-9070*	1	WASHER GP-WINDOW (LOWER)	2255
Y	*350-8250*	1	WIRING GP-CONVERTER (12-VOLT, 10-AMPERE)	613
	245-7794	1	FLOOR MAT	

Y - SEPARATE ILLUSTRATION

<END>

MACHINE ARRANGEMENT

379-7270 DISTRIBUTION AR

S/N: KGF1-UP

AN ATTACHMENT

SMCS-7000 **i04562088**

NOTE	PART NUMBER	QTY	PART NAME 1 2 3 4 5 6 (PRODUCT LEVEL)	SEE PAGE
Y	*264-8671*	1	AIR CLEANER AR (PRECLEANER)	255
Y	*235-9003*	1	AIR CONDITIONER AR	1943
Y	*299-2783*	1	BATTERY & WIRING GP (COLD WEATHER)	435
Y	*240-3830*	1	BOOM AR-1 PIECE LONG (HEAVY-DUTY)	1719
Y	*346-8037*	1	CAB GP	1993
Y	*310-0078*	1	CONTROL & MTG GP-JOYSTICK	2045
Y	*379-7062*	1	CONTROL AR-COMMUNICATION (PRODUCT LINK CELLULAR)	451
Y	*290-1911*	1	COOLING AR-HIGH AMBIENT TEMP	191
Y	**234-6500**	1	COVER GP-STORAGE (CAB, REAR)	2082
Y	*134-8875*	1	GUARD GP-SWIVEL (HEAVY-DUTY)	761
Y	*366-9342*	1	LIGHTING GP-FLOOD (CAB)	494
Y	*314-3851*	1	LINKAGE AR-BUCKET (B1-FAMILY, WITHOUT LIFTING EYE)	1755
Y	*251-0542*	1	PANEL GP-SWITCH (ENGINE SPEED, START)	513
Y	*314-3786*	1	PLATE GP-INFORMATION	2341
Y	*367-8698*	1	PUMP AR-REFUELING	335
Y	*327-6501*	1	SEAT & MOUNTING GP (HIGH BACK, TILT)	2201
Y	*305-0467*	1	SEAT BELT GP (RETRACTABLE)	2216
Y	*272-4772*	1	SENSOR GP-LIQUID LEVEL (WATER SEPARATOR)	529
Y	*314-3727*	1	STICK AR-HOE (HEAVY-DUTY, REACH)	1779
Y	**194-1910**	2	TRACK GP	893
Y	*247-7457*	1	VALVE AR-SWING (WITHOUT FINE SWING)	1516
Y	*161-3751*	1	VISOR GP-CAB (SUN)	2253
Y	*229-9070*	1	WASHER GP-WINDOW (LOWER)	2255
Y	*350-8250*	1	WIRING GP-CONVERTER (12-VOLT, 10-AMPERE)	613
	240-5071	1	FLOOR MAT	

Y - SEPARATE ILLUSTRATION

<END>

379-7271 DISTRIBUTION AR

S/N: KGF1-UP

AN ATTACHMENT

SMCS-7000 **i04751254**

NOTE	PART NUMBER	QTY	PART NAME 1 2 3 4 5 6 (PRODUCT LEVEL)	SEE PAGE
Y	*366-9342*	1	LIGHTING GP-FLOOD (CAB)	494
Y	*338-9911*	1	OPTION AR-LINKAGE	86
Y	*379-7298*	1	OPTION AR-REGIONAL	97

Y - SEPARATE ILLUSTRATION

<END>

379-7272 DISTRIBUTION AR

S/N: KGF1-UP

AN ATTACHMENT

SMCS-7000 **i04562090**

NOTE	PART NUMBER	QTY	PART NAME 1 2 3 4 5 6 (PRODUCT LEVEL)	SEE PAGE
Y	*379-7062*	1	CONTROL AR-COMMUNICATION (PRODUCT LINK CELLULAR)	451
Y	*274-2467*	1	CYLINDER AR-HYDRAULIC (COLD WEATHER, B1-FAM, LONG STK)	1006
Y	*366-9342*	1	LIGHTING GP-FLOOD (CAB)	494
Y	*338-9911*	1	OPTION AR-LINKAGE (HEAVY-DUTY, REACH)	86
Y	*379-7300*	1	OPTION AR-REGIONAL	99

Y - SEPARATE ILLUSTRATION

<END>

385-4025 DISTRIBUTION AR

S/N: FAL1-UP

AN ATTACHMENT

SMCS-7000 **i04668314**

NOTE	PART NUMBER	QTY	PART NAME 1 2 3 4 5 6 (PRODUCT LEVEL)	SEE PAGE
Y	*231-1771*	1	ALARM GP-TRAVEL (BACKUP)	400
Y	*366-9343*	1	LIGHTING GP-FLOOD (CAB)	496
Y	*354-1154*	1	OPTION AR-CAB	76
Y	*314-3868*	1	OPTION AR-HYDRAULIC	82
Y	*359-2525*	1	OPTION AR-LINKAGE	88
Y	*385-4027*	1	OPTION AR-REGIONAL	100
Y	*194-1920*	2	TRACK GP	895

Y - SEPARATE ILLUSTRATION

<END>

385-4026 DISTRIBUTION AR

S/N: KGF1-UP

AN ATTACHMENT

SMCS-7000 **i04668357**

NOTE	PART NUMBER	QTY	PART NAME 1 2 3 4 5 6 (PRODUCT LEVEL)	SEE PAGE
Y	*298-4099*	1	GUARD AR (HEAVY-DUTY)	756
Y	*352-9554*	1	GUARD GP-TRACK GUIDE (SEGMENTED)	864
Y	*354-1154*	1	OPTION AR-CAB	76
Y	*314-3868*	1	OPTION AR-HYDRAULIC	82
Y	*314-3900*	1	OPTION AR-LIGHTING	84
Y	*359-2526*	1	OPTION AR-LINKAGE	88
Y	*385-4027*	1	OPTION AR-REGIONAL	100
Y	*194-1914*	2	TRACK GP	894

Y - SEPARATE ILLUSTRATION

<END>

MACHINE ARRANGEMENT

385-4030 DISTRIBUTION AR

S/N: FAL1-UP

AN ATTACHMENT

SMCS-7000 **i04668577**

NOTE	PART NUMBER	QTY	PART NAME 1 2 3 4 5 6 (PRODUCT LEVEL)	SEE PAGE
Y	*235-9003*	1	AIR CONDITIONER AR	1943
Y	*240-3830*	1	BOOM AR-1 PIECE LONG (HEAVY-DUTY)	1719
Y	*346-8037*	1	CAB GP	1993
Y	*310-0078*	1	CONTROL & MTG GP-JOYSTICK	2045
Y	*367-8780*	1	CONTROL AR-COMMUNICATION (PRODUCT LINK CELLULAR)	451
Y	**234-6500**	1	COVER GP-STORAGE (CAB, REAR)	2082
Y	*289-6910*	1	DOOR GP-ACCESS (RADIATOR)	735
Y	*314-3848*	1	FILM GP	2298
Y	*314-3851*	1	LINKAGE AR-BUCKET (B1-FAMILY, WITHOUT LIFTING EYE)	1755
Y	*251-0542*	1	PANEL GP-SWITCH (ENGINE SPEED, START)	513
Y	*327-6501*	1	SEAT & MOUNTING GP (HIGH BACK, TILT)	2201
Y	*305-0467*	1	SEAT BELT GP (RETRACTABLE)	2216
Y	*272-4772*	1	SENSOR GP-LIQUID LEVEL (WATER SEPARATOR)	529
Y	*314-3727*	1	STICK AR-HOE (HEAVY-DUTY, REACH)	1779
Y	*194-1920*	2	TRACK GP	895
Y	*247-7457*	1	VALVE AR-SWING (WITHOUT FINE SWING)	1516
Y	*229-9070*	1	WASHER GP-WINDOW	2255
	240-5071	1	FLOOR MAT	

Y - SEPARATE ILLUSTRATION

<END>

385-4031 DISTRIBUTION AR

S/N: FAL1-UP

AN ATTACHMENT

SMCS-7000 **i04668529**

NOTE	PART NUMBER	QTY	PART NAME 1 2 3 4 5 6 (PRODUCT LEVEL)	SEE PAGE
Y	*235-9003*	1	AIR CONDITIONER AR	1943
Y	*240-3830*	1	BOOM AR-1 PIECE LONG (HEAVY-DUTY)	1719
Y	*346-8037*	1	CAB GP	1993
Y	*310-0078*	1	CONTROL & MTG GP-JOYSTICK	2045
Y	*367-8780*	1	CONTROL AR-COMMUNICATION (PRODUCT LINK CELLULAR)	451
Y	**234-6500**	1	COVER GP-STORAGE (CAB, REAR)	2082
Y	*289-6910*	1	DOOR GP-ACCESS (RADIATOR)	735
Y	*314-3848*	1	FILM GP	2298
Y	*314-3851*	1	LINKAGE AR-BUCKET (B1-FAMILY, WITHOUT LIFTING EYE)	1755
Y	*251-0542*	1	PANEL GP-SWITCH (ENGINE SPEED, START)	513
Y	*327-6501*	1	SEAT & MOUNTING GP (HIGH BACK, TILT)	2201
Y	*305-0467*	1	SEAT BELT GP (RETRACTABLE)	2216
Y	*272-4772*	1	SENSOR GP-LIQUID LEVEL (WATER SEPARATOR)	529
Y	*314-3727*	1	STICK AR-HOE (HEAVY-DUTY, REACH)	1779
Y	*194-1920*	2	TRACK GP	895
Y	*247-7457*	1	VALVE AR-SWING (WITHOUT FINE SWING)	1516
Y	*229-9070*	1	WASHER GP-WINDOW	2255
	240-5071	1	FLOOR MAT	

Y - SEPARATE ILLUSTRATION

<END>

MACHINE ARRANGEMENT

385-4032 DISTRIBUTION AR

S/N: FAL1-UP

AN ATTACHMENT

SMCS-7000 **i04668469**

NOTE	PART NUMBER	QTY	PART NAME 1 2 3 4 5 6 (PRODUCT LEVEL)	SEE PAGE
Y	*235-9003*	1	AIR CONDITIONER AR	1943
Y	*240-3830*	1	BOOM AR-1 PIECE LONG (HEAVY-DUTY)	1719
Y	*346-8037*	1	CAB GP	1993
Y	*310-0078*	1	CONTROL & MTG GP-JOYSTICK	2045
Y	*367-8780*	1	CONTROL AR-COMMUNICATION (PRODUCT LINK CELLULAR)	451
Y	**234-6500**	1	COVER GP-STORAGE (CAB, REAR)	2082
Y	*289-6910*	1	DOOR GP-ACCESS (RADIATOR)	735
Y	*314-3848*	1	FILM GP	2298
Y	*314-3851*	1	LINKAGE AR-BUCKET (B1-FAMILY, WITHOUT LIFTING EYE)	1755
Y	*251-0542*	1	PANEL GP-SWITCH (ENGINE SPEED, START)	513
Y	*327-6501*	1	SEAT & MOUNTING GP (HIGH BACK, TILT)	2201
Y	*305-0467*	1	SEAT BELT GP (RETRACTABLE)	2216
Y	*272-4772*	1	SENSOR GP-LIQUID LEVEL (WATER SEPARATOR)	529
Y	*298-4102*	1	STARTING AR-COLD WEATHER	532
Y	*314-3727*	1	STICK AR-HOE (HEAVY-DUTY, REACH)	1779
Y	*194-1920*	2	TRACK GP	895
Y	*247-7457*	1	VALVE AR-SWING (WITHOUT FINE SWING)	1516
Y	*229-9070*	1	WASHER GP-WINDOW	2255
	240-5071	1	FLOOR MAT	

Y - SEPARATE ILLUSTRATION

<END>

MACHINE ARRANGEMENT

385-4033 DISTRIBUTION AR

S/N: FAL1-UP

AN ATTACHMENT

SMCS-7000 **i04668431**

NOTE	PART NUMBER	QTY	PART NAME 1 2 3 4 5 6 (PRODUCT LEVEL)	SEE PAGE
Y	*235-9003*	1	AIR CONDITIONER AR	1943
Y	*240-3830*	1	BOOM AR-1 PIECE LONG (HEAVY-DUTY)	1719
Y	*346-8037*	1	CAB GP	1993
Y	*310-0078*	1	CONTROL & MTG GP-JOYSTICK	2045
Y	*367-8780*	1	CONTROL AR-COMMUNICATION (PRODUCT LINK CELLULAR)	451
Y	**234-6500**	1	COVER GP-STORAGE (CAB, REAR)	2082
Y	*289-6910*	1	DOOR GP-ACCESS (RADIATOR)	735
Y	*314-3848*	1	FILM GP	2298
Y	*314-3851*	1	LINKAGE AR-BUCKET (B1-FAMILY, WITHOUT LIFTING EYE)	1755
Y	*251-0542*	1	PANEL GP-SWITCH (ENGINE SPEED, START)	513
Y	*327-6501*	1	SEAT & MOUNTING GP (HIGH BACK, TILT)	2201
Y	*305-0467*	1	SEAT BELT GP (RETRACTABLE)	2216
Y	*272-4772*	1	SENSOR GP-LIQUID LEVEL (WATER SEPARATOR)	529
Y	*298-4102*	1	STARTING AR-COLD WEATHER	532
Y	*314-3727*	1	STICK AR-HOE (HEAVY-DUTY, REACH)	1779
Y	*194-1920*	2	TRACK GP	895
Y	*247-7457*	1	VALVE AR-SWING (WITHOUT FINE SWING)	1516
Y	*229-9070*	1	WASHER GP-WINDOW	2255
	240-5071	1	FLOOR MAT	

Y - SEPARATE ILLUSTRATION

<END>

MACHINE ARRANGEMENT

385-4035 DISTRIBUTION AR

S/N: KGF1-UP

AN ATTACHMENT

SMCS-7000 **i04666909**

NOTE	PART NUMBER	QTY	PART NAME 1 2 3 4 5 6 (PRODUCT LEVEL)	SEE PAGE
Y	*264-8671*	1	AIR CLEANER AR (PRECLEANER)	255
Y	*235-9003*	1	AIR CONDITIONER AR	1943
Y	*240-3830*	1	BOOM AR-1 PIECE LONG (HEAVY-DUTY)	1719
Y	*346-8039*	1	CAB GP	1997
Y	*310-0078*	1	CONTROL & MTG GP-JOYSTICK	2045
Y	*290-1911*	1	COOLING AR-HIGH AMBIENT TEMP	191
Y	*134-8875*	1	GUARD GP-SWIVEL (HEAVY-DUTY)	761
Y	**327-6515**	1	HEADREST AS-SEAT (CLOTH)	2129
Y	*259-5047*	1	LIGHTING GP-FLOOD (BOOM, RH)	488
Y	*366-9343*	1	LIGHTING GP-FLOOD (CAB)	496
Y	*240-3858*	1	LINKAGE AR-BUCKET (B1-FAMILY, WITH LIFTING EYE)	1753
Y	*251-0542*	1	PANEL GP-SWITCH (ENGINE SPEED, START)	513
Y	*367-8698*	1	PUMP AR-REFUELING	335
Y	*327-6500*	1	SEAT & MOUNTING GP (LOW BACK, TILT)	2199
Y	*305-0467*	1	SEAT BELT GP (RETRACTABLE)	2216
Y	*272-4772*	1	SENSOR GP-LIQUID LEVEL (WATER SEPARATOR)	529
Y	*240-3854*	1	STICK AR-HOE (HEAVY-DUTY, B-FAMILY)	1776
Y	*194-1910*	2	TRACK GP	893
Y	*247-7457*	1	VALVE AR-SWING (WITHOUT FINE SWING)	1516
Y	*161-3751*	1	VISOR GP-CAB (SUN)	2253
Y	*229-9070*	1	WASHER GP-WINDOW	2255
Y	*350-8250*	1	WIRING GP-CONVERTER (12-VOLT, 10-AMPERE)	613
	240-5071	1	FLOOR MAT	

Y - SEPARATE ILLUSTRATION

<END>

MACHINE ARRANGEMENT

385-4036 DISTRIBUTION AR

S/N: KGF1-UP

AN ATTACHMENT

SMCS-7000 **i04667069**

NOTE	PART NUMBER	QTY	PART NAME 1 2 3 4 5 6 (PRODUCT LEVEL)	SEE PAGE
Y	*264-8671*	1	AIR CLEANER AR (PRECLEANER)	255
Y	*235-9003*	1	AIR CONDITIONER AR	1943
Y	*346-8037*	1	CAB GP	1993
Y	*270-5688*	1	CONTROL & MTG GP-JOYSTICK (3-BUTTON, TRIGGER SWITCH)	2043
Y	*259-7501*	1	CONTROL AR-AUXILIARY (MEDIUM PRESSURE)	910
Y	*290-1911*	1	COOLING AR-HIGH AMBIENT TEMP	191
Y	*134-8875*	1	GUARD GP-SWIVEL (HEAVY-DUTY)	761
Y	*366-9343*	1	LIGHTING GP-FLOOD (CAB)	496
Y	*260-7984*	1	LINES GP-PILOT (PILOT OIL PRESSURE)	1379
Y	*302-9208*	1	LINKAGE AR-FRONT	1758
Y	*253-2866*	1	OPTION AR-HYDRAULIC	81
Y	*251-0542*	1	PANEL GP-SWITCH (ENGINE SPEED, START)	513
Y	*367-8698*	1	PUMP AR-REFUELING	335
Y	*327-6501*	1	SEAT & MOUNTING GP (HIGH BACK, TILT)	2201
Y	*305-0467*	1	SEAT BELT GP (RETRACTABLE)	2216
Y	*272-4772*	1	SENSOR GP-LIQUID LEVEL (WATER SEPARATOR)	529
Y	*314-3798*	2	TRACK AR (2-REQUIRED)	892
Y	*247-7457*	1	VALVE AR-SWING (WITHOUT FINE SWING)	1516
Y	*161-3751*	1	VISOR GP-CAB (SUN)	2253
Y	*161-3750*	1	VISOR GP-PROTECTION (RAIN)	2254
Y	*229-9070*	1	WASHER GP-WINDOW	2255
Y	*350-8250*	1	WIRING GP-CONVERTER (12-VOLT, 10-AMPERE)	613
	240-5071	1	FLOOR MAT	

Y - SEPARATE ILLUSTRATION

<END>

MACHINE ARRANGEMENT

385-4136 DISTRIBUTION AR

S/N: FAL1-UP

AN ATTACHMENT

SMCS-7000 **i04759272**

NOTE	PART NUMBER	QTY	PART NAME 1 2 3 4 5 6 (PRODUCT LEVEL)	SEE PAGE
Y	*264-8671*	1	AIR CLEANER AR (PRECLEANER)	255
Y	*235-9003*	1	AIR CONDITIONER AR	1943
Y	*299-2783*	1	BATTERY & WIRING GP (COLD WEATHER)	435
Y	*240-3830*	1	BOOM AR-1 PIECE LONG (HEAVY-DUTY)	1719
Y	*346-8037*	1	CAB GP	1993
Y	*310-0078*	1	CONTROL & MTG GP-JOYSTICK	2045
Y	*379-7062*	1	CONTROL AR-COMMUNICATION (PRODUCT LINK CELLULAR)	451
Y	*290-1911*	1	COOLING AR-HIGH AMBIENT TEMP	191
Y	*134-8875*	1	GUARD GP-SWIVEL (HEAVY-DUTY)	761
Y	*336-6071*	1	LIGHTING GP-FLOOD (CAB)	493
Y	*314-3851*	1	LINKAGE AR-BUCKET (B1-FAMILY, WITHOUT LIFTING EYE)	1755
Y	*251-0542*	1	PANEL GP-SWITCH (ENGINE SPEED, START)	513
Y	*327-6501*	1	SEAT & MOUNTING GP (HIGH BACK, TILT)	2201
Y	*305-0467*	1	SEAT BELT GP (RETRACTABLE)	2216
Y	*272-4772*	1	SENSOR GP-LIQUID LEVEL (WATER SEPARATOR)	529
Y	*314-3727*	1	STICK AR-HOE (HEAVY-DUTY, REACH)	1779
Y	*194-1920*	2	TRACK GP	895
Y	*247-7457*	1	VALVE AR-SWING (WITHOUT FINE SWING)	1516
Y	*161-3751*	1	VISOR GP-CAB (SUN)	2253
Y	*229-9070*	1	WASHER GP-WINDOW	2255
Y	*350-8250*	1	WIRING GP-CONVERTER (12-VOLT, 10-AMPERE)	613
	240-5071	1	FLOOR MAT	

Y - SEPARATE ILLUSTRATION

<END>

MACHINE ARRANGEMENT

396-6826 DISTRIBUTION AR

S/N: FAL1-UP

AN ATTACHMENT

SMCS-7000 **i04874795**

NOTE	PART NUMBER	QTY	PART NAME 1 2 3 4 5 6 (PRODUCT LEVEL)	SEE PAGE
Y	*235-9003*	1	AIR CONDITIONER AR	1943
Y	*231-1771*	1	ALARM GP-TRAVEL (BACKUP)	400
Y	*299-2783*	1	BATTERY & WIRING GP (COLD WEATHER)	435
Y	*240-3830*	1	BOOM AR-1 PIECE LONG (HEAVY-DUTY)	1719
Y	*346-8037*	1	CAB GP	1993
Y	*310-0078*	1	CONTROL & MTG GP-JOYSTICK	2045
Y	*290-1911*	1	COOLING AR-HIGH AMBIENT TEMP	191
Y	**234-6500**	1	COVER GP-STORAGE (CAB, REAR)	2082
Y	*298-4115*	1	INSTALLATION AR-COMMUNICATION (PRODUCT LINK 321SR)	469
Y	*259-5047*	1	LIGHTING GP-FLOOD (BOOM, RH)	488
Y	*366-9343*	1	LIGHTING GP-FLOOD (CAB)	496
Y	*240-3858*	1	LINKAGE AR-BUCKET (B1-FAMILY, WITH LIFTING EYE)	1753
Y	*251-0542*	1	PANEL GP-SWITCH (ENGINE SPEED, START)	513
Y	*251-0538*	1	RADIO GP (AM/FM)	2190
Y	*327-6501*	1	SEAT & MOUNTING GP (HIGH BACK, TILT)	2201
Y	*305-0466*	1	SEAT BELT GP (RETRACTABLE, 76-MM (3-IN))	2214
Y	*272-4772*	1	SENSOR GP-LIQUID LEVEL (WATER SEPARATOR)	529
Y	*240-3854*	1	STICK AR-HOE (HEAVY-DUTY, B-FAMILY)	1776
Y	*194-1920*	2	TRACK GP	895
Y	*240-3881*	1	VALVE & LINES GP-HEAVY LIFT	1511
Y	*229-9070*	1	WASHER GP-WINDOW	2255
Y	*350-8250*	1	WIRING GP-CONVERTER (12-VOLT, 10-AMPERE)	613
Y	*259-5051*	1	WIRING GP-ENGINE (JUMP START)	617
	240-5071	1	FLOOR MAT	

Y - SEPARATE ILLUSTRATION

<END>

MACHINE ARRANGEMENT

396-6827 DISTRIBUTION AR

S/N: KGF1-UP

AN ATTACHMENT

SMCS-7000 **i04874800**

NOTE	PART NUMBER	QTY	PART NAME 1 2 3 4 5 6 (PRODUCT LEVEL)	SEE PAGE
Y	*235-9003*	1	AIR CONDITIONER AR	1943
Y	*231-1771*	1	ALARM GP-TRAVEL (BACKUP)	400
Y	*299-2783*	1	BATTERY & WIRING GP (COLD WEATHER)	435
Y	*240-3830*	1	BOOM AR-1 PIECE LONG (HEAVY-DUTY)	1719
Y	*346-8037*	1	CAB GP	1993
Y	*310-0078*	1	CONTROL & MTG GP-JOYSTICK	2045
Y	*290-1911*	1	COOLING AR-HIGH AMBIENT TEMP	191
Y	**234-6500**	1	COVER GP-STORAGE (CAB, REAR)	2082
Y	*298-4115*	1	INSTALLATION AR-COMMUNICATION (PRODUCT LINK 321SR)	469
Y	*259-5047*	1	LIGHTING GP-FLOOD (BOOM, RH)	488
Y	*366-9343*	1	LIGHTING GP-FLOOD (CAB)	496
Y	*240-3858*	1	LINKAGE AR-BUCKET (B1-FAMILY, WITH LIFTING EYE)	1753
Y	*251-0542*	1	PANEL GP-SWITCH (ENGINE SPEED, START)	513
Y	*251-0538*	1	RADIO GP (AM/FM)	2190
Y	*327-6501*	1	SEAT & MOUNTING GP (HIGH BACK, TILT)	2201
Y	*305-0466*	1	SEAT BELT GP (RETRACTABLE, 76-MM (3-IN))	2214
Y	*272-4772*	1	SENSOR GP-LIQUID LEVEL (WATER SEPARATOR)	529
Y	*314-3727*	1	STICK AR-HOE (HEAVY-DUTY, REACH)	1779
Y	*194-1911*	2	TRACK GP	893
Y	*240-3881*	1	VALVE & LINES GP-HEAVY LIFT	1511
Y	*229-9070*	1	WASHER GP-WINDOW	2255
Y	*350-8250*	1	WIRING GP-CONVERTER (12-VOLT, 10-AMPERE)	613
Y	*259-5051*	1	WIRING GP-ENGINE (JUMP START)	617
	240-5071	1	FLOOR MAT	

Y - SEPARATE ILLUSTRATION

<END>

MACHINE ARRANGEMENT

396-6828 DISTRIBUTION AR

S/N: KGF1-UP

AN ATTACHMENT

SMCS-7000 **i04874798**

NOTE	PART NUMBER	QTY	PART NAME 1 2 3 4 5 6 (PRODUCT LEVEL)	SEE PAGE
Y	*235-9003*	1	AIR CONDITIONER AR	1943
Y	*231-1771*	1	ALARM GP-TRAVEL (BACKUP)	400
Y	*299-2783*	1	BATTERY & WIRING GP (COLD WEATHER)	435
Y	*346-8037*	1	CAB GP	1993
Y	*310-0078*	1	CONTROL & MTG GP-JOYSTICK	2045
Y	*290-1911*	1	COOLING AR-HIGH AMBIENT TEMP	191
Y	**234-6500**	1	COVER GP-STORAGE (CAB, REAR)	2082
Y	*298-4115*	1	INSTALLATION AR-COMMUNICATION (PRODUCT LINK 321SR)	469
Y	*366-9343*	1	LIGHTING GP-FLOOD (CAB)	496
Y	*302-9208*	1	LINKAGE AR-FRONT	1758
Y	*251-0542*	1	PANEL GP-SWITCH (ENGINE SPEED, START)	513
Y	*251-0538*	1	RADIO GP (AM/FM)	2190
Y	*327-6501*	1	SEAT & MOUNTING GP (HIGH BACK, TILT)	2201
Y	*305-0466*	1	SEAT BELT GP (RETRACTABLE, 76-MM (3-IN))	2214
Y	*272-4772*	1	SENSOR GP-LIQUID LEVEL (WATER SEPARATOR)	529
Y	*194-1911*	2	TRACK GP	893
Y	*229-9070*	1	WASHER GP-WINDOW	2255
Y	*350-8250*	1	WIRING GP-CONVERTER (12-VOLT, 10-AMPERE)	613
Y	*259-5051*	1	WIRING GP-ENGINE (JUMP START)	617
	240-5071	1	FLOOR MAT	

Y - SEPARATE ILLUSTRATION

<END>

264-8626 GENERAL AR

S/N: FAL1-UP

SMCS-7000 **i02579645**

NOTE	PART NUMBER	QTY	PART NAME 1 2 3 4 5 6 (PRODUCT LEVEL)	SEE PAGE
Y	*264-8638*	1	CHASSIS AR	1
Y	*270-5512*	1	ELECTRONICS GP-MACHINE (MACHINE CONTROL)	456
Y	*221-8861*	1	ELECTRONICS GP-MONITOR	457
Y	*272-4681*	1	ENGINE AR-COMPLETE	113
Y	*247-7454*	1	FRAME AR-UNDERCARRIAGE	856
Y	*285-1354*	1	HYDRAULIC AR	1077
Y	*272-4742*	1	INSTALLATION AR-ENGINE	120
Y	*267-6767*	1	POWER TRAIN AR	673

Y - SEPARATE ILLUSTRATION

<END>

MACHINE ARRANGEMENT

264-8627 GENERAL AR

S/N: KGF1-UP

SMCS-7000 **i02579646**

NOTE	PART NUMBER	QTY	PART NAME 1 2 3 4 5 6 (PRODUCT LEVEL)	SEE PAGE
Y	*264-8639*	1	CHASSIS AR	2
Y	*270-5512*	1	ELECTRONICS GP-MACHINE (MACHINE CONTROL)	456
Y	*221-8861*	1	ELECTRONICS GP-MONITOR	457
Y	*272-4681*	1	ENGINE AR-COMPLETE	113
Y	*240-3822*	1	FRAME AR-UNDERCARRIAGE	856
Y	*285-1355*	1	HYDRAULIC AR	1077
Y	*272-4742*	1	INSTALLATION AR-ENGINE	120
Y	*267-6767*	1	POWER TRAIN AR	673

Y - SEPARATE ILLUSTRATION

<END>

290-1910 MACHINE AR—HIGH AMBIENT, HIGH POWER

S/N: KGF1-UP; FAL1-UP
AN ATTACHMENT

SMCS-7000 **i02814514**

NOTE	PART NUMBER	QTY	PART NAME 1 2 3 4 5 6 (PRODUCT LEVEL)	SEE PAGE
Y	*289-6910*	1	DOOR GP-ACCESS (RADIATOR)	735
Y	*270-5514*	1	ELECTRONICS GP-MACHINE (HIGH POWER)	457
Y	*296-4678*	1	ENGINE AR-COMPLETE	114

Y - SEPARATE ILLUSTRATION

<END>

330-1194 MACHINE AR

S/N: KGF1-UP; FAL1-UP
PART OF 314-3735 CAMERA AR
AN ATTACHMENT

SMCS-7000 **i03164740**

NOTE	PART NUMBER	QTY	PART NAME 1 2 3 4 5 6 (PRODUCT LEVEL)	SEE PAGE
Y	*330-1426*	1	COVER AS-ACCESS (FUEL, HYDRAULIC TANKS)	723
Y	*330-1166*	1	FENDER & COVER GP	748
Y	*330-1162*	1	MIRROR GP-DOWN VIEW (FUEL TANK, RH)	2163
Y	*327-3191*	1	TANK & MTG GP-FUEL	349

Y - SEPARATE ILLUSTRATION

<END>

347-3344 OPTION AR-CAB

S/N: KGF1-UP; FAL1-UP

PART OF 347-3338, 347-3339, 354-1062, 354-1063, 354-1141, 354-1142 DISTRIBUTION AR

AN ATTACHMENT

SMCS-7000 **i03838230**

NOTE	PART NUMBER	QTY	PART NAME 1 2 3 4 5 6 (PRODUCT LEVEL)	SEE PAGE
Y	*235-9003*	1	AIR CONDITIONER AR	1943
Y	*346-8038*	1	CAB GP	1995
Y	**234-6500**	1	COVER GP-STORAGE (CAB, REAR)	2082
Y	*327-6501*	1	SEAT & MOUNTING GP (HIGH BACK, TILT)	2201
Y	*305-0467*	1	SEAT BELT GP (RETRACTABLE)	2216
Y	*161-3751*	1	VISOR GP-CAB (SUN)	2253
Y	*229-9070*	1	WASHER GP-WINDOW	2255
Y	*251-0482*	1	WIRING GP-CONVERTER (12-VOLT, 7-AMPERE)	611
Y	*283-2913*	1	WIRING GP-RADIO (12-VOLT)	643

Y - SEPARATE ILLUSTRATION

<END>

347-3345 OPTION AR-CAB

S/N: KGF1-UP; FAL1-UP

AN ATTACHMENT

SMCS-7000 **i03900253**

NOTE	PART NUMBER	QTY	PART NAME 1 2 3 4 5 6 (PRODUCT LEVEL)	SEE PAGE
Y	*235-9003*	1	AIR CONDITIONER AR	1943
Y	*231-1771*	1	ALARM GP-TRAVEL (BACKUP)	400
Y	*346-8038*	1	CAB GP	1995
Y	**234-6500**	1	COVER GP-STORAGE (CAB, REAR)	2082
Y	*245-7881*	1	SCREEN GP-SUN	2191
Y	*327-6503*	1	SEAT & MOUNTING GP (HIGH BACK, WITH HEATER)	2205
Y	*305-0466*	1	SEAT BELT GP (RETRACTABLE, 76-MM (3-IN))	2214
Y	*229-9086*	1	WIPER AR-WINDOW (LOWER)	2273
Y	*251-0485*	1	WIRING GP-CONVERTER (12-VOLT, 7-AMPERE)	612
Y	*283-2913*	1	WIRING GP-RADIO (12-VOLT)	643

Y - SEPARATE ILLUSTRATION

<END>

354-1154 OPTION AR-CAB

S/N: KGF1-UP; FAL1-UP
PART OF 354-1145, 354-1146, 359-2504, 359-2505, 379-7223, 379-7224, 385-4025, 385-4026 DISTRIBUTION AR
AN ATTACHMENT

SMCS-7000 **i03898090**

NOTE	PART NUMBER	QTY	PART NAME 1 2 3 4 5 6 (PRODUCT LEVEL)	SEE PAGE
Y	*235-9003*	1	AIR CONDITIONER AR	1943
Y	*346-8038*	1	CAB GP	1995
Y	**234-6500**	1	COVER GP-STORAGE (CAB, REAR)	2082
Y	*327-6501*	1	SEAT & MOUNTING GP (HIGH BACK, TILT)	2201
Y	*305-0467*	1	SEAT BELT GP (RETRACTABLE)	2216
Y	*161-3751*	1	VISOR GP-CAB (SUN)	2253
Y	*229-9070*	1	WASHER GP-WINDOW	2255
Y	*350-8250*	1	WIRING GP-CONVERTER (12-VOLT, 10-AMPERE)	613
Y	*283-2913*	1	WIRING GP-RADIO (12-VOLT)	643

Y - SEPARATE ILLUSTRATION

<END>

354-1155 OPTION AR-CAB

S/N: KGF1-UP; FAL1-UP
AN ATTACHMENT

SMCS-7000 **i03900009**

NOTE	PART NUMBER	QTY	PART NAME 1 2 3 4 5 6 (PRODUCT LEVEL)	SEE PAGE
Y	*235-9003*	1	AIR CONDITIONER AR	1943
Y	*231-1771*	1	ALARM GP-TRAVEL (BACKUP)	400
Y	*346-8038*	1	CAB GP	1995
Y	**234-6500**	1	COVER GP-STORAGE (CAB, REAR)	2082
Y	*245-7881*	1	SCREEN GP-SUN	2191
Y	*327-6503*	1	SEAT & MOUNTING GP (HIGH BACK, WITH HEATER)	2205
Y	*305-0466*	1	SEAT BELT GP (RETRACTABLE, 76-MM (3-IN))	2214
Y	*229-9086*	1	WIPER AR-WINDOW (LOWER)	2273
Y	*350-8250*	1	WIRING GP-CONVERTER (12-VOLT, 10-AMPERE)	613
Y	*283-2913*	1	WIRING GP-RADIO (12-VOLT)	643

Y - SEPARATE ILLUSTRATION

<END>

MACHINE ARRANGEMENT

338-9925 OPTION AR-COLD WEATHER

S/N: KGF1-UP

AN ATTACHMENT

SMCS-7000 **i03855850**

NOTE	PART NUMBER	QTY	PART NAME 1 2 3 4 5 6 (PRODUCT LEVEL)	SEE PAGE
Y	*264-8671*	1	AIR CLEANER AR (PRECLEANER)	255
Y	*235-9003*	1	AIR CONDITIONER AR	1943
Y	*299-2783*	1	BATTERY & WIRING GP (COLD WEATHER)	435
Y	*229-9098*	1	CAB GP	1961
Y	*284-4442*	1	CONDENSER & LINES GP-RFGT (CHASSIS)	2019
Y	*310-0078*	1	CONTROL & MTG GP-JOYSTICK	2045
Y	*259-7495*	1	CONTROL AR-AUXILIARY (COMBINED FCTN, MEDIUM PRESSURE)	908
Y	*290-1911*	1	COOLING AR-HIGH AMBIENT TEMP	191
Y	**234-6500**	1	COVER GP-STORAGE (CAB, REAR)	2082
Y	*134-8875*	1	GUARD GP-SWIVEL (HEAVY-DUTY)	761
Y	*251-0542*	1	PANEL GP-SWITCH (ENGINE SPEED, START)	513
Y	*314-3785*	1	PUMP AR-FUEL TRANSFER	335
Y	*327-6501*	1	SEAT & MOUNTING GP (HIGH BACK, TILT)	2201
Y	*305-0467*	1	SEAT BELT GP (RETRACTABLE)	2216
Y	*272-4772*	1	SENSOR GP-LIQUID LEVEL (WATER SEPARATOR)	529
Y	*314-3798*	2	TRACK AR	892
Y	*247-7457*	1	VALVE AR-SWING (WITHOUT FINE SWING)	1516
Y	*161-3751*	1	VISOR GP-CAB (SUN)	2253
Y	*229-9070*	1	WASHER GP-WINDOW	2255
Y	*251-0482*	1	WIRING GP-CONVERTER (12-VOLT, 7-AMPERE)	611
	245-7794	1	FLOOR MAT	

Y - SEPARATE ILLUSTRATION

<END>

MACHINE ARRANGEMENT

351-9691 OPTION AR-COLD WEATHER

S/N: KGF1-UP

AN ATTACHMENT

SMCS-7000 **i03906195**

NOTE	PART NUMBER	QTY	PART NAME 1 2 3 4 5 6 (PRODUCT LEVEL)	SEE PAGE
Y	*264-8671*	1	AIR CLEANER AR (PRECLEANER)	255
Y	*235-9003*	1	AIR CONDITIONER AR	1943
Y	*299-2783*	1	BATTERY & WIRING GP (COLD WEATHER)	435
Y	*346-8037*	1	CAB GP	1993
Y	*284-4442*	1	CONDENSER & LINES GP-RFGT (CHASSIS)	2019
Y	*310-0078*	1	CONTROL & MTG GP-JOYSTICK	2045
Y	*259-7495*	1	CONTROL AR-AUXILIARY (COMBINED FCTN, MEDIUM PRESSURE)	908
Y	*290-1911*	1	COOLING AR-HIGH AMBIENT TEMP	191
Y	**234-6500**	1	COVER GP-STORAGE (CAB, REAR)	2082
Y	*134-8875*	1	GUARD GP-SWIVEL (HEAVY-DUTY)	761
Y	*251-0542*	1	PANEL GP-SWITCH (ENGINE SPEED, START)	513
Y	*314-3785*	1	PUMP AR-FUEL TRANSFER	335
Y	*327-6501*	1	SEAT & MOUNTING GP (HIGH BACK, TILT)	2201
Y	*305-0467*	1	SEAT BELT GP (RETRACTABLE)	2216
Y	*272-4772*	1	SENSOR GP-LIQUID LEVEL (WATER SEPARATOR)	529
Y	*314-3798*	2	TRACK AR	892
Y	*247-7457*	1	VALVE AR-SWING (WITHOUT FINE SWING)	1516
Y	*161-3751*	1	VISOR GP-CAB (SUN)	2253
Y	*229-9070*	1	WASHER GP-WINDOW	2255
Y	*251-0482*	1	WIRING GP-CONVERTER (12-VOLT, 7-AMPERE)	611
	245-7794	1	FLOOR MAT	

Y - SEPARATE ILLUSTRATION

<END>

MACHINE ARRANGEMENT

359-2264 OPTION AR-COLD WEATHER

S/N: KGF1-UP

AN ATTACHMENT

SMCS-7000 **i03900782**

NOTE	PART NUMBER	QTY	PART NAME 1 2 3 4 5 6 (PRODUCT LEVEL)	SEE PAGE
Y	*264-8671*	1	AIR CLEANER AR (PRECLEANER)	255
Y	*235-9003*	1	AIR CONDITIONER AR	1943
Y	*299-2783*	1	BATTERY & WIRING GP (COLD WEATHER)	435
Y	*346-8037*	1	CAB GP	1993
Y	*284-4442*	1	CONDENSER & LINES GP-RFGT (CHASSIS)	2019
Y	*310-0078*	1	CONTROL & MTG GP-JOYSTICK	2045
Y	*259-7495*	1	CONTROL AR-AUXILIARY (COMBINED FCTN, MEDIUM PRESSURE)	908
Y	*290-1911*	1	COOLING AR-HIGH AMBIENT TEMP	191
Y	**234-6500**	1	COVER GP-STORAGE (CAB, REAR)	2082
Y	*134-8875*	1	GUARD GP-SWIVEL (HEAVY-DUTY)	761
Y	*251-0542*	1	PANEL GP-SWITCH (ENGINE SPEED, START)	513
Y	*314-3785*	1	PUMP AR-FUEL TRANSFER	335
Y	*327-6501*	1	SEAT & MOUNTING GP (HIGH BACK, TILT)	2201
Y	*305-0467*	1	SEAT BELT GP (RETRACTABLE)	2216
Y	*272-4772*	1	SENSOR GP-LIQUID LEVEL (WATER SEPARATOR)	529
Y	*314-3798*	2	TRACK AR	892
Y	*247-7457*	1	VALVE AR-SWING (WITHOUT FINE SWING)	1516
Y	*161-3751*	1	VISOR GP-CAB (SUN)	2253
Y	*229-9070*	1	WASHER GP-WINDOW	2255
Y	*350-8250*	1	WIRING GP-CONVERTER (12-VOLT, 10-AMPERE)	613
	245-7794	1	FLOOR MAT	

Y - SEPARATE ILLUSTRATION

<END>

314-3867 OPTION AR-COUPLER

S/N: KGF1-UP; FAL1-UP

AN ATTACHMENT

SMCS-7000 **i03679023**

NOTE	PART NUMBER	QTY	PART NAME 1 2 3 4 5 6 (PRODUCT LEVEL)	SEE PAGE
Y	*288-7608*	1	CONTROL AR-COUPLER	912
Y	*242-6478*	1	LINES GP-COUPLER (REACH BOOM)	1153
Y	*242-6490*	1	LINES GP-COUPLER (STICK)	1157

Y - SEPARATE ILLUSTRATION

<END>

347-3354 OPTION AR-COUPLER

S/N: KGF1-UP; FAL1-UP

AN ATTACHMENT

SMCS-7000 **i03755783**

NOTE	PART NUMBER	QTY	PART NAME 1 2 3 4 5 6 (PRODUCT LEVEL)	SEE PAGE
Y	*288-7608*	1	CONTROL AR-COUPLER	912
Y	*242-6478*	1	LINES GP-COUPLER (REACH BOOM)	1153
Y	*242-6494*	1	LINES GP-COUPLER (STICK)	1158

Y - SEPARATE ILLUSTRATION

<END>

MACHINE ARRANGEMENT

347-3355 OPTION AR-COUPLER

S/N: KGF1-UP

AN ATTACHMENT

SMCS-7000 **i03755781**

NOTE	PART NUMBER	QTY	PART NAME 1 2 3 4 5 6 (PRODUCT LEVEL)	SEE PAGE
Y	*288-7608*	1	CONTROL AR-COUPLER	912
Y	*242-6482*	1	LINES GP-COUPLER (MASS BOOM)	1154
Y	*242-6494*	1	LINES GP-COUPLER (STICK)	1158

Y - SEPARATE ILLUSTRATION

<END>

359-2446 OPTION AR-COUPLER

S/N: KGF1-UP; FAL1-UP

AN ATTACHMENT

SMCS-7000 **i04038229**

NOTE	PART NUMBER	QTY	PART NAME 1 2 3 4 5 6 (PRODUCT LEVEL)	SEE PAGE
Y	*344-4363*	1	CONTROL AR-COUPLER	912
Y	*242-6478*	1	LINES GP-COUPLER (REACH BOOM)	1153
Y	*242-6490*	1	LINES GP-COUPLER (STICK)	1157

Y - SEPARATE ILLUSTRATION

<END>

359-2447 OPTION AR-COUPLER

S/N: KGF1-UP; FAL1-UP

AN ATTACHMENT

SMCS-7000 **i04038355**

NOTE	PART NUMBER	QTY	PART NAME 1 2 3 4 5 6 (PRODUCT LEVEL)	SEE PAGE
Y	*344-4363*	1	CONTROL AR-COUPLER	912
Y	*242-6478*	1	LINES GP-COUPLER (REACH BOOM)	1153
Y	*242-6494*	1	LINES GP-COUPLER (STICK)	1158

Y - SEPARATE ILLUSTRATION

<END>

359-2448 OPTION AR-COUPLER

S/N: KGF1-UP

AN ATTACHMENT

SMCS-7000 **i04038361**

NOTE	PART NUMBER	QTY	PART NAME 1 2 3 4 5 6 (PRODUCT LEVEL)	SEE PAGE
Y	*344-4363*	1	CONTROL AR-COUPLER	912
Y	*242-6482*	1	LINES GP-COUPLER (MASS BOOM)	1154
Y	*242-6494*	1	LINES GP-COUPLER (STICK)	1158

Y - SEPARATE ILLUSTRATION

<END>

MACHINE ARRANGEMENT

347-3363 OPTION AR-ELECTRICAL

S/N: KGF1-UP; FAL1-UP
AN ATTACHMENT

SMCS-7000 **i03900145**

NOTE	PART NUMBER	QTY	PART NAME 1 2 3 4 5 6 (PRODUCT LEVEL)	SEE PAGE
Y	*314-3735*	1	CAMERA AR	441
Y	*327-6552*	1	MIRROR GP-REAR VIEW (WITHOUT FRONT GUARD)	2169

Y - SEPARATE ILLUSTRATION

<END>

347-3364 OPTION AR-ELECTRICAL

S/N: KGF1-UP; FAL1-UP
AN ATTACHMENT

SMCS-7000 **i03900134**

NOTE	PART NUMBER	QTY	PART NAME 1 2 3 4 5 6 (PRODUCT LEVEL)	SEE PAGE
Y	*314-3735*	1	CAMERA AR	441
Y	*327-6553*	1	MIRROR GP-REAR VIEW	2170

Y - SEPARATE ILLUSTRATION

<END>

347-3362 OPTION AR-GUARD

S/N: KGF1-UP; FAL1-UP
AN ATTACHMENT

SMCS-7000 **i03900156**

NOTE	PART NUMBER	QTY	PART NAME 1 2 3 4 5 6 (PRODUCT LEVEL)	SEE PAGE
Y	*289-6425*	1	GUARD GP-BOTTOM (HEAVY-DUTY)	758
Y	*166-1478*	1	GUARD GP-TRAVEL MOTOR (HEAVY-DUTY)	866

Y - SEPARATE ILLUSTRATION

<END>

253-2866 OPTION AR-HYDRAULIC

S/N: KGF1-UP
PART OF 347-3340, 359-2300, 359-2421, 367-8697, 379-7218, 379-7268, 385-4036 DISTRIBUTION AR
AN ATTACHMENT

SMCS-7000 **i05196478**

NOTE	PART NUMBER	QTY	PART NAME 1 2 3 4 5 6 (PRODUCT LEVEL)	SEE PAGE
Y	*268-7122*	1	LINES GP-AUXILIARY HYDRAULIC (MEDIUM PRESSURE)	1105
Y	*288-7603*	1	LINES GP-AUXILIARY HYDRAULIC (MEDIUM PRESSURE)	1106

Y - SEPARATE ILLUSTRATION

<END>

MACHINE ARRANGEMENT

314-3868 OPTION AR-CONTROL

S/N: KGF1-UP; FAL1-UP

PART OF 347-3338, 347-3339, 354-1062, 354-1063, 354-1141, 354-1142, 354-1145, 354-1146, 359-2504, 359-2505, 379-7223, 379-7224, 385-4025, 385-4026 DISTRIBUTION AR

AN ATTACHMENT

SMCS-7000 **i03855682**

NOTE	PART NUMBER	QTY	PART NAME 1 2 3 4 5 6 (PRODUCT LEVEL)	SEE PAGE
Y	*310-0078*	1	CONTROL & MTG GP-JOYSTICK	2045
	240-5071	1	FLOOR MAT	

Y - SEPARATE ILLUSTRATION

<END>

347-3346 OPTION AR-CONTROL

S/N: KGF1-UP; FAL1-UP

AN ATTACHMENT

SMCS-7000 **i03857429**

NOTE	PART NUMBER	QTY	PART NAME 1 2 3 4 5 6 (PRODUCT LEVEL)	SEE PAGE
Y	*310-0078*	1	CONTROL & MTG GP-JOYSTICK	2045
Y	*259-7494*	1	CONTROL AR-AUXILIARY (SYSTEM 3, 1-WAY, 2-PUMP)	908
	240-5073	1	FLOOR MAT	

Y - SEPARATE ILLUSTRATION

<END>

347-3347 OPTION AR-CONTROL

S/N: KGF1-UP; FAL1-UP

AN ATTACHMENT

SMCS-7000 **i03855845**

NOTE	PART NUMBER	QTY	PART NAME 1 2 3 4 5 6 (PRODUCT LEVEL)	SEE PAGE
Y	*310-0078*	1	CONTROL & MTG GP-JOYSTICK	2045
Y	*259-7493*	1	CONTROL AR-AUXILIARY (SYSTEM 2, COMBINED FUNCTION)	907
	245-7794	1	FLOOR MAT	

Y - SEPARATE ILLUSTRATION

<END>

347-3348 OPTION AR-CONTROL

S/N: KGF1-UP; FAL1-UP

AN ATTACHMENT

SMCS-7000 **i03855844**

NOTE	PART NUMBER	QTY	PART NAME 1 2 3 4 5 6 (PRODUCT LEVEL)	SEE PAGE
Y	*310-0078*	1	CONTROL & MTG GP-JOYSTICK	2045
Y	*259-7495*	1	CONTROL AR-AUXILIARY	908
	245-7794	1	FLOOR MAT	

Y - SEPARATE ILLUSTRATION

<END>

MACHINE ARRANGEMENT

347-3356 OPTION AR-HYDRAULIC

S/N: KGF1-UP; FAL1-UP

AN ATTACHMENT

SMCS-7000 **i03809729**

NOTE	PART NUMBER	QTY	PART NAME 1 2 3 4 5 6 (PRODUCT LEVEL)	SEE PAGE
Y	*242-6475*	1	LINES GP-AUXILIARY HYDRAULIC (BOOM, HIGH PRESSURE)	1082
Y	*242-6487*	1	LINES GP-AUXILIARY HYDRAULIC (STICK, HIGH PRESSURE)	1097

Y - SEPARATE ILLUSTRATION

<END>

347-3357 OPTION AR-HYDRAULIC

S/N: KGF1-UP; FAL1-UP

AN ATTACHMENT

SMCS-7000 **i03900233**

NOTE	PART NUMBER	QTY	PART NAME 1 2 3 4 5 6 (PRODUCT LEVEL)	SEE PAGE
Y	*237-3184*	1	LINES GP-AUXILIARY HYDRAULIC (STICK, HIGH PRESSURE)	1078
Y	*242-6475*	1	LINES GP-AUXILIARY HYDRAULIC (BOOM, HIGH PRESSURE)	1082

Y - SEPARATE ILLUSTRATION

<END>

347-3358 OPTION AR-HYDRAULIC

S/N: KGF1-UP; FAL1-UP

AN ATTACHMENT

SMCS-7000 **i03900217**

NOTE	PART NUMBER	QTY	PART NAME 1 2 3 4 5 6 (PRODUCT LEVEL)	SEE PAGE
Y	*242-6476*	1	LINES GP-AUXILIARY HYDRAULIC (BOOM, MEDIUM PRESSURE)	1084
Y	*242-6488*	1	LINES GP-AUXILIARY HYDRAULIC (STICK, MEDIUM PRESSURE)	1101

Y - SEPARATE ILLUSTRATION

<END>

347-3359 OPTION AR-HYDRAULIC

S/N: KGF1-UP; FAL1-UP

AN ATTACHMENT

SMCS-7000 **i03900176**

NOTE	PART NUMBER	QTY	PART NAME 1 2 3 4 5 6 (PRODUCT LEVEL)	SEE PAGE
Y	*242-6476*	1	LINES GP-AUXILIARY HYDRAULIC (BOOM, MEDIUM PRESSURE)	1084
Y	*242-6492*	1	LINES GP-AUXILIARY HYDRAULIC (STICK, MEDIUM PRESSURE)	1103

Y - SEPARATE ILLUSTRATION

<END>

MACHINE ARRANGEMENT

347-3360 OPTION AR-HYDRAULIC

S/N: KGF1-UP

AN ATTACHMENT

SMCS-7000 **i03906347**

NOTE	PART NUMBER	QTY	PART NAME 1 2 3 4 5 6 (PRODUCT LEVEL)	SEE PAGE
Y	*237-3184*	1	LINES GP-AUXILIARY HYDRAULIC (STICK, HIGH PRESSURE)	1078
Y	*242-6479*	1	LINES GP-AUXILIARY HYDRAULIC (MASS BOOM, HIGH PRESSURE)	1086

Y - SEPARATE ILLUSTRATION

<END>

347-3361 OPTION AR-VALVE

S/N: KGF1-UP; FAL1-UP

AN ATTACHMENT

SMCS-7000 **i03809732**

NOTE	PART NUMBER	QTY	PART NAME 1 2 3 4 5 6 (PRODUCT LEVEL)	SEE PAGE
Y	*270-5974*	1	VALVE AR-CHECK & RELIEF	1514
Y	*239-8677*	1	VALVE AR-LOAD CONTROL	1515

Y - SEPARATE ILLUSTRATION

<END>

314-3899 OPTION AR-LIGHTING

S/N: KGF1-UP; FAL1-UP

CANNOT BE USED WITH 314-3900—PAGE: 84, 163-6772—PAGE: 479

AN ATTACHMENT

SMCS-7000 **i03575320**

NOTE	PART NUMBER	QTY	PART NAME 1 2 3 4 5 6 (PRODUCT LEVEL)	SEE PAGE
Y	*164-0534*	1	GUARD GP-FRONT WINDOW (FULL)	2111
Y	*170-9294*	1	LIGHTING GP-FLOOD (CAB GUARD)	481

Y - SEPARATE ILLUSTRATION

<END>

314-3900 OPTION AR-LIGHTING

S/N: KGF1-UP; FAL1-UP

CANNOT BE USED WITH 314-3899—PAGE: 84, 163-6772—PAGE: 479

PART OF 347-3339, 354-1063, 354-1142, 354-1146, 359-2505, 379-7224, 385-4026 DISTRIBUTION AR

AN ATTACHMENT

SMCS-7000 **i03467476**

NOTE	PART NUMBER	QTY	PART NAME 1 2 3 4 5 6 (PRODUCT LEVEL)	SEE PAGE
Y	*178-5549*	1	GUARD AR-OVERHEAD (FALLING OBJECTS GUARD SYSTEM)	2110
Y	*170-9294*	1	LIGHTING GP-FLOOD (CAB GUARD)	481

Y - SEPARATE ILLUSTRATION

<END>

MACHINE ARRANGEMENT

338-9900 OPTION AR-LIGHTING

S/N: KGF1-UP

AN ATTACHMENT

SMCS-7000 **i03652802**

NOTE	PART NUMBER	QTY	PART NAME 1 2 3 4 5 6 (PRODUCT LEVEL)	SEE PAGE
Y	*178-5549*	1	GUARD AR-OVERHEAD (FALLING OBJECTS GUARD SYSTEM)	2110
Y	*238-1628*	1	LIGHTING GP-FLOOD (CAB GUARD)	484

Y - SEPARATE ILLUSTRATION

<END>

338-9901 OPTION AR-LIGHTING

S/N: KGF1-UP

AN ATTACHMENT

SMCS-7000 **i03652803**

NOTE	PART NUMBER	QTY	PART NAME 1 2 3 4 5 6 (PRODUCT LEVEL)	SEE PAGE
Y	*171-7485*	1	GUARD GP-FRONT WINDOW	2116
Y	*238-1628*	1	LIGHTING GP-FLOOD (CAB GUARD)	484

Y - SEPARATE ILLUSTRATION

<END>

314-3925 OPTION AR-LINKAGE

S/N: FAL1-UP

AN ATTACHMENT

SMCS-7000 **i05226206**

NOTE	PART NUMBER	QTY	PART NAME 1 2 3 4 5 6 (PRODUCT LEVEL)	SEE PAGE
Y	*298-4308*	1	BOOM AR-1 PIECE LONG	1721
Y	*237-3184*	1	LINES GP-AUXILIARY HYDRAULIC (STICK, HIGH PRESSURE)	1078
Y	*242-6475*	1	LINES GP-AUXILIARY HYDRAULIC (BOOM, HIGH PRESSURE)	1082
Y	*240-3858*	1	LINKAGE AR-BUCKET (B1-FAMILY, WITH LIFTING EYE)	1753
Y	*240-3854*	1	STICK AR-HOE (HEAVY-DUTY, B-FAMILY)	1776

Y - SEPARATE ILLUSTRATION

<END>

338-9898 OPTION AR-LINKAGE

S/N: KGF1-UP

AN ATTACHMENT

SMCS-7000 **i03652798**

NOTE	PART NUMBER	QTY	PART NAME 1 2 3 4 5 6 (PRODUCT LEVEL)	SEE PAGE
Y	*240-3830*	1	BOOM AR-1 PIECE LONG (HEAVY-DUTY)	1719
Y	*242-6475*	1	LINES GP-AUXILIARY HYDRAULIC (BOOM, HIGH PRESSURE)	1082
Y	*242-6487*	1	LINES GP-AUXILIARY HYDRAULIC (STICK, HIGH PRESSURE)	1097
Y	*314-3851*	1	LINKAGE AR-BUCKET	1755
Y	*314-3727*	1	STICK AR-HOE (HEAVY-DUTY, REACH)	1779

Y - SEPARATE ILLUSTRATION

<END>

338-9899 OPTION AR-LINKAGE

S/N: KGF1-UP

AN ATTACHMENT

SMCS-7000 **i03652800**

NOTE	PART NUMBER	QTY	PART NAME 1 2 3 4 5 6 (PRODUCT LEVEL)	SEE PAGE
Y	*240-3830*	1	BOOM AR-1 PIECE LONG (HEAVY-DUTY)	1719
Y	*242-6475*	1	LINES GP-AUXILIARY HYDRAULIC (BOOM, HIGH PRESSURE)	1082
Y	*242-6476*	1	LINES GP-AUXILIARY HYDRAULIC (BOOM, MEDIUM PRESSURE)	1084
Y	*242-6487*	1	LINES GP-AUXILIARY HYDRAULIC (STICK, HIGH PRESSURE)	1097
Y	*242-6488*	1	LINES GP-AUXILIARY HYDRAULIC (STICK, MEDIUM PRESSURE)	1101
Y	*314-3851*	1	LINKAGE AR-BUCKET	1755
Y	*314-3727*	1	STICK AR-HOE (HEAVY-DUTY, REACH)	1779

Y - SEPARATE ILLUSTRATION

<END>

338-9911 OPTION AR-LINKAGE

S/N: KGF1-UP

PART OF 367-8811, 367-8813, 379-7221, 379-7222, 379-7271, 379-7272 DISTRIBUTION AR

AN ATTACHMENT

SMCS-7000 **i03652806**

NOTE	PART NUMBER	QTY	PART NAME 1 2 3 4 5 6 (PRODUCT LEVEL)	SEE PAGE
Y	*240-3830*	1	BOOM AR-1 PIECE LONG (HEAVY-DUTY)	1719
Y	*314-3851*	1	LINKAGE AR-BUCKET	1755
Y	*314-3727*	1	STICK AR-HOE (HEAVY-DUTY, REACH)	1779

Y - SEPARATE ILLUSTRATION

<END>

347-3349 OPTION AR-LINKAGE

S/N: KGF1-UP; FAL1-UP

PART OF 347-3338, 354-1062, 354-1141, 354-1145 DISTRIBUTION AR

AN ATTACHMENT

SMCS-7000 **i03755844**

NOTE	PART NUMBER	QTY	PART NAME 1 2 3 4 5 6 (PRODUCT LEVEL)	SEE PAGE
Y	*240-3832*	1	BOOM AR-1 PIECE LONG	1720
Y	*240-3861*	1	LINKAGE AR-BUCKET (B1-FAMILY, WITH LIFTING EYE)	1753
Y	*240-3849*	1	STICK AR-HOE	1776

Y - SEPARATE ILLUSTRATION

<END>

MACHINE ARRANGEMENT

347-3350 OPTION AR-LINKAGE

S/N: KGF1-UP; FAL1-UP

AN ATTACHMENT

SMCS-7000 **i03755833**

NOTE	PART NUMBER	QTY	PART NAME 1 2 3 4 5 6 (PRODUCT LEVEL)	SEE PAGE
Y	*240-3832*	1	BOOM AR-1 PIECE LONG	1720
Y	*240-3861*	1	LINKAGE AR-BUCKET (B1-FAMILY, WITH LIFTING EYE)	1753
Y	*240-3882*	1	STICK AR-HOE	1777

Y - SEPARATE ILLUSTRATION

<END>

347-3351 OPTION AR-LINKAGE

S/N: KGF1-UP; FAL1-UP

AN ATTACHMENT

SMCS-7000 **i03755831**

NOTE	PART NUMBER	QTY	PART NAME 1 2 3 4 5 6 (PRODUCT LEVEL)	SEE PAGE
Y	*240-3836*	1	BOOM AR-1 PIECE LONG (HEAVY-DUTY)	1720
Y	*240-3861*	1	LINKAGE AR-BUCKET (B1-FAMILY, WITH LIFTING EYE)	1753
Y	*314-3727*	1	STICK AR-HOE (HEAVY-DUTY, REACH)	1779

Y - SEPARATE ILLUSTRATION

<END>

347-3352 OPTION AR-LINKAGE

S/N: KGF1-UP; FAL1-UP

AN ATTACHMENT

SMCS-7000 **i03755826**

NOTE	PART NUMBER	QTY	PART NAME 1 2 3 4 5 6 (PRODUCT LEVEL)	SEE PAGE
Y	*240-3836*	1	BOOM AR-1 PIECE LONG	1720
Y	*240-3861*	1	LINKAGE AR-BUCKET (B1-FAMILY, WITH LIFTING EYE)	1753
Y	*240-3854*	1	STICK AR-HOE (HEAVY-DUTY, B-FAMILY)	1776

Y - SEPARATE ILLUSTRATION

<END>

347-3353 OPTION AR-LINKAGE

S/N: KGF1-UP

PART OF 347-3339, 354-1063, 354-1142, 354-1146 DISTRIBUTION AR

AN ATTACHMENT

SMCS-7000 **i03755822**

NOTE	PART NUMBER	QTY	PART NAME 1 2 3 4 5 6 (PRODUCT LEVEL)	SEE PAGE
Y	*240-3835*	1	BOOM AR-1 PIECE SHORT	1723
Y	*247-7383*	1	LINKAGE AR-BUCKET (CB2-FAMILY)	1754
Y	*240-3846*	1	STICK AR-HOE (MASS)	1775
	240-3899	1	FILM GP	
	290-1746		FILM-IDENTIFICATION (320D LME)	

Y - SEPARATE ILLUSTRATION

<END>

MACHINE ARRANGEMENT

359-2525 OPTION AR-LINKAGE

S/N: KGF1-UP; FAL1-UP
PART OF 359-2504, 379-7223, 385-4025 DISTRIBUTION AR
AN ATTACHMENT

SMCS-7000 **i04381913**

NOTE	PART NUMBER	QTY	PART NAME 1 2 3 4 5 6 (PRODUCT LEVEL)	SEE PAGE
Y	*240-3828*	1	BOOM AR-1 PIECE LONG	1719
Y	*240-3858*	1	LINKAGE AR-BUCKET (B1-FAMILY, WITH LIFTING EYE)	1753
Y	*240-3849*	1	STICK AR-HOE (REACH)	1776

Y - SEPARATE ILLUSTRATION

<END>

359-2526 OPTION AR-LINKAGE

S/N: KGF1-UP
PART OF 359-2505, 379-7224, 385-4026 DISTRIBUTION AR
AN ATTACHMENT

SMCS-7000 **i04110753**

NOTE	PART NUMBER	QTY	PART NAME 1 2 3 4 5 6 (PRODUCT LEVEL)	SEE PAGE
Y	*240-3833*	1	BOOM AR (1-PIECE SHORT)	1718
Y	*240-3899*	1	FILM GP	2278
Y	*247-7331*	1	LINKAGE AR-BUCKET (CB2-FAMILY, WITH LIFTING EYE)	1753
Y	*240-3846*	1	STICK AR-HOE (MASS)	1775

Y - SEPARATE ILLUSTRATION

<END>

359-2530 OPTION AR-LINKAGE

S/N: KGF1-UP; FAL1-UP
AN ATTACHMENT

SMCS-7000 **i04083934**

NOTE	PART NUMBER	QTY	PART NAME 1 2 3 4 5 6 (PRODUCT LEVEL)	SEE PAGE
Y	*240-3830*	1	BOOM AR-1 PIECE LONG (HEAVY-DUTY)	1719
Y	*240-3858*	1	LINKAGE AR-BUCKET (B1-FAMILY, WITH LIFTING EYE)	1753
Y	*314-3727*	1	STICK AR-HOE (HEAVY-DUTY, REACH)	1779

Y - SEPARATE ILLUSTRATION

<END>

359-2531 OPTION AR-LINKAGE

S/N: KGF1-UP; FAL1-UP
AN ATTACHMENT

SMCS-7000 **i04110790**

NOTE	PART NUMBER	QTY	PART NAME 1 2 3 4 5 6 (PRODUCT LEVEL)	SEE PAGE
Y	*240-3830*	1	BOOM AR-1 PIECE LONG (HEAVY-DUTY)	1719
Y	*240-3858*	1	LINKAGE AR-BUCKET (B1-FAMILY, WITH LIFTING EYE)	1753
Y	*240-3854*	1	STICK AR-HOE (HEAVY-DUTY, B-FAMILY)	1776

Y - SEPARATE ILLUSTRATION

<END>

MACHINE ARRANGEMENT

359-2532 OPTION AR-LINKAGE

S/N: KGF1-UP; FAL1-UP

AN ATTACHMENT

SMCS-7000 **i04110814**

NOTE	PART NUMBER	QTY	PART NAME 1 2 3 4 5 6 (PRODUCT LEVEL)	SEE PAGE
Y	*240-3828*	1	BOOM AR-1 PIECE LONG	1719
Y	*240-3858*	1	LINKAGE AR-BUCKET (B1-FAMILY, WITH LIFTING EYE)	1753
Y	*240-3882*	1	STICK AR-HOE	1777

Y - SEPARATE ILLUSTRATION

<END>

338-9924 OPTION AR-REGIONAL

S/N: KGF1-UP

AN ATTACHMENT

SMCS-7000 **i03855849**

NOTE	PART NUMBER	QTY	PART NAME 1 2 3 4 5 6 (PRODUCT LEVEL)	SEE PAGE
Y	*264-8671*	1	AIR CLEANER AR (PRECLEANER)	255
Y	*235-9003*	1	AIR CONDITIONER AR	1943
Y	*299-2783*	1	BATTERY & WIRING GP (COLD WEATHER)	435
Y	*229-9098*	1	CAB GP	1961
Y	*284-4442*	1	CONDENSER & LINES GP-RFGT (CHASSIS)	2019
Y	*310-0078*	1	CONTROL & MTG GP-JOYSTICK	2045
Y	*259-7495*	1	CONTROL AR-AUXILIARY (COMBINED FCTN, MEDIUM PRESSURE)	908
Y	*290-1911*	1	COOLING AR-HIGH AMBIENT TEMP	191
Y	**234-6500**	1	COVER GP-STORAGE (CAB, REAR)	2082
Y	*134-8875*	1	GUARD GP-SWIVEL (HEAVY-DUTY)	761
Y	*251-0542*	1	PANEL GP-SWITCH (ENGINE SPEED, START)	513
Y	*314-3785*	1	PUMP AR-FUEL TRANSFER	335
Y	*327-6501*	1	SEAT & MOUNTING GP (HIGH BACK, TILT)	2201
Y	*305-0467*	1	SEAT BELT GP (RETRACTABLE)	2216
Y	*272-4772*	1	SENSOR GP-LIQUID LEVEL (WATER SEPARATOR)	529
Y	**194-1910**	2	TRACK GP	893
Y	*247-7457*	1	VALVE AR-SWING (WITHOUT FINE SWING)	1516
Y	*161-3751*	1	VISOR GP-CAB (SUN)	2253
Y	*229-9070*	1	WASHER GP-WINDOW	2255
Y	*251-0482*	1	WIRING GP-CONVERTER (12-VOLT, 7-AMPERE)	611
	245-7794	1	FLOOR MAT	

Y - SEPARATE ILLUSTRATION

<END>

MACHINE ARRANGEMENT

347-3341 OPTION AR-REGIONAL

S/N: KGF1-UP

AN ATTACHMENT

SMCS-7000 **i03755816**

NOTE	PART NUMBER	QTY	PART NAME 1 2 3 4 5 6 (PRODUCT LEVEL)	SEE PAGE
Y	*284-4442*	1	CONDENSER & LINES GP-RFGT (CHASSIS)	2019
Y	*290-1911*	1	COOLING AR-HIGH AMBIENT TEMP	191
Y	*302-9208*	1	LINKAGE AR-FRONT	1758
Y	*251-0542*	1	PANEL GP-SWITCH (ENGINE SPEED, START)	513
Y	*272-4772*	1	SENSOR GP-LIQUID LEVEL (WATER SEPARATOR)	529
Y	*247-7457*	1	VALVE AR-SWING (WITHOUT FINE SWING)	1516

Y - SEPARATE ILLUSTRATION

<END>

347-3342 OPTION AR-CONFIGURATION

S/N: KGF1-UP; FAL1-UP

PART OF 347-3338, 347-3339 DISTRIBUTION AR

AN ATTACHMENT

SMCS-7000 **i03755818**

NOTE	PART NUMBER	QTY	PART NAME 1 2 3 4 5 6 (PRODUCT LEVEL)	SEE PAGE
Y	*290-1911*	1	COOLING AR-HIGH AMBIENT TEMP	191
Y	*290-1902*	1	COUNTERWEIGHT AR	701
Y	*251-0542*	1	PANEL GP-SWITCH (ENGINE SPEED, START)	513
Y	*272-4772*	1	SENSOR GP-LIQUID LEVEL (WATER SEPARATOR)	529
Y	*247-7457*	1	VALVE AR-SWING (WITHOUT FINE SWING)	1516

Y - SEPARATE ILLUSTRATION

<END>

347-3343 OPTION AR-REGIONAL

S/N: KGF1-UP; FAL1-UP

AN ATTACHMENT

SMCS-7000 **i04003931**

NOTE	PART NUMBER	QTY	PART NAME 1 2 3 4 5 6 (PRODUCT LEVEL)	SEE PAGE
Y	*275-3695*	1	BOOM AR-1 PIECE LONG	1721
Y	*290-1911*	1	COOLING AR-HIGH AMBIENT TEMP	191
Y	*278-3908*	1	COUNTERWEIGHT & MOUNTING GP	695
Y	*314-3882*	1	INSTALLATION AR (ACCUGRADE READY)	2143
Y	*275-3707*	1	LINKAGE AR-BUCKET (B1-FAMILY, WITH LIFTING EYE)	1754
Y	*251-0542*	1	PANEL GP-SWITCH (ENGINE SPEED, START)	513
Y	*272-4772*	1	SENSOR GP-LIQUID LEVEL (WATER SEPARATOR)	529
Y	*275-3702*	1	STICK AR-HOE (REACH, ACCUGRADE READY)	1777
Y	*247-7457*	1	VALVE AR-SWING (WITHOUT FINE SWING)	1516

Y - SEPARATE ILLUSTRATION

<END>

MACHINE ARRANGEMENT

351-9690 OPTION AR-REGIONAL

S/N: KGF1-UP

AN ATTACHMENT

SMCS-7000 **i03906177**

NOTE	PART NUMBER	QTY	PART NAME 1 2 3 4 5 6 (PRODUCT LEVEL)	SEE PAGE
Y	*264-8671*	1	AIR CLEANER AR (PRECLEANER)	255
Y	*235-9003*	1	AIR CONDITIONER AR	1943
Y	*299-2783*	1	BATTERY & WIRING GP (COLD WEATHER)	435
Y	*346-8037*	1	CAB GP	1993
Y	*284-4442*	1	CONDENSER & LINES GP-RFGT (CHASSIS)	2019
Y	*310-0078*	1	CONTROL & MTG GP-JOYSTICK	2045
Y	*259-7495*	1	CONTROL AR-AUXILIARY (COMBINED FCTN, MEDIUM PRESSURE)	908
Y	*290-1911*	1	COOLING AR-HIGH AMBIENT TEMP	191
Y	**234-6500**	1	COVER GP-STORAGE (CAB, REAR)	2082
Y	*134-8875*	1	GUARD GP-SWIVEL (HEAVY-DUTY)	761
Y	*251-0542*	1	PANEL GP-SWITCH (ENGINE SPEED, START)	513
Y	*314-3785*	1	PUMP AR-FUEL TRANSFER	335
Y	*327-6501*	1	SEAT & MOUNTING GP (HIGH BACK, TILT)	2201
Y	*305-0467*	1	SEAT BELT GP (RETRACTABLE)	2216
Y	*272-4772*	1	SENSOR GP-LIQUID LEVEL (WATER SEPARATOR)	529
Y	**194-1910**	2	TRACK GP	893
Y	*247-7457*	1	VALVE AR-SWING (WITHOUT FINE SWING)	1516
Y	*161-3751*	1	VISOR GP-CAB (SUN)	2253
Y	*229-9070*	1	WASHER GP-WINDOW	2255
Y	*251-0482*	1	WIRING GP-CONVERTER (12-VOLT, 7-AMPERE)	611
	245-7794	1	FLOOR MAT	

Y - SEPARATE ILLUSTRATION

<END>

354-1065 OPTION AR-REGIONAL

S/N: KGF1-UP; FAL1-UP

PART OF 354-1062, 354-1063 DISTRIBUTION AR

AN ATTACHMENT

SMCS-7000 **i03895890**

NOTE	PART NUMBER	QTY	PART NAME 1 2 3 4 5 6 (PRODUCT LEVEL)	SEE PAGE
Y	*290-1911*	1	COOLING AR-HIGH AMBIENT TEMP	191
Y	*251-0542*	1	PANEL GP-SWITCH (ENGINE SPEED, START)	513
Y	*272-4772*	1	SENSOR GP-LIQUID LEVEL (WATER SEPARATOR)	529
Y	*247-7457*	1	VALVE AR-SWING (WITHOUT FINE SWING)	1516

Y - SEPARATE ILLUSTRATION

<END>

MACHINE ARRANGEMENT

354-1151 OPTION AR-REGIONAL

S/N: KGF1-UP; FAL1-UP

PART OF 354-1141, 354-1142, 354-1145, 354-1146, 359-2504, 359-2505, 379-7223, 379-7224 DISTRIBUTION AR

AN ATTACHMENT

SMCS-7000 **i03898098**

NOTE	PART NUMBER	QTY	PART NAME 1 2 3 4 5 6 (PRODUCT LEVEL)	SEE PAGE
Y	*354-1056*	1	COOLING AR-HIGH AMBIENT TEMP	193
Y	*251-0542*	1	PANEL GP-SWITCH (ENGINE SPEED, START)	513
Y	*272-4772*	1	SENSOR GP-LIQUID LEVEL (WATER SEPARATOR)	529
Y	*247-7457*	1	VALVE AR-SWING (WITHOUT FINE SWING)	1516

Y - SEPARATE ILLUSTRATION

<END>

354-1152 OPTION AR-REGIONAL

S/N: KGF1-UP; FAL1-UP

AN ATTACHMENT

SMCS-7000 **i04007449**

NOTE	PART NUMBER	QTY	PART NAME 1 2 3 4 5 6 (PRODUCT LEVEL)	SEE PAGE
Y	*275-3695*	1	BOOM AR-1 PIECE LONG	1721
Y	*354-1056*	1	COOLING AR-HIGH AMBIENT TEMP	193
Y	*278-3908*	1	COUNTERWEIGHT & MOUNTING GP	695
Y	*314-3882*	1	INSTALLATION AR	2143
Y	*275-3707*	1	LINKAGE AR-BUCKET (B1-FAMILY, WITH LIFTING EYE)	1754
Y	*251-0542*	1	PANEL GP-SWITCH (ENGINE SPEED, START)	513
Y	*272-4772*	1	SENSOR GP-LIQUID LEVEL (WATER SEPARATOR)	529
Y	*275-3702*	1	STICK AR-HOE (REACH, ACCUGRADE READY)	1777
Y	*247-7457*	1	VALVE AR-SWING (WITHOUT FINE SWING)	1516

Y - SEPARATE ILLUSTRATION

<END>

354-1153 OPTION AR-REGIONAL

S/N: KGF1-UP

AN ATTACHMENT

SMCS-7000 **i04038230**

NOTE	PART NUMBER	QTY	PART NAME 1 2 3 4 5 6 (PRODUCT LEVEL)	SEE PAGE
Y	*284-4442*	1	CONDENSER & LINES GP-RFGT (CHASSIS)	2019
Y	*354-1056*	1	COOLING AR-HIGH AMBIENT TEMP	193
Y	*302-9208*	1	LINKAGE AR-FRONT	1758
Y	*251-0542*	1	PANEL GP-SWITCH (ENGINE SPEED, START)	513
Y	*272-4772*	1	SENSOR GP-LIQUID LEVEL (WATER SEPARATOR)	529
Y	*247-7457*	1	VALVE AR-SWING (WITHOUT FINE SWING)	1516

Y - SEPARATE ILLUSTRATION

<END>

MACHINE ARRANGEMENT

359-2263 OPTION AR-REGIONAL

S/N: KGF1-UP

AN ATTACHMENT

SMCS-7000 **i03900824**

NOTE	PART NUMBER	QTY	PART NAME 1 2 3 4 5 6 (PRODUCT LEVEL)	SEE PAGE
Y	*264-8671*	1	AIR CLEANER AR (PRECLEANER)	255
Y	*235-9003*	1	AIR CONDITIONER AR	1943
Y	*299-2783*	1	BATTERY & WIRING GP (COLD WEATHER)	435
Y	*346-8037*	1	CAB GP	1993
Y	*284-4442*	1	CONDENSER & LINES GP-RFGT (CHASSIS)	2019
Y	*310-0078*	1	CONTROL & MTG GP-JOYSTICK	2045
Y	*259-7495*	1	CONTROL AR-AUXILIARY (COMBINED FCTN, MEDIUM PRESSURE)	908
Y	*290-1911*	1	COOLING AR-HIGH AMBIENT TEMP	191
Y	**234-6500**	1	COVER GP-STORAGE (CAB, REAR)	2082
Y	*134-8875*	1	GUARD GP-SWIVEL (HEAVY-DUTY)	761
Y	*251-0542*	1	PANEL GP-SWITCH (ENGINE SPEED, START)	513
Y	*314-3785*	1	PUMP AR-FUEL TRANSFER	335
Y	*327-6501*	1	SEAT & MOUNTING GP (HIGH BACK, TILT)	2201
Y	*305-0467*	1	SEAT BELT GP (RETRACTABLE)	2216
Y	*272-4772*	1	SENSOR GP-LIQUID LEVEL (WATER SEPARATOR)	529
Y	**194-1910**	2	TRACK GP	893
Y	*247-7457*	1	VALVE AR-SWING (WITHOUT FINE SWING)	1516
Y	*161-3751*	1	VISOR GP-CAB (SUN)	2253
Y	*229-9070*	1	WASHER GP-WINDOW	2255
Y	*350-8250*	1	WIRING GP-CONVERTER (12-VOLT, 10-AMPERE)	613
	245-7794	1	FLOOR MAT	

Y - SEPARATE ILLUSTRATION

<END>

MACHINE ARRANGEMENT

367-8812 OPTION AR-REGIONAL

S/N: KGF1-UP

PART OF 367-8811, 379-7221 DISTRIBUTION AR

AN ATTACHMENT

SMCS-7000 **i04457829**

NOTE	PART NUMBER	QTY	PART NAME 1 2 3 4 5 6 (PRODUCT LEVEL)	SEE PAGE
Y	*264-8671*	1	AIR CLEANER AR (PRECLEANER)	255
Y	*235-9003*	1	AIR CONDITIONER AR	1943
Y	*299-2783*	1	BATTERY & WIRING GP (COLD WEATHER)	435
Y	*346-8037*	1	CAB GP	1993
Y	*310-0078*	1	CONTROL & MTG GP-JOYSTICK	2045
Y	*259-7495*	1	CONTROL AR-AUXILIARY (COMBINED FCTN, MEDIUM PRESSURE)	908
Y	*290-1911*	1	COOLING AR-HIGH AMBIENT TEMP	191
Y	**234-6500**	1	COVER GP-STORAGE (CAB, REAR)	2082
Y	*134-8875*	1	GUARD GP-SWIVEL (HEAVY-DUTY) (HEAVY-DUTY)	761
Y	*251-0542*	1	PANEL GP-SWITCH (ENGINE SPEED, START)	513
Y	*367-8698*	1	PUMP AR-REFUELING	335
Y	*327-6501*	1	SEAT & MOUNTING GP (HIGH BACK, TILT)	2201
Y	*305-0467*	1	SEAT BELT GP (RETRACTABLE)	2216
Y	*272-4772*	1	SENSOR GP-LIQUID LEVEL (WATER SEPARATOR)	529
Y	**194-1910**	2	TRACK GP	893
Y	*247-7457*	1	VALVE AR-SWING (WITHOUT FINE SWING)	1516
Y	*161-3751*	1	VISOR GP-CAB (SUN)	2253
Y	*229-9070*	1	WASHER GP-WINDOW (LOWER)	2255
Y	*350-8250*	1	WIRING GP-CONVERTER (12-VOLT, 10-AMPERE)	613
	245-7794	1	FLOOR MAT	

Y - SEPARATE ILLUSTRATION

<END>

MACHINE ARRANGEMENT

367-8814 OPTION AR-REGIONAL

S/N: KGF1-UP

PART OF 367-8813, 379-7222 DISTRIBUTION AR

AN ATTACHMENT

SMCS-7000 **i04457760**

NOTE	PART NUMBER	QTY	PART NAME 1 2 3 4 5 6 (PRODUCT LEVEL)	SEE PAGE
Y	*264-8671*	1	AIR CLEANER AR (PRECLEANER)	255
Y	*235-9003*	1	AIR CONDITIONER AR	1943
Y	*299-2783*	1	BATTERY & WIRING GP (COLD WEATHER)	435
Y	*346-8037*	1	CAB GP	1993
Y	*310-0078*	1	CONTROL & MTG GP-JOYSTICK	2045
Y	*290-1911*	1	COOLING AR-HIGH AMBIENT TEMP	191
Y	**234-6500**	1	COVER GP-STORAGE (CAB, REAR)	2082
Y	*134-8875*	1	GUARD GP-SWIVEL (HEAVY-DUTY) (HEAVY-DUTY)	761
Y	*251-0542*	1	PANEL GP-SWITCH (ENGINE SPEED, START)	513
Y	*367-8698*	1	PUMP AR-REFUELING	335
Y	*327-6501*	1	SEAT & MOUNTING GP (HIGH BACK, TILT)	2201
Y	*305-0467*	1	SEAT BELT GP (RETRACTABLE)	2216
Y	*272-4772*	1	SENSOR GP-LIQUID LEVEL (WATER SEPARATOR)	529
Y	*314-3798*	2	TRACK AR	892
Y	*247-7457*	1	VALVE AR-SWING (WITHOUT FINE SWING)	1516
Y	*161-3751*	1	VISOR GP-CAB (SUN)	2253
Y	*229-9070*	1	WASHER GP-WINDOW (LOWER)	2255
Y	*350-8250*	1	WIRING GP-CONVERTER (12-VOLT, 10-AMPERE)	613
	240-5071	1	FLOOR MAT	

Y - SEPARATE ILLUSTRATION

<END>

MACHINE ARRANGEMENT

379-7297 OPTION AR-REGIONAL

S/N: KGF1-UP

PART OF 379-7221 DISTRIBUTION AR

AN ATTACHMENT

SMCS-7000 **i04556322**

NOTE	PART NUMBER	QTY	PART NAME 1 2 3 4 5 6 (PRODUCT LEVEL)	SEE PAGE
Y	*264-8671*	1	AIR CLEANER AR (PRECLEANER)	255
Y	*235-9003*	1	AIR CONDITIONER AR	1943
Y	*299-2783*	1	BATTERY & WIRING GP (COLD WEATHER)	435
Y	*346-8037*	1	CAB GP	1993
Y	*310-0078*	1	CONTROL & MTG GP-JOYSTICK	2045
Y	*259-7495*	1	CONTROL AR-AUXILIARY (COMBINED FCTN, MEDIUM PRESSURE)	908
Y	*290-1911*	1	COOLING AR-HIGH AMBIENT TEMP	191
Y	**234-6500**	1	COVER GP-STORAGE (CAB, REAR)	2082
Y	*134-8875*	1	GUARD GP-SWIVEL (HEAVY-DUTY)	761
Y	*298-4115*	1	INSTALLATION AR-COMMUNICATION (PRODUCT LINK 321SR)	469
Y	*251-0542*	1	PANEL GP-SWITCH (ENGINE SPEED, START)	513
Y	*367-8698*	1	PUMP AR-REFUELING	335
Y	*327-6501*	1	SEAT & MOUNTING GP (HIGH BACK, TILT)	2201
Y	*305-0467*	1	SEAT BELT GP (RETRACTABLE)	2216
Y	*272-4772*	1	SENSOR GP-LIQUID LEVEL (WATER SEPARATOR)	529
Y	*194-1910*	2	TRACK GP (2-REQUIRED)	893
Y	*247-7457*	1	VALVE AR-SWING (WITHOUT FINE SWING)	1516
Y	*161-3751*	1	VISOR GP-CAB (SUN)	2253
Y	*229-9070*	1	WASHER GP-WINDOW (LOWER)	2255
Y	*350-8250*	1	WIRING GP-CONVERTER (12-VOLT, 10-AMPERE)	613
	245-7794	1	FLOOR MAT	

Y - SEPARATE ILLUSTRATION

<END>

MACHINE ARRANGEMENT

379-7298 OPTION AR-REGIONAL

S/N: KGF1-UP

PART OF 379-7271 DISTRIBUTION AR

AN ATTACHMENT

SMCS-7000 **i04556384**

NOTE	PART NUMBER	QTY	PART NAME 1 2 3 4 5 6 (PRODUCT LEVEL)	SEE PAGE
Y	*264-8671*	1	AIR CLEANER AR (PRECLEANER)	255
Y	*235-9003*	1	AIR CONDITIONER AR	1943
Y	*299-2783*	1	BATTERY & WIRING GP (COLD WEATHER)	435
Y	*346-8037*	1	CAB GP	1993
Y	*310-0078*	1	CONTROL & MTG GP-JOYSTICK	2045
Y	*259-7495*	1	CONTROL AR-AUXILIARY (COMBINED FCTN, MEDIUM PRESSURE)	908
Y	*379-7062*	1	CONTROL AR-COMMUNICATION (PRODUCT LINK CELLULAR)	451
Y	*290-1911*	1	COOLING AR-HIGH AMBIENT TEMP	191
Y	**234-6500**	1	COVER GP-STORAGE (CAB, REAR)	2082
Y	*134-8875*	1	GUARD GP-SWIVEL (HEAVY-DUTY)	761
Y	*251-0542*	1	PANEL GP-SWITCH (ENGINE SPEED, START)	513
Y	*367-8698*	1	PUMP AR-REFUELING	335
Y	*327-6501*	1	SEAT & MOUNTING GP (HIGH BACK, TILT)	2201
Y	*305-0467*	1	SEAT BELT GP (RETRACTABLE)	2216
Y	*272-4772*	1	SENSOR GP-LIQUID LEVEL (WATER SEPARATOR)	529
Y	*194-1910*	2	TRACK GP (2-REQUIRED)	893
Y	*247-7457*	1	VALVE AR-SWING (WITHOUT FINE SWING)	1516
Y	*161-3751*	1	VISOR GP-CAB (SUN)	2253
Y	*229-9070*	1	WASHER GP-WINDOW (LOWER)	2255
Y	*350-8250*	1	WIRING GP-CONVERTER (12-VOLT, 10-AMPERE)	613
	245-7794	1	FLOOR MAT	

Y - SEPARATE ILLUSTRATION

<END>

MACHINE ARRANGEMENT

379-7299 OPTION AR-REGIONAL

S/N: KGF1-UP

PART OF 379-7222 DISTRIBUTION AR

AN ATTACHMENT

SMCS-7000 **i04562096**

NOTE	PART NUMBER	QTY	PART NAME 1 2 3 4 5 6 (PRODUCT LEVEL)	SEE PAGE
Y	*264-8671*	1	AIR CLEANER AR (PRECLEANER)	255
Y	*235-9003*	1	AIR CONDITIONER AR	1943
Y	*299-2783*	1	BATTERY & WIRING GP (COLD WEATHER)	435
Y	*346-8037*	1	CAB GP	1993
Y	*310-0078*	1	CONTROL & MTG GP-JOYSTICK	2045
Y	*290-1911*	1	COOLING AR-HIGH AMBIENT TEMP	191
Y	**234-6500**	1	COVER GP-STORAGE (CAB, REAR)	2082
Y	*134-8875*	1	GUARD GP-SWIVEL (HEAVY-DUTY)	761
Y	*298-4115*	1	INSTALLATION AR-COMMUNICATION (PRODUCT LINK 321SR)	469
Y	*251-0542*	1	PANEL GP-SWITCH (ENGINE SPEED, START)	513
Y	*367-8698*	1	PUMP AR-REFUELING	335
Y	*327-6501*	1	SEAT & MOUNTING GP (HIGH BACK, TILT)	2201
Y	*305-0467*	1	SEAT BELT GP (RETRACTABLE)	2216
Y	*272-4772*	1	SENSOR GP-LIQUID LEVEL (WATER SEPARATOR)	529
Y	*314-3798*	2	TRACK AR	892
Y	*247-7457*	1	VALVE AR-SWING (WITHOUT FINE SWING)	1516
Y	*161-3751*	1	VISOR GP-CAB (SUN)	2253
Y	*229-9070*	1	WASHER GP-WINDOW (LOWER)	2255
Y	*350-8250*	1	WIRING GP-CONVERTER (12-VOLT, 10-AMPERE)	613
	240-5071	1	FLOOR MAT	

Y - SEPARATE ILLUSTRATION

<END>

379-7300 OPTION AR-REGIONAL

S/N: KGF1-UP
PART OF 379-7272 DISTRIBUTION AR
AN ATTACHMENT

SMCS-7000 **i04562098**

NOTE	PART NUMBER	QTY	PART NAME 1 2 3 4 5 6 (PRODUCT LEVEL)	SEE PAGE
Y	*264-8671*	1	AIR CLEANER AR (PRECLEANER)	255
Y	*235-9003*	1	AIR CONDITIONER AR	1943
Y	*299-2783*	1	BATTERY & WIRING GP (COLD WEATHER)	435
Y	*346-8037*	1	CAB GP	1993
Y	*310-0078*	1	CONTROL & MTG GP-JOYSTICK	2045
Y	*379-7062*	1	CONTROL AR-COMMUNICATION (PRODUCT LINK CELLULAR)	451
Y	*290-1911*	1	COOLING AR-HIGH AMBIENT TEMP	191
Y	**234-6500**	1	COVER GP-STORAGE (CAB, REAR)	2082
Y	*134-8875*	1	GUARD GP-SWIVEL (HEAVY-DUTY)	761
Y	*251-0542*	1	PANEL GP-SWITCH (ENGINE SPEED, START)	513
Y	*367-8698*	1	PUMP AR-REFUELING	335
Y	*327-6501*	1	SEAT & MOUNTING GP (HIGH BACK, TILT)	2201
Y	*305-0467*	1	SEAT BELT GP (RETRACTABLE)	2216
Y	*272-4772*	1	SENSOR GP-LIQUID LEVEL (WATER SEPARATOR)	529
Y	*314-3798*	2	TRACK AR	892
Y	*247-7457*	1	VALVE AR-SWING (WITHOUT FINE SWING)	1516
Y	*161-3751*	1	VISOR GP-CAB (SUN)	2253
Y	*229-9070*	1	WASHER GP-WINDOW (LOWER)	2255
Y	*350-8250*	1	WIRING GP-CONVERTER (12-VOLT, 10-AMPERE)	613
	240-5071	1	FLOOR MAT	

Y - SEPARATE ILLUSTRATION

<END>

379-7305 OPTION AR-REGIONAL

S/N: KGF1-UP; FAL1-UP
PART OF 379-7223, 379-7224 DISTRIBUTION AR
AN ATTACHMENT

SMCS-7000 **i04562099**

NOTE	PART NUMBER	QTY	PART NAME 1 2 3 4 5 6 (PRODUCT LEVEL)	SEE PAGE
Y	*379-7062*	1	CONTROL AR-COMMUNICATION (PRODUCT LINK CELLULAR)	451
Y	*354-1056*	1	COOLING AR-HIGH AMBIENT TEMP	193
Y	*251-0542*	1	PANEL GP-SWITCH (ENGINE SPEED, START)	513
Y	*272-4772*	1	SENSOR GP-LIQUID LEVEL (WATER SEPARATOR)	529
Y	*247-7457*	1	VALVE AR-SWING (WITHOUT FINE SWING)	1516

Y - SEPARATE ILLUSTRATION

<END>

MACHINE ARRANGEMENT

379-7306 OPTION AR-REGIONAL

S/N: KGF1-UP; FAL1-UP

AN ATTACHMENT

SMCS-7000 **i04562100**

NOTE	PART NUMBER	QTY	PART NAME 1 2 3 4 5 6 (PRODUCT LEVEL)	SEE PAGE
Y	*275-3695*	1	BOOM AR-1 PIECE LONG (GRADE CONTROL)	1721
Y	*379-7062*	1	CONTROL AR-COMMUNICATION (PRODUCT LINK CELLULAR)	451
Y	*354-1056*	1	COOLING AR-HIGH AMBIENT TEMP	193
Y	*278-3908*	1	COUNTERWEIGHT & MOUNTING GP	695
Y	*314-3882*	1	INSTALLATION AR (GRADE CONTROL)	2143
Y	*275-3707*	1	LINKAGE AR-BUCKET (B1-FAMILY, WITH LIFTING EYE)	1754
Y	*251-0542*	1	PANEL GP-SWITCH (ENGINE SPEED, START)	513
Y	*272-4772*	1	SENSOR GP-LIQUID LEVEL (WATER SEPARATOR)	529
Y	*275-3702*	1	STICK AR-HOE (REACH, ACCUGRADE READY)	1777
Y	*247-7457*	1	VALVE AR-SWING (WITHOUT FINE SWING)	1516

Y - SEPARATE ILLUSTRATION

<END>

379-7347 OPTION AR-REGIONAL

S/N: KGF1-UP

AN ATTACHMENT

SMCS-7000 **i04898439**

NOTE	PART NUMBER	QTY	PART NAME 1 2 3 4 5 6 (PRODUCT LEVEL)	SEE PAGE
Y	*284-4442*	1	CONDENSER & LINES GP-RFGT (CHASSIS)	2019
Y	*379-7062*	1	CONTROL AR-COMMUNICATION (PRODUCT LINK CELLULAR)	451
Y	*354-1056*	1	COOLING AR-HIGH AMBIENT TEMP	193
Y	*302-9208*	1	LINKAGE AR-FRONT	1758
Y	*251-0542*	1	PANEL GP-SWITCH (ENGINE SPEED, START)	513
Y	*272-4772*	1	SENSOR GP-LIQUID LEVEL (WATER SEPARATOR)	529
Y	*247-7457*	1	VALVE AR-SWING (WITHOUT FINE SWING)	1516

Y - SEPARATE ILLUSTRATION

<END>

385-4027 OPTION AR-REGIONAL

S/N: KGF1-UP; FAL1-UP

PART OF 385-4025, 385-4026 DISTRIBUTION AR

AN ATTACHMENT

SMCS-7000 **i04668349**

NOTE	PART NUMBER	QTY	PART NAME 1 2 3 4 5 6 (PRODUCT LEVEL)	SEE PAGE
Y	*379-7062*	1	CONTROL AR-COMMUNICATION (PRODUCT LINK CELLULAR)	451
Y	*290-1911*	1	COOLING AR-HIGH AMBIENT TEMP	191
Y	*251-0542*	1	PANEL GP-SWITCH (ENGINE SPEED, START)	513
Y	*272-4772*	1	SENSOR GP-LIQUID LEVEL (WATER SEPARATOR)	529
Y	*247-7457*	1	VALVE AR-SWING (WITHOUT FINE SWING)	1516

Y - SEPARATE ILLUSTRATION

<END>

MACHINE ARRANGEMENT

385-4028 OPTION AR-REGIONAL

S/N: KGF1-UP

AN ATTACHMENT

SMCS-7000 **i04898169**

NOTE	PART NUMBER	QTY	PART NAME 1 2 3 4 5 6 (PRODUCT LEVEL)	SEE PAGE
Y	*284-4442*	1	CONDENSER & LINES GP-RFGT (CHASSIS)	2019
Y	*379-7062*	1	CONTROL AR-COMMUNICATION (PRODUCT LINK CELLULAR)	451
Y	*290-1911*	1	COOLING AR-HIGH AMBIENT TEMP	191
Y	*302-9208*	1	LINKAGE AR-FRONT	1758
Y	*251-0542*	1	PANEL GP-SWITCH (ENGINE SPEED, START)	513
Y	*272-4772*	1	SENSOR GP-LIQUID LEVEL (WATER SEPARATOR)	529
Y	*247-7457*	1	VALVE AR-SWING (WITHOUT FINE SWING)	1516

Y - SEPARATE ILLUSTRATION

<END>

385-4029 OPTION AR-REGIONAL

S/N: KGF1-UP; FAL1-UP

AN ATTACHMENT

SMCS-7000 **i04668771**

NOTE	PART NUMBER	QTY	PART NAME 1 2 3 4 5 6 (PRODUCT LEVEL)	SEE PAGE
Y	*275-3695*	1	BOOM AR-1 PIECE LONG (GRADE CONTROL)	1721
Y	*379-7062*	1	CONTROL AR-COMMUNICATION (PRODUCT LINK CELLULAR)	451
Y	*290-1911*	1	COOLING AR-HIGH AMBIENT TEMP	191
Y	*278-3908*	1	COUNTERWEIGHT & MOUNTING GP	695
Y	*314-3882*	1	INSTALLATION AR (GRADE CONTROL)	2143
Y	*275-3707*	1	LINKAGE AR-BUCKET (B1-FAMILY, WITH LIFTING EYE)	1754
Y	*251-0542*	1	PANEL GP-SWITCH (ENGINE SPEED, START)	513
Y	*272-4772*	1	SENSOR GP-LIQUID LEVEL (WATER SEPARATOR)	529
Y	*275-3702*	1	STICK AR-HOE (REACH, ACCUGRADE READY)	1777
Y	*247-7457*	1	VALVE AR-SWING (WITHOUT FINE SWING)	1516

Y - SEPARATE ILLUSTRATION

<END>

290-1892 SPECIAL AR–TIER II SOUND, TIER III ENGINE

S/N: KGF1-UP

PART OF 314-3859, 314-3860, 314-3861, 314-3862, 314-3905 DISTRIBUTION AR

AN ATTACHMENT

SMCS-7000 **i03078282**

NOTE	PART NUMBER	QTY	PART NAME 1 2 3 4 5 6 (PRODUCT LEVEL)	SEE PAGE
Y	*241-1999*	1	COUNTERWEIGHT & MOUNTING GP	683
Y	*272-4675*	1	ENGINE AR	105
			–OR–	
Y	*305-4763*	1	ENGINE AR	110
Y	*273-7725*	1	HOOD & GUARD GP	763
			–OR–	
Y	*320-5732*	1	HOOD & GUARD GP	809
Y	*265-3600*	1	RADIATOR & HYD OIL COOLER GP	206
Y	*275-6798*	1	WIRING GP-FAN (FLUID CLUTCH)	619
			–OR–	
Y	*306-8501*	1	WIRING GP-FAN (FLUID CLUTCH)	624

Y - SEPARATE ILLUSTRATION

<END>

MACHINE ARRANGEMENT

298-4286 SPECIAL AR

S/N: KGF1-UP; FAL1-UP
CHINA MARKET
FOR USE WITH 600-MM (23.6-IN) TRACK SHOES
AN ATTACHMENT

SMCS-7000 **i02842543**

NOTE	PART NUMBER	QTY	PART NAME 1 2 3 4 5 6 (PRODUCT LEVEL)	SEE PAGE
Y	*298-4281*	1	FILM GP	2292
	305-0395	1	HANDRAIL GP	

Y - SEPARATE ILLUSTRATION

<END>

298-4287 SPECIAL AR

S/N: KGF1-UP; FAL1-UP
CHINA MARKET
FOR USE WITH 700-MM (27.6-IN) TRACK SHOES
AN ATTACHMENT

SMCS-7000 **i02843434**

NOTE	PART NUMBER	QTY	PART NAME 1 2 3 4 5 6 (PRODUCT LEVEL)	SEE PAGE
Y	*298-4281*	1	FILM GP	2292
Y	*235-7764*	2	STEP GP	844
	305-0395	1	HANDRAIL GP	

Y - SEPARATE ILLUSTRATION

<END>

298-4288 SPECIAL AR

S/N: KGF1-UP; FAL1-UP
CHINA MARKET
FOR USE WITH 800-MM (31.5-IN) TRACK SHOES
AN ATTACHMENT

SMCS-7000 **i02843491**

NOTE	PART NUMBER	QTY	PART NAME 1 2 3 4 5 6 (PRODUCT LEVEL)	SEE PAGE
Y	*298-4281*	1	FILM GP	2292
Y	*308-8881*	2	STEP GP	845
	305-0395	1	HANDRAIL GP	

Y - SEPARATE ILLUSTRATION

<END>

MACHINE ARRANGEMENT

314-3574 SPECIAL AR

S/N: KGF1-UP; FAL1-UP
CHINA MARKET
FOR USE WITH 600-MM (23.6-IN) TRACK SHOES
AN ATTACHMENT

SMCS-7000 **i03001022**

NOTE	PART NUMBER	QTY	PART NAME 1 2 3 4 5 6 (PRODUCT LEVEL)	SEE PAGE
Y	*298-4281*	1	FILM GP	2292

Y - SEPARATE ILLUSTRATION

<END>

314-3575 SPECIAL AR

S/N: KGF1-UP; FAL1-UP
CHINA MARKET
FOR USE WITH 700-MM (27.6-IN) TRACK SHOES
AN ATTACHMENT

SMCS-7000 **i03001023**

NOTE	PART NUMBER	QTY	PART NAME 1 2 3 4 5 6 (PRODUCT LEVEL)	SEE PAGE
Y	*298-4281*	1	FILM GP	2292
Y	*235-7764*	2	STEP GP	844

Y - SEPARATE ILLUSTRATION

<END>

314-3576 SPECIAL AR

S/N: KGF1-UP; FAL1-UP
CHINA MARKET
FOR USE WITH 800-MM (31.5-IN) TRACK SHOES
AN ATTACHMENT

SMCS-7000 **i03001024**

NOTE	PART NUMBER	QTY	PART NAME 1 2 3 4 5 6 (PRODUCT LEVEL)	SEE PAGE
Y	*298-4281*	1	FILM GP	2292
Y	*308-8881*	2	STEP GP	845

Y - SEPARATE ILLUSTRATION

<END>

314-3846 SPECIAL AR

S/N: KGF1-UP; FAL1-UP
CHINA MARKET
FOR USE WITH 700-MM (27.6-IN) TRACK SHOE
AN ATTACHMENT

SMCS-7000 **i03207788**

NOTE	PART NUMBER	QTY	PART NAME 1 2 3 4 5 6 (PRODUCT LEVEL)	SEE PAGE
Y	*314-3848*	1	FILM GP	2298
Y	*235-7764*	2	STEP GP	844

Y - SEPARATE ILLUSTRATION

<END>

MACHINE ARRANGEMENT

314-3847 SPECIAL AR

S/N: KGF1-UP; FAL1-UP
CHINA MARKET
FOR USE WITH 800-MM(31.5-IN)TRACK SHOES
AN ATTACHMENT

SMCS-7000 **i03362683**

NOTE	PART NUMBER	QTY	PART NAME 1 2 3 4 5 6 (PRODUCT LEVEL)	SEE PAGE
Y	*314-3848*	1	FILM GP	2298
Y	*308-8881*	2	STEP GP	845

Y - SEPARATE ILLUSTRATION

<END>

ENGINE ARRANGEMENT

272-4675 ENGINE AR

S/N: KGF1-UP
PART OF 290-1892 SPECIAL AR
AN ATTACHMENT

SMCS-1000 **i02690531**

NOTE	PART NUMBER	QTY	PART NAME 1 2 3 4 5 6 (PRODUCT LEVEL)	SEE PAGE
Y	*272-4676*	1	ENGINE AR-COMPLETE	112
Y	*230-2979*	1	FAN GP-SUCTION	195

Y - SEPARATE ILLUSTRATION

<END>

ENGINE ARRANGEMENT

272-4677 ENGINE AR

S/N: GDC1-UP

PART OF 272-4676 ENGINE AR-COMPLETE

AN ATTACHMENT

SMCS-1000 **i03732586**

NOTE	PART NUMBER	QTY	PART NAME 1 2 3 4 5 6 (PRODUCT LEVEL)	SEE PAGE
Y	*296-4638*	1	BREATHER GP (CRANKCASE)	179
Y	*305-4744*	1	CAMSHAFT GP	122
Y	*296-4664*	1	CONTROL & MTG GP-ENGINE ELEK	449
Y	*296-4642*	1	COOLER GP-ENGINE OIL	190
Y	*296-4647*	1	COVER GP-VALVE MECHANISM	123
Y	*296-4650*	1	CRANKSHAFT GP	125
Y	*296-4648*	1	CYLINDER BLOCK GP	129
Y	*296-4645*	1	CYLINDER HEAD GP	131
Y	*296-4654*	1	ADAPTER GP-REMOTE OIL FILTER	177
Y	*305-4745*	1	FILTER GP-FUEL	290
Y	*296-4644*	1	FLYWHEEL GP	132
Y	*296-4651*	1	GEAR GP-FRONT	133
Y	*296-4643*	1	HOUSING GP-FLYWHEEL	134
Y	*296-4649*	1	HOUSING GP-FRONT	135
Y	**260-5656**	6	INJECTOR GP-FUEL	296
			S/N: GDC1-1846	
Y	*310-9606*	1	INJECTOR GP-FUEL	298
			S/N: GDC1847-UP	
Y	*296-4641*	1	LINES GP-ENGINE OIL	186
Y	*296-4656*	1	LINES GP-FUEL	305
Y	*296-4636*	1	LINES GP-TURBOCHARGER OIL	189
Y	*296-4658*	1	HOUSING & REGULATOR GP	203
Y	*296-4653*	1	MANIFOLD GP-EXHAUST	273
Y	*296-4652*	1	MANIFOLD GP-INLET	275
			—OR—	
Y	*324-4194*	1	MANIFOLD GP-INLET	277
Y	*296-4661*	1	MOUNTING GP-ALTERNATOR	138
Y	*305-4678*	1	MOUNTING GP-PUMP	333
			S/N: GDC1847-UP	
Y	*296-4662*	1	MUFFLER GP	280
			—OR—	
Y	*297-7745*	1	MUFFLER GP	282
			—OR—	
Y	*324-4173*	1	MUFFLER GP	284
Y	*296-4640*	1	PAN GP-OIL	142
Y	*296-4659*	1	PISTON & ROD GP	146
Y	*296-4655*	1	PUMP GP-WATER	204
Y	*296-4666*	1	SENSOR GP-ENGINE	527
Y	*296-4637*	1	MOUNTING GP-STARTING MOTOR	141
Y	*310-9617*	1	TURBOCHARGER GP	288
Y	*305-4910*	1	VALVE MECHANISM GP	175
Y	*296-4665*	1	WIRING GP-ELECTRONIC CONTROL	615
	300-4003	1	ELECTRONICS GP-ENGINE RATINGS	
			PLEASE USE THE GASKET KIT LINK IN SIS OR CONTACT YOUR LOCAL DEALER FOR THE LATEST GASKET KIT INFORMATION	

Y - SEPARATE ILLUSTRATION

<END>

ENGINE ARRANGEMENT

272-4683 ENGINE AR

S/N: GDC1-UP

PART OF 272-4682, 272-4685, 272-4687, 296-4680, 310-9484, 310-9485, 324-3965, 324-3969, 324-3971, 324-3975, 327-7289, 327-7290 ENGINE AR-COMPLETE

ALSO AN ATTACHMENT

SMCS-1000 **i03784454**

NOTE	PART NUMBER	QTY	PART NAME 1 2 3 4 5 6 (PRODUCT LEVEL)	SEE PAGE
Y	**296-4661**	1	MOUNTING GP-ALTERNATOR	138
Y	*296-4638*	1	BREATHER GP (CRANKCASE)	179
Y	*305-4744*	1	CAMSHAFT GP	122
Y	*296-4664*	1	CONTROL & MTG GP-ENGINE ELEK	449
Y	*296-4642*	1	COOLER GP-ENGINE OIL	190
Y	*296-4647*	1	COVER GP-VALVE MECHANISM	123
Y	*296-4650*	1	CRANKSHAFT GP	125
Y	*296-4648*	1	CYLINDER BLOCK GP	129
Y	*296-4645*	1	CYLINDER HEAD GP	131
Y	*296-4654*	1	ADAPTER GP-REMOTE OIL FILTER	177
Y	*305-4745*	1	FILTER GP-FUEL	290
Y	*296-4644*	1	FLYWHEEL GP	132
Y	*296-4651*	1	GEAR GP-FRONT	133
Y	*296-4643*	1	HOUSING GP-FLYWHEEL	134
Y	*296-4649*	1	HOUSING GP-FRONT	135
Y	*296-4641*	1	LINES GP-ENGINE OIL	186
Y	*296-4656*	1	LINES GP-FUEL	305
Y	*296-4636*	1	LINES GP-TURBOCHARGER OIL	189
Y	*296-4658*	1	HOUSING & REGULATOR GP	203
Y	*296-4653*	1	MANIFOLD GP-EXHAUST	273
Y	*296-4652*	1	MANIFOLD GP-INLET	275
			—OR—	
Y	*324-4194*	1	MANIFOLD GP-INLET	277
Y	*305-4678*	1	MOUNTING GP-PUMP	333
			S/N: GDC1847-UP	
Y	*296-4637*	1	MOUNTING GP-STARTING MOTOR	141
Y	*296-4662*	1	MUFFLER GP	280
			—OR—	
Y	*324-4173*	1	MUFFLER GP	284
Y	*296-4640*	1	PAN GP-OIL	142
Y	*296-4659*	1	PISTON & ROD GP	146
Y	*296-4655*	1	PUMP GP-WATER	204
Y	*296-4666*	1	SENSOR GP-ENGINE	527
Y	*310-9617*	1	TURBOCHARGER GP	288
Y	*305-4910*	1	VALVE MECHANISM GP	175
Y	*296-4665*	1	WIRING GP-ELECTRONIC CONTROL	615
	299-1419	1	ELECTRONICS GP-ENGINE RATINGS	
YR	**295-9130**	6	INJECTOR GP-FUEL	297
			S/N: GDC1-1846	
Y	*310-9607*	1	INJECTOR GP-FUEL	299
			S/N: GDC1847-UP	

R - REMFG PART MAY BE AVAILABLE
Y - SEPARATE ILLUSTRATION

<END>

ENGINE ARRANGEMENT

272-4684 ENGINE AR

S/N: KGF1-UP; FAL1-UP

AN ATTACHMENT

SMCS-1000 **i02586038**

NOTE	PART NUMBER	QTY	PART NAME 1 2 3 4 5 6 (PRODUCT LEVEL)	SEE PAGE
Y	**272-4685**	1	ENGINE AR-COMPLETE	113

Y - SEPARATE ILLUSTRATION

<END>

296-4676 ENGINE AR

S/N: GDC1-UP

PART OF 296-4675, 296-4678, 324-4004 ENGINE AR-COMPLETE

AN ATTACHMENT

SMCS-1000 **i03776358**

NOTE	PART NUMBER	QTY	PART NAME 1 2 3 4 5 6 (PRODUCT LEVEL)	SEE PAGE
Y	*296-4654*	1	ADAPTER GP-REMOTE OIL FILTER	177
Y	*296-4638*	1	BREATHER GP (CRANKCASE)	179
Y	*305-4744*	1	CAMSHAFT GP	122
Y	*296-4664*	1	CONTROL & MTG GP-ENGINE ELEK	449
Y	*296-4642*	1	COOLER GP-ENGINE OIL	190
Y	*296-4647*	1	COVER GP-VALVE MECHANISM	123
Y	*296-4650*	1	CRANKSHAFT GP	125
Y	*296-4648*	1	CYLINDER BLOCK GP	129
Y	*296-4645*	1	CYLINDER HEAD GP	131
Y	*305-4745*	1	FILTER GP-FUEL	290
Y	*296-4644*	1	FLYWHEEL GP	132
Y	*296-4651*	1	GEAR GP-FRONT	133
Y	*296-4643*	1	HOUSING GP-FLYWHEEL	134
Y	*296-4649*	1	HOUSING GP-FRONT	135
YR	**295-9130**	1	INJECTOR GP-FUEL	297
			S/N: GDC1-1846	
Y	*310-9607*	1	INJECTOR GP-FUEL	299
			S/N: GDC1847-UP	
Y	*296-4641*	1	LINES GP-ENGINE OIL	186
Y	*296-4656*	1	LINES GP-FUEL	305
Y	*296-4636*	1	LINES GP-TURBOCHARGER OIL	189
Y	*296-4658*	1	HOUSING & REGULATOR GP	203
Y	*296-4653*	1	MANIFOLD GP-EXHAUST	273
Y	*296-4652*	1	MANIFOLD GP-INLET	275
			—OR—	
Y	*324-4194*	1	MANIFOLD GP-INLET	277
Y	*296-4661*	1	MOUNTING GP-ALTERNATOR	138
Y	*305-4678*	1	MOUNTING GP-PUMP	333
			S/N: GDC1847-UP	
Y	*296-4637*	1	MOUNTING GP-STARTING MOTOR	141
Y	*296-4662*	1	MUFFLER GP	280
			S/N: GDC1-7001	
Y	*324-4173*	1	MUFFLER GP	284
			S/N: GDC7002-UP	
Y	*296-4640*	1	PAN GP-OIL	142
Y	*296-4659*	1	PISTON & ROD GP	146
Y	*296-4655*	1	PUMP GP-WATER	204
Y	*296-4666*	1	SENSOR GP-ENGINE	527
Y	*310-9617*	1	TURBOCHARGER GP	288
Y	*305-4910*	1	VALVE MECHANISM GP	175
Y	*296-4665*	1	WIRING GP-ELECTRONIC CONTROL	615
	299-1425	1	ELECTRONICS GP-ENGINE RATINGS	

R - REMFG PART MAY BE AVAILABLE
Y - SEPARATE ILLUSTRATION

<END>

ENGINE ARRANGEMENT

296-4687 ENGINE AR

S/N: GDC1-UP

PART OF 324-4003 ENGINE AR-COMPLETE

AN ATTACHMENT

SMCS-1000 **i03671321**

NOTE	PART NUMBER	QTY	PART NAME 1 2 3 4 5 6 (PRODUCT LEVEL)	SEE PAGE
Y	*296-4654*	1	ADAPTER GP-REMOTE OIL FILTER	177
Y	*296-4638*	1	BREATHER GP (CRANKCASE)	179
Y	*305-4744*	1	CAMSHAFT GP	122
Y	*296-4664*	1	CONTROL & MTG GP-ENGINE ELEK	449
Y	*296-4642*	1	COOLER GP-ENGINE OIL	190
Y	*296-4647*	1	COVER GP-VALVE MECHANISM	123
Y	*296-4650*	1	CRANKSHAFT GP	125
Y	*296-4648*	1	CYLINDER BLOCK GP	129
Y	*296-4645*	1	CYLINDER HEAD GP	131
Y	*305-4745*	1	FILTER GP-FUEL	290
Y	*296-4644*	1	FLYWHEEL GP	132
Y	*296-4651*	1	GEAR GP-FRONT	133
Y	*296-4658*	1	HOUSING & REGULATOR GP	203
Y	*296-4643*	1	HOUSING GP-FLYWHEEL	134
Y	*296-4649*	1	HOUSING GP-FRONT	135
Y	*310-9607*	1	INJECTOR GP-FUEL	299
Y	*296-4641*	1	LINES GP-ENGINE OIL	186
Y	*296-4656*	1	LINES GP-FUEL	305
Y	*296-4636*	1	LINES GP-TURBOCHARGER OIL	189
Y	*296-4653*	1	MANIFOLD GP-EXHAUST	273
Y	*296-4652*	1	MANIFOLD GP-INLET	275
Y	*296-4661*	1	MOUNTING GP-ALTERNATOR	138
Y	*305-4678*	1	MOUNTING GP-PUMP	333
Y	*296-4637*	1	MOUNTING GP-STARTING MOTOR	141
Y	*324-4173*	1	MUFFLER GP	284
Y	*296-4640*	1	PAN GP-OIL	142
Y	*296-4659*	1	PISTON & ROD GP	146
Y	*296-4655*	1	PUMP GP-WATER	204
Y	*296-4666*	1	SENSOR GP-ENGINE	527
Y	*310-9617*	1	TURBOCHARGER GP	288
Y	*305-4910*	1	VALVE MECHANISM GP	175
Y	*296-4665*	1	WIRING GP-ELECTRONIC CONTROL	615
	299-1425	1	ELECTRONICS GP-ENGINE RATINGS	

Y - SEPARATE ILLUSTRATION

<END>

305-4763 ENGINE AR

S/N: KGF1-UP

PART OF 290-1892 SPECIAL AR

AN ATTACHMENT

SMCS-1000 **i03675742**

NOTE	PART NUMBER	QTY	PART NAME 1 2 3 4 5 6 (PRODUCT LEVEL)	SEE PAGE
Y	**305-4776**	1	ENGINE AR-COMPLETE	115
			—OR—	
Y	**324-3972**	1	ENGINE AR-COMPLETE	116
Y	*230-2979*	1	FAN GP-SUCTION	195

Y - SEPARATE ILLUSTRATION

<END>

ENGINE ARRANGEMENT

305-4777 ENGINE AR

S/N: GDC1-UP

PART OF 305-4776, 324-3972 ENGINE AR-COMPLETE

AN ATTACHMENT

SMCS-1000 **i03648825**

NOTE	PART NUMBER	QTY	PART NAME 1 2 3 4 5 6 (PRODUCT LEVEL)	SEE PAGE
Y	*296-4654*	1	ADAPTER GP-REMOTE OIL FILTER	177
YR	**212-8561**	1	ALTERNATOR GP-CHARGING	401
			S/N: GDC1-7001	
Y	*296-4638*	1	BREATHER GP (CRANKCASE)	179
Y	*305-4744*	1	CAMSHAFT GP	122
Y	*296-4664*	1	CONTROL & MTG GP-ENGINE ELEK	449
Y	*296-4642*	1	COOLER GP-ENGINE OIL	190
Y	*296-4647*	1	COVER GP-VALVE MECHANISM	123
Y	*296-4650*	1	CRANKSHAFT GP	125
Y	*296-4648*	1	CYLINDER BLOCK GP	129
Y	*296-4645*	1	CYLINDER HEAD GP	131
Y	*305-4745*	1	FILTER GP-FUEL	290
Y	*296-4644*	1	FLYWHEEL GP	132
Y	*296-4651*	1	GEAR GP-FRONT	133
Y	*296-4643*	1	HOUSING GP-FLYWHEEL	134
Y	*296-4649*	1	HOUSING GP-FRONT	135
Y	*310-9607*	1	INJECTOR GP-FUEL	299
			S/N: GDC1847-UP	
Y	*296-4641*	1	LINES GP-ENGINE OIL	186
Y	*296-4656*	1	LINES GP-FUEL	305
Y	*296-4636*	1	LINES GP-TURBOCHARGER OIL	189
Y	*296-4658*	1	HOUSING & REGULATOR GP	203
Y	*296-4653*	1	MANIFOLD GP-EXHAUST	273
Y	*296-4652*	1	MANIFOLD GP-INLET	275
			—OR—	
Y	*324-4194*	1	MANIFOLD GP-INLET	277
Y	*296-4661*	1	MOUNTING GP-ALTERNATOR	138
Y	*305-4678*	1	MOUNTING GP-PUMP	333
			S/N: GDC1847-UP	
Y	*296-4637*	1	MOUNTING GP-STARTING MOTOR	141
Y	*296-4662*	1	MUFFLER GP	280
			S/N: GDC1-7001	
Y	*324-4173*	1	MUFFLER GP	284
			S/N: GDC7002-UP	
Y	*296-4640*	1	PAN GP-OIL	142
Y	*296-4659*	1	PISTON & ROD GP	146
Y	*296-4655*	1	PUMP GP-WATER	204
Y	*296-4666*	1	SENSOR GP-ENGINE	527
YR	**272-4774**	1	STARTING MOTOR GP-ELECTRIC	533
			S/N: GDC1-7001	
Y	**287-0049**	1	TURBOCHARGER GP	286
			S/N: GDC1-7001	
Y	*310-9617*	1	TURBOCHARGER GP	288
			S/N: GDC7002-UP	
Y	*305-4910*	1	VALVE MECHANISM GP	175
Y	*296-4665*	1	WIRING GP-ELECTRONIC CONTROL	615
YR	**295-9130**	6	INJECTOR GP-FUEL	297
			S/N: GDC1-1846	
	311-0027	1	ELECTRONICS GP-ENGINE RATINGS	

R - REMFG PART MAY BE AVAILABLE
Y - SEPARATE ILLUSTRATION

<END>

ENGINE ARRANGEMENT

327-7195 ENGINE AR

S/N: KGF1-UP; FAL1-UP
PART OF 354-1057 COOLING AR-HIGH AMBIENT TEMP
AN ATTACHMENT

SMCS-1000 **i03898059**

NOTE	PART NUMBER	QTY	PART NAME 1 2 3 4 5 6 (PRODUCT LEVEL)	SEE PAGE
Y	*327-7199*	1	ENGINE AR-PRIMARY	119
Y	*324-4200*	1	PULLEY GP-ENGINE	163

Y - SEPARATE ILLUSTRATION

<END>

327-7267 ENGINE AR

S/N: KGF1-UP; FAL1-UP
PART OF 354-1057 COOLING AR-HIGH AMBIENT TEMP
AN ATTACHMENT

SMCS-1000 **i04671971**

NOTE	PART NUMBER	QTY	PART NAME 1 2 3 4 5 6 (PRODUCT LEVEL)	SEE PAGE
Y	*327-7199*	1	ENGINE AR-PRIMARY	119
Y	*297-7747*	1	PULLEY GP-ENGINE	153

Y - SEPARATE ILLUSTRATION

<END>

327-7268 ENGINE AR

S/N: KGF6245-UP; FAL6776-UP
PART OF 354-1056 COOLING AR-HIGH AMBIENT TEMP
AN ATTACHMENT

SMCS-1000 **i04553716**

NOTE	PART NUMBER	QTY	PART NAME 1 2 3 4 5 6 (PRODUCT LEVEL)	SEE PAGE
Y	*327-7199*	1	ENGINE AR-PRIMARY	119
Y	*327-7270*	1	PULLEY GP-ENGINE	165

Y - SEPARATE ILLUSTRATION

<END>

272-4676 ENGINE AR-COMPLETE

S/N: KGF1-UP
PART OF 272-4675 ENGINE AR
AN ATTACHMENT

SMCS-1000 **i03937631**

NOTE	PART NUMBER	QTY	PART NAME 1 2 3 4 5 6 (PRODUCT LEVEL)	SEE PAGE
Y	*272-4677*	1	ENGINE AR	106
Y	*296-4667*	1	PULLEY GP-ENGINE	151
	1R-0739	1	FILTER AS-ENGINE OIL (STANDARD EFFICIENCY)	

Y - SEPARATE ILLUSTRATION

<END>

272-4681 ENGINE AR-COMPLETE

S/N: KGF1-UP; FAL1-UP
PART OF 264-8626, 264-8627 GENERAL AR

SMCS-1000 **i03287300**

NOTE	PART NUMBER	QTY	PART NAME 1 2 3 4 5 6 (PRODUCT LEVEL)	SEE PAGE
Y	**272-4682**	1	ENGINE AR-COMPLETE	113
			—OR—	
Y	**324-3965**	1	ENGINE AR-COMPLETE	115
Y	*245-9313*	1	FAN GP-SUCTION	199

Y - SEPARATE ILLUSTRATION

<END>

272-4682 ENGINE AR-COMPLETE

S/N: KGF1-UP; FAL1-UP
PART OF 272-4681 ENGINE AR-COMPLETE

SMCS-1000 **i03851655**

NOTE	PART NUMBER	QTY	PART NAME 1 2 3 4 5 6 (PRODUCT LEVEL)	SEE PAGE
Y	*272-4683*	1	ENGINE AR	107
Y	*297-7747*	1	PULLEY GP-ENGINE	153

Y - SEPARATE ILLUSTRATION

<END>

272-4685 ENGINE AR-COMPLETE

S/N: KGF1-UP; FAL1-UP
PART OF 298-4256 COOLING AR-HIGH AMBIENT TEMP, 272-4684 ENGINE AR AN ATTACHMENT

SMCS-1000 **i02762396**

NOTE	PART NUMBER	QTY	PART NAME 1 2 3 4 5 6 (PRODUCT LEVEL)	SEE PAGE
Y	*272-4683*	1	ENGINE AR	107
Y	*297-7748*	1	PULLEY GP	157

Y - SEPARATE ILLUSTRATION

<END>

272-4687 ENGINE AR-COMPLETE

S/N: KGF1-UP; FAL1-UP
PART OF 264-8651 COOLING AR-HIGH AMBIENT TEMP AN ATTACHMENT

SMCS-1000 **i02585774**

NOTE	PART NUMBER	QTY	PART NAME 1 2 3 4 5 6 (PRODUCT LEVEL)	SEE PAGE
Y	*272-4683*	1	ENGINE AR	107
Y	*266-6317*	1	PULLEY GP-ENGINE	148

Y - SEPARATE ILLUSTRATION

<END>

ENGINE ARRANGEMENT

290-1909 ENGINE AR-COMPLETE

S/N: KGF1-UP; FAL1-UP

AN ATTACHMENT

SMCS-1000 **i02814467**

NOTE	PART NUMBER	QTY	PART NAME 1 2 3 4 5 6 (PRODUCT LEVEL)	SEE PAGE
Y	*270-5514*	1	ELECTRONICS GP-MACHINE (HIGH POWER)	457
Y	*296-4675*	1	ENGINE AR-COMPLETE	114

Y - SEPARATE ILLUSTRATION

<END>

296-4675 ENGINE AR-COMPLETE

S/N: KGF1-UP; FAL1-UP

PART OF 290-1909 ENGINE AR-COMPLETE

AN ATTACHMENT

SMCS-1000 **i02814482**

NOTE	PART NUMBER	QTY	PART NAME 1 2 3 4 5 6 (PRODUCT LEVEL)	SEE PAGE
Y	*296-4676*	1	ENGINE AR	109
Y	*297-7747*	1	PULLEY GP-ENGINE	153

Y - SEPARATE ILLUSTRATION

<END>

296-4678 ENGINE AR-COMPLETE

S/N: KGF1-UP; FAL1-UP

PART OF 290-1910 MACHINE AR

AN ATTACHMENT

SMCS-1000 **i02814524**

NOTE	PART NUMBER	QTY	PART NAME 1 2 3 4 5 6 (PRODUCT LEVEL)	SEE PAGE
Y	*296-4676*	1	ENGINE AR	109
Y	*266-6317*	1	PULLEY GP-ENGINE	148

Y - SEPARATE ILLUSTRATION

<END>

296-4680 ENGINE AR-COMPLETE

S/N: KGF1-UP; FAL1-UP

PART OF 290-1911 COOLING AR-HIGH AMBIENT TEMP

AN ATTACHMENT

SMCS-1000 **i02656425**

NOTE	PART NUMBER	QTY	PART NAME 1 2 3 4 5 6 (PRODUCT LEVEL)	SEE PAGE
Y	*272-4683*	1	ENGINE AR	107
Y	*296-4667*	1	PULLEY GP-ENGINE	151

Y - SEPARATE ILLUSTRATION

<END>

ENGINE ARRANGEMENT

305-4776 ENGINE AR-COMPLETE

S/N: KGF1-UP
PART OF 305-4763 ENGINE AR
AN ATTACHMENT

SMCS-1000 **i02890158**

NOTE	PART NUMBER	QTY	PART NAME 1 2 3 4 5 6 (PRODUCT LEVEL)	SEE PAGE
Y	*305-4777*	1	ENGINE AR	111
Y	*296-4667*	1	PULLEY GP-ENGINE	151

Y - SEPARATE ILLUSTRATION

<END>

310-9484 ENGINE AR-COMPLETE

S/N: KGF1-UP; FAL1-UP
PART OF 298-4271 COOLING AR-HIGH AMBIENT TEMP
AN ATTACHMENT

SMCS-1000 **i02762629**

NOTE	PART NUMBER	QTY	PART NAME 1 2 3 4 5 6 (PRODUCT LEVEL)	SEE PAGE
Y	*272-4683*	1	ENGINE AR	107
Y	*296-4667*	1	PULLEY GP-ENGINE	151

Y - SEPARATE ILLUSTRATION

<END>

310-9485 ENGINE AR-COMPLETE

S/N: KGF1-UP; FAL1-UP
PART OF 298-4272 COOLING AR-HIGH AMBIENT TEMP
AN ATTACHMENT

SMCS-1000 **i02784736**

NOTE	PART NUMBER	QTY	PART NAME 1 2 3 4 5 6 (PRODUCT LEVEL)	SEE PAGE
Y	*272-4683*	1	ENGINE AR	107
Y	*296-4667*	1	PULLEY GP-ENGINE	151

Y - SEPARATE ILLUSTRATION

<END>

324-3965 ENGINE AR-COMPLETE

S/N: KGF1-UP; FAL1-UP
PART OF 272-4681 ENGINE AR-COMPLETE

SMCS-1000 **i03168989**

NOTE	PART NUMBER	QTY	PART NAME 1 2 3 4 5 6 (PRODUCT LEVEL)	SEE PAGE
Y	*272-4683*	1	ENGINE AR	107
Y	*297-7747*	1	PULLEY GP-ENGINE	153

Y - SEPARATE ILLUSTRATION

<END>

324-3969 ENGINE AR-COMPLETE

S/N: KGF1-UP; FAL1-UP
PART OF 298-4271 COOLING AR-HIGH AMBIENT TEMP
AN ATTACHMENT

SMCS-1000 **i03741421**

NOTE	PART NUMBER	QTY	PART NAME 1 2 3 4 5 6 (PRODUCT LEVEL)	SEE PAGE
Y	*272-4683*	1	ENGINE AR	107
Y	*324-4200*	1	PULLEY GP-ENGINE	163

Y - SEPARATE ILLUSTRATION

<END>

324-3971 ENGINE AR-COMPLETE

S/N: KGF1-UP; FAL1-UP
PART OF 290-1911 COOLING AR-HIGH AMBIENT TEMP
AN ATTACHMENT

SMCS-1000 **i04004703**

NOTE	PART NUMBER	QTY	PART NAME 1 2 3 4 5 6 (PRODUCT LEVEL)	SEE PAGE
Y	*272-4683*	1	ENGINE AR	107
Y	*296-4667*	1	PULLEY GP-ENGINE	151
			—OR—	
Y	*324-4200*	1	PULLEY GP-ENGINE	163

Y - SEPARATE ILLUSTRATION

<END>

324-3972 ENGINE AR-COMPLETE

S/N: KGF1-UP
PART OF 305-4763 ENGINE AR
AN ATTACHMENT

SMCS-1000 **i04630252**

NOTE	PART NUMBER	QTY	PART NAME 1 2 3 4 5 6 (PRODUCT LEVEL)	SEE PAGE
Y	*305-4777*	1	ENGINE AR	111
Y	*324-4200*	1	PULLEY GP-ENGINE	163

Y - SEPARATE ILLUSTRATION

<END>

324-3975 ENGINE AR-COMPLETE

S/N: KGF1-UP; FAL1-UP
PART OF 298-4272 COOLING AR-HIGH AMBIENT TEMP
AN ATTACHMENT

SMCS-1000 **i04630160**

NOTE	PART NUMBER	QTY	PART NAME 1 2 3 4 5 6 (PRODUCT LEVEL)	SEE PAGE
Y	*272-4683*	1	ENGINE AR	107
Y	*296-4667*	1	PULLEY GP-ENGINE	151
			—OR—	
Y	*324-4200*	1	PULLEY GP-ENGINE	163

Y - SEPARATE ILLUSTRATION

<END>

324-4003 ENGINE AR-COMPLETE

S/N: KGF1-UP
PART OF 359-2423 COOLING AR-HIGH AMBIENT TEMP
AN ATTACHMENT

SMCS-1000 **i04094010**

NOTE	PART NUMBER	QTY	PART NAME 1 2 3 4 5 6 (PRODUCT LEVEL)	SEE PAGE
Y	*296-4687*	1	ENGINE AR	110
Y	*296-4667*	1	PULLEY GP-ENGINE	151
			—OR—	
Y	*324-4200*	1	PULLEY GP-ENGINE	163

Y - SEPARATE ILLUSTRATION

<END>

324-4004 ENGINE AR-COMPLETE

S/N: KGF1-UP
PART OF 359-2423 COOLING AR-HIGH AMBIENT TEMP
AN ATTACHMENT

SMCS-1000 **i04629538**

NOTE	PART NUMBER	QTY	PART NAME 1 2 3 4 5 6 (PRODUCT LEVEL)	SEE PAGE
Y	*296-4676*	1	ENGINE AR	109
Y	*324-4200*	1	PULLEY GP-ENGINE	163

Y - SEPARATE ILLUSTRATION

<END>

327-7198 ENGINE AR-COMPLETE

S/N: KGF1-6244; FAL1-6775
PART OF 354-1056 COOLING AR-HIGH AMBIENT TEMP
AN ATTACHMENT

SMCS-1000 **i03897381**

NOTE	PART NUMBER	QTY	PART NAME 1 2 3 4 5 6 (PRODUCT LEVEL)	SEE PAGE
Y	*327-7199*	1	ENGINE AR-PRIMARY	119
Y	*324-4200*	1	PULLEY GP-ENGINE	163

Y - SEPARATE ILLUSTRATION

<END>

327-7289 ENGINE AR-COMPLETE

S/N: KGF1-UP; FAL1-UP
PART OF 290-1911 COOLING AR-HIGH AMBIENT TEMP
AN ATTACHMENT

SMCS-1000 **i04880878**

NOTE	PART NUMBER	QTY	PART NAME 1 2 3 4 5 6 (PRODUCT LEVEL)	SEE PAGE
Y	*272-4683*	1	ENGINE AR	107
Y	*327-7270*	1	PULLEY GP-ENGINE	165

Y - SEPARATE ILLUSTRATION

<END>

ENGINE ARRANGEMENT

327-7290 ENGINE AR-COMPLETE

S/N: KGF1-UP; FAL1-UP
PART OF 298-4272 COOLING AR-HIGH AMBIENT TEMP
AN ATTACHMENT

SMCS-1000 **i04788605**

NOTE	PART NUMBER	QTY	PART NAME 1 2 3 4 5 6 (PRODUCT LEVEL)	SEE PAGE
Y	*272-4683*	1	ENGINE AR	107
Y	*327-7270*	1	PULLEY GP-ENGINE	165

Y - SEPARATE ILLUSTRATION

<END>

327-7199 ENGINE AR-PRIMARY

S/N: GDC1-UP

PART OF 327-7195, 327-7267, 327-7268 ENGINE AR, 327-7198 ENGINE AR-COMPLETE AN ATTACHMENT

SMCS-1000 **i03950350**

NOTE	PART NUMBER	QTY	PART NAME 1 2 3 4 5 6 (PRODUCT LEVEL)	SEE PAGE
Y	*296-4654*	1	ADAPTER GP-REMOTE OIL FILTER	177
Y	*296-4638*	1	BREATHER GP (CRANKCASE)	179
Y	*305-4744*	1	CAMSHAFT GP	122
Y	*296-4664*	1	CONTROL & MTG GP-ENGINE ELEK	449
Y	*296-4642*	1	COOLER GP-ENGINE OIL	190
Y	*296-4647*	1	COVER GP-VALVE MECHANISM	123
Y	*296-4650*	1	CRANKSHAFT GP	125
Y	*296-4648*	1	CYLINDER BLOCK GP	129
Y	*296-4645*	1	CYLINDER HEAD GP	131
Y	*305-4745*	1	FILTER GP-FUEL	290
			—OR—	
Y	*327-7227*	1	FILTER GP-FUEL	293
Y	*296-4644*	1	FLYWHEEL GP	132
Y	*296-4651*	1	GEAR GP-FRONT	133
Y	*296-4658*	1	HOUSING & REGULATOR GP	203
Y	*296-4643*	1	HOUSING GP-FLYWHEEL	134
Y	*296-4649*	1	HOUSING GP-FRONT	135
Y	*310-9607*	1	INJECTOR GP-FUEL	299
Y	*296-4641*	1	LINES GP-ENGINE OIL	186
Y	*296-4656*	1	LINES GP-FUEL	305
Y	*296-4636*	1	LINES GP-TURBOCHARGER OIL	189
Y	*296-4653*	1	MANIFOLD GP-EXHAUST	273
Y	*324-4194*	1	MANIFOLD GP-INLET	277
			—OR—	
Y	*327-7249*	1	MANIFOLD GP-INLET	278
Y	*296-4661*	1	MOUNTING GP-ALTERNATOR	138
Y	*305-4678*	1	MOUNTING GP-PUMP	333
Y	*296-4637*	1	MOUNTING GP-STARTING MOTOR	141
Y	*324-4173*	1	MUFFLER GP	284
Y	*296-4640*	1	PAN GP-OIL (ENGINE)	142
			—OR—	
Y	*327-7228*	1	PAN GP-OIL	144
Y	*296-4659*	1	PISTON & ROD GP	146
Y	*296-4655*	1	PUMP GP-WATER	204
Y	*296-4666*	1	SENSOR GP-ENGINE	527
Y	*310-9617*	1	TURBOCHARGER GP	288
Y	*305-4910*	1	VALVE MECHANISM GP	175
Y	*296-4665*	1	WIRING GP-ELECTRONIC CONTROL	615
	299-1419	1	ELECTRONICS GP-ENGINE RATINGS	
			AVAILABLE GASKET KIT(S):	
	310-9545	1	KIT-GASKET	
	310-9552	1	KIT-SEAL	

Y - SEPARATE ILLUSTRATION

<END>

ENGINE ARRANGEMENT

272-4742 INSTALLATION AR-ENGINE

S/N: KGF1-UP; FAL1-UP

PART OF 264-8626, 264-8627 GENERAL AR

SMCS-1000 **i05221860**

NOTE	PART NUMBER	QTY	PART NAME 1 2 3 4 5 6 (PRODUCT LEVEL)	SEE PAGE
Y	*109-9313*	1	AIR CLEANER & MOUNTING GP	253
Y	*239-6507*	1	COMPRESSOR GP-REFRIGERANT	2014
Y	*259-7184*	1	CONDENSER & MTG GP-REFRIGERANT	2020
Y	*255-3044*	1	EXTENSION GP-EXHAUST	267
			S/N: FAL1-709 ; KGF1-1005	
Y	*279-7911*	1	FILTER & MTG GP-ENGINE OIL	180
Y	*272-4744*	1	LINES GP-AIR (AIR CLEANER TO TURBOCHARGER)	271
Y	*265-3504*	1	LINES GP-AIR	268
Y	*162-6185*	1	LINES GP-ENGINE OIL DRAIN	187
			S/N: FAL1-709 ; KGF1-1005	
Y	*310-9582*	1	LINES GP-ENGINE OIL DRAIN	188
			S/N: FAL710-UP ; KGF1006-UP	
Y	*287-0183*	1	LINES GP-MUFFLER DRAIN	272
			S/N: FAL1-10145 ; KGF1-9348	
Y	*379-4387*	1	DRAIN GP-MUFFLER (PLUG)	266
			S/N: FAL10146-UP ; KGF9349-UP	
Y	*266-6297*	1	MOUNTING GP-ENGINE	139
Y	*297-7671*	1	MOUNTING GP-FUEL FILTER	329
Y	*265-3616*	1	RADIATOR & HYD OIL COOLER GP	222

Y - SEPARATE ILLUSTRATION

<END>

305-4743 CAMSHAFT GP

S/N: GDC1847-7001
PART OF 305-4777 ENGINE AR
AN ATTACHMENT

SMCS-1210 **i02739643**

NOTE	REF NO	GRAPHIC REF	PART NUMBER	QTY	PART NAME 1 2 3 4 5 6 (PRODUCT LEVEL)	SEE PAGE
	1	1	**305-4748**	1	CAMSHAFT	
	2	1	**279-7859**	12	TAPPET	
	3	1	**294-1716**	12	PUSHROD	
	4	1	**094-4628**	1	KEY	
	5	1	**5I-7650**	1	PLATE	
M	6	1	**6V-5215**	2	BOLT (M8X1.25X16-MM)	

M - METRIC PART

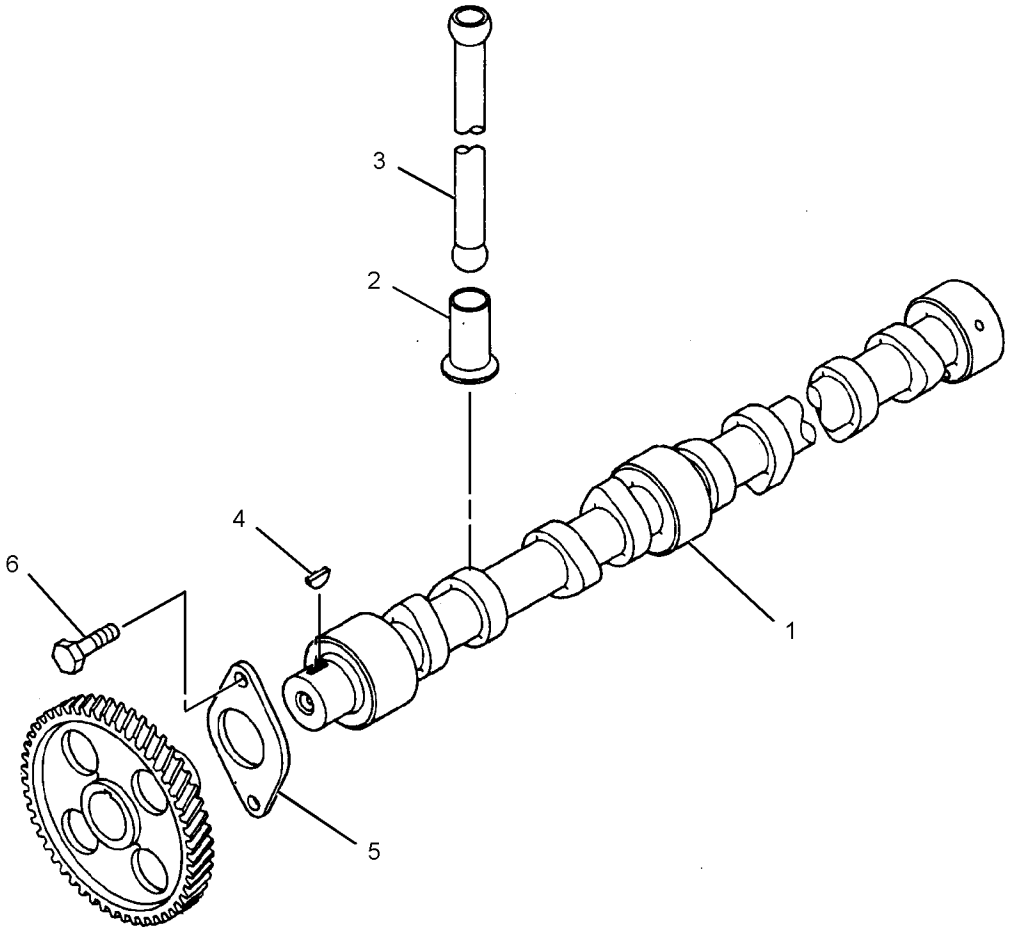

GRAPHIC #1 **<END>** g01316640

305-4744 CAMSHAFT GP

S/N: GDC1-UP

PART OF 272-4677, 272-4683, 296-4676, 296-4687, 305-4777 ENGINE AR, 327-7199 ENGINE AR-PRIMARY

ALSO AN ATTACHMENT

SMCS-1210 **i03461838**

NOTE	REF NO	GRAPHIC REF	PART NUMBER	QTY	PART NAME 1 2 3 4 5 6 (PRODUCT LEVEL)	SEE PAGE
	1	1	**305-4756**	1	CAMSHAFT	
	2	1	**324-4060**	12	TAPPET	
	3	1	**294-1716**	12	PUSHROD	
	4	1	**094-4628**	1	KEY	
	5	1	**5I-7650**	1	PLATE	
M	6	1	**6V-5215**	2	BOLT (M8X1.25X16-MM)	

M - METRIC PART

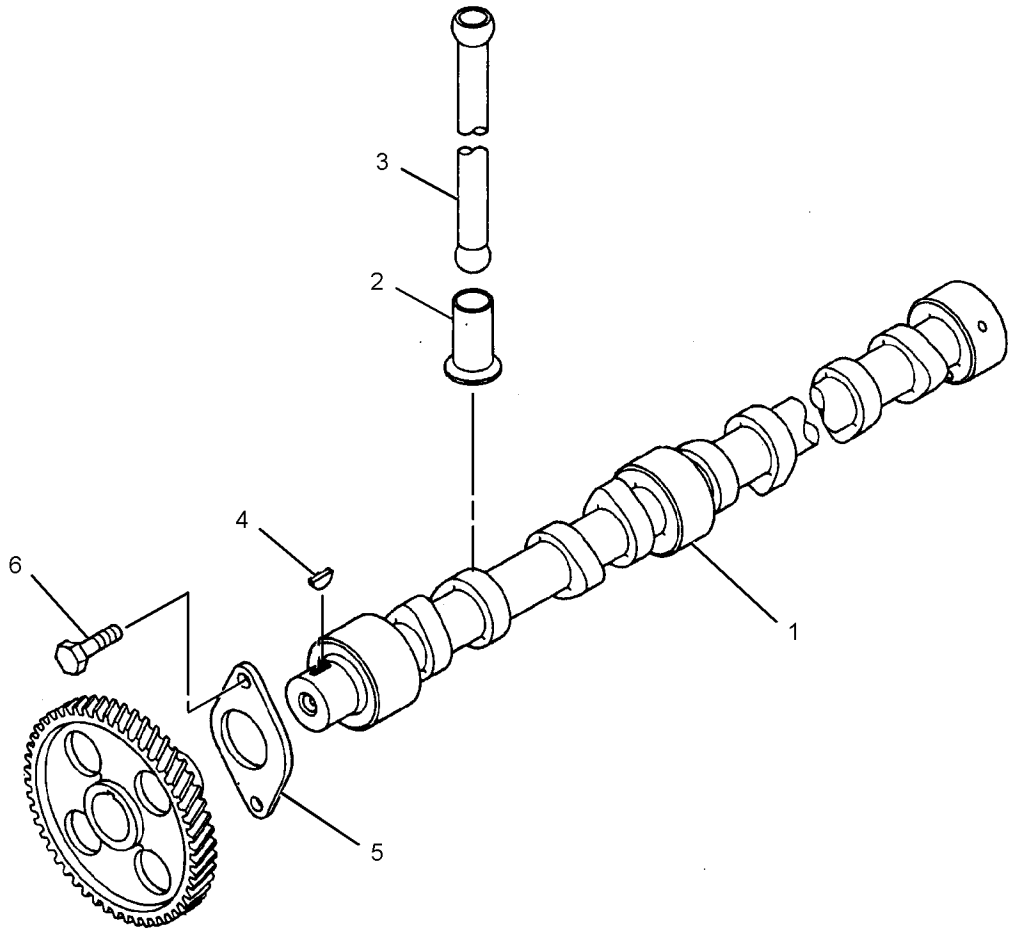

GRAPHIC #1 **<END>** g01316640

296-4647 COVER GP-VALVE MECHANISM

S/N: GDC1-UP

PART OF 272-4677, 272-4683, 296-4676, 296-4687, 305-4777 ENGINE AR, 327-7199 ENGINE AR-PRIMARY

ALSO AN ATTACHMENT

SMCS-1107 **i03753700**

NOTE	REF NO	GRAPHIC REF	PART NUMBER	QTY	PART NAME 1 2 3 4 5 6 (PRODUCT LEVEL)	SEE PAGE
	1	1	**294-1703**	1	COVER-ROCKER	
	2	1	**324-4220**	1	COVER-ROCKER	
	3	1	**294-1705**	1	GASKET (VALVE COVER BASE)	
	4	1	**294-1706**	1	GASKET (VALVE COVER)	
	5	1	**324-4221**	1	COVER	
	6	1	**294-1708**	1	CAP (ENGINE OIL FILLER)	
	7	1	**294-1709**	1	BRACKET	
	8	1	**294-1710**	8	BOLT (M6X1X16.2-MM)	
	9	1	**294-1711**	16	WASHER	
	10	1	**096-8569**	2	BOLT (140-MM LG)	
	11	1	**294-1712**	1	SEAL	
	12	1	**8T-4224**	9	WASHER-HARD (8.8X16X2-MM THK)	
	13	1	**294-1713**	16	BOLT (M8X1.25X38.3-MM)	
	14	1	**294-1700**	16	BOLT (M8X1.25X108.3-MM)	
	15	1	**095-8799**	7	BOLT (M8X1.25X30.5-MM)	
	16	1	**294-1714**	2	STUD	
	17	1	**294-1821**	2	BOLT (M8X1.25X35.5-MM)	

296-4647 **COVER GP-VALVE MECHANISM (*contd.*)** **i03753700**

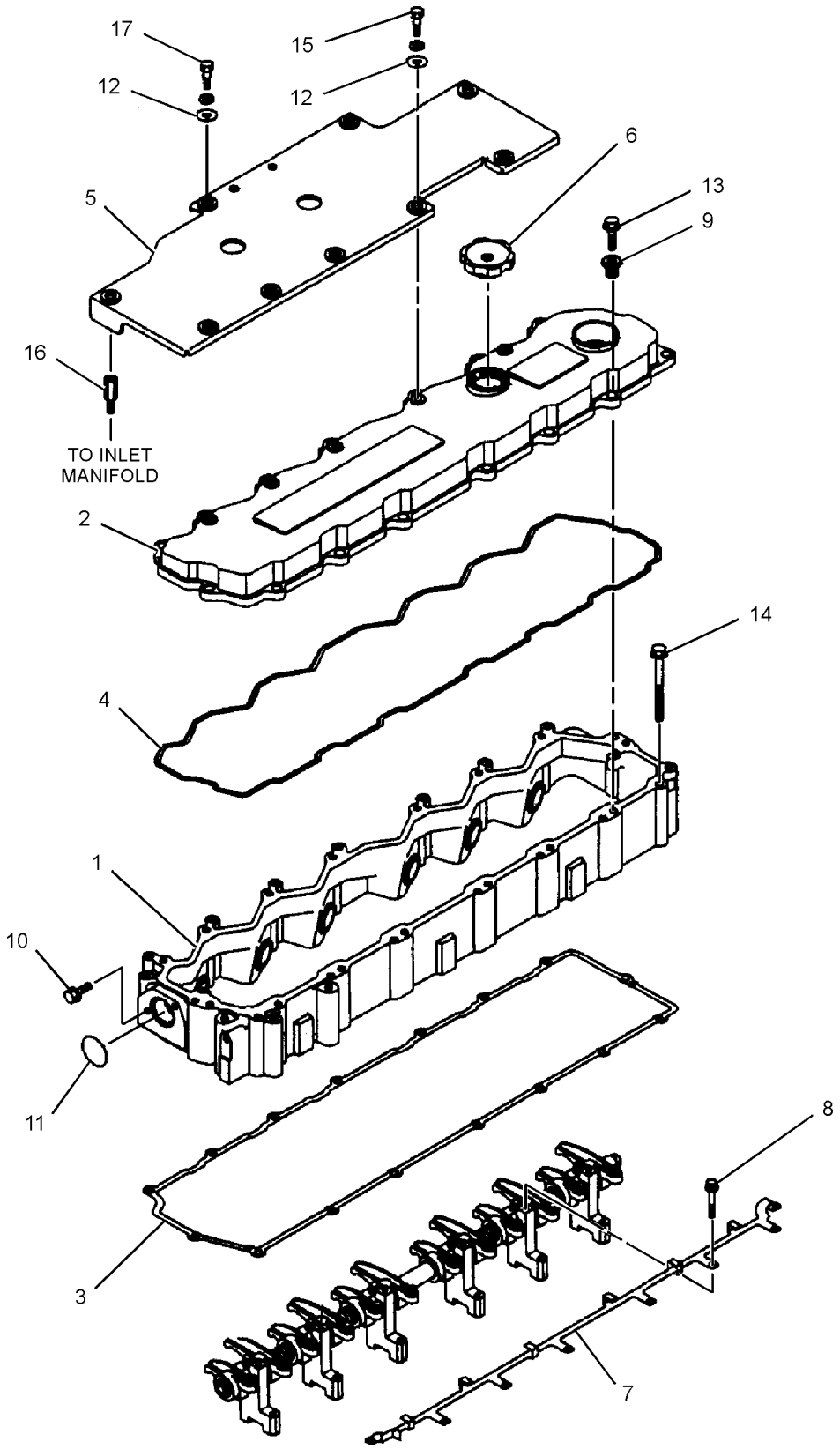

GRAPHIC #1 **<END>** g01356344

296-4650 CRANKSHAFT GP

S/N: GDC1-UP

PART OF 272-4677, 272-4683, 296-4676, 296-4687, 305-4777 ENGINE AR, 327-7199 ENGINE AR-PRIMARY

ALSO AN ATTACHMENT

SMCS-1202 **i02836317**

NOTE	REF NO	GRAPHIC REF	PART NUMBER	QTY	PART NAME 1 2 3 4 5 6 (PRODUCT LEVEL)	SEE PAGE
	1	1	**294-1749**	1	CRANKSHAFT AS	
	1A	1	**085-9513**	2	PIN	
	1B	1	**094-4628**	2	KEY (CRANKSHAFT)	
	1C	1	**130-7596**	1	NUT	
	1D	1	**294-1751**	1	GEAR (31-TEETH)	
	2	1	**233-1277**	1	PLATE	

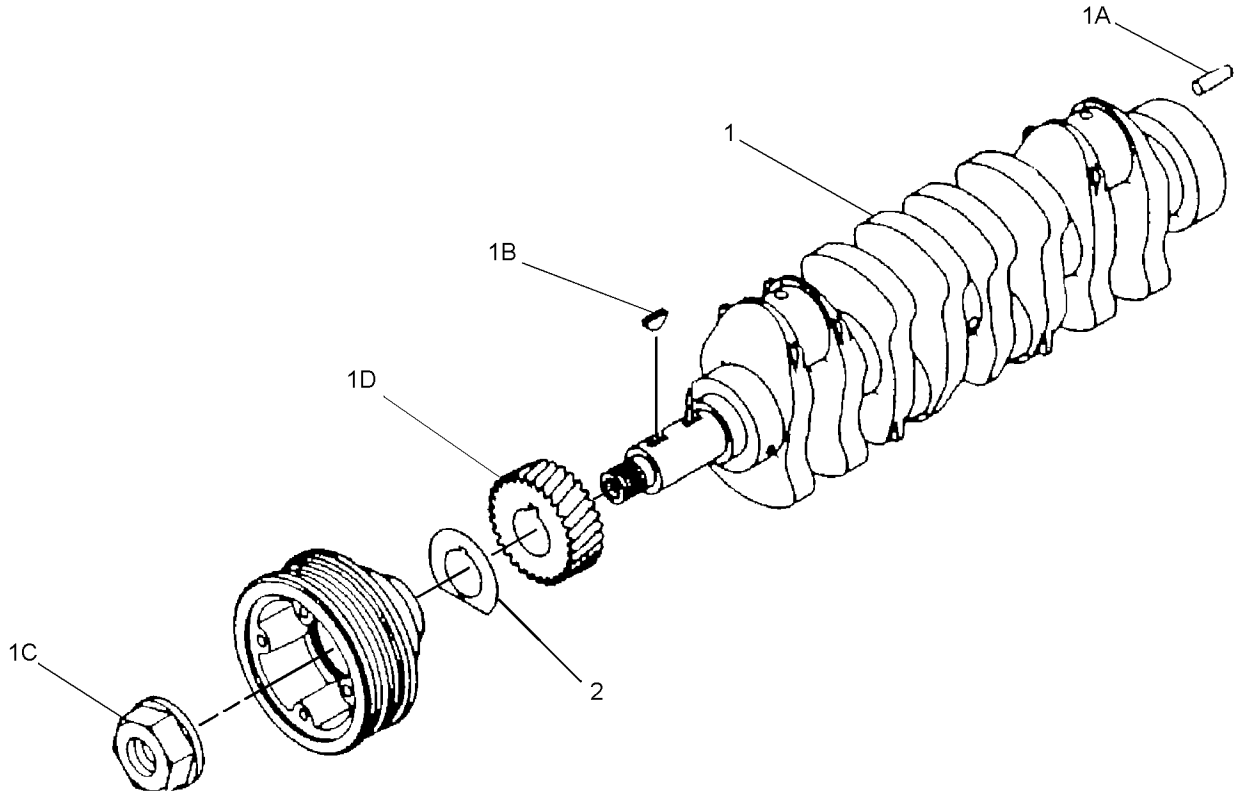

GRAPHIC #1 **<END>** g01340092

294-1725 CYLINDER BLOCK GP

S/N: GDC1-UP

PART OF 296-4648 CYLINDER BLOCK GP

ALSO AN ATTACHMENT

SMCS-1201 **i04232914**

NOTE	REF NO	GRAPHIC REF	PART NUMBER	QTY	PART NAME 1 2 3 4 5 6 (PRODUCT LEVEL)	SEE PAGE
	1	2	**5I-7505**	12	PLUG	
	2	1	**5I-7523**	6	SLEEVE	
	3	2	**094-9424**	12	GASKET	
	4	2	**139-7814**	6	VALVE	
	5	1	**5I-8009**	1	BUSHING	
	6	1	**5I-7528**	2	BUSHING	
	7	1	**5I-7529**	1	BUSHING	
	8	1	**3P-1896**	14	PLUG-CUP	
M	9	1	**094-7741**	14	BOLT-BEARING CAP (M14X2X120-MM)	
	10	2	**095-2005**	2	CAP	
	11	1	**096-3741**	7	CAP	
	12	1	**294-1720**	2	SEAL	
	13	2	**294-1722**	6	JET	
	14	1	**5I-7525**	1	PLUG	
	15	2	**195-8212**	1	PLUG	
	16	2	**294-1721**	1	SHAFT	
	17	2	**5I-7724**	2	PIN	
	18	2	**095-2039**	1	WASHER-SPECIAL	
M	19	2	**8T-4191**	1	BOLT (M10X1.5X16-MM)	
	20	1	**4I-9664**	2	PIN	
	21	2	**099-4420**	2	PIN	
	22	1	**183-5916**	6	PIN-SPRING	

M - METRIC PART

294-1725 **CYLINDER BLOCK GP** (*contd.*) **i04232914**

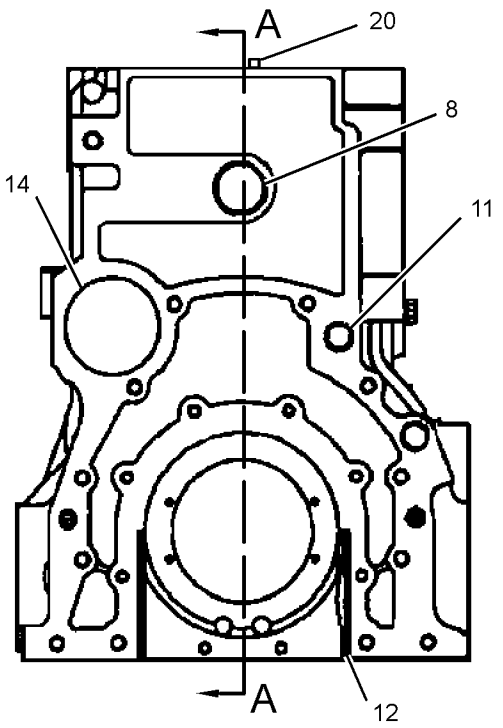

REAR VIEW OF ENGINE

FRONT VIEW OF ENGINE

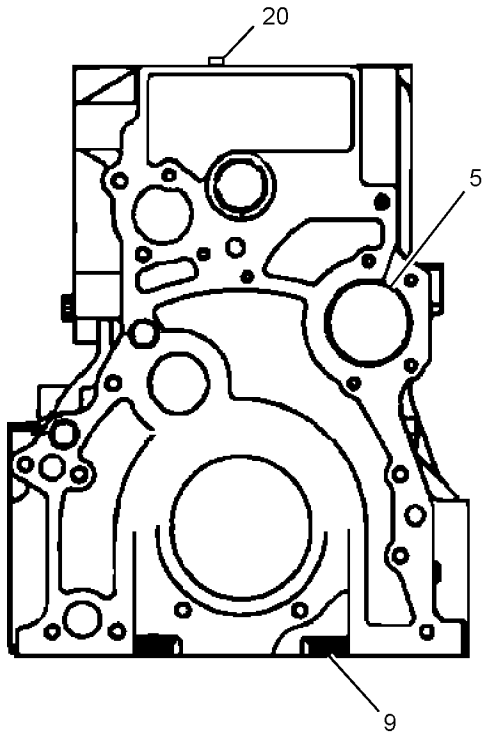

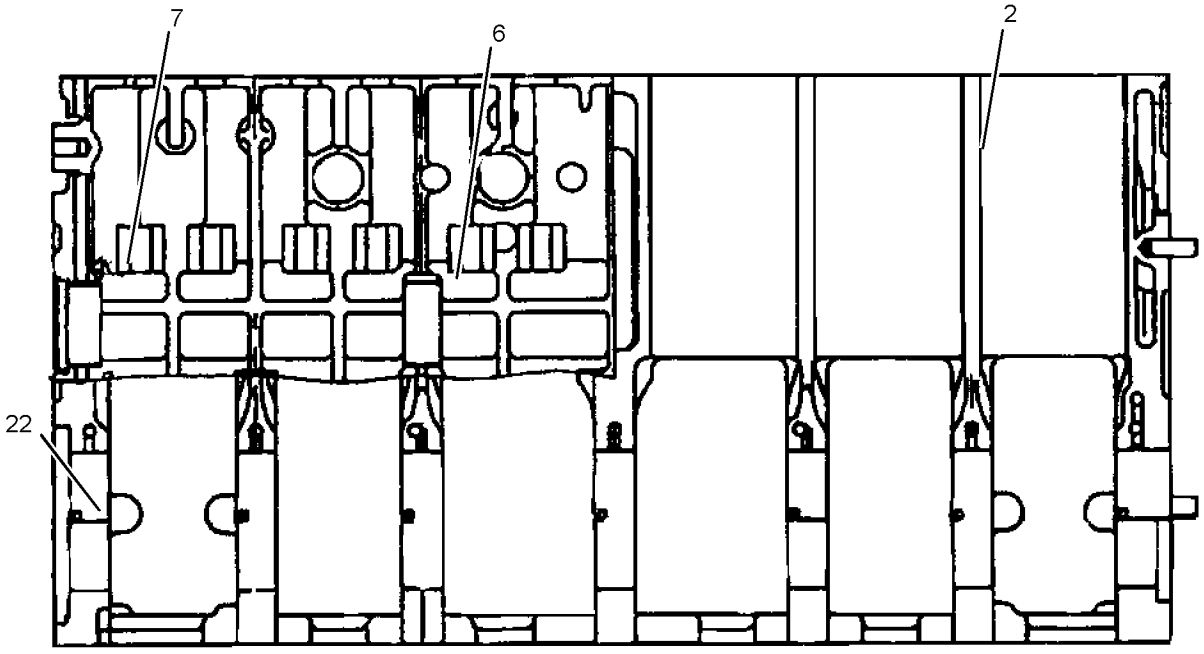

SECTION A-A

GRAPHIC #1 g02144934

294-1725 **CYLINDER BLOCK GP (*contd.*)** **i04232914**

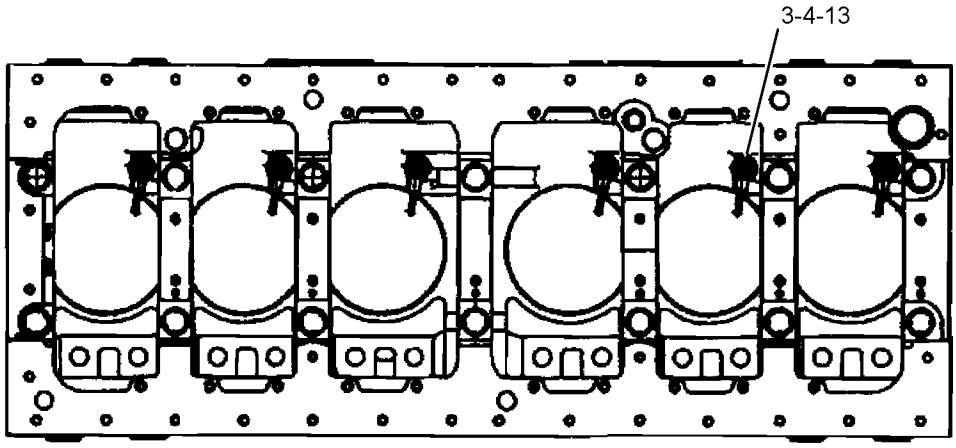

BOTTOM VIEW OF ENGINE

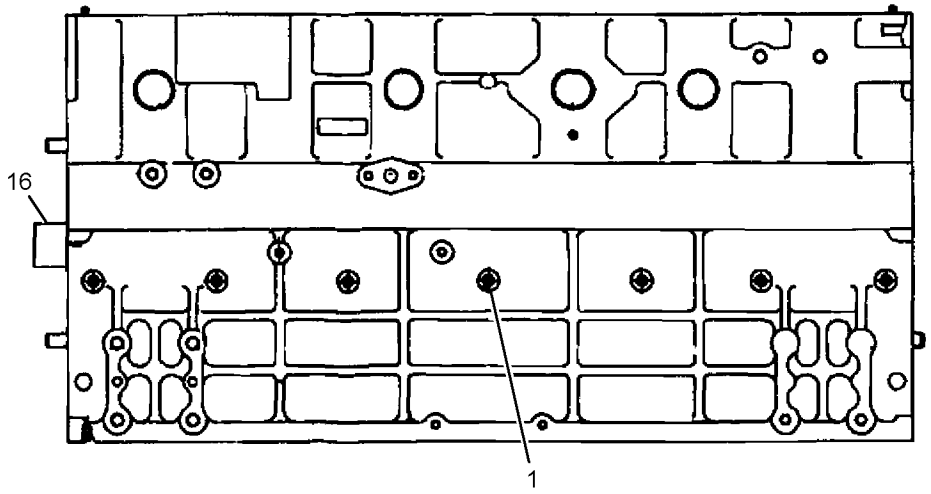

LEFT SIDE VIEW OF ENGINE

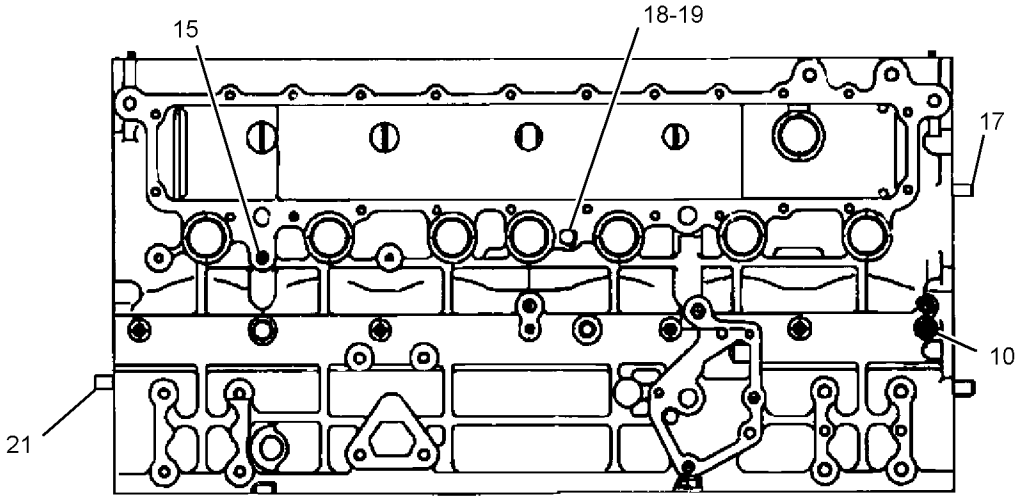

RIGHT SIDE VIEW OF ENGINE

GRAPHIC #2 **<END>** g02408337

296-4648 CYLINDER BLOCK GP

S/N: GDC1-UP

PART OF 272-4677, 272-4683, 296-4676, 296-4687, 305-4777 ENGINE AR, 327-7199 ENGINE AR-PRIMARY

ALSO AN ATTACHMENT

SMCS-1201 **i03865912**

NOTE	REF NO	GRAPHIC REF	PART NUMBER	QTY	PART NAME 1 2 3 4 5 6 (PRODUCT LEVEL)	SEE PAGE
	1	1	**324-4175**	1	EYE	
	2	1	**294-1724**	1	EYE	
	3	1	**5I-5181**	2	BOLT	
	4	1	**096-2501**	4	LOCKWASHER	
M	5	1	**099-4483**	2	BOLT (M12X1.25X30-MM)	
	6	1	**5I-7654**	3	PLATE (STANDARD)	
AB		1	**5I-7787**		PLATE (0.15-MM OS)	
AB		1	**5I-7788**		PLATE (0.3-MM OS)	
AB		1	**5I-7789**		PLATE (0.45-MM OS)	
	7	1	**5I-7588**	7	SET-BEARING (STANDARD)	
AB		1	**5I-7784**		SET-BEARING (0.25-MM US)	
AB		1	**5I-7785**		SET-BEARING (0.5-MM US)	
AB		1	**5I-7786**		SET-BEARING (0.75-MM US)	
Y	8	1	**294-1725**	1	CYLINDER BLOCK GP	126

A - NOT PART OF THIS GROUP
B - USE AS REQUIRED
M - METRIC PART
Y - SEPARATE ILLUSTRATION

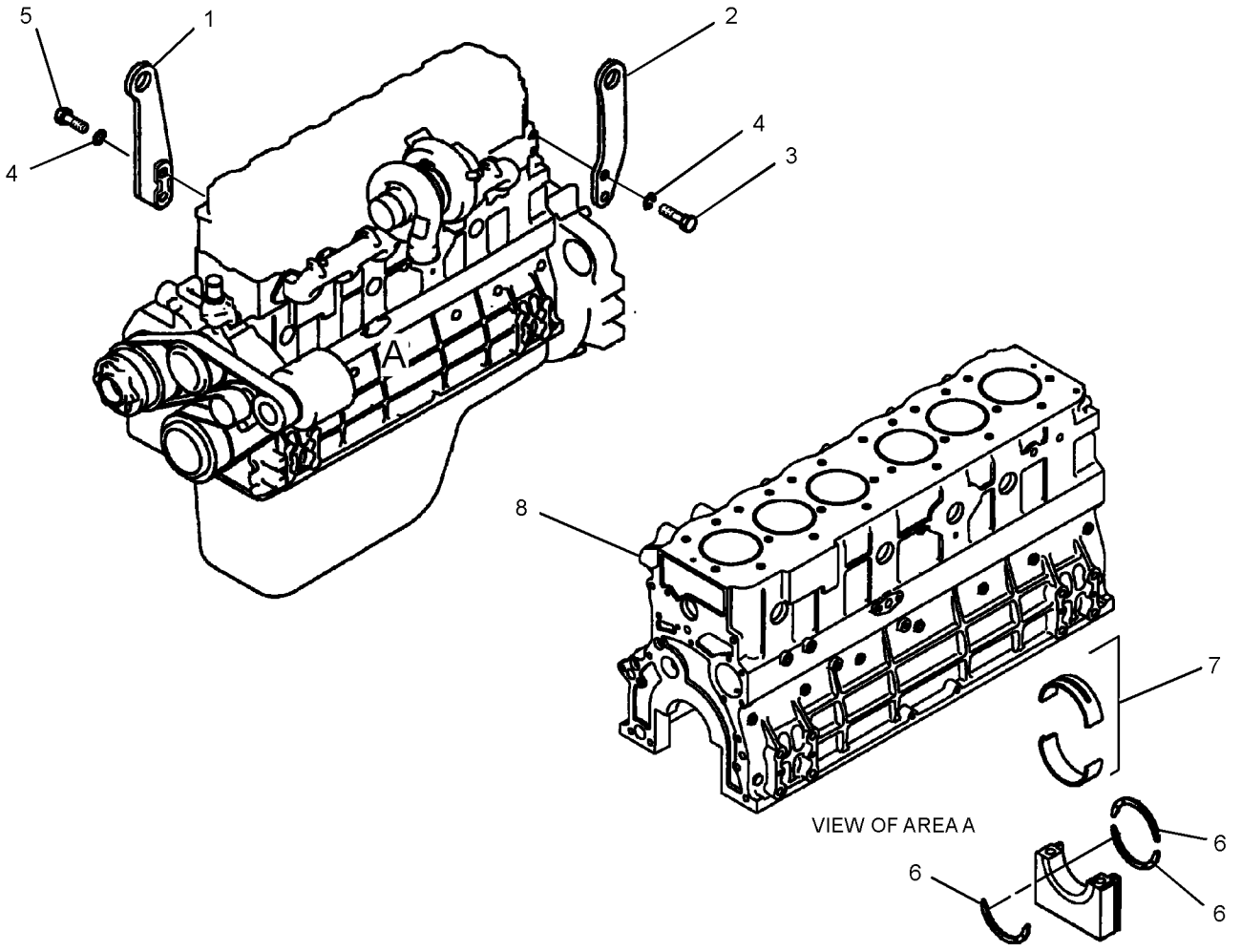

GRAPHIC #1 **<END>** g02108862

297-7644 CYLINDER HEAD AS

S/N: GDC1-UP

PART OF 296-4645 CYLINDER HEAD GP

ALSO AN ATTACHMENT

SMCS-1100 **i03649397**

NOTE	REF NO	GRAPHIC REF	PART NUMBER	QTY	PART NAME 1 2 3 4 5 6 (PRODUCT LEVEL)	SEE PAGE
	1	1	**4I-9664**	2	PIN	
	2	1	**294-1679**	12	SEAT	
	3	1	**294-1680**	12	SEAT	
	4	1	**294-1678**	24	GUIDE	
	5	1	**212-8475**	13	CAP	
	6	1	**5I-4915**	9	CAP	

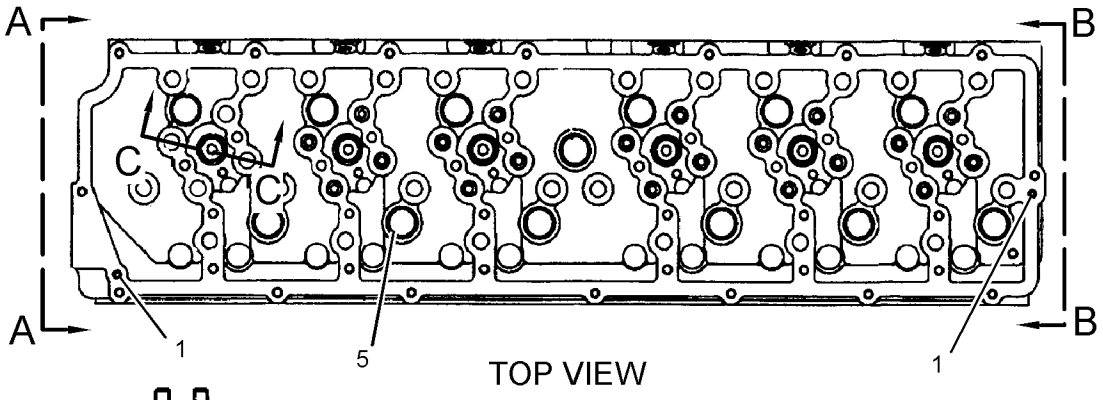

TOP VIEW

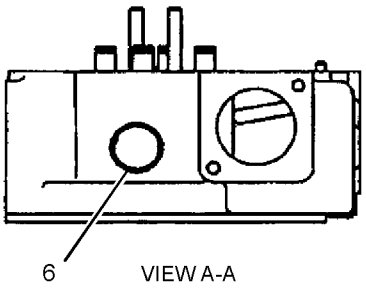

VIEW A-A

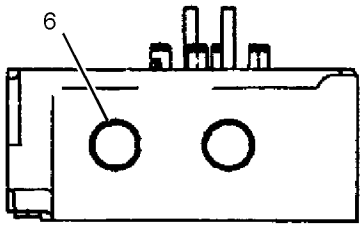

VIEW B-B

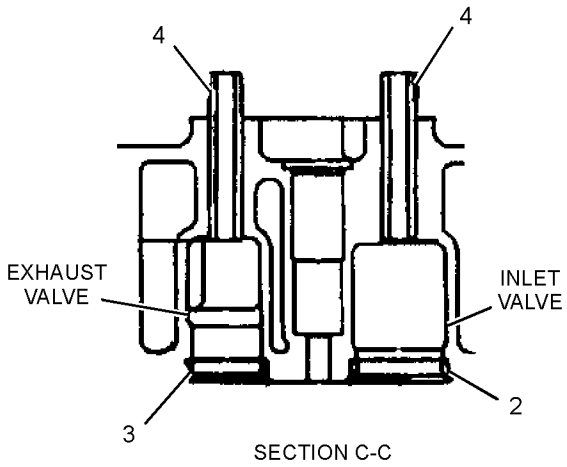

SECTION C-C

GRAPHIC #1 **<END>** g01356657

296-4645 CYLINDER HEAD GP

S/N: GDC1-UP

PART OF 272-4677, 272-4683, 296-4676, 296-4687, 305-4777 ENGINE AR, 327-7199 ENGINE AR-PRIMARY

ALSO AN ATTACHMENT

SMCS-1100 **i04403443**

NOTE	REF NO	GRAPHIC REF	PART NUMBER	QTY	PART NAME 1 2 3 4 5 6 (PRODUCT LEVEL)	SEE PAGE
Y	1	1	**297-7644**	1	CYLINDER HEAD AS	130
	2	1	**4I-9664**	2	PIN	
	3	1	**294-1682**	1	GASKET	
	4	1	**294-1683**	26	BOLT	
	5	1	**310-9532**	12	GUIDE	

Y - SEPARATE ILLUSTRATION

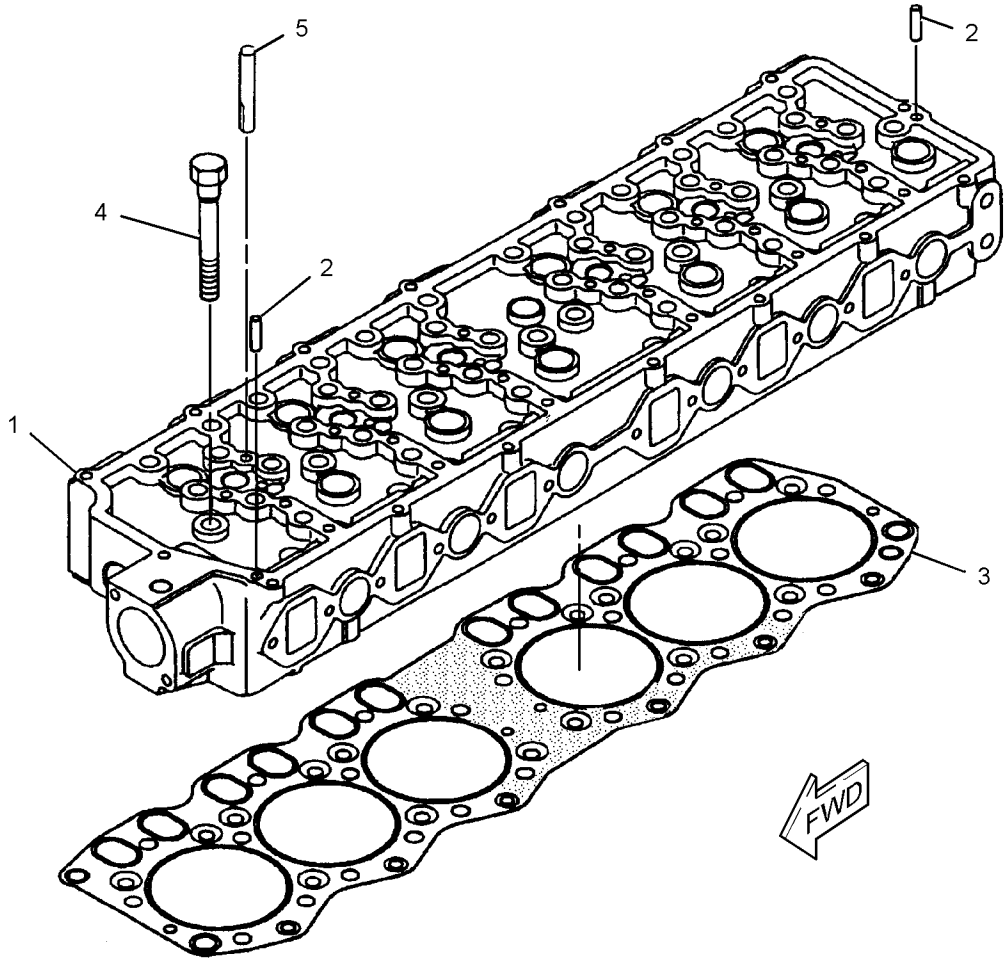

GRAPHIC #1 **<END>** g01313571

296-4644 FLYWHEEL GP

S/N: GDC1-UP

PART OF 272-4677, 272-4683, 296-4676, 296-4687, 305-4777 ENGINE AR, 327-7199 ENGINE AR-PRIMARY

ALSO AN ATTACHMENT

SMCS-1156 **i02618435**

NOTE	REF NO	GRAPHIC REF	PART NUMBER	QTY	PART NAME 1 2 3 4 5 6 (PRODUCT LEVEL)	SEE PAGE
	1	1	**294-1752**	1	FLYWHEEL AS	
	1A	1	**205-6788**	1	GEAR (127-TEETH)	
	2	1	**5I-5005**	6	BOLT (M12X1.25X35-MM)	
	3	1	**096-2501**	6	LOCKWASHER	

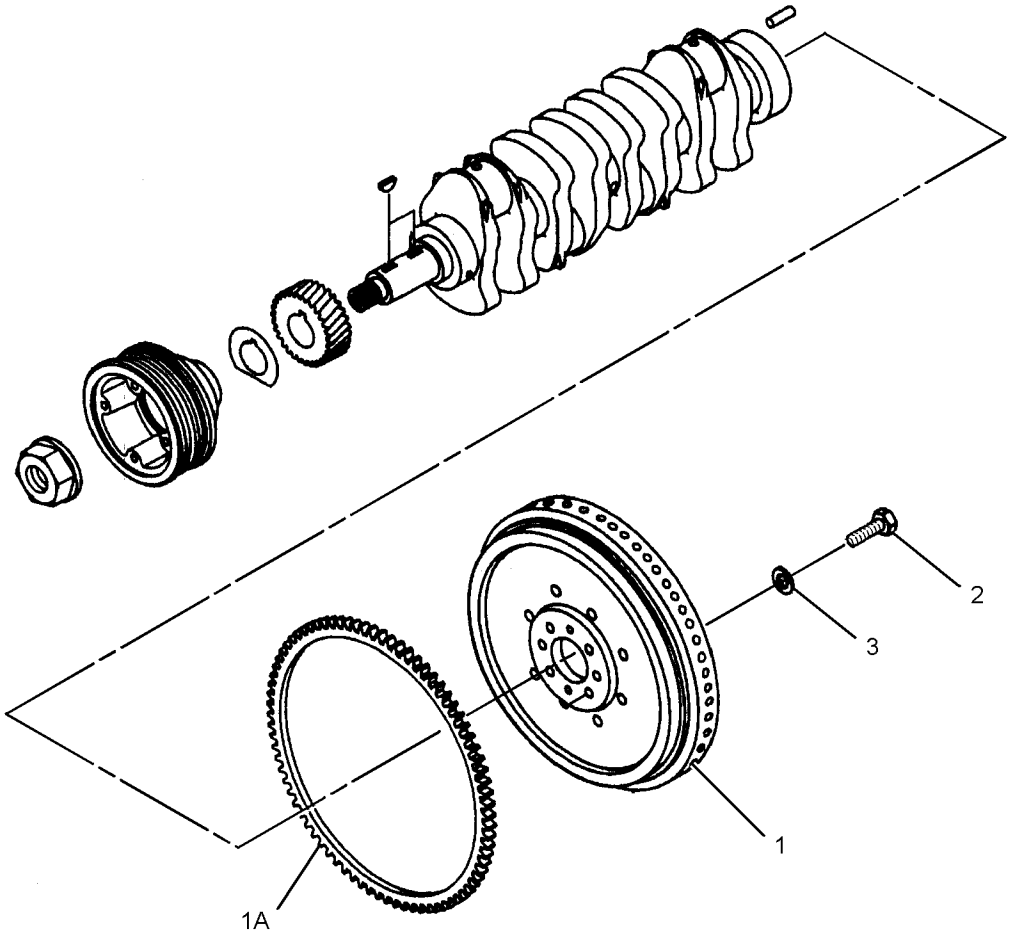

GRAPHIC #1 **<END>** g01312147

296-4651 GEAR GP-FRONT

S/N: GDC1-UP

PART OF 272-4677, 272-4683, 296-4676, 296-4687, 305-4777 ENGINE AR, 327-7199 ENGINE AR-PRIMARY

ALSO AN ATTACHMENT

SMCS-1151, 1162, 1206 **i02981450**

NOTE	REF NO	GRAPHIC REF	PART NUMBER	QTY	PART NAME 1 2 3 4 5 6 (PRODUCT LEVEL)	SEE PAGE
	1	1	*294-1753*	1	GEAR AS-IDLER (69-TEETH)	
	1A	1	**296-4673**	1	BUSHING	
	2	1	**294-1754**	1	GEAR (62-TEETH)	
	3	1	**294-1755**	1	GEAR (62-TEETH)	
	4	1	**294-1756**	1	PLATE	
	5	1	**294-1757**	1	BOLT	

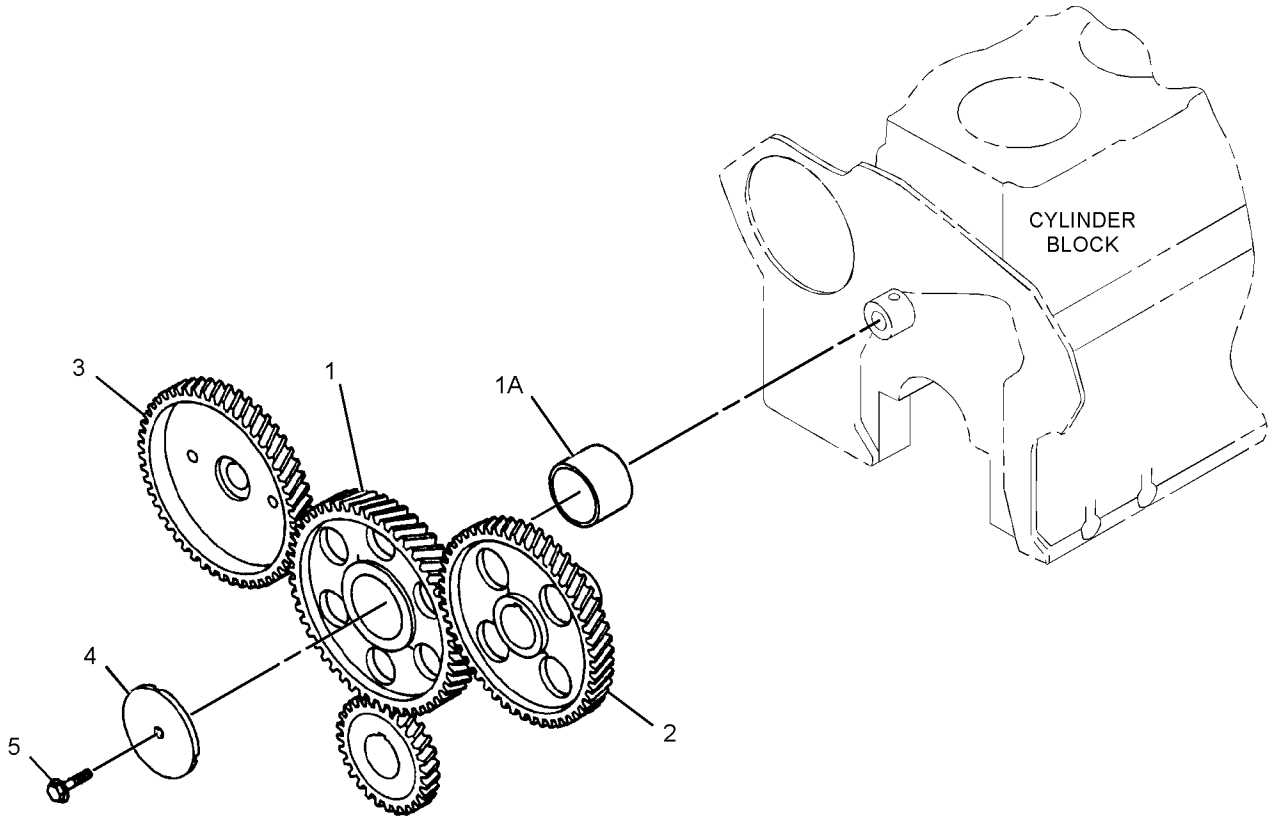

GRAPHIC #1 **<END>** g01317830

296-4643 HOUSING GP-FLYWHEEL

S/N: GDC1-UP

PART OF 272-4677, 272-4683, 296-4676, 296-4687, 305-4777 ENGINE AR, 327-7199 ENGINE AR-PRIMARY

ALSO AN ATTACHMENT

SMCS-1157 **i04662800**

NOTE	REF NO	GRAPHIC REF	PART NUMBER	QTY	PART NAME 1 2 3 4 5 6 (PRODUCT LEVEL)	SEE PAGE
	1	1	**294-1736**	1	HOUSING	
	2	1	**5I-7660**	1	SEAL AS	
	3	1	**324-4131**	1	SENSOR GP-SPEED (ENGINE)	
	4	1	**5I-4983**	2	STUD	
	5	1	**5I-5597**	2	BOLT (M14X1.5-THD)	
	6	1	**294-1737**	8	BOLT (M8X1.25X35.5-MM)	
	7	1	**294-1738**	2	BOLT (M10X1.5X32-MM)	
M	8	1	**294-1726**	10	BOLT (M10X1.5X37-MM)	
	9	1	**379-4433**	1	GASKET	
	10	1	**294-1740**	1	BRACKET	

M - METRIC PART

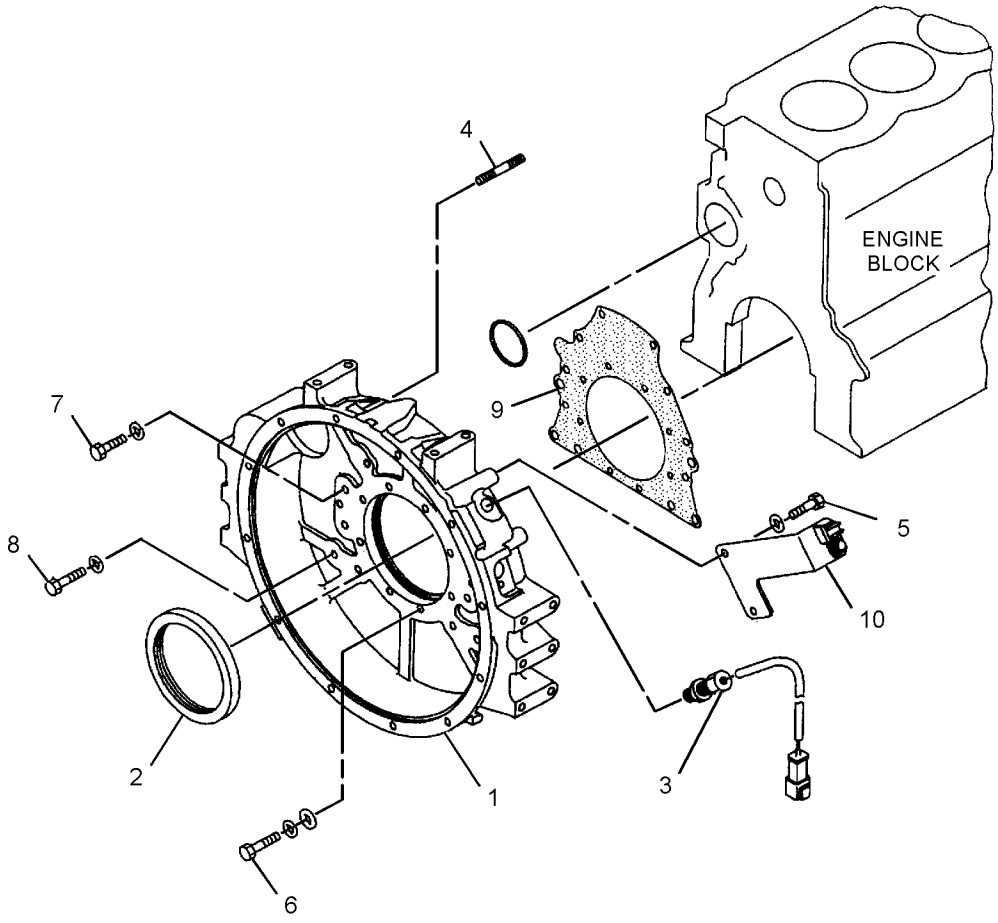

GRAPHIC #1 **<END>** g02109774

296-4649 HOUSING GP-FRONT

S/N: GDC1-UP

PART OF 272-4677, 272-4683, 296-4676, 296-4687, 305-4777 ENGINE AR, 327-7199 ENGINE AR-PRIMARY

ALSO AN ATTACHMENT

SMCS-1151, 1162, 1206 **i03982873**

NOTE	REF NO	GRAPHIC REF	PART NUMBER	QTY	PART NAME 1 2 3 4 5 6 (PRODUCT LEVEL)	SEE PAGE
	1	2	**222-8292**	1	POINTER	
	2	2	**294-1731**	1	BOLT (M8X1.25X19.5-MM)	
	3	2	**6V-8236**	1	PIN-SPRING	
	4	2	**294-1732**	1	PLATE	
M	5	2	**6V-5215**	2	BOLT (M8X1.25X16-MM)	
	6	2	**297-7646**	2	BOLT (M8X1.25X95.5-MM)	
	7	1	**178-6538**	1	COVER AS	
	8	2	**5I-5597**	6	BOLT (M14X1.5-THD)	
M	9	2	**5I-7610**	1	BOLT (M10X1.5X20-MM)	
	10	2	**297-7647**	6	BOLT (M10X1.5X77-MM)	
M	11	2	**8T-4172**	2	BOLT (M10X1.5X80-MM)	
M	12	2	**8T-6685**	4	BOLT (M10X1.5X110-MM)	
	13	2	**7X-0796**	6	LOCKWASHER	
	14	2	**294-1733**	1	GASKET	
	15	2	**294-1734**	1	GASKET	
	16	2	**212-8571**	1	COVER	
	17	2	**212-8572**	1	GASKET	
	18	2	**196-8366**	1	BOLT	
	19	2	**294-1735**	5	BOLT (M8X1.25X90.5-MM)	
M	20	1	**294-7251**	6	BOLT AS	
M	21	1	**294-1726**	4	BOLT (M10X1.5X37-MM)	
	22	1	**096-9435**	1	PLUG	
	23	1	**096-9532**	1	WASHER (15.8X22.5X2-MM THK)	
	24	1	**096-9528**	1	SEAL-O-RING	
	25	1	**6F-7556**	2	COVER	
	26	1	**5I-7632**	1	PIPE	
	27	1	**294-1727**	1	BODY AS	
	27A	1	**294-1728**	1	GEAR (32-TEETH)	
	27B	1	**125-2950**	1	GEAR AS (9-TEETH)	
		1	**195-8225**	1	CAP (MAIN BEARING)	
	28	1	**5I-7559**	1	VALVE AS	
	29	1	**5I-7558**	1	GEAR AS (9-TEETH)	
	30	1	**294-1729**	1	GEAR AS (33-TEETH)	
	31	1	**324-4223**	1	SEAL	
	32	1	**6F-7557**	2	GASKET	
	33	1	**5I-7683**	1	SPINDLE	
	34	1	**178-6537**	1	GASKET	

M - METRIC PART

296-4649 **HOUSING GP-FRONT (*contd.*)** **i03982873**

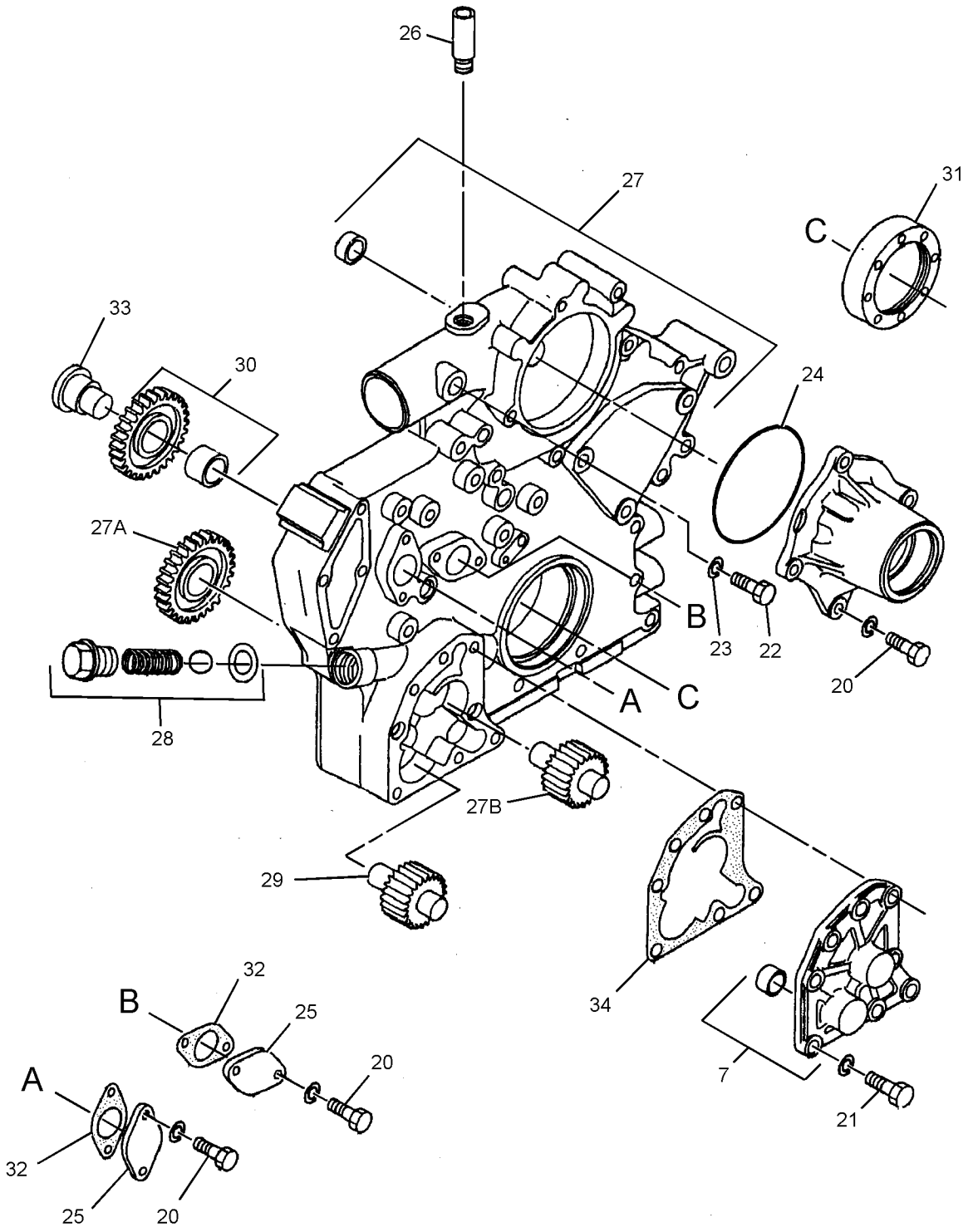

GRAPHIC #1 g02173544

296-4649 **HOUSING GP-FRONT (*contd.*)** **i03982873**

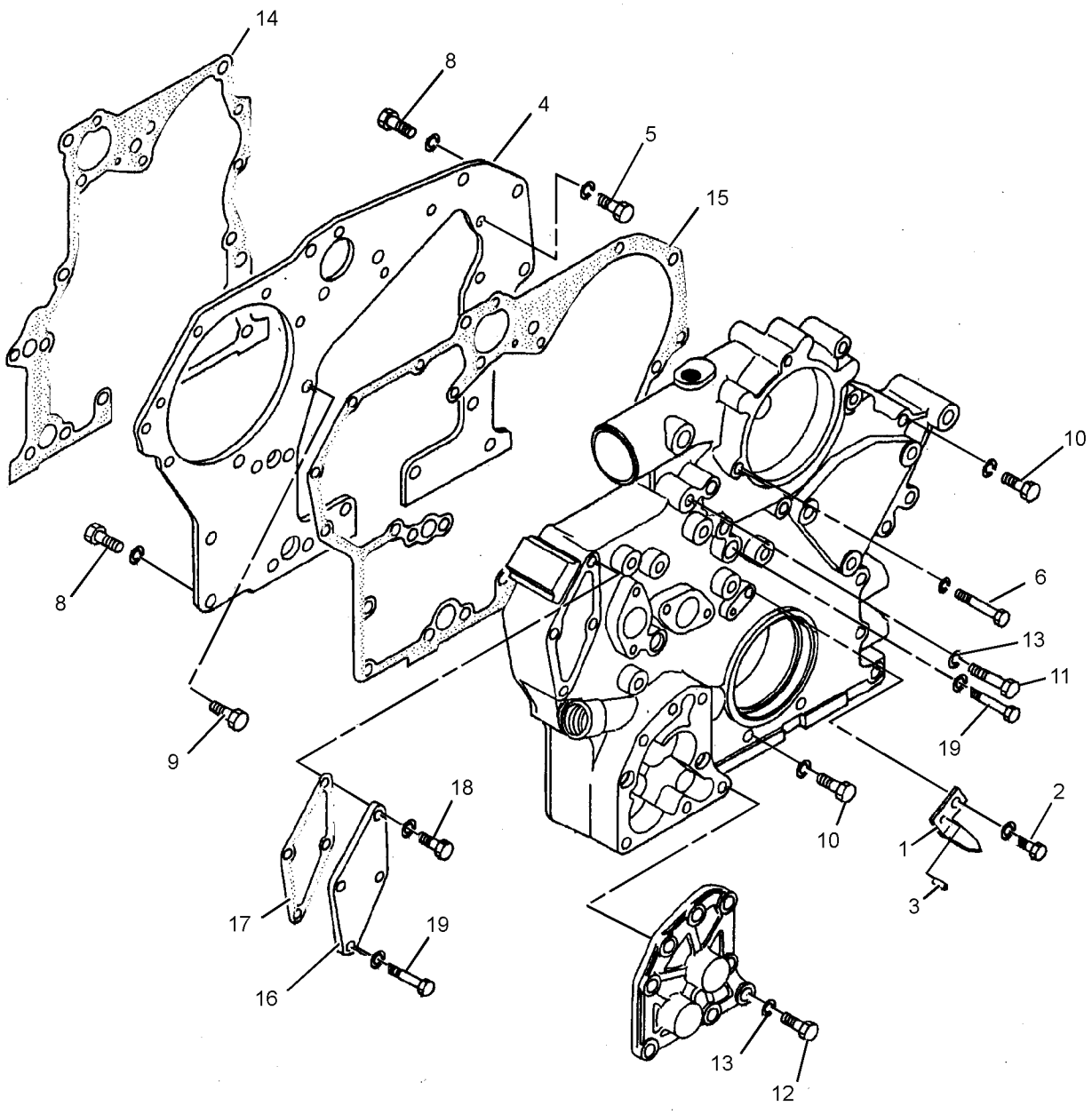

GRAPHIC #2 **<END>** g01355454

296-4661 MOUNTING GP-ALTERNATOR

S/N: GDC1-UP

PART OF 272-4677, 272-4683, 296-4676, 296-4687, 305-4777 ENGINE AR, 327-7199 ENGINE AR-PRIMARY

ALSO AN ATTACHMENT

SMCS-1405 **i02934258**

NOTE	REF NO	GRAPHIC REF	PART NUMBER	QTY	PART NAME 1 2 3 4 5 6 (PRODUCT LEVEL)	SEE PAGE
	1	1	**178-6600**	1	PULLER	
	2	1	**294-1859**	1	PLATE	
	3	1	**5I-7750**	2	WASHER (12.5X25X8-MM THK)	
	4	1	**294-1860**	1	BOLT	
	5	1	**5I-5597**	1	BOLT (M14X1.5-THD)	
M	6	1	**294-1861**	2	BOLT (M12X1.75X30-MM)	
	7	1	**8T-4223**	1	WASHER-HARD (13.5X25.5X3-MM THK)	
M	8	1	**178-6598**	1	BOLT (M12X1.25X135-MM)	
	9	1	**178-6599**	1	WASHER	
	10	1	**178-6601**	1	RING	
YR	11	1	**212-8561**	1	ALTERNATOR GP-CHARGING	401

M - METRIC PART
R - REMFG PART MAY BE AVAILABLE
Y - SEPARATE ILLUSTRATION

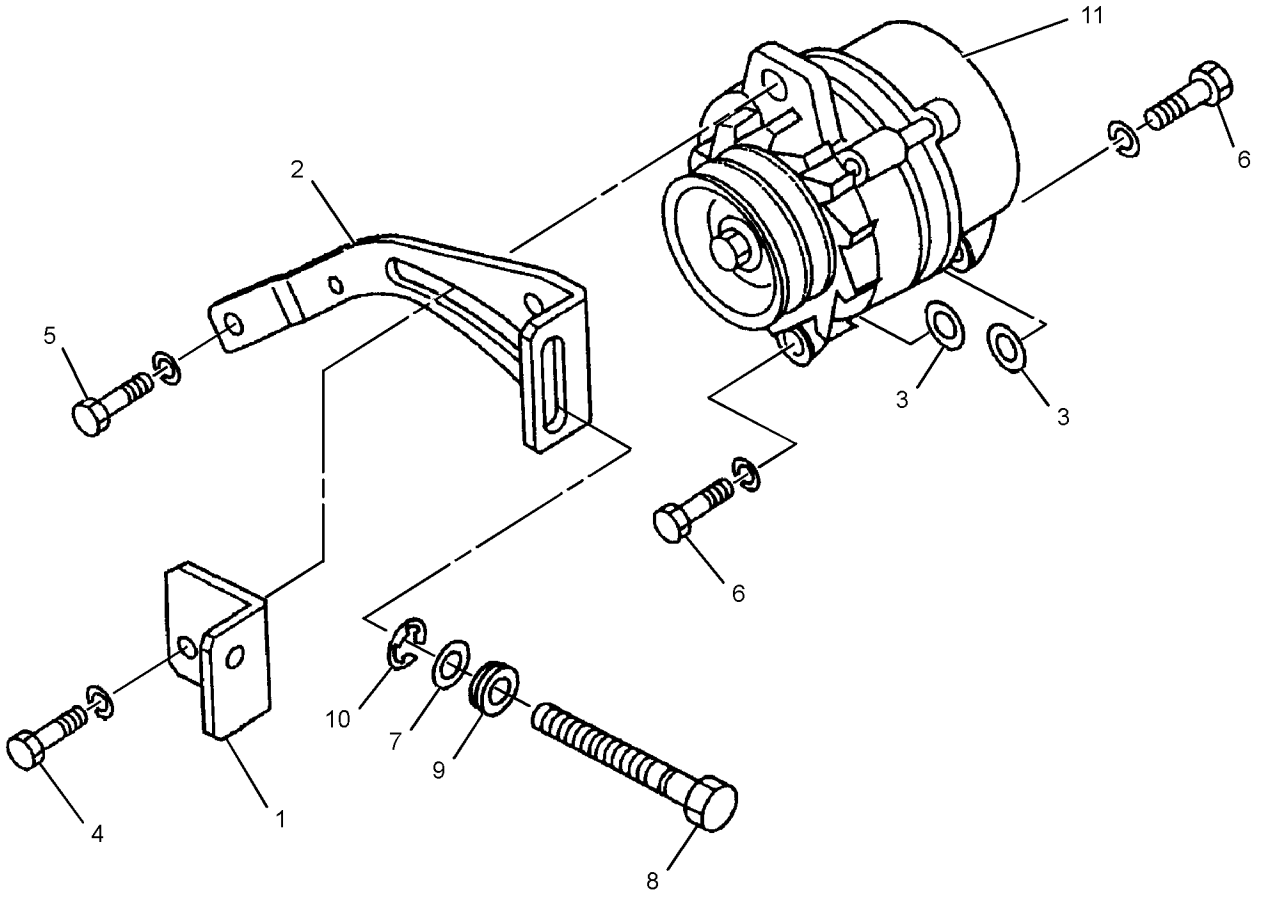

GRAPHIC #1 **<END>** g01455222

266-6297 MOUNTING GP-ENGINE

S/N: KGF1-UP; FAL1-UP

PART OF 272-4742 INSTALLATION AR-ENGINE

SMCS-1152 **i02417345**

NOTE	REF NO	GRAPHIC REF	PART NUMBER	QTY	PART NAME 1 2 3 4 5 6 (PRODUCT LEVEL)	SEE PAGE
	1	1	**109-9329**	4	WASHER (21.5X120X8-MM THK)	
	2	1	**118-9784**	2	BRACKET-REAR	
	3	1	**118-9785**	2	BRACKET-FRONT	
	4	1	**118-9930**	4	SUPPORT AS	
	5	1	**266-6298**	2	MOUNT-RUBBER	
	6	1	**266-6299**	2	MOUNT-RUBBER	
	7	1	**266-6300**	2	MOUNT-RUBBER	
	8	1	**266-6301**	2	MOUNT-RUBBER	
M	9	1	**7X-2532**	4	BOLT (M20X2.5X130-MM)	
	10	1	**8T-4123**	8	WASHER (22X35X3.5-MM THK)	
M	11	1	**8T-4139**	8	BOLT (M12X1.75X30-MM)	
M	12	1	**8T-4183**	8	BOLT (M12X1.75X40-MM)	
	13	1	**8T-4223**	16	WASHER-HARD (13.5X25.5X3-MM THK)	

M - METRIC PART

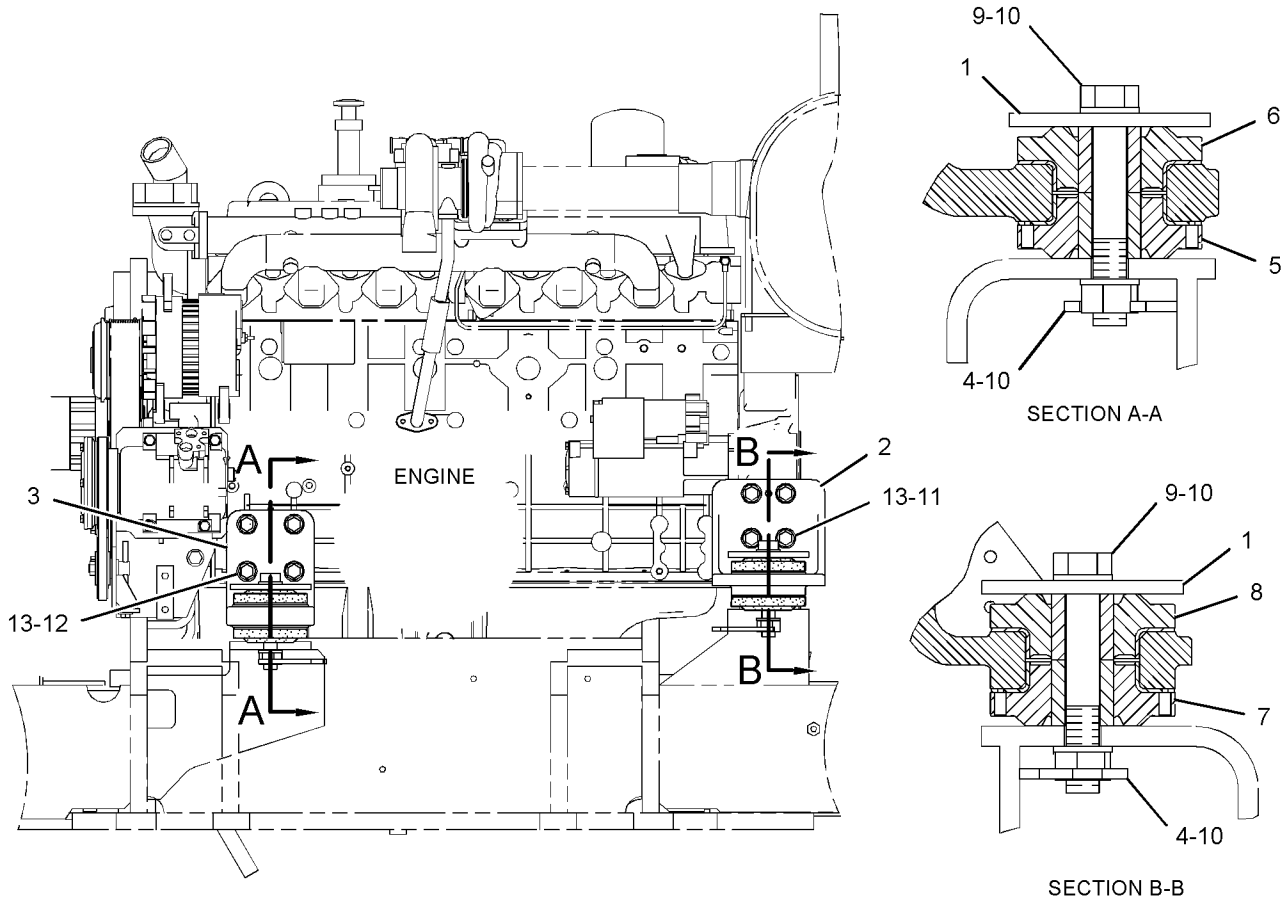

LEFT SIDE VIEW OF ENGINE

GRAPHIC #1 **<END>** g01222807

324-4051 MOUNTING GP-FAN DRIVE

S/N: KGF1-UP; FAL1-UP
PART OF 290-1911 COOLING AR-HIGH AMBIENT TEMP
AN ATTACHMENT

SMCS-1359 **i04015410**

NOTE	REF NO	GRAPHIC REF	PART NUMBER	QTY	PART NAME 1 2 3 4 5 6 (PRODUCT LEVEL)	SEE PAGE
	1	1	**324-4053**	1	ADAPTER	
	2	1	**327-7251**	1	BRACKET AS	

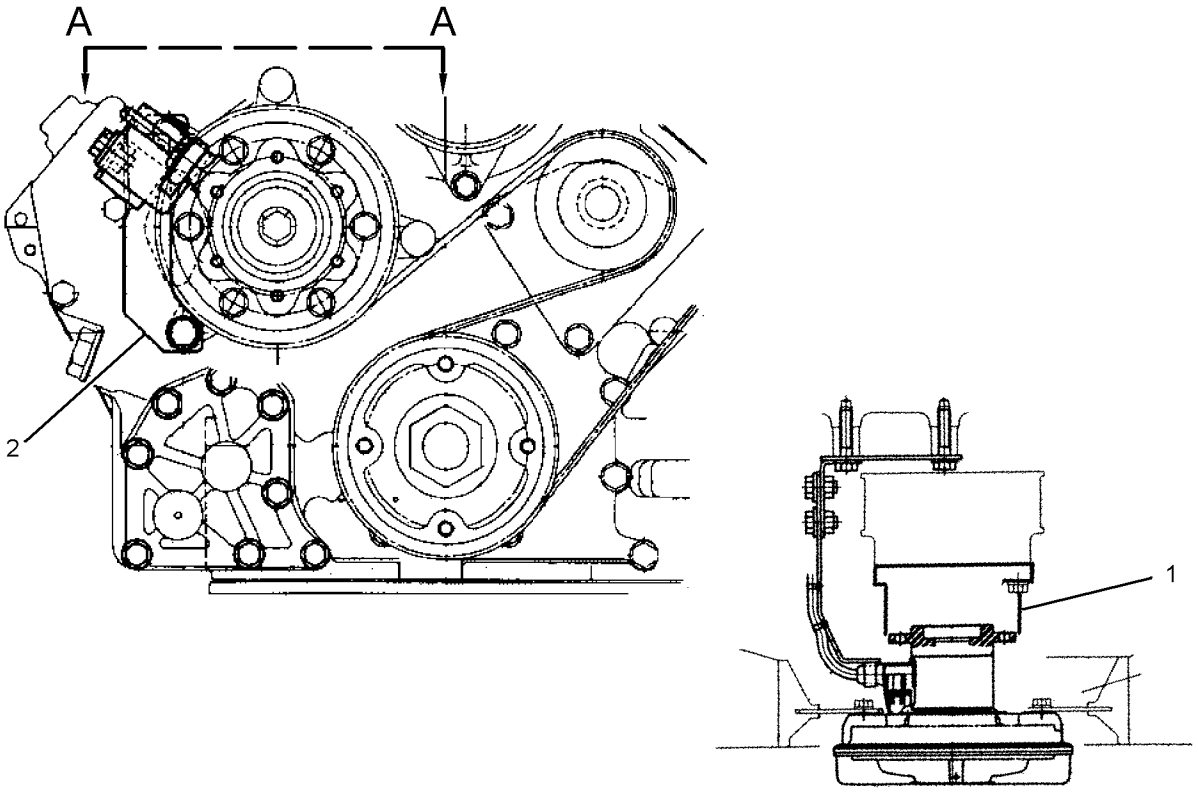

VIEW A-A

GRAPHIC #1 **<END>** g02189733

296-4637 MOUNTING GP-STARTING MOTOR

S/N: GDC1-UP

PART OF 272-4677, 272-4683, 296-4676, 296-4687, 305-4777 ENGINE AR, 327-7199 ENGINE AR-PRIMARY

ALSO AN ATTACHMENT

SMCS-1453 **i05274250**

NOTE	REF NO	GRAPHIC REF	PART NUMBER	QTY	PART NAME 1 2 3 4 5 6 (PRODUCT LEVEL)	SEE PAGE
	1	1	**5I-7599**	1	SEAL-O-RING	
	2	1	**135-2369**	1	COVER	
M	3	1	**135-2370**	1	BOLT (M5X0.8X25-MM)	
	4	1	**294-1850**	1	WASHER	
	5	1	**294-1851**	1	WASHER	
YR	6	1	**272-4774**	1	STARTING MOTOR GP-ELECTRIC	533
M	7	1	**6V-8231**	2	NUT (M10X1.25-THD)	
	8	1	**7X-0796**	2	LOCKWASHER	

M - METRIC PART
R - REMFG PART MAY BE AVAILABLE
Y - SEPARATE ILLUSTRATION

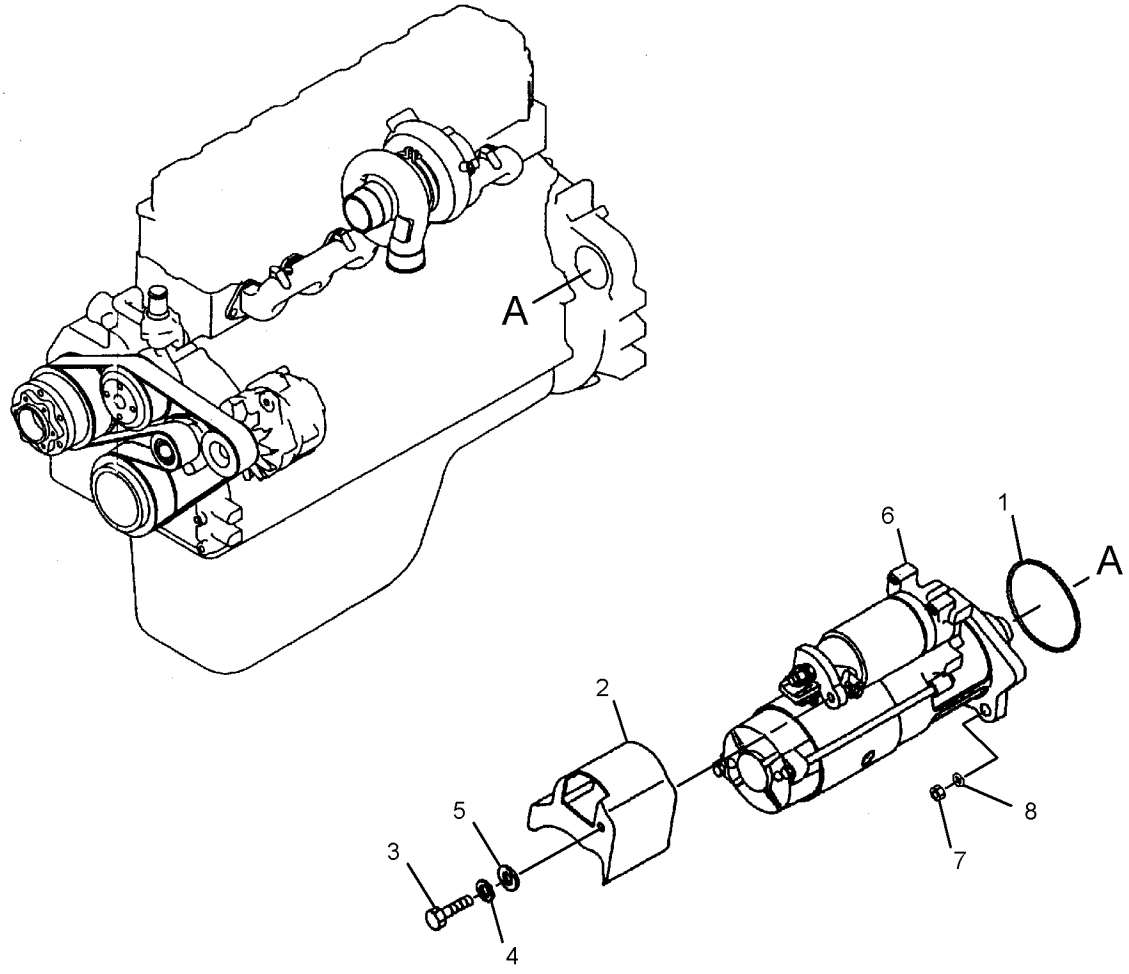

GRAPHIC #1 **<END>** g01456158

296-4640 PAN GP-OIL

S/N: GDC1-UP

PART OF 272-4677, 272-4683, 296-4676, 296-4687, 305-4777 ENGINE AR, 327-7199 ENGINE AR-PRIMARY

ALSO AN ATTACHMENT

SMCS-1302 **i02702138**

NOTE	REF NO	GRAPHIC REF	PART NUMBER	QTY	PART NAME 1 2 3 4 5 6 (PRODUCT LEVEL)	SEE PAGE
	1	1	**294-1741**	1	GUIDE	
	2	1	**196-8366**	37	BOLT	
	3	1	**199-2178**	1	BOLT (M10X1.25X20-MM)	
	4	1	**125-2968**	1	SEAL	
	5	1	**5I-8067**	1	WASHER-SEALING	
	6	1	**7W-3556**	1	WASHER (14.27X20.57X1.5-MM THK)	
	7	1	**183-8177**	1	PLUG	
	8	1	**183-8176**	1	VALVE (ENGINE OIL PAN)	
	9	1	**294-1742**	1	PAN AS	
		1	**287-0187**	1	BOSS	
		1	**287-0188**	1	PLATE	
		1	**287-0189**	1	SEAL	
		1	**287-0190**	1	BOLT	
	10	1	**213-0677**	1	SWITCH AS-LIQUID LEVEL (ENGINE OIL)	
		1	**102-8802**	2	KIT-RECEPTACLE (2-PIN)	
					(EACH INCLUDES RECEPTACLE AS & WEDGE)	
		1	**9X-3401**	2	PIN-CONNECTOR (16-GA TO 18-GA)	
	11	1	**294-1743**	1	GAUGE AS-OIL LEVEL (DIPSTICK) (ENGINE)	
	12	1	**5I-4993**	1	SEAL	
	13	1	**5I-7666**	1	GASKET	
	14	1	**282-8567**	1	BOLT	

296-4640 **PAN GP-OIL (*contd.*)** **i02702138**

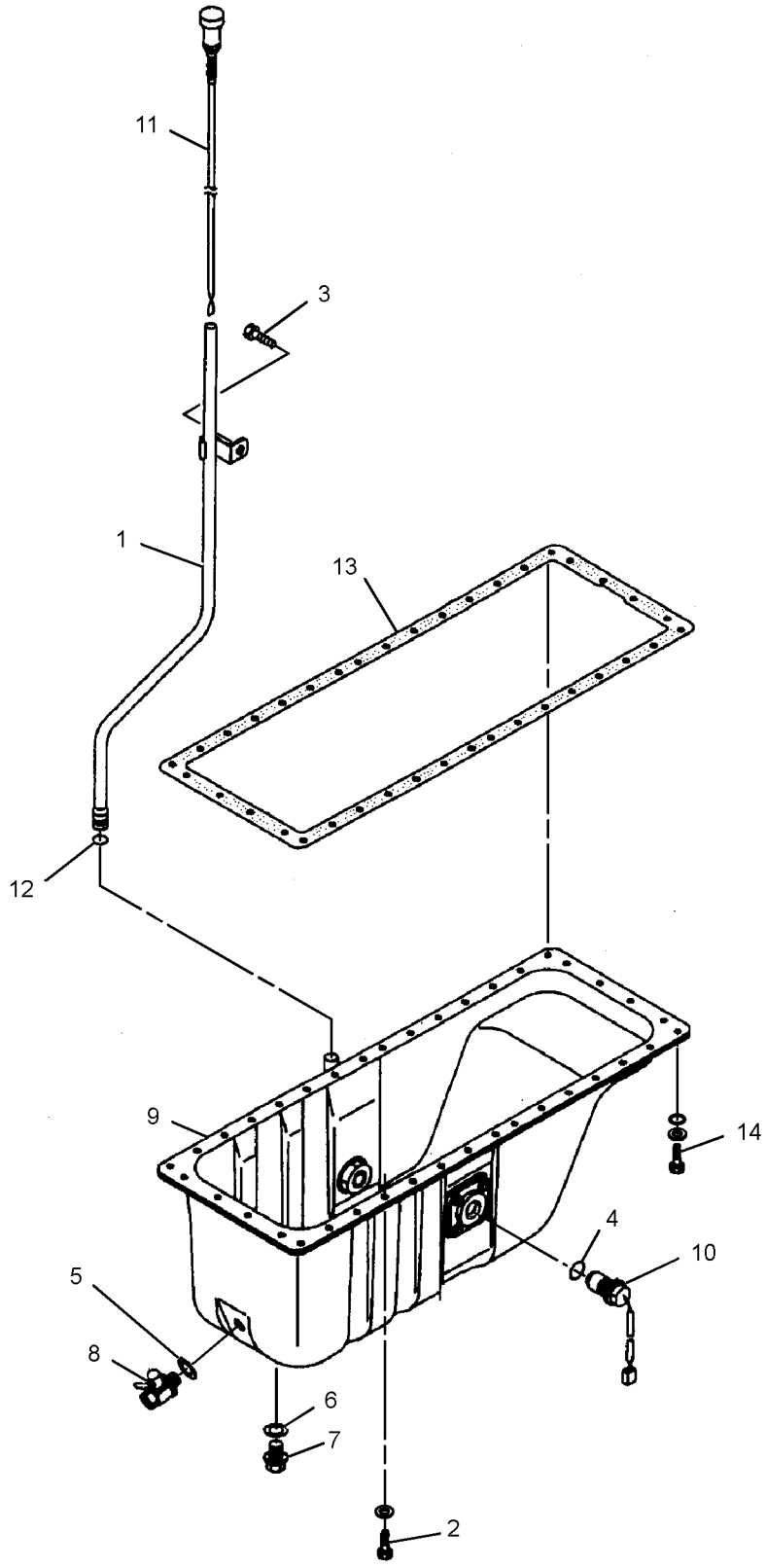

GRAPHIC #1 **<END>** g01356947

327-7228 PAN GP-OIL

S/N: GDC1-UP

PART OF 327-7199 ENGINE AR-PRIMARY

AN ATTACHMENT

SMCS-1302 **i03950552**

NOTE	REF NO	GRAPHIC REF	PART NUMBER	QTY	PART NAME 1 2 3 4 5 6 (PRODUCT LEVEL)	SEE PAGE
	1	1	**327-7229**	1	GUIDE	
	2	1	**196-8366**	37	BOLT	
	3	1	**199-2178**	1	BOLT (M10X1.25X20-MM)	
	4	1	**125-2968**	1	SEAL	
	5	1	**5I-8067**	1	WASHER-SEALING	
	6	1	**7W-3556**	1	WASHER (14.27X20.57X1.5-MM THK)	
	7	1	**183-8177**	1	PLUG	
	8	1	**183-8176**	1	VALVE	
	9	1	**294-1742**	1	PAN AS	
		1	**287-0187**	1	BOSS	
		1	**287-0188**	1	PLATE	
		1	**287-0189**	1	SEAL	
		1	**287-0190**	4	BOLT	
	10	1	**213-0677**	1	SWITCH AS-LIQUID LEVEL	
		1	**102-8802**	1	KIT-RECEPTACLE (2-PIN)	
					(INCLUDES RECEPTACLE AS AND WEDGE)	
		1	**144-1636**	2	PIN-CONNECTOR (14-GA TO 18-GA)	
	11	1	**327-7247**	1	GAUGE-OIL LEVEL (PAN)	
	12	1	**5I-4993**	1	SEAL	
	13	1	**5I-7666**	1	GASKET	
	14	1	**282-8567**	1	BOLT	

327-7228 **PAN GP-OIL (*contd.*)** **i03950552**

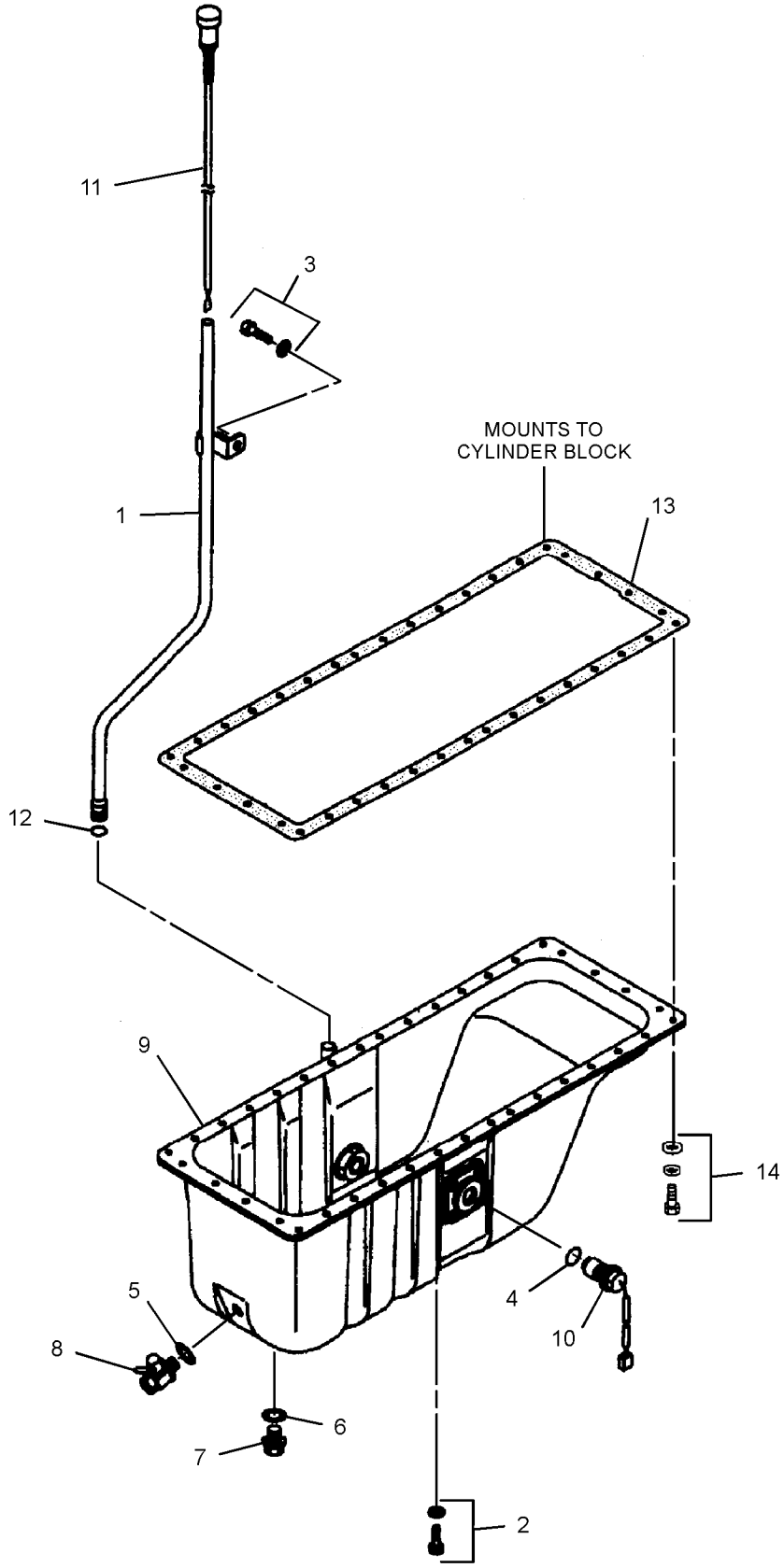

GRAPHIC #1 **<END>** g02158945

296-4659 PISTON & ROD GP

S/N: GDC1-UP

PART OF 272-4677, 272-4683, 296-4676, 296-4687, 305-4777 ENGINE AR, 327-7199 ENGINE AR-PRIMARY

ALSO AN ATTACHMENT

SMCS-1225 **i03995747**

NOTE	REF NO	GRAPHIC REF	PART NUMBER	QTY	PART NAME 1 2 3 4 5 6 (PRODUCT LEVEL)	SEE PAGE
	1	1	**324-4235**	6	PISTON (STANDARD)	
AB		1	**324-4236**		PISTON (0.25-MM OS)	
AB		1	**324-4237**		PISTON (0.5-MM OS)	
	2	1	**094-7134**	6	PIN	
	3	1	**5I-7667**	12	RING	
J	4	1	**178-6543**	6	SET-PISTON RING (STANDARD)	
ABJ		1	**178-6544**		SET-PISTON RING (0.25-MM OS)	
ABJ		1	**178-6545**		SET-PISTON RING (0.5-MM OS)	
	5	1	**294-1747**	6	ROD AS	
					(EACH INCLUDES)	
	5A	1	**094-7154**	2	BOLT (M12X1.25X85-MM)	
	5B	1	**094-7516**	2	NUT (M12X1.25-THD)	
	6	1	**294-1748**	12	BEARING (STANDARD)	
AB		1	**297-7648**		BEARING (0.25-MM US)	
AB		1	**297-7649**		BEARING (0.50-MM US)	
AB		1	**297-7650**		BEARING (0.75-MM US)	

A - NOT PART OF THIS GROUP
B - USE AS REQUIRED
J - INCLUDES A COMPLETE SET OF RINGS FOR ONE PISTON

296-4659 **PISTON & ROD GP (*contd.*)** **i03995747**

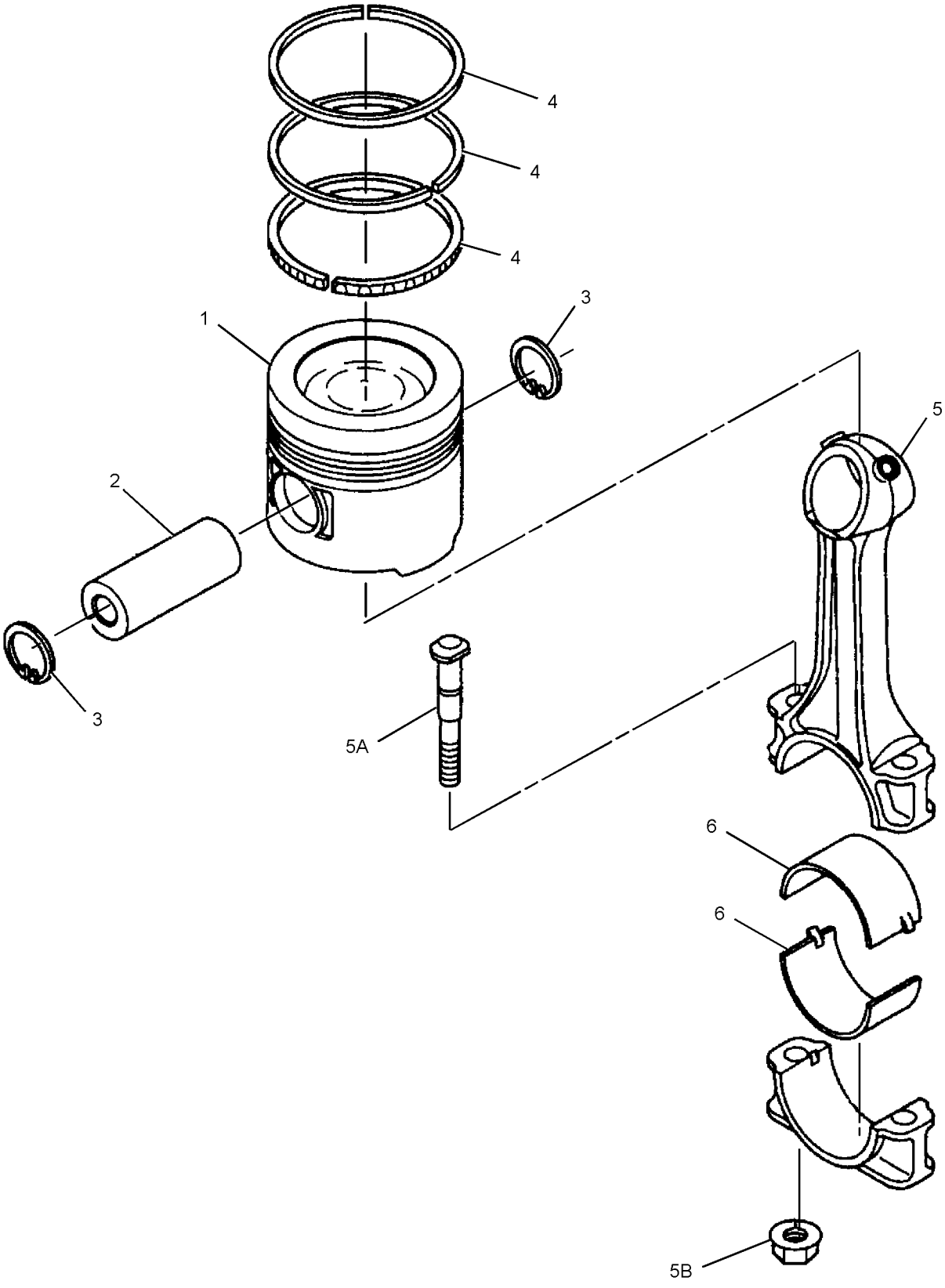

GRAPHIC #1 **<END>** g02173864

266-6317 PULLEY GP-ENGINE

S/N: KGF1-UP; FAL1-UP
PART OF 272-4687, 296-4678 ENGINE AR-COMPLETE
AN ATTACHMENT

SMCS-1205, 1207, 1359, 1384, 1425 **i03977130**

NOTE	REF NO	GRAPHIC REF	PART NUMBER	QTY	PART NAME 1 2 3 4 5 6 (PRODUCT LEVEL)	SEE PAGE
Y	1	1	**305-4908**	1	PULLEY GP-IDLER (BELT TENSIONING)	171
	2	1	**212-8584**	1	PULLEY (WATER PUMP)	
	3	1	**212-8585**	1	BELT-SERPENTINE	
	4	1	**327-7204**	1	PULLEY AS (DRIVE)	
		1	**5I-7540**	1	SLEEVE	
	5	1	**266-6327**	1	PULLEY	

Y - SEPARATE ILLUSTRATION

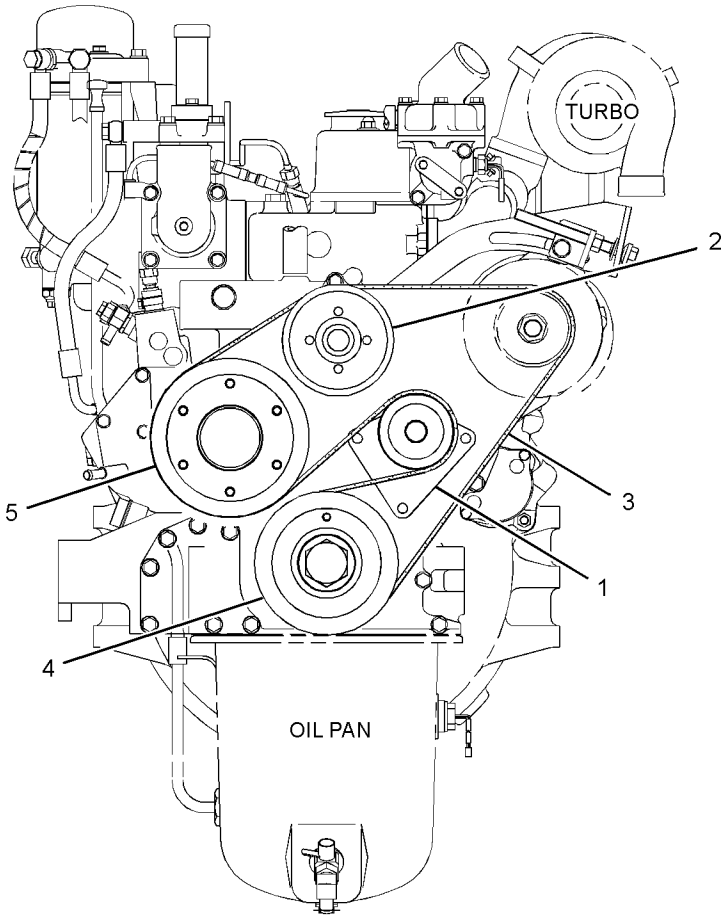

FRONT VIEW OF ENGINE

GRAPHIC #1 **<END>** g01338650

296-4660 PULLEY GP-ENGINE

S/N: KGF1-UP; FAL1-UP
PART OF 296-4667 PULLEY GP-ENGINE
AN ATTACHMENT

SMCS-1205, 1207, 1359, 1384, 1425

i02707575

NOTE	REF NO	GRAPHIC REF	PART NUMBER	QTY	PART NAME 1 2 3 4 5 6 (PRODUCT LEVEL)	SEE PAGE
	1	1	**266-6332**	1	BRACKET	
	2	1	**266-6333**	1	COVER	
	3	1	**266-6337**	1	PULLEY	
	4	1	**266-6334**	2	BEARING	
	5	1	**212-8596**	2	BUSHING	
	6	1	**266-6335**	1	SPACER (40.8X50.8X27-MM THK)	
	7	1	**266-6336**	1	WASHER (13X49X8-MM THK)	
M	8	1	**266-6338**	1	BOLT (M12X1.25X25-MM)	
M	9	1	**294-1726**	6	BOLT (M10X1.5X37-MM)	

M - METRIC PART

296-4660 **PULLEY GP-ENGINE (*contd.*)** **i02707575**

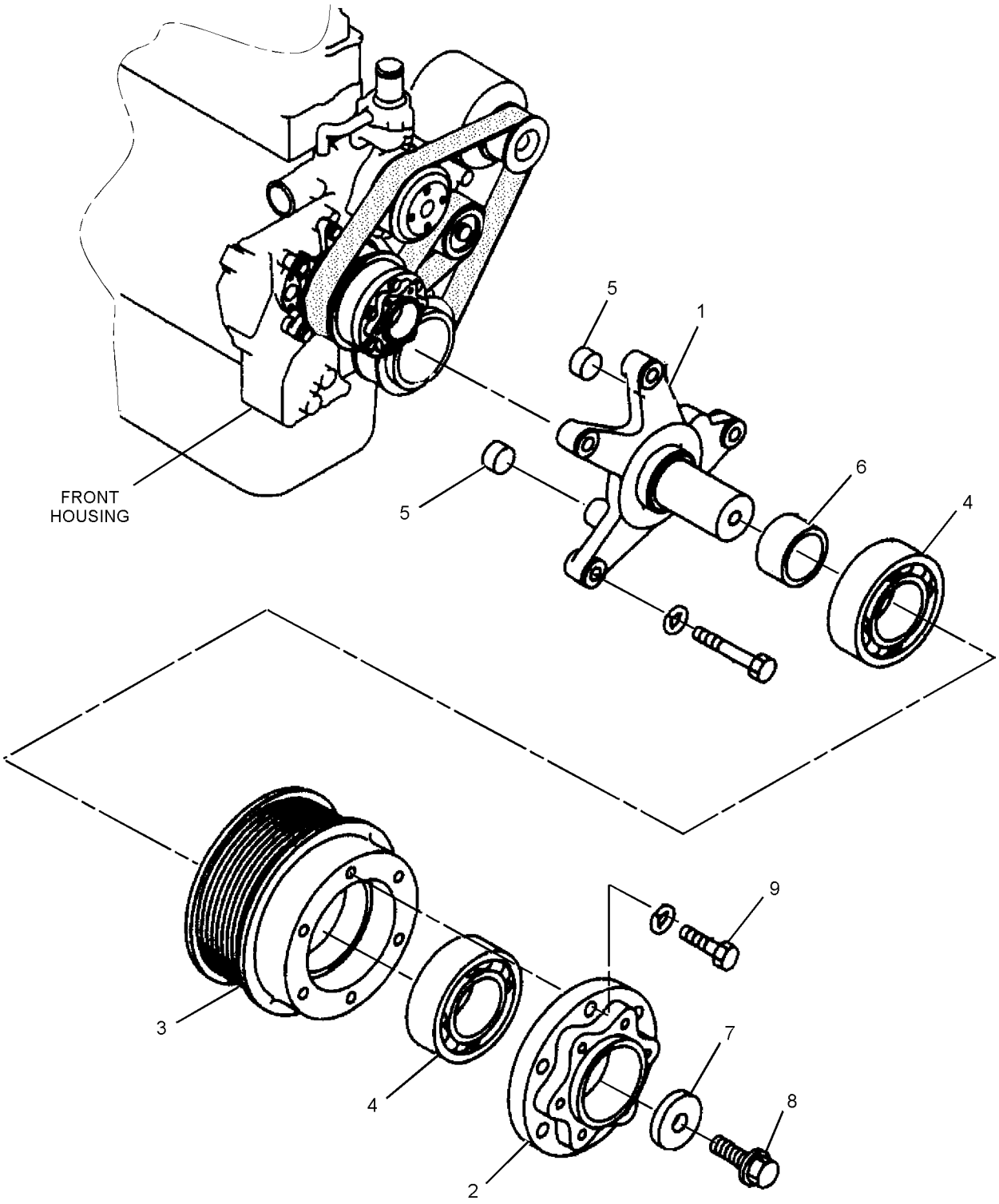

GRAPHIC #1 **<END>** g01363823

296-4667 PULLEY GP-ENGINE

S/N: KGF1-UP; FAL1-UP
1.04
PART OF 272-4676, 296-4680, 305-4776, 310-9484, 310-9485, 324-3971, 324-3972, 324-3975 ENGINE AR-COMPLETE
AN ATTACHMENT

SMCS-1205, 1207, 1359, 1384, 1425 **i03977369**

NOTE	REF NO	GRAPHIC REF	PART NUMBER	QTY	PART NAME 1 2 3 4 5 6 (PRODUCT LEVEL)	SEE PAGE
	1	1	**212-8584**	1	PULLEY	
	2	1	**324-4225**	1	PULLEY AS	
Y	3	1	**305-4908**	1	PULLEY GP-IDLER	171
	4	1	**294-1781**	1	BELT-SERPENTINE	
	5	1	**266-6332**	1	BRACKET	
	6	1	**266-6333**	1	COVER	
	7	1	**266-6337**	1	PULLEY	
	8	1	**266-6334**	2	BEARING	
	9	1	**212-8596**	2	BUSHING	
	10	1	**266-6335**	1	SPACER (40.8X50.8X27-MM THK)	
	11	1	**266-6336**	1	WASHER (13X49X8-MM THK)	
M	12	1	**266-6338**	1	BOLT (M12X1.25X25-MM)	
M	13	1	**294-1726**	6	BOLT (M10X1.5X37-MM)	
M	14	1	**213-9433**	4	BOLT (M10X1.5X45-MM)	
FY			**296-4660**	1	PULLEY GP-ENGINE	149

F - NOT SHOWN
M - METRIC PART
Y - SEPARATE ILLUSTRATION

296-4667 **PULLEY GP-ENGINE (*contd.*)** **i03977369**

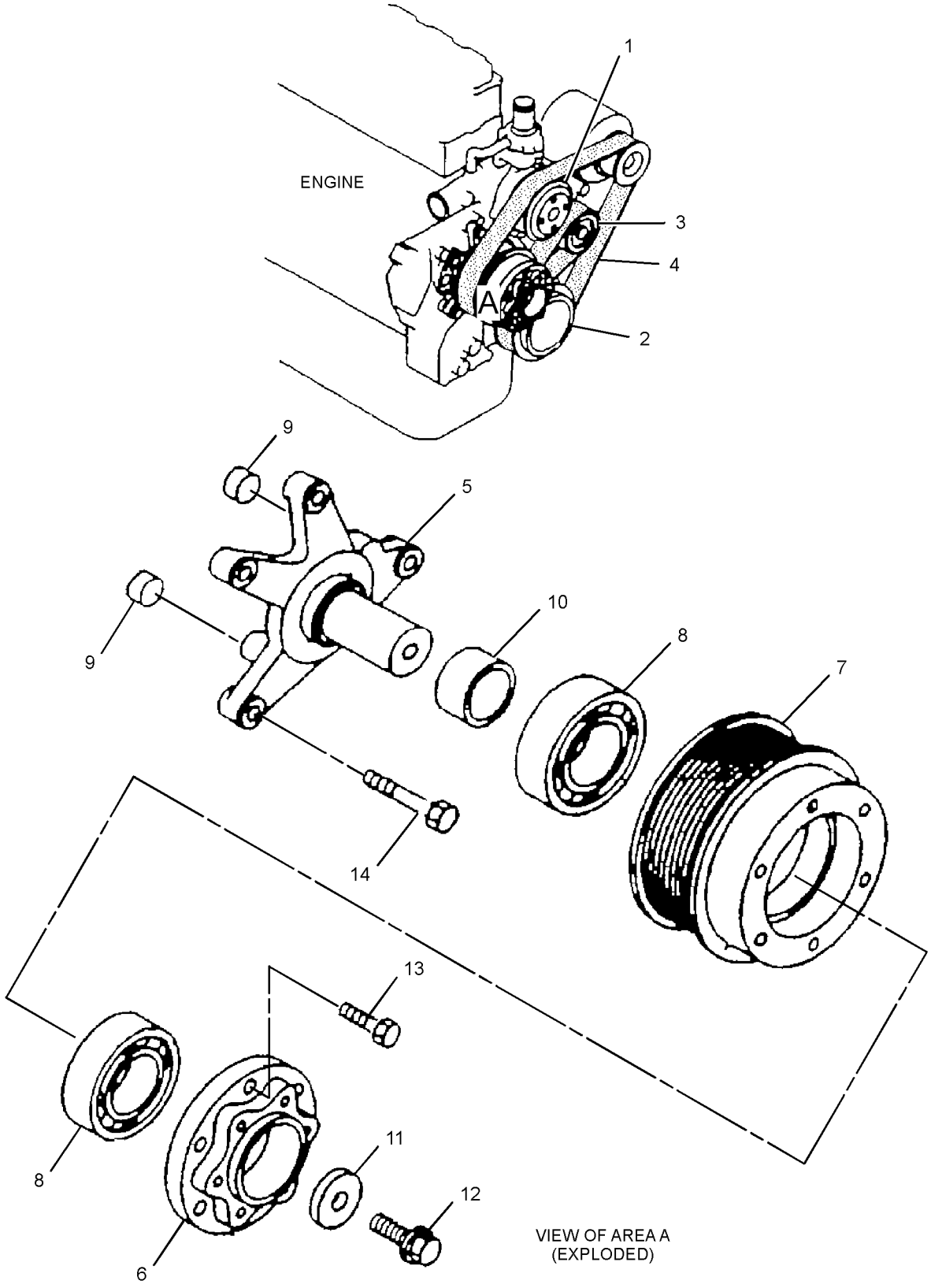

GRAPHIC #1 **<END>** g01376966

297-7747 PULLEY GP-ENGINE

S/N: KGF1-3780; FAL1-2823
PART OF 272-4682, 296-4675, 324-3965 ENGINE AR-COMPLETE
ALSO AN ATTACHMENT

SMCS-1205, 1207, 1359, 1384, 1425 **i02784900**

NOTE	REF NO	GRAPHIC REF	PART NUMBER	QTY	PART NAME 1 2 3 4 5 6 (PRODUCT LEVEL)	SEE PAGE
Y	1	1	**305-4908**	1	PULLEY GP-IDLER	171
M	2	1	**297-7824**	11	BOLT AS	
	3	1	**7X-0796**	6	LOCKWASHER	
	4	1	**266-6230**	1	SPACER-FAN	
	5	1	**212-8593**	1	PLATE	
M	6	1	**266-6231**	6	BOLT (M10X1.5X120-MM)	
	7	1	**212-8584**	1	PULLEY	
	8	1	**297-7825**	1	BELT-SERPENTINE	
	9	1	**266-6228**	1	COVER	
	10	1	**222-8371**	1	PULLEY AS (DRIVE)	
		1	**5I-7540**	1	SLEEVE	
Y	11	1	**305-4775**	1	PULLEY GP-FAN	167

M - METRIC PART
Y - SEPARATE ILLUSTRATION

297-7747 **PULLEY GP-ENGINE (*contd.*)** **i02784900**

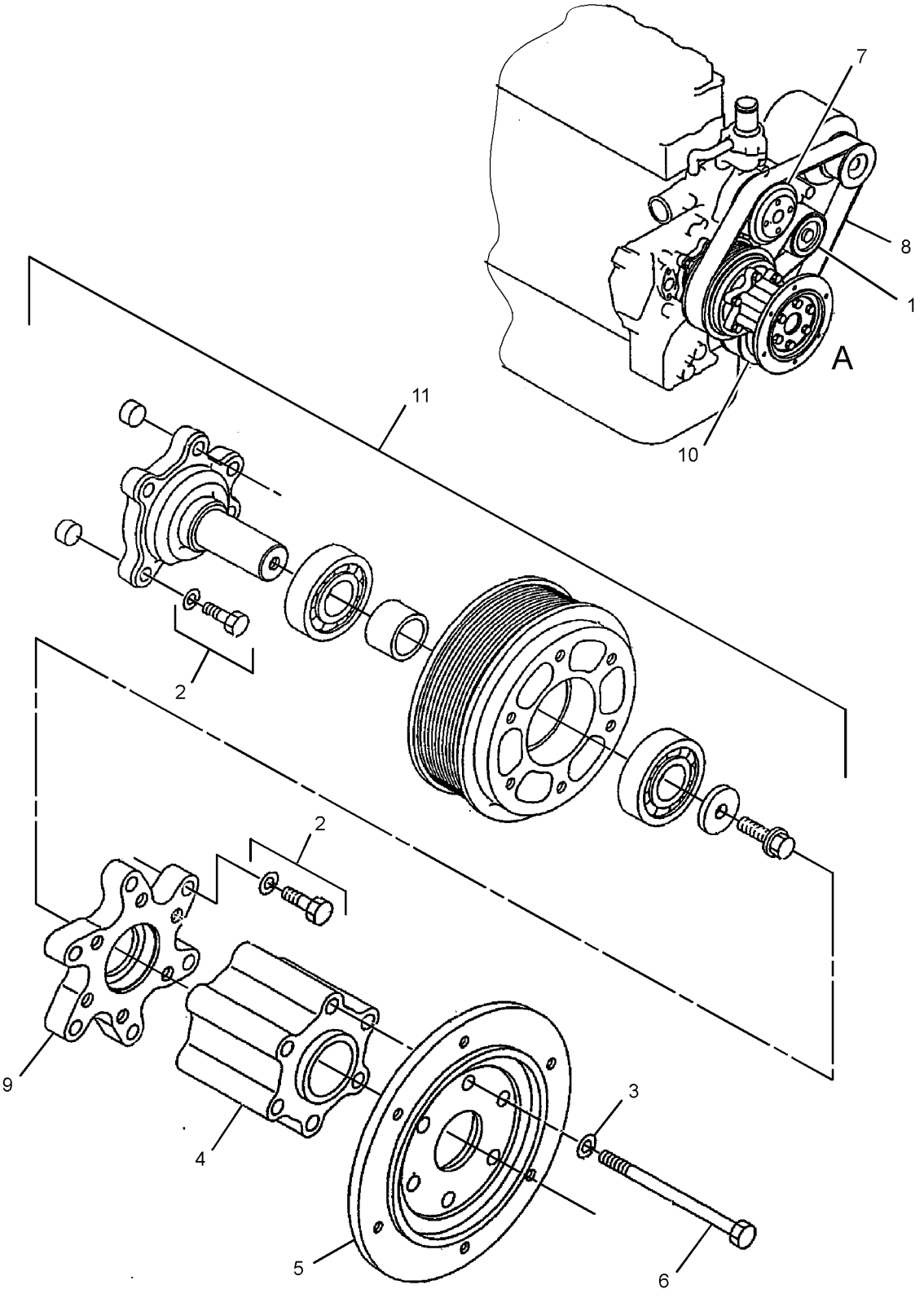

VIEW OF AREA A
(EXPLODED)

GRAPHIC #1 **<END>** g01393227

297-7747 PULLEY GP-ENGINE

S/N: KGF3781-UP; FAL2824-UP

PART OF 327-7267 ENGINE AR, 272-4682, 296-4675, 324-3965 ENGINE AR-COMPLETE

ALSO AN ATTACHMENT

SMCS-1205, 1207, 1359, 1384, 1425

i03993749

NOTE	REF NO	GRAPHIC REF	PART NUMBER	QTY	PART NAME 1 2 3 4 5 6 (PRODUCT LEVEL)	SEE PAGE
Y	1	1	**305-4908**	1	PULLEY GP-IDLER	171
M	2	1	**297-7824**	11	BOLT AS	
	3	1	**7X-0796**	6	LOCKWASHER	
	4	1	**266-6230**	1	SPACER-FAN	
	5	1	**212-8593**	1	PLATE	
M	6	1	**266-6231**	6	BOLT (M10X1.5X120-MM)	
	7	1	**212-8584**	1	PULLEY	
	8	1	**297-7825**	1	BELT-SERPENTINE	
	9	1	**266-6228**	1	COVER	
	10	1	**327-7221**	1	PULLEY AS (DRIVE)	
		1	**5I-7540**	1	SLEEVE	
C	11	1	**324-4107**	1	BRACKET	
M	12	1	**255-2873**	1	BOLT AS	
	13	1	**266-6229**	1	PULLEY-FAN DRIVE	
C	14	1	**324-4103**	2	BEARING	
	15	1	**212-8596**	2	BUSHING	
	16	1	**266-6232**	1	SPACER (31.1X38.1X28.4-MM THK)	
	17	1	**255-2871**	1	WASHER (10.5X38X7-MM THK)	
C	18	1	**324-4102**	1	PLATE	
C	19	1	**324-4106**	1	PLATE	
CY	20	1	**324-4122**	1	FAN GP-SUCTION	200

C - CHANGE FROM PREVIOUS TYPE
M - METRIC PART
Y - SEPARATE ILLUSTRATION

297-7747 **PULLEY GP-ENGINE (*contd.*)** **i03993749**

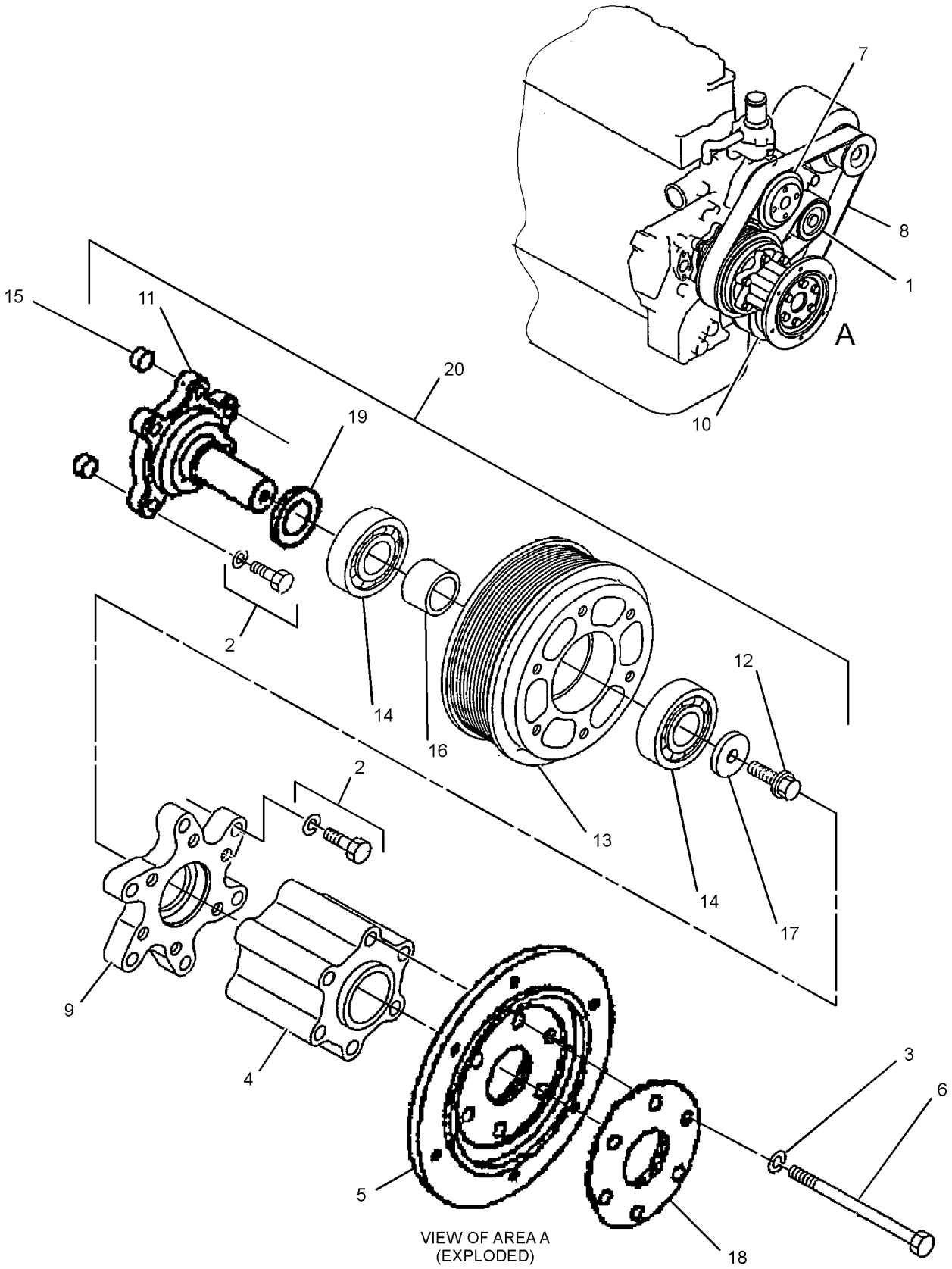

VIEW OF AREA A
(EXPLODED)

GRAPHIC #1 **<END>** g02093913

297-7748 PULLEY GP-ENGINE

S/N: KGF1-UP; FAL1-UP
PART OF 272-4685 ENGINE AR-COMPLETE
AN ATTACHMENT
TYPE 1

SMCS-1205, 1207, 1359, 1384, 1425 **i02762389**

NOTE	REF NO	GRAPHIC REF	PART NUMBER	QTY	PART NAME 1 2 3 4 5 6 (PRODUCT LEVEL)	SEE PAGE
Y	1	1	**305-4908**	1	PULLEY GP-IDLER	171
M	2	1	**297-7824**	11	BOLT AS	
	3	1	**7X-0796**	6	LOCKWASHER	
	4	1	**266-6230**	1	SPACER-FAN	
	5	1	**212-8593**	1	PLATE	
M	6	1	**266-6231**	6	BOLT (M10X1.5X120-MM)	
	7	1	**212-8584**	1	PULLEY	
	8	1	**212-8585**	1	BELT-SERPENTINE	
	9	1	**266-6326**	1	PULLEY AS	
		1	**5I-7540**	1	SLEEVE	
	10	1	**266-6228**	1	COVER	
Y	11	1	**305-4774**	1	PULLEY GP-ENGINE	161

M - METRIC PART
Y - SEPARATE ILLUSTRATION

297-7748 **PULLEY GP-ENGINE (*contd.*)** **i02762389**

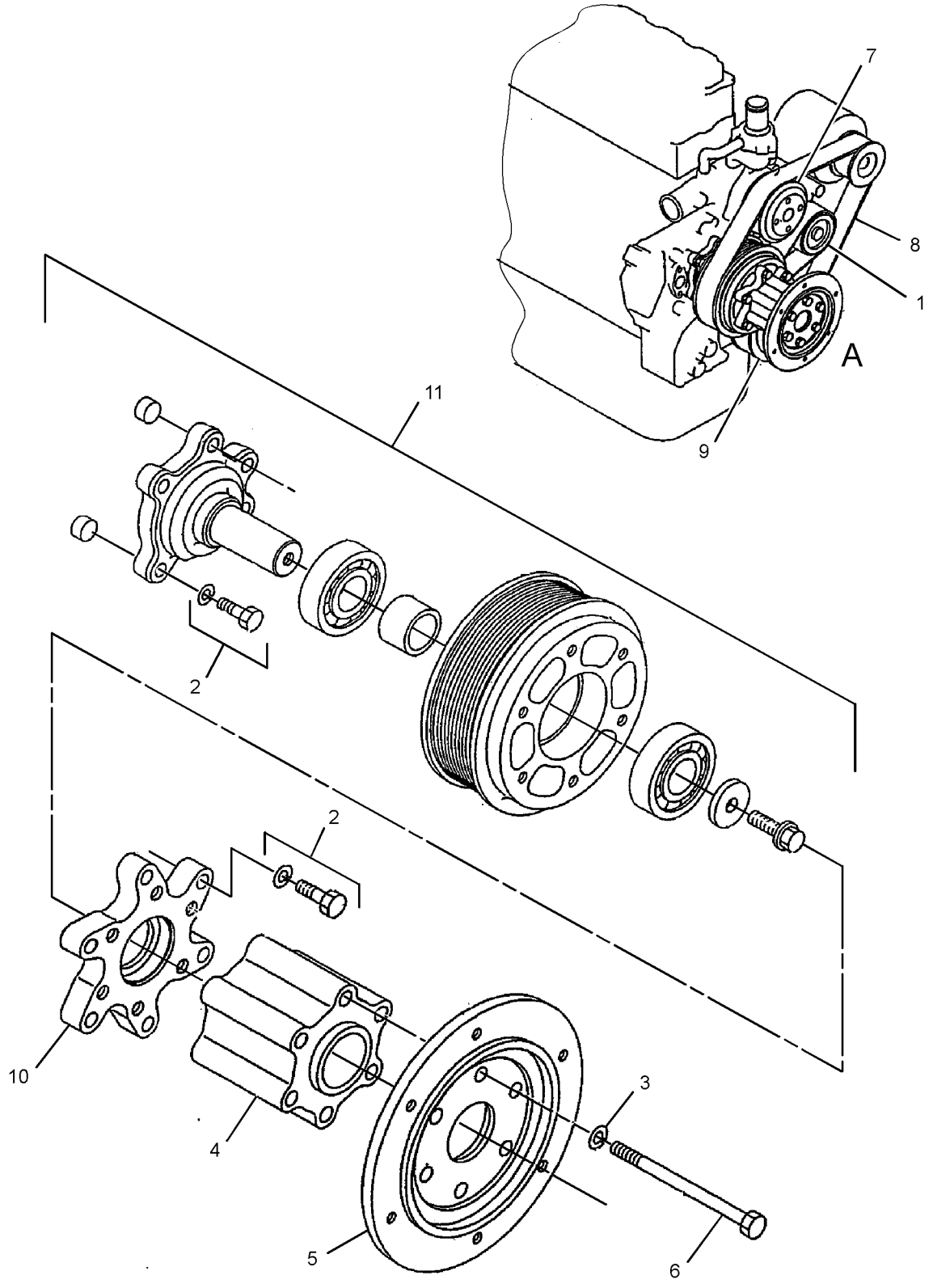

VIEW OF AREA A
(EXPLODED)

GRAPHIC #1 **<END>** g01383581

297-7748 PULLEY GP-ENGINE

S/N: KGF1-UP; FAL1-UP
PART OF 272-4685 ENGINE AR-COMPLETE
AN ATTACHMENT
TYPE 2

SMCS-1205, 1207, 1359, 1384, 1425 **i03993755**

NOTE	REF NO	GRAPHIC REF	PART NUMBER	QTY	PART NAME 1 2 3 4 5 6 (PRODUCT LEVEL)	SEE PAGE
Y	1	1	**305-4908**	1	PULLEY GP-IDLER	171
M	2	1	**297-7824**	11	BOLT AS	
	3	1	**7X-0796**	6	LOCKWASHER	
	4	1	**266-6230**	1	SPACER-FAN	
	5	1	**212-8593**	1	PLATE	
M	6	1	**266-6231**	6	BOLT (M10X1.5X120-MM)	
	7	1	**212-8584**	1	PULLEY	
	8	1	**212-8585**	1	BELT-SERPENTINE	
	9	1	**324-4225**	1	PULLEY AS	
	10	1	**266-6228**	1	COVER	
	11	1	**324-4107**	1	BRACKET	
M	12	1	**255-2873**	1	BOLT AS	
	13	1	**266-6327**	1	PULLEY	
	14	1	**324-4103**	2	BEARING	
	15	1	**212-8596**	2	BUSHING	
	16	1	**266-6232**	1	SPACER (31.1X38.1X28.4-MM THK)	
	17	1	**255-2871**	1	WASHER (10.5X38X7-MM THK)	
C	18	1	**324-4102**	1	PLATE	
	19	1	**324-4106**	1	PLATE	
CY	20	1	**324-4121**	1	PULLEY GP-FAN	169

C - CHANGE FROM PREVIOUS TYPE
M - METRIC PART
Y - SEPARATE ILLUSTRATION

297-7748 **PULLEY GP-ENGINE (*contd.*)** **i03993755**

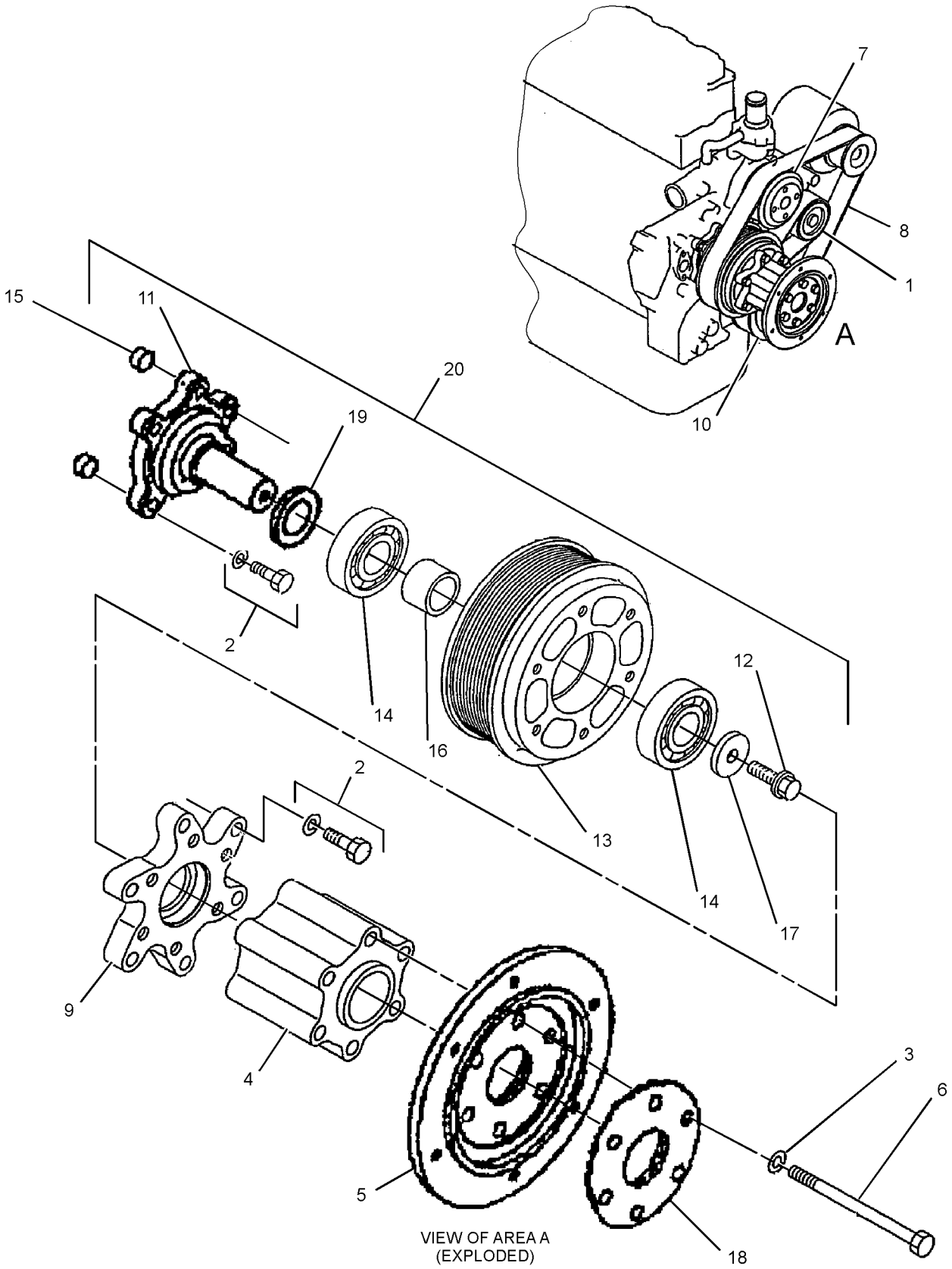

VIEW OF AREA A
(EXPLODED)

GRAPHIC #1 **<END>** g02093913

305-4774 PULLEY GP-ENGINE

S/N: KGF1-UP; FAL1-UP
PART OF 297-7748 PULLEY GP-ENGINE
AN ATTACHMENT

SMCS-1205, 1207, 1359, 1384, 1425

i02762391

NOTE	REF NO	GRAPHIC REF	PART NUMBER	QTY	PART NAME 1 2 3 4 5 6 (PRODUCT LEVEL)	SEE PAGE
	1	1	**266-6227**	1	BRACKET	
M	2	1	**255-2873**	1	BOLT AS	
	3	1	**266-6327**	1	PULLEY	
	4	1	**255-2926**	2	BEARING	
	5	1	**212-8596**	2	BUSHING	
	6	1	**266-6232**	1	SPACER (31.1X38.1X28.4-MM THK)	
	7	1	**255-2871**	1	WASHER (10.5X38X7-MM THK)	

M - METRIC PART

305-4774 **PULLEY GP-ENGINE (*contd.*)** **i02762391**

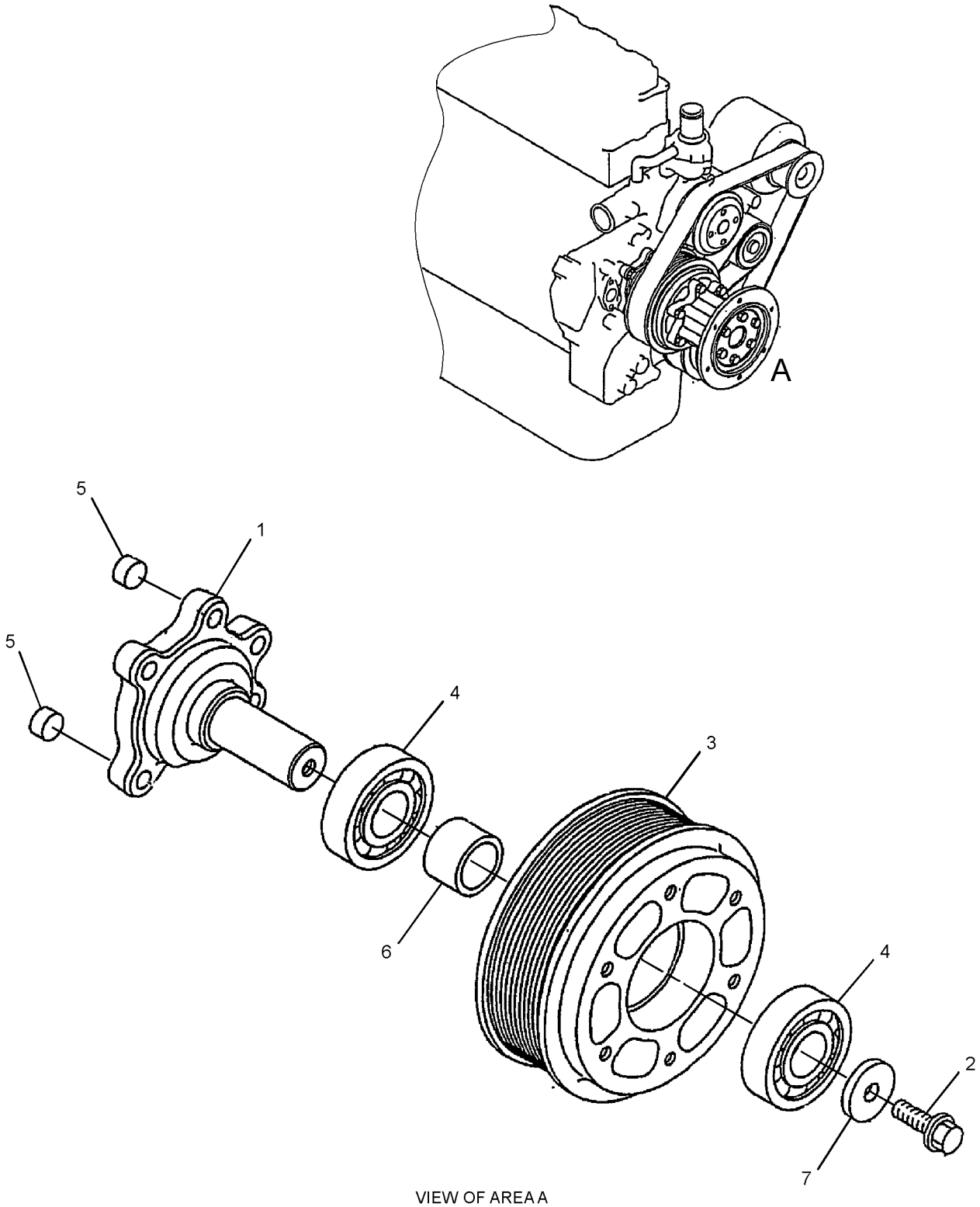

VIEW OF AREA A
(EXPLODED)

GRAPHIC #1 **<END>** g01383554

324-4200 PULLEY GP-ENGINE

S/N: KGF1-UP; FAL1-UP

PART OF 327-7195 ENGINE AR, 324-3969, 324-3971, 324-3972, 324-3975, 324-4003, 324-4004, 327-7198 ENGINE AR-COMPLETE

AN ATTACHMENT

SMCS-1205, 1207, 1359, 1384, 1425 **i04005512**

NOTE	REF NO	GRAPHIC REF	PART NUMBER	QTY	PART NAME 1 2 3 4 5 6 (PRODUCT LEVEL)	SEE PAGE
	1	1	**212-8584**	1	PULLEY	
	2	1	**324-4225**	1	PULLEY AS	
		1	**5I-7540**	1	SLEEVE	
Y	3	1	**305-4908**	1	PULLEY GP-IDLER	171
	4	1	**294-1781**	1	BELT-SERPENTINE	
Y	5	1	**327-7230**	1	FAN GP-SUCTION	201
M	6	1	**213-9433**	4	BOLT (M10X1.5X45-MM)	
	7	1	**327-7251**	1	BRACKET AS	

M - METRIC PART
Y - SEPARATE ILLUSTRATION

324-4200 **PULLEY GP-ENGINE (*contd.*)** **i04005512**

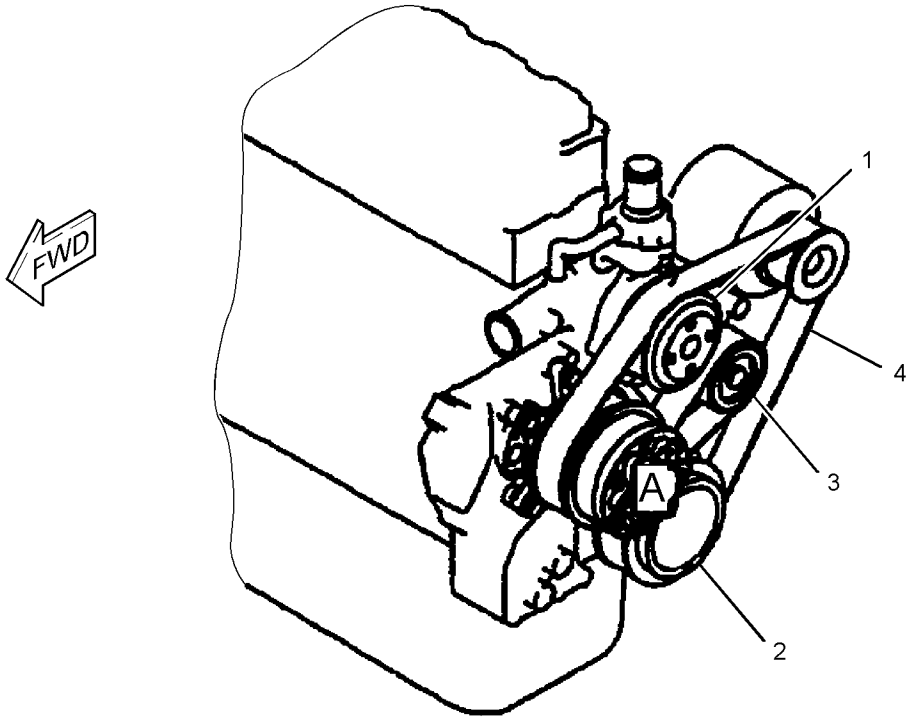

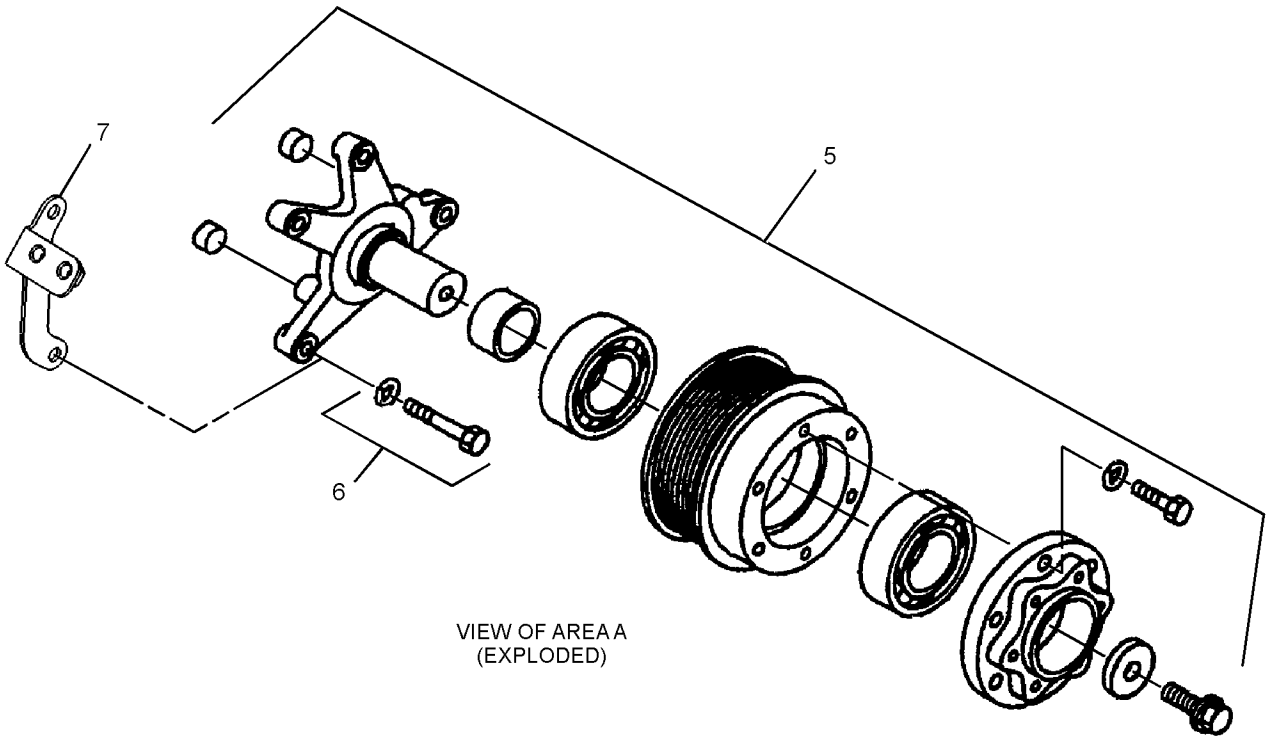

VIEW OF AREA A
(EXPLODED)

GRAPHIC #1 **<END>** g02179553

327-7270 PULLEY GP-ENGINE

S/N: KGF1-UP; FAL1-UP

PART OF 327-7268 ENGINE AR, 327-7289, 327-7290 ENGINE AR-COMPLETE

AN ATTACHMENT

SMCS-1205, 1207, 1359, 1384, 1425 **i04384256**

NOTE	REF NO	GRAPHIC REF	PART NUMBER	QTY	PART NAME 1 2 3 4 5 6 (PRODUCT LEVEL)	SEE PAGE
Y	1	1	**305-4908**	1	PULLEY GP-IDLER (BELT TENSIONING)	171
M	2	1	**297-7824**	11	BOLT AS	
	3	1	**7X-0796**	6	LOCKWASHER	
	4	1	**266-6230**	1	SPACER-FAN	
	5	1	**212-8593**	1	PLATE	
M	6	1	**266-6231**	6	BOLT (M10X1.5X120-MM)	
	7	1	**212-8584**	1	PULLEY	
	8	1	**212-8585**	1	BELT-SERPENTINE	
	9	1	**266-6228**	1	COVER	
	10	1	**327-7202**	1	PULLEY AS-CRANKSHAFT	
		1	**5I-7540**	1	SLEEVE	
	11	1	**324-4102**	1	PLATE	
Y	12	1	**324-4122**	1	FAN GP-SUCTION	200

M - METRIC PART
Y - SEPARATE ILLUSTRATION

327-7270 **PULLEY GP-ENGINE (*contd.*)** **i04384256**

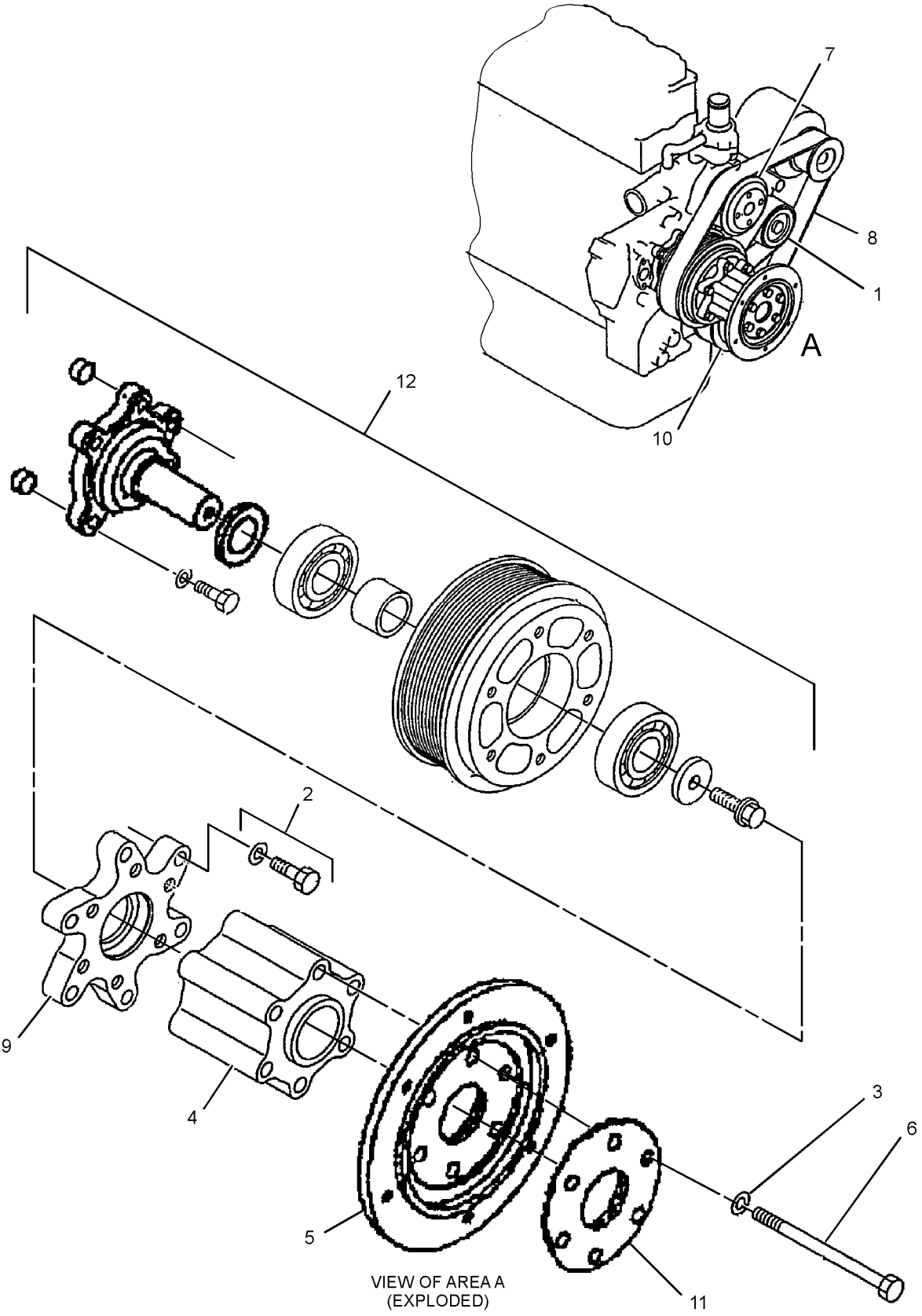

VIEW OF AREA A
(EXPLODED)

GRAPHIC #1 **<END>** g02547905

305-4775 PULLEY GP-FAN

S/N: KGF1-3780; FAL1-2823
PART OF 297-7747 PULLEY GP-ENGINE
ALSO AN ATTACHMENT

SMCS-1356, 1359

i02737576

NOTE	REF NO	GRAPHIC REF	PART NUMBER	QTY	PART NAME 1 2 3 4 5 6 (PRODUCT LEVEL)	SEE PAGE
	1	1	**266-6227**	1	BRACKET	
M	2	1	**255-2873**	1	BOLT AS	
	3	1	**266-6229**	1	PULLEY-FAN DRIVE	
	4	1	**255-2926**	2	BEARING	
	5	1	**212-8596**	2	BUSHING	
	6	1	**266-6232**	1	SPACER (31.1X38.1X28.4-MM THK)	
	7	1	**255-2871**	1	WASHER (10.5X38X7-MM THK)	

M - METRIC PART

305-4775 **PULLEY GP-FAN (*contd.*)** **i02737576**

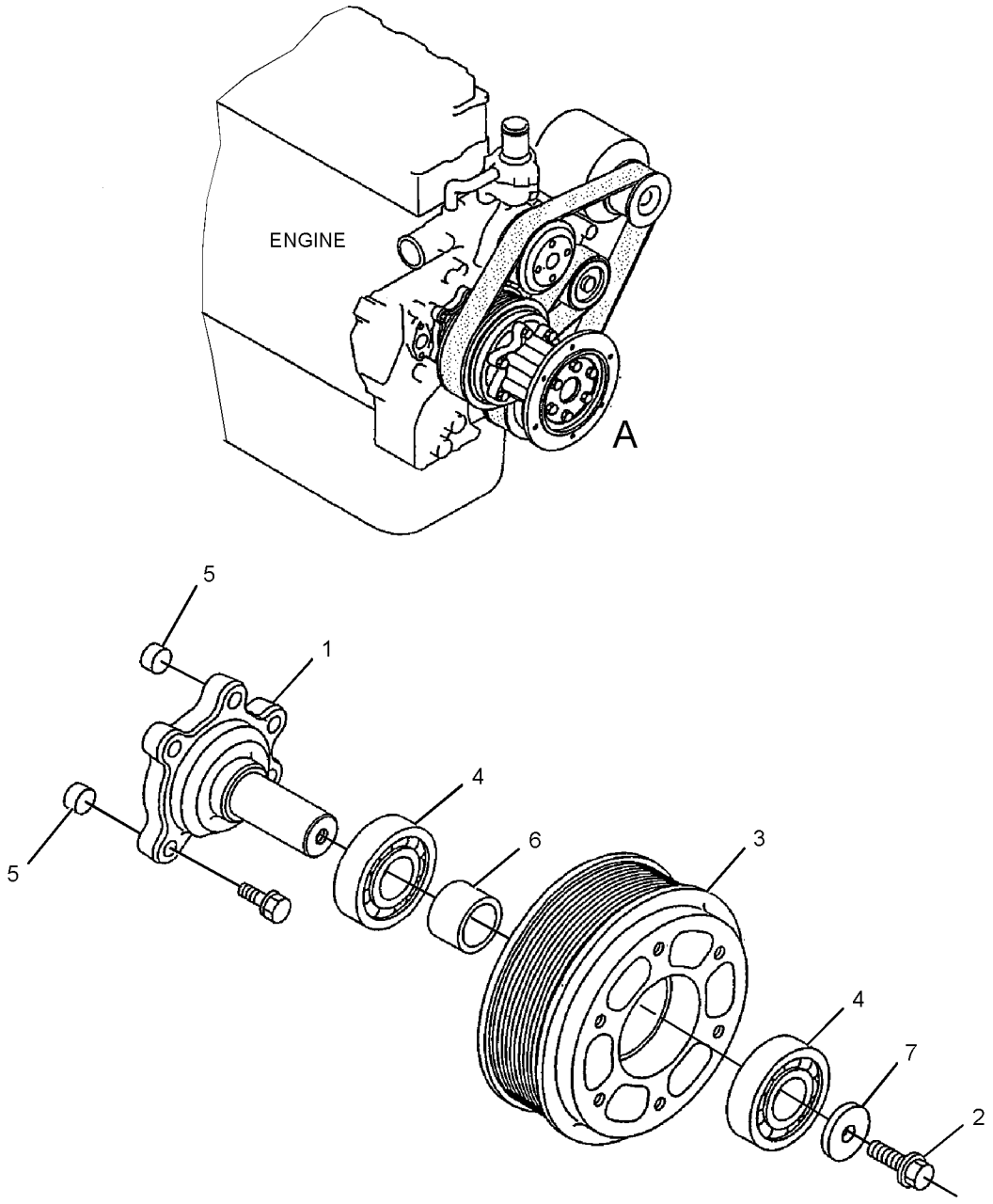

VIEW OF AREA A

GRAPHIC #1 **<END>** g01376577

324-4121 PULLEY GP-FAN

S/N: KGF1-UP; FAL1-UP
PART OF 297-7748 PULLEY GP-ENGINE
AN ATTACHMENT

SMCS-1356, 1359

i03429260

NOTE	REF NO	GRAPHIC REF	PART NUMBER	QTY	PART NAME 1 2 3 4 5 6 (PRODUCT LEVEL)	SEE PAGE
	1	1	**324-4107**	1	BRACKET	
M	2	1	**255-2873**	1	BOLT AS	
	3	1	**266-6327**	1	PULLEY	
	4	1	**324-4103**	2	BEARING	
	5	1	**212-8596**	2	BUSHING	
	6	1	**266-6232**	1	SPACER (31.1X38.1X28.4-MM THK)	
	7	1	**255-2871**	1	WASHER (10.5X38X7-MM THK)	
	8	1	**324-4106**	1	PLATE	

M - METRIC PART

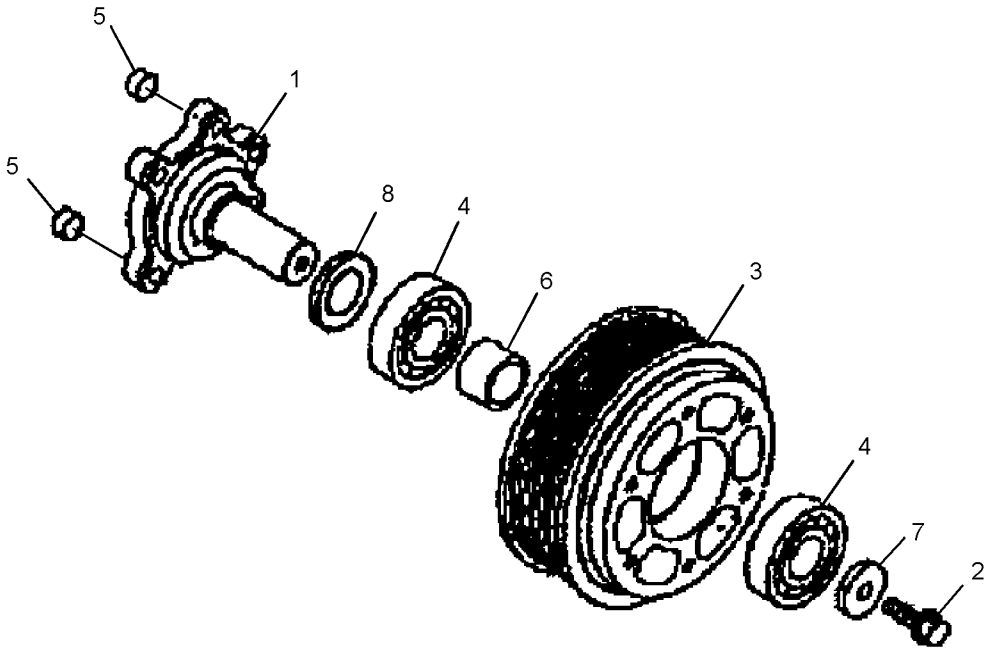

GRAPHIC #1

<END>

g01793634

255-3018 PULLEY GP-IDLER

S/N: KGF1-4205; FAL1-3125

PART OF 239-6507 COMPRESSOR GP-REFRIGERANT

SMCS-1358 **i02674719**

NOTE	REF NO	GRAPHIC REF	PART NUMBER	QTY	PART NAME 1 2 3 4 5 6 (PRODUCT LEVEL)	SEE PAGE
M	1	1	**255-3022**	1	NUT (M10X1.25-THD)	
	2	1	**239-6626**	1	PULLEY-IDLER	
M	3	1	**239-6627**	1	BOLT (M8X1.25X110-MM)	
	4	1	**239-6632**	1	RING-SNAP	
	5	1	**255-3020**	1	SHAFT	
	6	1	**255-3021**	1	WASHER	
	7	1	**239-6630**	1	COLLAR	
	8	1	**239-6631**	1	BEARING AS-BALL	

M - METRIC PART

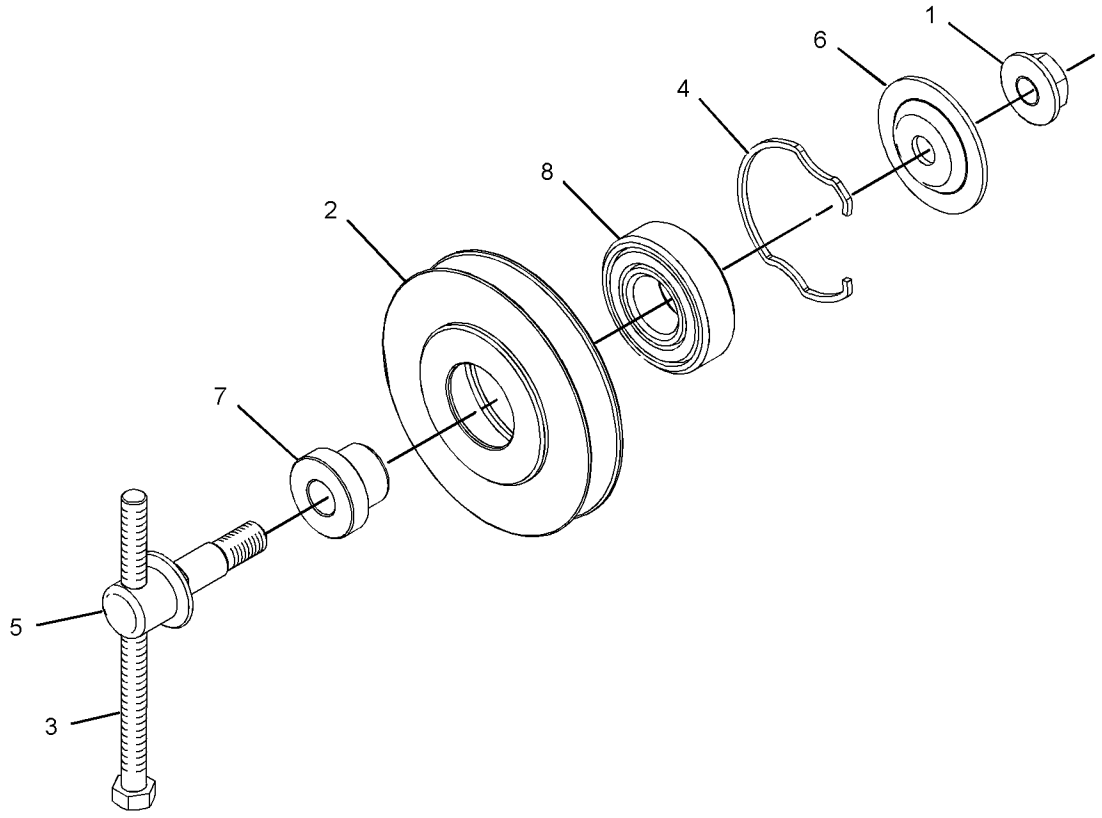

GRAPHIC #1 **<END>** g01277313

305-4908 PULLEY GP-IDLER

S/N: KGF1-UP; FAL1-UP

PART OF 266-6317, 296-4667, 297-7747, 297-7748, 324-4200, 327-7270 PULLEY GP-ENGINE

ALSO AN ATTACHMENT

SMCS-1358 **i02762390**

NOTE	REF NO	GRAPHIC REF	PART NUMBER	QTY	PART NAME 1 2 3 4 5 6 (PRODUCT LEVEL)	SEE PAGE
	1	1	**305-4907**	1	BRACKET	
	2	1	**294-1784**	1	PULLEY	
	3	1	**294-1785**	2	BEARING	
	4	1	**294-1786**	1	RING	
	5	1	**8T-9598**	2	RING-RETAINING	
	6	1	**305-4906**	1	COVER	
	7	1	**305-4905**	1	BOLT (M10X1.25X20-MM)	

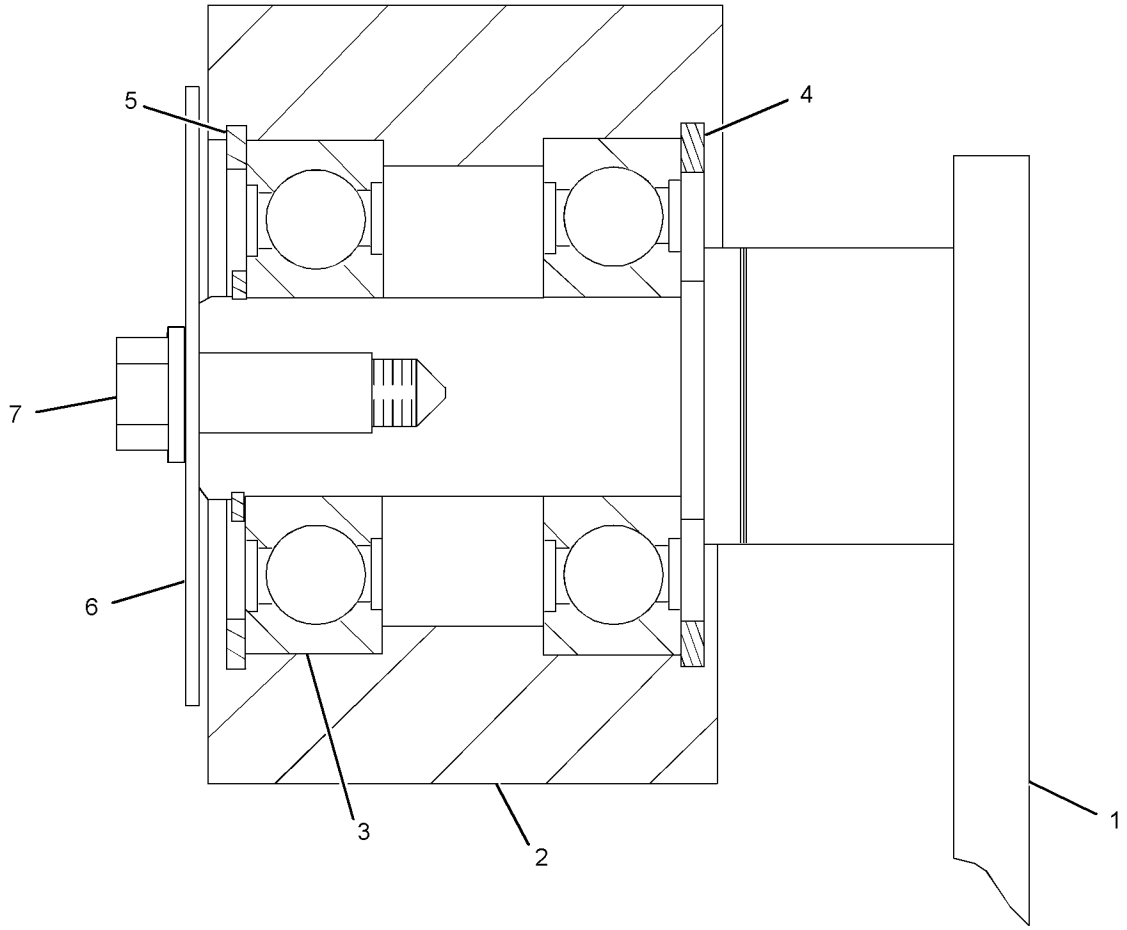

GRAPHIC #1 **<END>** g01383446

327-7193 PULLEY GP-IDLER

S/N: KGF4206-UP; FAL3126-UP

PART OF 239-6507 COMPRESSOR GP-REFRIGERANT

SMCS-1358 **i03897271**

NOTE	REF NO	GRAPHIC REF	PART NUMBER	QTY	PART NAME 1 2 3 4 5 6 (PRODUCT LEVEL)	SEE PAGE
M	1	1	**255-3022**	1	NUT (M10X1.25-THD)	
	2	1	**239-6626**	1	PULLEY-IDLER	
M	3	1	**239-6627**	1	BOLT (M8X1.25X110-MM)	
	4	1	**255-3020**	1	SHAFT	
	5	1	**324-4249**	1	WASHER	
	6	1	**239-6630**	1	COLLAR	
	7	1	**324-4248**	1	BEARING AS-BALL	
	8	1	**239-6632**	1	RING-SNAP	

M - METRIC PART

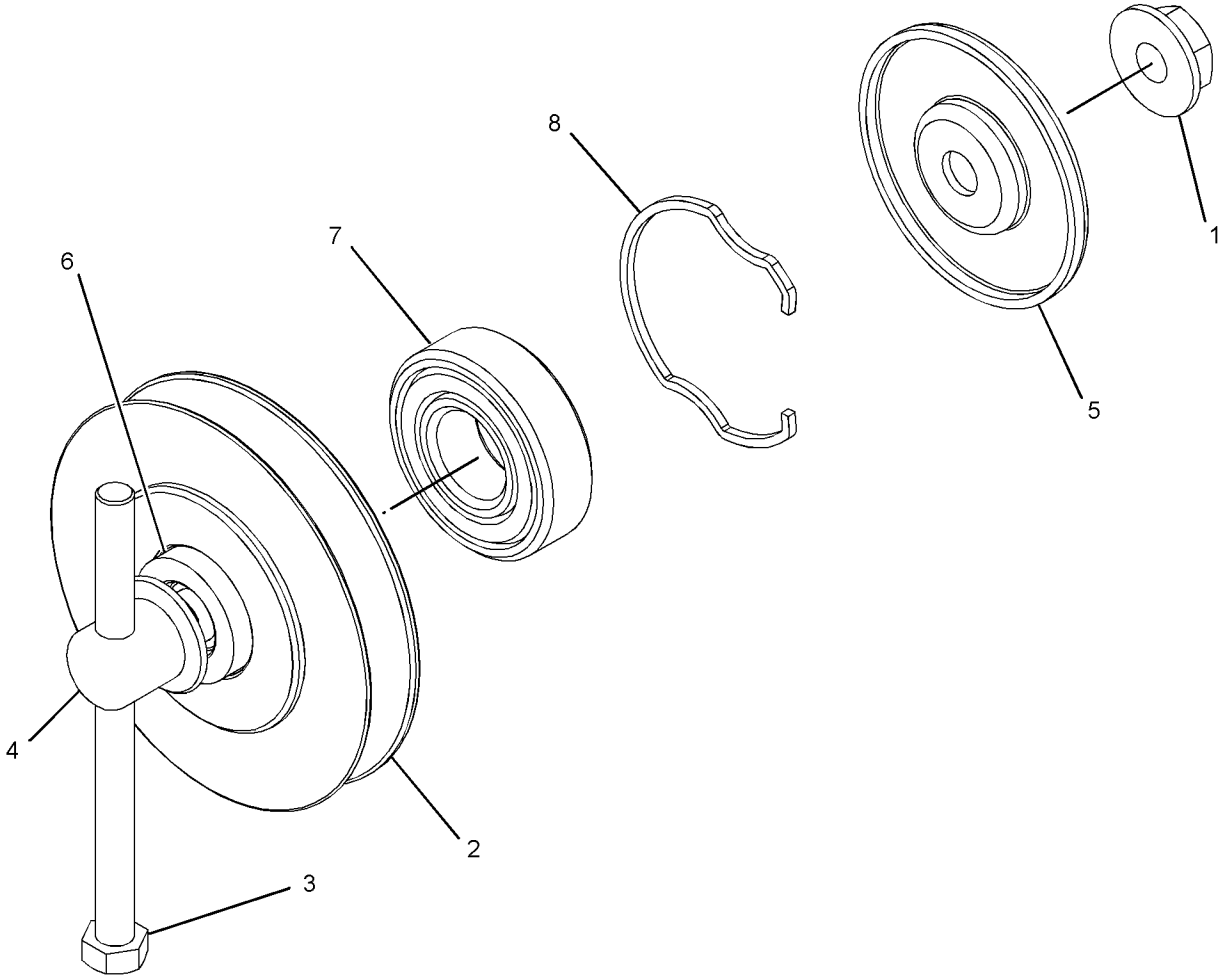

GRAPHIC #1 **<END>** g02131273

305-4742 VALVE MECHANISM GP

S/N: GDC1-UP
PART OF 305-4777 ENGINE AR
AN ATTACHMENT

SMCS-1209 **i02739641**

NOTE	REF NO	GRAPHIC REF	PART NUMBER	QTY	PART NAME 1 2 3 4 5 6 (PRODUCT LEVEL)	SEE PAGE
	1	1	**294-1684**	12	VALVE-INLET	
	2	1	**294-1685**	12	VALVE-EXHAUST	
	3	1	**294-1686**	6	BASE-ROCKER ARM	
	4	1	**294-1687**	6	BRIDGE-EXHAUST	
	5	1	**5I-7630**	12	CAP	
	6	1	**294-1688**	24	SPRING	
	7	1	**294-1689**	12	SCREW	
M	8	1	**8T-7964**	12	NUT (M6X1-THD)	
	9	1	**199-2188**	48	PIN-COTTER	
	10	1	**199-2189**	24	SEAL-VALVE STEM	
	11	1	**199-2187**	24	RETAINER	
	12	1	**294-1691**	6	BRACKET	
	13	1	**294-1692**	4	SPRING	
	14	1	**294-1693**	1	PIPE	
	15	1	**294-1694**	1	SHAFT AS-ROCKER ARM	
	15A	1	**096-3741**		CAP	
	16	1	**294-1695**	6	ROCKER ARM AS	
					(EACH INCLUDES)	
M	16A	1	**091-3474**	1	NUT (M8X1.25-THD)	
	16B	1	**094-9525**	1	SCREW	
	16C	1	**294-1696**	1	BUSHING	
	17	1	**294-1697**	6	ROCKER ARM AS	
					(EACH INCLUDES)	
M	17A	1	**091-3474**	1	NUT (M8X1.25-THD)	
	17B	1	**094-9525**	1	SCREW	
	17C	1	**294-1696**	1	BUSHING	
	18	1	**294-1698**	4	WASHER	
	19	1	**294-1699**	6	BOLT	
	20	1	**305-4746**	6	BOLT	
	21	1	**294-1786**	4	RING	
	22	1	**294-1702**	1	BOLT	
	23	1	**3B-4505**	4	LOCKWASHER	
	24	1	**305-4747**	4	WASHER	

M - METRIC PART

305-4742 **VALVE MECHANISM GP (*contd.*)** **i02739641**

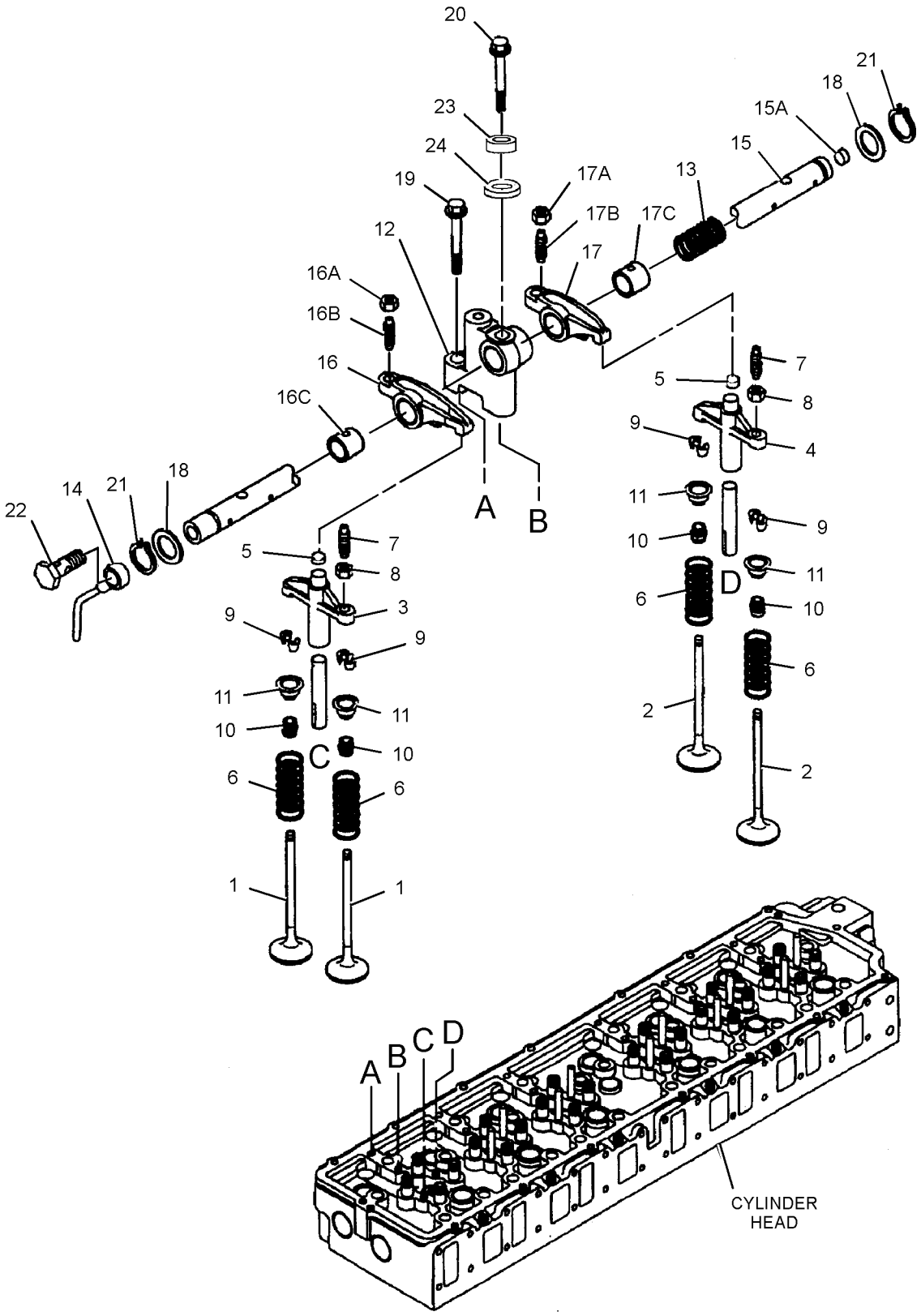

GRAPHIC #1 **<END>** g01368787

305-4910 VALVE MECHANISM GP

S/N: GDC1-UP

PART OF 272-4677, 272-4683, 296-4676, 296-4687, 305-4777 ENGINE AR, 327-7199 ENGINE AR-PRIMARY

ALSO AN ATTACHMENT

SMCS-1209 **i02739638**

NOTE	REF NO	GRAPHIC REF	PART NUMBER	QTY	PART NAME 1 2 3 4 5 6 (PRODUCT LEVEL)	SEE PAGE
	1	1	**294-1684**	12	VALVE-INLET	
	2	1	**294-1685**	12	VALVE-EXHAUST	
	3	1	**294-1686**	6	BASE-ROCKER ARM	
	4	1	**294-1687**	6	BRIDGE-EXHAUST	
	5	1	**5I-7630**	12	CAP	
	6	1	**294-1688**	24	SPRING	
	7	1	**294-1689**	12	SCREW	
M	8	1	**8T-7964**	12	NUT (M6X1-THD)	
	9	1	**199-2188**	48	PIN-COTTER	
	10	1	**199-2189**	24	SEAL-VALVE STEM	
	11	1	**199-2187**	24	RETAINER	
	12	1	**305-4750**	6	BRACKET	
	13	1	**305-4751**	4	SPRING	
	14	1	**294-1693**	1	PIPE	
	15	1	**305-4930**	1	SHAFT AS-ROCKER ARM	
	15A	1	**096-3741**	1	CAP	
	16	1	**305-4929**	6	ROCKER ARM AS	
					(EACH INCLUDES)	
M	16A	1	**091-3474**	1	NUT (M8X1.25-THD)	
	16B	1	**094-9525**	1	SCREW	
	16C	1	**305-4928**	1	BUSHING	
	17	1	**305-4927**	6	ROCKER ARM AS	
					(EACH INCLUDES)	
M	17A	1	**091-3474**	1	NUT (M8X1.25-THD)	
	17B	1	**094-9525**	1	SCREW	
	17C	1	**305-4928**	1	BUSHING	
	18	1	**294-1698**	4	WASHER	
	19	1	**294-1699**	6	BOLT	
	20	1	**305-4746**	6	BOLT	
	21	1	**294-1786**	4	RING	
	22	1	**294-1702**	1	BOLT	
	23	1	**3B-4505**	4	LOCKWASHER	
	24	1	**305-4747**	4	WASHER	

M - METRIC PART

305-4910 **VALVE MECHANISM GP (*contd.*)** **i02739638**

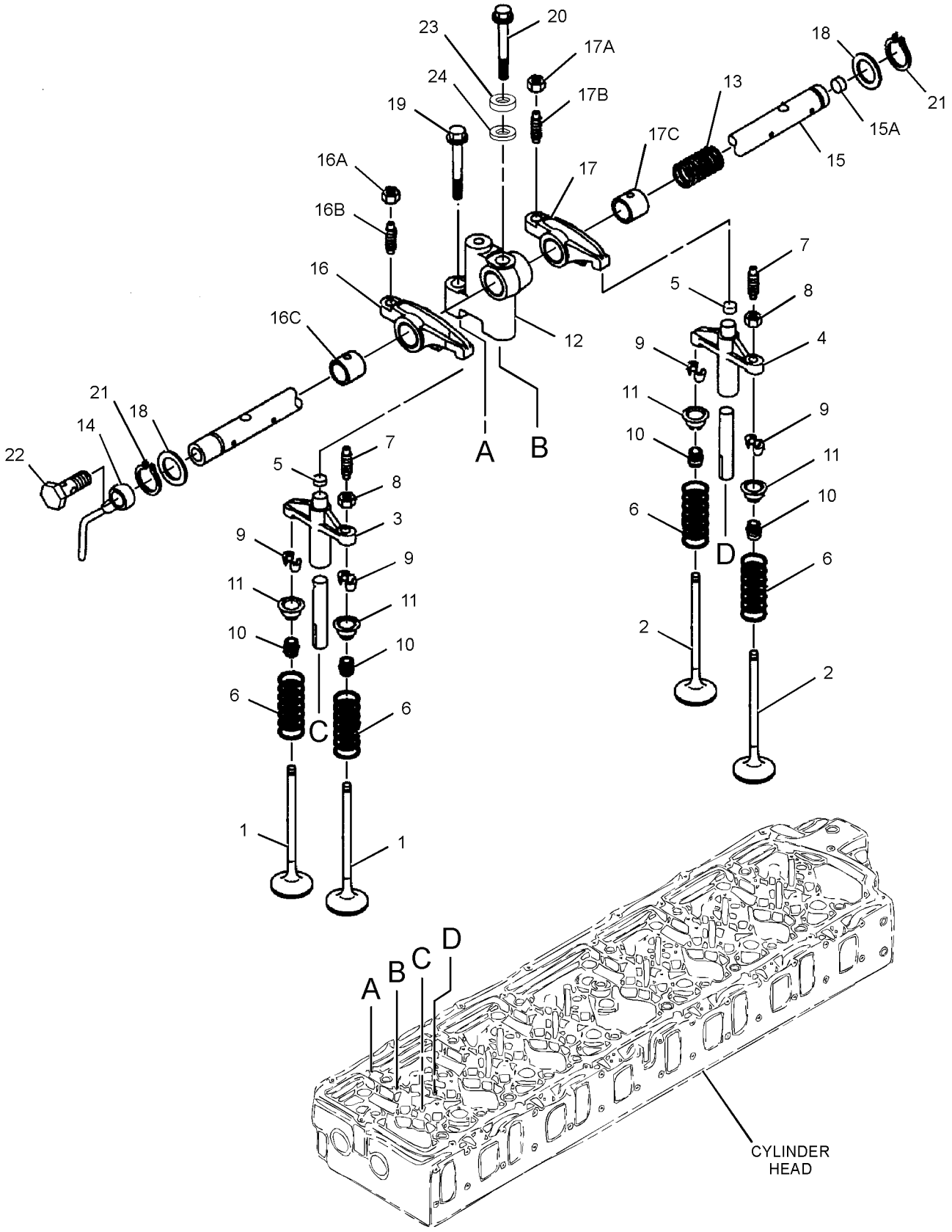

GRAPHIC #1 **<END>** g01369661

296-4654 ADAPTER GP-REMOTE OIL FILTER–ENGINE

S/N: GDC1-UP

PART OF 272-4677, 272-4683, 296-4676, 296-4687, 305-4777 ENGINE AR, 327-7199 ENGINE AR-PRIMARY

ALSO AN ATTACHMENT

SMCS-1308 **i02851402**

NOTE	REF NO	GRAPHIC REF	PART NUMBER	QTY	PART NAME 1 2 3 4 5 6 (PRODUCT LEVEL)	SEE PAGE
	1	1	**294-1769**	1	GASKET	
	2	1	**294-1770**	1	COVER AS-FILTER	
	2A	1	**185-2791**	2	SEAL	
	2B	1	**185-2793**	2	ELBOW	
	2C	1	**294-1771**	1	COVER	
M	3	1	**8T-4185**	1	BOLT (M10X1.5X50-MM)	
	4	1	**7X-0796**	1	LOCKWASHER	
M	5	1	**294-1726**	3	BOLT (M10X1.5X37-MM)	
	6	1	**294-1772**	2	BOLT	
	7	1	**5I-8066**	1	VALVE AS-RELIEF (ENGINE OIL PRESSURE)	
	8	1	**5B-5947**	1	GASKET	
	9	1	**5I-7505**	1	PLUG	

M - METRIC PART

296-4654 **ADAPTER GP-REMOTE OIL FILTER (*contd.*)** **i02851402**

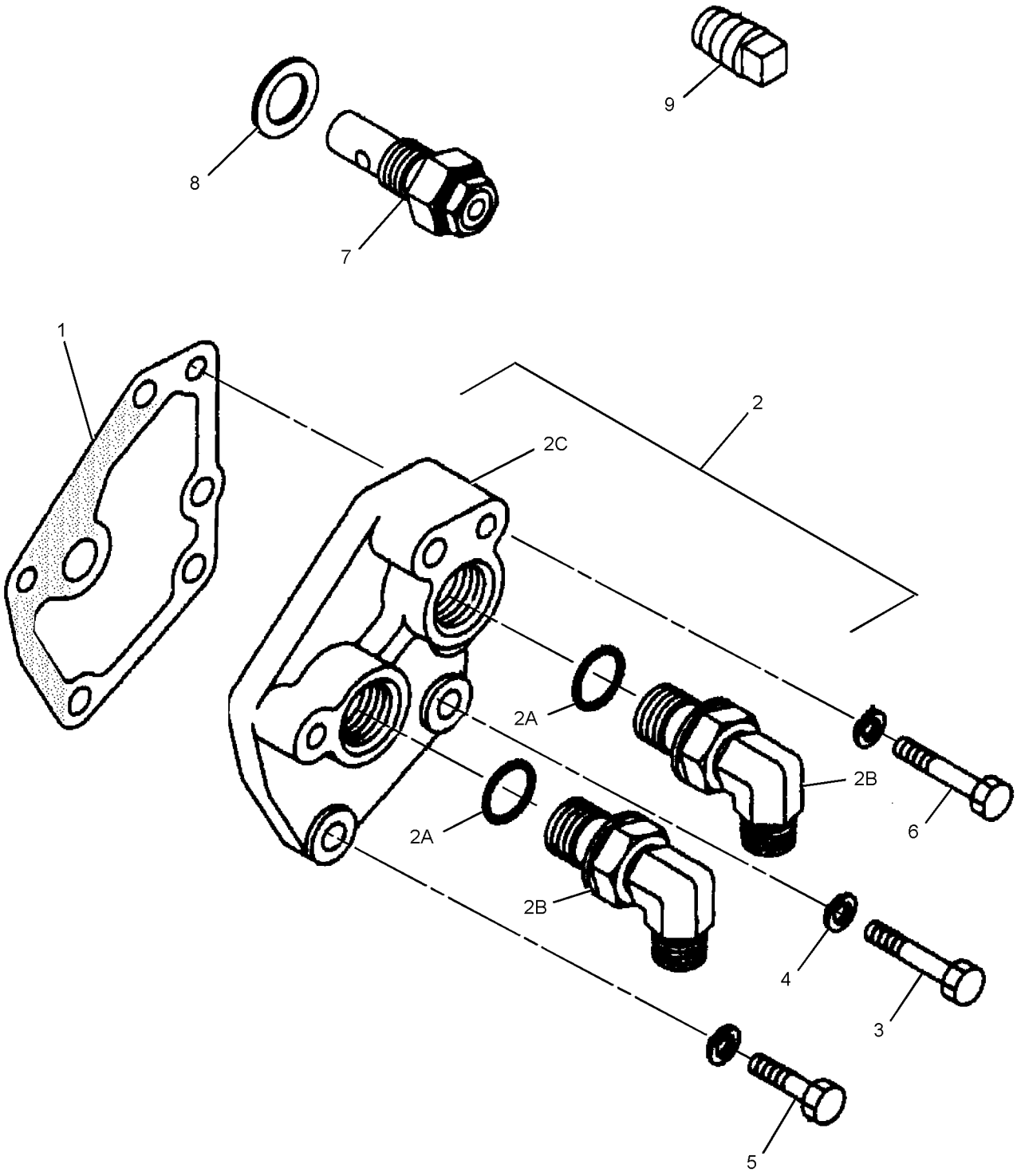

GRAPHIC #1 **<END>** g01316771

296-4638 BREATHER GP–CRANKCASE

S/N: GDC1-UP

PART OF 272-4677, 272-4683, 296-4676, 296-4687, 305-4777 ENGINE AR, 327-7199 ENGINE AR-PRIMARY

ALSO AN ATTACHMENT

SMCS-1317 **i04143793**

NOTE	REF NO	GRAPHIC REF	PART NUMBER	QTY	PART NAME 1 2 3 4 5 6 (PRODUCT LEVEL)	SEE PAGE
	1	1	**294-1773**	1	HOSE	
	2	1	**294-1774**	1	SEAL-O-RING	
	3	1	**5I-7725**	1	BREATHER (CRANKCASE)	
	4	1	**151-5332**	3	CLAMP	
	5	1	**5I-7645**	1	PIPE	
	6	1	**5I-5597**	2	BOLT (M14X1.5-THD)	
	7	1	**5I-4940**	1	TUBE (FUMES DISPOSAL)	
	8	1	**294-1775**	2	BOLT (M10X1.5X23-MM)	
	9	1	**294-1776**	3	CLIP	
	10	1	**8T-4121**	1	WASHER-HARD (11X21X2.5-MM THK)	

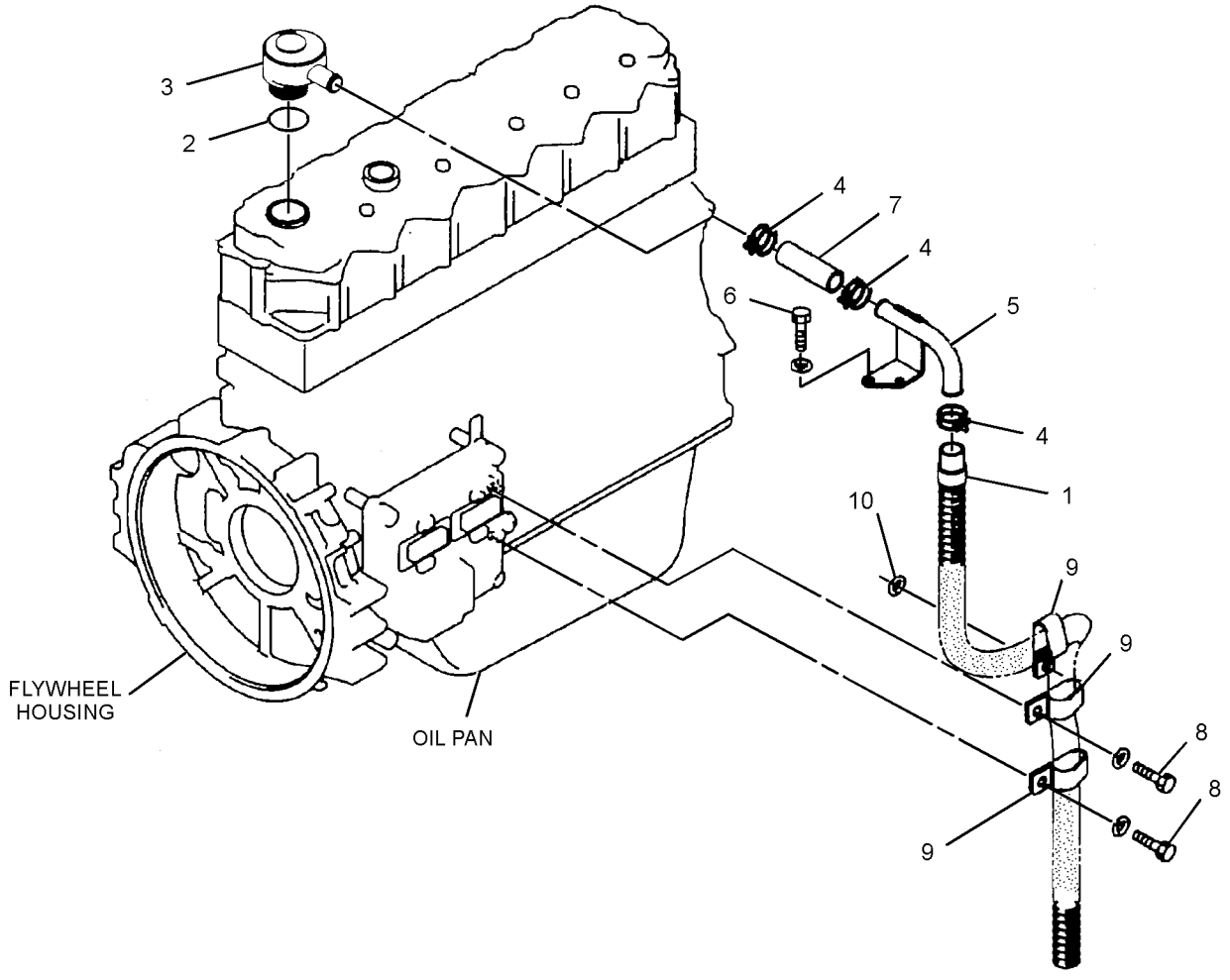

GRAPHIC #1 **<END>** g01356353

279-7911 FILTER & MTG GP-ENGINE OIL

S/N: KGF1-UP; FAL1-UP

PART OF 272-4742 INSTALLATION AR-ENGINE

SMCS-1306, 1308 **i04982936**

NOTE	REF NO	GRAPHIC REF	PART NUMBER	QTY	PART NAME 1 2 3 4 5 6 (PRODUCT LEVEL)	SEE PAGE
	1	1	**6V-5266**	3	SEAL-O-RING	
	2	1	**7C-1493**	1	VALVE AS-BYPASS	
	3	1	**7W-9028**	1	BASE AS-OIL FILTER	
		1	**2P-2537**	1	STUD-HOLLOW	
	4	1	**8C-3445**	1	CAP-DUST	
	5	1	**9L-9188**	1	SPRING-VALVE	
	6	1	**121-0307**	1	BASE	
	7	1	**305-4781**	1	PLATE AS	
I	8	1	**310-9498**	1	HOSE AS	
I	9	1	**310-9500**	1	HOSE AS	
	10	1	**1R-0739**	1	FILTER AS-ENGINE OIL (STANDARD EFFICIENCY)	
	11	1	**152-2939**	1	SEAL-O-RING	
	12	1	**2T-2991**	1	CONNECTOR	
	13	1	**189-9377**	1	SEAL-O-RING	
	14	1	**153-4906**	1	SEAL-O-RING	
	15	1	**033-5853**	1	SEAL-O-RING	
	16	1	**033-6038**	2	SEAL-O-RING	
M	17	1	**5P-8196**	1	PLUG	
	18	1	**5P-9617**	1	ADAPTER	
	19	1	**6D-1641**	4	CLIP	
	20	1	**6V-8713**	1	CONNECTOR	
	21	1	**228-7092**	1	SEAL-O-RING	
	22	1	**152-2938**	3	SEAL-O-RING	
	23	1	**8C-3446**	1	VALVE-FLUID SAMPLING (ENGINE OIL)	
	24	1	**8T-4121**	10	WASHER-HARD (11X21X2.5-MM THK)	
M	25	1	**8T-4136**	3	BOLT (M10X1.5X25-MM)	
M	26	1	**8T-4137**	4	BOLT (M10X1.5X20-MM)	
M	27	1	**8T-4186**	3	BOLT (M10X1.5X40-MM)	
M	28	1	**099-3649**	3	BOLT (M8X1.25X40-MM)	
	29	1	**8T-4224**	5	WASHER-HARD (8.8X16X2-MM THK)	
M	30	1	**8T-7547**	2	BOLT (M8X1.25X30-MM)	
	31	1	**9S-4188**	1	PLUG	
BM	32	1	**8T-4195**	3	BOLT (M10X1.5X30-MM)	
	33	1	**7K-1181**	2	STRAP-CABLE	

B - USE AS REQUIRED
I - REFER TO HYDRAULIC INFORMATION SYSTEM
M - METRIC PART

279-7911 **FILTER & MTG GP-ENGINE OIL (*contd.*)** **i04982936**

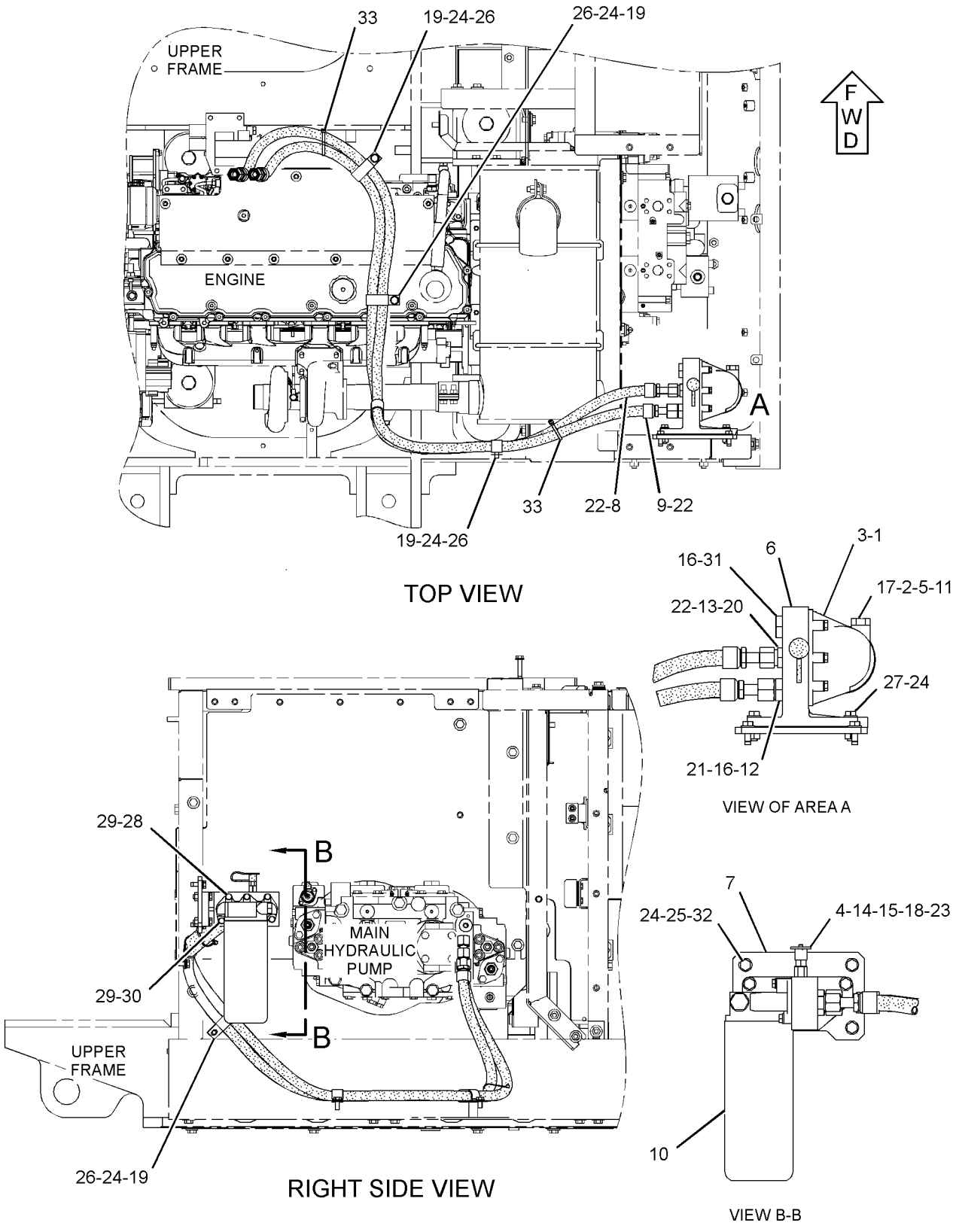

GRAPHIC #1 **<END>** g03168176

323-4762 KIT-HIGH SPEED OIL CHANGE–ENGINE, HYDRAULIC

S/N: KGF1-UP; FAL1-UP

FIELD INSTALLATION

SMCS-1325 **i03996398**

NOTE	REF NO	GRAPHIC REF	PART NUMBER	QTY	PART NAME 1 2 3 4 5 6 (PRODUCT LEVEL)	SEE PAGE
	1	2	**2V-2043**	1	NUT-BULKHEAD (1-5/8-12-THD)	
	2	2	**5B-3180**	1	NUT (5/16-18-THD)	
	3	2	**110-8827**	1	FITTING (QUICK DISCONNECT, MALE)	
	4	2	**118-0166**	1	FITTING (QUICK DISCONNECT, MALE)	
	5	1,2,3	**193-3973**	9	STRAP-CABLE	
	6	1,2,3	**200-6345**	6	MOUNT (DUAL SWIVEL)	
	7	1	**321-8629**	1	ELBOW	
	8	2	**321-8665**	1	PLUG-DRAIN	
	9	2	**322-8603**	1	BRACKET AS	
	10	1	**322-8604**	2	BRACKET	
	11	2	**323-0210**	1	BLOCK-HYDRAULIC	
	12	2	**117-8568**	1	NUT-BULKHEAD (1-7/8-12-THD)	
	13	2	*148-8339*	1	CONNECTOR AS	
		2	**6V-8716**	1	CONNECTOR	
		2	**6V-9746**	1	SEAL-O-RING	
		2	**7M-8485**	1	SEAL-O-RING	
	14	2	*148-8355*	1	ELBOW AS	
		2	**5K-9090**	1	SEAL-O-RING	
		2	**6V-9005**	1	ELBOW	
		2	**7M-8485**	1	SEAL-O-RING	
	15	2	*148-8357*	1	ELBOW AS	
		2	**5K-9090**	1	SEAL-O-RING	
		2	**6V-9008**	1	ELBOW	
		2	**7M-8485**	1	SEAL-O-RING	
	16	2	*148-8360*	1	ELBOW AS	
		2	**6V-9182**	1	ELBOW	
		2	**6V-9746**	1	SEAL-O-RING	
		2	**7M-8485**	1	SEAL-O-RING	
	17	2	*165-4927*	1	CONNECTOR AS	
		2	**2T-2991**	1	CONNECTOR	
		2	**4K-1388**	1	SEAL-O-RING	
		2	**6V-9746**	1	SEAL-O-RING	
	18	1	*169-7409*	1	UNION AS	
		1	**6V-8996**	1	UNION	
		1	**7J-9108**	2	SEAL-O-RING	
	19	2	**2B-0858**	1	PLUG-PIPE	
	20	2	**2S-4078**	1	SEAL-O-RING	
	21	2,3	**305-2124**	3	STRAP-CABLE	
	22	3	*330-9758*	1	ELBOW AS	
		3	**8T-4149**	1	ELBOW	
		3	**228-7092**	1	SEAL-O-RING	
		3	**238-5084**	1	SEAL-O-RING	
M	23	1	**3C-3681**	2	NUT	
	24	1	**3E-4352**	2	WASHER-HARD (8.8X20.5X2.5-MM THK)	
	25	2	**4J-5267**	1	SEAL-O-RING	
	26	2	**5P-1076**	2	WASHER-HARD (13.5X30X4-MM THK)	
M	27	1	**6V-8214**	2	BOLT (M6X1X20-MM)	
	28	1	**6V-9170**	1	NUT-BULKHEAD (1-14-THD)	
	29	1	**7J-9108**	1	SEAL-O-RING	
	30	2	**7X-2470**	1	ADAPTER	
	31	3	**8S-0948**	1	CLIP	
	32	2	**8S-7271**	1	SETSCREW	
	33	2,3	**8T-4121**	4	WASHER-HARD (11X21X2.5-MM THK)	
M	34	3	**8T-4133**	1	NUT (M10X1.5-THD)	
M	35	2	**8T-4137**	1	BOLT (M10X1.5X20-MM)	
M	36	2	**8T-4139**	2	BOLT (M12X1.75X30-MM)	
M	37	2	**8T-4185**	2	BOLT (M10X1.5X50-MM)	
M	38	3	**8T-4195**	1	BOLT (M10X1.5X30-MM)	

323-4762 **KIT-HIGH SPEED OIL CHANGE (*contd.*)** **i03996398**

NOTE	REF NO	GRAPHIC REF	PART NUMBER	QTY	PART NAME 1 2 3 4 5 6 (PRODUCT LEVEL)	SEE PAGE
	39	1	**8T-4224**	2	WASHER-HARD (8.8X16X2-MM THK)	
M	40	1	**8T-5093**	2	BOLT-LOCKING (M8X1.25X25-MM)	
	41	1	**9X-2332**	2	CLIP	
	42	2	**9X-8250**	1	CLIP	
	43	1	**9X-8256**	4	WASHER (6.6X12X2-MM THK)	
					KIT DOES NOT INCLUDE HOSE ASSEMBLIES. HOSE ASSEMBLY PART NUMBERS SHOWN IN GRAPHIC MUST BE FABRICATED BY YOUR CATERPILLAR	
					DEALER. REFER TO SPECIAL INSTRUCTION REHS3995 FOR ADDITIONAL INFORMATION	

M - METRIC PART

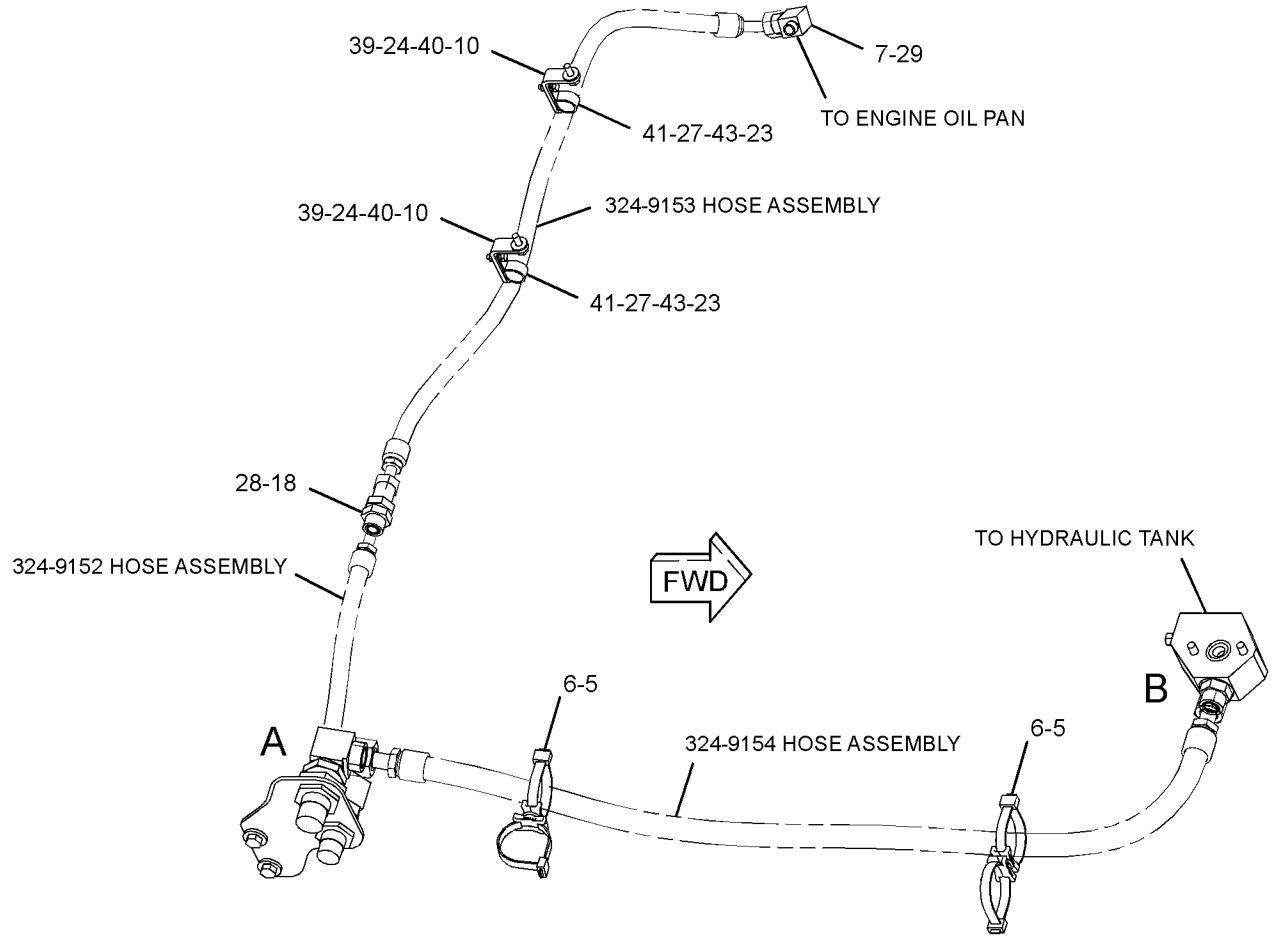

REFER TO ALL ILLUSTRATIONS OF THIS GROUP FOR AUXILIARY VIEWS

CONFIGURATION FOR SERIAL NUMBERS EBY, TAE, XCK, YDS, AND ZGB

GRAPHIC #1

g02177818

323-4762 **KIT-HIGH SPEED OIL CHANGE (*contd.*)** **i03996398**

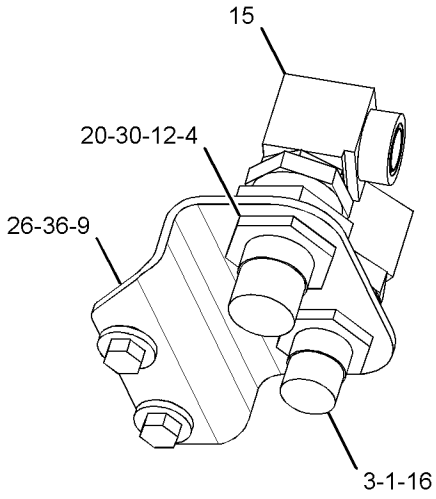

VIEW OF AREA A

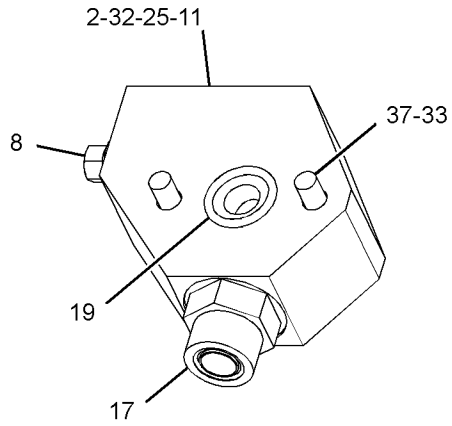

VIEW OF AREA B

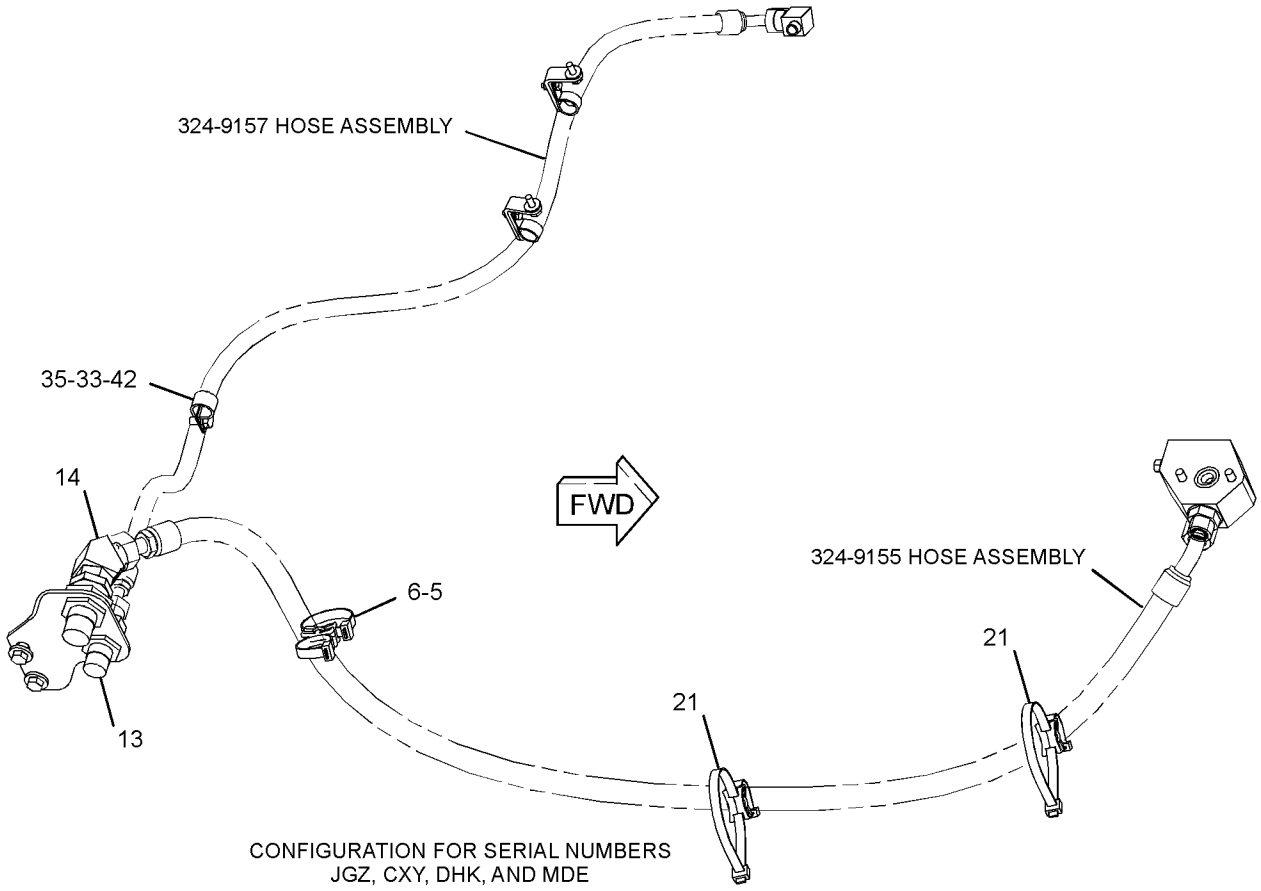

CONFIGURATION FOR SERIAL NUMBERS
JGZ, CXY, DHK, AND MDE

GRAPHIC #2

g02177824

323-4762 **KIT-HIGH SPEED OIL CHANGE (*contd.*)** **i03996398**

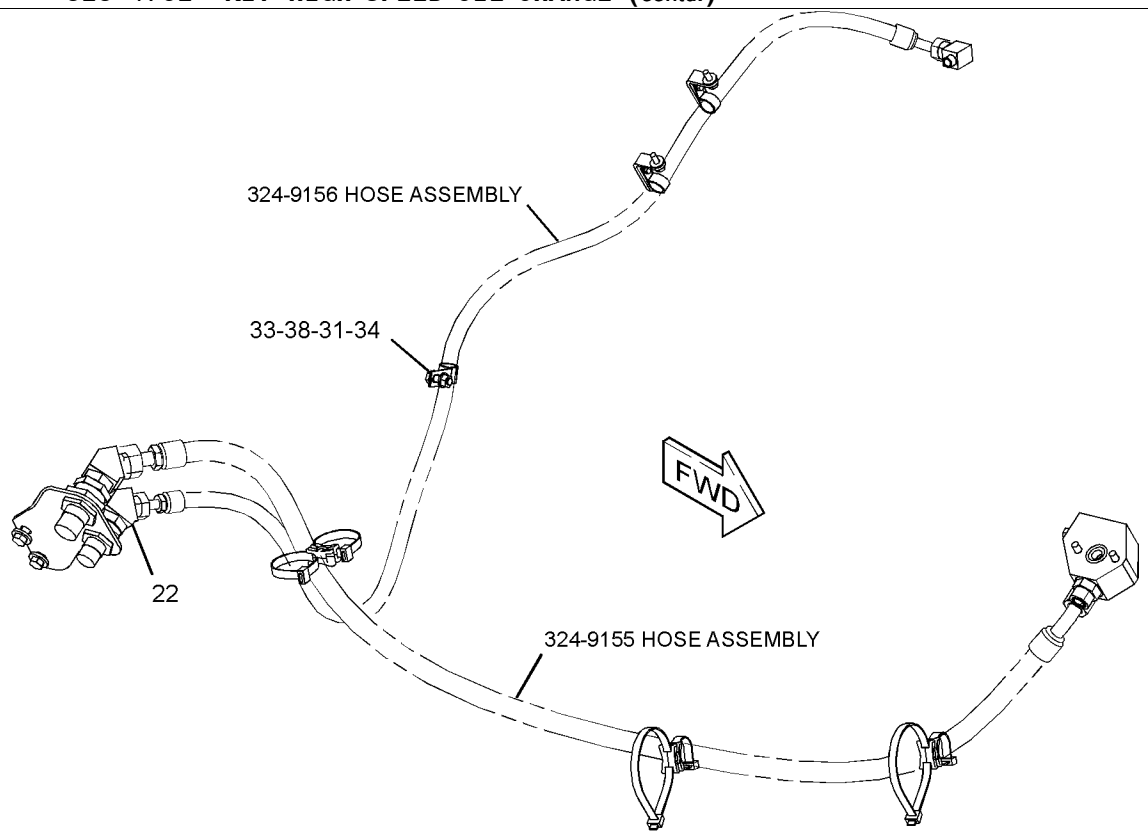

CONFIGURATION FOR SERIAL NUMBERS
FAL, JFZ, BZP, AGF, KGF, MGG, A8F, MCH, PHK, AND A9F

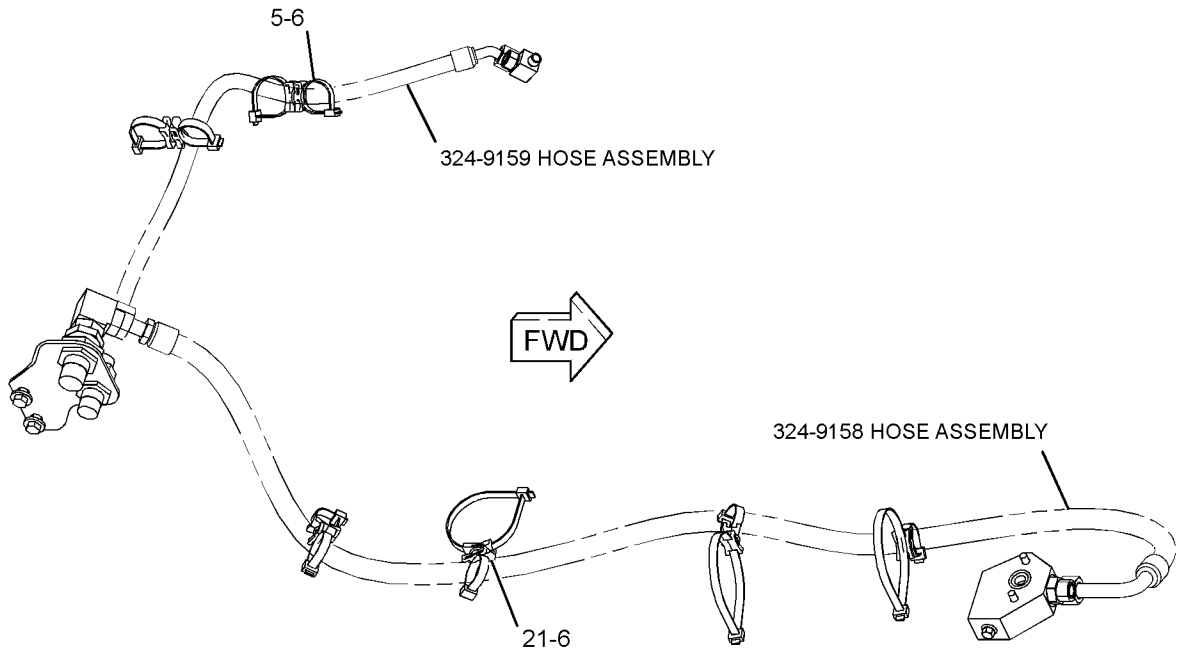

CONFIGURATION FOR SERIAL NUMBER WBN

GRAPHIC #3 **<END>** g02177826

296-4641 LINES GP-ENGINE OIL

S/N: GDC1-UP

PART OF 272-4677, 272-4683, 296-4676, 296-4687, 305-4777 ENGINE AR, 327-7199 ENGINE AR-PRIMARY

ALSO AN ATTACHMENT

SMCS-1307 **i04012831**

NOTE	REF NO	GRAPHIC REF	PART NUMBER	QTY	PART NAME 1 2 3 4 5 6 (PRODUCT LEVEL)	SEE PAGE
	1	1	**294-1767**	1	VALVE (PRESSURE RELIEF) (ENGINE OIL, SECONDARY)	
	2	1	**178-6563**	1	STRAINER	
	3	1	**5I-7642**	1	PLATE	
	4	1	**234-4796**	1	GASKET	
M	5	1	**195-8351**	1	BOLT AS	
	6	1	**294-1768**	3	BOLT	
	7	1	**5I-5038**	1	SEAL-O-RING	

M - METRIC PART

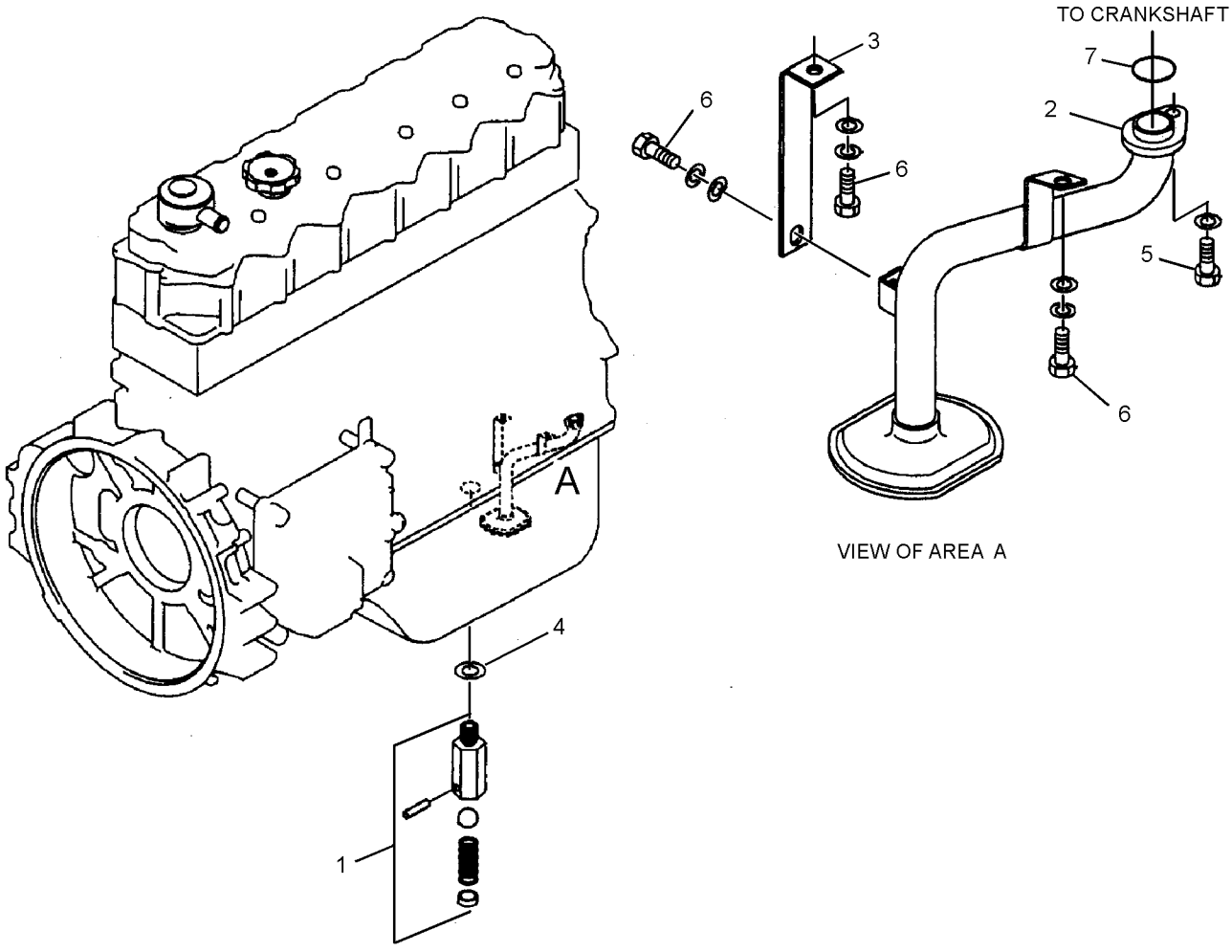

GRAPHIC #1 **<END>** g02109837

162-6185 LINES GP-ENGINE OIL DRAIN

S/N: KGF1-1005; FAL1-709

PART OF 272-4742 INSTALLATION AR-ENGINE

SMCS-1307 **i04894193**

NOTE	REF NO	GRAPHIC REF	PART NUMBER	QTY	PART NAME 1 2 3 4 5 6 (PRODUCT LEVEL)	SEE PAGE
	1	1	**096-0061**	1	STRAP-CABLE	
	2	1	**095-1388**	1	CLAMP-HOSE	
E	3	1	**5P-0743**		HOSE (17-CM)	
	4	1	**217-5469**	1	ELBOW	

E - ORDER BY THE CENTIMETER

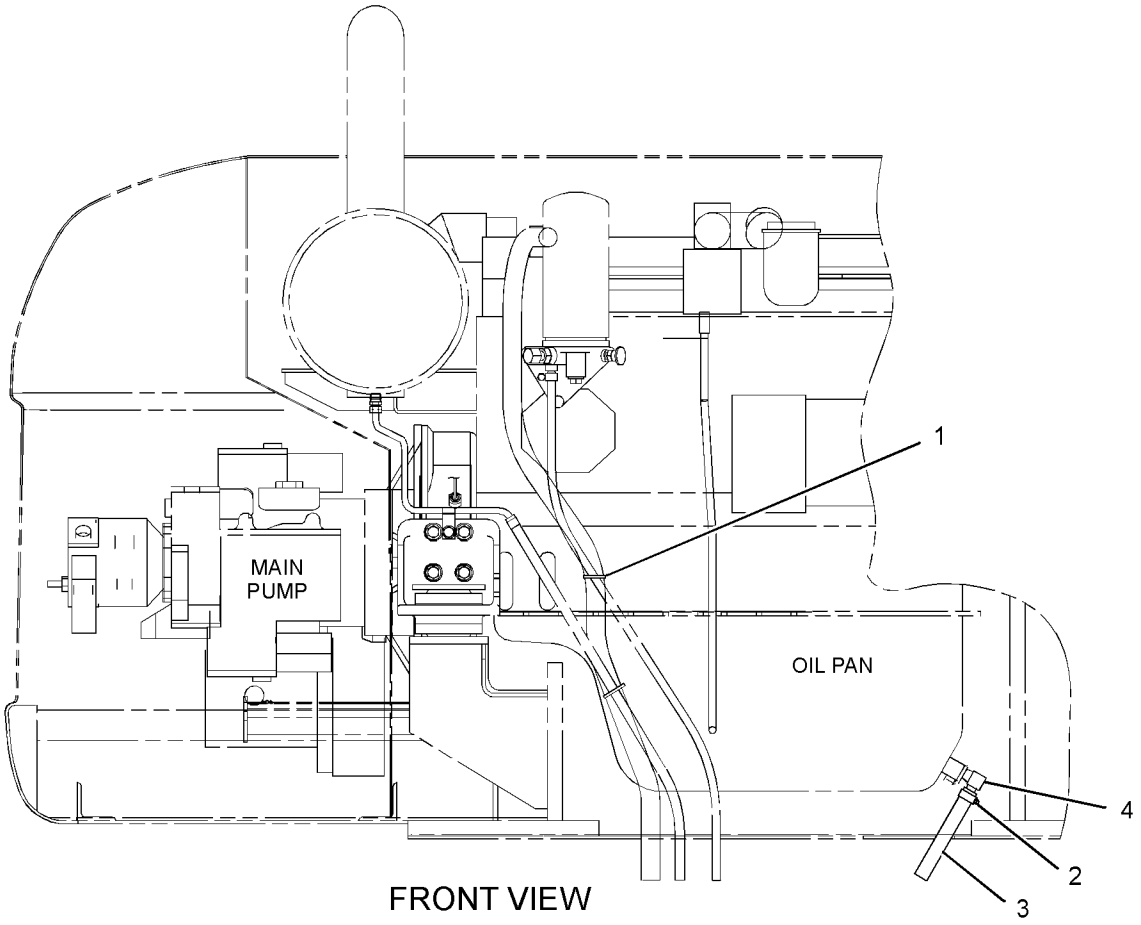

FRONT VIEW

GRAPHIC #1 **<END>** g01358666

310-9582 LINES GP-ENGINE OIL DRAIN

S/N: KGF1006-UP; FAL710-UP

PART OF 272-4742 INSTALLATION AR-ENGINE

SMCS-1307 **i02945306**

NOTE	REF NO	GRAPHIC REF	PART NUMBER	QTY	PART NAME 1 2 3 4 5 6 (PRODUCT LEVEL)	SEE PAGE
	1	1	**095-1388**	1	CLAMP-HOSE	
	2	1	**217-5469**	1	ELBOW	
E	3	1	**5P-0743**		HOSE (17-CM)	

E - ORDER BY THE CENTIMETER

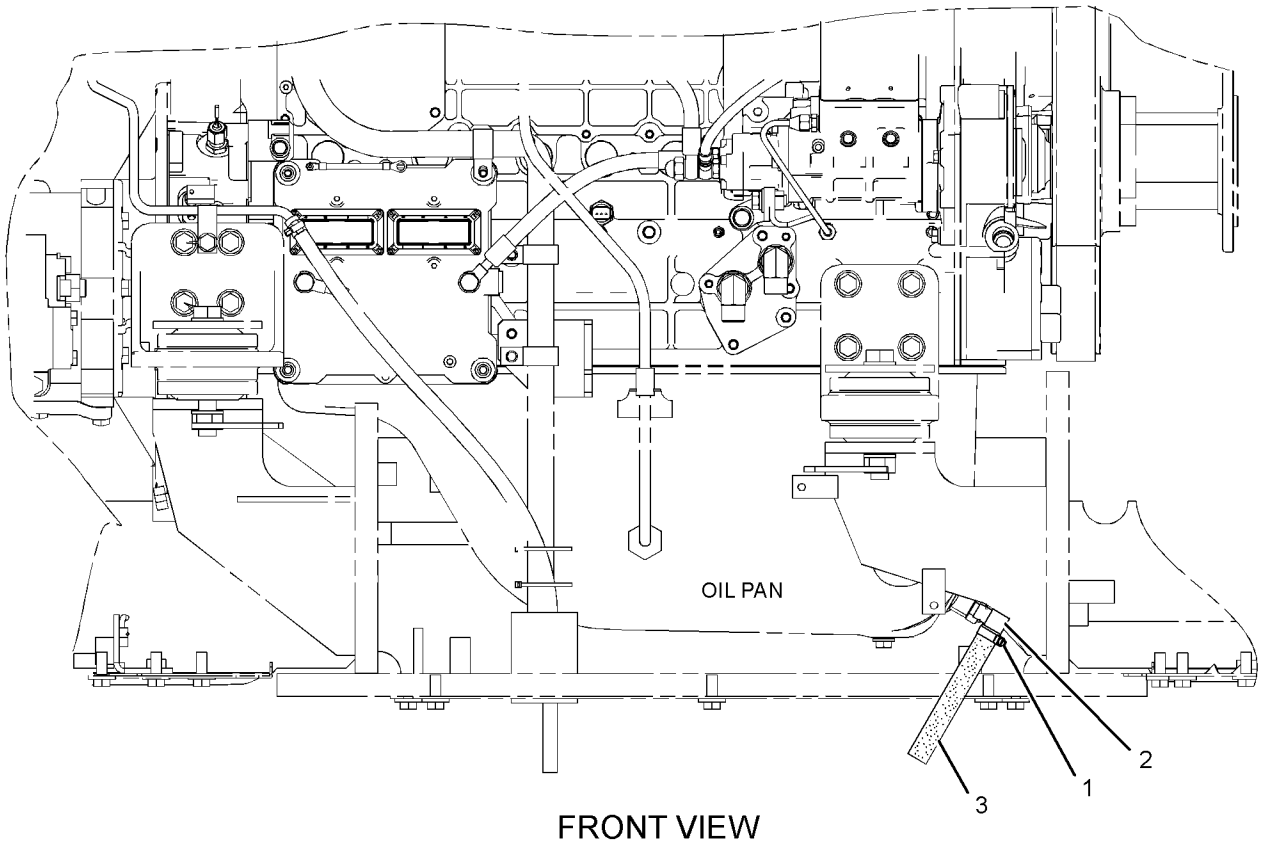

FRONT VIEW

GRAPHIC #1 **<END>** g01460734

296-4636 LINES GP-TURBOCHARGER OIL

S/N: GDC1-UP

PART OF 272-4677, 272-4683, 296-4676, 296-4687, 305-4777 ENGINE AR, 327-7199 ENGINE AR-PRIMARY

ALSO AN ATTACHMENT

SMCS-1052 **i02618405**

NOTE	REF NO	GRAPHIC REF	PART NUMBER	QTY	PART NAME 1 2 3 4 5 6 (PRODUCT LEVEL)	SEE PAGE
	1	1	**294-1764**	1	PIPE	
	2	1	**294-1765**	1	PIPE	
	3	1	**294-1766**	1	GASKET	
	4	1	**195-8322**	2	BOLT (M6X1X16-MM)	
	5	1	**2A-5222**	2	WASHER (10.3X15.9X1-MM THK)	
	6	1	**5I-7623**	1	BOLT (M10X1.25X20-MM)	
	7	1	**5I-8058**	1	CONNECTOR	
	8	1	**5I-7561**	1	GASKET	
	9	1	**196-8366**	2	BOLT	

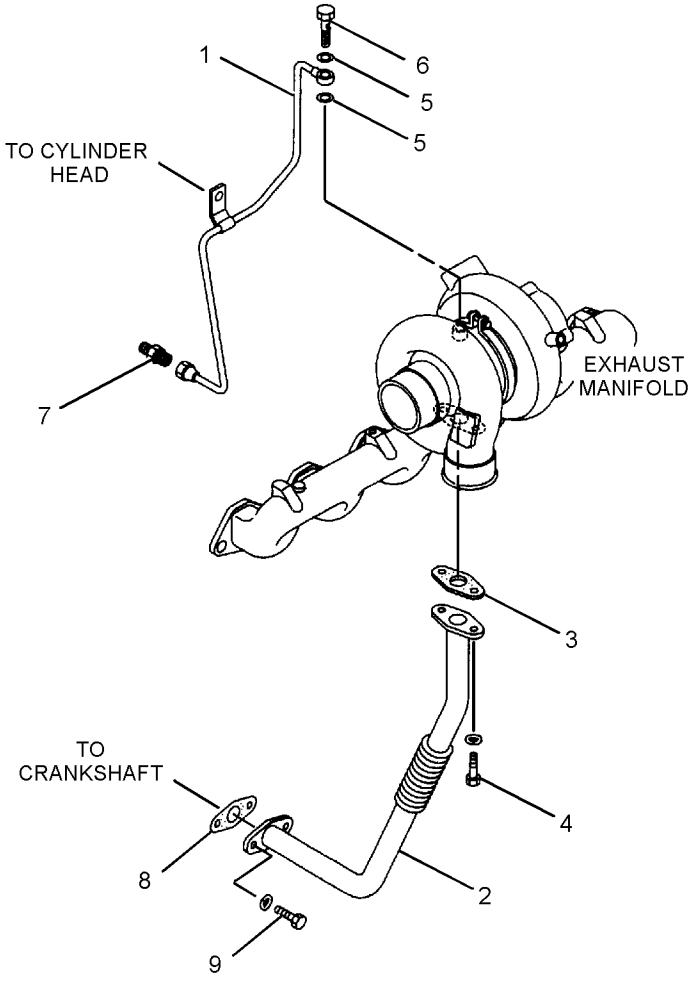

GRAPHIC #1 **<END>** g01319518

296-4642 COOLER GP-ENGINE OIL

S/N: GDC1-UP

PART OF 272-4677, 272-4683, 296-4676, 296-4687, 305-4777 ENGINE AR, 327-7199 ENGINE AR-PRIMARY

ALSO AN ATTACHMENT

SMCS-1378 **i02851398**

NOTE	REF NO	GRAPHIC REF	PART NUMBER	QTY	PART NAME 1 2 3 4 5 6 (PRODUCT LEVEL)	SEE PAGE
	1	1	**196-8366**	6	BOLT	
	2	1	**094-9266**	14	BOLT	
	3	1	**255-2904**	1	COVER AS	
	3A	1	**096-3321**	2	PLUG	
	4	1	**094-9267**	4	BOLT (M8X1.25X60.5-MM)	
	5	1	**294-1738**	4	BOLT (M10X1.5X32-MM)	
R	6	1	**125-2970**	1	CORE AS-OIL COOLER (ENGINE)	
M	7	1	**5C-7261**	4	NUT (M8X1.25-THD)	
	8	1	**3B-4505**	4	LOCKWASHER	
	9	1	**5I-7690**	1	GASKET	
	10	1	**5I-7691**	2	GASKET	
	11	1	**222-8238**	1	COVER	
	12	1	**217-5589**	1	GASKET	

M - METRIC PART
R - REMFG PART MAY BE AVAILABLE

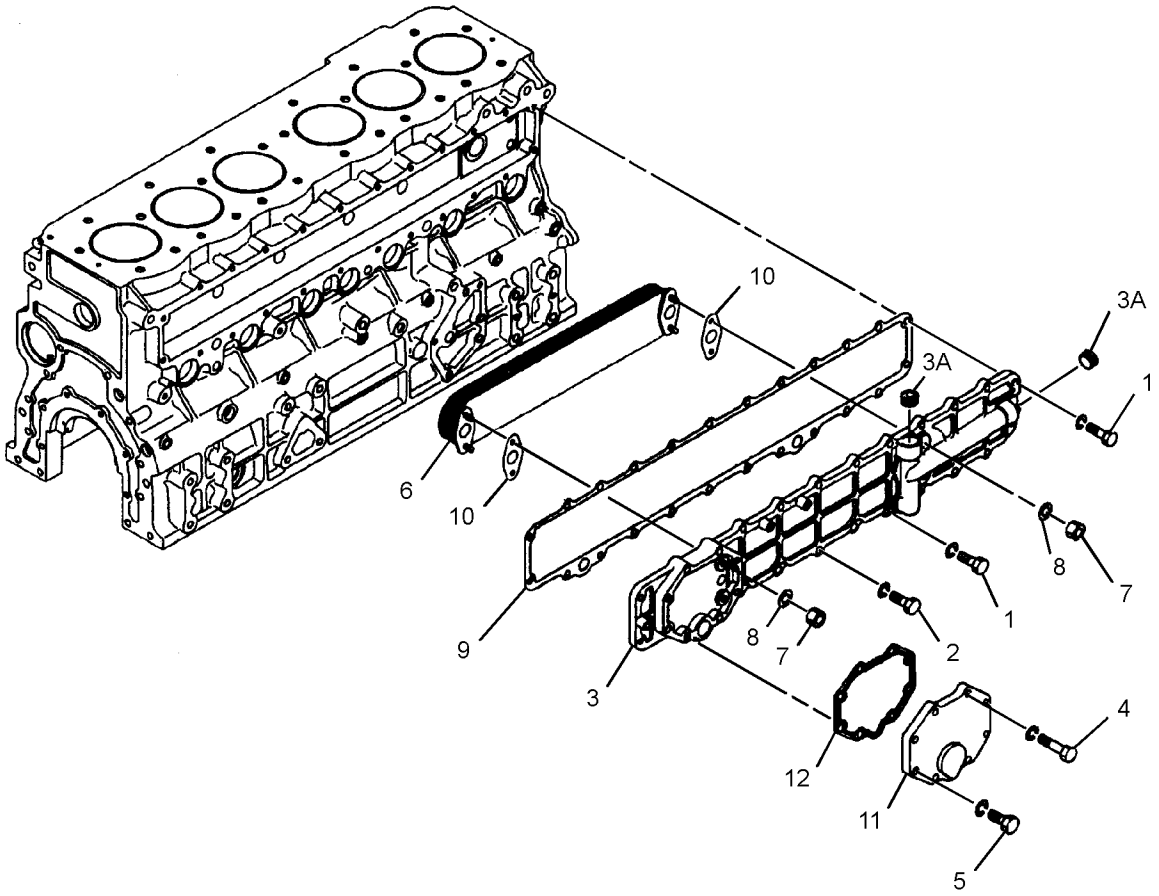

GRAPHIC #1 **<END>** g01316658

264-8651 COOLING AR-HIGH AMBIENT TEMP

S/N: KGF1-UP; FAL1-UP
AN ATTACHMENT

SMCS-1350 **i02611055**

NOTE	PART NUMBER	QTY	PART NAME 1 2 3 4 5 6 (PRODUCT LEVEL)	SEE PAGE
Y	*272-4687*	1	ENGINE AR-COMPLETE	113
Y	*289-6910*	1	DOOR GP-ACCESS (RADIATOR)	735
Y - SEPARATE ILLUSTRATION				

<END>

290-1911 COOLING AR-HIGH AMBIENT TEMP

S/N: KGF1-UP; FAL1-UP
PART OF 314-3864, 314-3865, 338-9908, 338-9923, 347-3340, 354-1018, 354-1019, 359-2298, 359-2299, 359-2300, 359-2309, 359-2310, 359-2404, 359-2405, 359-2506, 359-2507, 367-8686, 367-8697, 367-8809, 367-8810, 367-8817, 379-7118, 379-7119, 379-7216, 379-7217, 379-7218, 379-7219, 379-7220, 379-7226, 379-7227, 379-7228, 379-7267, 379-7268, 379-7269, 379-7270, 385-4035, 385-4036, 385-4136, 396-6826, 396-6827, 396-6828 DISTRIBUTION AR, 338-9925, 351-9691, 359-2264 OPTION AR-COLD WEATHER, 338-9924, 347-3341, 347-3342, 347-3343, 351-9690, 354-1065, 359-2263, 367-8812, 367-8814, 379-7297, 379-7298, 379-7299, 379-7300, 385-4027, 385-4028, 385-4029 OPTION AR-REGIONAL
AN ATTACHMENT

SMCS-1350 **i04941521**

NOTE	PART NUMBER	QTY	PART NAME 1 2 3 4 5 6 (PRODUCT LEVEL)	SEE PAGE
Y	*289-6910*	1	DOOR GP-ACCESS (RADIATOR)	735
			—OR—	
Y	*399-2552*	1	DOOR GP-ACCESS (RADIATOR)	744
Y	**296-4680**	1	ENGINE AR-COMPLETE	114
			—OR—	
Y	**324-3971**	1	ENGINE AR-COMPLETE	116
			—OR—	
Y	*327-7289*	1	ENGINE AR-COMPLETE	117
Y	*230-2979*	1	FAN GP-SUCTION	195
Y	*324-4051*	1	MOUNTING GP-FAN DRIVE	140
			(IF EQUIPPED)	
Y	*360-6175*	1	MOUNTING GP-WIRING	502
			(IF EQUIPPED)	
Y	*265-3600*	1	RADIATOR & HYD OIL COOLER GP	206
Y	*275-6798*	1	WIRING GP-FAN (FLUID CLUTCH)	619
			—OR—	
Y	*306-8501*	1	WIRING GP-FAN (FLUID CLUTCH)	624
Y - SEPARATE ILLUSTRATION				

<END>

298-4256 COOLING AR-HIGH AMBIENT TEMP

S/N: KGF1-UP; FAL1-UP
AN ATTACHMENT

SMCS-1350 **i02753077**

NOTE	PART NUMBER	QTY	PART NAME 1 2 3 4 5 6 (PRODUCT LEVEL)	SEE PAGE
Y	**272-4685**	1	ENGINE AR-COMPLETE	113
Y	*289-6910*	1	DOOR GP-ACCESS (RADIATOR)	735
Y - SEPARATE ILLUSTRATION				

<END>

298-4271 COOLING AR-HIGH AMBIENT TEMP

S/N: KGF1-UP; FAL1-UP
CHINA
PART OF 354-1047, 354-1054, 354-1147, 354-1148 DISTRIBUTION AR
AN ATTACHMENT

SMCS-1350 **i03903359**

NOTE	PART NUMBER	QTY	PART NAME 1 2 3 4 5 6 (PRODUCT LEVEL)	SEE PAGE
Y	*289-6910*	1	DOOR GP-ACCESS (RADIATOR)	735
Y	**310-9484**	1	ENGINE AR-COMPLETE	115
			—OR—	
Y	**324-3969**	1	ENGINE AR-COMPLETE	116
Y	*230-2979*	1	FAN GP-SUCTION	195
Y	*265-3600*	1	RADIATOR & HYD OIL COOLER GP	206
Y	*306-8501*	1	WIRING GP-FAN (FLUID CLUTCH)	624

Y - SEPARATE ILLUSTRATION

<END>

298-4272 COOLING AR-HIGH AMBIENT TEMP

S/N: KGF1-UP; FAL1-UP
AN ATTACHMENT

SMCS-1350 **i04788585**

NOTE	PART NUMBER	QTY	PART NAME 1 2 3 4 5 6 (PRODUCT LEVEL)	SEE PAGE
Y	*289-6910*	1	DOOR GP-ACCESS (RADIATOR)	735
Y	**310-9485**	1	ENGINE AR-COMPLETE	115
			—OR—	
Y	**324-3975**	1	ENGINE AR-COMPLETE	116
			—OR—	
Y	**327-7290**	1	ENGINE AR-COMPLETE	118
Y	*230-2979*	1	FAN GP-SUCTION	195
Y	*265-3600*	1	RADIATOR & HYD OIL COOLER GP	206
Y	*306-8501*	1	WIRING GP-FAN (FLUID CLUTCH)	624

Y - SEPARATE ILLUSTRATION

<END>

354-1056 COOLING AR-HIGH AMBIENT TEMP

S/N: KGF1-UP; FAL1-UP

PART OF 354-1112, 354-1113, 359-2500, 359-2501 DISTRIBUTION AR, 354-1151, 354-1152, 354-1153, 379-7305, 379-7306, 379-7347 OPTION AR-REGIONAL

AN ATTACHMENT

SMCS-1350 **i04813432**

NOTE	PART NUMBER	QTY	PART NAME 1 2 3 4 5 6 (PRODUCT LEVEL)	SEE PAGE
Y	**327-7198**	1	ENGINE AR-COMPLETE	117
			S/N: FAL1-6775 ; KGF1-6244	
Y	**327-7268**	1	ENGINE AR	112
			S/N: FAL6776-UP ; KGF6245-UP	
Y	*230-2979*	1	FAN GP-SUCTION	195
			S/N: FAL1-6775 ; KGF1-6244	
Y	*355-8167*	1	HOOD & GUARD GP	821
Y	*355-8168*	1	LINES GP-FUEL	307
Y	*327-7207*	1	MOUNTING GP-FUEL FILTER	330
Y	*265-3600*	1	RADIATOR & HYD OIL COOLER GP	206
			S/N: FAL1-6775 ; KGF1-6244	
Y	*306-8501*	1	WIRING GP-FAN (FLUID CLUTCH)	624
			S/N: FAL1-6775 ; KGF1-6244	

Y - SEPARATE ILLUSTRATION

<END>

354-1057 COOLING AR-HIGH AMBIENT TEMP—VARIABLE FAN SPEED

S/N: KGF1-UP; FAL1-UP

PART OF 354-1149, 354-1150, 359-2481, 359-2482, 367-8738, 367-8739, 367-8798, 367-8799, 367-8800, 367-8807, 379-7095, 379-7096, 379-7097, 379-7098 DISTRIBUTION AR

AN ATTACHMENT

SMCS-1350 **i05197192**

NOTE	PART NUMBER	QTY	PART NAME 1 2 3 4 5 6 (PRODUCT LEVEL)	SEE PAGE
Y	*289-6910*	1	DOOR GP-ACCESS (RADIATOR)	735
Y	**327-7195**	1	ENGINE AR	112
			—OR—	
Y	**327-7267**	1	ENGINE AR	112
Y	*230-2979*	1	FAN GP-SUCTION	195
Y	*355-8167*	1	HOOD & GUARD GP	821
Y	*355-8168*	1	LINES GP-FUEL	307
Y	*327-7207*	1	MOUNTING GP-FUEL FILTER	330
Y	*265-3600*	1	RADIATOR & HYD OIL COOLER GP	206
Y	*306-8501*	1	WIRING GP-FAN (FLUID CLUTCH)	624

Y - SEPARATE ILLUSTRATION

<END>

359-2423 COOLING AR-HIGH AMBIENT TEMP

S/N: KGF1-UP
PART OF 359-2421 DISTRIBUTION AR
AN ATTACHMENT

SMCS-1350 **i04979419**

NOTE	PART NUMBER	QTY	PART NAME 1 2 3 4 5 6 (PRODUCT LEVEL)	SEE PAGE
Y	*289-6910*	1	DOOR GP-ACCESS (RADIATOR)	735
Y	**324-4003**	1	ENGINE AR-COMPLETE	117
			—OR—	
Y	**324-4004**	1	ENGINE AR-COMPLETE	117
Y	*230-2979*	1	FAN GP-SUCTION	195
Y	*265-3600*	1	RADIATOR & HYD OIL COOLER GP	206
Y	*306-8501*	1	WIRING GP-FAN (FLUID CLUTCH)	624

Y - SEPARATE ILLUSTRATION

<END>

230-2979 FAN GP-SUCTION

S/N: KGF1-UP; FAL1-UP

PART OF 290-1911, 298-4271, 298-4272 COOLING AR-HIGH AMBIENT TEMP, 272-4675, 305-4763 ENGINE AR

AN ATTACHMENT

TYPE 1

SMCS-1356 **i03474308**

NOTE	REF NO	GRAPHIC REF	PART NUMBER	QTY	PART NAME 1 2 3 4 5 6 (PRODUCT LEVEL)	SEE PAGE
	1	1	**245-9344**	1	FAN AS (10-BLADE, BOLT MTG DIA 152-MM)	
	2	1	**265-3557**	1	PLATE AS	
	3	1	**281-3588**	1	DRIVE AS-FAN (FLUID CLUTCH)	
		1	**102-8805**	1	KIT-RECEPTACLE (6-PIN)	
					(INCLUDES RECEPTACLE AS & WEDGE)	
M	4	1	**7X-0818**	6	BOLT (M8X1.25X45-MM)	
M	5	1	**8T-4189**	6	BOLT (M8X1.25X20-MM)	
M	6	1	**8T-4200**	3	BOLT (M8X1.25X16-MM)	
	7	1	**8T-4224**	15	WASHER-HARD (8.8X16X2-MM THK)	

M - METRIC PART

230-2979 **FAN GP-SUCTION (*contd.*)** **i03474308**

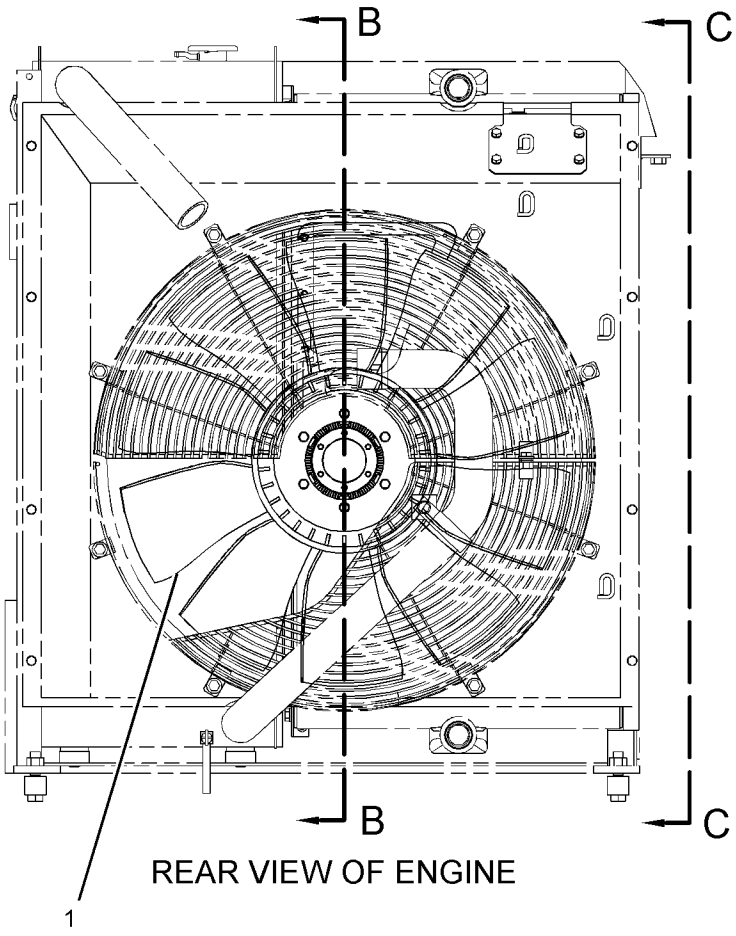

REAR VIEW OF ENGINE

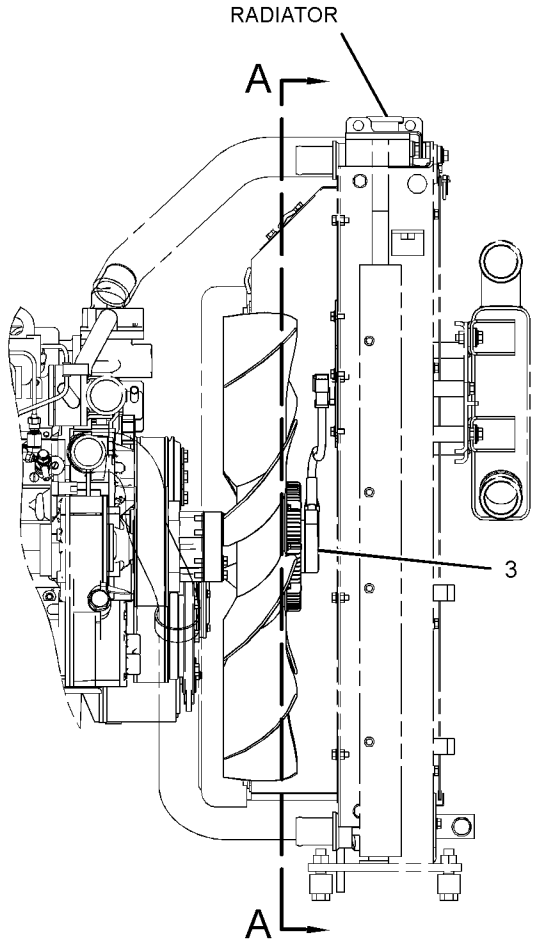

VIEW C-C

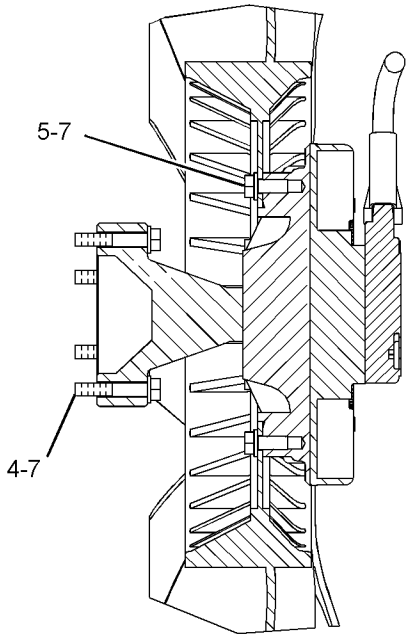

SECTION B-B

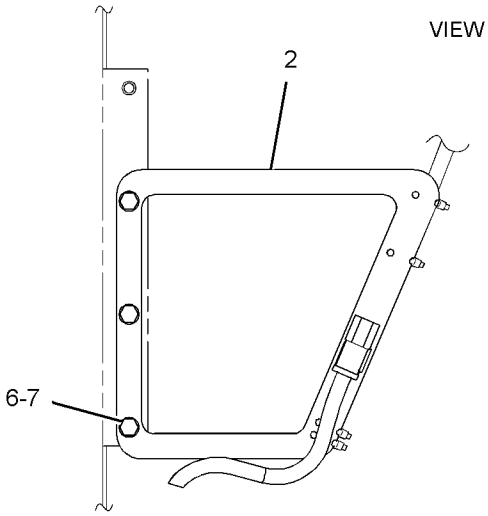

VIEW A-A

GRAPHIC #1 **<END>** g01381523

230-2979 FAN GP-SUCTION

S/N: KGF1-UP; FAL1-UP
PART OF 290-1911, 298-4271, 298-4272, 354-1056, 354-1057, 359-2423 COOLING AR-HIGH AMBIENT TEMP, 305-4763 ENGINE AR
AN ATTACHMENT
TYPE 2

SMCS-1356 **i04431391**

NOTE	REF NO	GRAPHIC REF	PART NUMBER	QTY	PART NAME 1 2 3 4 5 6 (PRODUCT LEVEL)	SEE PAGE
C	1	1	**3S-2093**	8	STRAP-CABLE	
C	2	1	**116-0118**	1	CLIP	
	3	1	**245-9344**	1	FAN AS (10-BLADE, BOLT MTG DIA 152-MM)	
C	4	1	**305-7671**	1	PLATE AS	
C	5	1	**305-7673**	1	PLATE AS	
		1	**7T-1099**	1	LINK	
C	6	1	**324-0123**	1	DRIVE AS-FAN	
C	7	1	**132-5789**	1	CLIP	
C	8	1	**8T-4121**	6	WASHER-HARD (11X21X2.5-MM THK)	
CM	9	1	**8T-4137**	6	BOLT (M10X1.5X20-MM)	
M	10	1	**8T-4189**	6	BOLT (M8X1.25X20-MM)	
C	11	1	**8T-4224**	6	WASHER-HARD (8.8X16X2-MM THK)	
CM	12	1	**8T-4908**	6	BOLT (M8X1.25X25-MM)	
	13	1	**214-1048**	6	SPACER (8.8X16X4-MM THK)	

C - CHANGE FROM PREVIOUS TYPE
M - METRIC PART

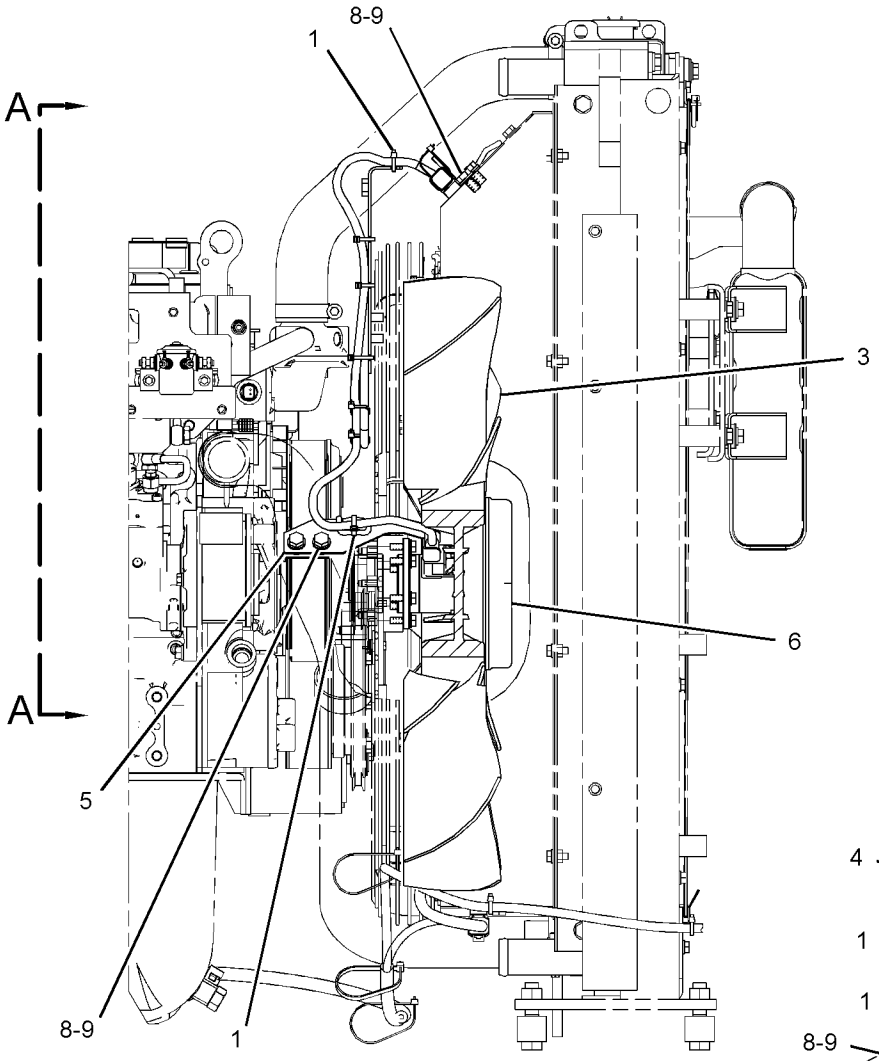

FRONT VIEW

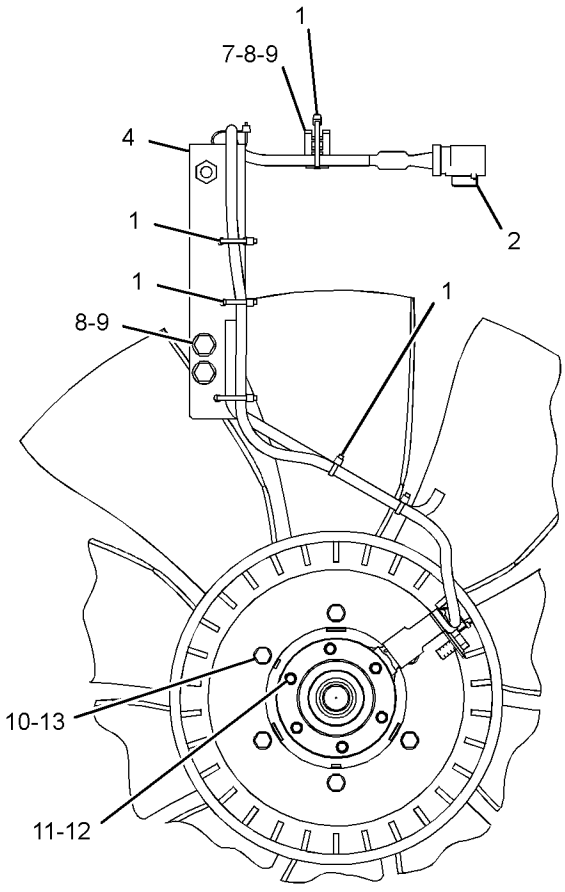

VIEW A-A

GRAPHIC #1 **<END>** g02695236

245-9313 FAN GP-SUCTION

S/N: KGF1-UP; FAL1-UP

PART OF 272-4681 ENGINE AR-COMPLETE

SMCS-1356 **i02424080**

NOTE	REF NO	GRAPHIC REF	PART NUMBER	QTY	PART NAME 1 2 3 4 5 6 (PRODUCT LEVEL)	SEE PAGE
	1	1	**245-9343**	1	FAN AS (10-BLADE, BOLT MTG DIA 170-MM)	
M	2	1	**8T-4189**	6	BOLT (M8X1.25X20-MM)	
	3	1	**8T-4224**	6	WASHER-HARD (8.8X16X2-MM THK)	

M - METRIC PART

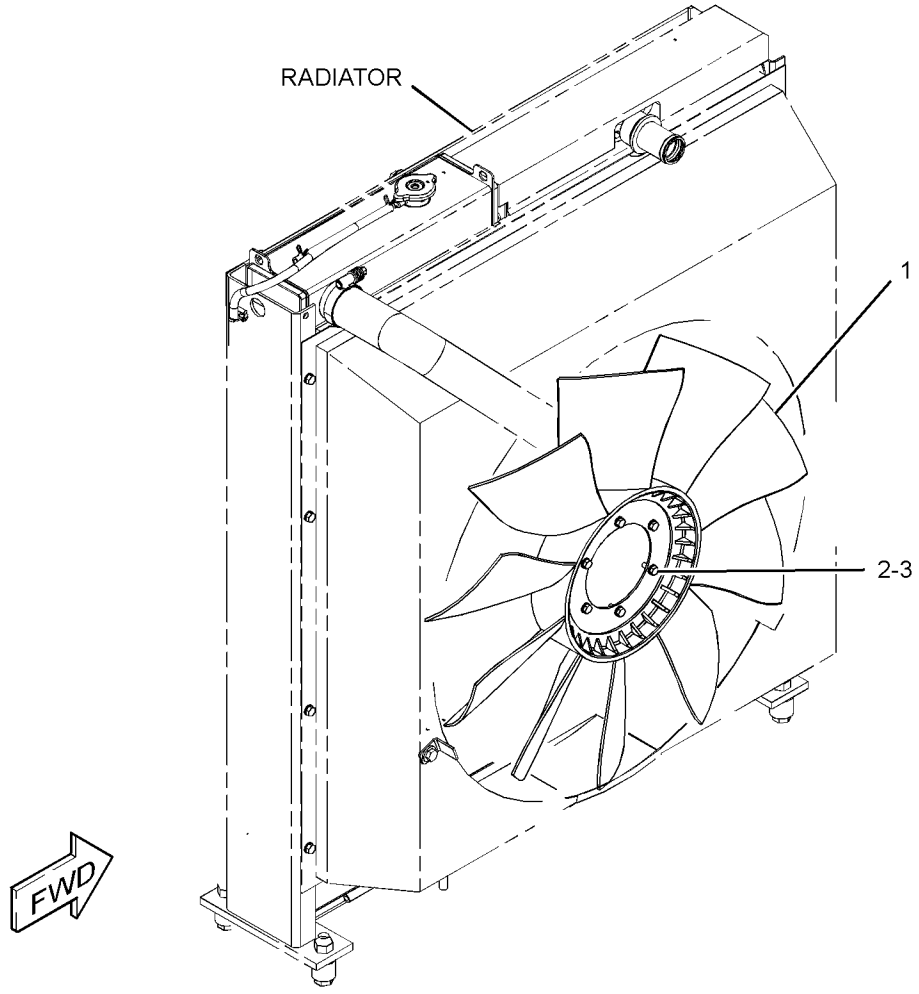

GRAPHIC #1 **<END>** g01222744

324-4122 FAN GP-SUCTION

S/N: KGF3781-UP; FAL2824-UP
PART OF 297-7747, 327-7270 PULLEY GP-ENGINE
ALSO AN ATTACHMENT

SMCS-1356 **i03429261**

NOTE	REF NO	GRAPHIC REF	PART NUMBER	QTY	PART NAME 1 2 3 4 5 6 (PRODUCT LEVEL)	SEE PAGE
	1	1	**324-4107**	1	BRACKET	
M	2	1	**255-2873**	1	BOLT AS	
	3	1	**266-6229**	1	PULLEY-FAN DRIVE	
	4	1	**324-4103**	2	BEARING	
	5	1	**212-8596**	2	BUSHING	
	6	1	**266-6232**	1	SPACER (31.1X38.1X28.4-MM THK)	
	7	1	**255-2871**	1	WASHER (10.5X38X7-MM THK)	
	8	1	**324-4106**	1	PLATE	

M - METRIC PART

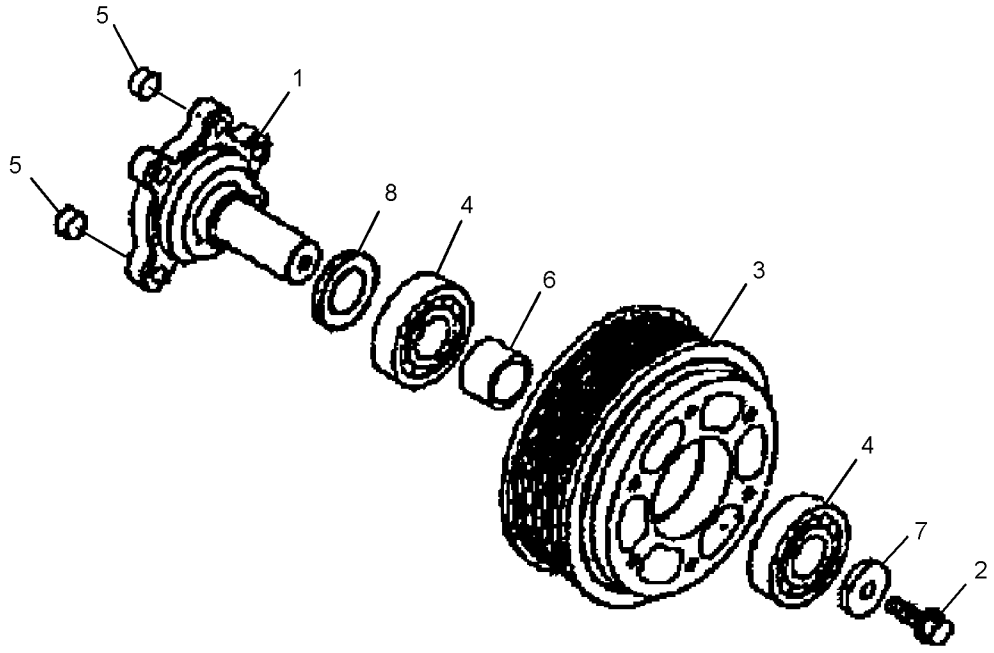

GRAPHIC #1 **<END>** g01793634

327-7230 FAN GP-SUCTION

S/N: KGF1-UP; FAL1-UP
PART OF 324-4200 PULLEY GP-ENGINE
AN ATTACHMENT

SMCS-1356 **i04005209**

NOTE	REF NO	GRAPHIC REF	PART NUMBER	QTY	PART NAME 1 2 3 4 5 6 (PRODUCT LEVEL)	SEE PAGE
	1	1	**266-6332**	1	BRACKET	
	2	1	**324-4053**	1	ADAPTER	
	3	1	**266-6337**	1	PULLEY	
	4	1	**266-6334**	2	BEARING	
	5	1	**212-8596**	2	BUSHING	
	6	1	**266-6335**	1	SPACER (40.8X50.8X27-MM THK)	
	7	1	**266-6336**	1	WASHER (13X49X8-MM THK)	
M	8	1	**266-6338**	1	BOLT (M12X1.25X25-MM)	
M	9	1	**294-1726**	6	BOLT (M10X1.5X37-MM)	

M - METRIC PART

327-7230 **FAN GP-SUCTION (*contd.*)** **i04005209**

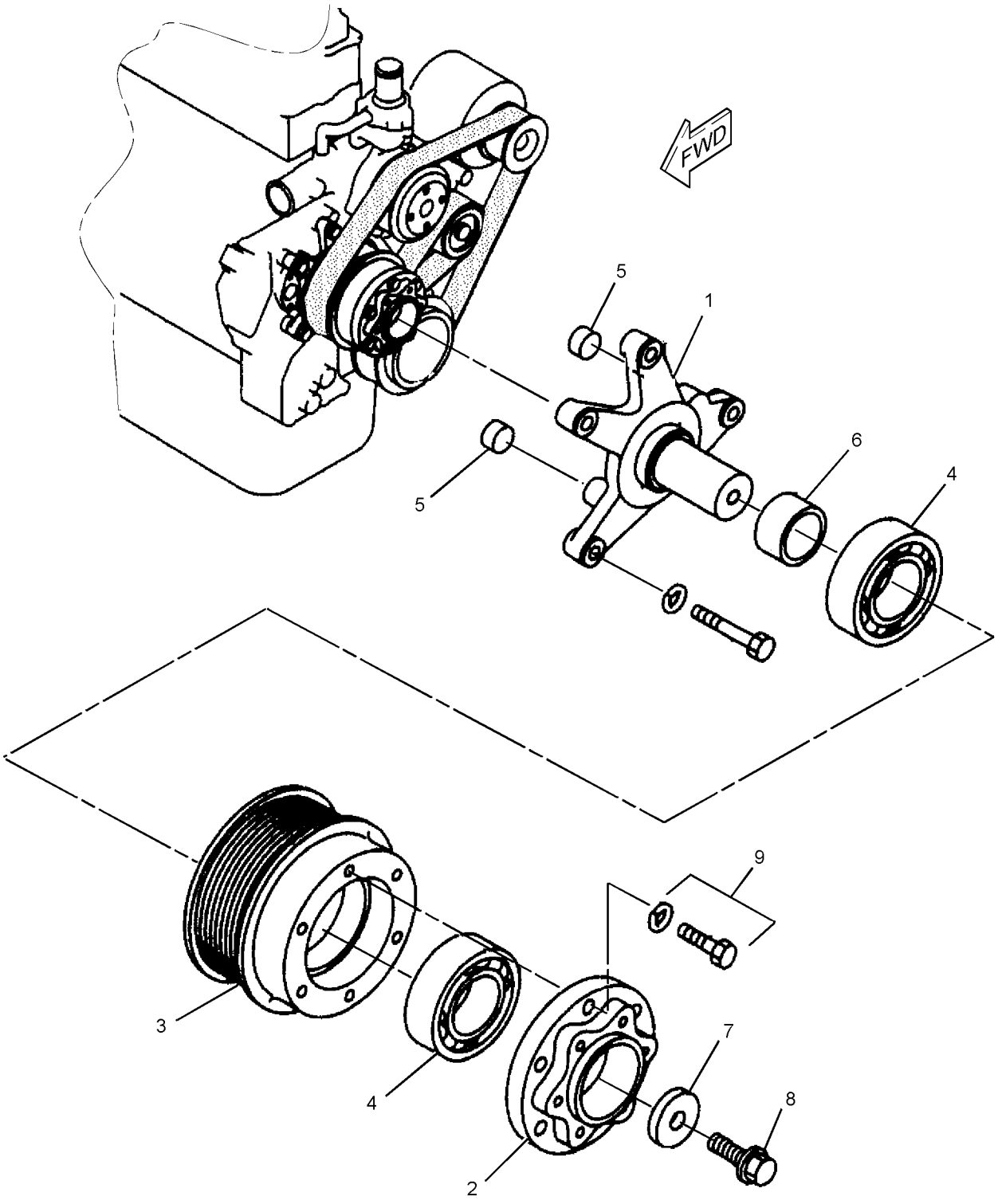

GRAPHIC #1 **<END>** g02179694

296-4658 HOUSING & REGULATOR GP

S/N: GDC1-UP

PART OF 272-4677, 272-4683, 296-4676, 296-4687, 305-4777 ENGINE AR, 327-7199 ENGINE AR-PRIMARY

ALSO AN ATTACHMENT

SMCS-1355, 1393 **i03897522**

NOTE	REF NO	GRAPHIC REF	PART NUMBER	QTY	PART NAME 1 2 3 4 5 6 (PRODUCT LEVEL)	SEE PAGE
	1	1	**5I-7867**	1	COVER AS	
	1A	1	**5I-7655**	1	PIPE	
	2	1	**154-9024**	1	VALVE GP-FLUID SAMPLING (ENGINE COOLANT)	
	3	1	**157-0670**	1	CAP-DUST	
	4	1	**5I-7646**	1	ELBOW	
	5	1	**294-1777**	2	GASKET	
	6	1	**5I-8056**	2	PLUG	
	7	1	**096-9532**	2	WASHER (15.8X22.5X2-MM THK)	
	8	1	**270-6338**	1	BOLT AS	
	8A	1	**3B-4505**	1	LOCKWASHER	
	9	1	**294-1778**	1	HOSE	
	10	1	**324-4128**	1	REGULATOR (COOLANT TEMPERATURE)	
	11	1	**5I-7735**	1	GASKET (WATER TEMPERATURE REGULATOR)	
	12	1	**096-8619**	3	BOLT	
	13	1	**297-7655**	1	BOLT	
	14	1	**3B-4505**	1	LOCKWASHER	
	15	1	**2S-3440**	2	CLAMP-HOSE	
	16	1	**294-1780**	1	GASKET (WATER TEMPERATURE REGULATOR)	
	17	1	**296-4733**	1	SPACER	

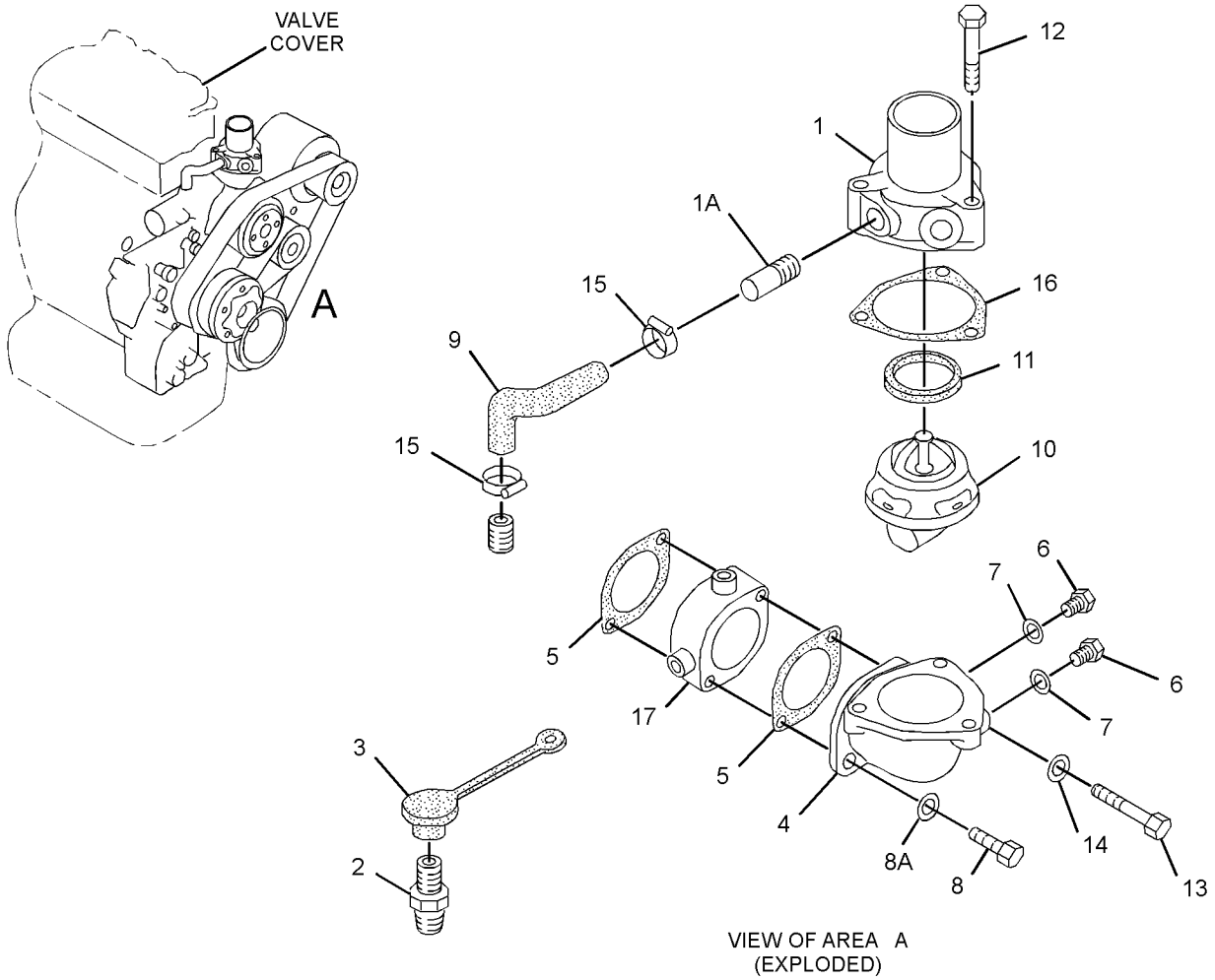

VIEW OF AREA A
(EXPLODED)

GRAPHIC #1 **<END>** g02140899

296-4655 PUMP GP-WATER

S/N: GDC1-UP

PART OF 272-4677, 272-4683, 296-4676, 296-4687, 305-4777 ENGINE AR, 327-7199 ENGINE AR-PRIMARY

ALSO AN ATTACHMENT

SMCS-1361 **i02618456**

NOTE	REF NO	GRAPHIC REF	PART NUMBER	QTY	PART NAME 1 2 3 4 5 6 (PRODUCT LEVEL)	SEE PAGE
	1	1	**178-6633**	1	PUMP GP-WATER	
	1A	1	**5I-7696**	1	FLANGE	
	1B	1	**178-6635**	1	SHAFT	
	1C	1	**8T-9598**	1	RING-RETAINING	
	1D	1	**5L-6326**	1	BALL BEARING (62-MM OD)	
	1E	1	**178-6634**	1	IMPELLER	
	1F	1	**5I-7697**	1	SPACER (28-MM)	
	1G	1	**2H-3814**	1	BALL BEARING (52-MM OD)	
	1H	1	**125-2947**	1	WASHER (1-MM THK)	
	1J	1	**178-6636**	1	SEAL	
	2	1	**294-1738**	7	BOLT	
	3	1	**8T-4121**	4	WASHER-HARD (11X21X2.5-MM THK)	

296-4655 **PUMP GP-WATER (*contd.*)** **i02618456**

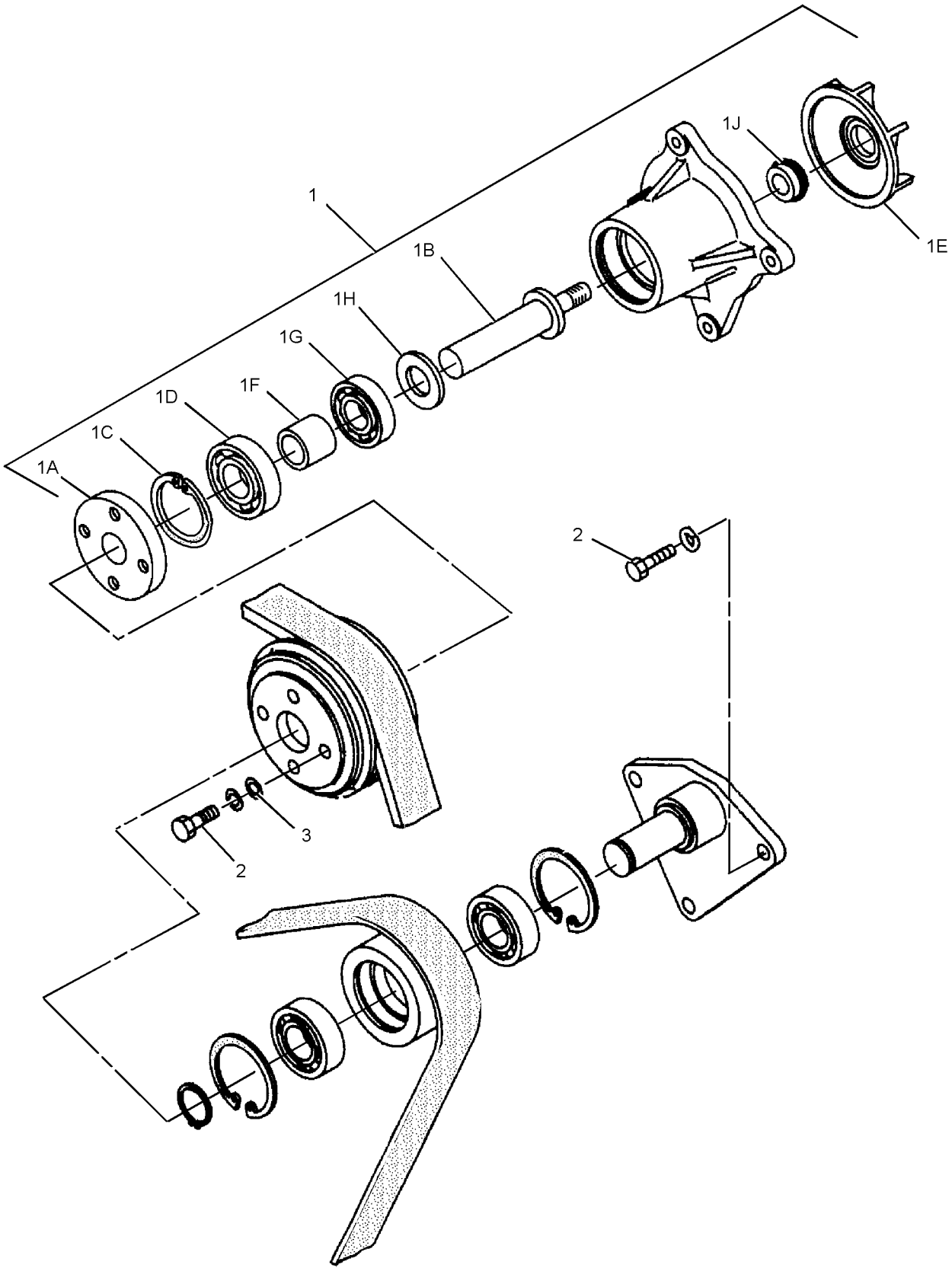

GRAPHIC #1 **<END>** g01316735

265-3600 RADIATOR & HYD OIL COOLER GP

S/N: KGF1-UP; FAL1-UP
PART OF 290-1911 COOLING AR-HIGH AMBIENT TEMP, 290-1892 SPECIAL AR
AN ATTACHMENT
TYPE 1

SMCS-1351 **i03937849**

NOTE	REF NO	GRAPHIC REF	PART NUMBER	QTY	PART NAME 1 2 3 4 5 6 (PRODUCT LEVEL)	SEE PAGE
	1	1	**3S-2093**	3	STRAP-CABLE	
	2	1	**7I-2673**	1	STRAP-CABLE	
	3	1	**8T-4984**	1	CLAMP-HOSE	
	4	1	**096-4035**	1	CLIP	
	5	1	**171-9077**	1	BAND	
	6	1	**178-6450**	4	SPACER (17X35X30-MM THK)	
	7	1	**245-9178**	1	HOSE-RADIATOR (LOWER)	
	8	1	**245-9185**	1	BRACKET AS	
	9	1	**245-9191**	1	PLATE AS	
	10	1	**245-9205**	1	TANK AS-COOLANT (RECOVERY)	
		1	**171-3369**	1	CAP AS (COOLANT RECOVERY)	
	11	1	**245-9348**	1	GUARD AS (UPPER)	
	12	1	**245-9349**	1	GUARD AS (LOWER)	
	13	1	**245-9352**	1	SEAL	
Y	14	1	**265-3601**	1	RADIATOR & HYD OIL COOLER GP	220
	15	1	**265-3602**	1	HOSE-RADIATOR (UPPER)	
	16	1	**3P-9847**	1	CLIP	
M	17	1	**7X-2554**	4	BOLT (M16X2X70-MM)	
	18	1	**7X-7729**	11	WASHER (11X25X3-MM THK)	
	19	1	**8T-4121**	1	WASHER-HARD (11X21X2.5-MM THK)	
M	20	1	**8T-4136**	2	BOLT (M10X1.5X25-MM)	
M	21	1	**8T-4137**	10	BOLT (M10X1.5X20-MM)	
M	22	1	**8T-4139**	2	BOLT (M12X1.75X30-MM)	
M	23	1	**8T-4200**	2	BOLT (M8X1.25X16-MM)	
	24	1	**8T-4223**	2	WASHER-HARD (13.5X25.5X3-MM THK)	
	25	1	**8T-4224**	2	WASHER-HARD (8.8X16X2-MM THK)	
E	26	1	**7Y-1976**		HOSE-WATER (40-CM)	
D	27	1	**5P-9909**		SEAL (1.1-M)	
	28	1	**8T-6703**	3	CLAMP-HOSE	

D - ORDER BY THE METER
E - ORDER BY THE CENTIMETER
M - METRIC PART
Y - SEPARATE ILLUSTRATION

265-3600 **RADIATOR & HYD OIL COOLER GP (*contd.*)** **i03937849**

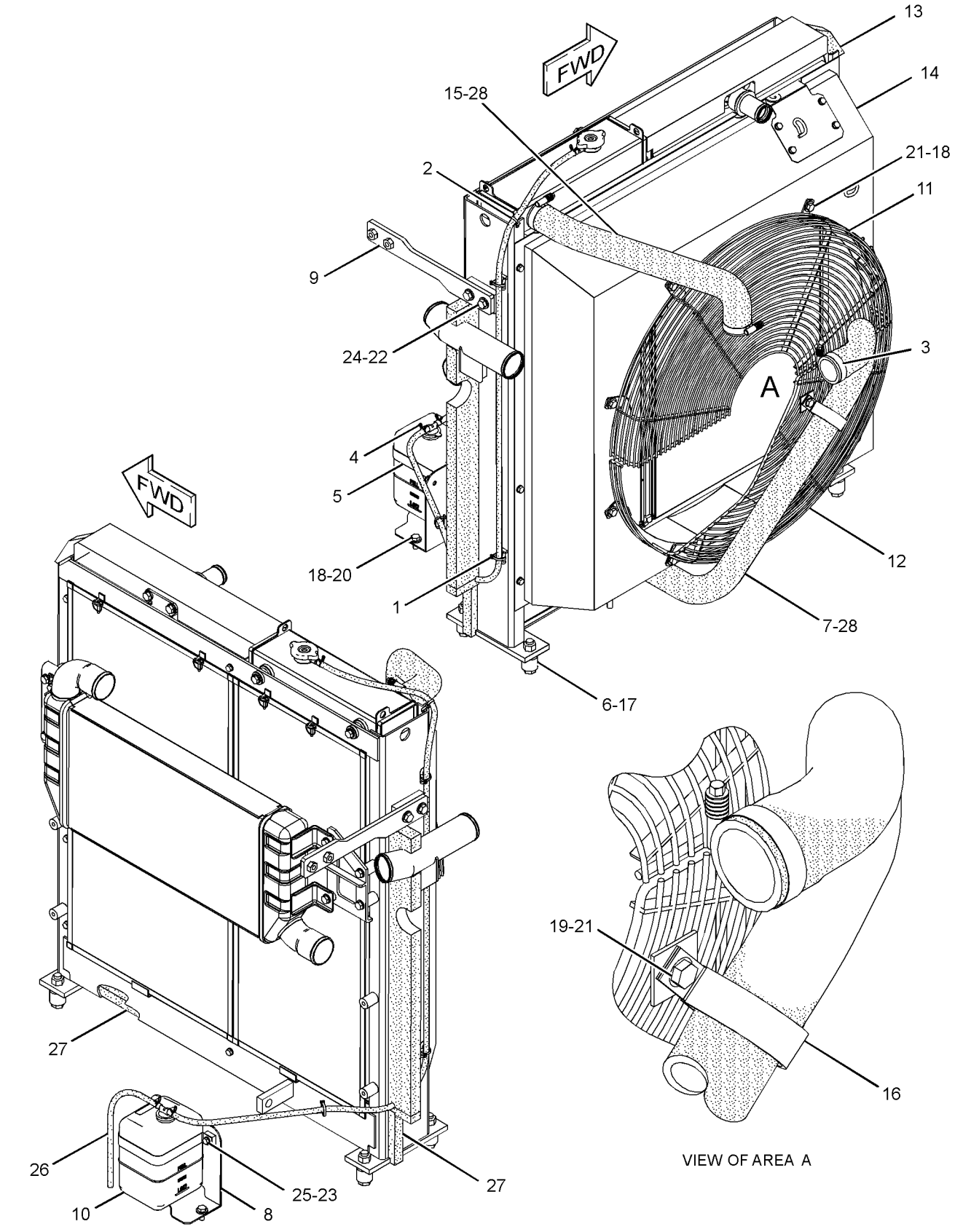

VIEW OF AREA A

GRAPHIC #1 **<END>** g01306893

265-3600 RADIATOR & HYD OIL COOLER GP

S/N: KGF1-UP; FAL1-UP
PART OF 290-1911, 298-4271, 298-4272 COOLING AR-HIGH AMBIENT TEMP, 290-1892 SPECIAL AR
AN ATTACHMENT
TYPE 2

SMCS-1351 **i03937869**

NOTE	REF NO	GRAPHIC REF	PART NUMBER	QTY	PART NAME 1 2 3 4 5 6 (PRODUCT LEVEL)	SEE PAGE
	1	1	**3S-2093**	3	STRAP-CABLE	
	2	1	**7I-2673**	1	STRAP-CABLE	
	3	1	**8T-4984**	1	CLAMP-HOSE	
	4	1	**096-4035**	1	CLIP	
	5	1	**171-9077**	1	BAND	
	6	1	**178-6450**	4	SPACER (17X35X30-MM THK)	
	7	1	**245-9178**	1	HOSE-RADIATOR (LOWER)	
	8	1	**245-9185**	1	BRACKET AS	
	9	1	**245-9191**	1	PLATE AS	
	10	1	**245-9205**	1	TANK AS-COOLANT (RECOVERY)	
		1	**171-3369**	1	CAP AS (COOLANT RECOVERY)	
	11	1	**245-9348**	1	GUARD AS (UPPER)	
	12	1	**245-9349**	1	GUARD AS (LOWER)	
	13	1	**245-9352**	1	SEAL	
CY	14	1	**281-3602**	1	RADIATOR & HYD OIL COOLER GP	236
	15	1	**265-3602**	1	HOSE-RADIATOR (UPPER)	
	16	1	**3P-9847**	1	CLIP	
M	17	1	**7X-2554**	4	BOLT (M16X2X70-MM)	
	18	1	**7X-7729**	11	WASHER (11X25X3-MM THK)	
	19	1	**8T-4121**	1	WASHER-HARD (11X21X2.5-MM THK)	
M	20	1	**8T-4136**	2	BOLT (M10X1.5X25-MM)	
M	21	1	**8T-4137**	10	BOLT (M10X1.5X20-MM)	
M	22	1	**8T-4139**	2	BOLT (M12X1.75X30-MM)	
M	23	1	**8T-4200**	2	BOLT (M8X1.25X16-MM)	
	24	1	**8T-4223**	2	WASHER-HARD (13.5X25.5X3-MM THK)	
	25	1	**8T-4224**	2	WASHER-HARD (8.8X16X2-MM THK)	
E	26	1	**7Y-1976**		HOSE-WATER (40-CM)	
D	27	1	**5P-9909**		SEAL (0.14-M)	
D	27A	1	**5P-9909**		SEAL (0.87-M)	
	28	1	**8T-6703**	3	CLAMP-HOSE	

C - CHANGE FROM PREVIOUS TYPE
D - ORDER BY THE METER
E - ORDER BY THE CENTIMETER
M - METRIC PART
Y - SEPARATE ILLUSTRATION

265-3600 **RADIATOR & HYD OIL COOLER GP (*contd.*)** **i03937869**

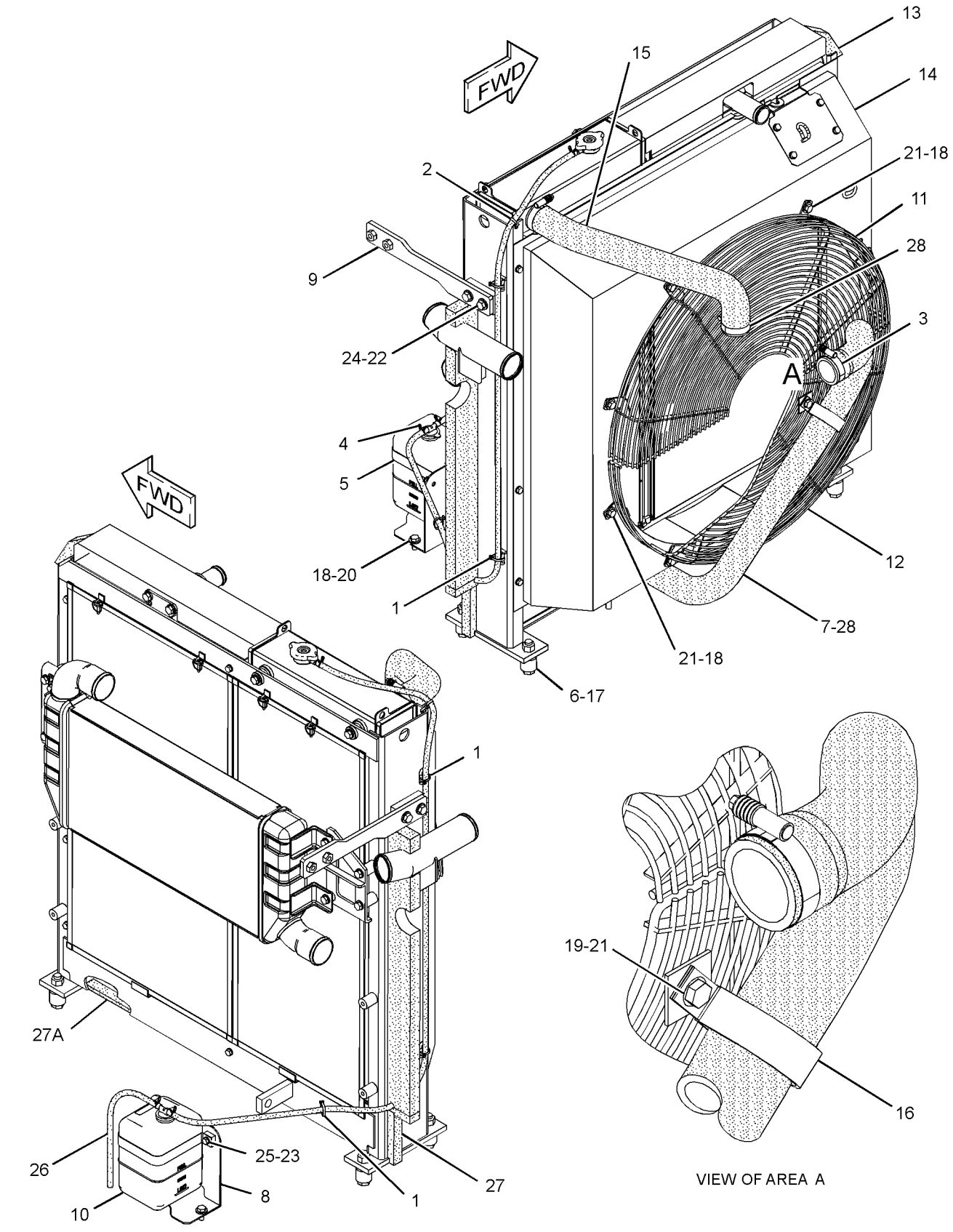

GRAPHIC #1

<END>

g01380034

265-3600 RADIATOR & HYD OIL COOLER GP

S/N: KGF1-UP; FAL1-UP

PART OF 290-1911, 298-4271, 298-4272 COOLING AR-HIGH AMBIENT TEMP, 290-1892 SPECIAL AR

AN ATTACHMENT

TYPE 3

SMCS-1351 **i03937870**

NOTE	REF NO	GRAPHIC REF	PART NUMBER	QTY	PART NAME 1 2 3 4 5 6 (PRODUCT LEVEL)	SEE PAGE
	1	1	**3S-2093**	3	STRAP-CABLE	
	2	1	**7I-2673**	1	STRAP-CABLE	
	3	1	**8T-4984**	1	CLAMP-HOSE	
	4	1	**096-4035**	1	CLIP	
	5	1	**171-9077**	1	BAND	
	6	1	**178-6450**	4	SPACER (17X35X30-MM THK)	
	7	1	**245-9178**	1	HOSE-RADIATOR (LOWER)	
	8	1	**245-9185**	1	BRACKET AS	
	9	1	**245-9191**	1	PLATE AS	
	10	1	**245-9205**	1	TANK AS-COOLANT (RECOVERY)	
		1	**171-3369**	1	CAP AS (COOLANT RECOVERY)	
	11	1	**245-9348**	1	GUARD AS (UPPER)	
	12	1	**245-9349**	1	GUARD AS (LOWER)	
	13	1	**245-9352**	1	SEAL	
CY	14	1	**326-3876**	1	RADIATOR & HYD OIL COOLER GP	243
	15	1	**265-3602**	1	HOSE-RADIATOR (UPPER)	
	16	1	**3P-9847**	1	CLIP	
M	17	1	**7X-2554**	4	BOLT (M16X2X70-MM)	
	18	1	**7X-7729**	11	WASHER (11X25X3-MM THK)	
	19	1	**8T-4121**	1	WASHER-HARD (11X21X2.5-MM THK)	
M	20	1	**8T-4136**	2	BOLT (M10X1.5X25-MM)	
M	21	1	**8T-4137**	10	BOLT (M10X1.5X20-MM)	
M	22	1	**8T-4139**	2	BOLT (M12X1.75X30-MM)	
M	23	1	**8T-4200**	2	BOLT (M8X1.25X16-MM)	
	24	1	**8T-4223**	2	WASHER-HARD (13.5X25.5X3-MM THK)	
	25	1	**8T-4224**	2	WASHER-HARD (8.8X16X2-MM THK)	
E	26	1	**7Y-1976**		HOSE-WATER (40-CM)	
D	27	1	**5P-9909**		SEAL (0.2-M)	
D	27A	1	**5P-9909**		SEAL (0.9-M)	
	28	1	**8T-6703**	3	CLAMP-HOSE	

C - CHANGE FROM PREVIOUS TYPE
D - ORDER BY THE METER
E - ORDER BY THE CENTIMETER
M - METRIC PART
Y - SEPARATE ILLUSTRATION

265-3600 **RADIATOR & HYD OIL COOLER GP (*contd.*)** **i03937870**

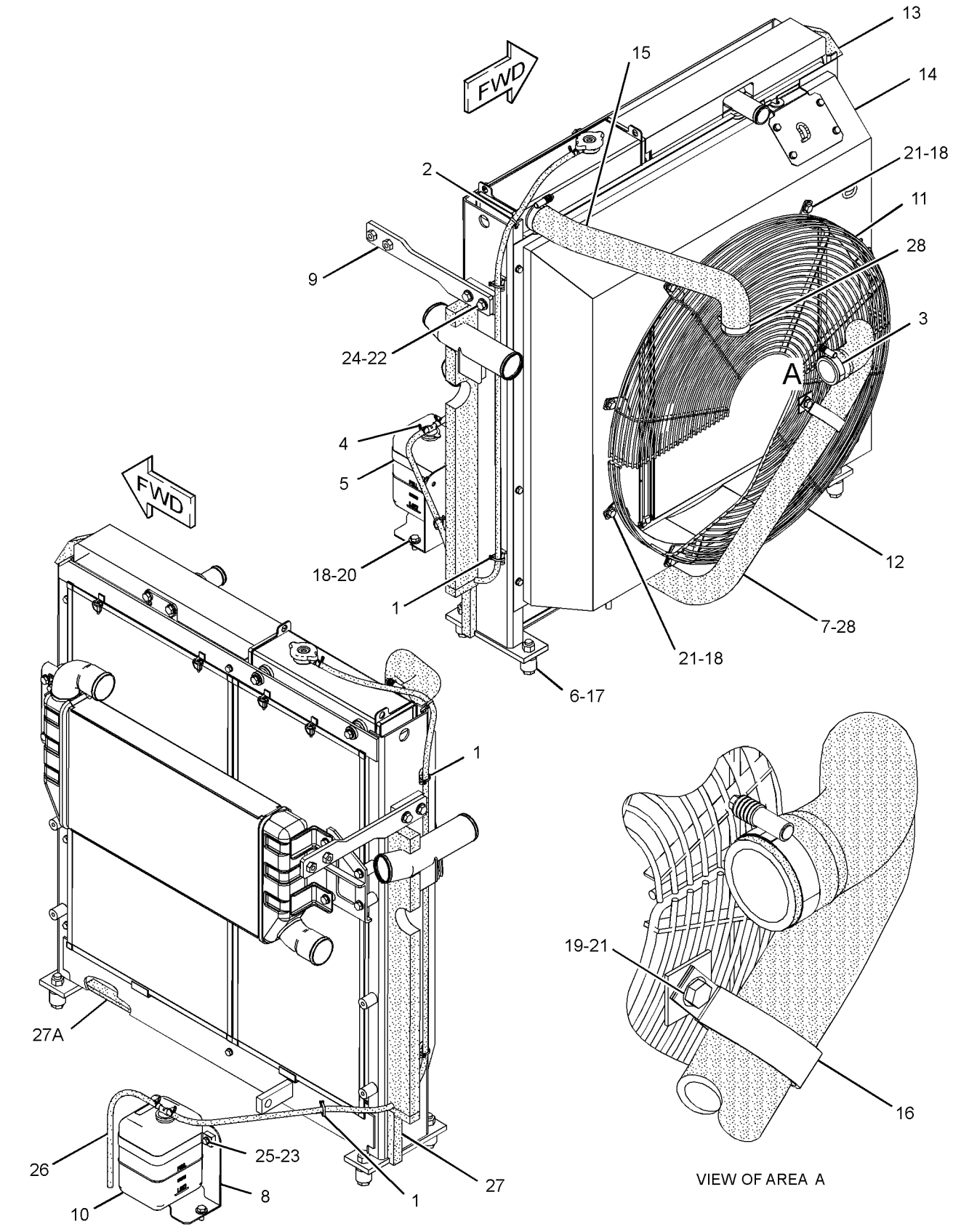

GRAPHIC #1 **<END>** g01380034

265-3600 RADIATOR & HYD OIL COOLER GP

S/N: KGF1-UP; FAL1-UP
PART OF 290-1911, 298-4271, 298-4272 COOLING AR-HIGH AMBIENT TEMP, 290-1892 SPECIAL AR
AN ATTACHMENT
TYPE 4

SMCS-1351 **i03937875**

NOTE	REF NO	GRAPHIC REF	PART NUMBER	QTY	PART NAME 1 2 3 4 5 6 (PRODUCT LEVEL)	SEE PAGE
	1	1	**3S-2093**	3	STRAP-CABLE	
	2	1	**7I-2673**	1	STRAP-CABLE	
	3	1	**8T-4984**	1	CLAMP-HOSE	
	4	1	**096-4035**	1	CLIP	
	5	1	**171-9077**	1	BAND	
	6	1	**178-6450**	4	SPACER (17X35X30-MM THK)	
	7	1	**245-9178**	1	HOSE-RADIATOR (LOWER)	
	8	1	**245-9185**	1	BRACKET AS	
	9	1	**245-9191**	1	PLATE AS	
	10	1	**245-9205**	1	TANK AS-COOLANT (RECOVERY)	
		1	**171-3369**	1	CAP AS (COOLANT RECOVERY)	
	11	1	**245-9348**	1	GUARD AS (UPPER)	
	12	1	**245-9349**	1	GUARD AS (LOWER)	
	13	1	**245-9352**	1	SEAL	
CY	14	1	**326-3937**	1	RADIATOR & HYD OIL COOLER GP	245
	15	1	**265-3602**	1	HOSE-RADIATOR (UPPER)	
	16	1	**3P-9847**	1	CLIP	
M	17	1	**7X-2554**	4	BOLT (M16X2X70-MM)	
	18	1	**7X-7729**	11	WASHER (11X25X3-MM THK)	
	19	1	**8T-4121**	1	WASHER-HARD (11X21X2.5-MM THK)	
M	20	1	**8T-4136**	2	BOLT (M10X1.5X25-MM)	
M	21	1	**8T-4137**	10	BOLT (M10X1.5X20-MM)	
M	22	1	**8T-4139**	2	BOLT (M12X1.75X30-MM)	
M	23	1	**8T-4200**	2	BOLT (M8X1.25X16-MM)	
	24	1	**8T-4223**	2	WASHER-HARD (13.5X25.5X3-MM THK)	
	25	1	**8T-4224**	2	WASHER-HARD (8.8X16X2-MM THK)	
E	26	1	**7Y-1976**		HOSE-WATER (40-CM)	
D	27	1	**5P-9909**		SEAL (0.2-M)	
D	27A	1	**5P-9909**		SEAL (0.9-M)	
	28	1	**8T-6703**	3	CLAMP-HOSE	

C - CHANGE FROM PREVIOUS TYPE
D - ORDER BY THE METER
E - ORDER BY THE CENTIMETER
M - METRIC PART
Y - SEPARATE ILLUSTRATION

265-3600 **RADIATOR & HYD OIL COOLER GP (*contd.*)** **i03937875**

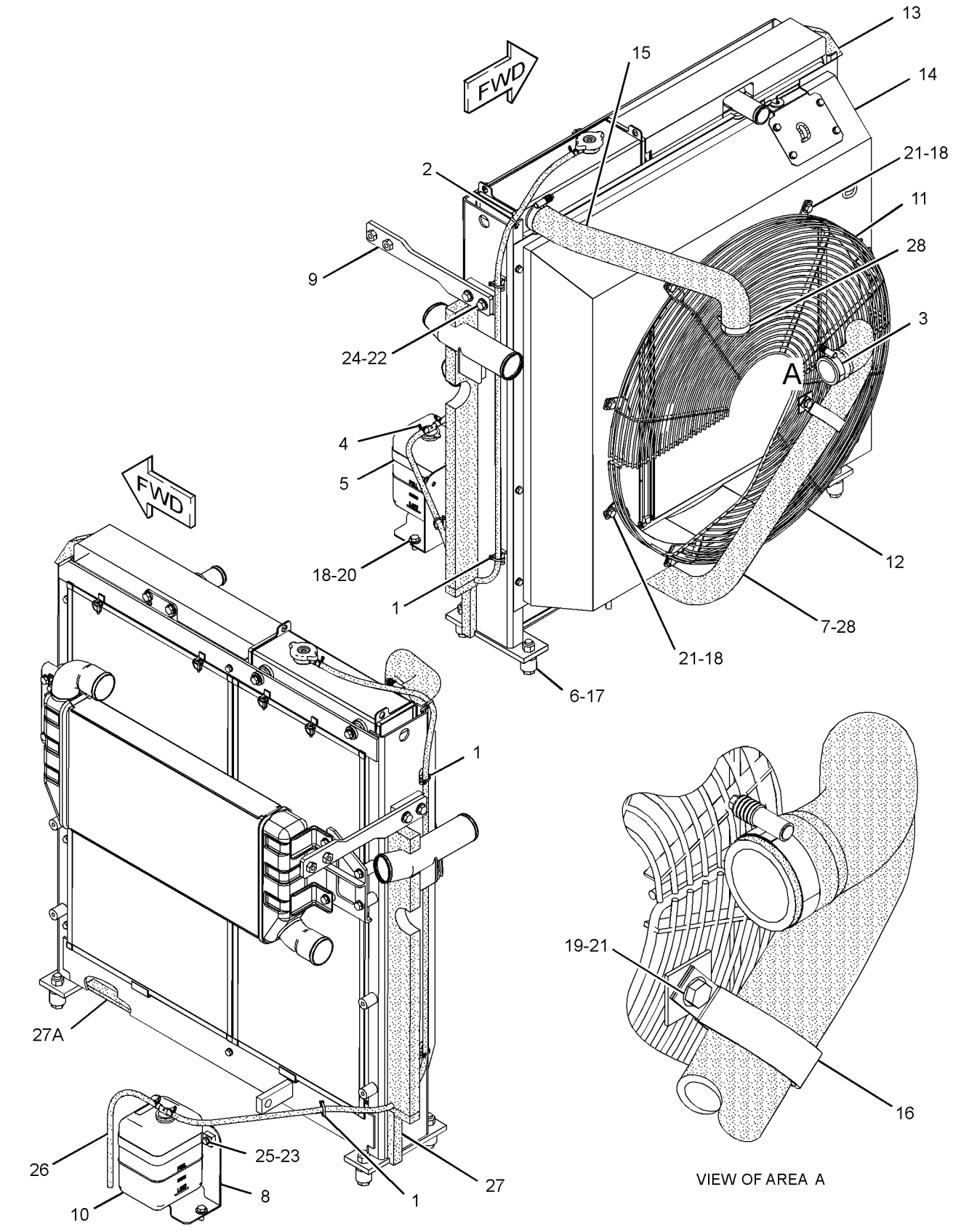

GRAPHIC #1 **<END>** g01380034

265-3600 RADIATOR & HYD OIL COOLER GP

S/N: KGF1-UP; FAL1-UP

PART OF 290-1911, 298-4271, 298-4272, 354-1056, 354-1057, 359-2423 COOLING AR-HIGH AMBIENT TEMP, 290-1892 SPECIAL AR

AN ATTACHMENT

TYPE 5

SMCS-1351 **i03937812**

NOTE	REF NO	GRAPHIC REF	PART NUMBER	QTY	PART NAME 1 2 3 4 5 6 (PRODUCT LEVEL)	SEE PAGE
	1	1	**3S-2093**	3	STRAP-CABLE	
	2	1	**7I-2673**	1	STRAP-CABLE	
	3	1	**8T-4984**	1	CLAMP-HOSE	
	4	1	**096-4035**	1	CLIP	
	5	1	**171-9077**	1	BAND	
	6	1	**178-6450**	4	SPACER (17X35X30-MM THK)	
	7	1	**245-9178**	1	HOSE-RADIATOR (LOWER)	
	8	1	**245-9185**	1	BRACKET AS	
	9	1	**245-9191**	1	PLATE AS	
	10	1	**245-9205**	1	TANK AS-COOLANT (RECOVERY)	
		1	**171-3369**	1	CAP AS (COOLANT RECOVERY)	
C	11	1	**305-7669**	1	GUARD AS-UPPER	
	12	1	**245-9349**	1	GUARD AS (LOWER)	
	13	1	**245-9352**	1	SEAL	
CY	14	1	**326-3956**	1	RADIATOR & HYD OIL COOLER GP	248
	15	1	**265-3602**	1	HOSE-RADIATOR (UPPER)	
	16	1	**3P-9847**	1	CLIP	
M	17	1	**7X-2554**	4	BOLT (M16X2X70-MM)	
	18	1	**7X-7729**	11	WASHER (11X25X3-MM THK)	
	19	1	**8T-4121**	1	WASHER-HARD (11X21X2.5-MM THK)	
M	20	1	**8T-4136**	2	BOLT (M10X1.5X25-MM)	
M	21	1	**8T-4137**	10	BOLT (M10X1.5X20-MM)	
M	22	1	**8T-4139**	2	BOLT (M12X1.75X30-MM)	
M	23	1	**8T-4200**	2	BOLT (M8X1.25X16-MM)	
	24	1	**8T-4223**	2	WASHER-HARD (13.5X25.5X3-MM THK)	
	25	1	**8T-4224**	2	WASHER-HARD (8.8X16X2-MM THK)	
E	26	1	**7Y-1976**		HOSE-WATER (40-CM)	
D	27	1	**5P-9909**		SEAL (0.2-M)	
D	27A	1	**5P-9909**		SEAL (0.9-M)	
	28	1	**8T-6703**	3	CLAMP-HOSE	

C - CHANGE FROM PREVIOUS TYPE
D - ORDER BY THE METER
E - ORDER BY THE CENTIMETER
M - METRIC PART
Y - SEPARATE ILLUSTRATION

265-3600 **RADIATOR & HYD OIL COOLER GP (*contd.*)** **i03937812**

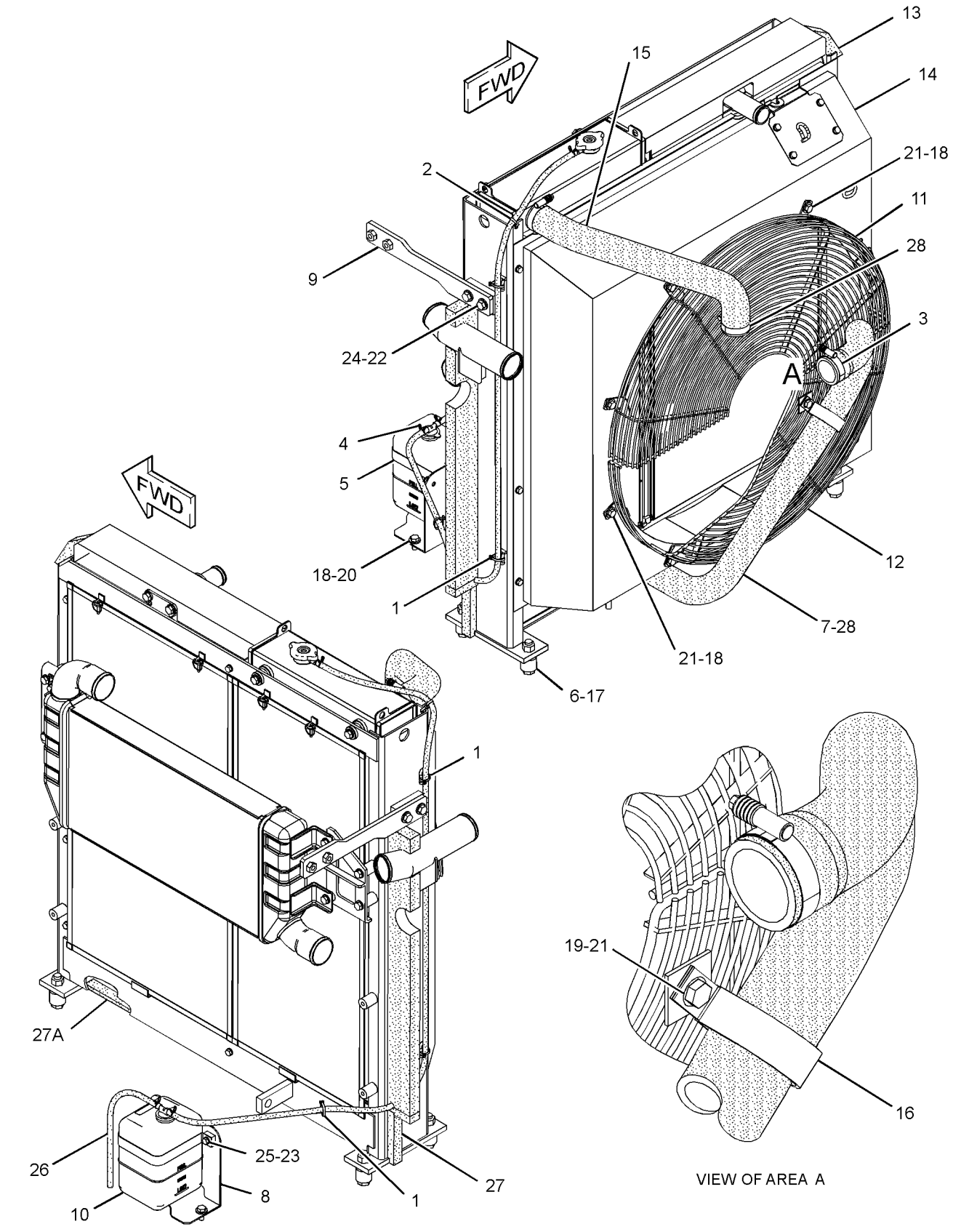

GRAPHIC #1

<END>

g01380034

265-3600 RADIATOR & HYD OIL COOLER GP

S/N: KGF1-UP; FAL1-UP

PART OF 290-1911, 298-4271, 298-4272, 354-1056, 354-1057, 359-2423 COOLING AR-HIGH AMBIENT TEMP, 290-1892 SPECIAL AR

AN ATTACHMENT

TYPE 6

SMCS-1351 **i04140451**

NOTE	REF NO	GRAPHIC REF	PART NUMBER	QTY	PART NAME 1 2 3 4 5 6 (PRODUCT LEVEL)	SEE PAGE
	1	1	**3S-2093**	3	STRAP-CABLE	
	2	1	**7I-2673**	1	STRAP-CABLE	
	3	1	**8T-4984**	1	CLAMP-HOSE	
	4	1	**096-4035**	1	CLIP	
	5	1	**171-9077**	1	BAND	
	6	1	**178-6450**	4	SPACER (17X35X30-MM THK)	
	7	1	**245-9178**	1	HOSE-RADIATOR (LOWER)	
	8	1	**245-9185**	1	BRACKET AS	
	9	1	**245-9191**	1	PLATE AS	
	10	1	**245-9205**	1	TANK AS-COOLANT (RECOVERY)	
		1	**171-3369**	1	CAP AS (COOLANT RECOVERY)	
C	11	1	**359-9381**	1	GUARD AS-UPPER	
	13	1	**245-9352**	1	SEAL	
Y	14	1	**326-3956**	1	RADIATOR & HYD OIL COOLER GP	248
	15	1	**265-3602**	1	HOSE-RADIATOR (UPPER)	
	16	1	**3P-9847**	1	CLIP	
M	17	1	**7X-2554**	4	BOLT (M16X2X70-MM)	
C	18	1	**7X-7729**	7	WASHER (11X25X3-MM THK)	
	19	1	**8T-4121**	1	WASHER-HARD (11X21X2.5-MM THK)	
M	20	1	**8T-4136**	2	BOLT (M10X1.5X25-MM)	
CM	21	1	**8T-4137**	6	BOLT (M10X1.5X20-MM)	
M	22	1	**8T-4139**	2	BOLT (M12X1.75X30-MM)	
M	23	1	**8T-4200**	2	BOLT (M8X1.25X16-MM)	
	24	1	**8T-4223**	2	WASHER-HARD (13.5X25.5X3-MM THK)	
	25	1	**8T-4224**	2	WASHER-HARD (8.8X16X2-MM THK)	
E	26	1	**7Y-1976**		HOSE-WATER (40-CM)	
D	27	1	**5P-9909**		SEAL (0.2-M)	
D	27A	1	**5P-9909**		SEAL (0.9-M)	
	28	1	**8T-6703**	3	CLAMP-HOSE	

C - CHANGE FROM PREVIOUS TYPE
D - ORDER BY THE METER
E - ORDER BY THE CENTIMETER
M - METRIC PART
Y - SEPARATE ILLUSTRATION

265-3600 **RADIATOR & HYD OIL COOLER GP (*contd.*)** **i04140451**

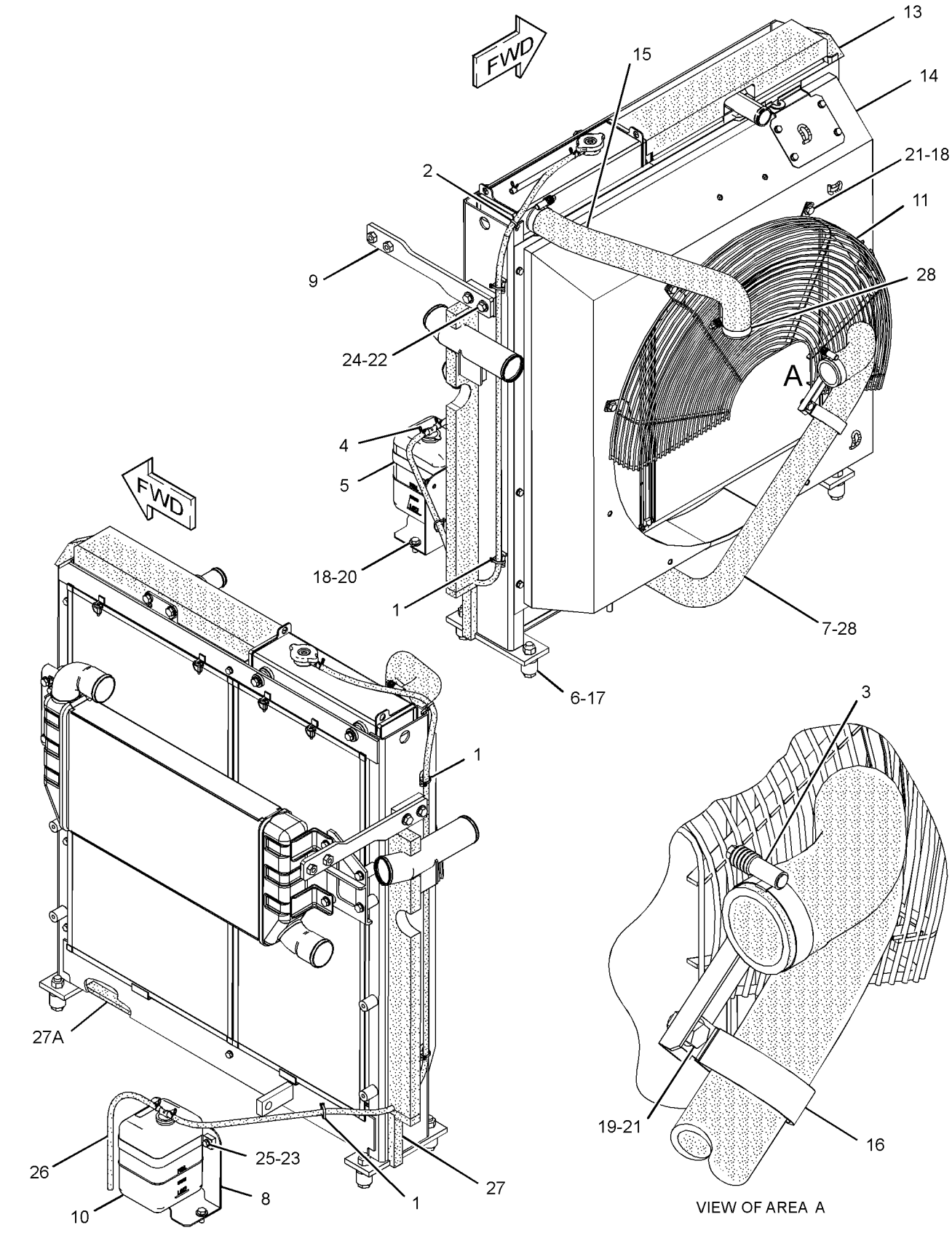

GRAPHIC #1 **<END>** g02343768

265-3600 RADIATOR & HYD OIL COOLER GP

S/N: KGF1-UP; FAL1-UP

PART OF 298-4271, 359-2423 COOLING AR-HIGH AMBIENT TEMP, 290-1892 SPECIAL AR AN ATTACHMENT

TYPE 7

SMCS-1351 **i04798413**

NOTE	REF NO	GRAPHIC REF	PART NUMBER	QTY	PART NAME 1 2 3 4 5 6 (PRODUCT LEVEL)	SEE PAGE
	1	1	**3S-2093**	3	STRAP-CABLE	
	2	1	**7I-2673**	1	STRAP-CABLE	
	3	1	**8T-4984**	1	CLAMP-HOSE	
	4	1	**096-4035**	1	CLIP	
	5	1	**171-9077**	1	BAND	
	6	1	**178-6450**	4	SPACER (17X35X30-MM THK)	
	7	1	**245-9178**	1	HOSE-RADIATOR (LOWER)	
	8	1	**245-9185**	1	BRACKET AS	
	9	1	**245-9191**	1	PLATE AS	
	10	1	**245-9205**	1	TANK AS-COOLANT (RECOVERY)	
		1	**171-3369**	1	CAP AS (COOLANT RECOVERY)	
C	11	1	**375-5693**	1	GUARD AS	
C	12	1	**375-5630**	1	PLATE AS	
	13	1	**245-9352**	1	SEAL	
Y	14	1	**326-3956**	1	RADIATOR & HYD OIL COOLER GP	248
	15	1	**265-3602**	1	HOSE-RADIATOR (UPPER)	
C	16	1	**3P-9847**	2	CLIP	
M	17	1	**7X-2554**	4	BOLT (M16X2X70-MM)	
C	18	1	**7X-7729**	9	WASHER (11X25X3-MM THK)	
C	19	1	**8T-4121**	2	WASHER-HARD (11X21X2.5-MM THK)	
CM	20	1	**8T-4136**	4	BOLT (M10X1.5X25-MM)	
M	21	1	**8T-4137**	6	BOLT (M10X1.5X20-MM)	
M	22	1	**8T-4139**	2	BOLT (M12X1.75X30-MM)	
M	23	1	**8T-4200**	2	BOLT (M8X1.25X16-MM)	
	24	1	**8T-4223**	2	WASHER-HARD (13.5X25.5X3-MM THK)	
	25	1	**8T-4224**	2	WASHER-HARD (8.8X16X2-MM THK)	
E	26	1	**7Y-1976**		HOSE-WATER (40-CM)	
D	27	1	**5P-9909**		SEAL (0.2-M)	
D	27A	1	**5P-9909**		SEAL (0.9-M)	
	28	1	**8T-6703**	3	CLAMP-HOSE	
CM	29	1	**8T-4195**	1	BOLT (M10X1.5X30-MM)	
C	30	1	**118-0275**	1	WASHER (13.5X32X8-MM THK)	

C - CHANGE FROM PREVIOUS TYPE
D - ORDER BY THE METER
E - ORDER BY THE CENTIMETER
M - METRIC PART
Y - SEPARATE ILLUSTRATION

265-3600 **RADIATOR & HYD OIL COOLER GP (*contd.*)** **i04798413**

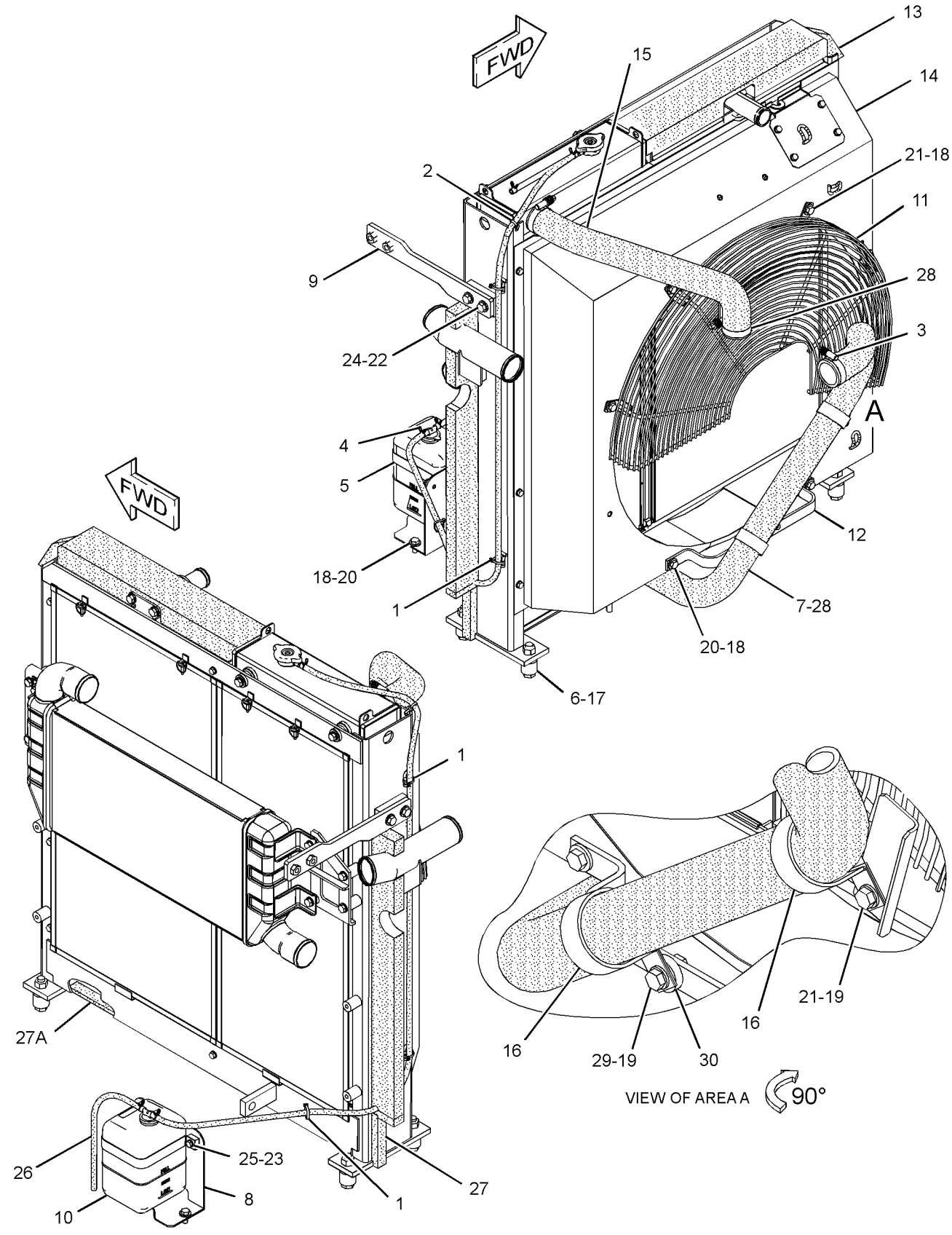

GRAPHIC #1 **<END>** g02923176

265-3601 RADIATOR & HYD OIL COOLER GP

S/N: KGF1-UP; FAL1-UP

PART OF 265-3600 RADIATOR & HYD OIL COOLER GP

AN ATTACHMENT

SMCS-1351 **i02638677**

NOTE	REF NO	GRAPHIC REF	PART NUMBER	QTY	PART NAME 1 2 3 4 5 6 (PRODUCT LEVEL)	SEE PAGE
	1	1	**5D-8159**	4	PIN AS	
M	2	1	**093-5432**	1	VALVE AS-DRAIN (COOLANT)	
	3	1	**096-4035**	2	CLIP	
	4	1	**210-8117**	2	SEAL	
	5	1	**210-8128**	1	PLATE AS	
	6	1	**245-9212**	1	CAP AS-PRESSURE (RADIATOR)	
	7	1	**245-9216**	2	BOSS	
	8	1	**245-9217**	2	CUSHION-RUBBER	
	9	1	**245-9218**	2	CUSHION-RUBBER	
	10	1	**245-9276**	2	SEAL	
	11	1	**265-3624**	1	CORE AS-RADIATOR	
	12	1	**265-3625**	1	CORE AS-OIL COOLER (HYDRAULIC)	
	13	1	**265-3627**	1	FRAME AS	
	14	1	**265-3628**	1	SHROUD AS-RADIATOR	
	15	1	**265-3629**	2	SEAL	
	16	1	**265-3630**	2	SEAL	
	17	1	**265-3631**	2	SEAL	
	18	1	**265-3632**	3	SEAL	
	19	1	**265-3633**	1	SEAL	
	20	1	**265-3634**	1	SCREEN AS (OIL COOLER)	
	21	1	**265-3635**	1	SCREEN AS (RADIATOR)	
	22	1	**265-3637**	1	TUBE AS	
	23	1	**265-3638**	1	SEAL	
	24	1	**265-3639**	1	PLATE AS	
	25	1	**265-3642**	1	SEAL	
	26	1	**265-3643**	1	SEAL	
	27	1	**281-3488**	2	SHEET-RUBBER	
	28	1	**281-3534**	1	AFTERCOOLER AS	
	29	1	**281-3535**	1	PLATE AS	
	30	1	**281-3568**	2	SEAL	
	31	1	**095-1543**	2	SEAL-O-RING	
	32	1	**8T-4121**	10	WASHER-HARD (11X21X2.5-MM THK)	
M	33	1	**8T-4137**	6	BOLT (M10X1.5X20-MM)	
M	34	1	**8T-4189**	20	BOLT (M8X1.25X20-MM)	
M	35	1	**8T-4195**	2	BOLT (M10X1.5X30-MM)	
M	36	1	**8T-4196**	2	BOLT (M10X1.5X35-MM)	
	37	1	**8T-4224**	20	WASHER-HARD (8.8X16X2-MM THK)	
E	38	1	**7Y-1976**		HOSE-WATER (190-CM)	
E	38A	1	**7Y-1976**		HOSE-WATER (8-CM)	

E - ORDER BY THE CENTIMETER
M - METRIC PART

265-3601 **RADIATOR & HYD OIL COOLER GP (*contd.*)** **i02638677**

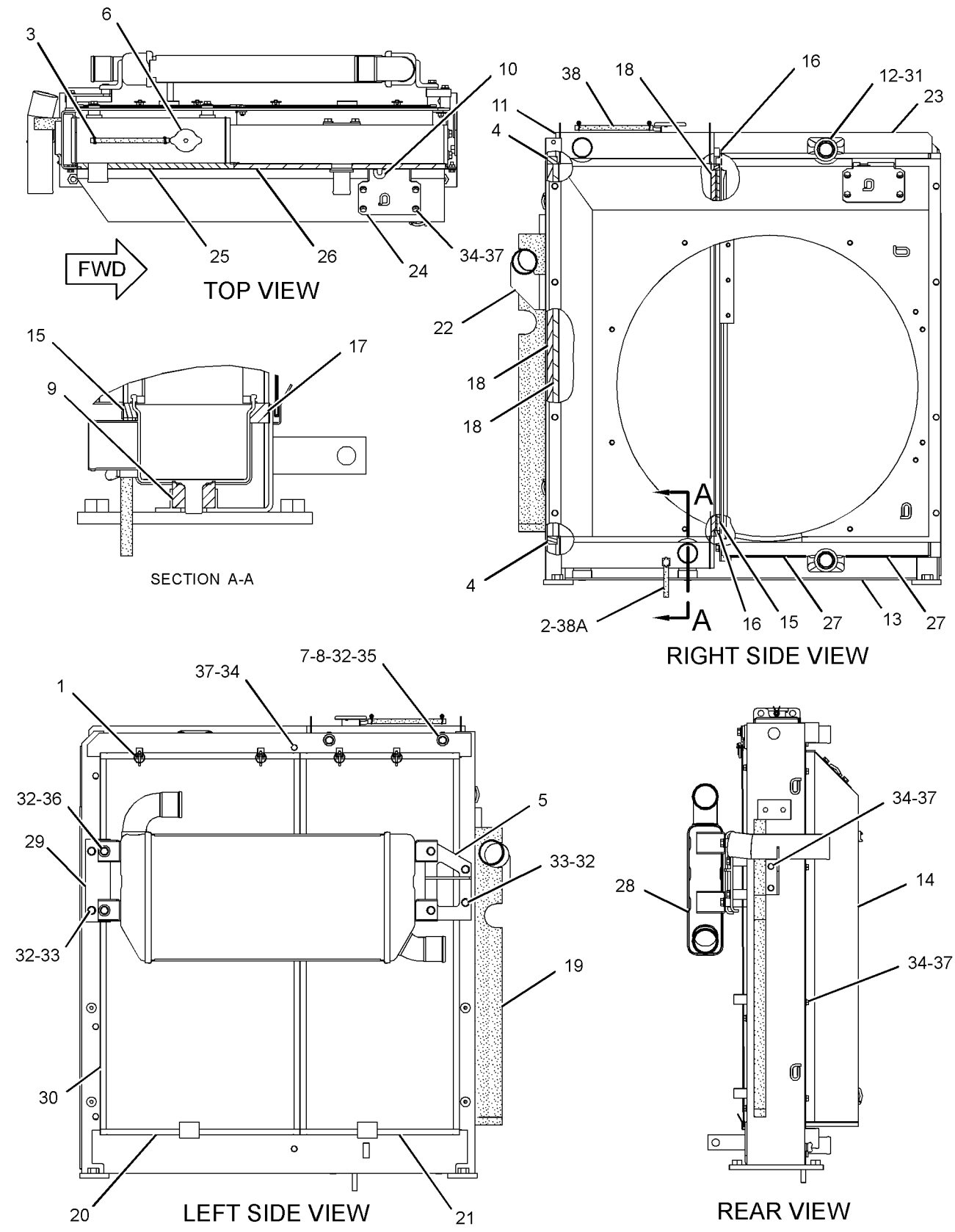

GRAPHIC #1 **<END>** g01324240

265-3616 RADIATOR & HYD OIL COOLER GP

S/N: KGF1-105; FAL1-182

PART OF 272-4742 INSTALLATION AR-ENGINE

SMCS-1351 **i03937890**

NOTE	REF NO	GRAPHIC REF	PART NUMBER	QTY	PART NAME 1 2 3 4 5 6 (PRODUCT LEVEL)	SEE PAGE
	1	2	**3S-2093**	3	STRAP-CABLE	
	2	2	**7I-2673**	1	STRAP-CABLE	
	3	2	**8T-4984**	1	CLAMP-HOSE	
	4	1	**096-4035**	1	CLIP	
	5	2	**171-9077**	1	BAND	
	6	1	**178-6450**	4	SPACER (17X35X30-MM THK)	
	7	1	**245-9178**	1	HOSE-RADIATOR (LOWER)	
	8	2	**245-9185**	1	BRACKET AS	
	9	2	**245-9191**	1	PLATE AS	
	10	1	**245-9205**	1	TANK AS-COOLANT (RECOVERY)	
		1	**171-3369**	1	CAP AS (COOLANT RECOVERY)	
	11	2	**245-9348**	1	GUARD AS (UPPER)	
	12	2	**245-9349**	1	GUARD AS (LOWER)	
	13	2	**245-9352**	1	SEAL	
	14	1	**265-3602**	1	HOSE-RADIATOR (UPPER)	
Y	15	1	**265-3617**	1	RADIATOR & HYD OIL COOLER GP	231
	16	2	**3P-9847**	1	CLIP	
M	17	1	**7X-2554**	4	BOLT (M16X2X70-MM)	
	18	2	**7X-7729**	11	WASHER (11X25X3-MM THK)	
	19	2	**8T-4121**	1	WASHER-HARD (11X21X2.5-MM THK)	
M	20	2	**8T-4136**	2	BOLT (M10X1.5X25-MM)	
M	21	2	**8T-4137**	10	BOLT (M10X1.5X20-MM)	
M	22	2	**8T-4139**	2	BOLT (M12X1.75X30-MM)	
M	23	2	**8T-4200**	2	BOLT (M8X1.25X16-MM)	
	24	2	**8T-4223**	2	WASHER-HARD (13.5X25.5X3-MM THK)	
	25	2	**8T-4224**	2	WASHER-HARD (8.8X16X2-MM THK)	
E	26	1	**7Y-1976**		HOSE-WATER (40-CM)	
D	27	2	**5P-9909**		SEAL (.87-M)	
D	27A	2	**5P-9909**		SEAL (.15-M)	
	28	1,2	**8T-6703**	3	CLAMP-HOSE	

D - ORDER BY THE METER
E - ORDER BY THE CENTIMETER
M - METRIC PART
Y - SEPARATE ILLUSTRATION

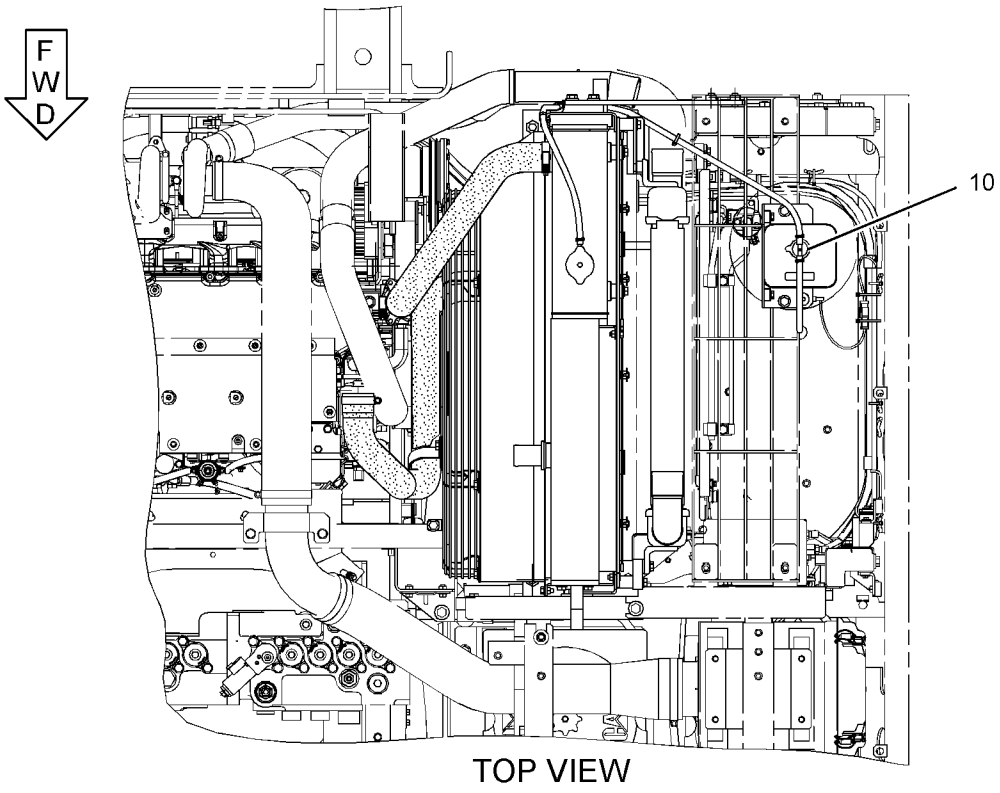

REFER TO ALL ILLUSTRATIONS OF THIS GROUP FOR AUXILIARY VIEWS

GRAPHIC #1

g01395782

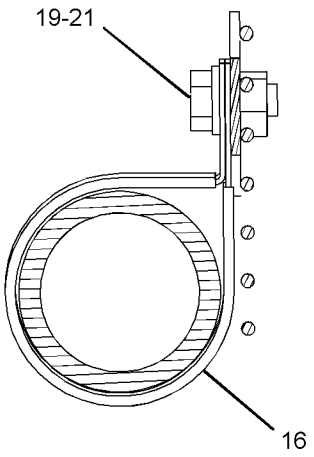

SECTION D-D

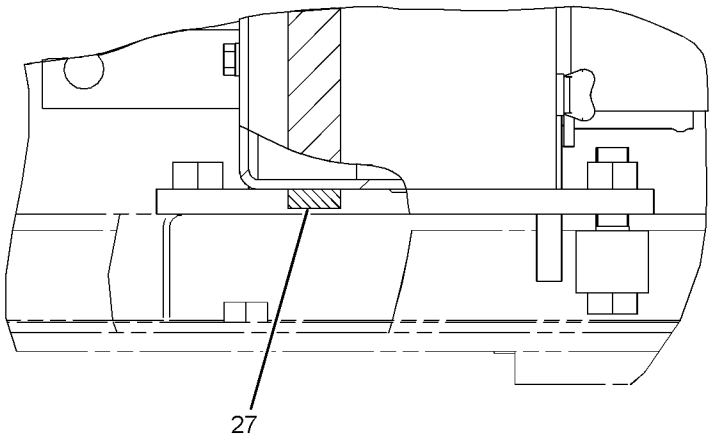

SECTION F-F

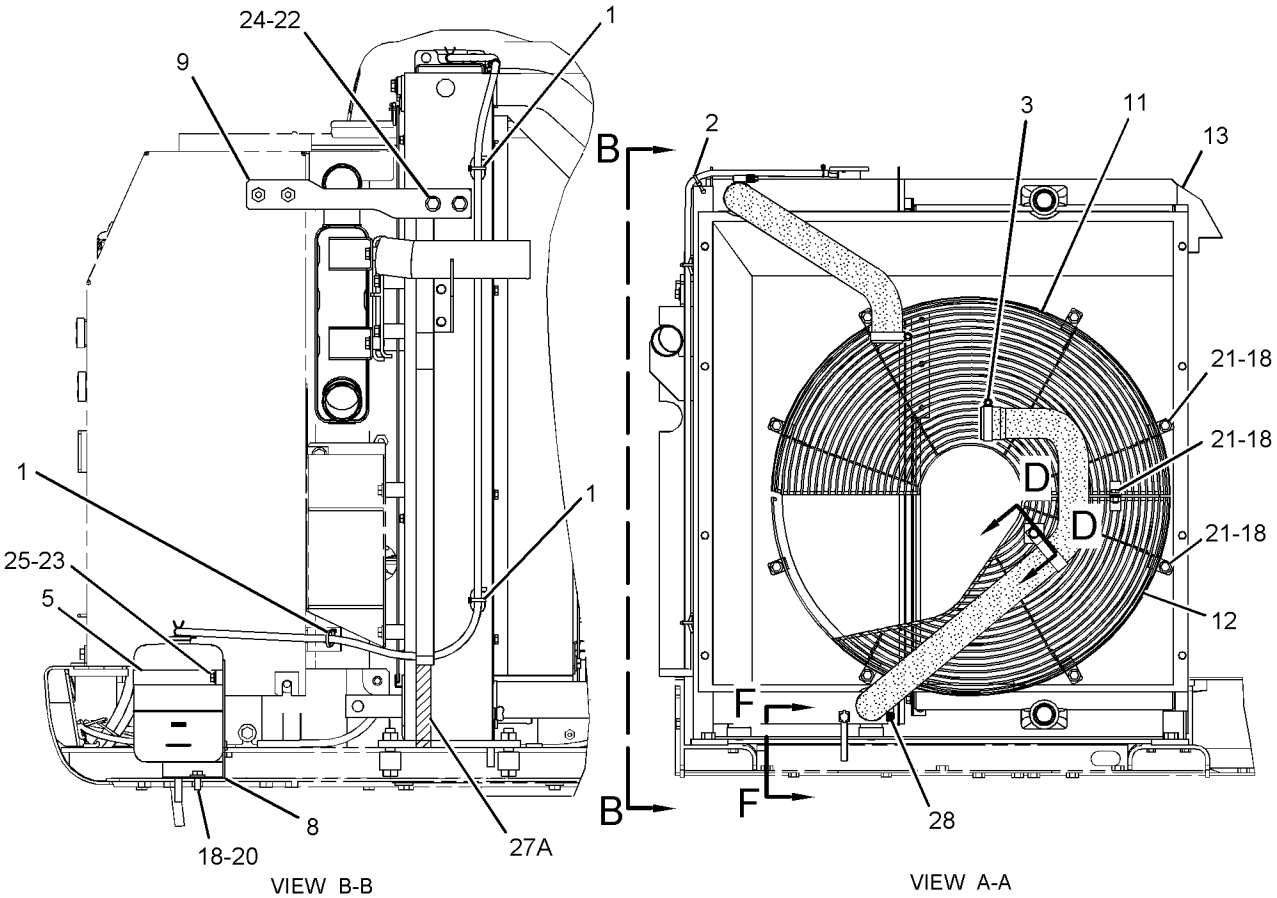

VIEW B-B

VIEW A-A

GRAPHIC #2 **<END>** g01395781

265-3616 RADIATOR & HYD OIL COOLER GP

S/N: KGF106-2961; FAL183-2236

PART OF 272-4742 INSTALLATION AR-ENGINE

SMCS-1351 **i03937931**

NOTE	REF NO	GRAPHIC REF	PART NUMBER	QTY	PART NAME 1 2 3 4 5 6 (PRODUCT LEVEL)	SEE PAGE
	1	1	**3S-2093**	3	STRAP-CABLE	
	2	1	**7I-2673**	1	STRAP-CABLE	
	3	1	**8T-4984**	1	CLAMP-HOSE	
	4	1	**096-4035**	1	CLIP	
	5	1	**171-9077**	1	BAND	
	6	1	**178-6450**	4	SPACER (17X35X30-MM THK)	
	7	1	**245-9178**	1	HOSE-RADIATOR (LOWER)	
	8	1	**245-9185**	1	BRACKET AS	
	9	1	**245-9191**	1	PLATE AS	
M		1	**8T-3597**	2	NUT-WELD (M12X1.75-THD)	
	10	1	**245-9205**	1	TANK AS-COOLANT (RECOVERY)	
		1	**171-3369**	1	CAP AS (COOLANT RECOVERY)	
	11	1	**245-9348**	1	GUARD AS (UPPER)	
	12	1	**245-9349**	1	GUARD AS (LOWER)	
M		1	**8T-3490**	2	NUT-WELD (M10X1.5-THD)	
	13	1	**245-9352**	1	SEAL	
	14	1	**265-3602**	1	HOSE-RADIATOR (UPPER)	
CY	15	1	**281-3601**	1	RADIATOR & HYD OIL COOLER GP	234
	16	1	**3P-9847**	1	CLIP	
M	17	1	**7X-2554**	4	BOLT (M16X2X70-MM)	
	18	1	**7X-7729**	11	WASHER (11X25X3-MM THK)	
	19	1	**8T-4121**	1	WASHER-HARD (11X21X2.5-MM THK)	
M	20	1	**8T-4136**	2	BOLT (M10X1.5X25-MM)	
M	21	1	**8T-4137**	10	BOLT (M10X1.5X20-MM)	
M	22	1	**8T-4139**	2	BOLT (M12X1.75X30-MM)	
M	23	1	**8T-4200**	2	BOLT (M8X1.25X16-MM)	
	24	1	**8T-4223**	2	WASHER-HARD (13.5X25.5X3-MM THK)	
	25	1	**8T-4224**	2	WASHER-HARD (8.8X16X2-MM THK)	
E	26	1	**7Y-1976**		HOSE-WATER (40-CM)	
D	27	1	**5P-9909**		SEAL (.87-M)	
D	27A	1	**5P-9909**		SEAL (.15-M)	
	28	1	**8T-6703**	3	CLAMP-HOSE	

C - CHANGE FROM PREVIOUS TYPE
D - ORDER BY THE METER
E - ORDER BY THE CENTIMETER
M - METRIC PART
Y - SEPARATE ILLUSTRATION

265-3616 **RADIATOR & HYD OIL COOLER GP (*contd.*)** **i03937931**

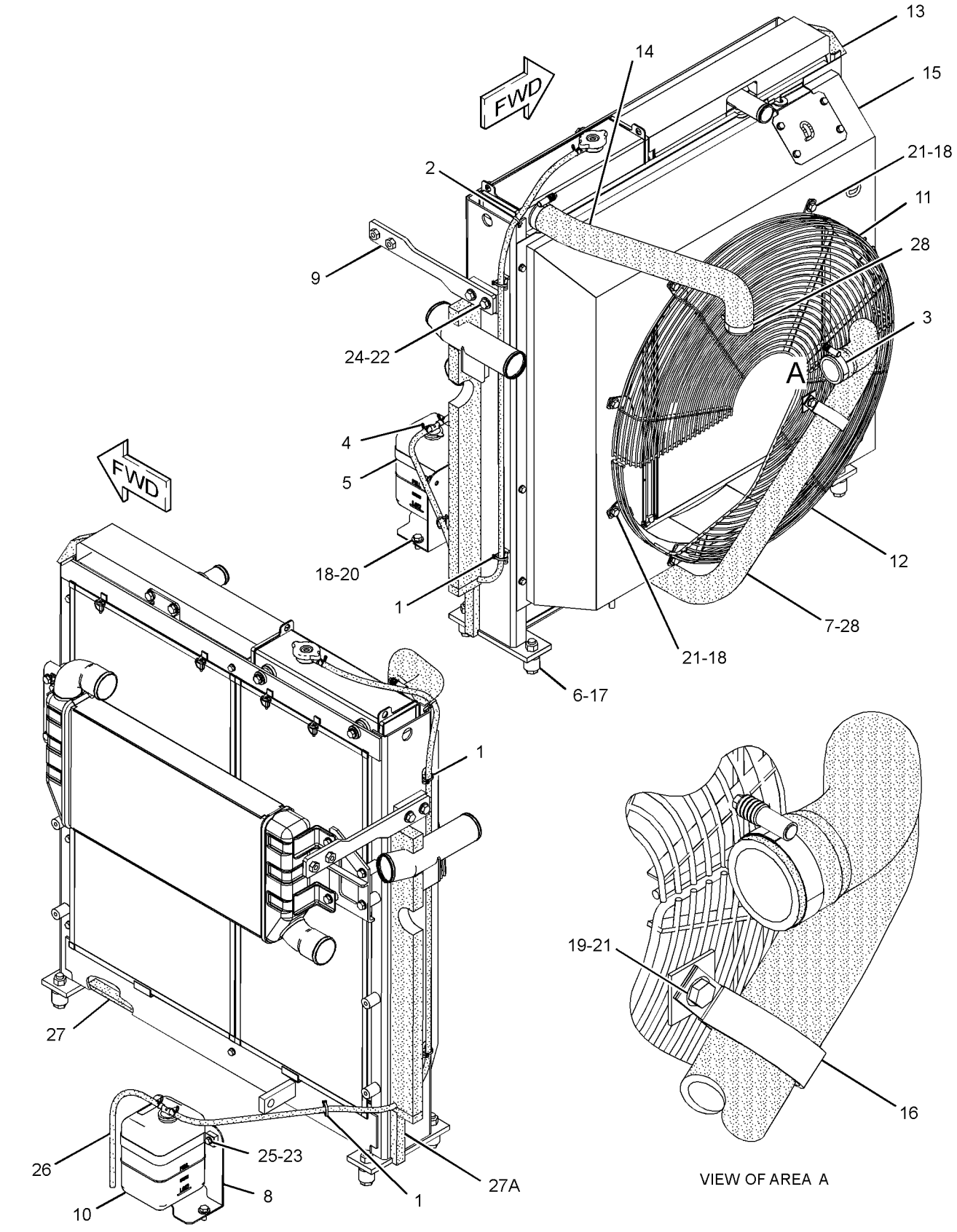

GRAPHIC #1 **<END>** g01380068

265-3616 RADIATOR & HYD OIL COOLER GP

S/N: KGF2962-UP; FAL2237-UP
PART OF 272-4742 INSTALLATION AR-ENGINE
TYPE 1

SMCS-1351 **i03937934**

NOTE	REF NO	GRAPHIC REF	PART NUMBER	QTY	PART NAME 1 2 3 4 5 6 (PRODUCT LEVEL)	SEE PAGE
	1	1	**3S-2093**	3	STRAP-CABLE	
	2	1	**7I-2673**	1	STRAP-CABLE	
	3	1	**8T-4984**	1	CLAMP-HOSE	
	4	1	**096-4035**	1	CLIP	
	5	1	**171-9077**	1	BAND	
	6	1	**178-6450**	4	SPACER (17X35X30-MM THK)	
	7	1	**245-9178**	1	HOSE-RADIATOR (LOWER)	
	8	1	**245-9185**	1	BRACKET AS	
	9	1	**245-9191**	1	PLATE AS	
M		1	**8T-3597**	2	NUT-WELD (M12X1.75-THD)	
	10	1	**245-9205**	1	TANK AS-COOLANT (RECOVERY)	
		1	**171-3369**	1	CAP AS (COOLANT RECOVERY)	
	11	1	**245-9348**	1	GUARD AS (UPPER)	
	12	1	**245-9349**	1	GUARD AS (LOWER)	
M		1	**8T-3490**	2	NUT-WELD (M10X1.5-THD)	
	13	1	**245-9352**	1	SEAL	
	14	1	**265-3602**	1	HOSE-RADIATOR (UPPER)	
CY	15	1	**326-3875**	1	RADIATOR & HYD OIL COOLER GP	241
	16	1	**3P-9847**	1	CLIP	
M	17	1	**7X-2554**	4	BOLT (M16X2X70-MM)	
	18	1	**7X-7729**	11	WASHER (11X25X3-MM THK)	
	19	1	**8T-4121**	1	WASHER-HARD (11X21X2.5-MM THK)	
M	20	1	**8T-4136**	2	BOLT (M10X1.5X25-MM)	
M	21	1	**8T-4137**	10	BOLT (M10X1.5X20-MM)	
M	22	1	**8T-4139**	2	BOLT (M12X1.75X30-MM)	
M	23	1	**8T-4200**	2	BOLT (M8X1.25X16-MM)	
	24	1	**8T-4223**	2	WASHER-HARD (13.5X25.5X3-MM THK)	
	25	1	**8T-4224**	2	WASHER-HARD (8.8X16X2-MM THK)	
E	26	1	**7Y-1976**		HOSE-WATER (40-CM)	
D	27	1	**5P-9909**		SEAL (.87-M)	
D	27A	1	**5P-9909**		SEAL (.15-M)	
	28	1	**8T-6703**	3	CLAMP-HOSE	

C - CHANGE FROM PREVIOUS TYPE
D - ORDER BY THE METER
E - ORDER BY THE CENTIMETER
M - METRIC PART
Y - SEPARATE ILLUSTRATION

265-3616 **RADIATOR & HYD OIL COOLER GP (*contd.*)** **i03937934**

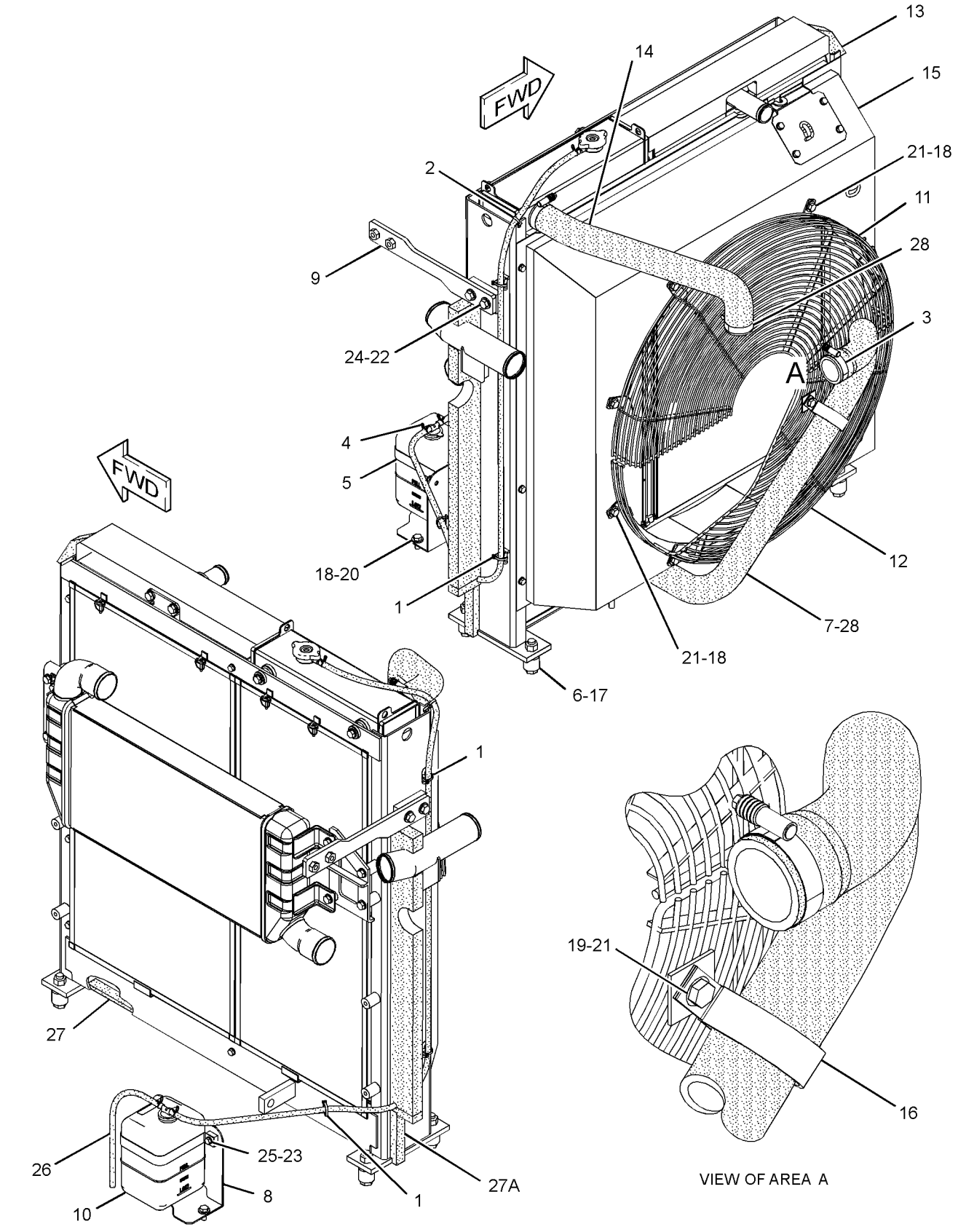

GRAPHIC #1 **<END>** g01380068

265-3616 RADIATOR & HYD OIL COOLER GP

S/N: KGF2962-UP; FAL2237-UP
PART OF 272-4742 INSTALLATION AR-ENGINE
TYPE 2

SMCS-1351 **i04795414**

NOTE	REF NO	GRAPHIC REF	PART NUMBER	QTY	PART NAME 1 2 3 4 5 6 (PRODUCT LEVEL)	SEE PAGE
	1	1	**3S-2093**	3	STRAP-CABLE	
	2	1	**7I-2673**	1	STRAP-CABLE	
	3	1	**8T-4984**	1	CLAMP-HOSE	
	4	1	**096-4035**	1	CLIP	
	5	1	**171-9077**	1	BAND	
	6	1	**178-6450**	4	SPACER (17X35X30-MM THK)	
	7	1	**245-9178**	1	HOSE-RADIATOR (LOWER)	
	8	1	**305-7664**	1	BRACKET AS	
	9	1	**245-9191**	1	PLATE AS	
	10	1	**245-9205**	1	TANK AS-COOLANT (RECOVERY)	
	11	1	**245-9348**	1	GUARD AS (UPPER)	
	12	1	**245-9349**	1	GUARD AS (LOWER)	
	13	1	**245-9352**	1	SEAL	
	14	1	**265-3602**	1	HOSE-RADIATOR (UPPER)	
CY	15	1	**347-9292**	1	RADIATOR & HYD OIL COOLER GP	251
	16	1	**3P-9847**	1	CLIP	
M	17	1	**7X-2554**	4	BOLT (M16X2X70-MM)	
	18	1	**7X-7729**	11	WASHER (11X25X3-MM THK)	
	19	1	**8T-4121**	1	WASHER-HARD (11X21X2.5-MM THK)	
M	20	1	**8T-4136**	2	BOLT (M10X1.5X25-MM)	
M	21	1	**8T-4137**	10	BOLT (M10X1.5X20-MM)	
M	22	1	**8T-4139**	2	BOLT (M12X1.75X30-MM)	
M	23	1	**8T-4200**	2	BOLT (M8X1.25X16-MM)	
	24	1	**8T-4223**	2	WASHER-HARD (13.5X25.5X3-MM THK)	
	25	1	**8T-4224**	2	WASHER-HARD (8.8X16X2-MM THK)	
E	26	1	**7Y-1976**		HOSE-WATER (40-CM)	
D	27	1	**5P-9909**		SEAL (0.9-M)	
D	27A	1	**5P-9909**		SEAL (0.2-M)	
	28	1	**8T-6703**	3	CLAMP-HOSE	

C - CHANGE FROM PREVIOUS TYPE
D - ORDER BY THE METER
E - ORDER BY THE CENTIMETER
M - METRIC PART
Y - SEPARATE ILLUSTRATION

265-3616 **RADIATOR & HYD OIL COOLER GP (*contd.*)** **i04795414**

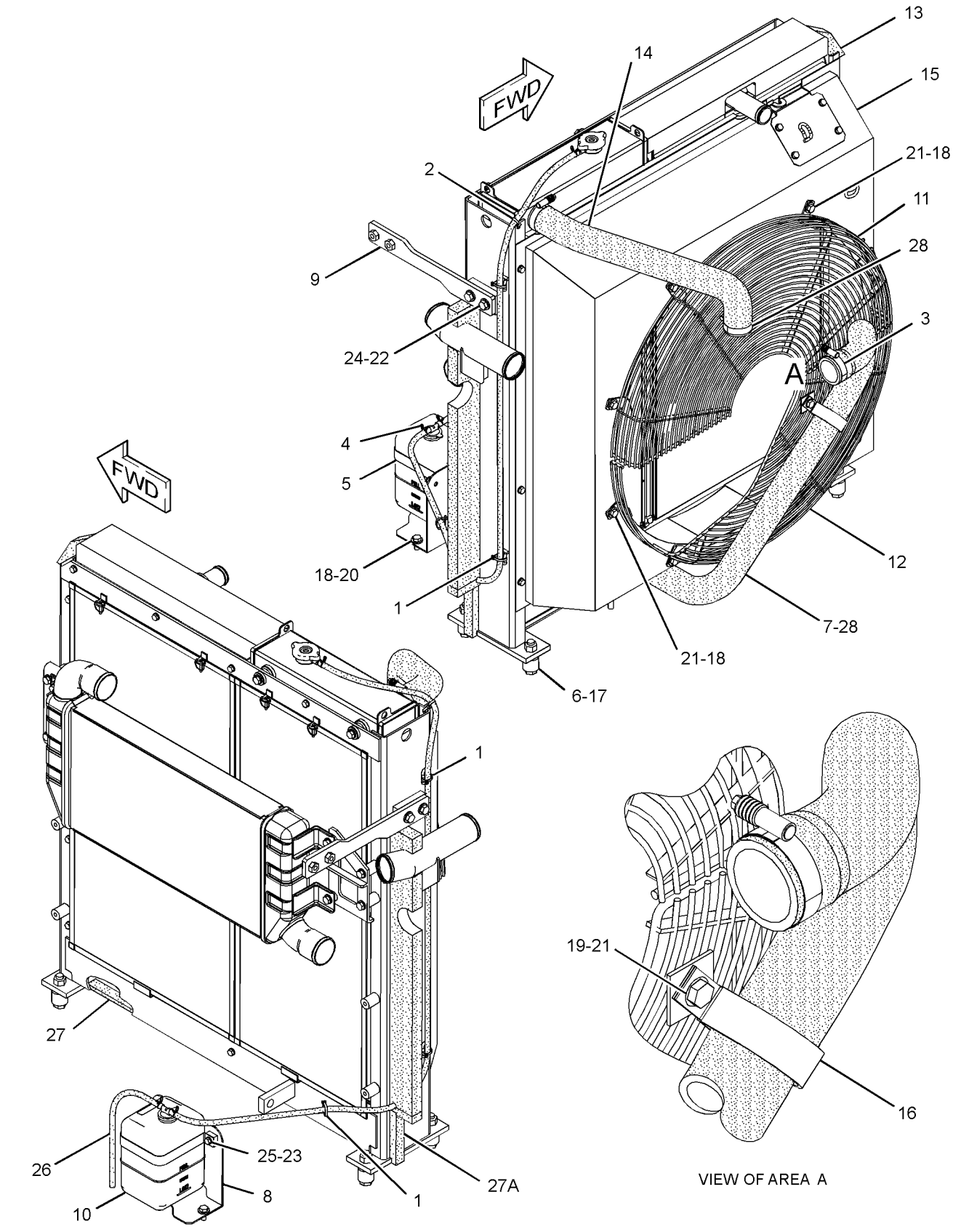

GRAPHIC #1 **<END>** g02557644

265-3617 RADIATOR & HYD OIL COOLER GP

S/N: KGF1-105; FAL1-182

PART OF 265-3616 RADIATOR & HYD OIL COOLER GP

SMCS-1351 **i02762188**

NOTE	REF NO	GRAPHIC REF	PART NUMBER	QTY	PART NAME 1 2 3 4 5 6 (PRODUCT LEVEL)	SEE PAGE
	1	2	**5D-8159**	4	PIN AS	
M	2	2	**093-5432**	1	VALVE AS-DRAIN (COOLANT)	
	3	1	**096-4035**	2	CLIP	
	4	1	**210-8117**	2	SEAL	
	5	2	**210-8128**	1	PLATE AS	
	6	1	**245-9212**	1	CAP AS-PRESSURE (RADIATOR)	
	7	2	**245-9216**	2	BOSS	
	8	2	**245-9217**	2	CUSHION-RUBBER	
	9	2	**245-9218**	2	CUSHION-RUBBER	
	10	1	**265-3624**	1	CORE AS-RADIATOR	
	11	1	**265-3625**	1	CORE AS-OIL COOLER (HYDRAULIC)	
	12	1	**265-3627**	1	FRAME AS	
	13	1,2	**265-3629**	3	SEAL	
	14	1	**265-3630**	2	SEAL	
	15	2	**265-3631**	2	SEAL	
	16	1	**265-3632**	3	SEAL	
	17	1	**265-3633**	1	SEAL	
	18	2	**265-3634**	1	SCREEN AS (OIL COOLER)	
	19	2	**265-3635**	1	SCREEN AS (RADIATOR)	
	20	1	**265-3637**	1	TUBE AS	
	21	1	**265-3638**	1	SEAL	
	22	1	**265-3640**	1	SHROUD AS-RADIATOR	
	23	1	**281-3488**	2	SHEET-RUBBER	
	24	1	**281-3534**	1	AFTERCOOLER AS	
	25	2	**281-3535**	1	PLATE AS	
	26	2	**095-1543**	2	SEAL-O-RING	
	27	2	**8T-4121**	10	WASHER-HARD (11X21X2.5-MM THK)	
M	28	2	**8T-4137**	6	BOLT (M10X1.5X20-MM)	
M	29	2	**8T-4189**	16	BOLT (M8X1.25X20-MM)	
M	30	2	**8T-4195**	2	BOLT (M10X1.5X30-MM)	
M	31	2	**8T-4196**	2	BOLT (M10X1.5X35-MM)	
	32	2	**8T-4224**	16	WASHER-HARD (8.8X16X2-MM THK)	
E	33	1	**7Y-1976**		HOSE-WATER (190-CM)	
E	33A	1	**7Y-1976**		HOSE-WATER (8-CM)	
	34	2	**281-3568**	2	SEAL	

E - ORDER BY THE CENTIMETER
M - METRIC PART

REFER TO ALL ILLUSTRATIONS OF THIS GROUP FOR AUXILIARY VIEWS

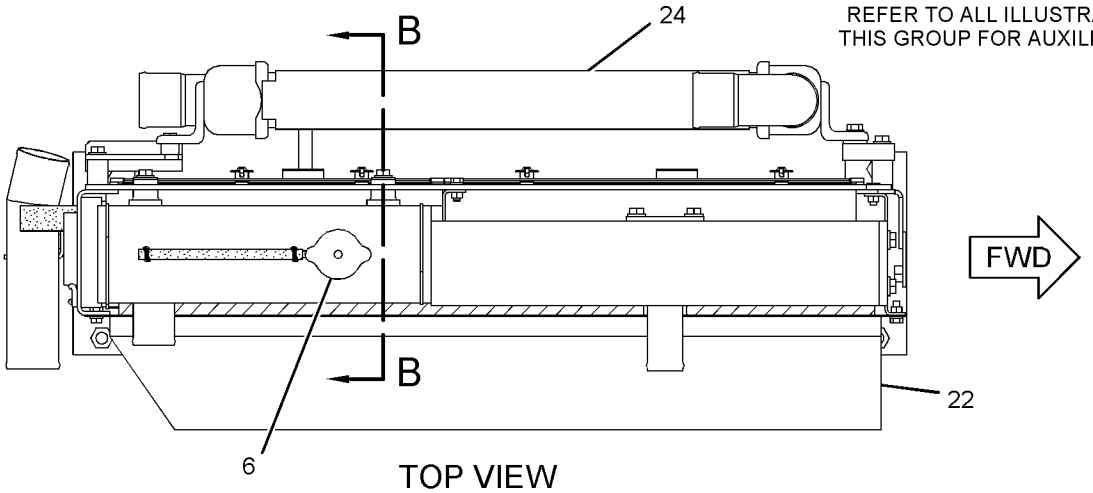

TOP VIEW

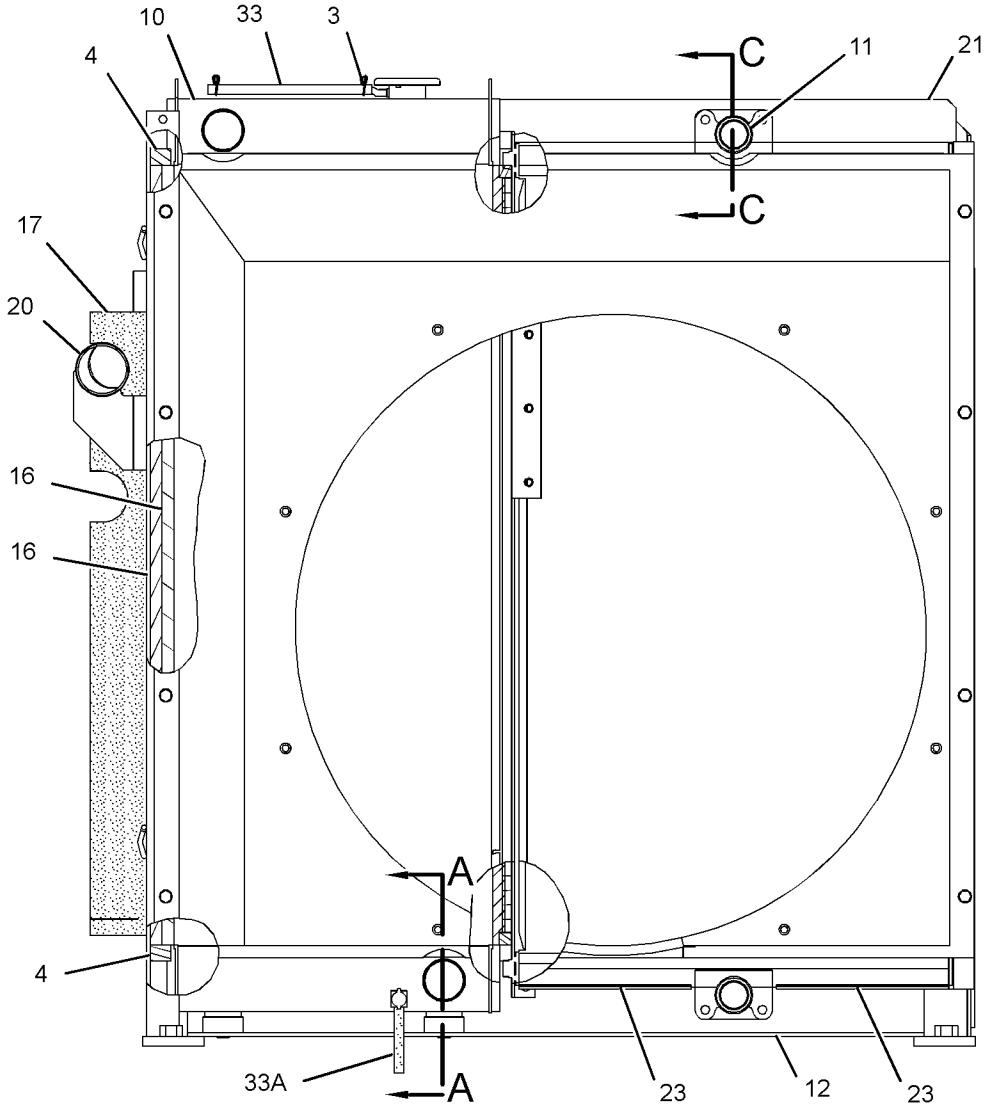

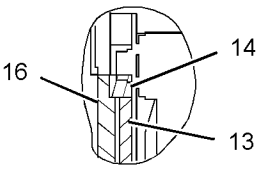

VIEW OF AREA D

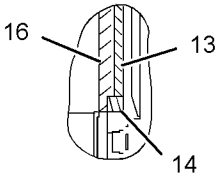

VIEW OF AREA E

RIGHT SIDE VIEW

GRAPHIC #1 g01386220

265-3617 **RADIATOR & HYD OIL COOLER GP (*contd.*)** **i02762188**

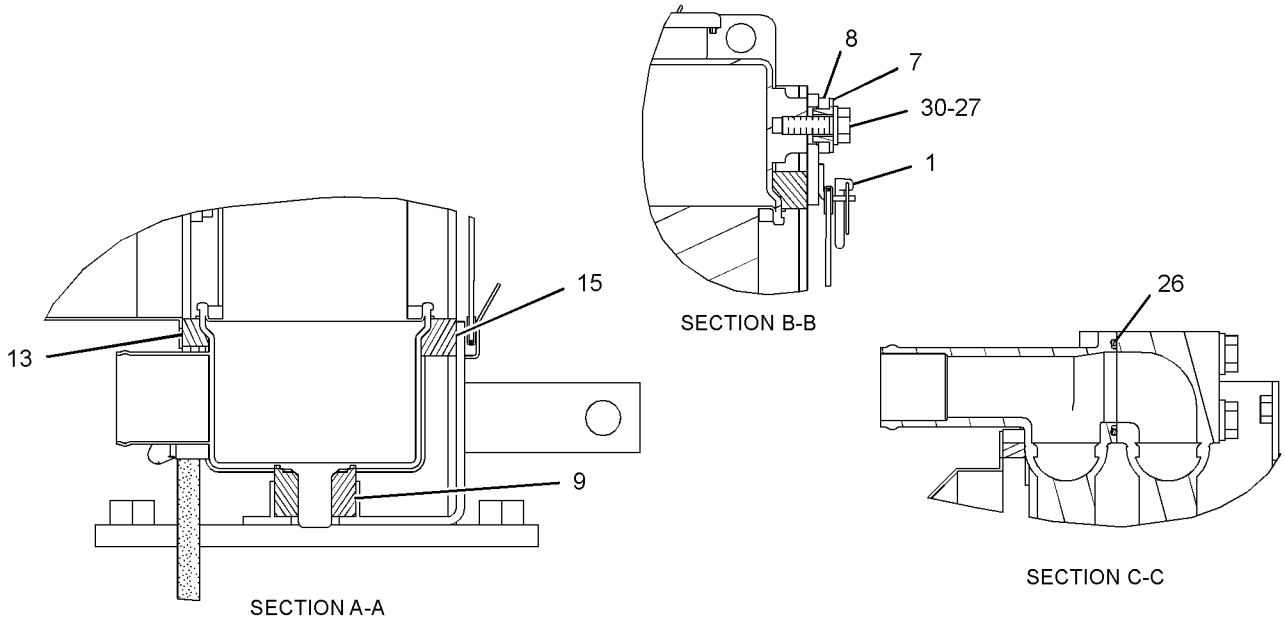

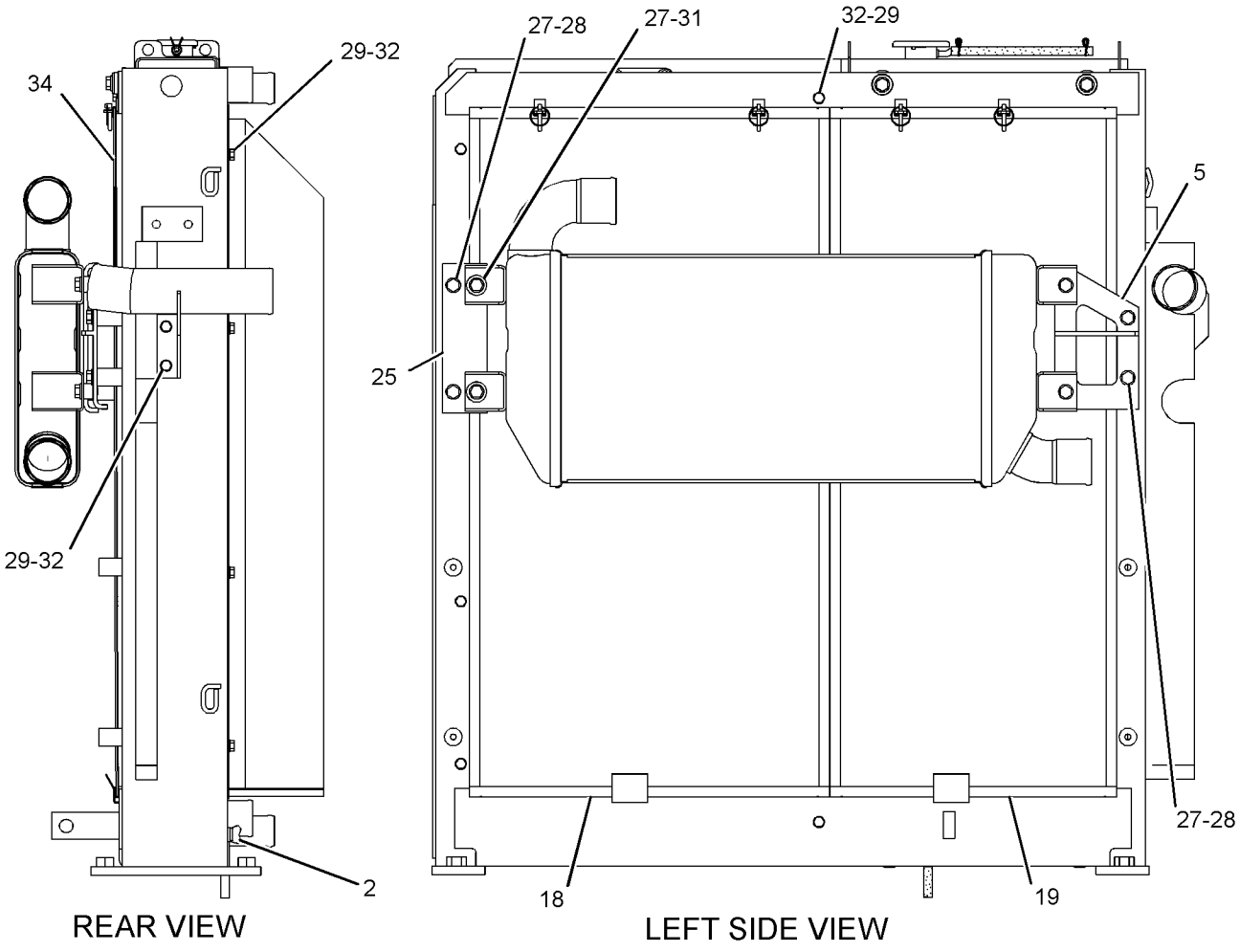

GRAPHIC #2 **<END>** g01386221

281-3601 RADIATOR & HYD OIL COOLER GP

S/N: KGF106-UP; FAL183-UP

PART OF 265-3616 RADIATOR & HYD OIL COOLER GP

SMCS-1351 **i02794909**

NOTE	REF NO	GRAPHIC REF	PART NUMBER	QTY	PART NAME 1 2 3 4 5 6 (PRODUCT LEVEL)	SEE PAGE
	1	1	**5D-8159**	4	PIN AS	
M	2	1	**093-5432**	1	VALVE AS-DRAIN (COOLANT)	
	3	1	**096-4035**	2	CLIP	
	4	1	**210-8117**	2	SEAL	
	5	1	**210-8128**	1	PLATE AS	
	6	1	**245-9212**	1	CAP AS-PRESSURE (RADIATOR)	
	7	1	**245-9216**	2	BOSS	
	8	1	**245-9217**	2	CUSHION-RUBBER	
	9	1	**245-9218**	2	CUSHION-RUBBER	
	10	1	**265-3624**	1	CORE AS-RADIATOR	
	11	1	**265-3625**	1	CORE AS-OIL COOLER (HYDRAULIC)	
	12	1	**281-3605**	1	FRAME AS	
	13	1	**265-3629**	3	SEAL	
	14	1	**265-3630**	2	SEAL	
	15	1	**265-3631**	2	SEAL	
	16	1	**265-3632**	3	SEAL	
	17	1	**265-3633**	1	SEAL	
	18	1	**265-3634**	1	SCREEN AS (OIL COOLER)	
	19	1	**265-3635**	1	SCREEN AS (RADIATOR)	
	20	1	**265-3637**	1	TUBE AS	
	21	1	**265-3638**	1	SEAL	
	22	1	**265-3640**	1	SHROUD AS-RADIATOR	
	23	1	**281-3488**	2	SHEET-RUBBER	
	24	1	**281-3534**	1	AFTERCOOLER AS	
	25	1	**281-3535**	1	PLATE AS	
	26	1	**095-1543**	2	SEAL-O-RING	
	27	1	**8T-4121**	10	WASHER-HARD (11X21X2.5-MM THK)	
M	28	1	**8T-4137**	6	BOLT (M10X1.5X20-MM)	
M	29	1	**8T-4189**	16	BOLT (M8X1.25X20-MM)	
M	30	1	**8T-4195**	2	BOLT (M10X1.5X30-MM)	
M	31	1	**8T-4196**	2	BOLT (M10X1.5X35-MM)	
	32	1	**8T-4224**	16	WASHER-HARD (8.8X16X2-MM THK)	
E	33	1	**7Y-1976**		HOSE-WATER (190-CM)	
E	33A	1	**7Y-1976**		HOSE-WATER (8-CM)	
	34	1	**281-3568**	2	SEAL	

E - ORDER BY THE CENTIMETER
M - METRIC PART

281-3601 **RADIATOR & HYD OIL COOLER GP (*contd.*)** **i02794909**

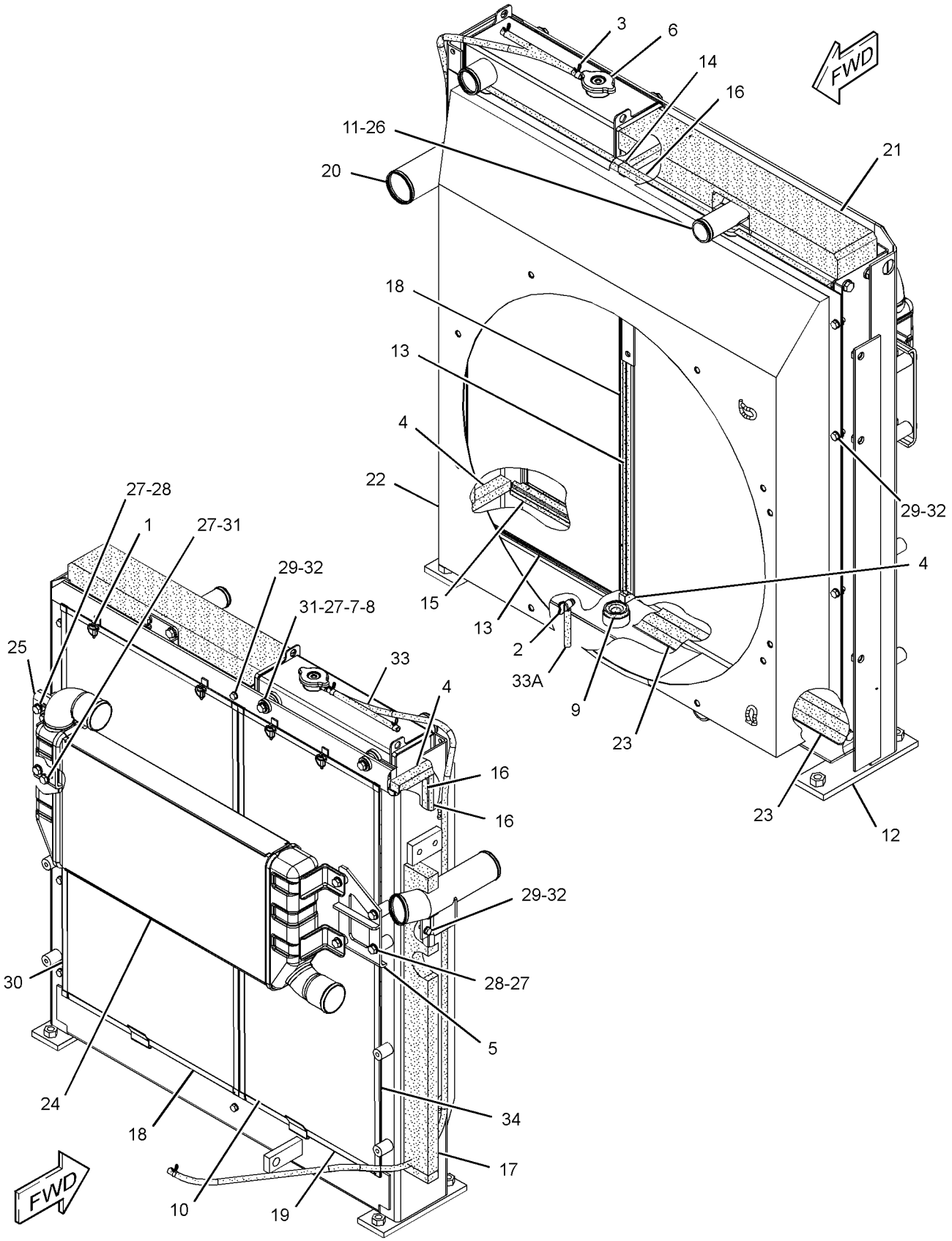

GRAPHIC #1 **<END>** g01380073

281-3602 RADIATOR & HYD OIL COOLER GP

S/N: KGF1-UP; FAL1-UP

PART OF 265-3600 RADIATOR & HYD OIL COOLER GP

AN ATTACHMENT

SMCS-1351 **i02763398**

NOTE	REF NO	GRAPHIC REF	PART NUMBER	QTY	PART NAME 1 2 3 4 5 6 (PRODUCT LEVEL)	SEE PAGE
	1	1	**5D-8159**	4	PIN AS	
M	2	1	**093-5432**	1	VALVE AS-DRAIN (COOLANT)	
	3	1	**095-1543**	2	SEAL-O-RING	
	4	1	**096-4035**	2	CLIP	
	5	1	**210-8117**	2	SEAL	
	6	1	**210-8128**	1	PLATE AS	
	7	1	**245-9212**	1	CAP AS-PRESSURE (RADIATOR)	
	8	1	**245-9216**	2	BOSS	
	9	1	**245-9217**	2	CUSHION-RUBBER	
	10	1	**245-9218**	2	CUSHION-RUBBER	
	11	1	**245-9276**	2	SEAL	
	12	1	**265-3624**	1	CORE AS-RADIATOR	
	13	1	**265-3625**	1	CORE AS-OIL COOLER (HYDRAULIC)	
	14	1	**265-3628**	1	SHROUD AS-RADIATOR	
	15	1	**265-3629**	2	SEAL	
	16	1	**265-3630**	2	SEAL	
	17	1	**265-3631**	2	SEAL	
	18	1	**265-3632**	3	SEAL	
	19	1	**265-3633**	1	SEAL	
	20	1	**265-3634**	1	SCREEN AS (OIL COOLER)	
	21	1	**265-3635**	1	SCREEN AS (RADIATOR)	
	22	1	**265-3637**	1	TUBE AS	
	23	1	**265-3638**	1	SEAL	
	24	1	**265-3639**	1	PLATE AS	
	25	1	**265-3642**	1	SEAL	
	26	1	**265-3643**	1	SEAL	
	27	1	**281-3488**	2	SHEET-RUBBER	
	28	1	**281-3534**	1	AFTERCOOLER AS	
	29	1	**281-3535**	1	PLATE AS	
	30	1	**281-3568**	2	SEAL	
	31	1	**281-3605**	1	FRAME AS	
	32	1	**8T-4121**	10	WASHER-HARD (11X21X2.5-MM THK)	
M	33	1	**8T-4137**	6	BOLT (M10X1.5X20-MM)	
M	34	1	**8T-4189**	20	BOLT (M8X1.25X20-MM)	
M	35	1	**8T-4195**	2	BOLT (M10X1.5X30-MM)	
M	36	1	**8T-4196**	2	BOLT (M10X1.5X35-MM)	
	37	1	**8T-4224**	20	WASHER-HARD (8.8X16X2-MM THK)	
E	38	1	**7Y-1976**		HOSE-WATER (190-CM)	
E	38A	1	**7Y-1976**		HOSE-WATER (8-CM)	

E - ORDER BY THE CENTIMETER
M - METRIC PART

281-3602 **RADIATOR & HYD OIL COOLER GP (*contd.*)** **i02763398**

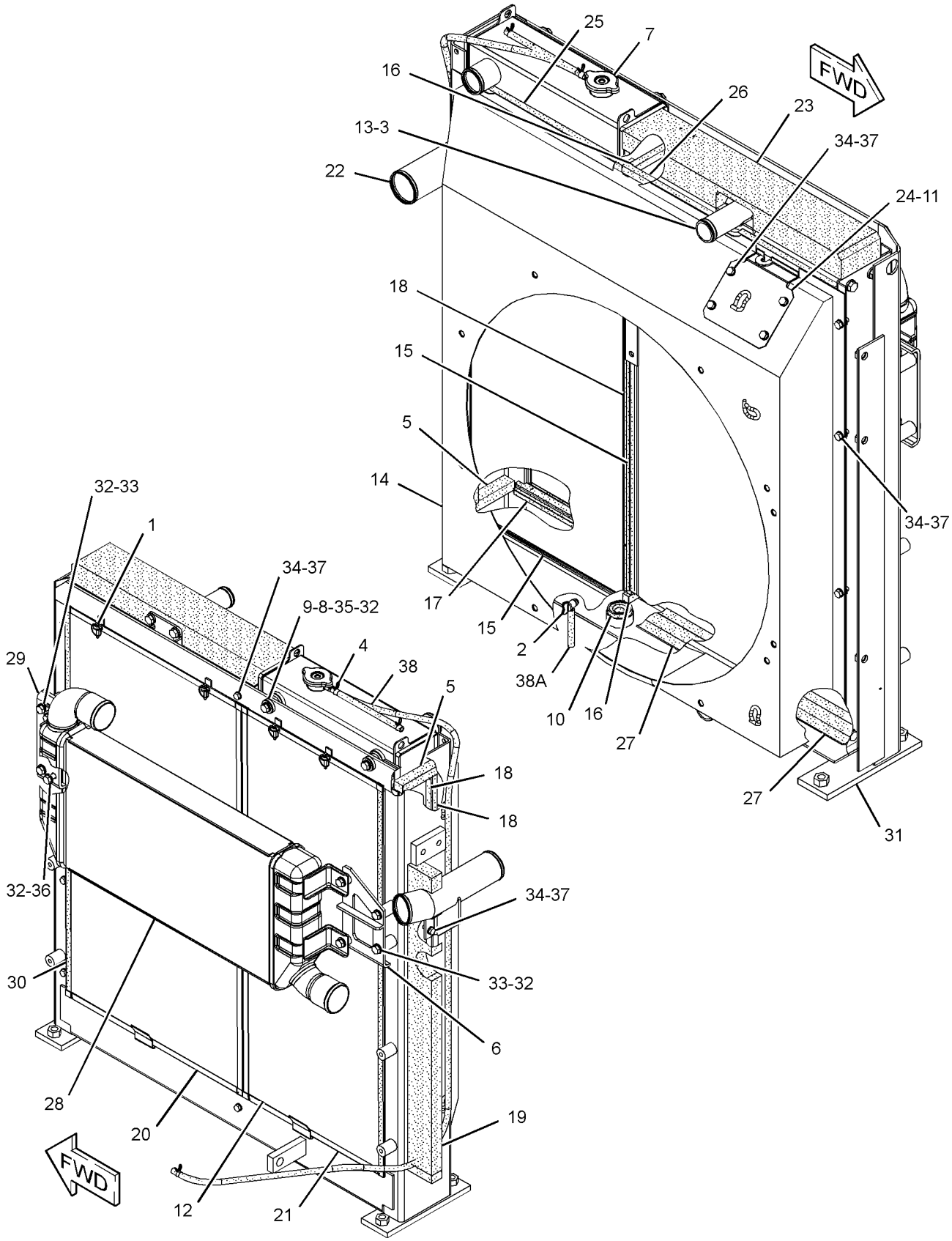

GRAPHIC #1 **<END>** g01383218

312-8341 RADIATOR & HYD OIL COOLER GP

S/N: KGF1-UP; FAL1-UP

PART OF 326-3937 RADIATOR & HYD OIL COOLER GP

AN ATTACHMENT

SMCS-1351 **i04249268**

NOTE	REF NO	GRAPHIC REF	PART NUMBER	QTY	PART NAME 1 2 3 4 5 6 (PRODUCT LEVEL)	SEE PAGE
	1	2	**5D-8159**	4	PIN AS	
	2	1	**096-4035**	2	CLIP	
	3	1	**312-8338**	1	CORE AS-OIL COOLER (HYDRAULIC)	
	4	2	**312-8339**	1	AFTERCOOLER AS	
	5	1	**313-3762**	2	CUSHION-RUBBER	
	6	2	**313-3763**	1	SCREEN AS (RADIATOR)	
	7	2	**313-3764**	1	SCREEN AS (OIL COOLER)	
	8	1	**313-3765**	1	PLATE AS	
	9	2	**313-3766**	2	SLEEVE	
	10	2	**313-3767**	1	PLATE AS	
	11	2	**313-3769**	2	CUSHION-RUBBER	
	12	2	**336-4590**	1	FRAME AS	
	13	1	**313-3772**	1	SEAL	
	14	1	**313-3773**	1	SEAL	
	15	1	**313-3774**	1	SEAL	
	16	1	**313-3775**	1	SEAL	
	17	1	**313-3776**	1	SEAL	
	18	2	**313-3777**	1	SEAL	
	19	1	**313-3780**	1	SEAL	
	20	1	**313-3781**	1	SEAL	
	21	1	**313-3782**	1	SEAL	
	22	2	**314-6501**	1	SEAL	
	23	1	**314-6504**	1	SEAL	
	24	2	**314-6505**	1	TUBE AS	
	25	2	**314-6506**	2	CUSHION-RUBBER	
	26	2	**314-6509**	2	WASHER-PLATE	
	27	2	**314-6510**	2	PIN	
	28	1	**332-4191**	1	PLUG	
	29	1	**336-4585**	1	SEAL	
	30	1	**336-4591**	1	BRACKET AS	
	31	2	**336-4593**	1	PLATE AS	
	32	1	**336-4597**	1	PLATE AS	
	33	1	**347-9293**	1	SHROUD AS	
	34	2	**352-7775**	2	SEAL	
	35	2	**353-5545**	4	MOUNT-RUBBER	
	36	1	**357-1959**	2	SEAL	
	37	1	**360-9273**	1	CORE AS-RADIATOR	
	38	1	**360-9274**	1	CAP-RADIATOR	
	39	1	**5P-4116**	6	WASHER-HARD (8.8X20.5X2-MM THK)	
	40	2	**8T-4121**	20	WASHER-HARD (11X21X2.5-MM THK)	
M	41	2	**8T-4136**	10	BOLT (M10X1.5X25-MM)	
M	42	2	**8T-4137**	4	BOLT (M10X1.5X20-MM)	
M	43	2	**8T-4185**	2	BOLT (M10X1.5X50-MM)	
M	44	1	**8T-4189**	20	BOLT (M8X1.25X20-MM)	
M	45	2	**8T-4195**	4	BOLT (M10X1.5X30-MM)	
	46	1	**8T-4224**	16	WASHER-HARD (8.8X16X2-MM THK)	
M	47	1	**8T-4908**	2	BOLT (M8X1.25X25-MM)	
E	48	1	**7Y-1976**		HOSE-WATER (190-CM)	
E	48A	1	**7Y-1976**		HOSE-WATER (8-CM)	

E - ORDER BY THE CENTIMETER
M - METRIC PART

312-8341 **RADIATOR & HYD OIL COOLER GP (*contd.*)** **i04249268**

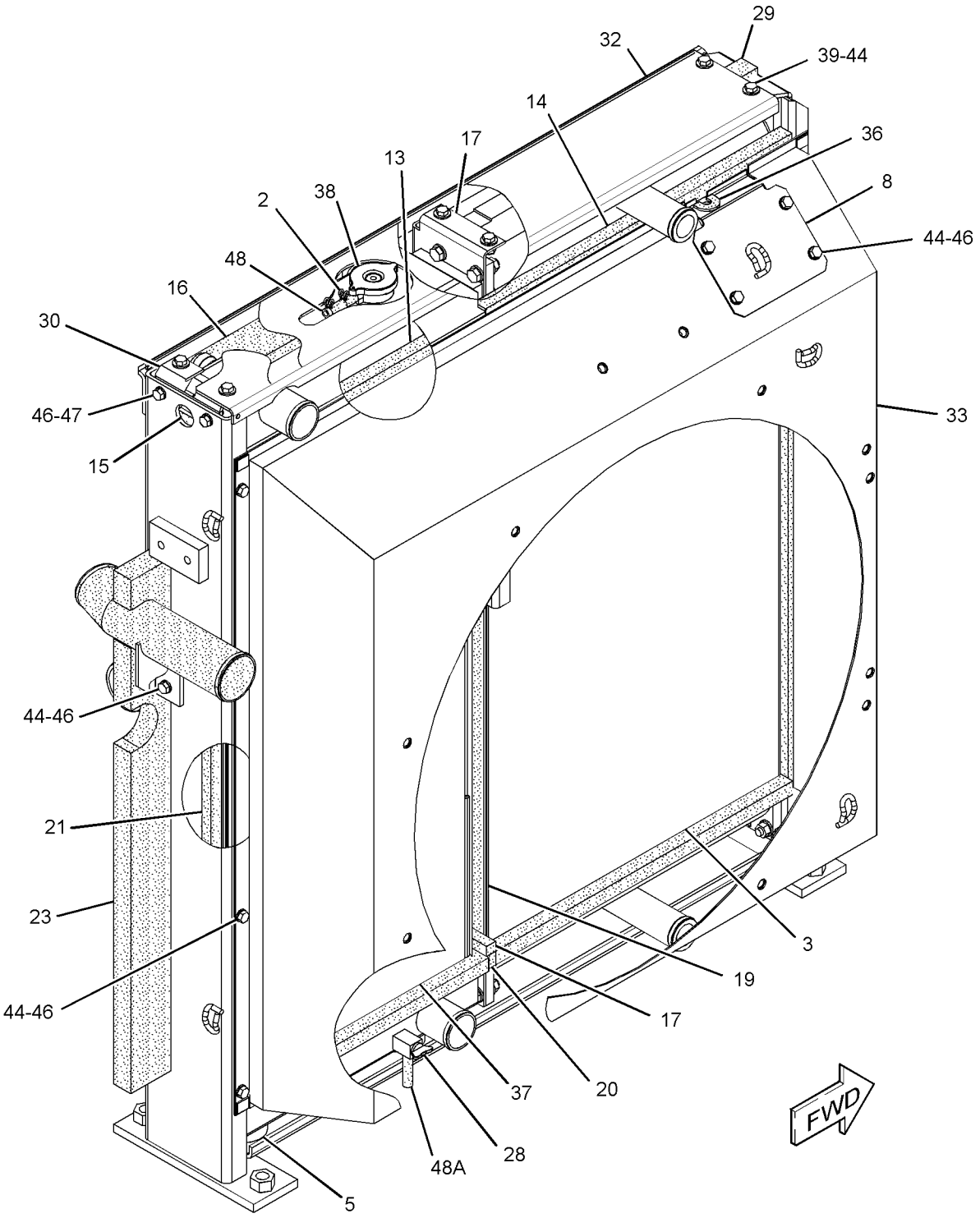

GRAPHIC #1 g02503057

312-8341 **RADIATOR & HYD OIL COOLER GP (*contd.*)** **i04249268**

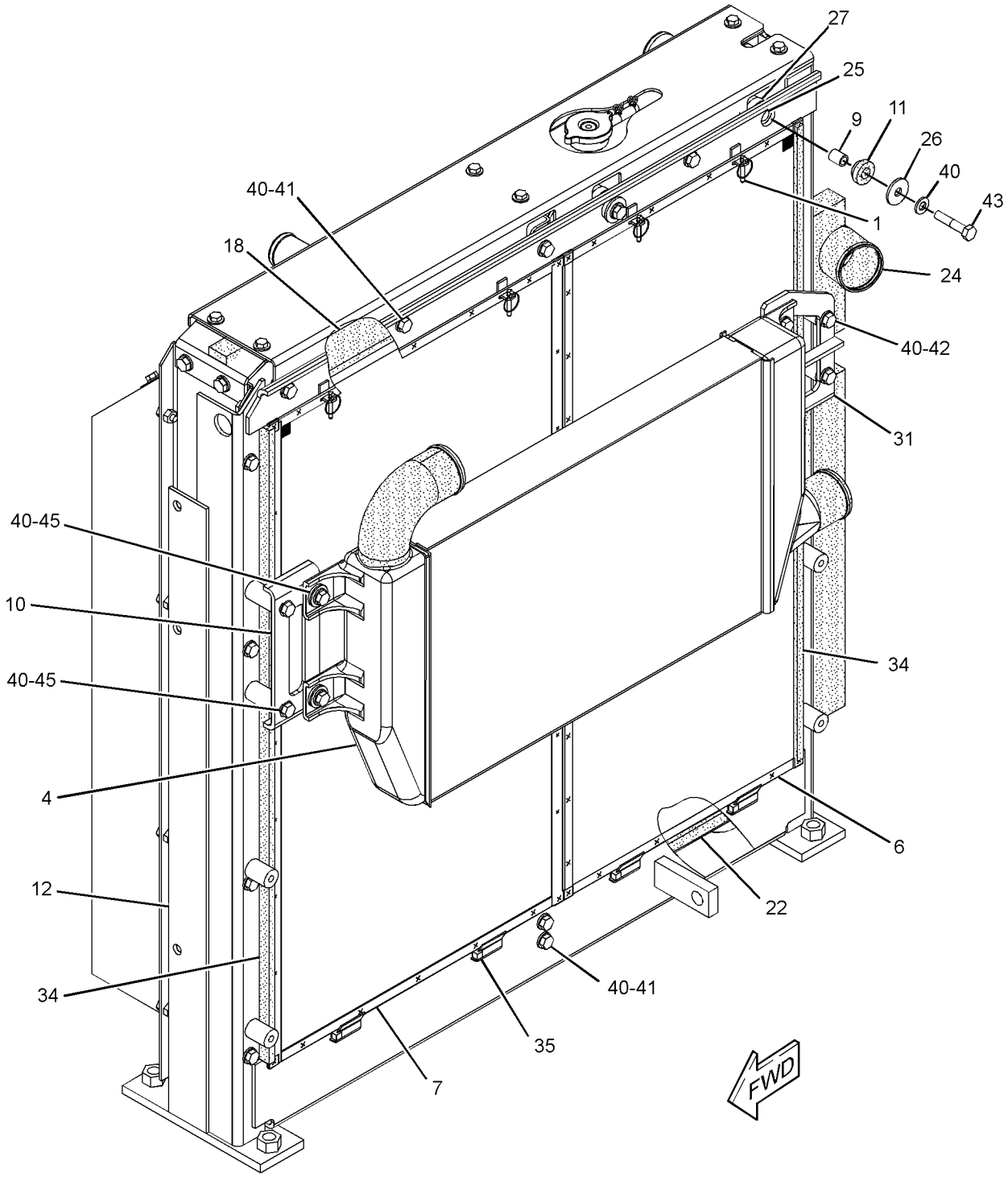

GRAPHIC #2 **<END>** g02507100

326-3875 RADIATOR & HYD OIL COOLER GP

S/N: KGF2962-UP; FAL2237-UP

PART OF 265-3616 RADIATOR & HYD OIL COOLER GP

SMCS-1351 **i03250666**

NOTE	REF NO	GRAPHIC REF	PART NUMBER	QTY	PART NAME 1 2 3 4 5 6 (PRODUCT LEVEL)	SEE PAGE
	1	1	**5D-8159**	4	PIN AS	
M	2	1	**093-5432**	1	VALVE AS-DRAIN (COOLANT)	
	3	1	**095-1543**	2	SEAL-O-RING	
	4	1	**096-4035**	2	CLIP	
	5	1	**210-8117**	2	SEAL	
	6	1	**210-8128**	1	PLATE AS	
	7	1	**245-9212**	1	CAP AS-PRESSURE (RADIATOR)	
	8	1	**245-9216**	2	BOSS	
	9	1	**245-9217**	2	CUSHION-RUBBER	
	10	1	**245-9218**	2	CUSHION-RUBBER	
	11	1	**265-3625**	1	CORE AS-OIL COOLER (HYDRAULIC)	
	12	1	**265-3629**	3	SEAL	
	13	1	**265-3630**	2	SEAL	
	14	1	**265-3631**	2	SEAL	
	15	1	**265-3632**	3	SEAL	
	16	1	**265-3633**	1	SEAL	
	17	1	**265-3634**	1	SCREEN AS (OIL COOLER)	
	18	1	**265-3635**	1	SCREEN AS (RADIATOR)	
	19	1	**265-3637**	1	TUBE AS	
	20	1	**265-3638**	1	SEAL	
	21	1	**265-3640**	1	SHROUD AS-RADIATOR	
	22	1	**281-3488**	2	SHEET-RUBBER	
	23	1	**281-3534**	1	AFTERCOOLER AS	
	24	1	**281-3535**	1	PLATE AS	
	25	1	**281-3568**	2	SEAL	
	26	1	**281-3605**	1	FRAME AS	
	27	1	**326-3870**	1	CORE AS-RADIATOR	
	28	1	**8T-4121**	10	WASHER-HARD (11X21X2.5-MM THK)	
M	29	1	**8T-4137**	6	BOLT (M10X1.5X20-MM)	
M	30	1	**8T-4189**	16	BOLT (M8X1.25X20-MM)	
M	31	1	**8T-4195**	2	BOLT (M10X1.5X30-MM)	
M	32	1	**8T-4196**	2	BOLT (M10X1.5X35-MM)	
	33	1	**8T-4224**	16	WASHER-HARD (8.8X16X2-MM THK)	
E	34	1	**7Y-1976**		HOSE-WATER (190-CM)	
E	34A	1	**7Y-1976**		HOSE-WATER (8-CM)	

E - ORDER BY THE CENTIMETER
M - METRIC PART

326-3875 **RADIATOR & HYD OIL COOLER GP (*contd.*)** **i03250666**

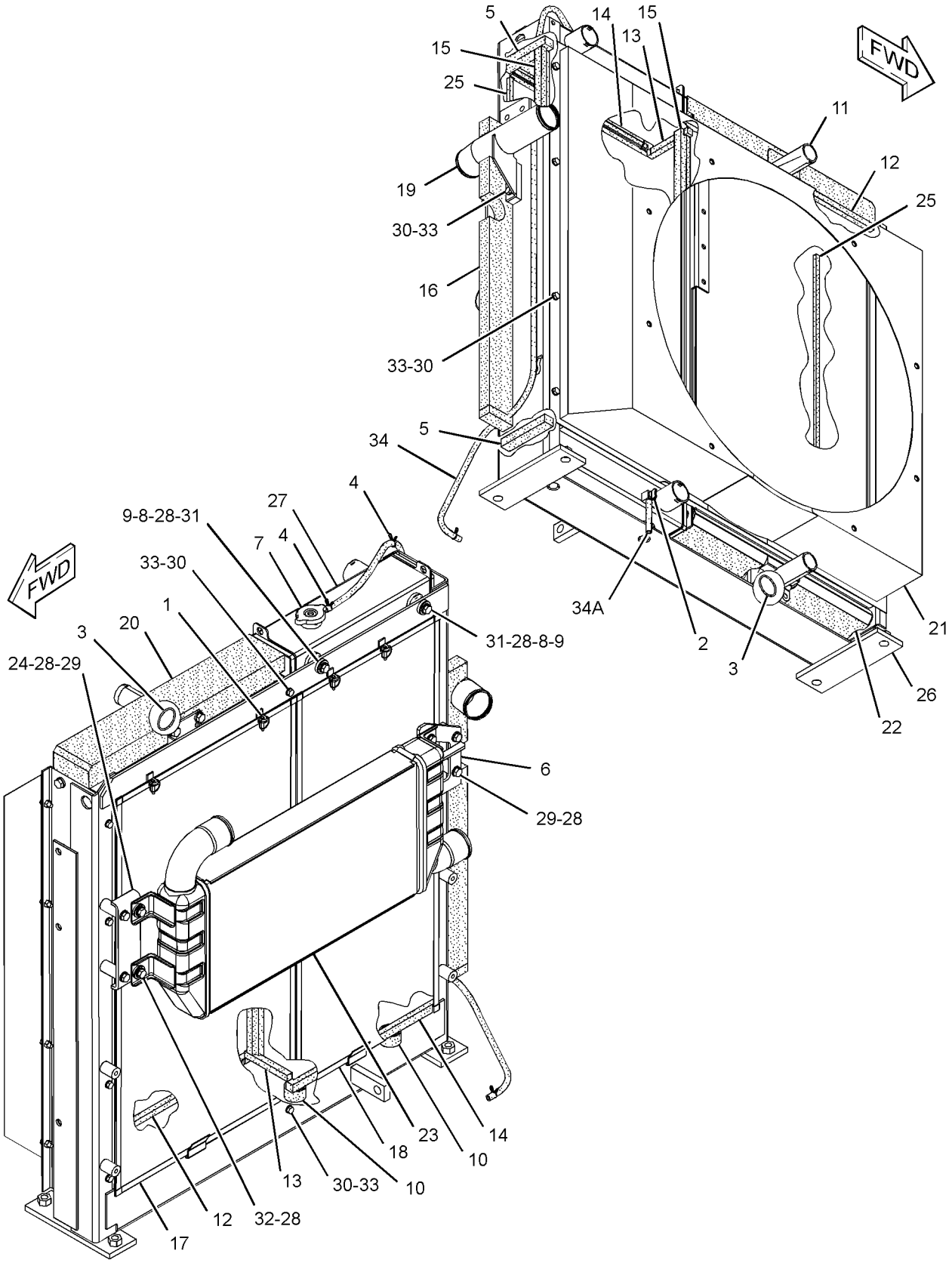

GRAPHIC #1 **<END>** g01655917

326-3876 RADIATOR & HYD OIL COOLER GP

S/N: KGF1-UP; FAL1-UP

PART OF 265-3600, 326-3937 RADIATOR & HYD OIL COOLER GP

AN ATTACHMENT

SMCS-1351 **i03250664**

NOTE	REF NO	GRAPHIC REF	PART NUMBER	QTY	PART NAME 1 2 3 4 5 6 (PRODUCT LEVEL)	SEE PAGE
	1	1	**5D-8159**	4	PIN AS	
M	2	1	**093-5432**	1	VALVE AS-DRAIN (COOLANT)	
	3	1	**095-1543**	2	SEAL-O-RING	
	4	1	**096-4035**	2	CLIP	
	5	1	**210-8117**	2	SEAL	
	6	1	**210-8128**	1	PLATE AS	
	7	1	**245-9212**	1	CAP AS-PRESSURE (RADIATOR)	
	8	1	**245-9216**	2	BOSS	
	9	1	**245-9217**	2	CUSHION-RUBBER	
	10	1	**245-9218**	2	CUSHION-RUBBER	
	11	1	**245-9276**	2	SEAL	
	12	1	**265-3625**	1	CORE AS-OIL COOLER (HYDRAULIC)	
	13	1	**265-3628**	1	SHROUD AS-RADIATOR	
	14	1	**265-3629**	2	SEAL	
	15	1	**265-3630**	2	SEAL	
	16	1	**265-3631**	2	SEAL	
	17	1	**265-3632**	3	SEAL	
	18	1	**265-3633**	1	SEAL	
	19	1	**265-3634**	1	SCREEN AS (OIL COOLER)	
	20	1	**265-3635**	1	SCREEN AS (RADIATOR)	
	21	1	**265-3637**	1	TUBE AS	
	22	1	**265-3638**	1	SEAL	
	23	1	**265-3639**	1	PLATE AS	
	24	1	**265-3642**	1	SEAL	
	25	1	**265-3643**	1	SEAL	
	26	1	**281-3488**	2	SHEET-RUBBER	
	27	1	**281-3534**	1	AFTERCOOLER AS	
	28	1	**281-3535**	1	PLATE AS	
	29	1	**281-3568**	2	SEAL	
	30	1	**281-3605**	1	FRAME AS	
	31	1	**326-3870**	1	CORE AS-RADIATOR	
	32	1	**8T-4121**	10	WASHER-HARD (11X21X2.5-MM THK)	
M	33	1	**8T-4137**	6	BOLT (M10X1.5X20-MM)	
M	34	1	**8T-4189**	20	BOLT (M8X1.25X20-MM)	
M	35	1	**8T-4195**	2	BOLT (M10X1.5X30-MM)	
M	36	1	**8T-4196**	2	BOLT (M10X1.5X35-MM)	
	37	1	**8T-4224**	20	WASHER-HARD (8.8X16X2-MM THK)	
E	38	1	**7Y-1976**		HOSE-WATER (190-CM)	
E	38A	1	**7Y-1976**		HOSE-WATER (8-CM)	

E - ORDER BY THE CENTIMETER
M - METRIC PART

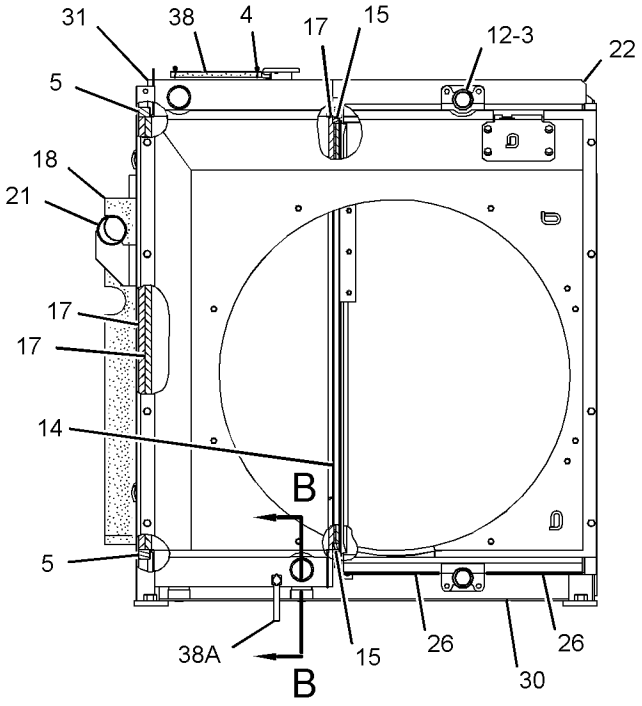

RIGHT SIDE VIEW

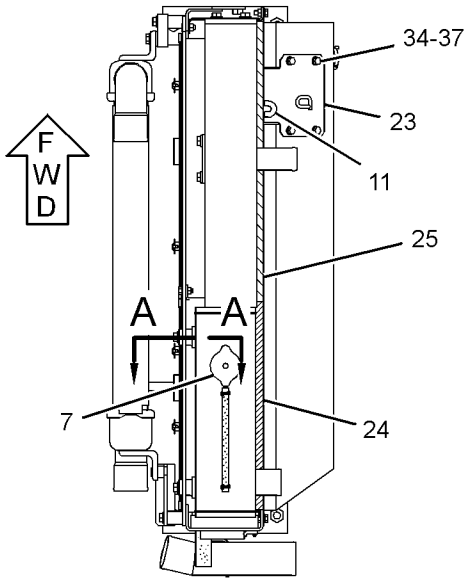

TOP VIEW

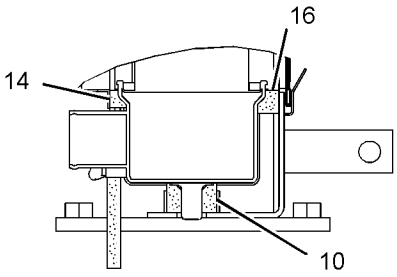

SECTION B-B

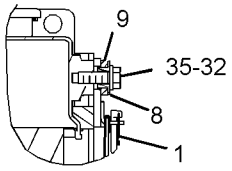

SECTION A-A

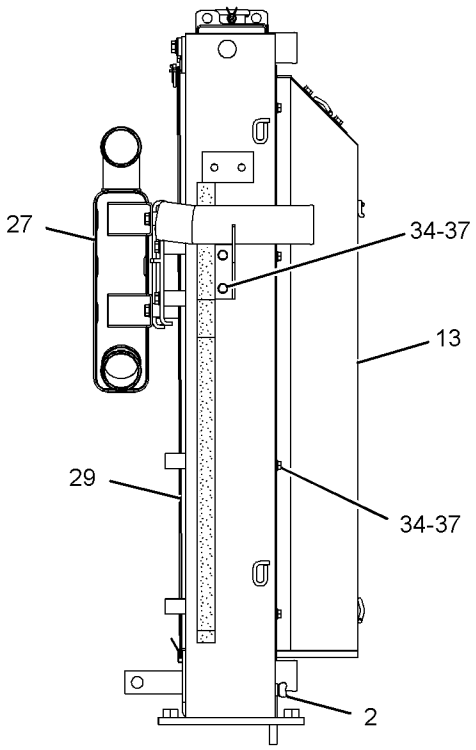

REAR VIEW

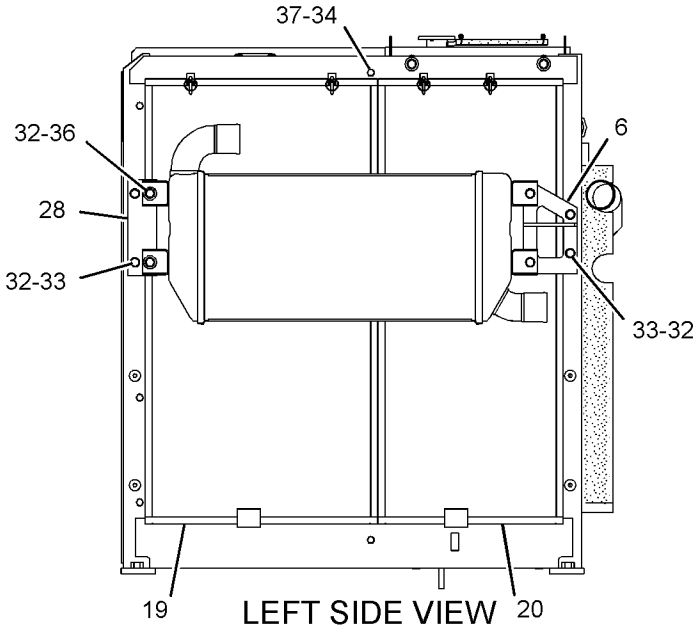

LEFT SIDE VIEW

GRAPHIC #1

<END>

g01652623

326-3937 RADIATOR & HYD OIL COOLER GP

S/N: KGF1-UP; FAL1-UP
PART OF 265-3600 RADIATOR & HYD OIL COOLER GP
AN ATTACHMENT

SMCS-1351 **i03736736**

NOTE	PART NUMBER	QTY	PART NAME 1 2 3 4 5 6 (PRODUCT LEVEL)	SEE PAGE
Y	*312-8341*	1	RADIATOR & HYD OIL COOLER GP	238
			—OR—	
Y	*326-3876*	1	RADIATOR & HYD OIL COOLER GP	243
			—OR—	
Y	**336-4589**	1	RADIATOR & HYD OIL COOLER GP	249

Y - SEPARATE ILLUSTRATION

<END>

326-3947 RADIATOR & HYD OIL COOLER GP

S/N: KGF1-UP; FAL1-UP

PART OF 326-3956 RADIATOR & HYD OIL COOLER GP

AN ATTACHMENT

SMCS-1351 **i03654691**

NOTE	REF NO	GRAPHIC REF	PART NUMBER	QTY	PART NAME 1 2 3 4 5 6 (PRODUCT LEVEL)	SEE PAGE
	1	1	**5D-8159**	4	PIN AS	
M	2	1	**093-5432**	1	VALVE AS-DRAIN (COOLANT)	
	3	1	**095-1543**	2	SEAL-O-RING	
	4	1	**096-4035**	2	CLIP	
	5	1	**210-8117**	2	SEAL	
	6	1	**210-8128**	1	PLATE AS	
	7	1	**245-9212**	1	CAP AS-PRESSURE (RADIATOR)	
	8	1	**245-9216**	2	BOSS	
	9	1	**245-9217**	2	CUSHION-RUBBER	
	10	1	**245-9218**	2	CUSHION-RUBBER	
	11	1	**245-9276**	2	SEAL	
	12	1	**265-3625**	1	CORE AS-OIL COOLER (HYDRAULIC)	
	13	1	**265-3629**	2	SEAL	
	14	1	**265-3630**	2	SEAL	
	15	1	**265-3631**	2	SEAL	
	16	1	**265-3632**	3	SEAL	
	17	1	**265-3633**	1	SEAL	
	18	1	**265-3634**	1	SCREEN AS (OIL COOLER)	
	19	1	**265-3635**	1	SCREEN AS (RADIATOR)	
	20	1	**265-3637**	1	TUBE AS	
	21	1	**265-3638**	1	SEAL	
	22	1	**265-3639**	1	PLATE AS	
	23	1	**265-3642**	1	SEAL	
	24	1	**265-3643**	1	SEAL	
	25	1	**281-3488**	2	SHEET-RUBBER	
	26	1	**281-3534**	1	AFTERCOOLER AS	
	27	1	**281-3535**	1	PLATE AS	
	28	1	**281-3568**	2	SEAL	
	29	1	**281-3605**	1	FRAME AS	
	30	1	**326-3870**	1	CORE AS-RADIATOR	
	31	1	**326-3951**	1	SHROUD AS	
	32	1	**8T-4121**	10	WASHER-HARD (11X21X2.5-MM THK)	
M	33	1	**8T-4137**	6	BOLT (M10X1.5X20-MM)	
M	34	1	**8T-4189**	20	BOLT (M8X1.25X20-MM)	
M	35	1	**8T-4195**	2	BOLT (M10X1.5X30-MM)	
M	36	1	**8T-4196**	2	BOLT (M10X1.5X35-MM)	
	37	1	**8T-4224**	20	WASHER-HARD (8.8X16X2-MM THK)	
E	38	1	**7Y-1976**		HOSE-WATER (190-CM)	
E	38A	1	**7Y-1976**		HOSE-WATER (8-CM)	

E - ORDER BY THE CENTIMETER
M - METRIC PART

326-3947 **RADIATOR & HYD OIL COOLER GP (*contd.*)** **i03654691**

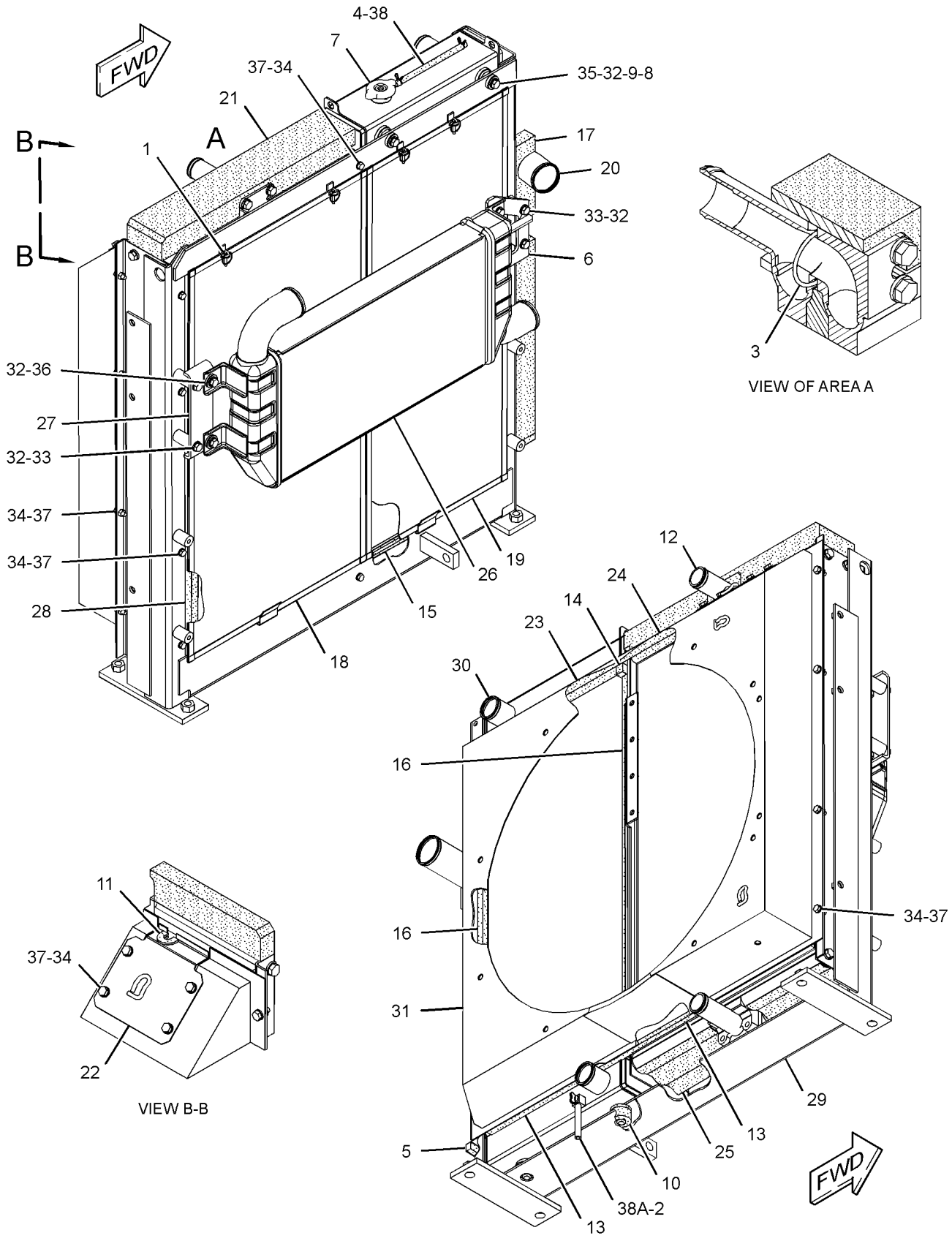

GRAPHIC #1

<END>

g01963783

326-3956 RADIATOR & HYD OIL COOLER GP

S/N: KGF1-UP; FAL1-UP
PART OF 265-3600 RADIATOR & HYD OIL COOLER GP
AN ATTACHMENT

SMCS-1351 **i05274448**

NOTE	PART NUMBER	QTY	PART NAME 1 2 3 4 5 6 (PRODUCT LEVEL)	SEE PAGE
Y	*326-3947*	1	RADIATOR & HYD OIL COOLER GP	246
			—OR—	
Y	*347-9292*	1	RADIATOR & HYD OIL COOLER GP	251

Y - SEPARATE ILLUSTRATION

<END>

336-4589 RADIATOR & HYD OIL COOLER GP

S/N: KGF1-UP; FAL1-UP
PART OF 326-3937 RADIATOR & HYD OIL COOLER GP
AN ATTACHMENT

SMCS-1351 **i03728664**

NOTE	REF NO	GRAPHIC REF	PART NUMBER	QTY	PART NAME 1 2 3 4 5 6 (PRODUCT LEVEL)	SEE PAGE
	1	1	**5D-8159**	4	PIN AS	
	2	1	**096-4035**	2	CLIP	
	3	1	**312-8338**	1	CORE AS-OIL COOLER (HYDRAULIC)	
	4	1	**312-8339**	1	AFTERCOOLER AS	
	5	1	**312-8340**	1	CORE AS-RADIATOR	
	6	1	**313-3762**	2	CUSHION-RUBBER	
	7	1	**313-3763**	1	SCREEN AS (RADIATOR)	
	8	1	**313-3764**	1	SCREEN AS (OIL COOLER)	
	9	1	**313-3765**	1	PLATE AS	
	10	1	**313-3766**	2	SLEEVE	
	11	1	**313-3767**	1	PLATE AS	
	12	1	**313-3769**	2	CUSHION-RUBBER	
	13	1	**313-3772**	2	SEAL	
	14	1	**313-3773**	2	SEAL	
	15	1	**313-3774**	2	SEAL	
	16	1	**313-3776**	2	SEAL	
	17	1	**313-3780**	2	SEAL	
	18	1	**313-3782**	2	SEAL	
	19	1	**314-6504**	1	SEAL	
	20	1	**314-6505**	1	TUBE AS	
	21	1	**314-6506**	2	CUSHION-RUBBER	
	22	1	**314-6509**	2	WASHER-PLATE	
	23	1	**314-6510**	2	PIN	
	24	1	**336-4585**	1	SEAL	
	25	1	**336-4586**	1	SEAL	
	26	1	**336-4587**	1	SEAL	
	27	1	**336-4588**	1	SEAL	
	28	1	**336-4590**	1	FRAME AS	
	29	1	**336-4591**	1	BRACKET AS	
	30	1	**336-4592**	1	SHROUD AS	
	31	1	**336-4593**	1	PLATE AS	
	32	1	**336-4597**	1	PLATE AS	
	33	1	**341-2143**	1	CAP-RADIATOR	
	34	1	**8T-4121**	20	WASHER-HARD (11X21X2.5-MM THK)	
M	35	1	**8T-4136**	4	BOLT (M10X1.5X25-MM)	
M	36	1	**8T-4137**	6	BOLT (M10X1.5X20-MM)	
M	37	1	**8T-4185**	2	BOLT (M10X1.5X50-MM)	
M	38	1	**8T-4195**	6	BOLT (M10X1.5X30-MM)	
M	39	1	**8T-4196**	2	BOLT (M10X1.5X35-MM)	
	40	1	**8T-4224**	22	WASHER-HARD (8.8X16X2-MM THK)	
M	41	1	**8T-4908**	22	BOLT (M8X1.25X25-MM)	
E	42	1	**7Y-1976**		HOSE-WATER (190-CM)	
E	42A	1	**7Y-1976**		HOSE-WATER (8-CM)	

E - ORDER BY THE CENTIMETER
M - METRIC PART

336-4589 **RADIATOR & HYD OIL COOLER GP (*contd.*)** **i03728664**

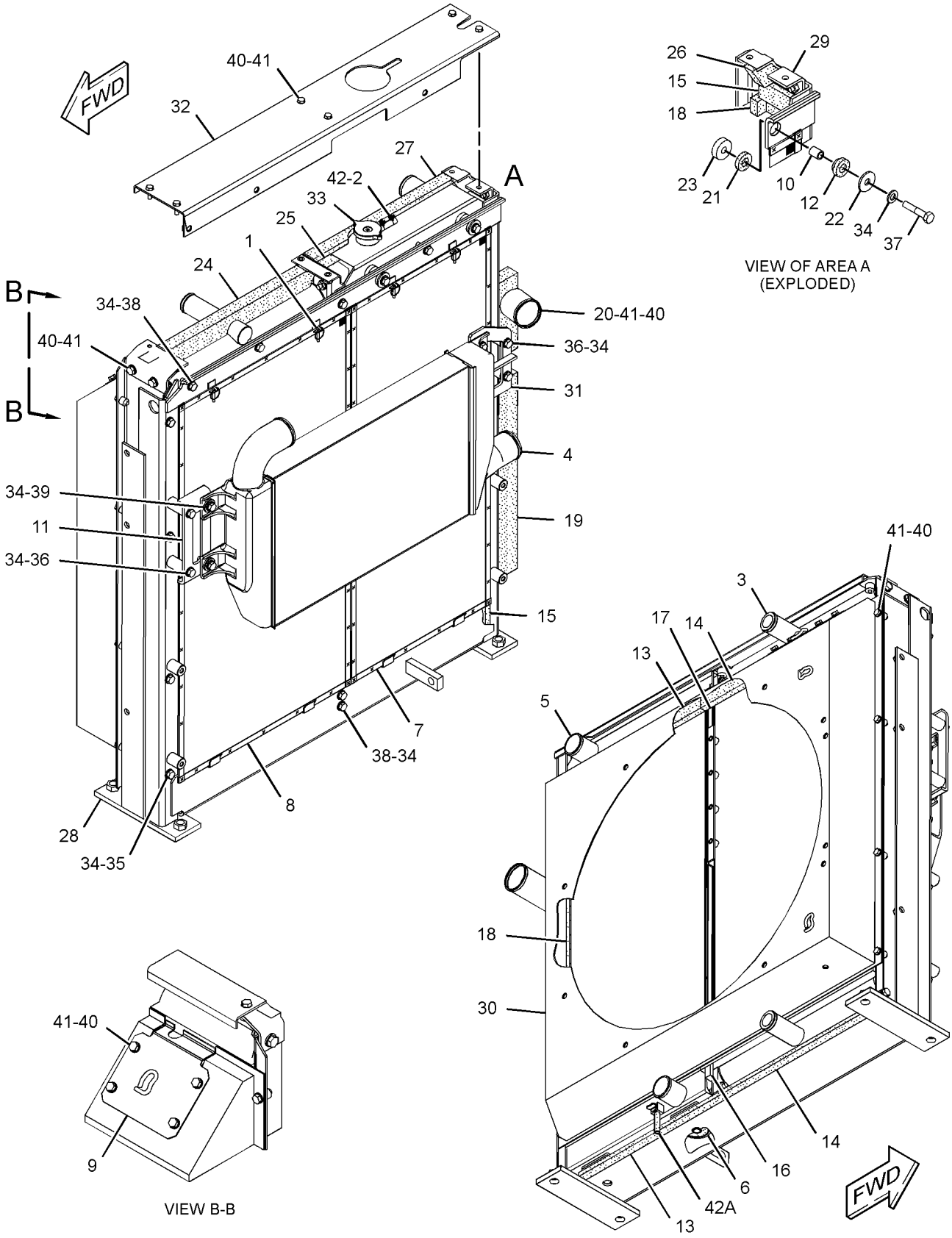

GRAPHIC #1 **<END>** g02023781

347-9292 RADIATOR & HYD OIL COOLER GP

S/N: KGF2962-UP; FAL2237-UP

PART OF 265-3616, 326-3956 RADIATOR & HYD OIL COOLER GP

ALSO AN ATTACHMENT

SMCS-1351 **i04112790**

NOTE	REF NO	GRAPHIC REF	PART NUMBER	QTY	PART NAME 1 2 3 4 5 6 (PRODUCT LEVEL)	SEE PAGE
	1	1	**5D-8159**	4	PIN AS	
	2	1	**096-4035**	2	CLIP	
	3	1	**312-8338**	1	CORE AS-OIL COOLER (HYDRAULIC)	
	4	1	**312-8339**	1	AFTERCOOLER AS	
	5	1	**313-3762**	2	CUSHION-RUBBER	
	6	1	**313-3763**	1	SCREEN AS (RADIATOR)	
	7	1	**313-3764**	1	SCREEN AS (OIL COOLER)	
	8	1	**313-3765**	1	PLATE AS	
		1	**7T-1099**	1	LINK	
	9	1	**313-3766**	2	SLEEVE	
	10	1	**313-3767**	1	PLATE AS	
M		1	**3E-6912**	2	NUT-WELD	
	11	1	**313-3769**	2	CUSHION-RUBBER	
	12	1	**313-3772**	2	SEAL	
	13	1	**313-3773**	2	SEAL	
	14	1	**313-3774**	2	SEAL	
	15	1	**313-3776**	2	SEAL	
	16	1	**313-3780**	2	SEAL	
	17	1	**313-3782**	2	SEAL	
	18	1	**314-6504**	1	SEAL	
	19	1	**314-6505**	1	TUBE AS	
	20	1	**314-6506**	2	CUSHION-RUBBER	
	21	1	**314-6509**	2	WASHER-PLATE	
	22	1	**314-6510**	2	PIN	
	23	1	**332-4191**	1	PLUG	
	24	1	**336-4585**	1	SEAL	
	25	1	**336-4586**	1	SEAL	
	26	1	**336-4587**	1	SEAL	
	27	1	**336-4588**	1	SEAL	
	28	1	**336-4590**	1	FRAME AS	
	29	1	**336-4591**	1	BRACKET AS	
M		1	**5C-7261**	4	NUT (M8X1.25-THD)	
	30	1	**336-4593**	1	PLATE AS	
	31	1	**336-4597**	1	PLATE AS	
M		1	**8T-3490**	3	NUT-WELD (M10X1.5-THD)	
	32	1	**347-9293**	1	SHROUD AS	
		1	**7T-1099**	2	LINK	
M		1	**8T-3490**	13	NUT-WELD (M10X1.5-THD)	
M		1	**8T-3612**	4	NUT-WELD (M8X1.25-THD)	
	33	1	**352-7775**	2	SEAL	
	34	1	**353-5545**	4	MOUNT-RUBBER	
	35	1	**357-1959**	2	SEAL	
	36	1	**360-9273**	1	CORE AS-RADIATOR	
	37	1	**360-9274**	1	CAP-RADIATOR	
	38	1	**5P-4116**	6	WASHER-HARD (8.8X20.5X2-MM THK)	
	39	1	**8T-4121**	20	WASHER-HARD (11X21X2.5-MM THK)	
M	40	1	**8T-4136**	10	BOLT (M10X1.5X25-MM)	
M	41	1	**8T-4137**	4	BOLT (M10X1.5X20-MM)	
M	42	1	**8T-4185**	2	BOLT (M10X1.5X50-MM)	
M	43	1	**8T-4189**	20	BOLT (M8X1.25X20-MM)	
M	44	1	**8T-4195**	4	BOLT (M10X1.5X30-MM)	
	45	1	**8T-4224**	16	WASHER-HARD (8.8X16X2-MM THK)	
M	46	1	**8T-4908**	2	BOLT (M8X1.25X25-MM)	
E	47	1	**7Y-1976**		HOSE-WATER (190-CM)	
E	47A	1	**7Y-1976**		HOSE-WATER (8-CM)	

E - ORDER BY THE CENTIMETER
M - METRIC PART

347-9292 **RADIATOR & HYD OIL COOLER GP (*contd.*)** **i04112790**

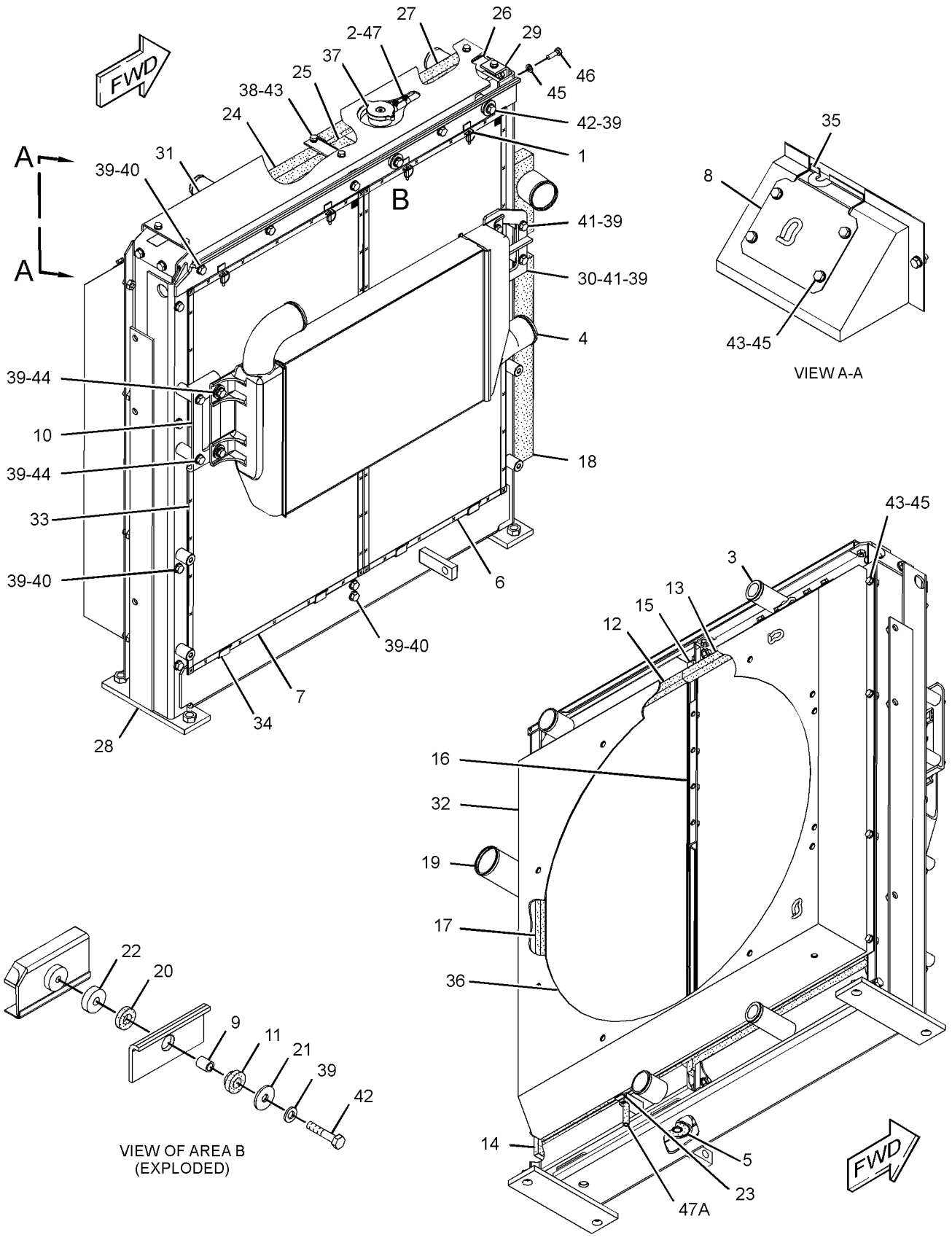

GRAPHIC #1 **<END>** g02320713

109-9313 AIR CLEANER & MOUNTING GP

S/N: KGF1-1960; FAL1-1265

PART OF 272-4742 INSTALLATION AR-ENGINE

SMCS-1051, 1054, 7452

i01074037

NOTE	REF NO	GRAPHIC REF	PART NUMBER	QTY	PART NAME 1 2 3 4 5 6 (PRODUCT LEVEL)	SEE PAGE
	1	1	**8T-4121**	4	WASHER-HARD (11X21X2.5-MM THK)	
M	2	1	**8T-4137**	4	BOLT (M10X1.5X20-MM)	
Y	3	1	**124-1711**	1	AIR CLEANER GP	256

M - METRIC PART
Y - SEPARATE ILLUSTRATION

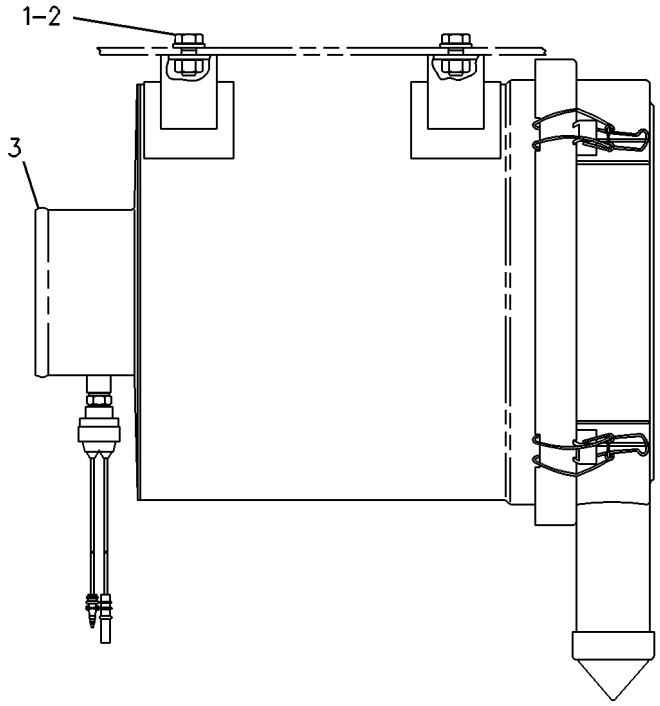

GRAPHIC #1

<END>

g00259005

109-9313 AIR CLEANER & MOUNTING GP

S/N: KGF1961-UP; FAL1266-UP

PART OF 272-4742 INSTALLATION AR-ENGINE

SMCS-1051, 1054, 7452 **i03016240**

NOTE	REF NO	GRAPHIC REF	PART NUMBER	QTY	PART NAME 1 2 3 4 5 6 (PRODUCT LEVEL)	SEE PAGE
	1	1	**8T-4121**	4	WASHER-HARD (11X21X2.5-MM THK)	
M	2	1	**8T-4137**	4	BOLT (M10X1.5X20-MM)	
CY	3	1	**310-9667**	1	AIR CLEANER GP	263

C - CHANGE FROM PREVIOUS TYPE
M - METRIC PART
Y - SEPARATE ILLUSTRATION

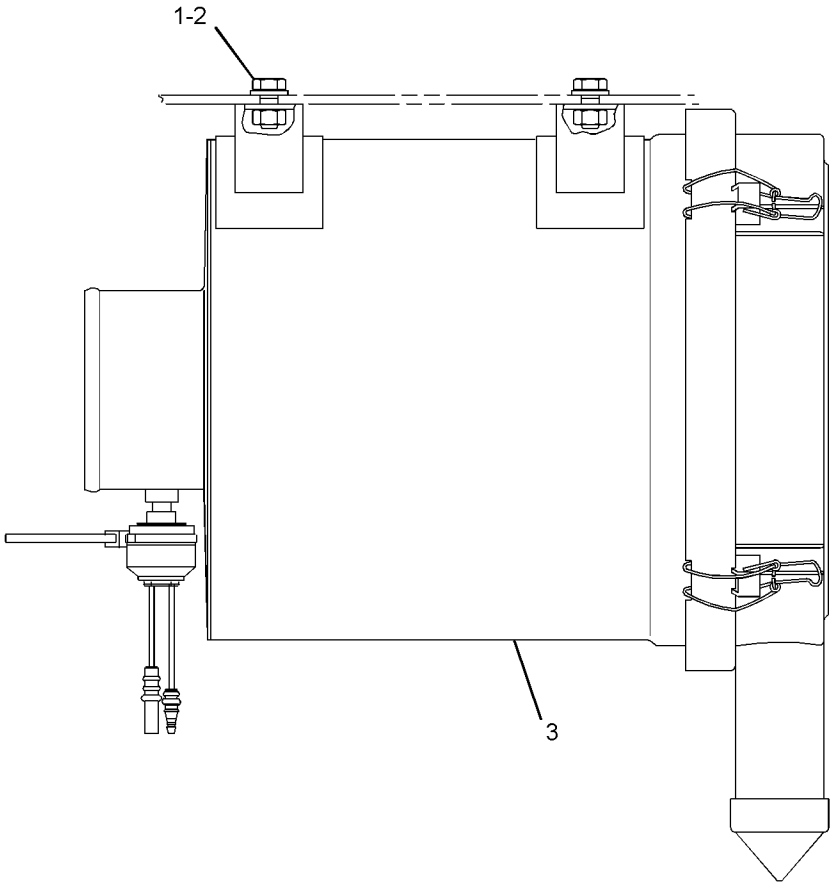

GRAPHIC #1 **<END>** g01528299

264-8671 AIR CLEANER AR–PRECLEANER

S/N: KGF1-UP; FAL1-UP

PART OF 314-3859, 314-3860, 314-3861, 314-3862, 314-3864, 314-3865, 314-3905, 338-9908, 338-9923, 347-3340, 354-1018, 354-1019, 359-2298, 359-2299, 359-2300, 359-2309, 359-2310, 359-2421, 359-2506, 359-2507, 367-8697, 367-8809, 367-8810, 367-8817, 379-7118, 379-7119, 379-7216, 379-7217, 379-7218, 379-7219, 379-7220, 379-7267, 379-7268, 379-7269, 379-7270, 385-4035, 385-4036, 385-4136 DISTRIBUTION AR, 338-9925, 351-9691, 359-2264 OPTION AR-COLD WEATHER, 338-9924, 351-9690, 359-2263, 367-8812, 367-8814, 379-7297, 379-7298, 379-7299, 379-7300 OPTION AR-REGIONAL

AN ATTACHMENT

SMCS-1051 **i05196474**

NOTE	PART NUMBER	QTY	PART NAME 1 2 3 4 5 6 (PRODUCT LEVEL)	SEE PAGE
Y	*272-4773*	1	AIR CLEANER GP	259
Y	*278-3778*	1	COVER GP-HOOD (PRECLEANER)	729

Y - SEPARATE ILLUSTRATION

<END>

359-2440 AIR CLEANER AR–PRECLEANER

S/N: KGF1-UP; FAL1-UP

FOR USE WITH 354-1056–PAGE: 193, 354-1057–PAGE: 193

AN ATTACHMENT

SMCS-1051 **i04586609**

NOTE	PART NUMBER	QTY	PART NAME 1 2 3 4 5 6 (PRODUCT LEVEL)	SEE PAGE
Y	*272-4773*	1	AIR CLEANER GP	259
Y	*364-6940*	1	COVER GP-HOOD (PRECLEANER)	733

Y - SEPARATE ILLUSTRATION

<END>

124-1711 AIR CLEANER GP

S/N: KGF1-1960; FAL1-1265
FIELD REPLACEMENT ORDER 310-9667—PAGE: 263
PART OF 109-9313 AIR CLEANER & MOUNTING GP

SMCS-1051, 1054

i02412207

NOTE	REF NO	GRAPHIC REF	PART NUMBER	QTY	PART NAME 1 2 3 4 5 6 (PRODUCT LEVEL)	SEE PAGE
	1	1	**5L-3233**	1	FITTING-CONNECTOR	
	2	1	**112-9717**	1	VALVE-DUST (AIR CLEANER)	
	3	1	**131-8821**	1	FILTER ELEMENT AS-AIR (SECONDARY)	
	4	1	**131-8822**	1	FILTER ELEMENT AS-AIR (PRIMARY)	
	5	1	**131-8826**	1	FILM-INSTRUCTION (TOP, AIR CLEANER COVER)	
	6	1	**131-8932**	4	LATCH	
	7	1	**184-3983**	1	COVER AS	
		1	**131-8824**	1	SEAL (266.7-MM ID X 6.9-MM THK)	
					—OR—	
		1	**168-0792**	1	SEAL (280.1-MM ID X 5-MM THK)	
	8	1	**255-2966**	1	INDICATOR AS-AIR FILTER CHANGE (AIR RESTRICTION)	

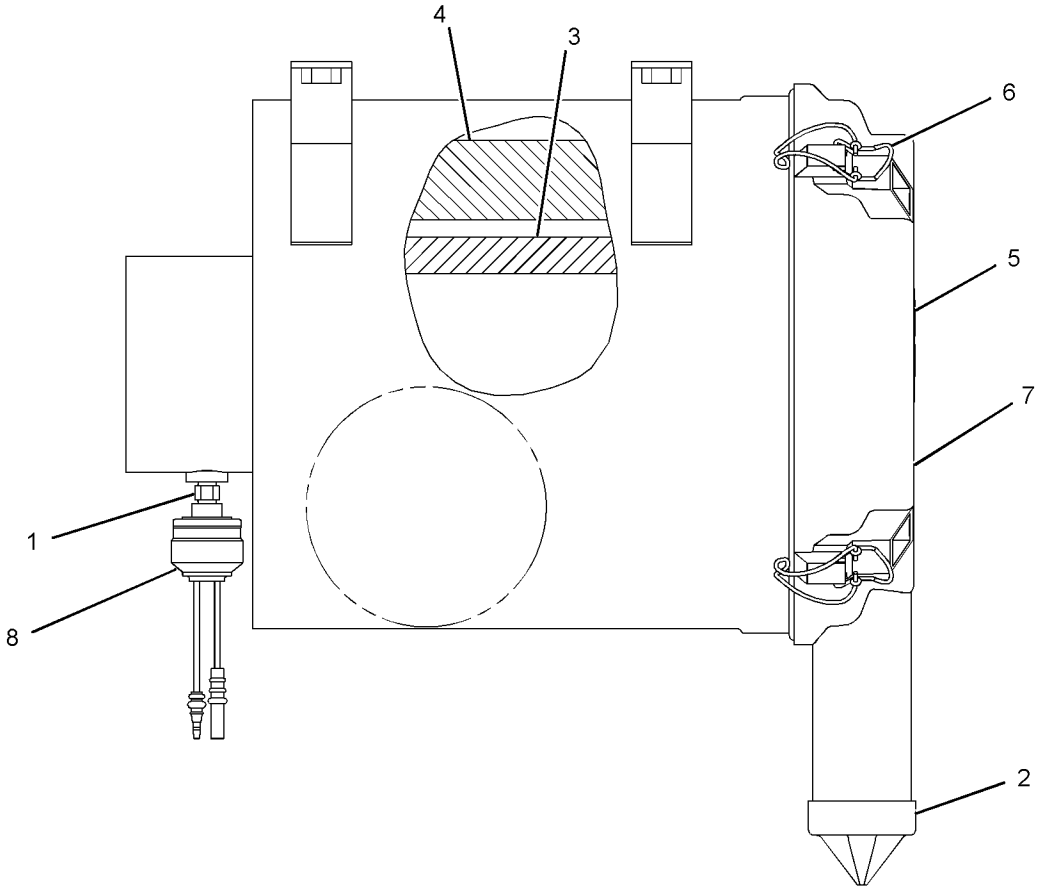

GRAPHIC #1

<END>

g01223093

239-6612 AIR CLEANER GP

S/N: KGF1-UP; FAL1-UP
FIELD REPLACEMENT ORDER 310-9676—PAGE: 264
PART OF 272-4773 AIR CLEANER GP
AN ATTACHMENT

SMCS-1051, 1054

i02981204

NOTE	REF NO	GRAPHIC REF	PART NUMBER	QTY	PART NAME 1 2 3 4 5 6 (PRODUCT LEVEL)	SEE PAGE
	1	1	**5L-3233**	1	FITTING-CONNECTOR	
	2	1	**6I-2501**	1	FILTER ELEMENT AS-AIR (PRIMARY, STANDARD EFFICIENCY)	
	3	1	**6I-2502**	1	FILTER ELEMENT AS-AIR (SECONDARY)	
	4	1	**131-8826**	1	FILM-INSTRUCTION (TOP, AIR CLEANER COVER)	
	5	1	**255-2966**	1	INDICATOR AS-AIR FILTER CHANGE (AIR RESTRICTION)	
	6	1	**171-9892**	1	COVER AS	

239-6612 **AIR CLEANER GP (*contd.*)** **i02981204**

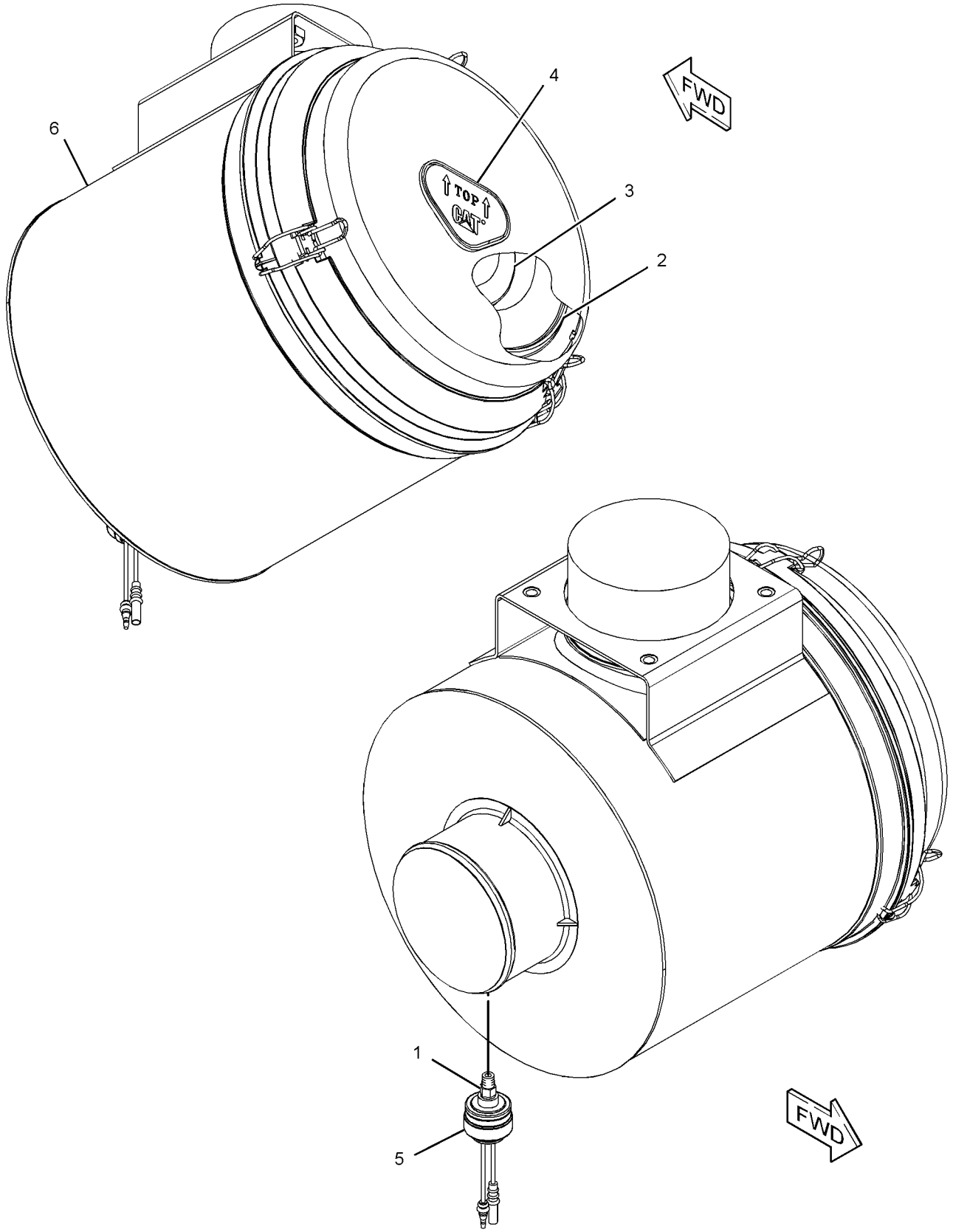

GRAPHIC #1 **<END>** g01221472

272-4773 AIR CLEANER GP

S/N: KGF1-UP; FAL1-UP
PART OF 264-8671 AIR CLEANER AR
AN ATTACHMENT
TYPE 1

SMCS-1051, 1054

i02563243

NOTE	REF NO	GRAPHIC REF	PART NUMBER	QTY	PART NAME 1 2 3 4 5 6 (PRODUCT LEVEL)	SEE PAGE
	1	1	**8T-4987**	1	CLAMP-HOSE	
	2	1	**116-2659**	1	DAMPER	
	3	1	**130-3280**	1	PRECLEANER AS	
		1	**174-5415**	1	CLAMP	
	4	1	**134-7089**	1	CLAMP	
	5	1	**239-6395**	1	TUBE AS	
Y	6	1	**239-6612**	1	AIR CLEANER GP	257
	7	1	**279-7909**	1	HOSE-AIR	
M	8	1	**8T-4139**	4	BOLT (M12X1.75X30-MM)	
	9	1	**8T-4223**	4	WASHER-HARD (13.5X25.5X3-MM THK)	

M - METRIC PART
Y - SEPARATE ILLUSTRATION

272-4773 **AIR CLEANER GP (*contd.*)** **i02563243**

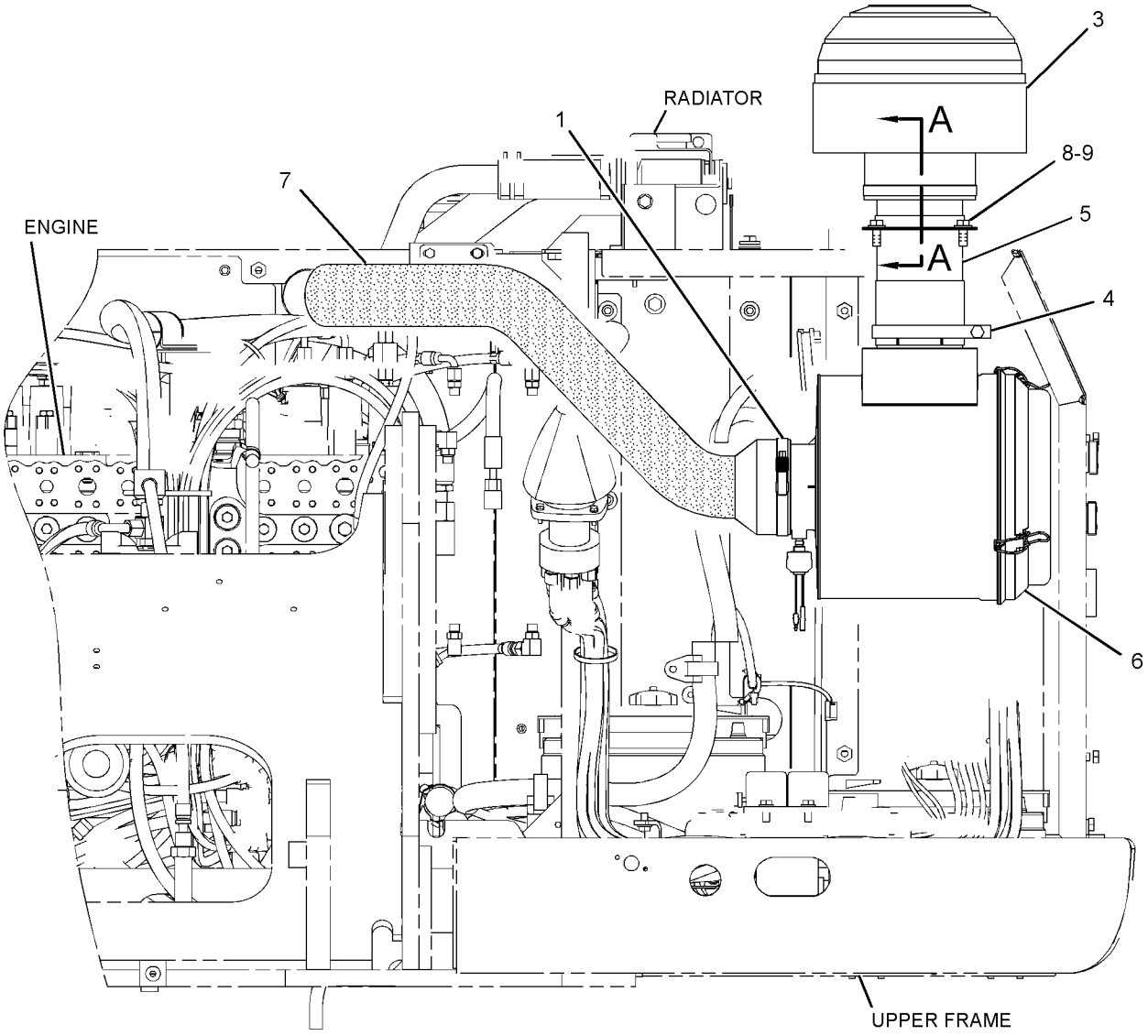

FRONT VIEW

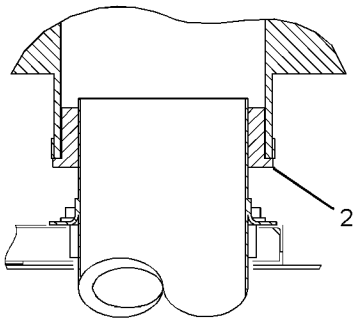

VIEW OF SECTION A-A

GRAPHIC #1 **<END>** g01227584

272-4773 AIR CLEANER GP

S/N: KGF1-UP; FAL1-UP
PART OF 264-8671, 359-2440 AIR CLEANER AR
AN ATTACHMENT
TYPE 2

SMCS-1051, 1054

i03091743

NOTE	REF NO	GRAPHIC REF	PART NUMBER	QTY	PART NAME 1 2 3 4 5 6 (PRODUCT LEVEL)	SEE PAGE
	1	1	**8T-4987**	1	CLAMP-HOSE	
	2	1	**116-2659**	1	DAMPER	
	3	1	**130-3280**	1	PRECLEANER AS	
		1	**174-5415**	1	CLAMP	
	4	1	**134-7089**	1	CLAMP	
	5	1	**239-6395**	1	TUBE AS	
CY	6	1	**310-9676**	1	AIR CLEANER GP	264
	7	1	**279-7909**	1	HOSE-AIR	
M	8	1	**8T-4139**	4	BOLT (M12X1.75X30-MM)	
	9	1	**8T-4223**	4	WASHER-HARD (13.5X25.5X3-MM THK)	

C - CHANGE FROM PREVIOUS TYPE
M - METRIC PART
Y - SEPARATE ILLUSTRATION

272-4773 **AIR CLEANER GP (*contd.*)** **i03091743**

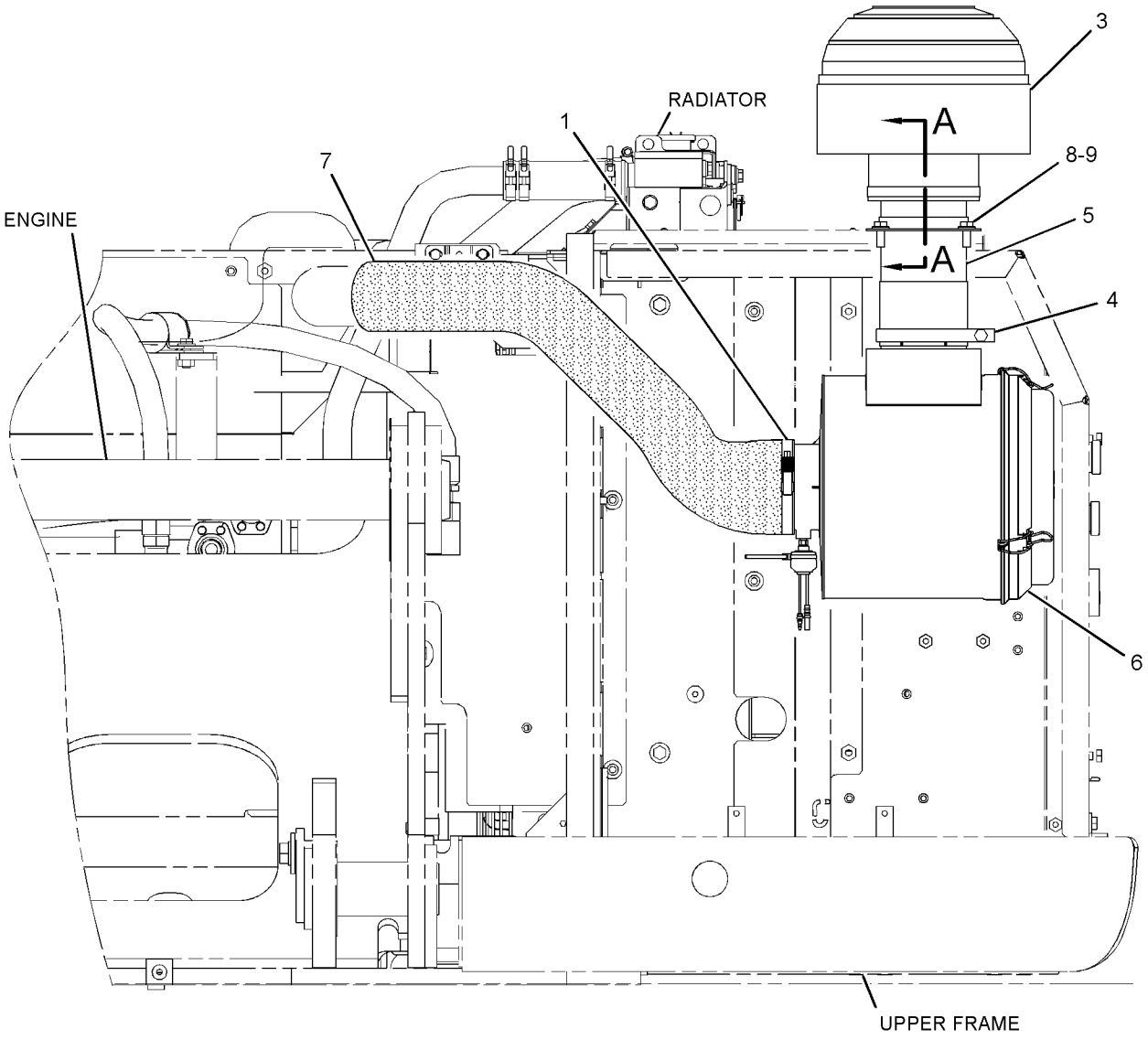

FRONT VIEW

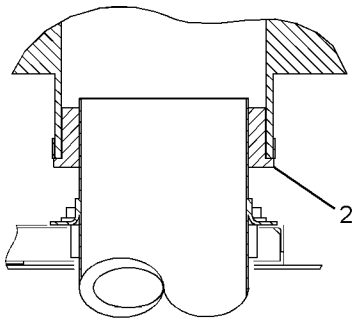

SECTION A-A

GRAPHIC #1 **<END>** g01502634

310-9667 AIR CLEANER GP

S/N: KGF1961-UP; FAL1266-UP
FIELD REPLACEMENT FOR 124-1711—PAGE: 256
PART OF 109-9313 AIR CLEANER & MOUNTING GP

SMCS-1051, 1054

i02998202

NOTE	REF NO	GRAPHIC REF	PART NUMBER	QTY	PART NAME 1 2 3 4 5 6 (PRODUCT LEVEL)	SEE PAGE
	1	1	**5L-3233**	1	FITTING-CONNECTOR	
	2	1	**7I-2673**	1	STRAP-CABLE	
	3	1	**112-9717**	1	VALVE-DUST (AIR CLEANER)	
	4	1	**131-8821**	1	FILTER ELEMENT AS-AIR (SECONDARY)	
	5	1	**131-8822**	1	FILTER ELEMENT AS-AIR (PRIMARY)	
					—OR—	
		1	**134-0685**	1	FILTER ELEMENT AS-AIR (ULTRA HIGH EFFICIENCY) (PRIMARY)	
	6	1	**131-8826**	1	FILM-INSTRUCTION (TOP, AIR CLEANER COVER)	
	7	1	**131-8932**	4	LATCH	
	8	1	**184-3983**	1	COVER AS	
	9	1	**255-2966**	1	INDICATOR AS-AIR FILTER CHANGE (AIR RESTRICTION)	

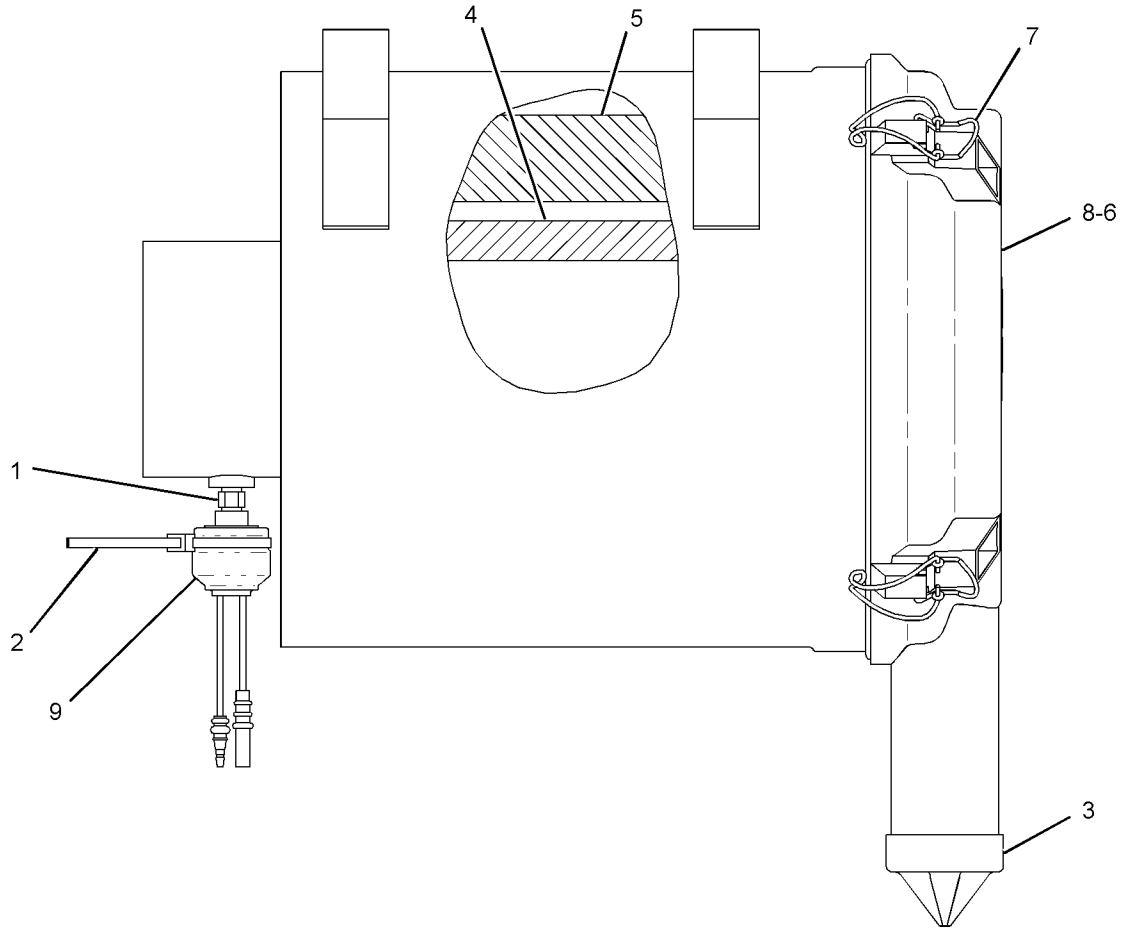

GRAPHIC #1

<END>

g01504054

310-9676 AIR CLEANER GP

S/N: KGF1-UP; FAL1-UP
FIELD REPLACEMENT FOR 239-6612—PAGE: 257
PART OF 272-4773 AIR CLEANER GP
AN ATTACHMENT

SMCS-1051, 1054 **i03011889**

NOTE	REF NO	GRAPHIC REF	PART NUMBER	QTY	PART NAME 1 2 3 4 5 6 (PRODUCT LEVEL)	SEE PAGE
	1	1	**5L-3233**	1	FITTING-CONNECTOR	
	2	1	**6I-2501**	1	FILTER ELEMENT AS-AIR (PRIMARY, STANDARD EFFICIENCY)	
					—OR—	
		1	**128-2686**	1	FILTER ELEMENT AS-AIR (PRIMARY, ULTRA HIGH EFFICIENCY)	
	3	1	**6I-2502**	1	FILTER ELEMENT AS-AIR (SECONDARY)	
	4	1	**7I-2673**	1	STRAP-CABLE	
	5	1	**131-8826**	1	FILM-INSTRUCTION (TOP, AIR CLEANER COVER)	
	6	1	**255-2966**	1	INDICATOR AS-AIR FILTER CHANGE (AIR RESTRICTION)	
	7	1	**171-9892**	1	COVER AS	

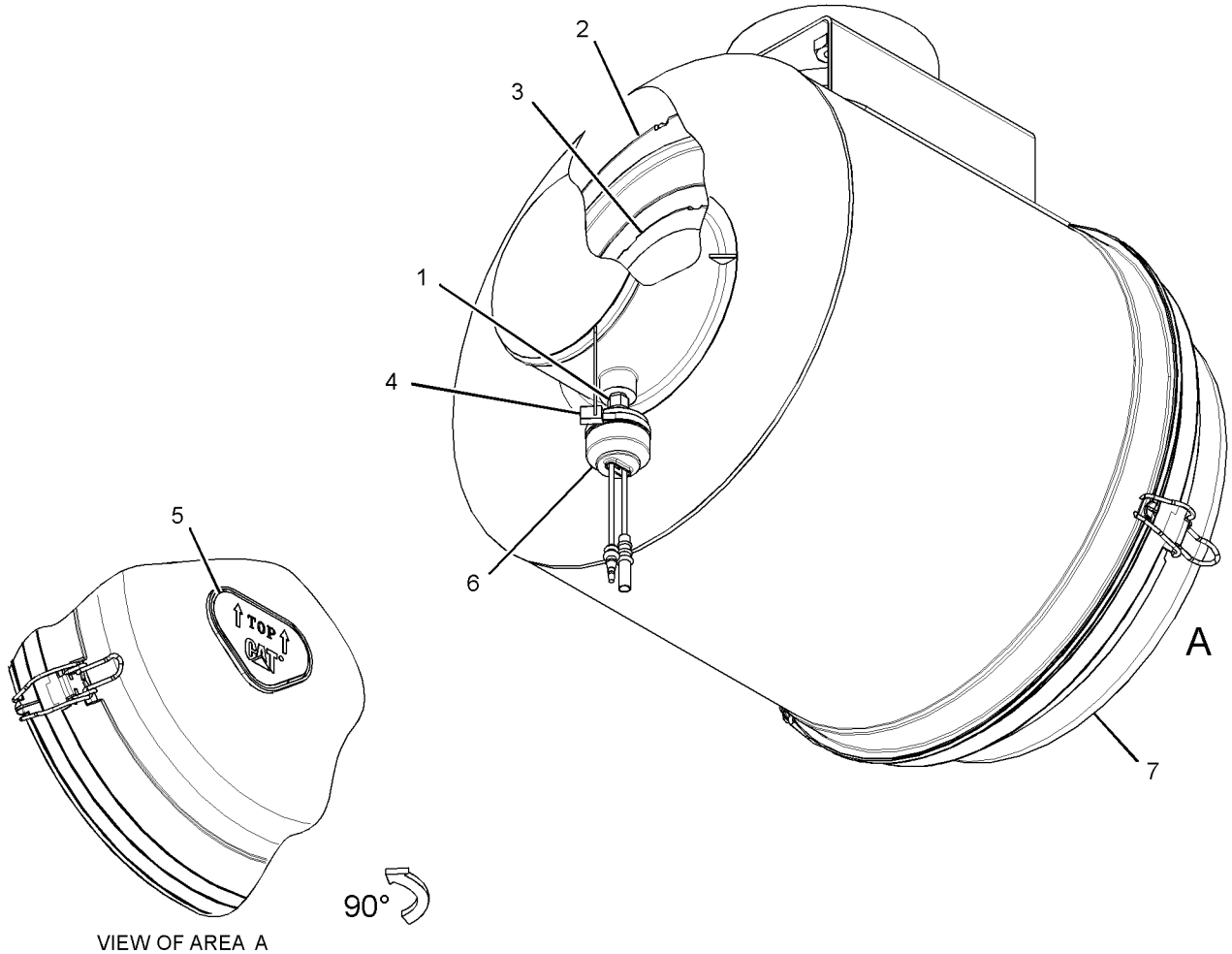

VIEW OF AREA A

GRAPHIC #1 **<END>** g01506593

5I-7589 CARTRIDGE AS-TURBOCHARGER

S/N: GDC1-UP
PART OF 287-0049 TURBOCHARGER GP
ALSO AN ATTACHMENT

SMCS-1053 **i02853748**

NOTE	REF NO	GRAPHIC REF	PART NUMBER	QTY	PART NAME 1 2 3 4 5 6 (PRODUCT LEVEL)	SEE PAGE
	1	1	**135-2351**	1	INSERT	
	2	1	**135-2352**	1	RING-RETAINING	
	3	1	**135-2355**	1	SEAL-O-RING	
	4	1	**135-2347**	1	BEARING-THRUST	
	5	1	**135-2356**	1	RING-THRUST	
	6	1	**135-2359**	1	HOUSING	
	7	1	**135-2346**	1	PLATE	
	8	1	**135-2354**	1	RING-PISTON (17.5MM ID)	
	9	1	**171-3254**	1	WHEEL AS	
	10	1	**135-2358**	2	BEARING (9.036MM ID)	
	11	1	**135-2348**	1	DEFLECTOR-OIL	
	12	1	**135-2349**	1	SLEEVE	
	13	1	**135-2350**	1	RING-PISTON (12.4MM ID)	
	14	1	**135-2360**	1	WHEEL-COMPRESSOR (SHAFT & TURBINE)	
	15	1	**156-3103**	1	NUT (1/4-28-THD)	

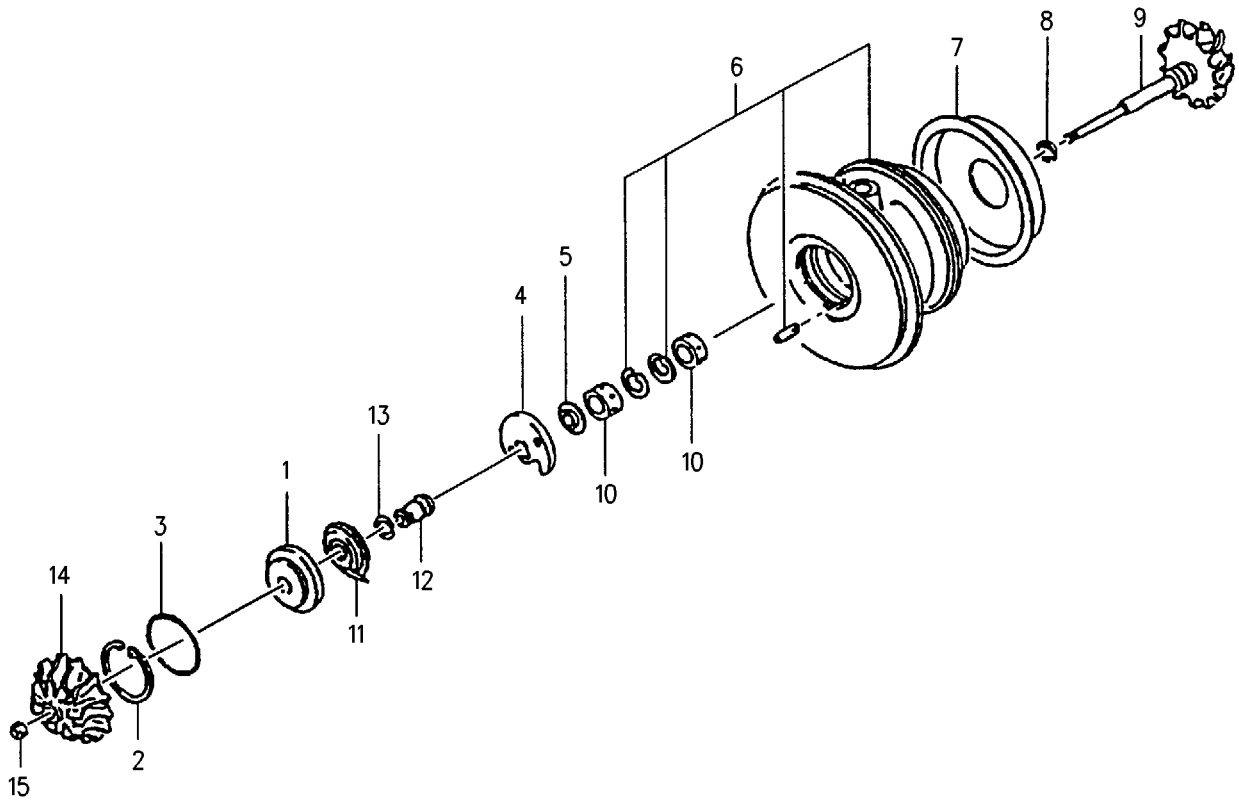

GRAPHIC #1 **<END>** g00680423

379-4387 DRAIN GP-MUFFLER

S/N: KGF9349-UP; FAL10146-UP

PART OF 272-4742 INSTALLATION AR-ENGINE

SMCS-1062 **i05185907**

NOTE	REF NO	GRAPHIC REF	PART NUMBER	QTY	PART NAME 1 2 3 4 5 6 (PRODUCT LEVEL)	SEE PAGE
	1	1	**3J-5390**	1	PLUG	

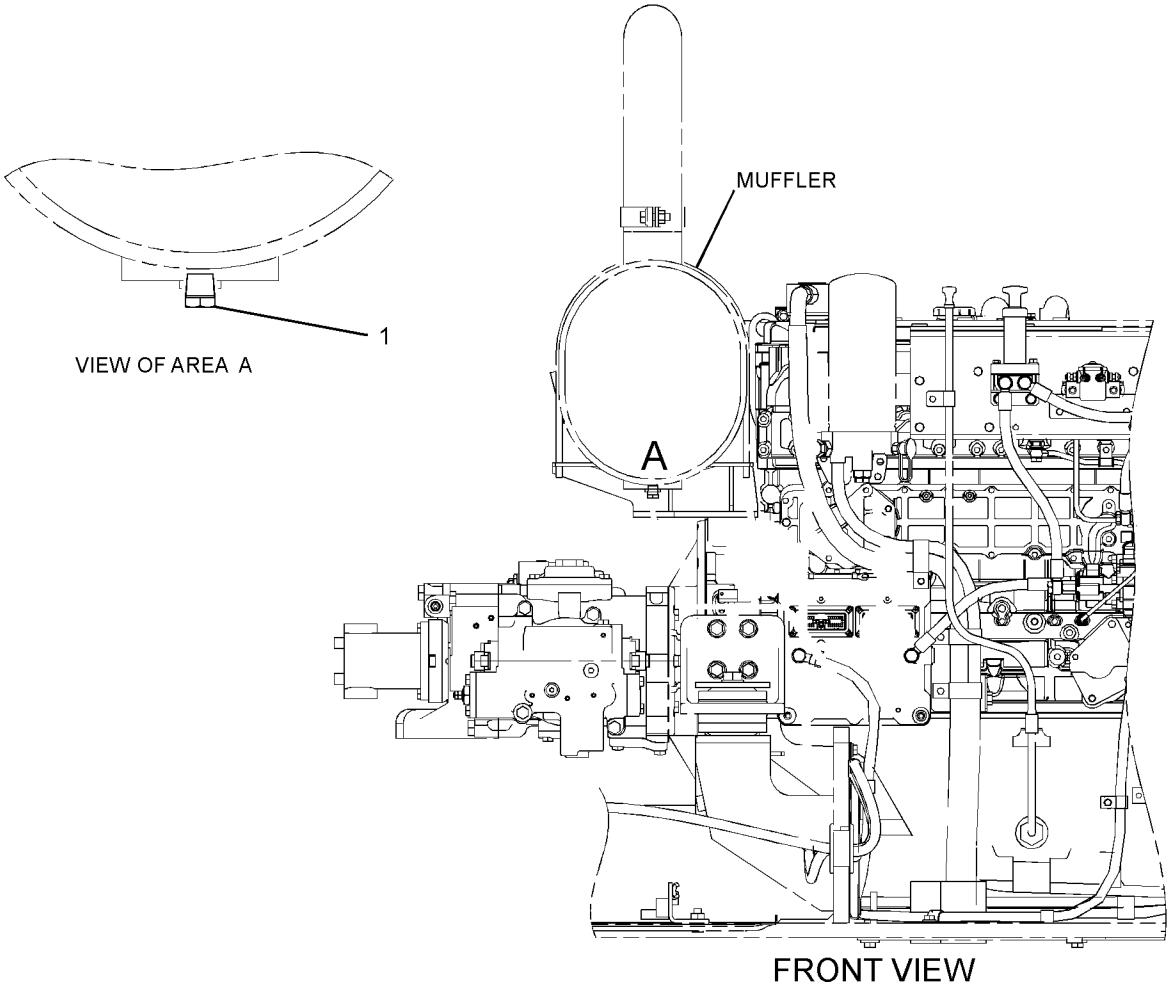

GRAPHIC #1 **<END>** g03361657

255-3044 EXTENSION GP-EXHAUST

S/N: KGF1-1005; FAL1-709

PART OF 272-4742 INSTALLATION AR-ENGINE

SMCS-1061 **i02417324**

NOTE	REF NO	GRAPHIC REF	PART NUMBER	QTY	PART NAME 1 2 3 4 5 6 (PRODUCT LEVEL)	SEE PAGE
	1	1	**4I-7554**	1	CLAMP	
	2	1	**266-6346**	1	PIPE	
M	3	1	**8T-4183**	1	BOLT (M12X1.75X40-MM)	
	4	1	**8T-4223**	1	WASHER-HARD (13.5X25.5X3-MM THK)	
M	5	1	**8T-4244**	1	NUT (M12X1.75-THD)	

M - METRIC PART

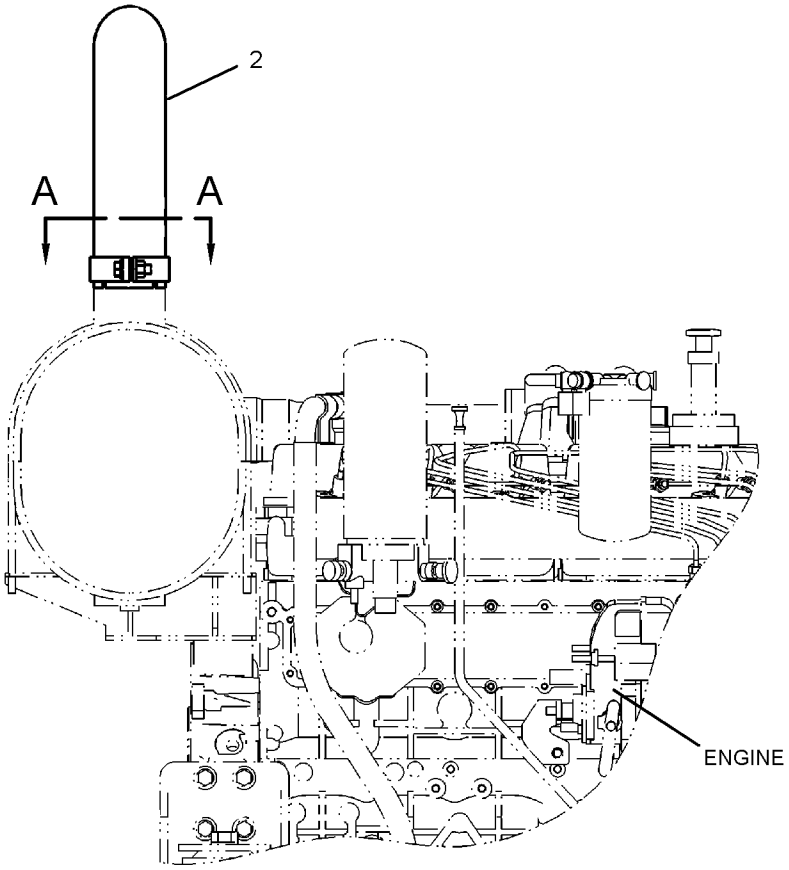

RIGHT SIDE VIEW
(ENGINE)

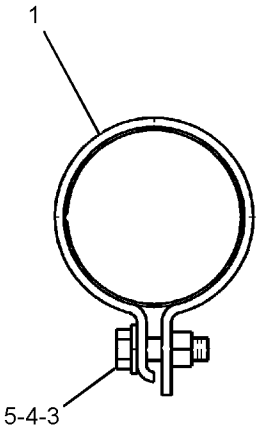

SECTION A-A

GRAPHIC #1 **<END>** g01214871

AIR INLET AND EXHAUST SYSTEM

265-3504 LINES GP-AIR

S/N: KGF1-UP; FAL1-UP

PART OF 272-4742 INSTALLATION AR-ENGINE

SMCS-1071 **i02577724**

NOTE	REF NO	GRAPHIC REF	PART NUMBER	QTY	PART NAME 1 2 3 4 5 6 (PRODUCT LEVEL)	SEE PAGE
	1	1,2	**8T-4984**	9	CLAMP-HOSE	
	2	1	**8T-6703**	1	CLAMP-HOSE	
	3	2	**210-8012**	1	SUPPORT	
	4	2	**265-3581**	1	TUBE AS	
	5	2	**265-3585**	1	HOSE	
	6	1	**265-3586**	1	HOSE	
	7	1	**265-3587**	1	TUBE AS	
	8	1	**265-3590**	1	HOSE	
	9	1	**265-3591**	1	HOSE	
	10	2	**265-3599**	1	HOSE	
	11	1,2	**8T-4121**	6	WASHER-HARD (11X21X2.5-MM THK)	
M	12	1,2	**8T-4136**	4	BOLT (M10X1.5X25-MM)	
M	13	2	**8T-4137**	2	BOLT (M10X1.5X20-MM)	

M - METRIC PART

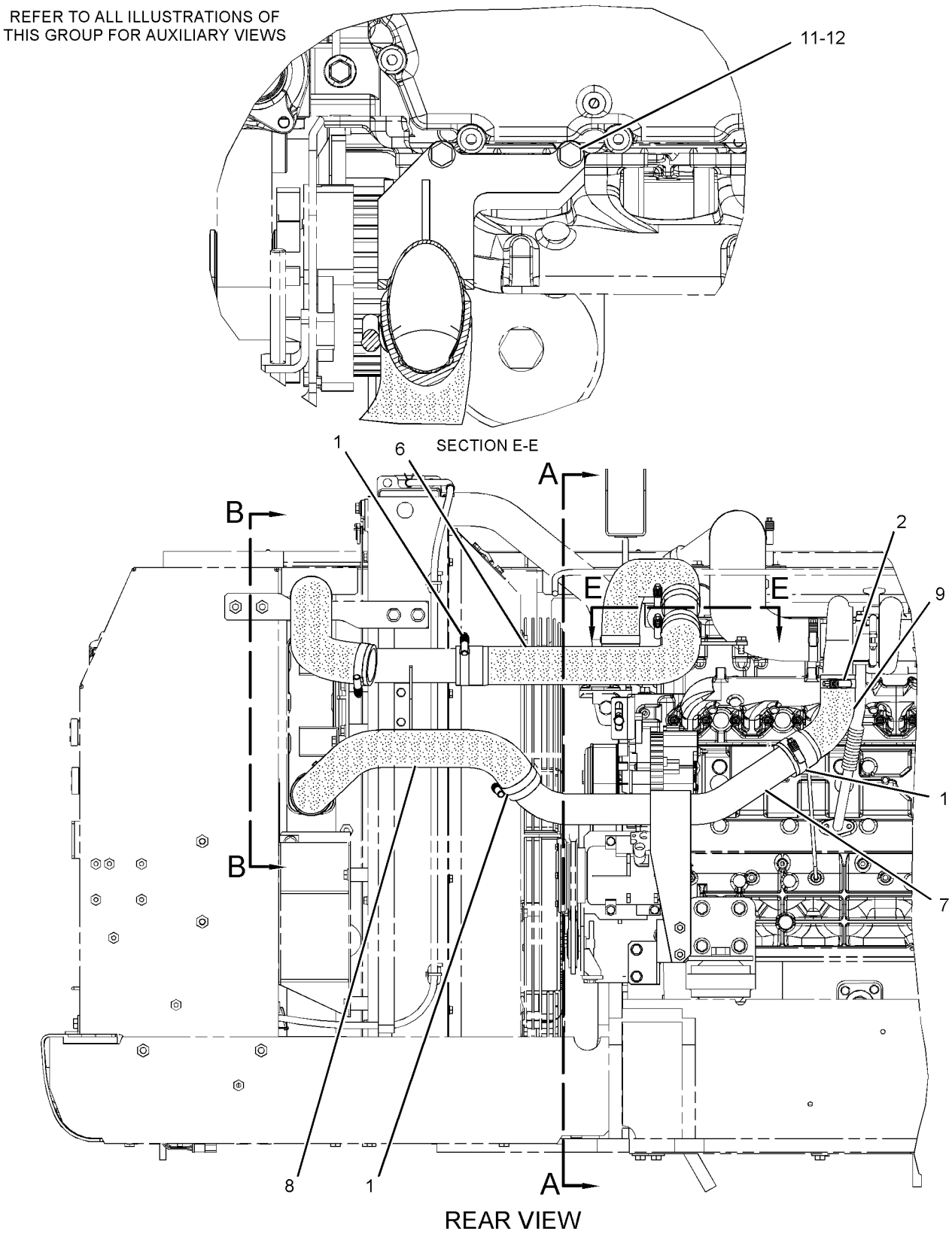

GRAPHIC #1 g01288146

265-3504 **LINES GP-AIR (*contd.*)** **i02577724**

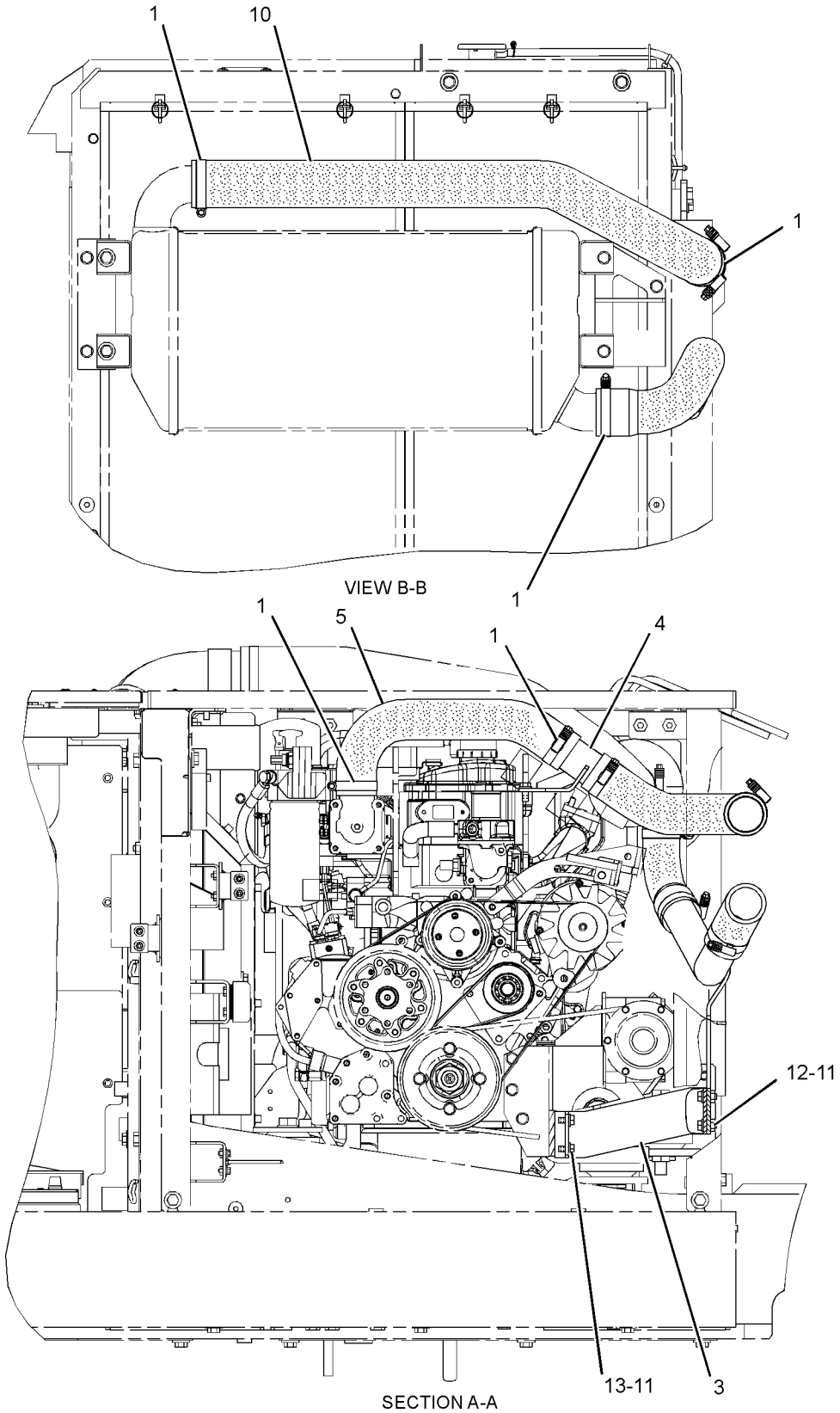

GRAPHIC #2 **<END>** g01288629

272-4744 LINES GP-AIR—AIR CLEANER TO TURBOCHARGER

S/N: KGF1-UP; FAL1-UP

PART OF 272-4742 INSTALLATION AR-ENGINE

SMCS-1071 **i02683858**

NOTE	REF NO	GRAPHIC REF	PART NUMBER	QTY	PART NAME 1 2 3 4 5 6 (PRODUCT LEVEL)	SEE PAGE
	1	1	**144-0367**	1	CLAMP-HOSE	
	2	1	**8T-4986**	1	CLAMP-HOSE	
	3	1	**9X-2201**	2	CLAMP-HOSE	
	4	1	**279-7907**	1	HOSE-AIR	
	5	1	**287-0211**	1	HOSE-AIR	

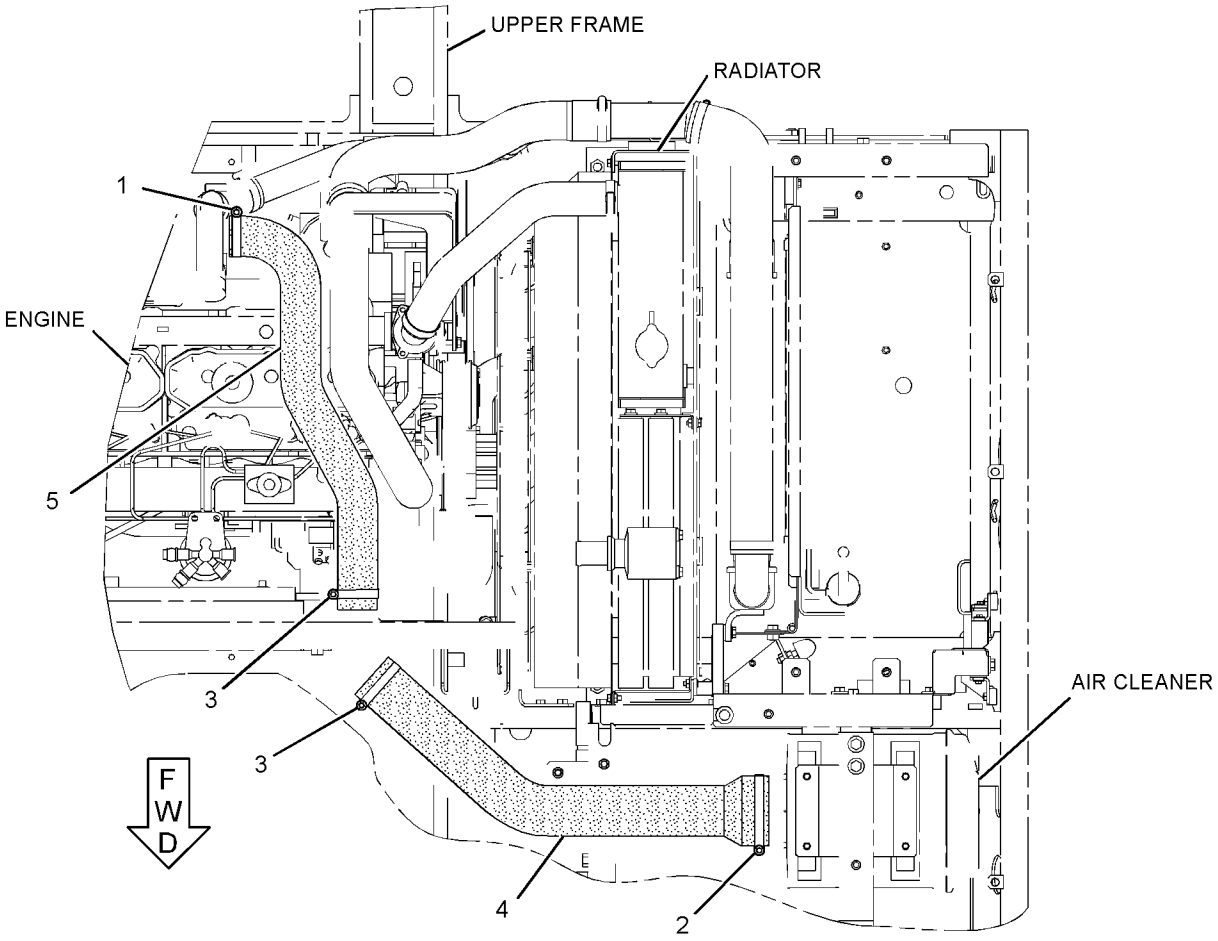

TOP VIEW

GRAPHIC #1 **<END>** g01350645

287-0183 LINES GP-MUFFLER DRAIN

S/N: KGF1-9348; FAL1-10145

PART OF 272-4742 INSTALLATION AR-ENGINE

SMCS-1062 **i02646608**

NOTE	REF NO	GRAPHIC REF	PART NUMBER	QTY	PART NAME 1 2 3 4 5 6 (PRODUCT LEVEL)	SEE PAGE
	1	1	**3S-2093**	3	STRAP-CABLE	
	2	1	**287-0171**	1	TUBE AS	
		1	**287-0118**	1	ADAPTER AS	
	3	1	**171-9073**	1	CLIP	
	4	1	**5P-4961**	1	CLAMP-HOSE	
	5	1	**8T-4121**	1	WASHER-HARD (11X21X2.5-MM THK)	
M	6	1	**8T-4191**	1	BOLT (M10X1.5X16-MM)	
E	7	1	**5P-1442**		HOSE (72-CM)	

E - ORDER BY THE CENTIMETER
M - METRIC PART

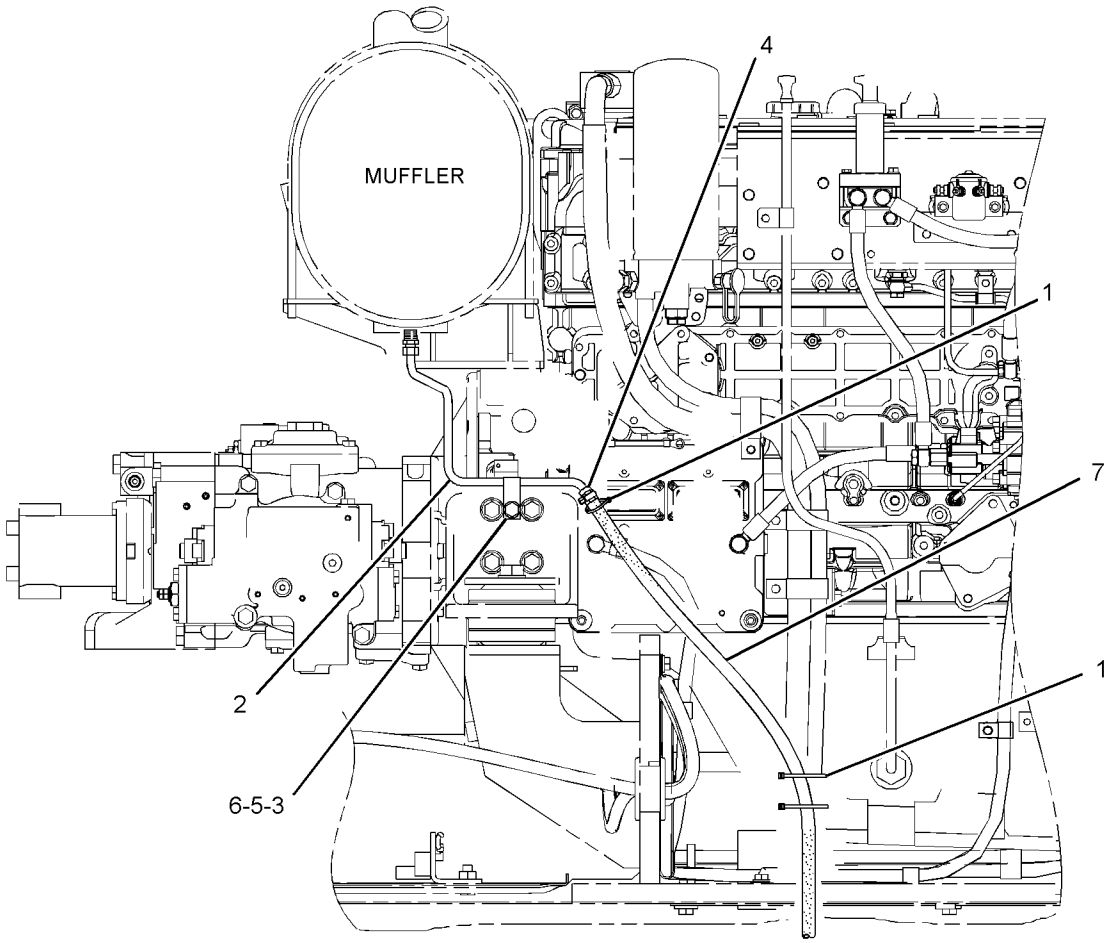

RIGHT SIDE VIEW OF ENGINE

GRAPHIC #1 **<END>** g01354840

296-4653 MANIFOLD GP-EXHAUST

S/N: GDC1-UP

PART OF 272-4677, 272-4683, 296-4676, 296-4687, 305-4777 ENGINE AR, 327-7199 ENGINE AR-PRIMARY

ALSO AN ATTACHMENT

SMCS-1059 **i03866630**

NOTE	REF NO	GRAPHIC REF	PART NUMBER	QTY	PART NAME 1 2 3 4 5 6 (PRODUCT LEVEL)	SEE PAGE
	1	1	**178-6552**	1	MANIFOLD	
	2	1	**294-1761**	2	GASKET	
M	3	1	**178-6554**	4	STUD (M10X1.5X15-MM, M10X1.25X20-MM)	
M	4	1	**091-3474**	1	NUT (M8X1.25-THD)	
	5	1	**5I-7601**	1	SPACER	
	6	1	**5I-7549**	12	STUD (M8X1.25X86-MM)	
	7	1	**5I-7550**	11	SPACER	
	8	1	**239-6604**	12	WASHER	
	9	1	**212-8489**	12	NUT	
	10	1	**3B-4505**	13	LOCKWASHER	

M - METRIC PART

296-4653 **MANIFOLD GP-EXHAUST (*contd.*)** **i03866630**

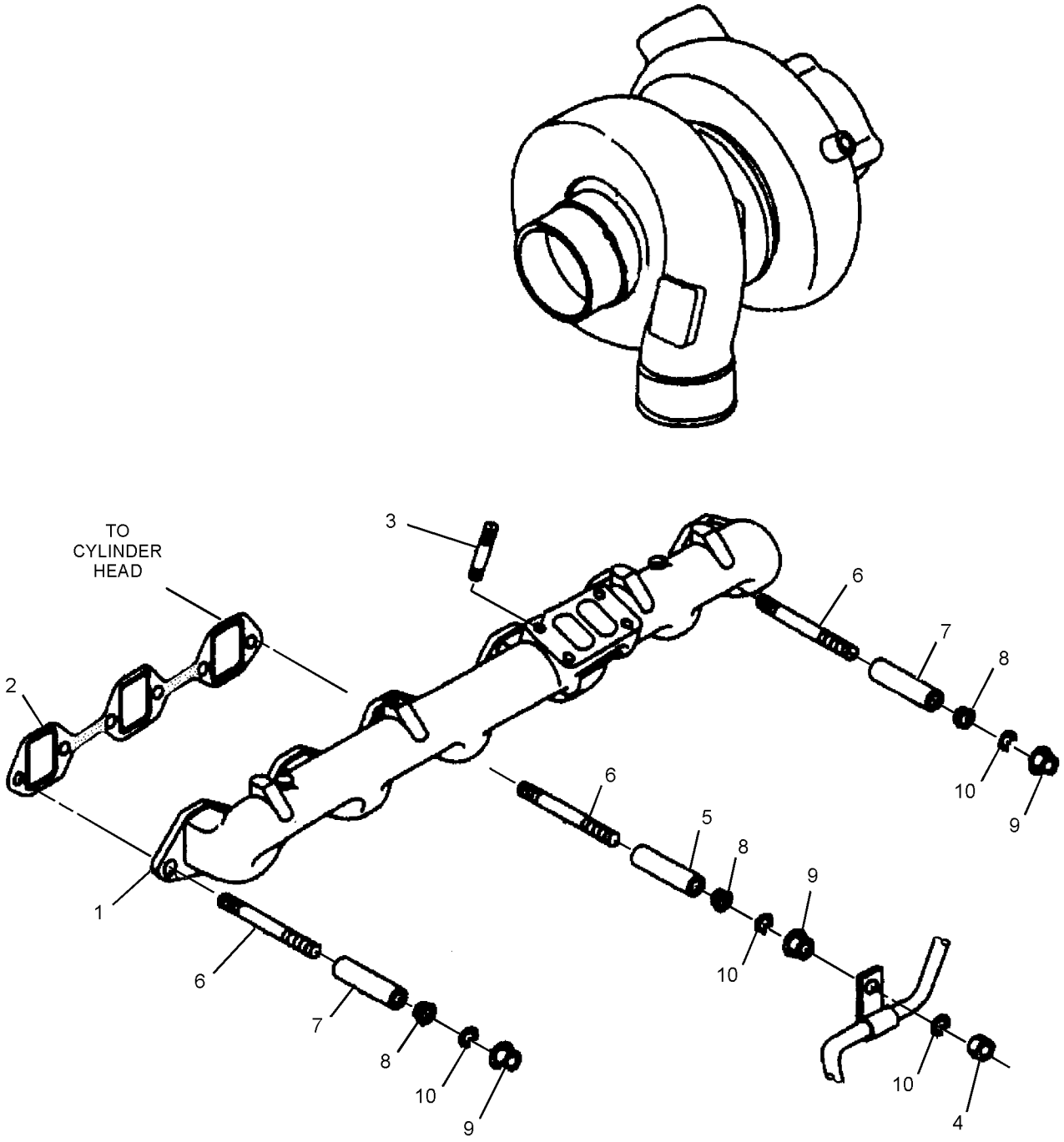

GRAPHIC #1 **<END>** g02111157

296-4652 MANIFOLD GP-INLET

S/N: GDC1-UP

PART OF 272-4677, 272-4683, 296-4676, 296-4687, 305-4777 ENGINE AR

ALSO AN ATTACHMENT

SMCS-1058, 1090

i03514863

NOTE	REF NO	GRAPHIC REF	PART NUMBER	QTY	PART NAME 1 2 3 4 5 6 (PRODUCT LEVEL)	SEE PAGE
	1	1	**294-1758**	2	GASKET	
	2	1	**096-8490**	12	BOLT	
	3	1	**294-1700**	16	BOLT (M8X1.25X108.3-MM)	
	4	1	**5I-8021**	1	ELBOW AS	
	4A	1	**5I-8023**	1	PLUG	
	5	1	**294-1854**	1	BRACKET	
	6	1	**294-1738**	2	BOLT (M10X1.5X32-MM)	
	7	1	**5I-7678**	1	GASKET (INLET MANIFOLD)	
	8	1	**303-6261**	4	BOLT	
	9	1	**294-1760**	1	MANIFOLD	
	10	1	**5I-7677**	1	GASKET	
	11	1	**324-4119**	1	HEATER (24-VOLT)	
Y	12	1	**223-4453**	1	SWITCH GP-MAGNETIC (24-VOLT) (STARTING AID HEATER)	540
	13	1	**294-1853**	1	CABLE	
	14	1	**5I-5597**	2	BOLT (M14X1.5-THD)	

Y - SEPARATE ILLUSTRATION

296-4652 **MANIFOLD GP-INLET (*contd.*)** **i03514863**

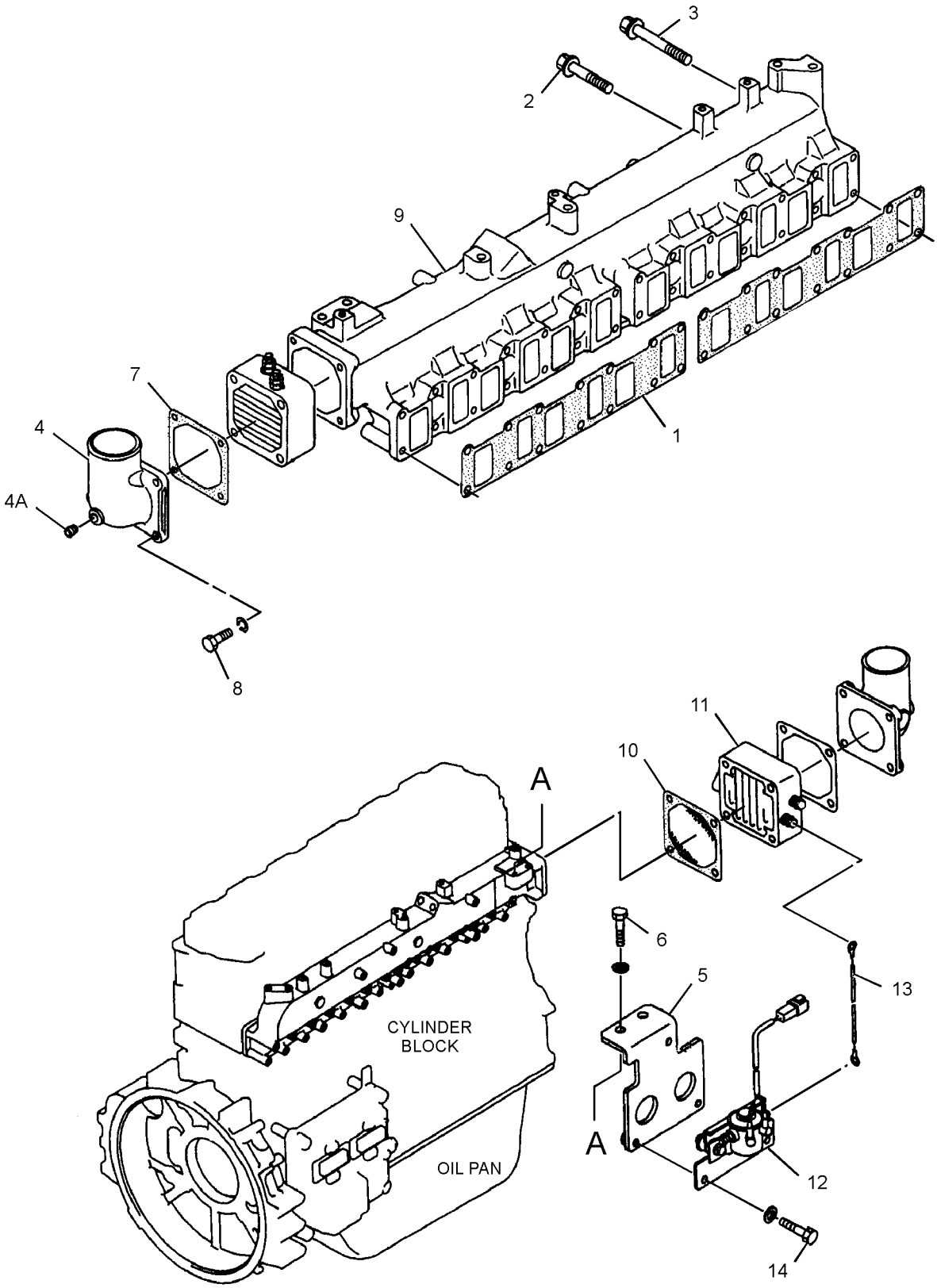

GRAPHIC #1 **<END>** g01317367

324-4194 MANIFOLD GP-INLET

S/N: GDC1847-UP

PART OF 272-4677, 272-4683, 296-4676, 305-4777 ENGINE AR, 327-7199 ENGINE AR-PRIMARY

ALSO AN ATTACHMENT

SMCS-1058, 1090 **i03642857**

NOTE	REF NO	GRAPHIC REF	PART NUMBER	QTY	PART NAME 1 2 3 4 5 6 (PRODUCT LEVEL)	SEE PAGE
	1	1	**294-1758**	2	GASKET	
	2	1	**096-8490**	12	BOLT (M8X1.25X70-MM)	
	3	1	**294-1700**	16	BOLT (M8X1.25X108.3-MM)	
	4	1	**5I-8021**	1	ELBOW AS	
		1	**5I-8023**	1	PLUG	
	5	1	**8T-4896**	1	WASHER-HARD (10.2X18.5X2.5-MM THK)	
M	6	1	**8T-4191**	1	BOLT (M10X1.5X16-MM)	
	7	1	**5I-7678**	1	GASKET	
	8	1	**303-6261**	4	BOLT	
	9	1	**294-1760**	1	MANIFOLD	
	10	1	**5I-7677**	1	GASKET	
	11	1	**324-4119**	1	HEATER (24-VOLT)	
	12	1	**4P-7581**	1	CLIP	

M - METRIC PART

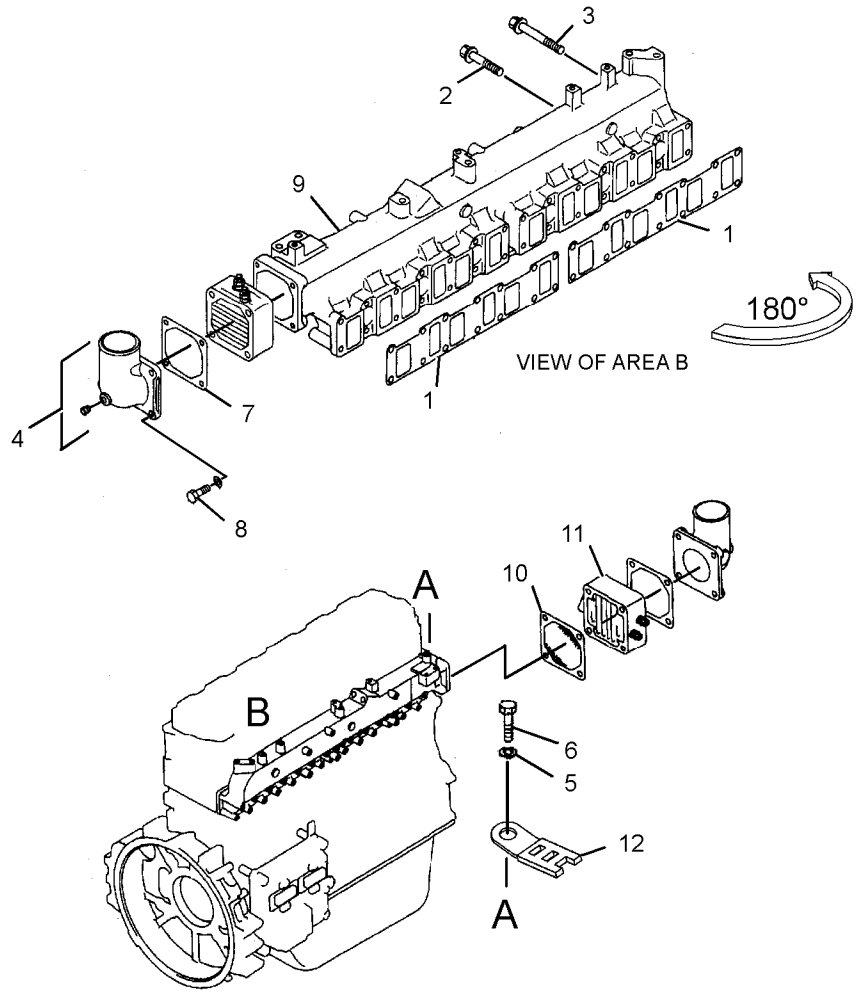

GRAPHIC #1 **<END>** g01955633

327-7249 MANIFOLD GP-INLET

S/N: GDC1-UP

PART OF 327-7199 ENGINE AR-PRIMARY

AN ATTACHMENT

SMCS-1058, 1090

i03950553

NOTE	REF NO	GRAPHIC REF	PART NUMBER	QTY	PART NAME 1 2 3 4 5 6 (PRODUCT LEVEL)	SEE PAGE
	1	1	**294-1758**	2	GASKET	
	2	1	**096-8490**	12	BOLT (M8X1.25X70-MM)	
	3	1	**294-1700**	16	BOLT (M8X1.25X108.3-MM)	
	4	1	**5I-8021**	1	ELBOW AS	
		1	**5I-8022**	1	ELBOW	
		1	**5I-8023**	1	PLUG	
	5	1	**5I-7677**	1	GASKET	
	6	1	**324-4119**	1	HEATER (24-VOLT)	
	7	1	**5I-7678**	1	GASKET	
	8	1	**303-6261**	4	BOLT	
	9	1	**294-1760**	1	MANIFOLD	

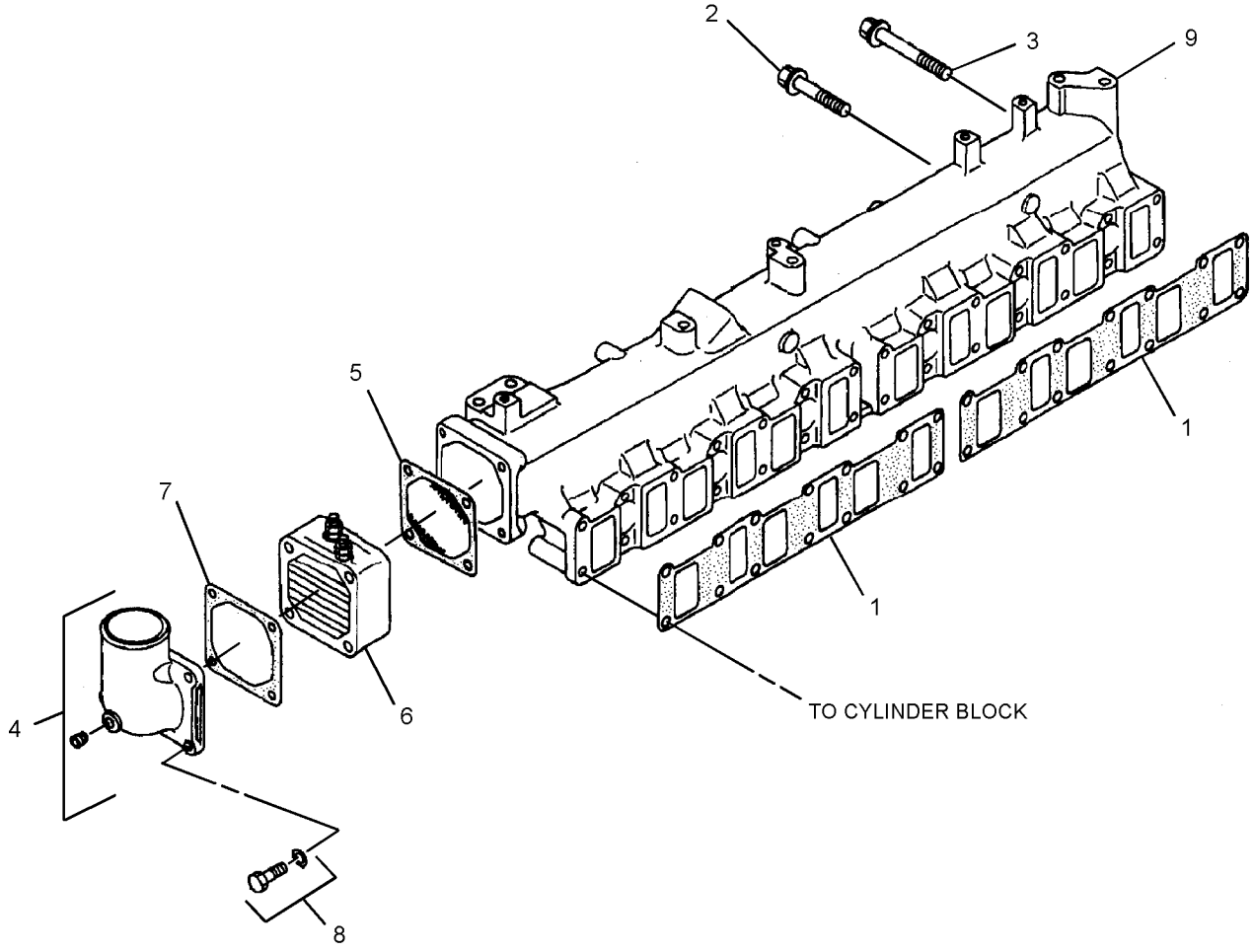

GRAPHIC #1

<END>

g02158912

AIR INLET AND EXHAUST SYSTEM

324-4156 MUFFLER

S/N: GDC1-UP; KGF1-UP
FIELD INSTALLATION

SMCS-1062 **i04428304**

NOTE	REF NO	GRAPHIC REF	PART NUMBER	QTY	PART NAME 1 2 3 4 5 6 (PRODUCT LEVEL)	SEE PAGE
					(NO SERVICED PARTS)	

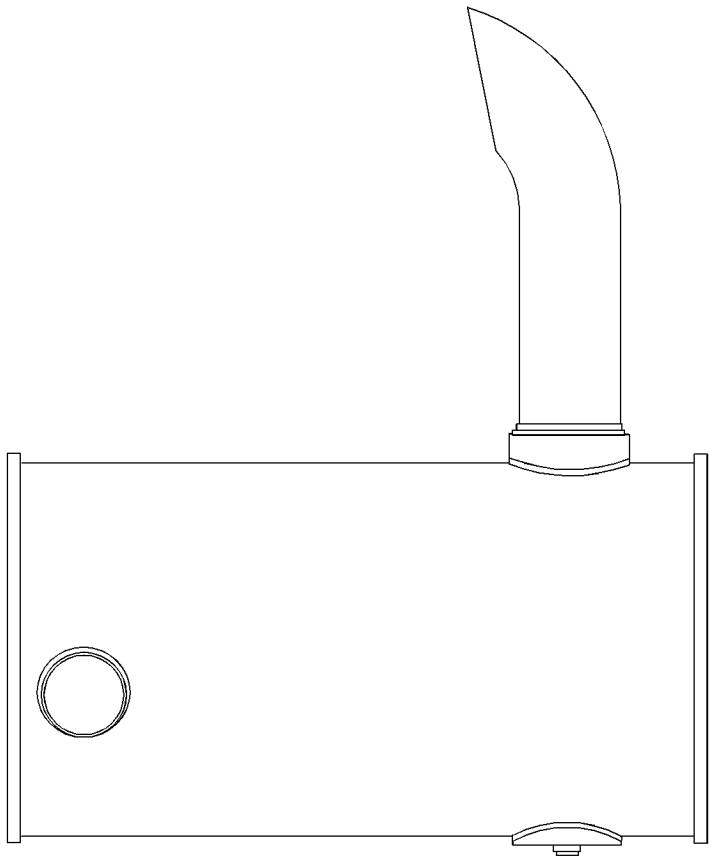

RIGHT SIDE VIEW

GRAPHIC #1 **<END>** g02623121

296-4662 MUFFLER GP

S/N: GDC1-7001

PART OF 272-4677, 272-4683, 296-4676, 305-4777 ENGINE AR

ALSO AN ATTACHMENT

SMCS-1062 **i02618452**

NOTE	REF NO	GRAPHIC REF	PART NUMBER	QTY	PART NAME 1 2 3 4 5 6 (PRODUCT LEVEL)	SEE PAGE
	1	1	**294-1762**	1	MUFFLER	
	2	1	**266-6321**	2	U-BOLT	
	3	1	**266-6319**	1	BRACKET	
	4	1	**266-6320**	1	BRACKET	
	5	1	**294-1738**	4	BOLT	
M	6	1	**6V-8231**	8	NUT (M10X1.25-THD)	
	7	1	**5I-8040**	1	PIPE	
	8	1	**5I-7679**	1	GASKET	
M	9	1	**178-6554**	3	STUD (M10X1.5X15-MM, M10X1.25X20-MM)	
	10	1	**5I-7633**	6	NUT (M10X1.25-THD)	
	11	1	**094-7583**	1	CLAMP AS	

M - METRIC PART

296-4662 **MUFFLER GP** (*contd.*) **i02618452**

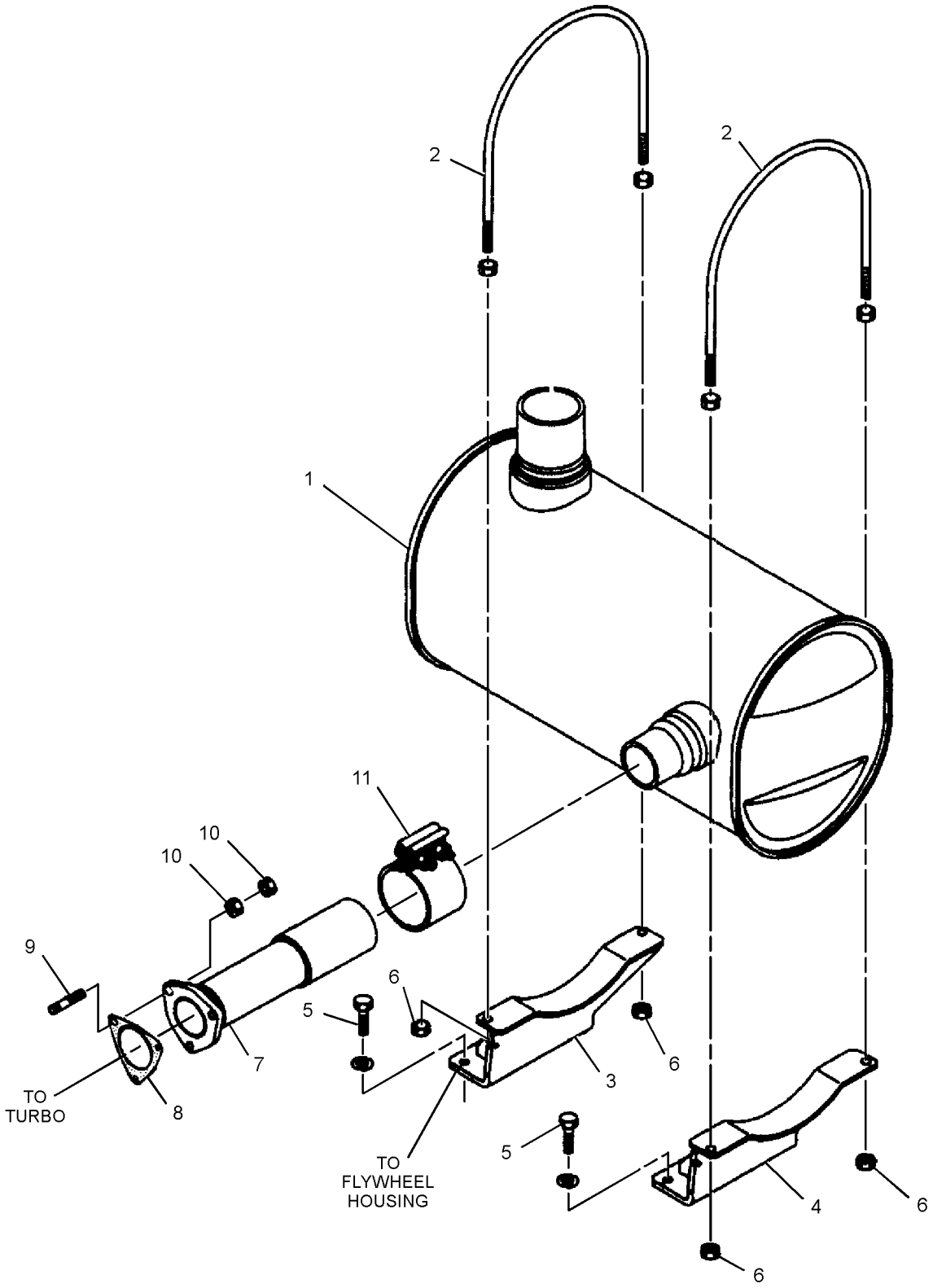

GRAPHIC #1 **<END>** g01317750

297-7745 MUFFLER GP

S/N: GDC7002-UP
PART OF 272-4677 ENGINE AR
AN ATTACHMENT

SMCS-1062 **i03503182**

NOTE	REF NO	GRAPHIC REF	PART NUMBER	QTY	PART NAME 1 2 3 4 5 6 (PRODUCT LEVEL)	SEE PAGE
	1	1	**297-7791**	1	MUFFLER	
	2	1	**266-6321**	2	U-BOLT	
	3	1	**266-6319**	1	BRACKET	
	4	1	**266-6320**	1	BRACKET	
	5	1	**297-7654**	4	BOLT (M10X1.5X37-MM)	
M	6	1	**6V-8231**	8	NUT (M10X1.25-THD)	
	7	1	**5I-8040**	1	PIPE	
	8	1	**5I-7679**	1	GASKET	
M	9	1	**178-6554**	3	STUD (M10X1.5X15-MM, M10X1.25X20-MM)	
	10	1	**5I-7633**	6	NUT (M10X1.25-THD)	
	11	1	**094-7583**	1	CLAMP AS	

M - METRIC PART

297-7745 **MUFFLER GP (*contd.*)** **i03503182**

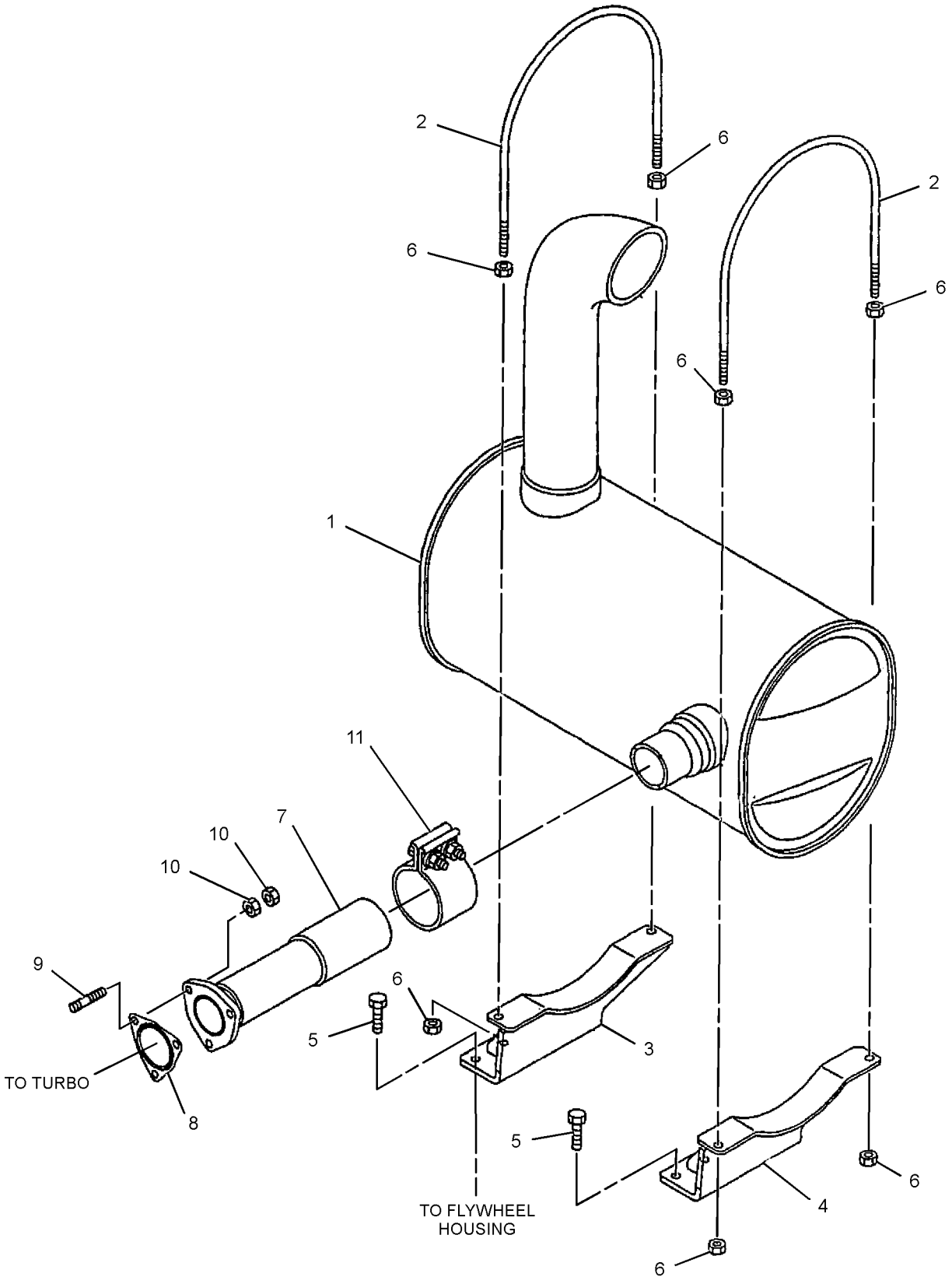

GRAPHIC #1 **<END>** g01371133

324-4173 MUFFLER GP

S/N: GDC7002-UP

PART OF 272-4677, 272-4683, 296-4676, 296-4687, 305-4777 ENGINE AR, 327-7199 ENGINE AR-PRIMARY

ALSO AN ATTACHMENT

SMCS-1062 **i03585126**

NOTE	REF NO	GRAPHIC REF	PART NUMBER	QTY	PART NAME 1 2 3 4 5 6 (PRODUCT LEVEL)	SEE PAGE
	1	1	**324-4156**	1	MUFFLER	
	2	1	**266-6321**	2	U-BOLT	
	3	1	**324-4165**	1	BRACKET AS	
	4	1	**324-4158**	1	BRACKET AS	
	5	1	**297-7654**	4	BOLT (M10X1.5X37-MM)	
M	6	1	**6V-8231**	8	NUT (M10X1.25-THD)	
	7	1	**324-4166**	1	PIPE AS	
	8	1	**5I-7679**	1	GASKET	
M	9	1	**178-6554**	3	STUD (M10X1.5X15-MM, M10X1.25X20-MM)	
	10	1	**5I-7633**	6	NUT (M10X1.25-THD)	
	11	1	**324-4167**	1	CLAMP AS	

M - METRIC PART

324-4173 **MUFFLER GP (*contd.*)** **i03585126**

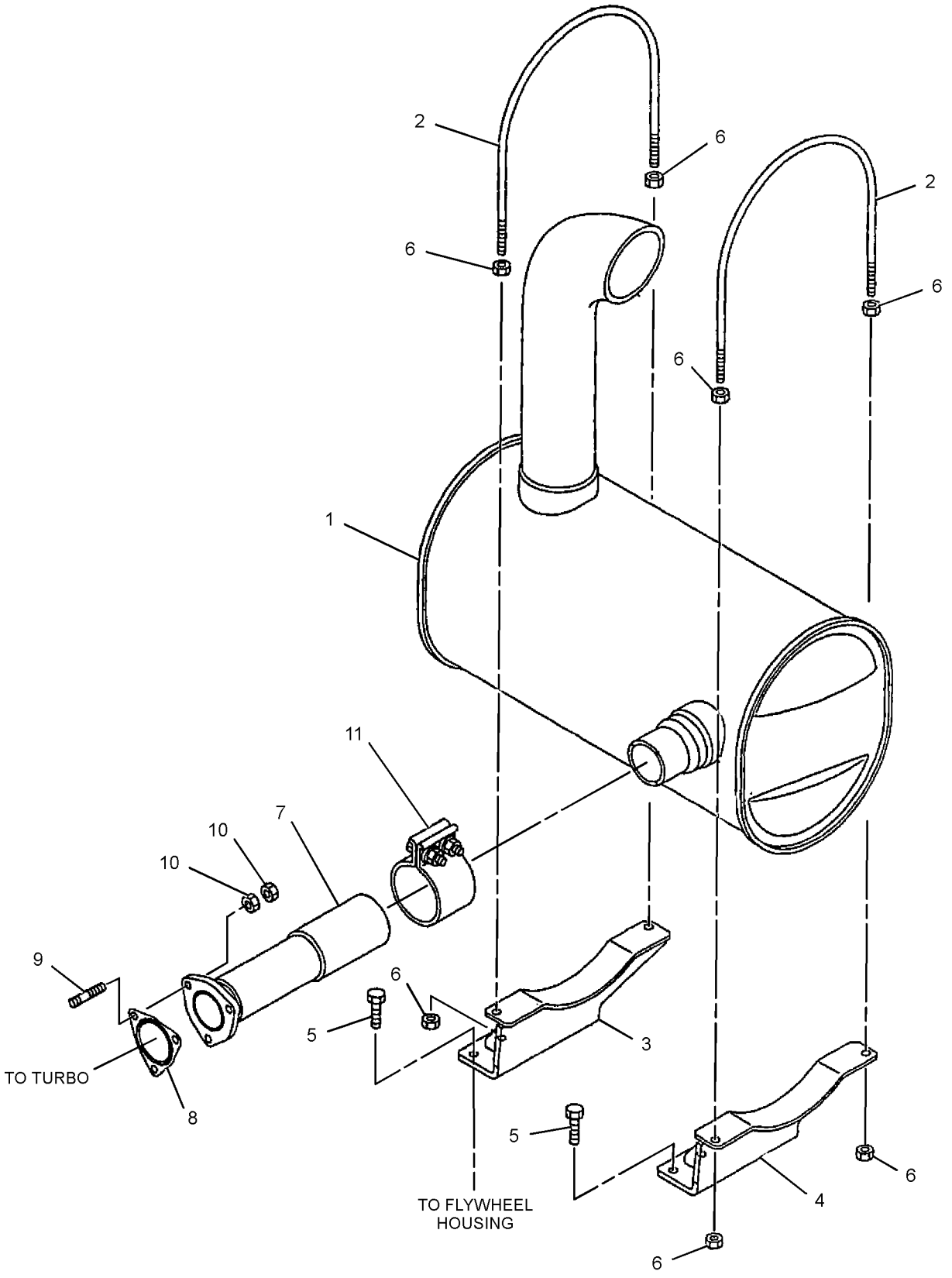

GRAPHIC #1 **<END>** g01371133

287-0049 TURBOCHARGER GP

S/N: GDC1-UP

PART OF 272-4677, 272-4683, 296-4676, 305-4777 ENGINE AR, 310-9617 TURBOCHARGER GP

ALSO AN ATTACHMENT

SMCS-1052, 1053

i02618441

NOTE	REF NO	GRAPHIC REF	PART NUMBER	QTY	PART NAME 1 2 3 4 5 6 (PRODUCT LEVEL)	SEE PAGE
	1	1	**5B-9304**	2	SCREW-DRIVE (NO 2X3/16-IN)	
	2	1	**5I-7587**	1	COVER	
Y	3	1	**5I-7589**	1	CARTRIDGE AS-TURBOCHARGER	265
	4	1	**135-2352**	1	RING-RETAINING	
	5	1	**5I-7602**	1	COUPLING AS	
	6	1	**294-1763**	1	HOUSING	

Y - SEPARATE ILLUSTRATION

287-0049 **TURBOCHARGER GP (*contd.*)** **i02618441**

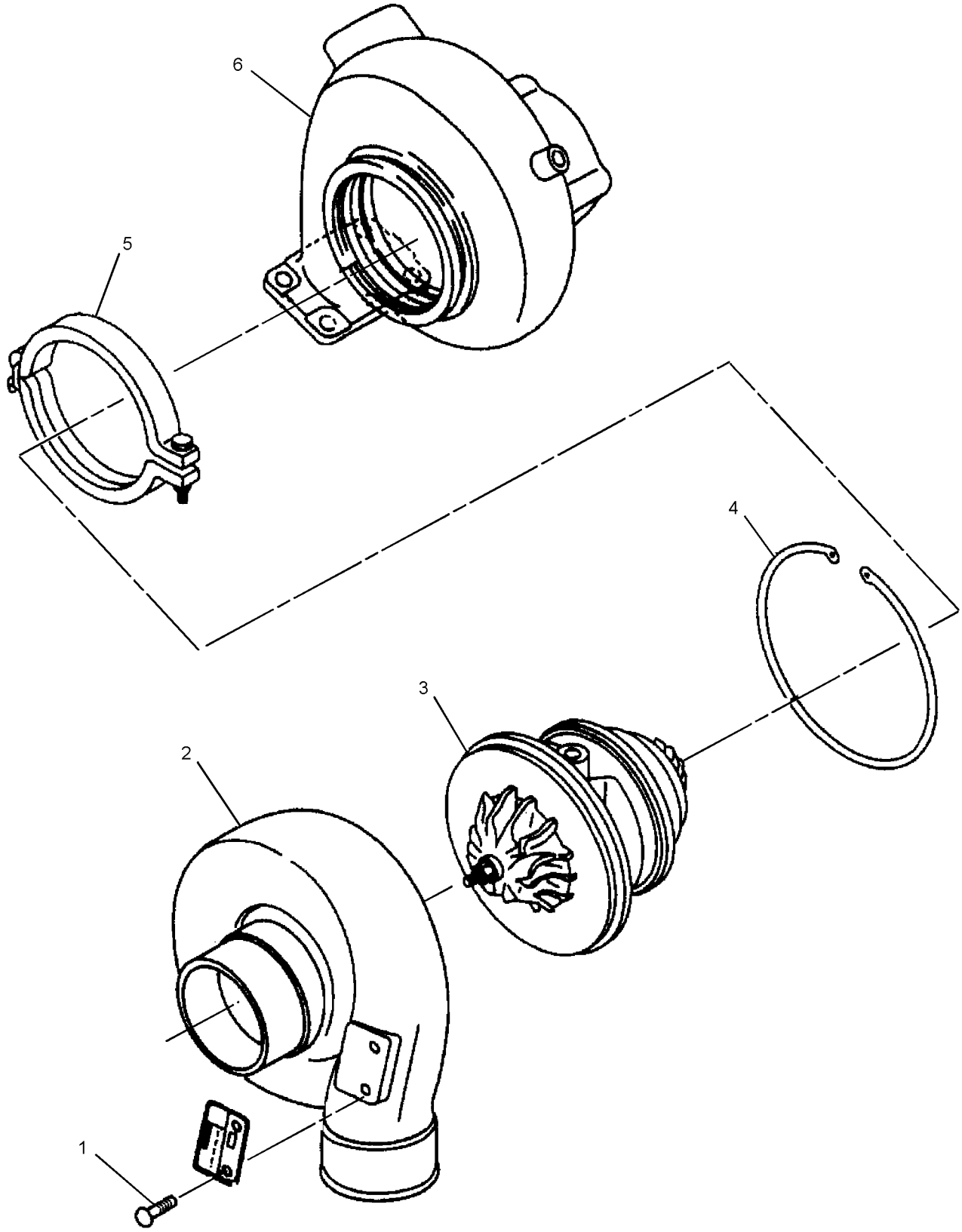

GRAPHIC #1 **<END>** g01317715

310-9617 TURBOCHARGER GP

S/N: GDC7002-UP

PART OF 272-4677, 272-4683, 296-4676, 296-4687, 305-4777 ENGINE AR, 327-7199 ENGINE AR-PRIMARY

ALSO AN ATTACHMENT

SMCS-1052, 1053 **i02934560**

NOTE	REF NO	GRAPHIC REF	PART NUMBER	QTY	PART NAME 1 2 3 4 5 6 (PRODUCT LEVEL)	SEE PAGE
Y	1	1	**287-0049**	1	TURBOCHARGER GP	286
	2	1	**5I-7742**	1	GASKET	
	3	1	**5I-7633**	8	NUT (M10X1.25-THD)	

Y - SEPARATE ILLUSTRATION

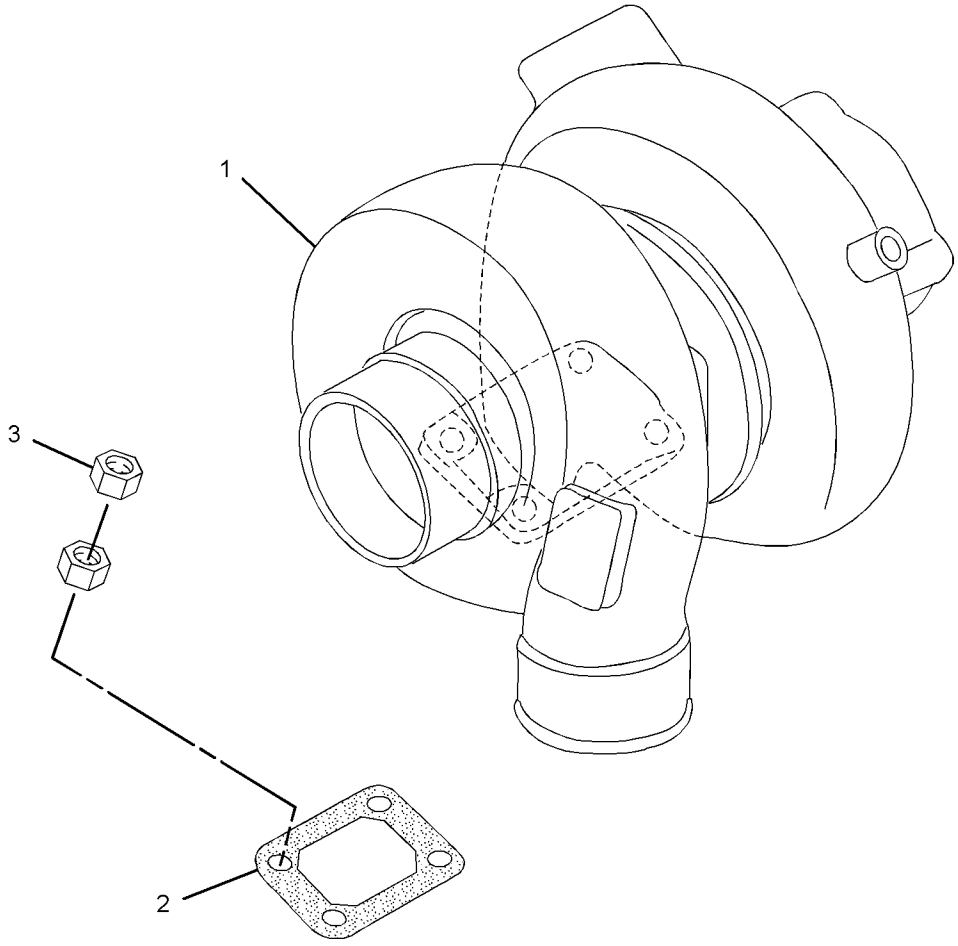

GRAPHIC #1 **<END>** g01459595

164-4858 CAP GP-FUEL FILLER–EXTREME SERVICE, LOCKABLE

S/N: KGF1-UP; FAL1-UP

PART OF 278-3898, 278-3899, 278-3902, 278-3903, 327-3193, 327-3196, 327-3200, 327-3203, 366-6363, 366-6364, 366-6365, 366-6366 TANK GP-FUEL

ALSO AN ATTACHMENT

SMCS-1273 **i05270528**

NOTE	REF NO	GRAPHIC REF	PART NUMBER	QTY	PART NAME 1 2 3 4 5 6 (PRODUCT LEVEL)	SEE PAGE
	1	1	**9X-8600**	1	SEAL-O-RING	
	2	1	**190-9775**	1	COVER AS-FILTER	

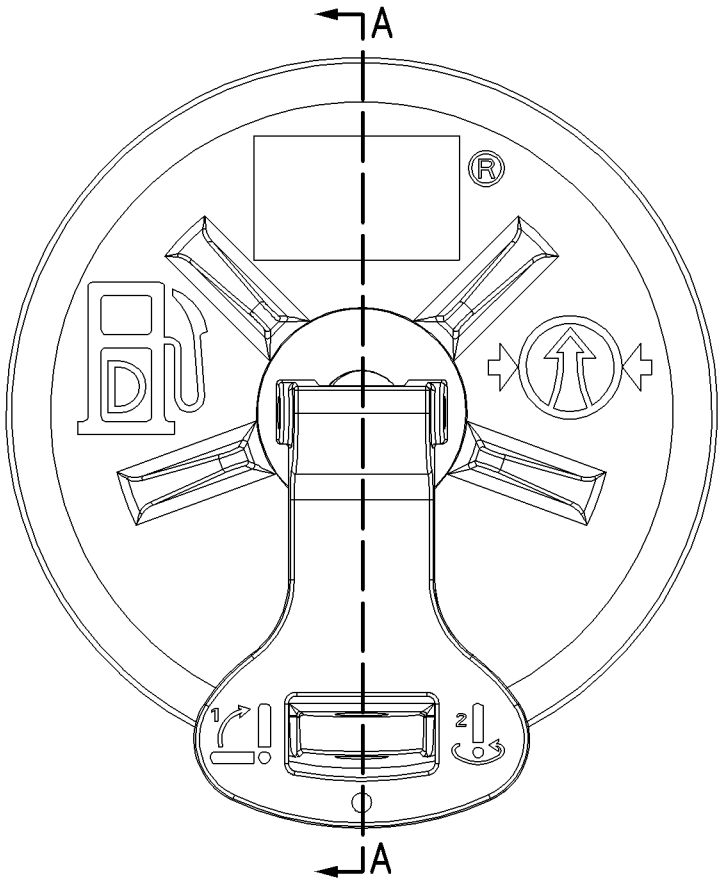

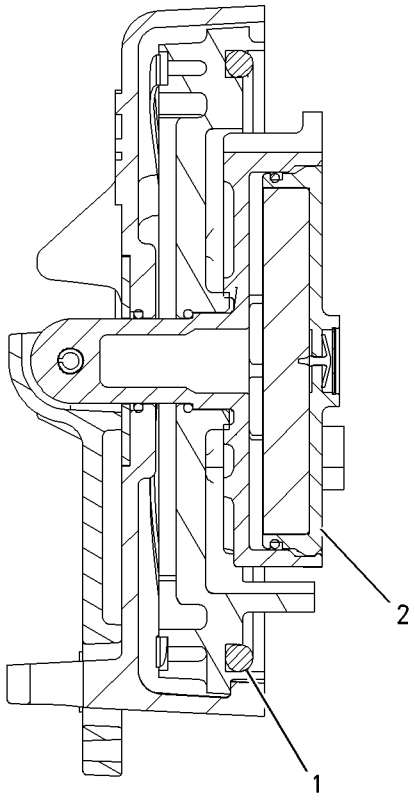

SECTION A-A

GRAPHIC #1 **<END>** g00849812

305-4745 FILTER GP-FUEL

S/N: GDC1-UP

PART OF 272-4677, 272-4683, 296-4676, 296-4687, 305-4777 ENGINE AR, 327-7199 ENGINE AR-PRIMARY

ALSO AN ATTACHMENT

SMCS-1261 **i04604614**

NOTE	REF NO	GRAPHIC REF	PART NUMBER	QTY	PART NAME 1 2 3 4 5 6 (PRODUCT LEVEL)	SEE PAGE
	1	1	**099-4437**	17	GASKET	
	2	1	**099-5041**	7	BOLT (M14X1.5X27-MM)	
	3	1	**294-1811**	1	WASHER (13.5-MM OD)	
	4	1	**294-1819**	1	HOSE	
	5	1	**137-5541**	1	PUMP GP-FUEL PRIMING (HAND)	
		1	**229-3218**	2	VALVE AS (FUEL PRIMING PUMP)	
	6	1	**294-1820**	1	GASKET (FUEL PRIMING PUMP)	
	7	1	**199-2241**	1	BOLT	
	8	1	**294-1821**	1	BOLT (M8X1.25X35.5-MM)	
	9	1	**294-1822**	1	BASE	
	10	1	**288-9297**	4	BOLT	
	11	1	**1R-0751**	2	FILTER-FUEL (ADVANCED EFFICIENCY) (SECONDARY)	
	12	1	**294-1825**	1	HOSE	
	13	1	**294-1826**	1	HOSE	
	14	1	**294-1827**	1	BRACKET	
	15	1	**294-1828**	2	BOLT (M10X1.5X62-MM)	
	16	1	**183-8224**	1	TUBE	
	17	1	**196-8217**	1	TUBE	
	18	1	**305-4889**	1	HOSE	
	19	1	**190-5830**	1	TUBE	
	20	1	**294-1830**	1	TUBE	
	21	1	**094-9725**	2	PLUG	
M	22	1	**5C-2890**	4	NUT (M6X1-THD)	
	23	1	**9X-8256**	4	WASHER (6.6X12X2-MM THK)	
	24	1	**294-1831**	4	CLAMP	
	25	1	**294-1833**	2	CLAMP	
	26	1	**297-7822**	2	BOLT (M6X1X44-MM)	
	27	1	**3B-4504**	4	LOCKWASHER	
	28	1	**297-7706**	2	BOLT (M6X1X64-MM)	
	29	2	**310-9534**	1	CONNECTOR	
	30	1	**305-4887**	1	HOSE	
M	31	1	**213-9433**	2	BOLT (M10X1.5X45-MM)	
	32	1	**095-2038**	1	WASHER (7.8X13.5X2-MM THK)	
	33	1	**310-9536**	1	BASE-FILTER	
	38	2	**294-1837**	1	BRACKET	
	39	2	**294-1838**	1	BRACKET	
	41	2	**305-4901**	1	SEAL-O-RING	
	42	2	**294-1804**	2	SEAL-O-RING	
	47	2	**294-1844**	1	BOLT (M12X1.75X28-MM)	
	48	2	**294-1845**	1	BOLT (M12X1.25X38-MM)	
	49	2	**305-4902**	1	CONNECTOR	
	50	2	**5I-8058**	1	CONNECTOR	
M	52	2	**6V-5215**	2	BOLT (M8X1.25X16-MM)	
	54	2	**305-4900**	1	PIPE	
	55	2	**294-1848**	1	CONNECTOR	
	56	2	**294-1849**	1	SEAL-O-RING	
	57	2	**297-7660**	1	NUT (M8-THD)	
	58	2	**310-9533**	1	CONNECTOR	

M - METRIC PART

305-4745 **FILTER GP-FUEL (*contd.*)** **i04604614**

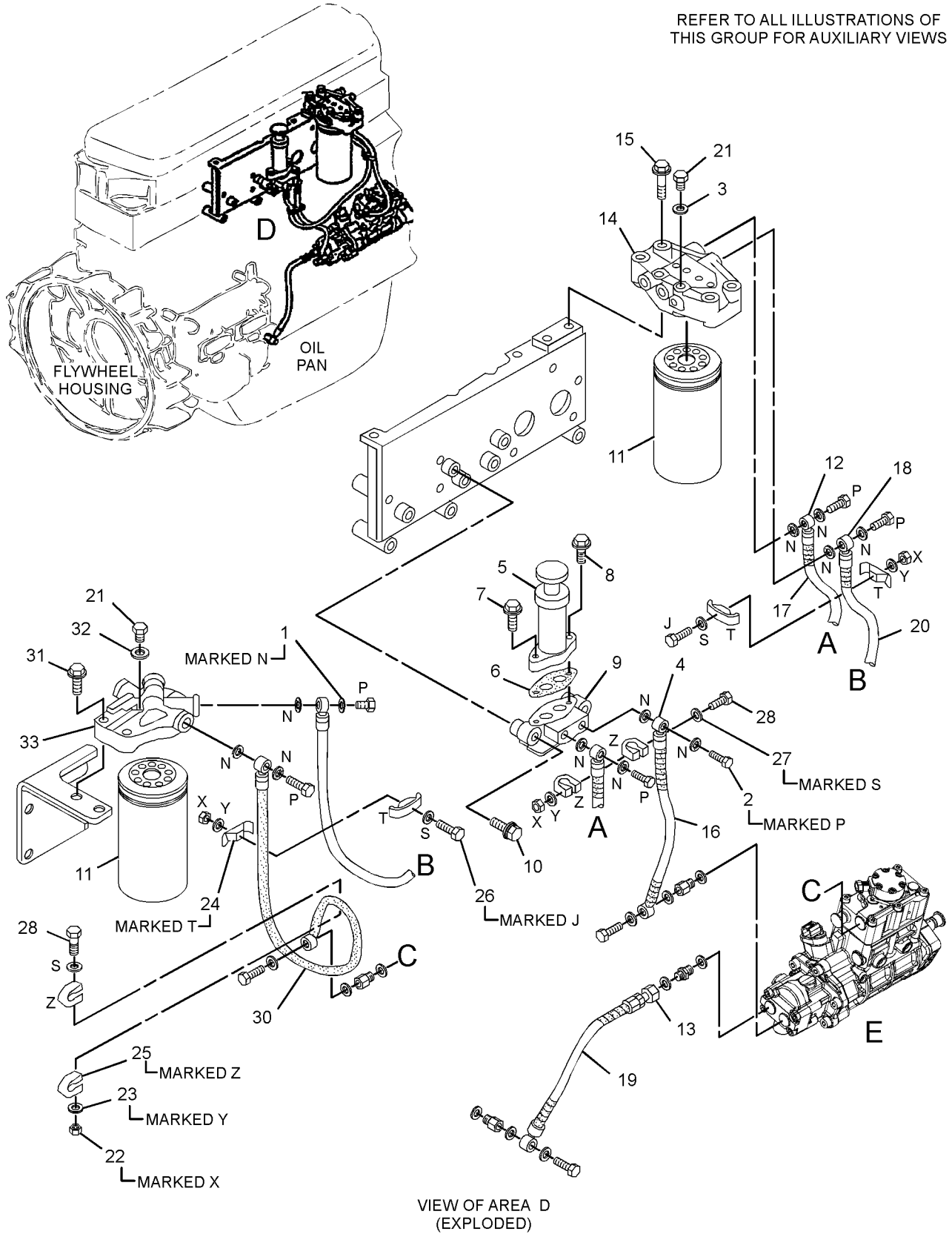

GRAPHIC #1 g01469827

305-4745 **FILTER GP-FUEL (*contd.*)** **i04604614**

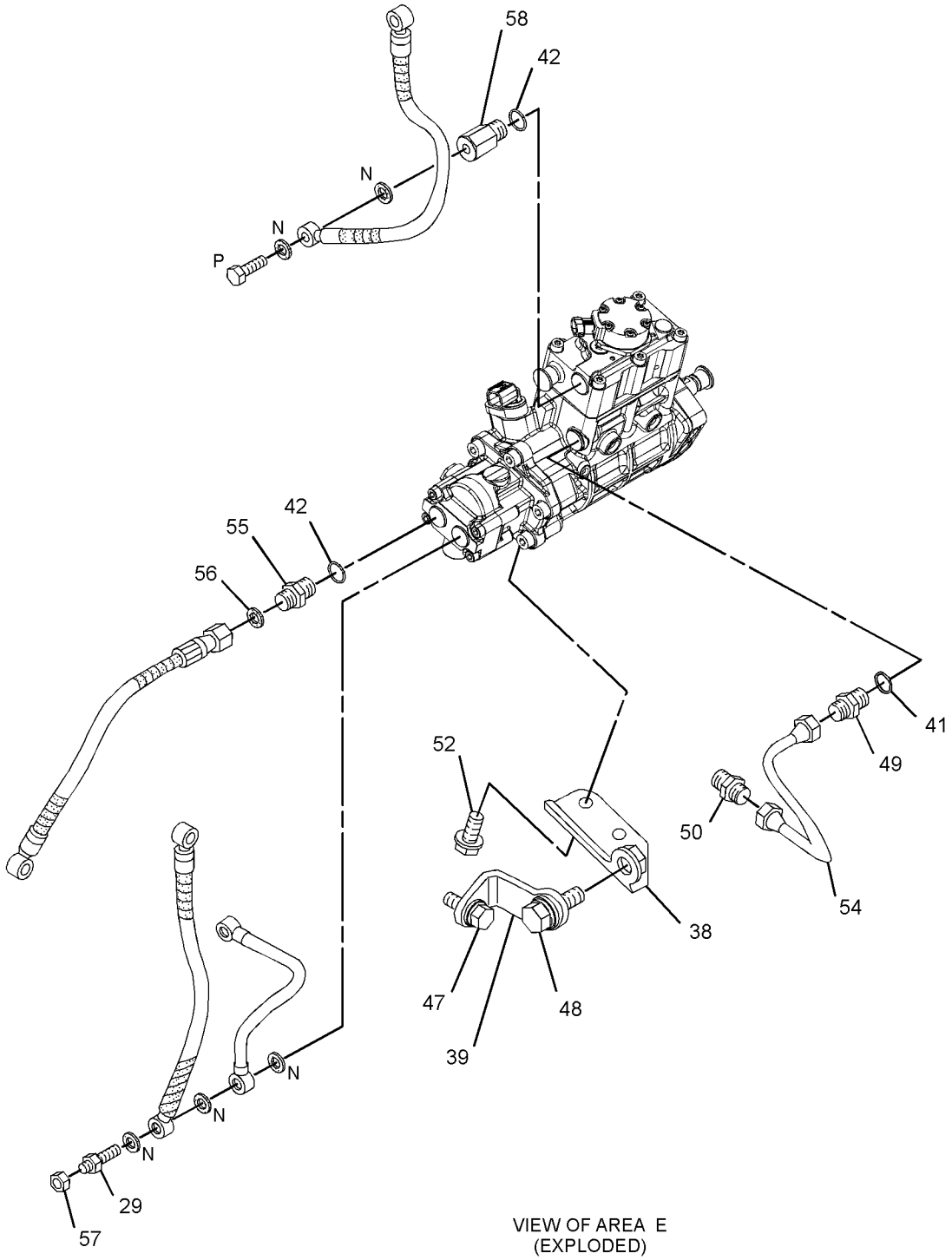

VIEW OF AREA E
(EXPLODED)

GRAPHIC #2 **<END>** g02940056

327-7227 FILTER GP-FUEL

S/N: GDC1-UP

PART OF 327-7199 ENGINE AR-PRIMARY

AN ATTACHMENT

SMCS-1261 **i04488432**

NOTE	REF NO	GRAPHIC REF	PART NUMBER	QTY	PART NAME 1 2 3 4 5 6 (PRODUCT LEVEL)	SEE PAGE
	1	1	**099-4437**	17	GASKET	
	2	1	**099-5041**	7	BOLT (M14X1.5X27-MM)	
	3	1	**294-1811**	2	WASHER (13.5-MM OD)	
	4	1	**294-1738**	2	BOLT (M10X1.5X32-MM)	
	5	1	**327-7239**	2	BOLT-FLANGE HEAD	
	6	1	**294-1804**	4	SEAL-O-RING	
	7	1	**327-7241**	2	SEAL-O-RING	
	8	1	**094-9725**	3	PLUG	
	9	1	**095-2038**	1	WASHER (7.8X13.5X2-MM THK)	
	10	1	**310-9536**	1	BASE-FILTER	
	11	1	**1R-0751**	3	FILTER-FUEL (ADVANCED EFFICIENCY)	
M	12	1	**213-9433**	2	BOLT (M10X1.5X45-MM)	
	13	1	**294-1827**	2	BRACKET	
	14	1	**294-1828**	4	BOLT (M10X1.5X62-MM)	
M	15	1	**5C-2890**	1	NUT (M6X1-THD)	
	16	1	**9X-8256**	1	WASHER (6.6X12X2-MM THK)	
	17	1	**294-1831**	2	CLAMP	
	18	1	**3B-4504**	1	LOCKWASHER	
	19	1	**297-7706**	1	BOLT (M6X1X64-MM)	
	20	1	**310-9534**	1	CONNECTOR	
	21	1	**305-4902**	1	CONNECTOR	
	22	1	**327-7240**	1	COVER	
	23	1	**327-7238**	2	PLUG	
	24	1	**305-4888**	1	HOSE	
	25	1	**327-7235**	1	HOSE	
	26	1	**327-7236**	1	HOSE	
	27	1	**327-7237**	1	HOSE	
	28	1	**294-1826**	1	HOSE	
	29	1	**190-5830**	2	TUBE	
	30	1	**294-1837**	1	BRACKET	
	31	1	**294-1838**	1	BRACKET	
	32	1	**305-4901**	1	SEAL-O-RING	
	33	1	**294-1845**	1	BOLT (M12X1.25X38-MM)	
	34	1	**305-4900**	1	PIPE	
	35	1	**294-1848**	1	CONNECTOR	
	36	1	**294-1849**	1	SEAL-O-RING	
	37	1	**297-7660**	1	NUT (M8-THD)	
	38	1	**5I-8058**	1	CONNECTOR	
	39	1	**327-7264**	2	TUBE	
M	40	1	**6V-5215**	2	BOLT (M8X1.25X16-MM)	
	41	1	**294-1844**	1	BOLT (M12X1.75X28-MM)	
	42	1	**294-1830**	1	TUBE	
	43	1	**183-8224**	1	TUBE	
	44	1	**310-9533**	1	CONNECTOR	

M - METRIC PART

327-7227 **FILTER GP-FUEL (*contd.*)** **i04488432**

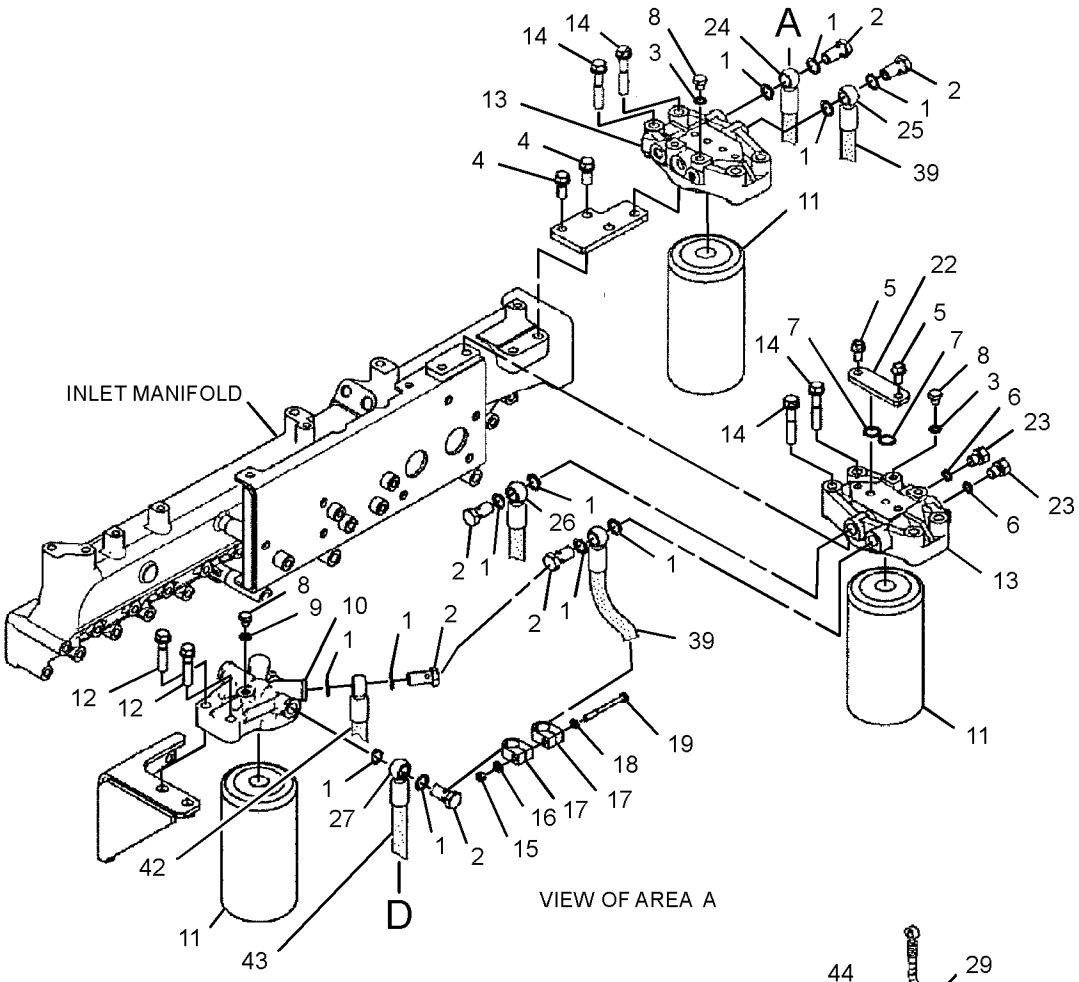

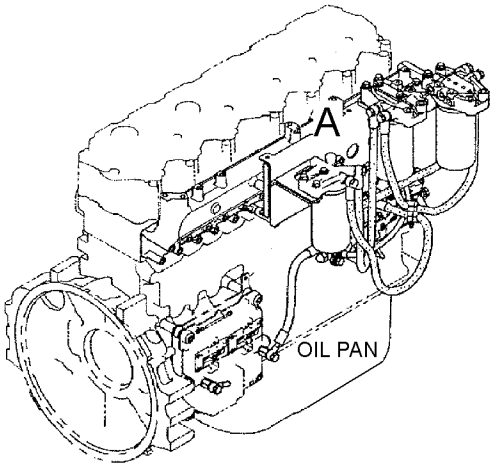

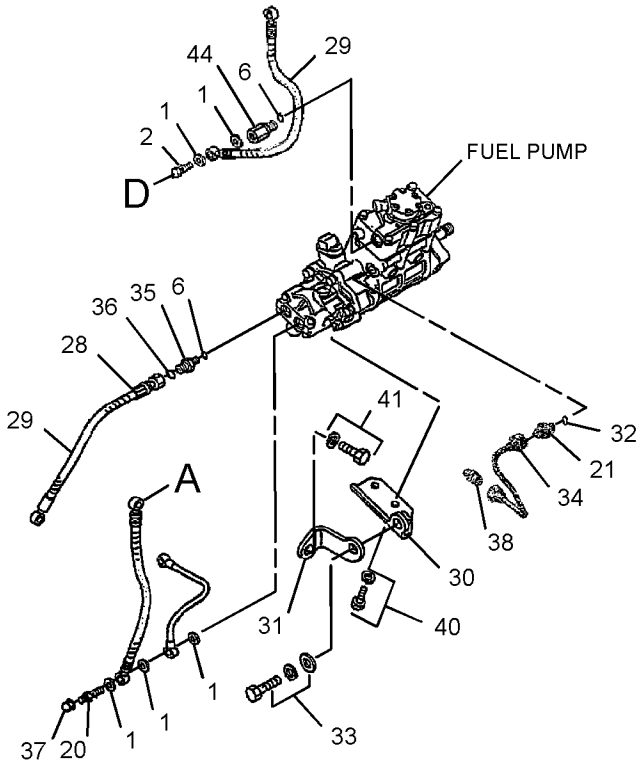

GRAPHIC #1

<END>

g02683458

174-9570 FILTER GP-WATER SEP & FUEL

S/N: KGF1-7705; FAL1-9016

PART OF 273-7735 LINES GP-FUEL

SMCS-1261, 1263 **i04393489**

NOTE	REF NO	GRAPHIC REF	PART NUMBER	QTY	PART NAME 1 2 3 4 5 6 (PRODUCT LEVEL)	SEE PAGE
	1	1	**326-1644**	1	FILTER AS-WATER SEP & FUEL (PRIMARY)	
	1A	1	**220-8678**	1	SEAL-RING (FUEL, WATER SEPARATOR)	
	2	1	**343-5527**	1	BOWL AS	
	2A	1	**3J-1907**	1	SEAL-O-RING	
	2B	1	**5F-9144**	1	SEAL-O-RING	
	2C	1	**8F-7219**	1	SEAL-O-RING	
	2D	1	**9S-8004**	1	PLUG-O-RING (DRAIN)	

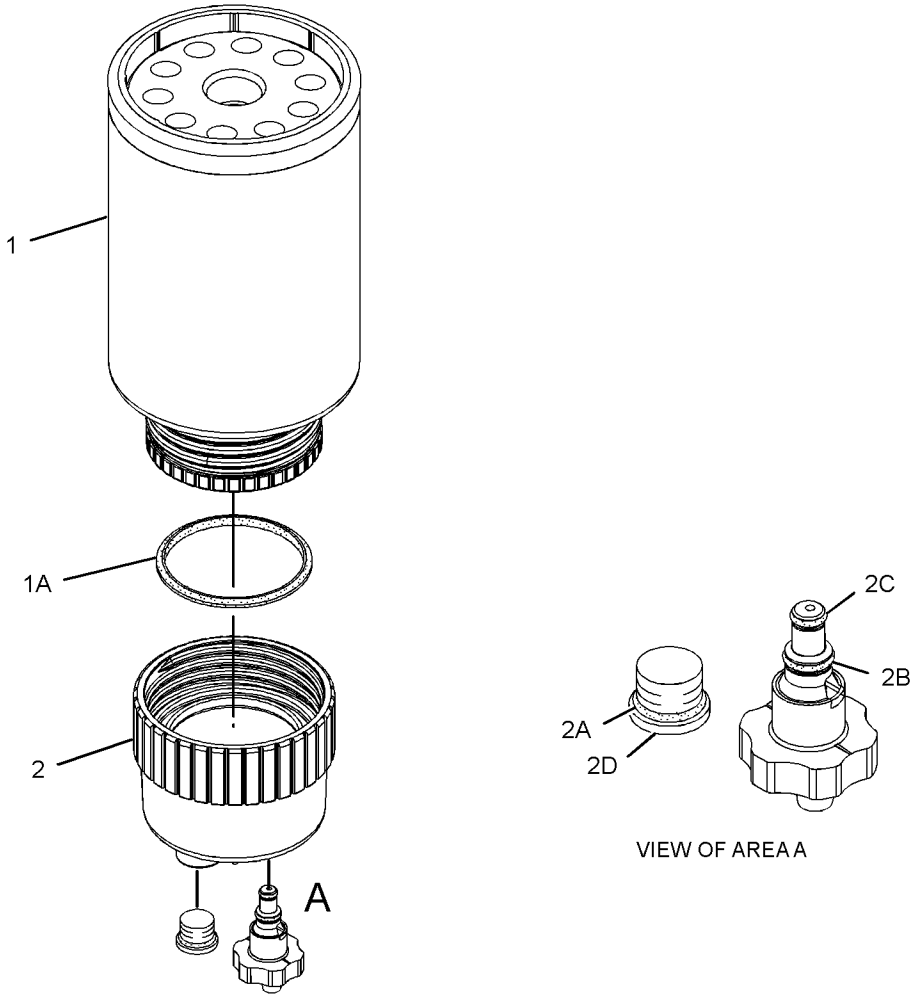

GRAPHIC #1 **<END>** g01960053

260-5656 INJECTOR GP-FUEL

S/N: GDC1-1846
PART OF 272-4677 ENGINE AR
AN ATTACHMENT

SMCS-1251, 1254, 1290, 1713

i02618662

NOTE	PART NUMBER	QTY	PART NAME 1 2 3 4 5 6 (PRODUCT LEVEL)	SEE PAGE
			(NO SERVICED PARTS)	

<END>

295-9130 INJECTOR GP-FUEL

S/N: GDC1-162
PART OF 272-4683, 296-4676, 305-4777 ENGINE AR
ALSO AN ATTACHMENT

SMCS-1251, 1254, 1290, 1713

i02715538

NOTE	REF NO	GRAPHIC REF	PART NUMBER	QTY	PART NAME 1 2 3 4 5 6 (PRODUCT LEVEL)	SEE PAGE
					(NO SERVICED PARTS)	

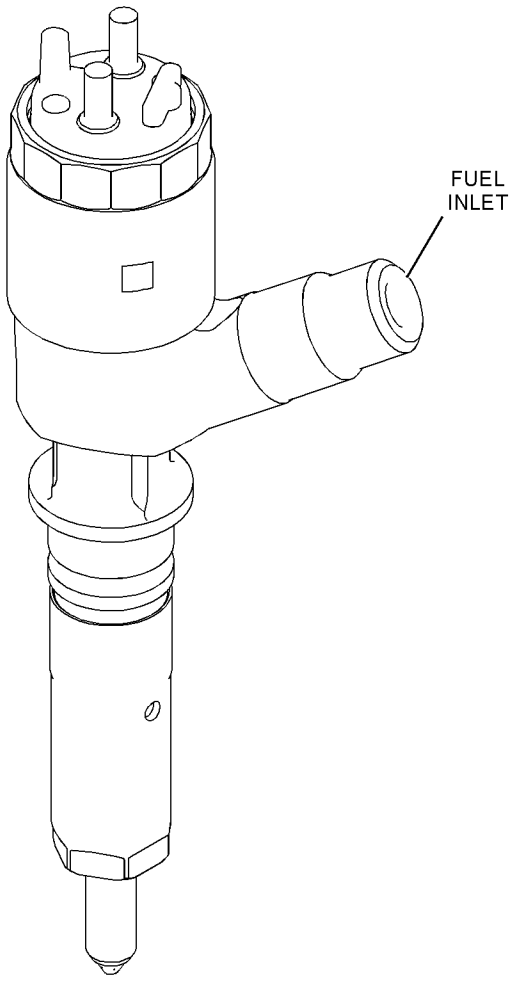

GRAPHIC #1

<END>

g01367386

310-9606 INJECTOR GP-FUEL

S/N: GDC1-UP
PART OF 272-4677 ENGINE AR
AN ATTACHMENT

SMCS-1251, 1254, 1290, 1713 **i03495600**

NOTE	REF NO	GRAPHIC REF	PART NUMBER	QTY	PART NAME 1 2 3 4 5 6 (PRODUCT LEVEL)	SEE PAGE
R	1	1	**326-4756**	6	INJECTOR GP-FUEL	
	2	1	**294-1796**	6	WASHER-SPECIAL	
	3	1	**294-1800**	6	SUPPORT	
	4	1	**294-1803**	6	SEAL-O-RING	
	5	1	**1R-6573**	6	GASKET	
M	6	1	**294-1805**	6	BOLT (M8X1.25X43-MM)	

M - METRIC PART
R - REMFG PART MAY BE AVAILABLE

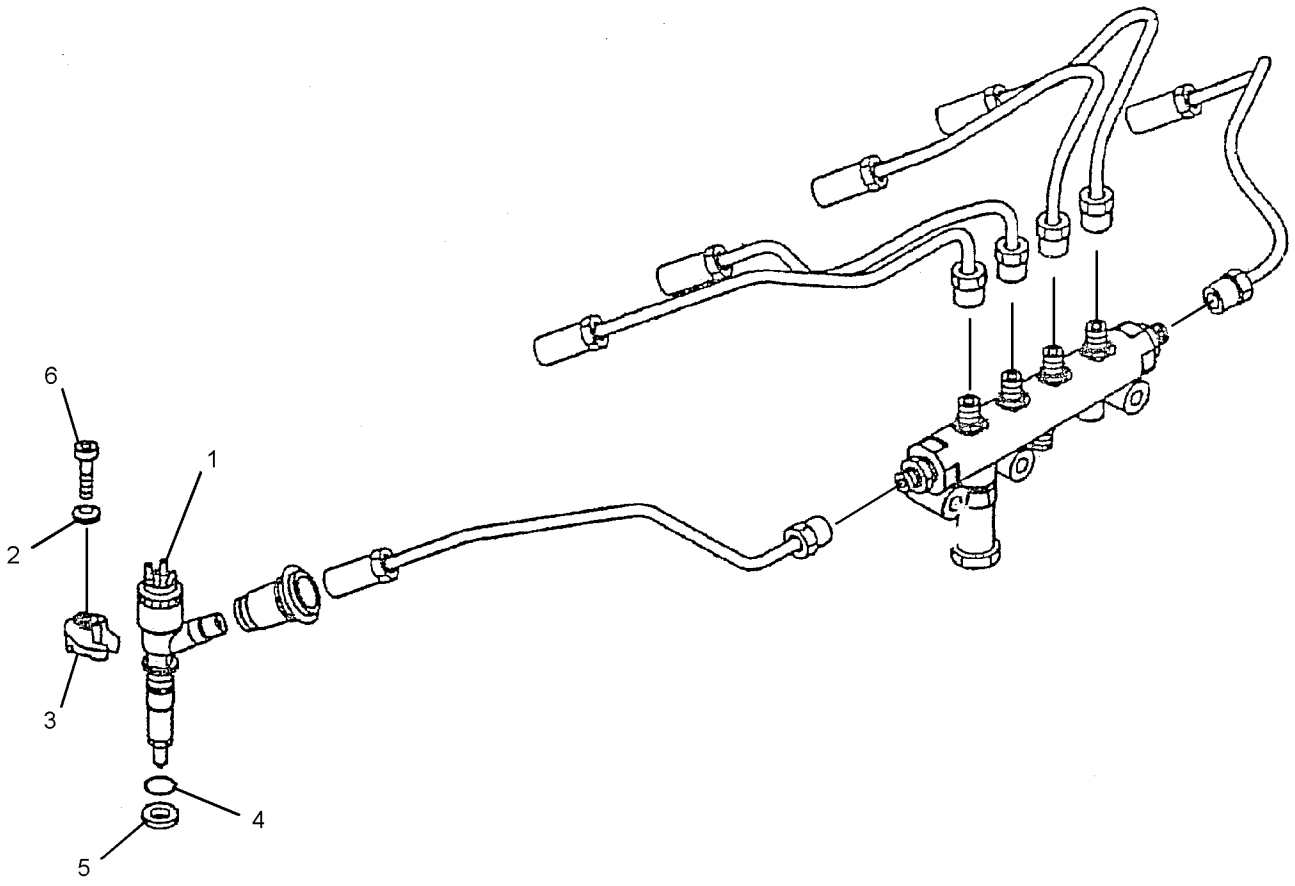

GRAPHIC #1 **<END>** g01618287

310-9607 INJECTOR GP-FUEL

S/N: GDC1847-UP

PART OF 272-4683, 296-4676, 296-4687, 305-4777 ENGINE AR, 327-7199 ENGINE AR-PRIMARY

ALSO AN ATTACHMENT

SMCS-1251, 1254, 1290, 1713 **i03460420**

NOTE	REF NO	GRAPHIC REF	PART NUMBER	QTY	PART NAME 1 2 3 4 5 6 (PRODUCT LEVEL)	SEE PAGE
R	1	1	**326-4700**	6	INJECTOR GP-FUEL	
	2	1	**294-1796**	6	WASHER-SPECIAL	
	3	1	**294-1800**	6	SUPPORT	
	4	1	**294-1803**	6	SEAL-O-RING	
	5	1	**1R-6573**	6	GASKET	
M	6	1	**294-1805**	6	BOLT (M8X1.25X43-MM)	

M - METRIC PART
R - REMFG PART MAY BE AVAILABLE

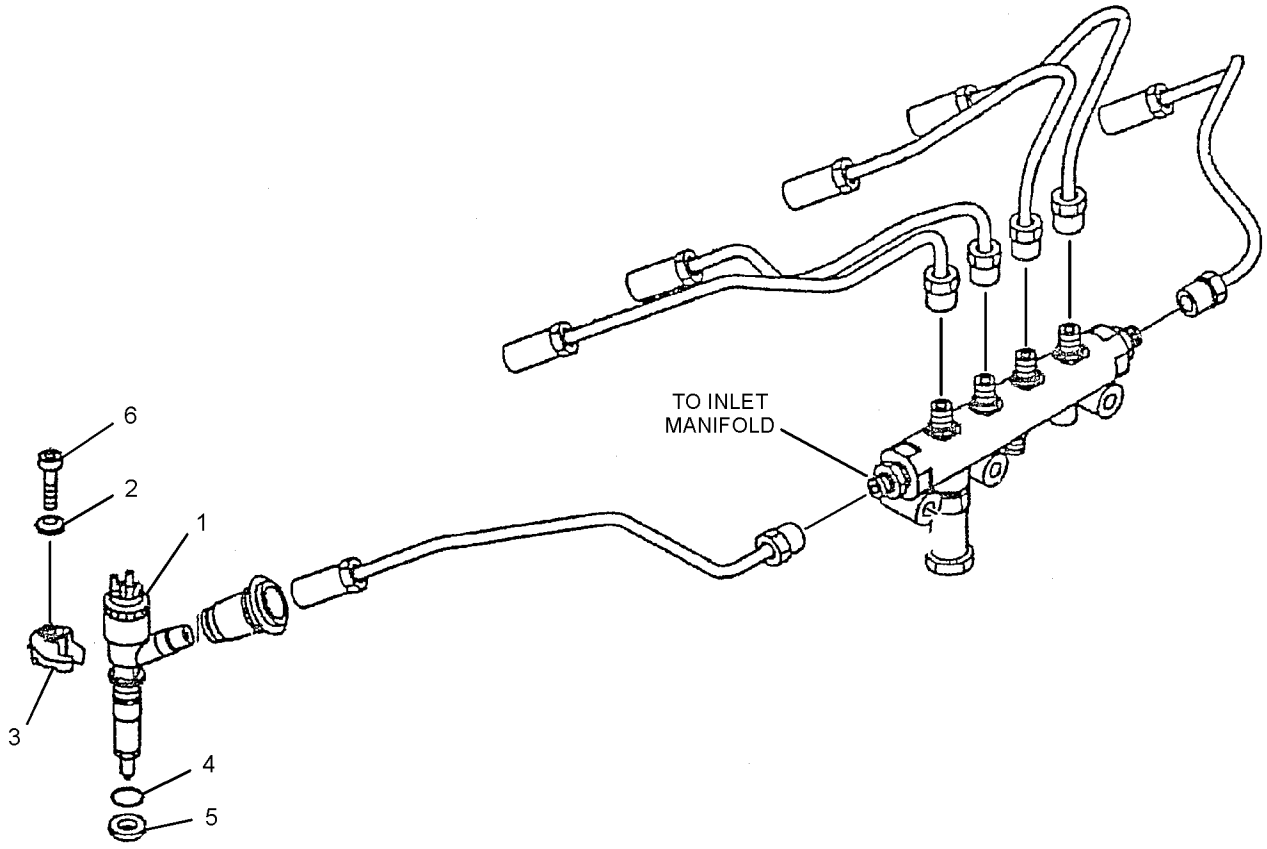

GRAPHIC #1 **<END>** g01421547

420-3862 KIT-FUEL PRIMING PUMP

S/N: KGF1-UP; FAL1-UP

FIELD INSTALLATION

SMCS-1258 **i05256407**

NOTE	PART NUMBER	QTY	PART NAME 1 2 3 4 5 6 (PRODUCT LEVEL)	SEE PAGE
Y	**416-1814**	1	HARNESS AS-PUMP	468
Y	**390-4679**	1	PUMP GP-FUEL PRIMING	338
	417-1948	1	SHEET AS	

Y - SEPARATE ILLUSTRATION

<END>

273-7735 LINES GP-FUEL

S/N: KGF1-UP; FAL1-UP

PART OF 264-8638, 264-8639 CHASSIS AR

SMCS-1274 **i04702725**

NOTE	REF NO	GRAPHIC REF	PART NUMBER	QTY	PART NAME 1 2 3 4 5 6 (PRODUCT LEVEL)	SEE PAGE
	1	1	**4I-0379**	1	VALVE-MANUAL (DRAIN, FUEL TANK)	
	2	1	**5P-7175**	1	FITTING-STRAIGHT	
	3	1	**003-7764**	2	END-HOSE	
	4	1	**095-1386**	9	CLAMP-HOSE	
	5	1	*150-3024*	1	ELBOW AS	
		1	**3J-1907**	1	SEAL-O-RING	
		1	**5P-4924**	1	ELBOW	
	6	1	**170-2901**	1	GROMMET	
Y	7	1	*174-9570*	1	FILTER GP-WATER SEP & FUEL (PRIMARY)	295
	8	1	**177-9778**	1	BASE AS	
		1	**9S-4167**	1	STUD-HOLLOW (1-14X1.47-IN)	
	9	1	**255-3160**	1	HOSE	
	10	1	**286-6186**	1	SHEET AS	
	11	1	**293-6789**	1	BRACKET AS	
Y	12	1	**298-3147**	1	VALVE GP-FUEL SHUTOFF	398
	13	1	**134-3299**	1	GROMMET	
	14	1	**2R-1498**	3	GROMMET	
	15	1	**3J-1907**	5	SEAL-O-RING	
	16	1	**5K-8451**	13	CLIP	
	17	1	**7Y-8167**	1	GROMMET	
	18	1	**8T-4121**	32	WASHER-HARD (11X21X2.5-MM THK)	
M	19	1	**8T-4133**	1	NUT (M10X1.5-THD)	
M	20	1	**8T-4136**	4	BOLT (M10X1.5X25-MM)	
M	21	1	**8T-4137**	22	BOLT (M10X1.5X20-MM)	
M	22	1	**135-8572**	1	BOLT AS	
M	23	1	**8T-4195**	5	BOLT (M10X1.5X30-MM)	
	24	1	**6D-4636**	3	CLIP	
	25	1	**9M-8406**	8	CLIP	
	26	1	**9S-8004**	5	PLUG-O-RING	
E	27	1	**5P-1442**		HOSE (30-CM)	
E	27A	1	**5P-1442**		HOSE (161-CM)	
E	27B	1	**5P-1442**		HOSE (519-CM)	
	29	1	**307-7804**	1	HOSE AS	
	30	1	**307-7803**	1	HOSE AS	
	31	1	**4I-9521**	2	BAND-MARKER (RED, L1)	

E - ORDER BY THE CENTIMETER
M - METRIC PART
Y - SEPARATE ILLUSTRATION

273-7735 **LINES GP-FUEL (*contd.*)** **i04702725**

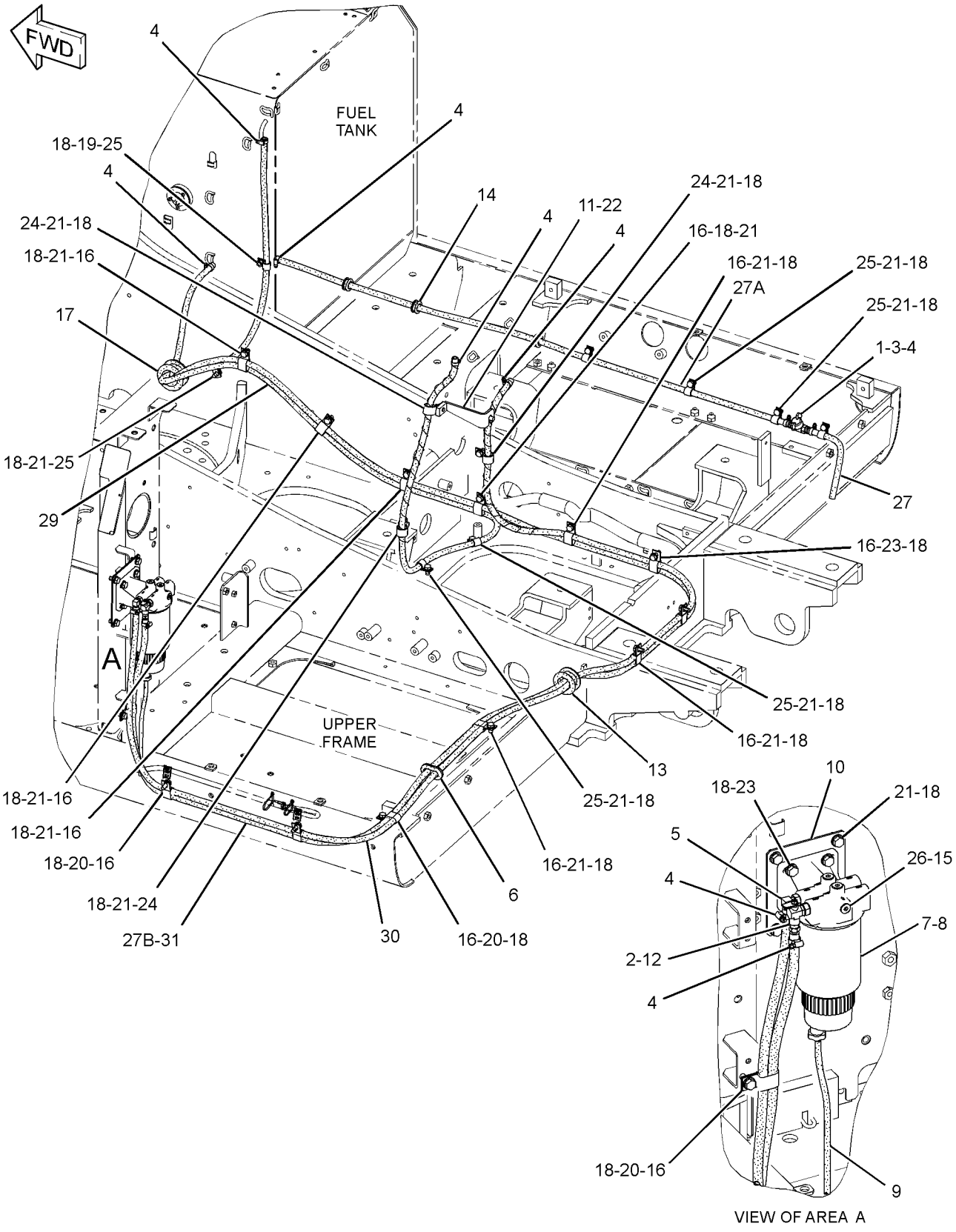

GRAPHIC #1 **<END>** g02809497

273-7735 LINES GP-FUEL

S/N: KGF1-7705; FAL1-9016

PART OF 264-8638, 264-8639 CHASSIS AR

SMCS-1274 **i04886711**

NOTE	REF NO	GRAPHIC REF	PART NUMBER	QTY	PART NAME 1 2 3 4 5 6 (PRODUCT LEVEL)	SEE PAGE
	1	1	**4I-0379**	1	VALVE-MANUAL (DRAIN, FUEL TANK)	
	2	1	**5P-7175**	1	FITTING-STRAIGHT	
	3	1	**003-7764**	2	END-HOSE	
	4	1	**095-1386**	9	CLAMP-HOSE	
	5	1	*150-3024*	1	ELBOW AS	
		1	**3J-1907**	1	SEAL-O-RING	
		1	**5P-4924**	1	ELBOW	
	6	1	**170-2901**	1	GROMMET	
Y	7	1	*174-9570*	1	FILTER GP-WATER SEP & FUEL (PRIMARY)	295
	8	1	**177-9778**	1	BASE AS	
		1	**9S-4167**	1	STUD-HOLLOW (1-14X1.47-IN)	
	9	1	**255-3160**	1	HOSE	
	10	1	**286-6186**	1	SHEET AS	
	11	1	**293-6789**	1	BRACKET AS	
Y	12	1	**298-3147**	1	VALVE GP-FUEL SHUTOFF	398
	13	1	**134-3299**	1	GROMMET	
	14	1	**2R-1498**	3	GROMMET	
	15	1	**3J-1907**	5	SEAL-O-RING	
	16	1	**5K-8451**	13	CLIP	
	17	1	**7Y-8167**	1	GROMMET	
	18	1	**8T-4121**	32	WASHER-HARD (11X21X2.5-MM THK)	
M	19	1	**8T-4133**	1	NUT (M10X1.5-THD)	
M	20	1	**8T-4136**	4	BOLT (M10X1.5X25-MM)	
M	21	1	**8T-4137**	22	BOLT (M10X1.5X20-MM)	
M	22	1	**135-8572**	1	BOLT AS	
M	23	1	**8T-4195**	5	BOLT (M10X1.5X30-MM)	
	24	1	**6D-4636**	3	CLIP	
	25	1	**9M-8406**	8	CLIP	
	26	1	**9S-8004**	5	PLUG-O-RING	
E	27	1	**5P-1442**		HOSE (30-CM)	
E	27A	1	**5P-1442**		HOSE (161-CM)	
E	27B	1	**5P-1442**		HOSE (519-CM)	
	29	1	**307-7804**	1	HOSE AS	
	30	1	**307-7803**	1	HOSE AS	
	31	1	**4I-9521**	2	BAND-MARKER (RED, L1)	

E - ORDER BY THE CENTIMETER
M - METRIC PART
Y - SEPARATE ILLUSTRATION

273-7735 **LINES GP-FUEL (*contd.*)** **i04886711**

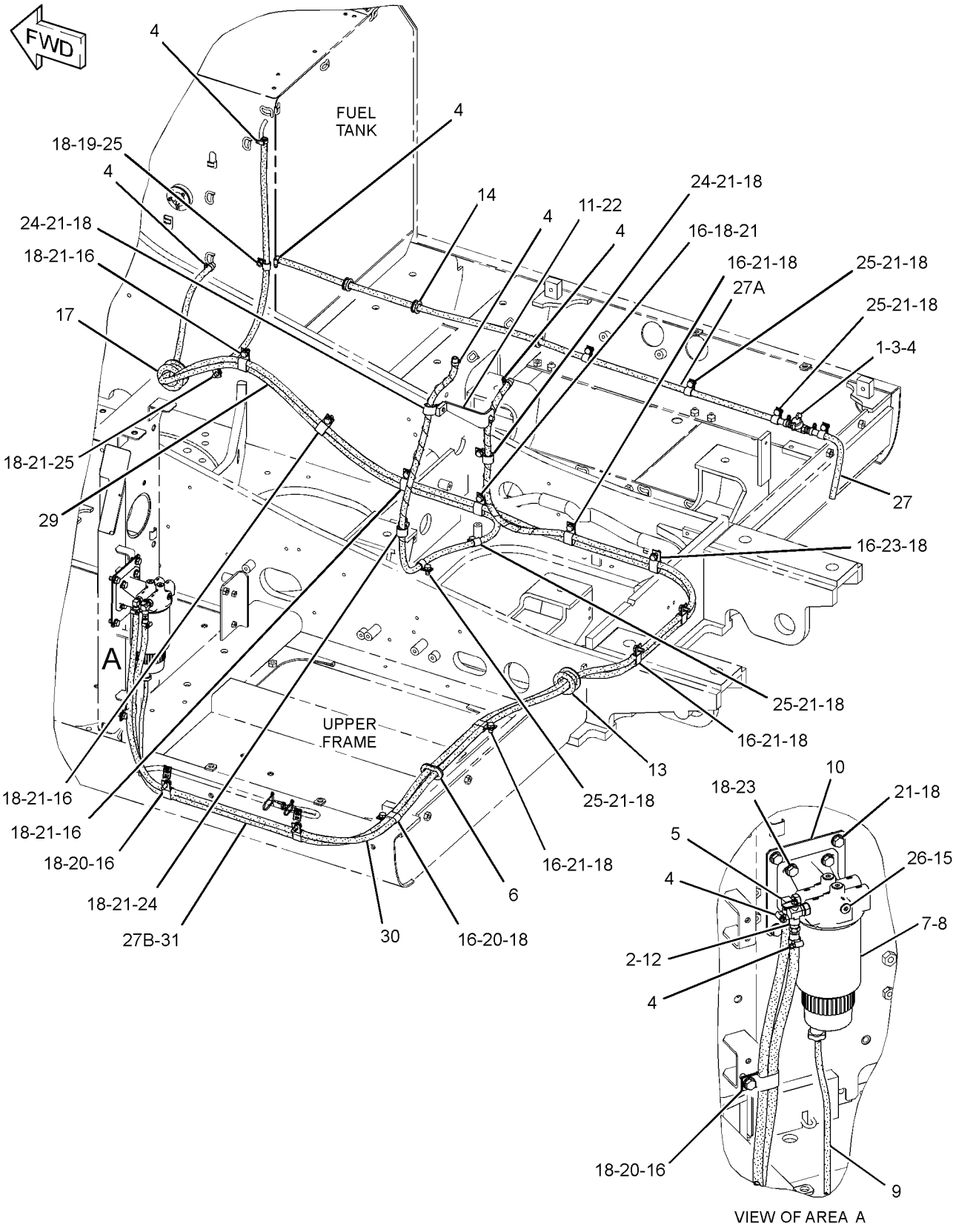

GRAPHIC #1 **<END>** g02809497

296-4656 LINES GP-FUEL

S/N: GDC1-UP

PART OF 272-4677, 272-4683, 296-4676, 296-4687, 305-4777 ENGINE AR, 327-7199 ENGINE AR-PRIMARY

ALSO AN ATTACHMENT

SMCS-1274 **i04040989**

NOTE	REF NO	GRAPHIC REF	PART NUMBER	QTY	PART NAME 1 2 3 4 5 6 (PRODUCT LEVEL)	SEE PAGE
	1	1	**294-1787**	1	SUPPORT	
	2	1	**294-1788**	6	SEAL	
	3	1	**095-2039**	12	WASHER-SPECIAL	
	4	1	**294-1789**	1	PIPE	
Y	5	1	**358-6634**	1	RAIL GP-FUEL	343
	6	1	**294-1790**	1	PIPE	
	7	1	**294-1791**	1	PIPE	
	8	1	**294-1792**	1	PIPE	
	9	1	**294-1793**	1	PIPE	
	10	1	**294-1794**	1	PIPE	
	11	1	**294-1795**	1	PIPE	
	13	1	**297-7656**	1	PIPE	
	15	1	**297-7658**	1	BLOCK	
	17	1	**294-1801**	1	CLAMP	
	18	1	**294-1802**	3	CLAMP	
	20	1	**125-2983**	1	FITTING	
	22	1	**296-4812**	6	BOLT	
	23	1	**294-1804**	2	SEAL-O-RING	
	25	1	**294-1806**	1	BOLT AS	
	26	1	**270-6259**	5	BOLT (M8X1.25X40-MM)	
M	27	1	**5C-2890**	3	NUT (M6X1-THD)	
	28	1	**9X-8256**	3	WASHER (6.6X12X2-MM THK)	
	29	1	**099-4437**	8	GASKET	
	31	1	**099-5041**	4	BOLT (M14X1.5X27-MM)	
	33	1	**294-1808**	4	BOLT AS	
	34	1	**294-1809**	1	BOLT	
	35	1	**310-9533**	2	CONNECTOR	
	36	1	**294-1811**	2	WASHER (13.5-MM OD)	
	37	1	**294-1812**	2	WASHER	
	38	1	**310-9537**	1	VALVE AS	
	39	1	**294-1814**	1	PIPE	
	40	1	**294-1815**	1	BRACKET	
M	41	1	**099-2503**	6	BOLT (M8X1.25X75.5-MM)	
	42	1	**4P-7581**	2	CLIP	
	45	1	**297-7657**	1	HOSE	

M - METRIC PART
Y - SEPARATE ILLUSTRATION

296-4656 **LINES GP-FUEL (*contd.*)** **i04040989**

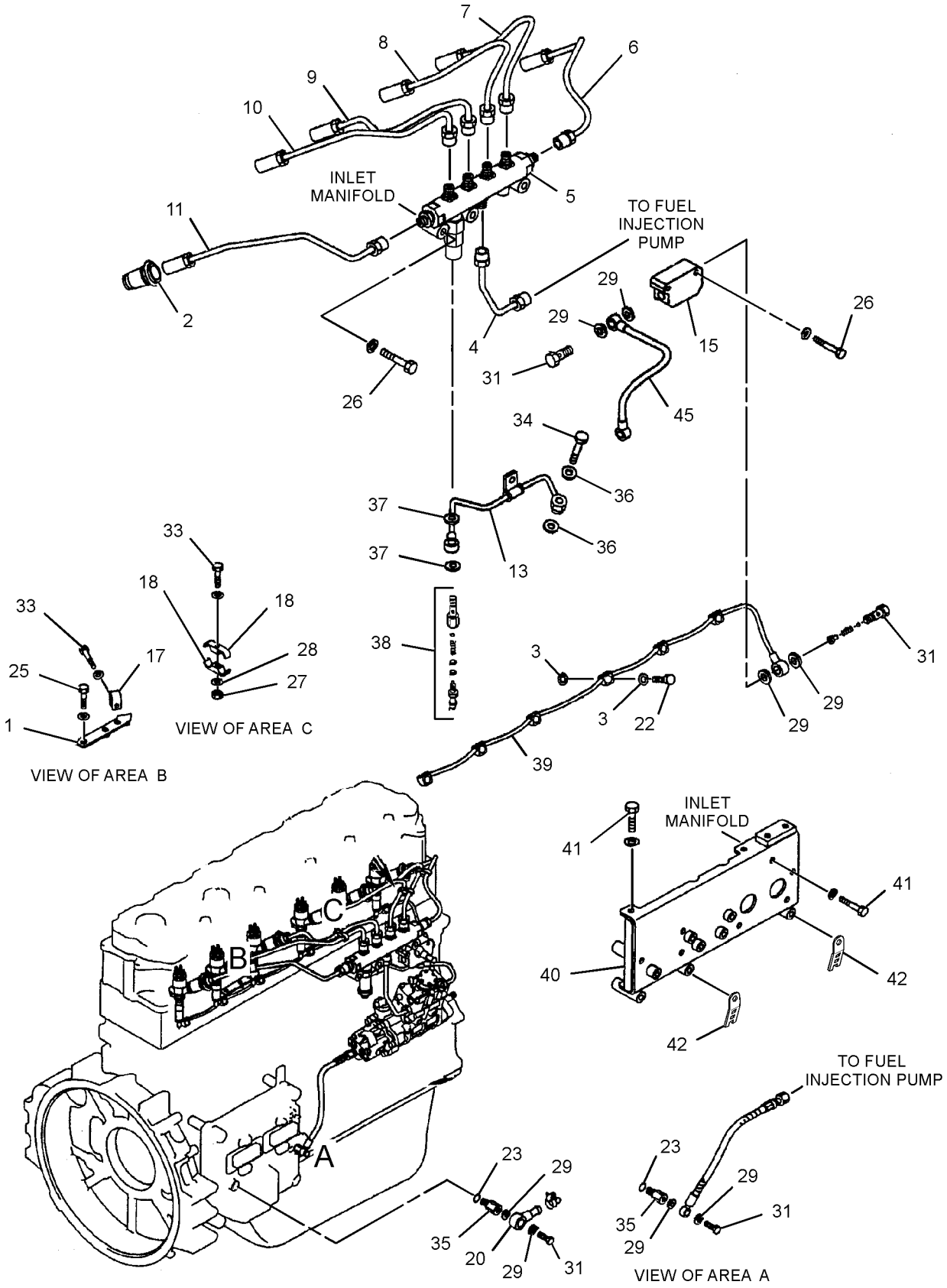

GRAPHIC #1

<END>

g01804614

355-8168 LINES GP-FUEL

S/N: KGF1-UP; FAL1-UP
PART OF 354-1056, 354-1057 COOLING AR-HIGH AMBIENT TEMP
AN ATTACHMENT
TYPE 1

SMCS-1274 **i03938233**

NOTE	REF NO	GRAPHIC REF	PART NUMBER	QTY	PART NAME 1 2 3 4 5 6 (PRODUCT LEVEL)	SEE PAGE
	1	1	**4I-0379**	1	VALVE-MANUAL (DRAIN, FUEL TANK)	
	2	2	**5P-7175**	1	FITTING-STRAIGHT	
	3	2	**9Y-8389**	2	GASKET (FUEL PRIMING PUMP)	
	4	1	**003-7764**	2	END-HOSE	
	5	1,2	**095-1386**	9	CLAMP-HOSE	
M	6	2	**135-8572**	1	BOLT AS	
	7	2	**137-5541**	1	PUMP GP-FUEL PRIMING	
		2	**061-7539**	1	SEAL-O-RING	
		2	**229-3218**	2	VALVE AS	
	8	2	*150-3024*	1	ELBOW AS	
		2	**3J-1907**	1	SEAL-O-RING	
		2	**5P-4924**	1	ELBOW	
	9	1	**170-2901**	1	GROMMET	
	10	2	**202-9871**	1	BASE AS	
		2	**7E-5346**	1	VALVE AS	
		2	**9S-4167**	1	STUD-HOLLOW (1-14X1.47-IN)	
	11	2	**250-6183**	1	ADAPTER	
	12	2	**293-6789**	1	BRACKET AS	
Y	13	2	**298-3147**	1	VALVE GP-FUEL SHUTOFF	398
	14	1	**307-7804**	1	HOSE AS	
		1	**4I-9523**	1	BAND-MARKER (BLUE, L3)	
		1	**4I-9525**	1	BAND-MARKER (ORANGE, R1)	
E		1	**5P-1442**		HOSE (337-CM)	
	15	2	**343-5527**	1	BOWL AS	
		2	**3J-1907**	1	SEAL-O-RING	
		2	**5F-9144**	1	SEAL-O-RING	
		2	**8F-7219**	1	SEAL-O-RING	
		2	**9S-8004**	1	PLUG-O-RING	
	16	1	**355-8164**	1	HOSE AS	
		1	**4I-9522**	1	BAND-MARKER (YELLOW, L2)	
		1	**4I-9527**	1	BAND-MARKER (GREEN, R3)	
E		1	**5P-1442**		HOSE (400-CM)	
	17	2	**355-8198**	1	HOSE	
	18	1	**134-3299**	1	GROMMET	
	19	2	*148-8313*	1	ADAPTER AS	
		2	**3K-0360**	1	SEAL-O-RING	
		2	**5P-6944**	1	ADAPTER	
	20	2	**2M-9780**	1	SEAL-O-RING	
	21	1	**2R-1498**	3	GROMMET	
	22	2	**326-1643**	1	FILTER AS-WATER SEP & FUEL	
		2	**220-8678**	1	SEAL-RING	
	23	1,2	**5K-8451**	12	CLIP	
	24	2	**5P-0537**	2	WASHER-HARD (7.2X14.5X2-MM THK)	
	25	2	**6D-4636**	3	CLIP	
	26	2	**6V-2606**	1	ADAPTER	
	27	2	**6V-5048**	4	SEAL-O-RING	
	28	2	**7B-2742**	2	BOLT (1/4-20X1.25-IN)	
	29	1	**7Y-8167**	1	GROMMET	
	30	1,2	**8T-4121**	27	WASHER-HARD (11X21X2.5-MM THK)	
M	31	1	**8T-4133**	1	NUT (M10X1.5-THD)	
M	32	1,2	**8T-4136**	5	BOLT (M10X1.5X25-MM)	
M	33	1,2	**8T-4137**	18	BOLT (M10X1.5X20-MM)	
M	34	2	**8T-4186**	2	BOLT (M10X1.5X40-MM)	
M	35	1	**8T-4195**	1	BOLT (M10X1.5X30-MM)	
	36	2	**8T-4205**	1	WASHER-HARD (7.2X14.5X2-MM THK)	
	37	2	**8T-4224**	1	WASHER-HARD (8.8X16X2-MM THK)	

355-8168 **LINES GP-FUEL (*contd.*)** **i03938233**

NOTE	REF NO	GRAPHIC REF	PART NUMBER	QTY	PART NAME 1 2 3 4 5 6 (PRODUCT LEVEL)	SEE PAGE
M	38	2	**8T-4971**	1	BOLT (M6X1X30-MM)	
M	39	2	**8T-7547**	1	BOLT (M8X1.25X30-MM)	
	40	1,2	**9M-8406**	10	CLIP	
	41	2	**9S-8002**	4	PLUG-O-RING	
E	42	1	**5P-1442**		HOSE (161-CM)	
E	42A	1	**5P-1442**		HOSE (30-CM)	
E	42B	1	**5P-1442**		HOSE (515-CM)	
	43	1	**4I-9521**	2	BAND-MARKER (RED, L1)	
	44	1	**133-5813**	2	BAND-MARKER (GRAY, P)	

E - ORDER BY THE CENTIMETER
M - METRIC PART
Y - SEPARATE ILLUSTRATION

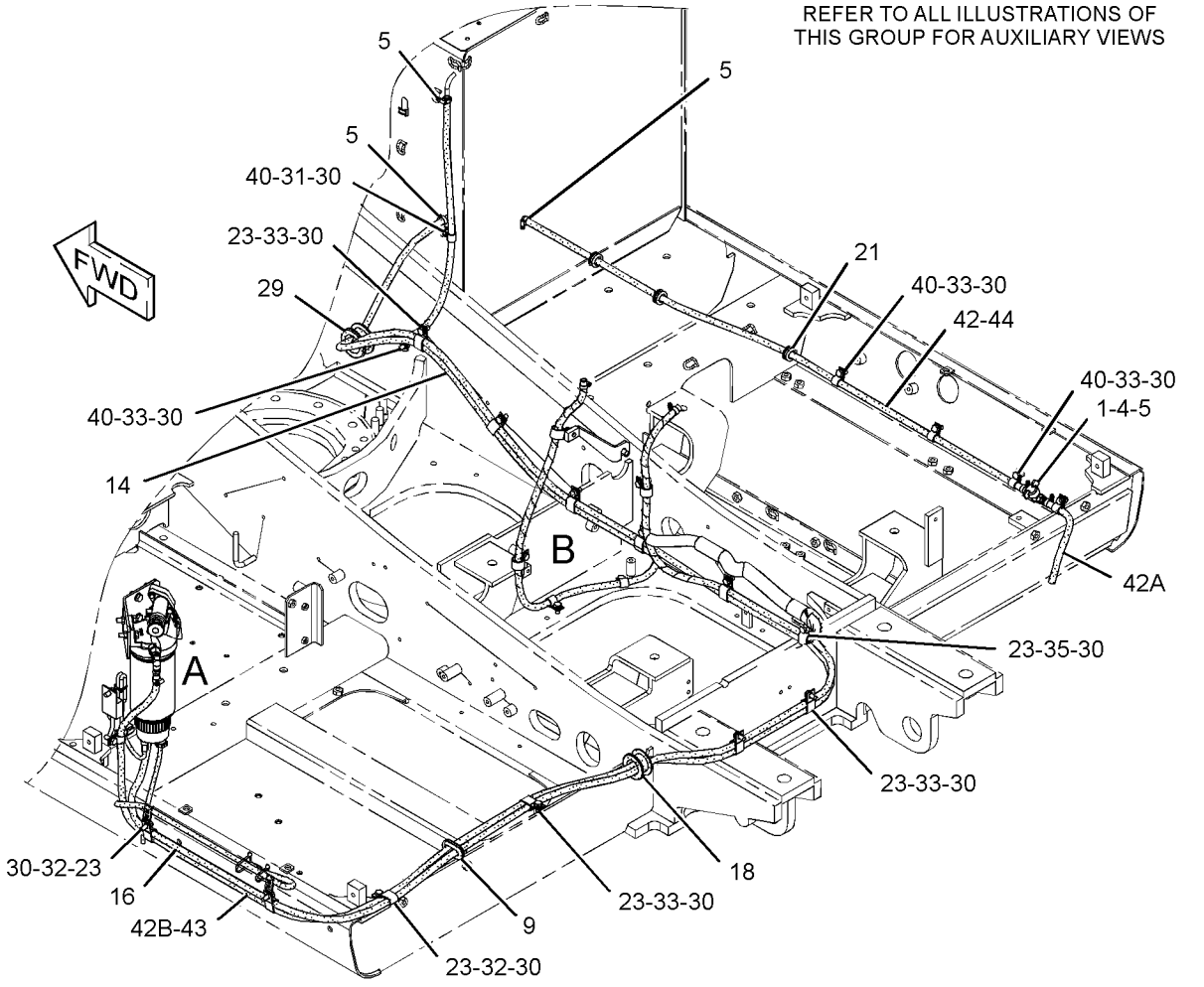

GRAPHIC #1 g02141282

355-8168 **LINES GP-FUEL (*contd.*)** **i03938233**

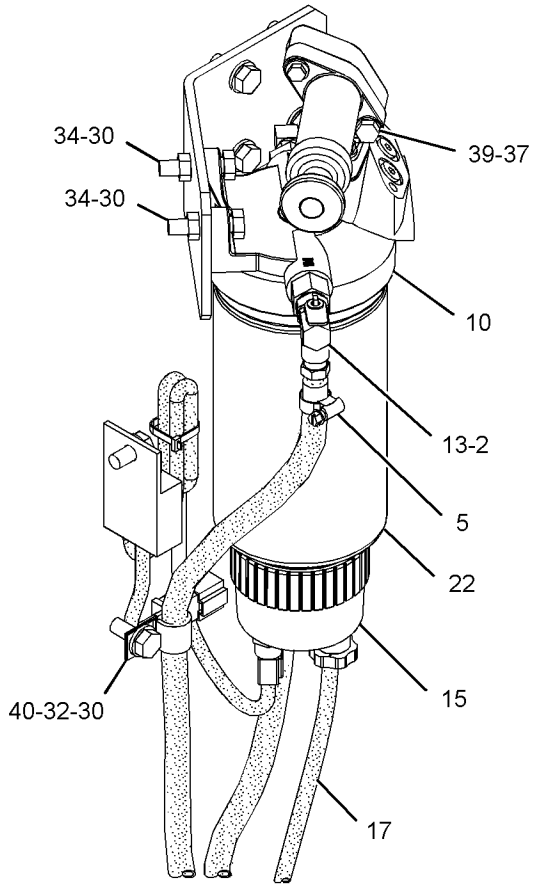

VIEW OF AREA A

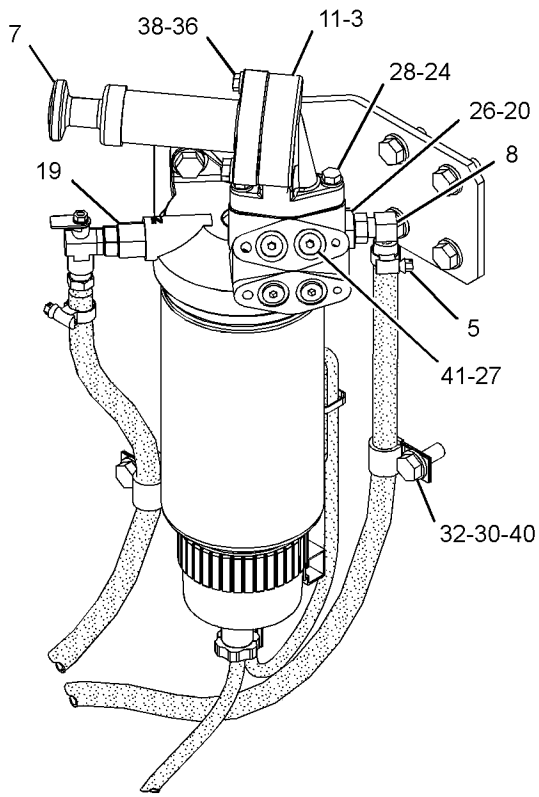

VIEW OF AREA A 90°

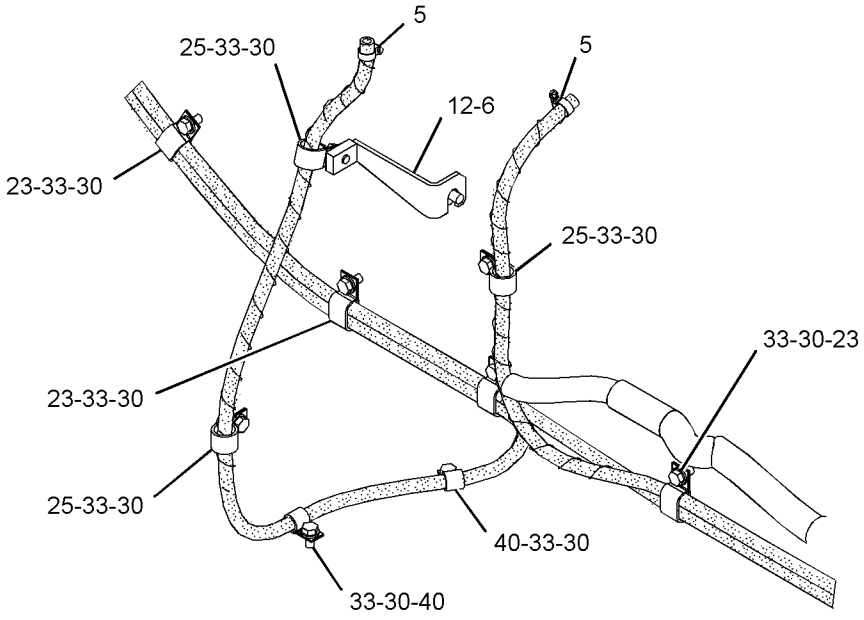

VIEW OF AREA B

GRAPHIC #2 **<END>** g02141285

355-8168 LINES GP-FUEL

S/N: KGF1-UP; FAL1-UP
PART OF 354-1056, 354-1057 COOLING AR-HIGH AMBIENT TEMP
AN ATTACHMENT
TYPE 2

SMCS-1274 **i04033342**

NOTE	REF NO	GRAPHIC REF	PART NUMBER	QTY	PART NAME 1 2 3 4 5 6 (PRODUCT LEVEL)	SEE PAGE
	1	1	**4I-0379**	1	VALVE-MANUAL (DRAIN, FUEL TANK)	
	2	2	**5P-7175**	1	FITTING-STRAIGHT	
	3	2	**9Y-8389**	2	GASKET (FUEL PRIMING PUMP)	
	4	1	**003-7764**	2	END-HOSE	
	5	1,2	**095-1386**	9	CLAMP-HOSE	
M	6	2	**135-8572**	1	BOLT AS	
	7	2	**137-5541**	1	PUMP GP-FUEL PRIMING	
		2	**061-7539**	1	SEAL-O-RING	
		2	**229-3218**	2	VALVE AS	
	8	2	*150-3024*	1	ELBOW AS	
		2	**3J-1907**	1	SEAL-O-RING	
		2	**5P-4924**	1	ELBOW	
	9	1	**170-2901**	1	GROMMET	
	10	2	**202-9871**	1	BASE AS	
		2	**7E-5346**	1	VALVE AS	
		2	**9S-4167**	1	STUD-HOLLOW (1-14X1.47-IN)	
	11	2	**250-6183**	1	ADAPTER	
	12	2	**293-6789**	1	BRACKET AS	
Y	13	2	**298-3147**	1	VALVE GP-FUEL SHUTOFF	398
	14	1	**307-7804**	1	HOSE AS	
		1	**4I-9523**	1	BAND-MARKER (BLUE, L3)	
		1	**4I-9525**	1	BAND-MARKER (ORANGE, R1)	
E		1	**5P-1442**		HOSE (337-CM)	
	15	2	**343-5527**	1	BOWL AS	
		2	**3J-1907**	1	SEAL-O-RING	
		2	**5F-9144**	1	SEAL-O-RING	
		2	**8F-7219**	1	SEAL-O-RING	
		2	**9S-8004**	1	PLUG-O-RING	
	16	1	**355-8164**	1	HOSE AS	
		1	**4I-9522**	1	BAND-MARKER (YELLOW, L2)	
		1	**4I-9527**	1	BAND-MARKER (GREEN, R3)	
E		1	**5P-1442**		HOSE (400-CM)	
	17	2	**355-8198**	1	HOSE	
	18	1	**134-3299**	1	GROMMET	
	19	2	*148-8313*	1	ADAPTER AS	
		2	**3K-0360**	1	SEAL-O-RING	
		2	**5P-6944**	1	ADAPTER	
	20	2	**2M-9780**	1	SEAL-O-RING	
	21	1	**2R-1498**	3	GROMMET	
	22	2	**326-1643**	1	FILTER AS-WATER SEP & FUEL	
		2	**220-8678**	1	SEAL-RING	
	23	1,2	**5K-8451**	12	CLIP	
C	24	2	**5P-0537**	1	WASHER-HARD (7.2X14.5X2-MM THK)	
	25	2	**6D-4636**	3	CLIP	
	26	2	**6V-2606**	1	ADAPTER	
	27	2	**6V-5048**	4	SEAL-O-RING	
C	28	2	**7X-2501**	1	BOLT (1/4-20X1.25-IN)	
	29	1	**7Y-8167**	1	GROMMET	
C	30	1,2	**8T-4121**	25	WASHER-HARD (11X21X2.5-MM THK)	
M	31	1	**8T-4133**	1	NUT (M10X1.5-THD)	
M	32	1,2	**8T-4136**	5	BOLT (M10X1.5X25-MM)	
M	33	1,2	**8T-4137**	18	BOLT (M10X1.5X20-MM)	
C	34	2	**8C-6561**	1	BOLT (5/16-18X1.375-IN)	
M	35	1	**8T-4195**	1	BOLT (M10X1.5X30-MM)	
	36	2	**8T-4205**	1	WASHER-HARD (7.2X14.5X2-MM THK)	
C	37	2	**8T-4224**	4	WASHER-HARD (8.8X16X2-MM THK)	

355-8168 **LINES GP-FUEL (*contd.*)** **i04033342**

NOTE	REF NO	GRAPHIC REF	PART NUMBER	QTY	PART NAME 1 2 3 4 5 6 (PRODUCT LEVEL)	SEE PAGE
M	38	2	**8T-4971**	1	BOLT (M6X1X30-MM)	
CM	39	2	**8T-7547**	3	BOLT (M8X1.25X30-MM)	
	40	1,2	**9M-8406**	10	CLIP	
	41	2	**9S-8002**	4	PLUG-O-RING	
E	42	1	**5P-1442**		HOSE (161-CM)	
E	42A	1	**5P-1442**		HOSE (30-CM)	
E	42B	1	**5P-1442**		HOSE (515-CM)	
	43	1	**4I-9521**	2	BAND-MARKER (RED, L1)	
	44	1	**133-5813**	2	BAND-MARKER (GRAY, P)	

C - CHANGE FROM PREVIOUS TYPE
E - ORDER BY THE CENTIMETER
M - METRIC PART
Y - SEPARATE ILLUSTRATION

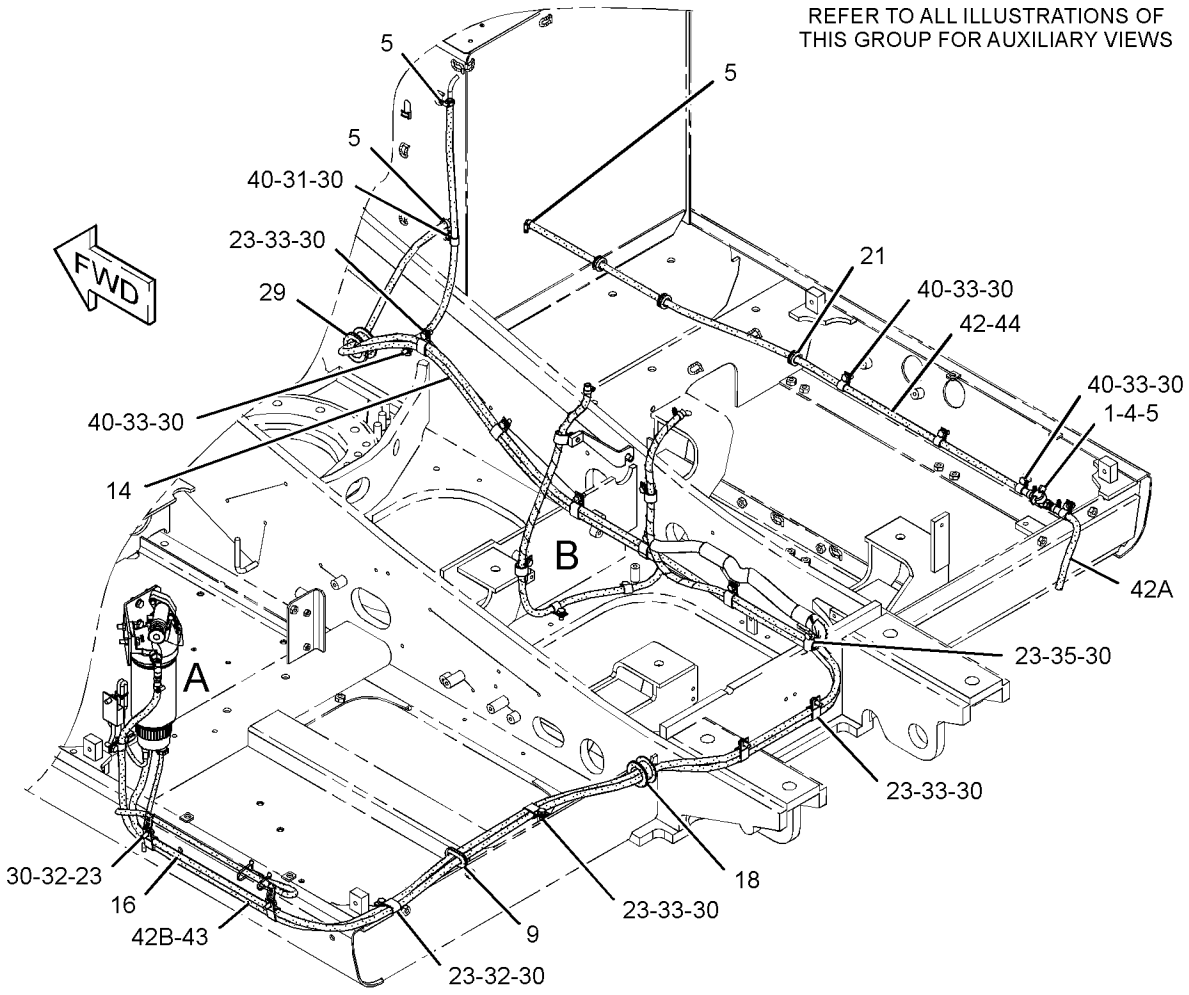

GRAPHIC #1 g02141282

355-8168 **LINES GP-FUEL (*contd.*)** **i04033342**

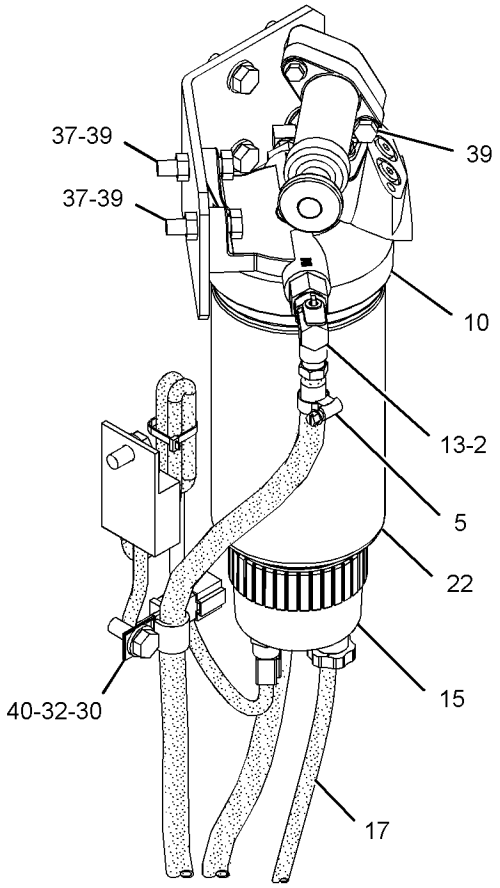

VIEW OF AREA A

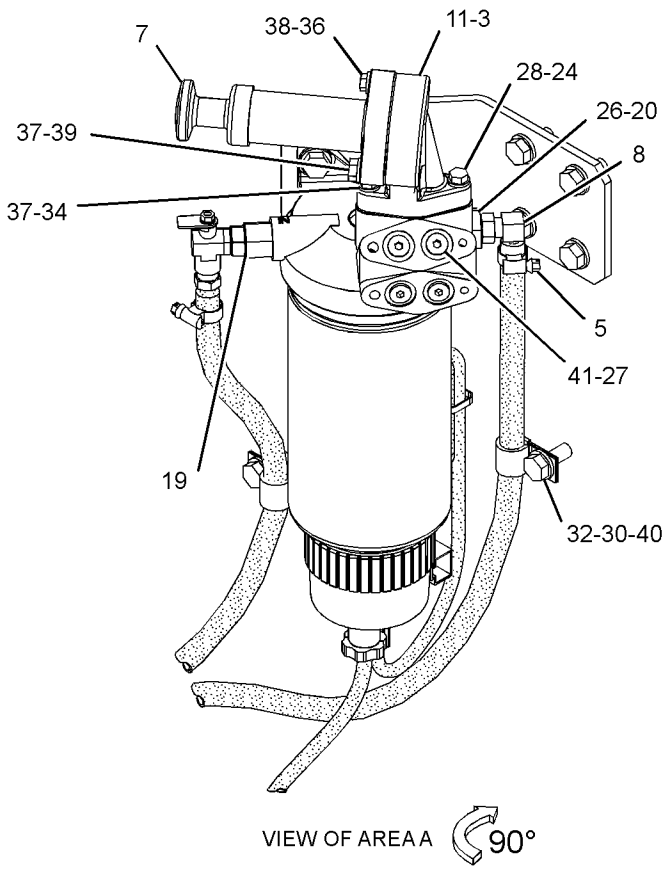

VIEW OF AREA A 90°

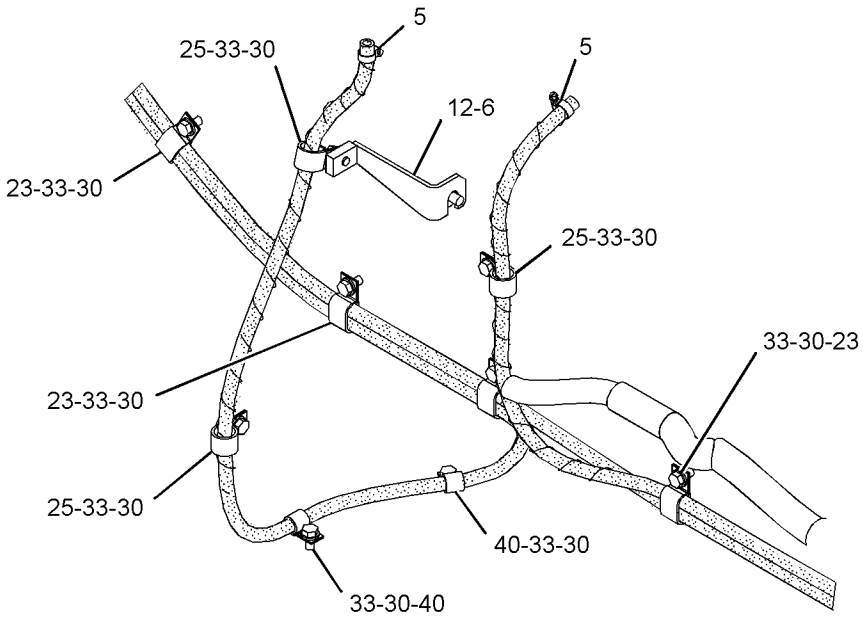

VIEW OF AREA B

GRAPHIC #2 **<END>** g02233493

355-8168 LINES GP-FUEL

S/N: KGF1-UP; FAL1-UP
PART OF 354-1056, 354-1057 COOLING AR-HIGH AMBIENT TEMP
AN ATTACHMENT
TYPE 3

SMCS-1274 **i04415166**

NOTE	REF NO	GRAPHIC REF	PART NUMBER	QTY	PART NAME 1 2 3 4 5 6 (PRODUCT LEVEL)	SEE PAGE
	1	1	**4I-0379**	1	VALVE-MANUAL (DRAIN, FUEL TANK)	
	2	2	**5P-7175**	1	FITTING-STRAIGHT	
	3	2	**9Y-8389**	2	GASKET (FUEL PRIMING PUMP)	
	4	1	**003-7764**	2	END-HOSE	
	5	1,2	**095-1386**	9	CLAMP-HOSE	
M	6	2	**135-8572**	1	BOLT AS	
	7	2	**137-5541**	1	PUMP GP-FUEL PRIMING	
		2	**061-7539**	1	SEAL-O-RING	
		2	**229-3218**	2	VALVE AS	
	8	2	*150-3024*	1	ELBOW AS	
		2	**3J-1907**	1	SEAL-O-RING	
		2	**5P-4924**	1	ELBOW	
	9	1	**170-2901**	1	GROMMET	
	10	2	**202-9871**	1	BASE AS	
		2	**7E-5346**	1	VALVE AS	
		2	**9S-4167**	1	STUD-HOLLOW (1-14X1.47-IN)	
	11	2	**250-6183**	1	ADAPTER	
	12	2	**293-6789**	1	BRACKET AS	
Y	13	2	**298-3147**	1	VALVE GP-FUEL SHUTOFF	398
	14	1	**307-7804**	1	HOSE AS	
		1	**4I-9523**	1	BAND-MARKER (BLUE, L3)	
		1	**4I-9525**	1	BAND-MARKER (ORANGE, R1)	
E		1	**5P-1442**		HOSE (337-CM)	
	15	2	**343-5527**	1	BOWL AS	
		2	**3J-1907**	1	SEAL-O-RING	
		2	**5F-9144**	1	SEAL-O-RING	
		2	**8F-7219**	1	SEAL-O-RING	
		2	**9S-8004**	1	PLUG-O-RING	
	16	1	**355-8164**	1	HOSE AS	
		1	**4I-9522**	1	BAND-MARKER (YELLOW, L2)	
		1	**4I-9527**	1	BAND-MARKER (GREEN, R3)	
E		1	**5P-1442**		HOSE (400-CM)	
	17	2	**355-8198**	1	HOSE	
	18	1	**134-3299**	1	GROMMET	
	19	2	*148-8313*	1	ADAPTER AS	
		2	**3K-0360**	1	SEAL-O-RING	
		2	**5P-6944**	1	ADAPTER	
	20	2	**2M-9780**	1	SEAL-O-RING	
	21	1	**2R-1498**	3	GROMMET	
	22	2	**326-1643**	1	FILTER AS-WATER SEP & FUEL	
		2	**220-8678**	1	SEAL-RING	
	23	1,2	**5K-8451**	12	CLIP	
C	24	2	**5P-0537**	1	WASHER-HARD (7.2X14.5X2-MM THK)	
	25	2	**6D-4636**	3	CLIP	
	26	2	**6V-2606**	1	ADAPTER	
	27	2	**6V-5048**	4	SEAL-O-RING	
C	28	2	**7X-2501**	1	BOLT (1/4-20X1.25-IN)	
	29	1	**7Y-8167**	1	GROMMET	
C	30	1,2	**8T-4121**	25	WASHER-HARD (11X21X2.5-MM THK)	
M	31	1	**8T-4133**	1	NUT (M10X1.5-THD)	
M	32	1,2	**8T-4136**	5	BOLT (M10X1.5X25-MM)	
M	33	1,2	**8T-4137**	18	BOLT (M10X1.5X20-MM)	
C	34	2	**8C-6561**	1	BOLT (5/16-18X1.375-IN)	
M	35	1	**8T-4195**	1	BOLT (M10X1.5X30-MM)	
	36	2	**8T-4205**	1	WASHER-HARD (7.2X14.5X2-MM THK)	
C	37	2	**8T-4224**	4	WASHER-HARD (8.8X16X2-MM THK)	

355-8168 **LINES GP-FUEL (*contd.*)** **i04415166**

NOTE	REF NO	GRAPHIC REF	PART NUMBER	QTY	PART NAME 1 2 3 4 5 6 (PRODUCT LEVEL)	SEE PAGE
M	38	2	**8T-4971**	1	BOLT (M6X1X30-MM)	
CM	39	2	**8T-7547**	3	BOLT (M8X1.25X30-MM)	
	40	1,2	**9M-8406**	10	CLIP	
	41	2	**9S-8002**	4	PLUG-O-RING	
E	42	1	**5P-1442**		HOSE (161-CM)	
E	42A	1	**5P-1442**		HOSE (30-CM)	
E	42B	1	**5P-1442**		HOSE (515-CM)	
	43	1	**4I-9521**	2	BAND-MARKER (RED, L1)	

C - CHANGE FROM PREVIOUS TYPE
E - ORDER BY THE CENTIMETER
M - METRIC PART
Y - SEPARATE ILLUSTRATION

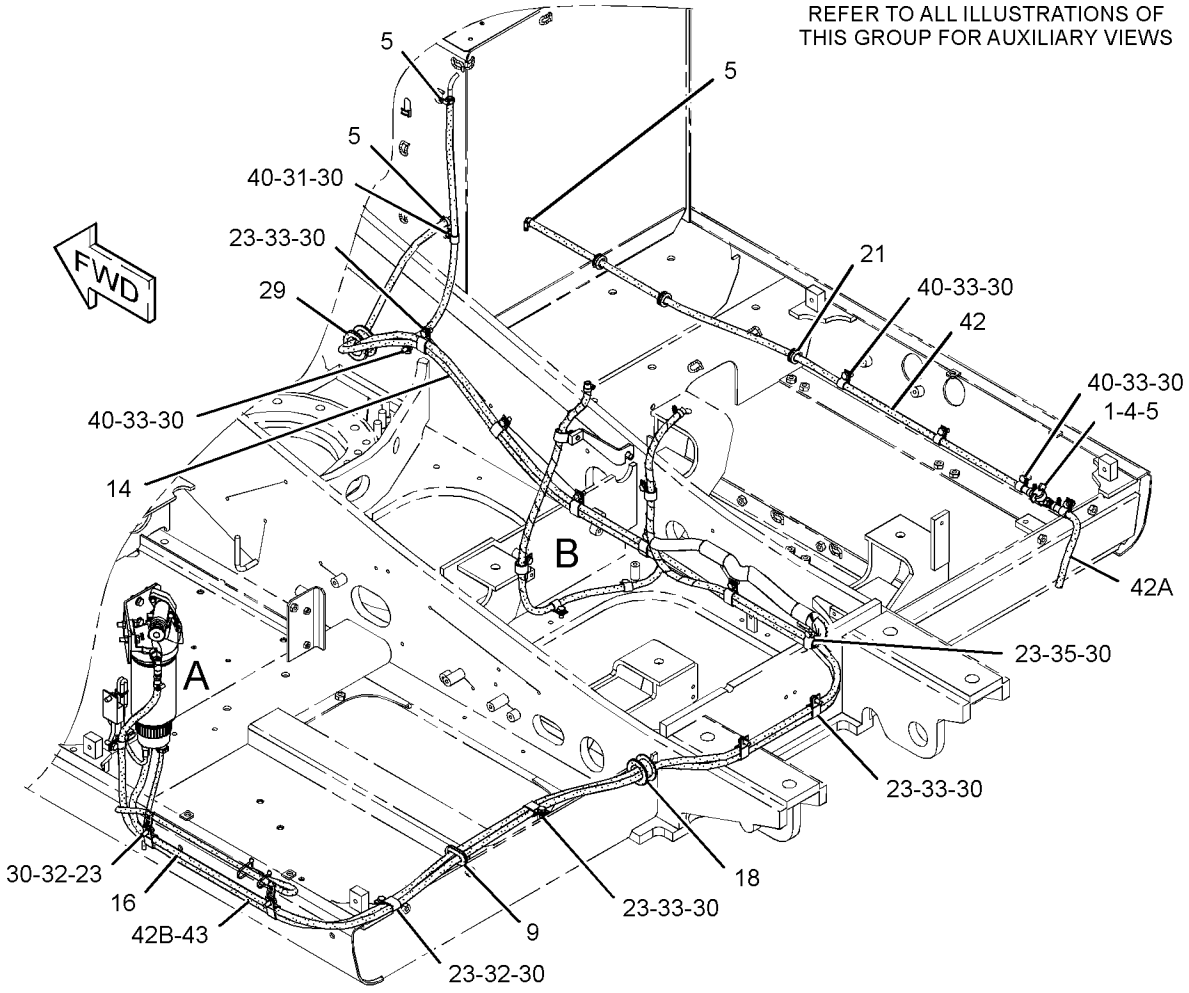

GRAPHIC #1 g02709586

355-8168 **LINES GP-FUEL (*contd.*)** **i04415166**

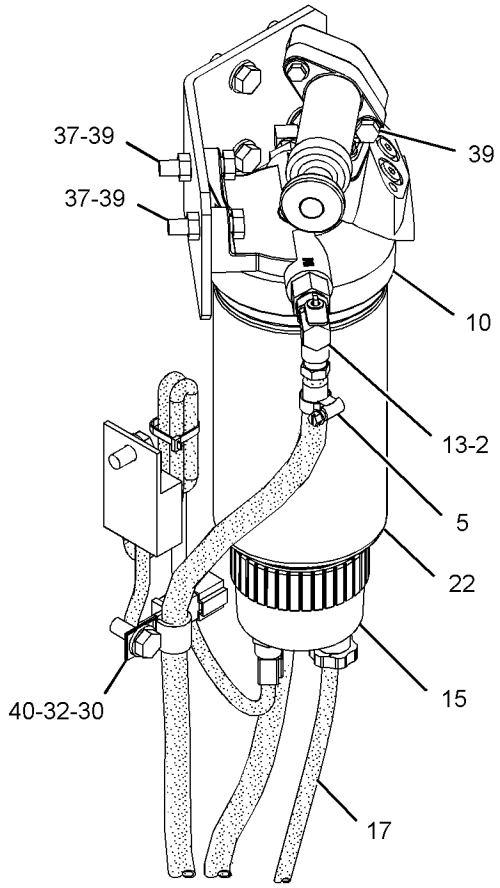

VIEW OF AREA A

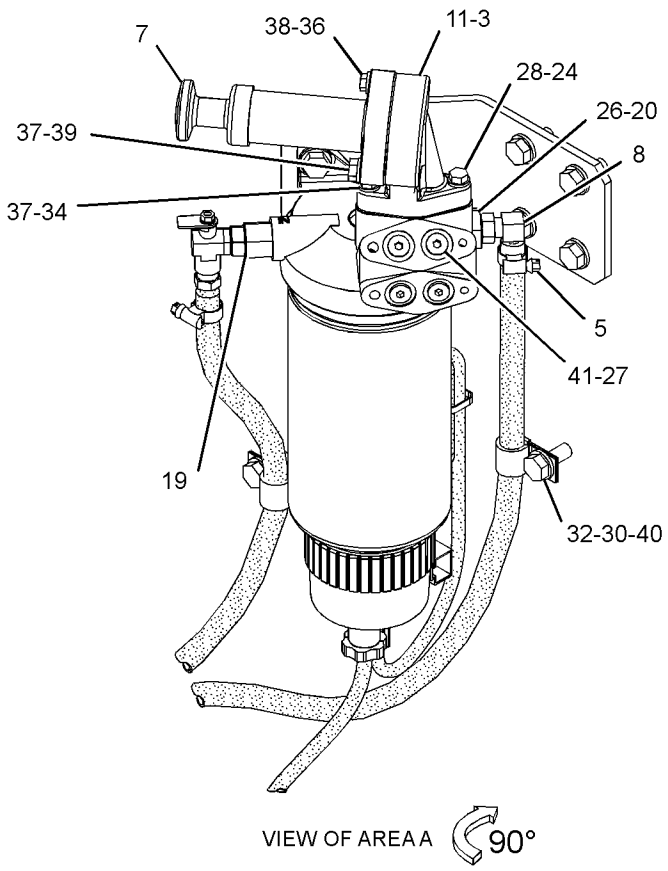

VIEW OF AREA A 90°

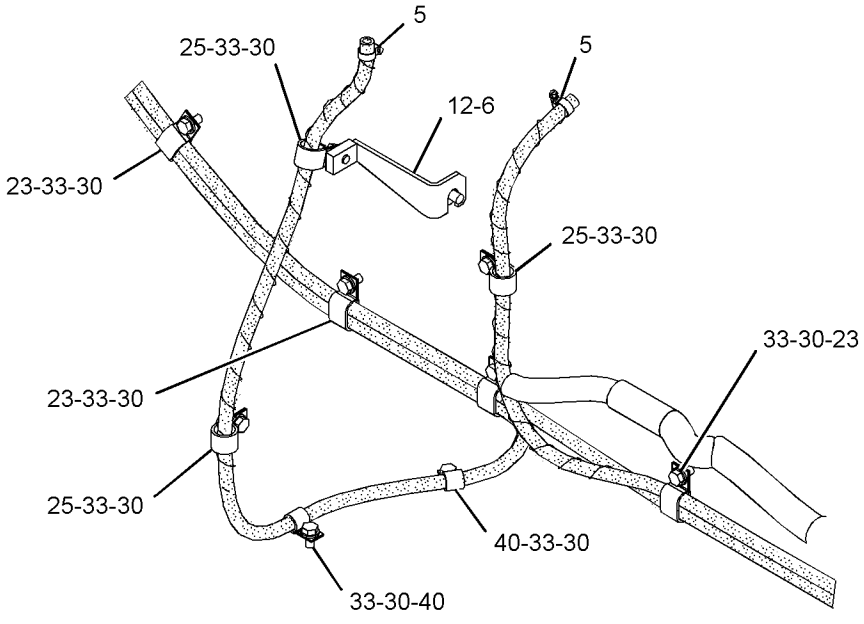

VIEW OF AREA B

GRAPHIC #2 **<END>** g02233493

355-8168 LINES GP-FUEL

S/N: KGF1-UP; FAL1-UP
PART OF 354-1056, 354-1057 COOLING AR-HIGH AMBIENT TEMP
AN ATTACHMENT
TYPE 4

SMCS-1274 **i04822423**

NOTE	REF NO	GRAPHIC REF	PART NUMBER	QTY	PART NAME 1 2 3 4 5 6 (PRODUCT LEVEL)	SEE PAGE
	1	1	**4I-0379**	1	VALVE-MANUAL (DRAIN, FUEL TANK)	
C	1A	1	**4I-0379**	1	VALVE-MANUAL (FUEL SHUTOFF)	
C	2	1,2	**6S-8620**	3	CLAMP-HOSE	
	3	2	**9Y-8389**	2	GASKET (FUEL PRIMING PUMP)	
C	4	1	**003-7764**	4	END-HOSE	
C	5	1,2	**095-1386**	8	CLAMP-HOSE	
M	6	2	**135-8572**	1	BOLT AS	
	7	2	**137-5541**	1	PUMP GP-FUEL PRIMING	
		2	**061-7539**	1	SEAL-O-RING	
		2	**229-3218**	2	VALVE AS	
C	8	2	*150-3024*	2	ELBOW AS	
					(EACH INCLUDES)	
		2	**3J-1907**	1	SEAL-O-RING	
		2	**5P-4924**	1	ELBOW	
	9	1	**170-2901**	1	GROMMET	
	10	2	**202-9871**	1	BASE AS	
		2	**7E-5346**	1	VALVE AS	
		2	**9S-4167**	1	STUD-HOLLOW (1-14X1.47-IN)	
	11	2	**250-6183**	1	ADAPTER	
	12	2	**293-6789**	1	BRACKET AS	
	14	1	**307-7804**	1	HOSE AS	
		1	**4I-9523**	1	BAND-MARKER (BLUE, L3)	
		1	**4I-9525**	1	BAND-MARKER (ORANGE, R1)	
E		1	**5P-1442**		HOSE (337-CM)	
	15	2	**343-5527**	1	BOWL AS	
		2	**3J-1907**	1	SEAL-O-RING	
		2	**5F-9144**	1	SEAL-O-RING	
		2	**8F-7219**	1	SEAL-O-RING	
		2	**9S-8004**	1	PLUG-O-RING	
	16	1	**355-8164**	1	HOSE AS	
		1	**4I-9522**	1	BAND-MARKER (YELLOW, L2)	
		1	**4I-9527**	1	BAND-MARKER (GREEN, R3)	
E		1	**5P-1442**		HOSE (400-CM)	
	17	2	**355-8198**	1	HOSE	
	18	1	**134-3299**	1	GROMMET	
	19	2	*148-8313*	1	ADAPTER AS	
		2	**3K-0360**	1	SEAL-O-RING	
		2	**5P-6944**	1	ADAPTER	
	20	2	**2M-9780**	1	SEAL-O-RING	
	21	1	**2R-1498**	3	GROMMET	
	22	2	**326-1643**	1	FILTER AS-WATER SEP & FUEL	
		2	**220-8678**	1	SEAL-RING	
	23	1,2	**5K-8451**	12	CLIP	
	24	2	**5P-0537**	1	WASHER-HARD (7.2X14.5X2-MM THK)	
	25	2	**6D-4636**	3	CLIP	
	26	2	**6V-2606**	1	ADAPTER	
	27	2	**6V-5048**	4	SEAL-O-RING	
	28	2	**7X-2501**	1	BOLT (1/4-20X1.25-IN)	
	29	1	**7Y-8167**	1	GROMMET	
	30	1,2	**8T-4121**	25	WASHER-HARD (11X21X2.5-MM THK)	
M	31	1	**8T-4133**	1	NUT (M10X1.5-THD)	
M	32	1,2	**8T-4136**	5	BOLT (M10X1.5X25-MM)	
M	33	1,2	**8T-4137**	18	BOLT (M10X1.5X20-MM)	
	34	2	**8C-6561**	1	BOLT (5/16-18X1.375-IN)	
M	35	1	**8T-4195**	1	BOLT (M10X1.5X30-MM)	
	36	2	**8T-4205**	1	WASHER-HARD (7.2X14.5X2-MM THK)	

355-8168 **LINES GP-FUEL (*contd.*)** **i04822423**

NOTE	REF NO	GRAPHIC REF	PART NUMBER	QTY	PART NAME 1 2 3 4 5 6 (PRODUCT LEVEL)	SEE PAGE
	37	2	**8T-4224**	4	WASHER-HARD (8.8X16X2-MM THK)	
M	38	2	**8T-4971**	1	BOLT (M6X1X30-MM)	
M	39	2	**8T-7547**	3	BOLT (M8X1.25X30-MM)	
	40	1,2	**9M-8406**	10	CLIP	
	41	2	**9S-8002**	4	PLUG-O-RING	
E	42	1	**5P-1442**		HOSE (161-CM)	
E	42A	1	**5P-1442**		HOSE (30-CM)	
E	42B	1	**5P-1442**		HOSE (515-CM)	
	43	1	**4I-9521**	2	BAND-MARKER (RED, L1)	

C - CHANGE FROM PREVIOUS TYPE
E - ORDER BY THE CENTIMETER
M - METRIC PART

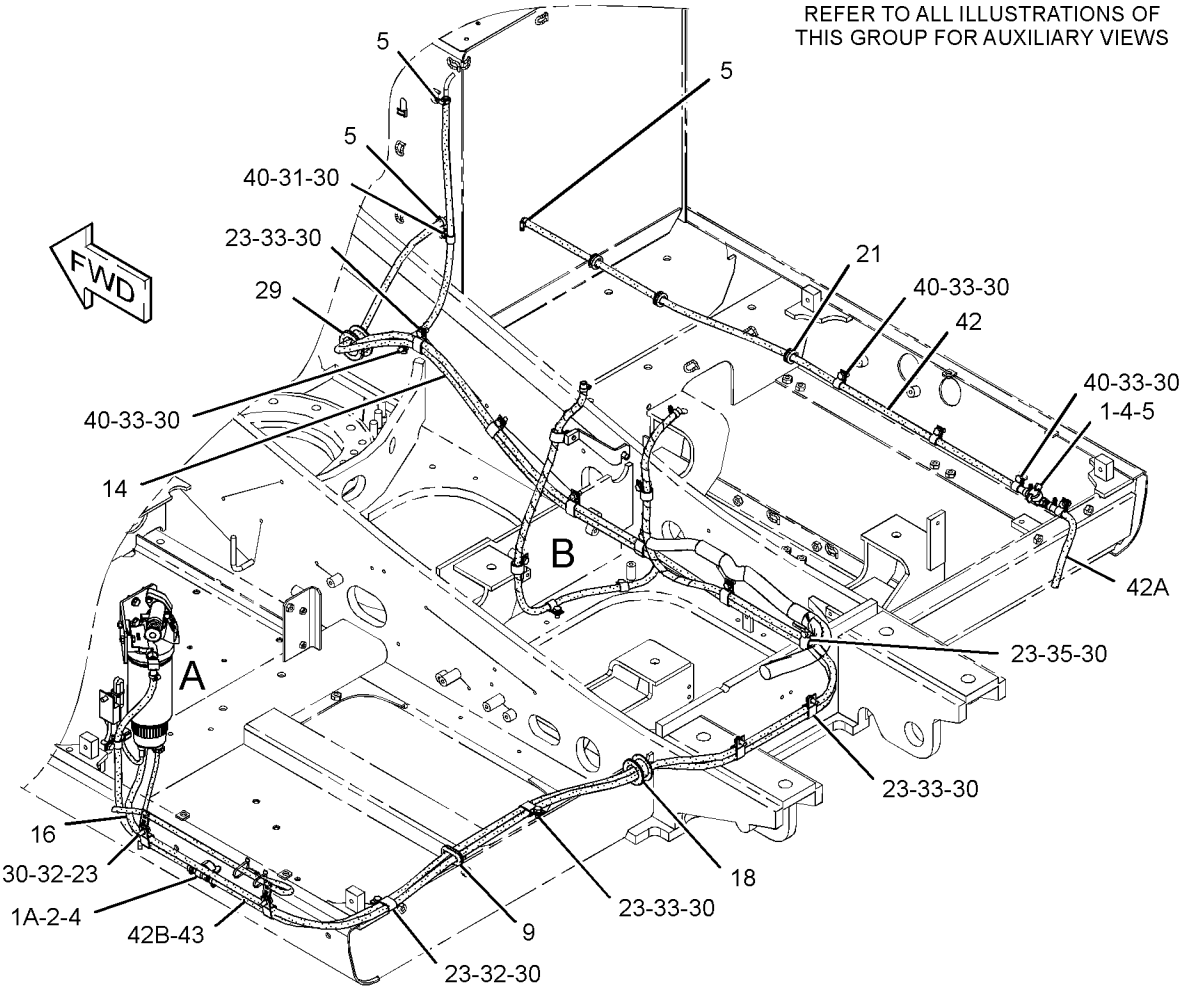

GRAPHIC #1 g02955518

355-8168 **LINES GP-FUEL (*contd.*)** **i04822423**

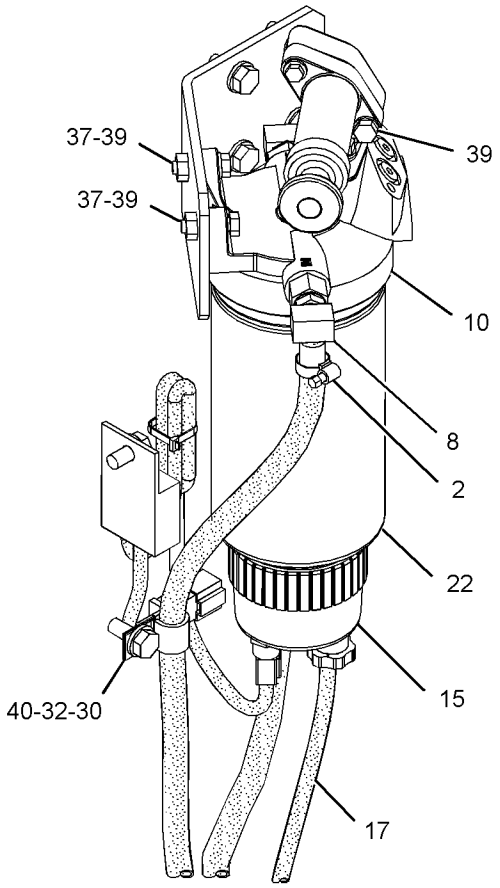

VIEW OF AREA A

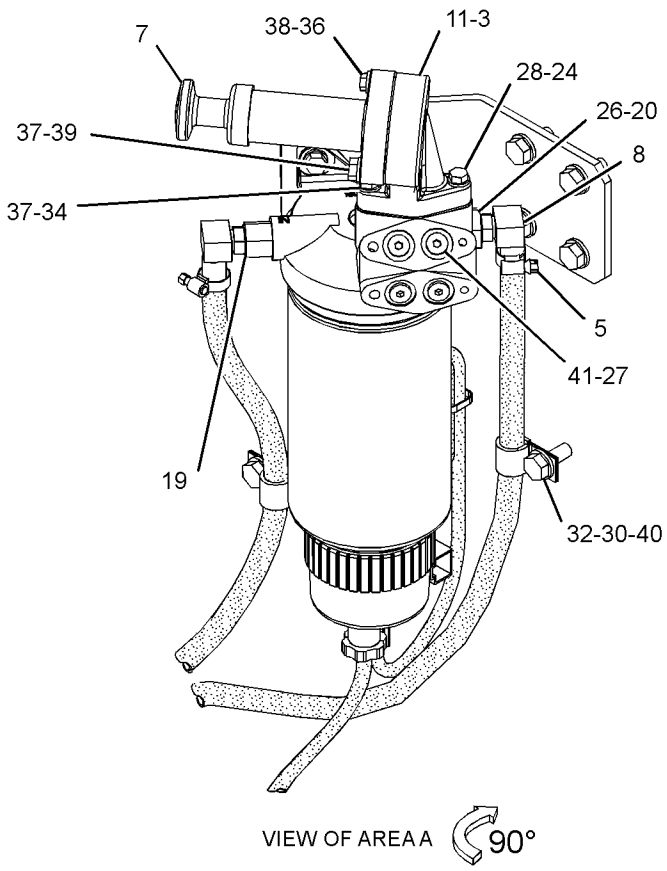

VIEW OF AREA A 90°

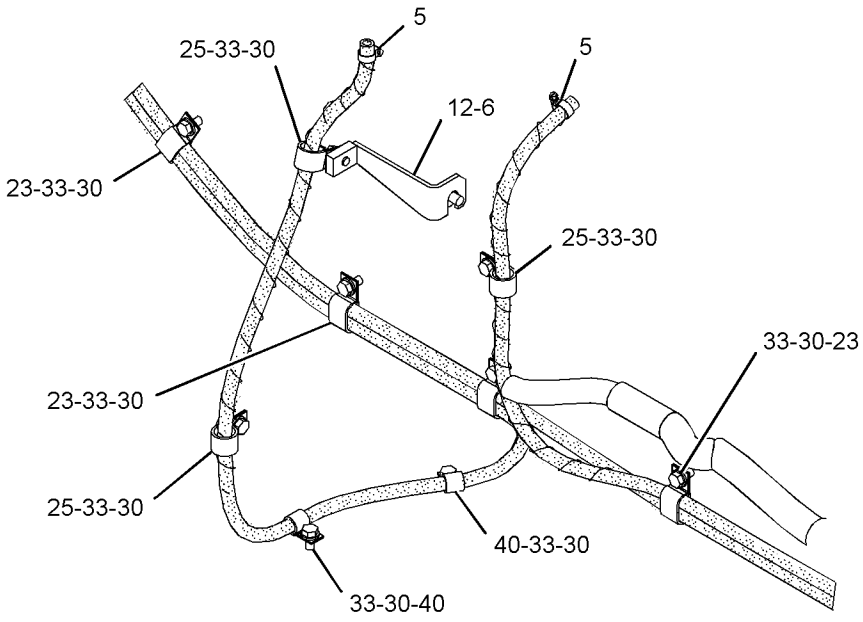

VIEW OF AREA B

GRAPHIC #2 **<END>** g02955519

355-8168 LINES GP-FUEL

S/N: KGF1-UP; FAL1-UP
PART OF 354-1056, 354-1057 COOLING AR-HIGH AMBIENT TEMP
AN ATTACHMENT
TYPE 5

SMCS-1274 **i04983065**

NOTE	REF NO	GRAPHIC REF	PART NUMBER	QTY	PART NAME 1 2 3 4 5 6 (PRODUCT LEVEL)	SEE PAGE
	1	1	**4I-0379**	1	VALVE-MANUAL (DRAIN, FUEL TANK)	
	1A	1	**4I-0379**	1	VALVE-MANUAL (FUEL SHUTOFF)	
	3	2	**9Y-8389**	2	GASKET (FUEL PRIMING PUMP)	
	4	1	**003-7764**	4	END-HOSE	
C	5	1,2	**095-1386**	11	CLAMP-HOSE	
M	6	2	**135-8572**	1	BOLT AS	
	7	2	**137-5541**	1	PUMP GP-FUEL PRIMING	
		2	**061-7539**	1	SEAL-O-RING	
		2	**229-3218**	2	VALVE AS	
	8	2	*150-3024*	2	ELBOW AS	
					(EACH INCLUDES)	
		2	**3J-1907**	1	SEAL-O-RING	
		2	**5P-4924**	1	ELBOW	
	9	1	**170-2901**	1	GROMMET	
	10	2	**202-9871**	1	BASE AS	
		2	**7E-5346**	1	VALVE AS	
		2	**9S-4167**	1	STUD-HOLLOW (1-14X1.47-IN)	
	11	2	**250-6183**	1	ADAPTER	
	12	2	**293-6789**	1	BRACKET AS	
	14	1	**307-7804**	1	HOSE AS	
	15	2	**343-5527**	1	BOWL AS	
		2	**3J-1907**	1	SEAL-O-RING	
		2	**5F-9144**	1	SEAL-O-RING	
		2	**8F-7219**	1	SEAL-O-RING	
		2	**9S-8004**	1	PLUG-O-RING	
	16	1	**355-8164**	1	HOSE AS	
	17	2	**355-8198**	1	HOSE	
	18	1	**134-3299**	1	GROMMET	
	19	2	*148-8313*	1	ADAPTER AS	
		2	**3K-0360**	1	SEAL-O-RING	
		2	**5P-6944**	1	ADAPTER	
	20	2	**2M-9780**	1	SEAL-O-RING	
	21	1	**2R-1498**	3	GROMMET	
	22	2	**326-1643**	1	FILTER AS-WATER SEP & FUEL	
		2	**220-8678**	1	SEAL-RING	
	23	1,2	**5K-8451**	12	CLIP	
	24	2	**5P-0537**	1	WASHER-HARD (7.2X14.5X2-MM THK)	
	25	2	**6D-4636**	3	CLIP	
	26	2	**6V-2606**	1	ADAPTER	
	27	2	**6V-5048**	4	SEAL-O-RING	
	28	2	**7X-2501**	1	BOLT (1/4-20X1.25-IN)	
	29	1	**7Y-8167**	1	GROMMET	
	30	1,2	**8T-4121**	25	WASHER-HARD (11X21X2.5-MM THK)	
M	31	1	**8T-4133**	1	NUT (M10X1.5-THD)	
M	32	1,2	**8T-4136**	5	BOLT (M10X1.5X25-MM)	
M	33	1,2	**8T-4137**	18	BOLT (M10X1.5X20-MM)	
	34	2	**8C-6561**	1	BOLT (5/16-18X1.375-IN)	
M	35	1	**8T-4195**	1	BOLT (M10X1.5X30-MM)	
	36	2	**8T-4205**	1	WASHER-HARD (7.2X14.5X2-MM THK)	
	37	2	**8T-4224**	4	WASHER-HARD (8.8X16X2-MM THK)	
M	38	2	**8T-4971**	1	BOLT (M6X1X30-MM)	
M	39	2	**8T-7547**	3	BOLT (M8X1.25X30-MM)	
	40	1,2	**9M-8406**	10	CLIP	
	41	2	**9S-8002**	4	PLUG-O-RING	
E	42	1	**5P-1442**		HOSE (161-CM)	
E	42A	1	**5P-1442**		HOSE (30-CM)	

355-8168 **LINES GP-FUEL (*contd.*)** **i04983065**

NOTE	REF NO	GRAPHIC REF	PART NUMBER	QTY	PART NAME 1 2 3 4 5 6 (PRODUCT LEVEL)	SEE PAGE
E	42B	1	**5P-1442**		HOSE (515-CM)	
	43	1	**4I-9521**	2	BAND-MARKER (RED, L1)	

C - CHANGE FROM PREVIOUS TYPE
E - ORDER BY THE CENTIMETER
M - METRIC PART

355-8168 **LINES GP-FUEL (*contd.*)** **i04983065**

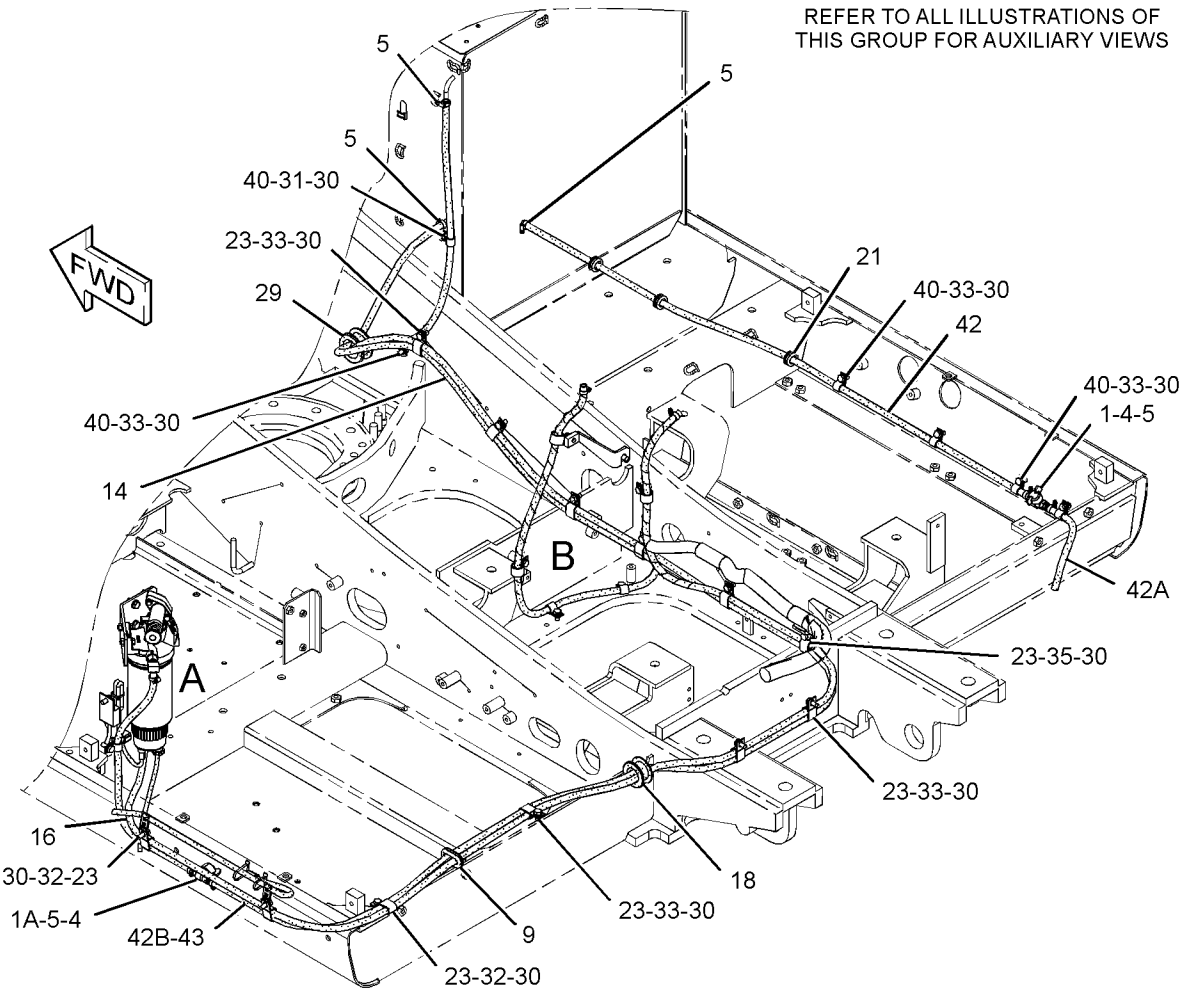

GRAPHIC #1 g03168477

355-8168 **LINES GP-FUEL (*contd.*)** **i04983065**

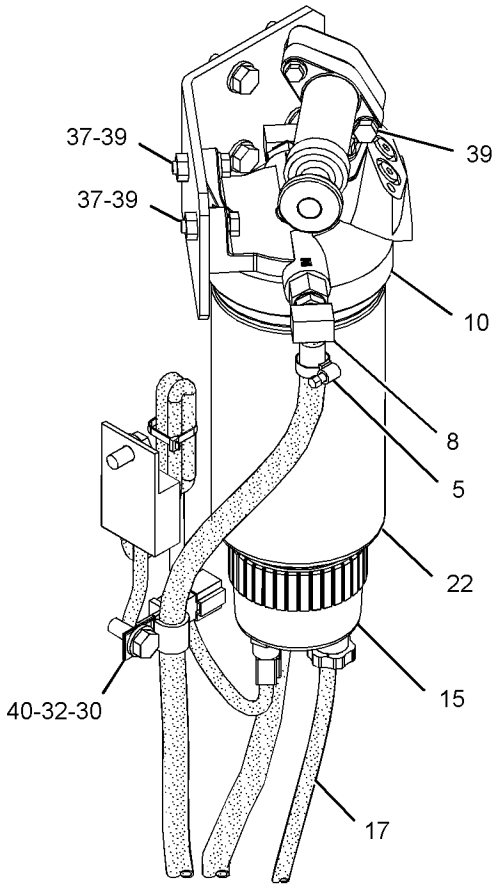

VIEW OF AREA A

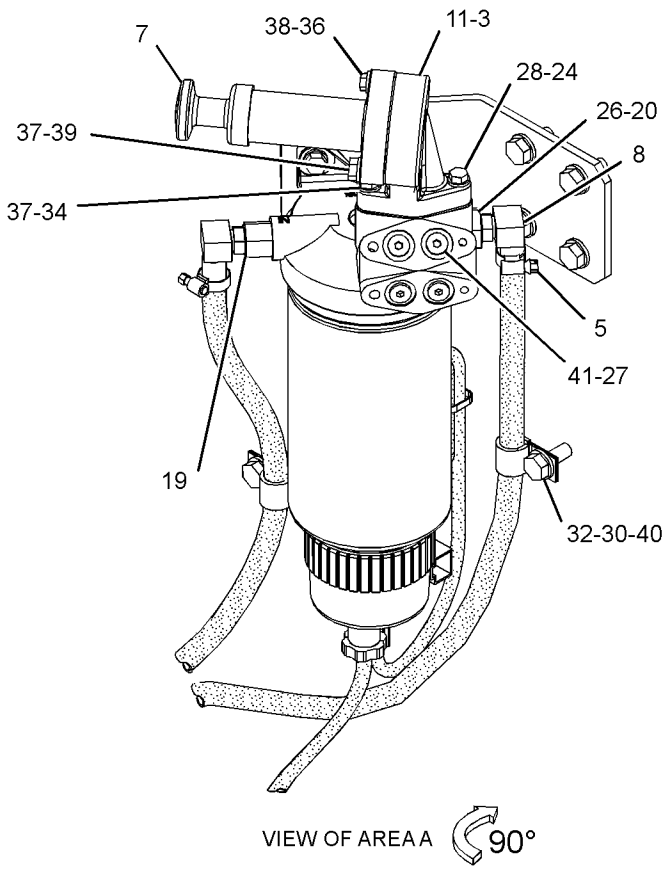

VIEW OF AREA A 90°

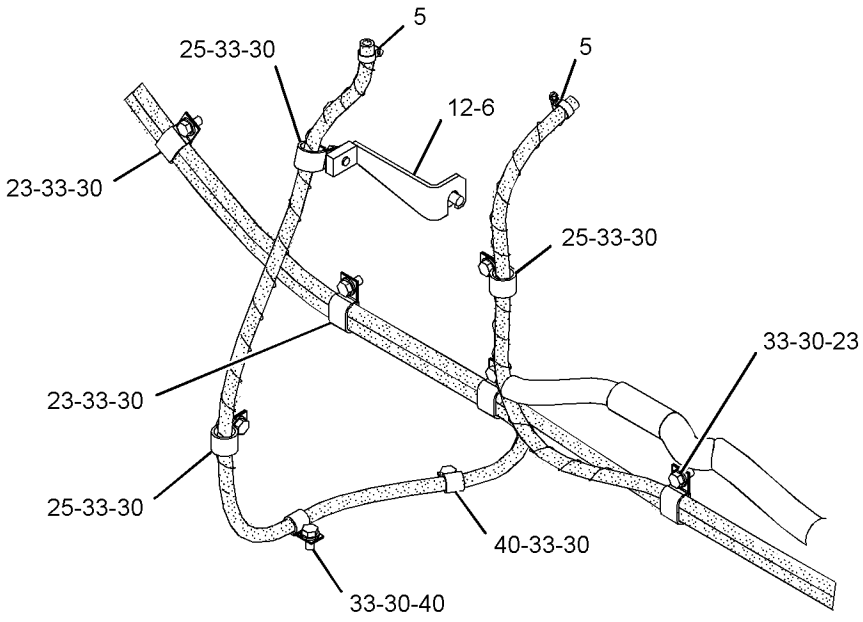

VIEW OF AREA B

GRAPHIC #2 **<END>** g03168481

375-3089 LINES GP-FUEL

S/N: KGF7706-9179; FAL9017-9991
PART OF 264-8638, 264-8639 CHASSIS AR

SMCS-1274 **i04896372**

NOTE	REF NO	GRAPHIC REF	PART NUMBER	QTY	PART NAME 1 2 3 4 5 6 (PRODUCT LEVEL)	SEE PAGE
	1	1	**4I-0379**	1	VALVE-MANUAL (FUEL SHUTOFF)	
	2	2	**5P-7175**	1	FITTING-STRAIGHT	
	3	1	**003-7764**	2	END-HOSE	
	4	1,2	**095-1386**	9	CLAMP-HOSE	
M	5	2	**135-8572**	1	BOLT AS	
	6	2	*150-3024*	1	ELBOW AS	
		2	**3J-1907**	1	SEAL-O-RING	
		2	**5P-4924**	1	ELBOW	
	7	1	**170-2901**	1	GROMMET	
	9	2	**293-6789**	1	BRACKET AS	
Y	10	2	**298-3147**	1	VALVE GP-FUEL SHUTOFF	398
	11	1	**307-7804**	1	HOSE AS	
	12	2	**375-3090**	1	SHEET AS	
M		2	**8T-3490**	3	NUT-WELD (M10X1.5-THD)	
	13	2	**375-3092**	1	SPACER-SPECIAL	
	14	1	**375-3093**	1	HOSE AS	
	15	2	**381-9061**	1	BASE AS-FUEL FILTER	
	16	2	**381-9064**	1	INDICATOR-FUEL FILTER CHANGE	
	17	2	**382-0664**	1	FILTER AS-WATER SEP & FUEL (ULTRA HIGH EFFICIENCY)	
	19	1	**134-3299**	1	GROMMET	
	20	2	*148-8313*	2	ADAPTER AS	
					(EACH INCLUDES)	
		2	**3K-0360**	1	SEAL-O-RING	
		2	**5P-6944**	1	ADAPTER	
	21	1	**2R-1498**	3	GROMMET	
	22	1,2	**5K-8451**	13	CLIP	
	23	2	**6D-4636**	3	CLIP	
	24	1	**7Y-8167**	1	GROMMET	
	25	2	**8L-2786**	3	SEAL-O-RING	
M	26	2	**8T-1159**	3	BOLT-SOCKET HEAD (M10X1.5X25-MM)	
	27	1,2	**8T-4121**	30	WASHER-HARD (11X21X2.5-MM THK)	
M	28	1	**8T-4133**	1	NUT (M10X1.5-THD)	
M	29	1,2	**8T-4136**	4	BOLT (M10X1.5X25-MM)	
M	30	1,2	**8T-4137**	22	BOLT (M10X1.5X20-MM)	
M	31	1,2	**8T-4195**	3	BOLT (M10X1.5X30-MM)	
	32	1,2	**9M-8406**	8	CLIP	
	33	2	**9S-4185**	3	PLUG-O-RING	
E	34	1	**5P-1442**		HOSE (520-CM)	
E	34A	1	**5P-1442**		HOSE (161-CM)	
E	34B	1	**5P-1442**		HOSE (30-CM)	
	35	1	**4I-9521**	2	BAND-MARKER (RED, L1)	

E - ORDER BY THE CENTIMETER
M - METRIC PART
Y - SEPARATE ILLUSTRATION

375-3089 **LINES GP-FUEL (*contd.*)** **i04896372**

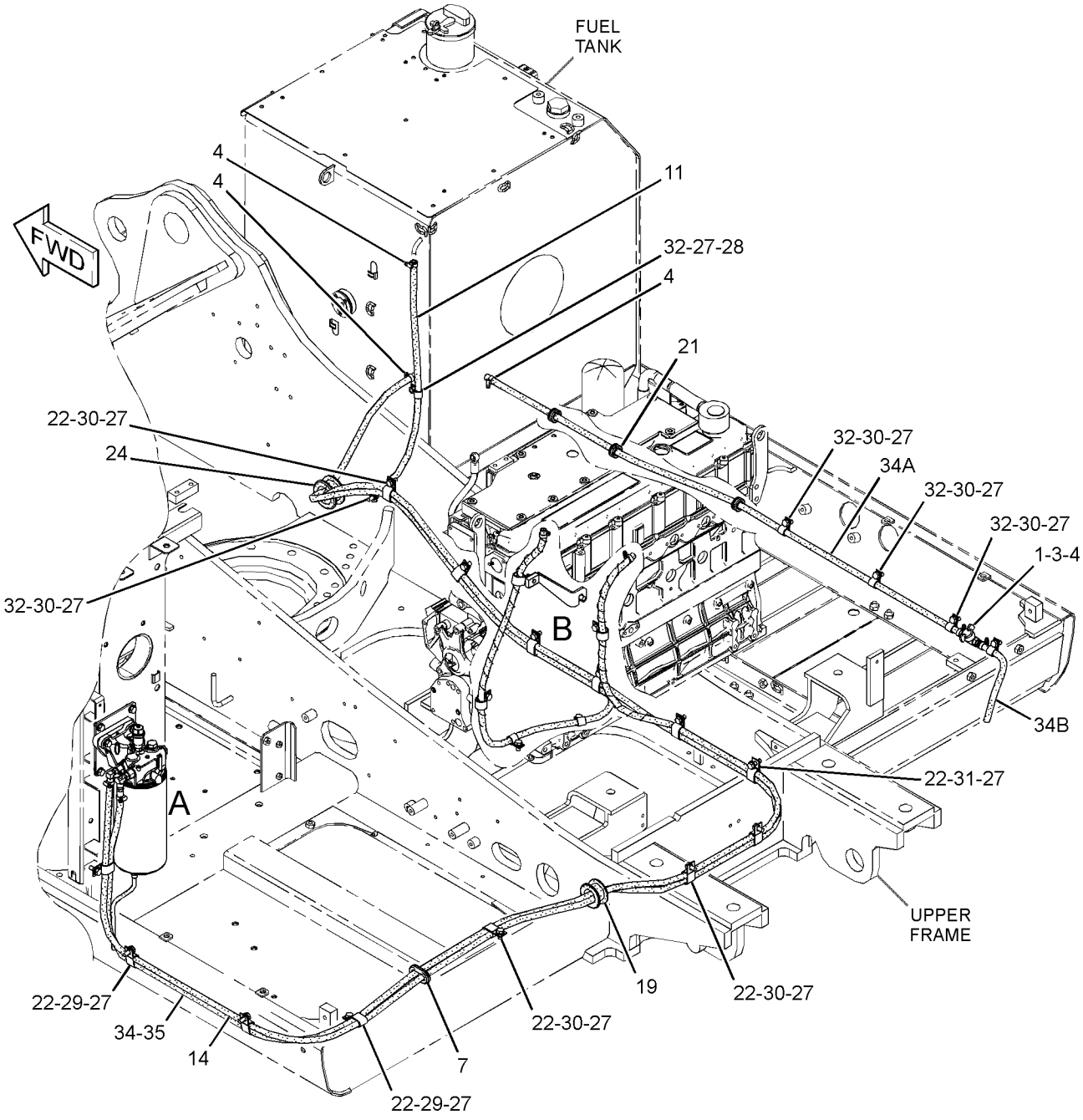

GRAPHIC #1 g02882961

375-3089 **LINES GP-FUEL (*contd.*)** **i04896372**

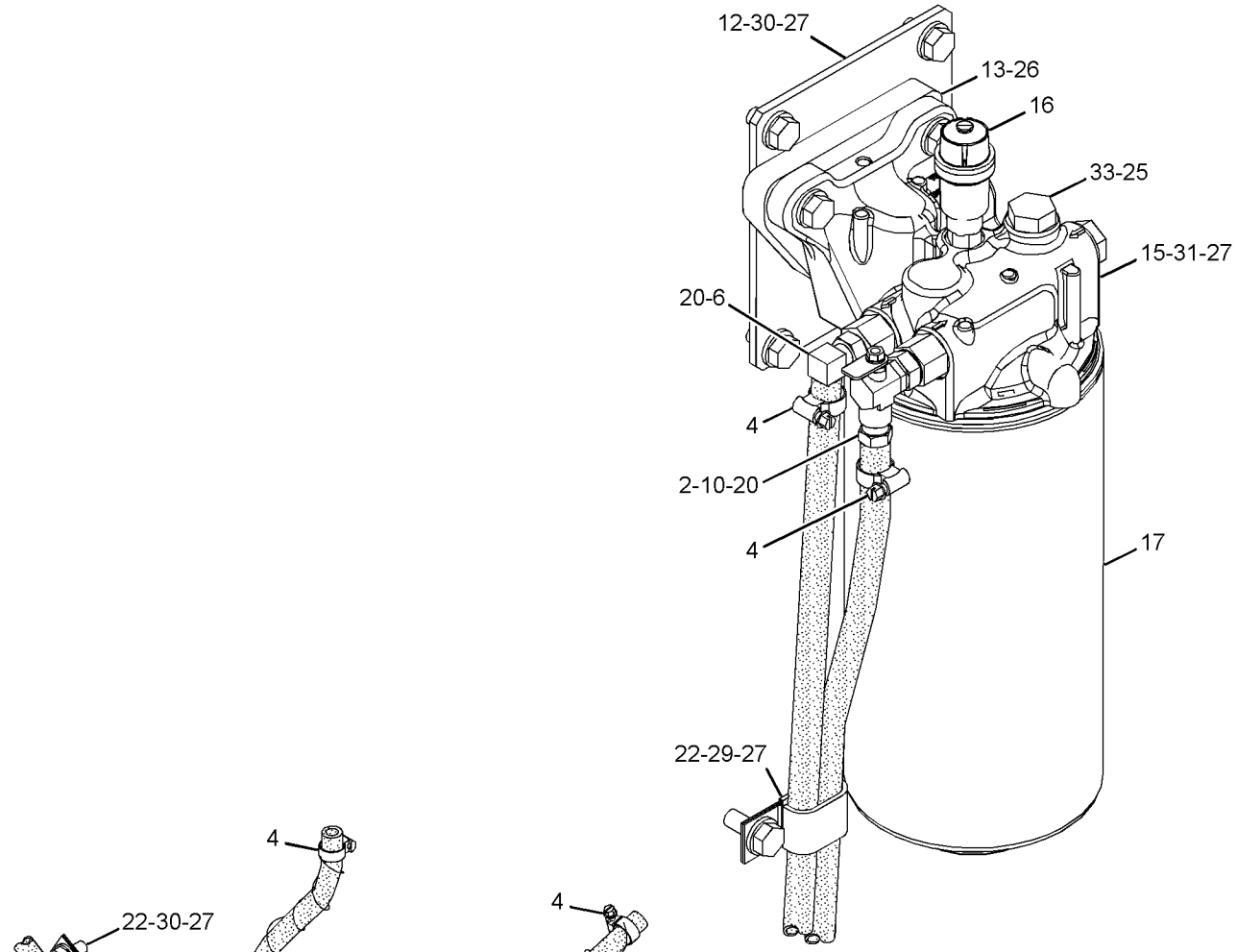

VIEW OF AREA A

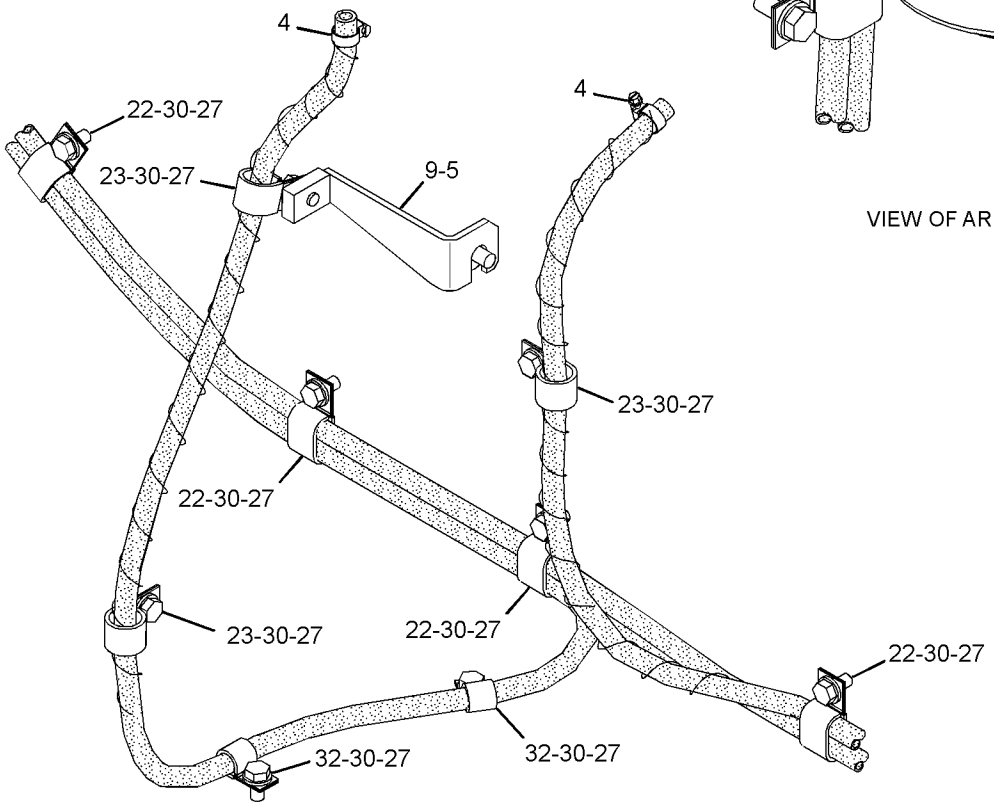

VIEW OF AREA B

GRAPHIC #2 **<END>** g03052963

375-3089 LINES GP-FUEL

S/N: KGF9180-UP; FAL9992-UP

PART OF 264-8638, 264-8639 CHASSIS AR

SMCS-1274 **i05167440**

NOTE	REF NO	GRAPHIC REF	PART NUMBER	QTY	PART NAME 1 2 3 4 5 6 (PRODUCT LEVEL)	SEE PAGE
	1	1	**4I-0379**	1	VALVE-MANUAL (DRAIN, FUEL TANK)	
C	1A	1	**4I-0379**	1	VALVE-MANUAL (FUEL SHUTOFF)	
C	2	1,2	**6S-8620**	3	CLAMP-HOSE	
C	3	1	**003-7764**	4	END-HOSE	
C	4	1,2	**095-1386**	8	CLAMP-HOSE	
M	5	2	**135-8572**	1	BOLT AS	
C	6	2	*150-3024*	2	ELBOW AS	
					(EACH INCLUDES)	
		2	**3J-1907**	1	SEAL-O-RING	
		2	**5P-4924**	1	ELBOW	
	7	1	**170-2901**	1	GROMMET	
	9	2	**293-6789**	1	BRACKET AS	
	11	1	**307-7804**	1	HOSE AS	
	12	2	**375-3090**	1	SHEET AS	
M		2	**8T-3490**	3	NUT-WELD (M10X1.5-THD)	
	13	2	**375-3092**	1	SPACER-SPECIAL	
	14	1	**375-3093**	1	HOSE AS	
	15	2	**381-9061**	1	BASE AS-FUEL FILTER	
	16	2	**381-9064**	1	INDICATOR-FUEL FILTER CHANGE	
	17	2	**382-0664**	1	FILTER AS-WATER SEP & FUEL (ULTRA HIGH EFFICIENCY)	
	19	1	**134-3299**	1	GROMMET	
	20	2	*148-8313*	2	ADAPTER AS	
					(EACH INCLUDES)	
		2	**3K-0360**	1	SEAL-O-RING	
		2	**5P-6944**	1	ADAPTER	
	21	1	**2R-1498**	3	GROMMET	
	22	1,2	**5K-8451**	13	CLIP	
	23	2	**6D-4636**	3	CLIP	
	24	1	**7Y-8167**	1	GROMMET	
	25	2	**8L-2786**	3	SEAL-O-RING	
M	26	2	**8T-1159**	3	BOLT-SOCKET HEAD (M10X1.5X25-MM)	
	27	1,2	**8T-4121**	30	WASHER-HARD (11X21X2.5-MM THK)	
M	28	1	**8T-4133**	1	NUT (M10X1.5-THD)	
M	29	1,2	**8T-4136**	8	BOLT (M10X1.5X25-MM)	
M	30	1,2	**8T-4137**	18	BOLT (M10X1.5X20-MM)	
M	31	1,2	**8T-4195**	3	BOLT (M10X1.5X30-MM)	
	32	1,2	**9M-8406**	8	CLIP	
	33	2	**9S-4185**	3	PLUG-O-RING	
E	34	1	**5P-1442**		HOSE (440-CM)	
E	34A	1	**5P-1442**		HOSE (161-CM)	
E	34B	1	**5P-1442**		HOSE (30-CM)	
E	34C	1	**5P-1442**		HOSE (75-CM)	
	35	1	**4I-9521**	2	BAND-MARKER (RED, L1)	

C - CHANGE FROM PREVIOUS TYPE
E - ORDER BY THE CENTIMETER
M - METRIC PART

375-3089 **LINES GP-FUEL (*contd.*)** **i05167440**

REFER TO ALL ILLUSTRATIONS OF
THIS GROUP FOR AUXILIARY VIEWS

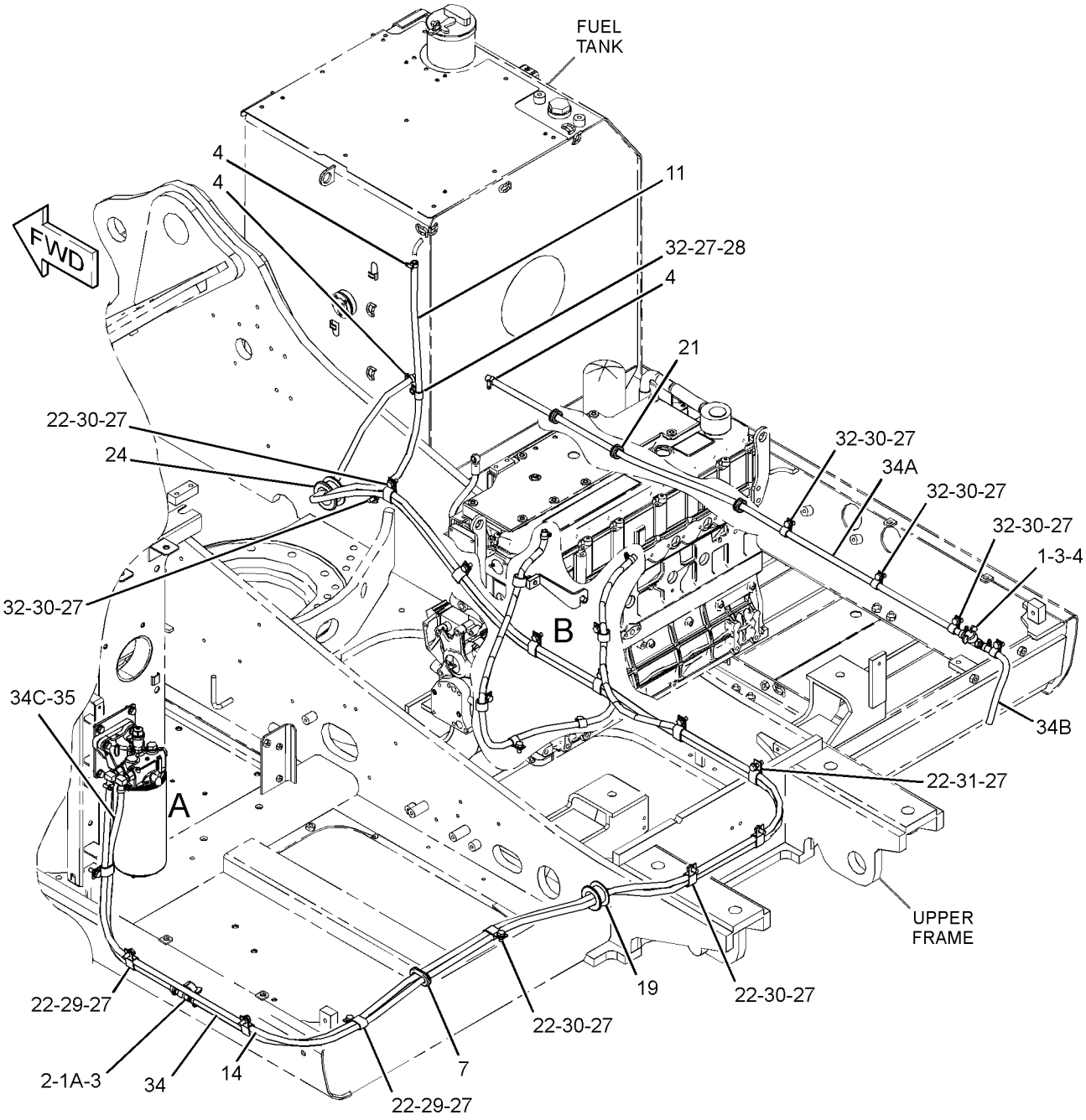

GRAPHIC #1 g03354899

375-3089 **LINES GP-FUEL (*contd.*)** **i05167440**

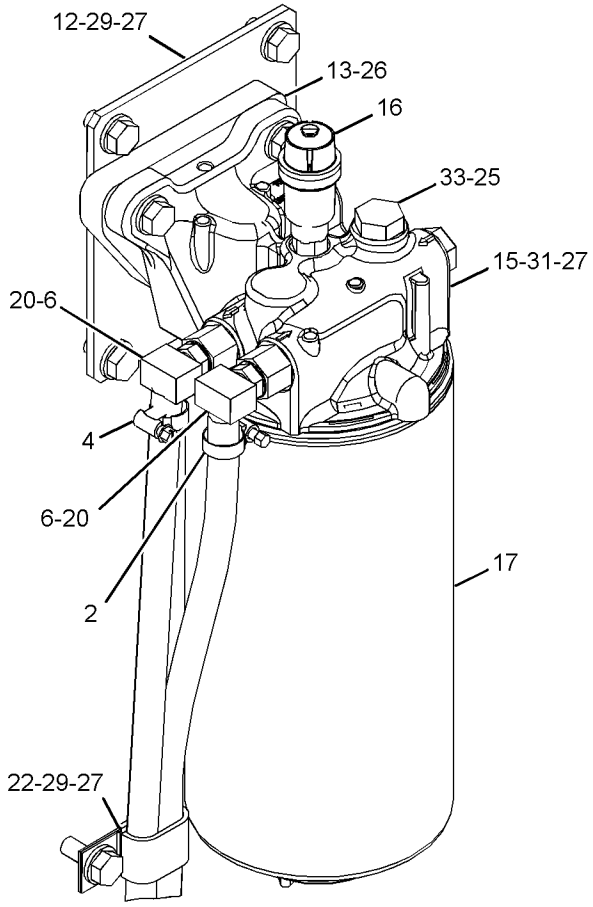

VIEW OF AREA A

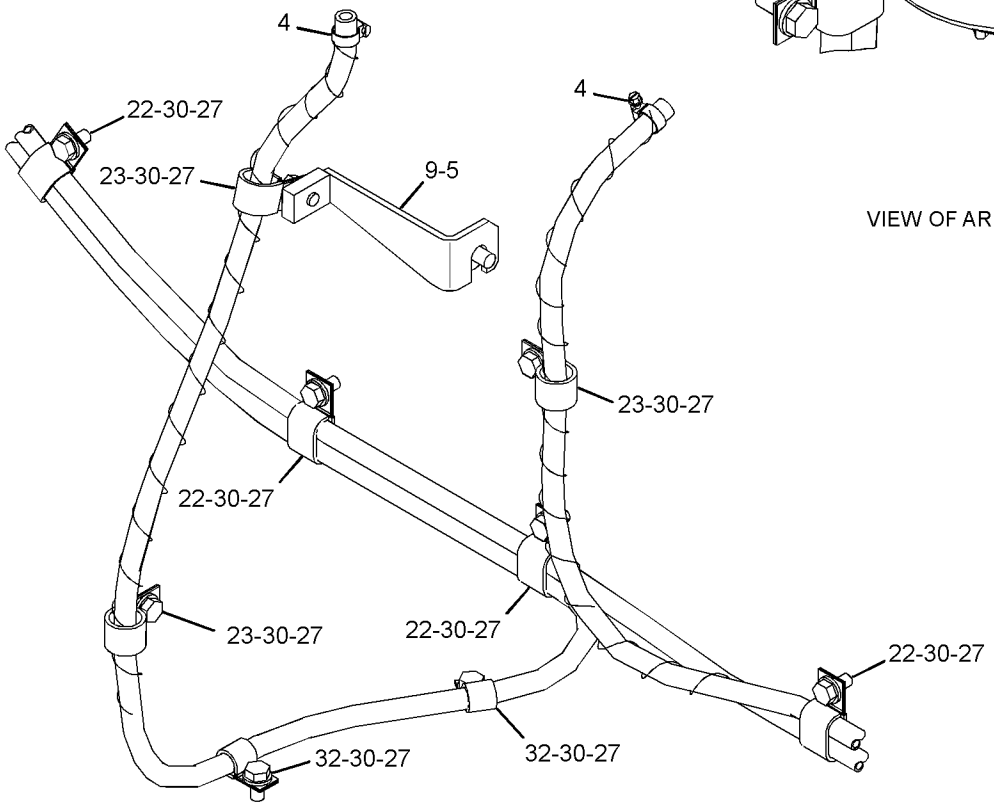

VIEW OF AREA B

GRAPHIC #2 **<END>** g03354900

297-7671 MOUNTING GP-FUEL FILTER

S/N: KGF1-UP; FAL1-UP

PART OF 272-4742 INSTALLATION AR-ENGINE

SMCS-1261 **i03938270**

NOTE	REF NO	GRAPHIC REF	PART NUMBER	QTY	PART NAME 1 2 3 4 5 6 (PRODUCT LEVEL)	SEE PAGE
	1	1	**3S-2093**	1	STRAP-CABLE	
	2	1	**116-0118**	1	CLIP	
BM	3	1	**135-8575**	4	BOLT AS	
					–OR–	
BJM		1	**135-8578**	2	BOLT AS	
	4	1	**294-1831**	2	CLAMP	
	5	1	**297-7672**	1	PLATE AS	
	6	1	**297-7673**	1	BRACKET AS	
	7	1	**297-7674**	1	PLATE AS	
	8	1	**132-5789**	1	CLIP	
M	9	1	**7X-2535**	1	BOLT (M6X1X60-MM)	
	10	1	**7X-7729**	1	WASHER (11X25X3-MM THK)	
	11	1	**8T-4121**	7	WASHER-HARD (11X21X2.5-MM THK)	
M	12	1	**8T-4133**	1	NUT (M10X1.5-THD)	
M	13	1	**8T-4137**	2	BOLT (M10X1.5X20-MM)	
M	14	1	**8T-4182**	2	BOLT (M10X1.5X45-MM)	
	15	1	**8T-4224**	6	WASHER-HARD (8.8X16X2-MM THK)	
M	16	1	**8T-6466**	3	BOLT (M10X1.5X60-MM)	
	17	1	**9X-8256**	2	WASHER (6.6X12X2-MM THK)	

B - USE AS REQUIRED
J - USE 135-8578 BOLT AS. ON MACHINES WITH S/N PREFIXES BZF, EAX, GKS
M - METRIC PART

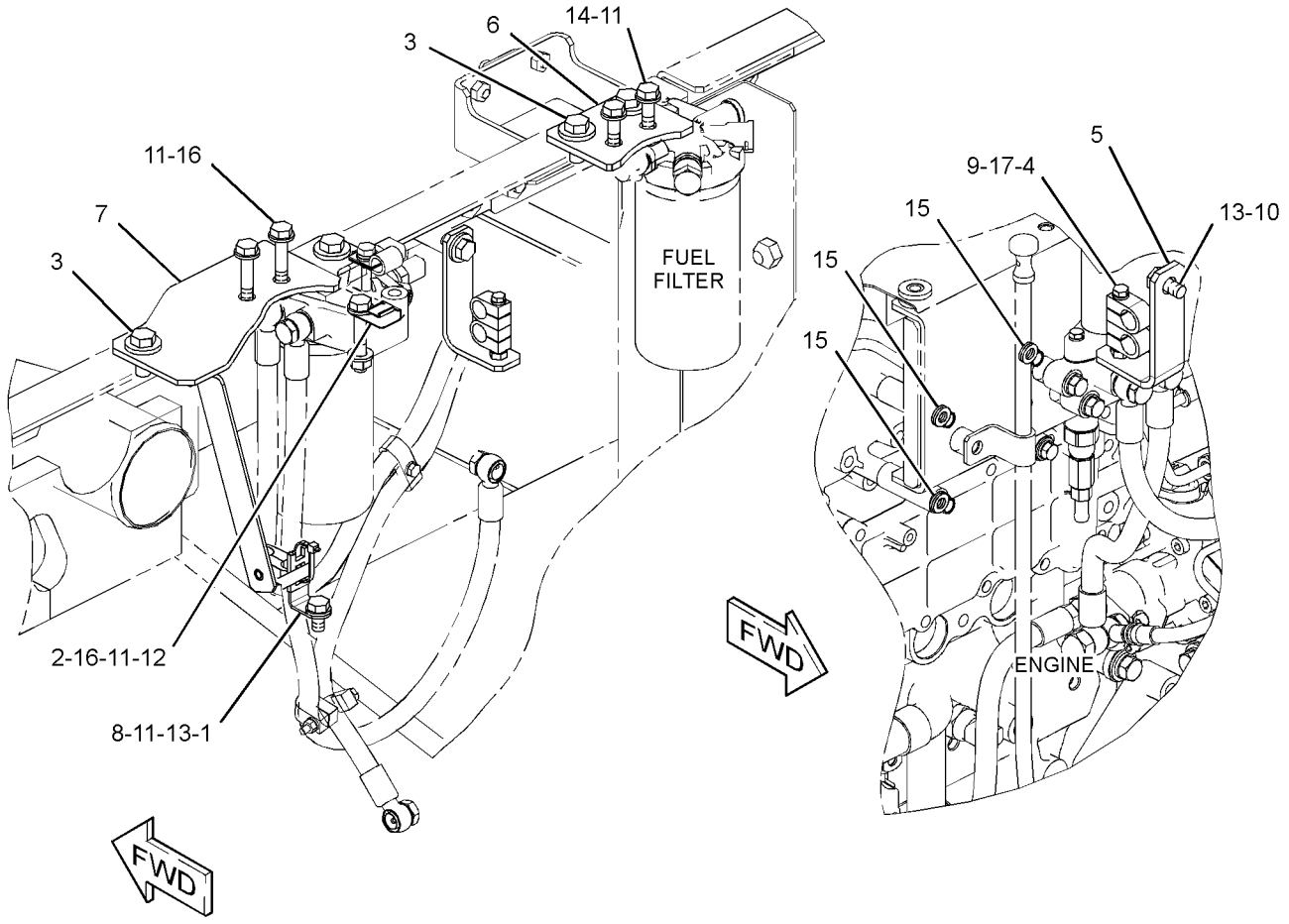

GRAPHIC #1 **<END>** g01626068

327-7207 MOUNTING GP-FUEL FILTER

S/N: KGF1-UP; FAL1-UP

PART OF 354-1056, 354-1057 COOLING AR-HIGH AMBIENT TEMP

AN ATTACHMENT

SMCS-1261 **i04033299**

NOTE	REF NO	GRAPHIC REF	PART NUMBER	QTY	PART NAME 1 2 3 4 5 6 (PRODUCT LEVEL)	SEE PAGE
	1	2	**3S-2093**	1	STRAP-CABLE	
	2	2	**116-0118**	1	CLIP	
M	3	1	**135-8575**	6	BOLT AS	
	4	1	**297-7674**	1	PLATE AS	
	5	1	**327-7211**	1	PLATE AS	
	6	1	**327-7214**	1	PLATE AS	
	7	1	**327-7217**	1	BLOCK	
	8	2	**132-5789**	1	CLIP	
	9	1,2	**8T-4121**	9	WASHER-HARD (11X21X2.5-MM THK)	
M	10	2	**8T-4133**	1	NUT (M10X1.5-THD)	
M	11	2	**8T-4137**	1	BOLT (M10X1.5X20-MM)	
M	12	1	**8T-4182**	2	BOLT (M10X1.5X45-MM)	
M	13	1,2	**8T-6466**	3	BOLT (M10X1.5X60-MM)	
M	14	1	**8T-6685**	2	BOLT (M10X1.5X110-MM)	
	15	1	**4P-7581**	1	CLIP	
M	16	1	**8T-4191**	1	BOLT (M10X1.5X16-MM)	
	17	1	**8T-4896**	1	WASHER-HARD (10.2X18.5X2.5-MM THK)	
	18	1	**294-1833**	3	CLAMP	
	19	1	**9X-8256**	6	WASHER (6.6X12X2-MM THK)	
M	20	1	**8C-8451**	3	BOLT (M6X1X40-MM)	

M - METRIC PART

327-7207 **MOUNTING GP-FUEL FILTER (*contd.*)** **i04033299**

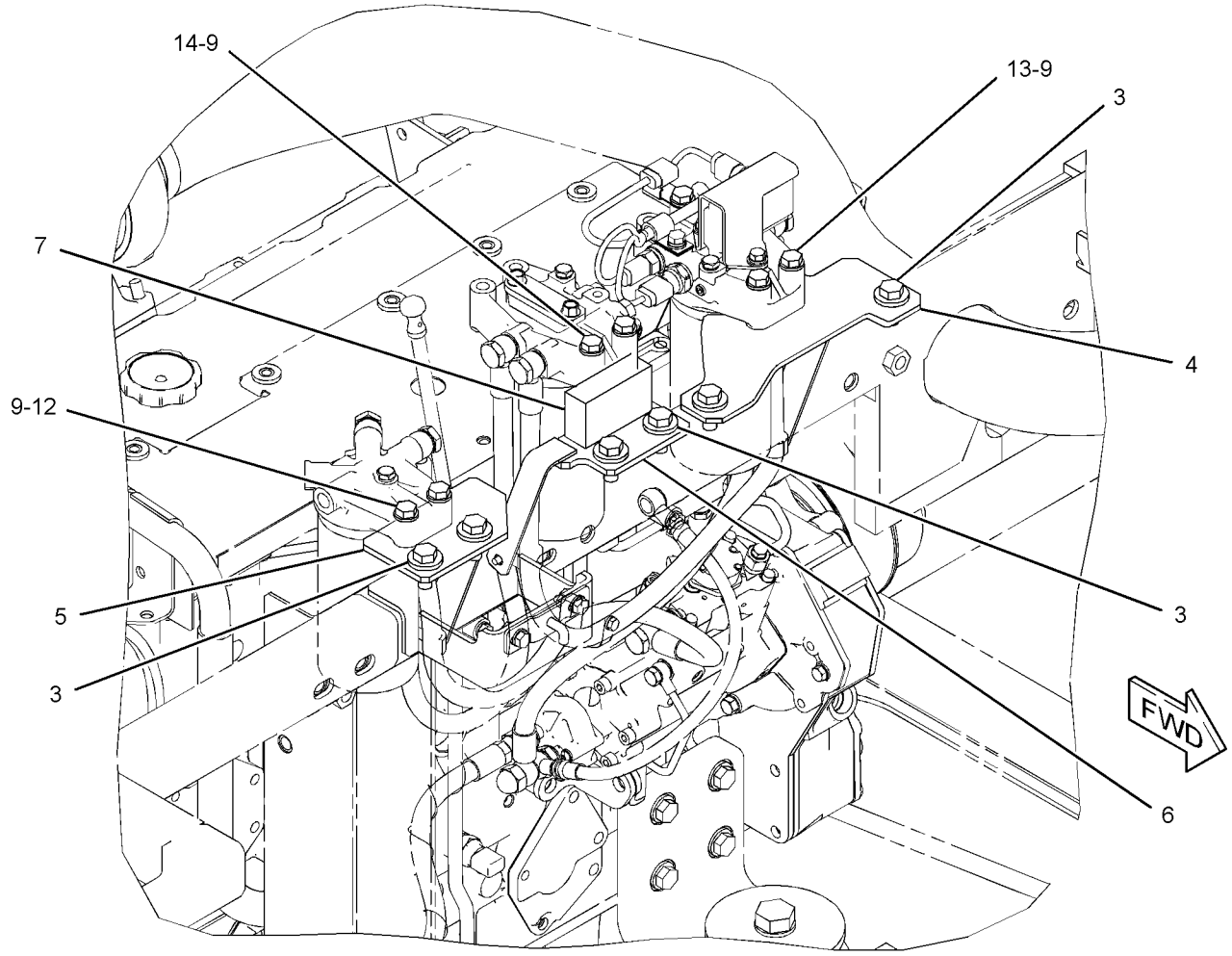

GRAPHIC #1 g02232413

327-7207 **MOUNTING GP-FUEL FILTER (*contd.*)** **i04033299**

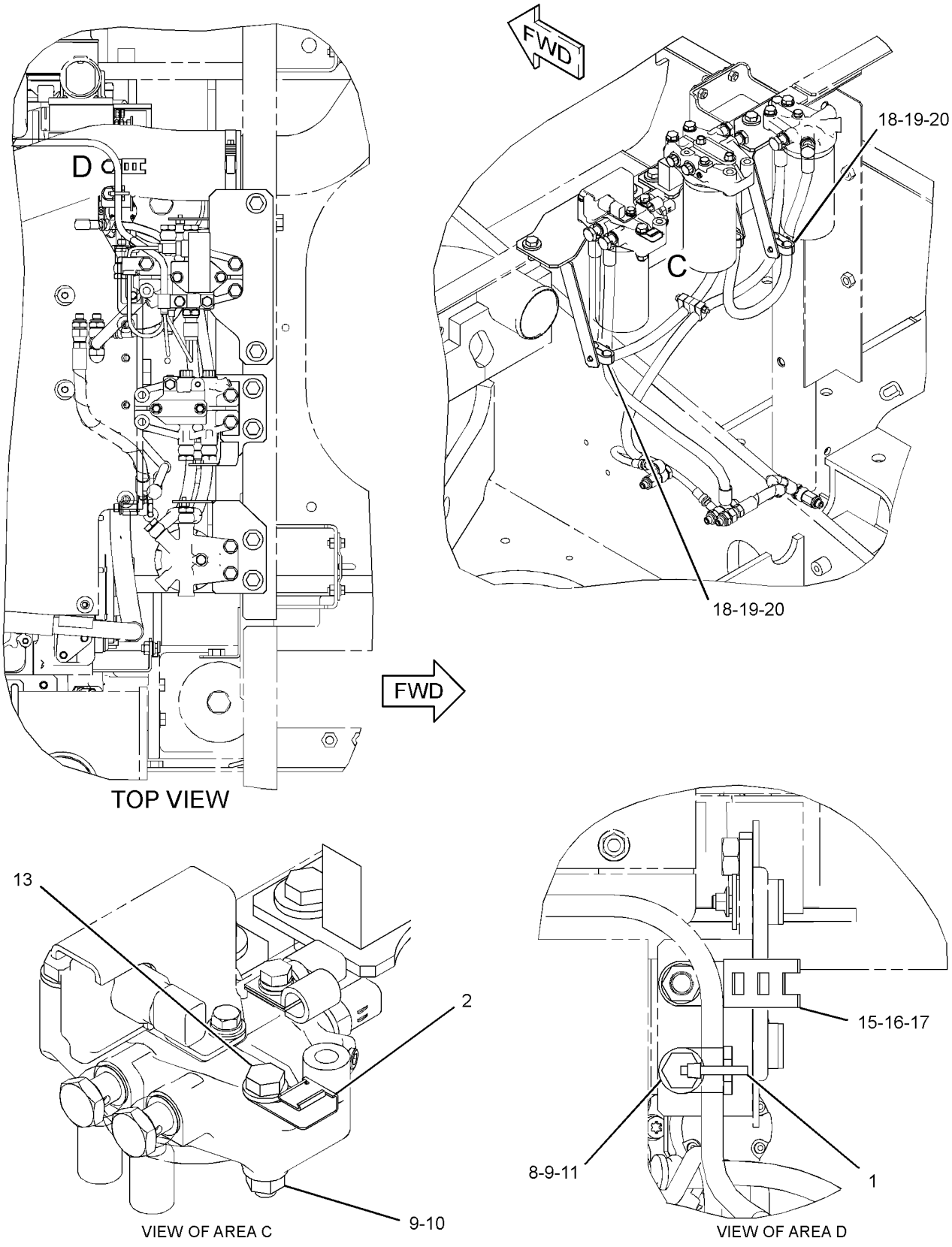

GRAPHIC #2 **<END>** g02232513

305-4678 MOUNTING GP-PUMP—FUEL INJECTION

S/N: GDC1847-UP

PART OF 272-4677, 272-4683, 296-4676, 296-4687, 305-4777 ENGINE AR, 327-7199 ENGINE AR-PRIMARY

ALSO AN ATTACHMENT

SMCS-1256 **i04495140**

NOTE	REF NO	GRAPHIC REF	PART NUMBER	QTY	PART NAME 1 2 3 4 5 6 (PRODUCT LEVEL)	SEE PAGE
YR	1	1	**326-4635**	1	PUMP GP-FUEL INJECTION	337
	2	1	**294-1834**	1	NUT	
	3	1	**294-1846**	1	SEAL-O-RING	
	4	1	**294-1836**	1	KEY-WOODRUFF	
	5	1	**294-1839**	1	FLANGE	
	6	1	**294-1841**	1	GASKET	
	7	1	**294-1842**	1	SEAL-O-RING	
	8	1	**095-8799**	1	BOLT (M8X1.25X30.5-MM)	
	9	1	**294-1843**	1	BOLT (M10X1.5X47-MM)	
	10	1	**294-1821**	3	BOLT (M8X1.25X35.5-MM)	

R - REMFG PART MAY BE AVAILABLE
Y - SEPARATE ILLUSTRATION

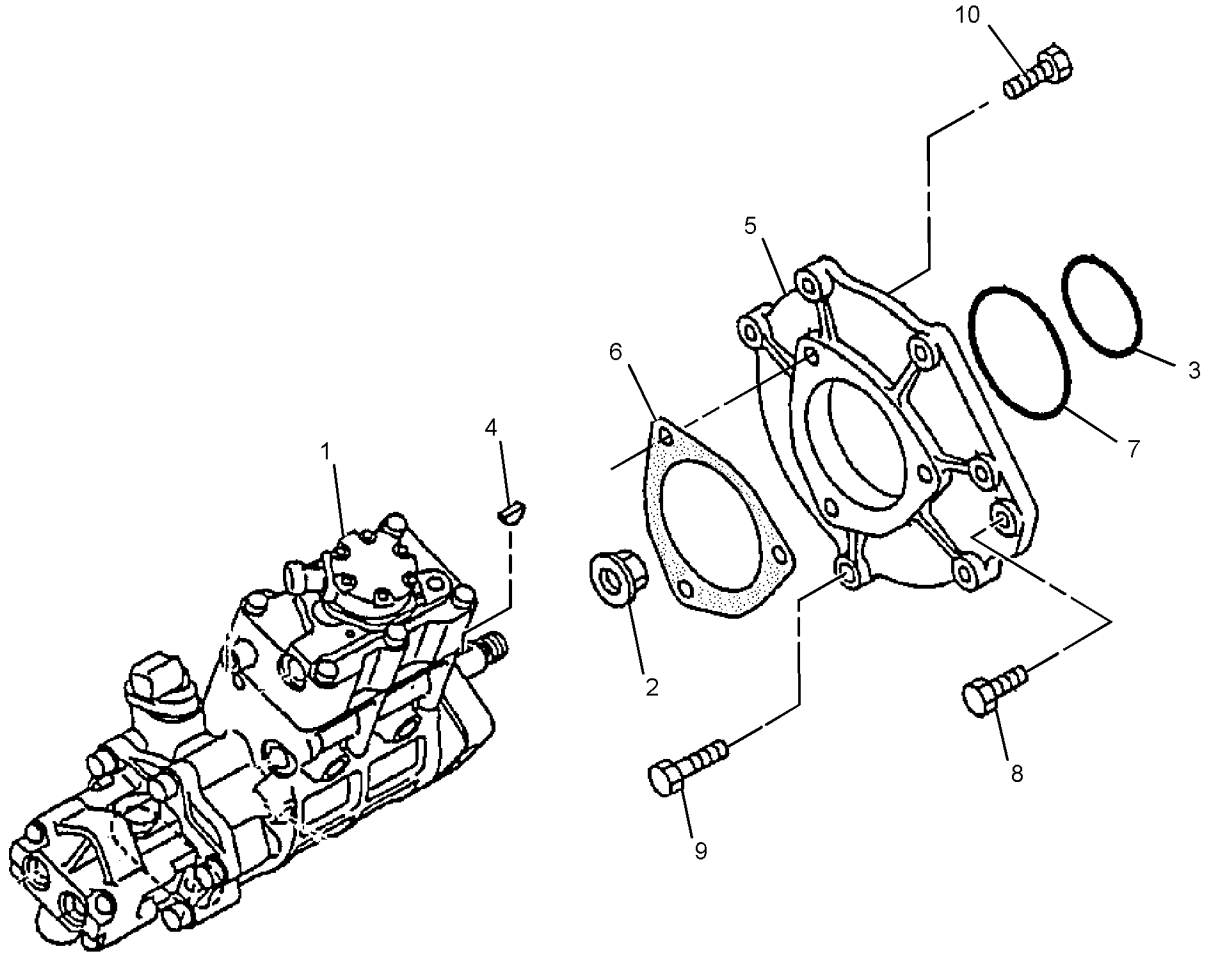

GRAPHIC #1 **<END>** g02109895

229-1859 PUMP & MOTOR GP-REFUELING

S/N: KGF1-UP; FAL1-UP
PART OF 229-1785 PUMP GP-REFUELING
AN ATTACHMENT

SMCS-1295 **i02213969**

NOTE	REF NO	GRAPHIC REF	PART NUMBER	QTY	PART NAME 1 2 3 4 5 6 (PRODUCT LEVEL)	SEE PAGE
	1	1	**121-1038**	1	HOUSING-RECEPTACLE	
	2	1	**116-0128**	1	SEAL	
	3	1	**121-1039**	2	TERMINAL (MALE)	

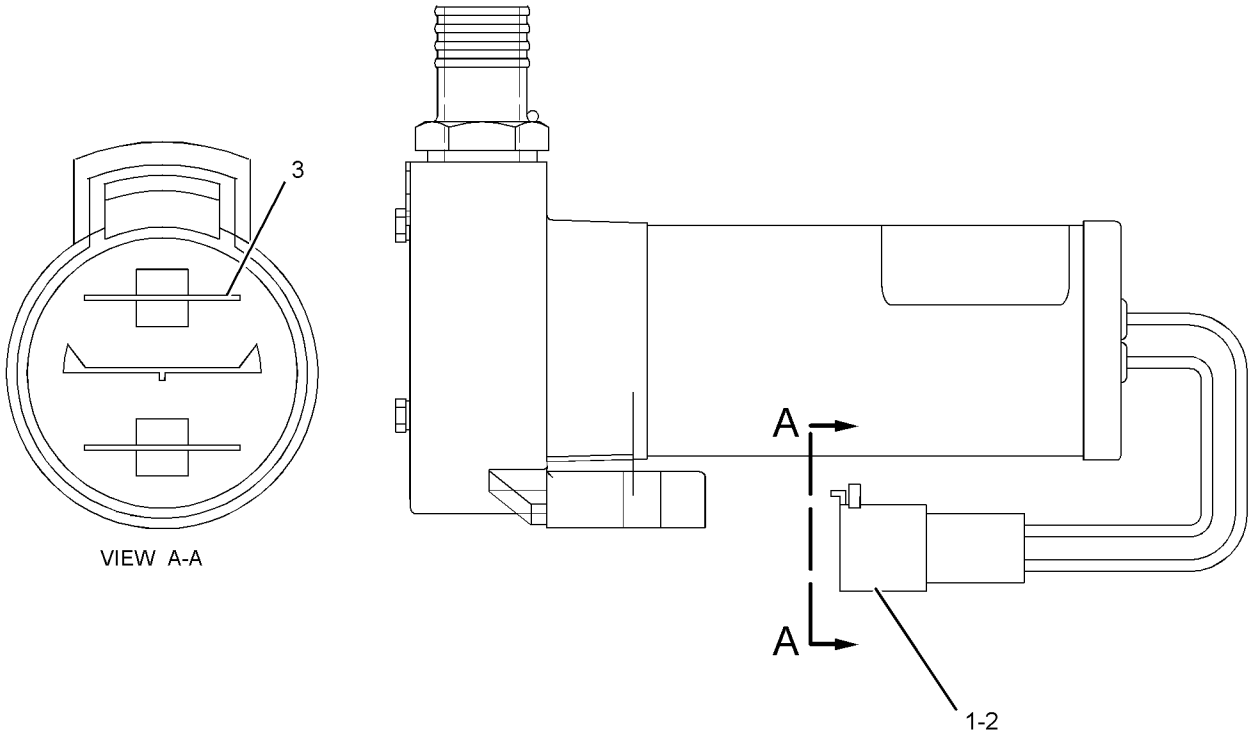

VIEW A-A

GRAPHIC #1 **<END>** g01104176

264-8770 PUMP AR-FUEL TRANSFER

S/N: KGF1-UP; FAL1-UP
CANNOT BE USED WITH 314-3735—PAGE: 441
AN ATTACHMENT

SMCS-1256 **i03391310**

NOTE	PART NUMBER	QTY	PART NAME 1 2 3 4 5 6 (PRODUCT LEVEL)	SEE PAGE
Y	*298-4258*	1	FILM GP (FUEL TRANSFER PUMP)	2291
Y	*229-1785*	1	PUMP GP-REFUELING	339
Y	*278-3900*	1	TANK & MTG GP-FUEL	348
Y	*238-1570*	1	WIRING GP-REFUELING PUMP	645

Y - SEPARATE ILLUSTRATION

<END>

314-3785 PUMP AR-FUEL TRANSFER

S/N: KGF1-UP; FAL1-UP
PART OF 314-3859, 314-3860, 314-3861, 314-3862, 314-3864, 314-3865, 314-3905, 338-9908, 338-9923, 347-3340, 354-1018, 354-1019, 359-2298, 359-2299, 359-2300, 359-2309, 359-2310, 359-2421 DISTRIBUTION AR, 338-9925, 351-9691, 359-2264 OPTION AR-COLD WEATHER, 338-9924, 351-9690, 359-2263 OPTION AR-REGIONAL
AN ATTACHMENT

SMCS-1256 **i03164741**

NOTE	PART NUMBER	QTY	PART NAME 1 2 3 4 5 6 (PRODUCT LEVEL)	SEE PAGE
Y	*330-1426*	1	COVER AS-ACCESS (FUEL, HYDRAULIC TANKS)	723
Y	*298-4258*	1	FILM GP (FUEL TRANSFER PUMP)	2291
Y	*229-1785*	1	PUMP GP-REFUELING	339
Y	*327-3198*	1	TANK & MTG GP-FUEL	352
Y	*238-1570*	1	WIRING GP-REFUELING PUMP	645

Y - SEPARATE ILLUSTRATION

<END>

367-8698 PUMP AR-REFUELING

S/N: KGF1-UP
PART OF 359-2506, 359-2507, 367-8697, 367-8809, 367-8810, 367-8817, 379-7216, 379-7217, 379-7218, 379-7219, 379-7220, 379-7267, 379-7268, 379-7269, 379-7270, 385-4035, 385-4036 DISTRIBUTION AR, 367-8812, 367-8814, 379-7297, 379-7298, 379-7299, 379-7300 OPTION AR-REGIONAL
AN ATTACHMENT

SMCS-1295 **i04450249**

NOTE	PART NUMBER	QTY	PART NAME 1 2 3 4 5 6 (PRODUCT LEVEL)	SEE PAGE
Y	*330-1426*	1	COVER AS-ACCESS (FUEL, HYDRAULIC TANKS)	723
Y	*327-3198*	1	TANK & MTG GP-FUEL	352

Y - SEPARATE ILLUSTRATION

<END>

419-0572 PUMP AR-REFUELING

S/N: KGF1-UP

CANNOT BE USED WITH 314-3785—PAGE: 335

AN ATTACHMENT

SMCS-1295 **i05126541**

NOTE	PART NUMBER	QTY	PART NAME 1 2 3 4 5 6 (PRODUCT LEVEL)	SEE PAGE
Y	*399-2560*	1	COVER AS-SOUND SUPPRESSION	728
Y	*399-0821*	1	TANK & MTG GP-FUEL	355

Y - SEPARATE ILLUSTRATION

<END>

326-4635 PUMP GP-FUEL INJECTION*R

S/N: GDC1-UP

PART OF 272-4683 ENGINE AR, 305-4678 MOUNTING GP-PUMP

ALSO AN ATTACHMENT

SMCS-1251, 1290 **i05291754**

NOTE	REF NO	GRAPHIC REF	PART NUMBER	QTY	PART NAME 1 2 3 4 5 6 (PRODUCT LEVEL)	SEE PAGE
	1	1	**238-0120**	1	SENSOR GP-SPEED (INJECTION PUMP)	
	2	1	**247-6019**	1	SEAL	
	3	1	**257-2381**	2	PIN	
	4	1	**257-2382**	2	PLUG	
	5	1	**258-8149**	2	SPRING	
	6	1	**292-3751**	1	PUMP GP-FUEL TRANSFER	
	7	1	**294-3031**	1	BOLT-SPECIAL	
	8	1	**294-3032**	1	WASHER-SPECIAL	
	9	1	**117-1385**	1	SEAL-O-RING	
	10	1	**334-2932**	1	SEAL-O-RING	
M	11	1	**5A-3604**	5	BOLT-SOCKET HEAD (M8X1.25X25-MM)	
	12	1	**8L-2779**	1	SEAL-O-RING	
M	13	1	**8T-4200**	1	BOLT (M8X1.25X16-MM)	
	14	1	**3B-4509**	1	LOCKWASHER	
	15	1	**295-4801**	1	NUT (M14X1.5-THD)	

M - METRIC PART

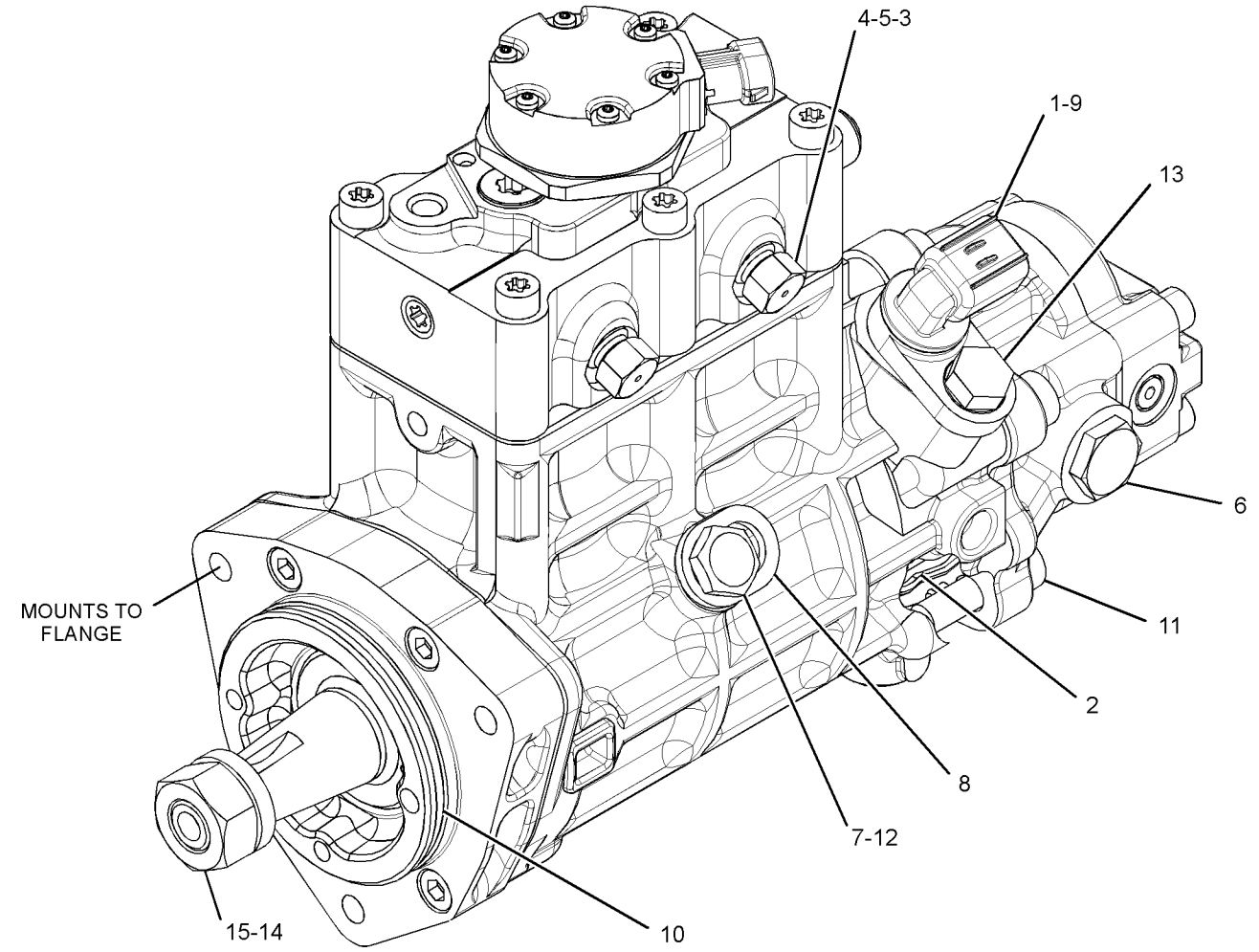

GRAPHIC #1 **<END>** g03360894

390-4679 PUMP GP-FUEL PRIMING—FUEL

S/N: KGF1-UP; FAL1-UP

PART OF 420-3862 KIT-FUEL PRIMING PUMP

SMCS-1258 **i05261437**

NOTE	REF NO	GRAPHIC REF	PART NUMBER	QTY	PART NAME 1 2 3 4 5 6 (PRODUCT LEVEL)	SEE PAGE
	1	1	**162-2220**	2	VALVE-CHECK	
	2	1	**162-2222**	2	SPRING	
	3	1	**9X-8267**	3	WASHER (6.6X12X2-MM THK)	
	4	1	**9S-8002**	1	PLUG-O-RING	
M	5	1	**8T-4138**	3	BOLT (M6X1X20-MM)	
	6	1	**6V-4368**	1	SEAL-O-RING	
	7	1	**6D-5801**	2	LOCKNUT (8-32-THD)	
	8	1	**236-6717**	2	SEAL-O-RING	
	9	1	**188-7541**	1	SEAL	
	10	1	**188-7536**	1	SEAL	
	11	1	**173-1016**	2	RING-BACKUP	
	12	1	**179-7400**	2	SEAL (FUEL)	

PARTS SHOWN IN GRAPHIC(S) WITHOUT A REFERENCE NUMBER ARE NOT SERVICED SEPARATELY

M - METRIC PART

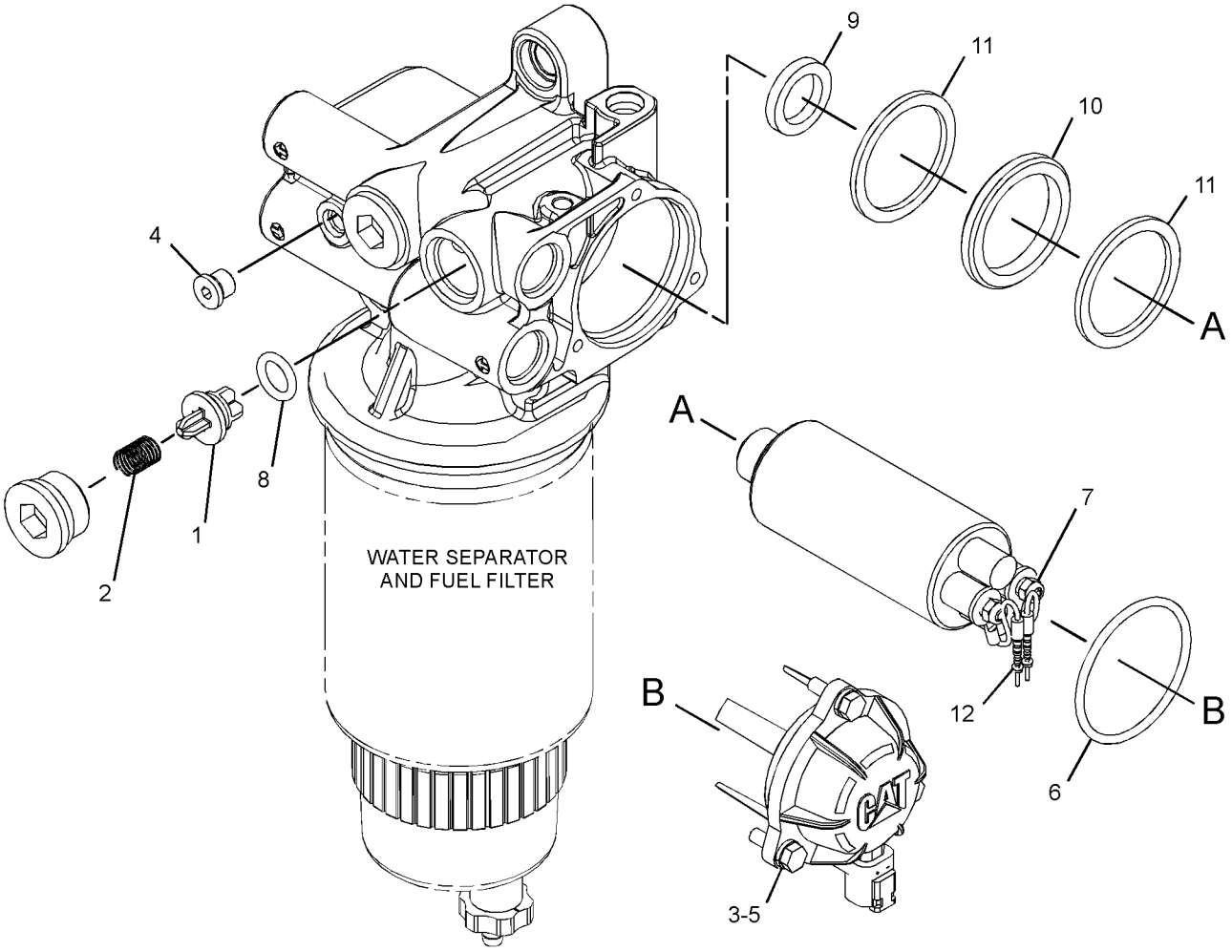

GRAPHIC #1 **<END>** g03336954

229-1785 PUMP GP-REFUELING

S/N: KGF1-UP; FAL1-UP
PART OF 264-8770 PUMP AR-FUEL TRANSFER
AN ATTACHMENT
TYPE 1

SMCS-1295 **i02706815**

NOTE	REF NO	GRAPHIC REF	PART NUMBER	QTY	PART NAME 1 2 3 4 5 6 (PRODUCT LEVEL)	SEE PAGE
Y	1	1	**5C-6108**	1	SWITCH GP-REFUELING (FUEL TANK SHUTOFF)	544
	2	1	**7K-1181**	1	STRAP-CABLE	
	3	1	**9M-7958**	4	CLAMP-HOSE	
	4	1	**120-5114**	1	FILM-INSTRUCTION (REFUELING PUMP)	
	5	1	**122-4021**	1	COVER	
M	6	1	**135-8572**	2	BOLT AS	
M	7	1	**135-8573**	4	BOLT AS	
Y	8	1	**229-1859**	1	PUMP & MOTOR GP-REFUELING	334
	9	1	**229-1860**	1	STRAINER AS-FUEL	
	10	1	**229-1861**	1	CONNECTOR-HOSE	
	11	1	**240-3920**	1	SUPPORT AS	
M	12	1	**8T-4194**	2	BOLT (M12X1.75X50-MM)	
	13	1	**8T-4223**	4	WASHER-HARD (13.5X25.5X3-MM THK)	
M	14	1	**8T-4244**	2	NUT (M12X1.75-THD)	
E	15	1	**229-1857**		HOSE (430-CM)	
E	15A	1	**229-1857**		HOSE (38-CM)	

E - ORDER BY THE CENTIMETER
M - METRIC PART
Y - SEPARATE ILLUSTRATION

229-1785 **PUMP GP-REFUELING (*contd.*)** **i02706815**

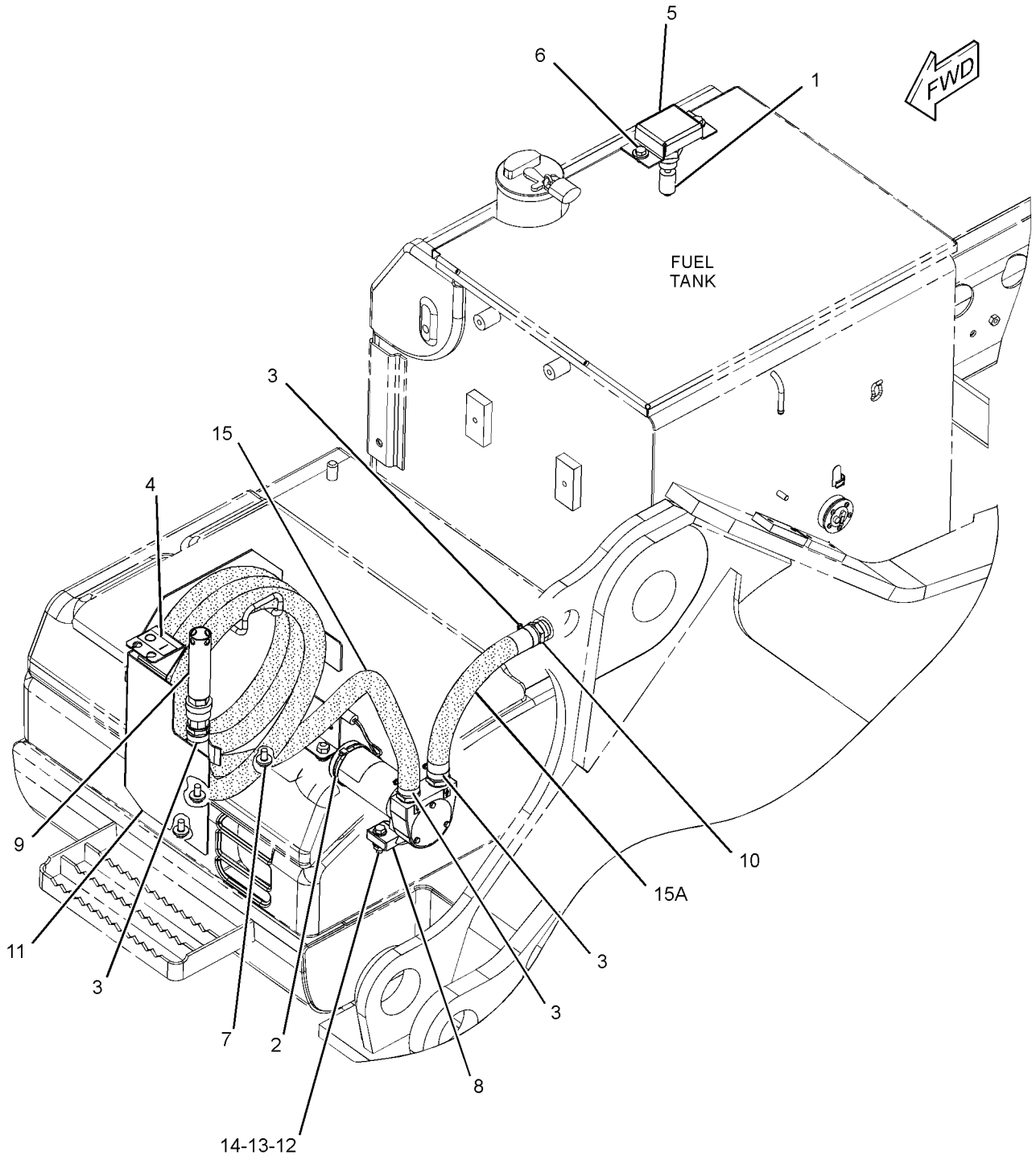

GRAPHIC #1 **<END>** g01236403

229-1785 PUMP GP-REFUELING

S/N: KGF1-UP; FAL1-UP
PART OF 314-3785 PUMP AR-FUEL TRANSFER
AN ATTACHMENT
TYPE 2

SMCS-1295 **i04523472**

NOTE	REF NO	GRAPHIC REF	PART NUMBER	QTY	PART NAME 1 2 3 4 5 6 (PRODUCT LEVEL)	SEE PAGE
C	1	1	**312-2645**	1	SWITCH AS-LIQUID LEVEL (FUEL TANK SHUTOFF)	
		1	**2S-4078**	1	SEAL-O-RING	
		1	**8T-8729**	2	PIN-CONNECTOR (16-GA TO 18-GA)	
		1	**243-4505**	1	RECEPTACLE AS-CONNECTOR (2-PIN)	
	2	1	**7K-1181**	1	STRAP-CABLE	
	3	1	**9M-7958**	4	CLAMP-HOSE	
	4	1	**120-5114**	1	FILM-INSTRUCTION (REFUELING PUMP)	
C	5	1	**324-5761**	1	COVER AS	
M	6	1	**135-8572**	2	BOLT AS	
M	7	1	**135-8573**	4	BOLT AS	
Y	8	1	**229-1859**	1	PUMP & MOTOR GP-REFUELING	334
	9	1	**229-1860**	1	STRAINER AS-FUEL	
	10	1	**229-1861**	1	CONNECTOR-HOSE	
	11	1	**240-3920**	1	SUPPORT AS	
M	12	1	**8T-4194**	2	BOLT (M12X1.75X50-MM)	
	13	1	**8T-4223**	4	WASHER-HARD (13.5X25.5X3-MM THK)	
M	14	1	**8T-4244**	2	NUT (M12X1.75-THD)	
E	15	1	**366-6495**		HOSE (430-CM)	
E	15A	1	**366-6495**		HOSE (38-CM)	

C - CHANGE FROM PREVIOUS TYPE
E - ORDER BY THE CENTIMETER
M - METRIC PART
Y - SEPARATE ILLUSTRATION

229-1785 **PUMP GP-REFUELING (*contd.*)** **i04523472**

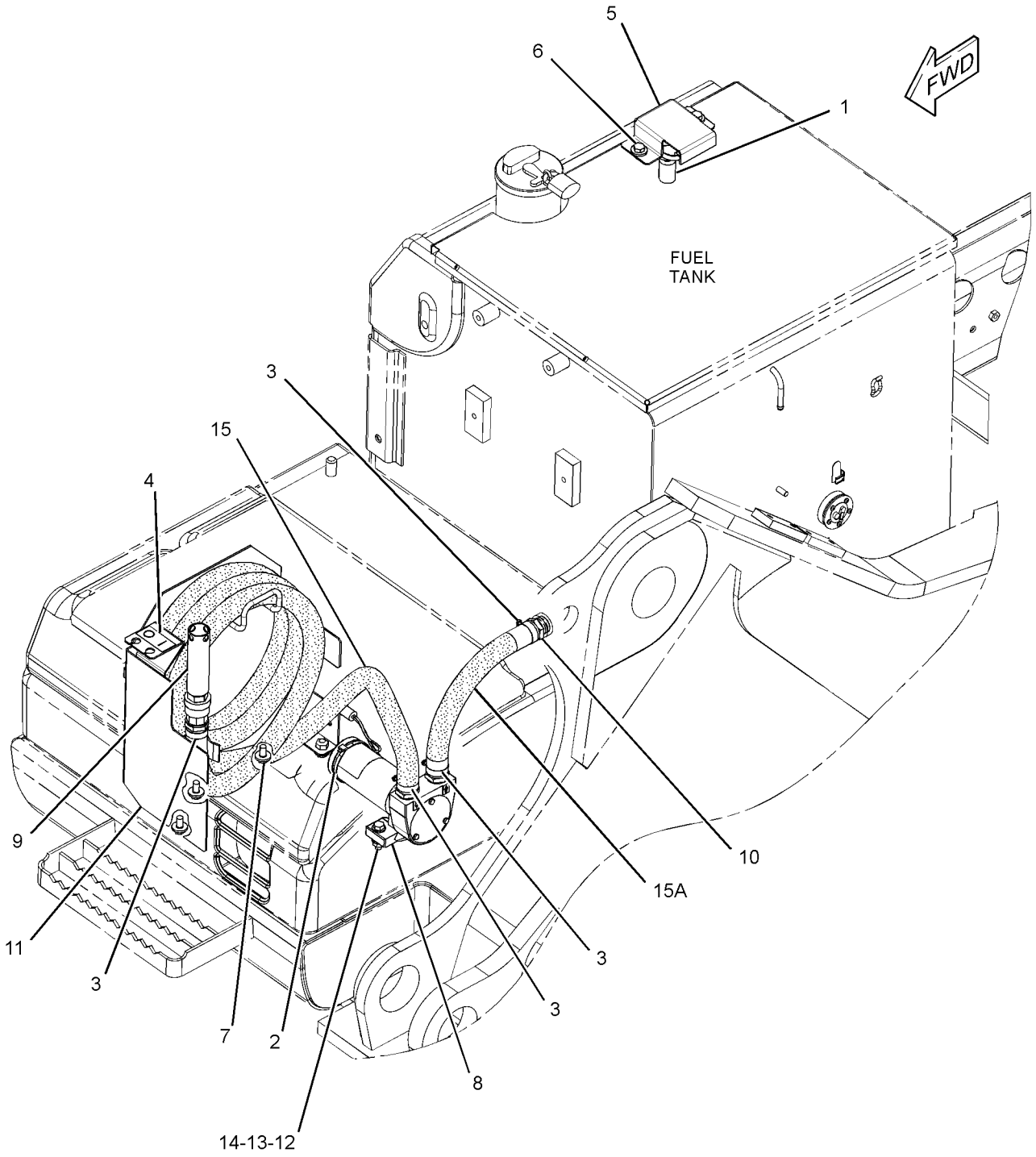

GRAPHIC #1 **<END>** g01582453

358-6634 RAIL GP-FUEL—6-CYLINDER ENGINE

S/N: GDC1-UP
PART OF 296-4656 LINES GP-FUEL
ALSO AN ATTACHMENT

SMCS-1288 **i04041735**

NOTE	REF NO	GRAPHIC REF	PART NUMBER	QTY	PART NAME 1 2 3 4 5 6 (PRODUCT LEVEL)	SEE PAGE
	1	1	**305-5291**	1	VALVE AS-RELIEF (FUEL RAIL)	

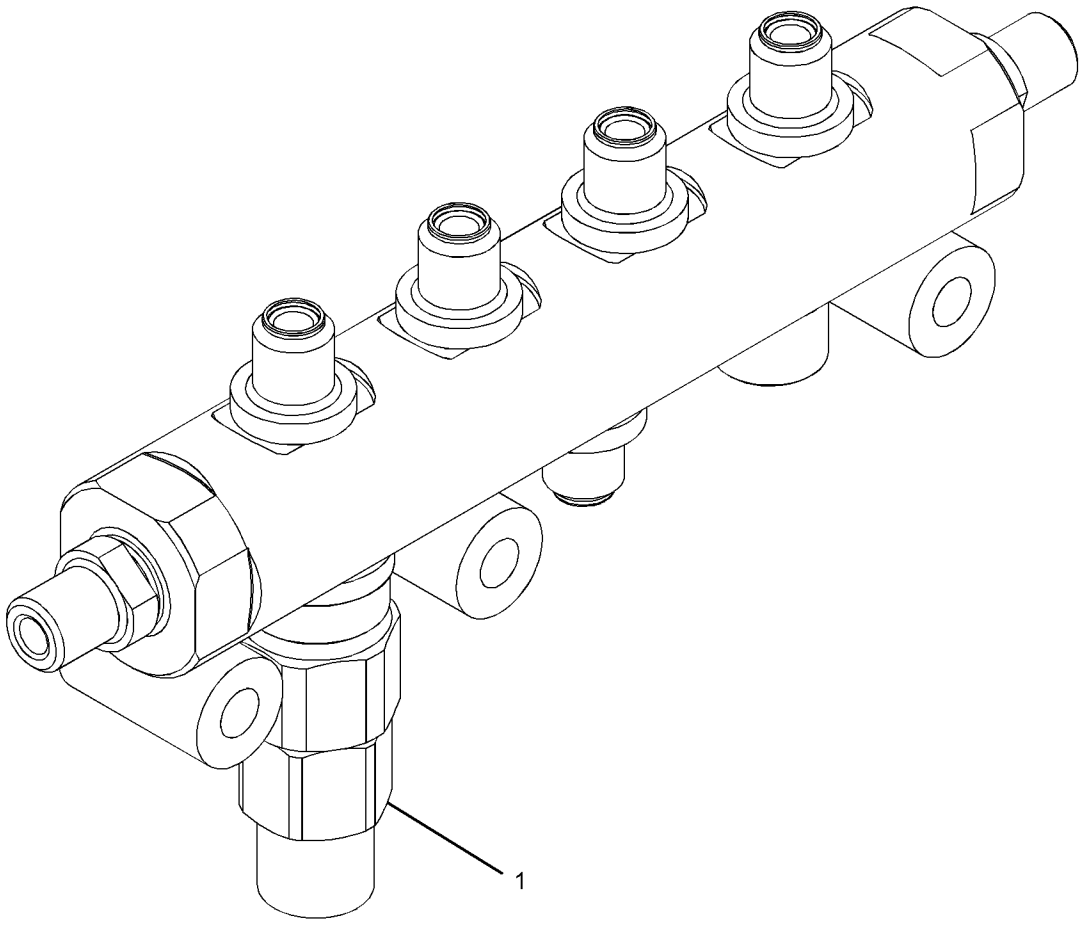

GRAPHIC #1 **<END>** g02204655

262-9372 STRAINER GP-FUEL—FLOAT GAUGE

S/N: KGF1-UP; FAL1-UP
PART OF 278-3898, 278-3899, 278-3902, 278-3903 TANK GP-FUEL
ALSO AN ATTACHMENT

SMCS-1261 **i03201561**

NOTE	REF NO	GRAPHIC REF	PART NUMBER	QTY	PART NAME 1 2 3 4 5 6 (PRODUCT LEVEL)	SEE PAGE
					INDIVIDUAL PARTS ARE NOT SERVICED SEPARATELY	
					AVAILABLE REPAIR KIT(S):	
J			**278-3970**	1	KIT-GAUGE (FUEL STRAINER)	

J - KIT MARKED J SERVICES PART(S) MARKED J IN GRAPHIC

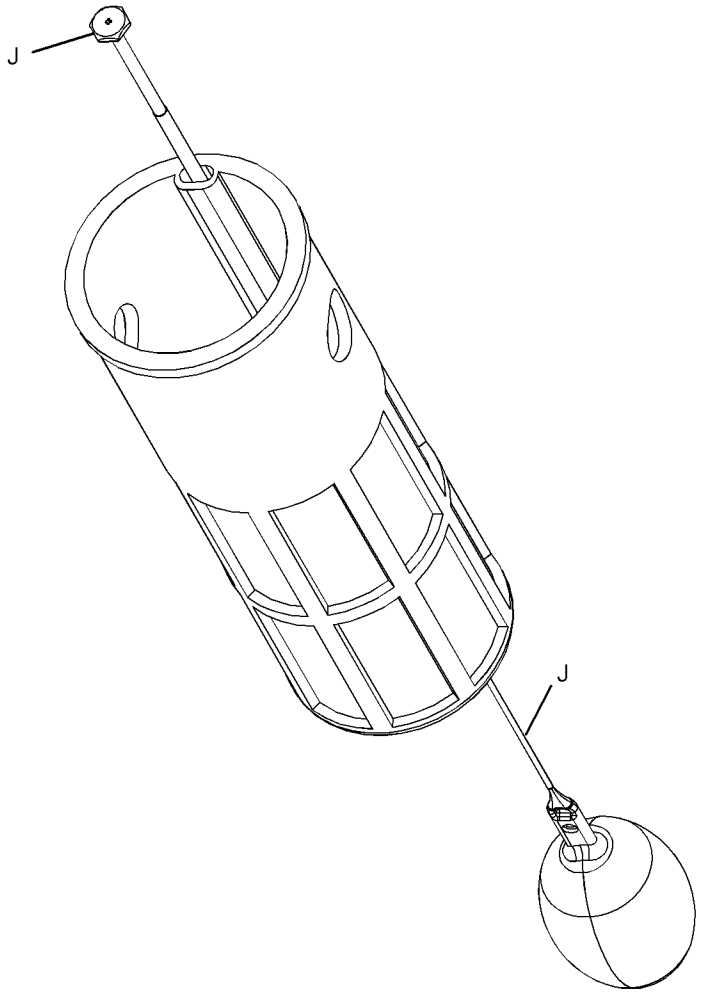

GRAPHIC #1 **<END>** g01387510

278-3896 TANK & MTG GP-FUEL

S/N: KGF1-UP; FAL1-UP

PART OF 264-8638, 264-8639 CHASSIS AR

SMCS-1273 **i02783626**

NOTE	REF NO	GRAPHIC REF	PART NUMBER	QTY	PART NAME 1 2 3 4 5 6 (PRODUCT LEVEL)	SEE PAGE
	1	1	**246-2641**	1	PADLOCK GP	
		1	**5P-8500**	1	KEY	
Y	2	1	**278-3897**	1	TANK GP-FUEL	356
	3	1	**085-9310**	4	SPACER (16.6X32X26-MM THK)	
M	4	1	**8T-4140**	4	BOLT (M16X2X60-MM)	

M - METRIC PART
Y - SEPARATE ILLUSTRATION

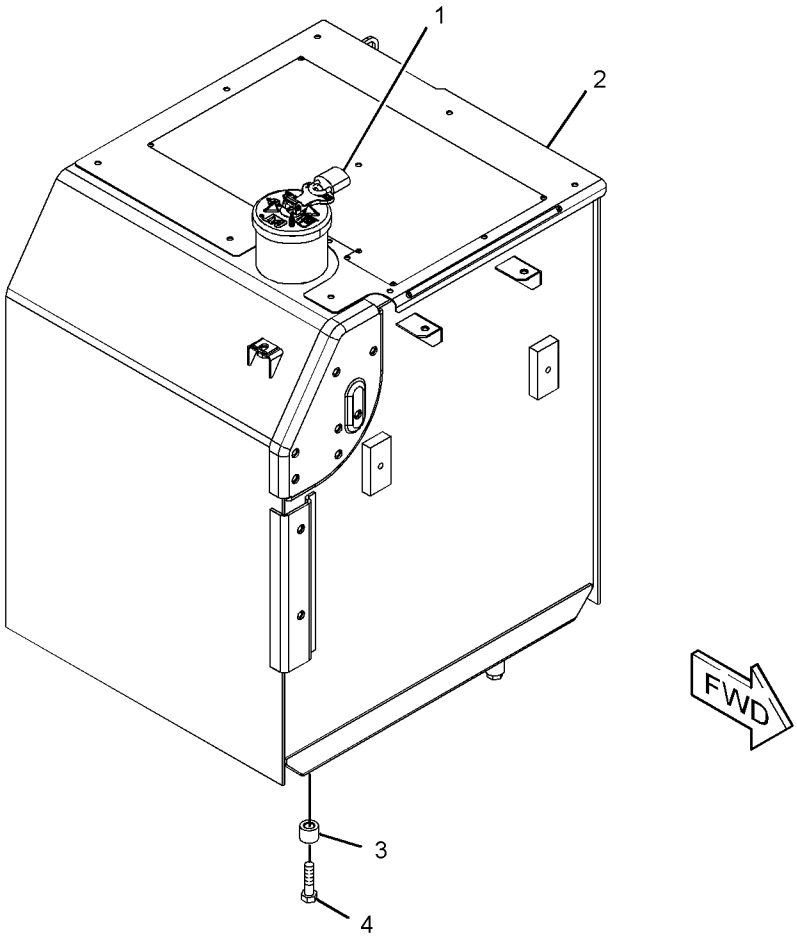

GRAPHIC #1 **<END>** g01392682

278-3896 TANK & MTG GP-FUEL

S/N: KGF1-7531; FAL1-8887

PART OF 264-8638, 264-8639 CHASSIS AR

SMCS-1273 **i04437590**

NOTE	REF NO	GRAPHIC REF	PART NUMBER	QTY	PART NAME 1 2 3 4 5 6 (PRODUCT LEVEL)	SEE PAGE
	1	1	**246-2641**	1	PADLOCK GP	
		1	**5P-8500**	1	KEY	
CY	2	1	**366-6363**	1	TANK GP-FUEL	383
	3	1	**085-9310**	4	SPACER (16.6X32X26-MM THK)	
M	4	1	**8T-4140**	4	BOLT (M16X2X60-MM)	

C - CHANGE FROM PREVIOUS TYPE
M - METRIC PART
Y - SEPARATE ILLUSTRATION

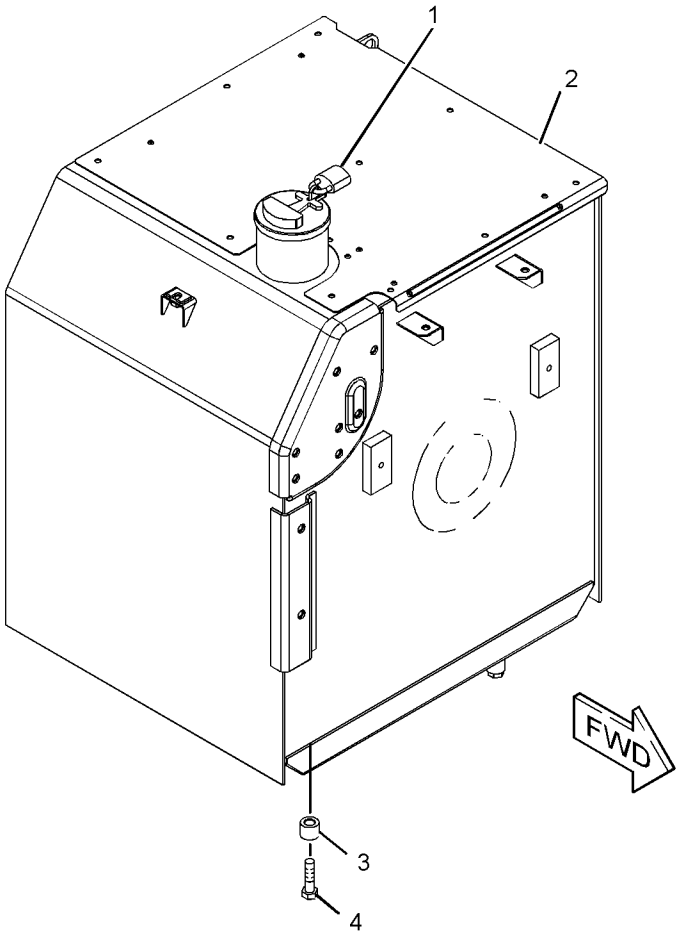

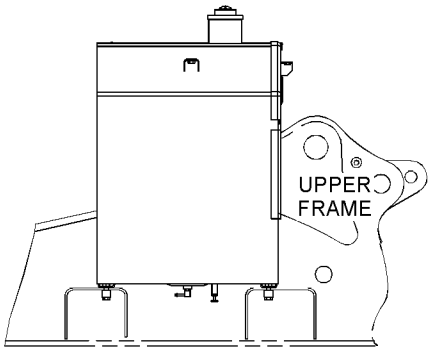

RIGHT SIDE VIEW

GRAPHIC #1 **<END>** g02593759

278-3896 TANK & MTG GP-FUEL

S/N: KGF7532-UP; FAL8888-UP

PART OF 264-8638, 264-8639 CHASSIS AR

SMCS-1273 **i04758665**

NOTE	REF NO	GRAPHIC REF	PART NUMBER	QTY	PART NAME 1 2 3 4 5 6 (PRODUCT LEVEL)	SEE PAGE
	1	1	**246-2641**	1	PADLOCK GP	
		1	**5P-8500**	1	KEY	
CY	2	1	**375-8620**	1	TANK GP-FUEL	392
	3	1	**085-9310**	4	SPACER (16.6X32X26-MM THK)	
M	4	1	**8T-4140**	4	BOLT (M16X2X60-MM)	

C - CHANGE FROM PREVIOUS TYPE
M - METRIC PART
Y - SEPARATE ILLUSTRATION

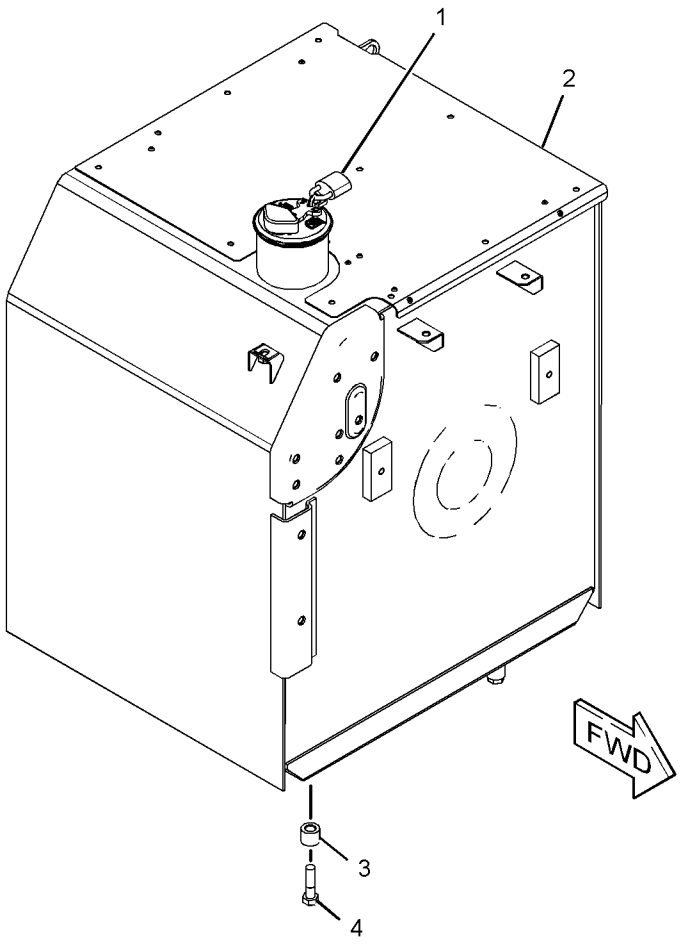

GRAPHIC #1 **<END>** g02911156

278-3900 TANK & MTG GP-FUEL

S/N: KGF1-UP; FAL1-UP
PART OF 264-8770 PUMP AR-FUEL TRANSFER
AN ATTACHMENT

SMCS-1273 **i03938330**

NOTE	REF NO	GRAPHIC REF	PART NUMBER	QTY	PART NAME 1 2 3 4 5 6 (PRODUCT LEVEL)	SEE PAGE
	1	1	**246-2641**	1	PADLOCK GP	
		1	**5P-8500**	1	KEY	
Y	2	1	**278-3901**	1	TANK GP-FUEL	363
	3	1	**085-9310**	4	SPACER (16.6X32X26-MM THK)	
M	4	1	**8T-4140**	4	BOLT (M16X2X60-MM)	

M - METRIC PART
Y - SEPARATE ILLUSTRATION

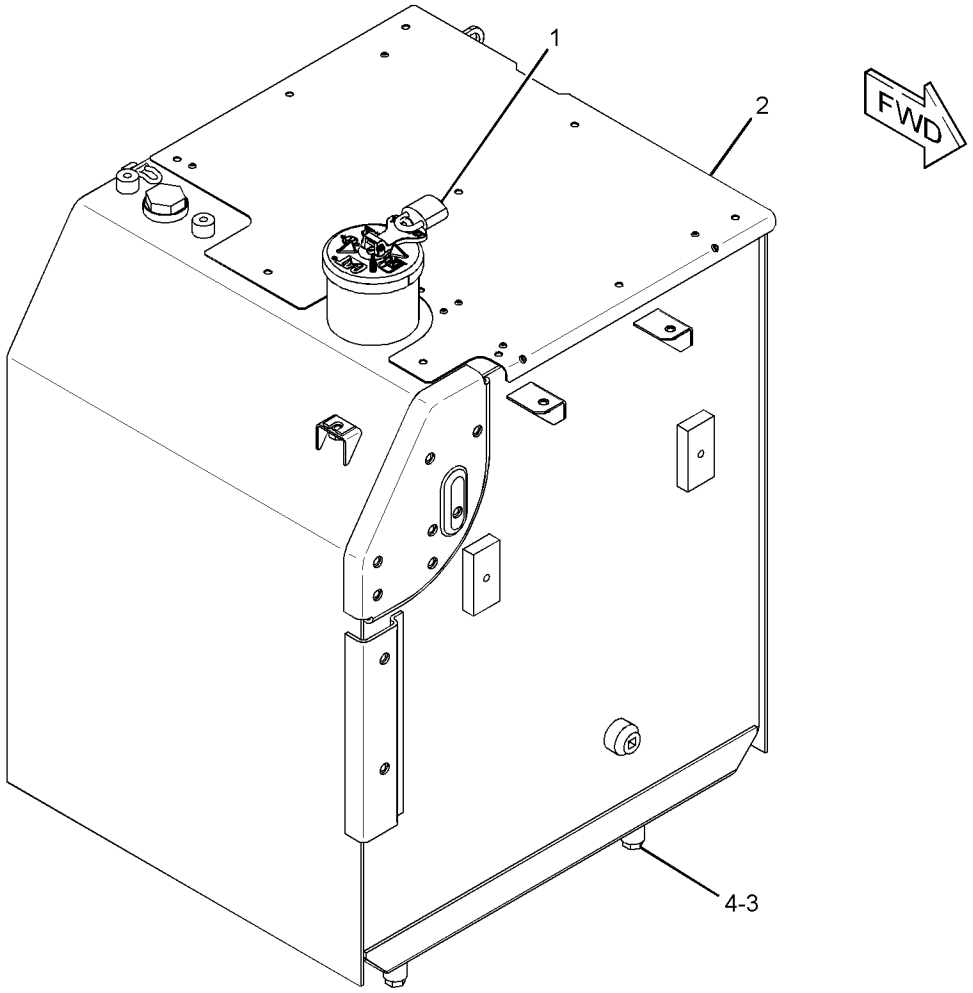

GRAPHIC #1 **<END>** g01381022

327-3191 TANK & MTG GP-FUEL

S/N: KGF1-UP; FAL1-UP
PART OF 330-1194 MACHINE AR
AN ATTACHMENT
TYPE 1

SMCS-1273 **i03142579**

NOTE	REF NO	GRAPHIC REF	PART NUMBER	QTY	PART NAME 1 2 3 4 5 6 (PRODUCT LEVEL)	SEE PAGE
	1	1	**246-2641**	1	PADLOCK GP	
		1	**5P-8500**	1	KEY	
	2	1	**085-9310**	4	SPACER (16.6X32X26-MM THK)	
Y	3	1	**327-3192**	1	TANK GP-FUEL	372
M	4	1	**8T-4140**	4	BOLT (M16X2X60-MM)	

M - METRIC PART
Y - SEPARATE ILLUSTRATION

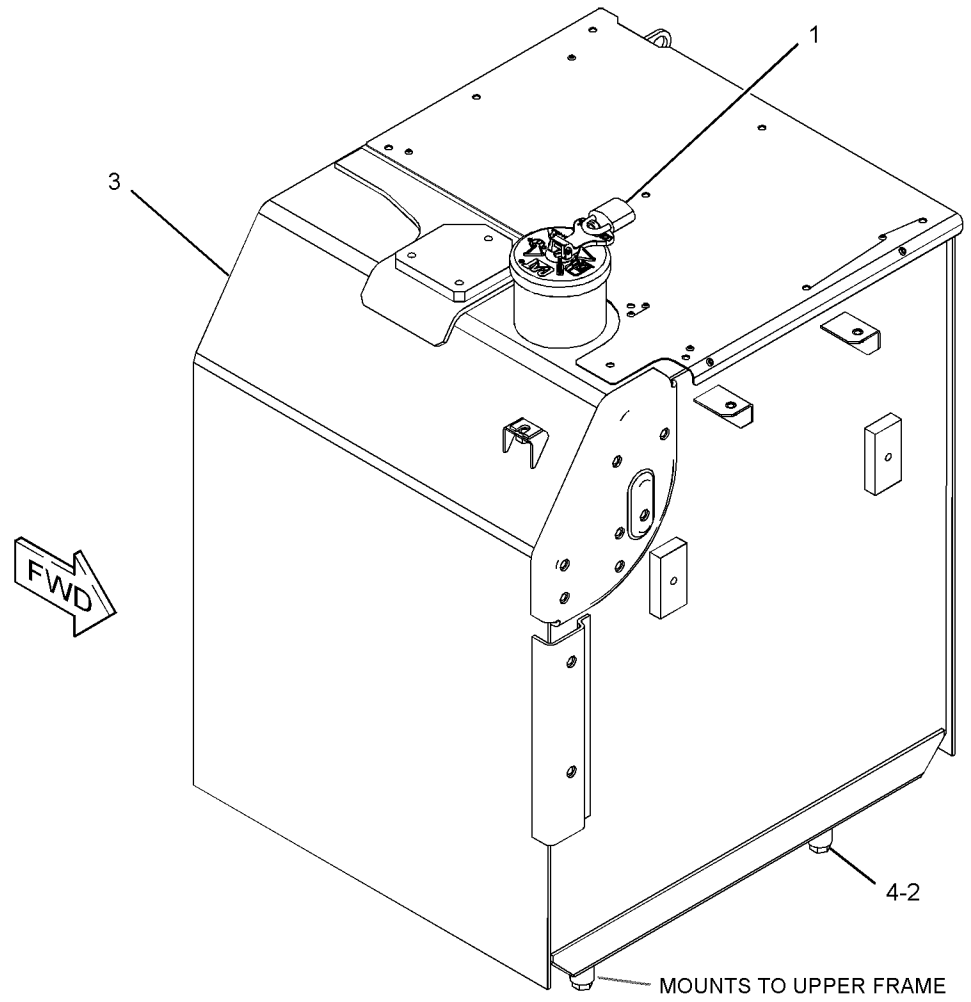

GRAPHIC #1 **<END>** g01627855

327-3191 TANK & MTG GP-FUEL

S/N: KGF1-UP; FAL1-UP
PART OF 330-1194 MACHINE AR
AN ATTACHMENT
TYPE 2

SMCS-1273 **i04140270**

NOTE	REF NO	GRAPHIC REF	PART NUMBER	QTY	PART NAME 1 2 3 4 5 6 (PRODUCT LEVEL)	SEE PAGE
	1	1	**246-2641**	1	PADLOCK GP	
		1	**5P-8500**	1	KEY	
	2	1	**085-9310**	4	SPACER (16.6X32X26-MM THK)	
CY	3	1	**366-6364**	1	TANK GP-FUEL	385
M	4	1	**8T-4140**	4	BOLT (M16X2X60-MM)	

C - CHANGE FROM PREVIOUS TYPE
M - METRIC PART
Y - SEPARATE ILLUSTRATION

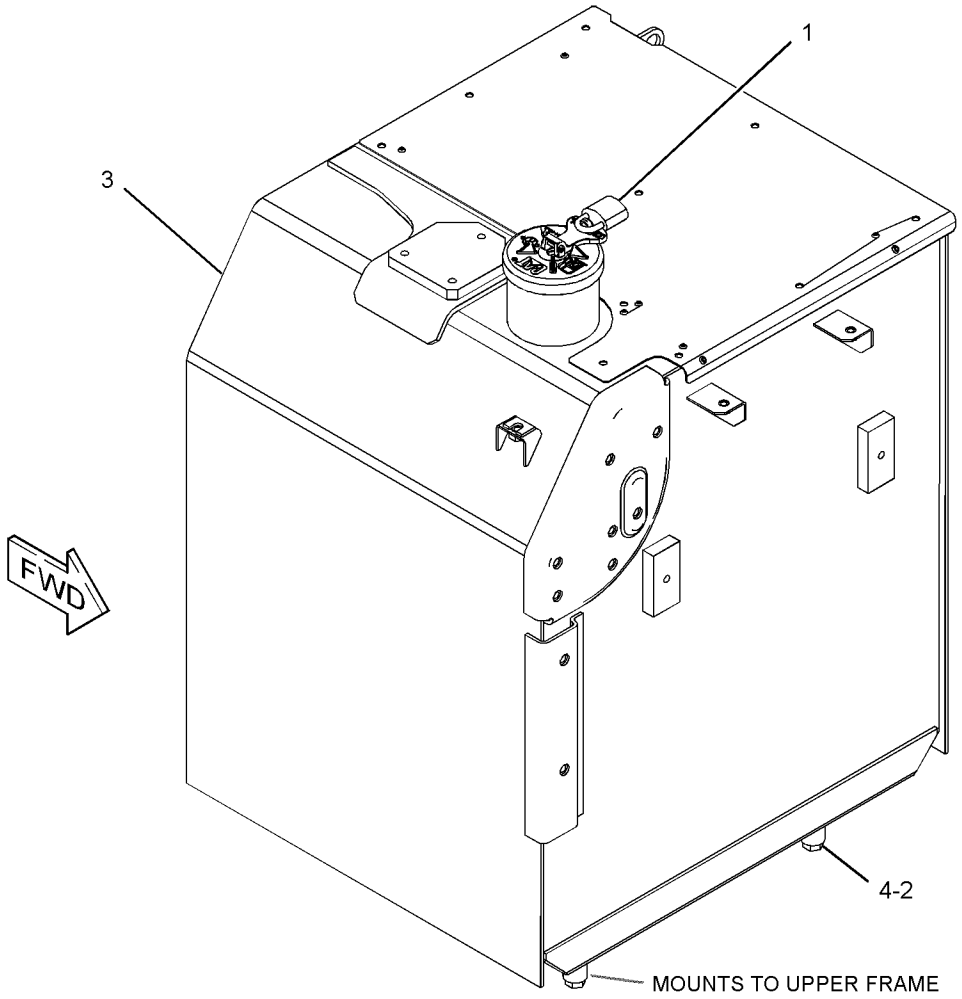

GRAPHIC #1 **<END>** g01627855

327-3191 TANK & MTG GP-FUEL

S/N: KGF1-UP; FAL1-UP
PART OF 330-1194 MACHINE AR
AN ATTACHMENT
TYPE 3

SMCS-1273 **i04989093**

NOTE	REF NO	GRAPHIC REF	PART NUMBER	QTY	PART NAME 1 2 3 4 5 6 (PRODUCT LEVEL)	SEE PAGE
	1	1	**246-2641**	1	PADLOCK GP	
		1	**5P-8500**	1	KEY	
	2	1	**085-9310**	4	SPACER (16.6X32X26-MM THK)	
CY	3	1	**375-8594**	1	TANK GP-FUEL	390
M	4	1	**8T-4140**	4	BOLT (M16X2X60-MM)	

C - CHANGE FROM PREVIOUS TYPE
M - METRIC PART
Y - SEPARATE ILLUSTRATION

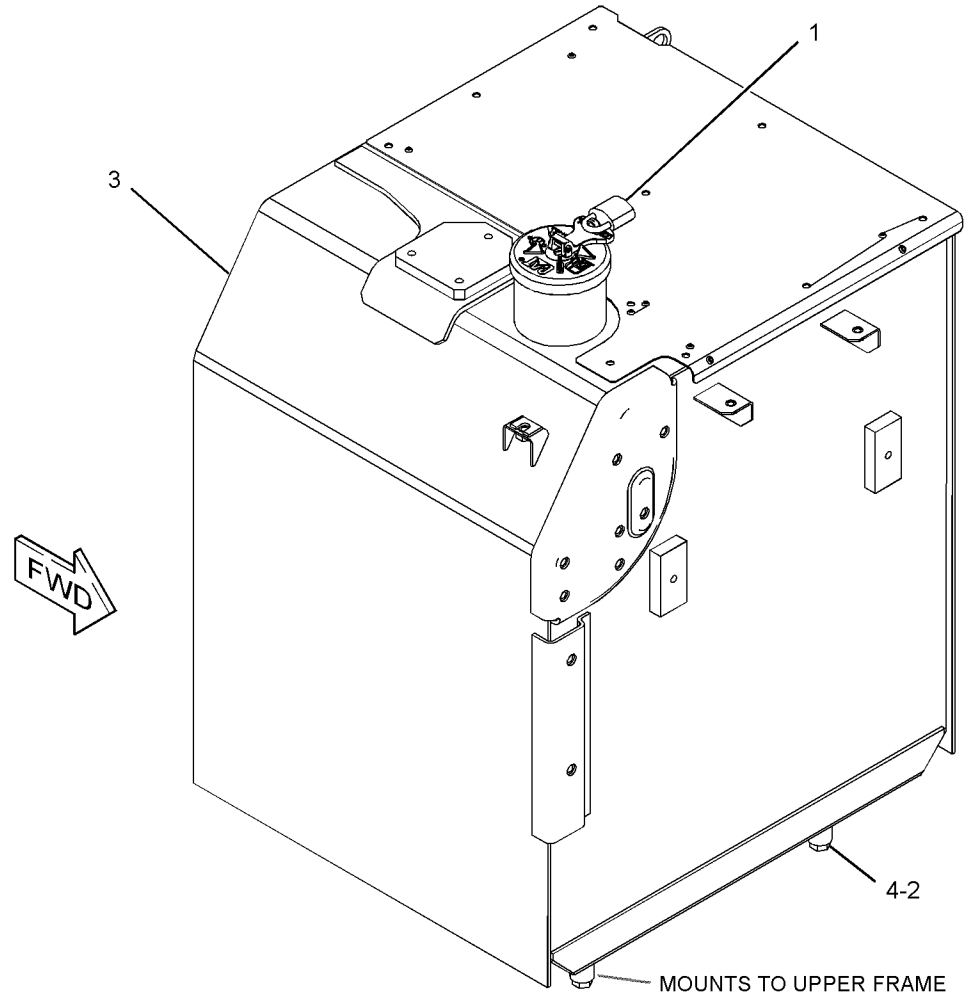

GRAPHIC #1 **<END>** g01627855

327-3198 TANK & MTG GP-FUEL

S/N: KGF1-UP; FAL1-UP
PART OF 314-3785 PUMP AR-FUEL TRANSFER
AN ATTACHMENT
TYPE 1

SMCS-1273 **i03127843**

NOTE	REF NO	GRAPHIC REF	PART NUMBER	QTY	PART NAME 1 2 3 4 5 6 (PRODUCT LEVEL)	SEE PAGE
	1	1	**246-2641**	1	PADLOCK GP	
		1	**5P-8500**	1	KEY	
Y	2	1	**327-3199**	1	TANK GP-FUEL	376
	3	1	**085-9310**	4	SPACER (16.6X32X26-MM THK)	
M	4	1	**8T-4140**	4	BOLT (M16X2X60-MM)	

M - METRIC PART
Y - SEPARATE ILLUSTRATION

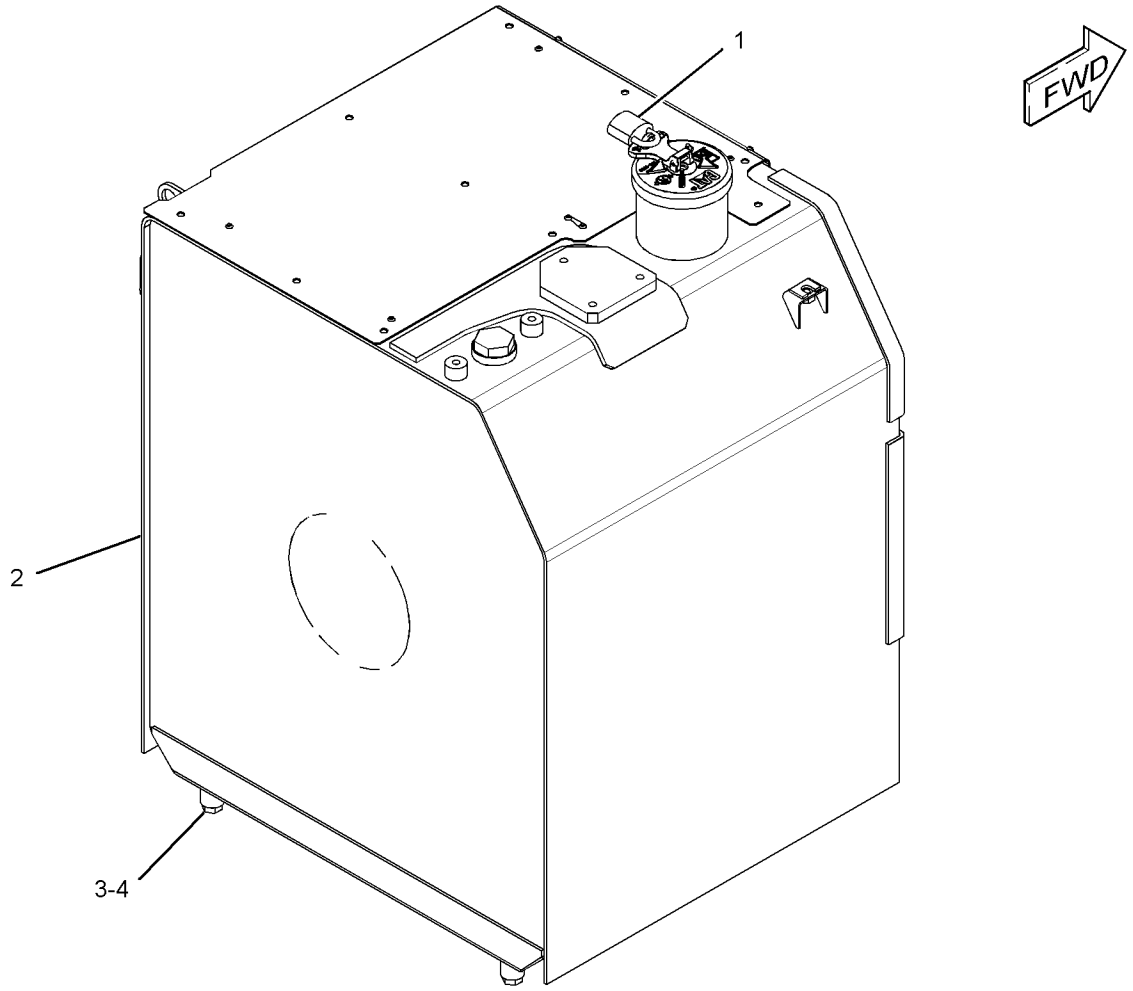

GRAPHIC #1 **<END>** g01623053

327-3198 TANK & MTG GP-FUEL

S/N: KGF1-UP; FAL1-UP
PART OF 314-3785 PUMP AR-FUEL TRANSFER, 367-8698 PUMP AR-REFUELING AN ATTACHMENT
TYPE 2

SMCS-1273 **i04094632**

NOTE	REF NO	GRAPHIC REF	PART NUMBER	QTY	PART NAME 1 2 3 4 5 6 (PRODUCT LEVEL)	SEE PAGE
	1	1	**246-2641**	1	PADLOCK GP	
		1	**5P-8500**	1	KEY	
CY	2	1	**366-6366**	1	TANK GP-FUEL	388
	3	1	**085-9310**	4	SPACER (16.6X32X26-MM THK)	
M	4	1	**8T-4140**	4	BOLT (M16X2X60-MM)	

C - CHANGE FROM PREVIOUS TYPE
M - METRIC PART
Y - SEPARATE ILLUSTRATION

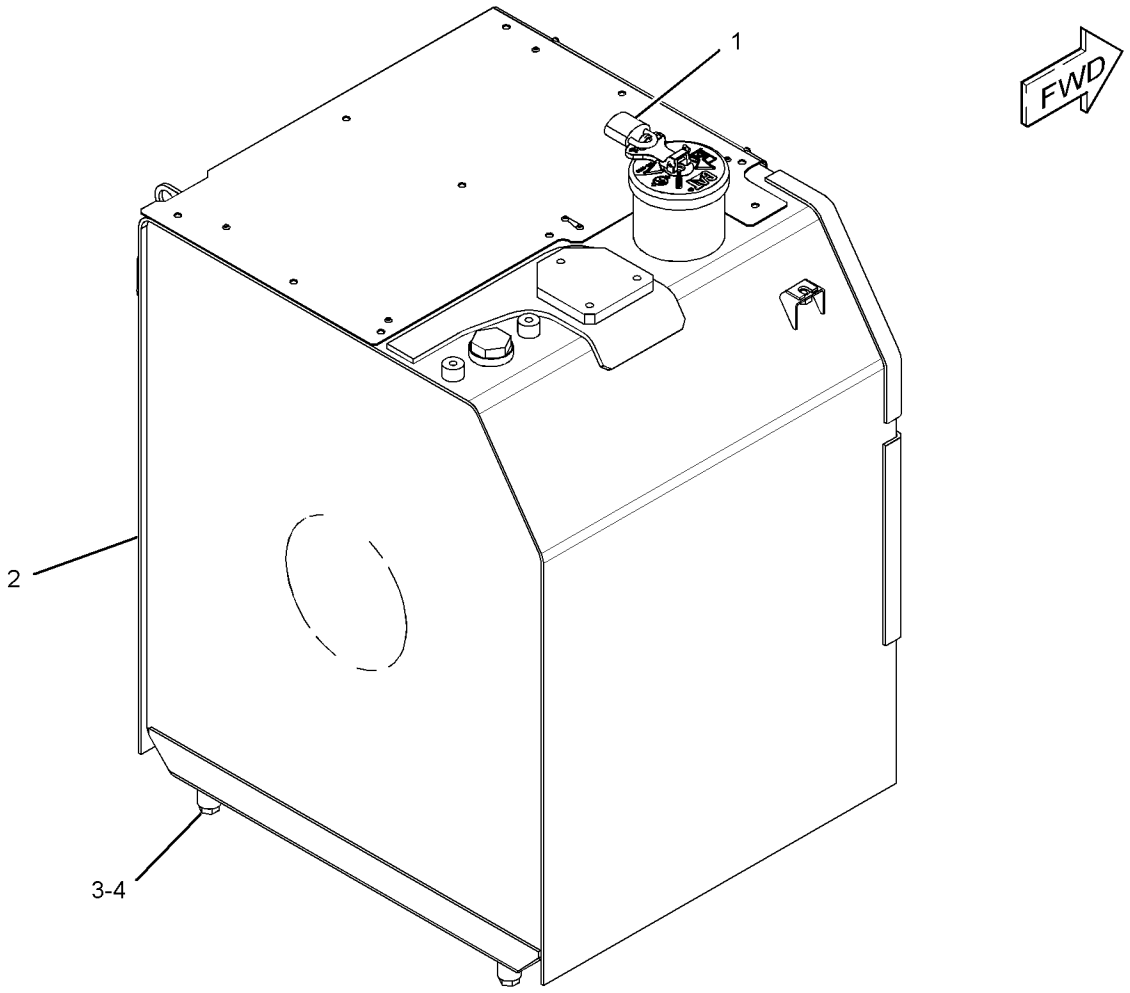

GRAPHIC #1 **<END>** g01623053

327-3198 TANK & MTG GP-FUEL

S/N: KGF1-UP; FAL1-UP
PART OF 314-3785 PUMP AR-FUEL TRANSFER, 367-8698 PUMP AR-REFUELING
AN ATTACHMENT
TYPE 3

SMCS-1273 **i04801338**

NOTE	REF NO	GRAPHIC REF	PART NUMBER	QTY	PART NAME 1 2 3 4 5 6 (PRODUCT LEVEL)	SEE PAGE
	1	1	**246-2641**	1	PADLOCK GP	
		1	**5P-8500**	1	KEY	
CY	2	1	**375-8626**	1	TANK GP-FUEL	394
	3	1	**085-9310**	4	SPACER (16.6X32X26-MM THK)	
M	4	1	**8T-4140**	4	BOLT (M16X2X60-MM)	

C - CHANGE FROM PREVIOUS TYPE
M - METRIC PART
Y - SEPARATE ILLUSTRATION

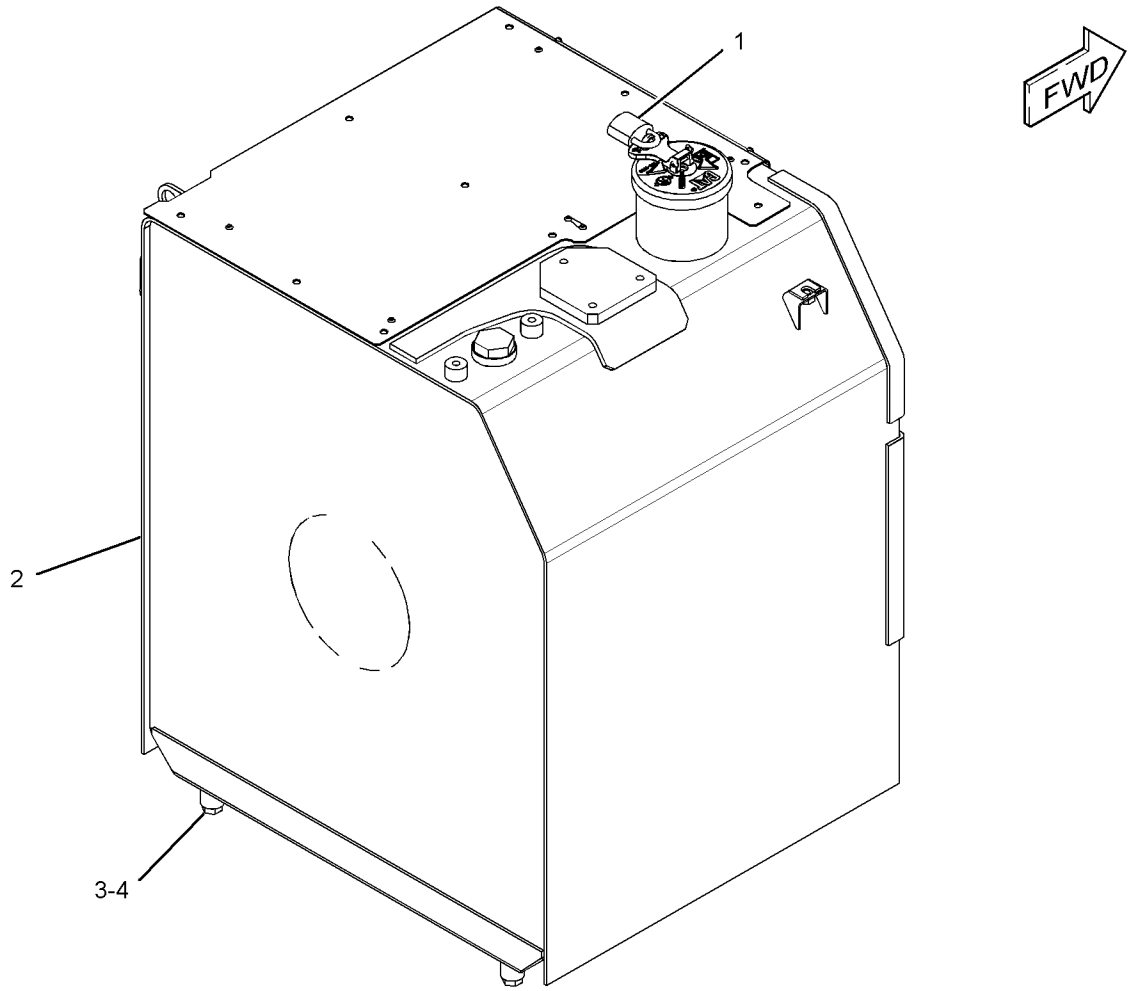

GRAPHIC #1 **<END>** g01623053

399-0821 TANK & MTG GP-FUEL

S/N: KGF1-UP
PART OF 419-0572 PUMP AR-REFUELING
AN ATTACHMENT

SMCS-1273 **i05126644**

NOTE	REF NO	GRAPHIC REF	PART NUMBER	QTY	PART NAME 1 2 3 4 5 6 (PRODUCT LEVEL)	SEE PAGE
	1	1	**246-2641**	1	PADLOCK GP	
		1	**5P-8500**	1	KEY	
	2	1	**085-9310**	4	SPACER (16.6X32X26-MM THK)	
Y	3	1	**399-0822**	1	TANK GP-FUEL	396
M	4	1	**8T-4140**	4	BOLT (M16X2X60-MM)	

M - METRIC PART
Y - SEPARATE ILLUSTRATION

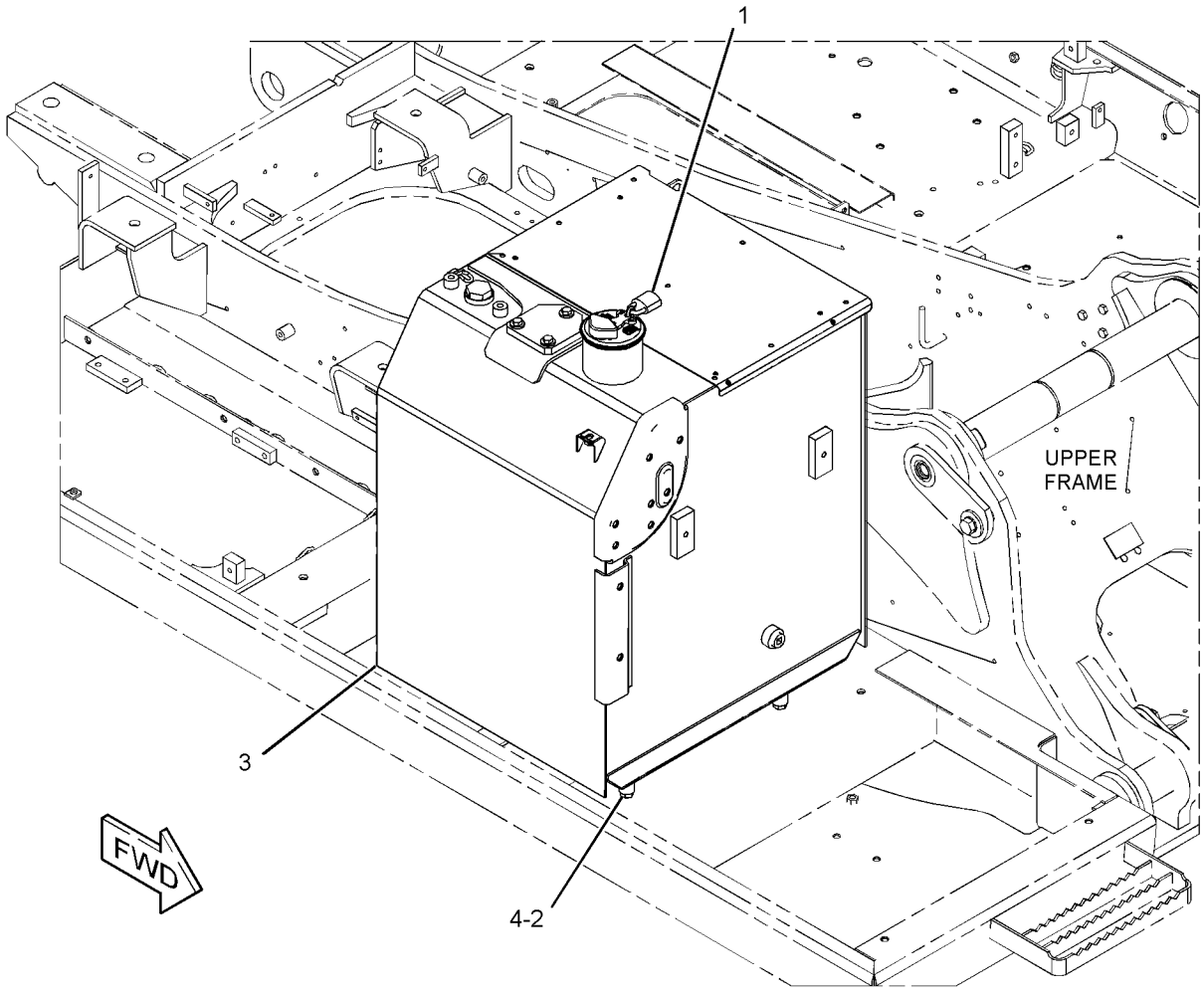

GRAPHIC #1 **<END>** g03361673

278-3897 TANK GP-FUEL

S/N: KGF1-UP; FAL1-UP
410-L (108-US GAL)
PART OF 278-3896 TANK & MTG GP-FUEL

SMCS-1273 **i02562631**

NOTE	PART NUMBER	QTY	PART NAME 1 2 3 4 5 6 (PRODUCT LEVEL)	SEE PAGE
Y	*278-3898*	1	TANK GP-FUEL	357
			—OR—	
Y	*278-3899*	1	TANK GP-FUEL	360

Y - SEPARATE ILLUSTRATION

<END>

278-3898 TANK GP-FUEL

S/N: KGF1-673; FAL1-429
410-L (108-US GAL)
PART OF 278-3897 TANK GP-FUEL

SMCS-1273 **i02962782**

NOTE	REF NO	GRAPHIC REF	PART NUMBER	QTY	PART NAME 1 2 3 4 5 6 (PRODUCT LEVEL)	SEE PAGE
	1	1	**4I-0378**	1	GASKET-RUBBER	
	2	1	**5P-4924**	1	ELBOW	
Y	3	1	**164-4858**	1	CAP GP-FUEL FILLER (EXTREME SERVICE, LOCKABLE)	289
	4	1	**003-7764**	1	END-HOSE	
	5	1	**128-4411**	1	VALVE AS (FUEL SHUTOFF)	
	6	1	**163-6700**	1	SENSOR GP-FUEL LEVEL	
		1	**186-3735**	2	PIN-CONNECTOR (16-GA TO 18-GA)	
		1	**102-8802**	1	KIT-RECEPTACLE (2-PIN)	
					(INCLUDES RECEPTACLE AS & WEDGE)	
Y	8	1	**262-9372**	1	STRAINER GP-FUEL (FLOAT GAUGE)	344
M	9	1	**095-0736**	5	SCREW-MACHINE (M5X0.8X10-MM)	
	10	1	**3J-1907**	1	SEAL-O-RING	
	11	1	**8T-0328**	5	WASHER-HARD (5.5X10X1-MM THK)	

M - METRIC PART
Y - SEPARATE ILLUSTRATION

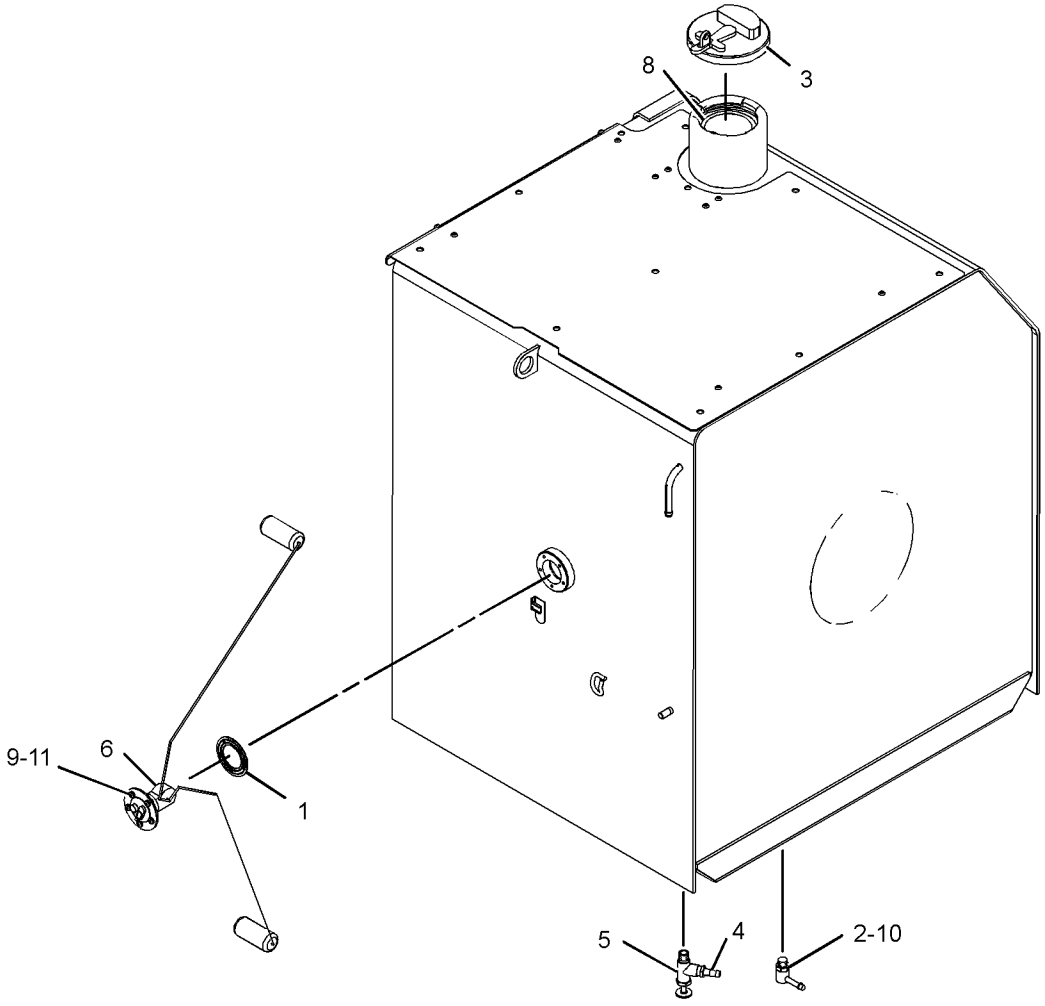

GRAPHIC #1 **<END>** g01392222

278-3898 TANK GP-FUEL

S/N: KGF674-UP; FAL430-UP
410-L (108-US GAL)
PART OF 278-3897 TANK GP-FUEL

SMCS-1273 **i04359315**

NOTE	REF NO	GRAPHIC REF	PART NUMBER	QTY	PART NAME 1 2 3 4 5 6 (PRODUCT LEVEL)	SEE PAGE
	1	1	**4I-0378**	1	GASKET-RUBBER	
	2	1	**5P-4924**	1	ELBOW	
					—OR—	
AFN			**165-2881**	1	VALVE-BALL (SEDIMENT, WATER)	
AFN			**193-9696**	1	HOSE-DRAIN	
Y	3	1	**164-4858**	1	CAP GP-FUEL FILLER (EXTREME SERVICE, LOCKABLE)	289
	4	1	**003-7764**	1	END-HOSE	
	5	1	**128-4411**	1	VALVE AS (FUEL SHUTOFF)	
	6	1	**341-1842**	1	SENDER AS-FUEL LEVEL	
		1	**186-3735**	2	PIN-CONNECTOR (16-GA TO 18-GA)	
		1	**102-8802**	1	KIT-RECEPTACLE (2-PIN)	
					(INCLUDES RECEPTACLE AS & WEDGE)	
CJ	8	1	**303-9933**	1	STRAINER AS-FUEL (FLOAT GAUGE)	
M	9	1	**095-0736**	5	SCREW-MACHINE (M5X0.8X10-MM)	
	10	1	**3J-1907**	1	SEAL-O-RING	
	11	1	**8T-0328**	5	WASHER-HARD (5.5X10X1-MM THK)	
					PARTS SHOWN IN GRAPHIC(S) WITHOUT A REFERENCE NUMBER ARE NOT SERVICED SEPARATELY	
					AVAILABLE REPAIR KIT(S):	
J			**303-9937**	1	KIT-GAUGE (FUEL STRAINER)	
					(INCLUDES STOPPER & GAUGE)	

A - NOT PART OF THIS GROUP
C - CHANGE FROM PREVIOUS TYPE
F - NOT SHOWN
J - KIT MARKED J SERVICES PART(S) MARKED J
M - METRIC PART
N - OPTIONAL USE TO DRAIN TANK IN COLD WEATHER
Y - SEPARATE ILLUSTRATION

278-3898 **TANK GP-FUEL (*contd.*)** **i04359315**

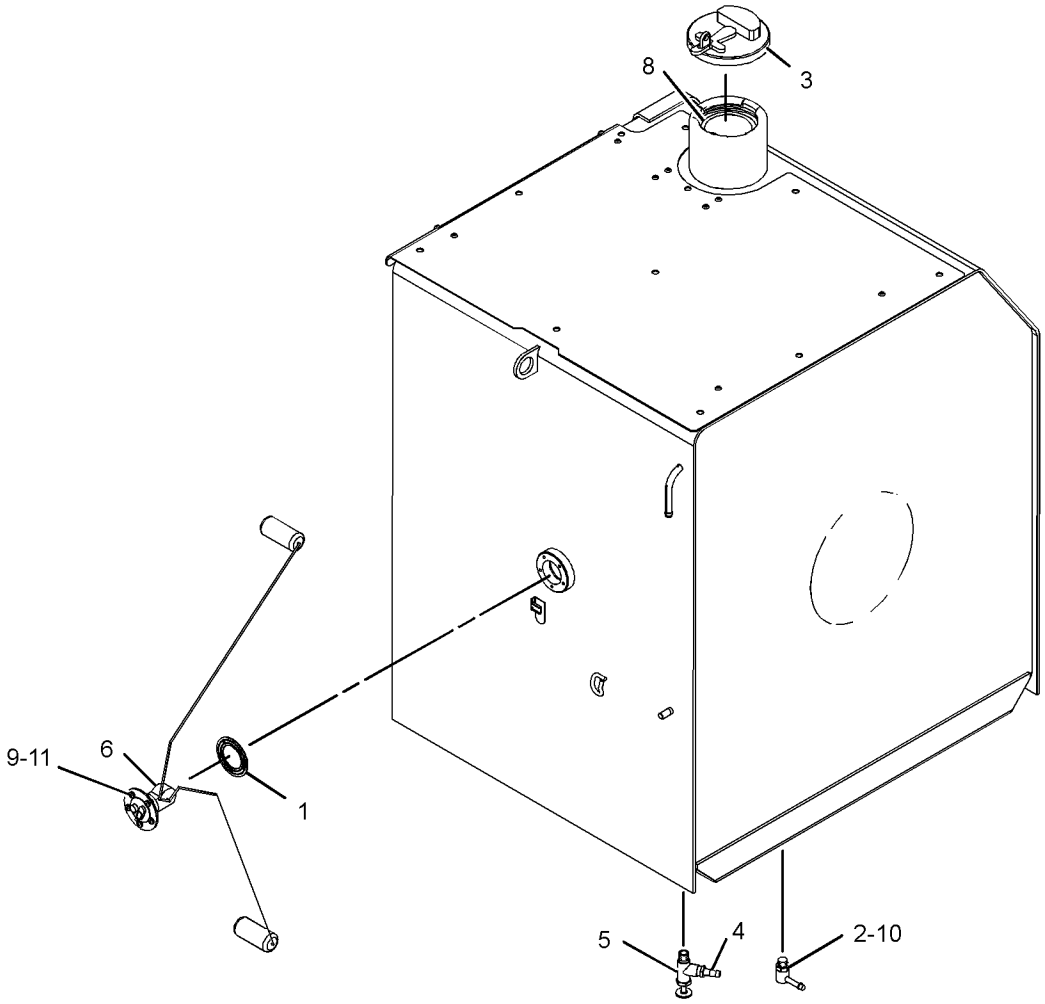

GRAPHIC #1 **<END>** g01392222

278-3899 TANK GP-FUEL

S/N: KGF1-UP; FAL1-UP
410-L (108-US GAL)
PART OF 278-3897 TANK GP-FUEL
TYPE 1

SMCS-1273 **i02959317**

NOTE	REF NO	GRAPHIC REF	PART NUMBER	QTY	PART NAME 1 2 3 4 5 6 (PRODUCT LEVEL)	SEE PAGE
	1	1	**4I-0378**	1	GASKET-RUBBER	
	2	1	**5P-4924**	1	ELBOW	
	3	1	**003-7764**	1	END-HOSE	
	4	1	**128-4411**	1	VALVE AS (FUEL SHUTOFF)	
	5	1	**163-6700**	1	SENSOR GP-FUEL LEVEL	
		1	**186-3735**	2	PIN-CONNECTOR (16-GA TO 18-GA)	
		1	**102-8802**	1	KIT-RECEPTACLE (2-PIN)	
					(INCLUDES RECEPTACLE AS & WEDGE)	
Y	6	1	**164-4858**	1	CAP GP-FUEL FILLER (EXTREME SERVICE, LOCKABLE)	289
Y	7	1	**262-9372**	1	STRAINER GP-FUEL (FLOAT GAUGE)	344
M	9	1	**095-0736**	5	SCREW-MACHINE (M5X0.8X10-MM)	
	10	1	**3J-1907**	1	SEAL-O-RING	
	11	1	**8T-0328**	5	WASHER-HARD (5.5X10X1-MM THK)	

M - METRIC PART
Y - SEPARATE ILLUSTRATION

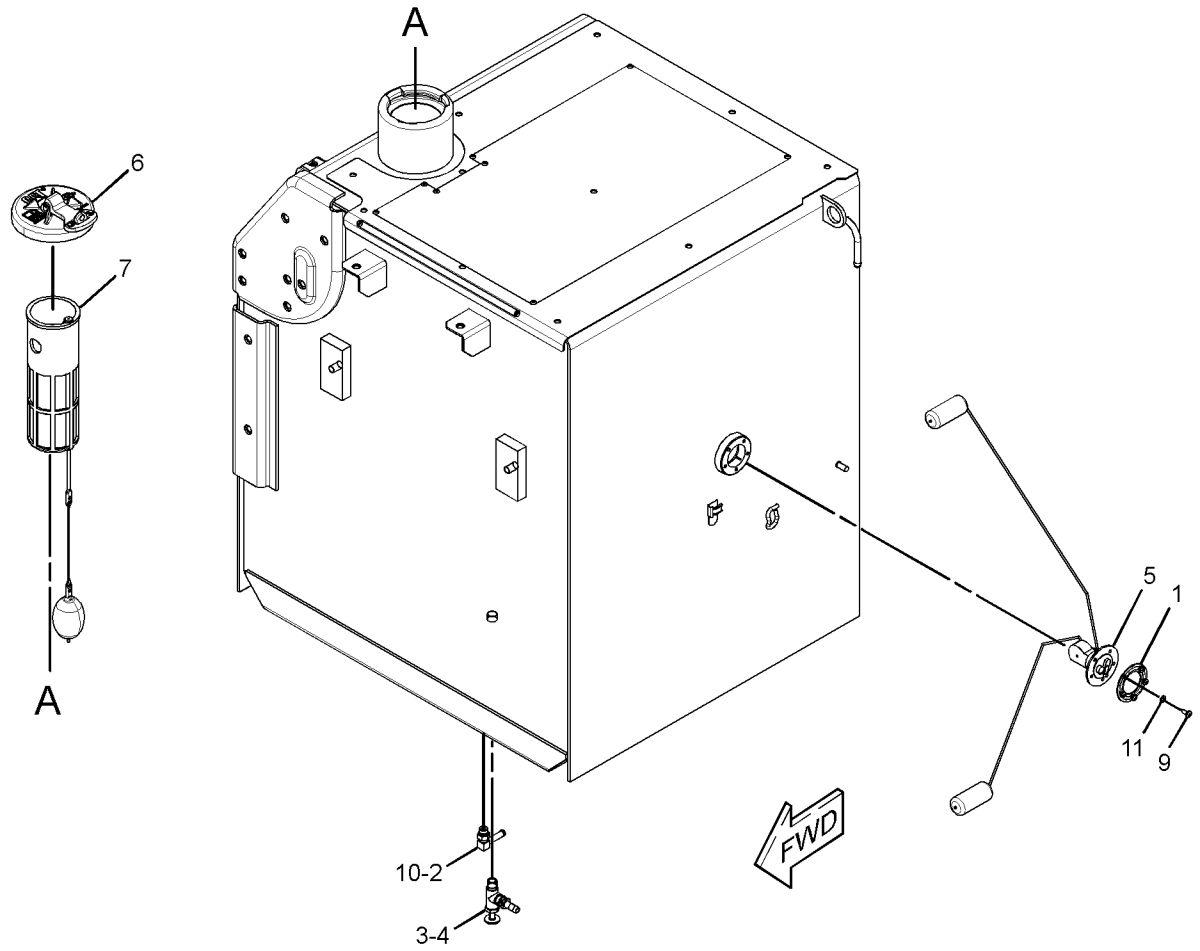

GRAPHIC #1 **<END>** g01393129

278-3899 TANK GP-FUEL

S/N: KGF1-UP; FAL1-UP
410-L (108-US GAL)
PART OF 278-3897 TANK GP-FUEL
TYPE 2

SMCS-1273 **i05270529**

NOTE	REF NO	GRAPHIC REF	PART NUMBER	QTY	PART NAME 1 2 3 4 5 6 (PRODUCT LEVEL)	SEE PAGE
	1	1	**4I-0378**	1	GASKET-RUBBER	
	2	1	**5P-4924**	1	ELBOW	
					—OR—	
AFN			**165-2881**	1	VALVE-BALL (SEDIMENT, WATER)	
AFN			**193-9696**	1	HOSE-DRAIN	
	3	1	**003-7764**	1	END-HOSE	
	4	1	**128-4411**	1	VALVE AS (FUEL SHUTOFF)	
	5	1	**341-1842**	1	SENDER AS-FUEL LEVEL	
		1	**186-3735**	2	PIN-CONNECTOR (16-GA TO 18-GA)	
		1	**102-8802**	1	KIT-RECEPTACLE (2-PIN)	
					(INCLUDES RECEPTACLE AS & WEDGE)	
Y	6	1	**164-4858**	1	CAP GP-FUEL FILLER (EXTREME SERVICE, LOCKABLE)	289
CJ	7	1	**303-9933**	1	STRAINER AS-FUEL (FLOAT GAUGE)	
M	9	1	**095-0736**	5	SCREW-MACHINE (M5X0.8X10-MM)	
	10	1	**3J-1907**	1	SEAL-O-RING	
	11	1	**8T-0328**	5	WASHER-HARD (5.5X10X1-MM THK)	
					PARTS SHOWN IN GRAPHIC(S) WITHOUT A REFERENCE NUMBER ARE NOT SERVICED SEPARATELY	
					AVAILABLE REPAIR KIT(S):	
J			**303-9937**	1	KIT-GAUGE (FUEL STRAINER)	
					(INCLUDES STOPPER & GAUGE)	

A - NOT PART OF THIS GROUP
C - CHANGE FROM PREVIOUS TYPE
F - NOT SHOWN
J - KIT MARKED J SERVICES PART(S) MARKED J
M - METRIC PART
N - OPTIONAL USE TO DRAIN TANK IN COLD WEATHER
Y - SEPARATE ILLUSTRATION

278-3899 **TANK GP-FUEL (*contd.*)** **i05270529**

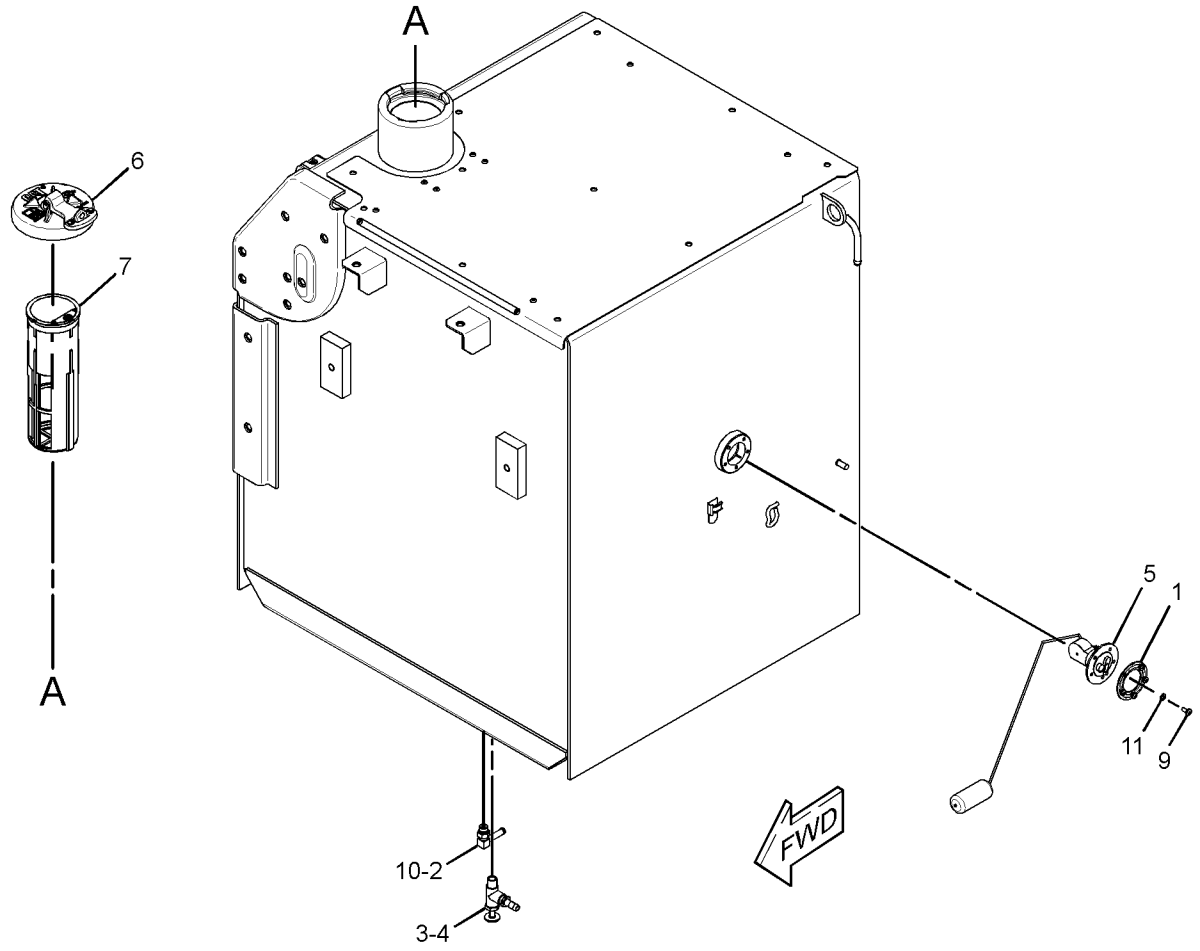

GRAPHIC #1 **<END>** g01528234

278-3901 TANK GP-FUEL

S/N: KGF1-UP; FAL1-UP
410-L (108.3-US GAL)
FIELD REPLACEMENT ORDER 366-6365—PAGE: 386
PART OF 278-3900 TANK & MTG GP-FUEL
AN ATTACHMENT

SMCS-1273 **i02563288**

NOTE	PART NUMBER	QTY	PART NAME 1 2 3 4 5 6 (PRODUCT LEVEL)	SEE PAGE
Y	*278-3902*	1	TANK GP-FUEL	364
			—OR—	
Y	*278-3903*	1	TANK GP-FUEL	368

Y - SEPARATE ILLUSTRATION

<END>

278-3902 TANK GP-FUEL

S/N: KGF1-UP; FAL1-UP
410-L (108.3-US GAL)
PART OF 278-3901 TANK GP-FUEL
AN ATTACHMENT
TYPE 1

SMCS-1273 **i02959232**

NOTE	REF NO	GRAPHIC REF	PART NUMBER	QTY	PART NAME 1 2 3 4 5 6 (PRODUCT LEVEL)	SEE PAGE
	1	1	**4I-0378**	1	GASKET-RUBBER	
	2	1	**5P-4924**	1	ELBOW	
	3	1	**003-7764**	1	END-HOSE	
	4	1	**128-4411**	1	VALVE AS (FUEL SHUTOFF)	
	5	1	**163-6700**	1	SENSOR GP-FUEL LEVEL	
		1	**186-3735**	2	PIN-CONNECTOR (16-GA TO 18-GA)	
		1	**102-8802**	1	KIT-RECEPTACLE (2-PIN)	
					(INCLUDES RECEPTACLE AS & WEDGE)	
Y	6	1	**164-4858**	1	CAP GP-FUEL FILLER (EXTREME SERVICE, LOCKABLE)	289
Y	8	1	**262-9372**	1	STRAINER GP-FUEL (FLOAT GAUGE)	344
M	9	1	**095-0736**	5	SCREW-MACHINE (M5X0.8X10-MM)	
	10	1	**2S-4078**	1	SEAL-O-RING	
	11	1	**3B-0551**	1	PLUG-PIPE	
	12	1	**3J-1907**	1	SEAL-O-RING	
	13	1	**8T-0328**	5	WASHER-HARD (5.5X10X1-MM THK)	
	14	1	**9S-6130**	1	PLUG	

M - METRIC PART
Y - SEPARATE ILLUSTRATION

278-3902 **TANK GP-FUEL (*contd.*)** **i02959232**

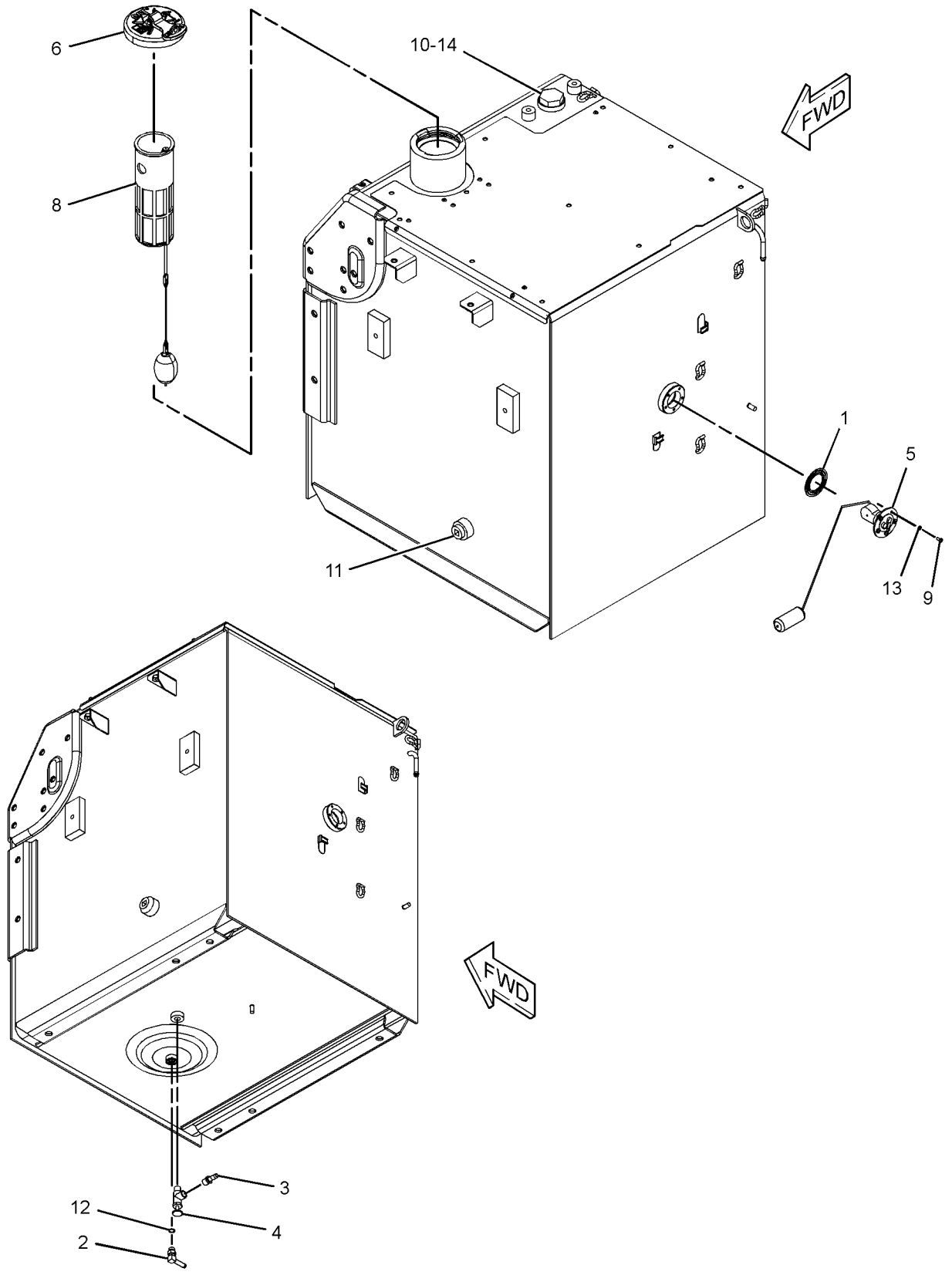

GRAPHIC #1 **<END>** g01396209

278-3902 TANK GP-FUEL

S/N: KGF1-UP; FAL1-UP
410-L (108.3-US GAL)
PART OF 278-3901 TANK GP-FUEL
AN ATTACHMENT
TYPE 2

SMCS-1273 **i03800951**

NOTE	REF NO	GRAPHIC REF	PART NUMBER	QTY	PART NAME 1 2 3 4 5 6 (PRODUCT LEVEL)	SEE PAGE
	1	1	**4I-0378**	1	GASKET-RUBBER	
	2	1	**5P-4924**	1	ELBOW	
	3	1	**003-7764**	1	END-HOSE	
	4	1	**128-4411**	1	VALVE AS (FUEL SHUTOFF)	
	5	1	**341-1842**	1	SENDER AS-FUEL LEVEL	
		1	**186-3735**	2	PIN-CONNECTOR (16-GA TO 18-GA)	
		1	**102-8802**	1	KIT-RECEPTACLE (2-PIN)	
					(INCLUDES RECEPTACLE AS & WEDGE)	
Y	6	1	**164-4858**	1	CAP GP-FUEL FILLER (EXTREME SERVICE, LOCKABLE)	289
CJ	8	1	**303-9933**	1	STRAINER AS-FUEL (FLOAT GAUGE)	
M	9	1	**095-0736**	5	SCREW-MACHINE (M5X0.8X10-MM)	
	10	1	**2S-4078**	1	SEAL-O-RING	
	11	1	**3B-0551**	1	PLUG-PIPE	
	12	1	**3J-1907**	1	SEAL-O-RING	
	13	1	**8T-0328**	5	WASHER-HARD (5.5X10X1-MM THK)	
	14	1	**9S-6130**	1	PLUG	
					PARTS SHOWN IN GRAPHIC(S) WITHOUT A REFERENCE NUMBER ARE NOT SERVICED SEPARATELY	
					AVAILABLE REPAIR KIT(S):	
J			**303-9937**	1	KIT-GAUGE (FUEL STRAINER)	
					(INCLUDES STOPPER & GAUGE)	

C - CHANGE FROM PREVIOUS TYPE
J - KIT MARKED J SERVICES PART(S) MARKED J
M - METRIC PART
Y - SEPARATE ILLUSTRATION

278-3902 **TANK GP-FUEL (*contd.*)** **i03800951**

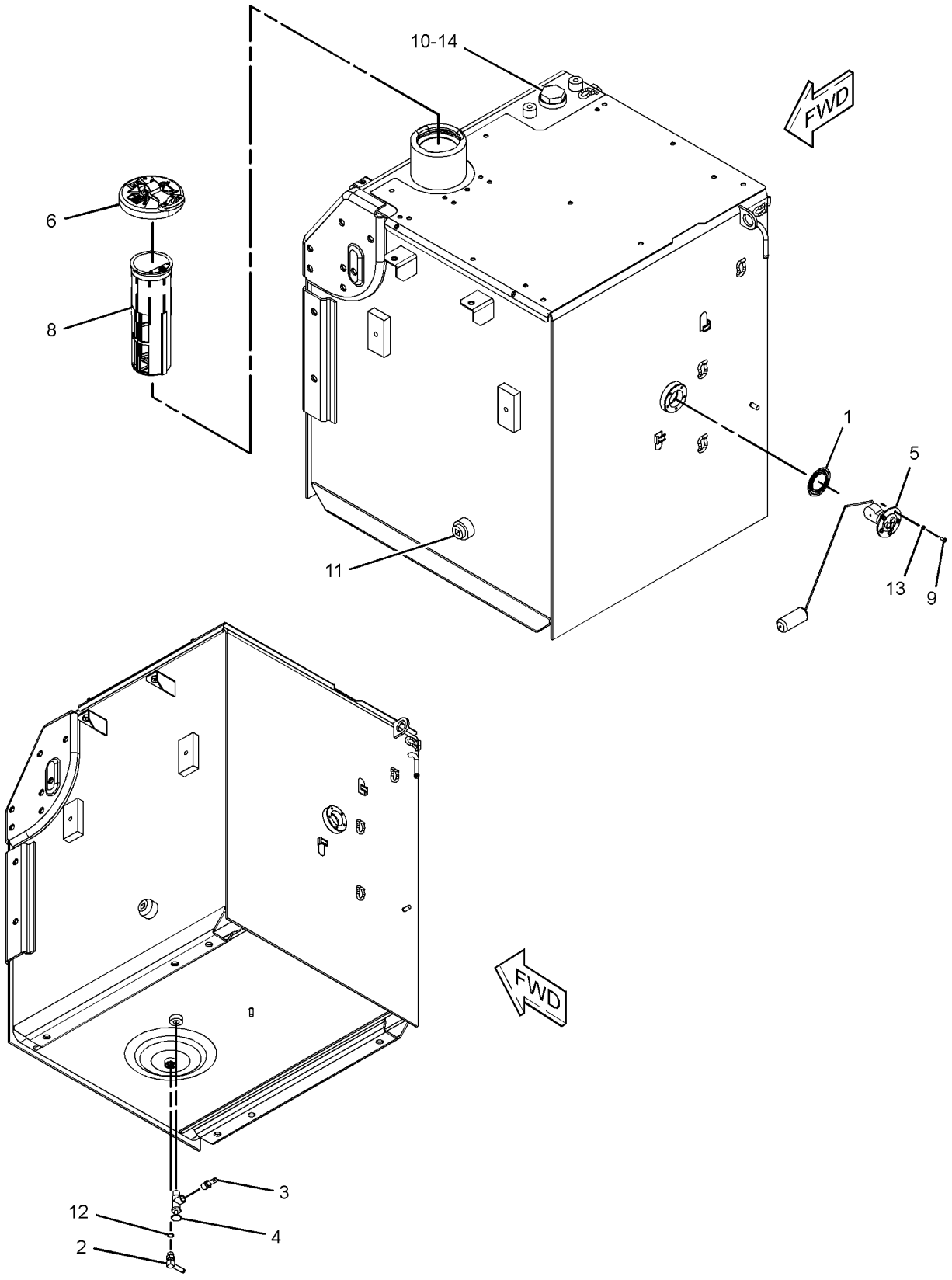

GRAPHIC #1 **<END>** g01529600

278-3903 TANK GP-FUEL

S/N: KGF1-UP; FAL1-UP
410-L (108.3-US GAL)
PART OF 278-3901 TANK GP-FUEL
AN ATTACHMENT
TYPE 1

SMCS-1273 **i02959320**

NOTE	REF NO	GRAPHIC REF	PART NUMBER	QTY	PART NAME 1 2 3 4 5 6 (PRODUCT LEVEL)	SEE PAGE
	1	1	**4I-0378**	1	GASKET-RUBBER	
	2	1	**5P-4924**	1	ELBOW	
Y	3	1	**164-4858**	1	CAP GP-FUEL FILLER (EXTREME SERVICE, LOCKABLE)	289
	4	1	**003-7764**	1	END-HOSE	
	5	1	**128-4411**	1	VALVE AS (FUEL SHUTOFF)	
	6	1	**163-6700**	1	SENSOR GP-FUEL LEVEL	
		1	**186-3735**	2	PIN-CONNECTOR (16-GA TO 18-GA)	
		1	**102-8802**	1	KIT-RECEPTACLE (2-PIN)	
					(INCLUDES RECEPTACLE AS & WEDGE)	
Y	7	1	**262-9372**	1	STRAINER GP-FUEL (FLOAT GAUGE)	344
	8	1	**9S-6130**	1	PLUG	
M	9	1	**095-0736**	5	SCREW-MACHINE (M5X0.8X10-MM)	
	10	1	**2S-4078**	1	SEAL-O-RING	
	11	1	**3B-0551**	1	PLUG-PIPE	
	12	1	**3J-1907**	1	SEAL-O-RING	
	13	1	**8T-0328**	5	WASHER-HARD (5.5X10X1-MM THK)	

M - METRIC PART
Y - SEPARATE ILLUSTRATION

278-3903 **TANK GP-FUEL (*contd.*)** **i02959320**

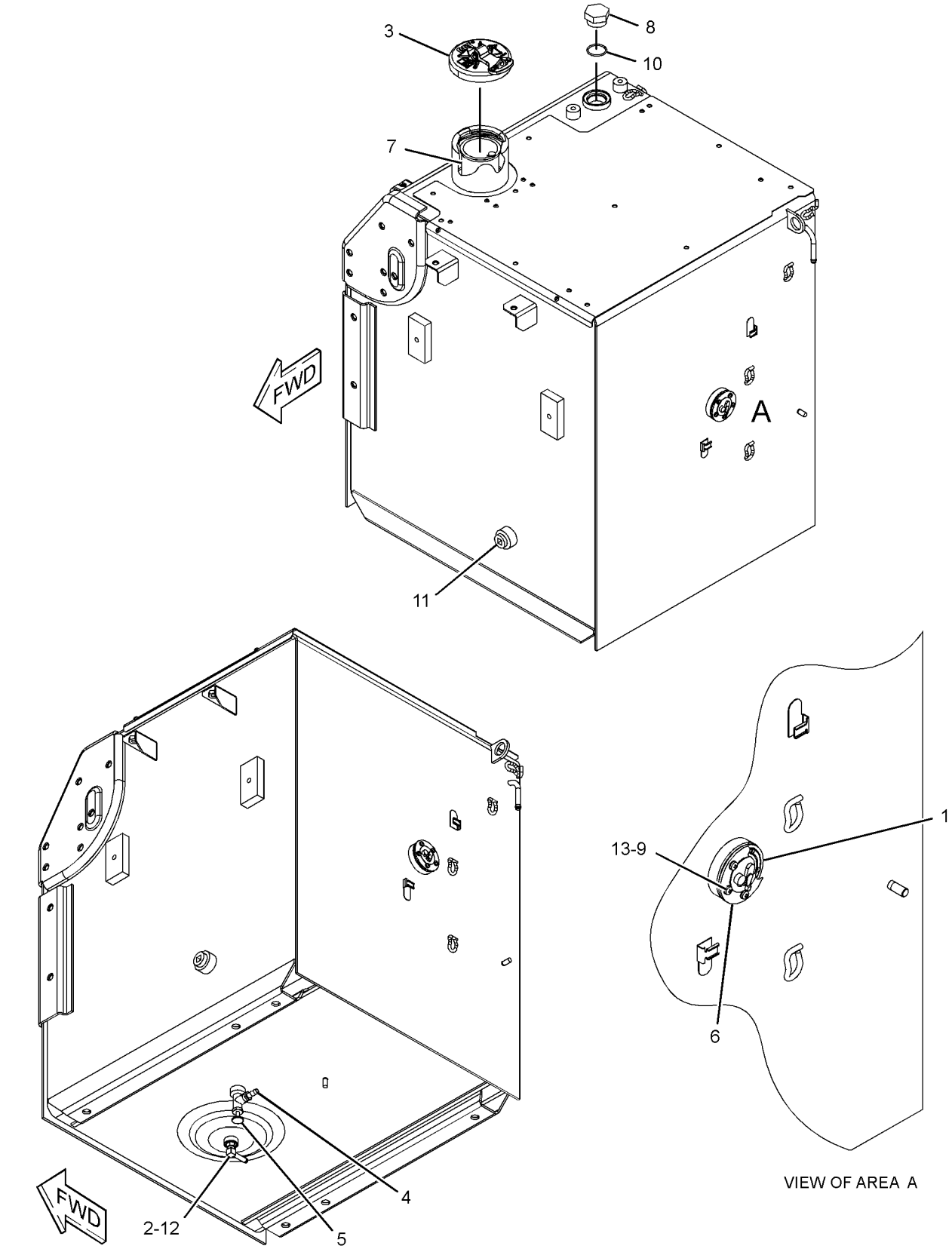

GRAPHIC #1 **<END>** g01389033

278-3903 TANK GP-FUEL

S/N: KGF1-UP; FAL1-UP
410-L (108.3-US GAL)
PART OF 278-3901 TANK GP-FUEL
AN ATTACHMENT
TYPE 2

SMCS-1273 **i03796610**

NOTE	REF NO	GRAPHIC REF	PART NUMBER	QTY	PART NAME 1 2 3 4 5 6 (PRODUCT LEVEL)	SEE PAGE
	1	1	**4I-0378**	1	GASKET-RUBBER	
	2	1	**5P-4924**	1	ELBOW	
Y	3	1	**164-4858**	1	CAP GP-FUEL FILLER (EXTREME SERVICE, LOCKABLE)	289
	4	1	**003-7764**	1	END-HOSE	
	5	1	**128-4411**	1	VALVE AS (FUEL SHUTOFF)	
	6	1	**341-1842**	1	SENDER AS-FUEL LEVEL	
		1	**186-3735**	2	PIN-CONNECTOR (16-GA TO 18-GA)	
		1	**102-8802**	1	KIT-RECEPTACLE (2-PIN)	
					(INCLUDES RECEPTACLE AS & WEDGE)	
CJ	7	1	**303-9933**	1	STRAINER AS-FUEL (FLOAT GAUGE)	
	8	1	**9S-6130**	1	PLUG	
M	9	1	**095-0736**	5	SCREW-MACHINE (M5X0.8X10-MM)	
	10	1	**2S-4078**	1	SEAL-O-RING	
	11	1	**3B-0551**	1	PLUG-PIPE	
	12	1	**3J-1907**	1	SEAL-O-RING	
	13	1	**8T-0328**	5	WASHER-HARD (5.5X10X1-MM THK)	
					PARTS SHOWN IN GRAPHIC(S) WITHOUT A REFERENCE NUMBER ARE NOT SERVICED SEPARATELY	
					AVAILABLE REPAIR KIT(S):	
J			**303-9937**	1	KIT-GAUGE (FUEL STRAINER)	
					(INCLUDES STOPPER & GAUGE)	

C - CHANGE FROM PREVIOUS TYPE
J - KIT MARKED J SERVICES PART(S) MARKED J
M - METRIC PART
Y - SEPARATE ILLUSTRATION

278-3903 **TANK GP-FUEL (*contd.*)** **i03796610**

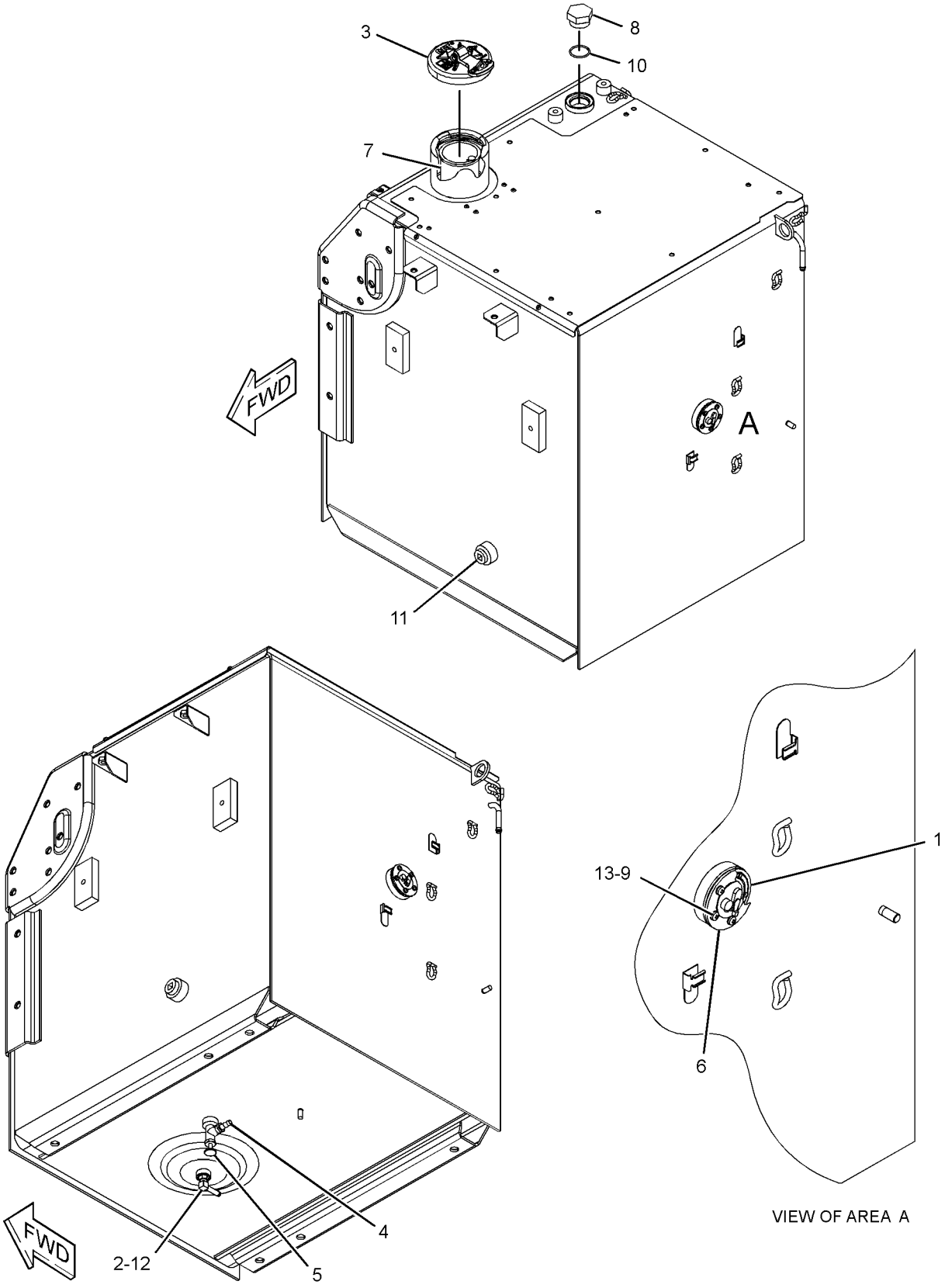

GRAPHIC #1 **<END>** g01389033

327-3192 TANK GP-FUEL

S/N: KGF1-UP; FAL1-UP
410-L (108-US GAL)
PART OF 327-3191 TANK & MTG GP-FUEL
AN ATTACHMENT

SMCS-1273 **i03939369**

NOTE	PART NUMBER	QTY	PART NAME 1 2 3 4 5 6 (PRODUCT LEVEL)	SEE PAGE
Y	*327-3193*	1	TANK GP-FUEL	373
			—OR—	
Y	*327-3196*	1	TANK GP-FUEL	375

Y - SEPARATE ILLUSTRATION

<END>

327-3193 TANK GP-FUEL

S/N: KGF1-UP; FAL1-UP
410-L (108-US GAL)
PART OF 327-3192 TANK GP-FUEL
AN ATTACHMENT

SMCS-1273 **i03655208**

NOTE	REF NO	GRAPHIC REF	PART NUMBER	QTY	PART NAME 1 2 3 4 5 6 (PRODUCT LEVEL)	SEE PAGE
	1	1	**4I-0378**	1	GASKET-RUBBER	
	2	1	**5P-4924**	1	ELBOW	
	3	1	**003-7764**	1	END-HOSE	
	4	1	**128-4411**	1	VALVE AS (FUEL SHUTOFF)	
	5	1	**341-1842**	1	SENDER AS-FUEL LEVEL	
		1	**186-3735**	2	PIN-CONNECTOR (16-GA TO 18-GA)	
		1	**102-8802**	1	KIT-RECEPTACLE (2-PIN)	
					(INCLUDES RECEPTACLE AS & WEDGE)	
Y	6	1	**164-4858**	1	CAP GP-FUEL FILLER (EXTREME SERVICE, LOCKABLE)	289
J	7	1	**303-9933**	1	STRAINER AS-FUEL (FLOAT GAUGE)	
	8	1	**8T-0328**	5	WASHER-HARD (5.5X10X1-MM THK)	
M	9	1	**095-0736**	5	SCREW-MACHINE (M5X0.8X10-MM)	
	10	1	**3J-1907**	1	SEAL-O-RING	
					PARTS SHOWN IN GRAPHIC(S) WITHOUT A REFERENCE NUMBER ARE NOT SERVICED SEPARATELY	
					AVAILABLE REPAIR KIT(S):	
J			**303-9937**	1	KIT-GAUGE (FUEL STRAINER)	
					(INCLUDES STOPPER & GAUGE)	

J - KIT MARKED J SERVICES PART(S) MARKED J
M - METRIC PART
Y - SEPARATE ILLUSTRATION

327-3193 **TANK GP-FUEL (*contd.*)** **i03655208**

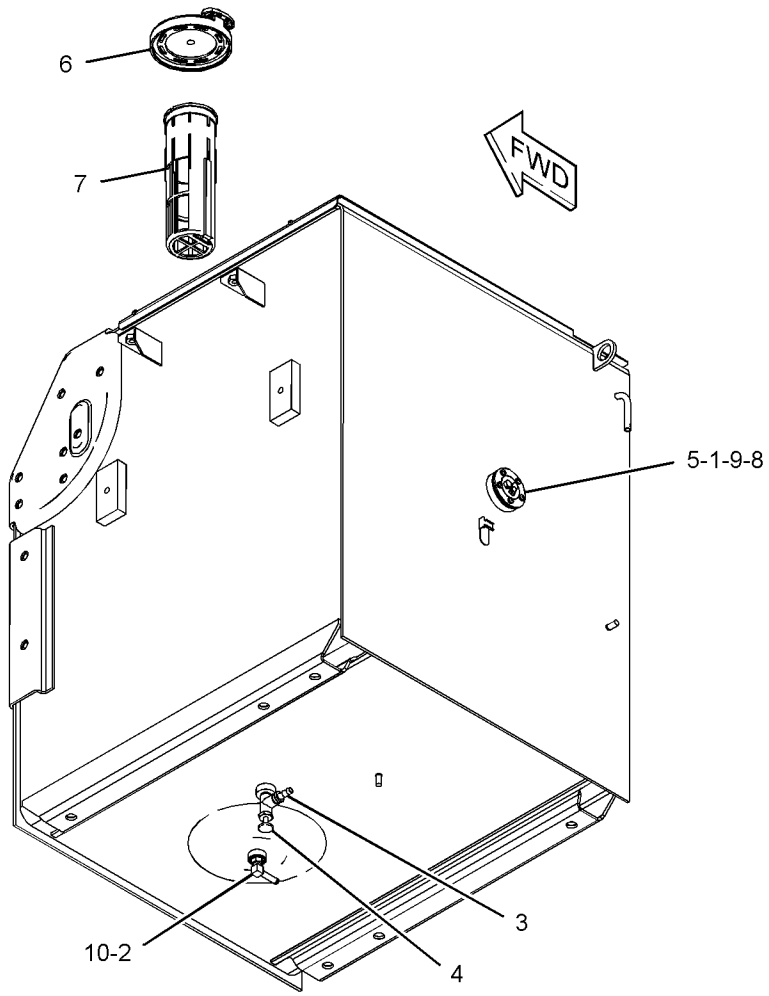

GRAPHIC #1

<END>

g01627881

327-3196 TANK GP-FUEL

S/N: KGF1-UP; FAL1-UP
410-L (108-US GAL)
PART OF 327-3192 TANK GP-FUEL
AN ATTACHMENT

SMCS-1273 **i03655209**

NOTE	REF NO	GRAPHIC REF	PART NUMBER	QTY	PART NAME 1 2 3 4 5 6 (PRODUCT LEVEL)	SEE PAGE
	1	1	**4I-0378**	1	GASKET-RUBBER	
	2	1	**5P-4924**	1	ELBOW	
	3	1	**003-7764**	1	END-HOSE	
	4	1	**128-4411**	1	VALVE AS (FUEL SHUTOFF)	
	5	1	**341-1842**	1	SENDER AS-FUEL LEVEL	
		1	**186-3735**	2	PIN-CONNECTOR (16-GA TO 18-GA)	
		1	**102-8802**	1	KIT-RECEPTACLE (2-PIN)	
					(INCLUDES RECEPTACLE AS & WEDGE)	
Y	6	1	**164-4858**	1	CAP GP-FUEL FILLER (EXTREME SERVICE, LOCKABLE)	289
J	7	1	**303-9933**	1	STRAINER AS-FUEL (FLOAT GAUGE)	
	8	1	**8T-0328**	5	WASHER-HARD (5.5X10X1-MM THK)	
M	9	1	**095-0736**	5	SCREW-MACHINE (M5X0.8X10-MM)	
	10	1	**3J-1907**	1	SEAL-O-RING	
					AVAILABLE REPAIR KIT(S):	
J			**303-9937**	1	KIT-GAUGE (FUEL STRAINER)	
					(INCLUDES STOPPER & GAUGE)	

J - KIT MARKED J SERVICES PART(S) MARKED J
M - METRIC PART
Y - SEPARATE ILLUSTRATION

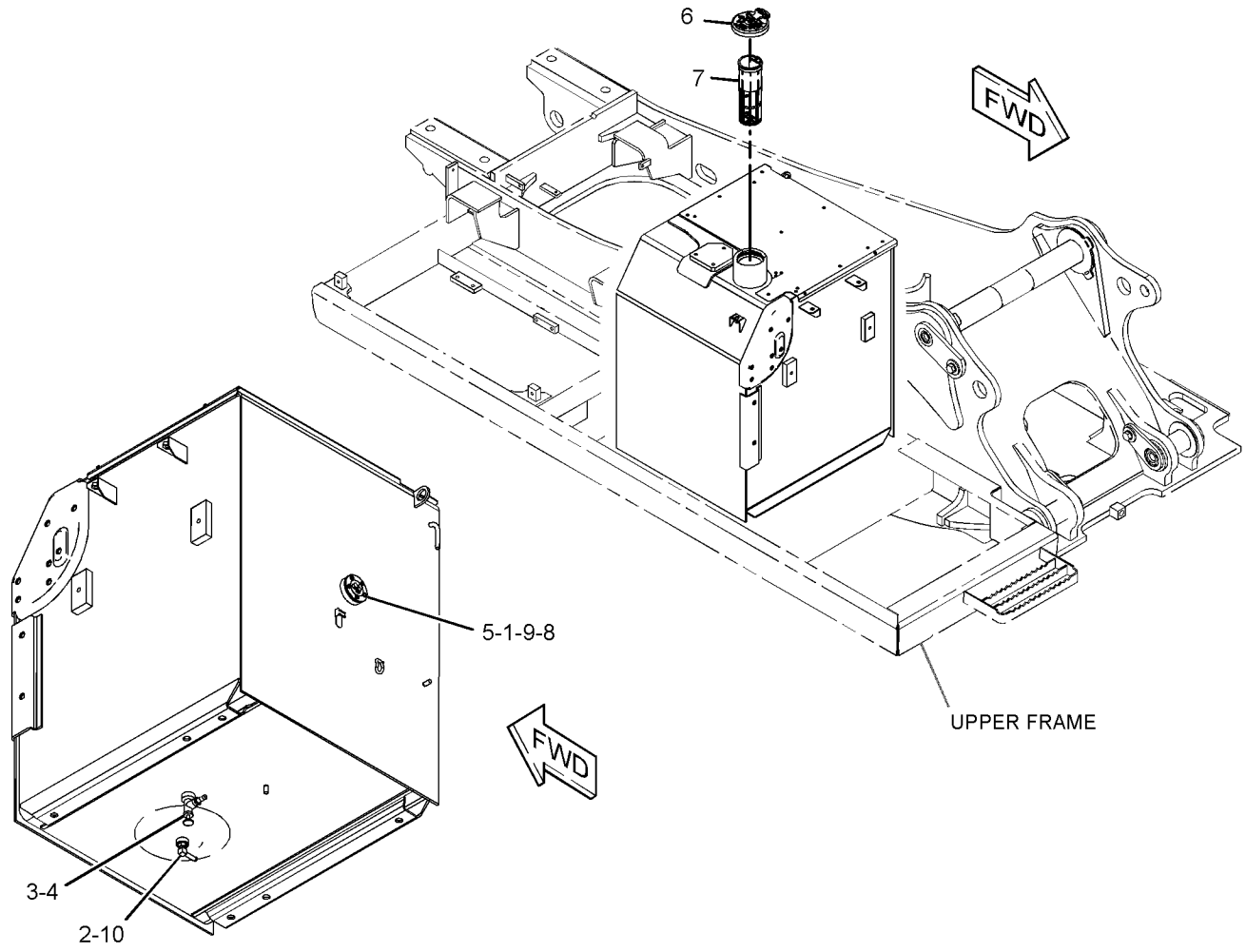

GRAPHIC #1 **<END>** g01627938

327-3199 TANK GP-FUEL

S/N: KGF1-UP; FAL1-UP
PART OF 327-3198 TANK & MTG GP-FUEL
AN ATTACHMENT

SMCS-1273 **i03127847**

NOTE	PART NUMBER	QTY	PART NAME 1 2 3 4 5 6 (PRODUCT LEVEL)	SEE PAGE
Y	*327-3200*	1	TANK GP-FUEL	377
			–OR–	
Y	*327-3203*	1	TANK GP-FUEL	381

Y - SEPARATE ILLUSTRATION

<END>

327-3200 TANK GP-FUEL

S/N: KGF1-UP; FAL1-UP
410-L (108-US GAL)
PART OF 327-3199 TANK GP-FUEL
AN ATTACHMENT
TYPE 1

SMCS-1273 **i03408849**

NOTE	REF NO	GRAPHIC REF	PART NUMBER	QTY	PART NAME 1 2 3 4 5 6 (PRODUCT LEVEL)	SEE PAGE
	1	1	**4I-0378**	1	GASKET-RUBBER	
	2	1	**5P-4924**	1	ELBOW	
	3	1	**003-7764**	1	END-HOSE	
	4	1	**128-4411**	1	VALVE AS (FUEL SHUTOFF)	
	5	1	**163-6700**	1	SENSOR GP-FUEL LEVEL	
		1	**186-3735**	2	PIN-CONNECTOR (16-GA TO 18-GA)	
		1	**102-8802**	1	KIT-RECEPTACLE (2-PIN)	
					(INCLUDES RECEPTACLE AS & WEDGE)	
Y	6	1	**164-4858**	1	CAP GP-FUEL FILLER (EXTREME SERVICE, LOCKABLE)	289
J	7	1	**303-9933**	1	STRAINER AS-FUEL (FLOAT GAUGE)	
	9	1	**9S-6130**	1	PLUG	
M	10	1	**095-0736**	5	SCREW-MACHINE (M5X0.8X10-MM)	
	11	1	**2S-4078**	1	SEAL-O-RING	
	12	1	**3B-0551**	1	PLUG-PIPE	
	13	1	**3J-1907**	1	SEAL-O-RING	
	14	1	**8T-0328**	5	WASHER-HARD (5.5X10X1-MM THK)	
M	15	1	**135-8579**	3	BOLT AS	
					AVAILABLE REPAIR KIT(S):	
J			**303-9937**	1	KIT-GAUGE (FUEL STRAINER)	
					(INCLUDES STOPPER & GAUGE)	

J - KIT MARKED J SERVICES PART(S) MARKED J
M - METRIC PART
Y - SEPARATE ILLUSTRATION

327-3200 **TANK GP-FUEL (*contd.*)** **i03408849**

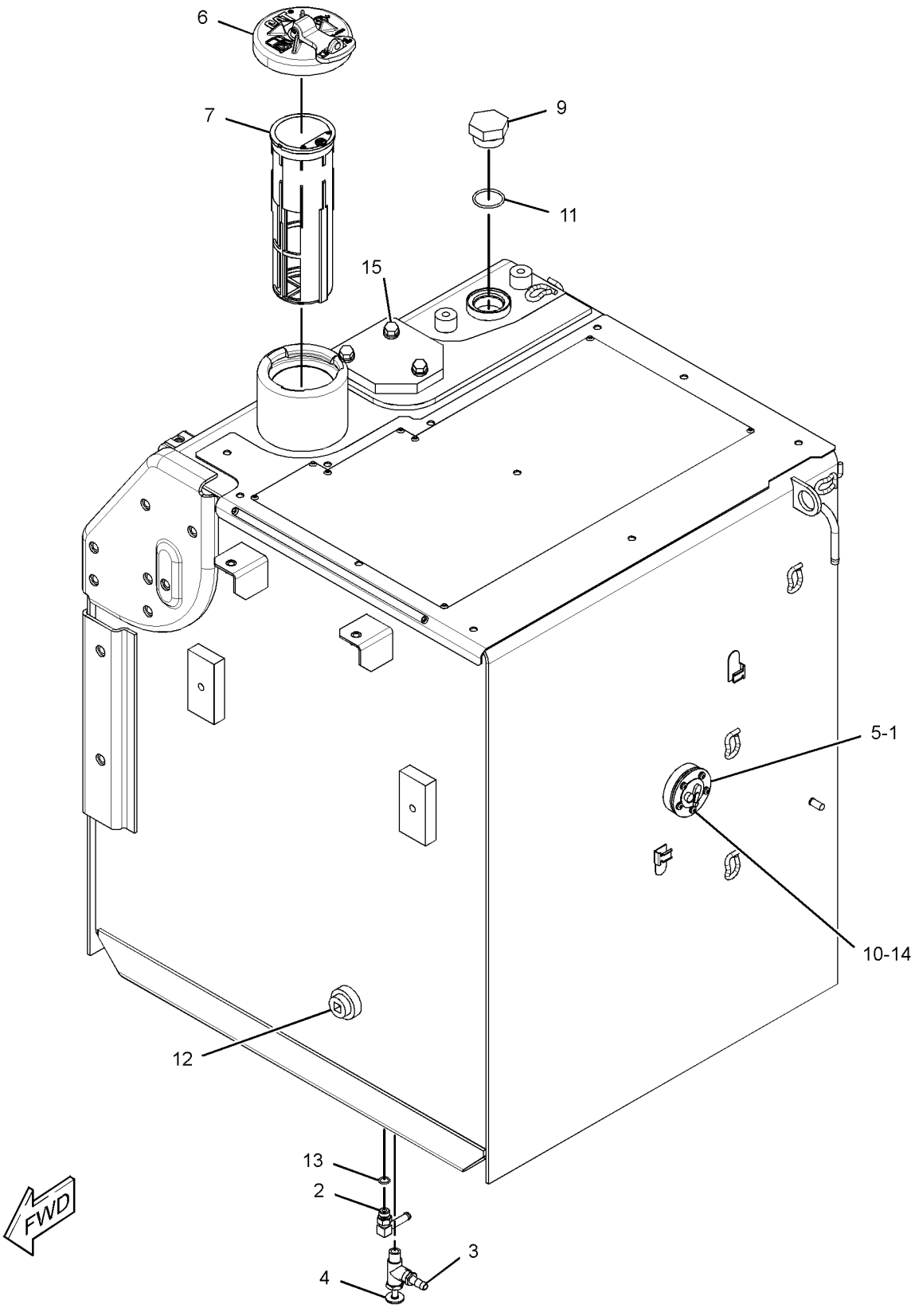

GRAPHIC #1 **<END>** g01788562

327-3200 TANK GP-FUEL

S/N: KGF1-UP; FAL1-UP
410-L (108-US GAL)
PART OF 327-3199 TANK GP-FUEL
AN ATTACHMENT
TYPE 2

SMCS-1273 **i03660443**

NOTE	REF NO	GRAPHIC REF	PART NUMBER	QTY	PART NAME 1 2 3 4 5 6 (PRODUCT LEVEL)	SEE PAGE
	1	1	**4I-0378**	1	GASKET-RUBBER	
	2	1	**5P-4924**	1	ELBOW	
	3	1	**003-7764**	1	END-HOSE	
	4	1	**128-4411**	1	VALVE AS (FUEL SHUTOFF)	
C	5	1	**341-1842**	1	SENDER AS-FUEL LEVEL	
		1	**186-3735**	2	PIN-CONNECTOR (16-GA TO 18-GA)	
		1	**102-8802**	1	KIT-RECEPTACLE (2-PIN)	
					(INCLUDES RECEPTACLE AS & WEDGE)	
Y	6	1	**164-4858**	1	CAP GP-FUEL FILLER (EXTREME SERVICE, LOCKABLE)	289
J	7	1	**303-9933**	1	STRAINER AS-FUEL (FLOAT GAUGE)	
	9	1	**9S-6130**	1	PLUG	
M	10	1	**095-0736**	5	SCREW-MACHINE (M5X0.8X10-MM)	
	11	1	**2S-4078**	1	SEAL-O-RING	
	12	1	**3B-0551**	1	PLUG-PIPE	
	13	1	**3J-1907**	1	SEAL-O-RING	
	14	1	**8T-0328**	5	WASHER-HARD (5.5X10X1-MM THK)	
M	15	1	**135-8579**	3	BOLT AS	
					AVAILABLE REPAIR KIT(S):	
J			**303-9937**	1	KIT-GAUGE (FUEL STRAINER)	
					(INCLUDES STOPPER & GAUGE)	

C - CHANGE FROM PREVIOUS TYPE
J - KIT MARKED J SERVICES PART(S) MARKED J
M - METRIC PART
Y - SEPARATE ILLUSTRATION

327-3200 **TANK GP-FUEL (*contd.*)** **i03660443**

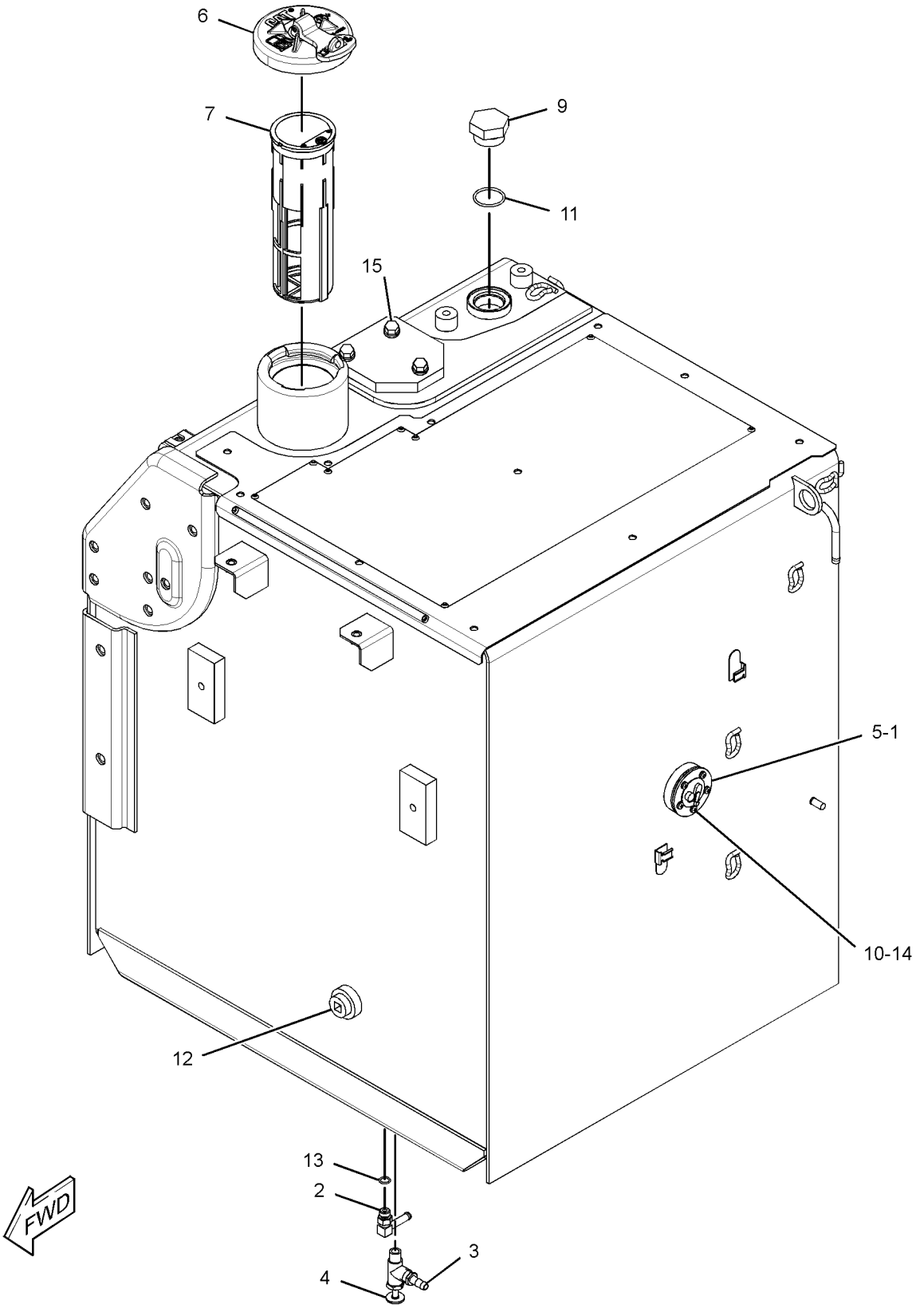

GRAPHIC #1 **<END>** g01788562

327-3203 TANK GP-FUEL

S/N: KGF1-UP; FAL1-UP
410-L (108-US GAL)
PART OF 327-3199 TANK GP-FUEL
AN ATTACHMENT

SMCS-1273 **i03796654**

NOTE	REF NO	GRAPHIC REF	PART NUMBER	QTY	PART NAME 1 2 3 4 5 6 (PRODUCT LEVEL)	SEE PAGE
	1	1	**4I-0378**	1	GASKET-RUBBER	
	2	1	**5P-4924**	1	ELBOW	
	3	1	**003-7764**	1	END-HOSE	
	4	1	**128-4411**	1	VALVE AS (FUEL SHUTOFF)	
	5	1	**341-1842**	1	SENDER AS-FUEL LEVEL	
		1	**186-3735**	2	PIN-CONNECTOR (16-GA TO 18-GA)	
		1	**102-8802**	1	KIT-RECEPTACLE (2-PIN)	
					(INCLUDES RECEPTACLE AS & WEDGE)	
Y	6	1	**164-4858**	1	CAP GP-FUEL FILLER (EXTREME SERVICE, LOCKABLE)	289
J	7	1	**303-9933**	1	STRAINER AS-FUEL (FLOAT GAUGE)	
M	9	1	**095-0736**	5	SCREW-MACHINE (M5X0.8X10-MM)	
	10	1	**2S-4078**	1	SEAL-O-RING	
	11	1	**3B-0551**	1	PLUG-PIPE	
	12	1	**3J-1907**	1	SEAL-O-RING	
	13	1	**8T-0328**	5	WASHER-HARD (5.5X10X1-MM THK)	
	14	1	**9S-6130**	1	PLUG	
M	15	1	**135-8579**	3	BOLT AS	
					PARTS SHOWN IN GRAPHIC(S) WITHOUT A REFERENCE NUMBER ARE NOT SERVICED SEPARATELY	
					AVAILABLE REPAIR KIT(S):	
J			**303-9937**	1	KIT-GAUGE (FUEL STRAINER)	
					(INCLUDES STOPPER & GAUGE)	

J - KIT MARKED J SERVICES PART(S) MARKED J
M - METRIC PART
Y - SEPARATE ILLUSTRATION

327-3203 **TANK GP-FUEL (*contd.*)** **i03796654**

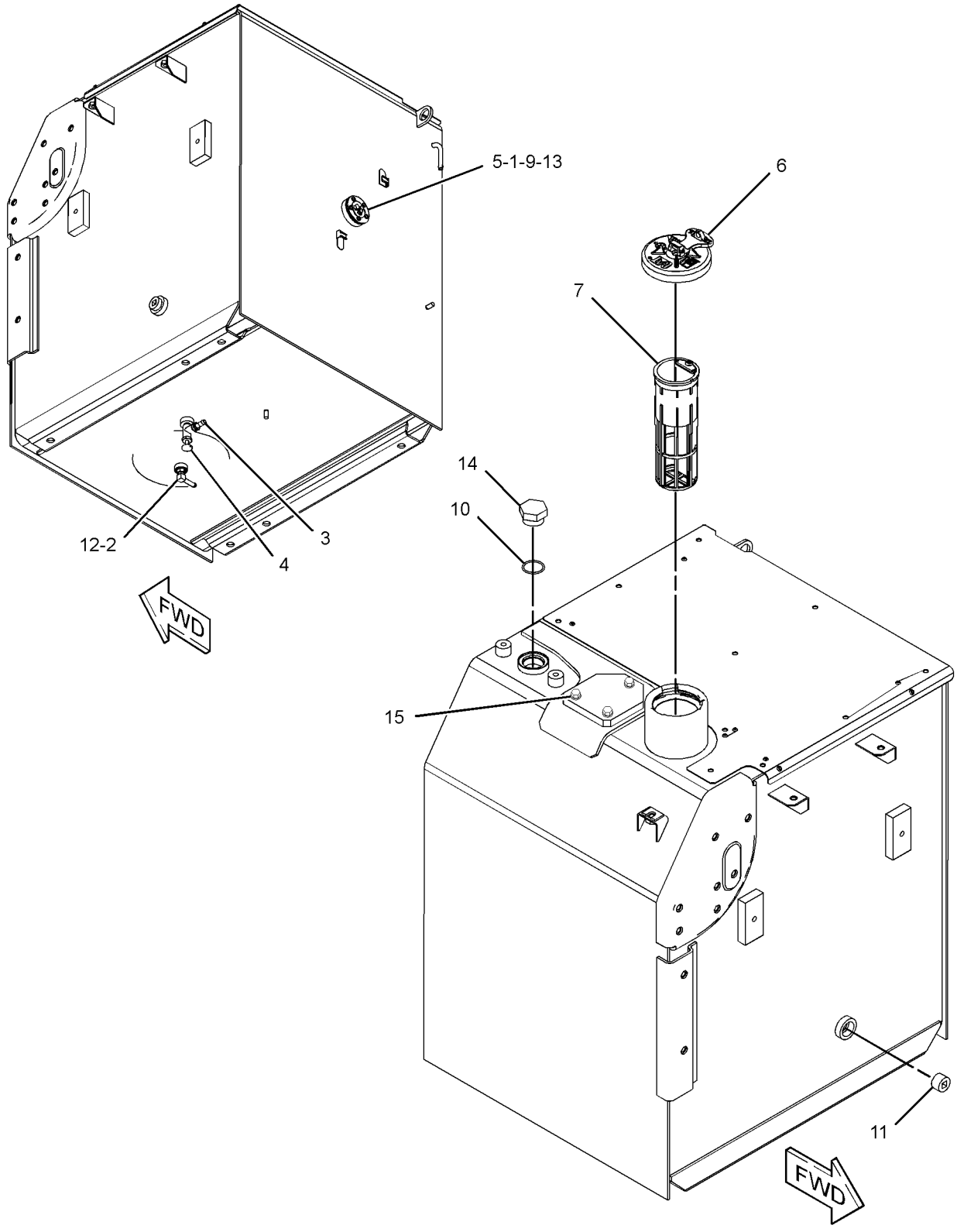

GRAPHIC #1 **<END>** g01789674

366-6363 TANK GP-FUEL

S/N: KGF1-7531; FAL1-8887
410-L (108.3-US GAL)
PART OF 278-3896 TANK & MTG GP-FUEL

SMCS-1273 **i04437611**

NOTE	REF NO	GRAPHIC REF	PART NUMBER	QTY	PART NAME 1 2 3 4 5 6 (PRODUCT LEVEL)	SEE PAGE
	1	1	**4I-0378**	1	GASKET-RUBBER	
	2	1	**5P-4924**	1	ELBOW	
	3	1	**003-7764**	1	END-HOSE	
	4	1	**128-4411**	1	VALVE AS (FUEL SHUTOFF)	
Y	6	1	**164-4858**	1	CAP GP-FUEL FILLER (EXTREME SERVICE, LOCKABLE)	289
J	7	1	**303-9933**	1	STRAINER AS-FUEL (FLOAT GAUGE)	
	8	1	**341-1842**	1	SENDER AS-FUEL LEVEL	
		1	**102-8802**	1	KIT-RECEPTACLE (2-PIN)	
					(INCLUDES RECEPTACLE AS & WEDGE)	
		1	**186-3735**	2	PIN-CONNECTOR (16-GA TO 18-GA)	
M	10	1	**095-0736**	5	SCREW-MACHINE (M5X0.8X10-MM)	
	13	1	**3J-1907**	1	SEAL-O-RING	
	14	1	**8T-0328**	5	WASHER-HARD (5.5X10X1-MM THK)	
					AVAILABLE REPAIR KIT(S):	
J			**303-9937**	1	KIT-GAUGE (FUEL STRAINER)	
					(INCLUDES STOPPER & FLOAT GAUGE)	

J - KIT MARKED J SERVICES PART(S) MARKED J
M - METRIC PART
Y - SEPARATE ILLUSTRATION

366-6363 **TANK GP-FUEL (*contd.*)** **i04437611**

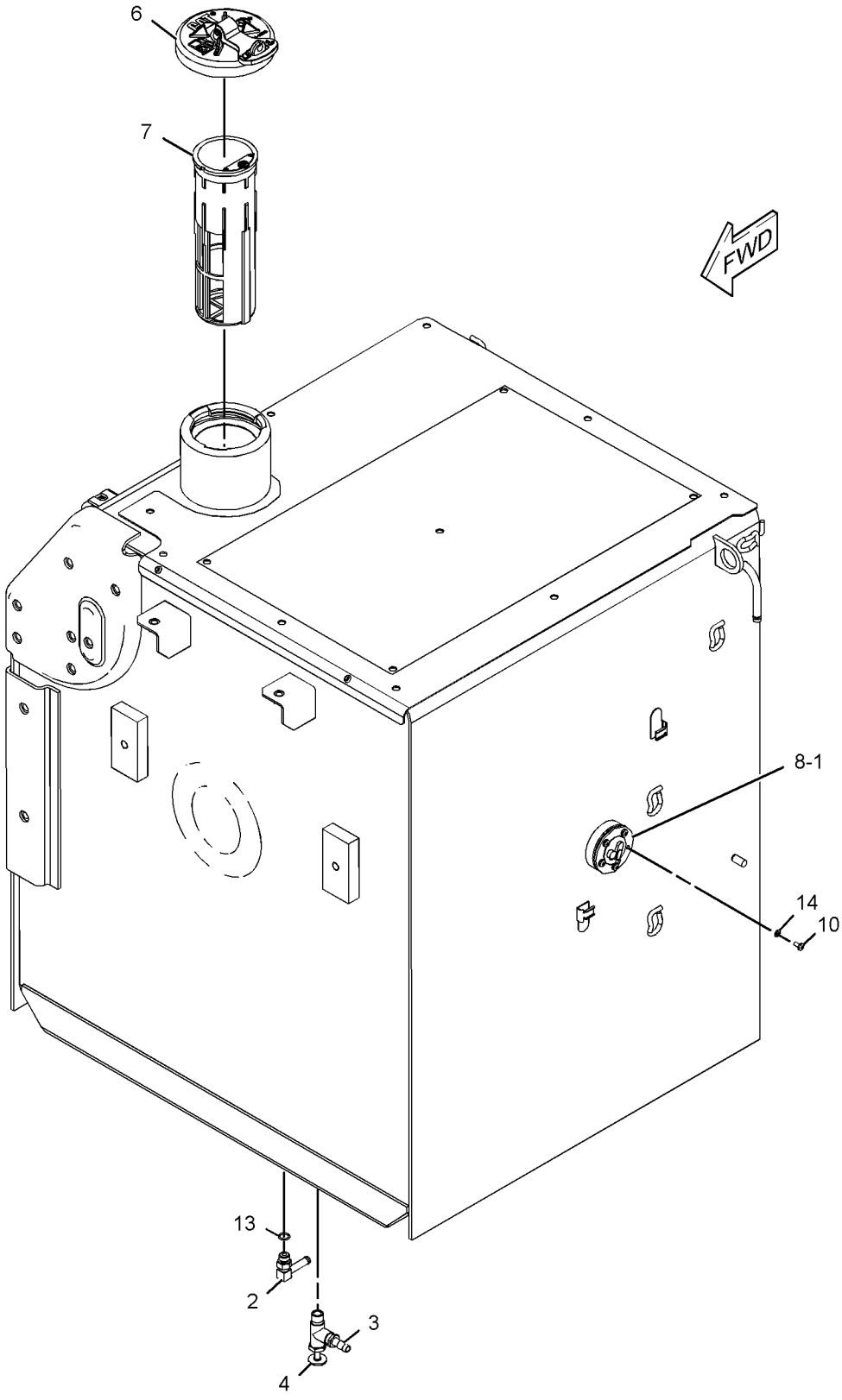

GRAPHIC #1 **<END>** g02594078

366-6364 TANK GP-FUEL

S/N: KGF1-UP; FAL1-UP
410-L (108-US GAL)
PART OF 327-3191 TANK & MTG GP-FUEL
AN ATTACHMENT

SMCS-1273 **i05270530**

NOTE	REF NO	GRAPHIC REF	PART NUMBER	QTY	PART NAME 1 2 3 4 5 6 (PRODUCT LEVEL)	SEE PAGE
	1	1	**4I-0378**	1	GASKET-RUBBER	
	2	1	**5P-4924**	1	ELBOW	
	3	1	**003-7764**	1	END-HOSE	
	4	1	**128-4411**	1	VALVE AS (FUEL SHUTOFF)	
	5	1	**341-1842**	1	SENDER AS-FUEL LEVEL	
		1	**186-3735**	2	PIN-CONNECTOR (16-GA TO 18-GA)	
		1	**102-8802**	1	KIT-RECEPTACLE (2-PIN)	
					(INCLUDES RECEPTACLE AS & WEDGE)	
Y	6	1	**164-4858**	1	CAP GP-FUEL FILLER (EXTREME SERVICE, LOCKABLE)	289
J	7	1	**303-9933**	1	STRAINER AS-FUEL (FLOAT GAUGE)	
	8	1	**8T-0328**	5	WASHER-HARD (5.5X10X1-MM THK)	
M	9	1	**095-0736**	5	SCREW-MACHINE (M5X0.8X10-MM)	
	10	1	**3J-1907**	1	SEAL-O-RING	
					AVAILABLE REPAIR KIT(S):	
J			**303-9937**	1	KIT-GAUGE (FUEL STRAINER)	
					(INCLUDES STOPPER & GAUGE)	

J - KIT MARKED J SERVICES PART(S) MARKED J
M - METRIC PART
Y - SEPARATE ILLUSTRATION

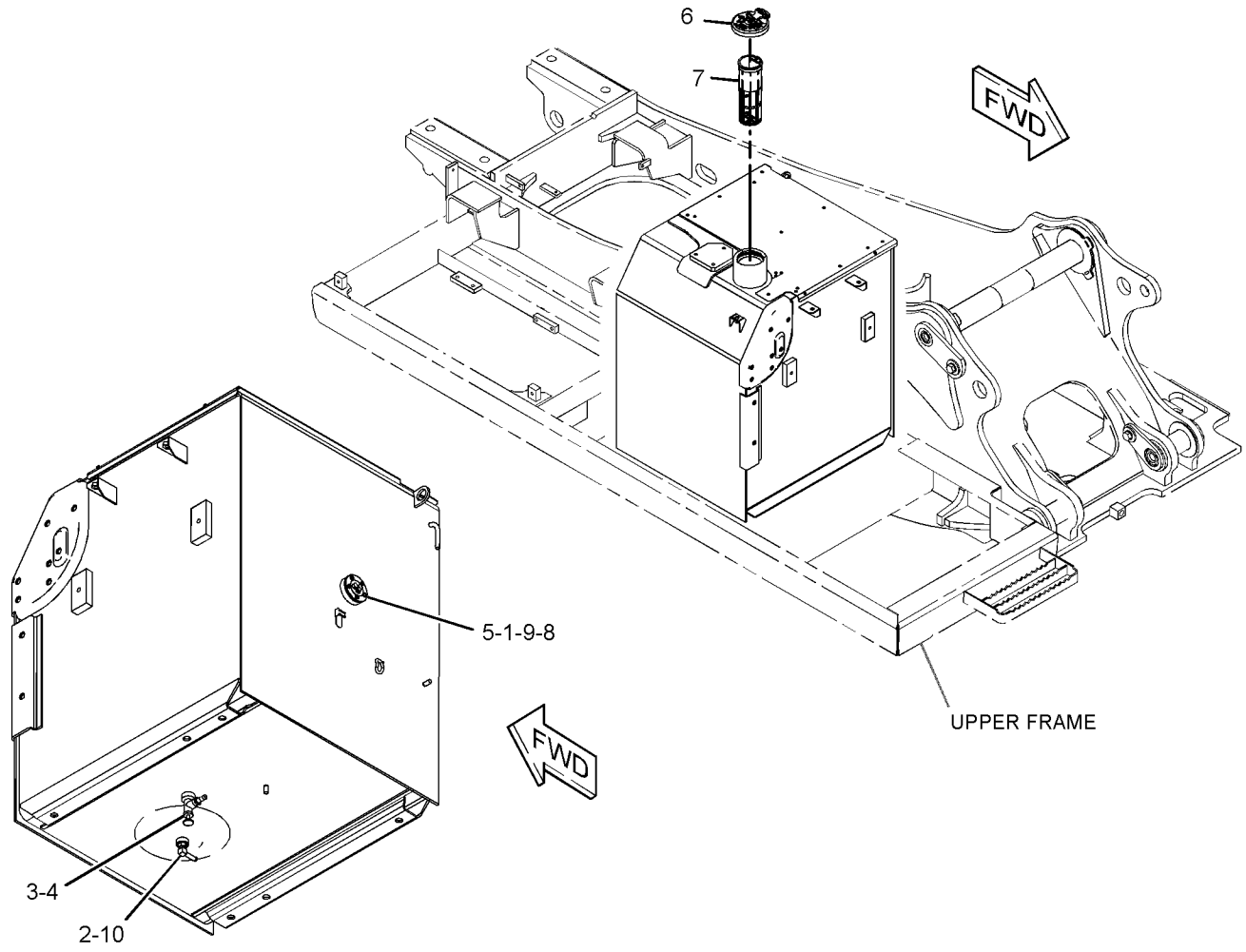

GRAPHIC #1 **<END>** g01627938

366-6365 TANK GP-FUEL

S/N: KGF1-UP; FAL1-UP
410-L 108.3-US GAL
FIELD REPLACEMENT FOR 278-3901—PAGE: 363
PART OF 278-3900 TANK & MTG GP-FUEL

SMCS-1273 **i04716166**

NOTE	REF NO	GRAPHIC REF	PART NUMBER	QTY	PART NAME 1 2 3 4 5 6 (PRODUCT LEVEL)	SEE PAGE
	1	1	**4I-0378**	1	GASKET-RUBBER	
	2	1	**5P-4924**	1	ELBOW	
	3	1	**003-7764**	1	END-HOSE	
	4	1	**128-4411**	1	VALVE AS (FUEL SHUTOFF)	
	5	1	**341-1842**	1	SENDER AS-FUEL LEVEL	
		1	**186-3735**	2	PIN-CONNECTOR (16-GA TO 18-GA)	
		1	**102-8802**	1	KIT-RECEPTACLE (2-PIN)	
					(INCLUDES RECEPTACLE AS & WEDGE)	
Y	6	1	**164-4858**	1	CAP GP-FUEL FILLER (EXTREME SERVICE, LOCKABLE)	289
J	8	1	**303-9933**	1	STRAINER AS-FUEL (FLOAT GAUGE)	
M	9	1	**095-0736**	5	SCREW-MACHINE (M5X0.8X10-MM)	
	10	1	**2S-4078**	1	SEAL-O-RING	
	11	1	**3B-0551**	1	PLUG-PIPE	
	12	1	**3J-1907**	1	SEAL-O-RING	
	13	1	**8T-0328**	5	WASHER-HARD (5.5X10X1-MM THK)	
	14	1	**9S-6130**	1	PLUG	
					PARTS SHOWN IN GRAPHIC(S) WITHOUT A REFERENCE NUMBER ARE NOT SERVICED SEPARATELY	
					AVAILABLE REPAIR KIT(S):	
J			**303-9937**	1	KIT-GAUGE (FUEL STRAINER)	
					(INCLUDES STOPPER & FLOAT GAUGE)	

J - KIT MARKED J SERVICES PART(S) MARKED J
M - METRIC PART
Y - SEPARATE ILLUSTRATION

366-6365 **TANK GP-FUEL (*contd.*)** **i04716166**

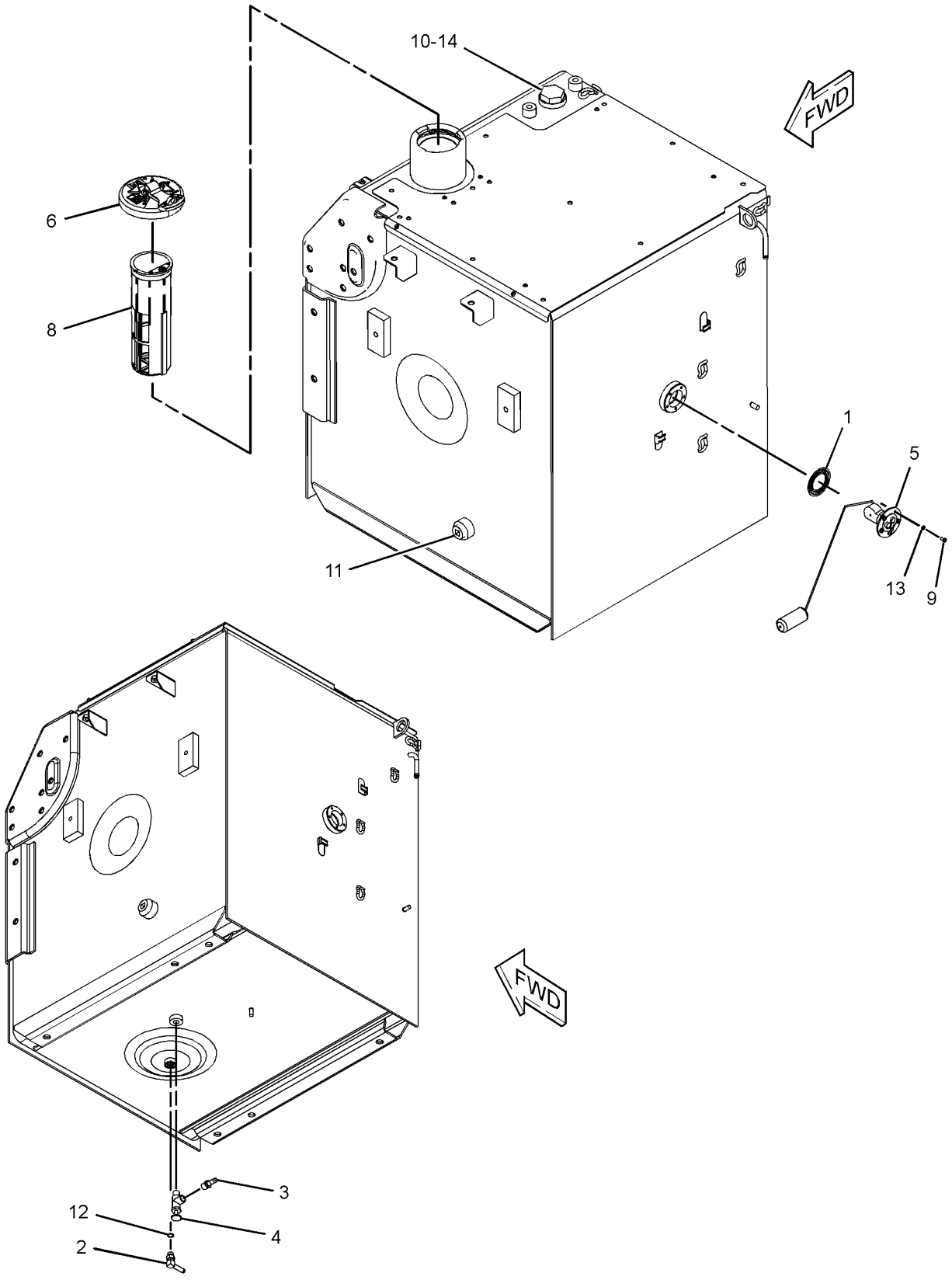

GRAPHIC #1 **<END>** g02828598

366-6366 TANK GP-FUEL

S/N: KGF1-UP; FAL1-UP
410-L (108-US GAL)
PART OF 327-3198 TANK & MTG GP-FUEL
AN ATTACHMENT

SMCS-1273 **i05270531**

NOTE	REF NO	GRAPHIC REF	PART NUMBER	QTY	PART NAME 1 2 3 4 5 6 (PRODUCT LEVEL)	SEE PAGE
	1	1	**4I-0378**	1	GASKET-RUBBER	
	2	1	**5P-4924**	1	ELBOW	
	3	1	**003-7764**	1	END-HOSE	
	4	1	**128-4411**	1	VALVE AS (FUEL SHUTOFF)	
M	5	1	**135-8579**	3	BOLT AS	
Y	6	1	**164-4858**	1	CAP GP-FUEL FILLER (EXTREME SERVICE, LOCKABLE)	289
J	7	1	**303-9933**	1	STRAINER AS-FUEL (FLOAT GAUGE)	
	8	1	**341-1842**	1	SENDER AS-FUEL LEVEL	
		1	**102-8802**	1	KIT-RECEPTACLE (2-PIN)	
					(INCLUDES RECEPTACLE AS & WEDGE)	
		1	**8T-8729**	2	PIN-CONNECTOR (16-GA TO 18-GA)	
	9	1	**9S-6130**	1	PLUG	
M	10	1	**095-0736**	5	SCREW-MACHINE (M5X0.8X10-MM)	
	11	1	**2S-4078**	1	SEAL-O-RING	
	12	1	**3B-0551**	1	PLUG-PIPE	
	13	1	**3J-1907**	1	SEAL-O-RING	
	14	1	**8T-0328**	5	WASHER-HARD (5.5X10X1-MM THK)	
					AVAILABLE REPAIR KIT(S):	
J			**303-9937**	1	KIT-GAUGE (FUEL STRAINER)	
					(INCLUDES STOPPER & FLOAT GAUGE)	

J - KIT MARKED J SERVICES PART(S) MARKED J
M - METRIC PART
Y - SEPARATE ILLUSTRATION

366-6366 **TANK GP-FUEL (*contd.*)** **i05270531**

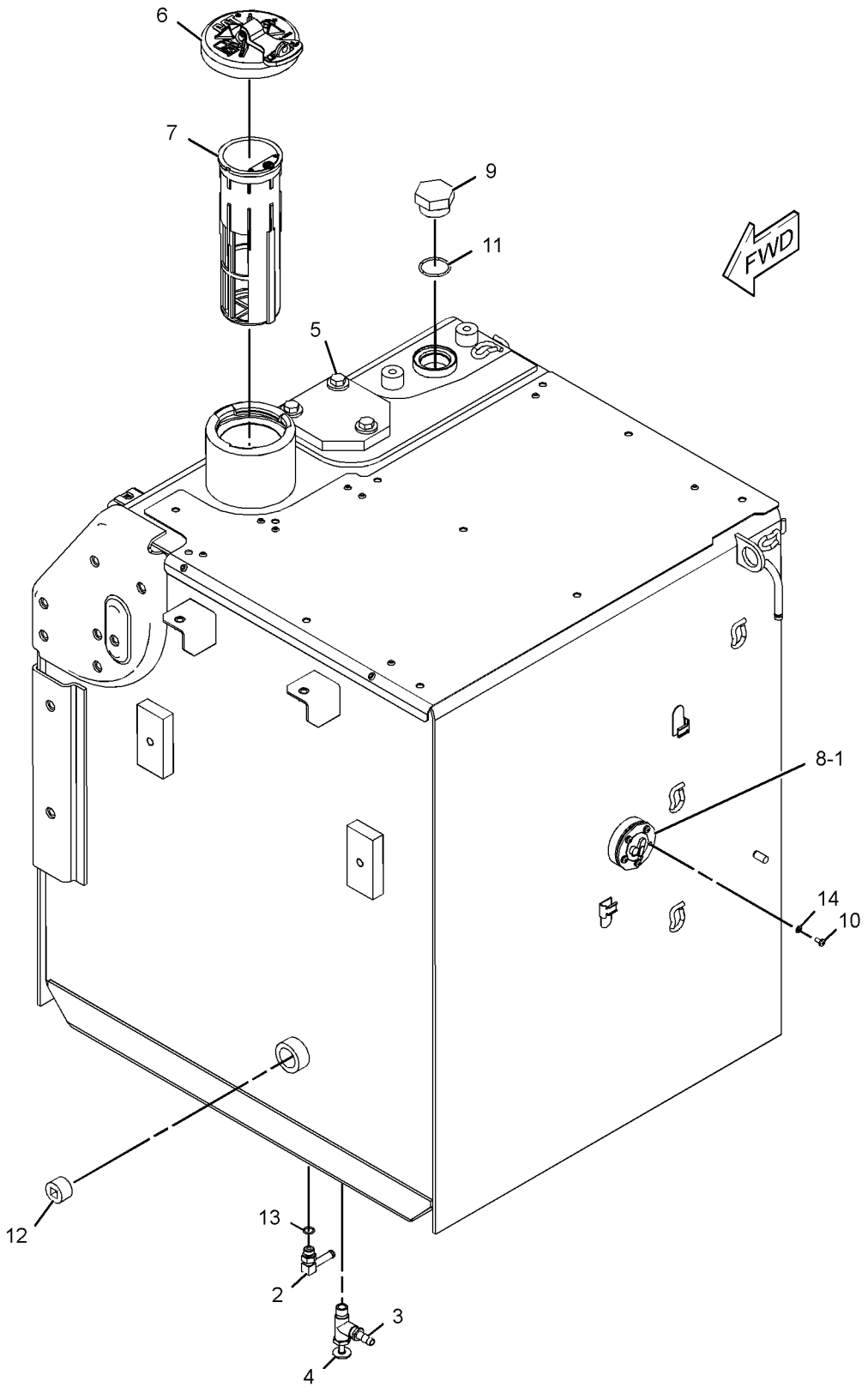

GRAPHIC #1 **<END>** g02317953

375-8594 TANK GP-FUEL

S/N: KGF1-UP; FAL1-UP
410-L (108-US GAL)
PART OF 327-3191 TANK & MTG GP-FUEL
AN ATTACHMENT

SMCS-1273 **i04989129**

NOTE	REF NO	GRAPHIC REF	PART NUMBER	QTY	PART NAME 1 2 3 4 5 6 (PRODUCT LEVEL)	SEE PAGE
	1	1	**4I-0378**	1	GASKET-RUBBER	
	2	1	*150-3024*	2	ELBOW AS	
					(EACH INCLUDES)	
		1	**3J-1907**	1	SEAL-O-RING	
		1	**5P-4924**	1	ELBOW	
M	3	1	**095-0736**	5	SCREW-MACHINE (M5X0.8X10-MM)	
	4	1	**8T-0328**	5	WASHER-HARD (5.5X10X1-MM THK)	
	5	1	**341-1842**	1	SENDER AS-FUEL LEVEL	
		1	**186-3735**	2	PIN-CONNECTOR (16-GA TO 18-GA)	
		1	**102-8802**	1	KIT-RECEPTACLE (2-PIN)	
					(INCLUDES RECEPTACLE AS & WEDGE)	
	6	1	**349-7059**	1	CAP AS-FUEL (DEBRIS BOOT, LOCKABLE) (EXTREME SERVICE, LOCKABLE)	
		1	**9X-8600**	1	SEAL-O-RING	
		1	**350-7735**	1	KIT-CAP FILTER (FUEL TANK)	
					(INCLUDES BODY, GASKET, SCREWS & WASHERS)	
J	7	1	**303-9933**	1	STRAINER AS-FUEL (FLOAT GAUGE)	
					AVAILABLE REPAIR KIT(S):	
J			**303-9937**	1	KIT-GAUGE (FUEL STRAINER)	
					(INCLUDES STOPPER & GAUGE)	

J - KIT MARKED J SERVICES PART(S) MARKED J
M - METRIC PART

375-8594 **TANK GP-FUEL (*contd.*)** **i04989129**

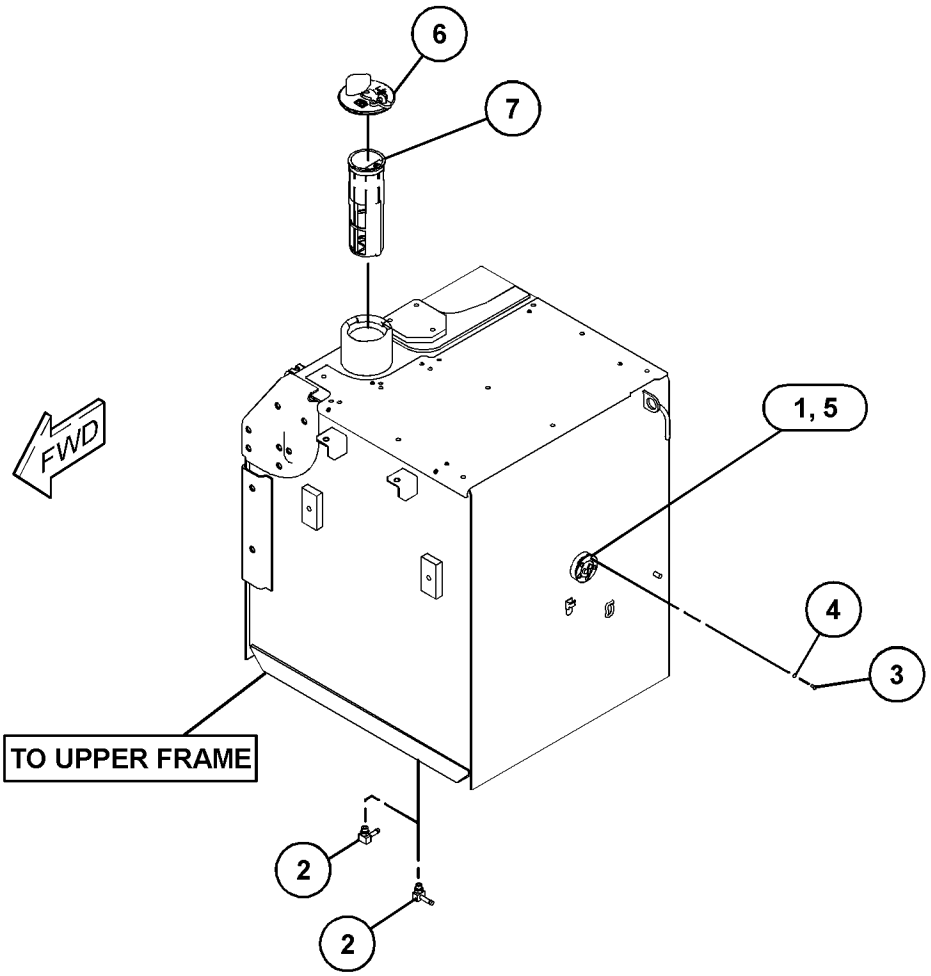

GRAPHIC #1 **<END>** g03170696

375-8620 TANK GP-FUEL

S/N: KGF7532-UP; FAL8888-UP
410-L (108.3-US GAL)
PART OF 278-3896 TANK & MTG GP-FUEL

SMCS-1273 **i05266704**

NOTE	REF NO	GRAPHIC REF	PART NUMBER	QTY	PART NAME 1 2 3 4 5 6 (PRODUCT LEVEL)	SEE PAGE
	1	1	**4I-0378**	1	GASKET-RUBBER	
	2	1	**3J-1907**	1	SEAL-O-RING	
	3	1	**5P-4924**	1	ELBOW	
					—OR—	
AFN			**165-2881**	1	VALVE-BALL (SEDIMENT, WATER)	
AFN			**193-9696**	1	HOSE-DRAIN	
	4	1	**349-7059**	1	CAP AS-FUEL (DEBRIS BOOT, LOCKABLE) (EXTREME SERVICE, LOCKABLE)	
		1	**9X-8600**	1	SEAL-O-RING	
		1	**350-7735**	1	KIT-CAP FILTER (FUEL TANK)	
					(KIT INCLUDES BODY, GASKET, SCREWS & WASHERS)	
	5	1	**003-7764**	1	END-HOSE	
	6	1	**9N-3666**	1	VALVE-MANUAL (FUEL SHUTOFF)	
	7	1	**341-1842**	1	SENDER AS-FUEL LEVEL	
		1	**186-3735**	2	PIN-CONNECTOR (16-GA TO 18-GA)	
		1	**102-8802**	1	KIT-RECEPTACLE (2-PIN)	
					(INCLUDES RECEPTACLE AS & WEDGE)	
J	8	1	**303-9933**	1	STRAINER AS-FUEL (FLOAT GAUGE)	
M	9	1	**095-0736**	5	SCREW-MACHINE (M5X0.8X10-MM)	
	10	1	**8T-0328**	5	WASHER-HARD (5.5X10X1-MM THK)	
					PARTS SHOWN IN GRAPHIC(S) WITHOUT A REFERENCE NUMBER ARE NOT SERVICED SEPARATELY	
					AVAILABLE REPAIR KIT(S):	
J			**303-9937**	1	KIT-GAUGE (FUEL STRAINER)	
					(INCLUDES STOPPER & FLOAT GAUGE)	

A - NOT PART OF THIS GROUP
F - NOT SHOWN
J - KIT MARKED J SERVICES PART(S) MARKED J
M - METRIC PART
N - OPTIONAL USE TO DRAIN TANK IN COLD WEATHER

375-8620 **TANK GP-FUEL (*contd.*)** **i05266704**

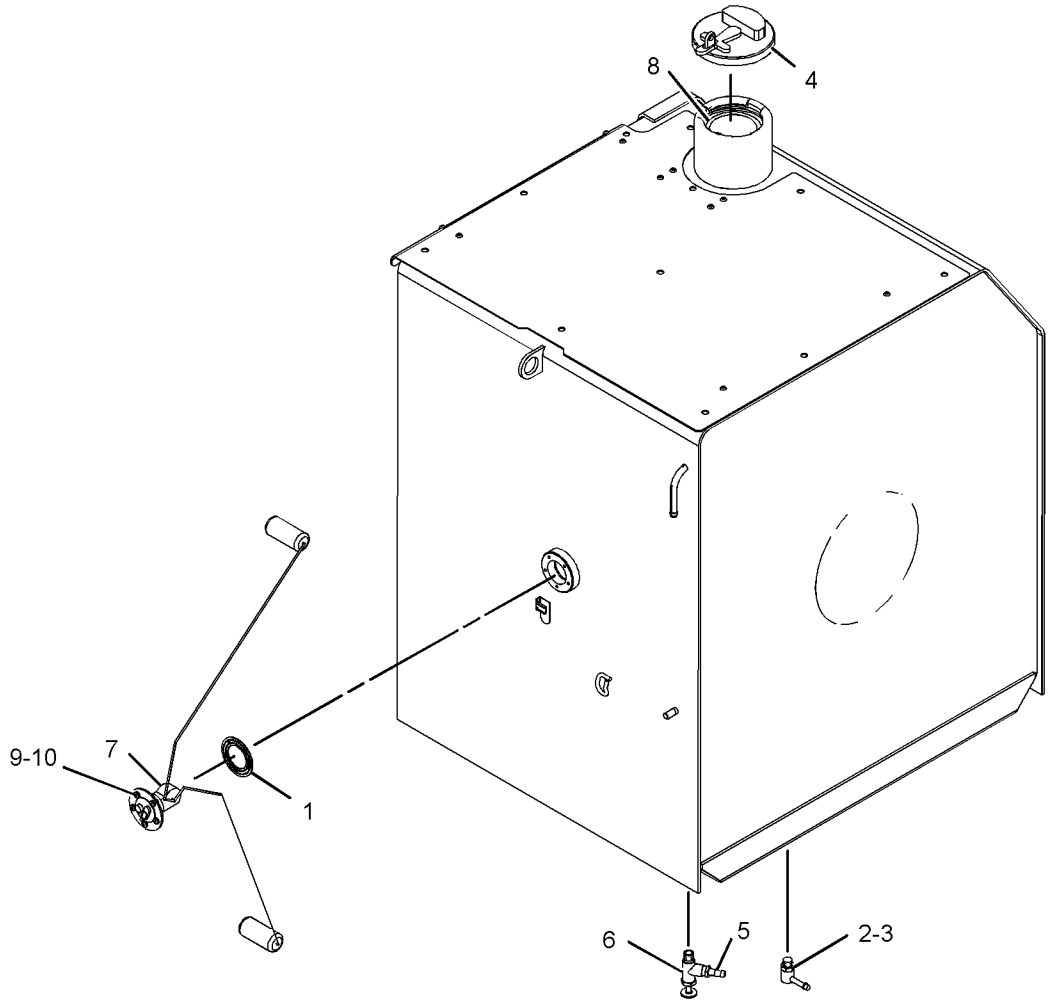

GRAPHIC #1 **<END>** g02862797

375-8626 TANK GP-FUEL

S/N: KGF1-UP; FAL1-UP
410-L (108-US GAL)
PART OF 327-3198 TANK & MTG GP-FUEL
AN ATTACHMENT

SMCS-1273 **i04801467**

NOTE	REF NO	GRAPHIC REF	PART NUMBER	QTY	PART NAME 1 2 3 4 5 6 (PRODUCT LEVEL)	SEE PAGE
	1	1	**4I-0378**	1	GASKET-RUBBER	
	2	1	*150-3024*	1	ELBOW AS	
		1	**3J-1907**	1	SEAL-O-RING	
		1	**5P-4924**	1	ELBOW	
	3	1	**003-7764**	1	END-HOSE	
	4	1	**9N-3666**	1	VALVE-MANUAL (FUEL SHUTOFF) (FUEL SHUTOFF)	
M	5	1	**135-8579**	3	BOLT AS	
	6	1	**349-7059**	1	CAP AS-FUEL (DEBRIS BOOT, LOCKABLE)	
		1	**9X-8600**	1	SEAL-O-RING	
		1	**350-7735**	1	KIT-CAP FILTER (FUEL TANK)	
	7	1	**303-9933**	1	STRAINER AS-FUEL (FLOAT GAUGE)	
J	8	1	**341-1842**	1	SENDER AS-FUEL LEVEL	
		1	**186-3735**	2	PIN-CONNECTOR (16-GA TO 18-GA)	
		1	**102-8802**	1	KIT-RECEPTACLE (2-PIN)	
					(INCLUDES RECPTACLE AS & WEDGE)	
	9	1	**9S-6130**	1	PLUG	
M	10	1	**095-0736**	5	SCREW-MACHINE (M5X0.8X10-MM)	
	11	1	**2S-4078**	1	SEAL-O-RING	
	12	1	**3B-0551**	1	PLUG-PIPE	
	13	1	**8T-0328**	5	WASHER-HARD (5.5X10X1-MM THK)	
					AVAILABLE REPAIR KIT(S):	
J			**303-9937**	1	KIT-GAUGE (FUEL STRAINER)	
					(INCLUDES STOPPER & FLOAT GAUGE)	

J - KIT MARKED J SERVICES PART(S) MARKED J
M - METRIC PART

375-8626 **TANK GP-FUEL (*contd.*)** **i04801467**

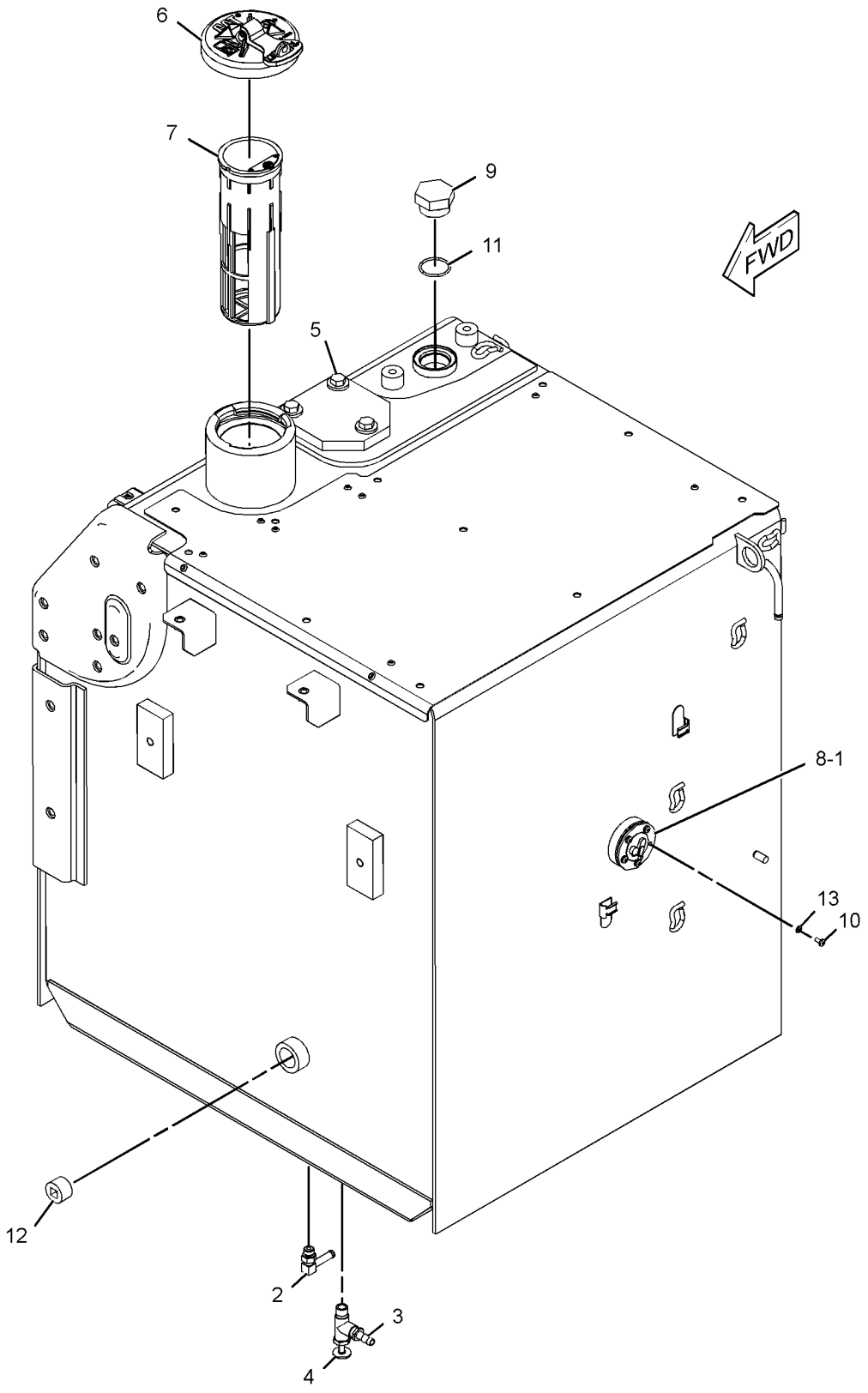

GRAPHIC #1 **<END>** g02926119

399-0822 TANK GP-FUEL

S/N: KGF1-UP
410-L (108-US GAL)
PART OF 399-0821 TANK & MTG GP-FUEL
AN ATTACHMENT

SMCS-1273 **i05126734**

NOTE	REF NO	GRAPHIC REF	PART NUMBER	QTY	PART NAME 1 2 3 4 5 6 (PRODUCT LEVEL)	SEE PAGE
	1	1	**4I-0378**	1	GASKET-RUBBER	
M	2	1	**135-8579**	3	BOLT AS	
J	3	1	**303-9933**	1	STRAINER AS-FUEL (FLOAT GAUGE)	
	4	1	**341-1842**	1	SENDER AS-FUEL LEVEL	
		1	**8T-8729**	2	PIN-CONNECTOR (16-GA TO 18-GA)	
		1	**102-8802**	1	KIT-RECEPTACLE (2-PIN)	
					(INCLUDES RECEPTACLE AS AND WEDGE)	
	5	1	**349-7059**	1	CAP AS-FUEL (DEBRIS BOOT, LOCKABLE)	
		1	**9X-8600**	1	SEAL-O-RING	
		1	**350-7735**	1	KIT-CAP FILTER (FUEL TANK)	
					(INCLUDES BODY, GASKET, SCREWS & WASHERS)	
	6	1	**9S-6130**	1	PLUG	
M	7	1	**095-0736**	5	SCREW-MACHINE (M5X0.8X10-MM)	
	8	1	*150-3024*	2	ELBOW AS	
					(EACH INCLUDES)	
		1	**3J-1907**	1	SEAL-O-RING	
		1	**5P-4924**	1	ELBOW	
	9	1	**2S-4078**	1	SEAL-O-RING	
	10	1	**3B-0551**	1	PLUG-PIPE	
	11	1	**8T-0328**	5	WASHER-HARD (5.5X10X1-MM THK)	
					AVAILABLE REPAIR KIT(S):	
J			**303-9937**	1	KIT-GAUGE (FUEL STRAINER)	
					(INCLUDES STOPPER & GAUGE)	

J - KIT MARKED J SERVICES PART(S) MARKED J
M - METRIC PART

399-0822 **TANK GP-FUEL (*contd.*)** **i05126734**

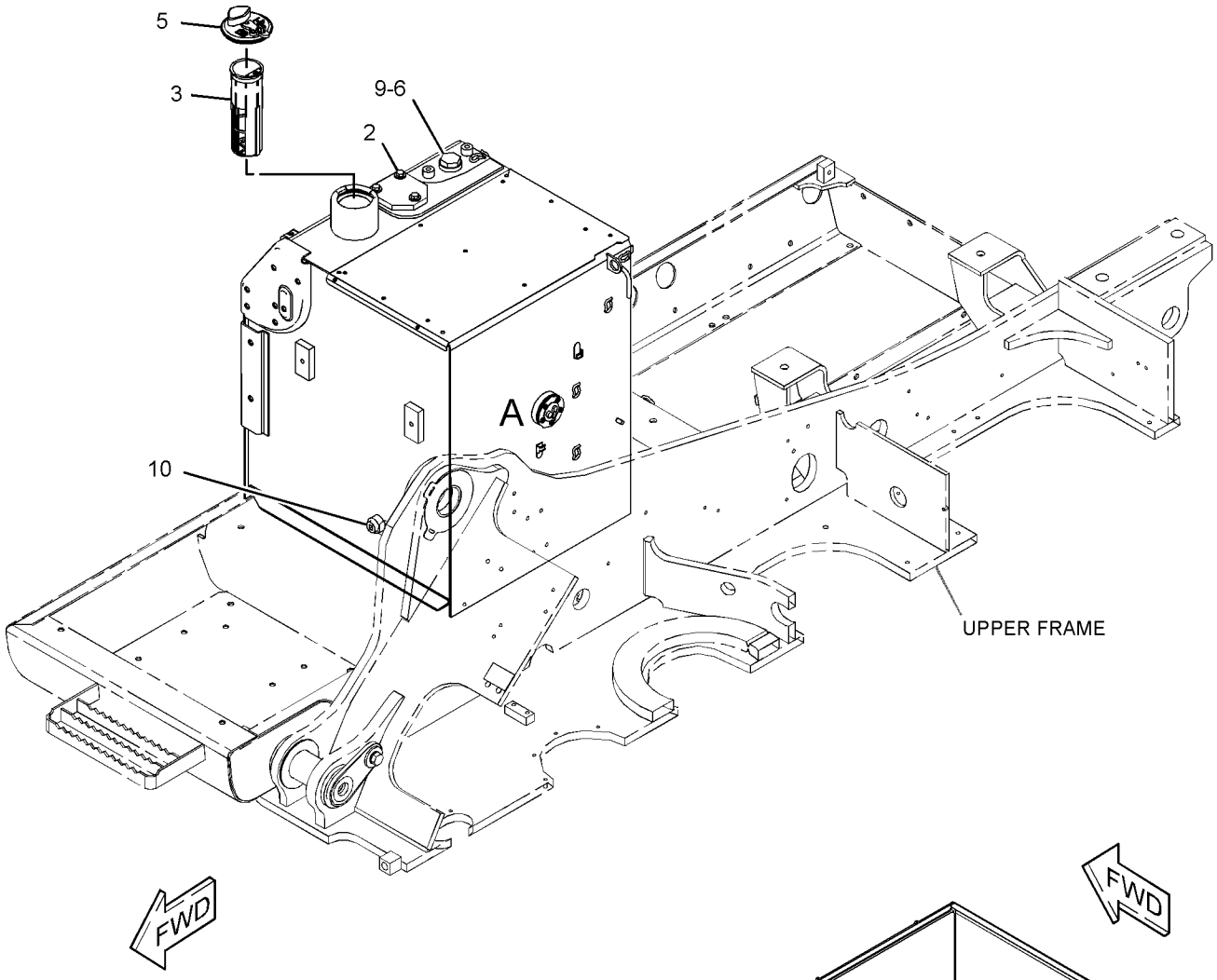

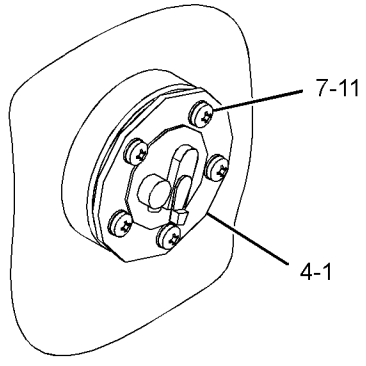

VIEW OF AREA A

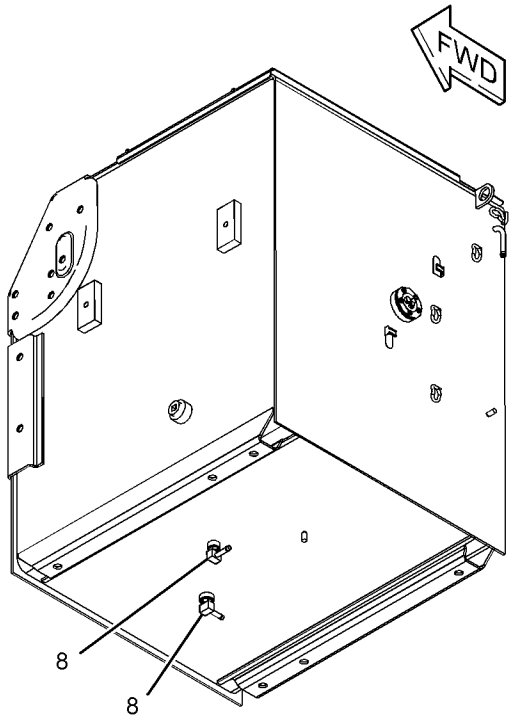

GRAPHIC #1 **<END>** g03361494

298-3147 VALVE GP-FUEL SHUTOFF

S/N: KGF1-9179; FAL1-9991
PART OF 273-7735, 355-8168, 375-3089 LINES GP-FUEL
ALSO AN ATTACHMENT

SMCS-1273 **i02750485**

NOTE	REF NO	GRAPHIC REF	PART NUMBER	QTY	PART NAME 1 2 3 4 5 6 (PRODUCT LEVEL)	SEE PAGE
	1	1	**298-3257**	1	STOP	
	2	1	**298-3258**	1	LEVER	
M	3	1	**260-6692**	1	NUT (M5X0.8-THD)	
	4	1	**3J-1907**	1	SEAL-O-RING	
	5	1	**8T-0328**	1	WASHER-HARD (5.5X10X1-MM THK)	
					PARTS SHOWN IN GRAPHIC(S) WITHOUT A REFERENCE NUMBER ARE NOT SERVICED SEPARATELY	

M - METRIC PART

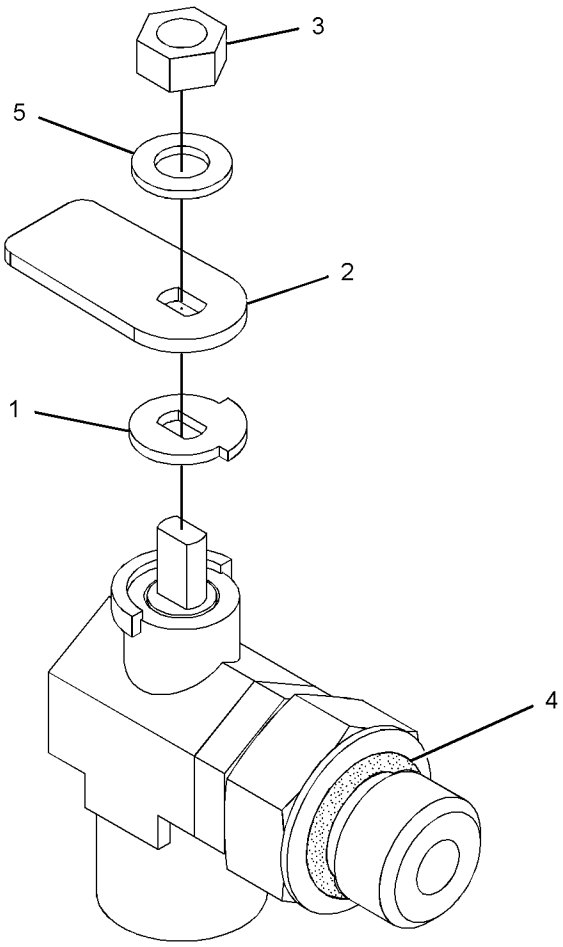

GRAPHIC #1 **<END>** g01377343

132-1829 ALARM GP–ACTION

S/N: KGF1-UP; FAL1-UP
24-VOLT
PART OF 259-5161 WIRING GP-CAB

SMCS-7400, 7402, 7407

i05270543

NOTE	REF NO	GRAPHIC REF	PART NUMBER	QTY	PART NAME 1 2 3 4 5 6 (PRODUCT LEVEL)	SEE PAGE
	1	1	**102-8802**	1	KIT-RECEPTACLE (2-PIN)	
					(INCLUDES RECEPTACLE AS & WEDGE)	
	2	1	**186-3735**	2	PIN-CONNECTOR (16-GA TO 18-GA)	

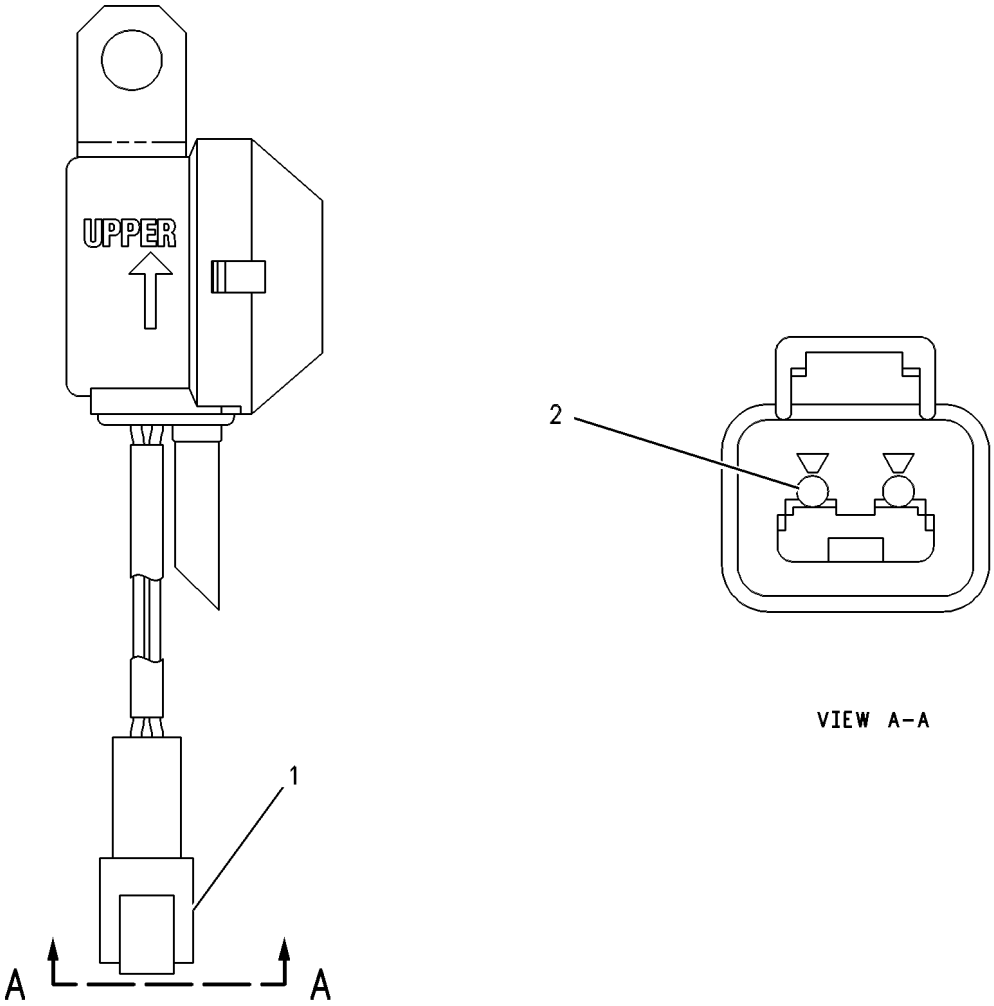

GRAPHIC #1

<END>

g00272185

231-1771 ALARM GP-TRAVEL–BACKUP

S/N: KGF1-UP; FAL1-UP

PART OF 347-3338, 354-1062, 354-1141, 354-1145, 359-2404, 359-2405, 359-2504, 367-8686, 379-7223, 379-7226, 379-7227, 379-7228, 385-4025, 396-6826, 396-6827, 396-6828 DISTRIBUTION AR, 347-3345, 354-1155 OPTION AR-CAB

AN ATTACHMENT

SMCS-7429 **i05238915**

NOTE	REF NO	GRAPHIC REF	PART NUMBER	QTY	PART NAME 1 2 3 4 5 6 (PRODUCT LEVEL)	SEE PAGE
	1	1	**213-9100**	1	ALARM AS	
		1	**102-8802**	1	KIT-RECEPTACLE (2-PIN)	
					(INCLUDES RECEPTACLE AS & WEDGE)	
		1	**8T-8729**	2	PIN-CONNECTOR (16-GA TO 18-GA)	
E	1A	1	**9X-1813**		SLEEVE (29-CM)	
M	2	1	**8T-4189**	2	BOLT (M8X1.25X20-MM)	
	3	1	**5P-4116**	2	WASHER-HARD (8.8X20.5X2-MM THK)	

E - ORDER BY THE CENTIMETER
M - METRIC PART

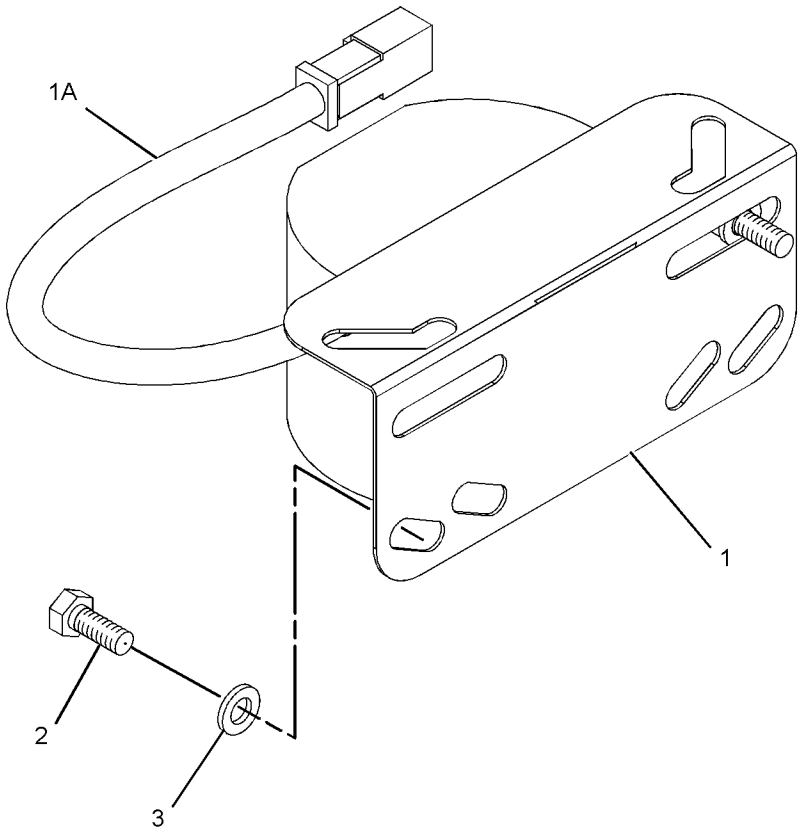

GRAPHIC #1 **<END>** g01682735

212-8561 ALTERNATOR GP-CHARGING*R

S/N: GDC1-UP

PART OF 272-4677, 272-4683, 296-4676, 305-4777 ENGINE AR, 296-4661 MOUNTING GP-ALTERNATOR

ALSO AN ATTACHMENT

SMCS-1405 **i04506021**

NOTE	REF NO	GRAPHIC REF	PART NUMBER	QTY	PART NAME 1 2 3 4 5 6 (PRODUCT LEVEL)	SEE PAGE
	1	1	**099-3913**	1	NUT SET	
	2	1	**212-8613**	1	PULLEY AS	
	3	1	**5I-7985**	1	SETSCREW	
	4	1	**5I-8086**	1	BRACKET AS	
	5	1	**5I-7987**	1	SETSCREW	
	6	1	**5I-8087**	1	BEARING	
	7	1	**5I-8088**	1	ROTOR AS	
	8	1	**5I-8089**	1	BEARING	
	9	1	**5I-8098**	1	COIL AS	
	10	1	**5I-8090**	1	STATOR	
	11	1	**5I-7997**	1	SETSCREW	
	12	1	**135-2381**	1	PLATE	
	13	1	**379-4373**	1	REGULATOR AS (ALTERNATOR)	
	14	1	**5I-8095**	1	RECTIFIER AS	
	15	1	**212-8521**	1	BRACKET	
	16	1	**085-9429**	1	NUT SET	
	17	1	**5I-8080**	1	CONNECTOR AS	
	18	1	**5I-8094**	1	BOLT	
	19	1	**5I-8097**	1	SETSCREW	

212-8561 **ALTERNATOR GP-CHARGING (*contd.*)** **i04506021**

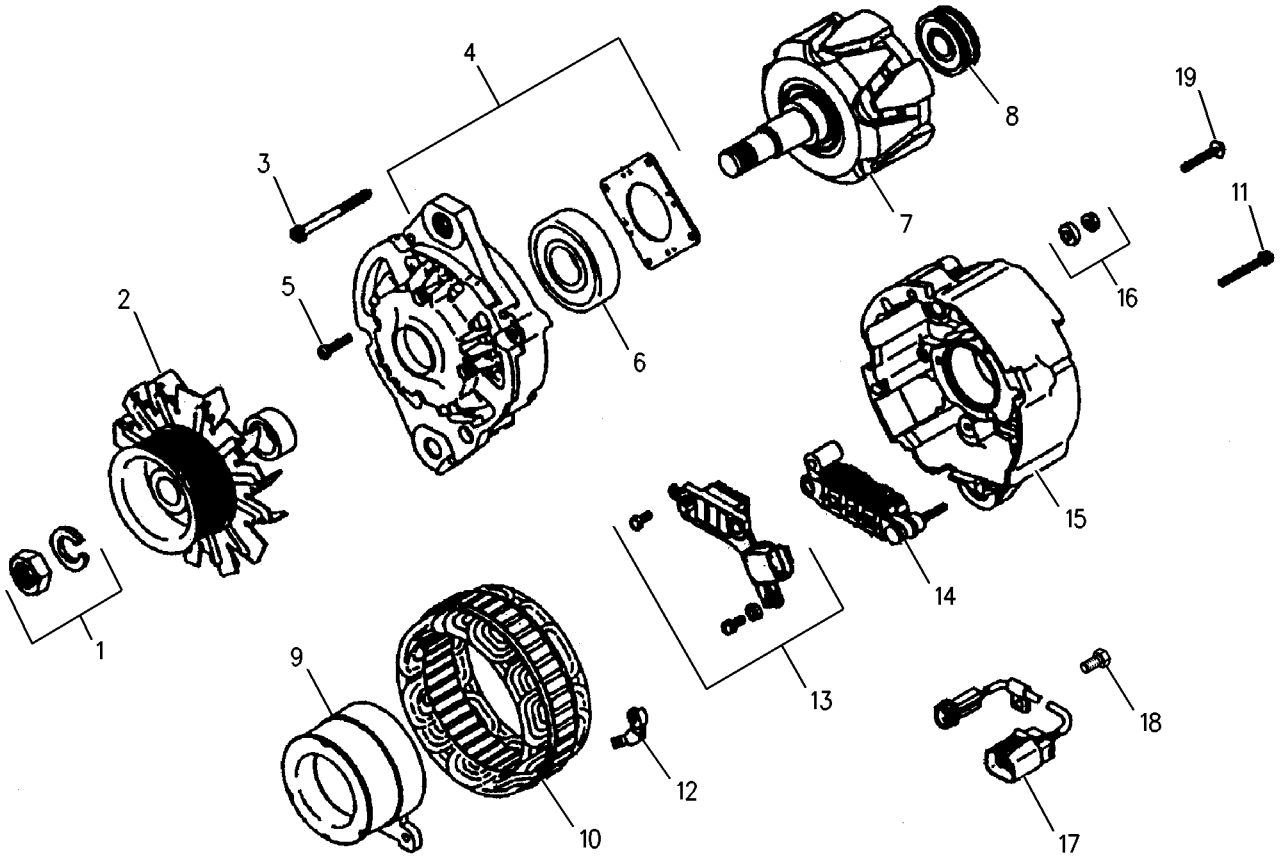

GRAPHIC #1 **<END>** g00923464

259-5049 BATTERY & WIRING GP–COLD WEATHER

S/N: KGF1-UP; FAL1-UP
PART OF 298-4102 STARTING AR-COLD WEATHER
AN ATTACHMENT

SMCS-1401, 1402, 1408 **i02989506**

NOTE	REF NO	GRAPHIC REF	PART NUMBER	QTY	PART NAME 1 2 3 4 5 6 (PRODUCT LEVEL)	SEE PAGE
	1	1	**3T-5760**	2	BATTERY GP (12-VOLT, 750-CCA)	
	2	1	**5I-8270**	1	COVER-BATTERY	
	3	1	**6W-6005**	1	HOLD-DOWN-BATTERY	
	4	1	**170-6929**	1	CABLE AS	
E		1	**5P-0761**		CABLE (00-GA, RED) (31-CM)	
		1	**9G-0002**	1	COVER AS-TERMINAL (RED)	
		1	**9G-0005**	1	COVER AS-TERMINAL (BLACK)	
		1	**8C-5918**	1	TERMINAL AS (NEGATIVE)	
		1	**8T-9756**	1	TERMINAL AS (POSITIVE)	
					(EACH TERMINAL AS INCLUDES)	
		1	**1M-6119**	1	BOLT (5/16-18X1.375-IN)	
		1	**1M-6120**	1	NUT (5/16-18-THD)	
	5	1	**238-2501**	1	KNOB	
	6	1	**238-2528**	1	ROD	
	7	1	**259-5225**	1	SUPPORT AS	
	8	1	**259-5229**	1	CABLE AS	
		1	**1S-7252**	1	TERMINAL-CABLE (00-GA, 3/8-IN SCREW)	
E		1	**5P-0747**		CABLE (00-GA, BLACK) (89-CM)	
		1	**9G-0003**	1	COVER AS-TERMINAL (BLACK)	
		1	**8T-9757**	1	TERMINAL AS-BATTERY (NEGATIVE)	
		1	**1M-6119**	1	BOLT (5/16-18X1.375-IN)	
		1	**1M-6120**	1	NUT (5/16-18-THD)	
Y	9	1	**289-6712**	1	SHEET AS-SOUND SUPPRESSION	838
	10	1	**291-7592**	1	CABLE AS	
		1	**1S-7252**	1	TERMINAL-CABLE (00-GA, 3/8-IN SCREW)	
E		1	**5P-0761**		CABLE (00-GA, RED) (281-CM)	
D		1	**6V-2722**		TUBE-HEAT SHRINK (25.4-MM DIA) (1-M)	
		1	**9G-0004**	1	COVER AS-TERMINAL (RED)	
		1	**8C-5917**	1	TERMINAL AS-BATTERY (POSITIVE)	
		1	**1M-6119**	1	BOLT (5/16-18X1.375-IN)	
		1	**1M-6120**	1	NUT (5/16-18-THD)	
	11	1	**4K-8864**	3	CLIP	
M	12	1	**5C-7261**	1	NUT (M8X1.25-THD)	
	13	1	**6K-8178**	2	CLIP	
	14	1	**8T-4121**	1	WASHER-HARD (11X21X2.5-MM THK)	
M	15	1	**8T-4133**	1	NUT (M10X1.5-THD)	
M	16	1	**8T-4191**	1	BOLT (M10X1.5X16-MM)	
M	17	1	**8T-4192**	4	BOLT (M12X1.75X25-MM)	
	18	1	**8T-4223**	4	WASHER-HARD (13.5X25.5X3-MM THK)	
	19	1	**8T-4226**	1	WASHER-PLATED (10.5X45X3-MM THK)	
	20	1	**204-1673**	1	STRAP-CABLE	

D - ORDER BY THE METER
E - ORDER BY THE CENTIMETER
M - METRIC PART
Y - SEPARATE ILLUSTRATION

259-5049 **BATTERY & WIRING GP (*contd.*)** **i02989506**

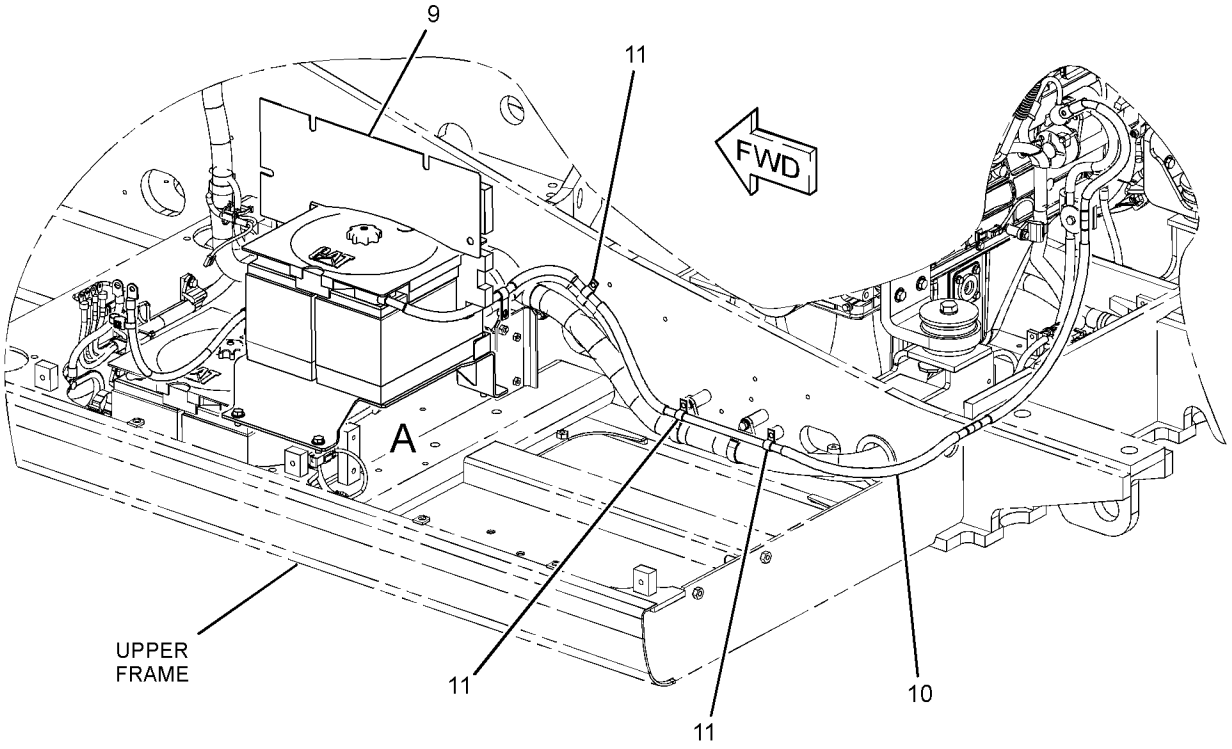

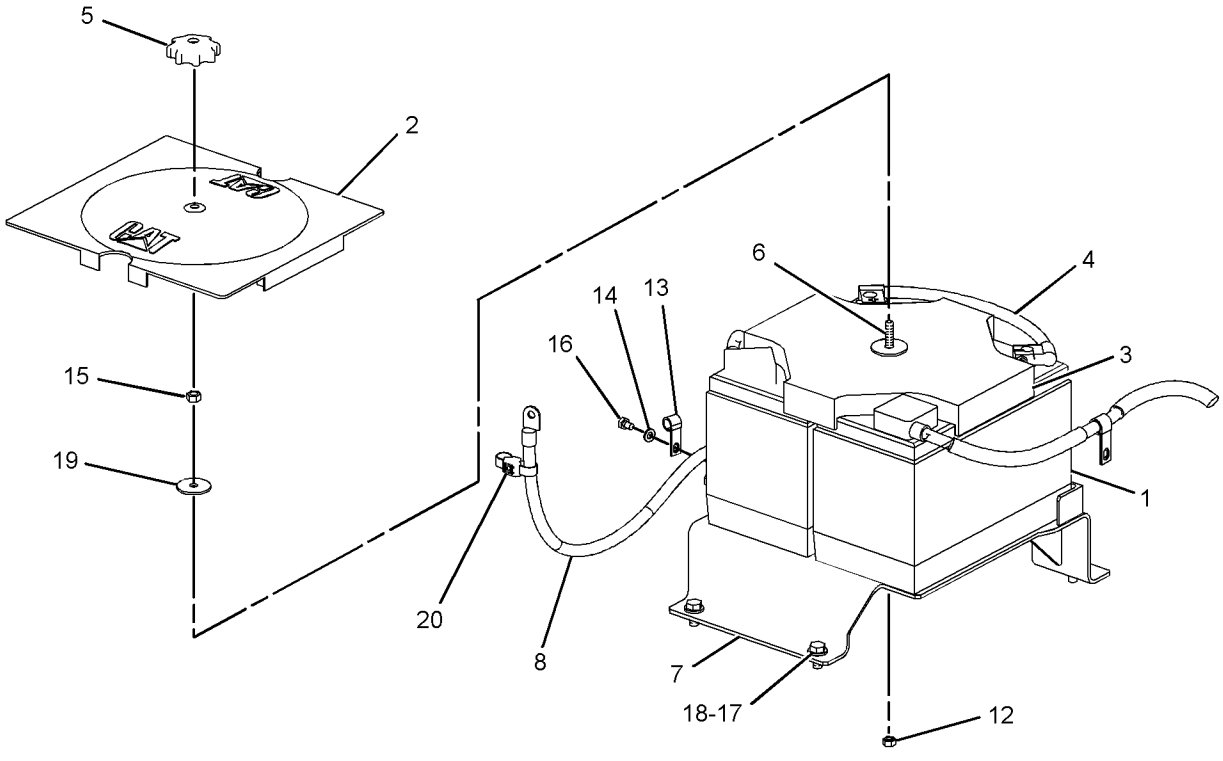

VIEW OF AREA A

GRAPHIC #1 **<END>** g01397361

267-8000 BATTERY & WIRING GP

S/N: KGF1-1317; FAL1-879

PART OF 264-8638, 264-8639 CHASSIS AR

SMCS-1401, 1402, 1408 **i02867327**

NOTE	REF NO	GRAPHIC REF	PART NUMBER	QTY	PART NAME 1 2 3 4 5 6 (PRODUCT LEVEL)	SEE PAGE
	1	3,4	**2G-8767**	2	WASHER (10.5X60X3-MM THK)	
	2	1,2,3,4,5	**3S-2093**	39	STRAP-CABLE	
	3	2	**3T-5760**	2	BATTERY GP (12-VOLT, 750-CCA)	
	4	2	**306-8401**	1	GROMMET	
	5	2	**5I-8270**	1	COVER-BATTERY	
	6	4	**5I-9368**	1	SPACER (9.24X13.72X20.5-MM THK)	
	7	2	**6W-6005**	1	HOLD-DOWN-BATTERY	
	8	3,4,5	**7I-2673**	4	STRAP-CABLE	
	9	2,3,5	**7K-1181**	15	STRAP-CABLE	
	10	1,2	**7Y-5456**	2	GROMMET	
	11	1,3,4,5	**111-4836**	11	CLIP	
	12	2,3,4,5	**111-4837**	12	CLIP	
	13	2,3,4	**111-4838**	13	CLIP	
	14	2,3,4	**111-4839**	13	STRAP	
	15	2,3,4,5	**116-0118**	10	CLIP	
	16	2	**132-1805**	1	STRAP AS-GROUND	
	17	4	**132-1806**	1	STRAP AS-GROUND	
	18	2	**170-6929**	1	CABLE AS	
E		2	**5P-0761**		CABLE (00-GA, RED) (31-CM)	
		2	**9G-0002**	1	COVER AS-TERMINAL (RED)	
		2	**9G-0005**	1	COVER AS-TERMINAL (BLACK)	
		2	**8T-9756**	1	TERMINAL AS (POSITIVE)	
		2	**8C-5918**	1	TERMINAL AS (NEGATIVE)	
					(EACH TERMINAL AS INCLUDES)	
		2	**1M-6119**	1	BOLT (5/16-18X1.375-IN)	
		2	**1M-6120**	1	NUT (5/16-18-THD)	
	19	4	**170-9336**	1	BRACKET AS	
	20	4	**183-1049**	1	BRACKET	
	21	2	**231-1827**	1	CABLE AS	
		2	**1S-7252**	1	TERMINAL-CABLE (00-GA, 3/8-IN SCREW)	
E		2	**5P-0747**		CABLE (00-GA, BLACK) (23-CM)	
		2	**9G-0003**	1	COVER AS-TERMINAL (BLACK)	
		2	**9G-8909**	1	COVER-TERMINAL (BLACK)	
		2	**8T-9757**	1	TERMINAL AS-BATTERY (NEGATIVE)	
		2	**1M-6119**	1	BOLT (5/16-18X1.375-IN)	
		2	**1M-6120**	1	NUT (5/16-18-THD)	
	22	2	**238-2501**	1	KNOB	
	23	2	**238-2528**	1	ROD	
	24	2	**251-0467**	1	BRACKET AS	
	25	3	**259-5267**	1	BRACKET AS	
	26	3	**259-5317**	1	BRACKET AS	
	27	2	**291-7590**	1	HARNESS AS-CHASSIS	
		2	**121-1038**	1	HOUSING-RECEPTACLE	
E		2	**103-2529**	1	HOSE (80-CM)	
		2	**102-8802**	4	KIT-RECEPTACLE (2-PIN)	
		2	**102-8803**	2	KIT-RECEPTACLE (3-PIN)	
		2	**102-8804**	1	KIT-RECEPTACLE (4-PIN)	
					(EACH RECPTACLE KIT INCLUDES RECEPTACLE AS & WEDGE)	
		2	**3S-2093**	17	STRAP-CABLE	
		2	**8T-8799**	2	BOOT	
E		2	**7Y-3820**	1	HOUSING-RECEPTACLE	
		2	**116-0128**	2	SEAL	
E		2	**119-3662**		TUBE-HEAT SHRINK (10.85-MM DIA) (26-CM)	
E		2	**125-7874**		TUBE-HEAT SHRINK (5.72-MM DIA) (95-CM)	
E		2	**125-7875**		TUBE-HEAT SHRINK (7.44-MM DIA) (50-CM)	
		2	**134-3297**	1	SEAL	

267-8000 **BATTERY & WIRING GP (*contd.*)** **i02867327**

NOTE	REF NO	GRAPHIC REF	PART NUMBER	QTY	PART NAME 1 2 3 4 5 6 (PRODUCT LEVEL)	SEE PAGE
		2	**153-2620**	1	PLUG AS-CONNECTOR (54-PIN, BLACK)	
		2	**163-6759**	1	SEAL	
		2	**153-2630**	1	PLUG AS-CONNECTOR (54-PIN, BROWN)	
		2	**163-6759**	1	SEAL	
		2	**155-2260**	2	KIT-CONNECTING PLUG (3-PIN)	
		2	**155-2270**	16	KIT-CONNECTING PLUG (2-PIN)	
		2	**155-2271**	1	KIT-CONNECTING PLUG (4-PIN)	
					(EACH PLUG KIT INCLUDES PLUG AS, WEDGE & INTERFACE SEAL)	
		2	**163-6637**	1	RECEPTACLE AS-CONNECTOR (54-PIN, BLACK)	
		2	**174-3016**	2	PLUG AS-CONNECTOR (3-PIN)	
		2	**230-4009**	3	PLUG AS-CONNECTOR (12-PIN)	
		2	**230-4011**	7	PLUG AS-CONNECTOR (2-PIN)	
		2	**230-4013**	1	PLUG AS-CONNECTOR (3-PIN)	
		2	**230-5010**	3	PLUG AS-CONNECTOR (6-PIN)	
		2	**231-2295**	2	PLUG AS-CONNECTOR (8-PIN)	
		2	**243-4505**	6	RECEPTACLE AS-CONNECTOR (2-PIN)	
		2	**243-4506**	1	RECEPTACLE AS-CONNECTOR (3-PIN)	
		2	**243-4508**	3	RECEPTACLE AS-CONNECTOR (6-PIN)	
		2	**243-4509**	2	RECEPTACLE AS-CONNECTOR (8-PIN)	
		2	**243-4510**	3	RECEPTACLE AS-CONNECTOR (12-PIN)	
		2	**245-1042**	1	PLUG AS-CONNECTOR (64-PIN)	
M		2	**267-7207**	1	BOLT-SPECIAL	
		2	**267-7208**	1	RING-RETAINING	
		2	**274-4990**	1	SEAL	
		2	**245-1045**	1	COVER	
	28	2	**291-7591**	1	CABLE AS	
		2	**1S-7252**	1	TERMINAL-CABLE (00-GA, 3/8-IN SCREW)	
E		2	**5P-0761**		CABLE (00-GA, RED) (327-CM)	
		2	**9G-0004**	1	COVER AS-TERMINAL (RED)	
		2	**8N-0869**	1	COVER-TERMINAL (RED)	
		2	**8C-5917**	1	TERMINAL AS-BATTERY (POSITIVE)	
		2	**1M-6119**	1	BOLT (5/16-18X1.375-IN)	
		2	**1M-6120**	1	NUT (5/16-18-THD)	
	29	2	**291-7593**	1	BRACKET AS	
	30	4	**085-7329**	2	SPACER (9X19X30-MM THK)	
	31	2	**091-9035**	1	SPACER (11X25X20-MM THK)	
	32	2,4	**9X-8256**	6	WASHER (6.6X12X2-MM THK)	
	33	2	**132-5789**	2	CLIP	
	34	2	**4K-8864**	1	CLIP	
	35	5	**4P-7428**	1	CLIP	
	36	2,3	**4P-7581**	4	CLIP	
M	37	2	**5C-7261**	1	NUT (M8X1.25-THD)	
M	38	2	**5C-7883**	4	BOLT-SOCKET HEAD (M6X1X16-MM)	
	39	5	**5I-3878**	1	GROMMET	
	40	4	**5P-4116**	5	WASHER-HARD (8.8X20.5X2-MM THK)	
	41	3,4	**6G-2256**	2	CLAMP	
	42	2,3,4	**6G-2263**	4	SPACER (10.5X19X28.5-MM THK)	
	43	2	**6K-8178**	4	CLIP	
M	44	4	**7X-0818**	2	BOLT (M8X1.25X45-MM)	
M	45	4	**7X-2533**	1	BOLT (M6X1X35-MM)	
M	46	4	**7X-2619**	1	BOLT (M6X1X10-MM)	
M	47	4	**7X-2621**	2	BOLT (M10X1.5X12-MM)	
	48	4	**7Y-1924**	2	SPACER (9X19X23-MM THK)	
M	49	4	**7Y-5226**	1	NUT (M5X0.8-THD)	
	50	4	**7Y-8165**	1	GROMMET	
	51	5	**7Y-8167**	1	GROMMET	
	52	4	**8J-1256**	1	CLIP	
	53	2	**8M-2770**	1	CLIP	
M	54	4	**8T-0286**	1	BOLT (M5X0.8X8-MM)	
	55	4	**8T-0328**	2	WASHER-HARD (5.5X10X1-MM THK)	

267-8000 **BATTERY & WIRING GP (*contd.*)** **i02867327**

NOTE	REF NO	GRAPHIC REF	PART NUMBER	QTY	PART NAME 1 2 3 4 5 6 (PRODUCT LEVEL)	SEE PAGE
	56	1,2,3,4,5	**8T-4121**	60	WASHER-HARD (11X21X2.5-MM THK)	
M	57	2	**8T-4133**	1	NUT (M10X1.5-THD)	
M	58	2,3	**8T-4136**	10	BOLT (M10X1.5X25-MM)	
M	59	1,2,3,4,5	**8T-4137**	36	BOLT (M10X1.5X20-MM)	
M	60	2,4	**8T-4182**	2	BOLT (M10X1.5X45-MM)	
M	61	2,3	**8T-4185**	2	BOLT (M10X1.5X50-MM)	
M	62	2,4	**8T-4191**	3	BOLT (M10X1.5X16-MM)	
M	63	2,3,4	**8T-4195**	5	BOLT (M10X1.5X30-MM)	
M	64	2	**8T-4196**	1	BOLT (M10X1.5X35-MM)	
M	65	4	**8T-4199**	1	BOLT (M8X1.25X12-MM)	
	66	2	**8T-4226**	1	WASHER-PLATED (10.5X45X3-MM THK)	
M	67	3	**8T-6466**	1	BOLT (M10X1.5X60-MM)	
M	68	4	**8T-6912**	2	BOLT (M8X1.25X50-MM)	

E - ORDER BY THE CENTIMETER
M - METRIC PART

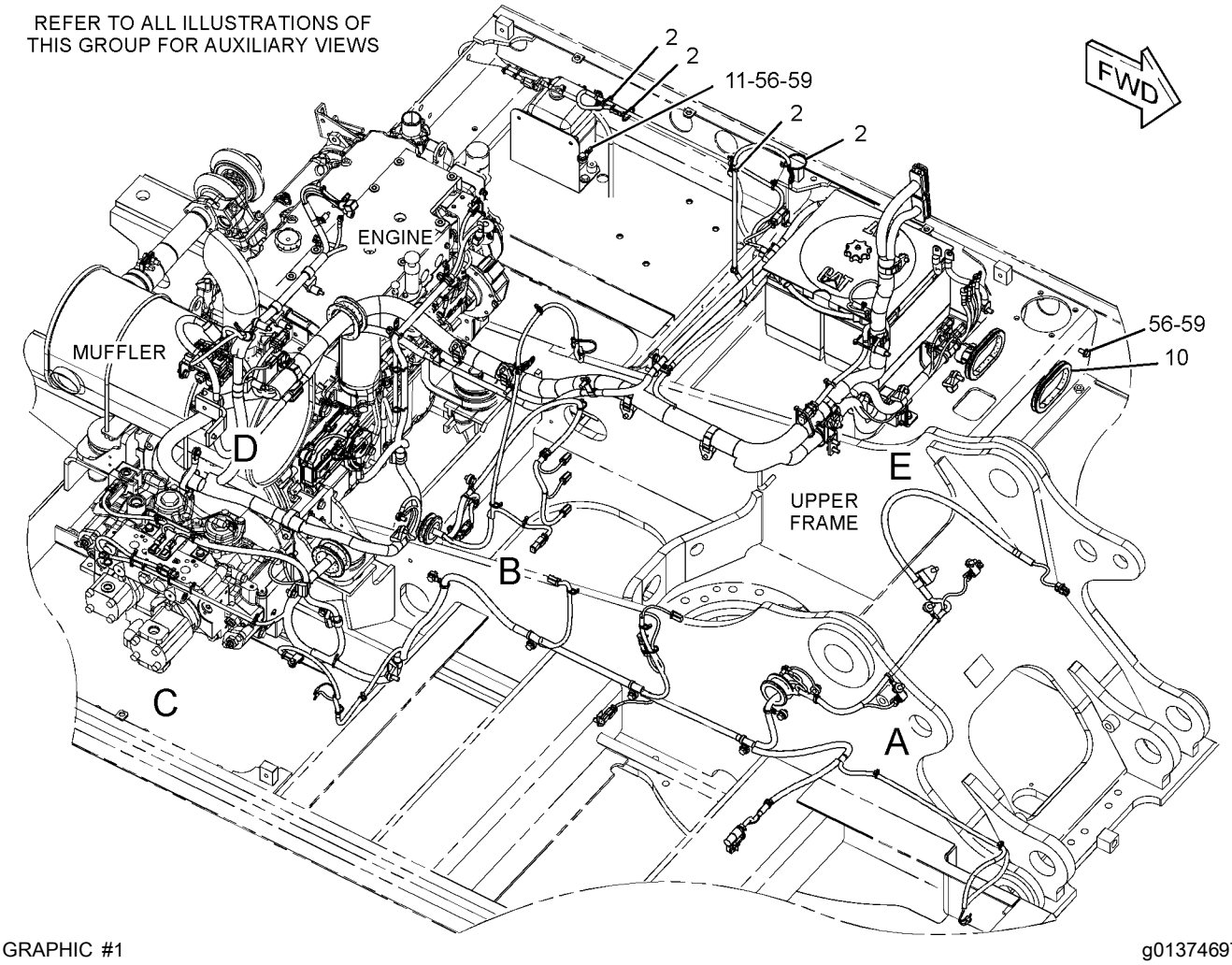

GRAPHIC #1 g01374697

267-8000 **BATTERY & WIRING GP (*contd.*)** **i02867327**

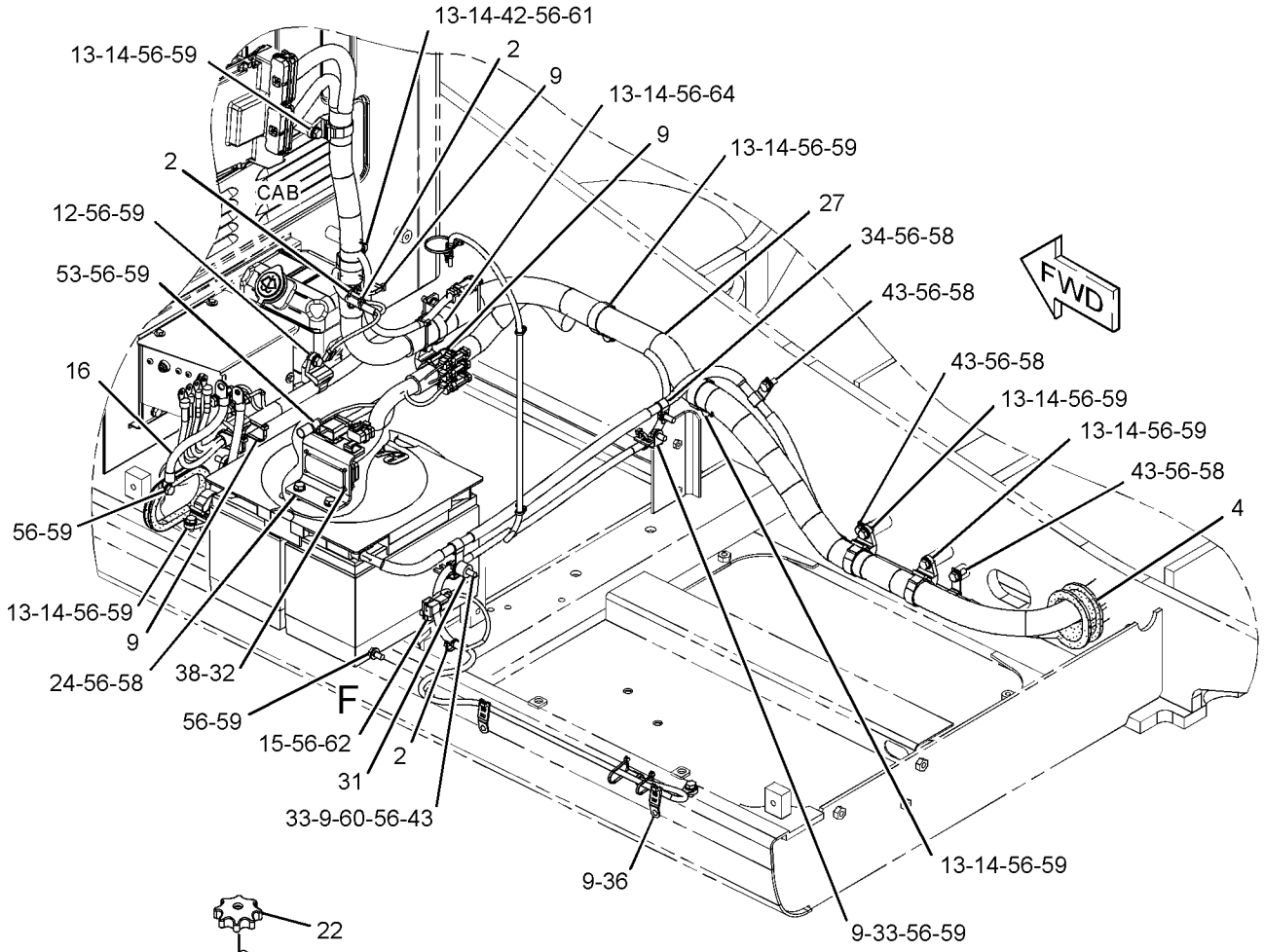

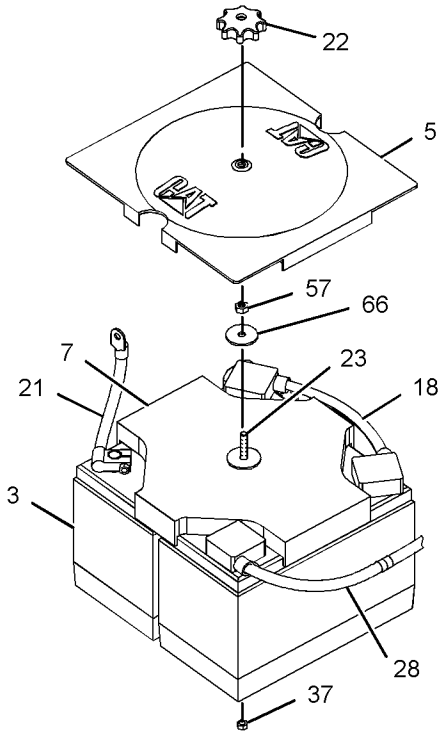

VIEW OF AREA F

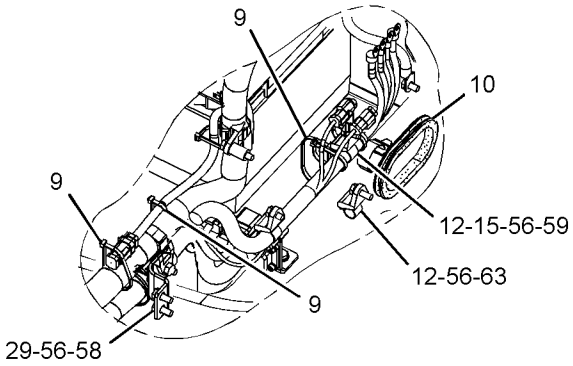

VIEW OF AREA E

GRAPHIC #2 g01374371

267-8000 **BATTERY & WIRING GP (*contd.*)** **i02867327**

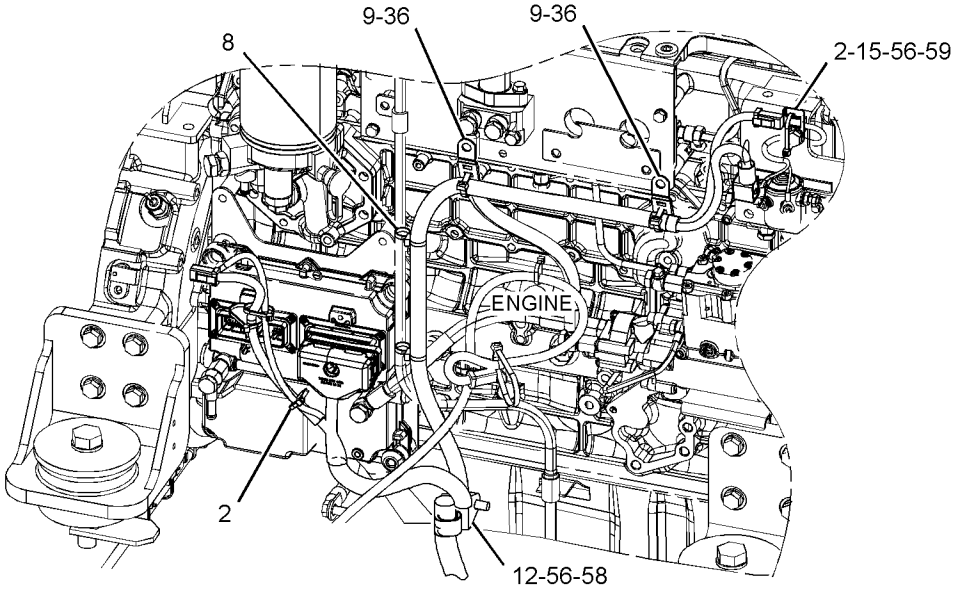

FRONT VIEW
(UPPER LEFT)

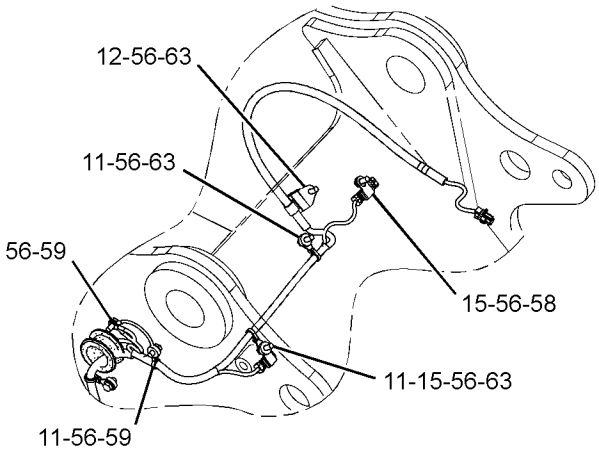

VIEW OF AREA A

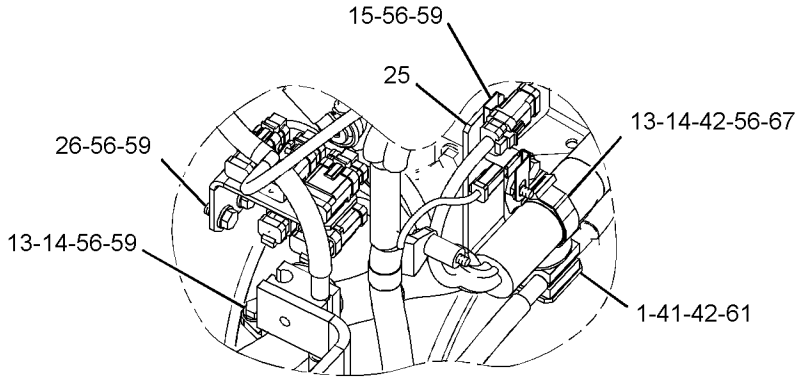

VIEW OF AREA D

GRAPHIC #3 g01310502

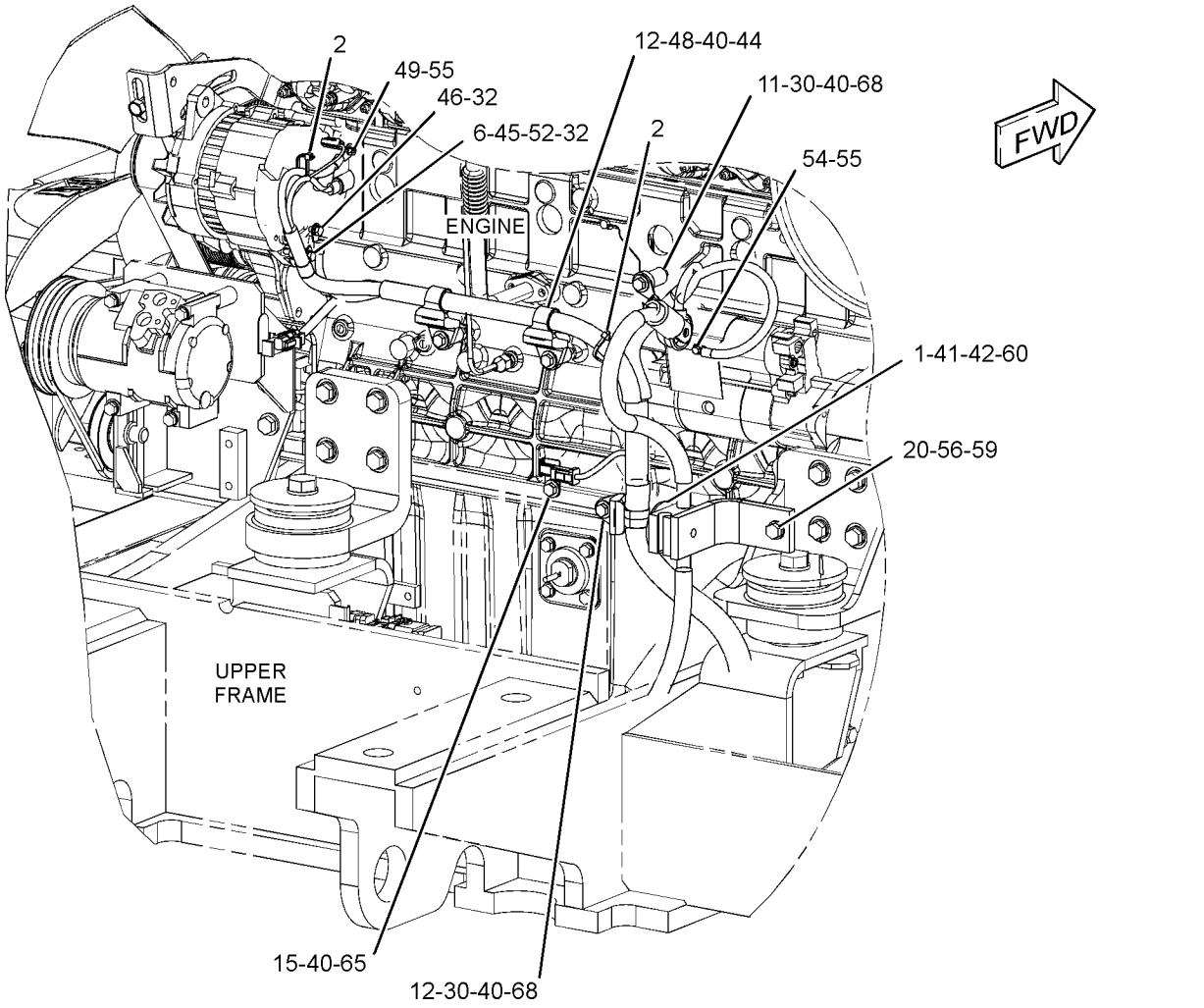

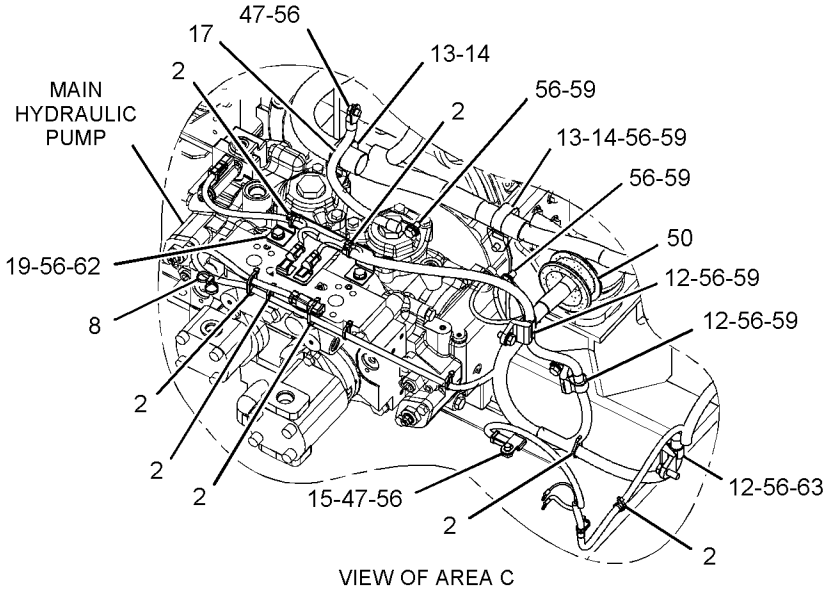

VIEW OF AREA C

GRAPHIC #4

g01374768

267-8000 **BATTERY & WIRING GP (*contd.*)** **i02867327**

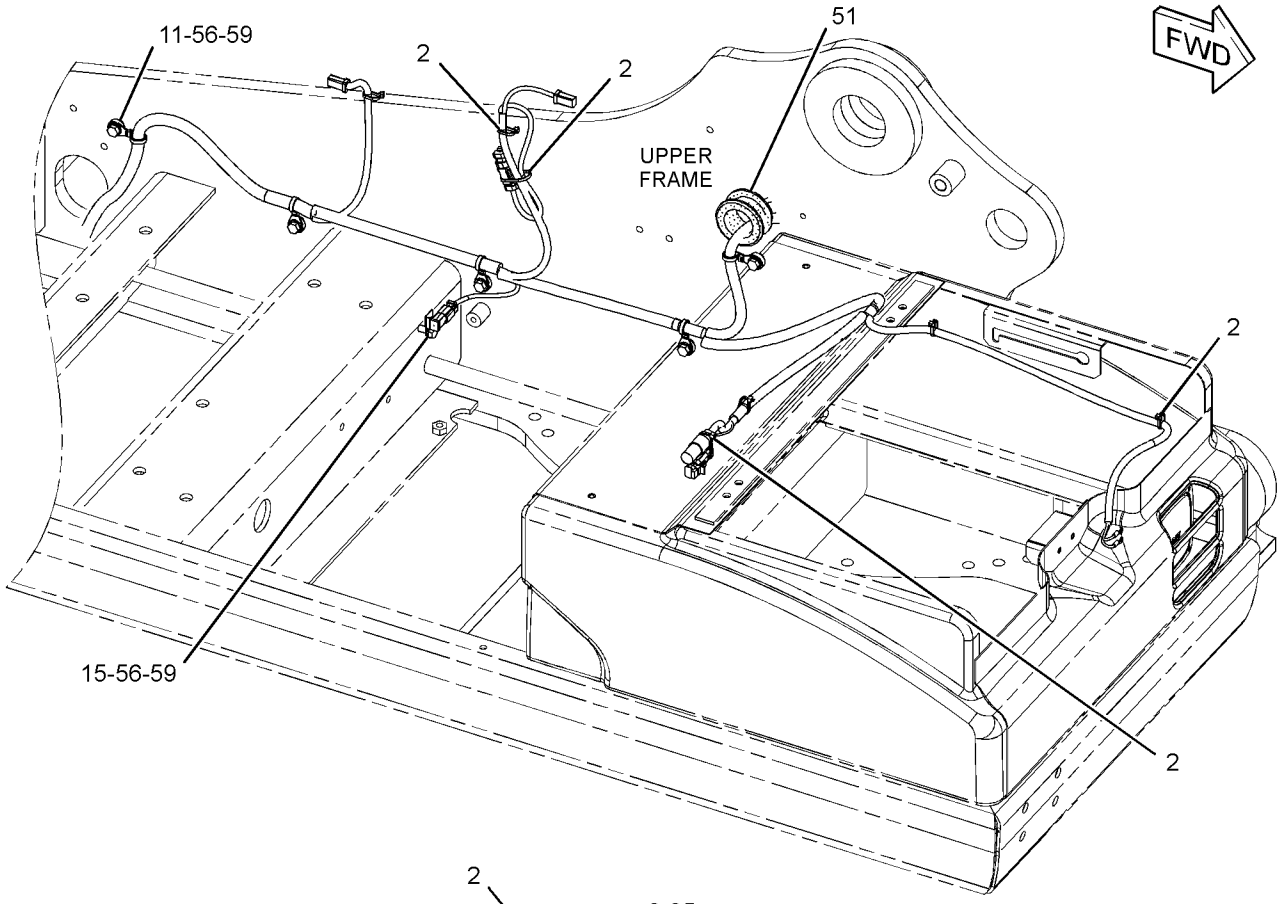

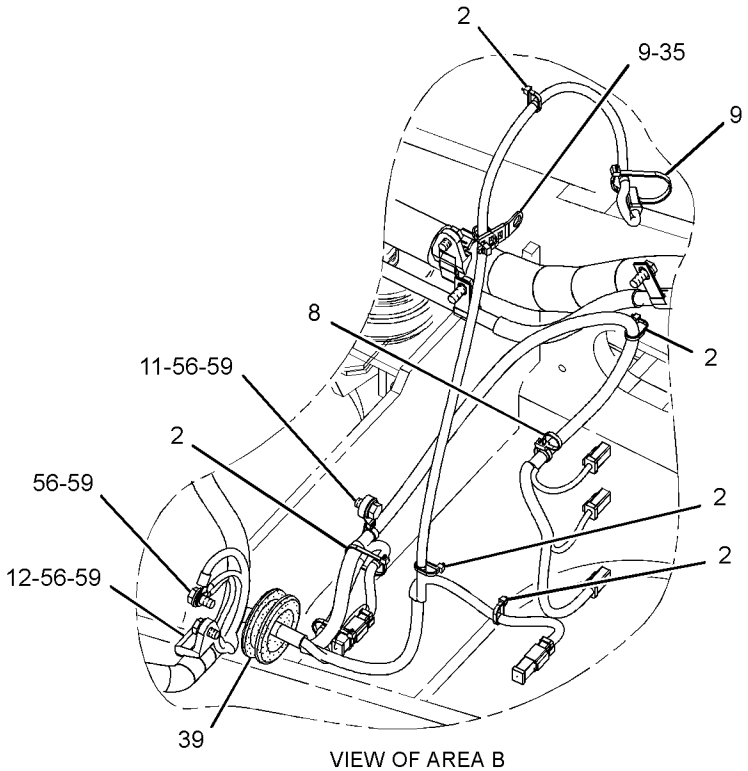

VIEW OF AREA B

GRAPHIC #5 **<END>** g01310504

267-8000 BATTERY & WIRING GP

S/N: KGF1318-UP; FAL880-UP

PART OF 264-8638, 264-8639 CHASSIS AR

SMCS-1401, 1402, 1408 **i02986680**

NOTE	REF NO	GRAPHIC REF	PART NUMBER	QTY	PART NAME 1 2 3 4 5 6 (PRODUCT LEVEL)	SEE PAGE
	1	3,4	**2G-8767**	2	WASHER (10.5X60X3-MM THK)	
C	2	1,2,3,4,5	**3S-2093**	38	STRAP-CABLE	
	3	2	**3T-5760**	2	BATTERY GP (12-VOLT, 750-CCA)	
	4	2	**306-8401**	1	GROMMET	
	5	2	**5I-8270**	1	COVER-BATTERY	
	6	4	**5I-9368**	1	SPACER (9.24X13.72X20.5-MM THK)	
	7	2	**6W-6005**	1	HOLD-DOWN-BATTERY	
	8	3,4,5	**7I-2673**	4	STRAP-CABLE	
	9	2,3,5	**7K-1181**	15	STRAP-CABLE	
	10	1,2	**7Y-5456**	2	GROMMET	
	11	1,3,4,5	**111-4836**	11	CLIP	
	12	2,3,4,5	**111-4837**	12	CLIP	
	13	2,3,4	**111-4838**	13	CLIP	
	14	2,3,4	**111-4839**	13	STRAP	
C	15	2,3,4,5	**116-0118**	11	CLIP	
	16	2	**132-1805**	1	STRAP AS-GROUND	
	17	4	**132-1806**	1	STRAP AS-GROUND	
	18	2	**170-6929**	1	CABLE AS	
E		2	**5P-0761**		CABLE (00-GA, RED) (31-CM)	
		2	**9G-0002**	1	COVER AS-TERMINAL (RED)	
		2	**9G-0005**	1	COVER AS-TERMINAL (BLACK)	
		2	**8T-9756**	1	TERMINAL AS (POSITIVE)	
		2	**8C-5918**	1	TERMINAL AS (NEGATIVE)	
					(EACH TERMINAL AS INCLUDES)	
		2	**1M-6119**	1	BOLT (5/16-18X1.375-IN)	
		2	**1M-6120**	1	NUT (5/16-18-THD)	
	19	4	**170-9336**	1	BRACKET AS	
	20	4	**183-1049**	1	BRACKET	
	21	2	**231-1827**	1	CABLE AS	
		2	**1S-7252**	1	TERMINAL-CABLE (00-GA, 3/8-IN SCREW)	
E		2	**5P-0747**		CABLE (00-GA, BLACK) (23-CM)	
		2	**9G-0003**	1	COVER AS-TERMINAL (BLACK)	
		2	**9G-8909**	1	COVER-TERMINAL (BLACK)	
		2	**8T-9757**	1	TERMINAL AS-BATTERY (NEGATIVE)	
		2	**1M-6119**	1	BOLT (5/16-18X1.375-IN)	
		2	**1M-6120**	1	NUT (5/16-18-THD)	
	22	2	**238-2501**	1	KNOB	
	23	2	**238-2528**	1	ROD	
	24	2	**251-0467**	1	BRACKET AS	
	25	3	**259-5267**	1	BRACKET AS	
	26	3	**259-5317**	1	BRACKET AS	
C	27	2	**306-8610**	1	HARNESS AS-CHASSIS	
	28	2	**291-7591**	1	CABLE AS	
		2	**1S-7252**	1	TERMINAL-CABLE (00-GA, 3/8-IN SCREW)	
E		2	**5P-0761**		CABLE (00-GA, RED) (327-CM)	
		2	**9G-0004**	1	COVER AS-TERMINAL (RED)	
		2	**8N-0869**	1	COVER-TERMINAL (RED)	
		2	**8C-5917**	1	TERMINAL AS-BATTERY (POSITIVE)	
		2	**1M-6119**	1	BOLT (5/16-18X1.375-IN)	
		2	**1M-6120**	1	NUT (5/16-18-THD)	
	29	2	**291-7593**	1	BRACKET AS	
	30	4	**085-7329**	2	SPACER (9X19X30-MM THK)	
	31	2	**091-9035**	1	SPACER (11X25X20-MM THK)	
	32	2,4	**9X-8256**	6	WASHER (6.6X12X2-MM THK)	
	33	2	**132-5789**	2	CLIP	
	34	2	**4K-8864**	1	CLIP	
	35	5	**4P-7428**	1	CLIP	

267-8000 **BATTERY & WIRING GP (*contd.*)** **i02986680**

NOTE	REF NO	GRAPHIC REF	PART NUMBER	QTY	PART NAME 1 2 3 4 5 6 (PRODUCT LEVEL)	SEE PAGE
	36	2,3	**4P-7581**	4	CLIP	
M	37	2	**5C-7261**	1	NUT (M8X1.25-THD)	
M	38	2	**5C-7883**	4	BOLT-SOCKET HEAD (M6X1X16-MM)	
	39	5	**5I-3878**	1	GROMMET	
	40	4	**5P-4116**	5	WASHER-HARD (8.8X20.5X2-MM THK)	
	41	3,4	**6G-2256**	2	CLAMP	
	42	2,3,4	**6G-2263**	4	SPACER (10.5X19X28.5-MM THK)	
	43	2	**6K-8178**	4	CLIP	
M	44	4	**7X-0818**	2	BOLT (M8X1.25X45-MM)	
M	45	4	**7X-2533**	1	BOLT (M6X1X35-MM)	
M	46	4	**7X-2619**	1	BOLT (M6X1X10-MM)	
M	47	4	**7X-2621**	2	BOLT (M10X1.5X12-MM)	
	48	4	**7Y-1924**	2	SPACER (9X19X23-MM THK)	
M	49	4	**7Y-5226**	1	NUT (M5X0.8-THD)	
	50	4	**7Y-8165**	1	GROMMET	
	51	5	**7Y-8167**	1	GROMMET	
	52	4	**8J-1256**	1	CLIP	
	53	2	**8M-2770**	1	CLIP	
M	54	4	**8T-0286**	1	BOLT (M5X0.8X8-MM)	
	55	4	**8T-0328**	2	WASHER-HARD (5.5X10X1-MM THK)	
	56	1,2,3,4,5	**8T-4121**	60	WASHER-HARD (11X21X2.5-MM THK)	
M	57	2	**8T-4133**	1	NUT (M10X1.5-THD)	
M	58	2,3	**8T-4136**	10	BOLT (M10X1.5X25-MM)	
M	59	1,2,3,4,5	**8T-4137**	36	BOLT (M10X1.5X20-MM)	
M	60	2,4	**8T-4182**	2	BOLT (M10X1.5X45-MM)	
M	61	2,3	**8T-4185**	2	BOLT (M10X1.5X50-MM)	
M	62	2,4	**8T-4191**	3	BOLT (M10X1.5X16-MM)	
M	63	2,3,4	**8T-4195**	5	BOLT (M10X1.5X30-MM)	
M	64	2	**8T-4196**	1	BOLT (M10X1.5X35-MM)	
M	65	4	**8T-4199**	1	BOLT (M8X1.25X12-MM)	
	66	2	**8T-4226**	1	WASHER-PLATED (10.5X45X3-MM THK)	
M	67	3	**8T-6466**	1	BOLT (M10X1.5X60-MM)	
M	68	4	**8T-6912**	2	BOLT (M8X1.25X50-MM)	
C	69	3	**299-2767**	1	WIRE AS	

C - CHANGE FROM PREVIOUS TYPE
E - ORDER BY THE CENTIMETER
M - METRIC PART

267-8000 **BATTERY & WIRING GP (*contd.*)** **i02986680**

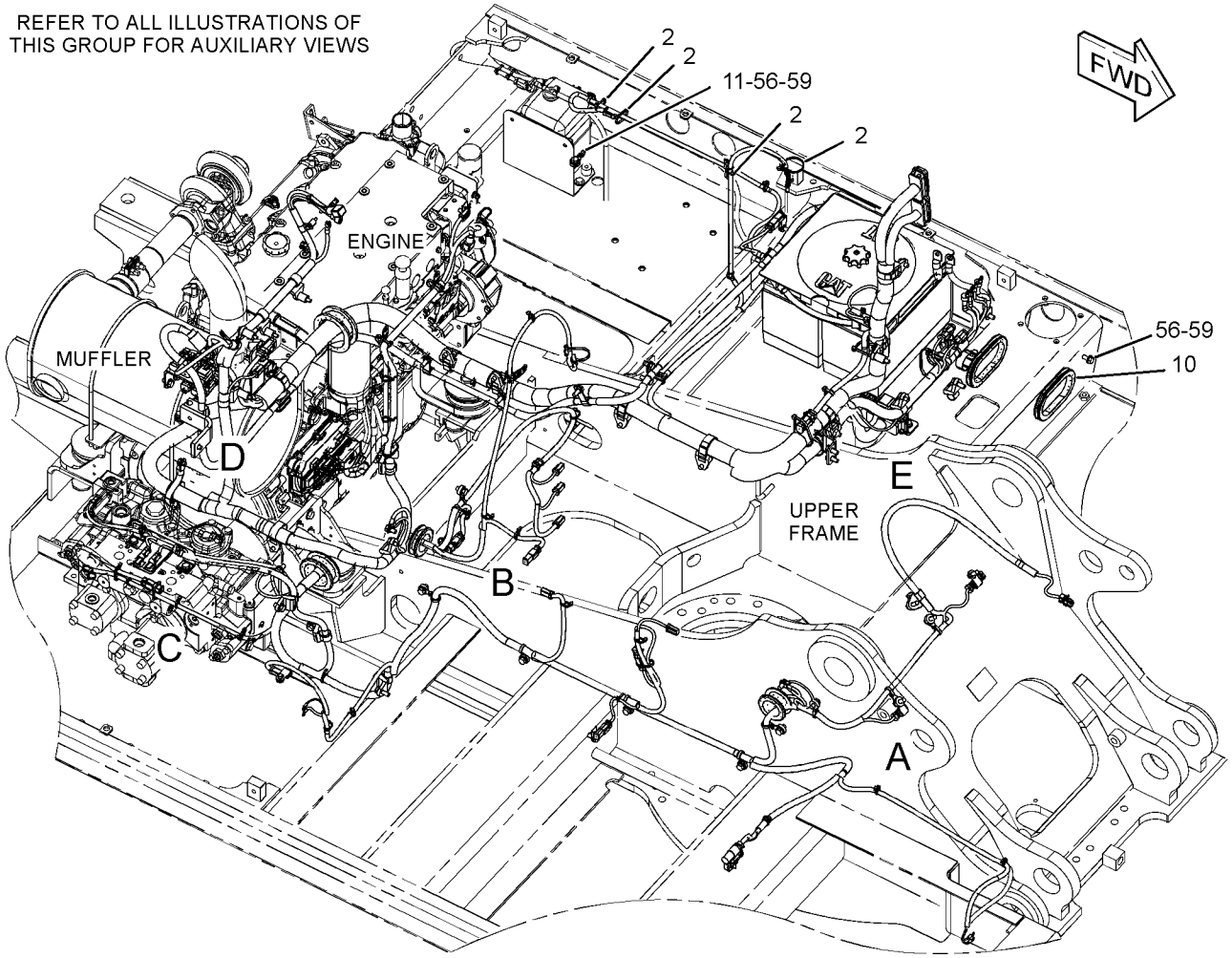

GRAPHIC #1 g01514570

267-8000 **BATTERY & WIRING GP (*contd.*)** **i02986680**

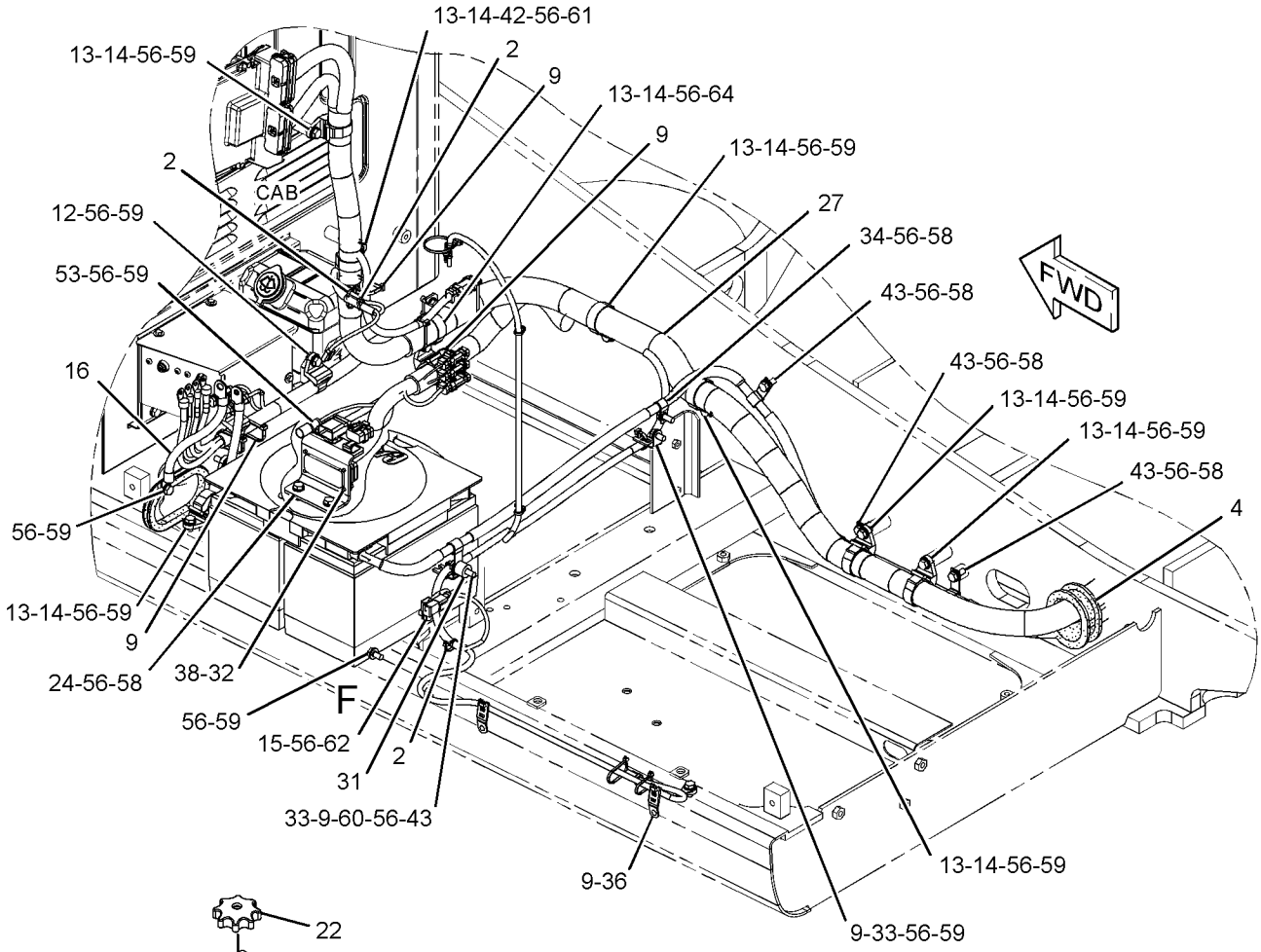

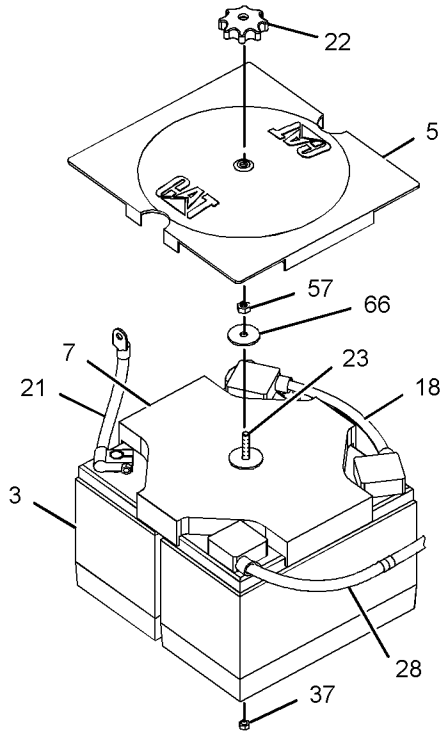

VIEW OF AREA F

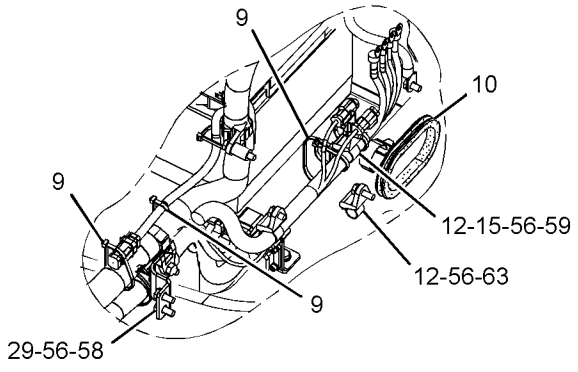

VIEW OF AREA E

GRAPHIC #2 g01374371

267-8000 **BATTERY & WIRING GP (*contd.*)** **i02986680**

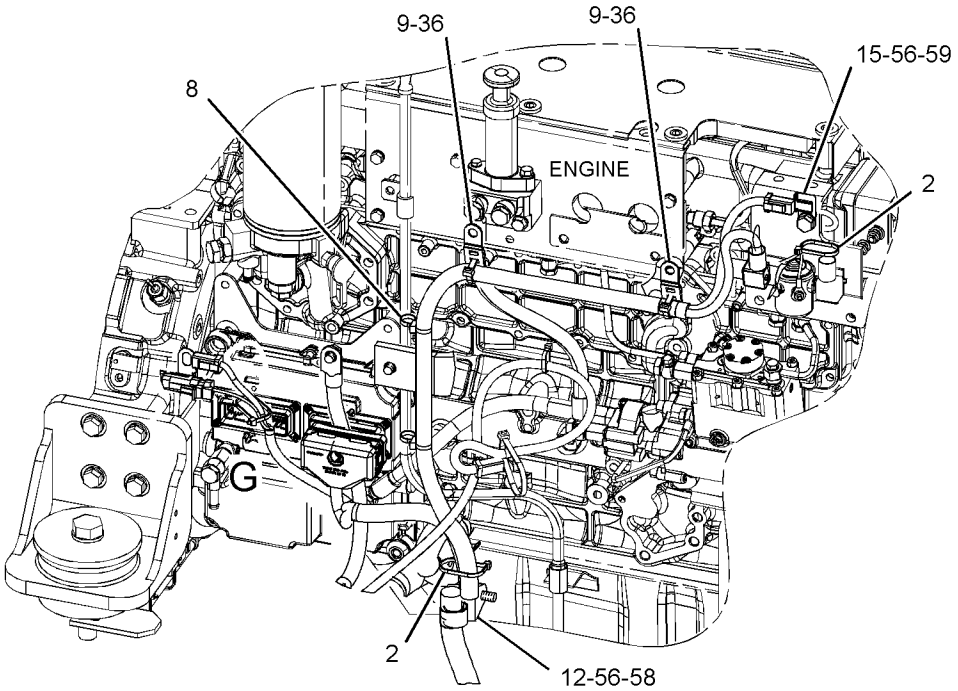

FRONT VIEW
(UPPER LEFT)

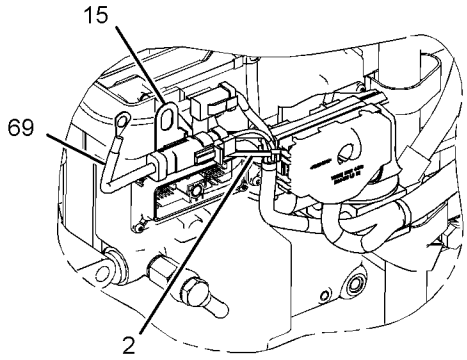

VIEW OF AREA G

90°

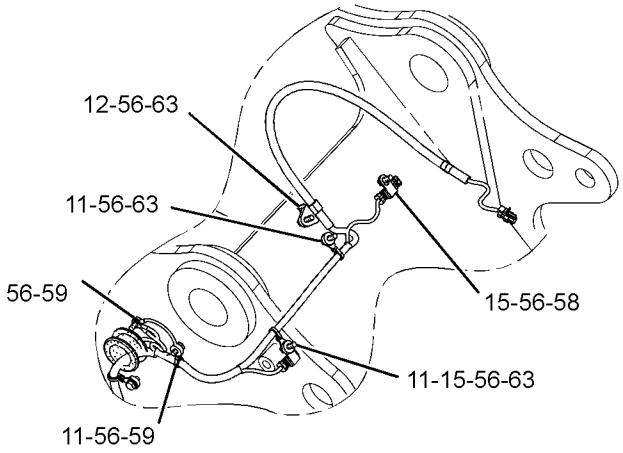

VIEW OF AREA A

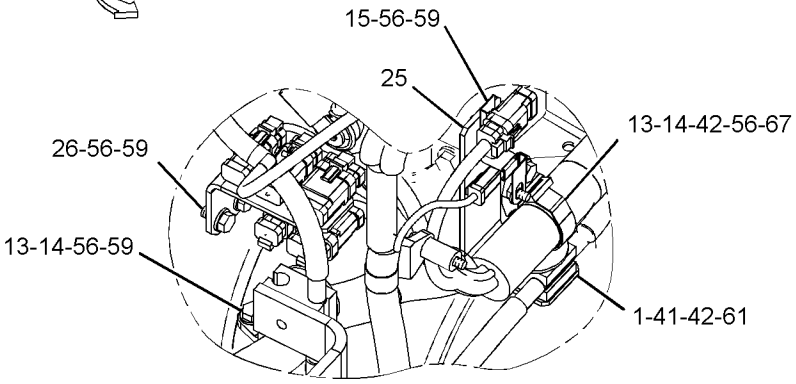

VIEW OF AREA D

GRAPHIC #3

g01514571

267-8000 **BATTERY & WIRING GP (*contd.*)** **i02986680**

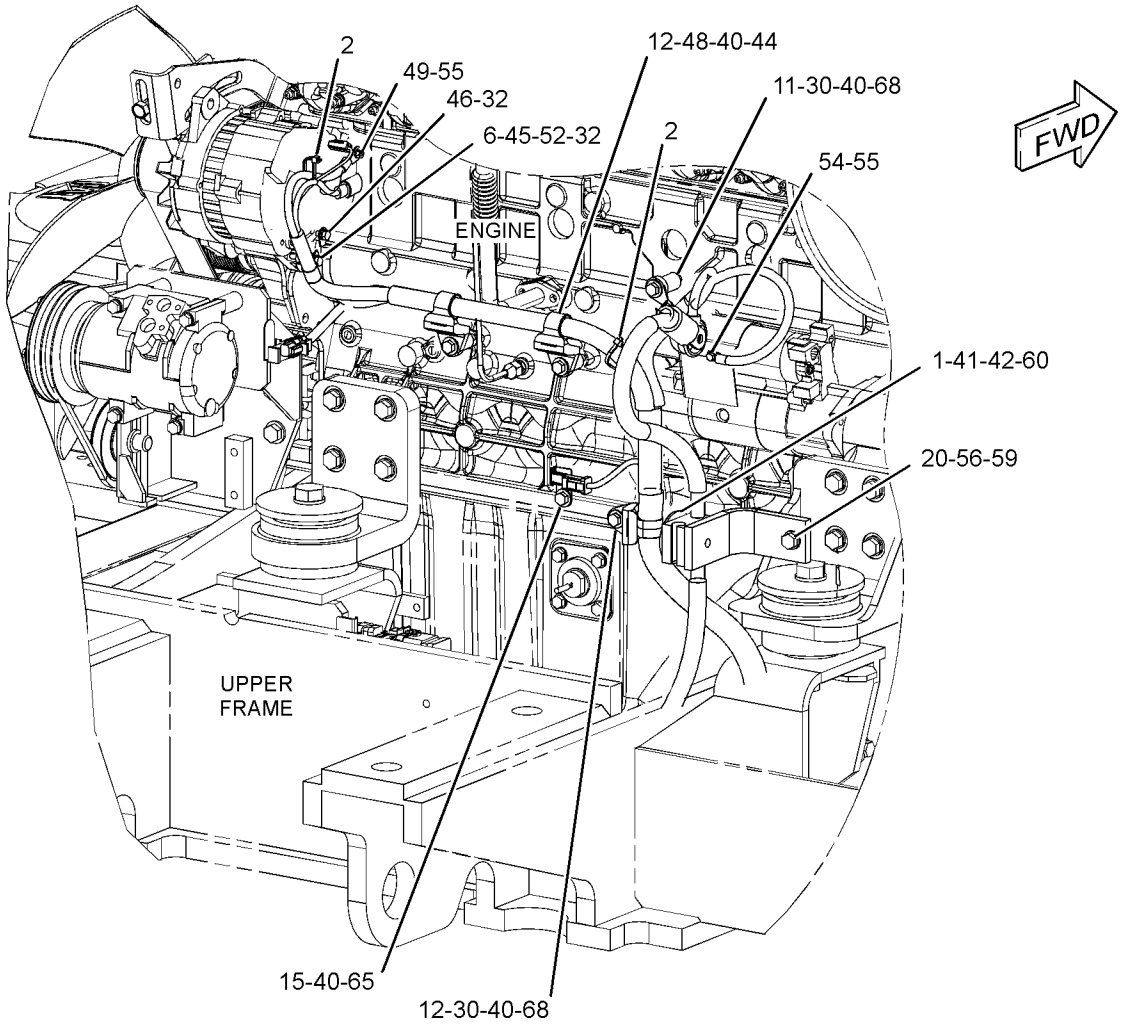

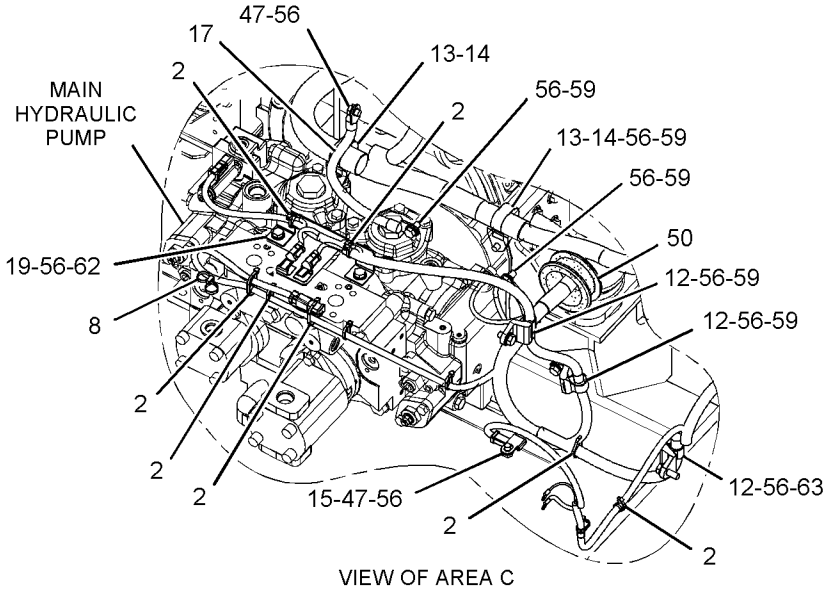

GRAPHIC #4

g01374768

267-8000 **BATTERY & WIRING GP (*contd.*)** **i02986680**

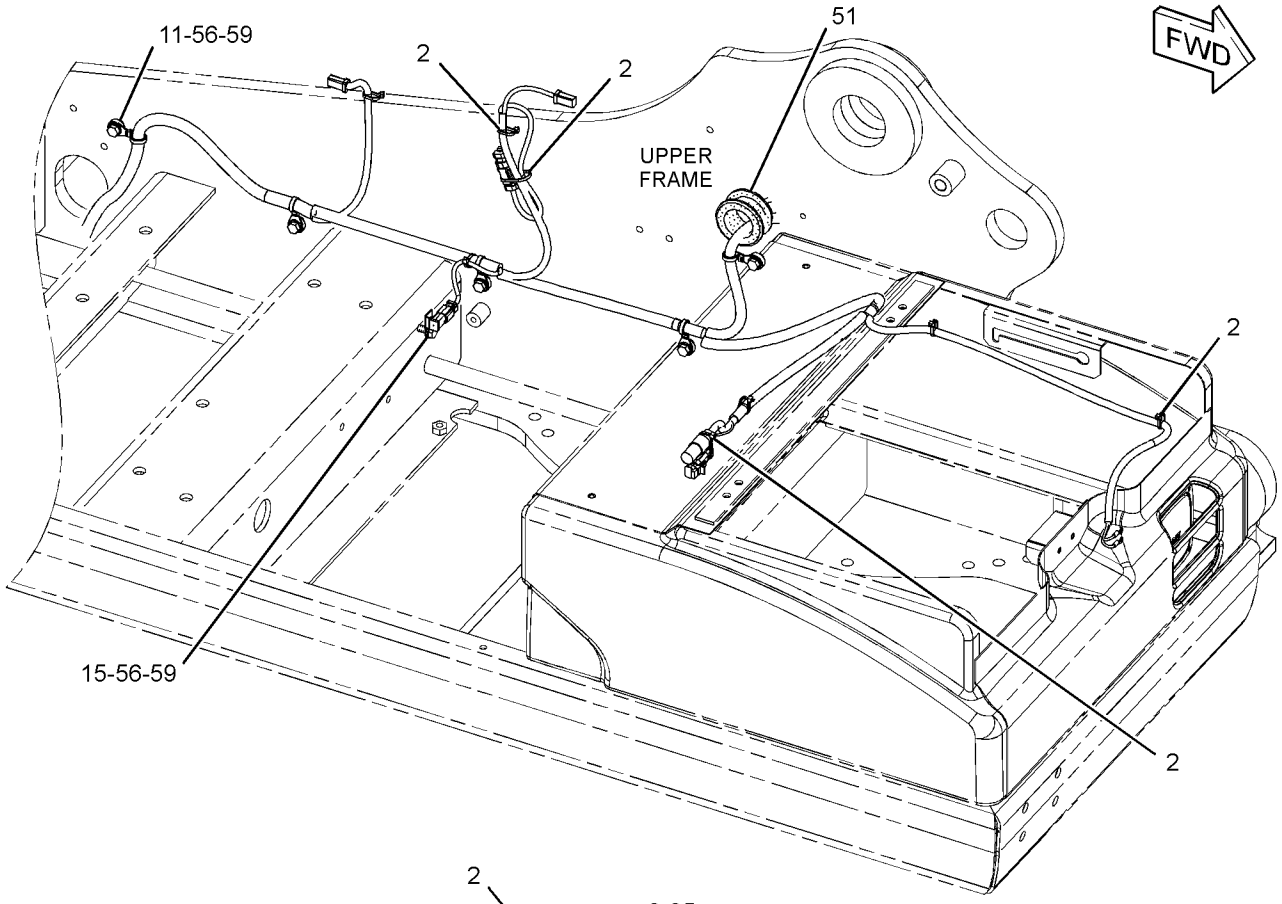

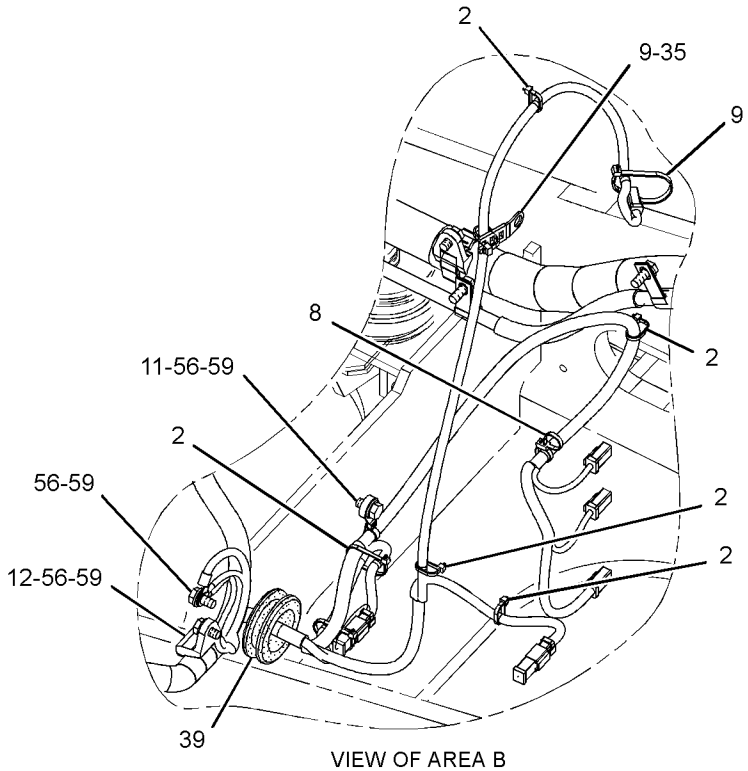

VIEW OF AREA B

GRAPHIC #5 **<END>** g01514573

267-8000 BATTERY & WIRING GP

S/N: KGF1318-6377; FAL880-7241
PART OF 264-8638, 264-8639 CHASSIS AR

SMCS-1401, 1402, 1408 **i04260952**

NOTE	REF NO	GRAPHIC REF	PART NUMBER	QTY	PART NAME 1 2 3 4 5 6 (PRODUCT LEVEL)	SEE PAGE
	1	3,5	**2G-8767**	2	WASHER (10.5X60X3-MM THK)	
C	2	1,2,3,4,5	**3S-2093**	37	STRAP-CABLE	
	3	2	**3T-5760**	2	BATTERY GP (12-VOLT, 750-CCA)	
	4	2	**306-8401**	1	GROMMET	
	5	2	**5I-8270**	1	COVER-BATTERY	
	6	3	**5I-9368**	1	SPACER (9.24X13.72X20.5-MM THK)	
	7	2	**6W-6005**	1	HOLD-DOWN-BATTERY	
	8	3,4,5	**7I-2673**	4	STRAP-CABLE	
C	9	2,4,5	**7K-1181**	16	STRAP-CABLE	
	10	1,2	**7Y-5456**	2	GROMMET	
	11	1,3,4,5	**111-4836**	11	CLIP	
	12	2,3,4,5	**111-4837**	12	CLIP	
	13	2,3,5	**111-4838**	13	CLIP	
	14	2,3,5	**111-4839**	13	STRAP	
C	15	2,3,4,5	**116-0118**	10	CLIP	
	16	2	**132-1805**	1	STRAP AS-GROUND	
	17	3	**132-1806**	1	STRAP AS-GROUND	
	18	2	**170-6929**	1	CABLE AS	
E		2	**159-8049**		CABLE (00-GA, RED) (31-CM)	
		2	**9G-0002**	1	COVER AS-TERMINAL (RED)	
		2	**8L-8413**	1	STRAP-CABLE	
		2	**9G-0005**	1	COVER AS-TERMINAL (BLACK)	
		2	**8L-8413**	1	STRAP-CABLE	
		2	**8T-9756**	1	TERMINAL AS (POSITIVE)	
		2	**8C-5918**	1	TERMINAL AS (NEGATIVE)	
					(EACH TERMINAL AS INCLUDES)	
		2	**1M-6119**	1	BOLT (5/16-18X1.375-IN)	
		2	**1M-6120**	1	NUT (5/16-18-THD)	
	19	3	**170-9336**	1	BRACKET AS	
	20	3	**183-1049**	1	BRACKET	
	21	2	**231-1827**	1	CABLE AS	
		2	**1S-7252**	1	TERMINAL-CABLE (00-GA, 3/8-IN SCREW)	
E		2	**159-8050**		CABLE (00-GA, BLACK) (23-CM)	
		2	**9G-0003**	1	COVER AS-TERMINAL (BLACK) (BATTERY NEGATIVE)	
		2	**8L-8413**	1	STRAP-CABLE	
		2	**9G-8909**	1	COVER-TERMINAL (BLACK) (DISCONNECT SWITCH)	
		2	**8T-9757**	1	TERMINAL AS-BATTERY (NEGATIVE)	
		2	**1M-6119**	1	BOLT (5/16-18X1.375-IN)	
		2	**1M-6120**	1	NUT (5/16-18-THD)	
	22	2	**238-2501**	1	KNOB	
	23	2	**238-2528**	1	ROD	
	24	2	**251-0467**	1	BRACKET AS	
	25	5	**259-5267**	1	BRACKET AS	
	26	5	**259-5317**	1	BRACKET AS	
C	27	2	**306-8777**	1	HARNESS AS-CHASSIS	
		2	**102-8802**	4	KIT-RECEPTACLE (2-PIN)	
		2	**102-8803**	2	KIT-RECEPTACLE (3-PIN)	
		2	**102-8804**	1	KIT-RECEPTACLE (4-PIN)	
					(EACH RECEPTACLE KIT INCLUDES RECEPTACLE AS & WEDGE)	
		2	**8T-8729**	12	PIN-CONNECTOR (16-GA TO 18-GA)	
		2	**8T-8730**	51	SOCKET-CONNECTOR (16-GA TO 18-GA)	
		2	**3S-2093**	17	STRAP-CABLE	
		2	**7Y-3820**	1	HOUSING-RECEPTACLE	
		2	**7Y-3821**	2	SOCKET-CONNECTOR	
		2	**7Y-3966**	1	TERMINAL AS	
		2	**7Y-3963**	1	TERMINAL-BULLET (FEMALE)	

267-8000 **BATTERY & WIRING GP (*contd.*)** **i04260952**

NOTE	REF NO	GRAPHIC REF	PART NUMBER	QTY	PART NAME 1 2 3 4 5 6 (PRODUCT LEVEL)	SEE PAGE
		2	**7Y-3995**	1	CONNECTOR-PLUG	
		2	**7Y-3996**	1	TERMINAL-BLADE (14-GA TO 20-GA)	
		2	**8T-8737**	131	PLUG-SEAL	
		2	**8T-8799**	1	BOOT	
E		2	**103-2529**		HOSE (80-CM)	
		2	**9W-0852**	13	PIN-CONNECTOR (14-GA TO 16-GA)	
		2	**9W-0844**	4	SOCKET-CONNECTOR (14-GA TO 16-GA)	
		2	**116-0126**	1	HOUSING-PLUG	
		2	**116-0128**	2	SEAL	
		2	**116-0255**	2	TERMINAL-BLADE (10-GA TO 20-GA)	
E		2	**119-3662**		TUBE-HEAT SHRINK (10.85-MM DIA) (26-CM)	
		2	**121-1038**	1	HOUSING-RECEPTACLE	
		2	**121-1039**	1	TERMINAL (MALE)	
E		2	**125-7874**		TUBE-HEAT SHRINK (5.72-MM DIA) (95-CM)	
E		2	**125-7875**		TUBE-HEAT SHRINK (7.44-MM DIA) (50-CM)	
		2	**9X-3402**	123	SOCKET-CONNECTOR (16-GA TO 18-GA)	
		2	**126-1768**	4	SOCKET-CONNECTOR (14-GA TO 16-GA)	
		2	**9G-4343**	3	TERMINAL-RING (4-GA, 1/4-IN SCREW)	
		2	**9G-4336**	1	TERMINAL-RING (4-GA, 3/8-IN SCREW)	
		2	**2L-8049**	1	TERMINAL-RING (6-GA, NO. 10 SCREW)	
		2	**2L-8050**	4	TERMINAL-RING (6-GA, 1/4-IN SCREW)	
		2	**2L-8052**	1	TERMINAL-RING (6-GA, 3/8-IN SCREW)	
		2	**2L-8069**	5	TERMINAL-RING (2-GA TO 10-GA, 3/8-IN SCREW)	
		2	**2L-8075**	4	TERMINAL-RING (14-GA TO 16-GA, NO. 8 SCREW)	
		2	**2L-8079**	5	TERMINAL-RING (14-GA TO 16-GA, 3/8-IN SCREW)	
		2	**176-9299**	2	KIT-RECEPTACLE (3-PIN)	
					(EACH INCLUDES RECEPTACLE AS & WEDGE)	
		2	**134-3297**	1	SEAL	
		2	**9X-3401**	60	PIN-CONNECTOR (16-GA TO 18-GA)	
		2	**153-2620**	1	PLUG AS-CONNECTOR (54-PIN, BLACK)	
		2	**153-2630**	1	PLUG AS-CONNECTOR (54-PIN, BROWN)	
					(EACH PLUG AS INCLUDES)	
		2	**163-6759**	1	SEAL	
		2	**155-2270**	16	KIT-CONNECTING PLUG (2-PIN)	
		2	**155-2271**	1	KIT-CONNECTING PLUG (4-PIN)	
		2	**155-2260**	2	KIT-CONNECTING PLUG (3-PIN)	
					(EACH PLUG KIT INCLUDES PLUG AS, WEDGE & INTERFACE SEAL)	
		2	**174-3016**	2	PLUG AS-CONNECTOR (3-PIN)	
		2	**230-4009**	3	PLUG AS-CONNECTOR (12-PIN)	
					(EACH INCLUDES)	
		2	**264-7034**	1	SEAL-CONNECTOR	
		2	**230-4011**	9	PLUG AS-CONNECTOR (2-PIN)	
					(EACH INCLUDES)	
		2	**264-7029**	1	SEAL-CONNECTOR	
		2	**230-4013**	1	PLUG AS-CONNECTOR (3-PIN)	
		2	**264-7030**		SEAL-CONNECTOR	
		2	**230-5010**	3	PLUG AS-CONNECTOR (6-PIN)	
					(EACH INCLUDES)	
		2	**264-7032**	1	SEAL-CONNECTOR	
		2	**264-7032**	3	SEAL-CONNECTOR	
		2	**231-2295**	2	PLUG AS-CONNECTOR (8-PIN)	
					(EACH INCLUDES)	
		2	**264-7033**	1	SEAL-CONNECTOR	
		2	**243-4505**	6	RECEPTACLE AS-CONNECTOR (2-PIN)	
		2	**163-6637**	1	RECEPTACLE AS-CONNECTOR (54-PIN, BLACK)	
		2	**243-4506**	1	RECEPTACLE AS-CONNECTOR (3-PIN)	
		2	**243-4508**	3	RECEPTACLE AS-CONNECTOR (6-PIN)	
		2	**243-4509**	2	RECEPTACLE AS-CONNECTOR (8-PIN)	
		2	**243-4510**	3	RECEPTACLE AS-CONNECTOR (12-PIN)	
		2	**245-1042**	1	PLUG AS-CONNECTOR (64-PIN)	

267-8000 **BATTERY & WIRING GP (*contd.*)** **i04260952**

NOTE	REF NO	GRAPHIC REF	PART NUMBER	QTY	PART NAME 1 2 3 4 5 6 (PRODUCT LEVEL)	SEE PAGE
		2	**274-4990**	1	SEAL	
M		2	**267-7207**	1	BOLT-SPECIAL	
		2	**267-7208**	1	RING-RETAINING	
		2	**245-1044**	2	LOCK-CONNECTOR	
		2	**245-1045**	1	COVER	
		2	**266-3317**	24	TERMINAL AS	
		2	**267-9572**	24	SOCKET-CONNECTION (18-GA)	
		2	**245-1048**	40	PLUG-CONNECTOR	
		2	**328-0072**	1	BOOT	
	28	2	**291-7591**	1	CABLE AS	
		2	**1S-7252**	1	TERMINAL-CABLE (00-GA, 3/8-IN SCREW)	
E		2	**159-8049**		CABLE (00-GA, RED) (324-CM)	
		2	**9G-0004**	1	COVER AS-TERMINAL (RED) (BATTERY POSITIVE)	
		2	**8L-8413**	1	STRAP-CABLE	
		2	**8N-0869**	1	COVER-TERMINAL (RED) (STARTING MOTOR)	
		2	**8C-5917**	1	TERMINAL AS-BATTERY (POSITIVE)	
		2	**1M-6119**	1	BOLT (5/16-18X1.375-IN)	
		2	**1M-6120**	1	NUT (5/16-18-THD)	
	29	2	**291-7593**	1	BRACKET AS	
	30	3	**085-7329**	2	SPACER (9X19X30-MM THK)	
	31	2	**091-9035**	1	SPACER (11X25X20-MM THK)	
	32	2,3	**9X-8256**	6	WASHER (6.6X12X2-MM THK)	
	33	2	**132-5789**	2	CLIP	
	34	2	**4K-8864**	1	CLIP	
	35	4	**4P-7428**	1	CLIP	
C	36	2	**4P-7581**	2	CLIP	
M	37	2	**5C-7261**	1	NUT (M8X1.25-THD)	
M	38	2	**5C-7883**	4	BOLT-SOCKET HEAD (M6X1X16-MM)	
	39	4	**5I-3878**	1	GROMMET	
	40	3	**5P-4116**	5	WASHER-HARD (8.8X20.5X2-MM THK)	
	41	3,5	**6G-2256**	2	CLAMP	
	42	2,3,5	**6G-2263**	4	SPACER (10.5X19X28.5-MM THK)	
	43	2	**6K-8178**	4	CLIP	
M	44	3	**7X-0818**	2	BOLT (M8X1.25X45-MM)	
M	45	3	**7X-2533**	1	BOLT (M6X1X35-MM)	
M	46	3	**7X-2619**	1	BOLT (M6X1X10-MM)	
M	47	3	**7X-2621**	2	BOLT (M10X1.5X12-MM)	
	48	3	**7Y-1924**	2	SPACER (9X19X23-MM THK)	
M	49	3	**5C-2874**	1	NUT (M5X0.8-THD)	
	50	3	**7Y-8165**	1	GROMMET	
	51	4	**7Y-8167**	1	GROMMET	
	52	3	**8J-1256**	1	CLIP	
	53	2	**8M-2770**	1	CLIP	
M	54	3	**8T-0286**	1	BOLT (M5X0.8X8-MM)	
	55	3	**8T-0328**	2	WASHER-HARD (5.5X10X1-MM THK)	
C	56	1,2,3,4,5	**8T-4121**	59	WASHER-HARD (11X21X2.5-MM THK)	
M	57	2	**8T-4133**	1	NUT (M10X1.5-THD)	
M	58	2,5	**8T-4136**	10	BOLT (M10X1.5X25-MM)	
CM	59	1,2,3,4,5	**8T-4137**	35	BOLT (M10X1.5X20-MM)	
M	60	2,3	**8T-4182**	2	BOLT (M10X1.5X45-MM)	
M	61	2,5	**8T-4185**	2	BOLT (M10X1.5X50-MM)	
M	62	2,3	**8T-4191**	3	BOLT (M10X1.5X16-MM)	
M	63	2,3,5	**8T-4195**	5	BOLT (M10X1.5X30-MM)	
M	64	2	**8T-4196**	1	BOLT (M10X1.5X35-MM)	
M	65	3	**8T-4199**	1	BOLT (M8X1.25X12-MM)	
	66	2	**8T-4226**	1	WASHER-PLATED (10.5X45X3-MM THK)	
M	67	5	**8T-6466**	1	BOLT (M10X1.5X60-MM)	
M	68	3	**8T-6912**	2	BOLT (M8X1.25X50-MM)	
	69	5	**299-2767**	1	WIRE AS	
	70	3	**177-2215**	1	STRAP-DUAL CLAMP	

267-8000 **BATTERY & WIRING GP (*contd.*)** **i04260952**

NOTE	REF NO	GRAPHIC REF	PART NUMBER	QTY	PART NAME 1 2 3 4 5 6 (PRODUCT LEVEL)	SEE PAGE

C - CHANGE FROM PREVIOUS TYPE
E - ORDER BY THE CENTIMETER
M - METRIC PART

REFER TO ALL ILLUSTRATIONS OF THIS GROUP FOR AUXILIARY VIEWS

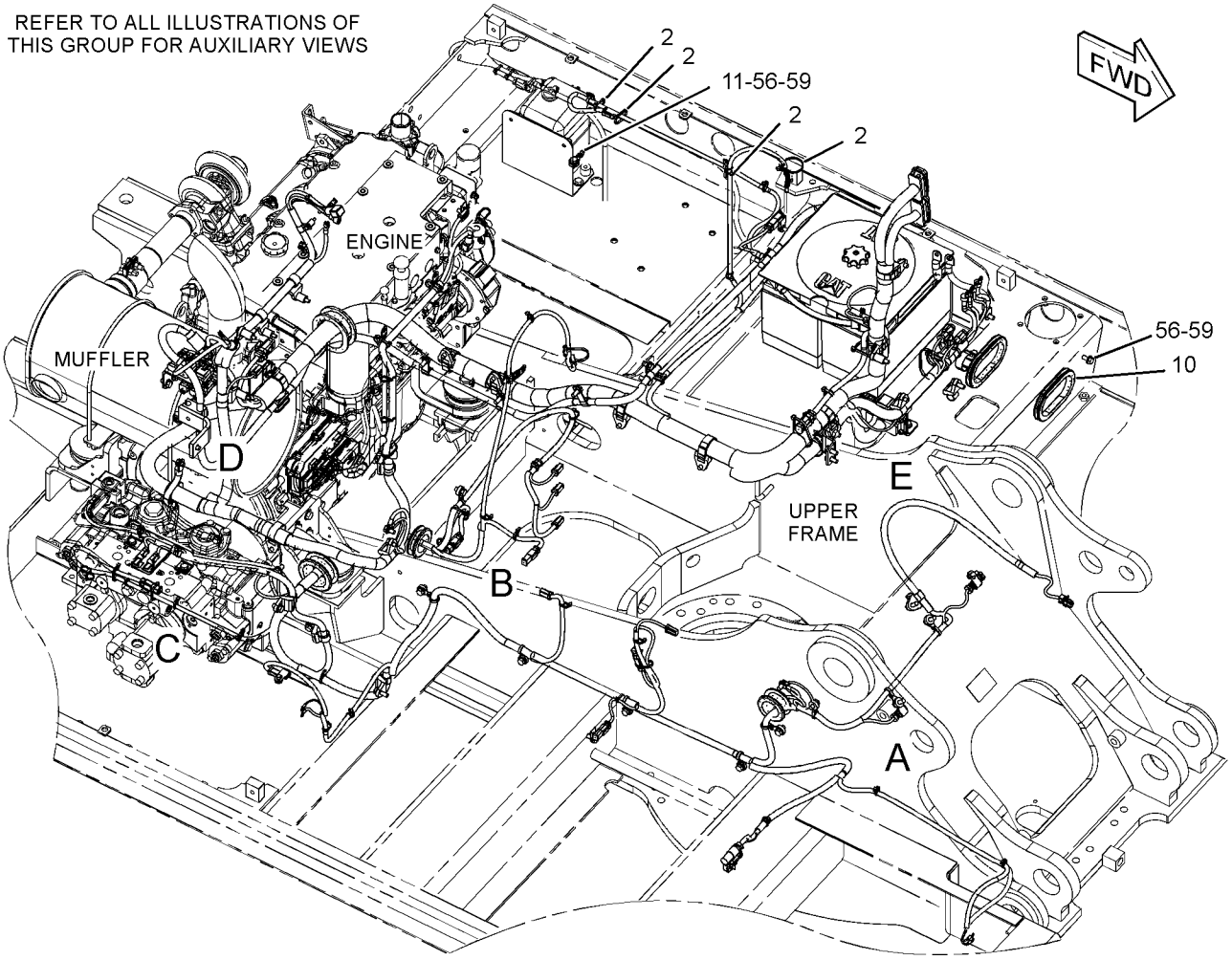

GRAPHIC #1 g01514570

267-8000 **BATTERY & WIRING GP (*contd.*)** **i04260952**

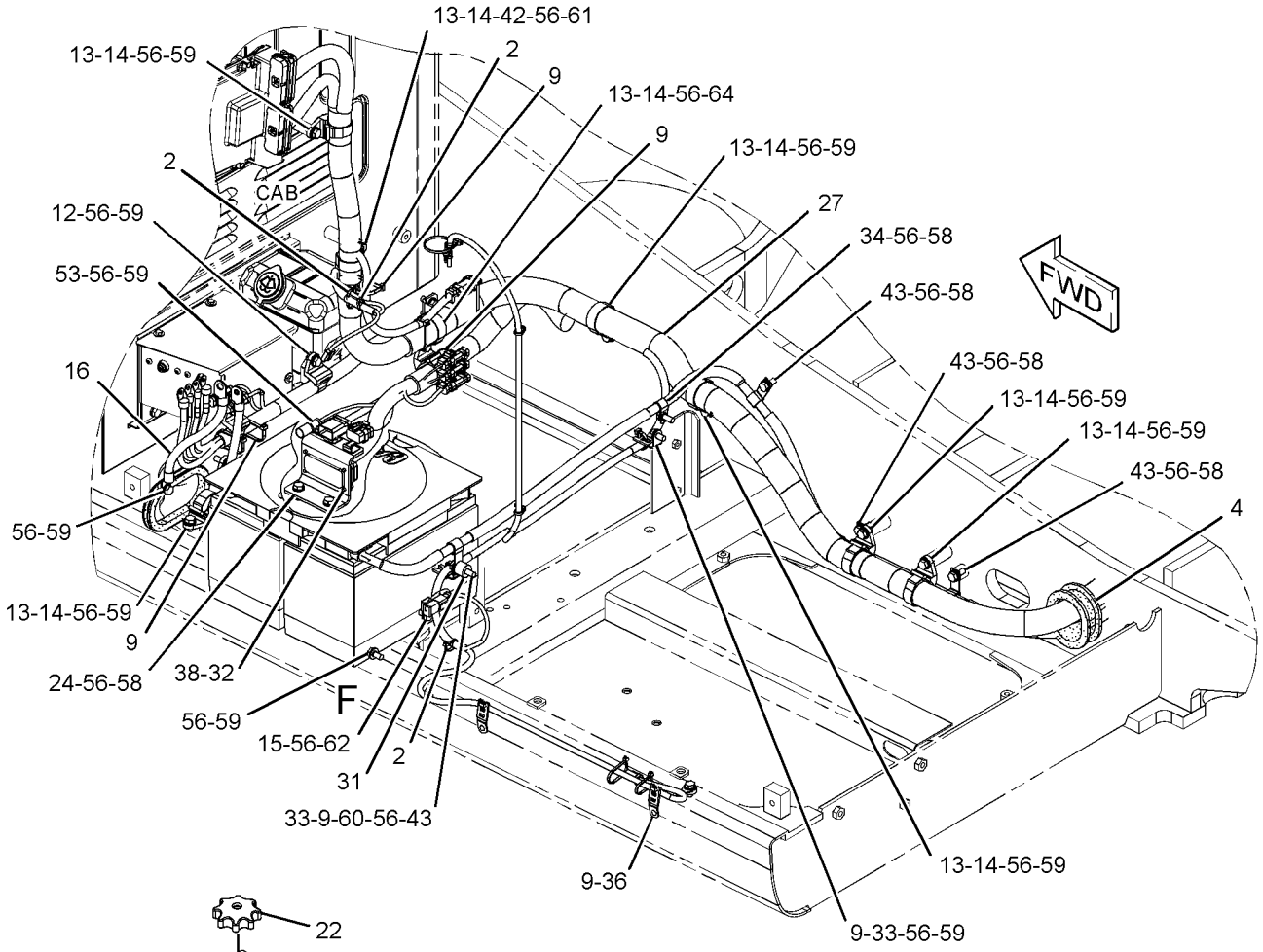

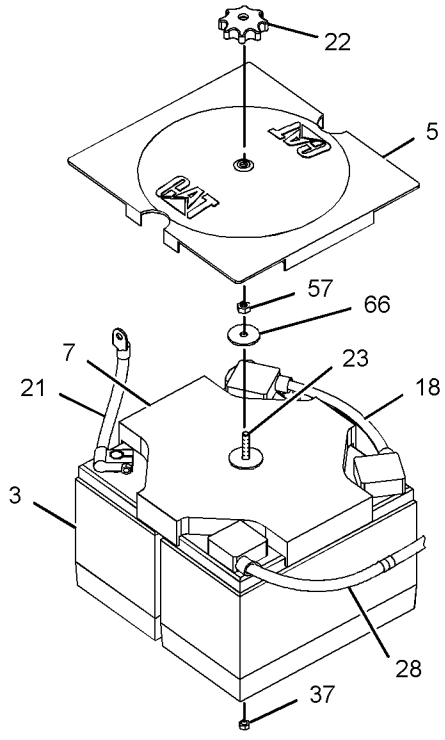

VIEW OF AREA F

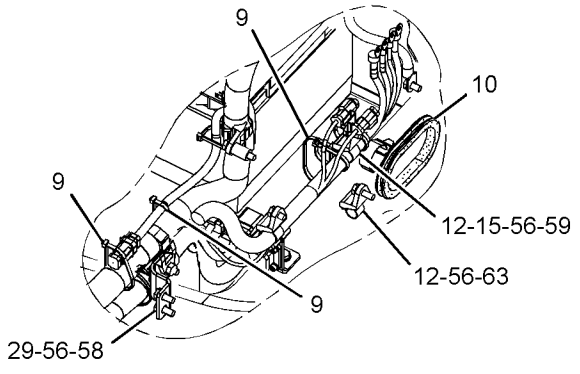

VIEW OF AREA E

GRAPHIC #2 g01374371

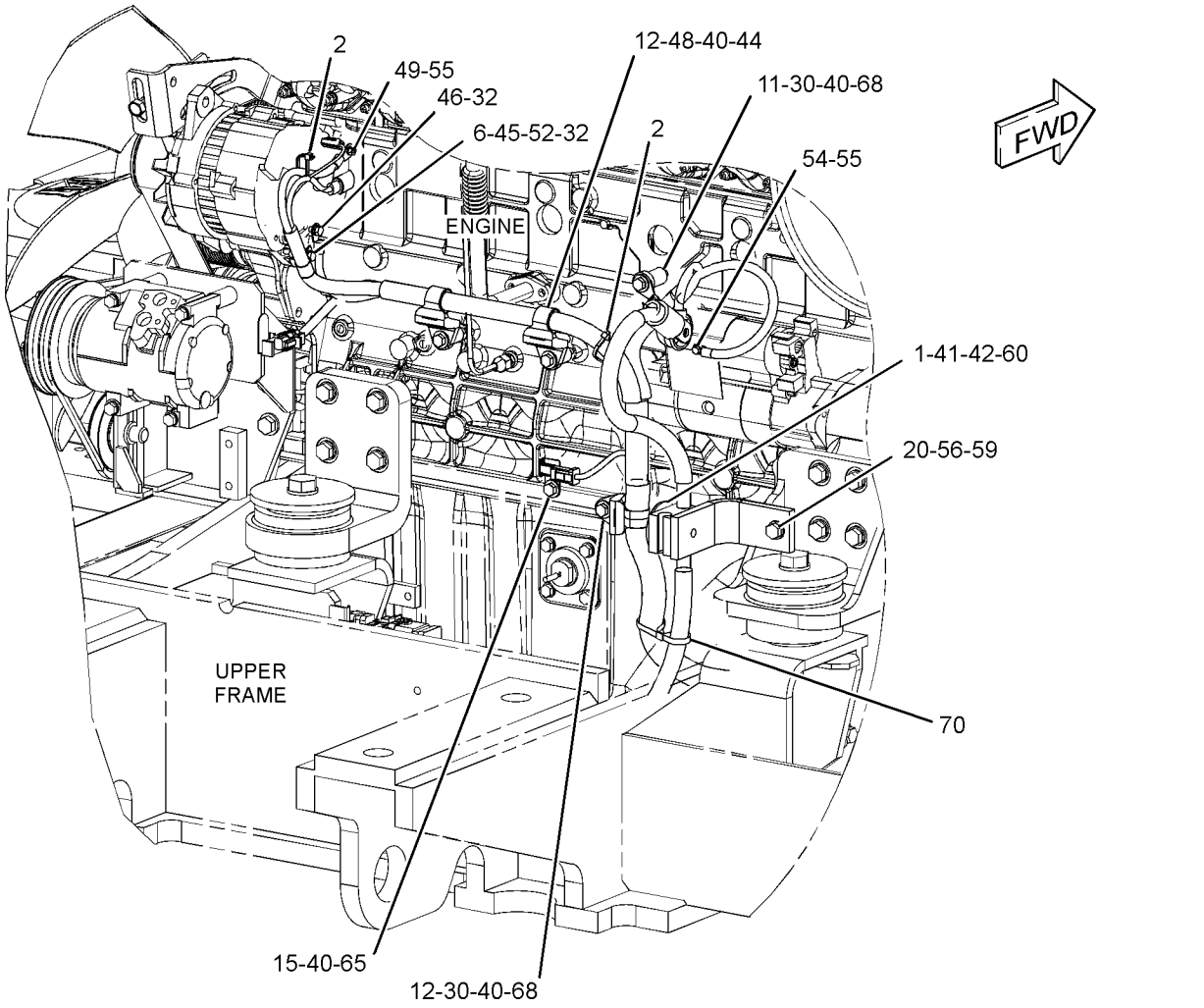

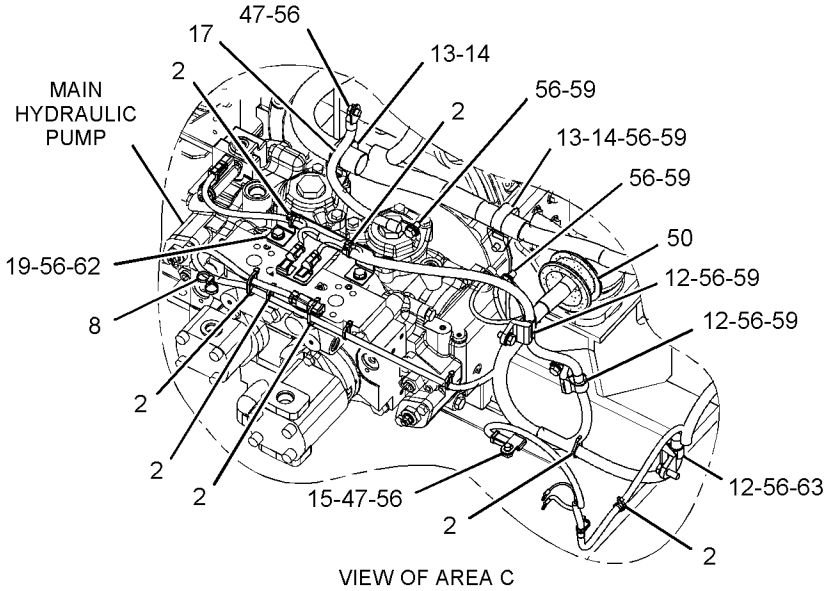

VIEW OF AREA C

GRAPHIC #3 g02554556

267-8000 **BATTERY & WIRING GP (*contd.*)** **i04260952**

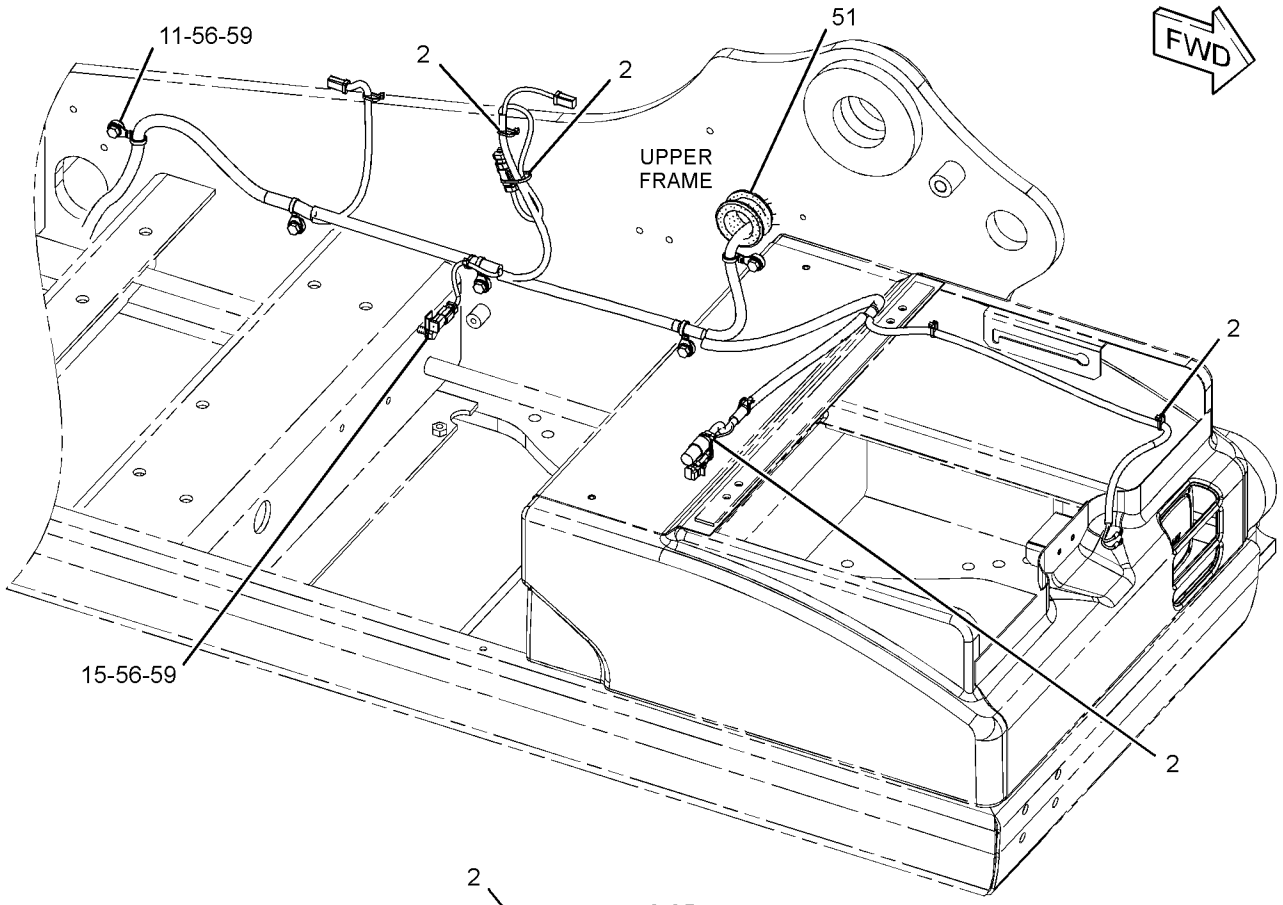

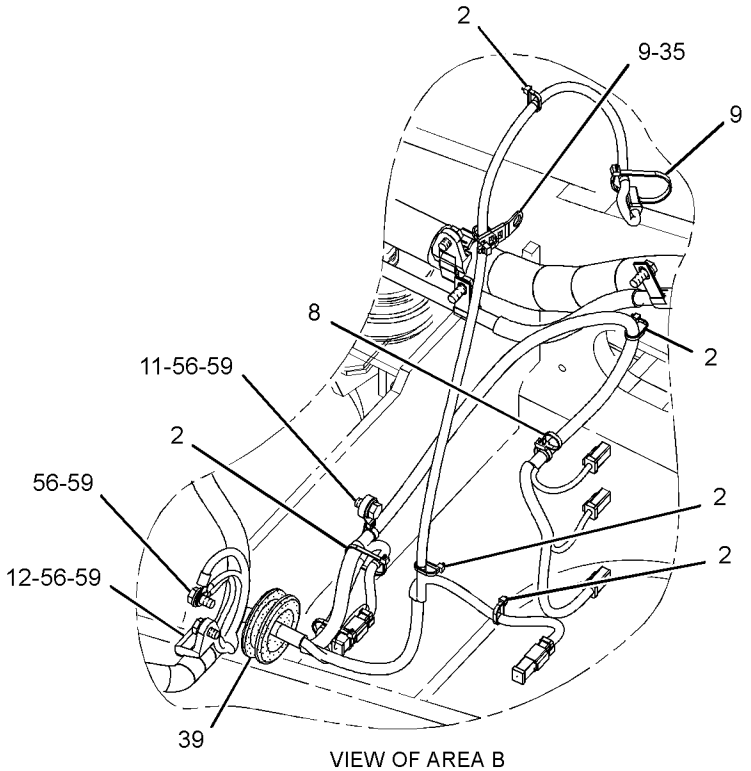

VIEW OF AREA B

GRAPHIC #4 g01514573

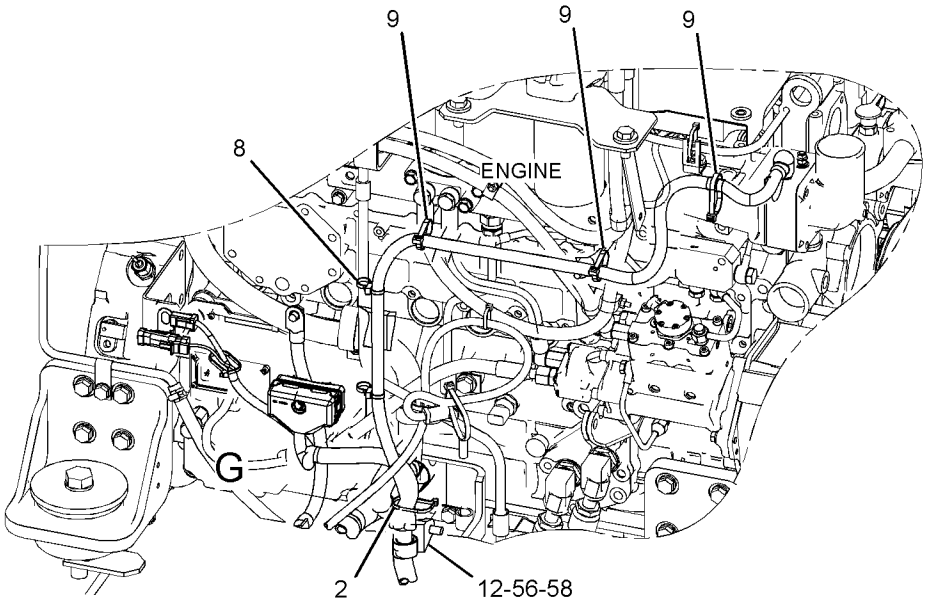

FRONT VIEW
(UPPER LEFT)

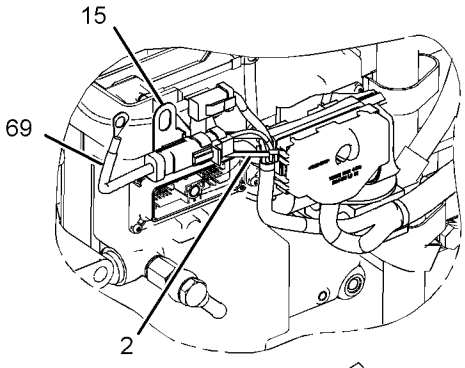

VIEW OF AREA G

90°

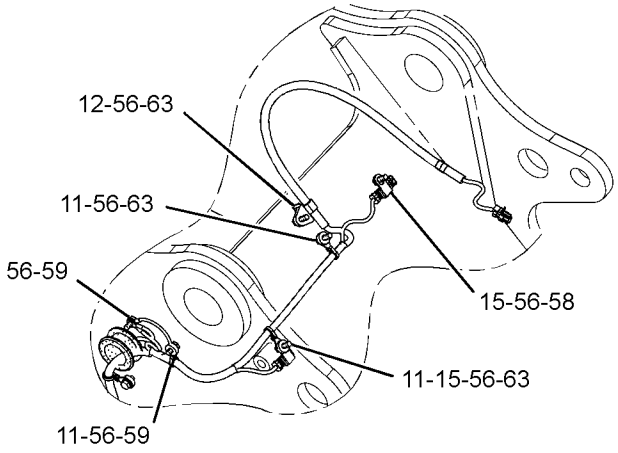

VIEW OF AREA A

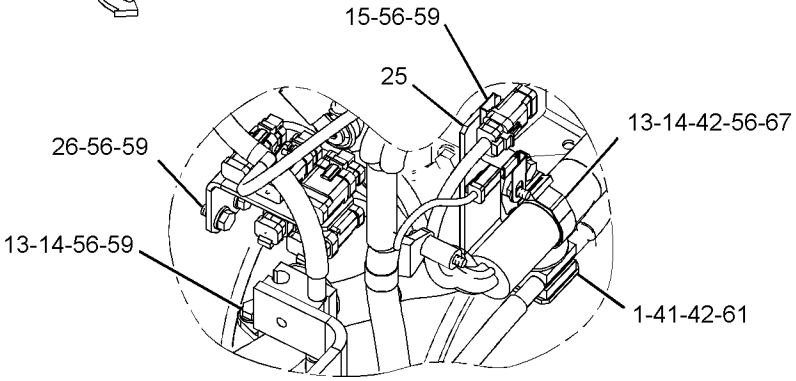

VIEW OF AREA D

GRAPHIC #5 **<END>** g01629956

267-8000 BATTERY & WIRING GP

S/N: KGF6378-UP; FAL7242-UP

PART OF 264-8638, 264-8639 CHASSIS AR

SMCS-1401, 1402, 1408 **i04557031**

NOTE	REF NO	GRAPHIC REF	PART NUMBER	QTY	PART NAME 1 2 3 4 5 6 (PRODUCT LEVEL)	SEE PAGE
	1	3,5	**2G-8767**	2	WASHER (10.5X60X3-MM THK)	
C	2	1,2,3,4,5	**3S-2093**	39	STRAP-CABLE	
	3	2	**3T-5760**	2	BATTERY GP (12-VOLT, 750-CCA)	
	4	2	**306-8401**	1	GROMMET	
	5	2	**5I-8270**	1	COVER-BATTERY	
	6	3	**5I-9368**	1	SPACER (9.24X13.72X20.5-MM THK)	
	7	2	**6W-6005**	1	HOLD-DOWN-BATTERY	
	8	3,4,5	**7I-2673**	4	STRAP-CABLE	
	9	2,4,5	**7K-1181**	16	STRAP-CABLE	
	10	1,2	**7Y-5456**	2	GROMMET	
	11	1,3,4,5	**111-4836**	11	CLIP	
	12	2,3,4,5	**111-4837**	12	CLIP	
	13	2,3,5	**111-4838**	13	CLIP	
	14	2,3,5	**111-4839**	13	STRAP	
	15	2,3,4,5	**116-0118**	10	CLIP	
	16	2	**132-1805**	1	STRAP AS-GROUND	
	17	3	**132-1806**	1	STRAP AS-GROUND	
	18	2	**170-6929**	1	CABLE AS	
E		2	**159-8049**		CABLE (00-GA, RED) (31-CM)	
		2	**9G-0002**	1	COVER AS-TERMINAL (RED)	
		2	**8L-8413**	1	STRAP-CABLE	
		2	**9G-0005**	1	COVER AS-TERMINAL (BLACK)	
		2	**8L-8413**	1	STRAP-CABLE	
		2	**8T-9756**	1	TERMINAL AS (POSITIVE)	
		2	**8C-5918**	1	TERMINAL AS (NEGATIVE)	
					(EACH TERMINAL AS INCLUDES)	
		2	**1M-6119**	1	BOLT (5/16-18X1.375-IN)	
		2	**1M-6120**	1	NUT (5/16-18-THD)	
C	19	3	**366-9331**	1	BRACKET AS-PUMP	
	20	3	**183-1049**	1	BRACKET	
	21	2	**231-1827**	1	CABLE AS	
		2	**1S-7252**	1	TERMINAL-CABLE (00-GA, 3/8-IN SCREW)	
E		2	**159-8050**		CABLE (00-GA, BLACK) (23-CM)	
		2	**9G-0003**	1	COVER AS-TERMINAL (BLACK) (BATTERY NEGATIVE)	
		2	**8L-8413**	1	STRAP-CABLE	
		2	**9G-8909**	1	COVER-TERMINAL (BLACK) (DISCONNECT SWITCH)	
		2	**8T-9757**	1	TERMINAL AS-BATTERY (NEGATIVE)	
		2	**1M-6119**	1	BOLT (5/16-18X1.375-IN)	
		2	**1M-6120**	1	NUT (5/16-18-THD)	
	22	2	**238-2501**	1	KNOB	
	23	2	**238-2528**	1	ROD	
	24	2	**251-0467**	1	BRACKET AS	
	25	5	**259-5267**	1	BRACKET AS	
	26	5	**259-5317**	1	BRACKET AS	
C	27	2	**366-9315**	1	HARNESS AS-CHASSIS	
		2	**102-8802**	4	KIT-RECEPTACLE (2-PIN)	
		2	**102-8803**	2	KIT-RECEPTACLE (3-PIN)	
		2	**102-8804**	1	KIT-RECEPTACLE (4-PIN)	
					(EACH RECEPTACLE KIT INCLUDES RECEPTACLE AS & WEDGE)	
		2	**8T-8729**	12	PIN-CONNECTOR (16-GA TO 18-GA)	
		2	**8T-8730**	51	SOCKET-CONNECTOR (16-GA TO 18-GA)	
		2	**3S-2093**	17	STRAP-CABLE	
		2	**9X-0196**	2	TERMINAL AS	
		2	**7Y-3820**	1	HOUSING-RECEPTACLE	
		2	**7Y-3821**	2	SOCKET-CONNECTOR	
		2	**7Y-3962**	1	TERMINAL-BULLET (MALE)	

267-8000 **BATTERY & WIRING GP (*contd.*)** **i04557031**

NOTE	REF NO	GRAPHIC REF	PART NUMBER	QTY	PART NAME 1 2 3 4 5 6 (PRODUCT LEVEL)	SEE PAGE
		2	**7Y-3964**	1	TUBE (CONNECTOR TERMINAL)	
		2	**7Y-3963**	1	TERMINAL-BULLET (FEMALE)	
		2	**7Y-3965**	1	TUBE (RECEPTACLE TERMINAL)	
		2	**7Y-3995**	1	CONNECTOR-PLUG	
		2	**7Y-3996**	1	TERMINAL-BLADE (14-GA TO 20-GA)	
D		2	**6V-2369**		CABLE (4-GA, BLACK) (5.4-M)	
		2	**8T-8737**	131	PLUG-SEAL	
		2	**8T-8799**	1	BOOT	
E		2	**103-2529**		HOSE (80-CM)	
		2	**9W-0852**	13	PIN-CONNECTOR (14-GA TO 16-GA)	
		2	**9W-0844**	4	SOCKET-CONNECTOR (14-GA TO 16-GA)	
		2	**116-0126**	1	HOUSING-PLUG	
		2	**116-0128**	2	SEAL	
		2	**116-0255**	2	TERMINAL-BLADE (10-GA TO 20-GA)	
E		2	**119-3662**		TUBE-HEAT SHRINK (10.85-MM DIA) (26-CM)	
		2	**121-1038**	1	HOUSING-RECEPTACLE	
		2	**121-1039**	1	TERMINAL (MALE)	
E		2	**125-7874**		TUBE-HEAT SHRINK (5.72-MM DIA) (95-CM)	
E		2	**125-7875**		TUBE-HEAT SHRINK (7.44-MM DIA) (50-CM)	
		2	**9X-3402**	123	SOCKET-CONNECTOR (16-GA TO 18-GA)	
					—OR—	
		2	**126-1768**	123	SOCKET-CONNECTOR (14-GA TO 16-GA)	
		2	**126-1768**	4	SOCKET-CONNECTOR (14-GA TO 16-GA)	
		2	**9G-4343**	3	TERMINAL-RING (4-GA, 1/4-IN SCREW)	
		2	**9G-4336**	1	TERMINAL-RING (4-GA, 3/8-IN SCREW)	
		2	**2L-8049**	1	TERMINAL-RING (6-GA, NO. 10 SCREW)	
					—OR—	
		2	**2L-8057**	1	TERMINAL-RING (8-GA, NO. 10 SCREW)	
		2	**2L-8050**	4	TERMINAL-RING (6-GA, 1/4-IN SCREW)	
					—OR—	
		2	**2L-8058**	4	TERMINAL-RING (8-GA, 1/4-IN SCREW)	
		2	**2L-8052**	1	TERMINAL-RING (6-GA, 3/8-IN SCREW)	
					—OR—	
		2	**2L-8060**	1	TERMINAL-RING (8-GA, 3/8-IN SCREW)	
		2	**2L-8069**	5	TERMINAL-RING (2-GA TO 10-GA, 3/8-IN SCREW)	
		2	**2L-8075**	4	TERMINAL-RING (14-GA TO 16-GA, NO. 8 SCREW)	
		2	**2L-8079**	5	TERMINAL-RING (14-GA TO 16-GA, 3/8-IN SCREW)	
		2	**176-9299**	2	KIT-RECEPTACLE (3-PIN)	
					(EACH INCLUDES RECEPTACLE AS & WEDGE)	
		2	**134-3297**	1	SEAL	
		2	**9X-3401**	60	PIN-CONNECTOR (16-GA TO 18-GA)	
					—OR—	
		2	**126-1767**	60	PIN-CONNECTOR (14-GA TO 16-GA)	
		2	**153-2620**	1	PLUG AS-CONNECTOR (54-PIN, BLACK)	
		2	**153-2630**	1	PLUG AS-CONNECTOR (54-PIN, BROWN)	
					(EACH PLUG AS INCLUDES)	
		2	**163-6759**	1	SEAL	
		2	**155-2270**	16	KIT-CONNECTING PLUG (2-PIN)	
		2	**155-2271**	1	KIT-CONNECTING PLUG (4-PIN)	
					(EACH PLUG KIT INCLUDES PLUG AS, WEDGE & INTERFACE SEAL)	
		2	**163-6637**	1	RECEPTACLE AS-CONNECTOR (54-PIN, BLACK)	
		2	**163-6773**	2	PLUG-SEAL	
		2	**174-3016**	2	PLUG AS-CONNECTOR (3-PIN)	
		2	**230-4009**	3	PLUG AS-CONNECTOR (12-PIN)	
					(EACH INCLUDES)	
		2	**264-7034**	1	SEAL-CONNECTOR	
		2	**230-4011**	9	PLUG AS-CONNECTOR (2-PIN)	
					(EACH INCLUDES)	
		2	**264-7029**	1	SEAL-CONNECTOR	
		2	**230-4013**	3	PLUG AS-CONNECTOR (3-PIN)	

267-8000 **BATTERY & WIRING GP (*contd.*)** **i04557031**

NOTE	REF NO	GRAPHIC REF	PART NUMBER	QTY	PART NAME 1 2 3 4 5 6 (PRODUCT LEVEL)	SEE PAGE
					(EACH INCLUDES)	
		2	**264-7030**		SEAL-CONNECTOR	
		2	**230-5010**	3	PLUG AS-CONNECTOR (6-PIN)	
					(EACH INCLUDES)	
		2	**264-7032**	1	SEAL-CONNECTOR	
		2	**231-2295**	2	PLUG AS-CONNECTOR (8-PIN)	
					(EACH INCLUDES)	
		2	**264-7033**	1	SEAL-CONNECTOR	
		2	**243-4505**	6	RECEPTACLE AS-CONNECTOR (2-PIN)	
		2	**243-4506**	1	RECEPTACLE AS-CONNECTOR (3-PIN)	
		2	**243-4508**	3	RECEPTACLE AS-CONNECTOR (6-PIN)	
		2	**243-4509**	2	RECEPTACLE AS-CONNECTOR (8-PIN)	
		2	**243-4510**	3	RECEPTACLE AS-CONNECTOR (12-PIN)	
		2	**245-1042**	1	PLUG AS-CONNECTOR (64-PIN)	
		2	**274-4990**	1	SEAL	
M		2	**267-7207**	1	BOLT-SPECIAL	
		2	**267-7208**	1	RING-RETAINING	
		2	**245-1044**	2	LOCK-CONNECTOR	
		2	**245-1045**	1	COVER	
		2	**267-9572**	24	SOCKET-CONNECTION (18-GA)	
		2	**245-1048**	40	PLUG-CONNECTOR	
		2	**328-0072**	1	BOOT	
		2	**342-2972**	2	CAP-CONNECTOR (2-PIN)	
		2	**342-2973**	1	CAP-CONNECTOR (3-PIN)	
		2	**342-2974**	2	CAP-CONNECTOR (6-PIN)	
		2	**342-2975**	2	CAP-CONNECTOR (8-PIN)	
		2	**342-2976**	1	CAP-CONNECTOR (12-PIN)	
	28	2	**291-7591**	1	CABLE AS	
		2	**1S-7252**	1	TERMINAL-CABLE (00-GA, 3/8-IN SCREW)	
E		2	**159-8049**		CABLE (00-GA, RED) (324-CM)	
		2	**9G-0004**	1	COVER AS-TERMINAL (RED) (BATTERY POSITIVE)	
		2	**8L-8413**	1	STRAP-CABLE	
		2	**8N-0869**	1	COVER-TERMINAL (RED) (STARTING MOTOR)	
		2	**8C-5917**	1	TERMINAL AS-BATTERY (POSITIVE)	
		2	**1M-6119**	1	BOLT (5/16-18X1.375-IN)	
		2	**1M-6120**	1	NUT (5/16-18-THD)	
	29	2	**291-7593**	1	BRACKET AS	
	30	3	**085-7329**	2	SPACER (9X19X30-MM THK)	
	31	2	**091-9035**	1	SPACER (11X25X20-MM THK)	
	32	2,3	**9X-8256**	6	WASHER (6.6X12X2-MM THK)	
	33	2	**132-5789**	2	CLIP	
	34	2	**4K-8864**	1	CLIP	
	35	4	**4P-7428**	1	CLIP	
	36	2	**4P-7581**	2	CLIP	
M	37	2	**5C-7261**	1	NUT (M8X1.25-THD)	
M	38	2	**5C-7883**	4	BOLT-SOCKET HEAD (M6X1X16-MM)	
	39	4	**5I-3878**	1	GROMMET	
	40	3	**5P-4116**	5	WASHER-HARD (8.8X20.5X2-MM THK)	
	41	3,5	**6G-2256**	2	CLAMP	
	42	2,3,5	**6G-2263**	4	SPACER (10.5X19X28.5-MM THK)	
	43	2	**6K-8178**	4	CLIP	
M	44	3	**7X-0818**	2	BOLT (M8X1.25X45-MM)	
M	45	3	**7X-2533**	1	BOLT (M6X1X35-MM)	
M	46	3	**7X-2619**	1	BOLT (M6X1X10-MM)	
M	47	3	**7X-2621**	2	BOLT (M10X1.5X12-MM)	
	48	3	**7Y-1924**	2	SPACER (9X19X23-MM THK)	
CM	49	3	**5C-2874**	1	NUT (M5X0.8-THD)	
	50	3	**7Y-8165**	1	GROMMET	
	51	4	**7Y-8167**	1	GROMMET	
	52	3	**8J-1256**	1	CLIP	
	53	2	**8M-2770**	1	CLIP	

267-8000 **BATTERY & WIRING GP (*contd.*)** **i04557031**

NOTE	REF NO	GRAPHIC REF	PART NUMBER	QTY	PART NAME 1 2 3 4 5 6 (PRODUCT LEVEL)	SEE PAGE
M	54	3	**8T-0286**	1	BOLT (M5X0.8X8-MM)	
	55	3	**8T-0328**	2	WASHER-HARD (5.5X10X1-MM THK)	
	56	1,2,3,4,5	**8T-4121**	59	WASHER-HARD (11X21X2.5-MM THK)	
M	57	2	**8T-4133**	1	NUT (M10X1.5-THD)	
M	58	2,5	**8T-4136**	10	BOLT (M10X1.5X25-MM)	
M	59	1,2,3,4,5	**8T-4137**	35	BOLT (M10X1.5X20-MM)	
M	60	2,3	**8T-4182**	2	BOLT (M10X1.5X45-MM)	
M	61	2,5	**8T-4185**	2	BOLT (M10X1.5X50-MM)	
M	62	2,3	**8T-4191**	3	BOLT (M10X1.5X16-MM)	
M	63	2,3,5	**8T-4195**	5	BOLT (M10X1.5X30-MM)	
M	64	2	**8T-4196**	1	BOLT (M10X1.5X35-MM)	
M	65	3	**8T-4199**	1	BOLT (M8X1.25X12-MM)	
	66	2	**8T-4226**	1	WASHER-PLATED (10.5X45X3-MM THK)	
M	67	5	**8T-6466**	1	BOLT (M10X1.5X60-MM)	
M	68	3	**8T-6912**	2	BOLT (M8X1.25X50-MM)	
	69	5	**299-2767**	1	WIRE AS	
	70	3	**177-2215**	1	STRAP-DUAL CLAMP	

C - CHANGE FROM PREVIOUS TYPE
D - ORDER BY THE METER
E - ORDER BY THE CENTIMETER
M - METRIC PART

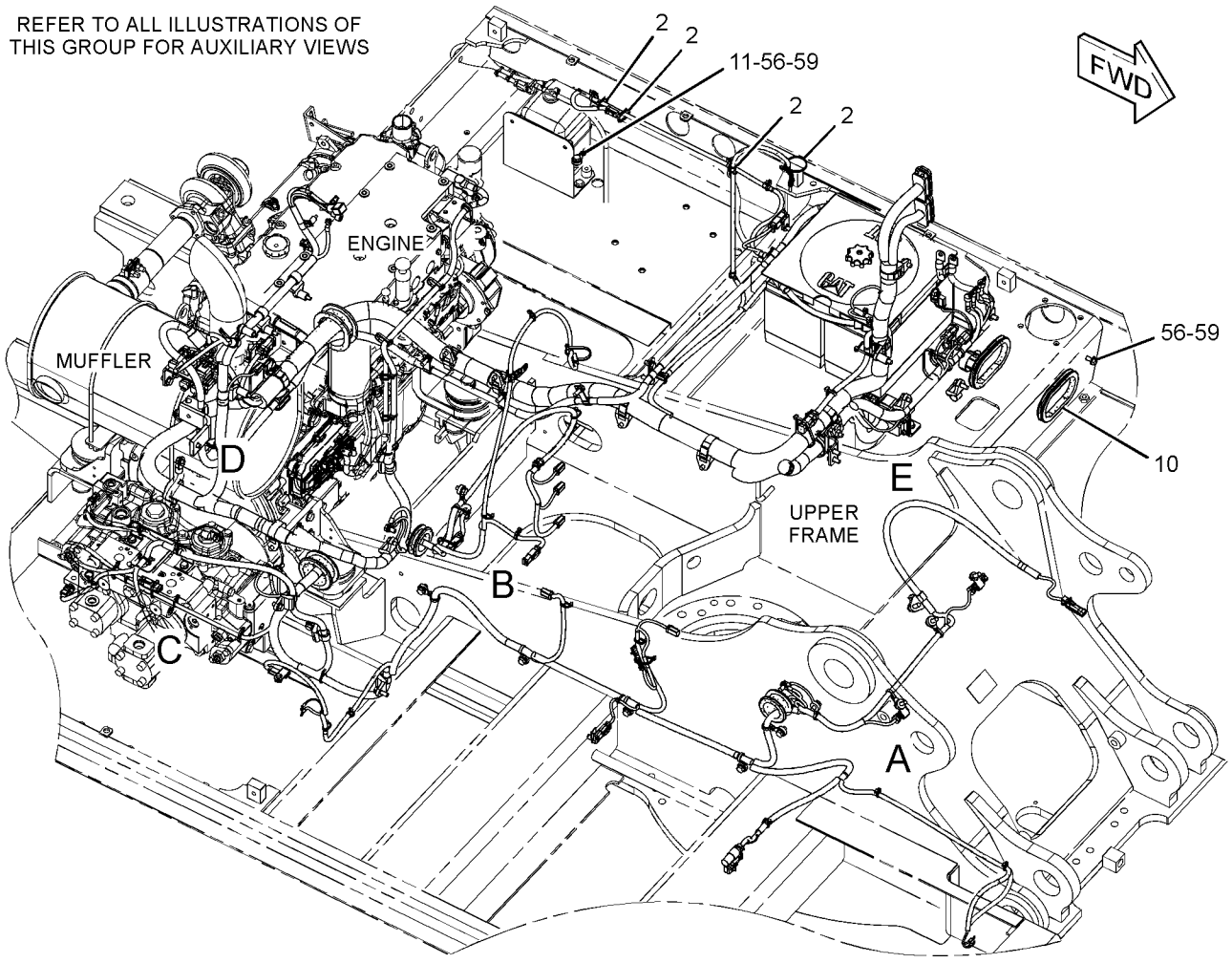

GRAPHIC #1 g02896469

267-8000 **BATTERY & WIRING GP (*contd.*)** **i04557031**

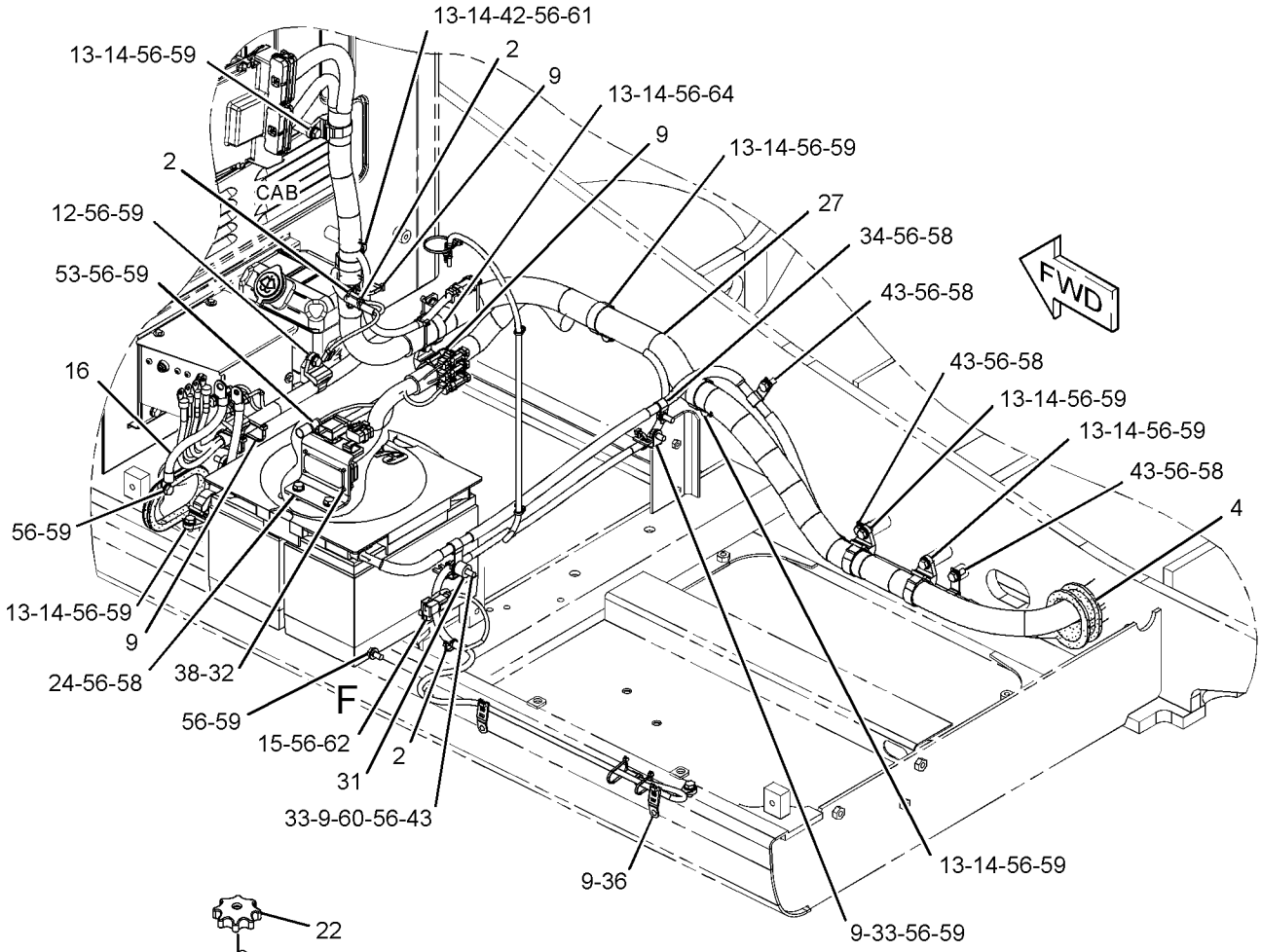

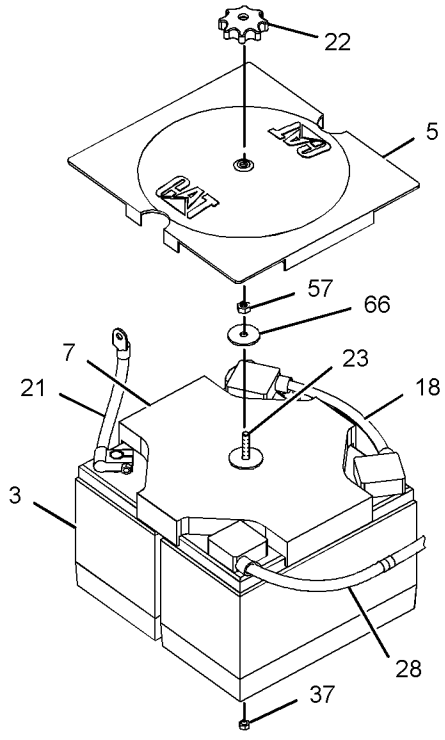

VIEW OF AREA F

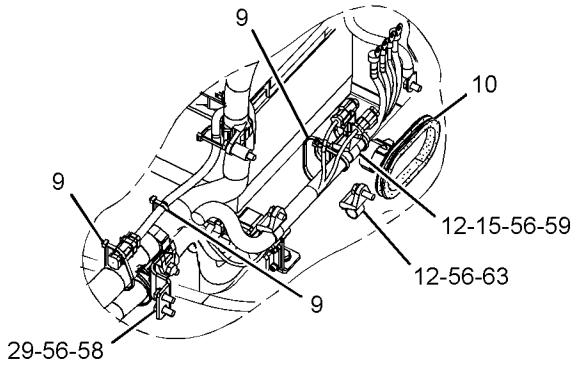

VIEW OF AREA E

GRAPHIC #2 g01374371

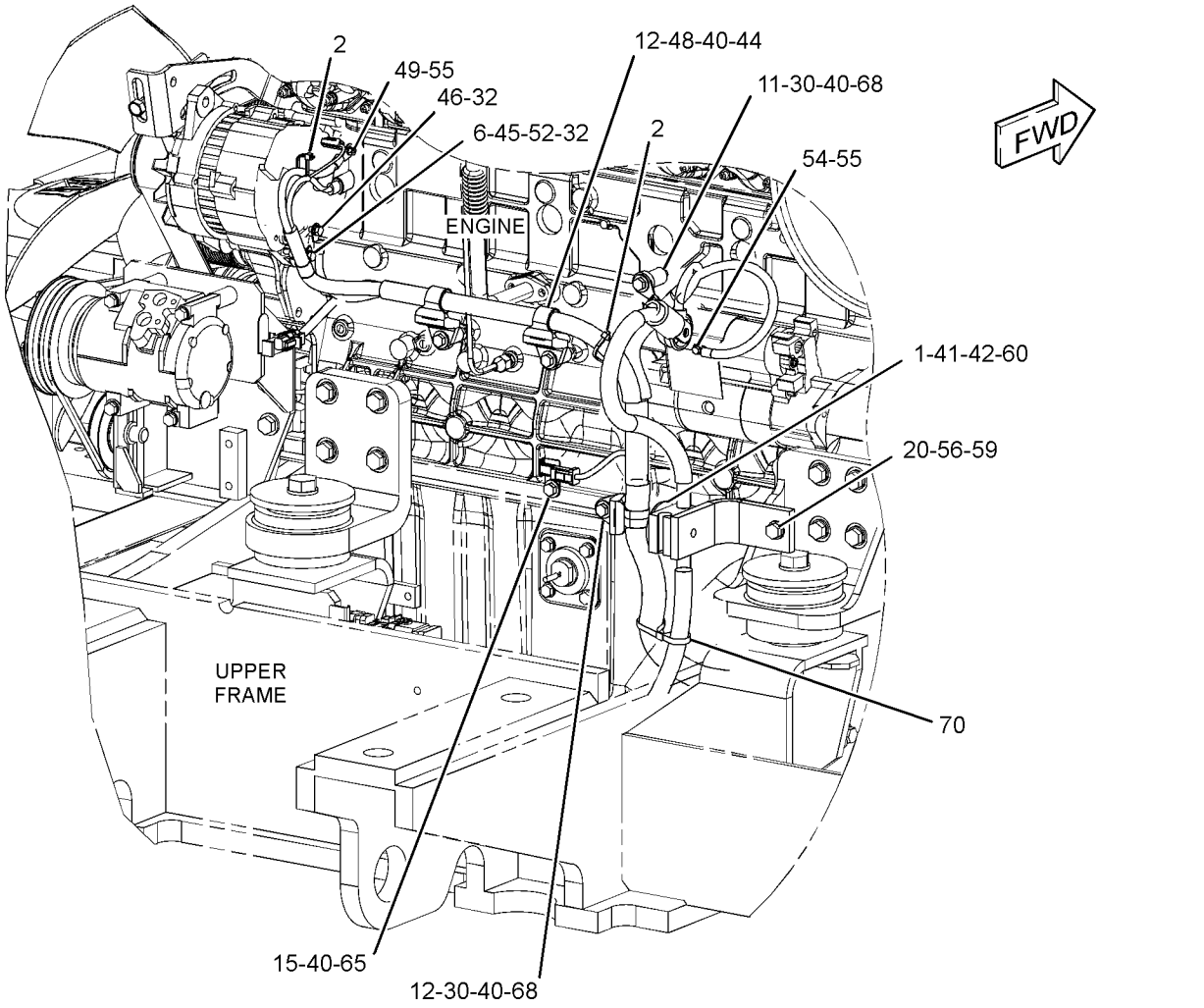

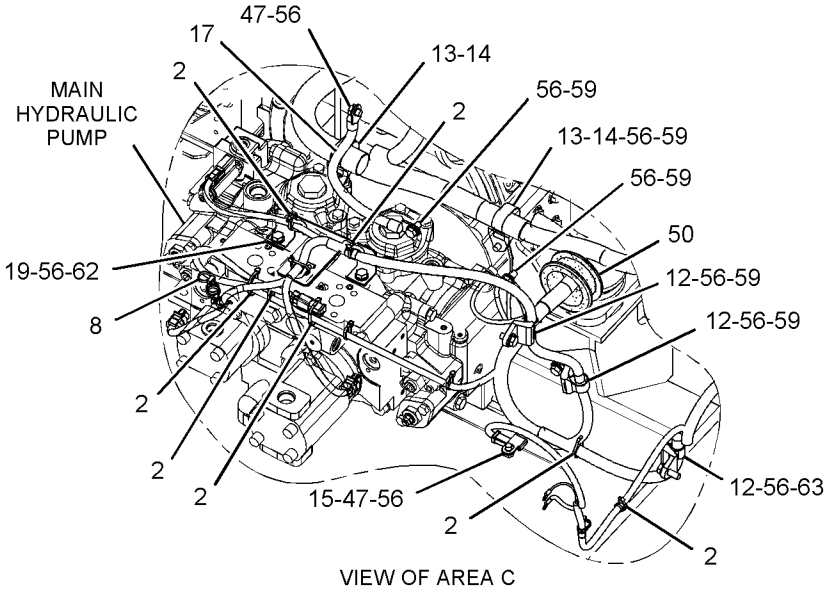

GRAPHIC #3 g02899197

267-8000 **BATTERY & WIRING GP (*contd.*)** **i04557031**

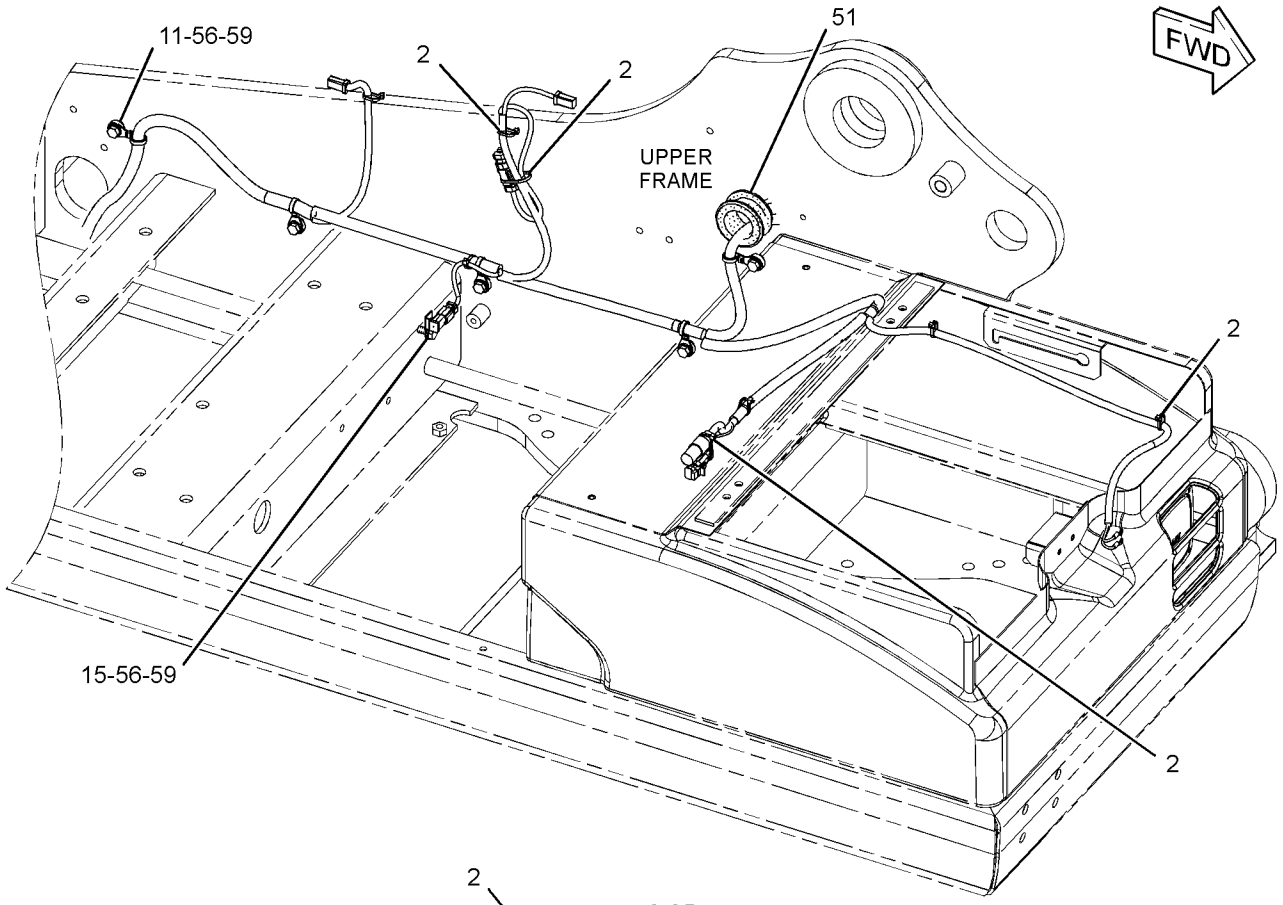

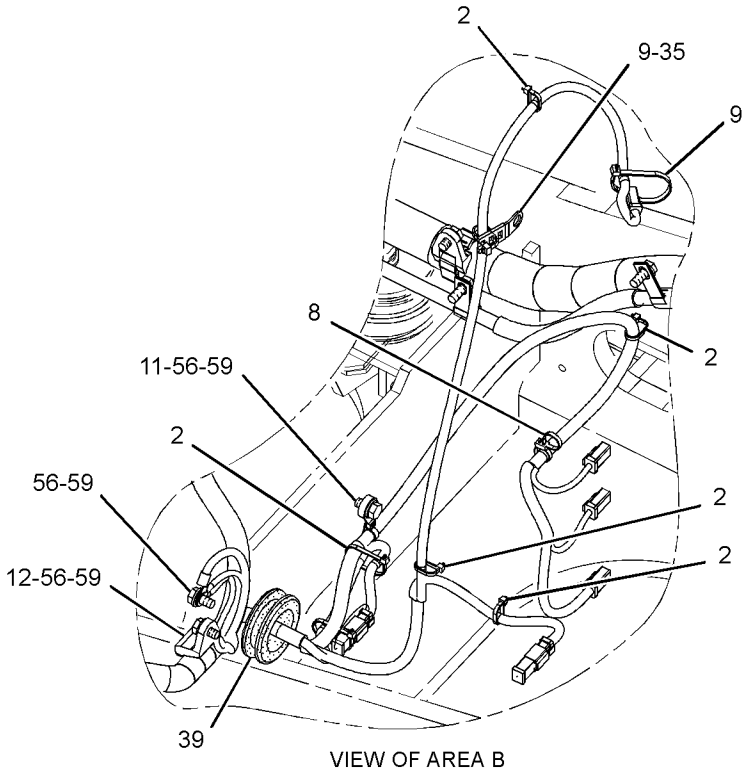

VIEW OF AREA B

GRAPHIC #4 g01514573

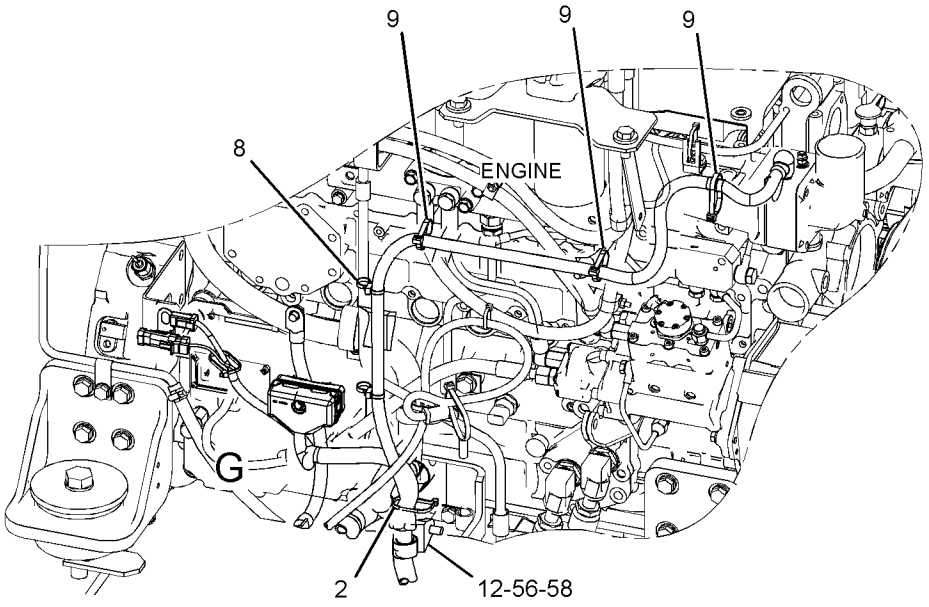

FRONT VIEW
(UPPER LEFT)

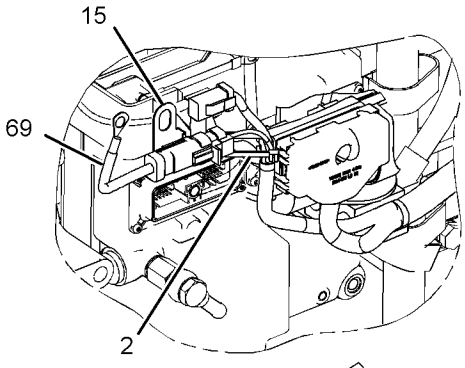

VIEW OF AREA G

90°

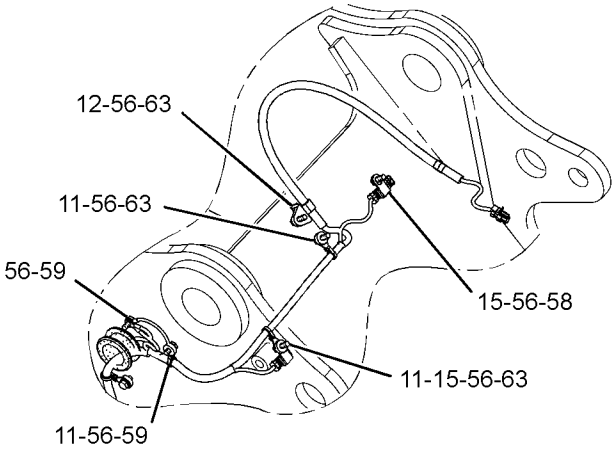

VIEW OF AREA A

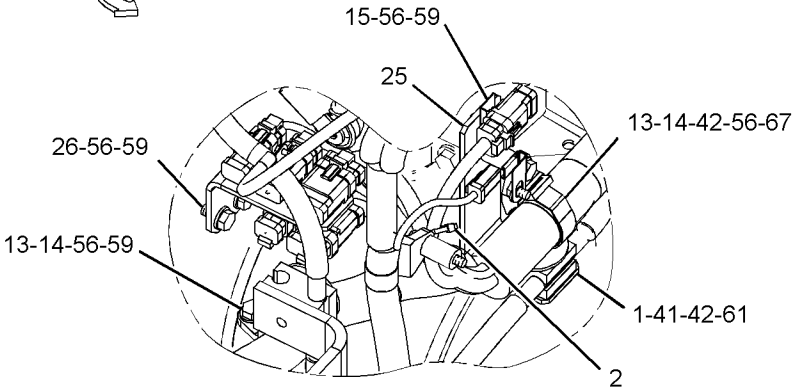

VIEW OF AREA D

GRAPHIC #5 **<END>** g02899356

299-2783 BATTERY & WIRING GP–COLD WEATHER

S/N: KGF1-UP; FAL1-UP

PART OF 338-9908, 338-9923, 359-2298, 359-2299, 359-2404, 359-2405, 367-8686, 367-8809, 367-8810, 379-7219, 379-7220, 379-7226, 379-7227, 379-7228, 379-7269, 379-7270, 385-4136, 396-6826, 396-6827, 396-6828 DISTRIBUTION AR, 338-9925, 351-9691, 359-2264 OPTION AR-COLD WEATHER, 338-9924, 351-9690, 359-2263, 367-8812, 367-8814, 379-7297, 379-7298, 379-7299, 379-7300 OPTION AR-REGIONAL

AN ATTACHMENT

SMCS-1401, 1402, 1408 **i03002064**

NOTE	REF NO	GRAPHIC REF	PART NUMBER	QTY	PART NAME 1 2 3 4 5 6 (PRODUCT LEVEL)	SEE PAGE
	1	1	**5I-8270**	1	COVER-BATTERY	
	2	1	**6W-6005**	1	HOLD-DOWN-BATTERY	
	3	1	**263-9574**	4	BATTERY GP (12-VOLT, MAINTENANCE FREE)	
	4	1	**170-6929**	1	CABLE AS	
E		1	**5P-0761**		CABLE (00-GA, RED) (31-CM)	
		1	**9G-0002**	1	COVER AS-TERMINAL (RED)	
		1	**8L-8413**	1	STRAP-CABLE	
		1	**9G-0005**	1	COVER AS-TERMINAL (BLACK)	
		1	**8L-8413**	1	STRAP-CABLE	
		1	**8C-5918**	1	TERMINAL AS (NEGATIVE) (RH)	
		1	**1M-6119**	1	BOLT (5/16-18X1.375-IN)	
		1	**1M-6120**	1	NUT (5/16-18-THD)	
		1	**8T-9756**	1	TERMINAL AS (POSITIVE) (LH)	
		1	**1M-6119**	1	BOLT (5/16-18X1.375-IN)	
		1	**1M-6120**	1	NUT (5/16-18-THD)	
	5	1	**204-1673**	1	STRAP-CABLE	
	6	1	**238-2501**	1	KNOB	
	7	1	**238-2528**	1	ROD	
	8	1	**259-5225**	1	SUPPORT AS	
	9	1	**259-5229**	1	CABLE AS	
		1	**1S-7252**	1	TERMINAL-CABLE (00-GA, 3/8-IN SCREW)	
E		1	**5P-0747**		CABLE (00-GA, BLACK) (89-CM)	
		1	**9G-0003**	1	COVER AS-TERMINAL (BLACK)	
		1	**8L-8413**	1	STRAP-CABLE	
		1	**8T-9757**	1	TERMINAL AS-BATTERY (NEGATIVE) (LH)	
		1	**1M-6119**	1	BOLT (5/16-18X1.375-IN)	
		1	**1M-6120**	1	NUT (5/16-18-THD)	
Y	10	1	**289-6712**	1	SHEET AS-SOUND SUPPRESSION	838
	11	1	**291-7592**	1	CABLE AS	
		1	**1S-7252**	1	TERMINAL-CABLE (00-GA, 3/8-IN SCREW)	
E		1	**5P-0761**		CABLE (00-GA, RED) (281-CM)	
D		1	**6V-2722**		TUBE-HEAT SHRINK (25.4-MM DIA) (1-M)	
		1	**9G-0004**	1	COVER AS-TERMINAL (RED)	
		1	**8L-8413**	1	STRAP-CABLE	
		1	**8C-5917**	1	TERMINAL AS-BATTERY (POSITIVE) (RH)	
		1	**1M-6119**	1	BOLT (5/16-18X1.375-IN)	
		1	**1M-6120**	1	NUT (5/16-18-THD)	
	12	1	**4K-8864**	3	CLIP	
M	13	1	**5C-7261**	1	NUT (M8X1.25-THD)	
	14	1	**6K-8178**	2	CLIP	
	15	1	**8T-4121**	1	WASHER-HARD (11X21X2.5-MM THK)	
M	16	1	**8T-4133**	1	NUT (M10X1.5-THD)	
M	17	1	**8T-4191**	1	BOLT (M10X1.5X16-MM)	
M	18	1	**8T-4192**	4	BOLT (M12X1.75X25-MM)	
	19	1	**8T-4223**	4	WASHER-HARD (13.5X25.5X3-MM THK)	
	20	1	**8T-4226**	1	WASHER-PLATED (10.5X45X3-MM THK)	

D - ORDER BY THE METER
E - ORDER BY THE CENTIMETER
M - METRIC PART
Y - SEPARATE ILLUSTRATION

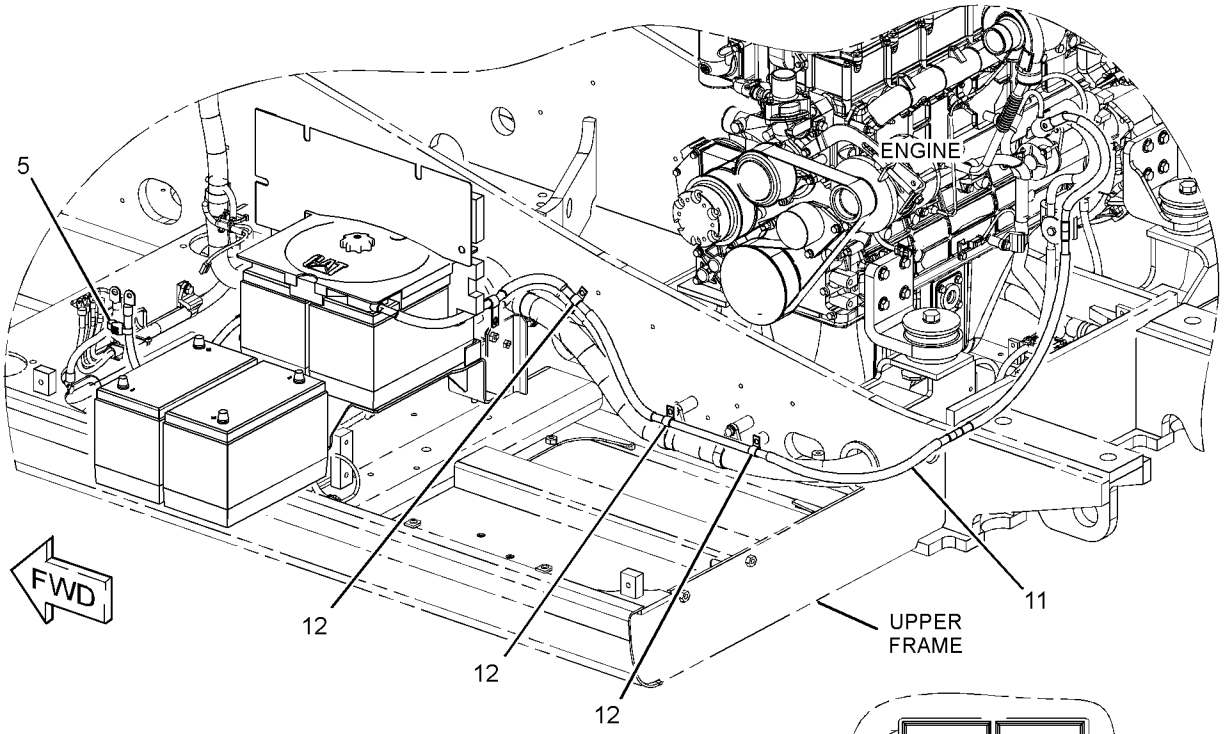

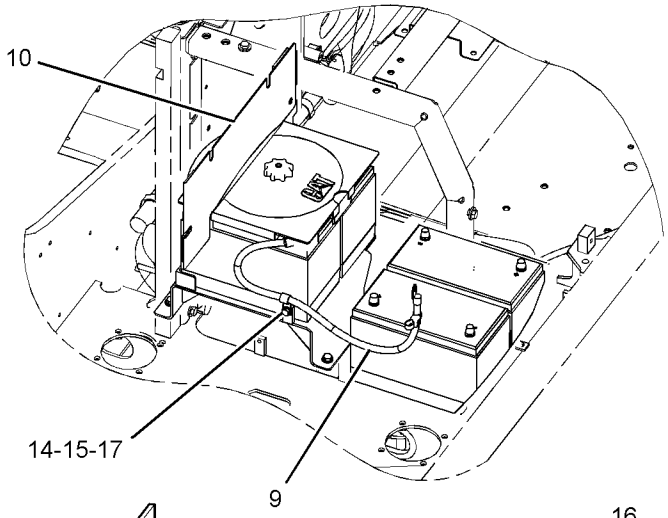

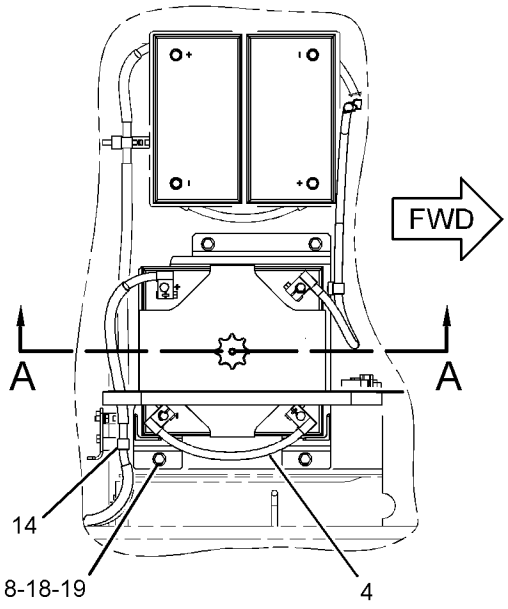

TOP VIEW

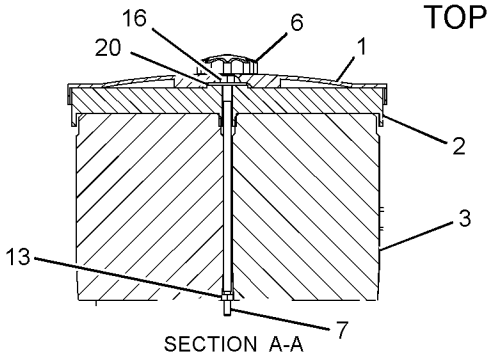

SECTION A-A

GRAPHIC #1 **<END>** g01506303

9W-0742 BLOCK GP-JUNCTION–BATTERY

S/N: KGF1-UP; FAL1-UP
PART OF 259-5051 WIRING GP-ENGINE
AN ATTACHMENT
TYPE 1

SMCS-7426 **i04894278**

NOTE	REF NO	GRAPHIC REF	PART NUMBER	QTY	PART NAME 1 2 3 4 5 6 (PRODUCT LEVEL)	SEE PAGE
	1	1	**8C-6358**	1	BLOCK AS-JUNCTION (BATTERY)	
	1A	1	**8T-3519**	3	BOLT-BRONZE (1/2-13X2-IN)	
		1	**1D-5117**	3	NUT-JAM (1/2-13-THD)	
BD	2	1	**6V-2722**		TUBE-HEAT SHRINK (25.4-MM DIA)	
	3	1	**7F-0560**	6	WASHER (0.516X0.938X0.101-IN THK)	
	4	1	**8T-3518**	6	NUT-FULL (1/2-13-THD)	

B - USE AS REQUIRED
D - ORDER BY THE METER

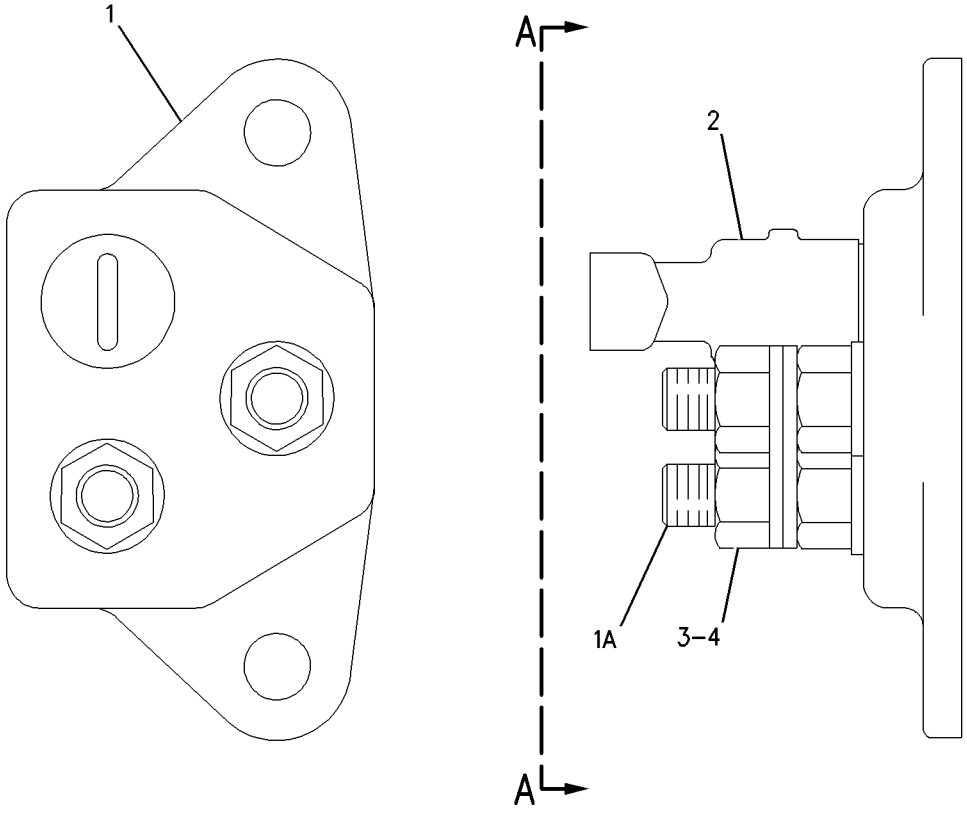

VIEW A-A

GRAPHIC #1 **<END>** g00650721

9W-0742 BLOCK GP-JUNCTION–BATTERY

S/N: KGF1-UP; FAL1-UP
PART OF 259-5051 WIRING GP-ENGINE
AN ATTACHMENT
TYPE 2

SMCS-7426 **i05240875**

NOTE	REF NO	GRAPHIC REF	PART NUMBER	QTY	PART NAME 1 2 3 4 5 6 (PRODUCT LEVEL)	SEE PAGE
C	1	1	**391-1322**	1	BLOCK AS-JUNCTION	
C	2	1	**7F-0560**	2	WASHER (0.516X0.938X0.101-IN THK)	
C	3	1	**391-1324**	1	COVER-TERMINAL	
C	4	1	**8T-3518**	2	NUT-FULL (1/2-13-THD)	

C - CHANGE FROM PREVIOUS TYPE

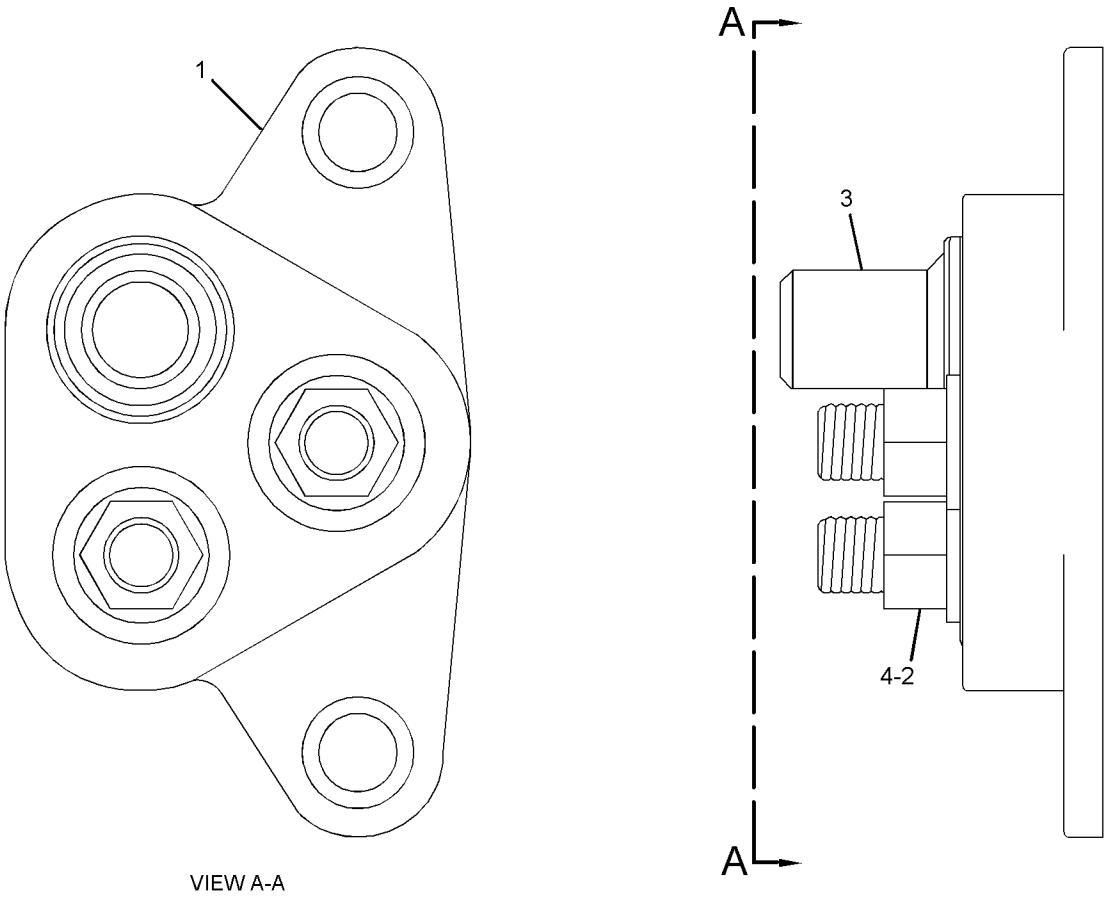

VIEW A-A

GRAPHIC #1 **<END>** g03339705

313-7833 CAMERA & MOUNTING GP—WORK AREA VISUAL SYSTEM, REAR

S/N: KGF1-UP; FAL1-UP
PART OF 327-3329 MOUNTING GP-CAMERA
AN ATTACHMENT

SMCS-7348 **i04097729**

NOTE	REF NO	GRAPHIC REF	PART NUMBER	QTY	PART NAME 1 2 3 4 5 6 (PRODUCT LEVEL)	SEE PAGE
	1	1	**3S-2093**	1	STRAP-CABLE	
Y	2	1	**336-6684**	1	CAMERA GP (12-VOLT, 24-VOLT) (WORK AREA VISUAL SYSTEM, REAR)	442
	3	1	**320-5392**	1	BRACKET AS	
M	4	1	**5C-9553**	2	BOLT (M6X1X16-MM)	
	5	1	**9X-8256**	2	WASHER (6.6X12X2-MM THK)	

M - METRIC PART
Y - SEPARATE ILLUSTRATION

313-7833 **CAMERA & MOUNTING GP (*contd.*)** **i04097729**

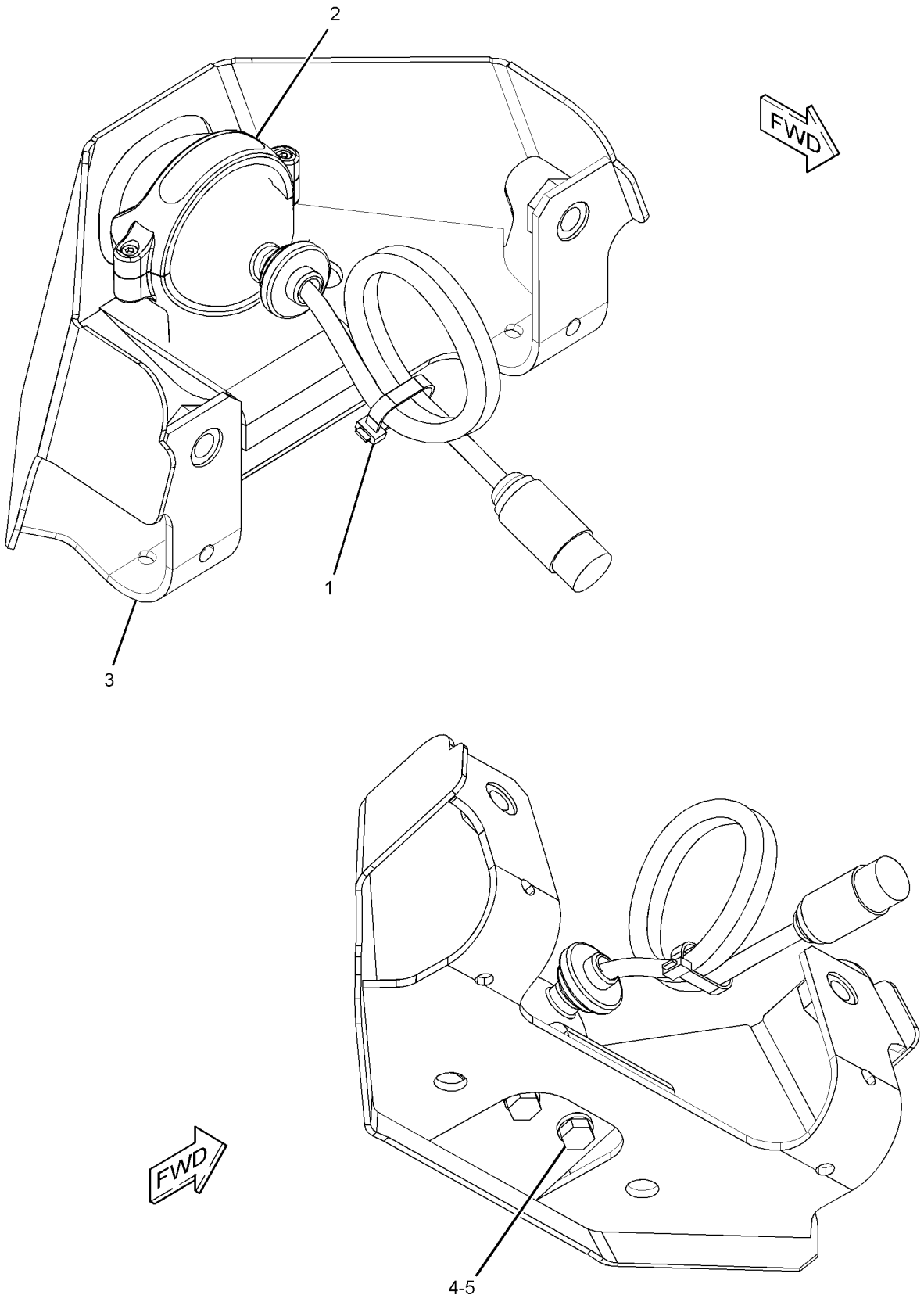

GRAPHIC #1 **<END>** g02034396

314-3735 CAMERA AR

S/N: KGF1-UP; FAL1-UP
FOR USE WITH 327-6552–PAGE: 2169, 327-6553–PAGE: 2170
PART OF 314-3859, 314-3860, 314-3861, 314-3862, 314-3905 DISTRIBUTION AR, 347-3363, 347-3364 OPTION AR-ELECTRICAL
AN ATTACHMENT

SMCS-7348 **i03162016**

NOTE	PART NUMBER	QTY	PART NAME 1 2 3 4 5 6 (PRODUCT LEVEL)	SEE PAGE
Y	*314-3774*	1	CAMERA AR (WORK AREA VISUAL SYSTEM)	441
Y	*330-1194*	1	MACHINE AR	74

Y - SEPARATE ILLUSTRATION

<END>

314-3774 CAMERA AR–WORK AREA VISUAL SYSTEM

S/N: KGF1-UP; FAL1-UP
PART OF 314-3735 CAMERA AR
AN ATTACHMENT

SMCS-7348 **i03142740**

NOTE	PART NUMBER	QTY	PART NAME 1 2 3 4 5 6 (PRODUCT LEVEL)	SEE PAGE
Y	*327-3329*	1	MOUNTING GP-CAMERA	498
Y	*303-2787*	1	FILM GP (WORK AREA VISUAL SYSTEM, REAR)	2296
Y	*328-0048*	1	WIRING GP-CAB RISER (WORK AREA VISUAL SYSTEM, REAR)	583
Y	*324-5774*	1	WIRING GP-CAMERA (REAR VISION CAMERA)	584

Y - SEPARATE ILLUSTRATION

<END>

336-6684 CAMERA GP—WORK AREA VISUAL SYSTEM, REAR

S/N: KGF1-UP; FAL1-UP
12-VOLT/24-VOLT
PART OF 313-7833 CAMERA & MOUNTING GP
AN ATTACHMENT

SMCS-7348 **i03757691**

NOTE	REF NO	GRAPHIC REF	PART NUMBER	QTY	PART NAME 1 2 3 4 5 6 (PRODUCT LEVEL)	SEE PAGE
					AVAILABLE REPAIR KIT(S):	
			251-4162	1	KIT-BRACKET (CAMERA)	
					(INCLUDES BRACKET, BOLTS, LOCK NUTS, GASKET & ALLEN KEY)	

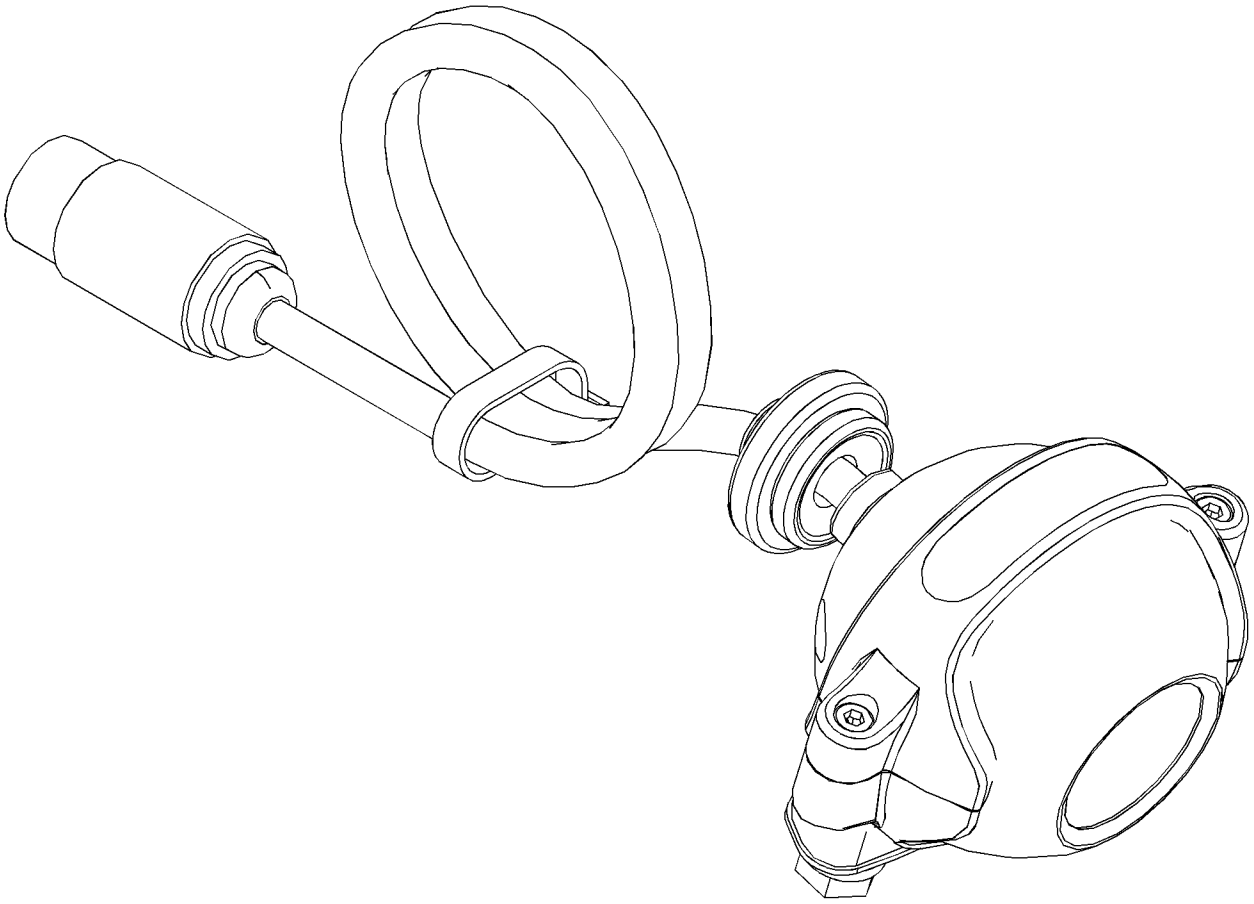

GRAPHIC #1 **<END>** g02034339

247-5284 CONTROL & MTG GP-COMMUNICATION—PRODUCT LINK

S/N: KGF1-UP; FAL1-UP
PART OF 264-8665 INSTALLATION AR-COMMUNICATION
AN ATTACHMENT

SMCS-7606 **i03278820**

NOTE	REF NO	GRAPHIC REF	PART NUMBER	QTY	PART NAME 1 2 3 4 5 6 (PRODUCT LEVEL)	SEE PAGE
	1	1	**8C-5608**	4	SPACER (6.5X9.5X25.4-MM THK)	
	2	1	**9X-9896**	8	MOUNT (ISOLATION)	
Y	3	1	**239-9954**	1	CONTROL GP-UNPROGRAMMED (PRODUCT LINK 300)	453
	4	1	**260-2042**	1	BRACKET AS	
M	5	1	**8C-8451**	4	BOLT (M6X1X40-MM)	
	6	1	**9X-6165**	4	WASHER (6.5X22X2.5-MM THK)	

M - METRIC PART
Y - SEPARATE ILLUSTRATION

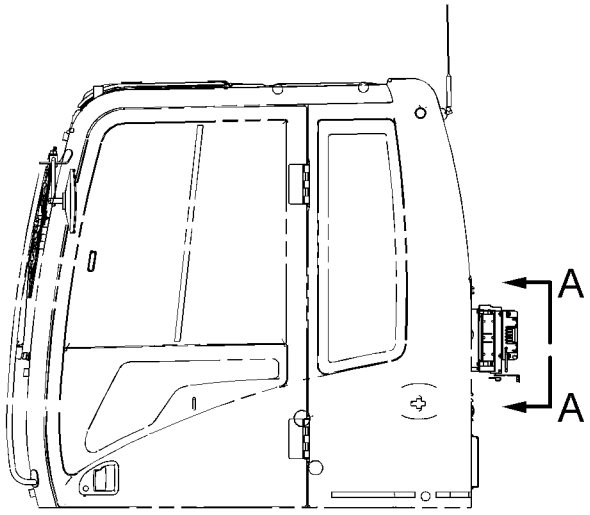

LEFT SIDE VIEW

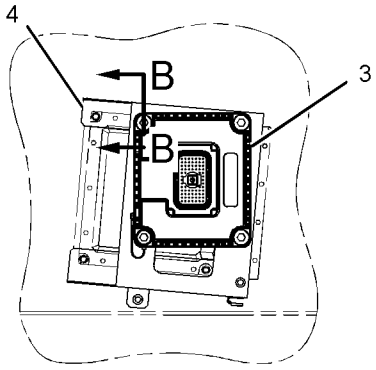

VIEW A-A

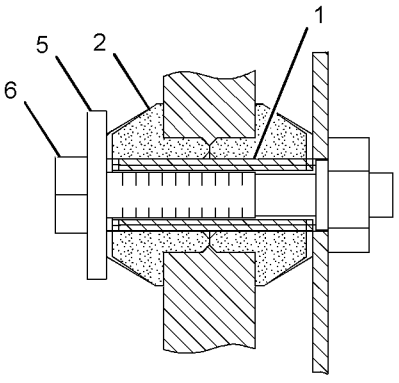

SECTION B-B

GRAPHIC #1 **<END>** g01126708

309-5842 CONTROL & MTG GP-COMMUNICATION–PRODUCT LINK

321SR

S/N: KGF1-UP; FAL1-UP

PART OF 298-4115 INSTALLATION AR-COMMUNICATION

AN ATTACHMENT

SMCS-7606 **i02898031**

NOTE	REF NO	GRAPHIC REF	PART NUMBER	QTY	PART NAME 1 2 3 4 5 6 (PRODUCT LEVEL)	SEE PAGE
	1	1	**8C-5608**	4	SPACER (6.5X9.5X25.4-MM THK)	
	2	1	**9X-9896**	8	MOUNT (ISOLATION)	
	3	1	**260-2042**	1	BRACKET AS	
Y	4	1	*262-1421*	1	ELECTRONICS GP-COMMUNICATION (PRODUCT LINK 300)	456
M	5	1	**8C-8451**	4	BOLT (M6X1X40-MM)	
	6	1	**9X-6165**	4	WASHER (6.5X22X2.5-MM THK)	

M - METRIC PART
Y - SEPARATE ILLUSTRATION

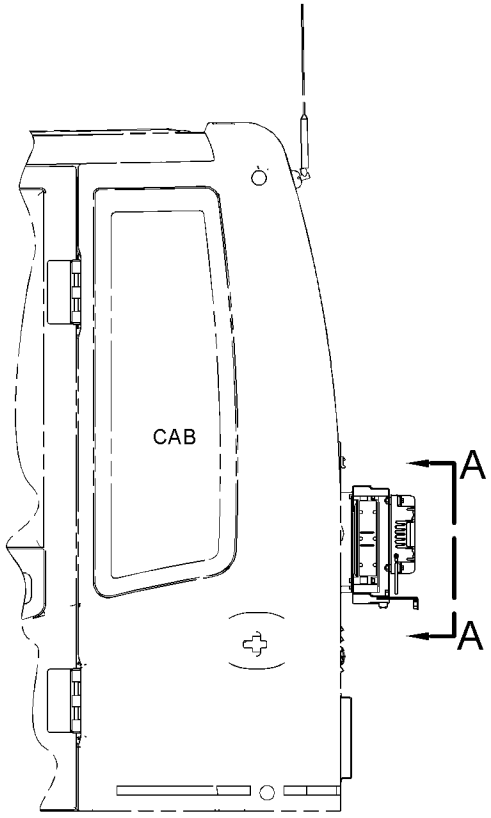

LEFT SIDE VIEW

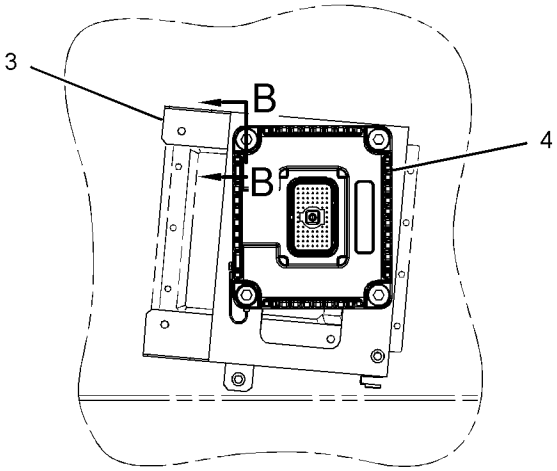

VIEW A-A

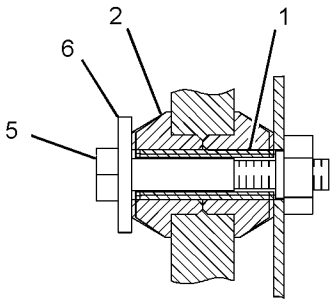

SECTION B-B

GRAPHIC #1 **<END>** g01447041

309-5881 CONTROL & MTG GP-COMMUNICATION—PRODUCT LINK

121SR

S/N: KGF1-UP; FAL1-UP

PART OF 298-4115, 298-4116 INSTALLATION AR-COMMUNICATION

AN ATTACHMENT

SMCS-7606 **i03413771**

NOTE	REF NO	GRAPHIC REF	PART NUMBER	QTY	PART NAME 1 2 3 4 5 6 (PRODUCT LEVEL)	SEE PAGE
	1	1	**3S-2093**	1	STRAP-CABLE	
	2	1	**7K-1181**	3	STRAP-CABLE	
Y	3	1	**263-9088**	1	RADIO GP-COMMUNICATION (PRODUCT LINK 121SR)	525
	4	1	**111-4836**	1	CLIP	
	5	1	**8T-4121**	1	WASHER-HARD (11X21X2.5-MM THK)	
M	6	1	**8T-4137**	1	BOLT (M10X1.5X20-MM)	
M	7	1	**8T-4138**	4	BOLT (M6X1X20-MM)	
	8	1	**9X-8256**	4	WASHER (6.6X12X2-MM THK)	
	9	1	**230-1340**	1	FILM-WARNING (PRODUCT LINK RADIO, U.S.)	
					—OR—	
		1	**230-1341**	1	FILM-WARNING (PRODUCT LINK RADIO, INTL)	
	10	1	**307-0047**	1	FILM-INFORMATION (PRODUCT LINK, READ OMM)	

M - METRIC PART
Y - SEPARATE ILLUSTRATION

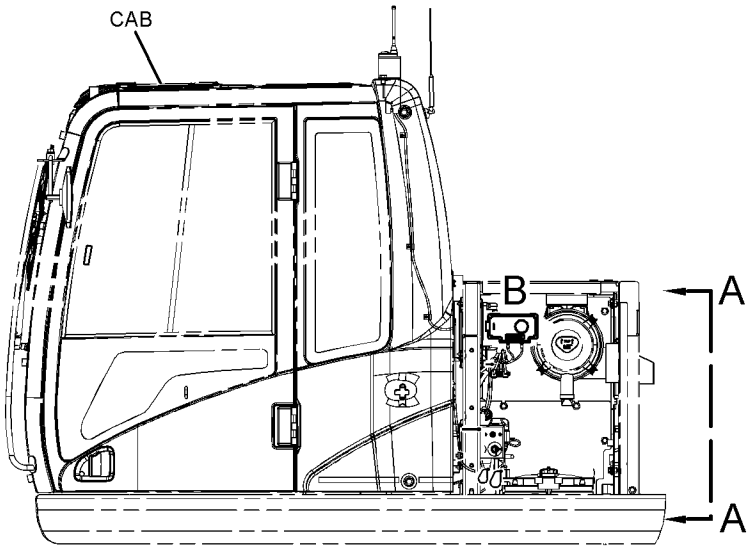

LEFT SIDE VIEW

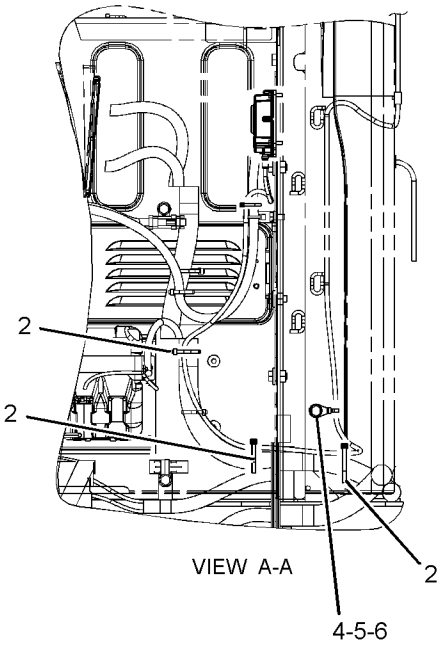

VIEW A-A

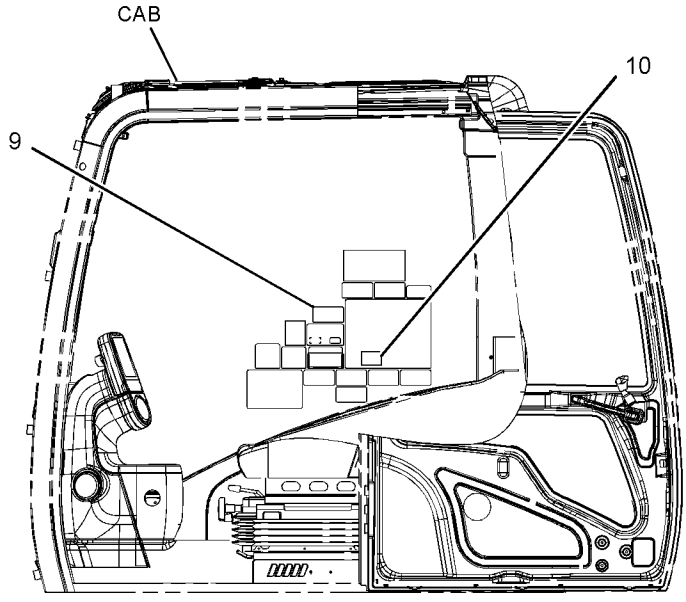

LEFT SIDE VIEW

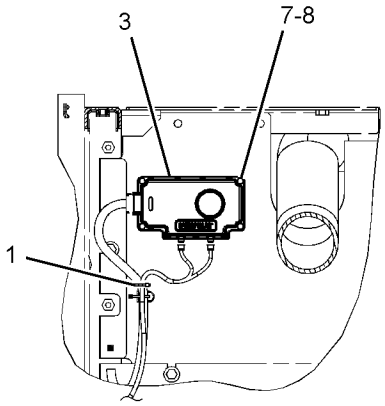

VIEW OF AREA B

GRAPHIC #1 **<END>** g01778333

366-9353 CONTROL & MTG GP-COMMUNICATION—PRODUCT LINK CELLULAR

S/N: KGF1-UP; FAL1-UP
PART OF 367-8780 CONTROL AR-COMMUNICATION
AN ATTACHMENT

SMCS-7606 **i04507950**

NOTE	REF NO	GRAPHIC REF	PART NUMBER	QTY	PART NAME 1 2 3 4 5 6 (PRODUCT LEVEL)	SEE PAGE
	1	1	**8C-5608**	4	SPACER (6.5X9.5X25.4-MM THK)	
	2	1	**9X-9896**	8	MOUNT (ISOLATION)	
	3	1	**373-8962**	1	BRACKET AS	
Y	4	1	*376-4616*	1	CONTROL GP-COMMUNICATION (PRODUCT LINK CELLULAR, CHINA)	451
M	5	1	**8C-8451**	4	BOLT (M6X1X40-MM)	
	6	1	**9X-6165**	4	WASHER (6.5X22X2.5-MM THK)	
	7	1	**230-1341**	1	FILM-WARNING (PRODUCT LINK RADIO, INTL)	
	8	1	**307-0047**	1	FILM-INFORMATION (PRODUCT LINK, READ OMM)	

M - METRIC PART
Y - SEPARATE ILLUSTRATION

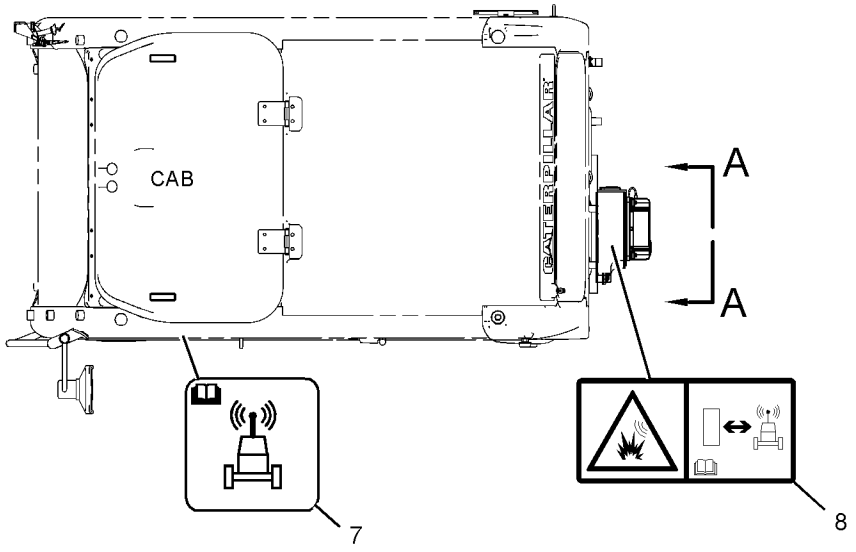

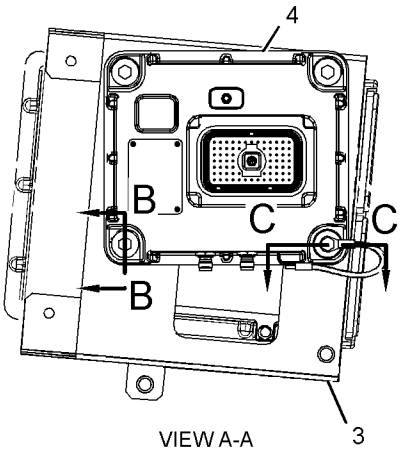

VIEW A-A



TOP VIEW

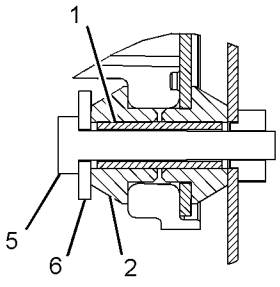

SECTION B-B

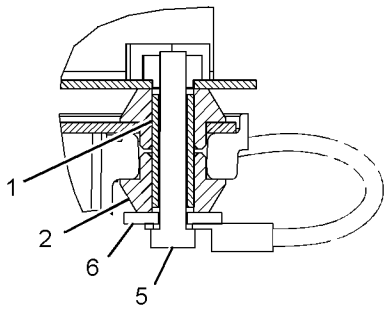

SECTION C-C

GRAPHIC #1 **<END>** g02683703

381-7372 CONTROL & MTG GP-COMMUNICATION–PRODUCT LINK CELLULAR

S/N: KGF1-UP; FAL1-UP
PART OF 379-7062 CONTROL AR-COMMUNICATION
AN ATTACHMENT

SMCS-7606 **i05190511**

NOTE	REF NO	GRAPHIC REF	PART NUMBER	QTY	PART NAME 1 2 3 4 5 6 (PRODUCT LEVEL)	SEE PAGE
	1	1	**8C-5608**	4	SPACER (6.5X9.5X25.4-MM THK)	
	2	1	**9X-9896**	8	MOUNT (ISOLATION)	
	3	1	**373-8962**	1	BRACKET AS	
Y	4	1	*376-6478*	1	CONTROL GP-COMMUNICATION (PRODUCT LINK CELLULAR)	452
M	5	1	**8C-8451**	4	BOLT (M6X1X40-MM)	
	6	1	**9X-6165**	4	WASHER (6.5X22X2.5-MM THK)	
	7	1	**230-1340**	1	FILM-WARNING (PRODUCT LINK RADIO, U.S.)	
					–OR–	
	8	1	**230-1341**	1	FILM-WARNING (PRODUCT LINK RADIO, INTL)	
	9	1	**307-0047**	1	FILM-INFORMATION (PRODUCT LINK, READ OMM)	

M - METRIC PART
Y - SEPARATE ILLUSTRATION

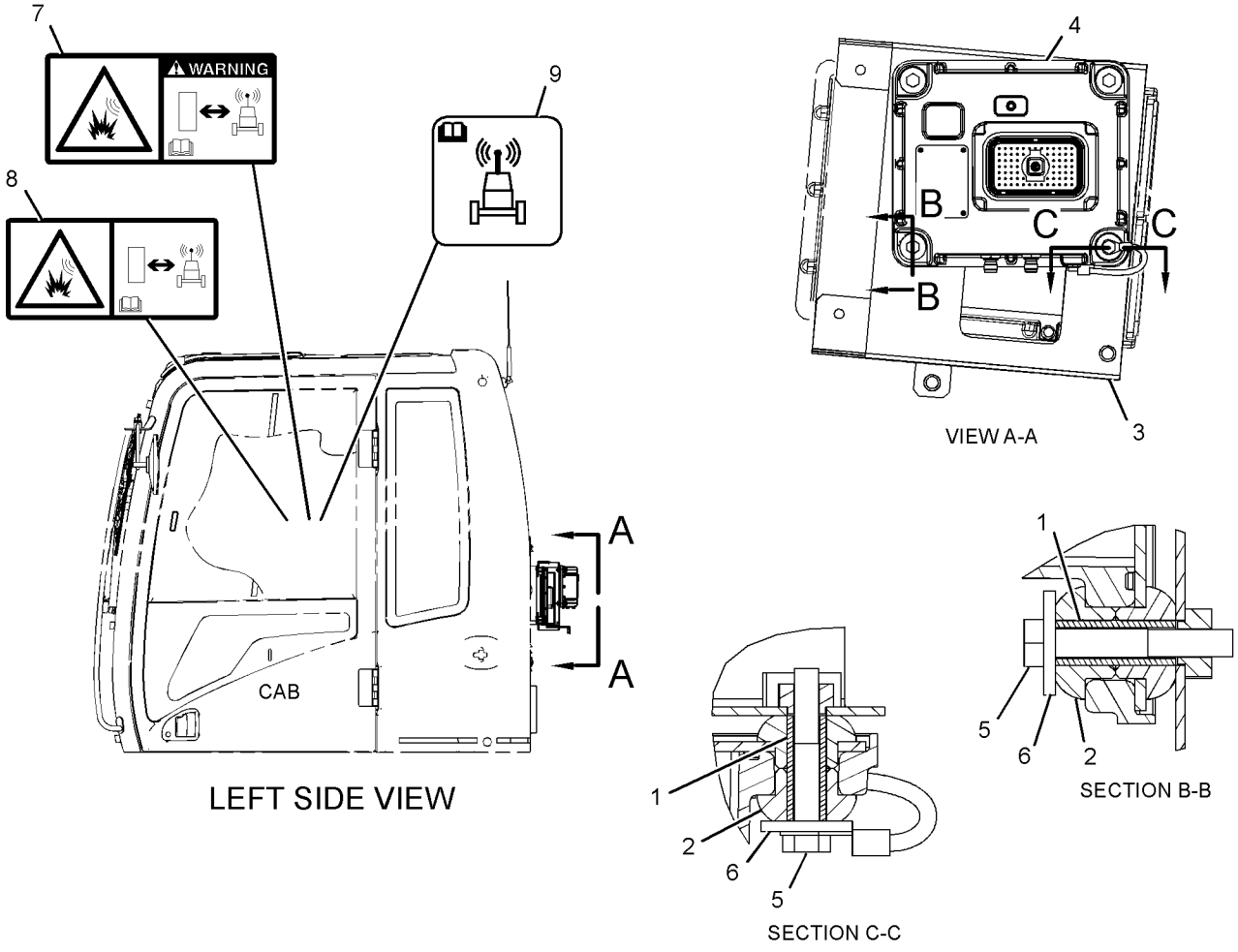

GRAPHIC #1 **<END>** g02684239

296-4664 CONTROL & MTG GP-ENGINE ELEK

S/N: GDC1-UP

PART OF 272-4677, 272-4683, 296-4676, 296-4687, 305-4777 ENGINE AR, 327-7199 ENGINE AR-PRIMARY

ALSO AN ATTACHMENT

SMCS-1901 **i04802381**

NOTE	REF NO	GRAPHIC REF	PART NUMBER	QTY	PART NAME 1 2 3 4 5 6 (PRODUCT LEVEL)	SEE PAGE
	1	1	**274-6721**	1	SENSOR GP-PRESSURE (ENGINE OIL)	
	2	1	**296-4632**	1	BRACKET	
	3	1	**155-0576**	8	MOUNT-ISOLATION	
	4	1	**6I-1418**	4	SPACER (8.2X12.7X28.7-MM THK)	
	5	1	**294-1775**	2	BOLT (M10X1.5X23-MM)	
M	6	1	**178-6577**	2	BOLT (M8X1.25X100-MM)	
	7	1	**270-6259**	2	BOLT (M8X1.25X40-MM)	
	8	1	**8T-4224**	4	WASHER-HARD (8.8X16X2-MM THK)	
	9	1	**294-1804**	1	SEAL-O-RING	
M	10	1	**8T-4137**	1	BOLT (M10X1.5X20-MM)	
	11	1	**296-4635**	1	BRACKET	
R	12	1	**331-7539**	1	CONTROL GP-UNPROGRAMMED	
	13	1	**3B-4505**	2	LOCKWASHER	

M - METRIC PART
R - REMFG PART MAY BE AVAILABLE

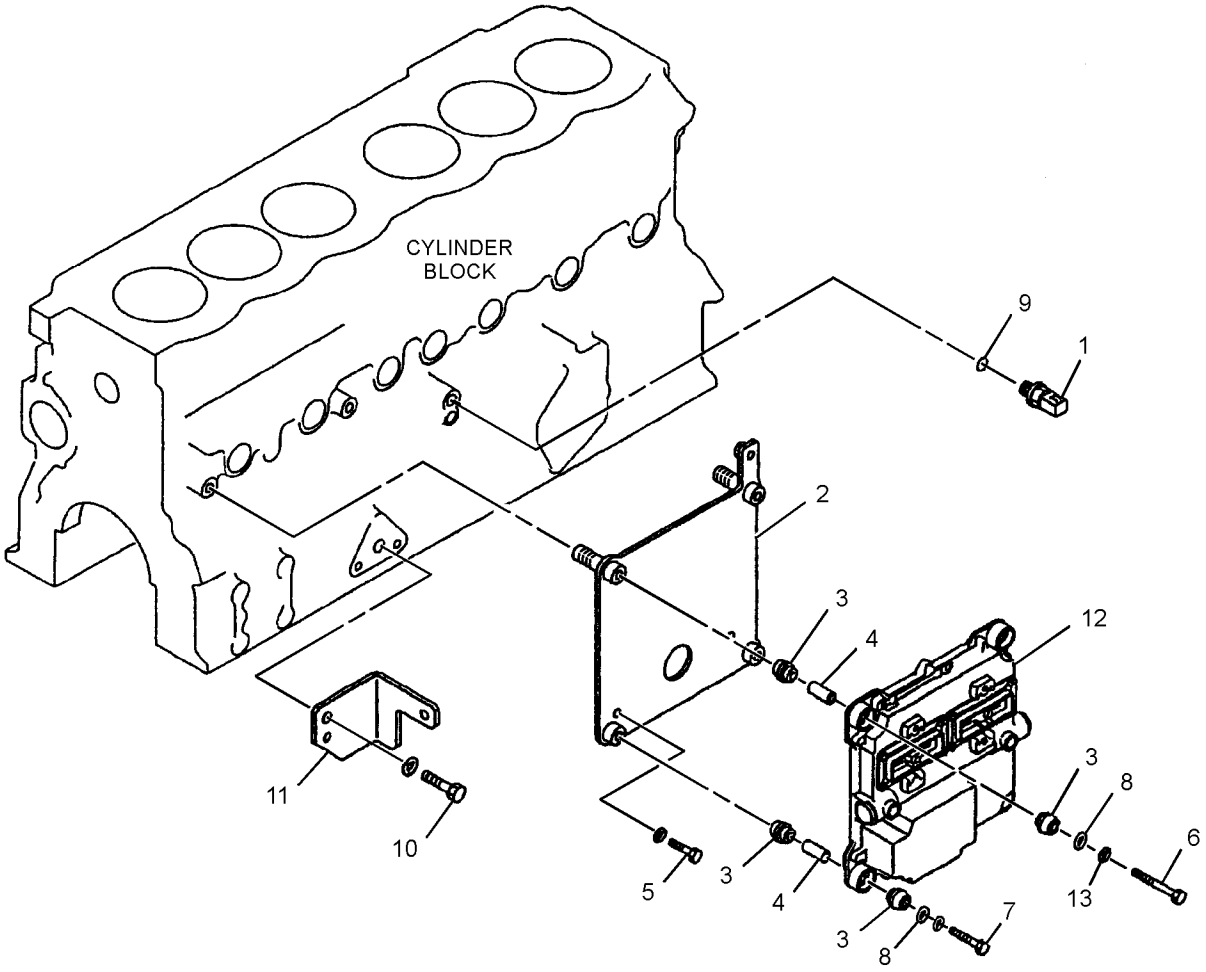

GRAPHIC #1 **<END>** g01356929

221-8872 CONTROL & MTG GP-MACHINE

S/N: KGF1-UP; FAL1-UP

PART OF 273-5387, 327-6568 OPERATOR AR

SMCS-1931, 7600 **i04991732**

NOTE	REF NO	GRAPHIC REF	PART NUMBER	QTY	PART NAME 1 2 3 4 5 6 (PRODUCT LEVEL)	SEE PAGE
	1	1	**366-8821**	1	CONTROL GP-UNPROGRAMMED	
M	2	1	**7X-2534**	4	BOLT (M6X1X50-MM)	
	3	1	**9X-8256**	4	WASHER (6.6X12X2-MM THK)	

M - METRIC PART

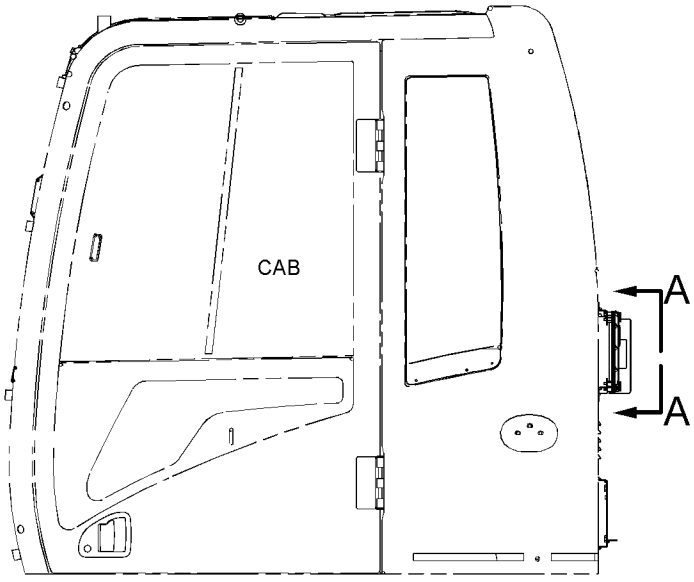

LEFT SIDE VIEW

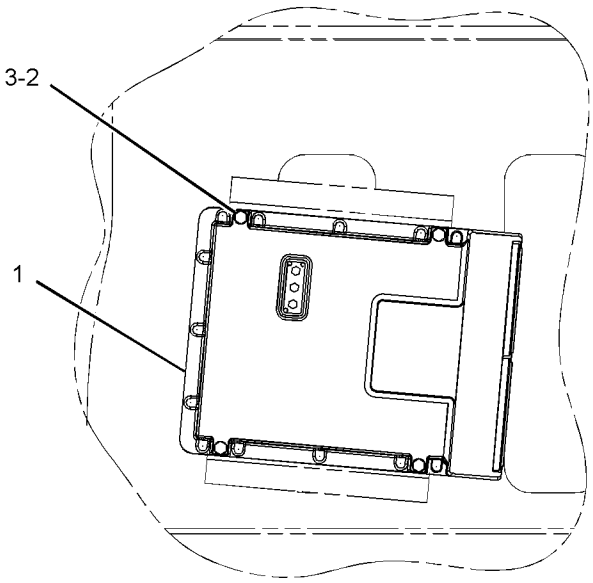

VIEW A-A

GRAPHIC #1 **<END>** g01150750

367-8780 CONTROL AR-COMMUNICATION—PRODUCT LINK CELLULAR

S/N: KGF1-UP; FAL1-UP

PART OF 367-8798, 367-8799, 367-8800, 367-8807, 385-4030, 385-4031, 385-4032, 385-4033 DISTRIBUTION AR

AN ATTACHMENT

SMCS-1400, 7600 **i05197190**

NOTE	PART NUMBER	QTY	PART NAME 1 2 3 4 5 6 (PRODUCT LEVEL)	SEE PAGE
Y	*366-9353*	1	CONTROL & MTG GP-COMMUNICATION (PRODUCT LINK CELLULAR)	447
Y	*366-9355*	1	MOUNTING GP-ANTENNA (PRODUCT LINK)	2182
Y	*366-9348*	1	WIRING GP-COMMUNICATION (PRODUCT LINK)	602

Y - SEPARATE ILLUSTRATION

<END>

379-7062 CONTROL AR-COMMUNICATION—PRODUCT LINK CELLULAR

S/N: KGF1-UP; FAL1-UP

PART OF 379-7217, 379-7223, 379-7224, 379-7226, 379-7227, 379-7228, 379-7267, 379-7268, 379-7269, 379-7270, 379-7272, 385-4136 DISTRIBUTION AR, 379-7298, 379-7300, 379-7305, 379-7306, 379-7347, 385-4027, 385-4028, 385-4029 OPTION AR-REGIONAL

AN ATTACHMENT

SMCS-1400, 7600 **i04948673**

NOTE	PART NUMBER	QTY	PART NAME 1 2 3 4 5 6 (PRODUCT LEVEL)	SEE PAGE
Y	*381-7372*	1	CONTROL & MTG GP-COMMUNICATION (PRODUCT LINK CELLULAR)	448
Y	*366-9355*	1	MOUNTING GP-ANTENNA (PRODUCT LINK)	2182
Y	*366-9348*	1	WIRING GP-COMMUNICATION (PRODUCT LINK)	602

Y - SEPARATE ILLUSTRATION

<END>

376-4616 CONTROL GP-COMMUNICATION—PRODUCT LINK

S/N: KGF1-UP; FAL1-UP

PART OF 366-9353 CONTROL & MTG GP-COMMUNICATION

AN ATTACHMENT

SMCS-7606, 7610, 7620 **i04441431**

NOTE	PART NUMBER	QTY	PART NAME 1 2 3 4 5 6 (PRODUCT LEVEL)	SEE PAGE
Y	**372-4531**	1	CONTROL GP-UNPROGRAMMED (PRODUCT LINK 522, CHINA)	455
	375-7128	1	SOFTWARE GP-COMMUNICATION (PRODUCT LINK 522, CHINA)	

Y - SEPARATE ILLUSTRATION

<END>

376-6478 CONTROL GP-COMMUNICATION—PRODUCT LINK 522

S/N: KGF1-UP; FAL1-UP
PART OF 381-7372 CONTROL & MTG GP-COMMUNICATION
AN ATTACHMENT

SMCS-7606, 7610, 7620

i05190510

NOTE	PART NUMBER	QTY	PART NAME 1 2 3 4 5 6 (PRODUCT LEVEL)	SEE PAGE
Y	**351-8490**	1	CONTROL GP-UNPROGRAMMED (PRODUCT LINK 522)	454
	380-9732	1	SOFTWARE GP-COMMUNICATION (PRODUCT LINK 522)	

Y - SEPARATE ILLUSTRATION

<END>

239-9954 CONTROL GP-UNPROGRAMMED–PRODUCT LINK 300

S/N: KGF1-UP; FAL1-UP

PART OF 247-5284 CONTROL & MTG GP-COMMUNICATION

AN ATTACHMENT

SMCS-7610 **i02418848**

NOTE	REF NO	GRAPHIC REF	PART NUMBER	QTY	PART NAME 1 2 3 4 5 6 (PRODUCT LEVEL)	SEE PAGE
	1	1	**7X-6315**	1	STRAP AS-GROUND	
	2	1	**126-7574**	1	SCREW-PAN HEAD (8-32X9.52-MM)	
	3	1	**134-4126**	1	WASHER (4.52X8.28X0.76-MM THK)	

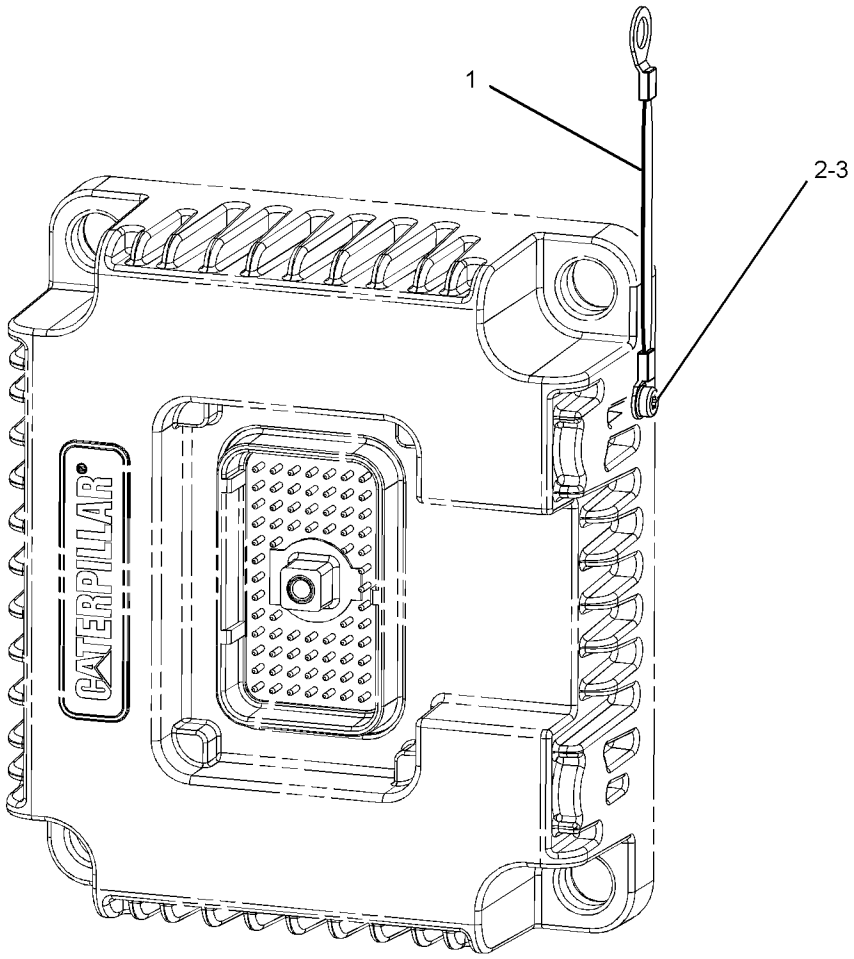

GRAPHIC #1 **<END>** g01213660

351-8490 CONTROL GP-UNPROGRAMMED–PRODUCT LINK 522

S/N: KGF1-UP; FAL1-UP
PART OF 376-6478 CONTROL GP-COMMUNICATION
AN ATTACHMENT

SMCS-7610 **i04679611**

NOTE	REF NO	GRAPHIC REF	PART NUMBER	QTY	PART NAME 1 2 3 4 5 6 (PRODUCT LEVEL)	SEE PAGE
	1	1	**346-7763**	1	COVER AS	
	2	1	**351-8488**	1	CARD-MEMORY (SUBSCRIBER IDENTITY MODULE)	
	3	1	**7X-6315**	1	STRAP AS-GROUND	
	4	1	**342-9022**	4	SCREW-PAN HEAD (M2.5X0.45-THD)	
	5	1	**342-9290**	1	SCREW-PAN HEAD (M4X0.7-THD)	
	6	1	**134-4126**	1	WASHER (4.52X8.28X0.76-MM THK)	
F		1	**376-7248**	1	SOFTWARE GP-ELECTRONIC	

F - NOT SHOWN

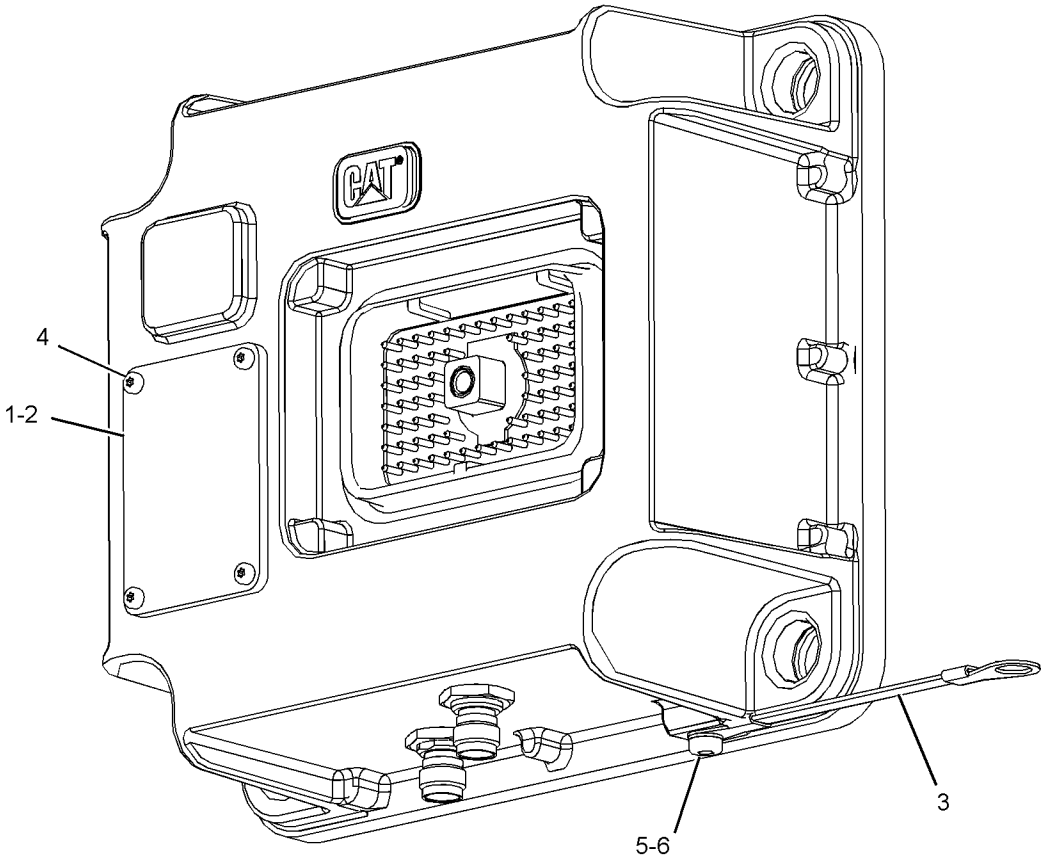

GRAPHIC #1 **<END>** g02330133

372-4531 CONTROL GP-UNPROGRAMMED–PRODUCT LINK 522

S/N: KGF1-UP; FAL1-UP
PART OF 376-4616 CONTROL GP-COMMUNICATION
AN ATTACHMENT

SMCS-7610 **i04886190**

NOTE	REF NO	GRAPHIC REF	PART NUMBER	QTY	PART NAME 1 2 3 4 5 6 (PRODUCT LEVEL)	SEE PAGE
	1	1	**346-7763**	1	COVER AS	
	2	1	**372-4532**	1	CARD-MEMORY (SUBSCRIBER IDENTITY MODULE)	
	3	1	**7X-6315**	1	STRAP AS-GROUND	
	4	1	**342-9022**	4	SCREW-PAN HEAD (M2.5X0.45-THD)	
	5	1	**342-9290**	1	SCREW-PAN HEAD (M4X0.7-THD)	
	6	1	**134-4126**	1	WASHER (4.52X8.28X0.76-MM THK)	
	7	1	**276-4053**	1	FILM-IDENTIFICATION (CAT)	
F			**376-7248**	1	SOFTWARE GP-ELECTRONIC	

F - NOT SHOWN

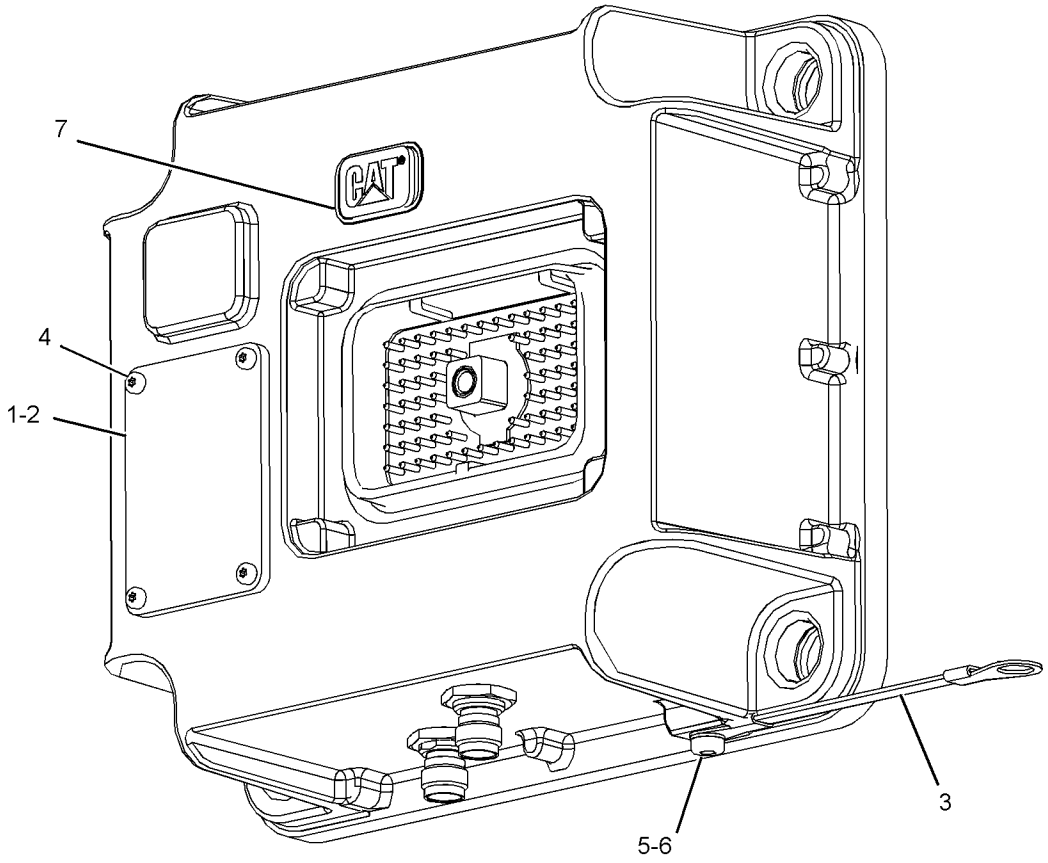

GRAPHIC #1 **<END>** g03009457

262-1421 ELECTRONICS GP-COMMUNICATION—PRODUCT LINK 300

S/N: KGF1-UP; FAL1-UP
PART OF 309-5842 CONTROL & MTG GP-COMMUNICATION
AN ATTACHMENT

SMCS-7606, 7610, 7620 **i04504510**

NOTE	PART NUMBER	QTY	PART NAME 1 2 3 4 5 6 (PRODUCT LEVEL)	SEE PAGE
	355-5105	1	SOFTWARE GP-COMMUNICATION (PRODUCT LINK 300)	
			-OR-	
	355-9764	1	SERVICE GP-COMMUNICATION (PRODUCT LINK 300)	
			(OPTIONAL SERVICE REPLACEMENT)(INCLUDES CONTROL GP & SOFTWARE)	
	7X-6315	1	STRAP AS-GROUND	
	126-7574	1	SCREW-PAN HEAD (8-32X9.52-MM)	
	134-4126	1	WASHER (4.52X8.28X0.76-MM THK)	
			<END>	

262-2043 ELECTRONICS GP-COMMUNICATION—PRODUCT LINK 300

S/N: KGF1-UP; FAL1-UP
PART OF 264-8665 INSTALLATION AR-COMMUNICATION
AN ATTACHMENT

SMCS-7606, 7610, 7620 **i02485254**

NOTE	PART NUMBER	QTY	PART NAME 1 2 3 4 5 6 (PRODUCT LEVEL)	SEE PAGE
	265-9642	1	SOFTWARE GP-COMMUNICATION (PRODUCT LINK 300)	
			(SOFTWARE ONLY)	
			—OR—	
	265-9643	1	SERVICE GP-COMMUNICATION (PRODUCT LINK 300)	
			(INCLUDES SOFTWARE)	
			(OPTIONAL SERVICE REPLACEMENT)	
	134-3379	1	FILM-IDENTIFICATION (ELECTRONIC CONTROL MODULE)	
			<END>	

270-5512 ELECTRONICS GP-MACHINE

S/N: KGF1-UP; FAL1-UP
PART OF 264-8626, 264-8627 GENERAL AR

SMCS-7610, 7620 **i05278637**

NOTE	PART NUMBER	QTY	PART NAME 1 2 3 4 5 6 (PRODUCT LEVEL)	SEE PAGE
	383-5388	1	SOFTWARE GP-MACHINE	
			—OR—	
	383-5389	1	SERVICE GP-MACHINE	
			(OPTIONAL SERVICE REPLACEMENT)(INCLUDES CONTROL GP & SOFTWARE)	
			<END>	

270-5514 ELECTRONICS GP-MACHINE—HIGH POWER

S/N: KGF1-UP; FAL1-UP
PART OF 290-1909 ENGINE AR-COMPLETE, 290-1910 MACHINE AR
AN ATTACHMENT

SMCS-7610, 7620 **i05228970**

NOTE	PART NUMBER	QTY	PART NAME 1 2 3 4 5 6 (PRODUCT LEVEL)	SEE PAGE
	383-5392	1	SOFTWARE GP-MACHINE	
			—OR—	
	383-5393	1	SERVICE GP-MACHINE	
			(OPTIONAL SERVICE REPLACEMENT) (INCLUDES CONTROL GP & SOFTWARE)	

<END>

349-5473 ELECTRONICS GP-MACHINE

S/N: FAL1-UP
PART OF 354-1114 CONVERSION AR-MACHINE
AN ATTACHMENT

SMCS-7610, 7620 **i05278634**

NOTE	PART NUMBER	QTY	PART NAME 1 2 3 4 5 6 (PRODUCT LEVEL)	SEE PAGE
	383-5390	1	SOFTWARE GP-ENG RATINGS ELEK	
			—OR—	
	383-5391	1	SERVICE GP-MACHINE	
			(OPTIONAL SERVICE REPLACEMENT)(INCLUDES CONTROL GP & SOFTWARE)	

<END>

221-8861 ELECTRONICS GP-MONITOR

S/N: KGF1-UP; FAL1-UP
PART OF 264-8626, 264-8627 GENERAL AR

SMCS-7490, 7601, 7610, 7620 **i05280821**

NOTE	PART NUMBER	QTY	PART NAME 1 2 3 4 5 6 (PRODUCT LEVEL)	SEE PAGE
	386-3454	1	SOFTWARE GP-MONITOR	
			—OR—	
Y	**386-3458**	1	MONITOR GP-OPERATOR	2175
			(OPTIONAL SERVICE REPLACEMENT)(INCLUDES MONITOR GP & SOFTWARE)	

Y - SEPARATE ILLUSTRATION

<END>

251-0436 FASTENER GP-WIRING HARNESS

S/N: KGF1-UP; FAL1-UP
PART OF 259-7492, 259-7494 CONTROL AR-AUXILIARY
AN ATTACHMENT

SMCS-1408, 7553

i03732641

NOTE	REF NO	GRAPHIC REF	PART NUMBER	QTY	PART NAME 1 2 3 4 5 6 (PRODUCT LEVEL)	SEE PAGE
	1	1	**3S-2093**	1	STRAP-CABLE	
	2	1	**116-0118**	1	CLIP	
	3	1	**156-6175**	1	CLIP	
M	4	1	**7X-2621**	1	BOLT (M10X1.5X12-MM)	
	5	1	**8T-4121**	1	WASHER-HARD (11X21X2.5-MM THK)	
M	6	1	**8T-4171**	1	BOLT (M6X1X12-MM)	
	7	1	**9X-8256**	1	WASHER (6.6X12X2-MM THK)	
	8	1	**7K-1181**	1	STRAP-CABLE	

M - METRIC PART

251-0436 **FASTENER GP-WIRING HARNESS (*contd.*)** **i03732641**

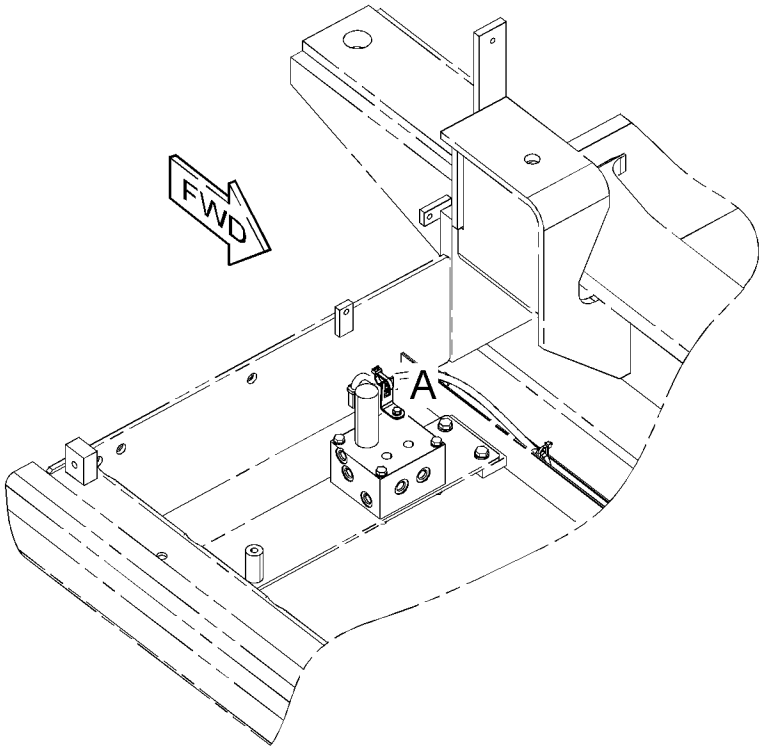

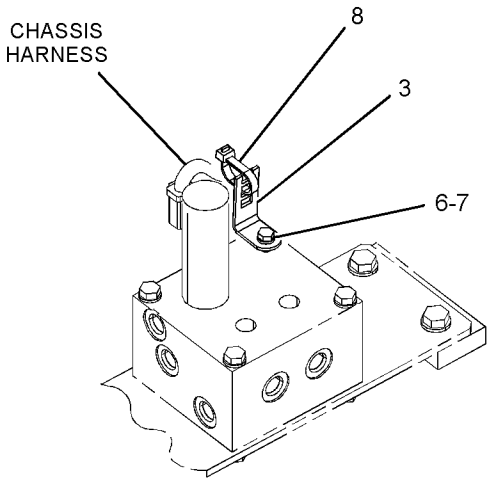

VIEW OF AREA A

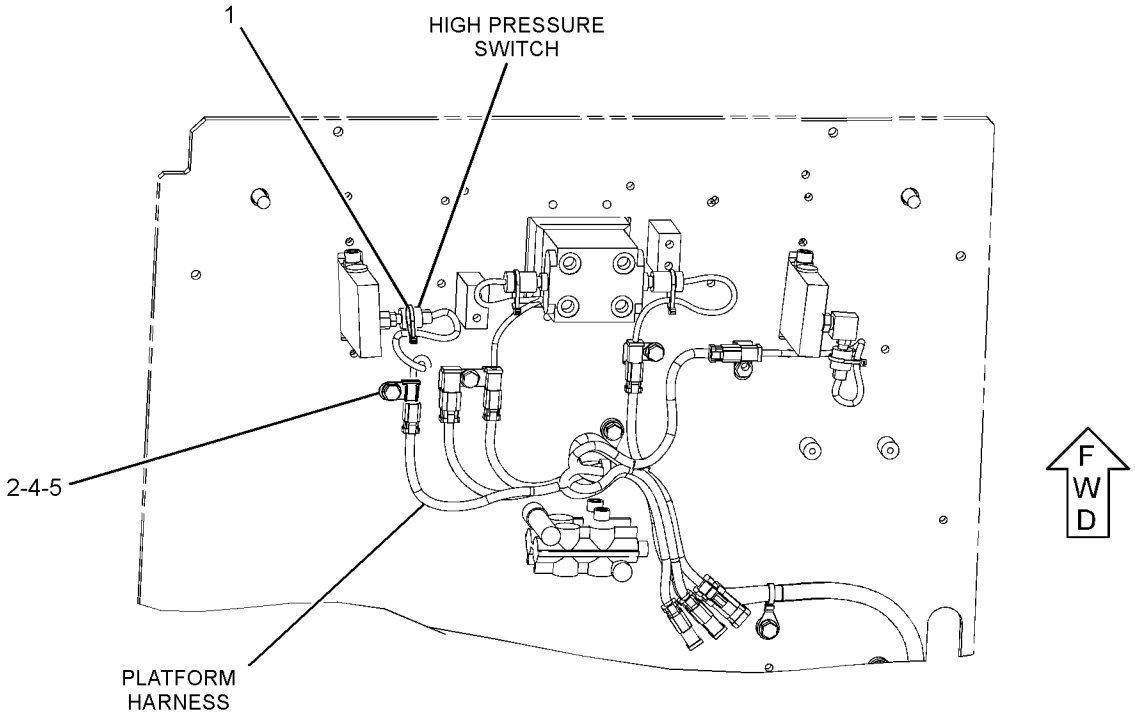

BOTTOM VIEW

GRAPHIC #1 **<END>** g02014853

251-0526 FASTENER GP-WIRING HARNESS—STRAIGHT TRAVEL

S/N: KGF1-UP; FAL1-UP
PART OF 259-7178 PEDAL AR-AUXILIARY
AN ATTACHMENT

SMCS-1408, 7553

i02344768

NOTE	REF NO	GRAPHIC REF	PART NUMBER	QTY	PART NAME 1 2 3 4 5 6 (PRODUCT LEVEL)	SEE PAGE
	1	1	**3S-2093**	1	STRAP-CABLE	
	2	1	**116-0118**	1	CLIP	
M	3	1	**7X-2621**	1	BOLT (M10X1.5X12-MM)	
	4	1	**8T-4121**	1	WASHER-HARD (11X21X2.5-MM THK)	

M - METRIC PART

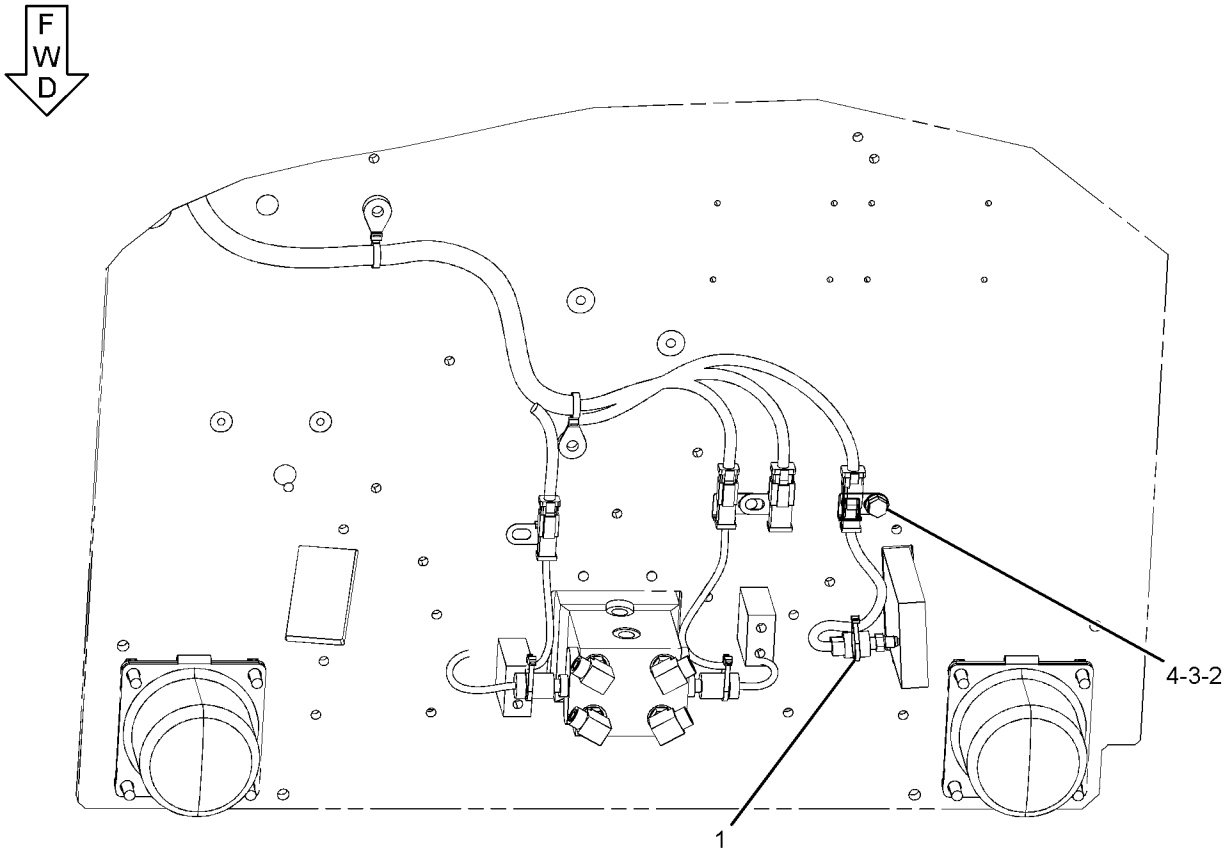

BOTTOM VIEW

GRAPHIC #1

<END>

g01190326

259-5237 FASTENER GP-WIRING HARNESS—HEAVY LIFT

S/N: KGF1-UP; FAL1-UP
PART OF 240-3881 VALVE & LINES GP-HEAVY LIFT
AN ATTACHMENT

SMCS-1408, 7553

i05245068

NOTE	REF NO	GRAPHIC REF	PART NUMBER	QTY	PART NAME 1 2 3 4 5 6 (PRODUCT LEVEL)	SEE PAGE
	1	1	**7I-2673**	1	STRAP - CABLE	

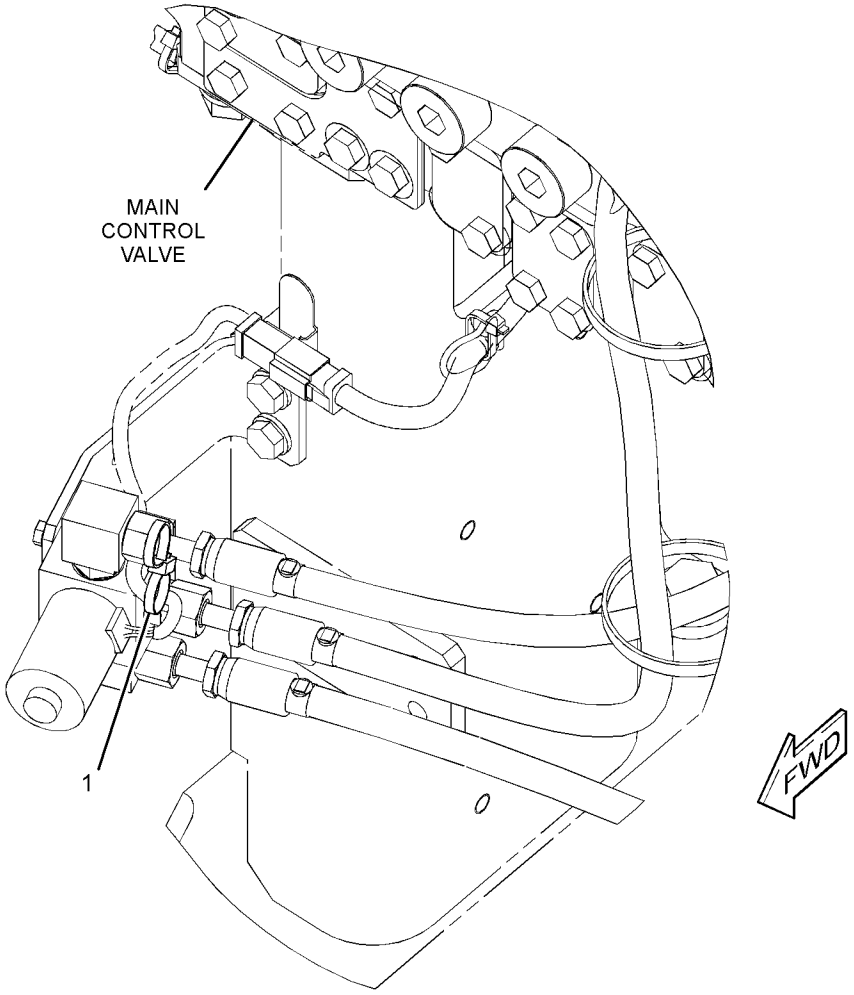

GRAPHIC #1

<END>

g02155914

259-5293 FASTENER GP-WIRING HARNESS–PEDAL CONTROL

S/N: KGF1-UP; FAL1-UP
PART OF 255-5845 PEDAL AR-AUXILIARY
AN ATTACHMENT

SMCS-1408, 7553

i02527277

NOTE	REF NO	GRAPHIC REF	PART NUMBER	QTY	PART NAME 1 2 3 4 5 6 (PRODUCT LEVEL)	SEE PAGE
	1	1	**116-0118**	1	CLIP	
M	2	1	**7X-2621**	1	BOLT (M10X1.5X12-MM)	
	3	1	**8T-4121**	1	WASHER-HARD (11X21X2.5-MM THK)	

M - METRIC PART

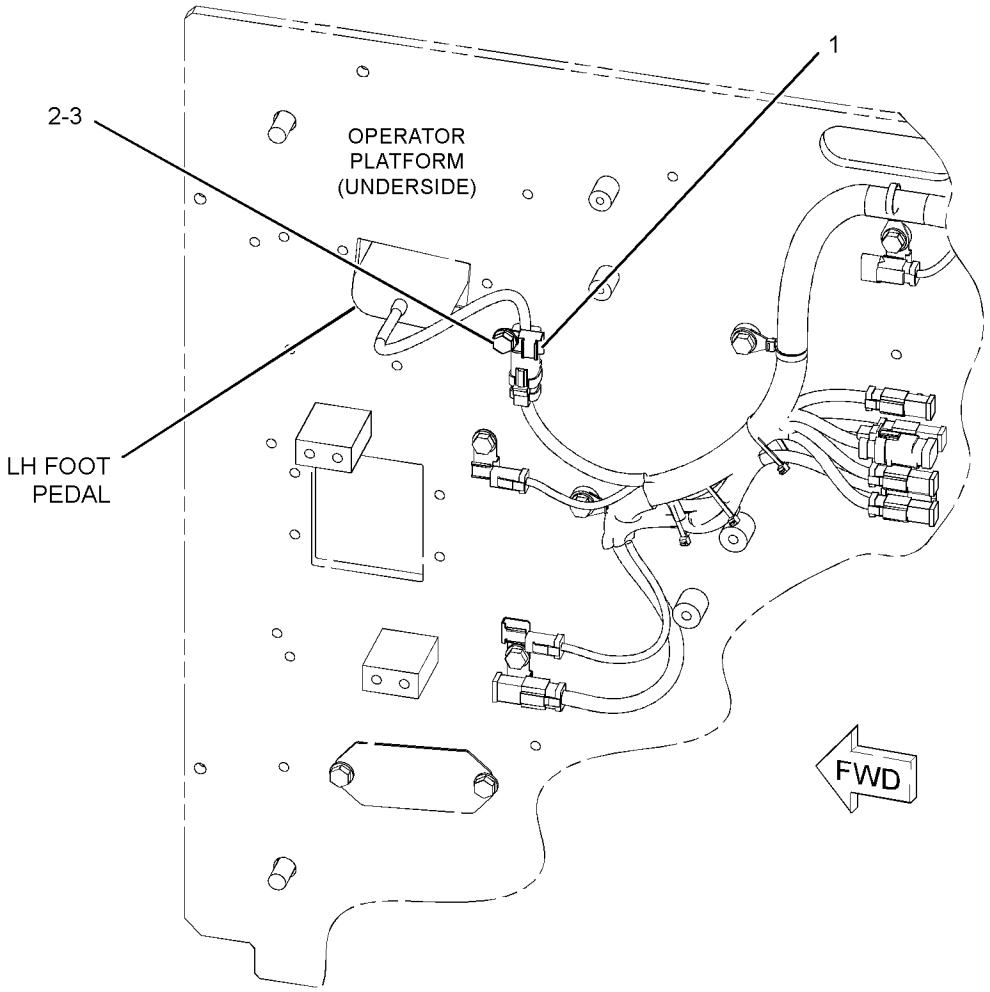

GRAPHIC #1

<END>

g01264273

259-5294 FASTENER GP-WIRING HARNESS–FOOT SWITCH

S/N: KGF1-UP; FAL1-UP
PART OF 255-5846, 270-6106 CONTROL AR-AUXILIARY
AN ATTACHMENT

SMCS-1408, 7553

i03670700

NOTE	REF NO	GRAPHIC REF	PART NUMBER	QTY	PART NAME 1 2 3 4 5 6 (PRODUCT LEVEL)	SEE PAGE
	1	1	**116-0118**	1	CLIP	
M	2	1	**7X-2621**	1	BOLT (M10X1.5X12-MM)	
	3	1	**8T-4121**	1	WASHER-HARD (11X21X2.5-MM THK)	

M - METRIC PART

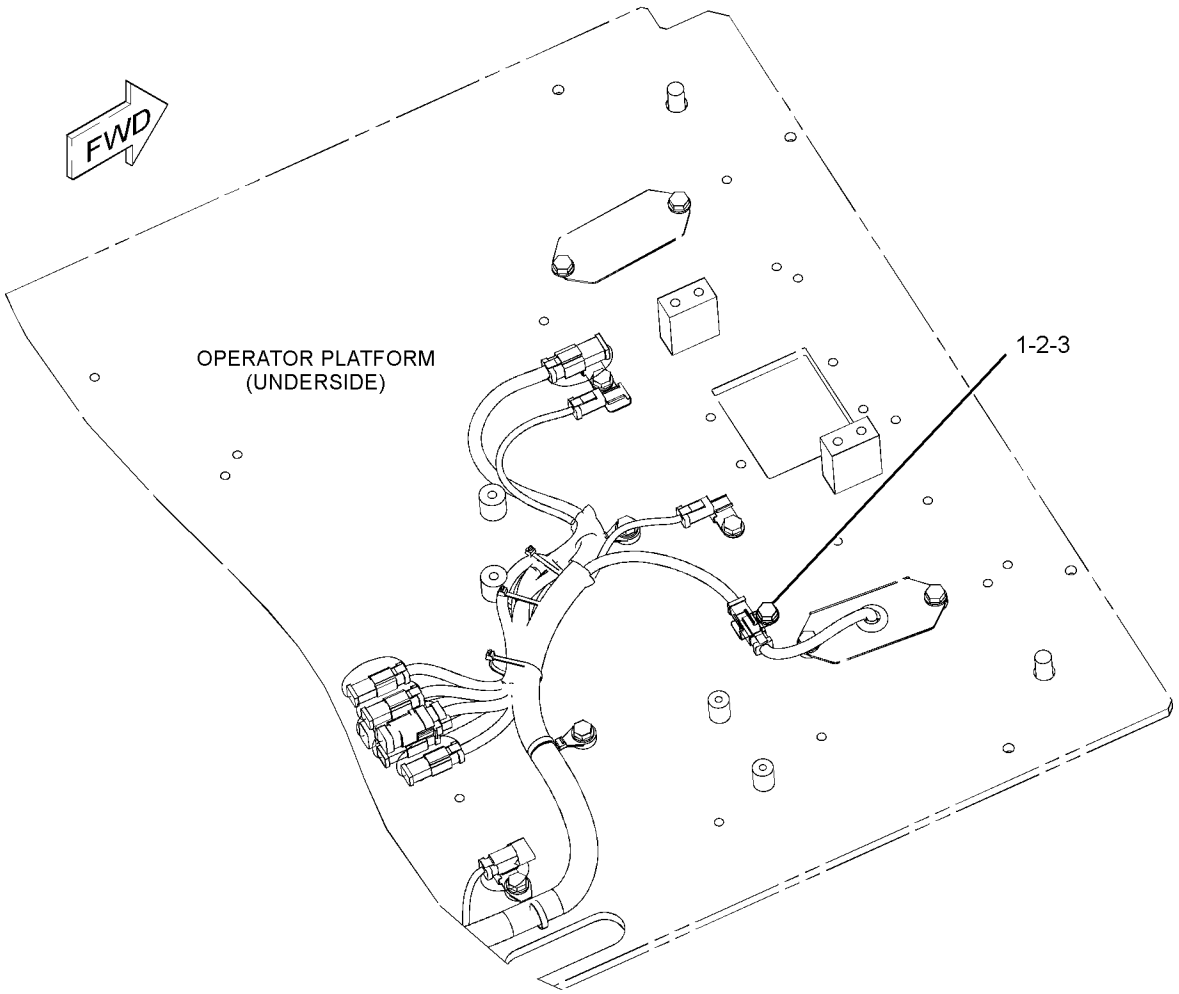

GRAPHIC #1

<END>

g01970833

259-5295 FASTENER GP-WIRING HARNESS–JOYSTICK

S/N: KGF1-UP; FAL1-UP

PART OF 270-5688 CONTROL & MTG GP-JOYSTICK, 255-5843, 255-5844 CONTROL AR-AUXILIARY AN ATTACHMENT

SMCS-1408, 7553 **i04007681**

NOTE	REF NO	GRAPHIC REF	PART NUMBER	QTY	PART NAME 1 2 3 4 5 6 (PRODUCT LEVEL)	SEE PAGE
	1	1	**3S-2093**	2	STRAP - CABLE	

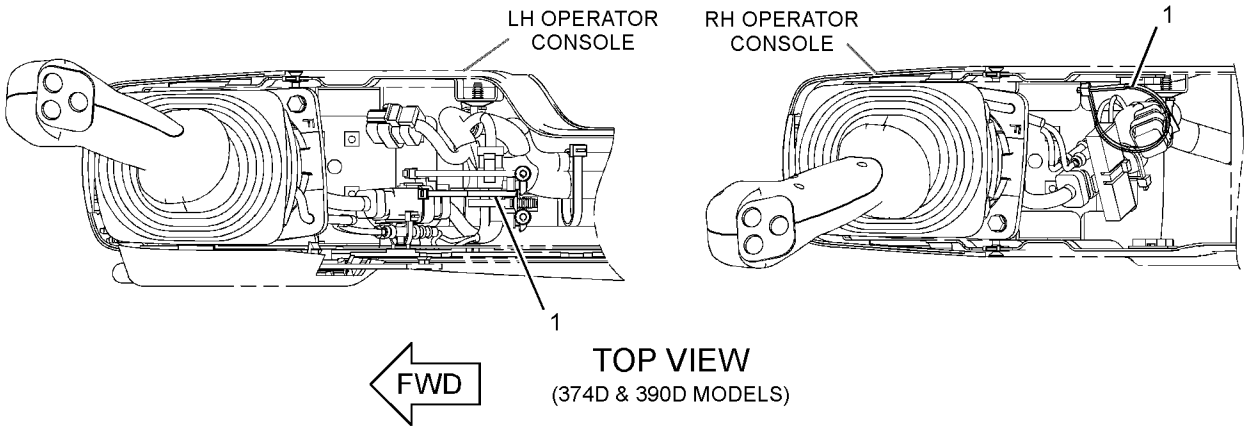

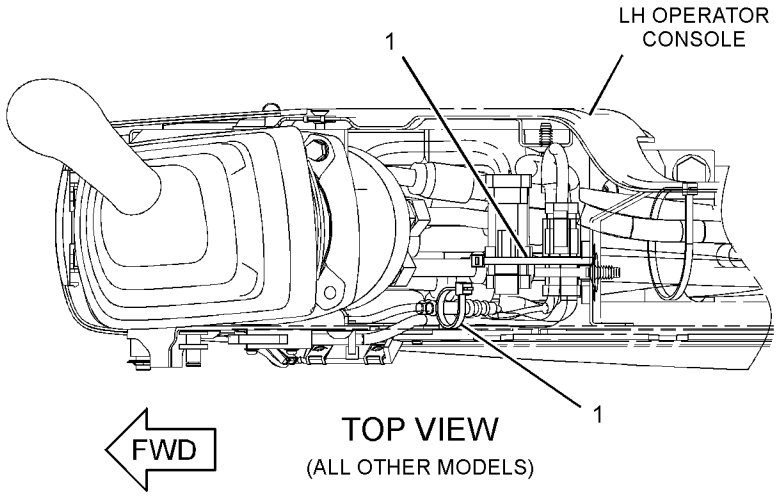

GRAPHIC #1 **<END>** g02181157

314-3883 GRADE CONTROL AR–ACCUGRADE READY

S/N: KGF1-UP

FOR USE WITH 275-3695–PAGE: 1721, 275-3702–PAGE: 1777, 290-1792–PAGE: 1778, 314-3729–PAGE: 1779, 314-3730–PAGE: 1780, 275-3707–PAGE: 1754, 307-7674–PAGE: 698

AN ATTACHMENT

SMCS-7220 **i03545622**

NOTE	PART NUMBER	QTY	PART NAME 1 2 3 4 5 6 (PRODUCT LEVEL)	SEE PAGE
Y	*303-9860*	1	HOOD GP-ENGINE (ACCUGRADE READY)	828
Y	*270-5603*	1	MOUNTING GP-ANTENNA (GRADE CONTROL)	2176
Y	*306-8349*	1	WIRING GP-CAB (GRADE CONTROL)	581
Y	*299-2954*	1	WIRING GP-CHASSIS (ACCUGRADE READY)	585

Y - SEPARATE ILLUSTRATION

<END>

339-2024 GRADE CONTROL AR-LASER

S/N: KGF1-UP; FAL1-UP

FIELD INSTALLATION

SMCS-7220 **i03700541**

NOTE	PART NUMBER	QTY	PART NAME 1 2 3 4 5 6 (PRODUCT LEVEL)	SEE PAGE
Y	*339-2038*	1	MOUNTING GP-SENSOR (LINKAGE)	501
Y	*292-4548*	1	SENSOR & MOUNTING GP (ANGLE SENSOR)	526
Y	*204-3461*	1	WIRING GP-GRADE CONTROL (SENSOR)	626
	339-0362	1	HARNESS AS-MONITOR (GRADE CONTROL)	
	8T-8737	19	PLUG-SEAL	
	8T-9605	1	PLUG AS-CONNECTOR (6-PIN)	
	9X-3402	5	SOCKET-CONNECTOR (16-GA TO 18-GA)	
	230-4009	1	PLUG AS-CONNECTOR (12-PIN) (KEY-1)	
	264-7034	1	SEAL-CONNECTOR	
	239-7356	1	PLUG AS-CONNECTOR (12-PIN) (KEY-2)	
	264-7034	1	SEAL-CONNECTOR	
	339-2037	1	MOUNTING GP-SENSOR (CHASSIS)	
	342-7914	1	BRACKET AS	
	349-6070	1	CABLE AS (SENSOR)	
	339-2042	1	SENSOR & MOUNTING GP (LINKAGE)	
	265-9492	1	JUNCTION BOX (GPS)	
	312-0754	3	SENSOR AS-ANGLE (AS450C)	

Y - SEPARATE ILLUSTRATION

<END>

339-2026 GRADE CONTROL AR-SATELLITE—DUAL GNSS

S/N: KGF1-UP; FAL1-UP
FIELD INSTALLATION

SMCS-7220 **i03700542**

NOTE	PART NUMBER	QTY	PART NAME 1 2 3 4 5 6 (PRODUCT LEVEL)	SEE PAGE
Y	*324-3309*	1	MOUNTING GP-MONITOR	2184
Y	*339-2038*	1	MOUNTING GP-SENSOR (LINKAGE)	501
Y	*339-2044*	1	SENSOR & MOUNTING GP (ANGLE SENSOR)	526
Y	*204-3461*	1	WIRING GP-GRADE CONTROL (SENSOR)	626
Y	*339-2041*	1	WIRING GP-GRADE CONTROL (DISPLAY)	627
	339-2039	1	MONITOR GP (LIGHT BAR)	
	244-1720	3	MONITOR AS (LIGHT BAR)	
	339-2037	1	MOUNTING GP-SENSOR (CHASSIS)	
	342-7914	1	BRACKET AS	
	349-6070	1	CABLE AS (SENSOR)	
	339-2042	1	SENSOR & MOUNTING GP (LINKAGE)	
	265-9492	1	JUNCTION BOX (GPS)	
	312-0754	3	SENSOR AS-ANGLE (AS450C)	

Y - SEPARATE ILLUSTRATION

<END>

339-2029 GRADE CONTROL AR-SATELLITE—SINGLE GNSS

S/N: KGF1-UP; FAL1-UP
FIELD INSTALLATION

SMCS-7220 **i03700544**

NOTE	PART NUMBER	QTY	PART NAME 1 2 3 4 5 6 (PRODUCT LEVEL)	SEE PAGE
Y	*324-3309*	1	MOUNTING GP-MONITOR	2184
Y	*339-2038*	1	MOUNTING GP-SENSOR (LINKAGE)	501
Y	*339-2044*	1	SENSOR & MOUNTING GP (ANGLE SENSOR)	526
Y	*204-3461*	1	WIRING GP-GRADE CONTROL (SENSOR)	626
Y	*339-2041*	1	WIRING GP-GRADE CONTROL (DISPLAY)	627
	339-2039	1	MONITOR GP (LIGHT BAR)	
	244-1720	3	MONITOR AS (LIGHT BAR)	
	339-2037	1	MOUNTING GP-SENSOR (CHASSIS)	
	342-7914	1	BRACKET AS	
	349-6070	1	CABLE AS (SENSOR)	
	339-2040	1	SENSOR & MOUNTING GP (ROLL)	
M	**8T-2396**	2	BOLT (M6X1X60-MM)	
	9X-8256	2	WASHER (6.6X12X2-MM THK)	
	276-6146	1	SENSOR AS-ANGLE (AS400TC)	
	339-2042	1	SENSOR & MOUNTING GP (LINKAGE)	
	265-9492	1	JUNCTION BOX (GPS)	
	312-0754	3	SENSOR AS-ANGLE (AS450C)	

M - METRIC PART
Y - SEPARATE ILLUSTRATION

<END>

339-2030 GRADE CONTROL GP-LASER

S/N: KGF1-UP; FAL1-UP
FIELD INSTALLATION

SMCS-7220 **i03700545**

NOTE	PART NUMBER	QTY	PART NAME 1 2 3 4 5 6 (PRODUCT LEVEL)	SEE PAGE
M	**8T-4137**	4	BOLT (M10X1.5X20-MM)	
M	**8T-4196**	4	BOLT (M10X1.5X35-MM)	
	322-0221	1	BRACKET-HOUSING	
	338-2744	1	CABLE AS (SENSOR)	
M	**5C-7261**	4	NUT (M8X1.25-THD)	
	273-6803	1	PLATE	
	312-0756	1	RECEIVER AS-LASER (WITH ANGLE SENSOR)	
	091-9035	4	SPACER (11X25X20-MM THK)	
	8T-4224	4	WASHER-HARD (8.8X16X2-MM THK)	
	8T-7934	4	WASHER-HARD (11X21X5-MM THK)	

M - METRIC PART

<END>

373-8965 HARNESS AS-CONTROL—PRODUCT LINK

S/N: KGF1-UP; FAL1-UP
PART OF 366-9348 WIRING GP-COMMUNICATION
AN ATTACHMENT

SMCS-1408 **i05229011**

NOTE	PART NUMBER	QTY	PART NAME 1 2 3 4 5 6 (PRODUCT LEVEL)	SEE PAGE
	126-1774	1	COVER-CONNECTOR	
	8T-8729	1	PIN-CONNECTOR (16-GA TO 18-GA)	
	9W-0852	1	PIN-CONNECTOR (14-GA TO 16-GA)	
	9X-3401	4	PIN-CONNECTOR (16-GA TO 18-GA)	
	160-7690	1	PLUG AS-CONNECTOR (70-PIN)	
	159-9322	1	SEAL-O-RING	
	8T-8737	64	PLUG-SEAL	
	243-4508	1	RECEPTACLE AS-CONNECTOR (6-PIN)	
	9X-3402	6	SOCKET-CONNECTOR (16-GA TO 18-GA)	
	3S-2093	1	STRAP-CABLE	
	2L-8077	1	TERMINAL-RING (14-GA TO 16-GA, 1/4-IN SCREW)	
E	**125-7874**		TUBE-HEAT SHRINK (5.72-MM DIA) (5-CM)	

E - ORDER BY THE CENTIMETER

<END>

416-1814 HARNESS AS-PUMP

S/N: KGF1-UP; FAL1-UP

PART OF 420-3862 KIT-FUEL PRIMING PUMP

SMCS-1408 **i05261443**

NOTE	REF NO	GRAPHIC REF	PART NUMBER	QTY	PART NAME 1 2 3 4 5 6 (PRODUCT LEVEL)	SEE PAGE
	1	1	**8T-8730**	2	SOCKET-CONNECTOR (16-GA TO 18-GA)	
	2	1	**3S-2093**	9	STRAP-CABLE	
	3	1	**7Y-3962**	2	TERMINAL-BULLET (MALE)	
	4	1	**2L-8079**	1	TERMINAL-RING (14-GA TO 16-GA, 3/8-IN SCREW)	
	5	1	**149-5051**	1	CONNECTOR-RECEPTACLE	
	6	1	**149-5069**	1	TERMINAL-BLADE (14-GA TO 20-GA)	
	7	1	**149-5070**	2	TERMINAL-BLADE (16-GA TO 20-GA)	
	8	1	**149-5071**	1	TERMINAL-BLADE (12-GA TO 14-GA)	
	9	1	**155-2270**	1	KIT-CONNECTING PLUG (2-PIN)	
					(INCLUDES PLUG AS, WEDGE & INTERFACE SEAL	

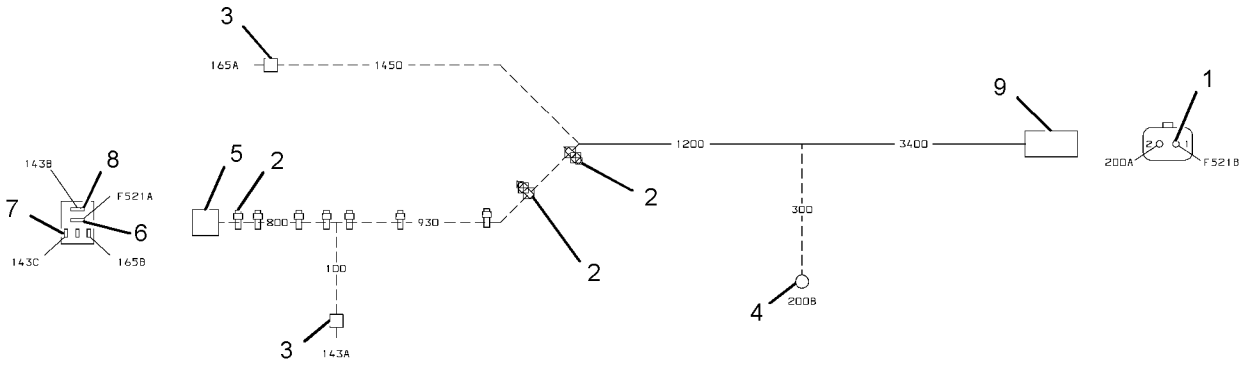

GRAPHIC #1 **<END>** g03352267

264-8665 INSTALLATION AR-COMMUNICATION–PRODUCT LINK 321SR

S/N: KGF1-UP; FAL1-UP

AN ATTACHMENT

SMCS-7606 **i02797999**

NOTE	PART NUMBER	QTY	PART NAME 1 2 3 4 5 6 (PRODUCT LEVEL)	SEE PAGE
Y	*247-5284*	1	CONTROL & MTG GP-COMMUNICATION (PRODUCT LINK 300)	443
Y	*262-2043*	1	ELECTRONICS GP-COMMUNICATION (PRODUCT LINK 300)	456
Y	*270-5511*	1	INSTALLATION GP-COMMUNICATION (PRODUCT LINK 121SR)	471
Y	**290-9466**	1	MOUNTING GP-ANTENNA (PRODUCT LINK)	2178
Y	*267-8007*	1	WIRING GP-COMMUNICATION (PRODUCT LINK 321SR)	592

Y - SEPARATE ILLUSTRATION

<END>

264-8666 INSTALLATION AR-COMMUNICATION–PRODUCT LINK 121SR

S/N: KGF1-UP; FAL1-UP

AN ATTACHMENT

SMCS-7606 **i02797955**

NOTE	PART NUMBER	QTY	PART NAME 1 2 3 4 5 6 (PRODUCT LEVEL)	SEE PAGE
Y	*270-5511*	1	INSTALLATION GP-COMMUNICATION (PRODUCT LINK 121SR)	471
Y	*290-9466*	1	MOUNTING GP-ANTENNA (PRODUCT LINK)	2178
Y	*267-8008*	1	WIRING GP-COMMUNICATION (PRODUCT LINK 121SR)	596

Y - SEPARATE ILLUSTRATION

<END>

298-4115 INSTALLATION AR-COMMUNICATION–PRODUCT LINK 321SR

S/N: KGF1-UP; FAL1-UP

PART OF 314-3859, 314-3860, 314-3861, 314-3862, 314-3905, 359-2404, 359-2405, 367-8686, 367-8817, 379-7216, 379-7218, 379-7219, 379-7220, 379-7221, 379-7222, 396-6826, 396-6827, 396-6828 DISTRIBUTION AR, 379-7297, 379-7299 OPTION AR-REGIONAL

AN ATTACHMENT

SMCS-7606 **i05193216**

NOTE	PART NUMBER	QTY	PART NAME 1 2 3 4 5 6 (PRODUCT LEVEL)	SEE PAGE
Y	*309-5842*	1	CONTROL & MTG GP-COMMUNICATION (PRODUCT LINK 321SR)	444
Y	*309-5881*	1	CONTROL & MTG GP-COMMUNICATION (PRODUCT LINK 121SR)	445
Y	*309-5771*	1	MOUNTING GP-ANTENNA (PRODUCT LINK)	2180
Y	*267-8007*	1	WIRING GP-COMMUNICATION	592

Y - SEPARATE ILLUSTRATION

<END>

298-4116 INSTALLATION AR-COMMUNICATION—PRODUCT LINK

121SR

S/N: KGF1-UP; FAL1-UP

AN ATTACHMENT

SMCS-7606 **i02953471**

NOTE	PART NUMBER	QTY	PART NAME 1 2 3 4 5 6 (PRODUCT LEVEL)	SEE PAGE
Y	*309-5881*	1	CONTROL & MTG GP-COMMUNICATION (PRODUCT LINK 121SR)	445
Y	*309-5771*	1	MOUNTING GP-ANTENNA (PRODUCT LINK)	2180
Y	*267-8008*	1	WIRING GP-COMMUNICATION (PRODUCT LINK 121SR)	596

Y - SEPARATE ILLUSTRATION

<END>

270-5511 INSTALLATION GP-COMMUNICATION–PRODUCT LINK 121SR

S/N: KGF1-UP; FAL1-UP

PART OF 264-8665, 264-8666 INSTALLATION AR-COMMUNICATION

AN ATTACHMENT

SMCS-7606 **i02684046**

NOTE	REF NO	GRAPHIC REF	PART NUMBER	QTY	PART NAME 1 2 3 4 5 6 (PRODUCT LEVEL)	SEE PAGE
	1	1	**3S-2093**	1	STRAP-CABLE	
	2	1	**7K-1181**	3	STRAP-CABLE	
Y	3	1	**263-9088**	1	RADIO GP-COMMUNICATION (PRODUCT LINK 121SR)	525
M	4	1	**8T-4138**	4	BOLT (M6X1X20-MM)	
	5	1	**9X-8256**	4	WASHER (6.6X12X2-MM THK)	
	6	1	**230-1340**	1	FILM-WARNING (PRODUCT LINK RADIO, U.S.)	
	7	1	**230-1341**	1	FILM-WARNING (PRODUCT LINK RADIO, INTL)	

M - METRIC PART
Y - SEPARATE ILLUSTRATION

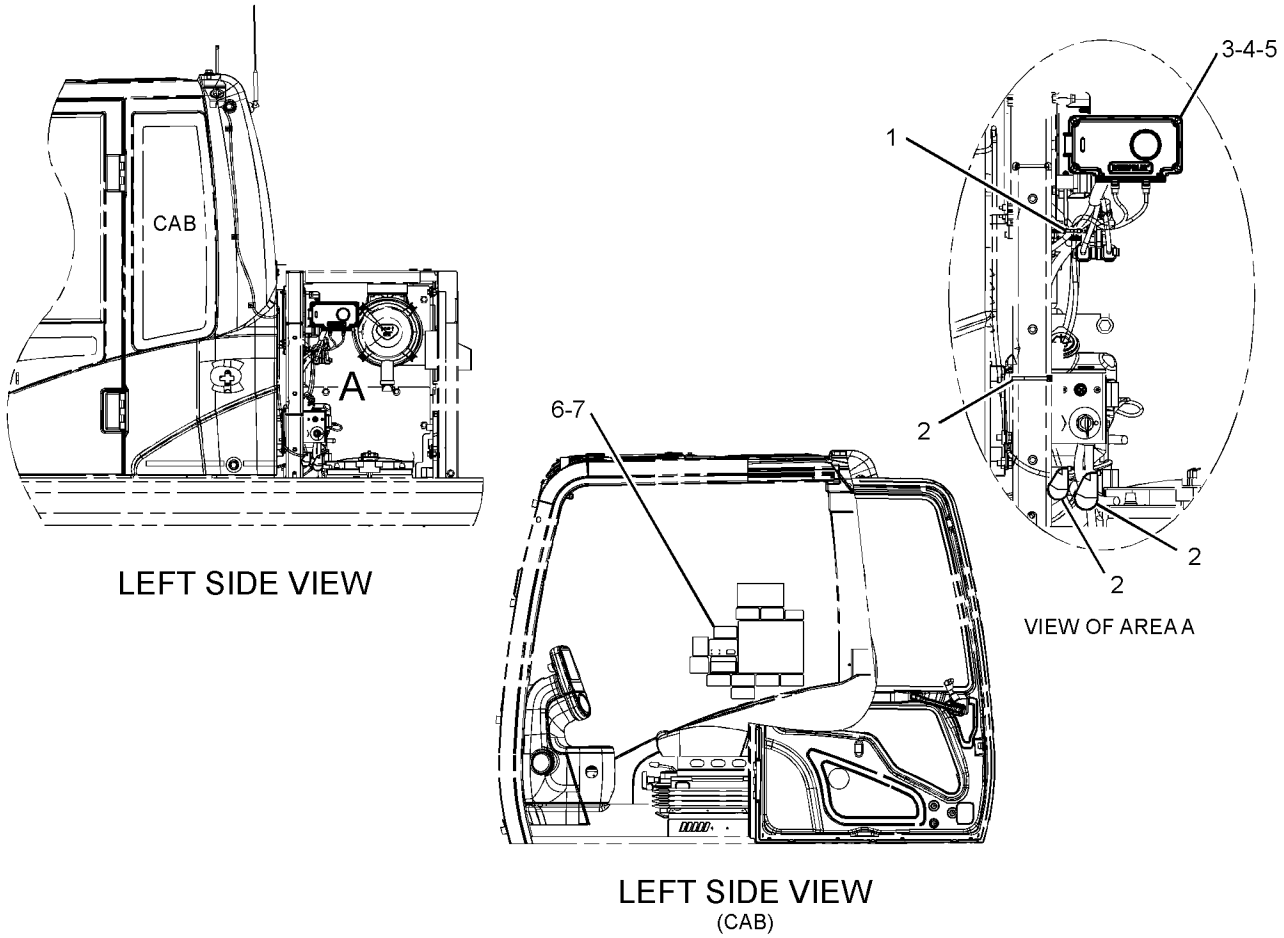

LEFT SIDE VIEW

VIEW OF AREA A

LEFT SIDE VIEW
(CAB)

GRAPHIC #1 **<END>** g01342214

227-7581 INSTALLATION GP-SECURITY

S/N: KGF1-UP; FAL1-UP
CANNOT BE USED WITH 251-0542—PAGE: 513
PART OF 314-3905 DISTRIBUTION AR
AN ATTACHMENT

SMCS-7631 **i05238912**

NOTE	REF NO	GRAPHIC REF	PART NUMBER	QTY	PART NAME 1 2 3 4 5 6 (PRODUCT LEVEL)	SEE PAGE
	1	1	**8C-5607**	4	MOUNT-ISOLATION	
	2	1	**8C-5608**	2	SPACER (6.5X9.5X25.4-MM THK)	
	3	1	**285-3231**	2	KEY AS-ELECTRONIC (SECURITY) (YELLOW)	
					—OR—	
		1	**285-3232**	2	KEY AS-ELECTRONIC (SECURITY) (GREY)	
	4	1	**218-0404**	1	MODULE GP-INTERFACE (KEY)	
	4A	1	**6V-6715**	1	SCREW-PAN HEAD (4-20X0.25-IN)	
	4B	1	**8C-3095**	1	SEAL-O-RING	
	5	1	**219-6314**	2	KEY RING (IDENTIFICATION)	
Y	6	1	*251-0544*	1	PANEL GP-SWITCH (ENGINE SPEED, START)	519
M	7	1	**7X-2533**	2	BOLT (M6X1X35-MM)	
	8	1	**9X-6165**	2	WASHER (6.5X22X2.5-MM THK)	
	9	1	**205-0826**	1	FILM-INSTRUCTION (MACHINE SECURITY, CONSOLE)	

M - METRIC PART
Y - SEPARATE ILLUSTRATION

227-7581 **INSTALLATION GP-SECURITY (*contd.*)** **i05238912**

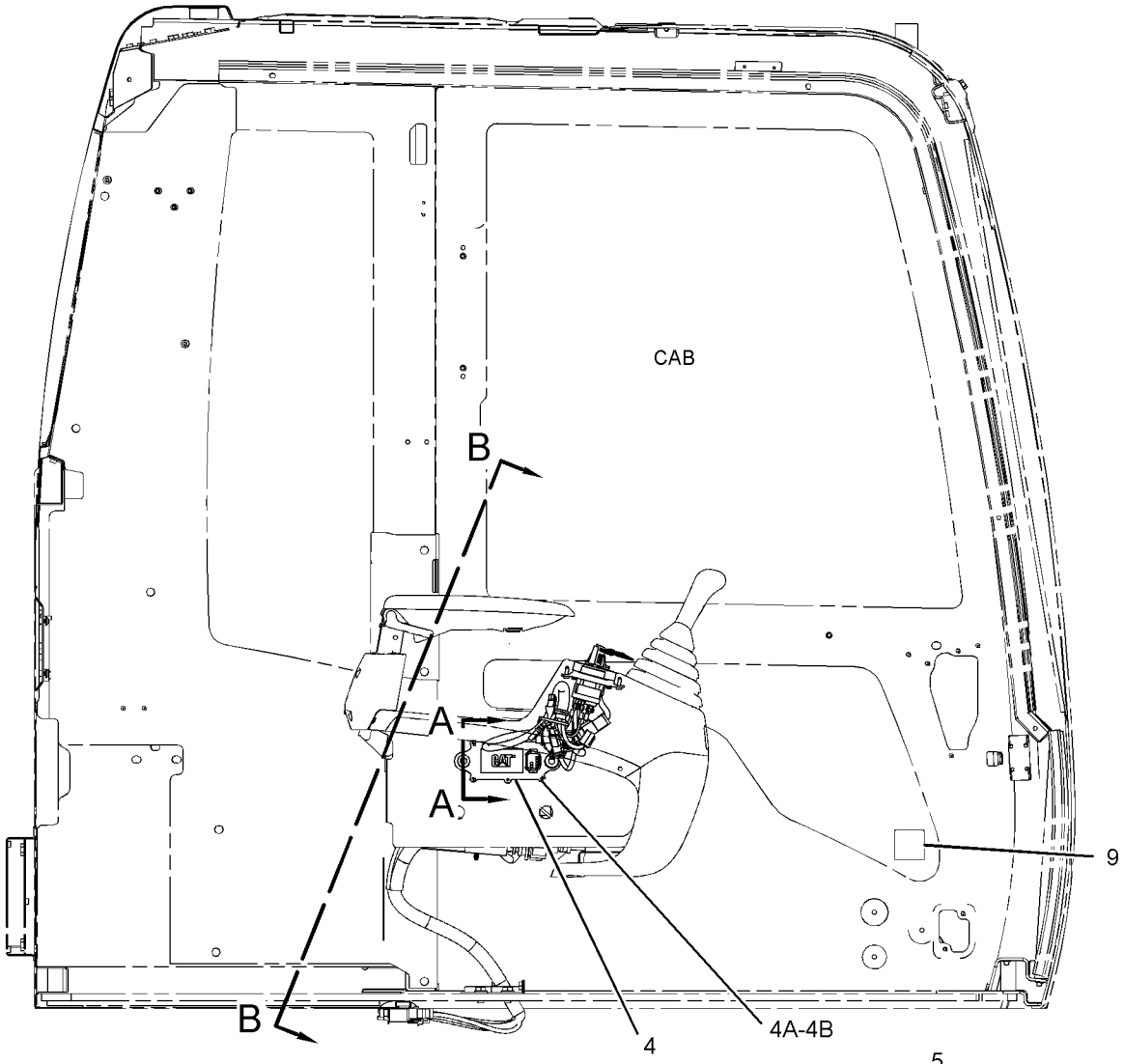

RIGHT SIDE VIEW

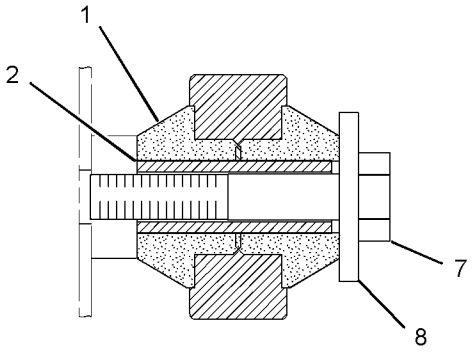

SECTION A-A

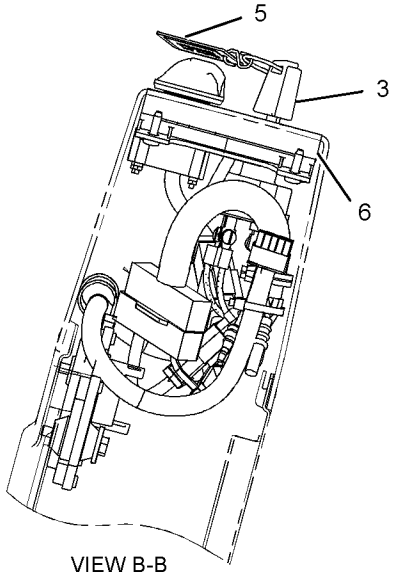

VIEW B-B

GRAPHIC #1 **<END>** g02156940

291-7701 KIT-BRACKET–PRODUCT LINK 121SR, 321SR

S/N: KGF1-UP; FAL1-UP

PROVIDES MOUNTING PARTS FOR PRODUCT LINK SYSTEM

FIELD INSTALLATION

SMCS-0635, 7606

i03296216

NOTE	PART NUMBER	QTY	PART NAME 1 2 3 4 5 6 (PRODUCT LEVEL)	SEE PAGE
M	**8T-4171**	1	BOLT (M6X1X12-MM)	
M	**8T-4190**	1	BOLT (M16X2X25-MM)	
	270-5433	1	BRACKET	
	260-2042	1	BRACKET AS	
	096-3872	1	GROMMET	
	291-7700	1	HARNESS AS-WIRING (PRODUCT LINK)	
	155-2274	1	KIT-CONNECTING PLUG (6-PIN)	
			(INCLUDES PLUG AS, WEDGE & INTERFACE SEAL)	
	243-4508	1	RECEPTACLE AS-CONNECTOR (6-PIN)	
	9X-8256	1	WASHER (6.6X12X2-MM THK)	
	9X-8257	1	WASHER (17.5X30X3.5-MM THK)	

M - METRIC PART

<END>

153-2521 LAMP GP-FLOOD

S/N: KGF1-UP; FAL1-UP
24-VOLT
PART OF 259-5043, 259-5047, 259-5048, 267-7627 LIGHTING GP-FLOOD
AN ATTACHMENT

SMCS-1434 **i05300867**

NOTE	REF NO	GRAPHIC REF	PART NUMBER	QTY	PART NAME 1 2 3 4 5 6 (PRODUCT LEVEL)	SEE PAGE
M	1	1	**6V-5210**	2	SCREW-MACHINE (M4X0.7X10-MM)	
	2	1	**3B-4501**	2	LOCKWASHER	
	3	1	**351-9918**	1	LAMP-HALOGEN (24-VOLT, 70-WATT)	
	4	1	**8T-4223**	1	WASHER-HARD (13.5X25.5X3-MM THK)	
M	5	1	**8T-4244**	1	NUT (M12X1.75-THD)	
M	6	1	**174-7791**	1	SCREW-TAPPING	
	7	1	**9B-0453**	1	LOCKWASHER	
	8	1	**170-6993**	1	COVER	
M	9	1	**180-3861**	4	SCREW-TAPPING	
	10	1	**170-9417**	1	LENS AS	
	11	1	**170-9418**	1	BAND	

M - METRIC PART

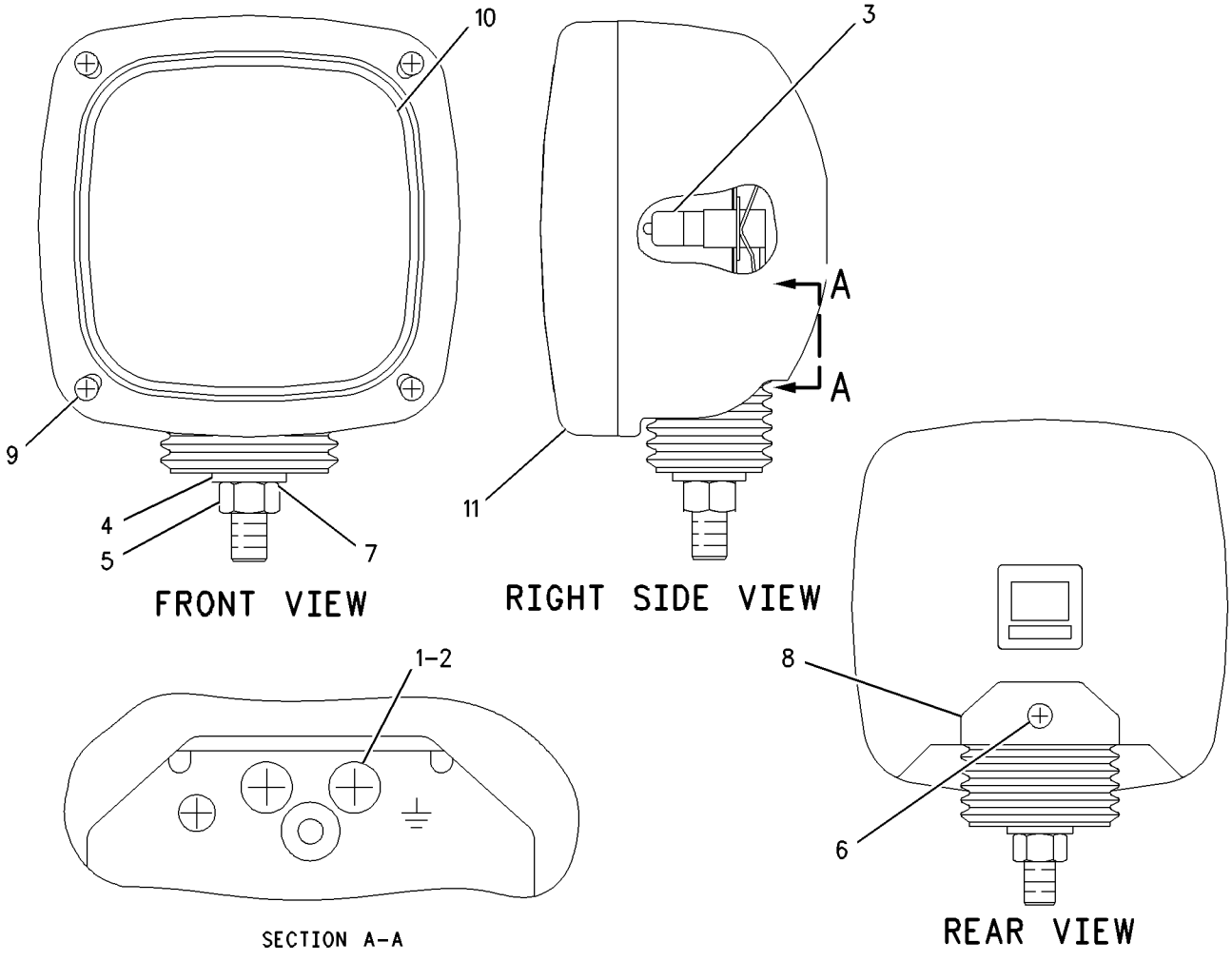

GRAPHIC #1 **<END>** g00645948

153-2523 LAMP GP-FLOOD

S/N: KGF1-UP; FAL1-UP
24-VOLT
PART OF 4I-5409 LIGHTING GP-FLOOD

SMCS-1434 **i02724687**

NOTE	REF NO	GRAPHIC REF	PART NUMBER	QTY	PART NAME 1 2 3 4 5 6 (PRODUCT LEVEL)	SEE PAGE
M	1	1	**6V-5210**	2	SCREW-MACHINE (M4X0.7X10-MM)	
	2	1	**3B-4501**	2	LOCKWASHER	
	3	1	**9X-3463**	1	LAMP-HALOGEN (24-VOLT, 70-WATT)	
	4	1	**8T-4223**	1	WASHER-HARD (13.5X25.5X3-MM THK)	
M	5	1	**8T-4244**	1	NUT (M12X1.75-THD)	
M	6	1	**174-7791**	1	SCREW-TAPPING	
	7	1	**5C-2889**	1	LOCKWASHER	
	8	1	**170-6993**	1	COVER	
M	9	1	**180-3861**	4	SCREW-TAPPING	
	10	1	**170-9417**	1	LENS AS	
	11	1	**170-9418**	1	BAND	

M - METRIC PART

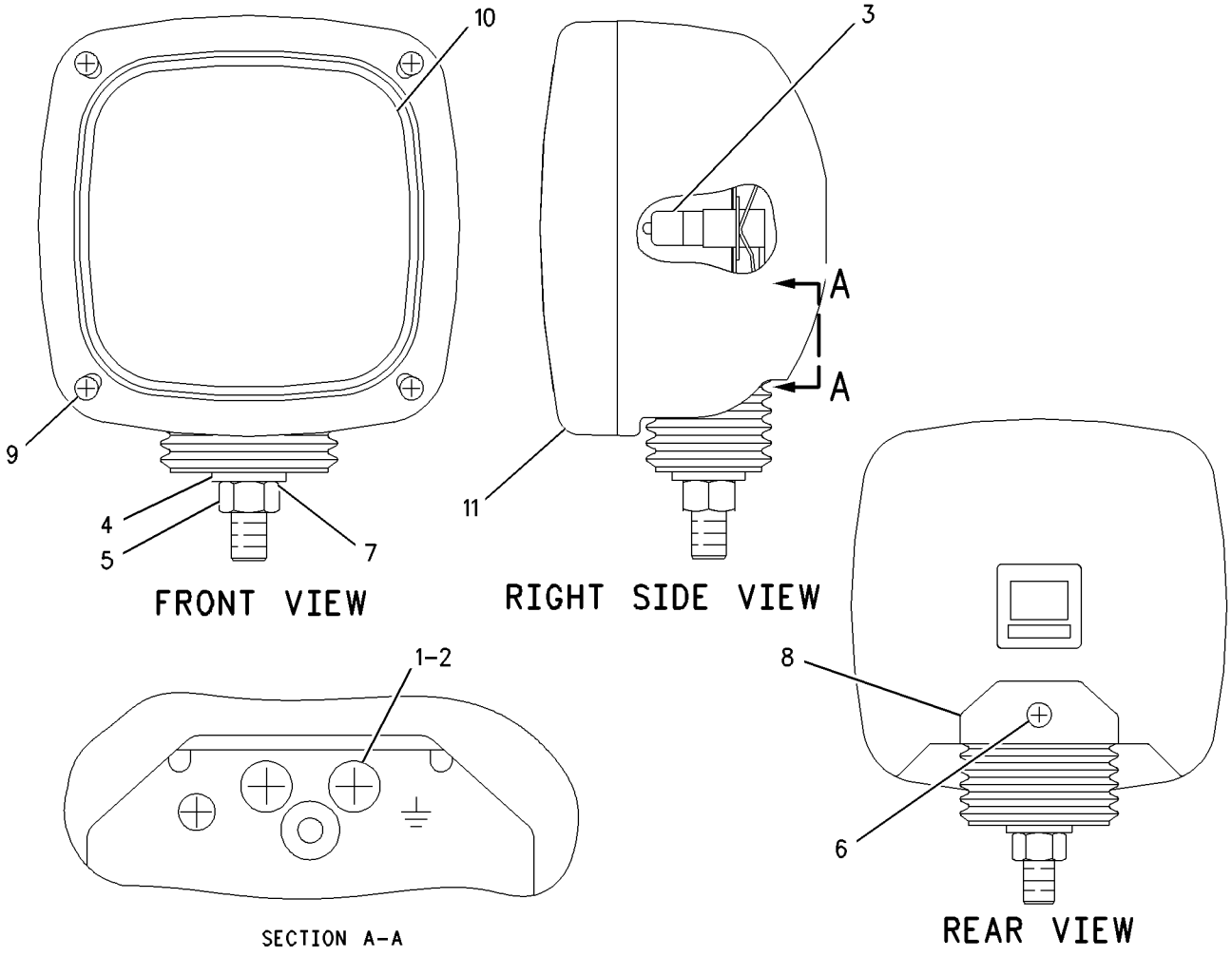

GRAPHIC #1 **<END>** g00645948

167-3441 LAMP GP-FLOOD

S/N: KGF1-UP; FAL1-UP
24-VOLT
PART OF 163-6772, 238-1627, 336-6071, 366-9342, 366-9343 LIGHTING GP-FLOOD
AN ATTACHMENT

SMCS-1434 **i01823005**

NOTE	REF NO	GRAPHIC REF	PART NUMBER	QTY	PART NAME 1 2 3 4 5 6 (PRODUCT LEVEL)	SEE PAGE
	1	1	**9X-3463**	1	LAMP-HALOGEN (24-VOLT, 70-WATT)	

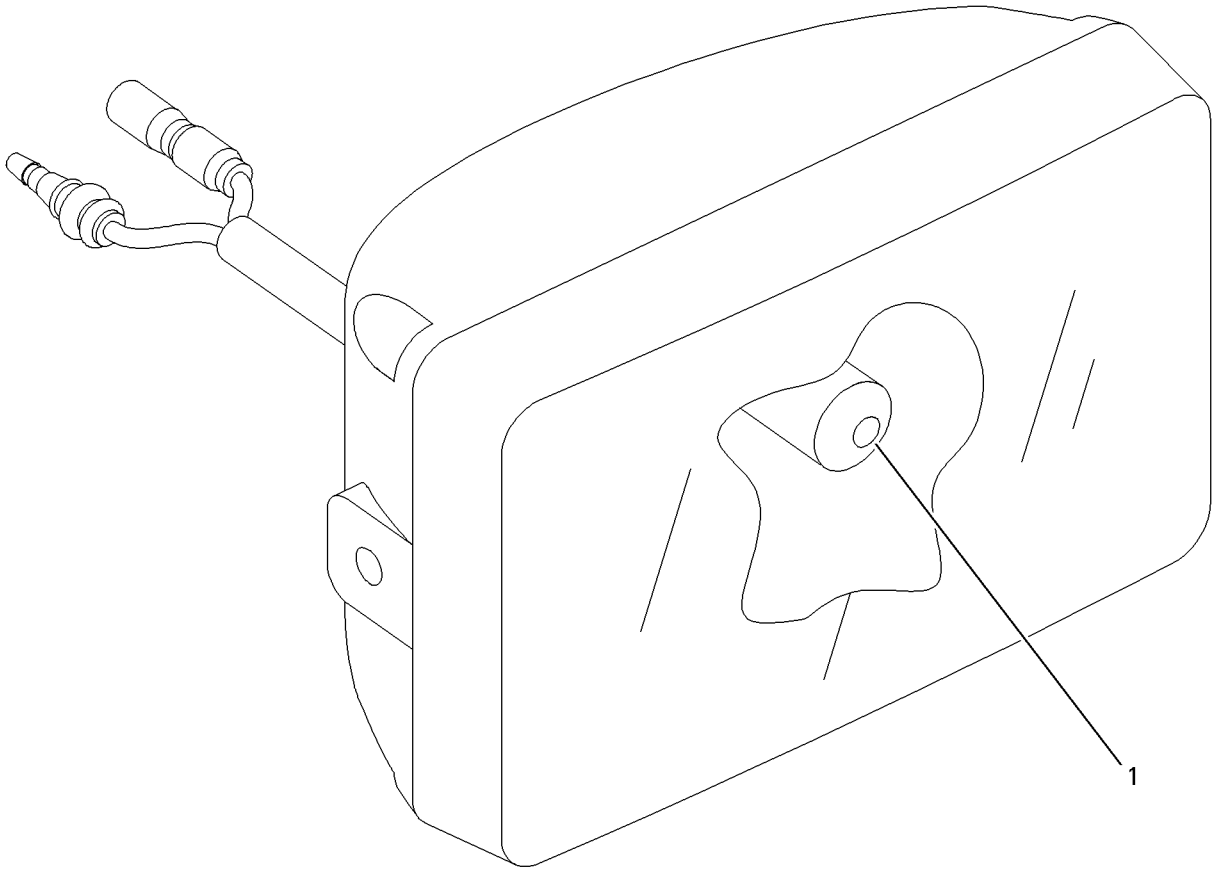

GRAPHIC #1 **<END>** g00692317

4I-5409 LIGHTING GP-FLOOD—CHASSIS, RH

S/N: KGF1-UP; FAL1-UP

PART OF 264-8638, 264-8639 CHASSIS AR

SMCS-1434 **i05190571**

NOTE	REF NO	GRAPHIC REF	PART NUMBER	QTY	PART NAME 1 2 3 4 5 6 (PRODUCT LEVEL)	SEE PAGE
Y	1	1	**153-2523**	1	LAMP GP-FLOOD (24-VOLT)	476

Y - SEPARATE ILLUSTRATION

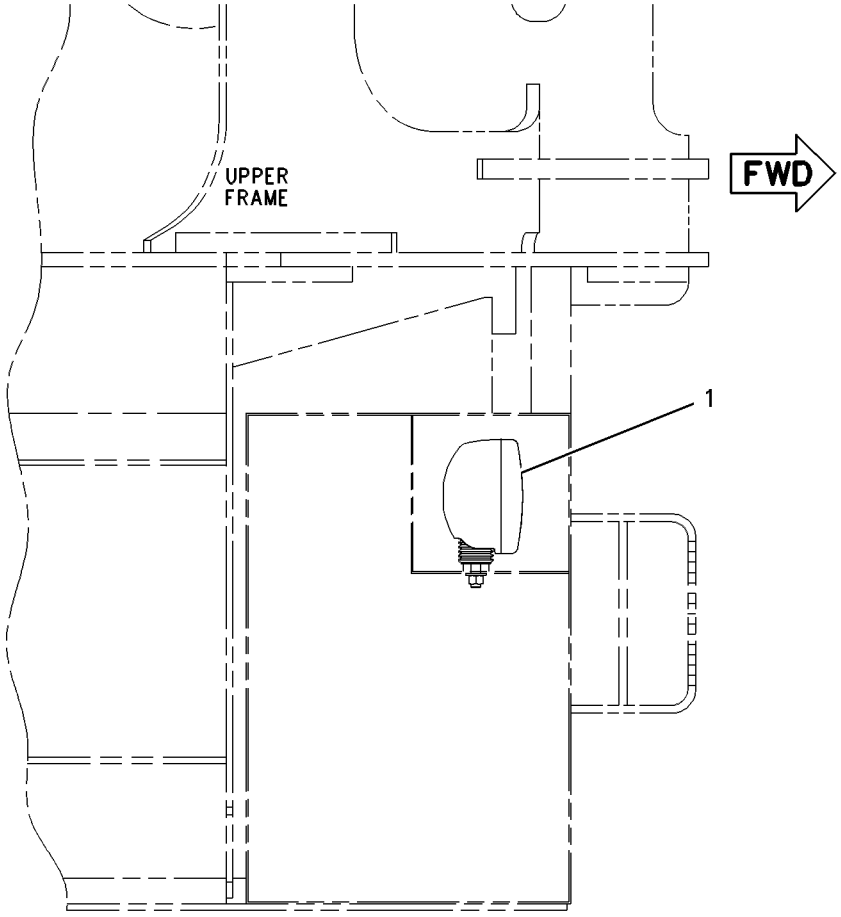

TOP VIEW

GRAPHIC #1 **<END>** g00588573

163-6772 LIGHTING GP-FLOOD–CAB

S/N: KGF1-UP; FAL1-UP

PART OF 346-8041 CAB GP, 314-3859, 314-3860, 314-3861, 314-3862, 314-3864, 314-3865, 314-3905, 347-3338, 347-3340, 354-1018, 354-1019, 354-1062, 354-1141, 354-1145, 359-2300, 359-2309, 359-2310, 359-2404, 359-2405, 359-2421, 359-2504, 359-2506, 359-2507, 367-8686, 367-8697, 367-8817, 379-7118, 379-7119 DISTRIBUTION AR AN ATTACHMENT

SMCS-1434 **i03296219**

NOTE	REF NO	GRAPHIC REF	PART NUMBER	QTY	PART NAME 1 2 3 4 5 6 (PRODUCT LEVEL)	SEE PAGE
	1	1	**163-6814**	1	COVER (RH)	
	2	1	**163-6813**	1	COVER (LH)	
M	3	1	**8T-4970**	4	BOLT (M6X1X14-MM)	
	4	1	**9X-8256**	12	WASHER (6.6X12X2-MM THK)	
Y	5	1	**167-3441**	2	LAMP GP-FLOOD (24-VOLT)	477
	6	1	**163-6795**	2	STRAP-CABLE	
B	7	1	**9X-8256**	4	WASHER (6.6X12X2-MM THK)	
	8	1	**167-3437**	1	BRACKET AS (LH)	
M	9	1	**8T-6411**	6	SCREW-MACHINE (M6X1X12-MM)	
M	10	1	**8T-4200**	2	BOLT (M8X1.25X16-MM)	
	11	1	**8T-4224**	2	WASHER-HARD (8.8X16X2-MM THK)	
	12	1	**167-3456**	2	HARNESS AS-LIGHTING (CAB FLOODLIGHT)	
					(EACH INCLUDES)	
		1	**7Y-3962**	1	TERMINAL-BULLET (MALE)	
		1	**7Y-3964**	1	TUBE (CONNECTOR TERMINAL)	
		1	**7Y-3963**	1	TERMINAL-BULLET (FEMALE)	
		1	**7Y-3965**	1	TUBE (RECEPTACLE TERMINAL)	
	13	1	**167-3438**	1	BRACKET AS (RH)	
M	14	1	**8T-6412**	2	SCREW-MACHINE (M6X1X20-MM)	

B - USE AS REQUIRED
M - METRIC PART
Y - SEPARATE ILLUSTRATION

163-6772 **LIGHTING GP-FLOOD (*contd.*)** **i03296219**

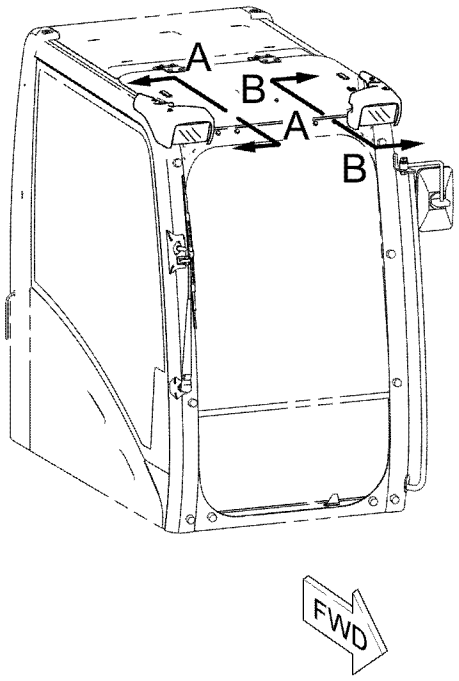

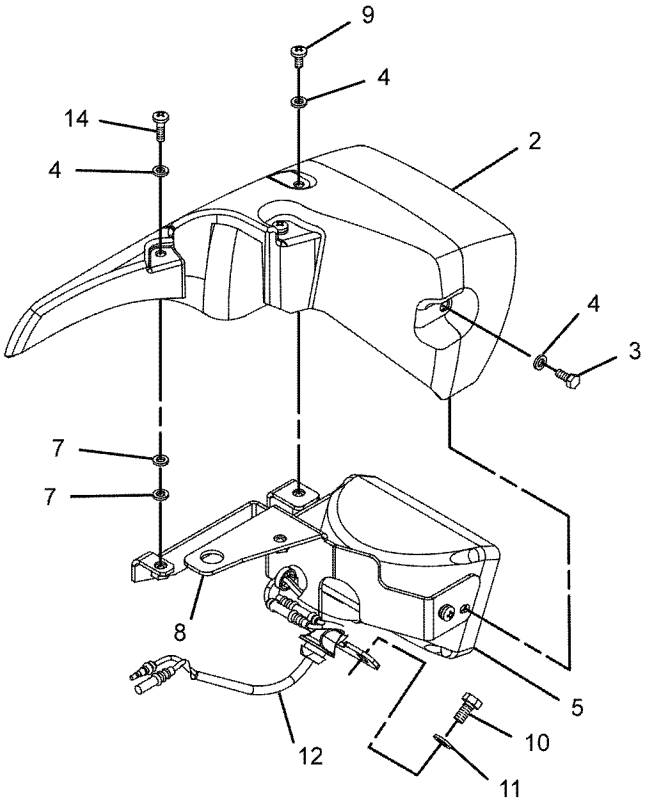

VIEW B-B
(EXPLODED)

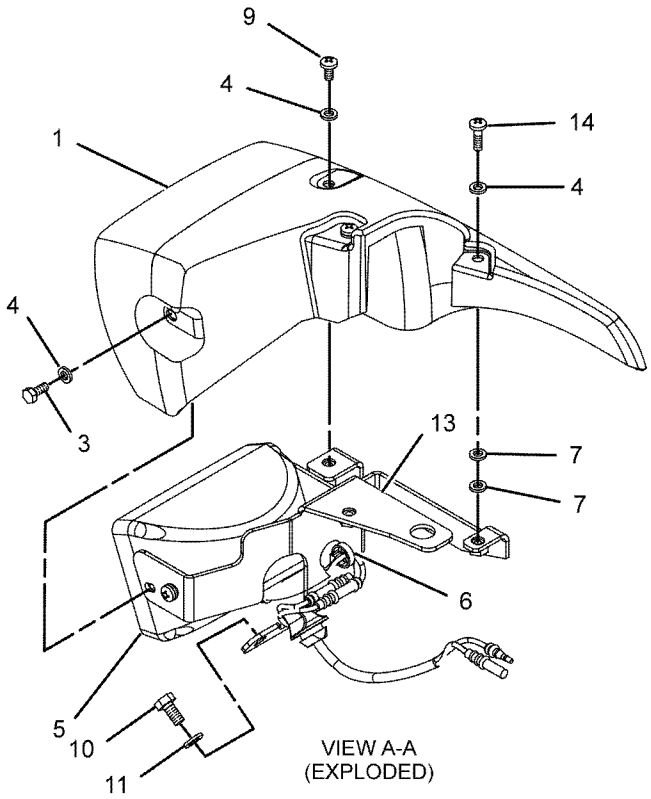

VIEW A-A
(EXPLODED)

GRAPHIC #1 **<END>** g01062205

170-9294 LIGHTING GP-FLOOD–CAB GUARD

S/N: KGF1-UP; FAL1-UP
PART OF 314-3899, 314-3900 OPTION AR-LIGHTING
AN ATTACHMENT

SMCS-1434 **i05134329**

NOTE	REF NO	GRAPHIC REF	PART NUMBER	QTY	PART NAME 1 2 3 4 5 6 (PRODUCT LEVEL)	SEE PAGE
	1	1	**183-1035**	2	LAMP GP-FLOOD (24-VOLT)	
					(EACH INCLUDES)	
		1	**9X-3463**	1	LAMP-HALOGEN (24-VOLT, 70-WATT)	
	2	1	**163-6795**	2	STRAP-CABLE	
M	3	1	**8T-4133**	2	NUT (M10X1.5-THD)	
	4	1	**8T-4121**	4	WASHER-HARD (11X21X2.5-MM THK)	
M	5	1	**8T-4137**	2	BOLT (M10X1.5X20-MM)	
	6	1	**170-9295**	2	HARNESS AS-LIGHTING (CAB FLOODLIGHTS, FRONT)	
					(EACH INCLUDES)	
		1	**7Y-3962**	2	TERMINAL-BULLET (MALE)	
		1	**7Y-3964**	2	TUBE (CONNECTOR TERMINAL)	
		1	**7Y-3963**	2	TERMINAL-BULLET (FEMALE)	
		1	**7Y-3965**	2	TUBE (RECEPTACLE TERMINAL)	

M - METRIC PART

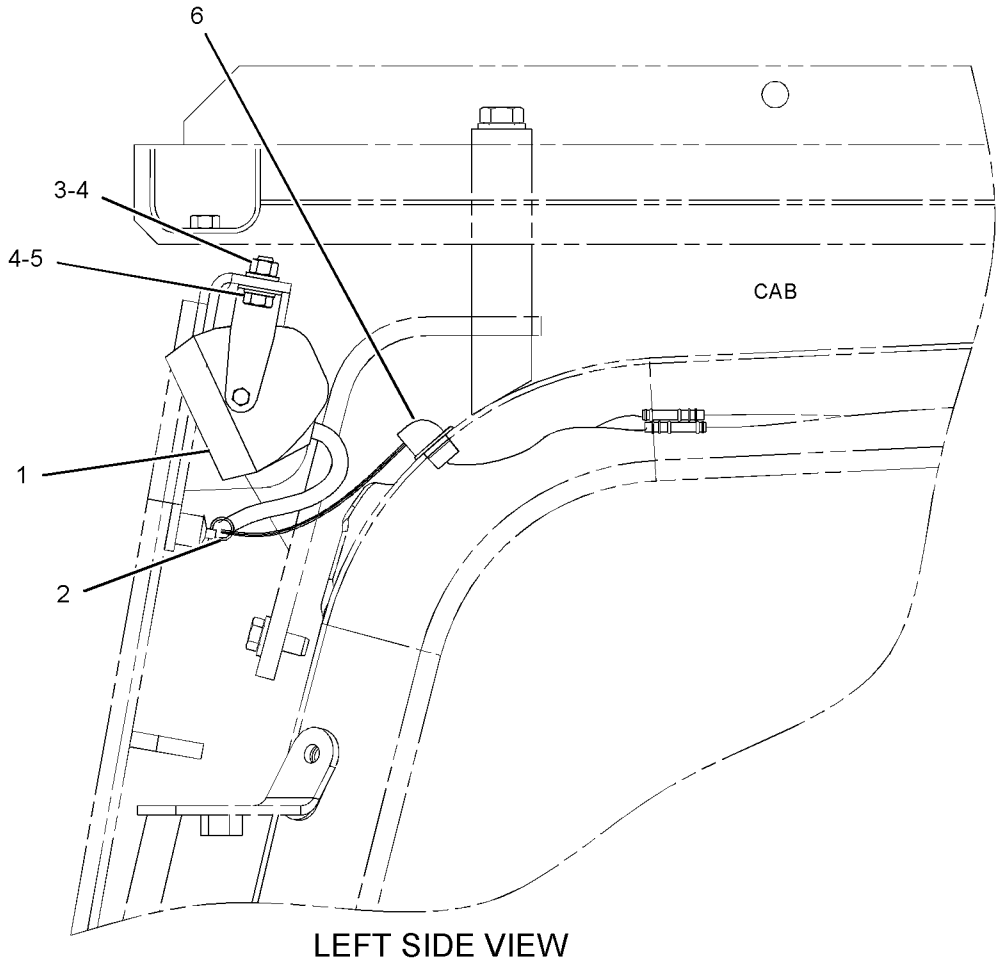

LEFT SIDE VIEW

GRAPHIC #1 **<END>** g01134805

238-1627 LIGHTING GP-FLOOD—CAB

S/N: KGF1-UP

PART OF 338-9908, 338-9923, 359-2298, 359-2299, 367-8809, 367-8810, 367-8811, 367-8813 DISTRIBUTION AR

AN ATTACHMENT

SMCS-1434 **i02602026**

NOTE	REF NO	GRAPHIC REF	PART NUMBER	QTY	PART NAME 1 2 3 4 5 6 (PRODUCT LEVEL)	SEE PAGE
	1	1	**3S-2093**	1	STRAP-CABLE	
	2	1	**163-6704**	1	TIMER AS (TIME DELAY LIGHTING)	
		1	**102-8802**	1	KIT-RECEPTACLE (2-PIN)	
		1	**102-8803**	1	KIT-RECEPTACLE (3-PIN)	
					(EACH RECEPTACLE KIT INCLUDES RECEPTACLE AS & WEDGE)	
		1	**186-3735**	5	PIN-CONNECTOR (16-GA TO 18-GA)	
	3	1	**163-6795**	2	STRAP-CABLE	
	4	1	**163-6813**	1	COVER (LH)	
	5	1	**163-6814**	1	COVER (RH)	
	6	1	**167-3437**	1	BRACKET AS (LH)	
	7	1	**167-3438**	1	BRACKET AS (RH)	
Y	8	1	**167-3441**	2	LAMP GP-FLOOD (24-VOLT) (CAB)	477
	9	1	**167-3456**	2	HARNESS AS-LIGHTING (CAB FLOODLIGHT)	
	10	1	**238-2326**	1	PLATE AS	
M	11	1	**8T-4200**	2	BOLT (M8X1.25X16-MM)	
	12	1	**8T-4224**	2	WASHER-HARD (8.8X16X2-MM THK)	
M	13	1	**8T-4970**	4	BOLT (M6X1X14-MM)	
M	14	1	**8T-6411**	3	SCREW-MACHINE (M6X1X12-MM)	
M	15	1	**8T-6412**	1	SCREW-MACHINE (M6X1X20-MM)	
M	16	1	**9X-2042**	2	SCREW-TRUSS HEAD (M6X1X12-MM)	
M	17	1	**9X-2043**	2	SCREW-TRUSS HEAD (M6X1X14-MM)	
	18	1	**9X-8256**	8	WASHER (6.6X12X2-MM THK)	
B	19	1	**9X-8256**	4	WASHER (6.6X12X2-MM THK)	

B - USE AS REQUIRED
M - METRIC PART
Y - SEPARATE ILLUSTRATION

238-1627 **LIGHTING GP-FLOOD (*contd.*)** **i02602026**

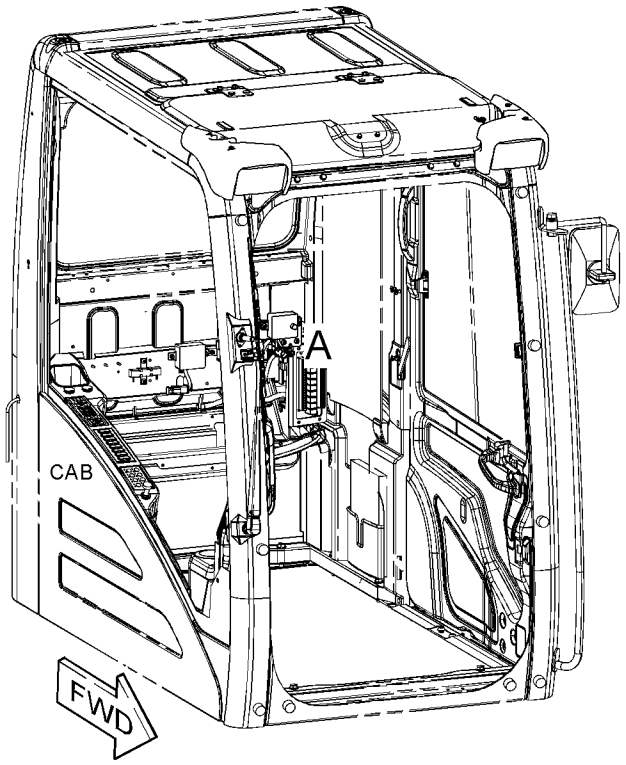

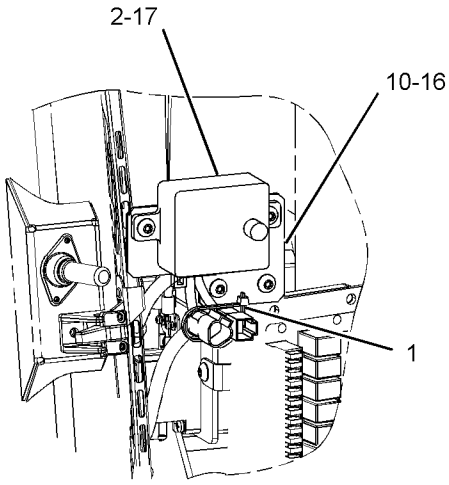

VIEW OF AREA A

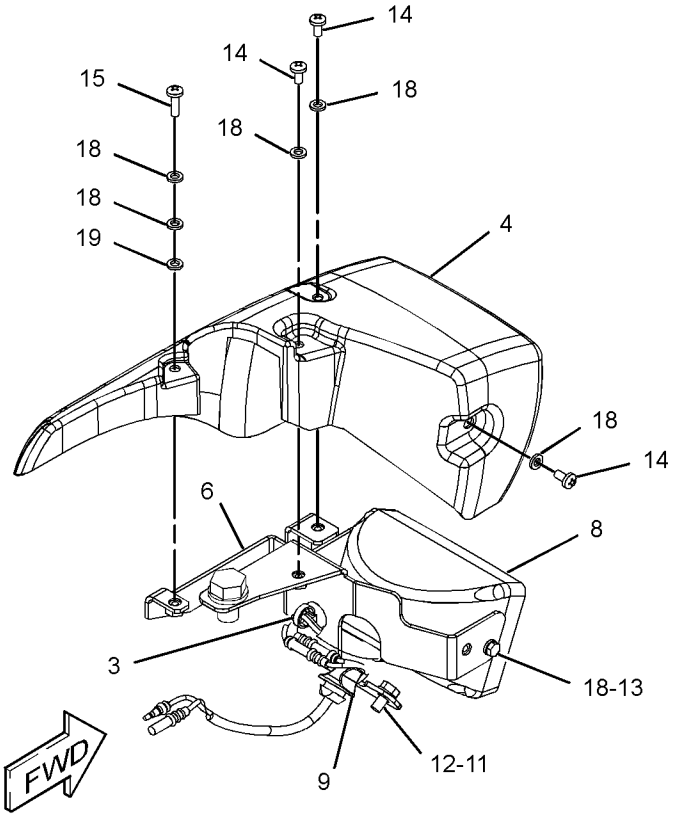

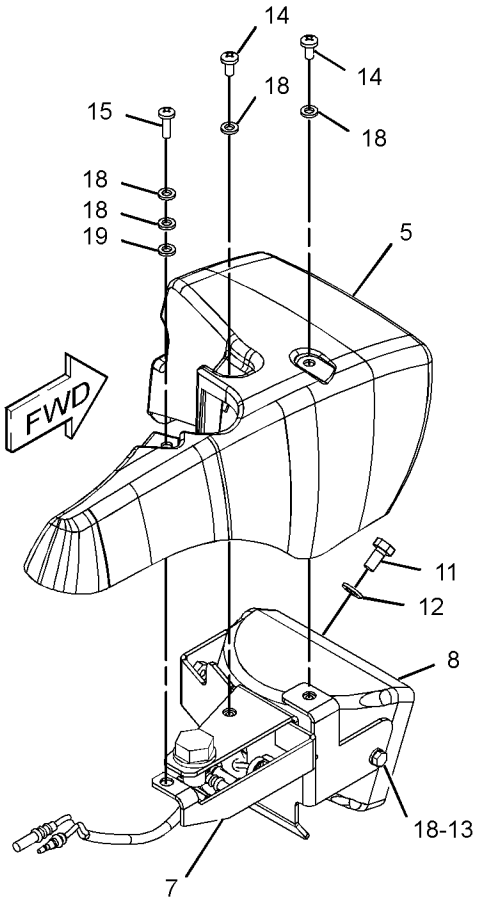

GRAPHIC #1 **<END>** g01310977

238-1628 LIGHTING GP-FLOOD—CAB GUARD

S/N: KGF1-UP

PART OF 338-9900, 338-9901 OPTION AR-LIGHTING

AN ATTACHMENT

SMCS-1434 **i03296221**

NOTE	REF NO	GRAPHIC REF	PART NUMBER	QTY	PART NAME 1 2 3 4 5 6 (PRODUCT LEVEL)	SEE PAGE
	1	1	**3S-2093**	1	STRAP-CABLE	
	2	1	**163-6704**	1	TIMER AS (TIME DELAY LIGHTING)	
		1	**186-3735**	5	PIN-CONNECTOR (16-GA TO 18-GA)	
		1	**102-8802**	1	KIT-RECEPTACLE (2-PIN)	
		1	**102-8803**	1	KIT-RECEPTACLE (3-PIN)	
					(EACH RECEPTACLE KIT INCLUDES RECEPTACLE AS & WEDGE)	
	3	1	**163-6795**	2	STRAP-CABLE	
	4	1	**170-9295**	2	HARNESS AS-LIGHTING (CAB FLOODLIGHTS, FRONT)	
					(EACH INCLUDES)	
		1	**7Y-3962**	1	TERMINAL-BULLET (MALE)	
		1	**7Y-3964**	1	TUBE (CONNECTOR TERMINAL)	
		1	**7Y-3963**	1	TERMINAL-BULLET (FEMALE)	
		1	**7Y-3965**	1	TUBE (RECEPTACLE TERMINAL)	
	5	1	**183-1035**	2	LAMP GP-FLOOD (24-VOLT)	
					(EACH INCLUDES)	
		1	**9X-3463**	1	LAMP-HALOGEN (24-VOLT, 70-WATT)	
	6	1	**238-2326**	1	PLATE AS	
	7	1	**8T-4121**	4	WASHER-HARD (11X21X2.5-MM THK)	
M	8	1	**8T-4133**	2	NUT (M10X1.5-THD)	
M	9	1	**8T-4137**	2	BOLT (M10X1.5X20-MM)	
M	10	1	**9X-2042**	2	SCREW-TRUSS HEAD (M6X1X12-MM)	
M	11	1	**9X-2043**	2	SCREW-TRUSS HEAD (M6X1X14-MM)	

M - METRIC PART

238-1628 **LIGHTING GP-FLOOD (*contd.*)** **i03296221**

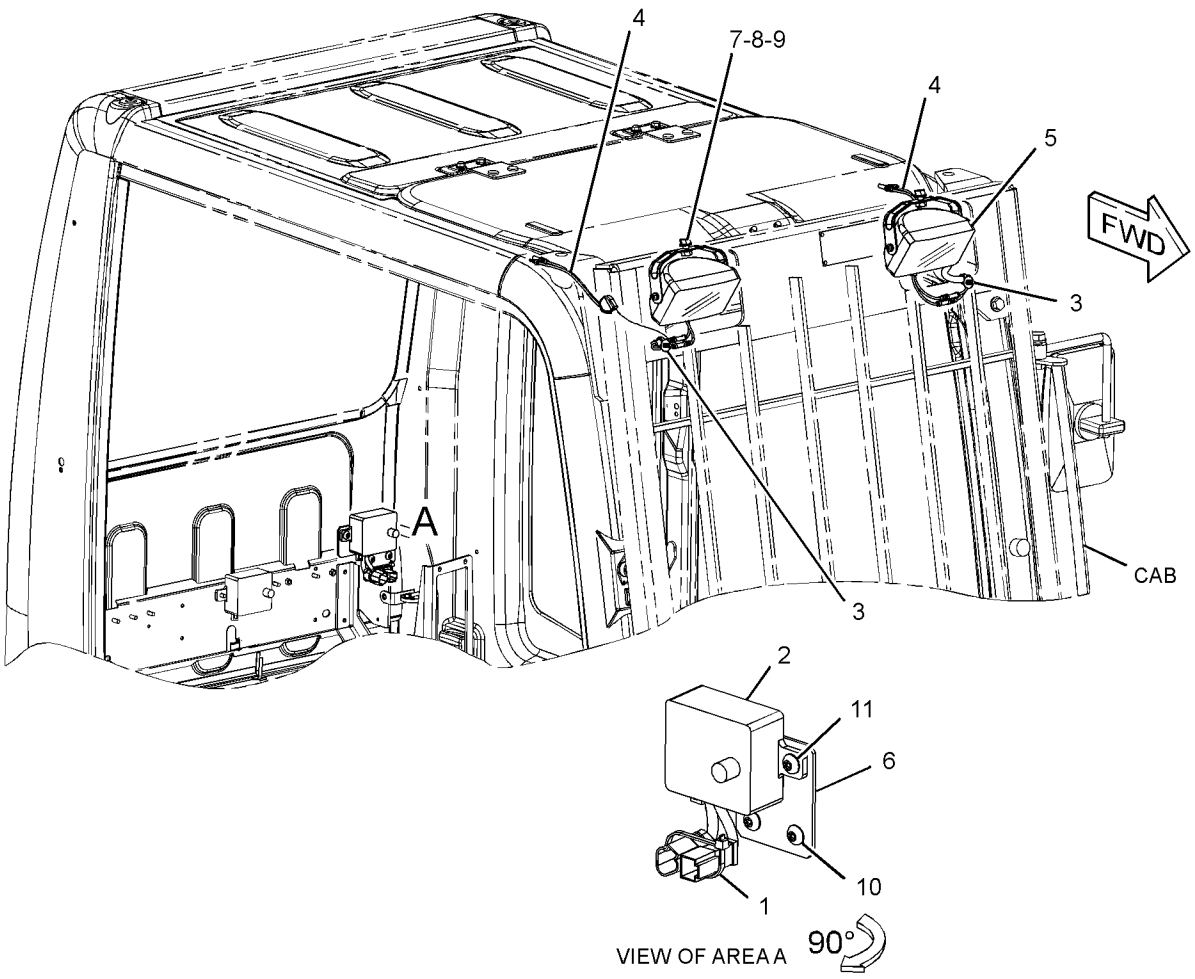

GRAPHIC #1 **<END>** g01620741

259-5043 LIGHTING GP-FLOOD—BOOM, LH

S/N: KGF1-UP; FAL1-UP

PART OF 240-3828, 240-3830, 240-3832, 240-3836, 275-3695, 298-4308, 359-2433, 359-2434, 415-1399, 415-8447, 416-0961 BOOM AR-1 PIECE LONG, 302-9208 LINKAGE AR-FRONT AN ATTACHMENT

SMCS-1434 **i05262222**

NOTE	REF NO	GRAPHIC REF	PART NUMBER	QTY	PART NAME 1 2 3 4 5 6 (PRODUCT LEVEL)	SEE PAGE
	1	1	**7I-2673**	1	STRAP-CABLE	
	2	1	**111-4836**	4	CLIP	
	3	1	**116-0118**	1	CLIP	
Y	4	1	**153-2521**	1	LAMP GP-FLOOD (24-VOLT)	475
	5	1	**259-5326**	1	HARNESS AS-LIGHTING (BOOM, LH)	
		1	**243-4505**	1	RECEPTACLE AS-CONNECTOR (2-PIN)	
	6	1	**111-4837**	1	CLIP	
	7	1	**134-3284**	1	BRACKET	
	8	1	**5P-9297**	2	CLIP	
	9	1	**8T-4121**	5	WASHER-HARD (11X21X2.5-MM THK)	
M	10	1	**8T-4133**	5	NUT (M10X1.5-THD)	
M	11	1	**7X-2552**	1	BOLT (M16X2X30-MM)	
	12	1	**9X-8257**	1	WASHER (17.5X30X3.5-MM THK)	

M - METRIC PART
Y - SEPARATE ILLUSTRATION

259-5043 **LIGHTING GP-FLOOD (*contd.*)** **i05262222**

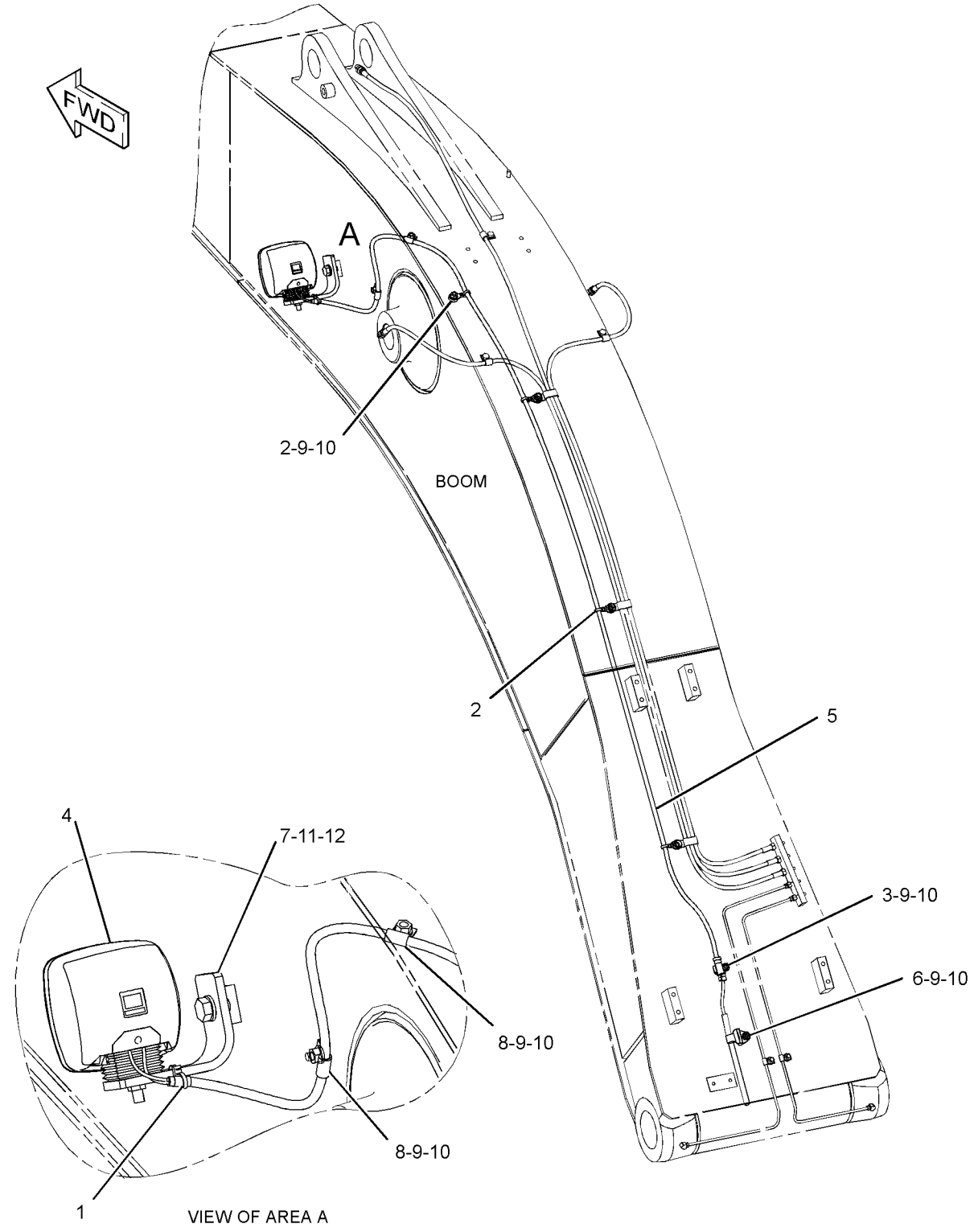

GRAPHIC #1 **<END>** g01226436

259-5047 LIGHTING GP-FLOOD—BOOM, RH

S/N: KGF1-UP; FAL1-UP

FOR USE WITH 259-5043—PAGE: 486

PART OF 314-3859, 314-3860, 314-3861, 314-3862, 314-3864, 314-3865, 314-3905, 354-1018, 354-1019, 359-2309, 359-2310, 359-2404, 359-2405, 359-2506, 359-2507, 367-8817, 379-7118, 379-7216, 379-7217, 379-7226, 379-7227, 379-7267, 385-4035, 396-6826, 396-6827 DISTRIBUTION AR

AN ATTACHMENT

SMCS-1434 **i05254604**

NOTE	REF NO	GRAPHIC REF	PART NUMBER	QTY	PART NAME 1 2 3 4 5 6 (PRODUCT LEVEL)	SEE PAGE
	1	1	**7I-2673**	2	STRAP-CABLE	
	2	1	**111-4836**	2	CLIP	
Y	3	1	**153-2521**	1	LAMP GP-FLOOD (24-VOLT)	475
	4	1	**259-5327**	1	HARNESS AS-LIGHTING (BOOM)	
		1	**2L-8075**	4	TERMINAL-RING (14-GA TO 16-GA, NO. 8 SCREW)	
	5	1	**134-3284**	1	BRACKET	
	6	1	**7N-3718**	2	CLIP	
	7	1	**8T-4121**	2	WASHER-HARD (11X21X2.5-MM THK)	
M	8	1	**8T-4133**	2	NUT (M10X1.5-THD)	
M	9	1	**7X-2552**	1	BOLT (M16X2X30-MM)	
	10	1	**9X-8257**	1	WASHER (17.5X30X3.5-MM THK)	

M - METRIC PART
Y - SEPARATE ILLUSTRATION

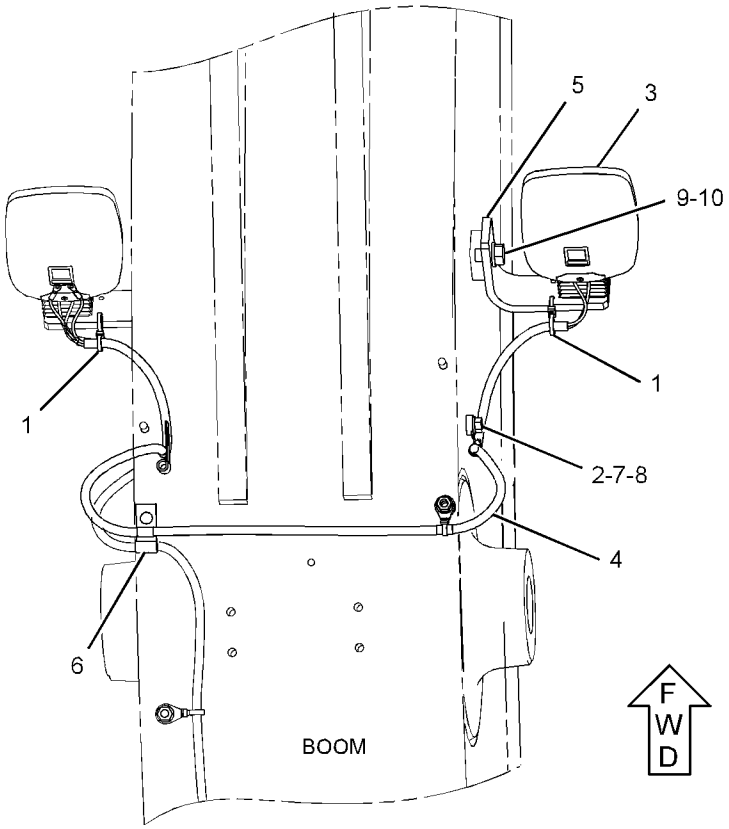

TOP VIEW

GRAPHIC #1 **<END>** g01223146

259-5048 LIGHTING GP-FLOOD—SHORT BOOM, RH

S/N: KGF1-UP; FAL1-UP
FOR USE WITH 267-7627—PAGE: 491
AN ATTACHMENT

SMCS-1434 **i02706828**

NOTE	REF NO	GRAPHIC REF	PART NUMBER	QTY	PART NAME 1 2 3 4 5 6 (PRODUCT LEVEL)	SEE PAGE
	1	1	**3S-2093**	1	STRAP-CABLE	
	2	1	**7I-2673**	1	STRAP-CABLE	
Y	3	1	**153-2521**	1	LAMP GP-FLOOD (24-VOLT)	475
	4	1	**267-7626**	1	HARNESS AS-LIGHTING (SHORT BOOM, RH)	
	5	1	**111-4836**	1	CLIP	
	6	1	**134-3284**	1	BRACKET	
	7	1	**5P-9297**	1	CLIP	
	8	1	**7N-3718**	2	CLIP	
	9	1	**8T-4121**	4	WASHER-HARD (11X21X2.5-MM THK)	
M	10	1	**8T-4133**	4	NUT (M10X1.5-THD)	
M	11	1	**8T-4190**	1	BOLT (M16X2X25-MM)	
	12	1	**9X-8257**	1	WASHER (17.5X30X3.5-MM THK)	

M - METRIC PART
Y - SEPARATE ILLUSTRATION

259-5048 **LIGHTING GP-FLOOD (*contd.*)** **i02706828**

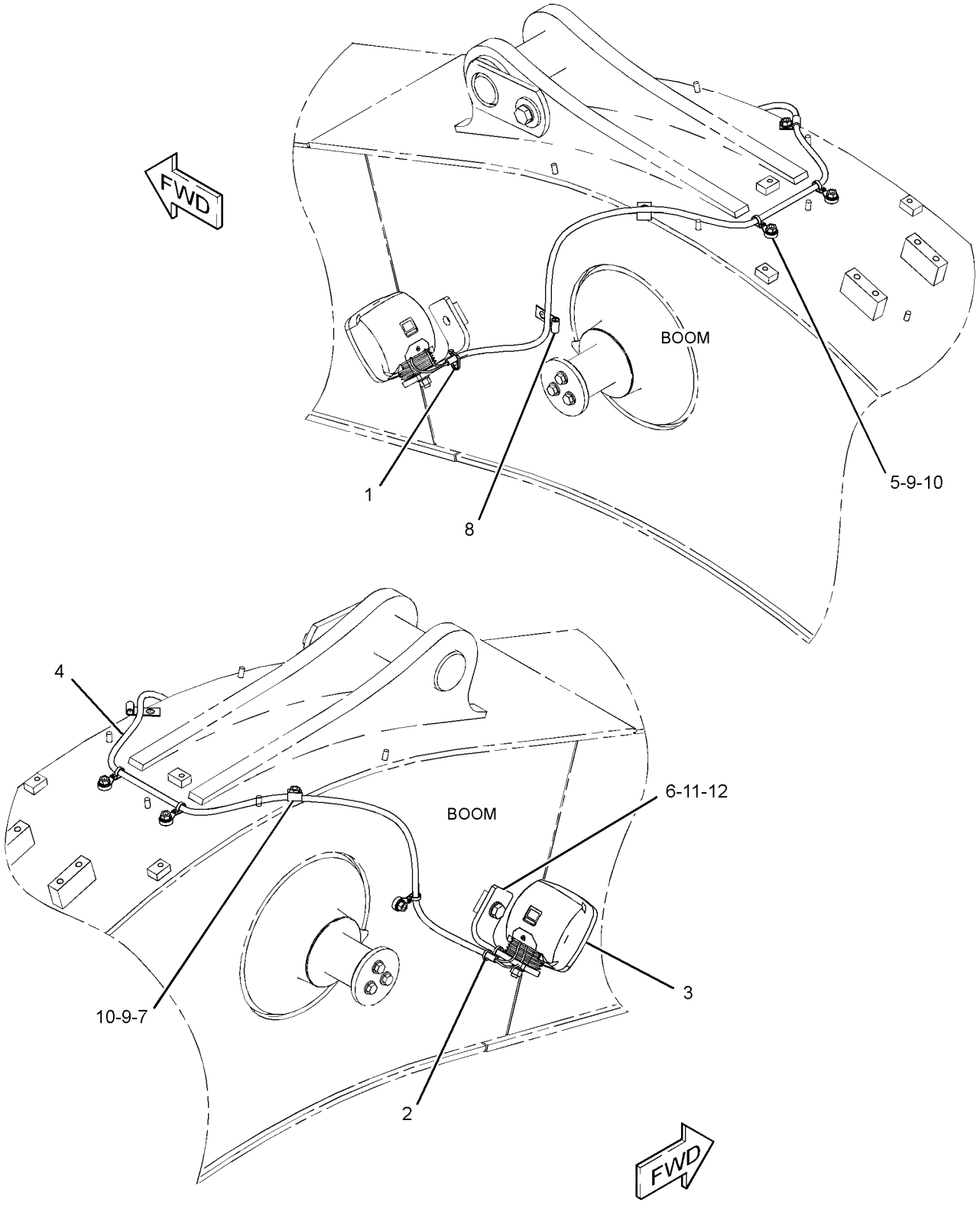

GRAPHIC #1 **<END>** g01230046

267-7627 LIGHTING GP-FLOOD—SHORT BOOM, LH

S/N: KGF1-UP; FAL1-UP

PART OF 240-3833, 415-1396 BOOM AR, 240-3835 BOOM AR-1 PIECE SHORT AN ATTACHMENT

SMCS-1434 **i05291910**

NOTE	REF NO	GRAPHIC REF	PART NUMBER	QTY	PART NAME 1 2 3 4 5 6 (PRODUCT LEVEL)	SEE PAGE
	1	1	**7I-2673**	1	STRAP-CABLE	
	2	1	**111-4836**	4	CLIP	
	3	1	**116-0118**	1	CLIP	
Y	4	1	**153-2521**	1	LAMP GP-FLOOD (24-VOLT)	475
	5	1	**267-7628**	1	HARNESS AS-LIGHTING (SHORT BOOM, LH)	
		1	**9W-0852**	2	PIN-CONNECTOR (14-GA TO 16-GA)	
		1	**2L-8075**	2	TERMINAL-RING (14-GA TO 16-GA, NO. 8 SCREW)	
		1	**243-4505**	1	RECEPTACLE AS-CONNECTOR (2-PIN)	
	6	1	**111-4837**	1	CLIP	
	7	1	**134-3284**	1	BRACKET	
	8	1	**5P-9297**	2	CLIP	
	9	1	**8T-4121**	5	WASHER-HARD (11X21X2.5-MM THK)	
M	10	1	**8T-4133**	5	NUT (M10X1.5-THD)	
M	11	1	**7X-2552**	1	BOLT (M16X2X30-MM)	
	12	1	**9X-8257**	1	WASHER (17.5X30X3.5-MM THK)	

M - METRIC PART
Y - SEPARATE ILLUSTRATION

267-7627 **LIGHTING GP-FLOOD (*contd.*)** **i05291910**

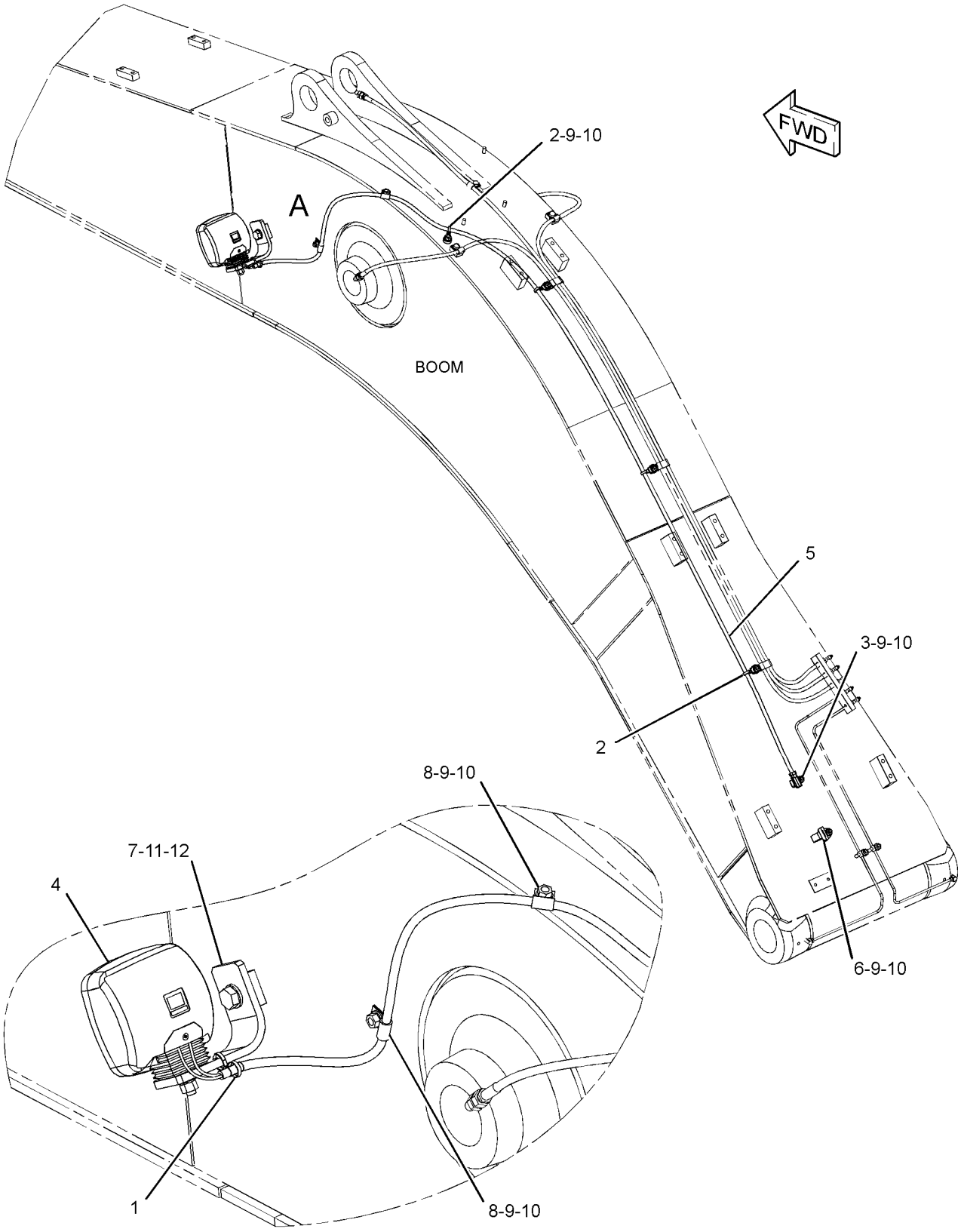

VIEW OF AREA A

GRAPHIC #1 **<END>** g01229074

336-6071 LIGHTING GP-FLOOD–CAB

S/N: FAL1-UP
PART OF 385-4136 DISTRIBUTION AR
AN ATTACHMENT

SMCS-1434 **i03939590**

NOTE	REF NO	GRAPHIC REF	PART NUMBER	QTY	PART NAME 1 2 3 4 5 6 (PRODUCT LEVEL)	SEE PAGE
C	1	1	**3S-2093**	4	STRAP-CABLE	
C	2	1	**7I-2673**	2	STRAP-CABLE	
Y	3	1	**167-3441**	2	LAMP GP-FLOOD (24-VOLT)	477
C	4	1	**350-8132**	2	HARNESS AS-LIGHTING	
					(EACH INCLUDES)	
		1	**7Y-3962**	2	TERMINAL-BULLET (MALE)	
		1	**7Y-3963**	2	TERMINAL-BULLET (FEMALE)	
C	5	1	**350-8133**	1	BRACKET (LH)	
C	6	1	**350-8134**	1	BRACKET (RH)	
C	7	1	**8T-4121**	2	WASHER-HARD (11X21X2.5-MM THK)	
M	8	1	**8T-4137**	2	BOLT (M10X1.5X20-MM)	
M	9	1	**8T-4190**	2	BOLT (M16X2X25-MM)	
M	10	1	**8T-4970**	4	BOLT (M6X1X14-MM)	
	11	1	**9X-8256**	4	WASHER (6.6X12X2-MM THK)	
	12	1	**9X-8257**	2	WASHER (17.5X30X3.5-MM THK)	

C - CHANGE FROM PREVIOUS TYPE
M - METRIC PART
Y - SEPARATE ILLUSTRATION

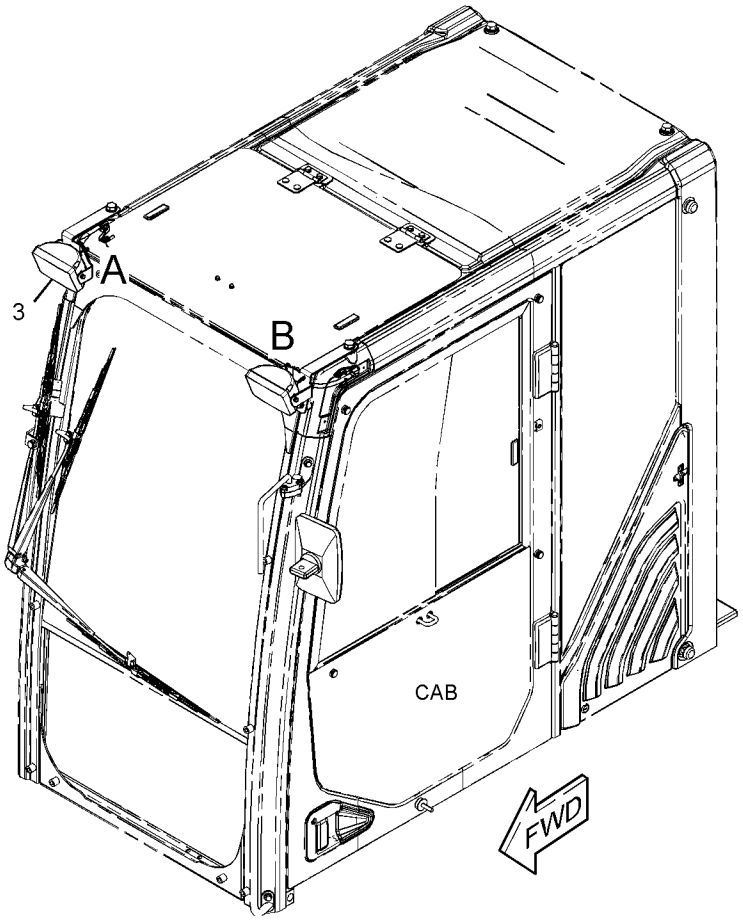

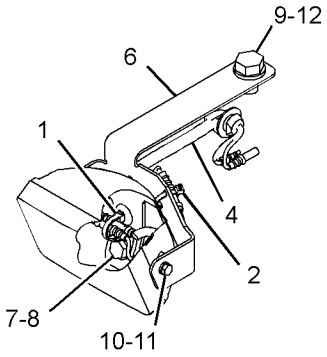

VIEW OF AREA A

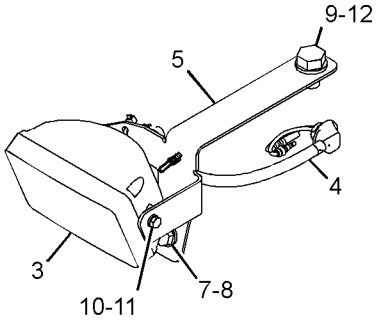

VIEW OF AREA B

GRAPHIC #1 **<END>** g02157068

366-9342 LIGHTING GP-FLOOD—CAB

S/N: KGF1-UP

PART OF 379-7219, 379-7220, 379-7221, 379-7222, 379-7269, 379-7270, 379-7271, 379-7272 DISTRIBUTION AR

AN ATTACHMENT

SMCS-1434 **i05194844**

NOTE	REF NO	GRAPHIC REF	PART NUMBER	QTY	PART NAME 1 2 3 4 5 6 (PRODUCT LEVEL)	SEE PAGE
	1	1	**3S-2093**	1	STRAP-CABLE	
	2	1	**163-6704**	1	TIMER AS (TIME DELAY LIGHTING)	
		1	**8T-8729**	5	PIN-CONNECTOR (16-GA TO 18-GA)	
		1	**102-8802**	1	KIT-RECEPTACLE (2-PIN)	
		1	**102-8803**	1	KIT-RECEPTACLE (3-PIN)	
					(EACH KIT INCLUDES RECEPTACLE AS & WEDGE)	
	3	1	**163-6795**	2	STRAP-CABLE	
Y	4	1	**167-3441**	2	LAMP GP-FLOOD (24-VOLT)	477
	5	1	**167-3456**	2	HARNESS AS-LIGHTING (CAB FLOODLIGHT)	
					(EACH INCLUDES)	
		1	**7Y-3962**	2	TERMINAL-BULLET (MALE)	
		1	**7Y-3964**	2	TUBE (CONNECTOR TERMINAL)	
		1	**7Y-3963**	2	TERMINAL-BULLET (FEMALE)	
		1	**7Y-3965**	2	TUBE (RECEPTACLE TERMINAL)	
	6	1	**238-2326**	1	PLATE AS	
	7	1	**366-9344**	1	BRACKET-LIGHT (CAB, LH)	
	8	1	**366-9345**	1	BRACKET-LIGHT (CAB, RH)	
M	9	1	**8T-4200**	2	BOLT (M8X1.25X16-MM)	
	10	1	**8T-4224**	2	WASHER-HARD (8.8X16X2-MM THK)	
M	11	1	**8T-4970**	4	BOLT (M6X1X14-MM)	
M	12	1	**9X-2042**	2	SCREW-TRUSS HEAD (M6X1X12-MM)	
M	13	1	**9X-2043**	2	SCREW-TRUSS HEAD (M6X1X14-MM)	
	14	1	**9X-8256**	4	WASHER (6.6X12X2-MM THK)	

M - METRIC PART
Y - SEPARATE ILLUSTRATION

366-9342 **LIGHTING GP-FLOOD (*contd.*)** **i05194844**

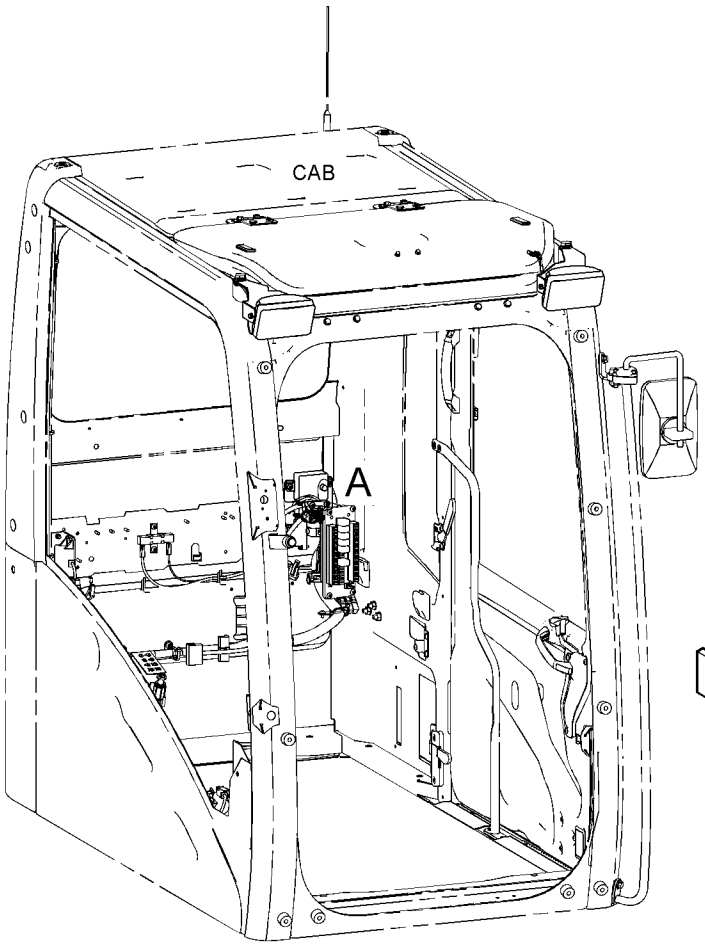

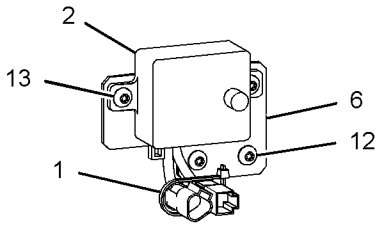

VIEW OF AREA A

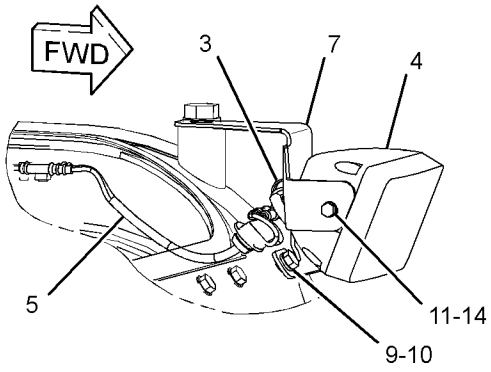

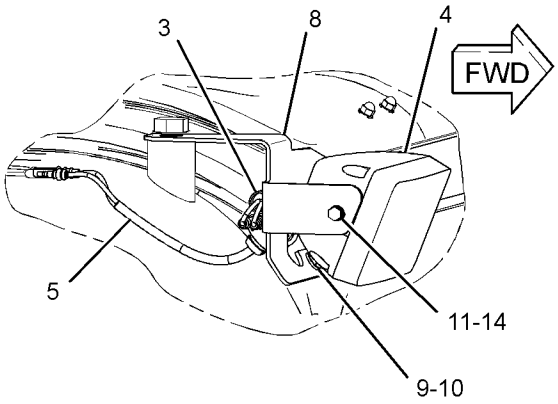

GRAPHIC #1 **<END>** g02798222

366-9343 LIGHTING GP-FLOOD—CAB

S/N: KGF1-UP; FAL1-UP

PART OF 379-7216, 379-7217, 379-7218, 379-7223, 379-7226, 379-7227, 379-7228, 379-7267, 379-7268, 385-4025, 385-4035, 385-4036, 396-6826, 396-6827, 396-6828 DISTRIBUTION AR

AN ATTACHMENT

SMCS-1434 **i05193585**

NOTE	REF NO	GRAPHIC REF	PART NUMBER	QTY	PART NAME 1 2 3 4 5 6 (PRODUCT LEVEL)	SEE PAGE
	1	1	**163-6795**	2	STRAP-CABLE	
Y	2	1	**167-3441**	2	LAMP GP-FLOOD (24-VOLT)	477
	3	1	**167-3456**	2	HARNESS AS-LIGHTING (CAB FLOODLIGHT)	
					(EACH INCLUDES)	
		1	**7Y-3962**	2	TERMINAL-BULLET (MALE)	
		1	**7Y-3964**	2	TUBE (CONNECTOR TERMINAL)	
		1	**7Y-3963**	2	TERMINAL-BULLET (FEMALE)	
		1	**7Y-3965**	2	TUBE (RECEPTACLE TERMINAL)	
	4	1	**366-9344**	1	BRACKET-LIGHT (CAB, LH)	
	5	1	**366-9345**	1	BRACKET-LIGHT (CAB, RH)	
M	6	1	**8T-4200**	2	BOLT (M8X1.25X16-MM)	
	7	1	**8T-4224**	2	WASHER-HARD (8.8X16X2-MM THK)	
M	8	1	**8T-4970**	4	BOLT (M6X1X14-MM)	
	9	1	**9X-8256**	4	WASHER (6.6X12X2-MM THK)	

M - METRIC PART
Y - SEPARATE ILLUSTRATION

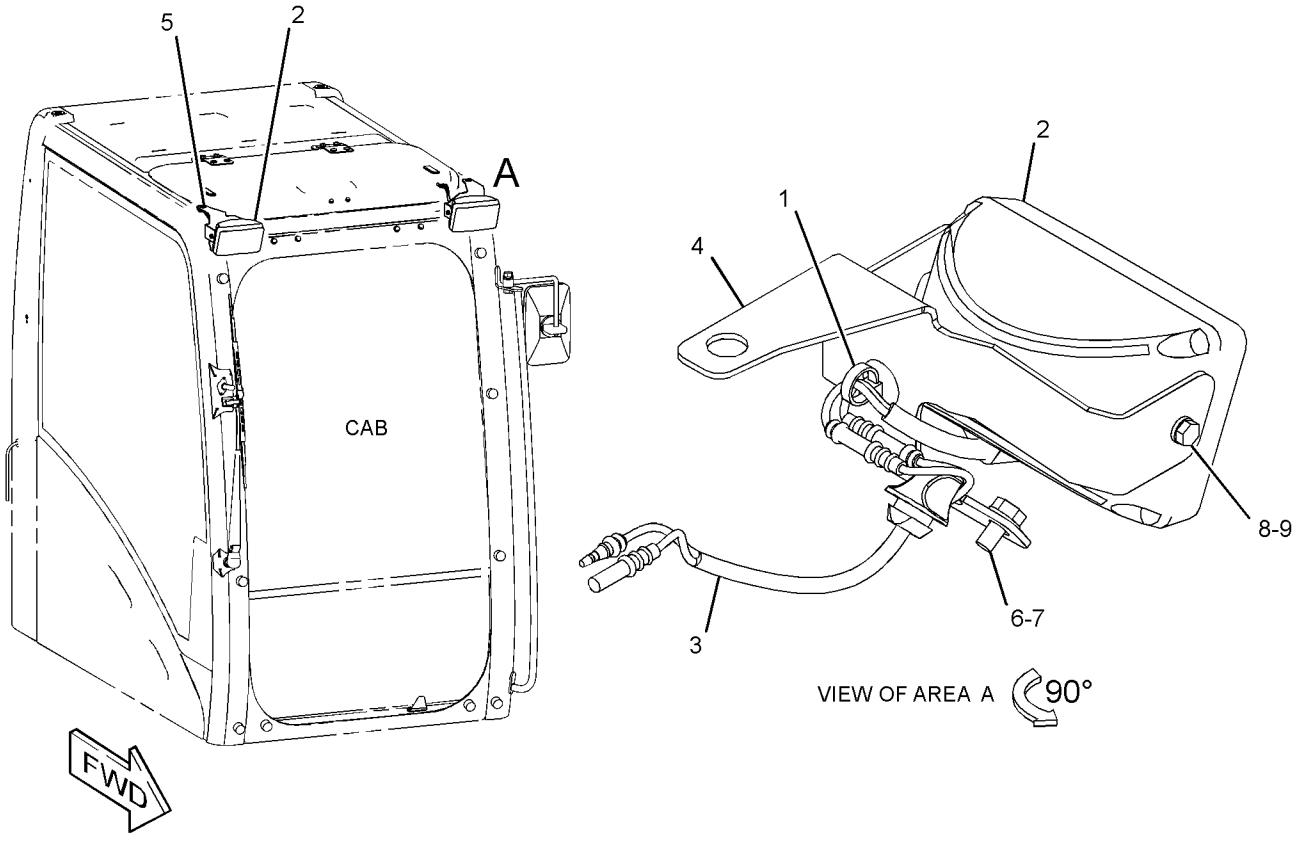

GRAPHIC #1 **<END>** g02768898

339-2019 MAST GP—DUAL GNSS

S/N: KGF1-UP; FAL1-UP
FIELD INSTALLATION

SMCS-7220, 79NS **i03695567**

NOTE	PART NUMBER	QTY	PART NAME 1 2 3 4 5 6 (PRODUCT LEVEL)	SEE PAGE
Y	*339-2032*	2	MOUNTING GP-MAST	499
Y	*339-2034*	2	WIRING GP-GRADE CONTROL	626
	317-3185	2	MAST AS	
Y - SEPARATE ILLUSTRATION				

<END>

339-2021 MAST GP—SINGLE GNSS

S/N: KGF1-UP; FAL1-UP
FIELD INSTALLATION

SMCS-7220, 79NS **i03700520**

NOTE	PART NUMBER	QTY	PART NAME 1 2 3 4 5 6 (PRODUCT LEVEL)	SEE PAGE
Y	*339-2032*	1	MOUNTING GP-MAST	499
Y	*339-2034*	1	WIRING GP-GRADE CONTROL	626
	317-3185	1	MAST AS	
	7T-1099	4	LINK	
	087-5841	1	PLATE	
Y - SEPARATE ILLUSTRATION				

<END>

339-2022 MAST GP—UNIVERSAL TOTAL STATION

S/N: KGF1-UP; FAL1-UP
FIELD INSTALLATION

SMCS-7220, 79NS **i03700540**

NOTE	PART NUMBER	QTY	PART NAME 1 2 3 4 5 6 (PRODUCT LEVEL)	SEE PAGE
Y	*339-2032*	1	MOUNTING GP-MAST	499
Y	*339-2036*	1	WIRING GP-GRADE CONTROL	627
	317-3185	1	MAST AS	
	7T-1099	4	LINK	
	087-5841	1	PLATE	
Y - SEPARATE ILLUSTRATION				

<END>

327-3329 MOUNTING GP-CAMERA–REAR

S/N: KGF1-UP; FAL1-UP
PART OF 314-3774 CAMERA AR
AN ATTACHMENT

SMCS-7348 **i05190509**

NOTE	REF NO	GRAPHIC REF	PART NUMBER	QTY	PART NAME 1 2 3 4 5 6 (PRODUCT LEVEL)	SEE PAGE
Y	1	1	*313-7833*	1	CAMERA & MOUNTING GP (WORK AREA VISUAL SYSTEM, REAR)	439
	2	1	**320-5396**	1	COVER	
	3	1	**8T-4121**	4	WASHER-HARD (11X21X2.5-MM THK)	
M	4	1	**8T-4137**	4	BOLT (M10X1.5X20-MM)	

M - METRIC PART
Y - SEPARATE ILLUSTRATION

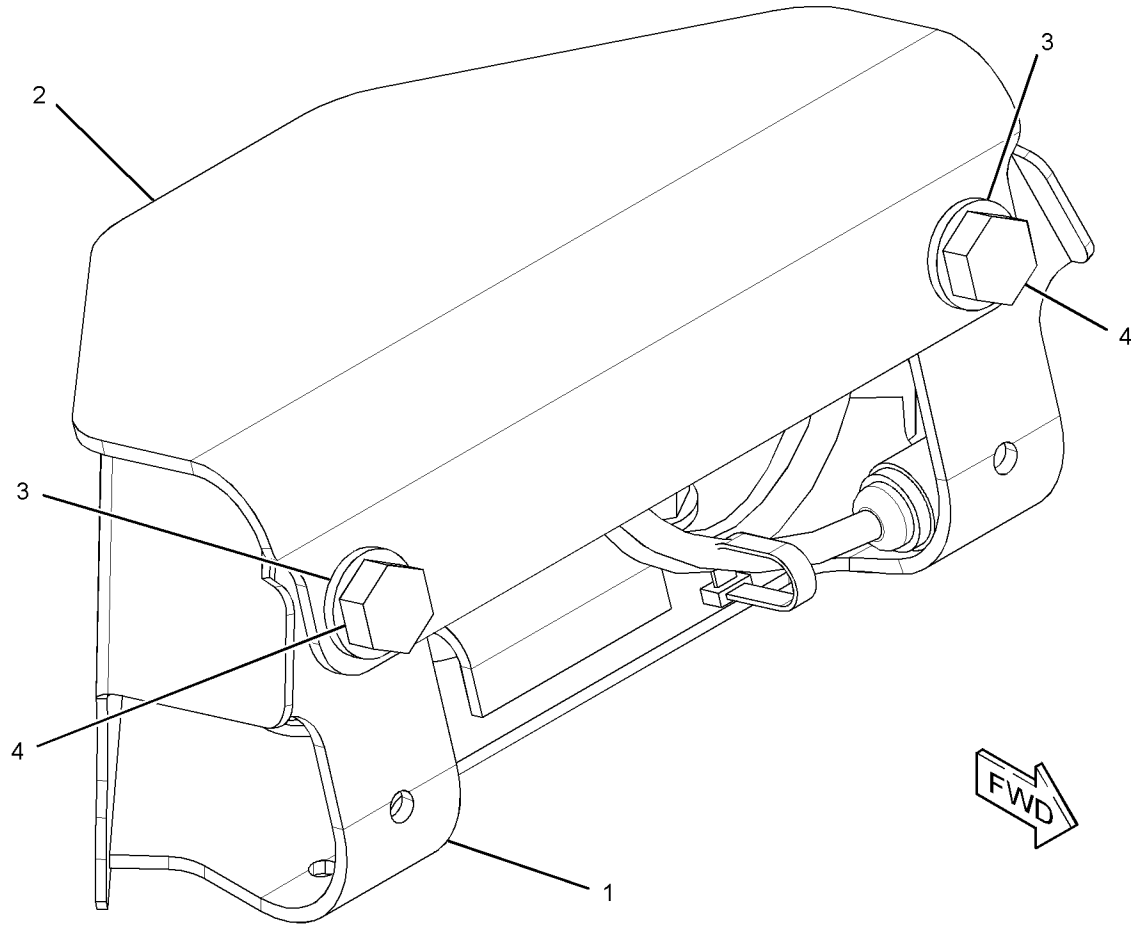

GRAPHIC #1 **<END>** g01609019

339-2032 MOUNTING GP-MAST–ACCUGRADE

S/N: KGF1-UP; FAL1-UP

PART OF 339-2019, 339-2021, 339-2022 MAST GP

SMCS-79NS **i03695566**

NOTE	PART NUMBER	QTY	PART NAME 1 2 3 4 5 6 (PRODUCT LEVEL)	SEE PAGE
M	**8T-4137**	3	BOLT (M10X1.5X20-MM)	
M	**8T-4140**	4	BOLT (M16X2X60-MM)	
	132-5789	3	CLIP	
	087-8738	1	SHIM (1-MM THK)	
	087-8740	3	SHIM (0.4-MM THK)	
	085-9310	4	SPACER (16.6X32X26-MM THK)	
	8T-4121	3	WASHER-HARD (11X21X2.5-MM THK)	

M - METRIC PART

<END>

252-9628 MOUNTING GP-RECEIVER–TARGET

S/N: KGF1-UP; FAL1-UP
FOR USE WITH ACCUGRADE
PART OF 292-0291, 292-0292 RECEIVER GP-SATELLITE, 256-2907 TARGET GP-LASER

SMCS-7009 **i03700460**

NOTE	REF NO	GRAPHIC REF	PART NUMBER	QTY	PART NAME 1 2 3 4 5 6 (PRODUCT LEVEL)	SEE PAGE
M	1	1	**8T-9388**	4	BOLT (M10X1.5X25-MM)	
	2	1	**113-0693**	5	LOCKWASHER	
	3	1	**8R-1803**	5	WASHER (10.5X18X1-MM THK)	
	4	1	**289-8449**	1	HANDLE AS	

M - METRIC PART

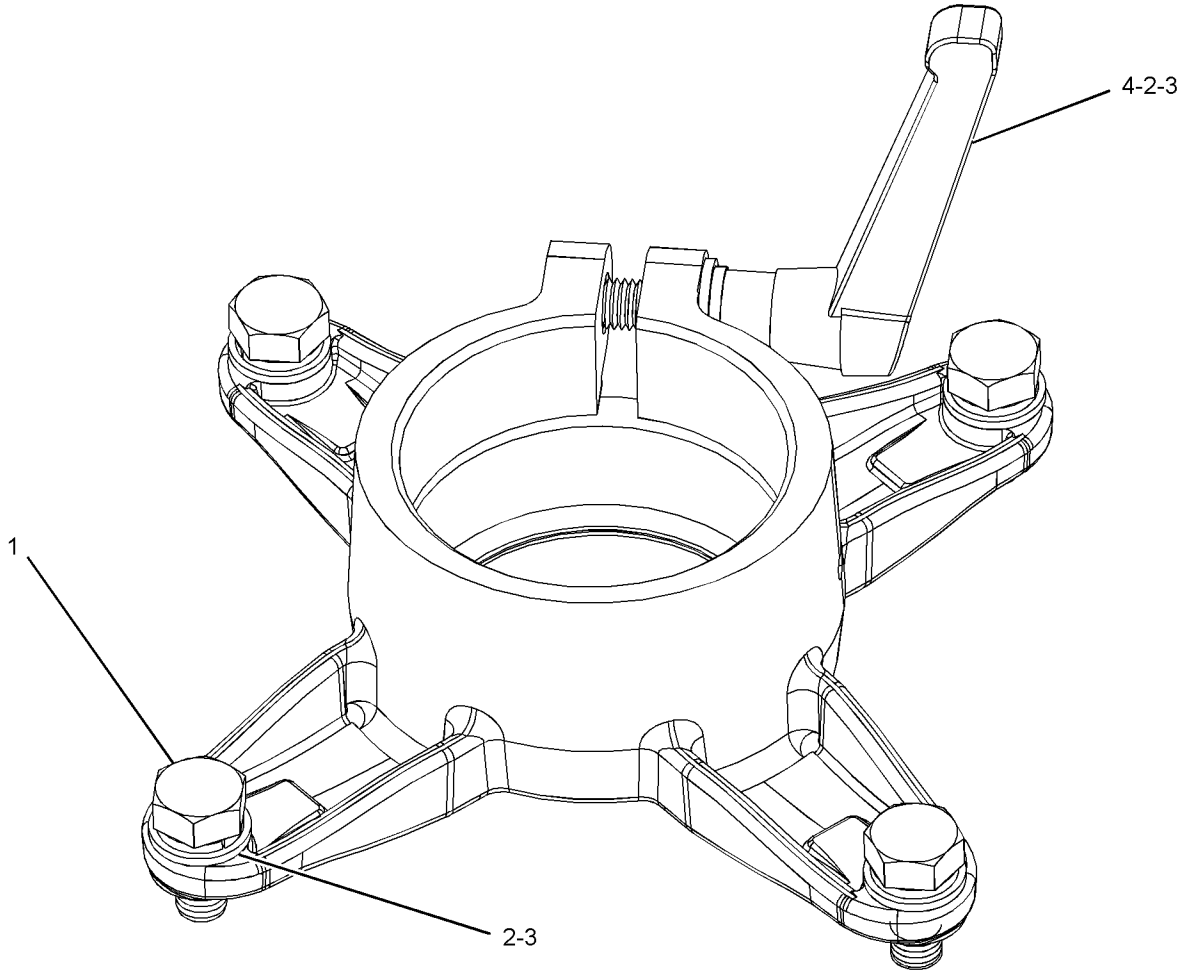

GRAPHIC #1 **<END>** g01998124

339-2038 MOUNTING GP-SENSOR—LINKAGE

S/N: KGF1-UP; FAL1-UP

PART OF 339-2024 GRADE CONTROL AR-LASER, 339-2026, 339-2029 GRADE CONTROL AR-SATELLITE

SMCS-1439, 1923, 1924

i03701720

NOTE	PART NUMBER	QTY	PART NAME 1 2 3 4 5 6 (PRODUCT LEVEL)	SEE PAGE
M	**5C-9553**	16	BOLT (M6X1X16-MM)	
M	**8T-4137**	16	BOLT (M10X1.5X20-MM)	
	265-8145	1	BRACKET-HOUSING	
	322-0221	3	BRACKET-HOUSING	
	265-8146	1	COVER	
	322-0222	3	COVER	
	7Y-8169	1	GROMMET	
M	**179-4324**	4	LOCKNUT (M5X0.8-THD)	
M	**5C-7261**	12	NUT (M8X1.25-THD)	
	9X-8256	16	WASHER (6.6X12X2-MM THK)	
	8T-0328	4	WASHER-HARD (5.5X10X1-MM THK)	
	8T-4224	12	WASHER-HARD (8.8X16X2-MM THK)	
	8T-7934	16	WASHER-HARD (11X21X5-MM THK)	

M - METRIC PART

<END>

360-6175 MOUNTING GP-WIRING

S/N: KGF1-UP; FAL1-UP
PART OF 290-1911 COOLING AR-HIGH AMBIENT TEMP
AN ATTACHMENT

SMCS-1408 **i04012671**

NOTE	REF NO	GRAPHIC REF	PART NUMBER	QTY	PART NAME 1 2 3 4 5 6 (PRODUCT LEVEL)	SEE PAGE
	1	1	**7K-1181**	1	STRAP-CABLE	
	2	1	**4P-7581**	1	CLIP	

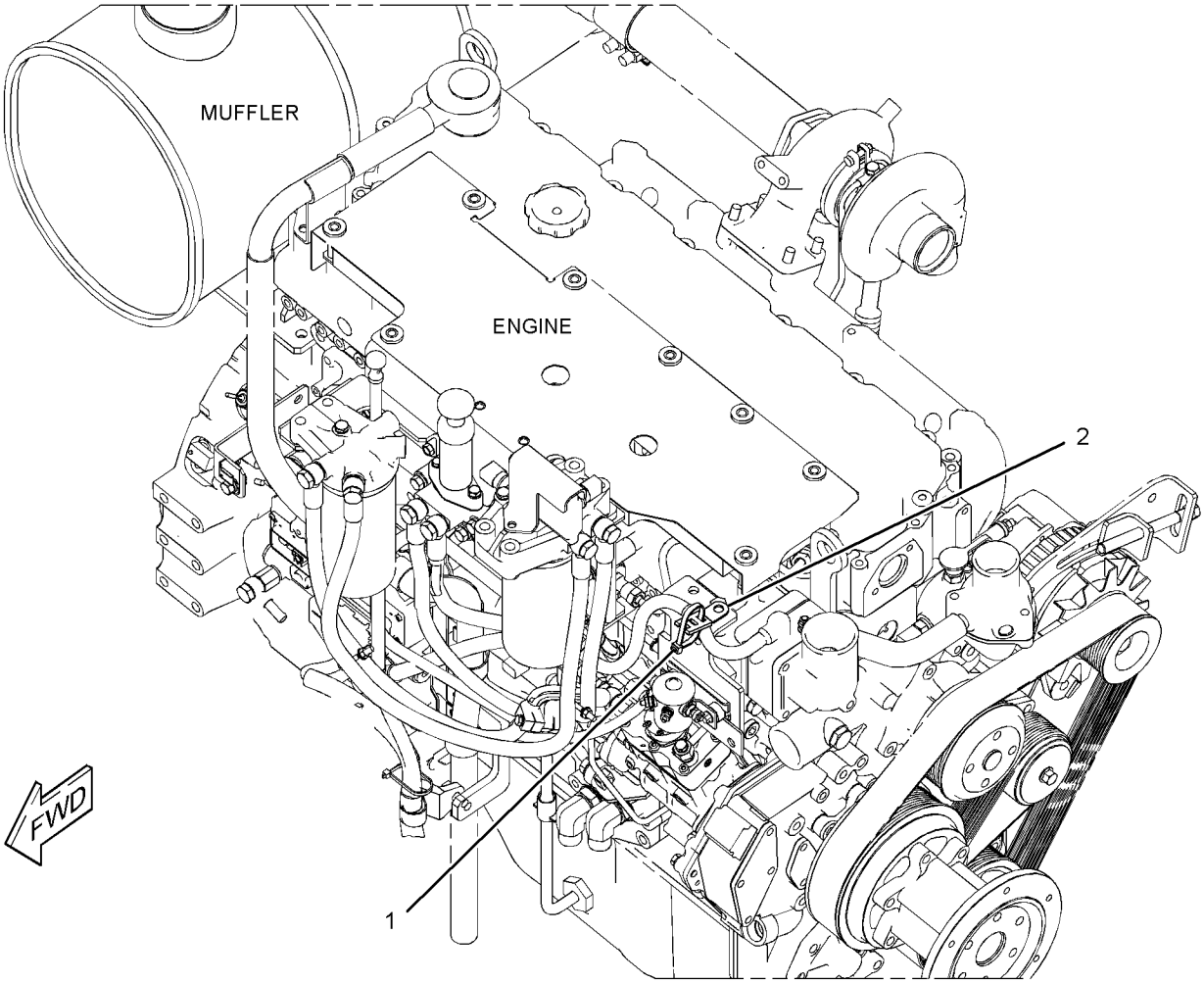

GRAPHIC #1 **<END>** g02189093

259-5176 PANEL & MTG GP-CIRCUIT BREAKER

S/N: KGF1-1257; FAL1-841
PART OF 273-5387 OPERATOR AR

SMCS-1417, 1420 **i03093343**

NOTE	REF NO	GRAPHIC REF	PART NUMBER	QTY	PART NAME 1 2 3 4 5 6 (PRODUCT LEVEL)	SEE PAGE
Y	1	1	**259-5177**	1	PANEL GP-CIRCUIT BREAKER	506
	2	1	**8T-4121**	4	WASHER-HARD (11X21X2.5-MM THK)	
M	3	1	**8T-4137**	4	BOLT (M10X1.5X20-MM)	

M - METRIC PART
Y - SEPARATE ILLUSTRATION

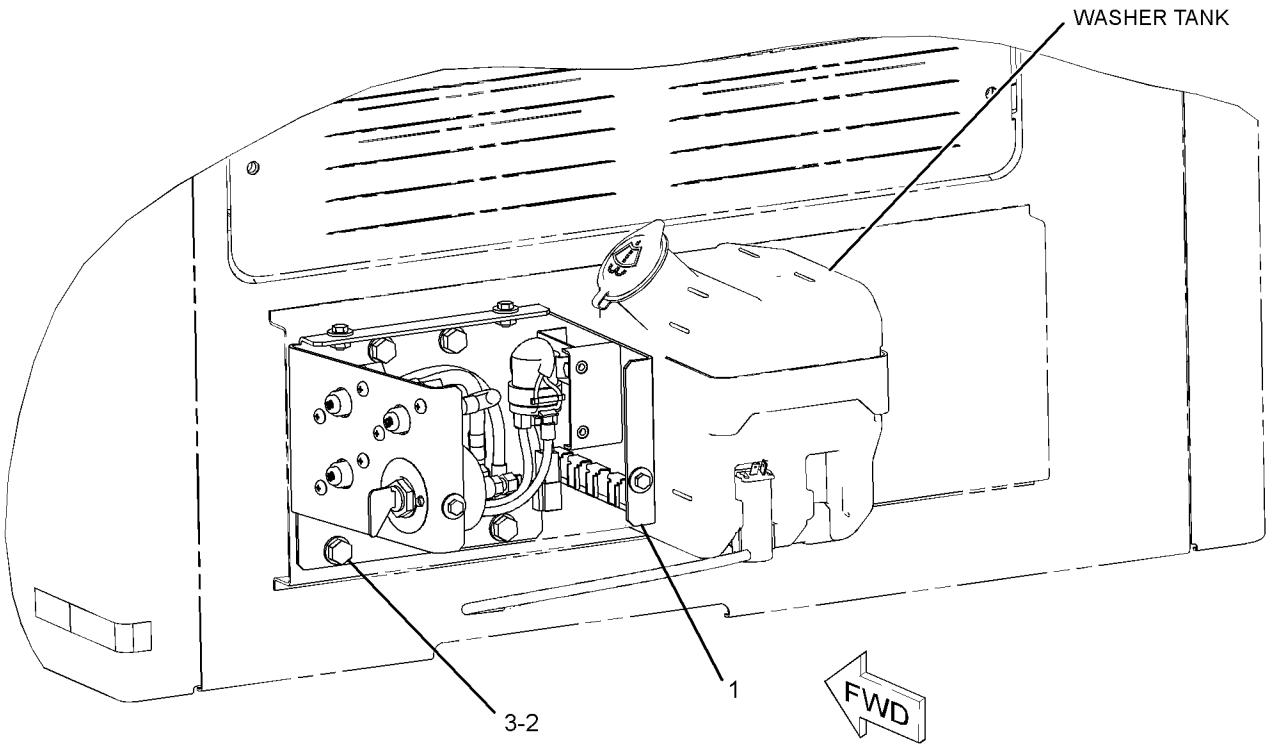

GRAPHIC #1 **<END>** g01193327

259-5176 PANEL & MTG GP-CIRCUIT BREAKER

S/N: KGF1258-3940; FAL842-2991
PART OF 273-5387 OPERATOR AR

SMCS-1417, 1420 **i03265580**

NOTE	REF NO	GRAPHIC REF	PART NUMBER	QTY	PART NAME 1 2 3 4 5 6 (PRODUCT LEVEL)	SEE PAGE
CY	1	1	**319-1386**	1	PANEL GP-CIRCUIT BREAKER	508
	2	1	**8T-4121**	4	WASHER-HARD (11X21X2.5-MM THK)	
M	3	1	**8T-4137**	4	BOLT (M10X1.5X20-MM)	

C - CHANGE FROM PREVIOUS TYPE
M - METRIC PART
Y - SEPARATE ILLUSTRATION

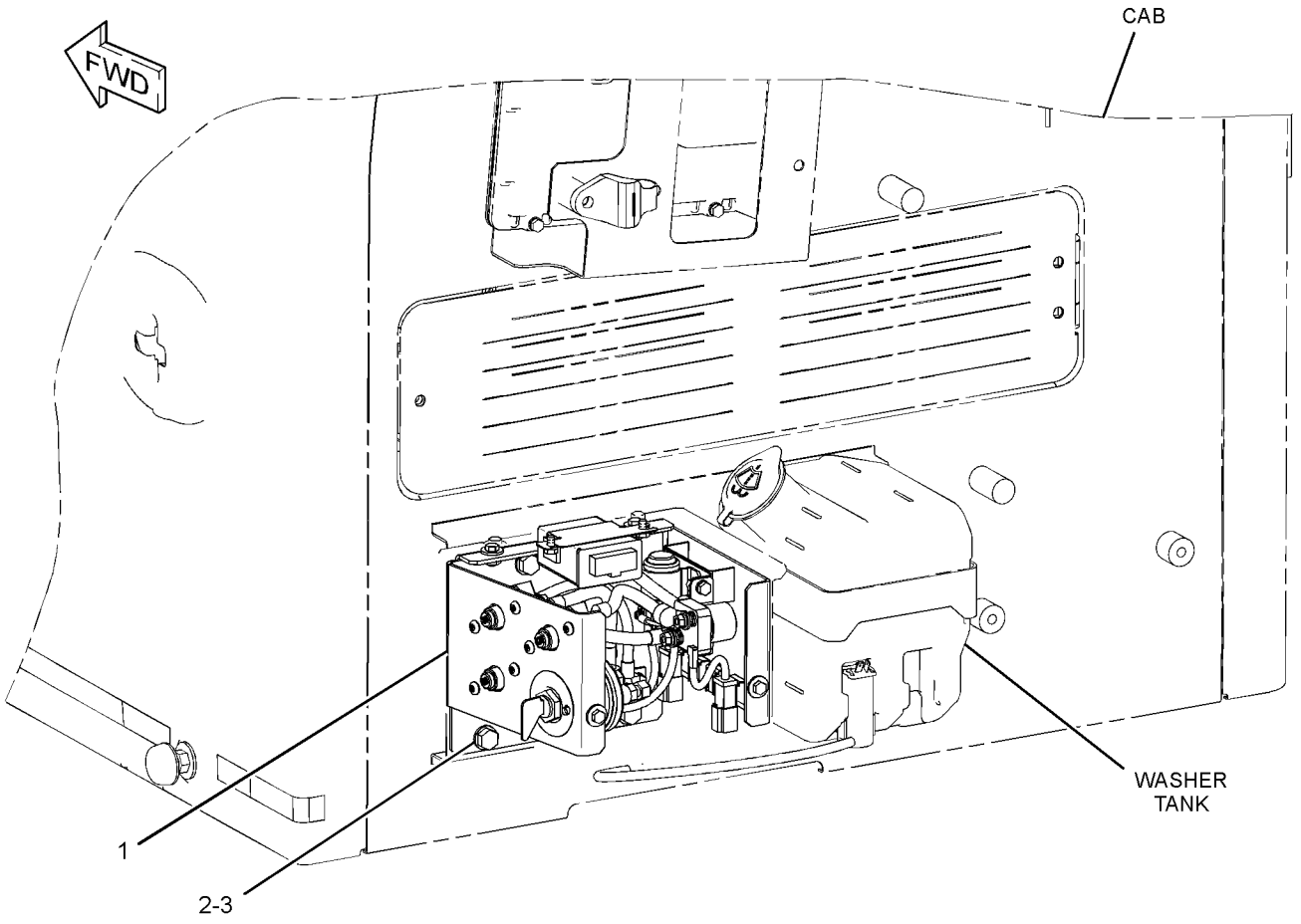

GRAPHIC #1 **<END>** g01515824

328-0040 PANEL & MTG GP-CIRCUIT BREAKER

S/N: KGF3941-UP; FAL2992-UP
PART OF 327-6568 OPERATOR AR

SMCS-1417, 1420 **i03137881**

NOTE	REF NO	GRAPHIC REF	PART NUMBER	QTY	PART NAME 1 2 3 4 5 6 (PRODUCT LEVEL)	SEE PAGE
Y	1	1	*324-5801*	1	PANEL GP-CIRCUIT BREAKER	510
	2	1	**8T-4121**	4	WASHER-HARD (11X21X2.5-MM THK)	
M	3	1	**8T-4137**	4	BOLT (M10X1.5X20-MM)	

M - METRIC PART
Y - SEPARATE ILLUSTRATION

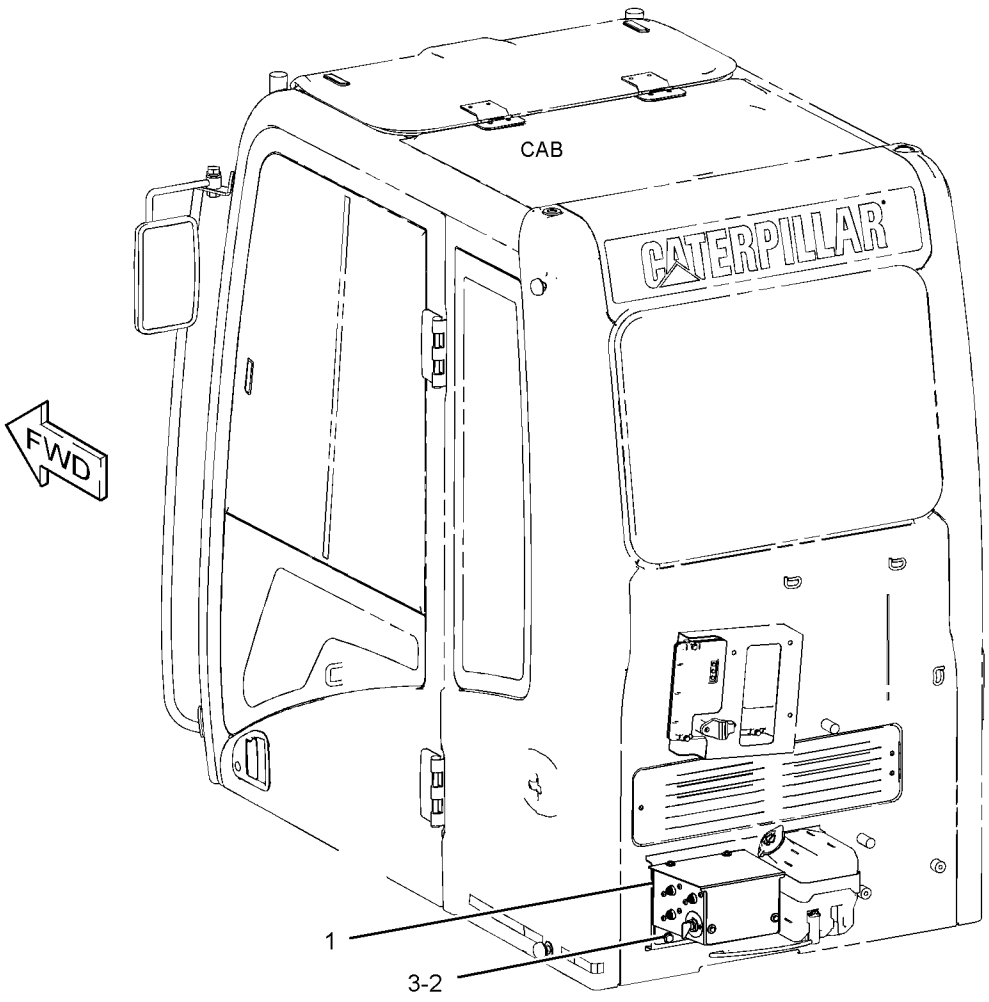

GRAPHIC #1 **<END>** g01732294

259-5177 PANEL GP-CIRCUIT BREAKER

S/N: KGF1-1257; FAL1-841

PART OF 259-5176 PANEL & MTG GP-CIRCUIT BREAKER

SMCS-1417 **i04894315**

NOTE	REF NO	GRAPHIC REF	PART NUMBER	QTY	PART NAME 1 2 3 4 5 6 (PRODUCT LEVEL)	SEE PAGE
	1	1	**3E-8320**	1	PLATE-INSTRUCTION (BATTERY)	
Y	2	1	**7N-0719**	1	SWITCH GP-DISCONNECT	537
	3	1	**121-1023**	1	BLOCK-TERMINAL	
	4	1	**171-2208**	1	CIRCUIT BREAKER AS (60-AMPERE) (ALTERNATOR)	
		1	**8T-0122**	2	NUT-FULL (1/4-28-THD)	
		1	**4E-5724**	2	WASHER (7X12X1-MM THK)	
		1	**253-2111**	2	LOCKWASHER	
	5	1	**216-4970**	1	CIRCUIT BREAKER AS (120-AMPERE) (HEATER)	
		1	**8T-0122**	2	NUT-FULL (1/4-28-THD)	
		1	**4E-5724**	2	WASHER (7X12X1-MM THK)	
		1	**253-2111**	2	LOCKWASHER	
	6	1	**291-7547**	1	BRACKET AS	
	7	1	**234-1035**	1	CABLE AS	
D		1	**6V-2369**		CABLE (4-GA, BLACK) (0.3-M)	
		1	**9G-4343**	2	TERMINAL-RING (4-GA, 1/4-IN SCREW)	
	8	1	**234-1037**	1	WIRE AS	
	9	1	**234-1038**	1	WIRE AS	
	10	1	**238-1506**	1	COVER	
	11	1	**238-2279**	1	BAR-BUS	
	12	1	**238-2280**	1	WIRE AS	
	13	1	**251-0303**	1	CABLE AS	
D		1	**6V-2369**		CABLE (4-GA, BLACK) (0.3-M)	
		1	**9G-4343**	2	TERMINAL-RING (4-GA, 1/4-IN SCREW)	
	14	1	**251-0304**	1	CABLE AS	
D		1	**6V-2369**		CABLE (4-GA, BLACK) (0.2-M)	
		1	**9G-4343**	2	TERMINAL-RING (4-GA, 1/4-IN SCREW)	
Y	15	1	**259-5274**	1	SWITCH GP-MAGNETIC (24-VOLT) (START RELAY)	541
	16	1	**171-2210**	1	CIRCUIT BREAKER AS (80-AMPERE) (MAIN)	
		1	**8T-0122**	2	NUT-FULL (1/4-28-THD)	
		1	**4E-5724**	2	WASHER (7X12X1-MM THK)	
		1	**253-2111**	2	LOCKWASHER	
M	17	1	**5C-9553**	5	BOLT (M6X1X16-MM)	
	18	1	**5P-4115**	4	WASHER-HARD (7.2X19X2-MM THK)	
	19	1	**6V-5645**	6	SCREW-MACHINE (10-32X0.87-IN)	
	20	1	**8T-0328**	6	WASHER-HARD (5.5X10X1-MM THK)	
M	21	1	**8T-4171**	4	BOLT (M6X1X12-MM)	
M	22	1	**8T-4970**	4	BOLT (M6X1X14-MM)	
	23	1	**9X-8256**	9	WASHER (6.6X12X2-MM THK)	

D - ORDER BY THE METER
M - METRIC PART
Y - SEPARATE ILLUSTRATION

259-5177 **PANEL GP-CIRCUIT BREAKER (*contd.*)** **i04894315**

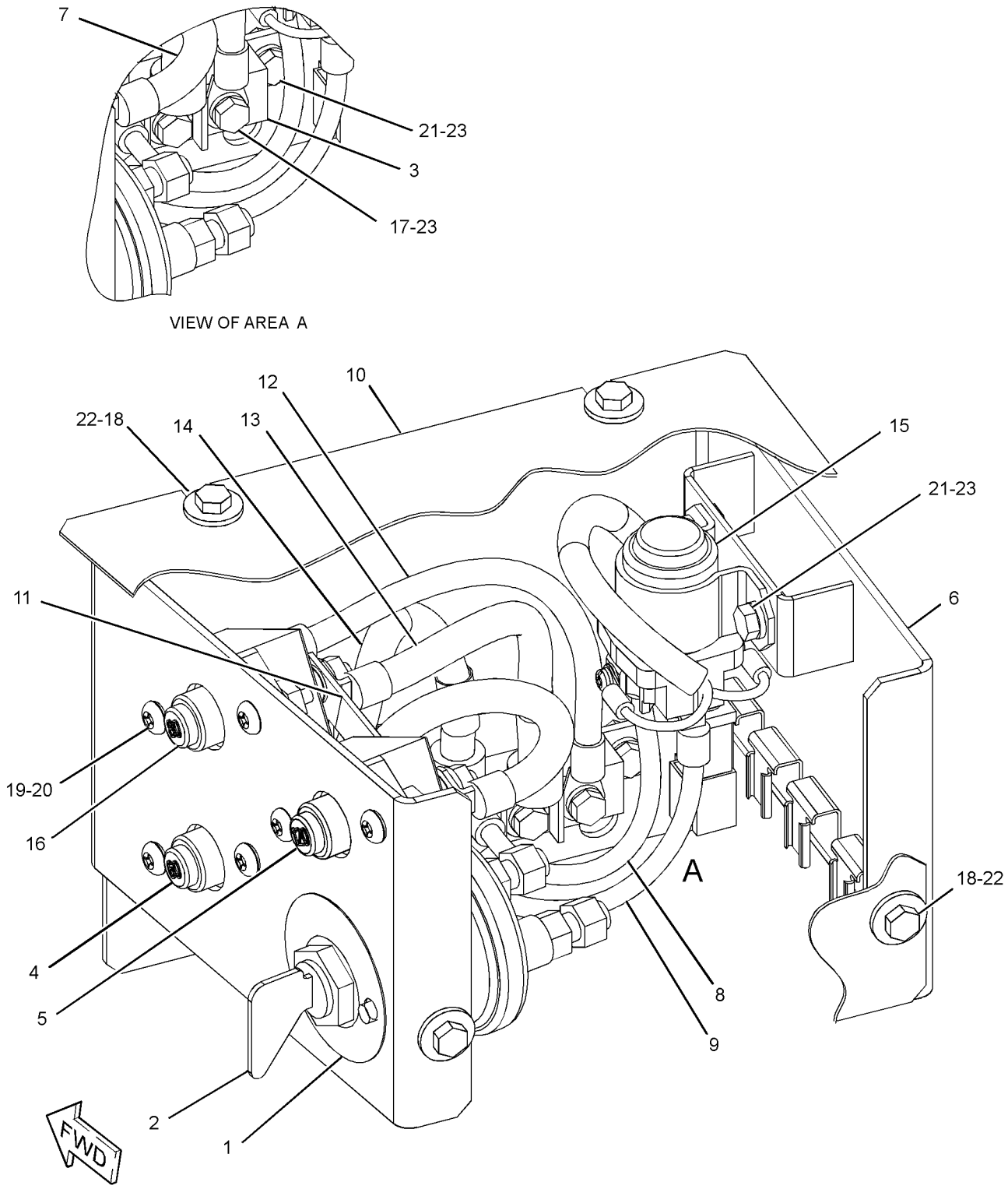

GRAPHIC #1 **<END>** g01362185

319-1386 PANEL GP-CIRCUIT BREAKER

S/N: KGF1258-3940; FAL842-2991

PART OF 259-5176 PANEL & MTG GP-CIRCUIT BREAKER

SMCS-1417 **i04894332**

NOTE	REF NO	GRAPHIC REF	PART NUMBER	QTY	PART NAME 1 2 3 4 5 6 (PRODUCT LEVEL)	SEE PAGE
	1	1	**3E-8320**	1	PLATE-INSTRUCTION (BATTERY)	
Y	2	1	**7N-0719**	1	SWITCH GP-DISCONNECT	537
	3	1	**116-0114**	1	SWITCH AS-MAGNETIC (24-VOLT) (HEATER RELAY)	
		1	**8T-8729**	2	PIN-CONNECTOR (16-GA TO 18-GA)	
		1	**102-8802**	1	KIT-RECEPTACLE (2-PIN)	
					(INCLUDES RECEPTACLE AS & WEDGE)	
	4	1	**121-1023**	1	BLOCK-TERMINAL	
	5	1	**171-2208**	1	CIRCUIT BREAKER AS (60-AMPERE) (ALTERNATOR)	
		1	**8T-0122**	2	NUT-FULL (1/4-28-THD)	
		1	**4E-5724**	2	WASHER (7X12X1-MM THK)	
		1	**253-2111**	2	LOCKWASHER	
	6	1	**197-4330**	1	CONTROLLER-AIR (HEATER)	
	7	1	**216-4970**	1	CIRCUIT BREAKER AS (120-AMPERE) (HEATER)	
		1	**8T-0122**	2	NUT-FULL (1/4-28-THD)	
		1	**4E-5724**	2	WASHER (7X12X1-MM THK)	
		1	**253-2111**	2	LOCKWASHER	
	8	1	**234-1037**	1	WIRE AS	
	9	1	**234-1038**	1	WIRE AS	
	10	1	**238-2279**	1	BAR-BUS	
	11	1	**238-2280**	1	WIRE AS	
	12	1	**238-2324**	1	CABLE AS	
		1	**9G-4343**	2	TERMINAL-RING (4-GA, 1/4-IN SCREW)	
D		1	**6V-2369**		CABLE (4-GA, BLACK) (0.2-M)	
E		1	**125-7876**		TUBE-HEAT SHRINK (17.78-MM DIA) (4-CM)	
	13	1	**238-2325**	1	CABLE AS	
D		1	**6V-2369**		CABLE (4-GA, BLACK) (0.3-M)	
		1	**9G-4343**	2	TERMINAL-RING (4-GA, 1/4-IN SCREW)	
E		1	**125-7876**		TUBE-HEAT SHRINK (17.78-MM DIA) (4-CM)	
	14	1	**251-0303**	1	CABLE AS	
D		1	**6V-2369**		CABLE (4-GA, BLACK) (0.2-M)	
		1	**9G-4343**	2	TERMINAL-RING (4-GA, 1/4-IN SCREW)	
E		1	**125-7876**		TUBE-HEAT SHRINK (17.78-MM DIA) (4-CM)	
	15	1	**251-0304**	1	CABLE AS	
D		1	**6V-2369**		CABLE (4-GA, BLACK) (0.2-M)	
		1	**9G-4343**	2	TERMINAL-RING (4-GA, 1/4-IN SCREW)	
E		1	**125-7876**		TUBE-HEAT SHRINK (17.78-MM DIA) (4-CM)	
Y	16	1	**259-5274**	1	SWITCH GP-MAGNETIC (24-VOLT) (START RELAY)	541
	17	1	**291-7547**	1	BRACKET AS	
	18	1	**319-1344**	1	BRACKET AS	
	19	1	**319-1346**	1	COVER AS	
	20	1	**171-2210**	1	CIRCUIT BREAKER AS (80-AMPERE) (MAIN)	
		1	**8T-0122**	2	NUT-FULL (1/4-28-THD)	
		1	**4E-5724**	2	WASHER (7X12X1-MM THK)	
		1	**253-2111**	2	LOCKWASHER	
M	21	1	**5C-2890**	2	NUT (M6X1-THD)	
M	22	1	**5C-9553**	5	BOLT (M6X1X16-MM)	
	23	1	**5P-4115**	4	WASHER-HARD (7.2X19X2-MM THK)	
	24	1	**6V-5645**	6	SCREW-MACHINE (10-32X0.87-IN)	
M	25	1	**7X-2619**	2	BOLT (M6X1X10-MM)	
	26	1	**8T-0328**	6	WASHER-HARD (5.5X10X1-MM THK)	
M	27	1	**8T-4171**	4	BOLT (M6X1X12-MM)	
M	28	1	**8T-4970**	6	BOLT (M6X1X14-MM)	
	29	1	**9X-8256**	15	WASHER (6.6X12X2-MM THK)	

D - ORDER BY THE METER
E - ORDER BY THE CENTIMETER
M - METRIC PART
Y - SEPARATE ILLUSTRATION

319-1386 **PANEL GP-CIRCUIT BREAKER (*contd.*)** **i04894332**

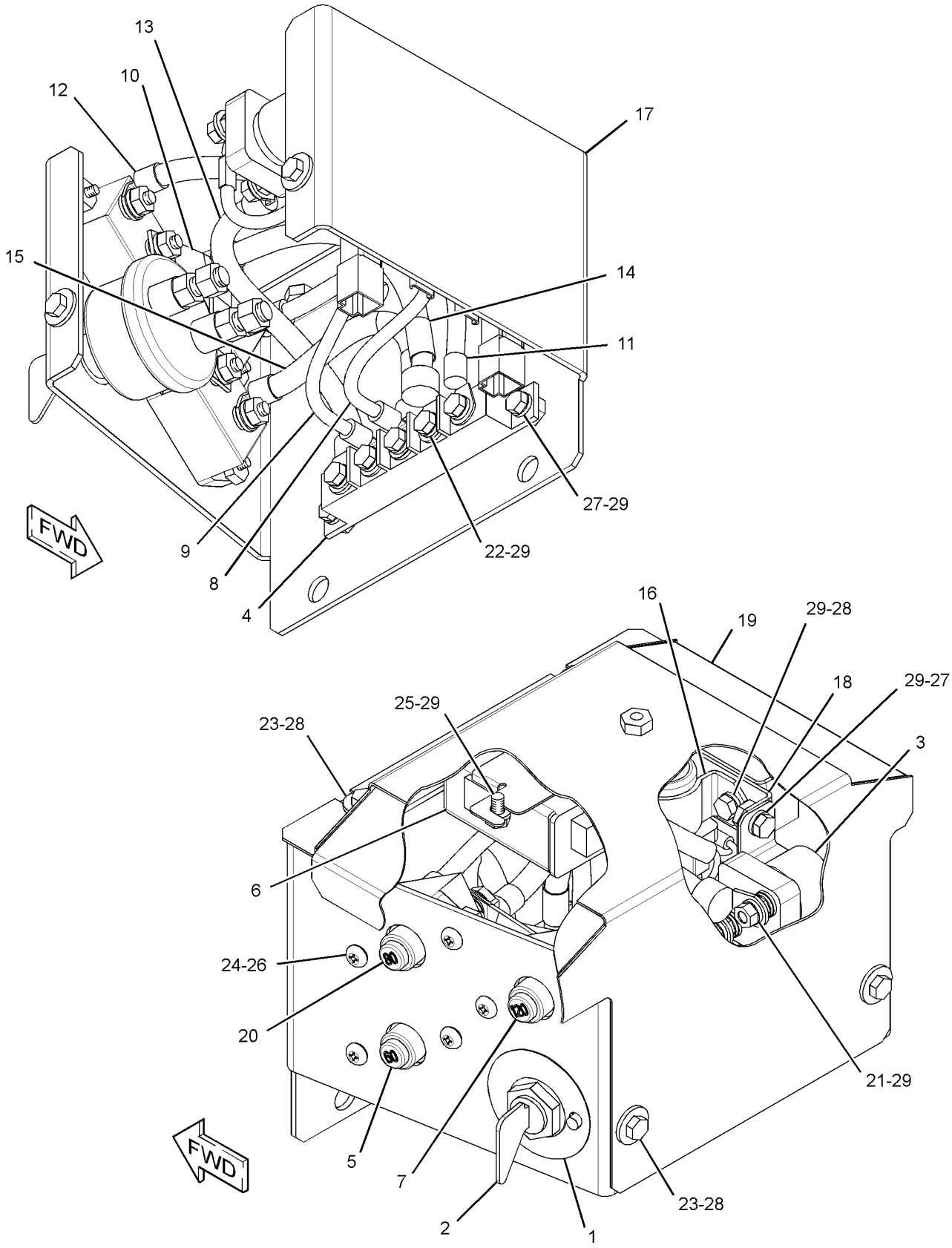

GRAPHIC #1 **<END>** g01515291

324-5801 PANEL GP-CIRCUIT BREAKER

S/N: KGF3941-UP; FAL2992-UP

PART OF 328-0040 PANEL & MTG GP-CIRCUIT BREAKER

SMCS-1417 **i04631382**

NOTE	REF NO	GRAPHIC REF	PART NUMBER	QTY	PART NAME 1 2 3 4 5 6 (PRODUCT LEVEL)	SEE PAGE
	1	1	**3E-8320**	1	PLATE-INSTRUCTION (BATTERY)	
	2	1	**3S-2093**	1	STRAP-CABLE	
Y	3	1	**7N-0719**	1	SWITCH GP-DISCONNECT	537
	4	1	**121-1023**	1	BLOCK-TERMINAL	
	5	1	**141-2759**	1	FUSE (5-AMPERE)	
	6	1	**171-2208**	1	CIRCUIT BREAKER AS (60-AMPERE) (ALTERNATOR)	
		1	**6V-8187**	2	NUT (1/4-28-THD)	
		1	**8T-4205**	2	WASHER-HARD (7.2X14.5X2-MM THK)	
		1	**253-2111**	2	LOCKWASHER	
	7	1	**171-2210**	1	CIRCUIT BREAKER AS (80-AMPERE) (MAIN)	
		1	**6V-8187**	2	NUT (1/4-28-THD)	
		1	**8T-4205**	2	WASHER-HARD (7.2X14.5X2-MM THK)	
		1	**253-2111**	2	LOCKWASHER	
Y	8	1	**209-5582**	1	SWITCH GP-MAGNETIC (24-VOLT) (AIR INLET HEATER RELAY)	539
	9	1	**216-4970**	1	CIRCUIT BREAKER AS (120-AMPERE) (HEATER)	
		1	**6V-8187**	2	NUT (1/4-28-THD)	
		1	**8T-4205**	2	WASHER-HARD (7.2X14.5X2-MM THK)	
		1	**253-2111**	2	LOCKWASHER	
	10	1	**238-1506**	1	COVER	
	11	1	**238-2279**	1	BAR-BUS	
	12	1	**238-2280**	1	WIRE AS	
	13	1	**251-0303**	1	CABLE AS	
D		1	**6V-2369**		CABLE (4-GA, BLACK) (0.2-M)	
		1	**9G-4343**	1	TERMINAL-RING (4-GA, 1/4-IN SCREW)	
BE		1	**125-7876**		TUBE-HEAT SHRINK (17.78-MM DIA)	
	14	1	**251-0304**	1	CABLE AS	
D		1	**6V-2369**		CABLE (4-GA, BLACK) (0.2-M)	
		1	**9G-4343**	1	TERMINAL-RING (4-GA, 1/4-IN SCREW)	
BE		1	**125-7876**		TUBE-HEAT SHRINK (17.78-MM DIA)	
Y	15	1	**259-5274**	1	SWITCH GP-MAGNETIC (24-VOLT) (START RELAY)	541
	16	1	**324-5802**	1	BRACKET AS	
	17	1	**324-5804**	1	WIRE AS	
	18	1	**324-5805**	1	WIRE AS	
	19	1	**324-5806**	1	CABLE AS	
D		1	**6V-2369**		CABLE (4-GA, BLACK) (0.2-M)	
		1	**9G-4343**	1	TERMINAL-RING (4-GA, 1/4-IN SCREW)	
		1	**5P-3454**	1	TERMINAL-RING (4-GA, 5/16-IN SCREW)	
BE		1	**125-7876**		TUBE-HEAT SHRINK (17.78-MM DIA)	
	20	1	**324-5807**	1	CABLE AS	
D		1	**6V-2369**		CABLE (4-GA, BLACK) (0.3-M)	
		1	**9G-4343**	1	TERMINAL-RING (4-GA, 1/4-IN SCREW)	
		1	**5P-3454**	1	TERMINAL-RING (4-GA, 5/16-IN SCREW)	
BE		1	**125-7876**		TUBE-HEAT SHRINK (17.78-MM DIA)	
	21	1	**324-5808**	1	HOLDER AS-FUSE	
		1	**8T-8737**	1	PLUG-SEAL	
		1	**9W-0852**	1	PIN-CONNECTOR (14-GA TO 16-GA)	
		1	**2L-8078**	1	TERMINAL-RING (14-GA TO 16-GA, 5/16-IN SCREW)	
		1	**243-4505**	1	RECEPTACLE AS-CONNECTOR (2-PIN)	
BE		1	**125-7874**		TUBE-HEAT SHRINK (5.72-MM DIA)	
	22	1	**156-6175**	1	CLIP	
M	23	1	**5C-9553**	5	BOLT (M6X1X16-MM)	
	24	1	**5P-4115**	4	WASHER-HARD (7.2X19X2-MM THK)	
	25	1	**6V-5645**	6	SCREW-MACHINE (10-32X0.87-IN)	
	26	1	**8T-0328**	6	WASHER-HARD (5.5X10X1-MM THK)	
M	27	1	**8T-4171**	4	BOLT (M6X1X12-MM)	

324-5801 **PANEL GP-CIRCUIT BREAKER (*contd.*)** **i04631382**

NOTE	REF NO	GRAPHIC REF	PART NUMBER	QTY	PART NAME 1 2 3 4 5 6 (PRODUCT LEVEL)	SEE PAGE
M	28	1	**8T-4970**	6	BOLT (M6X1X14-MM)	
	29	1	**9X-8256**	11	WASHER (6.6X12X2-MM THK)	

B - USE AS REQUIRED
D - ORDER BY THE METER
E - ORDER BY THE CENTIMETER
M - METRIC PART
Y - SEPARATE ILLUSTRATION

324-5801 **PANEL GP-CIRCUIT BREAKER (*contd.*)** **i04631382**

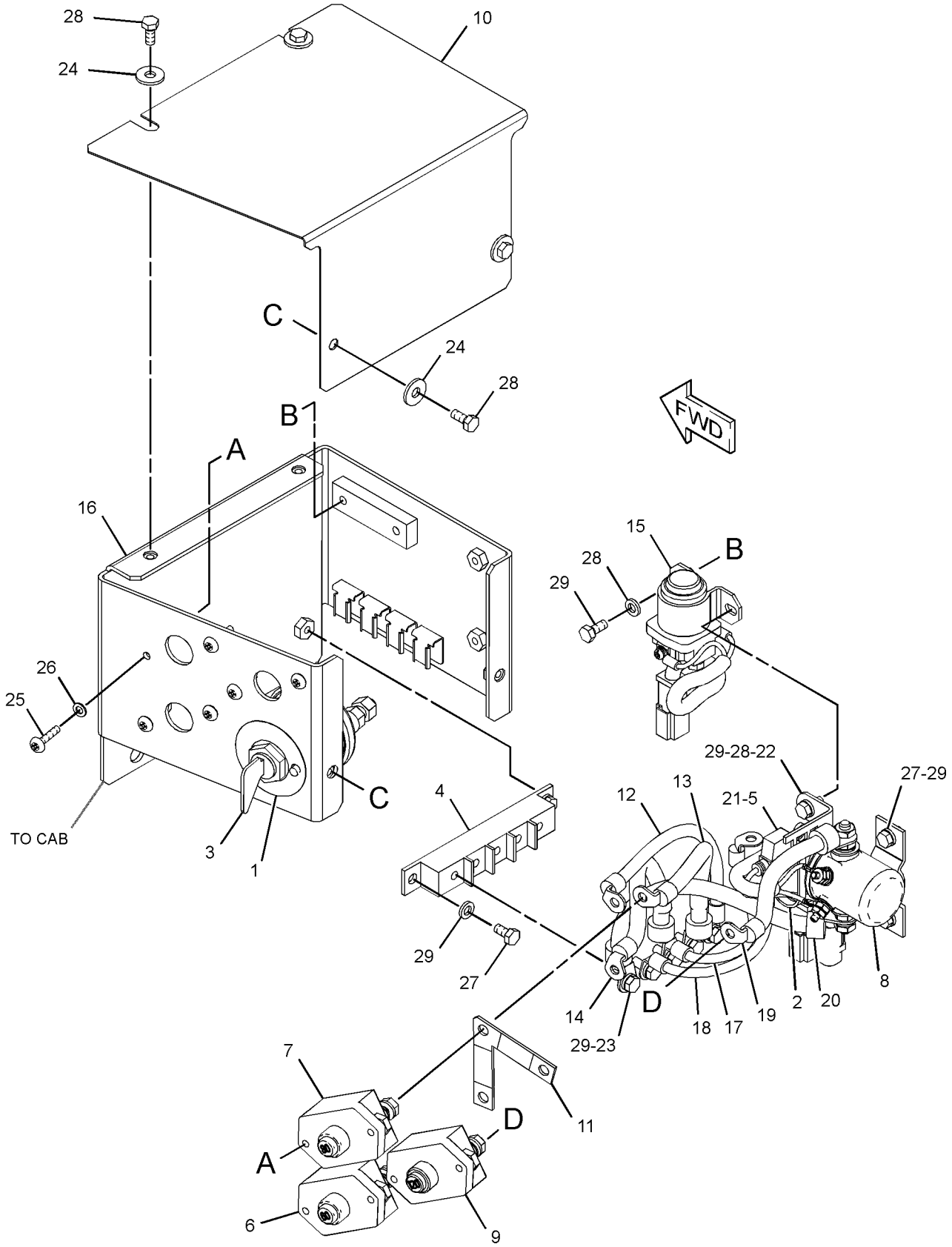

GRAPHIC #1 **<END>** g01732133

251-0542 PANEL GP-SWITCH—ENGINE SPEED, START

S/N: KGF1-UP; FAL1-UP
CANNOT BE USED WITH 251-0544—PAGE: 519
AN ATTACHMENT
TYPE 1

SMCS-1408, 1429, 7332, 7451 **i04894341**

NOTE	REF NO	GRAPHIC REF	PART NUMBER	QTY	PART NAME 1 2 3 4 5 6 (PRODUCT LEVEL)	SEE PAGE
	1	1	**3S-2093**	4	STRAP-CABLE	
Y	2	1	**9G-7641**	1	SWITCH GP-START (ENGINE, KEY)	547
Y	3	1	**106-0107**	1	SWITCH GP-ROTARY (THROTTLE POSITION)	545
	4	1	**170-9324**	1	LAMP AS (24-VOLT, 3-WATT)	
	5	1	**185-9208**	1	KNOB AS (THROTTLE POSITION)	
	6	1	**234-1156**	1	COVER	
	7	1	**234-1158**	1	COVER	
	8	1	**267-7976**	1	PANEL	
	9	1	**251-0543**	1	HARNESS AS-CONSOLE	
		1	**102-8802**	1	KIT-RECEPTACLE (2-PIN)	
					(INCLUDES RECEPTACLE AS & WEDGE)	
		1	**3S-2093**	3	STRAP-CABLE	
		1	**7Y-3951**	2	TERMINAL-BLADE (14-GA)	
		1	**7Y-3952**	1	PLUG-CONNECTOR (2-PIN)	
		1	**7Y-3962**	1	TERMINAL-BULLET (MALE)	
		1	**7Y-3964**	1	TUBE (CONNECTOR TERMINAL)	
		1	**7Y-3963**	1	TERMINAL-BULLET (FEMALE)	
		1	**7Y-3965**	1	TUBE (RECEPTACLE TERMINAL)	
		1	**8T-8737**	3	PLUG-SEAL	
		1	**121-1168**	1	CONNECTOR-RECEPTACLE	
		1	**126-1173**	14	PLATE	
		1	**9X-3402**	7	SOCKET-CONNECTOR (16-GA TO 18-GA)	
					—OR—	
		1	**126-1768**	7	SOCKET-CONNECTOR (14-GA TO 16-GA)	
		1	**2L-8075**	4	TERMINAL-RING (14-GA TO 16-GA, NO. 8 SCREW)	
		1	**153-2540**	10	TERMINAL (FEMALE)	
		1	**153-2541**	1	PLUG-CONNECTOR (10-PIN)	
		1	**155-2270**	1	KIT-CONNECTING PLUG (2-PIN)	
		1	**155-2274**	1	KIT-CONNECTING PLUG (6-PIN)	
					(EACH CONNECTING PLUG KIT INCLUDES PLUG AS, WEDGE & INTERFACE SEAL)	
		1	**238-2366**	7	TERMINAL (MALE)	
	10	1	**096-6166**	4	WASHER-HARD (4.5X9X1-MM THK)	
	11	1	**119-5026**	4	SCREW-PAN HEAD (10-16X0.63-IN)	
M	12	1	**6V-9491**	4	SCREW-MACHINE (M4X0.7X20-MM)	

M - METRIC PART
Y - SEPARATE ILLUSTRATION

251-0542 **PANEL GP-SWITCH (*contd.*)** **i04894341**

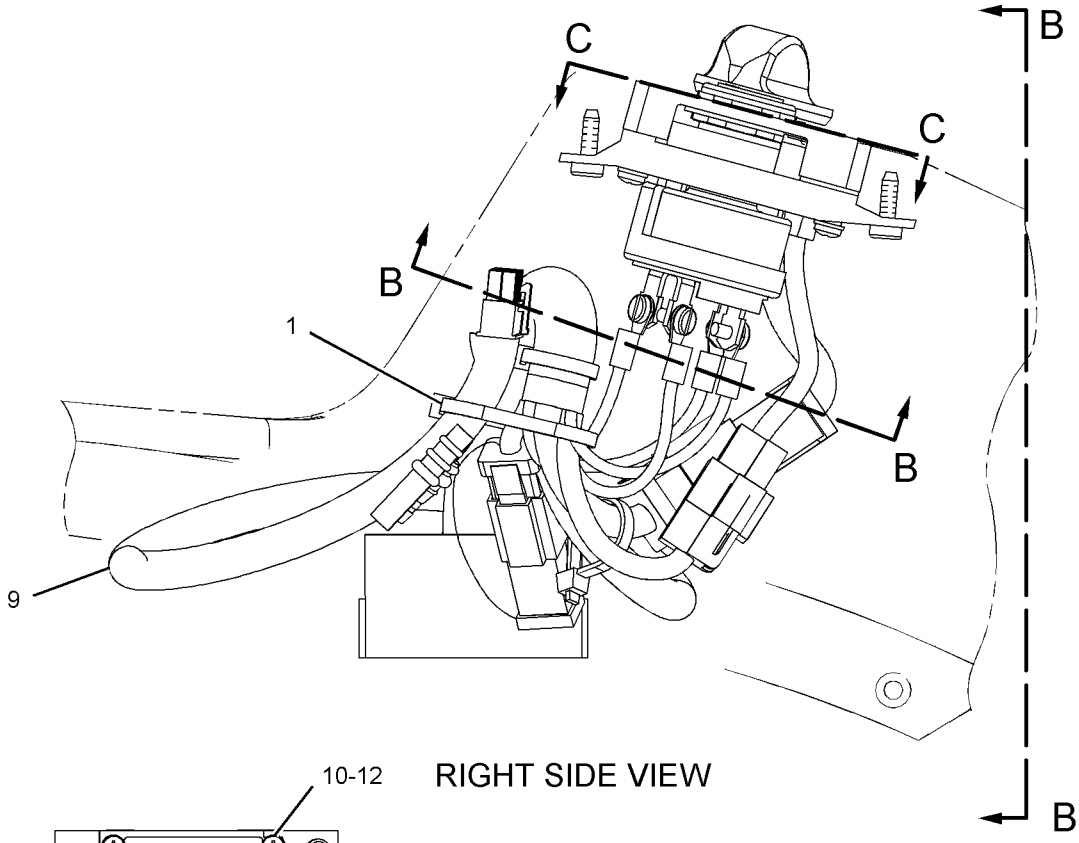

RIGHT SIDE VIEW

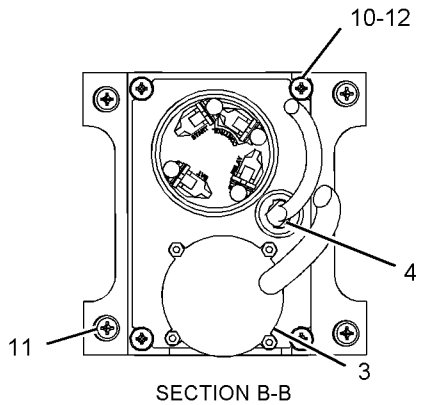

SECTION B-B

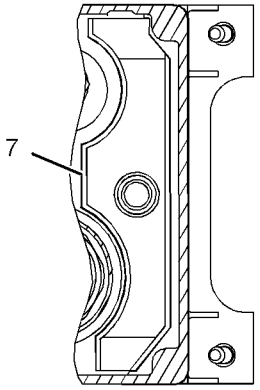

VIEW C-C

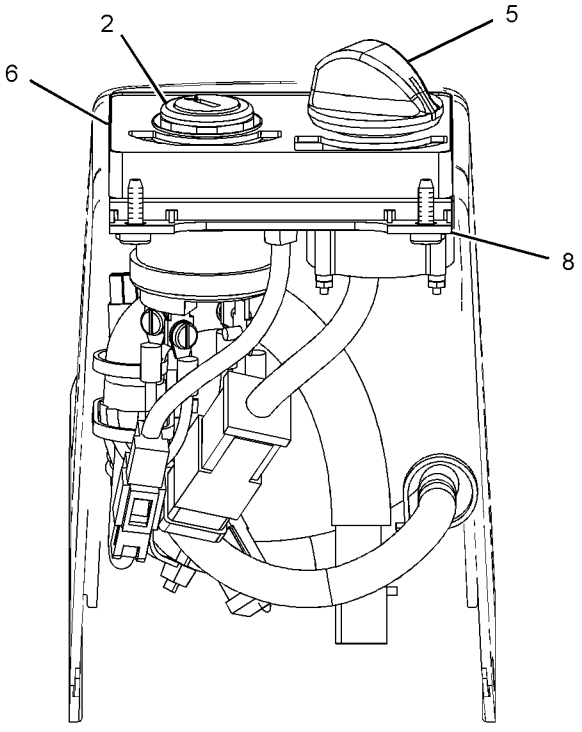

VIEW B-B

GRAPHIC #1 **<END>** g01112022

251-0542 PANEL GP-SWITCH—ENGINE SPEED, START

S/N: KGF1-UP; FAL1-UP

CANNOT BE USED WITH 251-0544—PAGE: 519

PART OF 314-3859, 314-3860, 314-3861, 314-3862, 314-3864, 314-3865, 338-9908, 338-9923, 347-3340, 354-1018, 354-1019, 354-1047, 354-1054, 354-1112, 354-1113, 354-1147, 354-1148, 354-1149, 354-1150, 359-2298, 359-2299, 359-2300, 359-2309, 359-2310, 359-2404, 359-2405, 359-2421, 359-2481, 359-2506, 359-2507 DISTRIBUTION AR, 338-9925, 351-9691, 359-2264 OPTION AR-COLD WEATHER, 338-9924, 347-3341, 347-3342, 347-3343, 351-9690, 354-1065, 354-1151, 354-1152, 354-1153, 359-2263 OPTION AR-REGIONAL

AN ATTACHMENT

TYPE 2

SMCS-1408, 1429, 7332, 7451 **i04894342**

NOTE	REF NO	GRAPHIC REF	PART NUMBER	QTY	PART NAME 1 2 3 4 5 6 (PRODUCT LEVEL)	SEE PAGE
	1	1	**3S-2093**	4	STRAP-CABLE	
Y	2	1	**9G-7641**	1	SWITCH GP-START (ENGINE, KEY)	547
CY	3	1	**319-4420**	1	SWITCH GP-ROTARY (THROTTLE POSITION)	546
	4	1	**170-9324**	1	LAMP AS (24-VOLT, 3-WATT)	
	5	1	**185-9208**	1	KNOB AS (THROTTLE POSITION)	
	6	1	**234-1156**	1	COVER	
	7	1	**234-1158**	1	COVER	
	8	1	**267-7976**	1	PANEL	
C	9	1	**328-0021**	1	HARNESS AS-CONSOLE	
		1	**102-8802**	1	KIT-RECEPTACLE (2-PIN)	
					(INCLUDES RECPTACLE AS & WEDGE)	
		1	**3S-2093**	3	STRAP-CABLE	
		1	**7Y-3951**	2	TERMINAL-BLADE (14-GA)	
		1	**7Y-3952**	1	PLUG-CONNECTOR (2-PIN)	
		1	**7Y-3962**	1	TERMINAL-BULLET (MALE)	
		1	**7Y-3964**	1	TUBE (CONNECTOR TERMINAL)	
		1	**7Y-3963**	1	TERMINAL-BULLET (FEMALE)	
		1	**7Y-3965**	1	TUBE (RECEPTACLE TERMINAL)	
		1	**8T-8737**	3	PLUG-SEAL	
		1	**121-1168**	1	CONNECTOR-RECEPTACLE	
		1	**121-1173**	14	TERMINAL (MALE)	
		1	**9X-3402**	7	SOCKET-CONNECTOR (16-GA TO 18-GA)	
					—OR—	
		1	**126-1768**	7	SOCKET-CONNECTOR (14-GA TO 16-GA)	
		1	**2L-8075**	4	TERMINAL-RING (14-GA TO 16-GA, NO. 8 SCREW)	
		1	**153-2540**	10	TERMINAL (FEMALE)	
		1	**153-2541**	1	PLUG-CONNECTOR (10-PIN)	
		1	**155-2270**	1	KIT-CONNECTING PLUG (2-PIN)	
					(INCLUDES PLUG AS, WEDGE & INTERFACE SEAL)	
		1	**230-5010**	1	PLUG AS-CONNECTOR (6-PIN)	
		1	**264-7032**	1	SEAL-CONNECTOR	
		1	**238-2366**	7	TERMINAL (MALE)	
	10	1	**096-6166**	4	WASHER-HARD (4.5X9X1-MM THK)	
	11	1	**119-5026**	4	SCREW-PAN HEAD (10-16X0.63-IN)	
M	12	1	**6V-9491**	4	SCREW-MACHINE (M4X0.7X20-MM)	

C - CHANGE FROM PREVIOUS TYPE
M - METRIC PART
Y - SEPARATE ILLUSTRATION

251-0542 **PANEL GP-SWITCH (*contd.*)** **i04894342**

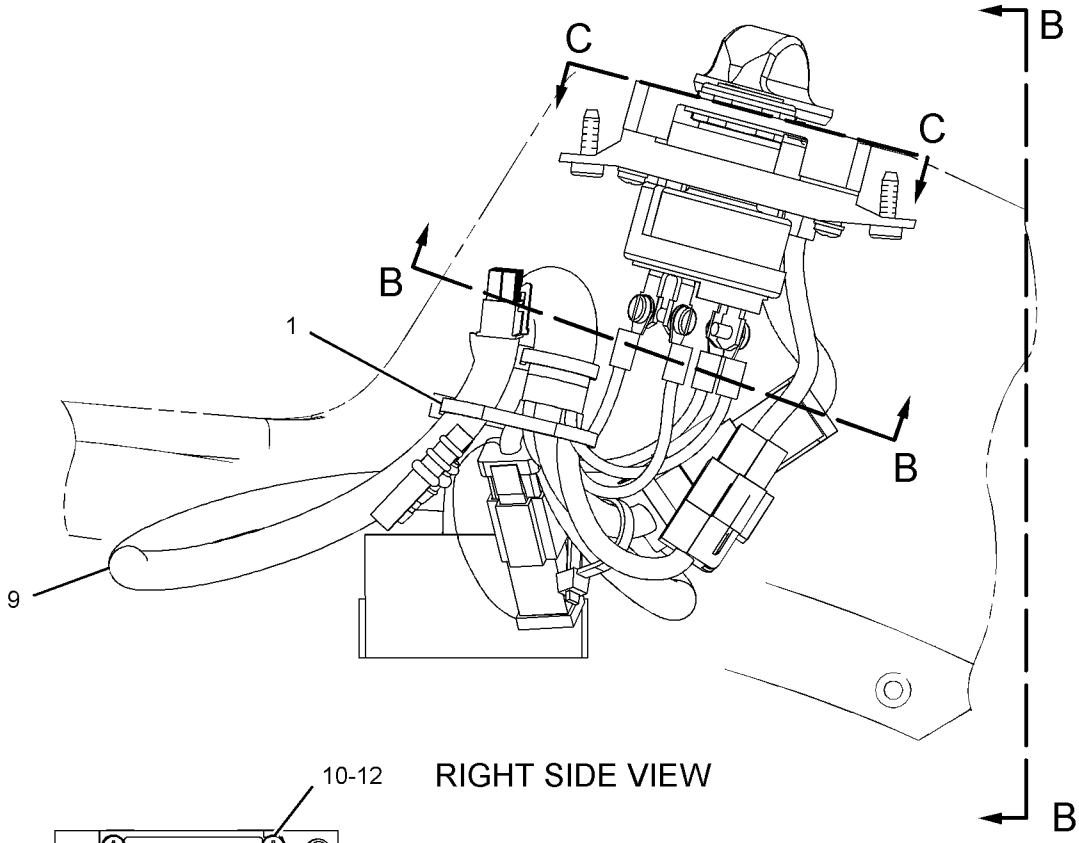

RIGHT SIDE VIEW

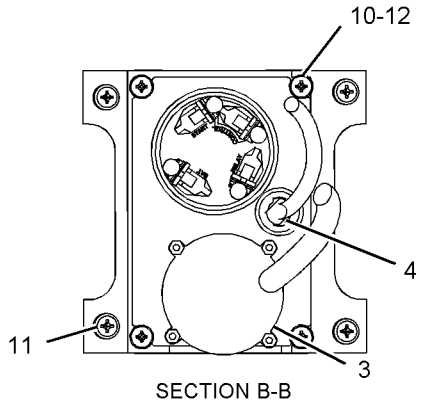

SECTION B-B

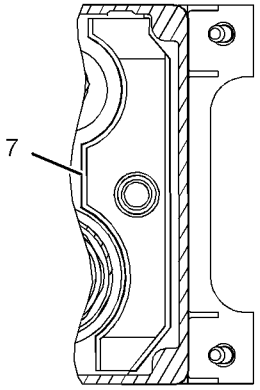

VIEW C-C

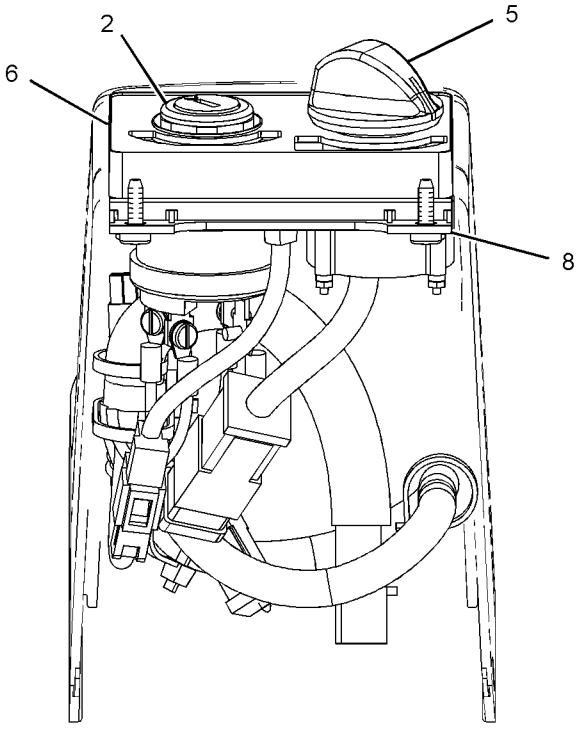

VIEW B-B

GRAPHIC #1 **<END>** g01112022

251-0542 PANEL GP-SWITCH—ENGINE SPEED, START

S/N: KGF1-UP; FAL1-UP

CANNOT BE USED WITH 251-0544—PAGE: 519

PART OF 314-3859, 314-3860, 314-3861, 314-3862, 314-3864, 314-3865, 338-9908, 338-9923, 347-3340, 354-1018, 354-1019, 354-1047, 354-1054, 354-1112, 354-1113, 354-1147, 354-1148, 354-1149, 354-1150, 359-2298, 359-2299, 359-2300, 359-2309, 359-2310, 359-2404, 359-2405, 359-2421, 359-2481, 359-2482, 359-2500, 359-2501, 359-2506, 359-2507, 367-8686, 367-8697, 367-8738, 367-8739, 367-8798, 367-8799, 367-8800, 367-8807, 367-8809, 367-8810, 367-8817, 379-7095, 379-7096, 379-7097, 379-7098, 379-7118, 379-7119, 379-7216, 379-7217, 379-7218, 379-7219, 379-7220, 379-7226, 379-7227, 379-7228, 379-7267, 379-7268, 379-7269, 379-7270, 385-4030, 385-4031, 385-4032, 385-4033, 385-4035, 385-4036, 385-4136, 396-6826, 396-6827, 396-6828 DISTRIBUTION AR, 338-9925, 351-9691, 359-2264 OPTION AR-COLD WEATHER, 338-9924, 347-3341, 347-3342, 347-3343, 351-9690, 354-1065, 354-1151, 354-1152, 354-1153, 359-2263, 367-8812, 367-8814, 379-7297, 379-7298, 379-7299, 379-7300, 379-7305, 379-7306, 379-7347, 385-4027, 385-4028, 385-4029 OPTION AR-REGIONAL

AN ATTACHMENT

TYPE 3

SMCS-1408, 1429, 7332, 7451 **i05238926**

NOTE	REF NO	GRAPHIC REF	PART NUMBER	QTY	PART NAME 1 2 3 4 5 6 (PRODUCT LEVEL)	SEE PAGE
	1	1	**3S-2093**	4	STRAP-CABLE	
CY	2	1	**255-2751**	1	SWITCH GP-START (ENGINE, KEY)	548
Y	3	1	**319-4420**	1	SWITCH GP-ROTARY (THROTTLE POSITION)	546
	4	1	**170-9324**	1	LAMP AS (24-VOLT, 3-WATT)	
	5	1	**185-9208**	1	KNOB AS (THROTTLE POSITION)	
	6	1	**234-1156**	1	COVER	
	7	1	**234-1158**	1	COVER	
	8	1	**267-7976**	1	PANEL	
	9	1	**328-0021**	1	HARNESS AS-CONSOLE	
		1	**3S-2093**	3	STRAP-CABLE	
		1	**102-8802**	1	KIT-RECEPTACLE (2-PIN)	
					(INCLUDES RECEPTACLE AS & WEDGE)	
		1	**7Y-3951**	2	TERMINAL-BLADE (14-GA)	
		1	**7Y-3952**	1	PLUG-CONNECTOR (2-PIN)	
		1	**7Y-3962**	1	TERMINAL-BULLET (MALE)	
		1	**7Y-3964**	1	TUBE (CONNECTOR TERMINAL)	
		1	**7Y-3963**	1	TERMINAL-BULLET (FEMALE)	
		1	**7Y-3965**	1	TUBE (RECEPTACLE TERMINAL)	
		1	**8T-8737**	3	PLUG-SEAL	
		1	**121-1168**	1	CONNECTOR-RECEPTACLE	
		1	**121-1173**	14	TERMINAL (MALE)	
		1	**9X-3402**	7	SOCKET-CONNECTOR (16-GA TO 18-GA)	
		1	**2L-8075**	4	TERMINAL-RING (14-GA TO 16-GA, NO. 8 SCREW)	
		1	**153-2540**	10	TERMINAL (FEMALE)	
		1	**153-2541**	1	PLUG-CONNECTOR (10-PIN)	
		1	**155-2270**	1	KIT-CONNECTING PLUG (2-PIN)	
					(INCLUDES PLUG AS, WEDGE & INTERFACE SEAL)	
		1	**230-5010**	1	PLUG AS-CONNECTOR (6-PIN)	
		1	**264-7032**	1	SEAL-CONNECTOR	
		1	**238-2366**	7	TERMINAL (MALE)	
	10	1	**096-6166**	4	WASHER-HARD (4.5X9X1-MM THK)	
	11	1	**119-5026**	4	SCREW-PAN HEAD (10-16X0.63-IN)	
M	12	1	**6V-9491**	4	SCREW-MACHINE (M4X0.7X20-MM)	

C - CHANGE FROM PREVIOUS TYPE
M - METRIC PART
Y - SEPARATE ILLUSTRATION

251-0542 **PANEL GP-SWITCH (*contd.*)** **i05238926**

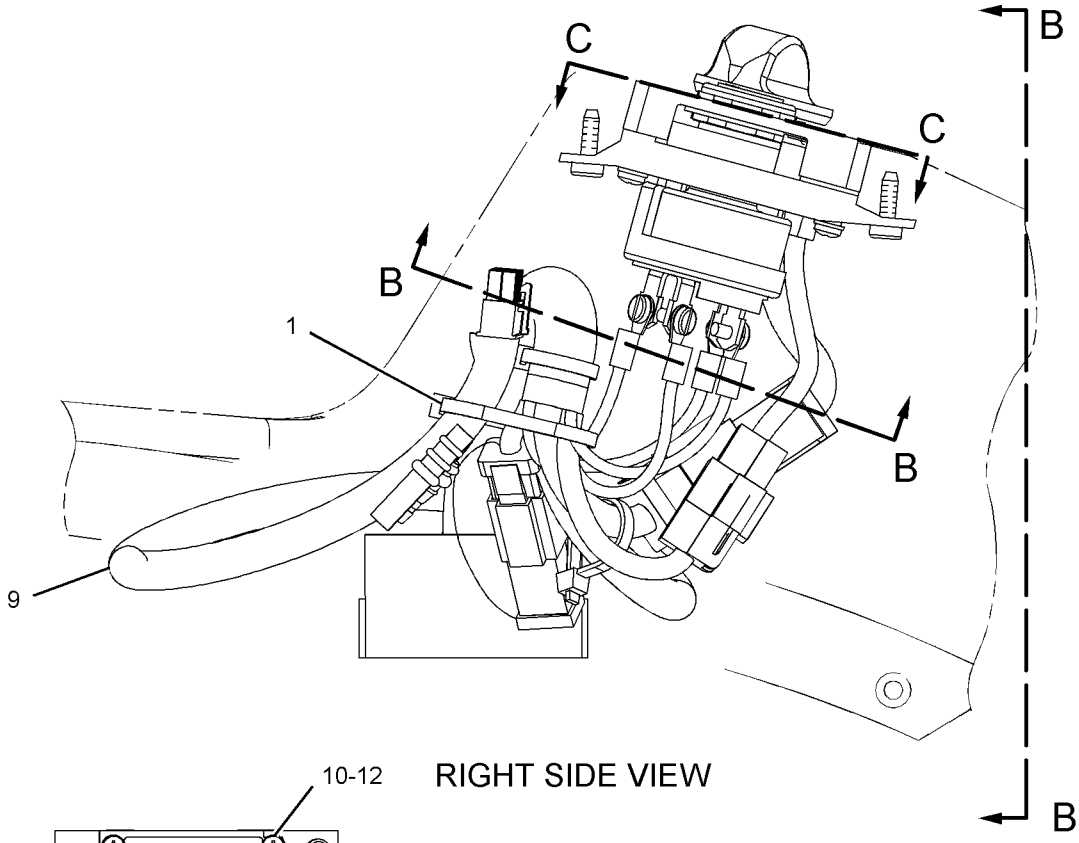

RIGHT SIDE VIEW

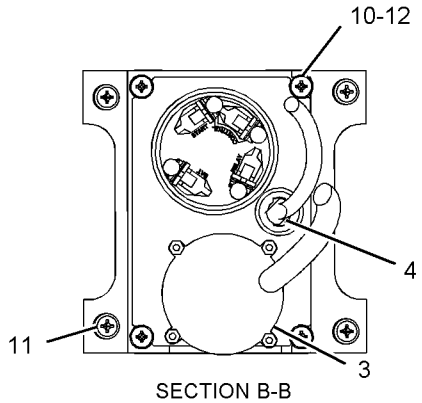

SECTION B-B

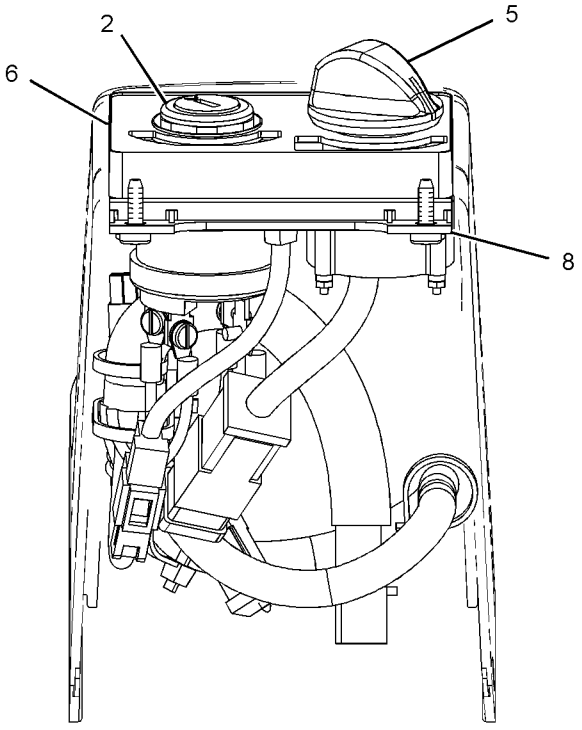

VIEW B-B

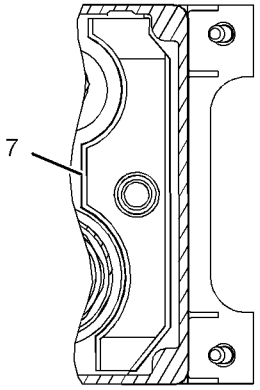

VIEW C-C

GRAPHIC #1 **<END>** g01112022

251-0544 PANEL GP-SWITCH—ENGINE SPEED, START

S/N: KGF1-UP; FAL1-UP
PART OF 227-7581 INSTALLATION GP-SECURITY
AN ATTACHMENT
TYPE 1

SMCS-1408, 1429, 7332, 7451 **i04894376**

NOTE	REF NO	GRAPHIC REF	PART NUMBER	QTY	PART NAME 1 2 3 4 5 6 (PRODUCT LEVEL)	SEE PAGE
	1	1	**3S-2093**	5	STRAP-CABLE	
Y	2	1	**9G-7641**	1	SWITCH GP-START (ENGINE, KEY)	547
Y	3	1	**106-0107**	1	SWITCH GP-ROTARY (THROTTLE POSITION)	545
	4	1	**185-9208**	1	KNOB AS	
	5	1	**205-0826**	1	FILM-INSTRUCTION (MACHINE SECURITY, CONSOLE)	
	6	1	**205-8257**	1	COIL AS (EXCITER)	
		1	**186-3735**	2	PIN-CONNECTOR (16-GA TO 18-GA)	
	7	1	**234-1156**	1	COVER	
	8	1	**267-7977**	1	PANEL	
	9	1	**251-0543**	1	HARNESS AS-CONSOLE	
		1	**102-8802**	1	KIT-RECEPTACLE (2-PIN)	
					(INCLUDES RECEPTACLE AS & WEDGE)	
		1	**3S-2093**	3	STRAP-CABLE	
		1	**7Y-3951**	2	TERMINAL-BLADE (14-GA)	
		1	**7Y-3952**	1	PLUG-CONNECTOR (2-PIN)	
		1	**7Y-3962**	1	TERMINAL-BULLET (MALE)	
		1	**7Y-3964**	1	TUBE (CONNECTOR TERMINAL)	
		1	**7Y-3963**	1	TERMINAL-BULLET (FEMALE)	
		1	**7Y-3965**	1	TUBE (RECEPTACLE TERMINAL)	
		1	**8T-8737**	3	PLUG-SEAL	
		1	**121-1168**	1	CONNECTOR-RECEPTACLE	
		1	**126-1173**	14	PLATE	
		1	**9X-3402**	7	SOCKET-CONNECTOR (16-GA TO 18-GA)	
					—OR—	
		1	**126-1768**	7	SOCKET-CONNECTOR (14-GA TO 16-GA)	
		1	**2L-8075**	4	TERMINAL-RING (14-GA TO 16-GA, NO. 8 SCREW)	
		1	**153-2540**	10	TERMINAL (FEMALE)	
		1	**153-2541**	1	PLUG-CONNECTOR (10-PIN)	
		1	**155-2270**	1	KIT-CONNECTING PLUG (2-PIN)	
		1	**155-2274**	1	KIT-CONNECTING PLUG (6-PIN)	
					(EACH CONNECTING PLUG KIT INCLUDES PLUG AS, WEDGE & INTERFACE SEAL)	
		1	**238-2366**	7	TERMINAL (MALE)	
	10	1	**096-6166**	4	WASHER-HARD (4.5X9X1-MM THK)	
	11	1	**119-5026**	4	SCREW-PAN HEAD (10-16X0.63-IN)	
M	12	1	**6V-9491**	4	SCREW-MACHINE (M4X0.7X20-MM)	

M - METRIC PART
Y - SEPARATE ILLUSTRATION

251-0544 **PANEL GP-SWITCH (*contd.*)** **i04894376**

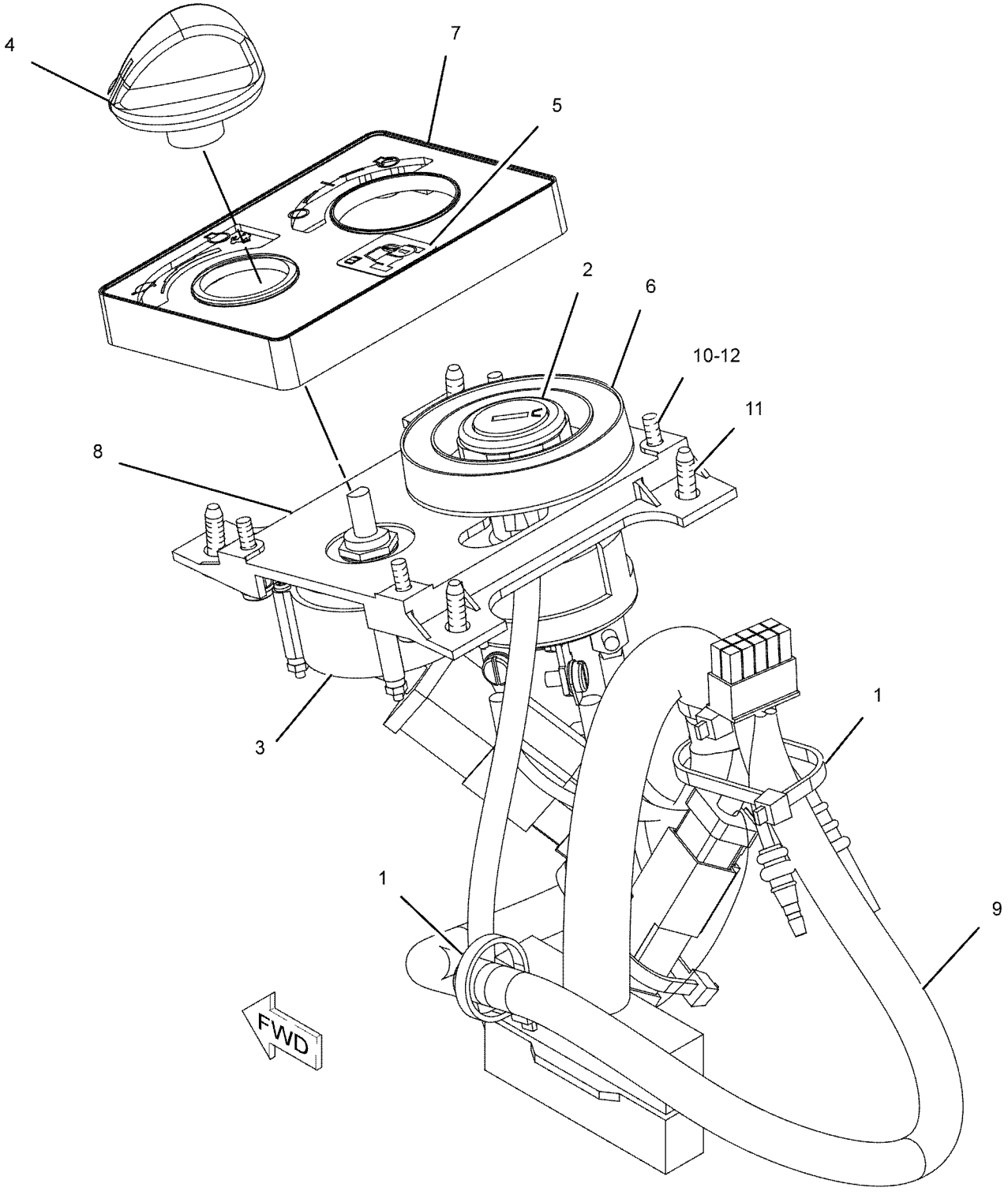

GRAPHIC #1 **<END>** g01123869

251-0544 PANEL GP-SWITCH—ENGINE SPEED, START

S/N: KGF1-UP; FAL1-UP
PART OF 227-7581 INSTALLATION GP-SECURITY
AN ATTACHMENT
TYPE 2

SMCS-1408, 1429, 7332, 7451 **i03751882**

NOTE	REF NO	GRAPHIC REF	PART NUMBER	QTY	PART NAME 1 2 3 4 5 6 (PRODUCT LEVEL)	SEE PAGE
	1	1	**3S-2093**	5	STRAP-CABLE	
Y	2	1	**9G-7641**	1	SWITCH GP-START (ENGINE, KEY)	547
CY	3	1	**319-4420**	1	SWITCH GP-ROTARY (THROTTLE POSITION)	546
	4	1	**185-9208**	1	KNOB AS	
	5	1	**205-0826**	1	FILM-INSTRUCTION (MACHINE SECURITY, CONSOLE)	
	6	1	**206-5208**	1	COIL AS (EXCITER)	
	7	1	**234-1156**	1	COVER	
	8	1	**267-7977**	1	PANEL	
C	9	1	**328-0021**	1	HARNESS AS-CONSOLE	
		1	**102-8802**	1	KIT-RECEPTACLE (2-PIN)	
					(INCLUDES RECEPTACLE AS & WEDGE)	
		1	**3S-2093**	3	STRAP-CABLE	
		1	**7Y-3951**	2	TERMINAL-BLADE (14-GA)	
		1	**7Y-3952**	1	PLUG-CONNECTOR (2-PIN)	
		1	**7Y-3962**	1	TERMINAL-BULLET (MALE)	
		1	**7Y-3963**	1	TERMINAL-BULLET (FEMALE)	
		1	**8T-8737**	3	PLUG-SEAL	
		1	**121-1168**	1	CONNECTOR-RECEPTACLE	
		1	**121-1173**	14	TERMINAL (MALE)	
		1	**9X-3402**	7	SOCKET-CONNECTOR (16-GA TO 18-GA)	
		1	**2L-8075**	4	TERMINAL-RING (14-GA TO 16-GA, NO. 8 SCREW)	
		1	**153-2540**	10	TERMINAL (FEMALE)	
		1	**153-2541**	1	PLUG-CONNECTOR (10-PIN)	
		1	**155-2270**	1	KIT-CONNECTING PLUG (2-PIN)	
					(INCLUDES PLUG AS, WEDGE & INTERFACE SEAL)	
		1	**230-5010**	1	PLUG AS-CONNECTOR (6-PIN)	
		1	**264-7032**	1	SEAL-CONNECTOR	
		1	**238-2366**	7	TERMINAL (MALE)	
	10	1	**096-6166**	4	WASHER-HARD (4.5X9X1-MM THK)	
	11	1	**119-5026**	4	SCREW-PAN HEAD (10-16X0.63-IN)	
M	12	1	**6V-9491**	4	SCREW-MACHINE (M4X0.7X20-MM)	

C - CHANGE FROM PREVIOUS TYPE
M - METRIC PART
Y - SEPARATE ILLUSTRATION

251-0544 **PANEL GP-SWITCH (*contd.*)** **i03751882**

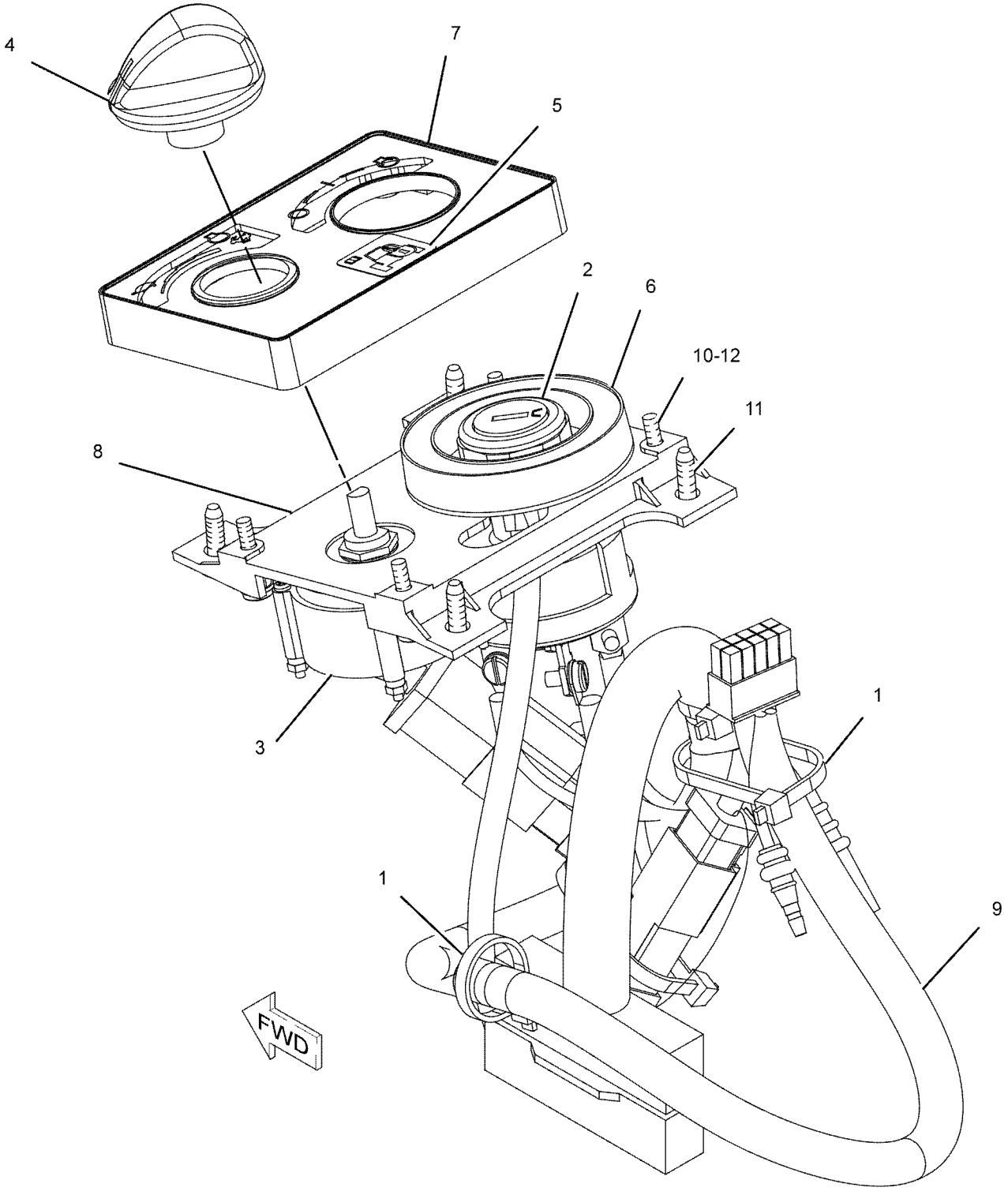

GRAPHIC #1 **<END>** g01123869

251-0544 PANEL GP-SWITCH—ENGINE SPEED, START

S/N: KGF1-UP; FAL1-UP
PART OF 227-7581 INSTALLATION GP-SECURITY
AN ATTACHMENT
TYPE 3

SMCS-1408, 1429, 7332, 7451 **i04894386**

NOTE	REF NO	GRAPHIC REF	PART NUMBER	QTY	PART NAME 1 2 3 4 5 6 (PRODUCT LEVEL)	SEE PAGE
	1	1	**3S-2093**	5	STRAP-CABLE	
CJY	2	1	**255-2751**	1	SWITCH GP-START (ENGINE, KEY)	548
Y	3	1	**319-4420**	1	SWITCH GP-ROTARY (THROTTLE POSITION)	546
	4	1	**185-9208**	1	KNOB AS	
	5	1	**205-0826**	1	FILM-INSTRUCTION (MACHINE SECURITY, CONSOLE)	
	6	1	**206-5208**	1	COIL AS (EXCITER)	
	7	1	**234-1156**	1	COVER	
	8	1	**267-7977**	1	PANEL	
	9	1	**328-0021**	1	HARNESS AS-CONSOLE	
		1	**102-8802**	1	KIT-RECEPTACLE (2-PIN)	
					(INCLUDES RECEPTACLE AS & WEDGE)	
		1	**3S-2093**	3	STRAP-CABLE	
		1	**7Y-3951**	2	TERMINAL-BLADE (14-GA)	
		1	**7Y-3952**	1	PLUG-CONNECTOR (2-PIN)	
		1	**7Y-3962**	1	TERMINAL-BULLET (MALE)	
		1	**7Y-3964**	1	TUBE (CONNECTOR TERMINAL)	
		1	**7Y-3963**	1	TERMINAL-BULLET (FEMALE)	
		1	**7Y-3965**	1	TUBE (RECEPTACLE TERMINAL)	
		1	**8T-8737**	3	PLUG-SEAL	
		1	**121-1168**	1	CONNECTOR-RECEPTACLE	
		1	**121-1173**	14	TERMINAL (MALE)	
		1	**9X-3402**	7	SOCKET-CONNECTOR (16-GA TO 18-GA)	
		1	**2L-8075**	4	TERMINAL-RING (14-GA TO 16-GA, NO. 8 SCREW)	
		1	**153-2540**	10	TERMINAL (FEMALE)	
		1	**153-2541**	1	PLUG-CONNECTOR (10-PIN)	
		1	**155-2270**	1	KIT-CONNECTING PLUG (2-PIN)	
					(INCLUDES PLUG AS, WEDGE & INTERFACE SEAL)	
		1	**230-5010**	1	PLUG AS-CONNECTOR (6-PIN)	
		1	**264-7032**	1	SEAL-CONNECTOR	
		1	**238-2366**	7	TERMINAL (MALE)	
	10	1	**096-6166**	4	WASHER-HARD (4.5X9X1-MM THK)	
	11	1	**119-5026**	4	SCREW-PAN HEAD (10-16X0.63-IN)	
M	12	1	**6V-9491**	4	SCREW-MACHINE (M4X0.7X20-MM)	

C - CHANGE FROM PREVIOUS TYPE
J - REQUIRES CORPORATE KEY
M - METRIC PART
Y - SEPARATE ILLUSTRATION

251-0544 **PANEL GP-SWITCH (*contd.*)** **i04894386**

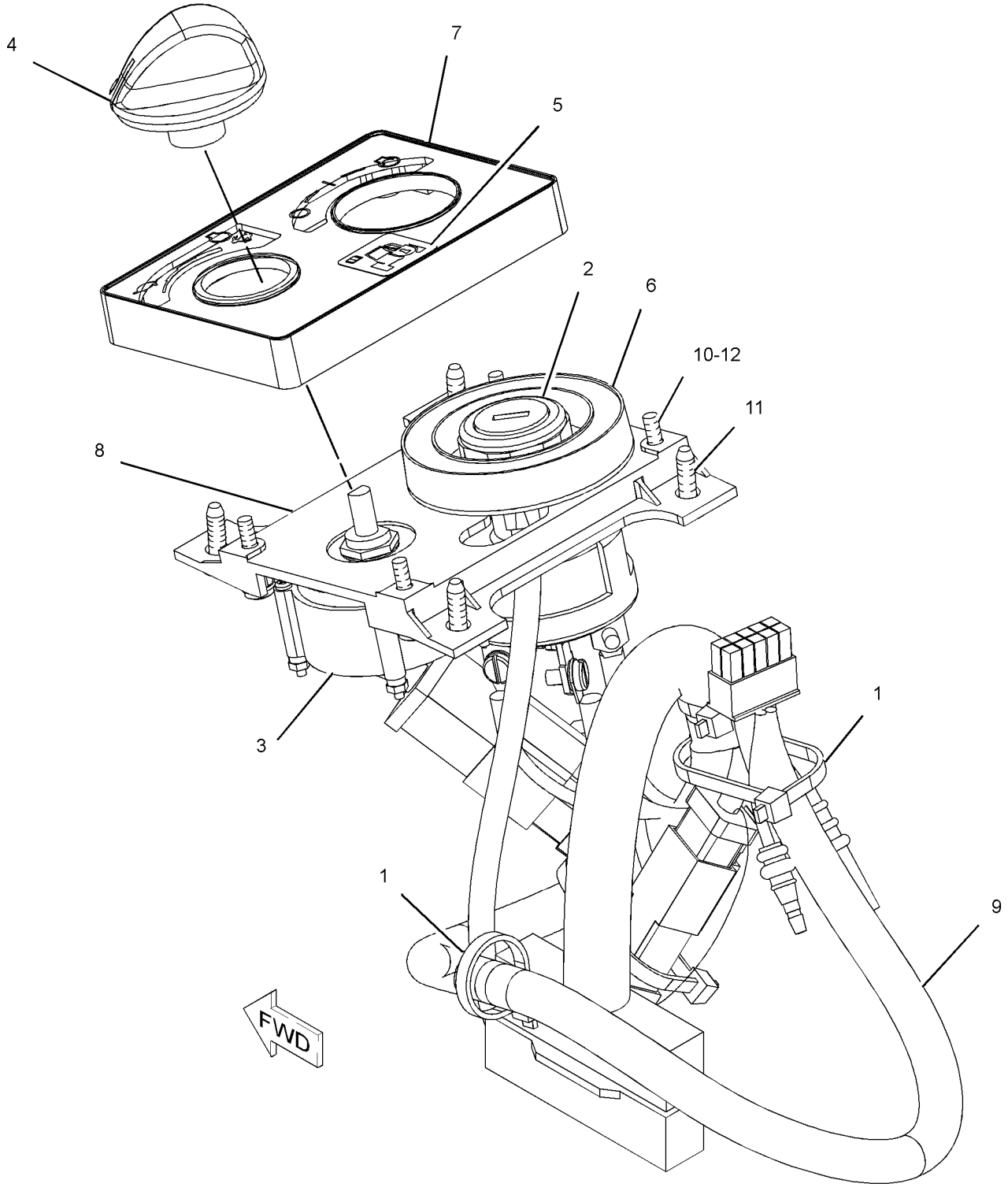

GRAPHIC #1 **<END>** g02609950

263-9088 RADIO GP-COMMUNICATION—PRODUCT LINK 121SR

S/N: KGF1-UP; FAL1-UP

PART OF 309-5881 CONTROL & MTG GP-COMMUNICATION, 270-5511 INSTALLATION GP-COMMUNICATION

AN ATTACHMENT

SMCS-733T **i03756382**

NOTE	PART NUMBER	QTY	PART NAME 1 2 3 4 5 6 (PRODUCT LEVEL)	SEE PAGE
	336-3566	1	SOFTWARE GP-COMMUNICATION (PRODUCT LINK 121SR)	

<END>

292-0291 RECEIVER GP-SATELLITE—DUAL GNSS, MS992

S/N: KGF1-UP; FAL1-UP

FIELD INSTALLATION

SMCS-7010 **i04002109**

NOTE	PART NUMBER	QTY	PART NAME 1 2 3 4 5 6 (PRODUCT LEVEL)	SEE PAGE
Y	**252-9628**	2	MOUNTING GP-RECEIVER (TARGET)	500
	353-2794	2	RECEIVER AS-SATELLITE (GNSS, MS992)	
	255-0939	1	CASE-PLASTIC (RECEIVER)	
	286-3017	2	HANDLE (RECEIVER)	

Y - SEPARATE ILLUSTRATION

<END>

292-0292 RECEIVER GP-SATELLITE—SINGLE GNSS, MS992

S/N: KGF1-UP; FAL1-UP

FIELD INSTALLATION

SMCS-7010 **i04001472**

NOTE	PART NUMBER	QTY	PART NAME 1 2 3 4 5 6 (PRODUCT LEVEL)	SEE PAGE
Y	**252-9628**	1	MOUNTING GP-RECEIVER (TARGET)	500
	353-2794	1	RECEIVER AS-SATELLITE (GNSS, MS992)	
	255-0939	1	CASE-PLASTIC (RECEIVER)	
	286-3017	1	HANDLE (RECEIVER)	

Y - SEPARATE ILLUSTRATION

<END>

292-4548 SENSOR & MOUNTING GP—GRADE CONTROL

S/N: KGF1-UP; FAL1-UP

PART OF 339-2024 GRADE CONTROL AR-LASER

SMCS-1906, 1907, 1912, 1917, 1923, 1924 **i05190505**

NOTE	PART NUMBER	QTY	PART NAME 1 2 3 4 5 6 (PRODUCT LEVEL)	SEE PAGE
	226-9169	1	MODULE AS-POWER SUPPLY (ELECTRICAL ENCLOSURE)	
	265-8047	1	SENSOR-ANGLE (AS21C)	
	276-6146	1	SENSOR AS-ANGLE (AS400TC)	
			—OR—	
	312-0755	1	SENSOR AS-ANGLE (AS460)	
M	**6V-7357**	4	BOLT (M6X1X25-MM)	
M	**8T-2396**	2	BOLT (M6X1X60-MM)	
M	**8T-4200**	8	BOLT (M8X1.25X16-MM)	
M	**8T-4138**	4	BOLT (M6X1X20-MM)	
M	**8T-4970**	3	BOLT (M6X1X14-MM)	
	7K-1181	20	STRAP-CABLE	
	8T-4224	8	WASHER-HARD (8.8X16X2-MM THK)	
	9X-8256	9	WASHER (6.6X12X2-MM THK)	

M - METRIC PART

<END>

339-2044 SENSOR & MOUNTING GP

S/N: KGF1-UP; FAL1-UP

PART OF 339-2026, 339-2029 GRADE CONTROL AR-SATELLITE

SMCS-1906, 1907, 1912, 1917, 1923, 1924 **i03702016**

NOTE	PART NUMBER	QTY	PART NAME 1 2 3 4 5 6 (PRODUCT LEVEL)	SEE PAGE
M	**8T-4138**	4	BOLT (M6X1X20-MM)	
M	**8T-4200**	4	BOLT (M8X1.25X16-MM)	
M	**8T-4970**	3	BOLT (M6X1X14-MM)	
	226-9169	1	MODULE AS-POWER SUPPLY (ELECTRICAL ENCLOSURE)	
	265-8047	1	SENSOR-ANGLE (AS21C)	
	9X-8256	7	WASHER (6.6X12X2-MM THK)	
	8T-4224	4	WASHER-HARD (8.8X16X2-MM THK)	

M - METRIC PART

<END>

296-4666 SENSOR GP-ENGINE

S/N: GDC1-UP

PART OF 272-4677, 272-4683, 296-4676, 296-4687, 305-4777 ENGINE AR, 327-7199 ENGINE AR-PRIMARY

ALSO AN ATTACHMENT

SMCS-1000, 1906, 1907, 1924, 7422 **i03626153**

NOTE	REF NO	GRAPHIC REF	PART NUMBER	QTY	PART NAME 1 2 3 4 5 6 (PRODUCT LEVEL)	SEE PAGE
	1	1	**238-0112**	1	SENSOR GP-TEMPERATURE (ENGINE COOLANT)	
	1A	1	**238-0112**	1	SENSOR GP-TEMPERATURE (AIR INLET MANIFOLD)	
	1B	1	**238-0112**	1	SENSOR GP-TEMPERATURE (FUEL)	
	2	1	**238-0118**	1	SENSOR GP-PRESSURE (FUEL MANIFOLD)	
	3	1	**296-4631**	1	WASHER	
	4	1	**274-6720**	1	SENSOR GP-PRESSURE (AIR INLET MANIFOLD)	
	5	1	**274-6721**	1	SENSOR GP-PRESSURE (FUEL)	
	6	1	**238-0120**	1	SENSOR GP-SPEED (ENGINE)	
	7	1	**294-1804**	4	SEAL-O-RING	
	8	1	**296-4633**	1	SEAL-O-RING	
	9	1	**266-0136**	1	SENSOR GP-PRESSURE (DIFFERENTIAL) (FUEL)	
E		1	**9X-1813**		SLEEVE (8-CM)	
		1	**9X-3401**	3	PIN-CONNECTOR (16-GA TO 18-GA)	
		1	**237-0228**	1	RECEPTACLE AS-CONNECTOR	
	10	1	**296-4621**	2	BOLT (M8X1.25-THD)	

E - ORDER BY THE CENTIMETER

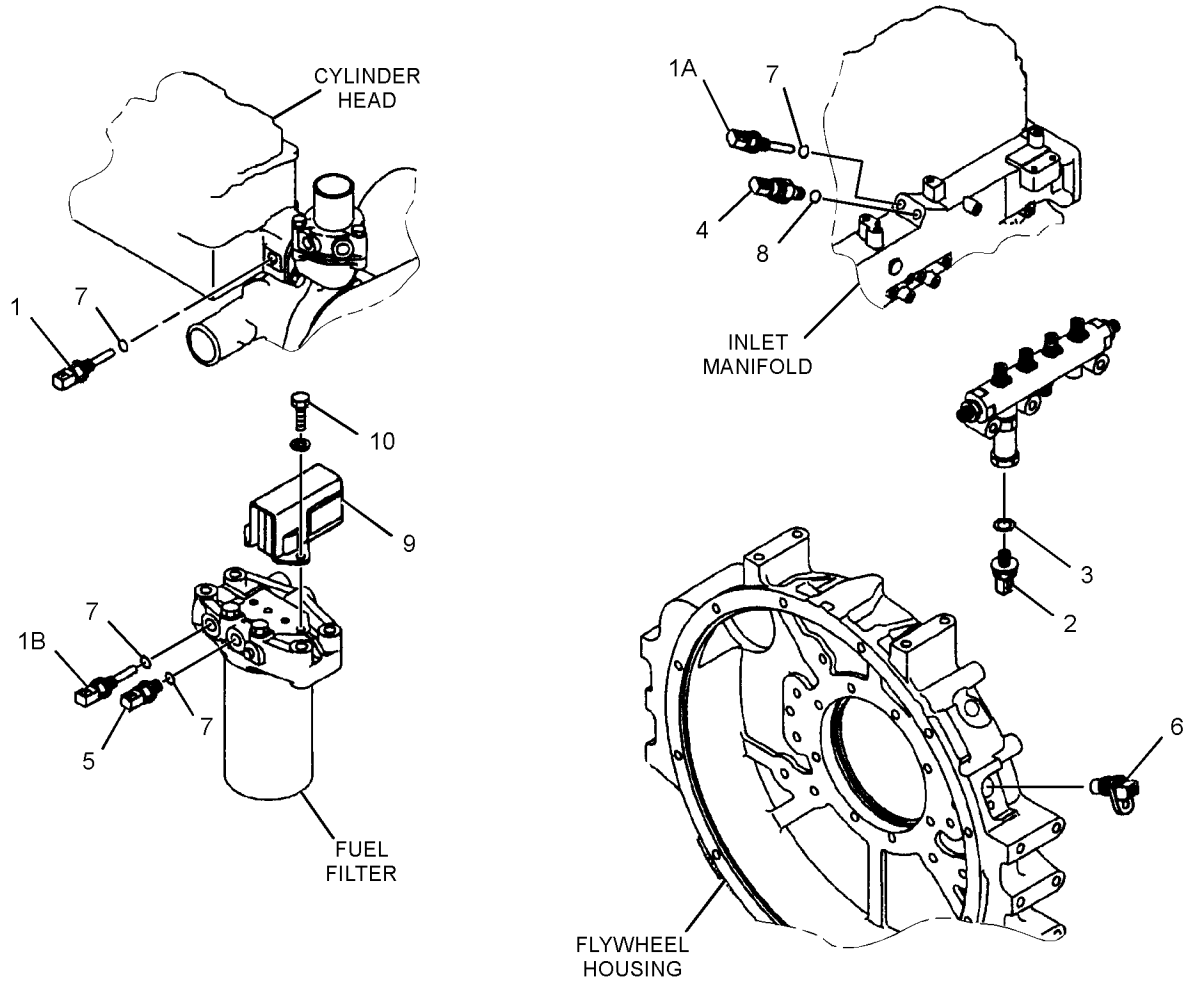

GRAPHIC #1

<END>

g01317849

178-2345 SENSOR GP-LIQUID LEVEL—WATER IN FUEL

S/N: KGF1-UP; FAL1-UP
PART OF 272-4772 SENSOR GP-LIQUID LEVEL
AN ATTACHMENT

SMCS-7422 **i03696480**

NOTE	REF NO	GRAPHIC REF	PART NUMBER	QTY	PART NAME 1 2 3 4 5 6 (PRODUCT LEVEL)	SEE PAGE
	1	1	**178-2334**	1	PROBE AS-LIQUID LEVEL (WATER SEPARATOR)	
		1	**3J-1907**	1	SEAL-O-RING	
	2	1	**178-2335**	1	SENSOR AS-LIQUID LEVEL (WATER SEPARATOR)	
		1	**102-8804**	1	KIT-RECEPTACLE (4-PIN)	
					(INCLUDES RECEPTACLE AS & WEDGE)	
		1	**155-2270**	1	KIT-CONNECTING PLUG (2-PIN)	
					(INCLUDES PLUG AS, WEDGE, & INTERFACE SEAL)	
		1	**186-3735**	4	PIN-CONNECTOR (16-GA TO 18-GA)	
		1	**186-3736**	2	SOCKET-CONNECTOR (16-GA TO 18-GA)	
	3	1	**3J-1907**	1	SEAL-O-RING	

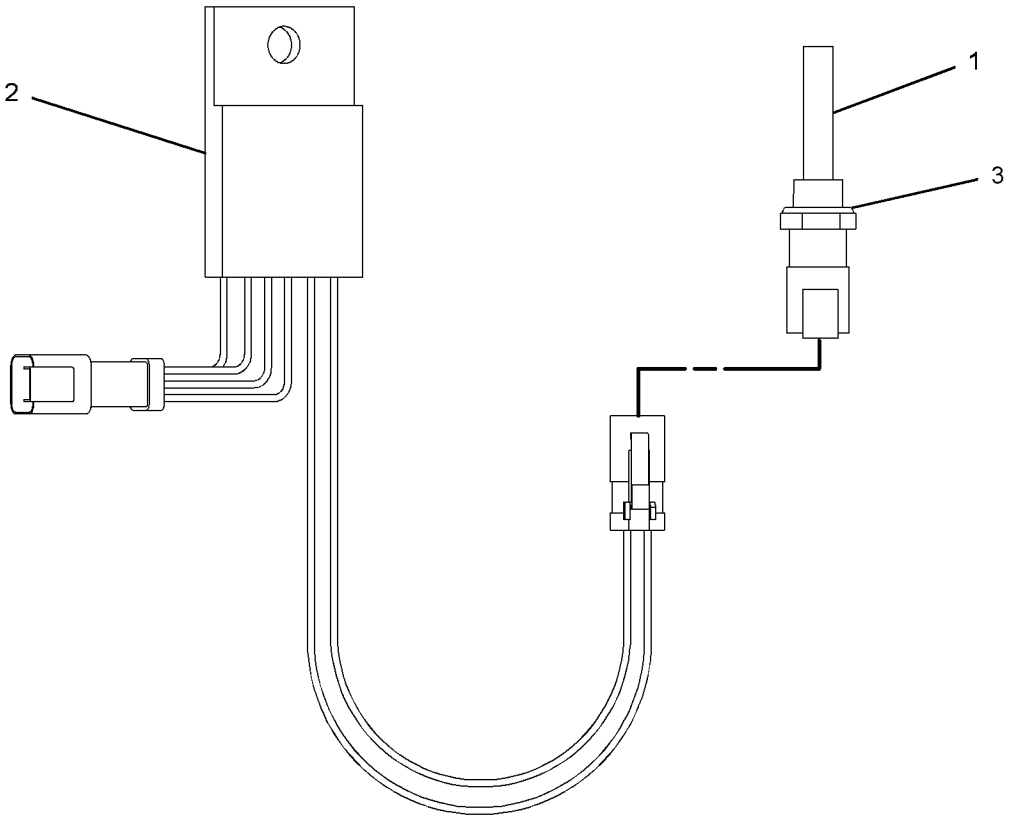

GRAPHIC #1 **<END>** g01988733

272-4772 SENSOR GP-LIQUID LEVEL—WATER SEPARATOR

S/N: KGF1-UP; FAL1-UP

PART OF 314-3859, 314-3860, 314-3861, 314-3862, 314-3864, 314-3865, 314-3905, 338-9908, 338-9923, 347-3340, 354-1018, 354-1019, 354-1047, 354-1054, 354-1112, 354-1113, 354-1147, 354-1148, 354-1149, 354-1150, 359-2298, 359-2299, 359-2300, 359-2309, 359-2310, 359-2404, 359-2405, 359-2421, 359-2481, 359-2482, 359-2500, 359-2501, 359-2506, 359-2507, 367-8686, 367-8697, 367-8738, 367-8739, 367-8798, 367-8799, 367-8800, 367-8807, 367-8809, 367-8810, 367-8817, 379-7095, 379-7096, 379-7097, 379-7098, 379-7118, 379-7119, 379-7216, 379-7217, 379-7218, 379-7219, 379-7220, 379-7226, 379-7227, 379-7228, 379-7267, 379-7268, 379-7269, 379-7270, 385-4030, 385-4031, 385-4032, 385-4033, 385-4035, 385-4036, 385-4136, 396-6826, 396-6827, 396-6828 DISTRIBUTION AR, 338-9925, 351-9691, 359-2264 OPTION AR-COLD WEATHER, 338-9924, 347-3341, 347-3342, 347-3343, 351-9690, 354-1065, 354-1151, 354-1152, 354-1153, 359-2263, 367-8812, 367-8814, 379-7297, 379-7298, 379-7299, 379-7300, 379-7305, 379-7306, 379-7347, 385-4027, 385-4028, 385-4029 OPTION AR-REGIONAL

AN ATTACHMENT

SMCS-7422 **i02852065**

NOTE	REF NO	GRAPHIC REF	PART NUMBER	QTY	PART NAME 1 2 3 4 5 6 (PRODUCT LEVEL)	SEE PAGE
	1	1	**3S-2093**	1	STRAP-CABLE	
Y	2	1	**178-2345**	1	SENSOR GP-LIQUID LEVEL (WATER SEPARATOR)	528
	3	1	**6V-5049**	1	SEAL-O-RING	
	4	1	**8T-4121**	1	WASHER-HARD (11X21X2.5-MM THK)	
M	5	1	**8T-4137**	1	BOLT (M10X1.5X20-MM)	

M - METRIC PART
Y - SEPARATE ILLUSTRATION

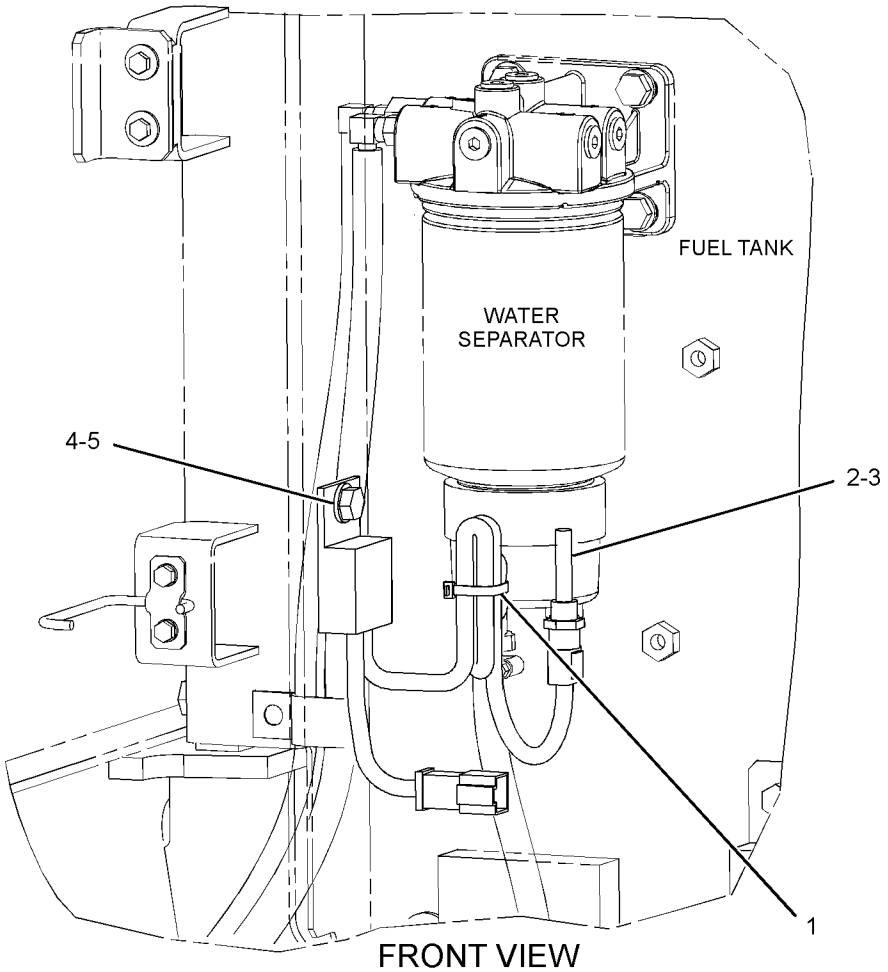

FRONT VIEW
(UPPER LEFT)

GRAPHIC #1 **<END>** g01392538

366-9311 SENSOR GP-PRESSURE

S/N: KGF1-UP; FAL1-UP
FIELD REPLACEMENT ORDER 434-8214—PAGE: 531
PART OF 275-1399, 330-2406 LINES GP-FRONT, 278-6894, 366-8625 LINES GP-SENSOR AN ATTACHMENT

SMCS-1439, 1916, 1917, 1923, 1924 **i04894395**

NOTE	REF NO	GRAPHIC REF	PART NUMBER	QTY	PART NAME 1 2 3 4 5 6 (PRODUCT LEVEL)	SEE PAGE
	1	1	**366-9312**	1	SENSOR AS-PRESSURE	
	1A	1	**3K-0360**	1	SEAL-O-RING	
	2	1	**366-9313**	1	HARNESS AS-SENSOR	
		1	**9X-3401**	3	PIN-CONNECTOR (16-GA TO 18-GA)	
		1	**230-4013**	1	PLUG AS-CONNECTOR (3-PIN)	
		1	**264-7030**	1	SEAL-CONNECTOR	
		1	**102-8803**	1	KIT-RECEPTACLE (3-PIN)	
					(INCLUDES RECEPTACLE AS AND WEDGE)	
		1	**9X-3402**	3	SOCKET-CONNECTOR (16-GA TO 18-GA)	

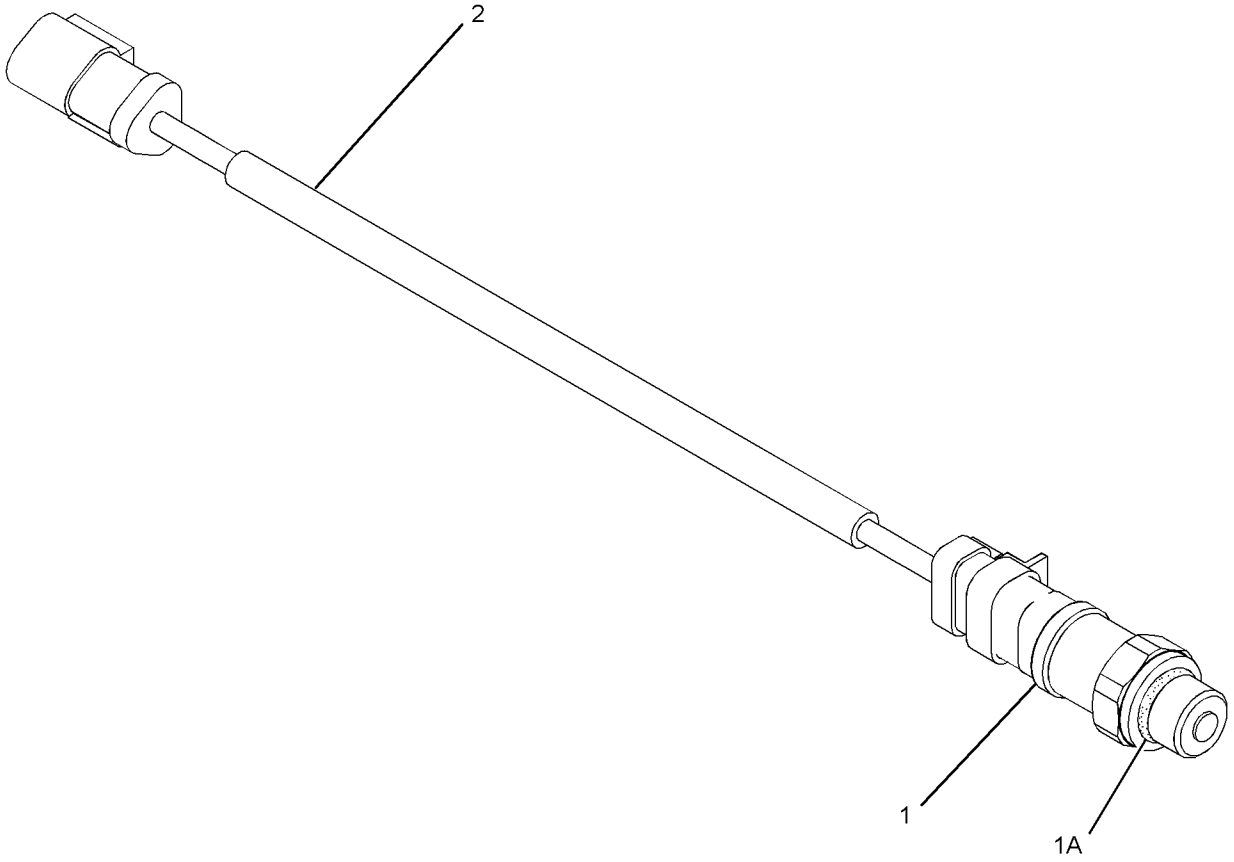

GRAPHIC #1 **<END>** g02571716

434-8214 SENSOR GP-PRESSURE

S/N: KGF1-UP; FAL1-UP

FIELD REPLACEMENT FOR 366-9311—PAGE: 530

SMCS-1439, 1916, 1917, 1923, 1924 **i05288200**

NOTE	REF NO	GRAPHIC REF	PART NUMBER	QTY	PART NAME 1 2 3 4 5 6 (PRODUCT LEVEL)	SEE PAGE
	1	1	**434-3436**	1	SENSOR AS-PRESSURE (BOOM CYLINDER)	
	1A	1	**3K-0360**	1	SEAL-O-RING	
	2	1	**366-9313**	1	HARNESS AS-SENSOR	
		1	**102-8803**	1	KIT-RECEPTACLE (3-PIN)	
					(INCLUDES RECEPTACLE AS AND WEDGE)	
		1	**9X-3402**	3	SOCKET-CONNECTOR (16-GA TO 18-GA)	
					—OR—	
		1	**126-1768**	3	SOCKET-CONNECTOR (14-GA TO 16-GA)	
		1	**9X-3401**	3	PIN-CONNECTOR (16-GA TO 18-GA)	
					—OR—	
		1	**126-1767**	3	PIN-CONNECTOR (14-GA TO 16-GA)	
		1	**230-4013**	1	PLUG AS-CONNECTOR (3-PIN)	
		1	**264-7030**	1	SEAL-CONNECTOR	

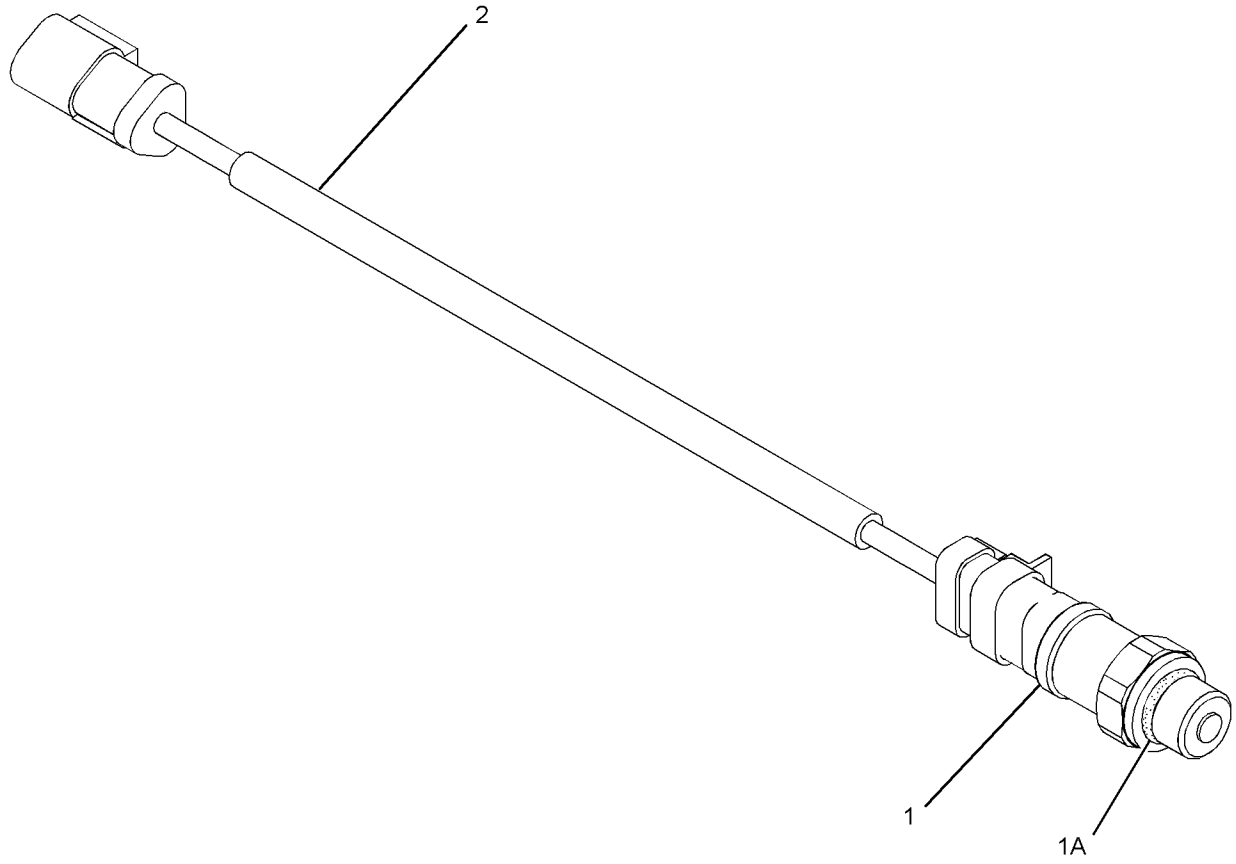

GRAPHIC #1 **<END>** g02571716

298-4102 STARTING AR-COLD WEATHER

S/N: KGF1-UP; FAL1-UP

PART OF 354-1054, 354-1147, 354-1149, 359-2482, 367-8739, 367-8800, 367-8807, 379-7096, 379-7098, 385-4032, 385-4033 DISTRIBUTION AR

AN ATTACHMENT

SMCS-1450 **i02668458**

NOTE	PART NUMBER	QTY	PART NAME 1 2 3 4 5 6 (PRODUCT LEVEL)	SEE PAGE
Y	*259-5049*	1	BATTERY & WIRING GP (COLD WEATHER)	403
Y	*259-5051*	1	WIRING GP-ENGINE (JUMP START)	617

Y - SEPARATE ILLUSTRATION

<END>

272-4774 STARTING MOTOR GP-ELECTRIC

S/N: GDC1-UP
PART OF 296-4637 MOUNTING GP-STARTING MOTOR
AN ATTACHMENT
TYPE 1

SMCS-1453 **i02431348**

NOTE	REF NO	GRAPHIC REF	PART NUMBER	QTY	PART NAME 1 2 3 4 5 6 (PRODUCT LEVEL)	SEE PAGE
	1	1	**127-5947**	1	SETSCREW	
	2	1	**233-1281**	1	BRACKET AS	
		1	**127-5937**	1	BEARING AS	
	3	1	**127-5944**	1	LEVER AS	
	4	1	**135-2364**	1	SWITCH AS (STARTING MOTOR)	
	5	1	**127-5948**	1	BALL	
	6	1	**127-5949**	1	PACKING AS	
	7	1	**127-5950**	1	ARMATURE AS	
		1	**095-0410**	1	BEARING	
	8	1	**095-0085**	1	BOLT SET	
	9	1	**279-7750**	1	PINION SET	
		1	**094-9950**	1	STOP SET	
	10	1	**233-1279**	1	SHAFT GP-MOTOR	
		1	**127-5939**	1	SHAFT AS-GEAR	
		1	**127-5940**	1	WASHER AS	
		1	**127-5941**	1	GEAR AS-INTERNAL	
		1	**127-5943**	4	GEAR AS (55/138-TEETH)	
		1	**233-1280**	1	CLUTCH	
	11	1	**094-9980**	2	GASKET	
	12	1	**127-5952**	1	YOKE AS	
		1	**127-5953**	2	BRUSH	
	13	1	**127-5955**	1	HOLDER AS-BRUSH	
		1	**127-5956**	4	SPRING	
	14	1	**135-2366**	1	BRACKET	

272-4774 **STARTING MOTOR GP-ELECTRIC (*contd.*)** **i02431348**

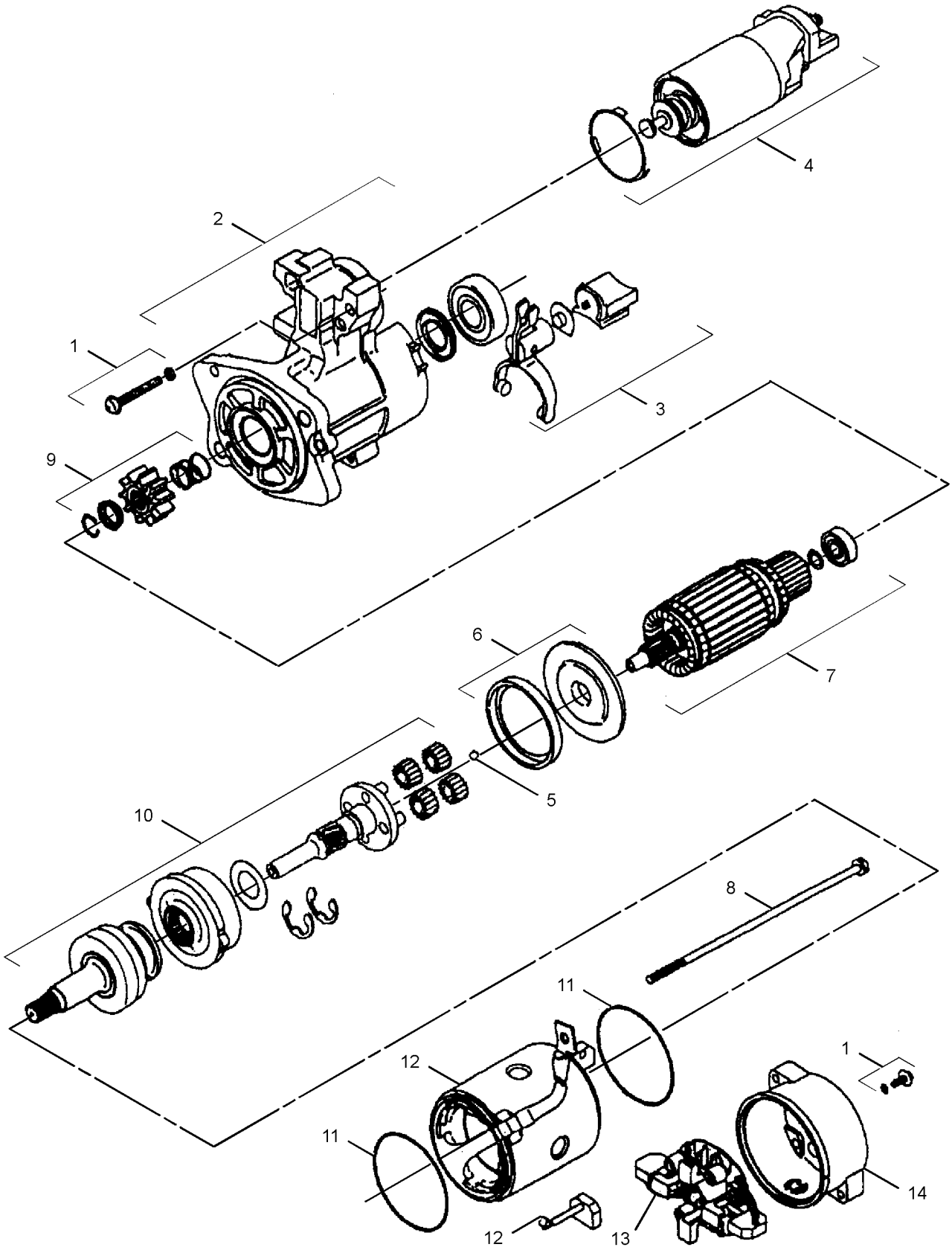

GRAPHIC #1 **<END>** g01219448

272-4774 STARTING MOTOR GP-ELECTRIC*R

S/N: GDC1-UP

PART OF 272-4677, 272-4683, 296-4676, 305-4777 ENGINE AR, 296-4637 MOUNTING GP-STARTING MOTOR

ALSO AN ATTACHMENT

TYPE 2

SMCS-1453 **i03279225**

NOTE	REF NO	GRAPHIC REF	PART NUMBER	QTY	PART NAME 1 2 3 4 5 6 (PRODUCT LEVEL)	SEE PAGE
	1	1	**127-5947**	1	SETSCREW	
C	2	1	**294-1855**	1	BRACKET AS	
		1	**127-5937**	1	BEARING AS	
	3	1	**127-5944**	1	LEVER AS	
C	4	1	**294-1857**	1	SOLENOID AS-STARTING MOTOR (24-VOLT)	
	5	1	**127-5948**	1	BALL	
	6	1	**127-5949**	1	PACKING AS	
	7	1	**127-5950**	1	ARMATURE AS	
		1	**095-0410**	1	BEARING	
	8	1	**095-0085**	1	BOLT SET	
	9	1	**279-7750**	1	PINION SET	
		1	**094-9950**	1	STOP SET	
	10	1	**233-1279**	1	SHAFT GP-MOTOR	
		1	**127-5939**	1	SHAFT AS-GEAR	
		1	**127-5940**	1	WASHER AS	
		1	**127-5941**	1	GEAR AS-INTERNAL	
		1	**127-5943**	4	GEAR AS (55/138-TEETH)	
		1	**233-1280**	1	CLUTCH	
	11	1	**094-9980**	2	GASKET	
	12	1	**127-5952**	1	YOKE AS	
		1	**127-5953**	2	BRUSH	
C	13	1	**294-1858**	1	HOLDER AS	
	14	1	**135-2366**	1	BRACKET	

C - CHANGE FROM PREVIOUS TYPE

272-4774 **STARTING MOTOR GP-ELECTRIC (*contd.*)** **i03279225**

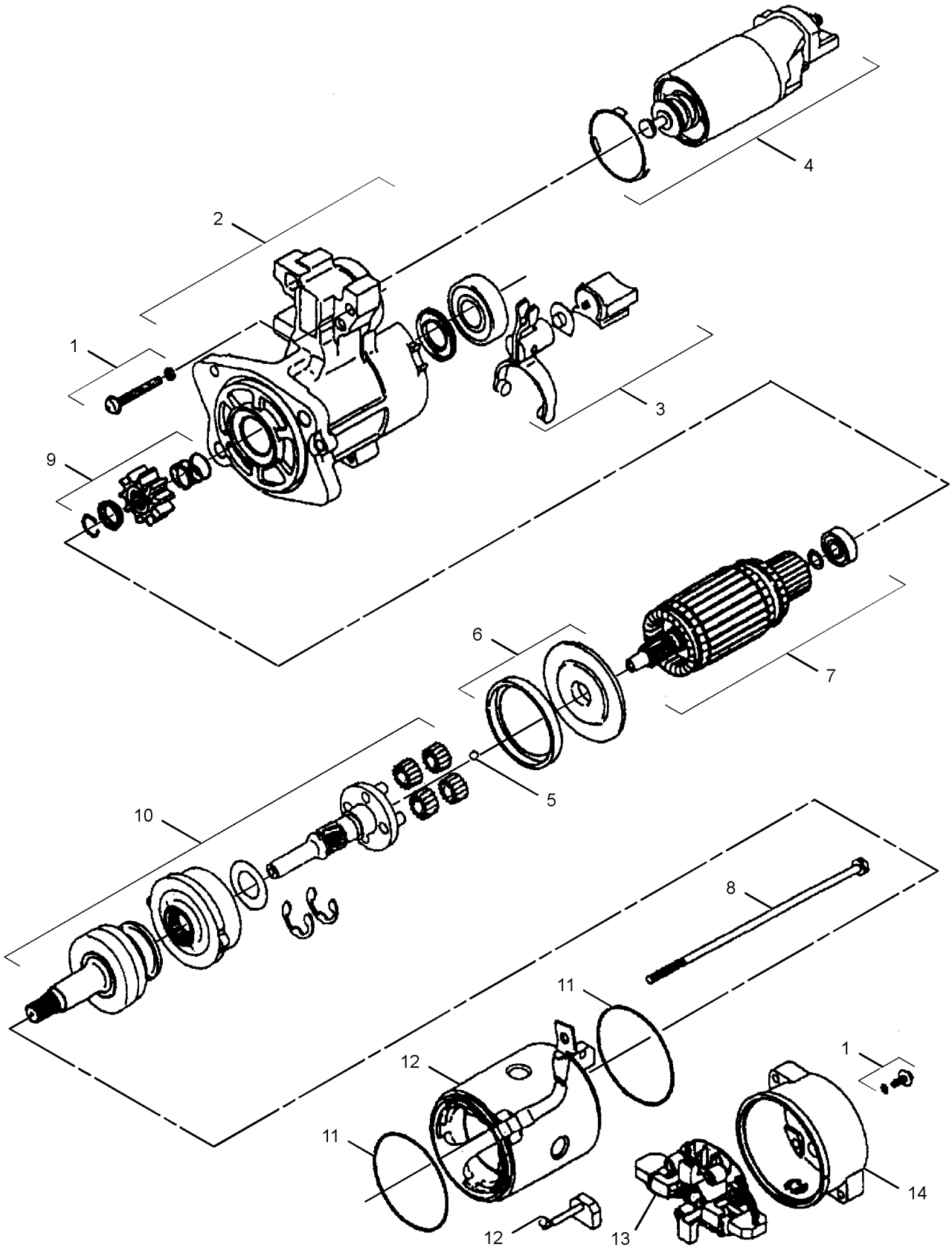

GRAPHIC #1 **<END>** g01219448

7N-0719 SWITCH GP-DISCONNECT–BATTERY

S/N: KGF1-UP; FAL1-UP

PART OF 259-5177, 319-1386, 324-5801 PANEL GP-CIRCUIT BREAKER

SMCS-1411 **i05227609**

NOTE	REF NO	GRAPHIC REF	PART NUMBER	QTY	PART NAME 1 2 3 4 5 6 (PRODUCT LEVEL)	SEE PAGE
	1	1	**2H-3922**	1	LOCKWASHER	
	2	1	**8H-5303**	1	NUT (3/4-16-THD)	
	3	1	**9F-5644**	2	LOCKWASHER	
	4	1	**6F-7045**	2	NUT-FULL (3/8-24-THD)	
	5	1	**8H-5306**	1	KEY (BATTERY DISCONNECT)	

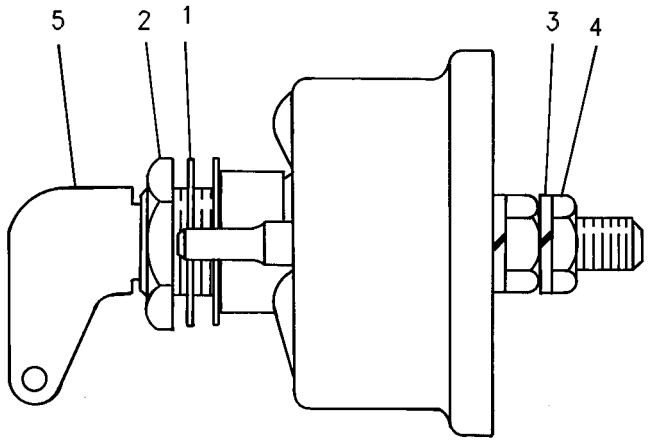

GRAPHIC #1 **<END>** g00580531

234-6613 SWITCH GP-LIMIT–HYDRAULIC LOCKOUT

S/N: KGF1-UP; FAL1-UP

PART OF 259-7349 CONSOLE GP-OPERATOR

SMCS-1435 **i04026174**

NOTE	REF NO	GRAPHIC REF	PART NUMBER	QTY	PART NAME 1 2 3 4 5 6 (PRODUCT LEVEL)	SEE PAGE
	1	1	**3S-2093**	1	STRAP-CABLE	
	2	1	**4I-3038**	2	WASHER (3.3X8X0.5-MM THK)	
	3	1	**111-4799**	1	SWITCH AS-LIMIT (HYDRAULIC LOCKOUT)	
		1	**102-8803**	1	KIT-RECEPTACLE (3-PIN)	
					(INCLUDES RECEPTACLE AS & WEDGE)	
		1	**186-3735**		PIN-CONNECTOR (16-GA TO 18-GA)	
D		1	**5P-5998**		TUBE (0.3-M)	
M	4	1	**185-8286**	2	SCREW-MACHINE (M4X0.7X8-MM)	
	5	1	**234-6615**	1	KNOB	
	6	1	**087-4683**	2	LOCKWASHER	
M	7	1	**120-9027**	2	SCREW-PAN HEAD (M3X0.5X16-MM)	

D - ORDER BY THE METER
M - METRIC PART

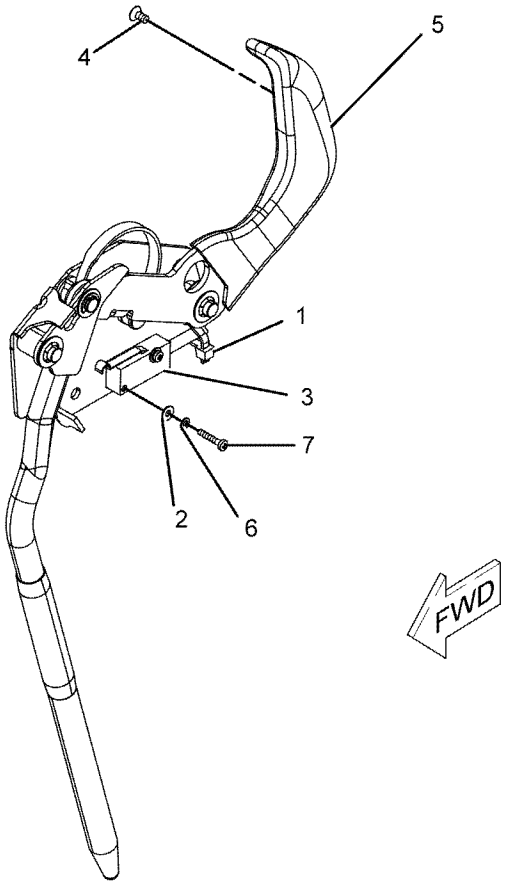

GRAPHIC #1 **<END>** g01096293

209-5582 SWITCH GP-MAGNETIC—AIR INLET HEATER RELAY

S/N: KGF3941-UP; FAL2992-UP

24-VOLT

PART OF 324-5801 PANEL GP-CIRCUIT BREAKER

SMCS-7499 **i03753263**

NOTE	REF NO	GRAPHIC REF	PART NUMBER	QTY	PART NAME 1 2 3 4 5 6 (PRODUCT LEVEL)	SEE PAGE
	1	1	**102-8802**	1	KIT-RECEPTACLE (2-PIN)	
					(INCLUDES RECEPTACLE AS & WEDGE)	
	2	1	**8T-8729**	2	PIN-CONNECTOR (16-GA TO 18-GA)	
	3	1	**3F-9556**	2	LOCKWASHER	
	4	1	**6V-8186**	2	NUT-FULL (5/16-24-THD)	
	5	1	**6V-8378**	2	NUT (10-32-THD)	
	6	1	**8F-1434**	2	LOCKWASHER	

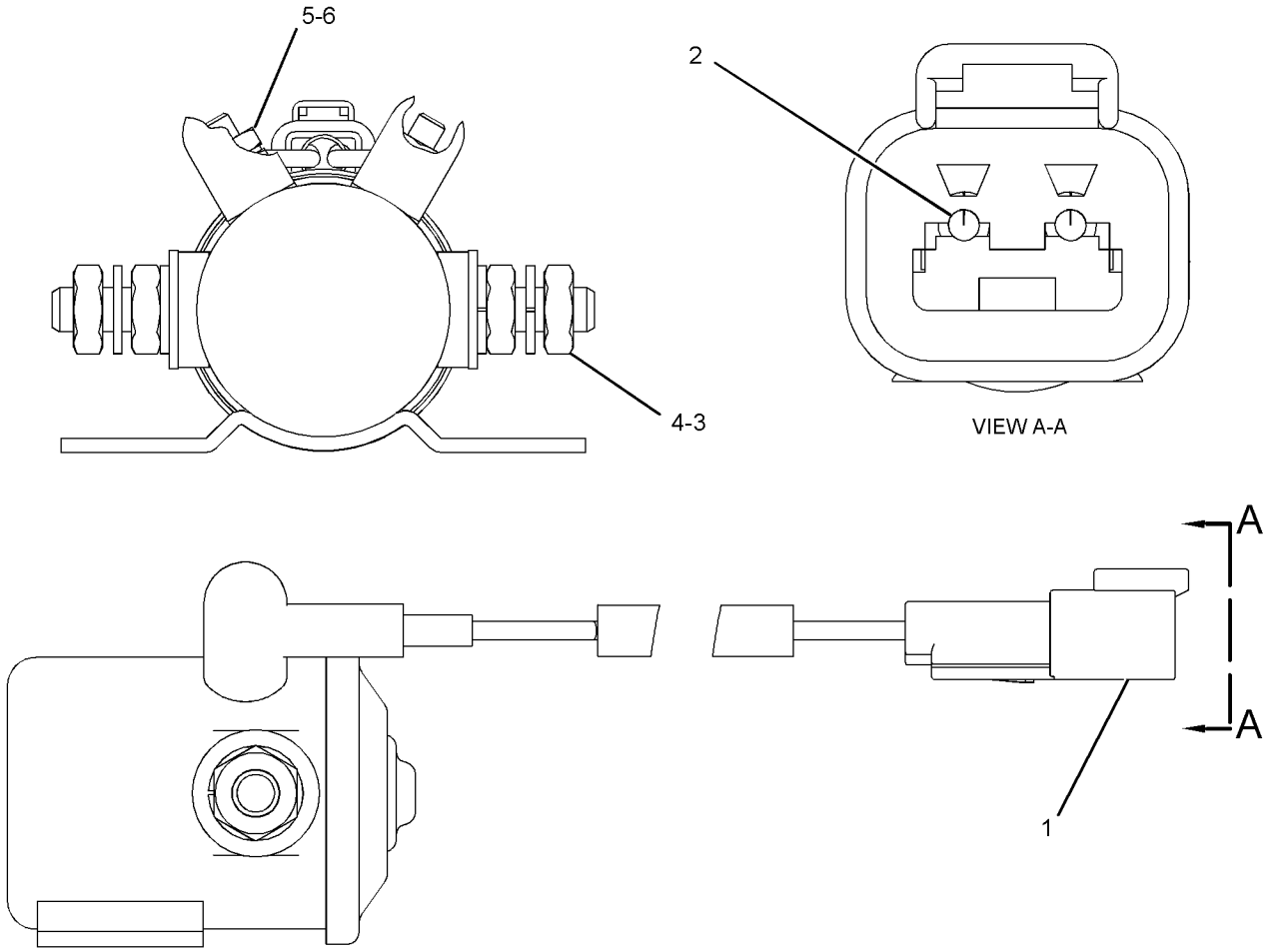

GRAPHIC #1 **<END>** g01279452

223-4453 SWITCH GP-MAGNETIC—STARTING AID HEATER

S/N: GDC1-UP
24-VOLT
PART OF 296-4652 MANIFOLD GP-INLET
ALSO AN ATTACHMENT

SMCS-7499 **i02077586**

NOTE	REF NO	GRAPHIC REF	PART NUMBER	QTY	PART NAME 1 2 3 4 5 6 (PRODUCT LEVEL)	SEE PAGE
	1	1	**209-5582**	1	SWITCH GP-MAGNETIC (24-VOLT) (STARTING AID HEATER)	
	2	1	**102-8802**	1	KIT-RECEPTACLE (2-PIN)	
					(INCLUDES RECEPTACLE AS AND WEDGE)	
	3	1	**186-3735**	2	PIN-CONNECTOR (16-GA TO 18-GA)	
	4	1	**3F-9556**	2	LOCKWASHER	
	5	1	**6V-8186**	2	NUT-FULL (5/16-24-THD)	
	6	1	**6V-8378**	2	NUT (10-32-THD)	
	7	1	**8F-1434**	2	LOCKWASHER	

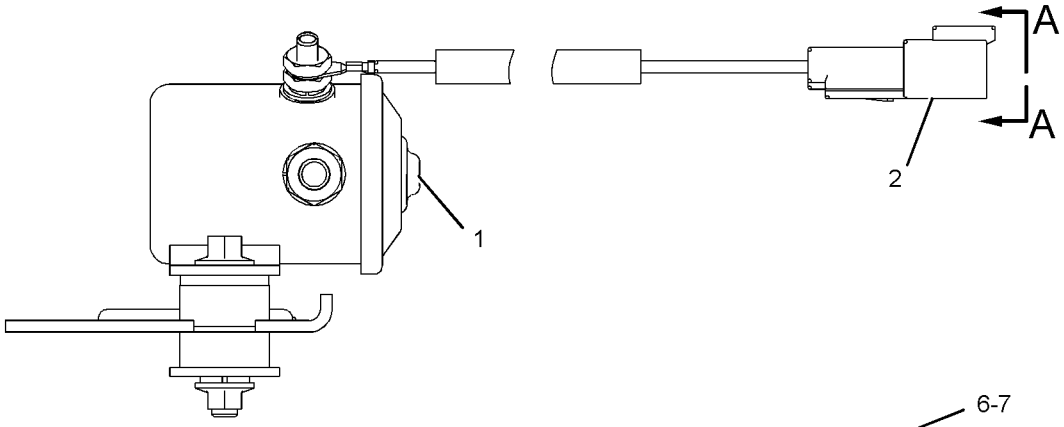

LEFT SIDE VIEW

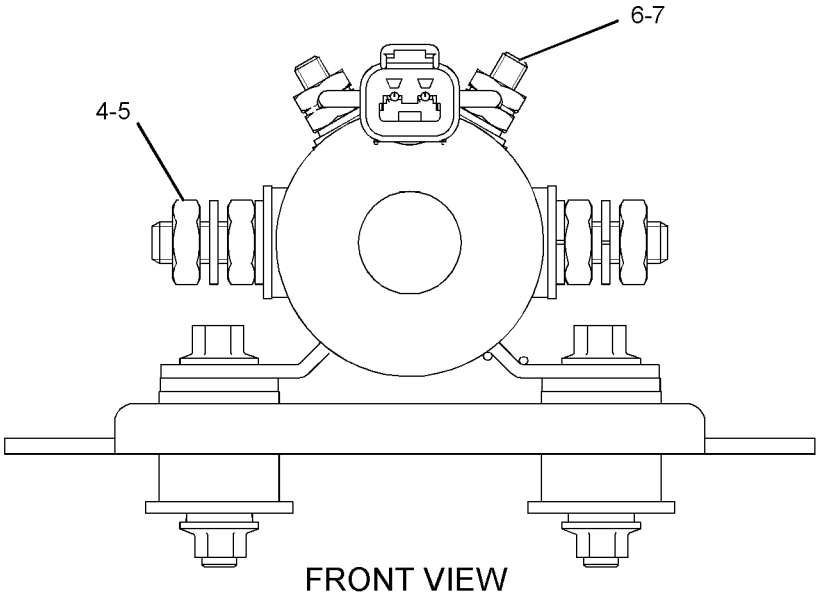

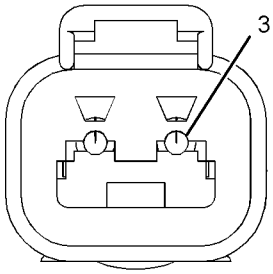

VIEW A-A

FRONT VIEW

GRAPHIC #1 **<END>** g01065673

259-5274 SWITCH GP-MAGNETIC–START RELAY

S/N: KGF1-UP; FAL1-UP
24-VOLT
PART OF 259-5177, 319-1386, 324-5801 PANEL GP-CIRCUIT BREAKER

SMCS-7499 **i03671327**

NOTE	REF NO	GRAPHIC REF	PART NUMBER	QTY	PART NAME 1 2 3 4 5 6 (PRODUCT LEVEL)	SEE PAGE
	1	1	**102-8802**	1	KIT-RECEPTACLE (2-PIN)	
					(INCLUDES RECEPTACLE AS & WEDGE)	
	2	1	**186-3735**	2	PIN-CONNECTOR (16-GA TO 18-GA)	
	3	1	**1H-3338**	2	LOCKWASHER (EXTERNAL TOOTH)	
	4	1	**012-0380**	2	LOCKWASHER (SPLIT)	
M	5	1	**5C-2890**	2	NUT (M6X1-THD)	

M - METRIC PART

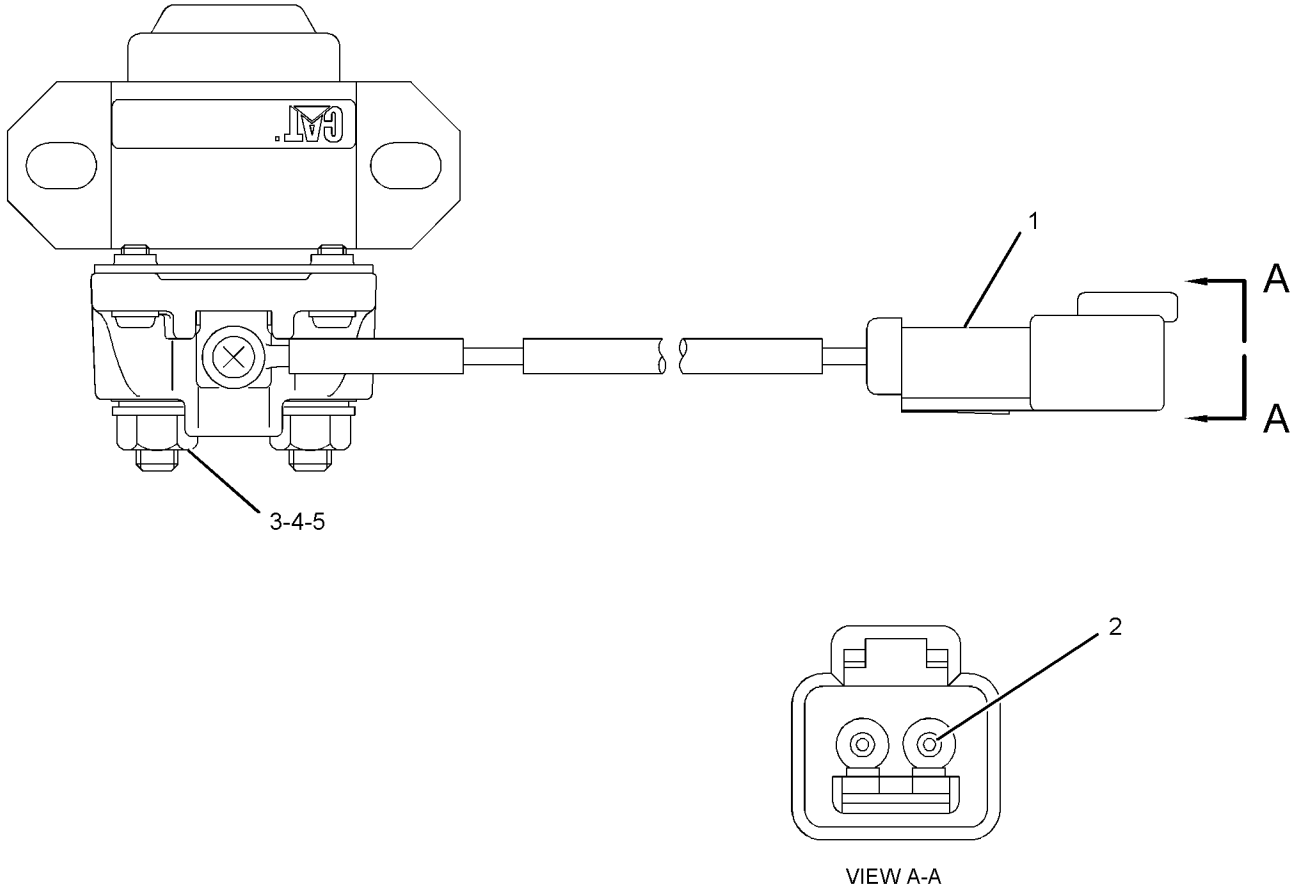

GRAPHIC #1 **<END>** g01196733

238-1594 SWITCH GP-PUSH BUTTON—REFUELING PUMP, START

S/N: KGF1-UP; FAL1-UP
PART OF 238-1570 WIRING GP-REFUELING PUMP
AN ATTACHMENT

SMCS-1435, 7332 **i04129913**

NOTE	REF NO	GRAPHIC REF	PART NUMBER	QTY	PART NAME 1 2 3 4 5 6 (PRODUCT LEVEL)	SEE PAGE
	1	1	**6T-9442**	1	SWITCH GP-PUSHBUTTON (REFUELING PUMP, START)	
		1	**1S-0812**	2	SCREW-TAPPING	
		1	**3K-0835**	1	NUT (5/8-24-THD)	
		1	**6F-0253**	1	LOCKWASHER	
		1	**8T-8748**	1	ADAPTER-MOUNT	
		1	**9W-0625**	1	SWITCH AS-PUSH BUTTON (REFUELING PUMP, START)	
	2	1	**238-1595**	1	HARNESS AS-SWITCH	
E	3	1	**125-7875**		TUBE-HEAT SHRINK (7.44-MM DIA) (6-CM)	

E - ORDER BY THE CENTIMETER

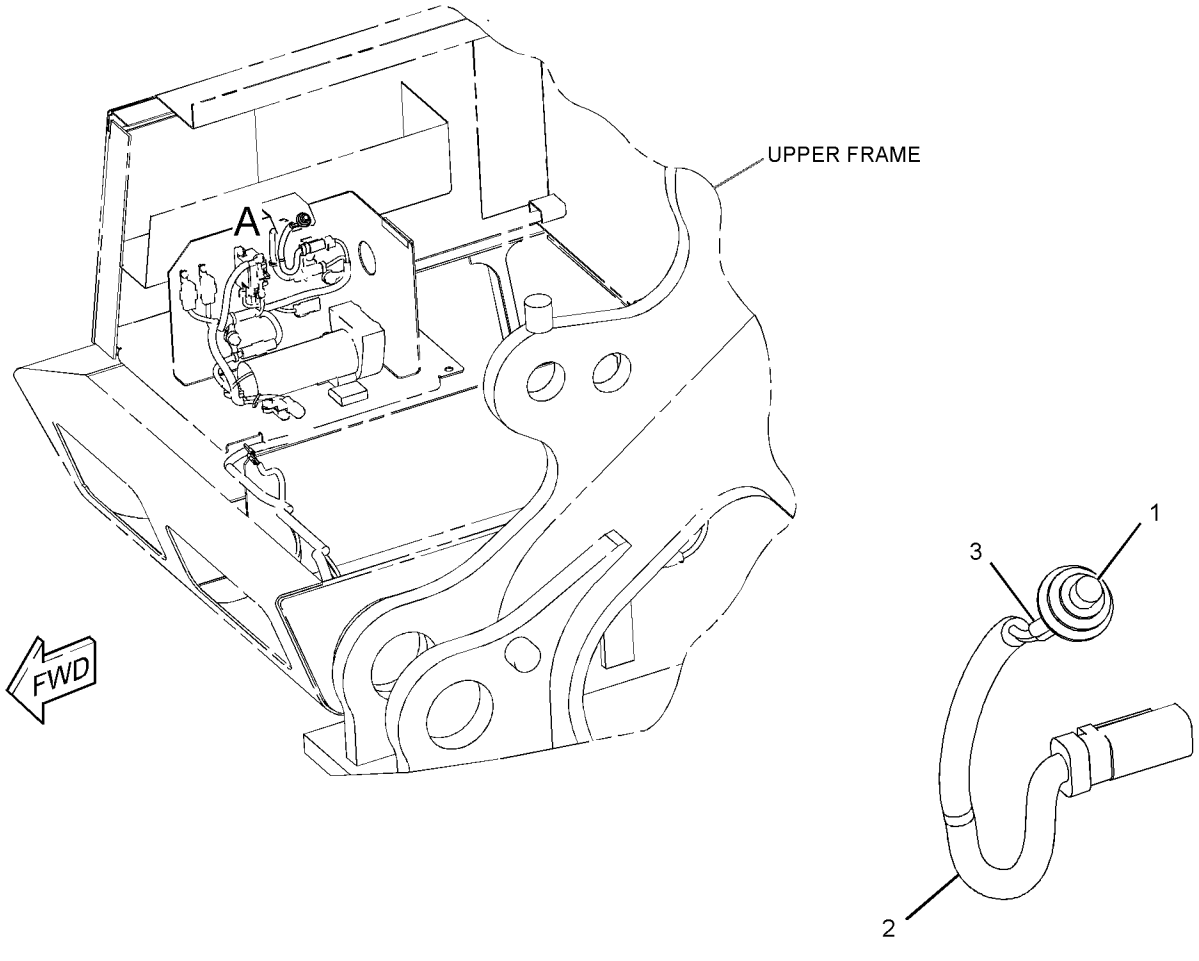

VIEW OF AREA A

GRAPHIC #1 **<END>** g01560235

238-1596 SWITCH GP-PUSH BUTTON—REFUELING PUMP, STOP

S/N: KGF1-UP; FAL1-UP
PART OF 238-1570 WIRING GP-REFUELING PUMP
AN ATTACHMENT

SMCS-1435, 7332

i04129914

NOTE	REF NO	GRAPHIC REF	PART NUMBER	QTY	PART NAME 1 2 3 4 5 6 (PRODUCT LEVEL)	SEE PAGE
	1	1	*9X-4184*	1	SWITCH GP-PUSH BUTTON (REFUELING PUMP, STOP)	
		1	**1S-0812**	2	SCREW-TAPPING	
		1	**3E-7389**	1	SWITCH-PUSH BUTTON (REFUELING PUMP, STOP)	
		1	**3K-0835**	1	NUT (5/8-24-THD)	
		1	**6F-0253**	1	LOCKWASHER	
		1	**8T-8748**	1	ADAPTER-MOUNT	
	2	1	**238-1597**	1	HARNESS AS-SWITCH	
E	3	1	**125-7875**		TUBE-HEAT SHRINK (7.44-MM DIA) (6-CM)	

E - ORDER BY THE CENTIMETER

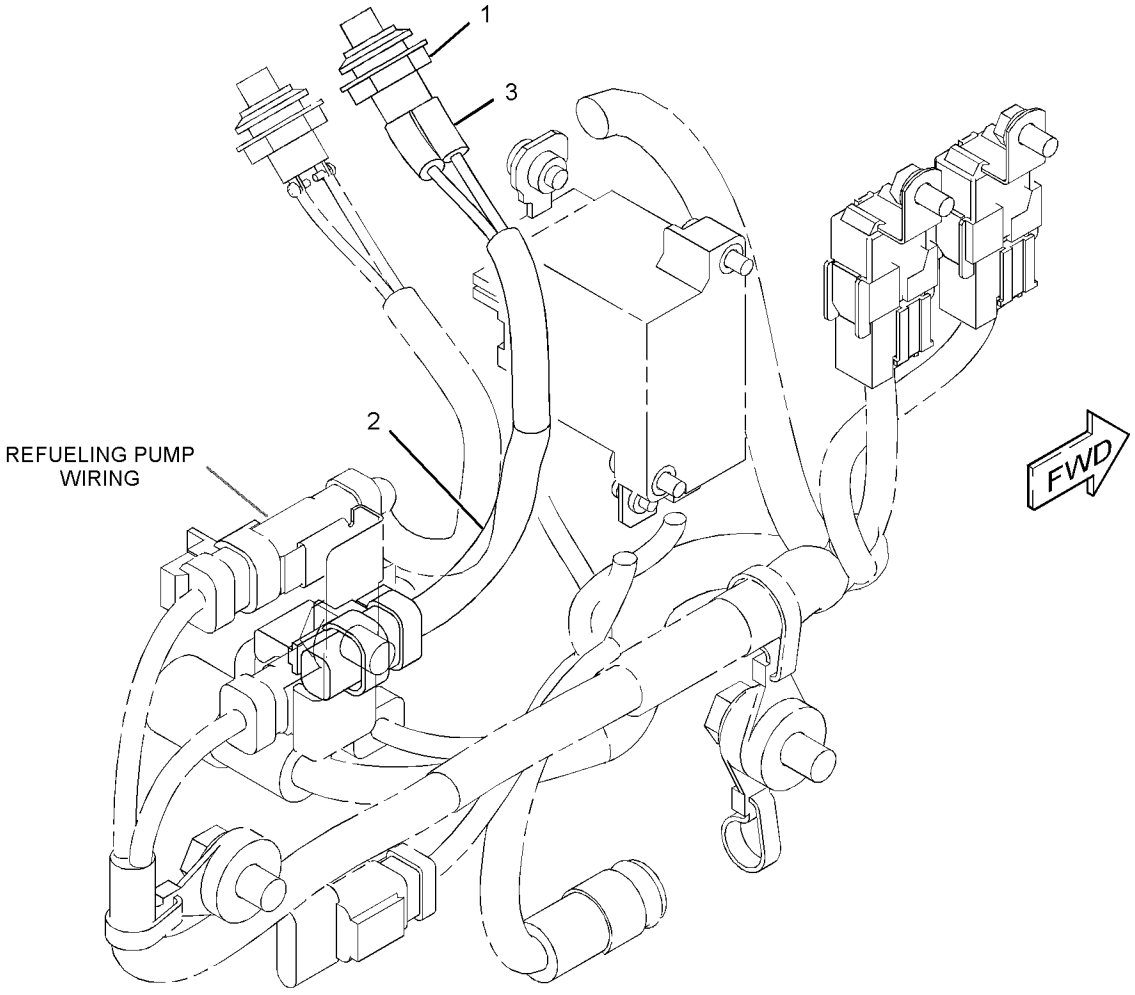

GRAPHIC #1

<END>

g01560319

5C-6108 SWITCH GP-REFUELING—FUEL TANK SHUTOFF

S/N: KGF1-UP; FAL1-UP
PART OF 229-1785 PUMP GP-REFUELING
AN ATTACHMENT

SMCS-1295 **i02742303**

NOTE	REF NO	GRAPHIC REF	PART NUMBER	QTY	PART NAME 1 2 3 4 5 6 (PRODUCT LEVEL)	SEE PAGE
	1	1	**8J-9236**	1	SWITCH (LIQUID LEVEL) (FUEL)	
	2	1	**5C-6074**	1	FITTING	
	3	1	**2S-4078**	1	SEAL-O-RING	
	4	1	**3D-2824**	1	SEAL-O-RING	
	5	1	**8S-1815**	1	PLUG	
	6	1	**8S-1814**	2	INSULATOR	
	7	1	**4B-2049**	2	NUT (10-32-THD)	
	8	1	**8S-1812**	1	TERMINAL	
	9	1	**9B-4499**	1	SCREW-MACHINE (8-36X0.375-IN)	
	10	1	**2L-8076**	1	TERMINAL-RING (14-GA TO 16-GA, NO. 10 SCREW)	

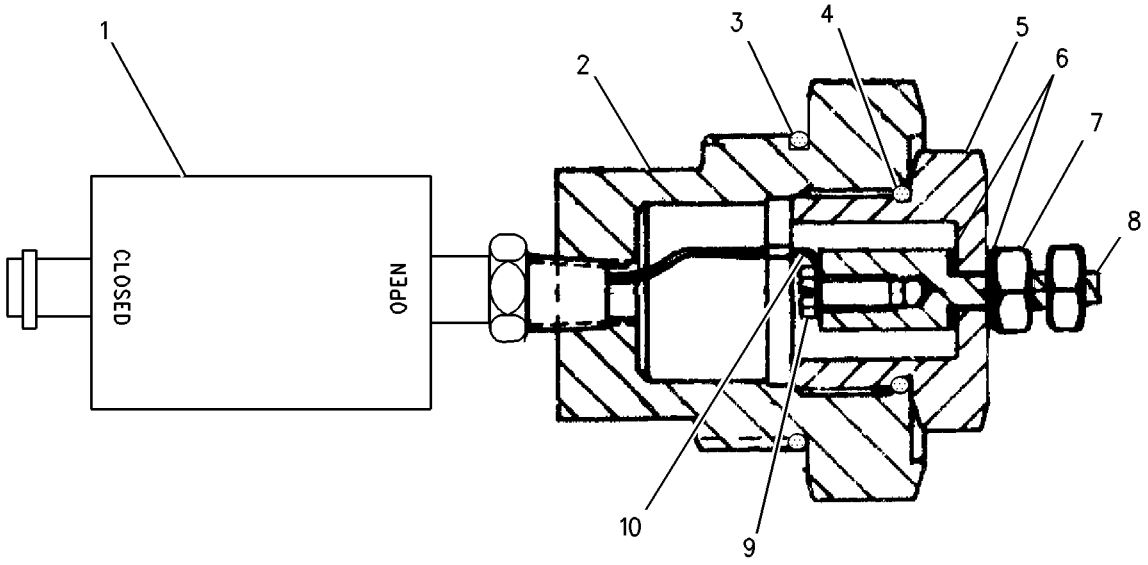

GRAPHIC #1 **<END>** g00687581

106-0107 SWITCH GP-ROTARY–THROTTLE POSITION

S/N: KGF1-UP; FAL1-UP
PART OF 251-0542, 251-0544 PANEL GP-SWITCH
AN ATTACHMENT

SMCS-7332 **i02164374**

NOTE	REF NO	GRAPHIC REF	PART NUMBER	QTY	PART NAME 1 2 3 4 5 6 (PRODUCT LEVEL)	SEE PAGE
	1	1	**102-8805**	1	KIT-RECEPTACLE (6-PIN)	
					(INCLUDES RECEPTACLE AS & WEDGE)	
	2	1	**3E-3383**	1	WEDGE-RECEPTACLE LOCK (6-PIN)	
	3	1	**8T-8737**	1	PLUG-SEAL	
	4	1	**144-1636**	5	PIN-CONNECTOR (14-GA TO 18-GA)	
M	5	1	**7Y-5458**	1	NUT (M12X1-THD)	
	6	1	**7Y-5464**	1	WASHER (12.2X15.4X0.5-MM THK)	
	7	1	**106-0210**	1	SEAL	

M - METRIC PART

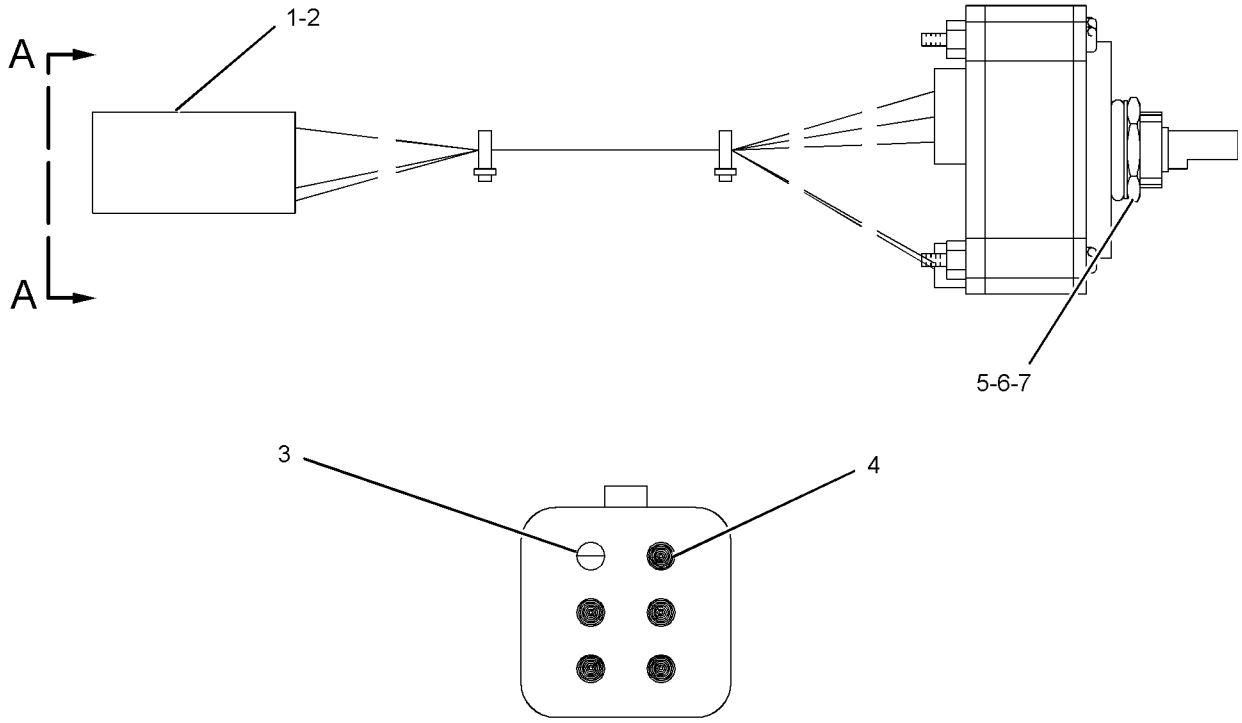

VIEW A-A

GRAPHIC #1 **<END>** g01098706

319-4420 SWITCH GP-ROTARY–THROTTLE POSITION

S/N: KGF1-UP; FAL1-UP
PART OF 251-0542, 251-0544 PANEL GP-SWITCH
AN ATTACHMENT

SMCS-7332 **i03105700**

NOTE	REF NO	GRAPHIC REF	PART NUMBER	QTY	PART NAME 1 2 3 4 5 6 (PRODUCT LEVEL)	SEE PAGE
	1	1	**243-4508**	1	RECEPTACLE AS-CONNECTOR (6-PIN)	
	2	1	**9X-3401**	5	PIN-CONNECTOR (16-GA TO 18-GA)	
					–OR–	
		1	**126-1767**	5	PIN-CONNECTOR (14-GA TO 16-GA)	
	3	1	**8T-8737**	1	PLUG-SEAL	
M	4	1	**7Y-5458**	1	NUT (M12X1-THD)	
	5	1	**7Y-5464**	1	WASHER (12.2X15.4X0.5-MM THK)	
	6	1	**106-0210**	1	SEAL	

M - METRIC PART

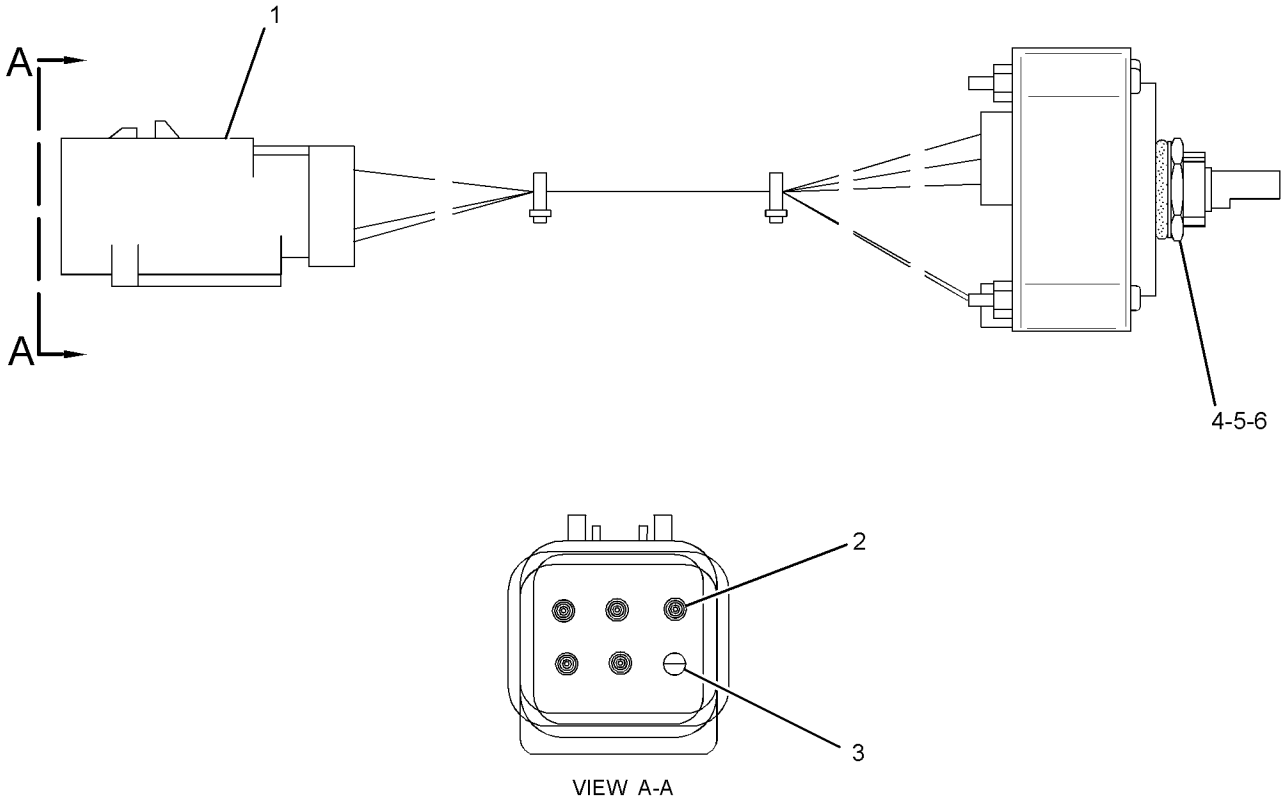

VIEW A-A

GRAPHIC #1 **<END>** g01588034

9G-7641 SWITCH GP-START–ENGINE, KEY

S/N: KGF1-UP; FAL1-UP
PART OF 251-0542, 251-0544 PANEL GP-SWITCH
AN ATTACHMENT

SMCS-1416 **i01101254**

NOTE	REF NO	GRAPHIC REF	PART NUMBER	QTY	PART NAME 1 2 3 4 5 6 (PRODUCT LEVEL)	SEE PAGE
	1	1	**6V-8362**	4	SCREW-MACHINE (8-32X0.31-IN)	
	2	1	**9B-7233**	4	LOCKWASHER	
	3	1	**7T-6799**	1	NUT-MOUNTING (1-32-THD)	

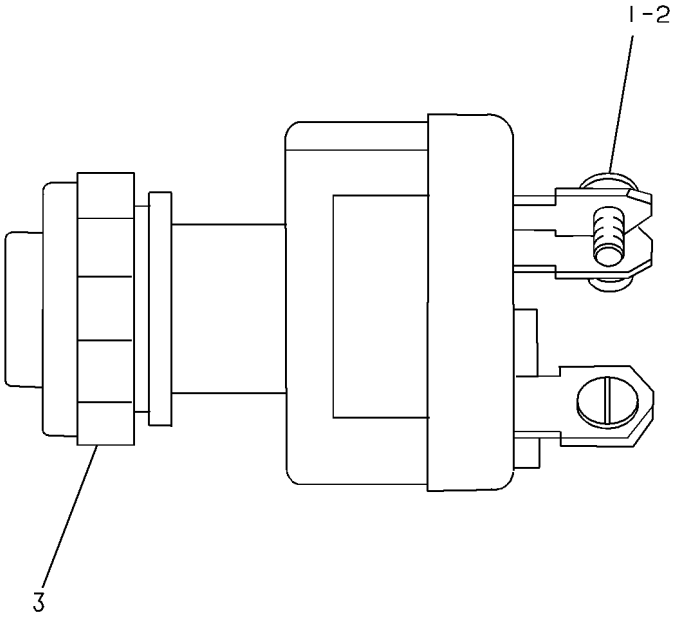

GRAPHIC #1 **<END>** g00081868

255-2751 SWITCH GP-START–ENGINE, KEY

S/N: KGF1-UP; FAL1-UP

PART OF 251-0542, 251-0544 PANEL GP-SWITCH

AN ATTACHMENT

SMCS-1416 **i04407211**

NOTE	REF NO	GRAPHIC REF	PART NUMBER	QTY	PART NAME 1 2 3 4 5 6 (PRODUCT LEVEL)	SEE PAGE
	1	1	**6V-8362**	4	SCREW-MACHINE (8-32X0.31-IN)	
	2	1	**9B-7233**	4	LOCKWASHER	
	3	1	**7T-6799**	1	NUT-MOUNTING (1-32-THD)	
AF			**5P-8500**	1	KEY (IGNITION)	

A - NOT PART OF THIS GROUP
F - NOT SHOWN

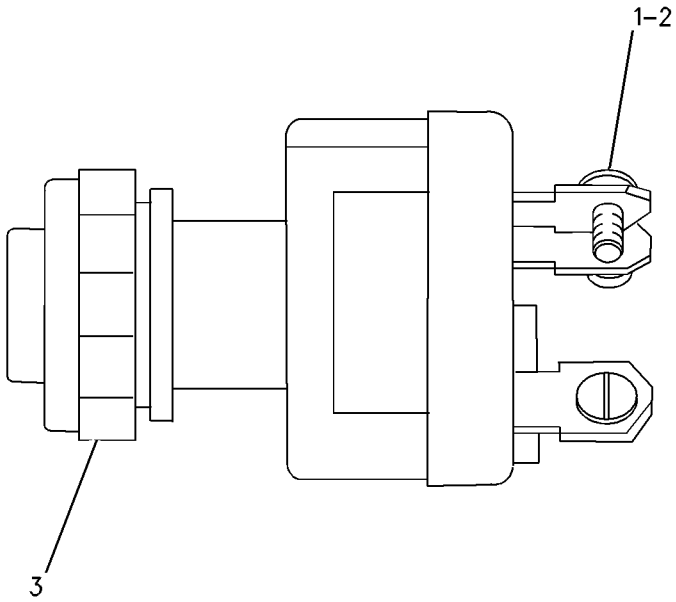

GRAPHIC #1 **<END>** g00699802

170-2512 SWITCH GP-TOGGLE

S/N: KGF1-UP; FAL1-UP
PART OF 283-2913 WIRING GP-RADIO
AN ATTACHMENT

SMCS-7332 **i03649736**

NOTE	REF NO	GRAPHIC REF	PART NUMBER	QTY	PART NAME 1 2 3 4 5 6 (PRODUCT LEVEL)	SEE PAGE
	1	1	**6T-3631**	2	NUT-HEX (15/32-32-THD)	
	2	1	**6T-3632**	1	LOCKWASHER	
	3	1	**6T-3633**	1	RING-LOCKING	
	4	1	**102-8805**	1	KIT-RECEPTACLE (6-PIN)	
					(INCLUDES RECEPTACLE AS & WEDGE)	
	5	1	**8T-8729**	6	PIN-CONNECTOR (16-GA TO 18-GA)	

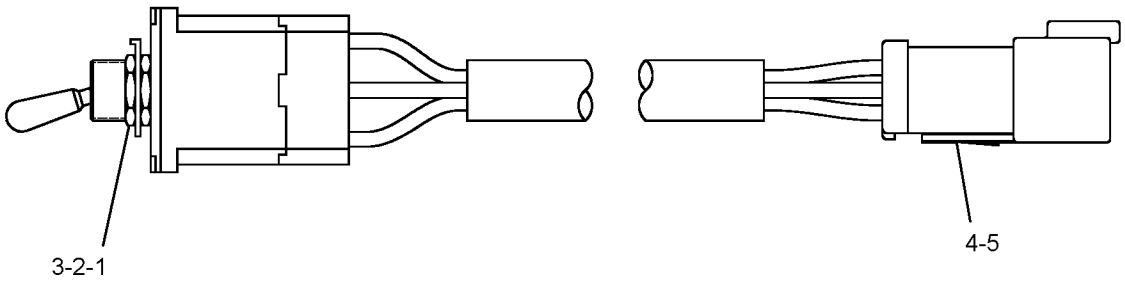

GRAPHIC #1 **<END>** g01814901

238-2478 SWITCH GP-TOGGLE–QUICK COUPLER

S/N: KGF1-UP; FAL1-UP
PART OF 238-2485 SWITCH GP-TOGGLE
AN ATTACHMENT

SMCS-7332 **i03750212**

NOTE	REF NO	GRAPHIC REF	PART NUMBER	QTY	PART NAME 1 2 3 4 5 6 (PRODUCT LEVEL)	SEE PAGE
	1	1	**7N-2353**	1	SWITCH AS-TOGGLE (QUICK COUPLER LOCK)	
	2	1	**238-2479**	1	HARNESS AS-WIRING (QUICK COUPLER SWITCH)	
		1	**7Y-3950**	2	TERMINAL-BLADE (14-GA TO 20-GA)	
		1	**7Y-3953**	1	CONNECTOR-RECEPTACLE	
		1	**3S-2093**	1	STRAP-CABLE	

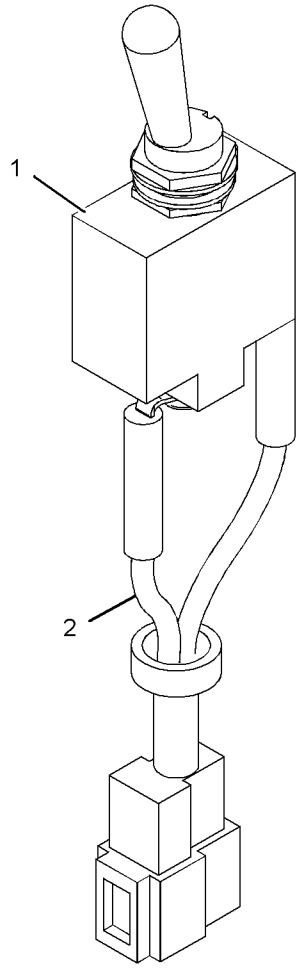

GRAPHIC #1 **<END>** g01125914

238-2485 SWITCH GP-TOGGLE—QUICK COUPLER LOCK

S/N: KGF1-UP; FAL1-UP

PART OF 288-7608, 344-4363 CONTROL AR-COUPLER, 279-5323 LINES GP-COUPLER AN ATTACHMENT

SMCS-7332 **i03750252**

NOTE	REF NO	GRAPHIC REF	PART NUMBER	QTY	PART NAME 1 2 3 4 5 6 (PRODUCT LEVEL)	SEE PAGE
Y	1	1	*238-2478*	1	SWITCH GP-TOGGLE (QUICK COUPLER LOCK)	550
	2	1	**259-4884**	1	BRACKET AS	
	3	1	**259-7180**	1	COVER	
M	4	1	**9X-2042**	3	SCREW-TRUSS HEAD (M6X1X12-MM)	

M - METRIC PART
Y - SEPARATE ILLUSTRATION

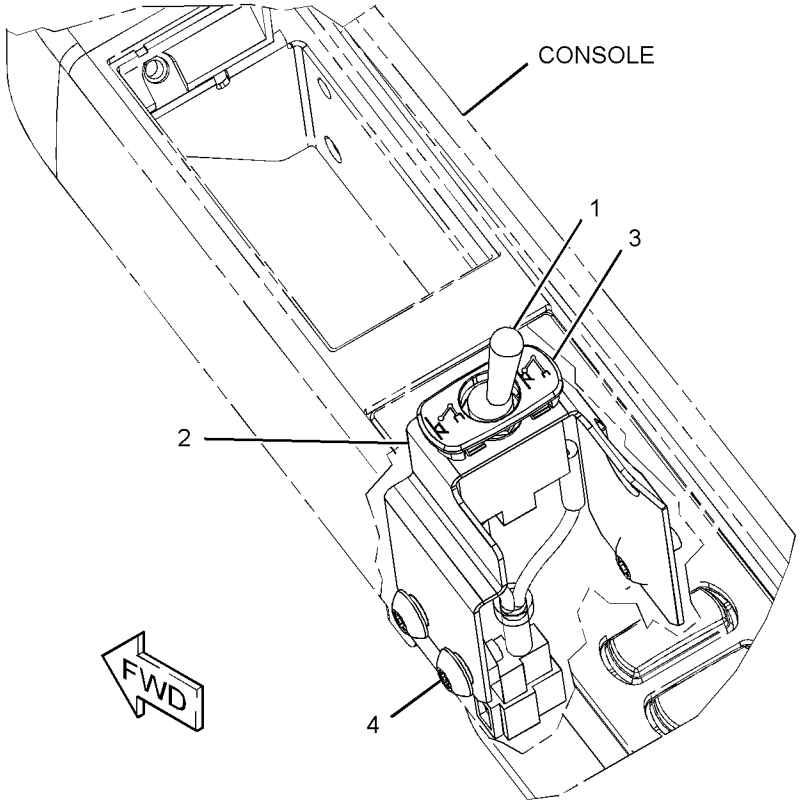

GRAPHIC #1 **<END>** g01259744

238-2208 SWITCH GP-WIPER–LOWER

S/N: KGF1-UP; FAL1-UP
PART OF 229-9086 WIPER AR-WINDOW
AN ATTACHMENT

SMCS-7305 **i05190537**

NOTE	REF NO	GRAPHIC REF	PART NUMBER	QTY	PART NAME 1 2 3 4 5 6 (PRODUCT LEVEL)	SEE PAGE
	1	1	**238-2209**	1	SWITCH AS-ROCKER (WIPER, LOWER)	
		1	**167-3542**	1	RECEPTACLE-CONNECTOR (5-PIN)	
		1	**167-3543**	5	TERMINAL (MALE)	
	2	1	**238-2210**	1	SWITCH AS-ROCKER (WASHER, LOWER)	
		1	**167-3542**	1	RECEPTACLE-CONNECTOR (5-PIN)	
		1	**167-3543**	4	TERMINAL (MALE)	

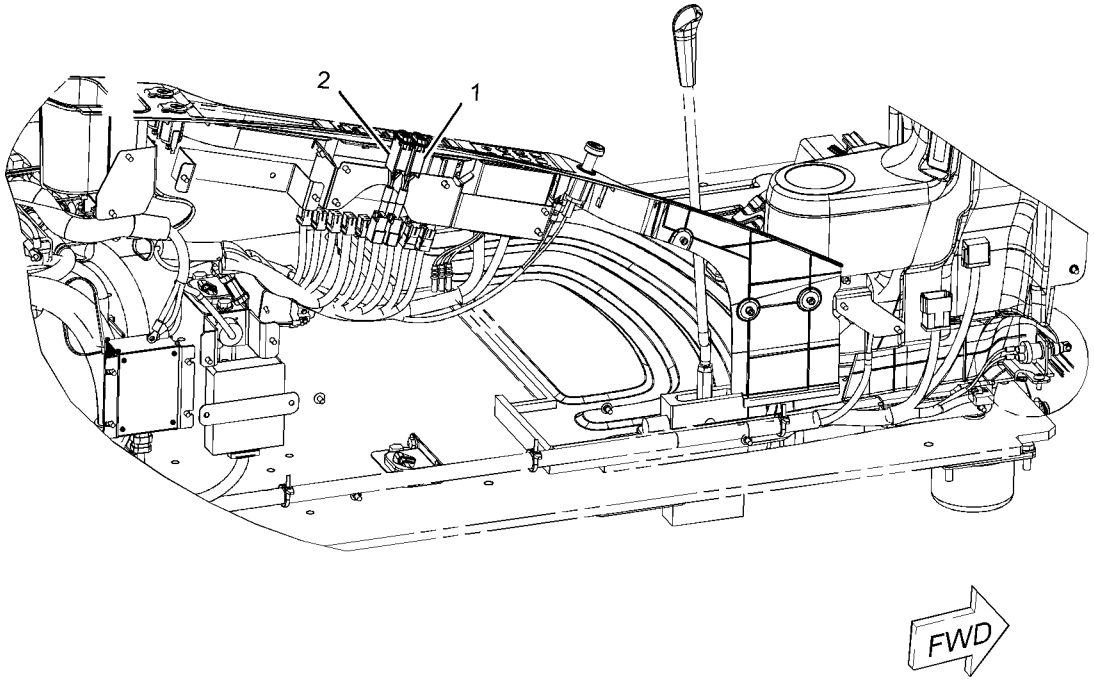

GRAPHIC #1 **<END>** g03039414

256-2907 TARGET GP-LASER

S/N: KGF1-UP; FAL1-UP
PART OF 339-2031 CASE GP-CARRYING

SMCS-7009 **i03733962**

NOTE	PART NUMBER	QTY	PART NAME 1 2 3 4 5 6 (PRODUCT LEVEL)	SEE PAGE
Y	**252-9628**	1	MOUNTING GP-RECEIVER (TARGET)	500
	8T-9368	4	BOLT (1/4-20X2.25-IN)	
	7X-0345	1	BOLT (5/8-11X1.75-IN)	
	275-4012	4	BUSHING	
	289-8449	1	HANDLE AS	
	113-0693	1	LOCKWASHER	
	8C-5607	8	MOUNT-ISOLATION	
	6V-8185	4	NUT (1/4-20-THD)	
	264-3171	1	PLATE-SHOCK	
	8C-5608	4	SPACER (6.5X9.5X25.4-MM THK)	
	275-3378	1	SPACER (16.7X38.1X12.7-MM THK)	
	291-1915	1	TARGET AS-LASER	
	7M-4672	1	WASHER (0.656X1.31X0.109-IN THK)	
	8R-1803	1	WASHER (10.5X18X1-MM THK)	
	9X-6165	8	WASHER (6.5X22X2.5-MM THK)	
	5P-4115	4	WASHER-HARD (7.2X19X2-MM THK)	

Y - SEPARATE ILLUSTRATION

<END>

314-3765 WARNING AR-OVERLOAD—BOOM LOWERING CONTROL VALVE

S/N: KGF1-UP
FOR USE WITH 270-5974—PAGE: 1514
PART OF 314-3859, 314-3860, 314-3861, 314-3862, 314-3905 DISTRIBUTION AR
AN ATTACHMENT

SMCS-5472 **i04780641**

NOTE	PART NUMBER	QTY	PART NAME 1 2 3 4 5 6 (PRODUCT LEVEL)	SEE PAGE
Y	*314-3768*	1	FILM GP (OVERLOAD WARNING DEVICE)	2297
Y	*278-6894*	1	LINES GP-SENSOR (OVERLOAD WARNING DEVICE)	1433
			—OR—	
Y	*366-8625*	1	LINES GP-SENSOR (OVERLOAD WARNING DEVICE)	1435
Y	*328-0094*	1	WIRING GP-OVERLOAD WARNING	635

Y - SEPARATE ILLUSTRATION

<END>

298-4257 WARNING GP-OVERLOAD—OVERLOAD WARNING DEVICE

S/N: KGF1-UP
FOR USE WITH 270-5974—PAGE: 1514
AN ATTACHMENT

SMCS-5472 **i02787890**

NOTE	PART NUMBER	QTY	PART NAME 1 2 3 4 5 6 (PRODUCT LEVEL)	SEE PAGE
Y	*278-6894*	1	LINES GP-SENSOR (OVERLOAD WARNING DEVICE)	1433
Y	*306-8452*	1	WIRING GP-OVERLOAD WARNING	634

Y - SEPARATE ILLUSTRATION

<END>

267-8003 WIRING GP-AUXILIARY CONTROL

S/N: KGF1-UP; FAL1-UP
PART OF 259-7498 CONTROL AR-AUXILIARY
AN ATTACHMENT

SMCS-1408 **i02994165**

NOTE	REF NO	GRAPHIC REF	PART NUMBER	QTY	PART NAME 1 2 3 4 5 6 (PRODUCT LEVEL)	SEE PAGE
	1	1	**3S-2093**	19	STRAP-CABLE	
	2	1	**7K-1181**	8	STRAP-CABLE	
	3	1	**111-4836**	2	CLIP	
	4	1	**204-1611**	5	STRAP-CABLE (DUAL)	
	5	1	**275-7197**	1	HARNESS AS-AUXILIARY	
		1	**102-8802**	8	KIT-RECEPTACLE (2-PIN)	
		1	**102-8803**	1	KIT-RECEPTACLE (3-PIN)	
					(EACH RECEPTACLE KIT INCLUDES RECPTACLE AS & WEDGE)	
		1	**243-4509**	1	RECEPTACLE AS-CONNECTOR (8-PIN)	
		1	**243-4510**	1	RECEPTACLE AS-CONNECTOR (12-PIN)	
		1	**3S-2093**	1	STRAP-CABLE	
		1	**155-2260**	1	KIT-CONNECTING PLUG (3-PIN)	
		1	**155-2270**	9	KIT-CONNECTING PLUG (2-PIN)	
					(EACH PLUG KIT INCLUDES PLUG AS, WEDGE & INTERFACE SEAL)	
	6	1	**319-1248**	1	BRACKET AS	
	7	1	**283-2640**	1	BRACKET AS	
	8	1	**132-5789**	2	CLIP	
	9	1	**156-6175**	1	CLIP	
	10	1	**8T-4121**	3	WASHER-HARD (11X21X2.5-MM THK)	
M	11	1	**8T-4137**	1	BOLT (M10X1.5X20-MM)	
M	12	1	**8T-4171**	1	BOLT (M6X1X12-MM)	
M	13	1	**8T-4179**	3	BOLT (M12X1.75X20-MM)	
M	14	1	**8T-4191**	2	BOLT (M10X1.5X16-MM)	
	15	1	**8T-4223**	3	WASHER-HARD (13.5X25.5X3-MM THK)	
	16	1	**9X-8256**	1	WASHER (6.6X12X2-MM THK)	

M - METRIC PART

267-8003 **WIRING GP-AUXILIARY CONTROL (*contd.*)** **i02994165**

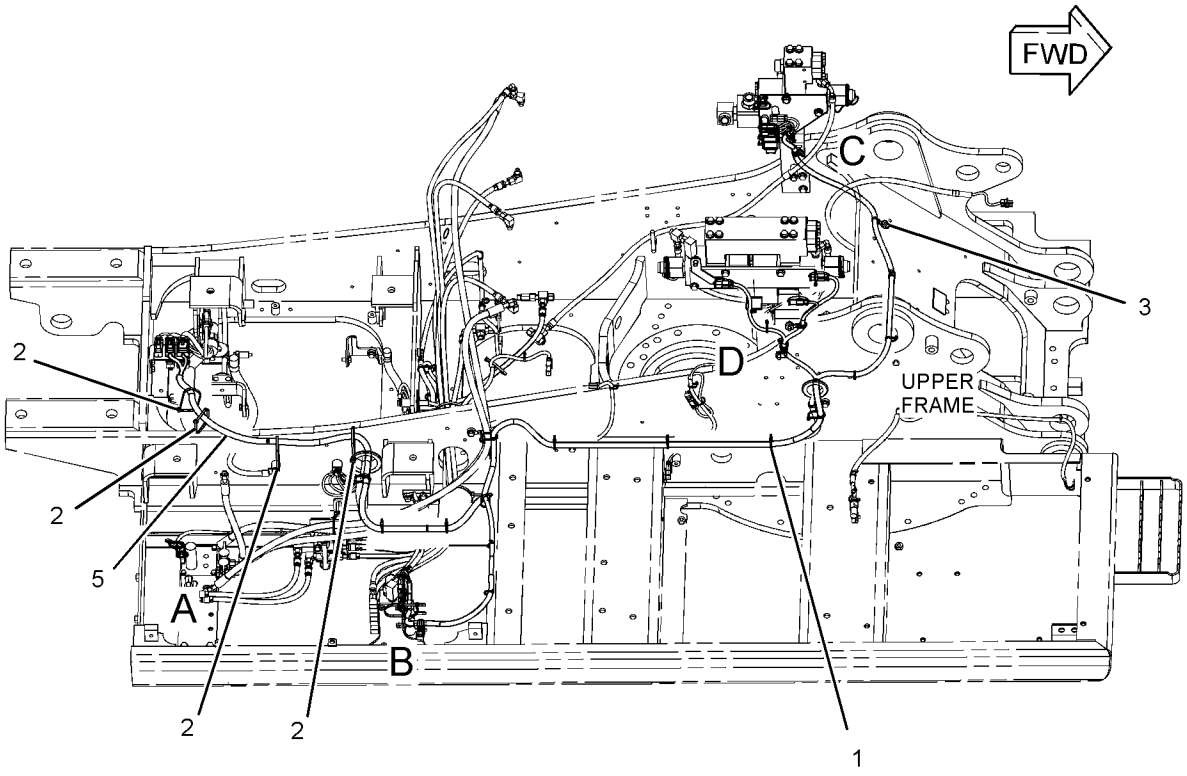

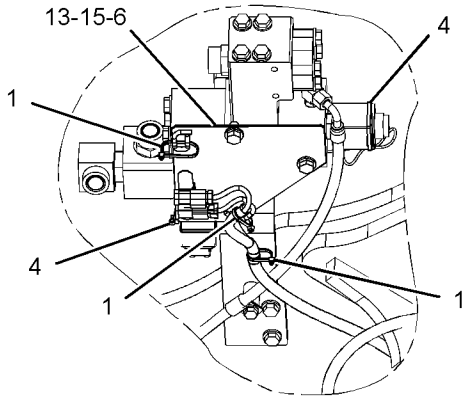

VIEW OF AREA C

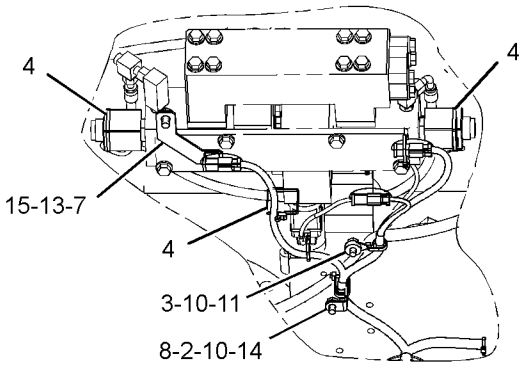

VIEW OF AREA D

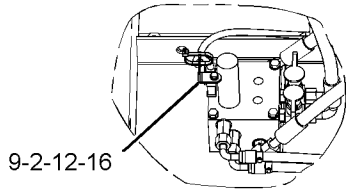

VIEW OF AREA A

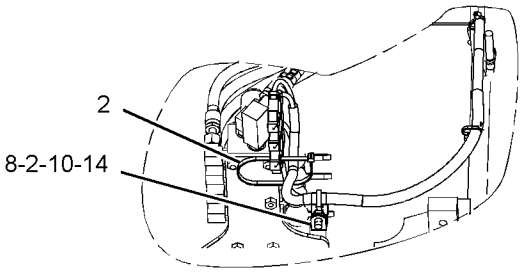

VIEW OF AREA B

GRAPHIC #1 **<END>** g01584795

275-7203 WIRING GP-AUXILIARY CONTROL—SYSTEMS 3, 5

S/N: KGF1-UP; FAL1-UP

PART OF 259-7496, 259-7497 CONTROL AR-AUXILIARY

AN ATTACHMENT

SMCS-1408 **i02559843**

NOTE	REF NO	GRAPHIC REF	PART NUMBER	QTY	PART NAME 1 2 3 4 5 6 (PRODUCT LEVEL)	SEE PAGE
	1	1	**3S-2093**	22	STRAP-CABLE	
	2	1	**7K-1181**	5	STRAP-CABLE	
	3	1	**275-7197**	1	HARNESS AS-AUXILIARY	
		1	**102-8802**	8	KIT-RECEPTACLE (2-PIN)	
		1	**102-8803**	1	KIT-RECEPTACLE (3-PIN)	
					(EACH RECEPTACLE KIT INCLUDES RECEPTACLE AS & WEDGE)	
		1	**3S-2093**	1	STRAP-CABLE	
		1	**155-2270**	9	KIT-CONNECTING PLUG (2-PIN)	
		1	**155-2260**	1	KIT-CONNECTING PLUG (3-PIN)	
					(EACH PLUG KIT INCLUDES PLUG AS, WEDGE, & INTERFACE SEAL)	
		1	**243-4509**	1	RECEPTACLE AS-CONNECTOR (8-PIN)	
		1	**243-4510**	1	RECEPTACLE AS-CONNECTOR (12-PIN)	
	4	1	**132-5789**	1	CLIP	
J	5	1	**156-6175**	1	CLIP	
	6	1	**8T-4121**	1	WASHER-HARD (11X21X2.5-MM THK)	
JM	7	1	**8T-4171**	1	BOLT (M6X1X12-MM)	
M	8	1	**8T-4191**	1	BOLT (M10X1.5X16-MM)	
J	9	1	**9X-8256**	1	WASHER (6.6X12X2-MM THK)	
J	10	1	**7K-1181**	1	STRAP-CABLE	

J - PART(S) MARKED J ARE FOR USE WITH SYSTEM 3 ONLY
M - METRIC PART

275-7203 **WIRING GP-AUXILIARY CONTROL (*contd.*)** **i02559843**

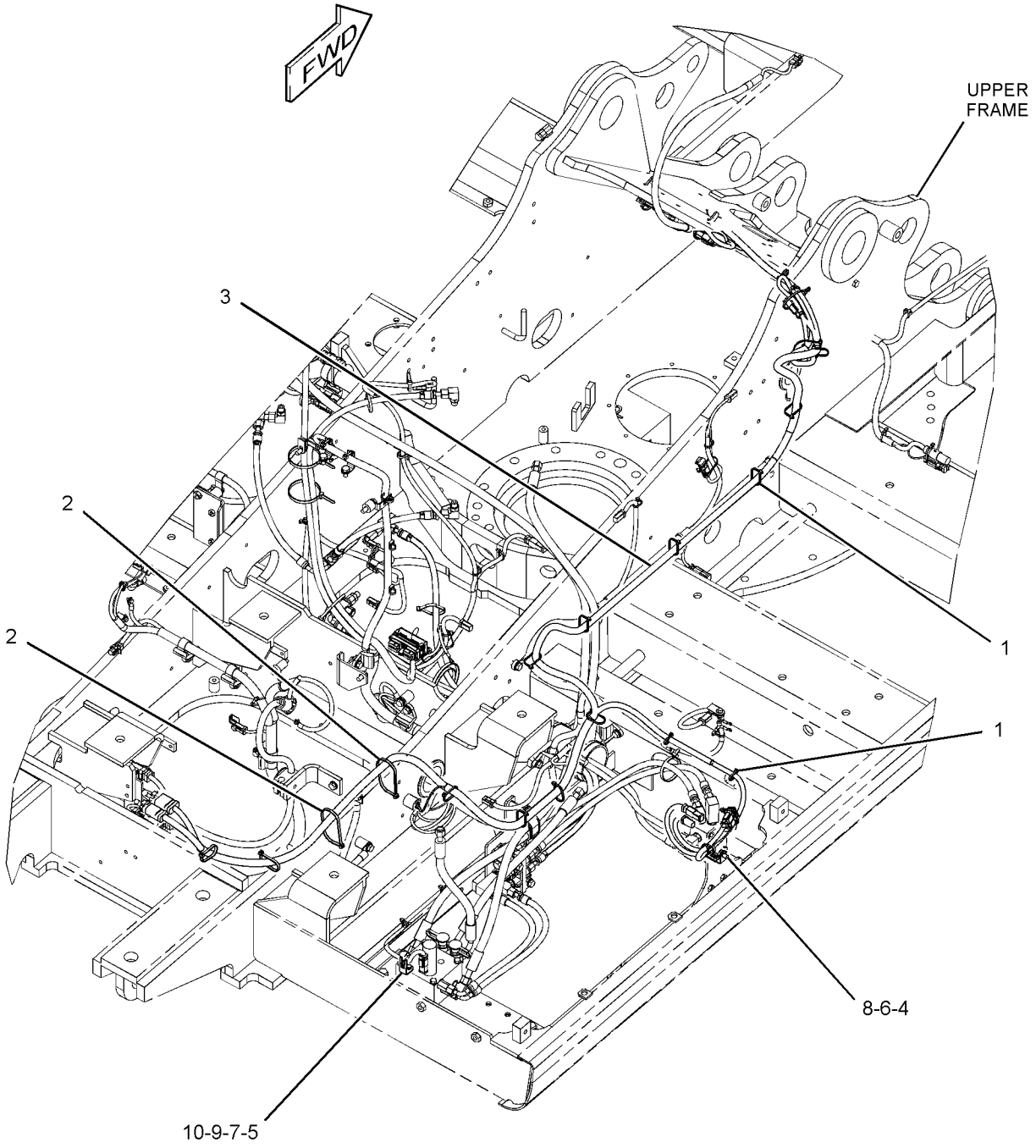

GRAPHIC #1 **<END>** g01310978

328-0388 WIRING GP-AUXILIARY CONTROL

S/N: KGF1-UP; FAL1-UP
PART OF 336-3318 CONTROL AR-AUXILIARY
AN ATTACHMENT

SMCS-1408 **i05190573**

NOTE	REF NO	GRAPHIC REF	PART NUMBER	QTY	PART NAME 1 2 3 4 5 6 (PRODUCT LEVEL)	SEE PAGE
	1	1	**3S-2093**	13	STRAP-CABLE	
	2	1	**7K-1181**	18	STRAP-CABLE	
	3	1	**116-0118**	1	CLIP	
	4	1	**275-7197**	1	HARNESS AS-AUXILIARY	
		1	**102-8802**	8	KIT-RECEPTACLE (2-PIN)	
		1	**102-8803**	1	KIT-RECEPTACLE (3-PIN)	
					(EACH RECEPTACLE KIT INCLUDES RECEPTACLE AS & WEDGE)	
		1	**8T-8729**	11	PIN-CONNECTOR (16-GA TO 18-GA)	
		1	**8T-8730**	18	SOCKET-CONNECTOR (16-GA TO 18-GA)	
		1	**3S-2093**	1	STRAP-CABLE	
		1	**8T-8737**	25	PLUG-SEAL	
E		1	**125-7874**		TUBE-HEAT SHRINK (5.72-MM DIA) (10-CM)	
E		1	**125-7875**		TUBE-HEAT SHRINK (7.44-MM DIA) (10-CM)	
		1	**9X-3402**	3	SOCKET-CONNECTOR (16-GA TO 18-GA)	
		1	**2L-8079**	1	TERMINAL-RING (14-GA TO 16-GA, 3/8-IN SCREW)	
		1	**9X-3401**	3	PIN-CONNECTOR (16-GA TO 18-GA)	
		1	**155-2270**	9	KIT-CONNECTING PLUG (2-PIN)	
		1	**155-2260**	1	KIT-CONNECTING PLUG (3-PIN)	
					(EACH PLUG KIT INCLUDES PLUG AS, WEDGE & INTERFACE SEAL)	
		1	**243-4509**	1	RECEPTACLE AS-CONNECTOR (8-PIN)	
		1	**243-4510**	1	RECEPTACLE AS-CONNECTOR (12-PIN)	
	5	1	**328-0371**	1	HARNESS AS-CONTROL	
		1	**102-8802**	1	KIT-RECEPTACLE (2-PIN)	
		1	**102-8803**	2	KIT-RECEPTACLE (3-PIN)	
					(EACH RECEPTACLE KIT INCLUDES RECEPTACLE AS & WEDGE)	
		1	**8T-8729**	2	PIN-CONNECTOR (16-GA TO 18-GA)	
		1	**8T-8730**	2	SOCKET-CONNECTOR (16-GA TO 18-GA)	
		1	**8T-8737**	3	PLUG-SEAL	
		1	**9X-3402**	3	SOCKET-CONNECTOR (16-GA TO 18-GA)	
		1	**9X-3401**	3	PIN-CONNECTOR (16-GA TO 18-GA)	
		1	**155-2260**	1	KIT-CONNECTING PLUG (3-PIN)	
					(INCLUDES PLUG AS, WEDGE & INTERFACE SEAL)	
		1	**230-4011**	1	PLUG AS-CONNECTOR (2-PIN)	
		1	**264-7029**	1	SEAL-CONNECTOR	
	6	1	**328-0372**	1	HARNESS AS-SOLENOID	
		1	**102-8802**	1	KIT-RECEPTACLE (2-PIN)	
					(INCLUDES RECEPTACLE AS & WEDGE)	
		1	**8T-8729**	2	PIN-CONNECTOR (16-GA TO 18-GA)	
		1	**8T-8730**	2	SOCKET-CONNECTOR (16-GA TO 18-GA)	
		1	**230-4011**	1	PLUG AS-CONNECTOR (2-PIN)	
		1	**264-7029**	1	SEAL-CONNECTOR	
	7	1	**132-5789**	3	CLIP	
	8	1	**156-6175**	1	CLIP	
	9	1	**8T-4121**	5	WASHER-HARD (11X21X2.5-MM THK)	
M	10	1	**8T-4171**	1	BOLT (M6X1X12-MM)	
M	11	1	**8T-4191**	4	BOLT (M10X1.5X16-MM)	
	12	1	**9X-8256**	1	WASHER (6.6X12X2-MM THK)	

E - ORDER BY THE CENTIMETER
M - METRIC PART

328-0388 **WIRING GP-AUXILIARY CONTROL (*contd.*)** **i05190573**

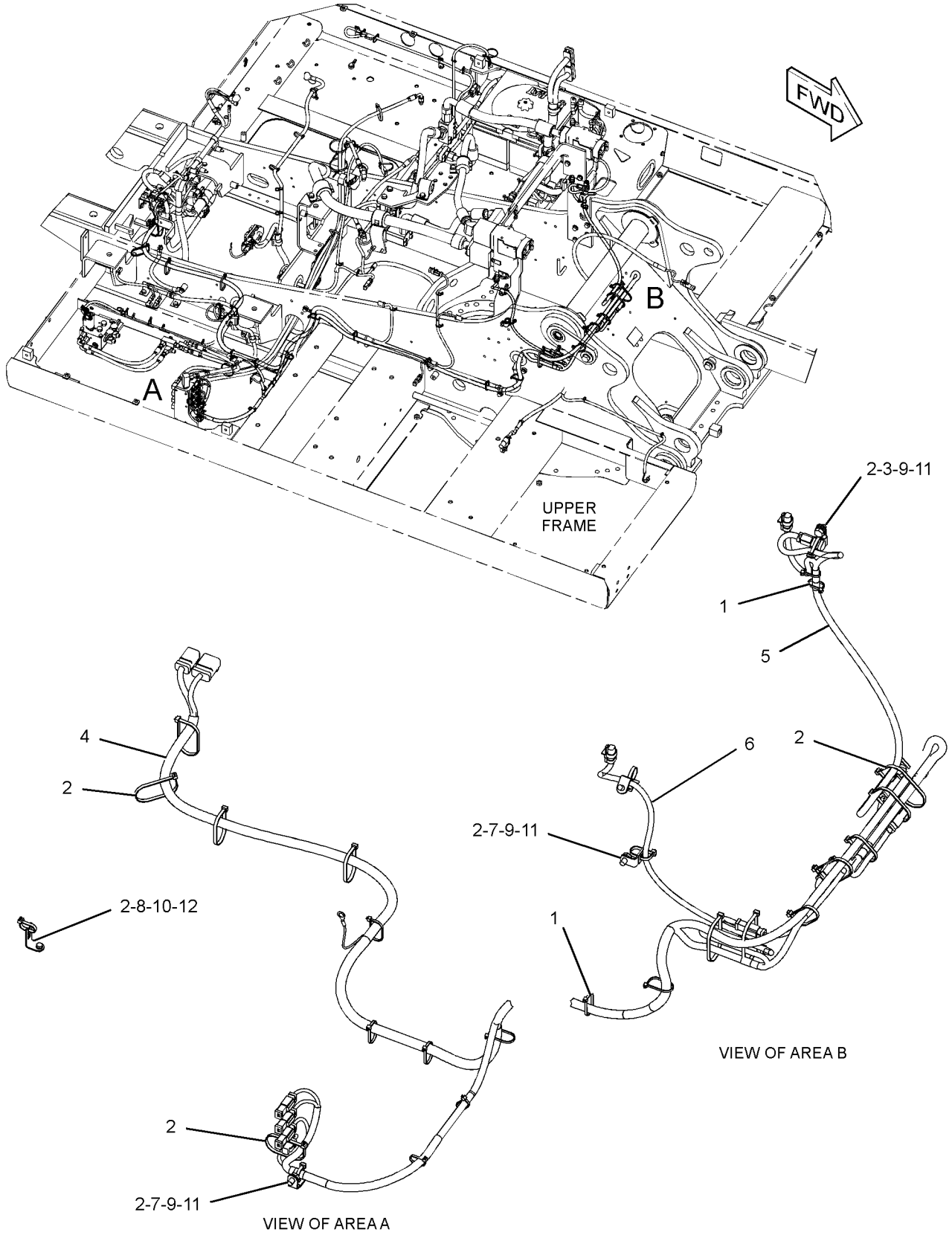

GRAPHIC #1 **<END>** g02715237

251-0529 WIRING GP-CAB—1-WAY/2-WAY FLOW

S/N: KGF1-UP; FAL1-UP
PART OF 259-7493, 259-7495 CONTROL AR-AUXILIARY
AN ATTACHMENT

SMCS-1408, 7301

i04606609

NOTE	REF NO	GRAPHIC REF	PART NUMBER	QTY	PART NAME 1 2 3 4 5 6 (PRODUCT LEVEL)	SEE PAGE
	1	1,3	**3S-2093**	4	STRAP-CABLE	
	2	1,2	**7K-1181**	8	STRAP-CABLE	
	3	3	**116-0118**	2	CLIP	
	4	1	**149-5050**	1	RELAY (24-VOLT) (1-WAY/2-WAY SOLENOID)	
	5	1	**251-0598**	1	HARNESS AS-SOLENOID (1-WAY, 2-WAY FLOW)	
		1	**3S-2093**	6	STRAP-CABLE	
		1	**8T-8737**	1	PLUG-SEAL	
		1	**243-4508**	1	RECEPTACLE AS-CONNECTOR (6-PIN)	
M	6	1	**5C-2890**	1	NUT (M6X1-THD)	
M	7	3	**7X-2621**	2	BOLT (M10X1.5X12-MM)	
	8	3	**8T-4121**	2	WASHER-HARD (11X21X2.5-MM THK)	
	9	1	**9X-8256**	1	WASHER (6.6X12X2-MM THK)	

M - METRIC PART

251-0529 **WIRING GP-CAB (*contd.*)** **i04606609**

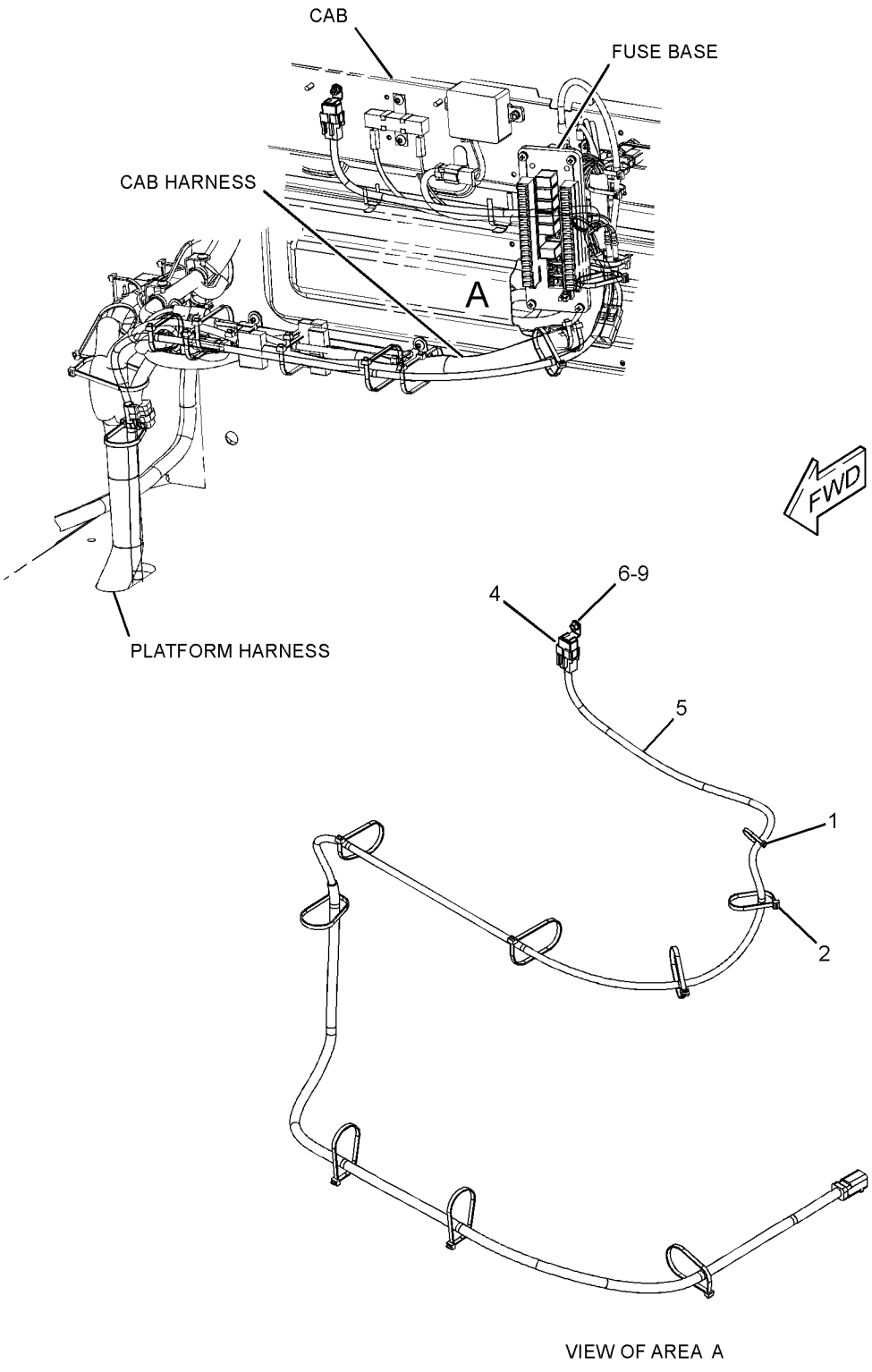

VIEW OF AREA A

GRAPHIC #1 g02756436

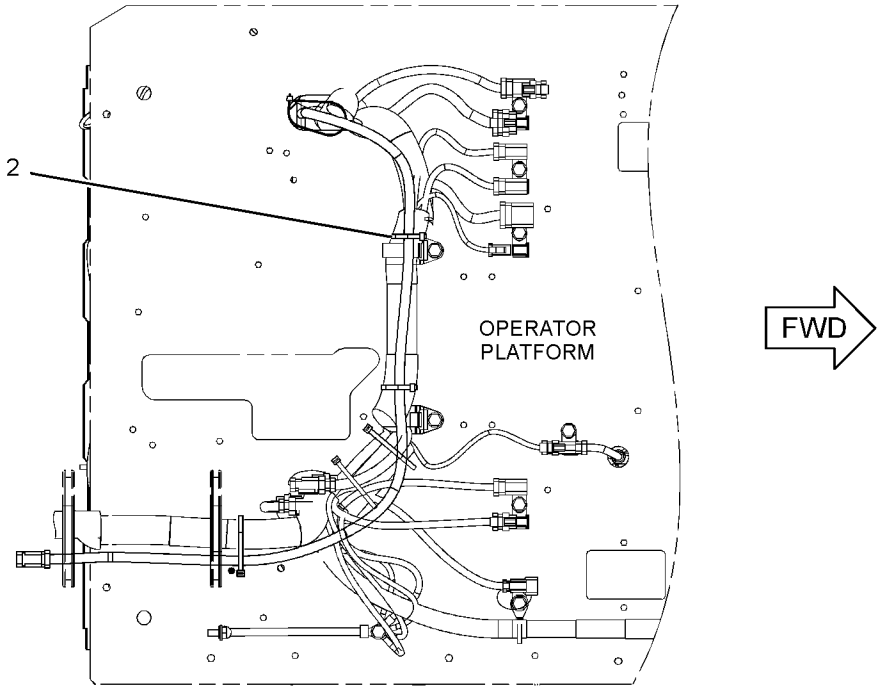

BOTTOM VIEW
(FOR CONFIG. 2,11)

GRAPHIC #2 g02756378

251-0529 **WIRING GP-CAB (*contd.*)** **i04606609**

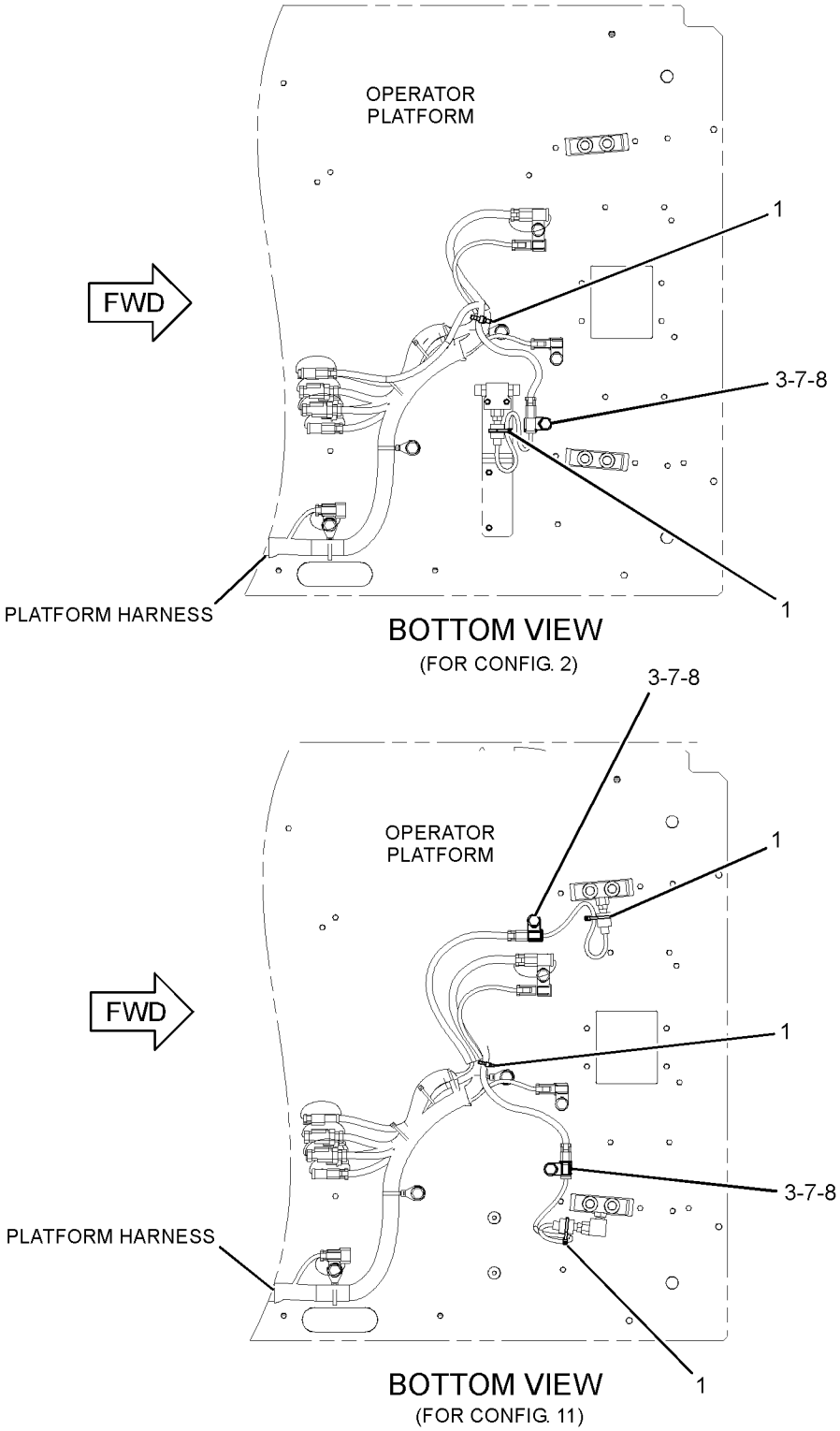

GRAPHIC #3 **<END>** g02756438

259-5161 WIRING GP-CAB

S/N: KGF1-4912; FAL1-3889

PART OF 273-5387, 327-6568 OPERATOR AR

SMCS-1408, 7301 **i03671336**

NOTE	REF NO	GRAPHIC REF	PART NUMBER	QTY	PART NAME 1 2 3 4 5 6 (PRODUCT LEVEL)	SEE PAGE
	1	3,4	**3S-2093**	10	STRAP-CABLE	
	2	4	**7Y-5505**	2	SPEAKER AS	
					(EACH INCLUDES)	
		4	**7Y-3951**	2	TERMINAL-BLADE (14-GA)	
		4	**7Y-3954**	1	CONNECTOR-PLUG (3-PIN)	
	3	3	**9W-0335**	1	LIGHTER AS-CIGAR (24-VOLT)	
	4	3	**094-2080**	1	SWITCH-MAGNETIC (24-VOLT) (START RELAY)	
M	5	4	**099-7127**	8	SCREW-MACHINE (M4X0.7X12-MM)	
	6	1	**102-8016**	1	RESISTOR AS	
	7	3	**113-8490**	20	FUSE (10-AMPERE)	
	8	3	**113-8491**	5	FUSE (15-AMPERE)	
	9	3	**113-8492**	3	FUSE (20-AMPERE)	
	10	3	**113-8493**	3	FUSE (25-AMPERE)	
	11	4	**116-0210**	4	BRACKET AS	
	12	3	**124-3548**	2	FUSE (30-AMPERE)	
Y	13	4	**132-1829**	1	ALARM GP (24-VOLT) (FAULT)	399
	14	3	**141-2759**	7	FUSE (5-AMPERE)	
	15	3	**161-3128**	1	RELAY (24-VOLT) (BOOM FLOODLIGHT)	
	15A	3	**161-3128**	1	RELAY (24-VOLT) (CHASSIS LIGHT)	
	15B	3	**161-3128**	1	RELAY (24-VOLT) (CAB FLOODLIGHT)	
	15C	3	**161-3128**	1	RELAY (24-VOLT) (HORN)	
	15D	3	**161-3128**	1	RELAY (24-VOLT) (NEUTRAL START)	
	15E	3	**161-3128**	1	RELAY (24-VOLT) (TRAVEL ALARM)	
	16	4	**268-1964**	1	KIT-SERVICE METER	
					(INCLUDES FILM & METER)	
	17	4	**163-6758**	1	WIRE AS	
	18	2,3,4	**163-6795**	15	STRAP-CABLE	
	19	3	**167-3593**	1	STRAP	
	20	3	**170-6888**	1	PULLER-FUSE	
	21	4	**213-0772**	1	SWITCH AS-MAGNETIC (24-VOLT) (MAIN RELAY)	
	22	3	**227-7575**	1	PANEL-CONTROL (SWITCH)	
	23	3	**234-1097**	1	BRACKET	
J	24	3	**238-2212**	1	SWITCH AS-ROCKER (FINE SWING)	
		3	**167-3542**	1	RECEPTACLE-CONNECTOR (5-PIN)	
		3	**167-3543**	5	TERMINAL (MALE)	
	26	4	**238-2390**	1	CABLE AS	
		4	**3T-4004**	1	TERMINAL-SOLDER	
BE		4	**125-7876**		TUBE-HEAT SHRINK (17.78-MM DIA)	
	27	4	**238-2391**	1	CABLE AS	
		4	**9G-4343**	1	TERMINAL-RING (4-GA, 1/4-IN SCREW)	
BE		4	**125-7876**		TUBE-HEAT SHRINK (17.78-MM DIA)	
	28	2	**245-7760**	8	INSULATION	
	29	2	**251-0637**	1	INSULATION	
	30	2	**259-4883**	1	ANTENNA AS	
	31	3	**259-5290**	1	BRACKET AS	
	32	1	**259-5296**	1	HARNESS AS-CAB	
		1	**7Y-3952**	4	PLUG-CONNECTOR (2-PIN)	
		1	**7Y-3958**	2	CONNECTOR-PLUG (6-PIN)	
		1	**102-7964**	2	PLUG-CONNECTOR (16-PIN)	
		1	**111-4816**	1	PLUG-CONNECTOR (13-PIN)	
		1	**163-6659**	1	CONNECTOR-PLUG (12-PIN)	
		1	**163-6699**	1	CONNECTOR-PLUG (18-PIN)	
		1	**163-6803**	9	PLUG-CONNECTOR (5-PIN)	
		1	**7Y-3955**	2	CONNECTOR-RECEPTACLE	
		1	**121-1168**	1	CONNECTOR-RECEPTACLE	
		1	**153-2602**	5	RECEPTACLE-CONNECTOR (1-PIN)	

259-5161 **WIRING GP-CAB (*contd.*)** **i03671336**

NOTE	REF NO	GRAPHIC REF	PART NUMBER	QTY	PART NAME 1 2 3 4 5 6 (PRODUCT LEVEL)	SEE PAGE
		1	**9W-1951**	1	RECEPTACLE-CONNECTOR (9-PIN)	
		1	**8C-6354**	1	CAP-RECEPTACLE (ET CONNECTOR)	
		1	**5P-6271**	1	CONNECTOR AS	
		1	**134-3296**	1	HOUSING-PLUG	
		1	**134-3297**	1	SEAL	
		1	**3S-2093**	111	STRAP-CABLE	
		1	**121-1022**	3	DIODE	
		1	**238-2319**	1	BASE AS (FUSE, RELAY PANEL)	
		1	**9X-8256**	2	WASHER (6.6X12X2-MM THK)	
M		1	**095-0742**	2	SCREW-MACHINE (M6X1X16-MM)	
		1	**170-9394**	40	TERMINAL	
		1	**102-8803**	3	KIT-RECEPTACLE (3-PIN)	
					(INCLUDES RECEPTACLE AS & WEDGE)	
		1	**155-2260**	1	KIT-CONNECTING PLUG (3-PIN)	
		1	**155-2270**	2	KIT-CONNECTING PLUG (2-PIN)	
					(EACH PLUG KIT INCLUDES PLUG AS, WEDGE & INTERFACE SEAL)	
		1	**230-4011**	1	PLUG AS-CONNECTOR (2-PIN)	
		1	**264-7029**	1	SEAL-CONNECTOR	
		1	**230-4013**	1	PLUG AS-CONNECTOR (3-PIN)	
		1	**264-7030**	1	SEAL-CONNECTOR	
		1	**239-7356**	1	PLUG AS-CONNECTOR (12-PIN)	
		1	**230-4009**	1	PLUG AS-CONNECTOR (12-PIN)	
					(EACH PLUG AS INCLUDES)	
		1	**264-7034**	1	SEAL-CONNECTOR	
		1	**174-3016**	2	PLUG AS-CONNECTOR (3-PIN)	
		1	**243-4505**	2	RECEPTACLE AS-CONNECTOR (2-PIN)	
		1	**243-4506**	1	RECEPTACLE AS-CONNECTOR (3-PIN)	
J	33	3	**267-7639**	1	SWITCH AS-ROCKER (LEVELING)	
		3	**167-3542**	1	RECEPTACLE-CONNECTOR (5-PIN)	
		3	**167-3543**	5	TERMINAL (MALE)	
M	34	3	**095-0723**	3	SCREW-SPECIAL	
	35	3	**096-5962**	3	WASHER-HARD (3.4X7X0.8-MM THK)	
	36	4	**096-6166**	2	WASHER-HARD (4.5X9X1-MM THK)	
	37	3,4	**132-5789**	7	CLIP	
	38	4	**4P-7581**	1	CLIP	
M	39	3	**5C-2890**	5	NUT (M6X1-THD)	
M	40	4	**6V-5210**	8	SCREW-MACHINE (M4X0.7X10-MM)	
M	41	4	**6V-9672**	2	SCREW-MACHINE (M4X0.7X16-MM)	
	42	4	**8T-0328**	3	WASHER-HARD (5.5X10X1-MM THK)	
M	43	4	**8T-4127**	2	SCREW-MACHINE (M5X0.8X20-MM)	
M	44	4	**8T-6693**	1	SCREW-MACHINE (M5X0.8X16-MM)	
M	45	1,3,4	**9X-2042**	13	SCREW-TRUSS HEAD (M6X1X12-MM)	
M	46	3	**9X-2044**	5	SCREW-TRUSS HEAD (M6X1X16-MM)	
	47	3	**9X-8256**	5	WASHER (6.6X12X2-MM THK)	
E	48	2	**101-2846**		GUARD (9.5-CM)	
E	48A	4	**101-2846**		GUARD (9-CM EACH)	

B - USE AS REQUIRED
E - ORDER BY THE CENTIMETER
J - IF EQUIPPED-NOT USED ON ALL MODELS
M - METRIC PART
Y - SEPARATE ILLUSTRATION

259-5161 **WIRING GP-CAB (*contd.*)** **i03671336**

REFER TO ALL ILLUSTRATIONS OF
THIS GROUP FOR AUXILIARY VIEWS

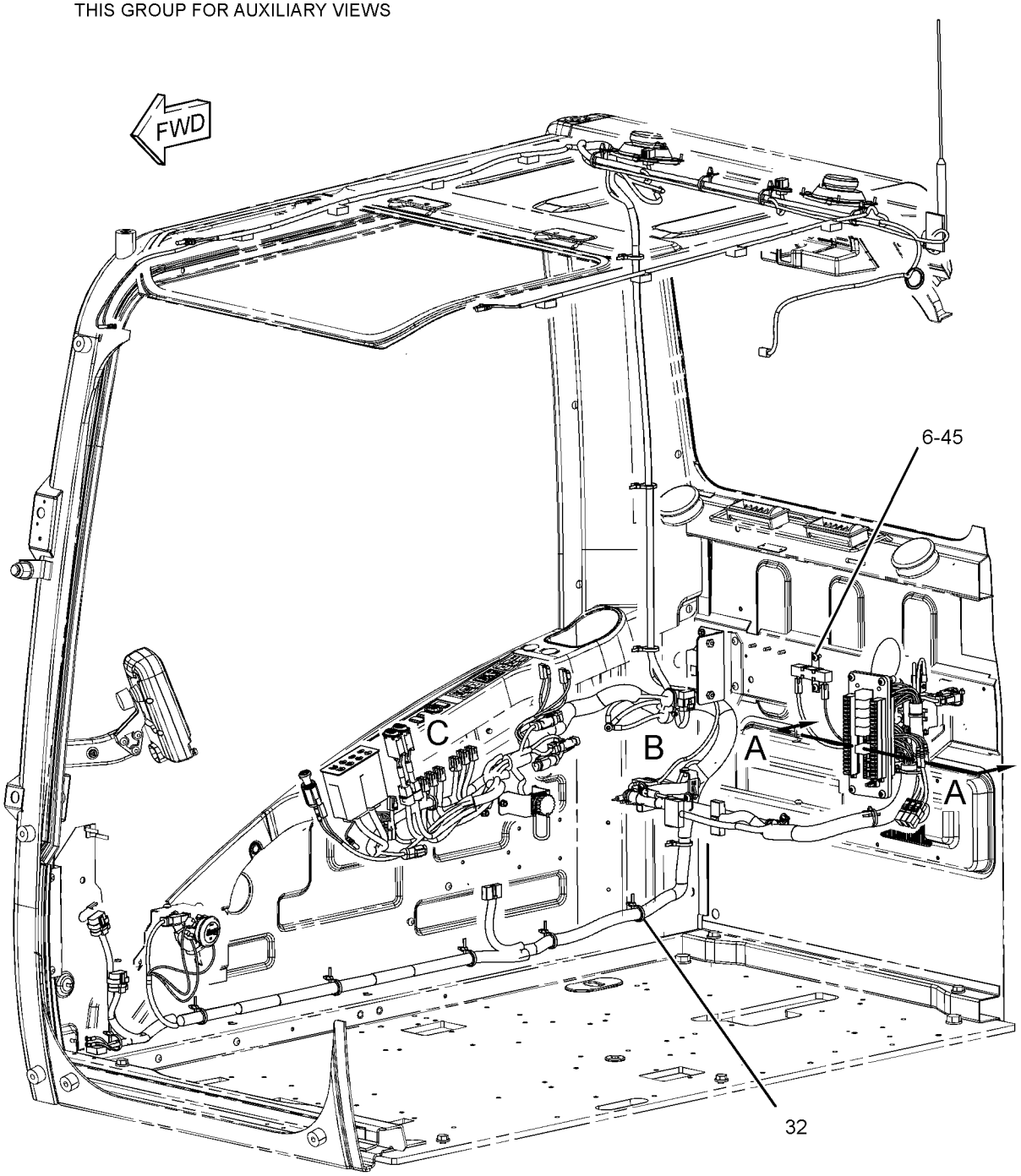

GRAPHIC #1 g01398279

259-5161 **WIRING GP-CAB (*contd.*)** **i03671336**

REFER TO ALL ILLUSTRATIONS OF
THIS GROUP FOR AUXILIARY VIEWS

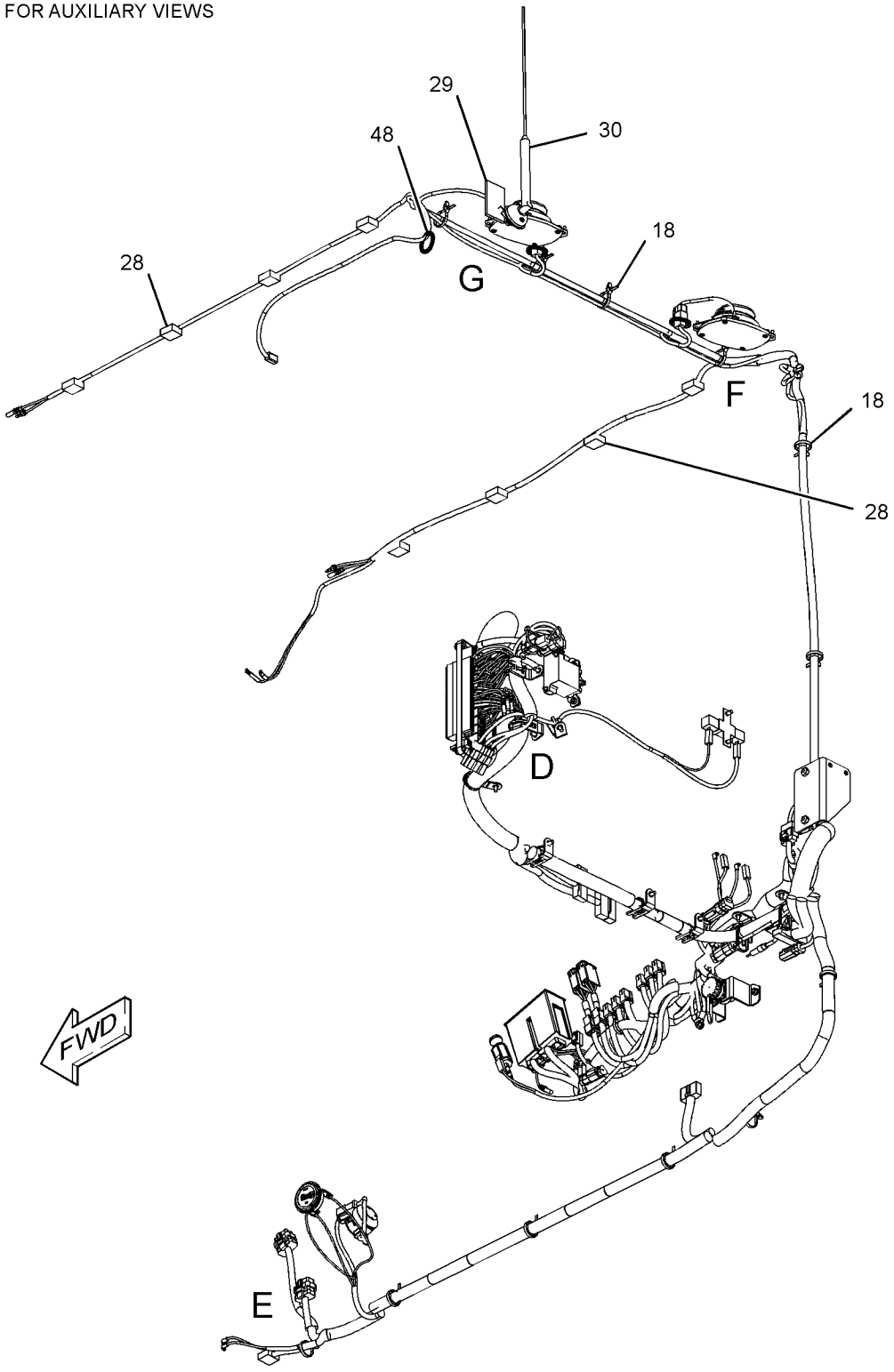

GRAPHIC #2 g01398365

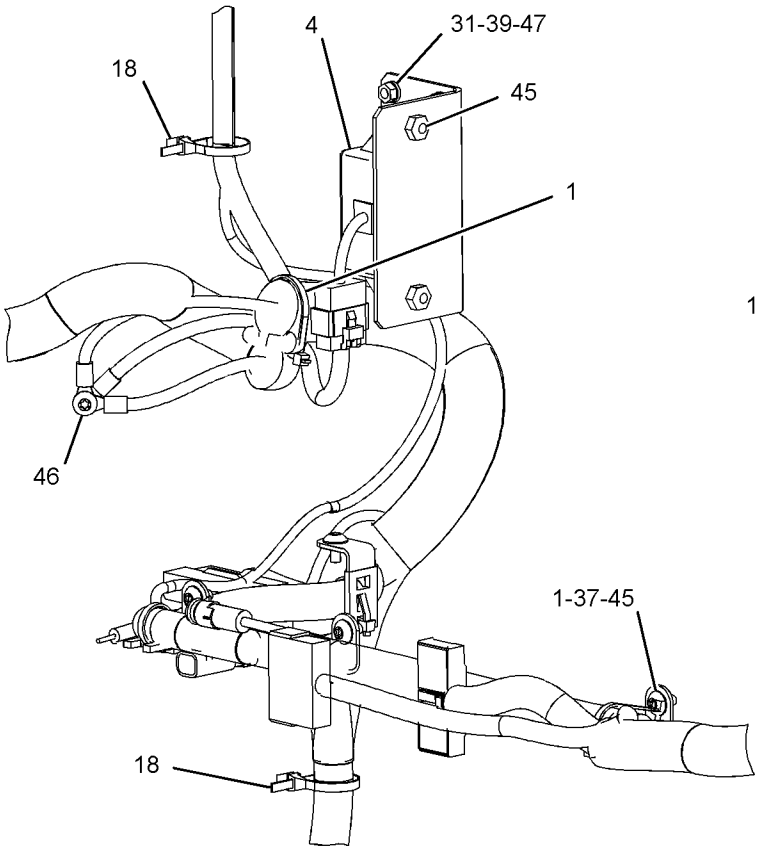

VIEW OF AREA B

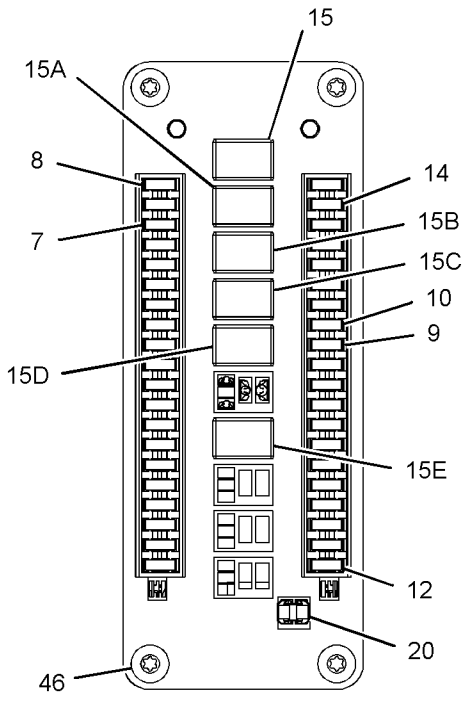

VIEW A-A

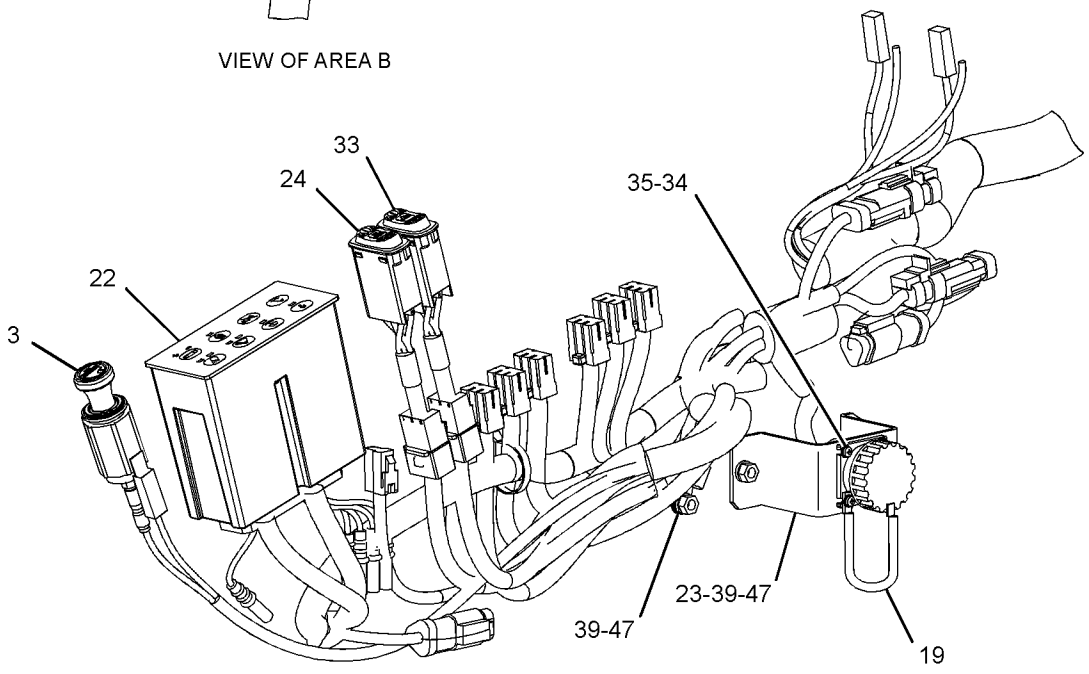

VIEW OF AREA C

GRAPHIC #3 g01398416

259-5161 **WIRING GP-CAB (*contd.*)** **i03671336**

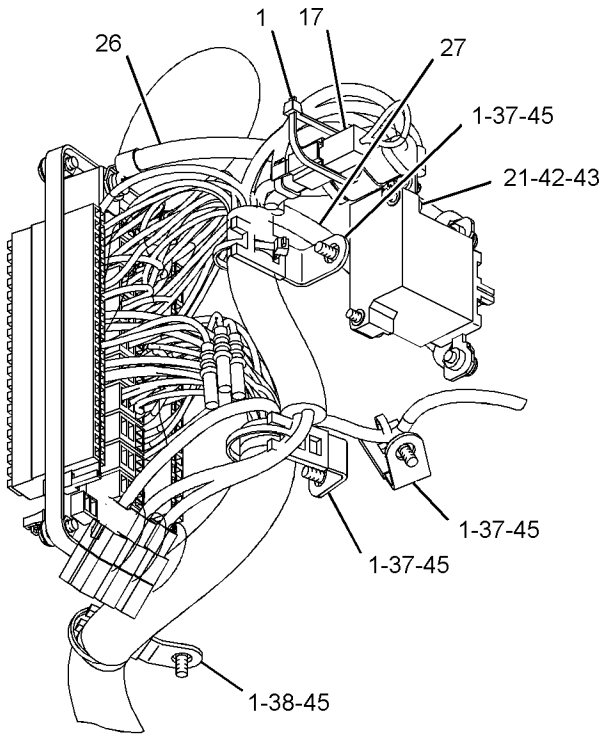

VIEW OF AREA D

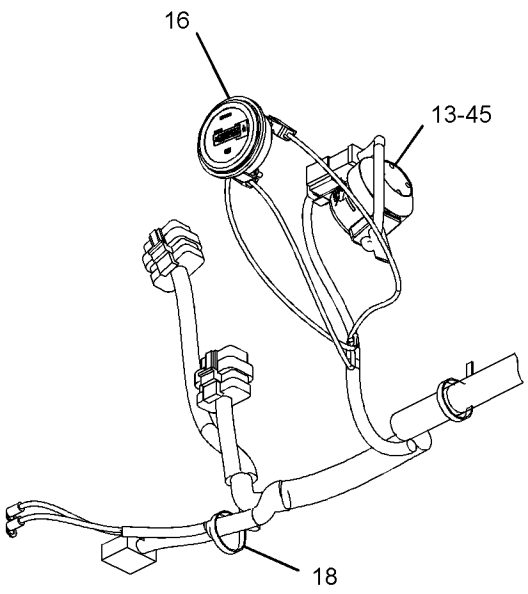

VIEW OF AREA E

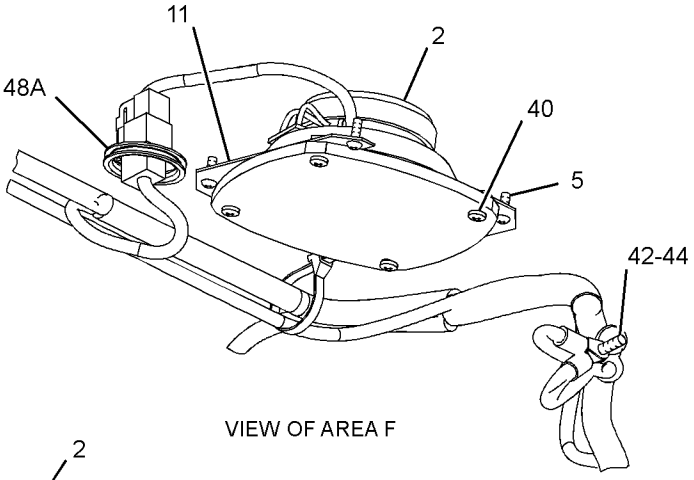

VIEW OF AREA F

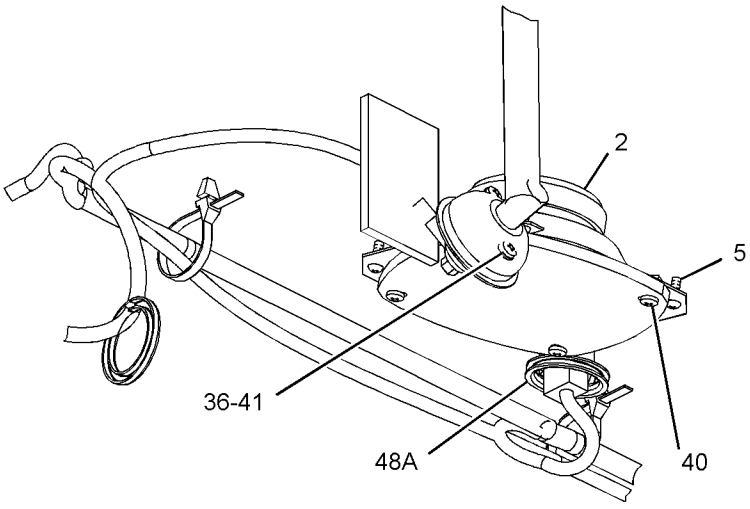

VIEW OF AREA G

GRAPHIC #4 **<END>** g01302137

259-5161 WIRING GP-CAB

S/N: KGF4913-UP; FAL3890-UP
PART OF 327-6568 OPERATOR AR

SMCS-1408, 7301 **i05190547**

NOTE	REF NO	GRAPHIC REF	PART NUMBER	QTY	PART NAME 1 2 3 4 5 6 (PRODUCT LEVEL)	SEE PAGE
C	1	3,4	**3S-2093**	2	STRAP-CABLE	
	2	4	**7Y-5505**	2	SPEAKER AS	
					(EACH INCLUDES)	
		4	**7Y-3951**	2	TERMINAL-BLADE (14-GA)	
		4	**7Y-3954**	1	CONNECTOR-PLUG (3-PIN)	
	3	3	**9W-0335**	1	LIGHTER AS-CIGAR (24-VOLT)	
	4	3	**094-2080**	1	SWITCH-MAGNETIC (24-VOLT) (START RELAY)	
M	5	4	**099-7127**	8	SCREW-MACHINE (M4X0.7X12-MM)	
	6	1	**102-8016**	1	RESISTOR AS	
	7	3	**113-8490**	20	FUSE (10-AMPERE)	
	8	3	**113-8491**	5	FUSE (15-AMPERE)	
	9	3	**113-8492**	3	FUSE (20-AMPERE)	
	10	3	**113-8493**	3	FUSE (25-AMPERE)	
	11	4	**116-0210**	4	BRACKET AS	
	12	3	**124-3548**	2	FUSE (30-AMPERE)	
Y	13	2	**132-1829**	1	ALARM GP (24-VOLT) (FAULT)	399
	14	3	**141-2759**	7	FUSE (5-AMPERE)	
	15	3	**161-3128**	1	RELAY (24-VOLT) (BOOM FLOODLIGHT)	
	15A	3	**161-3128**	1	RELAY (24-VOLT) (CHASSIS LIGHT)	
	15B	3	**161-3128**	1	RELAY (24-VOLT) (CAB FLOODLIGHT)	
	15C	3	**161-3128**	1	RELAY (24-VOLT) (HORN)	
	15D	3	**161-3128**	1	RELAY (24-VOLT) (NEUTRAL START)	
	15E	3	**161-3128**	1	RELAY (24-VOLT) (TRAVEL ALARM)	
C	16	2	**366-4622**	1	KIT-SERVICE METER	
					(INCLUDES FILM & METER)	
	17	4	**163-6758**	1	WIRE AS	
	18	2,3	**163-6795**	15	STRAP-CABLE	
	19	3	**167-3593**	1	STRAP	
	20	3	**170-6888**	1	PULLER-FUSE	
	21	4	**213-0772**	1	SWITCH AS-MAGNETIC (24-VOLT) (MAIN RELAY)	
	22	3	**227-7575**	1	PANEL-CONTROL (SWITCH)	
	23	3	**234-1097**	1	BRACKET	
	24	3	**238-2212**	1	SWITCH AS-ROCKER (FINE SWING)	
		3	**167-3542**	1	RECEPTACLE-CONNECTOR (5-PIN)	
		3	**167-3543**	5	TERMINAL (MALE)	
	26	4	**238-2390**	1	CABLE AS	
		4	**3T-4004**	1	TERMINAL-SOLDER	
E		4	**125-7876**		TUBE-HEAT SHRINK (17.78-MM DIA) (4-CM)	
	27	4	**238-2391**	1	CABLE AS	
		4	**9G-4343**	1	TERMINAL-RING (4-GA, 1/4-IN SCREW)	
E		4	**125-7876**		TUBE-HEAT SHRINK (17.78-MM DIA) (4-CM)	
	28	2	**245-7760**	8	INSULATION	
	29	2	**251-0637**	1	INSULATION	
	30	2	**259-4883**	1	ANTENNA AS	
	31	3	**259-5290**	1	BRACKET AS	
C	32	1	**350-8253**	1	HARNESS AS-CAB	
		1	**102-8803**	3	KIT-RECEPTACLE (3-PIN)	
		1	**8T-8729**	3	PIN-CONNECTOR (16-GA TO 18-GA)	
		1	**8T-8730**	5	SOCKET-CONNECTOR (16-GA TO 18-GA)	
		1	**3S-2093**	113	STRAP-CABLE	
		1	**7Y-3950**	4	TERMINAL-BLADE (14-GA TO 20-GA)	
		1	**7Y-3951**	18	TERMINAL-BLADE (14-GA)	
		1	**7Y-3952**	4	PLUG-CONNECTOR (2-PIN)	
		1	**7Y-3955**	2	CONNECTOR-RECEPTACLE	
		1	**7Y-3958**	2	CONNECTOR-PLUG (6-PIN)	
		1	**7Y-3962**	2	TERMINAL-BULLET (MALE)	
		1	**7Y-3964**	2	TUBE (CONNECTOR TERMINAL)	

259-5161 **WIRING GP-CAB (*contd.*)** **i05190547**

NOTE	REF NO	GRAPHIC REF	PART NUMBER	QTY	PART NAME 1 2 3 4 5 6 (PRODUCT LEVEL)	SEE PAGE
		1	**7Y-3963**	11	TERMINAL-BULLET (FEMALE)	
		1	**7Y-3965**	11	TUBE (RECEPTACLE TERMINAL)	
		1	**8C-6354**	1	CAP-RECEPTACLE (ET CONNECTOR)	
		1	**8T-8737**	22	PLUG-SEAL	
		1	**5P-6271**	1	CONNECTOR AS	
		1	**9W-1951**	1	RECEPTACLE-CONNECTOR (9-PIN)	
		1	**102-7964**	2	PLUG-CONNECTOR (16-PIN)	
		1	**102-7965**	80	TERMINAL (FEMALE)	
		1	**9W-0844**	4	SOCKET-CONNECTOR (14-GA TO 16-GA)	
		1	**111-4816**	1	PLUG-CONNECTOR (13-PIN)	
		1	**116-0255**	1	TERMINAL-BLADE (10-GA TO 20-GA)	
E		1	**119-3662**		TUBE-HEAT SHRINK (10.85-MM DIA) (33-CM)	
		1	**121-1022**	3	DIODE	
		1	**121-1168**	1	CONNECTOR-RECEPTACLE	
		1	**121-1173**	15	TERMINAL (MALE)	
		1	**125-4840**	1	WEDGE-PLUG LOCK (13-PIN)	
		1	**125-4841**	2	WEDGE-PLUG LOCK (21-PIN)	
E		1	**125-7874**		TUBE-HEAT SHRINK (5.72-MM DIA) (65-CM)	
E		1	**125-7875**		TUBE-HEAT SHRINK (7.44-MM DIA) (25-CM)	
		1	**9X-3402**	15	SOCKET-CONNECTOR (16-GA TO 18-GA)	
					—OR—	
		1	**126-1768**	15	SOCKET-CONNECTOR (14-GA TO 16-GA)	
		1	**2L-8065**	3	TERMINAL-RING (10-GA TO 12-GA, NO. 8 SCREW)	
		1	**2L-8066**	2	TERMINAL-RING (10-GA TO 12-GA, NO. 10 SCREW)	
		1	**2L-8067**	6	TERMINAL-RING (10-GA TO 12-GA, 1/4-IN SCREW)	
		1	**2L-8075**	3	TERMINAL-RING (14-GA TO 16-GA, NO. 8 SCREW)	
		1	**2L-8076**	2	TERMINAL-RING (14-GA TO 16-GA, NO. 10 SCREW)	
		1	**128-8950**	1	CONNECTOR-RECEPTACLE	
		1	**5P-2321**	1	TERMINAL-FORK (14-GA TO 16-GA, NO. 6 SCREW)	
		1	**176-9299**	2	KIT-RECEPTACLE (3-PIN)	
					(EACH INCLUDES RECEPTACLE AS & WEDGE)	
		1	**134-3296**	1	HOUSING-PLUG	
		1	**134-3297**	1	SEAL	
		1	**9X-3401**	12	PIN-CONNECTOR (16-GA TO 18-GA)	
					—OR—	
		1	**126-1767**	12	PIN-CONNECTOR (14-GA TO 16-GA)	
		1	**149-5069**	7	TERMINAL-BLADE (14-GA TO 20-GA)	
		1	**149-5070**	14	TERMINAL-BLADE (16-GA TO 20-GA)	
		1	**149-5071**	7	TERMINAL-BLADE (12-GA TO 14-GA)	
		1	**153-2602**	5	RECEPTACLE-CONNECTOR (1-PIN)	
		1	**153-2631**	5	TERMINAL (FEMALE)	
		1	**155-2270**	2	KIT-CONNECTING PLUG (2-PIN)	
		1	**155-2260**	1	KIT-CONNECTING PLUG (3-PIN)	
					(EACH PLUG KIT INCLUDES PLUG AS, WEDGE & INTERFACE SEAL)	
		1	**163-6659**	1	CONNECTOR-PLUG (12-PIN)	
		1	**163-6699**	1	CONNECTOR-PLUG (18-PIN)	
		1	**163-6790**	23	TERMINAL (FEMALE)	
		1	**163-6803**	9	PLUG-CONNECTOR (5-PIN)	
		1	**167-3487**	9	WEDGE-PLUG LOCK (5-PIN)	
		1	**167-3630**	1	CONNECTOR-PLUG	
		1	**167-3631**	2	TERMINAL (FEMALE)	
		1	**170-6890**	6	TERMINAL-BLADE (14-GA)	
		1	**170-6891**	22	TERMINAL-BLADE (16-GA TO 18-GA)	
		1	**174-3016**	2	PLUG AS-CONNECTOR (3-PIN)	
		1	**230-4009**	1	PLUG AS-CONNECTOR (12-PIN)	
		1	**264-7034**	1	SEAL-CONNECTOR	
		1	**230-4011**	1	PLUG AS-CONNECTOR (2-PIN)	
		1	**264-7029**	1	SEAL-CONNECTOR	
		1	**230-4013**	1	PLUG AS-CONNECTOR (3-PIN)	

259-5161 **WIRING GP-CAB (*contd.*)** **i05190547**

NOTE	REF NO	GRAPHIC REF	PART NUMBER	QTY	PART NAME 1 2 3 4 5 6 (PRODUCT LEVEL)	SEE PAGE
		1	**264-7030**	1	SEAL-CONNECTOR	
		1	**238-2319**	1	BASE AS (FUSE, RELAY PANEL)	
		1	**9X-8256**	2	WASHER (6.6X12X2-MM THK)	
M		1	**095-0742**	2	SCREW-MACHINE (M6X1X16-MM)	
		1	**170-9394**	40	TERMINAL	
		1	**238-2363**	6	TERMINAL (FEMALE)	
		1	**238-2366**	10	TERMINAL (MALE)	
		1	**239-7356**	1	PLUG AS-CONNECTOR (12-PIN)	
		1	**264-7034**	1	SEAL-CONNECTOR	
		1	**243-4505**	2	RECEPTACLE AS-CONNECTOR (2-PIN)	
		1	**243-4506**	1	RECEPTACLE AS-CONNECTOR (3-PIN)	
		1	**349-5084**	3	TERMINAL-BLADE	
		1	**349-5085**	3	RECEPTACLE AS-CONNECTOR	
	33	3	**267-7639**	1	SWITCH AS-ROCKER (LEVELING)	
		3	**167-3542**	1	RECEPTACLE-CONNECTOR (5-PIN)	
		3	**167-3543**	5	TERMINAL (MALE)	
M	34	3	**095-0723**	3	SCREW-SPECIAL	
	35	3	**096-5962**	3	WASHER-HARD (3.4X7X0.8-MM THK)	
	36	4	**096-6166**	2	WASHER-HARD (4.5X9X1-MM THK)	
	37	3,4	**132-5789**	7	CLIP	
	38	4	**4P-7581**	1	CLIP	
M	39	3	**5C-2890**	5	NUT (M6X1-THD)	
M	40	4	**6V-5210**	8	SCREW-MACHINE (M4X0.7X10-MM)	
M	41	4	**6V-9672**	2	SCREW-MACHINE (M4X0.7X16-MM)	
	42	4	**8T-0328**	3	WASHER-HARD (5.5X10X1-MM THK)	
M	43	4	**8T-4127**	2	SCREW-MACHINE (M5X0.8X20-MM)	
M	44	4	**8T-6693**	1	SCREW-MACHINE (M5X0.8X16-MM)	
M	45	1,2,3,4	**9X-2042**	13	SCREW-TRUSS HEAD (M6X1X12-MM)	
M	46	3	**9X-2044**	5	SCREW-TRUSS HEAD (M6X1X16-MM)	
	47	3	**9X-8256**	5	WASHER (6.6X12X2-MM THK)	
E	48	2	**101-2846**		GUARD (9.5-CM)	
E	48A	4	**101-2846**		GUARD (9-CM EACH)	
C	49	4	**7K-1181**	8	STRAP-CABLE	

C - CHANGE FROM PREVIOUS TYPE
E - ORDER BY THE CENTIMETER
M - METRIC PART
Y - SEPARATE ILLUSTRATION

259-5161 **WIRING GP-CAB (*contd.*)** **i05190547**

REFER TO ALL ILLUSTRATIONS OF
THIS GROUP FOR AUXILIARY VIEWS

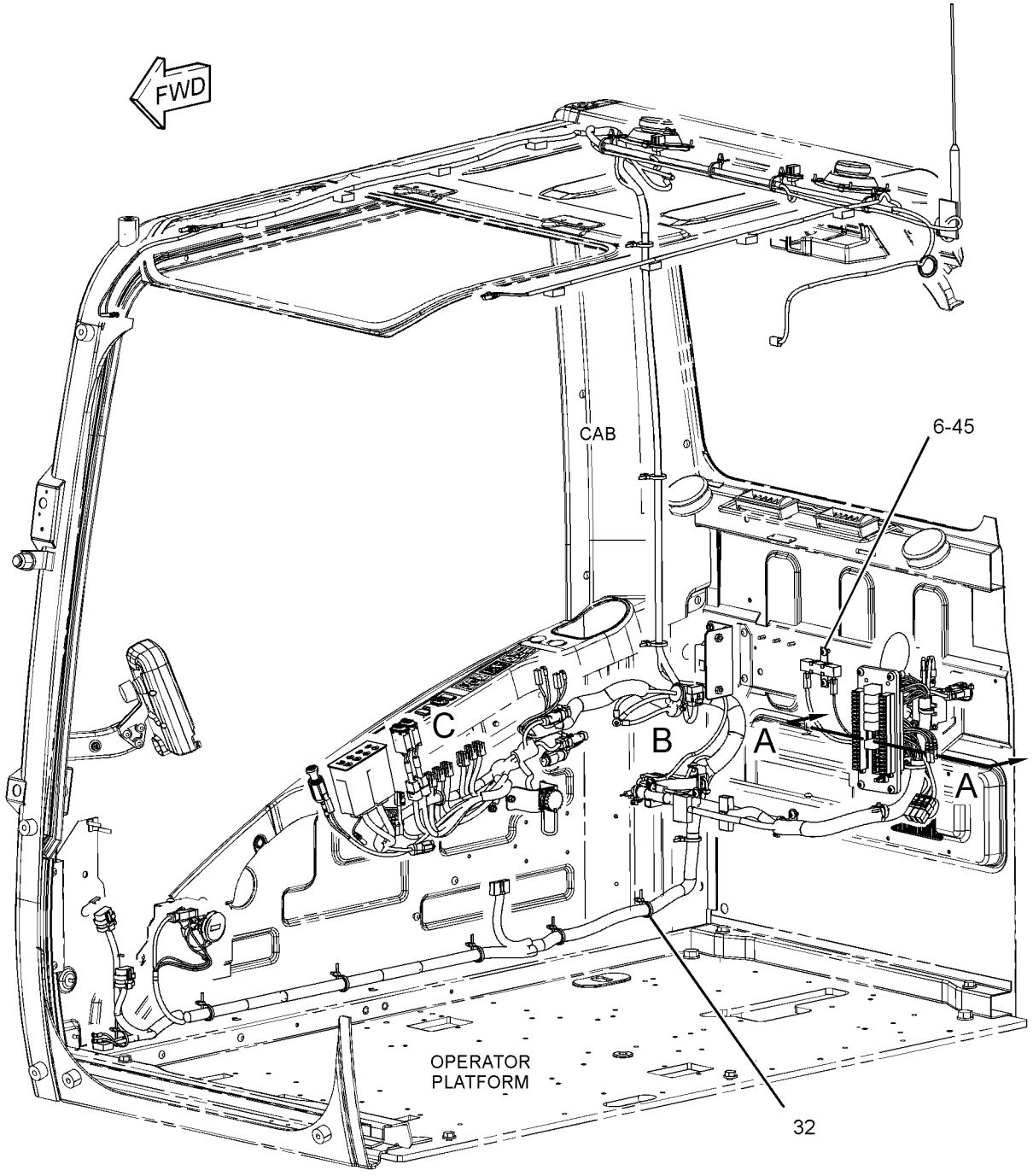

GRAPHIC #1 g02477289

259-5161 **WIRING GP-CAB (*contd.*)** **i05190547**

REFER TO ALL ILLUSTRATIONS OF
THIS GROUP FOR AUXILIARY VIEWS

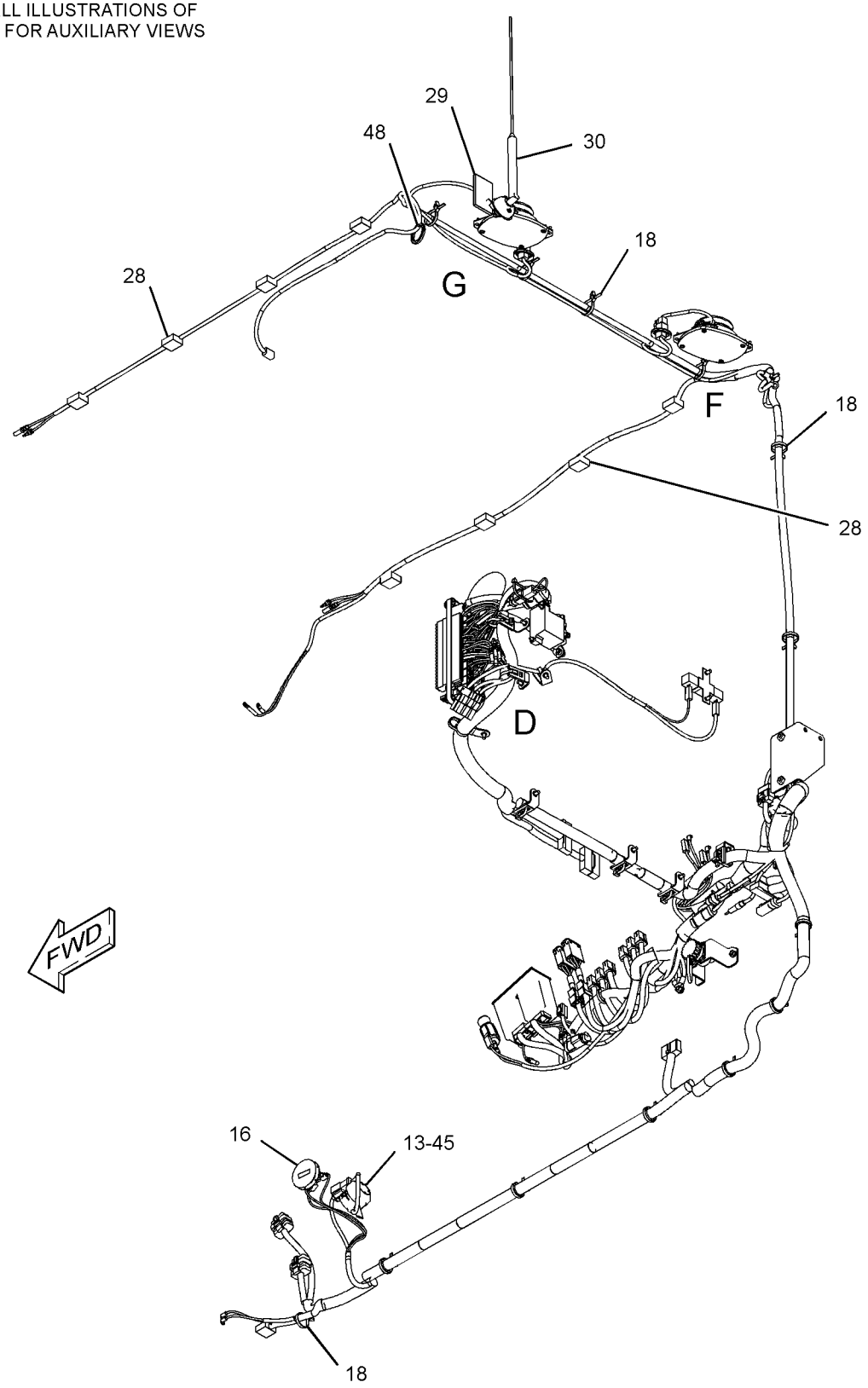

GRAPHIC #2 g02477315

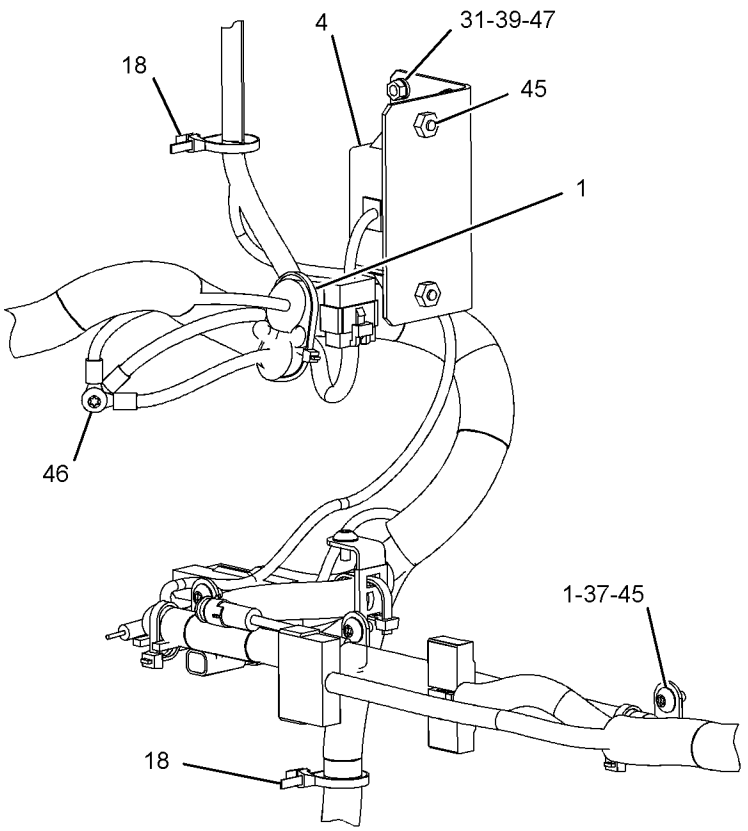

VIEW OF AREA B

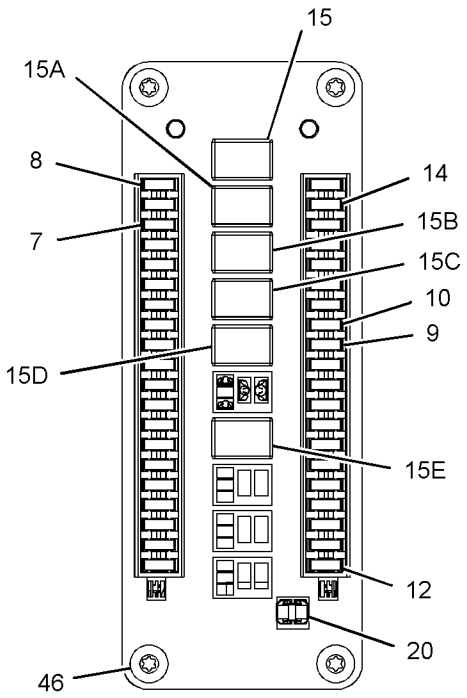

VIEW A-A

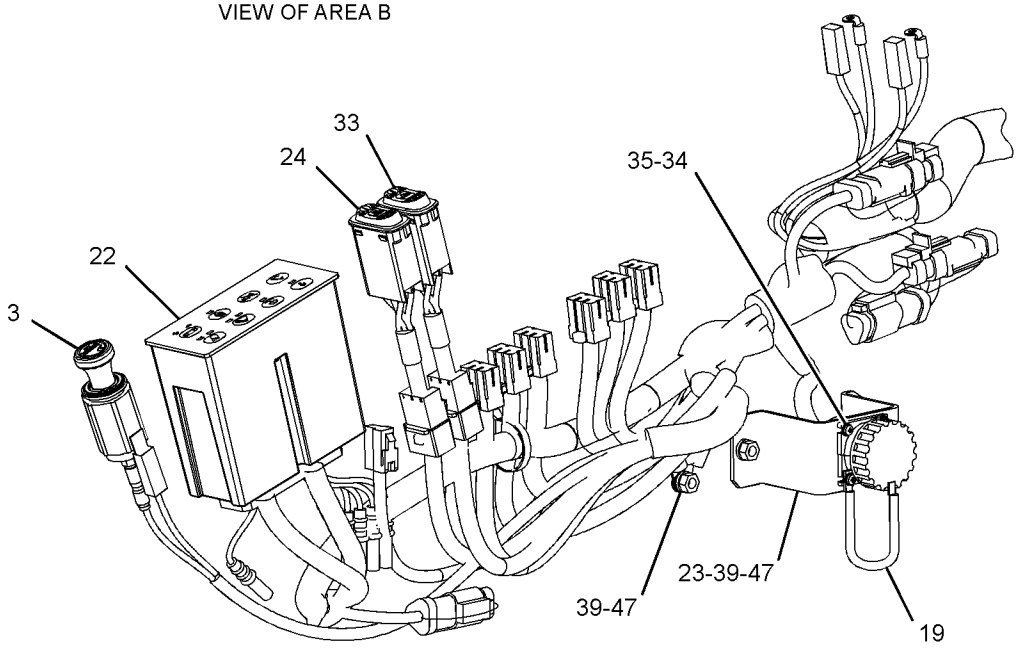

VIEW OF AREA C

GRAPHIC #3 g02477336

259-5161 **WIRING GP-CAB (*contd.*)** **i05190547**

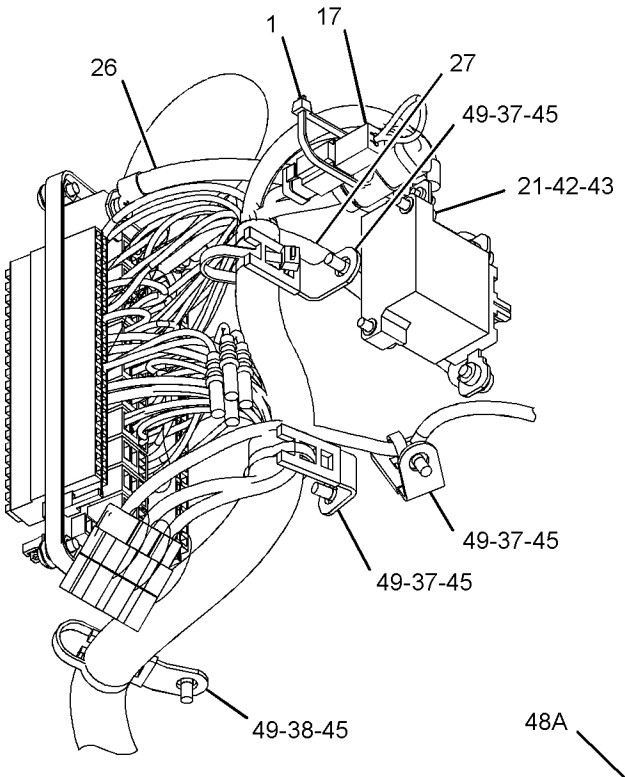

VIEW OF AREA D

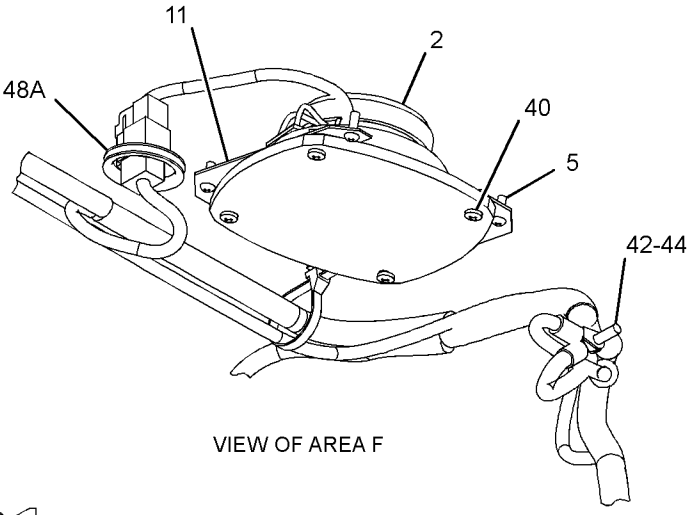

VIEW OF AREA F

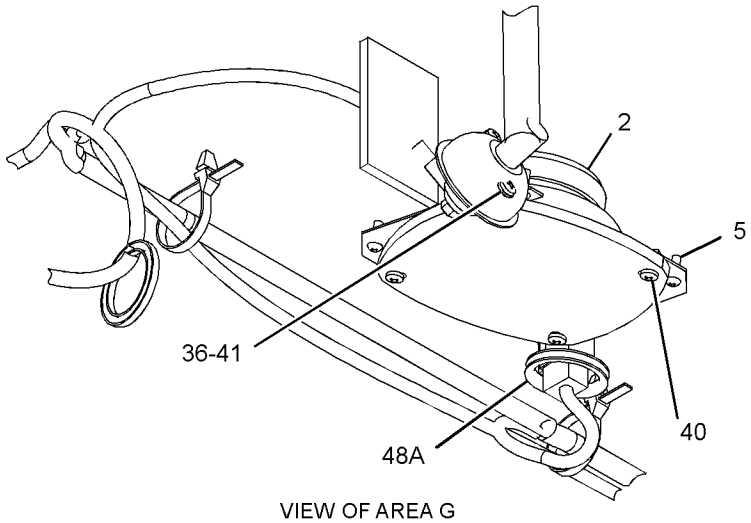

VIEW OF AREA G

GRAPHIC #4 **<END>** g02477352

267-7642 WIRING GP-CAB—COUPLER

S/N: KGF1-UP; FAL1-UP
PART OF 277-0863 CONTROL AR-COUPLER
AN ATTACHMENT

SMCS-1408, 7301

i04097910

NOTE	REF NO	GRAPHIC REF	PART NUMBER	QTY	PART NAME 1 2 3 4 5 6 (PRODUCT LEVEL)	SEE PAGE
	1	1	**7K-1181**	13	STRAP-CABLE	
	2	1	**149-5050**	1	RELAY (24-VOLT) (QUICK COUPLER LOCK PRIORITY)	
	2A	1	**149-5050**	1	RELAY (24-VOLT) (QUICK COUPLER LOCK ON)	
	2B	1	**149-5050**	2	RELAY (24-VOLT) (QUICK COUPLER LOCK)	
	3	1	**259-4884**	1	BRACKET AS	
	4	1	**259-7220**	1	COVER	
	5	1	**267-7644**	1	HARNESS AS-QUICK COUPLER	
		1	**102-7965**	3	TERMINAL (FEMALE)	
E		1	**125-7874**		TUBE-HEAT SHRINK (5.72-MM DIA) (10-CM)	
E		1	**125-7875**		TUBE-HEAT SHRINK (7.44-MM DIA) (15-CM)	
		1	**149-5070**	9	TERMINAL-BLADE (16-GA TO 20-GA)	
		1	**163-6803**	1	PLUG-CONNECTOR (5-PIN)	
		1	**230-5008**	1	PLUG AS-CONNECTOR (4-PIN)	
		1	**7Y-3950**	2	TERMINAL-BLADE (14-GA TO 20-GA)	
		1	**7Y-3953**	1	CONNECTOR-RECEPTACLE	
		1	**149-5069**	7	TERMINAL-BLADE (14-GA TO 20-GA)	
		1	**3S-2093**	15	STRAP-CABLE	
		1	**230-5008**	1	PLUG AS-CONNECTOR (4-PIN)	
	6	1	*267-7671*	1	SWITCH GP-TOGGLE (QUICK COUPLER)	
		1	**105-5175**	1	SWITCH AS-TOGGLE (QUICK COUPLER)	
		1	**3L-8187**	6	LOCKWASHER	
		1	**6T-3631**	2	NUT-HEX (15/32-32-THD)	
		1	**6T-3632**	1	LOCKWASHER	
		1	**6T-3633**	1	RING-LOCKING	
		1	**6V-8374**	6	SCREW-MACHINE (6-32X0.25-IN)	
		1	**267-7672**	1	HARNESS AS-WIRING (CAB)	
		1	**3S-2093**	1	STRAP-CABLE	
		1	**121-1173**	3	TERMINAL (MALE)	
		1	**167-3542**	1	RECEPTACLE-CONNECTOR (5-PIN)	
	7	1	**267-7676**	1	BRACKET AS	
M	8	1	**9X-2042**	7	SCREW-TRUSS HEAD (M6X1X12-MM)	

E - ORDER BY THE CENTIMETER
M - METRIC PART

267-7642 **WIRING GP-CAB (*contd.*)** **i04097910**

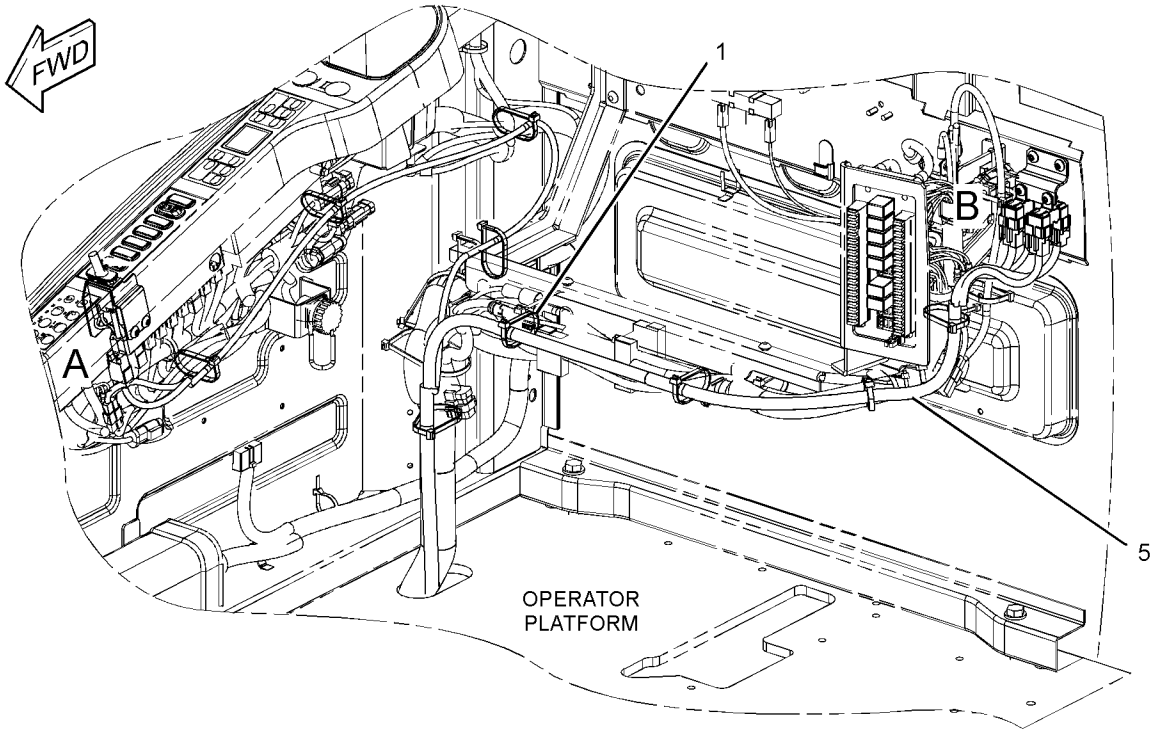

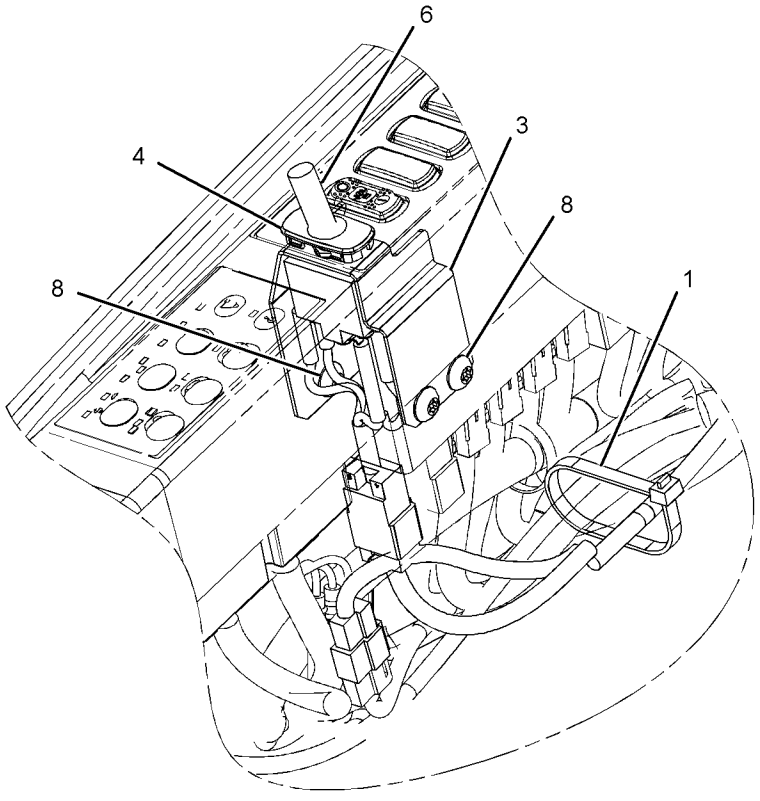

VIEW OF AREA A

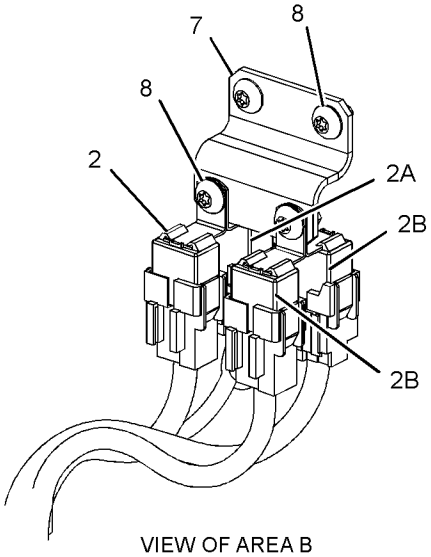

VIEW OF AREA B

GRAPHIC #1 **<END>** g02304153

299-2792 WIRING GP-CAB

S/N: KGF1-UP
PART OF 290-1775 CONVERSION AR-MACHINE
AN ATTACHMENT
TYPE 1

SMCS-1408, 7301 **i02845617**

NOTE	REF NO	GRAPHIC REF	PART NUMBER	QTY	PART NAME 1 2 3 4 5 6 (PRODUCT LEVEL)	SEE PAGE
	1	1	**7K-1181**	7	STRAP-CABLE	
	2	1	**113-8491**	1	FUSE (15-AMPERE)	
	3	1	**275-6840**	1	HARNESS AS-CONTROL (DISPLAY)	

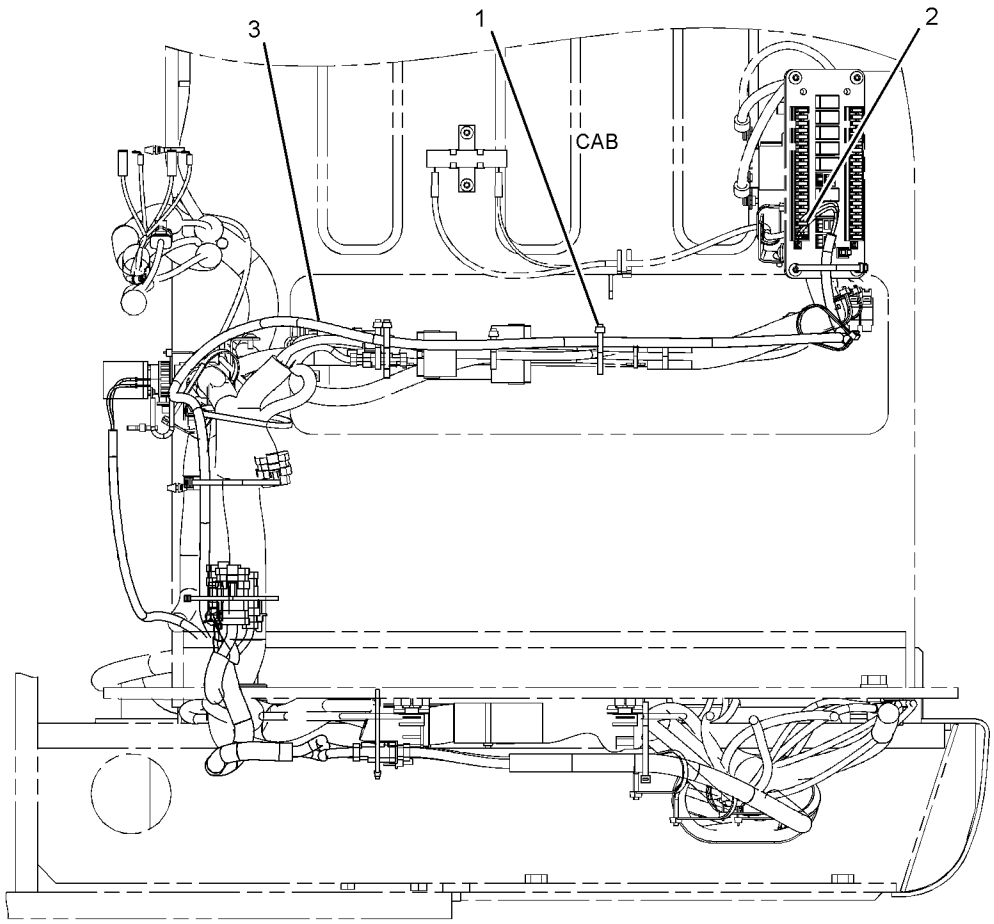

FRONT VIEW

GRAPHIC #1 **<END>** g01402306

299-2792 WIRING GP-CAB

S/N: KGF1-UP
PART OF 290-1775 CONVERSION AR-MACHINE
AN ATTACHMENT
TYPE 2

SMCS-1408, 7301 **i02981266**

NOTE	REF NO	GRAPHIC REF	PART NUMBER	QTY	PART NAME 1 2 3 4 5 6 (PRODUCT LEVEL)	SEE PAGE
	1	1	**7K-1181**	7	STRAP-CABLE	
	2	1	**113-8491**	1	FUSE (15-AMPERE)	
C	3	1	**306-8362**	1	HARNESS AS-CONTROL (DISPLAY)	

C - CHANGE FROM PREVIOUS TYPE

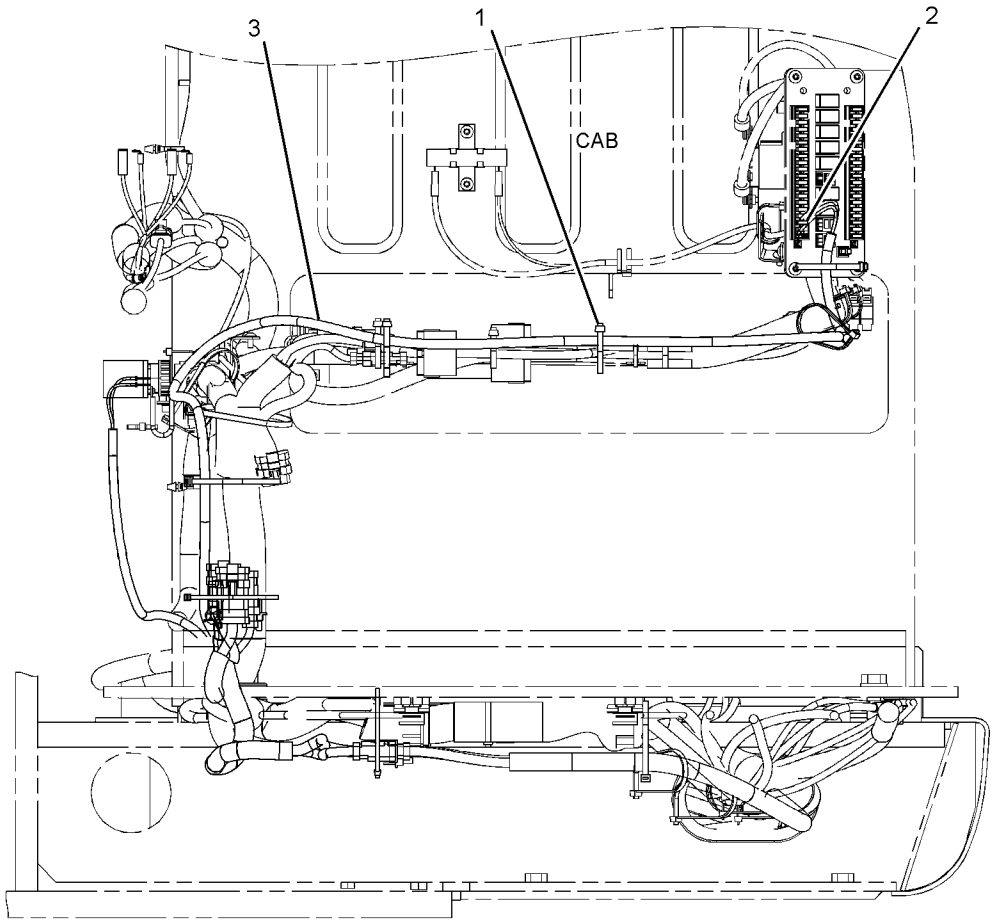

FRONT VIEW

GRAPHIC #1 **<END>** g01402306

306-8349 WIRING GP-CAB—GRADE CONTROL

S/N: KGF1-UP; FAL1-UP

PART OF 290-1774, 290-1775 CONVERSION AR-MACHINE, 314-3883 GRADE CONTROL AR, 314-3882 INSTALLATION AR

AN ATTACHMENT

SMCS-1408, 7301 **i04894427**

NOTE	REF NO	GRAPHIC REF	PART NUMBER	QTY	PART NAME 1 2 3 4 5 6 (PRODUCT LEVEL)	SEE PAGE
	1	1	**7K-1181**	7	STRAP-CABLE	
	2	1	**113-8491**	1	FUSE (15-AMPERE)	
	3	1	**306-8350**	1	HARNESS AS-CAB	
		1	**3S-2093**	2	STRAP-CABLE	
		1	**8T-8737**	36	PLUG-SEAL	
		1	**9W-0852**	5	PIN-CONNECTOR (14-GA TO 16-GA)	
E		1	**125-7874**		TUBE-HEAT SHRINK (5.72-MM DIA) (20-CM)	
E		1	**125-7875**		TUBE-HEAT SHRINK (7.44-MM DIA) (15-CM)	
		1	**9X-3402**	6	SOCKET-CONNECTOR (16-GA TO 18-GA)	
					—OR—	
		1	**126-1768**	6	SOCKET-CONNECTOR (14-GA TO 16-GA)	
		1	**134-2540**	1	RESISTOR AS-CONNECTION (3-PIN)	
		1	**9X-3401**	32	PIN-CONNECTOR (16-GA TO 18-GA)	
					—OR—	
		1	**126-1767**	32	PIN-CONNECTOR (14-GA TO 16-GA)	
		1	**155-2260**	1	KIT-CONNECTING PLUG (3-PIN)	
					(INCLUDES RECPTACLE AS, WEDGE & INTERFACE SEAL)	
		1	**155-2267**	1	PLUG AS-CONNECTOR (3-PIN)	
		1	**170-6891**	2	TERMINAL-BLADE (16-GA TO 18-GA)	
		1	**230-4009**	1	PLUG AS-CONNECTOR (12-PIN)	
		1	**264-7034**	1	SEAL-CONNECTOR	
		1	**230-5008**	1	PLUG AS-CONNECTOR (4-PIN)	
		1	**264-7031**	1	SEAL-CONNECTOR	
		1	**239-7356**	1	PLUG AS-CONNECTOR (12-PIN)	
		1	**264-7034**	1	SEAL-CONNECTOR	
		1	**243-4507**	1	RECEPTACLE AS-CONNECTOR (4-PIN)	
		1	**243-4509**	1	RECEPTACLE AS-CONNECTOR (8-PIN)	
		1	**243-4510**	2	RECEPTACLE AS-CONNECTOR (12-PIN)	
		1	**272-5000**	1	RECEPTACLE AS-CONNECTOR (12-PIN)	

E - ORDER BY THE CENTIMETER

306-8349 **WIRING GP-CAB (*contd.*)** **i04894427**

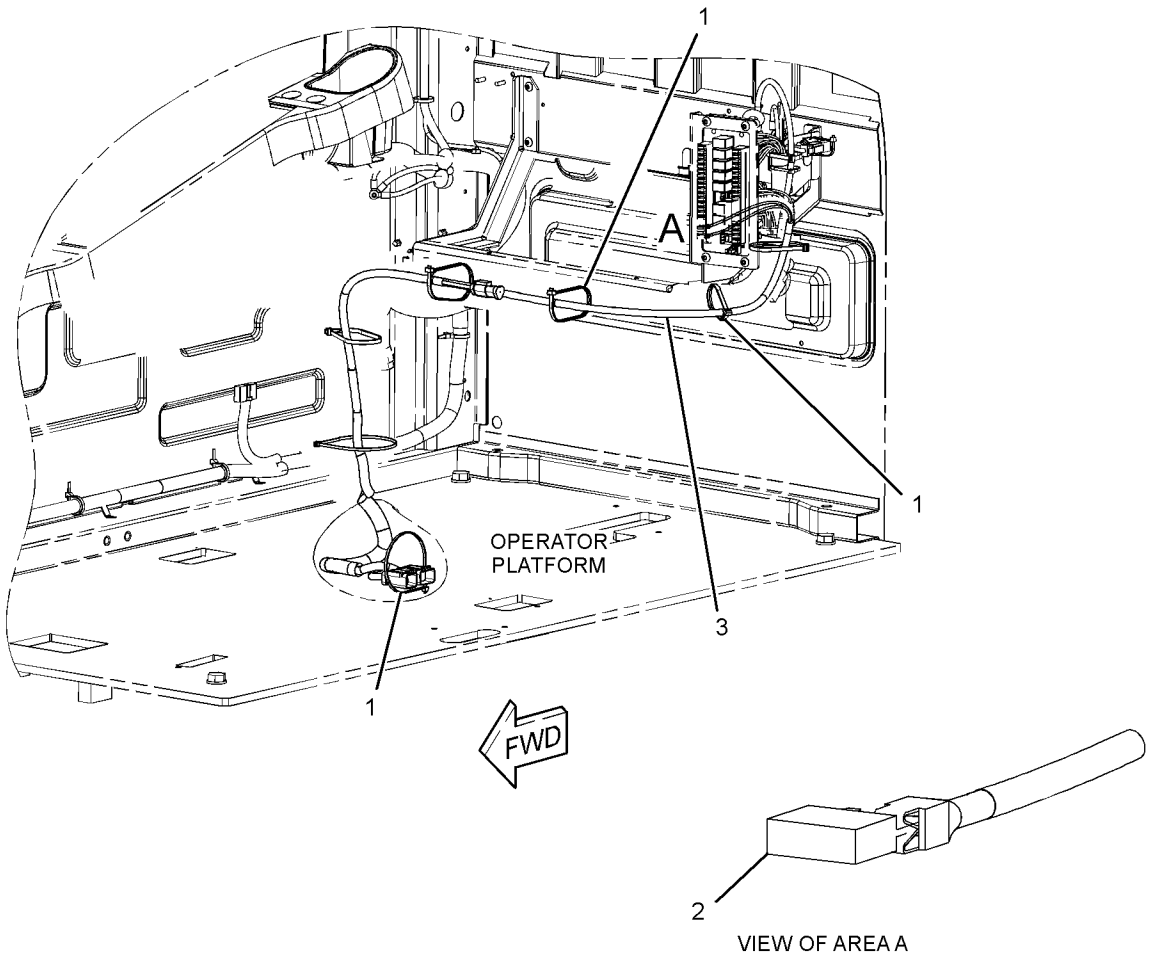

GRAPHIC #1 **<END>** g01398198

328-0048 WIRING GP-CAB RISER—WORK AREA VISUAL SYSTEM, REAR

S/N: KGF1-UP; FAL1-UP
PART OF 314-3774 CAMERA AR
AN ATTACHMENT

SMCS-1408 **i04934037**

NOTE	REF NO	GRAPHIC REF	PART NUMBER	QTY	PART NAME 1 2 3 4 5 6 (PRODUCT LEVEL)	SEE PAGE
	1	1	**3S-2093**	13	STRAP-CABLE	
	2	1	**7K-1181**	16	STRAP-CABLE	
	3	1	**306-8590**	1	HARNESS AS-WIRING (WORK AREA VISUAL SYSTEM, REAR)	
	4	1	**327-9998**	1	HARNESS AS-AUXILIARY (WORK AREA VISUAL SYSTEM, REAR)	
		1	**3S-2093**	1	STRAP-CABLE	
		1	**7Y-3962**	1	TERMINAL-BULLET (MALE)	
		1	**7Y-3963**	2	TERMINAL-BULLET (FEMALE)	
BE		1	**125-7875**		TUBE-HEAT SHRINK (7.44-MM DIA)	

B - USE AS REQUIRED
E - ORDER BY THE CENTIMETER

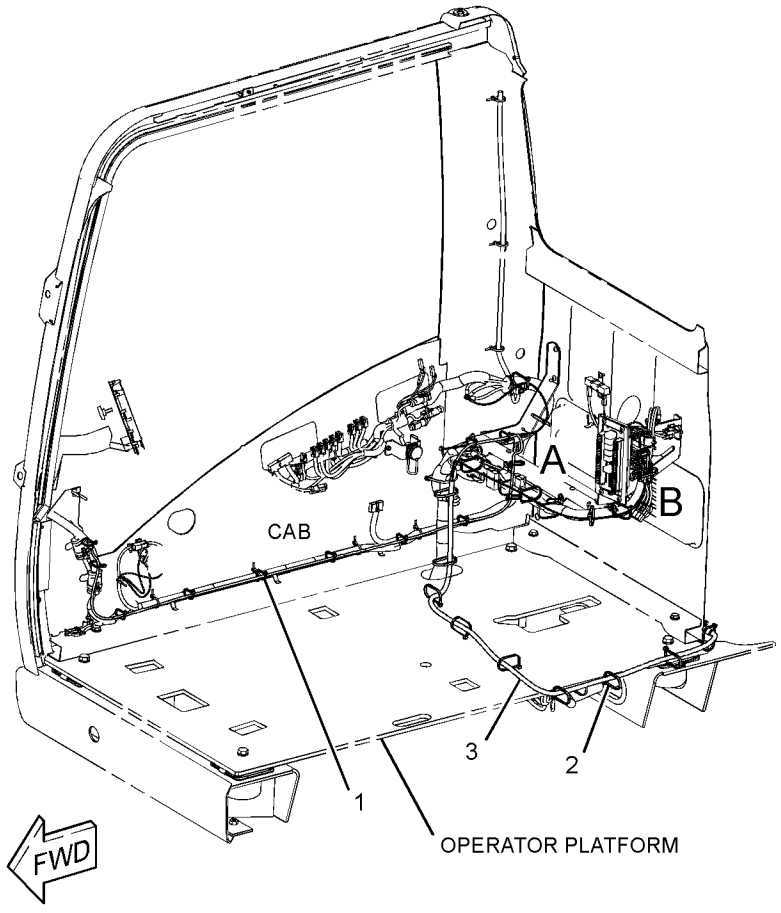

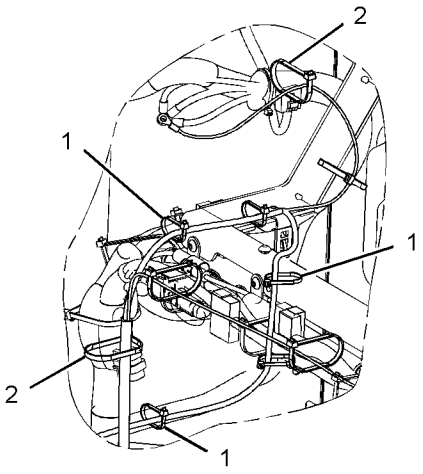

VIEW OF AREA A

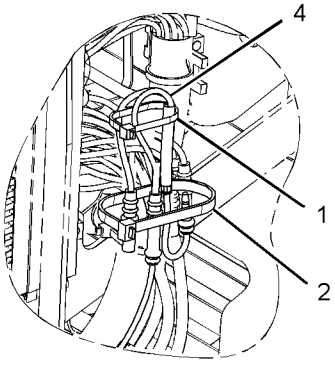

VIEW OF AREA B

GRAPHIC #1 **<END>** g01609106

324-5774 WIRING GP-CAMERA—REAR VISION CAMERA

S/N: KGF1-UP; FAL1-UP
PART OF 314-3774 CAMERA AR
AN ATTACHMENT

SMCS-1408, 7348 **i03114065**

NOTE	REF NO	GRAPHIC REF	PART NUMBER	QTY	PART NAME 1 2 3 4 5 6 (PRODUCT LEVEL)	SEE PAGE
	1	1	**3S-2093**	20	STRAP-CABLE	
	2	1	**7K-1181**	5	STRAP-CABLE	
	3	1	**268-8643**	1	CABLE AS	

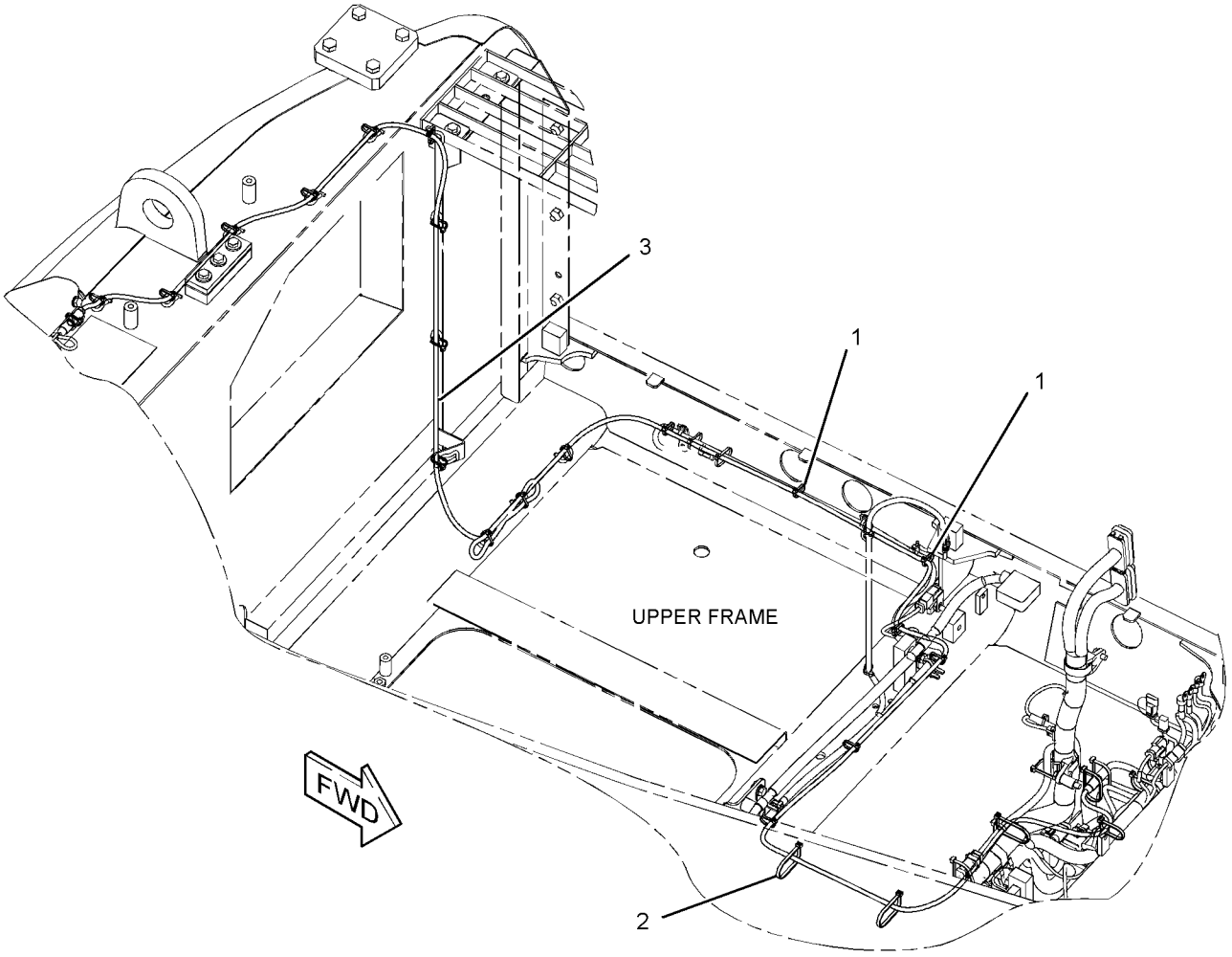

GRAPHIC #1 **<END>** g01600133

299-2954 WIRING GP-CHASSIS–ACCUGRADE READY

S/N: KGF1-UP; FAL1-UP
PART OF 290-1774, 290-1775 CONVERSION AR-MACHINE, 314-3883 GRADE CONTROL AR, 314-3882 INSTALLATION AR
AN ATTACHMENT
TYPE 1

SMCS-1408 **i03361300**

NOTE	REF NO	GRAPHIC REF	PART NUMBER	QTY	PART NAME 1 2 3 4 5 6 (PRODUCT LEVEL)	SEE PAGE
	1	1	**7K-1181**	46	STRAP-CABLE	
	2	1	**111-4836**	1	CLIP	
	3	1	**177-7707**	2	BOSS	
	4	1	**275-6841**	1	HARNESS AS-CONTROL (BODY TILT SENSOR, GPS RECEIVER)	
	5	1	**275-6842**	1	HARNESS AS-CONTROL (DISPLAY, GPS RADIO)	
	6	1	**279-7609**	1	BRACKET AS	
	7	1	**299-2963**	1	HARNESS AS-CONTROL (BLADE)	
	8	1	**132-5789**	2	CLIP	
	9	1	**2S-1647**	1	GROMMET	
	10	1	**4P-7428**	1	CLIP	
	11	1	**8T-4121**	2	WASHER-HARD (11X21X2.5-MM THK)	
M	12	1	**8T-4191**	2	BOLT (M10X1.5X16-MM)	
	13	1	**8T-4223**	2	WASHER-HARD (13.5X25.5X3-MM THK)	
M	14	1	**8T-4648**	2	BOLT (M12X1.75X70-MM)	

M - METRIC PART

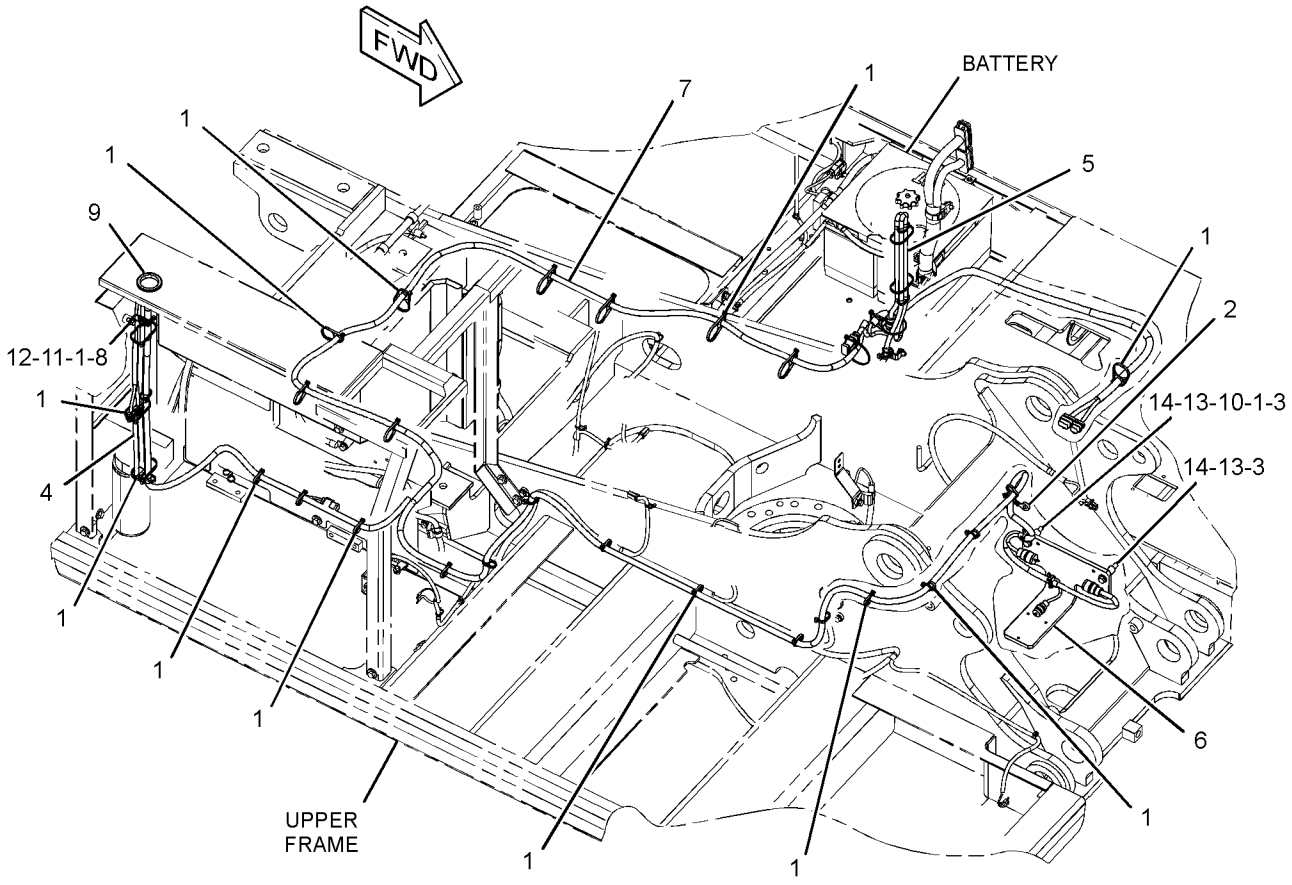

GRAPHIC #1 **<END>** g01733878

299-2954 WIRING GP-CHASSIS–ACCUGRADE READY

S/N: KGF1-UP; FAL1-UP

PART OF 290-1774, 290-1775 CONVERSION AR-MACHINE, 314-3883 GRADE CONTROL AR, 314-3882 INSTALLATION AR

AN ATTACHMENT

TYPE 2

SMCS-1408 **i04759208**

NOTE	REF NO	GRAPHIC REF	PART NUMBER	QTY	PART NAME 1 2 3 4 5 6 (PRODUCT LEVEL)	SEE PAGE
	1	1	**7K-1181**	46	STRAP-CABLE	
	2	1	**111-4836**	1	CLIP	
	3	1	**177-7707**	2	BOSS	
	4	1	**275-6841**	1	HARNESS AS-CONTROL (BODY TILT SENSOR, GPS RECEIVER)	
		1	**8T-8737**	16	PLUG-SEAL	
E		1	**125-7874**		TUBE-HEAT SHRINK (5.72-MM DIA) (20-CM)	
		1	**9X-3402**	12	SOCKET-CONNECTOR (16-GA TO 18-GA)	
		1	**9X-3401**	8	PIN-CONNECTOR (16-GA TO 18-GA)	
		1	**230-4009**	1	PLUG AS-CONNECTOR (12-PIN)	
		1	**264-7034**	1	SEAL-CONNECTOR	
		1	**239-7356**	1	PLUG AS-CONNECTOR (12-PIN)	
		1	**264-7034**	1	SEAL-CONNECTOR	
		1	**243-4510**	1	RECEPTACLE AS-CONNECTOR (12-PIN)	
	5	1	**275-6842**	1	HARNESS AS-CONTROL (DISPLAY, GPS RADIO)	
		1	**8T-8737**	6	PLUG-SEAL	
		1	**9X-3401**	6	PIN-CONNECTOR (16-GA TO 18-GA)	
		1	**167-8987**	1	PLUG AS-CONNECTOR (8-PIN)	
		1	**243-4510**	1	RECEPTACLE AS-CONNECTOR (12-PIN)	
	6	1	**279-7609**	1	BRACKET AS	
C	7	1	**364-0229**	1	HARNESS AS-CONTROL (BLADE)	
		1	**3R-9965**	1	PLUG AS-CONNECTOR (8-PIN)	
		1	**3S-2093**	1	STRAP-CABLE	
		1	**6D-5257**	1	PLUG AS-CONNECTOR (8-PIN)	
		1	**8L-8413**	3	STRAP-CABLE	
		1	**8T-8737**	18	PLUG-SEAL	
		1	**104-6871**	2	CAP-DUST	
		1	**9W-0844**	3	SOCKET-CONNECTOR (14-GA TO 16-GA)	
E		1	**119-3662**		TUBE-HEAT SHRINK (10.85-MM DIA) (7-CM)	
E		1	**125-7874**		TUBE-HEAT SHRINK (5.72-MM DIA) (40-CM)	
E		1	**125-7875**		TUBE-HEAT SHRINK (7.44-MM DIA) (50-CM)	
		1	**9X-3402**	32	SOCKET-CONNECTOR (16-GA TO 18-GA)	
		1	**2L-8069**	1	TERMINAL-RING (2-GA TO 10-GA, 3/8-IN SCREW)	
		1	**134-2540**	2	RESISTOR AS-CONNECTION (3-PIN)	
		1	**9X-3401**	21	PIN-CONNECTOR (16-GA TO 18-GA)	
		1	**174-0503**	2	KIT-CONNECTING PLUG (3-PIN)	
					(INCLUDES PLUG AS & WEDGE & INTERFACE SEAL)	
		1	**155-2260**	2	KIT-CONNECTING PLUG (3-PIN)	
					(INCLUDES PLUG AS & WEDGE & INTERFACE SEAL)	
		1	**230-4009**	3	PLUG AS-CONNECTOR (12-PIN)	
					(EACH INCLUDES)	
		1	**264-7034**	1	SEAL-CONNECTOR	
		1	**231-2295**	1	PLUG AS-CONNECTOR (8-PIN)	
		1	**264-7033**	1	SEAL-CONNECTOR	
		1	**243-4510**	1	RECEPTACLE AS-CONNECTOR (12-PIN)	
		1	**243-5362**	1	CAP-DUST	
		1	**253-2695**	1	PLUG AS-CONNECTOR	
		1	**272-5000**	1	RECEPTACLE AS-CONNECTOR (12-PIN)	
	8	1	**132-5789**	2	CLIP	
	9	1	**2S-1647**	1	GROMMET	
	10	1	**4P-7428**	1	CLIP	
	11	1	**8T-4121**	2	WASHER-HARD (11X21X2.5-MM THK)	
M	12	1	**8T-4191**	2	BOLT (M10X1.5X16-MM)	

299-2954 **WIRING GP-CHASSIS (*contd.*)** **i04759208**

NOTE	REF NO	GRAPHIC REF	PART NUMBER	QTY	PART NAME 1 2 3 4 5 6 (PRODUCT LEVEL)	SEE PAGE
	13	1	**8T-4223**	2	WASHER-HARD (13.5X25.5X3-MM THK)	
M	14	1	**8T-4648**	2	BOLT (M12X1.75X70-MM)	

C - CHANGE FROM PREVIOUS TYPE
E - ORDER BY THE CENTIMETER
M - METRIC PART

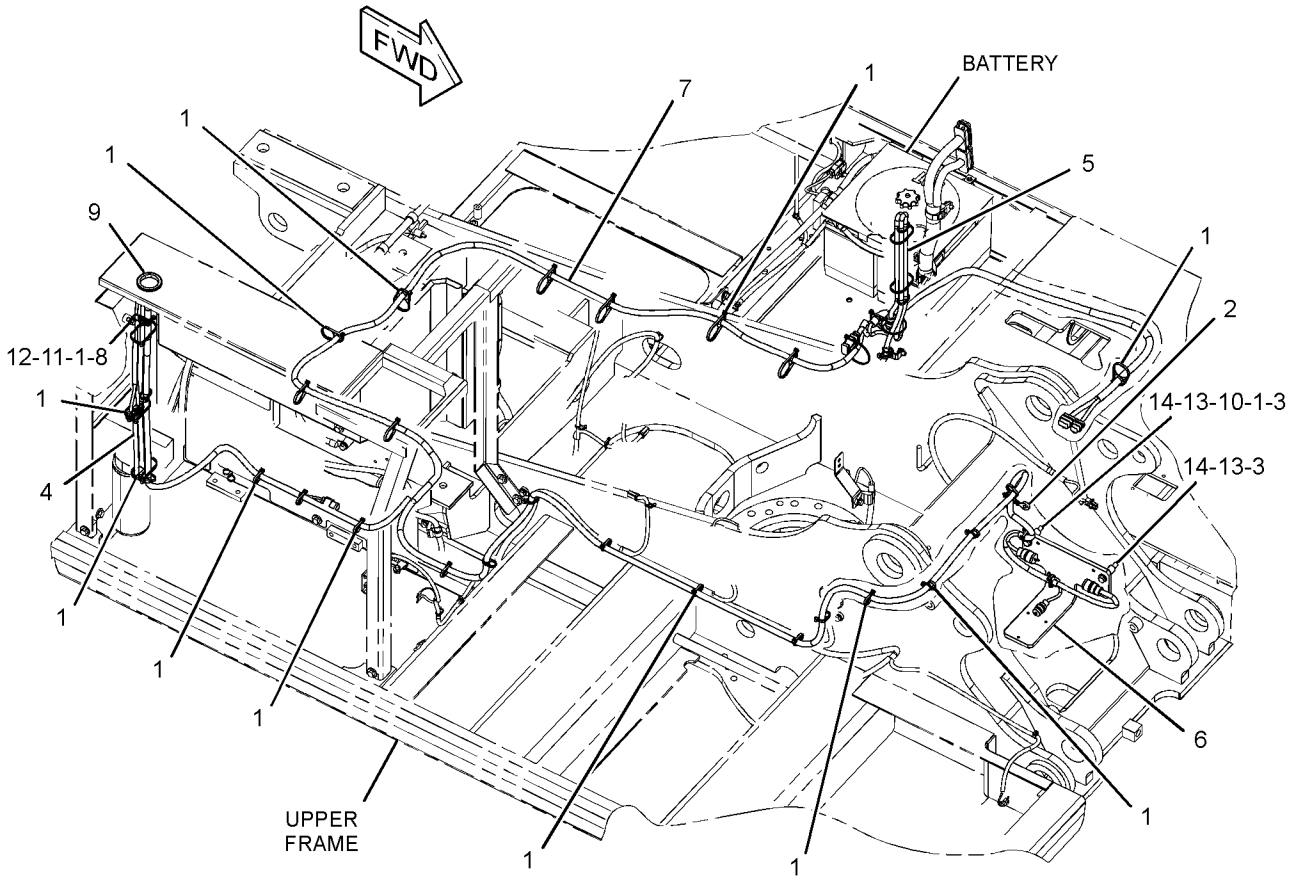

GRAPHIC #1 **<END>** g01733878

319-1387 WIRING GP-CHASSIS

S/N: KGF1258-3940; FAL842-2991
PART OF 264-8638, 264-8639 CHASSIS AR

SMCS-1408 **i02984882**

NOTE	REF NO	GRAPHIC REF	PART NUMBER	QTY	PART NAME 1 2 3 4 5 6 (PRODUCT LEVEL)	SEE PAGE
	1	1	**3S-2093**	2	STRAP-CABLE	
	2	1	**7K-1181**	5	STRAP-CABLE	
	3	1	**319-1348**	1	HARNESS AS-CONTROL (ENGINE START, PUMP CONTROL)	

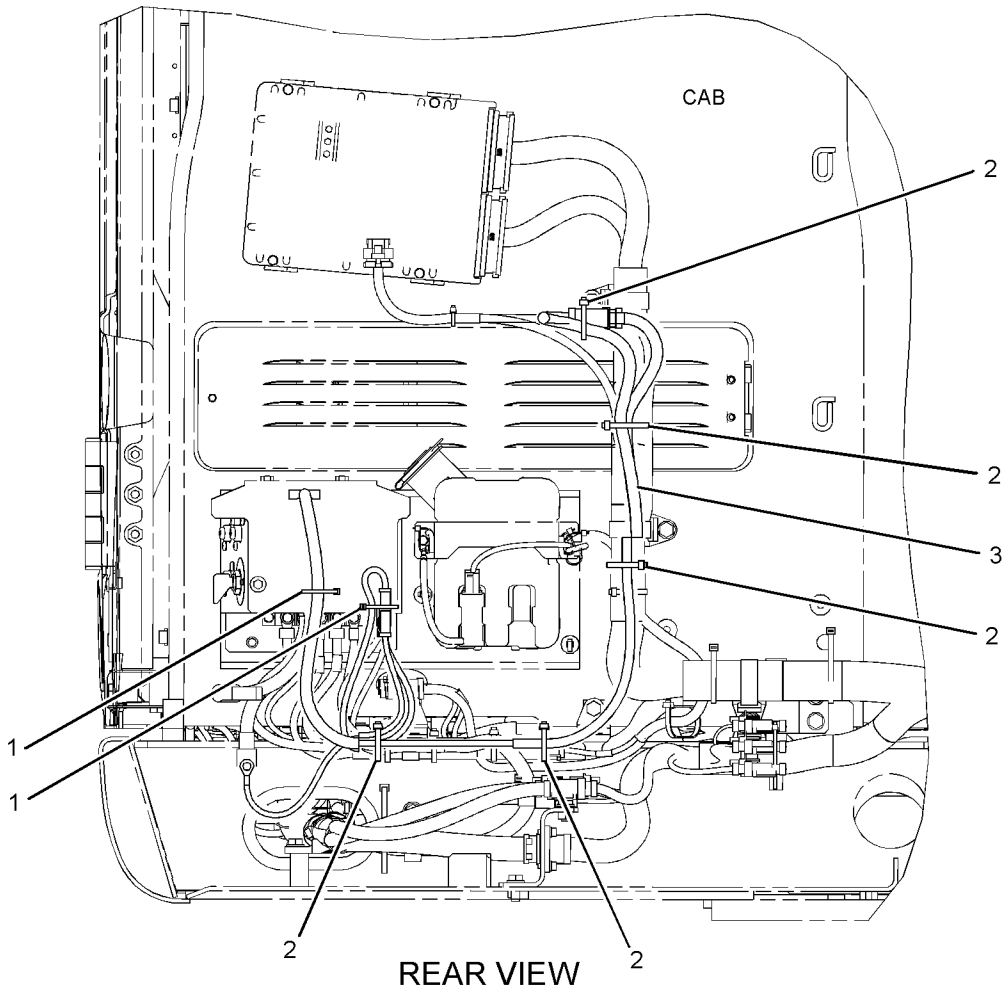

REAR VIEW

GRAPHIC #1 **<END>** g01460607

259-5045 WIRING GP-COMBINED FLOW

S/N: KGF1-UP; FAL1-UP
PART OF 259-7493, 259-7495 CONTROL AR-AUXILIARY
AN ATTACHMENT

SMCS-1408 **i04365891**

NOTE	REF NO	GRAPHIC REF	PART NUMBER	QTY	PART NAME 1 2 3 4 5 6 (PRODUCT LEVEL)	SEE PAGE
	1	1,2	**3S-2093**	23	STRAP-CABLE	
	2	1	**7K-1181**	11	STRAP-CABLE	
	3	2	**111-4836**	2	CLIP	
	4	1	**116-0118**	1	CLIP	
	5	1	**204-1611**	4	STRAP-CABLE (DUAL)	
	6	1	**267-7636**	1	HARNESS AS-AUXILIARY	
		1	**8T-8729**	2	PIN-CONNECTOR (16-GA TO 18-GA)	
		1	**9W-0852**	1	PIN-CONNECTOR (14-GA TO 16-GA)	
		1	**9X-3401**	1	PIN-CONNECTOR (16-GA TO 18-GA)	
		1	**155-2270**	6	KIT-CONNECTING PLUG (2-PIN)	
					(EACH INCLUDES PLUG AS, WEDGE & INTERFACE SEAL)	
		1	**230-5010**	1	PLUG AS-CONNECTOR (6-PIN)	
		1	**264-7032**	1	SEAL-CONNECTOR	
		1	**8T-8737**	9	PLUG-SEAL	
		1	**243-4510**	1	RECEPTACLE AS-CONNECTOR (12-PIN)	
		1	**8T-8730**	14	SOCKET-CONNECTOR (16-GA TO 18-GA)	
		1	**9W-0844**	1	SOCKET-CONNECTOR (14-GA TO 16-GA)	
		1	**9X-3402**	2	SOCKET-CONNECTOR (16-GA TO 18-GA)	
		1	**3S-2093**	1	STRAP-CABLE	
		1	**2L-8079**	3	TERMINAL-RING (14-GA TO 16-GA, 3/8-IN SCREW)	
E		1	**125-7874**		TUBE-HEAT SHRINK (5.72-MM DIA) (20-CM)	
	7	1	**132-5789**	1	CLIP	
	8	2	**156-6175**	1	CLIP	
	9	2	**4P-7581**	1	CLIP	
	10	1,2	**8T-4121**	3	WASHER-HARD (11X21X2.5-MM THK)	
M	11	2	**8T-4137**	1	BOLT (M10X1.5X20-MM)	
M	12	2	**8T-4171**	1	BOLT (M6X1X12-MM)	
M	13	1,2	**8T-4191**	2	BOLT (M10X1.5X16-MM)	
M	14	2	**8T-4195**	1	BOLT (M10X1.5X30-MM)	
	15	2	**9X-8256**	1	WASHER (6.6X12X2-MM THK)	

E - ORDER BY THE CENTIMETER
M - METRIC PART

259-5045 **WIRING GP-COMBINED FLOW (*contd.*)** **i04365891**

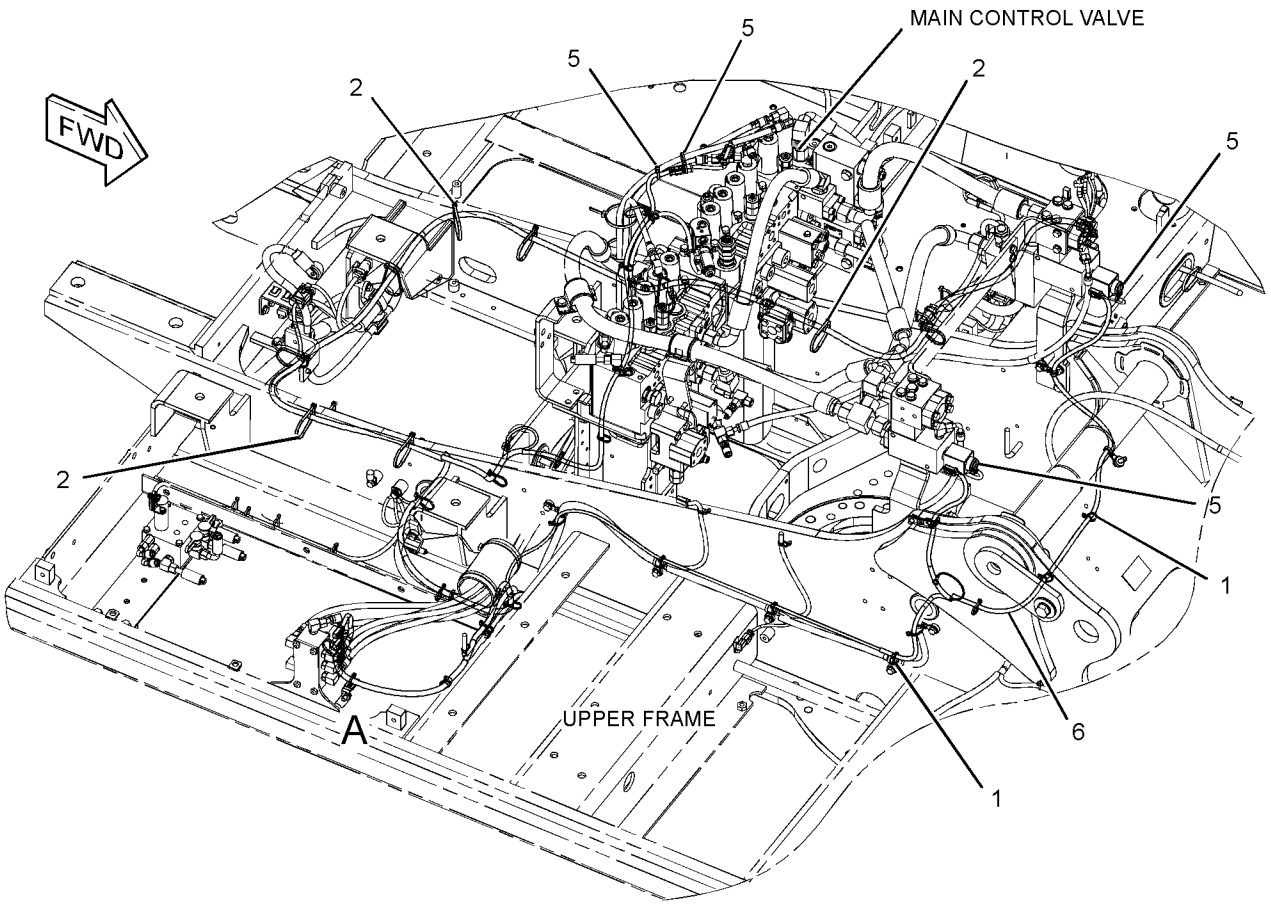

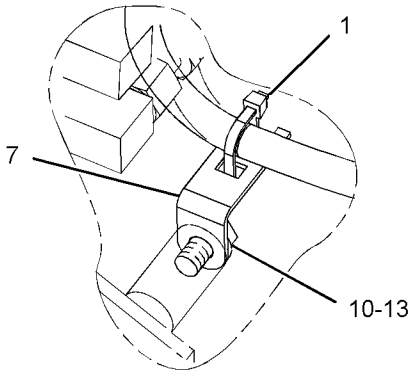

VIEW OF AREA A

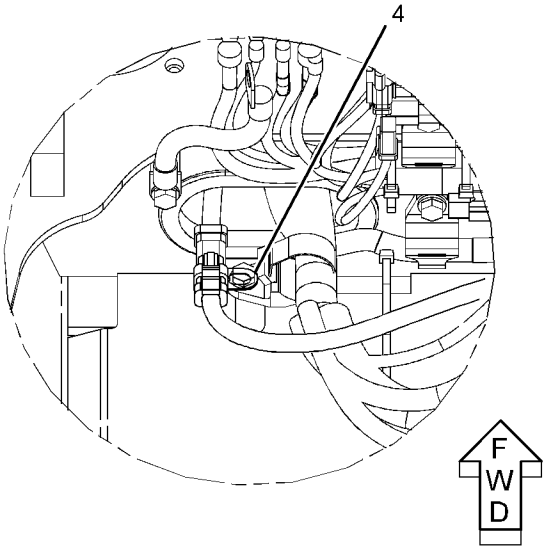

GRAPHIC #1 g02629719

259-5045 **WIRING GP-COMBINED FLOW (*contd.*)** **i04365891**

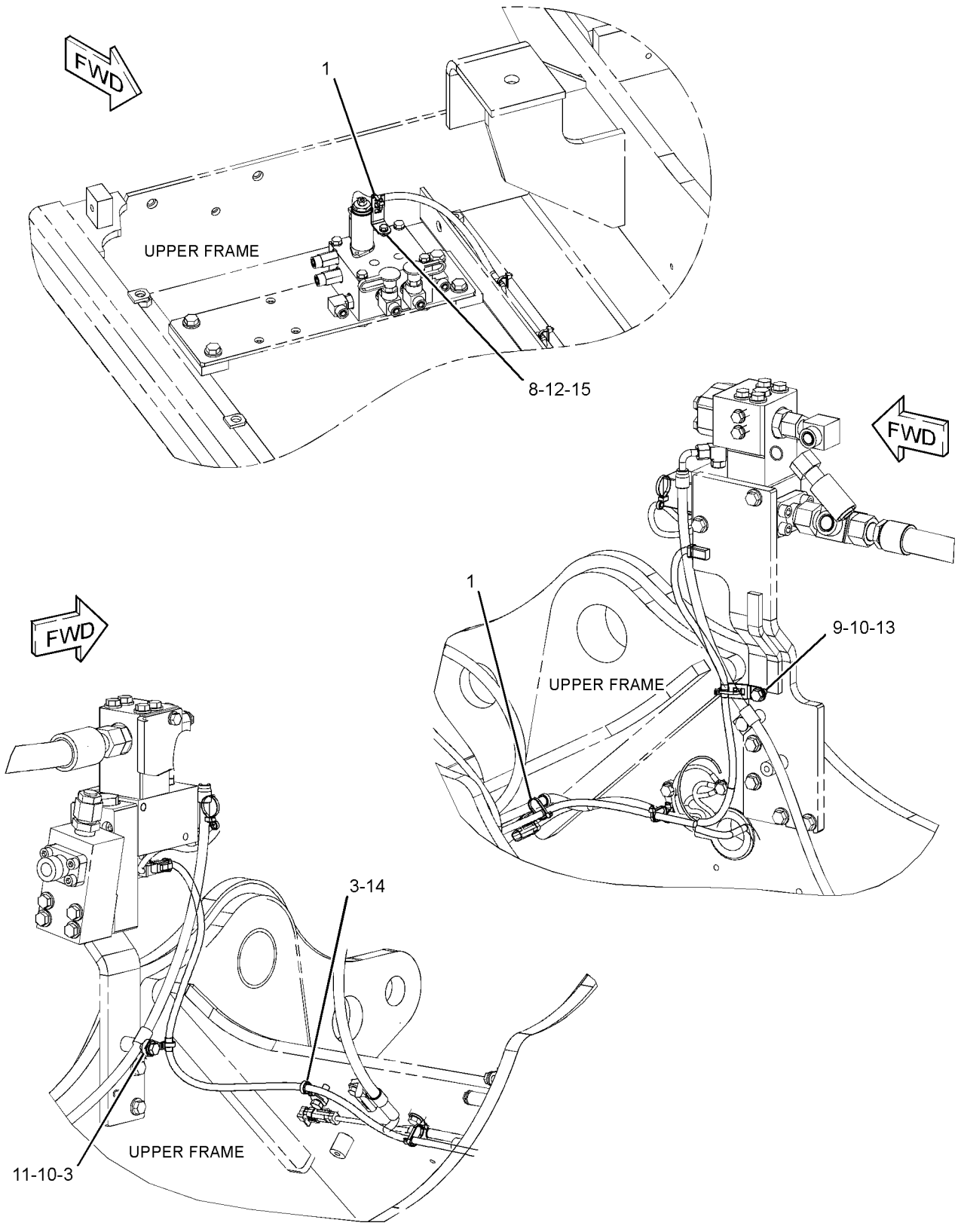

GRAPHIC #2 **<END>** g01230609

267-8007 WIRING GP-COMMUNICATION—PRODUCT LINK 321SR

S/N: KGF1-UP; FAL1-UP
PART OF 264-8665 INSTALLATION AR-COMMUNICATION
AN ATTACHMENT
TYPE 1

SMCS-1408 **i02555427**

NOTE	REF NO	GRAPHIC REF	PART NUMBER	QTY	PART NAME 1 2 3 4 5 6 (PRODUCT LEVEL)	SEE PAGE
	1	1	**3S-2093**	2	STRAP-CABLE	
	2	1	**4I-7889**	1	SPACER (11X25X45-MM THK)	
	3	1	**7K-1181**	3	STRAP-CABLE	
	4	1	**9X-3495**	1	CLIP AS	
	5	1	**091-9035**	1	SPACER (11X25X20-MM THK)	
	6	1	**116-0118**	3	CLIP	
	7	1	**259-4887**	1	HARNESS AS-WIRING (PRODUCT LINK)	
		1	**3S-2093**	2	STRAP-CABLE	
E		1	**125-7874**		TUBE-HEAT SHRINK (5.72-MM DIA) (15-CM)	
E		1	**125-7875**		TUBE-HEAT SHRINK (7.44-MM DIA) (5-CM)	
		1	**126-1774**	1	COVER-CONNECTOR	
		1	**160-7690**	1	PLUG AS-CONNECTOR (70-PIN)	
		1	**230-5010**	2	PLUG AS-CONNECTOR (6-PIN)	
		1	**243-4508**	2	RECEPTACLE AS-CONNECTOR (6-PIN)	
	8	1	**259-4940**	1	HARNESS AS-WIRING (SERVICE CONNECTOR)	
		1	**243-4508**	1	RECEPTACLE AS-CONNECTOR (6-PIN)	
	9	1	**275-6979**	1	HARNESS AS-CONTROL (PRODUCT LINK 121SR)	
		1	**155-2255**	1	KIT-CONNECTING PLUG (12-PIN)	
					(INCLUDES PLUG AS, WEDGE & INTERFACE SEAL)	
		1	**230-5010**	1	PLUG AS-CONNECTOR (6-PIN)	
		1	**243-4508**	1	RECEPTACLE AS-CONNECTOR (6-PIN)	
	10	1	**111-4837**	1	CLIP	
	11	1	**132-5789**	2	CLIP	
	12	1	**8T-4121**	3	WASHER-HARD (11X21X2.5-MM THK)	
M	13	1	**8T-4136**	1	BOLT (M10X1.5X25-MM)	
M	14	1	**8T-4137**	1	BOLT (M10X1.5X20-MM)	
M	15	1	**8T-4185**	1	BOLT (M10X1.5X50-MM)	
M	16	1	**8T-4191**	1	BOLT (M10X1.5X16-MM)	
M	17	1	**8T-5005**	1	BOLT (M10X1.5X70-MM)	

E - ORDER BY THE CENTIMETER
M - METRIC PART

267-8007 **WIRING GP-COMMUNICATION (*contd.*)** **i02555427**

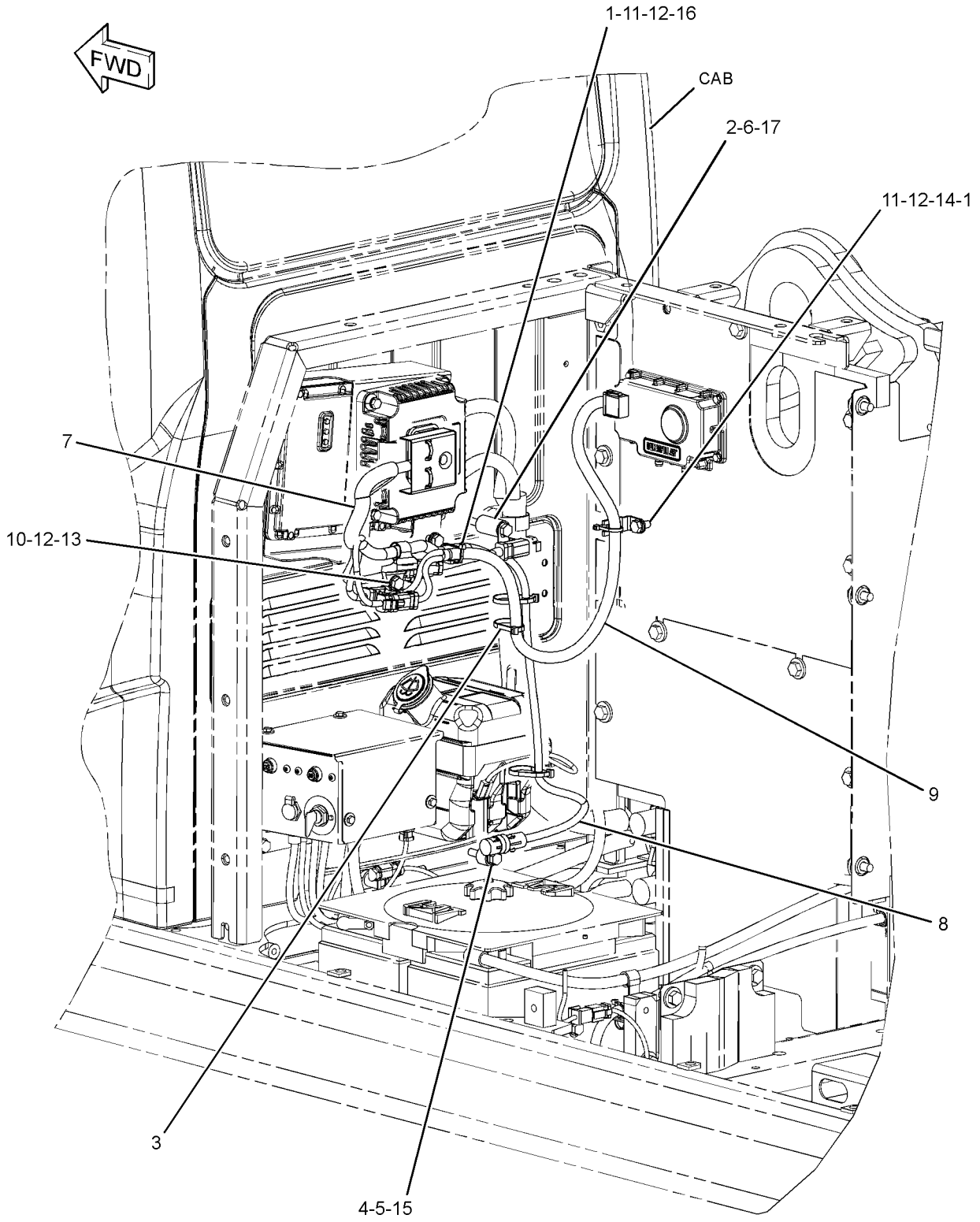

GRAPHIC #1 **<END>** g01297008

267-8007 WIRING GP-COMMUNICATION—PRODUCT LINK 321SR

S/N: KGF1-UP; FAL1-UP
PART OF 264-8665, 298-4115 INSTALLATION AR-COMMUNICATION
AN ATTACHMENT
TYPE 2

SMCS-1408 **i02858397**

NOTE	REF NO	GRAPHIC REF	PART NUMBER	QTY	PART NAME 1 2 3 4 5 6 (PRODUCT LEVEL)	SEE PAGE
	1	1	**3S-2093**	2	STRAP-CABLE	
	2	1	**4I-7889**	1	SPACER (11X25X45-MM THK)	
	3	1	**7K-1181**	3	STRAP-CABLE	
	4	1	**9X-3495**	1	CLIP AS	
	6	1	**116-0118**	3	CLIP	
	7	1	**259-4887**	1	HARNESS AS-WIRING (PRODUCT LINK)	
		1	**3S-2093**	2	STRAP-CABLE	
E		1	**125-7874**		TUBE-HEAT SHRINK (5.72-MM DIA) (15-CM)	
E		1	**125-7875**		TUBE-HEAT SHRINK (7.44-MM DIA) (5-CM)	
		1	**126-1774**	1	COVER-CONNECTOR	
		1	**160-7690**	1	PLUG AS-CONNECTOR (70-PIN)	
		1	**230-5010**	2	PLUG AS-CONNECTOR (6-PIN)	
		1	**243-4508**	2	RECEPTACLE AS-CONNECTOR (6-PIN)	
	8	1	**259-4940**	1	HARNESS AS-WIRING (SERVICE CONNECTOR)	
		1	**243-4508**	1	RECEPTACLE AS-CONNECTOR (6-PIN)	
	9	1	**275-6979**	1	HARNESS AS-CONTROL (PRODUCT LINK 121SR)	
		1	**155-2255**	1	KIT-CONNECTING PLUG (12-PIN)	
					(INCLUDES PLUG AS, WEDGE & INTERFACE SEAL)	
		1	**230-5010**	1	PLUG AS-CONNECTOR (6-PIN)	
		1	**243-4508**	1	RECEPTACLE AS-CONNECTOR (6-PIN)	
	10	1	**111-4837**	1	CLIP	
	11	1	**132-5789**	2	CLIP	
	12	1	**8T-4121**	3	WASHER-HARD (11X21X2.5-MM THK)	
CM	13	1	**8T-4136**	2	BOLT (M10X1.5X25-MM)	
M	14	1	**8T-4137**	1	BOLT (M10X1.5X20-MM)	
M	16	1	**8T-4191**	1	BOLT (M10X1.5X16-MM)	
M	17	1	**8T-5005**	1	BOLT (M10X1.5X70-MM)	

C - CHANGE FROM PREVIOUS TYPE
E - ORDER BY THE CENTIMETER
M - METRIC PART

267-8007 **WIRING GP-COMMUNICATION (*contd.*)** **i02858397**

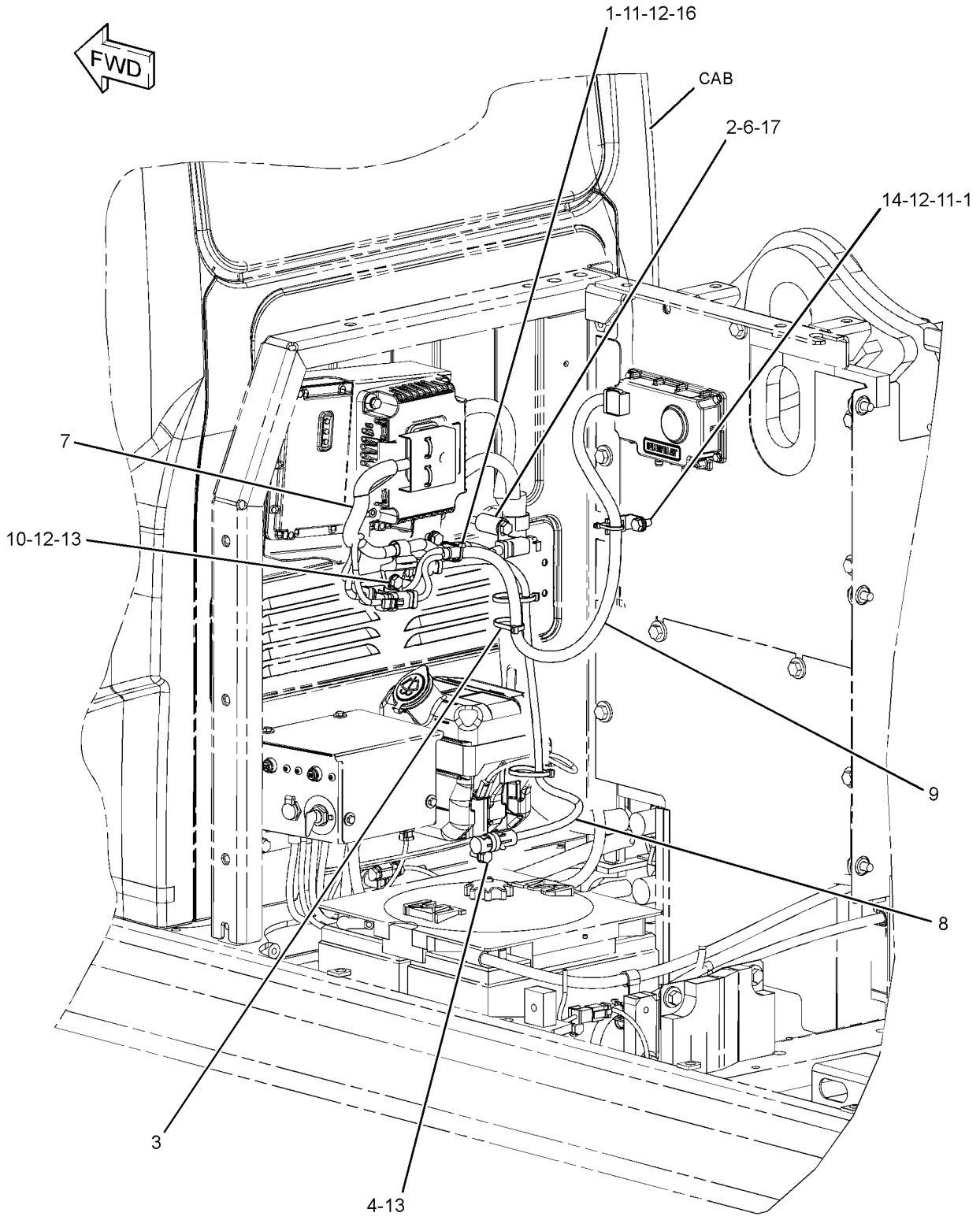

GRAPHIC #1 **<END>** g01431914

267-8008 WIRING GP-COMMUNICATION—PRODUCT LINK 121SR

S/N: KGF1-UP; FAL1-UP
PART OF 264-8666 INSTALLATION AR-COMMUNICATION
AN ATTACHMENT
TYPE 1

SMCS-1408 **i02426299**

NOTE	REF NO	GRAPHIC REF	PART NUMBER	QTY	PART NAME 1 2 3 4 5 6 (PRODUCT LEVEL)	SEE PAGE
	1	1	**3S-2093**	2	STRAP-CABLE	
	2	1	**4I-7889**	1	SPACER (11X25X45-MM THK)	
	3	1	**7K-1181**	3	STRAP-CABLE	
	4	1	**9X-3495**	1	CLIP AS	
		1	**8C-3334**	2	RIVET-TUBULAR	
	5	1	**091-9035**	1	SPACER (11X25X20-MM THK)	
	6	1	**116-0118**	2	CLIP	
	7	1	**259-4940**	1	HARNESS AS-WIRING (SERVICE CONNECTOR)	
		1	**102-8803**	1	KIT-RECEPTACLE (3-PIN)	
					(INCLUDES RECEPTACLE AS & WEDGE)	
		1	**155-2260**	6	KIT-CONNECTING PLUG (3-PIN)	
					(INCLUDES PLUG AS, WEDGE & INTERFACE SEAL)	
		1	**243-4508**		RECEPTACLE AS-CONNECTOR (6-PIN)	
	8	1	**275-6979**	1	HARNESS AS-CONTROL (PRODUCT LINK 121SR)	
		1	**155-2255**	1	KIT-CONNECTING PLUG (12-PIN)	
					(INCLUDES PLUG AS, WEDGE & INTERFACE SEAL)	
		1	**230-5010**	1	PLUG AS-CONNECTOR (6-PIN)	
		1	**243-4508**	1	RECEPTACLE AS-CONNECTOR (6-PIN)	
	9	1	**132-5789**	1	CLIP	
	10	1	**8T-4121**	1	WASHER-HARD (11X21X2.5-MM THK)	
M	11	1	**8T-4137**	1	BOLT (M10X1.5X20-MM)	
M	12	1	**8T-4185**	1	BOLT (M10X1.5X50-MM)	
M	13	1	**8T-5005**	1	BOLT (M10X1.5X70-MM)	

M - METRIC PART

267-8008 **WIRING GP-COMMUNICATION (*contd.*)** **i02426299**

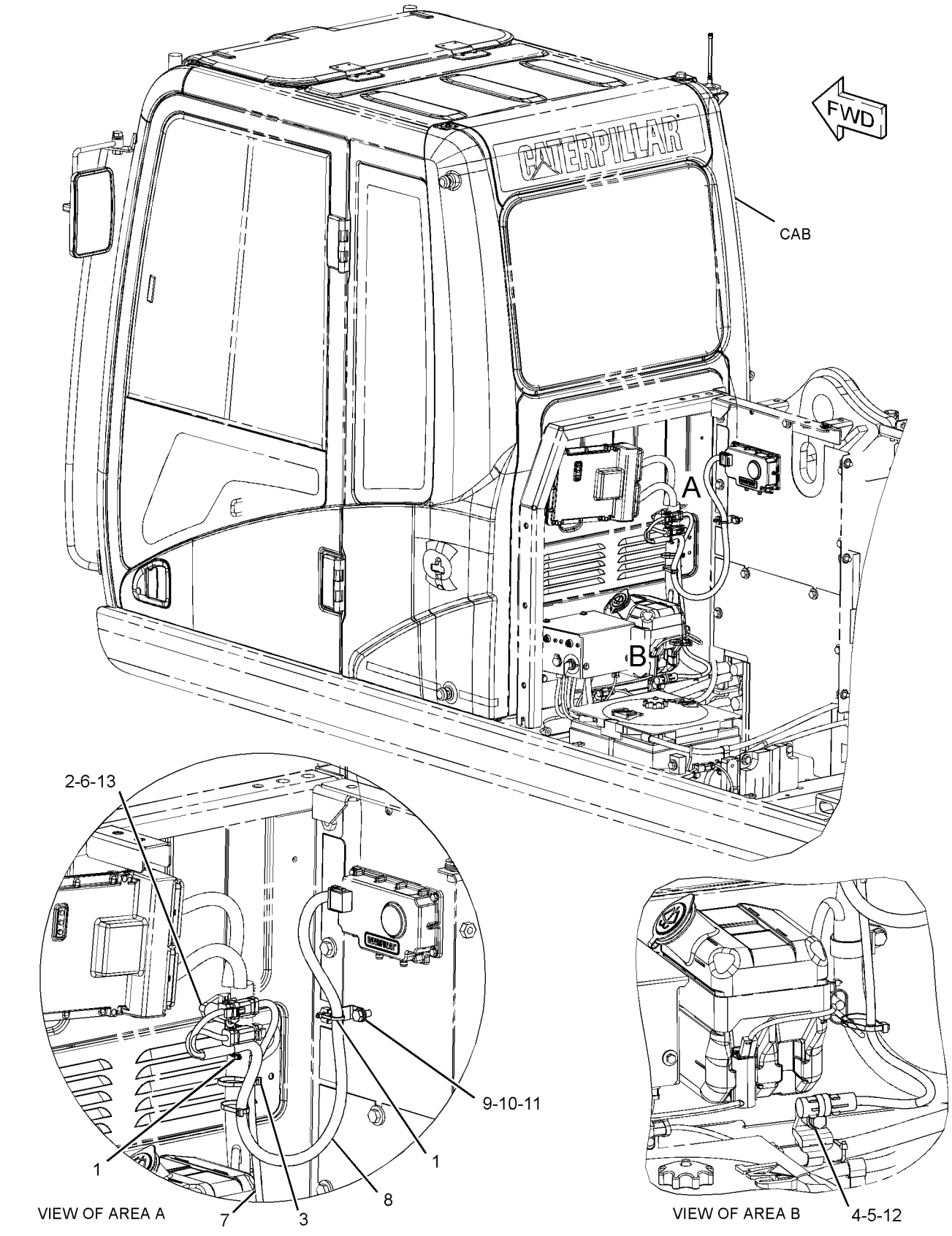

GRAPHIC #1 **<END>** g01229471

267-8008 WIRING GP-COMMUNICATION—PRODUCT LINK 121SR

S/N: KGF1-UP; FAL1-UP
PART OF 264-8666, 298-4116 INSTALLATION AR-COMMUNICATION
AN ATTACHMENT
TYPE 2

SMCS-1408 **i02858404**

NOTE	REF NO	GRAPHIC REF	PART NUMBER	QTY	PART NAME 1 2 3 4 5 6 (PRODUCT LEVEL)	SEE PAGE
	1	1	**3S-2093**	2	STRAP-CABLE	
	2	1	**4I-7889**	1	SPACER (11X25X45-MM THK)	
	3	1	**7K-1181**	3	STRAP-CABLE	
	4	1	**9X-3495**	1	CLIP AS	
	6	1	**116-0118**	2	CLIP	
	7	1	**259-4940**	1	HARNESS AS-WIRING (SERVICE CONNECTOR)	
	8	1	**275-6979**	1	HARNESS AS-CONTROL (PRODUCT LINK 121SR)	
	9	1	**132-5789**	1	CLIP	
	10	1	**8T-4121**	1	WASHER-HARD (11X21X2.5-MM THK)	
M	11	1	**8T-4137**	1	BOLT (M10X1.5X20-MM)	
CM	12	1	**8T-4136**	1	BOLT (M10X1.5X25-MM)	
M	13	1	**8T-5005**	1	BOLT (M10X1.5X70-MM)	

C - CHANGE FROM PREVIOUS TYPE
M - METRIC PART

267-8008 **WIRING GP-COMMUNICATION (*contd.*)** **i02858404**

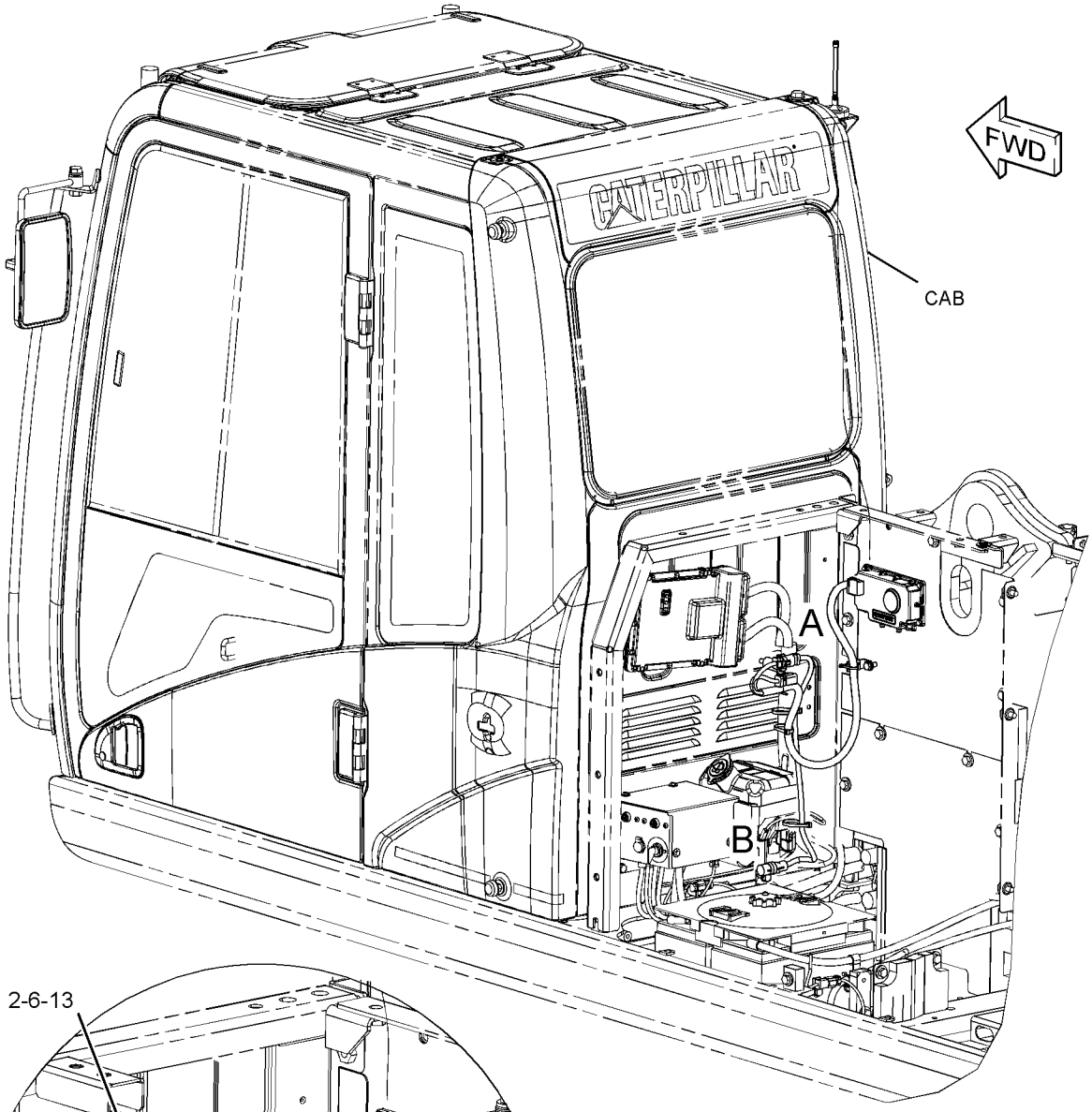

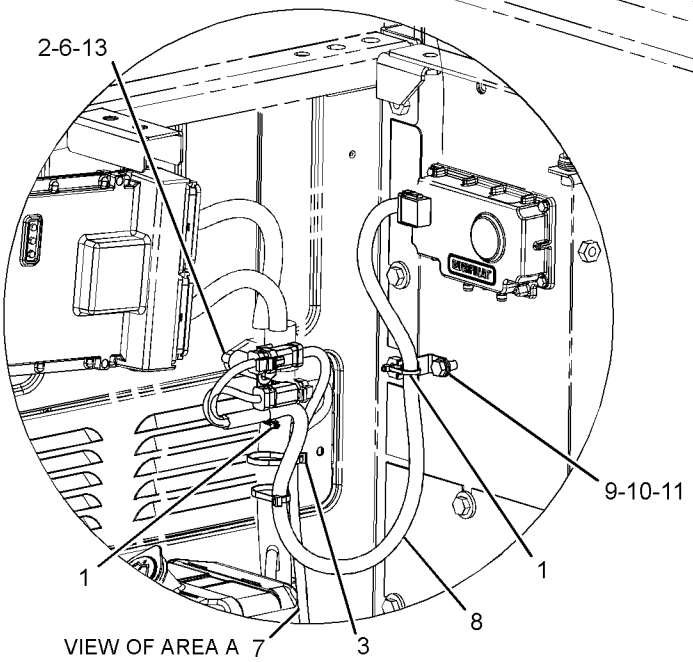

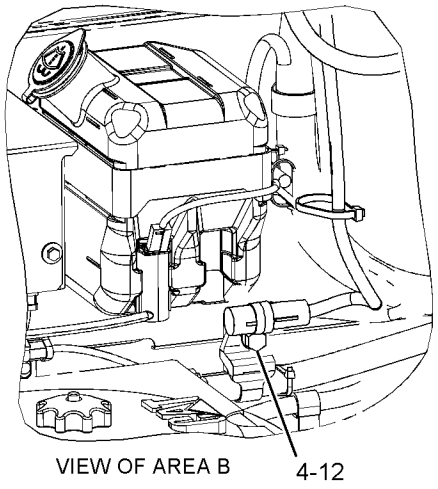

GRAPHIC #1 **<END>** g01431923

283-2761 WIRING GP-COMMUNICATION

S/N: KGF1-UP; FAL1-UP

PART OF 354-1047, 354-1054, 354-1147, 354-1148, 354-1149, 354-1150 DISTRIBUTION AR AN ATTACHMENT

SMCS-1408 **i03939592**

NOTE	REF NO	GRAPHIC REF	PART NUMBER	QTY	PART NAME 1 2 3 4 5 6 (PRODUCT LEVEL)	SEE PAGE
	1	1	**3S-2093**	3	STRAP-CABLE	
	2	1	**4I-7889**	1	SPACER (11X25X45-MM THK)	
	3	1	**7K-1181**	10	STRAP-CABLE	
	4	1	**116-0118**	1	CLIP	
	5	1	**149-5050**	1	RELAY (24-VOLT) (GPS)	
	6	1	**283-2762**	1	HARNESS AS-CONTROL	
M	7	1	**5C-2890**	1	NUT (M6X1-THD)	
M	8	1	**8T-5005**	1	BOLT (M10X1.5X70-MM)	
	9	1	**9X-8256**	1	WASHER (6.6X12X2-MM THK)	

M - METRIC PART

283-2761 **WIRING GP-COMMUNICATION (*contd.*)** **i03939592**

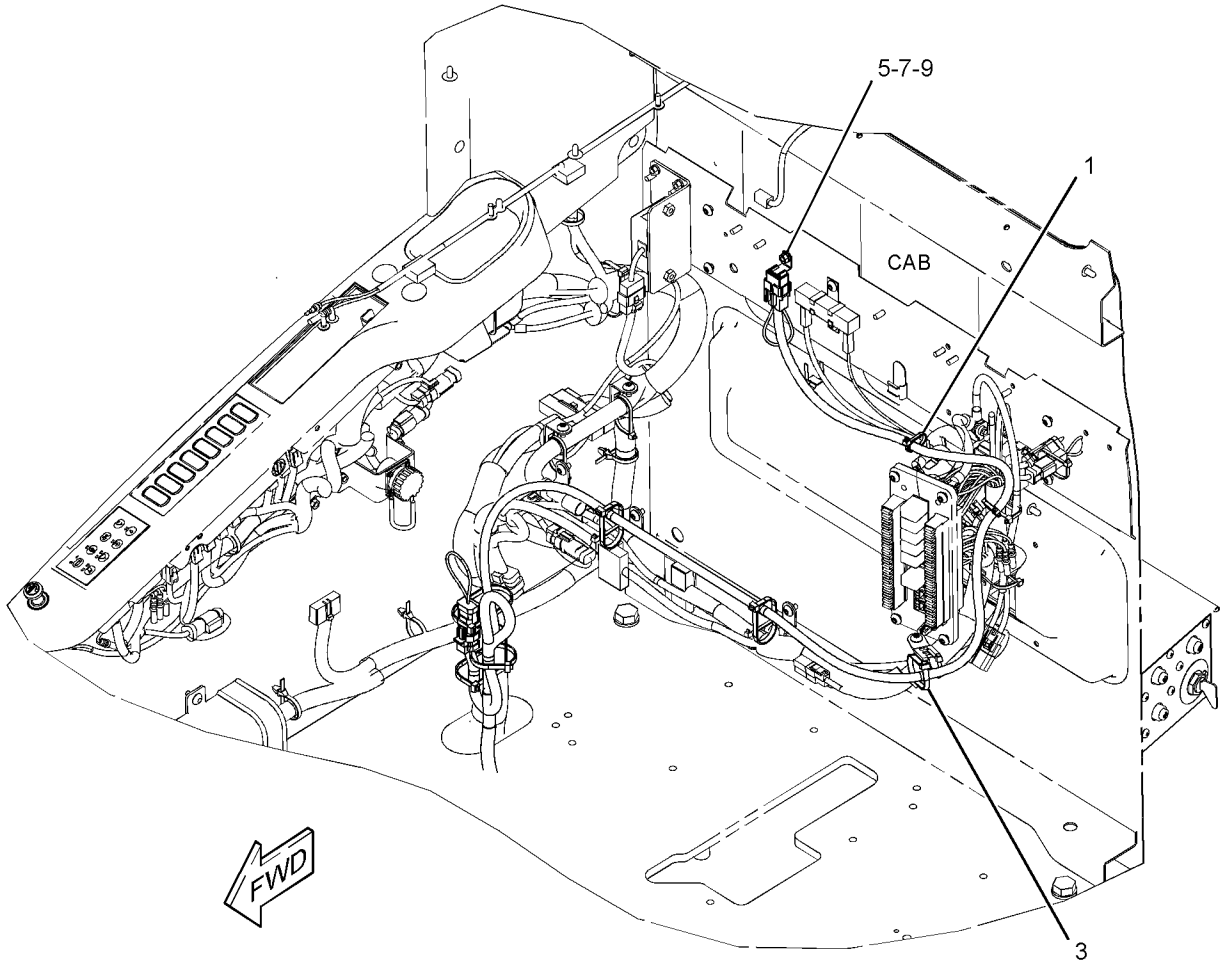

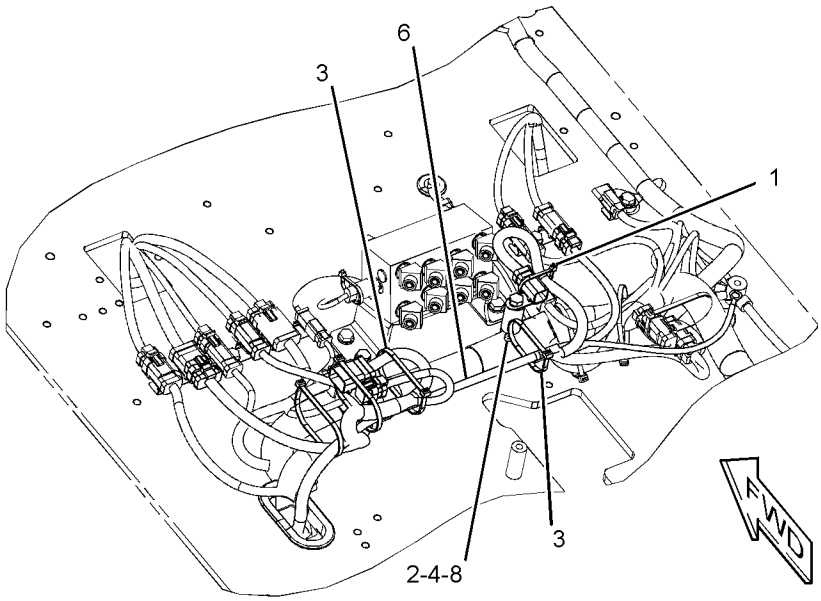

GRAPHIC #1 **<END>** g01571474

366-9348 WIRING GP-COMMUNICATION—PRODUCT LINK 522

S/N: KGF1-UP; FAL1-UP
CHINA
PART OF 367-8780, 379-7062 CONTROL AR-COMMUNICATION
AN ATTACHMENT

SMCS-1408 **i05229013**

NOTE	REF NO	GRAPHIC REF	PART NUMBER	QTY	PART NAME 1 2 3 4 5 6 (PRODUCT LEVEL)	SEE PAGE
	1	1	**4I-7889**	1	SPACER (11X25X45-MM THK)	
	2	1	**7K-1181**	1	STRAP-CABLE	
	3	1	**116-0118**	1	CLIP	
Y	4	1	**373-8965**	1	HARNESS AS-CONTROL (PRODUCT LINK)	467
	5	1	**111-4837**	1	CLIP	
	6	1	**132-5789**	1	CLIP	
	7	1	**8T-4121**	2	WASHER-HARD (11X21X2.5-MM THK)	
M	8	1	**8T-4136**	1	BOLT (M10X1.5X25-MM)	
M	9	1	**8T-4191**	1	BOLT (M10X1.5X16-MM)	
M	10	1	**8T-5005**	1	BOLT (M10X1.5X70-MM)	

M - METRIC PART
Y - SEPARATE ILLUSTRATION

366-9348 **WIRING GP-COMMUNICATION (*contd.*)** **i05229013**

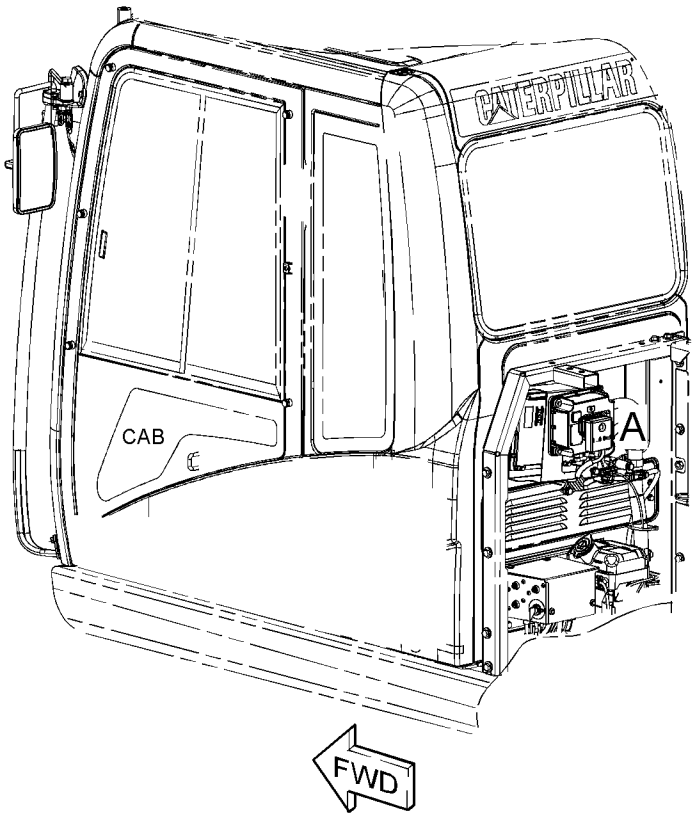

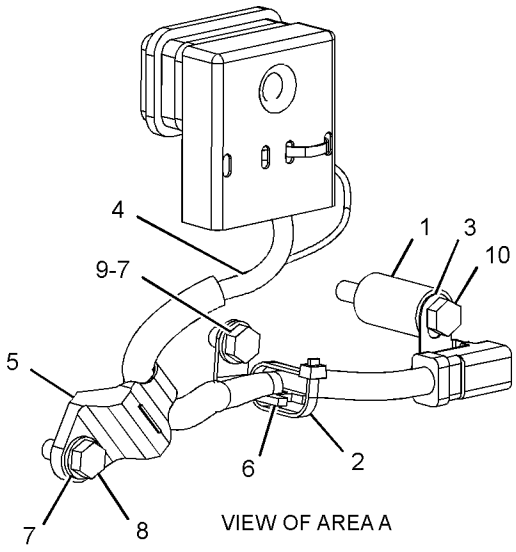

GRAPHIC #1 **<END>** g02681736

369-0033 WIRING GP-COMMUNICATION–PRODUCT LINK

S/N: FAL1-UP

PART OF 359-2481, 359-2482, 367-8738, 367-8739, 379-7095, 379-7096, 379-7097, 379-7098 DISTRIBUTION AR

AN ATTACHMENT

SMCS-1408 **i04651167**

NOTE	REF NO	GRAPHIC REF	PART NUMBER	QTY	PART NAME 1 2 3 4 5 6 (PRODUCT LEVEL)	SEE PAGE
	1	1	**3S-2093**	11	STRAP-CABLE	
	2	1	**7K-1181**	14	STRAP-CABLE	
	3	1	**369-0032**	1	HARNESS AS-CONTROL (PRODUCT LINK)	
		1	**102-8802**	1	KIT-RECEPTACLE (2-PIN)	
		1	**102-8803**	1	KIT-RECEPTACLE (3-PIN)	
		1	**102-8801**	1	KIT-RECEPTACLE (12-PIN)	
					(EACH RECEPTACLE KIT INCLUDES RECEPTACLE AS & WEDGE)	
		1	**8T-8729**	2	PIN-CONNECTOR (16-GA TO 18-GA)	
		1	**3S-2093**	2	STRAP-CABLE	
		1	**8T-8737**	10	PLUG-SEAL	
		1	**9W-0852**	2	PIN-CONNECTOR (14-GA TO 16-GA)	
		1	**9W-0844**	2	SOCKET-CONNECTOR (14-GA TO 16-GA)	
E		1	**119-3662**		TUBE-HEAT SHRINK (10.85-MM DIA) (7-CM)	
E		1	**125-7874**		TUBE-HEAT SHRINK (5.72-MM DIA) (15-CM)	
E		1	**125-7875**		TUBE-HEAT SHRINK (7.44-MM DIA) (10-CM)	
		1	**9X-3402**	15	SOCKET-CONNECTOR (16-GA TO 18-GA)	
		1	**2L-8077**	1	TERMINAL-RING (14-GA TO 16-GA, 1/4-IN SCREW)	
		1	**176-9299**	1	KIT-RECEPTACLE (3-PIN)	
					(INCLUDES RECEPTACLE AS & WEDGE)	
		1	**9X-3401**	5	PIN-CONNECTOR (16-GA TO 18-GA)	
		1	**155-2255**	1	KIT-CONNECTING PLUG (12-PIN)	
		1	**155-2270**	2	KIT-CONNECTING PLUG (2-PIN)	
		1	**155-2271**	1	KIT-CONNECTING PLUG (4-PIN)	
		1	**174-0503**	1	KIT-CONNECTING PLUG (3-PIN)	
		1	**155-2260**	1	KIT-CONNECTING PLUG (3-PIN)	
					(EACH PLUG KIT INCLUDES PLUG AS, WEDGE & INTERFACE SEAL)	
		1	**174-3016**	1	PLUG AS-CONNECTOR (3-PIN)	
		1	**197-4385**	1	DIODE	
		1	**243-4508**	1	RECEPTACLE AS-CONNECTOR (6-PIN)	
		1	**155-2258**	1	WEDGE-PLUG LOCK (12-PIN)	

E - ORDER BY THE CENTIMETER

369-0033 **WIRING GP-COMMUNICATION (*contd.*)** **i04651167**

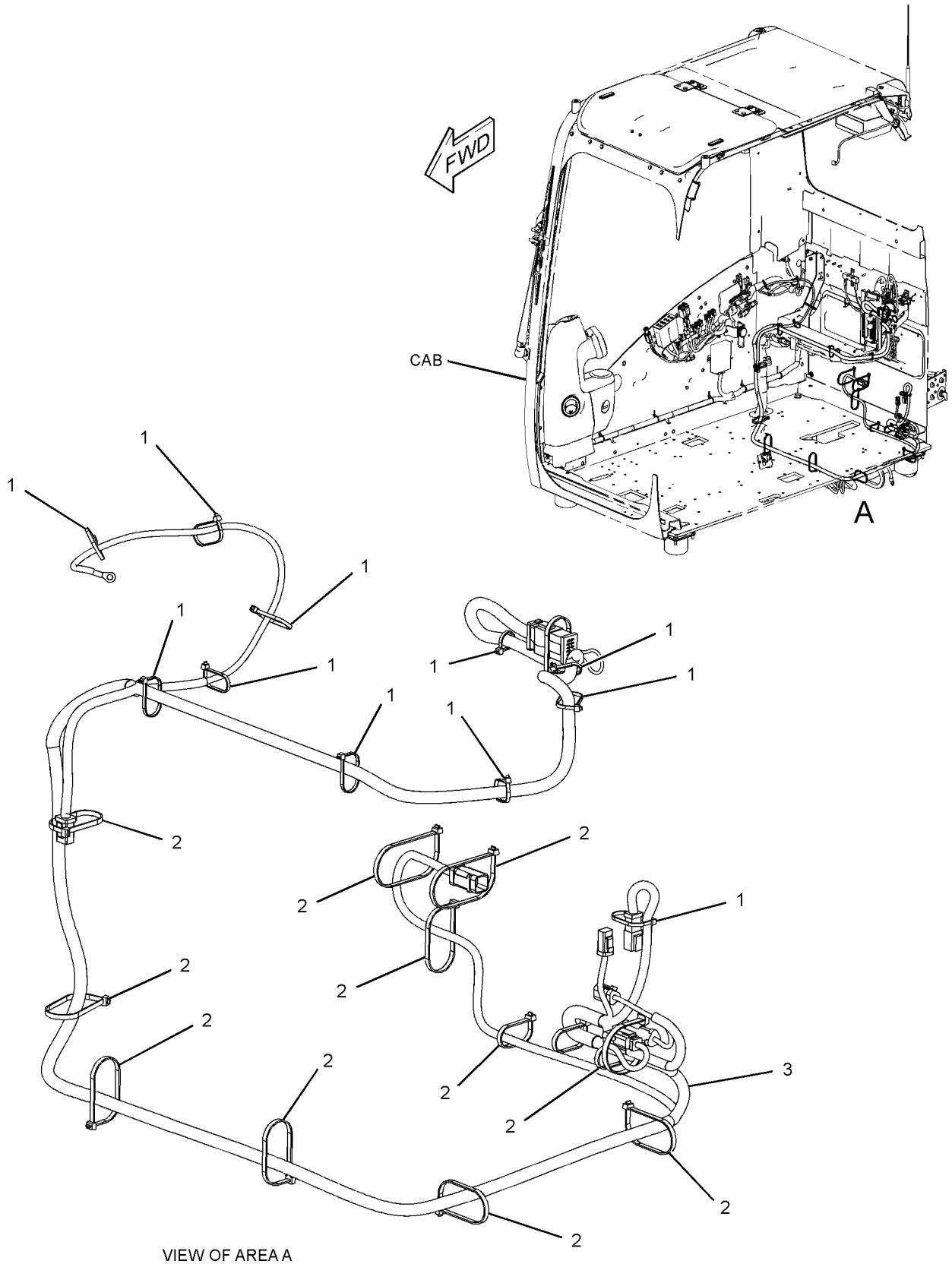

VIEW OF AREA A

GRAPHIC #1 **<END>** g02800830

231-1836 WIRING GP-CONSOLE—LH

S/N: KGF1-UP; FAL1-UP

PART OF 251-0433 WIRING GP-CONSOLE

SMCS-1408 **i04913377**

NOTE	REF NO	GRAPHIC REF	PART NUMBER	QTY	PART NAME 1 2 3 4 5 6 (PRODUCT LEVEL)	SEE PAGE
	1	1	**3S-2093**	2	STRAP-CABLE	
	2	1	**7K-1181**	1	STRAP-CABLE	
	3	1	**163-6795**	2	STRAP-CABLE	
	4	1	**251-0580**	1	HARNESS AS-CONSOLE	
		1	**8T-8729**	4	PIN-CONNECTOR (16-GA TO 18-GA)	
		1	**8T-8730**	3	SOCKET-CONNECTOR (16-GA TO 18-GA)	
		1	**3S-2093**	9	STRAP-CABLE	
D		1	**5P-5995**		TUBE (0.3-M)	
		1	**7Y-3963**	2	TERMINAL-BULLET (FEMALE)	
		1	**7Y-3965**	2	TUBE (RECEPTACLE TERMINAL)	
		1	**8T-8737**	9	PLUG-SEAL	
		1	**9W-0852**	2	PIN-CONNECTOR (14-GA TO 16-GA)	
		1	**9W-0844**	2	SOCKET-CONNECTOR (14-GA TO 16-GA)	
E		1	**125-7874**		TUBE-HEAT SHRINK (5.72-MM DIA) (5-CM)	
E		1	**125-7875**		TUBE-HEAT SHRINK (7.44-MM DIA) (5-CM)	
		1	**9X-3402**	11	SOCKET-CONNECTOR (16-GA TO 18-GA)	
					—OR—	
		1	**126-1768**	11	SOCKET-CONNECTOR (14-GA TO 16-GA)	
		1	**155-2260**	1	KIT-CONNECTING PLUG (3-PIN)	
					(INCLUDES PLUG AS, WEDGE & INTERFACE SEAL)	
		1	**230-4011**	1	PLUG AS-CONNECTOR (2-PIN)	
		1	**264-7029**	1	SEAL-CONNECTOR	
		1	**230-5010**	1	PLUG AS-CONNECTOR (6-PIN)	
		1	**264-7032**	1	SEAL-CONNECTOR	
		1	**239-7352**	1	PLUG AS-CONNECTOR (6-PIN)	
		1	**264-7032**	1	SEAL-CONNECTOR	
		1	**243-4505**	1	RECEPTACLE AS-CONNECTOR (2-PIN)	
		1	**243-4508**	1	RECEPTACLE AS-CONNECTOR (6-PIN)	
		1	**247-2693**	1	RECEPTACLE AS-CONNECTOR (6-PIN)	

D - ORDER BY THE METER
E - ORDER BY THE CENTIMETER

231-1836 **WIRING GP-CONSOLE (*contd.*)** **i04913377**

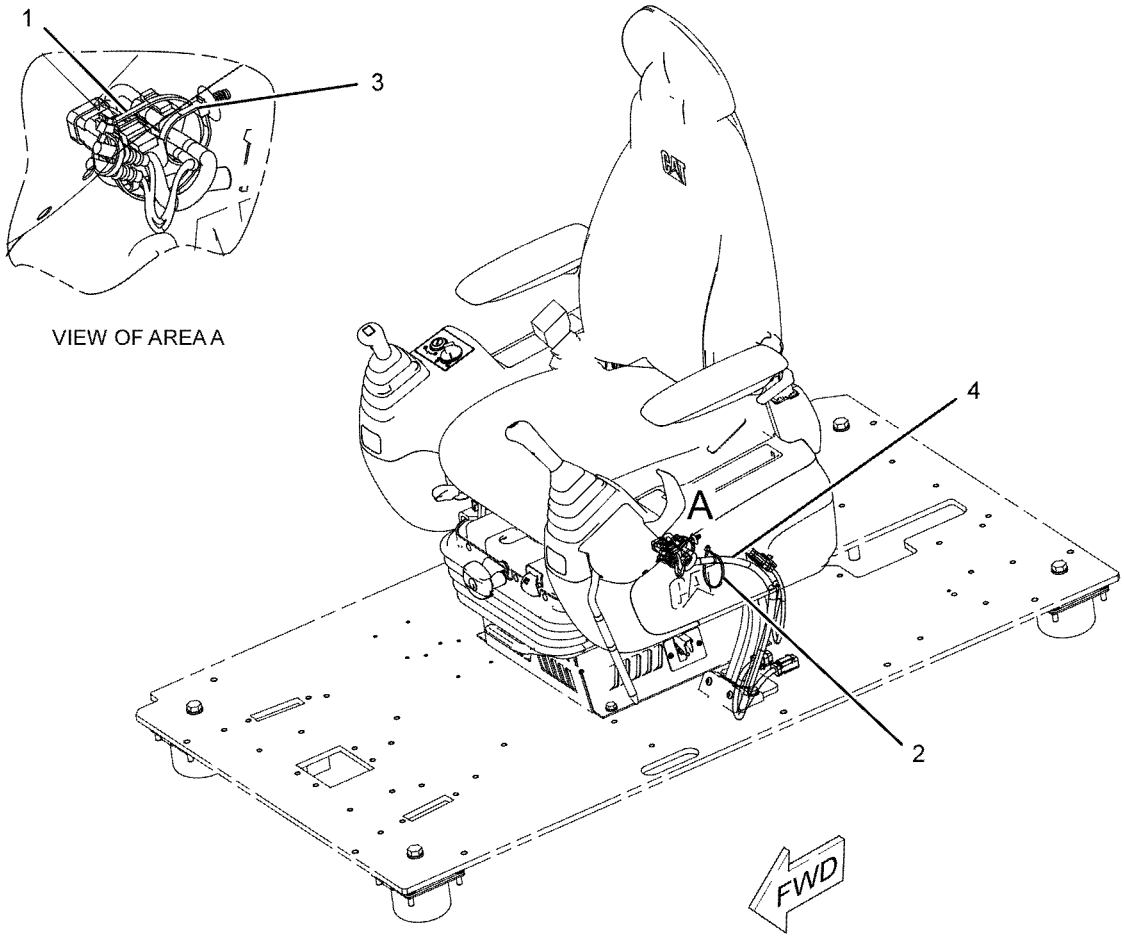

GRAPHIC #1 **<END>** g01150799

251-0433 WIRING GP-CONSOLE

S/N: KGF1-UP; FAL1-UP

PART OF 273-5387, 327-6568 OPERATOR AR

SMCS-1408 **i02706845**

NOTE	PART NUMBER	QTY	PART NAME 1 2 3 4 5 6 (PRODUCT LEVEL)	SEE PAGE
Y	*231-1836*	1	WIRING GP-CONSOLE (LH)	606
Y	*251-0435*	1	WIRING GP-CONSOLE (RH)	609

Y - SEPARATE ILLUSTRATION

<END>

251-0435 WIRING GP-CONSOLE–RH

S/N: KGF1-8043; FAL1-9331

PART OF 251-0433 WIRING GP-CONSOLE

SMCS-1408 **i03948425**

NOTE	REF NO	GRAPHIC REF	PART NUMBER	QTY	PART NAME 1 2 3 4 5 6 (PRODUCT LEVEL)	SEE PAGE
	1	1	**3S-2093**	5	STRAP-CABLE	
	2	1	**7K-1181**	2	STRAP-CABLE	
	3	1	**283-3074**	1	SWITCH AS-TOGGLE (AUTO/MANUAL ENG SPEED CONTROL)	
	4	1	**163-6711**	1	SWITCH AS-TOGGLE (MANUAL ENGINE SPEED CONTROL)	
	5	1	**163-6795**	2	STRAP-CABLE	
	6	1	**251-0602**	1	BRACKET	
	7	1	**259-4877**	1	HARNESS AS-CONSOLE	
		1	**102-8806**	1	KIT-RECEPTACLE (8-PIN)	
					(INCLUDES RECEPTACLE AS & WEDGE)	
		1	**3S-2093**	10	STRAP-CABLE	
		1	**7Y-3967**	2	TERMINAL AS	
					(EACH INCLUDES)	
		1	**7Y-3963**	1	TERMINAL-BULLET (FEMALE)	
		1	**7Y-3965**	1	TUBE (RECEPTACLE TERMINAL)	
		1	**102-7964**	1	PLUG-CONNECTOR (16-PIN)	
		1	**102-7965**	14	TERMINAL (FEMALE)	
E		1	**125-7874**		TUBE-HEAT SHRINK (5.72-MM DIA) (10-CM)	
E		1	**125-7875**		TUBE-HEAT SHRINK (7.44-MM DIA) (10-CM)	
		1	**155-2265**	1	KIT-CONNECTING PLUG (8-PIN)	
					(INCLUDES PLUG AS, WEDGE & INTERFACE SEAL)	
		1	**9X-3401**	2	PIN-CONNECTOR (16-GA TO 18-GA)	
					–OR–	
		1	**126-1767**	2	PIN-CONNECTOR (14-GA TO 16-GA)	
		1	**230-4009**	1	PLUG AS-CONNECTOR (12-PIN)	
		1	**264-7034**	1	SEAL-CONNECTOR	
		1	**230-4011**	1	PLUG AS-CONNECTOR (2-PIN)	
		1	**264-7029**	1	SEAL-CONNECTOR	
		1	**230-5008**	1	PLUG AS-CONNECTOR (4-PIN)	
		1	**264-7031**	1	SEAL-CONNECTOR	
		1	**230-5010**	1	PLUG AS-CONNECTOR (6-PIN)	
		1	**264-7032**	1	SEAL-CONNECTOR	
		1	**231-2295**	1	PLUG AS-CONNECTOR (8-PIN)	
		1	**264-7033**	1	SEAL-CONNECTOR	
		1	**239-7352**	1	PLUG AS-CONNECTOR (6-PIN)	
		1	**264-7032**	1	SEAL-CONNECTOR	
		1	**243-4505**	1	RECEPTACLE AS-CONNECTOR (2-PIN)	
		1	**243-4510**	1	RECEPTACLE AS-CONNECTOR (12-PIN)	
		1	**247-2693**	1	RECEPTACLE AS-CONNECTOR (6-PIN)	
M	8	1	**9X-2042**	3	SCREW-TRUSS HEAD (M6X1X12-MM)	
E	9	1	**8C-5063**		CONDUIT-FLEXIBLE (15.49-MM ID, SPLIT) (10-CM)	

E - ORDER BY THE CENTIMETER
M - METRIC PART

251-0435 **WIRING GP-CONSOLE (*contd.*)** **i03948425**

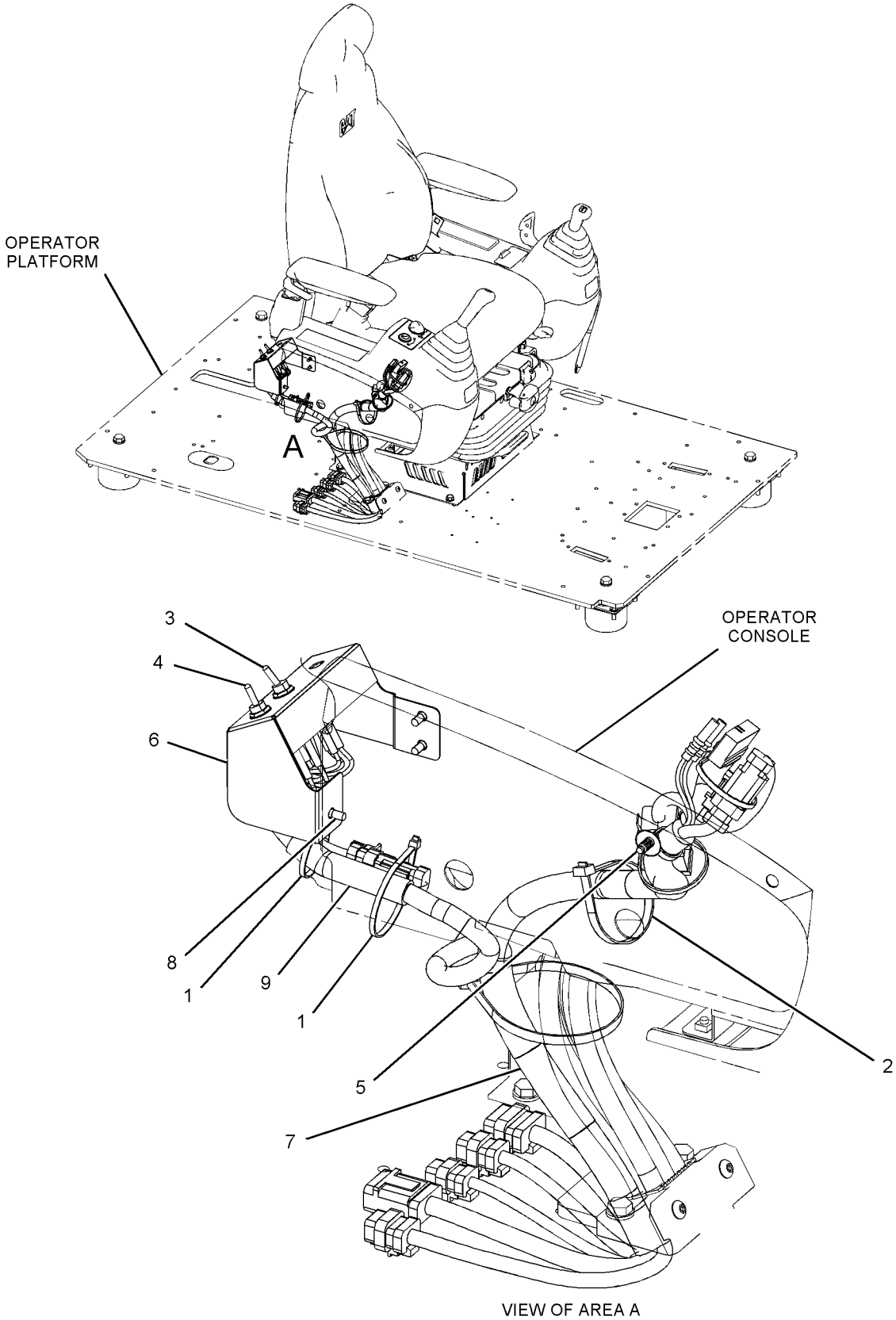

VIEW OF AREA A

GRAPHIC #1 **<END>** g02160266

251-0482 WIRING GP-CONVERTER

S/N: KGF1-UP; FAL1-UP
12-VOLT, 7-AMPERE POWER SUPPLY
CANNOT BE USED WITH 251-0485—PAGE: 612
PART OF 314-3864, 314-3865, 338-9908, 338-9923, 354-1018, 354-1019 DISTRIBUTION AR, 347-3344 OPTION AR-CAB, 338-9925, 351-9691 OPTION AR-COLD WEATHER, 338-9924, 351-9690 OPTION AR-REGIONAL
AN ATTACHMENT

SMCS-1421 **i02559417**

NOTE	REF NO	GRAPHIC REF	PART NUMBER	QTY	PART NAME 1 2 3 4 5 6 (PRODUCT LEVEL)	SEE PAGE
	1	1	**7K-1181**	2	STRAP-CABLE	
	2	1	**121-0987**	1	SOCKET-AUXILIARY POWER (12-VOLT, 7-AMPERE)	
	3	1	**283-2783**	1	CONVERTER-POWER (24-VOLT TO 12-VOLT)	
	4	1	**251-0483**	1	BRACKET	
	5	1	**8T-4121**	2	WASHER-HARD (11X21X2.5-MM THK)	
M	6	1	**8T-4136**	2	BOLT (M10X1.5X25-MM)	
M	7	1	**8T-4171**	4	BOLT (M6X1X12-MM)	
	8	1	**9X-8256**	4	WASHER (6.6X12X2-MM THK)	

M - METRIC PART

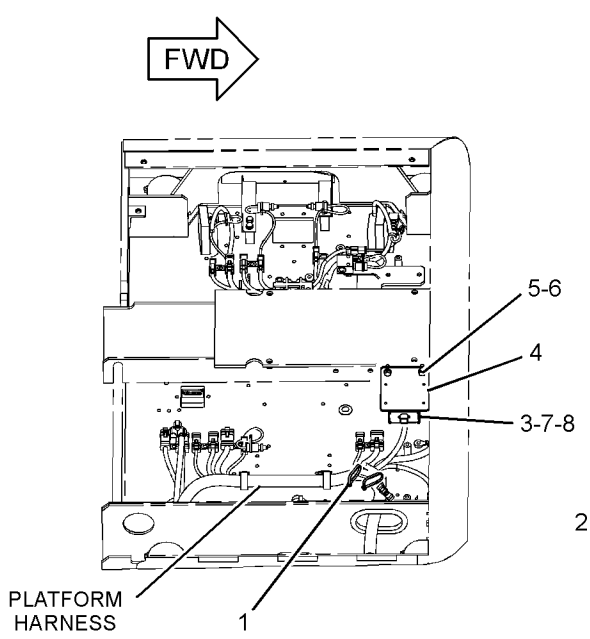

BOTTOM VIEW (PLATFORM)

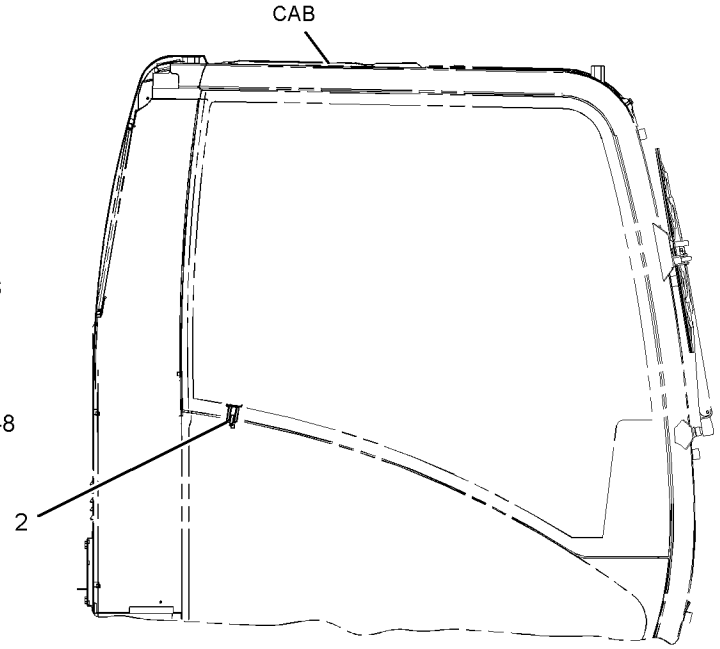

RIGHT SIDE VIEW

GRAPHIC #1 **<END>** g01155726

251-0485 WIRING GP-CONVERTER

S/N: KGF1-UP; FAL1-UP
12-VOLT, 7-AMPERE X2 POWER SUPPLY
CANNOT BE USED WITH 251-0482—PAGE: 611
PART OF 314-3859, 314-3860, 314-3861, 314-3862, 314-3905, 347-3340 DISTRIBUTION AR, 347-3345 OPTION AR-CAB
AN ATTACHMENT

SMCS-1421 **i02559437**

NOTE	REF NO	GRAPHIC REF	PART NUMBER	QTY	PART NAME 1 2 3 4 5 6 (PRODUCT LEVEL)	SEE PAGE
	1	1	**121-0987**	2	SOCKET-AUXILIARY POWER (12-VOLT, 7-AMPERE)	
	2	1	**283-2783**	2	CONVERTER-POWER (24-VOLT TO 12-VOLT)	
	3	1	**251-0483**	2	BRACKET	
	4	1	**8T-4121**	4	WASHER-HARD (11X21X2.5-MM THK)	
M	5	1	**8T-4136**	4	BOLT (M10X1.5X25-MM)	
M	6	1	**8T-4171**	8	BOLT (M6X1X12-MM)	
	7	1	**9X-8256**	8	WASHER (6.6X12X2-MM THK)	

M - METRIC PART

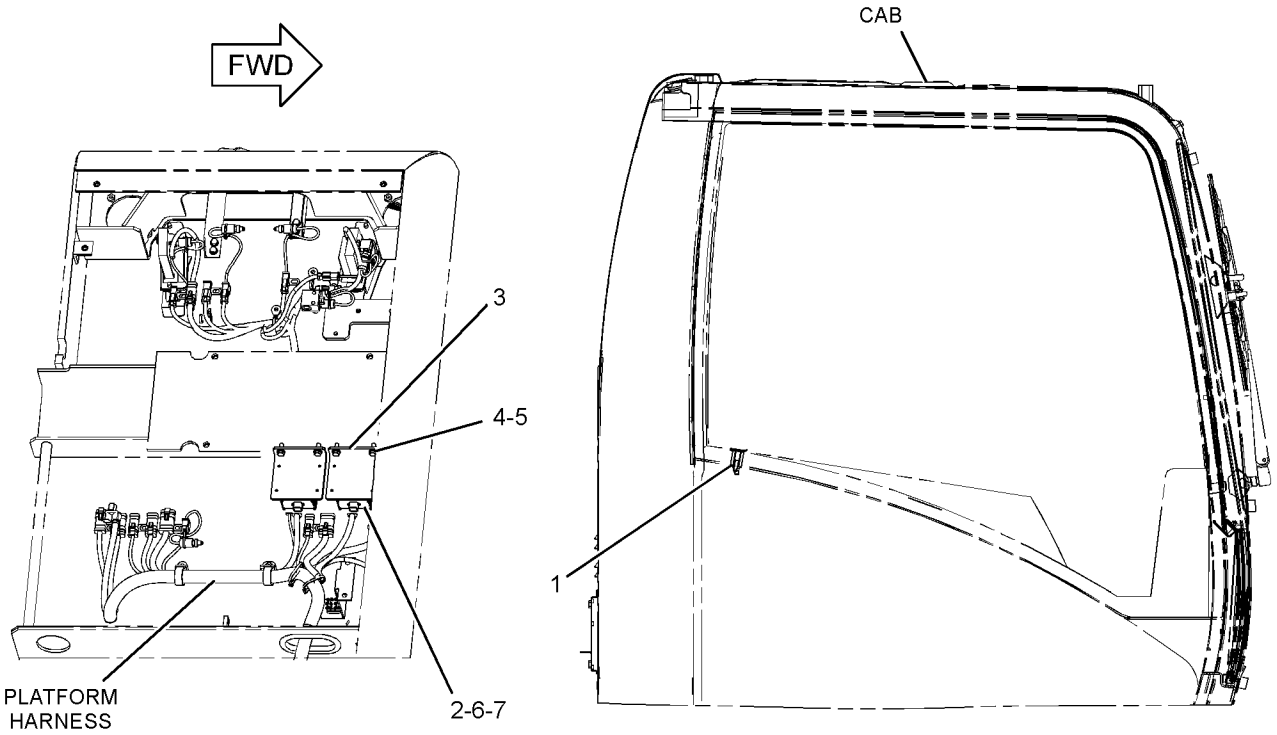

GRAPHIC #1 **<END>** g01155779

350-8250 WIRING GP-CONVERTER–12-VOLT, 10-AMPERE

S/N: KGF1-UP; FAL1-UP

PART OF 359-2298, 359-2299, 359-2300, 359-2309, 359-2310, 359-2404, 359-2405, 359-2421, 359-2506, 359-2507, 367-8686, 367-8697, 367-8809, 367-8810, 367-8817, 379-7118, 379-7119, 379-7216, 379-7217, 379-7218, 379-7219, 379-7220, 379-7226, 379-7227, 379-7228, 379-7267, 379-7268, 379-7269, 379-7270, 385-4035, 385-4036, 385-4136, 396-6826, 396-6827, 396-6828 DISTRIBUTION AR, 354-1154, 354-1155 OPTION AR-CAB, 359-2264 OPTION AR-COLD WEATHER, 359-2263, 367-8812, 367-8814, 379-7297, 379-7298, 379-7299, 379-7300 OPTION AR-REGIONAL

AN ATTACHMENT

SMCS-1421 **i05238944**

NOTE	REF NO	GRAPHIC REF	PART NUMBER	QTY	PART NAME 1 2 3 4 5 6 (PRODUCT LEVEL)	SEE PAGE
	1	1	**251-0483**	1	BRACKET	
	2	1	**324-5770**	1	CONVERTER-POWER (24-VOLT TO 12-VOLT)	
	3	1	**324-5771**	2	SOCKET-AUXILIARY POWER (12-VOLT)	
	4	1	**8T-4121**	2	WASHER-HARD (11X21X2.5-MM THK)	
M	5	1	**8T-4136**	2	BOLT (M10X1.5X25-MM)	
M	6	1	**8T-4171**	4	BOLT (M6X1X12-MM)	
	7	1	**9X-8256**	4	WASHER (6.6X12X2-MM THK)	

M - METRIC PART

350-8250 **WIRING GP-CONVERTER (*contd.*)** **i05238944**

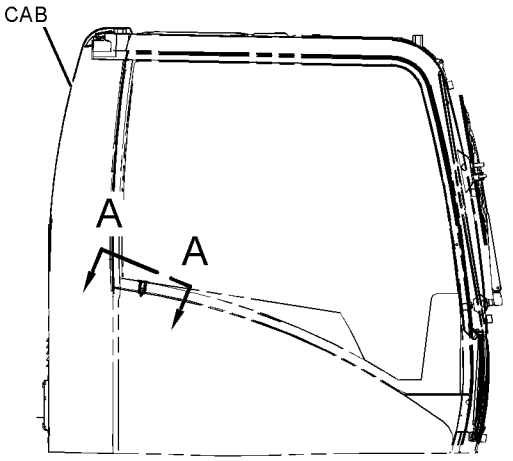

RIGHT SIDE VIEW

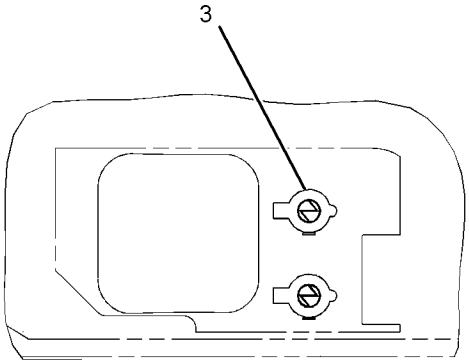

VIEW A-A

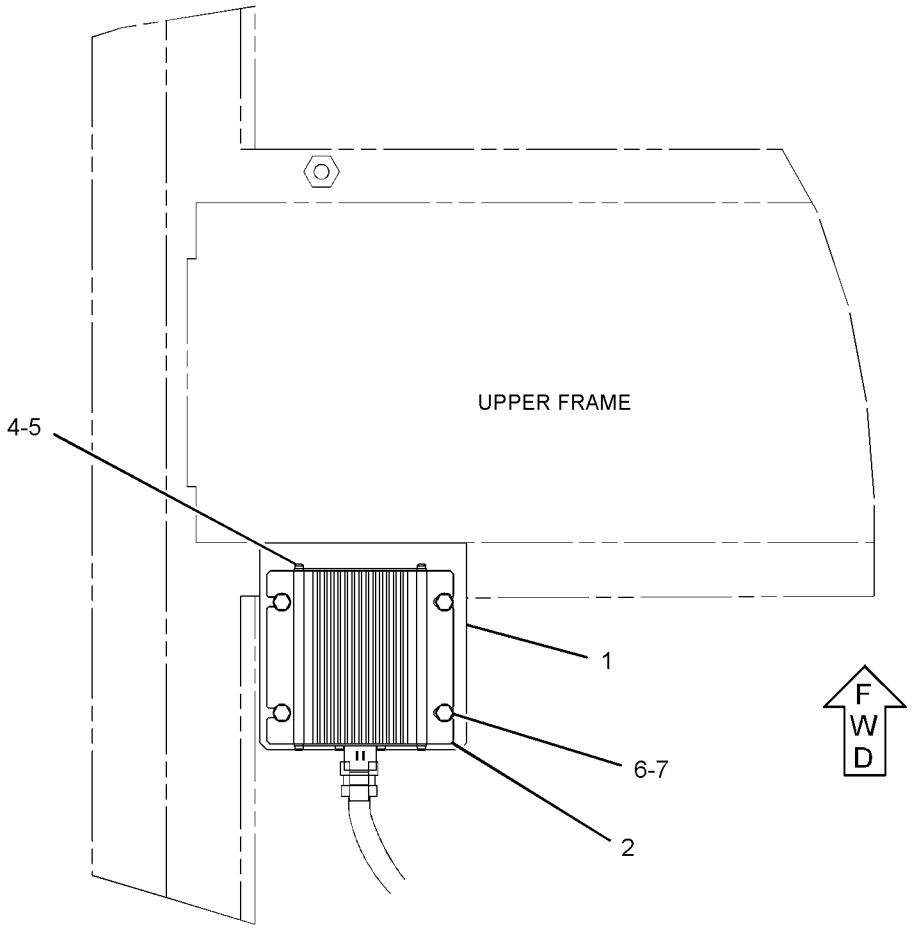

TOP VIEW

GRAPHIC #1 **<END>** g02143732

296-4665 WIRING GP-ELECTRONIC CONTROL

S/N: GDC1-UP

PART OF 272-4677, 272-4683, 296-4676, 296-4687, 305-4777 ENGINE AR, 327-7199 ENGINE AR-PRIMARY

ALSO AN ATTACHMENT

SMCS-1408 **i02725880**

NOTE	REF NO	GRAPHIC REF	PART NUMBER	QTY	PART NAME 1 2 3 4 5 6 (PRODUCT LEVEL)	SEE PAGE
	1	1	**296-4617**	1	HARNESS AS-ENGINE (ELECTRONIC CONTROL MODULE)	
	2	1	**296-4618**	1	SPACER	
	3	1	**296-4619**	1	CLIP	
	4	1	**099-4460**	1	BOLT	
	5	1	**096-2501**	1	LOCKWASHER	
	6	1	**8T-4223**	1	WASHER-HARD (13.5X25.5X3-MM THK)	
	7	1	**296-4621**	3	BOLT (M8X1.25-THD)	
	8	1	**305-4898**	2	CLIP	
	9	1	**305-4897**	1	CLIP	
	10	1	**305-4896**	5	CLIP	
	11	1	**282-8567**	3	BOLT	
	12	1	**305-4895**	8	STRAP-CABLE	
	13	1	**305-4893**	1	HARNESS AS-ENGINE (FUEL INJECTION)	

296-4665 **WIRING GP-ELECTRONIC CONTROL (*contd.*)** **i02725880**

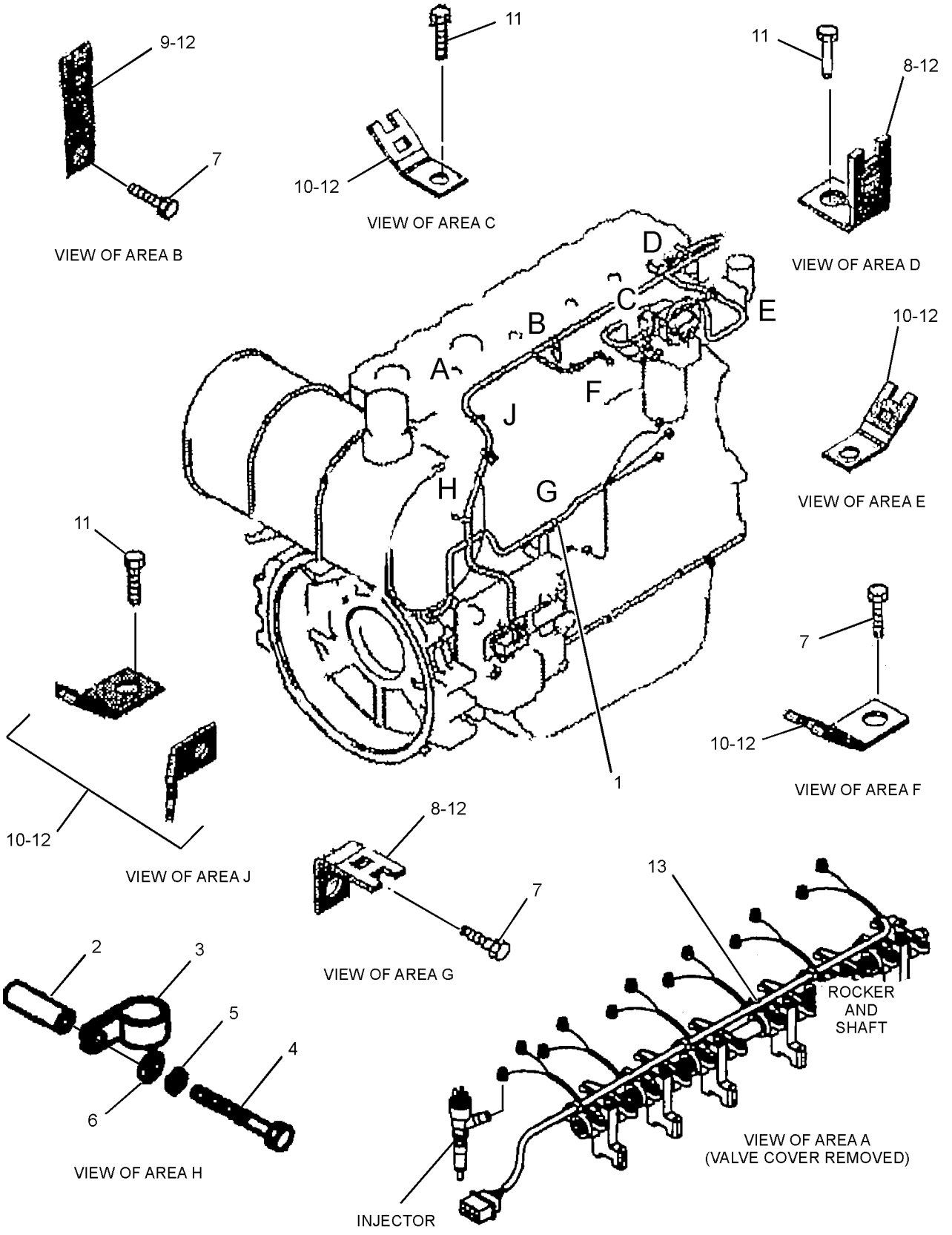

GRAPHIC #1 **<END>** g01368395

259-5051 WIRING GP-ENGINE–JUMP START

S/N: KGF1-UP; FAL1-UP

PART OF 359-2404, 359-2405, 367-8686, 379-7226, 379-7227, 379-7228, 396-6826, 396-6827, 396-6828 DISTRIBUTION AR, 298-4102 STARTING AR-COLD WEATHER AN ATTACHMENT

SMCS-1408 **i03360600**

NOTE	REF NO	GRAPHIC REF	PART NUMBER	QTY	PART NAME 1 2 3 4 5 6 (PRODUCT LEVEL)	SEE PAGE
	1	1	**2G-1830**	1	RECEPTACLE AS (AUXILIARY START)	
		1	**1S-7251**	2	TERMINAL-CABLE (00-GA, 1/2-IN SCREW)	
E		1	**5P-0747**		CABLE (00-GA, BLACK) (49-CM)	
E		1	**5P-0761**		CABLE (00-GA, RED) (56-CM)	
	2	1	**301-0091**	1	COVER-TERMINAL (RED)	
	3	1	**8S-2634**	1	COVER AS	
Y	4	1	**9W-0742**	1	BLOCK GP-JUNCTION (BATTERY)	437
	5	1	**251-0452**	1	BRACKET	
	6	1	**259-5097**	1	CABLE AS	
		1	**1S-7251**	1	TERMINAL-CABLE (00-GA, 1/2-IN SCREW)	
E		1	**5P-0761**		CABLE (00-GA, RED) (30-CM)	
		1	**301-0091**	1	COVER-TERMINAL (RED)	
		1	**9G-0004**	1	COVER AS-TERMINAL (RED)	
		1	**8C-5917**	1	TERMINAL AS-BATTERY (POSITIVE)	
		1	**1M-6119**	1	BOLT (5/16-18X1.375-IN)	
		1	**1M-6120**	1	NUT (5/16-18-THD)	
	7	1	**299-2798**	1	CABLE AS	
		1	**1S-7251**	1	TERMINAL-CABLE (00-GA, 1/2-IN SCREW)	
		1	**1S-7252**	1	TERMINAL-CABLE (00-GA, 3/8-IN SCREW)	
E		1	**5P-0761**		CABLE (00-GA, RED) (292-CM)	
		1	**8N-0869**	1	COVER-TERMINAL (RED)	
		1	**301-0091**	1	COVER-TERMINAL (RED)	
	8	1	**4I-7889**	1	SPACER (11X25X45-MM THK)	
	9	1	**4K-8864**	1	CLIP	
M	10	1	**5C-9553**	4	BOLT (M6X1X16-MM)	
	11	1	**5P-4115**	4	WASHER-HARD (7.2X19X2-MM THK)	
	12	1	**8T-4121**	5	WASHER-HARD (11X21X2.5-MM THK)	
M	13	1	**8T-4136**	2	BOLT (M10X1.5X25-MM)	
M	14	1	**8T-4136**	2	BOLT (M10X1.5X25-MM)	
					–OR–	
M		1	**8T-4137**	2	BOLT (M10X1.5X20-MM)	
M	15	1	**8T-5005**	1	BOLT (M10X1.5X70-MM)	

E - ORDER BY THE CENTIMETER
M - METRIC PART
Y - SEPARATE ILLUSTRATION

259-5051 **WIRING GP-ENGINE (*contd.*)** **i03360600**

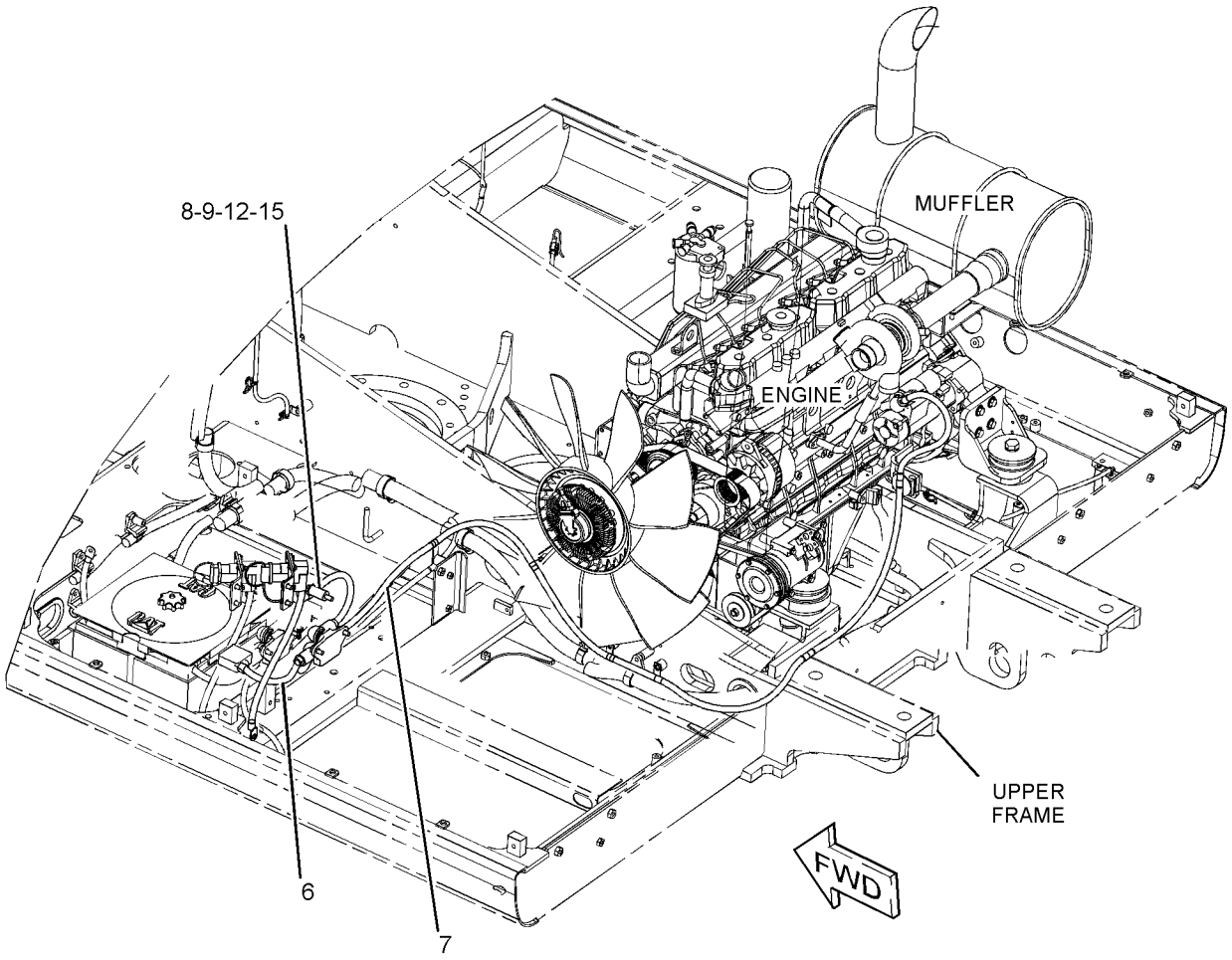

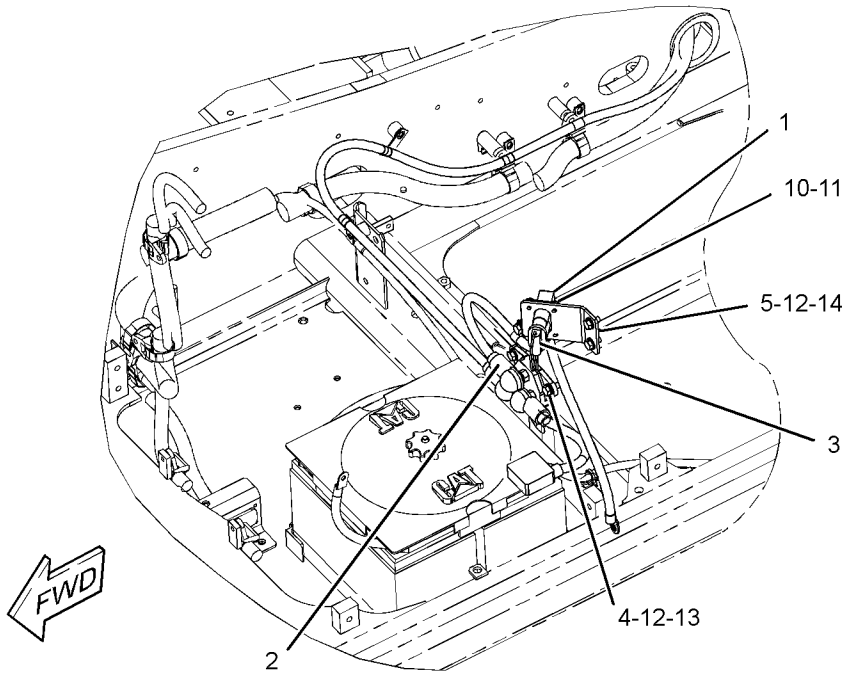

GRAPHIC #1 **<END>** g01230494

275-6798 WIRING GP-FAN—FLUID CLUTCH

S/N: KGF1-UP; FAL1-UP

PART OF 290-1911 COOLING AR-HIGH AMBIENT TEMP, 290-1892 SPECIAL AR AN ATTACHMENT

SMCS-1408 **i02615807**

NOTE	PART NUMBER	QTY	PART NAME 1 2 3 4 5 6 (PRODUCT LEVEL)	SEE PAGE
Y	*291-7462*	1	WIRING GP-FAN (HYD FAN CTL, AIR TEMP CTL)	620
Y	*291-7463*	1	WIRING GP-FAN (FAN CLUTCH)	621

Y - SEPARATE ILLUSTRATION

<END>

291-7462 WIRING GP-FAN—HYD FAN CTL, AIR TEMP CTL

S/N: KGF1-UP; FAL1-UP
PART OF 275-6798 WIRING GP-FAN
AN ATTACHMENT

SMCS-1408 **i02707637**

NOTE	REF NO	GRAPHIC REF	PART NUMBER	QTY	PART NAME 1 2 3 4 5 6 (PRODUCT LEVEL)	SEE PAGE
	1	1	**3S-2093**	7	STRAP-CABLE	
	2	1	**7K-1181**	4	STRAP-CABLE	
	3	1	**107-8618**	1	SENSOR GP-TEMPERATURE (INLET AIR)	
		1	**102-8803**	1	KIT-RECEPTACLE (3-PIN)	
					(INCLUDES RECEPTACLE AS & WEDGE)	
		1	**186-3735**	3	PIN-CONNECTOR (16-GA TO 18-GA)	
E		1	**112-4550**		SLEEVE (31-CM)	
	4	1	**116-0118**	1	CLIP	
	5	1	**275-6803**	1	HARNESS AS-PUMP (FAN CONTROL)	
		1	**3S-2093**	1	STRAP-CABLE	
		1	**125-7874**		TUBE-HEAT SHRINK (5.72-MM DIA) (5-CM)	
		1	**155-2260**	1	KIT-CONNECTING PLUG (3-PIN)	
					(INCLUDES PLUG AS, WEDGE & INTERFACE SEAL)	
		1	**230-5010**	1	PLUG AS-CONNECTOR (6-PIN)	
		1	**243-4509**	1	RECEPTACLE AS-CONNECTOR (8-PIN)	
	6	1	**8T-4121**	1	WASHER-HARD (11X21X2.5-MM THK)	
M	7	1	**8T-4137**	1	BOLT (M10X1.5X20-MM)	

E - ORDER BY THE CENTIMETER
M - METRIC PART

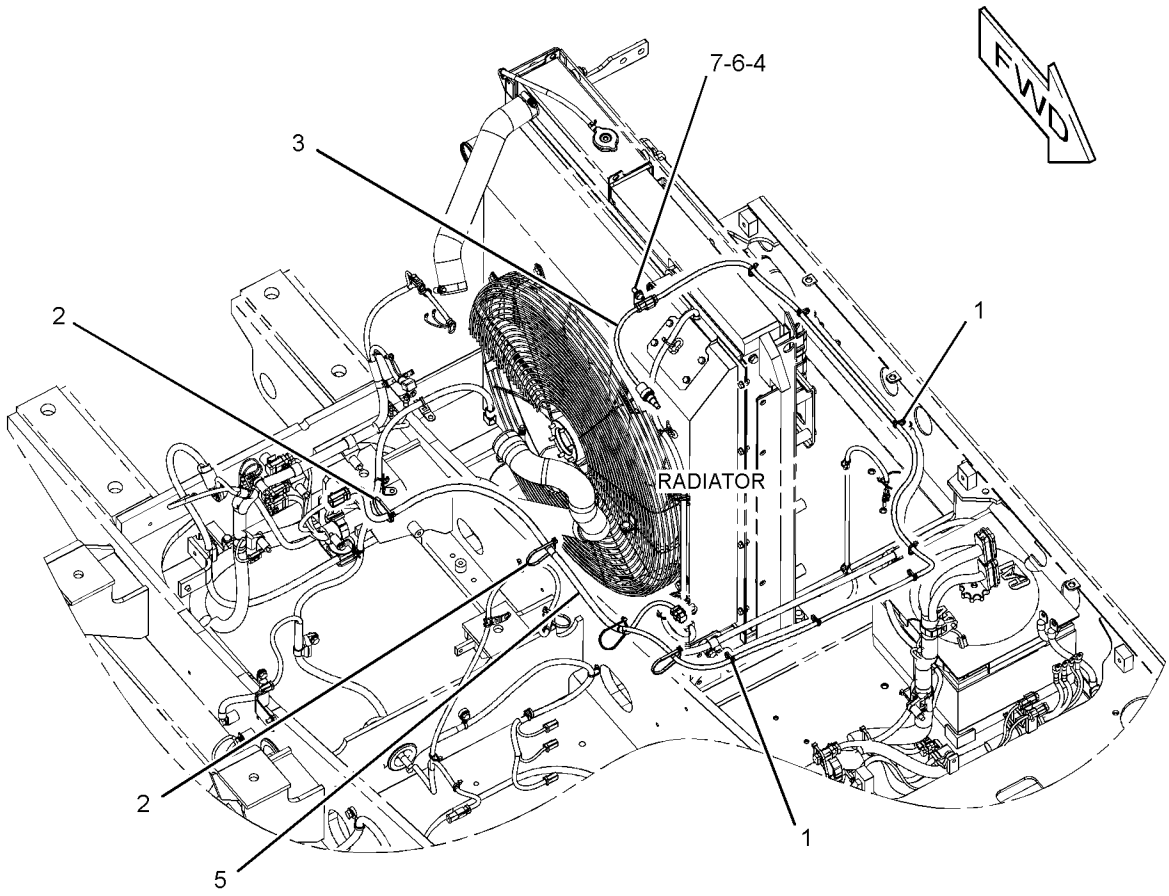

GRAPHIC #1 **<END>** g01310385

291-7463 WIRING GP-FAN–FAN CLUTCH

S/N: KGF1-UP; FAL1-UP
PART OF 275-6798, 306-8501 WIRING GP-FAN
AN ATTACHMENT
TYPE 1

SMCS-1408 **i02615806**

NOTE	REF NO	GRAPHIC REF	PART NUMBER	QTY	PART NAME 1 2 3 4 5 6 (PRODUCT LEVEL)	SEE PAGE
	1	1	**3S-2093**	7	STRAP-CABLE	
	2	1	**7K-1181**	2	STRAP-CABLE	
	3	1	**116-0118**	1	CLIP	
	4	1	**275-6846**	1	HARNESS AS-SOLENOID (FAN)	
		1	**155-2274**	1	KIT-CONNECTING PLUG (6-PIN)	
					(INCLUDES PLUG AS , WEDGE & INTERFACE SEAL)	
		1	**243-4508**	1	RECEPTACLE AS-CONNECTOR (6-PIN)	
	5	1	**132-5789**	2	CLIP	
	6	1	**8T-4121**	3	WASHER-HARD (11X21X2.5-MM THK)	
M	7	1	**8T-4191**	3	BOLT (M10X1.5X16-MM)	

M - METRIC PART

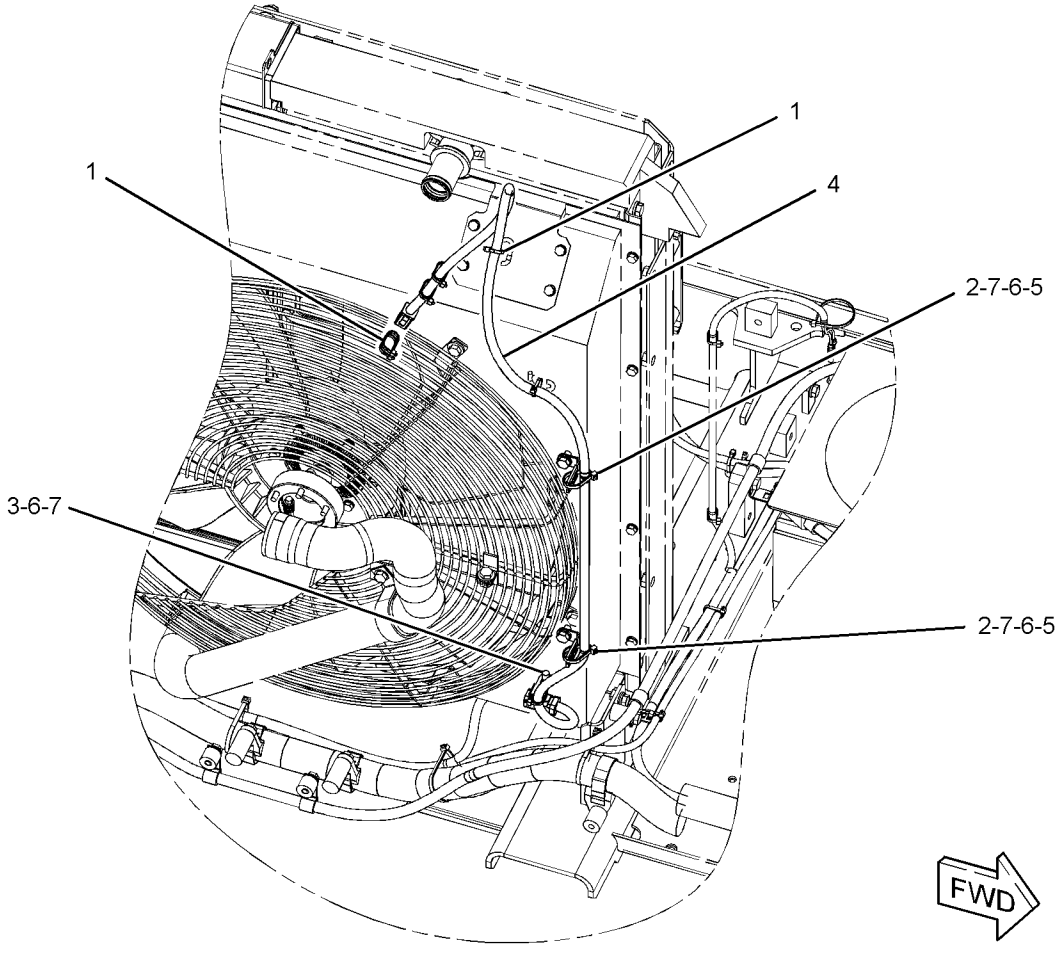

GRAPHIC #1 **<END>** g01315917

291-7463 WIRING GP-FAN—FAN CLUTCH

S/N: KGF1-UP; FAL1-UP
PART OF 306-8501 WIRING GP-FAN
AN ATTACHMENT
TYPE 2

SMCS-1408 **i04033158**

NOTE	REF NO	GRAPHIC REF	PART NUMBER	QTY	PART NAME 1 2 3 4 5 6 (PRODUCT LEVEL)	SEE PAGE
C	1	1	**3S-2093**	2	STRAP-CABLE	
	2	1	**7K-1181**	2	STRAP-CABLE	
	3	1	**116-0118**	1	CLIP	
C	4	1	**342-3003**	1	HARNESS AS-SOLENOID	
		1	**8T-8737**	2	PLUG-SEAL	
		1	**9X-3402**	5	SOCKET-CONNECTOR (16-GA TO 18-GA)	
		1	**9X-3401**	5	PIN-CONNECTOR (16-GA TO 18-GA)	
		1	**239-7352**	1	PLUG AS-CONNECTOR (6-PIN)	
		1	**264-7032**	1	SEAL-CONNECTOR	
		1	**243-4508**	1	RECEPTACLE AS-CONNECTOR (6-PIN)	
	5	1	**132-5789**	2	CLIP	
	6	1	**8T-4121**	3	WASHER-HARD (11X21X2.5-MM THK)	
M	7	1	**8T-4191**	3	BOLT (M10X1.5X16-MM)	

C - CHANGE FROM PREVIOUS TYPE
M - METRIC PART

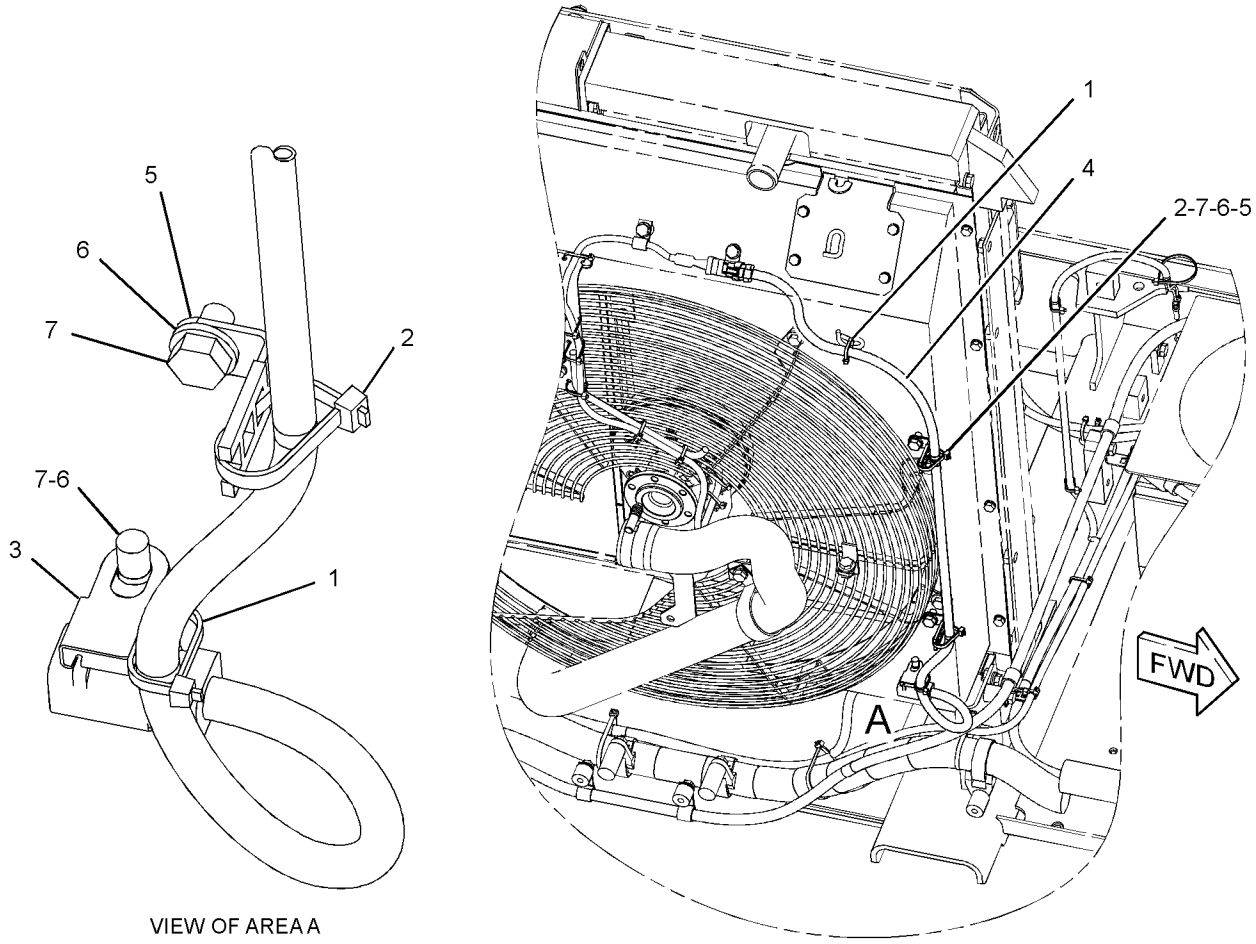

GRAPHIC #1 **<END>** g02236434

291-7716 WIRING GP-FAN—HYD FAN CTL, AIR TEMP CTL

S/N: KGF1-UP; FAL1-UP
PART OF 306-8501 WIRING GP-FAN
AN ATTACHMENT

SMCS-1408 **i02984883**

NOTE	REF NO	GRAPHIC REF	PART NUMBER	QTY	PART NAME 1 2 3 4 5 6 (PRODUCT LEVEL)	SEE PAGE
	1	1	**3S-2093**	9	STRAP-CABLE	
	2	1	**7K-1181**	4	STRAP-CABLE	
	3	1	**107-8618**	1	SENSOR GP-TEMPERATURE (AMBIENT AIR, RAD FAN CLUTCH)	
		1	**102-8803**	1	KIT-RECEPTACLE (3-PIN)	
					(INCLUDES RECEPTACLE AS & WEDGE)	
		1	**186-3735**	3	PIN-CONNECTOR (16-GA TO 18-GA)	
E		1	**112-4550**		SLEEVE (31-CM)	
	4	1	**275-6803**	1	HARNESS AS-PUMP (FAN CONTROL)	
		1	**3S-2093**	1	STRAP-CABLE	
		1	**155-2260**	1	KIT-CONNECTING PLUG (3-PIN)	
					(INCLUDES PLUG AS, WEDGE, & INTERFACE SEAL)	
		1	**230-5010**	1	PLUG AS-CONNECTOR (6-PIN)	
		1	**264-7032**	1	SEAL-CONNECTOR	
		1	**243-4509**	1	RECEPTACLE AS-CONNECTOR (8-PIN)	

E - ORDER BY THE CENTIMETER

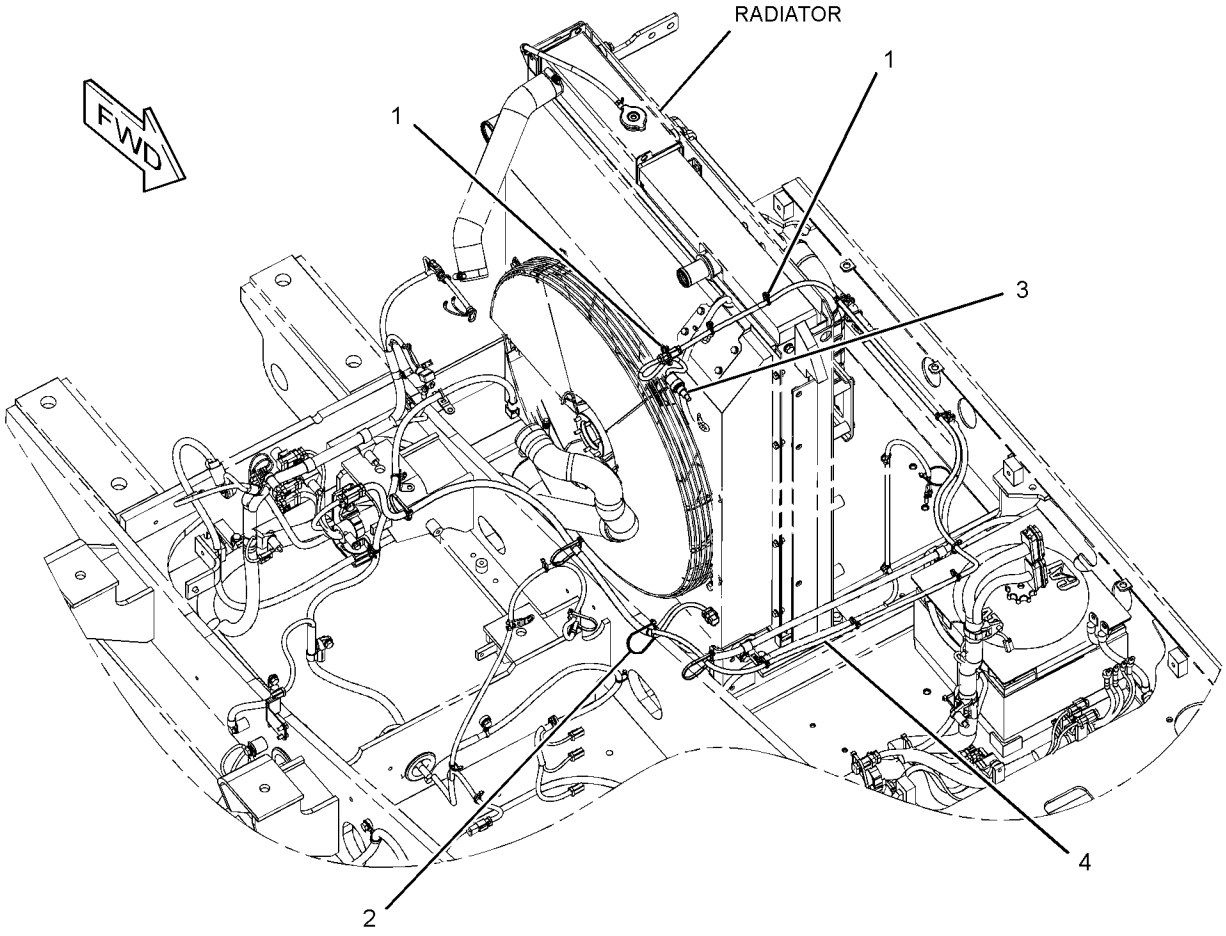

GRAPHIC #1 **<END>** g01383567

306-8501 WIRING GP-FAN—FLUID CLUTCH

S/N: KGF1-UP; FAL1-UP

PART OF 290-1911, 298-4271, 298-4272, 354-1056, 354-1057, 359-2423 COOLING AR-HIGH AMBIENT TEMP, 290-1892 SPECIAL AR AN ATTACHMENT

SMCS-1408 **i02757974**

NOTE	PART NUMBER	QTY	PART NAME 1 2 3 4 5 6 (PRODUCT LEVEL)	SEE PAGE
Y	*291-7463*	1	WIRING GP-FAN (FAN CLUTCH)	621
Y	*291-7716*	1	WIRING GP-FAN (HYD FAN CTL, AIR TEMP CTL)	623

Y - SEPARATE ILLUSTRATION

<END>

259-5052 WIRING GP-FINE SWING

S/N: KGF1-UP; FAL1-UP

PART OF 264-8638, 264-8639 CHASSIS AR

SMCS-1408 **i04915059**

NOTE	REF NO	GRAPHIC REF	PART NUMBER	QTY	PART NAME 1 2 3 4 5 6 (PRODUCT LEVEL)	SEE PAGE
	1	1	**111-4836**	1	CLIP	
	2	1	**111-4837**	3	CLIP	
	3	1	**238-2171**	1	BRACKET AS	
	4	1	**259-5129**	1	HARNESS AS-SOLENOID	
		1	**8T-8730**	2	SOCKET-CONNECTOR (16-GA TO 18-GA)	
		1	**3S-2093**	1	STRAP-CABLE	
E		1	**103-2529**		HOSE (100-CM)	
		1	**9W-0844**	2	SOCKET-CONNECTOR (14-GA TO 16-GA)	
		1	**155-2270**	1	KIT-CONNECTING PLUG (2-PIN)	
					(INCLUDES PLUG AS, WEDGE & INTERFACE SEAL)	
		1	**230-4011**	1	PLUG AS-CONNECTOR (2-PIN)	
		1	**264-7029**	1	SEAL-CONNECTOR	
	5	1	**8T-4121**	4	WASHER-HARD (11X21X2.5-MM THK)	
M	6	1	**8T-4136**	1	BOLT (M10X1.5X25-MM)	
M	7	1	**8T-4137**	3	BOLT (M10X1.5X20-MM)	

E - ORDER BY THE CENTIMETER
M - METRIC PART

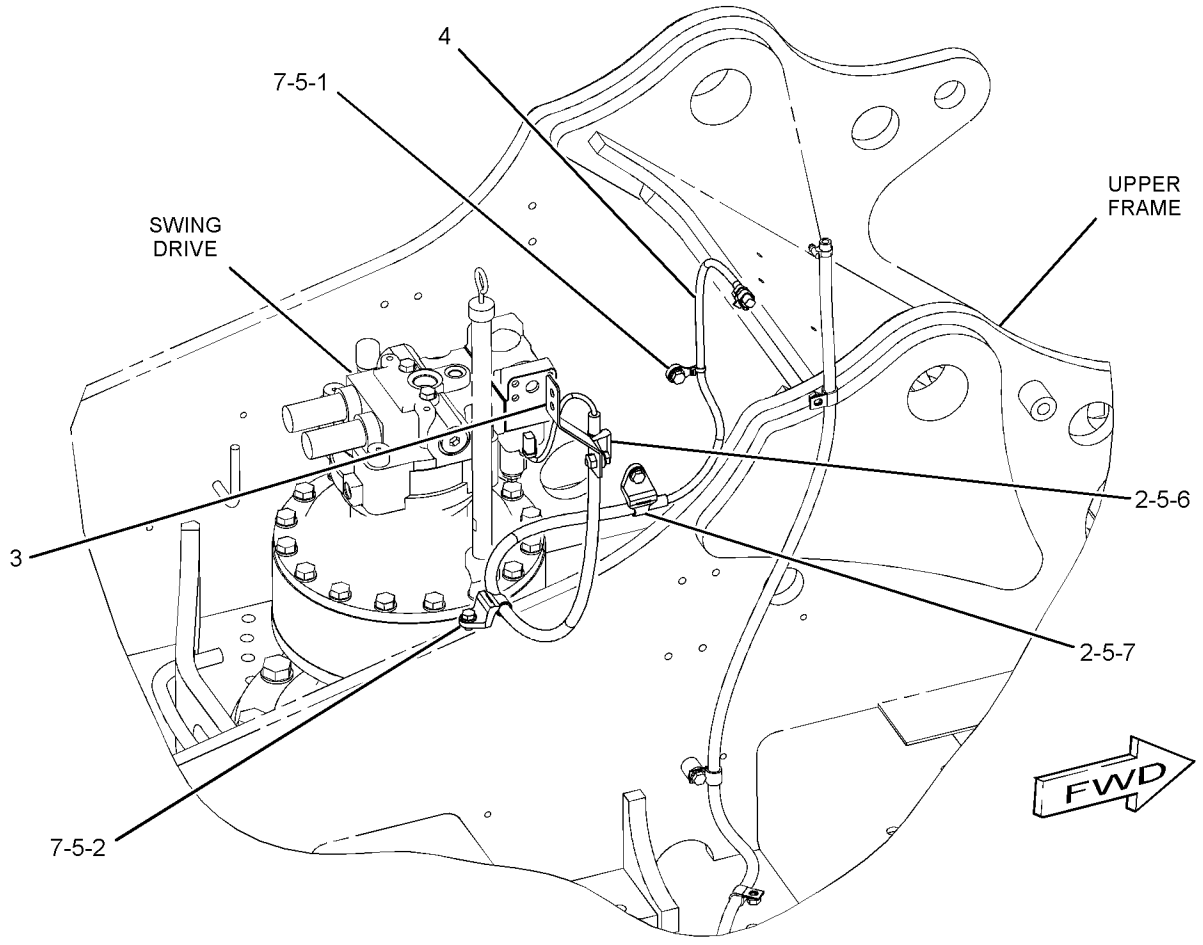

GRAPHIC #1 **<END>** g01228716

204-3461 WIRING GP-GRADE CONTROL

S/N: KGF1-UP; FAL1-UP

PART OF 339-2024 GRADE CONTROL AR-LASER, 339-2026, 339-2029 GRADE CONTROL AR-SATELLITE

SMCS-1408, 7220 **i03177182**

NOTE	PART NUMBER	QTY	PART NAME 1 2 3 4 5 6 (PRODUCT LEVEL)	SEE PAGE
M	**9X-2480**	4	BOLT (M6X1X45-MM)	
	177-3941	1	CABLE AS (BUCKET)	
	177-3942	1	CABLE AS (STICK)	
	177-3943	1	CABLE AS (BOOM)	
	286-2484	4	CLAMP	
	6D-4244	2	CLIP	
	111-4836	8	CLIP	
	132-5789	1	CLIP (LADDER)	
M	**8T-4133**	10	NUT (M10X1.5-THD)	
	107-4749	2	PLATE	
	3S-2093	6	STRAP-CABLE	
	7K-1181	16	STRAP-CABLE	
	9X-8256	4	WASHER (6.6X12X2-MM THK)	
	8T-4121	10	WASHER-HARD (11X21X2.5-MM THK)	

M - METRIC PART

<END>

339-2034 WIRING GP-GRADE CONTROL

S/N: KGF1-UP; FAL1-UP

PART OF 339-2019, 339-2021 MAST GP

SMCS-1408, 7220 **i03695565**

NOTE	PART NUMBER	QTY	PART NAME 1 2 3 4 5 6 (PRODUCT LEVEL)	SEE PAGE
M	**6V-8212**	2	BOLT (M10X1.5X16-MM)	
	292-0305	1	CABLE AS (MAST)	
	8T-8737	5	PLUG-SEAL	
	9X-3402	7	SOCKET-CONNECTOR (16-GA TO 18-GA)	
	230-4009	1	PLUG AS-CONNECTOR (12-PIN)	
	264-7034	1	SEAL-CONNECTOR	
	116-0118	2	CLIP	
	263-6699	1	CONNECTOR-RECEPTACLE (STORAGE)	
	3L-8187	4	LOCKWASHER	
M	**3E-8048**	4	SCREW-MACHINE (M3X0.5X6-MM)	
	3S-2093	4	STRAP-CABLE	
	7K-1181	8	STRAP-CABLE	
	8T-7934	2	WASHER-HARD (11X21X5-MM THK)	

M - METRIC PART

<END>

339-2036 WIRING GP-GRADE CONTROL

S/N: KGF1-UP; FAL1-UP
PART OF 339-2022 MAST GP

SMCS-1408, 7220 **i03702029**

NOTE	PART NUMBER	QTY	PART NAME 1 2 3 4 5 6 (PRODUCT LEVEL)	SEE PAGE
M	**6V-8212**	2	BOLT (M10X1.5X16-MM)	
	337-9021	1	CABLE AS (MAST)	
	8T-8737	7	PLUG-SEAL	
	9X-3402	5	SOCKET-CONNECTOR (16-GA TO 18-GA)	
	230-4009	1	PLUG AS-CONNECTOR (12-PIN)	
	264-7034	1	SEAL-CONNECTOR	
	116-0118	2	CLIP	
	229-6138	2	FASTENER	
	3L-8187	2	LOCKWASHER	
M	**3E-8048**	2	SCREW-MACHINE (M3X0.5X6-MM)	
	3S-2093	4	STRAP-CABLE	
	7K-1181	8	STRAP-CABLE	
	8T-7934	2	WASHER-HARD (11X21X5-MM THK)	
	096-6166	2	WASHER-HARD (4.5X9X1-MM THK)	

M - METRIC PART

<END>

339-2041 WIRING GP-GRADE CONTROL

S/N: KGF1-UP; FAL1-UP
PART OF 339-2026, 339-2029 GRADE CONTROL AR-SATELLITE

SMCS-1408, 7220 **i03702015**

NOTE	PART NUMBER	QTY	PART NAME 1 2 3 4 5 6 (PRODUCT LEVEL)	SEE PAGE
	202-0901	1	HARNESS AS-MONITOR (LOW MOUNT)	
	8T-8737	7	PLUG-SEAL	
BE	**119-3662**		TUBE-HEAT SHRINK (10.85-MM DIA)	
BE	**125-7874**		TUBE-HEAT SHRINK (5.72-MM DIA)	
	9X-3402	17	SOCKET-CONNECTOR (16-GA TO 18-GA)	
	230-4009	1	PLUG AS-CONNECTOR (12-PIN)	
	264-7034	1	SEAL-CONNECTOR	
	239-7356	1	PLUG AS-CONNECTOR (12-PIN)	
	264-7034	1	SEAL-CONNECTOR	
	248-5358	1	PLUG AS-CONNECTOR (39-PIN)	
	287-8404	1	CAP AS-DUST	
	275-6839	1	HARNESS AS-MONITOR (HIGH MOUNT)	
	8L-8413	1	STRAP-CABLE	
	8T-8737	7	PLUG-SEAL	
	9W-0844	3	SOCKET-CONNECTOR (14-GA TO 16-GA)	
	9X-3402	14	SOCKET-CONNECTOR (16-GA TO 18-GA)	
	230-4009	1	PLUG AS-CONNECTOR (12-PIN)	
	264-7034	1	SEAL-CONNECTOR	
	239-7356	1	PLUG AS-CONNECTOR (12-PIN)	
	264-7034	1	SEAL-CONNECTOR	
	248-5358	1	PLUG AS-CONNECTOR (39-PIN)	
	287-8404	1	CAP AS-DUST	
	267-8024	1	HARNESS AS-WIRING (LIGHT BAR)	
	9X-3401	4	PIN-CONNECTOR (16-GA TO 18-GA)	
	243-4507	1	RECEPTACLE AS-CONNECTOR (4-PIN)	
	253-2693	3	PLUG AS-CONNECTOR (4-PIN)	

B - USE AS REQUIRED
E - ORDER BY THE CENTIMETER

<END>

306-8690 WIRING GP-HEATER

S/N: KGF1-3940; FAL1-2991

PART OF 264-8638, 264-8639 CHASSIS AR

SMCS-7304 **i04895272**

NOTE	REF NO	GRAPHIC REF	PART NUMBER	QTY	PART NAME 1 2 3 4 5 6 (PRODUCT LEVEL)	SEE PAGE
	1	1	**3S-2093**	2	STRAP-CABLE	
	2	1	**116-0118**	1	CLIP	
	3	1	**306-8691**	1	HARNESS AS-SOLENOID (HEATER)	
		1	**102-8802**	1	KIT-RECEPTACLE (2-PIN)	
					(INCLUDES RECEPTACLE AS & WEDGE)	
		1	**8T-8729**	2	PIN-CONNECTOR (16-GA TO 18-GA)	
		1	**8T-8730**	4	SOCKET-CONNECTOR (16-GA TO 18-GA)	
E		1	**125-7874**		TUBE-HEAT SHRINK (5.72-MM DIA) (10-CM)	
		1	**155-2270**	2	KIT-CONNECTING PLUG (2-PIN)	
					(EACH INCLUDES RECEPTACLE AS, WEDGE & INTERFACE SEAL)	
		1	**197-4385**	1	DIODE	

E - ORDER BY THE CENTIMETER

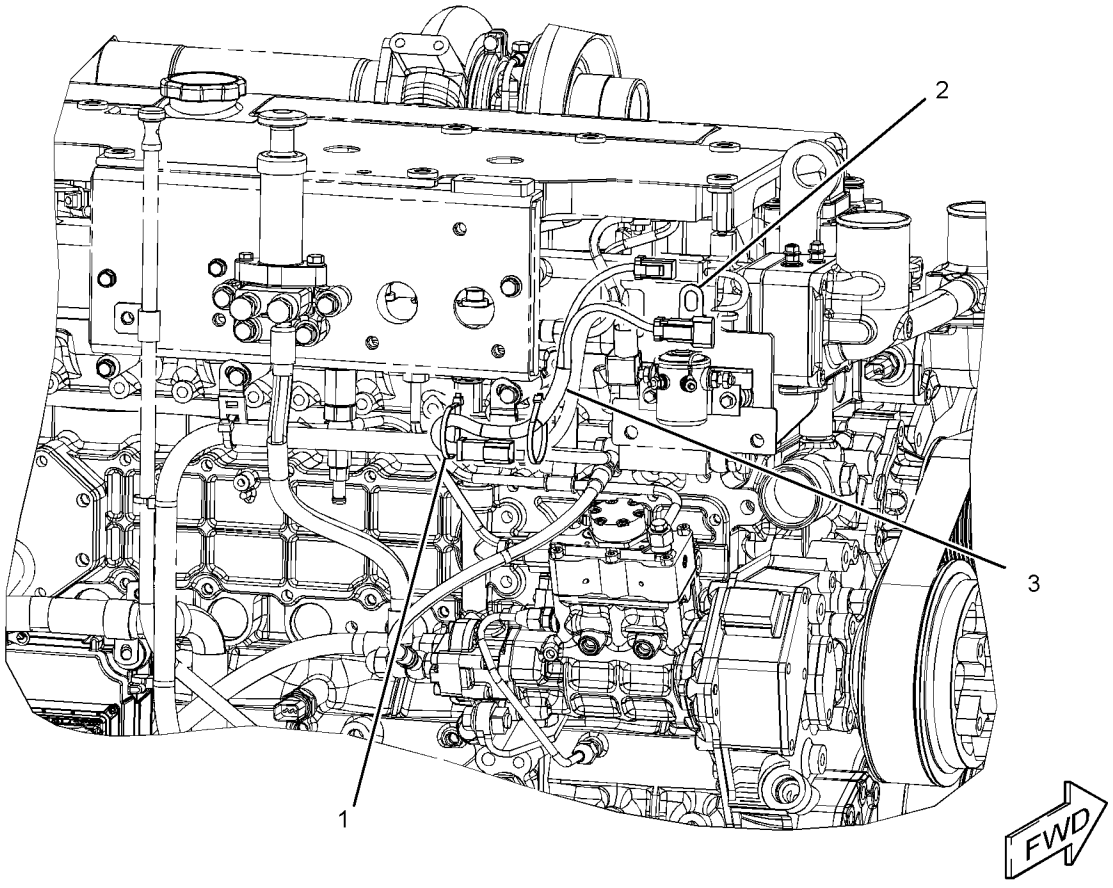

GRAPHIC #1 **<END>** g01406889

319-1358 WIRING GP-HEATER

S/N: KGF1-UP; FAL1-UP

FIELD INSTALLATION

SMCS-7304 **i02981304**

NOTE	REF NO	GRAPHIC REF	PART NUMBER	QTY	PART NAME 1 2 3 4 5 6 (PRODUCT LEVEL)	SEE PAGE
	1	1	**3S-2093**	2	STRAP-CABLE	
	2	1	**7K-1181**	5	STRAP-CABLE	
	3	1	**116-0114**	1	SWITCH AS-MAGNETIC (24-VOLT) (HEATER RELAY)	
		1	**186-3735**	2	PIN-CONNECTOR (16-GA TO 18-GA)	
		1	**102-8802**	1	KIT-RECEPTACLE (2-PIN)	
					(KIT INCLUDES RECEPTACLE AS & WEDGE)	
	4	1	**197-4330**	1	CONTROLLER-AIR (HEATER)	
	5	1	**238-2324**	1	CABLE AS	
		1	**6V-2369**	1	CABLE (4-GA, BLACK)	
		1	*131-1478*	2	TERMINAL AS	
					(EACH INCLUDES)	
		1	**9G-4343**	1	TERMINAL-RING (4-GA, 1/4-IN SCREW)	
		1	**125-7876**		TUBE-HEAT SHRINK (17.78-MM DIA) (4-CM EACH)	
	6	1	**238-2325**	1	CABLE AS	
		1	**6V-2369**	1	CABLE (4-GA, BLACK)	
		1	*131-1478*	2	TERMINAL AS	
					(EACH INCLUDES)	
		1	**9G-4343**	1	TERMINAL-RING (4-GA, 1/4-IN SCREW)	
		1	**125-7876**		TUBE-HEAT SHRINK (17.78-MM DIA) (4-CM EACH)	
	7	1	**319-1344**	1	BRACKET AS	
	8	1	**319-1346**	1	COVER AS	
	9	1	**319-1348**	1	HARNESS AS-CONTROL (ENGINE START, PUMP CONTROL) (HEATER)	
M	10	1	**5C-2890**	2	NUT (M6X1-THD)	
M	11	1	**7X-2619**	2	BOLT (M6X1X10-MM)	
M	12	1	**8T-4171**	2	BOLT (M6X1X12-MM)	
M	13	1	**8T-4970**	2	BOLT (M6X1X14-MM)	
	14	1	**9X-8256**	6	WASHER (6.6X12X2-MM THK)	

M - METRIC PART

319-1358 **WIRING GP-HEATER (*contd.*)** **i02981304**

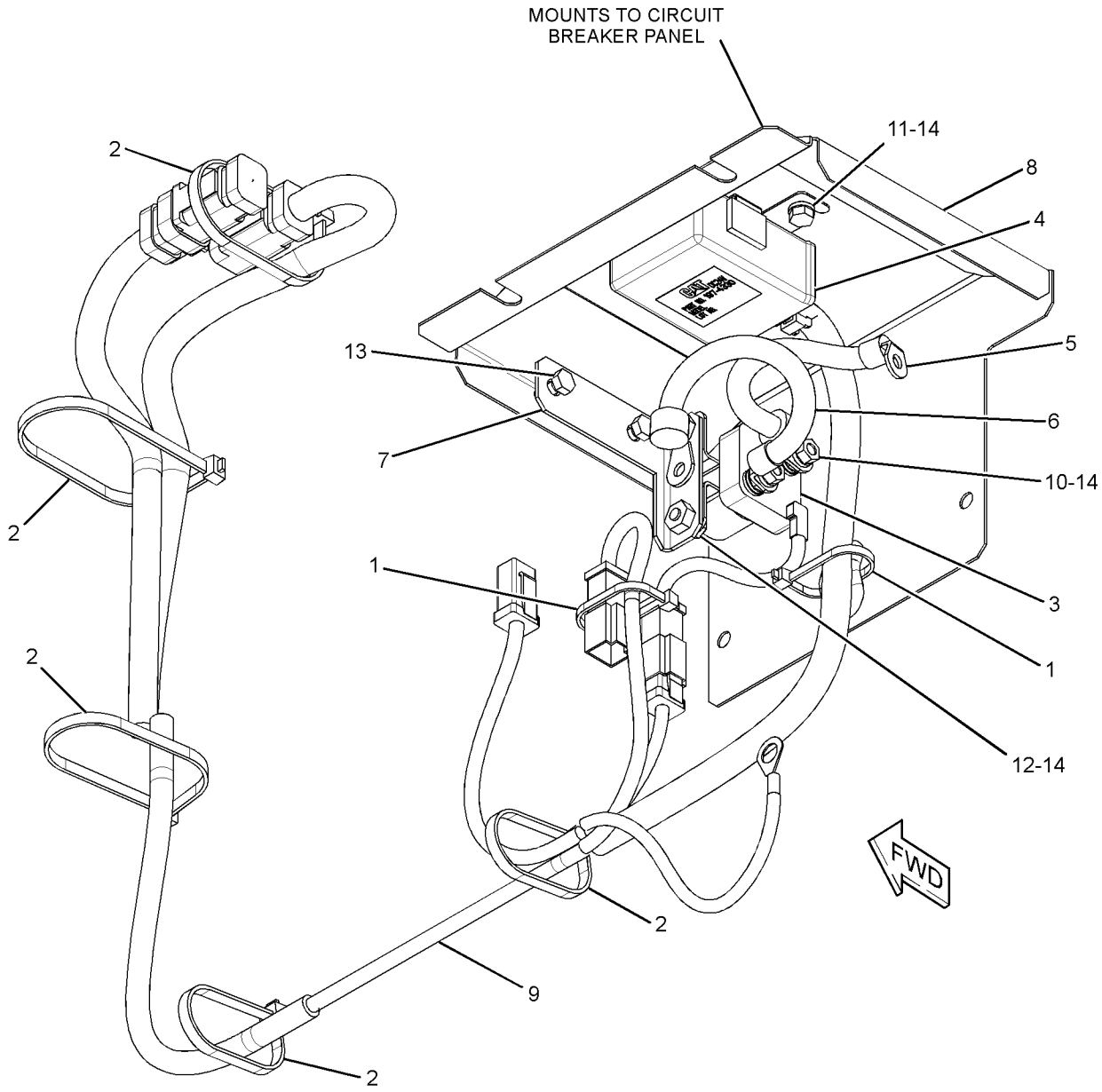

GRAPHIC #1 **<END>** g01473919

259-5046 WIRING GP-HYDRAULIC CONTROL–RETURN FILTER

S/N: KGF1-UP; FAL1-UP
PART OF 247-7459 FILTER AR-HYDRAULIC
AN ATTACHMENT

SMCS-1408 **i02423737**

NOTE	REF NO	GRAPHIC REF	PART NUMBER	QTY	PART NAME 1 2 3 4 5 6 (PRODUCT LEVEL)	SEE PAGE
	1	1	**3S-2093**	16	STRAP-CABLE	
	2	1	**4I-7889**	1	SPACER (11X25X45-MM THK)	
	3	1	**116-0118**	1	CLIP	
	4	1	**259-5344**	1	HARNESS AS-PUMP	
		1	**9X-3401**	1	PIN-CONNECTOR (16-GA TO 18-GA)	
		1	**155-2270**	1	KIT-CONNECTING PLUG (2-PIN)	
					(INCLUDES PLUG AS & WEDGE)	
	5	1	**132-5789**	2	CLIP	
	6	1	**8T-4121**	1	WASHER-HARD (11X21X2.5-MM THK)	
M	7	1	**8T-4191**	1	BOLT (M10X1.5X16-MM)	
M	8	1	**8T-5005**	1	BOLT (M10X1.5X70-MM)	

M - METRIC PART

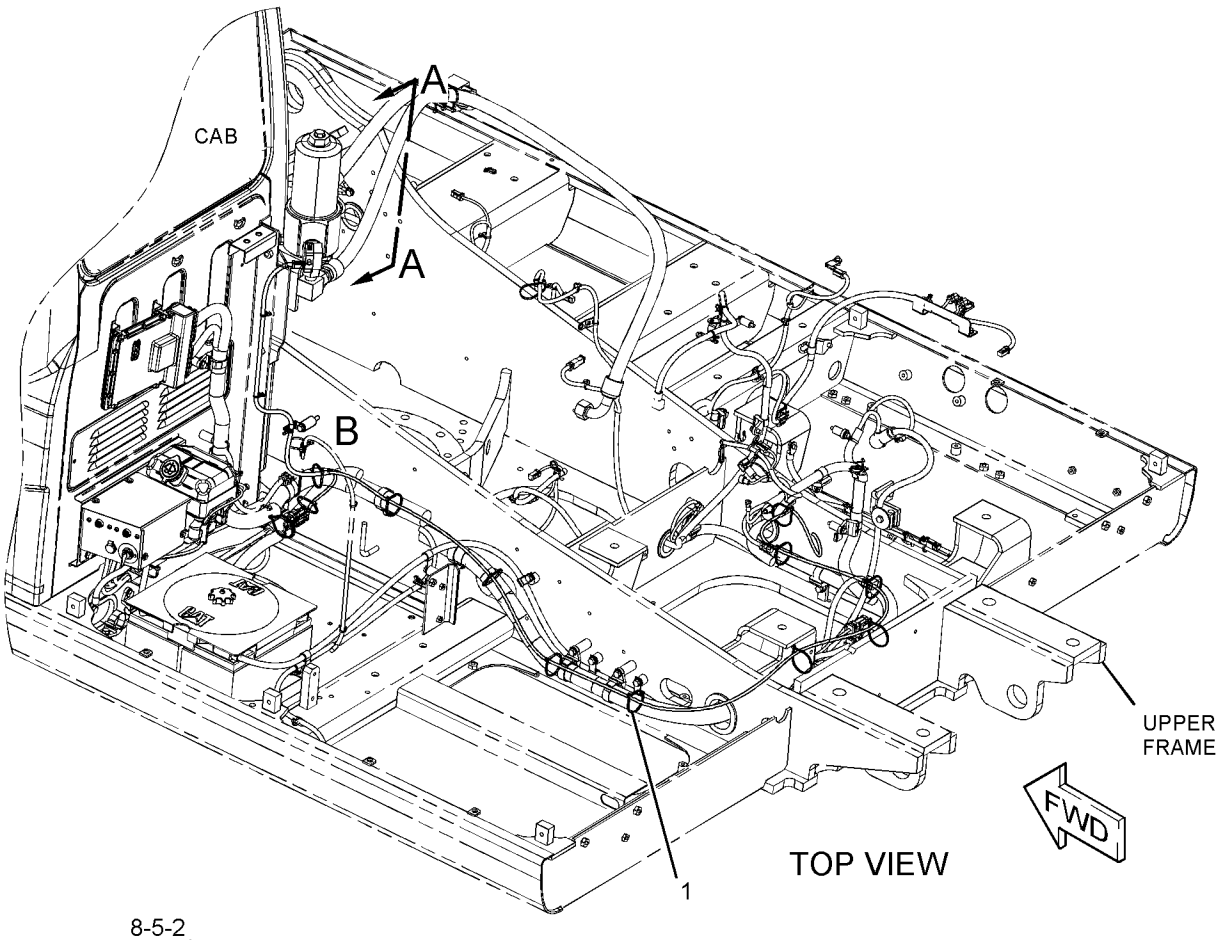

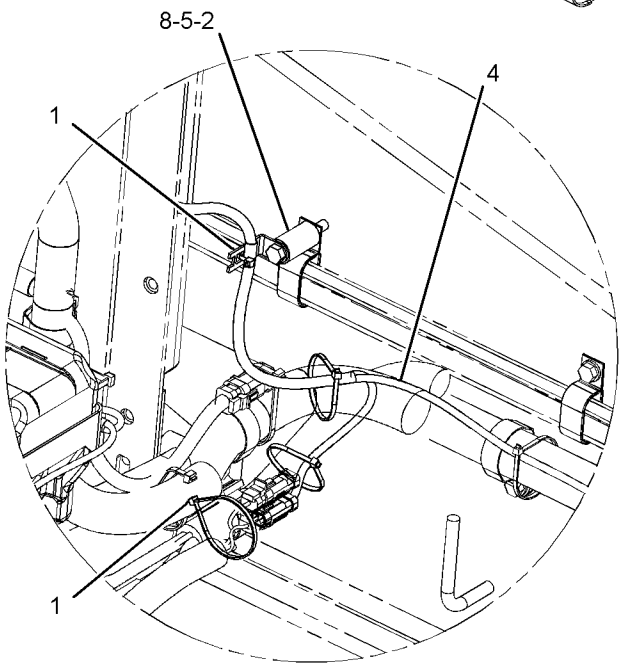

VIEW OF AREA B

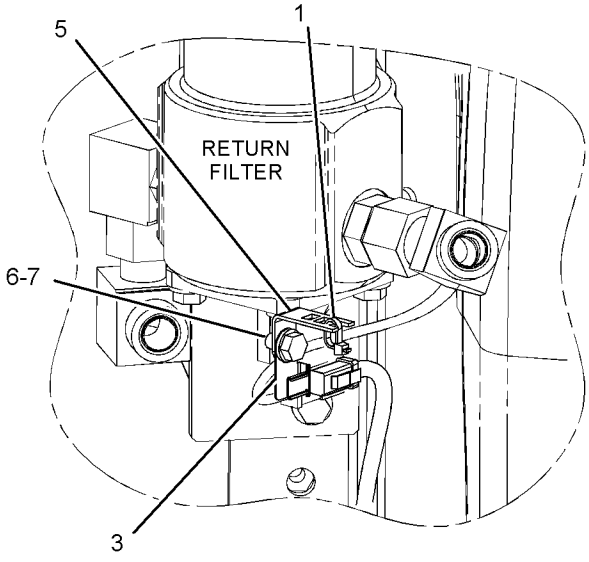

VIEW A-A

GRAPHIC #1 **<END>** g01228990

267-8005 WIRING GP-MEDIUM PRESSURE

S/N: KGF1-UP; FAL1-UP
PART OF 259-7501 CONTROL AR-AUXILIARY
AN ATTACHMENT

SMCS-1408 **i02998171**

NOTE	REF NO	GRAPHIC REF	PART NUMBER	QTY	PART NAME 1 2 3 4 5 6 (PRODUCT LEVEL)	SEE PAGE
	1	1	**3S-2093**	6	STRAP-CABLE	
	2	1	**7K-1181**	6	STRAP-CABLE	
	3	1	**275-7202**	1	HARNESS AS-SOLENOID	
	4	1	**132-5789**	1	CLIP	

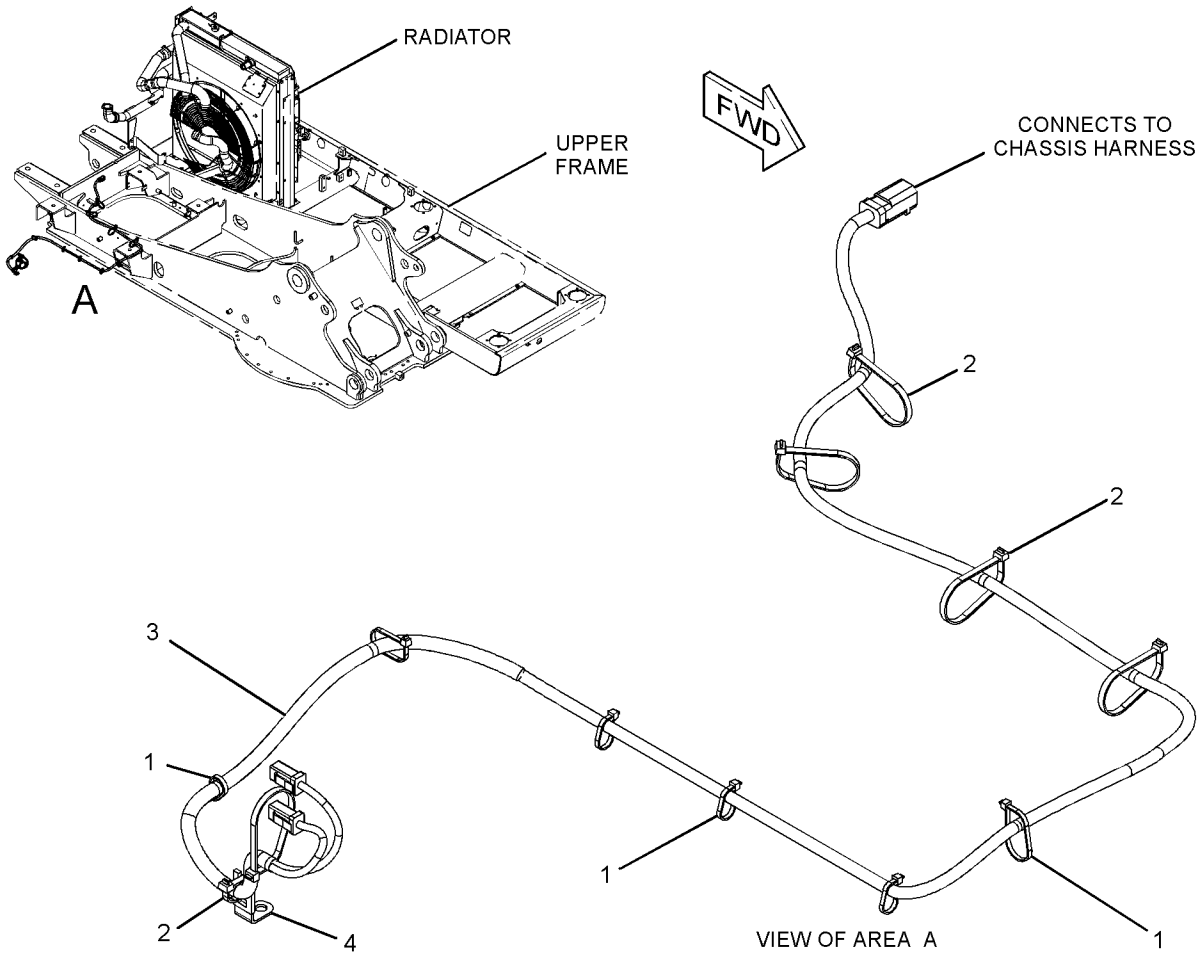

GRAPHIC #1 **<END>** g01522369

306-8452 WIRING GP-OVERLOAD WARNING

S/N: KGF1-UP

PART OF 298-4257 WARNING GP-OVERLOAD

AN ATTACHMENT

SMCS-1408 **i03939610**

NOTE	REF NO	GRAPHIC REF	PART NUMBER	QTY	PART NAME 1 2 3 4 5 6 (PRODUCT LEVEL)	SEE PAGE
	1	1	**3S-2093**	11	STRAP-CABLE	
	2	1	**7K-1181**	4	STRAP-CABLE	
	3	1	**116-0118**	1	CLIP	
	4	1	**238-2215**	1	SWITCH AS-ROCKER (OVERLOAD WARNING)	
		1	**167-3542**	1	RECEPTACLE-CONNECTOR (5-PIN)	
		1	**167-3543**	4	TERMINAL (MALE)	
	5	1	**306-8502**	1	HARNESS AS-SENSOR	

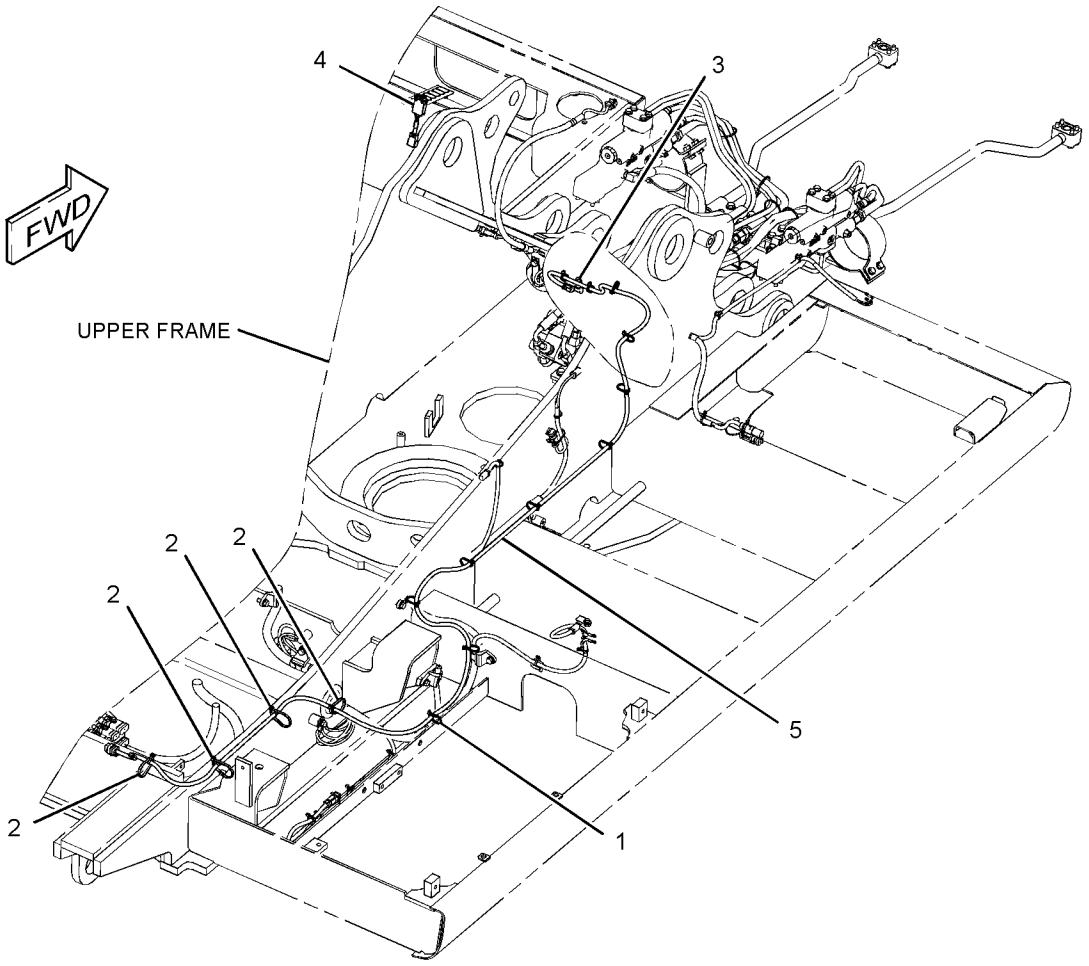

GRAPHIC #1 **<END>** g01431415

328-0094 WIRING GP-OVERLOAD WARNING

S/N: KGF1-UP
PART OF 314-3765 WARNING AR-OVERLOAD
AN ATTACHMENT

SMCS-1408 **i03939654**

NOTE	REF NO	GRAPHIC REF	PART NUMBER	QTY	PART NAME 1 2 3 4 5 6 (PRODUCT LEVEL)	SEE PAGE
	1	1	**3S-2093**	11	STRAP-CABLE	
	2	1	**7K-1181**	4	STRAP-CABLE	
	3	1	**116-0118**	1	CLIP	
	4	1	**306-8502**	1	HARNESS AS-SENSOR	
	5	1	**328-0028**	1	SWITCH AS-ROCKER (OVERLOAD WARNING)	
		1	**167-3542**	1	RECEPTACLE-CONNECTOR (5-PIN)	
		1	**167-3543**	4	TERMINAL (MALE)	

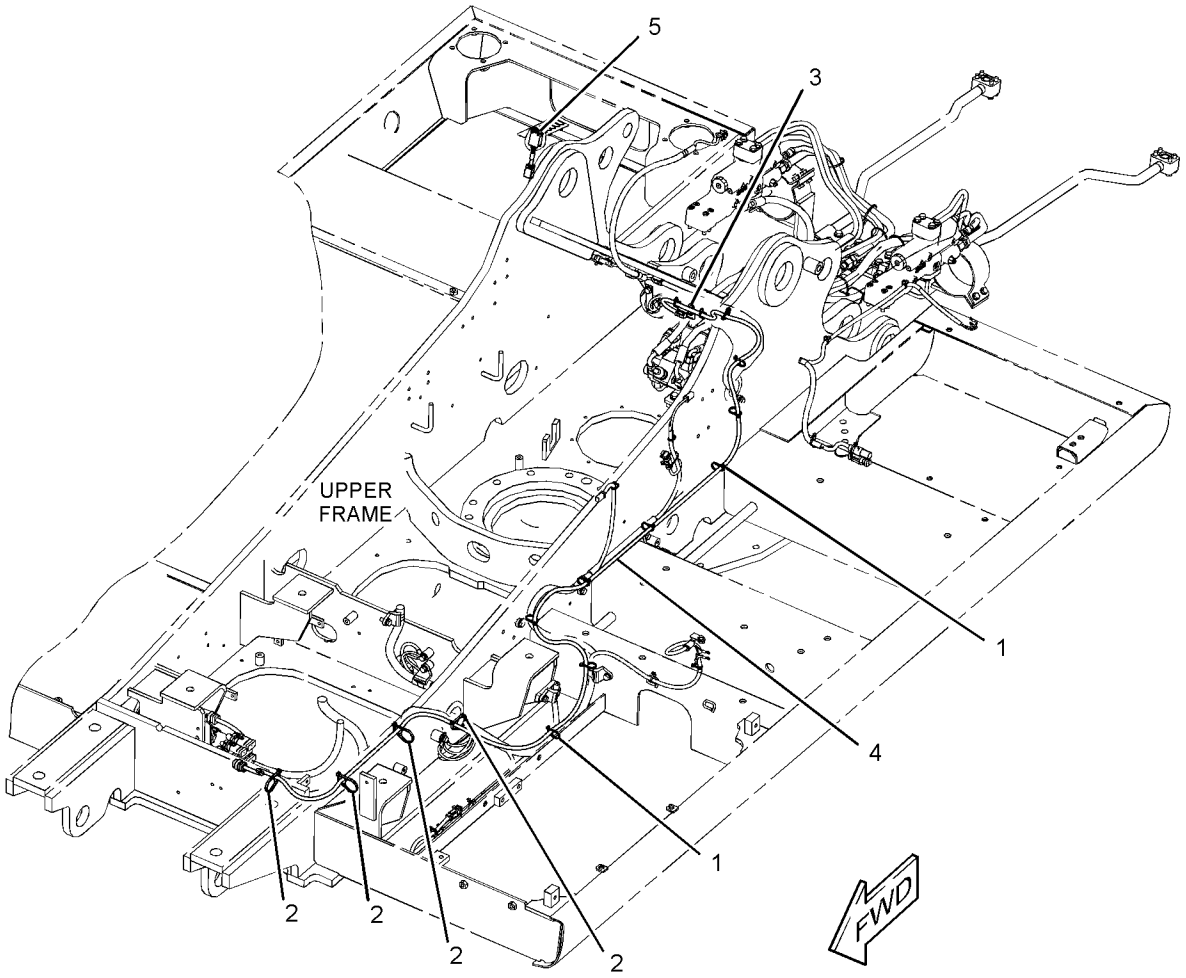

GRAPHIC #1 **<END>** g01620879

275-7003 WIRING GP-PLATFORM

S/N: KGF1-UP; FAL1-UP

PART OF 273-5387, 327-6568 OPERATOR AR

SMCS-1408 **i04912385**

NOTE	REF NO	GRAPHIC REF	PART NUMBER	QTY	PART NAME 1 2 3 4 5 6 (PRODUCT LEVEL)	SEE PAGE
	1	1	**3S-2093**	6	STRAP-CABLE	
	2	1	**7G-1060**	1	STRAP AS-GROUND	
	3	1	**7K-1181**	16	STRAP-CABLE	
	4	1	**111-4836**	4	CLIP	
	5	1	**111-4838**	2	CLIP	
	6	1	**111-4839**	2	STRAP	
	7	1	**116-0118**	14	CLIP	
	8	1	**234-1122**	1	COVER	
	9	1	**251-0299**	1	HARNESS AS-SWITCH (SECONDARY SHUTDOWN)	
		1	**2L-8074**	2	TERMINAL-RING (14-GA TO 16-GA, NO. 6 SCREW)	
		1	**9X-3401**	2	PIN-CONNECTOR (16-GA TO 18-GA)	
		1	**243-4505**	1	RECEPTACLE AS-CONNECTOR (2-PIN)	
	10	1	**275-7004**	1	HARNESS AS-PLATFORM	
		1	**102-8802**	5	KIT-RECEPTACLE (2-PIN)	
		1	**102-8804**	1	KIT-RECEPTACLE (4-PIN)	
					(EACH RECEPTACLE KIT INCLUDES RECEPTACLE AS & WEDGE)	
		1	**8T-8729**	13	PIN-CONNECTOR (16-GA TO 18-GA)	
		1	**8T-8730**	28	SOCKET-CONNECTOR (16-GA TO 18-GA)	
		1	**3S-2093**	22	STRAP-CABLE	
		1	**8T-8737**	58	PLUG-SEAL	
		1	**102-7964**	1	PLUG-CONNECTOR (16-PIN)	
		1	**102-7965**	15	TERMINAL (FEMALE)	
		1	**9W-0852**	6	PIN-CONNECTOR (14-GA TO 16-GA)	
		1	**9W-0844**	35	SOCKET-CONNECTOR (14-GA TO 16-GA)	
		1	**116-0255**	1	TERMINAL-BLADE (10-GA TO 20-GA)	
E		1	**119-3662**		TUBE-HEAT SHRINK (10.85-MM DIA) (7-CM)	
		1	**121-1039**	1	TERMINAL (MALE)	
		1	**121-1168**	2	CONNECTOR-RECEPTACLE	
		1	**121-1173**	32	TERMINAL (MALE)	
		1	**125-4766**	1	PLUG-CONNECTOR (17-PIN)	
		1	**125-4841**	1	WEDGE-PLUG LOCK (21-PIN)	
E		1	**125-7874**		TUBE-HEAT SHRINK (5.72-MM DIA) (30-CM)	
E		1	**125-7875**		TUBE-HEAT SHRINK (7.44-MM DIA) (50-CM)	
		1	**9X-3402**	65	SOCKET-CONNECTOR (16-GA TO 18-GA)	
					—OR—	
		1	**126-1768**	65	SOCKET-CONNECTOR (14-GA TO 16-GA)	
		1	**2L-8050**	2	TERMINAL-RING (6-GA, 1/4-IN SCREW)	
					—OR—	
		1	**2L-8058**	2	TERMINAL-RING (8-GA, 1/4-IN SCREW)	
		1	**2L-8052**	2	TERMINAL-RING (6-GA, 3/8-IN SCREW)	
					—OR—	
		1	**2L-8060**	2	TERMINAL-RING (8-GA, 3/8-IN SCREW)	
		1	**134-3296**	1	HOUSING-PLUG	
		1	**134-3297**	2	SEAL	
		1	**9X-3401**	25	PIN-CONNECTOR (16-GA TO 18-GA)	
					—OR—	
		1	**126-1767**	25	PIN-CONNECTOR (14-GA TO 16-GA)	
		1	**153-2620**	1	PLUG AS-CONNECTOR (54-PIN, BLACK)	
		1	**163-6759**	1	SEAL	
		1	**155-2270**	12	KIT-CONNECTING PLUG (2-PIN)	
		1	**155-2271**	1	KIT-CONNECTING PLUG (4-PIN)	
					(EACH CONNECTING PLUG KIT INCLUDES PLUG AS, WEDGE & INTERFACE SEAL)	
		1	**197-4385**	3	DIODE	
		1	**230-4009**	3	PLUG AS-CONNECTOR (12-PIN)	
					(EACH INCLUDES)	

275-7003 **WIRING GP-PLATFORM (*contd.*)** **i04912385**

NOTE	REF NO	GRAPHIC REF	PART NUMBER	QTY	PART NAME 1 2 3 4 5 6 (PRODUCT LEVEL)	SEE PAGE
		1	**264-7034**	1	SEAL-CONNECTOR	
		1	**230-4011**	3	PLUG AS-CONNECTOR (2-PIN)	
					(EACH INCLUDES)	
		1	**264-7029**	1	SEAL-CONNECTOR	
		1	**230-5010**	3	PLUG AS-CONNECTOR (6-PIN)	
					(EACH INCLUDES)	
		1	**264-7032**	1	SEAL-CONNECTOR	
		1	**238-2363**	10	TERMINAL (FEMALE)	
		1	**238-2366**	6	TERMINAL (MALE)	
		1	**239-7352**	1	PLUG AS-CONNECTOR (6-PIN)	
		1	**264-7032**	1	SEAL-CONNECTOR	
		1	**243-4505**	1	RECEPTACLE AS-CONNECTOR (2-PIN)	
		1	**243-4507**	1	RECEPTACLE AS-CONNECTOR (4-PIN)	
		1	**243-4508**	4	RECEPTACLE AS-CONNECTOR (6-PIN)	
		1	**243-4509**	1	RECEPTACLE AS-CONNECTOR (8-PIN)	
		1	**243-4510**	2	RECEPTACLE AS-CONNECTOR (12-PIN)	
		1	**247-2693**	1	RECEPTACLE AS-CONNECTOR (6-PIN)	
M	11	1	**095-0728**	2	SCREW-MACHINE (M4X0.7X12-MM)	
	12	1	**096-6166**	2	WASHER-HARD (4.5X9X1-MM THK)	
	13	1	**3E-5169**	1	GUARD-SWITCH	
	14	1	**4D-1836**	1	SWITCH AS-TOGGLE (SECONDARY SHUTDOWN)	
M	15	1	**7X-2621**	7	BOLT (M10X1.5X12-MM)	
	16	1	**8T-4121**	14	WASHER-HARD (11X21X2.5-MM THK)	
M	17	1	**8T-4137**	7	BOLT (M10X1.5X20-MM)	

E - ORDER BY THE CENTIMETER
M - METRIC PART

275-7003 **WIRING GP-PLATFORM (*contd.*)** **i04912385**

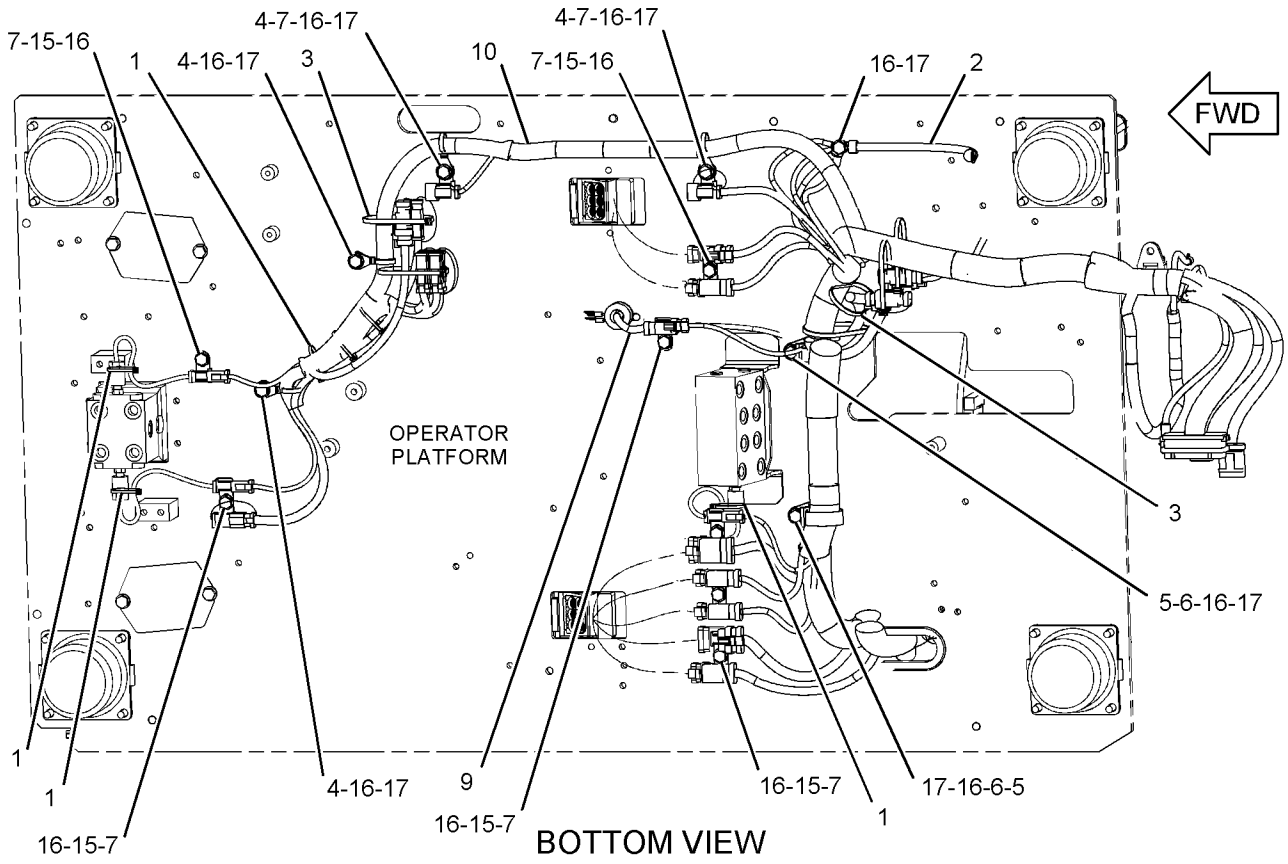

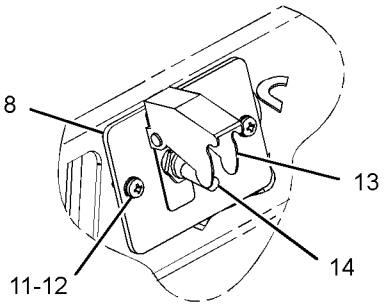

VIEW OF AREA A

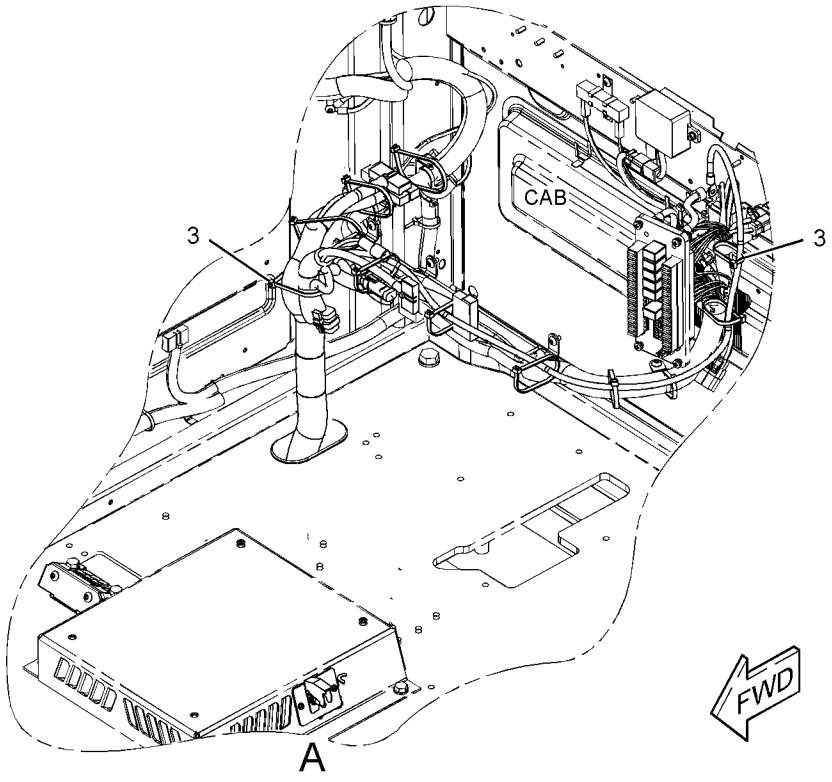

GRAPHIC #1 **<END>** g01297079

238-1565 WIRING GP-QUICK COUPLER

S/N: FAL1-UP
PART OF 279-5323 LINES GP-COUPLER
AN ATTACHMENT

SMCS-1408, 6129

i02478739

NOTE	REF NO	GRAPHIC REF	PART NUMBER	QTY	PART NAME 1 2 3 4 5 6 (PRODUCT LEVEL)	SEE PAGE
	1	1	**3S-2093**	7	STRAP-CABLE	
	2	1	**7K-1181**	16	STRAP-CABLE	
	3	1	**238-1588**	1	HARNESS AS-SOLENOID (QUICK COUPLER DISENGAGE)	
		1	**230-4011**	1	PLUG AS-CONNECTOR (2-PIN)	
		1	**243-4505**	1	RECEPTACLE AS-CONNECTOR (2-PIN)	

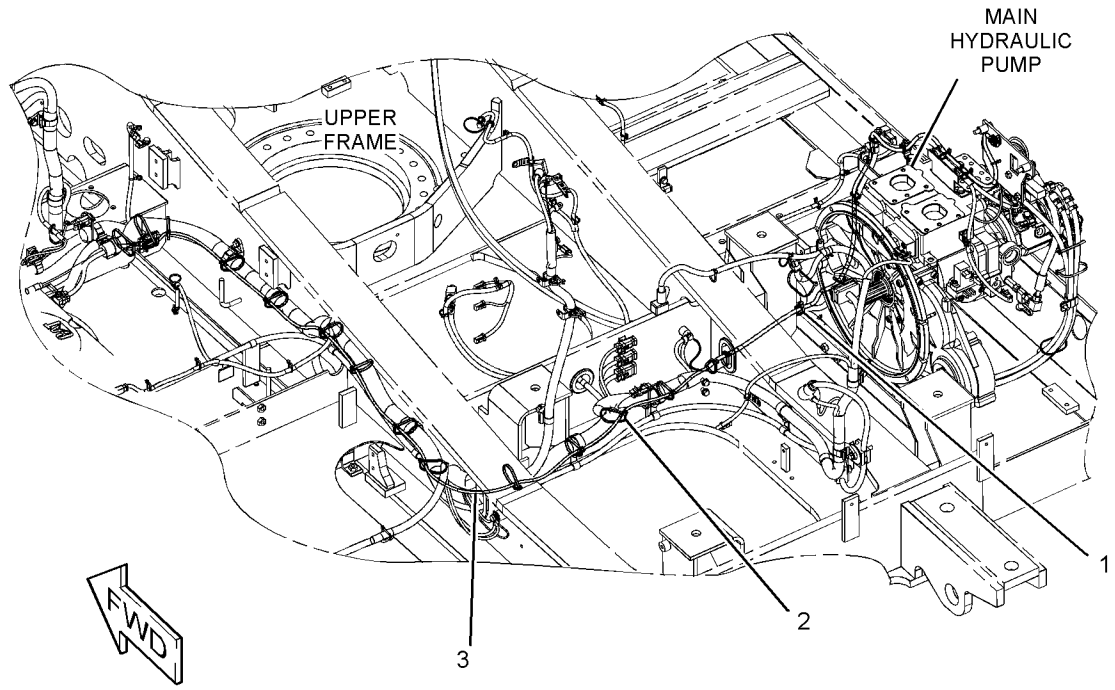

GRAPHIC #1 **<END>** g01217034

259-5044 WIRING GP-QUICK COUPLER

S/N: KGF1-UP; FAL1-UP
PART OF 288-7608, 344-4363 CONTROL AR-COUPLER
AN ATTACHMENT

SMCS-1408, 6129 **i02580840**

NOTE	REF NO	GRAPHIC REF	PART NUMBER	QTY	PART NAME 1 2 3 4 5 6 (PRODUCT LEVEL)	SEE PAGE
C	1	1	**3S-2093**	9	STRAP-CABLE	
C	2	1	**7K-1181**	9	STRAP-CABLE	
C	3	1	**283-3041**	1	HARNESS AS-SOLENOID (QUICK COUPLER)	
		1	**230-4011**	1	PLUG AS-CONNECTOR (2-PIN)	
		1	**243-4505**	1	RECEPTACLE AS-CONNECTOR (2-PIN)	

C - CHANGE FROM PREVIOUS TYPE

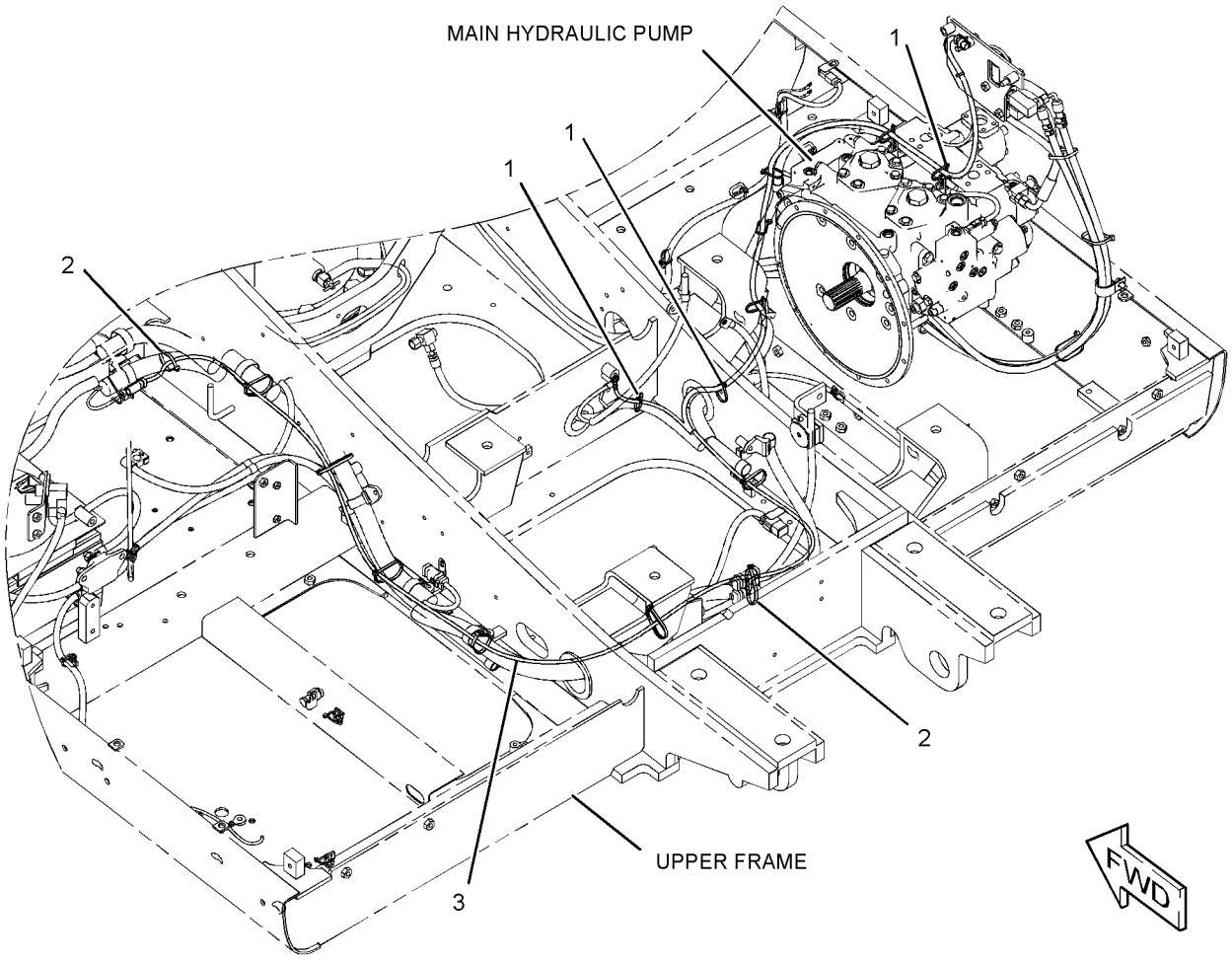

GRAPHIC #1 **<END>** g01230088

267-8002 WIRING GP-QUICK COUPLER

S/N: KGF1-UP; FAL1-UP
PART OF 277-0863 CONTROL AR-COUPLER
AN ATTACHMENT

SMCS-1408, 6129 **i04003948**

NOTE	REF NO	GRAPHIC REF	PART NUMBER	QTY	PART NAME 1 2 3 4 5 6 (PRODUCT LEVEL)	SEE PAGE
	1	1,2	**3S-2093**	13	STRAP-CABLE	
	2	2	**7I-2673**	2	STRAP-CABLE	
	3	1,2	**7K-1181**	15	STRAP-CABLE	
	4	2	**116-0118**	1	CLIP	
	5	2	**283-3015**	1	HARNESS AS-SOLENOID (COUPLER)	
	6	2	**132-5789**	2	CLIP	
	7	2	**4P-7581**	1	CLIP	
	8	2	**5P-4116**	3	WASHER-HARD (8.8X20.5X2-MM THK)	
M	9	2	**8T-4189**	3	BOLT (M8X1.25X20-MM)	

M - METRIC PART

REFER TO ALL ILLUSTRATIONS OF
THIS GROUP FOR AUXILIARY VIEWS

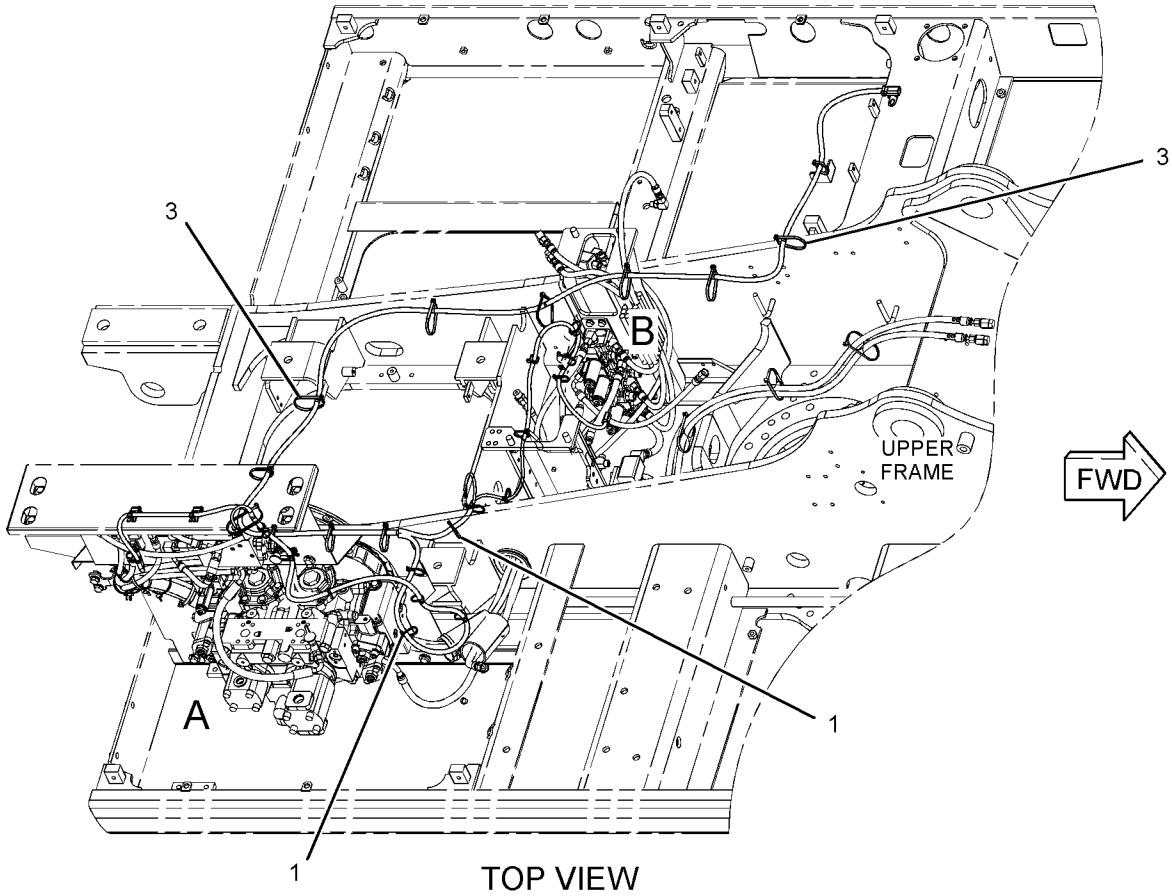

TOP VIEW

GRAPHIC #1 g01316032

267-8002 **WIRING GP-QUICK COUPLER (*contd.*)** **i04003948**

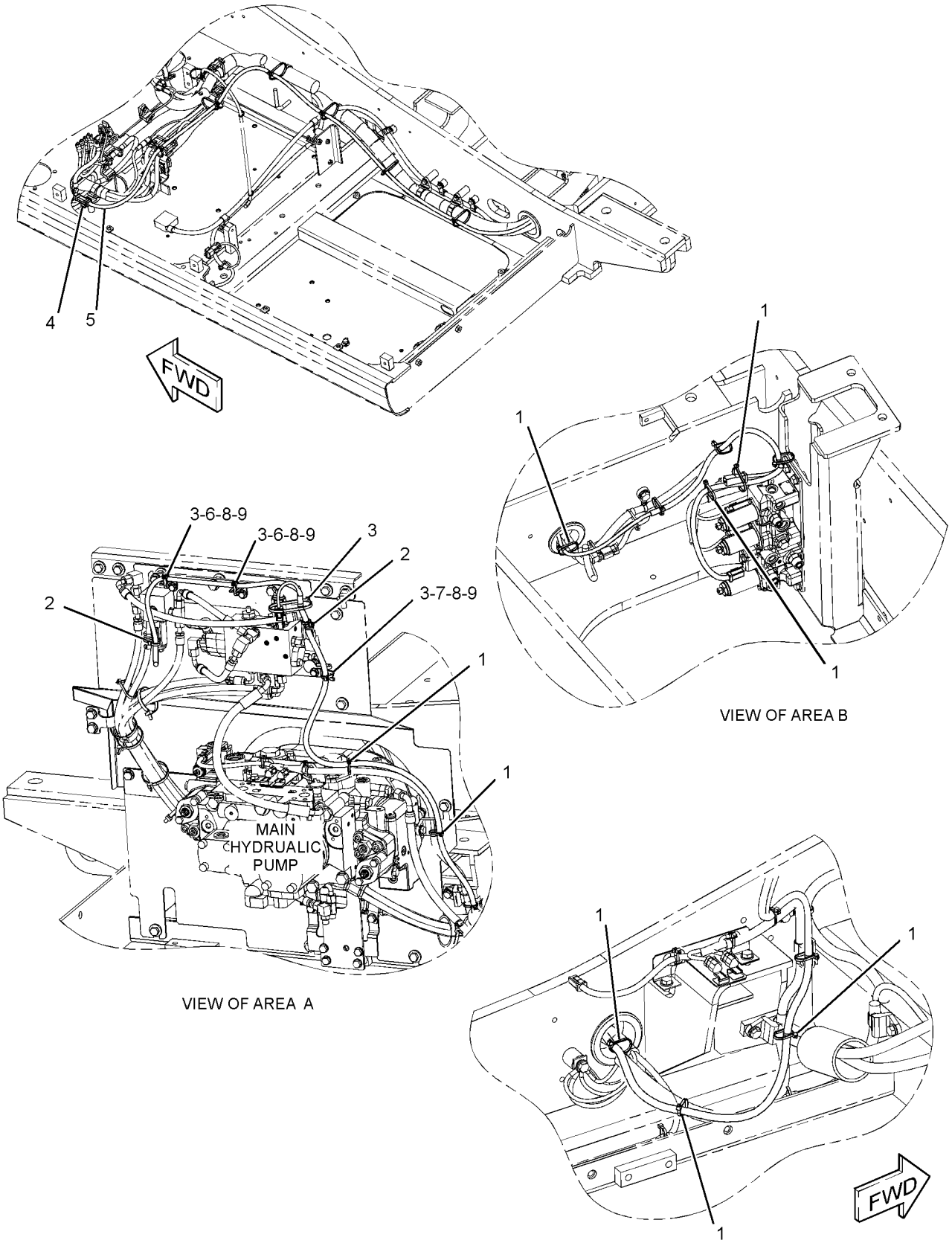

GRAPHIC #2 **<END>** g01316033

283-2913 WIRING GP-RADIO

S/N: KGF1-UP; FAL1-UP
CANNOT BE USED WITH 277-0863—PAGE: 912, 231-1768—PAGE: 2144
PART OF 347-3344, 347-3345, 354-1154, 354-1155 OPTION AR-CAB
AN ATTACHMENT

SMCS-1408, 7338 **i05238932**

NOTE	REF NO	GRAPHIC REF	PART NUMBER	QTY	PART NAME 1 2 3 4 5 6 (PRODUCT LEVEL)	SEE PAGE
	1	1	**3S-2093**	11	STRAP-CABLE	
	2	1	**4I-7889**	1	SPACER (11X25X45-MM THK)	
	3	1	**7K-1181**	10	STRAP-CABLE	
	4	1	**116-0118**	1	CLIP	
	5	1	**149-5050**	4	RELAY (24-VOLT) (SPEAKERS)	
Y	6	1	**170-2512**	1	SWITCH GP-TOGGLE (12-VOLT, 24-VOLT SPEAKER)	549
	7	1	**267-7676**	1	BRACKET AS	
	8	1	**267-7695**	1	BRACKET AS	
	9	1	**283-2914**	1	HARNESS AS-RADIO	
		1	**8T-8737**	9	PLUG-SEAL	
		1	**8T-8730**	21	SOCKET-CONNECTOR (16-GA TO 18-GA)	
		1	**9W-0844**	6	SOCKET-CONNECTOR (14-GA TO 16-GA)	
		1	**149-5069**	8	TERMINAL-BLADE (14-GA TO 20-GA)	
		1	**149-5070**	12	TERMINAL-BLADE (16-GA TO 20-GA)	
E		1	**125-7874**		TUBE-HEAT SHRINK (5.72-MM DIA) (20-CM)	
E		1	**125-7875**		TUBE-HEAT SHRINK (7.44-MM DIA) (10-CM)	
		1	**8T-8729**	6	PIN-CONNECTOR (16-GA TO 18-GA)	
		1	**9W-0852**	2	PIN-CONNECTOR (14-GA TO 16-GA)	
		1	**3S-2093**	25	STRAP-CABLE	
		1	**149-5051**	4	CONNECTOR-RECEPTACLE	
		1	**155-2274**	1	KIT-CONNECTING PLUG (6-PIN)	
					(INCLUDES PLUG AS, WEDGE & INTERFACE SEAL)	
		1	**230-5010**	1	PLUG AS-CONNECTOR (6-PIN)	
		1	**264-7032**	1	SEAL-CONNECTOR	
		1	**231-2295**	2	PLUG AS-CONNECTOR (8-PIN)	
					(EACH INCLUDES)	
		1	**264-7033**	1	SEAL-CONNECTOR	
		1	**243-4509**	2	RECEPTACLE AS-CONNECTOR (8-PIN)	
	10	1	**283-2984**	1	COVER	
	11	1	**324-5770**	1	CONVERTER-POWER (24-VOLT TO 12-VOLT)	
M	12	1	**8T-4171**	4	BOLT (M6X1X12-MM)	
M	13	1	**8T-5005**	1	BOLT (M10X1.5X70-MM)	
M	14	1	**9X-2042**	7	SCREW-TRUSS HEAD (M6X1X12-MM)	
	15	1	**9X-8256**	4	WASHER (6.6X12X2-MM THK)	

E - ORDER BY THE CENTIMETER
M - METRIC PART
Y - SEPARATE ILLUSTRATION

283-2913 **WIRING GP-RADIO (*contd.*)** **i05238932**

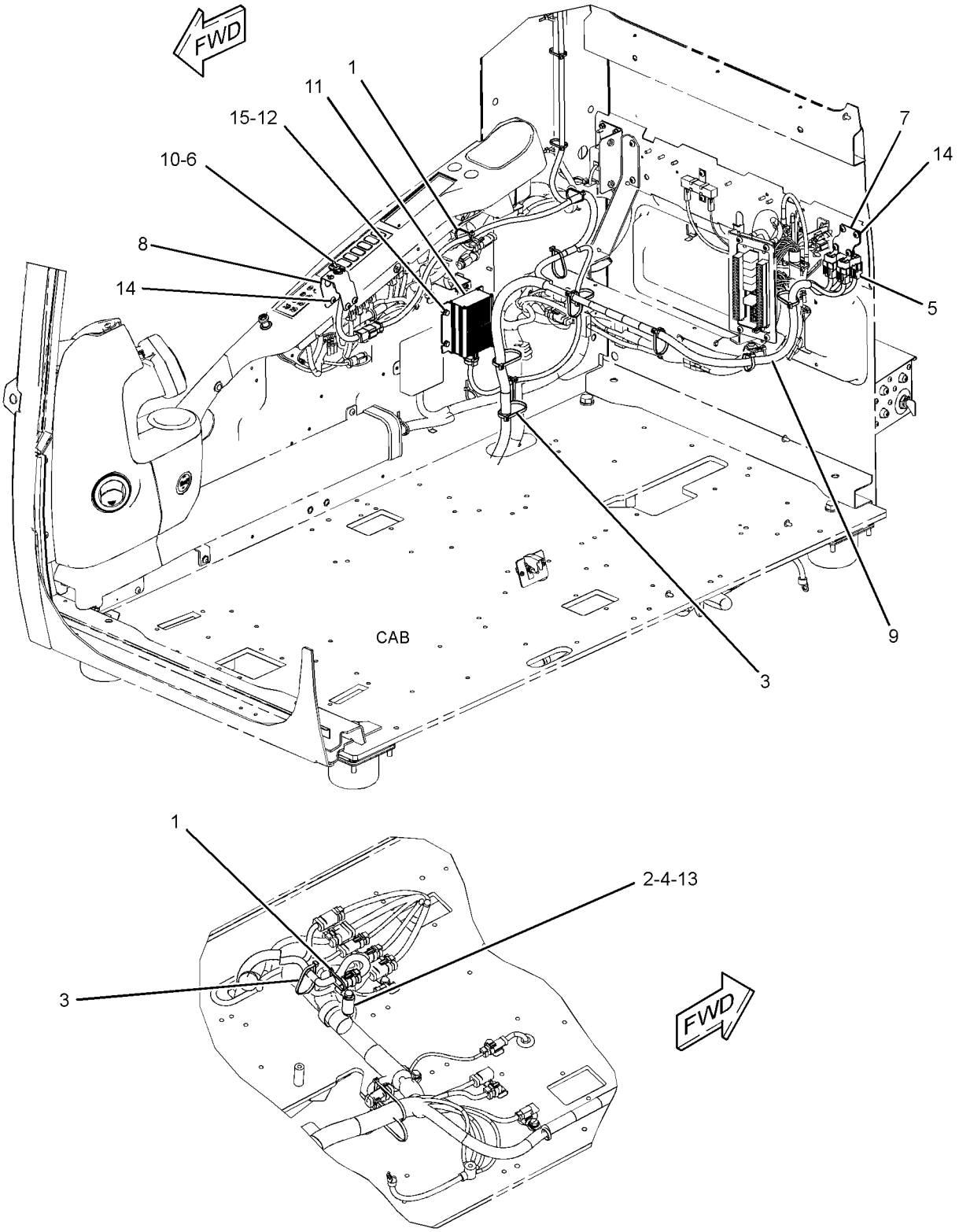

GRAPHIC #1 **<END>** g01290807

238-1570 WIRING GP-REFUELING PUMP

S/N: KGF1-UP; FAL1-UP
PART OF 264-8770 PUMP AR-FUEL TRANSFER
AN ATTACHMENT
TYPE 1

SMCS-1408 **i04472053**

NOTE	REF NO	GRAPHIC REF	PART NUMBER	QTY	PART NAME 1 2 3 4 5 6 (PRODUCT LEVEL)	SEE PAGE
	1	1	**3S-2093**	16	STRAP-CABLE	
	2	1	**9X-3495**	1	CLIP AS	
	3	1	**149-5050**	1	RELAY (24-VOLT) (REFUELING PUMP, STOP)	
	3A	1	**149-5050**	1	RELAY (24-VOLT) (REFUELING PUMP, START)	
	4	1	**213-0772**	1	SWITCH AS-MAGNETIC (24-VOLT) (REFUELING PUMP RELAY)	
	5	1	**238-1579**	1	HARNESS AS-PUMP (REFUELING)	
		1	**8T-8729**	2	PIN-CONNECTOR (16-GA TO 18-GA)	
		1	**8T-8730**	5	SOCKET-CONNECTOR (16-GA TO 18-GA)	
		1	**3S-2093**	3	STRAP-CABLE	
		1	**8T-8737**	1	PLUG-SEAL	
		1	**116-0126**	1	HOUSING-PLUG	
		1	**116-0128**	2	SEAL	
		1	**116-0255**	2	TERMINAL-BLADE (10-GA TO 20-GA)	
E		1	**119-3662**		TUBE-HEAT SHRINK (10.85-MM DIA) (7-CM)	
		1	**121-1038**	1	HOUSING-RECEPTACLE	
		1	**121-1039**	2	TERMINAL (MALE)	
E		1	**125-7875**		TUBE-HEAT SHRINK (7.44-MM DIA) (10-CM)	
		1	**2L-8065**	1	TERMINAL-RING (10-GA TO 12-GA, NO. 8 SCREW)	
		1	**2L-8067**	2	TERMINAL-RING (10-GA TO 12-GA, 1/4-IN SCREW)	
		1	**2L-8075**	1	TERMINAL-RING (14-GA TO 16-GA, NO. 8 SCREW)	
		1	**2L-8077**	1	TERMINAL-RING (14-GA TO 16-GA, 1/4-IN SCREW)	
		1	**149-5051**	2	CONNECTOR-RECEPTACLE	
		1	**149-5069**	4	TERMINAL-BLADE (14-GA TO 20-GA)	
		1	**149-5070**	4	TERMINAL-BLADE (16-GA TO 20-GA)	
		1	**155-2270**	1	KIT-CONNECTING PLUG (2-PIN)	
					(INCLUDES PLUG AS, WEDGE & INTERFACE SEAL)	
		1	**197-4385**	1	DIODE	
		1	**230-4011**	2	PLUG AS-CONNECTOR (2-PIN)	
					(EACH INCLUDES)	
		1	**264-7029**	1	SEAL-CONNECTOR	
		1	**243-4505**	1	RECEPTACLE AS-CONNECTOR (2-PIN)	
	6	1	**238-1593**	1	WIRE AS	
Y	7	1	**238-1594**	1	SWITCH GP-PUSH BUTTON (REFUELING PUMP, START)	542
Y	8	1	**238-1596**	1	SWITCH GP-PUSH BUTTON (REFUELING PUMP, STOP)	543
M	9	1	**096-2591**	2	SCREW-MACHINE (M5X0.8X35-MM)	
M	10	1	**7X-2619**	2	BOLT (M6X1X10-MM)	
	11	1	**8T-0328**	3	WASHER-HARD (5.5X10X1-MM THK)	
M	12	1	**8T-4199**	1	BOLT (M8X1.25X12-MM)	
	13	1	**8T-4224**	1	WASHER-HARD (8.8X16X2-MM THK)	
	14	1	**9X-8256**	2	WASHER (6.6X12X2-MM THK)	
	15	1	**275-6993**	1	COVER	

E - ORDER BY THE CENTIMETER
M - METRIC PART
Y - SEPARATE ILLUSTRATION

238-1570 **WIRING GP-REFUELING PUMP (*contd.*)** **i04472053**

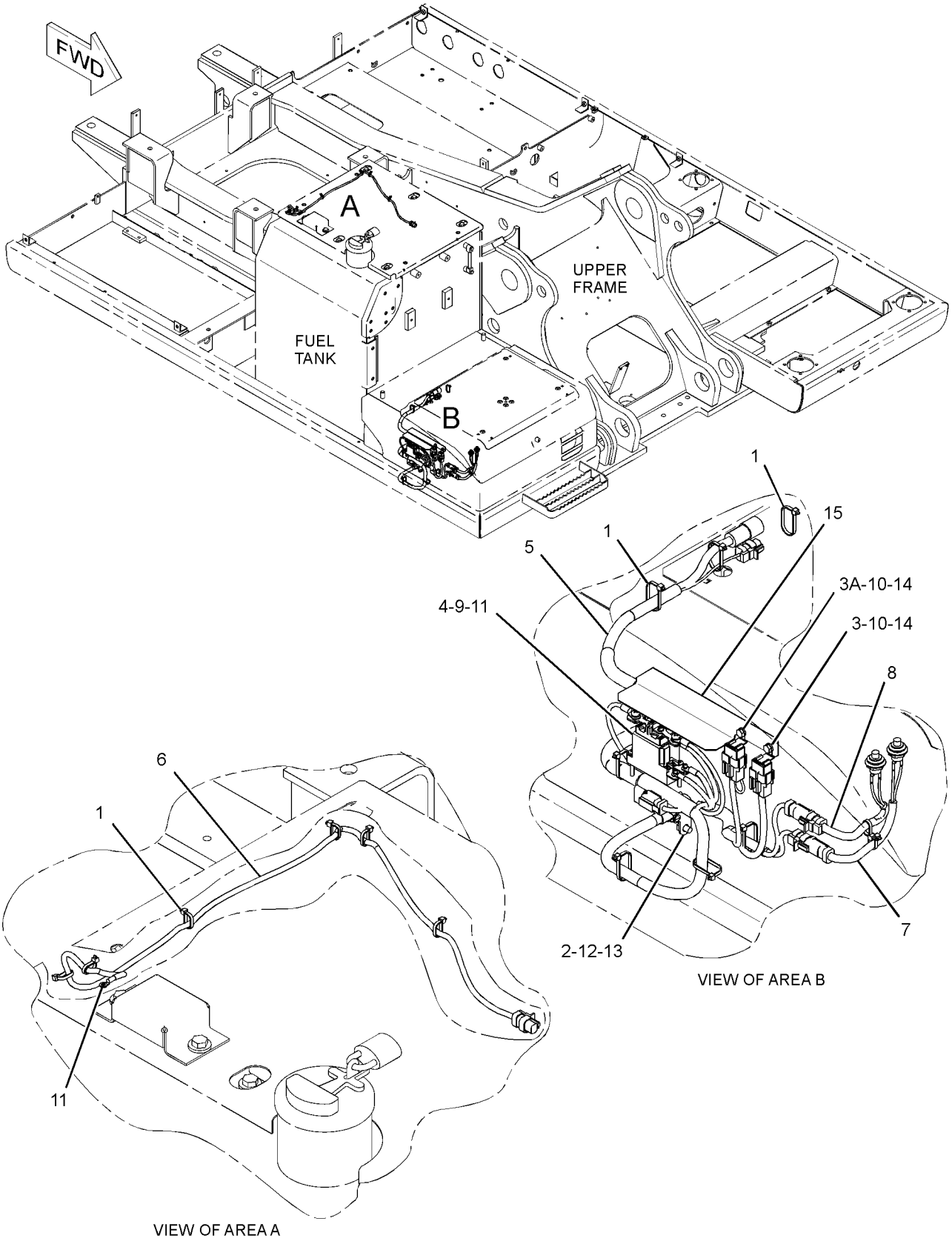

GRAPHIC #1 **<END>** g01481290

238-1570 WIRING GP-REFUELING PUMP

S/N: KGF1-UP; FAL1-UP
PART OF 314-3785 PUMP AR-FUEL TRANSFER
AN ATTACHMENT
TYPE 2

SMCS-1408 **i04472054**

NOTE	REF NO	GRAPHIC REF	PART NUMBER	QTY	PART NAME 1 2 3 4 5 6 (PRODUCT LEVEL)	SEE PAGE
	1	1	**3S-2093**	16	STRAP-CABLE	
	2	1	**9X-3495**	1	CLIP AS	
	3	1	**149-5050**	1	RELAY (24-VOLT) (REFUELING PUMP, STOP)	
	3A	1	**149-5050**	1	RELAY (24-VOLT) (REFUELING PUMP, START)	
	4	1	**213-0772**	1	SWITCH AS-MAGNETIC (24-VOLT) (REFUELING PUMP RELAY)	
	5	1	**238-1579**	1	HARNESS AS-PUMP (REFUELING)	
		1	**8T-8729**	2	PIN-CONNECTOR (16-GA TO 18-GA)	
		1	**8T-8730**	5	SOCKET-CONNECTOR (16-GA TO 18-GA)	
		1	**3S-2093**	3	STRAP-CABLE	
		1	**8T-8737**	1	PLUG-SEAL	
		1	**116-0126**	1	HOUSING-PLUG	
		1	**116-0128**	2	SEAL	
		1	**116-0255**	2	TERMINAL-BLADE (10-GA TO 20-GA)	
E		1	**119-3662**		TUBE-HEAT SHRINK (10.85-MM DIA) (7-CM)	
		1	**121-1038**	1	HOUSING-RECEPTACLE	
		1	**121-1039**	2	TERMINAL (MALE)	
E		1	**125-7875**		TUBE-HEAT SHRINK (7.44-MM DIA) (10-CM)	
		1	**2L-8065**	1	TERMINAL-RING (10-GA TO 12-GA, NO. 8 SCREW)	
		1	**2L-8067**	2	TERMINAL-RING (10-GA TO 12-GA, 1/4-IN SCREW)	
		1	**2L-8075**	1	TERMINAL-RING (14-GA TO 16-GA, NO. 8 SCREW)	
		1	**2L-8077**	1	TERMINAL-RING (14-GA TO 16-GA, 1/4-IN SCREW)	
		1	**149-5051**	2	CONNECTOR-RECEPTACLE	
		1	**149-5069**	4	TERMINAL-BLADE (14-GA TO 20-GA)	
		1	**149-5070**	4	TERMINAL-BLADE (16-GA TO 20-GA)	
		1	**155-2270**	1	KIT-CONNECTING PLUG (2-PIN)	
					(INCLUDES PLUG AS, WEDGE & INTERFACE SEAL)	
		1	**197-4385**	1	DIODE	
		1	**230-4011**	2	PLUG AS-CONNECTOR (2-PIN)	
					(EACH INCLUDES)	
		1	**264-7029**	1	SEAL-CONNECTOR	
		1	**243-4505**	1	RECEPTACLE AS-CONNECTOR (2-PIN)	
C	6	1	**319-1335**	1	HARNESS AS-WIRING	
		1	**8T-8730**	3	SOCKET-CONNECTOR (16-GA TO 18-GA)	
		1	**8T-8737**	1	PLUG-SEAL	
		1	**2L-8079**	1	TERMINAL-RING (14-GA TO 16-GA, 3/8-IN SCREW)	
		1	**230-4011**	2	PLUG AS-CONNECTOR (2-PIN)	
					(EACH INCLUDES)	
		1	**264-7029**	1	SEAL-CONNECTOR	
Y	7	1	**238-1594**	1	SWITCH GP-PUSH BUTTON (REFUELING PUMP, START)	542
Y	8	1	**238-1596**	1	SWITCH GP-PUSH BUTTON (REFUELING PUMP, STOP)	543
M	9	1	**096-2591**	2	SCREW-MACHINE (M5X0.8X35-MM)	
M	10	1	**7X-2619**	2	BOLT (M6X1X10-MM)	
C	11	1	**8T-0328**	2	WASHER-HARD (5.5X10X1-MM THK)	
M	12	1	**8T-4199**	1	BOLT (M8X1.25X12-MM)	
	13	1	**8T-4224**	1	WASHER-HARD (8.8X16X2-MM THK)	
	14	1	**9X-8256**	2	WASHER (6.6X12X2-MM THK)	
	15	1	**275-6993**	1	COVER	
C	16	1	**7K-1181**	11	STRAP-CABLE	

C - CHANGE FROM PREVIOUS TYPE
E - ORDER BY THE CENTIMETER
M - METRIC PART
Y - SEPARATE ILLUSTRATION

238-1570 **WIRING GP-REFUELING PUMP (*contd.*)** **i04472054**

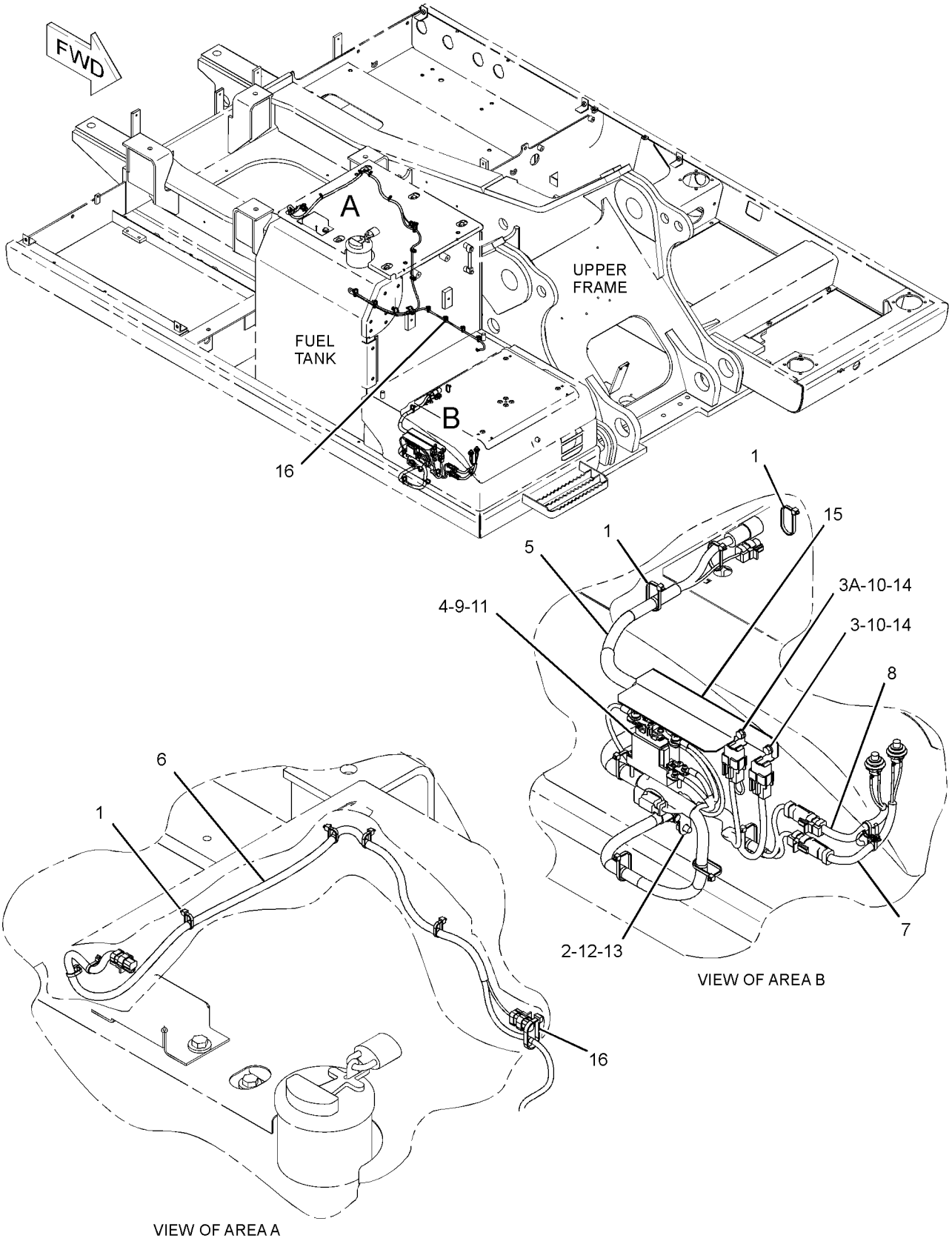

GRAPHIC #1 **<END>** g01620056

227-6035 DRIVE GP-FINAL—WITHOUT MOTOR

S/N: KGF1-2155; FAL1-1458

PART OF 227-6913 DRIVE GP-FINAL

SMCS-4050 **i05296547**

NOTE	REF NO	GRAPHIC REF	PART NUMBER	QTY	PART NAME 1 2 3 4 5 6 (PRODUCT LEVEL)	SEE PAGE
	1	1	**7Y-1434**	1	SPACER (40X69.5X6-MM THK)	
B	2	1	**096-1773**	1	SHIM (0.15-MM THK)	
B		1	**096-1774**	1	SHIM (0.3-MM THK)	
B		1	**096-1775**	1	SHIM (0.4-MM THK)	
B		1	**096-1776**	1	SHIM (0.5-MM THK)	
B		1	**096-1777**	1	SHIM (0.6-MM THK)	
B		1	**096-1778**	1	SHIM (0.7-MM THK)	
B		1	**096-1779**	1	SHIM (0.8-MM THK)	
B		1	**096-1780**	1	SHIM (1-MM THK)	
B		1	**096-1781**	1	SHIM (1.6-MM THK)	
	11	1	**227-6034**	14	BOLT-FLANGE HEAD (M16X2X60-MM)	
	12	1	**7Y-0223**	3	SHAFT-PLANETARY	
	13	1	**094-1542**	6	BEARING-ROLLER	
	14	1	**7Y-1431**	3	GEAR-PLANETARY (30-TEETH)	
M	15	1	**094-1528**	6	WASHER (53X84X1-MM THK)	
	16	1	**095-0891**	6	PIN-SPRING	
	17	1	**6I-6585**	3	GEAR-PLANETARY (44-TEETH)	
	18	1	**094-0616**	3	BEARING AS-ROLLER	
	19	1	**3E-2338**	2	PLUG-PIPE	
	20	1	**7M-8485**	2	SEAL-O-RING	
	21	1	**7Y-1426**	1	COVER	
	22	1	**7Y-0225**	3	SHAFT-PLANETARY	
	23	1	**094-0611**	6	WASHER (47.3X76X1-MM THK)	
	24	1	**094-0580**	1	PLATE (10-MM THK)	
	25	1	**6I-6583**	1	GEAR-SUN (13-TEETH)	
	26	1	**7Y-1430**	1	GEAR-SUN (17-TEETH)	
	27	1	**7Y-1558**	1	SPACER (90X119.6X7.5-MM THK)	
	28	1	**7Y-1432**	1	CARRIER	
M	29	1	**7X-2568**	16	BOLT (M20X2.5X180-MM)	
	30	1	**8T-4123**	16	WASHER (22X35X3.5-MM THK)	
B	31	1	**1U-8846**		SEALANT-GASKET	
	33	1	**148-4705**	1	GEAR-RING (104-TEETH)	
	34	1	**7Y-1433**	1	CARRIER	
	35	1	**6D-0692**	1	SEAL-O-RING	
	36	1	**148-4715**	1	GEAR-COUPLING (55-TEETH)	
	37	1	**114-1539**	6	PIN-DOWEL	
	38	1	**191-3235**	1	HOUSING	
	39	1	**168-8451**	2	BALL BEARING	
	40	1	**114-1497**	1	SEAL GP-DUO-CONE	
	41	1	**191-3236**	1	HOUSING	
M	42	1	**095-1270**	2	SETSCREW-SOCKET (M12X1.75X30-MM)	
	43	1	**148-4708**	1	GEAR-RING (79-TEETH)	

B - USE AS REQUIRED
M - METRIC PART

227-6035 **DRIVE GP-FINAL (*contd.*)** **i05296547**

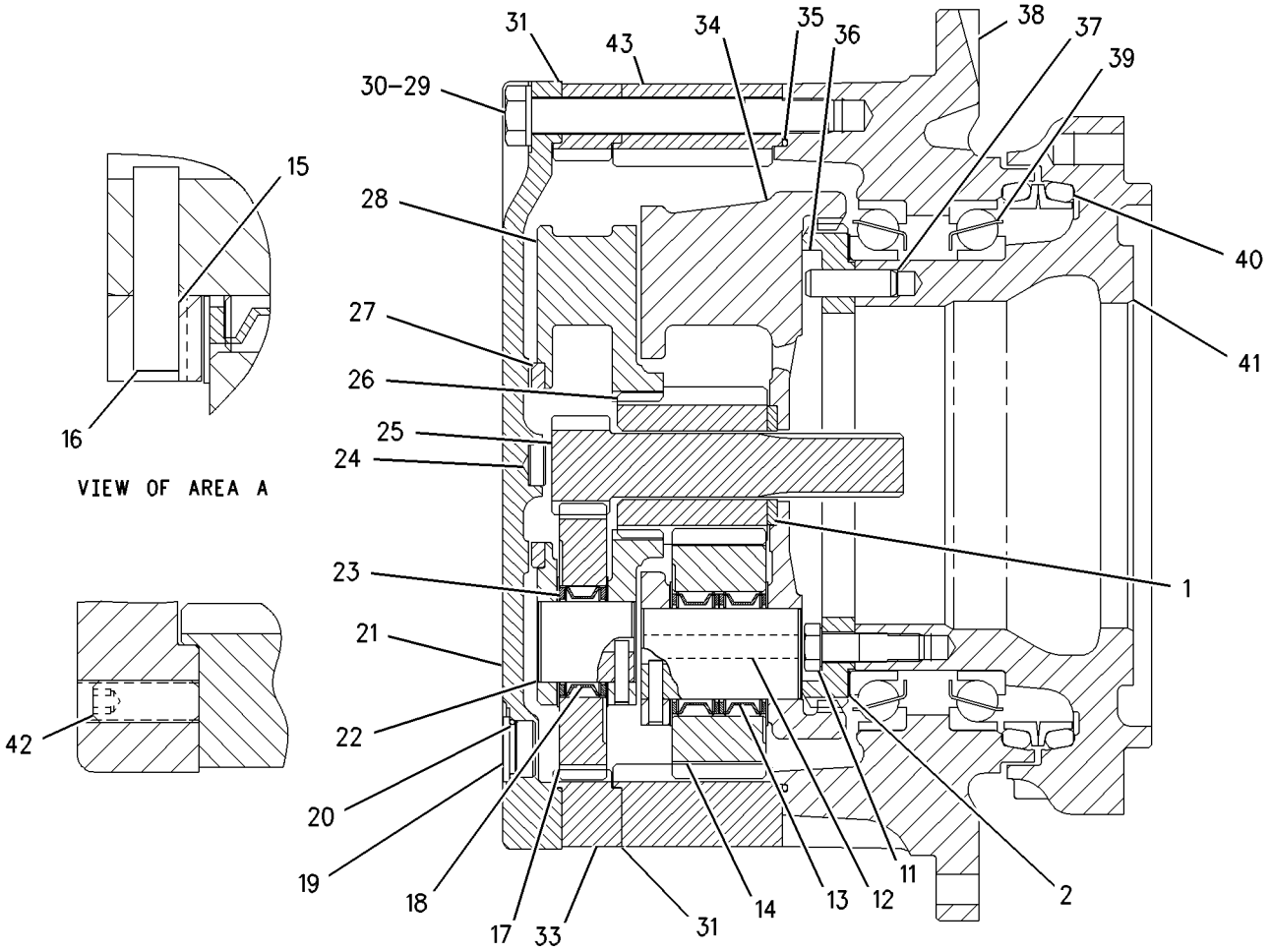

GRAPHIC #1 **<END>** g00880483

227-6913 DRIVE GP-FINAL–WITH MOTOR

S/N: KGF1-2155; FAL1-1458

PART OF 267-6767 POWER TRAIN AR

SMCS-4050 **i02562484**

NOTE	PART NUMBER	QTY	PART NAME 1 2 3 4 5 6 (PRODUCT LEVEL)	SEE PAGE
Y	**227-6035**	1	DRIVE GP-FINAL (WITHOUT MOTOR)	649
Y	*215-9982*	1	MOTOR & MTG GP-TRAVEL	1465

Y - SEPARATE ILLUSTRATION

<END>

296-6298 DRIVE GP-FINAL—WITH MOTOR

S/N: KGF2156-5527; FAL1459-5113

PART OF 353-0510 DRIVE GP-FINAL, 267-6767 POWER TRAIN AR

SMCS-4050 **i04098197**

NOTE	REF NO	GRAPHIC REF	PART NUMBER	QTY	PART NAME 1 2 3 4 5 6 (PRODUCT LEVEL)	SEE PAGE
Y	1	1	*215-9982*	1	MOTOR & MTG GP-TRAVEL	1465
Y	2	1	**296-6299**	1	DRIVE GP-FINAL (WITHOUT MOTOR)	653

Y - SEPARATE ILLUSTRATION

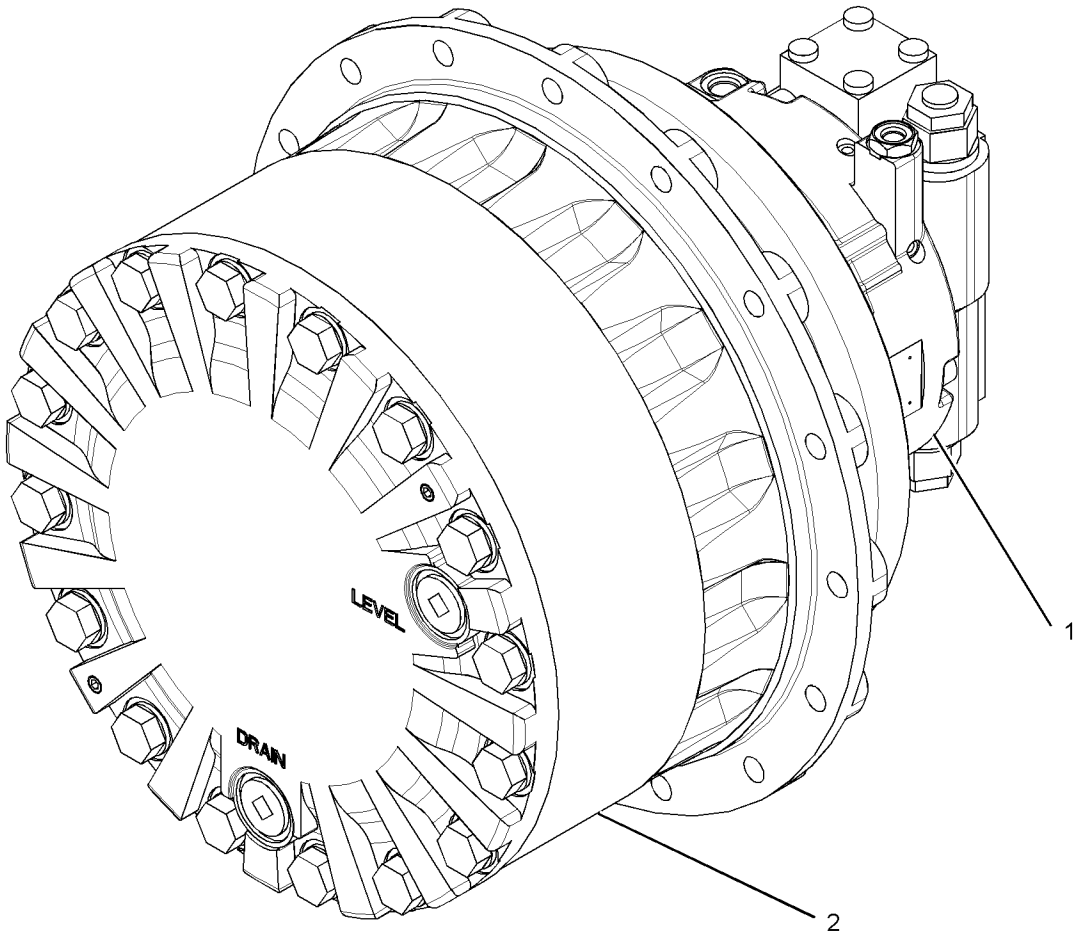

GRAPHIC #1 **<END>** g01522287

296-6299 DRIVE GP-FINAL—WITHOUT MOTOR

S/N: KGF2156-5527; FAL1459-5113

PART OF 296-6298 DRIVE GP-FINAL

SMCS-4050 **i03343724**

NOTE	REF NO	GRAPHIC REF	PART NUMBER	QTY	PART NAME 1 2 3 4 5 6 (PRODUCT LEVEL)	SEE PAGE
	1	1	**6I-6583**	1	GEAR-SUN (13-TEETH)	
	2	1	**6I-6585**	3	GEAR-PLANETARY (44-TEETH)	
	3	1	**7Y-0223**	3	SHAFT-PLANETARY	
	4	1	**7Y-0225**	3	SHAFT-PLANETARY	
	5	1	**7Y-1426**	1	COVER	
	6	1	**7Y-1430**	1	GEAR-SUN (17-TEETH)	
	7	1	**7Y-1431**	3	GEAR-PLANETARY (30-TEETH)	
	8	1	**7Y-1432**	1	CARRIER	
	9	1	**7Y-1433**	1	CARRIER	
	10	1	**7Y-1558**	1	SPACER (90X119.6X7.5-MM THK)	
	11	1	**094-0580**	1	PLATE (10-MM THK)	
	12	1	**094-0611**	6	WASHER (47.3X76X1-MM THK)	
M	13	1	**094-1528**	6	WASHER (53X84X1-MM THK)	
	14	1	**095-0891**	6	PIN-SPRING	
B	15	2	**096-1773**	1	SHIM (0.15-MM THK)	
B		2	**096-1774**	1	SHIM (0.3-MM THK)	
B		2	**096-1775**	1	SHIM (0.4-MM THK)	
B		2	**096-1776**	1	SHIM (0.5-MM THK)	
B		2	**096-1777**	1	SHIM (0.6-MM THK)	
B		2	**096-1778**	1	SHIM (0.7-MM THK)	
B		2	**096-1779**	1	SHIM (0.8-MM THK)	
B		2	**096-1780**	1	SHIM (1-MM THK)	
B		2	**096-1781**	1	SHIM (1.6-MM THK)	
	24	2	**114-1497**	1	SEAL GP-DUO-CONE	
	25	2	**114-1539**	6	PIN-DOWEL	
	26	2	**148-4715**	1	GEAR-COUPLING (55-TEETH)	
	27	2	**168-8451**	2	BALL BEARING	
	28	2	**191-3235**	1	HOUSING	
	29	2	**191-3236**	1	HOUSING	
	30	2	**227-6034**	14	BOLT-FLANGE HEAD (M16X2X60-MM)	
Y	31	2	**296-6300**	1	GEAR GP-TRANSFER	671
	32	1	**094-0616**	3	BEARING AS-ROLLER	
	33	1	**094-1542**	6	BEARING-ROLLER	
M	34	1	**095-1270**	2	SETSCREW-SOCKET (M12X1.75X30-MM)	
	35	1	**3E-2338**	2	PLUG-PIPE	
	36	2	**6D-0692**	1	SEAL-O-RING	
	37	1	**7M-8485**	2	SEAL-O-RING	
M	38	1	**7X-2568**	16	BOLT (M20X2.5X180-MM)	
	39	1	**7Y-1434**	1	SPACER (40X69.5X6-MM THK)	
	40	1	**8T-4123**	16	WASHER (22X35X3.5-MM THK)	
B	41	1	**1U-8846**		SEALANT-GASKET	

B - USE AS REQUIRED
M - METRIC PART
Y - SEPARATE ILLUSTRATION

296-6299 **DRIVE GP-FINAL (*contd.*)** **i03343724**

REFER TO ALL ILLUSTRATIONS OF
THIS GROUP FOR AUXILIARY VIEWS

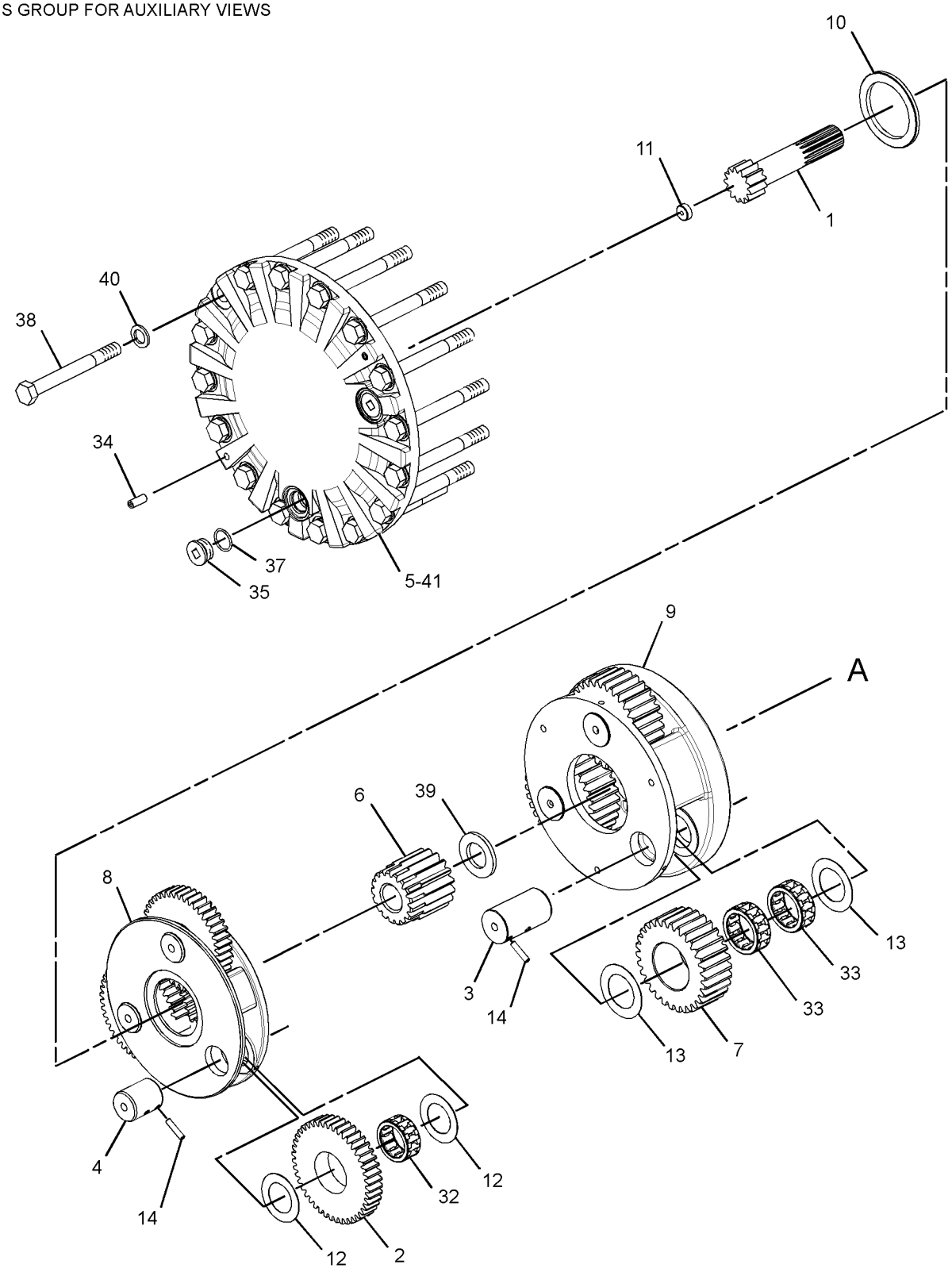

GRAPHIC #1 g01522723

296-6299 **DRIVE GP-FINAL (*contd.*)** **i03343724**

REFER TO ALL ILLUSTRATIONS OF
THIS GROUP FOR AUXILIARY VIEWS

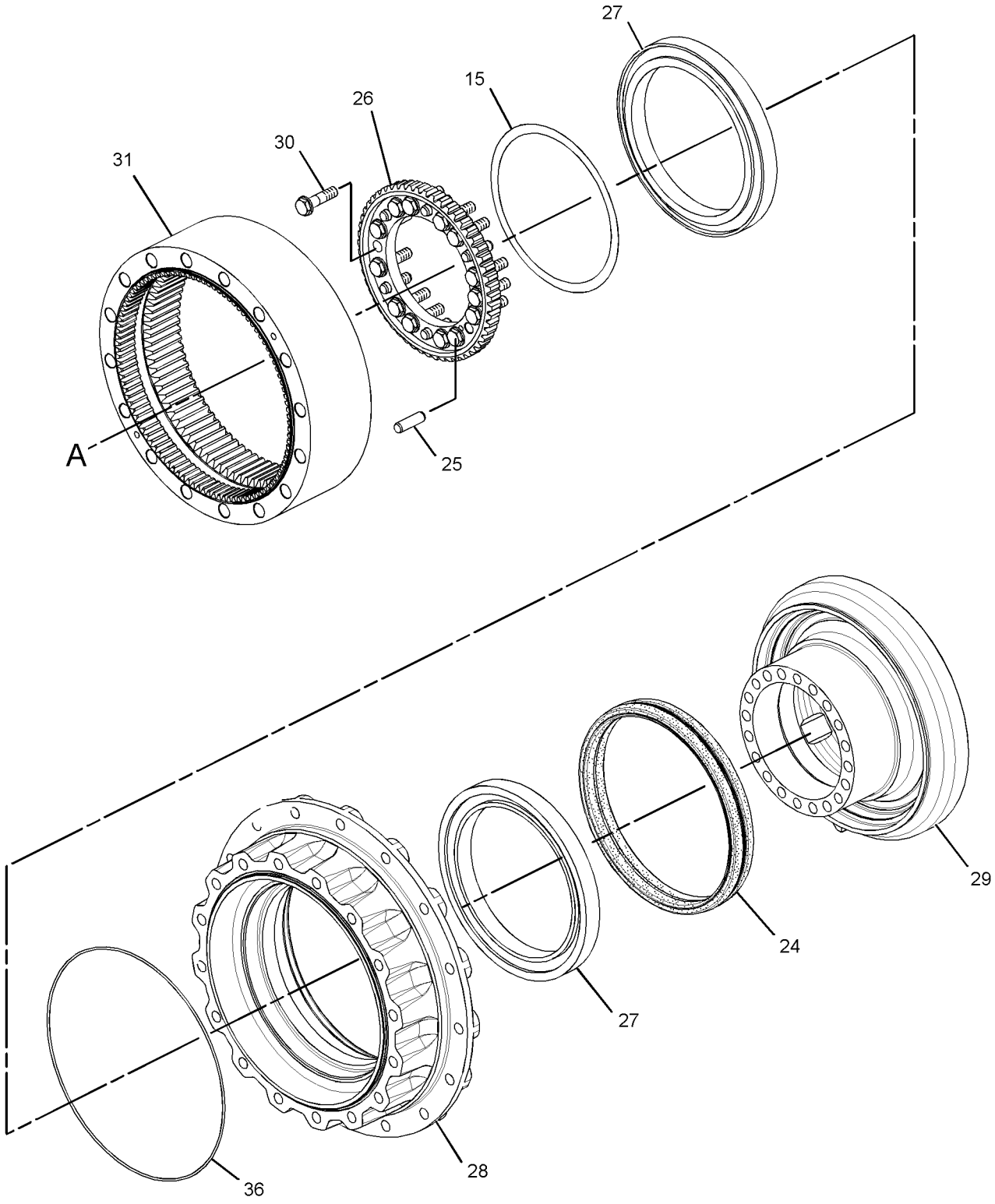

GRAPHIC #2 **<END>** g01522817

353-0510 DRIVE GP-FINAL—WITH MOTOR, SPROCKET

S/N: KGF4622-5527; FAL3592-5113

PART OF 267-6767 POWER TRAIN AR

SMCS-4050 **i04078253**

NOTE	PART NUMBER	QTY	PART NAME 1 2 3 4 5 6 (PRODUCT LEVEL)	SEE PAGE
Y	*296-6298*	1	DRIVE GP-FINAL (WITH MOTOR)	652
Y	*145-3042*	1	SPROCKET GP	674

Y - SEPARATE ILLUSTRATION

<END>

353-0545 DRIVE GP-FINAL—WITH MOTOR, SPROCKET

S/N: KGF6922-UP; FAL8648-UP

PART OF 267-6767 POWER TRAIN AR

SMCS-4050 **i04707969**

NOTE	REF NO	GRAPHIC REF	PART NUMBER	QTY	PART NAME 1 2 3 4 5 6 (PRODUCT LEVEL)	SEE PAGE
Y	1	1	*145-3042*	1	SPROCKET GP	674
Y	2	1	*353-0609*	1	DRIVE GP-FINAL (WITH MOTOR)	658

Y - SEPARATE ILLUSTRATION

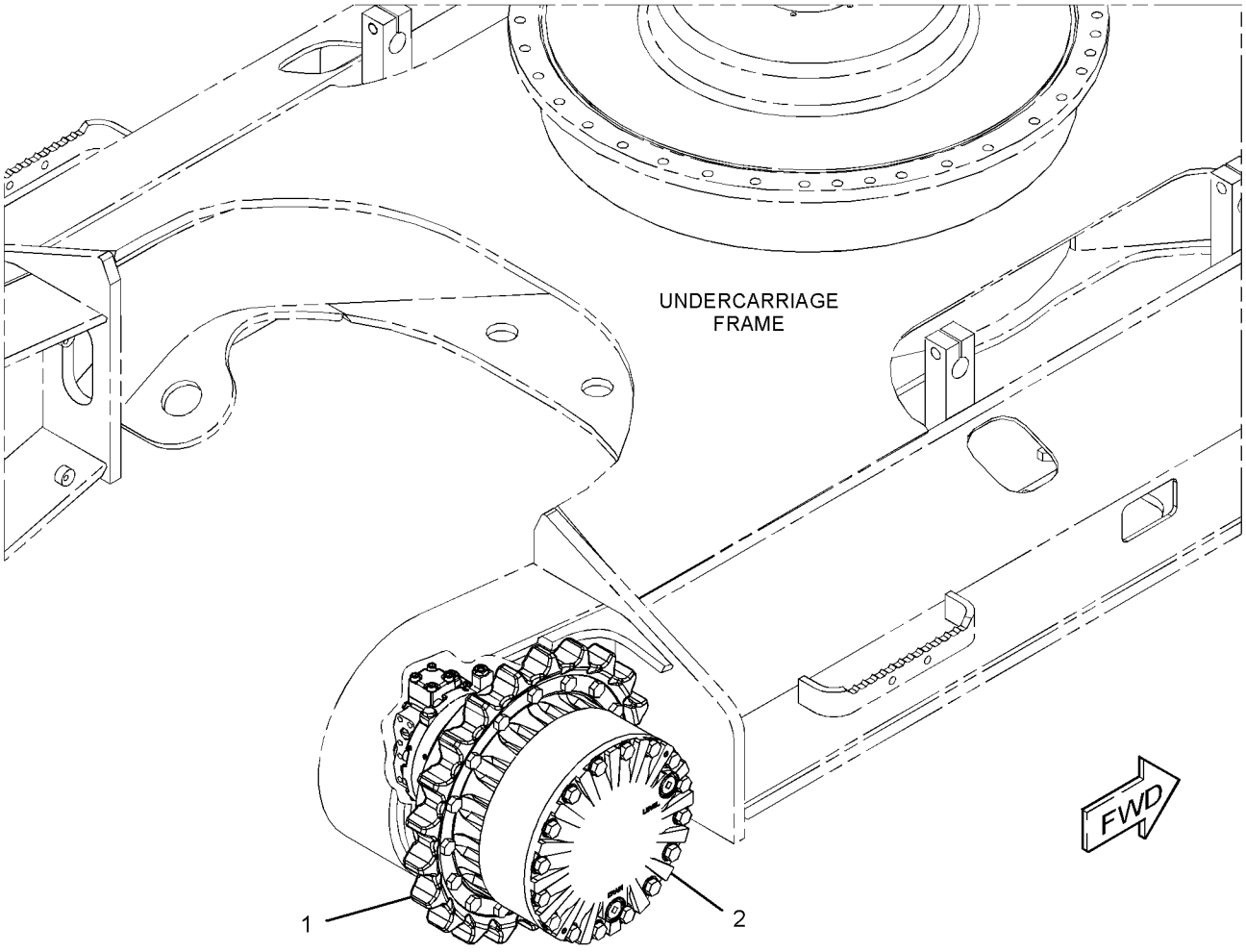

GRAPHIC #1 **<END>** g02813096

353-0609 DRIVE GP-FINAL—WITH MOTOR

S/N: KGF6922-UP; FAL8648-UP

PART OF 353-0545 DRIVE GP-FINAL

SMCS-4050 **i04422616**

NOTE	REF NO	GRAPHIC REF	PART NUMBER	QTY	PART NAME 1 2 3 4 5 6 (PRODUCT LEVEL)	SEE PAGE
Y	1	1	*334-9986*	1	MOTOR & MTG GP-TRAVEL	1467
Y	2	1	**353-0611**	1	DRIVE GP-FINAL (WITHOUT MOTOR)	659

Y - SEPARATE ILLUSTRATION

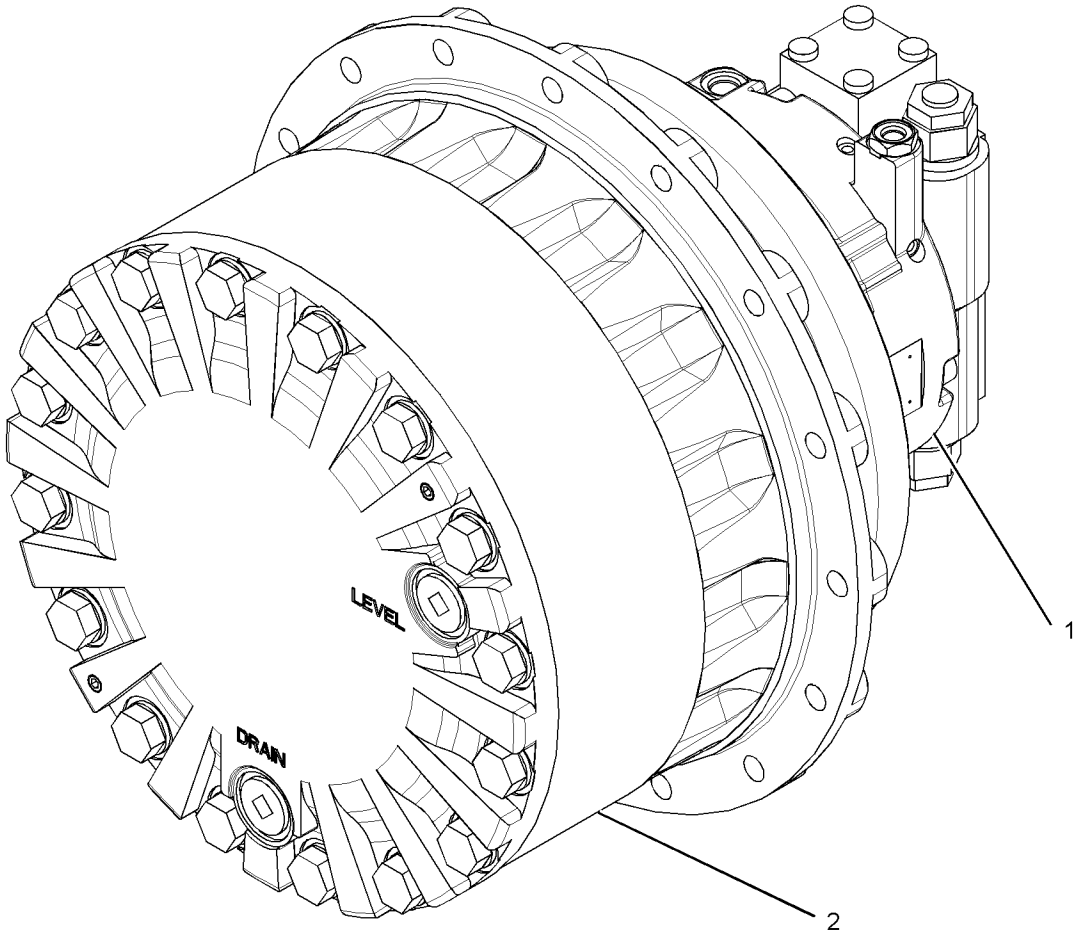

GRAPHIC #1 **<END>** g01522287

353-0611 DRIVE GP-FINAL—WITHOUT MOTOR

S/N: KGF6325-UP; FAL7080-UP

PART OF 353-0609, 353-0646 DRIVE GP-FINAL

SMCS-4050 **i04422904**

NOTE	REF NO	GRAPHIC REF	PART NUMBER	QTY	PART NAME 1 2 3 4 5 6 (PRODUCT LEVEL)	SEE PAGE
	1	1	**6I-6583**	1	GEAR-SUN (13-TEETH)	
	2	1	**6I-6585**	3	GEAR-PLANETARY (44-TEETH)	
	3	1	**7Y-0223**	3	SHAFT-PLANETARY	
	4	1	**7Y-0225**	3	SHAFT-PLANETARY	
	5	1	**7Y-1426**	1	COVER	
	6	1	**7Y-1430**	1	GEAR-SUN (17-TEETH)	
	7	1	**7Y-1431**	3	GEAR-PLANETARY (30-TEETH)	
	8	1	**7Y-1432**	1	CARRIER	
	9	1	**7Y-1433**	1	CARRIER	
	10	1	**7Y-1558**	1	SPACER (90X119.6X7.5-MM THK)	
	11	1	**094-0580**	1	PLATE (10-MM THK)	
	12	1	**094-0611**	6	WASHER (47.3X76X1-MM THK)	
M	13	1	**094-1528**	6	WASHER (53X84X1-MM THK)	
	14	1	**095-0891**	6	PIN-SPRING	
B	15	1	**096-1773**	1	SHIM (0.15-MM THK)	
B			**096-1774**	1	SHIM (0.3-MM THK)	
B			**096-1775**	1	SHIM (0.4-MM THK)	
B			**096-1776**	1	SHIM (0.5-MM THK)	
B			**096-1777**	1	SHIM (0.6-MM THK)	
B			**096-1778**	1	SHIM (0.7-MM THK)	
B			**096-1779**	1	SHIM (0.8-MM THK)	
B			**096-1780**	1	SHIM (1-MM THK)	
B			**096-1781**	1	SHIM (1.6-MM THK)	
	24	1	**114-1539**	6	PIN-DOWEL	
	25	1	**148-4715**	1	GEAR-COUPLING (55-TEETH)	
	26	1	**174-4874**	1	SEAL GP-DUO-CONE	
	27	1	**191-3235**	1	HOUSING	
	28	1	**227-6034**	14	BOLT-FLANGE HEAD (M16X2X60-MM)	
	29	1	**296-6220**	2	BALL BEARING	
	30	1	**296-6268**	3	BEARING AS-ROLLER	
	31	1	**296-6269**	6	BEARING-ROLLER	
Y	32	1	**296-6300**	1	GEAR GP-TRANSFER	671
	33	1	**353-0612**	1	HOUSING-MOTOR	
M	34	1	**095-1270**	2	SETSCREW-SOCKET (M12X1.75X30-MM)	
	35	1	**3E-2338**	2	PLUG-PIPE	
	36	1	**6D-0692**	1	SEAL-O-RING	
	37	1	**7M-8485**	2	SEAL-O-RING	
M	38	1	**7X-2568**	16	BOLT (M20X2.5X180-MM)	
	39	1	**7Y-1434**	1	SPACER (40X69.5X6-MM THK)	
	40	1	**8T-4123**	16	WASHER (22X35X3.5-MM THK)	
B	41	1	**1U-8846**		SEALANT-GASKET	

B - USE AS REQUIRED
M - METRIC PART
Y - SEPARATE ILLUSTRATION

353-0611 **DRIVE GP-FINAL (*contd.*)** **i04422904**

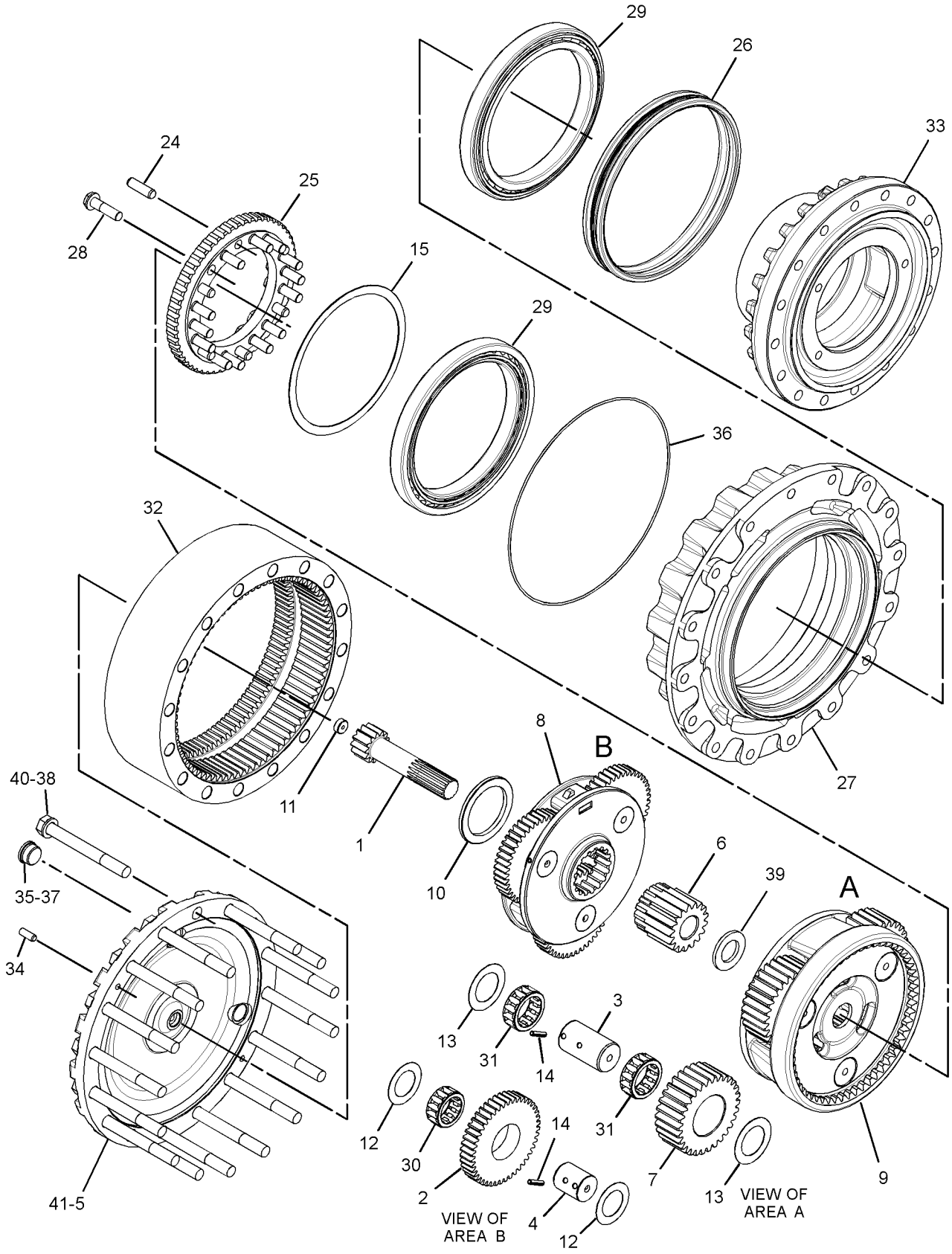

GRAPHIC #1

<END>

g02662318

353-0613 DRIVE GP-FINAL—WITH MOTOR

S/N: KGF5528-6324; FAL5114-7079

PART OF 353-0641 DRIVE GP-FINAL

SMCS-4050 **i04128069**

NOTE	REF NO	GRAPHIC REF	PART NUMBER	QTY	PART NAME 1 2 3 4 5 6 (PRODUCT LEVEL)	SEE PAGE
Y	1	1	*215-9982*	1	MOTOR & MTG GP-TRAVEL	1465
Y	2	1	**353-0615**	1	DRIVE GP-FINAL (WITHOUT MOTOR)	662

Y - SEPARATE ILLUSTRATION

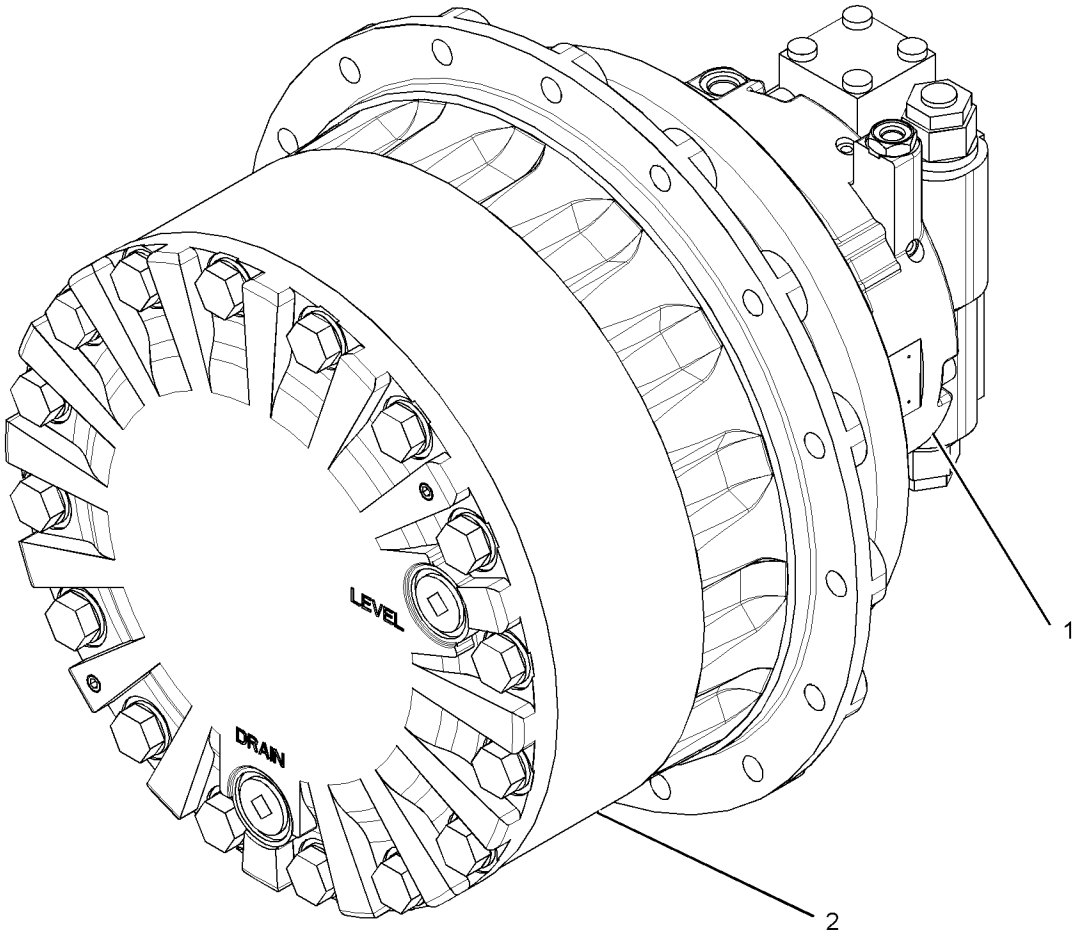

GRAPHIC #1 **<END>** g01522287

353-0615 DRIVE GP-FINAL—WITHOUT MOTOR

S/N: KGF5528-6324; FAL5114-7079

PART OF 353-0613 DRIVE GP-FINAL

SMCS-4050 **i04128472**

NOTE	REF NO	GRAPHIC REF	PART NUMBER	QTY	PART NAME 1 2 3 4 5 6 (PRODUCT LEVEL)	SEE PAGE
	1	1	**6I-6583**	1	GEAR-SUN (13-TEETH)	
	2	1	**6I-6585**	3	GEAR-PLANETARY (44-TEETH)	
	3	1	**7Y-0223**	3	SHAFT-PLANETARY	
	4	1	**7Y-0225**	3	SHAFT-PLANETARY	
	5	1	**7Y-1426**	1	COVER	
	6	1	**7Y-1430**	1	GEAR-SUN (17-TEETH)	
	7	1	**7Y-1431**	3	GEAR-PLANETARY (30-TEETH)	
	8	1	**7Y-1432**	1	CARRIER	
	9	1	**7Y-1433**	1	CARRIER	
	10	1	**7Y-1558**	1	SPACER (90X119.6X7.5-MM THK)	
	11	1	**094-0580**	1	PLATE (10-MM THK)	
	12	1	**094-0611**	6	WASHER (47.3X76X1-MM THK)	
M	13	1	**094-1528**	6	WASHER (53X84X1-MM THK)	
	14	1	**095-0891**	6	PIN-SPRING	
B	15	2	**096-1773**	1	SHIM (0.15-MM THK)	
B		2	**096-1774**	1	SHIM (0.3-MM THK)	
B		2	**096-1775**	1	SHIM (0.4-MM THK)	
B		2	**096-1776**	1	SHIM (0.5-MM THK)	
B		2	**096-1777**	1	SHIM (0.6-MM THK)	
B		2	**096-1778**	1	SHIM (0.7-MM THK)	
B		2	**096-1779**	1	SHIM (0.8-MM THK)	
B		2	**096-1780**	1	SHIM (1-MM THK)	
B		2	**096-1781**	1	SHIM (1.6-MM THK)	
	24	2	**114-1497**	1	SEAL GP-DUO-CONE	
	25	2	**114-1539**	6	PIN-DOWEL	
	26	2	**148-4715**	1	GEAR-COUPLING (55-TEETH)	
	27	2	**168-8451**	2	BALL BEARING	
	28	2	**191-3235**	1	HOUSING	
	29	2	**353-0612**	1	HOUSING-MOTOR	
	30	2	**227-6034**	14	BOLT-FLANGE HEAD (M16X2X60-MM)	
Y	31	2	**296-6300**	1	GEAR GP-TRANSFER	671
	32	1	**094-0616**	3	BEARING AS-ROLLER	
	33	1	**094-1542**	6	BEARING-ROLLER	
M	34	1	**095-1270**	2	SETSCREW-SOCKET (M12X1.75X30-MM)	
	35	1	**3E-2338**	2	PLUG-PIPE (FINAL DRIVE, OIL DRAIN, FILL)	
	36	2	**6D-0692**	1	SEAL-O-RING	
	37	1	**7M-8485**	2	SEAL-O-RING	
M	38	1	**7X-2568**	16	BOLT (M20X2.5X180-MM)	
	39	1	**7Y-1434**	1	SPACER (40X69.5X6-MM THK)	
	40	1	**8T-4123**	16	WASHER (22X35X3.5-MM THK)	
B	41	1	**1U-8846**		SEALANT-GASKET	

B - USE AS REQUIRED
M - METRIC PART
Y - SEPARATE ILLUSTRATION

353-0615 **DRIVE GP-FINAL (*contd.*)** **i04128472**

REFER TO ALL ILLUSTRATIONS OF
THIS GROUP FOR AUXILIARY VIEWS

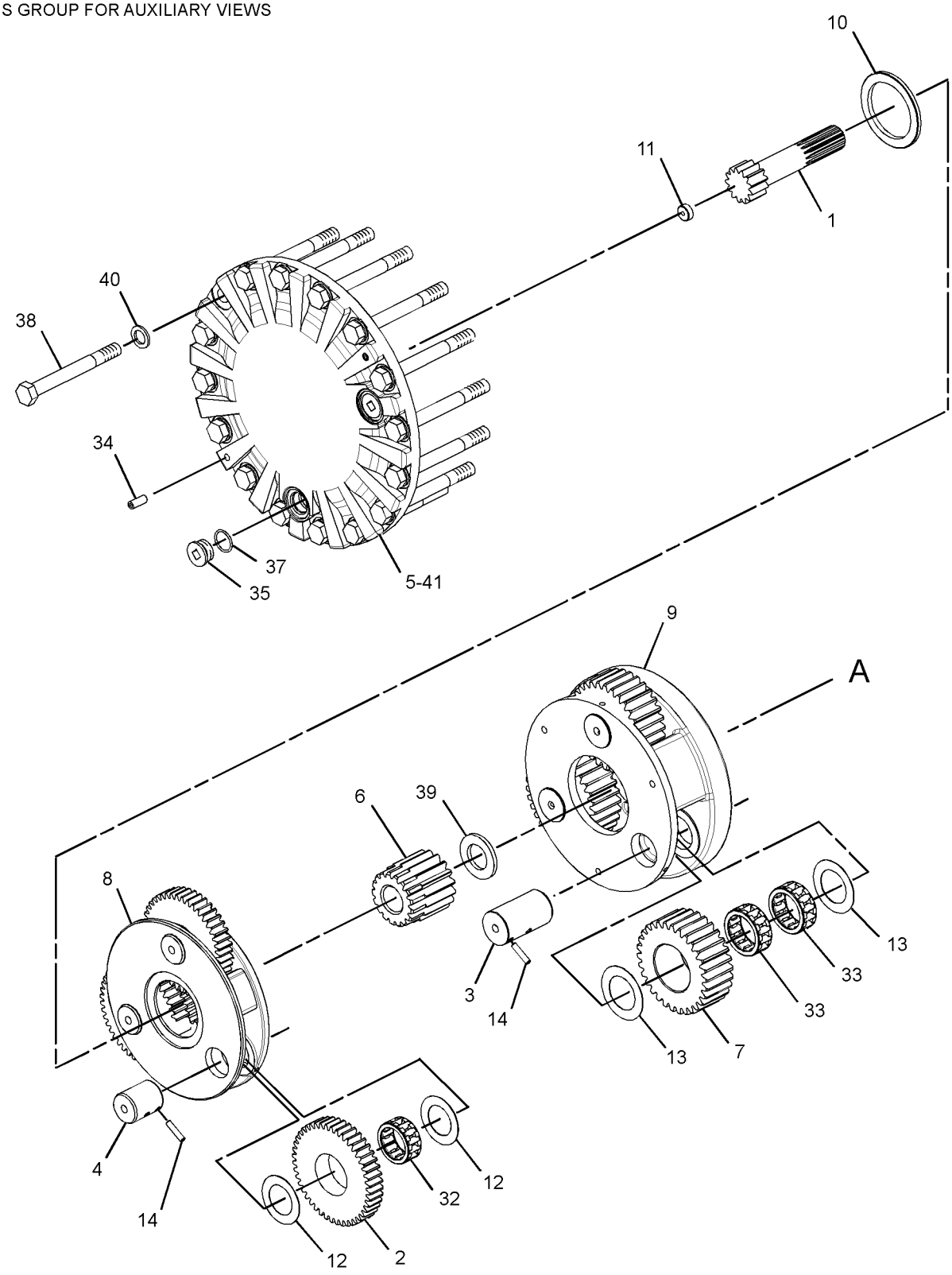

GRAPHIC #1

g01522723

353-0615 **DRIVE GP-FINAL (*contd.*)** **i04128472**

REFER TO ALL ILLUSTRATIONS OF
THIS GROUP FOR AUXILIARY VIEWS

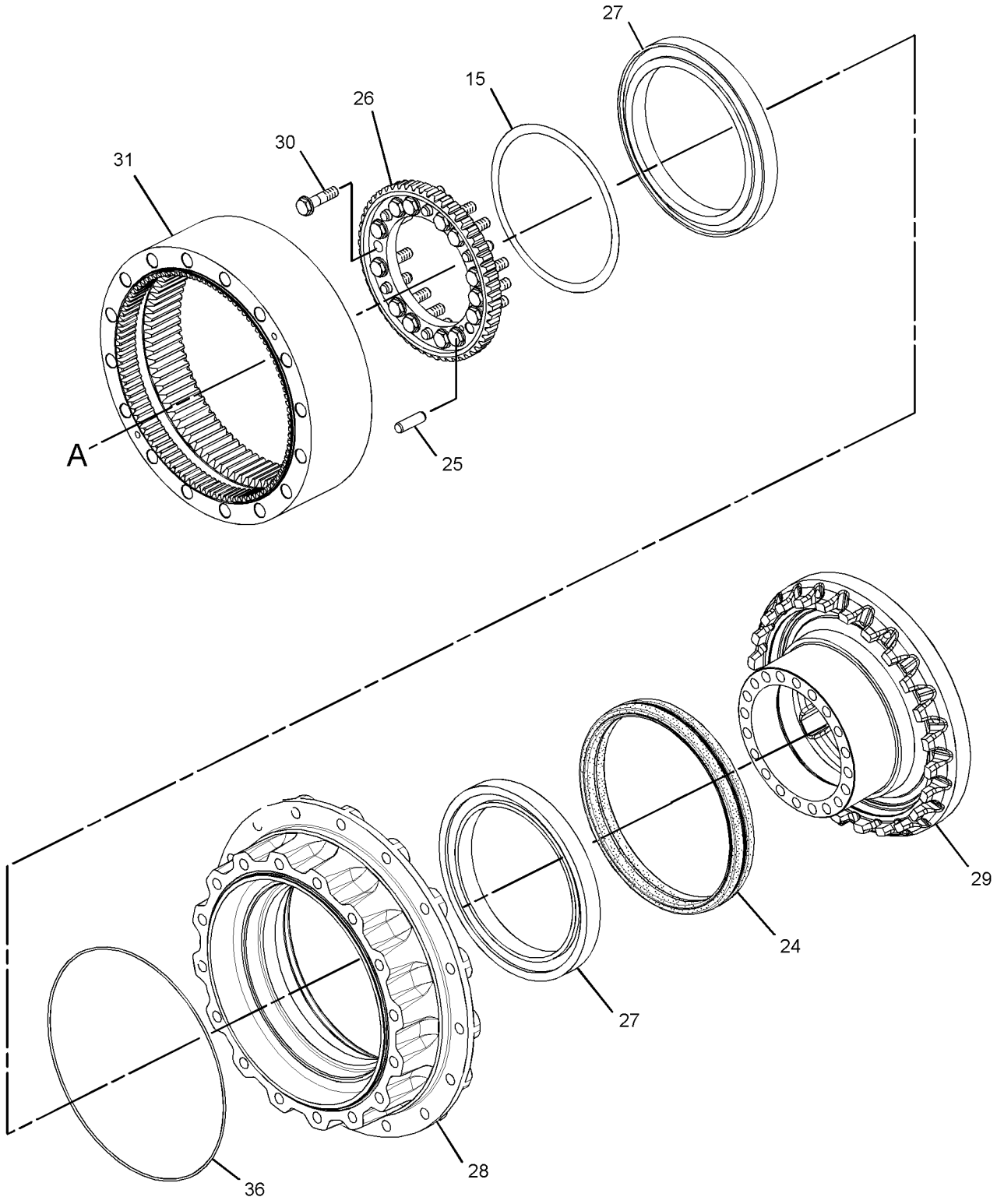

GRAPHIC #2 **<END>** g02355263

353-0641 DRIVE GP-FINAL—WITH MOTOR, SPROCKET

S/N: KGF5528-6324; FAL5114-7079
PART OF 267-6767 POWER TRAIN AR

SMCS-4050 **i04127956**

NOTE	REF NO	GRAPHIC REF	PART NUMBER	QTY	PART NAME 1 2 3 4 5 6 (PRODUCT LEVEL)	SEE PAGE
Y	1	1	*145-3042*	1	SPROCKET GP	674
Y	2	1	*353-0613*	1	DRIVE GP-FINAL (WITH MOTOR)	661

Y - SEPARATE ILLUSTRATION

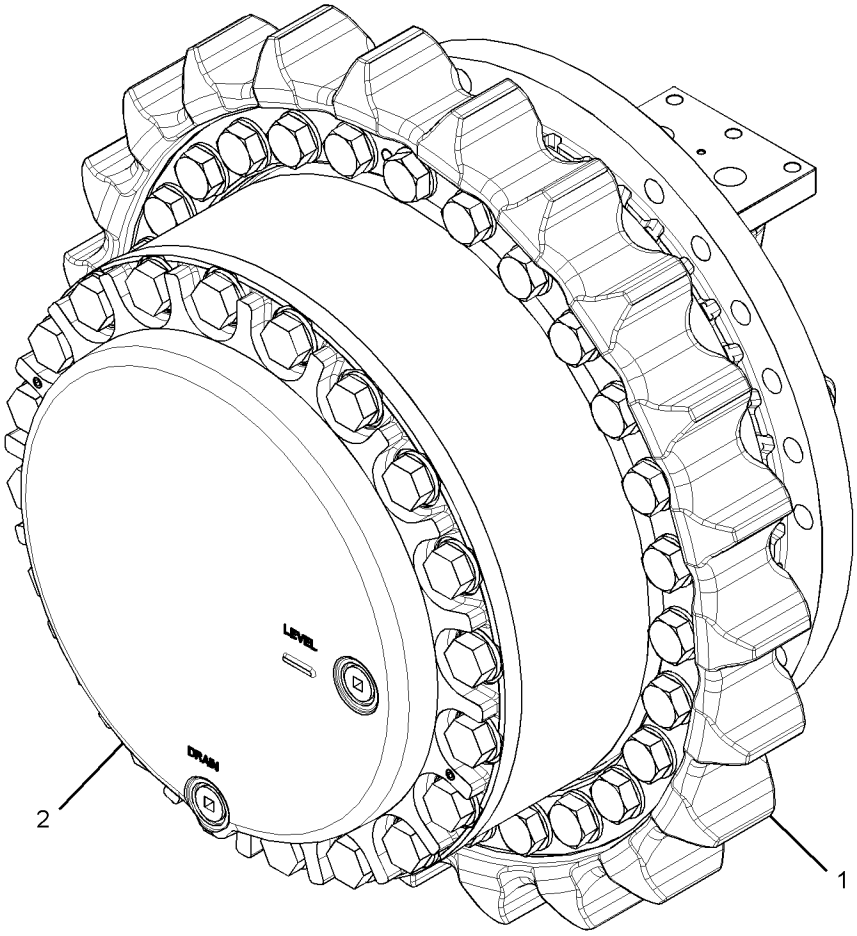

GRAPHIC #1 **<END>** g02190775

353-0645 DRIVE GP-FINAL—WITH MOTOR, SPROCKET

S/N: KGF6325-6921; FAL7080-8647
PART OF 267-6767 POWER TRAIN AR

SMCS-4050 **i04688472**

NOTE	REF NO	GRAPHIC REF	PART NUMBER	QTY	PART NAME 1 2 3 4 5 6 (PRODUCT LEVEL)	SEE PAGE
Y	1	1	*145-3042*	1	SPROCKET GP	674
Y	2	1	*353-0646*	1	DRIVE GP-FINAL (WITH MOTOR)	667

Y - SEPARATE ILLUSTRATION

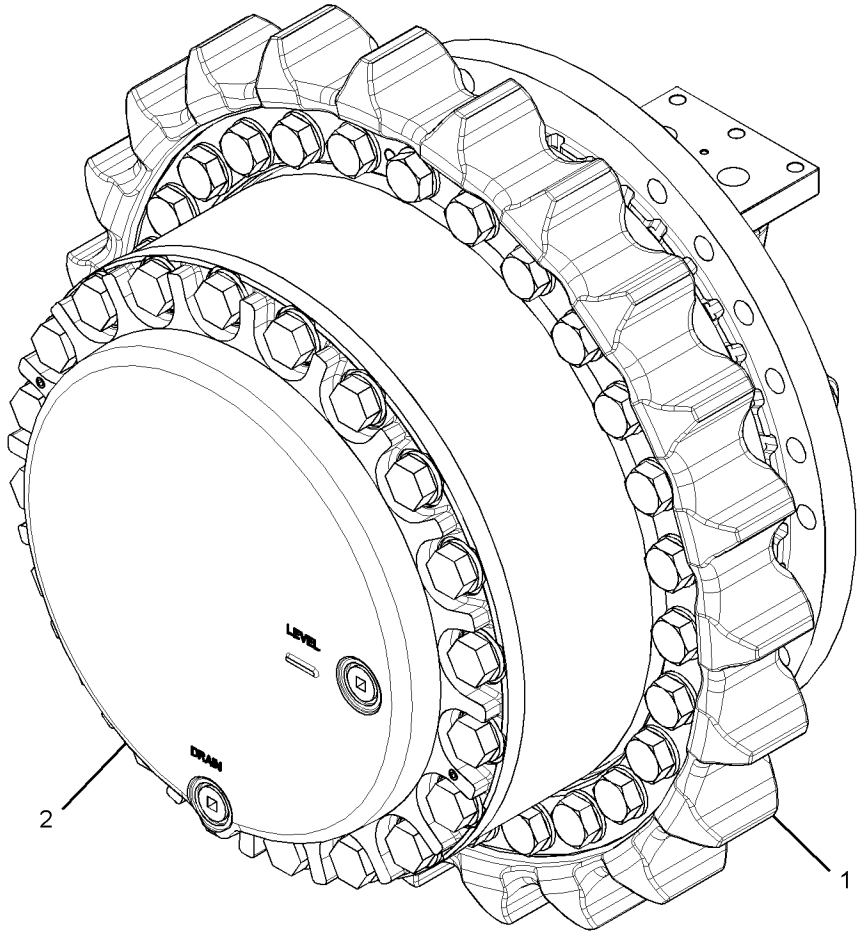

GRAPHIC #1 **<END>** g02190775

353-0646 DRIVE GP-FINAL—WITH MOTOR

S/N: KGF6325-6921; FAL7080-8647

PART OF 353-0645 DRIVE GP-FINAL

SMCS-4050 **i04688510**

NOTE	REF NO	GRAPHIC REF	PART NUMBER	QTY	PART NAME 1 2 3 4 5 6 (PRODUCT LEVEL)	SEE PAGE
Y	1	1	*215-9982*	1	MOTOR & MTG GP-TRAVEL	1465
Y	2	1	**353-0611**	1	DRIVE GP-FINAL (WITHOUT MOTOR)	659

Y - SEPARATE ILLUSTRATION

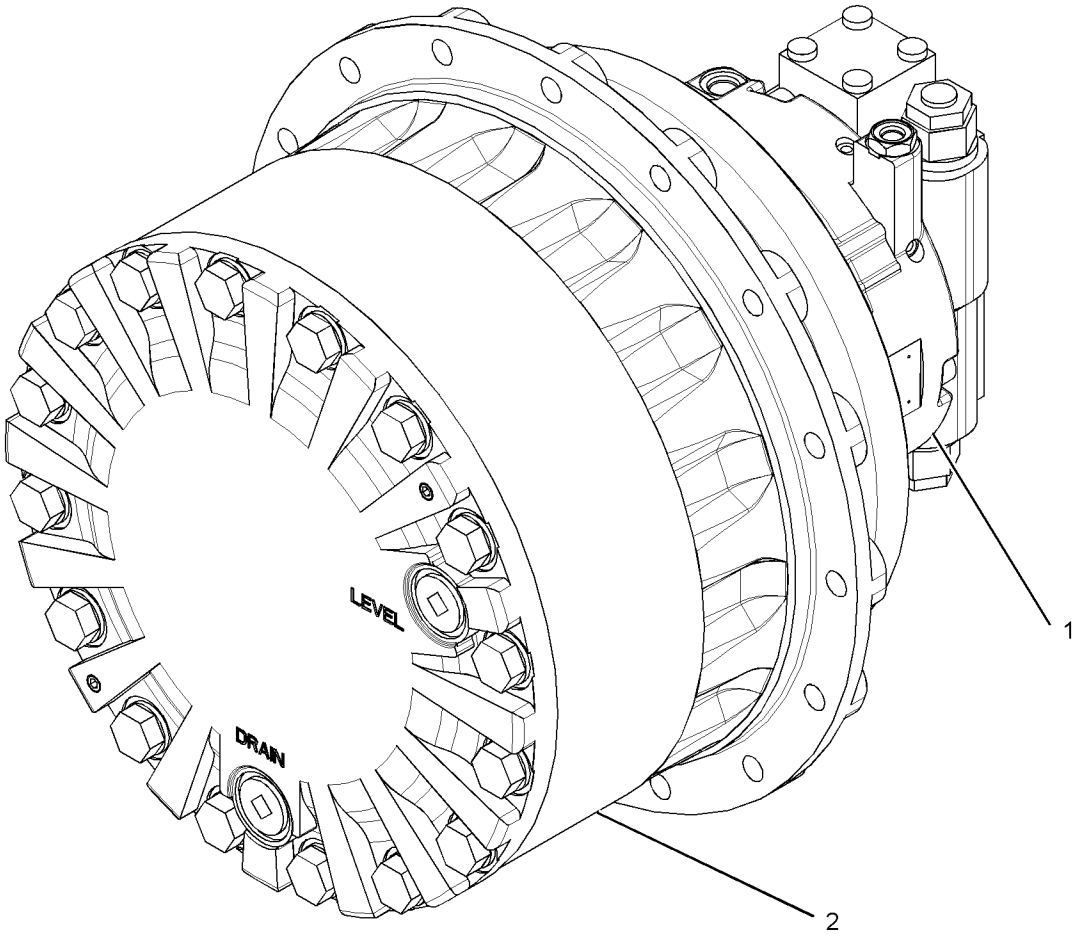

GRAPHIC #1 **<END>** g01522287

267-6783 GEAR GP-RING

S/N: KGF2156-UP; FAL1459-UP

PART OF 296-6300 GEAR GP-TRANSFER

SMCS- **i03553547**

NOTE	REF NO	GRAPHIC REF	PART NUMBER	QTY	PART NAME 1 2 3 4 5 6 (PRODUCT LEVEL)	SEE PAGE
					(NO SERVICED PARTS)	

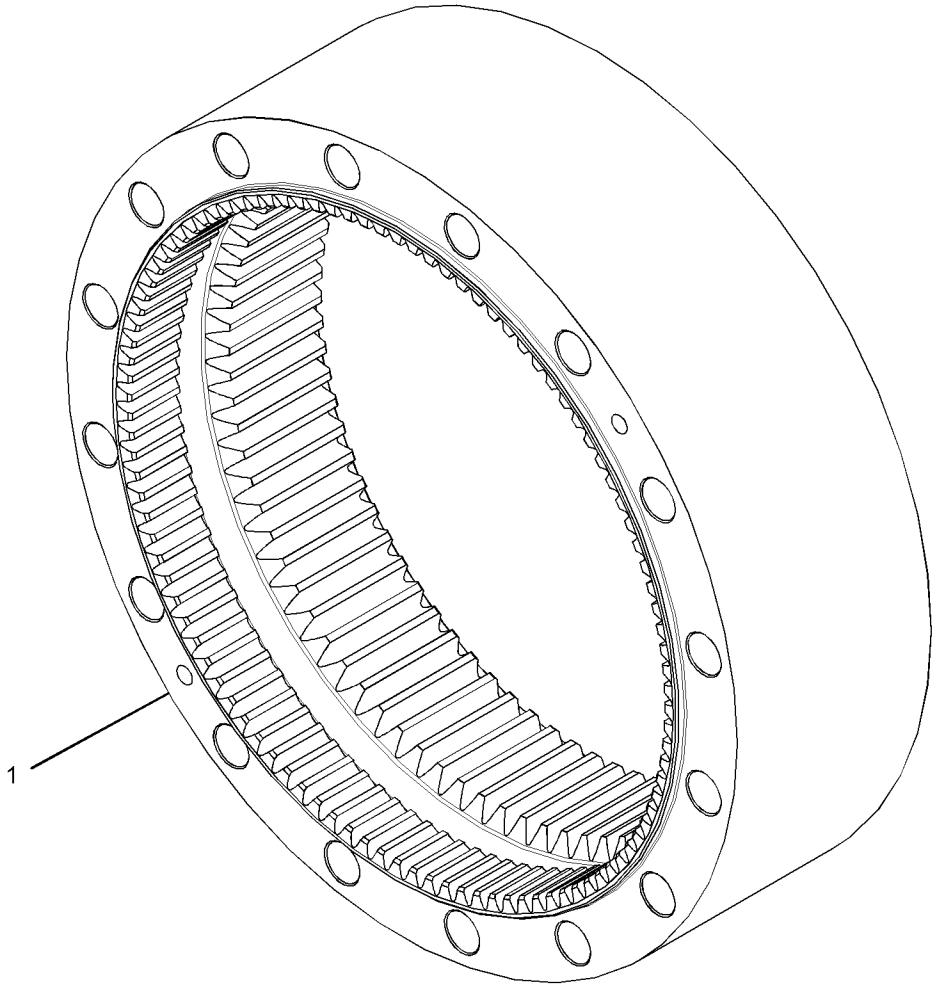

GRAPHIC #1 **<END>** g01731176

296-6301 GEAR GP-RING

S/N: KGF2156-UP; FAL1459-UP

PART OF 296-6300 GEAR GP-TRANSFER

SMCS- **i03343731**

NOTE	REF NO	GRAPHIC REF	PART NUMBER	QTY	PART NAME 1 2 3 4 5 6 (PRODUCT LEVEL)	SEE PAGE
	1	1	**148-4705**	1	GEAR-RING (104-TEETH)	
	2	1	**148-4708**	1	GEAR-RING (79-TEETH)	

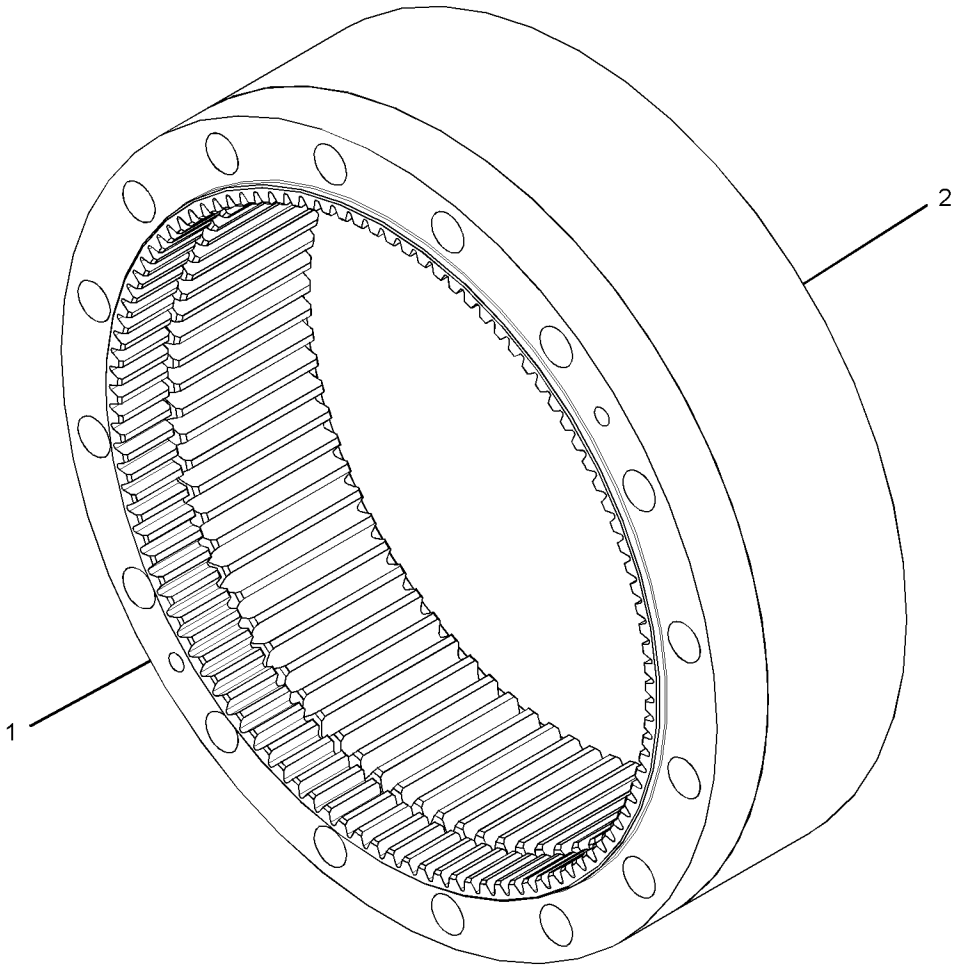

GRAPHIC #1 **<END>** g01731180

296-6302 GEAR GP-RING

S/N: KGF2156-UP; FAL1459-UP

PART OF 296-6300 GEAR GP-TRANSFER

SMCS- **i03343745**

NOTE	REF NO	GRAPHIC REF	PART NUMBER	QTY	PART NAME 1 2 3 4 5 6 (PRODUCT LEVEL)	SEE PAGE
	1	1	**102-6455**	1	GEAR-RING (104-TEETH)	
	2	1	**102-6457**	1	GEAR-RING (79-TEETH)	

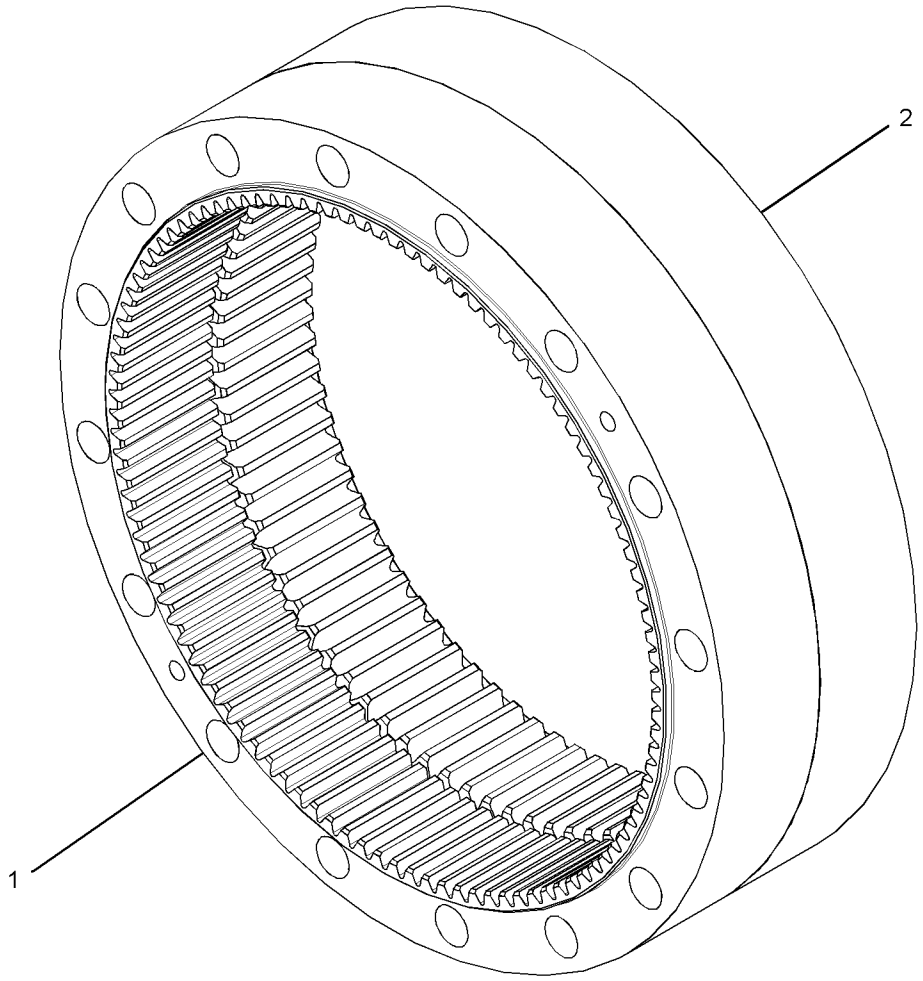

GRAPHIC #1 **<END>** g01731178

296-6300 GEAR GP-TRANSFER

S/N: KGF2156-UP; FAL1459-UP

PART OF 296-6299, 353-0611, 353-0615 DRIVE GP-FINAL

SMCS-1164, 3159

i03343727

NOTE	PART NUMBER	QTY	PART NAME 1 2 3 4 5 6 (PRODUCT LEVEL)	SEE PAGE
Y	*267-6783*	1	GEAR GP-RING	668
			—OR—	
Y	*296-6301*	1	GEAR GP-RING	669
			—OR—	
Y	*296-6302*	1	GEAR GP-RING	670

Y - SEPARATE ILLUSTRATION

<END>

367-8329 KIT-HOUSING—FINAL DRIVE

S/N: KGF1-UP; FAL1-UP

FIELD INSTALLATION

SMCS-4050 **i04460594**

NOTE	REF NO	GRAPHIC REF	PART NUMBER	QTY	PART NAME 1 2 3 4 5 6 (PRODUCT LEVEL)	SEE PAGE
B	1	1	**096-1773**	1	SHIM (0.15-MM THK)	
B		1	**096-1774**	1	SHIM (0.3-MM THK)	
B		1	**096-1775**	1	SHIM (0.4-MM THK)	
B		1	**096-1776**	1	SHIM (0.5-MM THK)	
B		1	**096-1777**	1	SHIM (0.6-MM THK)	
B		1	**096-1778**	1	SHIM (0.7-MM THK)	
B		1	**096-1779**	1	SHIM (0.8-MM THK)	
B		1	**096-1780**	1	SHIM (1-MM THK)	
B		1	**096-1781**	1	SHIM (1.6-MM THK)	
	2	1	**114-1539**	6	PIN-DOWEL	
	3	1	**148-4715**	1	GEAR-COUPLING (55-TEETH)	
	4	1	**174-4874**	1	SEAL GP-DUO-CONE	
		1	**174-4875**	2	RING-TORIC	
	5	1	**191-3235**	1	HOUSING (SPROCKET)	
	6	1	**227-6034**	14	BOLT-FLANGE HEAD (M16X2X60-MM)	
	7	1	**296-6220**	2	BALL BEARING	
	8	1	**353-0612**	1	HOUSING-MOTOR	

B - USE AS REQUIRED

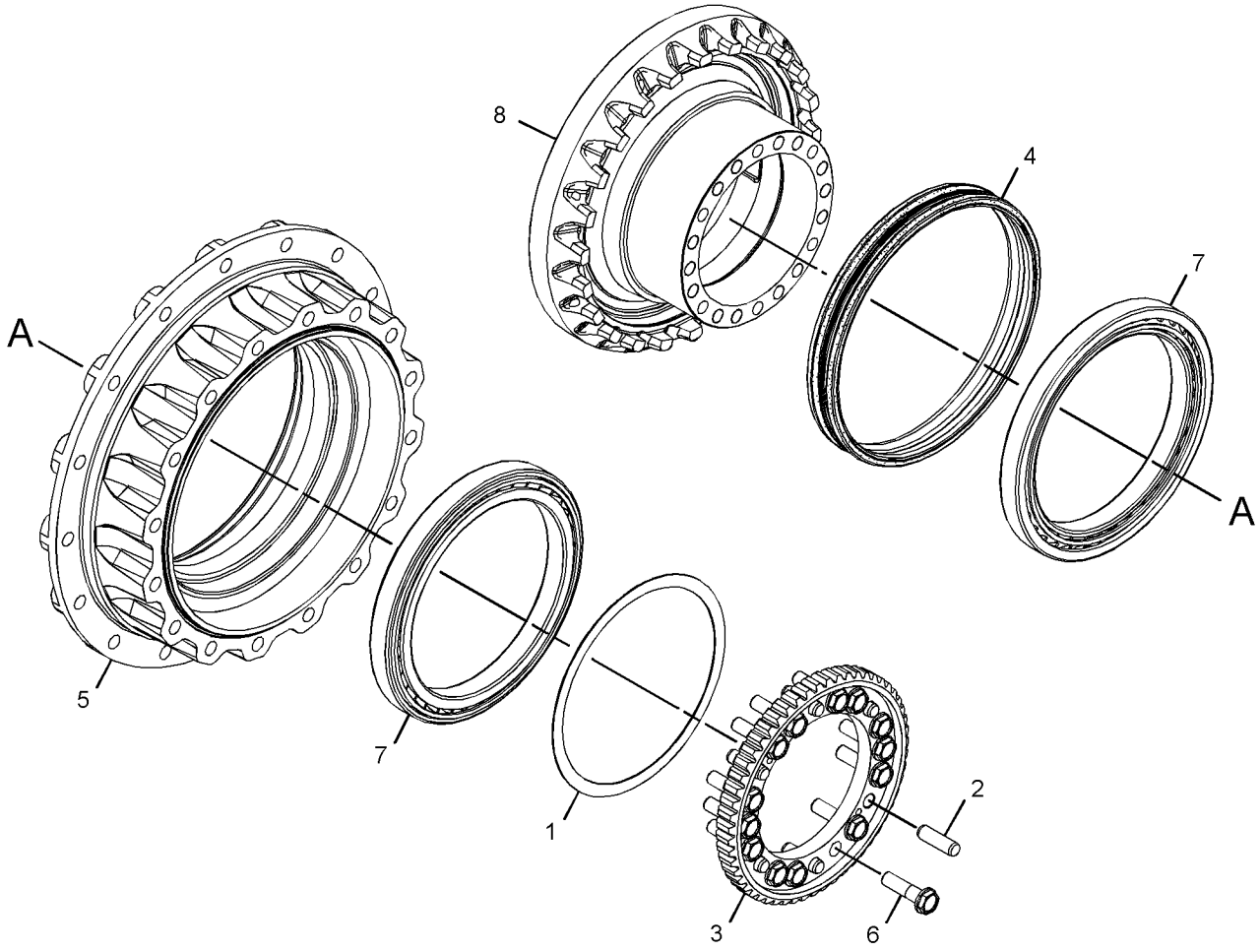

GRAPHIC #1 **<END>** g02708416

267-6767 POWER TRAIN AR

S/N: KGF1-UP; FAL1-UP

PART OF 264-8626, 264-8627 GENERAL AR

SMCS-3000, 4000 **i04762670**

NOTE	PART NUMBER	QTY	PART NAME 1 2 3 4 5 6 (PRODUCT LEVEL)	SEE PAGE
Y	*148-4679*	1	DRIVE GP-SWING (WITH MOTOR)	1028
Y	*227-6166*	1	FASTENER GP-SWING & FINAL DR	1031
Y	*227-6913*	2	DRIVE GP-FINAL (WITH MOTOR)	651
			S/N: FAL1-1458 ; KGF1-2155	
Y	*296-6298*	2	DRIVE GP-FINAL (WITH MOTOR)	652
			S/N: FAL1459-3591 ; KGF2156-4621	
Y	*353-0510*	2	DRIVE GP-FINAL (WITH MOTOR, SPROCKET)	656
			S/N: FAL3592-5113 ; KGF4622-5527	
Y	*353-0641*	2	DRIVE GP-FINAL (WITH MOTOR, SPROCKET)	665
			S/N: FAL5114-7079 ; KGF5528-6324	
Y	*353-0645*	1	DRIVE GP-FINAL (WITH MOTOR, SPROCKET)	666
			S/N: FAL7080-8647 ; KGF6325-6921	
Y	*353-0545*	2	DRIVE GP-FINAL (WITH MOTOR, SPROCKET)	657
			S/N: FAL8648-UP ; KGF6922-UP	
Y	*145-3042*	2	SPROCKET GP	674
			S/N: FAL1-3591 ; KGF1-4621	

Y - SEPARATE ILLUSTRATION

<END>

145-3042 SPROCKET GP

S/N: KGF1-UP; FAL1-UP
NON-SEGMENTED
PART OF 353-0510, 353-0545, 353-0641, 353-0645 DRIVE GP-FINAL, 267-6767 POWER TRAIN
AR

SMCS-4164 **i01831999**

NOTE	REF NO	GRAPHIC REF	PART NUMBER	QTY	PART NAME 1 2 3 4 5 6 (PRODUCT LEVEL)	SEE PAGE
	1	1	**8E-9805**	1	SPROCKET-TRACK (21-TEETH)	
M	2	1	**7X-2562**	16	BOLT (M20X2.5X45-MM)	

M - METRIC PART

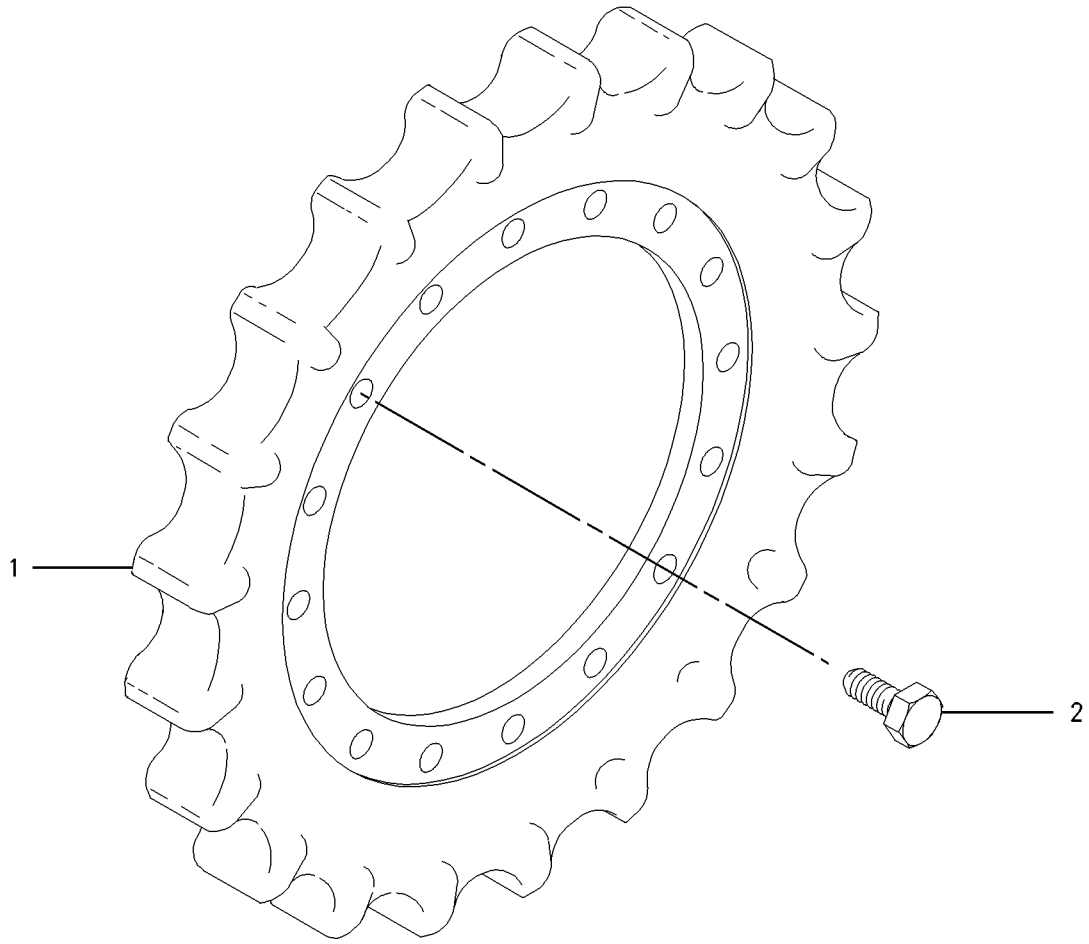

GRAPHIC #1 **<END>** g00935714

223-3040 BOX & MTG GP-STORAGE

S/N: KGF1-UP; FAL1-UP

PART OF 264-8638, 264-8639 CHASSIS AR

SMCS-7268 **i02347066**

NOTE	REF NO	GRAPHIC REF	PART NUMBER	QTY	PART NAME 1 2 3 4 5 6 (PRODUCT LEVEL)	SEE PAGE
Y	1	1	**223-3041**	1	BOX GP-STORAGE	676
M	2	1	**135-8577**	4	BOLT AS	

M - METRIC PART
Y - SEPARATE ILLUSTRATION

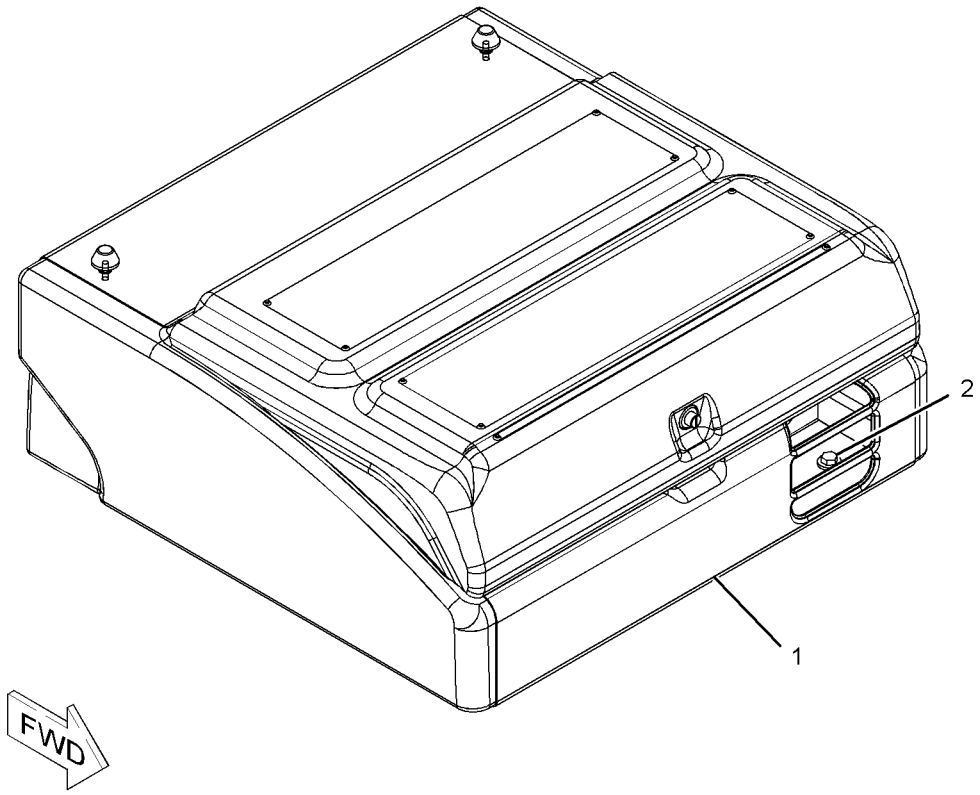

GRAPHIC #1 **<END>** g01150412

223-3041 BOX GP-STORAGE

S/N: KGF1-UP; FAL1-UP

PART OF 223-3040 BOX & MTG GP-STORAGE

SMCS-7268 **i04813349**

NOTE	REF NO	GRAPHIC REF	PART NUMBER	QTY	PART NAME 1 2 3 4 5 6 (PRODUCT LEVEL)	SEE PAGE
	1	1	**4I-2187**	1	SUPPORT AS	
J	2	1	**375-8597**	1	LOCK AS	
	3	1	**236-3670**	1	STRIKER AS	
	4	1	**236-3671**	1	SEAL	
	5	1	**236-9435**	1	BOX AS	
	6	1	**236-9437**	1	DOOR AS-ACCESS	
	6A	1	**3D-9143**	2	HINGE-BUTT	
	7	1	**236-9438**	1	PLUNGER AS	
	8	1	**236-9440**	1	SHEET	
	9	1	**273-7964**	2	MOUNT	
	10	1	**095-0843**	1	PIN-COTTER	
	11	1	**096-3780**	1	PIN-CLEVIS	
M	12	1	**105-3487**	4	BOLT-SOCKET HEAD (M6X1X20-MM)	
	13	1	**170-9360**	1	GROMMET	
M	15	1	**5C-9553**	3	BOLT (M6X1X16-MM)	
	16	1	**5P-1075**	4	WASHER-HARD (10.2X22.5X3-MM THK)	
	17	1	**5P-4116**	1	WASHER-HARD (8.8X20.5X2-MM THK)	
M	18	1	**8T-4133**	4	NUT (M10X1.5-THD)	
M	19	1	**8T-4200**	2	BOLT (M8X1.25X16-MM)	
	20	1	**8T-4224**	2	WASHER-HARD (8.8X16X2-MM THK)	
	21	1	**9X-8256**	7	WASHER (6.6X12X2-MM THK)	
	22	1	**278-3581**	4	CUSHION	
	23	1	**8T-4223**	2	WASHER-HARD (13.5X25.5X3-MM THK)	
B	24	1	**6I-5976**	6	SHIM (1-MM THK)	

B - USE AS REQUIRED
J - REQUIRES CORPORATE KEY
M - METRIC PART

223-3041 **BOX GP-STORAGE (*contd.*)** **i04813349**

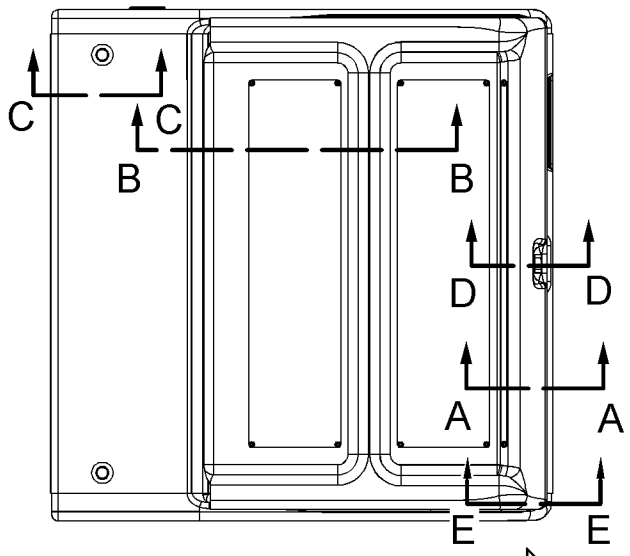

TOP VIEW

FWD

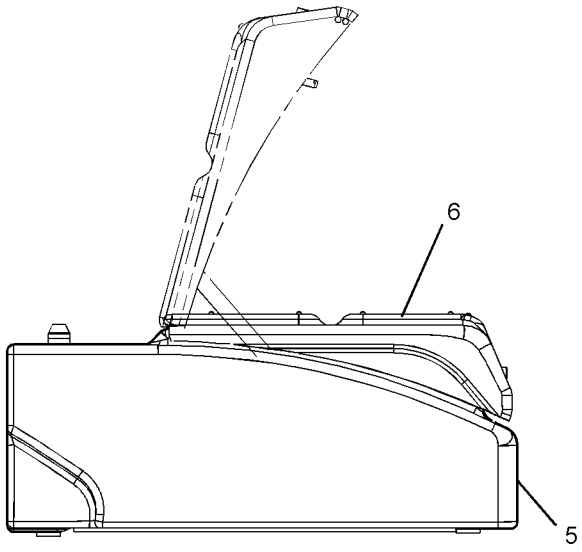

RIGHT SIDE VIEW

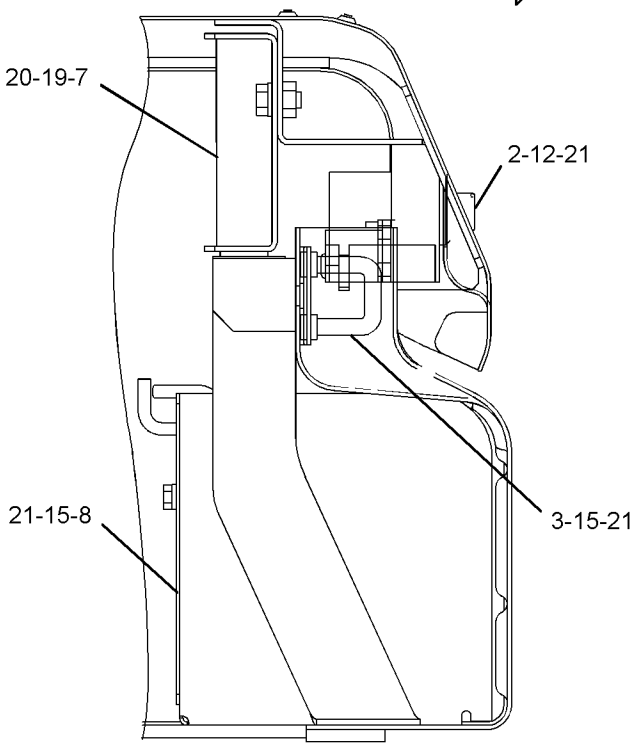

SECTION A-A

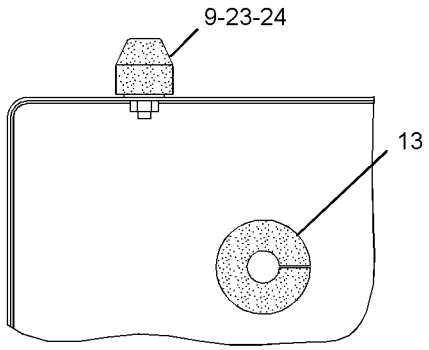

SECTION C-C

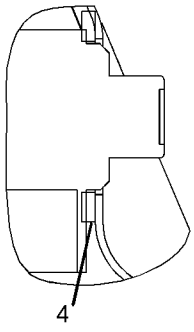

SECTION D-D

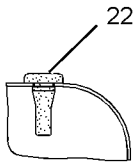

SECTION E-E

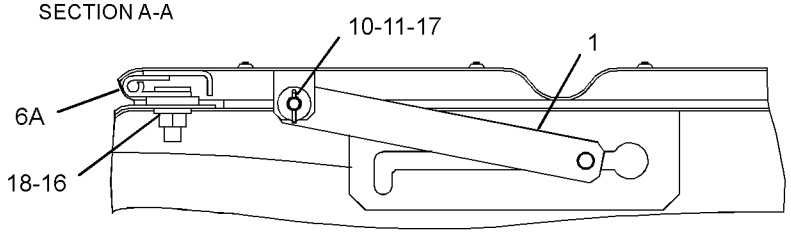

SECTION B-B

GRAPHIC #1

<END>

g02502876

278-9257 BUMPER GP

S/N: KGF1-UP; FAL1-UP
AN ATTACHMENT
TYPE 1

SMCS-7156 **i03146204**

NOTE	REF NO	GRAPHIC REF	PART NUMBER	QTY	PART NAME 1 2 3 4 5 6 (PRODUCT LEVEL)	SEE PAGE
	1	1	**180-7521**	2	BUMPER AS	
					(EACH INCLUDES)	
M		1	**8T-4183**	2	BOLT (M12X1.75X40-MM)	
	2	1	**180-7525**	1	BUMPER AS	
M		1	**8T-4183**	3	BOLT (M12X1.75X40-MM)	
	3	1	**180-7529**	1	BUMPER AS	
M		1	**8T-4183**	2	BOLT (M12X1.75X40-MM)	
	4	1	**180-7533**	1	BUMPER AS	
M		1	**8T-4183**	2	BOLT (M12X1.75X40-MM)	
	5	1	**218-5199**	1	BUMPER AS	
M		1	**8T-4183**	2	BOLT (M12X1.75X40-MM)	
	6	1	**228-5463**	1	BUMPER AS	
M		1	**8T-4183**	2	BOLT (M12X1.75X40-MM)	
	7	1	**278-9258**	1	FRAME AS-UPPER	
	7A	1	**163-3729**	1	STEP AS	
	7B	1	**7Y-0633**	1	BOSS	
	8	1	**8T-4223**	14	WASHER-HARD (13.5X25.5X3-MM THK)	
M	9	1	**8T-4244**	14	NUT (M12X1.75-THD)	

M - METRIC PART

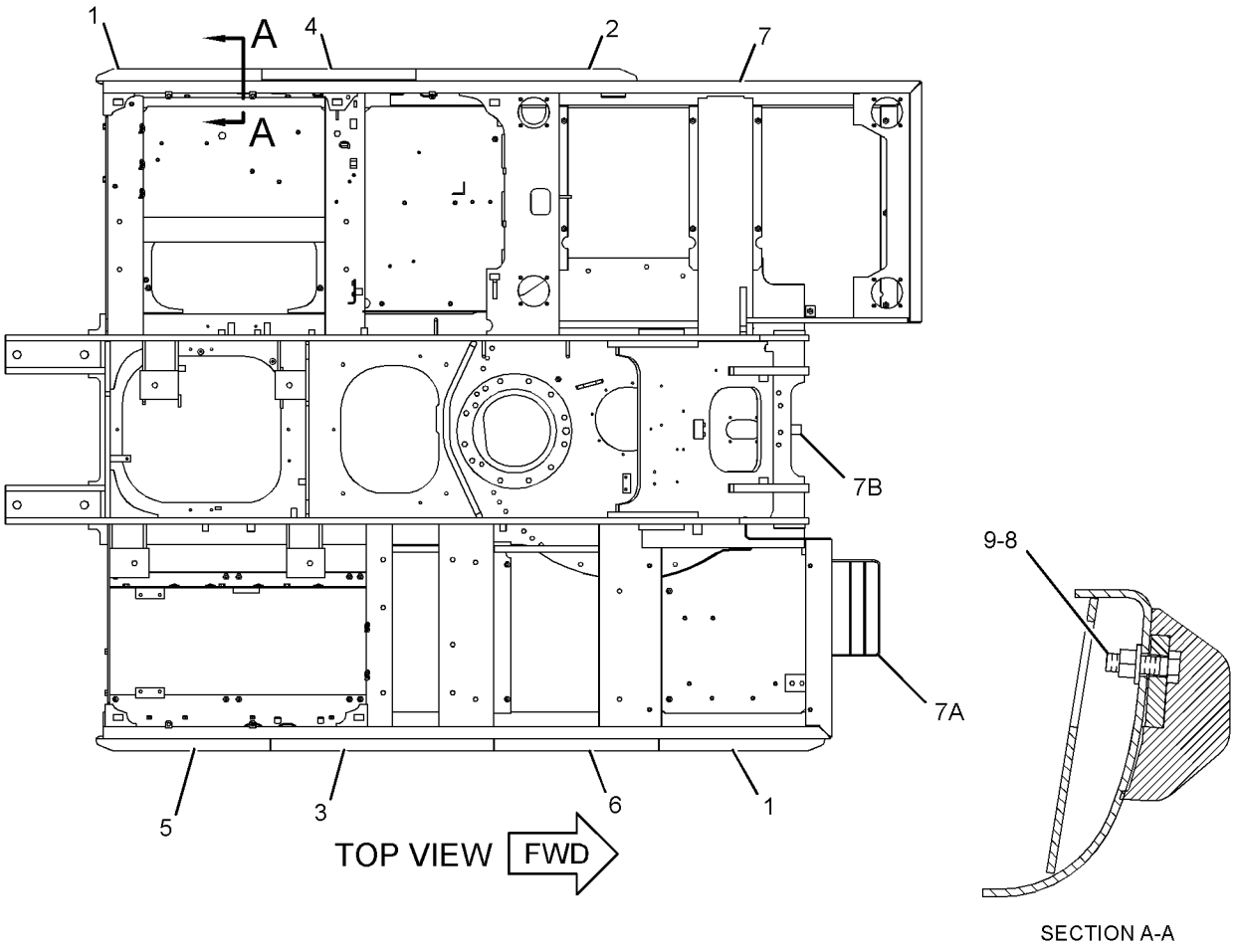

GRAPHIC #1 **<END>** g01620588

278-9257 BUMPER GP

S/N: KGF1-UP; FAL1-UP
AN ATTACHMENT
TYPE 2

SMCS-7156 **i04415308**

NOTE	REF NO	GRAPHIC REF	PART NUMBER	QTY	PART NAME 1 2 3 4 5 6 (PRODUCT LEVEL)	SEE PAGE
	1	1	**180-7521**	2	BUMPER AS	
					(EACH INCLUDES)	
M		1	**8T-4183**	2	BOLT (M12X1.75X40-MM)	
	2	1	**180-7525**	1	BUMPER AS	
M		1	**8T-4183**	3	BOLT (M12X1.75X40-MM)	
	3	1	**180-7529**	1	BUMPER AS	
M		1	**8T-4183**	2	BOLT (M12X1.75X40-MM)	
	4	1	**180-7533**	1	BUMPER AS	
M		1	**8T-4183**	2	BOLT (M12X1.75X40-MM)	
	5	1	**218-5199**	1	BUMPER AS	
M		1	**8T-4183**	2	BOLT (M12X1.75X40-MM)	
	6	1	**228-5463**	1	BUMPER AS	
M		1	**8T-4183**	2	BOLT (M12X1.75X40-MM)	
C	7	1	**352-9599**	1	FRAME AS-UPPER	
	7A	1	**163-3729**	1	STEP AS	
	7B	1	**7Y-0633**	1	BOSS	
	8	1	**8T-4223**	14	WASHER-HARD (13.5X25.5X3-MM THK)	
M	9	1	**8T-4244**	14	NUT (M12X1.75-THD)	
F			**178-0852**	1	PLATE-SKIRT (1100-MM)	
F			**184-5724**	1	PLATE-SKIRT (2000-MM)	

C - CHANGE FROM PREVIOUS TYPE
F - NOT SHOWN
M - METRIC PART

278-9257 **BUMPER GP** (*contd.*) **i04415308**

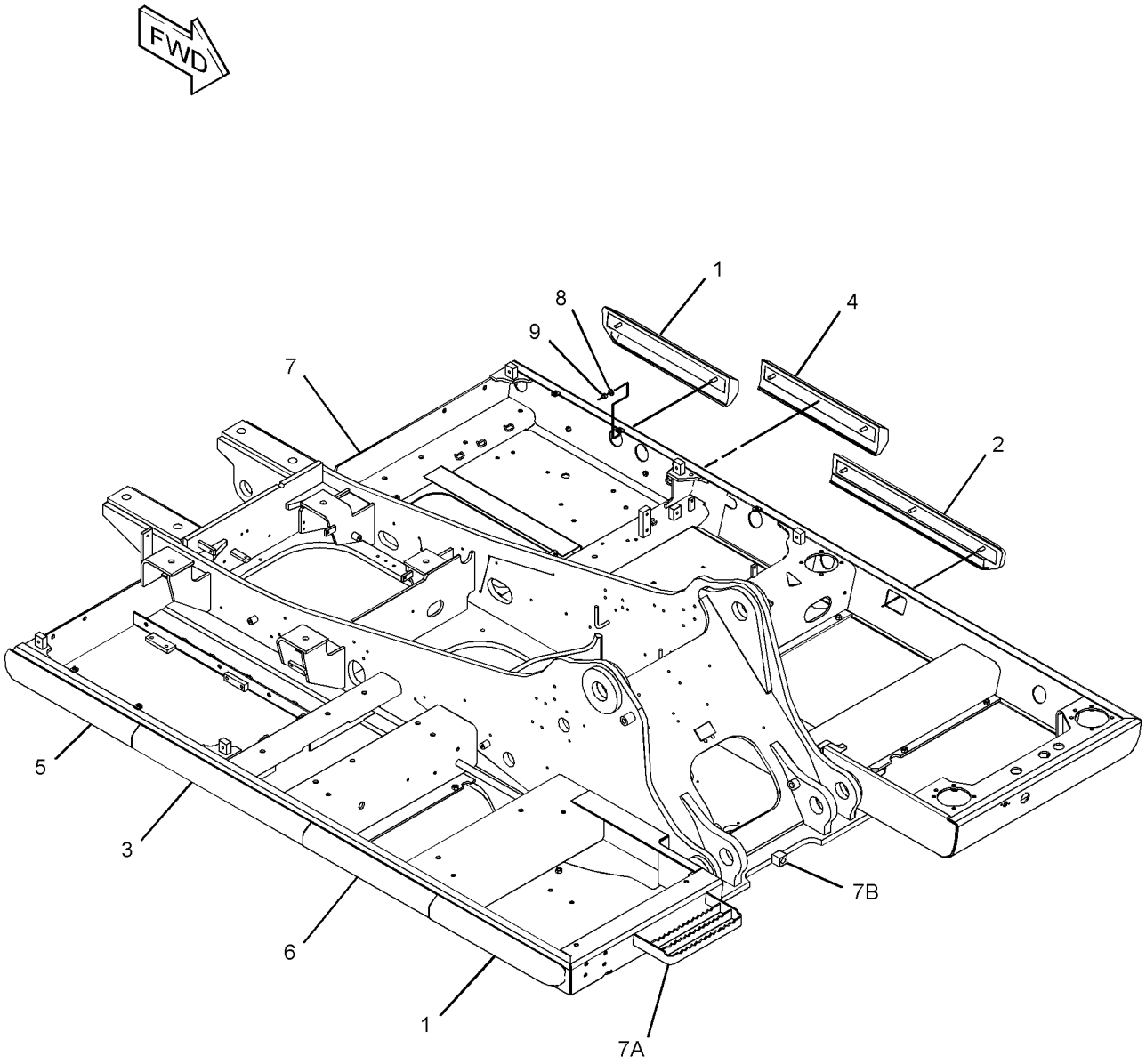

GRAPHIC #1 **<END>** g02789661

278-9257 BUMPER GP

S/N: KGF1-UP; FAL1-UP
AN ATTACHMENT
TYPE 3

SMCS-7156 **i05257455**

NOTE	REF NO	GRAPHIC REF	PART NUMBER	QTY	PART NAME 1 2 3 4 5 6 (PRODUCT LEVEL)	SEE PAGE
	1	1	**180-7521**	2	BUMPER AS	
	2	1	**180-7525**	1	BUMPER AS	
	3	1	**180-7529**	1	BUMPER AS	
	4	1	**180-7533**	1	BUMPER AS	
	5	1	**218-5199**	1	BUMPER AS	
	6	1	**228-5463**	1	BUMPER AS	
C	7	1	**421-4452**	1	FRAME AS-UPPER	
	7A	1	**163-3729**	1	STEP AS	
	7B	1	**7Y-0633**	1	BOSS	
	8	1	**8T-4223**	14	WASHER-HARD (13.5X25.5X3-MM THK)	
M	9	1	**8T-4244**	14	NUT (M12X1.75-THD)	
F			**178-0852**	1	PLATE-SKIRT (1100-MM)	
F			**184-5724**	1	PLATE-SKIRT (2000-MM)	

C - CHANGE FROM PREVIOUS TYPE
F - NOT SHOWN
M - METRIC PART

278-9257 **BUMPER GP** (*contd.*) **i05257455**

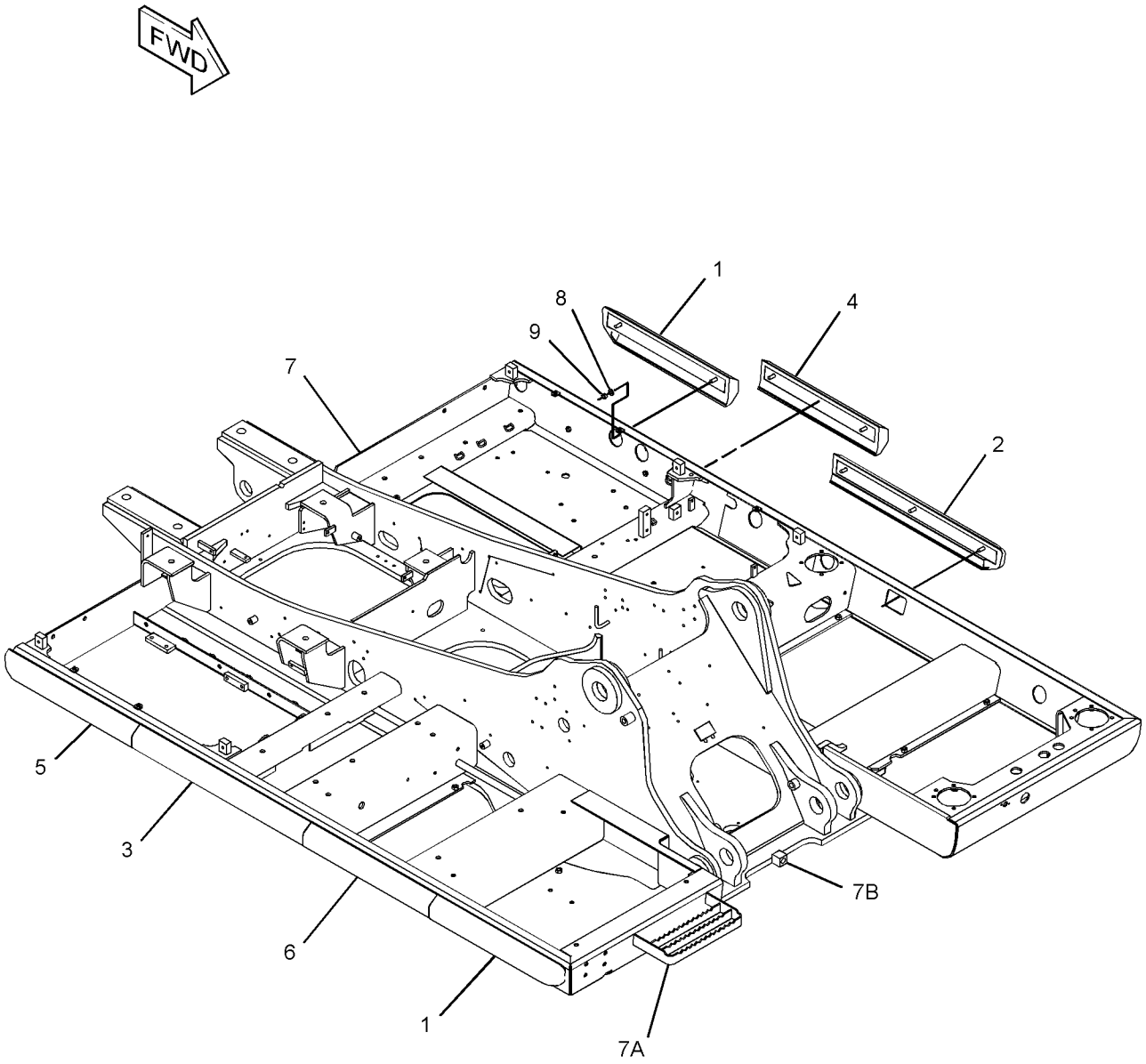

GRAPHIC #1 **<END>** g02789661

241-1999 COUNTERWEIGHT & MOUNTING GP

S/N: KGF1-UP
PART OF 290-1892 SPECIAL AR
AN ATTACHMENT
TYPE 1

SMCS-7056 **i02423523**

NOTE	REF NO	GRAPHIC REF	PART NUMBER	QTY	PART NAME 1 2 3 4 5 6 (PRODUCT LEVEL)	SEE PAGE
Y	1	1	**241-2000**	1	COUNTERWEIGHT GP	702
	2	1	**244-8194**	4	SPACER (32X65X30-MM THK)	
M	3	1	**7X-2583**	4	BOLT (M30X3.5X120-MM)	

M - METRIC PART
Y - SEPARATE ILLUSTRATION

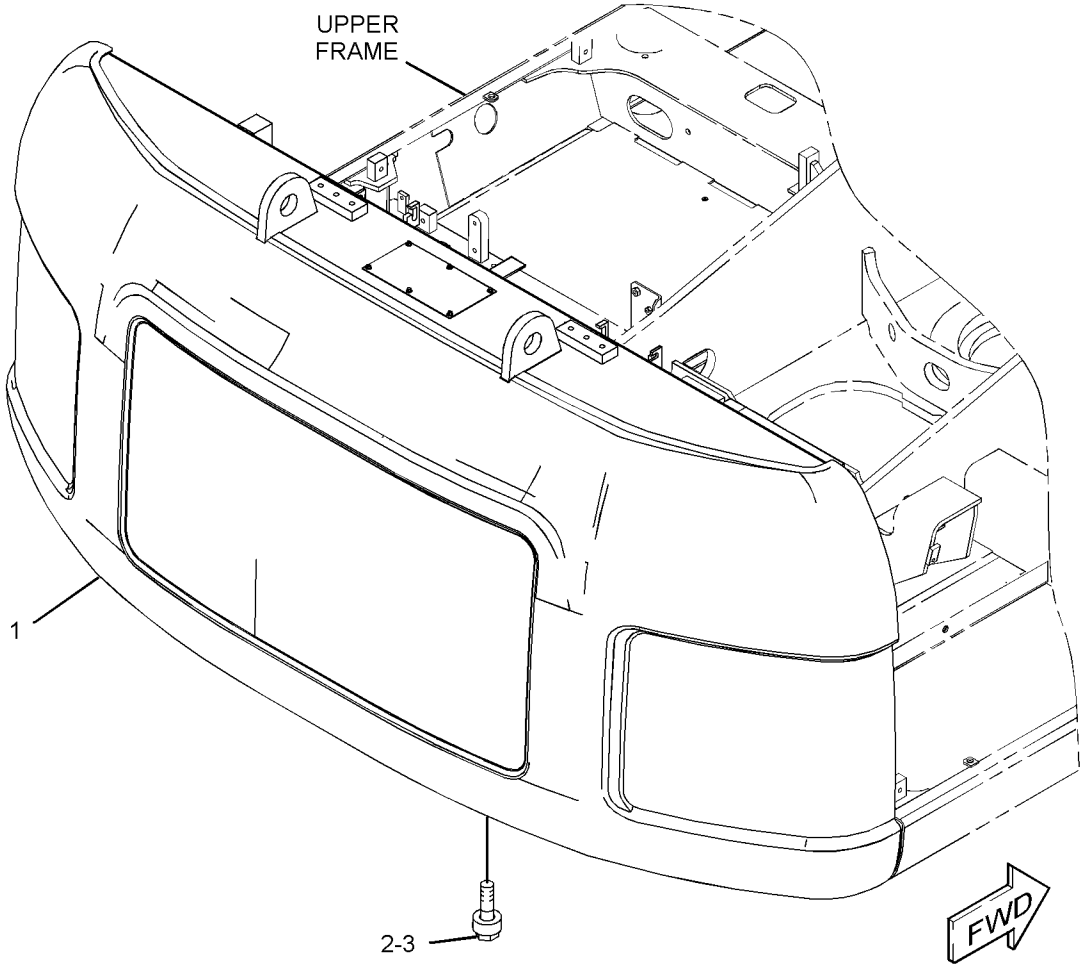

GRAPHIC #1 **<END>** g01228686

241-1999 COUNTERWEIGHT & MOUNTING GP

S/N: KGF1-UP
PART OF 290-1892 SPECIAL AR
AN ATTACHMENT
TYPE 2

SMCS-7056 **i03133264**

NOTE	REF NO	GRAPHIC REF	PART NUMBER	QTY	PART NAME 1 2 3 4 5 6 (PRODUCT LEVEL)	SEE PAGE
CY	1	1	**327-3236**	1	COUNTERWEIGHT GP	710
	2	1	**244-8194**	4	SPACER (32X65X30-MM THK)	
M	3	1	**7X-2583**	4	BOLT (M30X3.5X120-MM)	

C - CHANGE FROM PREVIOUS TYPE
M - METRIC PART
Y - SEPARATE ILLUSTRATION

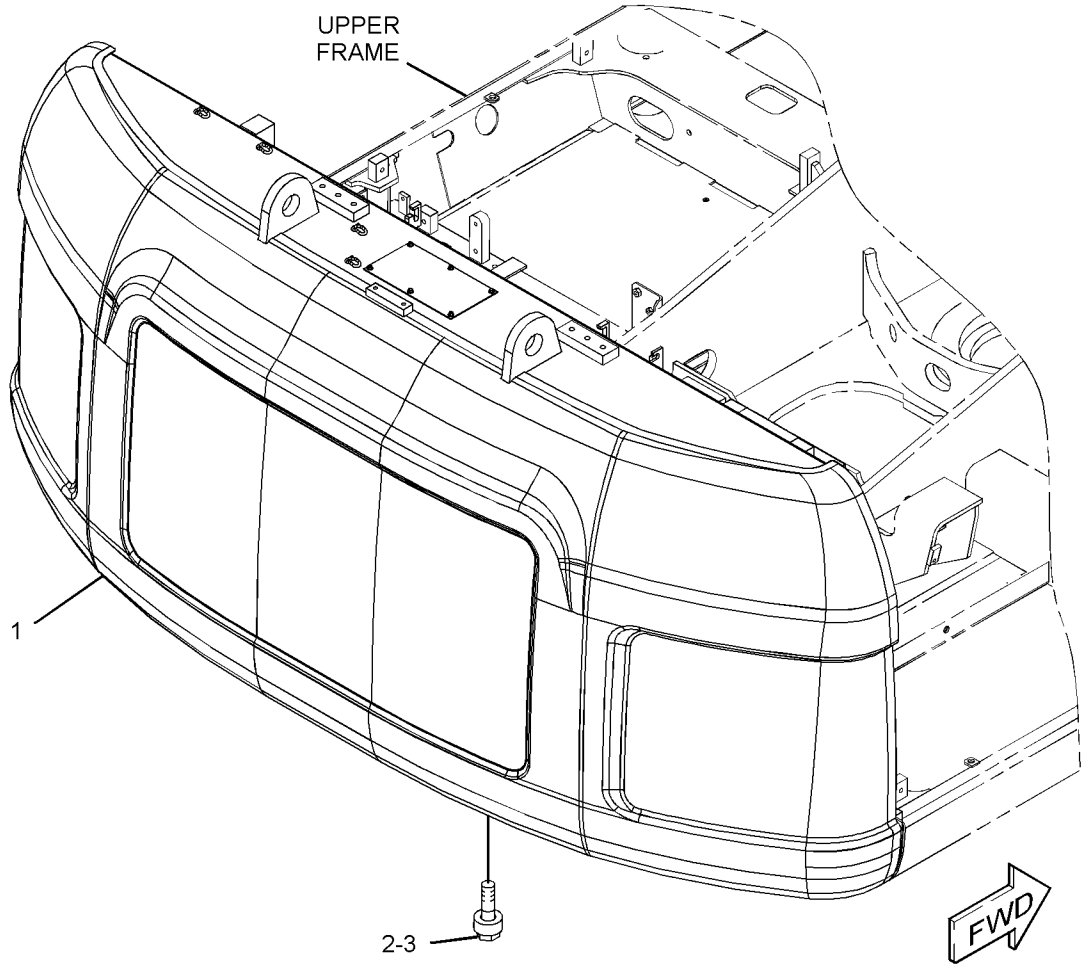

GRAPHIC #1 **<END>** g01628275

241-1999 COUNTERWEIGHT & MOUNTING GP

S/N: KGF1-UP
PART OF 290-1892 SPECIAL AR
AN ATTACHMENT
TYPE 3

SMCS-7056 **i04756789**

NOTE	REF NO	GRAPHIC REF	PART NUMBER	QTY	PART NAME 1 2 3 4 5 6 (PRODUCT LEVEL)	SEE PAGE
CY	1	1	*327-3232*	1	COUNTERWEIGHT GP	709
	2	1	**244-8194**	4	SPACER (32X65X30-MM THK)	
M	3	1	**7X-2583**	4	BOLT (M30X3.5X120-MM)	
C	4	1	**4I-0006**	2	CAP	
C	5	1	**7Y-0063**	2	FILM-INFORMATION (DO NOT LIFT)	

C - CHANGE FROM PREVIOUS TYPE
M - METRIC PART
Y - SEPARATE ILLUSTRATION

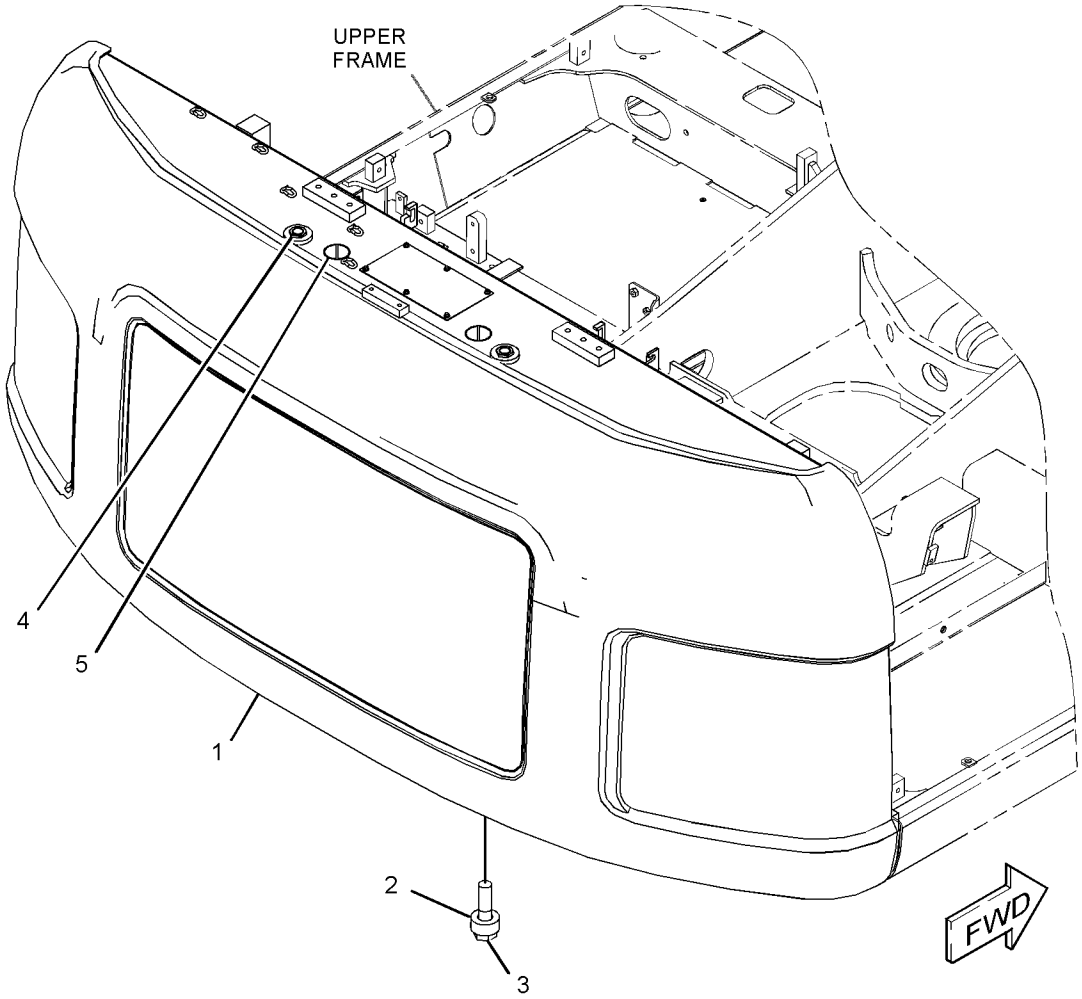

GRAPHIC #1 **<END>** g02890140

241-1999 COUNTERWEIGHT & MOUNTING GP

S/N: KGF1-UP
PART OF 290-1892 SPECIAL AR
AN ATTACHMENT
TYPE 4

SMCS-7056 **i04793367**

NOTE	REF NO	GRAPHIC REF	PART NUMBER	QTY	PART NAME 1 2 3 4 5 6 (PRODUCT LEVEL)	SEE PAGE
CY	1	1	*355-8128*	1	COUNTERWEIGHT GP	718
	2	1	**244-8194**	4	SPACER (32X65X30-MM THK)	
M	3	1	**7X-2583**	4	BOLT (M30X3.5X120-MM)	
C	4	1	**136-0139**	2	CAP	
	5	1	**7Y-0063**	2	FILM-INFORMATION (DO NOT LIFT)	

C - CHANGE FROM PREVIOUS TYPE
M - METRIC PART
Y - SEPARATE ILLUSTRATION

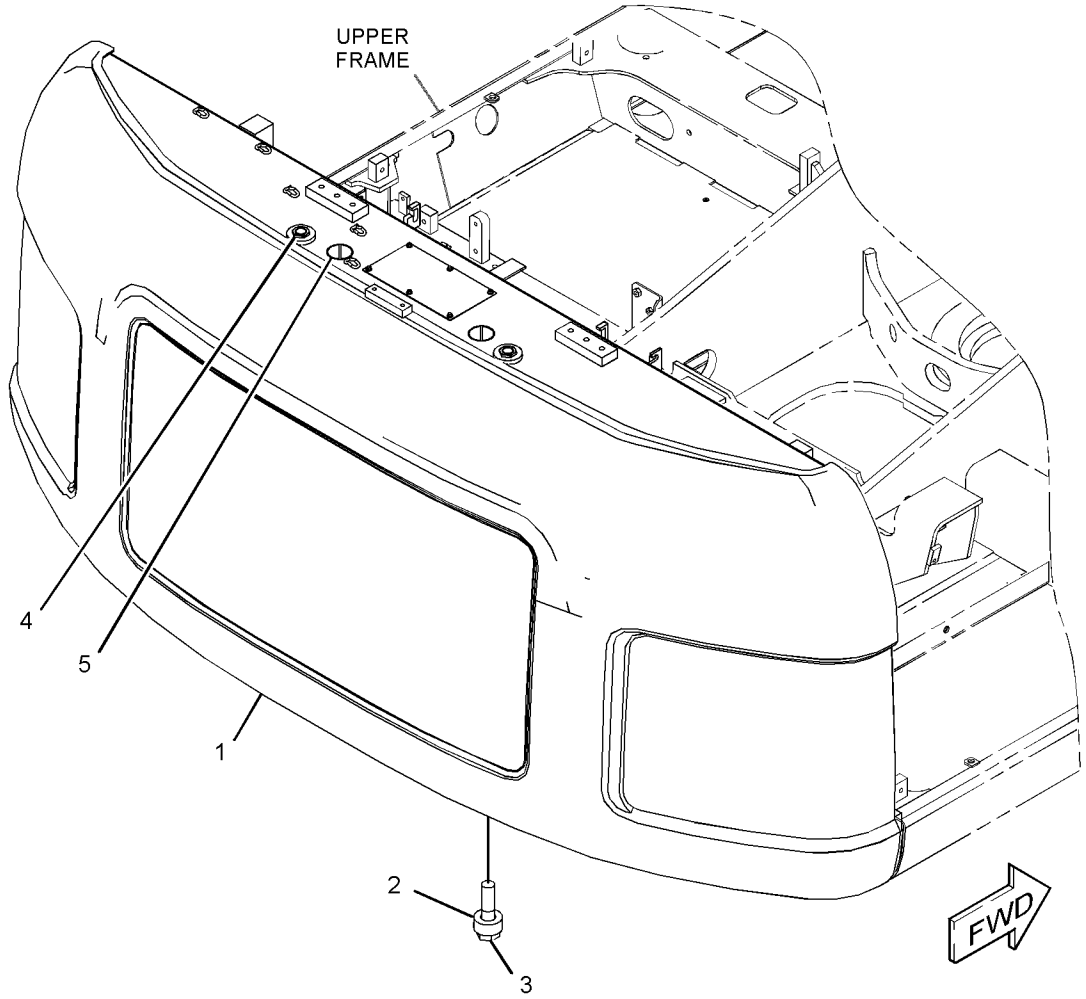

GRAPHIC #1 **<END>** g02890140

241-2002 COUNTERWEIGHT & MOUNTING GP

S/N: KGF1-UP
PART OF 302-9208 LINKAGE AR-FRONT
AN ATTACHMENT
TYPE 1

SMCS-7056 **i02423453**

NOTE	REF NO	GRAPHIC REF	PART NUMBER	QTY	PART NAME 1 2 3 4 5 6 (PRODUCT LEVEL)	SEE PAGE
Y	1	1	*241-2003*	1	COUNTERWEIGHT GP	704
	2	1	**244-8194**	4	SPACER (32X65X30-MM THK)	
M	3	1	**7X-2583**	4	BOLT (M30X3.5X120-MM)	

M - METRIC PART
Y - SEPARATE ILLUSTRATION

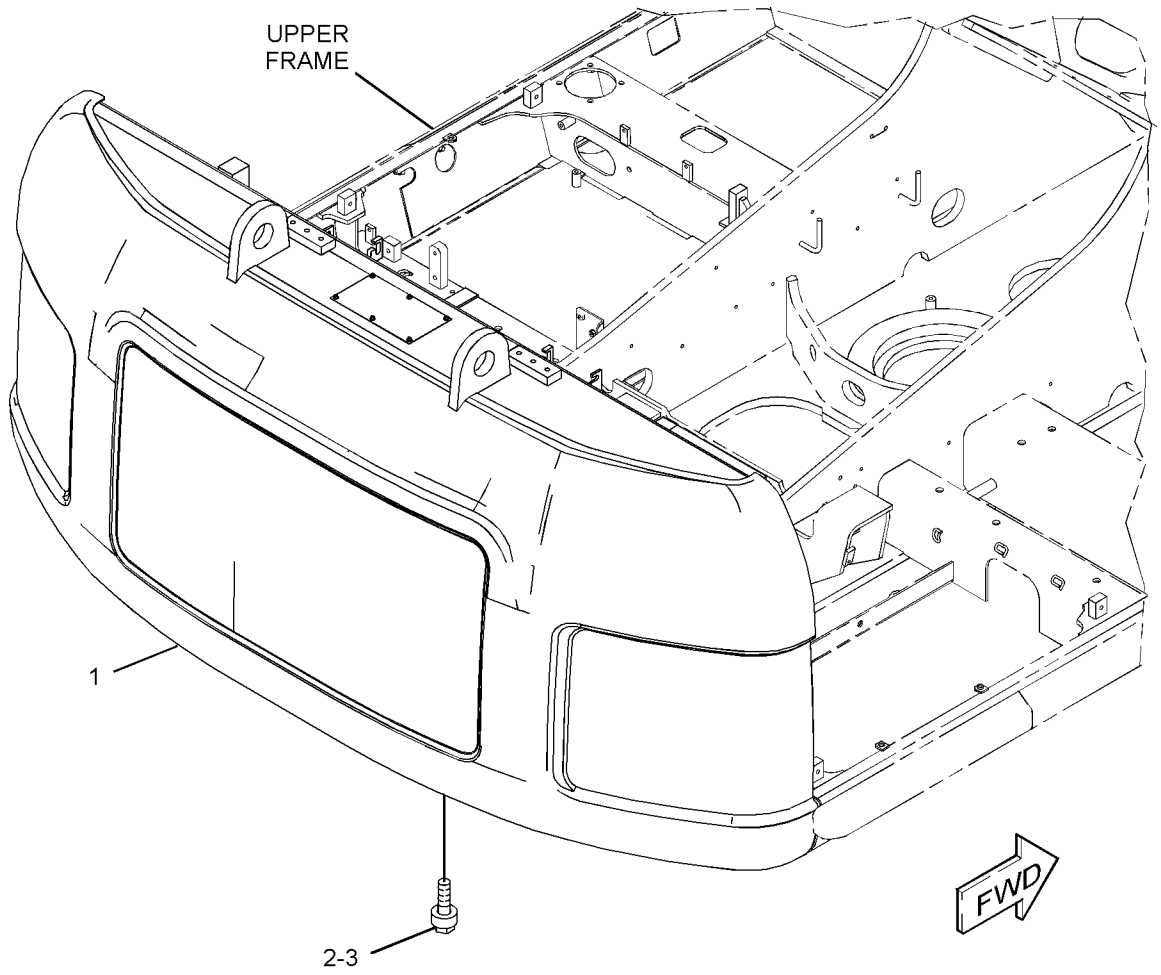

GRAPHIC #1 **<END>** g01229080

241-2002 COUNTERWEIGHT & MOUNTING GP

S/N: KGF1-UP
PART OF 302-9208 LINKAGE AR-FRONT
AN ATTACHMENT
TYPE 2

SMCS-7056 **i03137638**

NOTE	REF NO	GRAPHIC REF	PART NUMBER	QTY	PART NAME 1 2 3 4 5 6 (PRODUCT LEVEL)	SEE PAGE
CY	1	1	*327-3256*	1	COUNTERWEIGHT GP	713
	2	1	**244-8194**	4	SPACER (32X65X30-MM THK)	
M	3	1	**7X-2583**	4	BOLT (M30X3.5X120-MM)	

C - CHANGE FROM PREVIOUS TYPE
M - METRIC PART
Y - SEPARATE ILLUSTRATION

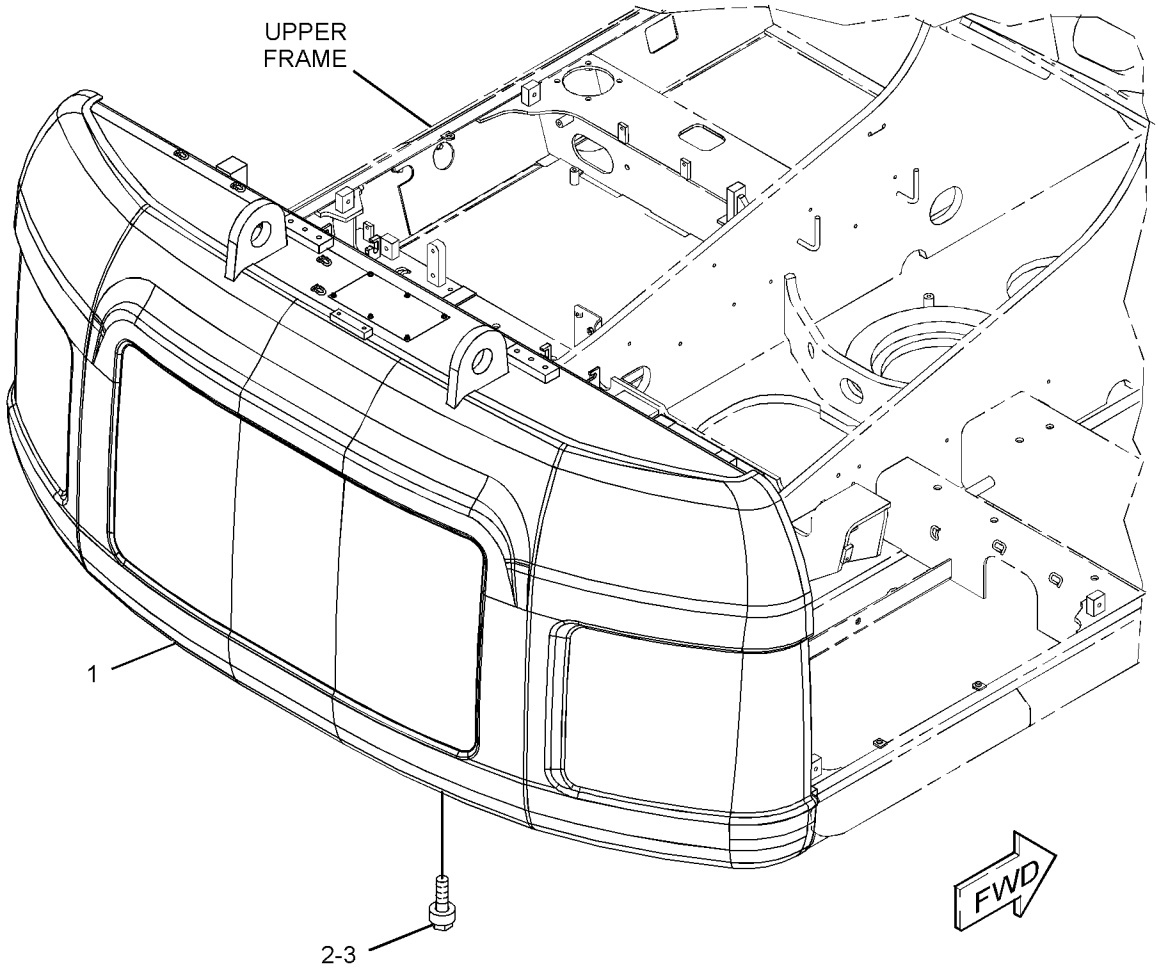

GRAPHIC #1 **<END>** g01628286

241-2002 COUNTERWEIGHT & MOUNTING GP

S/N: KGF1-UP
PART OF 302-9208 LINKAGE AR-FRONT
AN ATTACHMENT
TYPE 3

SMCS-7056 **i04039482**

NOTE	REF NO	GRAPHIC REF	PART NUMBER	QTY	PART NAME 1 2 3 4 5 6 (PRODUCT LEVEL)	SEE PAGE
CY	1	1	*355-8153*	1	COUNTERWEIGHT GP	719
	2	1	**244-8194**	4	SPACER (32X65X30-MM THK)	
M	3	1	**7X-2583**	4	BOLT (M30X3.5X120-MM)	
C	4	1	**087-3533**	2	CAP	
C	5	1	**7Y-0063**	2	FILM-INFORMATION (DO NOT LIFT)	

C - CHANGE FROM PREVIOUS TYPE
M - METRIC PART
Y - SEPARATE ILLUSTRATION

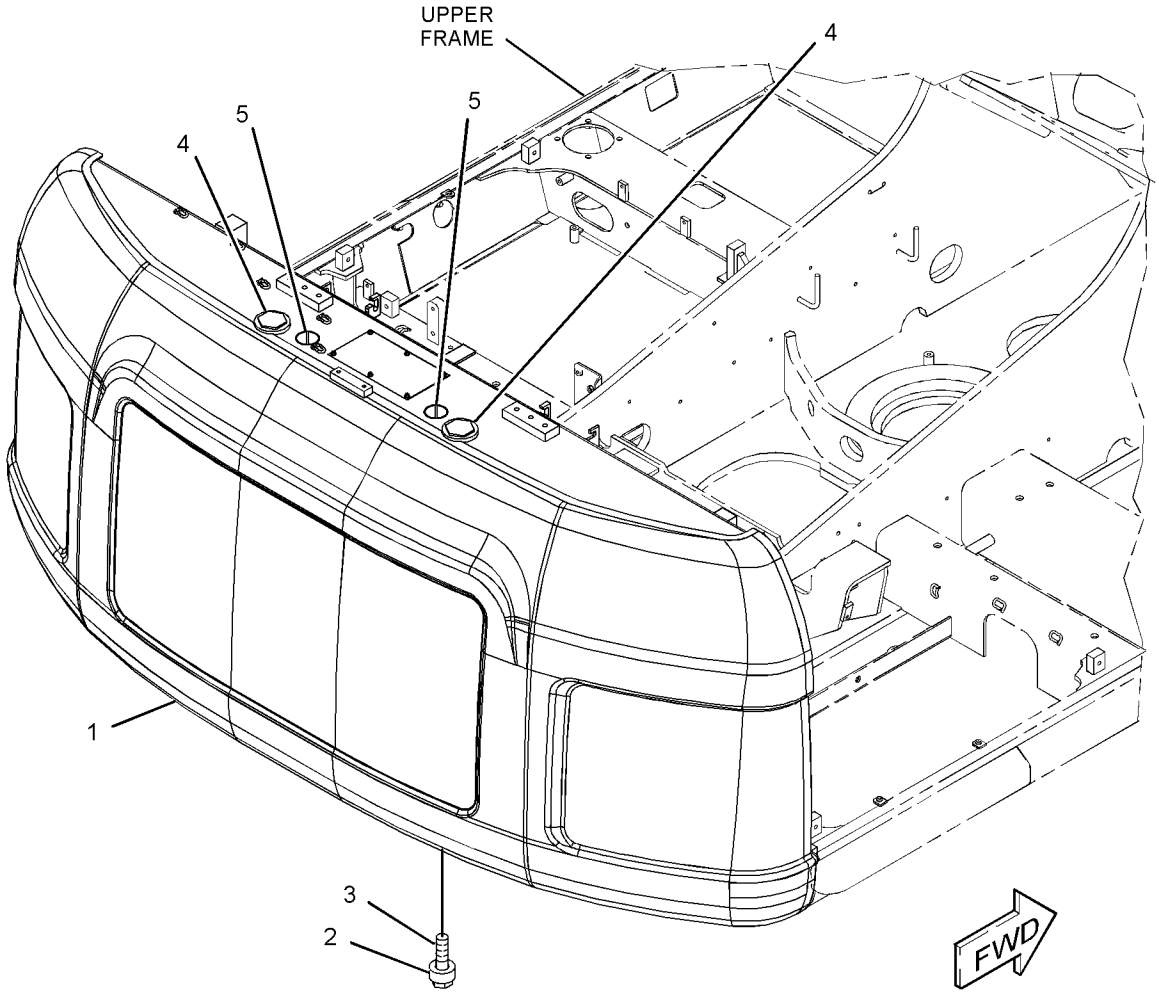

GRAPHIC #1 **<END>** g02358300

262-2607 COUNTERWEIGHT & MOUNTING GP

S/N: KGF1-UP; FAL1-UP
PART OF 264-8638, 264-8639 CHASSIS AR
TYPE 1

SMCS-7056 **i02418737**

NOTE	REF NO	GRAPHIC REF	PART NUMBER	QTY	PART NAME 1 2 3 4 5 6 (PRODUCT LEVEL)	SEE PAGE
	1	1	**244-8194**	4	SPACER (32X65X30-MM THK)	
Y	2	1	*262-2623*	1	COUNTERWEIGHT GP	705
M	3	1	**7X-2583**	4	BOLT (M30X3.5X120-MM)	

M - METRIC PART
Y - SEPARATE ILLUSTRATION

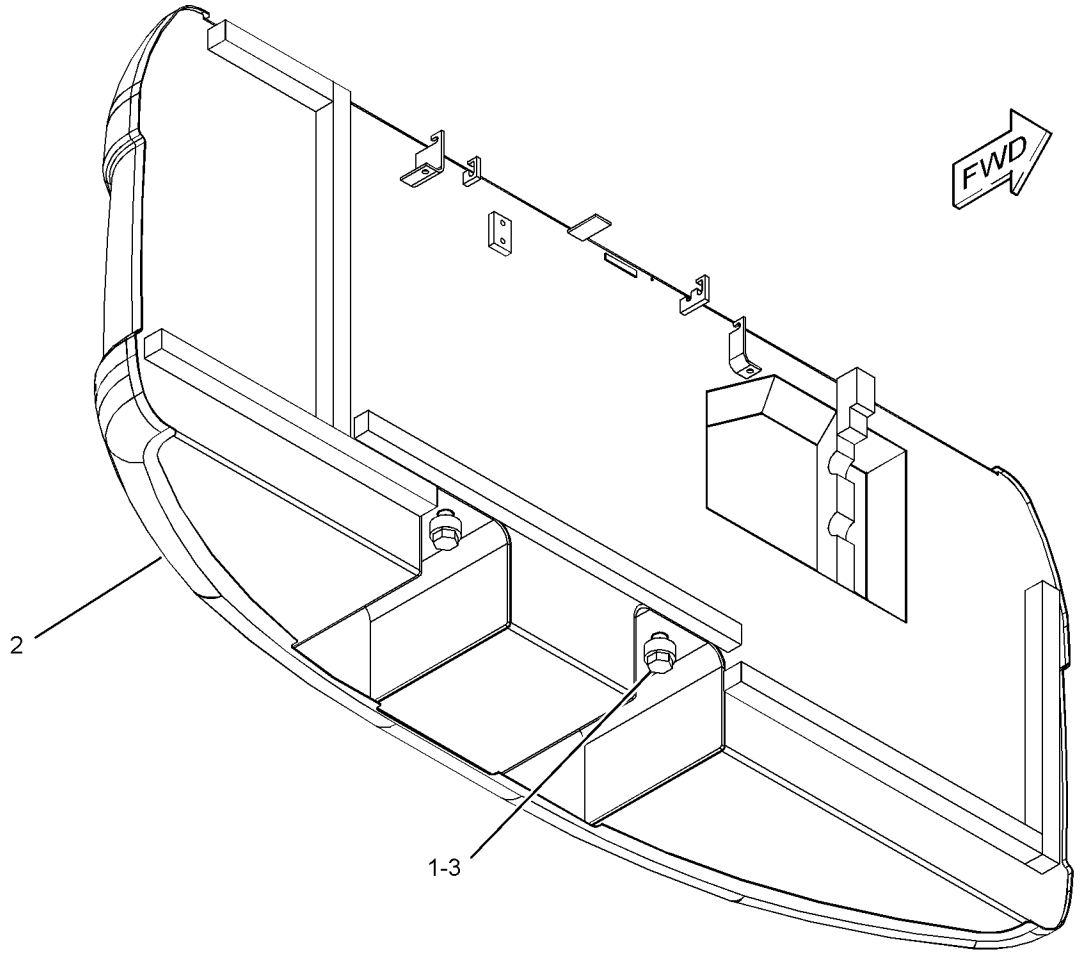

GRAPHIC #1 **<END>** g01229117

262-2607 COUNTERWEIGHT & MOUNTING GP

S/N: KGF1-UP; FAL1-UP
PART OF 264-8638, 264-8639 CHASSIS AR
TYPE 2

SMCS-7056 **i03751476**

NOTE	REF NO	GRAPHIC REF	PART NUMBER	QTY	PART NAME 1 2 3 4 5 6 (PRODUCT LEVEL)	SEE PAGE
	1	1	**244-8194**	4	SPACER (32X65X30-MM THK)	
CY	2	1	*327-3252*	1	COUNTERWEIGHT GP	712
M	3	1	**7X-2583**	4	BOLT (M30X3.5X120-MM)	

C - CHANGE FROM PREVIOUS TYPE
M - METRIC PART
Y - SEPARATE ILLUSTRATION

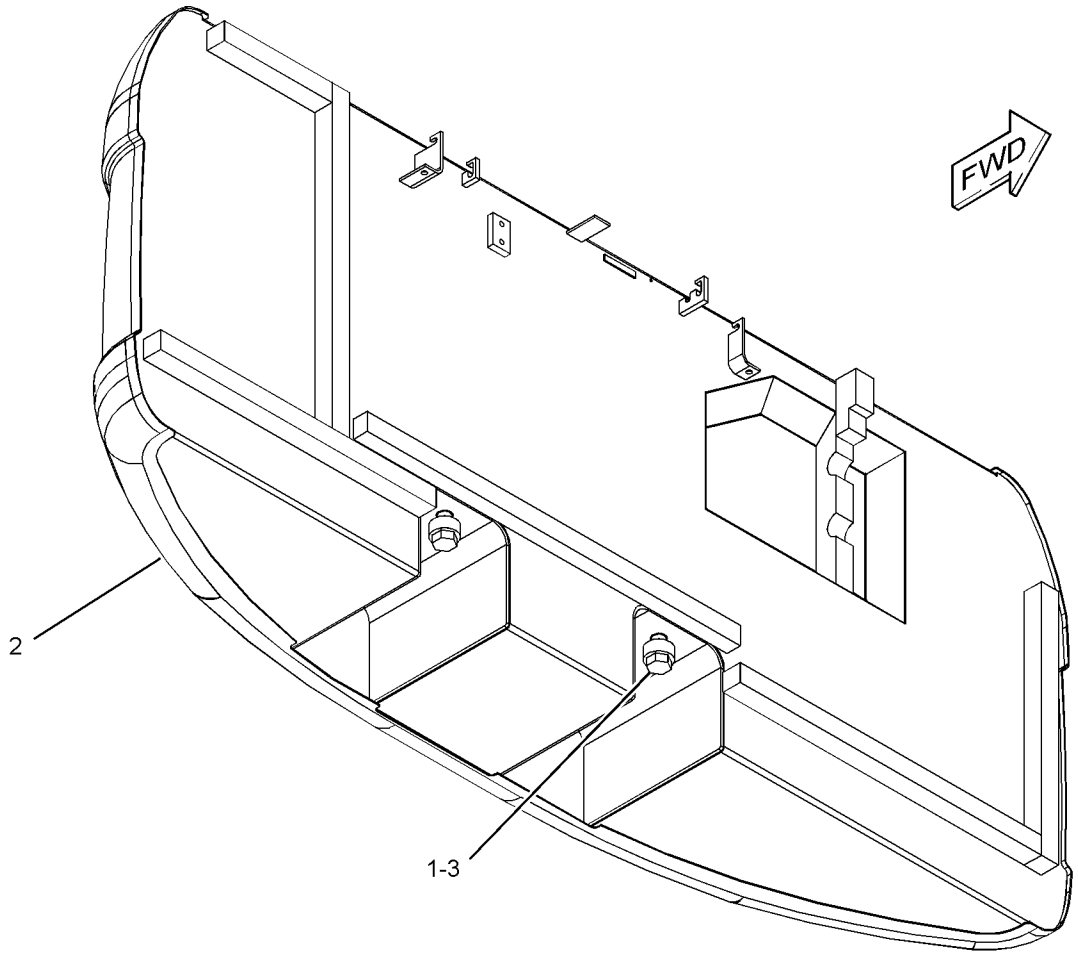

GRAPHIC #1 **<END>** g01229117

262-2607 COUNTERWEIGHT & MOUNTING GP

S/N: KGF1-UP; FAL1-UP
PART OF 264-8638, 264-8639 CHASSIS AR
TYPE 3

SMCS-7056 **i04756166**

NOTE	REF NO	GRAPHIC REF	PART NUMBER	QTY	PART NAME 1 2 3 4 5 6 (PRODUCT LEVEL)	SEE PAGE
C	1	1	**136-0139**	2	CAP	
C	2	1	**7Y-0063**	2	FILM-INFORMATION (DO NOT LIFT)	
	3	1	**244-8194**	4	SPACER (32X65X30-MM THK)	
CY	4	1	*327-3248*	1	COUNTERWEIGHT GP	711
M	5	1	**7X-2583**	4	BOLT (M30X3.5X120-MM)	

C - CHANGE FROM PREVIOUS TYPE
M - METRIC PART
Y - SEPARATE ILLUSTRATION

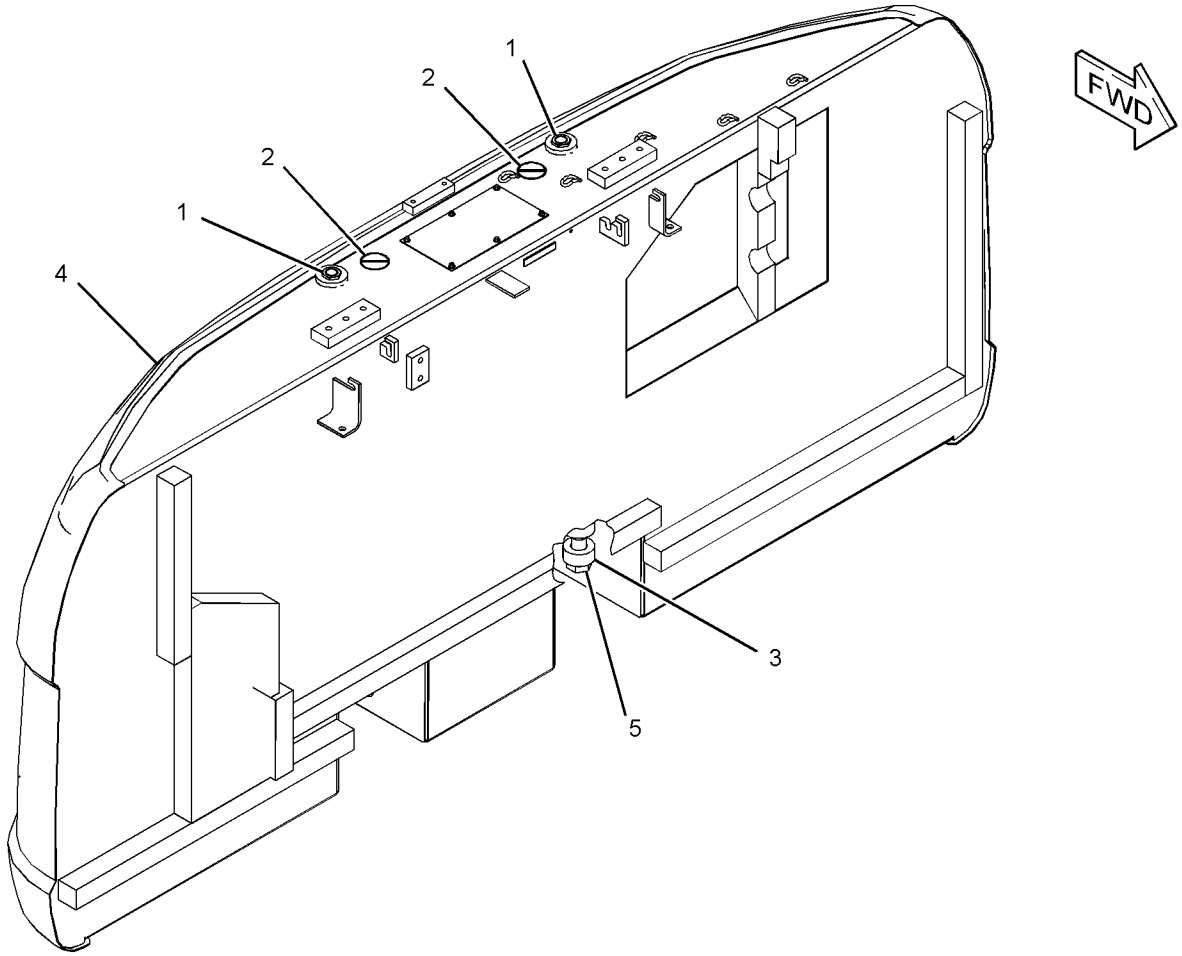

GRAPHIC #1 **<END>** g02362237

262-2608 COUNTERWEIGHT & MOUNTING GP

S/N: KGF1-UP; FAL1-UP
PART OF 290-1902 COUNTERWEIGHT AR
AN ATTACHMENT
TYPE 1

SMCS-7056 **i02423410**

NOTE	REF NO	GRAPHIC REF	PART NUMBER	QTY	PART NAME 1 2 3 4 5 6 (PRODUCT LEVEL)	SEE PAGE
	1	1	**4I-0006**	2	CAP	
	2	1	**7Y-0063**	2	FILM-INFORMATION (DO NOT LIFT)	
	3	1	**244-8194**	4	SPACER (32X65X30-MM THK)	
Y	4	1	**262-2626**	1	COUNTERWEIGHT GP	706
M	5	1	**7X-2583**	4	BOLT (M30X3.5X120-MM)	

M - METRIC PART
Y - SEPARATE ILLUSTRATION

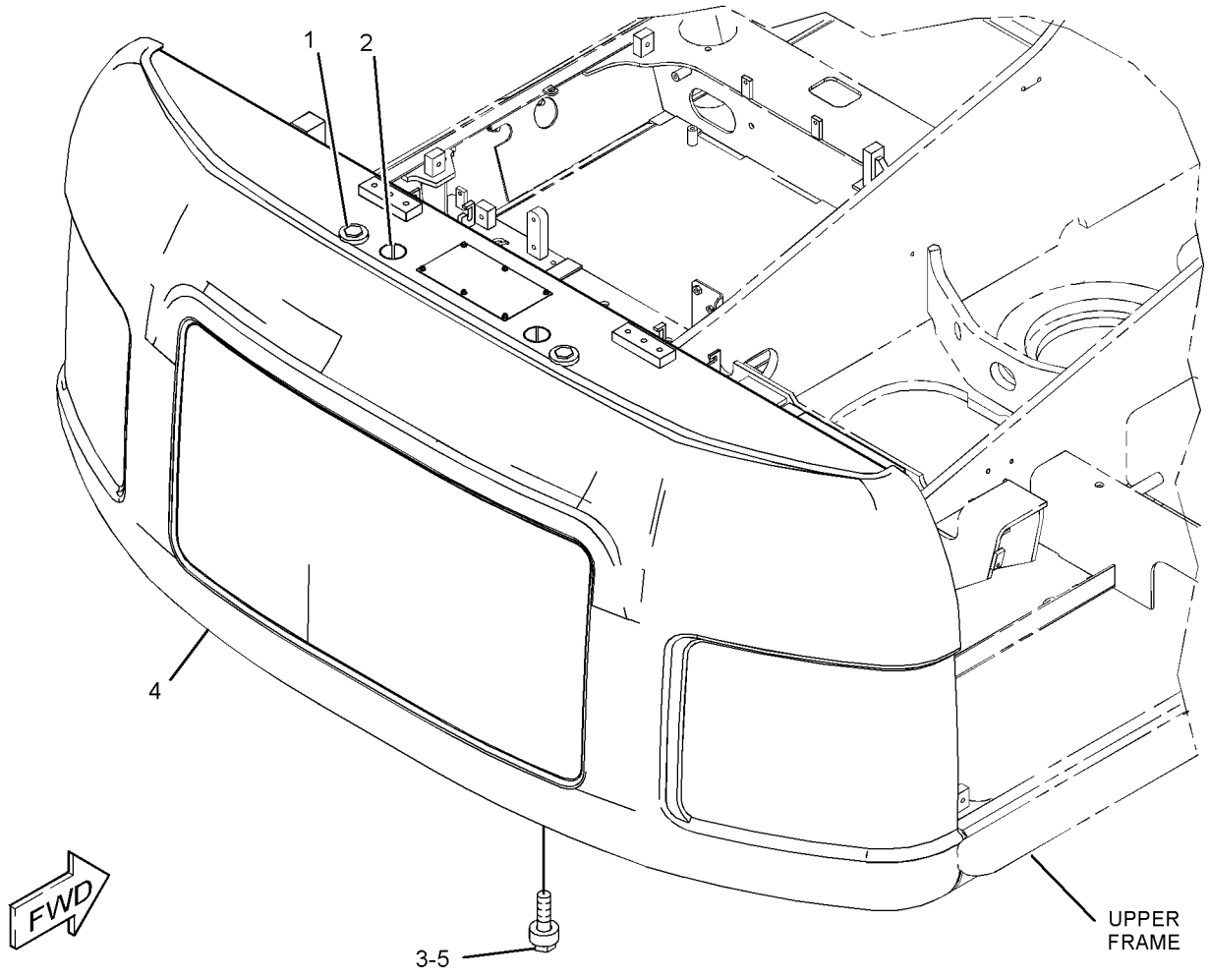

GRAPHIC #1 **<END>** g01229090

262-2608 COUNTERWEIGHT & MOUNTING GP

S/N: KGF1-UP; FAL1-UP
PART OF 290-1902 COUNTERWEIGHT AR
AN ATTACHMENT
TYPE 2

SMCS-7056 **i04321505**

NOTE	REF NO	GRAPHIC REF	PART NUMBER	QTY	PART NAME 1 2 3 4 5 6 (PRODUCT LEVEL)	SEE PAGE
	1	1	**136-0139**	2	CAP	
	2	1	**7Y-0063**	2	FILM-INFORMATION (DO NOT LIFT)	
	3	1	**244-8194**	4	SPACER (32X65X30-MM THK)	
CY	4	1	*327-3248*	1	COUNTERWEIGHT GP	711
M	5	1	**7X-2583**	4	BOLT (M30X3.5X120-MM)	

C - CHANGE FROM PREVIOUS TYPE
M - METRIC PART
Y - SEPARATE ILLUSTRATION

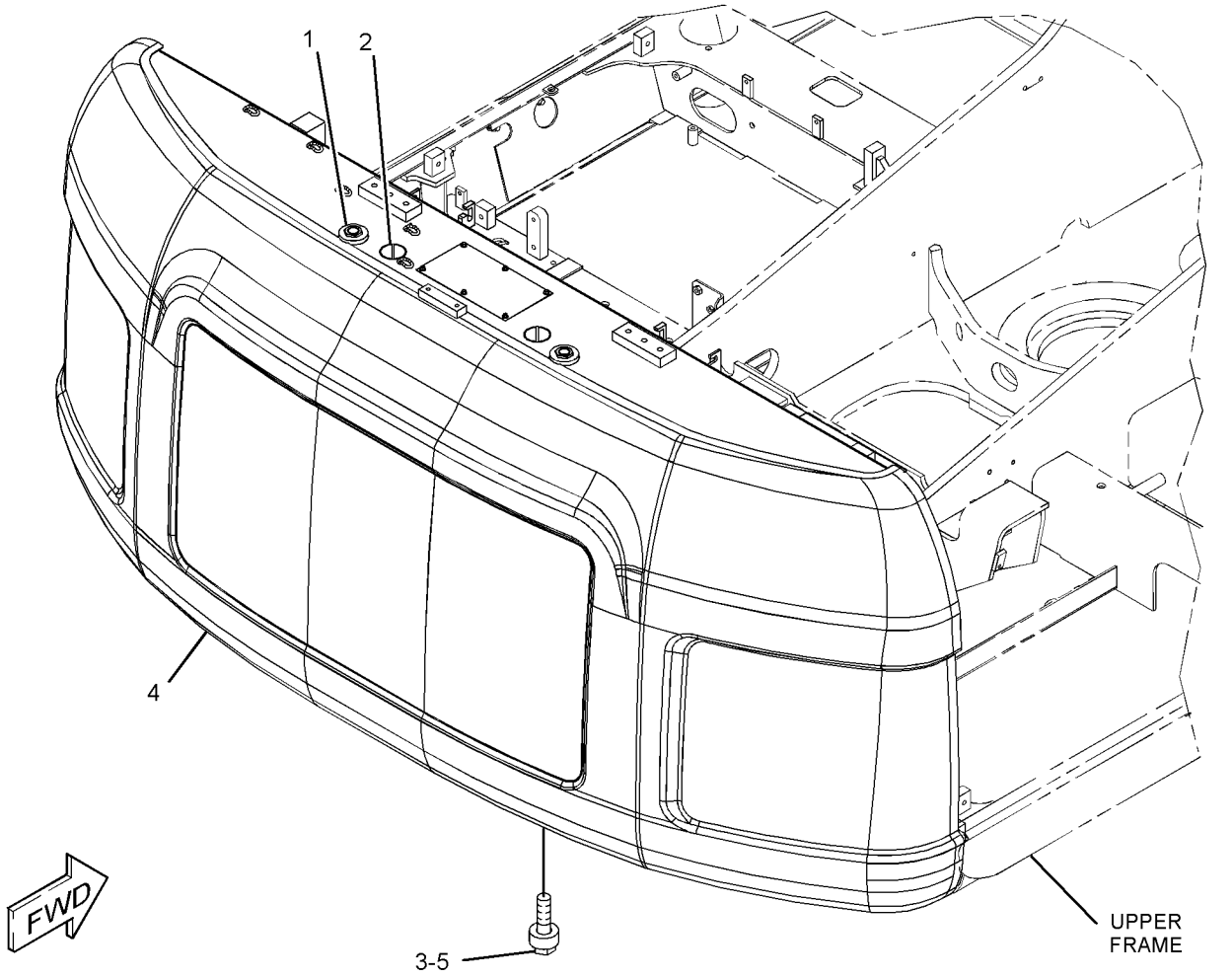

GRAPHIC #1 **<END>** g01628330

278-3908 COUNTERWEIGHT & MOUNTING GP

S/N: KGF1-UP; FAL1-UP
AN ATTACHMENT
TYPE 1

SMCS-7056 **i02846384**

NOTE	REF NO	GRAPHIC REF	PART NUMBER	QTY	PART NAME 1 2 3 4 5 6 (PRODUCT LEVEL)	SEE PAGE
	1	1	**244-8194**	4	SPACER (32X65X30-MM THK)	
Y	2	1	*307-7694*	1	COUNTERWEIGHT GP	708
M	3	1	**7X-2583**	4	BOLT (M30X3.5X120-MM)	
M	4	1	**8T-4190**	8	BOLT (M16X2X25-MM)	

M - METRIC PART
Y - SEPARATE ILLUSTRATION

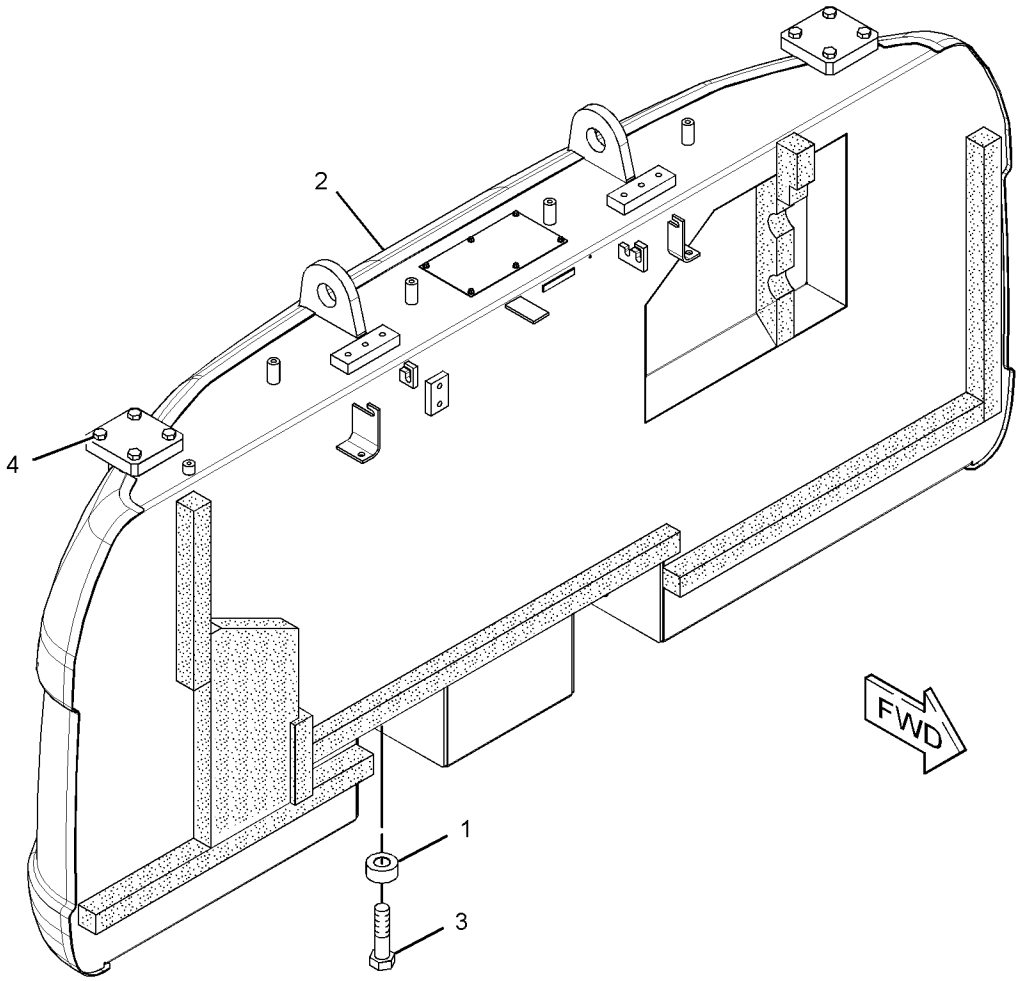

GRAPHIC #1 **<END>** g01431521

278-3908 COUNTERWEIGHT & MOUNTING GP

S/N: KGF1-UP; FAL1-UP
PART OF 347-3343 OPTION AR-REGIONAL
AN ATTACHMENT
TYPE 2

SMCS-7056 **i03137662**

NOTE	REF NO	GRAPHIC REF	PART NUMBER	QTY	PART NAME 1 2 3 4 5 6 (PRODUCT LEVEL)	SEE PAGE
	1	1	**244-8194**	4	SPACER (32X65X30-MM THK)	
CY	2	1	*327-3268*	1	COUNTERWEIGHT GP	714
M	3	1	**7X-2583**	4	BOLT (M30X3.5X120-MM)	
M	4	1	**8T-4190**	8	BOLT (M16X2X25-MM)	

C - CHANGE FROM PREVIOUS TYPE
M - METRIC PART
Y - SEPARATE ILLUSTRATION

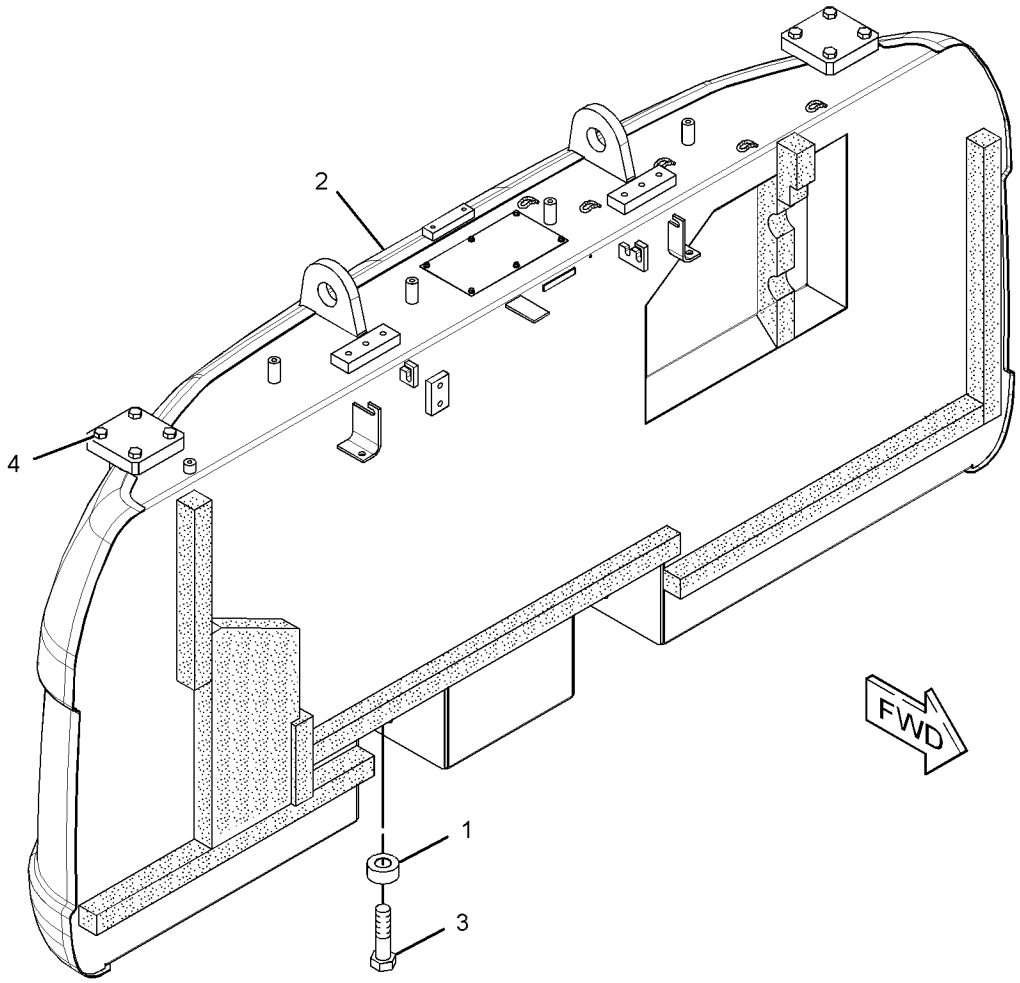

GRAPHIC #1 **<END>** g01628321

278-3908 COUNTERWEIGHT & MOUNTING GP

S/N: KGF1-UP; FAL1-UP
PART OF 347-3343, 354-1152, 379-7306, 385-4029 OPTION AR-REGIONAL
AN ATTACHMENT
TYPE 3

SMCS-7056 **i04321545**

NOTE	REF NO	GRAPHIC REF	PART NUMBER	QTY	PART NAME 1 2 3 4 5 6 (PRODUCT LEVEL)	SEE PAGE
	1	1	**244-8194**	4	SPACER (32X65X30-MM THK)	
CY	2	1	*351-3094*	1	COUNTERWEIGHT GP	716
M	3	1	**7X-2583**	4	BOLT (M30X3.5X120-MM)	
M	4	1	**8T-4190**	8	BOLT (M16X2X25-MM)	
C	5	1	**7Y-0063**	2	FILM-INFORMATION (DO NOT LIFT)	
C	6	1	**136-0139**	2	CAP	

C - CHANGE FROM PREVIOUS TYPE
M - METRIC PART
Y - SEPARATE ILLUSTRATION

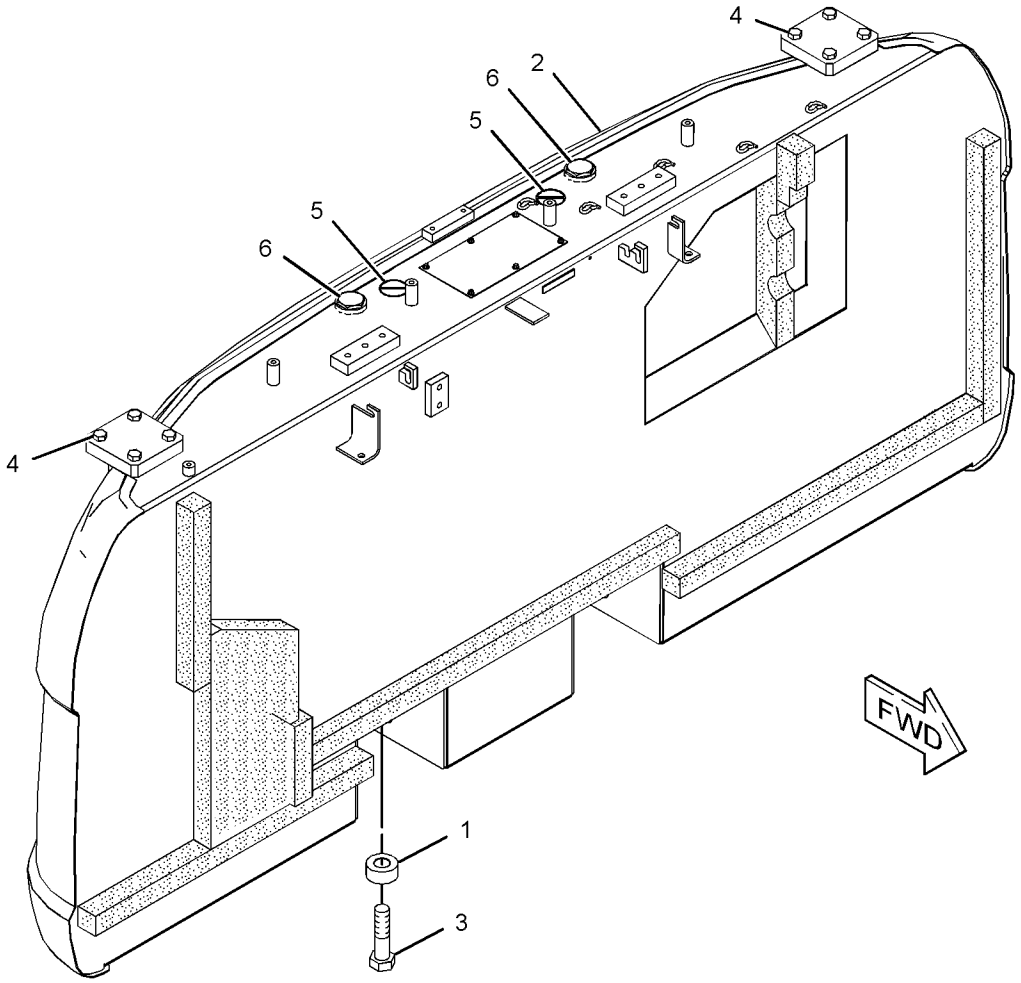

GRAPHIC #1 **<END>** g02511294

307-7674 COUNTERWEIGHT & MOUNTING GP

S/N: KGF1-UP
AN ATTACHMENT
TYPE 1

SMCS-7056 **i02781245**

NOTE	REF NO	GRAPHIC REF	PART NUMBER	QTY	PART NAME 1 2 3 4 5 6 (PRODUCT LEVEL)	SEE PAGE
	1	1	**244-8194**	4	SPACER (32X65X30-MM THK)	
Y	2	1	*304-0096*	1	COUNTERWEIGHT GP	707
M	3	1	**7X-2583**	4	BOLT (M30X3.5X120-MM)	
M	4	1	**8T-4190**	8	BOLT (M16X2X25-MM)	

M - METRIC PART
Y - SEPARATE ILLUSTRATION

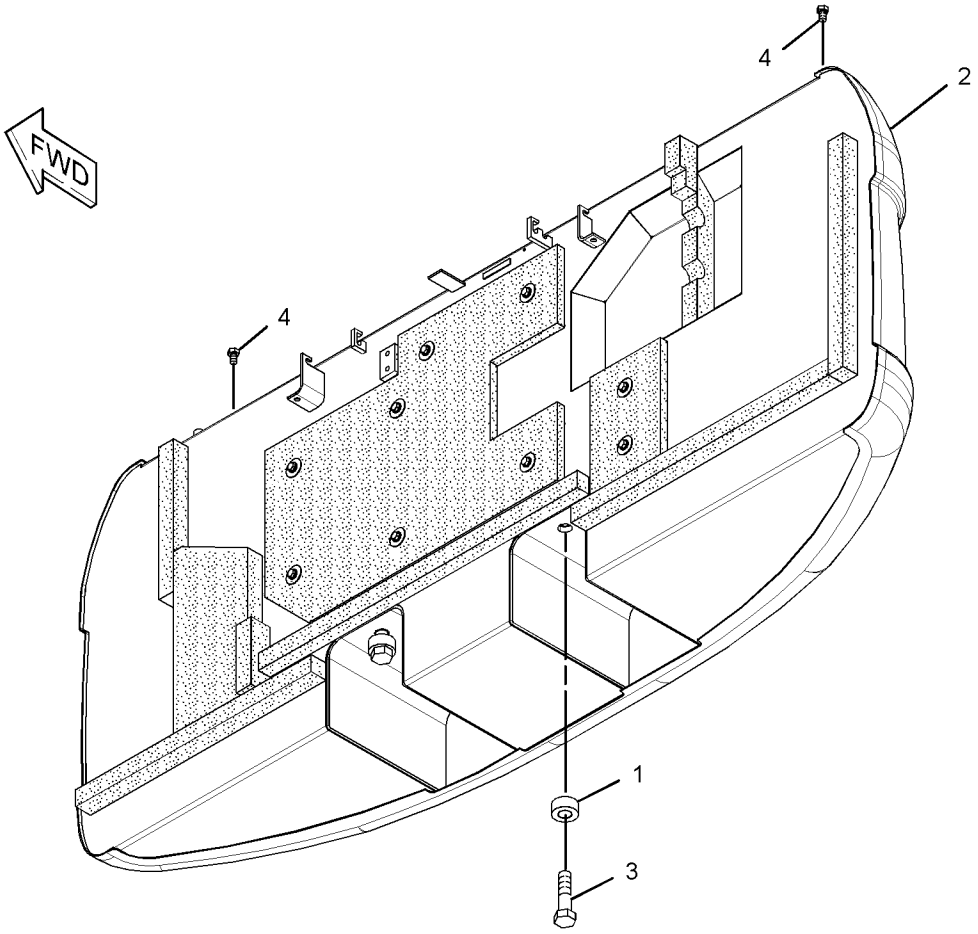

GRAPHIC #1 **<END>** g01404093

307-7674 COUNTERWEIGHT & MOUNTING GP

S/N: KGF1-UP
AN ATTACHMENT
TYPE 2

SMCS-7056 **i03133344**

NOTE	REF NO	GRAPHIC REF	PART NUMBER	QTY	PART NAME 1 2 3 4 5 6 (PRODUCT LEVEL)	SEE PAGE
	1	1	**244-8194**	4	SPACER (32X65X30-MM THK)	
CY	2	1	*327-3272*	1	COUNTERWEIGHT GP	715
M	3	1	**7X-2583**	4	BOLT (M30X3.5X120-MM)	
M	4	1	**8T-4190**	8	BOLT (M16X2X25-MM)	

C - CHANGE FROM PREVIOUS TYPE
M - METRIC PART
Y - SEPARATE ILLUSTRATION

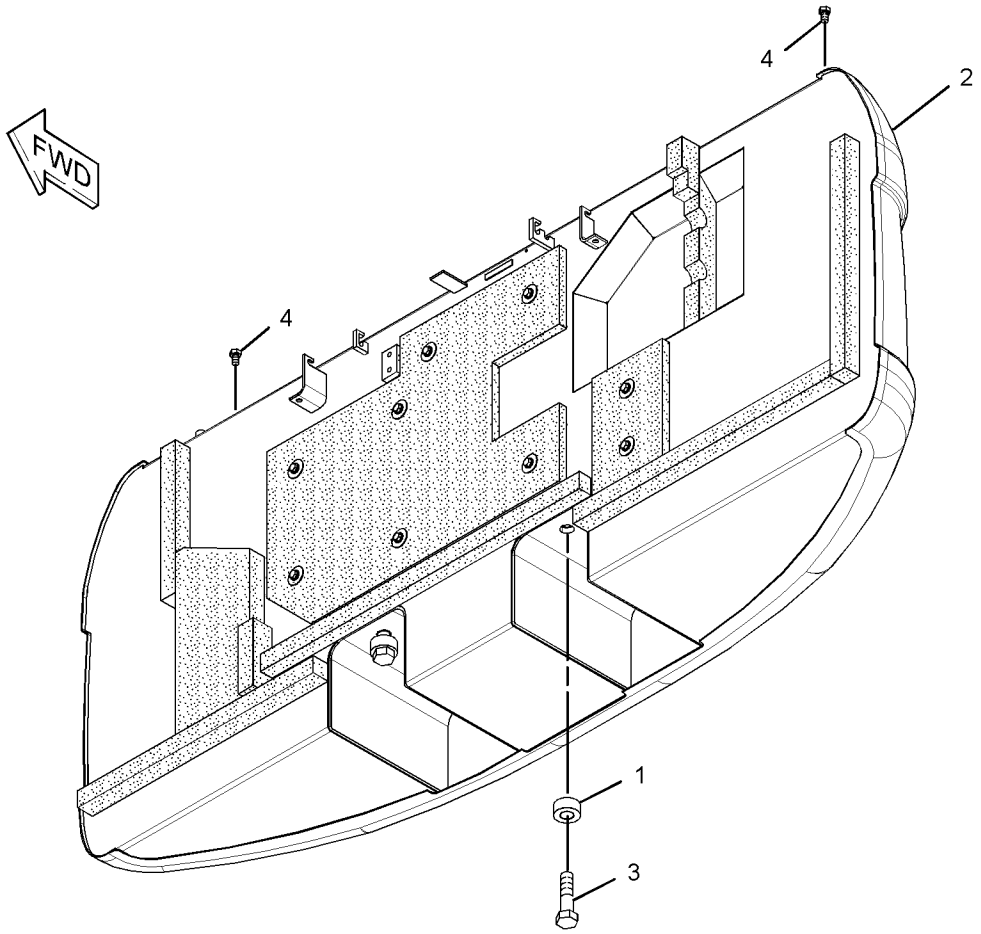

GRAPHIC #1 **<END>** g01404093

307-7674 COUNTERWEIGHT & MOUNTING GP

S/N: KGF1-UP
AN ATTACHMENT
TYPE 3

SMCS-7056 **i04304713**

NOTE	REF NO	GRAPHIC REF	PART NUMBER	QTY	PART NAME 1 2 3 4 5 6 (PRODUCT LEVEL)	SEE PAGE
	1	1	**244-8194**	4	SPACER (32X65X30-MM THK)	
CY	2	1	*351-3102*	1	COUNTERWEIGHT GP	717
M	3	1	**7X-2583**	4	BOLT (M30X3.5X120-MM)	
M	4	1	**8T-4190**	8	BOLT (M16X2X25-MM)	
	5	1	**136-0139**	2	CAP	
C	6	1	**7Y-0063**	2	FILM-INFORMATION (DO NOT LIFT)	

C - CHANGE FROM PREVIOUS TYPE
M - METRIC PART
Y - SEPARATE ILLUSTRATION

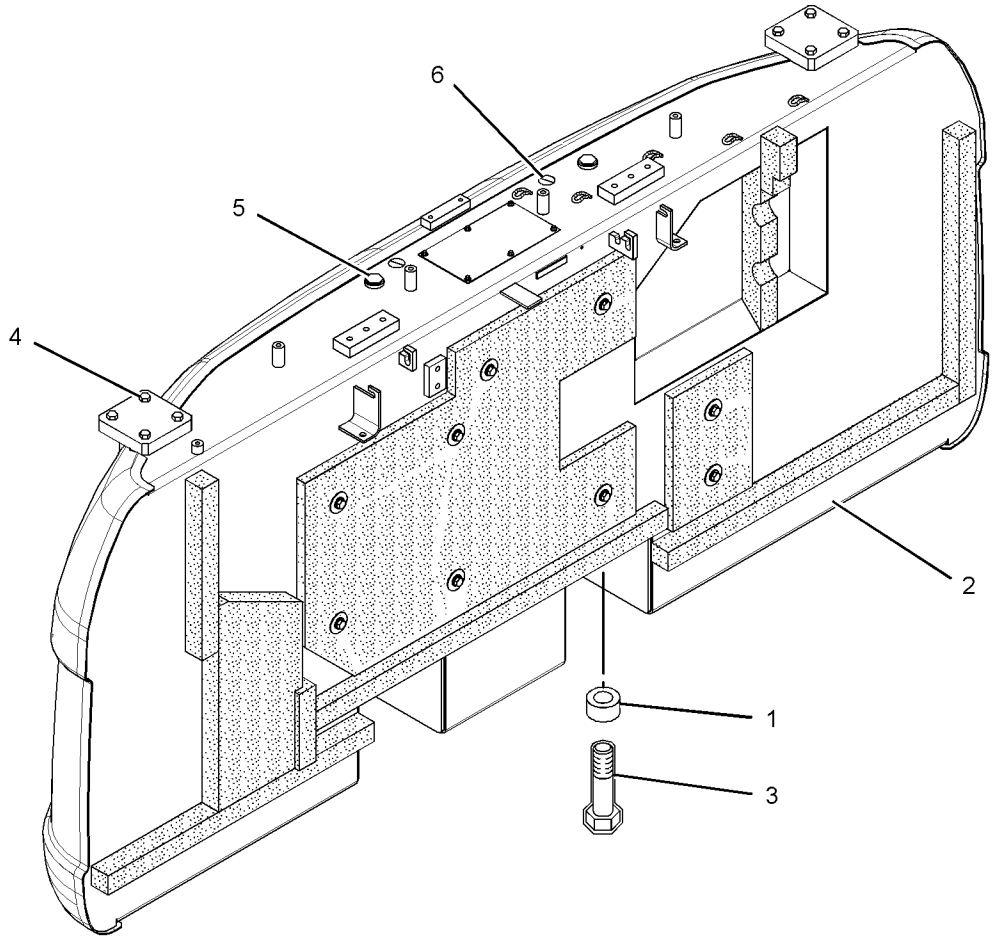

GRAPHIC #1 **<END>** g02514356

290-1902 COUNTERWEIGHT AR

S/N: KGF1-UP; FAL1-UP
PART OF 354-1047, 354-1054 DISTRIBUTION AR, 347-3342 OPTION AR-REGIONAL
AN ATTACHMENT

SMCS-7056 **i02595793**

NOTE	PART NUMBER	QTY	PART NAME 1 2 3 4 5 6 (PRODUCT LEVEL)	SEE PAGE
Y	*262-2608*	1	COUNTERWEIGHT & MOUNTING GP	693

Y - SEPARATE ILLUSTRATION

<END>

241-2000 COUNTERWEIGHT GP

S/N: KGF1-UP
3855-KG (8499-LB)
PART OF 241-1999 COUNTERWEIGHT & MOUNTING GP
AN ATTACHMENT
TYPE 1

SMCS-7056 **i02423524**

NOTE	REF NO	GRAPHIC REF	PART NUMBER	QTY	PART NAME 1 2 3 4 5 6 (PRODUCT LEVEL)	SEE PAGE
	1	1	**7I-0717**	1	LINER	
	2	1	**116-1665**	1	LINER	
	3	1	**165-3102**	1	LINER	
	4	1	**165-3103**	1	LINER	
	5	1	**184-8722**	1	LINER	
	6	1	**241-2001**	1	COUNTERWEIGHT AS	
	7	1	**248-9061**	1	LINER	
	8	1	**262-2404**	1	INSULATION	
	9	1	**262-2405**	1	INSULATION	
	10	1	**262-2406**	1	LINER	
	11	1	**262-2417**	1	LINER	
	12	1	**273-7677**	1	LINER	
	13	1	**7Y-2292**	9	WASHER (13X50X2-MM THK)	
M	14	1	**8T-4179**	9	BOLT (M12X1.75X20-MM)	
	15	1	**8T-4223**	9	WASHER-HARD (13.5X25.5X3-MM THK)	

M - METRIC PART

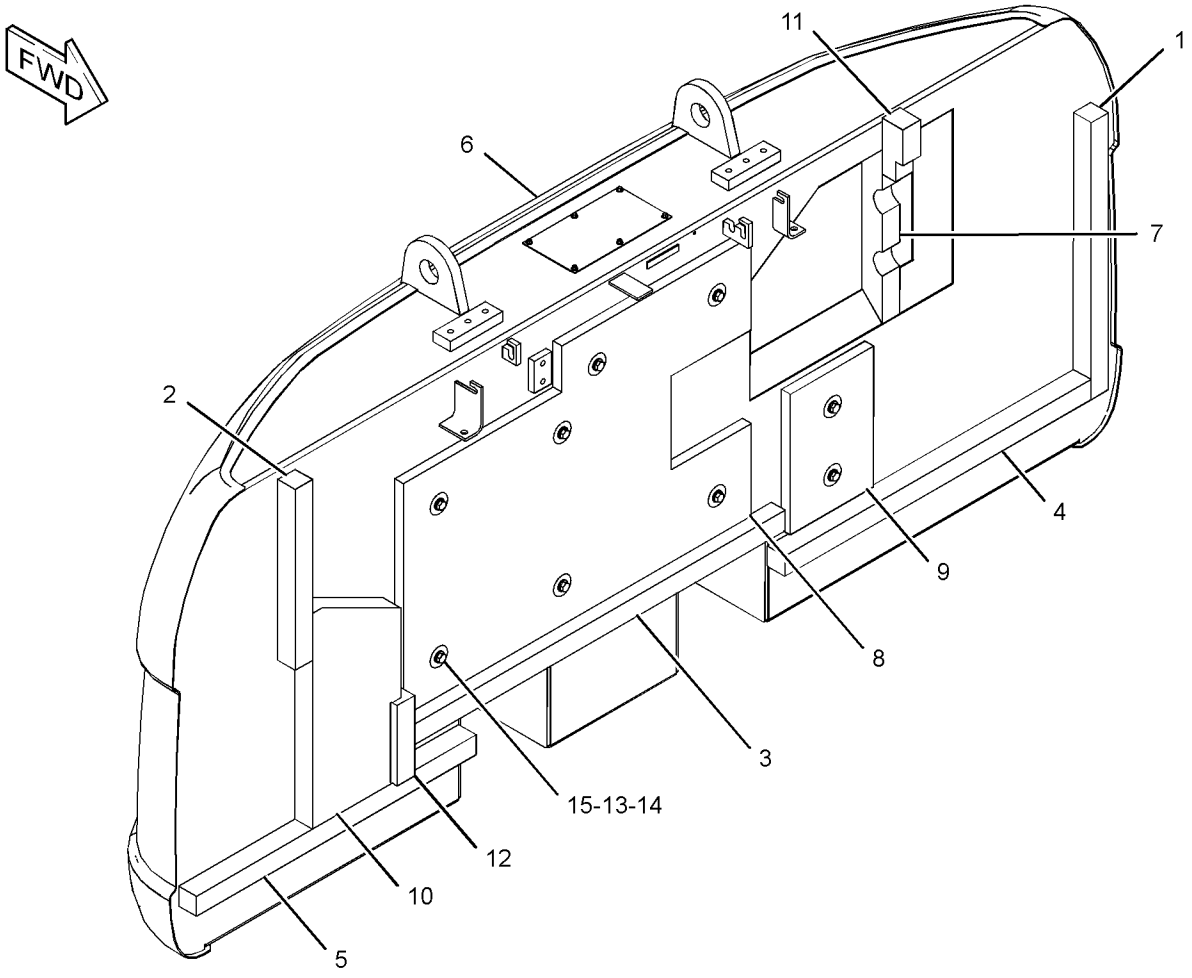

GRAPHIC #1 **<END>** g01228692

241-2000 COUNTERWEIGHT GP

S/N: KGF1-UP
3855-KG (8499-LB)
PART OF 241-1999 COUNTERWEIGHT & MOUNTING GP
AN ATTACHMENT
TYPE 2

SMCS-7056 **i03010096**

NOTE	REF NO	GRAPHIC REF	PART NUMBER	QTY	PART NAME 1 2 3 4 5 6 (PRODUCT LEVEL)	SEE PAGE
	1	1	**7I-0717**	1	LINER	
	2	1	**116-1665**	1	LINER	
	3	1	**165-3102**	1	LINER	
	4	1	**165-3103**	1	LINER	
	5	1	**184-8722**	1	LINER	
	7	1	**248-9061**	1	LINER	
C	8	1	**286-6346**	1	INSULATION	
	9	1	**262-2405**	1	INSULATION	
	10	1	**262-2406**	1	LINER	
	11	1	**262-2417**	1	LINER	
	12	1	**273-7677**	1	LINER	
	13	1	**7Y-2292**	9	WASHER (13X50X2-MM THK)	
M	14	1	**8T-4179**	9	BOLT (M12X1.75X20-MM)	
	15	1	**8T-4223**	9	WASHER-HARD (13.5X25.5X3-MM THK)	

C - CHANGE FROM PREVIOUS TYPE
M - METRIC PART

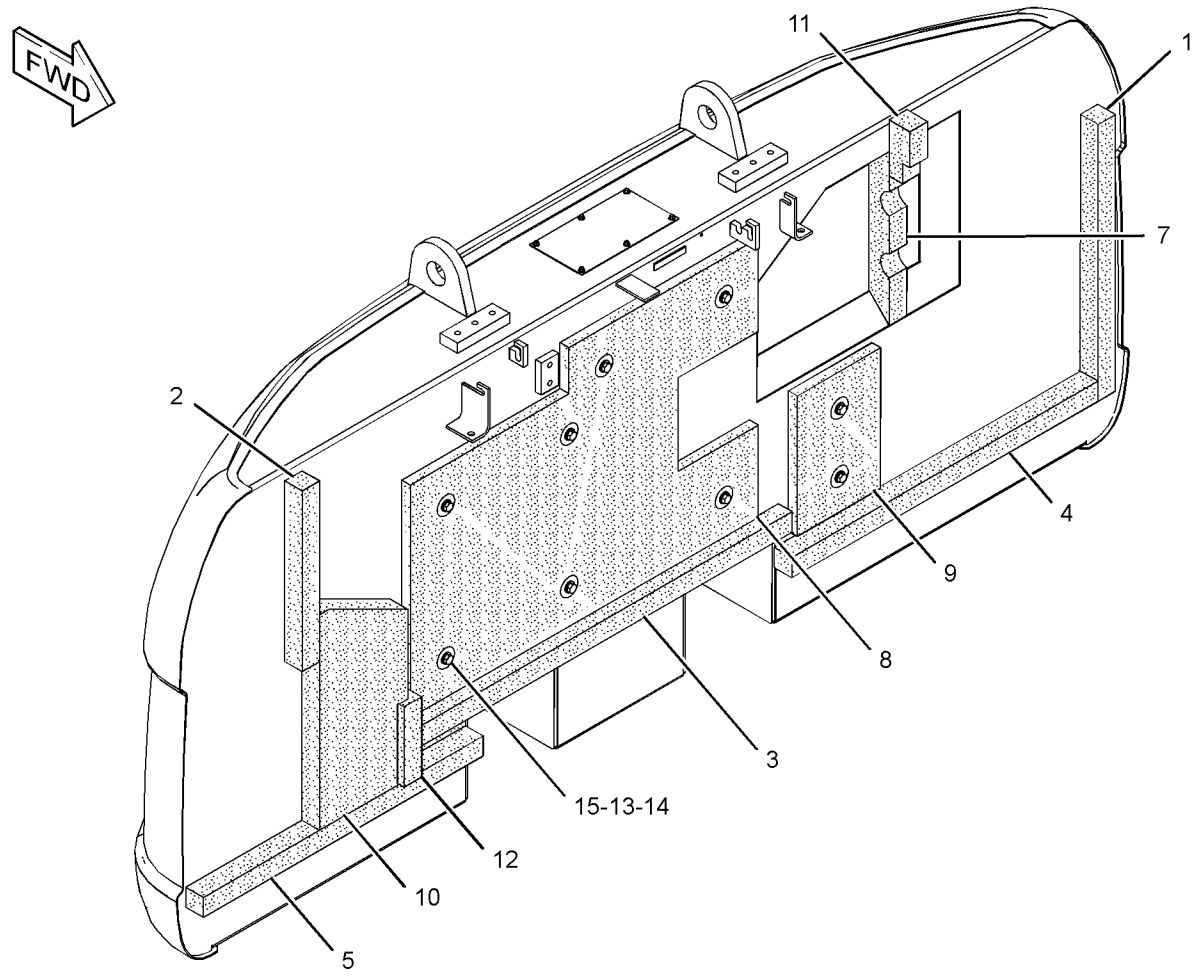

GRAPHIC #1 **<END>** g01619834

241-2003 COUNTERWEIGHT GP

S/N: KGF1-UP
4811-KG (10607-LB)
PART OF 241-2002 COUNTERWEIGHT & MOUNTING GP
AN ATTACHMENT

SMCS-7056 **i02580825**

NOTE	REF NO	GRAPHIC REF	PART NUMBER	QTY	PART NAME 1 2 3 4 5 6 (PRODUCT LEVEL)	SEE PAGE
	1	1	**7I-0717**	1	LINER	
	2	1	**116-1665**	1	LINER	
	3	1	**165-3102**	1	LINER	
	4	1	**165-3103**	1	LINER	
	5	1	**184-8722**	1	LINER	
C	6	1	**286-6340**	1	COUNTERWEIGHT AS	
	7	1	**248-9061**	1	LINER	
C	8	1	**286-6346**	1	INSULATION	
	9	1	**262-2405**	1	INSULATION	
	10	1	**262-2406**	1	LINER	
	11	1	**262-2417**	1	LINER	
	12	1	**273-7677**	1	LINER	
	13	1	**7Y-2292**	9	WASHER (13X50X2-MM THK)	
M	14	1	**8T-4179**	9	BOLT (M12X1.75X20-MM)	
	15	1	**8T-4223**	9	WASHER-HARD (13.5X25.5X3-MM THK)	

C - CHANGE FROM PREVIOUS TYPE
M - METRIC PART

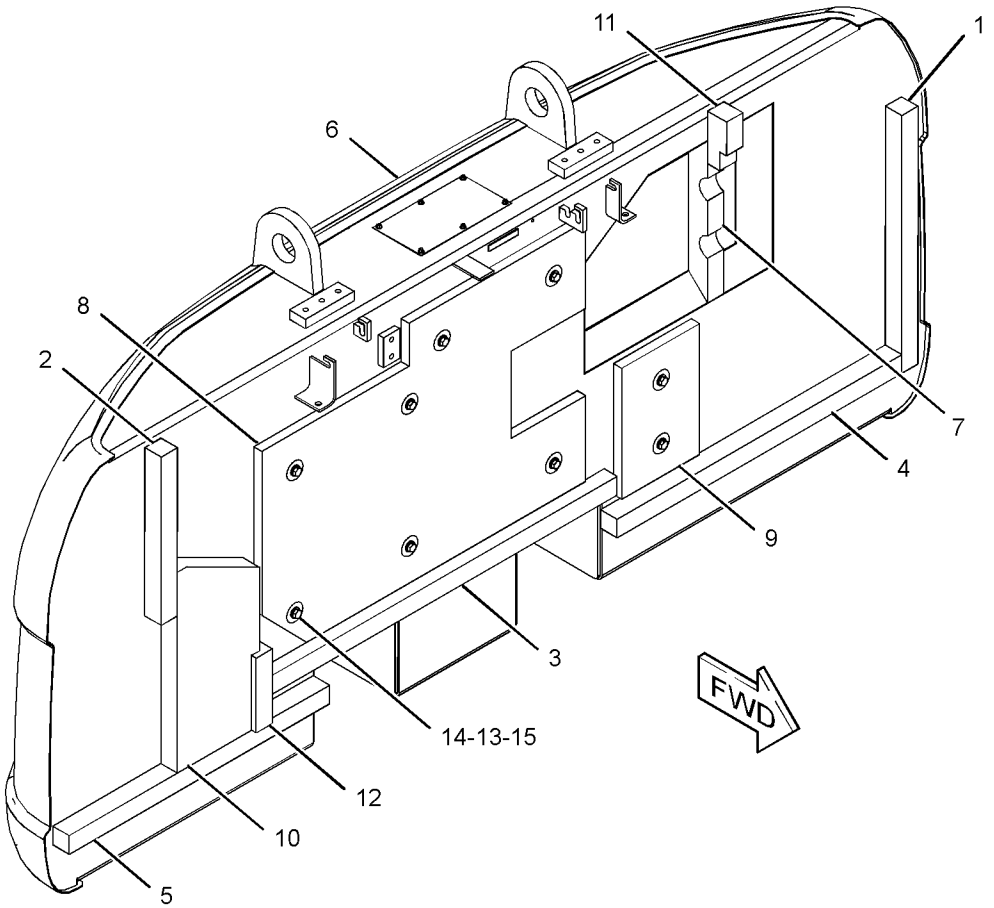

GRAPHIC #1 **<END>** g01296269

262-2623 COUNTERWEIGHT GP

S/N: KGF1-UP; FAL1-UP
3850-KG (8488-LB)
PART OF 262-2607 COUNTERWEIGHT & MOUNTING GP

SMCS-7056 **i02418745**

NOTE	REF NO	GRAPHIC REF	PART NUMBER	QTY	PART NAME 1 2 3 4 5 6 (PRODUCT LEVEL)	SEE PAGE
	1	1	**7I-0717**	1	LINER	
	2	1	**116-1665**	1	LINER	
	3	1	**165-3102**	1	LINER	
	4	1	**165-3103**	1	LINER	
	5	1	**184-8722**	1	LINER	
	6	1	**248-9061**	1	LINER	
	7	1	**262-2406**	1	LINER	
	8	1	**262-2417**	1	LINER	
	9	1	**262-2624**	1	COUNTERWEIGHT AS	
	10	1	**273-7677**	1	LINER	

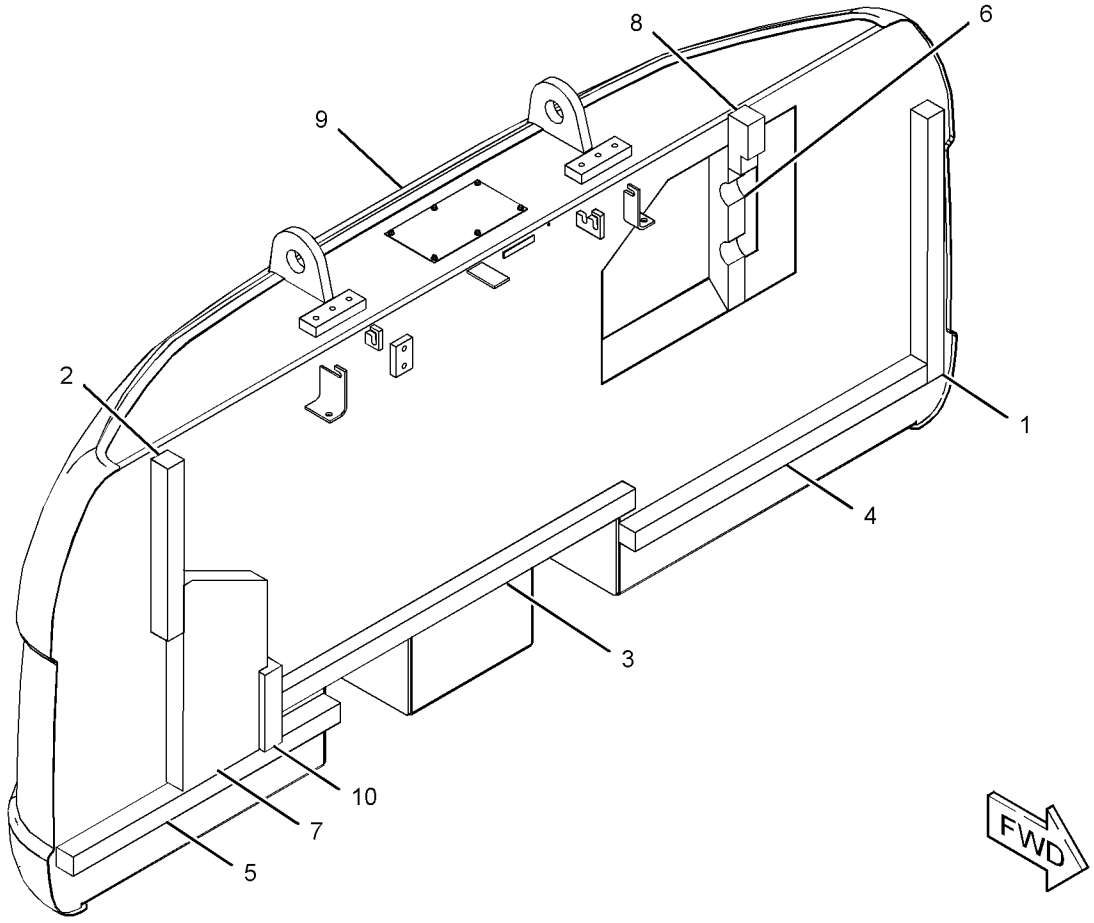

GRAPHIC #1 **<END>** g01230742

262-2626 COUNTERWEIGHT GP

S/N: KGF1-UP; FAL1-UP
3850-KG (8488-LB)
PART OF 262-2608 COUNTERWEIGHT & MOUNTING GP
AN ATTACHMENT

SMCS-7056 **i02423411**

NOTE	REF NO	GRAPHIC REF	PART NUMBER	QTY	PART NAME 1 2 3 4 5 6 (PRODUCT LEVEL)	SEE PAGE
	1	1	**7I-0717**	1	LINER	
	2	1	**116-1665**	1	LINER	
	3	1	**165-3102**	1	LINER	
	4	1	**165-3103**	1	LINER	
	5	1	**184-8722**	1	LINER	
	6	1	**248-9061**	1	LINER	
	7	1	**262-2406**	1	LINER	
	8	1	**262-2417**	1	LINER	
Z	9	1			COUNTERWEIGHT AS	
	10	1	**273-7677**	1	LINER	

Z - NOT SERVICED SEPARATELY

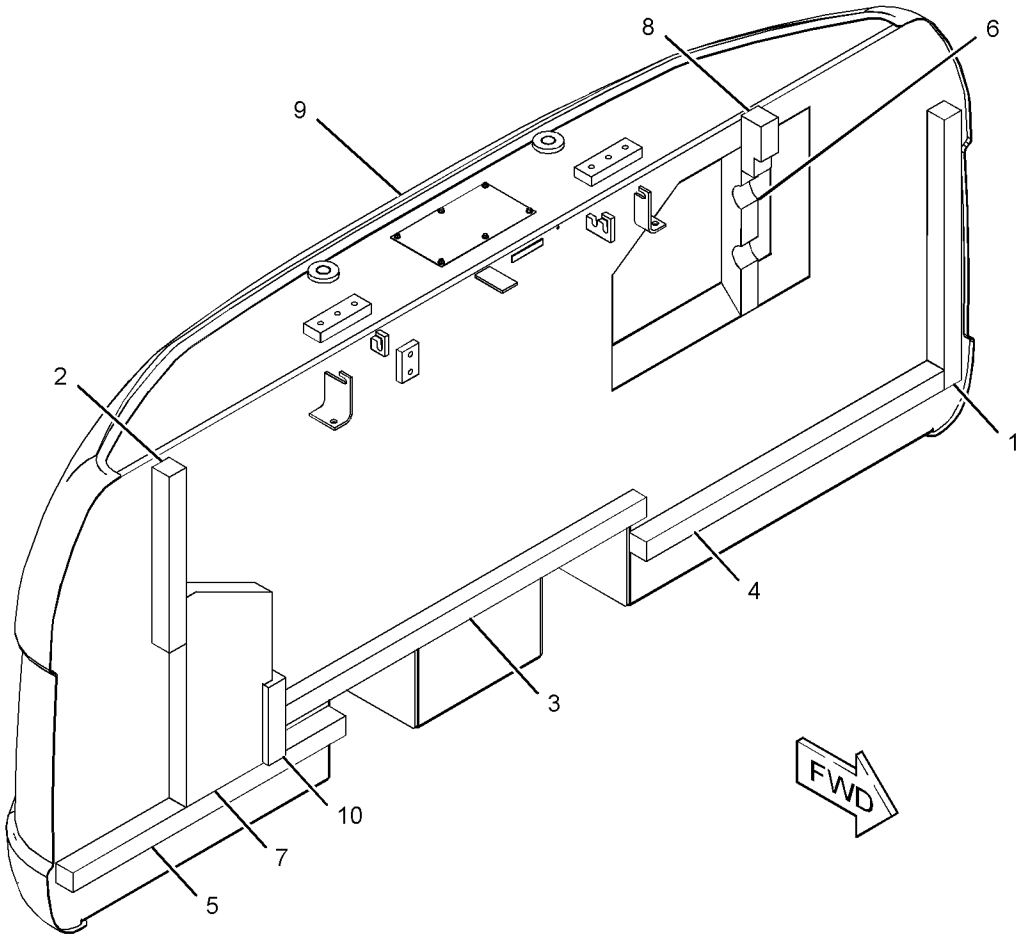

GRAPHIC #1 **<END>** g01230744

304-0096 COUNTERWEIGHT GP

S/N: KGF1-UP
3855-KG (8499-LB)
PART OF 307-7674 COUNTERWEIGHT & MOUNTING GP
AN ATTACHMENT

SMCS-7056 **i03956335**

NOTE	REF NO	GRAPHIC REF	PART NUMBER	QTY	PART NAME 1 2 3 4 5 6 (PRODUCT LEVEL)	SEE PAGE
	1	1	**7I-0717**	1	LINER	
	2	1	**116-1665**	1	LINER	
	3	1	**165-3102**	1	LINER	
	4	1	**165-3103**	1	LINER	
	5	1	**184-8722**	1	LINER	
	6	1	**248-9061**	1	LINER	
	7	1	**262-2405**	1	INSULATION	
	8	1	**262-2406**	1	LINER	
	9	1	**262-2417**	1	LINER	
	10	1	**273-7677**	1	LINER	
	11	1	**286-6346**	1	INSULATION	
	12	1	**304-0097**	1	COUNTERWEIGHT AS	
	13	1	**7Y-2292**	9	WASHER (13X50X2-MM THK)	
M	14	1	**8T-4179**	9	BOLT (M12X1.75X20-MM)	
	15	1	**8T-4223**	9	WASHER-HARD (13.5X25.5X3-MM THK)	

M - METRIC PART

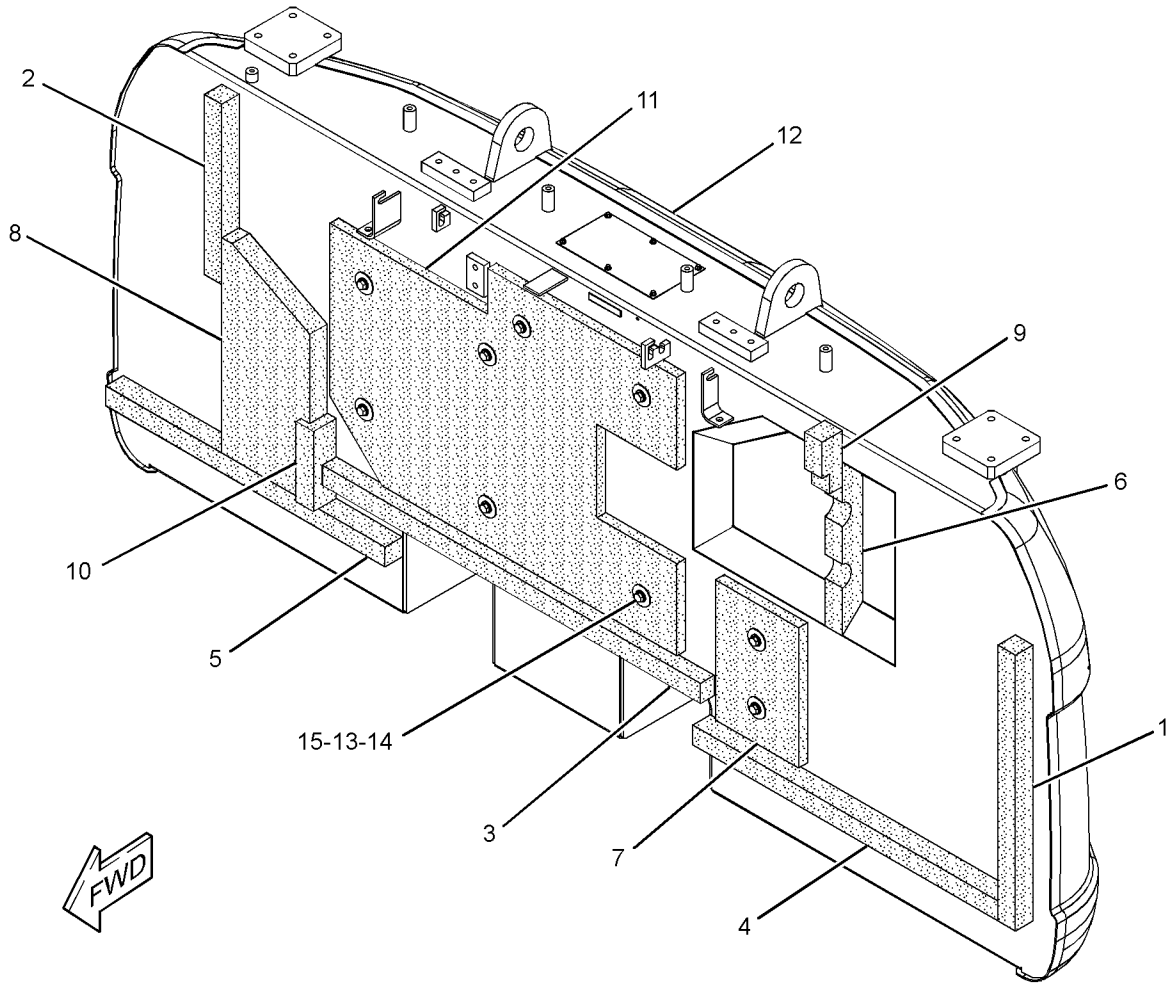

GRAPHIC #1 **<END>** g01363778

307-7694 COUNTERWEIGHT GP

S/N: KGF1-UP; FAL1-UP
3851-KG (8490-LB)
PART OF 278-3908 COUNTERWEIGHT & MOUNTING GP
AN ATTACHMENT

SMCS-7056 **i03292761**

NOTE	REF NO	GRAPHIC REF	PART NUMBER	QTY	PART NAME 1 2 3 4 5 6 (PRODUCT LEVEL)	SEE PAGE
	1	1	**7I-0717**	1	LINER	
	2	1	**116-1665**	1	LINER	
	3	1	**165-3102**	1	LINER	
	4	1	**165-3103**	1	LINER	
	5	1	**184-8722**	1	LINER	
	6	1	**248-9061**	1	LINER	
	7	1	**262-2406**	1	LINER	
	8	1	**262-2417**	1	LINER	
	9	1	**273-7677**	1	LINER	
	10	1	**307-7695**	1	COUNTERWEIGHT AS	

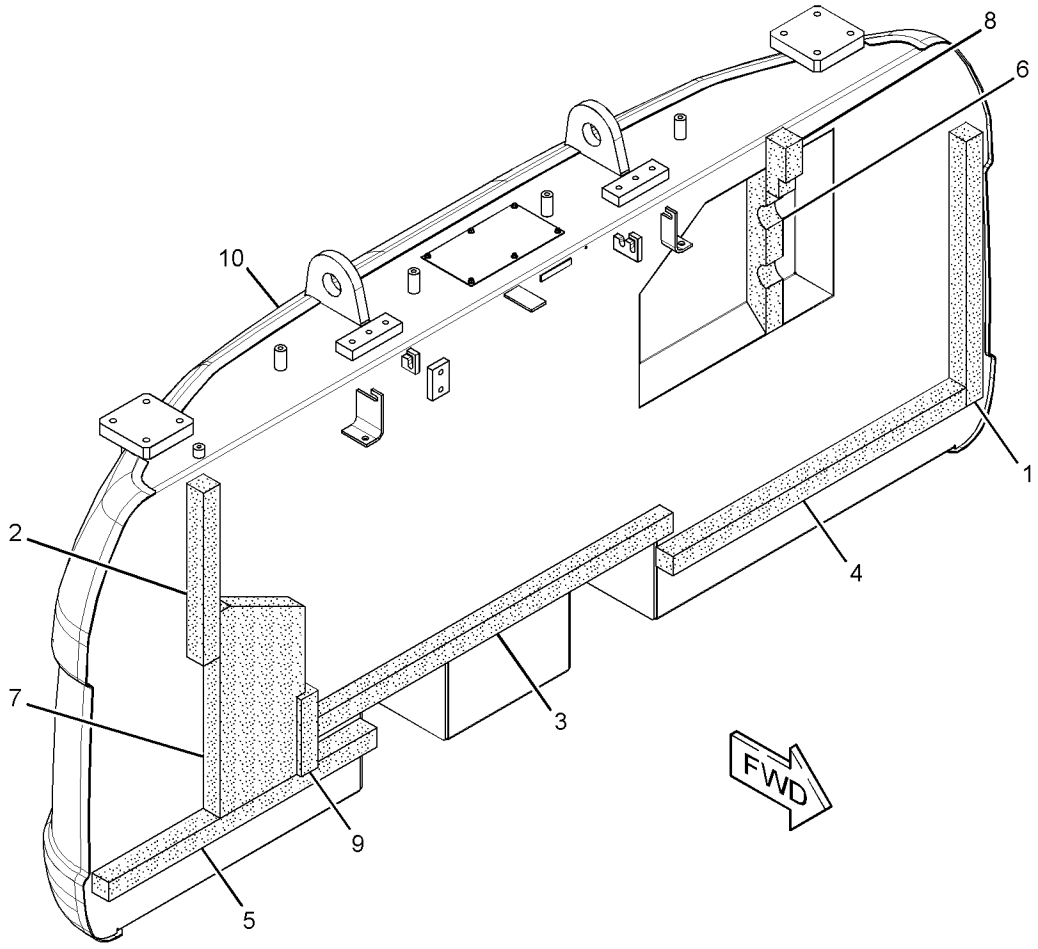

GRAPHIC #1 **<END>** g01431916

327-3232 COUNTERWEIGHT GP

S/N: KGF1-UP
3853-KG (8494-LB)
PART OF 241-1999 COUNTERWEIGHT & MOUNTING GP
AN ATTACHMENT

SMCS-7056 **i04756950**

NOTE	REF NO	GRAPHIC REF	PART NUMBER	QTY	PART NAME 1 2 3 4 5 6 (PRODUCT LEVEL)	SEE PAGE
	1	1	**7I-0717**	1	LINER	
	2	1	**116-1665**	1	LINER	
	3	1	**165-3102**	1	LINER	
	4	1	**165-3103**	1	LINER	
	5	1	**184-8722**	1	LINER	
	6	1	**248-9061**	1	LINER	
	7	1	**262-2405**	1	INSULATION	
	8	1	**262-2406**	1	LINER	
	9	1	**262-2417**	1	LINER	
	10	1	**273-7677**	1	LINER	
	11	1	**286-6346**	1	INSULATION	
	12	1	*327-3233*	1	COUNTERWEIGHT AS	
	12A	1	**165-3120**	1	SHEET	
M	12B	1	**192-3039**	6	SCREW-HEX FLANGE (6.3X1.8X19-MM)	
	13	1	**7Y-2292**	9	WASHER (13X50X2-MM THK)	
M	14	1	**8T-4179**	9	BOLT (M12X1.75X20-MM)	
	15	1	**8T-4223**	9	WASHER-HARD (13.5X25.5X3-MM THK)	

M - METRIC PART

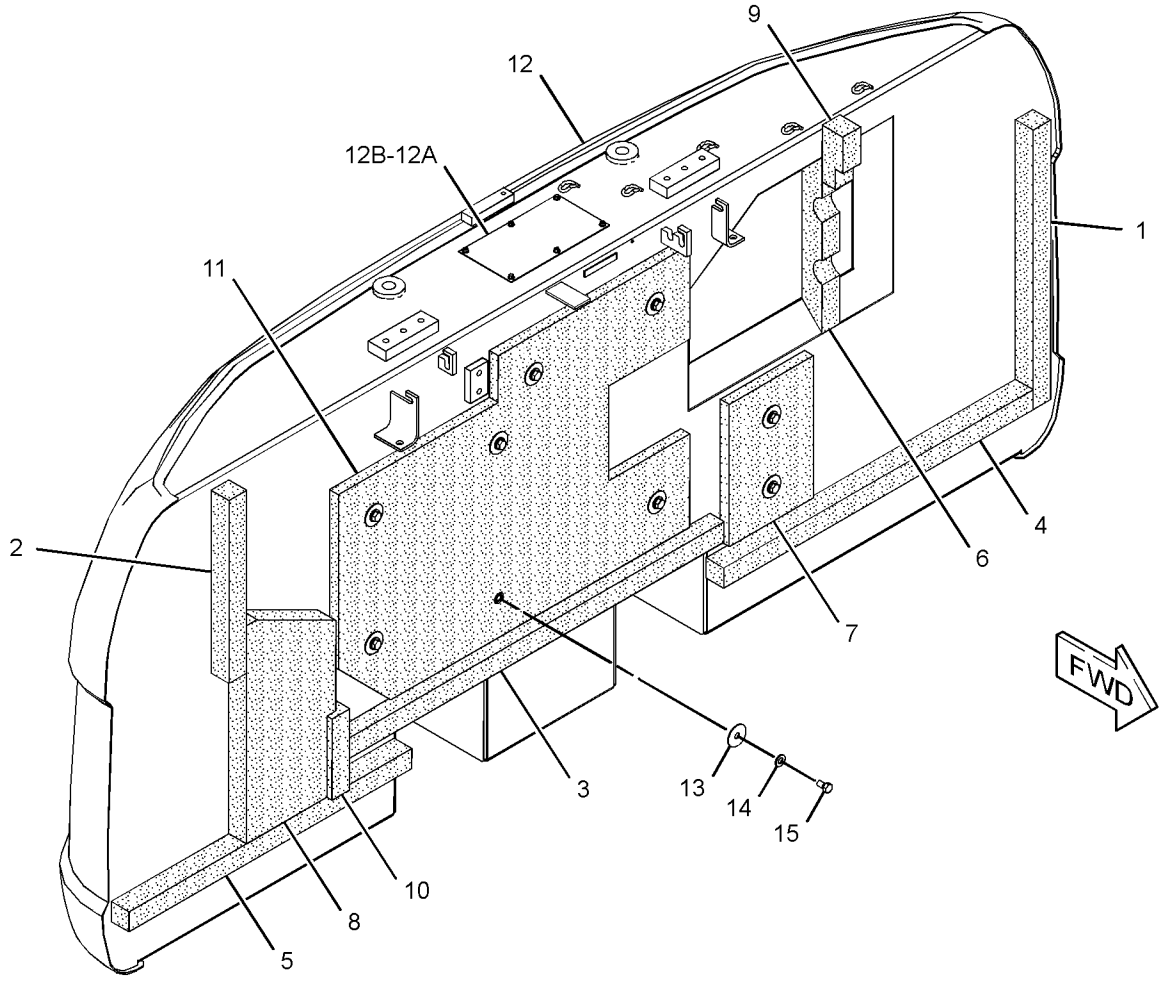

GRAPHIC #1 **<END>** g02861319

327-3236 COUNTERWEIGHT GP

S/N: KGF1-UP
3855-KG (8499-LB)
PART OF 241-1999 COUNTERWEIGHT & MOUNTING GP
AN ATTACHMENT

SMCS-7056 **i03956352**

NOTE	REF NO	GRAPHIC REF	PART NUMBER	QTY	PART NAME 1 2 3 4 5 6 (PRODUCT LEVEL)	SEE PAGE
	1	1	**7I-0717**	1	LINER	
	2	1	**116-1665**	1	LINER	
	3	1	**165-3102**	1	LINER	
	4	1	**165-3103**	1	LINER	
	5	1	**184-8722**	1	LINER	
	6	1	**248-9061**	1	LINER	
	7	1	**262-2405**	1	INSULATION	
	8	1	**262-2406**	1	LINER	
	9	1	**262-2417**	1	LINER	
	10	1	**273-7677**	1	LINER	
	11	1	**286-6346**	1	INSULATION	
	12	1	**327-3237**	1	COUNTERWEIGHT AS	
	13	1	**7Y-2292**	9	WASHER (13X50X2-MM THK)	
M	14	1	**8T-4179**	9	BOLT (M12X1.75X20-MM)	
	15	1	**8T-4223**	9	WASHER-HARD (13.5X25.5X3-MM THK)	

M - METRIC PART

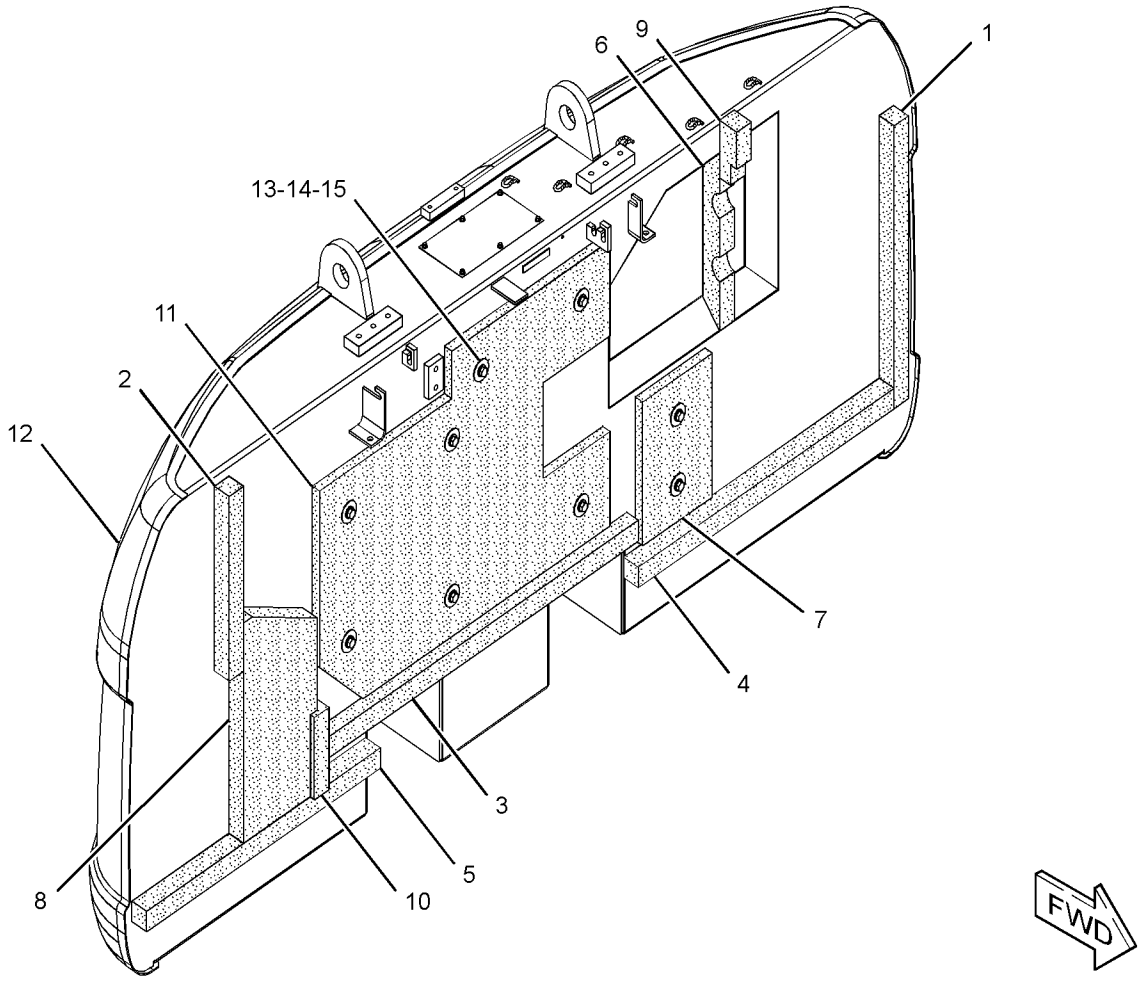

GRAPHIC #1 **<END>** g01628199

327-3248 COUNTERWEIGHT GP

S/N: KGF1-UP; FAL1-UP
3850-KG (8488-LB)
PART OF 262-2607, 262-2608 COUNTERWEIGHT & MOUNTING GP
ALSO AN ATTACHMENT

SMCS-7056 **i04388615**

NOTE	REF NO	GRAPHIC REF	PART NUMBER	QTY	PART NAME 1 2 3 4 5 6 (PRODUCT LEVEL)	SEE PAGE
	1	1	**7I-0717**	1	LINER	
	2	1	**116-1665**	1	LINER	
	3	1	**165-3102**	1	LINER	
	4	1	**165-3103**	1	LINER	
	5	1	**184-8722**	1	LINER	
	6	1	**248-9061**	1	LINER	
	7	1	**262-2406**	1	LINER	
	8	1	**262-2417**	1	LINER	
	9	1	**273-7677**	1	LINER	
	10	1	**366-6413**	1	COUNTERWEIGHT AS	
		1	**165-3120**	1	SHEET	
M		1	**192-3039**	6	SCREW-HEX FLANGE (6.3X1.8X19-MM)	

M - METRIC PART

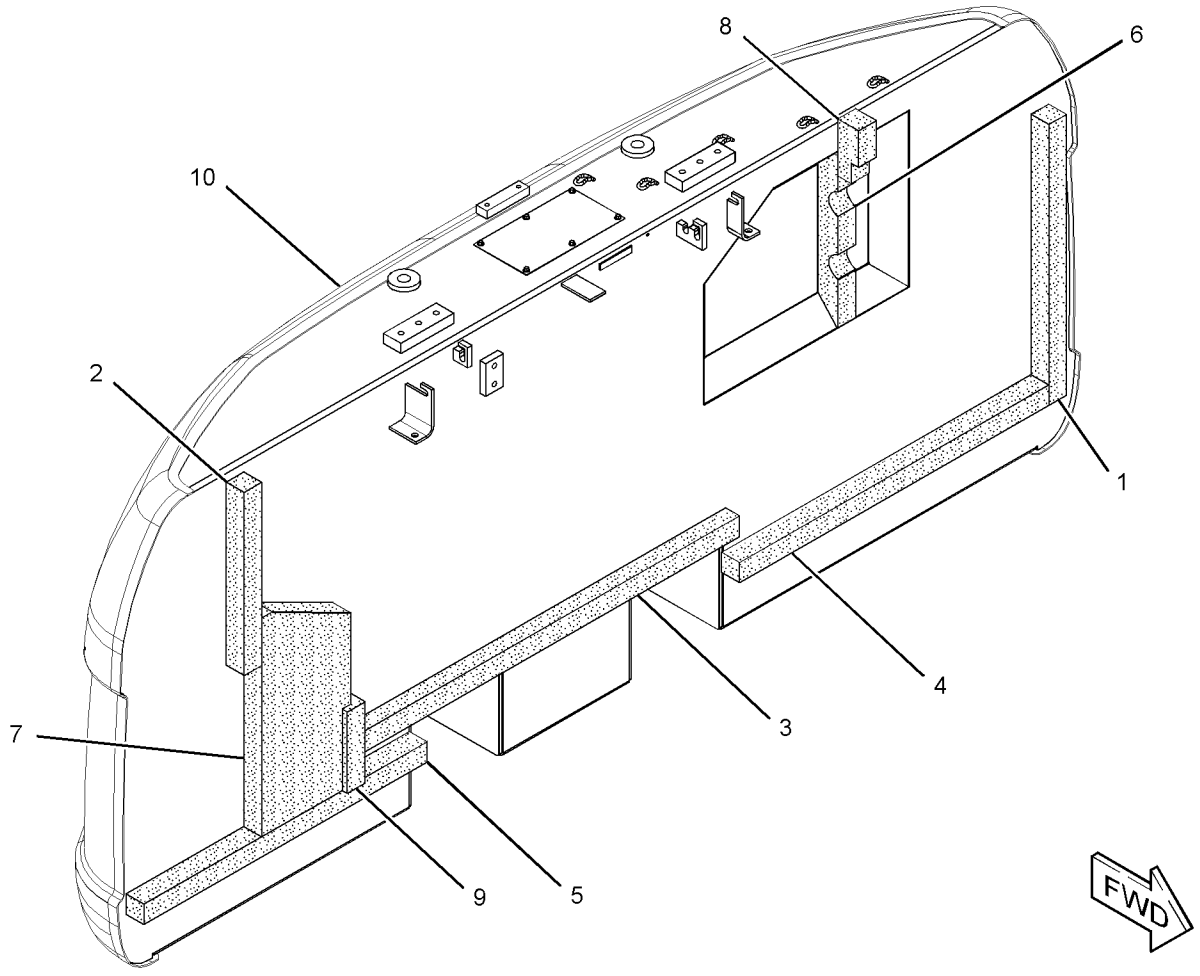

GRAPHIC #1 **<END>** g01629093

327-3252 COUNTERWEIGHT GP

S/N: KGF1-UP; FAL1-UP
3850-KG (8488-LB)
PART OF 262-2607 COUNTERWEIGHT & MOUNTING GP

SMCS-7056 **i03956369**

NOTE	REF NO	GRAPHIC REF	PART NUMBER	QTY	PART NAME 1 2 3 4 5 6 (PRODUCT LEVEL)	SEE PAGE
	1	1	**7I-0717**	1	LINER	
	2	1	**116-1665**	1	LINER	
	3	1	**165-3102**	1	LINER	
	4	1	**165-3103**	1	LINER	
	5	1	**184-8722**	1	LINER	
	6	1	**248-9061**	1	LINER	
	7	1	**262-2406**	1	LINER	
	8	1	**262-2417**	1	LINER	
	9	1	**273-7677**	1	LINER	
	10	1	**327-3253**	1	COUNTERWEIGHT AS	

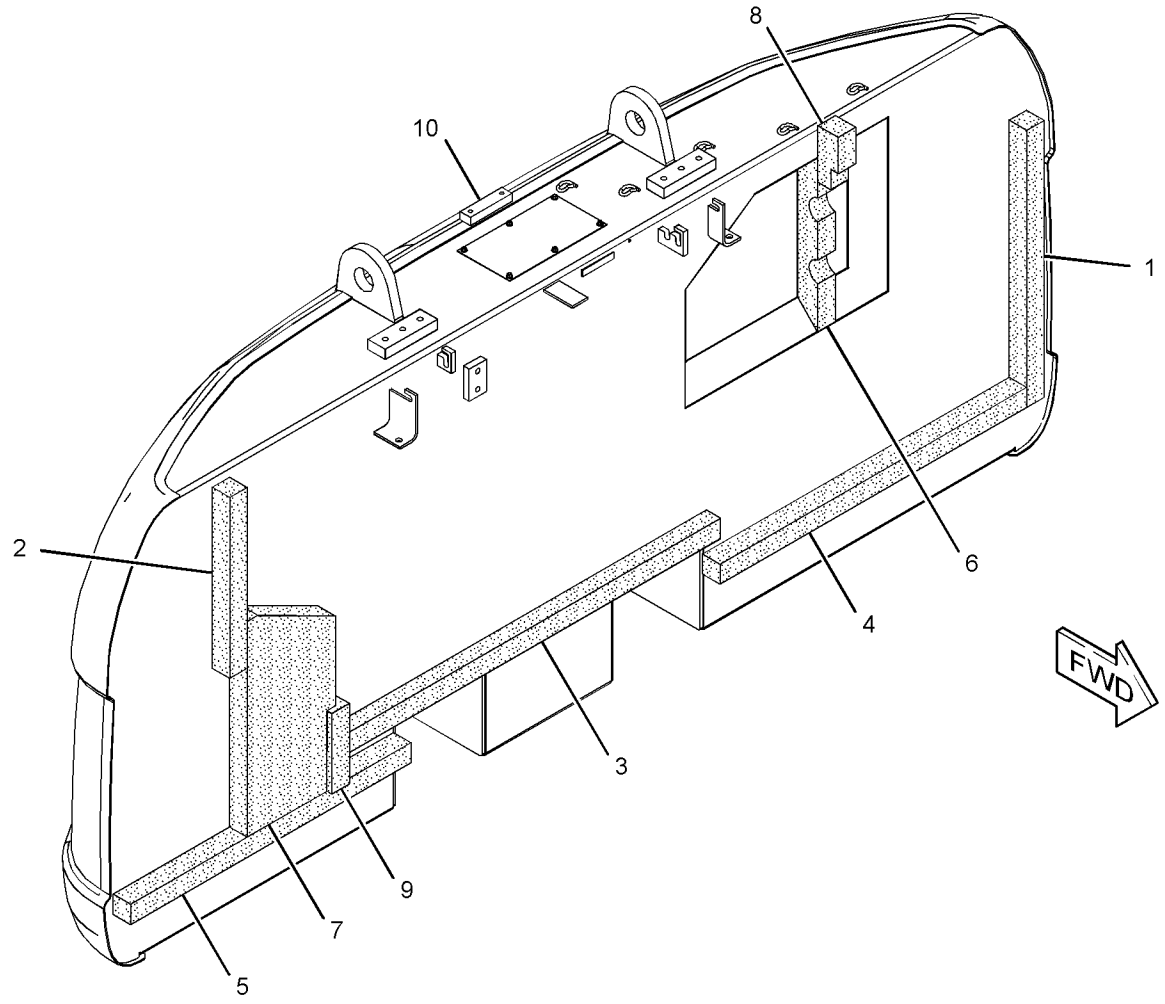

GRAPHIC #1 **<END>** g01638013

327-3256 COUNTERWEIGHT GP

S/N: KGF1-UP
4811-KG (10607-LB)
PART OF 241-2002 COUNTERWEIGHT & MOUNTING GP
AN ATTACHMENT

SMCS-7056 **i03956389**

NOTE	REF NO	GRAPHIC REF	PART NUMBER	QTY	PART NAME 1 2 3 4 5 6 (PRODUCT LEVEL)	SEE PAGE
	1	1	**7I-0717**	1	LINER	
	2	1	**116-1665**	1	LINER	
	3	1	**165-3102**	1	LINER	
	4	1	**165-3103**	1	LINER	
	5	1	**184-8722**	1	LINER	
	6	1	**248-9061**	1	LINER	
	7	1	**262-2405**	1	INSULATION	
	8	1	**262-2406**	1	LINER	
	9	1	**262-2417**	1	LINER	
	10	1	**273-7677**	1	LINER	
	11	1	**286-6346**	1	INSULATION	
	12	1	**327-3257**	1	COUNTERWEIGHT AS	
	13	1	**7Y-2292**	9	WASHER (13X50X2-MM THK)	
M	14	1	**8T-4179**	9	BOLT (M12X1.75X20-MM)	
	15	1	**8T-4223**	9	WASHER-HARD (13.5X25.5X3-MM THK)	

M - METRIC PART

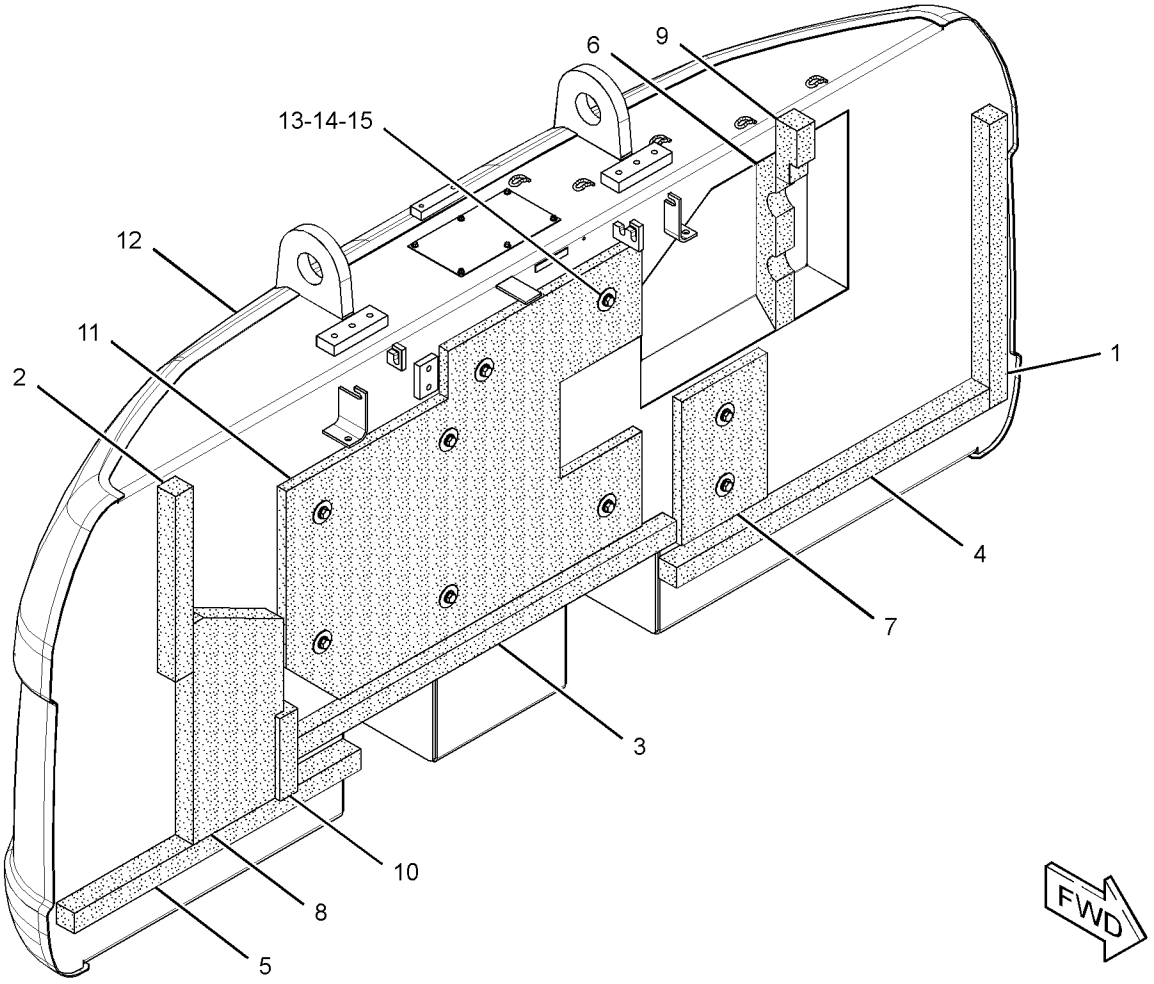

GRAPHIC #1 **<END>** g01628355

327-3268 COUNTERWEIGHT GP

S/N: KGF1-UP; FAL1-UP
3851-KG (8490-LB)
PART OF 278-3908 COUNTERWEIGHT & MOUNTING GP
AN ATTACHMENT

SMCS-7056 **i03956409**

NOTE	REF NO	GRAPHIC REF	PART NUMBER	QTY	PART NAME 1 2 3 4 5 6 (PRODUCT LEVEL)	SEE PAGE
	1	1	**7I-0717**	1	LINER	
	2	1	**116-1665**	1	LINER	
	3	1	**165-3102**	1	LINER	
	4	1	**165-3103**	1	LINER	
	5	1	**184-8722**	1	LINER	
	6	1	**248-9061**	1	LINER	
	7	1	**262-2406**	1	LINER	
	8	1	**262-2417**	1	LINER	
	9	1	**273-7677**	1	LINER	
	10	1	**327-3269**	1	COUNTERWEIGHT AS	

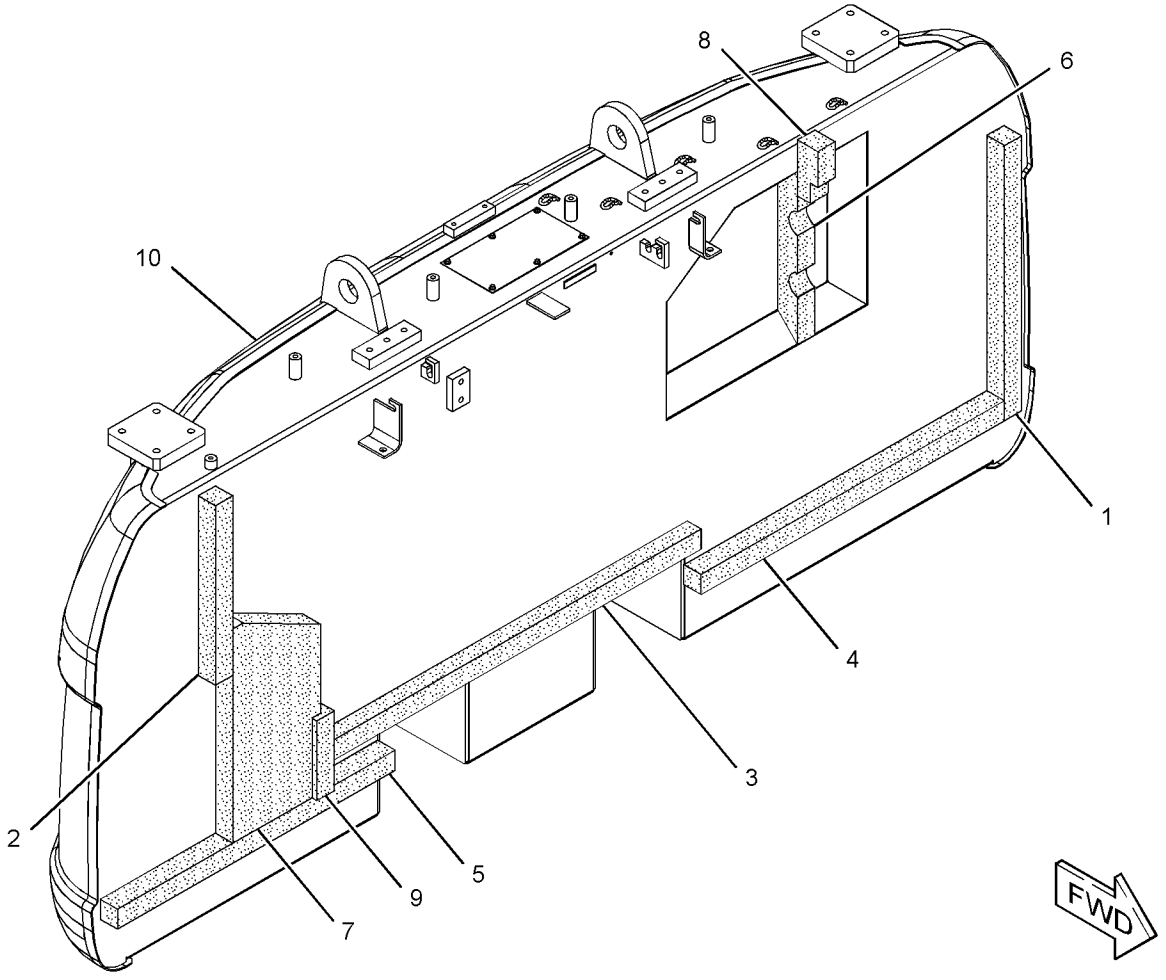

GRAPHIC #1 **<END>** g01628376

327-3272 COUNTERWEIGHT GP

S/N: KGF1-UP
3855-KG (8499-LB)
PART OF 307-7674 COUNTERWEIGHT & MOUNTING GP
AN ATTACHMENT

SMCS-7056 **i03133345**

NOTE	REF NO	GRAPHIC REF	PART NUMBER	QTY	PART NAME 1 2 3 4 5 6 (PRODUCT LEVEL)	SEE PAGE
	1	1	**7I-0717**	1	LINER	
	2	1	**116-1665**	1	LINER	
	3	1	**165-3102**	1	LINER	
	4	1	**165-3103**	1	LINER	
	5	1	**184-8722**	1	LINER	
	6	1	**248-9061**	1	LINER	
	7	1	**262-2405**	1	INSULATION	
	8	1	**262-2406**	1	LINER	
	9	1	**262-2417**	1	LINER	
	10	1	**273-7677**	1	LINER	
	11	1	**286-6346**	1	INSULATION	
	12	1	**327-3273**	1	COUNTERWEIGHT AS	
	13	1	**7Y-2292**	9	WASHER (13X50X2-MM THK)	
M	14	1	**8T-4179**	9	BOLT (M12X1.75X20-MM)	
	15	1	**8T-4223**	9	WASHER-HARD (13.5X25.5X3-MM THK)	

M - METRIC PART

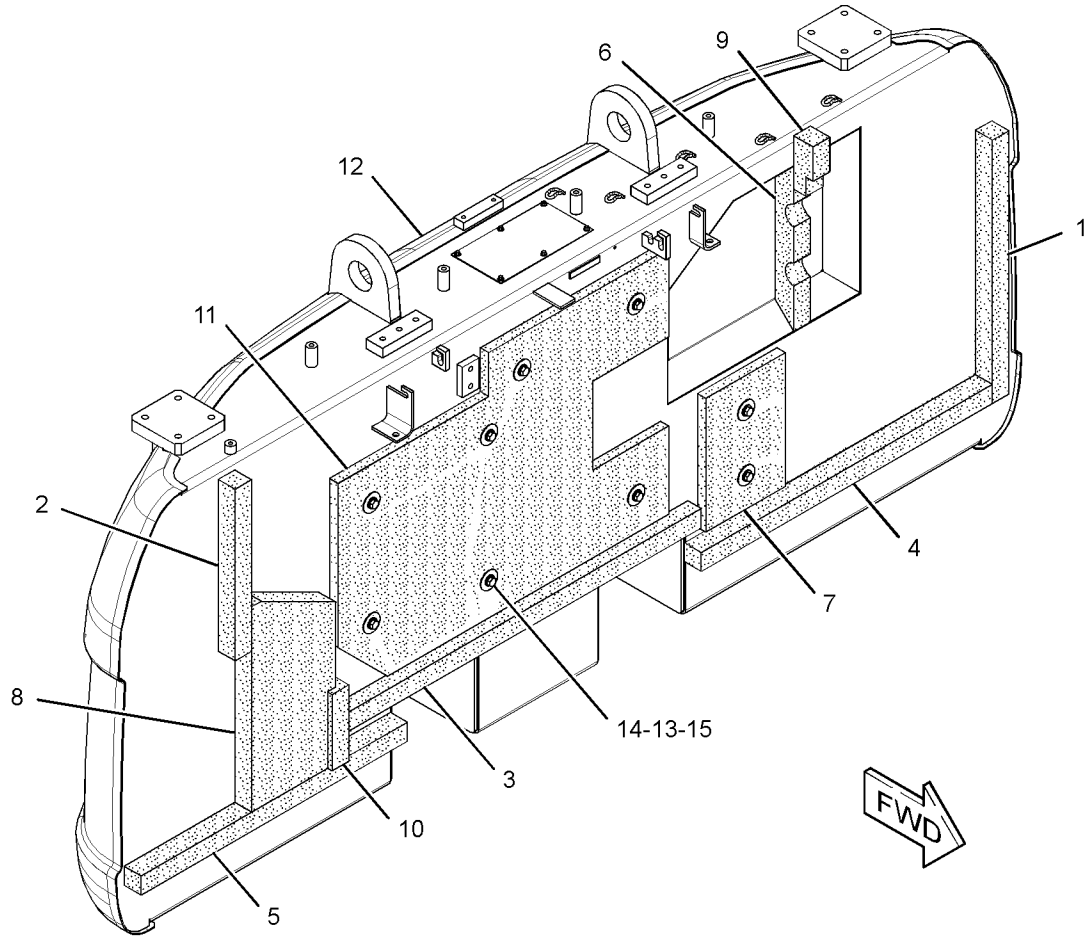

GRAPHIC #1 **<END>** g01627216

351-3094 COUNTERWEIGHT GP

S/N: KGF1-UP; FAL1-UP
3852-KG (8493-LB)
PART OF 278-3908 COUNTERWEIGHT & MOUNTING GP
AN ATTACHMENT

SMCS-7056 **i04353169**

NOTE	REF NO	GRAPHIC REF	PART NUMBER	QTY	PART NAME 1 2 3 4 5 6 (PRODUCT LEVEL)	SEE PAGE
	1	1	**7I-0717**	1	LINER	
	2	1	**116-1665**	1	LINER	
	3	1	**165-3102**	1	LINER	
	4	1	**165-3103**	1	LINER	
	5	1	**184-8722**	1	LINER	
	6	1	**248-9061**	1	LINER	
	7	1	**262-2406**	1	LINER	
	8	1	**262-2417**	1	LINER	
	9	1	**273-7677**	1	LINER	
	10	1	**366-6415**	1	COUNTERWEIGHT AS	
	10A	1	**165-3120**	1	SHEET	
M	10B	1	**192-3039**	6	SCREW-HEX FLANGE (6.3X1.8X19-MM)	

M - METRIC PART

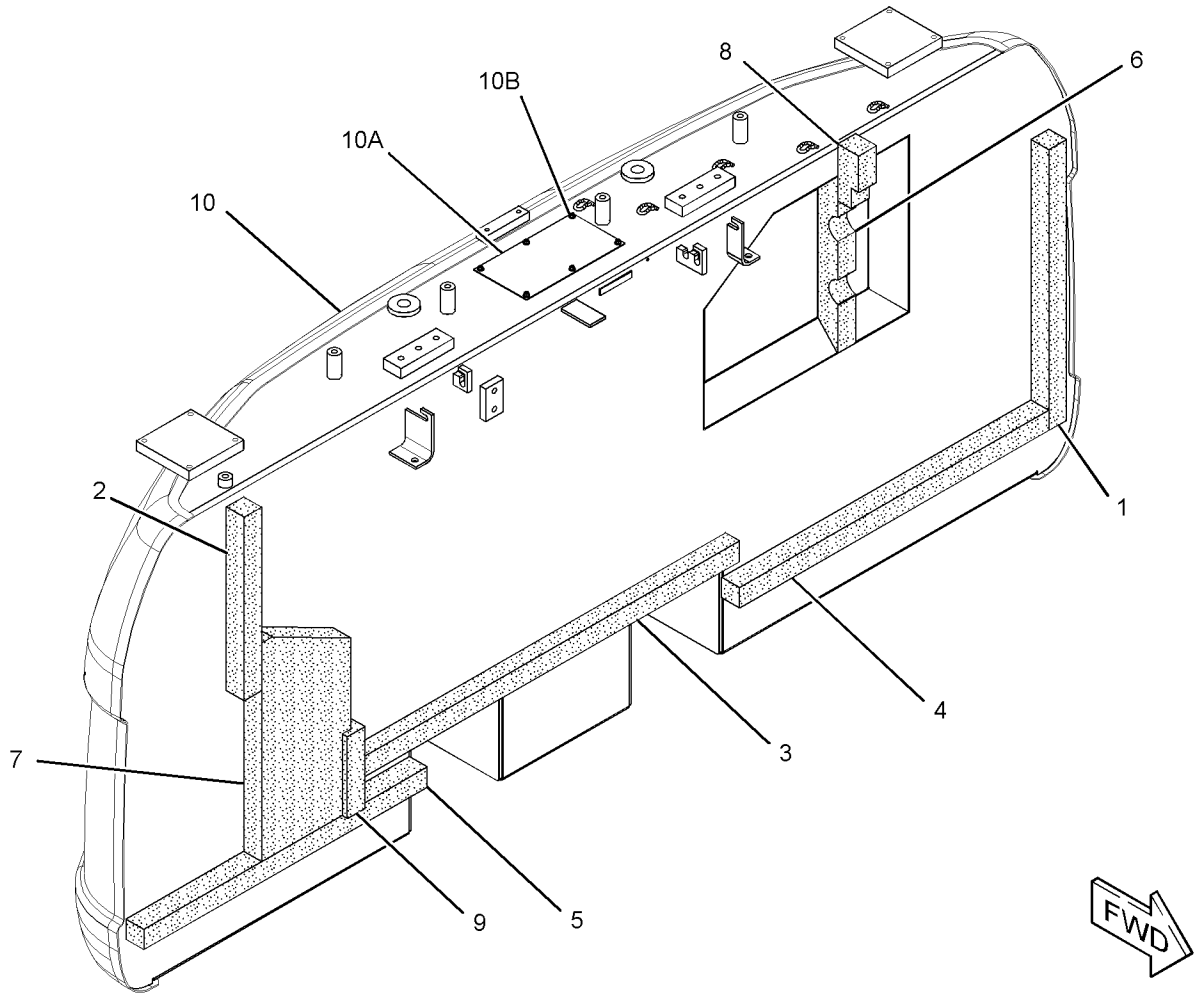

GRAPHIC #1 **<END>** g02528357

351-3102 COUNTERWEIGHT GP

S/N: KGF1-UP
3855-KG (8499-LB)
PART OF 307-7674 COUNTERWEIGHT & MOUNTING GP
AN ATTACHMENT

SMCS-7056 **i04304715**

NOTE	REF NO	GRAPHIC REF	PART NUMBER	QTY	PART NAME 1 2 3 4 5 6 (PRODUCT LEVEL)	SEE PAGE
	1	1	**7I-0717**	1	LINER	
	2	1	**116-1665**	1	LINER	
	3	1	**165-3102**	1	LINER	
	4	1	**165-3103**	1	LINER	
	5	1	**184-8722**	1	LINER	
	6	1	**248-9061**	1	LINER	
	7	1	**262-2405**	1	INSULATION	
	8	1	**262-2406**	1	LINER	
	9	1	**262-2417**	1	LINER	
	10	1	**273-7677**	1	LINER	
	11	1	**286-6346**	1	INSULATION	
	12	1	**351-3103**	1	COUNTERWEIGHT AS	
	13	1	**7Y-2292**	9	WASHER (13X50X2-MM THK)	
M	14	1	**8T-4179**	9	BOLT (M12X1.75X20-MM)	
	15	1	**8T-4223**	9	WASHER-HARD (13.5X25.5X3-MM THK)	

M - METRIC PART

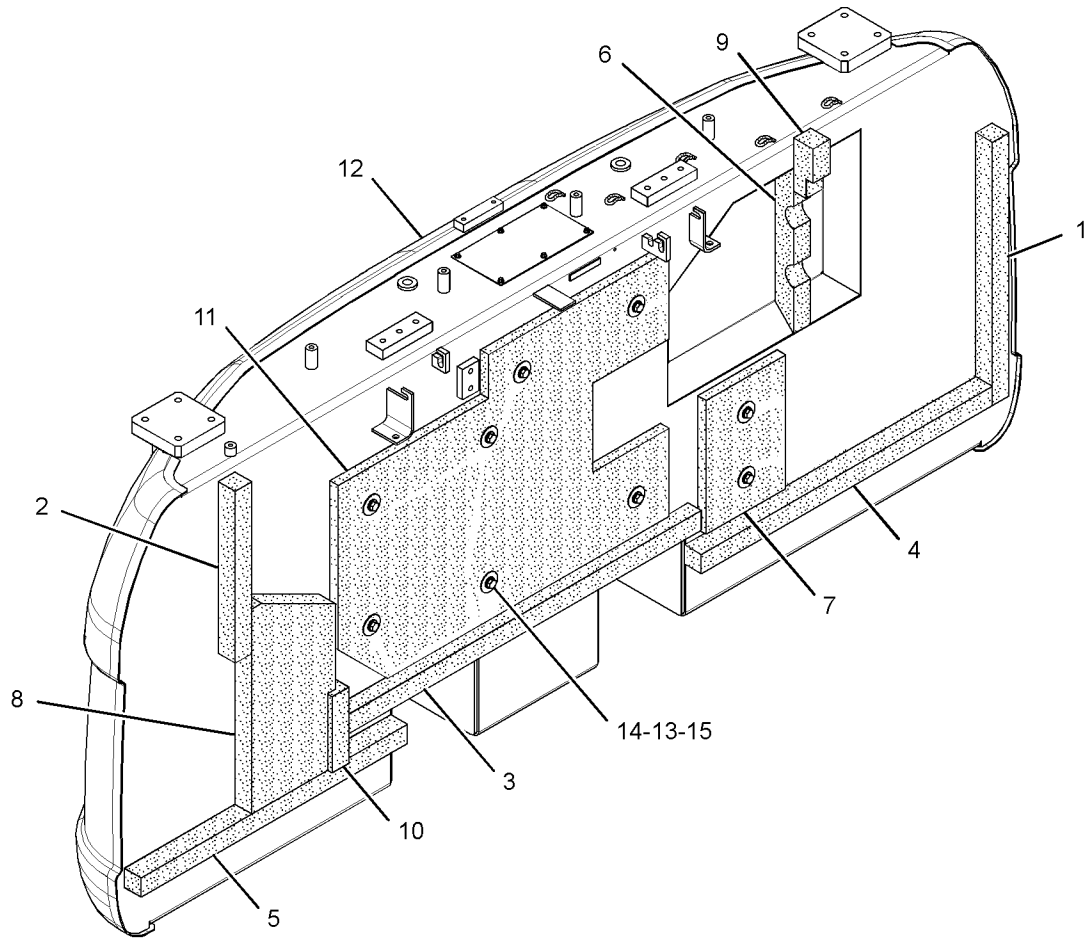

GRAPHIC #1 **<END>** g02514557

355-8128 COUNTERWEIGHT GP

S/N: KGF1-UP
3855-KG (8500-LB)
PART OF 241-1999 COUNTERWEIGHT & MOUNTING GP
AN ATTACHMENT

SMCS-7056 **i04793378**

NOTE	REF NO	GRAPHIC REF	PART NUMBER	QTY	PART NAME 1 2 3 4 5 6 (PRODUCT LEVEL)	SEE PAGE
	1	1	**7I-0717**	1	LINER	
	2	1	**116-1665**	1	LINER	
	3	1	**165-3102**	1	LINER	
	4	1	**165-3103**	1	LINER	
	5	1	**184-8722**	1	LINER	
	6	1	**248-9061**	1	LINER	
	7	1	**262-2405**	1	INSULATION	
	8	1	**262-2406**	1	LINER	
	9	1	**262-2417**	1	LINER	
	10	1	**273-7677**	1	LINER	
	11	1	**286-6346**	1	INSULATION	
	12	1	**355-8129**	1	COUNTERWEIGHT AS	
	12A	1	**165-3120**	1	SHEET	
M	12B	1	**192-3039**	6	SCREW-HEX FLANGE (6.3X1.8X19-MM)	
	13	1	**7Y-2292**	9	WASHER (13X50X2-MM THK)	
M	14	1	**8T-4179**	9	BOLT (M12X1.75X20-MM)	
	15	1	**8T-4223**	9	WASHER-HARD (13.5X25.5X3-MM THK)	

M - METRIC PART

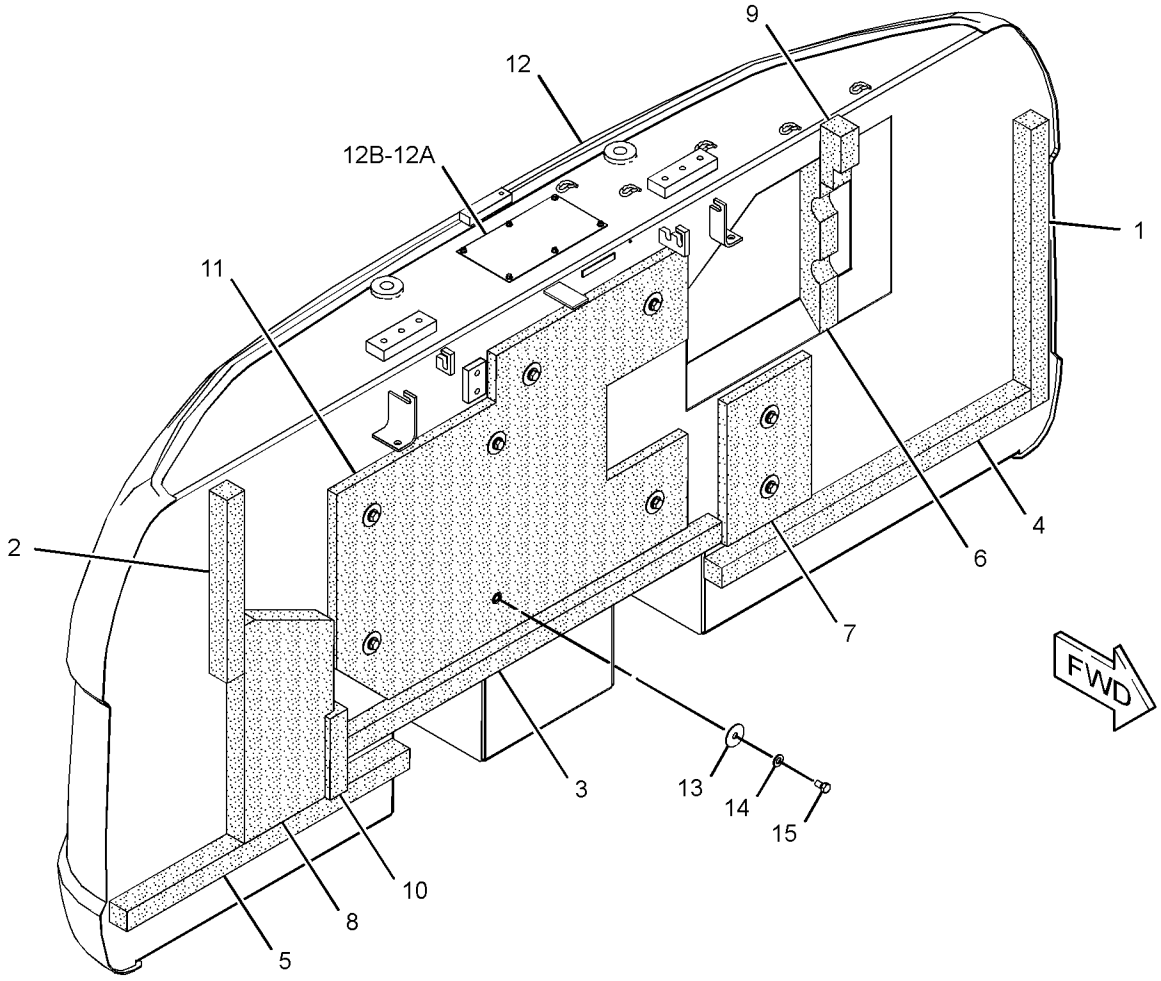

GRAPHIC #1 **<END>** g02861319

355-8153 COUNTERWEIGHT GP

S/N: KGF1-UP
4913-KG (10830-LB)
PART OF 241-2002 COUNTERWEIGHT & MOUNTING GP
AN ATTACHMENT
TYPE 1

SMCS-7056 **i04039484**

NOTE	REF NO	GRAPHIC REF	PART NUMBER	QTY	PART NAME 1 2 3 4 5 6 (PRODUCT LEVEL)	SEE PAGE
	1	1	**7I-0717**	1	LINER	
	2	1	**116-1665**	1	LINER	
	3	1	**165-3102**	1	LINER	
	4	1	**165-3103**	1	LINER	
	5	1	**184-8722**	1	LINER	
	6	1	**248-9061**	1	LINER	
	7	1	**262-2405**	1	INSULATION	
	8	1	**262-2406**	1	LINER	
	9	1	**262-2417**	1	LINER	
	10	1	**273-7677**	1	LINER	
	11	1	**286-6346**	1	INSULATION	
	12	1	**355-8154**	1	COUNTERWEIGHT AS	
	13	1	**7Y-2292**	9	WASHER (13X50X2-MM THK)	
M	14	1	**8T-4179**	9	BOLT (M12X1.75X20-MM)	
	15	1	**8T-4223**	9	WASHER-HARD (13.5X25.5X3-MM THK)	

M - METRIC PART

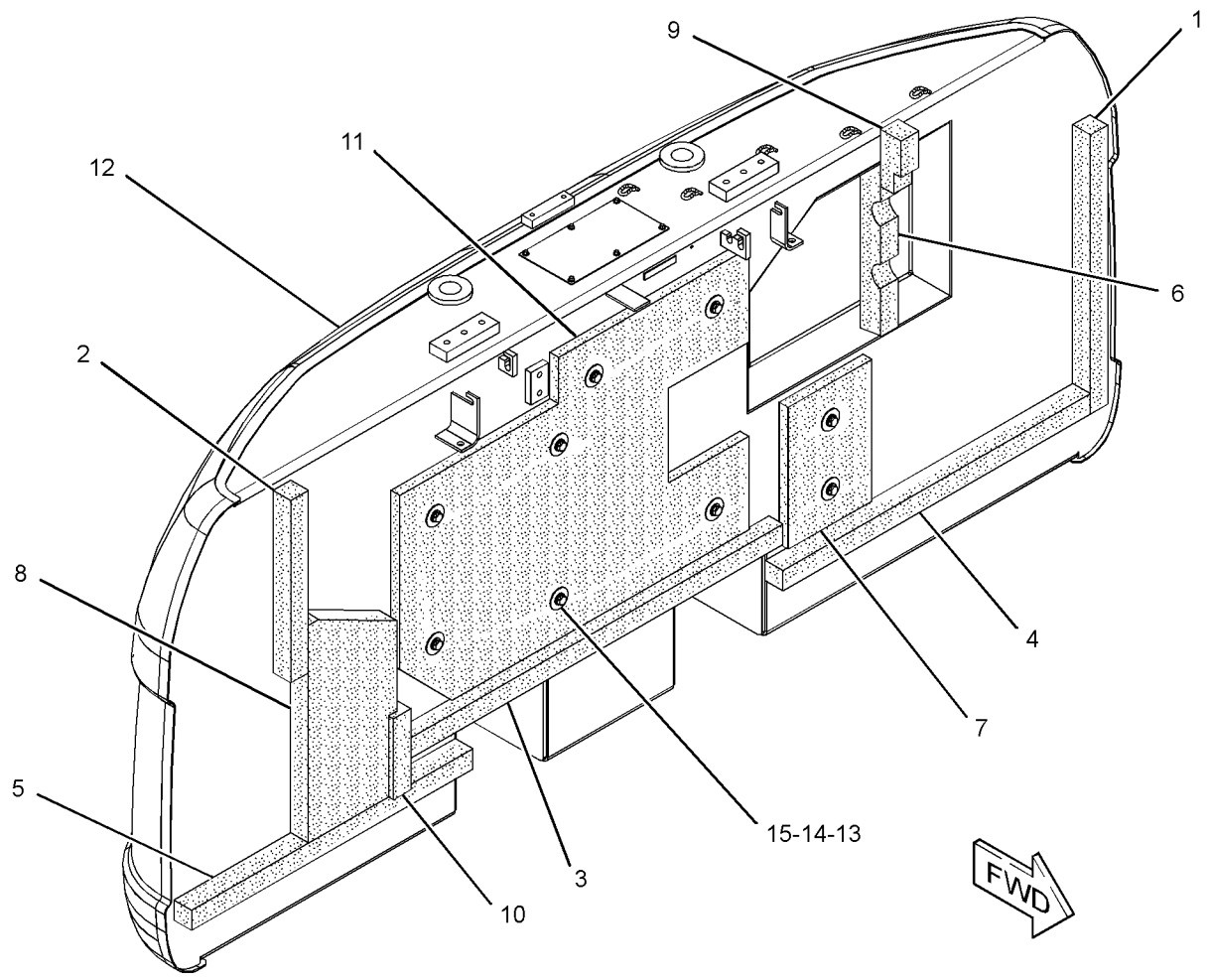

GRAPHIC #1 **<END>** g02358356

355-8153 COUNTERWEIGHT GP

S/N: KGF1-UP
4913-KG (10830-LB)
PART OF 241-2002 COUNTERWEIGHT & MOUNTING GP
AN ATTACHMENT
TYPE 2

SMCS-7056 **i04321542**

NOTE	REF NO	GRAPHIC REF	PART NUMBER	QTY	PART NAME 1 2 3 4 5 6 (PRODUCT LEVEL)	SEE PAGE
	1	1	**7I-0717**	1	LINER	
	2	1	**116-1665**	1	LINER	
	3	1	**165-3102**	1	LINER	
	4	1	**165-3103**	1	LINER	
	5	1	**184-8722**	1	LINER	
	6	1	**248-9061**	1	LINER	
	7	1	**262-2405**	1	INSULATION	
	8	1	**262-2406**	1	LINER	
	9	1	**262-2417**	1	LINER	
	10	1	**273-7677**	1	LINER	
	11	1	**286-6346**	1	INSULATION	
C	12	1	**366-6379**	1	COUNTERWEIGHT AS	
	13	1	**7Y-2292**	9	WASHER (13X50X2-MM THK)	
M	14	1	**8T-4179**	9	BOLT (M12X1.75X20-MM)	
	15	1	**8T-4223**	9	WASHER-HARD (13.5X25.5X3-MM THK)	

C - CHANGE FROM PREVIOUS TYPE
M - METRIC PART

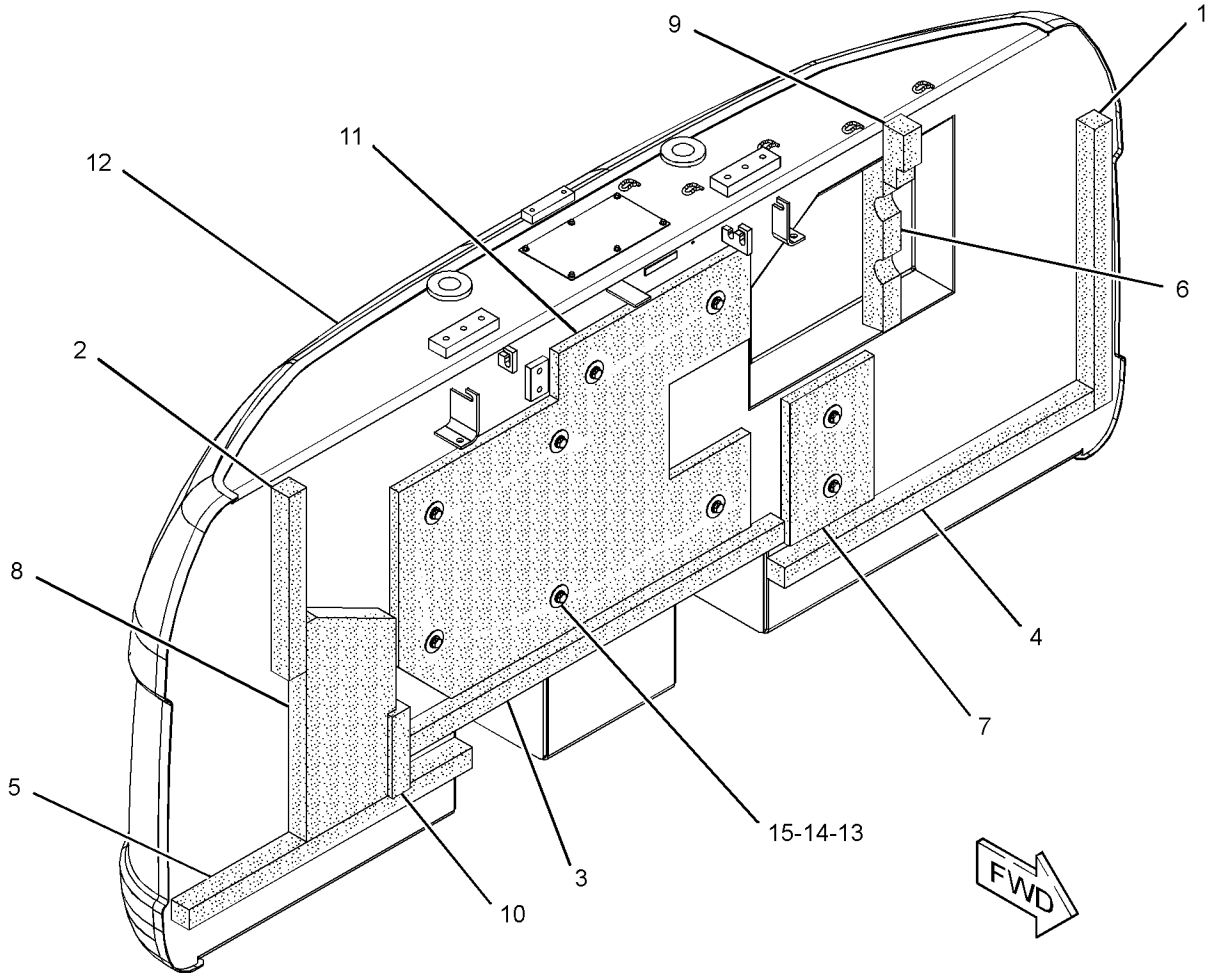

GRAPHIC #1 **<END>** g02358356

273-7893 COVER AS-ACCESS

S/N: FAL1-182

PART OF 273-7726 HOOD & GUARD GP

SMCS-726A, 795C

i03982951

NOTE	REF NO	GRAPHIC REF	PART NUMBER	QTY	PART NAME 1 2 3 4 5 6 (PRODUCT LEVEL)	SEE PAGE
	1	1	**170-3015**	1	BUMPER	
	2	1	**177-5739**	1	LINER	
	3	1	**240-2978**	2	LINER	
	4	1	**240-2979**	1	LINER	
Z	5	1		1	DOOR AS-ACCESS	

Z - NOT SERVICED SEPARATELY

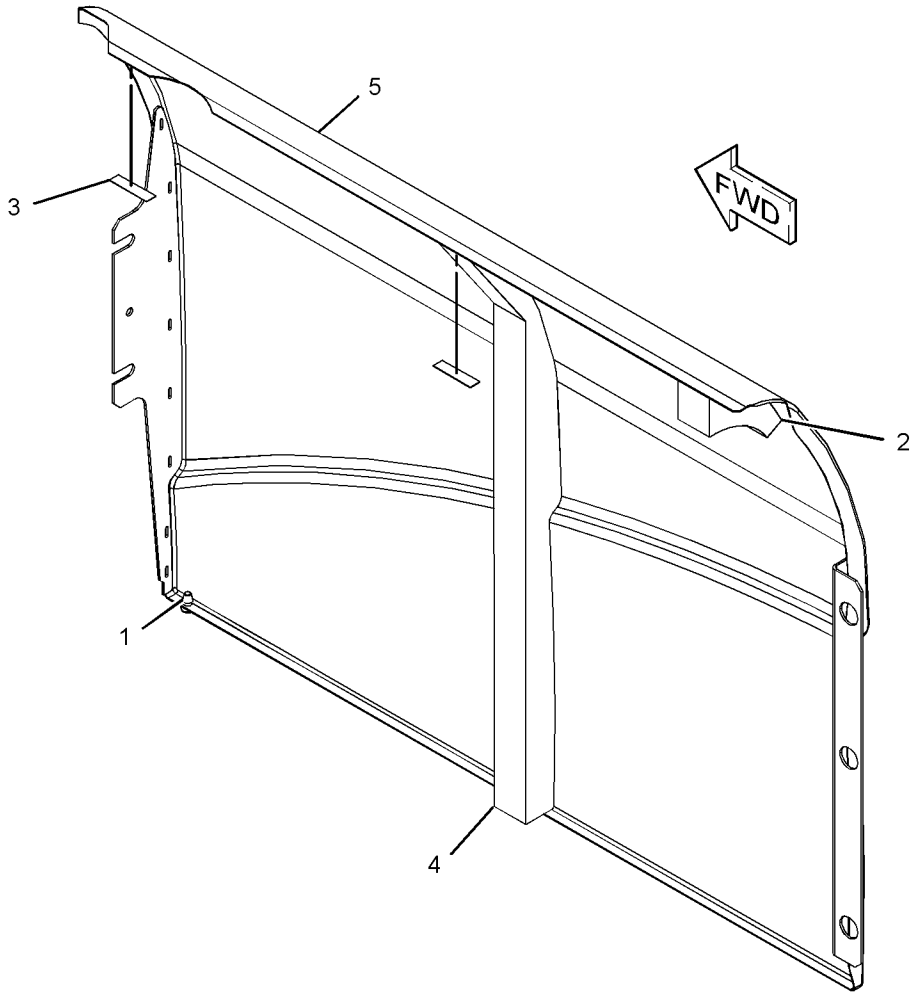

GRAPHIC #1

<END>

g02177682

298-2979 COVER AS-ACCESS—FUEL, HYDRAULIC TANKS

S/N: KGF1-UP; FAL183-UP
PART OF 273-7725, 273-7726, 320-5732 HOOD & GUARD GP
ALSO AN ATTACHMENT

SMCS-726A, 795C

i03900960

NOTE	REF NO	GRAPHIC REF	PART NUMBER	QTY	PART NAME 1 2 3 4 5 6 (PRODUCT LEVEL)	SEE PAGE
	1	1	**170-3015**	1	BUMPER	
	2	1	**177-5739**	1	LINER	
	3	1	**240-2978**	2	LINER	
	4	1	**240-2979**	1	LINER	

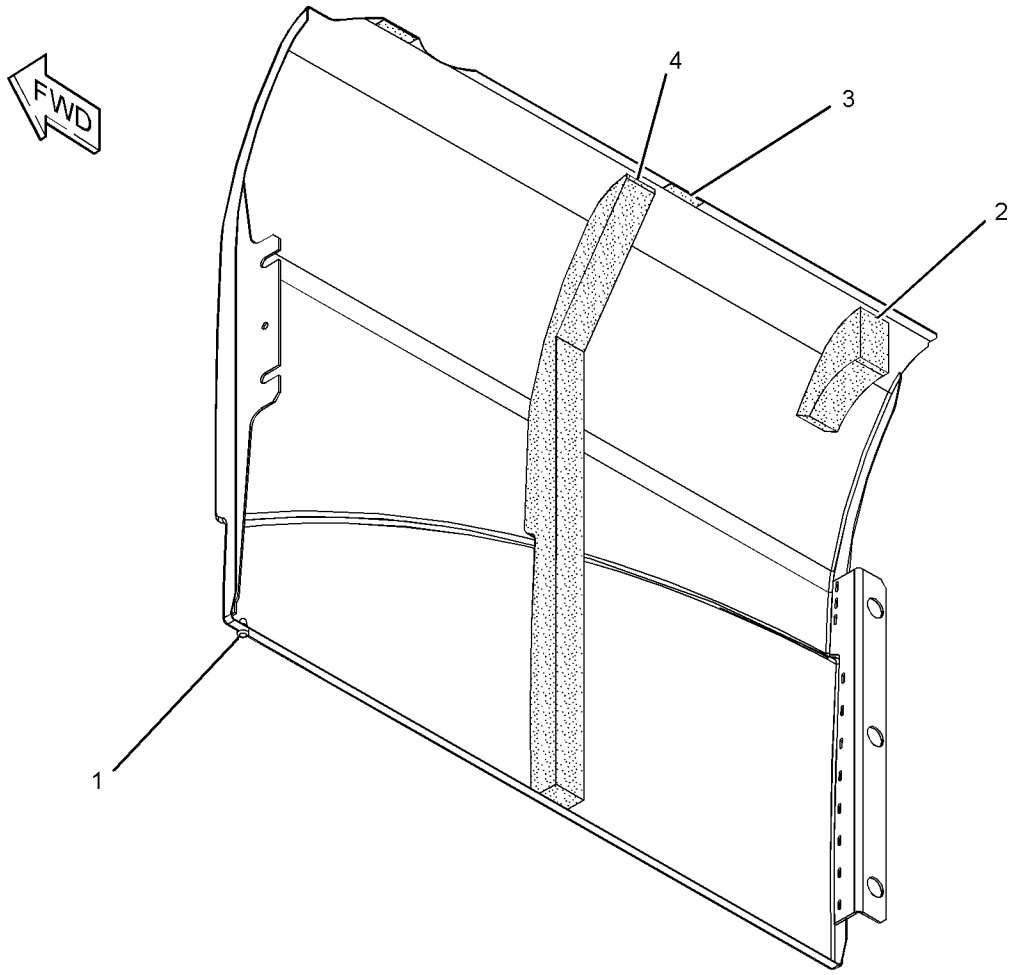

GRAPHIC #1

<END>

g01342289

330-1426 COVER AS-ACCESS—FUEL, HYDRAULIC TANKS

S/N: KGF1-UP; FAL1-UP

PART OF 330-1194 MACHINE AR, 314-3785 PUMP AR-FUEL TRANSFER, 367-8698 PUMP AR-REFUELING

AN ATTACHMENT

SMCS-726A, 795C

i03142602

NOTE	REF NO	GRAPHIC REF	PART NUMBER	QTY	PART NAME 1 2 3 4 5 6 (PRODUCT LEVEL)	SEE PAGE
Y	1	1	**330-1427**	1	COVER AS-ACCESS (FUEL, HYDRAULIC TANKS)	724

Y - SEPARATE ILLUSTRATION

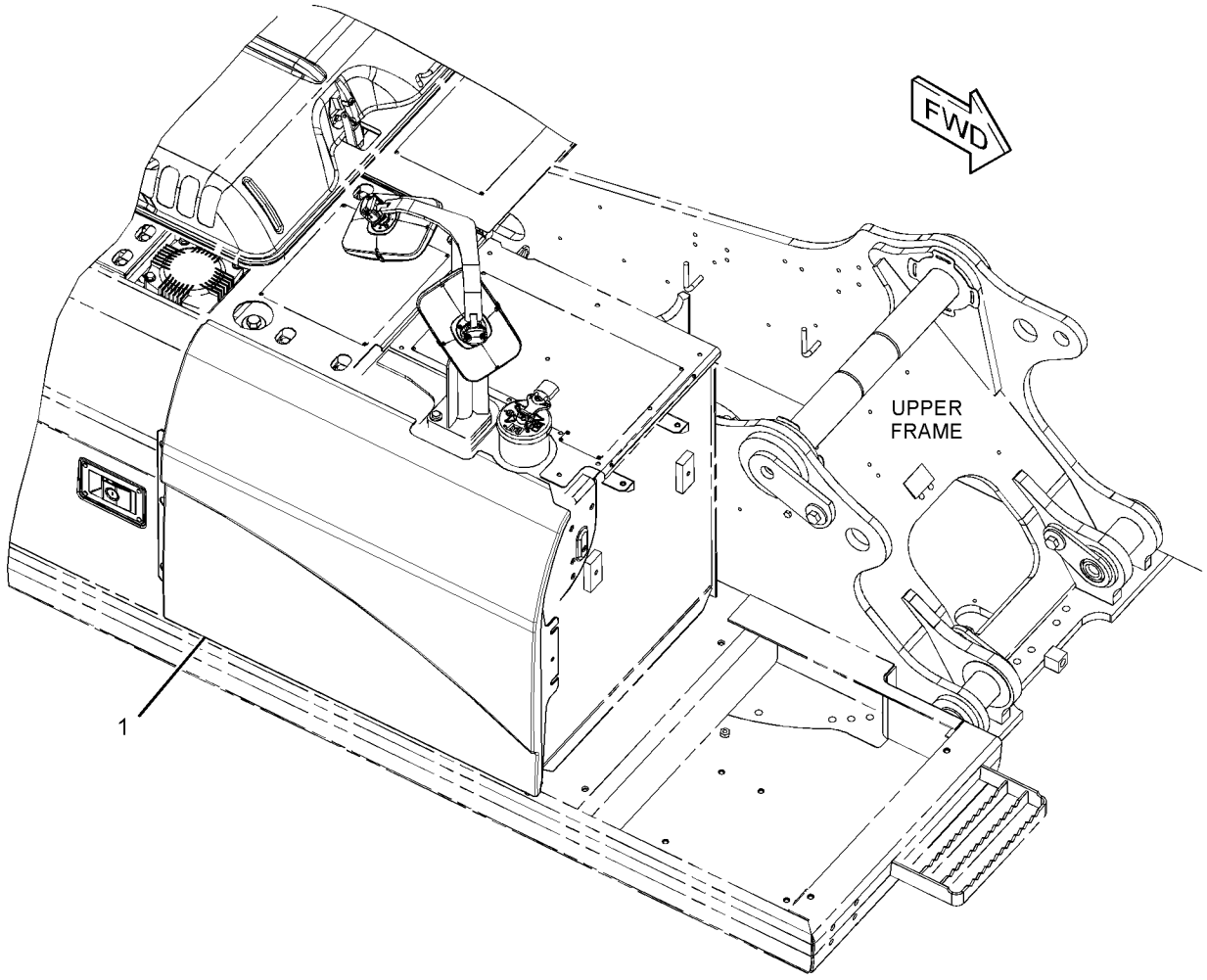

GRAPHIC #1

<END>

g01627806

330-1427 COVER AS-ACCESS—FUEL, HYDRAULIC TANKS

S/N: KGF1-UP; FAL1-UP
PART OF 330-1426 COVER AS-ACCESS
AN ATTACHMENT

SMCS-726A, 795C

i03131758

NOTE	REF NO	GRAPHIC REF	PART NUMBER	QTY	PART NAME 1 2 3 4 5 6 (PRODUCT LEVEL)	SEE PAGE
	1	1	**170-3015**	1	BUMPER	
	2	1	**177-5739**	1	LINER	
	3	1	**240-2978**	3	LINER	
	4	1	**240-2979**	1	LINER	

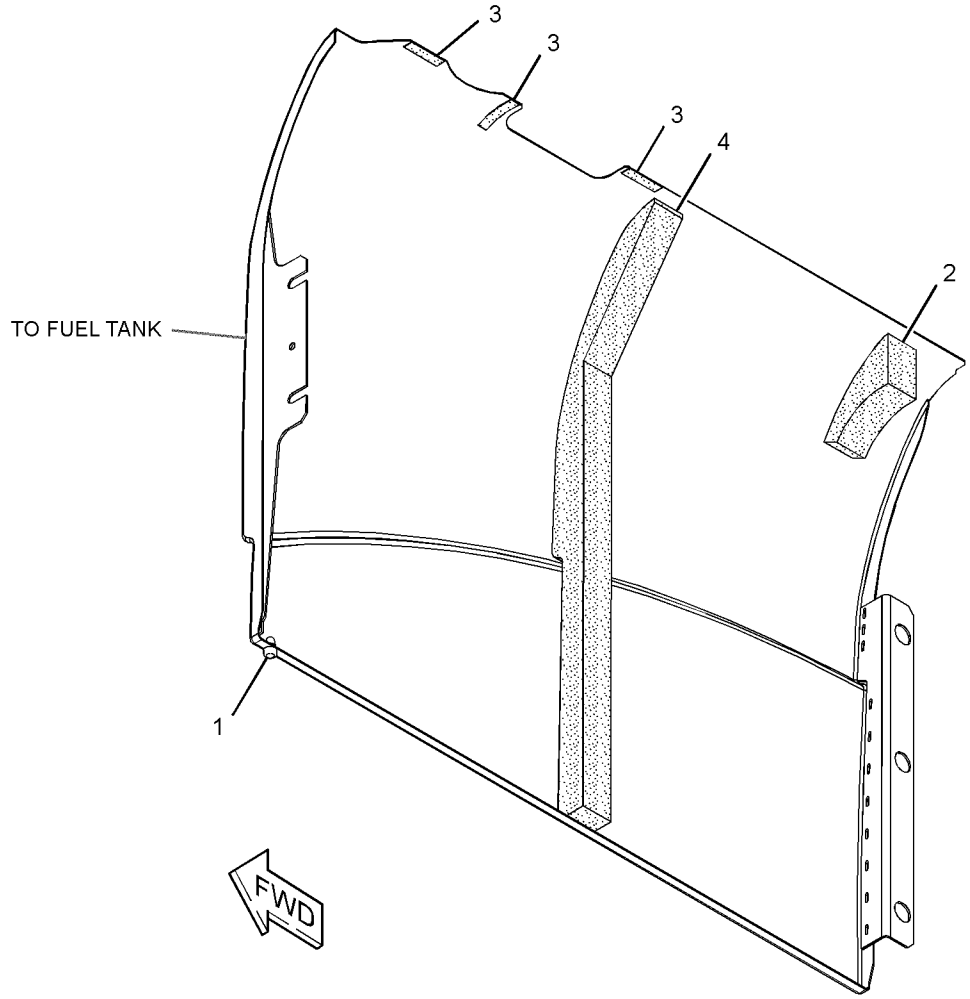

GRAPHIC #1

<END>

g01627354

268-0749 COVER AS-SOUND SUPPRESSION

S/N: KGF1-UP; FAL1-UP
PART OF 278-3778 COVER GP-HOOD
AN ATTACHMENT

SMCS-7253, 7263, 7276, 795C

i02528926

NOTE	REF NO	GRAPHIC REF	PART NUMBER	QTY	PART NAME 1 2 3 4 5 6 (PRODUCT LEVEL)	SEE PAGE
	1	1	**248-8930**	1	INSULATION	
Z	2	1		1	COVER AS	
	3	1	**273-7847**	1	INSULATION	
	4	1	**273-7848**	1	INSULATION	
	5	1	**273-7849**	2	INSULATION	

Z - NOT SERVICED SEPARATELY

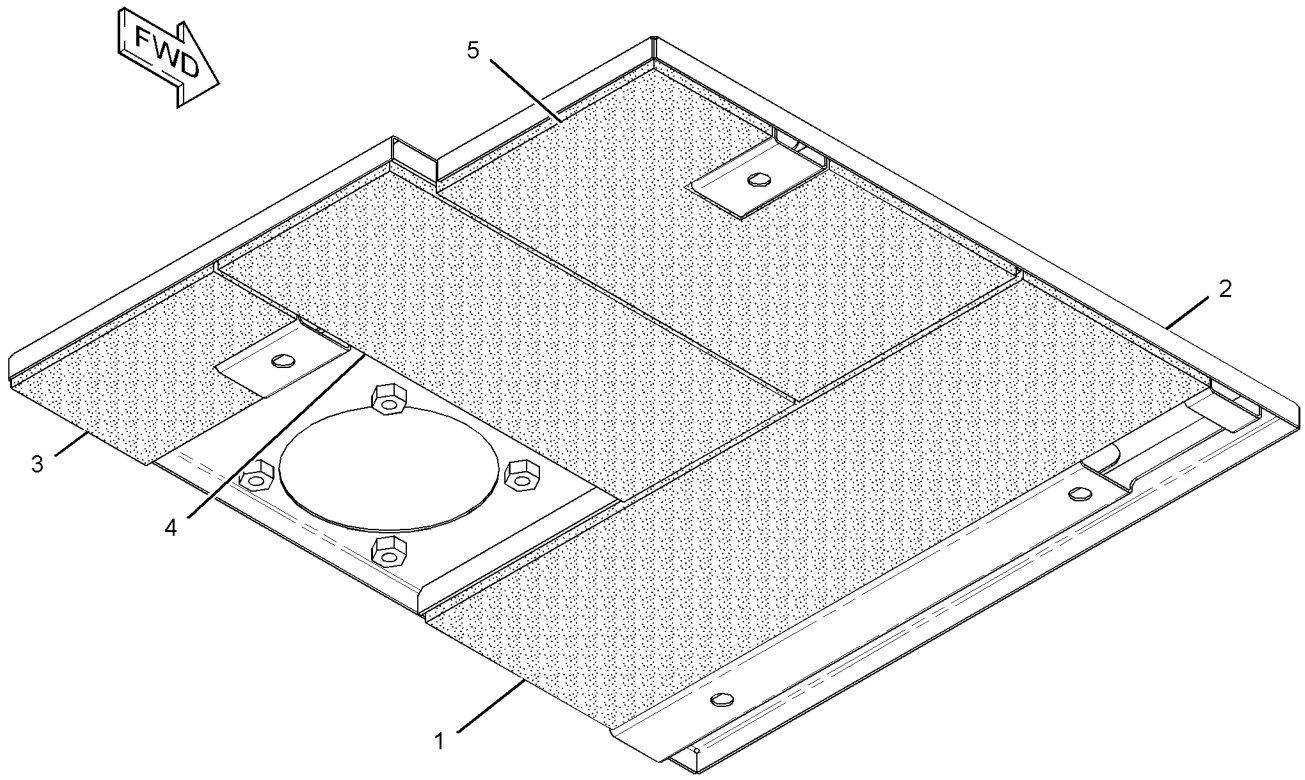

GRAPHIC #1

<END>

g01299016

372-7637 COVER AS-SOUND SUPPRESSION

S/N: KGF1-UP; FAL1-UP
PART OF 278-3778, 364-6940 COVER GP-HOOD
AN ATTACHMENT

SMCS-7253, 7263, 7276, 795C **i04586661**

NOTE	REF NO	GRAPHIC REF	PART NUMBER	QTY	PART NAME 1 2 3 4 5 6 (PRODUCT LEVEL)	SEE PAGE
	1	1	**248-8930**	1	INSULATION	
	2	1	**273-7847**	1	INSULATION	
	3	1	**273-7848**	1	INSULATION	
	4	1	**273-7849**	1	INSULATION	

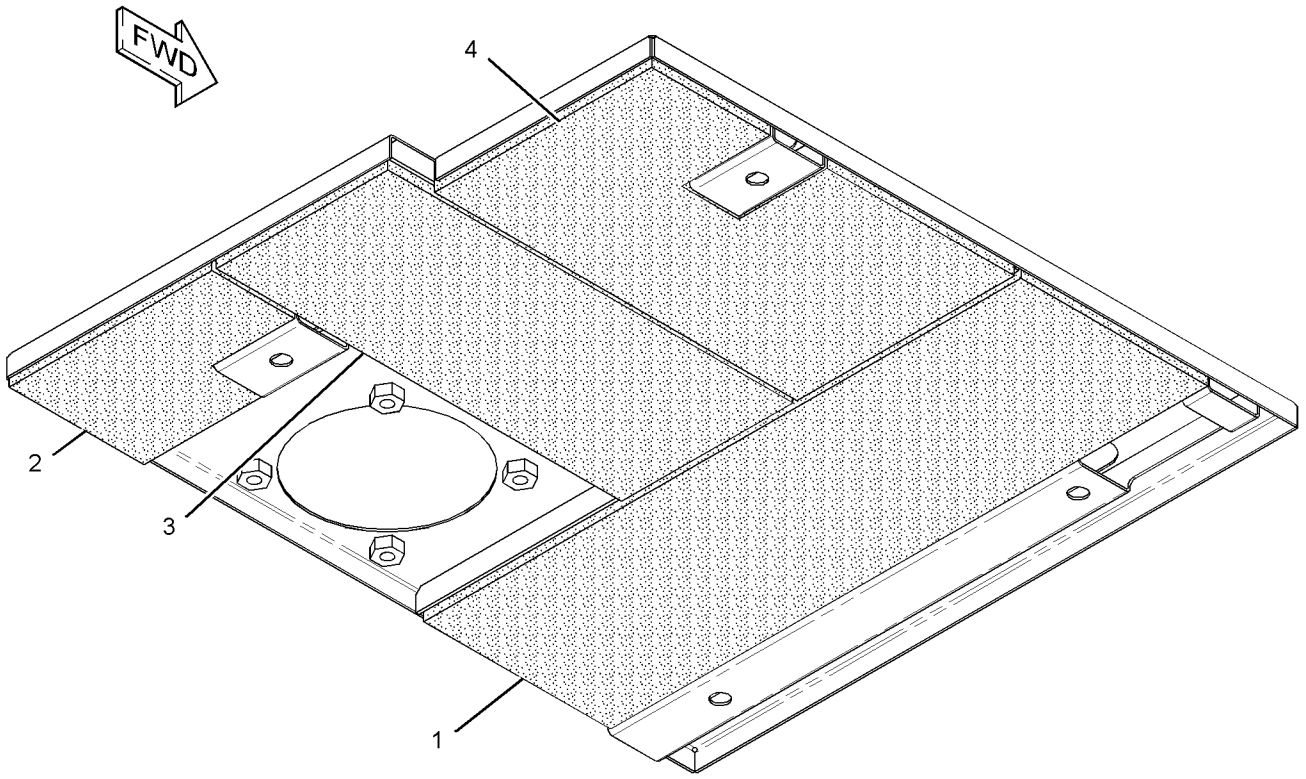

GRAPHIC #1 **<END>** g02741216

399-0819 COVER AS-SOUND SUPPRESSION

S/N: KGF1-UP

PART OF 399-2560 COVER AS-SOUND SUPPRESSION

AN ATTACHMENT

SMCS-7253, 7263, 7276, 795C

i05126837

NOTE	REF NO	GRAPHIC REF	PART NUMBER	QTY	PART NAME 1 2 3 4 5 6 (PRODUCT LEVEL)	SEE PAGE
	1	1	**170-3015**	1	BUMPER	
	2	1	**177-5739**	1	LINER	
	3	1	**240-2978**	3	LINER	
	4	1	**240-2979**	1	LINER	

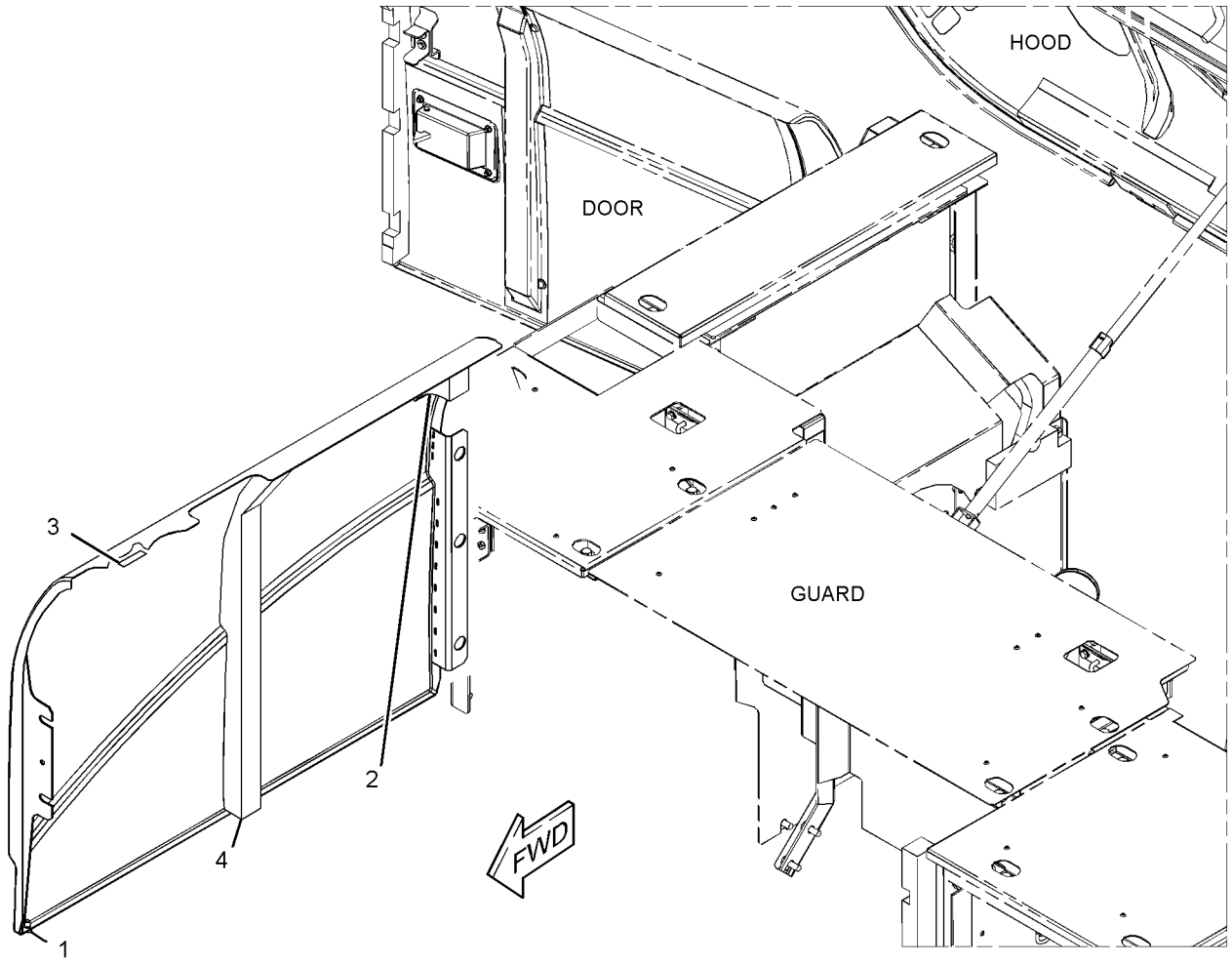

GRAPHIC #1

<END>

g03362270

399-2560 COVER AS-SOUND SUPPRESSION

S/N: KGF1-UP
PART OF 419-0572 PUMP AR-REFUELING
AN ATTACHMENT

SMCS-7253, 7263, 7276, 795C **i05126767**

NOTE	REF NO	GRAPHIC REF	PART NUMBER	QTY	PART NAME 1 2 3 4 5 6 (PRODUCT LEVEL)	SEE PAGE
Y	1	1	**399-0819**	1	COVER AS-SOUND SUPPRESSION	727

Y - SEPARATE ILLUSTRATION

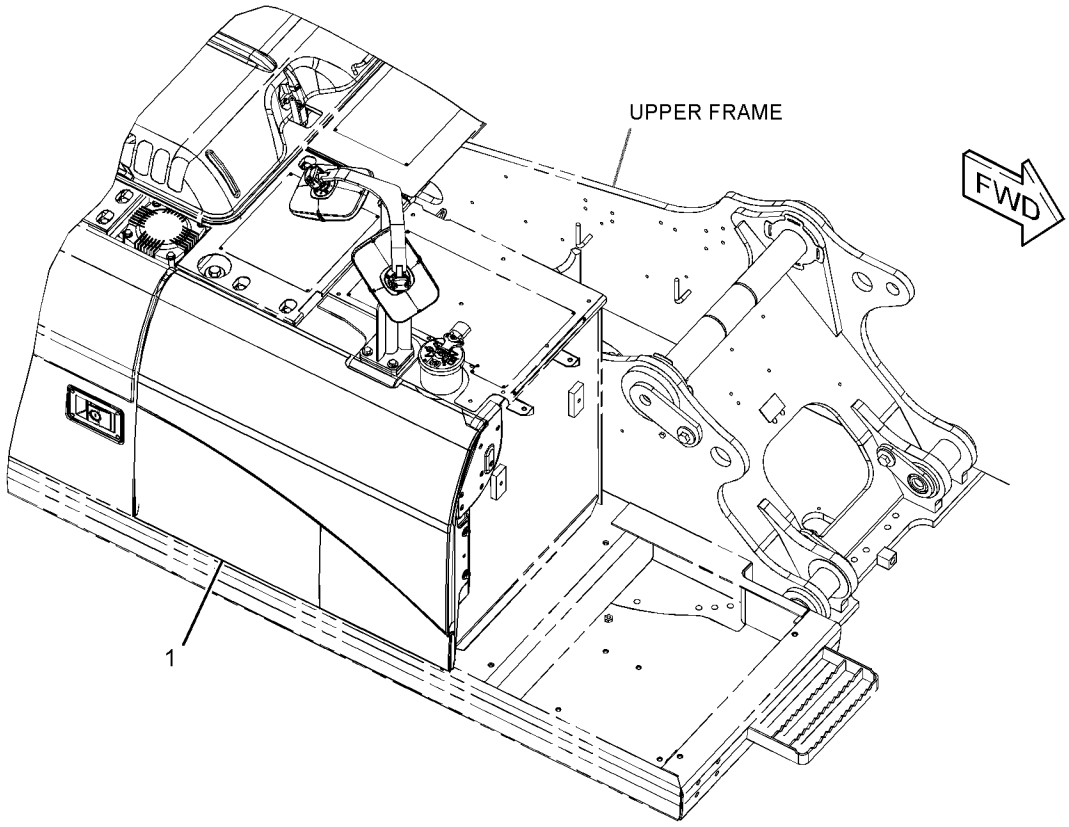

GRAPHIC #1 **<END>** g03361513

278-3778 COVER GP-HOOD–PRECLEANER

S/N: KGF1-UP; FAL1-UP
PART OF 264-8671 AIR CLEANER AR
AN ATTACHMENT
TYPE 1

SMCS-7251 **i02896007**

NOTE	REF NO	GRAPHIC REF	PART NUMBER	QTY	PART NAME 1 2 3 4 5 6 (PRODUCT LEVEL)	SEE PAGE
Y	1	1	**268-0749**	1	COVER AS-SOUND SUPPRESSION	725
Y	2	1	**304-0093**	1	SUPPORT AS-ENCLOSURE	849
	3	1	**273-7774**	1	SUPPORT AS	

Y - SEPARATE ILLUSTRATION

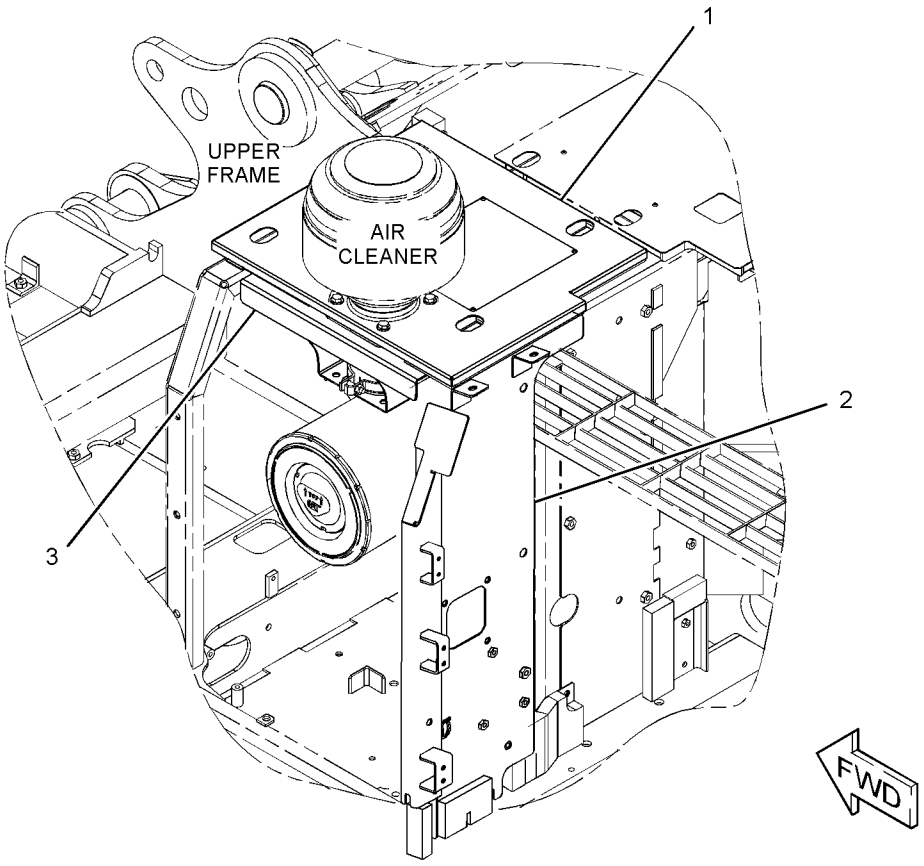

GRAPHIC #1 **<END>** g01388993

278-3778 COVER GP-HOOD—PRECLEANER

S/N: KGF1-UP; FAL1-UP
PART OF 264-8671 AIR CLEANER AR
AN ATTACHMENT
TYPE 2

SMCS-7251 **i05109732**

NOTE	REF NO	GRAPHIC REF	PART NUMBER	QTY	PART NAME 1 2 3 4 5 6 (PRODUCT LEVEL)	SEE PAGE
CY	1	1	**372-7637**	1	COVER AS-SOUND SUPPRESSION	726
Y	2	1	**304-0093**	1	SUPPORT AS-ENCLOSURE	849
	3	1	**273-7774**	1	SUPPORT AS	

C - CHANGE FROM PREVIOUS TYPE
Y - SEPARATE ILLUSTRATION

278-3778 **COVER GP-HOOD (*contd.*)** **i05109732**

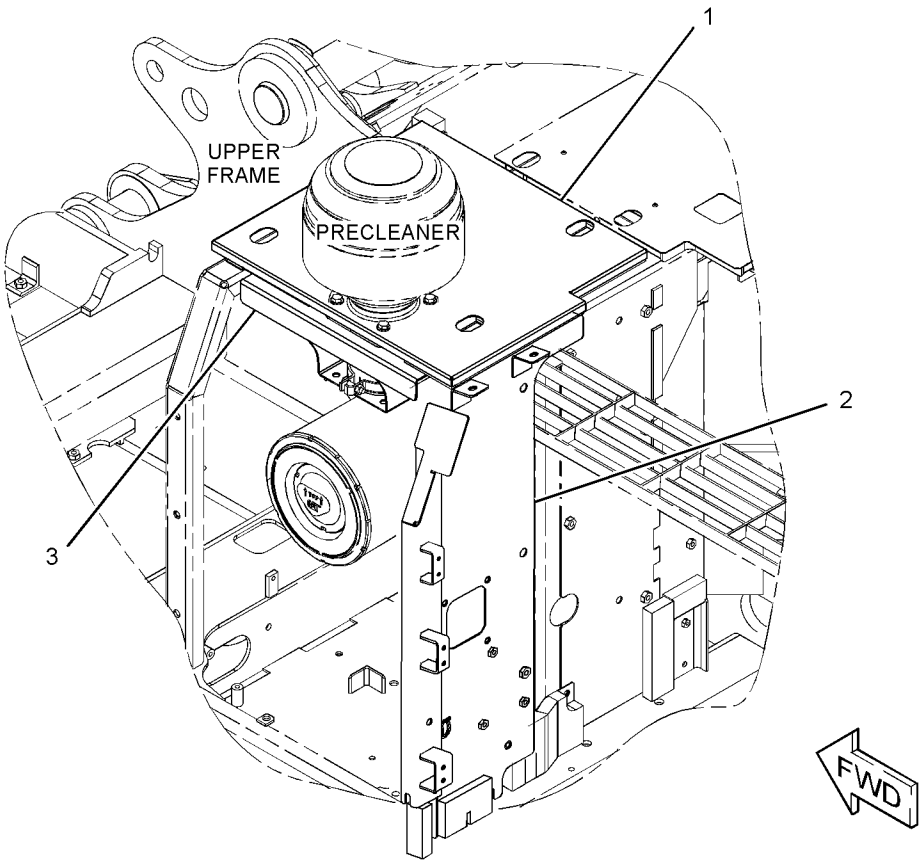

GRAPHIC #1 **<END>** g02758056

278-3778 COVER GP-HOOD—PRECLEANER

S/N: KGF1-UP; FAL1-UP
PART OF 264-8671 AIR CLEANER AR
AN ATTACHMENT
TYPE 3

SMCS-7251 **i05119911**

NOTE	REF NO	GRAPHIC REF	PART NUMBER	QTY	PART NAME 1 2 3 4 5 6 (PRODUCT LEVEL)	SEE PAGE
Y	1	1	**372-7637**	1	COVER AS-SOUND SUPPRESSION	726
CY	2	1	**384-9112**	1	SUPPORT AS-ENCLOSURE	855
	3	1	**273-7774**	1	SUPPORT AS	

C - CHANGE FROM PREVIOUS TYPE
Y - SEPARATE ILLUSTRATION

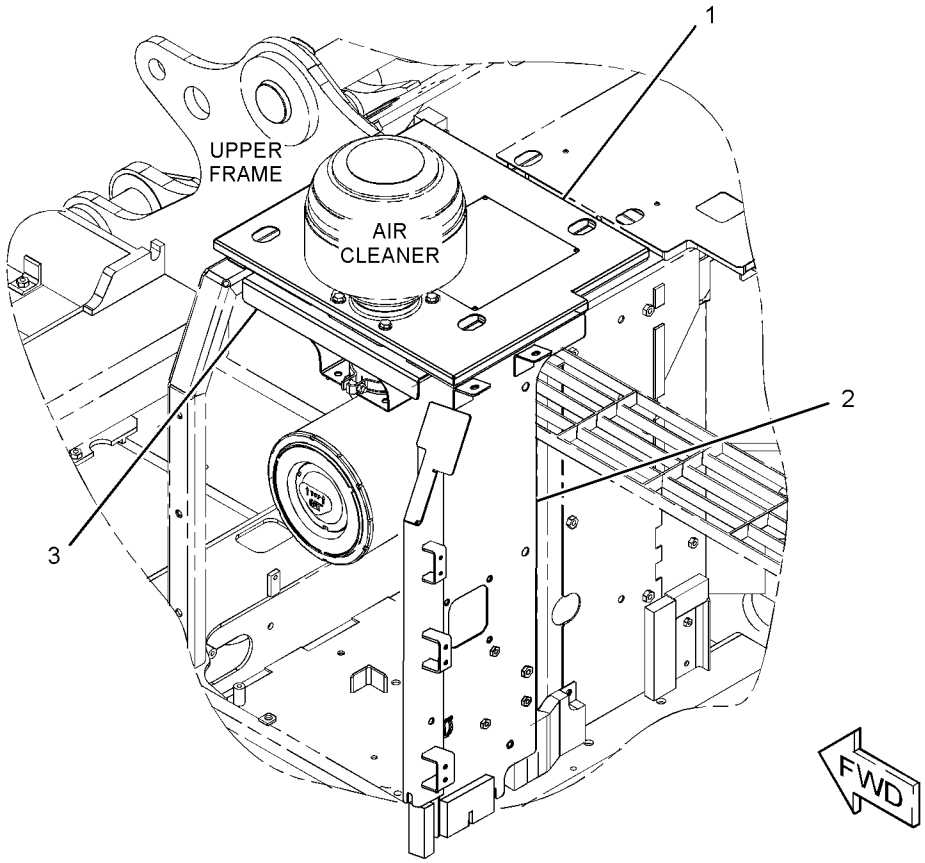

GRAPHIC #1 **<END>** g01388993

364-6940 COVER GP-HOOD–PRECLEANER

S/N: KGF1-UP; FAL1-UP
PART OF 359-2440 AIR CLEANER AR
AN ATTACHMENT

SMCS-7251 **i04586618**

NOTE	REF NO	GRAPHIC REF	PART NUMBER	QTY	PART NAME 1 2 3 4 5 6 (PRODUCT LEVEL)	SEE PAGE
	1	1	**273-7774**	1	SUPPORT AS	
Y	2	1	**364-6936**	1	SUPPORT AS-ENCLOSURE	853
Y	3	1	**372-7637**	1	COVER AS-SOUND SUPPRESSION	726

Y - SEPARATE ILLUSTRATION

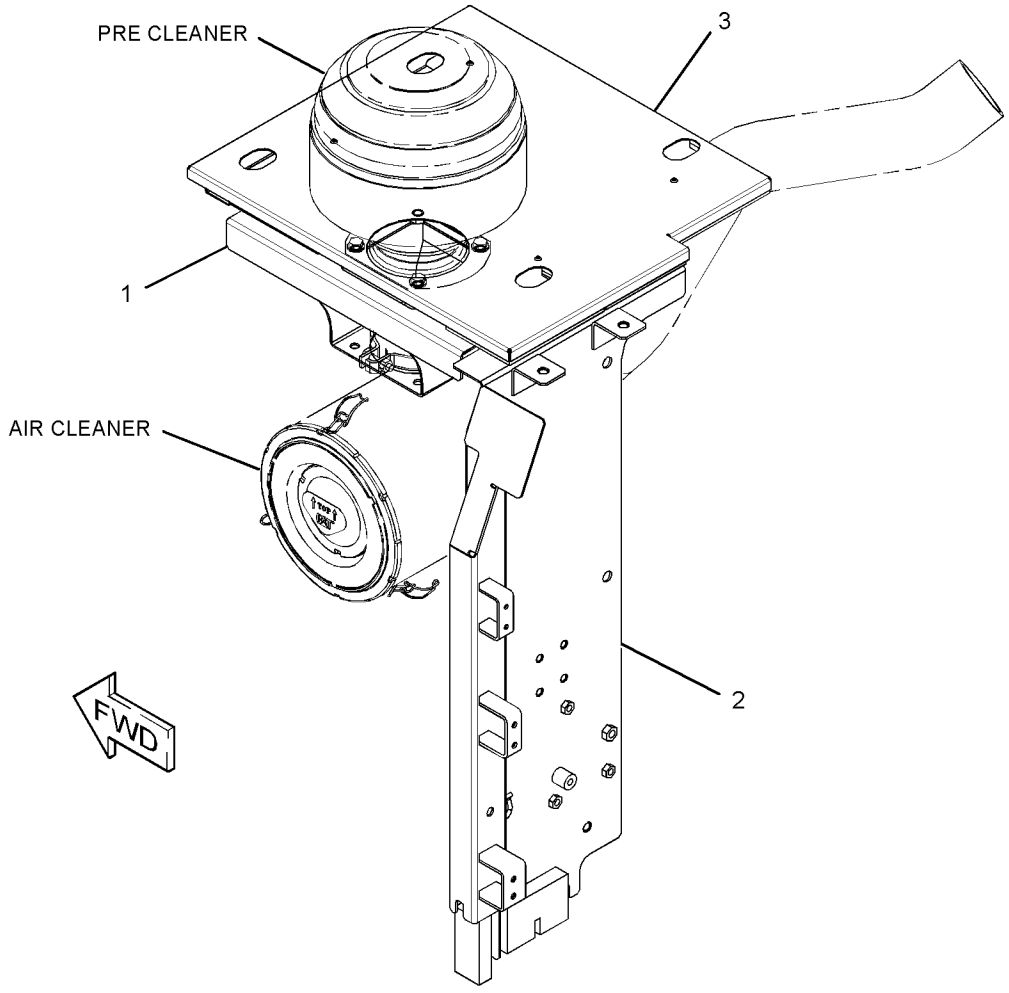

GRAPHIC #1 **<END>** g02819556

236-3746 DOOR GP-ACCESS—AIR CLEANER, BATTERY

S/N: FAL1-182

PART OF 273-7726 HOOD & GUARD GP

SMCS-7273 **i02777721**

NOTE	REF NO	GRAPHIC REF	PART NUMBER	QTY	PART NAME 1 2 3 4 5 6 (PRODUCT LEVEL)	SEE PAGE
	1	1	**236-3747**	1	INSULATION	
	2	1	**236-3748**	1	INSULATION	
	3	1	*236-3749*	1	DOOR AS-ACCESS	
	3A	1	**165-2976**	2	HINGE	
	4	1	**250-5054**	1	LINER	
	5	1	**208-4289**	1	CUSHION	

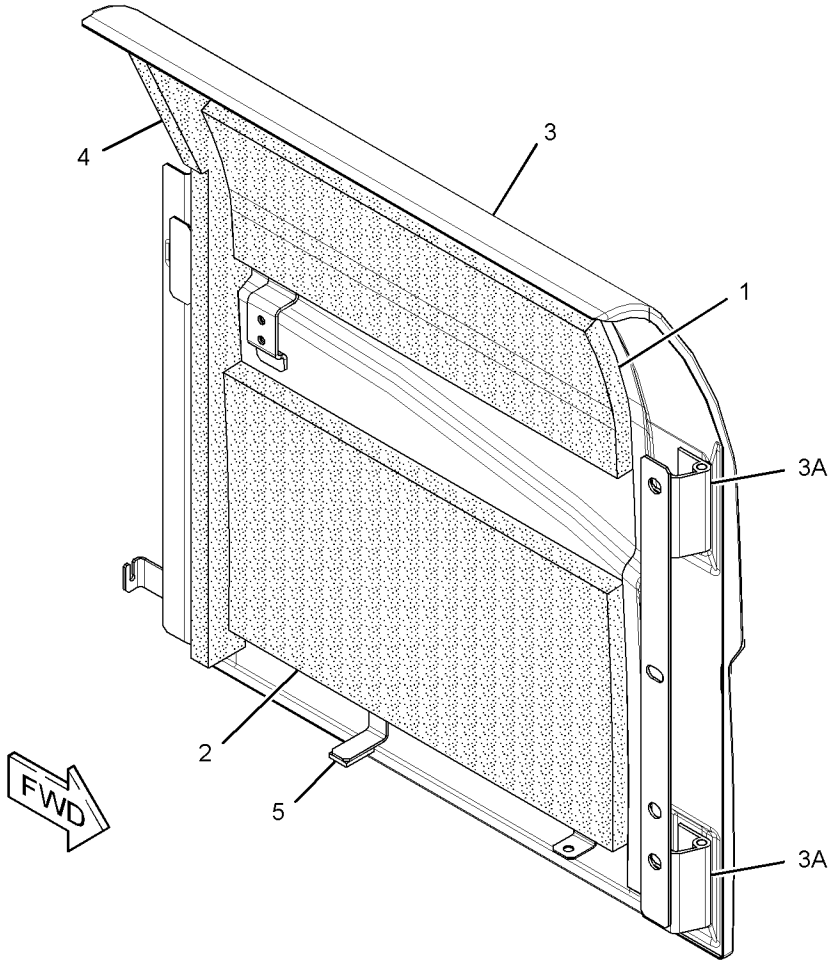

GRAPHIC #1 **<END>** g01392783

289-6910 DOOR GP-ACCESS–RADIATOR

S/N: KGF1-UP; FAL1-UP
PART OF 264-8651, 290-1911, 298-4256, 298-4271, 298-4272, 359-2423 COOLING AR-HIGH AMBIENT TEMP, 290-1910 MACHINE AR
AN ATTACHMENT
TYPE 1

SMCS-7273 **i02763460**

NOTE	REF NO	GRAPHIC REF	PART NUMBER	QTY	PART NAME 1 2 3 4 5 6 (PRODUCT LEVEL)	SEE PAGE
Y	1	1	**289-6917**	1	DOOR GP-ACCESS (RADIATOR)	740

Y - SEPARATE ILLUSTRATION

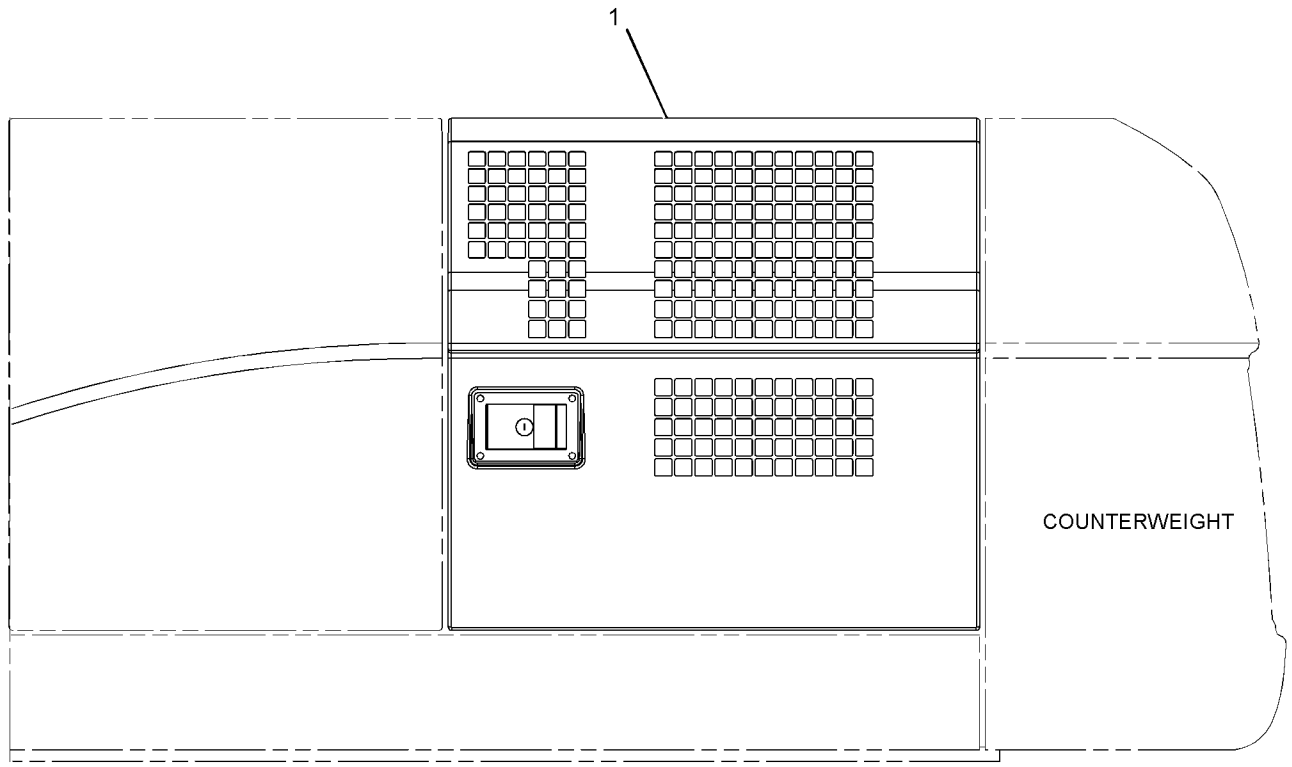

LEFT SIDE VIEW

GRAPHIC #1 **<END>** g01320462

289-6910 DOOR GP-ACCESS–RADIATOR

S/N: KGF1-UP; FAL1-UP

PART OF 264-8651, 290-1911, 298-4256, 298-4271, 298-4272, 359-2423 COOLING AR-HIGH AMBIENT TEMP, 385-4030, 385-4031, 385-4032, 385-4033 DISTRIBUTION AR, 290-1910 MACHINE AR

AN ATTACHMENT

TYPE 2

SMCS-7273 **i04528452**

NOTE	REF NO	GRAPHIC REF	PART NUMBER	QTY	PART NAME 1 2 3 4 5 6 (PRODUCT LEVEL)	SEE PAGE
CY	1	1	**374-4926**	1	DOOR GP-ACCESS (RADIATOR)	742

C - CHANGE FROM PREVIOUS TYPE
Y - SEPARATE ILLUSTRATION

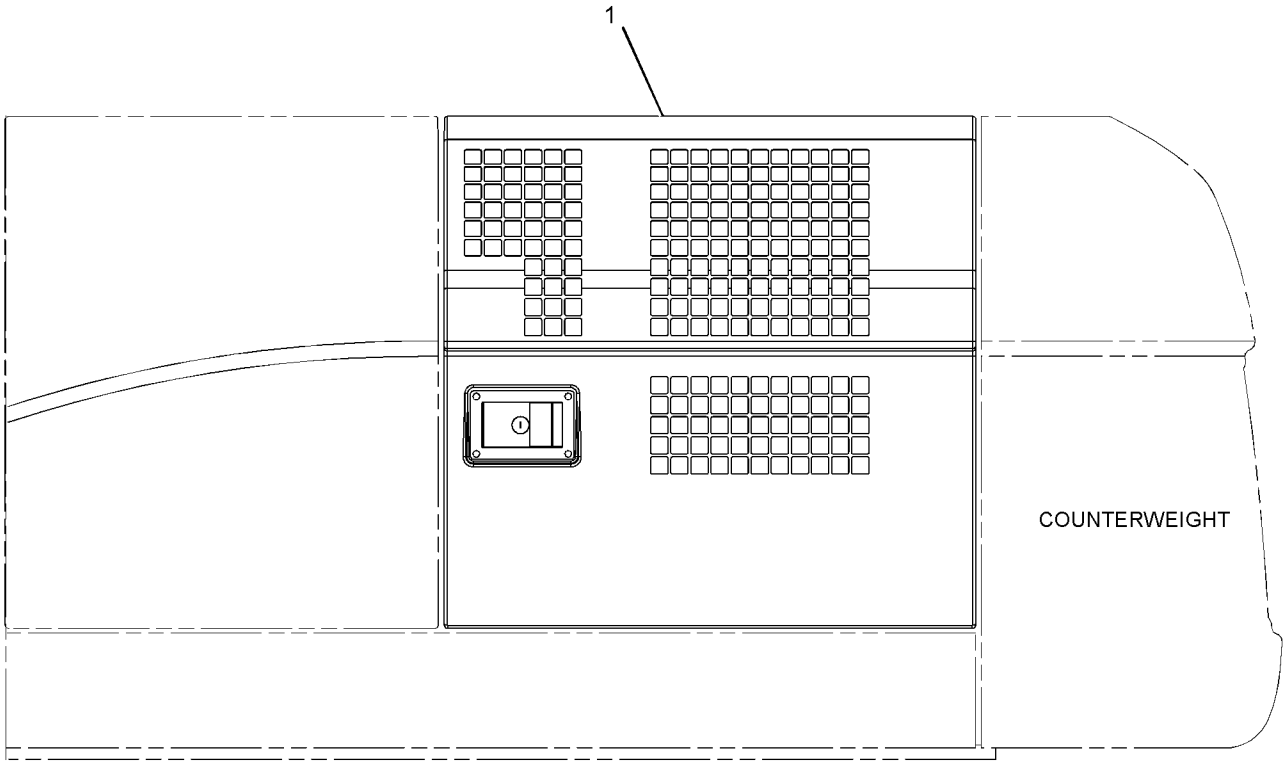

LEFT SIDE VIEW

GRAPHIC #1 **<END>** g01320462

289-6911 DOOR GP-ACCESS–RADIATOR, AFTCLR, HYD COOLER

S/N: KGF1-UP

PART OF 273-7725, 320-5732 HOOD & GUARD GP

AN ATTACHMENT

SMCS-7273 **i02765376**

NOTE	REF NO	GRAPHIC REF	PART NUMBER	QTY	PART NAME 1 2 3 4 5 6 (PRODUCT LEVEL)	SEE PAGE
	1	1	*289-6912*	1	DOOR AS-ACCESS	
		1	**165-2976**	2	HINGE	
J	2	1	**298-2942**	1	LATCH AS	
M	3	1	**099-6418**	4	NUT (M6X1-THD)	
	4	1	**244-7929**	1	INSULATION	
	5	1	**307-7656**	1	LINER	
	6	1	**122-4101**	1	RUBBER	
	7	1	**208-4289**	1	CUSHION	

J - REQUIRES CORPORATE KEY
M - METRIC PART

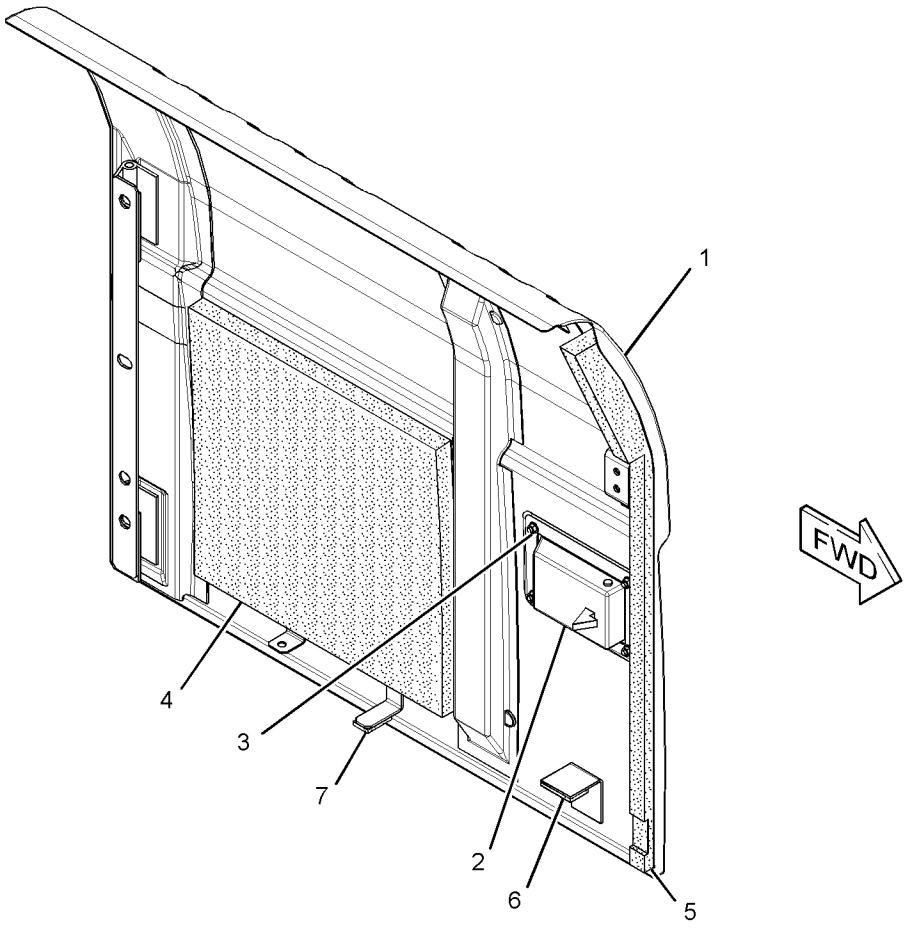

GRAPHIC #1 **<END>** g01388007

289-6913 DOOR GP-ACCESS—PUMP COMPARTMENT

S/N: KGF1-UP; FAL1-UP
PART OF 273-7725, 273-7726, 320-5732 HOOD & GUARD GP
ALSO AN ATTACHMENT

SMCS-7273 **i02785146**

NOTE	REF NO	GRAPHIC REF	PART NUMBER	QTY	PART NAME 1 2 3 4 5 6 (PRODUCT LEVEL)	SEE PAGE
	1	1	*289-6914*	1	DOOR AS-ACCESS	
		1	**165-2976**	2	HINGE	
J	2	1	**298-2942**	1	LATCH AS	
M	3	1	**099-6418**	4	NUT (M6X1-THD)	
	4	1	**244-7928**	1	INSULATION	
	5	1	**244-7927**	1	INSULATION	
	6	1	**248-8961**	1	LINER	
	7	1	**184-8862**	1	COVER	

J - REQUIRES CORPORATE KEY
M - METRIC PART

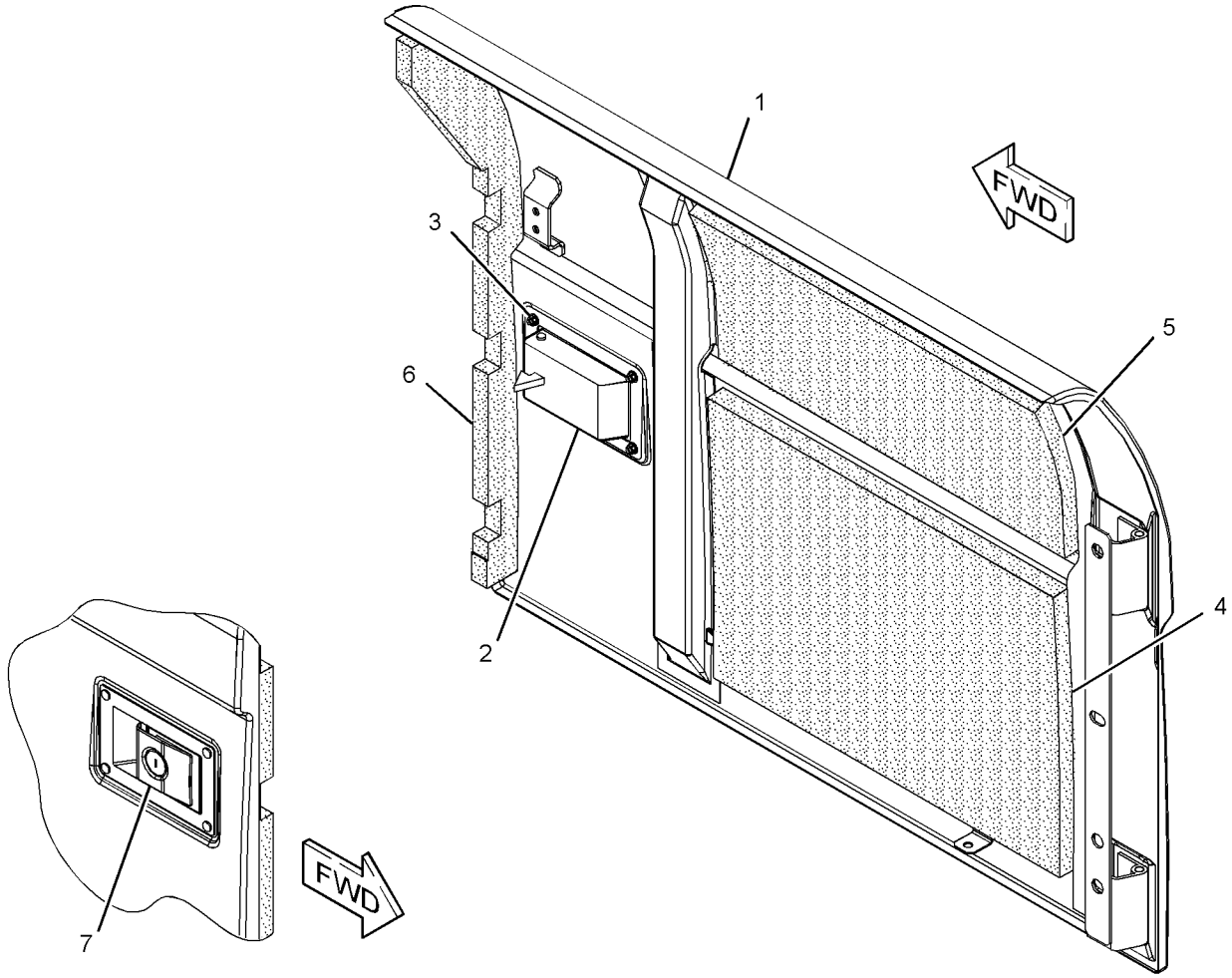

GRAPHIC #1 **<END>** g01370640

289-6915 DOOR GP-ACCESS–RADIATOR

S/N: KGF1-UP; FAL1-UP

PART OF 273-7726 HOOD & GUARD GP

SMCS-7273 **i04912387**

NOTE	REF NO	GRAPHIC REF	PART NUMBER	QTY	PART NAME 1 2 3 4 5 6 (PRODUCT LEVEL)	SEE PAGE
M	1	1	**099-6418**	4	NUT (M6X1-THD)	
	2	1	**122-4101**	1	RUBBER	
	3	1	**208-4289**	1	CUSHION	
	4	1	**244-7929**	1	INSULATION	
	5	1	**165-2976**	2	HINGE	
J	6	1	**298-2942**	1	LATCH AS	
		1	**366-6478**	1	LOCK AS	
	7	1	**307-7656**	1	LINER	

J - REQUIRES CORPORATE KEY
M - METRIC PART

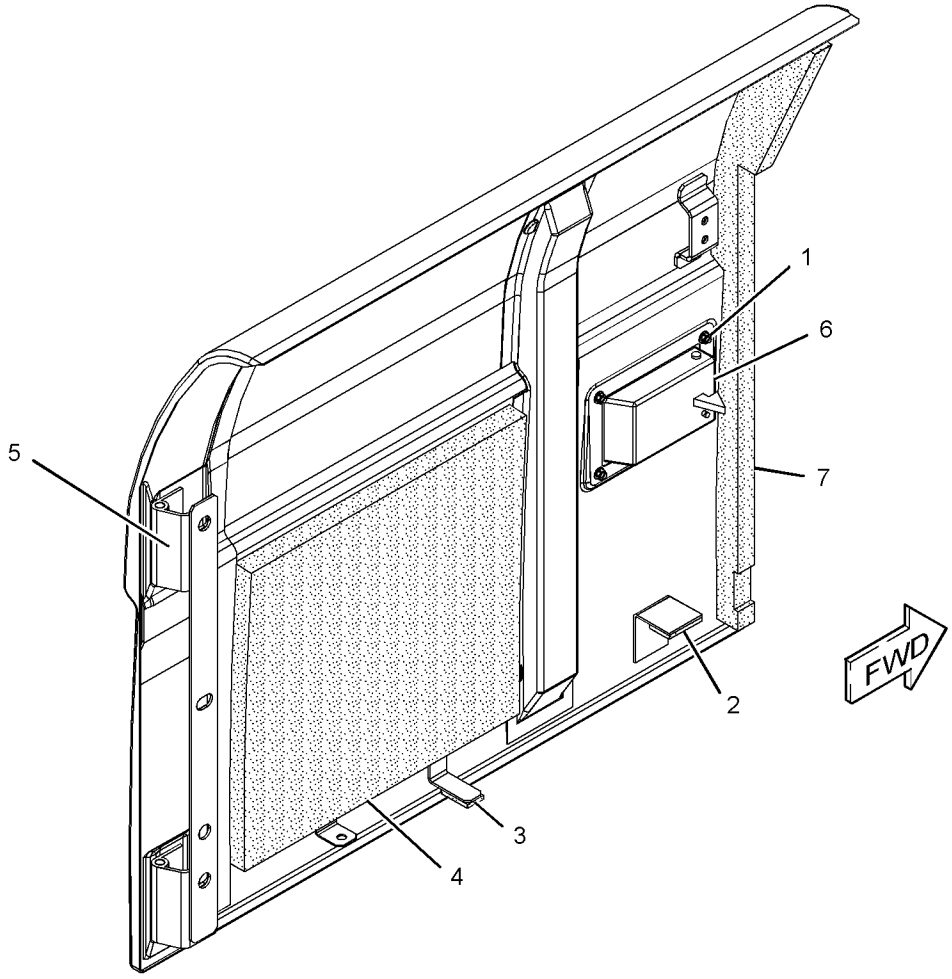

GRAPHIC #1 **<END>** g03080256

289-6917 DOOR GP-ACCESS–RADIATOR

S/N: KGF1-UP; FAL1-UP
PART OF 289-6910 DOOR GP-ACCESS, 355-8167 HOOD & GUARD GP
AN ATTACHMENT

SMCS-7273 **i03115741**

NOTE	REF NO	GRAPHIC REF	PART NUMBER	QTY	PART NAME 1 2 3 4 5 6 (PRODUCT LEVEL)	SEE PAGE
M	1	1	**099-6418**	4	NUT (M6X1-THD)	
	2	1	**122-4101**	1	RUBBER	
	3	1	**208-4289**	1	CUSHION	
	4	1	*293-6644*	1	DOOR AS-ACCESS	
	4A	1	**165-2976**	2	HINGE	
J	5	1	**298-2942**	1	LATCH AS	
	6	1	**307-7656**	1	LINER	

J - REQUIRES CORPORATE KEY
M - METRIC PART

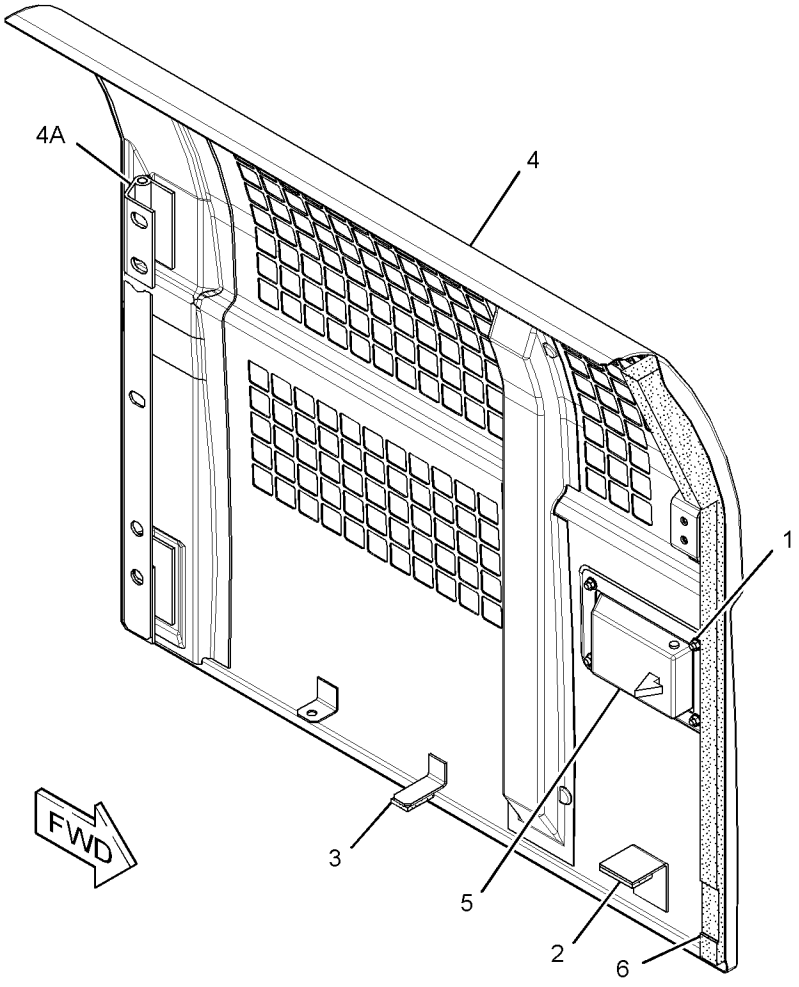

GRAPHIC #1 **<END>** g01481757

298-2977 DOOR GP-ACCESS—LEFT SIDE, FRONT

S/N: KGF1-UP; FAL183-UP

PART OF 273-7725, 273-7726, 320-5732 HOOD & GUARD GP

ALSO AN ATTACHMENT

SMCS-7273 **i03900954**

NOTE	REF NO	GRAPHIC REF	PART NUMBER	QTY	PART NAME 1 2 3 4 5 6 (PRODUCT LEVEL)	SEE PAGE
	1	1	**236-3747**	1	INSULATION	
	2	1	**236-3748**	1	INSULATION	
	3	1	**250-5054**	1	LINER	
	4	1	*298-2978*	1	DOOR AS-ACCESS	
	4A	1	**165-2976**	2	HINGE	
	5	1	**208-4289**	1	CUSHION	

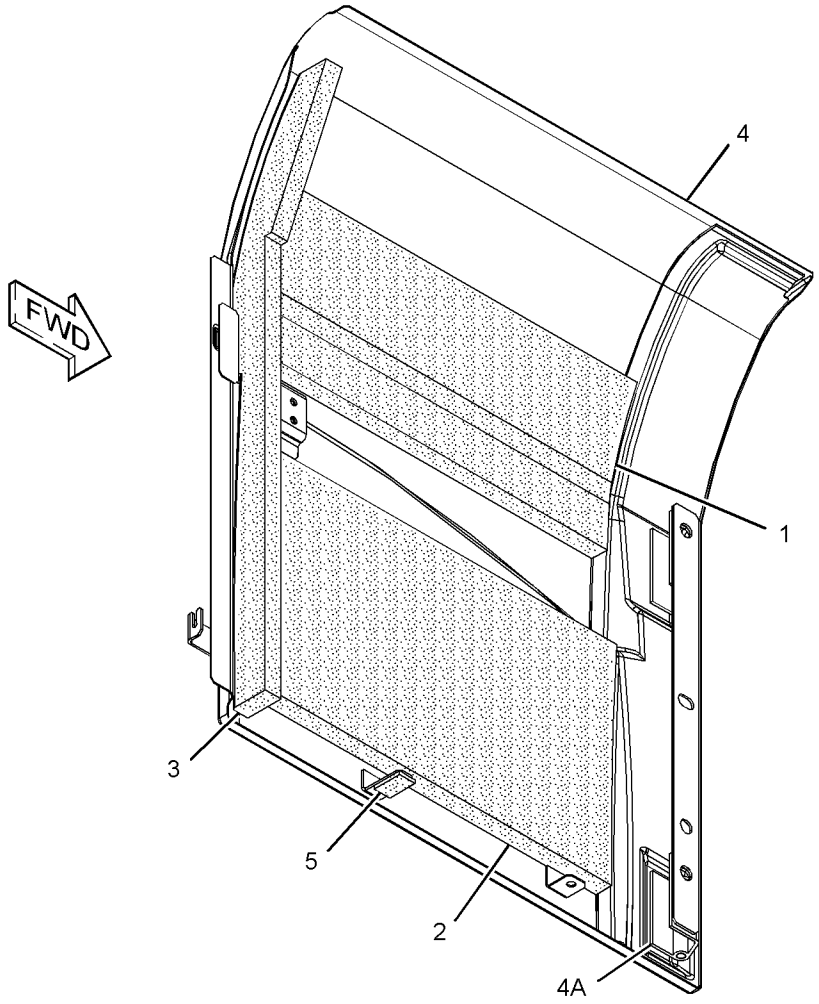

GRAPHIC #1 **<END>** g01390678

374-4926 DOOR GP-ACCESS–RADIATOR

S/N: KGF1-UP; FAL1-UP

PART OF 289-6910 DOOR GP-ACCESS, 355-8167 HOOD & GUARD GP

AN ATTACHMENT

SMCS-7273 **i04528453**

NOTE	REF NO	GRAPHIC REF	PART NUMBER	QTY	PART NAME 1 2 3 4 5 6 (PRODUCT LEVEL)	SEE PAGE
M	1	1	**099-6418**	4	NUT (M6X1-THD)	
	2	1	**122-4101**	1	RUBBER	
	3	1	**208-4289**	1	CUSHION	
	4	1	*374-4927*	1	DOOR AS-ACCESS	
	4A	1	**165-2976**	2	HINGE	
J	5	1	**298-2942**	1	LATCH AS	
	6	1	**307-7656**	1	LINER	

J - REQUIRES CORPORATE KEY
M - METRIC PART

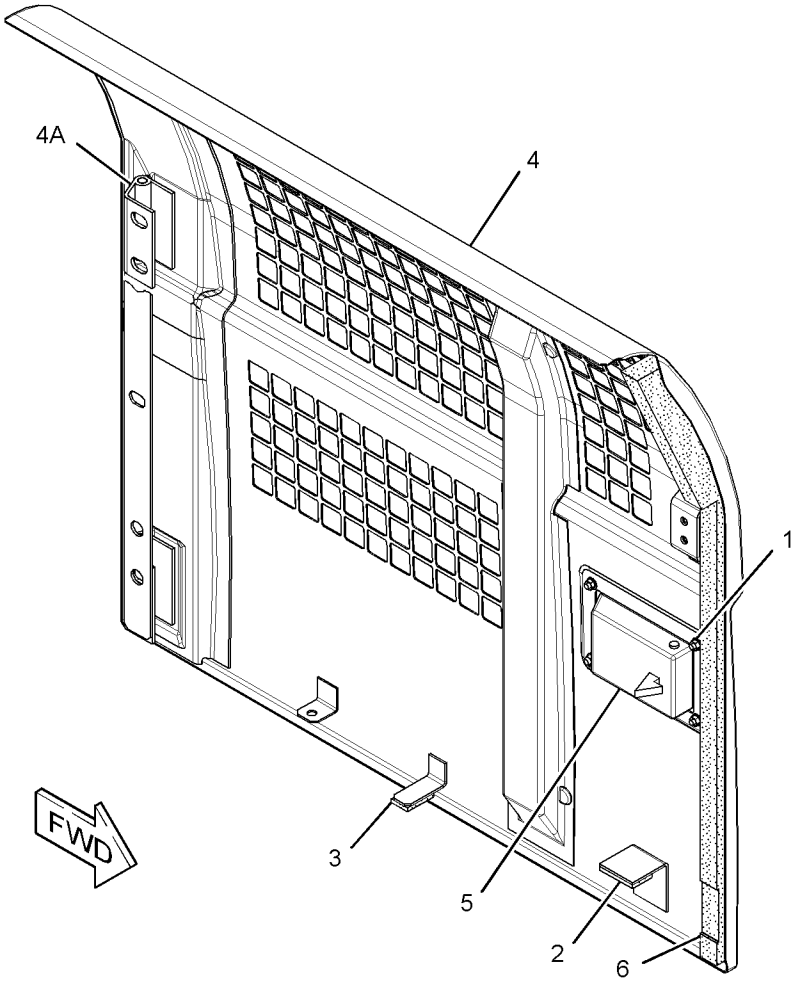

GRAPHIC #1 **<END>** g01481757

396-9391 DOOR GP-ACCESS–RADIATOR

S/N: KGF1-UP; FAL1-UP
PART OF 399-2552 DOOR GP-ACCESS
AN ATTACHMENT

SMCS-7273 **i04941526**

NOTE	REF NO	GRAPHIC REF	PART NUMBER	QTY	PART NAME 1 2 3 4 5 6 (PRODUCT LEVEL)	SEE PAGE
M	1	1	**099-6418**	4	NUT (M6X1-THD)	
	2	1	**122-4101**	1	RUBBER	
	3	1	**208-4289**	1	CUSHION	
	4	1	*396-9392*	1	DOOR AS-ACCESS	
	4A	1	**165-2976**	2	HINGE	
	5	1	**384-9095**	1	LATCH AS	
J		1	**366-6478**	1	LOCK AS	
	6	1	**307-7656**	1	LINER	

J - REQUIRES CORPORATE KEY
M - METRIC PART

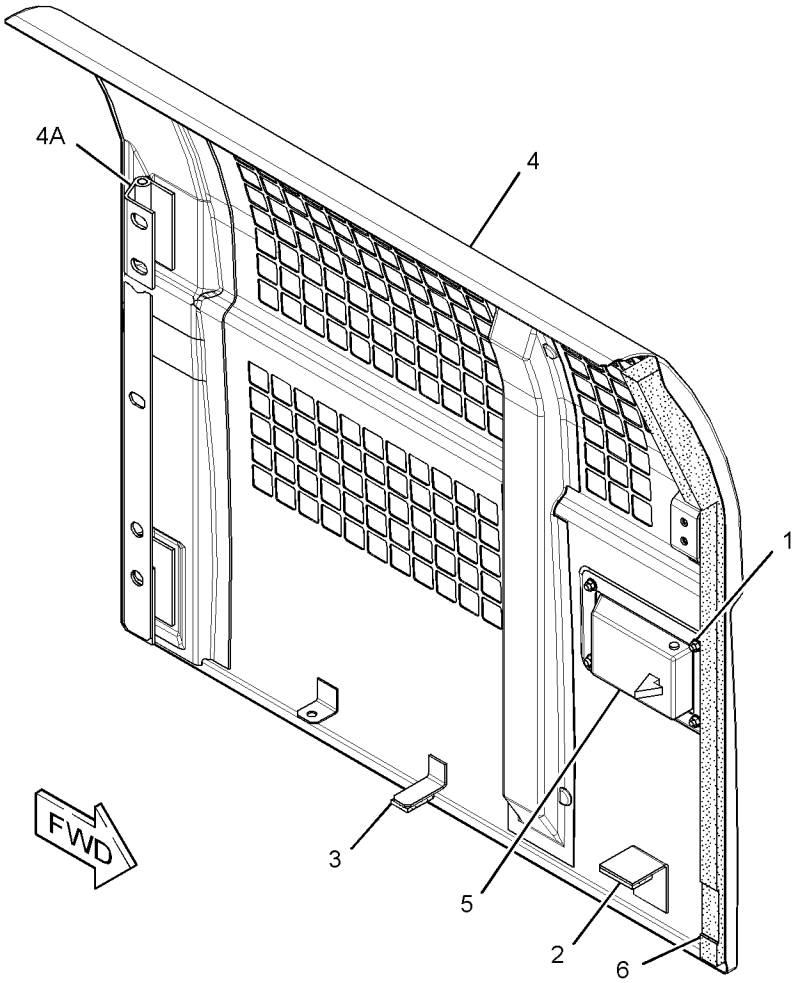

GRAPHIC #1 **<END>** g01481757

399-2552 DOOR GP-ACCESS–RADIATOR

S/N: KGF1-UP; FAL1-UP
PART OF 290-1911 COOLING AR-HIGH AMBIENT TEMP
AN ATTACHMENT
TYPE 1

SMCS-7273 **i04941523**

NOTE	REF NO	GRAPHIC REF	PART NUMBER	QTY	PART NAME 1 2 3 4 5 6 (PRODUCT LEVEL)	SEE PAGE
Y	1	1	**396-9391**	1	DOOR GP-ACCESS (RADIATOR)	743

Y - SEPARATE ILLUSTRATION

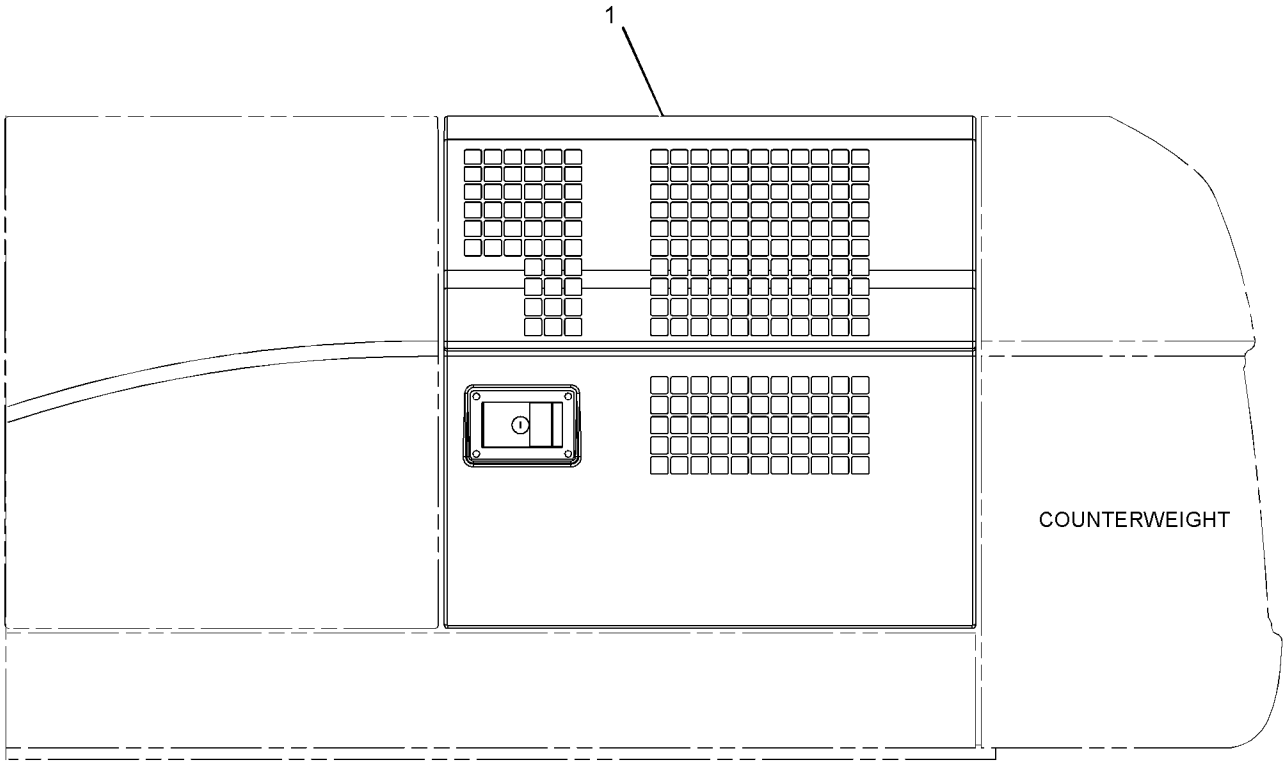

LEFT SIDE VIEW

GRAPHIC #1 **<END>** g01320462

399-2552 DOOR GP-ACCESS–RADIATOR

S/N: KGF1-UP; FAL1-UP
PART OF 290-1911 COOLING AR-HIGH AMBIENT TEMP
AN ATTACHMENT
TYPE 2

SMCS-7273 **i05256390**

NOTE	REF NO	GRAPHIC REF	PART NUMBER	QTY	PART NAME 1 2 3 4 5 6 (PRODUCT LEVEL)	SEE PAGE
CY	1	1	**421-4416**	1	DOOR GP-HOOD	746

C - CHANGE FROM PREVIOUS TYPE
Y - SEPARATE ILLUSTRATION

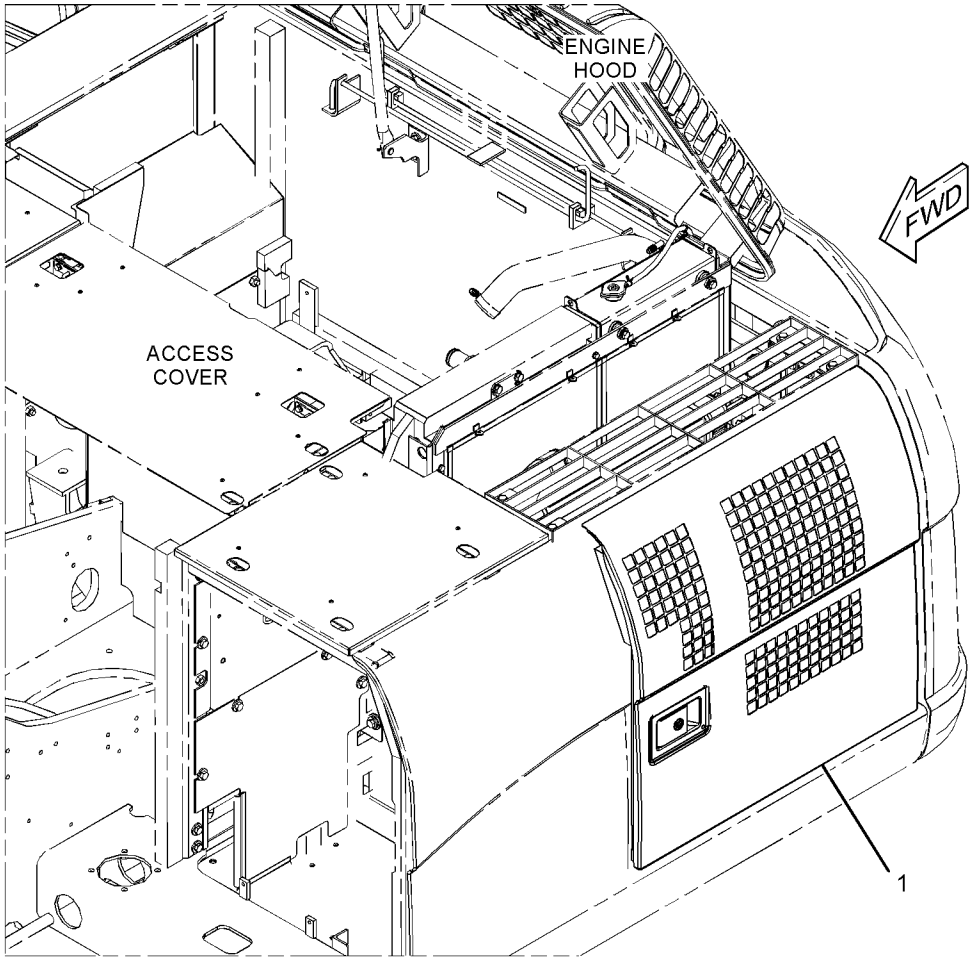

GRAPHIC #1 **<END>** g03348027

421-4416 DOOR GP-HOOD–RADIATOR

S/N: KGF1-UP; FAL1-UP
PART OF 399-2552 DOOR GP-ACCESS
AN ATTACHMENT

SMCS-7273 **i05256391**

NOTE	REF NO	GRAPHIC REF	PART NUMBER	QTY	PART NAME 1 2 3 4 5 6 (PRODUCT LEVEL)	SEE PAGE
M	1	1	**099-6418**	4	NUT (M6X1-THD)	
	2	1	**122-4101**	1	RUBBER	
	3	1	**208-4289**	1	CUSHION	
	4	1	*396-9392*	1	DOOR AS-ACCESS	
	4A	1	**165-2976**	2	HINGE	
	5	1	**358-0921**	1	LATCH AS	
J		1	**385-3458**	1	LOCK AS	
	6	1	**307-7656**	1	LINER	

J - REQUIRES CORPORATE KEY
M - METRIC PART

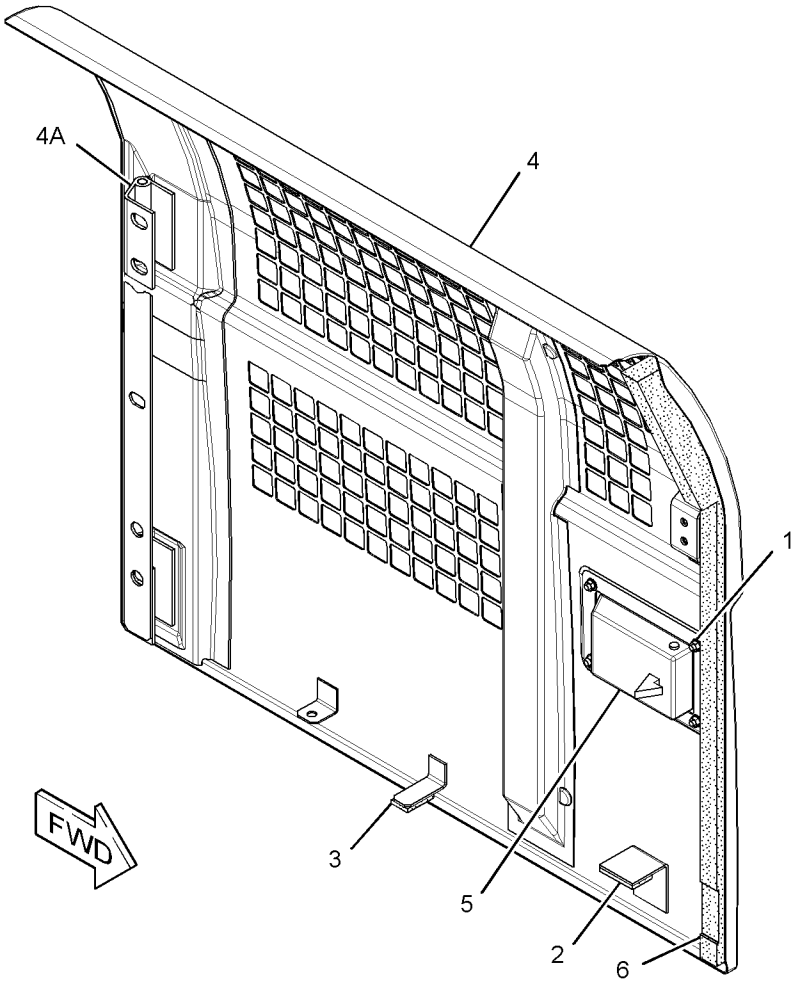

GRAPHIC #1 **<END>** g01481757

223-3042 FENDER & COVER GP

S/N: KGF1-UP; FAL1-UP

PART OF 264-8638, 264-8639 CHASSIS AR

SMCS-7252 **i02347079**

NOTE	REF NO	GRAPHIC REF	PART NUMBER	QTY	PART NAME 1 2 3 4 5 6 (PRODUCT LEVEL)	SEE PAGE
M	1	1	**135-8573**	2	BOLT AS	
	2	1	**236-3702**	2	SPACER (15X35X11-MM THK)	
	3	1	**236-3703**	2	WASHER (25X35X4-MM THK)	
	4	1	**236-9570**	1	COVER AS	
	5	1	**259-3543**	1	STEP AS	
	6	1	**5P-1075**	2	WASHER-HARD (10.2X22.5X3-MM THK)	
M	7	1	**8T-4195**	2	BOLT (M10X1.5X30-MM)	

M - METRIC PART

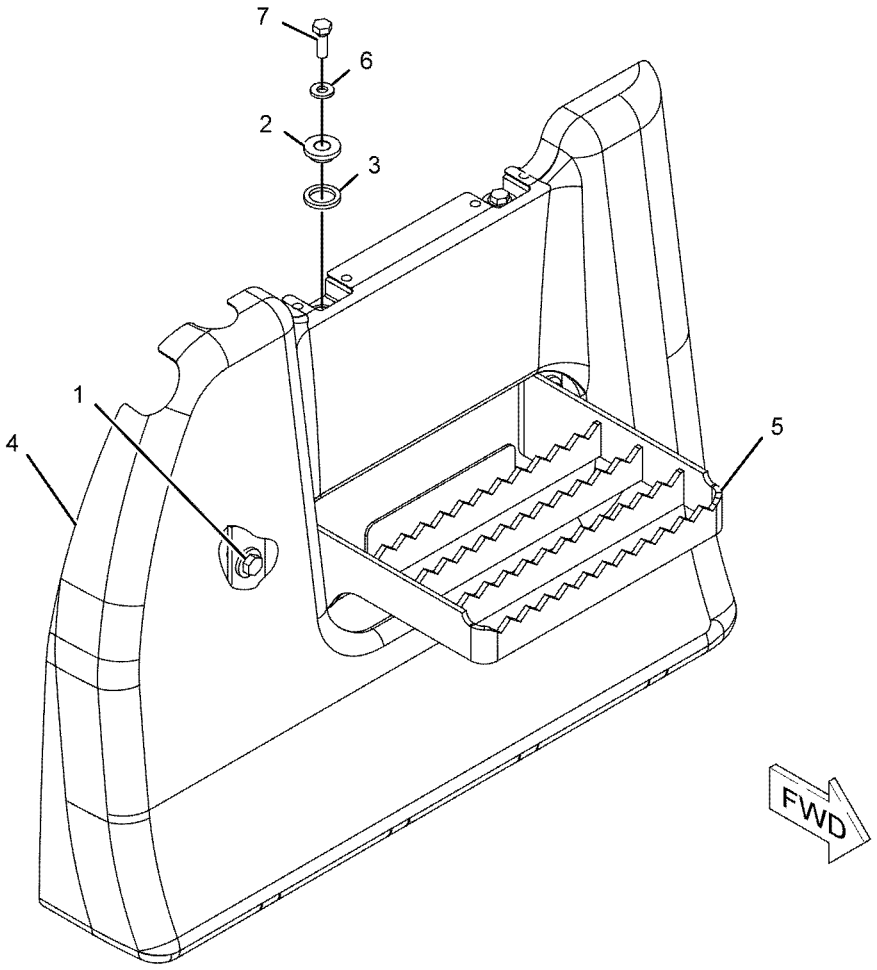

GRAPHIC #1 **<END>** g01150323

330-1166 FENDER & COVER GP

S/N: KGF1-UP; FAL1-UP
PART OF 330-1194 MACHINE AR
AN ATTACHMENT

SMCS-7252 **i03127885**

NOTE	REF NO	GRAPHIC REF	PART NUMBER	QTY	PART NAME 1 2 3 4 5 6 (PRODUCT LEVEL)	SEE PAGE
	1	1	**330-1167**	1	COVER AS	
		1	**278-3818**	1	LINER	

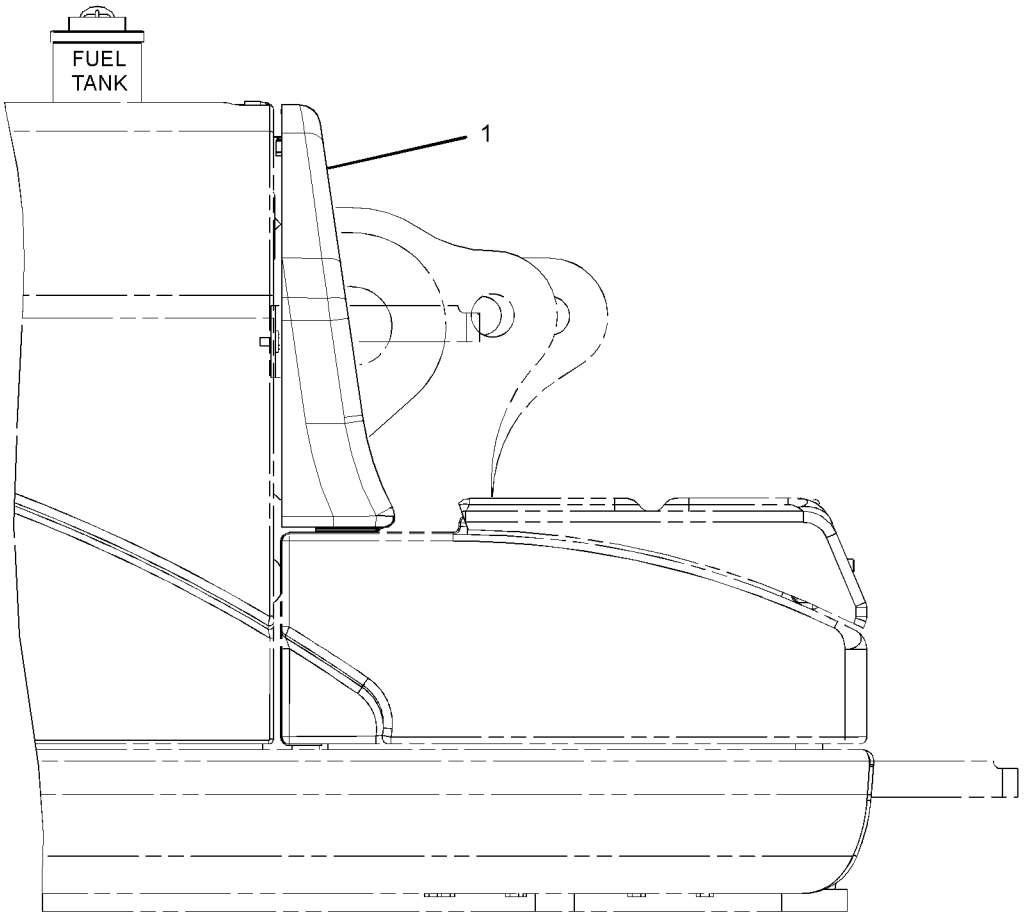

RIGHT SIDE VIEW

GRAPHIC #1 **<END>** g01619313

273-6716 FRAME GP-UPPER

S/N: KGF1-5482; FAL1-4959

PART OF 264-8638, 264-8639 CHASSIS AR

SMCS-7051 **i03146203**

NOTE	REF NO	GRAPHIC REF	PART NUMBER	QTY	PART NAME 1 2 3 4 5 6 (PRODUCT LEVEL)	SEE PAGE
B	1	1	**093-0083**	4	SHIM (1-MM THK)	
B	2	1	**308-8776**	2	SHIM (1-MM THK)	
B	3	1	**093-0115**	2	SHIM (2-MM THK)	
B	4	1	**308-8777**	1	SHIM (2-MM THK)	
	5	1	**093-0349**	3	WASHER (22X60X6-MM THK)	
	6	1	**093-0363**	2	SPACER (83X120X12-MM THK)	
B	7	1	**308-8775**	1	SHIM (0.5-MM THK)	
B	8	1	**133-2425**	2	SHIM (0.5-MM THK)	
	9	1	**4I-4812**	2	PIN AS	
	10	1	**212-2838**	2	SHIM (2-MM THK)	
J	11	1	**245-7900**	1	CAP	
J	12	1	**245-7901**	1	CAP	
	13	1	**315-0800**	1	PIN AS	
	14	1	**273-6717**	1	FRAME AS-UPPER	
	14A	1	**163-3729**	1	STEP AS	
	14B	1	**7Y-0633**	1	BOSS	
	15	1	**8T-4123**	3	WASHER (22X35X3.5-MM THK)	
BM	16	1	**8T-4191**	1	BOLT (M10X1.5X16-MM)	
M	17	1	**8T-4780**	3	BOLT (M20X2.5X30-MM)	

B - USE AS REQUIRED
J - USE ON MACHINE WITHOUT LOWER WIPER
M - METRIC PART

273-6716 **FRAME GP-UPPER (*contd.*)** **i03146203**

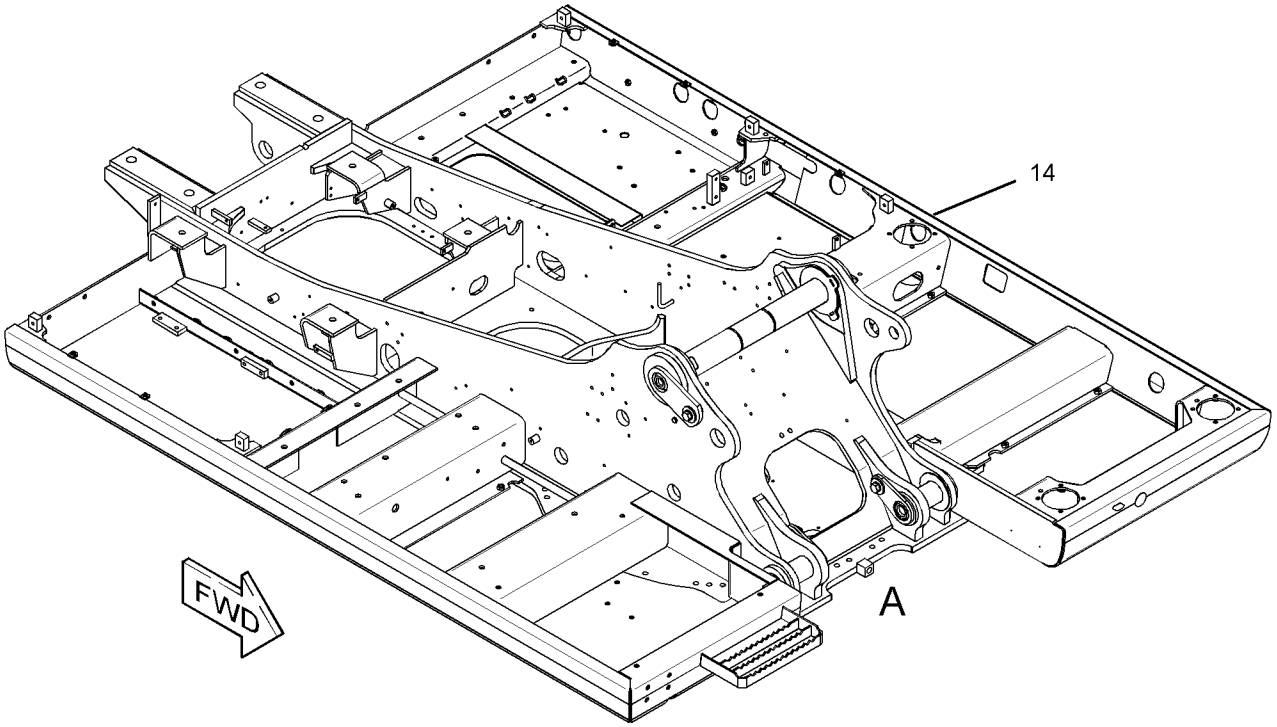

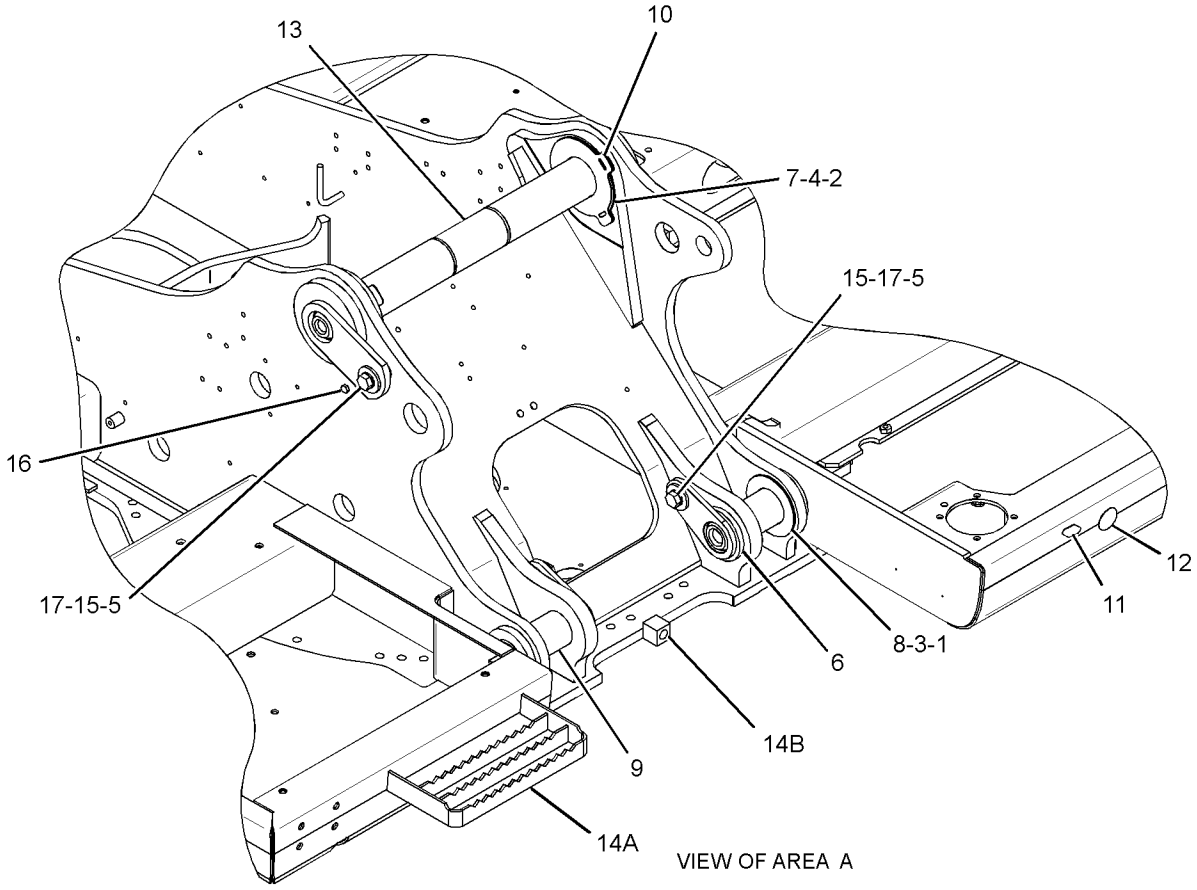

VIEW OF AREA A

GRAPHIC #1 **<END>** g01524900

273-6716 FRAME GP-UPPER

S/N: KGF5483-9458; FAL4960-10246
PART OF 264-8638, 264-8639 CHASSIS AR

SMCS-7051 **i04679215**

NOTE	REF NO	GRAPHIC REF	PART NUMBER	QTY	PART NAME 1 2 3 4 5 6 (PRODUCT LEVEL)	SEE PAGE
B	1	1	**093-0083**	4	SHIM (1-MM THK)	
B	2	1	**308-8776**	2	SHIM (1-MM THK)	
B	3	1	**093-0115**	2	SHIM (2-MM THK)	
B	4	1	**308-8777**	1	SHIM (2-MM THK)	
	5	1	**093-0349**	3	WASHER (22X60X6-MM THK)	
	6	1	**093-0363**	2	SPACER (83X120X12-MM THK)	
B	7	1	**308-8775**	1	SHIM (0.5-MM THK)	
B	8	1	**133-2425**	2	SHIM (0.5-MM THK)	
	9	1	**4I-4812**	2	PIN AS	
	10	1	**212-2838**	2	SHIM (2-MM THK)	
J	11	1	**245-7900**	1	CAP	
J	12	1	**245-7901**	1	CAP	
	13	1	**315-0800**	1	PIN AS	
C	14	1	**352-9597**	1	FRAME AS-UPPER	
	14A	1	**163-3729**	1	STEP AS	
	14B	1	**7Y-0633**	1	BOSS	
		1	**178-0852**	1	PLATE-SKIRT (1100-MM)	
		1	**184-5724**	1	PLATE-SKIRT (2000-MM)	
	15	1	**8T-4123**	3	WASHER (22X35X3.5-MM THK)	
BM	16	1	**8T-4191**	1	BOLT (M10X1.5X16-MM)	
M	17	1	**8T-4780**	3	BOLT (M20X2.5X30-MM)	

B - USE AS REQUIRED
C - CHANGE FROM PREVIOUS TYPE
J - USE ON MACHINE WITHOUT LOWER WIPER
M - METRIC PART

273-6716 **FRAME GP-UPPER (*contd.*)** **i04679215**

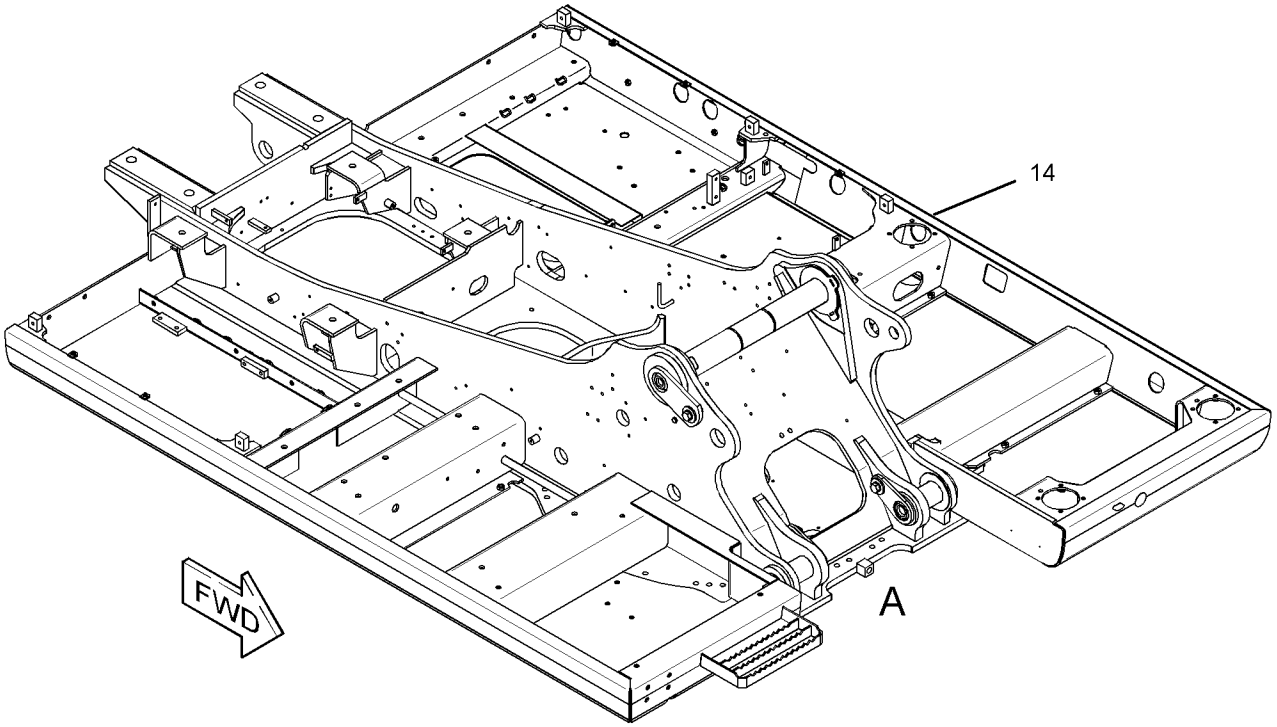

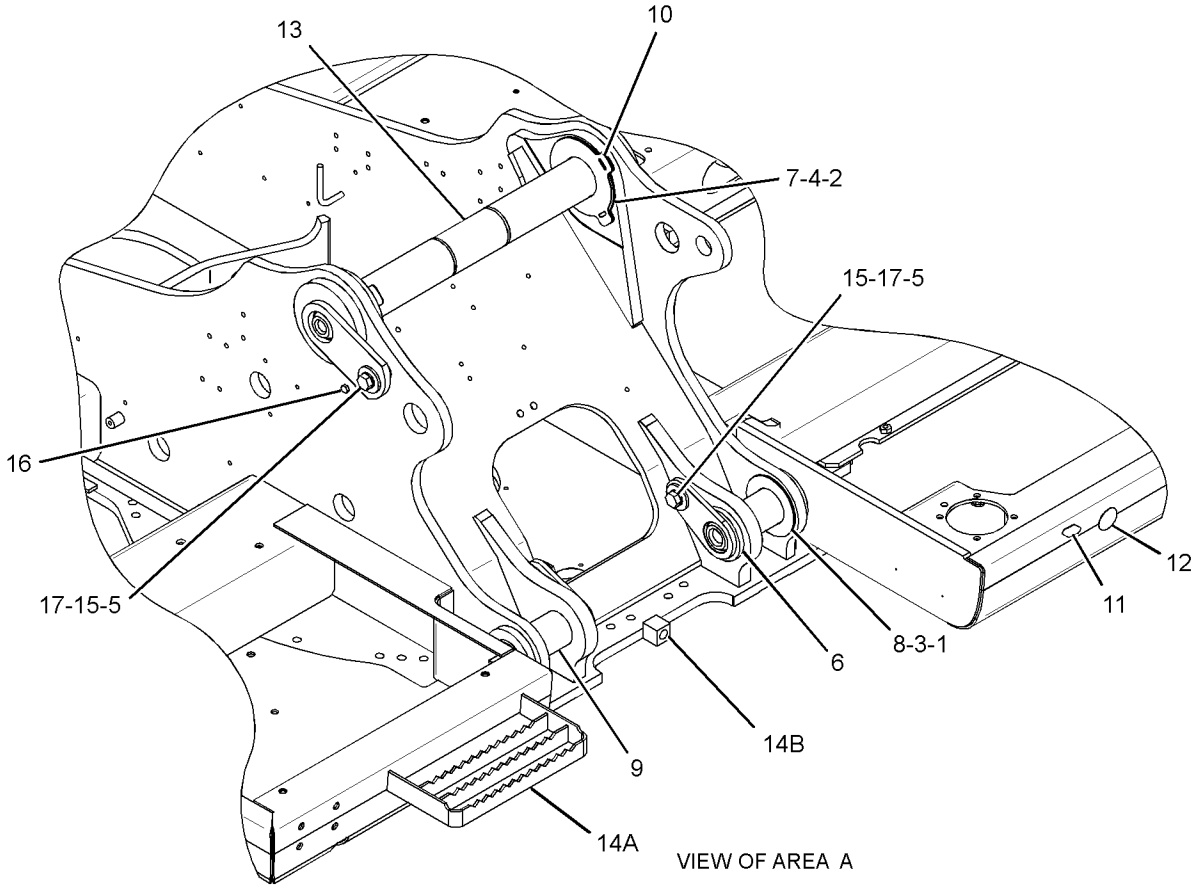

VIEW OF AREA A

GRAPHIC #1 **<END>** g01524900

227-6081 GEAR & BEARING GP-SWING

S/N: KGF1-UP; FAL1-UP

PART OF 227-6147 GEAR & BEARING GP-SWING

SMCS-7063 **i03982309**

NOTE	REF NO	GRAPHIC REF	PART NUMBER	QTY	PART NAME 1 2 3 4 5 6 (PRODUCT LEVEL)	SEE PAGE
	1	1	**3B-8489**	1	FITTING-GREASE	
	2	1	**227-6071**	1	SEAL-DUST	
E	3	1	**148-4685**		SEAL (368-CM)	

E - ORDER BY THE CENTIMETER

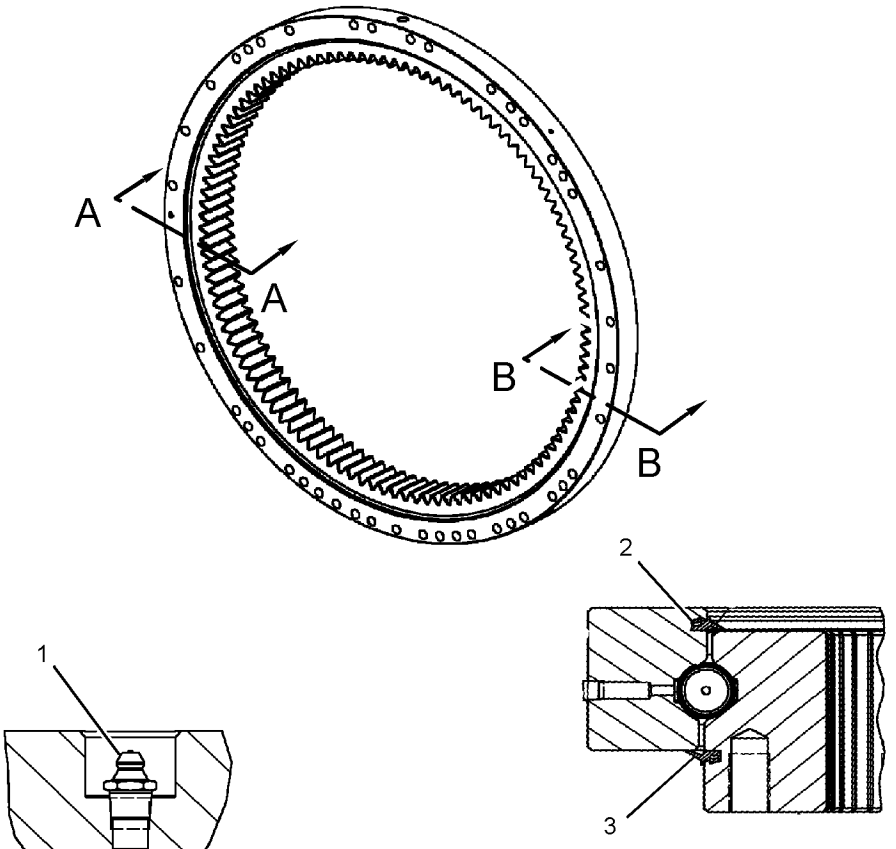

GRAPHIC #1 **<END>** g02177687

227-6147 GEAR & BEARING GP-SWING

S/N: KGF1-UP; FAL1-UP

PART OF 240-3822, 247-7454 FRAME AR-UNDERCARRIAGE

SMCS-7063 **i02507535**

NOTE	REF NO	GRAPHIC REF	PART NUMBER	QTY	PART NAME 1 2 3 4 5 6 (PRODUCT LEVEL)	SEE PAGE
	1	1	**5K-9243**	2	ELBOW-FLARED	
	2	1	**7Y-1647**	1	GASKET	
	3	1	**7Y-1650**	1	CLAMP-HOSE	
	4	1	**7Y-1863**	40	SPACER (20.5X38X34-MM THK)	
	5	1	**148-4689**	1	TUBE AS	
	6	1	**171-9464**	37	SPACER (20.6X38X6-MM THK)	
Y	7	1	**227-6081**	1	GEAR & BEARING GP-SWING (118-BEARING)	753
	8	1	**227-6105**	1	BOOT	
	9	1	**227-6106**	1	RETAINER	
	10	1	**096-4902**	1	DOWEL	
	11	1	**148-4703**	1	COVER	
	12	1	**148-4704**	1	GASKET	
	13	1	**3B-8489**	1	FITTING-GREASE	
	14	1	**4N-9170**	2	CLIP	
	15	1	**7Y-1648**	1	STRIP	
M	16	1	**8T-0360**	40	BOLT (M20X2.5X90-MM)	
M	17	1	**8T-0362**	37	BOLT (M20X2.5X110-MM)	
	18	1	**8T-4121**	14	WASHER-HARD (11X21X2.5-MM THK)	
M	19	1	**8T-4137**	2	BOLT (M10X1.5X20-MM)	
M	20	1	**8T-4136**	12	BOLT (M10X1.5X25-MM)	
M	21	1	**8T-4199**	2	BOLT (M8X1.25X12-MM)	
B	22	1	**1U-8846**		SEALANT-GASKET	

B - USE AS REQUIRED
M - METRIC PART
Y - SEPARATE ILLUSTRATION

227-6147 **GEAR & BEARING GP-SWING (*contd.*)** **i02507535**

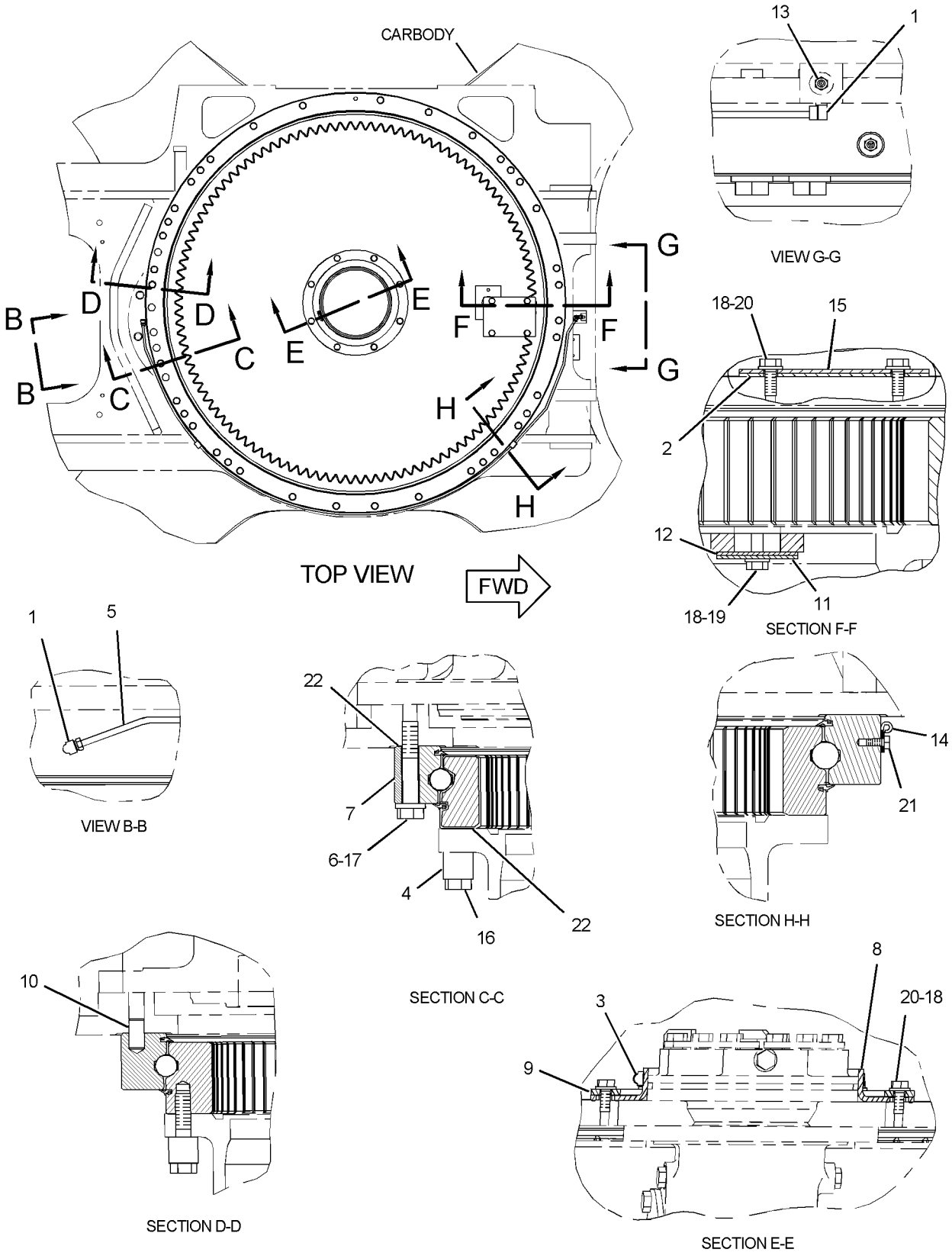

GRAPHIC #1 **<END>** g01276722

298-4099 GUARD AR—HEAVY-DUTY

S/N: KGF1-UP; FAL1-UP
PART OF 347-3339, 354-1063, 354-1142, 354-1146, 359-2505, 379-7224, 385-4026 DISTRIBUTION AR
AN ATTACHMENT

SMCS-7150 **i02668486**

NOTE	PART NUMBER	QTY	PART NAME 1 2 3 4 5 6 (PRODUCT LEVEL)	SEE PAGE
Y	*289-6425*	1	GUARD GP-BOTTOM (HEAVY-DUTY)	758
Y	*134-8875*	1	GUARD GP-SWIVEL	761
Y	*166-1478*	1	GUARD GP-TRAVEL MOTOR (HEAVY-DUTY)	866

Y - SEPARATE ILLUSTRATION

<END>

289-6424 GUARD GP-BOTTOM

S/N: KGF1-UP; FAL1-UP

PART OF 264-8638, 264-8639 CHASSIS AR

SMCS-7153 **i03795751**

NOTE	REF NO	GRAPHIC REF	PART NUMBER	QTY	PART NAME 1 2 3 4 5 6 (PRODUCT LEVEL)	SEE PAGE
M	1	1	**135-8576**	36	BOLT AS-LOCKING	
	2	1	**165-2823**	1	SHEET	
	3	1	**248-8992**	1	SHEET	
	4	1	**248-8993**	1	SHEET	
	5	1	**248-8994**	1	SHEET	
	6	1	**248-8995**	1	SHEET	
	7	1	**273-7674**	2	SHEET	
	8	1	**286-6281**	1	SHEET AS	
	9	1	**289-6603**	1	SHEET	
J	10	1	**342-0932**	1	SHEET AS	
J	11	1	**342-0965**	1	PLATE AS	
JM	12	1	**8C-8992**	2	BOLT-LOCKING (M12X1.75X30-MM)	
J	13	1	**5P-1076**	2	WASHER-HARD (13.5X30X4-MM THK)	

J - OPTIONAL DESIGN FOR COLD WEATHER APPLICATIONS
M - METRIC PART

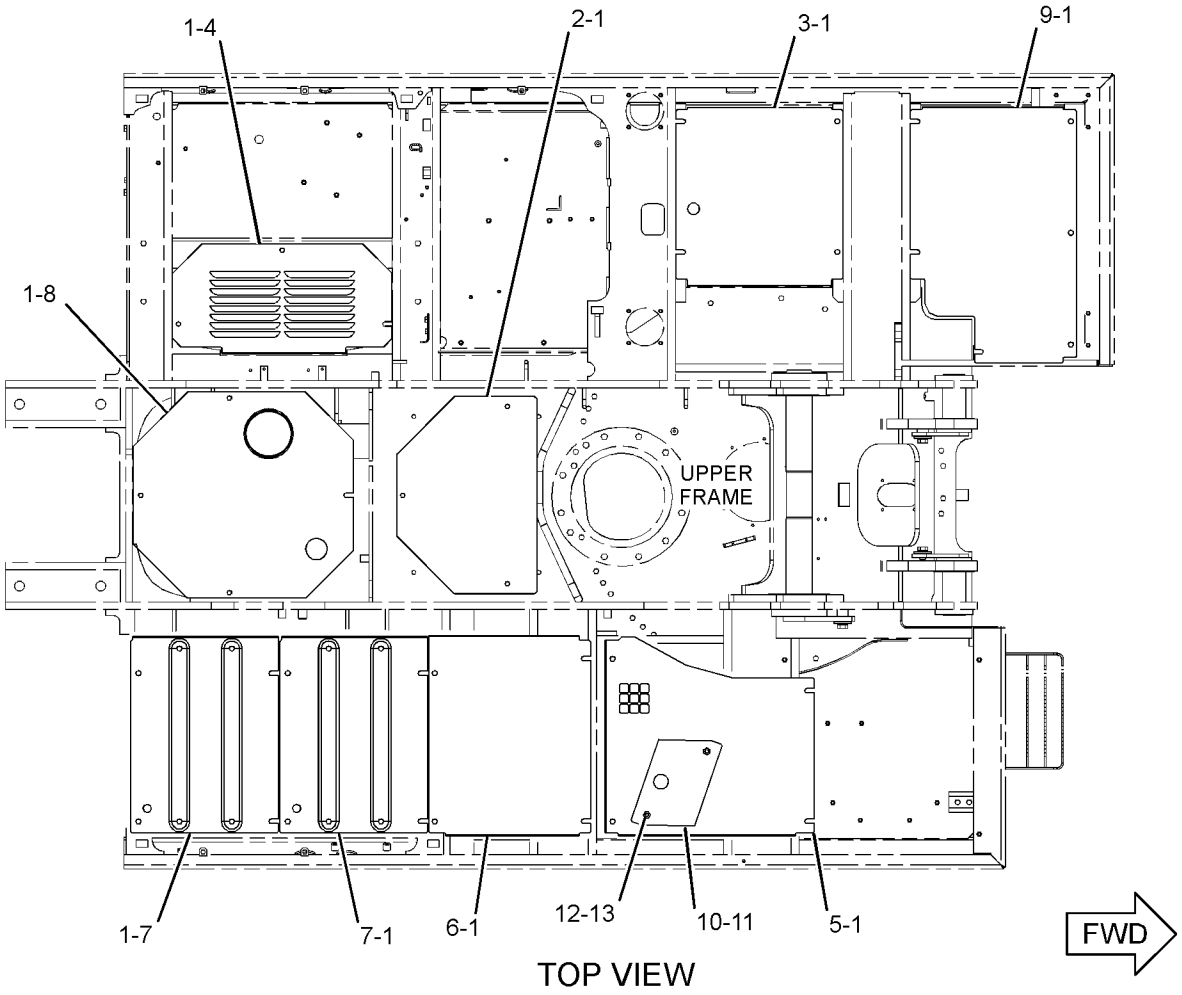

TOP VIEW

GRAPHIC #1 **<END>** g02126974

289-6425 GUARD GP-BOTTOM–HEAVY-DUTY

S/N: KGF1-UP; FAL1-UP
PART OF 298-4099 GUARD AR, 347-3362 OPTION AR-GUARD
AN ATTACHMENT
TYPE 1

SMCS-7153 **i02558343**

NOTE	REF NO	GRAPHIC REF	PART NUMBER	QTY	PART NAME 1 2 3 4 5 6 (PRODUCT LEVEL)	SEE PAGE
M	1	1	**135-8576**	4	BOLT AS-LOCKING	
	2	1	**165-2854**	1	PLATE AS	
	3	1	**248-9012**	1	SHEET AS	
	4	1	**248-9014**	1	SHEET AS	
	5	1	**248-9016**	1	SHEET AS	
	6	1	**248-9018**	1	SHEET AS	
	7	1	**248-9020**	1	SHEET AS	
	8	1	**262-2484**	1	PLATE AS	
		1	**099-7857**	1	HINGE	
	9	1	**273-7675**	2	SHEET AS	
	10	1	**286-6283**	1	SHEET AS	

M - METRIC PART

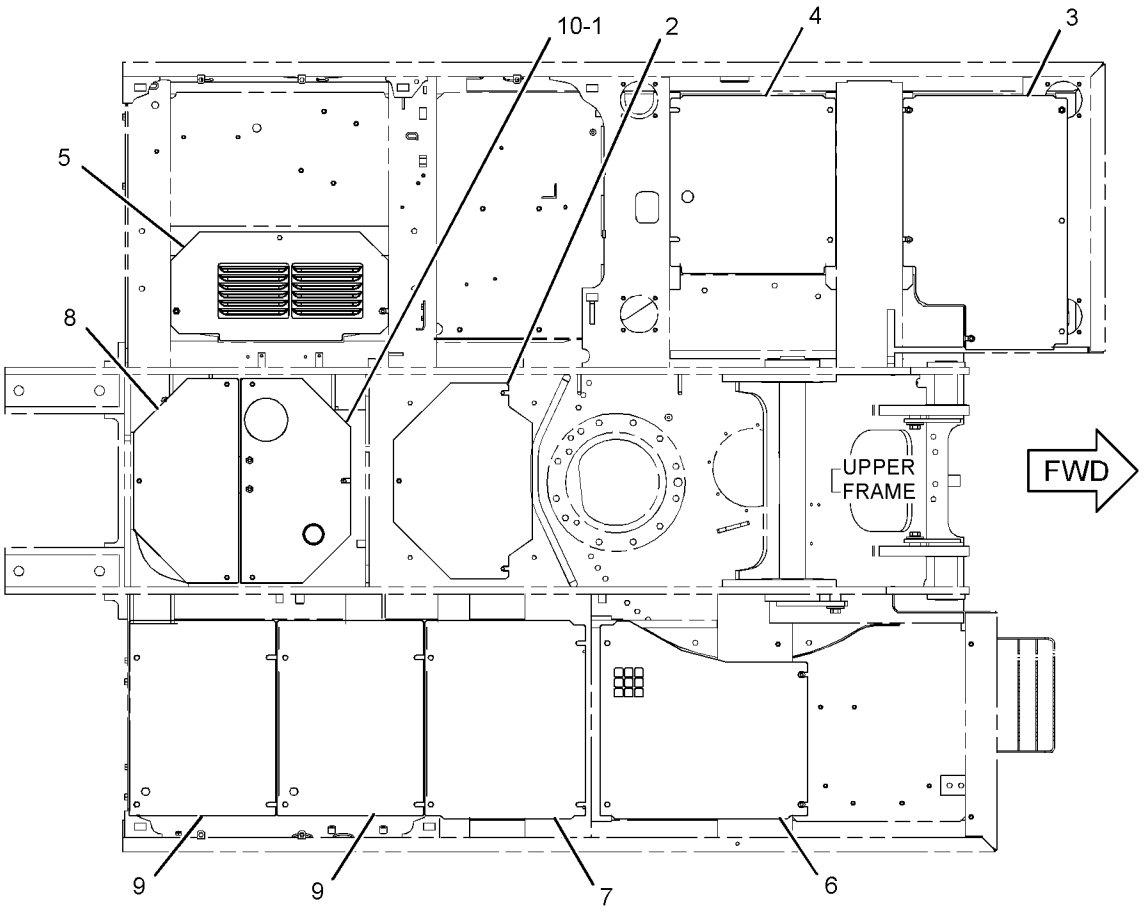

TOP VIEW

GRAPHIC #1 **<END>** g01285389

289-6425 GUARD GP-BOTTOM–HEAVY-DUTY

S/N: KGF1-UP; FAL1-UP
PART OF 298-4099 GUARD AR, 347-3362 OPTION AR-GUARD
AN ATTACHMENT
TYPE 2

SMCS-7153 **i05181002**

NOTE	REF NO	GRAPHIC REF	PART NUMBER	QTY	PART NAME 1 2 3 4 5 6 (PRODUCT LEVEL)	SEE PAGE
M	1	1	**135-8576**	2	BOLT AS-LOCKING	
C	2	1	**355-8010**	1	PLATE AS	
C	3	1	**355-8007**	1	SHEET AS	
C	4	1	**355-8008**	1	SHEET AS	
C	5	1	**355-8009**	1	SHEET AS	
C	6	1	**355-8013**	1	SHEET AS	
C	7	1	**355-8014**	1	SHEET AS	
C	8	1	**384-9012**	1	SHEET AS	
C	9	1	**355-8015**	2	SHEET AS	
C	10	1	**384-9010**	1	SHEET AS	

C - CHANGE FROM PREVIOUS TYPE
M - METRIC PART

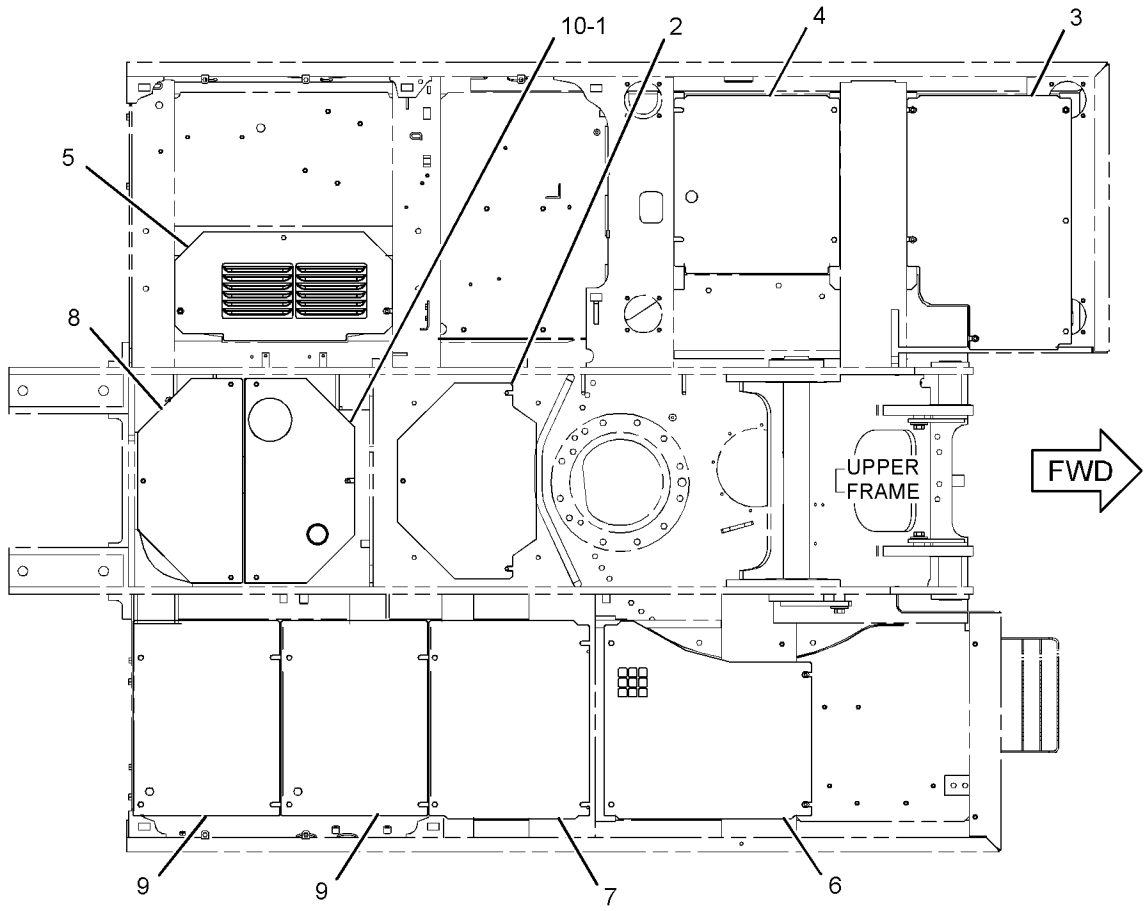

TOP VIEW

GRAPHIC #1 **<END>** g03055020

134-8850 GUARD GP-SWIVEL

S/N: KGF1-UP; FAL1-UP

AN ATTACHMENT

SMCS-7183 **i05193258**

NOTE	REF NO	GRAPHIC REF	PART NUMBER	QTY	PART NAME 1 2 3 4 5 6 (PRODUCT LEVEL)	SEE PAGE
	1	1	**134-8851**	1	PLATE AS	
	2	1	**130-4276**	4	PLATE	
M	3	1	**8T-4140**	8	BOLT (M16X2X60-MM)	
	4	1	**3E-9411**	8	WASHER-HARD (17.5X38X6-MM THK)	

M - METRIC PART

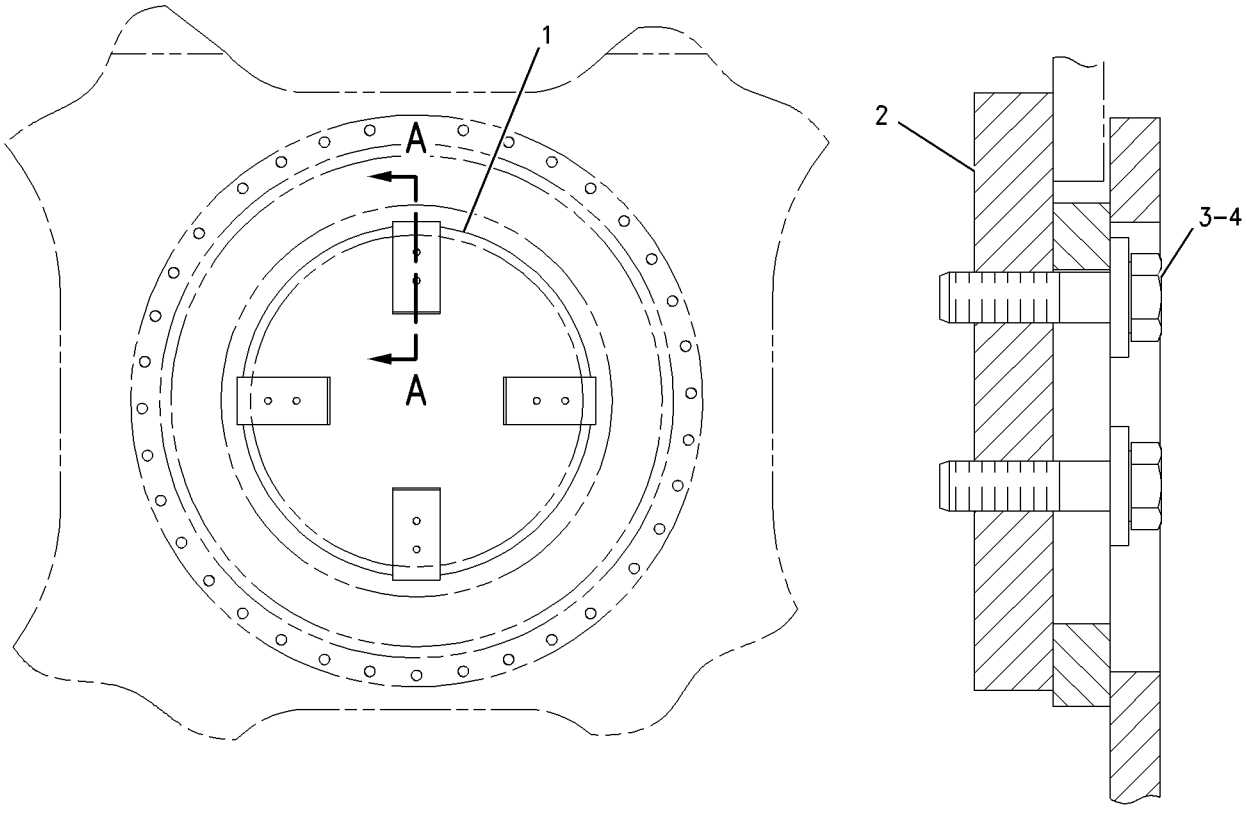

SECTION A-A

GRAPHIC #1 **<END>** g00690093

134-8875 GUARD GP-SWIVEL—HEAVY-DUTY

S/N: KGF1-UP; FAL1-UP

PART OF 314-3859, 314-3860, 314-3861, 314-3862, 314-3864, 314-3865, 314-3905, 338-9908, 338-9923, 347-3340, 354-1018, 354-1019, 359-2298, 359-2299, 359-2300, 359-2309, 359-2310, 359-2421, 359-2506, 359-2507, 367-8697, 367-8809, 367-8810, 367-8817, 379-7118, 379-7119, 379-7216, 379-7217, 379-7218, 379-7219, 379-7220, 379-7267, 379-7268, 379-7269, 379-7270, 385-4035, 385-4036, 385-4136 DISTRIBUTION AR, 298-4099 GUARD AR, 338-9925, 351-9691, 359-2264 OPTION AR-COLD WEATHER, 338-9924, 351-9690, 359-2263, 367-8812, 367-8814, 379-7297, 379-7298, 379-7299, 379-7300 OPTION AR-REGIONAL

AN ATTACHMENT

SMCS-7183 **i05214798**

NOTE	REF NO	GRAPHIC REF	PART NUMBER	QTY	PART NAME 1 2 3 4 5 6 (PRODUCT LEVEL)	SEE PAGE
	1	1	**134-8876**	1	PLATE AS	
	2	1	**134-8878**	1	PLATE AS	
M	3	1	**8C-8992**	5	BOLT-LOCKING (M12X1.75X30-MM)	
	4	1	**5P-1076**	5	WASHER-HARD (13.5X30X4-MM THK)	

M - METRIC PART

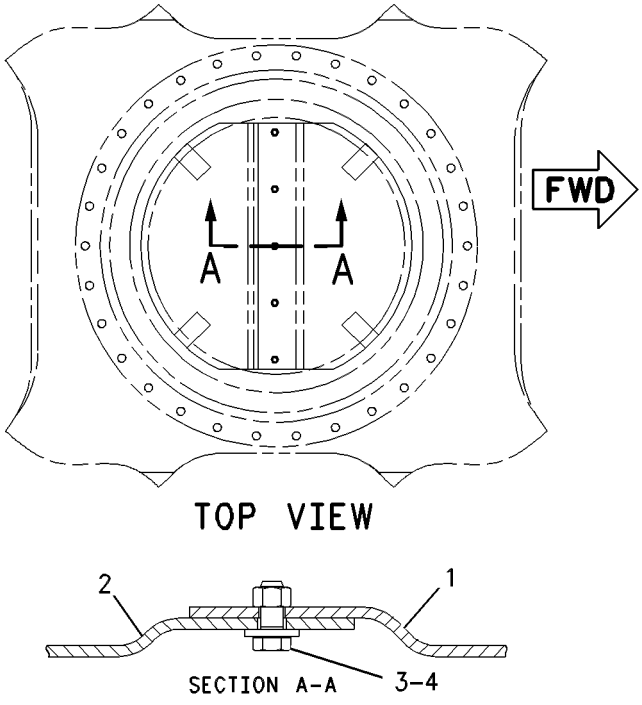

GRAPHIC #1 **<END>** g00390432

142-3835 HANDRAIL GP

S/N: KGF1-UP; FAL1-UP

PART OF 264-8638, 264-8639 CHASSIS AR

SMCS-7256 **i02781758**

NOTE	REF NO	GRAPHIC REF	PART NUMBER	QTY	PART NAME 1 2 3 4 5 6 (PRODUCT LEVEL)	SEE PAGE
	1	1	**8T-4223**	2	WASHER-HARD (13.5X25.5X3-MM THK)	
M	2	1	**8T-4192**	2	BOLT (M12X1.75X25-MM)	
	3	1	**177-5880**	2	SLEEVE	
	4	1	**177-5879**	1	CLAMP	
	5	1	**177-5877**	1	HANDHOLD AS	
M	6	1	**135-8578**	3	BOLT AS	

M - METRIC PART

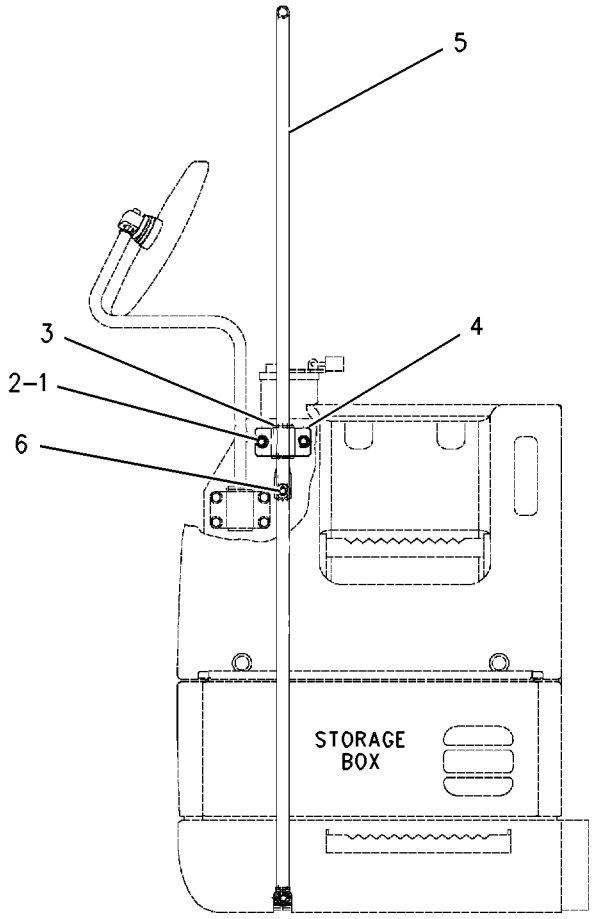

FRONT VIEW

GRAPHIC #1 **<END>** g00678707

273-7725 HOOD & GUARD GP

S/N: KGF1-UP
PART OF 290-1892 SPECIAL AR
AN ATTACHMENT
TYPE 1

SMCS-7251, 7276 **i02781580**

NOTE	REF NO	GRAPHIC REF	PART NUMBER	QTY	PART NAME 1 2 3 4 5 6 (PRODUCT LEVEL)	SEE PAGE
	1	1	**1R-9958**	1	LATCH AS	
	2	1	**4I-0117**	1	LATCH AS	
	3	3	**4I-0118**	2	HOOK AS	
	4	2	**4I-0232**	2	STRIKER	
	5	2	**4I-8019**	3	SUPPORT	
	6	2	**6I-6033**	3	STOP	
	7	2	**7Y-2853**	8	SPACER (13X38X5-MM THK)	
	8	2	**087-3908**	4	SHIM (1-MM THK)	
	9	2	**087-3909**	4	SHIM (2-MM THK)	
	10	2	**116-1628**	1	SUPPORT AS	
	11	2	**122-3979**	1	BAND	
	12	2	**122-3980**	1	ROD	
	13	1	**122-4120**	3	ROD	
M	14	1,2,3	**135-8573**	73	BOLT AS	
M	15	1,2,3	**135-8575**	35	BOLT AS	
M	16	2	**135-8577**	4	BOLT AS	
M	17	1	**135-8578**	6	BOLT AS	
	18	3	**170-3016**	15	SPACER (19X32X2-MM THK)	
	19	2	**184-8423**	1	SUPPORT AS	
	20	2	**190-6880**	3	SUPPORT AS	
					(EACH INCLUDES)	
M		2	**6V-9632**	2	NUT-WELD (M6X1-THD)	
	21	2	**203-4889**	1	SPRING	
	22	2	**203-4890**	1	SPRING	
	23	1	**244-8202**	1	COVER AS	
	24	1	**244-8207**	1	COVER AS	
	25	3	**244-8219**	1	SUPPORT AS	
	26	3	**244-8228**	1	SUPPORT AS	
	27	3	**244-8234**	1	SUPPORT AS	
	28	3	**244-8242**	1	SUPPORT AS	
	29	3	**244-8255**	1	SUPPORT AS	
Y	30	3	**248-8940**	1	SUPPORT AS-ENCLOSURE	847
Y	31	1	**259-3687**	1	HOOD GP-ENGINE	826
	32	3	**262-2324**	1	COVER AS	
	33	1	**262-2353**	1	COVER AS	
	34	3	**262-2363**	1	SHEET AS-SOUND SUPPRESSION	
Y	35	3	**278-3842**	1	SHEET AS-SOUND SUPPRESSION	833
	36	3	**283-3911**	1	SHEET AS	
	37	3	**286-6220**	1	SHEET AS	
		3	**286-6276**	1	LINER	
	38	3	**286-6359**	1	SUPPORT AS	
Y	39	3	**289-6572**	1	SHEET AS-SOUND SUPPRESSION	834
	40	2	*289-6583*	1	SUPPORT AS	
M		2	**8T-3597**	8	NUT-WELD (M12X1.75-THD)	
Y	41	3	**307-7660**	1	SUPPORT AS-ENCLOSURE	850
Y	42	2	**289-6588**	1	SHEET AS-SOUND SUPPRESSION	835
Y	43	2	**289-6695**	1	SHEET AS-SOUND SUPPRESSION	836
	44	2	**289-6698**	1	SUPPORT AS	
		2	**129-3400**	1	GUARD	
		2	**244-8198**	1	LINER	
Y	45	3	**289-6699**	1	SHEET AS-SOUND SUPPRESSION	837
	46	2	**289-6805**	1	SUPPORT AS-ENCLOSURE	
Y	47	1	**289-6911**	1	DOOR GP-ACCESS (RADIATOR, AFCLR, HYD COOLER)	737
Y	48	1	**289-6913**	1	DOOR GP-ACCESS (PUMP COMPARTMENT)	738
	49	3	**293-6982**	1	SHEET AS	
M		3	**8T-3597**	2	NUT-WELD (M12X1.75-THD)	
Y	50	1	**298-2977**	1	DOOR GP-ACCESS (AIR CLEANER, BATTERY)	741

273-7725 **HOOD & GUARD GP (*contd.*)** **i02781580**

NOTE	REF NO	GRAPHIC REF	PART NUMBER	QTY	PART NAME 1 2 3 4 5 6 (PRODUCT LEVEL)	SEE PAGE
Y	51	1	**298-2979**	1	COVER AS-ACCESS (FUEL, HYDRAULIC TANKS)	722
Y	52	3	**298-3033**	1	SHEET AS-SOUND SUPPRESSION	840
	53	3	**298-3038**	1	SUPPORT AS	
	54	3	**298-3041**	1	SUPPORT AS	
		3	**278-3832**	1	LINER	
	55	1	**298-3044**	1	COVER AS	
	56	1,2	**3B-4618**	1	PIN-COTTER	
M	57	2	**105-3487**	6	BOLT-SOCKET HEAD (M6X1X20-MM)	
	58	1	**114-6285**	2	BAR	
M	59	2	**5C-9553**	8	BOLT (M6X1X16-MM)	
	60	2	**5P-4115**	16	WASHER-HARD (7.2X19X2-MM THK)	
	61	2	**7Y-2854**	8	SPACER (24X38X3-MM THK)	
	62	1,3	**8T-4121**	5	WASHER-HARD (11X21X2.5-MM THK)	
M	63	3	**8T-4137**	2	BOLT (M10X1.5X20-MM)	
M	64	2	**8T-4138**	10	BOLT (M6X1X20-MM)	
M	65	3	**8T-4189**	4	BOLT (M8X1.25X20-MM)	
	66	2	**8T-4223**	2	WASHER-HARD (13.5X25.5X3-MM THK)	
	67	1,3	**8T-4224**	8	WASHER-HARD (8.8X16X2-MM THK)	
M	68	1	**8T-4908**	4	BOLT (M8X1.25X25-MM)	
	69	2	**9X-8256**	8	WASHER (6.6X12X2-MM THK)	
	70	3	**307-7700**	1	SHEET AS-SOUND SUPPRESSION	
		3	**6P-2216**	3	CAP	
		3	**307-7702**	1	INSULATION	

M - METRIC PART
Y - SEPARATE ILLUSTRATION

273-7725 **HOOD & GUARD GP (*contd.*)** **i02781580**

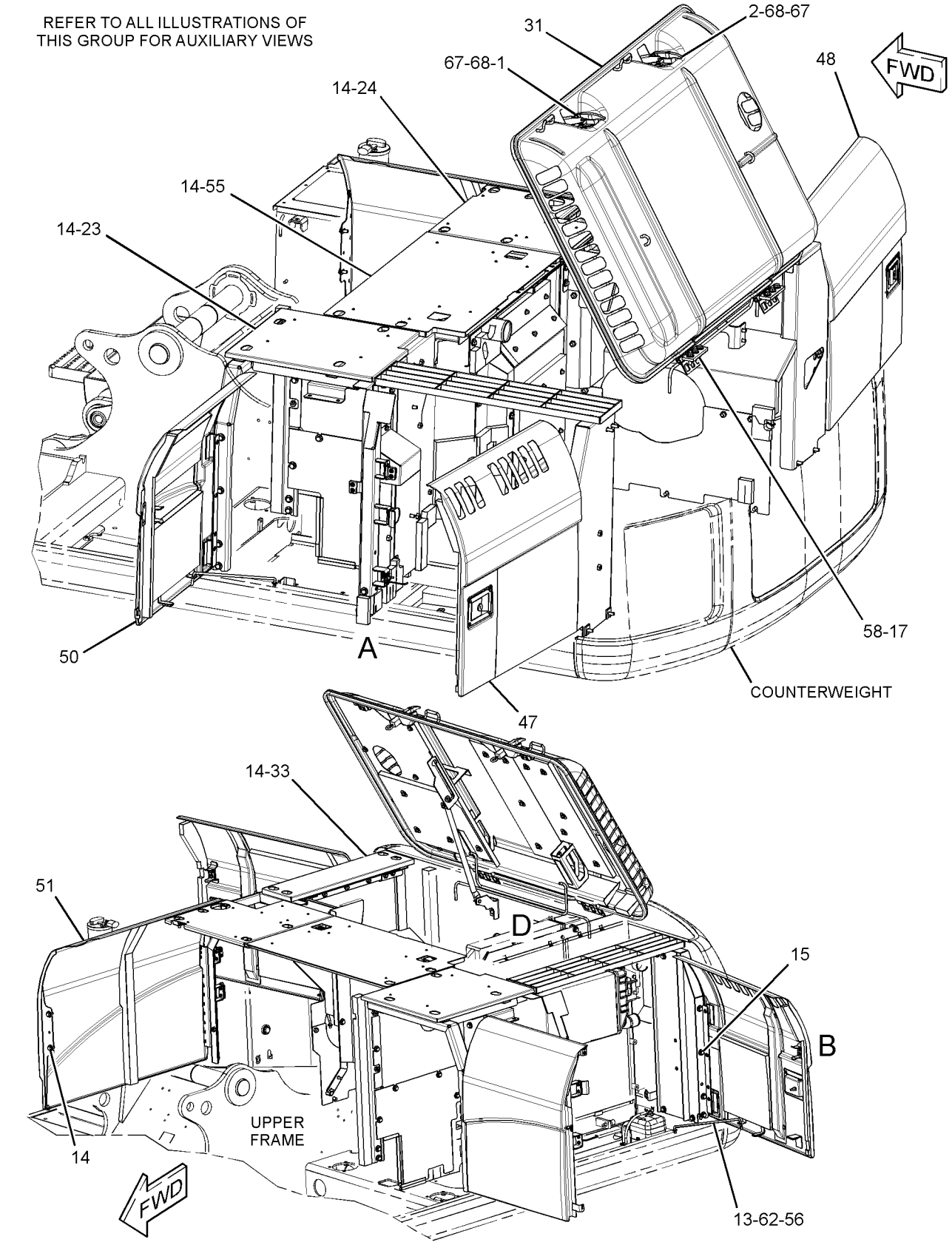

GRAPHIC #1

g01435693

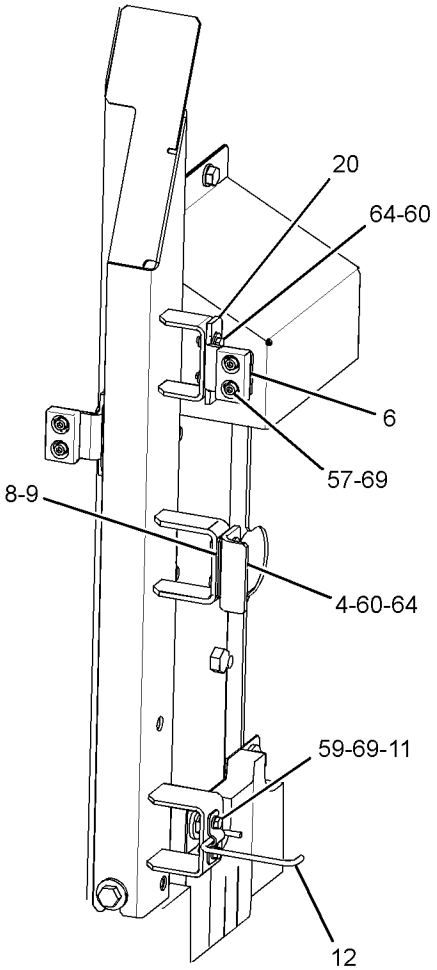

VIEW OF AREA A

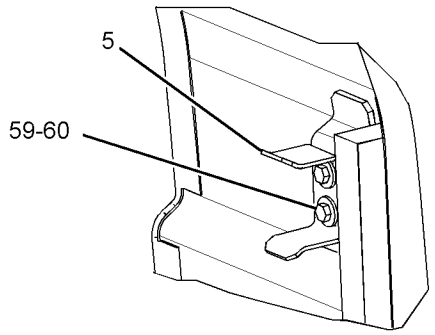

VIEW OF AREA B

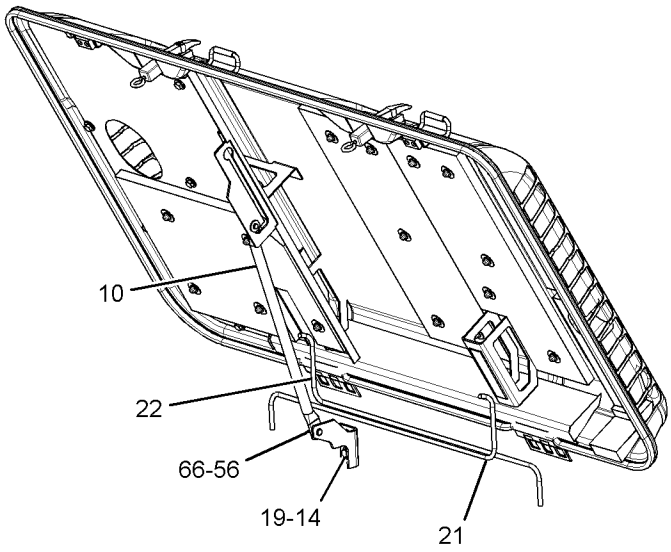

VIEW OF AREA D

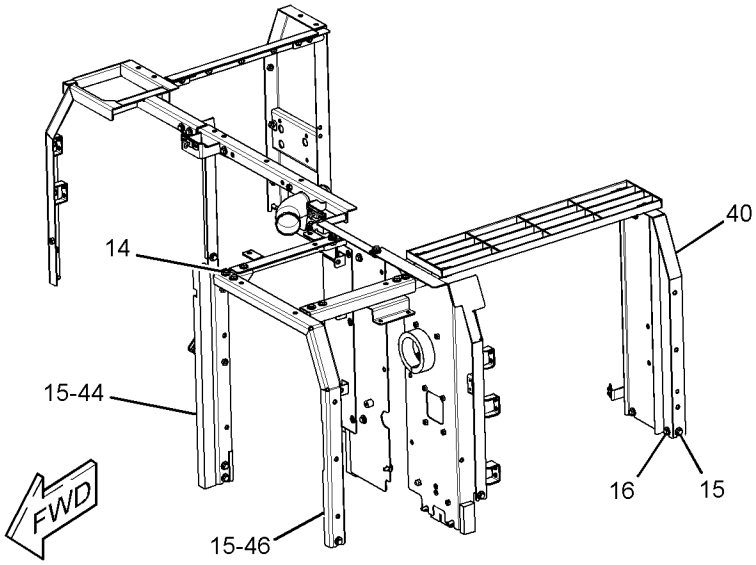

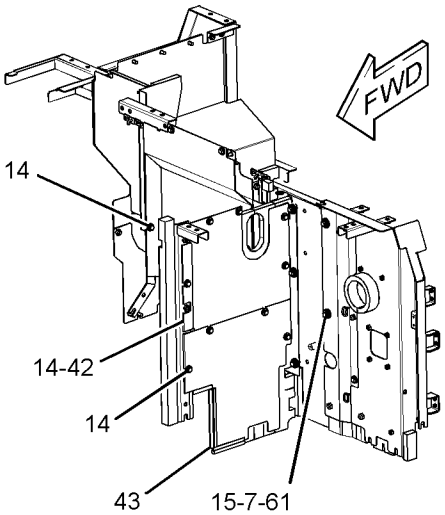

GRAPHIC #2

g01435694

273-7725 **HOOD & GUARD GP (*contd.*)** **i02781580**

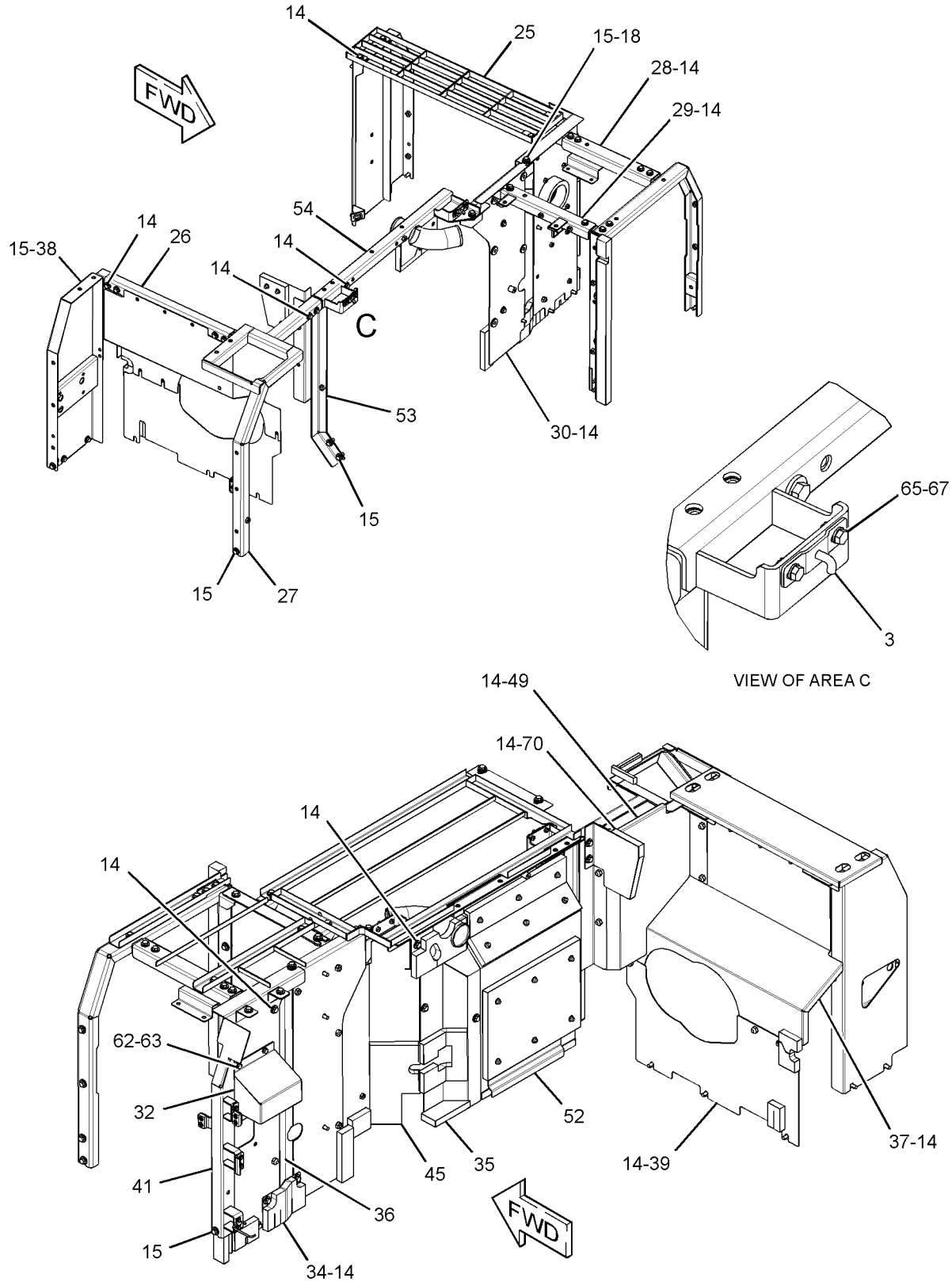

GRAPHIC #3 **<END>** g01435695

273-7725 HOOD & GUARD GP

S/N: KGF1-UP
PART OF 290-1892 SPECIAL AR
AN ATTACHMENT
TYPE 2

SMCS-7251, 7276 **i03180327**

NOTE	REF NO	GRAPHIC REF	PART NUMBER	QTY	PART NAME 1 2 3 4 5 6 (PRODUCT LEVEL)	SEE PAGE
	1	1	**1R-9958**	1	LATCH AS	
	2	1	**4I-0117**	1	LATCH AS	
	3	3	**4I-0118**	2	HOOK AS	
	4	2	**4I-0232**	2	STRIKER	
	5	2	**4I-8019**	3	SUPPORT	
	6	2	**6I-6033**	3	STOP	
	7	2	**7Y-2853**	8	SPACER (13X38X5-MM THK)	
	8	2	**087-3908**	4	SHIM (1-MM THK)	
	9	2	**087-3909**	4	SHIM (2-MM THK)	
	10	2	**116-1628**	1	SUPPORT AS	
	11	2	**122-3979**	1	BAND	
	12	2	**122-3980**	1	ROD	
	13	1	**122-4120**	3	ROD	
M	14	1,2,3	**135-8573**	73	BOLT AS	
M	15	1,2,3	**135-8575**	35	BOLT AS	
M	16	2	**135-8577**	4	BOLT AS	
M	17	1	**135-8578**	6	BOLT AS	
	18	3	**170-3016**	15	SPACER (19X32X2-MM THK)	
	19	2	**184-8423**	1	SUPPORT AS	
	20	2	**190-6880**	3	SUPPORT AS	
	21	2	**203-4889**	1	SPRING	
	22	2	**203-4890**	1	SPRING	
	23	1	**244-8202**	1	COVER AS	
	24	1	**330-1347**	1	COVER AS	
	25	3	**330-1182**	1	SUPPORT AS	
	26	3	**244-8228**	1	SUPPORT AS	
	27	3	**244-8234**	1	SUPPORT AS	
	28	3	**244-8242**	1	SUPPORT AS	
	29	3	**244-8255**	1	SUPPORT AS	
Y	30	3	**248-8940**	1	SUPPORT AS-ENCLOSURE	847
Y	31	1	**259-3687**	1	HOOD GP-ENGINE	826
	32	3	**262-2324**	1	COVER AS	
	33	1	**262-2353**	1	COVER AS	
	34	3	**262-2363**	1	SHEET AS-SOUND SUPPRESSION	
Y	35	3	**278-3842**	1	SHEET AS-SOUND SUPPRESSION	833
	36	3	**283-3911**	1	SHEET AS	
	37	3	**286-6220**	1	SHEET AS	
		3	**286-6276**	1	LINER	
	38	3	**286-6359**	1	SUPPORT AS	
Y	39	3	**289-6572**	1	SHEET AS-SOUND SUPPRESSION	834
	40	2	**330-1183**	1	SUPPORT AS	
CY	41	3	**307-7662**	1	SUPPORT AS-ENCLOSURE	851
Y	42	2	**289-6588**	1	SHEET AS-SOUND SUPPRESSION	835
Y	43	2	**289-6695**	1	SHEET AS-SOUND SUPPRESSION	836
	44	2	**289-6698**	1	SUPPORT AS	
		2	**129-3400**	1	GUARD	
		2	**244-8198**	1	LINER	
Y	45	3	**289-6699**	1	SHEET AS-SOUND SUPPRESSION	837
	46	2	**289-6805**	1	SUPPORT AS-ENCLOSURE	
Y	47	1	**289-6911**	1	DOOR GP-ACCESS (RADIATOR, AFCLR, HYD COOLER)	737
Y	48	1	**289-6913**	1	DOOR GP-ACCESS (PUMP COMPARTMENT)	738
	49	3	**293-6982**	1	SHEET AS	
Y	50	1	**298-2977**	1	DOOR GP-ACCESS (AIR CLEANER, BATTERY)	741
Y	51	1	**298-2979**	1	COVER AS-ACCESS (FUEL, HYDRAULIC TANKS)	722
Y	52	3	**298-3033**	1	SHEET AS-SOUND SUPPRESSION	840
	53	3	**298-3038**	1	SUPPORT AS	

273-7725 **HOOD & GUARD GP (*contd.*)** **i03180327**

NOTE	REF NO	GRAPHIC REF	PART NUMBER	QTY	PART NAME 1 2 3 4 5 6 (PRODUCT LEVEL)	SEE PAGE
	54	3	**298-3041**	1	SUPPORT AS	
		3	**278-3832**	1	LINER	
	55	1	**298-3044**	1	COVER AS	
	56	1,2	**3B-4618**	1	PIN-COTTER	
M	57	2	**105-3487**	6	BOLT-SOCKET HEAD (M6X1X20-MM)	
	58	1	**114-6285**	2	BAR	
M	59	2	**5C-9553**	8	BOLT (M6X1X16-MM)	
	60	2	**5P-4115**	16	WASHER-HARD (7.2X19X2-MM THK)	
	61	2	**7Y-2854**	8	SPACER (24X38X3-MM THK)	
	62	1,3	**8T-4121**	5	WASHER-HARD (11X21X2.5-MM THK)	
M	63	3	**8T-4137**	2	BOLT (M10X1.5X20-MM)	
M	64	2	**8T-4138**	10	BOLT (M6X1X20-MM)	
M	65	3	**8T-4189**	4	BOLT (M8X1.25X20-MM)	
	66	2	**8T-4223**	2	WASHER-HARD (13.5X25.5X3-MM THK)	
	67	1,3	**8T-4224**	8	WASHER-HARD (8.8X16X2-MM THK)	
M	68	1	**8T-4908**	4	BOLT (M8X1.25X25-MM)	
	69	2	**9X-8256**	8	WASHER (6.6X12X2-MM THK)	
	70	3	**307-7700**	1	SHEET AS-SOUND SUPPRESSION	
		3	**6P-2216**	3	CAP	
		3	**307-7702**	1	INSULATION	

C - CHANGE FROM PREVIOUS TYPE
M - METRIC PART
Y - SEPARATE ILLUSTRATION

273-7725 **HOOD & GUARD GP (*contd.*)** **i03180327**

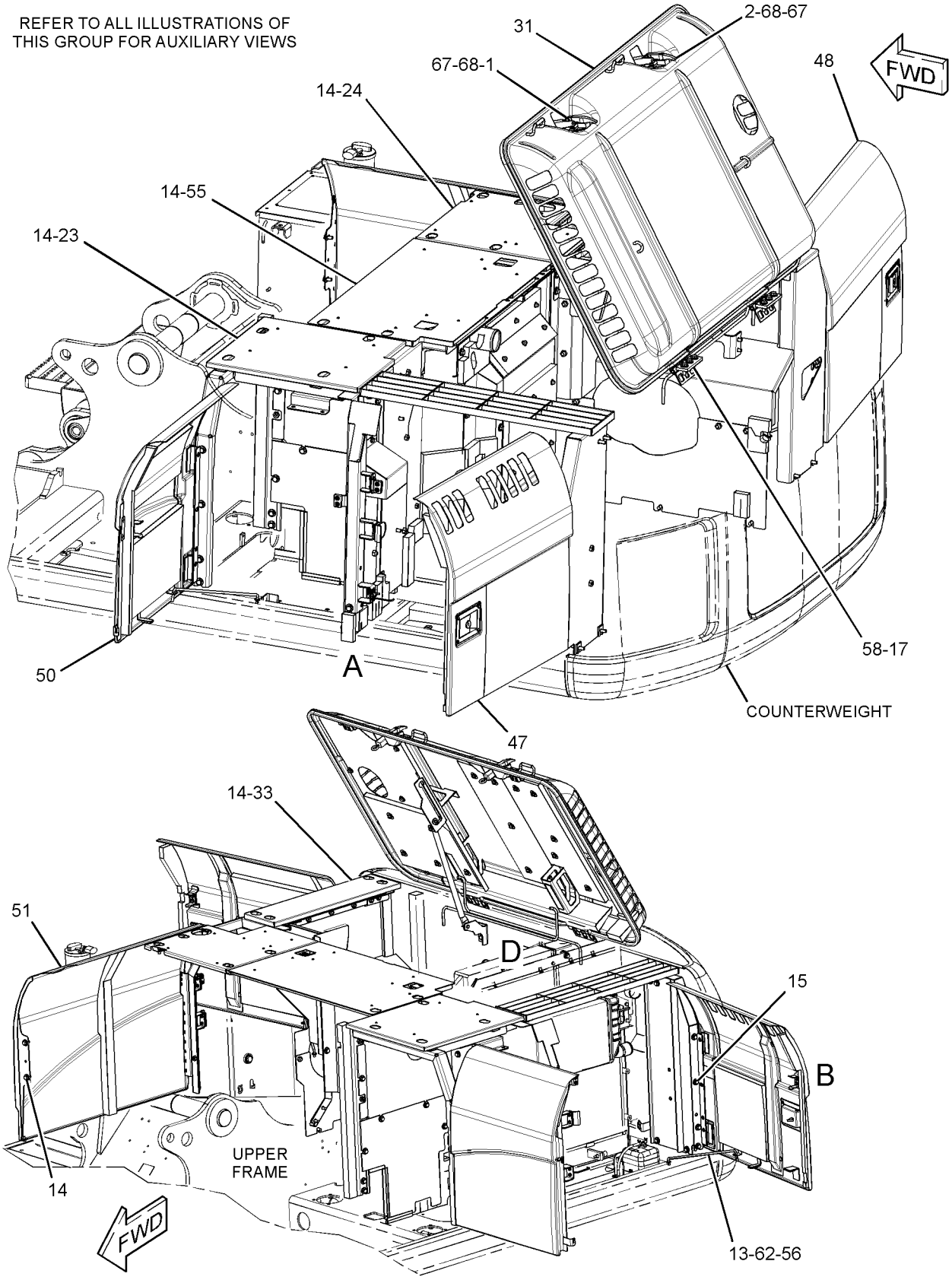

GRAPHIC #1 g01435693

273-7725 **HOOD & GUARD GP (*contd.*)** **i03180327**

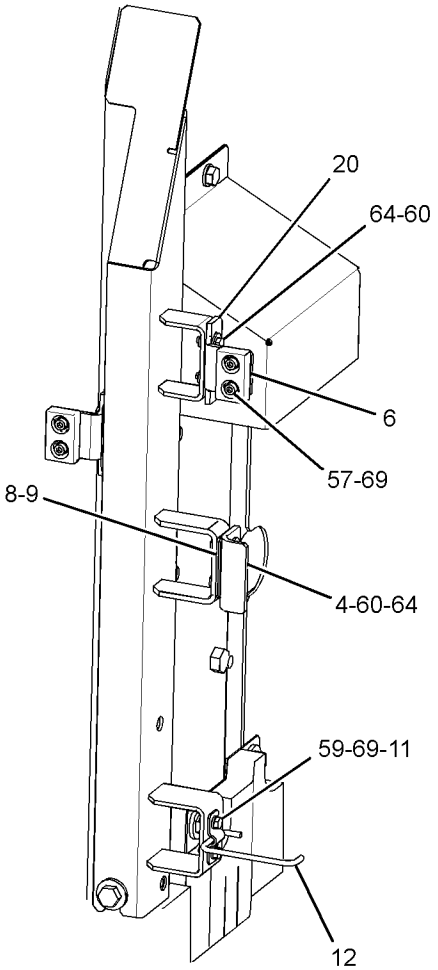

VIEW OF AREA A

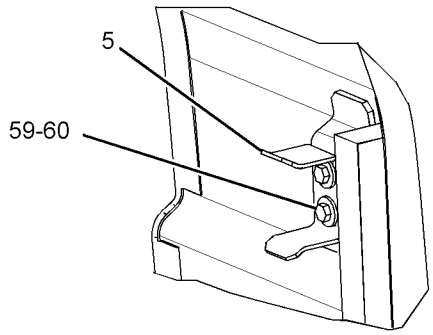

VIEW OF AREA B

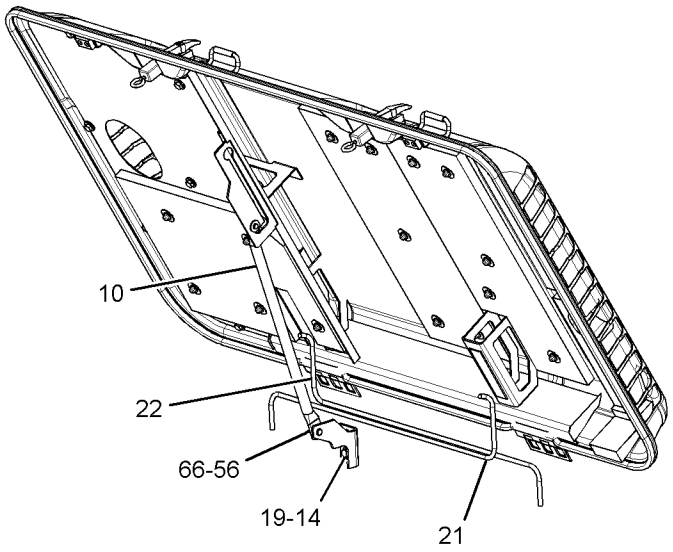

VIEW OF AREA D

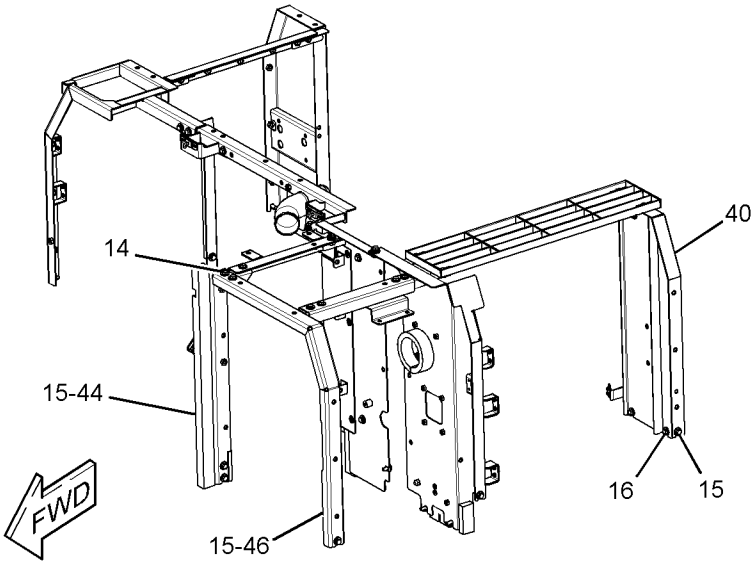

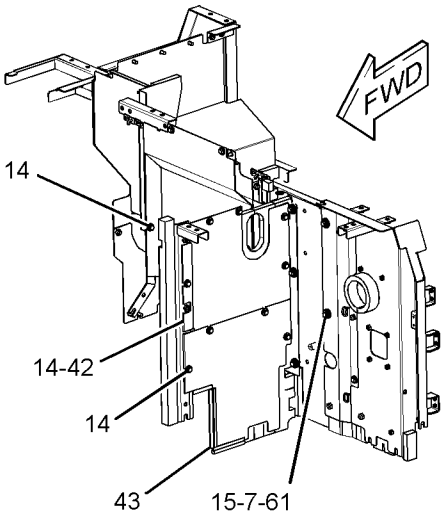

GRAPHIC #2

g01435694

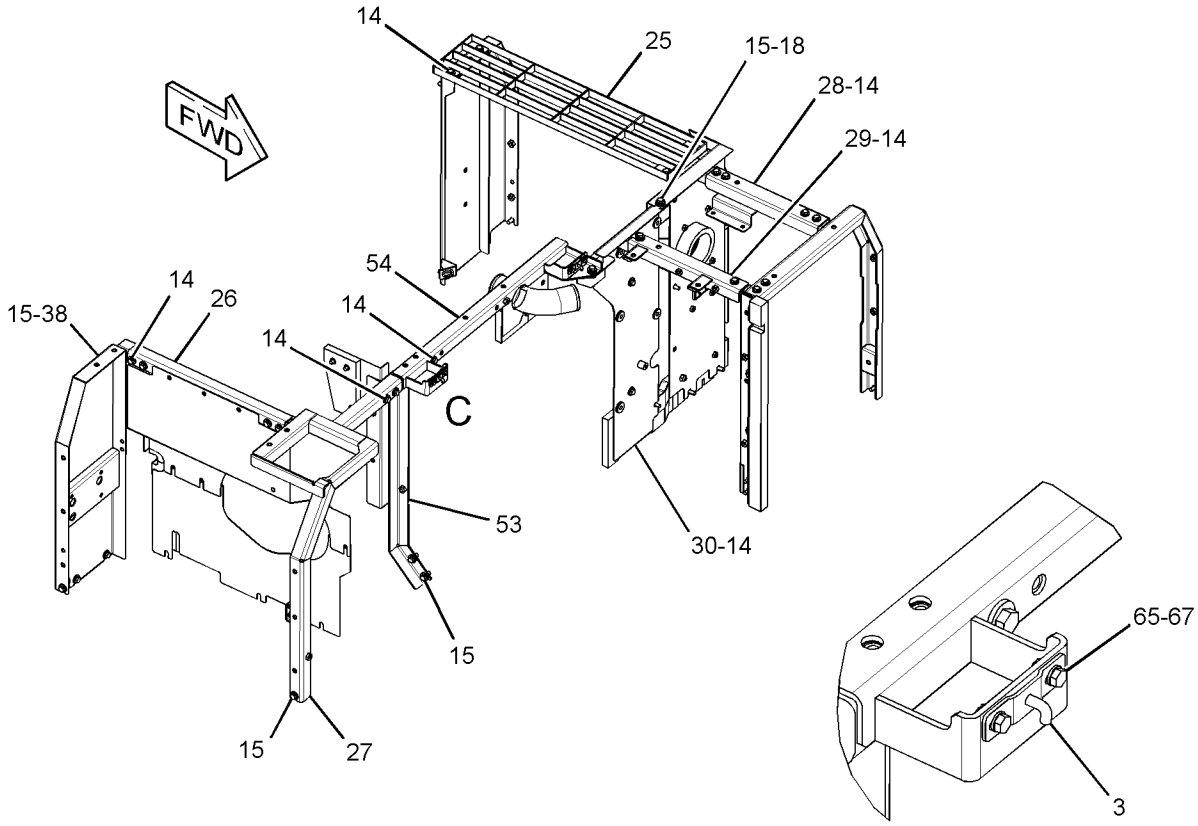

VIEW OF AREA C

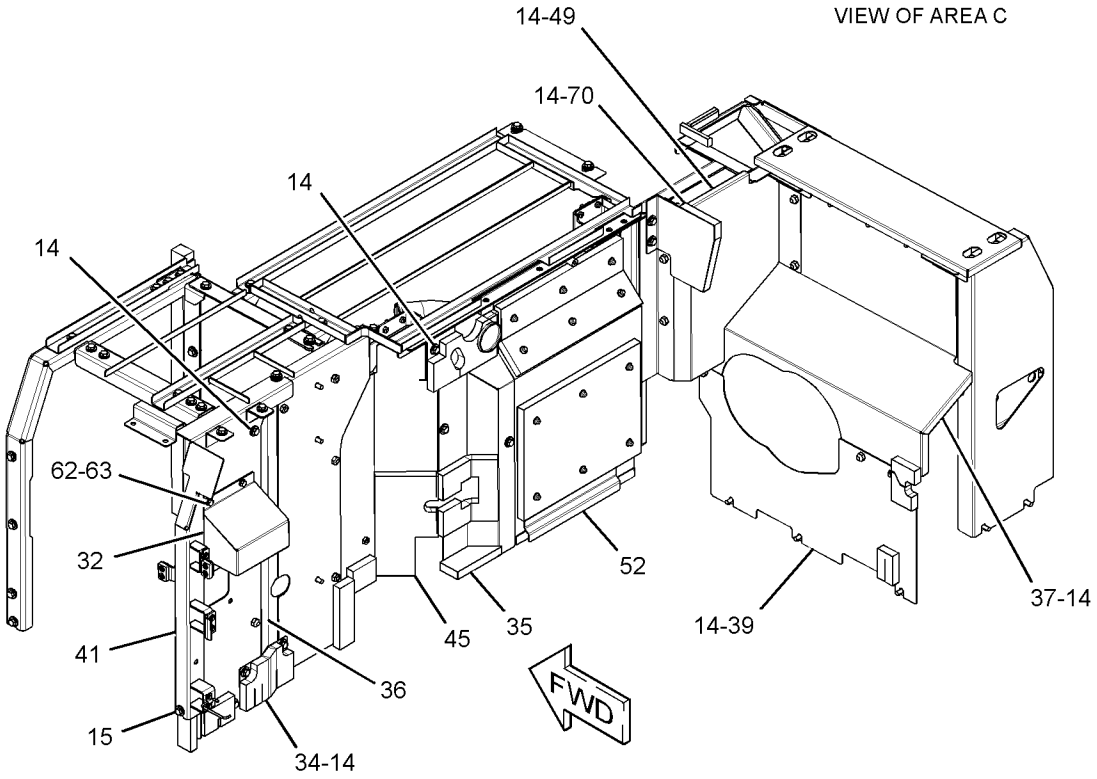

GRAPHIC #3 **<END>** g01435695

FRAME AND BODY

273-7726 HOOD & GUARD GP

S/N: FAL1-182

PART OF 264-8638 CHASSIS AR

SMCS-7251, 7276 **i04025960**

NOTE	REF NO	GRAPHIC REF	PART NUMBER	QTY	PART NAME 1 2 3 4 5 6 (PRODUCT LEVEL)	SEE PAGE
	1	1	**1R-9958**	1	LATCH AS	
	2	1	**4I-0117**	1	LATCH AS	
	3	2	**4I-0118**	2	HOOK AS	
	4	4	**4I-0232**	2	STRIKER	
	5	2	**4I-8019**	3	SUPPORT	
	6	4	**6I-6033**	3	STOP	
	7	3	**7Y-2853**	8	SPACER (13X38X5-MM THK)	
	8	4	**087-3908**	4	SHIM (1-MM THK)	
	9	4	**087-3909**	4	SHIM (2-MM THK)	
	10	1	**116-1628**	1	SUPPORT AS	
	11	3	**122-3979**	1	BAND	
	12	3	**122-3980**	1	ROD	
	13	2	**122-4120**	3	ROD	
M	14	1,2,3,4	**135-8573**	71	BOLT AS	
M	15	1,2,3,4	**135-8575**	35	BOLT AS	
M	16	2,4	**135-8577**	4	BOLT AS	
M	17	1	**135-8578**	6	BOLT AS	
	18	1,2	**170-3016**	15	SPACER (19X32X2-MM THK)	
	19	1	**184-8423**	1	SUPPORT AS	
	20	4	**190-6880**	3	SUPPORT AS	
	21	1	**203-4889**	1	SPRING	
	22	1	**203-4890**	1	SPRING	
Y	23	1	**236-3746**	1	DOOR GP-ACCESS (AIR CLEANER, BATTERY)	734
	24	1	**244-8202**	1	COVER AS	
	25	1	**244-8207**	1	COVER AS	
	26	2	**244-8219**	1	SUPPORT AS	
	27	2	**244-8228**	1	SUPPORT AS	
	28	2	**244-8234**	1	SUPPORT AS	
	29	2	**244-8242**	1	SUPPORT AS	
	30	2	**244-8251**	1	SUPPORT AS	
	31	2	**244-8255**	1	SUPPORT AS	
Y	32	2	**248-8940**	1	SUPPORT AS-ENCLOSURE	847
	33	4	**248-8957**	1	SHEET AS	
Y	34	1	**262-2286**	1	HOOD GP-ENGINE	827
	35	4	**262-2324**	1	COVER AS	
	36	3	**293-7056**	1	SHEET AS	
	37	1	**262-2353**	1	COVER AS	
	38	3	**262-2363**	1	SHEET AS-SOUND SUPPRESSION	
		3	**262-2365**	1	LINER	
Y	39	3	**273-7893**	1	COVER AS-ACCESS	721
	40	2	**278-3831**	1	SUPPORT AS	
		2	**278-3832**	1	LINER	
Y	41	3	**278-3836**	1	SHEET AS-SOUND SUPPRESSION	832
Y	42	3	**278-3842**	1	SHEET AS-SOUND SUPPRESSION	833
	43	4	**278-3845**	1	SUPPORT AS	
	44	1	**278-3848**	1	COVER AS	
Y	45	4	**278-3852**	1	SUPPORT AS-ENCLOSURE	848
	46	3	**283-3911**	1	SHEET AS	
	47	4	**286-6220**	1	SHEET AS	
		4	**286-6276**	1	LINER	
	48	2	**286-6359**	1	SUPPORT AS	
Y	49	4	**289-6572**	1	SHEET AS-SOUND SUPPRESSION	834
Y	50	3	**289-6695**	1	SHEET AS-SOUND SUPPRESSION	836
	51	4	**289-6698**	1	SUPPORT AS	
		4	**129-3400**	1	GUARD	
		4	**244-8198**	1	LINER	
Y	52	3	**289-6699**	1	SHEET AS-SOUND SUPPRESSION	837
	53	4	**289-6805**	1	SUPPORT AS-ENCLOSURE	
Y	54	1	**289-6913**	1	DOOR GP-ACCESS (PUMP COMPARTMENT)	738

273-7726 **HOOD & GUARD GP (*contd.*)** **i04025960**

NOTE	REF NO	GRAPHIC REF	PART NUMBER	QTY	PART NAME 1 2 3 4 5 6 (PRODUCT LEVEL)	SEE PAGE
Y	55	1	**289-6915**	1	DOOR GP-ACCESS (RADIATOR)	739
	56	1,2	**3B-4618**	4	PIN-COTTER	
M	57	4	**105-3487**	6	BOLT-SOCKET HEAD (M6X1X20-MM)	
	58	1	**114-6285**	2	BAR	
M	59	2,3	**5C-9553**	8	BOLT (M6X1X16-MM)	
	60	2,4	**5P-4115**	16	WASHER-HARD (7.2X19X2-MM THK)	
	61	3	**7Y-2854**	8	SPACER (24X38X3-MM THK)	
	62	2,4	**8T-4121**	5	WASHER-HARD (11X21X2.5-MM THK)	
M	63	4	**8T-4137**	2	BOLT (M10X1.5X20-MM)	
M	64	4	**8T-4138**	10	BOLT (M6X1X20-MM)	
M	65	2	**8T-4189**	4	BOLT (M8X1.25X20-MM)	
	66	1	**8T-4223**	2	WASHER-HARD (13.5X25.5X3-MM THK)	
	67	1,2	**8T-4224**	8	WASHER-HARD (8.8X16X2-MM THK)	
M	68	1	**8T-4908**	4	BOLT (M8X1.25X25-MM)	
	69	3,4	**9X-8256**	8	WASHER (6.6X12X2-MM THK)	

M - METRIC PART
Y - SEPARATE ILLUSTRATION

273-7726 **HOOD & GUARD GP (*contd.*)** **i04025960**

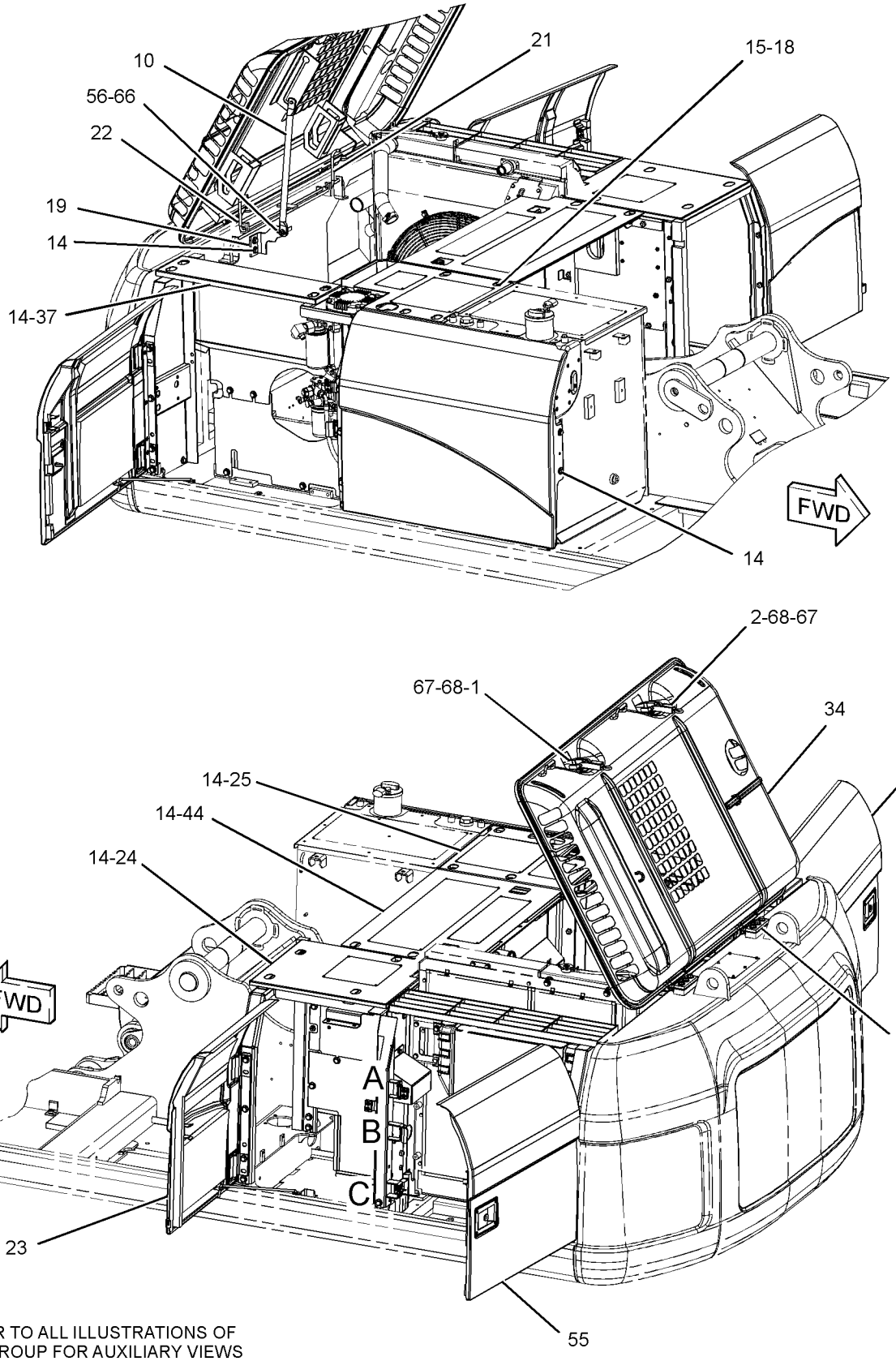

REFER TO ALL ILLUSTRATIONS OF THIS GROUP FOR AUXILIARY VIEWS

GRAPHIC #1 g01303441

273-7726 **HOOD & GUARD GP (*contd.*)** **i04025960**

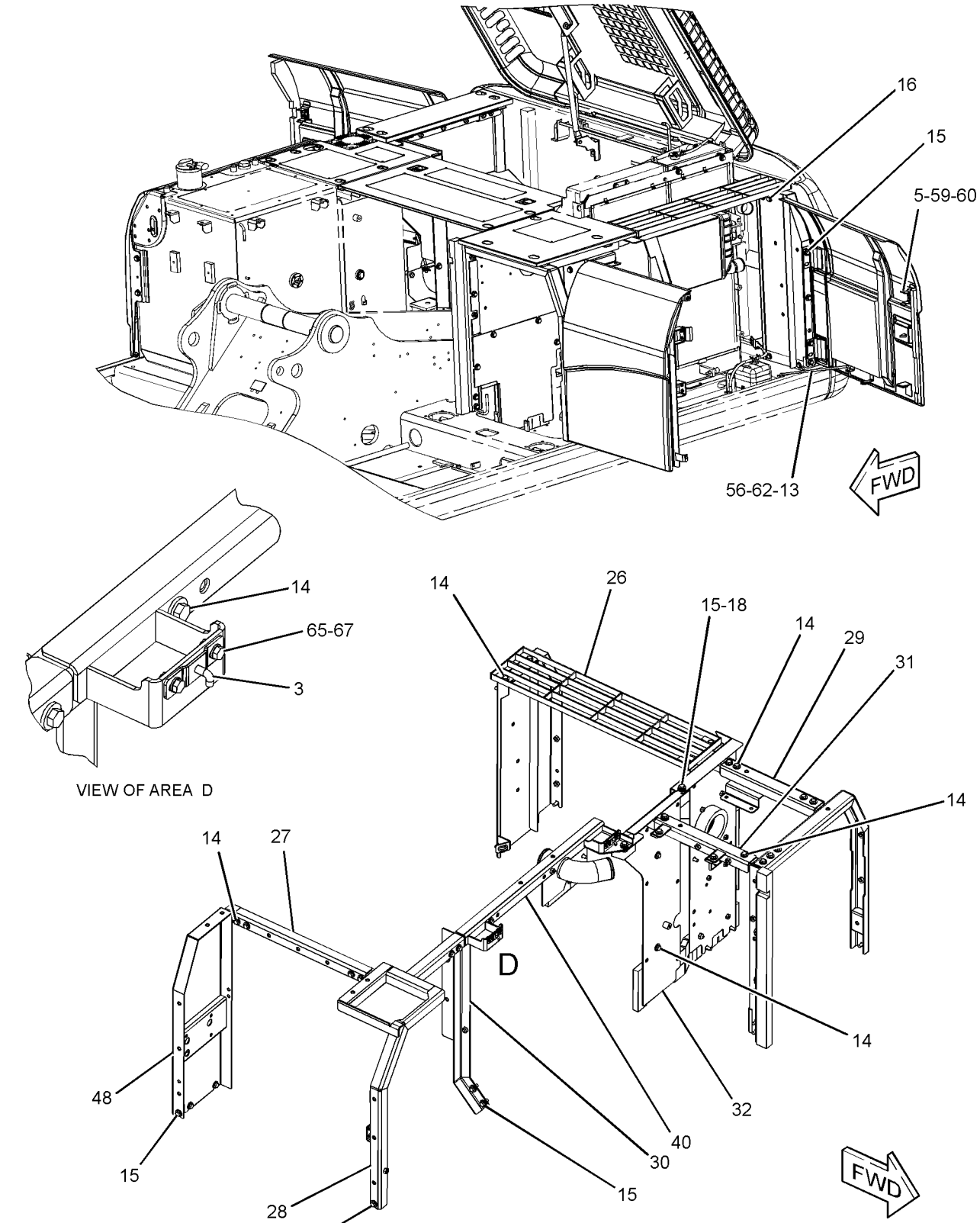

GRAPHIC #2 g01303443

273-7726 **HOOD & GUARD GP (*contd.*)** **i04025960**

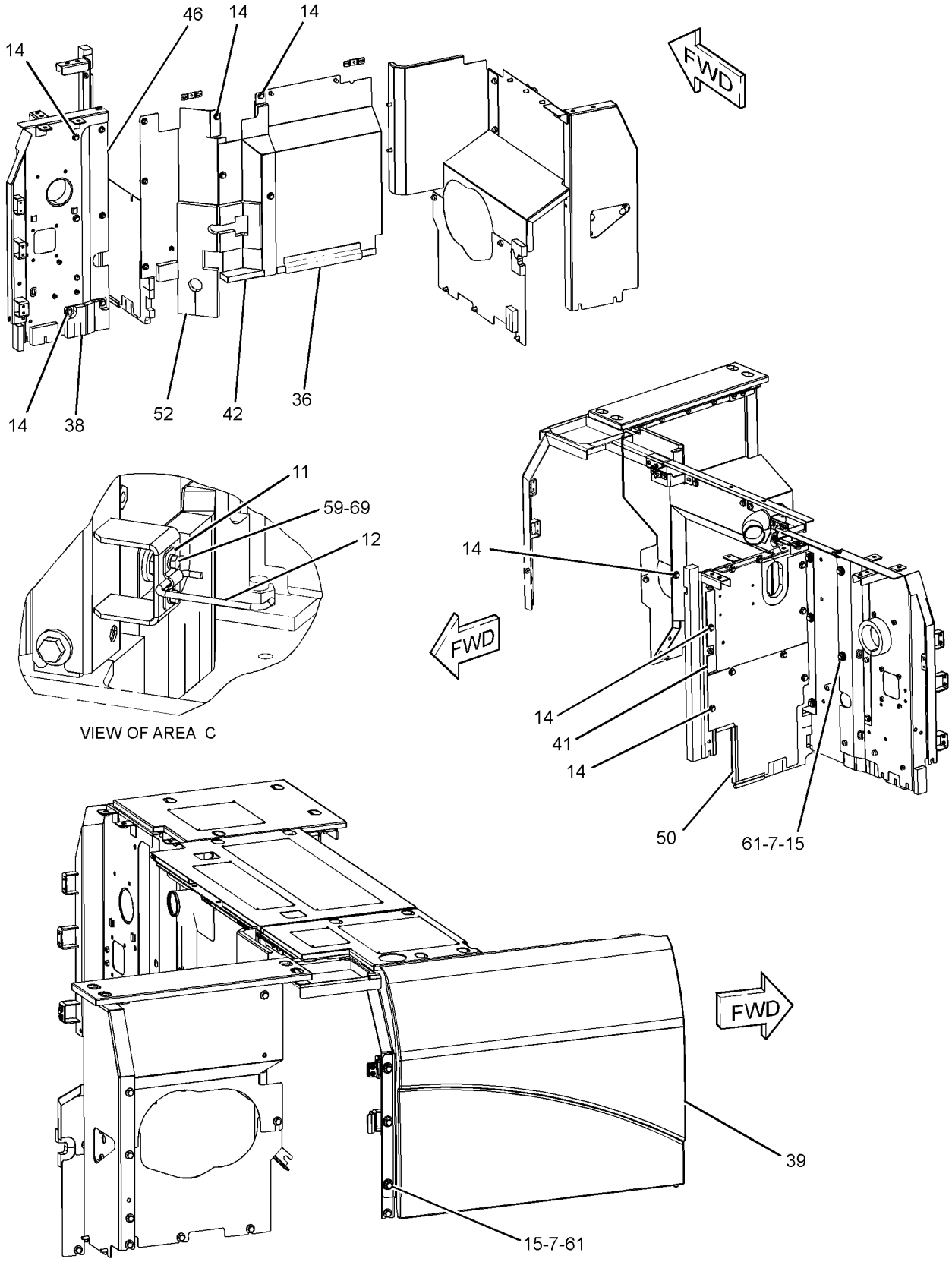

GRAPHIC #3 g02208814

273-7726 **HOOD & GUARD GP (*contd.*)** **i04025960**

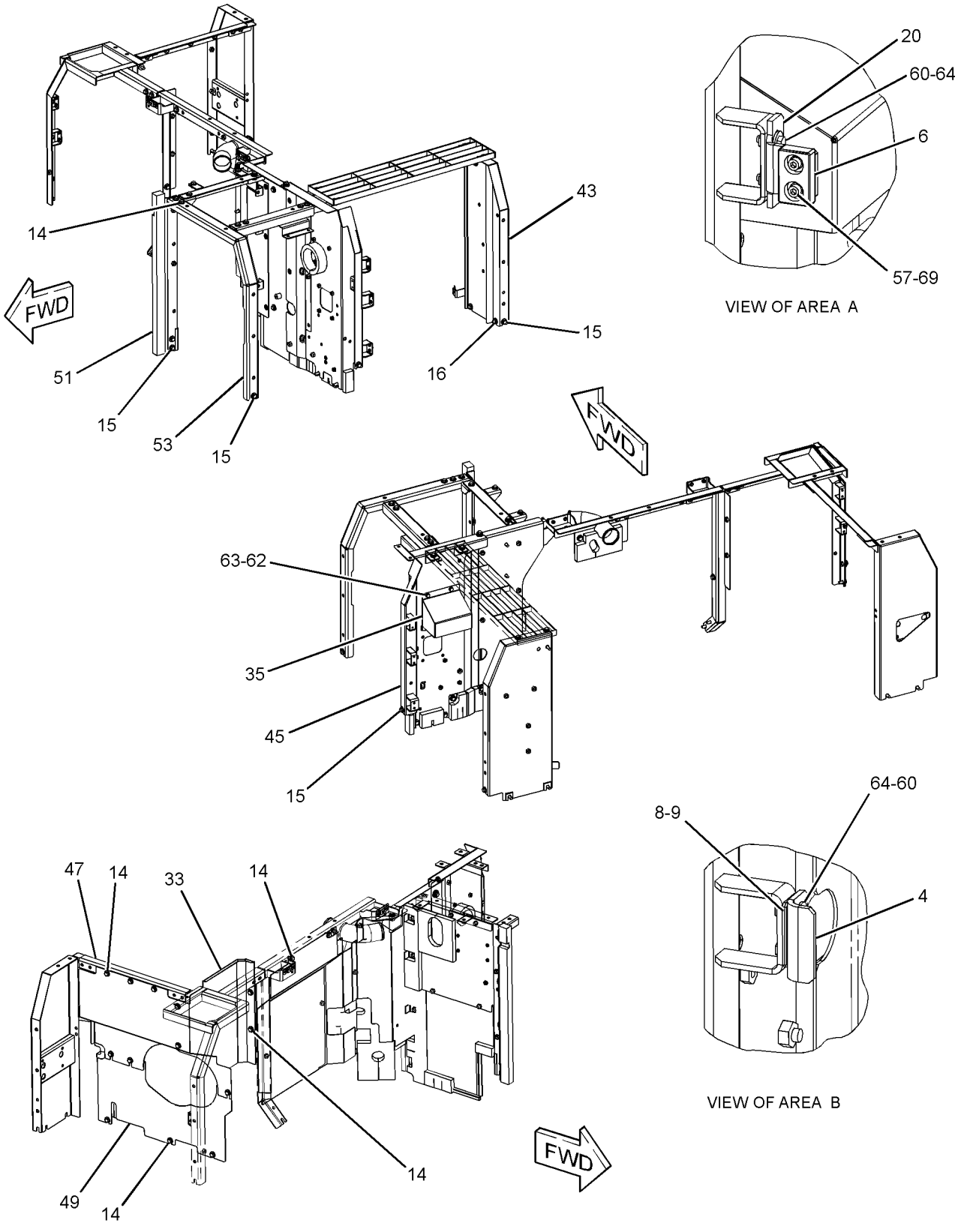

GRAPHIC #4 **<END>** g02208813

273-7726 HOOD & GUARD GP

S/N: KGF1-2727; FAL183-2037

PART OF 264-8638, 264-8639 CHASSIS AR

SMCS-7251, 7276 **i04025961**

NOTE	REF NO	GRAPHIC REF	PART NUMBER	QTY	PART NAME 1 2 3 4 5 6 (PRODUCT LEVEL)	SEE PAGE
	1	1	**1R-9958**	1	LATCH AS	
	2	1	**4I-0117**	1	LATCH AS	
	3	2	**4I-0118**	2	HOOK AS	
	4	3	**4I-0232**	2	STRIKER	
	5	2	**4I-8019**	3	SUPPORT	
	6	3	**6I-6033**	3	STOP	
	7	4	**7Y-2853**	8	SPACER (13X38X5-MM THK)	
	8	3	**087-3908**	4	SHIM (1-MM THK)	
	9	3	**087-3909**	4	SHIM (2-MM THK)	
	10	1	**116-1628**	1	SUPPORT AS	
	11	4	**122-3979**	1	BAND	
	12	4	**122-3980**	1	ROD	
	13	2	**122-4120**	3	ROD	
CM	14	1,2,3,4	**135-8573**	73	BOLT AS	
M	15	1,2,3,4	**135-8575**	35	BOLT AS	
M	16	2,3	**135-8577**	4	BOLT AS	
M	17	1	**135-8578**	6	BOLT AS	
	18	1,2	**170-3016**	15	SPACER (19X32X2-MM THK)	
	19	1	**184-8423**	1	SUPPORT AS	
	20	3	**190-6880**	3	SUPPORT AS	
					(EACH INCLUDES)	
M		3	**6V-9632**	2	NUT-WELD (M6X1-THD)	
	21	1	**203-4889**	1	SPRING	
	22	1	**203-4890**	1	SPRING	
CY	23	1	**298-2977**	1	DOOR GP-ACCESS (AIR CLEANER, BATTERY)	741
	24	1	**244-8202**	1	COVER AS	
	25	1	**244-8207**	1	COVER AS	
	26	2	**330-1182**	1	SUPPORT AS	
	27	2	**244-8228**	1	SUPPORT AS	
	28	2	**244-8234**	1	SUPPORT AS	
	29	2	**244-8242**	1	SUPPORT AS	
C	30	2	**298-3038**	1	SUPPORT AS	
	31	2	**244-8255**	1	SUPPORT AS	
Y	32	2	**248-8940**	1	SUPPORT AS-ENCLOSURE	847
C	33	3	**293-6982**	1	SHEET AS	
M		3	**8T-3597**	2	NUT-WELD (M12X1.75-THD)	
Y	34	1	**262-2286**	1	HOOD GP-ENGINE	827
	35	3	**262-2324**	1	COVER AS	
	36	4	**293-7056**	1	SHEET AS	
M		4	**8T-3597**	1	NUT-WELD (M12X1.75-THD)	
	37	1	**262-2353**	1	COVER AS	
	38	4	**262-2363**	1	SHEET AS-SOUND SUPPRESSION	
CY	39	4	**298-2979**	1	COVER AS-ACCESS (FUEL, HYDRAULIC TANKS)	722
C	40	2	**298-3041**	1	SUPPORT AS	
		2	**278-3832**	1	LINER	
Y	41	4	**278-3836**	1	SHEET AS-SOUND SUPPRESSION	832
Y	42	4	**278-3842**	1	SHEET AS-SOUND SUPPRESSION	833
	43	3	**330-1184**	1	SUPPORT AS	
C	44	1	**298-3044**	1	COVER AS	
CY	45	3	**307-7662**	1	SUPPORT AS-ENCLOSURE	851
	46	4	**283-3911**	1	SHEET AS	
	47	3	**286-6220**	1	SHEET AS	
		3	**286-6276**	1	LINER	
	48	2	**286-6359**	1	SUPPORT AS	
Y	49	3	**289-6572**	1	SHEET AS-SOUND SUPPRESSION	834
Y	50	4	**289-6695**	1	SHEET AS-SOUND SUPPRESSION	836
	51	3	**289-6698**	1	SUPPORT AS	
		3	**129-3400**	1	GUARD	

273-7726 **HOOD & GUARD GP (*contd.*)** **i04025961**

NOTE	REF NO	GRAPHIC REF	PART NUMBER	QTY	PART NAME 1 2 3 4 5 6 (PRODUCT LEVEL)	SEE PAGE
		3	**244-8198**	1	LINER	
Y	52	4	**289-6699**	1	SHEET AS-SOUND SUPPRESSION	837
	53	3	**289-6805**	1	SUPPORT AS-ENCLOSURE	
Y	54	1	**289-6913**	1	DOOR GP-ACCESS (PUMP COMPARTMENT)	738
Y	55	1	**289-6915**	1	DOOR GP-ACCESS (RADIATOR)	739
	56	1,2	**3B-4618**	4	PIN-COTTER	
M	57	3	**105-3487**	6	BOLT-SOCKET HEAD (M6X1X20-MM)	
	58	1	**114-6285**	2	BAR	
M	59	2,4	**5C-9553**	8	BOLT (M6X1X16-MM)	
	60	2,3	**5P-4115**	16	WASHER-HARD (7.2X19X2-MM THK)	
	61	4	**7Y-2854**	8	SPACER (24X38X3-MM THK)	
	62	2,3	**8T-4121**	5	WASHER-HARD (11X21X2.5-MM THK)	
M	63	3	**8T-4137**	2	BOLT (M10X1.5X20-MM)	
M	64	3	**8T-4138**	10	BOLT (M6X1X20-MM)	
M	65	2	**8T-4189**	4	BOLT (M8X1.25X20-MM)	
	66	1	**8T-4223**	2	WASHER-HARD (13.5X25.5X3-MM THK)	
	67	1,2	**8T-4224**	8	WASHER-HARD (8.8X16X2-MM THK)	
M	68	1	**8T-4908**	4	BOLT (M8X1.25X25-MM)	
	69	3,4	**9X-8256**	8	WASHER (6.6X12X2-MM THK)	
C	70	4	**307-7700**	1	SHEET AS-SOUND SUPPRESSION	
		4	**6P-2216**	3	CAP	
		4	**307-7702**	1	INSULATION	

C - CHANGE FROM PREVIOUS TYPE
M - METRIC PART
Y - SEPARATE ILLUSTRATION

273-7726 **HOOD & GUARD GP (*contd.*)** **i04025961**

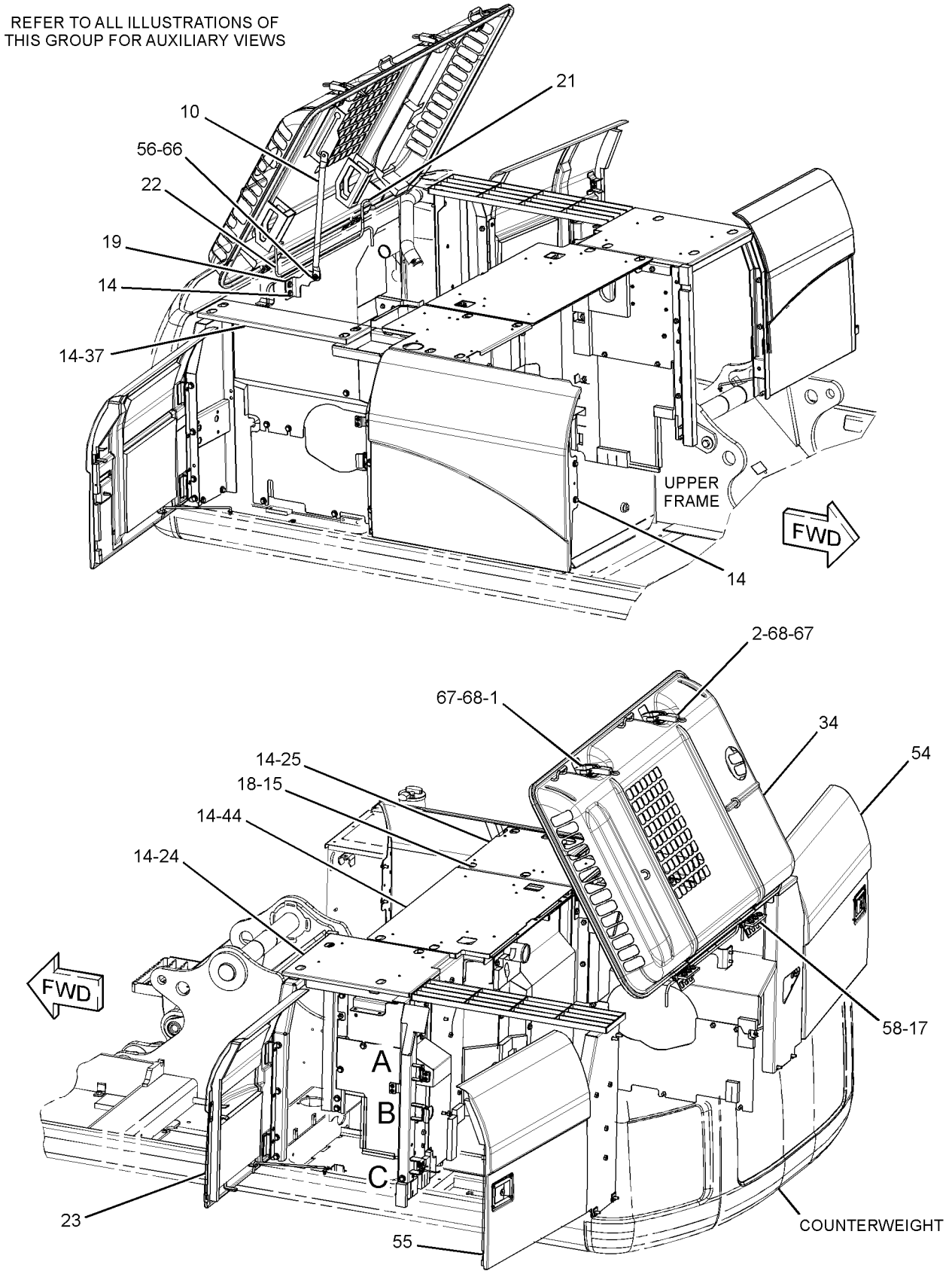

GRAPHIC #1

g01440901

273-7726 **HOOD & GUARD GP (*contd.*)** **i04025961**

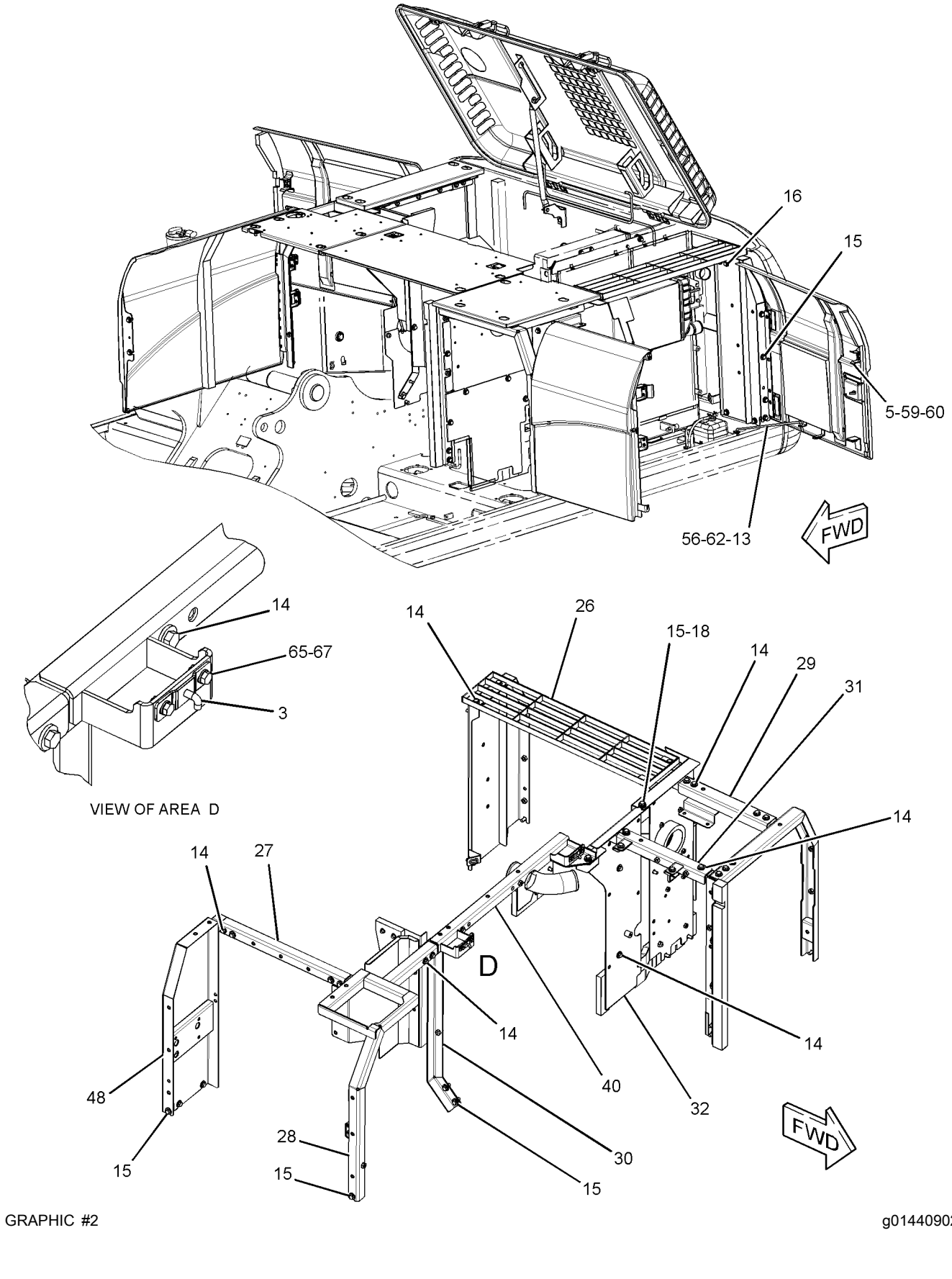

GRAPHIC #2 g01440902

273-7726 **HOOD & GUARD GP (*contd.*)** **i04025961**

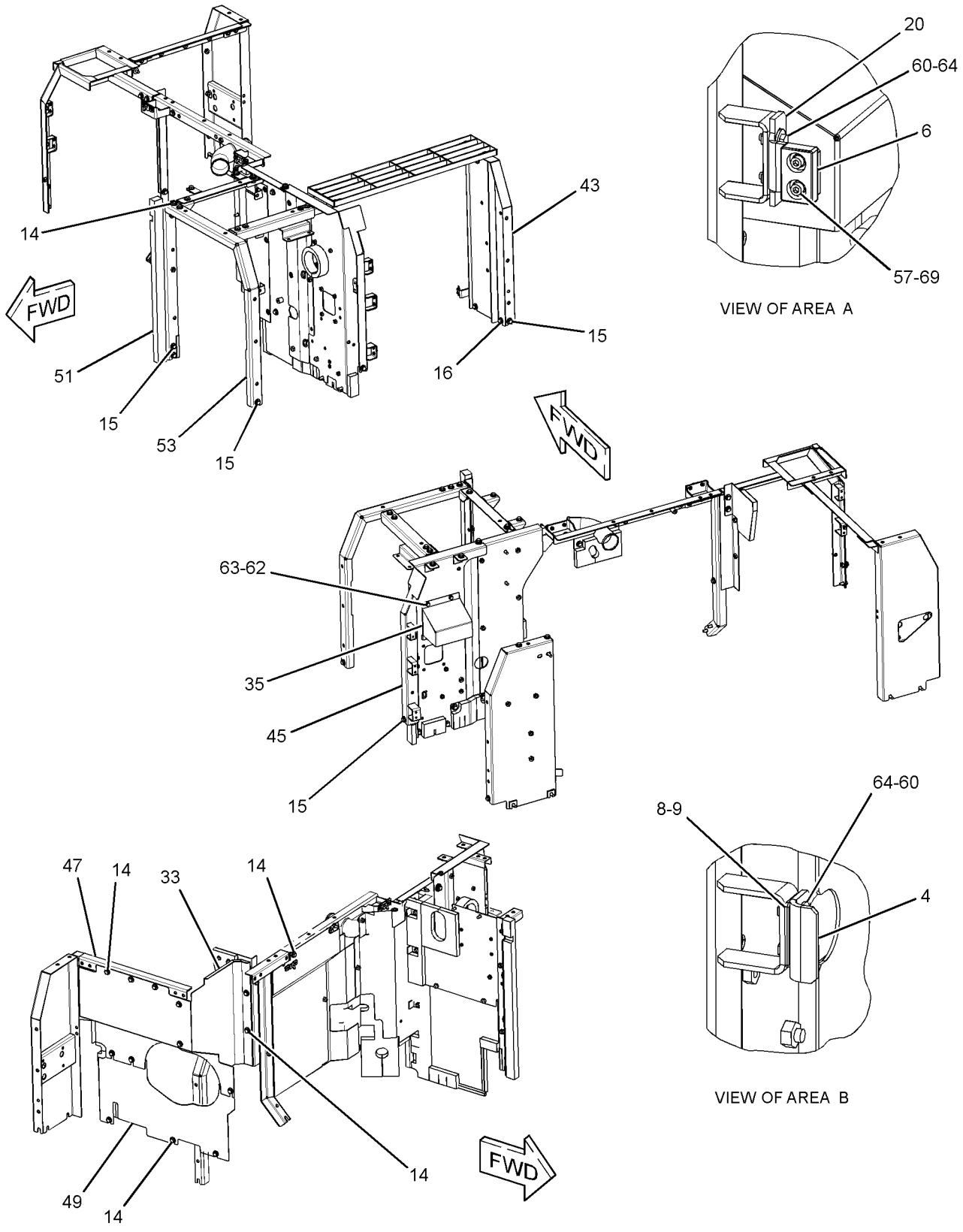

GRAPHIC #3 g02208956

273-7726 **HOOD & GUARD GP (*contd.*)** **i04025961**

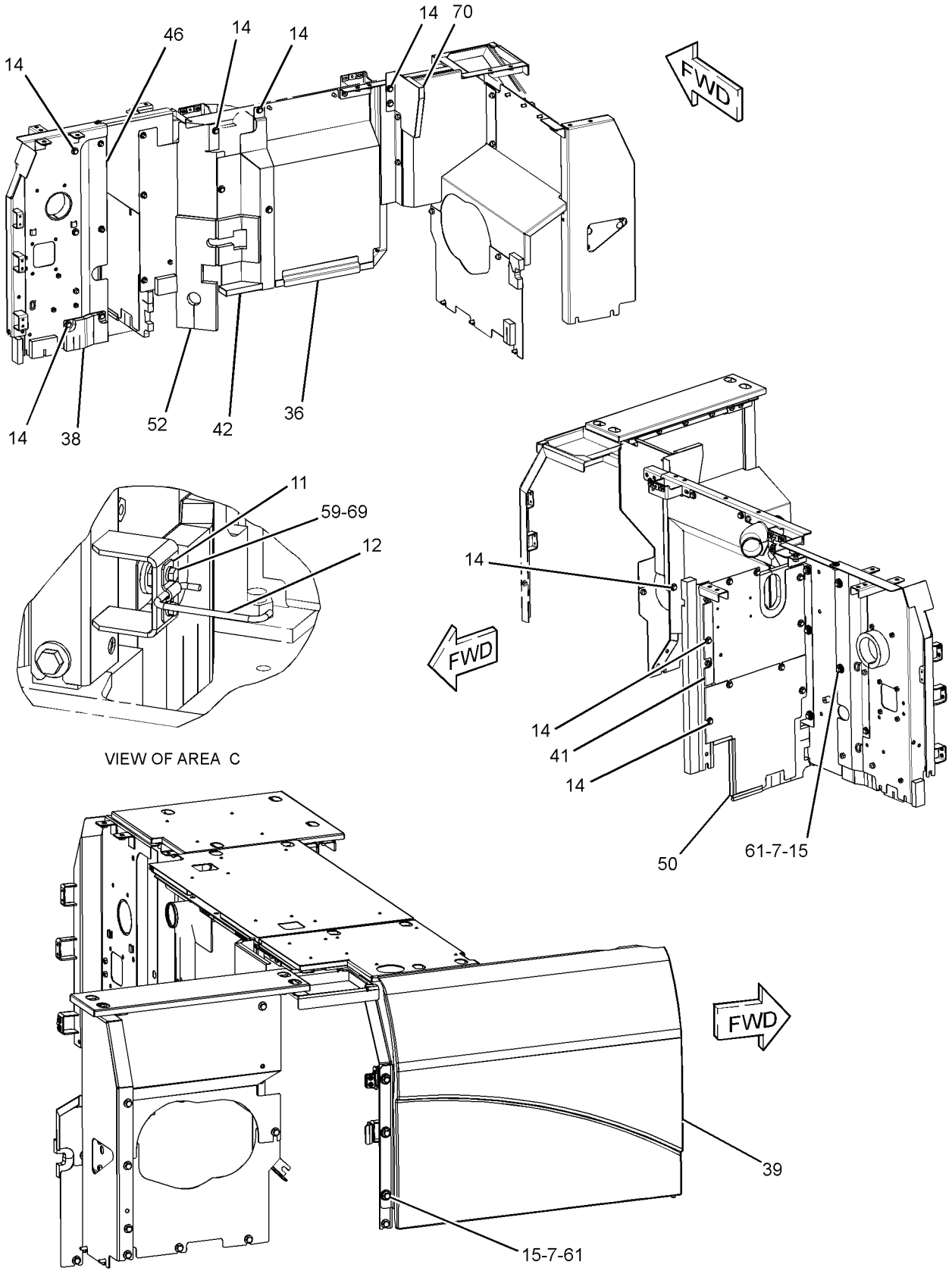

GRAPHIC #4 **<END>** g02208958

273-7726 HOOD & GUARD GP

S/N: KGF2728-3823; FAL2038-2884
PART OF 264-8638, 264-8639 CHASSIS AR

SMCS-7251, 7276 **i03201487**

NOTE	REF NO	GRAPHIC REF	PART NUMBER	QTY	PART NAME 1 2 3 4 5 6 (PRODUCT LEVEL)	SEE PAGE
	1	1	**1R-9958**	1	LATCH AS	
	2	1	**4I-0117**	1	LATCH AS	
	3	2	**4I-0118**	2	HOOK AS	
	4	3	**4I-0232**	2	STRIKER	
	5	2	**4I-8019**	3	SUPPORT	
	6	3	**6I-6033**	3	STOP	
	7	4	**7Y-2853**	8	SPACER (13X38X5-MM THK)	
	8	3	**087-3908**	4	SHIM (1-MM THK)	
	9	3	**087-3909**	4	SHIM (2-MM THK)	
	10	1	**116-1628**	1	SUPPORT AS	
	11	4	**122-3979**	1	BAND	
	12	4	**122-3980**	1	ROD	
	13	2	**122-4120**	3	ROD	
M	14	1,2,3,4	**135-8573**	73	BOLT AS	
M	15	1,2,3,4	**135-8575**	35	BOLT AS	
M	16	2,3	**135-8577**	4	BOLT AS	
M	17	1	**135-8578**	6	BOLT AS	
	18	1,2	**170-3016**	15	SPACER (19X32X2-MM THK)	
	19	1	**184-8423**	1	SUPPORT AS	
	20	3	**190-6880**	3	SUPPORT AS	
	21	1	**203-4889**	1	SPRING	
	22	1	**203-4890**	1	SPRING	
Y	23	1	**298-2977**	1	DOOR GP-ACCESS (AIR CLEANER, BATTERY)	741
	24	1	**244-8202**	1	COVER AS	
C	25	1	**330-1347**	1	COVER AS	
	26	2	**330-1182**	1	SUPPORT AS	
	27	2	**244-8228**	1	SUPPORT AS	
	28	2	**244-8234**	1	SUPPORT AS	
	29	2	**244-8242**	1	SUPPORT AS	
	30	2	**298-3038**	1	SUPPORT AS	
	31	2	**244-8255**	1	SUPPORT AS	
Y	32	2	**248-8940**	1	SUPPORT AS-ENCLOSURE	847
	33	3	**293-6982**	1	SHEET AS	
Y	34	1	**262-2286**	1	HOOD GP-ENGINE	827
	35	3	**262-2324**	1	COVER AS	
	36	4	**293-7056**	1	SHEET AS	
	37	1	**262-2353**	1	COVER AS	
	38	4	**262-2363**	1	SHEET AS-SOUND SUPPRESSION	
Y	39	4	**298-2979**	1	COVER AS-ACCESS (FUEL, HYDRAULIC TANKS)	722
	40	2	**298-3041**	1	SUPPORT AS	
		2	**278-3832**	1	LINER	
Y	41	4	**278-3836**	1	SHEET AS-SOUND SUPPRESSION	832
Y	42	4	**278-3842**	1	SHEET AS-SOUND SUPPRESSION	833
	43	3	**330-1184**	1	SUPPORT AS	
	44	1	**298-3044**	1	COVER AS	
Y	45	3	**307-7662**	1	SUPPORT AS-ENCLOSURE	851
	46	4	**283-3911**	1	SHEET AS	
	47	3	**286-6220**	1	SHEET AS	
		3	**286-6276**	1	LINER	
	48	2	**286-6359**	1	SUPPORT AS	
Y	49	3	**289-6572**	1	SHEET AS-SOUND SUPPRESSION	834
Y	50	4	**289-6695**	1	SHEET AS-SOUND SUPPRESSION	836
	51	3	**289-6698**	1	SUPPORT AS	
		3	**129-3400**	1	GUARD	
		3	**244-8198**	1	LINER	
Y	52	4	**289-6699**	1	SHEET AS-SOUND SUPPRESSION	837
	53	3	**289-6805**	1	SUPPORT AS-ENCLOSURE	
Y	54	1	**289-6913**	1	DOOR GP-ACCESS (PUMP COMPARTMENT)	738
Y	55	1	**289-6915**	1	DOOR GP-ACCESS (RADIATOR)	739

273-7726 **HOOD & GUARD GP (*contd.*)** **i03201487**

NOTE	REF NO	GRAPHIC REF	PART NUMBER	QTY	PART NAME 1 2 3 4 5 6 (PRODUCT LEVEL)	SEE PAGE
	56	1,2	**3B-4618**	4	PIN-COTTER	
M	57	3	**105-3487**	6	BOLT-SOCKET HEAD (M6X1X20-MM)	
	58	1	**114-6285**	2	BAR	
M	59	2,4	**5C-9553**	8	BOLT (M6X1X16-MM)	
	60	2,3	**5P-4115**	16	WASHER-HARD (7.2X19X2-MM THK)	
	61	4	**7Y-2854**	8	SPACER (24X38X3-MM THK)	
	62	2,3	**8T-4121**	5	WASHER-HARD (11X21X2.5-MM THK)	
M	63	3	**8T-4137**	2	BOLT (M10X1.5X20-MM)	
M	64	3	**8T-4138**	10	BOLT (M6X1X20-MM)	
M	65	2	**8T-4189**	4	BOLT (M8X1.25X20-MM)	
	66	1	**8T-4223**	2	WASHER-HARD (13.5X25.5X3-MM THK)	
	67	1,2	**8T-4224**	8	WASHER-HARD (8.8X16X2-MM THK)	
M	68	1	**8T-4908**	4	BOLT (M8X1.25X25-MM)	
	69	3,4	**9X-8256**	8	WASHER (6.6X12X2-MM THK)	
	70	4	**307-7700**	1	SHEET AS-SOUND SUPPRESSION	
		4	**6P-2216**	3	CAP	
		4	**307-7702**	1	INSULATION	

C - CHANGE FROM PREVIOUS TYPE
M - METRIC PART
Y - SEPARATE ILLUSTRATION

273-7726 **HOOD & GUARD GP (*contd.*)** **i03201487**

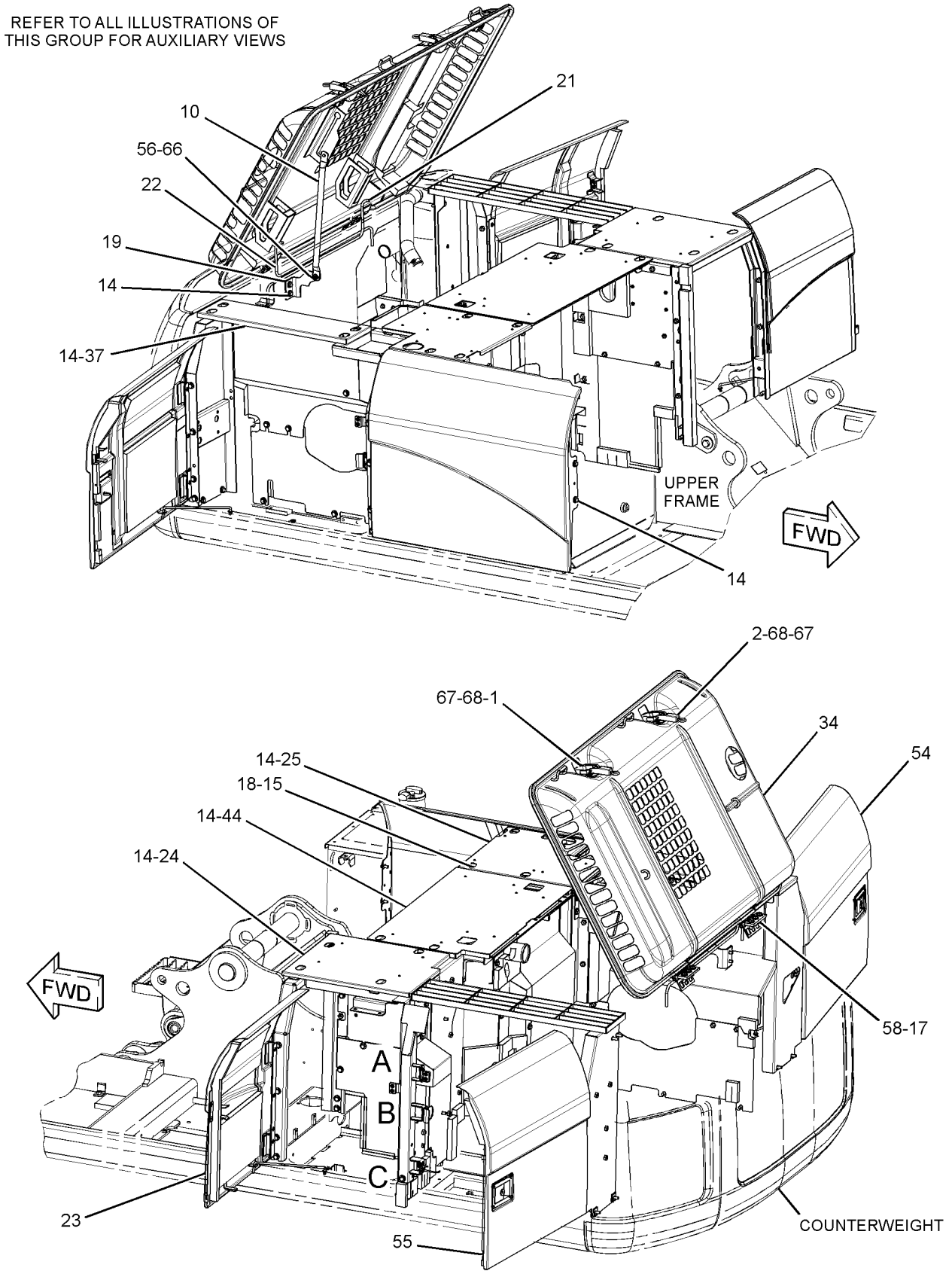

GRAPHIC #1 g01440901

273-7726 **HOOD & GUARD GP (*contd.*)** **i03201487**

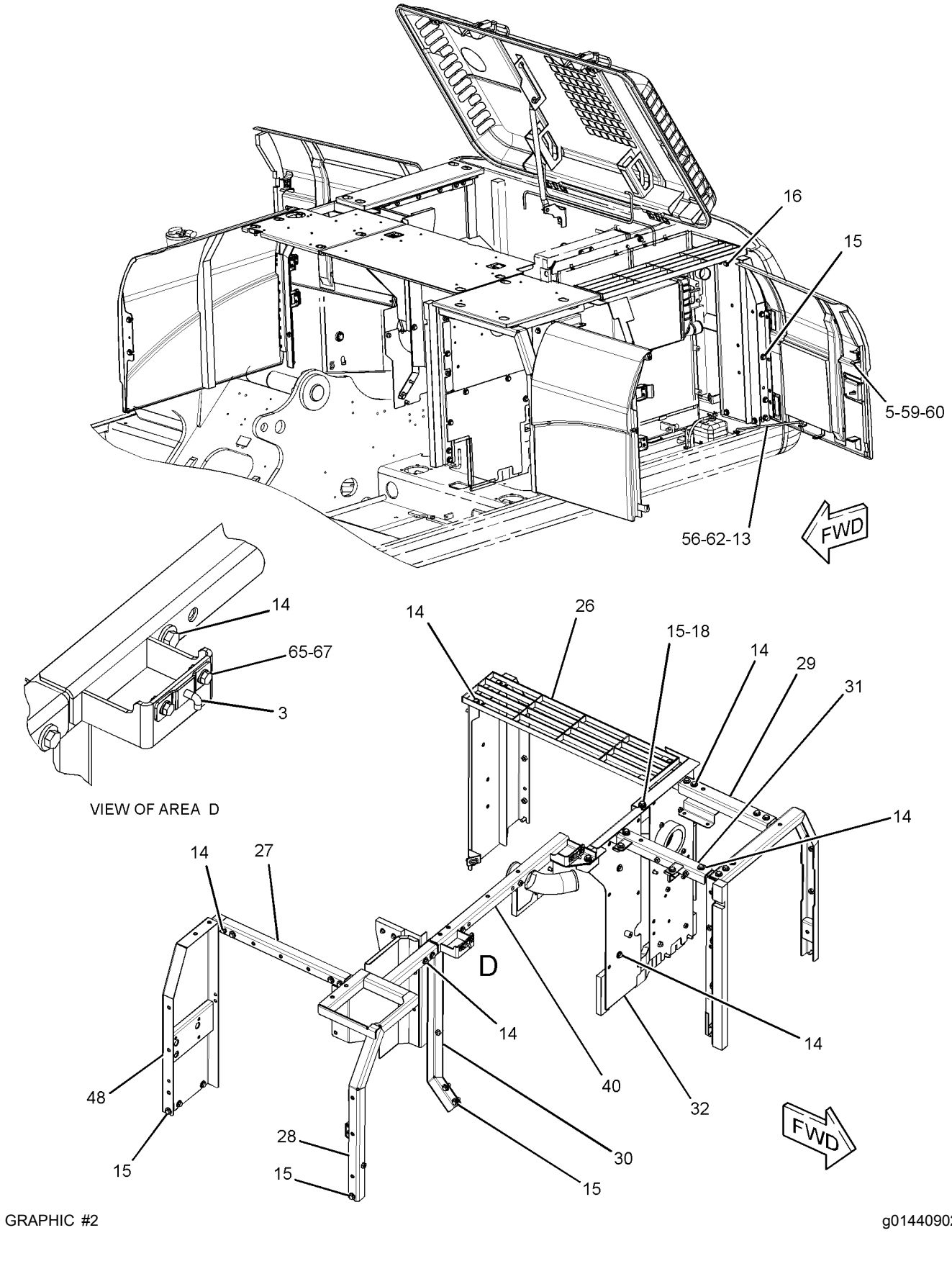

GRAPHIC #2 g01440902

273-7726 **HOOD & GUARD GP (*contd.*)** **i03201487**

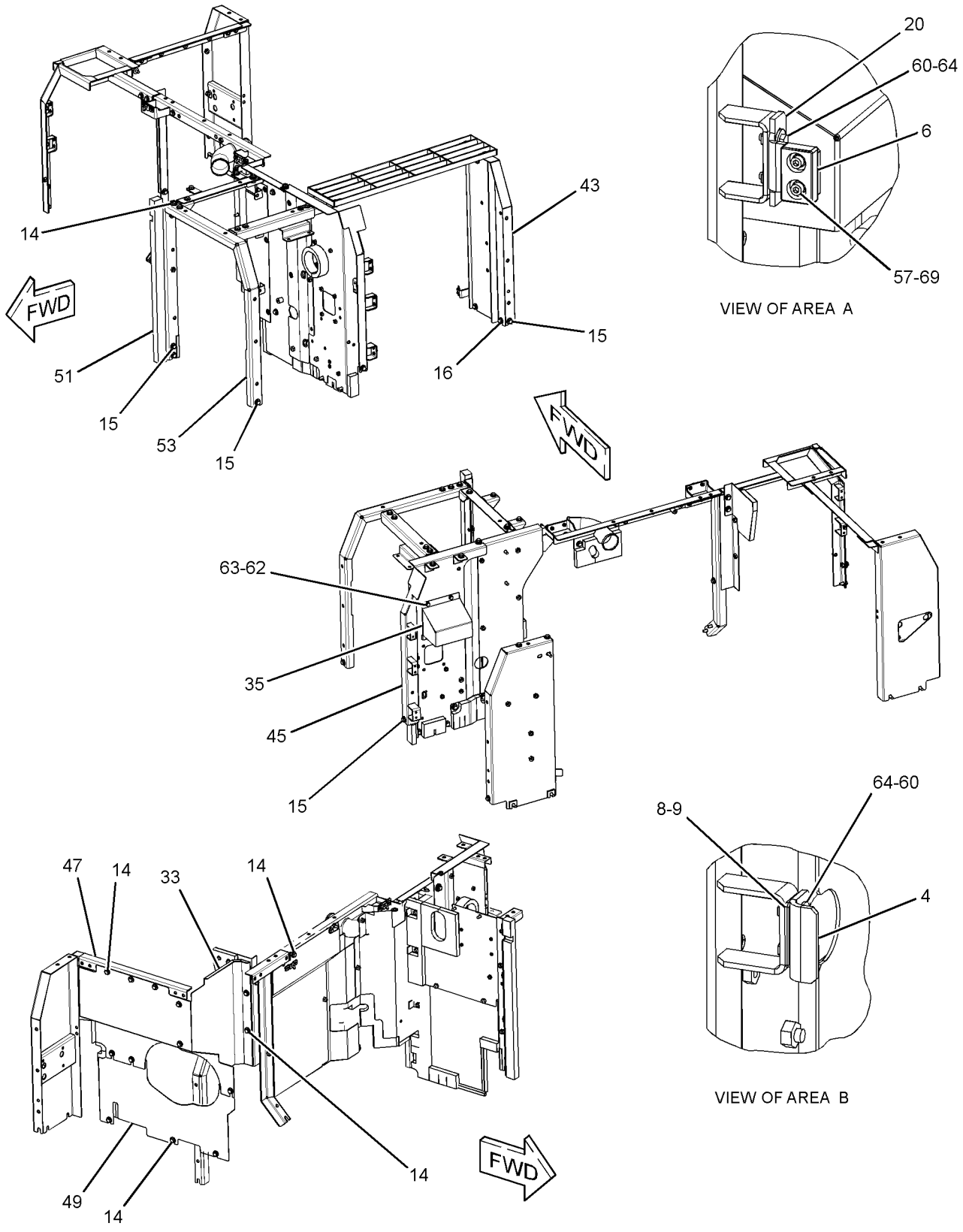

GRAPHIC #3 g01440903

273-7726 **HOOD & GUARD GP (*contd.*)** **i03201487**

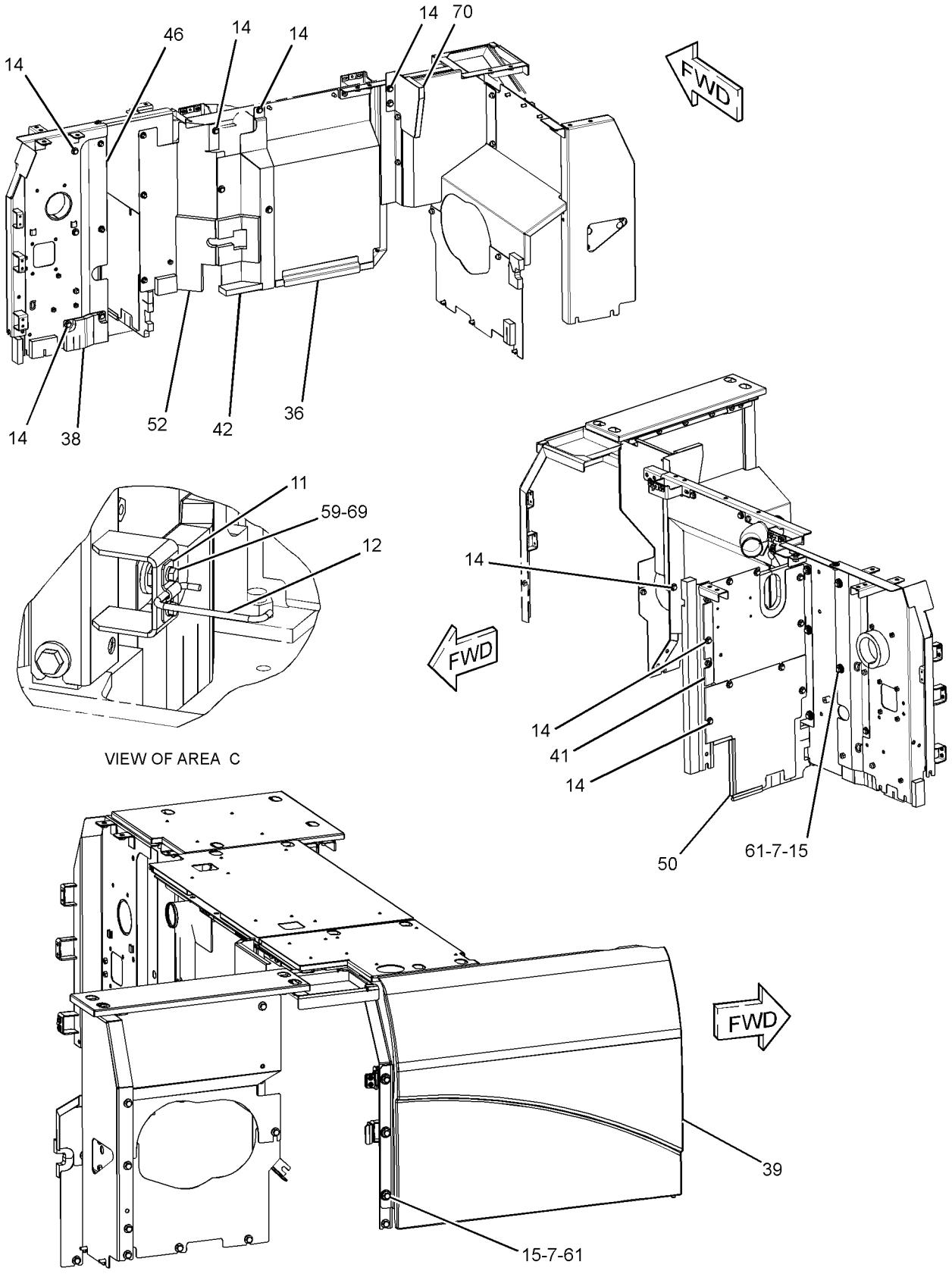

GRAPHIC #4 **<END>** g01440904

273-7726 HOOD & GUARD GP

S/N: KGF3824-7705; FAL2885-9016
PART OF 264-8638, 264-8639 CHASSIS AR

SMCS-7251, 7276 **i04801649**

NOTE	REF NO	GRAPHIC REF	PART NUMBER	QTY	PART NAME 1 2 3 4 5 6 (PRODUCT LEVEL)	SEE PAGE
	1	1	**375-8750**	1	LATCH AS	
J	2	1	**375-8749**	1	LATCH AS	
	3	2	**4I-0118**	2	HOOK AS	
	4	3	**4I-0232**	2	STRIKER	
	5	2	**4I-8019**	3	SUPPORT	
	6	3	**6I-6033**	3	STOP	
	7	4	**7Y-2853**	8	SPACER (13X38X5-MM THK)	
	8	3	**087-3908**	4	SHIM (1-MM THK)	
	9	3	**087-3909**	4	SHIM (2-MM THK)	
	10	1	**116-1628**	1	SUPPORT AS	
	11	4	**122-3979**	1	BAND	
	12	4	**122-3980**	1	ROD	
	13	2	**122-4120**	3	ROD	
M	14	1,2,3,4	**135-8573**	73	BOLT AS	
M	15	1,2,3,4	**135-8575**	35	BOLT AS	
M	16	2,3	**135-8577**	4	BOLT AS	
M	17	1	**135-8578**	6	BOLT AS	
	18	1,2	**170-3016**	15	SPACER (19X32X2-MM THK)	
	19	1	**184-8423**	1	SUPPORT AS	
	20	3	**190-6880**	3	SUPPORT AS	
	21	1	**203-4889**	1	SPRING	
	22	1	**203-4890**	1	SPRING	
Y	23	1	**298-2977**	1	DOOR GP-ACCESS (AIR CLEANER, BATTERY)	741
	24	1	**372-7633**	1	COVER AS-ACCESS	
	25	1	**330-1347**	1	COVER AS	
	26	2	**330-1182**	1	SUPPORT AS	
	27	2	**244-8228**	1	SUPPORT AS	
	28	2	**244-8234**	1	SUPPORT AS	
	29	2	**244-8242**	1	SUPPORT AS	
	30	2	**298-3038**	1	SUPPORT AS	
	31	2	**244-8255**	1	SUPPORT AS	
Y	32	2	**248-8940**	1	SUPPORT AS-ENCLOSURE	847
	33	3	**293-6982**	1	SHEET AS	
Y	34	1	**262-2286**	1	HOOD GP-ENGINE	827
	35	3	**262-2324**	1	COVER AS	
	36	4	**293-7056**	1	SHEET AS	
	37	1	**262-2353**	1	COVER AS	
	38	4	**262-2363**	1	SHEET AS-SOUND SUPPRESSION	
Y	39	4	**298-2979**	1	COVER AS-ACCESS (FUEL, HYDRAULIC TANKS)	722
	40	2	**298-3041**	1	SUPPORT AS	
		2	**278-3832**	1	LINER	
Y	41	4	**278-3836**	1	SHEET AS-SOUND SUPPRESSION	832
Y	42	4	**278-3842**	1	SHEET AS-SOUND SUPPRESSION	833
	43	3	**375-8682**	1	SUPPORT AS	
	44	1	**372-7627**	1	COVER AS-ACCESS	
Y	45	3	**307-7662**	1	SUPPORT AS-ENCLOSURE	851
	46	4	**283-3911**	1	SHEET AS	
	47	3	**286-6220**	1	SHEET AS	
		3	**286-6276**	1	LINER	
	48	2	**286-6359**	1	SUPPORT AS	
Y	49	3	**289-6572**	1	SHEET AS-SOUND SUPPRESSION	834
Y	50	4	**289-6695**	1	SHEET AS-SOUND SUPPRESSION	836
	51	3	**289-6698**	1	SUPPORT AS	
		3	**129-3400**	1	GUARD	
		3	**244-8198**	1	LINER	
CY	52	4	**355-8230**	1	SHEET AS-SOUND SUPPRESSION	842
	53	3	**289-6805**	1	SUPPORT AS-ENCLOSURE	
Y	54	1	**289-6913**	1	DOOR GP-ACCESS (PUMP COMPARTMENT)	738
Y	55	1	**289-6915**	1	DOOR GP-ACCESS (RADIATOR)	739

273-7726 **HOOD & GUARD GP (*contd.*)** **i04801649**

NOTE	REF NO	GRAPHIC REF	PART NUMBER	QTY	PART NAME 1 2 3 4 5 6 (PRODUCT LEVEL)	SEE PAGE
	56	1,2	**3B-4618**	4	PIN-COTTER	
M	57	3	**105-3487**	6	BOLT-SOCKET HEAD (M6X1X20-MM)	
	58	1	**114-6285**	2	BAR	
M	59	2,4	**5C-9553**	8	BOLT (M6X1X16-MM)	
	60	2,3	**5P-4115**	16	WASHER-HARD (7.2X19X2-MM THK)	
	61	4	**7Y-2854**	8	SPACER (24X38X3-MM THK)	
	62	2,3	**8T-4121**	5	WASHER-HARD (11X21X2.5-MM THK)	
M	63	3	**8T-4137**	2	BOLT (M10X1.5X20-MM)	
M	64	3	**8T-4138**	10	BOLT (M6X1X20-MM)	
M	65	2	**8T-4189**	4	BOLT (M8X1.25X20-MM)	
	66	1	**8T-4223**	2	WASHER-HARD (13.5X25.5X3-MM THK)	
	67	1,2	**8T-4224**	8	WASHER-HARD (8.8X16X2-MM THK)	
M	68	1	**8T-4908**	4	BOLT (M8X1.25X25-MM)	
	69	3,4	**9X-8256**	8	WASHER (6.6X12X2-MM THK)	
	70	4	**307-7700**	1	SHEET AS-SOUND SUPPRESSION	
		4	**6P-2216**	3	CAP	
		4	**307-7702**	1	INSULATION	

C - CHANGE FROM PREVIOUS TYPE
J - REQUIRES CORPORATE KEY
M - METRIC PART
Y - SEPARATE ILLUSTRATION

273-7726 **HOOD & GUARD GP (*contd.*)** **i04801649**

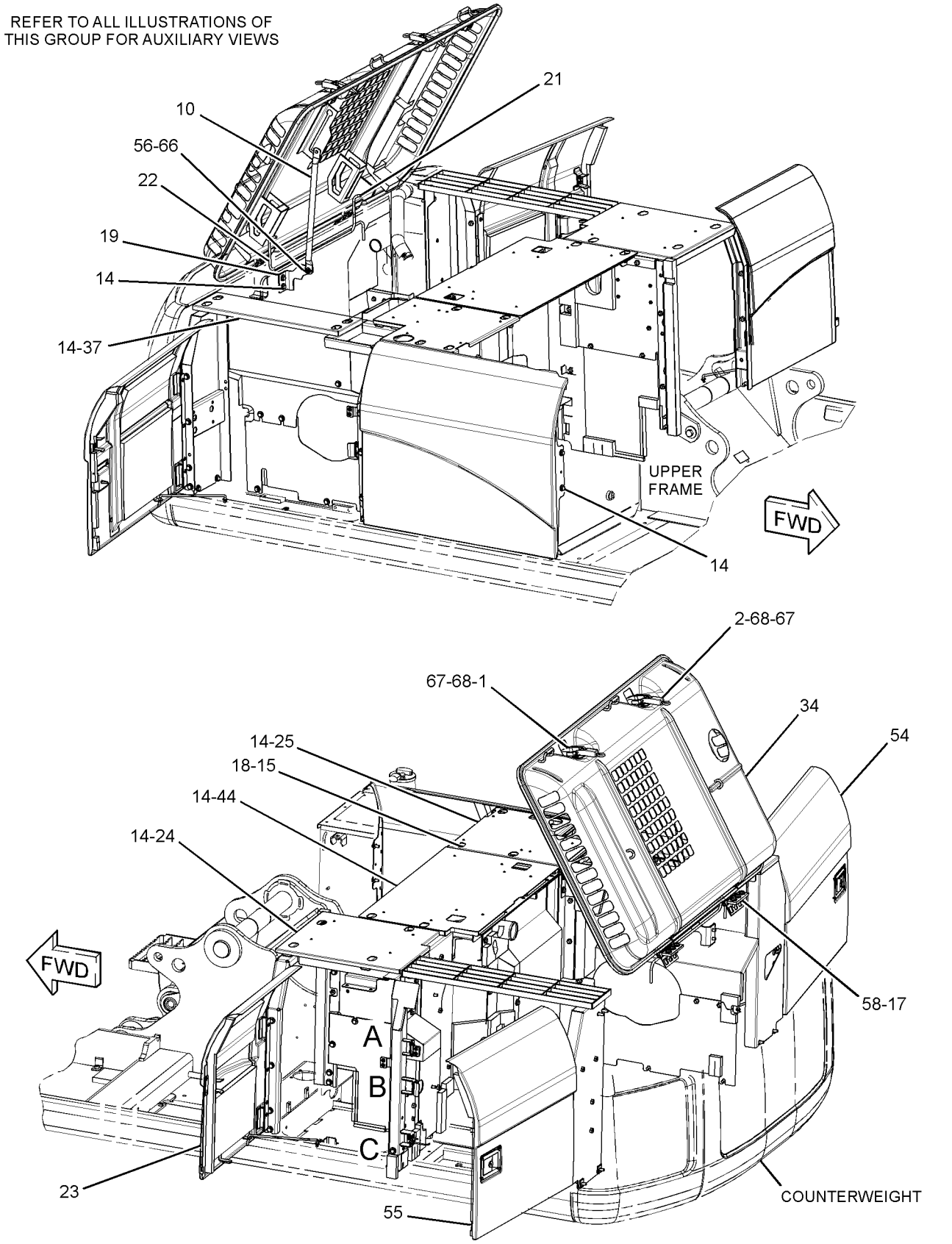

GRAPHIC #1

g01440901

273-7726 **HOOD & GUARD GP (*contd.*)** **i04801649**

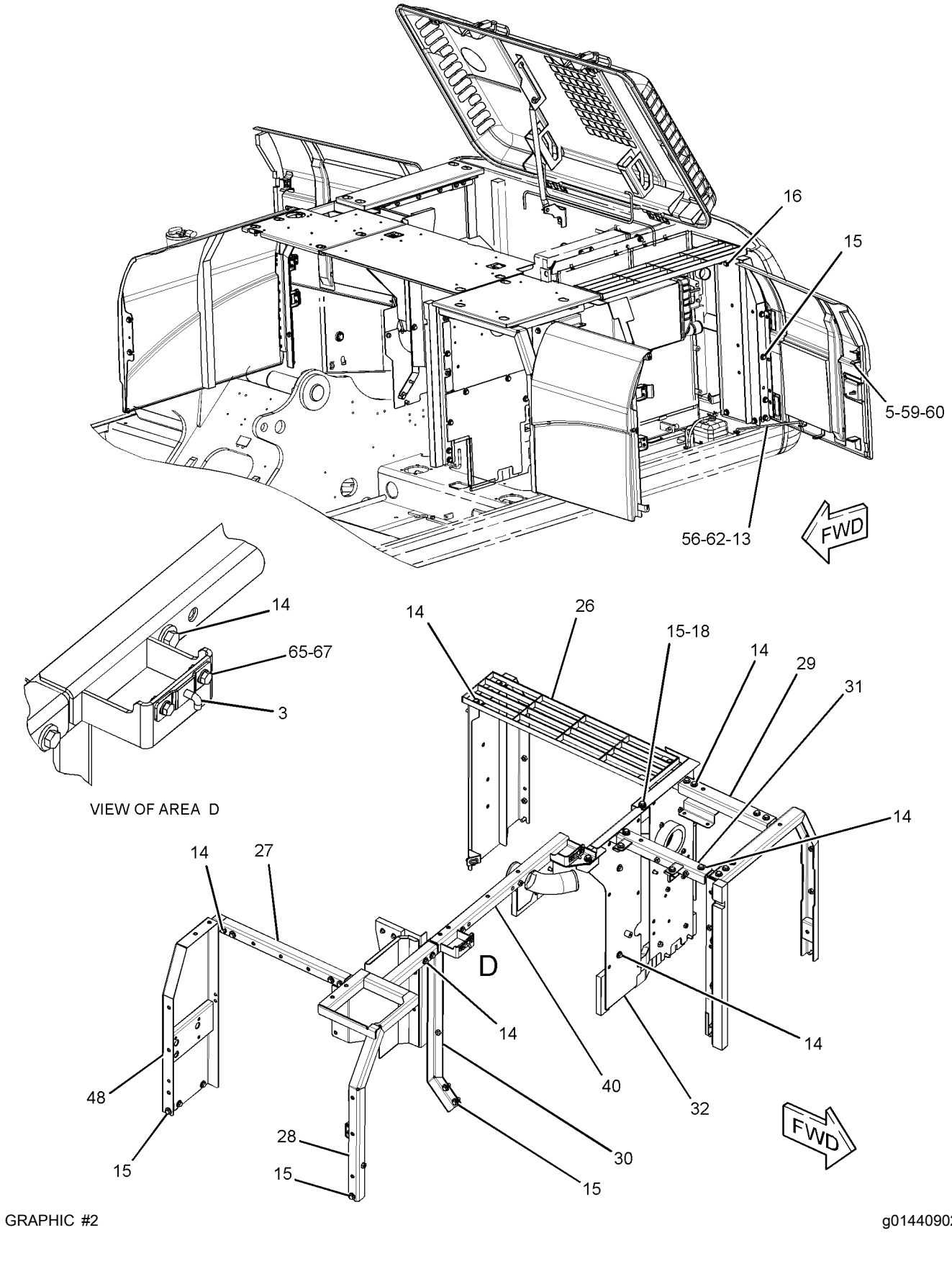

GRAPHIC #2 g01440902

273-7726 **HOOD & GUARD GP (*contd.*)** **i04801649**

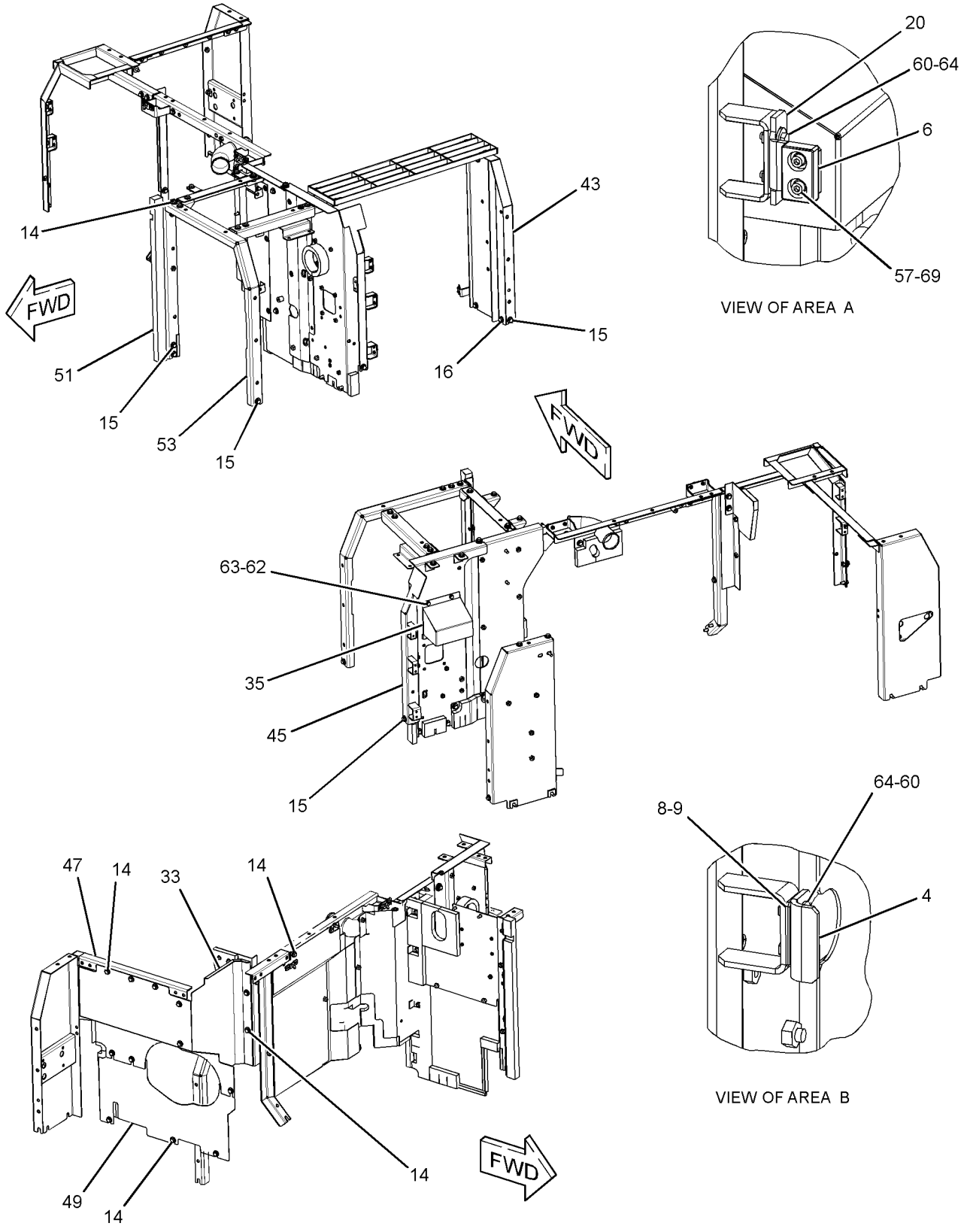

GRAPHIC #3 g01440903

273-7726 **HOOD & GUARD GP (*contd.*)** **i04801649**

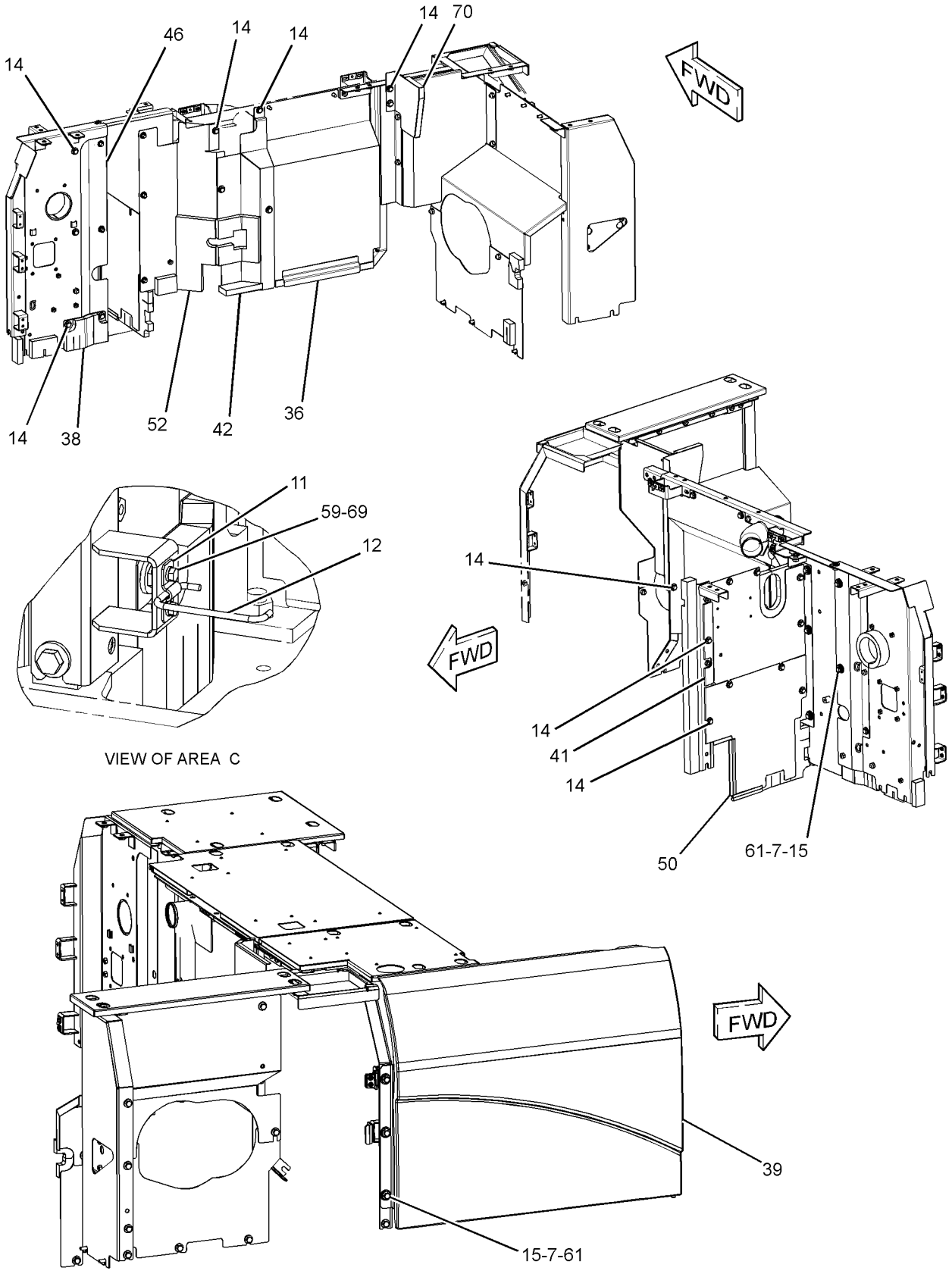

GRAPHIC #4 **<END>** g01440904

273-7726 HOOD & GUARD GP

S/N: KGF7706-UP; FAL9017-UP
PART OF 264-8638, 264-8639 CHASSIS AR
TYPE 1

SMCS-7251, 7276 **i04802771**

NOTE	REF NO	GRAPHIC REF	PART NUMBER	QTY	PART NAME 1 2 3 4 5 6 (PRODUCT LEVEL)	SEE PAGE
	1	1	**375-8750**	1	LATCH AS	
J	2	1	**375-8749**	1	LATCH AS	
	3	2	**4I-0118**	2	HOOK AS	
	4	3	**4I-0232**	2	STRIKER	
	5	2	**4I-8019**	3	SUPPORT	
	6	3	**6I-6033**	3	STOP	
	7	4	**7Y-2853**	8	SPACER (13X38X5-MM THK)	
	8	3	**087-3908**	4	SHIM (1-MM THK)	
	9	3	**087-3909**	4	SHIM (2-MM THK)	
	10	1	**116-1628**	1	SUPPORT AS	
	11	4	**122-3979**	1	BAND	
	12	4	**122-3980**	1	ROD	
	13	2	**122-4120**	3	ROD	
M	14	1,2,3,4	**135-8573**	73	BOLT AS	
M	15	1,2,3,4	**135-8575**	35	BOLT AS	
M	16	2,3	**135-8577**	4	BOLT AS	
M	17	1	**135-8578**	6	BOLT AS	
	18	1,2	**170-3016**	15	SPACER (19X32X2-MM THK)	
	19	1	**184-8423**	1	SUPPORT AS	
	20	3	**190-6880**	3	SUPPORT AS	
	21	1	**203-4889**	1	SPRING	
	22	1	**203-4890**	1	SPRING	
Y	23	1	**298-2977**	1	DOOR GP-ACCESS (AIR CLEANER, BATTERY)	741
	24	1	**372-7633**	1	COVER AS-ACCESS	
	25	1	**330-1347**	1	COVER AS	
	26	2	**330-1182**	1	SUPPORT AS	
	27	2	**244-8228**	1	SUPPORT AS	
	28	2	**244-8234**	1	SUPPORT AS	
	29	2	**244-8242**	1	SUPPORT AS	
	30	2	**298-3038**	1	SUPPORT AS	
	31	2	**244-8255**	1	SUPPORT AS	
Y	32	2	**248-8940**	1	SUPPORT AS-ENCLOSURE	847
	33	3	**293-6982**	1	SHEET AS	
Y	34	1	**262-2286**	1	HOOD GP-ENGINE	827
	35	3	**262-2324**	1	COVER AS	
	36	4	**293-7056**	1	SHEET AS	
	37	1	**262-2353**	1	COVER AS	
	38	4	**262-2363**	1	SHEET AS-SOUND SUPPRESSION	
Y	39	4	**298-2979**	1	COVER AS-ACCESS (FUEL, HYDRAULIC TANKS)	722
	40	2	**298-3041**	1	SUPPORT AS	
		2	**278-3832**	1	LINER	
Y	41	4	**278-3836**	1	SHEET AS-SOUND SUPPRESSION	832
Y	42	4	**278-3842**	1	SHEET AS-SOUND SUPPRESSION	833
	43	3	**375-8682**	1	SUPPORT AS	
	44	1	**372-7627**	1	COVER AS-ACCESS	
CY	45	3	**375-8764**	1	SUPPORT AS-ENCLOSURE	854
	46	4	**283-3911**	1	SHEET AS	
	47	3	**286-6220**	1	SHEET AS	
		3	**286-6276**	1	LINER	
	48	2	**286-6359**	1	SUPPORT AS	
Y	49	3	**289-6572**	1	SHEET AS-SOUND SUPPRESSION	834
Y	50	4	**289-6695**	1	SHEET AS-SOUND SUPPRESSION	836
	51	3	**289-6698**	1	SUPPORT AS	
		3	**129-3400**	1	GUARD	
		3	**244-8198**	1	LINER	
Y	52	4	**355-8230**	1	SHEET AS-SOUND SUPPRESSION	842
	53	3	**289-6805**	1	SUPPORT AS-ENCLOSURE	
Y	54	1	**289-6913**	1	DOOR GP-ACCESS (PUMP COMPARTMENT)	738

273-7726 **HOOD & GUARD GP (*contd.*)** **i04802771**

NOTE	REF NO	GRAPHIC REF	PART NUMBER	QTY	PART NAME 1 2 3 4 5 6 (PRODUCT LEVEL)	SEE PAGE
Y	55	1	**289-6915**	1	DOOR GP-ACCESS (RADIATOR)	739
	56	1,2	**3B-4618**	4	PIN-COTTER	
M	57	3	**105-3487**	6	BOLT-SOCKET HEAD (M6X1X20-MM)	
	58	1	**114-6285**	2	BAR	
M	59	2,4	**5C-9553**	8	BOLT (M6X1X16-MM)	
	60	2,3	**5P-4115**	16	WASHER-HARD (7.2X19X2-MM THK)	
	61	4	**7Y-2854**	8	SPACER (24X38X3-MM THK)	
	62	2,3	**8T-4121**	5	WASHER-HARD (11X21X2.5-MM THK)	
M	63	3	**8T-4137**	2	BOLT (M10X1.5X20-MM)	
M	64	3	**8T-4138**	10	BOLT (M6X1X20-MM)	
M	65	2	**8T-4189**	4	BOLT (M8X1.25X20-MM)	
	66	1	**8T-4223**	2	WASHER-HARD (13.5X25.5X3-MM THK)	
	67	1,2	**8T-4224**	8	WASHER-HARD (8.8X16X2-MM THK)	
M	68	1	**8T-4908**	4	BOLT (M8X1.25X25-MM)	
	69	3,4	**9X-8256**	8	WASHER (6.6X12X2-MM THK)	
	70	4	**307-7700**	1	SHEET AS-SOUND SUPPRESSION	
		4	**6P-2216**	3	CAP	
		4	**307-7702**	1	INSULATION	

C - CHANGE FROM PREVIOUS TYPE
J - REQUIRES CORPORATE KEY
M - METRIC PART
Y - SEPARATE ILLUSTRATION

273-7726 **HOOD & GUARD GP (*contd.*)** **i04802771**

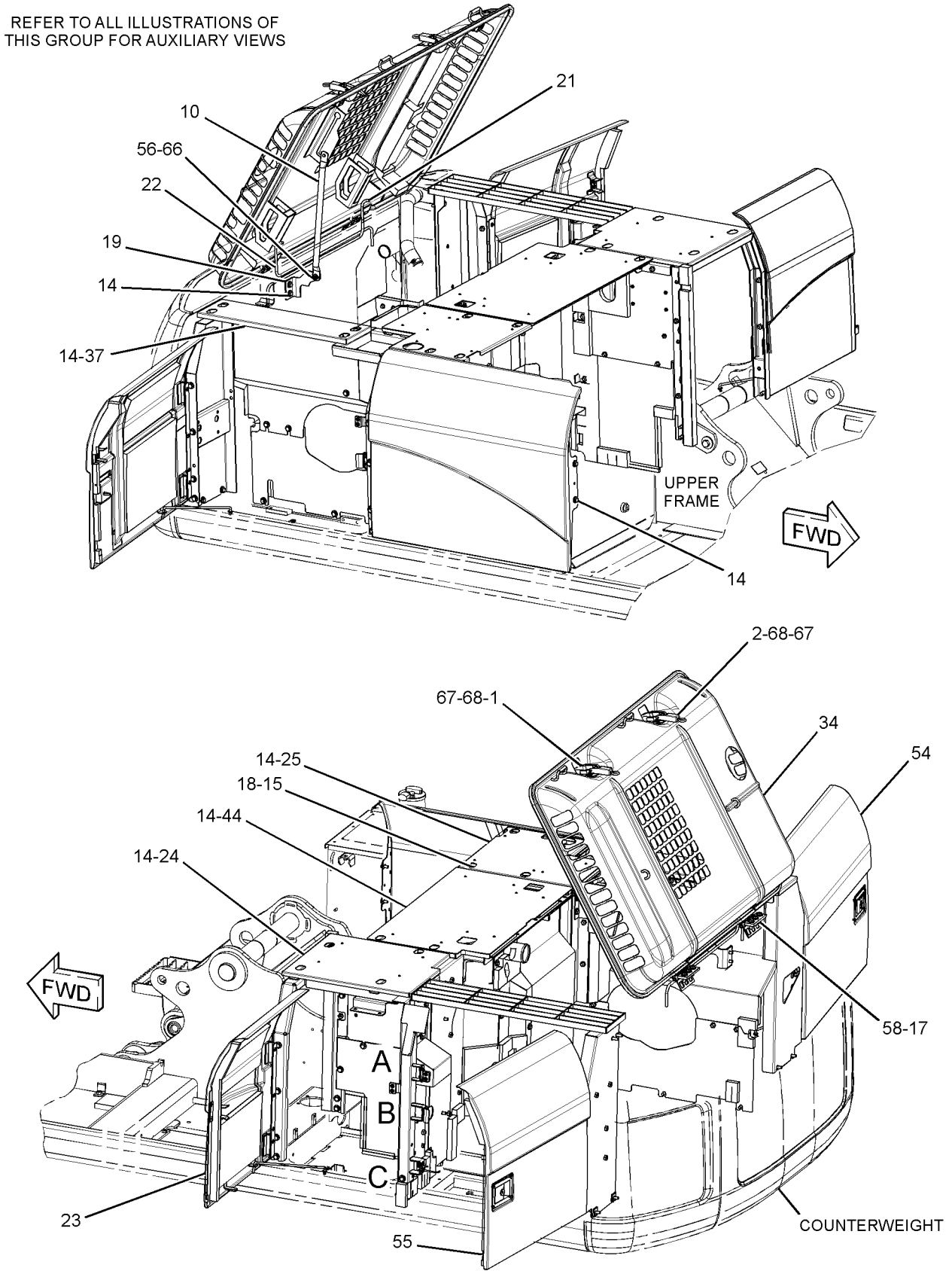

GRAPHIC #1

g01440901

273-7726 **HOOD & GUARD GP (*contd.*)** **i04802771**

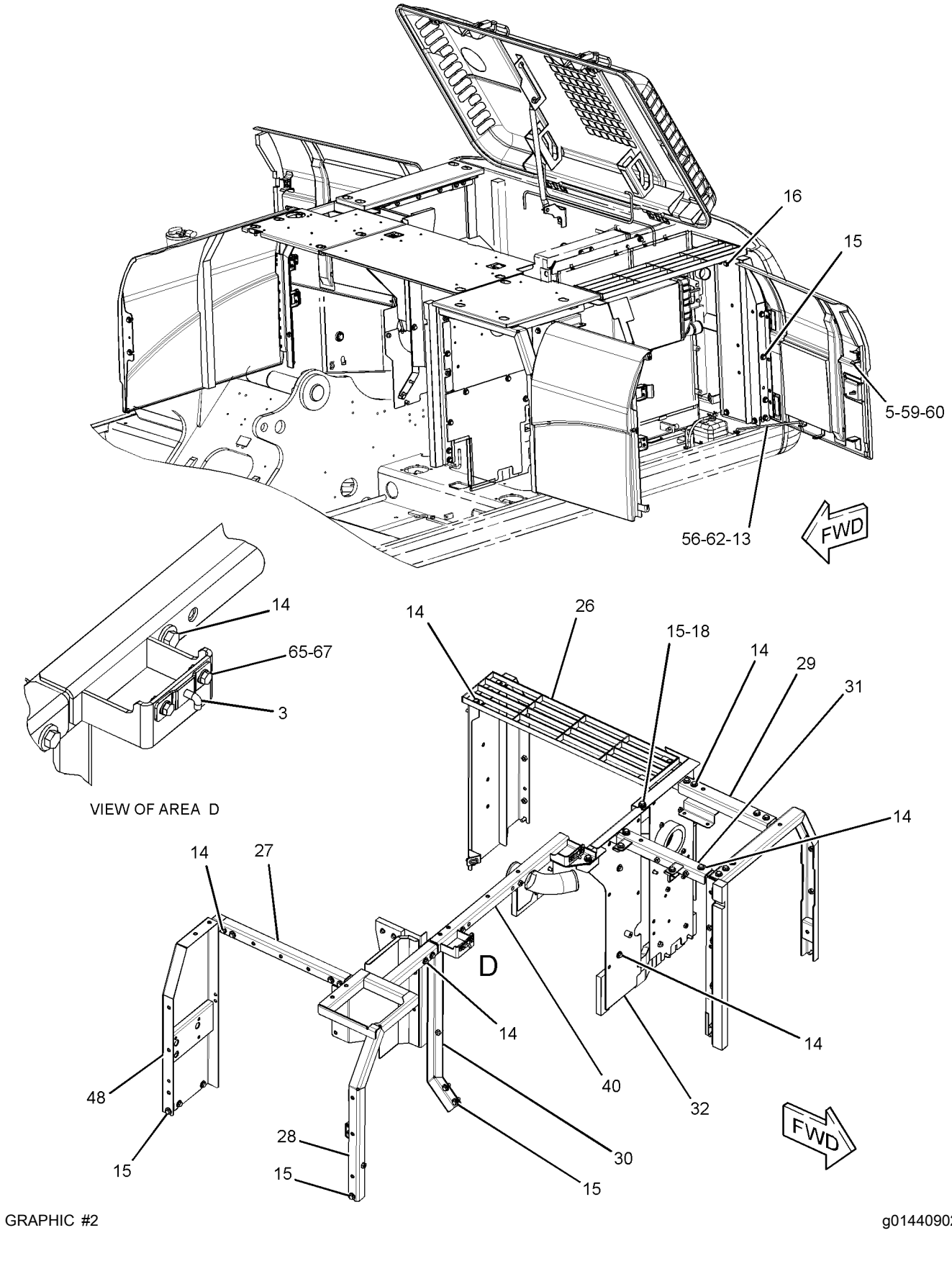

GRAPHIC #2 g01440902

273-7726 **HOOD & GUARD GP (*contd.*)** **i04802771**

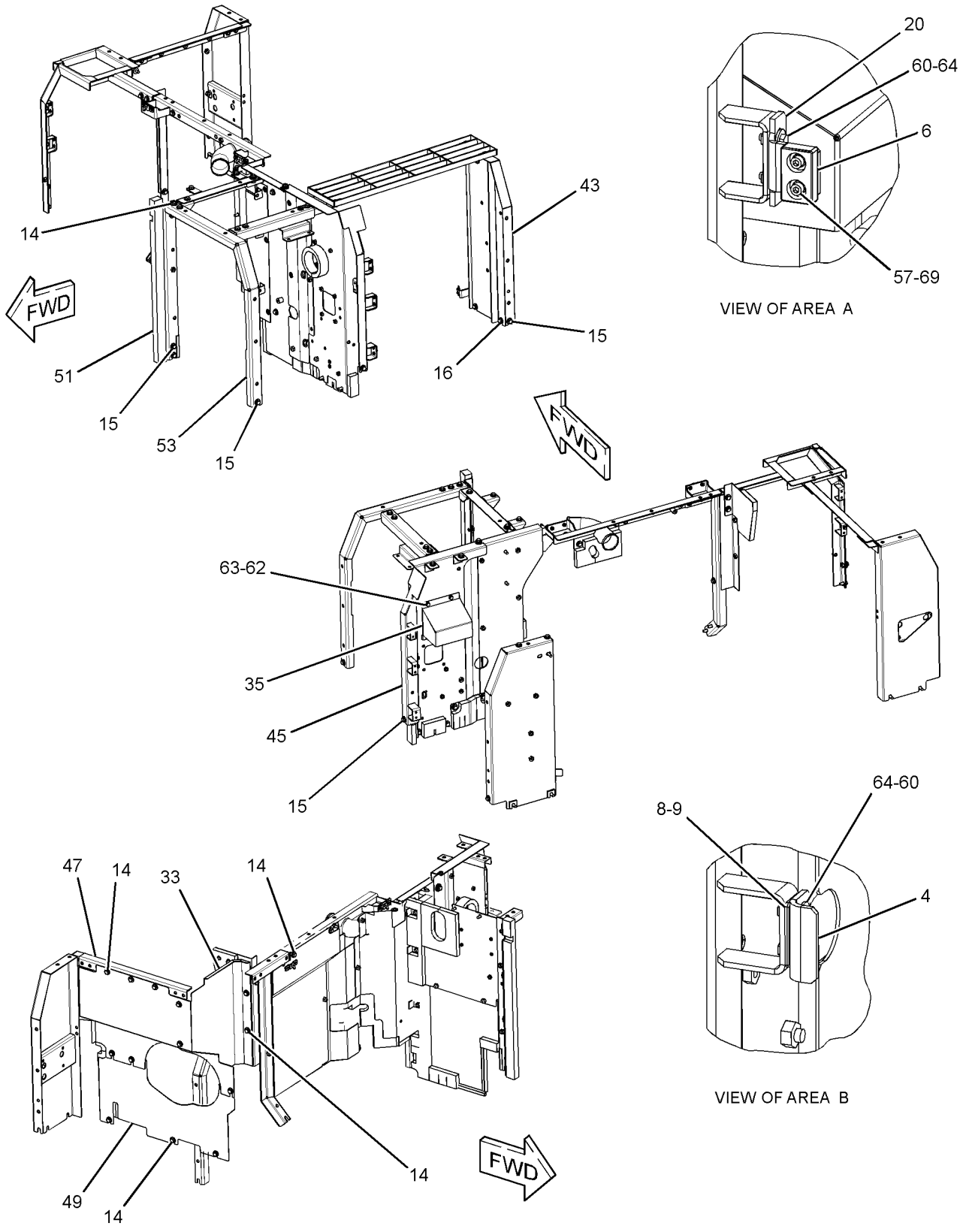

GRAPHIC #3 g01440903

273-7726 **HOOD & GUARD GP (*contd.*)** **i04802771**

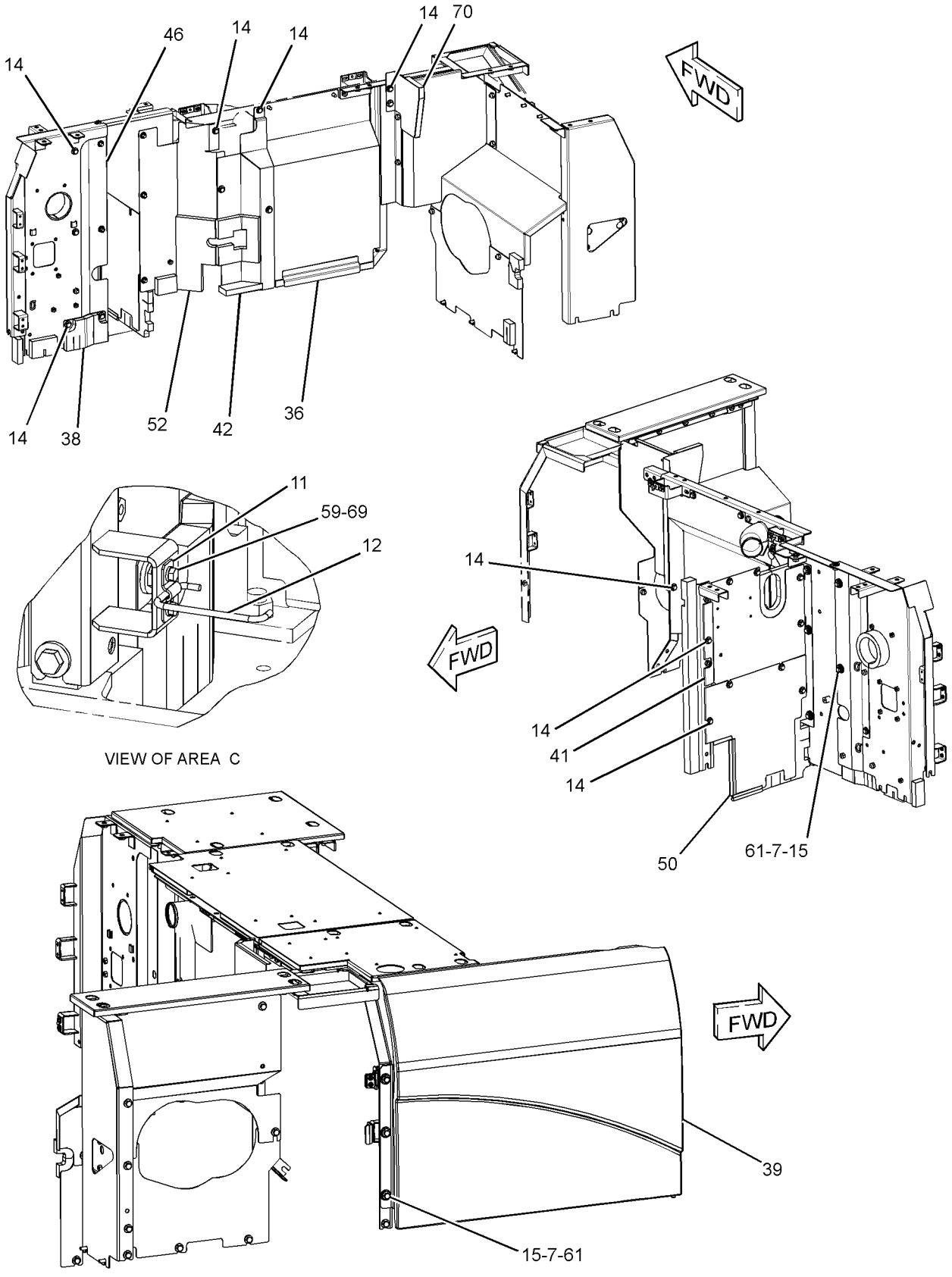

GRAPHIC #4 **<END>** g01440904

273-7726 HOOD & GUARD GP

S/N: KGF7706-UP; FAL9017-UP
PART OF 264-8638, 264-8639 CHASSIS AR
TYPE 2

SMCS-7251, 7276 **i04891965**

NOTE	REF NO	GRAPHIC REF	PART NUMBER	QTY	PART NAME 1 2 3 4 5 6 (PRODUCT LEVEL)	SEE PAGE
	1	1	**375-8750**	1	LATCH AS	
J	2	1	**375-8749**	1	LATCH AS	
	3	2	**4I-0118**	2	HOOK AS	
	4	3	**4I-0232**	2	STRIKER	
	5	2	**4I-8019**	3	SUPPORT	
	6	3	**6I-6033**	3	STOP	
	7	4	**7Y-2853**	8	SPACER (13X38X5-MM THK)	
	8	3	**087-3908**	4	SHIM (1-MM THK)	
	9	3	**087-3909**	4	SHIM (2-MM THK)	
	10	1	**116-1628**	1	SUPPORT AS	
	11	4	**122-3979**	1	BAND	
	12	4	**122-3980**	1	ROD	
	13	2	**122-4120**	3	ROD	
M	14	1,2,3,4	**135-8573**	73	BOLT AS	
M	15	1,2,3,4	**135-8575**	35	BOLT AS	
M	16	2,3	**135-8577**	4	BOLT AS	
M	17	1	**135-8578**	6	BOLT AS	
	18	1,2	**170-3016**	15	SPACER (19X32X2-MM THK)	
	19	1	**184-8423**	1	SUPPORT AS	
	20	3	**190-6880**	3	SUPPORT AS	
	21	1	**203-4889**	1	SPRING	
	22	1	**203-4890**	1	SPRING	
Y	23	1	**298-2977**	1	DOOR GP-ACCESS (AIR CLEANER, BATTERY)	741
	24	1	**372-7633**	1	COVER AS-ACCESS	
	25	1	**330-1347**	1	COVER AS	
	26	2	**330-1182**	1	SUPPORT AS	
	27	2	**244-8228**	1	SUPPORT AS	
	28	2	**244-8234**	1	SUPPORT AS	
	29	2	**244-8242**	1	SUPPORT AS	
	30	2	**298-3038**	1	SUPPORT AS	
	31	2	**244-8255**	1	SUPPORT AS	
Y	32	2	**248-8940**	1	SUPPORT AS-ENCLOSURE	847
	33	3	**293-6982**	1	SHEET AS	
Y	34	1	**262-2286**	1	HOOD GP-ENGINE	827
	35	3	**262-2324**	1	COVER AS	
	36	4	**293-7056**	1	SHEET AS	
	37	1	**262-2353**	1	COVER AS	
	38	4	**262-2363**	1	SHEET AS-SOUND SUPPRESSION	
Y	39	4	**298-2979**	1	COVER AS-ACCESS (FUEL, HYDRAULIC TANKS)	722
	40	2	**298-3041**	1	SUPPORT AS	
		2	**278-3832**	1	LINER	
Y	41	4	**278-3836**	1	SHEET AS-SOUND SUPPRESSION	832
Y	42	4	**278-3842**	1	SHEET AS-SOUND SUPPRESSION	833
	43	3	**330-1184**	1	SUPPORT AS	
C	44	1	**372-7640**	1	COVER AS-ACCESS	
Y	45	3	**375-8764**	1	SUPPORT AS-ENCLOSURE	854
	46	4	**283-3911**	1	SHEET AS	
	47	3	**286-6220**	1	SHEET AS	
		3	**286-6276**	1	LINER	
	48	2	**286-6359**	1	SUPPORT AS	
Y	49	3	**289-6572**	1	SHEET AS-SOUND SUPPRESSION	834
Y	50	4	**289-6695**	1	SHEET AS-SOUND SUPPRESSION	836
	51	3	**289-6698**	1	SUPPORT AS	
		3	**129-3400**	1	GUARD	
		3	**244-8198**	1	LINER	
Y	52	4	**355-8230**	1	SHEET AS-SOUND SUPPRESSION	842
	53	3	**289-6805**	1	SUPPORT AS-ENCLOSURE	
Y	54	1	**289-6913**	1	DOOR GP-ACCESS (PUMP COMPARTMENT)	738

273-7726 **HOOD & GUARD GP (*contd.*)** **i04891965**

NOTE	REF NO	GRAPHIC REF	PART NUMBER	QTY	PART NAME 1 2 3 4 5 6 (PRODUCT LEVEL)	SEE PAGE
Y	55	1	**289-6915**	1	DOOR GP-ACCESS (RADIATOR)	739
	56	1,2	**3B-4618**	4	PIN-COTTER	
M	57	3	**105-3487**	6	BOLT-SOCKET HEAD (M6X1X20-MM)	
	58	1	**114-6285**	2	BAR	
M	59	2,4	**5C-9553**	8	BOLT (M6X1X16-MM)	
	60	2,3	**5P-4115**	16	WASHER-HARD (7.2X19X2-MM THK)	
	61	4	**7Y-2854**	8	SPACER (24X38X3-MM THK)	
	62	2,3	**8T-4121**	5	WASHER-HARD (11X21X2.5-MM THK)	
M	63	3	**8T-4137**	2	BOLT (M10X1.5X20-MM)	
M	64	3	**8T-4138**	10	BOLT (M6X1X20-MM)	
M	65	2	**8T-4189**	4	BOLT (M8X1.25X20-MM)	
	66	1	**8T-4223**	2	WASHER-HARD (13.5X25.5X3-MM THK)	
	67	1,2	**8T-4224**	8	WASHER-HARD (8.8X16X2-MM THK)	
M	68	1	**8T-4908**	4	BOLT (M8X1.25X25-MM)	
	69	3,4	**9X-8256**	8	WASHER (6.6X12X2-MM THK)	
	70	4	**307-7700**	1	SHEET AS-SOUND SUPPRESSION	
		4	**6P-2216**	3	CAP	
		4	**307-7702**	1	INSULATION	

C - CHANGE FROM PREVIOUS TYPE
J - REQUIRES CORPORATE KEY
M - METRIC PART
Y - SEPARATE ILLUSTRATION

273-7726 **HOOD & GUARD GP (*contd.*)** **i04891965**

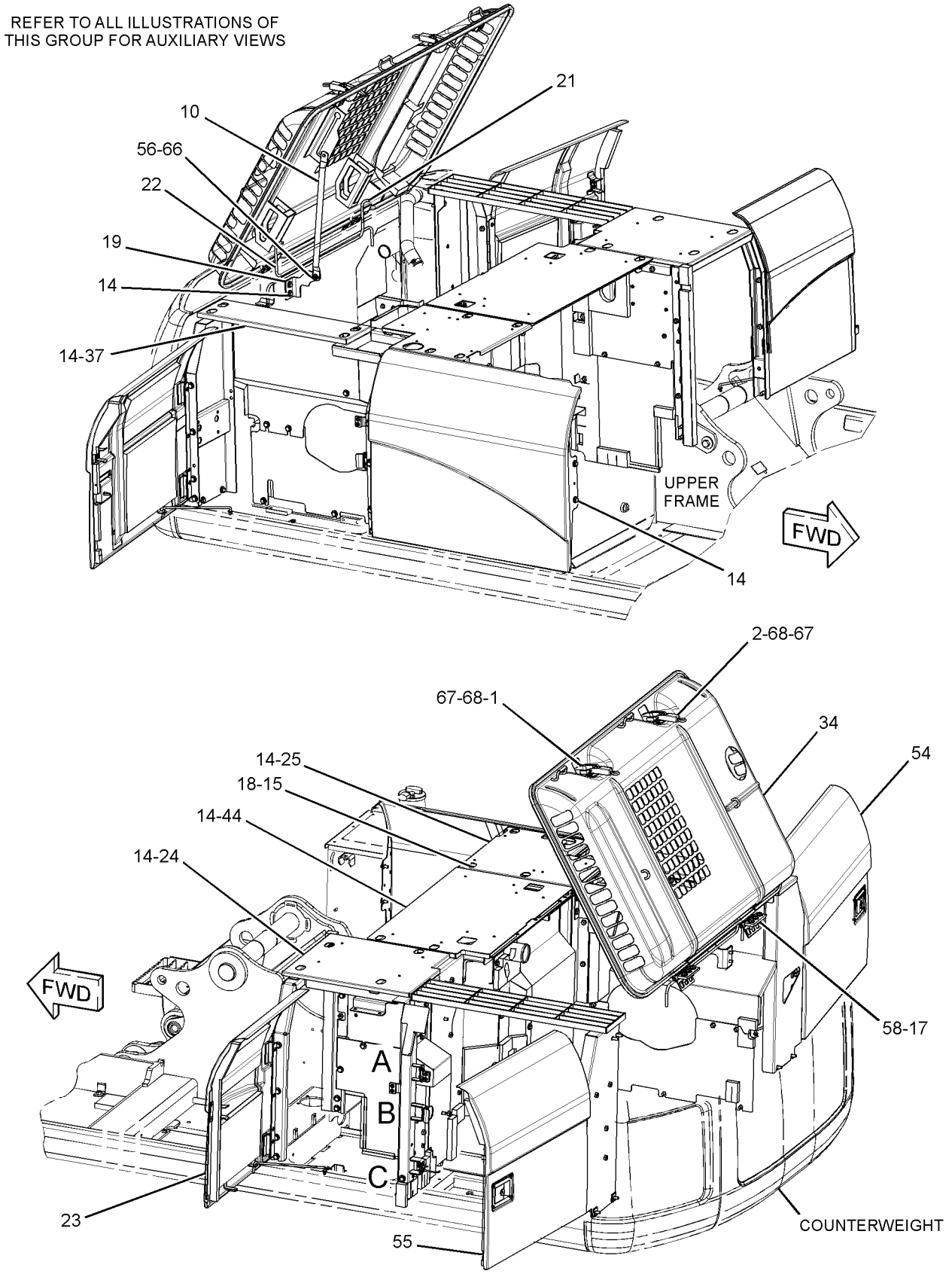

GRAPHIC #1

g01440901

273-7726 **HOOD & GUARD GP (*contd.*)** **i04891965**

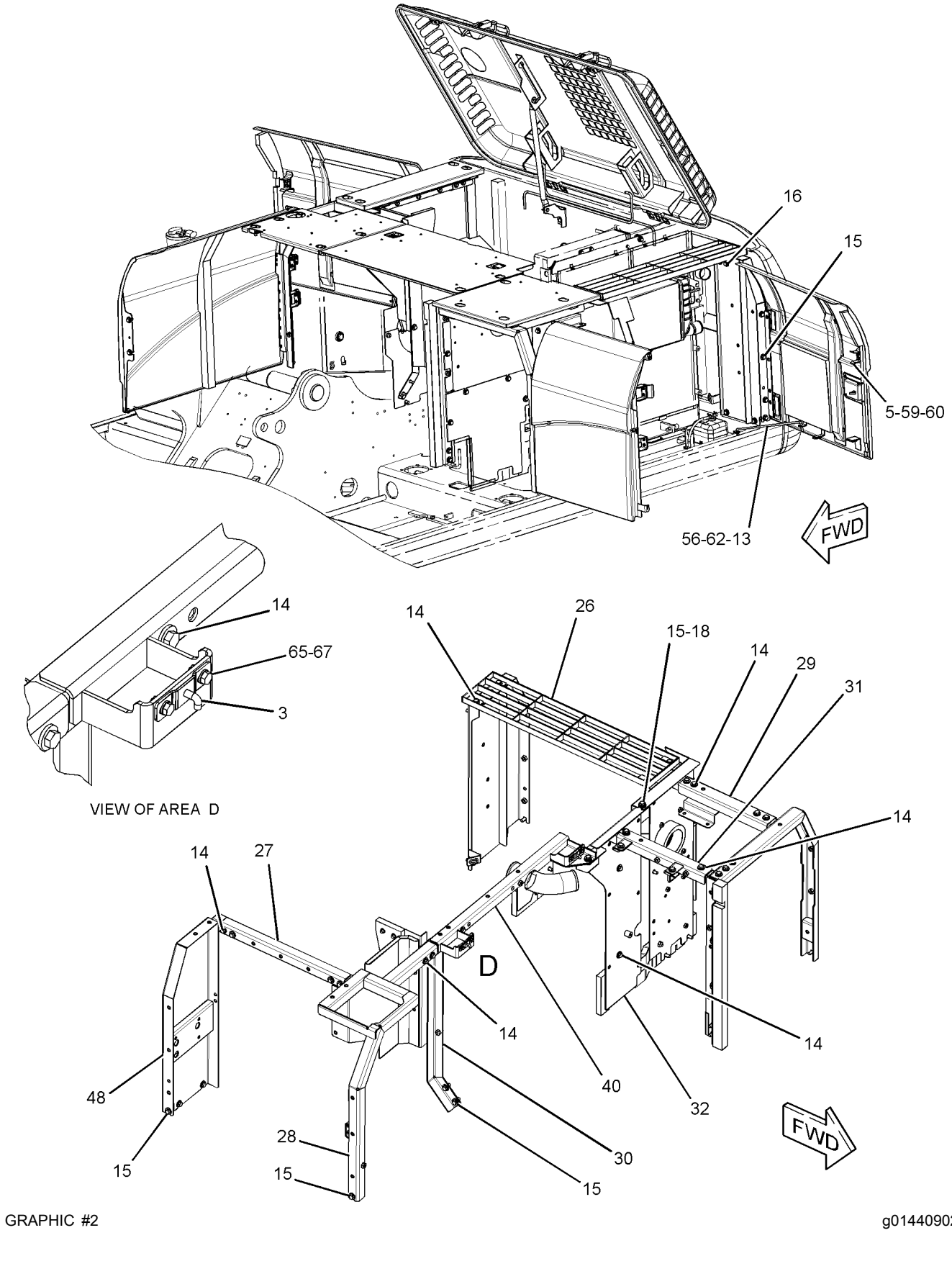

GRAPHIC #2 g01440902

273-7726 **HOOD & GUARD GP (*contd.*)** **i04891965**

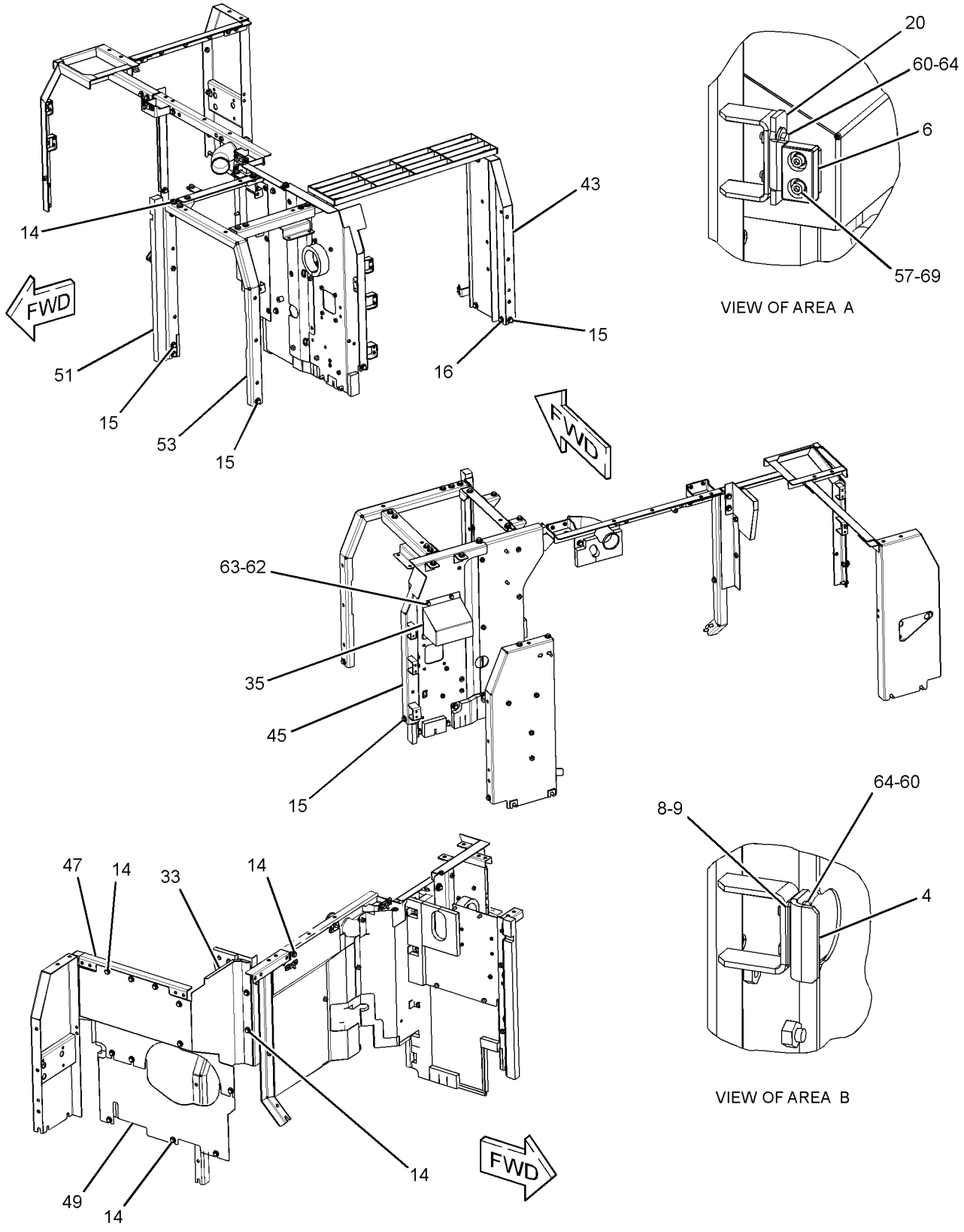

GRAPHIC #3 g01440903

273-7726 **HOOD & GUARD GP (*contd.*)** **i04891965**

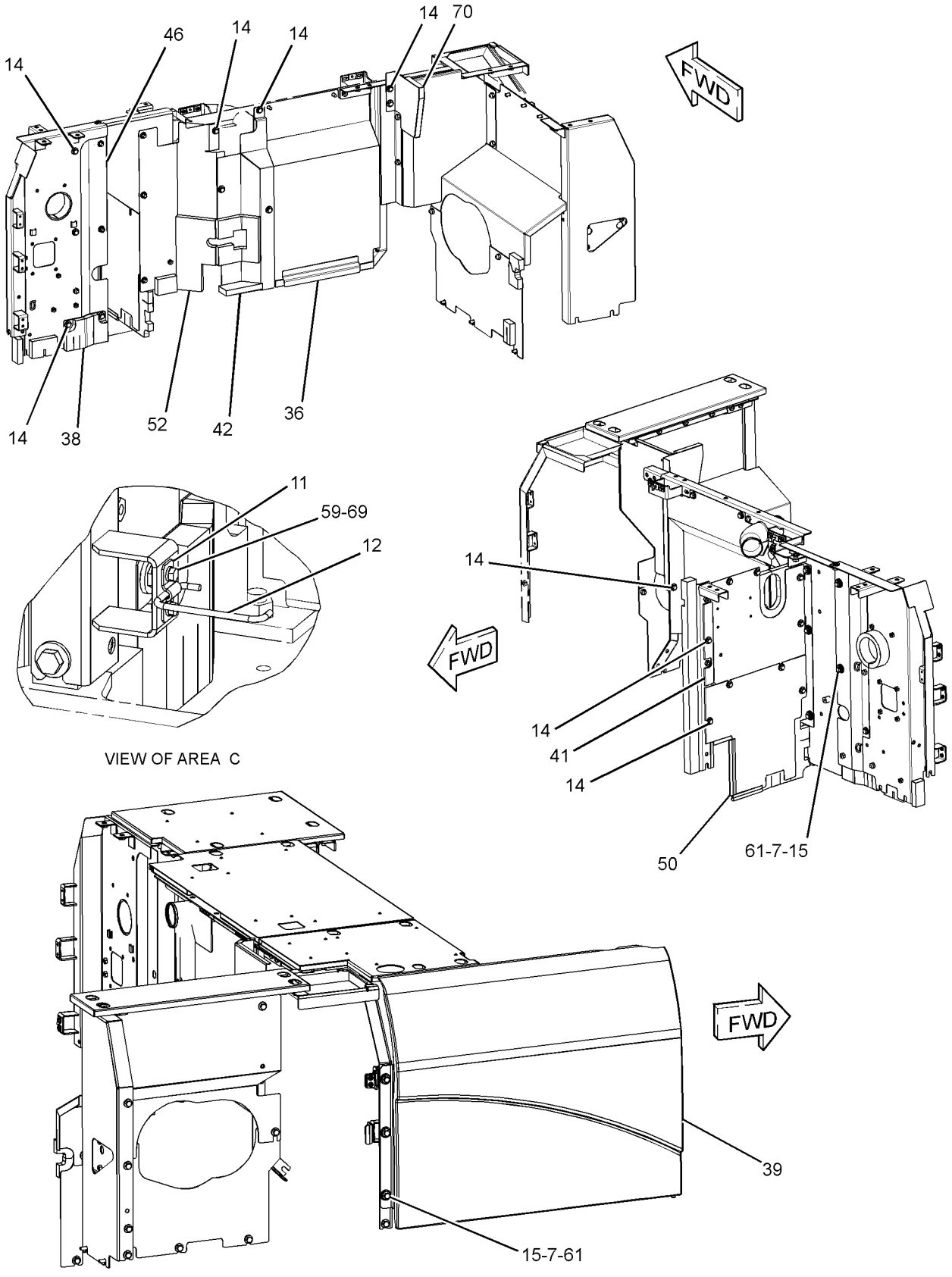

GRAPHIC #4 **<END>** g01440904

320-5732 HOOD & GUARD GP

S/N: KGF1-UP
PART OF 290-1892 SPECIAL AR
AN ATTACHMENT
TYPE 1

SMCS-7251, 7276 **i03078281**

NOTE	REF NO	GRAPHIC REF	PART NUMBER	QTY	PART NAME 1 2 3 4 5 6 (PRODUCT LEVEL)	SEE PAGE
	1	1	**1R-9958**	1	LATCH AS	
	2	1	**4I-0117**	1	LATCH AS	
	3	2	**4I-0118**	2	HOOK AS	
	4	3	**4I-0232**	2	STRIKER	
	5	1	**4I-8019**	3	SUPPORT	
	6	3	**6I-6033**	3	STOP	
	7	2	**7Y-2853**	8	SPACER (13X38X5-MM THK)	
	8	3	**087-3908**	4	SHIM (1-MM THK)	
	9	3	**087-3909**	4	SHIM (2-MM THK)	
	10	3	**116-1628**	1	SUPPORT AS	
	11	3	**122-3979**	1	BAND	
	12	3	**122-3980**	1	ROD	
	13	2	**122-4120**	3	ROD	
M	14	1,2,3	**135-8573**	73	BOLT AS	
M	15	1,2,3	**135-8575**	35	BOLT AS	
M	16	1	**135-8577**	4	BOLT AS	
M	17	2	**135-8578**	6	BOLT AS	
	18	1,2	**170-3016**	15	SPACER (19X32X2-MM THK)	
	19	3	**184-8423**	1	SUPPORT AS	
	20	3	**190-6880**	3	SUPPORT AS	
	21	3	**203-4889**	1	SPRING	
	22	3	**203-4890**	1	SPRING	
	23	1	**244-8202**	1	COVER AS	
	24	1	**244-8207**	1	COVER AS	
	25	1	**244-8219**	1	SUPPORT AS	
	26	2	**244-8228**	1	SUPPORT AS	
	27	2	**244-8234**	1	SUPPORT AS	
	28	2	**244-8242**	1	SUPPORT AS	
	29	2	**244-8255**	1	SUPPORT AS	
Y	30	2	**248-8940**	1	SUPPORT AS-ENCLOSURE	847
Y	31	1	**259-3687**	1	HOOD GP-ENGINE	826
	32	3	**262-2324**	1	COVER AS	
	33	1	**262-2353**	1	COVER AS	
	34	3	**262-2363**	1	SHEET AS-SOUND SUPPRESSION	
		3	**262-2365**	1	LINER	
Y	35	2	**278-3836**	1	SHEET AS-SOUND SUPPRESSION	832
Y	36	3	**278-3842**	1	SHEET AS-SOUND SUPPRESSION	833
	37	3	**283-3911**	1	SHEET AS	
	38	2	**286-6220**	1	SHEET AS	
		2	**286-6276**	1	LINER	
	39	2	**286-6359**	1	SUPPORT AS	
Y	40	2	**289-6572**	1	SHEET AS-SOUND SUPPRESSION	834
	41	1	**289-6583**	1	SUPPORT AS	
Y	42	2	**289-6695**	1	SHEET AS-SOUND SUPPRESSION	836
	43	2	**289-6698**	1	SUPPORT AS	
		2	**129-3400**	1	GUARD	
		2	**244-8198**	1	LINER	
Y	44	3	**289-6699**	1	SHEET AS-SOUND SUPPRESSION	837
	45	2	**289-6805**	1	SUPPORT AS-ENCLOSURE	
Y	46	1	**289-6911**	1	DOOR GP-ACCESS (RADIATOR, AFCLR, HYD COOLER)	737
Y	47	1	**289-6913**	1	DOOR GP-ACCESS (PUMP COMPARTMENT)	738
	48	2	**293-6982**	1	SHEET AS	
Y	49	1	**298-2977**	1	DOOR GP-ACCESS (AIR CLEANER, BATTERY)	741
Y	50	1	**298-2979**	1	COVER AS-ACCESS (FUEL, HYDRAULIC TANKS)	722
Y	51	3	**298-3033**	1	SHEET AS-SOUND SUPPRESSION	840
	52	2	**298-3038**	1	SUPPORT AS	

320-5732 **HOOD & GUARD GP (*contd.*)** **i03078281**

NOTE	REF NO	GRAPHIC REF	PART NUMBER	QTY	PART NAME 1 2 3 4 5 6 (PRODUCT LEVEL)	SEE PAGE
	53	3	**298-3041**	1	SUPPORT AS	
		3	**278-3832**	1	LINER	
	54	1	**298-3044**	1	COVER AS	
Y	55	3	**307-7662**	1	SUPPORT AS-ENCLOSURE	851
	56	2	**307-7700**	1	SHEET AS-SOUND SUPPRESSION	
		2	**6P-2216**	3	CAP	
		2	**307-7702**	1	INSULATION	
	57	2,3	**3B-4618**	4	PIN-COTTER	
M	58	3	**105-3487**	6	BOLT-SOCKET HEAD (M6X1X20-MM)	
	59	2	**114-6285**	2	BAR	
M	60	1,3	**5C-9553**	8	BOLT (M6X1X16-MM)	
	61	1,3	**5P-4115**	16	WASHER-HARD (7.2X19X2-MM THK)	
	62	2	**7Y-2854**	8	SPACER (24X38X3-MM THK)	
	63	2,3	**8T-4121**	5	WASHER-HARD (11X21X2.5-MM THK)	
M	64	3	**8T-4137**	2	BOLT (M10X1.5X20-MM)	
M	65	3	**8T-4138**	10	BOLT (M6X1X20-MM)	
M	66	2	**8T-4189**	4	BOLT (M8X1.25X20-MM)	
	67	3	**8T-4223**	2	WASHER-HARD (13.5X25.5X3-MM THK)	
	68	1,2	**8T-4224**	8	WASHER-HARD (8.8X16X2-MM THK)	
M	69	1	**8T-4908**	4	BOLT (M8X1.25X25-MM)	
	70	3	**9X-8256**	8	WASHER (6.6X12X2-MM THK)	

M - METRIC PART
Y - SEPARATE ILLUSTRATION

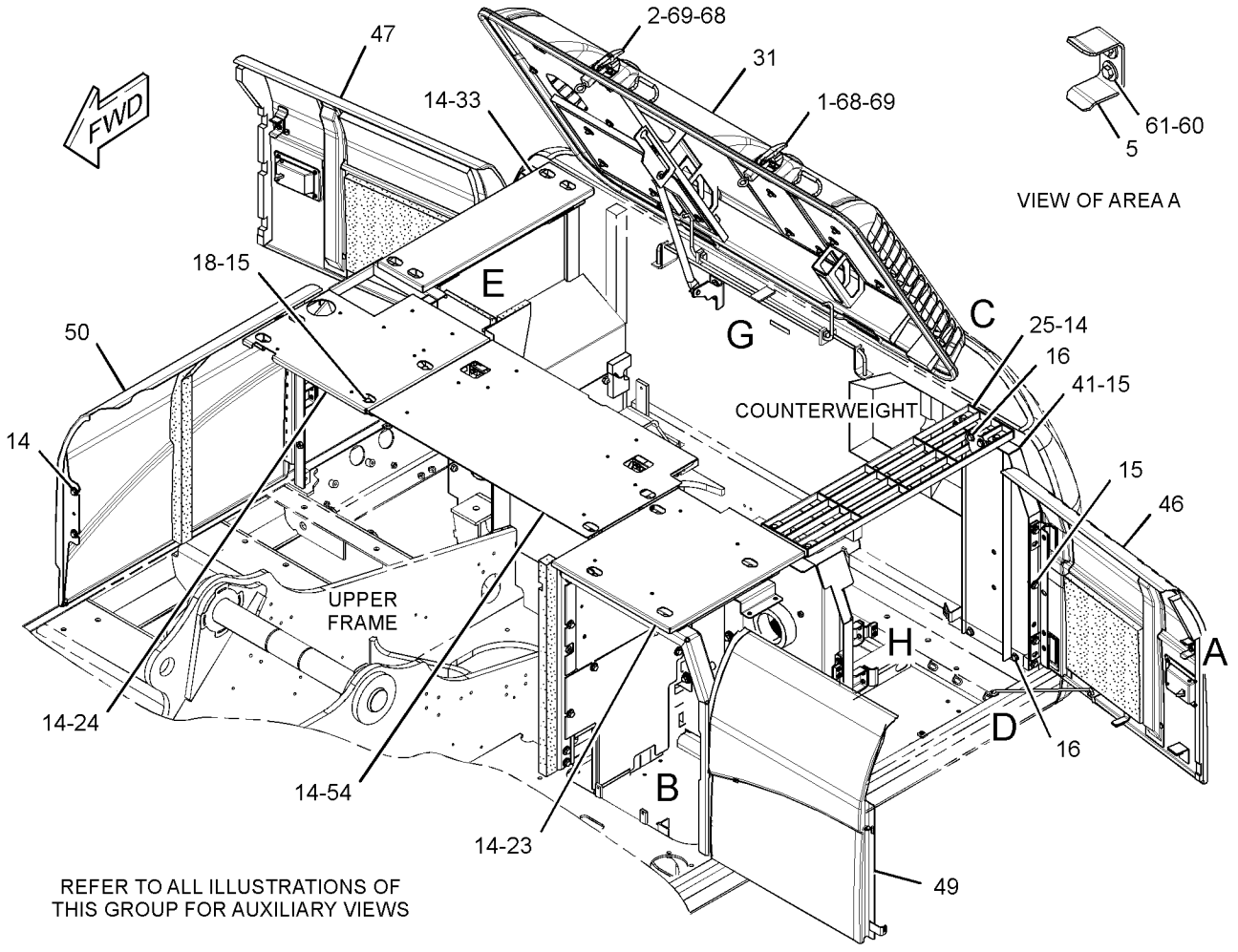

GRAPHIC #1 g01619947

320-5732 **HOOD & GUARD GP (*contd.*)** **i03078281**

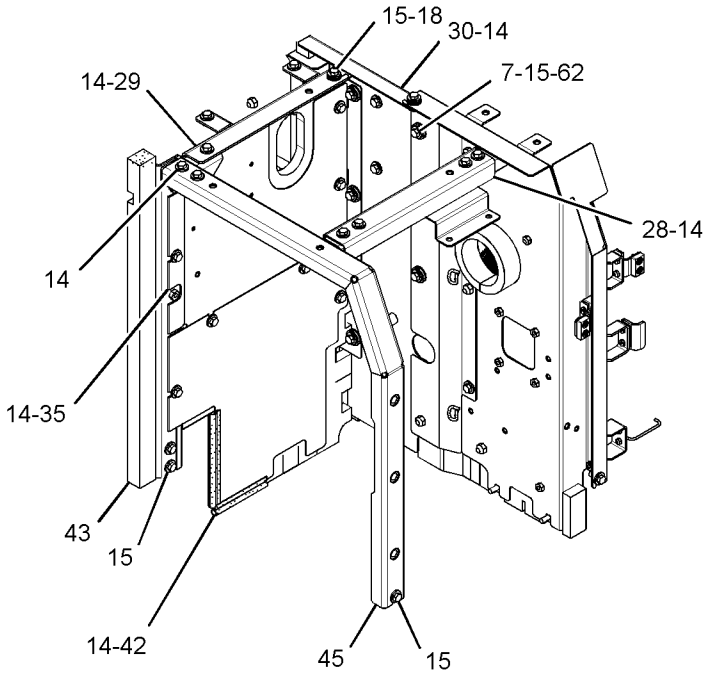

VIEW OF AREA B
(COVER REMOVED)

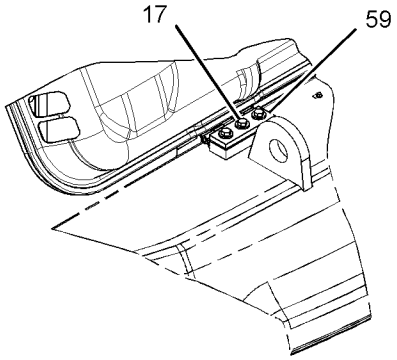

VIEW OF AREA C 90°

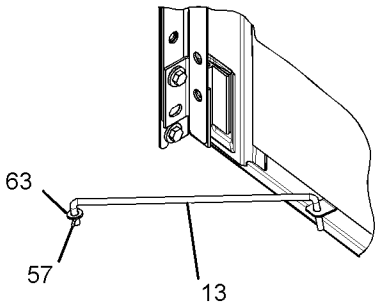

VIEW OF AREA D

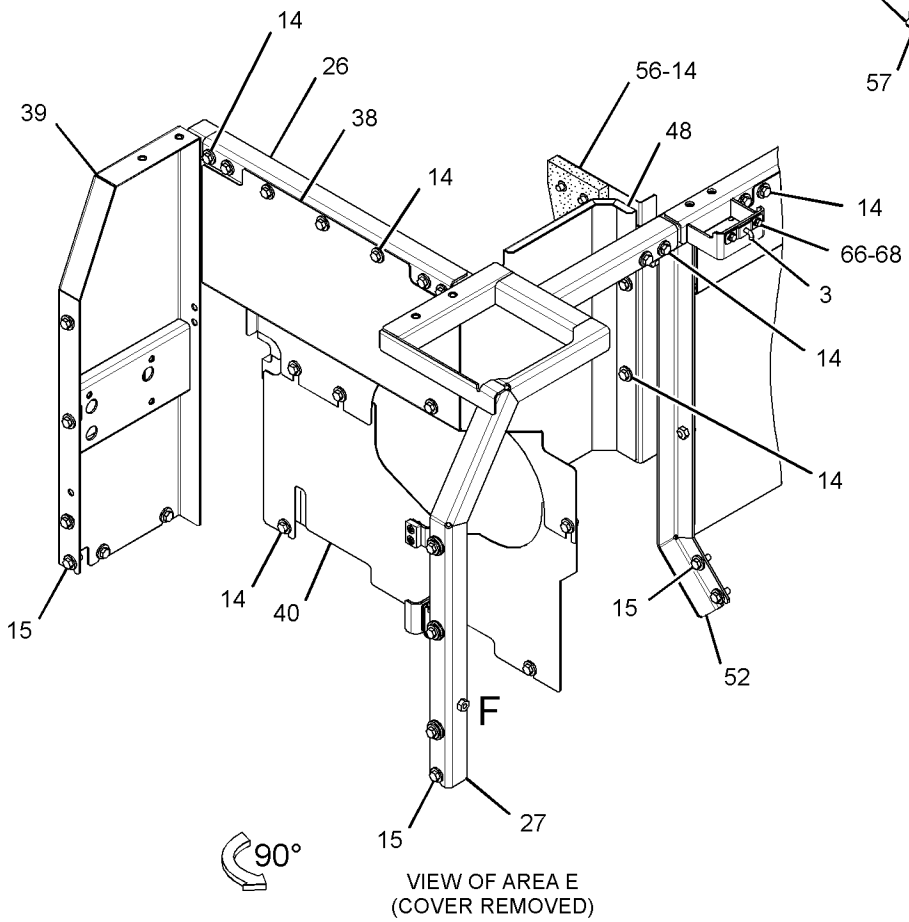

VIEW OF AREA E
(COVER REMOVED)

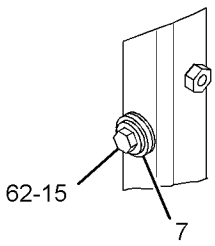

VIEW OF AREA F

GRAPHIC #2

g01619948

320-5732 **HOOD & GUARD GP (*contd.*)** **i03078281**

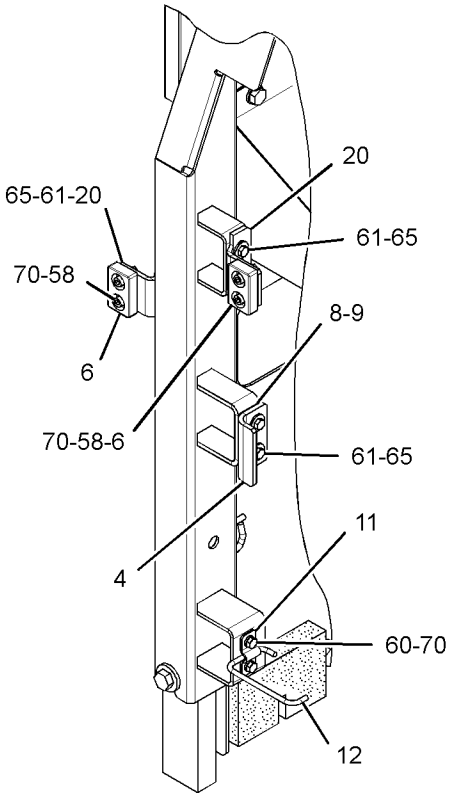

VIEW OF AREA J

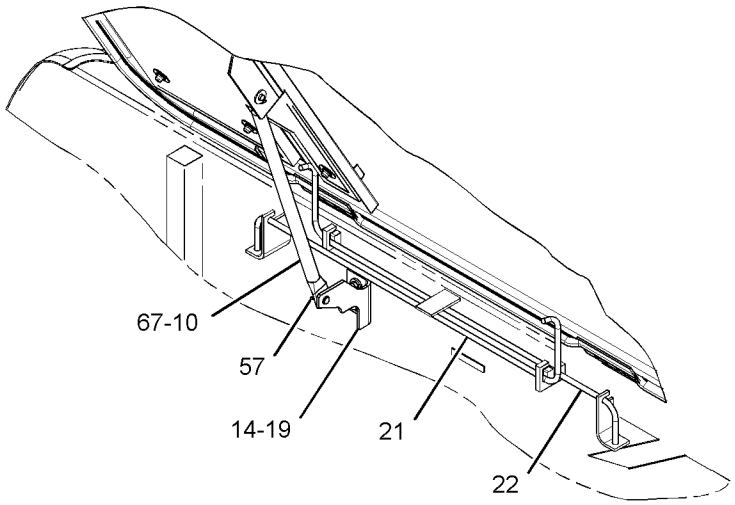

VIEW OF AREA G

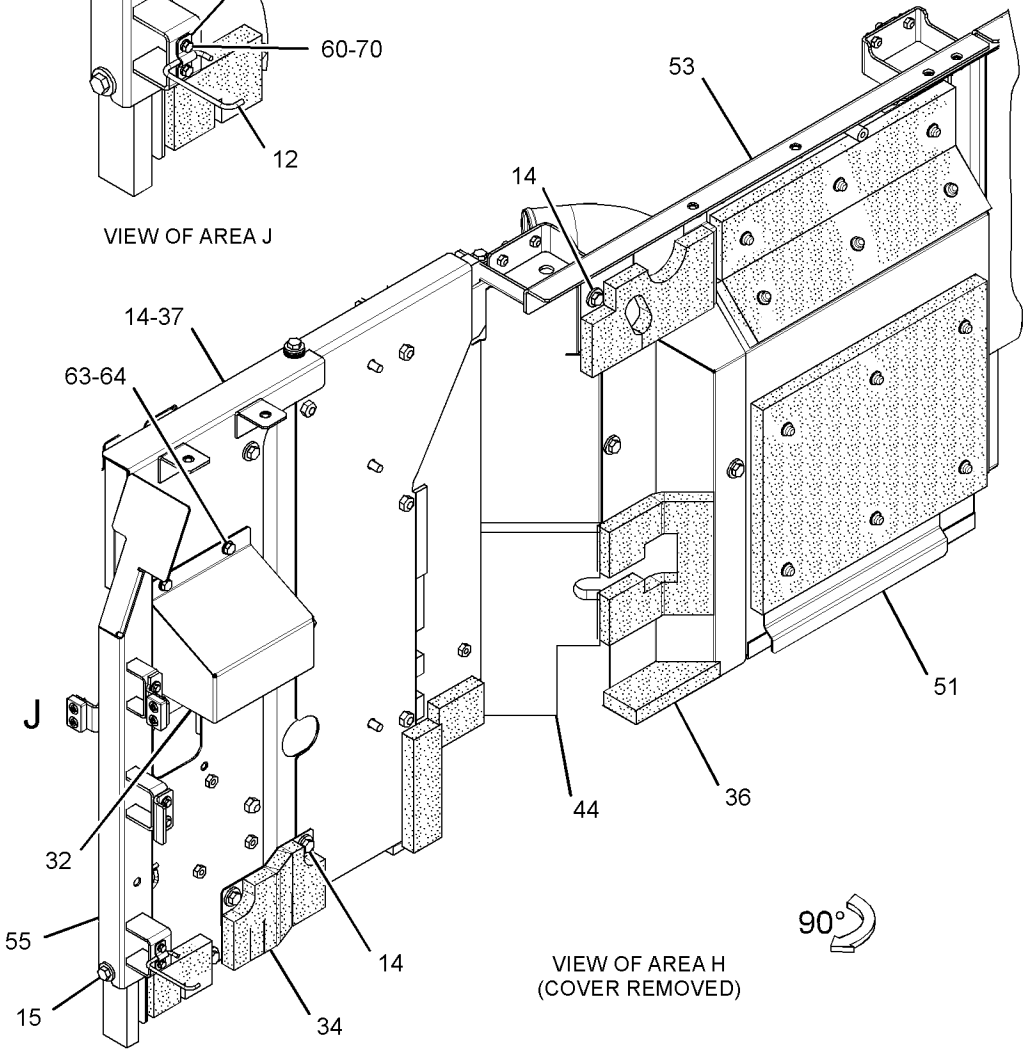

VIEW OF AREA H
(COVER REMOVED)

GRAPHIC #3 **<END>** g01619949

320-5732 HOOD & GUARD GP

S/N: KGF1-UP
PART OF 290-1892 SPECIAL AR
AN ATTACHMENT
TYPE 2

SMCS-7251, 7276 **i03087023**

NOTE	REF NO	GRAPHIC REF	PART NUMBER	QTY	PART NAME 1 2 3 4 5 6 (PRODUCT LEVEL)	SEE PAGE
	1	1	**1R-9958**	1	LATCH AS	
	2	1	**4I-0117**	1	LATCH AS	
	3	2	**4I-0118**	2	HOOK AS	
	4	3	**4I-0232**	2	STRIKER	
	5	1	**4I-8019**	3	SUPPORT	
	6	3	**6I-6033**	3	STOP	
	7	2	**7Y-2853**	8	SPACER (13X38X5-MM THK)	
	8	3	**087-3908**	4	SHIM (1-MM THK)	
	9	3	**087-3909**	4	SHIM (2-MM THK)	
	10	3	**116-1628**	1	SUPPORT AS	
	11	3	**122-3979**	1	BAND	
	12	3	**122-3980**	1	ROD	
	13	2	**122-4120**	3	ROD	
M	14	1,2,3	**135-8573**	73	BOLT AS	
M	15	1,2,3	**135-8575**	35	BOLT AS	
M	16	1	**135-8577**	4	BOLT AS	
M	17	2	**135-8578**	6	BOLT AS	
	18	1,2	**170-3016**	15	SPACER (19X32X2-MM THK)	
	19	3	**184-8423**	1	SUPPORT AS	
	20	3	**190-6880**	3	SUPPORT AS	
	21	3	**203-4889**	1	SPRING	
	22	3	**203-4890**	1	SPRING	
	23	1	**244-8202**	1	COVER AS	
	24	1	**244-8207**	1	COVER AS	
C	25	1	**330-1182**	1	SUPPORT AS	
	26	2	**244-8228**	1	SUPPORT AS	
	27	2	**244-8234**	1	SUPPORT AS	
	28	2	**244-8242**	1	SUPPORT AS	
	29	2	**244-8255**	1	SUPPORT AS	
Y	30	2	**248-8940**	1	SUPPORT AS-ENCLOSURE	847
Y	31	1	**259-3687**	1	HOOD GP-ENGINE	826
	32	3	**262-2324**	1	COVER AS	
	33	1	**262-2353**	1	COVER AS	
	34	3	**262-2363**	1	SHEET AS-SOUND SUPPRESSION	
		3	**262-2365**	1	LINER	
Y	35	2	**278-3836**	1	SHEET AS-SOUND SUPPRESSION	832
Y	36	3	**278-3842**	1	SHEET AS-SOUND SUPPRESSION	833
	37	3	**283-3911**	1	SHEET AS	
	38	2	**286-6220**	1	SHEET AS	
		2	**286-6276**	1	LINER	
	39	2	**286-6359**	1	SUPPORT AS	
Y	40	2	**289-6572**	1	SHEET AS-SOUND SUPPRESSION	834
C	41	1	**330-1183**	1	SUPPORT AS	
Y	42	2	**289-6695**	1	SHEET AS-SOUND SUPPRESSION	836
	43	2	**289-6698**	1	SUPPORT AS	
		2	**129-3400**	1	GUARD	
		2	**244-8198**	1	LINER	
Y	44	3	**289-6699**	1	SHEET AS-SOUND SUPPRESSION	837
	45	2	**289-6805**	1	SUPPORT AS-ENCLOSURE	
Y	46	1	**289-6911**	1	DOOR GP-ACCESS (RADIATOR, AFCLR, HYD COOLER)	737
Y	47	1	**289-6913**	1	DOOR GP-ACCESS (PUMP COMPARTMENT)	738
	48	2	**293-6982**	1	SHEET AS	
Y	49	1	**298-2977**	1	DOOR GP-ACCESS (AIR CLEANER, BATTERY)	741
Y	50	1	**298-2979**	1	COVER AS-ACCESS (FUEL, HYDRAULIC TANKS)	722
Y	51	3	**298-3033**	1	SHEET AS-SOUND SUPPRESSION	840
	52	2	**298-3038**	1	SUPPORT AS	

320-5732 **HOOD & GUARD GP** (*contd.*) **i03087023**

NOTE	REF NO	GRAPHIC REF	PART NUMBER	QTY	PART NAME 1 2 3 4 5 6 (PRODUCT LEVEL)	SEE PAGE
	53	3	**298-3041**	1	SUPPORT AS	
		3	**278-3832**	1	LINER	
	54	1	**298-3044**	1	COVER AS	
Y	55	3	**307-7662**	1	SUPPORT AS-ENCLOSURE	851
	56	2	**307-7700**	1	SHEET AS-SOUND SUPPRESSION	
		2	**6P-2216**	3	CAP	
		2	**307-7702**	1	INSULATION	
	57	2,3	**3B-4618**	4	PIN-COTTER	
M	58	3	**105-3487**	6	BOLT-SOCKET HEAD (M6X1X20-MM)	
	59	2	**114-6285**	2	BAR	
M	60	1,3	**5C-9553**	8	BOLT (M6X1X16-MM)	
	61	1,3	**5P-4115**	16	WASHER-HARD (7.2X19X2-MM THK)	
	62	2	**7Y-2854**	8	SPACER (24X38X3-MM THK)	
	63	2,3	**8T-4121**	5	WASHER-HARD (11X21X2.5-MM THK)	
M	64	3	**8T-4137**	2	BOLT (M10X1.5X20-MM)	
M	65	3	**8T-4138**	10	BOLT (M6X1X20-MM)	
M	66	2	**8T-4189**	4	BOLT (M8X1.25X20-MM)	
	67	3	**8T-4223**	2	WASHER-HARD (13.5X25.5X3-MM THK)	
	68	1,2	**8T-4224**	8	WASHER-HARD (8.8X16X2-MM THK)	
M	69	1	**8T-4908**	4	BOLT (M8X1.25X25-MM)	
	70	3	**9X-8256**	8	WASHER (6.6X12X2-MM THK)	

C - CHANGE FROM PREVIOUS TYPE
M - METRIC PART
Y - SEPARATE ILLUSTRATION

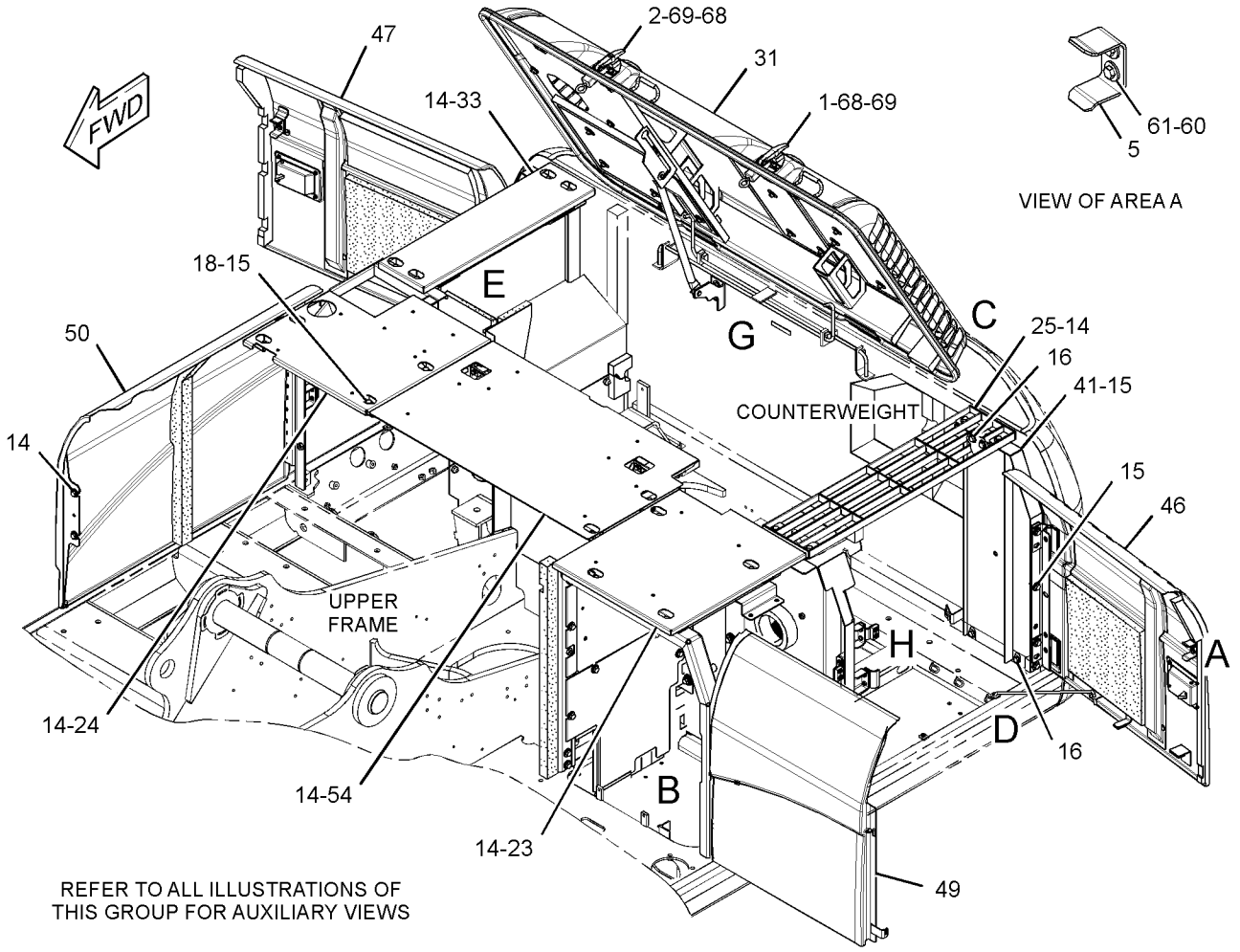

GRAPHIC #1 g01625602

320-5732 **HOOD & GUARD GP (*contd.*)** **i03087023**

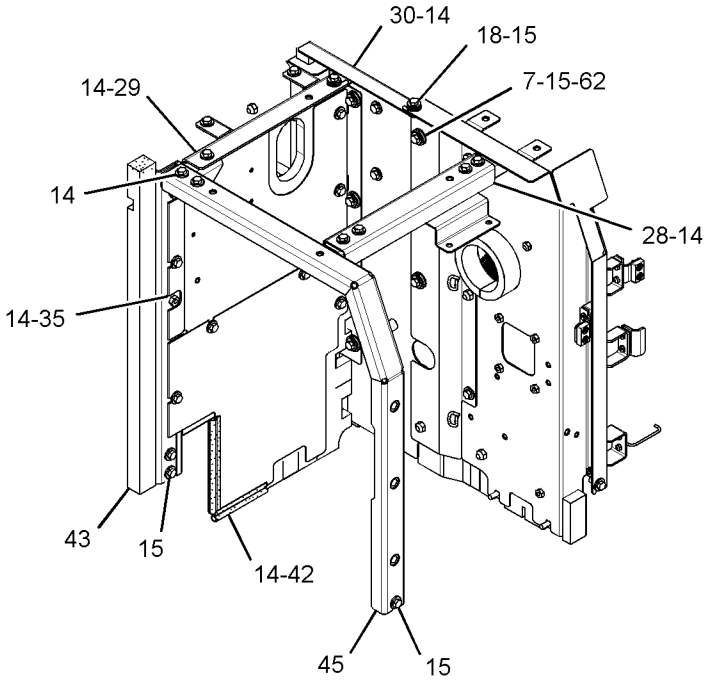

VIEW OF AREA B
(COVER REMOVED)

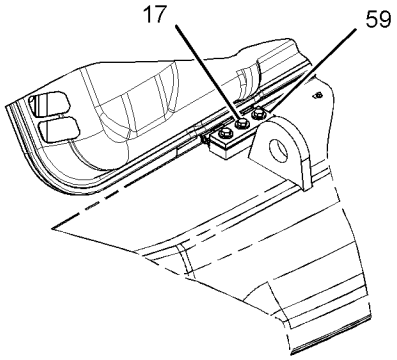

VIEW OF AREA C 90°

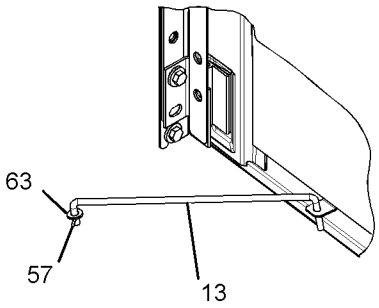

VIEW OF AREA D

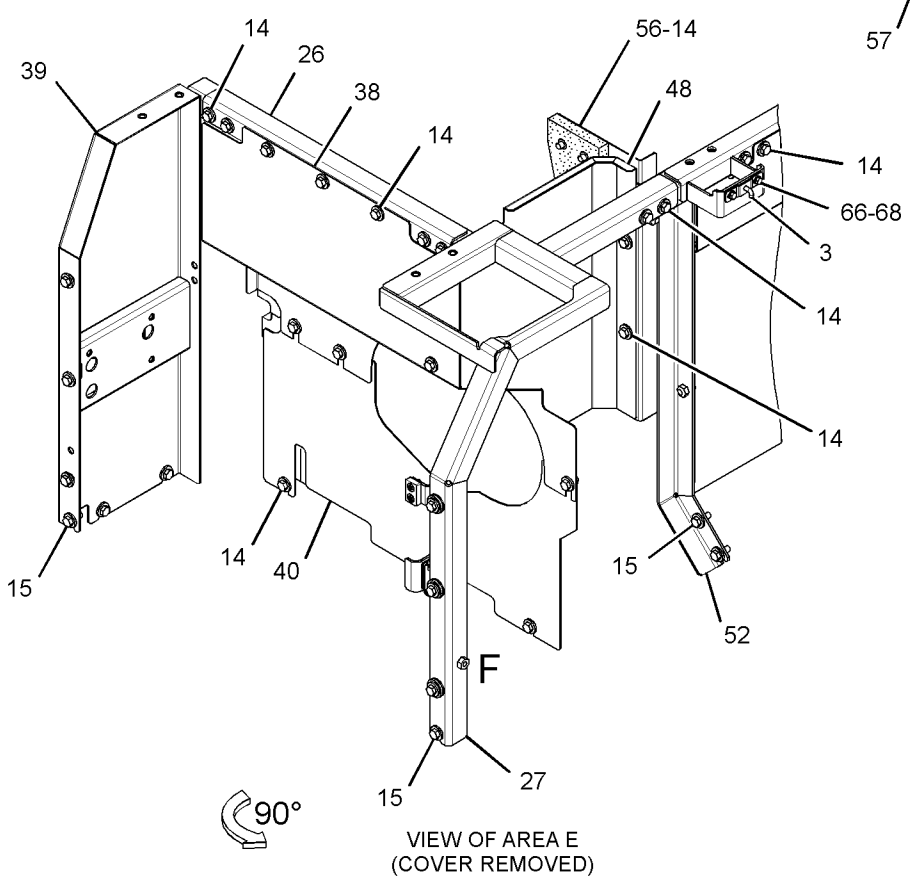

VIEW OF AREA E
(COVER REMOVED)

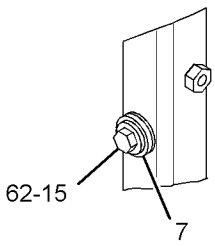

VIEW OF AREA F

GRAPHIC #2

g01625601

320-5732 **HOOD & GUARD GP (*contd.*)** **i03087023**

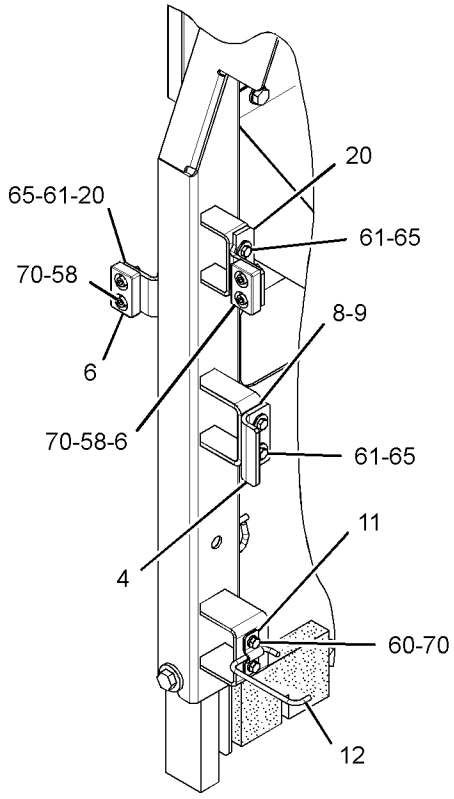

VIEW OF AREA J

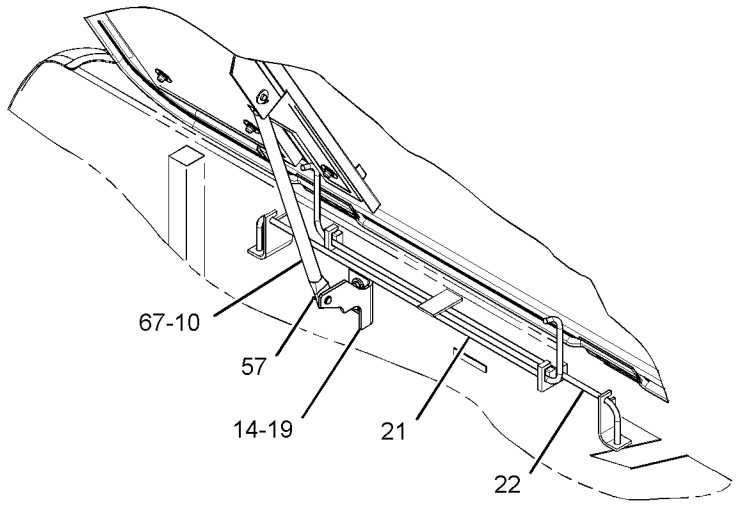

VIEW OF AREA G

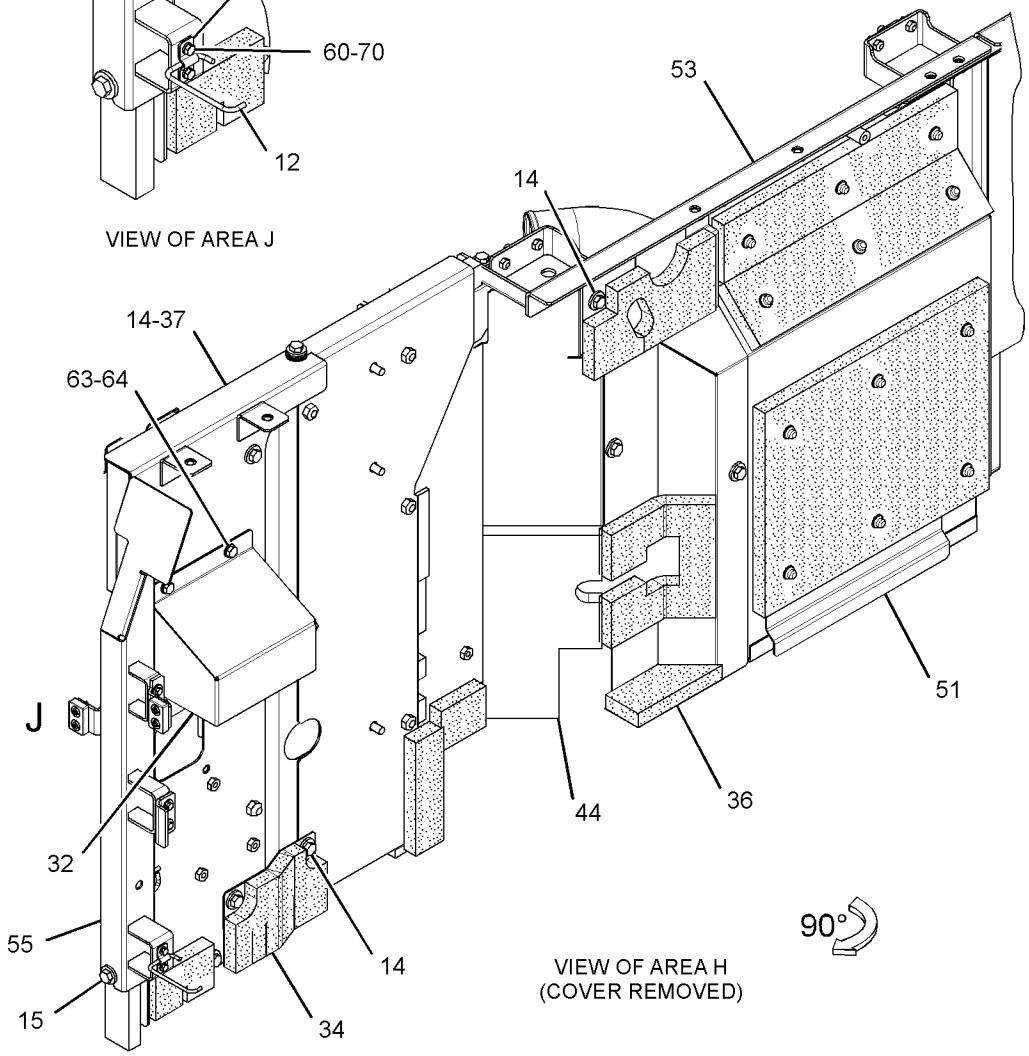

VIEW OF AREA H
(COVER REMOVED)

GRAPHIC #3 **<END>** g01625600

320-5732 HOOD & GUARD GP

S/N: KGF1-UP
PART OF 290-1892 SPECIAL AR
AN ATTACHMENT
TYPE 3

SMCS-7251, 7276 **i04898430**

NOTE	REF NO	GRAPHIC REF	PART NUMBER	QTY	PART NAME 1 2 3 4 5 6 (PRODUCT LEVEL)	SEE PAGE
	1	1	**375-8750**	1	LATCH AS	
J	2	1	**375-8749**	1	LATCH AS	
	3	2	**4I-0118**	2	HOOK AS	
	4	3	**4I-0232**	2	STRIKER	
	5	1	**4I-8019**	3	SUPPORT	
	6	3	**6I-6033**	3	STOP	
	7	2	**7Y-2853**	8	SPACER (13X38X5-MM THK)	
	8	3	**087-3908**	4	SHIM (1-MM THK)	
	9	3	**087-3909**	4	SHIM (2-MM THK)	
	10	3	**116-1628**	1	SUPPORT AS	
	11	3	**122-3979**	1	BAND	
	12	3	**122-3980**	1	ROD	
	13	2	**122-4120**	3	ROD	
M	14	1,2,3	**135-8573**	73	BOLT AS	
M	15	1,2,3	**135-8575**	35	BOLT AS	
M	16	1	**135-8577**	4	BOLT AS	
M	17	2	**135-8578**	6	BOLT AS	
	18	1,2	**170-3016**	15	SPACER (19X32X2-MM THK)	
	19	3	**184-8423**	1	SUPPORT AS	
	20	3	**190-6880**	3	SUPPORT AS	
	21	3	**203-4889**	1	SPRING	
	22	3	**203-4890**	1	SPRING	
	23	1	**372-7633**	1	COVER AS-ACCESS	
C	24	1	**330-1347**	1	COVER AS	
	25	1	**330-1182**	1	SUPPORT AS	
	26	2	**244-8228**	1	SUPPORT AS	
	27	2	**244-8234**	1	SUPPORT AS	
	28	2	**244-8242**	1	SUPPORT AS	
	29	2	**244-8255**	1	SUPPORT AS	
Y	30	2	**248-8940**	1	SUPPORT AS-ENCLOSURE	847
Y	31	1	**259-3687**	1	HOOD GP-ENGINE	826
	32	3	**262-2324**	1	COVER AS	
	33	1	**262-2353**	1	COVER AS	
	34	3	**262-2363**	1	SHEET AS-SOUND SUPPRESSION	
		3	**262-2365**	1	LINER	
Y	35	2	**278-3836**	1	SHEET AS-SOUND SUPPRESSION	832
Y	36	3	**278-3842**	1	SHEET AS-SOUND SUPPRESSION	833
	37	3	**283-3911**	1	SHEET AS	
	38	2	**286-6220**	1	SHEET AS	
		2	**286-6276**	1	LINER	
	39	2	**286-6359**	1	SUPPORT AS	
Y	40	2	**289-6572**	1	SHEET AS-SOUND SUPPRESSION	834
	41	1	**330-1183**	1	SUPPORT AS	
Y	42	2	**289-6695**	1	SHEET AS-SOUND SUPPRESSION	836
	43	2	**289-6698**	1	SUPPORT AS	
		2	**129-3400**	1	GUARD	
		2	**244-8198**	1	LINER	
Y	44	3	**355-8230**	1	SHEET AS-SOUND SUPPRESSION	842
	45	2	**289-6805**	1	SUPPORT AS-ENCLOSURE	
Y	46	1	**289-6911**	1	DOOR GP-ACCESS (RADIATOR, AFCLR, HYD COOLER)	737
Y	47	1	**289-6913**	1	DOOR GP-ACCESS (PUMP COMPARTMENT)	738
	48	2	**293-6982**	1	SHEET AS	
Y	49	1	**298-2977**	1	DOOR GP-ACCESS (AIR CLEANER, BATTERY)	741
Y	50	1	**298-2979**	1	COVER AS-ACCESS (FUEL, HYDRAULIC TANKS)	722
Y	51	3	**298-3033**	1	SHEET AS-SOUND SUPPRESSION	840
	52	2	**298-3038**	1	SUPPORT AS	

320-5732 **HOOD & GUARD GP** (*contd.*) **i04898430**

NOTE	REF NO	GRAPHIC REF	PART NUMBER	QTY	PART NAME 1 2 3 4 5 6 (PRODUCT LEVEL)	SEE PAGE
	53	3	**298-3041**	1	SUPPORT AS	
		3	**278-3832**	1	LINER	
	54	1	**372-7640**	1	COVER AS-ACCESS	
Y	55	3	**307-7662**	1	SUPPORT AS-ENCLOSURE	851
	56	2	**307-7700**	1	SHEET AS-SOUND SUPPRESSION	
		2	**6P-2216**	3	CAP	
		2	**307-7702**	1	INSULATION	
	57	2,3	**3B-4618**	4	PIN-COTTER	
M	58	3	**105-3487**	6	BOLT-SOCKET HEAD (M6X1X20-MM)	
	59	2	**114-6285**	2	BAR	
M	60	1,3	**5C-9553**	8	BOLT (M6X1X16-MM)	
	61	1,3	**5P-4115**	16	WASHER-HARD (7.2X19X2-MM THK)	
	62	2	**7Y-2854**	8	SPACER (24X38X3-MM THK)	
	63	2,3	**8T-4121**	5	WASHER-HARD (11X21X2.5-MM THK)	
M	64	3	**8T-4137**	2	BOLT (M10X1.5X20-MM)	
M	65	3	**8T-4138**	10	BOLT (M6X1X20-MM)	
M	66	2	**8T-4189**	4	BOLT (M8X1.25X20-MM)	
	67	3	**8T-4223**	2	WASHER-HARD (13.5X25.5X3-MM THK)	
	68	1,2	**8T-4224**	8	WASHER-HARD (8.8X16X2-MM THK)	
M	69	1	**8T-4908**	4	BOLT (M8X1.25X25-MM)	
	70	3	**9X-8256**	8	WASHER (6.6X12X2-MM THK)	

C - CHANGE FROM PREVIOUS TYPE
J - REQUIRES CORPORATE KEY
M - METRIC PART
Y - SEPARATE ILLUSTRATION

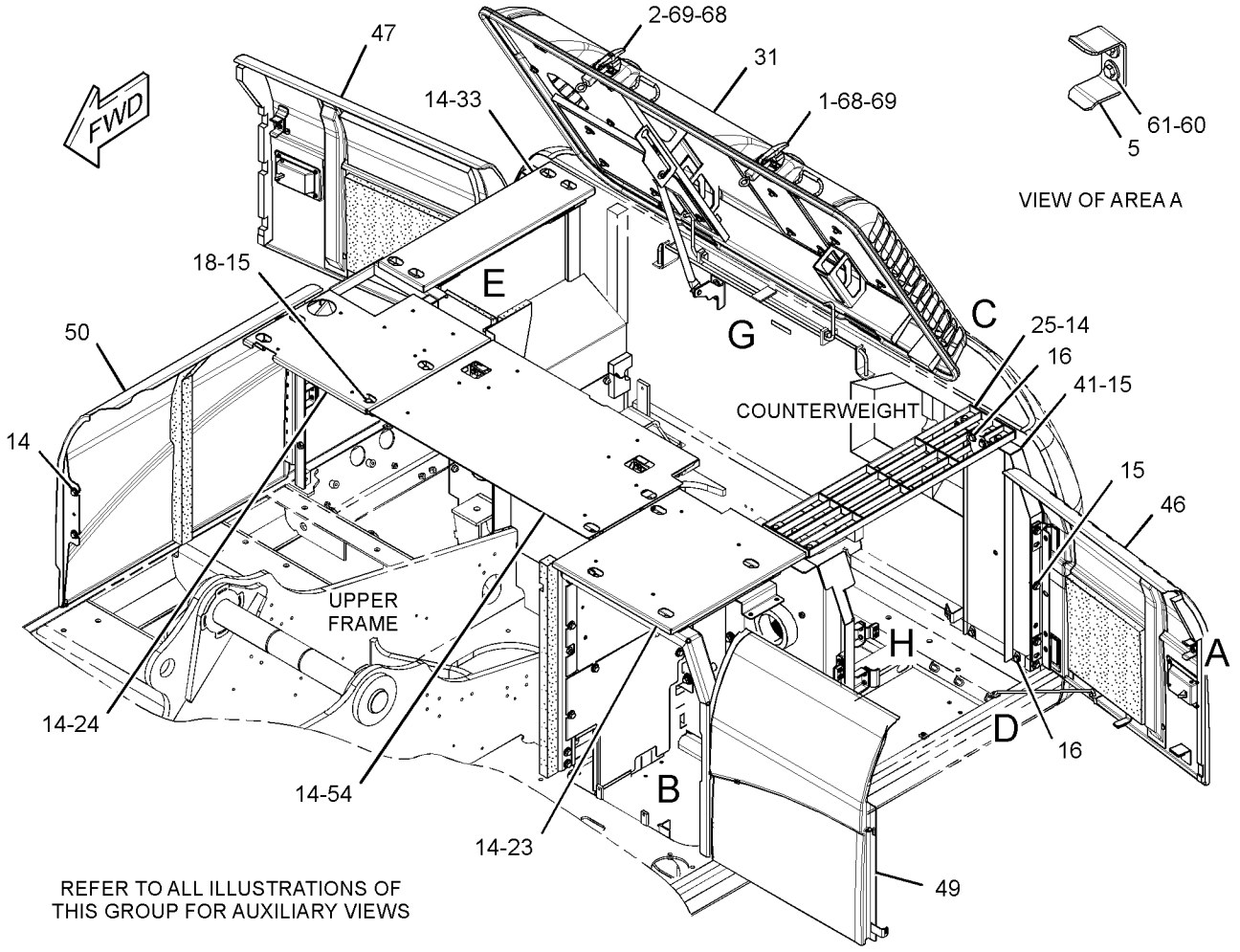

GRAPHIC #1 g01625602

320-5732 **HOOD & GUARD GP (*contd.*)** **i04898430**

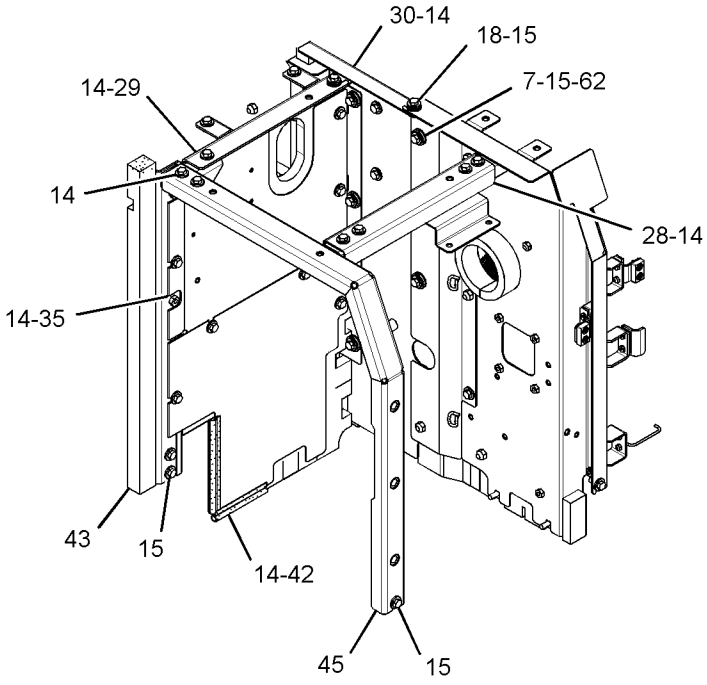

VIEW OF AREA B
(COVER REMOVED)

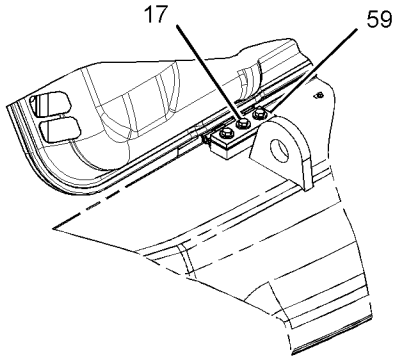

VIEW OF AREA C 90°

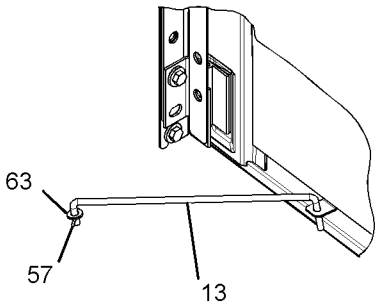

VIEW OF AREA D

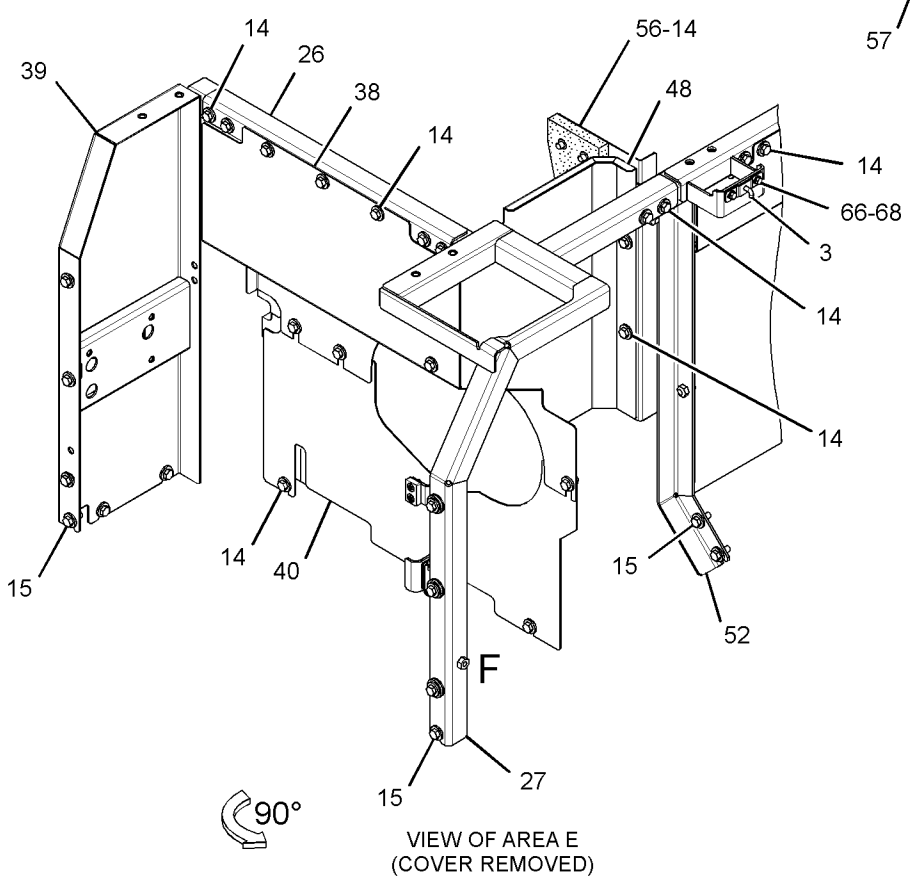

VIEW OF AREA E
(COVER REMOVED)

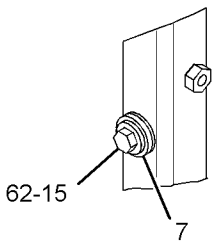

VIEW OF AREA F

GRAPHIC #2

g01625601

320-5732 **HOOD & GUARD GP (*contd.*)** **i04898430**

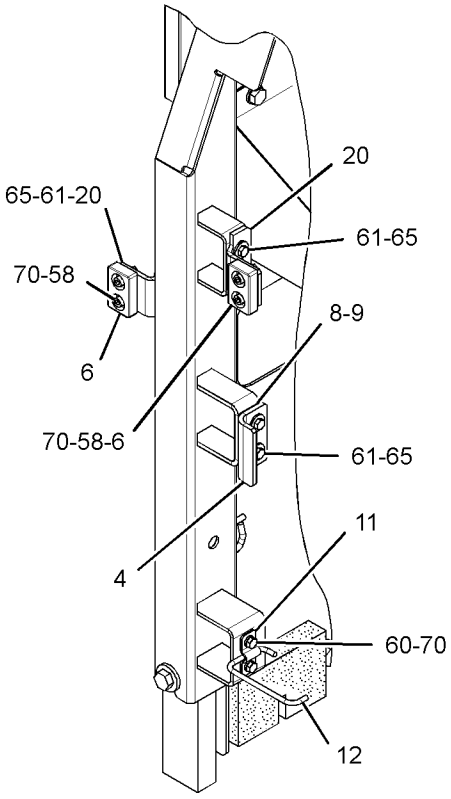

VIEW OF AREA J

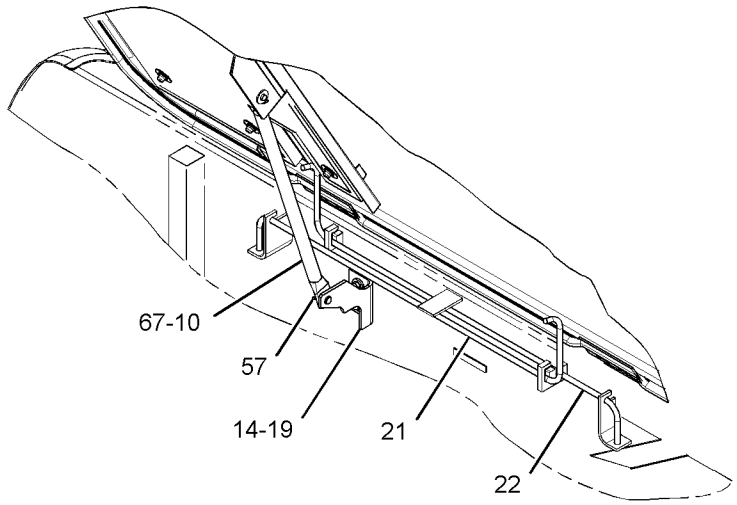

VIEW OF AREA G

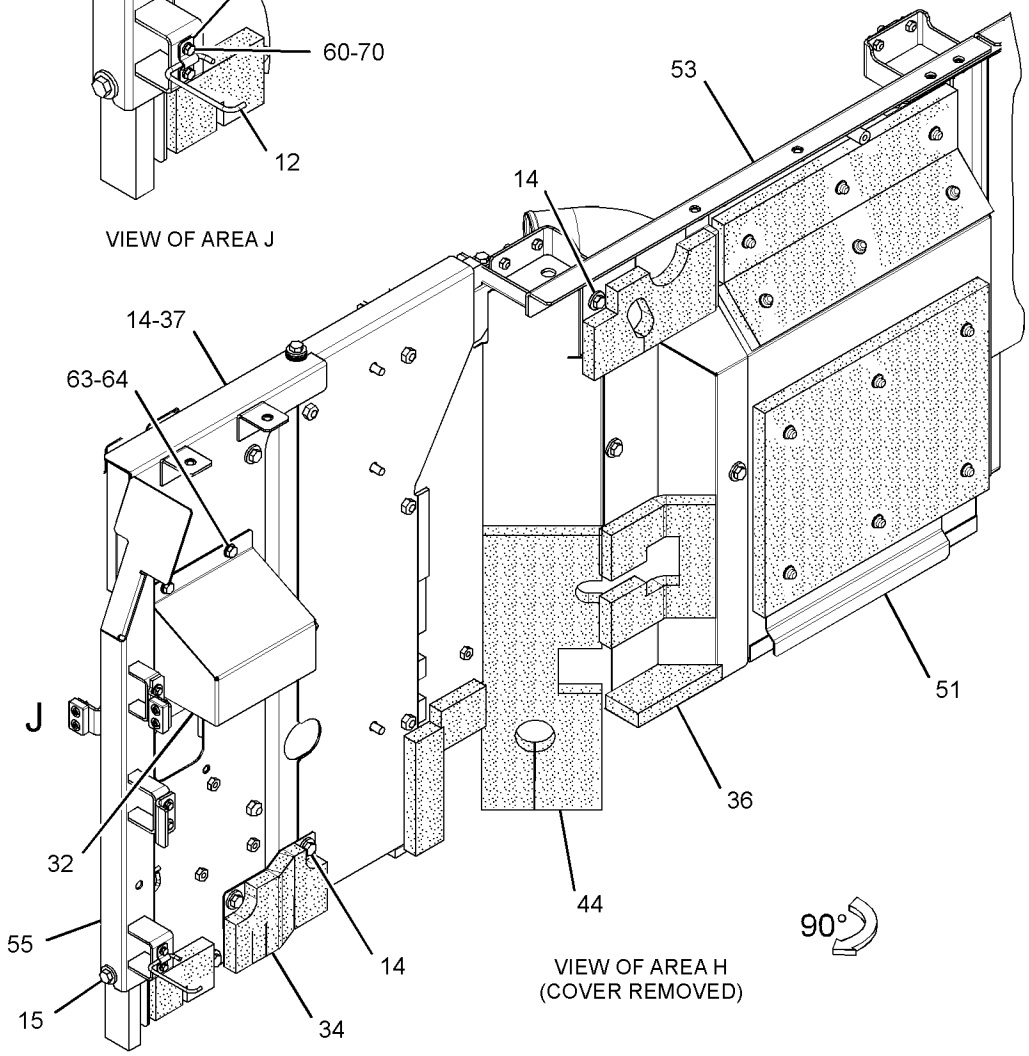

VIEW OF AREA H
(COVER REMOVED)

GRAPHIC #3 **<END>** g02650978

355-8167 HOOD & GUARD GP

S/N: KGF1-UP; FAL1-UP
PART OF 354-1056, 354-1057 COOLING AR-HIGH AMBIENT TEMP
AN ATTACHMENT
TYPE 1

SMCS-7251, 7276 **i04689871**

NOTE	REF NO	GRAPHIC REF	PART NUMBER	QTY	PART NAME 1 2 3 4 5 6 (PRODUCT LEVEL)	SEE PAGE
M	1	1,2	**135-8573**	14	BOLT AS	
M	2	1,2	**135-8575**	9	BOLT AS	
	3	1,2	**170-3016**	12	SPACER (19X32X2-MM THK)	
Y	4	1	**289-6917**	1	DOOR GP-ACCESS (RADIATOR)	740
Y	5	2	**355-8187**	1	SUPPORT AS-ENCLOSURE	852
	6	2	**355-8190**	1	SUPPORT AS	
		2	**278-3832**	1	LINER	
	7	1	**372-7640**	1	COVER AS-ACCESS	
	8	2	**355-8195**	1	PLATE AS	
M	9	2	**5C-9553**	2	BOLT (M6X1X16-MM)	
	10	2	**5P-4115**	6	WASHER-HARD (7.2X19X2-MM THK)	
	11	2	**8T-4121**	4	WASHER-HARD (11X21X2.5-MM THK)	
M	12	2	**8T-4136**	4	BOLT (M10X1.5X25-MM)	
M	13	2	**8T-4138**	6	BOLT (M6X1X20-MM)	
M	14	2	**8T-4189**	4	BOLT (M8X1.25X20-MM)	
	15	2	**8T-4224**	4	WASHER-HARD (8.8X16X2-MM THK)	
	16	2	**9X-8256**	2	WASHER (6.6X12X2-MM THK)	

M - METRIC PART
Y - SEPARATE ILLUSTRATION

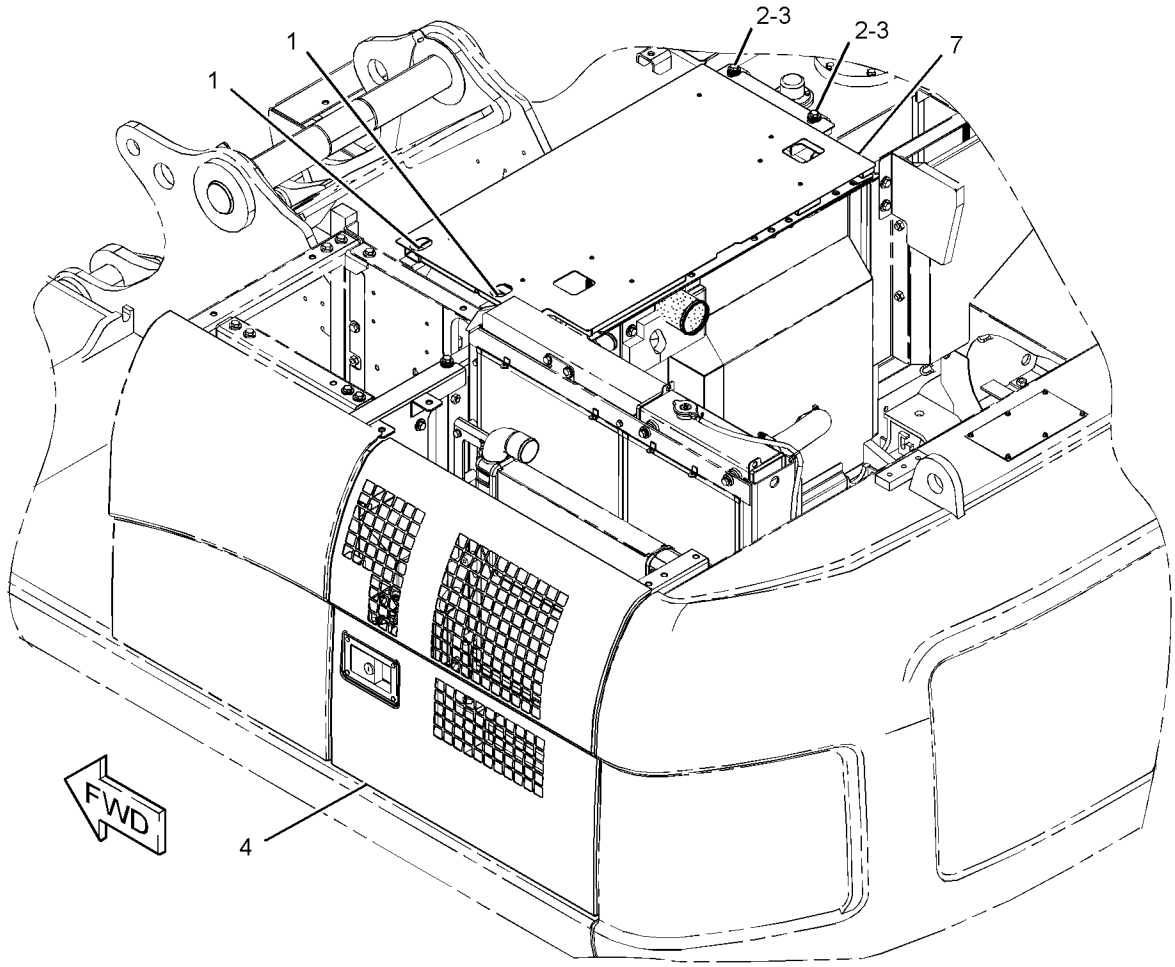

GRAPHIC #1 g02141650

355-8167 **HOOD & GUARD GP** (*contd.*) **i04689871**

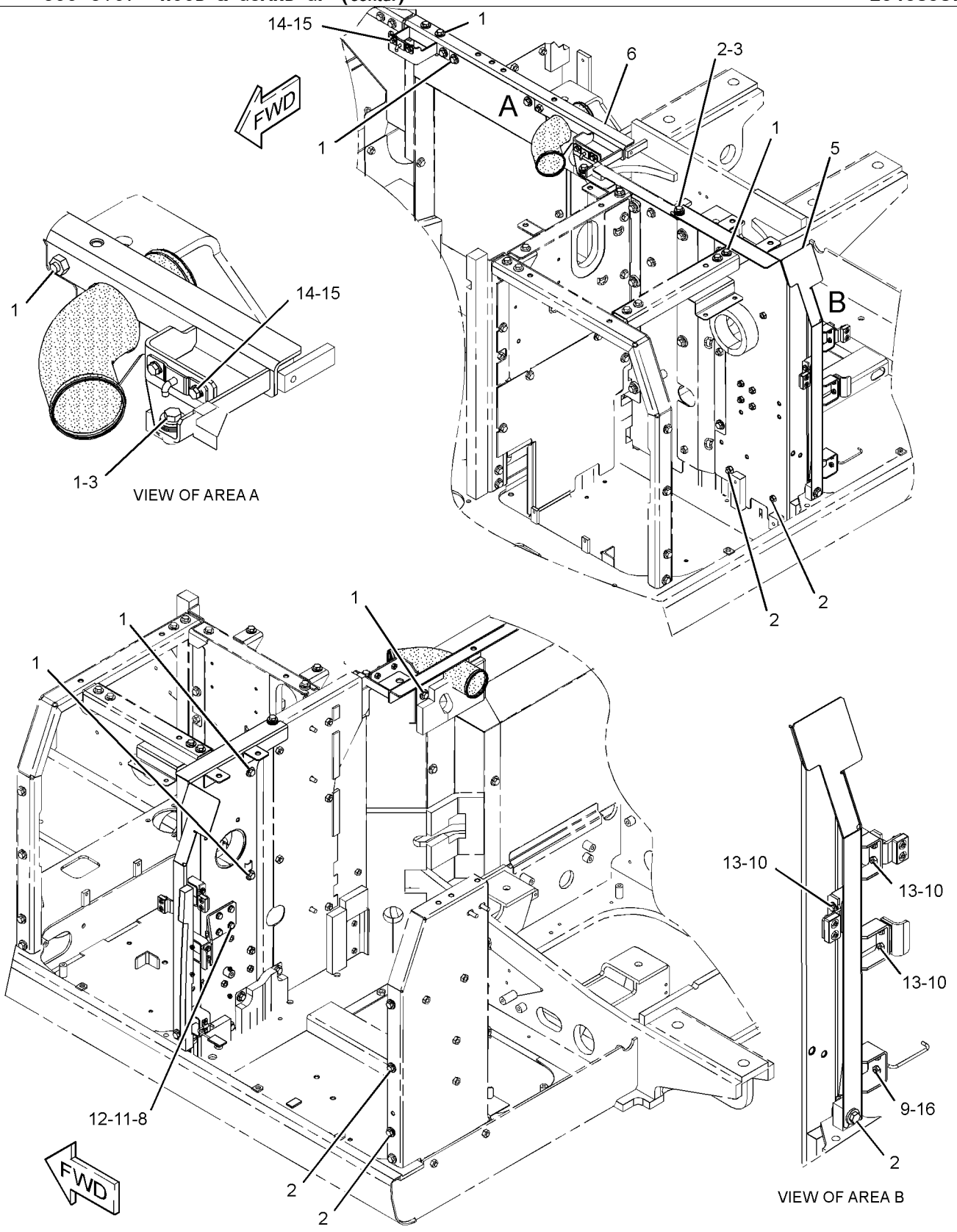

GRAPHIC #2 **<END>** g02141651

355-8167 HOOD & GUARD GP

S/N: KGF1-UP; FAL1-UP
PART OF 354-1056, 354-1057 COOLING AR-HIGH AMBIENT TEMP
AN ATTACHMENT
TYPE 2

SMCS-7251, 7276 **i04749916**

NOTE	REF NO	GRAPHIC REF	PART NUMBER	QTY	PART NAME 1 2 3 4 5 6 (PRODUCT LEVEL)	SEE PAGE
CM	1	2	**135-8573**	12	BOLT AS	
CM	2	2	**135-8575**	7	BOLT AS	
C	3	2	**170-3016**	6	SPACER (19X32X2-MM THK)	
CY	4	1	**374-4926**	1	DOOR GP-ACCESS (RADIATOR)	742
Y	5	2	**355-8187**	1	SUPPORT AS-ENCLOSURE	852
	6	2	**355-8190**	1	SUPPORT AS	
		2	**278-3832**	1	LINER	
	7	2	**9X-8256**	2	WASHER (6.6X12X2-MM THK)	
	8	2	**355-8195**	1	PLATE AS	
M	9	2	**5C-9553**	2	BOLT (M6X1X16-MM)	
	10	2	**5P-4115**	6	WASHER-HARD (7.2X19X2-MM THK)	
	11	2	**8T-4121**	4	WASHER-HARD (11X21X2.5-MM THK)	
M	12	2	**8T-4136**	4	BOLT (M10X1.5X25-MM)	
M	13	2	**8T-4138**	6	BOLT (M6X1X20-MM)	
M	14	2	**8T-4189**	4	BOLT (M8X1.25X20-MM)	
	15	2	**8T-4224**	4	WASHER-HARD (8.8X16X2-MM THK)	

C - CHANGE FROM PREVIOUS TYPE
M - METRIC PART
Y - SEPARATE ILLUSTRATION

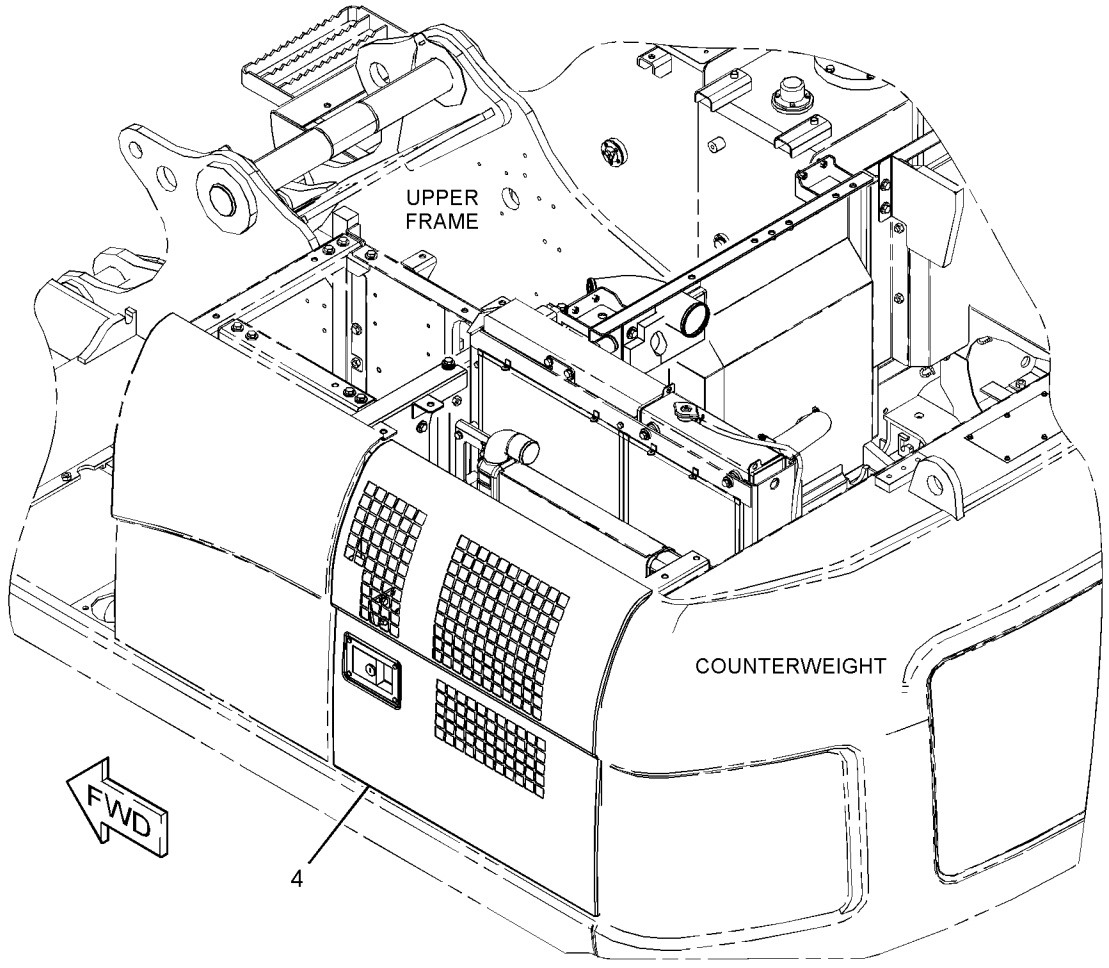

GRAPHIC #1 g02859037

355-8167 **HOOD & GUARD GP (*contd.*)** **i04749916**

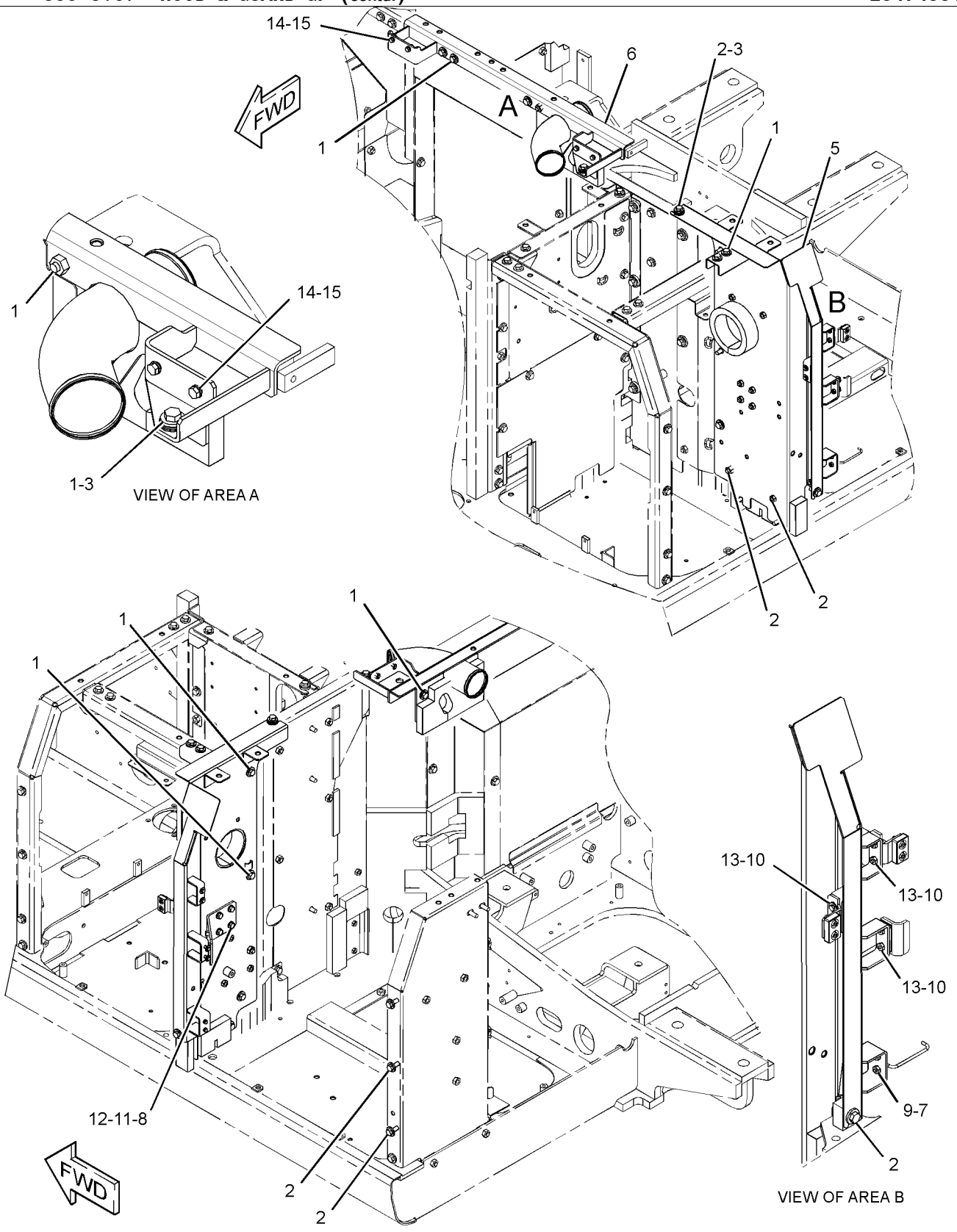

GRAPHIC #2 **<END>** g02859038

303-9859 HOOD GP—ACCUGRADE READY

S/N: KGF1-UP; FAL1-UP
PART OF 290-1774 CONVERSION AR-MACHINE, 314-3882 INSTALLATION AR
AN ATTACHMENT

SMCS-7251 **i02846379**

NOTE	REF NO	GRAPHIC REF	PART NUMBER	QTY	PART NAME 1 2 3 4 5 6 (PRODUCT LEVEL)	SEE PAGE
Y	1	1	**304-0014**	1	HOOD GP-ENGINE	829
	2	1	**304-0018**	1	SUPPORT AS	
	3	1	**304-0019**	1	COVER AS	

Y - SEPARATE ILLUSTRATION

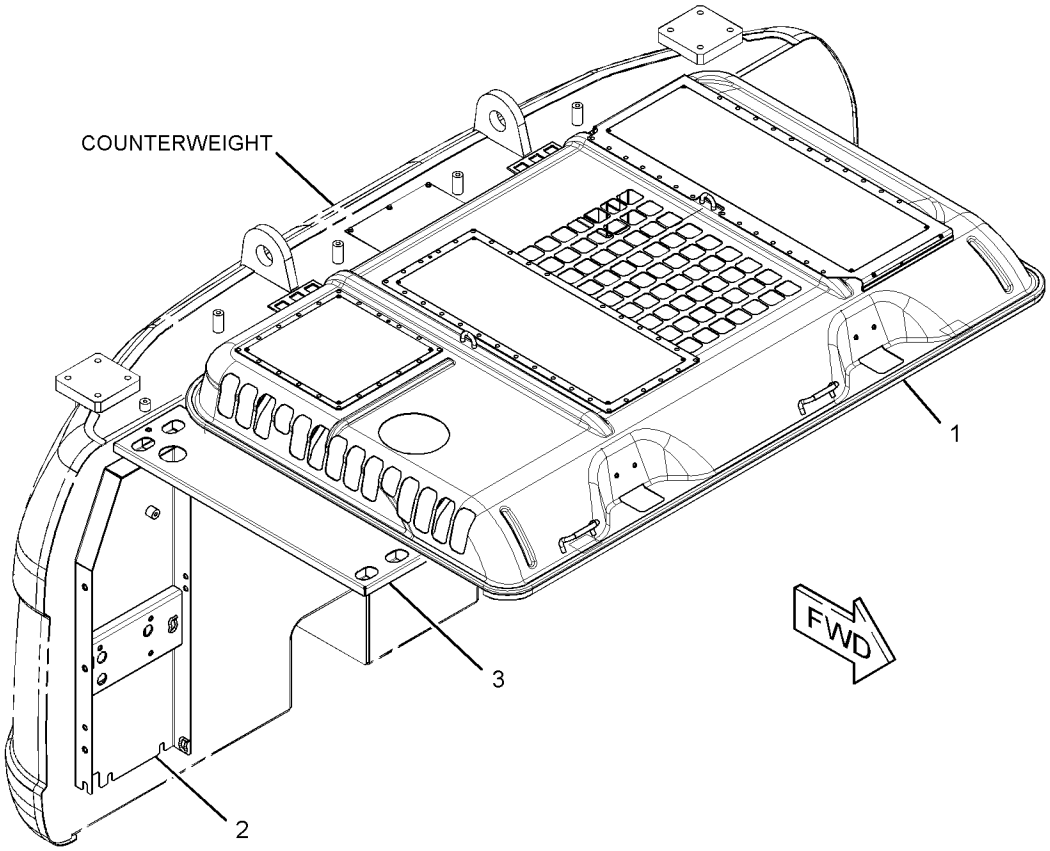

GRAPHIC #1 **<END>** g01422368

259-3687 HOOD GP-ENGINE

S/N: KGF1-UP

PART OF 273-7725, 320-5732 HOOD & GUARD GP

AN ATTACHMENT

SMCS-7251 **i03982353**

NOTE	REF NO	GRAPHIC REF	PART NUMBER	QTY	PART NAME 1 2 3 4 5 6 (PRODUCT LEVEL)	SEE PAGE
	1	1	**4I-7924**	15	WASHER (4.5X40X1.2-MM THK)	
	2	1	**6P-2216**	15	CAP	
	3	1	**096-4129**	2	CUSHION	
M	4	1	**135-8573**	8	BOLT AS	
	5	1	*259-3688*	1	HOOD AS-ENGINE	
		1	**146-4936**	2	HANDLE AS	
	5A	1	**114-6289**	2	HINGE	
	6	1	**262-2420**	1	SHEET AS	
	7	1	**262-2427**	1	LINER	
	8	1	**262-2428**	1	LINER	
	9	1	**262-2429**	1	LINER	
	10	1	**262-2430**	1	LINER	
	11	1	**262-2432**	1	LINER	
	12	1	**8T-0328**	4	WASHER-HARD (5.5X10X1-MM THK)	
M	13	1	**8T-6693**	4	SCREW-MACHINE (M5X0.8X16-MM)	
D	14	1	**101-9848**		SEAL (6.2-M)	

D - ORDER BY THE METER
M - METRIC PART

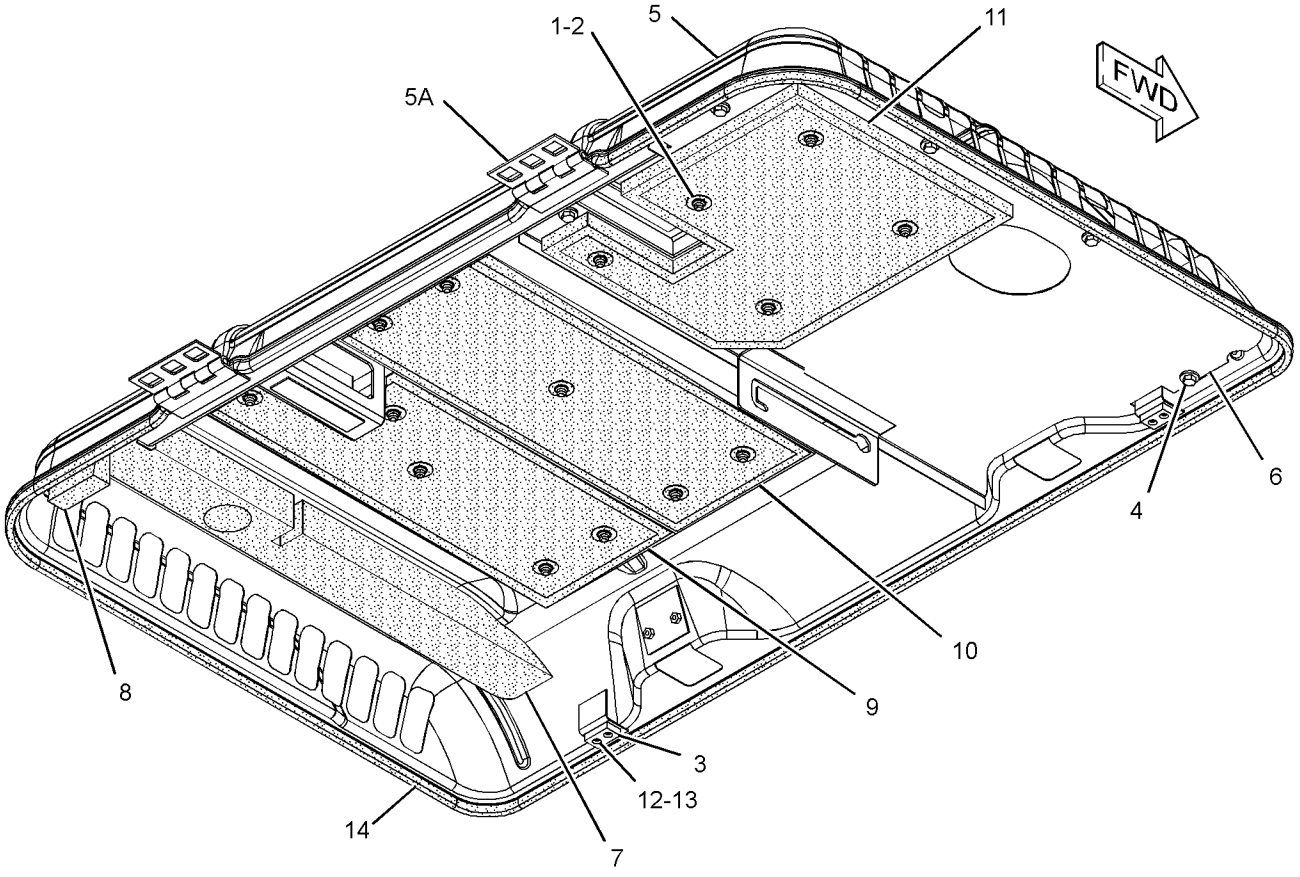

GRAPHIC #1 **<END>** g01293727

262-2286 HOOD GP-ENGINE

S/N: KGF1-UP; FAL1-UP

PART OF 273-7726 HOOD & GUARD GP

SMCS-7251 **i03982356**

NOTE	REF NO	GRAPHIC REF	PART NUMBER	QTY	PART NAME 1 2 3 4 5 6 (PRODUCT LEVEL)	SEE PAGE
	1	1	**096-4129**	2	CUSHION	
	2	1	*262-2287*	1	HOOD AS-ENGINE	
		1	**146-4936**	2	HANDLE AS	
	2A	1	**114-6289**	2	HINGE	
	3	1	**262-2427**	1	LINER	
	4	1	**262-2428**	1	LINER	
	5	1	**8T-0328**	4	WASHER-HARD (5.5X10X1-MM THK)	
M	6	1	**8T-6693**	4	SCREW-MACHINE (M5X0.8X16-MM)	
D	7	1	**101-9848**		SEAL (6.2-M)	

D - ORDER BY THE METER
M - METRIC PART

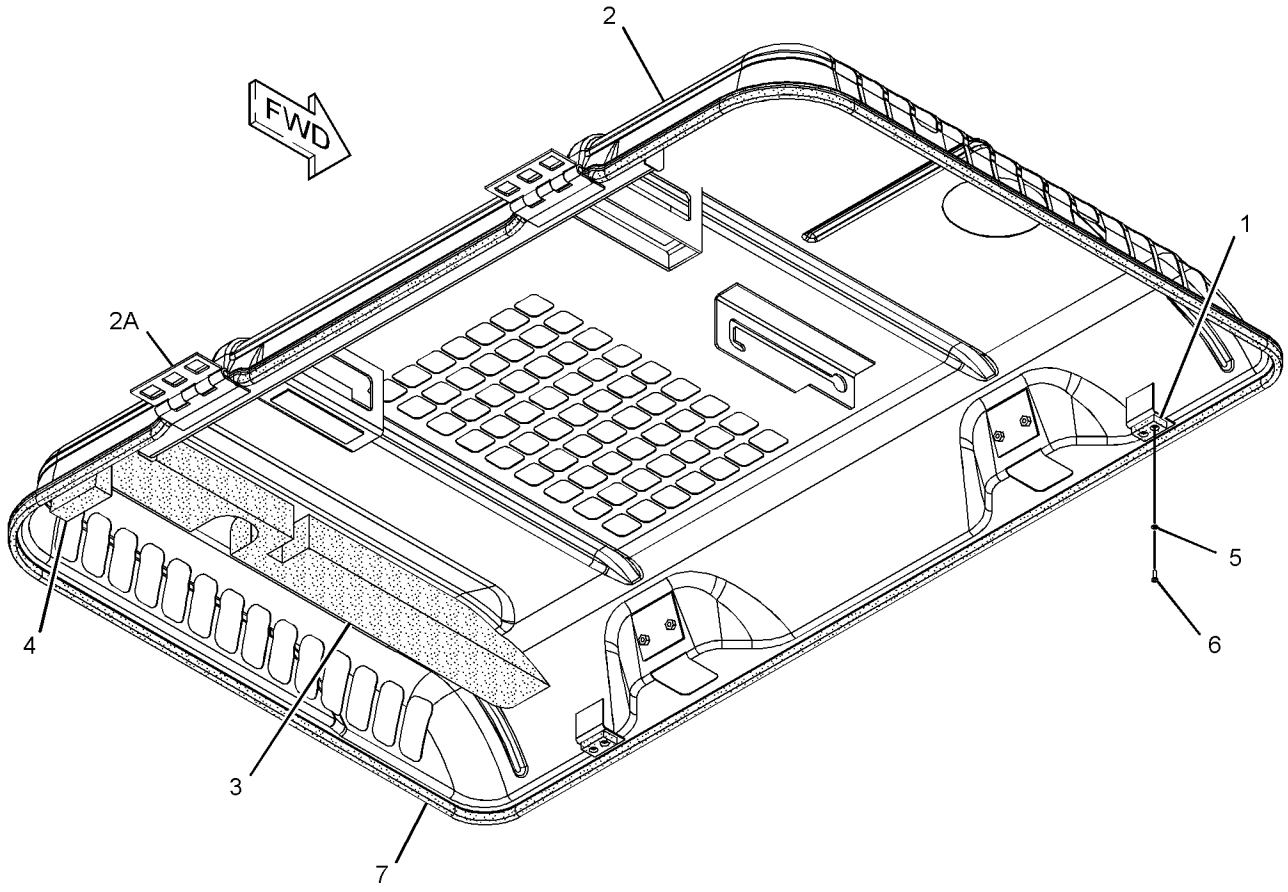

GRAPHIC #1 **<END>** g01392502

303-9860 HOOD GP-ENGINE–ACCUGRADE READY

S/N: KGF1-UP

PART OF 290-1775 CONVERSION AR-MACHINE, 314-3883 GRADE CONTROL AR AN ATTACHMENT

SMCS-7251 **i02845586**

NOTE	REF NO	GRAPHIC REF	PART NUMBER	QTY	PART NAME 1 2 3 4 5 6 (PRODUCT LEVEL)	SEE PAGE
Y	1	1	**304-0016**	1	HOOD GP-ENGINE	830
	2	1	**304-0018**	1	SUPPORT AS	
	3	1	**304-0019**	1	COVER AS	

Y - SEPARATE ILLUSTRATION

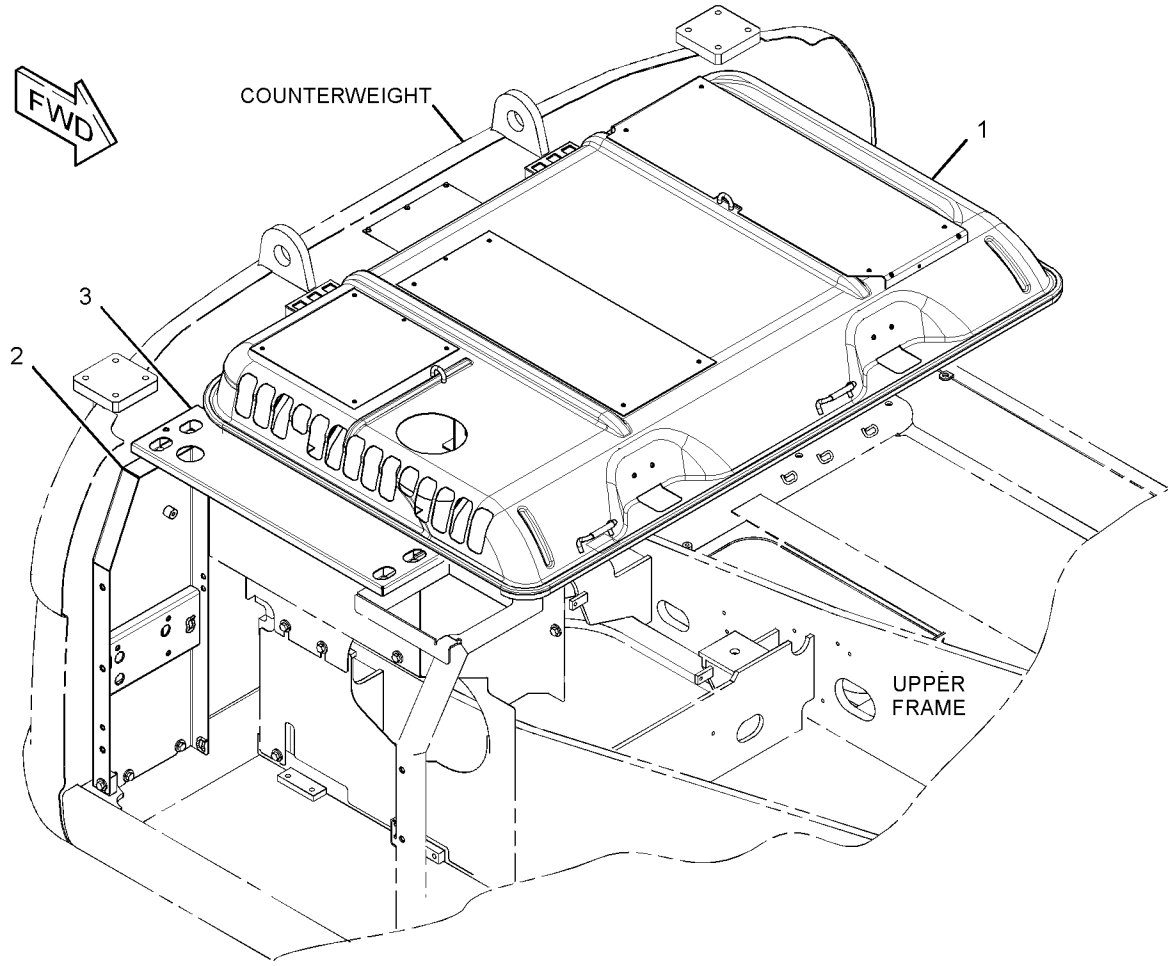

GRAPHIC #1 **<END>** g01409483

304-0014 HOOD GP-ENGINE

S/N: KGF1-UP; FAL1-UP
PART OF 303-9859 HOOD GP
AN ATTACHMENT

SMCS-7251 **i03982371**

NOTE	REF NO	GRAPHIC REF	PART NUMBER	QTY	PART NAME 1 2 3 4 5 6 (PRODUCT LEVEL)	SEE PAGE
	1	1	**096-4129**	2	CUSHION	
	2	1	**262-2427**	1	LINER	
	3	1	**262-2428**	1	LINER	
	5	1	**8T-0328**	4	WASHER-HARD (5.5X10X1-MM THK)	
M	6	1	**8T-6693**	4	SCREW-MACHINE (M5X0.8X16-MM)	
D	7	1	**101-9848**		SEAL (6.2-M)	
E	8	1	**184-8580**		SEAL (30-CM EACH)	
	9	1	*304-0015*	1	HOOD AS-ENGINE	
		1	**146-4936**	2	HANDLE AS	
	9A	1	**114-6289**	2	HINGE	

D - ORDER BY THE METER
E - ORDER BY THE CENTIMETER
M - METRIC PART

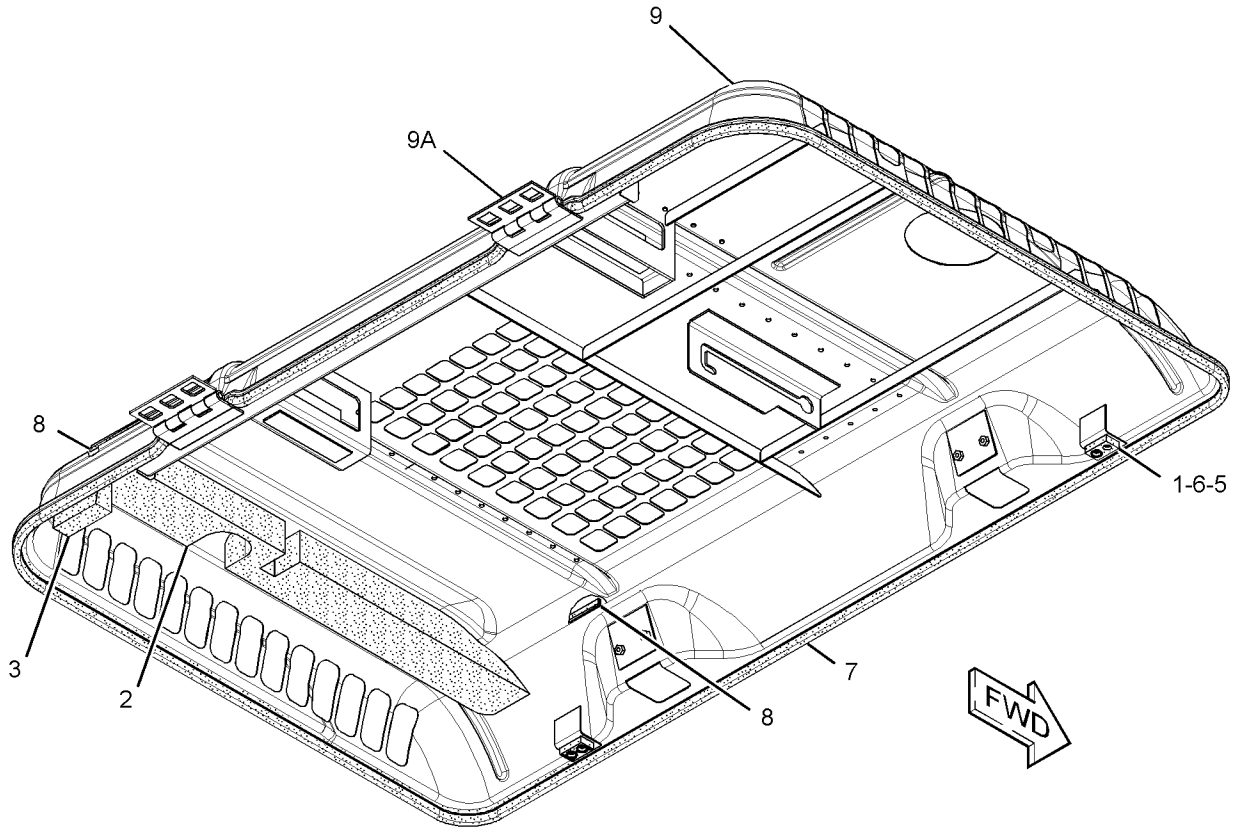

GRAPHIC #1 **<END>** g02177705

304-0016 HOOD GP-ENGINE

S/N: KGF1-UP
PART OF 303-9860 HOOD GP-ENGINE
AN ATTACHMENT

SMCS-7251 **i04002874**

NOTE	REF NO	GRAPHIC REF	PART NUMBER	QTY	PART NAME 1 2 3 4 5 6 (PRODUCT LEVEL)	SEE PAGE
	1	1	**4I-7924**	15	WASHER (4.5X40X1.2-MM THK)	
	2	1	**6P-2216**	15	CAP	
	3	1	**096-4129**	2	CUSHION	
M	4	1	**135-8573**	8	BOLT AS	
	5	1	**262-2420**	1	SHEET AS	
	6	1	**262-2427**	1	LINER	
	7	1	**262-2428**	1	LINER	
	8	1	**262-2429**	1	LINER	
	9	1	**262-2430**	1	LINER	
	10	1	**262-2432**	1	LINER	
	11	1	*304-0017*	1	HOOD AS-ENGINE	
		1	**146-4936**	2	HANDLE AS	
	11A	1	**114-6289**	2	HINGE	
	12	1	**8T-0328**	4	WASHER-HARD (5.5X10X1-MM THK)	
M	13	1	**8T-6693**	4	SCREW-MACHINE (M5X0.8X16-MM)	
D	14	1	**101-9848**		SEAL (6.2-M)	
	15	1	**184-8580**		SEAL (30-CM EACH)	

D - ORDER BY THE METER
M - METRIC PART

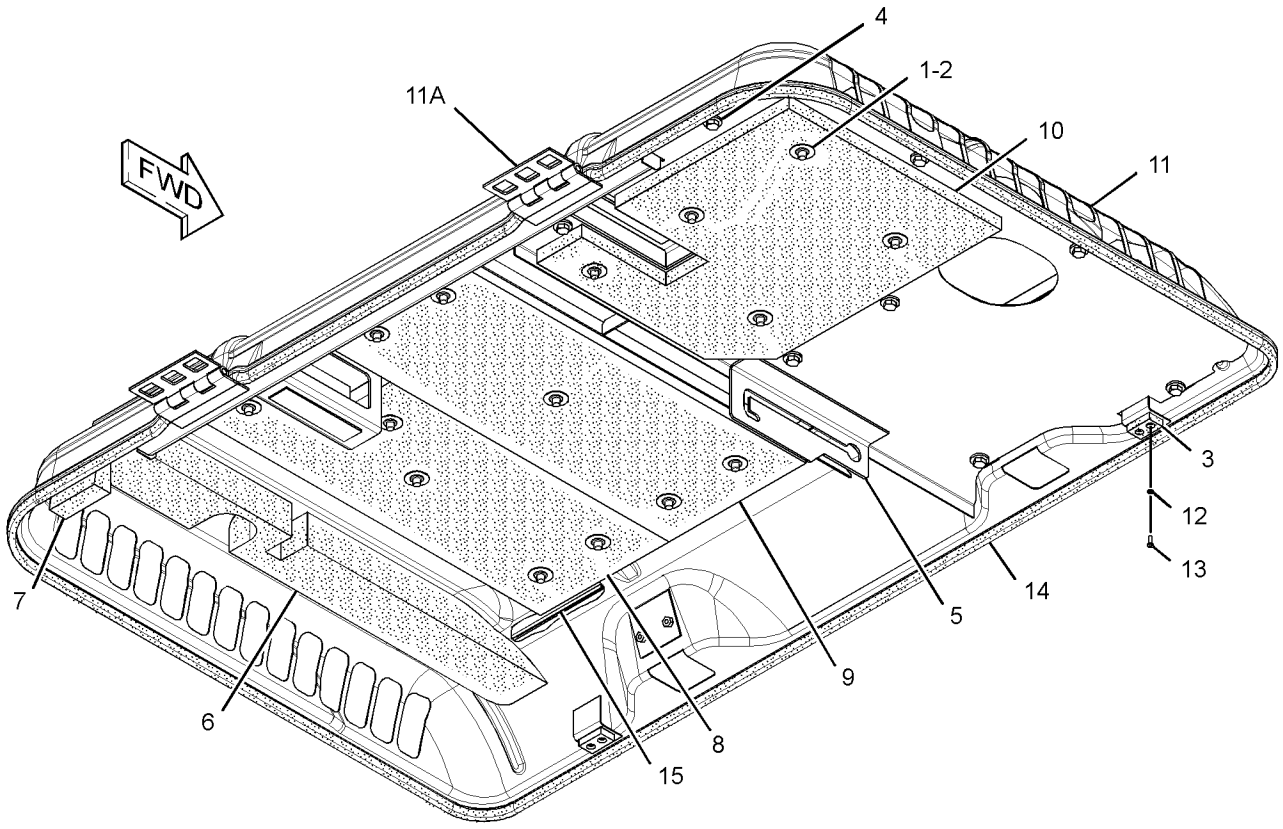

GRAPHIC #1 **<END>** g02177707

365-7192 KIT-PLATE—UNDERCARRIAGE FRAME

S/N: KGF1-UP

FOR USE WITH 236-8341—PAGE: 857

FIELD INSTALLATION

SMCS-7186 **i04780989**

NOTE	PART NUMBER	QTY	PART NAME 1 2 3 4 5 6 (PRODUCT LEVEL)	SEE PAGE
	365-7193	1	PLATE	
	365-7194	1	PLATE	
	365-7195	1	PLATE	
	365-7196	1	PLATE	

<END>

278-3836 SHEET AS-SOUND SUPPRESSION

S/N: KGF1-UP; FAL1-UP
PART OF 273-7726, 320-5732 HOOD & GUARD GP
ALSO AN ATTACHMENT

SMCS-1801, 7076, 7251, 7267

i04912211

NOTE	REF NO	GRAPHIC REF	PART NUMBER	QTY	PART NAME 1 2 3 4 5 6 (PRODUCT LEVEL)	SEE PAGE
	1	1	**262-2313**	1	LINER	
	2	1	**278-3837**	1	LINER	

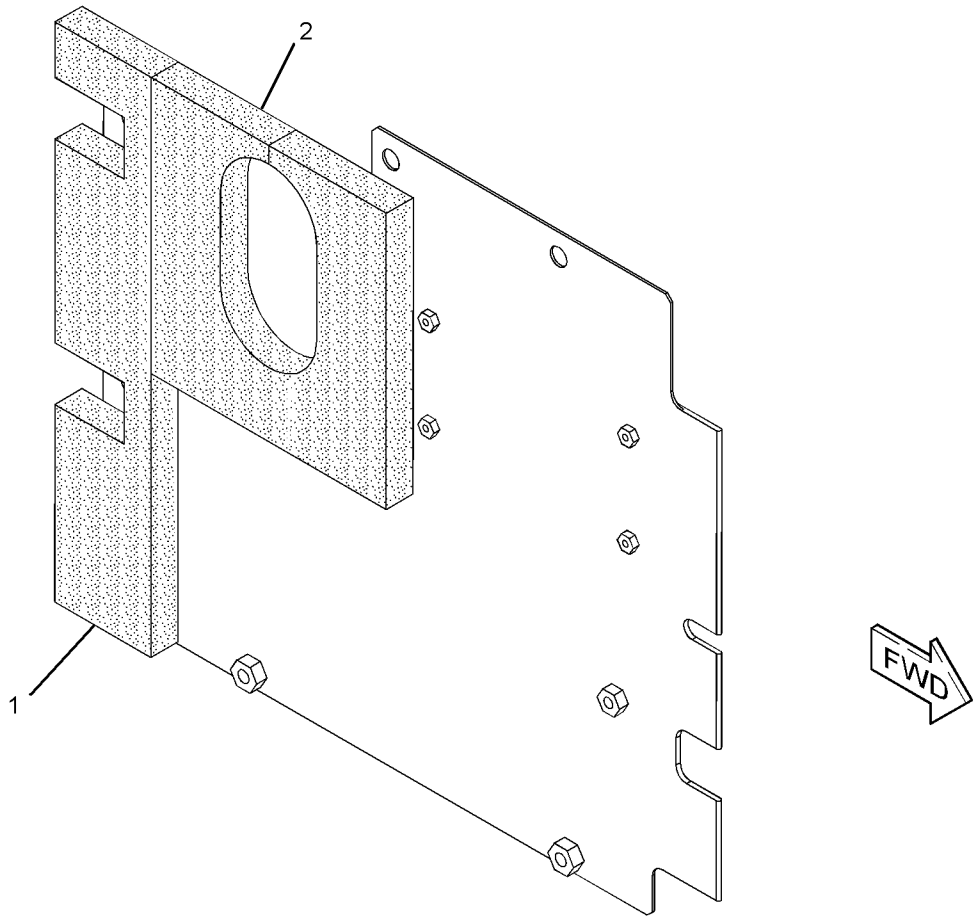

GRAPHIC #1

<END>

g01392526

278-3842 SHEET AS-SOUND SUPPRESSION

S/N: KGF1-UP; FAL1-UP
PART OF 273-7725, 273-7726, 320-5732 HOOD & GUARD GP
ALSO AN ATTACHMENT

SMCS-1801, 7076, 7251, 7267

i04912210

NOTE	REF NO	GRAPHIC REF	PART NUMBER	QTY	PART NAME 1 2 3 4 5 6 (PRODUCT LEVEL)	SEE PAGE
	1	1	**204-3663**	1	LINER	
	2	1	**199-7398**	1	LINER	

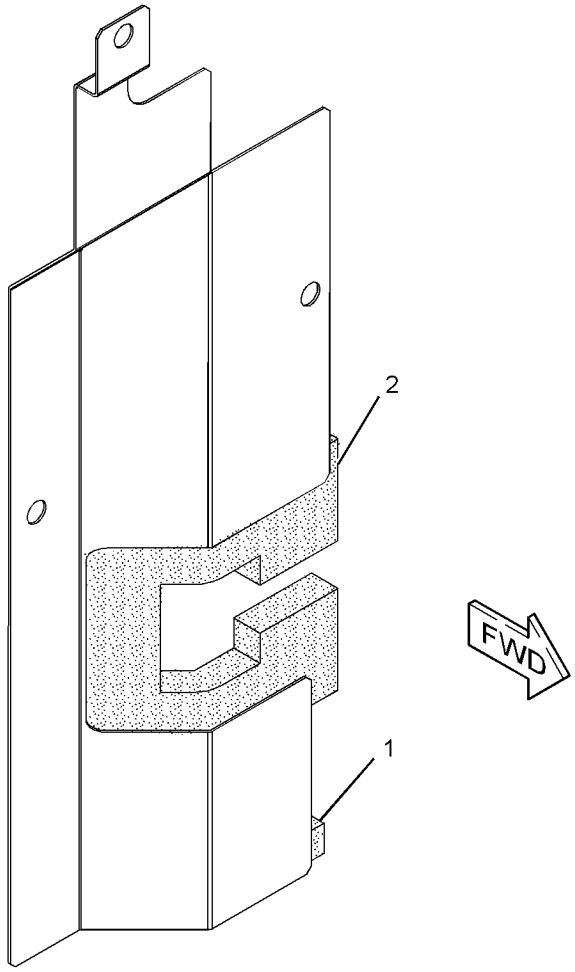

GRAPHIC #1

<END>

g01392629

289-6572 SHEET AS-SOUND SUPPRESSION

S/N: KGF1-UP; FAL1-UP
PART OF 273-7725, 273-7726, 320-5732 HOOD & GUARD GP
ALSO AN ATTACHMENT

SMCS-1801, 7076, 7251, 7267 **i02785154**

NOTE	REF NO	GRAPHIC REF	PART NUMBER	QTY	PART NAME 1 2 3 4 5 6 (PRODUCT LEVEL)	SEE PAGE
	1	1	**283-3905**	1	LINER	
	2	1	**286-6277**	1	LINER	

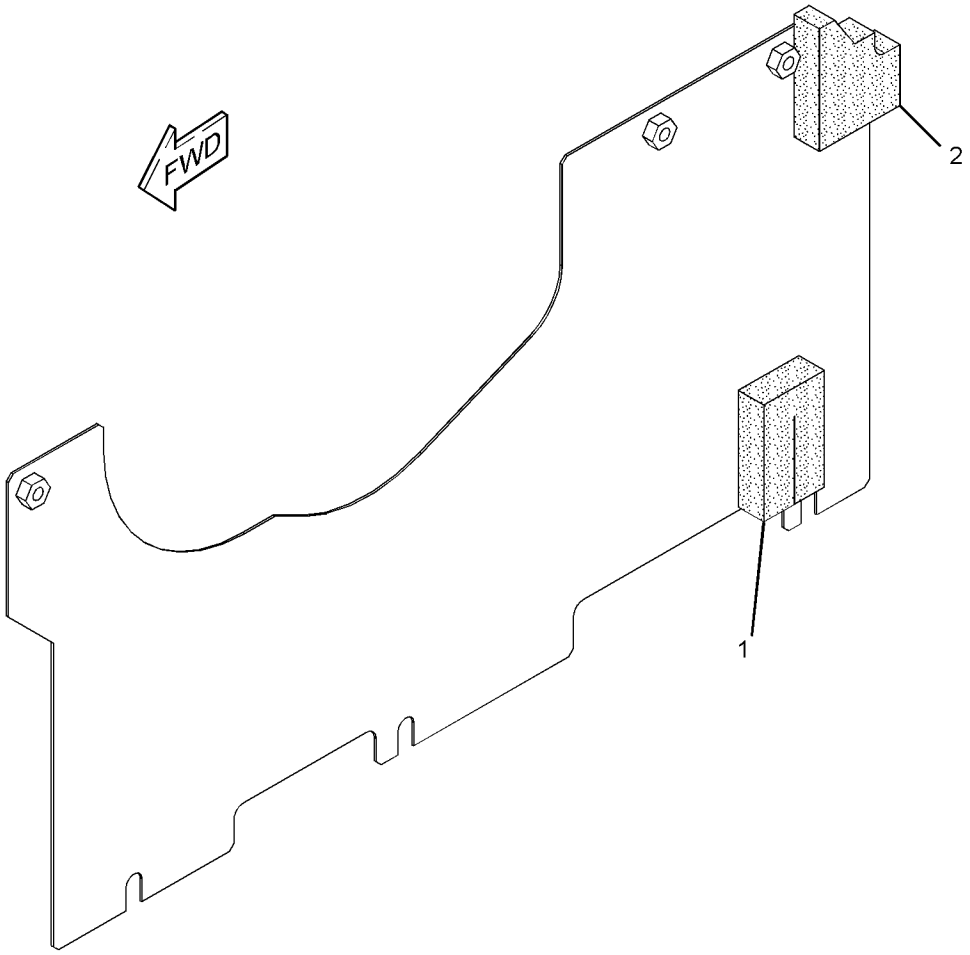

GRAPHIC #1 **<END>** g01393707

289-6588 SHEET AS-SOUND SUPPRESSION

S/N: KGF1-UP
PART OF 273-7725 HOOD & GUARD GP
AN ATTACHMENT

SMCS-1801, 7076, 7251, 7267

i02668897

NOTE	REF NO	GRAPHIC REF	PART NUMBER	QTY	PART NAME 1 2 3 4 5 6 (PRODUCT LEVEL)	SEE PAGE
	1	1	**262-2313**	1	LINER	
	2	1	**278-3837**	1	LINER	
Z	3	1		1	SHEET AS	

Z - NOT SERVICED SEPARATELY

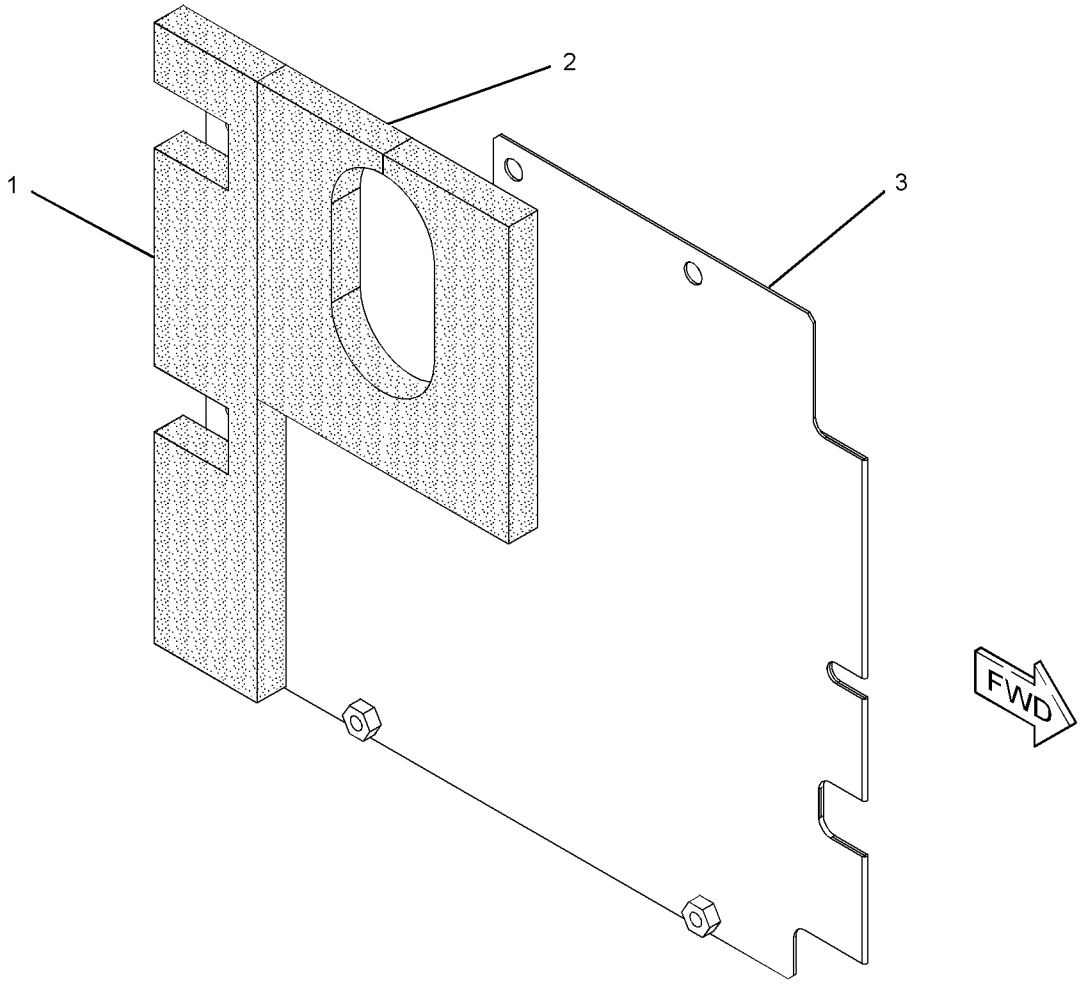

GRAPHIC #1

<END>

g01342464

289-6695 SHEET AS-SOUND SUPPRESSION

S/N: KGF1-UP; FAL1-UP
PART OF 273-7725, 273-7726, 320-5732 HOOD & GUARD GP
ALSO AN ATTACHMENT

SMCS-1801, 7076, 7251, 7267 **i04505652**

NOTE	REF NO	GRAPHIC REF	PART NUMBER	QTY	PART NAME 1 2 3 4 5 6 (PRODUCT LEVEL)	SEE PAGE
L	1	1	**348-5409**		SEAL (3-DM)	
L	1A	1	**348-5409**		SEAL (2-DM)	
	2	1	**289-6697**	1	LINER	
	3	1	**244-8284**	1	LINER	
	4	1	**262-2347**	1	LINER	

L - (ORDER BY THE DECIMETER)

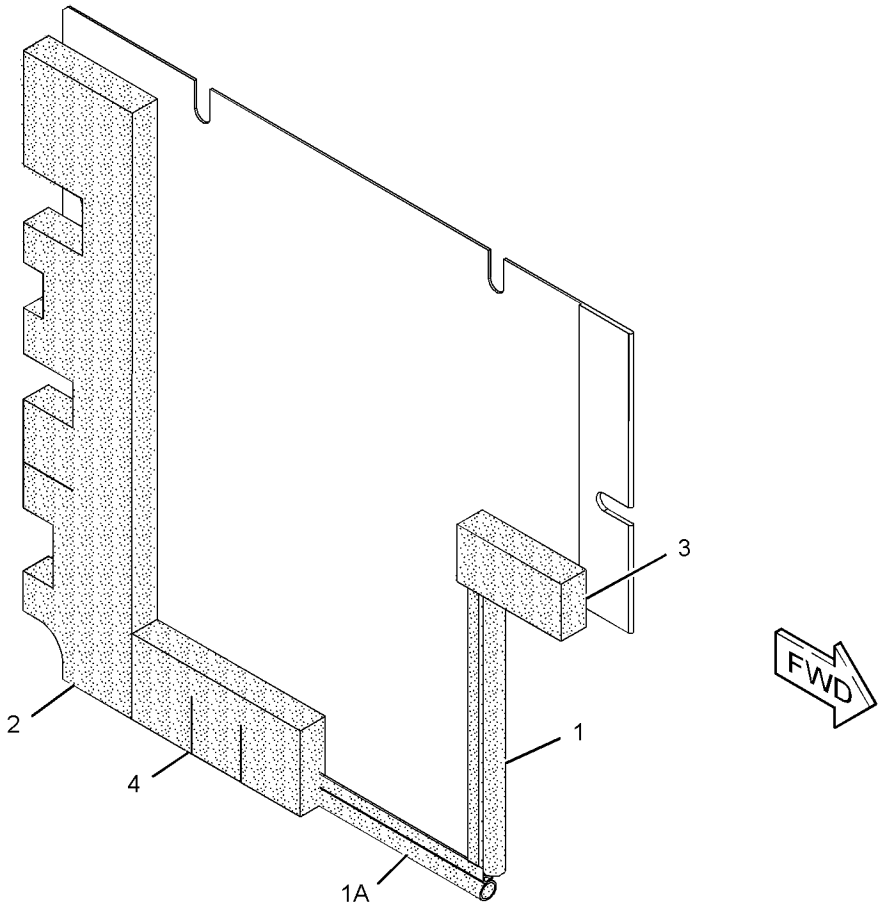

GRAPHIC #1 **<END>** g02721038

289-6699 SHEET AS-SOUND SUPPRESSION

S/N: KGF1-3823; FAL1-2884
PART OF 273-7725, 273-7726, 320-5732 HOOD & GUARD GP
ALSO AN ATTACHMENT

SMCS-1801, 7076, 7251, 7267

i03567868

NOTE	REF NO	GRAPHIC REF	PART NUMBER	QTY	PART NAME 1 2 3 4 5 6 (PRODUCT LEVEL)	SEE PAGE
	1	1	**262-2309**	1	LINER	
	2	1	**289-6700**	1	LINER	

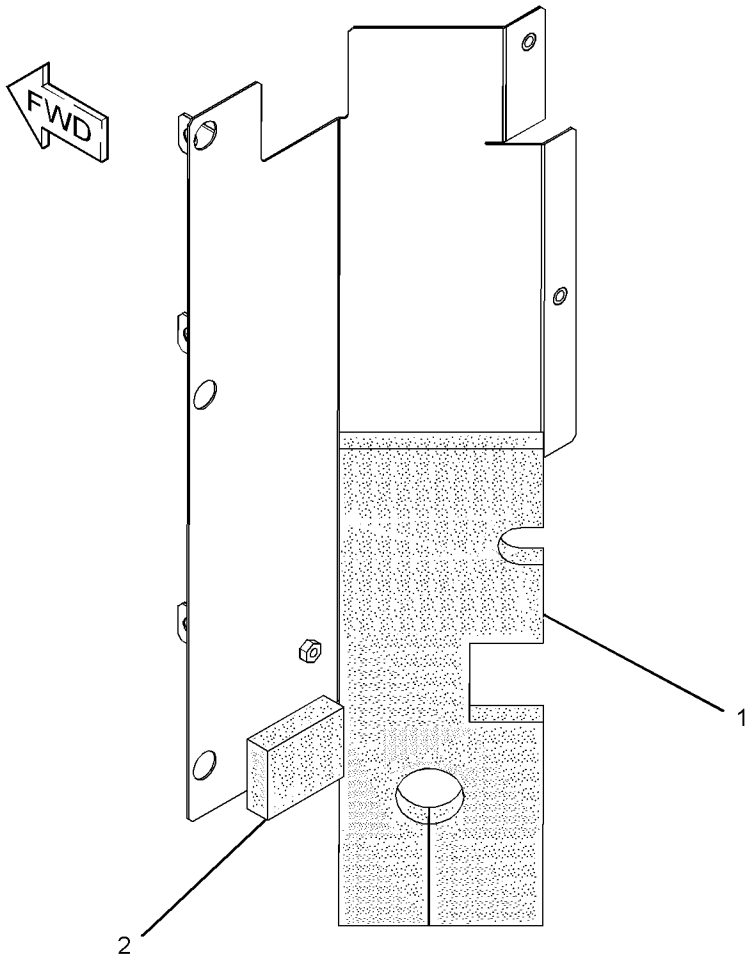

GRAPHIC #1

<END>

g01895284

289-6712 SHEET AS-SOUND SUPPRESSION

S/N: KGF1-UP; FAL1-UP
PART OF 259-5049, 299-2783 BATTERY & WIRING GP
AN ATTACHMENT

SMCS-1801, 7076, 7251, 7267

i02613437

NOTE	REF NO	GRAPHIC REF	PART NUMBER	QTY	PART NAME 1 2 3 4 5 6 (PRODUCT LEVEL)	SEE PAGE
Z	1	1		1	SHEET	
	2	1	**262-2333**	1	LINER	
	3	1	**262-2335**	1	LINER	
	4	1	**289-6713**	1	LINER	

Z - NOT SERVICED SEPARATELY

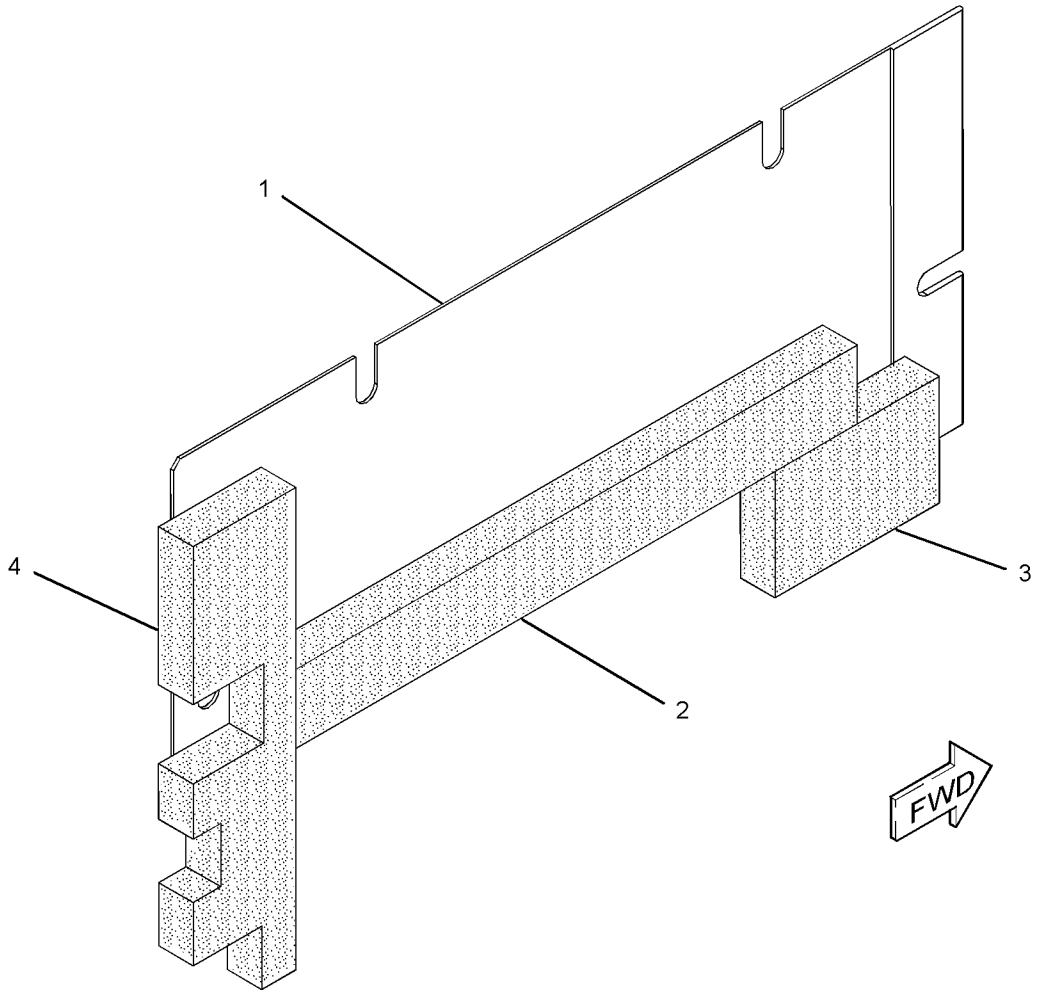

GRAPHIC #1

<END>

g01309481

298-2995 SHEET AS-SOUND SUPPRESSION

S/N: KGF1-UP; FAL1-UP
PART OF 290-1912 DRIVE GP-PUMP
AN ATTACHMENT

SMCS-1801, 7076, 7251, 7267

i02668505

NOTE	REF NO	GRAPHIC REF	PART NUMBER	QTY	PART NAME 1 2 3 4 5 6 (PRODUCT LEVEL)	SEE PAGE
	1	1	**283-3905**	1	LINER	
	2	1	**286-6277**	1	LINER	

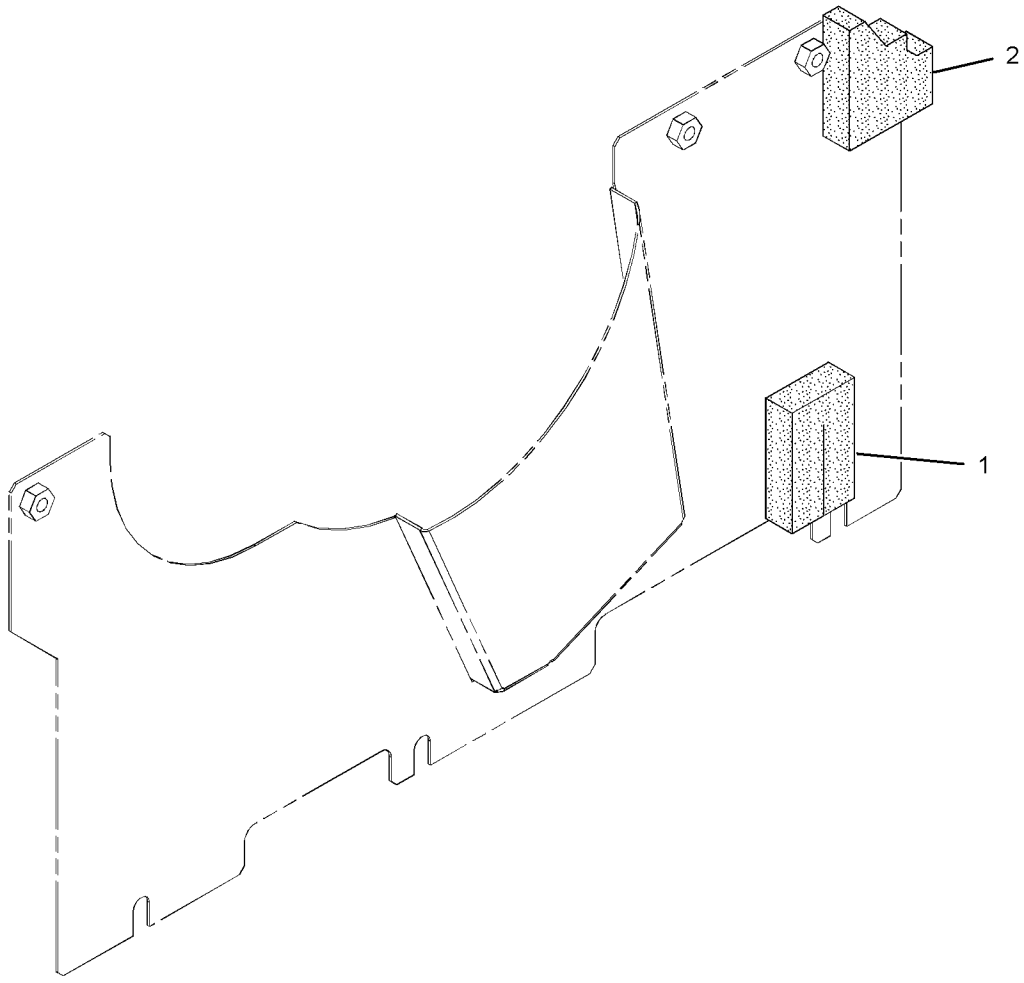

GRAPHIC #1

<END>

g01345191

298-3033 SHEET AS-SOUND SUPPRESSION

S/N: KGF1-UP

PART OF 273-7725, 320-5732 HOOD & GUARD GP

AN ATTACHMENT

SMCS-1801, 7076, 7251, 7267 **i04430657**

NOTE	REF NO	GRAPHIC REF	PART NUMBER	QTY	PART NAME 1 2 3 4 5 6 (PRODUCT LEVEL)	SEE PAGE
	1	1	**6P-2216**	8	CAP	
	2	1	**262-2346**	2	INSULATION	
	3	1	**298-3037**	1	INSULATION	
	4	1	**4I-7924**	8	WASHER (4.5X40X1.2-MM THK)	

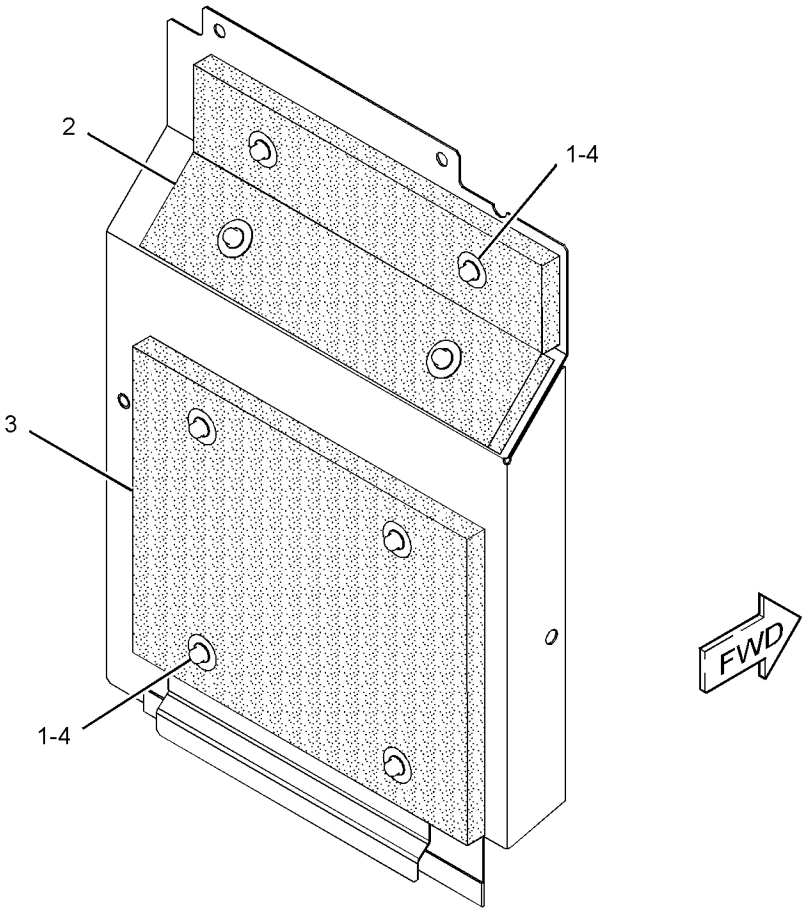

GRAPHIC #1 **<END>** g02899077

313-7881 SHEET AS-SOUND SUPPRESSION

S/N: KGF1-UP; FAL1-UP
PART OF 239-1726 LINES GP-RETURN & FILTER
AN ATTACHMENT

SMCS-1801, 7076, 7251, 7267

i03016725

NOTE	REF NO	GRAPHIC REF	PART NUMBER	QTY	PART NAME 1 2 3 4 5 6 (PRODUCT LEVEL)	SEE PAGE
	1	1	**262-2313**	1	LINER	
	2	1	**278-3837**	1	LINER	

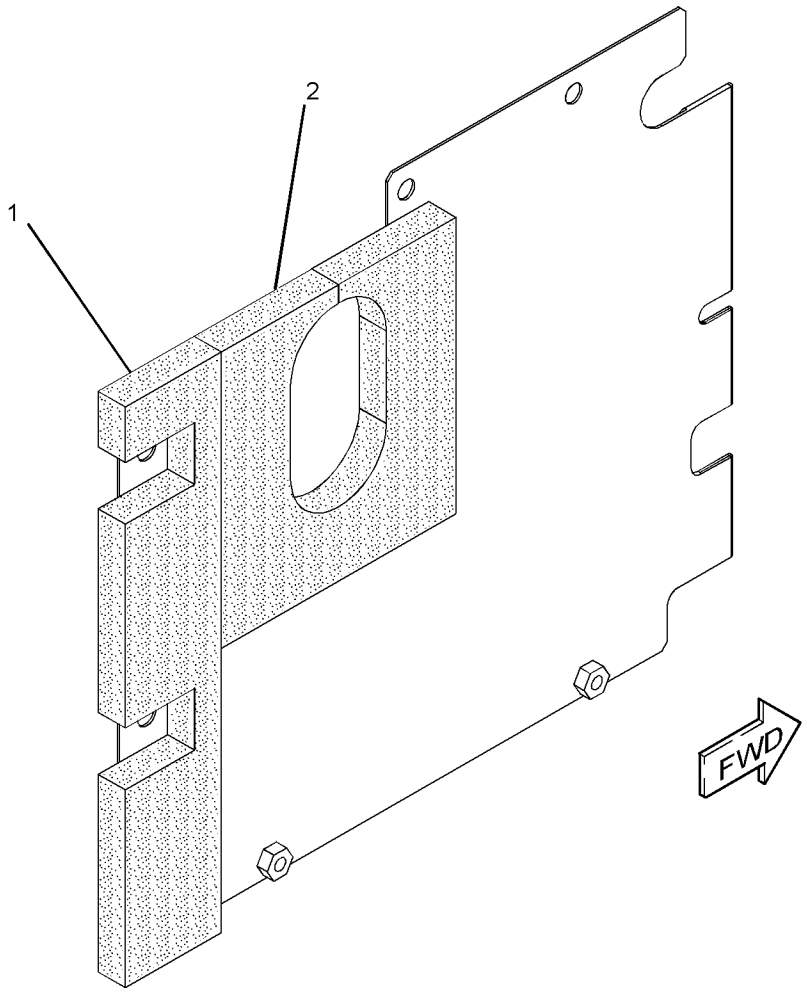

GRAPHIC #1

<END>

g01498373

355-8230 SHEET AS-SOUND SUPPRESSION

S/N: KGF3824-UP; FAL2885-UP
PART OF 273-7726, 320-5732 HOOD & GUARD GP
ALSO AN ATTACHMENT

SMCS-1801, 7076, 7251, 7267

i03957069

NOTE	REF NO	GRAPHIC REF	PART NUMBER	QTY	PART NAME 1 2 3 4 5 6 (PRODUCT LEVEL)	SEE PAGE
	1	1	**289-6700**	1	LINER	
	2	1	**355-8231**	1	LINER	

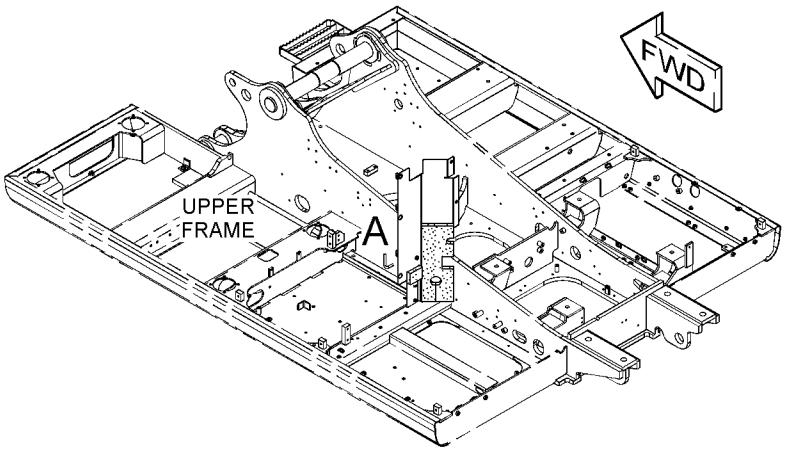

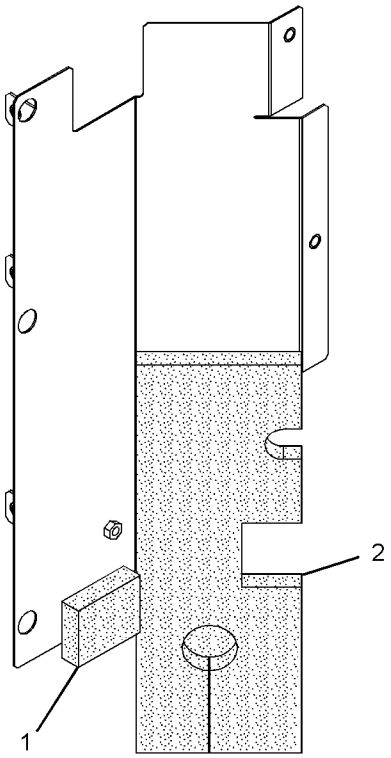

VIEW OF AREA A

GRAPHIC #1

<END>

g02161473

358-9712 SHEET AS-SOUND SUPPRESSION

S/N: KGF1-UP; FAL1-UP
PART OF 239-1726 LINES GP-RETURN & FILTER
AN ATTACHMENT

SMCS-1801, 7076, 7251, 7267 **i04009609**

NOTE	REF NO	GRAPHIC REF	PART NUMBER	QTY	PART NAME 1 2 3 4 5 6 (PRODUCT LEVEL)	SEE PAGE
	1	1	**262-2313**	1	LINER	
	2	1	**278-3837**	1	LINER	

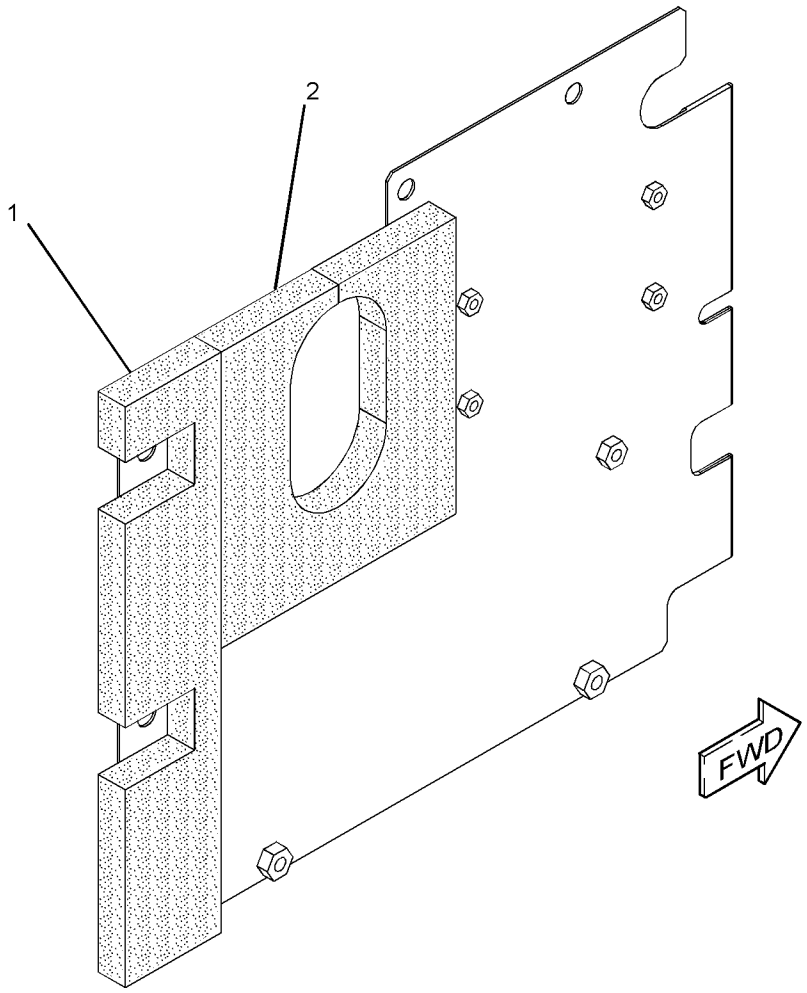

GRAPHIC #1 **<END>** g02205713

235-7764 STEP GP

S/N: KGF1-UP; FAL1-UP
FOR USE WITH TRACK SHOES UP TO 800-MM (32-IN) WIDE
PART OF 298-4287, 314-3575, 314-3846 SPECIAL AR, 247-7346, 247-7382, 314-3797, 314-3798 TRACK AR
AN ATTACHMENT

SMCS-7254 **i04546555**

NOTE	REF NO	GRAPHIC REF	PART NUMBER	QTY	PART NAME 1 2 3 4 5 6 (PRODUCT LEVEL)	SEE PAGE
	1	1	**359-5808**	2	STEP	
M	2	1	**8T-7338**	4	BOLT (M16X2X45-MM)	
	3	1	**9X-8257**	4	WASHER (17.5X30X3.5-MM THK)	

M - METRIC PART

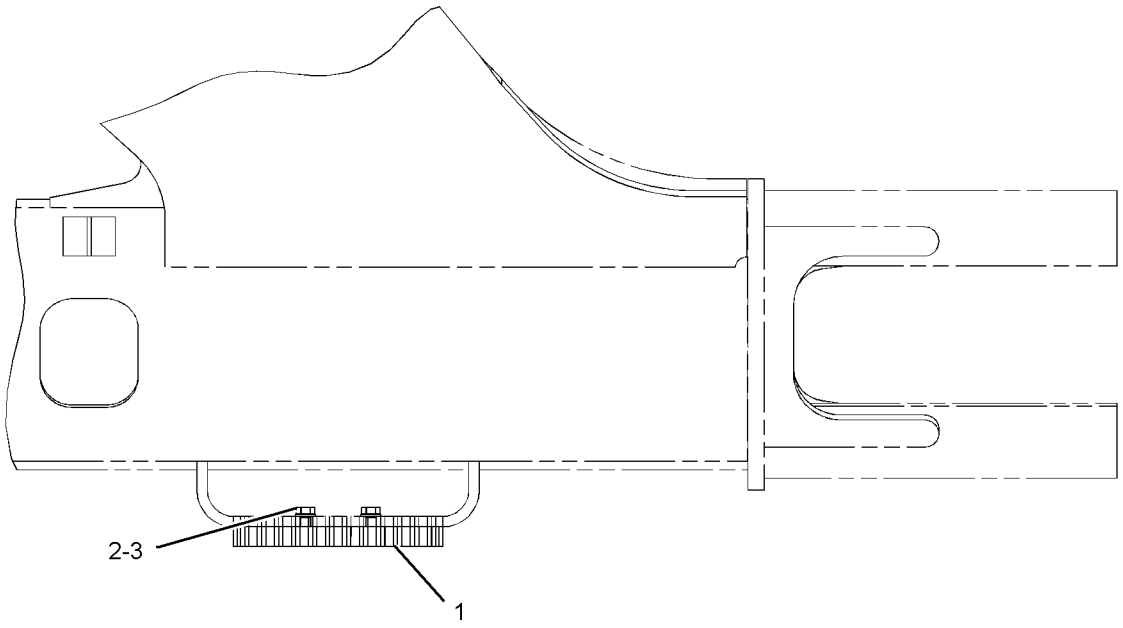

TOP VIEW

GRAPHIC #1 **<END>** g01150668

308-8881 STEP GP

S/N: KGF1-UP; FAL1-UP
PART OF 298-4288, 314-3576, 314-3847 SPECIAL AR
AN ATTACHMENT

SMCS-7254 **i02843488**

NOTE	REF NO	GRAPHIC REF	PART NUMBER	QTY	PART NAME 1 2 3 4 5 6 (PRODUCT LEVEL)	SEE PAGE
	1	1	**308-8882**	2	STEP AS	
M	2	1	**7X-2553**	4	BOLT (M16X2X40-MM)	
	3	1	**9X-8257**	4	WASHER (17.5X30X3.5-MM THK)	

M - METRIC PART

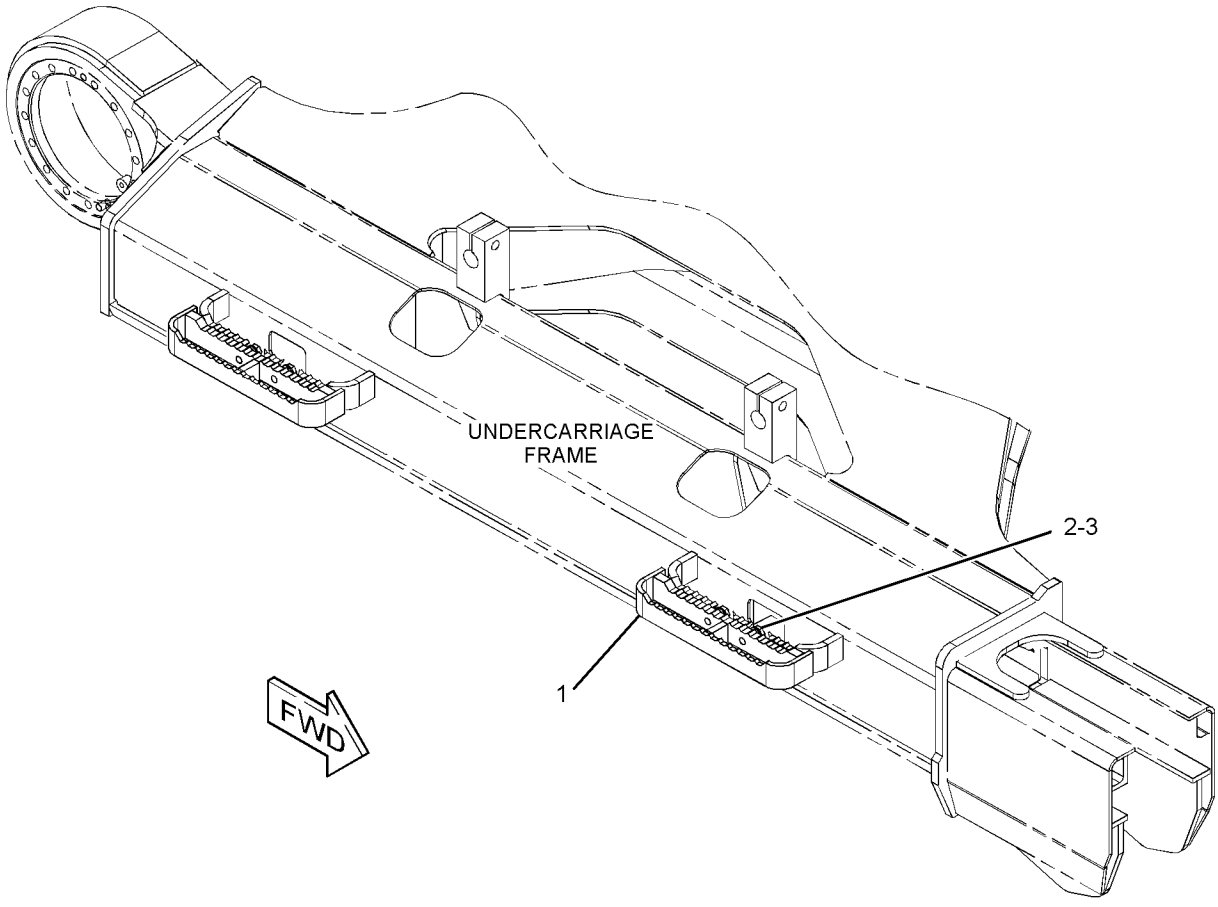

GRAPHIC #1 **<END>** g01421202

273-7727 STORAGE GP-VANDALISM GUARD

S/N: KGF1-UP; FAL1-UP

PART OF 264-8648, 264-8649 GUARD AR-VANDALISM

AN ATTACHMENT

SMCS-7315 **i02652033**

NOTE	REF NO	GRAPHIC REF	PART NUMBER	QTY	PART NAME 1 2 3 4 5 6 (PRODUCT LEVEL)	SEE PAGE
M	1	1	**135-8573**	4	BOLT AS	
	2	1	**170-3015**	4	BUMPER	
	3	1	**241-1933**	1	BOLT AS-SPECIAL	
	4	1	**241-1938**	1	CABLE	
	5	1	**278-3729**	1	SHEET AS	
E	5A	1	**184-8580**		SEAL (15-CM)	
E	5B	1	**237-5586**		SEAL (95-CM)	
	6	1	**5P-7958**	2	SLEEVE-CABLE SPLICE	

E - ORDER BY THE CENTIMETER
M - METRIC PART

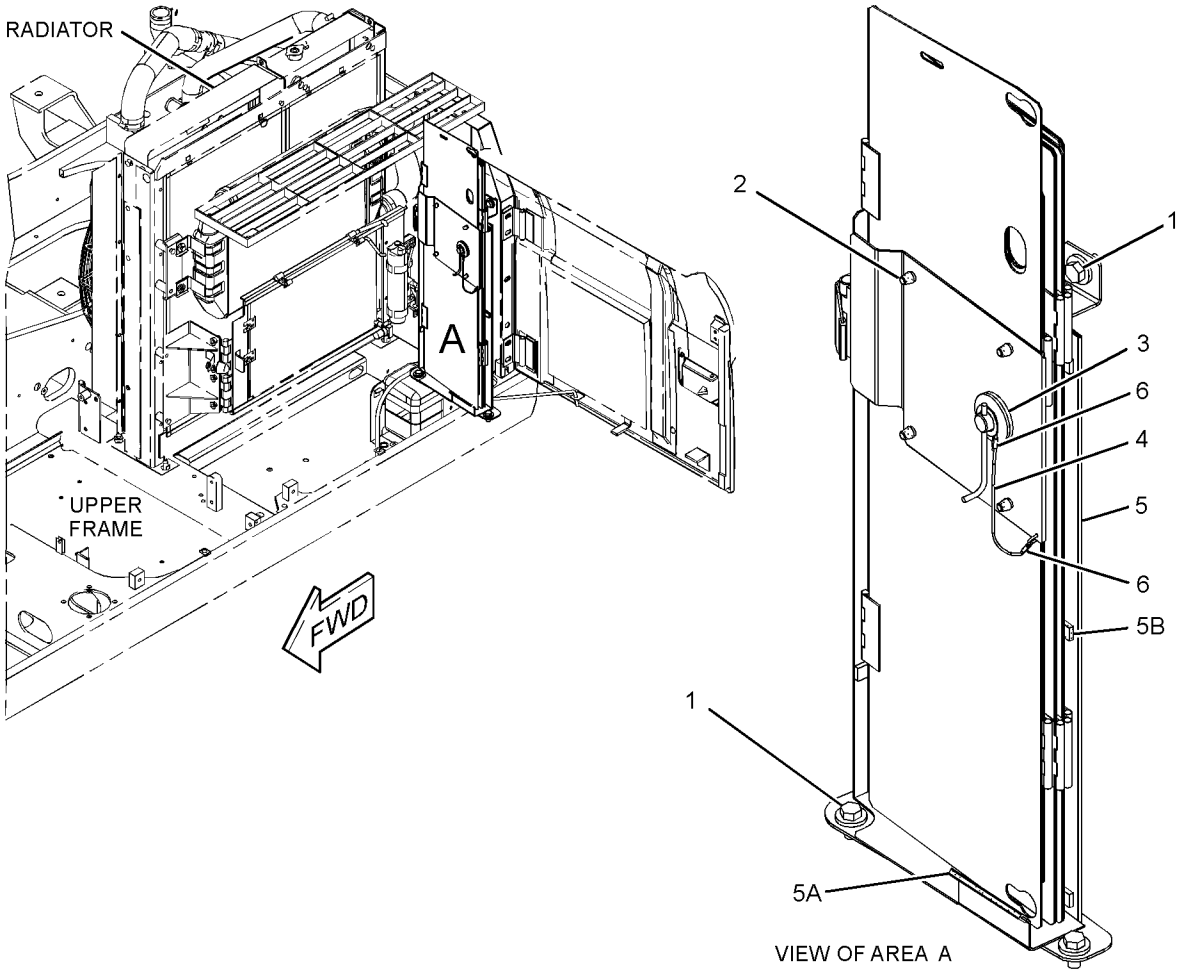

GRAPHIC #1 **<END>** g01339743

248-8940 SUPPORT AS-ENCLOSURE

S/N: KGF1-UP; FAL1-UP
PART OF 273-7725, 273-7726, 320-5732 HOOD & GUARD GP
ALSO AN ATTACHMENT

SMCS-0635, 1801, 7076, 7251, 7263, 7267, 7272, 7276 **i04910527**

NOTE	REF NO	GRAPHIC REF	PART NUMBER	QTY	PART NAME 1 2 3 4 5 6 (PRODUCT LEVEL)	SEE PAGE
	1	1	**248-8944**	1	LINER	
	2	1	**248-8943**	1	LINER	

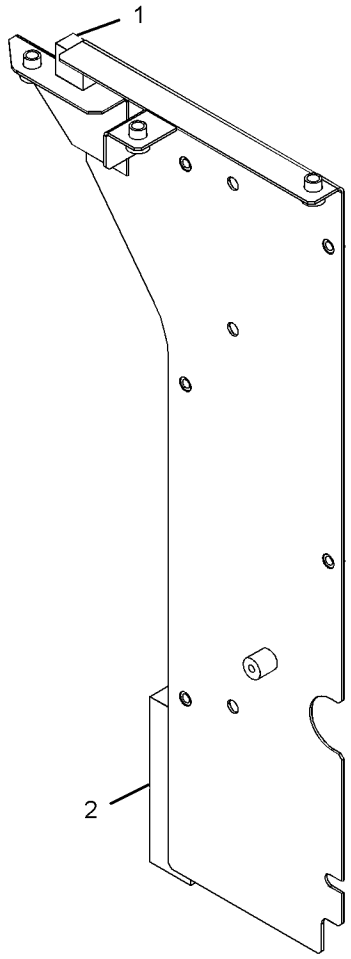

GRAPHIC #1 **<END>** g01392607

278-3852 SUPPORT AS-ENCLOSURE

S/N: FAL1-182

PART OF 273-7726 HOOD & GUARD GP

SMCS-0635, 1801, 7076, 7251, 7263, 7267, 7272, 7276 **i02562587**

NOTE	REF NO	GRAPHIC REF	PART NUMBER	QTY	PART NAME 1 2 3 4 5 6 (PRODUCT LEVEL)	SEE PAGE
	1	1	**244-8277**	1	LINER	
	2	1	**244-8278**	1	LINER	
	3	1	**244-8288**	1	LINER	
Z	4	1		1	SUPPORT AS	

Z - NOT SERVICED SEPARATELY

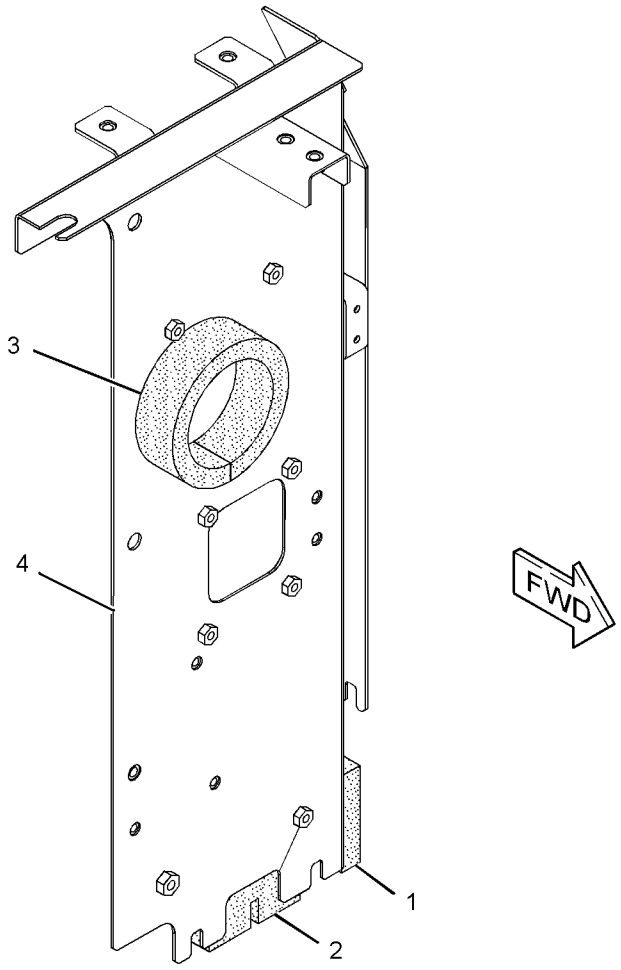

GRAPHIC #1 **<END>** g01290676

304-0093 SUPPORT AS-ENCLOSURE

S/N: KGF1-UP; FAL1-UP
PART OF 278-3778 COVER GP-HOOD
AN ATTACHMENT

SMCS-0635, 1801, 7076, 7251, 7263, 7267, 7272, 7276 **i02896005**

NOTE	REF NO	GRAPHIC REF	PART NUMBER	QTY	PART NAME 1 2 3 4 5 6 (PRODUCT LEVEL)	SEE PAGE
	1	1	**244-8277**	1	LINER	
	2	1	**244-8278**	1	LINER	

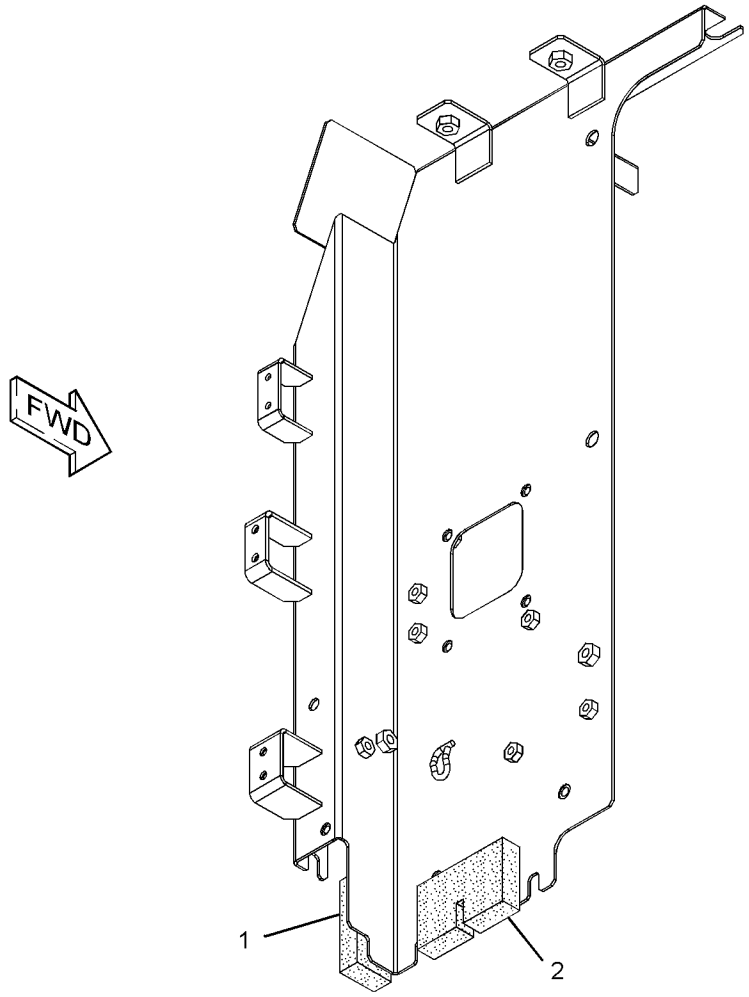

GRAPHIC #1 **<END>** g01387729

307-7660 SUPPORT AS-ENCLOSURE

S/N: KGF1-UP
PART OF 273-7725 HOOD & GUARD GP
AN ATTACHMENT

SMCS-0635, 1801, 7076, 7251, 7263, 7267, 7272, 7276 **i02781304**

NOTE	REF NO	GRAPHIC REF	PART NUMBER	QTY	PART NAME 1 2 3 4 5 6 (PRODUCT LEVEL)	SEE PAGE
	1	1	**244-8277**	1	LINER	
	2	1	**244-8278**	1	LINER	
	3	1	**244-8288**	1	LINER	

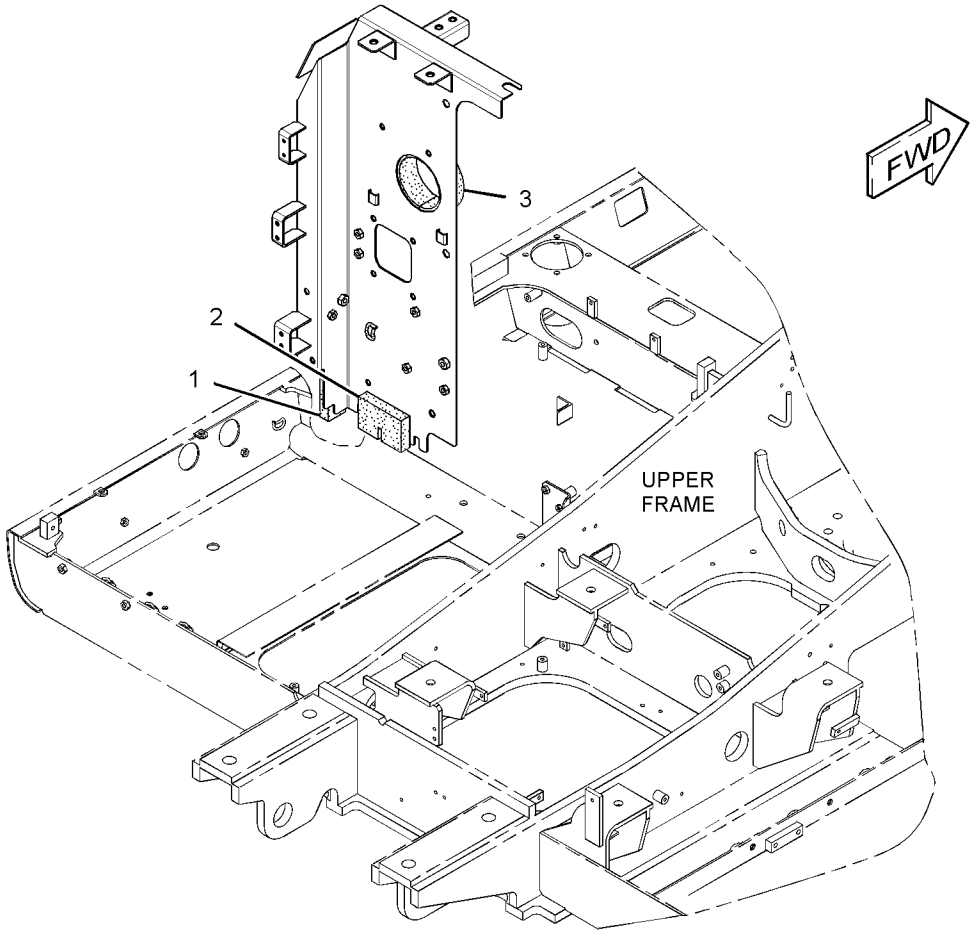

GRAPHIC #1 **<END>** g01416167

307-7662 SUPPORT AS-ENCLOSURE

S/N: KGF1-7705; FAL183-9016
PART OF 273-7725, 273-7726, 320-5732 HOOD & GUARD GP
ALSO AN ATTACHMENT

SMCS-0635, 1801, 7076, 7251, 7263, 7267, 7272, 7276 **i02900393**

NOTE	REF NO	GRAPHIC REF	PART NUMBER	QTY	PART NAME 1 2 3 4 5 6 (PRODUCT LEVEL)	SEE PAGE
	1	1	**244-8277**	1	LINER	
	2	1	**244-8278**	1	LINER	
	3	1	**244-8288**	1	LINER	

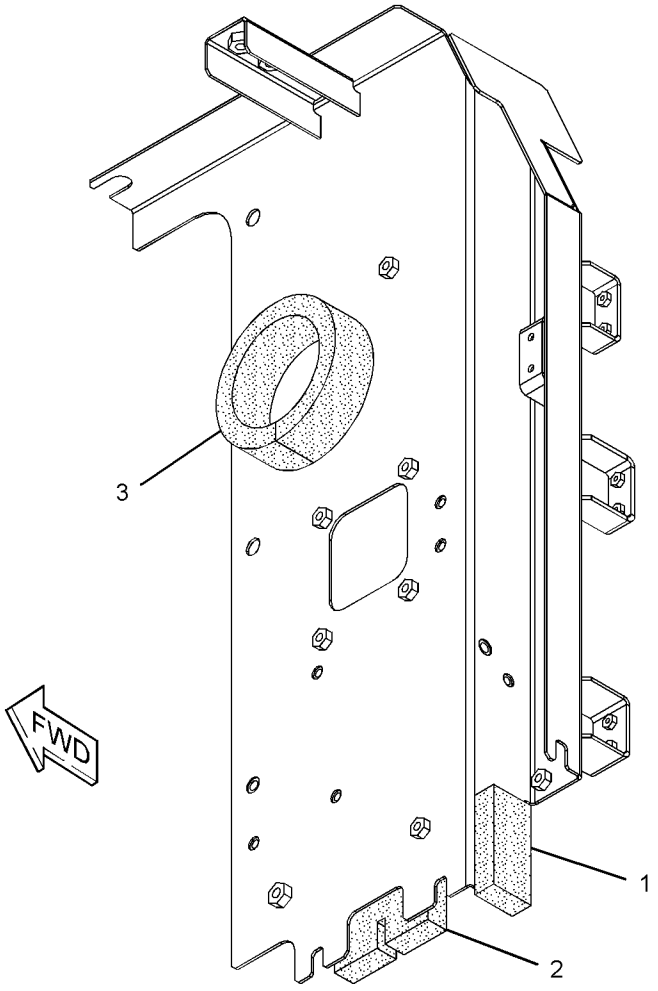

GRAPHIC #1 **<END>** g01377554

355-8187 SUPPORT AS-ENCLOSURE

S/N: KGF1-UP; FAL1-UP
PART OF 355-8167 HOOD & GUARD GP
AN ATTACHMENT

SMCS-0635, 1801, 7076, 7251, 7263, 7267, 7272, 7276 **i03897440**

NOTE	REF NO	GRAPHIC REF	PART NUMBER	QTY	PART NAME 1 2 3 4 5 6 (PRODUCT LEVEL)	SEE PAGE
	1	1	**244-8277**	1	LINER	
	2	1	**244-8278**	1	LINER	
	3	1	**244-8288**	1	LINER	

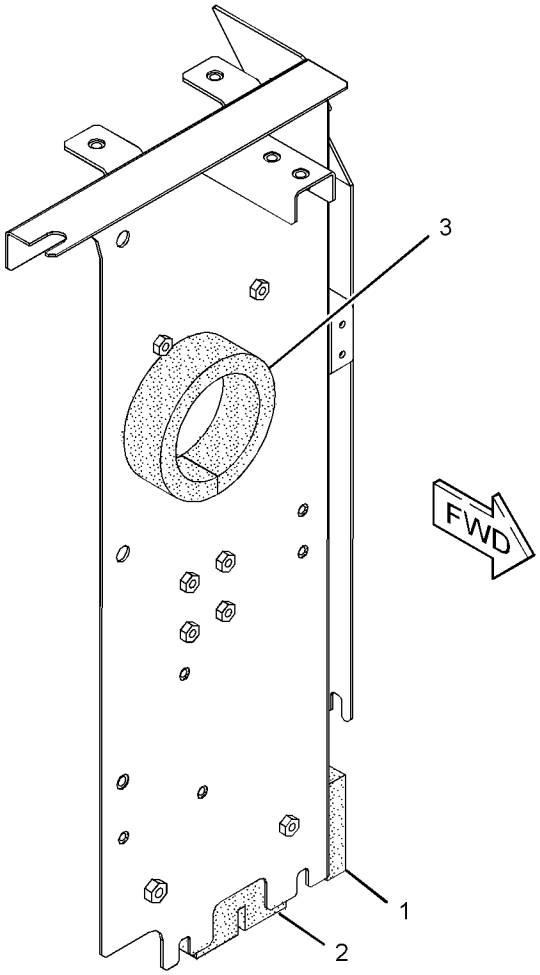

GRAPHIC #1

<END>

g02141339

364-6936 SUPPORT AS-ENCLOSURE

S/N: KGF1-UP; FAL1-UP
PART OF 364-6940 COVER GP-HOOD
AN ATTACHMENT

SMCS-0635, 1801, 7076, 7251, 7263, 7267, 7272, 7276 **i04586629**

NOTE	REF NO	GRAPHIC REF	PART NUMBER	QTY	PART NAME 1 2 3 4 5 6 (PRODUCT LEVEL)	SEE PAGE
	1	1	**244-8277**	1	LINER	
	2	1	**244-8278**	1	LINER	

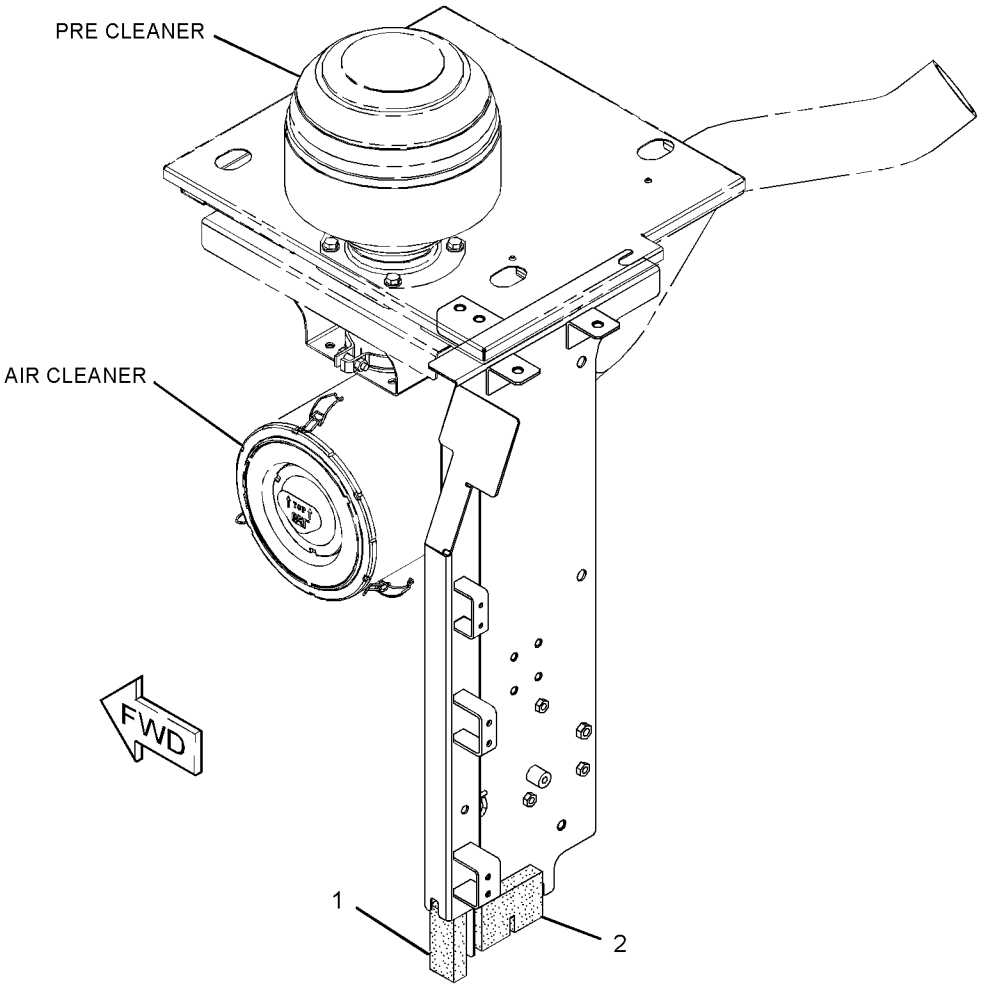

GRAPHIC #1 **<END>** g02819278

375-8764 SUPPORT AS-ENCLOSURE

S/N: KGF7706-UP; FAL9017-UP

PART OF 273-7726 HOOD & GUARD GP

SMCS-0635, 1801, 7076, 7251, 7263, 7267, 7272, 7276 **i04802757**

NOTE	REF NO	GRAPHIC REF	PART NUMBER	QTY	PART NAME 1 2 3 4 5 6 (PRODUCT LEVEL)	SEE PAGE
	1	1	**244-8277**	1	LINER	
	2	1	**244-8278**	1	LINER	
	3	1	**244-8288**	1	LINER	

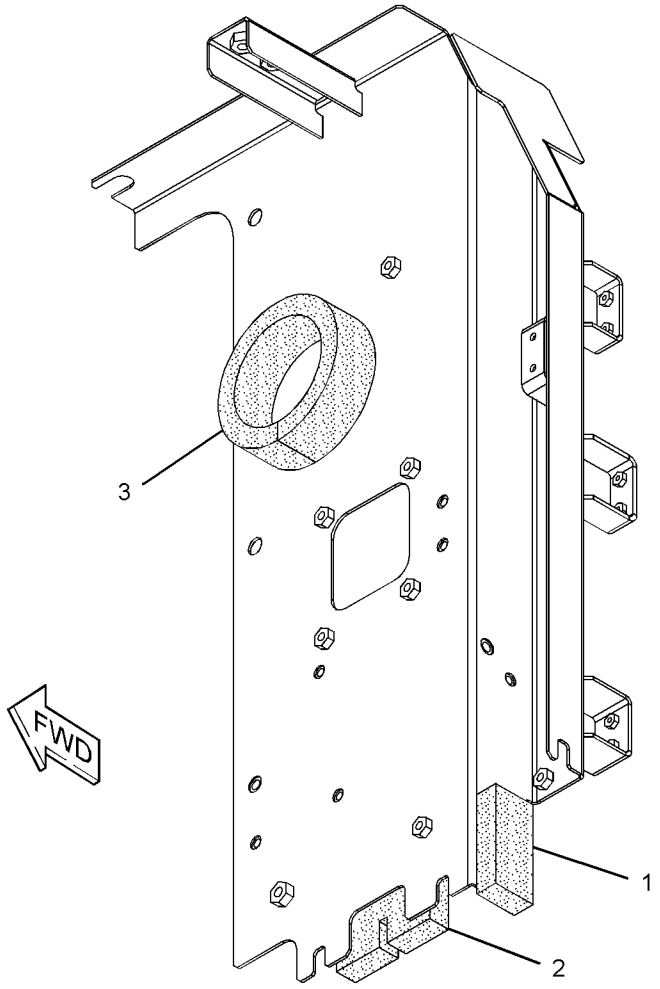

GRAPHIC #1 **<END>** g01377554

384-9112 SUPPORT AS-ENCLOSURE

S/N: KGF1-UP; FAL1-UP
PART OF 278-3778 COVER GP-HOOD
AN ATTACHMENT

SMCS-0635, 1801, 7076, 7251, 7263, 7267, 7272, 7276 **i05119916**

NOTE	REF NO	GRAPHIC REF	PART NUMBER	QTY	PART NAME 1 2 3 4 5 6 (PRODUCT LEVEL)	SEE PAGE
	1	1	**244-8277**	1	LINER	
	2	1	**244-8278**	1	LINER	

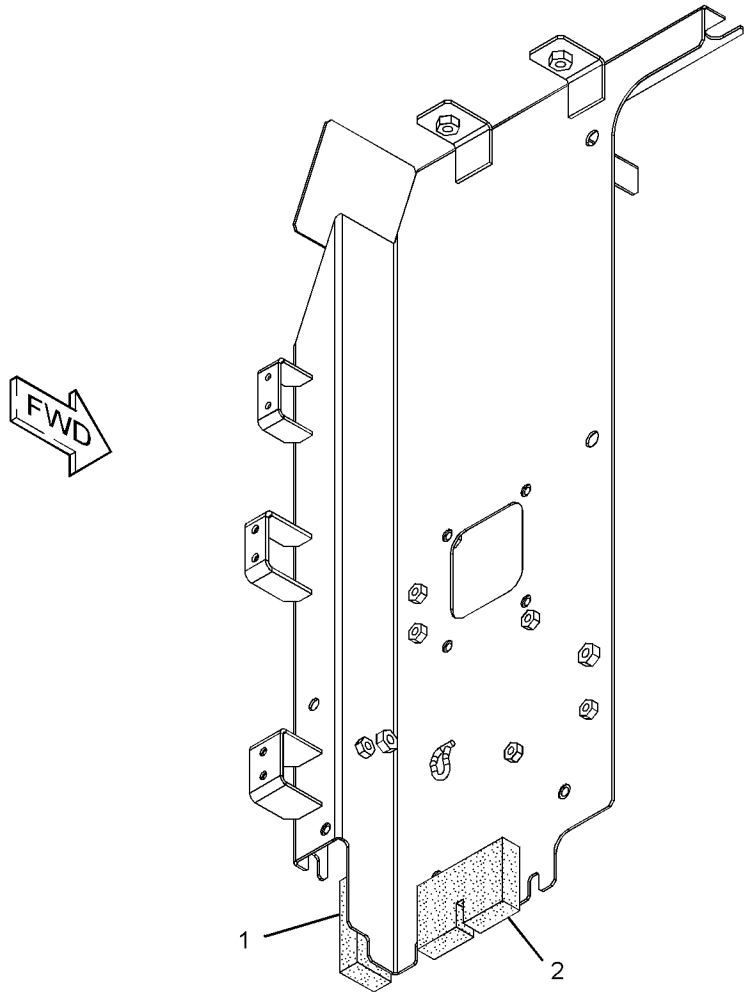

GRAPHIC #1 **<END>** g01387729

MEMORANDA

PART NUMBER INDEX

Part	Page
1	
1A-0621	2048
1D-4635	1909
1D-5117	437
1F-0425	1677
1H-3338	541
1H-4393	2142
1J-9671	1202
	1204
	1628
1M-6119	403
	405
	406
	412
	419
	421
	427
	429
	435
	617
1M-6120	403
	405
	406
	412
	419
	421
	427
	429
	435
	617
1P-2807	2301
	2306
	2311
	2316
	2321
	2326
	2331
	2336
1P-3702	1136
	1137
	1138
	1143
	1145
	1149
	1150
	1151
	1152
	1167
	1179
	1183
	1187
	1191
	1195
	1207
	1210
	1214
	1218
	1222
	1226
	1230
	1251
	1255
	1259
	1512
	1513
	1530
	1534
	1536
	1593
	1613
	1614
	1615
	1616
	1648
1P-3703	1072
	1076
	1078
	1080
	1082
	1086
	1091
	1093
	1097
	1099
	1108
	1117
	1121
	1122
	1123
	1125
	1132
	1136
	1137
	1138
	1143
	1144
	1145
	1149
	1150
	1151
	1152
	1167
	1169
	1172
	1175
	1179
	1183
	1187
	1191
	1195
	1206
	1207
	1210
	1214
	1218
	1222
	1226
	1230
	1251
	1255
	1259
	1262
	1265
	1407
	1424
	1425
	1426
	1438
	1440
	1445
	1447
	1449
	1452
	1455
1P-3704	1078
	1080
	1082
	1086
	1091
	1093
	1097
	1099
	1119
	1214
	1218
	1222
	1226
	1230
	1251
	1255
	1259
	1437
	1438
	1440
	1445
1P-3705	1082
	1086
1P-4578	1214
	1218
	1222
	1226
	1230
	1251
	1255
	1259
	1404
	1407
1P-4579	1404
	1407
1P-5765	1137
1P-5767	1078
	1080
	1082
	1086
	1091
	1093
	1097
	1099
1R-0739	112
	180
1R-0751	290
	293
1R-5998	1977
	1981
	2007
1R-6573	298
	299
1R-9958	763
	768
	773
	779
	785
	809
	813
1S-0812	542
	543
1S-4923	1895
	1897
	1899
	1901
1S-7251	617
1S-7252	403
	405
	406
	412
	419
	421
	427
	429
	435
	617
1S-9593	1699
	1700
1U-3252	1917
1U-3351	1928
1U-3352	1916
1U-8846	649
	653
	659
	662
	754
	1026
	1028
	1029
	1031
	1447
	1449
	1452
	1455
2	
2A-5222	189
2B-0858	182
	1508
2C-9259	1820
	1821
	1822
	1823
	1824
	1826
	1827
	1829
	1830
	1831
	1833
	1834
	1835
	1844
	1846
	1848
	1849
	1850
	1856
	1857
	1858
	1859
	1860
	1861
	1862
	1863
	1868
	1872
	1873
	1874
	1875
	1877
	1878
	1879
	1883
	1884
	1885
	1886
	1887
	1888
	1889
	1891
2C-9462	1904
2C-9544	1841
	1871
	1880
	1881
	1882
	1890
	1904
2D-6412	2212
2D-6642	1480
	1484
	1488
	1526
	1595
	1598
	1601

► **PRIMARY REFERENCE**

PART NUMBER INDEX

Part	Page
	1603
	1679
2G-1830	617
2G-8767	405
	412
	419
	427
2H-3814	204
2H-3922	537
	2271
2J-3507	1903
	1907
	1909
2K-1594	1895
	1897
	1899
	1901
2L-8049	420
	428
2L-8050	420
	428
	636
2L-8052	420
	428
	636
2L-8057	428
2L-8058	428
	636
2L-8060	428
	636
2L-8065	571
	645
	647
	2142
2L-8066	571
2L-8067	571
	645
	647
2L-8069	420
	428
	586
2L-8074	636
2L-8075	420
	428
	488
	491
	513
	515
	517
	519
	521
	523
	571
	645
	647
	2048
	2050
	2142
2L-8076	544
	571
2L-8077	467
	604
	645
	647
2L-8078	510
2L-8079	420
	428
	468
	558
	589
	647
2M-0849	2166
	2184
2M-9780	307
	310
	313
	316
	319
	1042
	1131
	1202
	1204
	1420
	1422
	1447
	1449
	1452
	1455
	1480
	1484
	1489
	1538
	1541
	1544
	1547
	1552
	1557
	1562
	1570
	1574
	1578
	1583
	1588
	1593
2P-1279	1165
	1166
2P-2537	180
2P-2975	1664
2Q-4703	2050
2R-1498	301
	303
	307
	310
	313
	316
	319
	323
	326
2S-1647	585
	586
2S-2596	1526
	1568
	1595
	1598
	1601
	1603
2S-3440	203
2S-4078	182
	341
	364
	366
	368
	370
	377
	379
	381
	386
	388
	394
	396
	544
	1169
	1172
	1175
	1178
	1182
	1186
	1190
	1194
	1214
	1218
	1222
	1226
	1230
	1250
	1254
	1258
	1518
	1519
2S-5926	891
2T-2991	180
	182
2U-2552	1954
	1955
2U-5338	1019
2V-2043	182
2Y-5503	1031
2Y-5685	2111
	2113
3	
3B-0551	364
	366
	368
	370
	377
	379
	381
	386
	388
	394
	396
3B-4501	475
	476
3B-4504	290
	293
3B-4505	173
	175
	190
	203
	273
	449
	2088
	2092
3B-4509	337
	1127
	1128
	1129
	1130
3B-4618	764
	769
	774
	780
	786
	792
	798
	804
	810
	814
	818
3B-8489	753
	754
	927
	929
	931
	933
	935
	937
	938
	940
	942
	944
	946
	948
	949
	951
	953
	954
	955
	957
	959
	961
	963
	965
	966
	967
	969
	972
	974
	976
	978
	980
	982
	984
	986
	989
	991
	993
	995
	997
	999
	1001
	1003
	1004
	1020
	1745
	1747
	1748
	1750
	1751
	1759
	1760
	1762
	1764
	1765
	1766
	1767
	1768
	1781
	1783
	1784
	1785
	1786
	1787
	1789
	1791
	1792
	1794
	1795
	1797
	1799
	1800
	1801
	1803
	1805
	1807
	1808
	1810
	1811
	1812
	1813
	1814
	1815

PART NUMBER INDEX

Part	Page	Part	Page	Part	Page	Part	Page
	1816		938	3H-0442	1526		1292
	1895		944		1595		1295
	1897		946		1598		1296
	1899		949		1601		1297
	1901		957		1603		1299
3C-3681	182		959	3J-1907	295		1301
3D-2824	544		961		301		1303
	1123		967		303		1305
	1125		1045		307		1307
	1131		1049		310		1309
	1132		1053		313		1311
	1178		1056		316		1313
	1182		1061		319		1315
	1186		1064		323		1317
	1187	3D-9143	676		326		1319
	1190	3E-2310	1339		357		1321
	1191		1342		358		1325
	1194		1346		360		1328
	1195		1349		361		1331
	1207		1353		364		1333
	1210		1357		366		1336
	1213		1360		368		1339
	1214		1364		370		1342
	1217		1368		373		1346
	1218		1372		375		1349
	1221		1382		377		1350
	1222		1387		379		1352
	1225		1397		381		1353
	1226	3E-2338	649		383		1356
	1229		653		385		1357
	1230		659		386		1360
	1250		662		388		1361
	1251	3E-2345	1404		390		1364
	1254		1407		392		1365
	1255	3E-3217	882		394		1367
	1258		883		396		1368
	1259		884		398		1371
	1299		886		528		1372
	1301		887		905		1375
	1303	3E-3365	1382		1024		1377
	1404	3E-3371	1213		1045		1379
	1407		1217		1049		1381
	1420		1221		1053		1382
	1422		1225		1057		1386
	1425		1299		1061		1387
	1426		1301		1064		1396
	1438		1433		1123		1397
	1440	3E-3383	545		1125		1398
	1445	3E-4297	1037		1131		1401
	1493	3E-4352	182		1132		1404
	1494	3E-5169	637		1159		1407
	1508	3E-6910	1465		1160		1411
	1640		1466		1161		1414
	1656	3E-6912	251		1166		1415
	1657	3E-7389	543		1202		1417
	1660	3E-8020	1977		1204		1418
	1661		1981		1233		1433
	1662		2007		1234		1434
	1663	3E-8048	626		1237		1435
	1665		627		1238		1438
	1666	3E-8320	506		1241		1440
	1668		508		1244		1445
	1669		510		1247		1447
	1671	3E-9411	760		1269		1449
	1672	3E-9872	2257		1270		1452
	1673		2274		1273		1455
	1674	3E-9874	1977		1277		1459
	1702		1981		1278		1469
	1705	3F-7147	1020		1281		1472
3D-2891	927	3F-9556	539		1282		1476
	929		540		1285		1478
	931	3G-3236	►1920		1287		1508
	933	3G-5083	1498		1288		1526
	935		1499		1291		1532

► **PRIMARY REFERENCE**

PART NUMBER INDEX

Part	Page
	1547
	1552
	1557
	1562
	1570
	1574
	1578
	1583
	1588
	1595
	1598
	1601
	1603
	1605
	1607
	1609
	1611
	1617
	1618
	1679
	1680
	1681
	1682
	1686
	1714
	1715
	1717
3J-5390	266
3J-7354	1131
	1159
	1160
	1166
	1278
	1282
	1403
	1433
	1434
	1435
	1508
	1526
	1595
	1598
	1601
	1603
	1635
	1715
3K-0360	307
	310
	313
	316
	319
	323
	326
	530
	531
	903
	1026
	1095
	1101
	1103
	1105
	1123
	1125
	1131
	1161
	1162
	1169
	1172
	1175
	1178
	1182
	1187
	1191
	1195
	1213
	1217
	1221
	1225
	1234
	1238
	1250
	1254
	1258
	1262
	1265
	1269
	1273
	1277
	1281
	1287
	1288
	1291
	1292
	1295
	1296
	1297
	1299
	1301
	1303
	1333
	1336
	1379
	1381
	1382
	1386
	1387
	1392
	1394
	1420
	1422
	1424
	1425
	1426
	1433
	1447
	1449
	1452
	1455
	1459
	1460
	1480
	1484
	1488
	1500
	1508
	1568
	1605
	1607
	1609
	1611
3K-0835	542
	543
3K-5234	1909
3L-8187	577
	626
	627
3P-0647	1639
	1664
3P-1896	126
3P-9847	206
	208
	210
	212
	214
	216
	218
	222
	225
	227
	229
3R-9965	586
3S-2093	197
	206
	208
	210
	212
	214
	216
	218
	222
	225
	227
	229
	272
	329
	330
	405
	412
	419
	427
	439
	445
	458
	460
	464
	467
	468
	471
	482
	484
	489
	493
	494
	510
	513
	515
	517
	519
	521
	523
	529
	538
	550
	554
	556
	558
	560
	564
	565
	570
	577
	581
	583
	584
	586
	588
	589
	592
	594
	596
	598
	600
	604
	606
	609
	620
	621
	622
	623
	625
	626
	627
	628
	629
	631
	633
	634
	635
	636
	639
	640
	641
	643
	645
	647
	1161
	1241
	1244
	1247
	1411
	1414
	1417
	1434
	1935
	1937
	1939
	1941
	2130
	2132
	2134
	2139
	2142
	2144
	2178
	2180
	2181
	2182
	2184
	2190
	2197
	2255
	2257
	2271
3T-4004	564
	570
3T-5760	403
	405
	412
	419
	427
3T-7528	1037
3V-0046	1159
	1160
	1161
3V-9744	1106
	1153
	1154
3W-6399	2255
3Y-9267	1635
	1637
4	
4B-2049	544
4B-4158	888
	889
4B-4278	2007
4B-7739	1508
4B-9783	1680
	1681
	1682
	1686
4B-9808	1020
4B-9880	940

PART NUMBER INDEX

Part	Page
	942
	951
	955
	963
	969
	972
	974
	976
	978
	980
	982
	984
	986
	989
	991
	993
	995
	997
	999
	1001
	1004
	1685
4D-1322	1895
	1897
	1899
	1901
4D-1836	637
4E-5724	506
	508
4H-1225	2048
4H-6112	1028
	1029
4I-0006	685
	693
4I-0117	763
	768
	773
	779
	785
	809
	813
4I-0118	763
	768
	773
	779
	785
	791
	797
	803
	809
	813
	817
4I-0232	763
	768
	773
	779
	785
	791
	797
	803
	809
	813
	817
4I-0378	357
	358
	360
	361
	364
	366
	368
	370
	373
	375
	377
	379
	381
	383
	385
	386
	388
	390
	392
	394
	396
4I-0379	301
	303
	307
	310
	313
	316
	319
	323
	326
4I-0420	2258
	2259
4I-0800	1392
	1394
4I-0818	1287
	1291
	1295
4I-0836	1287
	1291
	1295
4I-1022	1500
4I-1025	1311
	1313
	1317
	1319
4I-1031	1377
4I-1037	1287
	1291
	1295
4I-1163	2271
4I-1205	1977
	1981
	2007
4I-1206	1977
	1981
	2007
4I-1260	2125
4I-1536	►897
	901
4I-1539	897
4I-1631	1285
4I-1671	1349
	1364
4I-1674	1108
	1117
	1119
	1121
	1122
	1123
	1125
	1131
4I-1676	1108
	1117
	1119
4I-1704	1311
	1313
	1315
	1317
	1319
	1321
4I-1739	1287
	1291
	1295
4I-1780	1287
	1291
	1295
4I-1783	1411
4I-1878	1352
	1356
	1381
	1386
4I-2187	676
4I-2885	2286
	2287
	2300
4I-3038	538
4I-3063	1977
	1981
	2007
4I-3090	1978
	1982
	2007
	2274
4I-3091	2100
4I-3094	2100
4I-3123	1977
	1981
4I-3144	1977
	1981
	2007
4I-3266	2189
4I-3308	1724
	1726
	1728
	1730
	1732
	1734
	1736
	1738
	1740
	1742
4I-3309	1724
	1726
	1728
	1730
	1732
	1734
	1736
	1738
	1740
	1742
4I-3503	2152
	2156
4I-3510	1656
	1657
	1660
	1665
	1666
	1668
	1669
	1671
	1672
4I-3569	1547
	1552
	1557
	1562
	1570
	1574
	1578
	1583
	1588
4I-3573	1449
4I-3615	927
	929
	931
	933
	935
	938
	944
	946
	949
	957
	961
	967
4I-3621	1127
	1128
	1129
	1130
4I-3627	972
	974
	976
	978
	980
	982
	984
	989
	991
	993
	995
	997
	999
	1004
4I-3628	940
	942
	951
	955
	959
	963
	972
	974
	976
	978
	980
	982
	984
	989
	991
	993
	995
	997
	999
	1004
4I-3631	972
	974
	976
	978
	980
	982
	984
	989
	991
	993
	995
	997
	999
	1004
4I-3941	1352
	1356
	1381
	1386
4I-3981	1285
	1392
4I-3988	1325
	1328
	1331
	1352
	1356
	1360
	1364
	1367
	1371
	1375
	1381

► **PRIMARY REFERENCE**

PART NUMBER INDEX

Part	Page
	1386
	1397
4I-3991	1325
	1328
4I-3994	1285
4I-4270	1977
	1981
	2007
4I-4286	2088
	2090
	2092
	2095
	2098
4I-4298	2267
4I-4300	2267
4I-4361	2125
4I-4392	1977
	1981
	2007
4I-4543	1745
	1748
	1750
4I-4544	1745
	1748
	1750
4I-4580	2152
	2156
	2159
4I-4618	1730
	1781
	1795
	1797
4I-4809	1724
	1726
	1728
	1732
	1734
	1736
	1738
	1740
	1742
	1783
	1784
	1785
	1786
	1787
	1789
	1791
	1792
	1794
	1799
	1800
	1801
	1803
	1805
	1807
	1808
	1810
	1811
	1812
	1813
	1814
	1815
	1816
4I-4811	1783
	1784
	1785
	1786
	1787
	1789
	1792
	1794
	1799
	1800
	1801
	1803
	1805
	1807
	1808
	1810
	1811
	1812
	1813
	1814
	1815
	1816
4I-4812	749
	751
4I-4814	1791
4I-5020	2271
4I-5021	2271
4I-5049	2254
4I-5409	1
	2
	478
4I-5556	1134
4I-5795	1299
	1379
4I-5862	897
4I-5906	1287
	1291
	1295
4I-5933	1287
	1291
	1295
4I-6054	1285
	1360
	1364
	1367
	1371
	1397
	1401
4I-6248	1305
4I-6365	1619
	1625
	1630
	1632
	1633
	1634
4I-6397	1538
	1541
	1544
	1547
	1552
	1557
	1562
	1570
	1574
	1578
	1583
	1588
4I-6602	2111
	2113
	2115
	2116
4I-6608	1745
4I-6610	1745
4I-6914	►1817
	1833
4I-7554	267
4I-7714	1657
	1660
	1665
	1666
	1669
	1671
4I-7745	1123
	1125
4I-7889	592
	594
	596
	598
	600
	602
	617
	631
	643
	1321
4I-7924	826
	830
	840
4I-8019	763
	768
	773
	779
	785
	791
	797
	803
	809
	813
	817
4I-8267	898
	2321
4I-8472	2301
	2306
	2311
	2316
	2321
	2326
	2331
	2336
4I-8785	1136
	1149
4I-8789	1119
	1206
4I-8864	927
	929
	931
	933
	935
	938
4I-8869	972
	974
	976
	978
	980
	982
	984
	995
	997
	999
4I-8965	1605
	1607
	1609
	1611
4I-9521	301
	303
	308
	311
	314
	317
	320
	323
	326
	1132
	1161
	1233
	1237
	1241
	1244
	1247
	1269
	1273
	1277
	1281
	1285
	1287
	1291
	1295
	1323
	1325
	1328
	1331
	1352
	1356
	1360
	1364
	1367
	1371
	1375
	1381
	1386
	1397
	1401
	1411
	1414
	1417
4I-9522	307
	310
	313
	316
	1132
	1161
	1233
	1237
	1241
	1244
	1247
	1269
	1273
	1277
	1281
	1285
	1287
	1291
	1295
	1305
	1307
	1309
	1323
	1325
	1328
	1352
	1356
	1360
	1364
	1367
	1371
	1381
	1386
	1397
	1411
	1414
	1417
4I-9523	307
	310
	313
	316
	1269
	1273
	1277
	1281
	1285
	1287
	1291

► **PRIMARY REFERENCE**

PART NUMBER INDEX

Part	Page	Part	Page	Part	Page	Part	Page
	1295		1364		1381		1438
	1305		1367		1386		1440
	1307		1371	4I-9664	126		1445
	1309		1381		130	4J-7385	1646
	1325		1386		131		1647
	1328		1397	4J-0519	1613	4J-7386	1646
	1331		1401		1614		1647
	1333	4I-9526	1132		1615	4J-7533	1037
	1336		1233		1616		1459
	1339		1237	4J-0520	1071		1521
	1342		1269		1075		1526
	1346		1273		1538		1547
	1349		1277		1541		1552
	1352		1281		1544		1557
	1356		1285	4J-0522	1214		1562
	1360		1323		1218		1570
	1364		1325		1222		1574
	1367		1328		1226		1578
	1371		1361		1230		1583
	1377		1365		1251		1588
	1381		1367		1255		1595
	1386		1371		1259		1598
	1397		1375		1404		1601
	1401		1377		1407		1603
4I-9524	1269		1379	4J-0524	1262		1605
	1273		1397		1265		1607
	1277		1411		1404		1609
	1281		1414		1407		1611
	1285		1417		1524	4J-8998	1512
	1287	4I-9527	307		1525		1513
	1291		310	4J-0527	1234		1530
	1295		313		1238		1534
	1305		316		1262		1536
	1307		1233		1265		1648
	1309		1237		1508	4J-9208	1903
	1325		1269	4J-0528	1628	4K-1388	182
	1328		1273	4J-5267	182		1646
	1339		1277		1135		1647
	1342		1281		1167	4K-8864	403
	1346		1285		1411		406
	1349		1287		1414		412
	1352		1291		1417		421
	1356		1295		1508		429
	1360		1325		1530		435
	1364		1328		1532		617
	1367		1331	4J-5268	1167		1288
	1371		1339		1424		1292
	1375		1342		1425		1296
	1381		1346		1426	4N-9170	754
	1386		1349	4J-5309	1547	4P-7428	406
	1396		1352		1552		412
	1397		1356		1557		421
4I-9525	307		1360		1562		429
	310		1364		1570		585
	313		1367		1574		586
	316		1371		1578	4P-7581	277
	1132		1375		1583		305
	1269		1379		1588		330
	1273		1381	4J-5477	1156		406
	1277		1386		1157		413
	1281		1397		1158		421
	1285		1401		1161		429
	1287		1420		1165		502
	1291		1422		1166		565
	1295	4I-9528	1269		1233		572
	1323		1273		1234		589
	1325		1277		1237		641
	1328		1281		1238		1270
	1331		1285		1241		1274
	1346		1287		1244		1278
	1349		1291		1247		1282
	1352		1295		1411		1941
	1356		1325		1414	4S-1962	2152
	1360		1328		1417		2156

► **PRIMARY REFERENCE**

PART NUMBER INDEX

Part	Page
	2159
4T-0987	1526
	1595
	1598
	1601
	1603
4T-3148	1547
	1552
	1557
	1562
	1570
	1574
	1578
	1583
	1588
4T-5074	1547
	1552
	1557
	1562
	1570
	1574
	1578
	1583
	1588
5	
5A-3604	337
	2199
	2201
	2203
	2205
	2234
	2235
	2236
	2237
5B-3180	182
5B-3254	2215
5B-5947	177
5B-9304	286
5C-2874	421
	429
	1526
	1598
	1603
5C-2889	476
5C-2890	290
	293
	305
	508
	541
	560
	565
	572
	600
	629
	2271
	2274
5C-6074	544
5C-6108	339
	544
5C-7261	190
	251
	403
	406
	413
	421
	429
	435
	467
	501
	1641
	1642
	1933
	1934
	1956
	2146
	2149
	2219
	2220
	2221
	2222
	2228
	2229
	2230
	2231
	2232
	2233
	2238
	2239
	2246
	2247
	2248
	2249
5C-7793	1977
	1981
	2007
5C-7883	406
	413
	421
	429
5C-8138	2255
5C-8312	2259
5C-9553	439
	501
	506
	508
	510
	617
	676
	764
	769
	774
	780
	786
	792
	798
	804
	810
	814
	818
	821
	823
	1508
	1935
	1937
	1939
	1941
	2130
	2132
	2134
	2184
	2271
5D-1026	1031
	2152
5D-4822	2116
	2124
	2126
5D-8159	220
	231
	234
	236
	238
	241
	243
	246
	249
	251
5F-9144	295
	307
	310
	313
	316
	319
5G-2247	882
	884
5H-5672	1505
5H-8624	1403
5H-8936	1747
5I-3523	1781
	1795
	1797
5I-3878	406
	413
	421
	429
5I-4000	1628
5I-4002	1628
5I-4076	1287
	1291
	1295
	1379
5I-4111	1646
	1647
5I-4174	1136
	1137
	1138
	1143
	1145
5I-4216	1149
5I-4376	1161
	1233
	1237
	1241
	1244
	1247
5I-4393	1109
	1111
	1113
5I-4396	1287
	1291
	1295
	1317
	1319
	1339
	1342
	1346
	1349
	1364
5I-4915	130
5I-4940	179
5I-4983	134
5I-4993	142
	144
5I-5005	132
5I-5038	186
5I-5181	129
5I-5597	134
	135
	138
	179
	275
5I-7090	2046
5I-7233	1134
5I-7235	▶1745
	1758
5I-7238	1747
5I-7239	1747
5I-7505	126
	177
5I-7523	126
5I-7525	126
5I-7528	126
5I-7529	126
5I-7540	148
	153
	155
	157
	163
	165
5I-7549	273
5I-7550	273
5I-7558	135
5I-7559	135
5I-7561	189
5I-7587	286
5I-7588	129
5I-7589	▶265
	286
5I-7599	141
5I-7601	273
5I-7602	286
5I-7610	135
5I-7623	189
5I-7630	173
	175
5I-7632	135
5I-7633	280
	282
	284
	288
5I-7642	186
5I-7645	179
5I-7646	203
5I-7650	121
	122
5I-7654	129
5I-7655	203
5I-7660	134
5I-7666	142
	144
5I-7667	146
5I-7677	275
	277
	278
5I-7678	275
	277
	278
5I-7679	280
	282
	284
5I-7683	135
5I-7690	190
5I-7691	190
5I-7696	204
5I-7697	204
5I-7724	126
5I-7725	179
5I-7735	203
5I-7742	288
5I-7750	138
5I-7784	129
5I-7785	129
5I-7786	129
5I-7787	129
5I-7788	129
5I-7789	129
5I-7867	203
5I-7985	401
5I-7987	401
5I-7997	401
5I-8009	126
5I-8021	275
	277

PART NUMBER INDEX

Part	Page
	278
5I-8022	278
5I-8023	275
	277
	278
5I-8040	280
	282
5I-8056	203
5I-8058	189
	290
	293
5I-8066	177
5I-8067	142
	144
5I-8080	401
5I-8086	401
5I-8087	401
5I-8088	401
5I-8089	401
5I-8090	401
5I-8094	401
5I-8095	401
5I-8097	401
5I-8098	401
5I-8270	403
	405
	412
	419
	427
	435
5I-8416	►898
	901
5I-8417	1469
	1472
	1476
	1478
5I-8426	1469
	1472
	1476
	1478
5I-8510	1097
	1099
5I-8511	1605
	1607
	1609
	1611
5I-8623	1469
	1472
	1476
	1478
5I-8625	1469
	1472
	1476
	1478
5I-8670	1033
5I-8708	1287
	1291
	1295
5I-8715	1137
5I-8825	1392
	1394
5I-8853	1285
5I-9368	405
	412
	419
	427
5K-2298	1751
5K-3294	2152
5K-8451	301
	303
	307
	310
	313
	316
	319
	323
	326
	1234
	1238
	1377
	1392
5K-9090	182
	1041
	1069
	1072
	1076
	1119
	1123
	1125
	1167
	1169
	1172
	1175
	1176
	1178
	1179
	1182
	1183
	1186
	1187
	1190
	1191
	1194
	1195
	1206
	1207
	1210
	1213
	1214
	1217
	1218
	1221
	1222
	1225
	1226
	1229
	1230
	1250
	1254
	1258
	1262
	1265
	1424
	1425
	1426
	1427
	1429
	1431
5K-9242	1747
	1751
5K-9243	754
	1745
	1747
	1748
	1750
5L-3233	256
	257
	263
	264
5L-4758	905
5L-6326	204
5P-0537	307
	310
	313
	316
	319
5P-0743	187
	188
5P-0747	403
	405
	412
	435
	617
5P-0761	403
	405
	406
	412
	435
	617
5P-0767	1031
	2152
	2156
	2159
5P-1075	676
	747
5P-1076	182
	757
	761
	1123
	1125
5P-1318	1202
	1204
5P-1442	272
	301
	303
	307
	308
	310
	311
	313
	314
	316
	317
	319
	320
	323
	326
5P-2321	571
5P-2568	1714
	1715
	1717
5P-3108	1646
	1647
5P-3454	510
5P-4115	506
	508
	510
	553
	617
	764
	769
	774
	780
	786
	792
	798
	804
	810
	814
	818
	821
	823
5P-4116	238
	251
	400
	406
	413
	421
	429
	641
	676
	2014
	2016
	2021
	2023
	2025
5P-4924	301
	303
	307
	310
	313
	316
	319
	323
	326
	357
	358
	360
	361
	364
	366
	368
	370
	373
	375
	377
	379
	381
	383
	385
	386
	388
	390
	392
	394
	396
5P-4961	272
5P-5995	606
5P-5998	538
5P-6271	565
	571
5P-6944	307
	310
	313
	316
	319
	323
	326
5P-7175	301
	303
	307
	310
	313
	323
5P-7462	1288
	1292
5P-7463	1288
	1292
5P-7464	1420
	1422
5P-7465	1420
	1422
5P-7466	1195
	1226
	1230
	1259
5P-7467	1195
	1226
	1230
	1259
5P-7468	1169
	1172
	1175
	1179
	1183
	1187

► **PRIMARY REFERENCE**

PART NUMBER INDEX

Part	Page
	1191
	1195
	1251
	1255
	1262
	1265
	1404
	1407
5P-7469	1169
	1172
	1175
	1179
	1183
	1187
	1191
	1195
	1251
	1255
	1262
	1265
	1404
	1407
5P-7470	1214
	1218
	1222
	1226
	1230
	1251
	1255
	1259
5P-7471	1214
	1218
	1222
	1226
	1230
	1251
	1255
	1259
5P-7604	1894
5P-7854	1161
	1241
	1244
	1247
5P-7958	846
	2162
5P-8112	1194
	1226
	1230
	1259
5P-8182	1214
	1218
	1222
	1226
	1230
	1251
	1255
	1259
5P-8196	180
5P-8309	2254
5P-8444	1262
	1265
	1427
	1429
	1431
5P-8500	345
	346
	347
	348
	349
	350
	351
	352
	353
	354
	355
	548
	2162
5P-8523	2025
5P-9085	2152
5P-9297	486
	489
	491
5P-9617	180
5P-9909	206
	208
	210
	212
	214
	216
	218
	222
	225
	227
	229
5Q-3215	882
	883
5Q-3226	►875
	►876
5Q-3227	►877
	►878
5Q-4212	1109
	1111
	1113
	1115
	1153
	1154
	1156
	1157
	1158
5Q-4213	1109
	1111
	1113
	1115
	1153
	1154
	1438
	1440
	1445
6C-6760	1095
	1101
	1103
6C-8382	2111
	2113
	2116
6D-0692	649
	653
	659
	662
6D-1641	180
	2152
	2156
	2159
6D-3479	1353
	1357
	1368
	1372
	1382
	1387
	2152
	2156
6D-4244	626
6D-4636	301
	303
	307
	310
	313
	316
	319
	323
	326
6D-5257	586
6D-5801	338
6D-9157	1403
	1508
6E-2163	1568
6E-2271	1529
	1567
	1568
6E-2274	1530
	1534
	1536
	1538
	1541
	1544
	1547
	1552
	1557
	1562
	1570
	1574
	1578
	1583
	1588
6E-2313	1532
6E-2745	1492
6E-2746	1492
6E-3653	1547
	1552
	1557
	1562
	1570
	1574
	1578
	1583
	1588
6E-4793	1492
6E-4816	►1492
	1538
	1541
6E-5169	1547
	1552
	1557
	1562
	1570
	1574
	1578
	1583
	1588
6E-5431	1532
6E-5434	1532
6E-5438	1532
6E-5439	1532
6E-5643	1547
	1552
	1557
	1562
	1570
	1574
	1578
	1583
	1588
6E-5731	1530
	1534
	1536
	1538
	1541
	1544
	1547
	1552
	1557
	1562
	1570
	1574
	1578
	1583
	1588
6F-0253	542
	543
6F-4855	1043
	1044
6F-6672	1044
6F-7045	537
6F-7556	135
6F-7557	135
6G-2256	406
	413
	421
	429
6G-2263	406
	413
	421
	429
6H-3615	1125
	1206
6I-1418	449
6I-2501	257
	264
6I-2502	257
	264
6I-5134	1751
6I-5135	1751
6I-5136	1751
6I-5298	2051
	2053
6I-5342	2125
6I-5470	1977
	1981
	2008
6I-5976	676
6I-6033	763
	768
	773
	779
	785
	791
	797
	803
	809
	813
	817
6I-6354	1822
	1823
	1850
	1852
	1853
	1854
	1855
	1863
	1865
	1867
6I-6355	1850
	1852
	1853
	1854
	1855
	1863
	1865
	1867
6I-6356	1850
	1852
	1853

6

► PRIMARY REFERENCE

PART NUMBER INDEX

Part	Page
	1854
	1855
	1863
	1865
	1867
6I-6371	1907
6I-6583	649
	653
	659
	662
6I-6585	649
	653
	659
	662
6I-6721	1119
6I-6758	1628
6I-6795	1656
	1657
	1660
	1665
	1666
	1668
	1669
	1671
	1672
6I-6923	1677
6I-9454	893
	894
6J-2680	1420
	1422
	1508
6K-0806	2064
	2065
	2066
	2067
	2068
	2069
	2070
	2071
	2072
	2073
	2074
	2075
	2076
	2077
6K-8178	403
	406
	413
	421
	429
	435
6L-3616	1745
	1747
	1748
	1750
	1751
6M-5062	1493
	1494
6P-2216	764
	769
	780
	786
	792
	798
	804
	810
	814
	818
	826
	830
	840
6P-8855	2152
6S-8620	316
	326
6T-3631	549
	577
6T-3632	549
	577
6T-3633	549
	577
6T-9442	542
6V-0400	1078
	1080
	1082
	1086
	1091
	1093
	1097
	1099
	1108
	1117
	1149
	1150
	1151
	1152
	1167
	1251
	1255
	1259
	1262
	1265
	1403
	1447
	1449
	1452
	1455
6V-0683	1288
	1292
6V-0852	1161
	1202
	1204
	1233
	1237
	1241
	1244
	1247
	1299
	1301
	1303
	1339
	1342
	1346
	1349
	1353
	1357
	1361
	1365
	1368
	1372
	1375
	1377
	1382
	1387
	1397
	1404
	1407
	1508
6V-1874	1169
	1172
	1175
	1179
	1183
	1187
	1191
	1195
	1251
	1255
	1404
	1407
6V-2369	428
	506
	508
	510
	629
6V-2606	307
	310
	313
	316
	319
6V-2722	403
	435
	437
6V-3265	2152
	2156
	2257
6V-3342	1747
	1751
6V-3922	1538
	1541
	1544
	1547
	1552
	1557
	1562
	1570
	1574
	1578
	1583
	1588
6V-3938	1628
	1677
6V-3965	1161
	1202
	1204
	1233
	1237
	1241
	1244
	1247
	1299
	1301
	1303
	1339
	1342
	1346
	1349
	1353
	1357
	1361
	1365
	1368
	1372
	1375
	1377
	1382
	1387
	1397
	1404
	1407
	1508
6V-4298	1035
6V-4368	338
6V-5048	307
	310
	313
	316
	319
6V-5049	529
6V-5200	1461
	1462
	1463
	1464
6V-5210	475
	476
	565
	572
	2259
6V-5215	121
	122
	135
	290
	293
6V-5266	180
6V-5326	1526
	1595
	1598
	1601
	1603
6V-5393	1547
	1552
	1557
	1562
	1570
	1574
	1578
	1583
	1588
6V-5556	1547
	1552
	1557
	1562
	1570
	1574
	1578
	1583
	1588
	1649
6V-5589	1897
	1901
6V-5597	1530
	1534
	1536
	1538
	1541
	1544
	1547
	1552
	1557
	1562
	1570
	1574
	1578
	1583
	1588
6V-5645	506
	508
	510
6V-5683	1954
	1955
	2083
6V-5782	1202
	1204
6V-6715	472
6V-7238	1026
6V-7357	526
	2038
	2039
	2040
	2041
	2042
	2044
	2045
	2152
	2153
	2156
	2157

► **PRIMARY REFERENCE**

PART NUMBER INDEX

Part	Page	Part	Page	Part	Page	Part	Page
	2181		1123		1392		1440
	2254		1125		1394		1445
6V-7636	1977		1131		1396		1447
	1981		1132		1397		1449
	2007		1156		1398		1452
6V-7646	2050		1157		1401		1455
6V-7658	872		1158		1411		1687
	1037		1161		1412		1689
6V-7661	881		1165		1414	6V-8399	1622
6V-8185	553		1166		1415		1684
6V-8186	539		1233		1417	6V-8400	1214
	540		1234		1418		1218
6V-8187	510		1237		1420		1222
6V-8200	1045		1238		1422		1226
	1049		1241		1433		1230
	1053		1244		1434		1250
	1057		1247		1435		1254
	1061		1269		1438		1258
	1064		1270		1440		1623
	1436		1273		1445		1635
	1442		1274		1447		1637
	1443		1277		1449	6V-8467	1009
	1444		1278		1452		1011
6V-8202	1637		1281		1455		1015
	1677		1282		1609	6V-8624	1420
	2192		1285		1611		1422
	2193		1287		1682	6V-8625	1123
	2194		1288		1683		1125
	2195		1291		1686		1287
	2196		1292	6V-8398	1042		1291
	2197		1295		1084		1295
	2199		1296		1089		1333
	2200		1297		1095		1336
	2201		1299		1101		1447
	2202		1301		1103		1449
	2203		1303		1105		1452
	2204		1305		1106		1455
	2205		1307		1109	6V-8626	1131
	2206		1309		1111	6V-8627	1161
	2207		1311		1113		1241
	2208		1313		1115		1244
6V-8212	626		1315		1123		1247
	627		1317		1125		1411
6V-8214	182		1319		1153		1414
6V-8218	1656		1321		1154		1417
	1657		1325		1156		1438
	1660		1328		1157		1440
	1665		1331		1158		1445
	1666		1333		1162	6V-8632	1105
	1668		1336		1198		1381
	1669		1339		1200		1386
	1671		1342		1202	6V-8633	1438
	1672		1346		1204		1440
6V-8231	141		1349		1262		1445
	280		1350		1265	6V-8634	1161
	282		1352		1269	6V-8635	1041
	284		1353		1273		1119
	2274		1356		1277		1123
6V-8236	135		1357		1281		1172
6V-8337	1105		1360		1287		1178
	1619		1361		1288		1186
	1625		1364		1291		1206
6V-8362	547		1365		1292		1207
	548		1367		1295		1213
6V-8363	2271		1368		1296		1217
6V-8370	2271		1371		1297		1221
6V-8374	577		1372		1299		1225
6V-8378	539		1375		1301		1229
	540		1377		1303		1427
6V-8397	1042		1379		1333		1429
	1109		1381		1336		1431
	1111		1382		1420	6V-8636	1123
	1113		1386		1422		1125
	1115		1387		1438		1131

PART NUMBER INDEX

Part	Page
	1161
	1233
	1237
	1241
	1244
	1247
	1269
	1273
	1277
	1281
	1288
	1292
	1296
	1299
	1301
	1303
	1305
	1307
	1309
	1311
	1313
	1315
	1317
	1319
	1321
	1325
	1328
	1333
	1336
	1352
	1356
	1360
	1364
	1367
	1371
	1375
	1377
	1379
	1381
	1386
	1396
	1397
	1401
6V-8637	1213
	1217
	1221
	1225
	1229
	1420
	1422
	1425
	1426
6V-8639	1262
	1288
	1292
	1296
	1299
	1301
	1303
	1420
6V-8641	1233
	1237
6V-8713	180
	1131
6V-8714	1207
	1210
6V-8716	182
	1186
	1190
	1194
6V-8721	1447
	1452
6V-8722	1382
	1387
6V-8724	1131
	1161
	1234
	1238
	1241
	1244
	1247
	1269
	1273
	1277
	1281
	1285
	1288
	1292
	1296
	1299
	1301
	1303
	1305
	1307
	1309
	1311
	1313
	1315
	1317
	1319
	1321
	1325
	1328
	1331
	1333
	1339
	1342
	1346
	1349
	1352
	1356
	1360
	1364
	1367
	1371
	1375
	1377
	1382
	1387
	1397
	1401
	1411
	1414
	1417
	1433
	1434
	1435
	1447
	1449
	1452
	1455
6V-8729	1161
6V-8730	1161
6V-8774	1234
	1238
	1288
	1292
	1296
6V-8781	1132
	1234
	1238
	1285
	1287
	1291
	1295
	1305
	1307
	1309
	1396
6V-8782	1162
6V-8784	1187
	1191
	1214
	1218
	1222
6V-8934	1161
	1241
	1244
	1247
	1411
	1414
	1417
6V-8935	1156
	1157
	1158
	1234
	1238
	1241
	1244
	1247
	1411
	1414
	1417
6V-8936	1042
	1156
	1157
	1158
	1412
6V-8978	1656
	1657
	1660
	1665
	1666
	1668
	1669
	1671
	1672
6V-8979	1165
	1166
6V-8980	1165
	1166
6V-8994	1109
	1111
	1113
	1115
6V-8996	182
6V-9001	1123
	1125
	1269
	1273
	1277
	1281
	1288
	1292
	1296
	1311
	1313
	1315
	1317
	1319
	1321
	1325
	1328
	1352
	1356
	1381
	1386
	1401
6V-9002	1265
	1269
	1273
	1277
	1281
	1288
	1292
	1296
6V-9004	1178
	1182
	1187
	1191
	1195
	1214
	1218
	1222
	1226
	1230
	1251
	1254
	1258
	1299
	1301
	1303
6V-9005	182
	1178
	1182
	1186
	1190
	1194
	1207
	1210
	1214
	1218
	1222
	1226
	1229
	1250
	1254
	1258
6V-9007	1178
	1182
	1186
	1190
	1194
	1214
	1218
	1222
	1225
	1229
	1250
	1254
	1258
	1299
	1301
	1303
	1420
	1422
6V-9008	182
	1169
	1214
	1218
	1222
	1226
	1229
	1262
	1265
	1424
	1425
	1426
	1427
	1429
	1431
6V-9168	1109
	1111
	1113

► **PRIMARY REFERENCE**

PART NUMBER INDEX

Part	Page
	1115
	1165
	1166
6V-9170	182
6V-9175	1132
6V-9182	182
	1258
6V-9200	1433
	1434
	1435
6V-9491	513
	515
	517
	519
	521
	523
6V-9632	763
	779
6V-9672	565
	572
6V-9746	182
	1073
	1108
	1117
	1119
	1123
	1125
	1132
	1134
	1138
	1150
	1178
	1182
	1183
	1186
	1187
	1190
	1191
	1194
	1195
	1198
	1200
	1206
	1213
	1214
	1217
	1218
	1221
	1222
	1225
	1226
	1229
	1230
	1250
	1251
	1254
	1255
	1258
	1259
	1299
	1301
	1303
	1404
	1407
	1411
	1414
	1417
	1420
	1422
	1424
	1425
	1426
	1437
	1438
	1440
	1445
	1702
	1705
6V-9829	1336
	1339
	1342
	1346
	1349
	1353
	1357
	1379
	1382
	1387
6V-9833	1427
	1429
	1431
6V-9836	1241
	1287
	1291
	1295
	1333
	1336
	1339
	1342
	1346
	1349
	1352
	1356
	1360
	1364
	1367
	1371
	1379
	1382
	1387
	1392
	1394
	1411
6V-9837	1123
	1125
6V-9839	1187
	1191
	1195
6V-9840	1169
	1172
	1175
	1178
	1182
	1187
	1191
	1195
	1427
	1429
	1431
6V-9843	1333
	1336
6V-9844	1447
	1452
6V-9850	1123
	1125
	1161
	1234
	1238
	1244
	1247
	1288
	1292
	1296
	1305
	1360
	1396
	1411
	1414
	1417
6V-9852	1382
	1387
6V-9854	1169
	1172
	1175
	1178
	1182
	1186
	1190
	1194
	1427
	1429
	1431
6V-9872	1131
6V-9875	1169
	1172
	1175
	1178
	1182
	1186
	1190
	1194
6V-9876	1234
	1238
	1392
	1394
	1420
	1422
6W-2464	1159
	1160
	1161
6W-6005	403
	405
	412
	419
	427
	435
6W-7293	2152
	2156
6Y-0473	882
	884
6Y-0846	894
	895
	896
6Y-8186	873
	874
7	
7B-2742	307
7C-1493	180
7E-4846	1675
7E-5346	307
	310
	313
	316
	319
7F-0560	437
	438
7F-8268	882
	883
	884
	886
	887
7G-1060	636
7G-5984	1262
	1265
7G-5985	1262
	1265
7G-5986	1262
	1265
7H-3171	872
	881
	883
	887
7I-0375	2152
	2156
	2159
7I-0717	702
	703
	704
	705
	706
	707
	708
	709
	710
	711
	712
	713
	714
	715
	716
	717
	718
	719
	720
7I-0966	1649
7I-0986	1690
7I-1105	1386
7I-1248	1530
	1534
	1536
	1538
	1541
	1544
	1547
	1552
	1557
	1562
	1570
	1574
	1578
	1583
	1588
7I-2272	1045
	1049
	1053
	1459
	1460
	1532
	1547
	1552
	1557
	1562
	1570
	1574
	1578
	1583
	1588
	1691
	1692
	1694
	1696
7I-2673	206
	208
	210
	212
	214
	216
	218
	222
	225
	227
	229

PART NUMBER INDEX

Part	Page	Part	Page	Part	Page	Part	Page
	263		602		1396		1251
	264		604		1397		1254
	405		606		1401		1258
	412		609		1411		1262
	419		611		1414		1265
	427		620		1417		1404
	461		621		1420		1407
	486		622		1422		1424
	488		623		1424		1425
	489		626		1425		1426
	491		627		1426		1427
	493		629		1427		1429
	641		633		1429		1431
	2182		634		1431		1500
	2197		635		1433		1521
	2237		636		1434		1538
	2244		639		1435		1541
	2245		640		1447		1544
	2251		641		1449		1547
7I-6843	1760		643		1452		1552
7I-7131	1506		647		1455		1557
7I-7403	1690		1109		2028		1562
7I-7439	1131		1111		2030		1571
7I-8084	1685		1113		2032		1575
	1691		1115		2050		1579
	1692		1131		2144		1584
7I-8102	1690		1160		2153		1589
7J-8337	2215		1161		2156	7N-0719	506
	2217		1165		2159		508
7J-9108	182		1166		2182		510
	1084		1233		2184		537
	1089		1237		2190	7N-2353	550
	1105		1241	7K-9592	1895	7N-3718	488
	1106		1244		1897		489
	1131		1247		1899	7T-1099	197
	1132		1255		1901		251
	1381		1258	7M-4672	553		497
	1382		1269	7M-7410	1460		1175
	1386		1273	7M-8485	182		1207
	1387		1277		649		1210
	1493		1281		653	7T-6799	547
7J-9933	1649		1285		659		548
7K-1181	180		1287		662	7T-8890	2255
	339		1291		1041	7V-2882	1161
	341		1295		1119	7W-3556	142
	405		1299		1123		144
	412		1301		1125	7W-9028	180
	419		1303		1169	7X-0345	553
	427		1305		1172	7X-0578	1977
	445		1307		1175		1981
	458		1309		1176		2007
	471		1323		1178		2146
	502		1325		1182		2259
	526		1328		1183	7X-0796	135
	554		1331		1186		141
	556		1333		1187		153
	558		1336		1190		155
	560		1339		1191		157
	572		1342		1194		159
	577		1346		1195		165
	579		1349		1206		177
	580		1352		1207	7X-0818	195
	581		1356		1210		406
	583		1360		1213		413
	584		1364		1214		421
	585		1367		1217		429
	586		1371		1218		1317
	588		1375		1221		1319
	589		1377		1222	7X-0851	1908
	592		1379		1225	7X-0873	1411
	594		1381		1226		1414
	596		1386		1229		1417
	598		1392		1230	7X-2459	1346
	600		1394		1250		1349

► **PRIMARY REFERENCE**

PART NUMBER INDEX

Part	Page
	1352
	1356
	1381
	1386
7X-2470	182
7X-2475	1512
7X-2501	310
	313
	316
	319
7X-2532	139
7X-2533	406
	413
	421
	429
	472
	2020
	2157
7X-2534	450
7X-2535	329
7X-2536	890
	2046
	2047
	2060
	2061
	2062
7X-2543	1095
	1101
	1103
7X-2544	1262
	1265
7X-2545	1530
7X-2549	1082
	1084
	1086
	1089
	1109
	1111
	1113
	1115
	1149
	1150
	1151
	1152
7X-2550	1404
	1407
7X-2552	486
	488
	491
	1744
	2176
7X-2553	845
	1082
	1086
	1403
	2111
	2113
	2116
	2189
7X-2554	206
	208
	210
	212
	214
	216
	218
	222
	225
	227
	229
7X-2557	1500
	2120
7X-2558	1461
	1462
	1463
	1464
7X-2559	2118
7X-2562	674
7X-2563	1031
7X-2565	875
	876
	877
	878
	879
	880
7X-2568	649
	653
	659
	662
7X-2576	1031
7X-2583	683
	684
	685
	686
	687
	688
	689
	690
	691
	692
	693
	694
	695
	696
	697
	698
	699
	700
7X-2619	406
	413
	421
	429
	508
	629
	645
	647
7X-2621	406
	413
	421
	429
	458
	460
	462
	463
	560
	637
	1251
	1255
	1259
	1547
	1552
	1557
	1562
	1571
	1575
	1579
	1584
	1589
7X-3164	1095
	1101
	1103
7X-6315	453
	454
	455
	456
7X-7644	2301
	2306
	2311
	2316
	2321
	2326
	2331
	2336
7X-7729	206
	208
	210
	212
	214
	216
	218
	222
	225
	227
	229
	329
	1262
	1265
	1935
	1937
	1939
	1941
	2130
	2132
	2134
7Y-0059	1
	2
	2162
7Y-0063	685
	686
	689
	692
	693
	694
	697
	700
7Y-0223	649
	653
	659
	662
7Y-0225	649
	653
	659
	662
7Y-0252	1026
7Y-0357	1907
7Y-0358	1907
7Y-0366	1836
	1837
	1838
	1839
	1840
	1841
	1880
	1881
	1882
	1907
7Y-0463	913
7Y-0466	913
7Y-0467	913
7Y-0468	913
	914
	1619
	1625
7Y-0623	2111
	2113
	2116
7Y-0633	678
	679
	681
	749
	751
7Y-0682	891
7Y-0729	1835
	1836
	1840
	1908
7Y-1426	649
	653
	659
	662
7Y-1430	649
	653
	659
	662
7Y-1431	649
	653
	659
	662
7Y-1432	649
	653
	659
	662
7Y-1433	649
	653
	659
	662
7Y-1434	649
	653
	659
	662
7Y-1558	649
	653
	659
	662
7Y-1607	856
	879
7Y-1608	856
	880
7Y-1647	754
7Y-1648	754
7Y-1650	754
7Y-1746	888
	889
7Y-1781	890
7Y-1863	754
7Y-1924	406
	413
	421
	429
7Y-1976	206
	208
	210
	212
	214
	216
	218
	220
	222
	225
	227
	229
	231
	234
	236
	238
	241
	243
	246
	249
	251
7Y-2219	►1818
	1820
	1821
	1822
	1823

► PRIMARY REFERENCE

PART NUMBER INDEX

Part	Page
	1824
	1826
	1827
	1828
	1829
	1830
	1831
	1832
	1834
	1835
7Y-2292	702
	703
	704
	707
	709
	710
	713
	715
	717
	718
	719
	720
7Y-2496	1791
7Y-2670	1751
7Y-2853	763
	768
	773
	779
	785
	791
	797
	803
	809
	813
	817
7Y-2854	764
	769
	774
	780
	786
	792
	798
	804
	810
	814
	818
7Y-3110	1744
7Y-3470	2274
7Y-3472	2274
7Y-3474	2255
7Y-3529	1759
7Y-3721	1073
	1411
	1414
	1417
7Y-3729	1187
	1190
	1194
	1213
	1217
	1221
	1225
	1229
	1251
	1255
	1259
7Y-3730	1167
7Y-3731	1076
	1169
	1172
	1175
	1178
	1182
	1186
	1190
	1194
	1213
	1217
	1221
	1225
	1229
7Y-3732	1206
7Y-3820	405
	419
	427
7Y-3821	419
	427
7Y-3919	2139
	2142
7Y-3920	2139
	2142
7Y-3950	550
	570
	577
	1161
7Y-3951	513
	515
	517
	519
	521
	523
	564
	570
7Y-3952	513
	515
	517
	519
	521
	523
	564
	570
7Y-3953	550
	577
7Y-3954	564
	570
7Y-3955	564
	570
	1161
7Y-3958	564
	570
7Y-3962	427
	468
	479
	481
	484
	493
	494
	496
	513
	515
	517
	519
	521
	523
	570
	583
7Y-3963	419
	428
	479
	481
	484
	493
	494
	496
	513
	515
	517
	519
	521
	523
	570
	583
7Y-3964	428
	479
	481
	484
	494
	496
	513
	515
	517
	519
	523
	570
7Y-3965	428
	479
	481
	484
	494
	496
	513
	515
	517
	519
	523
	571
	606
	609
7Y-3966	419
7Y-3967	609
7Y-3995	420
	428
7Y-3996	420
	428
7Y-4193	1285
7Y-4199	1352
	1356
	1367
	1371
	1375
	1381
	1386
	1397
7Y-4202	1480
	1484
	1488
7Y-4212	1480
	1484
	1488
7Y-4213	1480
	1484
	1488
7Y-4215	1480
	1484
	1488
	1500
7Y-4216	1480
	1484
	1489
7Y-4217	1480
	1484
	1488
7Y-4222	1481
	1485
	1489
7Y-4224	1480
	1484
	1488
7Y-4234	1488
7Y-4267	1469
	1472
	1476
	1478
7Y-4268	1469
	1472
	1476
	1478
7Y-4366	1360
	1364
	1367
	1371
	1375
	1397
7Y-4390	1241
	1244
	1247
	1285
	1401
	1452
	1455
7Y-4399	1339
	1342
	1346
7Y-4444	▶899
	901
7Y-4538	1078
	1080
	1082
	1086
	1091
	1093
	1097
	1099
7Y-4562	1404
	1407
7Y-4631	940
	942
	951
	955
	963
7Y-4817	1506
7Y-4868	1084
	1089
	1108
	1117
	1119
	1134
	1135
	1144
	1437
7Y-5074	1073
7Y-5088	1396
7Y-5116	1007
	1013
	1017
7Y-5119	1007
	1013
	1017
7Y-5215	1022
7Y-5216	1007
	1013
	1017
7Y-5219	1548
	1553
	1558
	1563
	1571
	1575
	1579
	1584
	1589
	1628
7Y-5221	1469
	1472

► **PRIMARY REFERENCE**

PART NUMBER INDEX

Part	Page
	1476
	1478
7Y-5226	406
	413
	1595
	1601
7Y-5227	1904
7Y-5247	1262
	1265
7Y-5272	905
	1628
7Y-5456	405
	412
	419
	427
7Y-5458	545
	546
7Y-5464	545
	546
7Y-5505	564
	570
7Y-6402	▶1876
7Y-6442	1135
7Y-6510	1135
7Y-6511	1135
7Y-6601	1843
7Y-6627	1781
	1795
7Y-6641	1769
7Y-6649	1769
7Y-6660	▶1847
	1876
7Y-6661	1847
7Y-6664	1847
7Y-6665	1847
7Y-6666	1847
7Y-6667	1847
7Y-6668	1847
7Y-7364	2274
7Y-7904	1134
7Y-7955	1346
7Y-8099	1538
	1541
	1544
7Y-8165	406
	413
	421
	429
7Y-8167	301
	303
	307
	310
	313
	316
	319
	323
	326
	406
	413
	421
	429
7Y-8169	501
7Y-8309	1381
	1386
7Y-8379	1299
	1301
	1303
7Y-8436	1655
	1676
7Y-8437	1655
	1676
7Y-8463	2055
	2068
	2069
7Y-8478	1161
	1325
	1328
7Y-8484	1233
	1237
7Y-8487	1287
	1291
	1295
7Y-8561	2021
	2023
	2025
7Y-8621	2122
	2123
7Y-8622	2122
	2123
8	
8C-0564	1233
	1237
8C-3095	472
8C-3206	1071
	1075
8C-3334	596
8C-3445	180
8C-3446	180
	1508
8C-3451	1508
8C-5063	609
8C-5607	472
	553
8C-5608	443
	444
	447
	448
	472
	553
8C-5917	403
	406
	412
	421
	429
	435
	617
8C-5918	403
	405
	412
	419
	427
	435
8C-6354	565
	571
8C-6358	437
8C-6561	310
	313
	316
	319
	1159
	1160
	1161
8C-6965	1635
	1637
8C-7581	2178
8C-8400	1404
	1407
8C-8451	330
	443
	444
	447
	448
8C-8580	2050
8C-8729	1467
8C-8988	1131
8C-8992	757
	761
8D-7209	2215
	2217
8E-3752	▶1915
	1919
8E-3757	▶1910
8E-4359	872
8E-5031	882
	884
8E-5032	884
	887
8E-5035	882
	884
8E-5037	882
	884
	886
8E-5599	882
	883
	884
	886
	887
8E-5600	875
	876
	877
	878
	879
	880
	881
8E-5601	881
8E-5602	881
8E-5604	881
8E-5605	881
8E-5606	881
8E-5608	881
8E-6258	1917
8E-6259	1917
8E-6792	881
8E-6793	881
8E-8585	873
	874
8E-8586	873
	874
8E-9805	674
8F-0212	1532
8F-1434	539
	540
	2271
8F-7219	295
	307
	310
	313
	316
	319
8H-2282	2122
	2123
8H-3481	2253
8H-5303	537
8H-5306	537
8H-9819	1508
8J-1256	406
	413
	421
	429
	2184
8J-4645	1500
8J-4953	▶1930
8J-4954	▶1928
8J-4955	1836
	1916
8J-6815	1526
	1595
	1598
	1601
	1603
8J-9236	544
8L-2779	337
	1639
	1664
8L-2786	323
	326
8L-8413	419
	421
	427
	429
	435
	586
	627
8M-2770	406
	413
	421
	429
8M-2772	1745
	1747
	1748
	1750
	1751
8M-2773	1411
	2156
8N-0869	406
	412
	421
	429
	617
8P-9770	1820
	1821
	1822
	1823
	1826
	1827
	1845
	1846
	1848
-1870	
	1872
	1873
	1874
	1875
	1877
	1878
	1879
	1883
	1884
	1885
	1886
	1887
	1888
	1889
	1891
8R-1803	500
	553
8S-0934	2209
	2212
	2213
8S-0948	182
8S-1812	544
8S-1814	544
8S-1815	544
8S-2634	617
8S-4723	2209
	2212
	2213
8S-4724	2209
	2213
8S-7271	182
8T-0075	1305
	1307

PART NUMBER INDEX

Part	Page
	1309
	1339
	1342
	1346
	1349
	1352
	1356
	1360
	1364
	1367
	1377
	1379
	1381
	1386
8T-0078	1187
	1191
	1195
	1214
	1218
	1222
	1226
	1230
	1251
	1255
	1259
	1404
	1407
8T-0114	2046
	2047
	2060
	2061
	2062
8T-0122	506
	508
8T-0198	1176
	1182
	1190
	1194
	1210
	1218
	1222
	1226
	1230
8T-0267	1508
8T-0269	2050
	2163
	2165
	2168
8T-0285	2083
8T-0286	406
	413
	421
	430
8T-0288	1693
	1695
	1710
	1712
8T-0325	2184
8T-0328	357
	358
	360
	361
	364
	366
	368
	370
	373
	375
	377
	379
	381
	383
	385
	386
	388
	390
	392
	394
	396
	398
	406
	413
	421
	430
	501
	506
	508
	510
	565
	572
	645
	647
	826
	827
	829
	830
	1035
	1935
	1937
	1939
	2130
	2132
	2134
	2184
8T-0337	2184
8T-0343	1623
8T-0360	754
8T-0362	754
8T-0380	1908
8T-0439	1895
	1897
	1899
	1901
8T-1158	1623
	1635
8T-1159	323
	326
	881
	1628
8T-1447	927
	929
	931
	933
	935
	938
	944
	946
	949
	957
	961
	967
8T-1687	1422
8T-1779	1287
	1291
	1295
	1321
	1447
	1449
	1452
	1455
8T-1905	1161
	1241
	1244
	1247
	1299
	1301
	1303
	1311
	1313
	1321
	1331
	1339
	1342
	1346
	1349
	1353
	1356
	1360
	1364
	1367
	1371
	1377
	1382
	1387
	1397
	1411
	1414
	1417
8T-2396	466
	526
8T-2920	1420
	1422
8T-3008	1520
	1521
8T-3490	225
	227
	251
	323
	326
	1175
	1182
	1207
	2152
8T-3518	437
	438
8T-3519	437
8T-3597	225
	227
	763
	779
	1175
	1182
8T-3612	251
8T-3647	2014
	2016
	2152
	2156
	2159
8T-3653	1127
	1128
	1129
	1130
8T-4121	179
	180
	182
	197
	204
	206
	208
	210
	212
	214
	216
	218
	220
	222
	225
	227
	229
	231
	234
	236
	238
	241
	243
	246
	249
	251
	253
	254
	268
	272
	301
	303
	307
	310
	313
	316
	319
	323
	326
	329
	330
	403
	407
	413
	421
	430
	435
	445
	458
	460
	462
	463
	481
	484
	486
	488
	489
	491
	493
	498
	499
	503
	504
	505
	529
	554
	556
	558
	560
	585
	586
	589
	592
	594
	596
	598
	602
	611
	612
	613
	617
	620
	621
	622
	625
	626
	631
	637
	754
	764
	769
	774
	780
	786

► **PRIMARY REFERENCE**

PART NUMBER INDEX

Part	Page	Part	Page	Part	Page	Part	Page
	792		1307		2062		1811
	798		1309		2080		1812
	804		1325		2083		1813
	810		1328		2130		1814
	814		1353		2132		1815
	818		1357		2134		1816
	821		1361		2137		1899
	823		1365		2138		1904
	1078		1368		2139	8T-4127	565
	1080		1372		2142		572
	1084		1375		2152	8T-4131	1045
	1089		1377		2156		1049
	1091		1379		2159		1053
	1093		1382		2178		1056
	1095		1387		2181		1060
	1097		1392		2182		1064
	1099		1398		2184		1762
	1101		1404		2185	8T-4132	1759
	1103		1407		2189		1760
	1121		1412		2240		1764
	1122		1414		2241		1765
	1123		1417		2257		1766
	1125		1437		2271		1767
	1132		1438	8T-4123	139		1768
	1135		1440		649		1770
	1136		1445		653		1904
	1137		1447		659		2120
	1138		1449		662	8T-4133	182
	1143		1452		749		301
	1144		1455		751		303
	1145		1496		859		307
	1149		1497		860		310
	1150		1506		861		313
	1151		1508		862		316
	1152		1530		863		319
	1161		1534		864		323
	1165		1536		875		326
	1166		1538		876		329
	1167		1541		877		330
	1169		1544		878		403
	1172		1548		879		407
	1175		1553		880		413
	1179		1558		1031		421
	1183		1563		1724		430
	1187		1571		1726		435
	1191		1575		1728		481
	1195		1579		1730		484
	1198		1584		1732		486
	1200		1589		1734		488
	1207		1628		1736		489
	1210		1745		1738		491
	1214		1747		1740		626
	1218		1748		1742		676
	1222		1750		1762		1045
	1226		1751		1781		1049
	1230		1935		1783		1053
	1234		1937		1784		1056
	1238		1939		1785		1060
	1241		1941		1786		1064
	1244		2014		1787		1505
	1247		2016		1789		1623
	1251		2020		1791		1628
	1255		2021		1792		1635
	1259		2023		1794		1637
	1262		2025		1795		1745
	1265		2028		1797		1748
	1270		2030		1799		1750
	1274		2032		1800		1751
	1278		2046		1801		1769
	1282		2047		1803		1981
	1288		2048		1805		2007
	1292		2050		1807		2021
	1296		2060		1808		2023
	1305		2061		1810		2025

PART NUMBER INDEX

Part	Page	Part	Page	Part	Page	Part	Page
8T-4136	180		1262		251		1377
	206		1265		253		1500
	208		1270		254		1508
	210		1274		268		1935
	212		1288		301		1937
	214		1292		303		1939
	216		1296		307		1941
	218		1307		310		2007
	222		1309		313		2020
	225		1353		316		2021
	227		1357		319		2023
	229		1361		323		2025
	238		1365		326		2048
	249		1368		329		2050
	251		1372		330		2060
	268		1375		407		2061
	301		1377		413		2083
	303		1382		421		2130
	307		1387		430		2132
	310		1398		445		2134
	313		1412		449		2142
	316		1414		467		2152
	319		1417		481		2156
	323		1447		484		2159
	326		1449		493		2178
	407		1452		498		2181
	413		1455		499		2182
	421		1495		501	8T-4138	338
	430		1500		503		445
	592		1506		504		471
	594		1508		505		526
	598		1605		529		764
	602		1607		554		769
	611		1609		589		774
	612		1611		592		780
	613		1935		594		786
	617		1937		596		792
	625		1939		598		798
	754		1941		617		804
	821		2046		620		810
	823		2047		625		814
	1045		2060		637		818
	1049		2061		754		821
	1053		2062		764		823
	1057		2080		769		2123
	1061		2130		774		2152
	1064		2132		780		2156
	1095		2134		786		2180
	1101		2152		792	8T-4139	139
	1103		2156		798		182
	1132		2184		804		206
	1169	8T-4137	180		810		208
	1172		182		814		210
	1175		197		818		212
	1179		206		888		214
	1183		208		889		216
	1187		210		1161		218
	1191		212		1165		222
	1195		214		1166		225
	1207		216		1198		227
	1210		218		1200		229
	1214		220		1234		259
	1218		222		1238		261
	1222		225		1241		1078
	1226		227		1270		1080
	1230		229		1274		1082
	1234		231		1278		1084
	1238		234		1282		1086
	1241		236		1288		1089
	1244		238		1292		1091
	1247		241		1296		1093
	1251		243		1305		1095
	1255		246		1368		1097
	1259		249		1372		1099

► **PRIMARY REFERENCE**

PART NUMBER INDEX

Part	Page
	1101
	1103
	1105
	1106
	1108
	1109
	1111
	1113
	1115
	1117
	1119
	1121
	1122
	1123
	1125
	1134
	1135
	1144
	1153
	1154
	1207
	1210
	1214
	1218
	1222
	1226
	1230
	1234
	1238
	1241
	1244
	1247
	1251
	1255
	1259
	1262
	1265
	1292
	1296
	1412
	1414
	1418
	1420
	1422
	1427
	1429
	1431
	1437
	1438
	1440
	1445
	1500
	1526
	1595
	1598
	1601
	1603
	2111
	2113
	2116
8T-4140	345
	346
	347
	348
	349
	350
	351
	352
	353
	354
	355
	499
	760
	870
	871
	1500
	1510
	1613
	1614
	1615
	1616
8T-4149	182
	1251
	1254
	1404
	1407
8T-4167	1031
8T-4171	458
	474
	506
	508
	510
	554
	556
	558
	589
	611
	612
	613
	629
	643
	2027
	2083
	2144
	2178
8T-4172	135
	1288
	1292
	1296
	2014
	2016
	2159
8T-4174	2118
	2120
8T-4175	1500
	2169
8T-4176	1106
	1169
	1172
	1175
	1179
	1183
	1187
	1191
	1195
	1214
	1218
	1222
	1226
	1230
	1501
	2184
8T-4177	1339
	1342
	1346
	1349
	1353
	1357
	1361
	1365
	1368
	1372
	1382
	1387
	1398
8T-4178	1123
	1125
	1321
8T-4179	554
	702
	703
	704
	707
	709
	710
	713
	715
	717
	718
	719
	720
	890
	1138
	1150
	1781
	1795
	1797
	1957
	1961
	1965
	1969
	1991
	1993
	1995
	1997
	1999
	2021
	2023
	2025
8T-4182	329
	330
	407
	413
	421
	430
	1123
	1125
	1136
	1137
	1138
	1143
	1145
	1149
	1150
	1151
	1152
8T-4183	139
	267
	678
	679
	1026
	1078
	1082
	1086
	1091
	1093
	1095
	1097
	1101
	1103
	1172
	1176
	1183
	1191
	1195
	1207
	1210
	1218
	1222
	1226
	1230
	1251
	1255
	1259
	1262
	1265
	1288
	1404
	1407
	1508
	1817
8T-4184	1078
	1080
	1082
	1084
	1086
	1089
	1091
	1093
	1097
	1099
	1108
	1117
	1153
	1154
	1241
	1244
	1247
	1379
	1412
	1415
	1418
	1447
	1449
	1452
	1455
	2014
	2016
	2159
8T-4185	177
	182
	238
	249
	251
	407
	413
	421
	430
	592
	596
	1084
	1089
	1095
	1101
	1103
	1121
	1122
	1132
	1135
	1144
	1162
	1241
	1244
	1247
	1412
	1415
	1418
8T-4186	180
	307
	1262
	1265
	1368
	1372
	1438
	1440
	1445

PART NUMBER INDEX

Part	Page
8T-4189	195
	197
	199
	220
	231
	234
	236
	238
	241
	243
	246
	251
	400
	641
	764
	769
	774
	780
	786
	792
	798
	804
	810
	814
	818
	821
	823
	1024
	1317
	1319
	2021
	2023
	2025
	2254
8T-4190	474
	489
	493
	695
	696
	697
	698
	699
	700
	1957
	1961
	1965
	1969
	1991
	1993
	1995
	1997
	1999
	2178
	2180
	2181
	2182
8T-4191	126
	272
	277
	330
	403
	407
	413
	421
	430
	435
	554
	556
	558
	585
	586
	589
	592
	594
	602
	621
	622
	631
	749
	751
	1241
	1282
	1325
	1328
	1353
	1357
	1382
	1387
	1392
	1745
	1747
	1748
	1750
	2046
	2047
	2062
	2080
	2139
	2152
	2156
	2159
	2182
	2189
	2240
	2241
	2257
	2271
8T-4192	403
	435
	762
	1024
	1123
	1125
	1132
	1234
	1238
	1242
	1245
	1248
	1251
	1255
	1259
	1289
	1292
	1296
	1325
	1328
	1331
	1339
	1342
	1346
	1349
	1353
	1357
	1379
	1382
	1387
	1401
	1404
	1407
	1412
	1415
	1418
	1427
	1429
	1431
	1501
	2111
	2113
	2115
	2116
	2166
	2167
8T-4193	1613
	1614
	1615
	1616
	1818
	1819
	2170
8T-4194	339
	341
	1035
	1078
	1080
	1082
	1084
	1086
	1089
	1091
	1093
	1097
	1099
	1162
	1167
	1242
	1245
	1248
	1251
	1255
	1259
	1262
	1265
	1403
	1412
	1415
	1418
8T-4195	180
	182
	218
	220
	231
	234
	236
	238
	241
	243
	246
	249
	251
	301
	303
	307
	310
	313
	316
	319
	323
	326
	407
	413
	421
	430
	589
	747
	1135
	1195
	1226
	1230
	1259
	1496
	1497
	1508
	1530
	1532
	1534
	1536
	1538
	1541
	1544
	1548
	1553
	1558
	1563
	1571
	1575
	1579
	1584
	1589
	2028
	2030
	2032
	2137
	2138
	2185
8T-4196	220
	231
	234
	236
	241
	243
	246
	249
	407
	413
	421
	430
	467
	1045
	1049
	1053
	1057
	1061
	1064
	1121
	1122
	1127
	1128
	1129
	1130
	1132
	1140
	1141
	1142
	1144
	1146
	1147
	1148
	1169
	1172
	1175
	1179
	1183
	1187
	1191
	1195
	1207
	1210
	1214
	1218
	1222
	1226
	1230
	1251
	1255
	1259

► **PRIMARY REFERENCE**

PART NUMBER INDEX

Part	Page	Part	Page	Part	Page	Part	Page
	1404		339		1135		1427
	1407		341		1138		1429
	1436		403		1140		1431
	1437		435		1141		1436
	1438		475		1142		1437
	1440		476		1144		1438
	1442		554		1146		1440
	1443		585		1147		1442
	1444		587		1148		1443
	1445		615		1149		1444
	1501		676		1150		1445
8T-4198	1136		678		1151		1447
	1137		679		1152		1449
	1138		681		1153		1452
	1143		702		1154		1455
	1145		703		1156		1508
	1270		704		1157		1524
	1274		707		1158		1525
	1278		709		1162		1724
	1282		710		1167		1726
	1379		713		1169		1728
8T-4199	407		715		1172		1730
	413		717		1175		1732
	421		718		1179		1734
	430		719		1183		1736
	645		720		1187		1738
	647		762		1191		1740
	754		764		1195		1742
8T-4200	195		769		1198		1781
	206		774		1200		1795
	208		780		1202		1797
	210		786		1204		1817
	212		792		1206		1957
	214		798		1207		1961
	216		804		1210		1965
	218		810		1214		1969
	222		814		1218		1991
	225		818		1222		1993
	227		1026		1226		1995
	229		1035		1230		1997
	337		1045		1234		1999
	479		1049		1238		2014
	482		1053		1242		2016
	494		1057		1245		2021
	496		1061		1248		2023
	526		1064		1251		2025
	676		1078		1255		2111
	2122		1080		1259		2113
	2123		1082		1262		2115
	2152		1084		1265		2116
	2156		1086		1289		2159
	2159		1089		1293		2212
8T-4205	307		1091		1296	8T-4224	123
	310		1093		1325		180
	313		1095		1328		183
	316		1097		1331		195
	319		1099		1339		197
	510		1101		1342		199
8T-4223	138		1103		1347		206
	139		1105		1349		208
	206		1106		1353		210
	208		1108		1357		212
	210		1109		1379		214
	212		1111		1382		216
	214		1113		1387		218
	216		1115		1401		220
	218		1117		1403		222
	222		1119		1404		225
	225		1121		1407		227
	227		1122		1412		229
	229		1123		1415		231
	259		1125		1418		234
	261		1132		1420		236
	267		1134		1422		238

PART NUMBER INDEX

Part	Page	Part	Page	Part	Page	Part	Page
	241		2122		1740		1238
	243		2123		1742		1436
	246		2146		1781		1442
	249		2149		1783		1443
	251		2152		1784		1957
	307		2156		1785		1961
	310		2159		1786		1965
	313		2219		1787		1969
	317		2220		1789		1991
	319		2221		1791		1993
	329		2222		1792		1995
	449		2228		1794		1997
	467		2229		1795		1999
	479		2230		1797	8T-4944	1481
	482		2231		1799		1484
	494		2232		1800		1488
	496		2233		1801	8T-4956	1078
	501		2238		1803		1080
	526		2239		1805		1091
	645		2246		1807		1093
	647		2247		1808		1097
	676		2248		1810		1099
	764		2249		1811		1132
	769		2254		1812		1156
	774	8T-4226	403		1813		1157
	780		407		1814		1158
	786		413		1815		1169
	792		421		1816		1172
	798		430	8T-4896	277		1175
	804		435		330		1179
	810	8T-4244	267		1127		1183
	814		339		1128		1187
	818		341		1129		1191
	821		475		1130		1195
	823		476		1140		1198
	1202		678		1141		1200
	1204		679		1142		1202
	1317		681		1146		1204
	1319		1084		1147		1206
	1325		1089		1148		1207
	1328		1109		1436		1210
	1331		1111		1442		1214
	1339		1113		1443		1218
	1342		1115		1444		1222
	1347		1153	8T-4908	197		1226
	1350		1154		238		1230
	1353		1162		249		1251
	1357	8T-4648	585		251		1255
	1361		587		764		1259
	1365		1082		769		1262
	1368		1086		774		1265
	1372		1106		780		1404
	1382		1119		786		1407
	1387		1123		792		1420
	1398		1125		798		1422
	1401		1404		804		1724
	1508		1407		810		1726
	1532		1437		814		1728
	1933		1438		818		1730
	1934		1440		1325		1732
	1956		1445		1328		1734
	2014	8T-4779	1977		1331		1736
	2016		1981		1401		1738
	2046		2007		1508		1740
	2047	8T-4780	749	8T-4910	1123		1742
	2060		751		1125	8T-4970	479
	2061		1724		1140		482
	2062		1726		1141		493
	2092		1728		1142		494
	2095		1730		1146		496
	2098		1732		1147		506
	2111		1734		1148		508
	2113		1736		1206		511
	2116		1738		1234		526

► **PRIMARY REFERENCE**

PART NUMBER INDEX

Part	Page
	629
	1305
	1307
	1309
	2182
	2255
	2257
8T-4971	308
	311
	314
	317
	319
	2021
	2023
	2025
	2152
	2153
	2156
	2157
8T-4984	206
	208
	210
	212
	214
	216
	218
	222
	225
	227
	229
	268
8T-4986	271
8T-4987	259
	261
8T-5005	592
	594
	596
	598
	600
	602
	617
	631
	643
8T-5049	1024
8T-5092	1169
	1172
	1175
	1179
	1183
	1187
	1191
	1195
	1207
	1210
	1214
	1218
	1222
	1226
	1230
8T-5093	183
8T-5360	2215
	2217
8T-5460	859
	860
	861
	862
	863
	864
	1762
	1899
	1904
8T-5878	875
	876
	877
	878
	879
	880
8T-6383	1513
8T-6411	479
	482
8T-6412	479
	482
8T-6466	329
	330
	407
	413
	421
	430
	1132
	1214
	1218
	1222
	1226
	1230
	1353
	1357
	1382
	1387
	1412
	1415
	1418
	1769
	2014
	2016
8T-6684	1207
	1210
8T-6685	135
	330
	1078
	1080
	1091
	1093
	1097
	1099
	1548
	1553
	1558
	1563
	1571
	1575
	1579
	1584
	1589
8T-6693	565
	572
	826
	827
	829
	830
	1035
8T-6703	206
	208
	210
	212
	214
	216
	218
	222
	225
	227
	229
	268
	1268
8T-6759	1460
	1506
	1526
	1532
	1548
	1553
	1558
	1563
	1571
	1575
	1579
	1584
	1589
	1595
	1598
	1601
	1603
	1623
	1635
	1637
	1709
	1710
	1712
8T-6842	2301
	2306
	2311
	2316
	2321
	2326
	2331
	2336
8T-6868	1153
	1154
	1524
	1525
	1957
	1961
	1965
	1969
	1991
	1993
	1995
	1997
	1999
8T-6870	1353
	1357
	1361
	1365
	1368
	1372
	1375
	1377
	1382
	1387
	1398
	1532
8T-6912	407
	413
	421
	430
8T-7087	1251
	1255
	1262
	1265
8T-7338	844
	1403
	1404
	1407
8T-7547	180
	308
	311
	314
	317
	319
8T-7811	1172
	1714
	1715
	1717
8T-7852	2184
8T-7877	1639
8T-7930	1109
	1113
	1115
8T-7934	467
	501
	626
	627
8T-7964	173
	175
8T-7971	1404
	1407
	1508
	2167
8T-8729	341
	388
	396
	400
	419
	427
	467
	494
	508
	539
	549
	558
	570
	589
	604
	606
	628
	636
	643
	645
	647
	1698
	2018
	2144
8T-8730	419
	427
	468
	558
	570
	589
	606
	625
	628
	636
	643
	645
	647
	2048
	2050
	2144
8T-8737	420
	428
	465
	467
	510
	513
	515
	517
	519
	521
	523
	545
	546
	558
	560
	571
	581
	586
	589
	604

PART NUMBER INDEX

Part	Page
	606
	622
	626
	627
	636
	643
	645
	647
	2057
	2058
	2078
	2079
	2144
	2159
	2173
	2174
8T-8748	542
	543
8T-8799	405
	420
	428
8T-8887	1244
	1247
	1361
	1415
	1418
8T-8899	1404
	1407
8T-9368	553
8T-9388	500
8T-9403	1123
	1125
	1136
	1138
	1143
	1145
	1149
	1150
	1151
	1152
	1167
8T-9533	1677
8T-9598	171
	204
8T-9605	465
8T-9756	403
	405
	412
	419
	427
	435
8T-9757	403
	405
	412
	419
	427
	435
8V-1715	2118
	2120
8Y-6352	1973
	1975
	1985
	1987
8Y-6967	1957
	1961
	1965
	1969
	1991
	1993
	1995
	1997
	1999

9

Part	Page
9B-0453	475
9B-4499	544
9B-7233	547
	548
9F-2167	1020
	1123
	1125
	1206
9F-5644	537
9G-0002	403
	405
	412
	419
	427
	435
9G-0003	403
	405
	412
	419
	427
	435
9G-0004	403
	406
	412
	421
	429
	435
	617
9G-0005	403
	405
	412
	419
	427
	435
9G-4336	420
	428
9G-4343	420
	428
	506
	508
	510
	564
	570
	629
9G-7641	513
	515
	519
	521
	547
9G-8909	405
	412
	419
	427
9J-0705	1492
	1493
	1494
9J-0707	1639
	1664
9J-3169	1876
	1917
9J-4359	1920
9L-9188	180
9M-3786	1404
	1407
9M-5590	1622
	1623
9M-7958	339
	341
9M-8406	301
	303
	308
	311
	314
	317
	319
	323
	326
9N-3666	392
	394
9N-4352	1915
9N-4353	1910
9R-2640	1175
	1182
9S-4167	301
	303
	307
	310
	313
	316
	319
9S-4180	1037
	1547
	1552
	1557
	1570
	1574
	1578
9S-4181	1169
	1172
	1175
	1179
	1183
	1187
	1191
	1195
	1214
	1218
	1222
	1226
	1230
9S-4182	1403
9S-4185	323
	326
	1131
	1169
	1172
	1175
	1178
	1182
	1187
	1191
	1195
	1250
	1254
	1258
	1379
	1382
	1387
	1420
	1422
	1424
	1425
	1426
	1481
	1485
	1488
	1501
9S-4188	180
9S-4191	1024
	1045
	1049
	1053
	1057
	1131
	1269
	1273
	1277
	1281
	1288
	1292
	1296
	1315
	1317
	1319
	1379
	1532
	1609
	1611
	1617
9S-6130	364
	366
	368
	370
	377
	379
	381
	386
	388
	394
	396
	1518
	1519
9S-8002	308
	311
	314
	317
	319
	338
	1020
9S-8003	1628
9S-8004	295
	301
	303
	307
	310
	313
	316
	319
	1020
	1234
	1238
	1459
	1605
	1607
	1618
	1714
	1717
9S-8005	1459
	1460
	1605
	1607
	1609
	1611
9S-8006	1593
9T-0835	1500
9T-0836	1498
	1499
9T-1614	1526
	1595
	1598
	1601
	1603
9T-4506	1492
9W-0335	564
	570
9W-0625	542
9W-0742	►437
	►438
	617
9W-0844	420

► **PRIMARY REFERENCE**

PART NUMBER INDEX

Part	Page
	428
	571
	586
	589
	604
	606
	625
	627
	636
	643
	2142
	2144
9W-0852	420
	428
	467
	491
	510
	581
	589
	604
	606
	636
	643
9W-1951	565
	571
9W-2142	882
	883
	884
	886
	887
9W-2146	886
9W-2201	872
9W-2358	1921
9W-2359	1927
9W-3137	873
	874
9W-3138	873
	874
9W-3340	1019
9W-3361	893
	894
	895
	896
9W-3619	893
	894
	895
	896
9W-6472	▶1927
9W-6473	▶1921
9W-9351	893
	895
9W-9455	872
9X-0196	427
9X-0199	2271
9X-1813	400
	527
9X-2026	2180
	2181
	2182
9X-2041	1967
	1977
	1981
	1989
	2001
	2003
	2005
	2007
	2034
	2036
	2084
	2085
	2086
	2087
9X-2042	482
	484
	494
	551
	565
	572
	577
	609
	643
	1973
	1975
	1977
	1981
	1985
	1987
	2007
	2036
	2088
	2090
	2092
	2095
	2098
	2126
	2259
	2262
	2269
	2274
9X-2043	482
	484
	494
9X-2044	565
	572
	1973
	1975
	1977
	1981
	2007
	2253
	2259
	2271
	2274
9X-2045	1977
	1981
	2008
	2028
	2030
	2032
	2125
	2259
9X-2046	2028
	2030
	2032
	2171
	2172
	2253
9X-2201	271
	1403
	1404
	1407
9X-2297	1234
	1238
9X-2332	183
9X-2404	969
	986
	1001
9X-2480	626
9X-2616	2223
	2224
	2225
9X-3401	142
	420
	428
	467
	527
	530
	531
	546
	558
	571
	581
	586
	589
	604
	609
	622
	627
	631
	636
	1213
	1217
	1221
	1225
	1250
	1269
	1273
	1277
	1281
	1299
	1301
	1311
	1313
	1315
	1317
	1319
	1321
	1353
	1357
	1382
	1387
	1508
	2054
	2055
	2056
	2057
	2058
	2078
	2079
9X-3402	420
	428
	465
	467
	513
	515
	517
	519
	521
	523
	530
	531
	558
	571
	581
	586
	589
	604
	606
	622
	626
	627
	636
9X-3463	476
	477
	481
	484
9X-3495	592
	594
	596
	598
	645
	647
9X-3592	1007
	1013
	1017
9X-3598	1022
9X-4184	543
9X-6032	1127
	1128
	1129
	1130
	1140
	1141
	1142
	1146
	1147
	1148
9X-6153	1954
	1955
9X-6165	443
	444
	447
	448
	472
	553
	2178
	2180
	2181
9X-6582	1156
	1157
	1158
	1233
	1237
	1241
	1244
	1247
	1411
	1414
	1417
9X-7298	1009
	1011
	1015
9X-8250	183
9X-8256	183
	290
	293
	305
	329
	330
	406
	412
	421
	429
	439
	445
	450
	458
	466
	471
	474
	479
	482
	493
	494
	496
	501
	506
	508
	511
	526
	554
	556
	558
	560
	565

► PRIMARY REFERENCE

PART NUMBER INDEX

Part	Page
	572
	589
	600
	611
	612
	613
	626
	629
	643
	645
	647
	676
	764
	769
	774
	780
	786
	792
	798
	804
	810
	814
	818
	821
	823
	1305
	1307
	1309
	1508
	1935
	1937
	1939
	1941
	2027
	2038
	2039
	2040
	2041
	2042
	2044
	2045
	2050
	2083
	2130
	2132
	2134
	2144
	2152
	2156
	2163
	2164
	2165
	2168
	2184
	2253
	2254
	2255
	2257
	2259
	2271
9X-8257	474
	486
	488
	489
	491
	493
	844
	845
	1082
	1086
	1403
	1404
	1407
	1461
	1462
	1463
	1464
	1491
	1613
	1614
	1615
	1616
	1818
	1819
	1957
	1961
	1965
	1969
	1977
	1981
	1991
	1993
	1995
	1997
	1999
	2007
	2111
	2113
	2116
	2118
	2120
	2169
	2170
	2176
	2178
	2180
	2182
	2189
9X-8267	338
9X-8600	289
	390
	392
	394
	396
9X-9896	443
	444
	447
	448
9Y-8389	307
	310
	313
	316
	319

0

Part	Page
003-7764	301
	303
	307
	310
	313
	316
	319
	323
	326
	357
	358
	360
	361
	364
	366
	368
	370
	373
	375
	377
	379
	381
	383
	385
	386
	388
	392
	394
006-6803	1677
012-0380	541
030-0167	1639
	1664
033-5853	180
033-5879	1492
033-6036	1492
	1639
	1664
033-6038	180
033-8248	1745
	1748
	1750
061-7539	307
	310
	313
	316
	319
081-6344	1411
	1414
	1417
085-6444	►2150
	2267
085-6445	2150
085-6446	2150
085-6447	2150
085-6448	2150
085-6449	2125
	2150
085-6452	1978
085-7079	1677
085-7080	1677
085-7081	1677
085-7083	1677
085-7084	1677
085-7329	406
	412
	421
	429
085-7356	1311
	1313
	1360
	1364
	1367
	1371
	1375
	1377
	1397
085-7538	1702
	1705
085-8037	2257
085-8604	969
	972
	974
	976
	978
	980
	982
	984
	986
	989
	991
	993
	995
	997
	999
	1001
	1004
085-8605	969
	972
	974
	976
	978
	980
	982
	986
	989
	991
	993
	995
	997
	999
	1001
	1004
085-8828	1817
085-9310	345
	346
	347
	348
	349
	350
	351
	352
	353
	354
	355
	499
	1510
085-9429	401
085-9513	125
085-9769	1817
086-0255	927
	929
	931
	933
	935
	938
	944
	946
	949
	957
	961
	967
086-0321	1818
086-0322	1818
086-0414	1817
086-0415	1817
086-0416	1817
086-0523	1760
086-1345	959
086-1346	959
087-3533	689
087-3908	763
	768
	773
	779
	785
	791
	797
	803
	809
	813
	817
087-3909	763
	768
	773
	779
	785
	791
	797

► **PRIMARY REFERENCE**

PART NUMBER INDEX

Part	Page
	803
	809
	813
	817
087-4402	1269
	1273
	1277
	1281
	1305
	1307
	1309
	1311
	1313
	1315
	1317
	1319
	1321
	1360
	1364
	1367
	1371
	1397
087-4411	1287
	1291
	1295
087-4454	898
	▶900
087-4456	▶901
	903
087-4531	1287
	1291
	1295
087-4532	1367
	1371
087-4534	1287
	1291
	1295
087-4575	900
087-4576	900
087-4577	900
087-4683	538
087-4710	1623
	1635
	1637
087-4742	1480
	1484
	1488
087-4743	1480
	1484
	1488
087-4757	1488
087-4786	1480
	1484
	1488
087-5166	1605
	1607
	1609
	1611
087-5303	1285
	1331
	1401
	1414
087-5431	1022
087-5434	1022
087-5436	1022
087-5507	1007
087-5510	1007
	1013
	1017
087-5591	1377
087-5708	1623
	1635
	1637
087-5709	1623
087-5760	1287
	1291
	1295
087-5762	1287
	1291
	1295
	1321
	1360
087-5764	1352
	1356
	1367
	1371
	1381
	1386
087-5765	1321
087-5766	1305
	1307
	1309
	1321
	1346
	1349
087-5772	1287
	1291
	1295
	1307
	1309
	1352
	1356
	1381
	1386
087-5774	1287
	1291
	1295
087-5778	1331
	1401
087-5780	1325
	1328
087-5805	1759
	1764
	1765
	1766
	1767
	1768
	1770
087-5838	1751
087-5840	1745
087-5841	497
087-5908	856
	▶859
087-5966	1747
087-5974	1819
087-5975	1819
087-5976	1819
087-6583	1323
087-6585	1317
087-8738	499
087-8740	499
090-8865	2118
	2120
091-3474	173
	175
	273
091-5928	1019
	1894
091-9035	406
	412
	421
	429
	467
	592
	596
	1367
	1371
093-0083	749
	751
093-0084	1724
	1726
	1728
	1730
	1732
	1734
	1736
	1738
	1740
	1742
093-0115	749
	751
093-0116	1724
	1726
	1728
	1732
	1734
	1736
	1738
	1740
	1742
093-0349	749
	751
	1724
	1726
	1728
	1730
	1732
	1734
	1736
	1738
	1740
	1742
	1762
	1781
	1783
	1784
	1785
	1786
	1787
	1789
	1791
	1792
	1794
	1795
	1797
	1799
	1800
	1801
	1803
	1805
	1807
	1808
	1810
	1811
	1812
	1813
	1814
	1815
	1816
093-1291	1084
	1089
093-1294	1438
	1440
	1445
093-1433	948
	1781
	1795
	1797
093-1436	891
093-1512	891
093-1519	1011
	1015
093-1571	959
093-1572	1022
093-1729	1026
093-2069	2050
093-5432	220
	231
	234
	236
	241
	243
	246
093-7521	1040
094-0580	649
	653
	659
	662
094-0584	1026
094-0611	649
	653
	659
	662
	1026
094-0616	649
	653
	662
094-0747	927
	929
	931
	933
	935
	938

▶ **PRIMARY REFERENCE**

PART NUMBER INDEX

Part	Page
	944
	946
	949
	957
	961
	967
094-0876	1619
	1625
	1630
	1632
	1633
	1634
094-1399	1480
	1484
	1488
094-1509	1026
094-1516	1026
094-1528	649
	653
	659
	662
094-1542	649
	653
	662
094-1875	1024
	1045
	1049
	1053
	1056
	1060
	1064
	1480
	1484
	1488
	1500
094-1881	1045
	1049
	1053
	1056
	1060
	1064
094-1882	1045
	1049
	1053
	1056
	1060
	1064
	1480
	1484
	1488
	1500
094-1900	1469
	1472
	1476
	1478
094-1920	1127
	1128
	1129
	1130
094-1931	972
	974
	976
	978
	980
	982
	984
	989
	991
	993
	995
	997
	999
	1004
094-2080	564
	570
094-4628	121
	122
	125
094-7134	146
094-7154	146
094-7516	146
094-7583	280
	282
094-7741	126
094-9266	190
094-9267	190
094-9424	126
094-9525	173
	175
094-9725	290
	293
094-9950	533
	535
094-9980	533
	535
095-0085	533
	535
095-0410	533
	535
095-0673	1635
095-0707	1465
	1466
	1467
095-0723	565
	572
095-0728	637
	2080
095-0735	2046
	2047
	2051
	2053
	2060
	2061
	2062
095-0736	357
	358
	360
	361
	364
	366
	368
	370
	373
	375
	377
	379
	381
	383
	385
	386
	388
	390
	392
	394
	396
	2190
095-0742	565
	572
095-0755	2007
095-0772	2092
095-0826	1508
	2139
095-0827	2027
095-0843	676
095-0863	873
	874
095-0882	1469
	1472
	1476
	1478
095-0886	1026
095-0891	649
	653
	659
	662
	1026
095-0910	2178
	2180
	2181
095-0913	2152
	2156
	2159
095-0924	1895
	1897
	1899
	1901
095-0929	1022
095-0936	1623
095-0946	1500
095-0965	1677
095-1022	1026
095-1260	1623
	1635
	1637
095-1270	649
	653
	659
	662
095-1386	301
	303
	307
	310
	313
	316
	319
	323
	326
095-1388	187
	188
095-1519	1043
	1690
	1698
095-1543	220
	231
	234
	236
	241
	243
	246
095-1547	1518
	1519
095-1572	1480
	1484
	1488
095-1575	1480
	1484
	1488
	1547
	1552
	1557
	1562
	1570
	1574
	1578
	1583
	1588
	1622
	1635
	1637
095-1576	1709
	1710
	1712
095-1578	1622
	1623
	1640
	1661
	1662
	1663
	1673
	1674
	1685
	1690
095-1579	1622
	1656
	1657
	1660
	1665
	1666
	1668
	1669
	1671
	1672
	1698
095-1580	1641
	1642
095-1582	1039
	1641
	1642
	1715
095-1583	1675
095-1584	1033
	1622
	1657
	1666
	1669
095-1585	1480
	1484
	1488
	1521
095-1586	1480
	1484
	1488
	1620
	1626
	1630
	1632
	1633
	1634
	1650
	1655
	1676
	1687
	1688
	1689
	1697
095-1587	1656
	1657
	1660
	1665
	1666
	1668
	1669
	1671
	1672
	1715
095-1590	1033
	1530
	1534
	1536
	1538
	1541
	1544
	1547
	1552
	1557
	1562

► **PRIMARY REFERENCE**

PART NUMBER INDEX

Part	Page
	1570
	1574
	1578
	1583
	1588
	1641
	1642
	1655
	1656
	1657
	1660
	1665
	1666
	1668
	1669
	1671
	1672
	1675
	1676
	1677
095-1594	1526
	1595
	1598
	1601
	1603
	1605
	1607
	1609
	1611
095-1595	1469
	1472
	1476
	1478
095-1596	1033
095-1597	1127
	1128
	1140
	1141
	1142
	1148
	1708
095-1600	1436
	1443
	1444
095-1601	1520
	1521
	1655
	1676
095-1602	1520
	1521
095-1603	1547
	1552
	1557
	1562
	1570
	1574
	1578
	1583
	1588
095-1604	1708
095-1608	1508
095-1625	1009
	1506
095-1632	1022
095-1657	1521
095-1680	1024
095-1681	1037
095-1685	1465
	1466
	1467
	1480
	1488
095-1698	1649
	1709
	1710
	1712
095-1700	1480
	1484
	1488
	1520
	1521
095-1704	891
095-1710	1677
095-1713	1011
	1015
095-1716	1506
095-1717	927
	929
	933
	935
	938
	944
	946
	957
	961
	967
	1007
	1013
	1017
	1039
095-1719	959
095-1720	940
	942
	955
	963
095-1721	972
	974
	976
	978
	980
	989
	991
	993
	995
	997
	999
095-1723	969
	986
	1001
095-1730	1508
095-1750	1687
	1689
095-1751	1684
	1687
	1689
095-1778	1547
	1552
	1557
	1562
	1570
	1574
	1578
	1583
	1588
095-1785	1650
	1655
	1676
095-1786	1656
	1657
	1660
	1665
	1666
	1668
	1669
	1671
	1672
095-1787	1530
	1534
	1536
	1538
	1541
	1544
	1547
	1552
	1557
	1562
	1570
	1574
	1578
	1583
	1588
	1655
	1676
095-1788	1045
	1049
	1053
	1056
	1060
	1064
095-1789	1526
	1595
	1598
	1601
	1603
	1605
	1607
	1609
	1611
095-1791	1708
095-2005	126
095-2038	290
	293
095-2039	126
	305
095-6639	1505
095-7378	1480
	1484
	1488
095-7380	1480
	1484
	1488
095-7382	1480
	1484
	1488
095-7383	1480
	1484
	1488
095-7384	1480
	1484
	1488
095-7386	1480
	1484
	1488
095-7387	1480
	1484
	1488
095-7930	1508
	2139
	2142
095-8799	123
	333
096-0061	187
096-0121	1024
096-0131	1781
	1795
	1797
096-0854	959
	1001
096-1055	1009
096-1519	1480
	1484
	1488
096-1521	1480
	1484
	1488
096-1522	1480
	1484
	1488
096-1523	1480
	1484
	1488
096-1545	1714
	1717
096-1567	927
	931
	938
	944
	949
	967
096-1568	927
	931
	933
	935
	938
	944
	949
	957
	961
	967
096-1570	972
	974
	976
	978
	980
	982
	984
	989
	991
	993
	995
	997
	999
	1004
096-1571	972
	974
	976
	978
	980
	982
	984
	989
	991
	993
	995
	997
	999
	1004
096-1628	1619
	1625
	1630
	1632
	1633
	1634
096-1773	649
	653
	659
	662
	672
096-1774	649
	653
	659
	662
	672
096-1775	649
	653
	659

PART NUMBER INDEX

Part	Page
	662
	672
096-1776	649
	653
	659
	662
	672
096-1777	649
	653
	659
	662
	672
096-1778	649
	653
	659
	662
	672
096-1779	649
	653
	659
	662
	672
096-1780	649
	653
	659
	662
	672
096-1781	649
	653
	659
	662
	672
096-2501	129
	132
	615
096-2591	645
	647
096-2622	2088
	2090
	2092
	2095
	2098
096-2626	2182
096-2665	1022
096-2902	1715
096-3216	927
	929
	931
	933
	935
	938
	944
	946
	949
	957
	961
	967
096-3321	190
096-3741	126
	173
	175
096-3773	1593
096-3780	676
096-3785	1480
	1484
	1488
096-3786	1480
	1484
	1488
096-3787	1480
	1484
	1488
096-3788	1480
	1484
	1488
096-3872	474
	2178
096-3884	2090
	2095
	2098
096-3944	1500
096-3964	927
	929
	931
	933
	935
	938
	944
	946
	949
	957
	961
	967
096-3978	1480
	1484
	1488
096-3983	1500
096-4003	1480
	1484
	1488
096-4035	206
	208
	210
	212
	214
	216
	218
	220
	222
	225
	227
	229
	231
	234
	236
	238
	241
	243
	246
	249
	251
096-4129	826
	827
	829
	830
096-4255	872
096-4279	881
096-4295	882
	883
	884
	886
	887
096-4376	1480
	1484
	1488
096-4377	1480
	1484
	1488
096-4378	1480
	1484
	1488
096-4389	1488
096-4402	927
	929
	931
	933
	935
	938
	944
	946
	949
	957
096-4430	940
	942
	951
	955
	963
096-4447	1443
	1444
096-4449	1142
096-4480	1140
	1141
	1142
	1146
	1147
	1148
	1436
	1442
096-4498	1619
	1625
096-4514	1715
096-4747	1908
096-4748	1908
096-4755	1031
096-4876	1760
096-4882	2111
	2113
	2116
096-4883	1262
	1265
096-4902	754
096-5625	972
	974
	976
	978
	980
	982
	984
	989
	991
	993
	995
	997
096-5915	1480
	1484
	1488
096-5916	1480
	1484
	1488
096-5919	1480
	1484
	1488
096-5962	565
	572
096-6073	1039
096-6166	513
	515
	517
	519
	521
	523
	565
	572
	627
	637
	944
	946
	949
	957
096-6210	940
	942
	951
	955
	963
	969
	972
	974
	976
	978
	980
	982
	984
	986
	989
	991
	993
	995
	997
	999
	1001
	1004
096-6837	1895
	1897
	1899
	1901
096-7803	927
	929
	931
	933
	935
	938
	944
	946
	949
	957
	961
	967
096-8490	275
	277
	278
096-8569	123
096-8619	203
096-9435	135
096-9528	135
096-9532	135
	203
099-0139	2267
099-0596	1009
099-0600	1009
	1011
	1015
099-0699	1009
099-0700	1009
099-0707	1760
099-0724	1760
099-0822	1690
099-0823	1977
	1981
	2007
	2259
099-2096	1024
099-2374	1935
	1937
	1939
	2130
	2132
	2134
099-2503	305
099-3506	2124
	2126

► **PRIMARY REFERENCE**

PART NUMBER INDEX

Part	Page
099-3607	1977
	1981
	2007
099-3629	2265
	2266
099-3645	2162
099-3649	180
	1288
	1292
	1296
099-3669	1045
	1049
	1053
	1056
	1060
	1064
099-3670	1045
	1049
	1053
	1056
	1060
	1064
099-3671	1045
	1049
	1053
	1056
	1060
	1064
099-3913	401
099-4420	126
099-4437	290
	293
	305
099-4460	615
099-4483	129
099-5041	290
	293
	305
099-5399	1011
	1015
099-5400	1011
	1015
099-5572	969
	986
	1001
099-5573	969
	986
	1001
099-6025	1444
099-6109	1045
	1049
	1053
	1056
	1060
	1064
099-6110	1045
	1049
	1053
	1056
	1060
	1064
099-6111	1045
	1049
	1053
	1056
	1060
	1064
099-6112	1045
	1049
	1053
	1056
	1060
	1064
099-6113	1045
	1049
	1053
	1056
	1060
	1064
099-6115	1045
	1049
	1053
	1056
	1060
	1064
099-6117	1045
	1049
	1053
	1056
	1060
	1064
099-6118	1045
	1049
	1053
	1056
	1060
	1064
099-6119	1045
	1049
	1053
	1056
	1060
	1064
099-6120	1045
	1049
	1053
	1056
	1060
	1064
099-6121	1045
	1049
	1053
	1056
	1060
	1064
099-6122	1045
	1049
	1053
	1056
	1060
	1064
099-6123	1045
	1049
	1053
	1056
	1060
	1064
099-6124	1045
	1049
	1053
	1056
	1060
	1064
099-6125	1045
	1049
	1053
	1056
	1060
	1064
099-6126	1045
	1049
	1053
	1056
	1060
	1064
099-6127	1045
	1049
	1053
	1056
	1060
	1064
099-6128	1045
	1049
	1053
	1056
	1060
	1064
099-6136	1623
099-6137	1619
	1623
	1625
	1630
	1632
	1633
	1634
	1635
	1637
099-6141	1623
	1635
	1637
099-6144	1623
	1635
	1637
099-6145	1623
	1635
	1637
099-6418	737
	738
	739
	740
	742
	743
	746
099-7127	564
	570
099-7857	758
	2025
099-8232	1169
	1172
	1175
	1178
	1182
	1186
	1190
	1194
	1213
	1217
	1221
	1225
	1229
	1675
1	
100-2881	2125
100-3866	1491
100-4336	2152
	2156
101-2846	565
	572
101-7397	1167
	1176
	1178
	1182
	1186
	1190
	1194
101-7398	1123
	1125
	1206
101-7401	1178
	1182
	1186
	1190
	1194
	1207
	1210
	1213
	1217
	1221
	1225
	1229
	1250
	1254
	1258
101-7402	1024
	1169
	1172
	1175
	1178
	1182
	1186
	1190
	1194
	1233
	1237
	1262
	1265
101-7403	1167
101-7404	1123
	1125
	1167
	1169
	1172
	1175
	1178
	1182
	1186
	1190
	1194
	1213
	1217
	1221
	1225
	1229
	1250
	1254
	1258
	1411
	1414
	1417
101-8899	2088
	2090
	2092
	2095
	2098
	2101
101-8900	2088
	2090
	2092
	2095
	2098
	2259
	2269
101-9848	826
	827
	829
	830
102-0818	1715
102-0889	1644
102-1120	1138
	1150
102-1248	1169
	1172

PART NUMBER INDEX

Part	Page
	1175
	1178
	1182
	1186
	1190
	1194
102-1279	1138
	1150
102-1291	1138
	1150
102-6455	670
102-6457	670
102-7964	564
	571
	609
	636
102-7965	571
	577
	609
	636
102-8016	564
	570
102-8801	604
102-8802	142
	144
	357
	358
	360
	361
	364
	366
	368
	370
	373
	375
	377
	379
	381
	383
	385
	386
	388
	390
	392
	394
	396
	399
	400
	405
	419
	427
	482
	484
	494
	508
	513
	515
	517
	519
	521
	523
	539
	540
	541
	554
	556
	558
	604
	628
	629
	636
	1269
	1281
	1311
	1313
	1315
	1317
	1319
	1321
	1353
	1357
	1382
	1387
	1508
	1698
102-8803	405
	419
	427
	482
	484
	494
	530
	531
	538
	554
	556
	558
	565
	570
	596
	604
	620
	623
102-8804	405
	419
	427
	528
	636
102-8805	195
	545
	549
102-8806	609
103-2529	405
	420
	428
	625
103-8173	1547
	1552
	1570
	1574
	1644
103-8177	1547
	1552
	1557
	1562
	1570
	1574
	1578
	1583
	1588
103-8252	1640
	1661
	1662
	1663
	1673
	1674
103-8253	1640
	1661
	1662
	1663
	1673
	1674
103-8254	1640
	1661
	1662
	1663
	1673
	1674
103-8255	1640
	1661
	1662
	1663
	1673
	1674
103-8378	1022
103-8379	1022
103-8380	1022
104-6871	586
104-8750	1091
	1093
104-8774	1325
	1328
	1331
104-8783	1325
	1328
	1331
	1401
104-8838	1287
	1291
	1295
104-8903	1325
	1328
104-8976	1352
	1381
105-1321	►1639
	1654
105-1766	2028
	2030
105-2169	1978
	1982
	2007
	2124
	2126
105-2575	959
105-2578	959
105-2579	959
105-2583	959
105-3477	1167
	1178
	1182
	1186
	1190
	1194
	1207
	1210
	1213
	1217
	1221
	1225
	1229
	1250
	1254
	1258
105-3478	1407
	1495
	1496
105-3483	1167
	1213
	1217
	1221
	1225
	1229
105-3484	1250
	1254
	1288
	1292
	1296
105-3485	1213
	1217
	1221
	1225
	1229
105-3487	676
	764
	769
	774
	780
	786
	792
	798
	804
	810
	814
	818
105-5175	577
105-7781	1404
	1407
105-9526	2257
105-9527	2257
106-0107	513
	519
	►545
106-0210	545
	546
106-0615	894
	895
	896
106-0616	894
106-6248	1492
106-8715	1404
	1407
107-1567	1424
	1425
	1426
107-3350	1930
107-4749	626
107-6370	1646
	1647
107-6371	1646
	1647
107-6479	1622
	1623
	1685
107-6540	1657
	1660
	1665
	1666
	1669
	1671
107-6541	1657
	1660
	1665
	1666
	1669
	1671
	1705
107-6631	1270
	1274
	1278
	1282
	1311
	1313
	1315
	1317
	1319
	1321
107-6954	1480
	1484
	1488
107-6955	1480
	1484
	1488
107-6969	1480
	1484
	1488
107-7017	1702

► **PRIMARY REFERENCE**

PART NUMBER INDEX

Part	Page
	1705
107-7018	1702
	1705
107-7640	1019
107-8618	620
	623
108-1782	1250
	1254
	1258
	1438
	1440
	1445
108-4282	1186
	1190
	1194
	1207
	1210
	1213
	1217
	1221
	1225
	1229
	1250
	1254
	1258
	1401
108-7118	1447
	1449
	1452
	1455
108-7313	1356
	1371
	1381
	1386
	1397
108-7354	1123
	1125
108-7357	1367
108-7360	1325
	1328
108-7373	1352
108-7375	1325
	1328
	1339
	1342
	1346
	1349
108-7516	1311
	1313
	1315
	1317
	1319
	1321
108-7550	1123
	1125
109-2665	1646
109-2667	▶1646
	1648
109-5152	1538
	1541
	1544
	▶1647
109-5153	1647
109-7556	1377
109-9313	120
	▶253
	▶254
109-9329	139
110-5496	1287
	1291
	1295
110-5525	1469
	1472
	1476
	1478
110-8827	182
111-0988	1331
	1339
	1342
	1346
	1349
	1352
	1356
	1381
	1386
111-4799	538
111-4816	564
	571
111-4836	405
	412
	419
	427
	445
	486
	488
	489
	491
	554
	585
	586
	589
	625
	626
	636
	1935
	1937
	1939
	1941
	2130
	2132
	2134
	2178
	2182
111-4837	405
	412
	419
	427
	486
	491
	592
	594
	602
	625
111-4838	405
	412
	419
	427
	636
111-4839	405
	412
	419
	427
	636
111-6511	1105
111-6752	1325
	1328
	1447
	1449
111-9916	1045
	1049
	1053
	▶1687
	1692
	1694
	1695
	1696
111-9959	1538
	1541
	1544
	1583
	1589
111-9977	1702
	1705
111-9985	1702
	1705
111-9986	1702
	1705
111-9998	1641
	1642
112-0083	1321
	▶1679
112-0085	1679
112-0090	1702
	1705
112-2489	1906
112-4550	620
	623
112-9717	256
	263
113-0693	500
	553
113-2127	1724
	1726
	1728
	1730
	1732
	1734
	1736
	1738
	1740
	1742
113-6479	1072
	1167
113-6738	1115
113-8490	564
	570
113-8491	564
	570
	579
	580
	581
113-8492	564
	570
113-8493	564
	570
114-0358	1910
	1915
	1916
	1918
	1920
	1921
	1923
	1927
	1928
	1930
114-0359	1910
	1915
	1916
	1918
	1920
	1921
	1923
	1927
	1928
	1930
114-0489	1702
	1705
114-0623	1687
	1689
114-0706	969
	986
	1001
114-0710	969
	986
	1001
114-0711	969
	986
	1001
114-0713	969
	986
	1001
114-0753	1011
	1015
114-0754	1009
114-0756	1007
	1013
	1017
114-0757	1022
114-1398	1028
	1029
114-1399	1028
	1029
114-1497	649
	653
	662
114-1539	649
	653
	659
	662
	672
114-1581	1026
114-6285	764
	769
	774
	780
	786
	792
	798
	804
	810
	814
	818
114-6289	826
	827
	829
	830
115-2677	1748
115-2678	1748
115-8634	1042
	1449
	1455
115-8645	1233
	1237
	1285
	1325
	1328
	1331
	1401
115-8646	1325
115-8902	917
	▶1121
115-8903	917
	▶1122
116-0114	508
	629
116-0118	197
	329
	330
	405
	412
	419
	427
	458
	460
	462
	463

PART NUMBER INDEX

Part	Page
	486
	491
	558
	560
	589
	592
	594
	596
	598
	600
	602
	620
	621
	622
	626
	627
	628
	631
	634
	635
	636
	641
	643
116-0126	420
	428
	645
	647
116-0128	334
	405
	420
	428
	645
	647
116-0210	564
	570
116-0255	420
	428
	571
	636
	645
	647
116-1628	763
	768
	773
	779
	785
	791
	797
	803
	809
	813
	817
116-1665	702
	703
	704
	705
	706
	707
	708
	709
	710
	711
	712
	713
	714
	715
	716
	717
	718
	719
	720
116-2659	259
	261
116-3412	1342
	1350
	1357
	1364
	1371
	1386
	1397
116-3526	▶1688
	1710
116-9115	1758
	▶1769
116-9129	1135
116-9135	2294
	2295
117-1385	337
117-5540	857
	858
117-6306	2259
117-6349	2080
117-6350	2080
117-6356	2080
117-8568	182
117-8683	2054
	2055
	2056
	2057
	2058
117-8929	2020
	2021
	2023
	2025
117-9436	1895
	1897
	1899
	1901
118-0166	182
118-0275	218
118-4044	1605
	1607
	1609
	1611
118-4057	1480
	1484
	1500
118-4086	1620
	1626
	1630
	1632
	1633
	1634
118-4087	1619
	1625
	1630
	1632
	1633
	1634
118-4140	1894
118-5982	1783
	1784
	1785
	1786
	1787
	1789
	1791
	1792
	1794
	1799
	1800
	1801
	1803
	1805
	1807
	1808
	1810
	1811
	1812
	1813
	1814
	1815
	1816
118-5983	1628
118-9784	139
118-9785	139
118-9863	2014
118-9902	1352
	1356
	1381
	1386
118-9930	139
119-2320	1121
	1122
119-2321	1121
	1122
	1144
119-2323	1144
119-2324	1437
119-2325	1437
	1438
	1440
119-2434	1121
119-2435	1121
119-2436	1122
119-2437	1122
119-2804	1131
119-3253	1847
	1851
119-3662	405
	420
	428
	571
	586
	604
	627
	636
	645
	647
119-5026	513
	515
	517
	519
	521
	523
	1941
	2190
119-5259	1702
	1705
119-5260	1702
	1705
119-5262	1702
	1705
119-5388	1623
	1635
	1637
119-5389	1623
	1635
	1637
119-5391	1623
	1635
	1637
119-5392	1623
119-5398	1657
	1660
	1665
	1666
	1669
	1671
120-5114	339
	341
120-5737	2181
120-7164	▶860
120-7165	▶861
120-7167	13
	18
	20
	▶862
120-7168	▶863
120-9027	538
121-0307	180
121-0987	611
	612
121-1022	565
	571
121-1023	506
	508
	510
121-1029	1186
121-1038	334
	405
	420
	428
	645
	647
121-1039	334
	420
	428
	636
	645
	647
121-1168	513
	515
	517
	519
	521
	523
	564
	571
	636
121-1173	515
	517
	521
	523
	571
	577
	636
121-1371	972
	974
	978
	982
	984
	1004
121-1372	972
	974
	978
	982
	984
	989
	991
	993
	995
	997
	999
	1004
121-1459	1655
	1676
121-1491	1459
	1460
	1532
	1547
	1552
	1557
	1562
	1570
	1574

► **PRIMARY REFERENCE**

PART NUMBER INDEX

Part	Page
	1578
	1583
	1588
	►1689
	1691
	1693
121-1548	969
	986
	1001
121-1549	969
	972
	974
	976
	978
	980
	982
	984
	986
	989
	991
	993
	995
	997
	999
	1001
	1004
121-1558	1480
	1484
	1488
121-1611	927
	931
	933
	935
	938
	944
	949
	957
	961
	967
121-1807	►1843
121-1811	1843
121-1813	1843
121-1865	2046
	2047
	2061
121-6303	1305
	1307
	►1690
121-6304	1690
121-7098	2152
	2156
121-7136	2010
	2012
	2152
	2156
121-7137	2010
	2012
	2152
	2156
121-7138	2152
	2156
122-3979	763
	768
	773
	779
	785
	791
	797
	803
	809
	813
	817
122-3980	763
	768
	773
	779
	785
	791
	797
	803
	809
	813
	817
122-4021	339
122-4101	737
	739
	740
	742
	743
	746
122-4120	763
	768
	773
	779
	785
	791
	797
	803
	809
	813
	817
122-5114	1480
	1484
	1488
122-5318	1469
	1472
	1476
	1478
122-7797	1526
	1595
	1598
	1601
	1603
122-9605	2152
	2156
	2159
122-9608	2080
122-9609	2080
122-9610	2080
122-9611	2060
	2061
122-9617	2028
	2030
	2032
122-9657	2152
	2156
123-2003	1035
123-2008	1480
	1484
	1488
123-2060	1022
123-2423	1593
123-2430	1292
	1317
	►1680
123-2485	1547
	1552
	1557
	1562
	1570
	1574
	1578
	1583
	1588
123-2511	1681
123-2516	1702
	1705
123-2549	1233
	1237
	1241
123-2552	1680
	1681
	1682
123-4750	1233
	1237
	1241
124-0914	1443
124-0988	1297
124-1008	1339
	1342
	1346
	1349
	1352
	1356
	1379
	1381
	1386
124-1019	1436
	1442
124-1020	1436
	1442
124-1021	1142
124-1034	1141
	1146
124-1035	1233
	1237
124-1047	1123
	1125
124-1062	1123
	1125
124-1107	1082
	1086
124-1108	1082
	1086
124-1212	1420
	1422
124-1266	1455
124-1711	253
	►256
124-2111	1161
124-2113	1161
124-3548	564
	570
124-3953	2274
124-3966	2262
124-4009	2051
	2053
124-4010	2051
	2053
125-2947	204
125-2950	135
125-2968	142
	144
125-2970	190
125-2983	305
125-4766	636
125-4840	571
125-4841	571
	636
125-7874	405
	420
	428
	467
	510
	558
	571
	577
	581
	583
	586
	592
	594
	604
	606
	609
	620
	627
	628
	636
	643
125-7875	405
	420
	428
	542
	543
	558
	571
	577
	581
	583
	586
	592
	594
	604
	606
	609
	636
	643
	645
	647
125-7876	508
	510
	564
	570
	629
126-1173	513
	519
126-1767	428
	531
	546
	571
	581
	609
	636
	1213
	1217
	1221
	1225
	1250
	1269
	1273
	1277
	1281
	1299
	1301
	1311
	1313
	1315
	1317
	1319
	1321
	1357
	1387
	2054
	2055
	2056
	2057
	2058
	2078
	2079
126-1768	420
	428
	513
	515
	519
	531

► PRIMARY REFERENCE

PART NUMBER INDEX

Part	Page
	571
	581
	606
	636
126-1774	467
	592
	594
126-1865	1623
	1635
	1637
126-1866	1623
	1635
	1637
126-1870	959
126-1876	972
	976
	978
	980
	982
	984
	989
	993
	995
	999
	1004
126-1885	959
126-1935	927
	929
	931
	933
	935
	938
126-2016	1500
126-2043	1007
	1013
	1017
126-2055	1469
	1472
	1476
	1478
126-5062	893
	895
126-6514	1688
	1697
126-6515	1688
	1697
126-6516	1688
	1697
126-7574	453
	456
126-9993	1677
127-0580	1977
	1981
	2007
127-3913	1797
127-5937	533
	535
127-5939	533
	535
127-5940	533
	535
127-5941	533
	535
127-5943	533
	535
127-5944	533
	535
127-5947	533
	535
127-5948	533
	535
127-5949	533
	535
127-5950	533
	535
127-5952	533
	535
127-5953	533
	535
127-5955	533
127-5956	533
127-6624	►1134
	1758
127-6625	►1747
	1758
127-6780	1078
	1080
127-6792	1843
127-6797	919
	921
	►1135
128-2135	1957
	1961
	1965
	1969
	1973
	1975
	1985
	1987
	1991
	1993
	1995
	1997
	1999
	2034
	2036
128-2136	1973
	1975
	1985
	1987
128-2173	2046
	2047
128-2686	264
128-4411	357
	358
	360
	361
	364
	366
	368
	370
	373
	375
	377
	379
	381
	383
	385
	386
	388
128-8950	571
129-3400	763
	768
	773
	779
	785
	791
	797
	803
	809
	813
	817
	1328
	1331
	1401
	1429
	1431
129-5874	1082
	1086
129-6466	2271
129-7784	1505
129-7854	1500
129-7855	1500
129-7857	1024
	1500
129-7859	1500
129-7863	1500
129-7921	1500
129-7925	1500
129-7927	1500
129-7978	1046
	1050
	1054
	1056
	1060
	1065
129-7979	1500
129-8034	1035
130-0252	2152
	2156
130-0270	2152
	2156
130-3280	259
	261
130-4276	760
130-7596	125
131-1478	629
131-5818	1623
	1635
	1637
131-5915	1619
	1625
	1630
	1632
	1633
	1634
131-8821	256
	263
131-8822	256
	263
131-8824	256
131-8826	256
	257
	263
	264
131-8932	256
	263
131-9424	1424
	1425
132-0999	1905
	1906
132-1531	1747
132-1805	405
	412
	419
	427
132-1806	405
	412
	419
	427
132-1829	►399
	564
	570
132-5789	197
	329
	330
	406
	412
	421
	429
	499
	554
	556
	558
	565
	572
	585
	586
	589
	592
	594
	596
	598
	602
	621
	622
	626
	631
	633
	641
	2139
	2153
	2156
	2159
133-1207	1895
	1897
	1899
	1901
133-2425	749
	751
133-5813	308
	311
	1269
	1273
	1277
	1281
	1333
	1336
	1392
	1394
133-5828	1123
	1125
133-6686	1011
	1015
133-6777	1480
	1484
133-6788	1710
	1712
133-6904	972
	974
	978
	982
	984
	989
	991
	993
	995
	997
	999
	1004
133-6909	969
	986
	1001
133-8016	1977
	1981
	2007
134-0685	263
134-2540	581
	586
134-3284	486
	488
	489
	491
134-3296	565
	571
	636

► **PRIMARY REFERENCE**

PART NUMBER INDEX

Part	Page
134-3297	405
	420
	428
	565
	571
	636
134-3299	301
	303
	307
	310
	313
	316
	319
	323
	326
134-3379	456
134-4126	453
	454
	455
	456
134-6921	1381
	1386
134-7089	259
	261
134-7113	1517
134-7114	1517
134-7115	1517
134-7258	2301
	2306
	2311
	2316
	2321
	2326
	2331
	2336
134-8850	▶760
134-8851	760
134-8875	4
	5
	6
	7
	8
	9
	10
	11
	12
	13
	14
	15
	23
	24
	25
	26
	27
	30
	34
	35
	37
	43
	44
	45
	50
	51
	52
	53
	54
	55
	60
	61
	62
	63
	68
	69
	70
	77
	78
	79
	89
	91
	93
	94
	95
	96
	97
	98
	99
	756
	▶761
134-8876	761
134-8878	761
134-8948	1818
134-8950	1819
134-9137	1750
135-2274	2062
135-2346	265
135-2347	265
135-2348	265
135-2349	265
135-2350	265
135-2351	265
135-2352	265
	286
135-2354	265
135-2355	265
135-2356	265
135-2358	265
135-2359	265
135-2360	265
135-2364	533
135-2366	533
	535
135-2369	141
135-2370	141
135-2381	401
135-3980	1153
	1154
	1156
135-4063	1097
	1099
135-8572	301
	303
	307
	310
	313
	316
	319
	323
	326
	339
	341
135-8573	339
	341
	747
	763
	768
	773
	779
	785
	791
	797
	803
	809
	813
	817
	821
	823
	826
	830
	846
135-8575	329
	330
	763
	768
	773
	779
	785
	791
	797
	803
	809
	813
	817
	821
	823
	2163
	2164
	2165
135-8576	757
	758
	759
	865
	866
	867
	868
135-8577	675
	763
	768
	773
	779
	785
	791
	797
	803
	809
	813
	817
135-8578	329
	762
	763
	768
	773
	779
	785
	791
	797
	803
	809
	813
	817
135-8579	377
	379
	381
	388
	394
	396
135-8965	2189
135-8966	2189
136-0139	686
	692
	694
	697
	700
136-0207	1325
	1328
	1333
	1336
	1339
	1346
	1352
	1381
137-0856	1073
137-2270	2166
	2167
137-3623	1037
137-3624	1037
137-3625	1037
137-3626	905
	1037
137-3628	905
	1037
137-3631	905
137-3709	1127
	1128
	1129
	1130
137-5541	290
	307
	310
	313
	316
	319
138-5111	1207
	1210
138-5708	1082
	1086
139-7099	1959
	1963
	1967
	1989
	2001
	2003
	▶2124
139-7100	2084
	2087
	▶2088
	▶2090
139-7101	1959
	1963
	1967
	1971
	1989
	2001
	2003
	2005
	▶2259
139-7119	2263
139-7126	1977
	1981
	2007
139-7127	1977
	1981
	2007
139-7814	126
140-0674	1644
	1645
140-0677	1644
	1645
141-2759	510
	564
	570
141-6519	2181
142-0038	1427
	1429
	1431
142-0485	2259
142-3835	1
	2
	▶762
142-3836	1
	2
	▶2166
	▶2167
142-5515	1488
142-5546	2080
142-5834	2048
142-6582	1078

▶ **PRIMARY REFERENCE**

PART NUMBER INDEX

Part	Page
	1080
142-7764	1076
142-7765	1069
142-7768	1123
	1125
142-7769	1123
	1125
143-4254	1287
	1291
	1295
143-4308	1233
	1237
143-8023	1009
143-8024	1009
143-8025	1009
	1011
	1015
143-8033	1009
143-8149	1009
143-9397	2180
	2181
	2182
144-0195	2255
	2257
144-0367	271
	1262
	1265
144-1636	144
	545
	1433
	2173
	2174
144-9126	2301
	2306
	2311
	2316
	2321
	2326
	2331
	2336
144-9691	2262
144-9692	2262
145-2237	1233
	1237
145-3031	891
145-3035	890
145-3042	656
	657
	665
	666
	673
	▶674
145-5106	901
	▶902
146-4936	826
	827
	829
	830
146-6747	2301
	2306
	2311
	2316
	2321
	2326
	2331
	2336
147-4131	1635
147-4184	1605
	1607
147-4921	2242
	2244
	2245
147-5835	1007
	1013
	1017
147-5860	1480
	1484
	1488
148-4632	1026
148-4633	1026
148-4634	1026
148-4635	1026
148-4636	1026
148-4637	1026
148-4638	1026
148-4640	1026
148-4642	1026
148-4643	1026
148-4644	▶1026
	1028
	1029
148-4679	673
	▶1028
148-4685	753
148-4689	754
148-4703	754
148-4704	754
148-4705	649
	669
148-4708	649
	669
148-4715	649
	653
	659
	662
	672
148-4732	1026
148-4733	1026
148-8313	307
	310
	313
	316
	319
	323
	326
148-8317	1207
	1210
148-8321	1233
	1237
148-8323	1169
	1172
	1175
	1178
	1182
	1186
	1190
	1194
148-8325	1233
	1237
148-8326	1131
148-8327	1213
	1217
	1221
	1225
	1229
	1420
	1422
	1425
	1426
148-8328	1438
	1440
	1445
148-8330	1175
	1182
	1190
	1194
	1210
	1218
	1222
	1226
	1230
148-8335	1119
	1172
	1178
	1186
	1206
	1207
	1213
	1217
	1221
	1225
	1229
	1427
	1429
	1431
148-8336	1123
	1125
	1131
	1233
	1237
	1241
	1244
	1247
	1269
	1273
	1277
	1281
	1288
	1292
	1296
	1299
	1301
	1303
	1305
	1307
	1309
	1311
	1313
	1315
	1317
	1319
	1321
	1325
	1328
	1333
	1336
	1352
	1356
	1360
	1364
	1367
	1371
	1375
	1377
	1379
	1381
	1386
148-8339	182
	1186
	1190
	1194
148-8340	1262
	1288
	1292
	1296
	1299
	1301
	1303
	1420
148-8341	1131
148-8342	1105
	1381
	1386
148-8347	1178
	1182
	1186
	1190
	1194
	1213
	1217
	1221
	1225
	1229
	1250
	1254
	1258
	1299
	1301
	1303
	1420
	1422
148-8352	1169
	1172
	1175
	1178
	1182
	1186
	1190
	1194
	1427
	1429
	1431
148-8353	1123
	1125
	1269
	1273
	1277
	1281
	1288
	1292
	1296
	1311
	1313
	1315
	1317
	1319
	1321
	1325
	1328
	1352
	1356
	1381
	1386
	1401
148-8354	1265
	1269
	1273

▶ **PRIMARY REFERENCE**

PART NUMBER INDEX

Part	Page
	1277
	1281
	1288
	1292
	1296
	1420
	1422
148-8355	182
	1178
	1182
	1186
	1190
	1194
	1207
	1210
	1214
	1218
	1222
	1225
	1229
	1250
	1254
	1258
148-8357	182
	1169
	1214
	1218
	1222
	1226
	1229
	1262
	1265
	1424
	1425
	1426
	1427
	1429
	1431
148-8358	1420
	1422
148-8360	182
	1258
148-8361	1433
	1434
	1435
148-8362	1207
	1210
148-8363	1234
	1238
	1392
	1394
	1420
	1422
148-8364	1123
	1125
	1287
	1291
	1295
	1333
	1336
	1447
	1449
	1452
	1455
148-8367	1123
	1125
	1161
	1234
	1238
	1244
	1247
	1288
	1292
	1296
	1305
	1360
	1396
	1411
	1414
	1417
148-8368	1161
	1241
	1244
	1247
	1411
	1414
	1417
	1438
	1440
	1445
148-8371	1131
148-8372	1447
	1452
148-8378	1131
	1161
	1234
	1238
	1241
	1244
	1247
	1269
	1273
	1277
	1281
	1285
	1288
	1292
	1296
	1299
	1301
	1303
	1305
	1307
	1309
	1311
	1313
	1315
	1317
	1319
	1321
	1325
	1328
	1331
	1333
	1339
	1342
	1346
	1349
	1352
	1356
	1360
	1364
	1367
	1371
	1375
	1377
	1381
	1387
	1397
	1401
	1411
	1414
	1417
	1433
	1434
	1435
	1447
	1449
	1452
	1455
148-8384	1165
148-8390	1131
148-8393	1382
	1387
148-8395	1605
	1607
	1609
	1611
148-8407	1131
	1269
	1273
	1277
	1281
	1288
	1292
	1296
	1315
	1317
	1319
	1379
	1532
	1609
	1611
148-8411	1131
	1169
	1172
	1175
	1178
	1182
	1186
	1190
	1194
	1250
	1254
	1258
	1379
	1382
	1387
	1420
	1422
	1424
	1425
	1426
148-8413	1161
	1241
	1244
	1247
	1411
	1414
	1417
148-8415	1156
	1157
	1158
	1412
148-8419	1156
	1157
	1158
	1234
	1238
	1241
	1244
	1247
	1411
	1414
	1417
148-8428	1162
148-8429	1169
	1172
	1175
	1178
	1182
	1187
	1191
	1195
	1427
	1429
	1431
148-8430	1411
	1414
	1417
148-8433	1241
	1287
	1291
	1295
	1333
	1336
	1339
	1342
	1346
	1349
	1352
	1356
	1360
	1364
	1367
	1371
	1379
	1382
	1387
	1392
	1394
148-8434	1333
	1336
148-8435	1132
	1234
	1238
	1285
	1287
	1291
	1295
	1305
	1307
	1309
	1396
148-8439	1234
	1238
	1288
	1292
	1296
148-8443	1346
	1349
	1352
	1356
	1381
	1386
148-8444	1123
	1125
	1411
148-8449	1187
	1191
	1195
149-1738	1095
	1101
	1103
	1105
	1106
	1131
149-5050	560
	577
	600
	643
	645
	647
149-5051	468
	643
	645

PART NUMBER INDEX

Part	Page
	647
149-5069	468
	571
	577
	643
	645
	647
149-5070	468
	571
	577
	643
	645
	647
149-5071	468
	571
149-5452	1109
	1111
	1113
	1115
150-3024	301
	303
	307
	310
	313
	316
	319
	323
	326
	390
	394
	396
150-3036	1161
	1241
	1244
	1247
	1299
	1301
	1303
	1311
	1313
	1321
	1331
	1339
	1342
	1346
	1349
	1352
	1356
	1360
	1364
	1367
	1371
	1377
	1382
	1387
	1397
	1411
	1414
	1417
150-4027	1339
	1342
	1346
	1349
	1353
	1357
	1360
	1364
	1368
	1371
	1382
	1387
	1397
150-4037	1447
	1452
150-4044	1287
	1291
	1295
	1321
	1447
	1449
	1452
	1455
150-4048	1382
	1387
150-4049	1250
	1254
	1404
	1407
150-5782	1500
150-5797	1046
	1050
	1054
	1056
	1060
	1065
150-5826	940
	951
150-5827	940
	951
	955
	963
150-5828	940
	951
	955
	963
151-1846	1108
151-5332	179
151-6703	2088
	2092
	2098
	2259
	2269
151-6704	2088
	2092
	2098
	2259
	2269
151-6705	2262
151-6767	2084
	2086
151-6777	1967
	1989
	2001
	2003
	2005
	2084
	2085
	2086
	2087
151-6778	2259
	2269
151-6785	2259
151-6790	2265
151-6792	2088
	2090
	2092
	2095
	2098
▶	2267
151-6793	2267
151-6813	2259
	2269
151-6815	2259
	2269
151-6831	2259
	2269
151-6832	2259
	2269
151-6841	2267
151-6844	2259
151-9272	1273
	1277
151-9461	2088
	2090
	2092
	2095
	2098
151-9497	2088
	2090
	2092
	2095
	2098
151-9557	2259
151-9576	2259
	2269
152-2938	180
152-2939	180
152-3411	1162
153-2521	▶475
	486
	488
	489
	491
153-2523	▶476
	478
153-2540	513
	515
	517
	519
	521
	523
153-2541	513
	515
	517
	519
	521
	523
153-2602	564
	571
153-2620	406
	420
	428
	636
153-2630	406
	420
	428
153-2631	571
153-3568	2191
153-4906	180
153-5223	1623
	1635
	1637
153-5239	1648
153-5276	1529
	1567
	1568
153-5286	1538
	1541
	1544
153-5288	1538
	1541
	1544
	1547
	1552
	1557
	1562
	1570
	1574
	1578
	1583
	1588
153-5289	1538
	1541
	1544
	1547
	1552
	1557
	1562
	1570
	1574
	1578
	1583
	1588
153-5290	1538
	1541
	1544
	1547
	1552
	1557
	1562
	1570
	1574
	1578
	1583
	1588
153-5291	1538
	1541
	1544
	1547
	1552
	1557
	1562
	1570
	1574
	1578
	1583
	1588
153-5292	1538
	1541
	1544
	1547
	1552
	1557
	1562
	1570
	1574
	1578
	1583
	1588
153-5293	1538
	1541
	1544
	1547
	1552
	1557
	1562
	1570
	1574
	▶1644
153-5298	1547
	1552
	1557
	1562
	1570
	1574
	1578
	1583
	1588
153-5299	1547

▶ **PRIMARY REFERENCE**

PART NUMBER INDEX

Part	Page
	1552
	1557
	1562
	1570
	1574
	1578
	1583
	1588
153-5306	1547
	1552
	1557
	1562
	1570
	1574
	1578
	1583
	1588
153-5309	1547
	1552
	1557
	1562
	1570
	1574
	1578
	1583
	1588
153-5311	1547
	1552
	1557
	1562
	1570
	1574
	1578
	1583
	1588
153-5313	1613
	1614
	1615
	1616
	▶1648
153-6237	1178
	1182
	1187
	1191
	1195
	1214
	1218
	1222
	1226
	1230
	1251
	1254
	1258
	1299
	1301
	1303
153-6249	1244
	1247
	1361
	1415
	1418
153-8623	1046
	1050
	1054
	1056
	1060
	1065
153-8723	2046
	2047
153-8753	2061
153-8762	2060
	2061
153-8763	2060
	2061
153-8798	1082
	1086
153-8867	1084
	1089
	1106
	1198
	1200
154-0729	929
	946
154-0730	929
	946
154-0731	929
	946
154-0732	929
	946
154-0736	976
	980
154-0737	976
	980
154-0738	976
	980
154-0739	976
	980
154-9024	203
155-0576	449
155-2255	592
	594
	596
	604
155-2258	604
155-2260	406
	420
	554
	556
	558
	565
	571
	581
	586
	596
	604
	606
	620
	623
155-2265	609
155-2267	581
155-2270	406
	420
	428
	468
	513
	515
	517
	519
	521
	523
	528
	554
	556
	558
	565
	571
	589
	604
	625
	628
	631
	636
	645
	647
	2048
	2050
155-2271	406
	420
	428
	604
	636
155-2274	474
	513
	519
	621
	643
155-3624	1403
155-7024	2152
	2156
	2159
155-7042	2274
156-3103	265
156-5970	1699
	1700
156-6175	458
	510
	554
	556
	558
	589
156-6469	2265
156-6470	2258
	2259
	2269
156-6471	2088
	2090
	2098
156-6472	2258
	2259
	2269
156-6473	2263
156-6474	2267
156-6475	2267
156-6554	2259
156-6555	2259
156-6562	2259
156-6563	2259
156-6579	2259
156-6598	2088
	2090
	2092
	2095
	2098
156-6599	1977
	1981
	2007
156-6600	2088
	2090
	2092
	2095
	2098
156-6601	2259
156-6617	1977
156-6627	2259
156-6631	2263
156-6642	2151
156-6643	2088
	2090
	2092
	2095
	2098
156-6644	2088
	2090
	2092
	2095
156-6645	2088
	2090
	2092
	2095
	2098
156-6646	2271
156-6647	▶2262
	2271
156-6648	2262
156-6656	1973
	1975
156-6657	1973
	1975
156-8845	1233
	1237
157-0670	203
158-4380	873
	874
158-4381	873
	874
158-7864	2292
	2293
	2298
	2299
158-8150	1547
	1552
	1557
	1562
	1570
	1574
	1578
	1583
	1588
158-8159	1530
	1534
	1536
	1538
	1541
	1544
	1547
	1552
	1557
	1562
	1570
	1574
	1578
	1583
	1588
158-8186	1644
	1645
158-8206	1547
	1552
	1557
	1562
	1570
	1574
	1578
	1583
	1588
158-8207	1547
	1552
	1557
	1562
	1570
	1574
	1578
	1583
	1588
158-8985	1028
	▶1461
	▶1462
158-8986	1461
	▶1468
158-8987	▶1033
	1508
158-9062	1007
	1013
	1017
158-9063	1007
	1013
	1017

PART NUMBER INDEX

Part	Page
158-9064	1022
158-9065	1022
158-9085	▶1709
	1711
158-9090	1123
	▶1710
159-4700	902
159-7782	1506
159-7784	1035
159-8035	1895
	1897
	1899
	1901
159-8036	1895
	1897
	1899
	1901
159-8049	419
	421
	427
	429
159-8050	419
	427
159-9322	467
160-7690	467
	592
	594
160-8290	1893
160-8759	959
161-1980	1020
161-3128	564
	570
161-3639	2088
	2090
	2092
	2095
	2098
161-3650	2088
	2090
	2092
	2095
	2098
161-3663	2088
	2090
	2092
	2095
	2098
161-3665	2088
	2090
	2092
	2095
	2098
161-3669	2274
161-3670	2274
161-3677	2274
161-3684	2259
161-3685	1977
	1981
	2007
161-3694	2125
161-3695	2267
161-3697	1977
	1981
	2007
161-3698	2258
	2259
	2269
161-3705	2267
161-3717	2189
161-3750	4
	5
	6
	7
	10
	13
	25
	30
	37
	53
	61
	69
	▶2254
161-3751	8
	9
	11
	12
	13
	14
	15
	23
	24
	25
	26
	27
	30
	34
	35
	37
	43
	44
	45
	51
	52
	53
	54
	55
	60
	61
	62
	63
	68
	69
	70
	75
	76
	77
	78
	79
	89
	91
	93
	94
	95
	96
	97
	98
	99
	▶2253
161-6987	2178
	2180
	2181
	2182
	2184
162-0177	1234
	1238
	1605
	1607
162-2220	338
162-2222	338
162-6185	120
	▶187
163-3729	678
	679
	681
	749
	751
163-3754	856
	▶865
163-3755	865
163-4143	875
	877
	879
	880
	▶884
163-4144	875
	877
	▶882
163-6637	406
	420
	428
163-6659	564
	571
163-6699	564
	571
163-6700	357
	360
	364
	368
	377
163-6704	482
	484
	494
163-6711	609
163-6758	564
	570
163-6759	406
	420
	428
	636
163-6772	4
	5
	6
	7
	8
	9
	10
	12
	13
	14
	15
	17
	19
	20
	25
	26
	27
	28
	29
	30
	33
	34
	35
	36
	37
	45
	50
	▶479
	1999
163-6773	428
163-6790	571
163-6795	479
	481
	482
	484
	494
	496
	564
	570
	606
	609
	2255
	2257
	2274
163-6803	564
	571
	577
163-6813	479
	482
163-6814	479
	482
164-0497	2110
	▶2118
	▶2120
164-0514	2088
	2090
	2092
	2095
	2098
164-0515	2088
	2090
	2092
	2095
	2098
164-0516	2267
164-0517	2267
164-0518	2267
164-0519	2088
	2090
	2092
	2095
	2098
164-0523	1977
	1981
	2007
164-0527	1977
	1981
	2007
164-0528	1977
	1981
	2007
	▶2151
164-0534	84
	▶2111
	▶2113
164-0535	▶2115
164-0614	2062
164-0617	2062
164-0618	2254
164-0619	2254
164-0620	2254
164-0639	2253
164-0643	2123
164-0646	1973
	1975
	1985
	1987
164-0648	2259
164-0655	1973
	1975
	1985
	1987
164-0664	2151
164-0666	2265
	2266
164-4180	1169
	1172
	1175
	1178
	1183
	1187
	1191
	1195
	1214
	1218
	1222
	1226

▶ **PRIMARY REFERENCE**

PART NUMBER INDEX

Part	Page
	1230
164-4858	►289
	357
	358
	360
	361
	364
	366
	368
	370
	373
	375
	377
	379
	381
	383
	385
	386
	388
164-5552	1123
	1125
164-5567	1161
	1202
	1204
	1233
	1237
	1241
	1244
	1247
	1299
	1301
	1303
	1339
	1342
	1346
	1349
	1353
	1357
	1361
	1365
	1368
	1372
	1375
	1377
	1382
	1387
	1397
	1404
	1407
	1508
164-5574	1187
	1191
	1214
	1218
	1222
164-5578	1132
164-5590	1508
164-5606	1187
	1191
	1195
	1214
	1218
	1222
	1226
	1230
	1251
	1255
	1259
	1404
	1407
164-5608	1422
164-5628	1269
	1273
	1277
	1281
	1311
	1313
	1315
	1317
	1319
	1321
164-5629	1311
	1313
	1315
	1317
	1319
	1321
164-5639	1297
164-6872	1449
	1455
164-6874	1311
	1313
	1360
	1364
	1367
	1371
	1375
	1377
	1397
164-6979	1296
	1319
	►1682
164-6980	1237
	►1683
164-6981	►903
	1287
	1291
	1295
164-8474	1957
	1961
	1965
	1969
	1973
	1975
	1985
	1987
	1991
	1993
	1995
	1997
	1999
164-8977	1287
	1291
	1295
164-8983	1287
	1291
	1295
164-9640	1233
	1237
164-9869	1234
	1238
165-2823	757
165-2854	758
165-2881	358
	361
	392
165-2976	734
	737
	738
	739
	740
	741
	742
	743
	746
165-3065	2166
	2167
165-3102	702
	703
	704
	705
	706
	707
	708
	709
	710
	711
	712
	713
	714
	715
	716
	717
	718
	719
	720
165-3103	702
	703
	704
	705
	706
	707
	708
	709
	710
	711
	712
	713
	714
	715
	716
	717
	718
	719
	720
165-3120	709
	711
	716
	718
165-3165	1069
165-3173	1072
165-3185	1167
165-3190	1167
165-3256	1508
165-3260	1420
	1422
165-4927	182
165-9282	1009
165-9283	1011
	1015
165-9286	1013
165-9431	1619
	1625
	1630
	1632
	1633
	1634
165-9435	1620
	1626
	1630
	1632
	1633
	1634
165-9436	1619
	1625
	1630
	1632
	1633
	1634
165-9438	1620
	1626
	1630
	1632
165-9439	1619
	1625
165-9442	1619
	1625
	1630
	1632
	1633
	1634
165-9443	1620
	1626
	1630
	1632
	1633
	1634
165-9444	1619
	1625
	1630
	1632
	1633
	1634
165-9448	1619
	1625
165-9460	1619
	1625
	1630
	1632
	1633
	1634
165-9461	1619
	1634
165-9463	1623
	1635
165-9464	1623
	1685
165-9470	1325
	1328
	►1677
165-9473	►1493
	1530
165-9474	1493
165-9497	1593
165-9513	1526
	1595
	1598
	1601
	1603
165-9514	1526
	1595
	1598
	1601
	1603
165-9549	1353
	1357
	1382
	1387
	►1691
165-9551	1623
165-9552	1623
	1635
	1637
165-9553	1623
	1635
165-9554	1623
	1635
	1637
165-9595	1547
	1552
	1570
	1574
165-9627	1701
166-1478	81

► PRIMARY REFERENCE

PART NUMBER INDEX

Part	Page
	756
	▶866
	▶867
166-1479	866
166-1482	1760
166-1486	1724
	1726
	1728
	1730
	1732
	1734
	1736
	1738
	1740
	1742
	1759
	1764
	1765
	1766
	1767
	1768
	1781
	1783
	1784
	1785
	1786
	1787
	1789
	1791
	1792
	1794
	1795
	1797
	1799
	1800
	1801
	1803
	1805
	1807
	1808
	1810
	1811
	1812
	1813
	1814
	1815
	1816
166-1487	1724
	1726
	1728
	1730
	1732
	1734
	1736
	1738
	1740
	1742
	1762
166-1492	953
	965
166-1494	927
	929
	931
	933
	935
	937
	938
	944
	946
	949
	954
	957
	961
	966
	967
	969
	972
	974
	976
	978
	980
	982
	984
	986
	989
	991
	993
	995
	997
	999
	1003
	1004
	1759
	1764
	1765
	1766
	1767
	1768
	1783
	1784
	1785
	1786
	1787
	1789
	1794
	1799
	1800
	1801
	1803
	1805
	1808
	1810
	1811
	1812
	1813
	1814
166-1495	940
	942
	951
	955
	963
	1724
	1726
	1728
	1730
	1732
	1734
	1736
	1738
	1740
	1742
	1762
	1764
	1766
	1768
	1781
	1783
	1784
	1785
	1786
	1787
	1789
	1791
	1792
	1794
	1795
	1797
	1799
	1800
	1801
	1803
	1805
	1807
	1808
	1810
	1811
	1812
	1813
	1814
	1815
	1816
166-1512	866
166-1579	1748
	1750
166-3152	1748
167-3437	479
	482
167-3438	479
	482
167-3441	▶477
	479
	482
	493
	494
	496
167-3456	479
	482
	494
	496
167-3466	1311
	1353
	1382
167-3487	571
167-3542	552
	564
	565
	570
	572
	577
	634
	635
	2144
	2197
	2205
	2206
167-3543	552
	564
	565
	570
	572
	634
	635
	2144
	2197
	2205
	2206
167-3593	564
	570
167-3630	571
167-3631	571
167-7018	1977
	1981
	2007
167-7036	2266
167-7037	2266
167-7038	2092
	2095
167-7039	2088
	2090
	2092
	2095
	2098
167-7042	1977
	1981
	2007
167-7055	2115
167-7141	2118
167-7270	2301
	2306
	2311
	2316
	2321
	2326
	2331
	2336
167-8853	2184
167-8987	586
168-0765	1649
168-0792	256
168-0794	1619
	1625
168-1351	1918
168-1359	1923
168-1969	1202
	1204
168-2628	1759
168-2629	1759
168-6761	888
	889
168-8451	649
	653
	662
168-9523	1072
168-9759	1269
	1273
	1277
	1281
	1379
168-9760	1068
168-9762	1071
169-7409	182
170-0848	1582
170-2512	▶549
	643
170-2901	301
	303
	307
	310
	313
	316
	319
	323
	326
170-3015	721
	722
	724
	727
	846
170-3016	763
	768
	773
	779
	785
	791
	797
	803
	809
	813
	817
	821
	823
170-6888	564
	570
170-6890	571
170-6891	571
	581
170-6929	403

▶ **PRIMARY REFERENCE**

PART NUMBER INDEX

Part	Page
	405
	412
	419
	427
	435
170-6993	475
	476
170-9294	84
	▶481
170-9295	481
	484
170-9324	513
	515
	517
170-9336	405
	412
	419
170-9360	676
170-9394	565
	572
170-9417	475
	476
170-9418	475
	476
170-9492	2257
170-9497	▶2080
	2187
170-9498	2080
170-9499	2080
170-9722	2258
	2259
	2269
170-9724	1973
	1975
	1985
	1987
170-9840	1009
170-9841	1011
170-9856	1009
170-9857	1011
170-9938	1009
170-9941	1009
171-0023	1702
	1705
171-0031	1660
171-0034	1656
	1657
	1660
171-0035	1656
	1660
	1665
	1668
	1671
	1672
171-0036	1656
	1660
	1665
	1668
	1671
	1672
171-0037	1656
	1657
	1660
	1665
	1666
	1668
	1669
	1671
	1672
171-0087	1619
	1625
	1630
	1632
	1633
	1634
171-0123	1641
	1642
171-0124	1641
	1642
171-0126	1641
	1642
171-0127	1641
	1642
171-0128	1641
	1642
171-0150	1534
	1536
171-0183	1677
171-0184	1677
171-0185	1677
171-0188	1339
	1342
	1346
	1349
	1353
	1357
	1361
	1365
	1368
	1372
	1382
	1387
	1397
	▶1692
171-0198	▶1684
	1692
171-0596	1213
	1217
	1221
	1225
	1250
	1299
	1301
	1433
171-2208	506
	508
	510
171-2210	506
	508
	510
171-3254	265
171-3369	206
	208
	210
	212
	214
	216
	218
	222
	225
	227
171-5956	1894
171-6723	1404
	1407
171-7325	1952
	1953
	2036
171-7413	2267
171-7414	2267
171-7420	1973
	1975
	1985
	1987
171-7426	1977
	1981
	2007
171-7477	2125
171-7485	85
	2110
	▶2116
171-7503	1959
	1963
	1967
	1971
	1989
	2001
	2003
	2005
	▶2269
171-9073	272
171-9077	206
	208
	210
	212
	214
	216
	218
	222
	225
	227
	229
171-9383	1026
171-9464	754
171-9892	257
	264
172-2939	1718
	1723
	▶1748
172-4432	1532
172-8402	▶1019
	1894
172-8406	1019
172-8487	1019
172-9966	1444
173-1016	338
173-3384	1046
	1050
	1054
	1056
	1060
	1065
173-3397	1046
	1050
	1054
	1056
	1060
	1065
173-3398	1045
	1049
	1056
	1060
173-3406	1024
173-3413	1046
	1050
	1054
	1056
	1060
	1065
173-3427	1500
173-3428	1500
173-3436	1024
173-3439	1469
	1472
	1476
	1478
173-3440	1469
	1472
	1476
	1478
173-3441	1469
	1472
	1476
	1478
173-3442	1469
	1472
	1476
	1478
173-3443	1469
	1472
	1476
	1478
173-3444	1469
	1472
	1476
	1478
173-3445	1469
	1472
	1476
	1478
173-3447	1469
	1472
	1476
	1478
173-3450	1469
	1472
	1476
	1478
173-3451	1469
	1472
	1476
	1478
173-3452	1468
	1471
	1474
	1475
	▶1649
173-3454	1469
	1472
	1476
	1478
173-3473	1500
173-3496	1500
173-3498	1500
173-3503	▶905
	1035
173-3505	905
173-3506	905
173-3507	1035
173-3510	1035
173-3513	1037
173-3515	1037
173-3516	1037
173-3517	1037
173-3518	1035
173-3529	1037
173-3536	▶1650
	1709
	1710
	1712
173-4664	1169
	1172
	1175
	1179
	1183
	1187
	1190
	1194
173-4816	1262
	1265
173-4834	1403
173-5089	1452
173-7895	1084
	1089
	1105
	1106
173-7916	1078

▶ PRIMARY REFERENCE

PART NUMBER INDEX

Part	Page
	1080
	1082
	1086
	1091
	1093
	1097
	1099
173-7995	1082
	1086
173-8093	1105
	►1517
174-0503	586
	604
174-3016	406
	420
	428
	565
	571
	604
174-4874	659
	672
174-4875	672
174-5415	259
	261
174-7791	475
	476
174-8029	1903
174-9570	►295
	301
	303
175-4430	1682
176-1902	2152
	2156
176-1916	2028
	2030
	2032
176-1925	2116
176-1928	2111
	2113
	2116
176-1931	2255
176-1932	2257
176-1937	1977
	1981
	2007
176-1938	1977
	1981
	2007
176-1939	1977
	1981
	2007
176-1941	2151
176-1942	1977
	1981
176-1946	1973
	1975
176-1947	1973
	1975
176-1949	2126
176-1951	2267
176-1952	2267
176-1953	2267
176-1954	2267
176-1955	2267
176-1956	2267
176-1957	2267
176-1958	1959
	1963
	1967
	1971
	1989
	2001
	2003
	2005
	►2263
176-1964	2085
	►2092
	►2095
176-1972	1973
	1975
	1985
	1987
176-1986	1977
	1981
	2007
176-1996	2101
176-2278	1724
	1726
	1728
	1730
	1732
	1734
	1736
	1738
	1740
	1742
176-2688	2287
176-2815	2285
176-4366	1325
	1328
176-4463	1287
	1291
	1295
176-4469	1287
	1291
	1295
176-4472	1287
	1291
	1295
176-4684	1325
	1328
176-4708	1285
176-4743	1299
	1301
	1303
176-4755	1291
	1295
176-4768	1287
176-4770	1420
	1422
176-9299	420
	428
	571
	604
177-1061	1427
	1429
	1431
177-2215	421
	430
177-2470	1500
177-2471	1500
177-2553	1037
177-2584	1469
	1472
	1476
	1478
177-2585	1024
177-2611	944
	946
	949
	957
	961
	967
177-2619	905
177-2653	1169
	1172
	1175
	1178
	1182
	1186
	1190
	1194
	►1651
	1652
	1653
177-2713	1518
177-3941	626
177-3942	626
177-3943	626
177-5739	721
	722
	724
	727
177-5877	762
177-5879	762
177-5880	762
177-6315	2166
177-7707	585
	586
177-8506	1095
177-8572	1101
	1156
177-8628	►1770
	1892
	1893
177-9778	301
	303
178-0852	679
	681
	751
178-2334	528
178-2335	528
178-2345	►528
	529
178-5422	2028
	2030
	2032
178-5423	2028
	2030
	2032
178-5431	2255
178-5500	2257
178-5549	84
	85
	►2110
178-5569	2263
178-5570	1977
	1981
	2007
178-5572	2265
	2266
178-5573	2088
	2090
	2092
	2095
	2098
	2265
	2266
178-5574	2088
	2090
	2092
	2095
	2098
	2265
	2266
178-5576	2259
178-5659	2220
	2221
	2224
	2225
178-6450	206
	208
	210
	212
	214
	216
	218
	222
	225
	227
	229
178-6537	135
178-6538	135
178-6543	146
178-6544	146
178-6545	146
178-6552	273
178-6554	273
	280
	282
	284
178-6563	186
178-6577	449
178-6598	138
178-6599	138
178-6600	138
178-6601	138
178-6633	204
178-6634	204
178-6635	204
178-6636	204
179-4324	501
179-5005	1086
179-5006	1086
179-5030	1109
	1113
	1115
179-5260	1084
	1089
179-7400	338
179-7433	1331
179-7456	1321
179-7467	1437
179-7578	1317
	1319
179-7616	1352
	1356
	1381
	1386
179-7662	1207
	1210
179-7863	1262
	1265
179-7867	1262
	1265
179-9667	1022
179-9674	1007
	1013
	1017
179-9681	1045
179-9682	1056
179-9763	1500
179-9806	1037
180-3861	475
	476
180-7521	678
	679
	681
180-7525	678
	679
	681
180-7529	678
	679
	681
180-7533	678
	679

► **PRIMARY REFERENCE**

PART NUMBER INDEX

Part	Page
	681
180-9286	1404
	1407
183-1035	481
	484
183-1049	405
	412
	419
	427
183-5916	126
183-8176	142
	144
183-8177	142
	144
183-8224	290
	293
184-3833	1518
184-3906	1178
	1186
184-3983	256
	263
184-5724	679
	681
	751
184-8423	763
	768
	773
	779
	785
	791
	797
	803
	809
	813
	817
184-8580	829
	830
	846
184-8722	702
	703
	704
	705
	706
	707
	708
	709
	710
	711
	712
	713
	714
	715
	716
	717
	718
	719
	720
184-8862	738
184-9156	1325
	1328
184-9216	1411
	1414
	1417
184-9253	1108
184-9254	1108
184-9256	1108
184-9257	1108
184-9336	1269
	1273
	1277
184-9469	1213
	1217
	1221
185-0169	1046
	1050
	1054
	1056
	1060
	1065
185-0194	959
185-0201	1046
	1050
	1054
	1056
	1060
	1064
185-0334	927
	929
	931
	933
	935
	938
185-0383	1269
	1273
	1277
185-0400	1593
185-0407	1684
185-0423	1641
	1642
185-0462	1269
	1273
	1277
	1281
	▶1685
185-0463	1685
185-0490	1530
	▶1593
185-2791	177
185-2793	177
185-8161	2028
	2030
	2032
185-8180	2088
	2090
	2092
	2095
	2098
185-8182	1967
	1989
	2001
	2003
	2005
	2259
185-8187	1967
	1989
	2001
	2003
	2005
	2259
185-8196	1977
	1981
	2007
185-8205	1973
	1975
	1985
	1987
185-8214	1973
	1975
	1985
	1987
185-8221	2259
185-8280	2151
185-8281	2151
185-8284	1943
	2034
185-8286	538
	1952
	1953
185-8290	2274
185-8293	2152
	2156
185-8300	1944
	1947
	1950
	2059
185-8302	1944
	1947
	1950
185-9208	513
	515
	517
	519
	521
	523
186-3735	357
	358
	360
	361
	364
	366
	368
	370
	373
	375
	377
	379
	381
	383
	385
	386
	390
	392
	394
	399
	482
	484
	519
	528
	538
	540
	541
	620
	623
	629
	1699
	1700
186-3736	528
186-5649	1762
186-5662	1762
187-0661	2301
	2306
	2311
	2316
	2321
	2326
	2331
	2336
187-5589	1202
	1204
187-5669	1394
187-5693	▶1136
	1775
	1776
	1777
	1778
	1779
	1780
187-5853	1207
	1210
187-5954	1073
187-5975	▶1137
	1775
187-5976	▶1138
	1775
	1779
187-6058	1143
	1145
	1151
	1152
187-6696	1138
	1150
187-6720	1213
	1217
	1221
	1225
	1229
187-6851	1213
	1217
	1221
	1225
	1229
187-6974	1213
	1217
	1221
	1225
	1229
187-7051	1213
	1217
	1221
	1225
	1229
187-7070	1287
	1291
	1295
187-7077	1213
	1217
	1221
	1225
	1229
187-9977	1095
	1101
	1103
187-9978	1095
	1101
	1103
187-9981	1095
	1101
	1103
188-2315	1764
188-3064	873
	874
188-4140	▶1035
	1508
188-4142	1035
	▶1037
188-4143	1037
188-4181	972
	974
	976
	978
	980
	982
	984
	989
	991
	993
	995
	997
	999
	1004
188-7536	338
188-7541	338
189-2678	1973
	1975
	1985
	1987

PART NUMBER INDEX

Part	Page
189-2690	2088
	2090
	2092
	2095
	2098
189-2693	2125
189-2694	2125
189-2702	2263
189-2704	1977
	1981
	2007
189-2711	2088
	2090
189-2716	2125
189-2717	2126
189-2768	1959
	1963
	1971
	▶2084
189-2793	1967
	▶2085
189-2796	2085
	2087
	2100
189-2847	2124
	2126
189-2849	2124
	▶2125
189-2853	1985
	1987
189-2854	1985
	1987
189-2855	1973
	1975
	1985
	1987
189-2864	1978
	1982
	2007
189-3396	1977
189-3409	1977
	1981
189-3925	1762
189-9377	180
189-9763	1046
	1050
	1054
	1056
	1060
	1064
	1500
190-3523	873
	874
190-3524	873
	874
190-4896	1045
	1056
	1500
190-5386	2301
	2306
	2311
	2316
	2321
	2326
	2331
	2336
190-5830	290
	293
190-6880	763
	768
	773
	779
	785
	791
	797
	803
	809
	813
	817
190-7673	1046
	1050
	1054
	1056
	1060
	1064
190-7674	1045
	1049
	1053
	1056
	1060
	1064
190-7750	1619
	1625
	1632
	1633
190-7751	1619
	1625
190-7819	1622
190-7826	1518
	1519
190-7865	1609
	1611
190-9775	289
191-2578	1026
191-3235	649
	653
	659
	662
	672
191-3236	649
	653
191-5537	▶1024
	1025
191-5539	1024
191-5540	1024
191-5541	1024
191-5542	1468
	▶1469
191-5543	1469
	1472
	1476
	1478
191-5601	1024
191-5707	1045
	1049
	1053
	1056
	1060
	1064
191-5709	1500
191-8921	2164
192-0573	1500
192-3039	709
	711
	716
	718
193-1736	1500
193-2764	2021
	2023
193-2765	2021
	2023
193-3973	182
193-5014	1818
193-5015	1818
193-6606	1082
	1086
193-9696	358
	361
	392
194-0027	1233
	1237
194-0174	▶1068
	1167
194-0176	1068
	▶1069
194-0180	▶1070
	1167
194-0181	1070
	▶1071
194-0182	1070
	▶1072
194-1608	▶873
	893
	894
	896
194-1609	▶874
	894
	895
	896
194-1910	4
	6
	8
	9
	11
	12
	14
	15
	23
	24
	26
	27
	34
	35
	43
	44
	45
	50
	51
	52
	54
	55
	60
	62
	63
	68
	89
	91
	93
	94
	96
	97
	▶893
194-1911	5
	7
	29
	36
	58
	59
	72
	73
	▶893
194-1912	892
	▶893
194-1914	13
	18
	20
	33
	56
	64
	▶894
194-1915	▶894
194-1917	▶894
194-1920	12
	16
	17
	18
	19
	20
	21
	22
	28
	31
	32
	33
	38
	39
	40
	41
	42
	46
	47
	48
	49
	56
	57
	64
	65
	66
	67
	70
	71
	▶895
194-1921	892
	▶895
194-8031	2083
194-8353	969
	986
	1001
194-8354	969
194-8355	969
	986
	1001
194-8356	969
	1001
194-8359	969
	972
	974
	976
	978
	980
	982
	984
	986
	989
	991
	993
	995
	997
	999
	1001
	1004
194-8380	1443
194-9041	1213
	1217
	1221
	1225
	1229
195-0090	1517
195-5081	1840
	▶1918
195-7216	1890
	▶1905
195-8212	126
195-8225	135
195-8322	189
195-8351	186

▶ **PRIMARY REFERENCE**

PART NUMBER INDEX

Part	Page
195-9181	▶1923
196-0711	1491
196-0807	1262
	1265
196-0877	1427
	1429
	1431
196-1569	2111
	2113
	2116
196-1571	2111
	2113
	2116
196-1572	2111
	2113
	2116
196-1599	2111
196-1666	2059
196-3784	1635
196-8217	290
196-8366	135
	142
	144
	189
	190
197-0196	1459
	1460
197-0199	1459
	1460
197-0252	1702
	1705
197-0273	1459
	1460
197-2362	1103
197-4330	508
	629
197-4385	604
	628
	636
	645
	647
198-2003	1161
198-3899	1934
	2246
	2247
	2248
	2249
	2250
	2251
198-8464	1842
	▶1919
199-1286	1167
199-1609	1381
	1386
199-1773	1213
	1217
	1221
	1226
	1230
	1250
	1254
	1258
199-1863	1392
199-1914	1360
199-1965	1287
	1291
	1295
199-2045	1404
	1407
199-2178	142
	144
199-2187	173
	175
199-2188	173
	175
199-2189	173
	175
199-2241	290
199-4561	1026
199-7394	1262
	1265
199-7398	833
199-7403	1262
	1265

2

Part	Page
200-3244	1045
	1049
	1053
	1056
	1060
	1064
200-3245	1045
	1049
	1053
	1056
	1060
	1064
200-3246	1045
	1049
	1053
	1056
	1060
	1064
200-3255	1045
	1049
	1053
	1056
	1060
	1064
200-3327	1495
	1496
200-3333	1500
200-3334	1500
200-3365	910
	▶1495
	▶1496
200-6345	182
201-3665	1894
201-3888	2014
	2016
201-4391	2088
	2090
	2092
	2095
	2098
201-4417	1977
	1981
	2007
201-4530	1977
	1981
	2007
201-4534	2111
	2113
	2116
201-4535	2111
	2113
201-9263	1547
	1552
	1557
	1562
	1570
	1574
	1578
	1583
	1588
201-9299	1037
201-9329	▶1518
	▶1519
	1524
	1525
201-9352	1593
	▶1654
201-9353	▶1640
	1654
201-9378	1424
	1425
	1426
201-9379	1333
	1336
202-0901	627
202-0943	2184
202-1713	1250
	1254
	1258
202-3855	1117
202-3856	1117
202-3857	1117
202-3858	1117
202-3915	1084
	1089
	1106
	1109
	1111
	1113
	1115
202-4004	1285
	1287
	1291
	1295
202-6996	1117
202-7127	1082
	1086
202-7128	1082
	1086
202-9871	307
	310
	313
	316
	319
203-4889	763
	768
	773
	779
	785
	791
	797
	803
	809
	813
	817
203-4890	763
	768
	773
	779
	785
	791
	797
	803
	809
	813
	817
204-1611	554
	589
204-1673	403
	435
204-2281	1293
	1296
	1342
	1349
	1356
	1386
204-2755	▶1655
	1714
204-2762	1037
204-2763	905
204-2800	1498
	1499
204-2819	1465
	▶1714
204-3461	465
	466
	▶626
204-3622	927
	931
	938
	944
	949
	967
204-3623	972
	974
	978
	982
	984
	1004
204-3663	833
204-3737	1169
	1172
	1175
204-3796	1524
204-8137	1169
	1172
	1175
205-0826	472
	519
	521
	523
205-1339	2048
	2050
205-1340	2048
	2050
205-6295	1977
	1981
	2007
205-6388	2215
	2217
205-6788	132
205-8257	519
206-3305	▶1619
	2064
	2065
	2066
	2067
206-3336	▶1622
	2060
	2061
	2062
206-5208	521
	523
207-0144	1959
	1963
	1967
	1971
	1989
	2001
	2003
	2005
	▶2258
207-0159	2110
	▶2122
207-0160	2110
	▶2123
207-0161	2122

PART NUMBER INDEX

Part	Page
207-0164	2122
	2123
207-0167	2122
	2123
207-0170	2122
	2123
207-0173	2122
	2123
207-0176	2123
207-0216	2111
	2113
207-6222	1172
	1175
	1178
	1182
	1186
	1190
	1194
207-6403	1508
207-6404	1508
207-6449	1424
207-6666	1073
207-6667	1073
208-4289	734
	737
	739
	740
	741
	742
	743
	746
209-0348	2248
	2249
209-4280	2247
209-5582	510
	▶539
	540
209-5894	1480
	1484
	1488
209-5909	1480
	1484
	1488
209-5920	1714
	1717
209-5957	940
	951
209-5992	1465
	1466
	1467
	▶1480
	▶1484
209-6000	1505
209-6009	969
209-6049	1480
210-5808	1977
	1981
210-5827	2253
210-5828	2253
210-5829	2253
210-5834	2253
210-5836	2253
210-5837	2253
210-5838	2253
210-8012	268
210-8117	220
	231
	234
	236
	241
	243
	246
210-8128	220
	231
	234
	236
	241
	243
	246
210-9966	1158
212-2838	749
	751
212-5148	1169
	1172
	1175
	1178
	1182
	1210
212-5419	1352
	1356
212-5423	1352
	1356
	1381
	1386
212-8475	130
212-8489	273
212-8521	401
212-8561	111
	138
	▶401
212-8571	135
212-8572	135
212-8584	148
	151
	153
	155
	157
	159
	163
	165
212-8585	148
	157
	159
	165
212-8593	153
	155
	157
	159
	161
	167
	169
	200
	201
212-8596	149
	151
	155
	159
	161
	167
	169
	200
	201
212-8613	401
213-0677	142
	144
	1508
213-0772	564
	570
	645
	647
213-3745	1233
	1237
213-9100	400
213-9433	151
	163
	290
	293
214-1048	197
214-4400	1041
214-4401	1042
214-4421	1250
	1254
	1258
214-4501	974
	991
	997
214-4511	▶1041
	1167
214-4512	▶1042
	1420
214-4518	1041
214-4519	1042
214-4531	2287
214-4532	2287
214-7568	1161
	1342
	1349
	1372
	1375
	1398
214-7915	2301
	2306
	2311
	2316
	2321
	2326
	2331
	2336
215-4890	1213
	▶1520
215-4909	1033
215-5037	1287
	1291
	1295
	▶1458
215-9952	▶1488
215-9961	1045
	1049
	1053
	1056
	1060
	1064
215-9962	1045
	1049
	1053
	1056
	1060
	1064
215-9982	651
	652
	661
	667
	▶1465
	▶1466
216-4970	506
	508
	510
216-6485	1103
	1105
216-6589	1082
	1086
216-6676	1039
216-6677	1039
216-6678	1039
216-6682	1750
217-4890	▶1931
217-4891	1838
	1839
	1842
	▶1912
217-4892	▶1922
217-4893	1840
	1842
	1880
	1881
	1882
	1890
	▶1924
217-4894	▶1929
217-4895	▶1911
217-4896	1835
	▶1914
217-5469	187
	188
217-5589	190
218-0404	472
218-1061	1401
218-1139	1169
	1172
	1175
	1178
	1182
	1186
	1190
	1194
218-5199	678
	679
	681
219-0305	2116
	2118
	2120
219-6314	472
219-8468	860
	861
219-8469	862
	863
220-8678	295
	307
	310
	313
	316
	319
220-9081	1913
220-9083	1925
220-9084	1845
	1872
	1873
	1877
	1878
	1879
220-9085	1845
	1872
	1873
220-9086	1845
	1872
	1873
220-9090	1911
	1912
	1913
	1914
	1922
	1924
	1925
	1926
	1929
	1931
220-9091	1912
220-9092	1922
220-9093	1924
220-9094	1820
	1821
	1826
	1827
	1846
	1848
	1856
	1857
	1858
	1859

▶ **PRIMARY REFERENCE**

PART NUMBER INDEX

Part	Page
	1860
	1861
	1862
	1864
	1866
	1868
	1869
	1870
	1874
	1875
	1883
	1884
	1885
	1886
	1887
	1888
	1889
	1891
220-9095	1874
	1875
220-9096	1874
	1875
220-9097	1929
220-9099	1914
220-9103	1926
220-9104	1849
220-9128	1871
	▶1903
221-4807	1367
	1371
221-4883	1285
	1323
221-8045	2301
	2306
	2311
	2316
	2321
	2326
	2331
	2336
221-8813	▶2171
	▶2172
	2187
221-8859	1213
	1217
	1221
	1225
	1250
	1299
	1301
	1433
221-8861	73
	74
	▶457
221-8872	▶450
	2187
221-8884	▶2046
	▶2047
	2187
222-0084	1651
	▶1656
222-0085	1656
	1668
	1672
222-0124	1128
	1130
222-0126	1127
	1129
222-0225	2051
	2053
222-1090	1931
222-4087	1161
222-4088	1161
222-4737	1547
	1552
	1557
	1570
	1574
	1578
222-8238	190
222-8292	135
222-8371	153
223-3040	1
	2
	▶675
223-3041	675
	▶676
223-3042	1
	2
	▶747
223-4296	2178
223-4453	275
	▶540
223-6768	1381
223-7050	1161
223-9818	2301
	2306
	2311
	2316
	2321
	2326
	2331
	2336
224-0554	2301
	2306
	2311
	2316
	2321
	2326
	2331
224-1685	1039
224-1687	▶1039
	1427
	1429
	1431
224-8946	2301
	2306
	2311
	2316
	2321
	2326
	2331
	2336
225-0312	2301
	2306
	2311
	2316
	2321
	2326
	2331
	2336
225-4257	2301
	2306
	2311
	2316
	2321
	2326
	2331
	2336
225-4543	1500
225-4544	1500
225-4548	1506
225-4549	1506
225-4588	924
	▶969
225-4590	▶918
	1753
225-4591	918
	▶940
225-4592	918
	920
	921
	▶1140
225-4598	▶918
	1754
225-4599	918
	▶942
225-4607	1045
	1049
	1053
	1056
	1060
	1064
225-4785	1131
	▶1595
	▶1598
225-4787	1595
	1598
	1601
	1603
225-4789	1526
	1595
	1598
	1601
	1603
225-4790	1526
	1595
	1598
	1601
	1603
225-4791	1526
	1595
	1598
	1601
	1603
225-4792	1526
	1595
	1598
	1601
	1603
225-4793	1526
	1595
	1598
	1601
	1603
225-4796	1526
	1595
	1598
	1601
	1603
225-4797	1526
	1595
	1598
	1601
	1603
225-4803	1526
	1595
	1598
	1601
	1603
225-4804	1459
	1521
	1526
	1562
	1583
	1588
	1595
	1598
	1601
	1603
	1605
	1607
	1609
	1611
225-4815	1619
	1625
	1632
	1633
225-4816	1619
	1625
225-4818	1459
	1526
	1562
	1583
	1588
	1595
	1598
	1601
	1603
	1605
	1607
	1609
	1611
225-4820	1526
	1595
	1598
	1601
	1603
225-4821	1526
	1595
	1598
	1601
	1603
225-4830	1526
	1595
	1598
	1601
	1603
225-4831	1526
	1595
	1598
	1601
	1603
225-4832	1526
	1595
	1598
	1601
	1603
225-4833	1526
	1595
	1598
	1601
	1603
225-4843	1438
	▶1601
	▶1603
225-5707	2153
	2156
225-5714	2153
	2156
	2159
226-3065	1086
226-9169	526
226-9258	2184
227-0265	1268
227-0581	1262
	1265
227-0590	1508
227-0620	▶1043
	1508
227-6034	649
	653
	659
	662

PART NUMBER INDEX

Part	Page
	672
227-6035	▶649
	651
227-6071	753
227-6081	▶753
	754
227-6105	754
227-6106	754
227-6147	▶754
	856
227-6166	673
	▶1031
227-6215	1028
	1029
227-6221	1028
	1029
227-6228	1026
227-6884	1443
	1444
227-6913	▶651
	673
227-7575	564
	570
227-7581	10
	▶472
227-7617	2055
227-7625	2046
	2047
227-8807	▶904
228-2781	2301
	2306
	2311
	2316
	2321
	2326
	2331
	2336
228-5463	678
	679
	681
228-5614	1791
	1792
	1807
228-5615	940
	942
	951
	955
	963
	1742
	1762
	1773
	1791
	1792
	1807
	1810
228-7092	180
	182
228-7316	2301
	2306
	2311
	2316
	2321
	2326
	2331
	2336
228-9254	2301
	2306
	2311
	2316
	2321
	2326
	2331
	2336
229-0887	2301
	2306
	2311
	2316
	2321
	2326
	2331
	2336
229-1009	1009
229-1091	1781
	1795
	1797
229-1092	1760
229-1095	1781
	1795
	1797
229-1096	1771
	1773
	1774
	1783
	1784
	1785
	1786
	1787
	1789
	1794
	1799
	1800
	1801
	1803
	1805
	1808
	1810
	1811
	1812
	1813
	1814
	1815
229-1785	335
	▶339
	▶341
229-1857	339
229-1859	▶334
	339
	341
229-1860	339
	341
229-1861	339
	341
229-3218	290
	307
	310
	313
	316
	319
229-6138	627
229-6964	1836
	1837
	▶1913
229-6966	1836
	1841
	▶1925
229-6975	1840
	▶1926
229-9070	11
	12
	16
	17
	18
	19
	21
	22
	23
	24
	28
	29
	31
	32
	34
-55	
	57
	58
	59
	60
	61
	62
	63
	65
	66
	67
	68
	69
	70
	71
	72
	73
	75
	76
	77
	78
	79
	89
	91
	93
	94
	95
	96
	97
	98
	99
	▶2255
229-9075	2192
	▶2228
229-9076	▶2219
	2228
	2230
229-9077	2228
	2229
	▶2242
229-9078	2187
	▶2189
229-9082	1943
	▶2101
	2136
229-9084	▶2130
	▶2132
	▶2134
	2136
229-9086	4
	5
	6
	7
	8
	9
	10
	13
	14
	15
	25
	26
	27
	30
	75
	76
	▶2273
229-9087	▶2271
	2273
229-9088	▶2257
	2273
229-9089	2194
	▶2229
229-9090	▶2220
	2229
	2232
229-9093	▶2221
	2233
229-9094	▶2127
	2220
	2221
229-9095	2230
	2231
	▶2243
229-9096	▶1957
229-9097	1957
	▶1959
229-9098	4
	5
	6
	7
	10
	77
	89
	▶1961
229-9099	1961
	▶1963
229-9100	▶1965
229-9101	1965
	▶1967
229-9108	8
	9
	▶1969
229-9109	1969
	▶1971
230-0185	1169
230-0280	1758
	▶1781
230-1340	445
	448
	471
230-1341	445
	447
	448
	471
230-2979	105
	110
	191
	192
	193
	194
	▶195
	▶197
230-4009	406
	420
	428
	465
	565
	571
	581
	586
	609
	626
	627
	636
230-4011	406
	420
	428
	558
	565
	571
	606
	609
	625
	637

▶ **PRIMARY REFERENCE**

PART NUMBER INDEX

Part	Page
	639
	640
	645
	647
	2139
	2142
230-4012	1699
	1700
230-4013	406
	420
	428
	530
	531
	565
	571
230-5008	577
	581
	609
230-5010	406
	420
	429
	515
	517
	521
	523
	589
	592
	594
	596
	606
	609
	620
	623
	637
	643
	2144
231-1768	▶2144
231-1771	12
	17
	19
	20
	28
	29
	33
	36
	56
	57
	58
	59
	64
	71
	72
	73
	75
	76
	▶400
231-1827	405
	412
	419
	427
231-1836	▶606
	608
231-2295	406
	420
	429
	586
	609
	643
	2144
231-6805	986
231-6969	1028
232-0092	▶1932
232-2085	1877
	1878
	1879
232-2086	1877
	1878
	1879
232-2095	1826
	1827
	1846
	1848
	1856
	1857
	1858
	1859
	1860
	1861
	1862
	1864
	1866
	1868
	1869
	1870
	1883
	1884
	1885
	1886
	1887
	1888
	1889
	1891
232-2096	1826
	1827
	1846
	1848
	1856
	1857
	1858
	1859
	1860
	1861
	1862
	1864
	1866
	1868
	1869
	1870
	1883
	1884
	1885
	1886
	1887
	1888
	1889
	1891
232-2105	1849
232-2106	1849
232-2923	1844
232-4102	1288
	▶1641
232-4103	1202
	▶1528
232-4113	1520
	1521
232-4114	1521
233-1277	125
233-1279	533
	535
233-1280	533
	535
233-1281	533
233-5260	2047
	2060
	2061
	2062
234-1035	506
234-1037	506
	508
234-1038	506
	508
234-1097	564
	570
234-1122	636
234-1124	2144
234-1156	513
	515
	517
	519
	521
	523
234-1158	513
	515
	517
234-3927	1762
234-3928	1762
234-3930	1762
234-3931	1762
	1904
234-4440	1447
	1449
	1452
	1455
	▶1506
234-4452	1045
	1049
	1053
	1056
	1060
	1064
234-4453	1045
	1049
	1053
	1056
	1060
	1064
234-4492	1123
	1125
234-4573	969
	986
	1001
234-4574	969
	986
	1001
234-4576	969
234-4577	969
	1001
234-4578	969
	1001
234-4580	940
	942
	951
	955
	963
234-4581	940
	942
	951
	955
	963
234-4582	940
	942
	951
	955
	963
234-4583	940
	942
	951
	955
	963
234-4584	940
	942
	951
	955
	963
234-4585	940
	942
	951
	955
	963
234-4586	940
	942
	951
	955
	963
234-4587	940
234-4588	940
	942
	951
	963
234-4589	940
	942
	951
	955
	963
234-4591	1140
	1147
234-4592	1140
	1147
234-4629	1488
234-4796	186
234-6467	1959
	1971
	2005
234-6468	1973
	1975
	1985
	1987
234-6469	1973
	1975
	1985
	1987
234-6470	1973
	1975
	1985
	1987
234-6471	1973
	1975
	1985
	1987
234-6472	1973
	1975
	1985
	1987
234-6473	1973
	1975
	1985
	1987
234-6474	1973
	1975
	1985
	1987
234-6475	1985
234-6476	1973
	1975
	1985
	1987
234-6477	1973
	1975
	1985
	1987
234-6478	1985
234-6480	1973
	1975
	1985
	1987
234-6483	1973

PART NUMBER INDEX

Part	Page
	1975
	1985
	1987
234-6485	1973
	1975
	1985
	1987
234-6489	2265
234-6490	1973
	1975
	1985
	1987
234-6491	1973
	1975
	1985
	1987
234-6493	1967
	1989
	2003
234-6497	1973
	1975
	1985
	1987
234-6498	1973
	1975
	1985
	1987
234-6499	2081
234-6500	4
	5
	6
	7
	8
	9
	10
	11
	12
	13
	14
	15
	16
	17
	21
	22
	23
	24
	25
	26
	27
	28
	29
	30
	31
	36
	38
	39
	40
	41
	42
	43
	44
	46
	47
	48
	49
	50
	54
	55
	57
	58
	59
	62
	63
	65
	66
	67
	71
	72
	73
	75
	76
	77
	78
	79
	89
	91
	93
	94
	95
	96
	97
	98
	99
	►2082
234-6501	1957
	1961
	1965
	1969
	1991
	1993
	1995
	1997
	1999
	►2081
234-6502	2081
234-6521	1973
	1975
	1985
	1987
234-6547	1973
	1975
	1985
	1987
234-6548	1973
	1975
	1985
	1987
234-6549	1973
	1975
	1985
	1987
234-6550	1973
	1975
	1985
	1987
234-6579	1973
	1975
	1985
	1987
	2034
	2036
234-6580	2034
	2036
234-6593	2081
234-6594	1959
	1963
	1967
	1971
	1989
	2001
	2003
	2005
	►2274
234-6602	2034
234-6603	2036
234-6604	2034
234-6605	2036
234-6608	2034
	2036
234-6609	2034
	2036
234-6610	2034
	2036
234-6611	2036
234-6612	2036
234-6613	►538
	2036
234-6614	2036
234-6615	538
235-0723	1159
	1160
	►1894
235-7520	857
	858
235-7679	940
	942
	944
	946
	948
	949
	951
	953
	954
	955
	957
	961
	963
	965
	966
	967
	1760
	1783
	1784
	1785
	1786
	1787
	1789
	1791
	1792
	1794
	1799
	1800
	1801
	1803
	1805
	1807
	1808
	1810
	1811
	1812
	1813
	1814
	1815
	1816
235-7764	102
	103
	►844
	892
235-7769	940
	942
	944
	946
	949
	951
	961
	963
	1013
	1017
235-7770	969
	1001
235-8856	2187
	►2240
235-8857	2240
235-8862	2185
235-8873	1935
	1937
	1939
	2130
	2132
	2134
235-8874	1935
	1937
	1939
	1941
	2130
	2132
	2134
235-8875	1935
	1937
	1939
	1941
	2130
	2132
	2134
235-8876	2101
235-8877	2101
235-8878	2101
235-8879	2101
235-8880	2027
235-8891	2152
	2156
235-8893	2028
	2030
	2032
235-8894	2028
	2030
	2032
235-8908	1959
	1963
	1967
	►1973
	►1975
	1989
	2001
	2003
235-8909	1959
	1963
	1971
	1989
	2001
	2003
	2005
	►2265
235-8910	1959
	1963
	1967
	1971
	►1977
	►1981
	1989
235-8911	2266
235-8912	1977
	1981
	2007
235-8914	2034
	2036
235-8915	1967
	►2266
235-8916	1963
	2001
235-8917	1971
	►1985
	►1987
	2005
235-8922	1973
	1975

► **PRIMARY REFERENCE**

PART NUMBER INDEX

Part	Page
	1985
	1987
235-8923	1973
	1975
	1985
	1987
235-8928	1973
	1975
235-8929	1973
235-8930	1985
	1987
235-8932	2274
235-8933	1977
	1981
	2007
235-8950	1943
	1973
	1975
	1985
	1987
235-8951	1952
235-8952	1953
235-8965	2036
235-8966	2034
235-8969	▶2051
	2068
	2071
235-8970	▶2053
	2069
	2070
235-8974	2271
235-8996	1952
	1953
235-8997	1952
235-8998	1953
235-9001	1957
	1961
	1965
	1969
	1991
	1993
	1995
	1997
	1999
235-9003	4
	5
	6
	7
	8
	9
	10
	11
	12
	13
	14
	15
	16
	17
	21
	22
	23
	24
	25
	26
	27
	28
	29
	30
	31
	34
-55	
	57
	58
	59
	60
	61
	62
	63
	65
	66
	67
	68
	69
	70
	71
	72
	73
	75
	76
	77
	78
	79
	89
	91
	93
	94
	95
	96
	97
	98
	99
	▶1943
235-9004	▶1935
	▶1937
	▶1939
	1943
235-9005	1935
	1937
	1939
	1941
235-9012	2255
	2257
235-9014	2152
	2156
	2159
235-9015	2152
	2156
	2159
235-9020	▶2209
	2211
235-9028	2193
	▶2230
236-2843	1269
	1273
	1277
	1281
236-2844	1269
	1273
	1277
	1281
236-2848	1269
	1274
	1278
	1282
236-2970	1115
236-3200	1161
	1241
	1244
	1247
	1411
	1414
	1417
236-3212	▶1073
	1167
236-3213	▶1073
	1167
236-3214	▶1073
236-3215	▶1073
236-3257	1043
	1044
236-3258	1043
236-3259	1043
	1044
236-3670	676
236-3671	676
236-3702	747
236-3703	747
236-3746	▶734
	773
236-3747	734
	741
236-3748	734
	741
236-3749	734
236-6365	1759
	1760
	1764
	1765
	1766
	1767
	1768
236-6366	1765
	1766
	1767
	1768
	1770
236-6419	1530
	1534
	1536
	1538
	1541
	1544
	1547
	1552
	1557
	1562
	1570
	1574
	1578
	1583
	1588
236-6421	1538
	1541
	1544
	1547
	1552
	1557
	1562
	1570
	1574
	1578
	1583
	1588
236-6717	338
236-8341	856
	▶857
236-8357	857
236-8358	857
236-9435	676
236-9437	676
236-9438	676
236-9440	676
236-9570	747
237-0228	527
237-3106	1781
237-3184	6
	83
	84
	85
	▶1078
	▶1080
237-5586	846
238-0112	527
238-0118	527
238-0120	337
	527
238-1463	2144
238-1506	506
	510
238-1565	▶639
	1161
238-1570	335
	▶645
	▶647
238-1579	645
	647
238-1588	639
238-1593	645
238-1594	▶542
	645
	647
238-1595	542
238-1596	▶543
	645
	647
238-1597	543
238-1627	11
	12
	23
	24
	43
	44
	45
	▶482
238-1628	85
	▶484
238-2171	625
238-2208	▶552
	2273
238-2209	552
238-2210	552
238-2211	2197
	2205
	2206
238-2212	564
	570
238-2215	634
238-2216	2144
238-2260	2190
238-2279	506
	508
	510
238-2280	506
	508
	510
238-2319	565
	572
238-2324	508
	629
238-2325	508
	629
238-2326	482
	484
	494
238-2363	572
	637
238-2366	513
	515
	517
	519
	521
	523
	572
	637
238-2390	564

PART NUMBER INDEX

Part	Page
	570
238-2391	564
	570
238-2478	▶550
	551
238-2479	550
238-2485	▶551
	912
	1161
238-2501	403
	405
	412
	419
	427
	435
238-2528	403
	405
	412
	419
	427
	435
238-5084	182
239-1699	1077
	▶1123
	▶1125
239-1710	1077
	▶1510
239-1711	▶1508
	1510
239-1714	1077
	▶1167
239-1716	1077
	▶1447
	▶1449
239-1717	1077
	▶1452
	▶1455
239-1726	1034
	▶1427
	▶1429
	▶1431
239-1732	▶1108
	1718
	1723
239-2582	▶1835
239-2583	▶1820
	1835
239-2585	▶1835
239-2586	▶1821
	1835
239-2689	▶1836
239-2690	▶1822
	1836
239-2692	▶1836
239-2693	▶1823
	1836
239-2876	1820
	1822
239-4341	856
	▶869
239-4362	872
239-4378	890
239-4382	890
239-4383	890
239-4384	890
239-4385	869
	▶870
239-4386	869
	▶871
239-4387	870
	▶888
239-4388	871
	▶889
239-4389	888
	889
	▶890
239-4390	890
	▶891
239-4391	891
239-4392	891
239-4393	890
239-4394	891
239-6395	259
	261
239-6507	120
	▶2014
	▶2016
239-6604	273
239-6612	▶257
	259
239-6626	170
	172
239-6627	170
	172
239-6630	170
	172
239-6631	170
239-6632	170
	172
239-6986	2301
	2306
	2311
	2316
	2321
	2326
	2331
	2336
239-7352	606
	609
	622
	637
239-7356	465
	565
	572
	581
	586
	627
239-8677	4
	84
	▶1515
239-8679	▶1515
239-8693	907
	908
	▶2060
239-8695	907
	908
	▶2061
239-8696	906
	▶2048
239-8697	1458
	▶1459
239-8774	1570
	▶1657
239-8998	1458
	▶1460
239-9954	443
	▶453
240-2912	1759
	1764
	1765
	1766
	1767
	1768
240-2913	933
	938
	1771
	1773
	1774
	1783
	1784
	1785
	1786
	1787
	1789
	1794
	1799
	1800
	1801
	1803
	1805
	1808
	1810
	1811
	1812
	1813
	1814
	1815
240-2914	989
	991
	993
	1004
240-2915	959
240-2978	721
	722
	724
	727
240-2979	721
	722
	724
	727
240-2988	859
	864
240-2998	1495
	▶1498
240-3822	74
	▶856
240-3828	4
	5
	6
	7
	10
	32
	88
	89
	▶1719
240-3830	11
	12
	16
	17
	21
	22
	23
	24
	28
	29
	31
	32
	34
	35
	38
	39
	40
	41
	42
	43
	44
	45
	46
	47
	48
	49
	50
	51
	52
	54
	55
	57
	58
	60
	62
	63
	65
	66
	67
	68
	70
	71
	72
	85
	86
	88
	▶1719
240-3832	18
	86
	87
	▶1720
240-3833	88
	▶1718
240-3835	87
	▶1723
240-3836	8
	9
	14
	15
	19
	26
	27
	87
	▶1720
240-3839	▶1775
240-3843	▶1775
240-3845	▶1775
240-3846	87
	88
	▶1775
240-3849	4
	5
	7
	10
	86
	88
	▶1776
240-3851	▶1776
240-3854	8
	14
	19
	26
	28
	32
	34
	45
	51
	57
	60
	68
	71
	85
	87
	88
	▶1776
240-3858	16
	17
	21
	22
	28
	29

▶ **PRIMARY REFERENCE**

PART NUMBER INDEX

Part	Page
	31
	32
	34
	35
	38
	45
	50
	51
	52
	57
	58
	60
	68
	71
	72
	85
	88
	89
	▶1753
240-3861	8
	9
	14
	15
	18
	19
	26
	27
	86
	87
	▶1753
240-3881	28
	29
	57
	58
	71
	72
	▶1511
240-3882	6
	18
	32
	87
	89
	▶1777
240-3898	▶2277
240-3899	87
	88
	▶2278
240-3920	339
	341
240-4999	▶2192
240-5001	▶2193
240-5003	▶2194
240-5036	1935
	▶1944
	2130
240-5037	▶2210
240-5039	▶2211
240-5056	▶2195
240-5057	2195
	▶2231
240-5058	▶2222
	2231
240-5061	▶2196
240-5062	2196
	▶2232
240-5063	2232
	2233
	▶2244
	▶2245
240-5064	▶2197
240-5065	2197
	▶2233
240-5067	2055
240-5071	8
	11
	12
	13
	14
	16
	17
	18
	19
	21
	22
	25
	26
	28
	29
	30
	31
	32
	34
	36
	37
	38
	39
	40
	41
	42
	44
	45
	46
	47
	48
	49
	50
	51
	53
	55
	57
	58
	59
	60
	61
	63
	65
	66
	67
	68
	69
	70
	71
	72
	73
	82
	95
	98
	99
	▶2102
240-5073	9
	15
	27
	35
	52
	82
	▶2103
240-5074	2101
241-1933	846
241-1938	846
241-1999	101
	▶683
	684
	685
	686
241-2000	683
	▶702
	▶703
241-2001	702
241-2002	▶687
	688
	689
	1758
241-2003	687
	▶704
241-7282	1719
	1720
	1722
	▶1724
241-7283	1724
241-7286	1719
	1720
	1721
	1722
	1723
	▶1750
241-7287	1719
	1720
	1722
	▶1726
241-7288	1726
241-7291	1718
	1723
	▶1728
241-7292	1728
241-7296	1775
	▶1783
241-7300	1775
	▶1784
241-7301	▶1771
	1772
	1784
241-7303	1776
	▶1785
241-7304	1785
241-7306	1777
	▶1786
241-7309	1776
	▶1787
	▶1789
241-7312	1775
	▶1791
241-7313	1791
241-7315	1775
	▶1792
241-7316	1792
241-7319	1768
241-7321	1756
	▶1759
241-7322	1759
241-7325	1767
241-7379	927
	929
	931
	935
	1007
241-7380	927
	929
	931
	935
	1007
241-7381	972
	974
	976
	978
	980
	982
	984
	995
	997
	999
	1022
241-7382	944
	946
	949
	957
	959
	961
	967
	1013
	1017
242-1510	2301
	2306
	2311
	2316
	2321
	2326
	2331
	2336
242-1588	2301
	2306
	2311
	2316
	2321
	2326
	2331
	2336
242-6092	2301
	2306
	2311
	2316
	2321
	2326
	2331
	2336
242-6463	1776
	▶1794
242-6464	1794
242-6475	4
	5
	6
	7
	9
	10
	15
	27
	35
	52
	83
	85
	86
	▶1082
242-6476	4
	5
	10
	83
	86
	▶1084
242-6478	7
	79
	80
	▶1153
242-6479	84
	▶1086
242-6480	▶1089
242-6482	80
	▶1154
242-6483	▶1091
	▶1093
242-6484	▶1095
242-6486	▶1156
242-6487	4
	5
	7
	9
	10
	15

▶ **PRIMARY REFERENCE**

PART NUMBER INDEX

Part	Page
	27
	35
	52
	83
	85
	86
	▶1097
	▶1099
242-6488	4
	5
	10
	83
	86
	▶1101
242-6490	7
	79
	80
	▶1157
242-6492	83
	▶1103
242-6494	79
	80
	▶1158
242-6505	▶1109
	▶1111
	▶1113
	1515
242-6506	▶1115
	1515
242-6730	▶915
	1718
	1719
	1721
	1758
242-6731	915
	▶927
242-6732	915
	916
	917
	▶1127
242-6733	▶922
	1719
	1721
242-6734	922
	▶972
242-6735	922
	923
	924
	925
	▶1436
242-6736	▶915
	1718
	1719
	1721
	1758
242-6737	915
	916
	917
	▶1128
242-6743	▶922
	1719
242-6744	922
	▶974
242-6745	▶915
	1720
	1723
242-6746	915
	▶929
242-6747	▶923
	1720
242-6748	923
	▶976
242-6749	▶915
	1720
	1723
242-6750	▶923
	1718
242-6751	923
	▶978
242-6755	▶919
	1753
	1754
	1755
	1892
242-6756	919
	▶944
242-6757	919
	920
	921
	▶1141
242-6758	▶919
	1753
242-6759	919
	▶946
242-6762	▶923
	1723
242-6763	923
	▶980
242-6771	921
	▶1142
242-6801	1500
242-6803	1500
242-6804	1500
242-8768	2242
	2243
	2244
	2245
	2252
243-4505	341
	406
	420
	429
	486
	491
	510
	565
	572
	606
	609
	636
	637
	639
	640
	645
	647
	2018
	2144
	2159
243-4506	406
	420
	429
	565
	572
243-4507	581
	627
	637
243-4508	406
	420
	429
	467
	474
	546
	560
	592
	594
	596
	604
	606
	621
	622
	637
243-4509	406
	420
	429
	554
	556
	558
	581
	620
	623
	637
	643
	2144
243-4510	406
	420
	429
	554
	556
	558
	581
	586
	589
	609
	637
243-5362	586
244-1716	2083
244-1719	2276
244-1720	466
244-4254	1764
	1765
	1767
	1768
244-4255	1764
	1765
	1766
	1767
	1768
244-4277	1724
	1726
	1728
	1730
	1732
	1734
	1736
	1738
	1740
	1771
	1781
	1783
	1784
	1785
	1786
	1787
	1789
	1791
	1792
	1794
	1795
	1797
	1799
	1800
	1801
	1803
	1805
	1807
	1808
	1811
	1812
	1813
	1814
	1815
244-4360	1759
	1764
	1765
	1766
	1767
	1768
244-7927	738
244-7928	738
244-7929	737
	739
244-8194	683
	684
	685
	686
	687
	688
	689
	690
	691
	692
	693
	694
	695
	696
	697
	698
	699
	700
244-8198	763
	768
	773
	780
	785
	791
	797
	803
	809
	813
	817
	1429
	1431
244-8202	763
	768
	773
	779
	785
	809
	813
244-8207	763
	773
	779
	809
	813
244-8219	763
	773
	809
244-8228	763
	768
	773
	779
	785
	791
	797
	803
	809
	813
	817
244-8234	763
	768
	773
	779
	785
	791
	797
	803

▶ **PRIMARY REFERENCE**

PART NUMBER INDEX

Part	Page
	809
	813
	817
244-8242	763
	768
	773
	779
	785
	791
	797
	803
	809
	813
	817
244-8251	773
244-8255	763
	768
	773
	779
	785
	791
	797
	803
	809
	813
	817
244-8277	848
	849
	850
	851
	852
	853
	854
	855
244-8278	848
	849
	850
	851
	852
	853
	854
	855
244-8284	836
244-8288	848
	850
	851
	852
	854
244-8400	▶1529
	1530
	1534
	1536
244-8419	1513
	▶1530
244-8494	1619
	1625
244-8495	1619
	1625
244-8496	1619
	1625
244-8497	1620
	1626
244-8498	1619
	1625
244-8499	1619
	1625
244-8500	1619
	1625
244-8501	1620
	1626
244-8503	4
	5
	6
	7
	9
	10
	15
	27
	50
	▶1744
244-8504	1744
244-8506	1213
	1217
	▶1701
244-8507	1701
	▶1702
244-8522	1172
245-1042	406
	420
	429
245-1044	421
	429
245-1045	406
	421
	429
245-1048	421
	429
245-5079	1269
	1273
	1277
	1281
245-5285	1403
245-5287	1403
245-5402	1508
245-5416	1452
	1455
245-5427	1447
	1449
245-5457	2301
	2306
	2311
	2321
	2326
	2331
245-7749	2020
	2021
	2023
	2025
	▶2027
245-7750	2027
245-7751	2027
245-7756	2156
245-7757	2156
245-7758	2152
	2156
245-7760	564
	570
245-7790	1973
	1975
	1985
	1987
	2034
	2036
245-7791	2101
245-7792	2101
245-7793	2101
245-7794	4
	5
	10
	23
	24
	43
	54
	62
	77
	78
	79
	82
	89
	91
	93
	94
	96
	97
	▶2104
245-7795	▶2105
245-7796	▶2106
245-7811	1
	2
	▶2185
245-7813	2059
245-7814	2059
245-7815	2059
245-7816	2059
245-7817	1944
	1947
	1950
245-7818	1944
	1947
	1950
245-7819	1944
	1947
	1950
245-7820	1944
	1947
	1950
245-7823	1944
	1947
	1950
245-7824	1944
	1947
	1950
245-7825	1944
	1947
	1950
245-7826	1944
	1947
	1950
245-7827	1944
	1947
	1950
245-7828	1944
	1947
	1950
245-7829	1944
	1947
	1950
245-7830	1944
	1947
	1950
245-7831	1944
	1947
	1950
245-7832	1944
	1947
	1950
245-7833	1944
	1947
	1950
245-7834	1944
	1947
	1950
245-7835	1944
	1947
	1950
245-7836	1944
	1947
	1950
	▶2010
245-7837	2010
	2012
245-7838	1944
	1947
	1950
245-7839	1944
	1947
	1950
245-7842	2051
245-7844	2053
245-7846	1944
	1947
	1950
	▶2059
245-7847	1944
	1947
	1950
245-7850	2152
	2156
245-7851	2152
	2156
245-7856	1944
	1947
	1950
245-7858	2130
	2132
	2134
245-7872	2101
245-7873	2101
245-7881	75
	76
	▶2191
245-7882	2222
245-7883	2219
245-7884	2220
245-7885	2221
245-7886	1934
245-7887	2219
	2220
	2221
	2222
245-7888	2219
	2220
	2221
	2222
245-7889	▶1933
	2242
	2243
	2244
	2245
	2252
245-7890	▶1956
	2242
	2243
	2244
	2245
245-7891	2243
	▶2246
	2252
245-7892	2242
	▶2247
245-7893	2244
	▶2248
245-7895	2242
	2243
	2244
	2245
	2250
	2251
	2252
245-7896	▶1934
	2242
	2243
	2244
	2245
	2252
245-7897	1933

▶ PRIMARY REFERENCE

PART NUMBER INDEX

Part	Page
	1934
	1956
	2146
	2149
	2246
	2247
	2248
	2249
	2252
245-7898	1934
	2219
	2220
	2221
	2222
	2246
	2247
	2248
	2249
245-7899	1933
	1956
	2146
	2149
	2246
	2247
	2248
	2249
245-7900	749
	751
245-7901	749
	751
245-7905	2010
	2012
245-7916	2189
245-7922	▶2028
	▶2030
	▶2032
	2187
245-7925	2036
245-7926	2034
245-7929	2081
245-7931	2274
245-7948	2034
	2036
245-9178	206
	208
	210
	212
	214
	216
	218
	222
	225
	227
	229
245-9185	206
	208
	210
	212
	214
	216
	218
	222
	225
	227
245-9191	206
	208
	210
	212
	214
	216
	218
	222
	225
	227
	229
245-9205	206
	208
	210
	212
	214
	216
	218
	222
	225
	227
	229
245-9212	220
	231
	234
	236
	241
	243
	246
245-9216	220
	231
	234
	236
	241
	243
	246
245-9217	220
	231
	234
	236
	241
	243
	246
245-9218	220
	231
	234
	236
	241
	243
	246
245-9276	220
	236
	243
	246
245-9313	113
	▶199
245-9343	199
245-9344	195
	197
245-9348	206
	208
	210
	212
	222
	225
	227
	229
245-9349	206
	208
	210
	212
	214
	222
	225
	227
	229
245-9352	206
	208
	210
	212
	214
	216
	222
	225
	227
	229
246-2641	345
	346
	347
	348
	349
	350
	351
	352
	353
	354
	355
246-5425	872
247-2693	606
	609
	637
	2054
	2055
	2056
	2057
	2058
	2078
	2079
247-2694	2173
	2174
247-2695	2173
	2174
247-5112	2078
	2079
247-5276	2046
	▶2078
247-5284	▶443
	469
247-6019	337
247-7331	88
	▶1753
247-7346	30
	▶892
247-7382	▶892
247-7383	87
	▶1754
247-7410	906
	▶2279
247-7411	906
	2043
	▶2281
247-7418	2187
	▶2282
247-7423	907
	908
	▶2283
247-7424	907
	▶2284
247-7436	2301
	2306
	2311
	2316
	2321
	2326
	2331
	2336
247-7437	2301
	2306
	2311
	2316
	2321
	2326
	2331
	2336
247-7438	2301
	2306
	2311
	2316
	2321
	2326
	2331
	2336
247-7454	73
	▶856
247-7457	4
	5
	6
	7
	8
	9
	10
	11
	12
	13
	14
	15
	16
	17
	18
	19
	21
	22
	23
	24
	25
	26
	27
	30
	31
	32
	34
	35
	37
	38
	39
	40
	41
	42
	43
	44
	45
	46
	47
	48
	49
	50
	51
	52
	53
	54
	55
	60
	61
	62
	63
	65
	66
	67
	68
	69
	70
	77
	78
	79
	89
	90
	91
	92
	93
	94
	95

► **PRIMARY REFERENCE**

PART NUMBER INDEX

Part	Page
	96
	97
	98
	99
	100
	101
	▶1516
247-7459	▶1034
247-7465	906
	910
	▶2285
247-7490	1514
	▶2286
247-7492	1514
	▶2287
247-7587	1532
247-8751	1013
	1017
247-8782	1500
247-8789	1007
247-8790	1013
247-8791	1022
247-8864	927
	929
	931
	933
	935
	938
247-8865	927
	929
	931
	933
	935
	938
	944
	946
	949
	957
	961
	967
247-8866	927
	929
	931
	935
247-8867	927
	929
	931
	935
247-8868	927
247-8869	1127
	1129
247-8870	1128
	1130
247-8873	972
	974
	976
	978
	980
	982
	984
	989
	991
	993
	995
	997
	999
	1004
247-8874	972
	974
	976
	978
	980
	982
	984
	989
	991
	993
	995
	997
	999
	1004
247-8876	972
	974
	976
	982
	995
	997
247-8877	972
	974
	976
	982
	995
	997
247-8878	972
	978
247-8881	978
	980
	984
	999
247-8882	978
	980
	984
	999
247-8883	1436
	1442
247-8885	944
	946
	949
	957
	961
	967
247-8886	944
	946
	949
	961
247-8887	944
	946
	949
	961
247-8888	944
247-8920	1500
247-8974	974
247-9006	959
247-9030	1082
247-9033	1082
247-9034	1082
247-9073	1438
	1440
	1445
247-9074	1438
	1440
	1445
247-9076	1438
	1440
	1445
247-9078	1438
	1440
	1445
247-9129	1084
247-9132	1084
247-9135	1084
247-9138	1084
247-9141	1084
247-9144	1084
247-9147	1084
247-9164	1153
247-9173	1153
247-9177	1153
247-9294	1153
	1154
247-9298	1084
	1089
248-5358	627
248-7143	870
	871
	▶872
248-7174	891
248-7820	1760
248-7822	1760
248-7823	1760
248-7831	1758
	▶1760
248-7832	1760
248-7833	1760
248-7835	1760
248-7836	1760
248-7854	919
	▶948
248-7857	1009
	1011
	1015
248-8930	725
	726
248-8940	763
	768
	773
	779
	785
	791
	797
	803
	809
	813
	817
	▶847
248-8943	847
248-8944	847
248-8957	773
248-8961	738
248-8992	757
248-8993	757
248-8994	757
248-8995	757
248-9012	758
248-9014	758
248-9016	758
248-9018	758
248-9020	758
248-9061	702
	703
	704
	705
	706
	707
	708
	709
	710
	711
	712
	713
	714
	715
	716
	717
	718
	719
	720
248-9428	1447
248-9633	▶1143
	1775
	1778
248-9825	1077
	▶1269
	▶1273
	▶1277
	▶1281
248-9846	1077
	▶1262
	▶1265
248-9847	1077
	▶1403
248-9848	1077
	▶1268
248-9850	1077
	▶1285
248-9851	1077
	▶1287
	▶1291
	▶1295
248-9852	1077
	▶1299
	▶1301
	▶1303
248-9853	▶1420
	▶1422
	1510
248-9925	926
	▶1437
248-9926	920
	922
	▶1144
250-1440	1095
	1101
	1103
250-2402	1730
250-2446	1547
	1552
	1557
	1562
	1570
	1574
	1578
	1583
	1588
250-2447	1547
	1552
	1557
	1562
	1570
	1574
	1578
	1583
	1588
250-2503	1501
250-2508	1207
	1210
	▶1659
250-5054	734
	741
250-6183	307
	310
	313
	316
	319
250-6417	1819
250-6418	▶1819
	1828
250-8054	2279
	2281
	2282
	2283
	2284
	2285
251-0299	636
251-0303	506
	508

PART NUMBER INDEX

Part	Page
	510
251-0304	506
	508
	510
251-0433	▶608
	2187
251-0435	608
	▶609
251-0436	▶458
	907
	908
251-0452	617
251-0467	405
	412
	419
	427
251-0482	8
	9
	11
	12
	14
	15
	75
	77
	78
	89
	91
	▶611
251-0483	611
	612
	613
251-0485	4
	5
	6
	7
	10
	13
	75
	▶612
251-0526	▶460
	2188
251-0529	▶560
	907
	908
251-0538	28
	29
	36
	57
	58
	59
	71
	72
	73
	▶2190
251-0542	4
	5
	6
	7
	8
	9
	11
	12
	13
	14
	15
	16
	17
	18
	19
	21
	22
	23
	24
	25
	26
	27
	28
	29
	30
	31
	32
	34
-55	
	57
	58
	59
	60
	61
	62
	63
	65
	66
	67
	68
	69
	70
	71
	72
	73
	77
	78
	79
	89
	90
	91
	92
	93
	94
	95
	96
	97
	98
	99
	100
	101
	▶513
	▶515
	▶517
251-0543	513
	519
251-0544	472
	▶519
	▶521
	▶523
251-0580	606
251-0598	560
251-0602	609
251-0637	564
	570
251-2597	1753
	1754
	1755
	▶1762
251-3522	1874
	1875
251-3523	1845
	1872
	1873
251-3871	▶1824
	1836
251-3923	1824
	▶1845
251-4162	442
251-8663	1845
	1872
251-8665	1873
251-8670	1875
251-8674	1845
	1872
251-8676	1873
251-8681	1875
251-8684	1845
251-8690	1872
	1874
251-8692	1873
	1875
252-9628	▶500
	525
	553
253-0861	2301
	2306
	2311
	2321
	2326
	2331
253-1346	888
	889
253-2111	506
	508
	510
253-2693	627
253-2695	586
253-2866	13
	25
	30
	37
	53
	61
	69
	▶81
253-6445	1097
	1099
253-6453	1097
	1099
253-6454	1097
	1099
253-6455	1101
253-6548	1157
253-6551	1157
253-6621	1091
	1093
253-6664	▶919
	1758
253-6685	1103
253-6688	1158
253-6691	1158
253-6694	1078
	1080
253-6697	1078
	1080
254-2996	1762
254-3022	856
	▶858
254-3023	858
254-3024	858
254-3052	1759
	1764
	1765
	1766
	1767
	1768
254-3053	1759
	1764
	1765
	1766
	1767
	1768
254-3080	1233
	1237
	▶1532
255-0350	1820
	1821
	1822
	1823
255-0351	1822
255-0353	1820
	1822
255-0354	1820
	1822
255-0372	1820
255-0383	1823
255-0385	1821
255-0386	1821
	1823
255-0387	1821
	1823
255-0388	1821
	1823
255-0939	525
255-1592	1144
255-1659	▶1305
	▶1307
	▶1309
	1511
255-1663	908
	▶1311
	▶1313
255-1665	1269
	1273
	1277
	1281
255-1666	1269
	1273
	1277
	1281
255-1781	1325
	1328
	1331
	1401
255-1800	907
	908
	▶1315
255-1802	907
	▶1317
	▶1319
255-1843	▶1321
	2188
255-2068	1377
255-2751	517
	523
	▶548
255-2871	155
	159
	161
	167
	169
	200
255-2873	155
	159
	161
	167
	169
	200
255-2904	190
255-2926	161
	167
255-2927	2014
	2016
255-2966	256
	257
	263
	264
255-3018	▶170
	2014
255-3020	170
	172

▶ **PRIMARY REFERENCE**

PART NUMBER INDEX

Part	Page
255-3021	170
255-3022	170
	172
255-3044	120
	▶267
255-3160	301
	303
255-3170	2286
255-3171	2286
	2300
255-3173	2286
	2300
255-4410	2191
255-5594	1557
	1562
	1578
	1583
	1588
	1645
255-5660	1547
	▶1660
255-5661	1534
	1538
	1547
	1552
	1557
	1570
	1574
	1578
	▶1661
255-5662	1595
	1601
	1605
	1609
	▶1662
255-5680	1167
	▶1605
	▶1607
255-5683	1167
	▶1609
	▶1611
255-5713	907
	908
	909
	911
	▶1512
255-5716	908
	▶1513
255-5843	▶906
	911
255-5844	▶906
255-5845	911
	▶2187
255-5846	▶906
256-0093	▶1045
	▶1049
	▶1053
	1500
256-0096	▶1056
	▶1060
	▶1064
	1500
256-2907	▶553
	2276
256-9806	1894
256-9807	1894
257-2381	337
257-2382	337
257-4502	2301
	2306
	2321
	2326
257-4547	2287
257-5015	2286
	2300
258-0330	2111
	2113
	2116
258-4095	▶2212
	2217
258-4096	2215
258-6749	1233
	1237
	▶1693
258-8149	337
259-0647	1140
	1147
259-0652	942
259-0653	942
259-0654	942
259-0655	942
259-0656	942
259-0675	959
259-0680	1516
	▶1711
259-0775	976
	980
259-0918	1505
259-0922	▶1505
	1508
259-3543	747
259-3687	763
	768
	809
	813
	817
	▶826
259-3688	826
259-4877	609
259-4883	564
	570
259-4884	551
	577
259-4887	592
	594
259-4914	2190
259-4940	592
	594
	596
	598
259-5043	▶486
	1719
	1720
	1721
	1722
	1723
	1758
259-5044	▶640
	912
259-5045	▶589
	907
	908
259-5046	▶631
	1034
259-5047	4
	5
	6
	7
	8
	9
	10
	14
	15
	26
	27
	28
	29
	34
	35
	45
	50
	51
	52
	57
	58
	60
	68
	71
	72
	▶488
259-5048	▶489
259-5049	▶403
	532
259-5051	28
	29
	36
	57
	58
	59
	71
	72
	73
	532
	▶617
259-5052	1
	2
	▶625
259-5097	617
259-5129	625
259-5161	▶564
	▶570
	2187
259-5176	▶503
	▶504
	2187
259-5177	503
	▶506
259-5225	403
	435
259-5229	403
	435
259-5237	▶461
	1511
259-5267	405
	412
	419
	427
259-5274	506
	508
	510
	▶541
259-5290	564
	570
259-5293	▶462
	2187
259-5294	▶463
	906
	910
259-5295	▶464
	906
	2043
259-5296	564
259-5317	405
	412
	419
	427
259-5326	486
259-5327	488
259-5344	631
259-7178	▶2188
259-7179	▶2062
	2188
259-7180	551
259-7184	120
	▶2020
259-7202	2036
259-7207	2020
259-7214	2191
259-7215	2191
259-7220	577
259-7244	2014
	2016
	▶2018
259-7286	2018
259-7295	▶1954
	1977
259-7345	1953
259-7346	▶1952
	2034
259-7347	▶1953
	2036
259-7348	2028
	2030
	2032
	▶2034
259-7349	2028
	2030
	2032
	▶2036
259-7350	1971
	2005
	▶2126
259-7351	2126
259-7352	2126
259-7353	1985
	1987
259-7354	2088
	2090
	2092
	2095
	2098
259-7378	1512
	1513
	▶1534
	▶1536
259-7429	1367
	1371
	1397
	▶1694
259-7430	1360
	1364
	1375
	1377
	▶1695
	▶1696
259-7464	1077
	▶1613
	▶1614
259-7465	▶1538
	▶1541
	▶1544
	1613
	1614
	1615
	1616
259-7466	▶1547
	▶1552
	▶1557
	▶1562
	1613
259-7484	▶1514
259-7485	▶1514
259-7492	▶907
259-7493	82
	▶907
259-7494	9

PART NUMBER INDEX

Part	Page
	15
	27
	35
	52
	82
	▶908
259-7495	4
	5
	10
	11
	12
	23
	24
	43
	54
	62
	77
	78
	79
	82
	89
	91
	93
	94
	96
	97
	▶908
259-7496	6
	7
	▶909
	910
259-7497	▶909
	911
259-7498	▶909
259-7501	13
	25
	30
	37
	53
	61
	69
	▶910
259-7598	906
	▶2038
	▶2039
259-7599	906
	▶2040
	▶2041
259-7600	1528
259-7601	1528
259-7602	1511
	▶1615
	▶1616
259-7631	1538
	1541
	1544
	▶1567
259-7632	1547
	1552
	1557
	1562
	▶1568
	1570
	1574
	1578
	1583
	1588
259-7646	1659
	▶1663
259-7662	▶1570
	▶1574
	▶1578
	1615
259-7707	▶2042
259-7732	1288
	▶1686
259-7733	1297
	1686
259-7762	2038
	▶2064
259-7763	2038
	▶2065
259-7764	2040
	▶2066
259-7765	2040
	▶2067
259-7788	1526
	1595
	1598
	1601
	1603
259-7848	1657
	1666
	1669
259-7849	1657
	1666
	1669
259-7850	1657
	1666
	1669
259-7851	1657
	1666
	1669
259-7852	1657
	1666
259-7877	2061
260-2042	443
	444
	474
260-2109	▶2054
	2064
	2072
260-2110	▶2055
	▶2056
	2065
	2073
260-2111	2054
	2055
	2056
	2057
	2058
260-2127	▶2057
	2066
	2074
	2076
260-2128	▶2058
	2067
	2075
	2077
260-2288	1753
	1754
	1755
	1756
	▶1764
260-2289	1764
	1765
	1766
260-3003	1582
260-3877	1241
	1244
	▶1699
260-3883	1699
	1700
260-5656	106
	▶296
260-6692	398
260-6941	2279
260-6942	2281
260-6945	2283
260-6946	2284
260-6948	2188
	2282
260-7135	2301
	2306
	2311
	2316
	2321
	2326
	2331
	2336
260-7868	1077
	▶1491
260-7872	1169
	1172
	1175
	1178
	1182
	1186
	1190
260-7900	1244
	1247
260-7904	1491
260-7906	1491
260-7910	▶1074
	1167
260-7911	1074
	▶1075
260-7912	1075
260-7913	1074
	▶1076
260-7914	1076
260-7965	▶1323
	2188
260-7966	▶1325
	▶1328
	1514
260-7967	▶1331
	1514
260-7970	▶1333
	▶1336
	1515
260-7971	907
	▶1339
	▶1342
260-7972	908
	▶1346
	▶1349
260-7974	907
	▶1352
	▶1356
260-7976	909
	▶1360
	▶1364
260-7977	909
	▶1367
	▶1371
260-7978	909
	▶1375
260-7982	910
	▶1377
260-7983	910
	▶1404
	▶1407
260-7984	6
	7
	13
	25
	30
	37
	53
	61
	69
	910
	911
	▶1379
260-7986	908
	▶1381
	▶1386
260-7988	1167
	1241
260-7992	1167
260-7996	1167
260-8000	1167
260-8006	907
	▶1169
	▶1172
	▶1175
260-8007	908
	909
	▶1178
	▶1182
260-8008	907
	908
	▶1186
	▶1190
	▶1194
260-8009	908
	▶1198
	▶1200
260-8010	▶1117
	1719
	1720
	1721
	1722
	1723
260-8011	▶1145
	1776
	1777
	1778
260-8015	910
	▶1202
	▶1204
260-8043	1169
	1172
	1175
	1178
	1182
	1186
	1190
	1194
	1207
	1210
260-8315	1117
260-8316	1117
260-8320	1108
260-8321	1108
260-9172	1250
	1254
	1258
261-2445	1582
261-2452	1582
262-1421	444
	▶456
262-2043	▶456
	469
262-2286	773
	779
	785
	791
	797
	803
	▶827
262-2287	827
262-2309	837
262-2313	832

▶ **PRIMARY REFERENCE**

PART NUMBER INDEX

Part	Page
	835
	841
	843
262-2324	763
	768
	773
	779
	785
	791
	797
	803
	809
	813
	817
262-2333	838
262-2335	838
262-2346	840
262-2347	836
262-2353	763
	768
	773
	779
	785
	791
	797
	803
	809
	813
	817
262-2363	763
	768
	773
	779
	785
	791
	797
	803
	809
	813
	817
262-2365	773
	809
	813
	817
262-2404	702
262-2405	702
	703
	704
	707
	709
	710
	713
	715
	717
	718
	719
262-2406	702
	703
	704
	705
	706
	707
	708
	709
	710
	711
	712
	713
	714
	715
	716
	717
	718
	719
	720
262-2417	702
	703
	704
	705
	706
	707
	708
	709
	710
	711
	712
	713
	714
	715
	716
	717
	718
	719
	720
262-2420	826
	830
262-2427	826
	827
	829
	830
262-2428	826
	827
	829
	830
262-2429	826
	830
262-2430	826
	830
262-2432	826
	830
262-2484	758
262-2607	1
	2
	▶690
	691
	692
262-2608	▶693
	▶694
	701
262-2623	690
	▶705
262-2624	705
262-2626	693
	▶706
262-3390	1157
262-3402	1091
	1093
262-3403	1091
	1093
262-3404	1095
262-3407	1156
262-3410	1156
262-3471	▶1438
	▶1440
	1515
262-3494	▶1892
262-3495	▶1892
262-3496	▶1159
	▶1160
	1892
262-3497	▶1765
	1892
262-3589	1153
262-3838	1857
262-3839	1858
	1868
262-3840	1846
	1848
	1860
262-3841	1861
262-3842	1857
262-3843	1858
262-3844	1860
262-3845	1861
262-3846	1857
262-3847	1858
262-3848	1860
262-3849	1861
262-4781	872
262-9372	▶344
	357
	360
	364
	368
263-6699	626
263-9088	445
	471
	▶525
263-9574	435
264-1622	1759
264-1623	1759
264-1702	1724
	1726
	1728
	1732
	1734
	1736
	1738
	1740
	1742
264-3171	553
264-7029	420
	428
	558
	565
	571
	606
	609
	625
	637
	645
	647
	2142
264-7030	420
	429
	530
	531
	565
	572
264-7031	581
	609
264-7032	420
	429
	515
	517
	521
	523
	589
	606
	609
	622
	623
	637
	643
	2144
264-7033	420
	429
	586
	609
	643
	2144
264-7034	420
	428
	465
	565
	571
	572
	581
	586
	609
	626
	627
	637
264-8507	2301
264-8508	2321
264-8626	▶73
264-8627	▶74
264-8638	▶1
	73
264-8639	▶2
	74
264-8648	▶2110
264-8649	▶2110
264-8651	▶191
264-8665	▶469
264-8666	▶469
264-8671	4
	5
	6
	7
	8
	9
	10
	11
	12
	13
	14
	15
	23
	24
	25
	26
	27
	30
	34
	35
	37
	43
	44
	45
	50
	51
	52
	53
	54
	55
	60
	61
	62
	63
	68
	69
	70
	77
	78
	79
	89
	91
	93
	94
	95
	96
	97
	98
	99

PART NUMBER INDEX

Part	Page
	►255
264-8770	►335
264-9961	1547
	1552
	1557
	1562
	1570
	1574
	1578
	1583
	1588
264-9982	2018
264-9983	2018
264-9984	2018
265-3504	120
	►268
265-3557	195
265-3581	268
265-3585	268
265-3586	268
265-3587	268
265-3590	268
265-3591	268
265-3599	268
265-3600	101
	191
	192
	193
	194
	►206
	►208
	►210
	►212
	►214
	►216
	►218
265-3601	206
	►220
265-3602	206
	208
	210
	212
	214
	216
	218
	222
	225
	227
	229
265-3616	120
	►222
	►225
	►227
	►229
265-3617	222
	►231
265-3624	220
	231
	234
	236
265-3625	220
	231
	234
	236
	241
	243
	246
265-3627	220
	231
265-3628	220
	236
	243
265-3629	220
	231
	234
	236
	241
	243
	246
265-3630	220
	231
	234
	236
	241
	243
	246
265-3631	220
	231
	234
	236
	241
	243
	246
265-3632	220
	231
	234
	236
	241
	243
	246
265-3633	220
	231
	234
	236
	241
	243
	246
265-3634	220
	231
	234
	236
	241
	243
	246
265-3635	220
	231
	234
	236
	241
	243
	246
265-3637	220
	231
	234
	236
	241
	243
	246
265-3638	220
	231
	234
	236
	241
	243
	246
265-3639	220
	236
	243
	246
265-3640	231
	234
	241
265-3642	220
	236
	243
	246
265-3643	220
	236
	243
	246
265-8047	526
265-8145	501
265-8146	501
265-9492	465
	466
265-9642	456
265-9643	456
266-0136	527
266-0898	1178
266-0900	1178
266-0908	1202
	1204
266-0912	1169
	1172
	1175
	1178
	1182
	1186
	1190
	1194
	1207
	1210
	1213
	1217
	1221
	1225
	1229
266-0913	1169
	1172
	1175
	1178
	1182
	1186
	1190
	1194
	1207
	1210
	1213
	1217
	1221
	1225
	1229
266-0955	1407
266-0982	1411
	1414
	1417
266-1028	1299
	1301
	1303
266-1037	1262
	1265
266-1045	1262
	1265
266-1055	1262
266-1071	1169
	1172
	1178
	1186
	1213
266-1098	1288
	1292
	1296
266-1108	1339
	1342
	1346
	1349
	1352
	1356
	1379
	1381
	1386
266-1110	1131
266-1111	1131
266-1114	1131
266-1115	1131
266-1116	1131
266-1133	1339
	1342
	1346
	1349
	1352
	1356
	1360
	1364
	1367
	1371
	1381
	1386
	1397
266-1136	1339
	1346
	1352
	1381
266-1139	1339
	1346
	1352
	1360
	1367
	1381
266-1142	1346
	1349
	1352
	1356
266-1147	1131
266-1179	1360
	1364
	1367
	1371
	1381
	1386
	1397
266-1215	1427
266-1217	1169
	1172
	1175
	1182
	1190
	1194
266-1258	1427
	1429
	1431
266-1266	1186
	1190
	1213
	1217
	1221
266-1278	1178
	1182
	1186
	1190
	1194
	1213
	1217
	1221
	1225
	1229
	1250
	1254
	1258
266-1279	1178
	1182
	1186
	1190
	1194
	1207
	1210

► **PRIMARY REFERENCE**

PART NUMBER INDEX

Part	Page
	1213
	1217
	1221
	1225
	1229
	1258
266-1303	1178
	1182
	1186
	1190
	1194
	1213
	1217
	1221
	1225
	1229
	1250
	1254
	1258
266-1307	1178
	1186
	1213
266-1311	1186
266-1315	1186
	1190
	1213
	1217
	1221
266-2861	2178
266-3317	421
266-5431	2301
	2306
	2311
	2316
	2321
	2326
	2331
	2336
266-6207	2014
	2016
	2159
266-6227	161
	167
266-6228	153
	155
	157
	159
	165
266-6229	155
	167
	200
266-6230	153
	155
	157
	159
	165
266-6231	153
	155
	157
	159
	165
266-6232	155
	159
	161
	167
	169
	200
266-6297	120
	▶139
266-6298	139
266-6299	139
266-6300	139
266-6301	139
266-6317	113
	114
	▶148
266-6319	280
	282
266-6320	280
	282
266-6321	280
	282
	284
266-6326	157
266-6327	148
	159
	161
	169
266-6332	149
	151
	201
266-6333	149
	151
266-6334	149
	151
	201
266-6335	149
	151
	201
266-6336	149
	151
	201
266-6337	149
	151
	201
266-6338	149
	151
	201
266-6346	267
266-7891	929
266-7892	946
266-7928	959
266-7939	959
266-7964	1129
	1130
	1146
	1147
266-7965	1442
266-7966	931
	949
266-7968	982
	984
	1004
266-7970	▶916
	1006
266-7971	▶916
	1006
266-7972	916
	▶931
266-7973	▶923
	1006
266-7974	923
	▶982
266-7975	▶924
	1006
266-7976	924
	▶984
266-7977	▶919
	1006
266-7978	919
	▶949
266-7991	▶920
	1006
266-7992	920
	▶951
266-8011	931
	938
266-8012	982
	984
	1004
266-8022	916
	918
	▶1129
266-8023	916
	918
	▶1130
266-8024	923
	924
	926
	▶1442
266-8025	919
	922
	▶1146
266-8026	951
266-8044	920
	▶1147
266-8045	951
266-8057	949
	967
267-0138	▶1751
	1775
	1778
	1779
267-0139	1751
267-0140	1751
267-0141	1751
267-0925	▶895
267-3727	1659
	▶1664
267-4051	1233
	1237
267-6767	73
	74
	▶673
267-6783	▶668
	671
267-6785	1029
267-7207	406
	421
	429
267-7208	406
	421
	429
267-7626	489
267-7627	▶491
	1718
	1723
267-7628	491
267-7636	589
267-7639	565
	572
267-7642	▶577
	912
267-7644	577
267-7671	577
267-7672	577
267-7676	577
	643
267-7695	643
267-7965	1162
267-7976	513
	515
	517
267-7977	519
	521
	523
267-8000	1
	2
	▶405
	▶412
	▶419
	▶427
267-8002	▶641
	912
267-8003	▶554
	909
267-8005	▶633
	910
267-8007	469
	▶592
	▶594
267-8008	469
	470
	▶596
	▶598
267-8024	627
267-8071	1
	2
	▶2137
	▶2138
267-9572	421
	429
268-0749	▶725
	729
268-1621	1422
268-1964	564
268-4450	1893
	▶1904
268-4530	2290
268-4531	1895
	1897
	1899
	1901
	2290
268-4712	1893
268-5145	1213
	1217
	1221
	1225
	1229
268-6787	1084
268-6790	1084
268-6816	912
	▶2289
268-6817	2289
268-6850	1109
	1111
	1113
	1349
268-6966	1086
268-6969	1086
268-6970	1086
268-6971	1154
268-6974	1154
268-6977	1154
268-6980	1154
268-6983	1154
268-6986	1154
268-6989	1089
268-6992	1089
268-6995	1089
268-6998	1089
268-7001	1089
268-7004	1089
268-7007	1089
268-7010	1089
268-7043	▶1730
	1758
268-7044	1730
268-7046	▶1119
	1758
268-7047	1119
268-7048	1119
268-7049	1119
268-7074	▶1206
	1758

PART NUMBER INDEX

Part	Page
268-7122	81
	▶1105
268-7124	1106
268-7127	1106
268-7129	1105
268-7130	1105
268-7131	1105
268-7132	1758
	▶1795
	▶1797
268-7133	1795
268-7183	1206
268-7185	1206
268-7186	1206
268-7188	2294
268-7238	1119
268-7239	1119
268-7240	1119
268-7241	1438
	1440
268-7256	▶924
	1758
268-7257	924
	▶1443
268-8209	1700
268-8643	584
268-8872	2290
269-0120	2290
269-0121	2290
269-2600	▶1826
	1842
269-2616	▶1827
	1842
269-8509	1874
269-9919	1305
	1307
	1309
269-9970	1161
270-0012	1202
	1204
270-0013	1202
	1204
270-0014	1202
	1204
270-0015	1202
	1204
270-5433	474
	2178
270-5511	469
	▶471
270-5512	73
	74
	▶456
270-5514	74
	114
	▶457
270-5582	2184
270-5589	2184
270-5603	2
	3
	465
	2143
	▶2176
270-5688	13
	25
	30
	37
	53
	61
	69
	▶2043
270-5690	2043
	▶2044
270-5947	1269
	▶1623
270-5949	1623
	1635
	1637
270-5950	1623
	1635
	1637
270-5951	2042
	▶2068
270-5952	2042
	▶2069
270-5953	1625
	1630
270-5974	4
	5
	6
	7
	10
	84
	▶1514
270-6106	6
	7
	▶910
270-6107	910
	▶2050
270-6259	305
	449
270-6338	203
271-7843	2054
	2056
	2057
	2058
	2070
	2071
272-4153	1250
	1254
272-4675	101
	▶105
272-4676	105
	▶112
272-4677	▶106
	112
272-4681	73
	74
	▶113
272-4682	▶113
272-4683	▶107
	113
	114
	115
	116
	117
	118
272-4684	▶108
272-4685	108
	▶113
	191
272-4687	▶113
	191
272-4742	73
	74
	▶120
272-4744	120
	▶271
272-4772	4
	5
	6
	7
	8
	9
	10
	11
	12
	13
	14
	15
	16
	17
	18
	19
	21
	22
	23
	24
	25
	26
	27
	28
	29
	30
	31
	32
	34
-55	
	57
	58
	59
	60
	61
	62
	63
	65
	66
	67
	68
	69
	70
	71
	72
	73
	77
	78
	79
	89
	90
	91
	92
	93
	94
	95
	96
	97
	98
	99
	100
	101
	▶529
272-4773	255
	▶259
	▶261
272-4774	111
	141
	▶533
	▶535
272-5000	581
	586
272-6955	1497
	▶1500
273-1269	1862
273-1270	1862
273-3423	1856
273-3424	1826
	1827
	1859
	1863
273-3426	1856
273-3427	1826
	1859
	1863
273-3429	1856
273-3430	1826
	1859
	1863
273-3433	1868
273-3434	1827
273-3437	1868
273-3438	1827
273-4159	1894
273-4160	1894
273-4161	1894
273-4162	1894
273-4163	1894
273-4165	1894
273-5166	2019
	▶2152
273-5167	2019
	▶2021
	▶2023
	▶2025
273-5168	18
	19
	32
	▶2136
273-5169	2136
	▶2159
273-5274	2259
273-5333	2109
273-5345	2259
	2269
273-5346	2259
	2269
273-5358	2
	3
	▶2109
273-5359	2109
273-5360	2109
273-5384	2245
	▶2249
273-5386	2249
273-5387	1
	2
	▶2187
273-5399	2021
	2023
	2025
273-5400	2156
273-5446	2210
	▶2213
273-6716	1
	2
	▶749
	▶751
273-6717	749
273-6803	467
273-6810	1011
273-7674	757
273-7675	758
273-7677	702
	703
	704
	705
	706
	707
	708
	709
	710
	711
	712
	713
	714

▶ **PRIMARY REFERENCE**

PART NUMBER INDEX

Part	Page
	715
	716
	717
	718
	719
	720
273-7725	101
	▶763
	▶768
273-7726	1
	2
	▶773
	▶779
	▶785
	▶791
	▶797
	▶803
273-7727	▶846
	2110
273-7735	1
	2
	▶301
	▶303
273-7774	729
	730
	732
	733
273-7847	725
	726
273-7848	725
	726
273-7849	725
	726
273-7893	▶721
	773
273-7964	676
273-8314	1500
273-8315	1495
	1496
	1500
273-8316	1045
	1049
	1053
	1056
	1060
	1064
273-8317	1045
	1049
	1053
	1056
	1060
	1064
273-8318	1045
	1049
	1053
	1056
	1060
	1064
273-8319	1045
	1049
	1053
	1056
	1060
	1064
274-2467	45
	56
	64
	▶1006
274-2488	▶1006
274-2547	1141
	1142
	1146
	1148
274-4990	406
	421
	429
274-6720	527
274-6721	449
	527
275-1361	1420
	1422
275-1362	1508
275-1398	909
	▶1207
	▶1210
275-1399	909
	▶1213
	▶1217
	▶1221
	▶1225
	▶1229
275-1409	912
	▶1233
	▶1237
275-1439	1178
	1182
	1186
	1190
	1194
	1207
	1210
	1213
	1217
	1221
	1225
	1229
	1250
	1254
	1258
275-1440	1186
	1190
	1194
	1207
	1210
	1213
	1217
	1221
	1225
	1229
	1250
	1254
	1258
275-1442	1288
	1292
	1360
	1364
	1367
	1371
	1397
	1411
	1414
	1417
275-1443	1288
	1292
	1360
	1364
	1367
	1371
	1397
	1411
	1414
	1417
275-1444	1288
	1292
	1360
	1364
	1367
	1371
	1397
	1411
	1414
	1417
275-1460	1207
275-1468	1233
	1237
275-1538	1233
	1237
275-1712	1333
	1336
275-1713	1333
	1336
275-3378	553
275-3683	1
	▶2301
	▶2306
	▶2311
	▶2316
275-3684	2
	▶2321
	▶2326
	▶2331
	▶2336
275-3695	90
	92
	100
	101
	▶1721
275-3702	90
	92
	100
	101
	▶1777
275-3707	90
	92
	100
	101
	▶1754
275-3835	▶1777
275-4012	553
275-5982	1905
	1906
275-6798	101
	191
	▶619
275-6803	620
	623
275-6839	627
275-6840	579
275-6841	585
	586
275-6842	585
	586
275-6846	621
275-6979	592
	594
	596
	598
275-6993	645
	647
275-7003	▶636
	2187
275-7004	636
275-7197	554
	556
	558
275-7202	633
275-7203	▶556
	909
276-4053	455
276-6146	466
	526
277-0786	1082
	1086
277-0863	▶912
277-0954	1078
	1091
	1097
	▶1617
277-1045	1159
277-1046	1159
277-7148	▶896
278-3581	676
278-3729	846
278-3778	255
	▶729
	▶730
	▶732
278-3818	748
278-3831	773
278-3832	764
	769
	773
	779
	785
	791
	797
	803
	810
	814
	818
	821
	823
278-3836	773
	779
	785
	791
	797
	803
	809
	813
	817
	▶832
278-3837	832
	835
	841
	843
278-3842	763
	768
	773
	779
	785
	791
	797
	803
	809
	813
	817
	▶833
278-3845	773
278-3848	773
278-3852	773
	▶848
278-3896	1
	2
	▶345
	346
	347
278-3897	345
	▶356
278-3898	356
	▶357
	▶358
278-3899	356
	▶360
	▶361
278-3900	335

PART NUMBER INDEX

Part	Page
	▶348
278-3901	348
	▶363
278-3902	363
	▶364
	▶366
278-3903	363
	▶368
	▶370
278-3908	90
	92
	100
	101
	▶695
	696
	697
278-3970	344
278-6426	1213
	1217
	1221
	1225
	1229
278-6427	1213
	1217
	1221
	1225
	1229
278-6428	1213
	1217
	1221
	1225
	1229
278-6430	1213
	1217
	1221
	1225
	1229
278-6470	1342
	1349
	1356
	1360
	1364
	1367
	1371
	1386
	1397
278-6587	1131
278-6593	1131
278-6756	1186
	1190
278-6811	1213
	1217
	1221
	1250
	1254
278-6875	1131
278-6877	1131
278-6894	553
	▶1433
	▶1434
278-6907	1433
	1434
	1435
278-6912	1404
	1407
278-9257	▶678
	▶679
	▶681
278-9258	678
279-3161	1952
279-4090	1856
	1883
279-4091	1857
	1884
279-4092	1858
	1868
	1885
	1891
279-4093	1826
	1827
	1859
	1864
	1870
	1886
279-4094	1846
	1848
	1860
	1887
279-4095	1861
	1888
279-4096	1862
	1889
279-5323	▶1161
279-7609	585
	586
279-7750	533
	535
279-7859	121
279-7869	1077
	▶1497
279-7870	▶914
	1497
279-7871	▶913
	914
279-7907	271
279-7909	259
	261
279-7911	120
	▶180
279-9284	1874
280-2747	1132
	1179
	1183
	1187
	1191
	1195
	1251
	1255
	1259
281-0791	2010
	2012
281-3488	220
	231
	234
	236
	241
	243
	246
281-3534	220
	231
	234
	236
	241
	243
	246
281-3535	220
	231
	234
	236
	241
	243
	246
281-3568	220
	231
	234
	236
	241
	243
	246
281-3588	195
281-3601	225
	▶234
281-3602	208
	▶236
281-3605	234
	236
	241
	243
	246
282-4533	1721
	▶1732
282-4534	1732
282-4536	1777
	▶1799
282-4537	1799
282-4539	1754
	1756
	▶1766
282-4540	1766
282-5567	1109
	1113
	1115
282-5681	1115
282-5705	912
	▶2290
282-7055	1404
	1407
282-7061	1404
282-7079	1333
	1336
282-7086	1198
282-7088	1198
	1200
282-7096	1198
282-7097	1198
282-7135	1427
	1429
	1431
282-7161	▶1424
	1425
	1426
	1514
282-7162	▶1392
	▶1394
	1514
282-7615	1233
	1237
282-8567	142
	144
	615
283-2640	554
283-2761	16
	17
	21
	22
	▶600
283-2762	600
283-2783	611
	612
283-2893	2159
283-2913	75
	76
	▶643
283-2914	643
283-2984	643
283-3015	641
283-3041	640
283-3074	609
283-3326	1842
	▶1909
283-3905	834
	839
283-3911	763
	768
	773
	779
	785
	791
	797
	803
	809
	813
	817
283-4426	2083
283-5952	1011
	1015
283-5953	1011
	1015
283-6118	948
	▶1009
283-6119	1009
283-6179	1011
283-8982	2294
283-8983	2294
284-4386	1
	2
	▶2156
284-4426	1977
	1981
	2007
284-4442	4
	5
	6
	7
	10
	11
	12
	23
	24
	77
	78
	79
	89
	90
	91
	92
	93
	100
	101
	▶2019
284-4552	2152
284-7161	1777
	▶1800
284-7162	1800
284-7313	955
284-7317	1786
284-7325	1787
284-8532	2180
	2181
285-1327	▶1625
	2068
	2069
285-1332	2050
285-1333	2050
285-1337	2050
285-1354	73
	▶1077
285-1355	74
	▶1077
285-1399	1288
	1292
	1296
285-1465	1288
	1292
	1296
285-1531	1204

PART NUMBER INDEX

Part	Page
	▶1582
285-1764	1628
285-1765	1331
	▶1628
285-1766	1628
285-1767	1628
285-1777	1582
285-2415	1233
	1237
	1241
	1244
	1247
	1411
	1414
	1417
285-2423	1233
	1237
285-2427	1233
	1237
285-2428	1233
	1237
285-2431	1241
285-3231	472
285-3232	472
285-4470	1045
	1049
	1053
	1057
	1061
	1064
285-9066	2116
286-0134	▶2083
286-2140	1906
286-2181	1842
	▶1906
286-2484	626
286-3017	525
286-4942	1161
286-5464	1895
	1899
286-6186	301
	303
286-6220	763
	768
	773
	779
	785
	791
	797
	803
	809
	813
	817
286-6276	763
	768
	773
	779
	785
	791
	797
	803
	809
	813
	817
286-6277	834
	839
286-6281	757
286-6283	758
286-6340	704
286-6346	703
	704
	707
	709
	710
	713
	715
	717
	718
	719
	720
286-6359	763
	768
	773
	779
	785
	791
	797
	803
	809
	813
	817
286-6495	▶1131
	1514
286-6561	1352
	1356
	1381
	1386
286-6720	1131
286-6721	1131
286-6731	1131
286-6760	1288
	1292
287-0047	914
287-0049	111
	▶286
	288
287-0118	272
287-0171	272
287-0183	120
	▶272
287-0187	142
	144
287-0188	142
	144
287-0189	142
	144
287-0190	142
	144
287-0211	271
287-2352	1532
287-2499	1669
287-6049	▶1836
287-6233	▶1856
	1880
287-6234	▶1857
	1880
287-6235	▶1858
	1880
287-6236	▶1859
	1881
287-6237	▶1860
	1881
287-6238	▶1861
	1881
287-6239	▶1862
	1882
287-6240	▶1868
	1890
287-6241	▶1828
	1842
287-6246	1828
	▶1863
287-6298	1826
	1856
	1857
	1858
	1859
	1860
	1861
	1862
	1863
287-6300	1827
	1868
287-8404	627
288-0646	2083
288-7410	1109
	1111
	1113
288-7502	1082
	1086
288-7603	81
	▶1106
288-7604	1106
288-7605	1106
288-7606	1106
288-7607	1106
288-7608	7
	79
	80
	▶912
288-9297	290
289-5400	1241
289-5416	912
	▶1241
	▶1244
	▶1247
289-5475	1360
	1364
	1367
	1371
	1375
	1397
289-5578	1379
289-5607	1241
	1244
	1247
289-5657	1270
	1274
	1278
	1282
289-5672	1167
289-5681	1404
	1407
289-5690	1149
	1150
	1151
	1152
289-5731	1404
	1407
289-6424	1
	2
	▶757
289-6425	81
	756
	▶758
	▶759
289-6572	763
	768
	773
	779
	785
	791
	797
	803
	809
	813
	817
	▶834
289-6583	763
	809
289-6588	763
	768
	▶835
289-6603	757
289-6695	763
	768
	773
	779
	785
	791
	797
	803
	809
	813
	817
	▶836
289-6697	836
289-6698	763
	768
	773
	779
	785
	791
	797
	803
	809
	813
	817
289-6699	763
	768
	773
	780
	785
	809
	813
	▶837
289-6700	837
	842
289-6712	403
	435
	▶838
289-6713	838
289-6805	763
	768
	773
	780
	785
	791
	797
	803
	809
	813
	817
289-6910	65
	66
	67
	74
	191
	192
	193
	194
	▶735
	▶736
289-6911	▶737
	763
	768
	809
	813
	817
289-6912	737
289-6913	▶738
	763
	768
	773
	780
	785

PART NUMBER INDEX

Part	Page
	791
	797
	803
	809
	813
	817
289-6914	738
289-6915	▶739
	774
	780
	785
	791
	798
	804
289-6917	735
	▶740
	821
289-7698	921
	▶953
289-7699	953
	▶1011
289-7700	1011
289-7702	1011
	1015
289-7743	1011
	1015
289-7929	1007
289-7934	1022
289-7937	1022
289-7946	▶920
	1754
289-7947	920
	▶954
289-7948	954
	▶1013
289-7949	1013
	1017
289-8194	▶1040
	1508
289-8195	1040
289-8449	500
	553
290-1727	2301
	2306
	2321
	2326
290-1728	2301
	2306
	2321
	2326
290-1729	2301
	2306
	2311
	2316
	2321
	2326
	2331
	2336
290-1742	2301
	2306
	2311
	2316
290-1743	2321
	2326
	2331
	2336
290-1745	2277
290-1746	87
	2278
290-1774	▶2
290-1775	▶3
290-1785	▶1777
290-1786	▶1778
290-1788	▶1778
290-1790	▶1754
290-1792	▶1778
290-1837	▶1778
290-1892	4
	5
	6
	7
	10
	▶101
290-1902	16
	17
	90
	▶701
290-1906	2301
	2306
	2311
	2316
	2321
	2326
	2331
	2336
290-1909	▶114
290-1910	▶74
290-1911	8
	9
	11
	12
	13
	14
	15
	23
	24
	25
	26
	27
	28
	29
	34
	35
	36
	37
	43
	44
	45
	50
	51
	52
	53
	54
	55
	57
	58
	59
	60
	61
	62
	63
	68
	69
	70
	71
	72
	73
	77
	78
	79
	89
	90
	91
	93
	94
	95
	96
	97
	98
	99
	100
	101
	▶191
290-1912	▶1025
290-5833	1826
	1827
290-5890	▶1828
	1840
290-5891	▶1828
	1840
290-5892	1828
	▶1846
290-5893	1828
	▶1848
290-5929	1863
290-5997	1844
290-6000	▶1844
	1871
290-9101	1783
290-9180	986
290-9192	1722
	▶1734
290-9193	1734
290-9195	1723
	▶1736
290-9196	1736
290-9198	1718
	▶1738
290-9199	1738
290-9207	1777
	▶1801
290-9208	1801
290-9213	1778
	▶1803
290-9214	1803
290-9216	1778
	▶1805
290-9222	1778
	▶1807
290-9223	1807
290-9466	469
	▶2178
291-1915	553
291-6249	1844
291-6250	1844
291-7462	619
	▶620
291-7463	619
	▶621
	▶622
	624
291-7547	506
	508
291-7559	2137
	▶2139
	2143
291-7560	2139
	2142
291-7561	2139
291-7590	405
291-7591	406
	412
	421
	429
291-7592	403
	435
291-7593	406
	412
	421
	429
291-7700	474
291-7701	▶474
291-7716	▶623
	624
292-0291	▶525
292-0292	▶525
292-0305	626
292-0311	2083
292-3751	337
292-4151	1893
	▶1895
	▶1897
292-4162	1893
	▶1899
	▶1901
292-4547	▶2083
292-4548	465
	▶526
292-7153	1420
	1422
292-7297	1508
293-1117	2152
293-1118	2152
293-1119	2152
293-1120	2152
293-1121	2021
293-1124	2021
293-1127	2021
	2023
293-1136	1935
	1937
	1939
293-1137	1944
	1947
	1950
293-1138	2130
	2132
	2134
293-1140	2271
293-1168	6
	7
	▶2107
293-1183	2101
293-1184	2101
293-1230	2152
	2156
	2159
293-1256	2257
293-5146	1895
	1897
293-5677	1846
293-5678	1846
	1848
293-6644	740
293-6789	301
	303
	307
	310
	313
	316
	319
	323
	326
293-6982	763
	768
	779
	785
	791
	797
	803
	809
	813
	817
293-7056	773
	779
	785

▶ **PRIMARY REFERENCE**

PART NUMBER INDEX

Part	Page
	791
	797
	803
294-1480	1723
	►1740
294-1481	1740
294-1483	1778
	►1808
294-1484	1808
294-1678	130
294-1679	130
294-1680	130
294-1682	131
294-1683	131
294-1684	173
	175
294-1685	173
	175
294-1686	173
	175
294-1687	173
	175
294-1688	173
	175
294-1689	173
	175
294-1691	173
294-1692	173
294-1693	173
	175
294-1694	173
294-1695	173
294-1696	173
294-1697	173
294-1698	173
	175
294-1699	173
	175
294-1700	123
	275
	277
	278
294-1702	173
	175
294-1703	123
294-1705	123
294-1706	123
294-1708	123
294-1709	123
294-1710	123
294-1711	123
294-1712	123
294-1713	123
294-1714	123
294-1716	121
	122
294-1720	126
294-1721	126
294-1722	126
294-1724	129
294-1725	►126
	129
294-1726	134
	135
	149
	151
	177
	201
294-1727	135
294-1728	135
294-1729	135
294-1731	135
294-1732	135
294-1733	135
294-1734	135
294-1735	135
294-1736	134
294-1737	134
294-1738	134
	190
	204
	275
	280
	293
294-1740	134
294-1741	142
294-1742	142
	144
294-1743	142
294-1747	146
294-1748	146
294-1749	125
294-1751	125
294-1752	132
294-1753	133
294-1754	133
294-1755	133
294-1756	133
294-1757	133
294-1758	275
	277
	278
294-1760	275
	277
	278
294-1761	273
294-1762	280
294-1763	286
294-1764	189
294-1765	189
294-1766	189
294-1767	186
294-1768	186
294-1769	177
294-1770	177
294-1771	177
294-1772	177
294-1773	179
294-1774	179
294-1775	179
	449
294-1776	179
294-1777	203
294-1778	203
294-1780	203
294-1781	151
	163
294-1784	171
294-1785	171
294-1786	171
	173
	175
294-1787	305
294-1788	305
294-1789	305
294-1790	305
294-1791	305
294-1792	305
294-1793	305
294-1794	305
294-1795	305
294-1796	298
	299
294-1800	298
	299
294-1801	305
294-1802	305
294-1803	298
	299
294-1804	290
	293
	305
	449
	527
294-1805	298
	299
294-1806	305
294-1808	305
294-1809	305
294-1811	290
	293
	305
294-1812	305
294-1814	305
294-1815	305
294-1819	290
294-1820	290
294-1821	123
	290
	333
294-1822	290
294-1825	290
294-1826	290
	293
294-1827	290
	293
294-1828	290
	293
294-1830	290
	293
294-1831	290
	293
	329
294-1833	290
	330
294-1834	333
294-1836	333
294-1837	290
	293
294-1838	290
	293
294-1839	333
294-1841	333
294-1842	333
294-1843	333
294-1844	290
	293
294-1845	290
	293
294-1846	333
294-1848	290
	293
294-1849	290
	293
294-1850	141
294-1851	141
294-1853	275
294-1854	275
294-1855	535
294-1857	535
294-1858	535
294-1859	138
294-1860	138
294-1861	138
294-2955	1863
	1865
	1867
294-3031	337
294-3032	337
294-3794	1084
	1089
294-3795	1084
	1089
294-3796	1084
	1089
294-3797	1084
	1089
294-5258	1848
294-7251	135
294-8011	►1020
	1895
	1897
	1899
	1901
295-1257	1045
	1049
	1056
	1060
295-1258	1045
	1049
	1056
	1060
295-1921	2184
295-4801	337
295-6864	1856
295-6865	1857
295-6866	1858
	1868
295-6867	1859
295-6868	1860
295-6869	1861
295-6870	1862
295-7964	1895
	1897
295-7974	1895
295-9130	107
	109
	111
	►297
295-9685	1469
	1472
296-4617	615
296-4618	615
296-4619	615
296-4621	527
	615
296-4631	527
296-4632	449
296-4633	527
296-4635	449
296-4636	106
	107
	109
	110
	111
	119
	►189
296-4637	106
	107
	109
	110
	111
	119
	►141
296-4638	106
	107
	109
	110
	111
	119
	►179
296-4640	106
	107
	109
	110
	111

► PRIMARY REFERENCE

PART NUMBER INDEX

Part	Page
	119
	▶142
296-4641	106
	107
	109
	110
	111
	119
	▶186
296-4642	106
	107
	109
	110
	111
	119
	▶190
296-4643	106
	107
	109
	110
	111
	119
	▶134
296-4644	106
	107
	109
	110
	111
	119
	▶132
296-4645	106
	107
	109
	110
	111
	119
	▶131
296-4647	106
	107
	109
	110
	111
	119
	▶123
296-4648	106
	107
	109
	110
	111
	119
	▶129
296-4649	106
	107
	109
	110
	111
	119
	▶135
296-4650	106
	107
	109
	110
	111
	119
	▶125
296-4651	106
	107
	109
	110
	111
	119
	▶133
296-4652	106
	107
	109
	110
	111
	119
	▶142
296-4653	106
	107
	109
	110
	111
	119
	▶273
296-4654	106
	107
	109
	110
	111
	119
	▶177
296-4655	106
	107
	109
	110
	111
	119
	▶204
296-4656	106
	107
	109
	110
	111
	119
	▶305
296-4658	106
	107
	109
	110
	111
	119
	▶203
296-4659	106
	107
	109
	110
	111
	119
	▶146
296-4660	▶149
	151
296-4661	106
	107
	109
	110
	111
	119
	▶138
296-4662	106
	107
	109
	111
	119
	▶280
296-4664	106
	107
	109
	110
	111
	119
	▶449
296-4665	106
	107
	109
	110
	111
	119
	▶615
296-4666	106
	107
	109
	110
	111
	119
	▶527
296-4667	112
	114
	115
	116
	117
	▶151
296-4673	133
296-4675	▶114
296-4676	▶109
	114
	117
296-4678	74
	▶114
296-4680	▶114
	191
296-4687	▶110
	117
296-4733	203
296-4812	305
296-6220	659
	672
296-6268	659
296-6269	659
296-6272	▶1029
	1030
296-6288	▶1030
296-6298	▶652
	656
	673
296-6299	652
	▶653
296-6300	653
	659
	662
	▶671
296-6301	▶669
	671
296-6302	▶670
	671
296-6975	1339
	1342
296-7024	1250
	1254
	1258
296-7067	1169
	1172
	1175
	1182
	1186
	1190
	1194
	1207
	1210
	1213
	1217
	1221
	1225
	1229
296-7069	1169
	1172
	1175
	1182
	1186
	1190
	1194
	1207
	1210
296-7229	1233
	1237
296-8596	1844
297-0265	1250
	1254
	1258
	▶1703
297-0292	▶910
297-0293	▶911
297-0294	▶911
297-0370	1186
	1190
	1194
	1217
	1221
	1225
	1229
	▶1521
297-0462	1262
	1265
	▶1523
297-0483	1645
297-0503	1523
	▶1524
297-0504	1523
	▶1525
297-0529	▶1630
	2070
	2071
297-0530	▶1632
	2076
297-0531	▶1633
	2077
297-0532	2045
	▶2070
297-0533	2045
	▶2071
297-0534	2039
	▶2072
297-0535	2039
	▶2073
297-0536	2041
	▶2074
297-0537	2041
	▶2075
297-0540	2044
	▶2076
297-0541	2044
	▶2077
297-0589	▶1634
	2072
	2073
	2074
	2075
297-4471	2083
297-4474	2083
297-4589	2054
297-4590	2056
297-4595	2057
	2058
297-7644	▶130
	131
297-7646	135
297-7647	135
297-7648	146
297-7649	146
297-7650	146
297-7654	282
	284
297-7655	203
297-7656	305
297-7657	305
297-7658	305

▶ **PRIMARY REFERENCE**

PART NUMBER INDEX

Part	Page
297-7660	290
	293
297-7671	120
	▶329
297-7672	329
297-7673	329
297-7674	329
	330
297-7706	290
	293
297-7745	106
	▶282
297-7747	112
	113
	114
	115
	▶153
	▶155
297-7748	113
	▶157
	▶159
297-7791	282
297-7822	290
297-7824	153
	155
	157
	159
	165
297-7825	153
	155
298-2942	737
	738
	739
	740
	742
298-2977	▶741
	763
	768
	779
	785
	791
	797
	803
	809
	813
	817
298-2978	741
298-2979	▶722
	764
	768
	779
	785
	791
	797
	803
	809
	813
	817
298-2995	▶839
	1025
298-3033	764
	768
	809
	813
	817
	▶840
298-3037	840
298-3038	764
	768
	779
	785
	791
	797
	803
	809
	813
	817
298-3041	764
	769
	779
	785
	791
	797
	803
	810
	814
	818
298-3044	764
	769
	779
	785
	810
	814
298-3147	301
	303
	307
	310
	313
	323
	▶398
298-3257	398
298-3258	398
298-4099	13
	18
	20
	33
	56
	64
	▶756
298-4102	17
	21
	22
	31
	38
	41
	42
	47
	49
	66
	67
	▶532
298-4115	4
	5
	6
	7
	10
	28
	29
	36
	45
	51
	53
	54
	55
	56
	71
	72
	73
	96
	98
	▶469
298-4116	▶470
298-4127	▶1779
298-4195	2116
298-4196	2118
	2120
298-4256	▶191
298-4257	▶553
298-4258	335
	▶2291
298-4271	16
	17
	21
	▶192
298-4272	▶192
298-4281	102
	103
	▶2292
	▶2293
298-4282	2292
	2298
	2311
	2316
	2331
	2336
298-4286	▶102
298-4287	▶102
298-4288	▶102
298-4308	85
	▶1721
299-1419	107
	119
299-1425	109
	110
299-2767	413
	421
	430
299-2783	11
	12
	23
	24
	28
	29
	36
	43
	44
	54
	55
	57
	58
	59
	62
	63
	70
	71
	72
	73
	77
	78
	79
	89
	91
	93
	94
	95
	96
	97
	98
	99
	▶435
299-2792	3
	▶579
	▶580
299-2798	617
299-2954	2
	3
	465
	▶585
	▶586
	2143
299-2963	585
3	
300-4003	106
300-9715	1049
300-9716	1060
301-0091	617
301-0589	2180
	2181
301-6874	1053
	1064
301-8294	1053
	1064
302-2852	1233
	1237
302-3168	1288
302-3171	1233
	1237
302-3196	1525
302-5941	1895
	1897
302-5943	1895
	1897
302-6859	1895
	1897
	1899
	1901
302-6860	1895
	1897
	1899
	1901
302-9208	13
	25
	30
	36
	37
	50
	53
	59
	61
	69
	73
	90
	92
	100
	101
	▶1758
302-9210	1758
	▶2294
	▶2295
302-9466	1617
	1618
302-9635	1394
303-2668	2306
	2311
	2316
	2326
	2331
	2336
303-2787	441
	▶2296
303-6261	275
	277
	278
303-9859	2
	▶825
	2143
303-9860	3
	465
	▶828
303-9933	358
	361
	366
	370
	373

PART NUMBER INDEX

Part	Page
	375
	377
	379
	381
	383
	385
	386
	388
	390
	392
	394
	396
303-9937	358
	361
	366
	370
	373
	375
	377
	379
	381
	383
	385
	386
	388
	390
	392
	394
	396
304-0014	825
	▶829
304-0015	829
304-0016	828
	▶830
304-0017	830
304-0018	825
	828
304-0019	825
	828
304-0093	729
	730
	▶849
304-0096	698
	▶707
304-0097	707
304-5302	1899
	1901
304-5314	1899
	1901
304-5317	1899
	1901
304-5341	1899
	1901
304-5342	1899
305-0326	▶2108
305-0330	1973
	1975
	1987
305-0331	2056
	2058
305-0332	2054
	2057
305-0333	1973
	1975
	1987
305-0351	2146
305-0352	2146
305-0353	2146
305-0356	2146
305-0361	2263
305-0395	102
305-0441	2153
	2156
	2159
305-0442	2153
	2156
	2159
305-0466	28
	29
	36
	57
	58
	59
	71
	72
	73
	75
	76
	▶2214
	▶2215
305-0467	4
	5
	6
	7
	8
	9
	10
	11
	12
	13
	14
	15
	16
	17
	18
	19
	21
	22
	23
	24
	25
	26
	27
	30
	31
	32
	34
	35
	37
	38
	39
	40
	41
	42
	43
	44
	45
	46
	47
	48
	49
	50
	51
	52
	53
	54
	55
	60
	61
	62
	63
	65
	66
	67
	68
	69
	70
	75
	76
	77
	78
	79
	89
	91
	93
	94
	95
	96
	97
	98
	99
	▶2216
	▶2217
305-2124	182
305-4678	106
	107
	109
	110
	111
	119
	▶333
305-4742	▶173
305-4743	▶121
305-4744	106
	107
	109
	110
	111
	119
	▶122
305-4745	106
	107
	109
	110
	111
	119
	▶290
305-4746	173
	175
305-4747	173
	175
305-4748	121
305-4750	175
305-4751	175
305-4756	122
305-4763	101
	▶110
305-4774	157
	▶161
305-4775	153
	▶167
305-4776	110
	▶115
305-4777	▶111
	115
	116
305-4781	180
305-4887	290
305-4888	293
305-4889	290
305-4893	615
305-4895	615
305-4896	615
305-4897	615
305-4898	615
305-4900	290
	293
305-4901	290
	293
305-4902	290
	293
305-4905	171
305-4906	171
305-4907	171
305-4908	148
	151
	153
	155
	157
	159
	163
	165
	▶171
305-4910	106
	107
	109
	110
	111
	119
	▶175
305-4927	175
305-4928	175
305-4929	175
305-4930	175
305-4950	913
305-4951	913
305-4952	913
305-5291	343
305-7664	229
305-7669	214
305-7671	197
305-7673	197
306-1294	1111
306-1503	▶1396
	1758
306-1611	1082
306-1614	1082
306-1615	1082
306-8349	2
	3
	465
	▶581
	2143
306-8350	581
306-8362	580
306-8401	405
	412
	419
	427
306-8452	553
	▶634
306-8501	101
	191
	192
	193
	194
	▶624
306-8502	634
	635
306-8590	583
306-8610	412
306-8690	1
	2
	▶628
306-8691	628
306-8777	419
306-8802	2190
307-0047	445
	447
	448
307-1818	2086
	▶2098
	2100
307-4918	1123
	1125
307-4919	1125

▶ **PRIMARY REFERENCE**

PART NUMBER INDEX

Part	Page
307-4920	1425
	1426
307-5034	1117
307-5035	1108
307-5097	1422
307-5098	1422
307-5120	1301
	1303
307-5121	1132
307-5161	1233
	1237
	1244
	1247
	1411
	1414
	1417
307-7656	737
	739
	740
	742
	743
	746
307-7660	763
	▶850
307-7662	768
	779
	785
	791
	810
	814
	818
	▶851
307-7674	▶698
	699
	700
307-7694	695
	▶708
307-7695	708
307-7700	764
	769
	780
	786
	792
	798
	804
	810
	814
	818
307-7702	764
	769
	780
	786
	792
	798
	804
	810
	814
	818
307-7803	301
	303
307-7804	301
	303
	307
	310
	313
	316
	319
	323
	326
308-8775	749
	751
308-8776	749
	751
308-8777	749
	751
308-8881	102
	103
	104
	▶845
308-8882	845
309-1098	1911
309-3872	2291
309-5751	2180
309-5769	1269
	1273
	1277
	1281
	1313
	1315
	1317
	1319
	1321
	1357
	1387
309-5771	469
	470
	▶2180
	▶2181
309-5808	2047
	▶2079
309-5842	▶444
	469
309-5849	2176
309-5881	▶445
	469
	470
309-9941	1582
310-0078	4
	5
	6
	7
	8
	9
	10
	11
	12
	14
	15
	16
	17
	18
	19
	21
	22
	23
	24
	26
	27
	28
	29
	31
	32
	34
	35
	36
	38
	39
	40
	41
	42
	43
	44
	45
	46
	47
	48
	49
	50
	51
	52
	54
	55
	57
	58
	59
	60
	62
	63
	65
	66
	67
	68
	70
	71
	72
	73
	77
	78
	79
	82
	89
	91
	93
	94
	95
	96
	97
	98
	99
	▶2045
310-0210	1292
	1296
	▶1642
310-0390	1552
	1557
	1562
	▶1665
310-0393	1574
	1578
	▶1666
310-0394	1652
	▶1668
310-0404	▶1494
	1544
310-0405	1494
310-0414	1273
	▶1635
310-0419	1635
	1637
310-0420	1635
	1637
310-0421	1635
310-0422	1635
310-6252	2301
	2306
	2311
	2321
	2326
	2331
310-9484	▶115
	192
310-9485	▶115
	192
310-9498	180
310-9500	180
310-9532	131
310-9533	290
	293
	305
310-9534	290
	293
310-9536	290
	293
310-9537	305
310-9545	119
310-9552	119
310-9582	120
	▶188
310-9606	106
	▶298
310-9607	107
	109
	110
	111
	119
	▶299
310-9617	106
	107
	109
	110
	111
	119
	▶288
310-9667	254
	▶263
310-9676	261
	▶264
310-9694	2016
311-0027	111
312-0754	465
	466
312-0755	526
312-0756	467
312-1284	1161
312-2645	341
312-5525	2292
	2293
	2298
	2299
312-5694	1829
	1830
	1831
	1833
	1834
	1835
	1877
	1878
	1883
	1895
	1899
312-8338	238
	249
	251
312-8339	238
	249
	251
312-8340	249
312-8341	▶238
	245
313-3762	238
	249
	251
313-3763	238
	249
	251
313-3764	238
	249
	251
313-3765	238
	249
	251
313-3766	238
	249
	251
313-3767	238
	249

PART NUMBER INDEX

Part	Page
	251
313-3769	238
	249
	251
313-3772	238
	249
	251
313-3773	238
	249
	251
313-3774	238
	249
	251
313-3775	238
313-3776	238
	249
	251
313-3777	238
313-3780	238
	249
	251
313-3781	238
313-3782	238
	249
	251
313-7833	▶439
	498
313-7878	1429
	1431
313-7881	▶841
	1429
314-3574	▶103
314-3575	▶103
314-3576	▶103
314-3727	9
	11
	12
	15
	16
	17
	21
	22
	23
	24
	27
	29
	31
	35
	38
	39
	40
	41
	42
	43
	44
	46
	47
	48
	49
	50
	52
	54
	55
	58
	62
	63
	65
	66
	67
	70
	72
	85
	86
	87
	88
	▶1779
314-3729	▶1779
314-3730	▶1780
314-3735	4
	5
	6
	7
	10
	81
	▶441
314-3765	4
	5
	6
	7
	10
	▶553
314-3768	553
	▶2297
314-3774	▶441
314-3785	4
	5
	6
	7
	8
	9
	10
	11
	12
	13
	14
	15
	23
	24
	25
	26
	27
	30
	77
	78
	79
	89
	91
	93
	▶335
314-3786	11
	23
	43
	44
	54
	55
	62
	63
	▶2341
314-3797	▶892
314-3798	10
	13
	25
	37
	50
	53
	61
	69
	77
	78
	79
	95
	98
	99
	▶892
314-3846	▶103
314-3847	▶104
314-3848	16
	17
	21
	22
	31
	38
	39
	40
	41
	42
	46
	47
	48
	49
	65
	66
	67
	103
	104
	▶2298
	▶2299
314-3851	4
	5
	6
	7
	10
	11
	12
	23
	24
	39
	40
	41
	42
	43
	44
	46
	47
	48
	49
	54
	55
	62
	63
	65
	66
	67
	70
	85
	86
	▶1755
314-3859	▶4
314-3860	▶5
314-3861	▶6
314-3862	▶7
314-3864	▶8
314-3865	▶9
314-3867	▶79
314-3868	12
	13
	17
	18
	19
	20
	33
	56
	64
	▶82
314-3882	90
	92
	100
	101
	▶2143
314-3883	▶465
314-3899	▶84
314-3900	13
	18
	20
	33
	56
	64
	▶84
314-3905	▶10
314-3925	▶85
314-6501	238
314-6504	238
	249
	251
314-6505	238
	249
	251
314-6506	238
	249
	251
314-6509	238
	249
	251
314-6510	238
	249
	251
314-8124	1429
	1431
314-8128	1292
	1296
314-8205	1190
	1194
314-8246	1244
	1247
314-8252	1175
314-8262	1411
	1414
	1417
315-0800	749
	751
315-1040	1779
	▶1810
315-1041	1810
315-1049	1721
	▶1742
315-1050	1742
315-4370	1029
	▶1463
	▶1464
315-4371	1463
	▶1471
315-4372	1471
	▶1472
315-4412	▶1697
	1712
315-5313	2007
316-4084	1160
316-4085	1160
316-6166	2001
	2005
	▶2086
316-8811	1937
	▶1947
	2132
316-8845	1944
	1947
316-8846	1944
	1947
	1950
316-8847	1944
	1947
	1950
316-8848	1944
	1947
316-8849	1944

PART NUMBER INDEX

Part	Page
	1947
	1950
316-8850	1944
	1947
316-8872	▶2146
316-8908	2116
316-8916	1939
	1941
	▶1950
	2134
316-8918	1950
316-8920	1950
316-8921	1950
316-8987	2199
	2201
	2203
	2205
	2223
	2224
	2225
	2234
	2235
	2236
	2237
316-8989	2170
317-0740	1901
317-3185	497
317-4712	1182
	1190
	1194
	1217
	1221
	1225
	1229
317-4798	1210
319-1248	554
319-1335	647
319-1344	508
	629
319-1346	508
	629
319-1348	588
	629
319-1358	▶629
319-1386	504
	▶508
319-1387	1
	2
	▶588
319-4420	515
	517
	521
	523
	▶546
319-9152	2296
319-9845	1426
319-9888	1265
319-9996	1407
320-0013	1131
320-0198	1108
320-5392	439
320-5396	498
320-5525	2163
	2164
	2165
320-5732	101
	▶809
	▶813
	▶817
321-8629	182
321-8665	182
322-0221	467
	501
322-0222	501
322-4582	2297
322-8603	182
322-8604	182
322-8714	1467
	▶1715
322-8716	1125
	▶1712
323-0210	182
323-3820	1007
323-4762	▶182
323-7558	1221
	1225
	1229
	▶1704
323-7559	1704
	▶1705
323-7770	1277
	1281
	1635
323-7772	1705
323-7897	1557
	1562
	1578
	1583
	1588
323-7898	1557
	1562
	1578
	1583
	1588
	▶1645
323-7942	1250
	1254
	1258
	▶1707
324-0123	197
324-0966	1779
	▶1811
	▶1812
324-0968	1811
324-0980	1779
	▶1813
	▶1814
324-0981	1780
	▶1815
324-0983	1813
324-3309	466
	▶2184
324-3965	113
	▶115
324-3969	▶116
	192
324-3971	▶116
	191
324-3972	110
	▶116
324-3975	▶116
	192
324-4003	▶117
	194
324-4004	▶117
	194
324-4051	▶140
	191
324-4053	140
	201
324-4060	122
324-4102	155
	159
	165
324-4103	155
	159
	169
	200
324-4106	155
	159
	169
	200
324-4107	155
	159
	169
	200
324-4119	275
	277
	278
324-4121	159
	▶169
324-4122	155
	165
	▶200
324-4128	203
324-4131	134
324-4156	▶279
	284
324-4158	284
324-4165	284
324-4166	284
324-4167	284
324-4173	106
	107
	109
	110
	111
	119
	▶284
324-4175	129
324-4194	106
	107
	109
	111
	119
	▶277
324-4200	112
	116
	117
	▶163
324-4220	123
324-4221	123
324-4223	135
324-4225	151
	159
	163
324-4235	146
324-4236	146
324-4237	146
324-4248	172
324-4249	172
324-5761	341
324-5770	613
	643
	2144
324-5771	613
324-5774	441
	▶584
324-5801	505
	▶510
324-5802	510
324-5804	510
324-5805	510
324-5806	510
324-5807	510
324-5808	510
325-8865	1175
	1182
	1190
	1194
	1217
	1221
	1225
	1229
	1250
	1254
	1258
	1307
	310
	313
	316
	319
326-1644	295
326-3870	241
	243
	246
326-3875	227
	▶241
326-3876	210
	▶243
	245
326-3937	212
	▶245
326-3947	▶246
	248
326-3951	246
326-3956	214
	216
	218
	▶248
326-4635	333
	▶337
326-4700	299
326-4756	298
327-3062	2163
327-3063	2163
327-3191	74
	▶349
	350
	351
327-3192	349
	▶372
327-3193	372
	▶373
327-3196	372
	▶375
327-3198	335
	▶352
	353
	354
327-3199	352
	▶376
327-3200	376
	▶377
	▶379
327-3203	376
	▶381
327-3232	685
	▶709
327-3233	709
327-3236	684
	▶710
327-3237	710
327-3248	692
	694
	▶711
327-3252	691
	▶712
327-3253	712
327-3256	688
	▶713
327-3257	713
327-3268	696
	▶714
327-3269	714
327-3272	699

PART NUMBER INDEX

Part	Page
	▶715
327-3273	715
327-3329	441
	▶498
327-3652	▶1880
327-3653	▶1880
327-3654	▶1880
327-3655	▶1881
327-3656	▶1881
327-3657	▶1881
327-3658	▶1882
327-3659	▶1890
327-3660	▶1871
327-4930	1517
327-6500	8
	9
	14
	15
	26
	27
	34
	35
	45
	51
	52
	60
	68
	▶2199
	▶2200
327-6501	6
	11
	12
	13
	16
	17
	21
	22
	23
	24
	25
	28
	29
	30
	31
	36
	37
	38
	39
	40
	41
	42
	43
	44
	46
	47
	48
	49
	50
	53
	54
	55
	57
	58
	59
	61
	62
	63
	65
	66
	67
	69
	70
	71
	72
	73
	75
	76
	77
	78
	79
	89
	91
	93
	94
	95
	96
	97
	98
	99
	▶2201
	▶2202
327-6502	▶2203
	▶2204
327-6503	4
	5
	7
	10
	75
	76
	▶2205
	▶2206
327-6506	2199
	2200
	▶2234
327-6507	2201
	2202
	▶2235
327-6508	2203
	2204
	▶2236
327-6509	2205
	2206
	▶2237
327-6511	▶2223
	2234
327-6512	▶2224
	2235
	2236
327-6513	▶2225
	2237
327-6514	▶2128
327-6515	8
	9
	14
	15
	26
	27
	34
	35
	45
	51
	52
	60
	68
	▶2129
	2224
	2225
327-6520	2234
	2235
	▶2250
327-6521	2236
	2237
	▶2251
327-6523	2187
	▶2241
327-6538	2241
327-6540	2214
327-6541	2216
327-6550	1981
	2007
	▶2168
	2169
	2170
327-6552	4
	5
	6
	7
	10
	81
	▶2169
327-6553	81
	▶2170
327-6568	1
	2
	▶2187
327-6576	2169
327-6579	2090
	2095
327-6581	2254
327-6601	2113
327-6639	2223
	2227
327-6640	2147
	2223
	2224
	2225
327-6642	2223
	2224
	2225
	2226
	2227
327-6643	2223
	2224
	2225
327-6644	2250
	2251
327-6645	2250
327-6646	2250
	2251
327-6647	2250
327-6648	2250
	2251
327-7193	▶172
	2016
327-7195	▶112
	193
327-7198	▶117
	193
327-7199	112
	117
	▶119
327-7202	165
327-7204	148
327-7207	193
	▶330
327-7211	330
327-7214	330
327-7217	330
327-7221	155
327-7227	119
	▶293
327-7228	119
	▶144
327-7229	144
327-7230	163
	▶201
327-7235	293
327-7236	293
327-7237	293
327-7238	293
327-7239	293
327-7240	293
327-7241	293
327-7247	144
327-7249	119
	▶278
327-7251	140
	163
327-7264	293
327-7267	▶112
	193
327-7268	▶112
	193
327-7270	112
	117
	118
	▶165
327-7289	▶117
	191
327-7290	▶118
	192
327-7482	2171
	▶2173
327-9998	583
328-0021	515
	517
	521
	523
328-0028	635
328-0040	▶505
	2187
328-0048	441
	▶583
328-0072	421
	429
328-0094	553
	▶635
328-0371	558
328-0372	558
328-0388	▶558
	911
328-2035	1161
	1247
	1411
	1414
	1417
	▶1700
329-2817	1200
329-2819	1200
329-2820	1200
329-5958	1905
329-6605	1836
	▶1872
329-6606	1838
	▶1874
329-6607	1839
	▶1875
329-7258	1875
329-7259	1874
329-7260	1872
330-1162	74
	▶2163
	2164
	2165
330-1166	74
	▶748
330-1167	748
330-1182	768
	779
	785
	791
	797
	803
	813
	817
330-1183	768

▶ **PRIMARY REFERENCE**

PART NUMBER INDEX

Part	Page
	813
	817
330-1184	779
	785
	803
330-1194	▶74
	441
330-1347	768
	785
	791
	797
	803
	817
330-1426	74
	335
	▶723
330-1427	723
	▶724
330-2384	1342
	1349
	1356
	1364
	1371
	1386
	1397
330-2406	911
	▶1250
	▶1254
	▶1258
330-2407	911
	▶1397
330-2445	1226
	1230
330-2448	1226
	1230
	1250
	1254
	1258
330-2470	1250
	1254
	1258
330-2568	1293
	1296
330-9758	182
331-0094	1837
	▶1873
331-1878	▶1828
	1840
331-1879	1828
	▶1849
331-1881	1849
331-1884	1849
331-1885	1849
331-1887	1849
331-1888	1849
331-1889	1849
331-1894	1849
331-1924	1866
	1887
331-1925	1869
	1888
331-1926	1866
	1887
331-1927	1869
	1888
331-3247	1873
331-7539	449
331-7972	2311
	2316
	2331
	2336
331-7973	2311
	2316
	2331
	2336
332-1063	2341
332-4191	238
	251
332-4606	▶1836
332-4607	▶1838
332-4608	▶1839
332-4609	▶1837
332-5077	1755
	1756
	▶1767
332-8903	896
332-8908	892
	▶896
332-8915	892
	▶896
333-4157	2251
333-4158	2251
333-4159	2251
333-4160	2224
333-4172	▶2147
	2226
333-4178	2251
333-4179	2147
	2223
	2224
	2225
333-4180	2148
	2250
	2251
333-4181	2250
333-9952	2341
334-2932	337
334-4603	2306
	2311
	2316
	2326
	2331
	2336
334-9940	1714
	1715
	1717
334-9968	1462
	▶1474
334-9969	1464
	▶1475
334-9976	1474
	▶1476
334-9977	1475
	▶1478
334-9981	1476
	1478
334-9986	658
	▶1467
335-0084	1703
	1707
	▶1708
335-0136	1622
335-0138	1622
335-0545	1401
335-4926	▶1892
336-1136	▶1989
	1991
336-1137	1989
	▶2087
336-1147	▶1991
336-1230	▶2207
336-3318	▶911
336-3566	525
336-4585	238
	249
	251
336-4586	249
	251
336-4587	249
	251
336-4588	249
	251
336-4589	245
	▶249
336-4590	238
	249
	251
336-4591	238
	249
	251
336-4592	249
336-4593	238
	249
	251
336-4597	238
	249
	251
336-6071	70
	▶493
336-6684	439
	▶442
337-1141	1250
	1254
	1258
337-1142	1250
	1254
	1258
337-1145	1250
	1254
	1258
337-1148	1250
	1254
	1258
337-1152	1250
	1254
337-1153	1250
	1254
337-1169	1250
	1254
337-1170	1250
	1254
337-1182	1167
337-1205	1285
337-1264	912
	▶1411
	▶1414
	▶1417
337-1265	1411
	1414
	1417
337-1424	1194
	1226
	1230
	1258
337-1426	1194
337-1435	1250
	1254
	1258
337-2709	1411
	1414
	1417
337-5123	2083
337-9021	627
338-2744	467
338-8366	2083
338-9898	▶85
338-9899	▶86
338-9900	▶85
338-9901	▶85
338-9908	▶11
338-9911	44
	45
	55
	56
	63
	64
	▶86
338-9923	▶12
338-9924	▶89
338-9925	▶77
339-0362	465
339-0695	2295
339-2019	▶497
339-2021	▶497
339-2022	▶497
339-2024	▶465
339-2026	▶466
339-2029	▶466
339-2030	▶467
339-2031	▶2276
339-2032	497
	▶499
339-2034	497
	▶626
339-2036	497
	▶627
339-2037	465
	466
339-2038	465
	466
	▶501
339-2039	466
339-2040	466
339-2041	466
	▶627
339-2042	465
	466
339-2044	466
	▶526
339-3730	1020
340-6474	2207
	▶2238
340-6475	▶2226
	2238
340-6476	2238
	2239
	▶2252
340-6477	▶2148
	2226
	2227
340-6478	18
	19
	32
	▶2208
340-6479	2208
	▶2239
340-6480	▶2227
	2239
340-6481	▶2149
	2252
340-8237	890
341-1842	358
	361
	366
	370
	373
	375
	379
	381
	383
	385
	386
	388
	390
	392
	394

PART NUMBER INDEX

Part	Page
	396
341-2143	249
341-2177	924
	▶986
341-2181	▶920
	1755
341-2182	920
	▶955
341-2788	▶916
	1718
	1722
	1723
341-2789	▶916
	1718
	1722
	1723
341-2790	916
	▶933
341-2801	▶924
	1722
	1723
341-2802	924
	▶989
341-2806	▶924
	1723
341-2807	924
	▶991
341-2808	▶925
	1718
341-2809	925
	▶993
341-2813	▶920
	1756
	1757
341-2814	920
	▶957
341-2817	▶921
	1756
341-2818	921
	▶959
342-0932	757
342-0965	757
342-1861	1495
	1496
342-1962	1745
342-2924	1508
342-2972	429
342-2973	429
342-2974	429
342-2975	429
342-2976	429
342-3003	622
342-7914	465
	466
342-9022	454
	455
342-9290	454
	455
342-9480	▶1840
342-9481	▶1840
342-9482	▶1842
342-9483	▶1842
342-9484	▶1840
343-2386	1414
	1417
343-5527	295
	307
	310
	313
	316
	319
344-4363	80
	▶912
344-4386	▶921
	1758
344-6828	1815
345-3156	▶1165
	1893
345-3157	▶1166
	1893
345-4467	1165
	1166
346-0643	1020
346-1340	1484
346-3046	1165
346-3047	1165
346-3084	1166
346-3085	1166
346-5591	1020
346-5592	1020
346-5593	1020
346-5594	1020
346-5595	1020
346-5596	1020
346-7204	856
	▶868
346-7232	867
346-7233	867
346-7236	868
346-7237	868
346-7375	▶1955
	1981
	2007
346-7763	454
	455
346-8012	2023
	2025
346-8014	2023
346-8037	11
	12
	13
	16
	17
	21
	22
	23
	24
	25
	28
	29
	30
	31
	36
	37
	38
	39
	40
	41
	42
	43
	44
	46
	47
	48
	49
	50
	53
	54
	55
	57
	58
	59
	61
	62
	63
	65
	66
	67
	69
	70
	71
	72
	73
	78
	79
	91
	93
	94
	95
	96
	97
	98
	99
	▶1993
346-8038	75
	76
	▶1995
346-8039	14
	15
	18
	19
	26
	27
	32
	34
	35
	45
	50
	51
	52
	60
	68
	▶1997
346-8041	▶1999
346-8053	1993
	▶2001
346-8054	1995
	1999
	▶2003
346-8055	1997
	▶2005
346-8058	2001
	2003
	2005
	▶2007
346-8061	2003
	▶2100
346-9376	2182
347-3338	▶12
347-3339	▶13
347-3340	▶13
347-3341	▶90
347-3342	12
	13
	▶90
347-3343	▶90
347-3344	12
	13
	17
	18
	19
	20
	▶75
347-3345	▶75
347-3346	▶82
347-3347	▶82
347-3348	▶82
347-3349	12
	17
	19
	20
	▶86
347-3350	▶87
347-3351	▶87
347-3352	▶87
347-3353	13
	18
	20
	▶87
347-3354	▶79
347-3355	▶80
347-3356	▶83
347-3357	▶83
347-3358	▶83
347-3359	▶83
347-3360	▶84
347-3361	▶84
347-3362	▶81
347-3363	▶81
347-3364	▶81
347-6081	▶1044
347-6082	1044
347-6730	▶1829
347-6736	1829
	▶1864
347-6739	▶1829
347-6741	1829
	▶1865
347-6750	▶1830
347-6755	1830
	▶1870
347-6831	▶1883
347-6832	▶1884
347-6833	▶1885
347-6834	▶1886
347-6835	▶1887
347-6836	▶1888
347-6837	▶1889
347-6838	▶1891
347-6843	1841
	▶1877
347-6846	1841
	▶1878
347-6849	▶1831
347-6852	▶1831
347-6853	▶1831
347-6858	1841
	▶1879
347-7468	1878
347-7478	1879
347-7479	1853
	1855
347-7480	1852
	1854
347-7481	1879
347-7482	1853
	1855
347-7483	1852
	1854
347-7507	1878
	1879
347-7508	1878
	1879
347-7510	1877
	1878
	1879
347-7516	1864
	1870
347-7541	1883
347-7542	1884
347-7543	1885
	1891
347-7544	1864
	1865
	1867
	1870

▶ **PRIMARY REFERENCE**

PART NUMBER INDEX

Part	Page
	1886
347-7545	1866
	1887
347-7547	1869
	1888
347-7548	1883
347-7549	1884
347-7550	1885
347-7551	1864
	1865
	1867
	1886
347-7553	1883
347-7554	1884
347-7555	1885
347-7556	1864
	1865
	1867
	1886
347-7571	1864
	1866
	1869
	1870
	1884
	1885
	1886
	1887
	1888
	1889
	1891
347-7572	1864
	1866
	1869
	1870
	1884
	1885
	1886
	1887
	1888
	1889
	1891
347-7574	1864
	1865
	1866
	1867
	1869
	1883
	1884
	1885
	1886
	1887
	1888
	1889
347-7580	1877
347-9292	229
	248
	▶251
347-9293	238
	251
348-1867	876
	878
	▶885
348-1868	876
	878
	▶883
348-1869	883
	887
348-1870	883
	887
348-1871	883
	887
348-3094	1866
348-3184	1866
348-3185	1869
348-3193	1877
348-3196	1878
348-3198	1877
348-3201	1878
348-4330	1897
348-5409	836
348-5410	2254
349-4087	1496
	▶1499
349-4116	1015
349-4118	1015
349-4121	1015
349-4124	▶917
	1718
	1719
	1720
	1721
	1723
	1758
349-4125	▶917
	1718
	1719
	1720
	1721
	1723
	1758
349-4126	917
	▶935
349-4127	▶925
	1719
	1720
	1721
349-4128	925
	▶995
349-4129	▶925
	1719
349-4130	925
	▶997
349-4131	▶925
	1718
	1723
349-4132	925
	▶999
349-4133	▶921
	1753
	1754
	1755
	1892
349-4134	921
	▶961
349-4148	924
	▶1001
349-4151	▶921
	1753
	1754
349-4152	921
	▶963
349-5084	572
349-5085	572
349-5413	2181
349-5414	2181
349-5473	3
	▶457
349-6070	465
	466
349-6114	1895
	1897
349-6115	1899
	1901
349-6653	2300
349-7059	390
	392
	394
	396
349-7473	▶1893
350-0071	1889
350-0073	1889
350-0952	933
	935
	957
	961
350-0953	959
350-0954	955
	963
350-0955	989
	991
	993
	995
	997
	999
350-0956	986
	1001
350-0957	933
	935
	957
	961
350-0958	959
350-0959	955
	963
350-0960	989
	991
	993
	995
	997
	999
350-0961	986
	1001
350-0962	933
	935
350-0967	957
	961
350-0968	959
350-0970	989
	993
	995
	999
350-0971	991
	997
350-0974	1001
350-0975	986
350-0976	955
	963
350-4211	▶1893
350-7735	390
	392
	394
	396
350-8132	493
350-8133	493
350-8134	493
350-8250	23
	24
	25
	26
	27
	28
	29
	30
	34
	35
	36
	37
	43
	44
	45
	50
	51
	52
	53
	54
	55
	57
	58
	59
	60
	61
	62
	63
	68
	69
	70
	71
	72
	73
	76
	79
	93
	94
	95
	96
	97
	98
	99
	▶613
350-8253	570
350-9339	986
350-9344	986
351-0286	1296
351-3094	697
	▶716
351-3102	700
	▶717
351-3103	717
351-8488	454
351-8490	452
	▶454
351-8602	▶1893
351-9690	▶91
351-9691	▶78
351-9705	3
351-9918	475
352-1096	933
	938
352-1098	989
	991
	1004
352-1099	993
352-1100	957
	967
352-1101	959
352-1102	933
	938
352-1104	989
	991
	1004
352-1105	993
352-1106	957
	967
352-6815	1680
	1682
	1686
352-6864	1665
	1666
	1668
	1669
	1671
	1672
352-7057	1529
	1567
	1568

PART NUMBER INDEX

Part	Page
352-7058	1567
	1568
352-7059	1567
	1568
352-7063	1462
	1464
352-7113	1583
	▶1669
352-7116	1588
	▶1671
352-7117	1653
	▶1672
352-7122	1536
	1541
	1544
	1562
	1583
	1588
	▶1673
352-7123	1526
	1598
	1603
	1607
	1611
	▶1674
352-7129	▶1583
	1616
352-7138	▶1588
	1614
352-7176	1309
	▶1698
352-7190	1526
352-7243	1440
	1445
	▶1526
352-7775	238
	251
352-9554	20
	33
	56
	64
	▶864
352-9597	751
352-9599	679
353-0510	▶656
	673
353-0545	▶657
	673
353-0609	657
	▶658
353-0611	658
	▶659
	667
353-0612	659
	662
	672
353-0613	▶661
	665
353-0615	661
	▶662
353-0641	▶665
	673
353-0645	▶666
	673
353-0646	666
	▶667
353-2149	2051
353-2150	2053
353-2151	▶2012
353-2794	525
353-5545	238
	251
354-1018	▶14
354-1019	▶15
354-1028	1514
	▶2300
354-1047	▶16
354-1054	▶17
354-1056	18
	19
	32
	92
	99
	100
	▶193
354-1057	22
	31
	38
	39
	40
	41
	42
	46
	47
	48
	49
	▶193
354-1062	▶17
354-1063	▶18
354-1065	17
	18
	▶91
354-1112	▶18
354-1113	▶19
354-1114	▶3
	18
	19
	32
354-1141	▶19
354-1142	▶20
354-1145	▶20
354-1146	▶20
354-1147	▶21
354-1148	▶21
354-1149	▶22
354-1150	▶22
354-1151	19
	20
	33
	56
	▶92
354-1152	▶92
354-1153	▶92
354-1154	20
	33
	56
	64
	▶76
354-1155	▶76
354-3691	1296
354-3701	1258
354-3703	1258
354-3704	1258
354-3724	▶1401
	1514
354-3725	1401
354-3728	1401
354-3764	1250
	1254
354-3838	1225
	1229
	1258
354-3863	1357
	1387
354-3864	1365
	1372
	1375
	1377
	1398
354-5807	1851
354-5811	1851
354-5813	1851
355-0598	2181
355-1213	2182
355-1675	1850
355-1676	1850
355-1682	1850
355-2203	1015
355-5105	456
355-5818	1007
	1013
	1017
355-5820	1007
	1013
	1017
355-8007	759
355-8008	759
355-8009	759
355-8010	759
355-8013	759
355-8014	759
355-8015	759
355-8128	686
	▶718
355-8129	718
355-8153	689
	▶719
	▶720
355-8154	719
355-8164	307
	310
	313
	316
	319
355-8167	193
	▶821
	▶823
355-8168	193
	▶307
	▶310
	▶313
	▶316
	▶319
355-8187	821
	823
	▶852
355-8190	821
	823
355-8195	821
	823
355-8198	307
	310
	313
	316
	319
355-8230	791
	797
	803
	817
	▶842
355-8231	842
355-9764	456
356-1585	▶1842
356-4276	1889
356-4308	1891
356-4309	1870
356-4314	1891
356-4315	1870
356-8109	▶1893
356-8174	1153
356-8177	1153
356-8417	▶1840
356-8418	▶1832
	1840
356-8419	1832
	▶1850
357-0518	1850
357-1959	238
	251
357-2696	1909
357-2697	1909
357-3877	2060
	2061
	2062
357-4101	2025
357-5709	1774
357-5711	989
	991
	993
	1004
357-5712	957
	967
357-5717	933
	938
357-7540	891
358-0921	746
358-2107	921
	▶965
358-2108	965
	▶1015
358-2110	1015
358-5457	1850
358-5459	1850
358-6043	1850
358-6634	305
	▶343
358-8615	▶1833
358-8627	1833
	▶1851
358-9712	▶843
	1431
359-2263	▶93
359-2264	▶79
359-2298	▶23
359-2299	▶24
359-2300	▶25
359-2309	▶26
359-2310	▶27
359-2380	2299
359-2404	▶28
359-2405	▶29
359-2421	▶30
359-2423	30
	▶194
359-2433	▶1722
359-2434	▶1722
359-2435	▶1755
359-2440	▶255
359-2446	▶80
359-2447	▶80
359-2448	▶80
359-2481	▶31
359-2482	▶31
359-2500	▶32
359-2501	▶32
359-2504	▶33
359-2505	▶33
359-2506	▶34
359-2507	▶35
359-2525	33
	56
	64
	▶88
359-2526	33
	56
	64

▶ **PRIMARY REFERENCE**

PART NUMBER INDEX

Part	Page
	▶88
359-2530	▶88
359-2531	▶88
359-2532	▶89
359-2912	1165
359-2913	1165
359-2914	1166
359-2915	1166
359-5808	844
359-8724	1797
359-8784	1119
359-8787	1119
359-9381	216
360-0074	955
360-4583	1715
360-4584	1715
360-4585	1715
360-4586	1715
360-4587	1715
360-4588	▶1675
	1715
360-4598	1466
	▶1717
360-4599	▶1676
	1717
360-5863	885
	▶886
360-5864	885
	▶887
360-5865	886
360-6175	191
	▶502
360-9273	238
	251
360-9274	238
	251
361-1045	2182
362-3642	2295
362-3643	2295
363-6132	1342
	1350
	1357
	1364
	1371
	1386
	1397
363-6133	1357
	1387
363-6134	1365
	1372
	1375
	1377
	1398
363-9545	2025
363-9548	2025
363-9550	2025
364-0229	586
364-0931	▶917
	1722
364-0932	▶917
	1722
364-0933	917
	▶937
364-0934	937
	▶1007
364-0935	▶926
	1722
364-0936	926
	▶1003
364-0937	1003
	▶1022
364-0938	▶922
	1755
364-0939	922
	▶966
364-0940	966
	▶1017
364-0952	1007
	1017
364-0955	1022
364-1975	1675
364-1976	1675
364-1977	1675
364-1978	1675
364-5044	1812
364-5047	1805
364-5048	1789
364-6936	733
	▶853
364-6940	255
	▶733
365-2276	1879
365-7153	1814
365-7192	▶831
365-7193	831
365-7194	831
365-7195	831
365-7196	831
366-4622	570
366-6363	346
	▶383
366-6364	350
	▶385
366-6365	▶386
366-6366	353
	▶388
366-6379	720
366-6413	711
366-6415	716
366-6478	739
	743
366-6495	341
366-8625	553
	▶1435
366-8749	2173
	2174
366-8821	450
366-9311	▶530
	1229
	1254
	1258
	1434
	1435
366-9312	530
	1303
366-9313	530
	531
366-9315	427
366-9331	427
366-9342	54
	55
	56
	62
	63
	64
	▶494
366-9343	51
	52
	53
	56
	57
	58
	59
	60
	61
	64
	68
	69
	71
	72
	73
	▶496
366-9344	494
	496
366-9345	494
	496
366-9348	451
	▶602
366-9353	▶447
	451
366-9355	451
	▶2182
367-0844	2311
	2316
	2331
	2336
367-8329	▶672
367-8465	1760
367-8467	1759
	1764
	1765
	1766
	1767
	1768
367-8468	1762
367-8569	1851
367-8686	▶36
367-8697	▶37
367-8698	34
	35
	37
	43
	44
	45
	51
	52
	53
	54
	55
	60
	61
	62
	63
	68
	69
	94
	95
	96
	97
	98
	99
	▶335
367-8738	▶38
367-8739	▶38
367-8780	39
	40
	41
	42
	65
	66
	67
	▶451
367-8798	▶39
367-8799	▶40
367-8800	▶41
367-8807	▶42
367-8809	▶43
367-8810	▶44
367-8811	▶44
367-8812	44
	55
	▶94
367-8813	▶45
367-8814	45
	56
	▶95
367-8817	▶45
368-3360	1851
368-3361	1851
368-8651	1700
368-9573	1417
368-9574	1417
369-0032	604
369-0033	31
	38
	46
	47
	48
	49
	▶604
369-0134	▶2140
369-0135	▶2141
369-2775	2165
369-2776	2165
369-8502	1277
	1281
	▶1637
369-8507	1637
369-8508	1637
369-8509	1637
369-8510	1637
369-8568	1637
369-8569	1637
369-9620	1444
369-9673	924
	▶1444
369-9677	920
	921
	▶1148
369-9678	1148
370-4401	1851
371-9076	1877
371-9079	1878
371-9082	1831
	▶1852
371-9085	1831
	▶1866
371-9086	1831
	▶1869
371-9087	1883
371-9088	1884
371-9089	1885
371-9090	1886
371-9091	1887
371-9092	1888
371-9093	1889
371-9102	1891
371-9130	1852
	1854
371-9146	1869
371-9150	1883
371-9151	1883
371-9163	1870
	1891
371-9167	1879
371-9185	1877
	1883
371-9186	1884
371-9187	1885
	1891
371-9189	1879
	1886
371-9190	1878
	1887
371-9191	1888
371-9193	1889

PART NUMBER INDEX

Part	Page
371-9198	1853
371-9199	1853
372-4531	451
	▶455
372-4532	455
372-7627	791
	797
372-7633	791
	797
	803
	817
372-7637	▶726
	730
	732
	733
372-7640	803
	818
	821
372-9285	2274
372-9306	2250
	2251
372-9334	2274
372-9498	2215
	2217
372-9551	2025
372-9565	2120
373-8961	2182
373-8962	447
	448
373-8965	▶467
	602
373-8970	2182
374-4926	736
	▶742
	823
374-4927	742
375-3089	1
	2
	▶323
	▶326
375-3090	323
	326
375-3092	323
	326
375-3093	323
	326
375-5630	218
375-5693	218
375-7128	451
375-8594	351
	▶390
375-8597	676
375-8620	347
	▶392
375-8626	354
	▶394
375-8682	791
	797
375-8749	791
	797
	803
	817
375-8750	791
	797
	803
	817
375-8764	797
	803
	▶854
376-2124	1877
376-2125	1877
376-4616	447
	▶451
376-6478	448
	▶452
376-7248	454
	455
377-5391	▶1841
377-5392	▶1841
377-5393	▶1841
377-5419	▶1834
377-5887	2142
377-6019	1022
377-6022	1022
377-6536	▶2142
	2143
378-0319	1852
	1853
	1854
	1855
378-0320	1852
	1854
378-0361	1865
	1867
378-0362	1865
	1867
378-0363	1865
	1867
378-1556	989
	991
	993
	1004
379-4373	401
379-4387	120
	▶266
379-4433	134
379-7062	52
	56
	57
	58
	59
	60
	61
	62
	63
	64
	70
	97
	99
	100
	101
	▶451
379-7095	▶46
379-7096	▶47
379-7097	▶48
379-7098	▶49
379-7118	▶50
379-7119	▶50
379-7216	▶51
379-7217	▶52
379-7218	▶53
379-7219	▶54
379-7220	▶55
379-7221	▶55
379-7222	▶56
379-7223	▶56
379-7224	▶56
379-7226	▶57
379-7227	▶58
379-7228	▶59
379-7267	▶60
379-7268	▶61
379-7269	▶62
379-7270	▶63
379-7271	▶63
379-7272	▶64
379-7297	55
	▶96
379-7298	63
	▶97
379-7299	56
	▶98
379-7300	64
	▶99
379-7305	56
	▶99
379-7306	▶100
379-7347	▶100
380-9732	452
381-7372	▶448
	451
381-7416	2138
	▶2143
381-7417	2182
381-9061	323
	326
381-9064	323
	326
382-0664	323
	326
383-2514	1755
	1757
	▶1768
383-5388	456
383-5389	456
383-5390	457
383-5391	457
383-5392	457
383-5393	457
383-5646	2147
383-5647	2147
383-5648	2147
383-5706	1973
	1975
383-9558	1319
384-9010	759
384-9012	759
384-9095	743
384-9112	732
	▶855
385-3458	746
385-4025	▶64
385-4026	▶64
385-4027	64
	▶100
385-4028	▶101
385-4029	▶101
385-4030	▶65
385-4031	▶65
385-4032	▶66
385-4033	▶67
385-4035	▶68
385-4036	▶69
385-4136	▶70
385-4165	▶1755
386-3454	457
	2175
386-3457	2172
	▶2174
	2175
386-3458	457
	▶2175
387-3699	1281
389-2407	1080
	1093
	1099
	▶1618
390-4679	300
	▶338
390-5448	1834
	▶1853
390-5451	1853
	1855
390-6802	1853
	1855
391-0665	1053
391-0666	1064
391-0668	1053
	1064
391-1322	438
391-1324	438
392-2185	1281
394-9459	2164
394-9460	2164
396-6826	▶71
396-6827	▶72
396-6828	▶73
396-6895	1941
396-9391	▶743
	744
396-9392	743
	746
397-9294	1007
	1017
398-1900	1022
399-0819	▶727
	728
399-0821	336
	▶355
399-0822	355
	▶396
399-2552	191
	▶744
	▶745
399-2560	336
	▶728
399-5223	1780
	▶1816
399-5224	▶1772
	1816
399-5225	1772
	▶1773
399-5413	1772
	▶1774

4

Part	Page
415-1396	▶1718
415-1399	▶1722
415-8447	▶1723
416-0961	▶1723
416-1002	▶1780
416-1005	▶1755
416-1008	▶1756
416-1009	▶1756
416-1010	▶1756
416-1011	▶1756
416-1798	▶1941
	1943
416-1802	1941
416-1803	1943
416-1814	300
	▶468
416-4309	2007
417-1948	300
417-9771	▶1757
418-5243	▶1834
418-5244	1834
	▶1854
418-5499	▶1006
418-5502	▶918
	1006
418-5510	▶918
	1006

PART NUMBER INDEX

Part	Page	Part	Page	Part	Page	Part	Page
418-5511	▶938						
418-5512	▶926 1006						
418-5513	926 ▶1004						
418-6282	1296						
418-6286	1296						
418-8772	▶922 1006						
418-8777	922 ▶967						
418-9897	▶1943						
419-0572	▶336						
419-5123	▶1515						
419-5136	▶1445 1515						
419-7336	▶1757						
420-1013	1445						
420-1015	1445						
420-3351	1834 ▶1855						
420-3353	▶1834						
420-3356	▶1835						
420-3366	1835 ▶1867						
420-3862	▶300						
421-4416	745 ▶746						
421-4452	681						
423-6161	2225						
431-0455	▶1149 1780						
431-1641	▶1150 1779						
431-1642	▶1151 1778						
431-1643	▶1152 1778						
431-1802	1151 1152						
431-1805	1150						
434-3436	531						
434-8214	▶531						



©2013 Caterpillar
All Rights Reserved

CAT, CATERPILLAR, their respective logos, “Caterpillar Yellow”, and the POWER EDGE trade dress as well as corporate and product identity used herein, are trademarks of Caterpillar and may not be used without permission.

SEBP4874-24
VOLUME I
Pages 1-854

320D & 320D L Excavators

FAL1-UP
KGF1-UP