CATERPILLAR®

XEBP0044-02
December 2008

RUTHZIL TRATOR COMERCIAL DE PEÇAS LTDA  11 97083-6812 ROLANDO

# 320D 320D L Track-Type Excavators

## Powered by C6.4 Engine

**SERIAL NUMBER**
**BWZ1-Up(Vehicle)**
**DFB1-Up(Vehicle)**
**SNS1-Up(Vehicle)**
**WJN1-Up(Vehicle)**
**GDC00158-Up(Engine)**

© 2008 Caterpillar
All Rights Reserved

## HOW TO USE THE PARTS MANUAL

Caterpillar Parts Manuals include illustrations of the groups or assemblies which make up the machine. These illustrations show the standard components plus many of the attachments available for the machine.

The alphabetical index located in the front part of the book should be used to determine the page number on which specific illustrations are shown. Reference to those pages will identify each of the individual serviceable parts.

### Captions

The caption under each illustration identifies the part number and name of the group or assembly shown. If more than one illustration is included for any group, the caption identifies the specific machine serial numbers to which each illustration applies. In some cases it is not possible to determine the specific machine serial numbers to which different illustrations are applicable. In those cases the caption identifies the illustration as “First Type”, “Second Type”, etc. Reference to the actual group or assembly is necessary in those cases to determine which illustration should be used.

Captions provide additional information such as page numbers where illustrations of sub assemblies are shown, information regarding quantities used and other information intended to assist the user in determining parts needs.

This information indicates the effective serial number or effective date on which changes became effective.

Example :

D95.05- : Applicable on and after May 1995

↑ D indicates the nineteen hundreds.

T00.05- : Applicable on and after May 2000

↑ T indicates the two thousands.

### Indented Part Names

Within each illustration is a parts list identifying each serviceable part in the illustration. When a part name is indented in this list, it means that serviceable item is a part of the serviceable item under which it is indented.

### Abbreviations and Symbols

| | | |
|---|---|---|
| R.H. | Right Hand | Refers to the side of the machine as viewed from the operator's compartment. |
| L.H. | Left Hand | |
| L | Length | |
| T | Thickness | |
| Z | Number of Gear Teeth | |
| O.D. | Outside Diameter | |
| I.D. | Inside Diameter | |
| O.S. | Over Size | |
| U.S. | Under Size | |
| N/S | Not Serviced | |
| AS | Assembly | |
| NOM | Nominal | |

Abbreviations of Wire Colors

| | | | |
|---|---|---|---|
| RD | :Red | BR | :Brown |
| WH | :White | GN | :Green |
| OR | :Orange | BU | :Blue |
| YL | :Yellow | T | :Tan |
| PK | :Pink | DK/BU | :Dark Blue |
| BK | :Black | DK/GN | :Dark Green |
| GY | :Gray | LT/BU | :Light Blue |
| PU | :Purple | LT/GN | :Light Green |

### Note

Continuing improvement and advancement of product design may cause changes to your machine which may not be included in this publication. Each publication is reviewed and revised, as required, to update and include these changes in later editions.

Whenever a question arises regarding your Caterpillar product, or this publication, please consult your Caterpillar dealer for the latest available information.

# MODEL VIEW

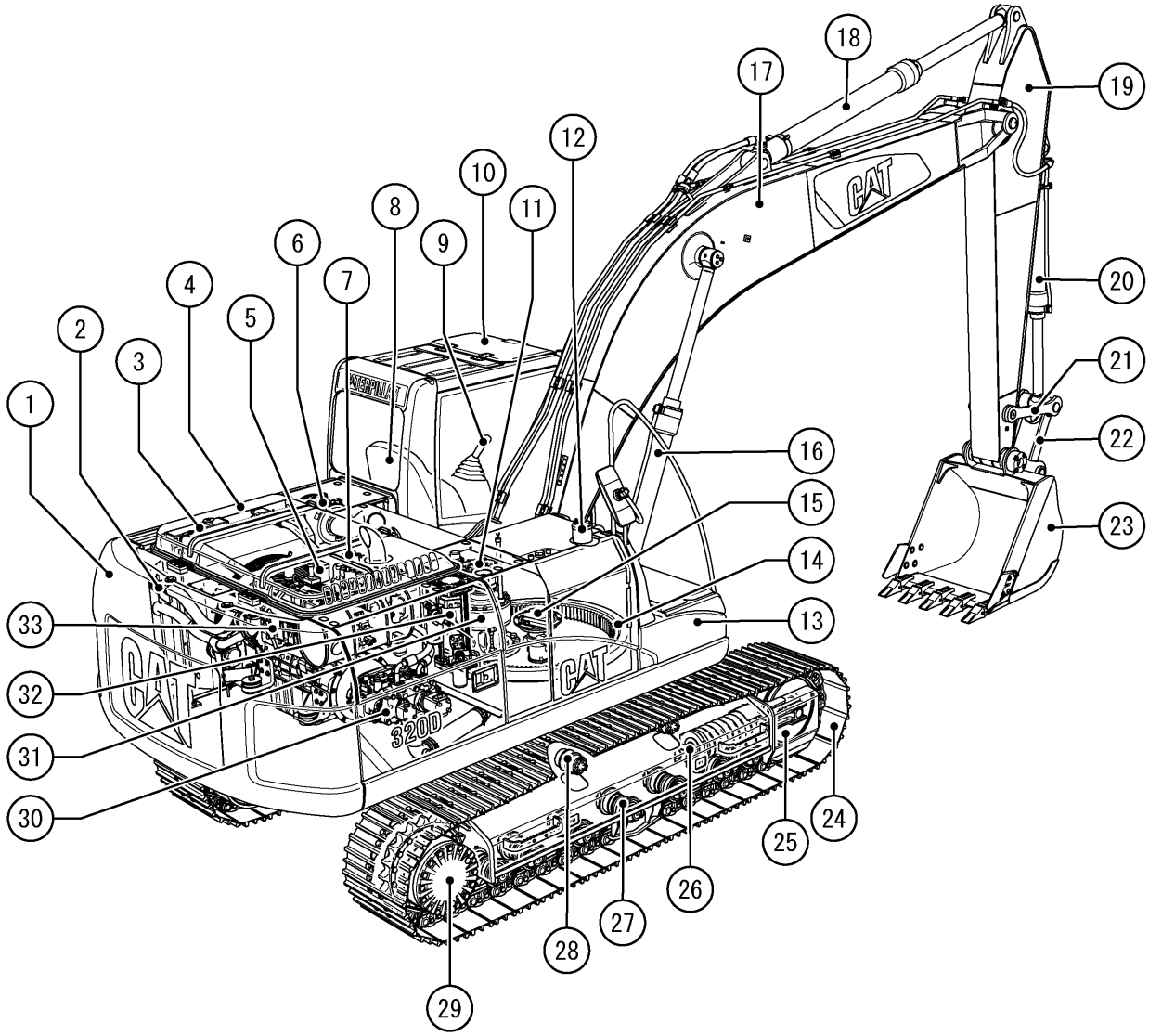



| | PAGE | | PAGE | | PAGE |
|---|---|---|---|---|---|
| ① Counterweight | 267 | ⑫ Fuel Tank | 84 | ㉓ Bucket | 793 |
| ② Aftercooler | 56 | ⑬ Storage Box | 258 | ㉔ Track | 316 |
| ③ Radiator & Oil Cooler | 54 | ⑭ Swing Bearing | 274 | ㉕ Idler | 293 |
| ④ Engine Cover | 236 | ⑮ Swivel | 518 | ㉖ Track Adjuster | 297 |
| ⑤ Battery | 92 | ⑯ Boom Cylinder | 356 | ㉗ Track Roller | 307 |
| ⑥ Air Cleaner | 64 | ⑰ Boom | 742 | ㉘ Carrier Roller | 307 |
| ⑦ Control Valve | 536 | ⑱ Stick Cylinder | 358 | ㉙ Final Drive | 231 |
| ⑧ Operator Seat | 680 | ⑲ Stick | 752 | ㉚ Pump | 338 |
| ⑨ Control Lever | 519 | ⑳ Bucket Cylinder | 366 | ㉛ Swing Drive | 500 |
| ⑩ Cab | 606 | ㉑ Link | 768 | ㉜ Return Filter | 328 |
| ⑪ Hydraulic Tank | 322 | ㉒ Rod | 768 | ㉝ Engine | 13 |

# REPLACEMENT ITEMS

The following chart provides a convenient listing of those items which require occasional replacement during normal operation or maintenance.

| DESCRIPTION | PART NO. | QTY. USED | PAGE NO. |
|---|---|---|---|
| Filter | | | |
| Air Conditioner Filter | 245-7823 | 1 | 711 |
| Air Filter | | | |
| Primary Filter Assembly | 131-8822 | 1 | 65 |
| Secondary Filter Assembly | 131-8821 | 1 | 65 |
| Cab Air Filter | 293-1184 | 1 | 717 |
| Engine Oil Filter | 1R-0739 | 1 | 45 |
| Fuel Filter | 1R-0751 | 2 | 79 |
| Hydraulic Oil Drain Filter | 093-7521 | 1 | 329 |
| Hydraulic Oil Pilot Filter | 126-1813 | 1 | 331 |
| | 5I-8670 | 1 | 332 |
| Hydraulic Oil Tank Return Filter | 179-9806 | 1 | 328 |
| Water Separator Element | 1R-0770 | 1 | 83 |
| V-Belt | | | |
| Alternator & Fan Belt | 294-1781 | 1 | 35 |
| Refrigerant Compressor V-Belt | 255-2927 | 1 | 729 |

# LIST OF ATTACHMENTS

The following chart provides a convenient listing of attachments with their reference page numbers as a quick reference for parts ordering.


| Consists of: | | Page |
|---|---|---|
| 284-4442 | **A/C CONDENSER MOUTING** | 707 |
| 290-1912 | **ADDITIONAL GEAR TRAIN FOR AUXILIARY PUMP** | 347 |
| 235-9003 | **AIR CONDITIONER** | 707 |
| 264-8671 | **AIR PREFILTER** | 66 |
| 231-1771 | **ALARM, TRAVEL** | 208 |
| | **BOOM** | |
| 240-3833 | M-BOOM, MASS 5.2M (BWZ1-Up, DFB1-Up) | 732 |
| 240-3828 | R-BOOM, REACH 5.7M | 731 |
| 240-3830 | R-BOOM, REACH 5.7M (Heavy Duty) | 731 |
| | **BUCKET** | |
| | EXCAVATION (X) | |
| 255-0395 | B Family 970MM Wide-0.8Cu.M.(ESCO) | 784 |
| 239-2683 | B Family 972MM Wide-0.8Cu.M.-Adapter Size J300 | 779 |
| 239-2573 | B Family 1000MM Wide-0.8Cu.M.-Adapter Size K80 | 783 |
| 255-0398 | B Family 1090MM Wide-0.9Cu.M.(ESCO) | 784 |
| 239-2686 | B Family 1092MM Wide-0.9Cu.M.-Adapter Size J300 | 779 |
| 239-2576 | B Family 1120MM Wide-0.9Cu.M.-Adapter Size K80 | 783 |
| 239-2579 | B Family 1150MM Wide-1.0Cu.M.-Adapter Size J300 | 780 |
| 239-2564 | CB Family 1345MM Wide-1.1Cu.M.-Adapter Size J400 | 780 |
| 239-2695 | CB Family 1435MM Wide-1.2Cu.M.-Adapter Size J400 | 781 |
| | For Demolition | |
| 239-2582 | B Family 990MM Wide-0.8Cu.M.-Adapter Size K90 | 785 |
| 239-2692 | B Family 1100MM Wide-0.9Cu.M.-Adapter Size J350 | 782 |
| | For Hammer | |
| 239-2689 | B Family 980MM Wide-0.8Cu.M.-Adapter Size J350 | 782 |
| 239-2585 | B Family 1110MM Wide-0.9Cu.M.-Adapter Size K90 | 785 |
| | **BUCKET LINKAGE** | |
| 247-7453 | B1 FAMILY (Casting Type) | 737 |
| 240-3860 | B1 FAMILY (Fabrication Type) | 737 |
| 229-1772 | CB2 FAMILY | 738 |
| 240-3867 | For Demolition | 738 |
| | **CAB** | |
| 229-9108 | METAL ROOF HATCH CAB (BWZ1-Up, DFB1-Up) | 608 |
| 229-9096 | SKYLIGHT HATCH CAB | 606 |

# LIST OF ATTACHMENTS


| Consists of: | | Page |
|---|---|---|
| | **COUNTERWEIGHT** | |
| 241-2005 | COUNTERWEIGHT (Without Lifting Eye) (BWZ1-Up, DFB1-Up) | 271 |
| 241-2002 | EXTRA COUNTERWEIGHT (BWZ1-Up, DFB1-Up) | 269 |
| | **FILM** | |
| 240-3894 | DEMOLITION (BWZ1-Up, SNS1-Up) | 844 |
| 240-3895 | DEMOLITION (DFB1-Up, WJN1-Up) | 845 |
| 240-3896 | HAMMER (BWZ1-Up, SNS1-Up) | 842 |
| 240-3897 | HAMMER (DFB1-Up, WJN1-Up) | 843 |
| | **FLOOR MAT** | |
| 240-5071 | BASIC | 668 |
| 245-7794 | Combined Function | 670 |
| 240-5073 | Single Function | 669 |
| | **GUARD** | |
| 289-6425 | BOTTOM, HEAVY DUTY (BWZ1-Up, DFB1-Up) | 265 |
| 274-2503 | BUCKET CYLINDER (For Demolition) | 389 |
| 266-8035 | BUCKET CYLINDER (For Hammer) | 390 |
| 178-5549 | FOGS | 655 |
| 171-7485 | CAB FRONT (SNS1-Up, WJN1-Up) | 658 |
| 164-0497 | CAB TOP (SNS1-Up, WJN1-Up) | 656 |
| 278-9257 | RUBBER BUMPER (BWZ1-Up, DFB1-Up) | 287 |
| 134-8875 | SWIVEL (SNS1-Up, WJN1-Up) | 266 |
| | TRACK GUIDE | |
| 120-7165 | Full Length (BWZ1-Up) | 302 |
| 120-7168 | Full Length (DFB1-Up) | 303 |
| 120-7164 | Track End Guide (BWZ1-Up) | 304 |
| 120-7167 | Track End Guide (DFB1-Up) | 305 |
| 164-0534 | WINDSHIELD, FRONT (Full Net) (For Hammer) | 660 |
| 164-0535 | WINDSHIELD, FRONT (Half Net) (For Demolition) | 662 |
| 259-7483 | **HAND CONTROL PATTERN CHANGER (4 Ways)** | 446 |
| 273-5168 | **HEATER & DEFROSTER** | 708 |
| | **HYDRAULIC SYSTEMS, AUXILIARY** | |
| | BOOM LINE GROUPS | |
| | M-Boom (5.2M) | |
| 242-6481 | Drain Lines | 429 |
| 242-6479 | High Pressure Lines | 412 |
| 242-6480 | Medium Pressure Lines | 420 |

# LIST OF ATTACHMENTS


| Consists of: | | Page |
|---|---|---|
| | R-Boom (5.7M) | |
| 242-6477 | Drain Lines | 428 |
| 242-6475 | High Pressure Lines | 410 |
| 242-6476 | Medium Pressure Lines | 418 |
| 179-5146 | With Slow Return Valve (For Demolition) | 400 |
| | STICK LINE GROUPS | |
| | M2.4CB2 & R2.5B1 Stick | |
| 242-6493 | Drain Lines | 434 |
| 237-3184 | High Pressure Lines | 416 |
| 242-6492 | Medium Pressure Lines | 426 |
| | R2.9B1 Stick | |
| 242-6489 | Drain Lines | 432 |
| 242-6487 | High Pressure Lines | 415 |
| 242-6488 | Medium Pressure Lines | 424 |
| | R3.9B1 Stick | |
| 242-6485 | Drain Lines | 430 |
| 242-6483 | High Pressure Lines | 414 |
| 242-6484 | Medium Pressure Lines | 422 |
| | TOOL CONTROL | |
| | Additional Circuit | |
| 260-8012 | Drain Circuit | 498 |
| 247-7459 | HYDRAULIC RETURN FILTER FOR HAMMER | 448 |
| | Combined Function | |
| 259-7493 | 2 Pump | 444 |
| 259-7495 | 2 Pump (Medium Pressure) | 445 |
| | Single Function | |
| 259-7492 | 1 Pump | 443 |
| 259-7494 | 2 Pump | 443 |
| 259-7707 | **JOYSTICK** | 519 |
| | **LIGHT** | |
| 259-5048 | M-BOOM, RIGHT SIDE | 220 |
| 259-5047 | R-BOOM, RIGHT SIDE | 216 |
| | WORKING, CAB MOUNTED (Time Delay) | |
| 238-1628 | For Use With Cab Guard | 212 |
| 238-1627 | Without Cab Guard | 210 |
| | **LONG REACH FRONT (15.6M)** | |
| | BUCKET | |
| 7Y-6402 | 810MM Wide-0.45Cu.M.-Backhoe (DFB1-Up) | 801 |
| 121-1807 | 1140MM Wide-0.6Cu.M.-Ditch Cleaning (DFB1-Up) | 800 |

# LIST OF ATTACHMENTS


| Consists of: | | Page |
|---|---|---|
| 302-9207 | LONG REACH FRONT (DFB1-Up) | 740 |
| 234-6500 | **LUNCH BOX COVER** | 639 |
| 299-2831 | **MACHINE SECURITY SYSTEMS** | 650 |
| 279-2732 | **NEW SHOVEL CRANE (BWZ1-Up)** | 11 |
| 279-2733 | **NEW SHOVEL CRANE (DFB1-Up)** | 12 |
| | **OPTIONAL SEAT** | |
| 240-4999 | KAB 84/E1P SEAT (BWZ, DFB, SNS, WJN (1-T08.12)) | 694 |
| 327-6500 | KAB 61K1 SEAT (BWZ, DFB, SNS, WJN (T09.01-Up)) | 694.01 |
| 240-5064 | KAB 86/E4P SEAT (With Seat Heater) (BWZ, DFB, SNS, WJN (1-T08.12)) | 699 |
| 327-6503 | KAB 65K4 SEAT (With Seat Heater) (BWZ, DFB, SNS, WJN (T09.01-Up)) | 699.01 |
| 240-5001 | KAB E1P SEAT (BWZ, DFB, SNS, WJN (1-T08.12)) | 680 |
| 327-6499 | KAB K1 SEAT (BWZ, DFB, SNS, WJN (T09.01-Up)) | 680.01 |
| 240-5056 | KAB E1P SEAT (Vinyl) (BWZ, DFB, SNS, WJN (1-T08.12)) | 690 |
| 327-6498 | KAB K1 SEAT (Vinyl) (BWZ, DFB, SNS, WJN (T09.01-Up)) | 690.01 |
| 229-9094 | HEADREST (For KAB 84/E1P & E1P) (BWZ, DFB, SNS, WJN (1-T08.12)) | 705 |
| 327-6515 | HEADREST (For KAB 61K1 & K1) (BWZ, DFB, SNS, WJN (T09.01-Up)) | 705.01 |
| 240-5060 | HEADREST (For KAB E1P Vinyl Seat) (BWZ, DFB, SNS, WJN (1-T08.12)) | 705 |
| 327-6514 | HEADREST (For KAB K1 Vinyl Seat) (BWZ, DFB, SNS, WJN (T09.01-Up)) | 705.01 |
| 240-5037 | SEAT BELT (BWZ, DFB, SNS, WJN (1-T08.12)) | 703 |
| 305-0467 | SEAT BELT (BWZ, DFB, SNS, WJN (T09.01-Up)) | 703.01 |
| 275-3668 | **Product Link Japan** | 195 |
| 251-0536 | **RADIO (AM/FM)** | 652 |
| 161-3750 | **RAIN PROTECTOR, CAB FRONT** | 654 |
| | **REAR VIEW CAMERA** | |
| | CAB MIRRORS | |
| 327-6553 | With Guard | 665.04 |
| 327-6552 | Without Guard | 665.03 |
| 314-3734 | RIGHT SIDE MIRRORS | 665.05 |
| | **SIDECUTTER** | |
| 7Y-0729 | B FAMILY | 804 |
| 7Y-0366 | C FAMILY | 804 |
| 251-0542 | **START SWITCH PANEL (Without CAT MSS)** | 142 |
| | **STARTING, COLD WEATHER** | |
| 240-3893 | FILM (32WR Hydraulic Oil Package) | 849 |
| 299-2783 | STARTING AID | 150 |

# LIST OF ATTACHMENTS


| Consists of: | | Page |
|---|---|---|
| | **STICK** | |
| | FOR THE MASS (5.2M) BOOM ONLY | |
| 240–3846 | M2.4CB2 Stick (Auxiliary) | 736 |
| | FOR THE REACH (5.2M) BOOM ONLY | |
| 240–3882 | R2.5B1 Stick (Auxiliary) | 735 |
| 240–3854 | R2.5B1 Stick (Auxiliary) (Heavy Duty) | 736 |
| 240–3839 | R2.9B1 Stick | 733 |
| 240–3849 | R2.9B1 Stick (Auxiliary) | 734 |
| 240–3852 | R2.9B1 Stick (Auxiliary) (For Demolition) | 735 |
| 240–3851 | R2.9B1 Stick (Auxiliary) (Heavy Duty) | 734 |
| 240–3845 | R3.9B1 Stick (Auxiliary) | 733 |
| 161–3751 | **SUN VISOR** | 653 |
| | **TIP** | |
| | ADAPTER SIZE J300 | |
| 8E–3756 | Abrasion, Heavy Duty | 807 |
| 9J–3167 | Long | 805 |
| 8E–3751 | Long, Heavy Duty | 805 |
| 3G–3237 | Penetration | 807 |
| 9W–9188 | Sharp–Center | 808 |
| 9W–9189 | Sharp–Corner | 808 |
| 9J–3175 | Short | 806 |
| 4T–2215 | Wide | 806 |
| | ADAPTER SIZE J350 | |
| 8E–3757 | Abrasion, Heavy Duty | 811 |
| 8J–4955 | Long | 809 |
| 8E–3752 | Long, Heavy Duty | 809 |
| 3G–3236 | Penetration | 811 |
| 9W–6472 | Sharp–Center | 812 |
| 9W–6473 | Sharp–Corner | 812 |
| 8J–4954 | Short | 810 |
| 8J–4953 | Wide | 810 |
| | ADAPTER SIZE J400 | |
| 8E–0837 | Abrasion, Heavy Duty | 815 |
| 127–0716 | Long | 813 |
| 6Y–5472 | Long, Heavy Duty | 814 |
| 8E–0838 | Penetration | 816 |
| 8E–0840 | Sharp–Center | 816 |
| 8E–0839 | Sharp–Corner | 817 |
| 127–0715 | Short | 815 |
| 8E–0836 | Wide | 814 |

# LIST OF ATTACHMENTS


| Consists of: | | Page |
|---|---|---|
| | ADAPTER SIZE K80 | |
| 229-6968 | Double Spike | 820 |
| 229-6964 | Extra Duty | 818 |
| 229-6969 | General Duty | 820 |
| 229-6965 | Penetration | 818 |
| 229-6966 | Penetration Plus | 819 |
| 229-6967 | Spike | 819 |
| 229-6963 | Wide | 817 |
| | ADAPTER SIZE K90 | |
| 217-4895 | Double Spike | 823 |
| 217-4891 | Extra Duty | 821 |
| 217-4896 | General Duty | 824 |
| 217-4892 | Penetration | 822 |
| 217-4893 | Penetration Plus | 822 |
| 217-4894 | Spike | 823 |
| 217-4890 | Wide | 821 |
| | **TOOL** | |
| 176-2676 | TOOL KIT | 825 |
| 117-4166 | WRENCH (For Demolition) | 827 |
| | **TRACK** | |
| | TRIPLE GROUSER | |
| 194-1920 | 600MM (BWZ1-Up, SNS1-Up) | 316 |
| 194-1910 | 600MM (DFB1-Up, WJN1-Up) | 318 |
| 194-1917 | 700MM (BWZ1-Up, SNS1-Up) | 316 |
| 194-1911 | 700MM (DFB1-Up, WJN1-Up) | 318 |
| 247-7382 | 800MM (BWZ1-T08.08, SNS1-T08.08) | 317 |
| 314-3797 | 790MM (BWZ T08.09-Up, SNS T08.09-Up) | 317.01 |
| 247-7346 | 800MM (DFB1-T08.08, WJN1-T08.08) | 319 |
| 314-3798 | 790MM (DFB T08.09-Up, WJN T08.09-Up) | 319.01 |
| | **TRACK ROLLERS** | |
| 5Q-3226 | DOUBLE FLANGE (BWZ1-Up, SNS1-Up) | 309 |
| 5Q-3227 | DOUBLE FLANGE (DFB1-Up, WJN1-Up) | 310 |
| 229-9070 | **WINDOW WASHER** | 640 |
| 229-9086 | **WIPER, LOWER WINDSHIELD** | 642 |
| 251-0482 | **12V-7A POWER SUPPLY SOCKET** | 157 |

# INDEX


Name Page

## A

ACCUMULATOR GP ..... 349
ADJUSTER GP - BUCKET ..... 802
ADJUSTER KIT - LOWER SLIDE ..... 687
ADJUSTER KIT - UPPER SLIDE ..... 686
AIR CLEANER GP ..... 65
67
AIR CONDITIONER & MOUNTING GP ..... 712
AIR CONDITIONER AR ..... 707
AIR CONDITIONER GP ..... 710
ALARM GP ..... 118
ALARM GP - TRAVEL ..... 208
ALTERNATOR GP - CHARGING ..... 202
ARM AS - WIPER ..... 636
ARMREST GP ..... 676

## B

BATTERY & WIRING GP ..... 90
BATTERY & WIRING GP - COLD WEATH ..... 150
BLOCK GP - HYDRAULIC ..... 335
BOOM AR ..... 732
BOOM AR - 1 PIECE LONG ..... 731
BOOM GP ..... 742
BOX & MTG GP - STORAGE ..... 256
BOX GP - STORAGE ..... 258
BRACKET GP - MTG ..... 665.07
BRACKET KIT - CONSOLE ..... 688
BREATHER GP ..... 43
BUCKET & ADJUSTER GP ..... 786
BUCKET AR ..... 779
BUCKET AS - DITCH CLEANING ..... 800
BUCKET AS - EXCAVATION ..... 793
BUCKET AS - GENERAL PURPOSE ..... 801
BUCKET GP ..... 801
BUMPER GP - SIDE ..... 286

## C

CAB GP ..... 606
CAB GP (BASIC) ..... 610
CAB GP - EXTERIOR ..... 618
CAB GP - INTERIOR ..... 614

Name Page

CABLE AS ..... 104
152
CAMSHAFT GP ..... 21
CARTRIDGE AS - TURBOCHARGER ..... 61
CLEANER AR ..... 66
COMPRESSOR GP - REFRIGERANT ..... 728
CONDENSER & MTG GP - REFRIGERANT ..... 724
CONDENSER GP - REFRIGERANT ..... 726
CONSOLE GP ..... 672
CONSOLE GP - OPERATOR ..... 671
CONTROL & MTG GP - ELECTRONIC ..... 193
CONTROL & MTG GP - JOYSTICK ..... 519
CONTROL AR ..... 195
CONTROL AR - AUXILIARY ..... 443
CONTROL GP ..... 650
CONTROL GP - ELECTRONIC ..... 192
CONTROL GP - HYDRAULIC ..... 528
CONTROL GP - PILOT OPERATED HYD ..... 522
526
COOLER GP - ENGINE OIL ..... 46
COUNTERWEIGHT GP ..... 267
COUPLING GP - FLEXIBLE ..... 337.01
COUPLING GP - PUMP ..... 337
COVER AS ..... 252
639
COVER GP ..... 253
638
COVER GP - VALVE MECHANISM ..... 28
CRANKSHAFT GP ..... 20
CYLINDER & LINES GP - BOOM ..... 350
CYLINDER & LINES GP - BUCKET ..... 353
CYLINDER & LINES GP - STICK ..... 351
CYLINDER & SEAL GP - BOOM ..... 356
CYLINDER & SEAL GP - BUCKET ..... 366
CYLINDER & SEAL GP - STICK ..... 358
CYLINDER BLOCK GP ..... 18
CYLINDER GP - BUCKET ..... 374
CYLINDER HEAD GP ..... 24

## D

DOOR AS ..... 246
250.02

# INDEX


Name Page

DOOR GP ..... 244
DOOR GP - CAB ..... 622
DRIVE GP - PUMP ..... 347
DRIVE GP - SWING ..... 500
DUCT GP - AIR ..... 716

## E

ELECTRONICS GP ..... 190
ENGINE AR ..... 13
14
ENGINE AR - COMPLETE ..... 13

## F

FAN GP - SUCTION ..... 50
FASTENER GP - SWING & FINAL DR ..... 234
FENDER & COVER GP ..... 260
FILM GP ..... 840
FILTER & MTG GP - ENGINE OIL ..... 44
FILTER & MTG GP - FUEL ..... 74
FILTER AR ..... 448
FILTER AS ..... 334
FILTER GP ..... 83
FILTER GP - ENGINE OIL ..... 39
FILTER GP - FUEL ..... 78
FILTER GP - HYDRAULIC ..... 328
FINAL DRIVE GP ..... 231
FLOORMAT ..... 668
FLYWHEEL GP ..... 33
FRAME AS - UNDERCARRIAGE ..... 288
FRAME GP - UPPER ..... 280

## G

GAUGE AS ..... 327
GEAR & BEARING GP - SWING ..... 274
GEAR GP - FRONT ..... 32
GUARD AR - OVERHEAD ..... 655
GUARD GP - BOTTOM ..... 263
GUARD GP - CYLINDER ..... 389
GUARD GP - FRONT ..... 306
GUARD GP - FRONT WINDOW ..... 658
GUARD GP - OVERHEAD ..... 656

Name Page

GUARD GP - SWIVEL ..... 266
GUARD GP - TRACK GUIDE ..... 301
GUARD GP - TRAVEL MOTOR ..... 314

## H

HANDHOLD GP ..... 262
HARNESS AS ..... 100
112
122
125
128
138
140
141.01
146
155
168
172
180
188
189.05
225
229
HATCH AS ..... 633
HATCH GP ..... 632
634
HEAD GP - PUMP CONTROL ..... 342
HEADREST AS ..... 705
HEATER & MTG GP - CAB ..... 714
HEATER AR - CAB ..... 708
HOOD & GUARD GP ..... 238
HOOD GP ..... 250.01
251
HOOD GP - ENGINE ..... 236
HORN GP - ELECTRIC ..... 663
HOUSING GP - FLYWHEEL ..... 34
HOUSING GP - FRONT ..... 30

# INDEX


Name Page

## I

IDLER GP - FRONT ..... 293
INJECTOR GP - FUEL ..... 77.01
INSTALLATION AR ..... 665.05

## K

KNOB AS ..... 523

## L

LAMP GP - FLOOD ..... 222
LEVER AS ..... 620
678

LIGHTING GP - BOOM ..... 214
LIGHTING GP - CAB ..... 210
LIGHTING GP - CHASSIS ..... 209
LIGHTING GP - WARNING ..... 226
LINES & CONTROL GP - FRONT ..... 480
LINES & CONTROL GP - REAR ..... 484
LINES GP - AIR ..... 63
LINES GP - AIR CONDITIONER ..... 718
LINES GP - AUXILIARY HYDRAULIC ..... 410
LINES GP - BOOM ..... 392
LINES GP - BOOM CYLINDER ..... 376
LINES GP - BUCKET CYLINDER ..... 385
LINES GP - COOLING ..... 51
LINES GP - DRAIN ..... 70
428
498

LINES GP - ENGINE OIL ..... 40
LINES GP - FRONT ..... 486
LINES GP - FUEL ..... 76
80

LINES GP - GREASE ..... 762
LINES GP - HEATER ..... 722
LINES GP - OIL DRAIN ..... 42
LINES GP - PILOT ..... 450
LINES GP - PUMP ..... 442
LINES GP - RETURN ..... 497
LINES GP - SENSOR ..... 391
LINES GP - STICK ..... 404

Name Page

LINES GP - STICK CYLINDER ..... 382
LINES GP - TRAVEL MOTOR ..... 436
LINES GP - TURBOCHARGER OIL ..... 41
LINES GP - WATER ..... 49
LINK AS - TRACK ..... 320
LINKAGE AR ..... 739
LINKAGE AR - BUCKET ..... 737
LINKAGE AR - FRONT ..... 740
LINKAGE GP - BUCKET ..... 768
LITERATURE GP ..... 706
LOCK GP - TRANSPORT ..... 767

## M

MANIFOLD GP - EXHAUST ..... 59
MANIFOLD GP - INLET ..... 58
MIRROR AR ..... 665.01
MIRROR GP ..... 665.02
MIRROR GP - REAR VIEW ..... 665
MONITOR & MTG GP - OPERATOR ..... 647
MONITOR GP - OPERATOR ..... 648
MOTOR & MTG GP - SWING ..... 504
MOTOR & MTG GP - TRAVEL ..... 510
MOTOR AS - WINDOW WIPER ..... 637
MOTOR GP - SWING ..... 506
MOTOR GP - TRAVEL ..... 512
MOUNTING GP ..... 196
621
665.06

MOUNTING GP - AIR CLEANER ..... 64
MOUNTING GP - ALTERNATOR ..... 37
MOUNTING GP - ENGINE ..... 38
MOUNTING GP - GREASE GUN ..... 255
MOUNTING GP - PLATFORM ..... 666
MOUNTING GP - PUMP ..... 75.01
MOUNTING GP - STARTING MOTOR ..... 203
MOUNTING GP - VALVE ..... 533
MUFFLER GP ..... 62

## P

PAN GP - OIL ..... 36
PANEL GP - CIRCUIT BREAKER ..... 132

# INDEX


Name Page

PANEL GP - SWITCH ..... 142
PISTON & ROD GP ..... 22
PLATE & FILM GP ..... 828
PLATFORM GP - OPERATOR ..... 667
PLUG GP ..... 560
PULLEY AS ..... 730
PULLEY GP ..... 35
PUMP & MOUNTING GP ..... 336
PUMP AS - WATER ..... 48
PUMP GP - GEAR ..... 346
PUMP GP - MAIN HYDRAULIC ..... 338
PUMP GP - WATER ..... 47


## R


RADIATOR & HYD OIL COOLER GP ..... 54
RADIO GP - AM/FM ..... 652
ROLLER AR - TRACK & CARRIER ..... 307
ROLLER GP - TRACK CARRIER ..... 311
ROLLER GP - TRACK - DOUBLE FLANGE ..... 313
ROLLER GP - TRACK - SINGLE FLANGE ..... 312


## S


SCREEN GP ..... 326
SEAT BELT GP ..... 703
SEAT GP ..... 680
690
694
699
SEAT KIT ..... 683
693
702
SENSOR & MOUNTING GP ..... 198
SENSOR GP - ELECTRONIC ..... 204
SENSOR GP - LEVEL ..... 197
SERVICE KIT ..... 402
SHEET AS ..... 248
254
SIDECUTTER GP ..... 804
SPECIAL AR ..... 11
SPROCKET GP - NONSEGMENTED ..... 230

Name Page

STARTING MOTOR GP - ELECTRIC ..... 200
STEP GP ..... 292
STICK AR ..... 733
STICK AR - HOE ..... 733
STICK GP - HOE ..... 752
SUPPORT GP - SEAT ..... 679
685
SUPPORT KIT - SEAT ..... 689
SUPPORT KIT - TILT ..... 684
SUSPENSION GP - SEAT ..... 696
SUSPENSION KIT - SEAT ..... 698
SWITCH AS ..... 134
228
SWITCH AS - DISCONNECT ..... 135
SWITCH AS - MAGNETIC ..... 149
SWITCH AS - ROLLER ..... 228
SWITCH AS - ROTARY ..... 148
SWITCH GP - START ..... 147
SWIVEL GP ..... 518


## T


TANK & FILTER GP - HYDRAULIC ..... 324
TANK & LINES GP - HYDRAULIC ..... 440
TANK & MTG GP - FUEL ..... 84
TANK & MTG GP - HYDRAULIC ..... 322
TANK AS - WINDOW WASHER ..... 641
TANK GP - FUEL ..... 85
TIMER AS ..... 227
TIP GP ..... 808
812
816
TIP GP - ABRASION ..... 807
811
815
TIP GP - LONG ..... 805
809
813

# INDEX


Name Page

TIP GP - PENETRATION ..... 807
811
816
818
822
TIP GP - SHORT ..... 806
810
815
TIP GP - WIDE ..... 806
810
814
817
821
TOOL AR ..... 825
TOOL GP ..... 826
TRACK ADJUSTER & RECOIL GP ..... 297
TRACK GP ..... 316
TURBOCHARGER GP ..... 59.01


## V


VALVE & MOUNTING GP ..... 534
VALVE AR - 4 WAY ..... 446
VALVE AR - CHECK & RELIEF ..... 447
VALVE AS ..... 82
VALVE AS - BALL ..... 602
VALVE GP - CHECK ..... 596
VALVE GP - CHECK & RELIEF ..... 592
VALVE GP - CONTROL ..... 540
548
556
575
VALVE GP - CUSHION CROSSOVER RLF ..... 584
VALVE GP - FLOW CONTROL & RELIEF ..... 561
VALVE GP - MAIN CONTROL ..... 536
VALVE GP - PILOT ..... 520
524
532
566

Name Page

VALVE GP - PILOT RELIEF ..... 547
564
574
VALVE GP - PRESS REDUCING SOL ..... 576
VALVE GP - PRESSURE REDUCING ..... 582
VALVE GP - RELIEF ..... 509
517
538
546
554
562
588
VALVE GP - SELECTOR ..... 577
VALVE GP - SHUTTLE ..... 603
VALVE GP - SOLENOID ..... 555
586
VALVE GP - TRACTION CONTROL ..... 516
VALVE MECHANISM GP ..... 26
VISOR GP - PROTECTION - RAIN ..... 654
VISOR GP - SUN ..... 653


## W


WASHER GP - WINDOW ..... 640
646
WINDOW AS ..... 631
WINDOW GP ..... 626
630
WINDOW GP - CAB ..... 629
WINDOW GP - DOOR ..... 625
WIPER & WASHER GP - WINDOW ..... 644
WIPER AR - WINDOW ..... 642
WIPER GP - WINDOW ..... 635

# INDEX


| Name | Page | Name | Page |
|---|---|---|---|
| WIRING GP | 131 | | |
| | 136 | | |
| | 139 | | |
| | 154 | | |
| | 157 | | |
| | 174 | | |
| | 189.01 | | |
| WIRING GP - BOOM | 184 | | |
| | 189 | | |
| WIRING GP - CAB | 106 | | |
| | 170 | | |
| | 176 | | |
| | 189.03 | | |
| WIRING GP - CHASSIS | 137 | | |
| WIRING GP - CONSOLE | 119 | | |
| | 124 | | |
| WIRING GP - ELECTRONIC CONTROL | 206 | | |
| WIRING GP - HEATER | 141 | | |
| WIRING GP - LOWER WIPER | 156 | | |
| WIRING GP - PLATFORM | 126 | | |
| WRENCH | 827 | | |

# MACHINE ARRANGEMENT

Consists of :


| | | | Page |
|---|---|---|---|
| 1 | 161-9604 | GUARD GP-FRONT | 306 |
| 1 | 210-2921 | LIGHTING GP-WARNING | 226 |
| 1 | 239-8677 | VALVE AR-CHECK & RELIEF | 447 |
| 1 | 257-2926 | LINKAGE AR | 739 |
| 1 | 257-2927 | SENSOR & MOUNTING GP | 198 |
| 1 | 257-2928 | SENSOR & MOUNTING GP | 199 |
| 1 | 257-2929 | SENSOR GP-LEVEL | 197 |
| 1 | 279-2860 | FILM GP | 846 |
| 1 | 270-5974 | VALVE AR-CHECK & RELIEF | 447 |
| 1 | 267-7890 | WIRING GP-BOOM | 184 |
| 1 | 267-7891 | WIRING GP-CAB | 176 |
| 1 | 267-7924 | WIRING GP-BOOM | 189 |
| 1 | 294-1436 | FRAME GP-UPPER | 284 |
| 1 | 269-1596 | BOOM GP | 746 |
| 1 | 269-1597 | STICK GP-HOE | 760 |
| 1 | 270-9972 | FENDER & COVER GP | 261 |
| 1 | 272-4170 | LINES GP-PILOT | 472 |
| 1 | 272-4171 | LINES GP-SENSOR | 391 |
| 1 | 275-1539 | LINES GP-PILOT | 474 |


H94171E 00

# MACHINE ARRANGEMENT

Consists of :

| | | | Page |
|---|---|---|---|
| 1 | 161-9604 | GUARD GP-FRONT | 306 |
| 1 | 210-2921 | LIGHTING GP-WARNING | 226 |
| 1 | 239-8677 | VALVE AR-CHECK & RELIEF | 447 |
| 1 | 257-2926 | LINKAGE AR | 739 |
| 1 | 257-2927 | SENSOR & MOUNTING GP | 198 |
| 1 | 257-2928 | SENSOR & MOUNTING GP | 199 |
| 1 | 257-2929 | SENSOR GP-LEVEL | 197 |
| 1 | 279-2864 | FILM GP | 847 |
| 1 | 270-5974 | VALVE AR-CHECK & RELIEF | 447 |
| 1 | 267-7890 | WIRING GP-BOOM | 184 |
| 1 | 267-7891 | WIRING GP-CAB | 176 |
| 1 | 267-7924 | WIRING GP-BOOM | 189 |
| 1 | 294-1436 | FRAME GP-UPPER | 284 |
| 1 | 269-1596 | BOOM GP | 746 |
| 1 | 269-1597 | STICK GP-HOE | 760 |
| 1 | 270-9972 | FENDER & COVER GP | 261 |
| 1 | 272-4170 | LINES GP-PILOT | 472 |
| 1 | 272-4171 | LINES GP-SENSOR | 391 |
| 1 | 275-1539 | LINES GP-PILOT | 474 |

H94172E 00

**279-2733 SPECIAL AR**
S/N DFB 1-Up
An Attachment

# ENGINE ARRANGEMENT

Consists of :

| | | | Page |
|---|---|---|---|
| 1 | 230-2979 | FAN GP-SUCTION | 50 |
| 1 | 272-4676 | ENGINE AR-COMPLETE | 13 |

H95215E 00

**272-4675 ENGINE AR**

Consists of :

| | | | Page |
|---|---|---|---|
| 1 | 272-4677 | ENGINE AR | 14 |
| 1 | 296-4667 | PULLEY GP | 35 |

H99719E 05

**272-4676 ENGINE AR-COMPLETE**
Part of 272-4675-Page13

# ENGINE ARRANGEMENT

Consists of :

| | | | Page |
|---|---|---|---|
| | | BASIC ENGINE | |
| 1 | 296-4640 | PAN GP-OIL | 36 |
| 1 | 305-4744 | CAMSHAFT GP | 21 |
| 1 | 296-4650 | CRANKSHAFT GP | 20 |
| 1 | 296-4648 | CYLINDER BLOCK GP | 18 |
| 1 | 296-4645 | CYLINDER HEAD GP | 24 |
| 1 | 305-4910 | VALVE MECHANISM GP | 26 |
| 1 | 296-4647 | COVER GP-VALVE MECHANISM | 28 |
| 1 | 296-4644 | FLYWHEEL GP | 33 |
| 1 | 296-4643 | HOUSING GP-FLYWHEEL | 34 |
| 1 | 296-4651 | GEAR GP-FRONT | 32 |
| 1 | 296-4649 | HOUSING GP-FRONT | 30 |
| 1 | 296-4659 | PISTON & ROD GP | 22 |
| 1 | 296-4661 | MOUNTING GP-ALTERNATOR | 37 |
| | | LUBRICATION SYSTEM | |
| 1 | 296-4654 | FILTER GP-ENGINE OIL | 39 |
| 1 | 296-4641 | LINES GP-ENGINE OIL | 40 |
| 1 | 296-4638 | BREATHER GP | 43 |
| 1 | 296-4636 | LINES GP-TURBOCHARGER OIL | 41 |

H99759E 10

**272-4677 ENGINE AR (1/3)**
Part of 272-4676-Page13

# ENGINE ARRANGEMENT

Consists of :

| | | | Page |
|---|---|---|---|
| | | COOLING SYSTEM | |
| 1 | 296-4655 | PUMP GP-WATER | 47 |
| 1 | 296-4658 | LINES GP-WATER | 49 |
| 1 | 296-4642 | COOLER GP-ENGINE OIL | 46 |
| | | AIR INLET AND EXHAUST SYSTEM | |
| 1 | 296-4652 | MANIFOLD GP-INLET | 58 |
| 1 | 296-4653 | MANIFOLD GP-EXHAUST | 59 |
| 1 | 310-9617 | TURBOCHARGER GP | 59.01 |
| 1 | 297-7745 | MUFFLER GP | 62 |
| | | FUEL SYSTEM | |
| 1 | 305-4745 | FILTER GP-FUEL | 78 |
| 1 | 296-4656 | LINES GP-FUEL | 76 |
| 6 | 310-9606 | INJECTOR GP-FUEL | 77.01 |
| 1 | 305-4678 | MOUNTING GP-PUMP | 75.01 |

H99760E 10

# ENGINE ARRANGEMENT

Consists of :


| | | | Page |
|---|---|---|---|
| | | ELECTRICAL AND STARTING SYSTEM | |
| 1 | 296-4637 | MOUNTING GP-STARTING MOTOR | 203 |
| 1 | 296-4666 | SENSOR GP-ELECTRONIC | 204 |
| 1 | 296-4664 | CONTROL & MTG GP-ELECTRONIC | 194 |
| 1 | 296-4665 | WIRING GP-ELECTRONIC CONTROL | 206 |
| 1 | 300-4003 | ELECTRONICS GP | |


H99761E 10

# MEMORANDA

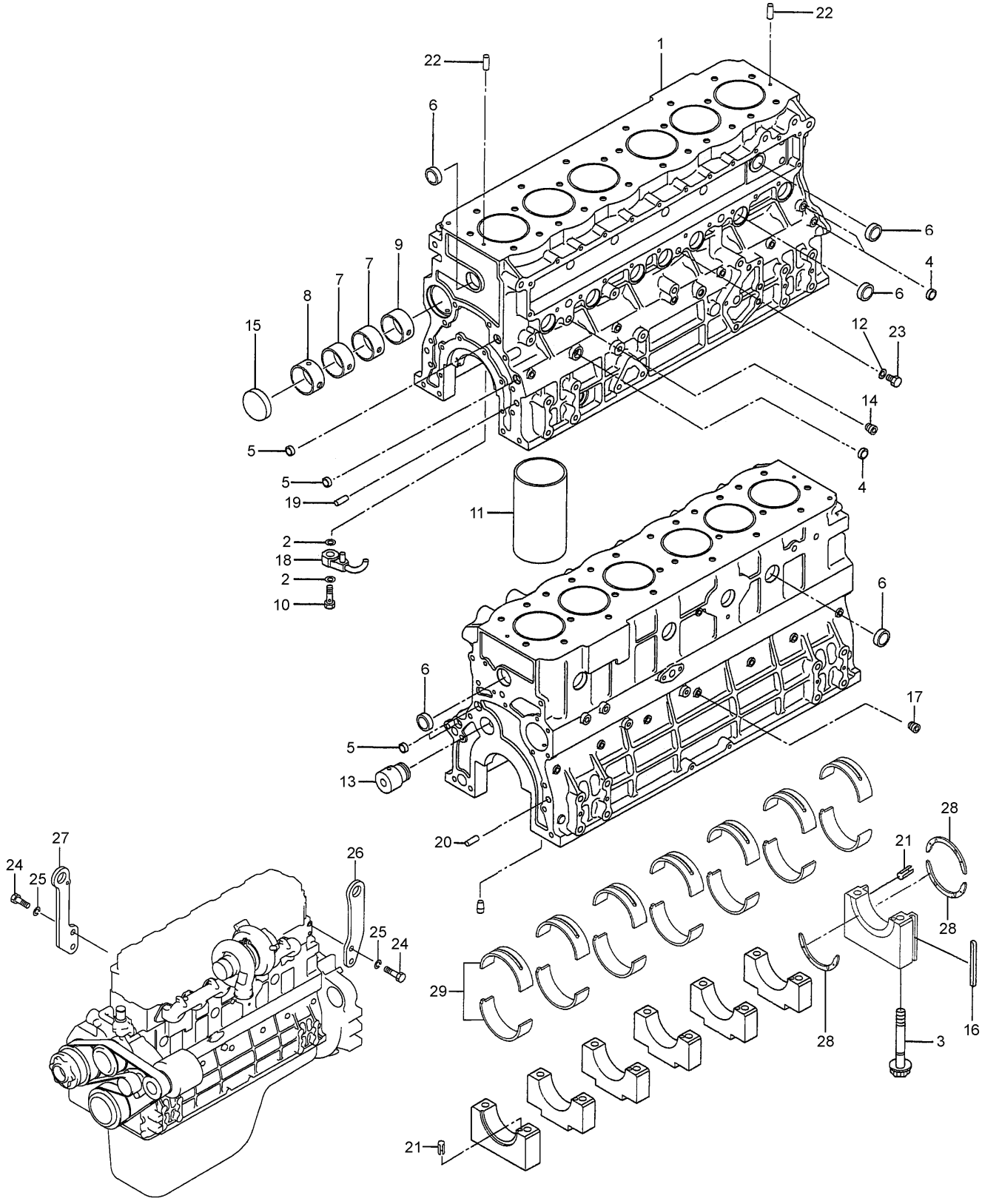


HA0911E 02

**296-4648 CYLINDER BLOCK GP**
Part of 272-4677-Page14

# BASIC ENGINE

| NOTE | No. | PART No. | QTY | PART NAME | NOTE | No. | PART No. | QTY | PART NAME |
|---|---|---|---|---|---|---|---|---|---|
| | 1 | 294-1725 | 1 | CRANKCASE AS | | | | | |
| | 2 | 094-9424 | 12 | GASKET | | | | | |
| | 3 | 094-7741 | 14 | BOLT | | | | | |
| | 4 | 095-2005 | 2 | CAP | | | | | |
| | 5 | 096-3741 | 7 | CAP | | | | | |
| | 6 | 3P-1896 | 14 | PLUG | | | | | |
| | 7 | 5I-7528 | 2 | BUSHING | | | | | |
| | 8 | 5I-7529 | 1 | BUSHING | | | | | |
| | 9 | 5I-8009 | 1 | BUSHING | | | | | |
| | 10 | 139-7814 | 6 | VALVE | | | | | |
| | 11 | 5I-7523 | 6 | SLEEVE | | | | | |
| | 12 | 095-2039 | 1 | WASHER | | | | | |
| | 13 | 294-1721 | 1 | SHAFT | | | | | |
| | 14 | 195-8212 | 1 | PLUG | | | | | |
| | 15 | 5I-7525 | 1 | PLUG | | | | | |
| | 16 | 294-1720 | 2 | SEAL | | | | | |
| | 17 | 5I-7505 | 12 | PLUG | | | | | |
| | 18 | 294-1722 | 6 | JET AS | | | | | |
| | 19 | 099-4420 | 2 | PIN | | | | | |
| | 20 | 5I-7724 | 2 | PIN | | | | | |
| | 21 | 183-5916 | 6 | PIN | | | | | |
| | 22 | 4I-9664 | 2 | PIN | | | | | |
| | 23 | 8T-4191 | 1 | BOLT (L=16mm) | | | | | |
| | 24 | 5I-5181 | 4 | BOLT (L=25mm) | | | | | |
| | 25 | 096-2501 | 4 | WASHER | | | | | |
| | 26 | 294-1724 | 1 | EYE | | | | | |
| | 27 | 294-1723 | 1 | EYE | | | | | |
| | 28 | 5I-7654 | 3 | PLATE (STANDARD) | | | | | |
| A | | 5I-7787 | 3 | PLATE (OS=0.15mm) | | | | | |
| A | | 5I-7788 | 3 | PLATE (OS=0.30mm) | | | | | |
| A | | 5I-7789 | 3 | PLATE (OS=0.45mm) | | | | | |
| | 29 | 5I-7588 | 7 | BEARING SET (STANDARD) | | | | | |
| A | | 5I-7784 | 7 | BEARING SET (US=0.25mm) | | | | | |
| A | | 5I-7785 | 7 | BEARING SET (US=0.50mm) | | | | | |
| A | | 5I-7786 | 7 | BEARING SET (US=0.75mm) | | | | | |

A—NOT PART OF THIS GROUP

HA0911E 02

## 296-4648 CYLINDER BLOCK GP

Part of 272-4677-Page14

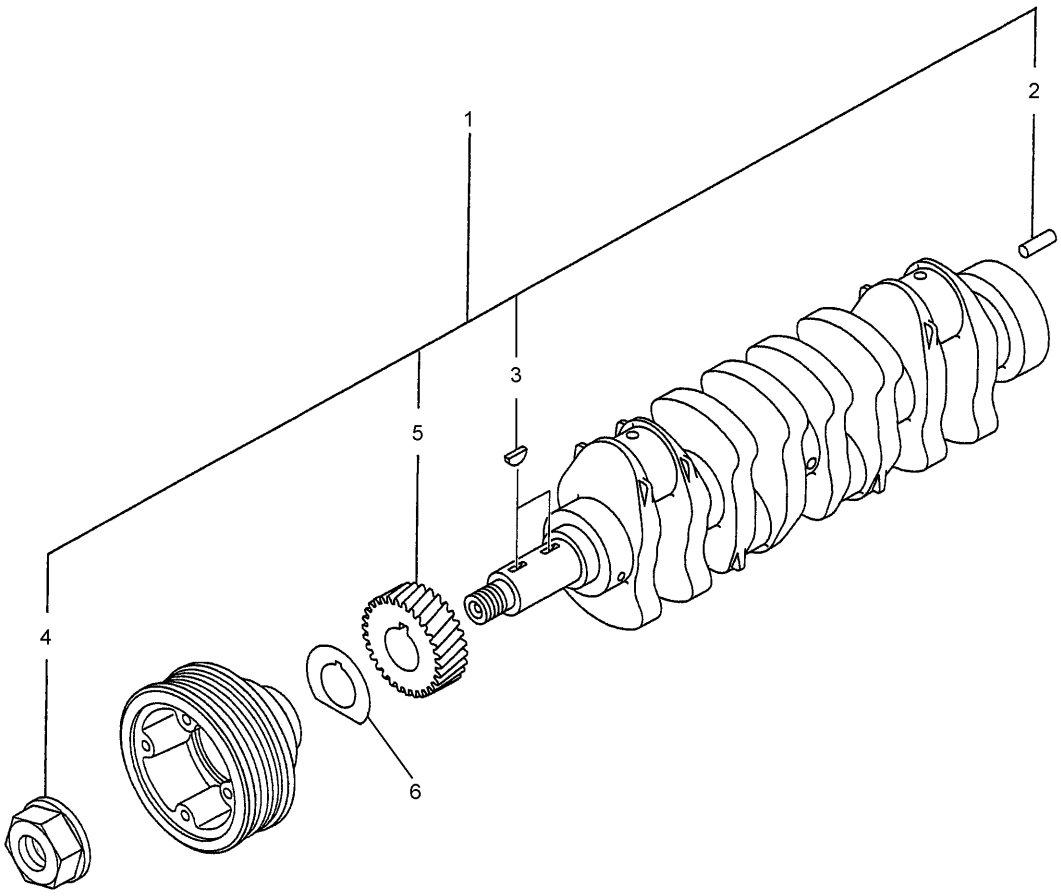


| NOTE | No. | PART No. | QTY | PART NAME | NOTE | No. | PART No. | QTY | PART NAME |
|---|---|---|---|---|---|---|---|---|---|
| | 1 | 294-1749 | 1 | CRANKSHAFT AS | | | | | |
| | 2 | 085-9513 | 2 | PIN | | | | | |
| | 3 | 094-4628 | 2 | KEY | | | | | |
| | 4 | 130-7596 | 1 | NUT | | | | | |
| | 5 | 294-1751 | 1 | GEAR | | | | | |
| | 6 | 233-1277 | 1 | PLATE | | | | | |

H96895E 00

## 296-4650 CRANKSHAFT GP

Part of 272-4677-Page14

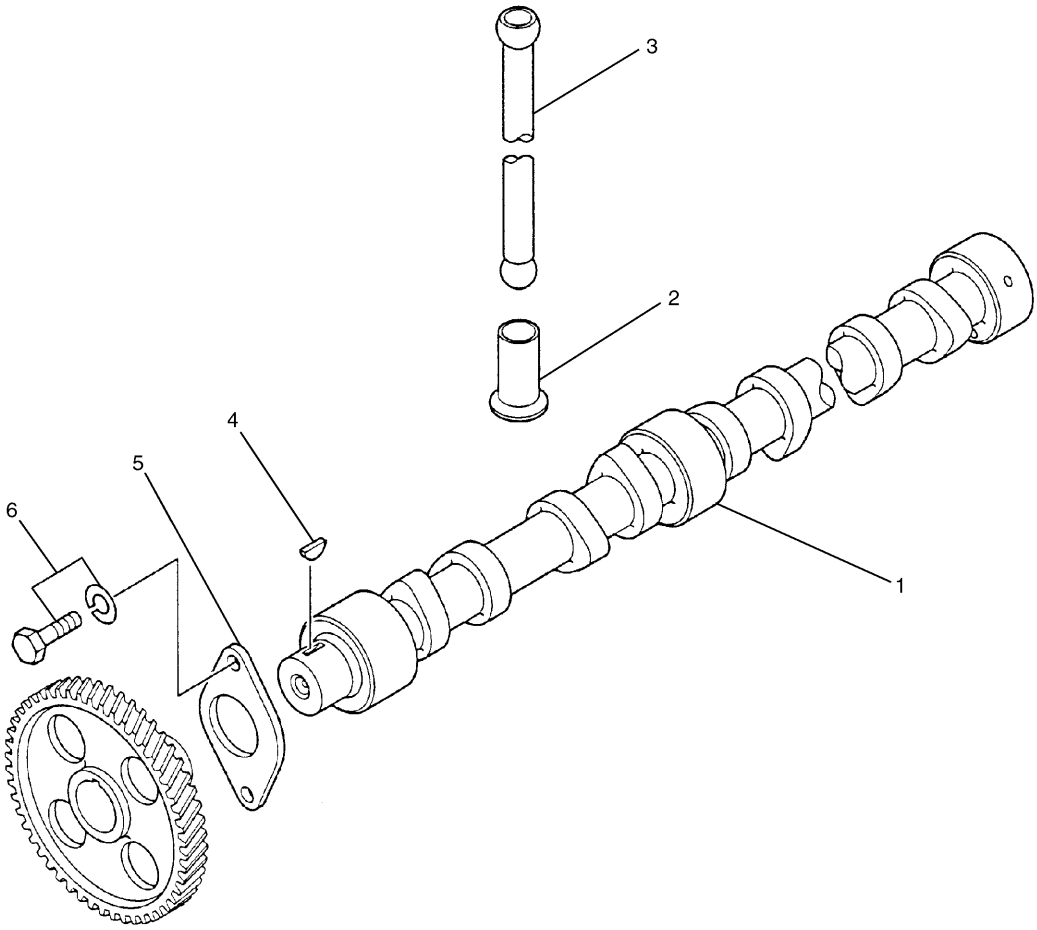


| NOTE | No. | PART No. | QTY | PART NAME | NOTE | No. | PART No. | QTY | PART NAME |
|---|---|---|---|---|---|---|---|---|---|
| | 1 | 305-4756 | 1 | CAMSHAFT | | | | | |
| | 2 | 279-7859 | 12 | TAPPET | | | | | |
| | 3 | 294-1716 | 12 | ROD | | | | | |
| | 4 | 094-4628 | 1 | KEY | | | | | |
| | 5 | 5I-7650 | 1 | PLATE | | | | | |
| | 6 | 6V-5215 | 2 | BOLT (L=16mm) | | | | | |

H96607E 00

**305-4744 CAMSHAFT GP**
Single
Part of 272-4677-Page14

# BASIC ENGINE

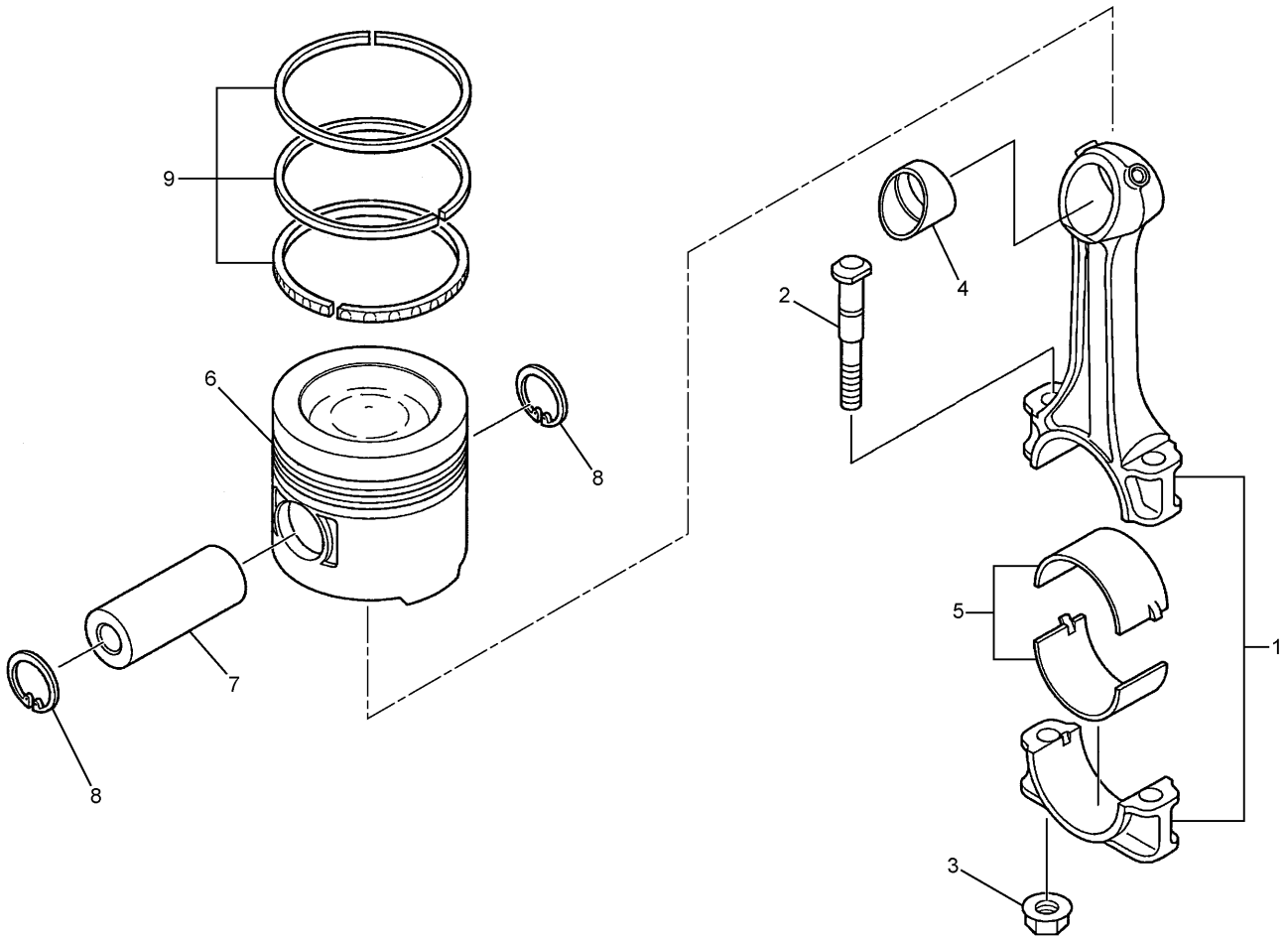


| NOTE | No. | PART No. | QTY | PART NAME | NOTE | No. | PART No. | QTY | PART NAME |
|---|---|---|---|---|---|---|---|---|---|
| | 1 | 294-1747 | 6 | ROD AS | | | | | |
| | 2 | 094-7154 | 12 | BOLT (L=85mm) | | | | | |
| | 3 | 094-7516 | 12 | NUT | | | | | |
| | 4 | 296-4663 | 6 | BUSHING | | | | | |
| | 5 | 294-1748 | 12 | BEARING | | | | | |
| A | | 297-7648 | 12 | BEARING (US=0.25mm) | | | | | |
| A | | 297-7649 | 12 | BEARING (US=0.50mm) | | | | | |
| A | | 297-7650 | 12 | BEARING (US=0.75mm) | | | | | |
| | 6 | 310-9509 | 6 | PISTON (STANDARD) | | | | | |
| A | | 310-9510 | 6 | PISTON (OS=0.25mm) | | | | | |
| A | | 310-9511 | 6 | PISTON (OS=0.50mm) | | | | | |
| | 7 | 094-7134 | 6 | PIN | | | | | |
| | 8 | 51-7667 | 12 | RING | | | | | |
| | 9 | 178-6543 | 6 | RING SET (STANDARD) | | | | | |
| A | | 178-6544 | 6 | RING SET (OS=0.25mm) | | | | | |
| A | | 178-6545 | 6 | RING SET (OS=0.50mm) | | | | | |

A—NOT PART OF THIS GROUP

H97936E 03

## 296-4659 PISTON & ROD GP

Part of 272-4677-Page14

# MEMORANDA

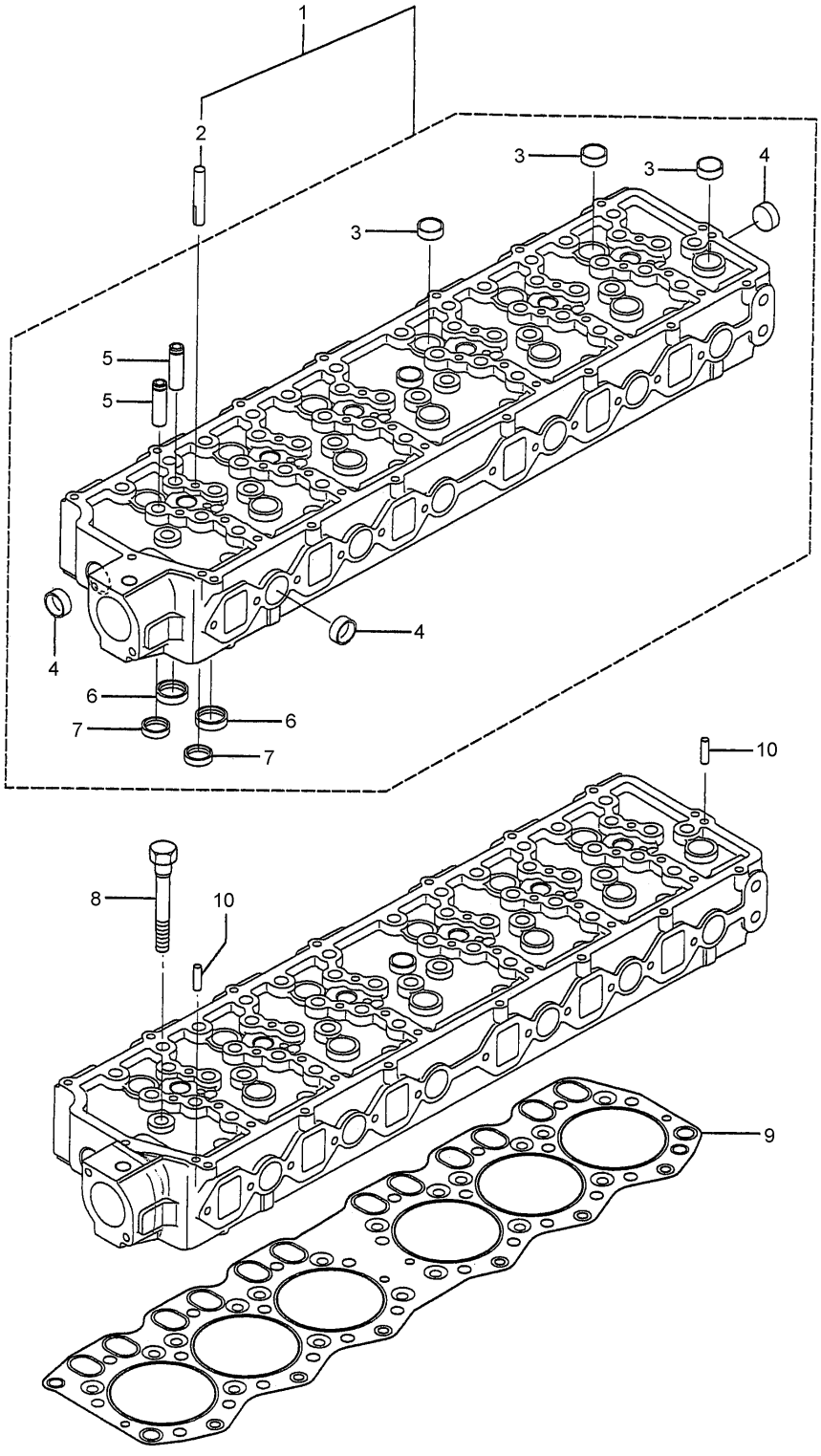


H96478E 01

**296-4645 CYLINDER HEAD GP**
Part of 272-4677-Page14

# BASIC ENGINE

| NOTE | No. | PART No. | QTY | PART NAME | NOTE | No. | PART No. | QTY | PART NAME |
|---|---|---|---|---|---|---|---|---|---|
| | 1 | 297-7644 | 1 | HEAD AS | | | | | |
| | 2 | 297-7645 | 12 | GUIDE | | | | | |
| | 3 | 103-9011 | 13 | CAP | | | | | |
| | 4 | 5I-4915 | 9 | CAP | | | | | |
| | 5 | 294-1678 | 24 | GUIDE | | | | | |
| | 6 | 294-1679 | 12 | SEAT | | | | | |
| | 7 | 294-1680 | 12 | SEAT | | | | | |
| | 8 | 294-1683 | 26 | BOLT | | | | | |
| | 9 | 294-1682 | 1 | GASKET | | | | | |
| | 10 | 4I-9664 | 2 | PIN | | | | | |

H96478E 01

## 296-4645 CYLINDER HEAD GP

Part of 272-4677-Page14

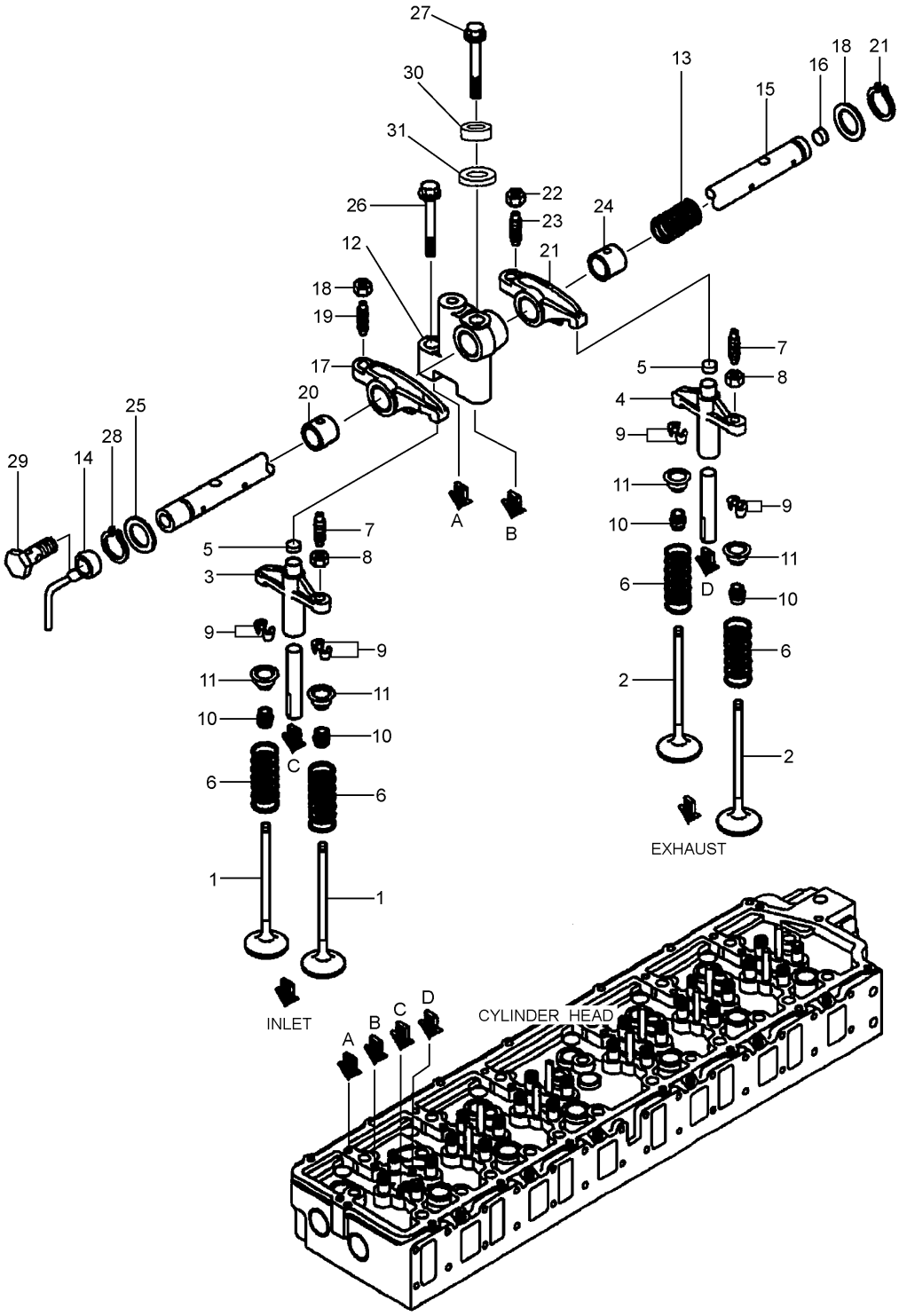


H99337E 00

**305-4910 VALVE MECHANISM GP**
Part of 272-4677-Page14

# BASIC ENGINE

| NOTE | No. | PART No. | QTY | PART NAME | NOTE | No. | PART No. | QTY | PART NAME |
|---|---|---|---|---|---|---|---|---|---|
| | 1 | 294-1684 | 12 | VALVE (IN) | | | | | |
| | 2 | 294-1685 | 12 | VALVE (EXH) | | | | | |
| | 3 | 294-1686 | 6 | BRIDGE | | | | | |
| | 4 | 294-1687 | 6 | BRIDGE | | | | | |
| | 5 | 5I-7630 | 12 | CAP | | | | | |
| | 6 | 294-1688 | 24 | SPRING | | | | | |
| | 7 | 294-1689 | 12 | SCREW | | | | | |
| | 8 | 8T-7964 | 12 | NUT | | | | | |
| | 9 | 199-2188 | 48 | COTTER | | | | | |
| | | | | (AVAILABLE IN SET WITH PAIR) | | | | | |
| | 10 | 199-2189 | 24 | SEAL | | | | | |
| | 11 | 199-2187 | 24 | RETAINER | | | | | |
| | 12 | 305-4750 | 6 | BRACKET | | | | | |
| | 13 | 305-4751 | 4 | SPRING | | | | | |
| | 14 | 294-1693 | 1 | PIPE | | | | | |
| | 15 | 305-4930 | 1 | SHAFT AS | | | | | |
| | 16 | 096-3741 | 1 | CAP | | | | | |
| | 17 | 305-4929 | 6 | ARM AS | | | | | |
| | 18 | 091-3474 | 1 | NUT | | | | | |
| | 19 | 094-9525 | 1 | SCREW | | | | | |
| | 20 | 305-4928 | 1 | BUSHING | | | | | |
| | 21 | 305-4927 | 6 | ARM AS | | | | | |
| | 22 | 091-3474 | 1 | NUT | | | | | |
| | 23 | 094-9525 | 1 | SCREW | | | | | |
| | 24 | 305-4928 | 1 | BUSHING | | | | | |
| | 25 | 294-1698 | 4 | WASHER | | | | | |
| | 26 | 294-1699 | 6 | BOLT | | | | | |
| | 27 | 305-4746 | 6 | BOLT | | | | | |
| | 28 | 294-1786 | 4 | RING | | | | | |
| | 29 | 294-1702 | 1 | BOLT | | | | | |
| | 30 | 095-8638 | 4 | WASHER | | | | | |
| | 31 | 305-4747 | 4 | WASHER | | | | | |

H99337E 00

## 305-4910 VALVE MECHANISM GP

Part of 272-4677-Page14

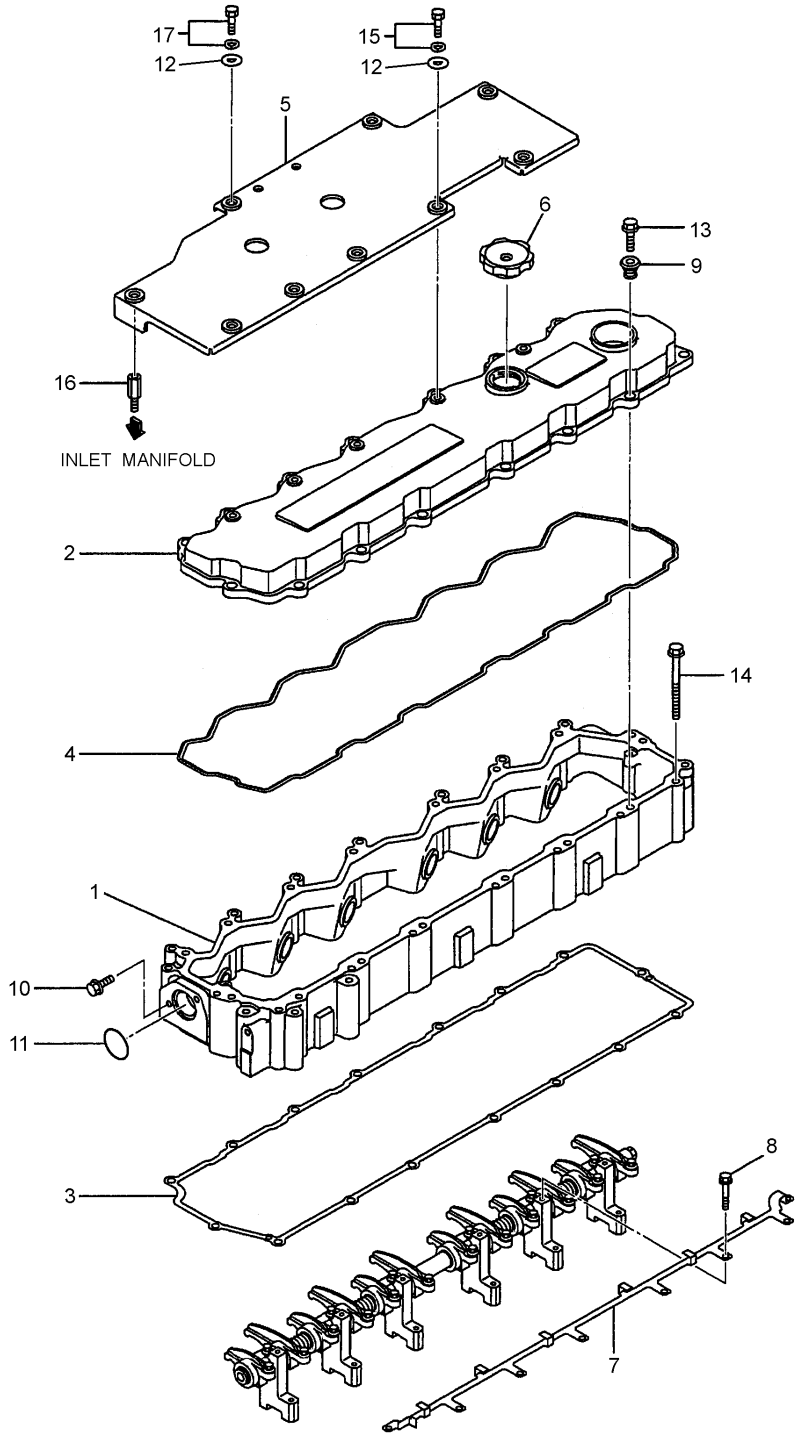


H96479E 01

**296-4647 COVER GP-VALVE MECHANISM**
Part of 272-4677-Page14

# BASIC ENGINE

| NOTE | No. | PART No. | QTY | PART NAME | NOTE | No. | PART No. | QTY | PART NAME |
|---|---|---|---|---|---|---|---|---|---|
| | 1 | 294-1703 | 1 | CASE | | | | | |
| | 2 | 294-1704 | 1 | COVER | | | | | |
| | 3 | 294-1705 | 1 | GASKET | | | | | |
| | 4 | 294-1706 | 1 | GASKET | | | | | |
| | 5 | 294-1707 | 1 | COVER | | | | | |
| | 6 | 294-1708 | 1 | CAP | | | | | |
| | 7 | 294-1709 | 1 | BRACKET | | | | | |
| | 8 | 294-1710 | 8 | BOLT | | | | | |
| | 9 | 294-1711 | 16 | WASHER | | | | | |
| | 10 | 096-8569 | 2 | BOLT | | | | | |
| | 11 | 294-1712 | 1 | SEAL | | | | | |
| | 12 | 195-8497 | 9 | WASHER | | | | | |
| | 13 | 294-1713 | 16 | BOLT | | | | | |
| | 14 | 294-1700 | 16 | BOLT | | | | | |
| | 15 | 095-8799 | 7 | BOLT AS | | | | | |
| | 16 | 294-1714 | 2 | STUD | | | | | |
| | 17 | 294-1821 | 2 | BOLT AS | | | | | |

H96479E 01

## 296-4647 COVER GP-VALVE MECHANISM

Part of 272-4677-Page14

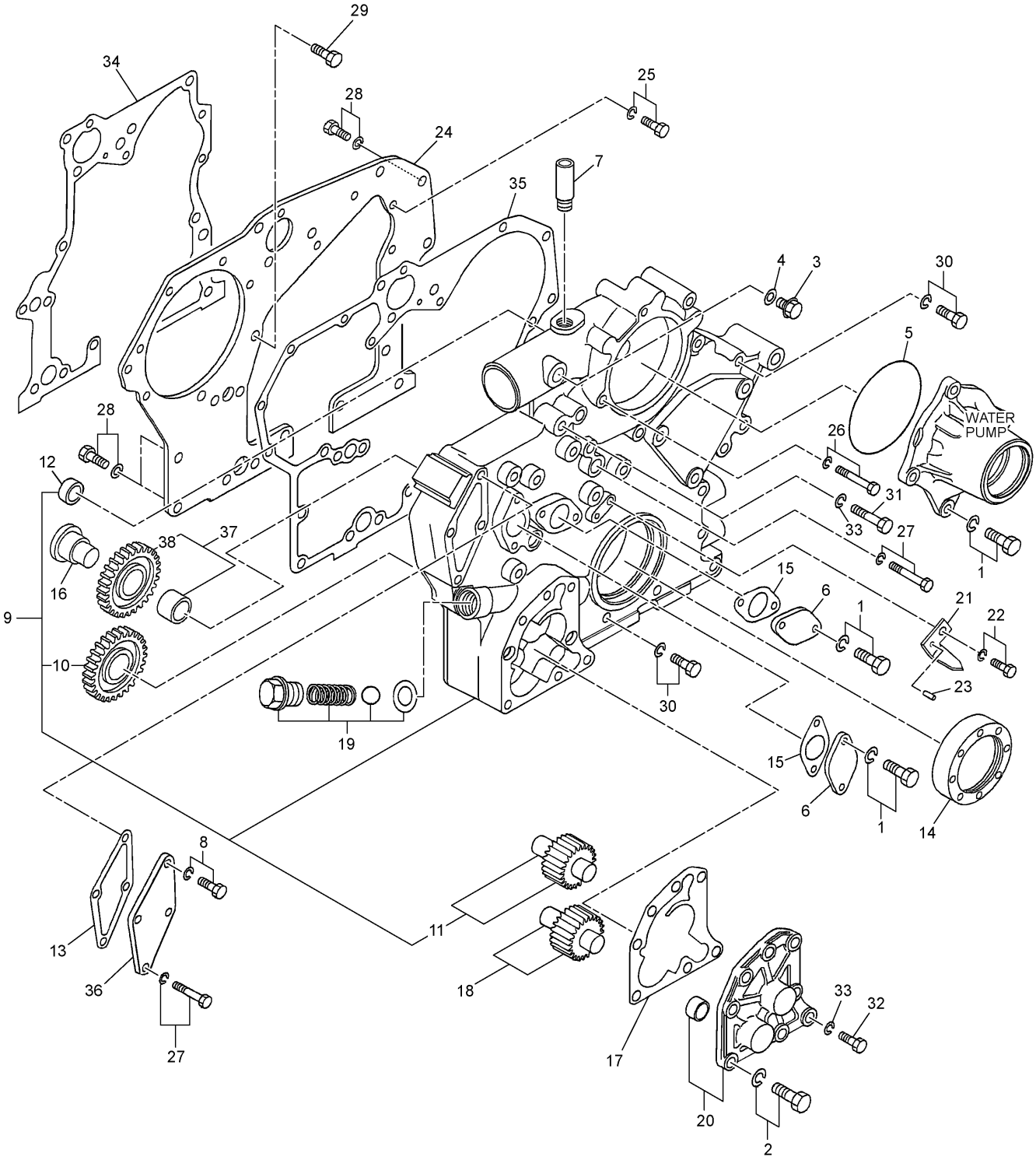


H99964E 03

**296-4649 HOUSING GP-FRONT**
Part of 272-4677-Page14

# BASIC ENGINE

| NOTE | No. | PART No. | QTY | PART NAME | NOTE | No. | PART No. | QTY | PART NAME |
|---|---|---|---|---|---|---|---|---|---|
| | 1 | 294-7251 | 6 | BOLT AS | | | | | |
| | 2 | 294-1726 | 4 | BOLT AS | | | | | |
| | 3 | 096-9435 | 1 | PLUG | | | | | |
| | 4 | 096-9532 | 1 | WASHER | | | | | |
| | 5 | 096-9528 | 1 | SEAL-O-RING (ID=109.50mm) | | | | | |
| | 6 | 6F-7556 | 2 | COVER | | | | | |
| | 7 | 5I-7632 | 1 | PIPE | | | | | |
| | 8 | 196-8366 | 1 | BOLT AS | | | | | |
| | 9 | 294-1727 | 1 | BODY AS | | | | | |
| | 10 | 294-1728 | 1 | GEAR | | | | | |
| | 11 | 125-2950 | 1 | GEAR AS | | | | | |
| | 12 | 195-8225 | 1 | CAP | | | | | |
| | 13 | 212-8572 | 1 | GASKET | | | | | |
| | 14 | 5I-7656 | 1 | SEAL | | | | | |
| | 15 | 6F-7557 | 2 | GASKET | | | | | |
| | 16 | 5I-7683 | 1 | SPINDLE | | | | | |
| | 17 | 178-6537 | 1 | GASKET | | | | | |
| | 18 | 5I-7558 | 1 | GEAR AS (Z=9) | | | | | |
| | 19 | 5I-7559 | 1 | VALVE AS | | | | | |
| | 20 | 178-6538 | 1 | COVER AS | | | | | |
| | 21 | 222-8292 | 1 | POINTER | | | | | |
| | 22 | 294-1731 | 1 | BOLT AS | | | | | |
| | 23 | 6V-8236 | 1 | PIN | | | | | |
| | 24 | 294-1732 | 1 | PLATE | | | | | |
| | 25 | 6V-5215 | 2 | BOLT (L=16mm) | | | | | |
| | 26 | 297-7646 | 2 | BOLT AS | | | | | |
| | 27 | 297-1735 | 5 | BOLT AS | | | | | |
| | 28 | 5I-5597 | 6 | BOLT AS | | | | | |
| | 29 | 5I-7610 | 1 | BOLT (L=20mm) | | | | | |
| | 30 | 297-7647 | 6 | BOLT AS | | | | | |
| | 31 | 8T-4172 | 2 | BOLT (L=80mm) | | | | | |
| | 32 | 8T-6685 | 4 | BOLT (L=110mm) | | | | | |
| | 33 | 7X-0796 | 6 | LOCKWASHER | | | | | |
| | 34 | 294-1733 | 1 | GASKET | | | | | |
| | 35 | 294-1734 | 1 | GASKET | | | | | |
| | 36 | 212-8571 | 1 | COVER | | | | | |
| | 37 | 294-1729 | 1 | GEAR AS (Z=33) | | | | | |
| | 38 | 294-1730 | 1 | GEAR | | | | | |

H99964E 03

## 296-4649 HOUSING GP-FRONT

Part of 272-4677-Page14

# BASIC ENGINE

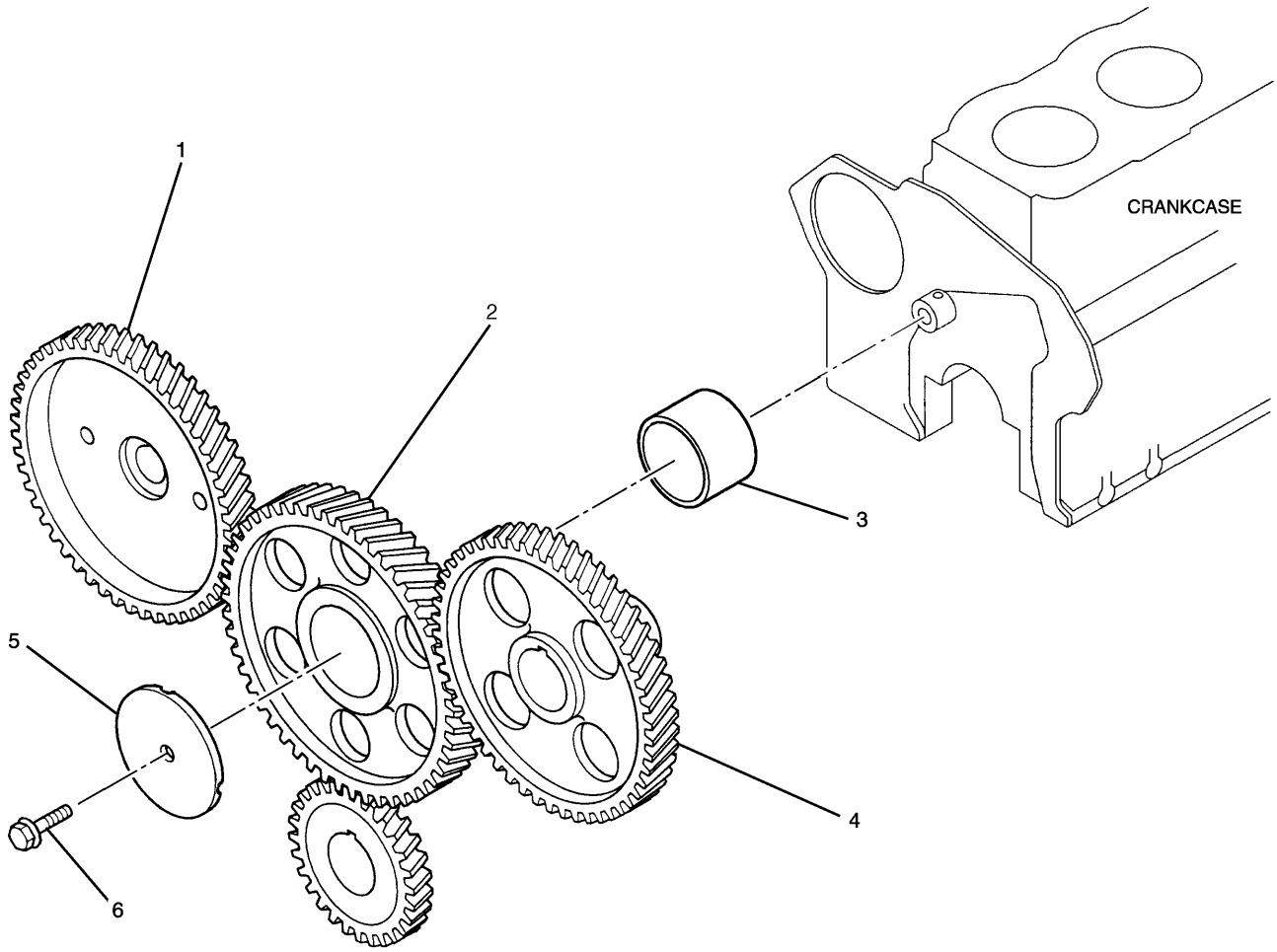


| NOTE | No. | PART No. | QTY | PART NAME | NOTE | No. | PART No. | QTY | PART NAME |
|---|---|---|---|---|---|---|---|---|---|
| | 1 | 294-1755 | 1 | GEAR (Z=62) | | | | | |
| | 2 | 294-1753 | 1 | GEAR AS | | | | | |
| | 3 | 296-4673 | 1 | BUSHING | | | | | |
| | 4 | 294-1754 | 1 | GEAR (Z=62) | | | | | |
| | 5 | 294-1756 | 1 | PLATE | | | | | |
| | 6 | 294-1757 | 1 | BOLT | | | | | |

H95959E 00

## 296-4651 GEAR GP-FRONT

Part of 272-4677-Page14

# BASIC ENGINE

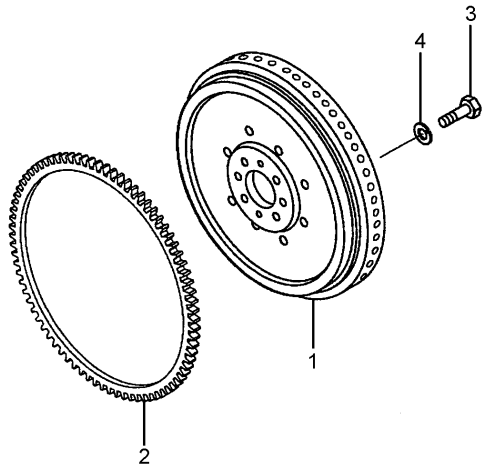


| NOTE | No. | PART No. | QTY | PART NAME |
|---|---|---|---|---|
| | 1 | 294-1752 | 1 | FLYWHEEL AS |
| | 2 | 205-6788 | 1 | GEAR |
| | 3 | 51-5005 | 6 | BOLT (L=35mm) |
| | 4 | 096-2501 | 6 | WASHER |

H96843E 00

## 296-4644 FLYWHEEL GP

Part of 272-4677-Page14

# BASIC ENGINE

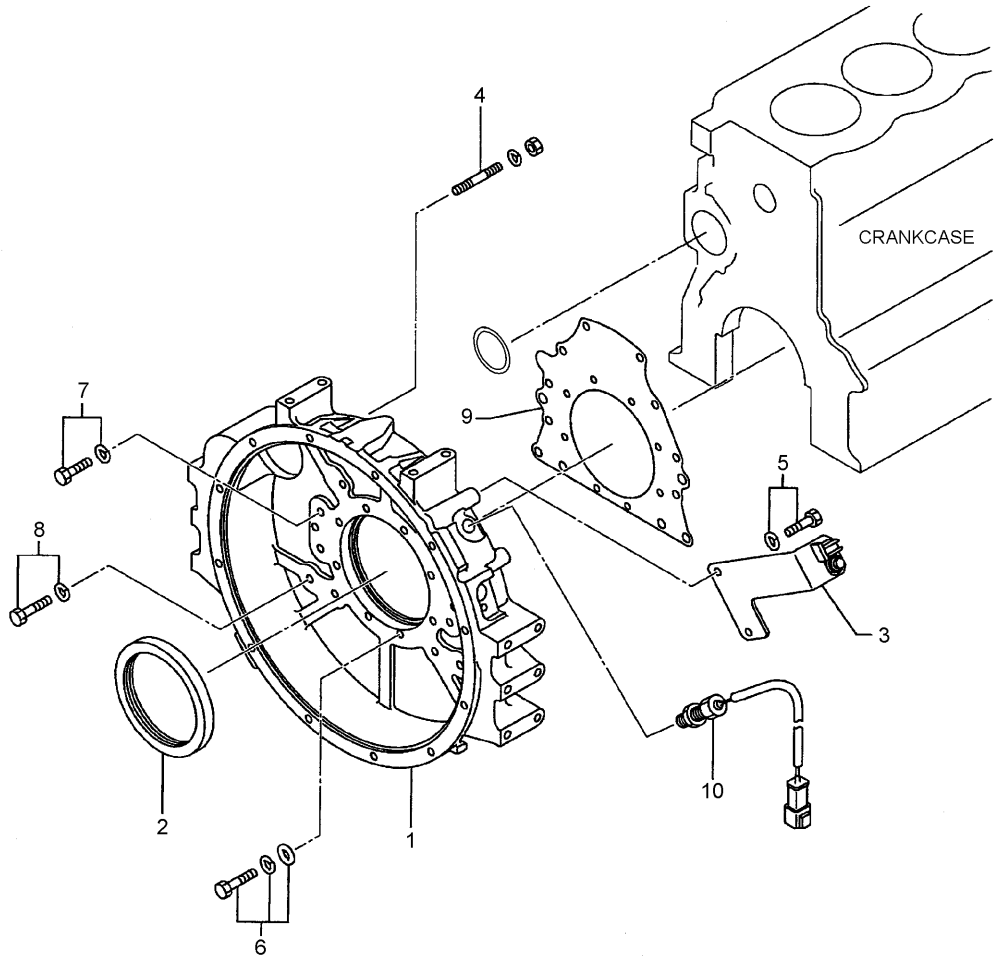


| NOTE | No. | PART No. | QTY | PART NAME | NOTE | No. | PART No. | QTY | PART NAME |
|---|---|---|---|---|---|---|---|---|---|
| | 1 | 294-1736 | 1 | HOUSING | | | | | |
| | 2 | 5I-7660 | 1 | SEAL AS | | | | | |
| | 3 | 294-1740 | 1 | BRACKET | | | | | |
| | 4 | 5I-4983 | 2 | STUD (STARTER) | | | | | |
| | 5 | 5I-5597 | 2 | BOLT AS | | | | | |
| | 6 | 294-1737 | 8 | BOLT AS | | | | | |
| | 7 | 294-1738 | 2 | BOLT AS | | | | | |
| | 8 | 294-1726 | 10 | BOLT AS | | | | | |
| | 9 | 294-1739 | 1 | GASKET | | | | | |
| | 10 | 196-7973 | 1 | SENSOR | | | | | |

H99756E 02

**296-4643 HOUSING GP-FLYWHEEL**

Part of 272-4677-Page14

# BASIC ENGINE

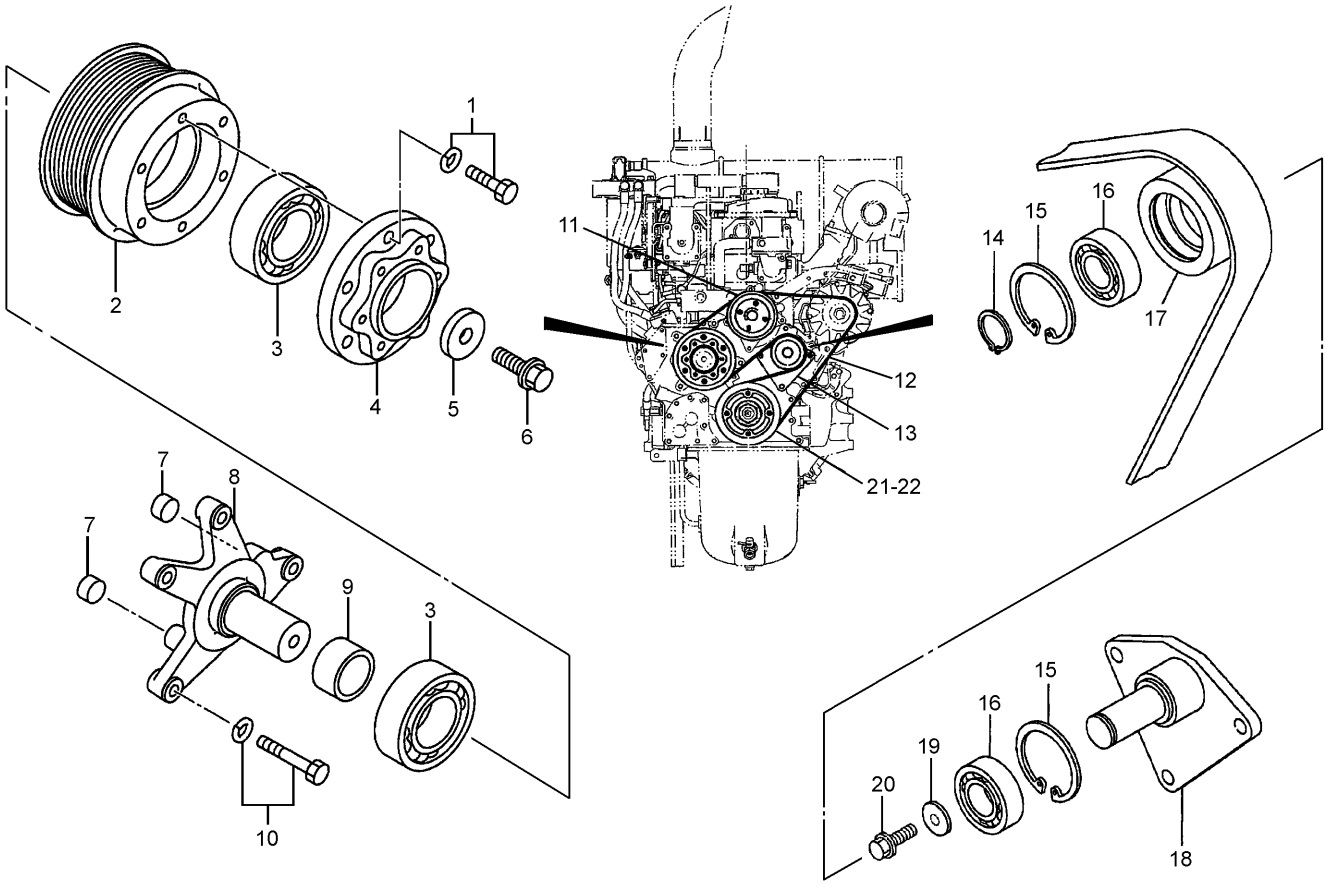


| NOTE | No. | PART No. | QTY | PART NAME | NOTE | No. | PART No. | QTY | PART NAME |
|---|---|---|---|---|---|---|---|---|---|
| | 1 | 294-1726 | 6 | BOLT AS | | 21 | 266-6326 | 1 | PULLEY AS |
| | 2 | 266-6337 | 1 | PULLEY | | 22 | 5I-7540 | 1 | SLEEVE |
| | 3 | 266-6334 | 2 | BEARING | | | | | |
| | 4 | 266-6333 | 1 | COVER | | | | | |
| | 5 | 266-6336 | 1 | WASHER | | | | | |
| | 6 | 266-6338 | 1 | BOLT (L=25mm) | | | | | |
| | 7 | 212-8596 | 2 | BUSHING | | | | | |
| | 8 | 266-6332 | 1 | BRACKET | | | | | |
| | 9 | 266-6335 | 1 | SPACER | | | | | |
| | 10 | 213-9433 | 4 | BOLT AS | | | | | |
| | 11 | 212-8584 | 1 | PULLEY | | | | | |
| | 12 | 294-1781 | 1 | BELT | | | | | |
| | 13 | 305-4908 | 1 | PULLEY AS | | | | | |
| | 14 | 294-1786 | 1 | RING | | | | | |
| | 15 | 8T-9598 | 2 | RING | | | | | |
| | 16 | 294-1785 | 2 | BEARING | | | | | |
| | 17 | 294-1784 | 1 | PULLEY | | | | | |
| | 18 | 305-4907 | 1 | BRACKET | | | | | |
| | 19 | 305-4906 | 1 | COVER | | | | | |
| | 20 | 305-4905 | 1 | BOLT | | | | | |

H97937E 02

**296-4667 PULLEY GP**
Part of 272-4676-Page13

# BASIC ENGINE

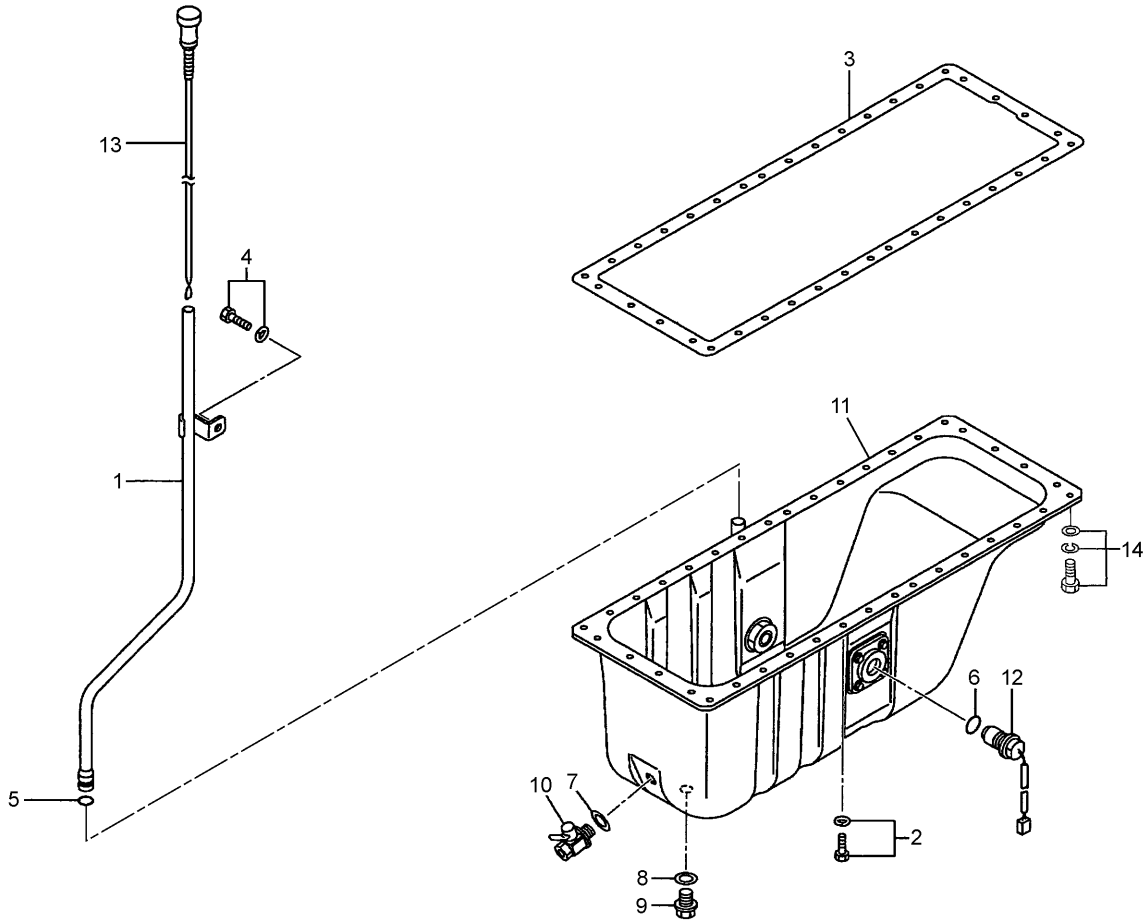


| NOTE | No. | PART No. | QTY | PART NAME | NOTE | No. | PART No. | QTY | PART NAME |
|---|---|---|---|---|---|---|---|---|---|
| | 1 | 294-1741 | 1 | GUIDE | | | | | |
| | 2 | 196-8366 | 37 | BOLT AS | | | | | |
| | 3 | 5I-7666 | 1 | GASKET | | | | | |
| | 4 | 199-2178 | 1 | BOLT AS | | | | | |
| | 5 | 5I-4993 | 1 | SEAL | | | | | |
| | 6 | 125-2968 | 1 | SEAL | | | | | |
| | 7 | 5I-8067 | 1 | WASHER | | | | | |
| | 8 | 7W-3556 | 1 | WASHER | | | | | |
| | 9 | 183-8177 | 1 | PLUG | | | | | |
| | 10 | 183-8176 | 1 | VALVE | | | | | |
| | 11 | 294-1742 | 1 | PAN | | | | | |
| | 12 | 213-0677 | 1 | SWITCH AS | | | | | |
| | | 102-8802 | 1 | RECEPTACLE KIT | | | | | |
| | | 9X-3401 | 2 | PIN | | | | | |
| | 13 | 294-1743 | 1 | GAUGE | | | | | |
| | 14 | 282-8567 | 1 | BOLT AS | | | | | |

H96476E 01

**296-4640 PAN GP-OIL**
Part of 272-4677-Page14

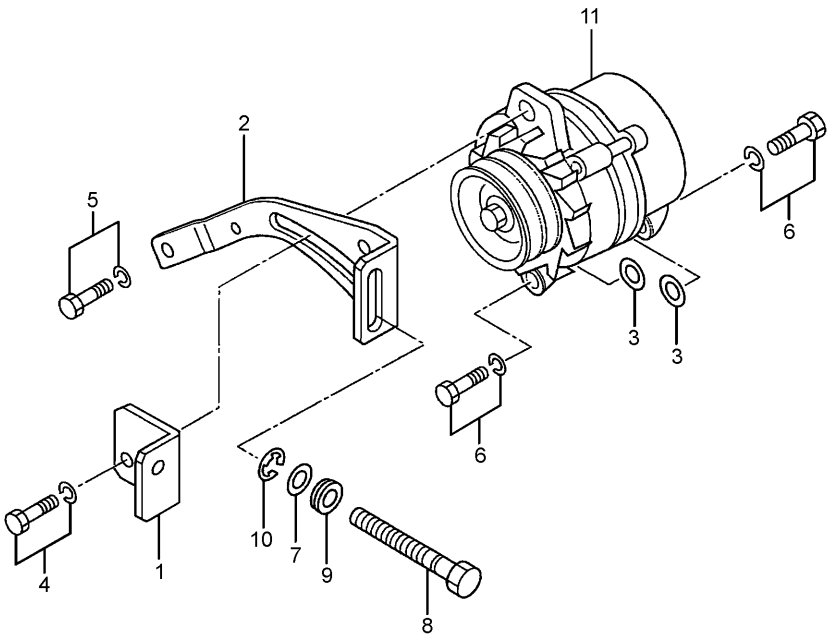


| NOTE | No. | PART No. | QTY | PART NAME | NOTE | No. | PART No. | QTY | PART NAME |
|---|---|---|---|---|---|---|---|---|---|
| | 1 | 178-6600 | 1 | PULLER | | | | | |
| | 2 | 294-1859 | 1 | PLATE | | | | | |
| | 3 | 5I-7750 | 2 | WASHER | | | | | |
| | 4 | 294-1860 | 1 | BOLT AS | | | | | |
| | 5 | 5I-5597 | 1 | BOLT AS | | | | | |
| | 6 | 294-1861 | 2 | BOLT AS | | | | | |
| | 7 | 8T-4223 | 1 | WASHER | | | | | |
| | 8 | 178-6598 | 1 | BOLT (L=135mm) | | | | | |
| | 9 | 178-6599 | 1 | WASHER | | | | | |
| | 10 | 178-6601 | 1 | RING | | | | | |
| Y | 11 | 212-8561 | 1 | ALTERNATOR GP | | | | | |

Y—SEE SEPARATE ILLUSTRATION

H99752E 02

## 296-4661 MOUNTING GP-ALTERNATOR

Part of 272-4677-Page14
212-8561-Page202

# BASIC ENGINE

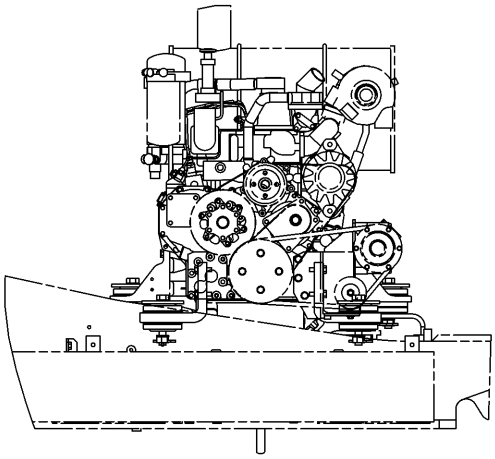

FRONT VIEW OF ENGINE

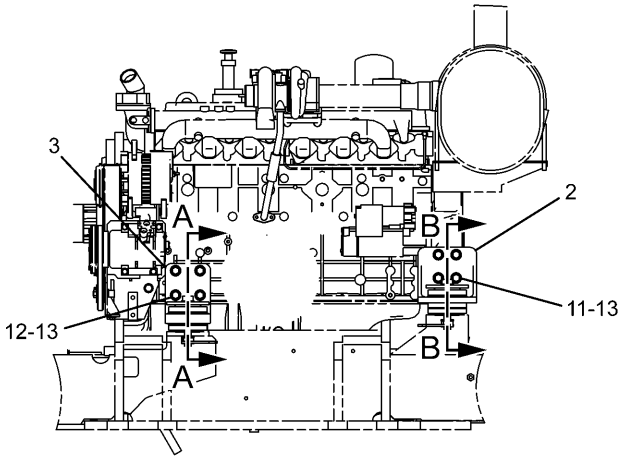


LH VIEW OF ENGINE

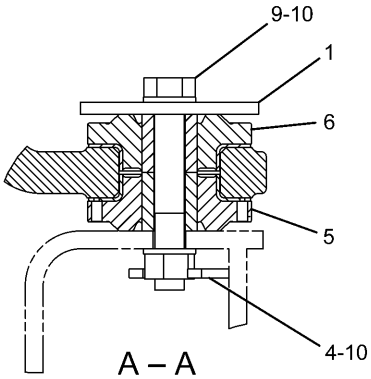


A – A

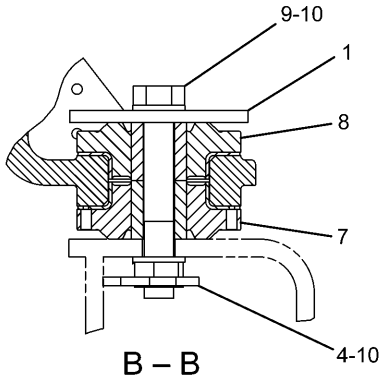


B – B

| NOTE | No. | PART No. | QTY | PART NAME | NOTE | No. | PART No. | QTY | PART NAME |
|---|---|---|---|---|---|---|---|---|---|
| | 1 | 109-9329 | 4 | WASHER | | | | | |
| | 2 | 118-9784 | 2 | BRACKET | | | | | |
| | 3 | 118-9785 | 2 | BRACKET | | | | | |
| | 4 | 118-9930 | 4 | SUPPORT AS | | | | | |
| | 5 | 266-6298 | 2 | MOUNT | | | | | |
| | 6 | 266-6299 | 2 | MOUNT | | | | | |
| | 7 | 266-6300 | 2 | MOUNT | | | | | |
| | 8 | 266-6301 | 2 | MOUNT | | | | | |
| | 9 | 7X-2532 | 4 | BOLT (L=130mm) | | | | | |
| | 10 | 8T-4123 | 8 | WASHER | | | | | |
| | 11 | 8T-4139 | 8 | BOLT (L=30mm) | | | | | |
| | 12 | 8T-4183 | 8 | BOLT (L=40mm) | | | | | |
| | 13 | 8T-4223 | 16 | WASHER | | | | | |

H89528E 00

**266-6297 MOUNTING GP-ENGINE**

# LUBRICATION SYSTEM

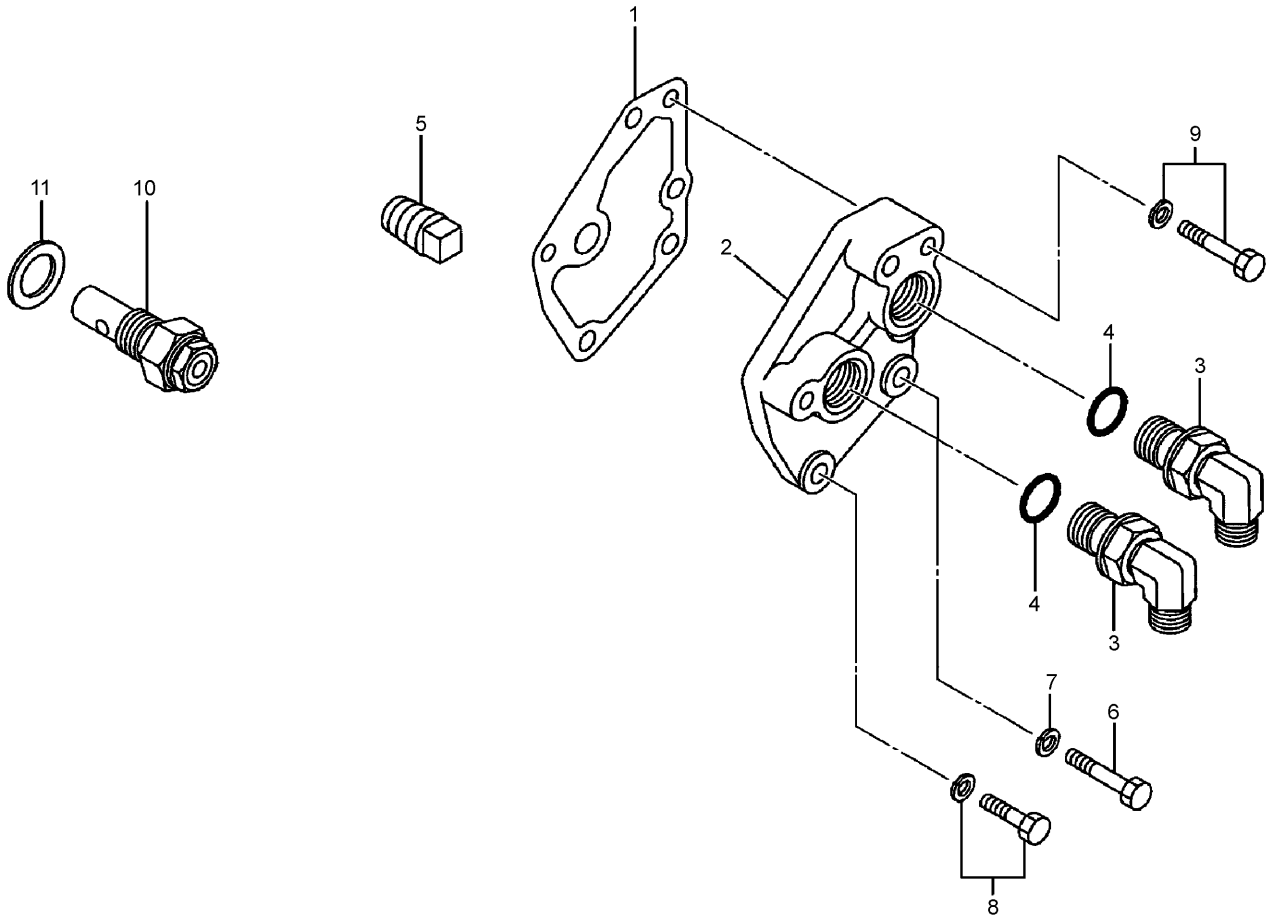


| NOTE | No. | PART No. | QTY | PART NAME | NOTE | No. | PART No. | QTY | PART NAME |
|---|---|---|---|---|---|---|---|---|---|
| | 1 | 294-1769 | 1 | GASKET | | | | | |
| | 2 | 294-1770 | 1 | COVER AS | | | | | |
| | | 294-1771 | 1 | COVER | | | | | |
| | 3 | 185-2793 | 2 | ELBOW | | | | | |
| | 4 | 305-4892 | 2 | SEAL | | | | | |
| | 5 | 5I-7505 | 1 | PLUG | | | | | |
| | 6 | 099-4643 | 1 | BOLT | | | | | |
| | 7 | 7X-0796 | 1 | LOCKWASHER | | | | | |
| | 8 | 294-1726 | 3 | BOLT AS | | | | | |
| | 9 | 294-1772 | 2 | BOLT AS | | | | | |
| | 10 | 5I-8066 | 1 | VALVE AS | | | | | |
| | 11 | 5B-5947 | 1 | GASKET | | | | | |

H97938E 01

**296-4654 FILTER GP-ENGINE OIL**

Part of 272-4677-Page14

# LUBRICATION SYSTEM

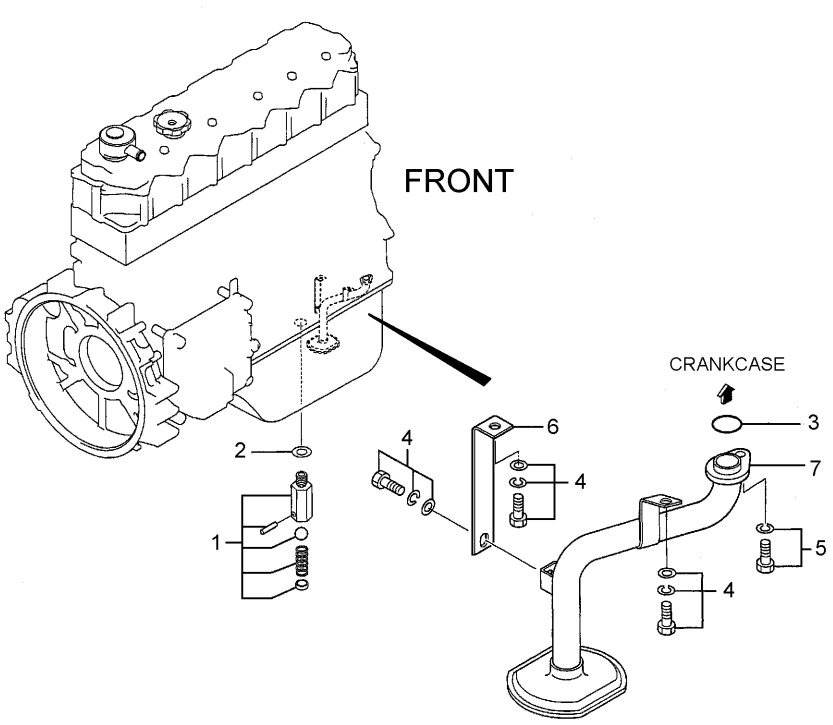


| NOTE | No. | PART No. | QTY | PART NAME | NOTE | No. | PART No. | QTY | PART NAME |
|---|---|---|---|---|---|---|---|---|---|
| | 1 | 294-1767 | 1 | VALVE AS | | | | | |
| | 2 | 234-4796 | 1 | GASKET | | | | | |
| | 3 | 5I-5038 | 1 | SEAL-O-RING (ID=24.40mm) | | | | | |
| | 4 | 294-1768 | 3 | BOLT AS | | | | | |
| | 5 | 195-8351 | 1 | BOLT AS | | | | | |
| | 6 | 5I-7642 | 1 | PLATE | | | | | |
| | 7 | 178-6563 | 1 | STRAINER | | | | | |

H96477E 01

**296-4641 LINES GP-ENGINE OIL**
Part of 272-4677-Page14

# LUBRICATION SYSTEM

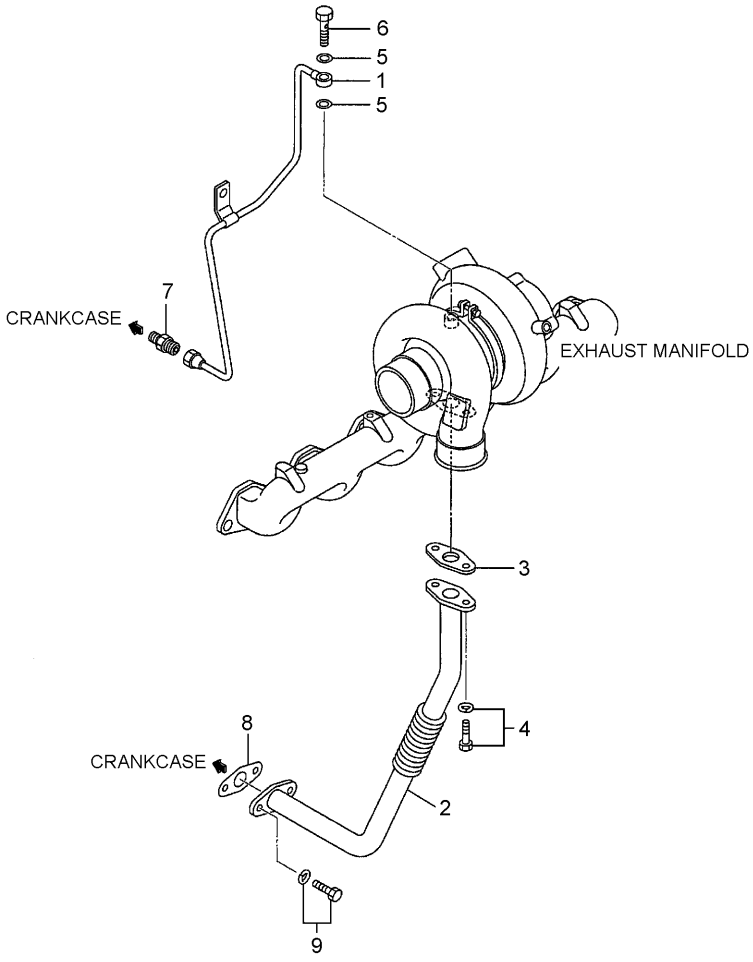


| NOTE | No. | PART No. | QTY | PART NAME | NOTE | No. | PART No. | QTY | PART NAME |
|---|---|---|---|---|---|---|---|---|---|
| | 1 | 294-1764 | 1 | PIPE | | | | | |
| | 2 | 294-1765 | 1 | PIPE | | | | | |
| | 3 | 294-1766 | 1 | GASKET | | | | | |
| | 4 | 195-8322 | 2 | BOLT AS | | | | | |
| | 5 | 2A-5222 | 2 | WASHER | | | | | |
| | 6 | 5I-7623 | 1 | BOLT (L=20mm) | | | | | |
| | 7 | 5I-8058 | 1 | CONNECTOR | | | | | |
| | 8 | 5I-7561 | 1 | GASKET | | | | | |
| | 9 | 196-8366 | 2 | BOLT AS | | | | | |

H96853E 00

## 296-4636 LINES GP-TURBOCHARGER OIL

Part of 272-4677-Page14

# LUBRICATION SYSTEM

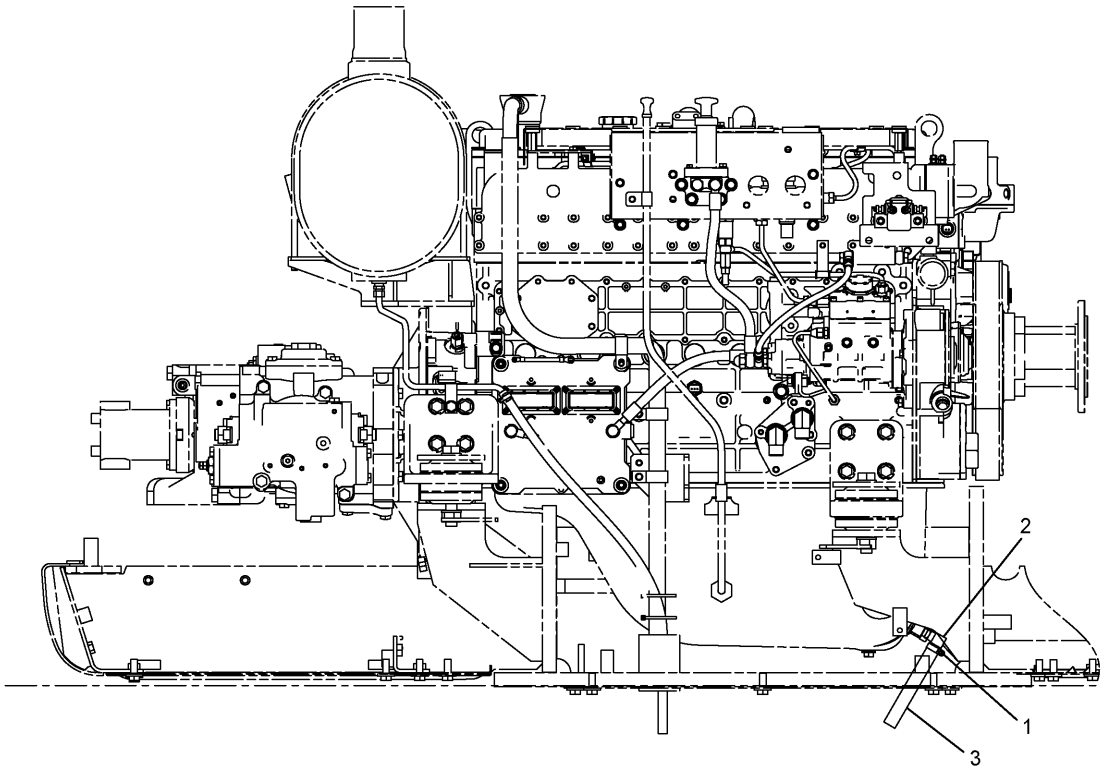


RH SIDE VIEW OF ENGINE

| NOTE | No. | PART No. | QTY | PART NAME | NOTE | No. | PART No. | QTY | PART NAME |
|---|---|---|---|---|---|---|---|---|---|
| | 1 | 095-1388 | 1 | CLAMP | | | | | |
| | 2 | 217-5469 | 1 | ELBOW | | | | | |
| E | 3 | 5P-0743 | | HOSE…(17cm) | | | | | |

E—ORDER BY THE CENTIMETER

H98507E 00

## 310-9582 LINES GP-OIL DRAIN

# LUBRICATION SYSTEM

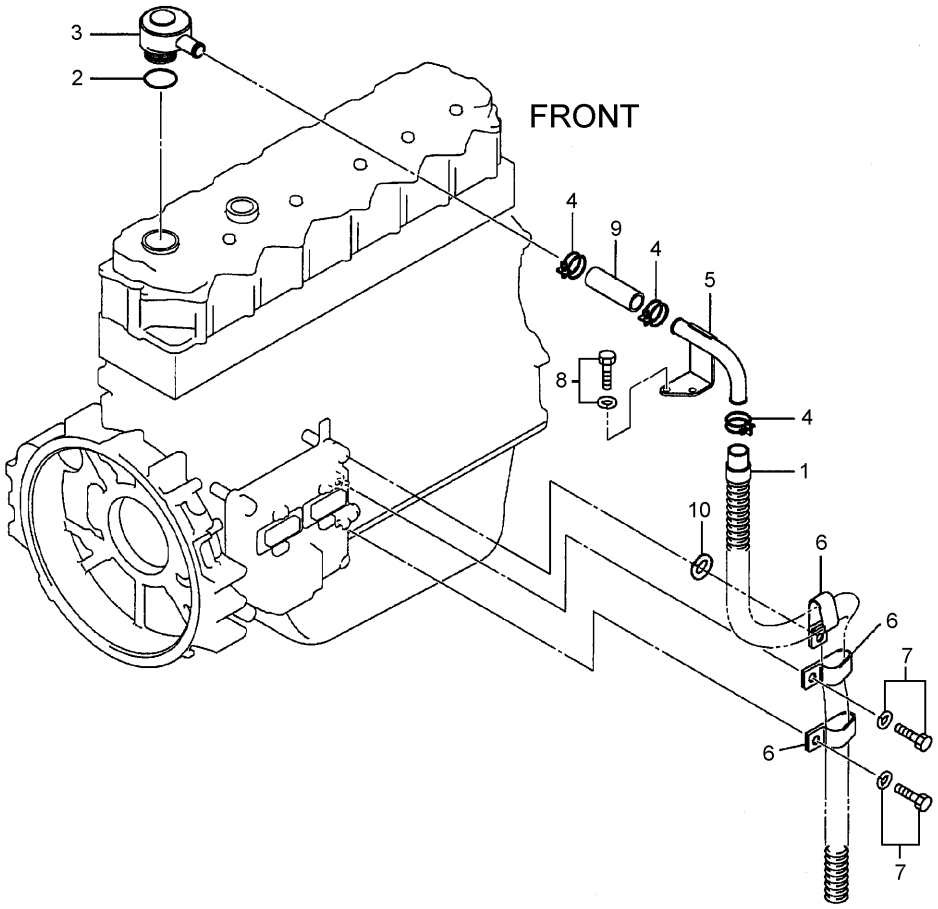


| NOTE | No. | PART No. | QTY | PART NAME | NOTE | No. | PART No. | QTY | PART NAME |
|---|---|---|---|---|---|---|---|---|---|
| | 1 | 294-1773 | 1 | HOSE | | | | | |
| | 2 | 294-1774 | 1 | SEAL | | | | | |
| | 3 | 5I-7725 | 1 | BREATHER | | | | | |
| | 4 | 2S-3440 | 3 | CLAMP | | | | | |
| | 5 | 5I-7645 | 1 | PIPE | | | | | |
| | 6 | 294-1776 | 3 | CLIP | | | | | |
| | 7 | 294-1775 | 2 | BOLT AS | | | | | |
| | 8 | 5I-5597 | 2 | BOLT AS | | | | | |
| | 9 | 5I-4940 | 1 | TUBE | | | | | |
| | 10 | 8T-4121 | 1 | WASHER | | | | | |

H96475E 01

**296-4638 BREATHER GP**

Part of 272-4677-Page14

# LUBRICATION SYSTEM

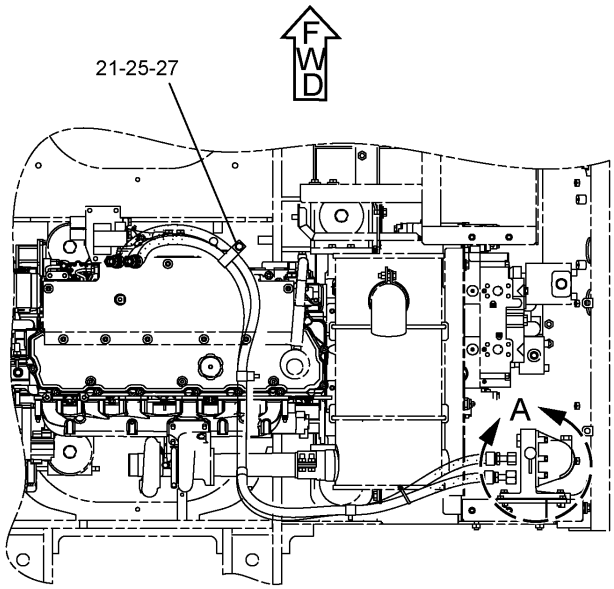


TOP VIEW

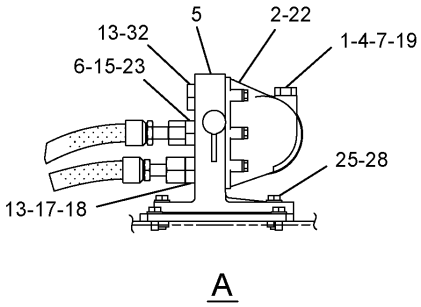


A

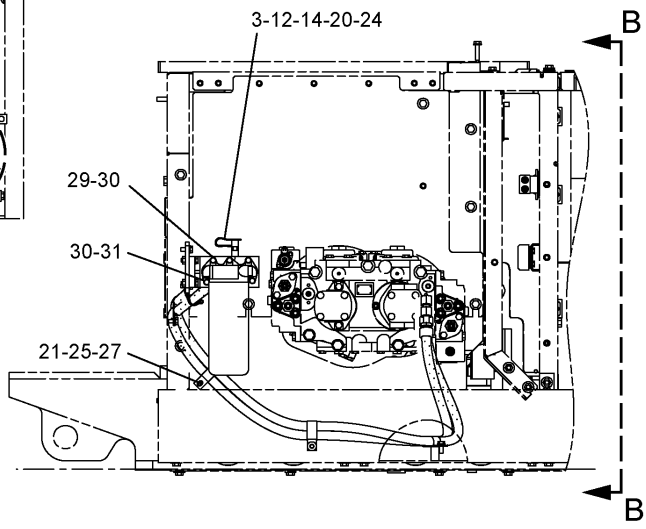


RIGHT SIDE VIEW

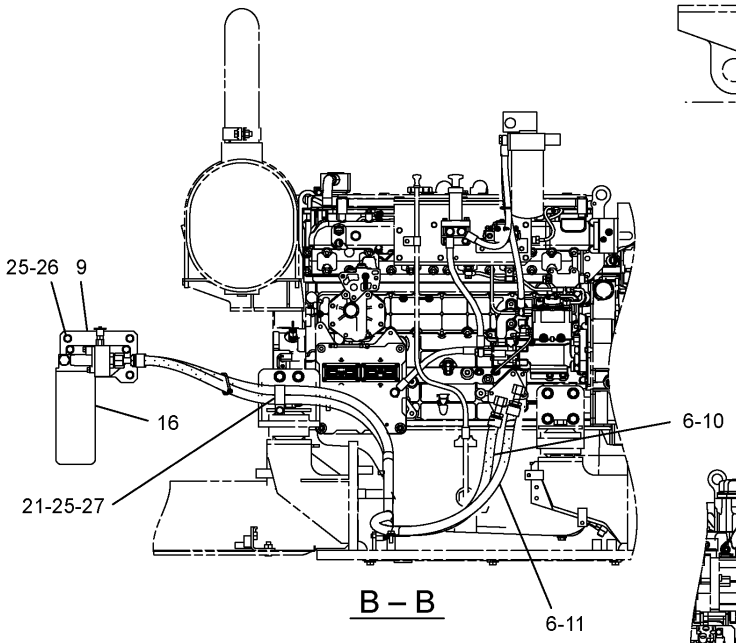


B – B

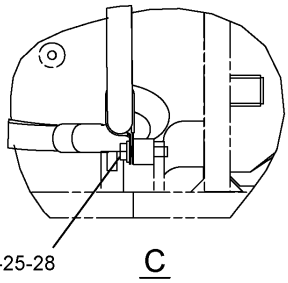


C

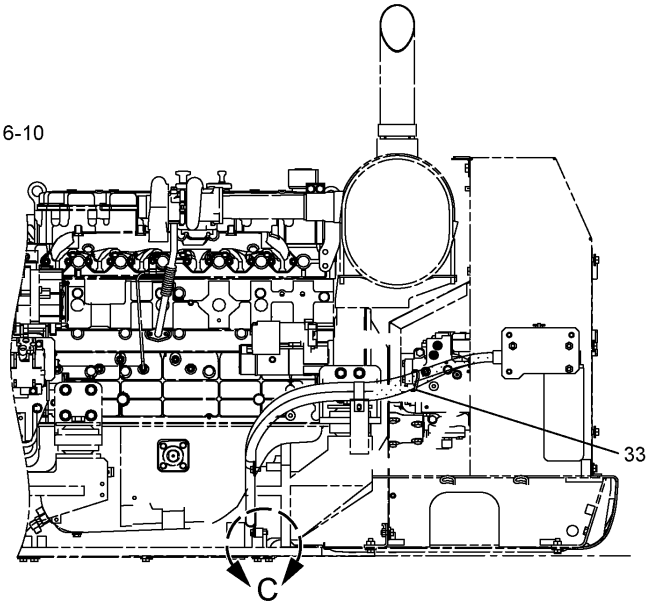


REAR VIEW

H99638E 09

279-7911 FILTER & MTG GP-ENGINE OIL

# LUBRICATION SYSTEM

| NOTE | No. | PART No. | QTY | PART NAME | NOTE | No. | PART No. | QTY | PART NAME |
|---|---|---|---|---|---|---|---|---|---|
| | 1 | 7C-1493 | 1 | VALVE | | | | | |
| | 2 | 7W-9028 | 1 | BASE AS | | | | | |
| | 3 | 8C-3445 | 1 | CAP | | | | | |
| | 4 | 9L-9188 | 1 | SPRING | | | | | |
| | 5 | 121-0307 | 1 | BASE | | | | | |
| | 6 | 152-2938 | 3 | SEAL | | | | | |
| | 7 | 152-2939 | 1 | SEAL | | | | | |
| | 8 | 173-8073 | 1 | BOSS | | | | | |
| | 9 | 305-4781 | 1 | PLATE AS | | | | | |
| | 10 | 310-9498 | 1 | HOSE AS | | | | | |
| | 11 | 310-9500 | 1 | HOSE AS | | | | | |
| | 12 | 033-5853 | 1 | SEAL-O-RING (ID=8.92mm) | | | | | |
| | 13 | 033-6038 | 2 | SEAL | | | | | |
| | 14 | 153-4906 | 1 | SEAL-O-RING (ID=11.89mm) | | | | | |
| | 15 | 189-9377 | 1 | SEAL-O-RING (ID=23.47mm) | | | | | |
| | 16 | 1R-0739 | 1 | FILTER AS | | | | | |
| | 17 | 228-7092 | 1 | SEAL | | | | | |
| | 18 | 2T-2991 | 1 | CONNECTOR | | | | | |
| | 19 | 5P-8196 | 1 | PLUG | | | | | |
| | 20 | 5P-9617 | 1 | ADAPTER | | | | | |
| | 21 | 6D-1641 | 4 | CLIP | | | | | |
| | 22 | 6V-5266 | 3 | SEAL-O-RING (ID=36.09mm) | | | | | |
| | 23 | 6V-8713 | 1 | CONNECTOR | | | | | |
| | 24 | 8C-3446 | 1 | VALVE | | | | | |
| | 25 | 8T-4121 | 10 | WASHER | | | | | |
| | 26 | 8T-4136 | 3 | BOLT (L=25mm) | | | | | |
| | 27 | 8T-4137 | 3 | BOLT (L=20mm) | | | | | |
| | 28 | 8T-4186 | 4 | BOLT (L=40mm) | | | | | |
| | 29 | 8T-4197 | 3 | BOLT (L=40mm) | | | | | |
| | 30 | 8T-4224 | 5 | WASHER | | | | | |
| | 31 | 8T-7547 | 2 | BOLT (L=30mm) | | | | | |
| | 32 | 9S-4188 | 1 | PLUG | | | | | |
| | 33 | 7K-1181 | 1 | STRAP | | | | | |

H99638E 09

## 279-7911 FILTER & MTG GP-ENGINE OIL

# COOLING SYSTEM

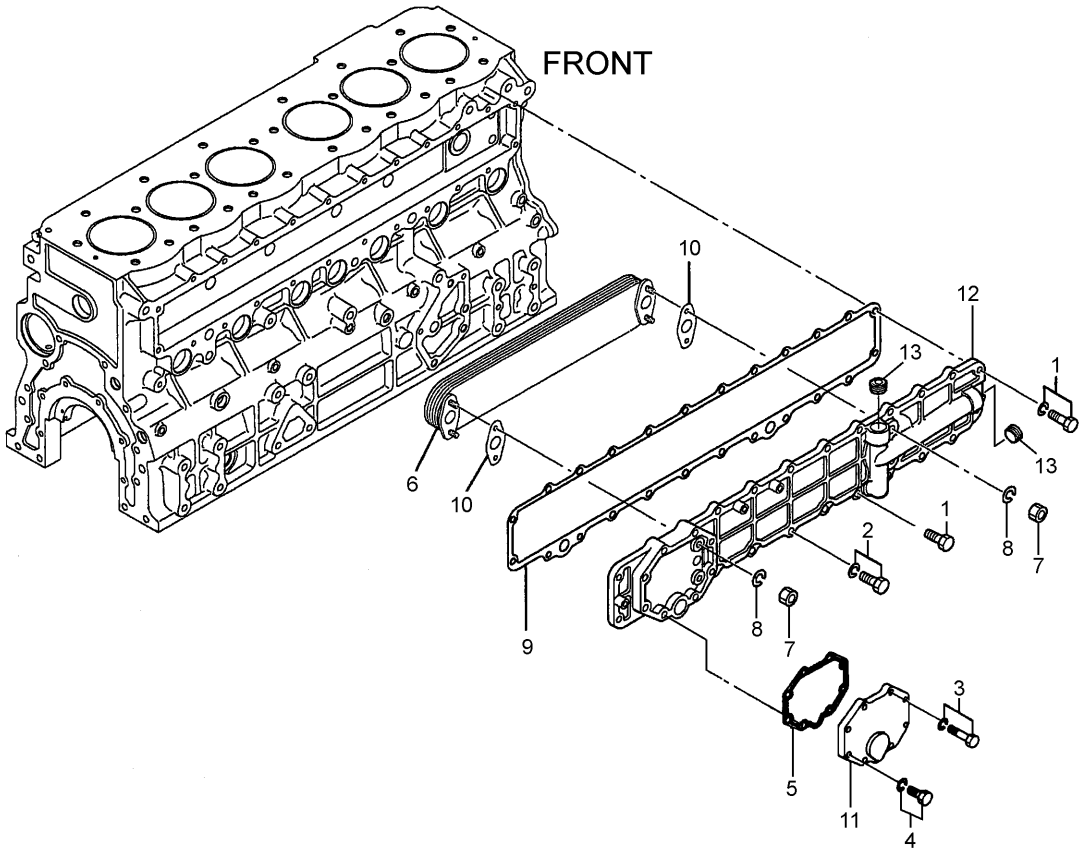


| NOTE | No. | PART No. | QTY | PART NAME | NOTE | No. | PART No. | QTY | PART NAME |
|---|---|---|---|---|---|---|---|---|---|
| | 1 | 196-8366 | 6 | BOLT AS | | | | | |
| | 2 | 094-9266 | 14 | BOLT AS | | | | | |
| | 3 | 094-9267 | 4 | BOLT AS | | | | | |
| | 4 | 294-1738 | 4 | BOLT AS | | | | | |
| | 5 | 217-5589 | 1 | GASKET | | | | | |
| | 6 | 125-2970 | 1 | ELEMENT | | | | | |
| | 7 | 5C-7261 | 4 | NUT | | | | | |
| | 8 | 095-8638 | 4 | WASHER | | | | | |
| | 9 | 5I-7690 | 1 | GASKET | | | | | |
| | 10 | 5I-7691 | 2 | GASKET | | | | | |
| | 11 | 222-8238 | 1 | COVER | | | | | |
| | 12 | 255-2904 | 1 | COVER AS | | | | | |
| | 13 | 096-3321 | 2 | PLUG | | | | | |

H96886E 00

## 296-4642 COOLER GP-ENGINE OIL

Part of 272-4677-Page15

# COOLING SYSTEM

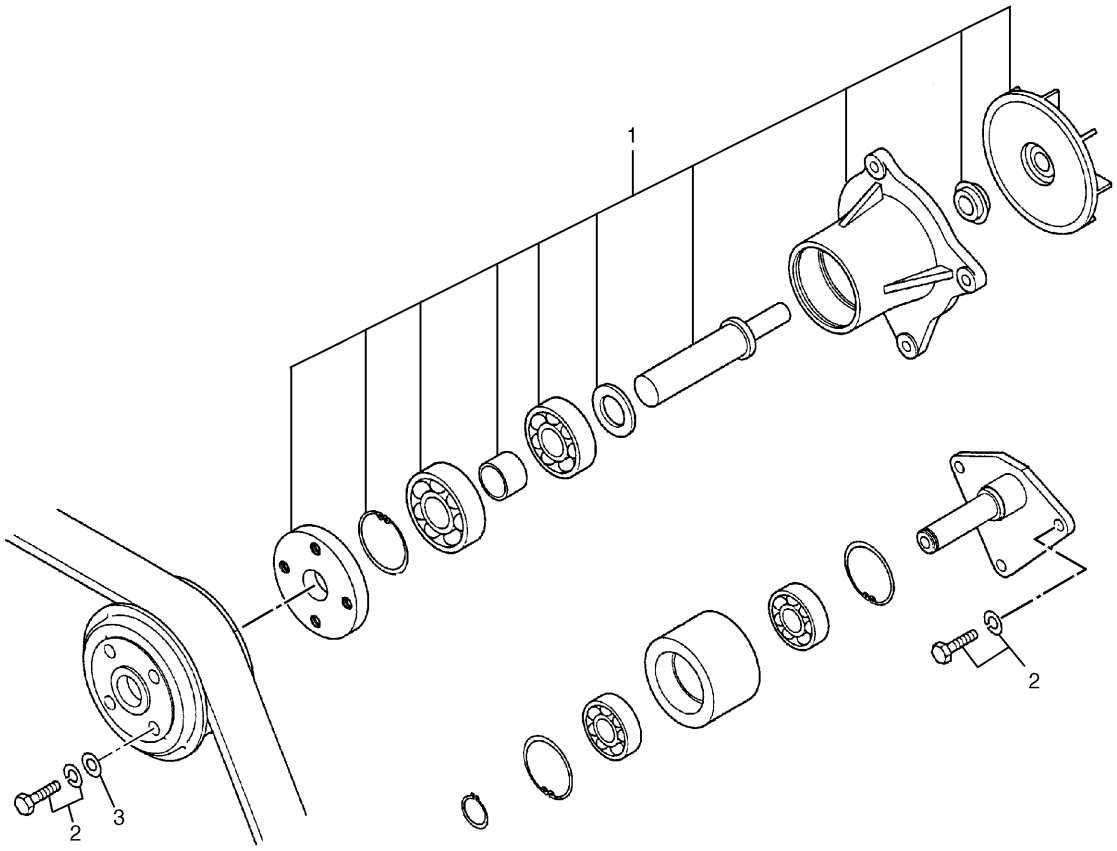


| NOTE | No. | PART No. | QTY | PART NAME | NOTE | No. | PART No. | QTY | PART NAME |
|---|---|---|---|---|---|---|---|---|---|
| Y | 1 | 178-6633 | 1 | PUMP AS | | | | | |
| | 2 | 294-1738 | 7 | BOLT AS | | | | | |
| | 3 | 8T-4121 | 4 | WASHER | | | | | |

Y—SEE SEPARATE ILLUSTRATION

H96891E 00

## 296-4655 PUMP GP-WATER

Part of 272-4677-Page15
178-6633-Page48

# COOLING SYSTEM

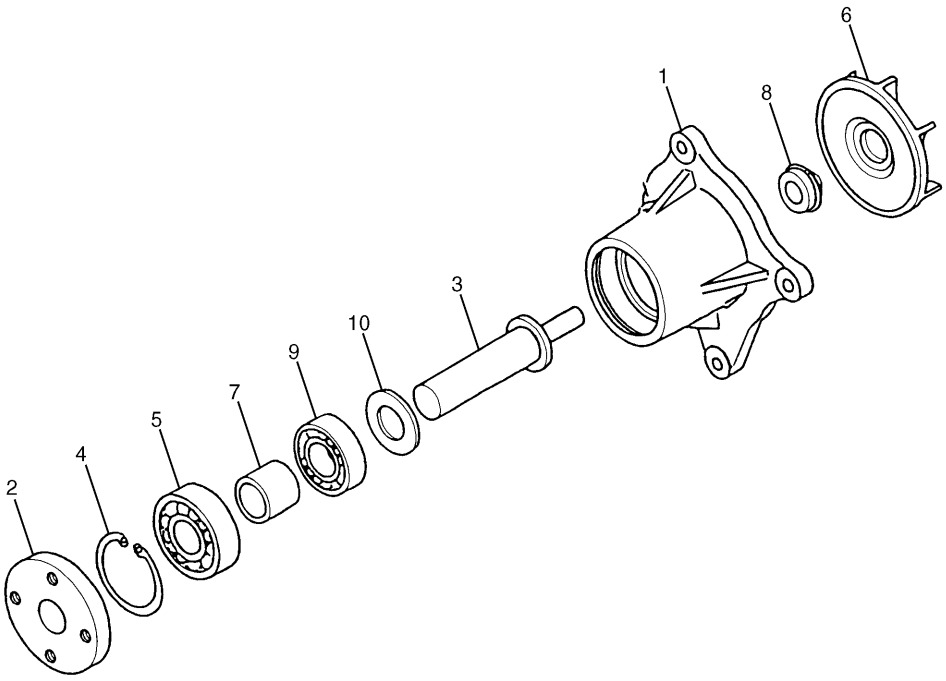


| NOTE | No. | PART No. | QTY | PART NAME | NOTE | No. | PART No. | QTY | PART NAME |
|---|---|---|---|---|---|---|---|---|---|
| Z | 1 | | 1 | CASE | | | | | |
| | 2 | 5I-7696 | 1 | FLANGE | | | | | |
| | 3 | 178-6635 | 1 | SHAFT | | | | | |
| | 4 | 8T-9598 | 1 | RING | | | | | |
| | 5 | 5L-6326 | 1 | BEARING | | | | | |
| | 6 | 178-6634 | 1 | IMPELLER | | | | | |
| | 7 | 5I-7697 | 1 | SPACER | | | | | |
| | 8 | 178-6636 | 1 | SEAL | | | | | |
| | 9 | 2H-3814 | 1 | BEARING | | | | | |
| | 10 | 125-2947 | 1 | WASHER | | | | | |

Z—NOT SERVICED

H81949E 00

**178-6633 PUMP AS-WATER**

Part of 296-4655-Page47

# COOLING SYSTEM

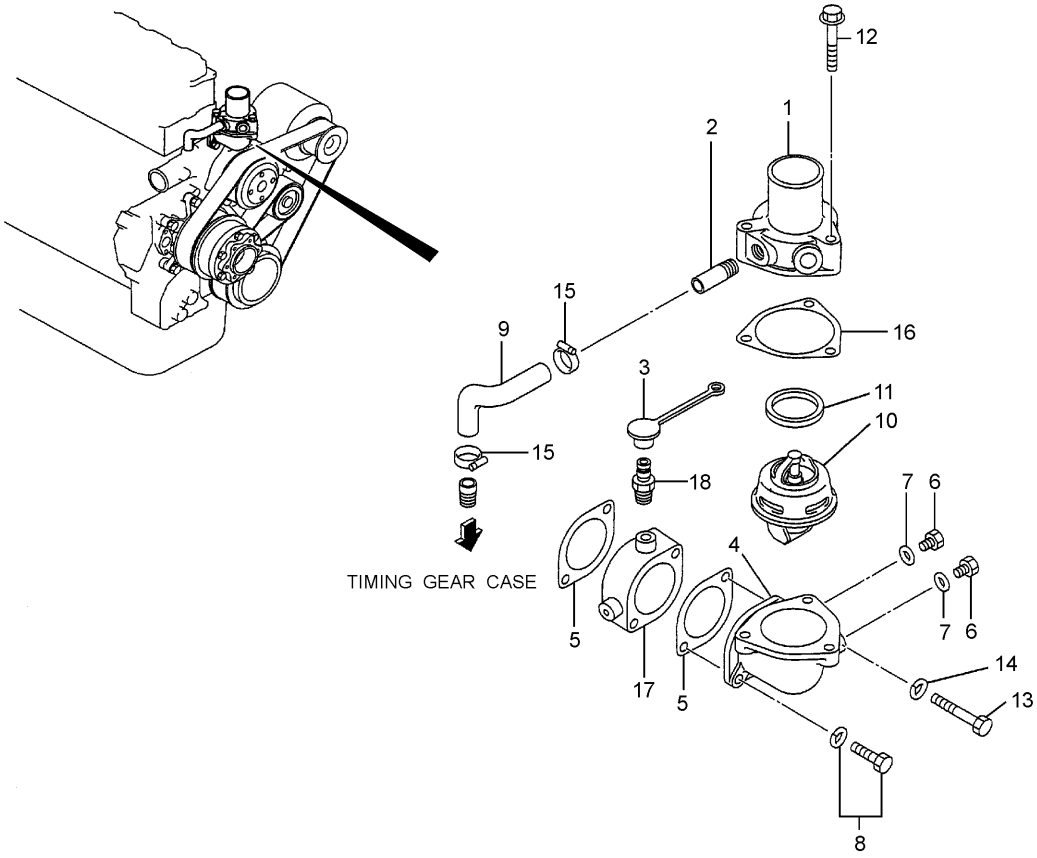


| NOTE | No. | PART No. | QTY | PART NAME | NOTE | No. | PART No. | QTY | PART NAME |
|---|---|---|---|---|---|---|---|---|---|
| | 1 | 5I-7867 | 1 | COVER AS | | | | | |
| | 2 | 5I-7655 | 1 | PIPE | | | | | |
| | 3 | 157-0670 | 1 | CAP | | | | | |
| | 4 | 5I-7646 | 1 | ELBOW | | | | | |
| | 5 | 294-1777 | 2 | GASKET | | | | | |
| | 6 | 5I-8056 | 2 | PLUG | | | | | |
| | 7 | 096-9532 | 2 | WASHER | | | | | |
| | 8 | 270-6338 | 1 | BOLT AS | | | | | |
| | 9 | 294-1778 | 1 | HOSE | | | | | |
| | 10 | 5I-8010 | 1 | REGULATOR | | | | | |
| | 11 | 5I-7735 | 1 | GASKET | | | | | |
| | 12 | 096-8619 | 3 | BOLT (L=50mm) | | | | | |
| | 13 | 297-7655 | 1 | BOLT | | | | | |
| | 14 | 095-8638 | 1 | WASHER | | | | | |
| | 15 | 2S-3440 | 2 | CLAMP | | | | | |
| | 16 | 294-1780 | 1 | GASKET | | | | | |
| | 17 | 296-4733 | 1 | SPACER | | | | | |
| | 18 | 154-9024 | 1 | VALVE | | | | | |

H96486E 01

**296-4658 LINES GP-WATER**
Part of 272-4677-Page15

# COOLING SYSTEM

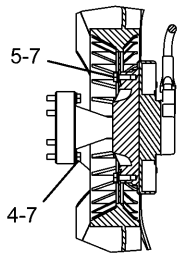


A – A

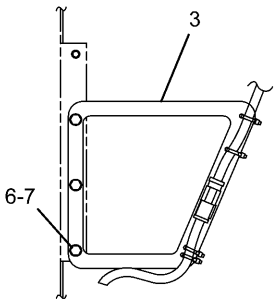


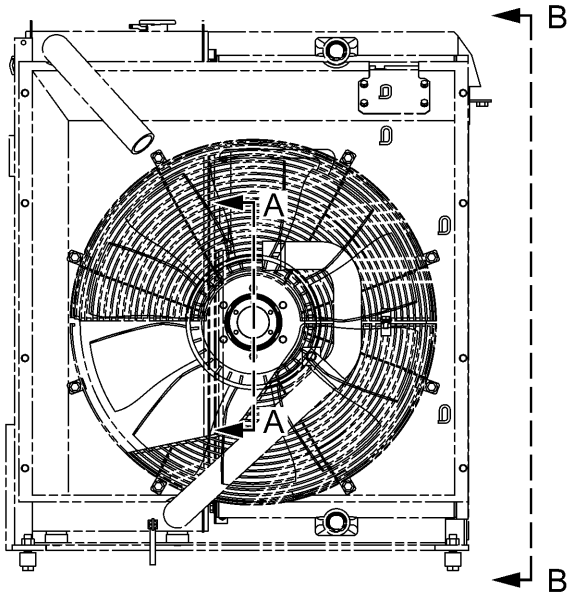


REAR VIEW OF ENGINE

C – C

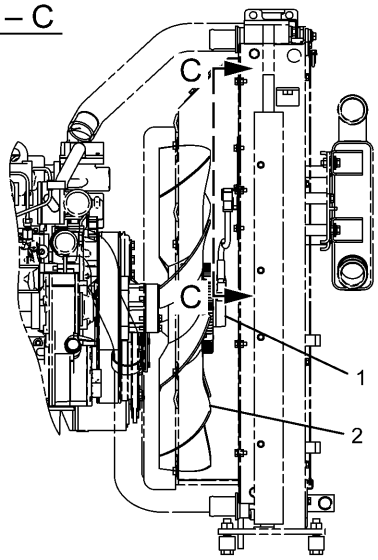


B – B

| NOTE | No. | PART No. | QTY | PART NAME | NOTE | No. | PART No. | QTY | PART NAME |
|---|---|---|---|---|---|---|---|---|---|
| | 1 | 281-3588 | 1 | DRIVE AS | | | | | |
| | | 102-8805 | 1 | RECEPTACLE KIT | | | | | |
| | | 186-3735 | 6 | PIN | | | | | |
| | 2 | 245-9344 | 1 | FAN AS | | | | | |
| | 3 | 265-3557 | 1 | PLATE AS | | | | | |
| | 4 | 7X-0818 | 6 | BOLT (L=45mm) | | | | | |
| | 5 | 8T-4189 | 6 | BOLT (L=20mm) | | | | | |
| | 6 | 8T-4200 | 3 | BOLT (L=16mm) | | | | | |
| | 7 | 8T-4224 | 15 | WASHER | | | | | |

H97939E 06

**230-2979 FAN GP-SUCTION**
Part of 272-4675-Page13

# COOLING SYSTEM

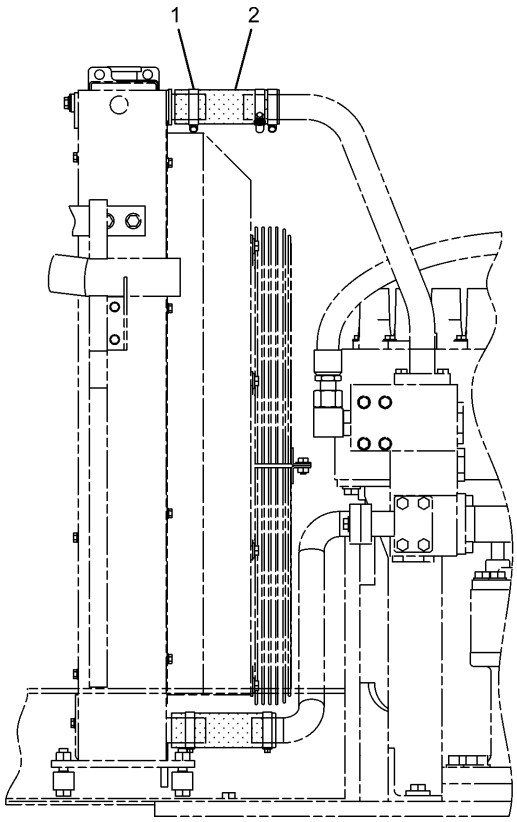


REAR VIEW

| NOTE | No. | PART No. | QTY | PART NAME | NOTE | No. | PART No. | QTY | PART NAME |
|---|---|---|---|---|---|---|---|---|---|
| | 1 | 8T-6703 | 5 | CLAMP | | | | | |
| | 2 | 227-0265 | 2 | HOSE | | | | | |

H93439E 02

**248-9848 LINES GP-COOLING**

# COOLING SYSTEM

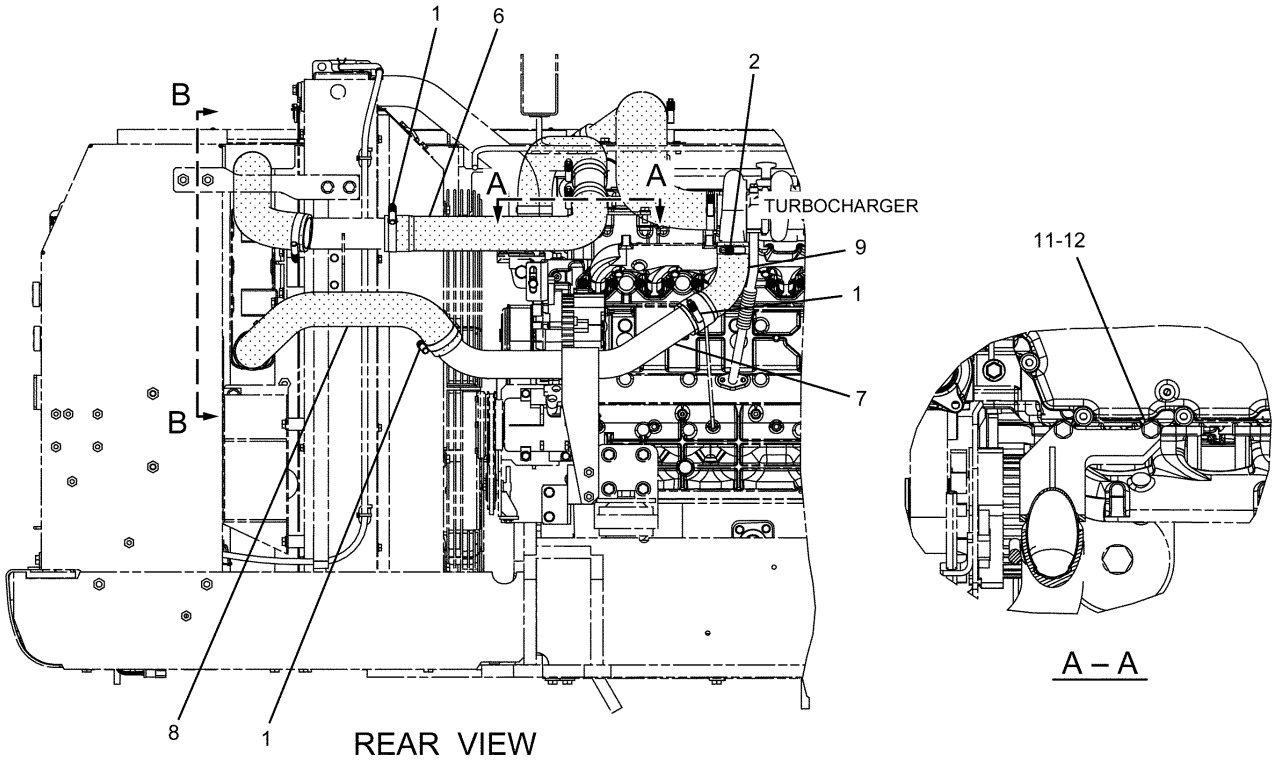


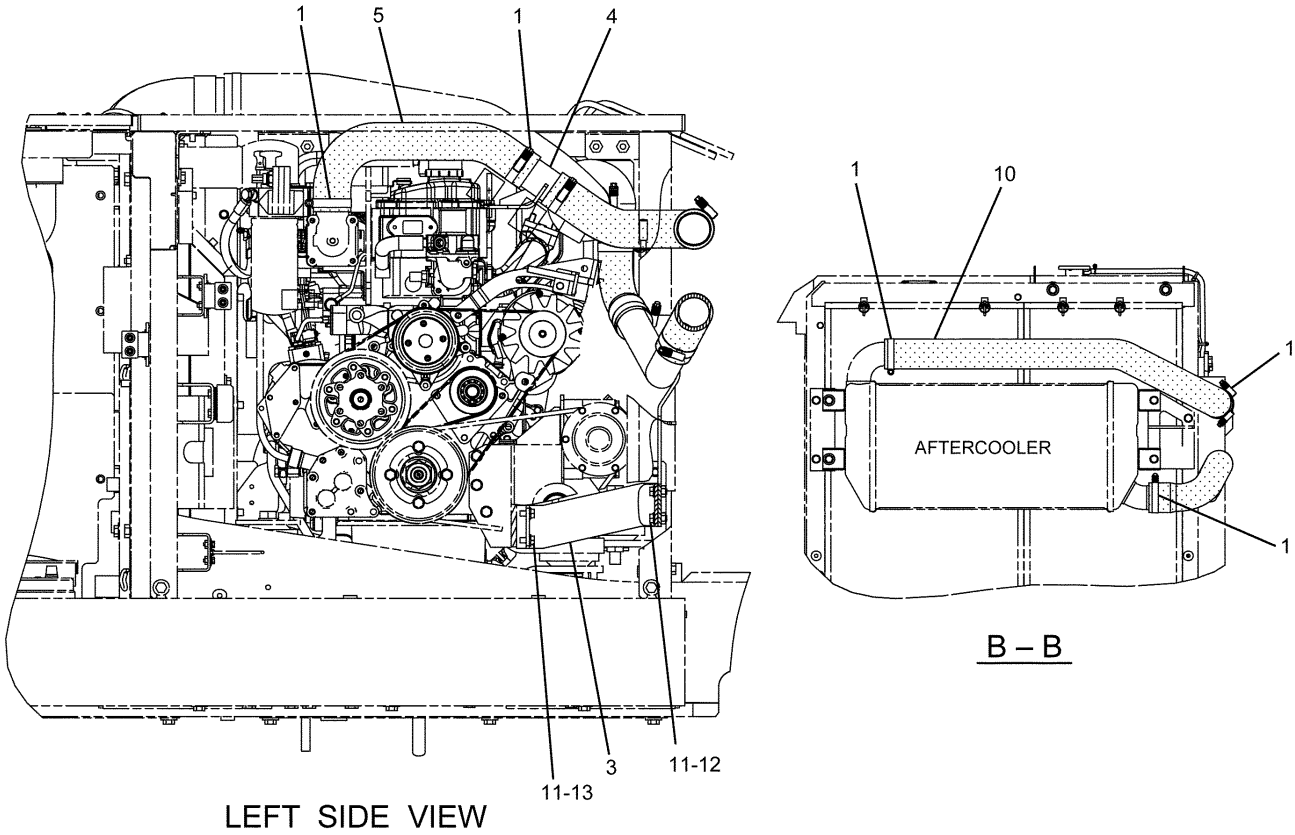


H94389E 01

265-3504 LINES GP-COOLING

# COOLING SYSTEM

| NOTE | No. | PART No. | QTY | PART NAME | NOTE | No. | PART No. | QTY | PART NAME |
|---|---|---|---|---|---|---|---|---|---|
| | 1 | 8T-4984 | 9 | CLAMP | | | | | |
| | 2 | 8T-6703 | 1 | CLAMP | | | | | |
| | 3 | 210-8012 | 1 | SUPPORT | | | | | |
| | 4 | 265-3581 | 1 | PIPE AS | | | | | |
| | 5 | 265-3585 | 1 | HOSE | | | | | |
| | 6 | 265-3586 | 1 | HOSE | | | | | |
| | 7 | 265-3587 | 1 | PIPE AS | | | | | |
| | 8 | 265-3590 | 1 | HOSE | | | | | |
| | 9 | 265-3591 | 1 | HOSE | | | | | |
| | 10 | 265-3599 | 1 | HOSE | | | | | |
| | 11 | 8T-4121 | 6 | WASHER | | | | | |
| | 12 | 8T-4136 | 4 | BOLT (L=25mm) | | | | | |
| | 13 | 8T-4137 | 2 | BOLT (L=20mm) | | | | | |

H94389E 01

265-3504 LINES GP-COOLING

# COOLING SYSTEM

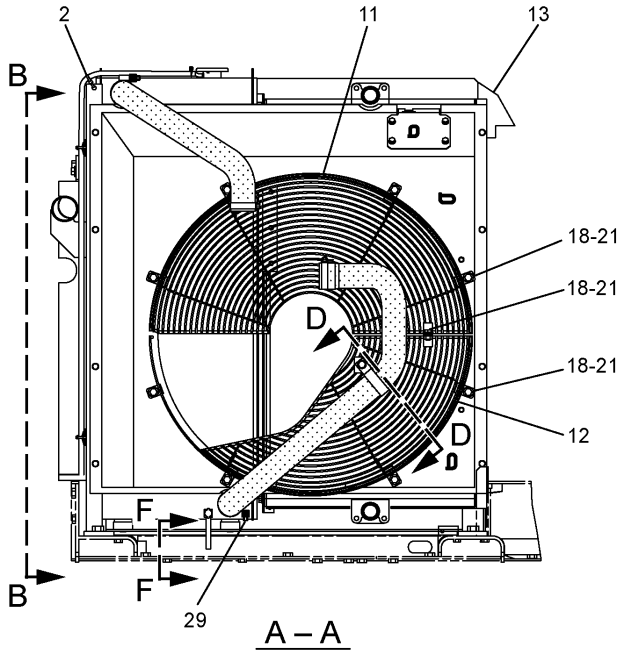


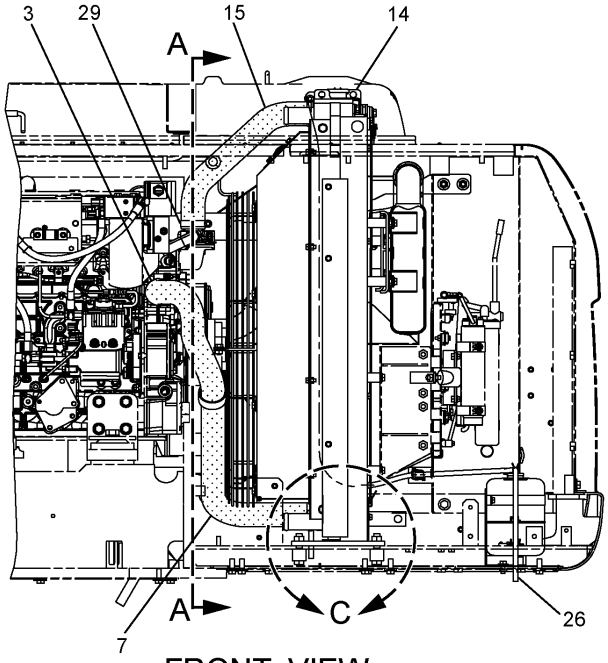


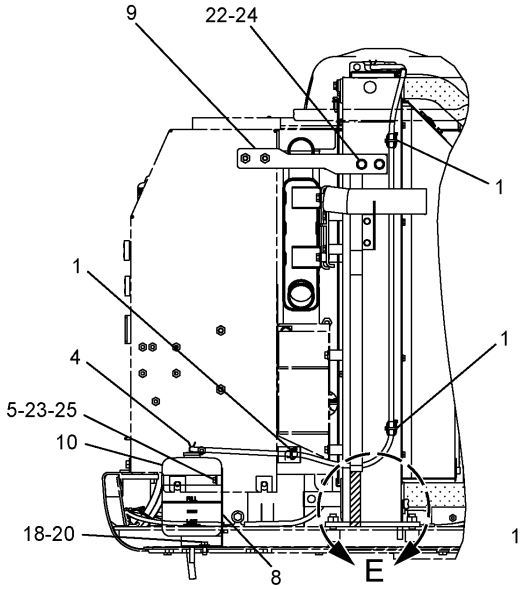


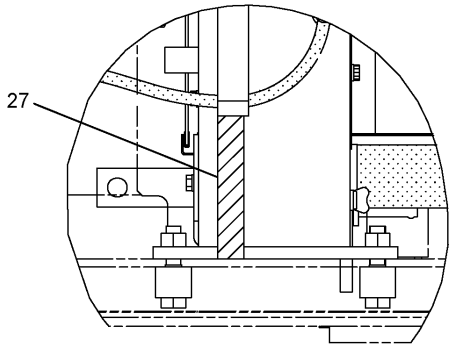


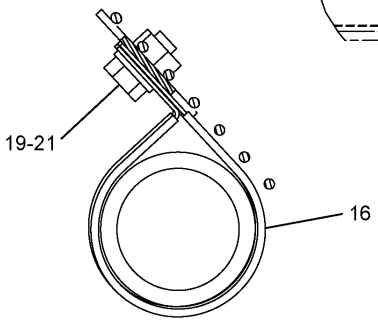


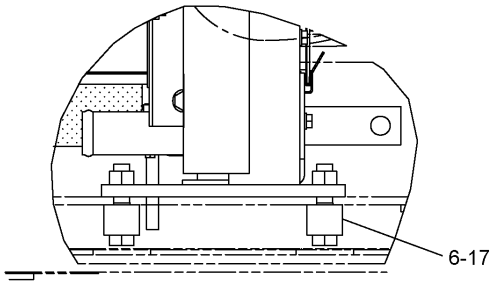


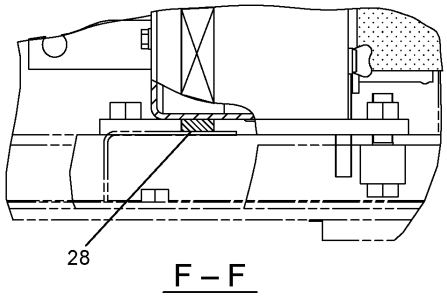


H96828E 03

**265-3600 RADIATOR & HYD OIL COOLER GP**
281-3602-Page56

# COOLING SYSTEM

| NOTE | No. | PART No. | QTY | PART NAME | NOTE | No. | PART No. | QTY | PART NAME |
|---|---|---|---|---|---|---|---|---|---|
| | 1 | 3S-2093 | 3 | STRAP | | | | | |
| | 2 | 7I-2673 | 1 | STRAP | | | | | |
| | 3 | 8T-4984 | 1 | CLAMP | | | | | |
| | 4 | 096-4035 | 1 | CLIP | | | | | |
| | 5 | 171-9077 | 1 | BAND | | | | | |
| | 6 | 178-6450 | 4 | SPACER | | | | | |
| | 7 | 245-9178 | 1 | HOSE | | | | | |
| | 8 | 245-9185 | 1 | BRACKET AS | | | | | |
| | 9 | 245-9191 | 1 | PLATE AS | | | | | |
| | 10 | 245-9205 | 1 | TANK AS | | | | | |
| | | 171-3369 | 1 | CAP AS | | | | | |
| | 11 | 245-9348 | 1 | GUARD AS | | | | | |
| | 12 | 245-9349 | 1 | GUARD AS | | | | | |
| | 13 | 245-9352 | 1 | SEAL | | | | | |
| Y | 14 | 281-3602 | 1 | RADIATOR GP | | | | | |
| | 15 | 265-3602 | 1 | HOSE | | | | | |
| | 16 | 3P-9847 | 1 | CLIP | | | | | |
| | 17 | 7X-2554 | 4 | BOLT (L=70mm) | | | | | |
| | 18 | 7X-7729 | 11 | WASHER | | | | | |
| | 19 | 8T-4121 | 1 | WASHER | | | | | |
| | 20 | 8T-4136 | 2 | BOLT (L=25mm) | | | | | |
| | 21 | 8T-4137 | 10 | BOLT (L=20mm) | | | | | |
| | 22 | 8T-4139 | 2 | BOLT (L=30mm) | | | | | |
| | 23 | 8T-4200 | 2 | BOLT (L=16mm) | | | | | |
| | 24 | 8T-4223 | 2 | WASHER | | | | | |
| | 25 | 8T-4224 | 2 | WASHER | | | | | |
| E | 26 | 7Y-1976 | | HOSE…(40cm) | | | | | |
| D | 27 | 5P-9909 | | SEAL…(0.14m) | | | | | |
| D | 28 | 5P-9909 | | SEAL…(0.865m) | | | | | |
| | 29 | 8T-6703 | 3 | CLAMP | | | | | |

D—ORDER BY THE METER
E—ORDER BY THE CENTIMETER
Y—SEE SEPARATE ILLUSTRATION

H96828E 03

## 265-3600 RADIATOR & HYD OIL COOLER GP
281-3602-Page56

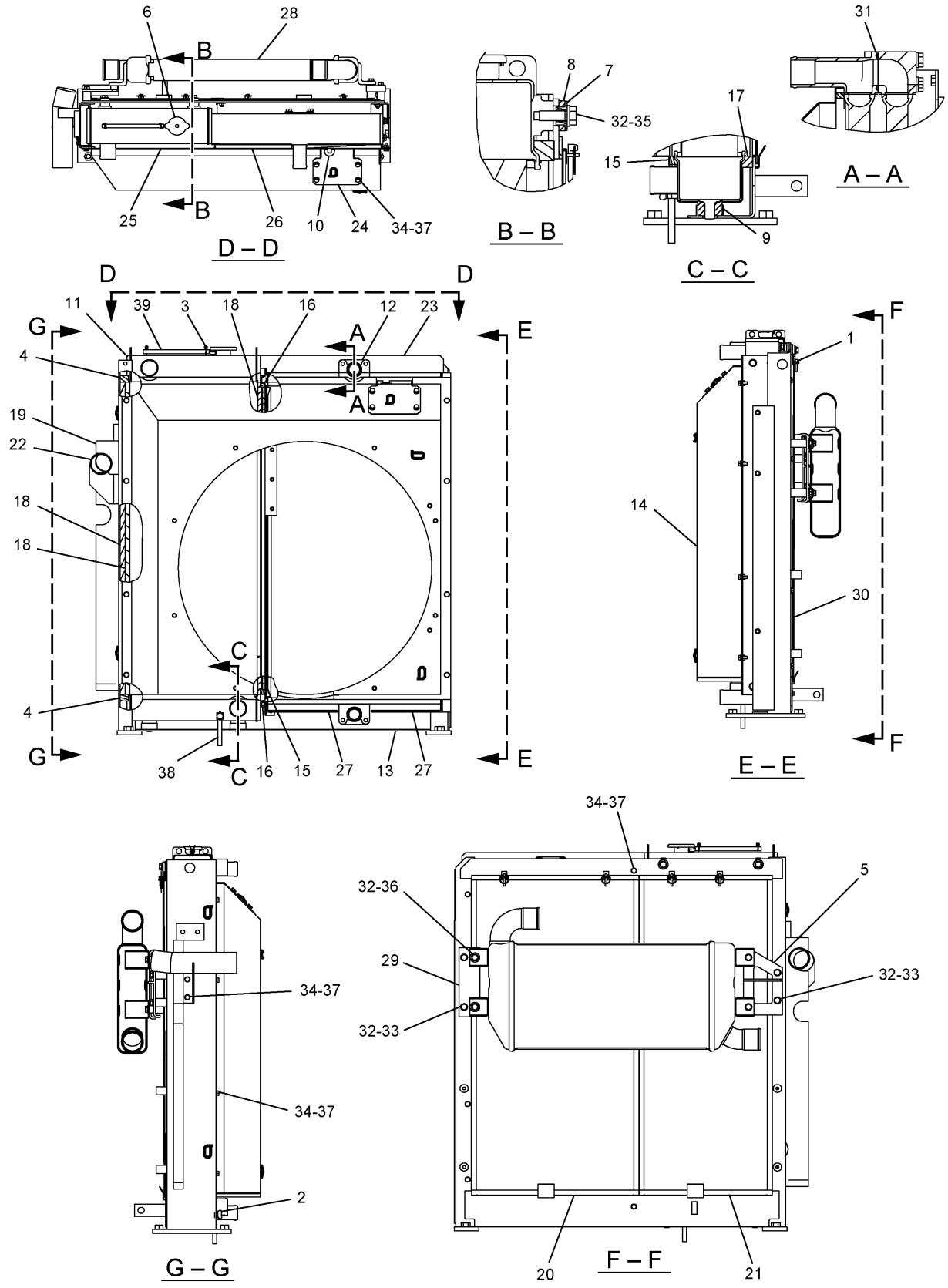


H96829E 00

**281-3602 RADIATOR & HYD OIL COOLER GP**
Part of 265-3600-Page55

# COOLING SYSTEM

| NOTE | No. | PART No. | QTY | PART NAME | NOTE | No. | PART No. | QTY | PART NAME |
|---|---|---|---|---|---|---|---|---|---|
| | 1 | 5D-8159 | 4 | PIN AS | | | | | |
| | 2 | 093-5432 | 1 | COCK AS | | | | | |
| | 3 | 096-4035 | 2 | CLIP | | | | | |
| | 4 | 210-8117 | 2 | SEAL | | | | | |
| | 5 | 210-8128 | 1 | PLATE AS | | | | | |
| | 6 | 245-9212 | 1 | CAP AS | | | | | |
| | 7 | 245-9216 | 2 | BOSS | | | | | |
| | 8 | 245-9217 | 2 | CUSHION | | | | | |
| | 9 | 245-9218 | 2 | CUSHION | | | | | |
| | 10 | 245-9276 | 2 | SEAL | | | | | |
| | 11 | 265-3624 | 1 | CORE AS (RADIATOR) | | | | | |
| | 12 | 265-3625 | 1 | CORE AS (OIL COOLER) | | | | | |
| | 13 | 281-3605 | 1 | FRAME AS | | | | | |
| | 14 | 265-3628 | 1 | SHROUD AS | | | | | |
| | 15 | 265-3629 | 2 | SEAL | | | | | |
| | 16 | 265-3630 | 2 | SEAL | | | | | |
| | 17 | 265-3631 | 2 | SEAL | | | | | |
| | 18 | 265-3632 | 3 | SEAL | | | | | |
| | 19 | 265-3633 | 1 | SEAL | | | | | |
| | 20 | 265-3634 | 1 | SCREEN AS | | | | | |
| | 21 | 265-3635 | 1 | SCREEN AS | | | | | |
| | 22 | 265-3637 | 1 | PIPE AS | | | | | |
| | 23 | 265-3638 | 1 | SEAL-O-RING (ID=44.70mm) | | | | | |
| | 24 | 265-3639 | 1 | PLATE AS | | | | | |
| | 25 | 265-3642 | 1 | SEAL | | | | | |
| | 26 | 265-3643 | 1 | SEAL | | | | | |
| | 27 | 281-3488 | 2 | SHEET | | | | | |
| | 28 | 281-3534 | 1 | AFTERCOOLER AS | | | | | |
| | 29 | 281-3535 | 1 | PLATE AS | | | | | |
| | 30 | 281-3568 | 2 | SEAL | | | | | |
| | 31 | 095-1543 | 2 | SEAL-O-RING (ID=44.70mm) | | | | | |
| | 32 | 8T-4121 | 10 | WASHER | | | | | |
| | 33 | 8T-4137 | 6 | BOLT (L=20mm) | | | | | |
| | 34 | 8T-4189 | 20 | BOLT (L=20mm) | | | | | |
| | 35 | 8T-4195 | 2 | BOLT (L=30mm) | | | | | |
| | 36 | 8T-4196 | 2 | BOLT (L=35mm) | | | | | |
| | 37 | 8T-4224 | 20 | WASHER | | | | | |
| E | 38 | 7Y-1976 | | HOSE…(8cm) | | | | | |
| E | 39 | 7Y-1976 | | HOSE…(19cm) | | | | | |

E—ORDER BY THE CENTIMETER

H96829E 00

## 281-3602 RADIATOR & HYD OIL COOLER GP

Part of 265-3600-Page55

# AIR INLET AND EXHAUST SYSTEM

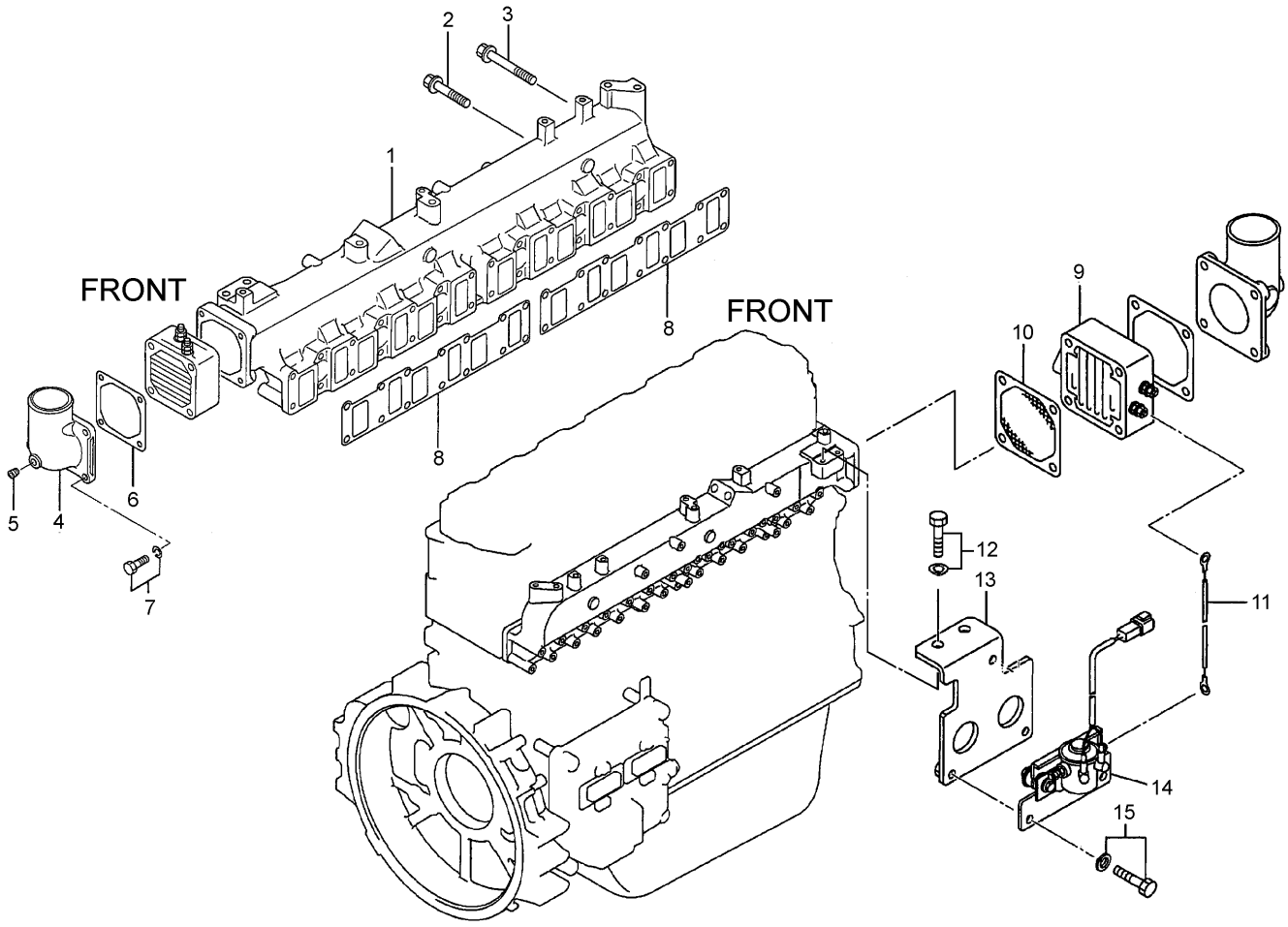


| NOTE | No. | PART No. | QTY | PART NAME | NOTE | No. | PART No. | QTY | PART NAME |
|---|---|---|---|---|---|---|---|---|---|
| | 1 | 294-1760 | 1 | MANIFOLD | | | | | |
| | 2 | 096-8490 | 12 | BOLT (L=40mm) | | | | | |
| | 3 | 294-1700 | 16 | BOLT | | | | | |
| | 4 | 5I-8021 | 1 | ELBOW AS | | | | | |
| | | 5I-8022 | 1 | ELBOW | | | | | |
| | 5 | 5I-8023 | 1 | PLUG | | | | | |
| | 6 | 5I-7678 | 1 | GASKET | | | | | |
| | 7 | 303-6261 | 4 | BOLT AS | | | | | |
| | 8 | 294-1758 | 2 | GASKET | | | | | |
| | 9 | 168-5057 | 1 | HEATER | | | | | |
| | 10 | 5I-7677 | 1 | GASKET | | | | | |
| | 11 | 294-1853 | 1 | CABLE | | | | | |
| | 12 | 294-1738 | 2 | BOLT AS | | | | | |
| | 13 | 294-1854 | 1 | BRACKET | | | | | |
| Y | 14 | 223-4453 | 1 | SWITCH AS | | | | | |
| | 15 | 5I-5597 | 2 | BOLT AS | | | | | |

Y—SEE SEPARATE ILLUSTRATION

H96257E 01

## 296-4652 MANIFOLD GP-INLET

Part of 272-4677-Page15
223-4453-Page149

# AIR INLET AND EXHAUST SYSTEM

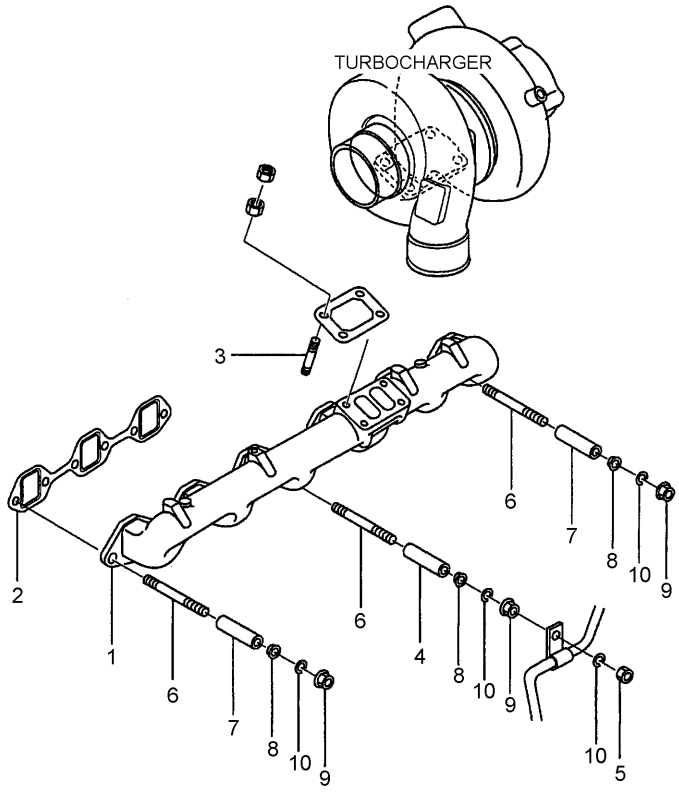


| NOTE | No. | PART No. | QTY | PART NAME | NOTE | No. | PART No. | QTY | PART NAME |
|---|---|---|---|---|---|---|---|---|---|
| | 1 | 178-6552 | 1 | MANIFOLD | | | | | |
| | 2 | 294-1761 | 2 | GASKET | | | | | |
| | 3 | 178-6554 | 4 | STUD | | | | | |
| | 4 | 5I-7601 | 1 | SPACER | | | | | |
| | 5 | 091-3474 | 1 | NUT | | | | | |
| | 6 | 5I-7549 | 12 | STUD | | | | | |
| | 7 | 5I-7550 | 11 | SPACER | | | | | |
| | 8 | 239-6604 | 12 | WASHER | | | | | |
| | 9 | 212-8489 | 12 | NUT | | | | | |
| | 10 | 095-8638 | 13 | WASHER | | | | | |

H99755E 02

**296-4653 MANIFOLD GP-EXHAUST**

Part of 272-4677-Page15

# AIR INLET AND EXHAUST SYSTEM

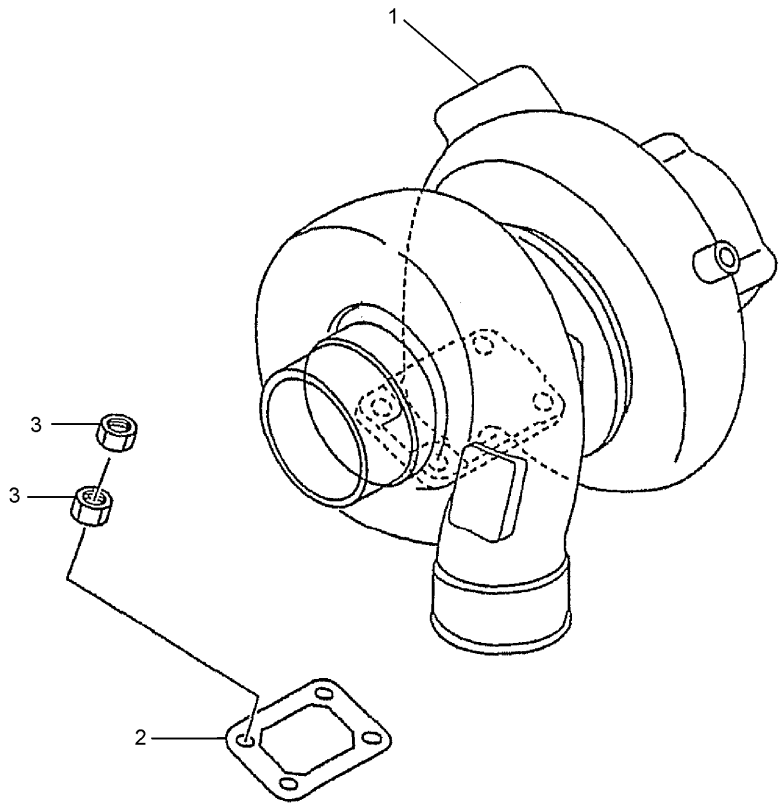


| NOTE | No. | PART No. | QTY | PART NAME | NOTE | No. | PART No. | QTY | PART NAME |
|---|---|---|---|---|---|---|---|---|---|
| Y | 1 | 287-0049 | 1 | TURBOCHARGER GP | | | | | |
| | 2 | 5I-7742 | 1 | GASKET | | | | | |
| | 3 | 5I-7633 | 8 | NUT | | | | | |

Y—SEE SEPARATE ILLUSTRATION

H99753E 00

## 310-9617 TURBOCHARGER GP

Part of 272-4677-Page15
287-0049-Page60

# MEMORANDA

# AIR INLET AND EXHAUST SYSTEM

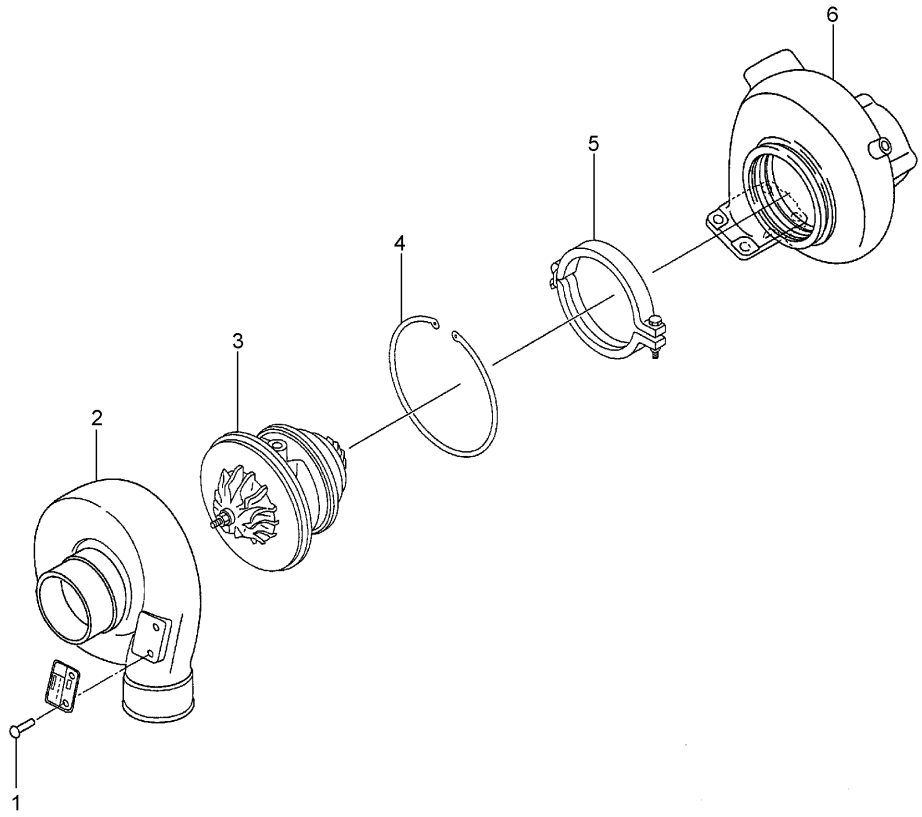


| NOTE | No. | PART No. | QTY | PART NAME | NOTE | No. | PART No. | QTY | PART NAME |
|---|---|---|---|---|---|---|---|---|---|
| | 1 | 5B-9304 | 2 | SCREW | | | | | |
| | 2 | 5I-7587 | 1 | COVER | | | | | |
| Y | 3 | 5I-7589 | 1 | CARTRIDGE AS | | | | | |
| | 4 | 135-2352 | 1 | RING | | | | | |
| | 5 | 5I-7602 | 1 | COUPLING AS | | | | | |
| | 6 | 294-1763 | 1 | HOUSING | | | | | |

Y—SEE SEPARATE ILLUSTRATION

H96872E 00

**287-0049 TURBOCHARGER GP**

Part of 310-9617-Page59.01
5I-7589-Page61

# AIR INLET AND EXHAUST SYSTEM

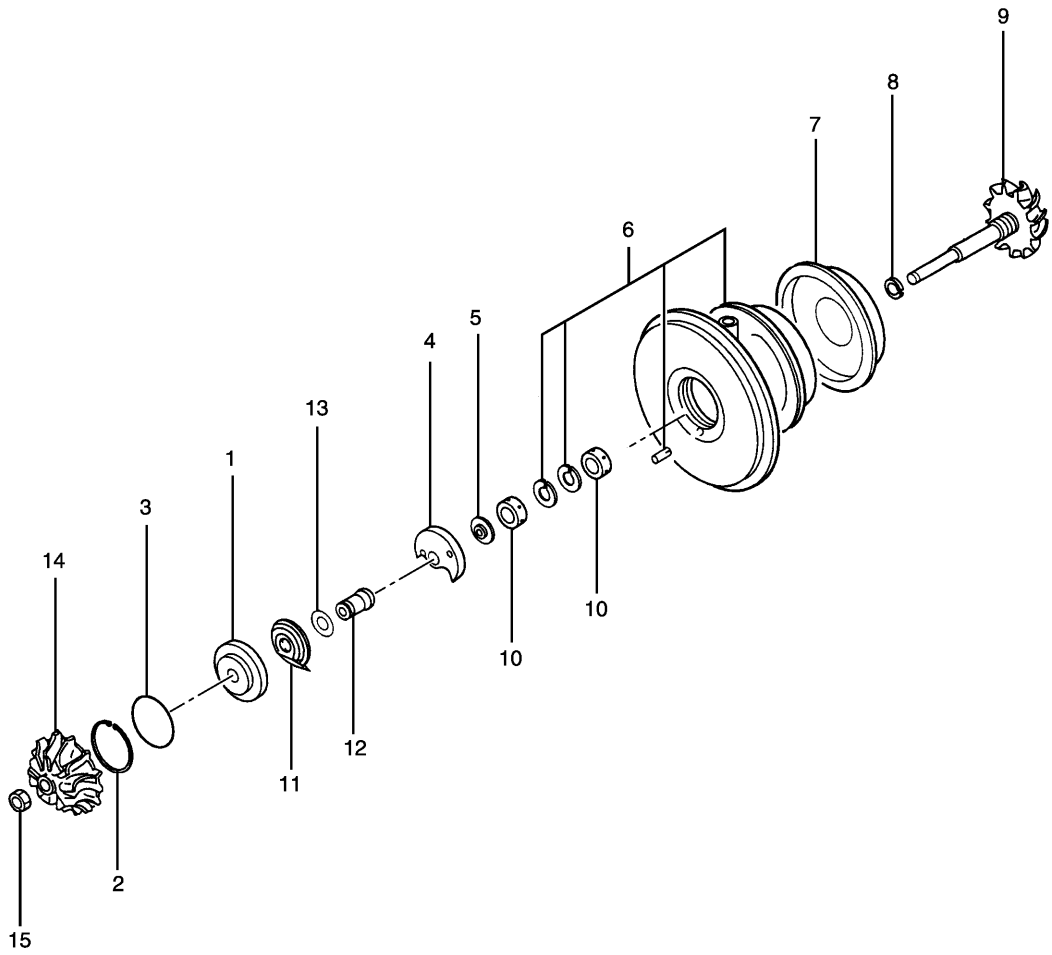


| NOTE | No. | PART No. | QTY | PART NAME | NOTE | No. | PART No. | QTY | PART NAME |
|---|---|---|---|---|---|---|---|---|---|
| | 1 | 135-2351 | 1 | INSERT | | | | | |
| | 2 | 135-2352 | 1 | RING | | | | | |
| | 3 | 135-2355 | 1 | SEAL-O-RING (ID=49.40mm) | | | | | |
| | 4 | 135-2347 | 1 | BEARING | | | | | |
| | 5 | 135-2356 | 1 | RING | | | | | |
| | 6 | 135-2359 | 1 | HOUSING | | | | | |
| | 7 | 135-2346 | 1 | PLATE | | | | | |
| | 8 | 135-2354 | 1 | RING | | | | | |
| | 9 | 171-3254 | 1 | WHEEL AS | | | | | |
| | 10 | 135-2358 | 2 | BEARING | | | | | |
| | 11 | 135-2348 | 1 | DEFLECTOR | | | | | |
| | 12 | 135-2349 | 1 | SLEEVE | | | | | |
| | 13 | 135-2350 | 1 | RING | | | | | |
| | 14 | 135-2360 | 1 | WHEEL | | | | | |
| | 15 | 156-3103 | 1 | NUT | | | | | |

H67681E 03

**5I-7589 CARTRIDGE AS-TURBOCHARGER**
Part of 287-0049-Page60

# AIR INLET AND EXHAUST SYSTEM

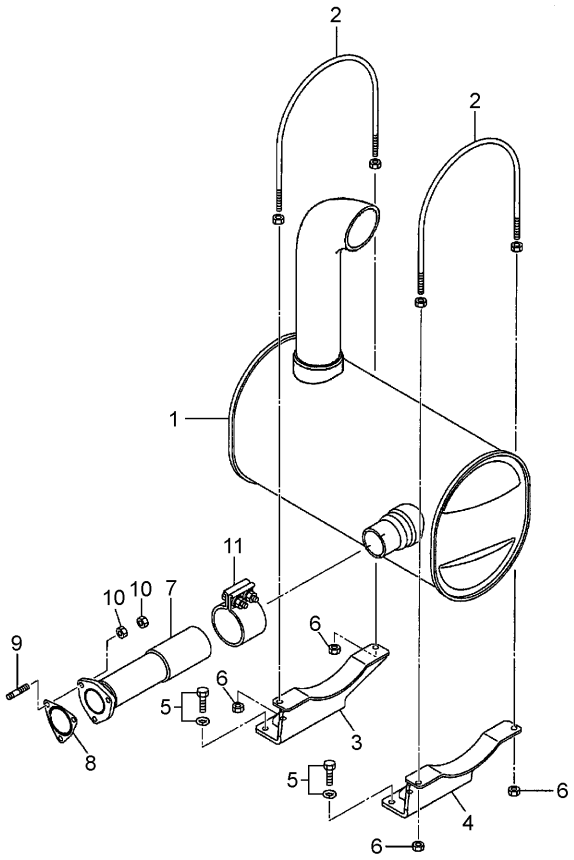


| NOTE | No. | PART No. | QTY | PART NAME | NOTE | No. | PART No. | QTY | PART NAME |
|---|---|---|---|---|---|---|---|---|---|
| | 1 | 297-7791 | 1 | MUFFLER | | | | | |
| | 2 | 266-6321 | 2 | U-BOLT | | | | | |
| | 3 | 266-6319 | 1 | BRACKET | | | | | |
| | 4 | 266-6320 | 1 | BRACKET | | | | | |
| | 5 | 294-1738 | 4 | BOLT AS | | | | | |
| | 6 | 6V-8231 | 8 | NUT | | | | | |
| | 7 | 5I-8040 | 1 | PIPE | | | | | |
| | 8 | 5I-7679 | 1 | GASKET | | | | | |
| | 9 | 178-6554 | 3 | STUD | | | | | |
| | 10 | 5I-7633 | 6 | NUT | | | | | |
| | 11 | 094-7583 | 1 | CLAMP AS | | | | | |

H99717E 00

**297-7745 MUFFLER GP**

Part of 272-4677-Page15

# AIR INLET AND EXHAUST SYSTEM

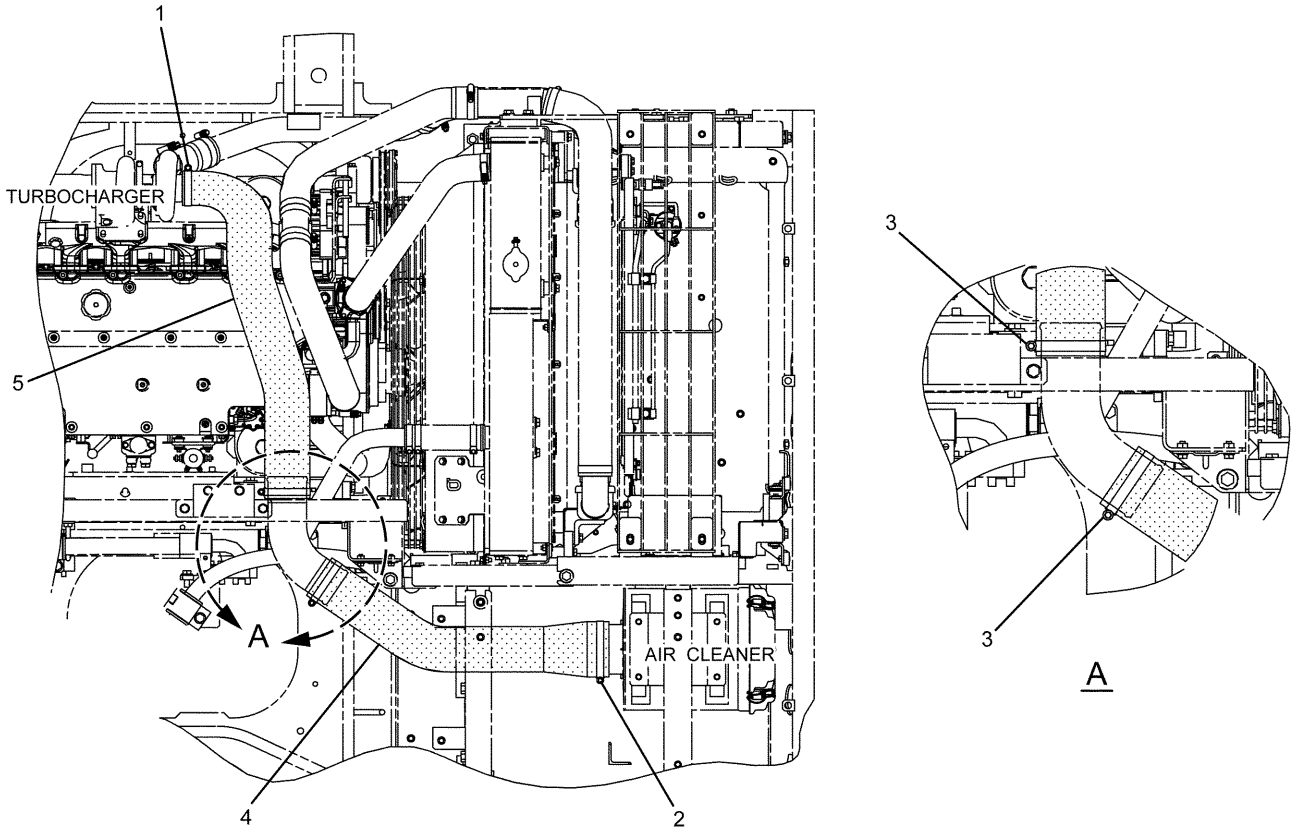


TOP VIEW OF ENGINE

| NOTE | No. | PART No. | QTY | PART NAME | NOTE | No. | PART No. | QTY | PART NAME |
|---|---|---|---|---|---|---|---|---|---|
| | 1 | 144-0367 | 1 | CLAMP | | | | | |
| | 2 | 8T-4986 | 1 | CLAMP | | | | | |
| | 3 | 9X-2201 | 2 | CLAMP | | | | | |
| | 4 | 279-7907 | 1 | HOSE | | | | | |
| | 5 | 287-0211 | 1 | HOSE | | | | | |

H95445E 03

**272-4744 LINES GP-AIR**

# AIR INLET AND EXHAUST SYSTEM

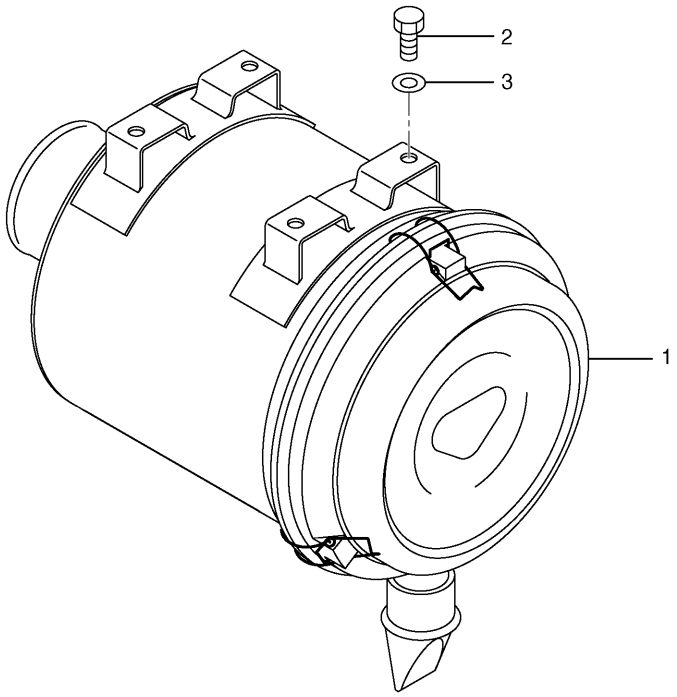


| NOTE | No. | PART No. | QTY | PART NAME | NOTE | No. | PART No. | QTY | PART NAME |
|---|---|---|---|---|---|---|---|---|---|
| Y | 1 | 124-1711 | 1 | CLEANER GP | | | | | |
| | 2 | 8T-4137 | 4 | BOLT (L=20mm) | | | | | |
| | 3 | 8T-4121 | 4 | WASHER | | | | | |

Y—SEE SEPARATE ILLUSTRATION

H90609E 04

## 109-9313 MOUNTING GP-AIR CLEANER

124-1711-Page65

# AIR INLET AND EXHAUST SYSTEM

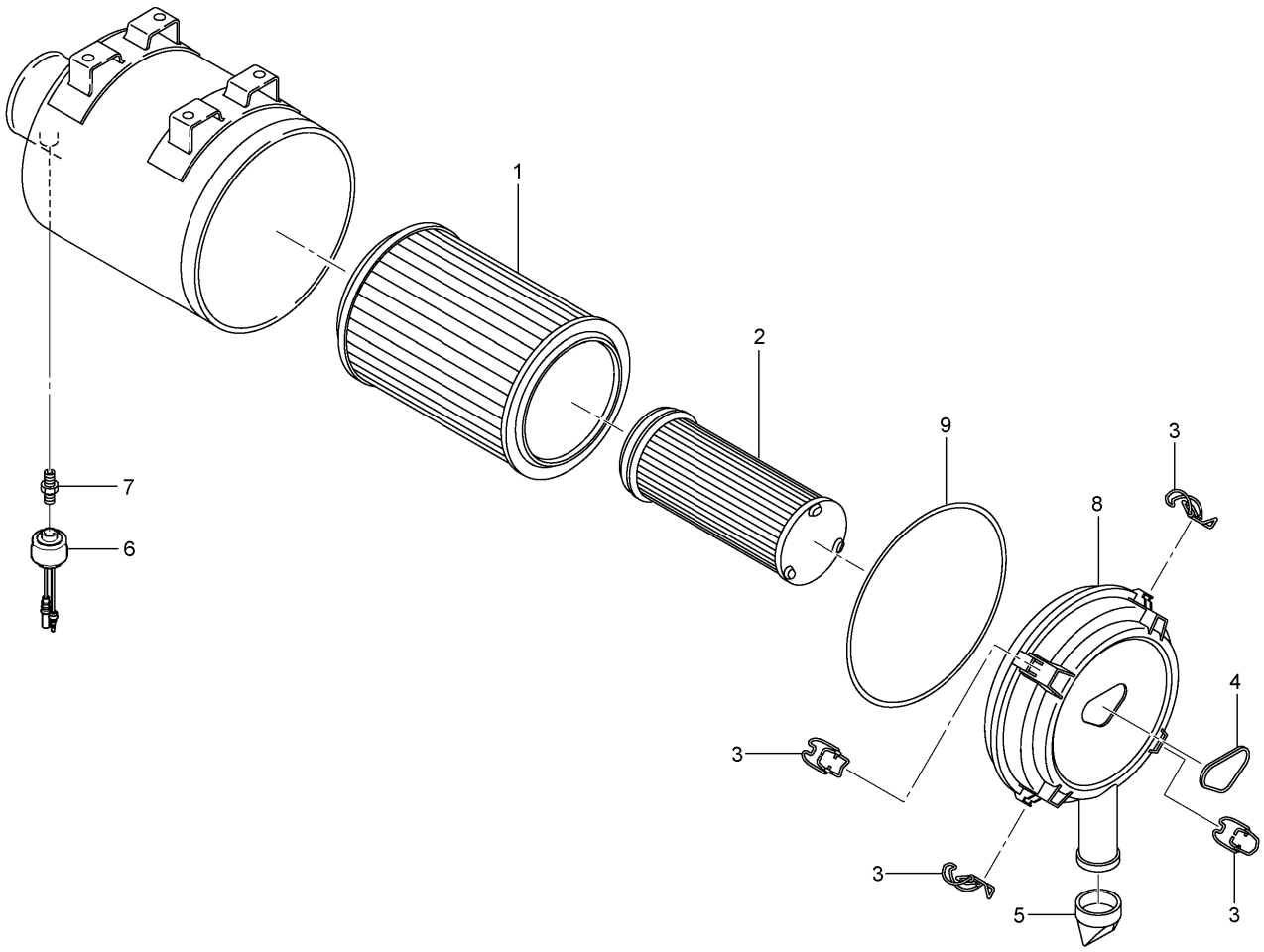


| NOTE | No. | PART No. | QTY | PART NAME | NOTE | No. | PART No. | QTY | PART NAME |
|---|---|---|---|---|---|---|---|---|---|
| | 1 | 131-8822 | 1 | ELEMENT AS | | | | | |
| | 2 | 131-8821 | 1 | ELEMENT AS | | | | | |
| | 3 | 131-8932 | 4 | LATCH | | | | | |
| | 4 | 131-8826 | 1 | FILM | | | | | |
| | 5 | 112-9717 | 1 | VALVE (VACUATOR) | | | | | |
| | 6 | 255-2966 | 1 | INDICATOR AS | | | | | |
| | 7 | 5L-3233 | 1 | FITTING | | | | | |
| | 8 | 184-3983 | 1 | COVER AS | | | | | |
| | 9 | 168-0792 | 1 | SEAL | | | | | |

H91107E 07

## 124-1711 AIR CLEANER GP

Part of 109-9313-Page64

# AIR INLET AND EXHAUST SYSTEM

Consists of :


| | | | Page |
|---|---|---|---|
| 1 | 272-4773 | AIR CLEANER GP | 67 |
| 1 | 278-3778 | HOOD GP | 251 |


H94143E 00

**264-8671 CLEANER AR**
Air Prefilter
An Attachment

# AIR INLET AND EXHAUST SYSTEM

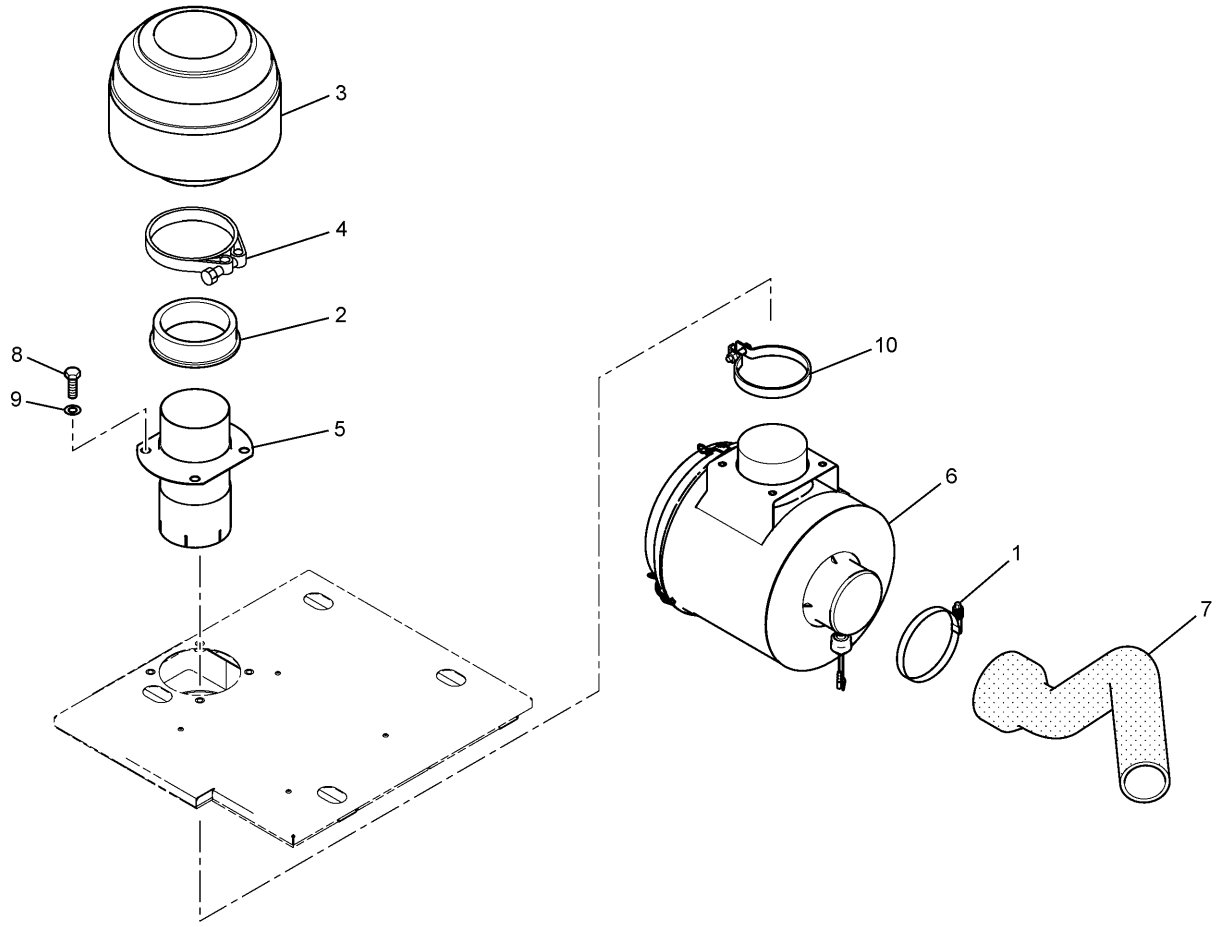


| NOTE | No. | PART No. | QTY | PART NAME | NOTE | No. | PART No. | QTY | PART NAME |
|---|---|---|---|---|---|---|---|---|---|
| | 1 | 8T-4987 | 1 | CLAMP | | | | | |
| | 2 | 116-2659 | 1 | DAMPER | | | | | |
| | 3 | 130-3280 | 1 | PRECLEANER AS | | | | | |
| | 4 | 174-5415 | 1 | CLAMP | | | | | |
| | 5 | 239-6395 | 1 | PIPE AS | | | | | |
| Y | 6 | 239-6612 | 1 | CLEANER GP | | | | | |
| | 7 | 279-7909 | 1 | HOSE | | | | | |
| | 8 | 8T-4139 | 4 | BOLT (L=30mm) | | | | | |
| | 9 | 8T-4223 | 4 | WASHER | | | | | |
| | 10 | 134-7089 | 1 | CLAMP | | | | | |

Y—SEE SEPARATE ILLUSTRATION

H93693E 01

## 272-4773 AIR CLEANER GP

Part of 264-8671-Page66
239-6612-Page68
An Attachment

# AIR INLET AND EXHAUST SYSTEM

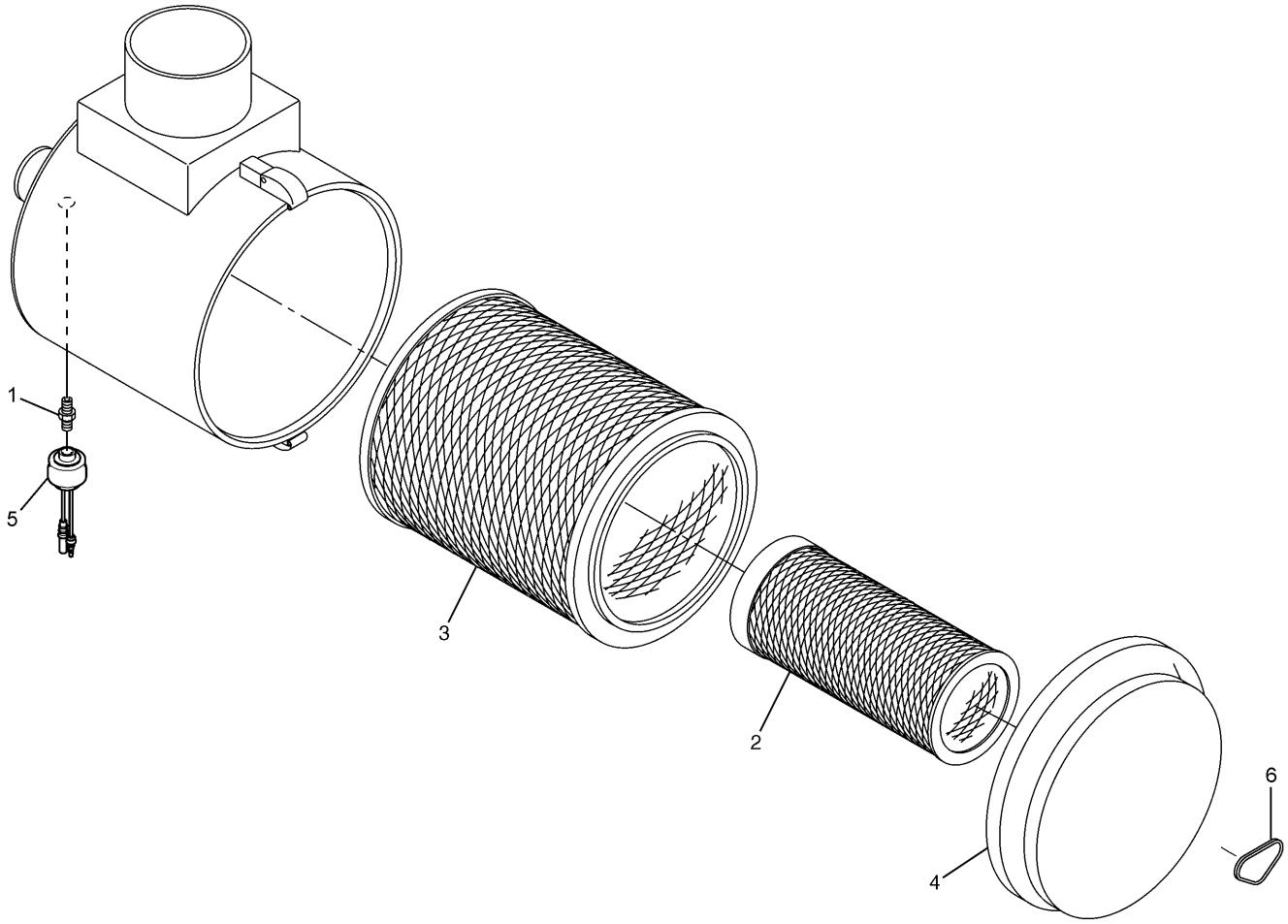


| NOTE | No. | PART No. | QTY | PART NAME | NOTE | No. | PART No. | QTY | PART NAME |
|---|---|---|---|---|---|---|---|---|---|
| | 1 | 5L-3233 | 1 | FITTING | | | | | |
| | 2 | 6I-2502 | 1 | ELEMENT AS | | | | | |
| | 3 | 6I-2501 | 1 | ELEMENT AS | | | | | |
| | 4 | 171-9892 | 1 | COVER AS | | | | | |
| | 5 | 255-2966 | 1 | INDICATOR AS | | | | | |
| | 6 | 131-8826 | 1 | FILM | | | | | |

H91267E 03

**239-6612 AIR CLEANER GP**
Part of 272-4773-Page67
An Attachment

# MEMORANDA

# AIR INLET AND EXHAUST SYSTEM

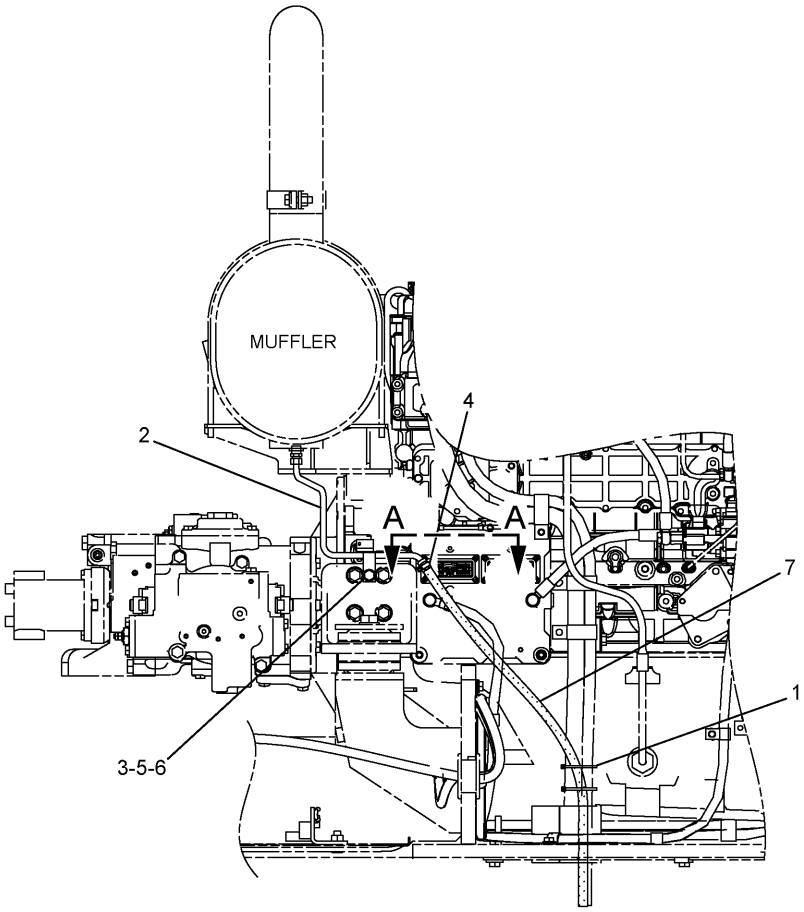


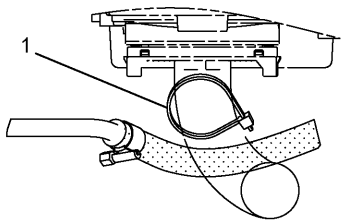


A – A

RIGHT SIDE VIEW OF ENGINE

| NOTE | No. | PART No. | QTY | PART NAME | NOTE | No. | PART No. | QTY | PART NAME |
|---|---|---|---|---|---|---|---|---|---|
| | 1 | 3S-2093 | 3 | STRAP | | | | | |
| | 2 | 287-0171 | 1 | PIPE AS | | | | | |
| | 3 | 171-9073 | 1 | CLIP | | | | | |
| | 4 | 5P-4961 | 1 | CLAMP | | | | | |
| | 5 | 8T-4121 | 1 | WASHER | | | | | |
| | 6 | 8T-4191 | 1 | BOLT (L=16mm) | | | | | |
| E | 7 | 5P-1442 | | HOSE…(72cm) | | | | | |

E—ORDER BY THE CENTIMETER

H96877E 01

287-0183 LINES GP-DRAIN

# MEMORANDA

# MEMORANDA

# MEMORANDA

# FUEL SYSTEM

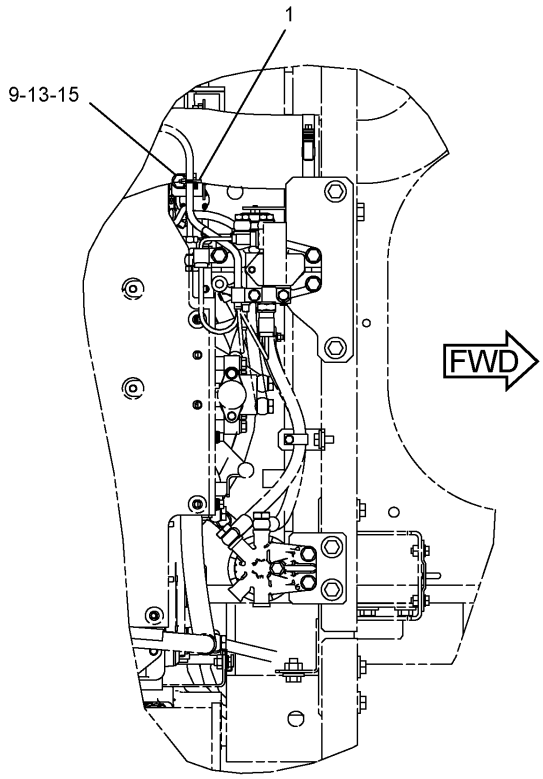


TOP VIEW

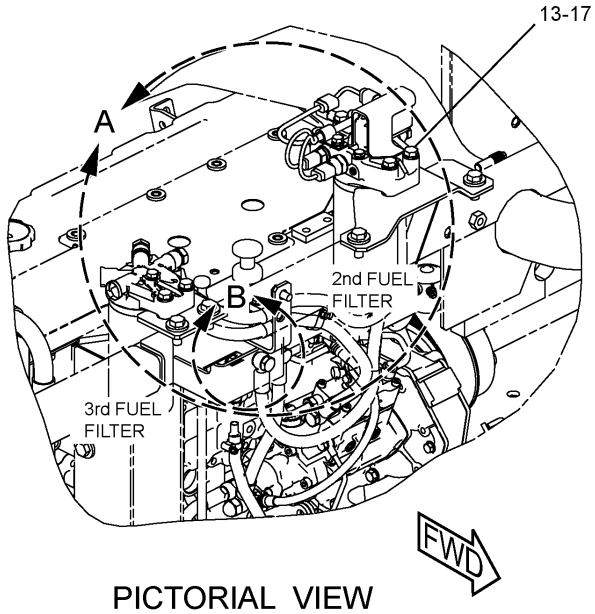


PICTORIAL VIEW

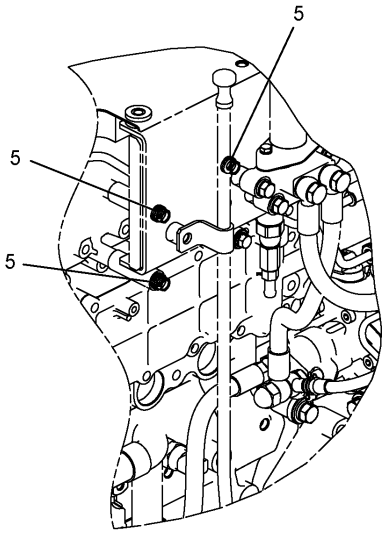


B

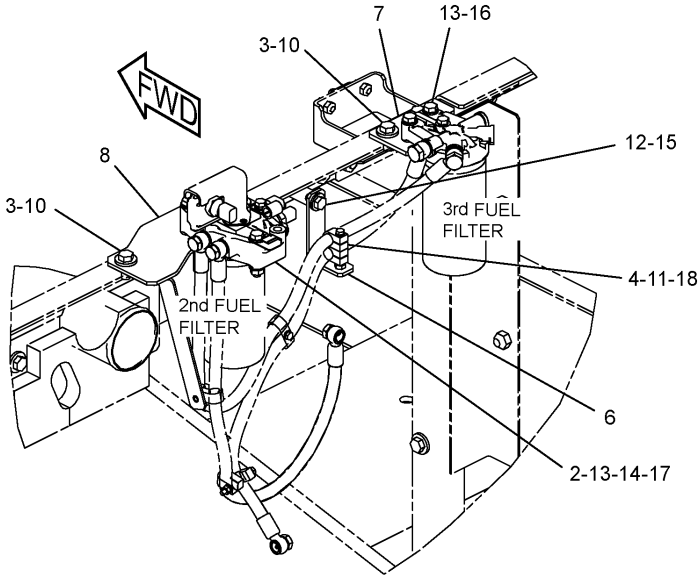


A

H98419E 04

297-7671 FILTER & MTG GP-FUEL

# FUEL SYSTEM

| NOTE | No. | PART No. | QTY | PART NAME | NOTE | No. | PART No. | QTY | PART NAME |
|---|---|---|---|---|---|---|---|---|---|
| | 1 | 3S-2093 | 1 | STRAP | | | | | |
| | 2 | 116-0118 | 1 | CLIP | | | | | |
| | 3 | 8T-4139 | 4 | BOLT (L=30mm) | | | | | |
| | 4 | 294-1831 | 2 | CLAMP | | | | | |
| | 5 | 8T-4224 | 6 | WASHER | | | | | |
| | 6 | 297-7672 | 1 | PLATE AS | | | | | |
| | 7 | 297-7673 | 1 | PLATE AS | | | | | |
| | 8 | 297-7674 | 1 | PLATE AS | | | | | |
| | 9 | 132-5789 | 1 | CLIP | | | | | |
| | 10 | 5P-1076 | 4 | WASHER | | | | | |
| | 11 | 7X-2535 | 1 | BOLT (L=60mm) | | | | | |
| | 12 | 7X-7729 | 1 | WASHER | | | | | |
| | 13 | 8T-4121 | 7 | WASHER | | | | | |
| | 14 | 8T-4133 | 1 | NUT | | | | | |
| | 15 | 8T-4137 | 2 | BOLT (L=20mm) | | | | | |
| | 16 | 8T-4182 | 2 | BOLT (L=45mm) | | | | | |
| | 17 | 8T-6466 | 3 | BOLT (L=60mm) | | | | | |
| | 18 | 9X-8256 | 2 | WASHER | | | | | |

H98419E 04

## 297-7671 FILTER & MTG GP-FUEL

# FUEL SYSTEM

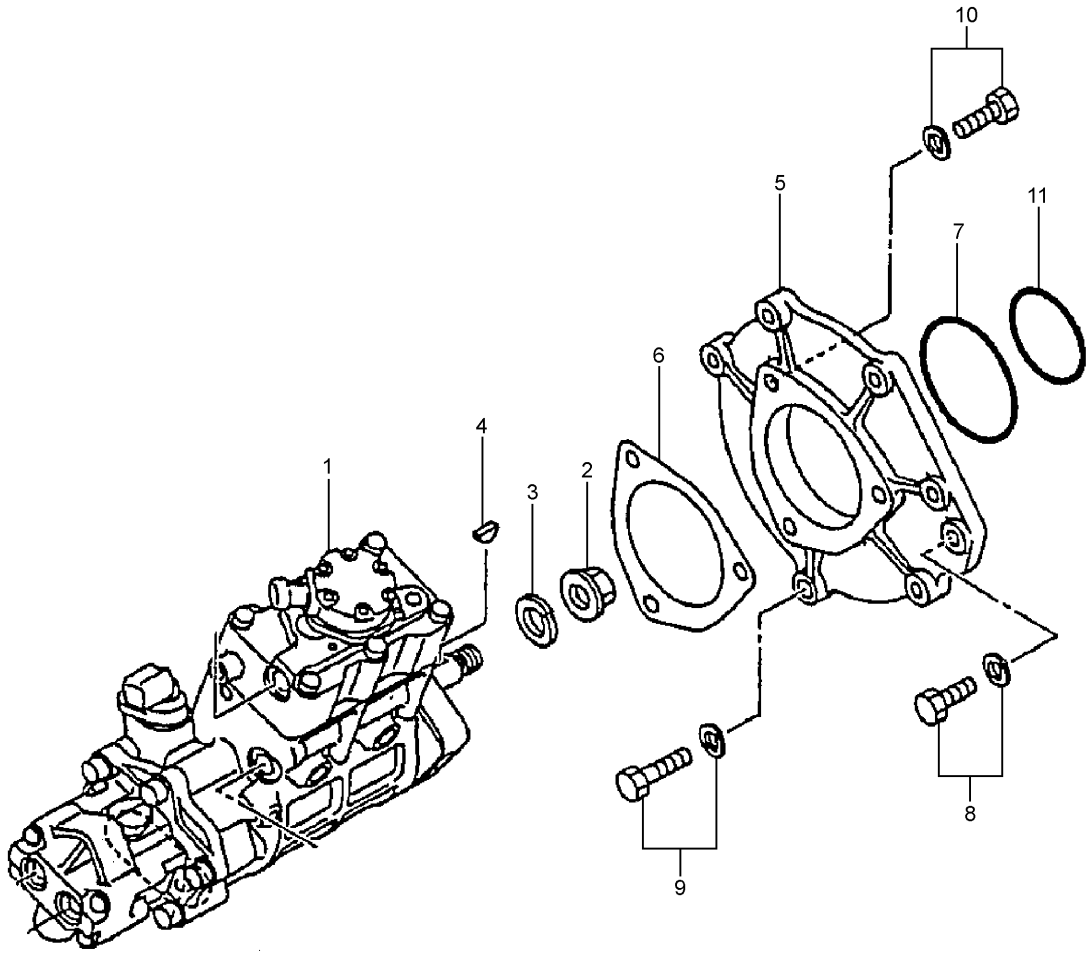


| NOTE | No. | PART No. | QTY | PART NAME | NOTE | No. | PART No. | QTY | PART NAME |
|---|---|---|---|---|---|---|---|---|---|
| | 1 | 295-9126 | 1 | PUMP GP | | | | | |
| | 2 | 294-1834 | 1 | NUT | | | | | |
| | 3 | 294-1835 | 1 | WASHER | | | | | |
| | 4 | 294-1836 | 1 | KEY | | | | | |
| | 5 | 294-1839 | 1 | FLANGE | | | | | |
| | 6 | 294-1841 | 1 | GASKET | | | | | |
| | 7 | 294-1842 | 1 | SEAL | | | | | |
| | 8 | 095-8799 | 1 | BOLT AS | | | | | |
| | 9 | 294-1843 | 1 | BOLT AS | | | | | |
| | 10 | 294-1821 | 3 | BOLT AS | | | | | |
| | 11 | 294-1846 | 1 | SEAL-O-RING | | | | | |

H99322E 00

## 305-4678 MOUNTING GP-PUMP

Part of 272-4677-Page15

# MEMORANDA

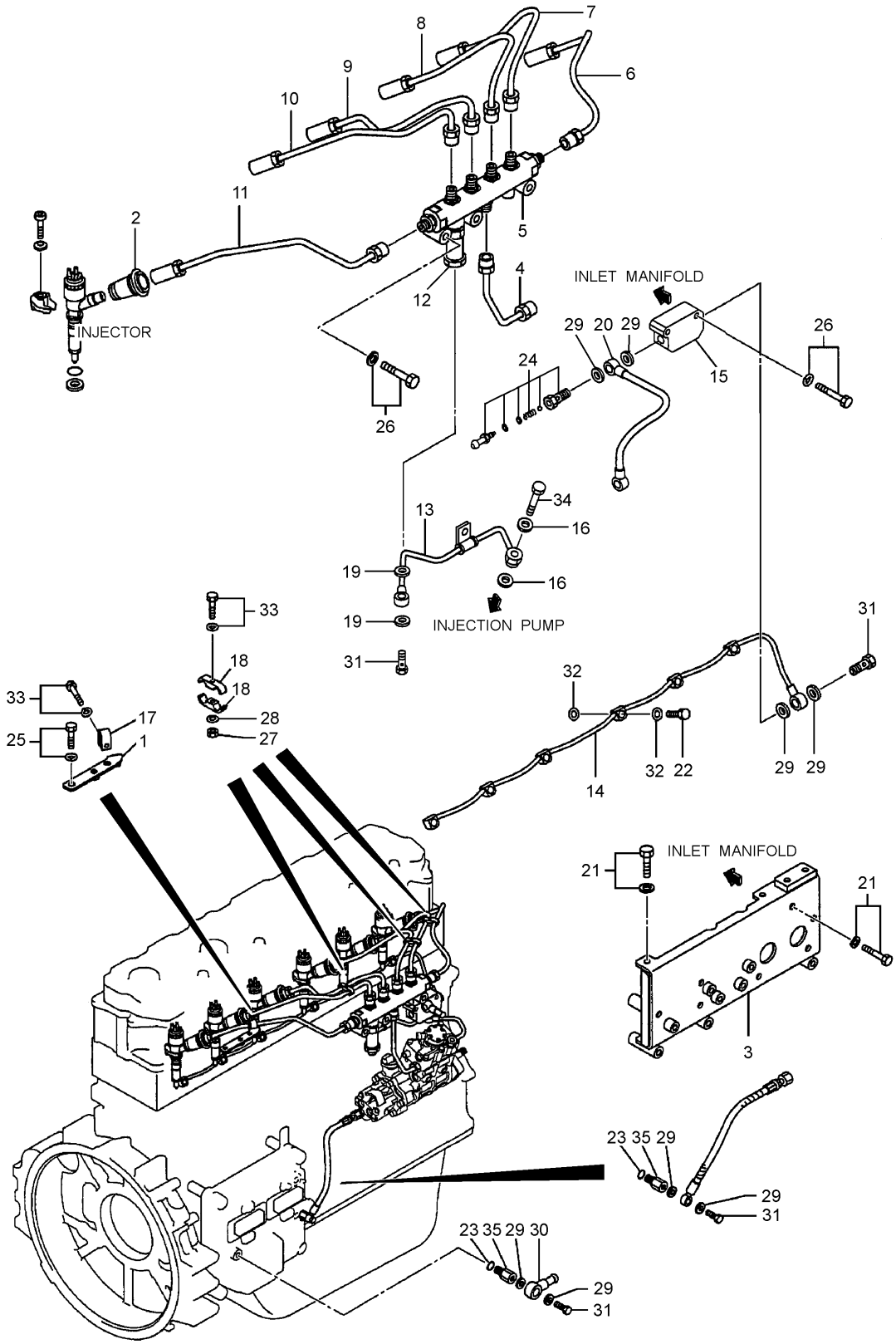


H99721E 06

**296-4656 LINES GP-FUEL**
Part of 272-4677-Page15

# FUEL SYSTEM

| NOTE | No. | PART No. | QTY | PART NAME | NOTE | No. | PART No. | QTY | PART NAME |
|---|---|---|---|---|---|---|---|---|---|
| | 1 | 294-1787 | 1 | SUPPORT | | | | | |
| | 2 | 294-1788 | 6 | SEAL | | | | | |
| | 3 | 294-1815 | 1 | BRACKET | | | | | |
| | 4 | 294-1789 | 1 | PIPE | | | | | |
| | 5 | 311-6632 | 1 | RAIL AS | | | | | |
| | 6 | 294-1790 | 1 | PIPE | | | | | |
| | 7 | 294-1791 | 1 | PIPE | | | | | |
| | 8 | 294-1792 | 1 | PIPE | | | | | |
| | 9 | 294-1793 | 1 | PIPE | | | | | |
| | 10 | 294-1794 | 1 | PIPE | | | | | |
| | 11 | 294-1795 | 1 | PIPE | | | | | |
| | 12 | 314-4007 | 1 | PACKAGING | | | | | |
| | 13 | 297-7656 | 1 | PIPE | | | | | |
| | 14 | 294-1814 | 1 | PIPE | | | | | |
| | 15 | 297-7658 | 1 | BLOCK | | | | | |
| | 16 | 294-1811 | 2 | WASHER | | | | | |
| | 17 | 294-1801 | 1 | CLAMP | | | | | |
| | 18 | 294-1802 | 3 | CLAMP | | | | | |
| | 19 | 294-1812 | 2 | WASHER | | | | | |
| | 20 | 297-7657 | 1 | HOSE | | | | | |
| | 21 | 099-2503 | 6 | BOLT AS | | | | | |
| | 22 | 296-4812 | 6 | BOLT | | | | | |
| | 23 | 294-1804 | 2 | SEAL-O-RING | | | | | |
| | 24 | 310-9537 | 1 | VALVE AS | | | | | |
| | 25 | 294-1806 | 1 | BOLT AS | | | | | |
| | 26 | 270-6259 | 5 | BOLT AS | | | | | |
| | 27 | 5I-5078 | 3 | NUT | | | | | |
| | 28 | 9X-8256 | 3 | WASHER | | | | | |
| | 29 | 099-4437 | 8 | GASKET | | | | | |
| | 30 | 125-2983 | 1 | JOINT | | | | | |
| | 31 | 099-5041 | 4 | BOLT (L=27mm) | | | | | |
| | 32 | 095-2039 | 12 | WASHER | | | | | |
| | 33 | 294-1808 | 4 | BOLT AS | | | | | |
| | 34 | 294-1809 | 1 | BOLT | | | | | |
| | 35 | 310-9533 | 2 | CONNECTOR | | | | | |

H99721E 06

## 296-4656 LINES GP-FUEL

Part of 272-4677-Page15

# FUEL SYSTEM

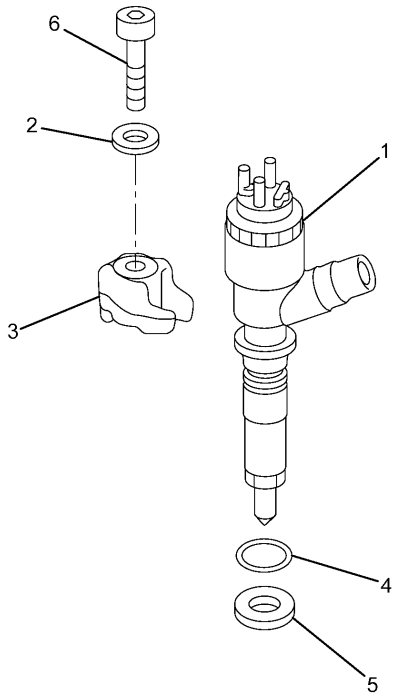


| NOTE | No. | PART No. | QTY | PART NAME |
|---|---|---|---|---|
| | 1 | 260-5656 | 6 | INJECTOR GP |
| | 2 | 294-1796 | 6 | WASHER |
| | 3 | 294-1800 | 6 | SUPPORT |
| | 4 | 294-1803 | 6 | SEAL |
| | 5 | 1R-6573 | 6 | GASKET |
| | 6 | 294-1805 | 6 | BOLT |

H99302E 00

**310-9606 INJECTOR GP-FUEL**

Part of 272-4677-Page15

# MEMORANDA

# FUEL SYSTEM

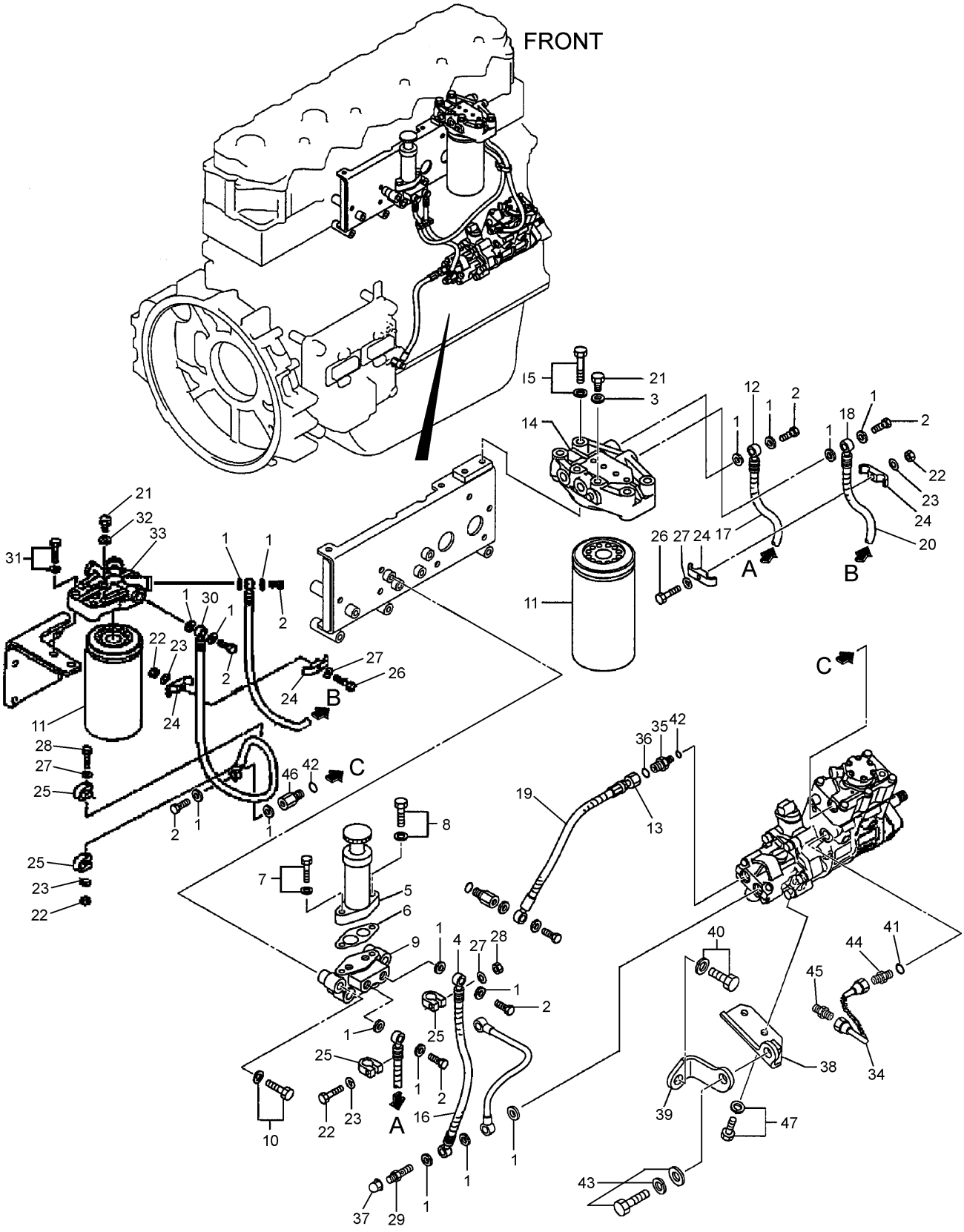


**305-4745 FILTER GP-FUEL**
Part of 272-4677-Page15

# FUEL SYSTEM

| NOTE | No. | PART No. | QTY | PART NAME | NOTE | No. | PART No. | QTY | PART NAME |
|---|---|---|---|---|---|---|---|---|---|
| | 1 | 099-4437 | 17 | GASKET | | | | | |
| | 2 | 099-5041 | 7 | BOLT (L=27mm) | | | | | |
| | 3 | 294-1811 | 1 | WASHER | | | | | |
| | 4 | 294-1819 | 1 | HOSE | | | | | |
| | 5 | 137-5541 | 1 | PUMP AS | | | | | |
| | 6 | 294-1820 | 1 | GASKET | | | | | |
| | 7 | 199-2241 | 1 | BOLT AS | | | | | |
| | 8 | 294-1821 | 1 | BOLT AS | | | | | |
| | 9 | 294-1822 | 1 | BASE | | | | | |
| | 10 | 294-1823 | 4 | BOLT AS | | | | | |
| | 11 | 1R-0751 | 2 | FILTER AS | | | | | |
| | 12 | 294-1825 | 1 | HOSE | | | | | |
| | 13 | 294-1826 | 1 | HOSE | | | | | |
| | 14 | 294-1827 | 1 | BRACKET | | | | | |
| | 15 | 294-1828 | 2 | BOLT AS | | | | | |
| | 16 | 183-8224 | 1 | TUBE | | | | | |
| | 17 | 196-8217 | 1 | TUBE | | | | | |
| | 18 | 305-4889 | 1 | HOSE | | | | | |
| | 19 | 190-5830 | 1 | TUBE | | | | | |
| | 20 | 294-1830 | 1 | TUBE | | | | | |
| | 21 | 094-9725 | 2 | PLUG | | | | | |
| | 22 | 5I-5078 | 4 | NUT | | | | | |
| | 23 | 9X-8256 | 4 | WASHER | | | | | |
| | 24 | 294-1833 | 2 | CLAMP | | | | | |
| | 25 | 294-1831 | 4 | CLAMP | | | | | |
| | 26 | 297-7822 | 2 | BOLT | | | | | |
| | 27 | 096-2500 | 4 | WASHER | | | | | |
| | 28 | 297-7706 | 2 | BOLT | | | | | |
| | 29 | 310-9534 | 1 | CONNECTOR | | | | | |
| | 30 | 305-4887 | 1 | HOSE | | | | | |
| | 31 | 213-9433 | 2 | BOLT AS | | | | | |
| | 32 | 095-2038 | 1 | WASHER | | | | | |
| | 33 | 310-9536 | 1 | BRACKET | | | | | |
| | 34 | 305-4900 | 1 | PIPE | | | | | |
| | 35 | 294-1848 | 1 | CONNECTOR | | | | | |
| | 36 | 294-1849 | 1 | SEAL-O-RING | | | | | |
| | 37 | 297-7660 | 1 | NUT | | | | | |
| | 38 | 294-1837 | 1 | BRACKET | | | | | |
| | 39 | 294-1838 | 1 | BRACKET | | | | | |
| | 40 | 294-1844 | 1 | BOLT AS | | | | | |
| | 41 | 305-4901 | 1 | SEAL | | | | | |
| | 42 | 294-1804 | 2 | SEAL-O-RING | | | | | |
| | 43 | 294-1845 | 1 | BOLT AS | | | | | |
| | 44 | 305-4902 | 1 | CONNECTOR | | | | | |
| | 45 | 5I-8058 | 1 | CONNECTOR | | | | | |
| | 46 | 310-9533 | 1 | CONNECTOR | | | | | |
| | 47 | 6V-5215 | 2 | BOLT (L=16mm) | | | | | |

H99742E 04

**305-4745 FILTER GP-FUEL**
Part of 272-4677-Page15

# FUEL SYSTEM

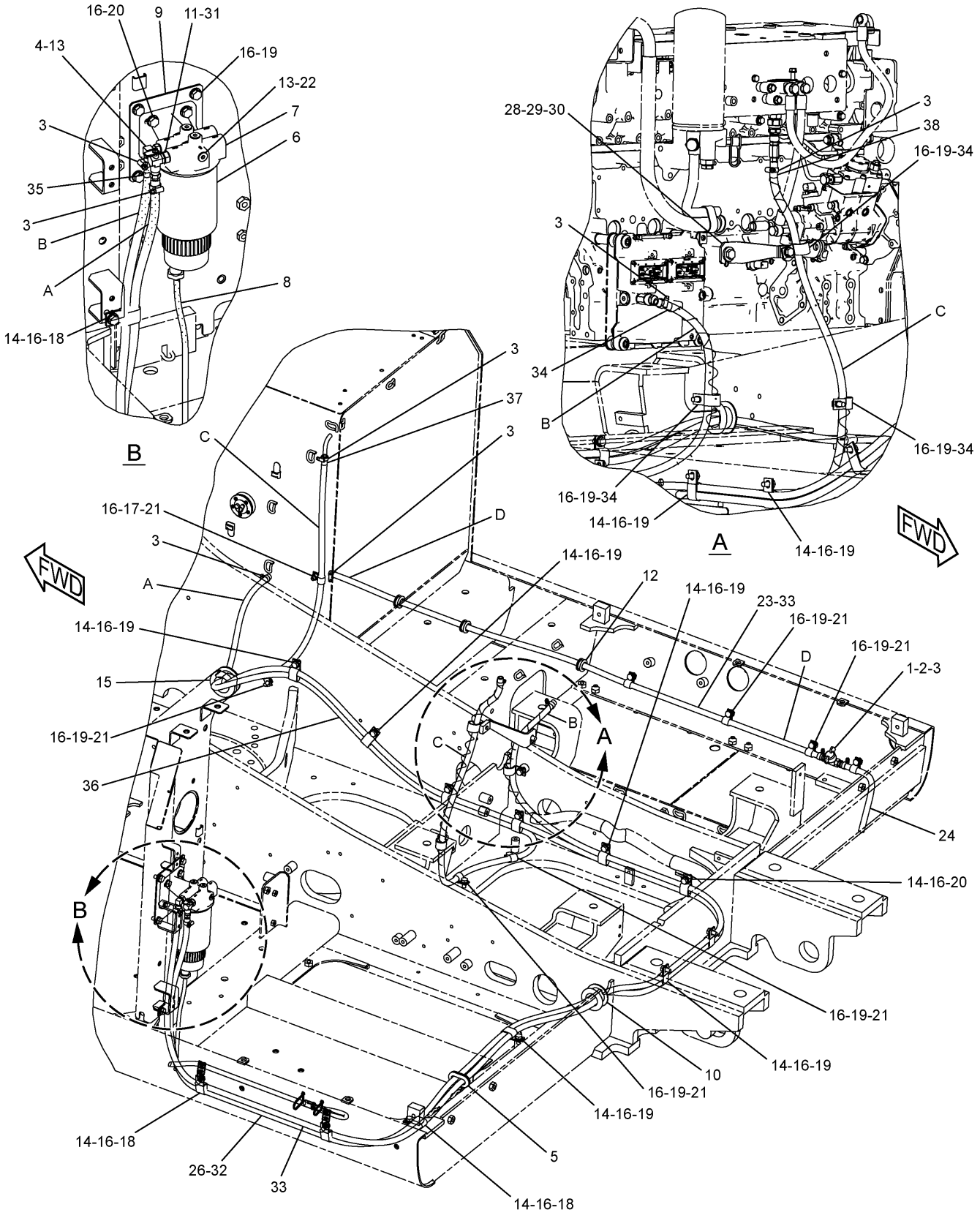


HA1995E 06

**273-7735 LINES GP-FUEL**
298-3147-Page82,174-9570-Page83

# FUEL SYSTEM

| NOTE | No. | PART No. | QTY | PART NAME | NOTE | No. | PART No. | QTY | PART NAME |
|---|---|---|---|---|---|---|---|---|---|
| | 1 | 4I-0379 | 1 | VALVE | | | | | |
| | 2 | 003-7764 | 2 | END | | | | | |
| | 3 | 095-1386 | 9 | CLAMP | | | | | |
| | 4 | 5P-4924 | 1 | ELBOW | | | | | |
| | 5 | 170-2901 | 1 | GROMMET | | | | | |
| Y | 6 | 174-9570 | 1 | FILTER GP | | | | | |
| | 7 | 177-9778 | 1 | BASE AS | | | | | |
| | 8 | 255-3160 | 1 | HOSE | | | | | |
| | 9 | 286-6186 | 1 | SHEET AS | | | | | |
| | 10 | 134-3299 | 1 | GROMMET | | | | | |
| Y | 11 | 298-3147 | 1 | VALVE AS | | | | | |
| | 12 | 2R-1498 | 3 | GROMMET | | | | | |
| | 13 | 3J-1907 | 7 | SEAL-O-RING (ID=11.89mm) | | | | | |
| | 14 | 5K-8451 | 13 | CLIP | | | | | |
| | 15 | 7Y-8167 | 1 | GROMMET | | | | | |
| | 16 | 8T-4121 | 32 | WASHER | | | | | |
| | 17 | 8T-4133 | 1 | NUT | | | | | |
| | 18 | 8T-4136 | 4 | BOLT (L=25mm) | | | | | |
| | 19 | 8T-4137 | 22 | BOLT (L=20mm) | | | | | |
| | 20 | 8T-4195 | 5 | BOLT (L=30mm) | | | | | |
| | 21 | 9M-8406 | 8 | CLIP | | | | | |
| | 22 | 9S-8004 | 5 | PLUG | | | | | |
| E | 23 | 5P-1442 | | HOSE…(160cm) | | | | | |
| E | 24 | 5P-1442 | | HOSE…(30cm) | | | | | |
| | 25 | 133-5813 | 2 | BAND (P,GRAY) | | | | | |
| E | 26 | 5P-1442 | | HOSE…(519cm) | | | | | |
| | 27 | 6D-4636 | 3 | CLIP | | | | | |
| | 28 | 293-6789 | 1 | BRACKET AS | | | | | |
| | 29 | 8T-4179 | 1 | BOLT (L=20mm) | | | | | |
| | 30 | 5P-1072 | 1 | WASHER | | | | | |
| | 31 | 5P-7175 | 1 | NIPPLE | | | | | |
| | 32 | 4I-9521 | 2 | BAND (L1,RED) | | | | | |
| | 33 | 307-7803 | 1 | HOSE AS | | | | | |
| E | | 5P-1442 | | HOSE…(400cm) | | | | | |
| | 34 | 4I-9522 | 1 | BAND (L2,YELLOW) | | | | | |
| | 35 | 4I-9527 | 1 | BAND (R3,GREEN) | | | | | |
| | 36 | 307-7804 | 1 | HOSE AS | | | | | |
| E | | 5P-1442 | | HOSE…(337cm) | | | | | |
| | 37 | 4I-9523 | 1 | BAND (L3,BLUE) | | | | | |
| | 38 | 4I-9525 | 1 | BAND (R1,ORANGE) | | | | | |

E—ORDER BY THE CENTIMETER

Y—SEE SEPARATE ILLUSTRATION

HA1995E 06

## 273-7735 LINES GP-FUEL

298-3147-Page82,174-9570-Page83

# FUEL SYSTEM

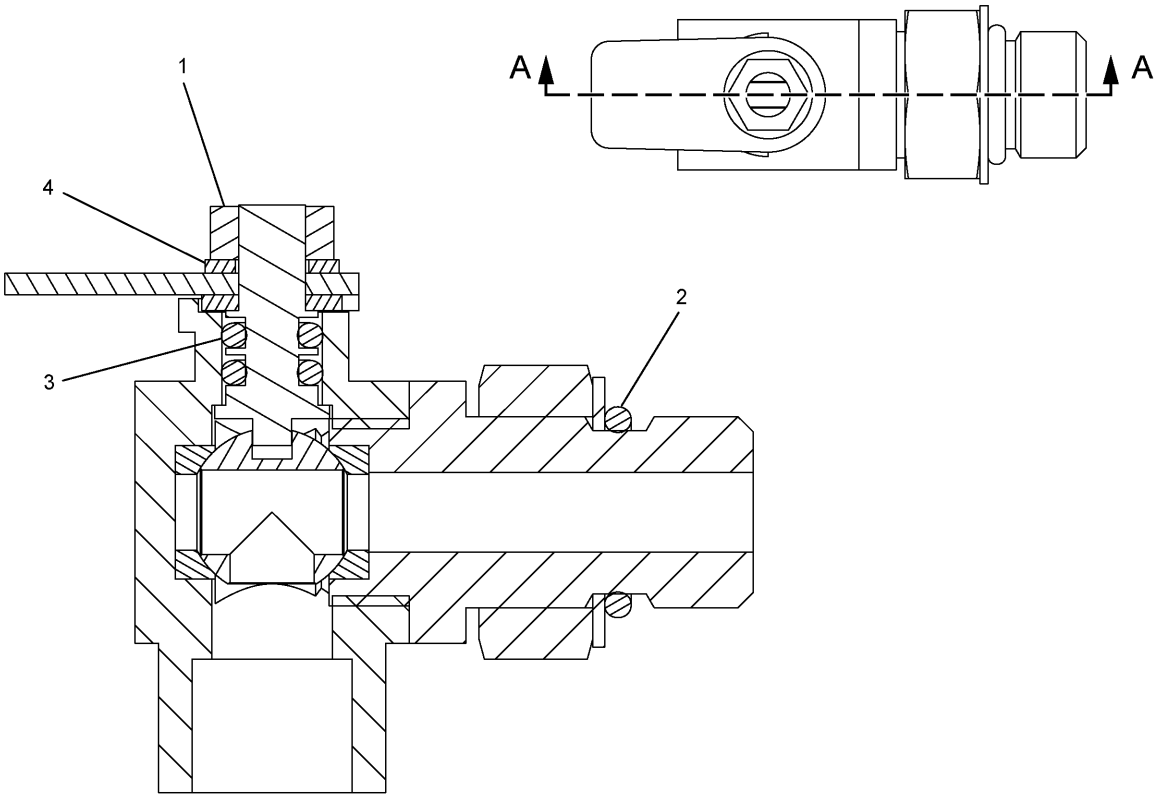


A – A

| NOTE | No. | PART No. | QTY | PART NAME | NOTE | No. | PART No. | QTY | PART NAME |
|---|---|---|---|---|---|---|---|---|---|
| | 1 | 260-6692 | 1 | NUT | | | | | |
| | 2 | 3J-1907 | 1 | SEAL-O-RING (ID=11.89mm) | | | | | |
| | 3 | 7Y-5280 | 2 | SEAL-O-RING (ID=3.80mm) | | | | | |
| | 4 | 8T-0328 | 1 | WASHER | | | | | |

H95513E 00

**298-3147 VALVE AS**
Part of 273-7735-Page81

# FUEL SYSTEM

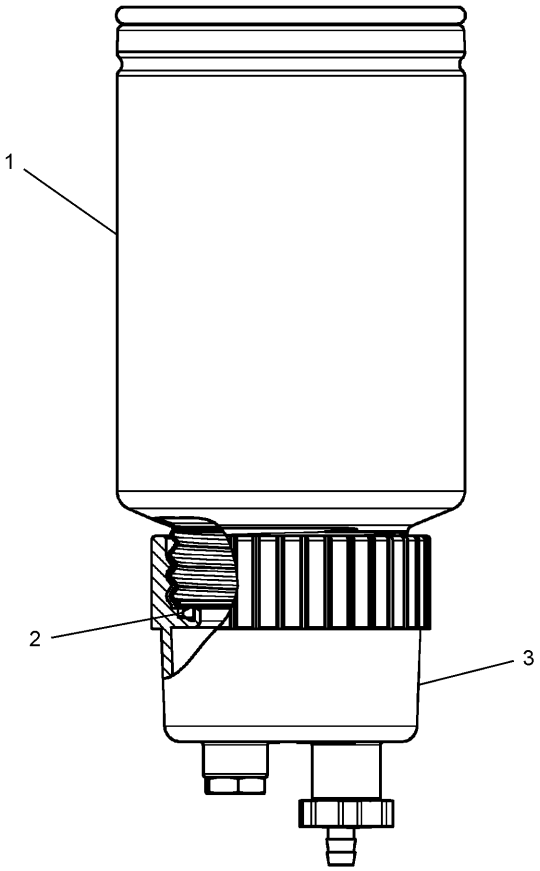


| NOTE | No. | PART No. | QTY | PART NAME | NOTE | No. | PART No. | QTY | PART NAME |
|---|---|---|---|---|---|---|---|---|---|
| | 1 | 1R-0770 | 1 | FILTER AS | | | | | |
| | 2 | 220-8678 | 1 | SEAL | | | | | |
| | 3 | 173-7126 | 1 | BOWL AS | | | | | |

H88895E 01

**174-9570 FILTER GP**
Part of 273-7735-Page81

# FUEL SYSTEM

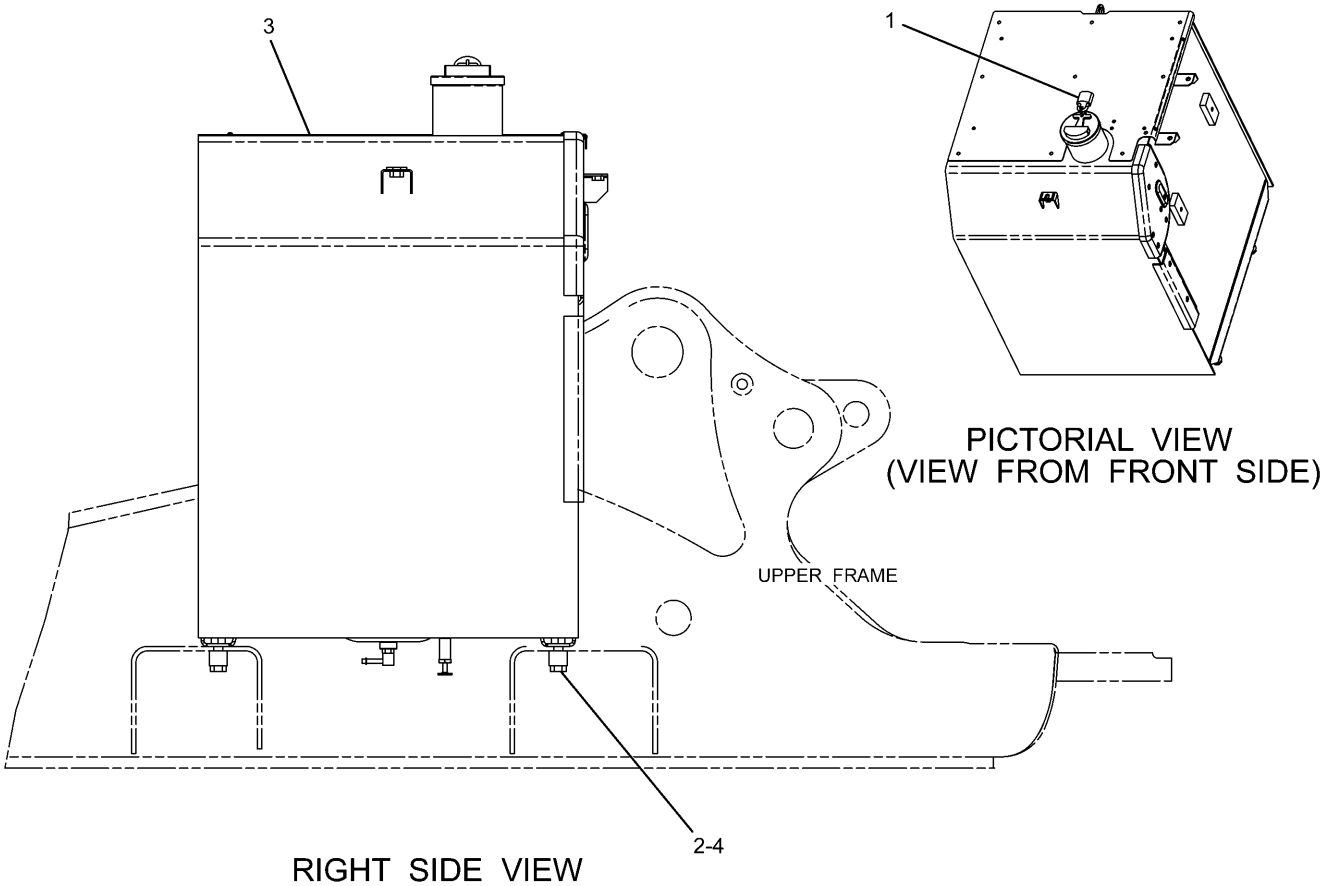


PICTORIAL VIEW
(VIEW FROM FRONT SIDE)

RIGHT SIDE VIEW

| NOTE | No. | PART No. | QTY | PART NAME | NOTE | No. | PART No. | QTY | PART NAME |
|---|---|---|---|---|---|---|---|---|---|
| | 1 | 246-2641 | 1 | PADLOCK GP | | | | | |
| | 2 | 8T-4140 | 4 | BOLT (L=60mm) | | | | | |
| Y | 3 | 278-3897 | 1 | TANK GP | | | | | |
| | 4 | 085-9310 | 4 | SPACER | | | | | |

Y—SEE SEPARATE ILLUSTRATION

H93703E 00

**278-3896 TANK & MTG GP-FUEL**
278-3897-Page85

# FUEL SYSTEM

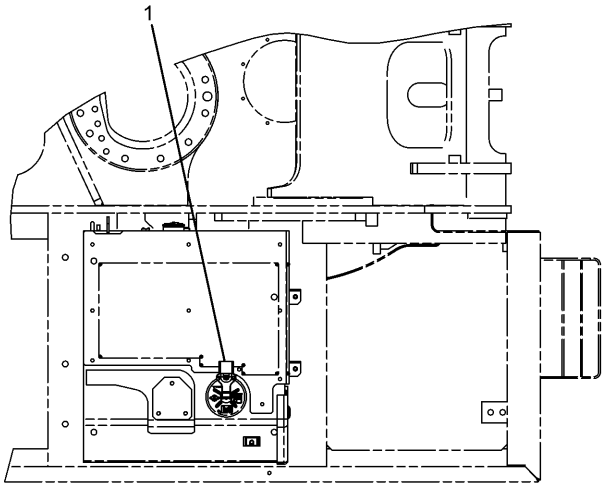


TOP VIEW

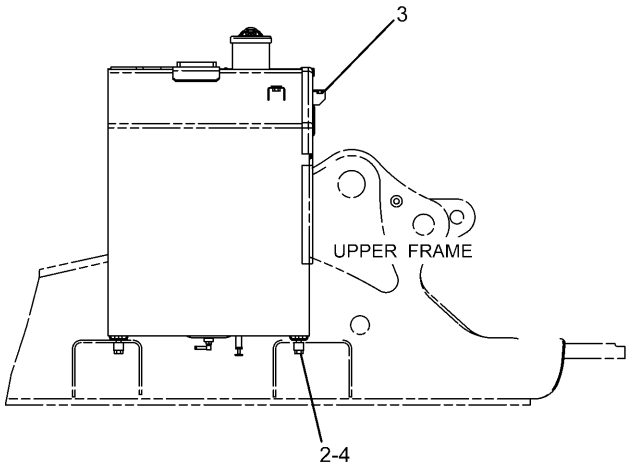


RIGHT SIDE VIEW

| NOTE | No. | PART No. | QTY | PART NAME | NOTE | No. | PART No. | QTY | PART NAME |
|---|---|---|---|---|---|---|---|---|---|
| | 1 | 246-2641 | 1 | PADLOCK GP | | | | | |
| | 2 | 085-9310 | 4 | SPACER | | | | | |
| Y | 3 | 327-3192 | 1 | TANK GP | | | | | |
| | 4 | 8T-4140 | 4 | BOLT (L=60mm) | | | | | |

Y—SEE SEPARATE ILLUSTRATION

HA0822E 00

## 327-3191 TANK & MTG GP-FUEL

Part of 330-1194-Page665.01
327-3192-Page85
An Attachment

# MEMORANDA

Consists of :


| | | | Page |
|---|---|---|---|
| 1 | 278-3898 | TANK GP-FUEL ..... | 86 |
| | | -OR- | |
| 1 | 278-3899 | TANK GP-FUEL ..... | 88 |


H94140E 00

278-3897 TANK GP-FUEL
Part of 278-3896-Page84

Consists of :


| | | | Page |
|---|---|---|---|
| 1 | 327-3193 | TANK GP-FUEL ..... | 89.01 |
| | | -OR- | |
| 1 | 327-3196 | TANK GP-FUEL ..... | 89.02 |


HA0826E 00

327-3192 TANK GP-FUEL
Part of 327-3191-Page84.01
An Attachment

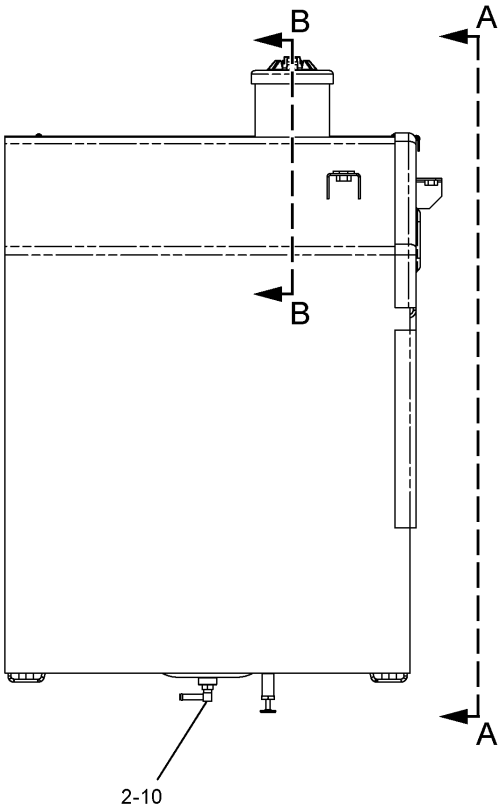


RIGHT SIDE VIEW

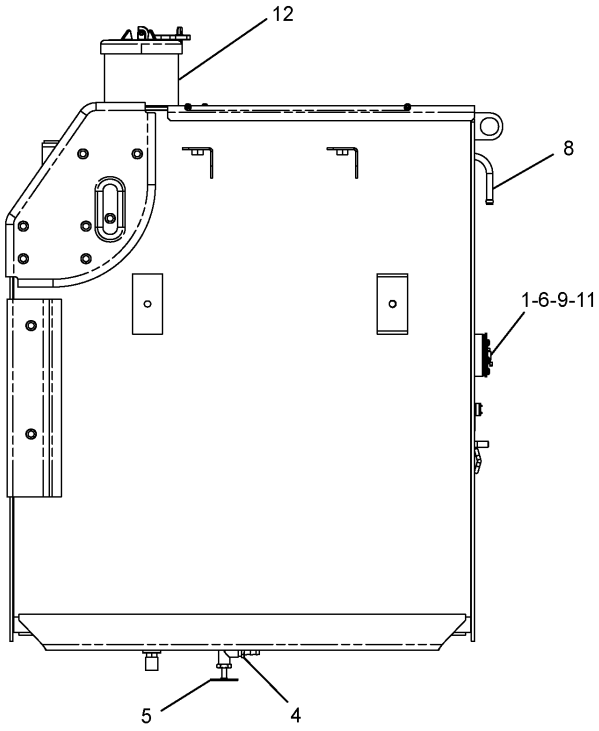


A – A

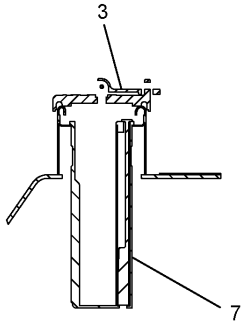


B – B

H98434E 04

**278-3898 TANK GP-FUEL**
Part of 278-3897-Page85

# FUEL SYSTEM

| NOTE | No. | PART No. | QTY | PART NAME | NOTE | No. | PART No. | QTY | PART NAME |
|---|---|---|---|---|---|---|---|---|---|
| | 1 | 4I-0378 | 1 | PACKING | | | | | |
| | 2 | 5P-4924 | 1 | ELBOW | | | | | |
| | 3 | 164-4858 | 1 | CAP | | | | | |
| | | 190-9775 | 1 | COVER AS | | | | | |
| | | 9X-8600 | 1 | SEAL-O-RING (ID=110.49mm) | | | | | |
| | 4 | 003-7764 | 1 | END | | | | | |
| | 5 | 128-4411 | 1 | VALVE AS | | | | | |
| | 6 | 163-6700 | 1 | SENSOR | | | | | |
| | | 186-3735 | 2 | PIN | | | | | |
| | | 102-8802 | 1 | RECEPTACLE KIT | | | | | |
| | 7 | 303-9933 | 1 | STRAINER AS | | | | | |
| | | 303-9937 | 1 | GAUGE KIT | | | | | |
| | 8 | 4I-0050 | 1 | PIPE | | | | | |
| | 9 | 095-0736 | 5 | SCREW | | | | | |
| | 10 | 3J-1907 | 1 | SEAL-O-RING (ID=11.89mm) | | | | | |
| | 11 | 8T-0328 | 5 | WASHER | | | | | |
| | 12 | 131-7501 | 1 | ADAPTER AS | | | | | |
| | | 7Y-8737 | 1 | FILLER | | | | | |
| | | 9X-2206 | 1 | ADAPTER AS | | | | | |

H98434E 04

**278-3898 TANK GP-FUEL**

Part of 278-3897-Page85

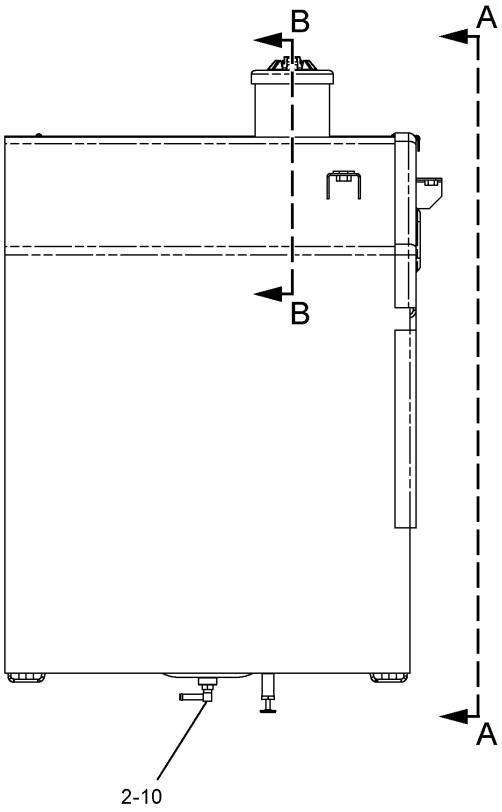


RIGHT SIDE VIEW

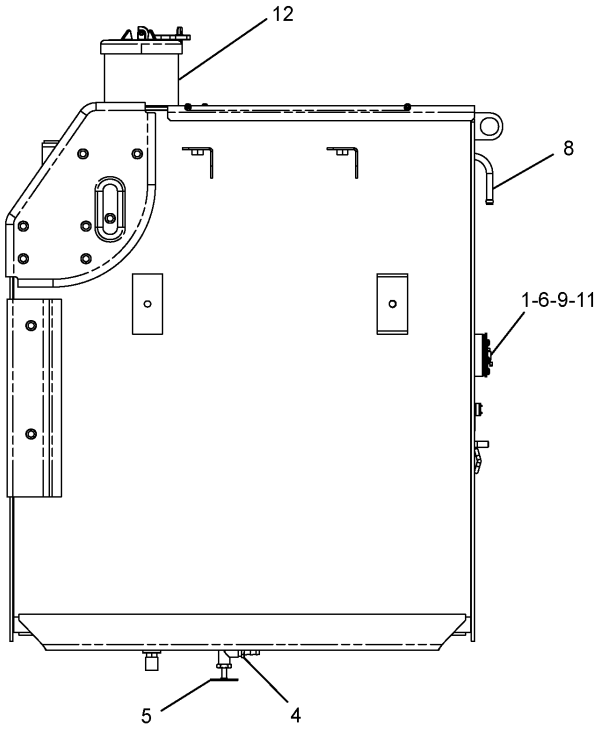


A – A

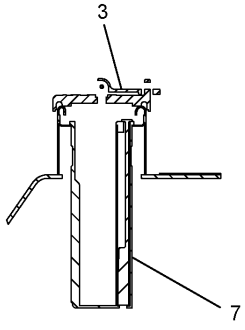


B – B

H98435E 04

**278-3899 TANK GP-FUEL**
Part of 278-3897-Page85

# FUEL SYSTEM

| NOTE | No. | PART No. | QTY | PART NAME | NOTE | No. | PART No. | QTY | PART NAME |
|---|---|---|---|---|---|---|---|---|---|
| | 1 | 4I-0378 | 1 | PACKING | | | | | |
| | 2 | 5P-4924 | 1 | ELBOW | | | | | |
| | 3 | 164-4858 | 1 | CAP | | | | | |
| | | 190-9775 | 1 | COVER AS | | | | | |
| | | 9X-8600 | 1 | SEAL-O-RING (ID=110.49mm) | | | | | |
| | 4 | 003-7764 | 1 | END | | | | | |
| | 5 | 128-4411 | 1 | VALVE AS | | | | | |
| | 6 | 163-6700 | 1 | SENSOR | | | | | |
| | | 186-3735 | 2 | PIN | | | | | |
| | | 102-8802 | 1 | RECEPTACLE KIT | | | | | |
| | 7 | 303-9933 | 1 | STRAINER AS | | | | | |
| | | 303-9937 | 1 | GAUGE KIT | | | | | |
| | 8 | 4I-0050 | 1 | PIPE | | | | | |
| | 9 | 095-0736 | 5 | SCREW | | | | | |
| | 10 | 3J-1907 | 1 | SEAL-O-RING (ID=11.89mm) | | | | | |
| | 11 | 8T-0328 | 5 | WASHER | | | | | |
| | 12 | 131-7501 | 1 | ADAPTER AS | | | | | |
| | | 7Y-8737 | 1 | FILLER | | | | | |
| | | 9X-2206 | 1 | ADAPTER AS | | | | | |

H98435E 04

**278-3899 TANK GP-FUEL**

Part of 278-3897-Page85

# FUEL SYSTEM

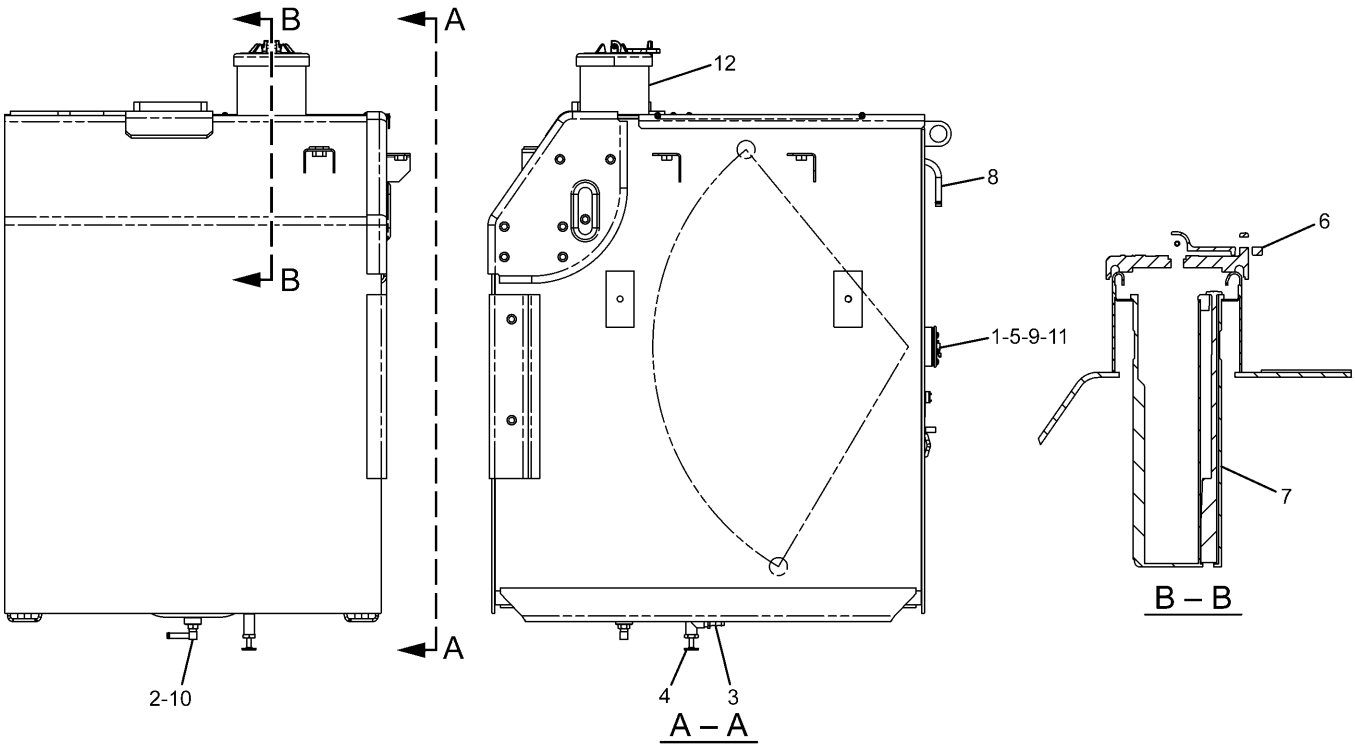


| NOTE | No. | PART No. | QTY | PART NAME | NOTE | No. | PART No. | QTY | PART NAME |
|---|---|---|---|---|---|---|---|---|---|
| | 1 | 4I-0378 | 1 | PACKING | | | | | |
| | 2 | 5P-4924 | 1 | ELBOW | | | | | |
| | 3 | 003-7764 | 1 | END | | | | | |
| | 4 | 128-4411 | 1 | VALVE AS | | | | | |
| | 5 | 163-6700 | 1 | SENSOR | | | | | |
| | | 8T-8729 | 2 | PIN | | | | | |
| | | 102-8802 | 1 | RECEPTACLE KIT | | | | | |
| | 6 | 164-4858 | 1 | CAP | | | | | |
| | 7 | 303-9933 | 1 | STRAINER AS | | | | | |
| | | 303-9937 | 1 | GAUGE KIT | | | | | |
| | 8 | 4I-0050 | 1 | PIPE | | | | | |
| | 9 | 095-0736 | 5 | SCREW | | | | | |
| | 10 | 3J-1907 | 1 | SEAL-O-RING (ID=11.89mm) | | | | | |
| | 11 | 8T-0328 | 5 | WASHER | | | | | |
| | 12 | 131-7501 | 1 | ADAPTER AS | | | | | |
| | | 7Y-8737 | 1 | FILLER | | | | | |
| | | 9X-2206 | 1 | ADAPTER AS | | | | | |

HA0828E 00

## 327-3193 TANK GP-FUEL

Part of 327-3192-Page85
An Attachment

# FUEL SYSTEM

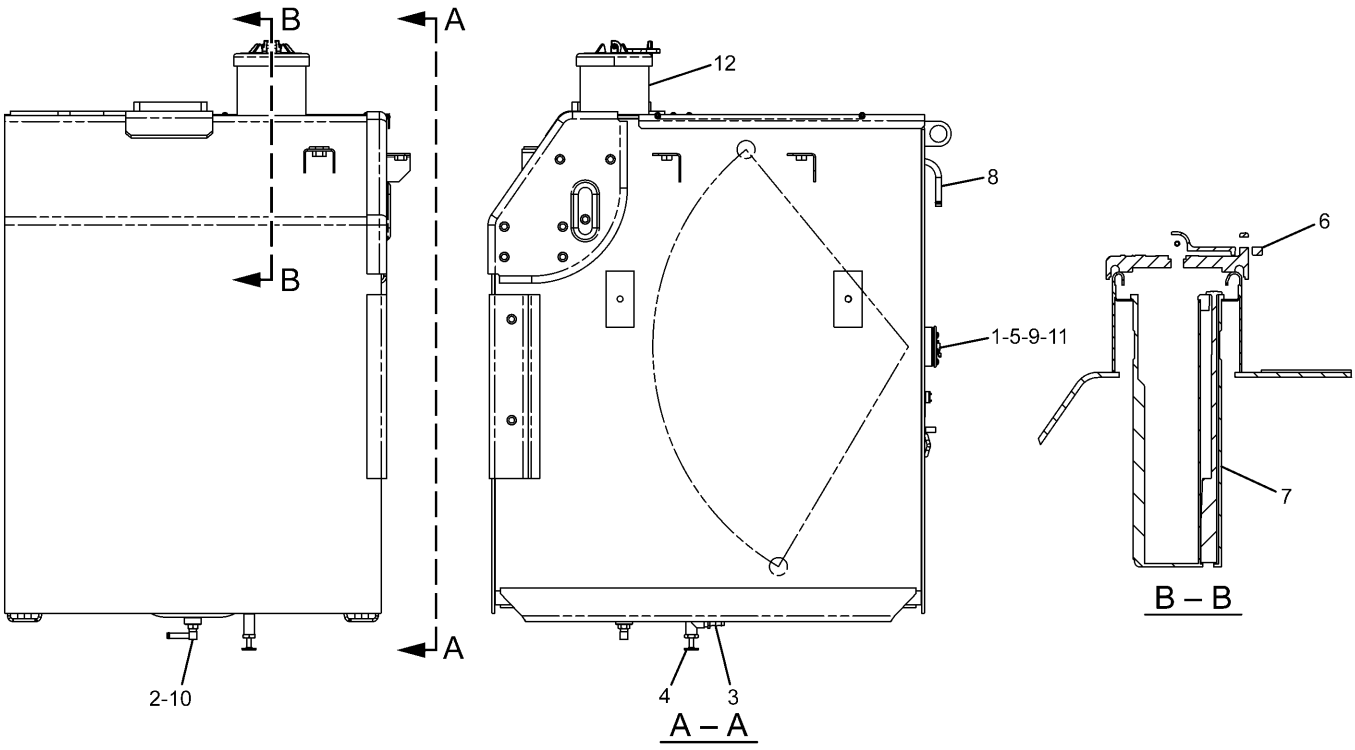


| NOTE | No. | PART No. | QTY | PART NAME | NOTE | No. | PART No. | QTY | PART NAME |
|---|---|---|---|---|---|---|---|---|---|
| | 1 | 4I-0378 | 1 | PACKING | | | | | |
| | 2 | 5P-4924 | 1 | ELBOW | | | | | |
| | 3 | 003-7764 | 1 | END | | | | | |
| | 4 | 128-4411 | 1 | VALVE AS | | | | | |
| | 5 | 163-6700 | 1 | SENSOR | | | | | |
| | | 8T-8729 | 2 | PIN | | | | | |
| | | 102-8802 | 1 | RECEPTACLE KIT | | | | | |
| | 6 | 164-4858 | 1 | CAP | | | | | |
| | 7 | 303-9933 | 1 | STRAINER AS | | | | | |
| | | 303-9937 | 1 | GAUGE KIT | | | | | |
| | 8 | 4I-0050 | 1 | PIPE | | | | | |
| | 9 | 095-0736 | 5 | SCREW | | | | | |
| | 10 | 3J-1907 | 1 | SEAL-O-RING (ID=11.89mm) | | | | | |
| | 11 | 8T-0328 | 5 | WASHER | | | | | |
| | 12 | 131-7501 | 1 | ADAPTER AS | | | | | |
| | | 7Y-8737 | 1 | FILLER | | | | | |
| | | 9X-2206 | 1 | ADAPTER AS | | | | | |

HA0829E 00

## 327-3196 TANK GP-FUEL

Part of 327-3192-Page85
An Attachment

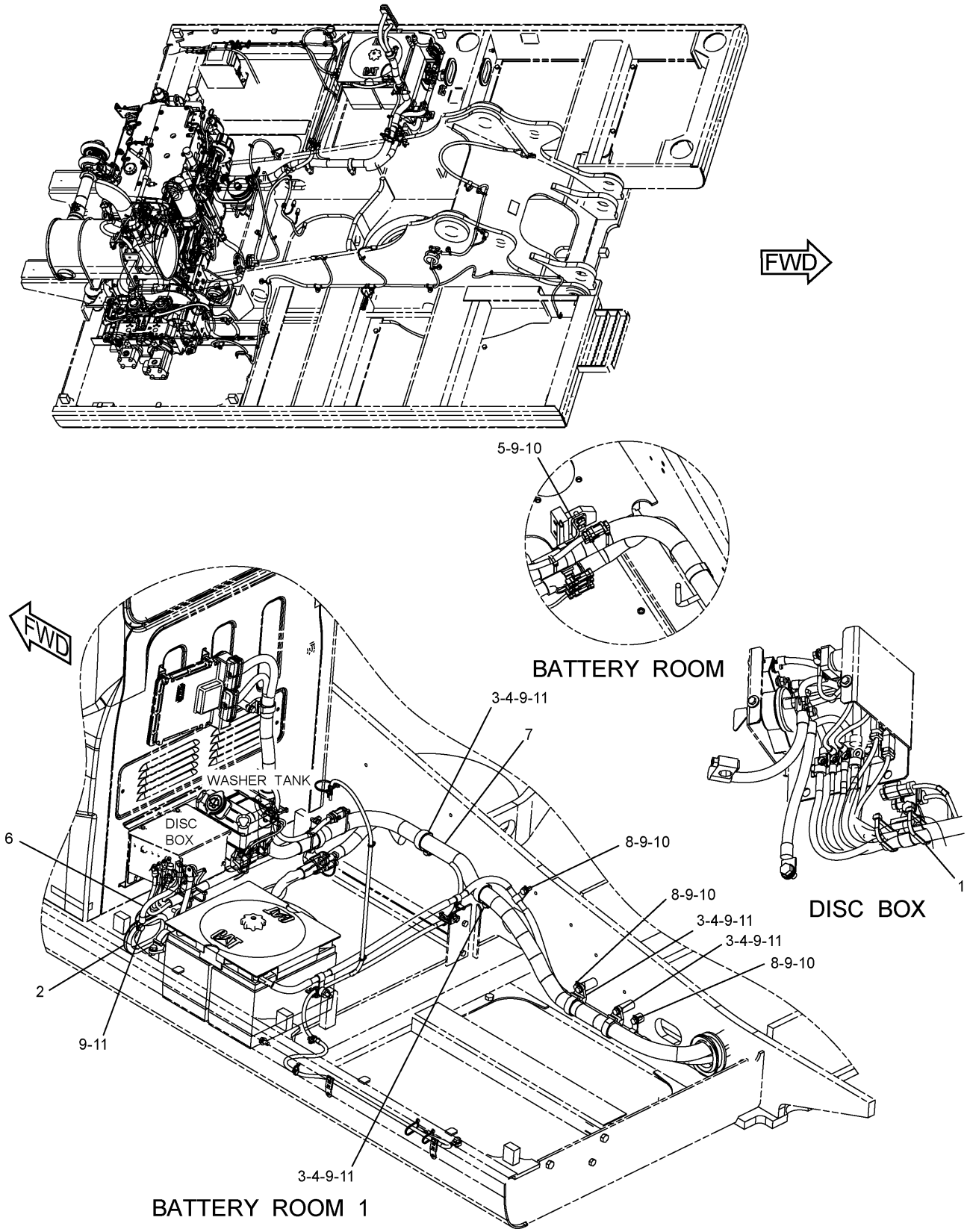


H98486E 03

**291-7920 BATTERY & WIRING GP (1/5)**
306-8453-Page100

# ELECTRICAL AND STARTING SYSTEM

| NOTE | No. | PART No. | QTY | PART NAME | NOTE | No. | PART No. | QTY | PART NAME |
|---|---|---|---|---|---|---|---|---|---|
| | 1 | 7K-1181 | 2 | STRAP | | | | | |
| | 2 | 7Y-5456 | 1 | GROMMET | | | | | |
| | 3 | 111-4838 | 4 | CLIP | | | | | |
| | 4 | 111-4839 | 4 | STRAP | | | | | |
| | 5 | 291-7593 | 1 | BRACKET AS | | | | | |
| | 6 | 132-1805 | 1 | STRAP AS | | | | | |
| Y | 7 | 306-8453 | 1 | HARNESS AS | | | | | |
| | 8 | 6K-8178 | 3 | CLIP | | | | | |
| | 9 | 8T-4121 | 11 | WASHER | | | | | |
| | 10 | 8T-4136 | 5 | BOLT (L=25mm) | | | | | |
| | 11 | 8T-4137 | 5 | BOLT (L=20mm) | | | | | |

Y—SEE SEPARATE ILLUSTRATION

H98486E 03

## 291-7920 BATTERY & WIRING GP (1/5)

306-8453-Page100

# ELECTRICAL AND STARTING SYSTEM

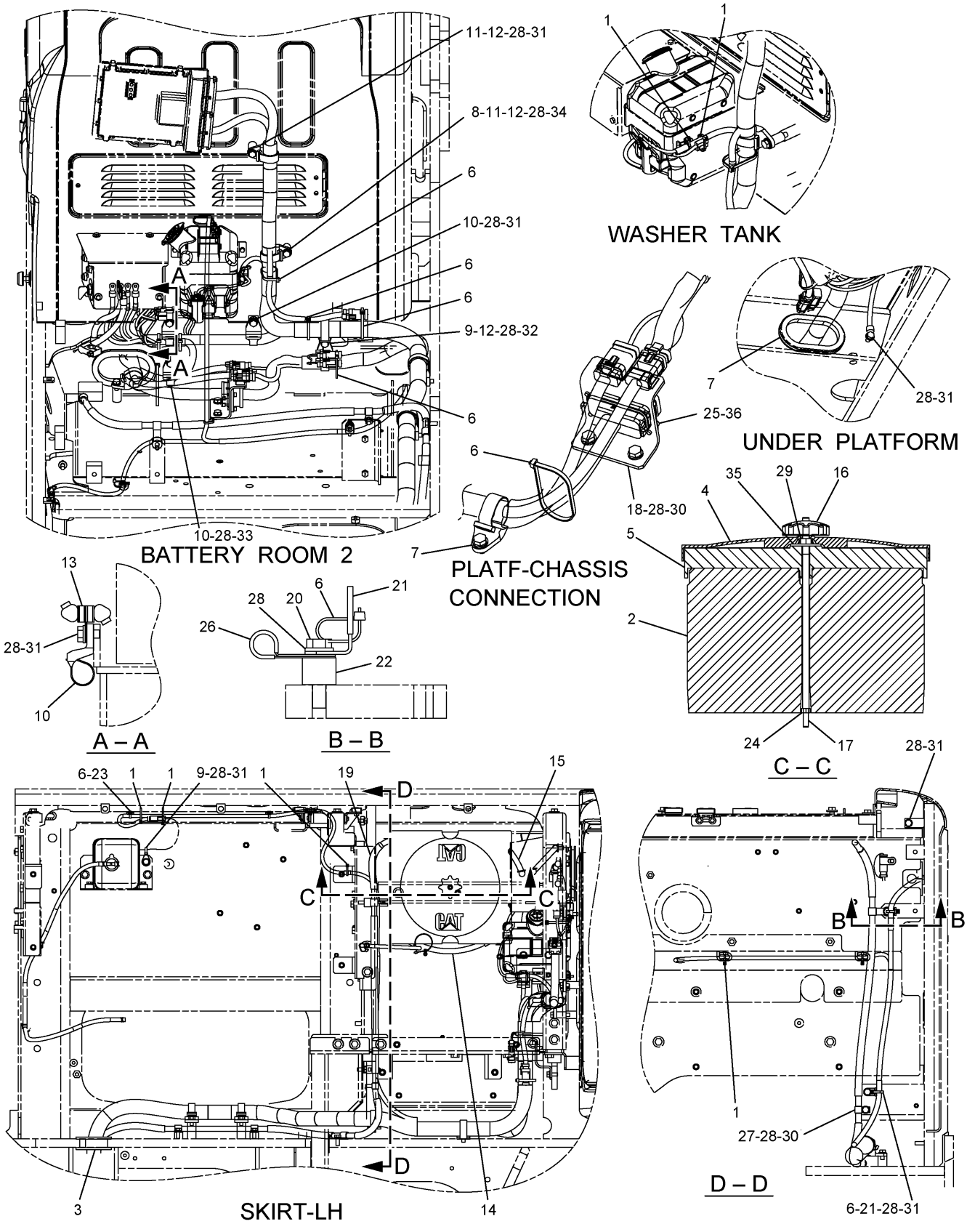


**291-7920 BATTERY & WIRING GP (2/5)**
291-7591-Page104,170-6929,231-1827-Page105

# ELECTRICAL AND STARTING SYSTEM

| NOTE | No. | PART No. | QTY | PART NAME | NOTE | No. | PART No. | QTY | PART NAME |
|---|---|---|---|---|---|---|---|---|---|
| | 1 | 3S-2093 | 8 | STRAP | | | | | |
| | 2 | 3T-5760 | 2 | BATTERY | | | | | |
| | 3 | 306-8401 | 1 | GROMMET | | | | | |
| | 4 | 5I-8270 | 1 | COVER | | | | | |
| | 5 | 6W-6005 | 1 | HOLDDOWN | | | | | |
| | 6 | 7K-1181 | 9 | STRAP | | | | | |
| | 7 | 7Y-5456 | 1 | GROMMET | | | | | |
| | 8 | 6G-2263 | 2 | SPACER | | | | | |
| | 9 | 111-4836 | 1 | CLIP | | | | | |
| | 10 | 111-4837 | 3 | CLIP | | | | | |
| | 11 | 111-4838 | 5 | CLIP | | | | | |
| | 12 | 111-4839 | 5 | STRAP | | | | | |
| | 13 | 116-0118 | 2 | CLIP | | | | | |
| Y | 14 | 170-6929 | 1 | CABLE AS | | | | | |
| Y | 15 | 231-1827 | 1 | CABLE AS | | | | | |
| | 16 | 238-2501 | 1 | KNOB | | | | | |
| | 17 | 238-2528 | 1 | ROD | | | | | |
| | 18 | 251-0467 | 1 | BRACKET AS | | | | | |
| Y | 19 | 291-7591 | 1 | CABLE AS | | | | | |
| | 20 | 8T-4182 | 1 | BOLT (L=45mm) | | | | | |
| | 21 | 132-5789 | 2 | CLIP | | | | | |
| | 22 | 091-9035 | 1 | SPACER | | | | | |
| | 23 | 4P-7581 | 2 | CLIP | | | | | |
| | 24 | 5C-7261 | 1 | NUT | | | | | |
| | 25 | 5C-7883 | 4 | BOLT | | | | | |
| | 26 | 6K-8178 | 1 | CLIP | | | | | |
| | 27 | 4K-8864 | 1 | CLIP | | | | | |
| | 28 | 8T-4121 | 15 | WASHER | | | | | |
| | 29 | 8T-4133 | 1 | NUT | | | | | |
| | 30 | 8T-4136 | 3 | BOLT (L=25mm) | | | | | |
| | 31 | 8T-4137 | 8 | BOLT (L=20mm) | | | | | |
| | 32 | 8T-4196 | 1 | BOLT (L=35mm) | | | | | |
| | 33 | 8T-4195 | 1 | BOLT (L=30mm) | | | | | |
| | 34 | 8T-4185 | 1 | BOLT (L=50mm) | | | | | |
| | 35 | 8T-4226 | 1 | WASHER | | | | | |
| | 36 | 9X-8256 | 4 | WASHER | | | | | |

Y—SEE SEPARATE ILLUSTRATION

H98487E 03

## 291-7920 BATTERY & WIRING GP (2/5)

291-7591-Page104,170-6929,231-1827-Page105

# ELECTRICAL AND STARTING SYSTEM

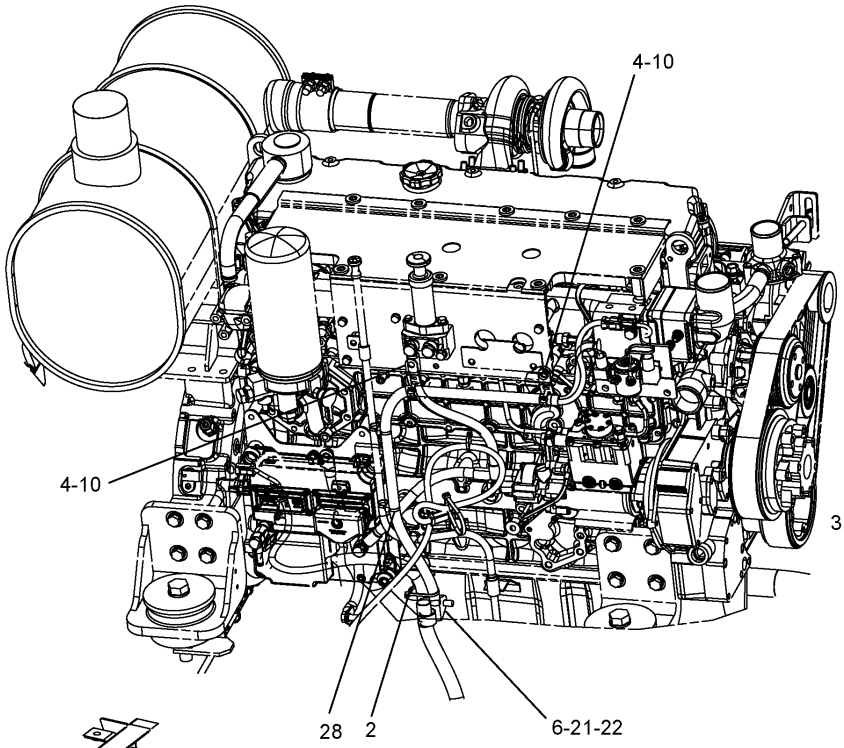


ENGINE-FRONT

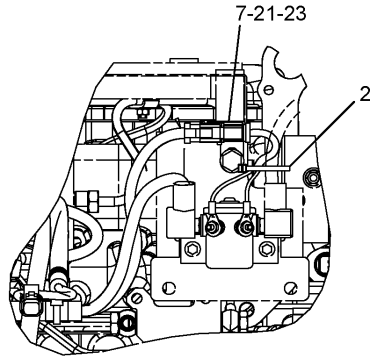


DETAIL OF HEATER RELAY

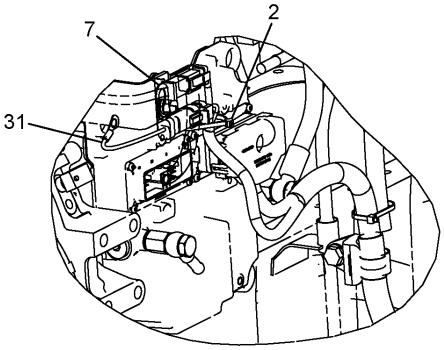


ENGINE CONTROL

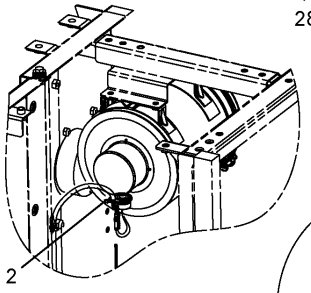


AIR CLEANER

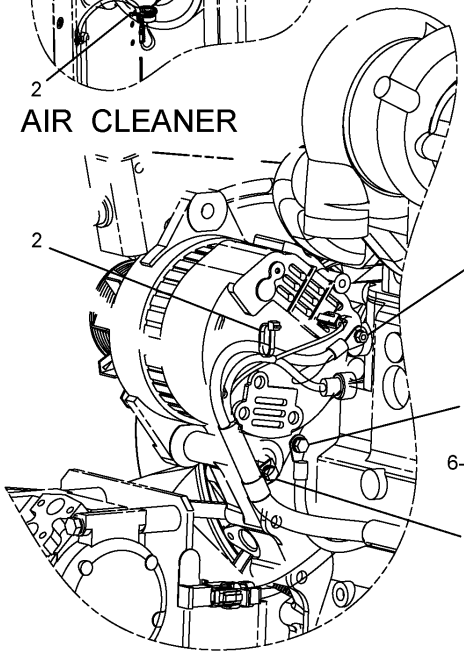


DETAIL OF ALTERNATOR

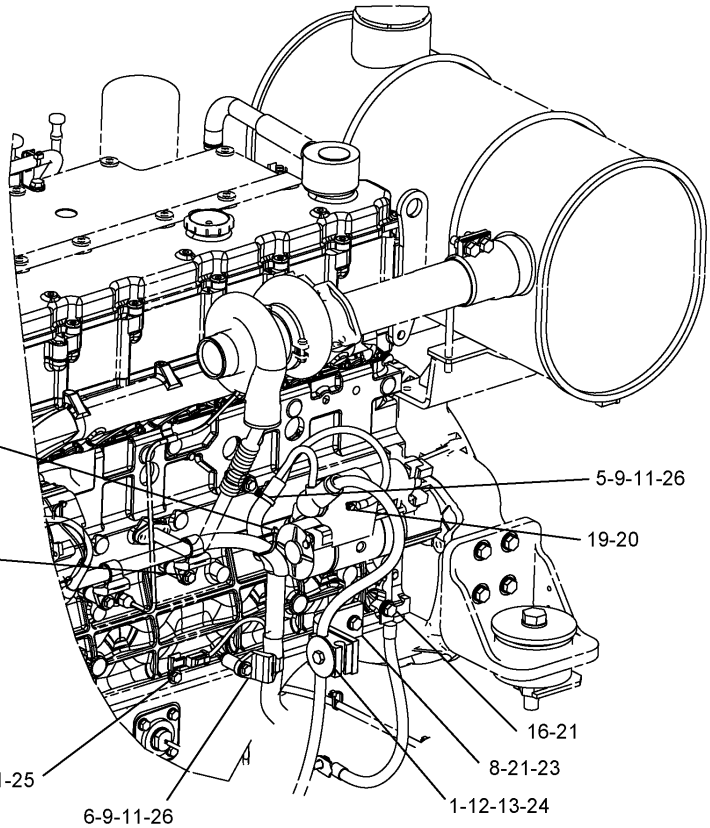


ENGINE-REAR-STARTER

H98488E 03

**291-7920 BATTERY & WIRING GP (3/5)**

# ELECTRICAL AND STARTING SYSTEM

| NOTE | No. | PART No. | QTY | PART NAME | NOTE | No. | PART No. | QTY | PART NAME |
|---|---|---|---|---|---|---|---|---|---|
| | 1 | 2G-8767 | 1 | WASHER | | | | | |
| | 2 | 3S-2093 | 6 | STRAP | | | | | |
| | 3 | 5I-9368 | 1 | SPACER | | | | | |
| | 4 | 7K-1181 | 2 | STRAP | | | | | |
| | 5 | 111-4836 | 1 | CLIP | | | | | |
| | 6 | 111-4837 | 4 | CLIP | | | | | |
| | 7 | 116-0118 | 3 | CLIP | | | | | |
| | 8 | 183-1049 | 1 | BRACKET | | | | | |
| | 9 | 085-7329 | 2 | SPACER | | | | | |
| | 10 | 4P-7581 | 2 | CLIP | | | | | |
| | 11 | 5P-4116 | 5 | WASHER | | | | | |
| | 12 | 6G-2256 | 1 | CLAMP | | | | | |
| | 13 | 6G-2263 | 1 | SPACER | | | | | |
| | 14 | 7X-2533 | 1 | BOLT (L=35mm) | | | | | |
| | 15 | 7X-2619 | 1 | BOLT (L=10mm) | | | | | |
| | 16 | 7X-2621 | 1 | BOLT (L=12mm) | | | | | |
| | 17 | 7Y-5226 | 1 | NUT | | | | | |
| | 18 | 8J-1256 | 1 | CLIP | | | | | |
| | 19 | 8T-0286 | 1 | BOLT (L=8mm) | | | | | |
| | 20 | 8T-0328 | 2 | WASHER | | | | | |
| | 21 | 8T-4121 | 4 | WASHER | | | | | |
| | 22 | 8T-4136 | 1 | BOLT (L=25mm) | | | | | |
| | 23 | 8T-4137 | 2 | BOLT (L=20mm) | | | | | |
| | 24 | 8T-4182 | 1 | BOLT (L=45mm) | | | | | |
| | 25 | 8T-4199 | 1 | BOLT (L=12mm) | | | | | |
| | 26 | 8T-6912 | 2 | BOLT (L=50mm) | | | | | |
| | 27 | 9X-8256 | 2 | WASHER | | | | | |
| | 28 | 7I-2673 | 2 | STRAP | | | | | |
| | 29 | 7Y-1924 | 2 | SPACER | | | | | |
| | 30 | 7X-0818 | 2 | BOLT (L=45mm) | | | | | |
| | 31 | 299-2767 | 1 | WIRE AS | | | | | |
| | | 186-3735 | 1 | PIN | | | | | |
| | | 8T-8737 | 1 | PLUG | | | | | |
| | | 2L-8078 | 1 | TERMINAL | | | | | |
| E | | 125-7874 | | TUBE…(3cm) | | | | | |
| | | 243-4505 | 1 | RECEPTACLE AS | | | | | |

E—ORDER BY THE CENTIMETER

H98488E 03

291-7920 BATTERY & WIRING GP (3/5)

# ELECTRICAL AND STARTING SYSTEM

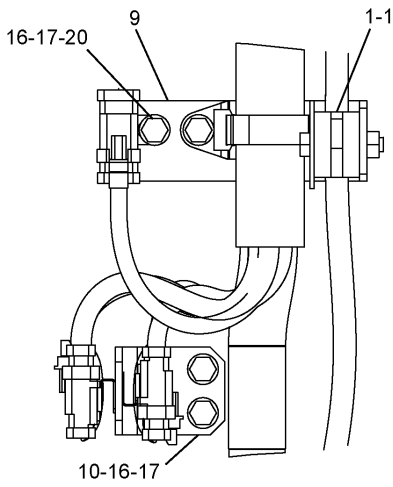


E – E

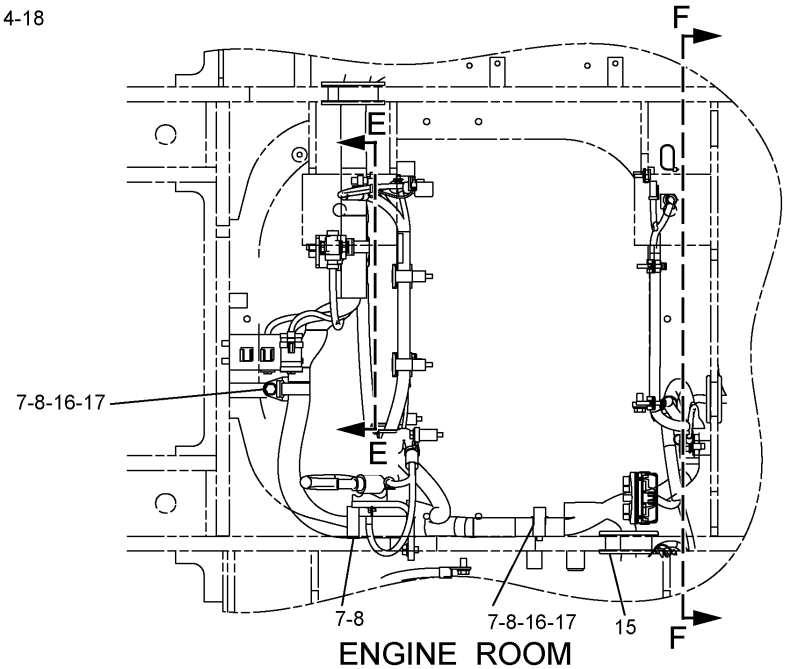


ENGINE ROOM

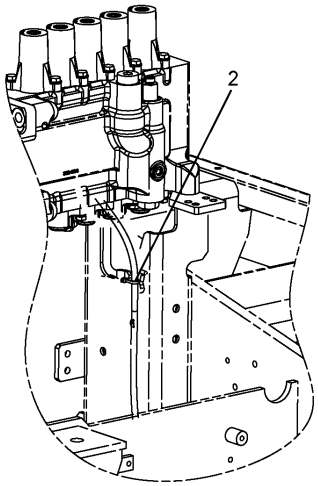


CONTROL VALVE SUPPORT-RH

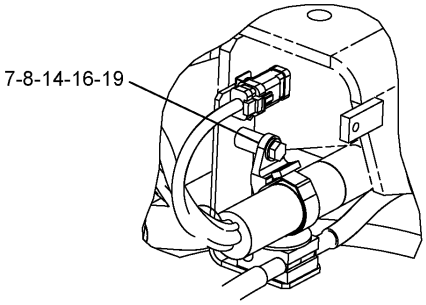


ENGINE ROOM REAR

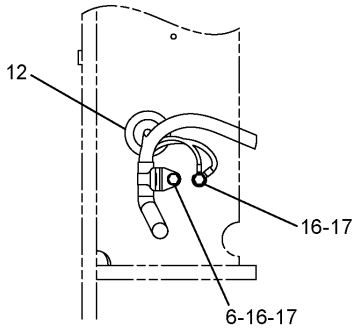


F – F

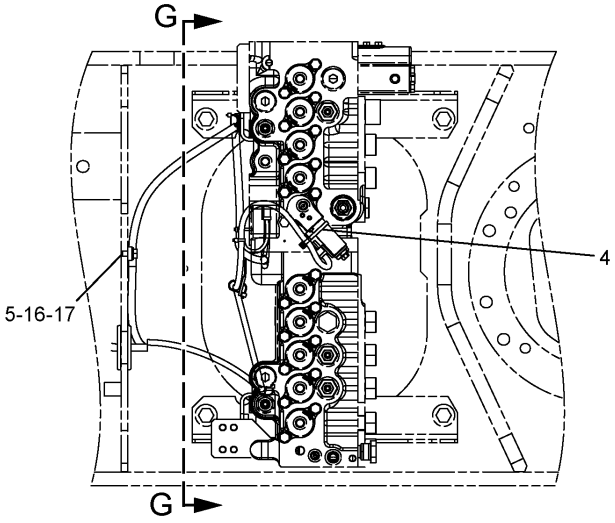


CONTROL VALVE ROOM

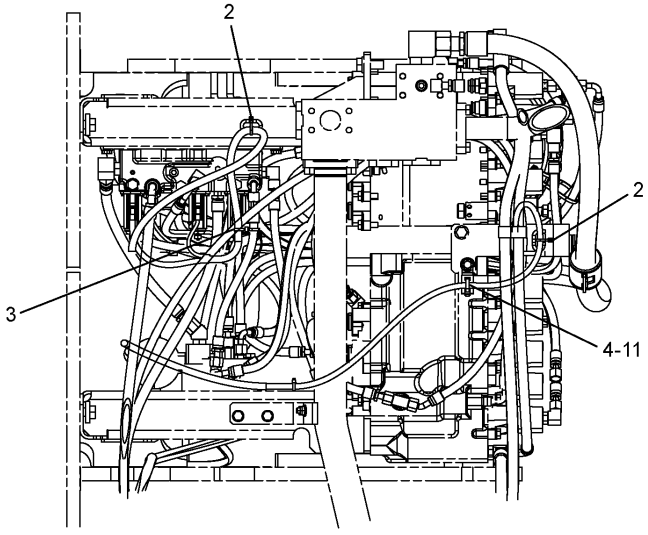


G – G

H98489E 03

291-7920 BATTERY & WIRING GP (4/5)

# ELECTRICAL AND STARTING SYSTEM

| NOTE | No. | PART No. | QTY | PART NAME | NOTE | No. | PART No. | QTY | PART NAME |
|---|---|---|---|---|---|---|---|---|---|
| | 1 | 2G-8767 | 1 | WASHER | | | | | |
| | 2 | 3S-2093 | 3 | STRAP | | | | | |
| | 3 | 7I-2673 | 1 | STRAP | | | | | |
| | 4 | 7K-1181 | 2 | STRAP | | | | | |
| | 5 | 111-4836 | 1 | CLIP | | | | | |
| | 6 | 111-4837 | 1 | CLIP | | | | | |
| | 7 | 111-4838 | 4 | CLIP | | | | | |
| | 8 | 111-4839 | 4 | STRAP | | | | | |
| | 9 | 259-5267 | 1 | BRACKET AS | | | | | |
| | 10 | 259-5317 | 1 | BRACKET AS | | | | | |
| | 11 | 4P-7428 | 1 | CLIP | | | | | |
| | 12 | 5I-3878 | 1 | GROMMET | | | | | |
| | 13 | 6G-2256 | 1 | CLAMP | | | | | |
| | 14 | 6G-2263 | 1 | SPACER | | | | | |
| | 15 | 7Y-8165 | 1 | GROMMET | | | | | |
| | 16 | 8T-4121 | 9 | WASHER | | | | | |
| | 17 | 8T-4137 | 8 | BOLT (L=20mm) | | | | | |
| | 18 | 8T-4185 | 1 | BOLT (L=50mm) | | | | | |
| | 19 | 8T-6466 | 1 | BOLT (L=60mm) | | | | | |
| | 20 | 116-0118 | 1 | CLIP | | | | | |

H98489E 03

291-7920 BATTERY & WIRING GP (4/5)

# ELECTRICAL AND STARTING SYSTEM

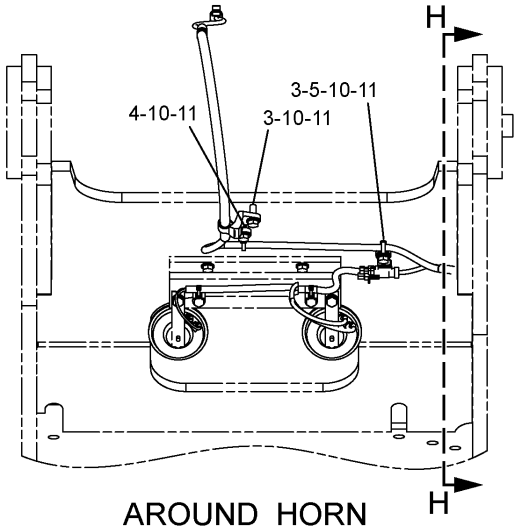


AROUND HORN

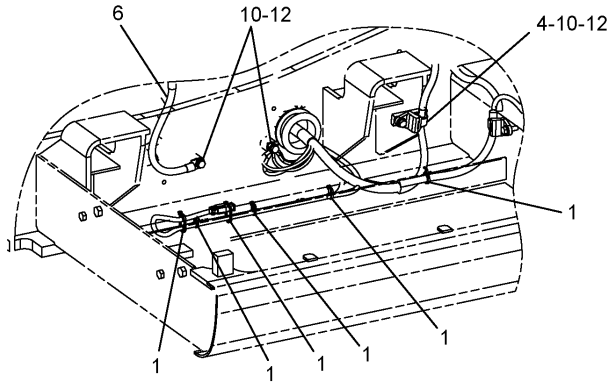


PUMP ROOM

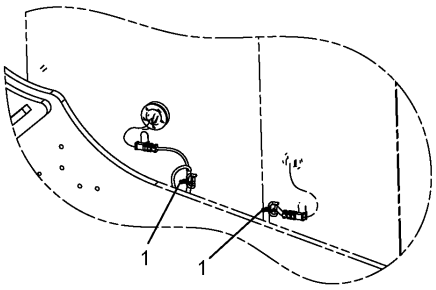


FUEL TANK & HYD TANK

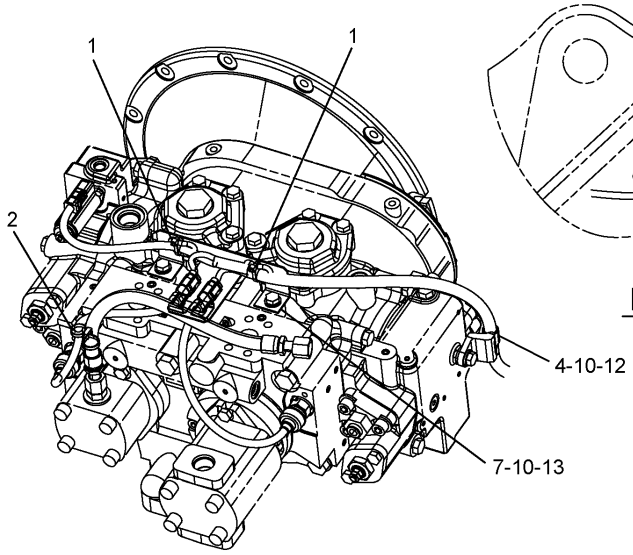


MAIN PUMP

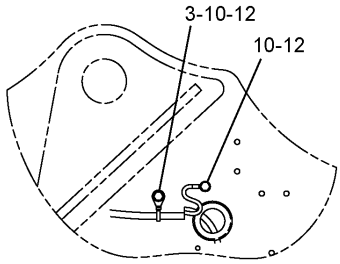


H – H

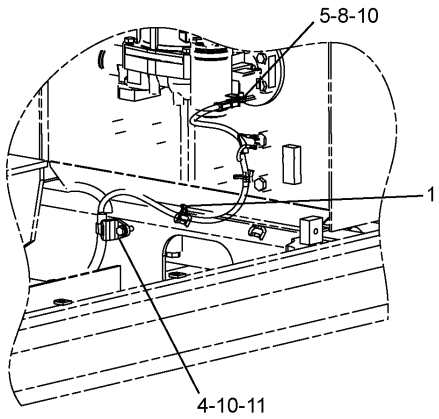


HYD TANK-REAR

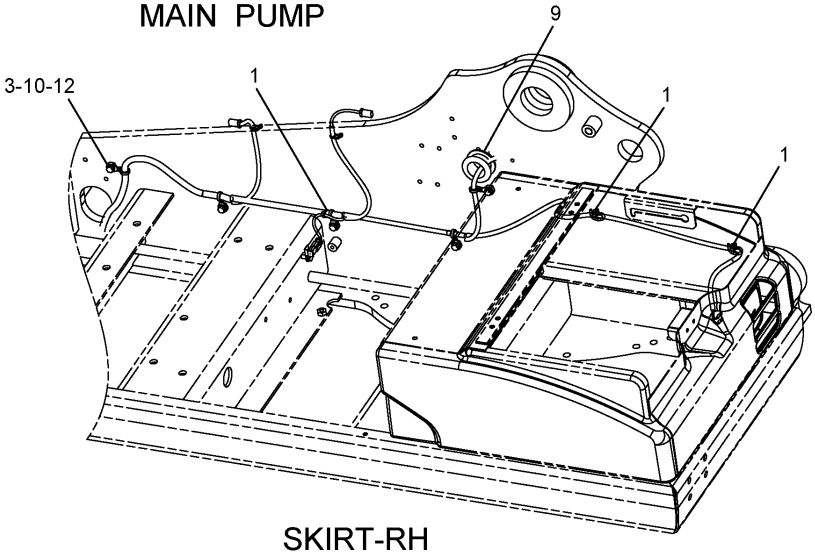


SKIRT-RH

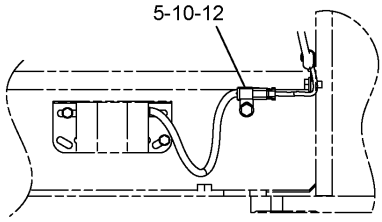


DETAIL OF TRAVEL ALARM

H98490E 03

291-7920 BATTERY & WIRING GP (5/5)

# ELECTRICAL AND STARTING SYSTEM

| NOTE | No. | PART No. | QTY | PART NAME | NOTE | No. | PART No. | QTY | PART NAME |
|---|---|---|---|---|---|---|---|---|---|
| | 1 | 3S-2093 | 15 | STRAP | | | | | |
| | 2 | 7I-2673 | 1 | STRAP | | | | | |
| | 3 | 111-4836 | 8 | CLIP | | | | | |
| | 4 | 111-4837 | 4 | CLIP | | | | | |
| | 5 | 116-0118 | 3 | CLIP | | | | | |
| | 6 | 132-1806 | 1 | STRAP AS | | | | | |
| | 7 | 170-9336 | 1 | BRACKET AS | | | | | |
| | 8 | 7X-2621 | 1 | BOLT (L=12mm) | | | | | |
| | 9 | 7Y-8167 | 1 | GROMMET | | | | | |
| | 10 | 8T-4121 | 18 | WASHER | | | | | |
| | 11 | 8T-4195 | 4 | BOLT (L=30mm) | | | | | |
| | 12 | 8T-4137 | 12 | BOLT (L=20mm) | | | | | |
| | 13 | 8T-4191 | 2 | BOLT (L=16mm) | | | | | |

H98490E 03

291-7920 BATTERY & WIRING GP (5/5)

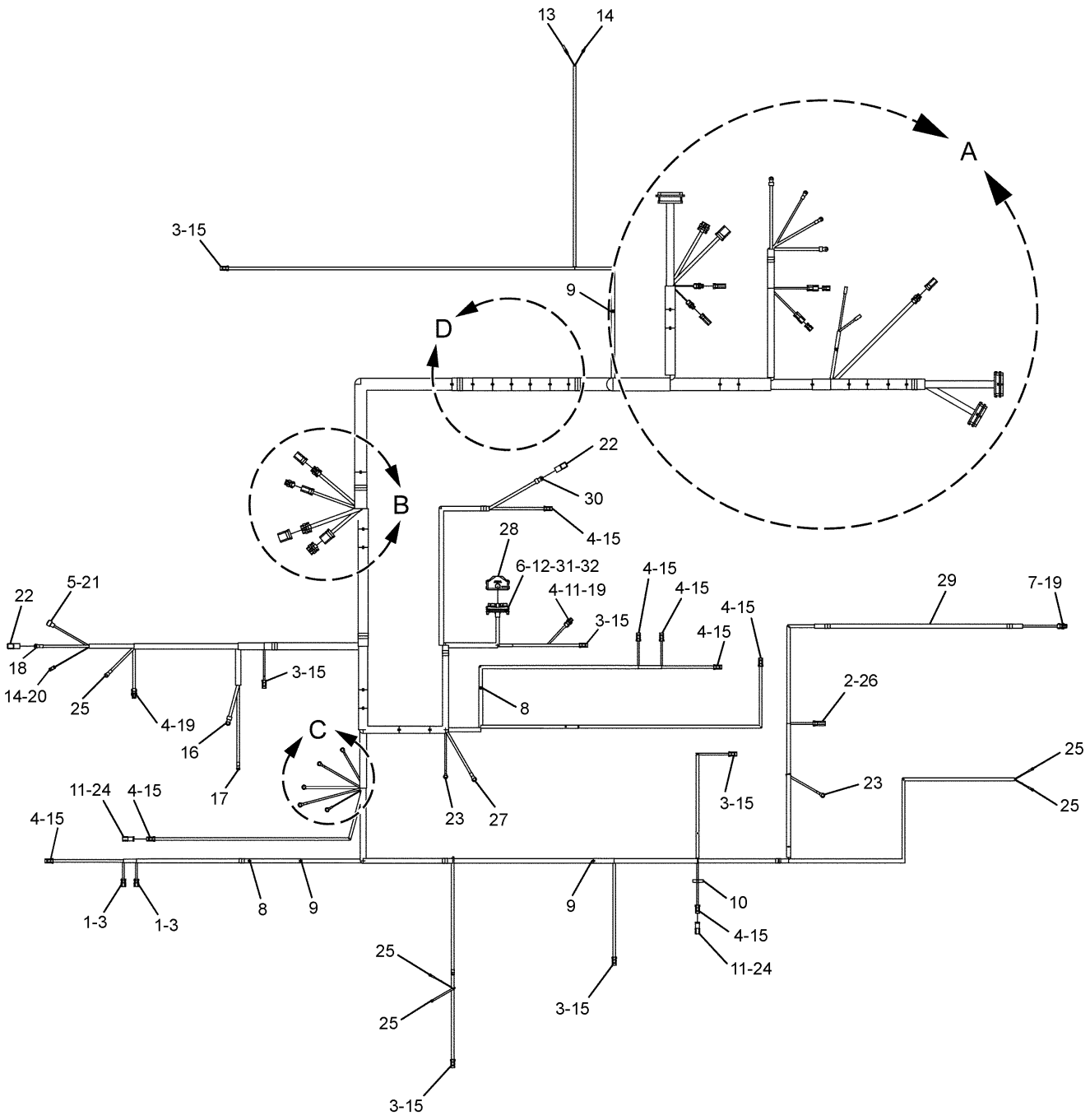


H98501E 01

**306-8453 HARNESS AS (1/2)**
Part of 291-7920-Page91

# ELECTRICAL AND STARTING SYSTEM

| NOTE | No. | PART No. | QTY | PART NAME | NOTE | No. | PART No. | QTY | PART NAME |
|---|---|---|---|---|---|---|---|---|---|
| | 1 | 155-2260 | 2 | PLUG KIT | | | | | |
| | 2 | 9W-0852 | 2 | PIN | | | | | |
| | 3 | 126-1768 | 20 | SOCKET | | | | | |
| | 4 | 186-3736 | 17 | SOCKET | | | | | |
| | 5 | 7Y-3821 | 2 | SOCKET | | | | | |
| | 6 | 266-3317 | 20 | TERMINAL AS | | | | | |
| | 7 | 9W-0844 | 2 | SOCKET | | | | | |
| E | 8 | 125-7874 | | TUBE…(5cm × 2) | | | | | |
| E | 9 | 125-7875 | | TUBE…(5cm × 3) | | | | | |
| | 10 | 3S-2093 | 1 | STRAP | | | | | |
| | 11 | 8T-8737 | 5 | PLUG | | | | | |
| | 12 | 245-1048 | 44 | PLUG | | | | | |
| | 13 | 7Y-3963 | 1 | TERMINAL | | | | | |
| | | 7Y-3965 | 1 | TUBE | | | | | |
| | 14 | 7Y-3962 | 1 | TERMINAL | | | | | |
| | | 7Y-3964 | 1 | TUBE | | | | | |
| | 15 | 155-2270 | 13 | PLUG KIT | | | | | |
| | 16 | 9G-4336 | 1 | TERMINAL | | | | | |
| | 17 | 2L-8049 | 1 | TERMINAL | | | | | |
| | 18 | 2L-8050 | 2 | TERMINAL | | | | | |
| | 19 | 230-4011 | 3 | PLUG AS | | | | | |
| | 20 | 7Y-3995 | 1 | CONNECTOR | | | | | |
| | 21 | 7Y-3820 | 1 | HOUSING | | | | | |
| | 22 | 8T-8799 | 2 | BOOT | | | | | |
| | 23 | 2L-8069 | 2 | TERMINAL | | | | | |
| | 24 | 102-8802 | 2 | RECEPTACLE KIT | | | | | |
| | 25 | 2L-8075 | 4 | TERMINAL | | | | | |
| | 26 | 243-4505 | 1 | RECEPTACLE AS | | | | | |
| | 27 | 2L-8052 | 1 | TERMINAL | | | | | |
| | 28 | 245-1045 | 1 | ENDBELL | | | | | |
| E | 29 | 103-2529 | | HOSE…(80cm) | | | | | |
| | 30 | 5P-3454 | 1 | TERMINAL | | | | | |
| | 31 | 245-1042 | 1 | PLUG AS | | | | | |
| | | 268-3317 | 2 | TERMINAL AS | | | | | |
| | | 267-7207 | 1 | BOLT | | | | | |
| | | 267-7208 | 1 | RING | | | | | |
| | 32 | 245-1044 | 2 | LOCK | | | | | |

E—ORDER BY THE CENTIMETER

H98501E 01

## 306-8453 HARNESS AS (1/2)

Part of 291-7920-Page91

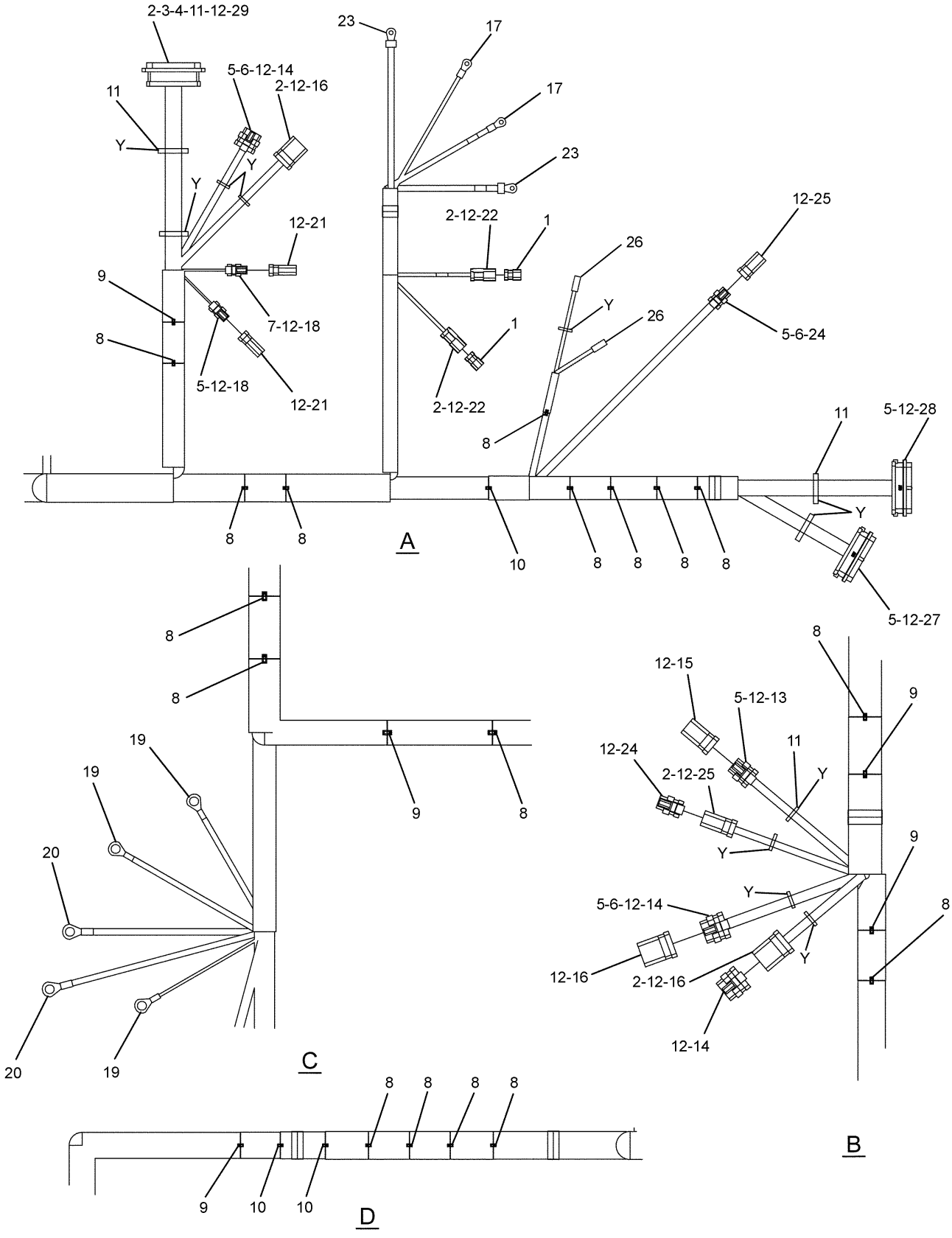


H98502E 01

**306-8453 HARNESS AS (2/2)**
Part of 291-7920-Page91

# ELECTRICAL AND STARTING SYSTEM

| NOTE | No. | PART No. | QTY | PART NAME | NOTE | No. | PART No. | QTY | PART NAME |
|---|---|---|---|---|---|---|---|---|---|
| | 1 | 174-3016 | 2 | PLUG AS | | | | | |
| | 2 | 9X-3401 | 49 | PIN | | | | | |
| | 3 | 9W-0852 | 9 | PIN | | | | | |
| | 4 | 186-3735 | 8 | PIN | | | | | |
| | 5 | 126-1768 | 72 | SOCKET | | | | | |
| | 6 | 186-3736 | 11 | SOCKET | | | | | |
| | 7 | 9W-0844 | 2 | SOCKET | | | | | |
| E | 8 | 125-7874 | | TUBE…(5cm × 17) | | | | | |
| E | 9 | 125-7875 | | TUBE…(5cm × 5) | | | | | |
| E | 10 | 119-3662 | | TUBE…(6.5cm × 3) | | | | | |
| | 11 | 3S-2093 | 12 | STRAP | | | | | |
| | 12 | 8T-8737 | 137 | PLUG | | | | | |
| | 13 | 231-2295 | 1 | PLUG AS | | | | | |
| | 14 | 230-4009 | 3 | PLUG AS | | | | | |
| | 15 | 243-4509 | 1 | RECEPTACLE AS | | | | | |
| | 16 | 243-4510 | 3 | RECEPTACLE AS | | | | | |
| | 17 | 2L-8050 | 2 | TERMINAL | | | | | |
| | 18 | 230-4011 | 2 | PLUG AS | | | | | |
| | 19 | 2L-8079 | 3 | TERMINAL | | | | | |
| | 20 | 2L-8069 | 2 | TERMINAL | | | | | |
| | 21 | 243-4505 | 2 | RECEPTACLE AS | | | | | |
| | 22 | 102-8803 | 2 | RECEPTACLE KIT | | | | | |
| | 23 | 9G-4343 | 2 | TERMINAL | | | | | |
| | 24 | 230-5010 | 2 | PLUG AS | | | | | |
| | 25 | 243-4508 | 2 | RECEPTACLE AS | | | | | |
| | 26 | 9X-0196 | 2 | TERMINAL AS | | | | | |
| | 27 | 153-2630 | 1 | PLUG AS | | | | | |
| | | 163-6759 | 1 | SEAL | | | | | |
| | 28 | 153-2620 | 1 | PLUG AS | | | | | |
| | | 163-6759 | 1 | SEAL | | | | | |
| | 29 | 163-6637 | 1 | RECEPTACLE AS | | | | | |

E—ORDER BY THE CENTIMETER

H98502E 01

**306-8453 HARNESS AS (2/2)**
Part of 291-7920-Page91

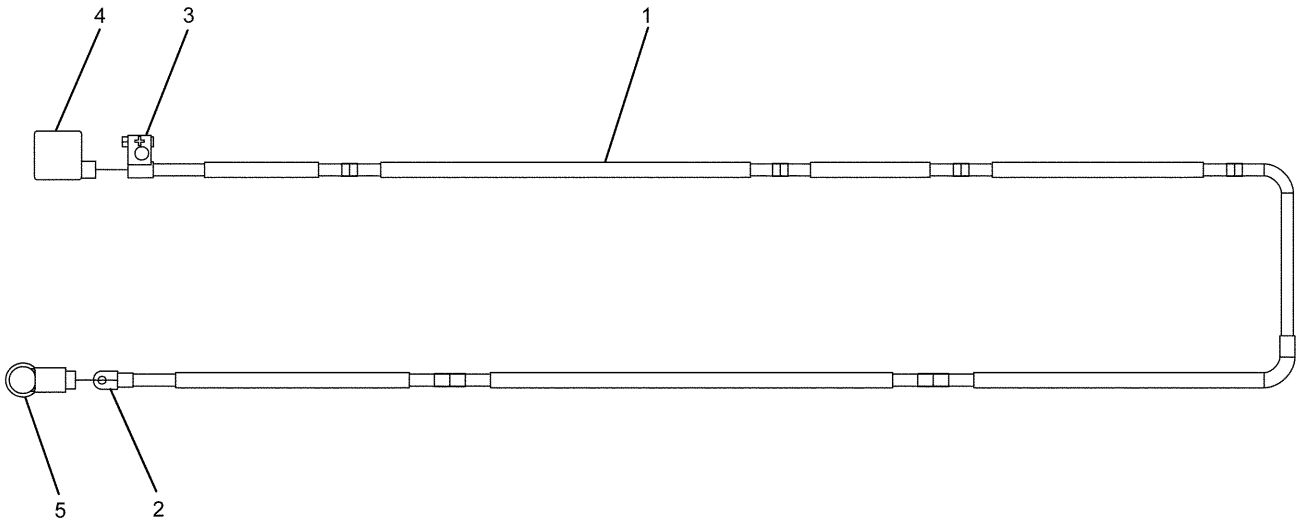


| NOTE | No. | PART No. | QTY | PART NAME | NOTE | No. | PART No. | QTY | PART NAME |
|---|---|---|---|---|---|---|---|---|---|
| E | 1 | 5P-0761 | | CABLE…(324cm) | | | | | |
| | 2 | 1S-7252 | 1 | TERMINAL | | | | | |
| | 3 | 8C-5917 | 1 | TERMINAL AS | | | | | |
| | 4 | 9G-0004 | 1 | COVER | | | | | |
| | 5 | 8N-0869 | 1 | COVER | | | | | |

E—ORDER BY THE CENTIMETER

H95305E 01

**291-7591 CABLE AS**
Part of 291-7920-Page93

# ELECTRICAL AND STARTING SYSTEM




| NOTE | No. | PART No. | QTY | PART NAME |
|---|---|---|---|---|
| | 1 | 9G-0005 | 1 | COVER |
| | 2 | 8C-5918 | 1 | TERMINAL AS |
| | 3 | 9G-0002 | 1 | COVER |
| | 4 | 8T-9756 | 1 | TERMINAL AS |

H81970E 01

## 170-6929 CABLE AS

Part of 291-7920-Page93,299-2783-Page151

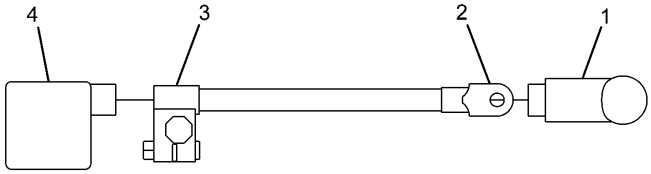


| NOTE | No. | PART No. | QTY | PART NAME |
|---|---|---|---|---|
| | 1 | 9G-8909 | 1 | COVER |
| | 2 | 1S-7252 | 1 | TERMINAL |
| | 3 | 8T-9757 | 1 | TERMINAL AS |
| | 4 | 9G-0003 | 1 | COVER |

H89341E 02

## 231-1827 CABLE AS

Part of 291-7920-Page93

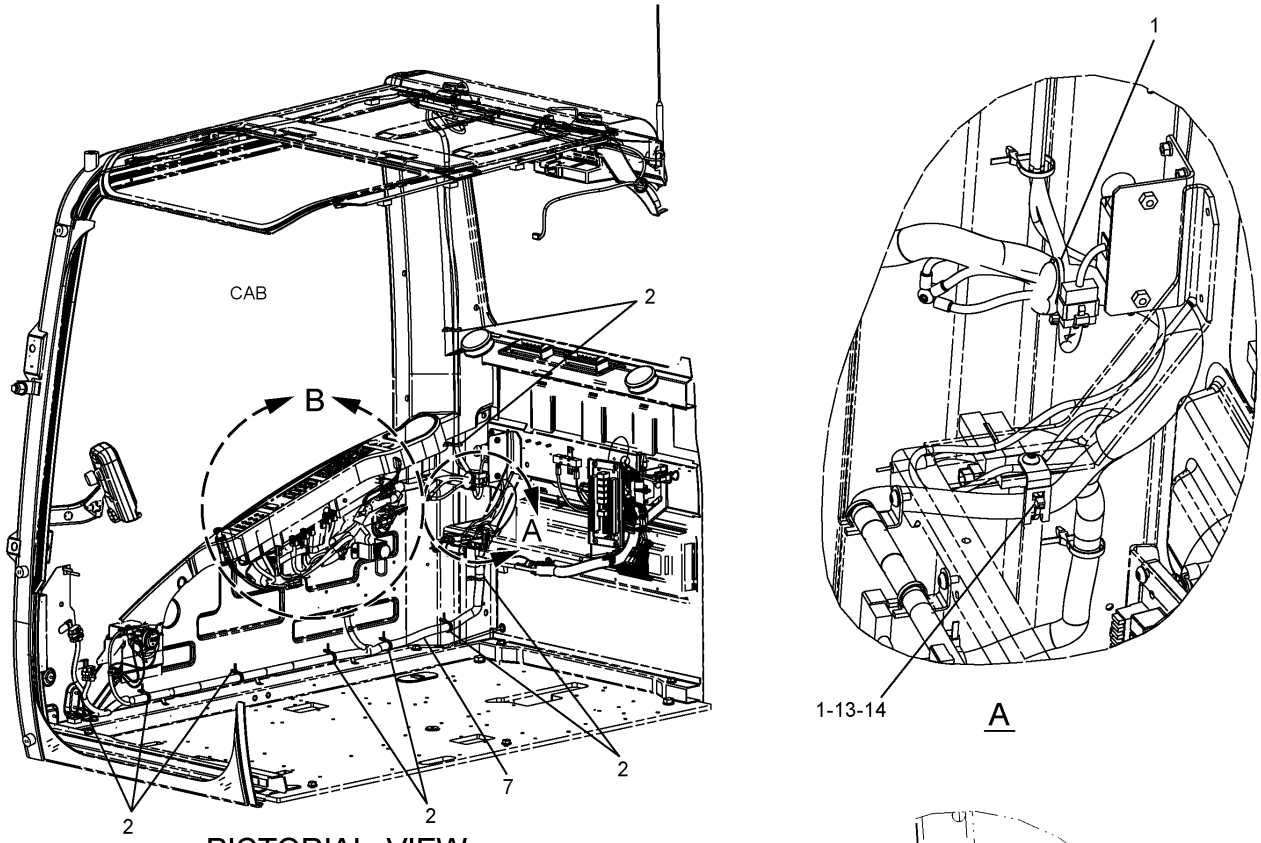


PICTORIAL VIEW
(VIEW FROM FRONT SIDE)




A

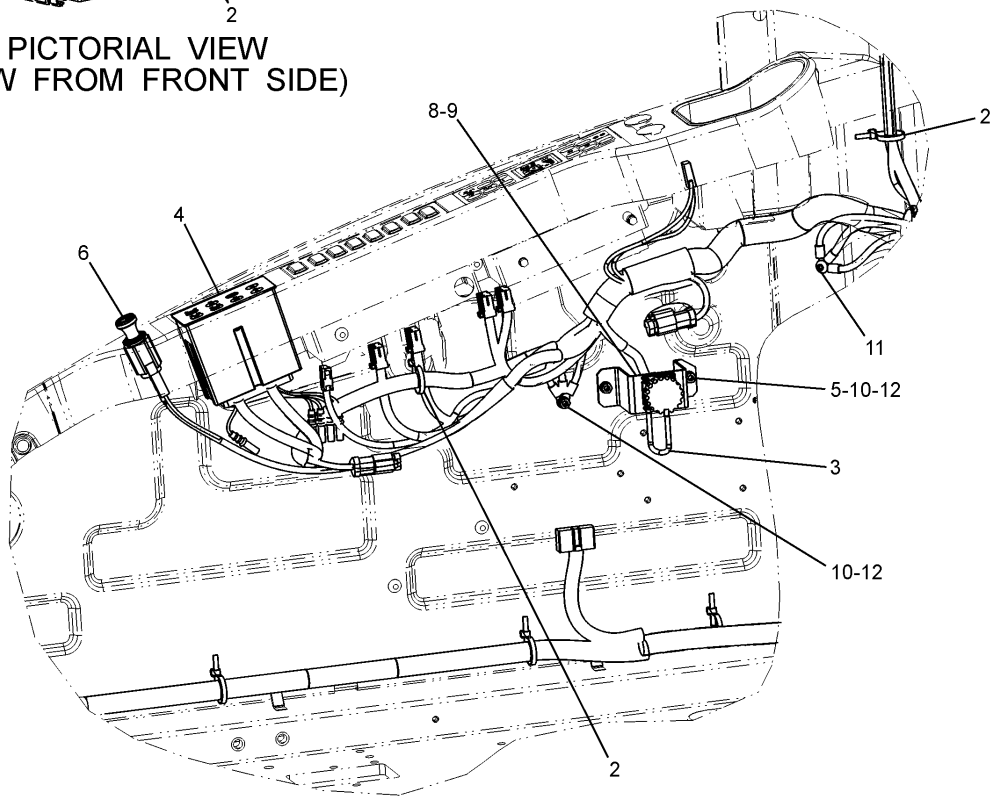


B

H98512E 01

**291-7922 WIRING GP-CAB (1/3)**
291-7928-Page112

# ELECTRICAL AND STARTING SYSTEM

| NOTE | No. | PART No. | QTY | PART NAME | NOTE | No. | PART No. | QTY | PART NAME |
|---|---|---|---|---|---|---|---|---|---|
| | 1 | 3S-2093 | 2 | STRAP | | | | | |
| | 2 | 163-6795 | 9 | STRAP | | | | | |
| | 3 | 167-3593 | 1 | STRAP | | | | | |
| | 4 | 227-7575 | 1 | PANEL AS | | | | | |
| | 5 | 234-1097 | 1 | BRACKET | | | | | |
| | 6 | 238-2318 | 1 | LIGHTER AS | | | | | |
| | | 167-3542 | 1 | CONNECTOR | | | | | |
| | | 167-3543 | 4 | TERMINAL | | | | | |
| Y | 7 | 291-7928 | 1 | HARNESS AS | | | | | |
| | 8 | 095-0723 | 3 | SCREW | | | | | |
| | 9 | 096-5962 | 3 | WASHER | | | | | |
| | 10 | 5C-2890 | 3 | NUT | | | | | |
| | 11 | 9X-2044 | 1 | SCREW | | | | | |
| | 12 | 9X-8256 | 3 | WASHER | | | | | |
| | 13 | 132-5789 | 1 | CLIP | | | | | |
| | 14 | 9X-2042 | 1 | SCREW | | | | | |

Y—SEE SEPARATE ILLUSTRATION

H98512E 01

**291-7922 WIRING GP-CAB (1/3)**
291-7928-Page112

# ELECTRICAL AND STARTING SYSTEM

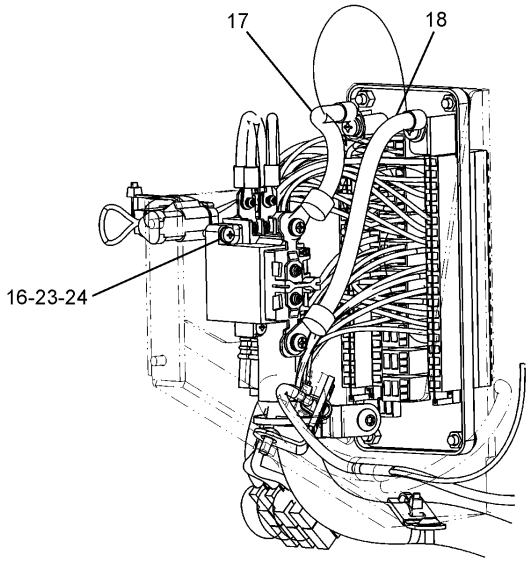


FRONT VIEW OF THE MAIN RELAY

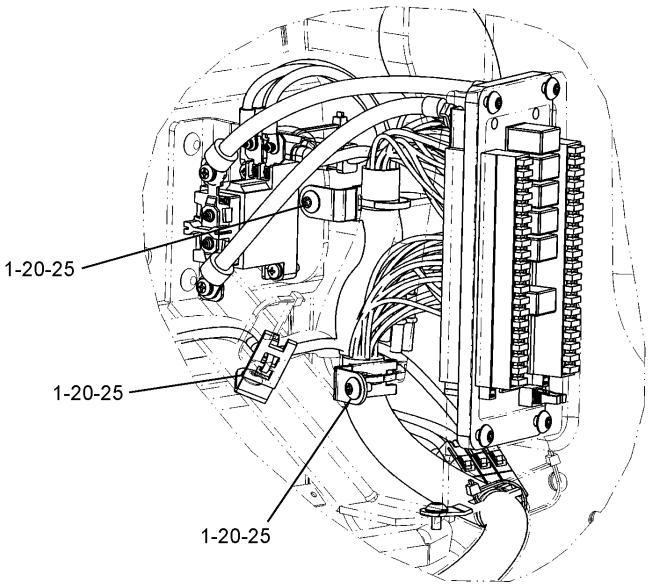


LEFT BACK VIEW

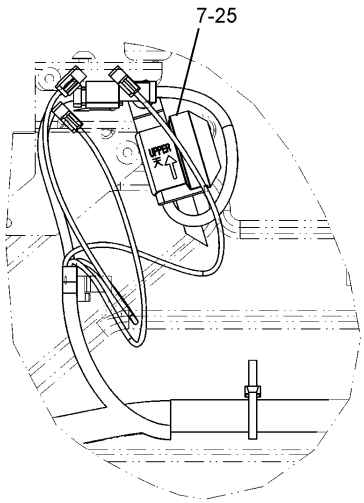


FRONT VIEW OF THE FAULT ALARM

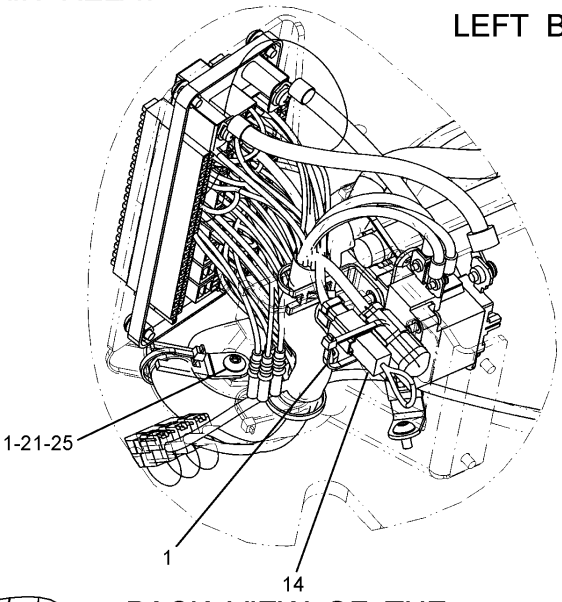


BACK VIEW OF THE FUSE BASE

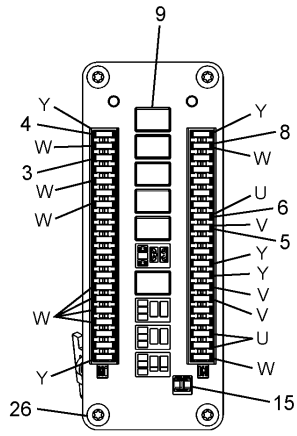


FRONT VIEW OF THE FUSE BASE

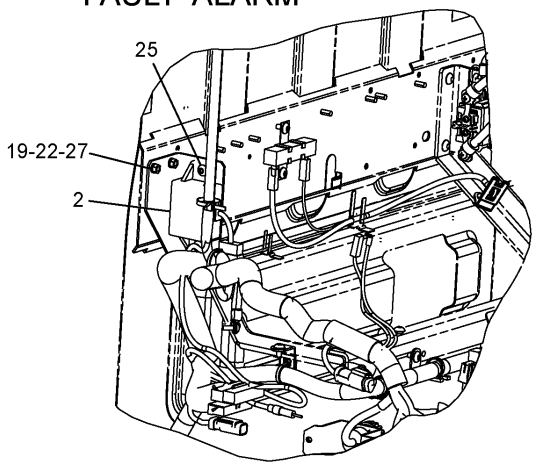


DETAIL OF START CONT RELAY

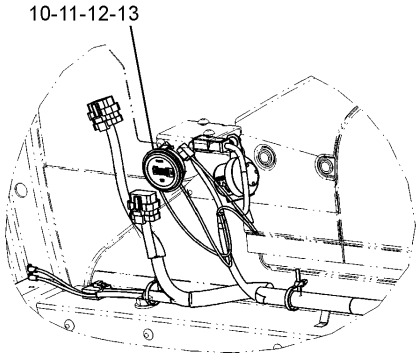


FRONT RIGHT OF THE CAB

H98513E 01

**291-7922 WIRING GP-CAB (2/3)**
132-1829-Page118

# ELECTRICAL AND STARTING SYSTEM

| NOTE | No. | PART No. | QTY | PART NAME | NOTE | No. | PART No. | QTY | PART NAME |
|---|---|---|---|---|---|---|---|---|---|
| | 1 | 3S-2093 | 5 | STRAP | | | | | |
| | 2 | 094-2080 | 1 | RELAY | | | | | |
| | 3 | 113-8490 | 20 | FUSE (10A) | | | | | |
| | 4 | 113-8491 | 5 | FUSE (15A) | | | | | |
| | 5 | 113-8492 | 3 | FUSE(20A) | | | | | |
| | 6 | 113-8493 | 3 | FUSE (25A) | | | | | |
| Y | 7 | 132-1829 | 1 | ALARM GP | | | | | |
| | 8 | 141-2759 | 9 | FUSE (5A) | | | | | |
| | 9 | 161-3128 | 6 | RELAY | | | | | |
| | 10 | 121-1241 | 1 | METER KIT | | | | | |
| | 11 | 5C-8312 | 2 | NUT | | | | | |
| | 12 | 9B-7233 | 2 | LOCKWASHER | | | | | |
| | 13 | 096-6166 | 2 | WASHER | | | | | |
| | 14 | 163-6758 | 1 | WIRE AS | | | | | |
| | | 102-8802 | 1 | RECEPTACLE KIT | | | | | |
| | | 186-3735 | 2 | PIN | | | | | |
| | 15 | 170-6888 | 1 | TOOL | | | | | |
| | 16 | 213-0772 | 1 | SWITCH AS | | | | | |
| | 17 | 238-2390 | 1 | CABLE AS | | | | | |
| | | 9G-4343 | 2 | TERMINAL | | | | | |
| | 18 | 238-2391 | 1 | CABLE AS | | | | | |
| | | 9G-4343 | 2 | TERMINAL | | | | | |
| | 19 | 259-5290 | 1 | BRACKET AS | | | | | |
| | 20 | 132-5789 | 3 | CLIP | | | | | |
| | 21 | 4P-7581 | 1 | CLIP | | | | | |
| | 22 | 5C-2890 | 2 | NUT | | | | | |
| | 23 | 8T-0328 | 2 | WASHER | | | | | |
| | 24 | 8T-4127 | 2 | SCREW | | | | | |
| | 25 | 9X-2042 | 7 | SCREW | | | | | |
| | 26 | 9X-2044 | 4 | SCREW | | | | | |
| | 27 | 9X-8256 | 2 | WASHER | | | | | |

Y—SEE SEPARATE ILLUSTRATION

H98513E 01

**291-7922 WIRING GP-CAB (2/3)**
132-1829-Page118

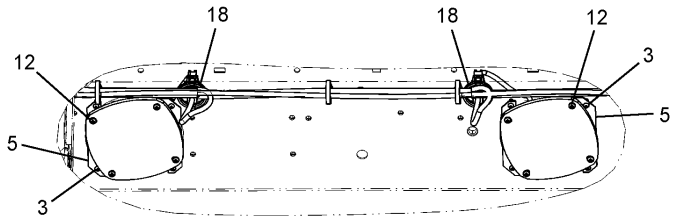


FRONT VIEW OF THE SPEAKER

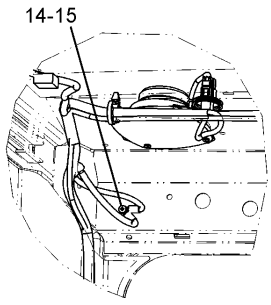


GROUND OF THE UPPER RIGHT

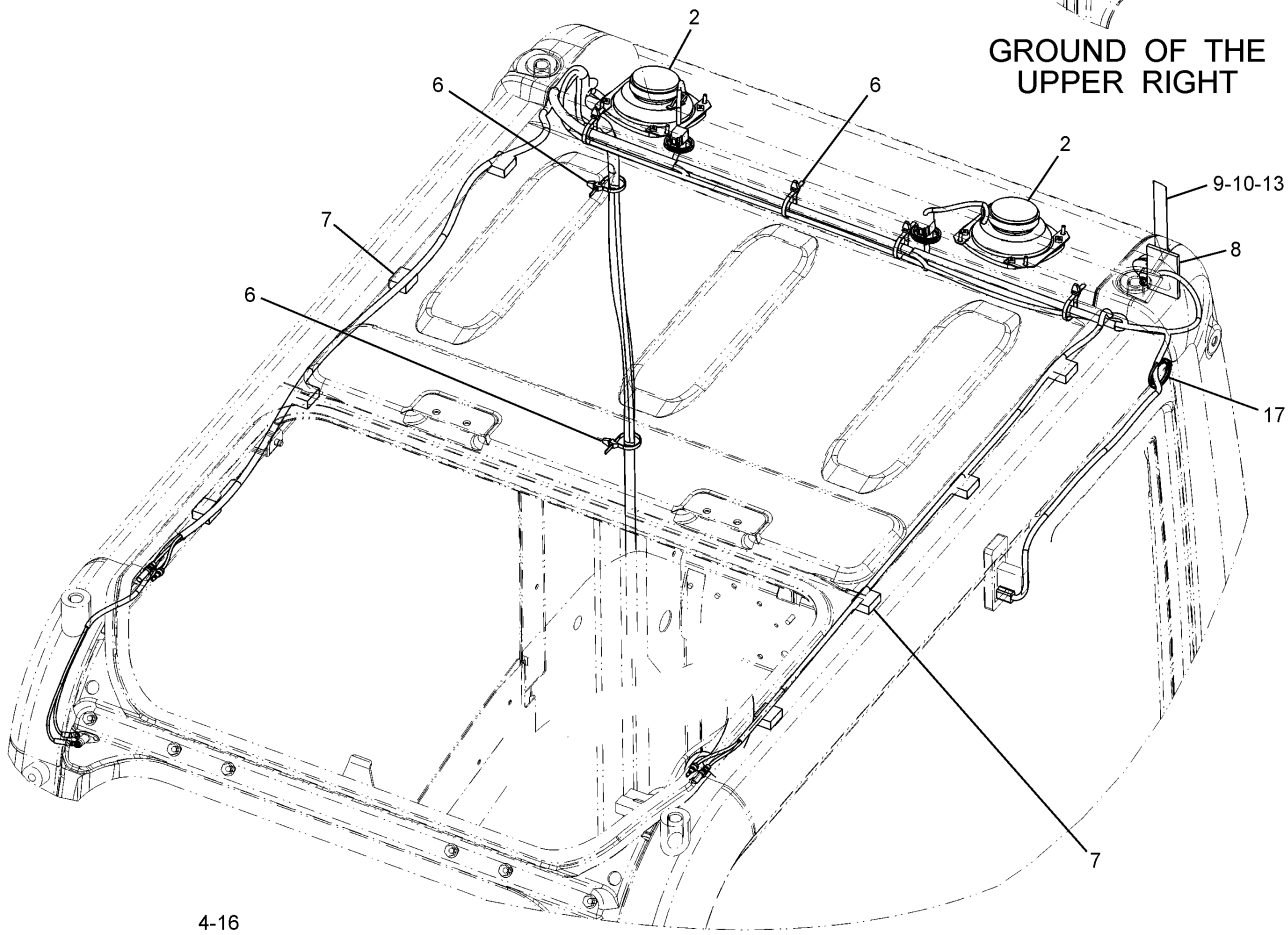


TOP VIEW OF THE CAB

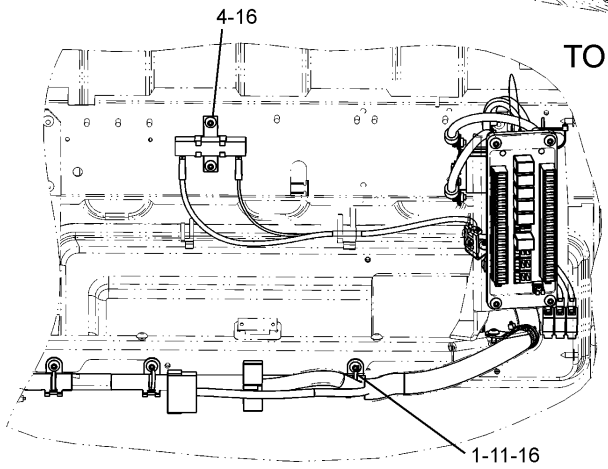


REAR VIEW OF THE INSIDE CAB

H98514E 01

291-7922 WIRING GP-CAB (3/3)

# ELECTRICAL AND STARTING SYSTEM

| NOTE | No. | PART No. | QTY | PART NAME | NOTE | No. | PART No. | QTY | PART NAME |
|---|---|---|---|---|---|---|---|---|---|
| | 1 | 3S-2093 | 3 | STRAP | | | | | |
| | 2 | 7Y-5505 | 2 | SPEAKER AS | | | | | |
| | | 7Y-3951 | 2 | TERMINAL | | | | | |
| | | 7Y-3954 | 1 | CONNECTOR | | | | | |
| | 3 | 099-7127 | 8 | SCREW | | | | | |
| | 4 | 102-8016 | 1 | RESISTOR AS | | | | | |
| | 5 | 116-0210 | 4 | BRACKET AS | | | | | |
| | 6 | 163-6795 | 6 | STRAP | | | | | |
| | 7 | 245-7760 | 8 | INSULATION | | | | | |
| | 8 | 251-0637 | 1 | INSULATION | | | | | |
| | 9 | 259-4883 | 1 | ANTENNA AS | | | | | |
| | | 259-5081 | 1 | ROD | | | | | |
| | | 259-5082 | 1 | CABLE AS | | | | | |
| | 10 | 096-6166 | 2 | WASHER | | | | | |
| | 11 | 132-5789 | 3 | CLIP | | | | | |
| | 12 | 6V-5210 | 8 | SCREW | | | | | |
| | 13 | 6V-9672 | 2 | SCREW | | | | | |
| | 14 | 8T-0328 | 1 | WASHER | | | | | |
| | 15 | 8T-6693 | 1 | SCREW | | | | | |
| | 16 | 9X-2042 | 5 | SCREW | | | | | |
| E | 17 | 101-2846 | | GUARD…(9.5cm) | | | | | |
| E | 18 | 101-2846 | | GUARD…(9cm X 2) | | | | | |

E—ORDER BY THE CENTIMETER

H98514E 01

## 291-7922 WIRING GP-CAB (3/3)

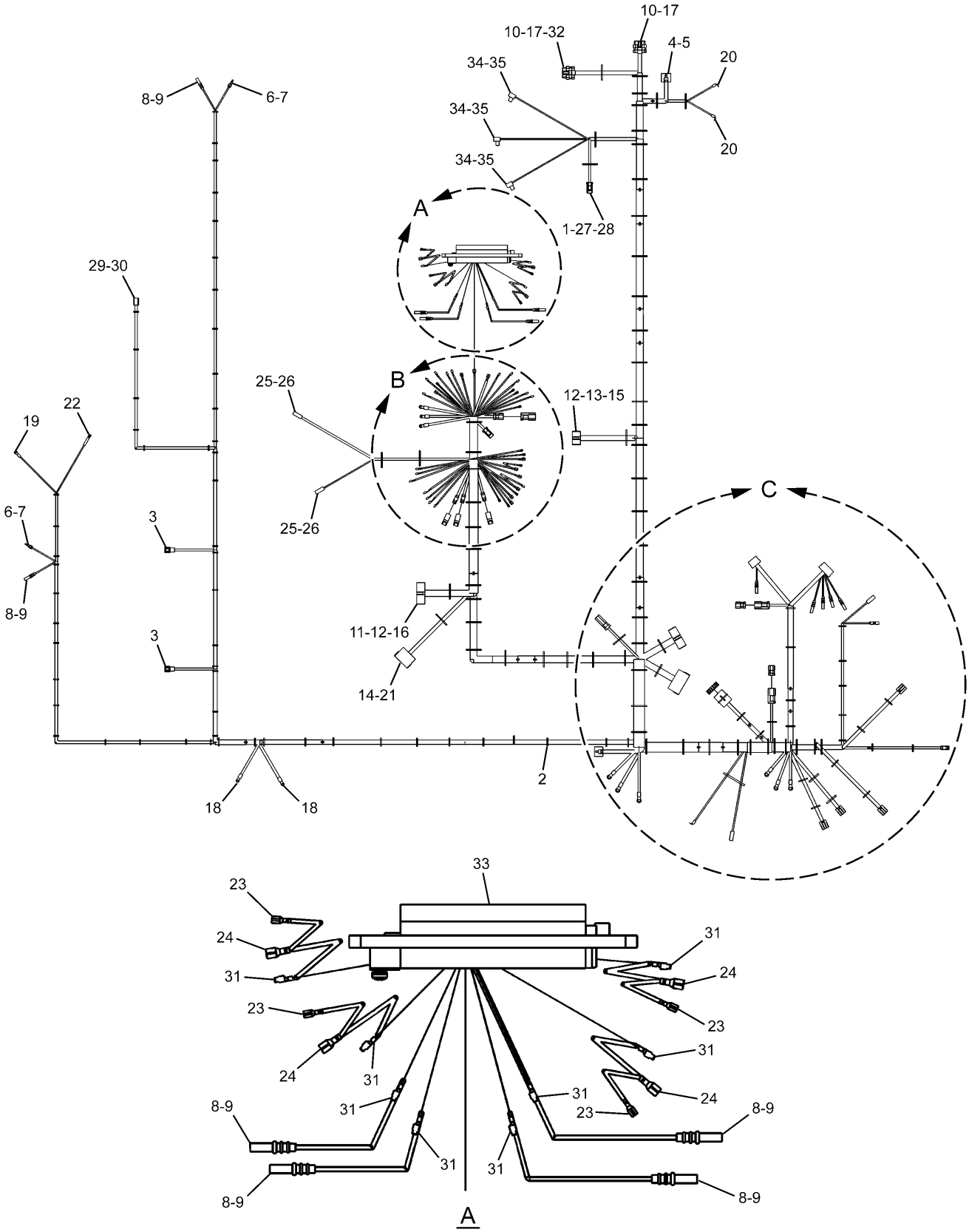


**291-7928 HARNESS AS (1/3)**
Part of 291-7922-Page107

# ELECTRICAL AND STARTING SYSTEM

| NOTE | No. | PART No. | QTY | PART NAME | NOTE | No. | PART No. | QTY | PART NAME |
|---|---|---|---|---|---|---|---|---|---|
| | 1 | 186-3736 | 2 | SOCKET | | | | | |
| | 2 | 3S-2093 | 46 | STRAP | | | | | |
| | 3 | 7Y-3950 | 4 | TERMINAL | | | | | |
| | 4 | 7Y-3951 | 5 | TERMINAL | | | | | |
| | 5 | 7Y-3958 | 1 | CONNECTOR | | | | | |
| | 6 | 7Y-3962 | 2 | TERMINAL | | | | | |
| | 7 | 7Y-3964 | 2 | TUBE | | | | | |
| | 8 | 7Y-3963 | 6 | TERMINAL | | | | | |
| | 9 | 7Y-3965 | 6 | TUBE | | | | | |
| | 10 | 8T-8737 | 9 | PLUG | | | | | |
| | 11 | 102-7964 | 1 | CONNECTOR | | | | | |
| | 12 | 102-7965 | 29 | TERMINAL | | | | | |
| | 13 | 111-4816 | 1 | CONNECTOR | | | | | |
| | 14 | 121-1173 | 6 | TERMINAL | | | | | |
| | 15 | 125-4840 | 1 | WEDGE | | | | | |
| | 16 | 125-4841 | 1 | WEDGE | | | | | |
| | 17 | 126-1768 | 15 | SOCKET | | | | | |
| | 18 | 2L-8066 | 2 | TERMINAL | | | | | |
| | 19 | 2L-8075 | 1 | TERMINAL | | | | | |
| | 20 | 2L-8076 | 2 | TERMINAL | | | | | |
| | 21 | 128-8950 | 1 | CONNECTOR | | | | | |
| | 22 | 5P-2321 | 1 | TERMINAL | | | | | |
| | 23 | 149-5070 | 4 | TERMINAL | | | | | |
| | 24 | 149-5071 | 4 | TERMINAL | | | | | |
| | 25 | 153-2602 | 2 | CONNECTOR | | | | | |
| | 26 | 153-2631 | 2 | TERMINAL | | | | | |
| | 27 | 155-2261 | 1 | WEDGE | | | | | |
| | 28 | 155-2270 | 1 | PLUG KIT | | | | | |
| | 29 | 167-3630 | 1 | CONNECTOR | | | | | |
| | 30 | 167-3631 | 2 | TERMINAL | | | | | |
| | 31 | 170-6891 | 8 | TERMINAL | | | | | |
| | 32 | 230-4009 | 1 | PLUG AS | | | | | |
| | 33 | 238-2319 | 1 | BASE AS | | | | | |
| | 34 | 267-7629 | 3 | CONNECTOR | | | | | |
| | 35 | 267-7630 | 3 | TERMINAL | | | | | |

H95510E 00

**291-7928 HARNESS AS (1/3)**
Part of 291-7922-Page107

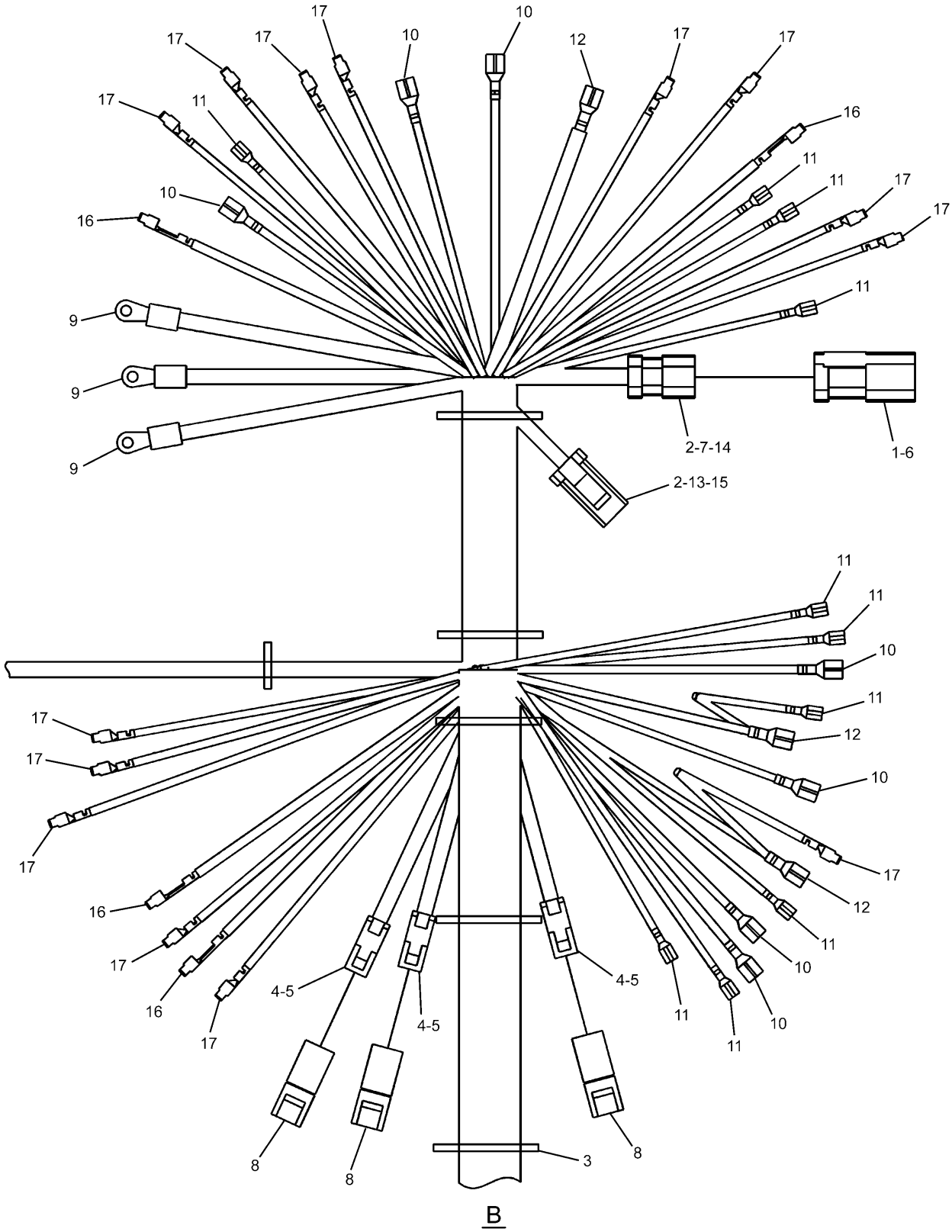


H95511E 00

**291-7928 HARNESS AS (2/3)**
Part of 291-7922-Page107

# ELECTRICAL AND STARTING SYSTEM

| NOTE | No. | PART No. | QTY | PART NAME | NOTE | No. | PART No. | QTY | PART NAME |
|---|---|---|---|---|---|---|---|---|---|
| | 1 | 102-8803 | 1 | RECEPTACLE KIT | | | | | |
| | 2 | 186-3736 | 3 | SOCKET | | | | | |
| | 3 | 3S-2093 | 6 | STRAP | | | | | |
| | 4 | 7Y-3951 | 6 | TERMINAL | | | | | |
| | 5 | 7Y-3952 | 3 | CONNECTOR | | | | | |
| | 6 | 8T-8737 | 3 | PLUG | | | | | |
| | 7 | 9W-0844 | 2 | SOCKET | | | | | |
| | 8 | 121-1022 | 3 | DIODE | | | | | |
| | 9 | 2L-8065 | 3 | TERMINAL | | | | | |
| | 10 | 149-5069 | 7 | TERMINAL | | | | | |
| | 11 | 149-5070 | 10 | TERMINAL | | | | | |
| | 12 | 149-5071 | 3 | TERMINAL | | | | | |
| | 13 | 155-2261 | 1 | WEDGE | | | | | |
| | 14 | 155-2260 | 1 | PLUG KIT | | | | | |
| | 15 | 155-2270 | 1 | PLUG KIT | | | | | |
| | 16 | 170-6890 | 4 | TERMINAL | | | | | |
| | 17 | 170-6891 | 14 | TERMINAL | | | | | |

H95511E 00

**291-7928 HARNESS AS (2/3)**
Part of 291-7922-Page107

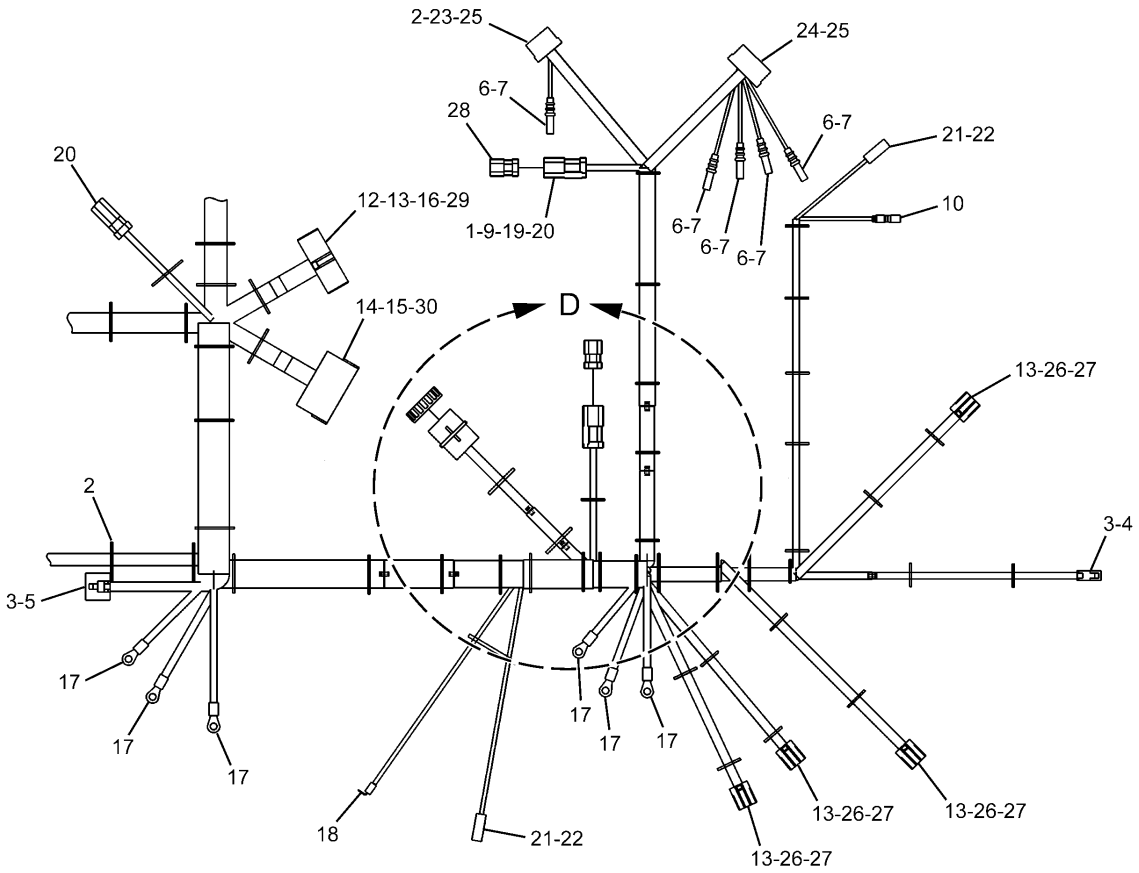


C

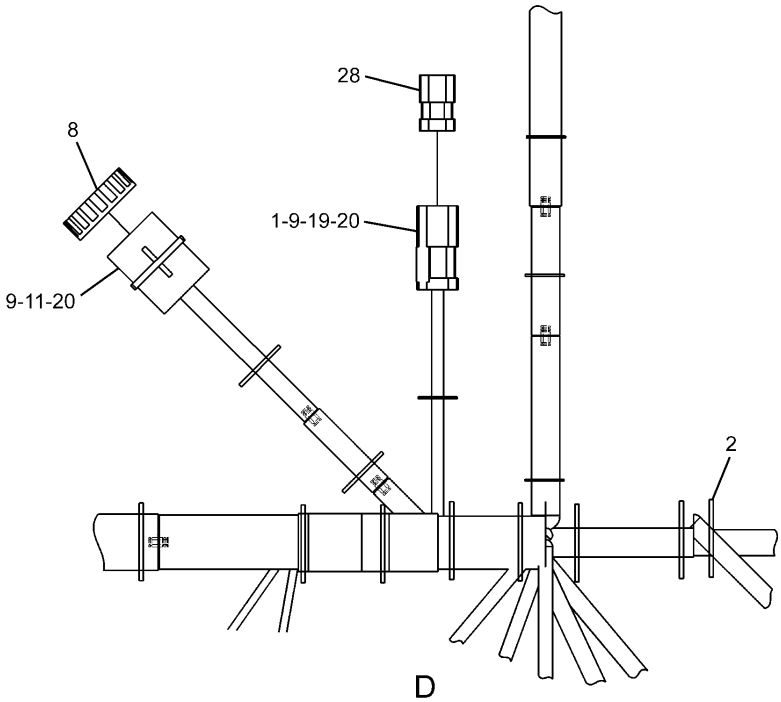


D

H95512E 00

**291-7928 HARNESS AS (3/3)**
Part of 291-7922-Page107

# ELECTRICAL AND STARTING SYSTEM

| NOTE | No. | PART No. | QTY | PART NAME | NOTE | No. | PART No. | QTY | PART NAME |
|---|---|---|---|---|---|---|---|---|---|
| | 1 | 102-8803 | 2 | RECEPTACLE KIT | | | | | |
| | 2 | 3S-2093 | 53 | STRAP | | | | | |
| | 3 | 7Y-3951 | 7 | TERMINAL | | | | | |
| | 4 | 7Y-3952 | 1 | CONNECTOR | | | | | |
| | 5 | 7Y-3958 | 1 | CONNECTOR | | | | | |
| | 6 | 7Y-3963 | 5 | TERMINAL | | | | | |
| | 7 | 7Y-3965 | 5 | TUBE | | | | | |
| | 8 | 8C-6354 | 1 | CAP | | | | | |
| | 9 | 8T-8737 | 5 | PLUG | | | | | |
| | 10 | 5P-6271 | 1 | CONNECTOR AS | | | | | |
| | 11 | 9W-1951 | 1 | RECEPTACLE | | | | | |
| | 12 | 102-7964 | 1 | CONNECTOR | | | | | |
| | 13 | 102-7965 | 29 | TERMINAL | | | | | |
| | 14 | 121-1168 | 1 | CONNECTOR | | | | | |
| | 15 | 121-1173 | 7 | TERMINAL | | | | | |
| | 16 | 125-4841 | 1 | WEDGE | | | | | |
| | 17 | 2L-8067 | 6 | TERMINAL | | | | | |
| | 18 | 2L-8075 | 1 | TERMINAL | | | | | |
| | 19 | 133-0975 | 2 | WEDGE | | | | | |
| | 20 | 9X-3401 | 12 | PIN | | | | | |
| | 21 | 153-2602 | 2 | CONNECTOR | | | | | |
| | 22 | 153-2631 | 2 | TERMINAL | | | | | |
| | 23 | 163-6659 | 1 | CONNECTOR | | | | | |
| | 24 | 163-6699 | 1 | CONNECTOR | | | | | |
| | 25 | 163-6790 | 20 | TERMINAL | | | | | |
| | 26 | 163-6803 | 4 | CONNECTOR | | | | | |
| | 27 | 167-3487 | 4 | WEDGE | | | | | |
| | 28 | 174-3016 | 2 | PLUG AS | | | | | |
| | 29 | 238-2363 | 5 | TERMINAL | | | | | |
| | 30 | 238-2366 | 10 | TERMINAL | | | | | |

H95512E 00

**291-7928 HARNESS AS (3/3)**
Part of 291-7922-Page107

# ELECTRICAL AND STARTING SYSTEM

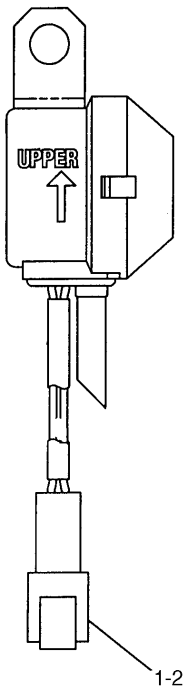


| NOTE | No. | PART No. | QTY | PART NAME |
|---|---|---|---|---|
| | 1 | 102-8802 | 1 | RECEPTACLE KIT |
| | 2 | 8T-8729 | 2 | PIN |

H84265E 01

**132-1829 ALARM GP**
Part of 291-7922-Page109

Consists of :


| | | | Page |
|---|---|---|---|
| 1 | 291-7924 | WIRING GP-CONSOLE..... | 124 |
| 1 | 291-7925 | WIRING GP-CONSOLE..... | 120 |


H95514E 00

## 291-7923 WIRING GP-CONSOLE

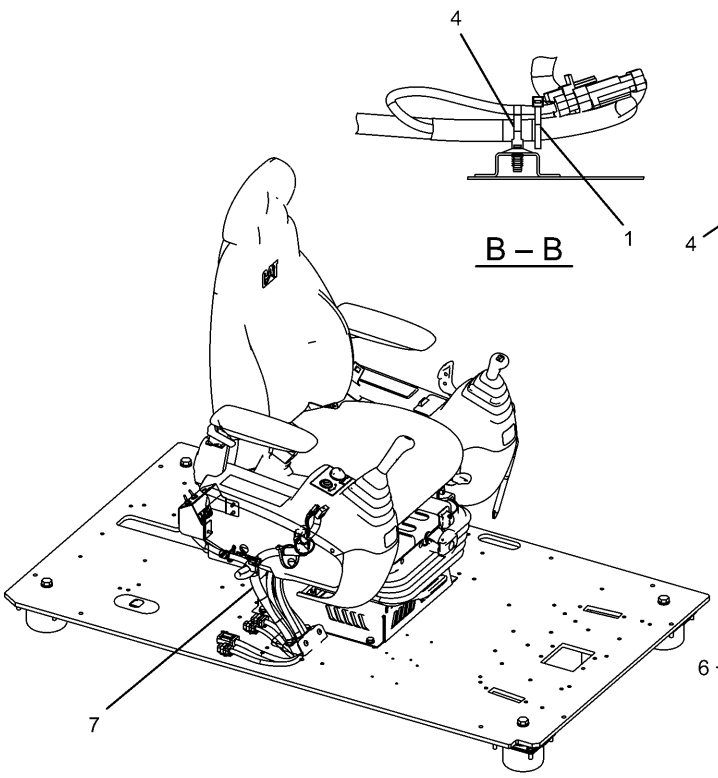


RH OF CONSOLE

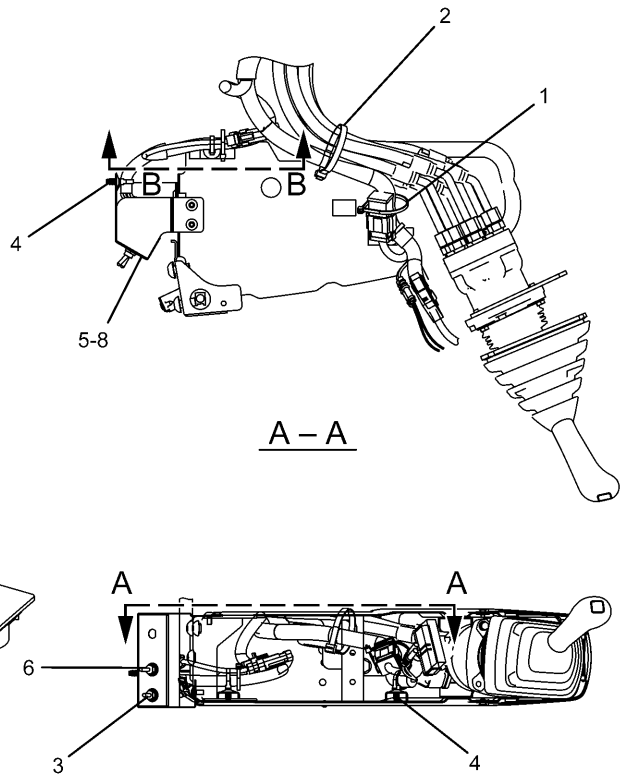


TOP VIEW OF CONSOLE (RH)

| NOTE | No. | PART No. | QTY | PART NAME | NOTE | No. | PART No. | QTY | PART NAME |
|---|---|---|---|---|---|---|---|---|---|
| | 1 | 3S-2093 | 2 | STRAP | | | | | |
| | 2 | 7K-1181 | 1 | STRAP | | | | | |
| | 3 | 163-6711 | 1 | SWITCH AS (BACKUP) | | | | | |
| | 4 | 163-6795 | 3 | STRAP | | | | | |
| | 5 | 251-0602 | 1 | BRACKET | | | | | |
| | 6 | 283-3074 | 1 | SWITCH AS (BACKUP) | | | | | |
| Y | 7 | 291-7930 | 1 | HARNESS AS | | | | | |
| | 8 | 9X-2042 | 3 | SCREW | | | | | |

Y—SEE SEPARATE ILLUSTRATION

H95474E 00

## 291-7925 WIRING GP-CONSOLE

Right Hand

Part of 291-7923-Page119
291-7930-Page122

# MEMORANDA

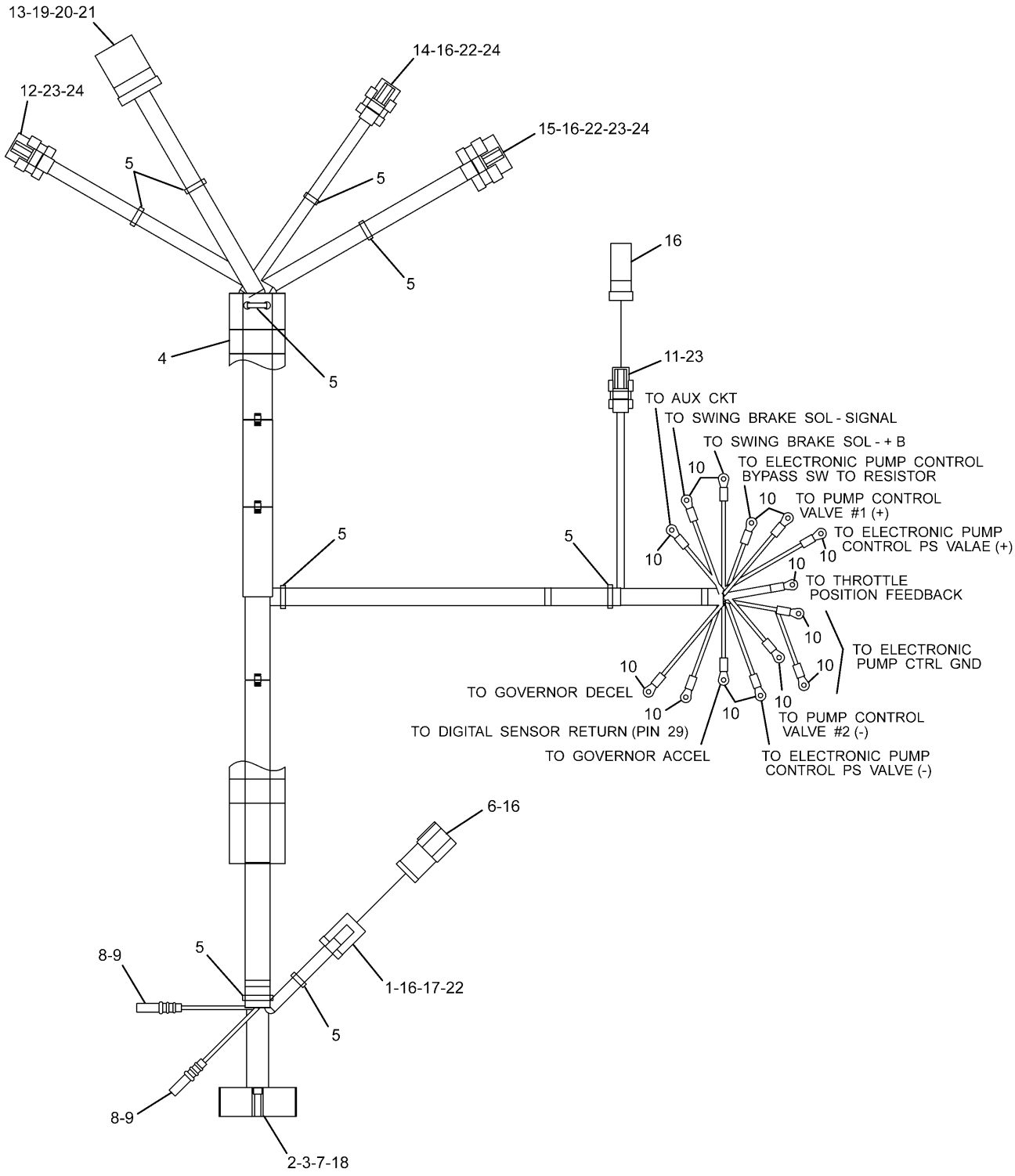


**291-7930 HARNESS AS**
Part of 291-7925-Page120

# ELECTRICAL AND STARTING SYSTEM

| NOTE | No. | PART No. | QTY | PART NAME | NOTE | No. | PART No. | QTY | PART NAME |
|---|---|---|---|---|---|---|---|---|---|
| | 1 | 155-2265 | 1 | PLUG KIT | | | | | |
| | 2 | 238-2363 | 7 | TERMINAL | | | | | |
| | 3 | 102-7965 | 14 | TERMINAL | | | | | |
| | 4 | 251-0579 | 1 | HOSE | | | | | |
| | 5 | 3S-2093 | 9 | STRAP | | | | | |
| | 6 | 102-8806 | 1 | RECEPTACLE KIT | | | | | |
| | 7 | 102-7964 | 1 | CONNECTOR | | | | | |
| | 8 | 7Y-3963 | 2 | TERMINAL | | | | | |
| | 9 | 7Y-3965 | 2 | TUBE | | | | | |
| | 10 | 2L-8074 | 14 | TERMINAL | | | | | |
| | 11 | 230-4011 | 1 | PLUG AS | | | | | |
| | 12 | 231-2295 | 1 | PLUG AS | | | | | |
| | 13 | 243-4510 | 1 | RECEPTACLE AS | | | | | |
| | 14 | 230-5010 | 1 | PLUG AS | | | | | |
| | 15 | 230-4009 | 1 | PLUG AS | | | | | |
| | 16 | 8T-8737 | 14 | PLUG | | | | | |
| | 17 | 155-2259 | 1 | WEDGE | | | | | |
| | 18 | 125-4841 | 1 | WEDGE | | | | | |
| | 19 | 186-3735 | 9 | PIN | | | | | |
| | 20 | 9X-3401 | 2 | PIN | | | | | |
| | 21 | 9W-0852 | 1 | PIN | | | | | |
| | 22 | 126-1768 | 16 | SOCKET | | | | | |
| | 23 | 186-3736 | 9 | SOCKET | | | | | |
| | 24 | 9W-0844 | 7 | SOCKET | | | | | |

H95476E 00

## 291-7930 HARNESS AS

Part of 291-7925-Page120

# ELECTRICAL AND STARTING SYSTEM

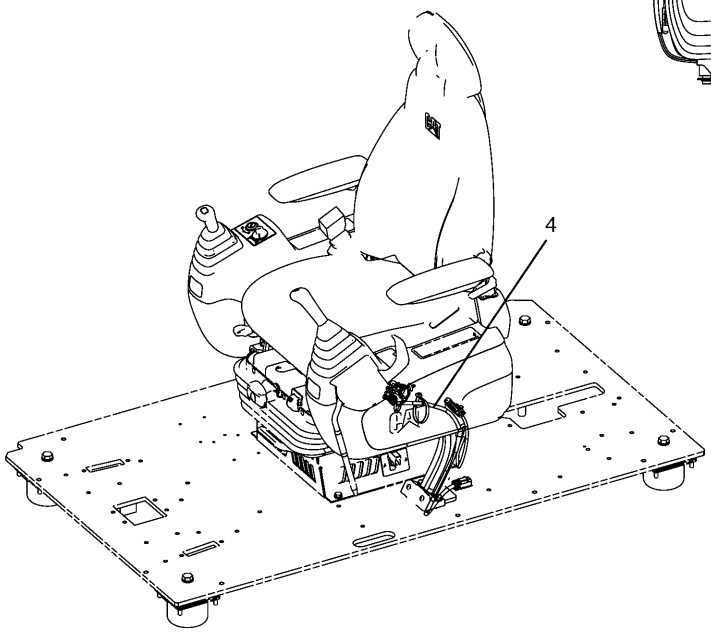


LH OF CONSOLE

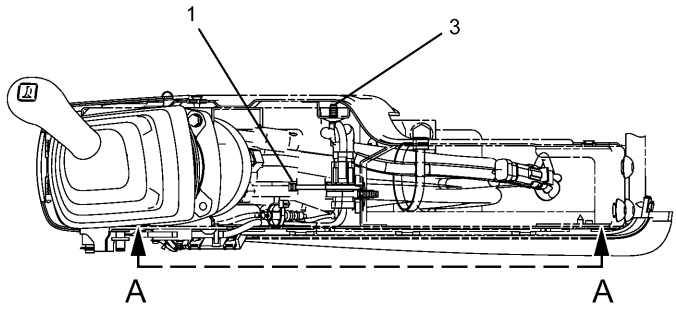


TOP VIEW OF CONSOLE (LH)

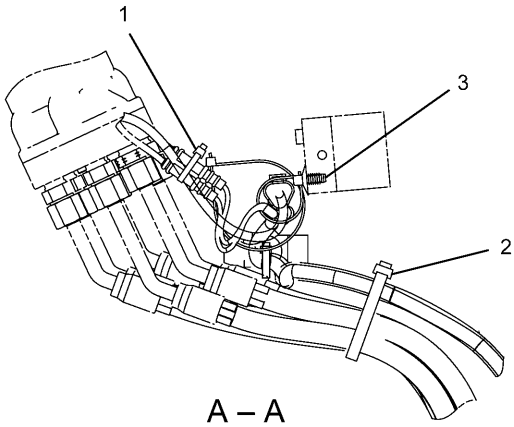


A – A

| NOTE | No. | PART No. | QTY | PART NAME | NOTE | No. | PART No. | QTY | PART NAME |
|---|---|---|---|---|---|---|---|---|---|
| | 1 | 3S-2093 | 2 | STRAP | | | | | |
| | 2 | 7K-1181 | 1 | STRAP | | | | | |
| | 3 | 163-6795 | 2 | STRAP | | | | | |
| Y | 4 | 291-7929 | 1 | HARNESS AS | | | | | |

Y—SEE SEPARATE ILLUSTRATION

H95473E 00

## 291-7924 WIRING GP-CONSOLE

Left Hand

Part of 291-7923-Page119
291-7929-Page125

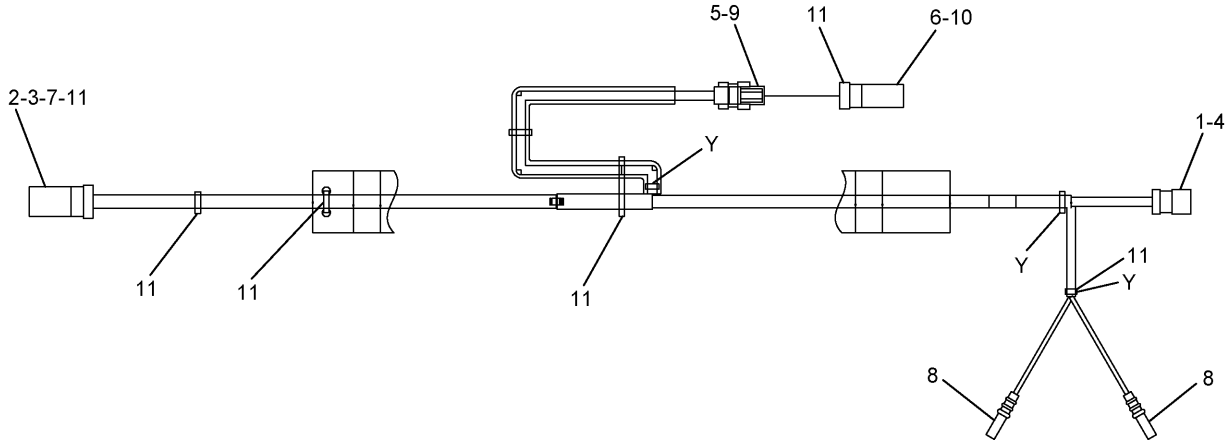


| NOTE | No. | PART No. | QTY | PART NAME | NOTE | No. | PART No. | QTY | PART NAME |
|---|---|---|---|---|---|---|---|---|---|
| | 1 | 155-2260 | 1 | PLUG KIT | | | | | |
| | 2 | 186-3735 | 4 | PIN | | | | | |
| | 3 | 9W-0852 | 2 | PIN | | | | | |
| | 4 | 186-3736 | 3 | SOCKET | | | | | |
| | 5 | 9W-0844 | 2 | SOCKET | | | | | |
| | 6 | 8T-8737 | 2 | PLUG | | | | | |
| | 7 | 243-4508 | 1 | RECEPTACLE AS | | | | | |
| | 8 | 7Y-3963 | 2 | TERMINAL | | | | | |
| | | 7Y-3965 | 2 | TUBE | | | | | |
| | 9 | 230-4011 | 1 | PLUG AS | | | | | |
| | 10 | 243-4505 | 1 | RECEPTACLE AS | | | | | |
| | 11 | 3S-2093 | 8 | STRAP | | | | | |

H95469E 00

## 291-7929 HARNESS AS

Part of 291-7924-Page124

# ELECTRICAL AND STARTING SYSTEM

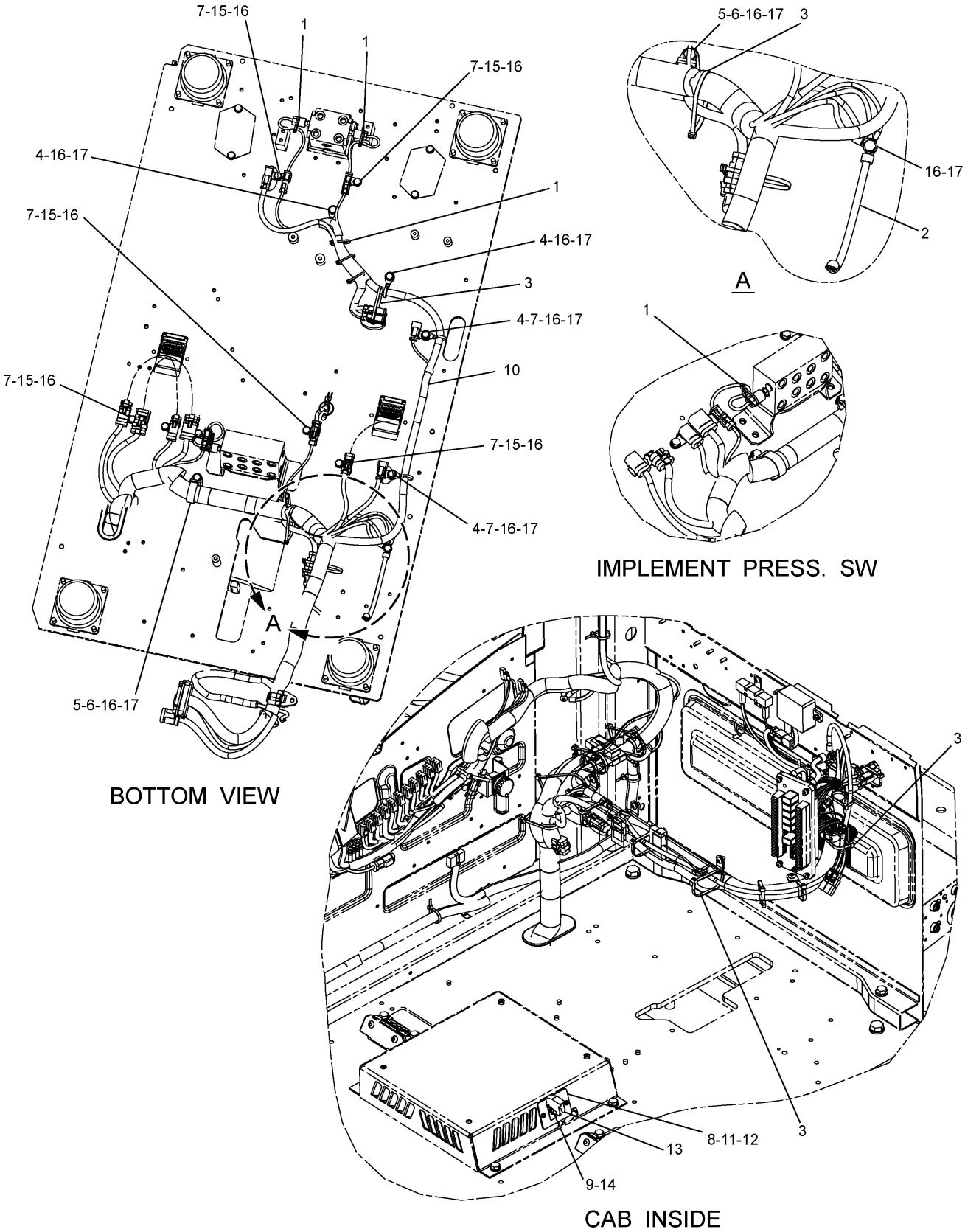


H95508E 00

**291-7921 WIRING GP-PLATFORM**
291-7927-Page128,251-0299-Page130

# ELECTRICAL AND STARTING SYSTEM

| NOTE | No. | PART No. | QTY | PART NAME | NOTE | No. | PART No. | QTY | PART NAME |
|---|---|---|---|---|---|---|---|---|---|
| | 1 | 3S-2093 | 6 | STRAP | | | | | |
| | 2 | 7G-1060 | 1 | STRAP AS | | | | | |
| | 3 | 7K-1181 | 13 | STRAP | | | | | |
| | 4 | 111-4836 | 4 | CLIP | | | | | |
| | 5 | 111-4838 | 2 | CLIP | | | | | |
| | 6 | 111-4839 | 2 | STRAP | | | | | |
| | 7 | 116-0118 | 12 | CLIP | | | | | |
| | 8 | 234-1122 | 1 | COVER | | | | | |
| Y | 9 | 251-0299 | 1 | HARNESS AS | | | | | |
| Y | 10 | 291-7927 | 1 | HARNESS AS | | | | | |
| | 11 | 095-0728 | 2 | SCREW | | | | | |
| | 12 | 096-6166 | 2 | WASHER | | | | | |
| | 13 | 3E-5169 | 1 | GUARD | | | | | |
| | 14 | 4D-1836 | 1 | SWITCH | | | | | |
| | 15 | 7X-2621 | 7 | BOLT (L=12mm) | | | | | |
| | 16 | 8T-4121 | 14 | WASHER | | | | | |
| | 17 | 8T-4137 | 7 | BOLT (L=20mm) | | | | | |

Y—SEE SEPARATE ILLUSTRATION

H95508E 00

## 291-7921 WIRING GP-PLATFORM

291-7927-Page128,251-0299-Page130

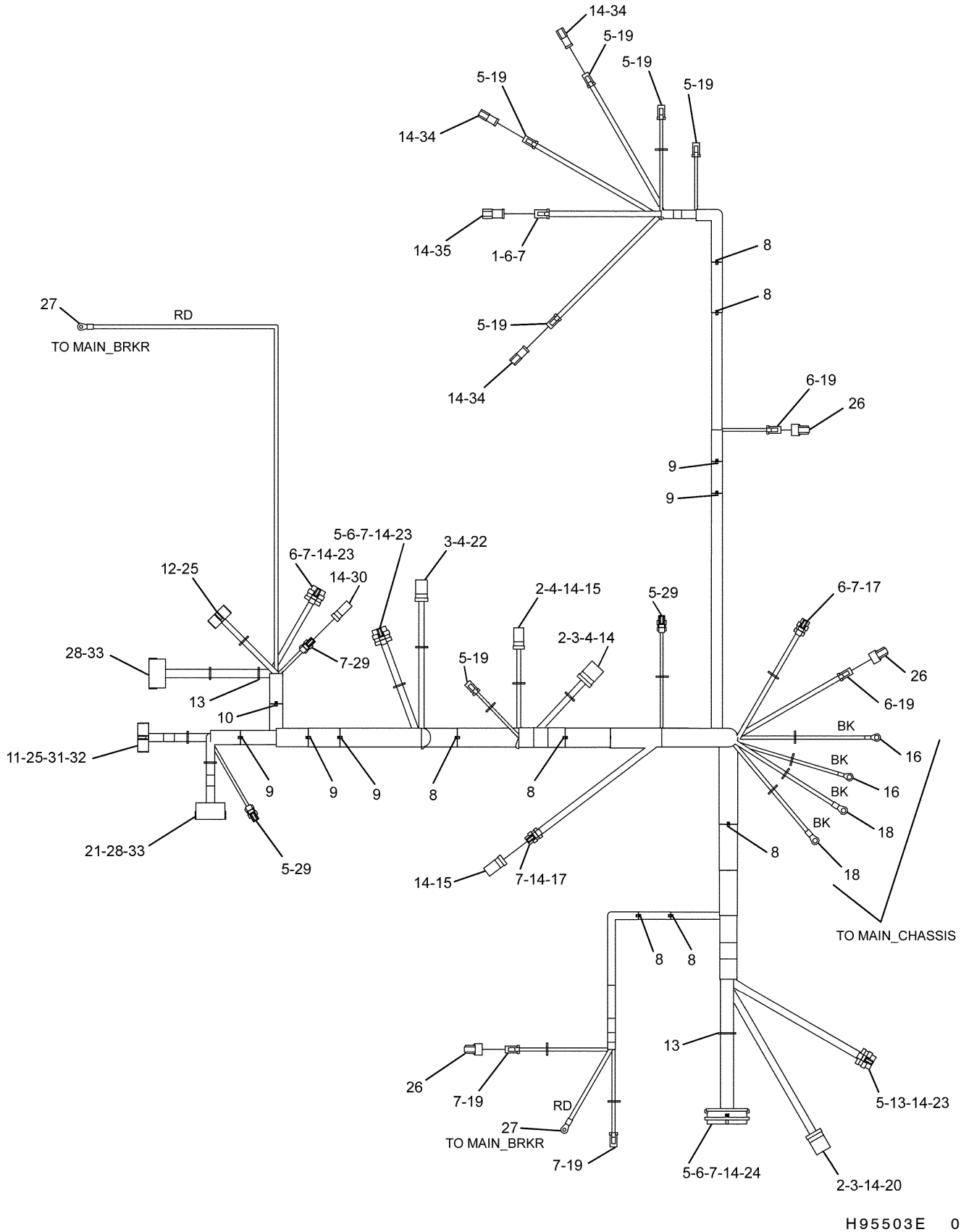


**291-7927 HARNESS AS**
Part of 291-7921-Page127

# ELECTRICAL AND STARTING SYSTEM

| NOTE | No. | PART No. | QTY | PART NAME | NOTE | No. | PART No. | QTY | PART NAME |
|---|---|---|---|---|---|---|---|---|---|
| | 1 | 155-2271 | 1 | PLUG KIT | | | | | |
| | 2 | 9X-3401 | 14 | PIN | | | | | |
| | 3 | 186-3735 | 13 | PIN | | | | | |
| | 4 | 9W-0852 | 6 | PIN | | | | | |
| | 5 | 126-1768 | 48 | SOCKET | | | | | |
| | 6 | 186-3736 | 28 | SOCKET | | | | | |
| | 7 | 9W-0844 | 29 | SOCKET | | | | | |
| E | 8 | 125-7875 | | TUBE…(5cm × 6) | | | | | |
| E | 9 | 125-7874 | | TUBE…(5cm × 6) | | | | | |
| E | 10 | 119-3662 | | TUBE…(7cm) | | | | | |
| | 11 | 125-4841 | 1 | WEDGE | | | | | |
| | 12 | 128-8952 | 1 | WEDGE | | | | | |
| | 13 | 3S-2093 | 20 | STRAP | | | | | |
| | 14 | 8T-8737 | 50 | PLUG | | | | | |
| | 15 | 243-4508 | 2 | RECEPTACLE AS | | | | | |
| | 16 | 2L-8069 | 2 | TERMINAL | | | | | |
| | 17 | 230-5010 | 2 | PLUG AS | | | | | |
| | 18 | 2L-8052 | 2 | TERMINAL | | | | | |
| | 19 | 155-2270 | 10 | PLUG KIT | | | | | |
| | 20 | 243-4510 | 2 | RECEPTACLE AS | | | | | |
| | 21 | 238-2366 | 5 | TERMINAL | | | | | |
| | 22 | 243-4509 | 1 | RECEPTACLE AS | | | | | |
| | 23 | 230-4009 | 3 | PLUG AS | | | | | |
| | 24 | 153-2620 | 1 | PLUG AS | | | | | |
| | | 163-6759 | 1 | SEAL | | | | | |
| | 25 | 102-7965 | 13 | TERMINAL | | | | | |
| | 26 | 197-4385 | 3 | DIODE | | | | | |
| | 27 | 2L-8050 | 2 | TERMINAL | | | | | |
| | 28 | 121-1168 | 2 | CONNECTOR | | | | | |
| | 29 | 230-4011 | 3 | PLUG AS | | | | | |
| | 30 | 243-4505 | 1 | RECEPTACLE AS | | | | | |
| | 31 | 238-2363 | 10 | TERMINAL | | | | | |
| | 32 | 102-7964 | 1 | CONNECTOR | | | | | |
| | 33 | 121-1173 | 29 | TERMINAL | | | | | |
| | 34 | 102-8802 | 3 | RECEPTACLE KIT | | | | | |
| | 35 | 102-8804 | 1 | RECEPTACLE KIT | | | | | |

E—ORDER BY THE CENTIMETER

H95503E 00

## 291-7927 HARNESS AS

Part of 291-7921-Page127

# ELECTRICAL AND STARTING SYSTEM

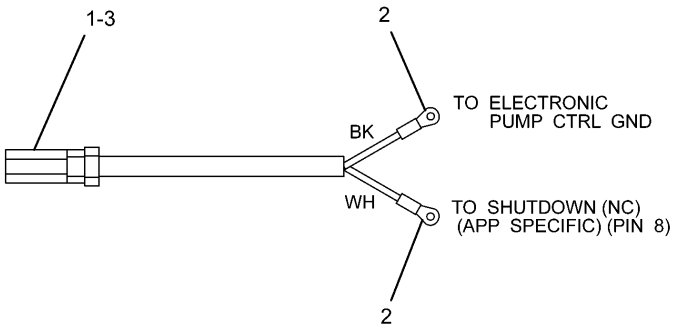


| NOTE | No. | PART No. | QTY | PART NAME |
|---|---|---|---|---|
| | 1 | 9X-3401 | 2 | PIN |
| | 2 | 2L-8074 | 2 | TERMINAL |
| | 3 | 243-4505 | 1 | RECEPTACLE AS |

H89431E 00

**251-0299 HARNESS AS**

Part of 291-7921-Page127

# ELECTRICAL AND STARTING SYSTEM

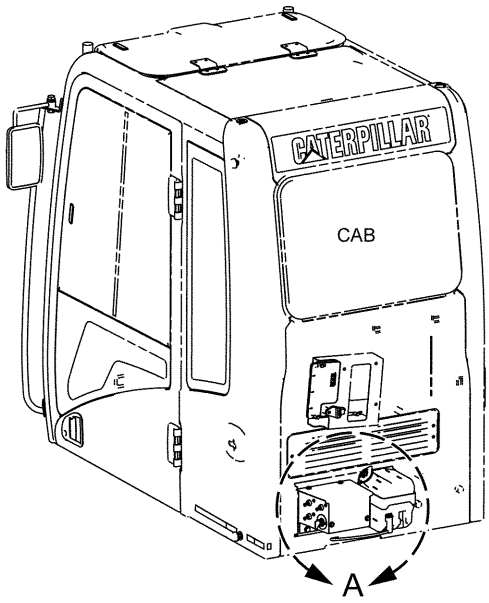


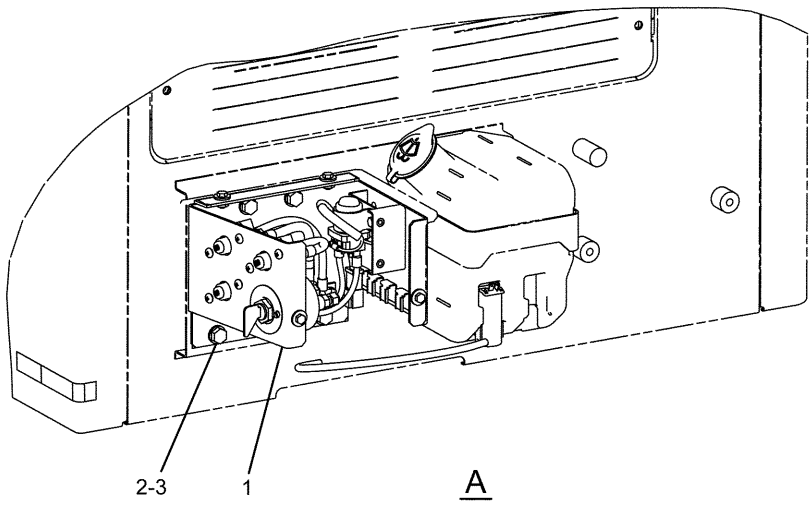


| NOTE | No. | PART No. | QTY | PART NAME | NOTE | No. | PART No. | QTY | PART NAME |
|---|---|---|---|---|---|---|---|---|---|
| Y | 1 | 259-5177 | 1 | PANEL GP | | | | | |
| | 2 | 8T-4121 | 4 | WASHER | | | | | |
| | 3 | 8T-4137 | 4 | BOLT (L=20mm) | | | | | |

Y—SEE SEPARATE ILLUSTRATION

H93679E 01

**259-5176 WIRING GP**
PANEL
259-5177-Page132

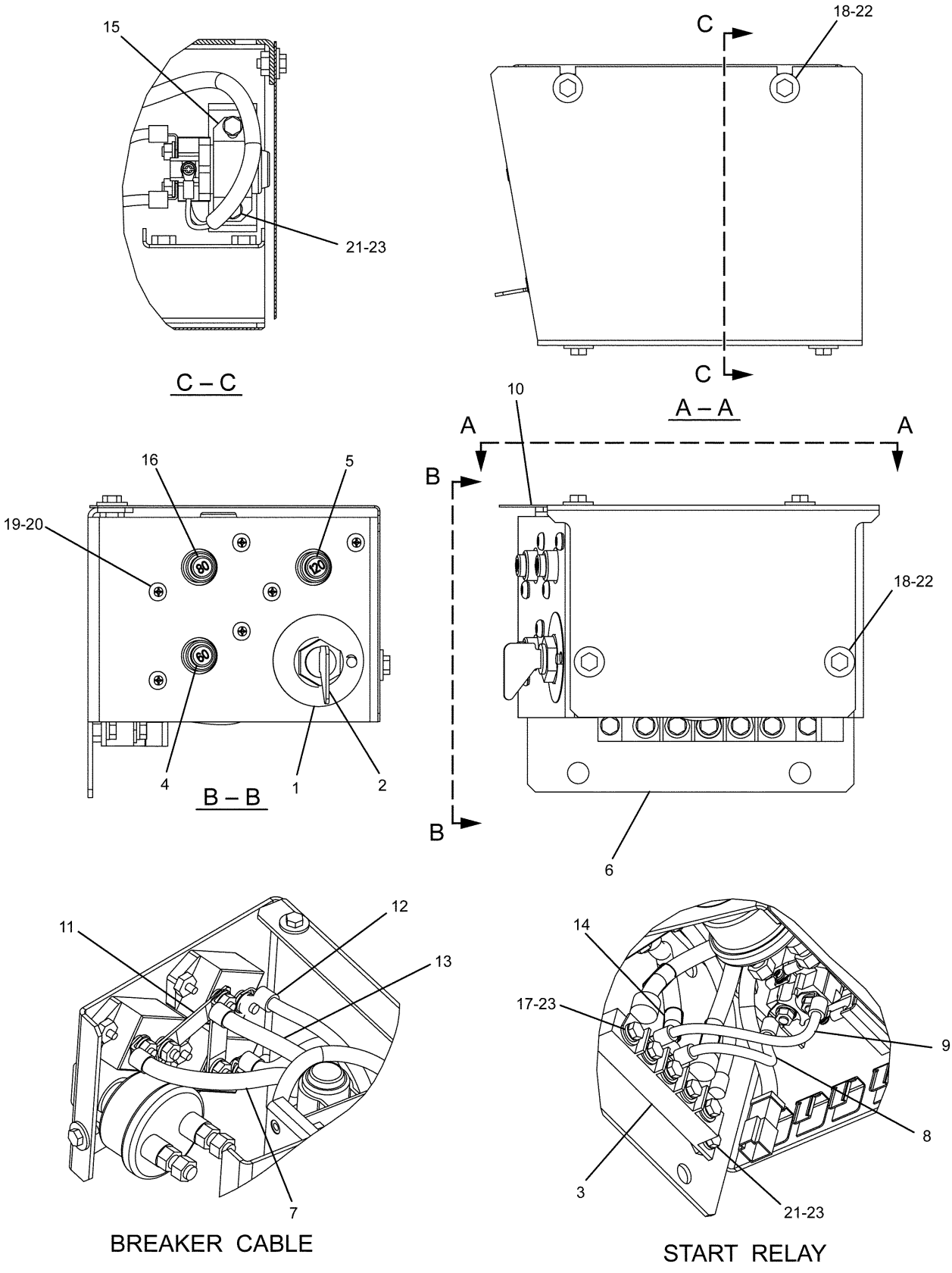


H94393E 02

**259-5177 PANEL GP-CIRCUIT BREAKER**

Part of 259-5176-Page131
259-5274-Page134,7N-0719-Page135

# ELECTRICAL AND STARTING SYSTEM

| NOTE | No. | PART No. | QTY | PART NAME | NOTE | No. | PART No. | QTY | PART NAME |
|---|---|---|---|---|---|---|---|---|---|
| | 1 | 3E-8320 | 1 | PLATE (INSTRUCTION) | | | | | |
| Y | 2 | 7N-0719 | 1 | SWITCH AS (DISCONNECT) | | | | | |
| | 3 | 121-1023 | 1 | BLOCK | | | | | |
| | 4 | 171-2208 | 1 | BREAKER AS | | | | | |
| | | 253-2111 | 2 | LOCKWASHER | | | | | |
| | | 6V-8187 | 2 | NUT | | | | | |
| | | 8T-4205 | 2 | WASHER | | | | | |
| | 5 | 216-4970 | 1 | BREAKER AS | | | | | |
| | | 253-2111 | 2 | LOCKWASHER | | | | | |
| | | 6V-8187 | 2 | NUT | | | | | |
| | | 8T-4205 | 2 | WASHER | | | | | |
| | 6 | 291-7547 | 1 | BRACKET AS | | | | | |
| | 7 | 234-1035 | 1 | CABLE AS | | | | | |
| | | 9G-4343 | 2 | TERMINAL | | | | | |
| | 8 | 234-1037 | 1 | WIRE AS | | | | | |
| | | 2L-8050 | 2 | TERMINAL | | | | | |
| | 9 | 234-1038 | 1 | WIRE AS | | | | | |
| | | 2L-8050 | 2 | TERMINAL | | | | | |
| | 10 | 238-1506 | 1 | COVER | | | | | |
| | 11 | 238-2279 | 1 | BUS | | | | | |
| | 12 | 238-2280 | 1 | WIRE AS | | | | | |
| | | 2L-8050 | 2 | TERMINAL | | | | | |
| | 13 | 251-0303 | 1 | CABLE AS | | | | | |
| | | 9G-4343 | 2 | TERMINAL | | | | | |
| | 14 | 251-0304 | 1 | CABLE AS | | | | | |
| | | 9G-4343 | 2 | TERMINAL | | | | | |
| Y | 15 | 259-5274 | 1 | SWITCH AS (START RELAY) | | | | | |
| | 16 | 171-2210 | 1 | BREAKER AS | | | | | |
| | | 253-2111 | 2 | LOCKWASHER | | | | | |
| | | 6V-8187 | 2 | NUT | | | | | |
| | | 8T-4205 | 2 | WASHER | | | | | |
| | 17 | 5C-9553 | 5 | BOLT (L=16mm) | | | | | |
| | 18 | 5P-4115 | 4 | WASHER | | | | | |
| | 19 | 6V-5645 | 6 | SCREW | | | | | |
| | 20 | 8T-0328 | 6 | WASHER | | | | | |
| | 21 | 8T-4171 | 4 | BOLT (L=12mm) | | | | | |
| | 22 | 8T-4970 | 4 | BOLT (L=14mm) | | | | | |
| | 23 | 9X-8256 | 9 | WASHER | | | | | |

Y—SEE SEPARATE ILLUSTRATION

H94393E 02

## 259-5177 PANEL GP-CIRCUIT BREAKER

Part of 259-5176-Page131
259-5274-Page134,7N-0719-Page135

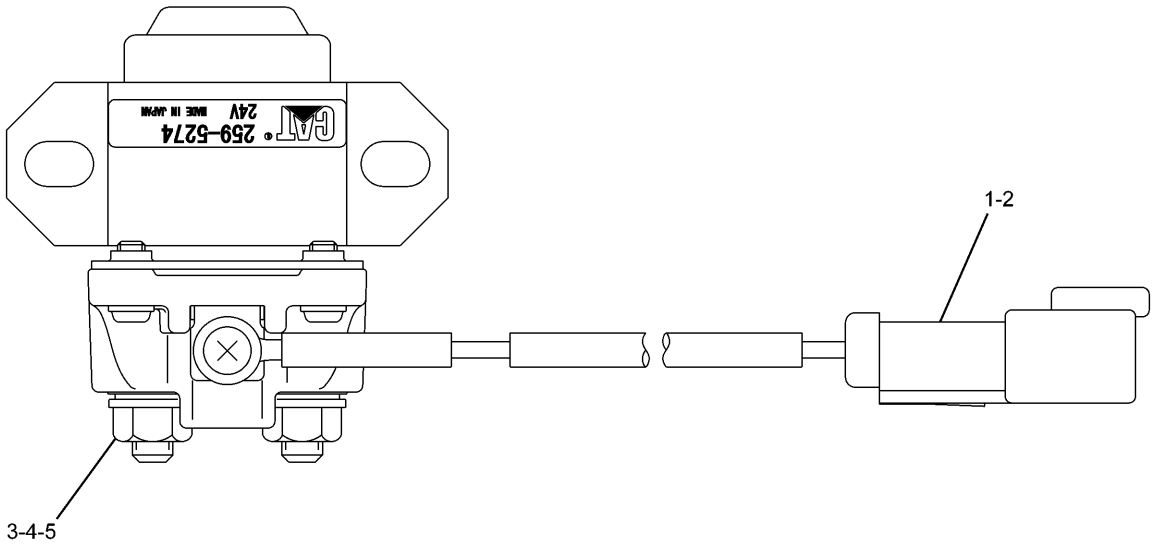


| NOTE | No. | PART No. | QTY | PART NAME | NOTE | No. | PART No. | QTY | PART NAME |
|---|---|---|---|---|---|---|---|---|---|
| | 1 | 102-8802 | 1 | RECEPTACLE KIT | | | | | |
| | 2 | 186-3735 | 2 | PIN | | | | | |
| | 3 | 1H-3338 | 2 | LOCKWASHER | | | | | |
| | 4 | 012-0380 | 2 | LOCKWASHER | | | | | |
| | 5 | 5C-2890 | 2 | NUT | | | | | |

H89144E 00

**259-5274 SWITCH AS**
Part of 259-5177-Page133

# ELECTRICAL AND STARTING SYSTEM

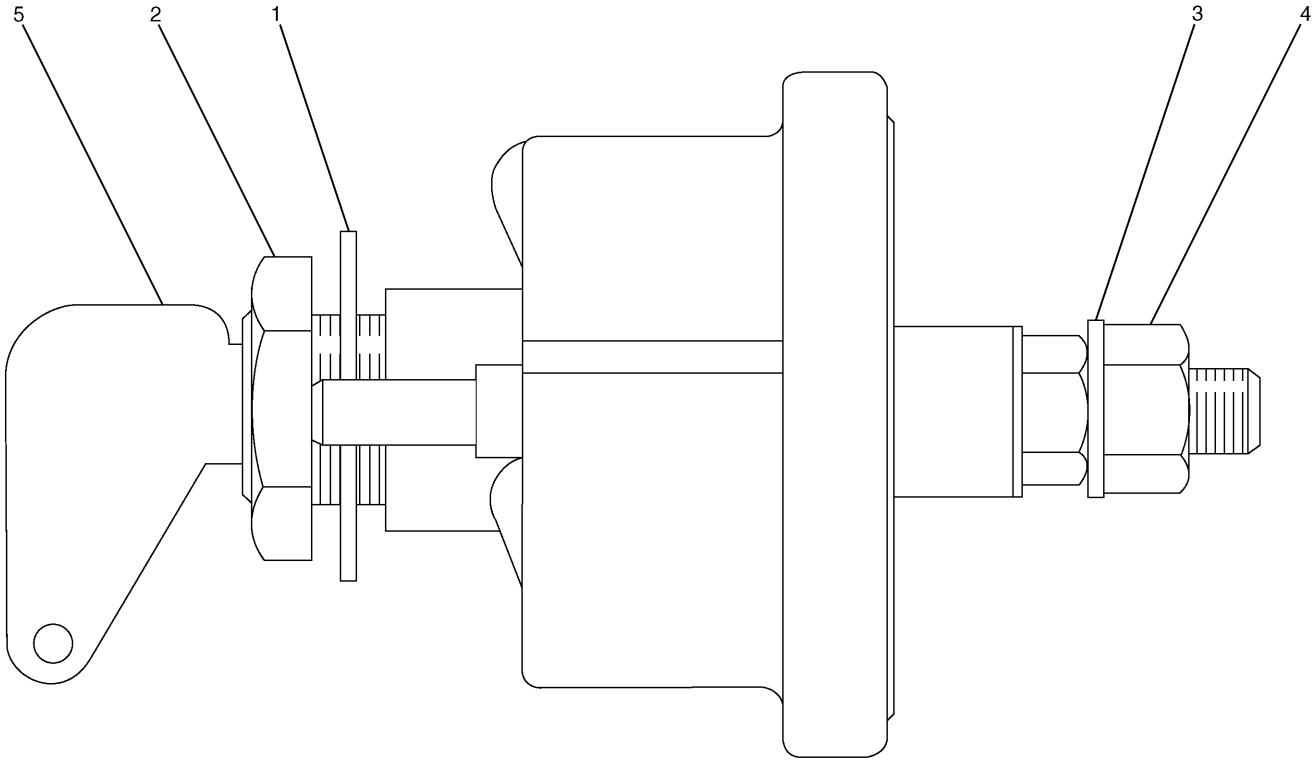


| NOTE | No. | PART No. | QTY | PART NAME | NOTE | No. | PART No. | QTY | PART NAME |
|---|---|---|---|---|---|---|---|---|---|
| | 1 | 2H-3922 | 1 | LOCKWASHER | | | | | |
| | 2 | 8H-5303 | 1 | NUT | | | | | |
| | 3 | 9F-5644 | 2 | LOCKWASHER | | | | | |
| | 4 | 6F-7045 | 2 | NUT | | | | | |
| | 5 | 8H-5306 | 1 | KEY | | | | | |

H67734E 11

## 7N-0719 SWITCH AS-DISCONNECT

Part of 259-5177-Page133

# ELECTRICAL AND STARTING SYSTEM

Consists of :


| | | | Page |
|---|---|---|---|
| 1 | 291-7716 | WIRING GP-CHASSIS | 137 |
| 1 | 291-7463 | WIRING GP | 139 |


H98317E 00

**306-8501 WIRING GP**
Viscous Cluch

# ELECTRICAL AND STARTING SYSTEM

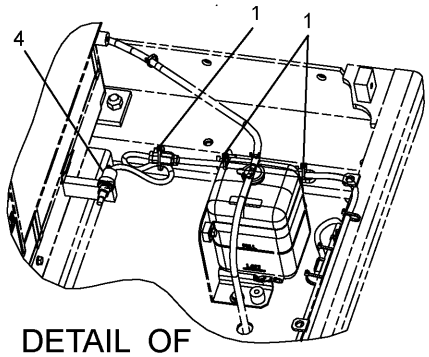


DETAIL OF
TEMP SENSOR

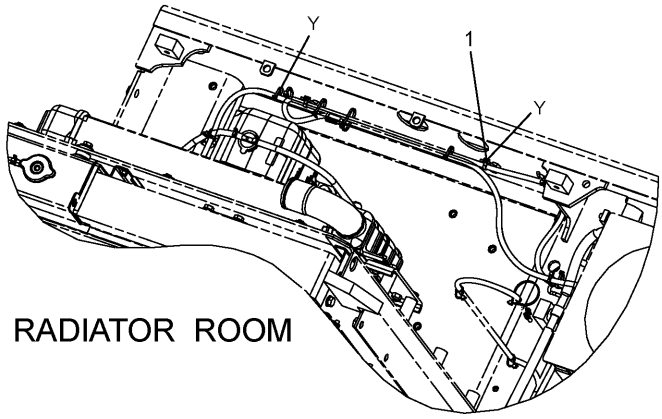


RADIATOR ROOM

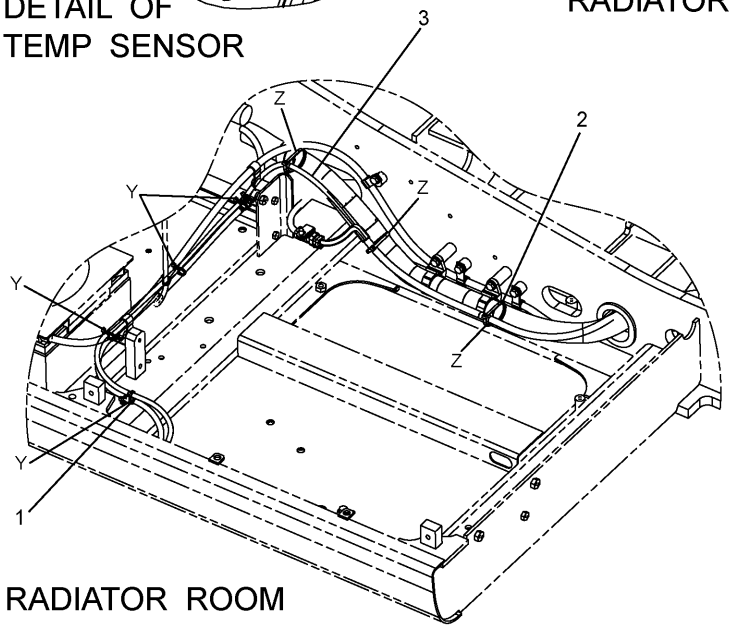


RADIATOR ROOM

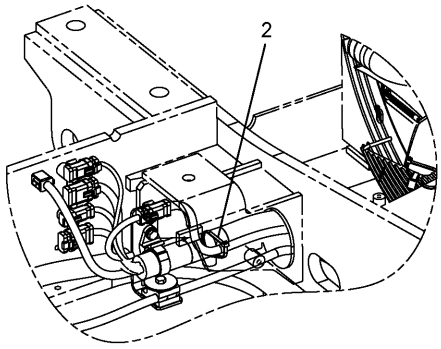


ENGINE ROOM

| NOTE | No. | PART No. | QTY | PART NAME | NOTE | No. | PART No. | QTY | PART NAME |
|---|---|---|---|---|---|---|---|---|---|
| | 1 | 3S-2093 | 9 | STRAP | | | | | |
| | 2 | 7K-1181 | 4 | STRAP | | | | | |
| Y | 3 | 275-6803 | 1 | HARNESS AS | | | | | |
| | 4 | 107-8618 | 1 | SENSOR GP | | | | | |
| | | 102-8803 | 1 | RECEPTACLE KIT | | | | | |
| | | 3E-3371 | 1 | WEDGE | | | | | |
| | | 186-3735 | 1 | PIN | | | | | |
| E | | 112-4550 | | SLEEVE…(31cm) | | | | | |

E—ORDER BY THE CENTIMETER
Y—SEE SEPARATE ILLUSTRATION

H98318E 00

**291-7716 WIRING GP-CHASSIS**
Viscous Cluch
Part of 306-8501-Page136
275-6803-Page138

# ELECTRICAL AND STARTING SYSTEM

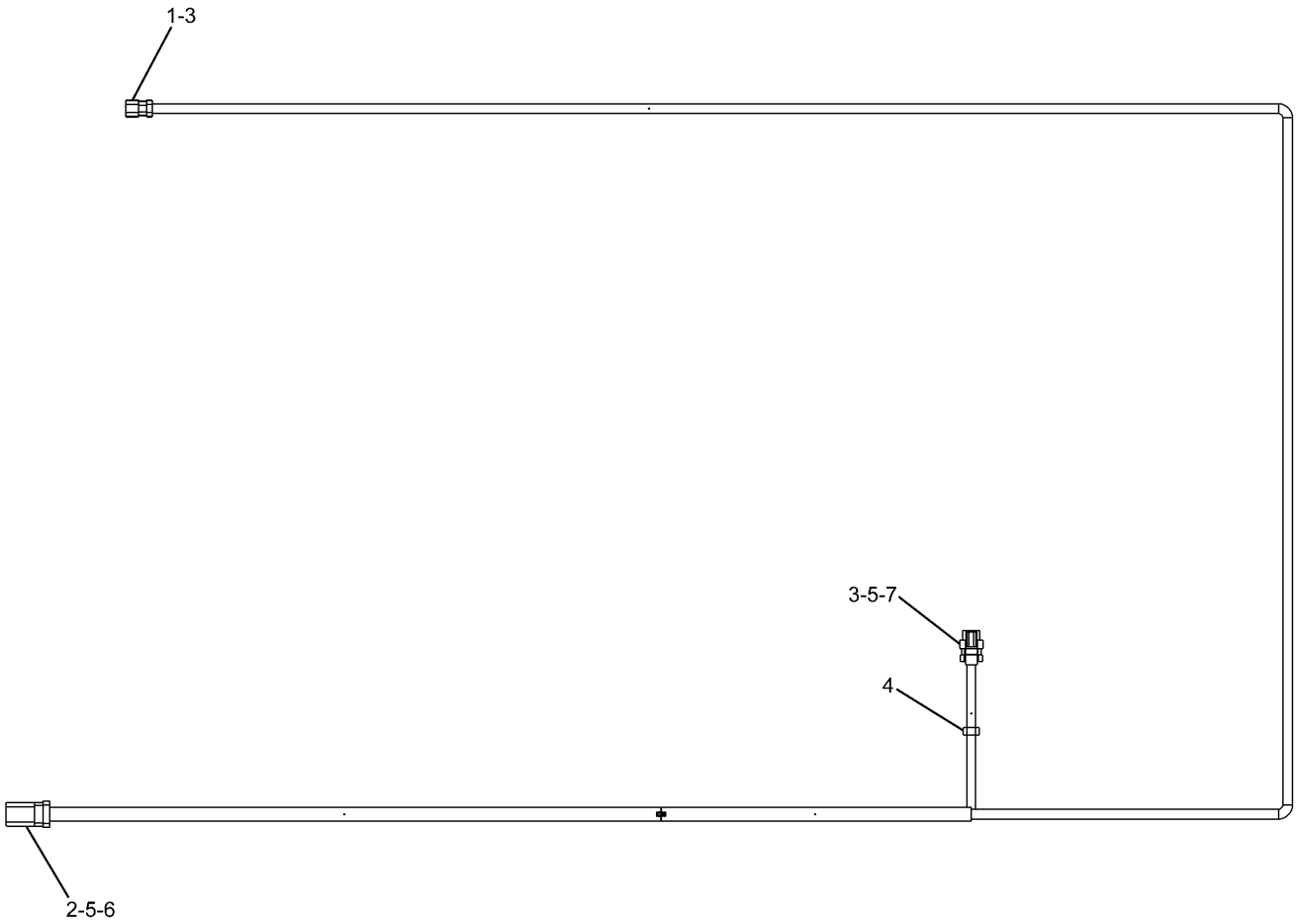


| NOTE | No. | PART No. | QTY | PART NAME | NOTE | No. | PART No. | QTY | PART NAME |
|---|---|---|---|---|---|---|---|---|---|
| | 1 | 155-2260 | 2 | PLUG KIT | | | | | |
| | 2 | 9X-3401 | 7 | PIN | | | | | |
| | 3 | 9X-3402 | 8 | SOCKET | | | | | |
| | 4 | 3S-2093 | 1 | STRAP | | | | | |
| | 5 | 8T-8737 | 2 | PLUG | | | | | |
| | 6 | 243-4509 | 1 | RECEPTACLE AS | | | | | |
| | 7 | 230-5010 | 1 | PLUG AS | | | | | |

H91183E 00

**275-6803 HARNESS AS**
Part of 291-7716-Page137

# ELECTRICAL AND STARTING SYSTEM

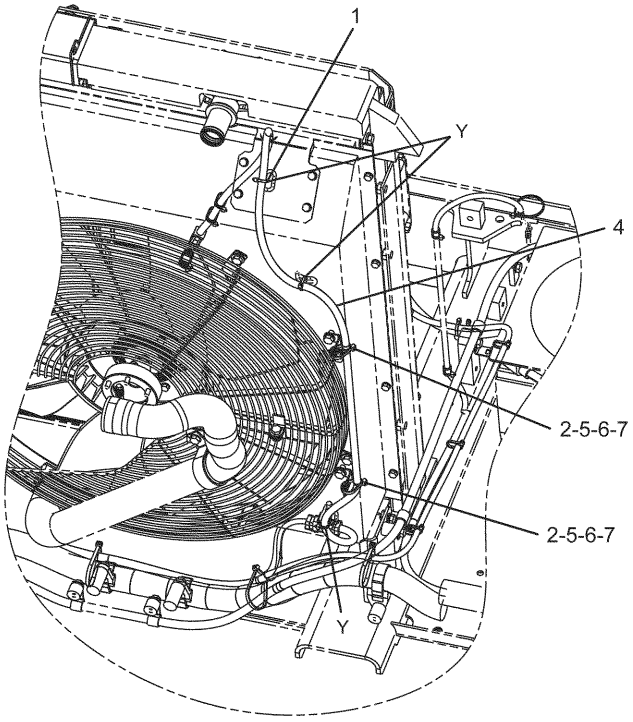


DETAIL OF RADIATOR

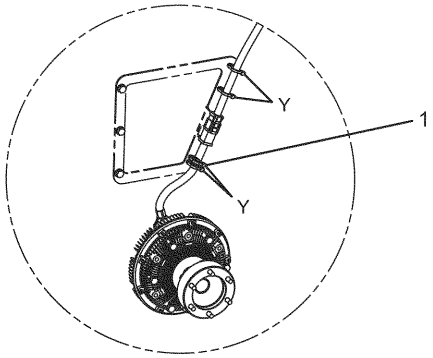


DETAIL OF VISCOUS CLUTCH

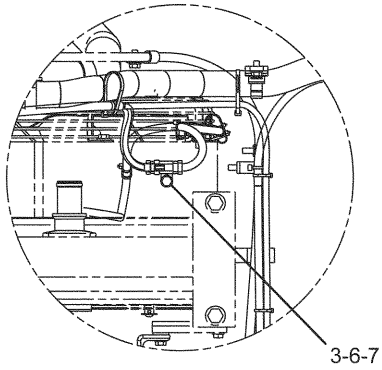


BOTTOM VIEW (RADIATOR)

| NOTE | No. | PART No. | QTY | PART NAME | NOTE | No. | PART No. | QTY | PART NAME |
|---|---|---|---|---|---|---|---|---|---|
| | 1 | 3S-2093 | 7 | STRAP | | | | | |
| | 2 | 7K-1181 | 2 | STRAP | | | | | |
| | 3 | 116-0118 | 1 | CLIP | | | | | |
| Y | 4 | 275-6846 | 1 | HARNESS AS | | | | | |
| | 5 | 132-5789 | 2 | CLIP | | | | | |
| | 6 | 8T-4121 | 3 | WASHER | | | | | |
| | 7 | 8T-4191 | 3 | BOLT (L=16mm) | | | | | |

Y—SEE SEPARATE ILLUSTRATION

H94397E 00

**291-7463 WIRING GP**

Part of 306-8501-Page136
275-6846-Page140

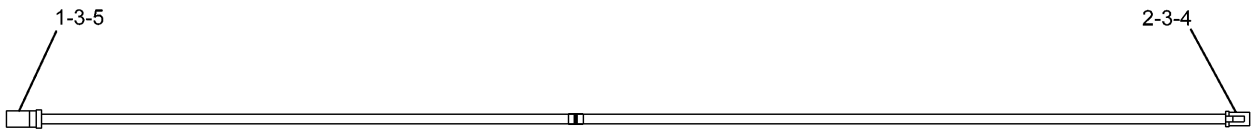


| NOTE | No. | PART No. | QTY | PART NAME | NOTE | No. | PART No. | QTY | PART NAME |
|---|---|---|---|---|---|---|---|---|---|
| | 1 | 9X-3401 | 5 | PIN | | | | | |
| | 2 | 126-1768 | 5 | SOCKET | | | | | |
| | 3 | 8T-8737 | 2 | PLUG | | | | | |
| | 4 | 155-2274 | 1 | PLUG KIT | | | | | |
| | 5 | 243-4508 | 1 | RECEPTACLE AS | | | | | |

H90633E 00

**275-6846 HARNESS AS**
Part of 291-7463-Page139

# ELECTRICAL AND STARTING SYSTEM

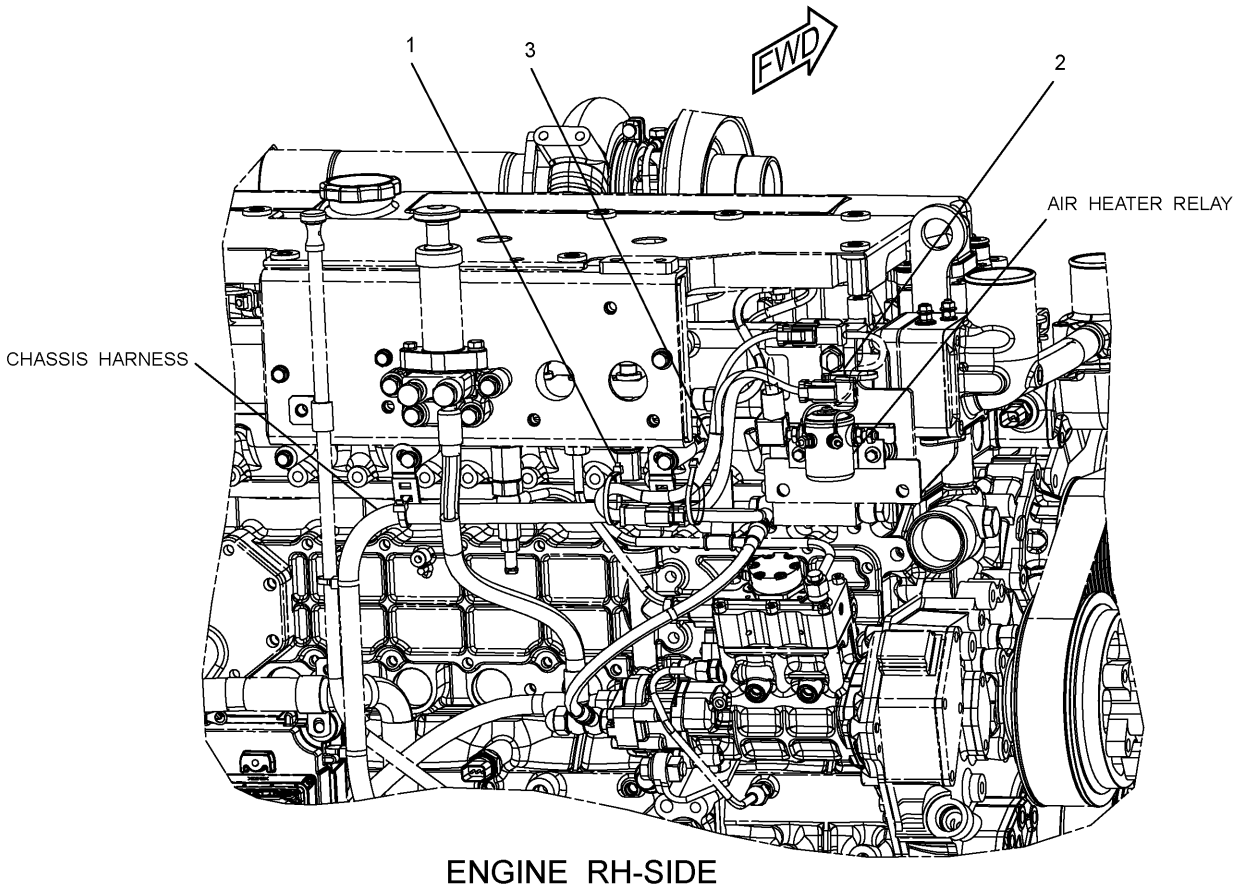


ENGINE RH-SIDE

| NOTE | No. | PART No. | QTY | PART NAME | NOTE | No. | PART No. | QTY | PART NAME |
|---|---|---|---|---|---|---|---|---|---|
| | 1 | 3S-2093 | 2 | STRAP | | | | | |
| | 2 | 116-0118 | 1 | CLIP | | | | | |
| Y | 3 | 306-8691 | 1 | HARNESS AS | | | | | |

Y—SEE SEPARATE ILLUSTRATION

H98323E 00

**306-8690 WIRING GP-HEATER**

306-8691-Page141.01

# ELECTRICAL AND STARTING SYSTEM

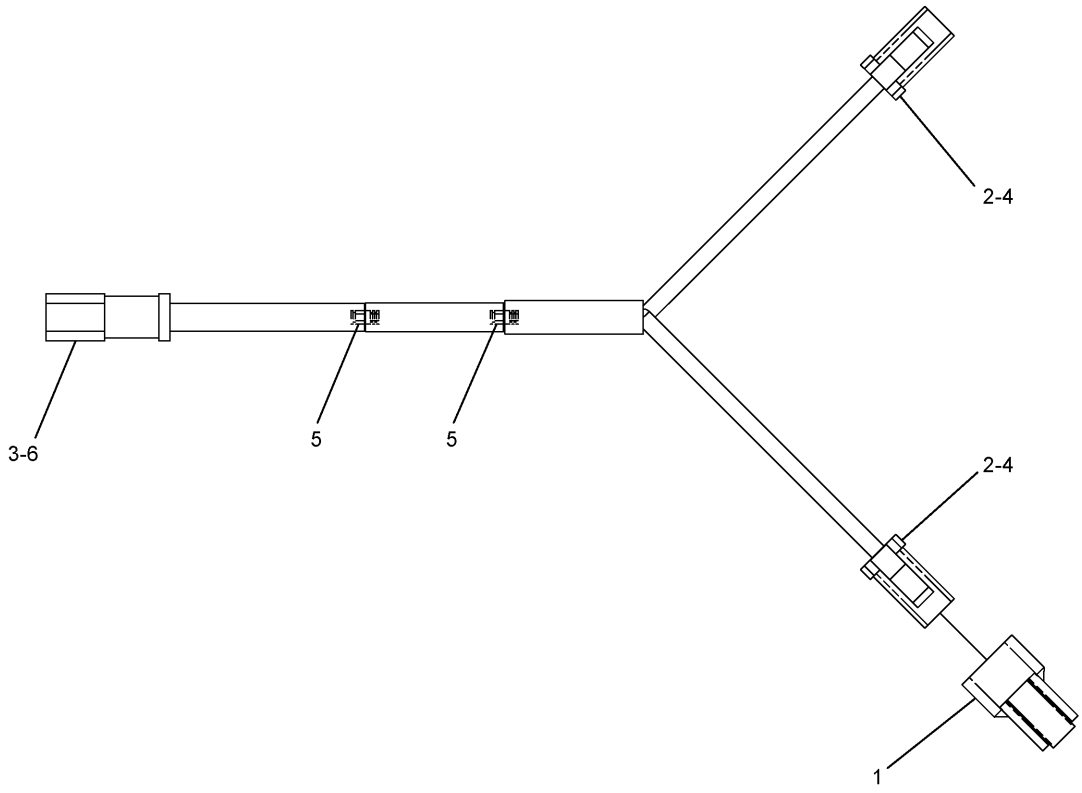


| NOTE | No. | PART No. | QTY | PART NAME | NOTE | No. | PART No. | QTY | PART NAME |
|---|---|---|---|---|---|---|---|---|---|
| | 1 | 197-4385 | 1 | DIODE | | | | | |
| | 2 | 155-2270 | 4 | PLUG KIT | | | | | |
| | 3 | 8T-8729 | 2 | PIN | | | | | |
| | 4 | 186-3736 | 4 | SOCKET | | | | | |
| E | 5 | 125-7874 | | TUBE…(5cm × 2) | | | | | |
| | 6 | 102-8802 | 2 | RECEPTACLE KIT | | | | | |

E—ORDER BY THE CENTIMETER

HA1732E 00

## 306-8691 HARNESS AS

Part of 306-8690-Page141

# MEMORANDA

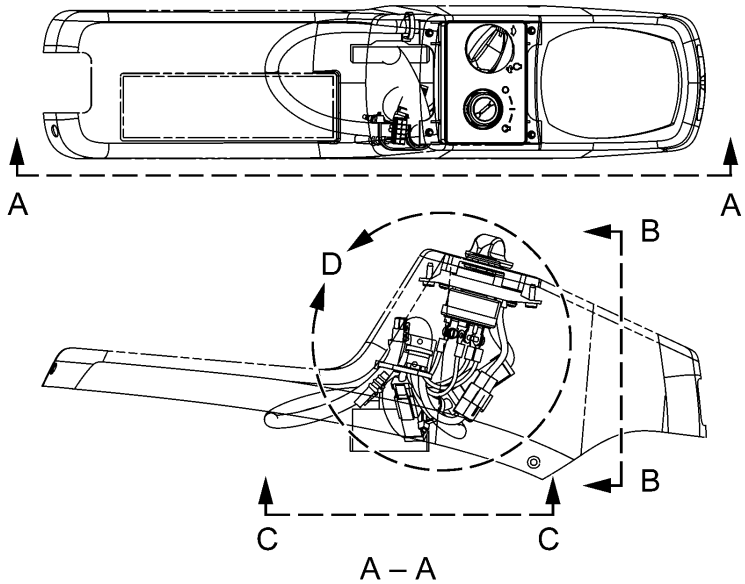


A – A

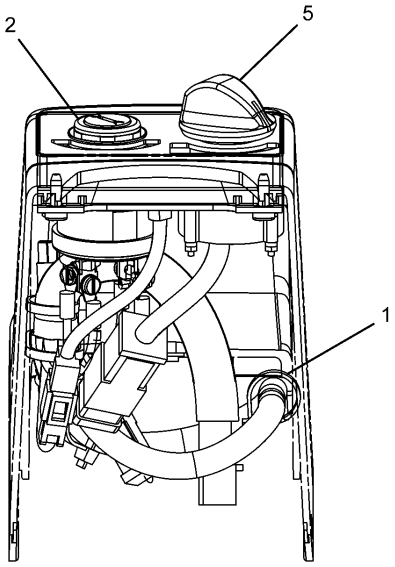


B – B

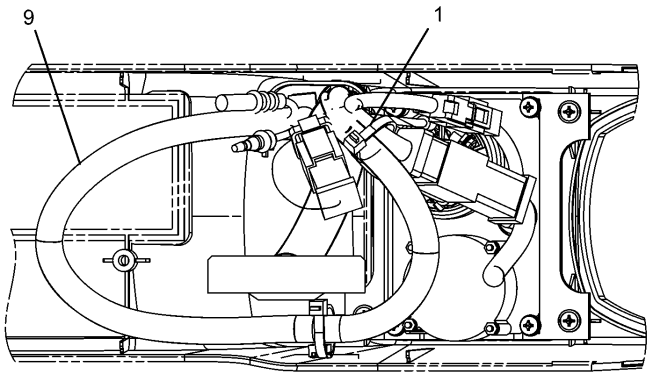


C – C

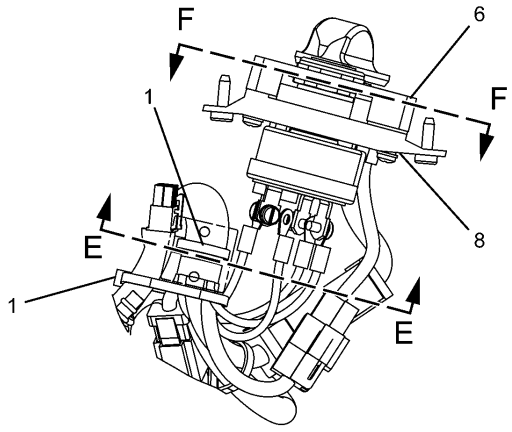


D

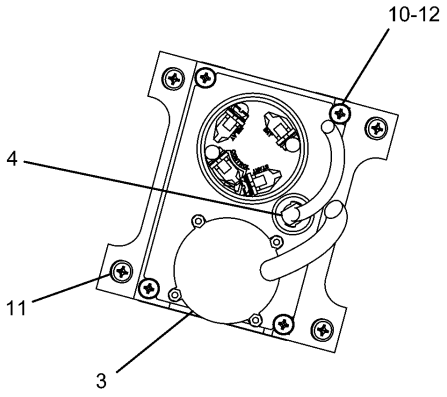


E – E

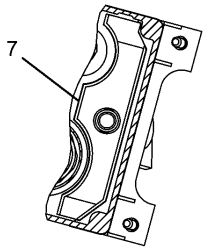


F – F

H89817E 02

**251-0542 PANEL GP-SWITCH**
251-0543-Page146,9G-7641-Page147,106-0107-Page148
An Attachment

# ELECTRICAL AND STARTING SYSTEM

| NOTE | No. | PART No. | QTY | PART NAME | NOTE | No. | PART No. | QTY | PART NAME |
|---|---|---|---|---|---|---|---|---|---|
| | 1 | 3S-2093 | 4 | STRAP | | | | | |
| Y | 2 | 9G-7641 | 1 | SWITCH GP (ENGINE STARTER) | | | | | |
| Y | 3 | 106-0107 | 1 | SWITCH AS (ACCELERATOR) | | | | | |
| | 4 | 170-9324 | 1 | BULB AS | | | | | |
| | 5 | 185-9208 | 1 | KNOB AS | | | | | |
| | | 124-4003 | 1 | PLATE | | | | | |
| | | 185-9209 | 1 | SPRING | | | | | |
| | 6 | 234-1156 | 1 | COVER | | | | | |
| | 7 | 234-1158 | 1 | COVER | | | | | |
| | 8 | 267-7976 | 1 | PANEL | | | | | |
| Y | 9 | 251-0543 | 1 | HARNESS AS | | | | | |
| | 10 | 096-6166 | 4 | WASHER | | | | | |
| | 11 | 119-5026 | 4 | SCREW | | | | | |
| | 12 | 6V-9491 | 4 | SCREW | | | | | |

Y—SEE SEPARATE ILLUSTRATION

H89817E 02

## 251-0542 PANEL GP-SWITCH

251-0543-Page146,9G-7641-Page147,106-0107-Page148

An Attachment

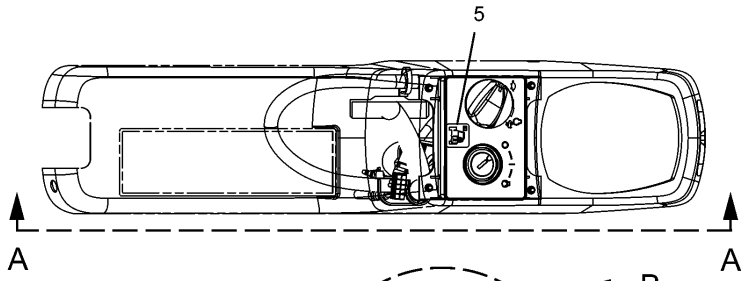


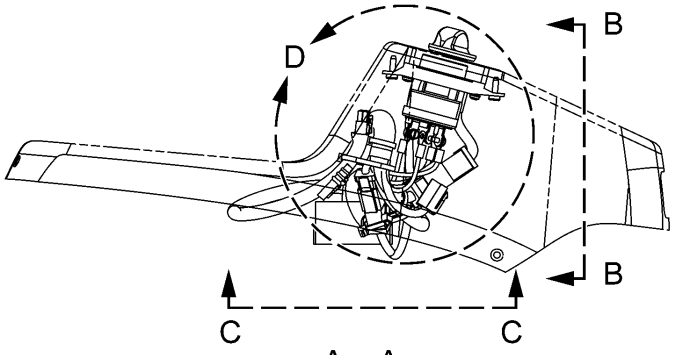


A – A

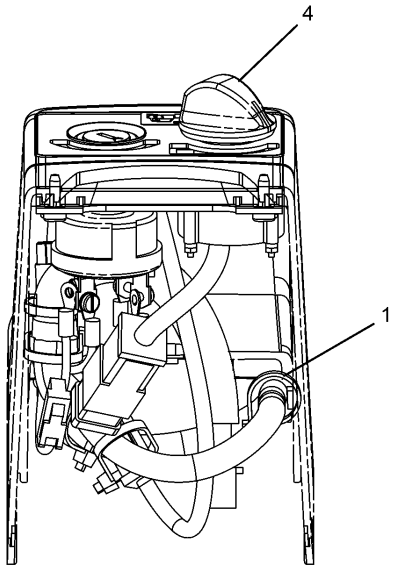


B – B

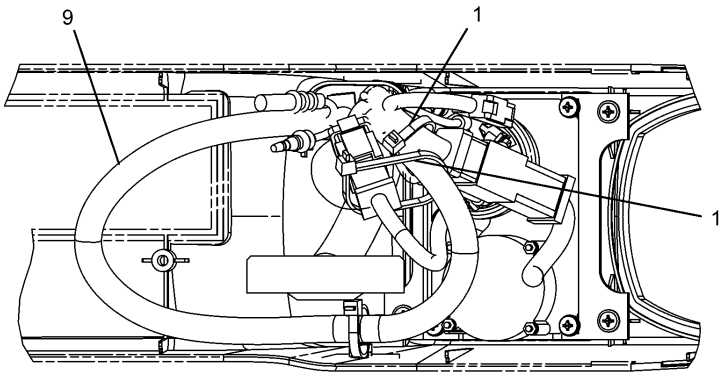


C – C

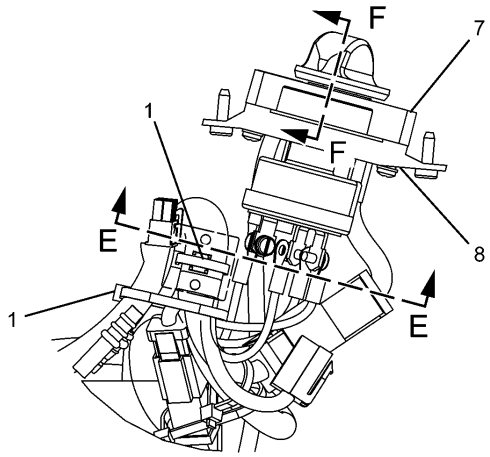


D

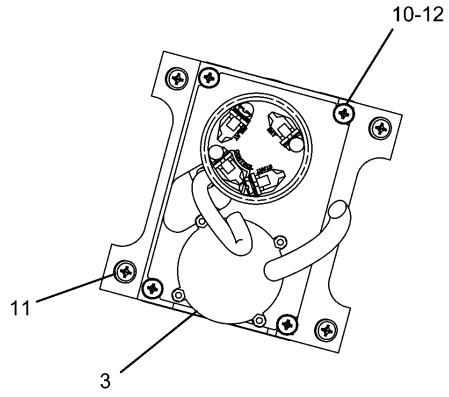


E – E

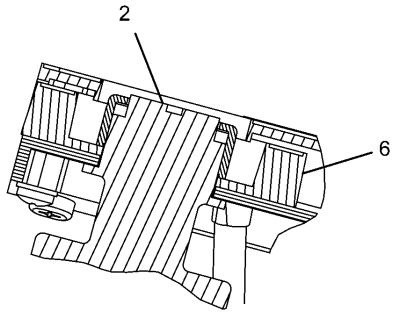


F – F

H89810E 02

**251-0544 PANEL GP-SWITCH**
Machine Security System
Part of 299-2831-Page651
251-0543-Page146,9G-7641-Page147,106-0107-Page148
An Attachment

# ELECTRICAL AND STARTING SYSTEM

| NOTE | No. | PART No. | QTY | PART NAME | NOTE | No. | PART No. | QTY | PART NAME |
|---|---|---|---|---|---|---|---|---|---|
| | 1 | 3S-2093 | 5 | STRAP | | | | | |
| Y | 2 | 9G-7641 | 1 | SWITCH GP (ENGINE STARTER) | | | | | |
| Y | 3 | 106-0107 | 1 | SWITCH AS (ACCELERATOR) | | | | | |
| | 4 | 185-9208 | 1 | KNOB AS | | | | | |
| | | 124-4003 | 1 | PLATE | | | | | |
| | | 185-9209 | 1 | SPRING | | | | | |
| | 5 | 205-0826 | 1 | FILM | | | | | |
| | | | | (MACHINE SECURITY SYSTEM) | | | | | |
| | 6 | 205-8257 | 1 | COIL AS | | | | | |
| | | 200-5125 | 1 | FILM (IGNITION SWITCH) | | | | | |
| | | 198-5389 | 1 | FILM (IGNITION SWITCH) | | | | | |
| | | 102-8802 | 1 | RECEPTACLE KIT | | | | | |
| | 7 | 234-1156 | 1 | COVER | | | | | |
| | 8 | 267-7977 | 1 | PANEL | | | | | |
| Y | 9 | 251-0543 | 1 | HARNESS AS | | | | | |
| | 10 | 096-6166 | 4 | WASHER | | | | | |
| | 11 | 119-5026 | 4 | SCREW | | | | | |
| | 12 | 6V-9491 | 4 | SCREW | | | | | |

Y—SEE SEPARATE ILLUSTRATION

H89810E 02

## 251-0544 PANEL GP-SWITCH

Machine Security System
Part of 299-2831-Page651
251-0543-Page146,9G-7641-Page147,106-0107-Page148
An Attachment

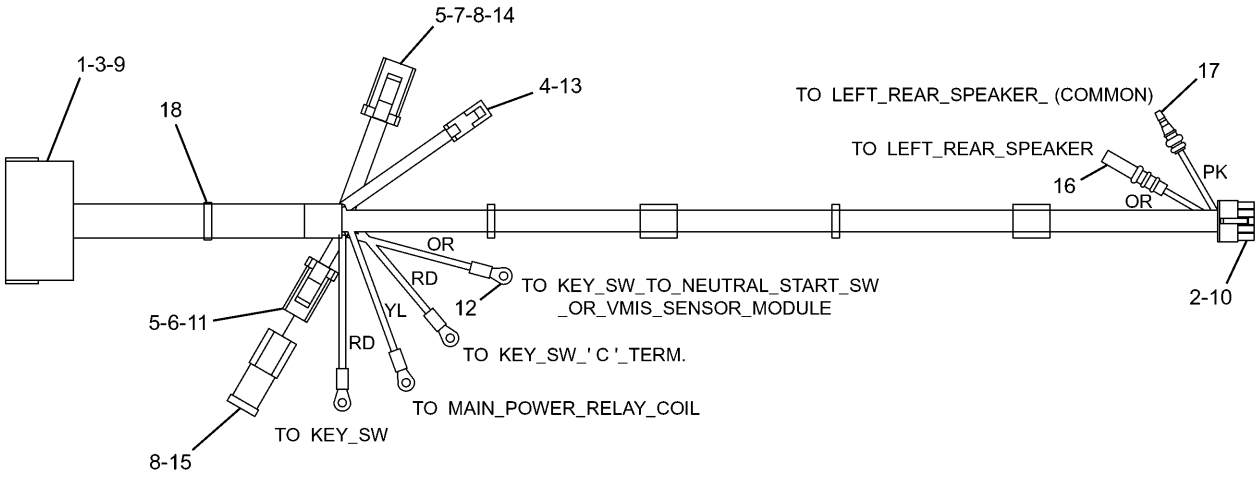


| NOTE | No. | PART No. | QTY | PART NAME | NOTE | No. | PART No. | QTY | PART NAME |
|---|---|---|---|---|---|---|---|---|---|
| | 1 | 238-2366 | 7 | TERMINAL | | | | | |
| | 2 | 153-2540 | 10 | TERMINAL | | | | | |
| | 3 | 121-1173 | 14 | TERMINAL | | | | | |
| | 4 | 7Y-3951 | 2 | TERMINAL | | | | | |
| | 5 | 126-1768 | 7 | SOCKET | | | | | |
| | 6 | 155-2261 | 1 | WEDGE | | | | | |
| | 7 | 155-2263 | 1 | WEDGE | | | | | |
| | 8 | 8T-8737 | 3 | PLUG | | | | | |
| | 9 | 121-1168 | 1 | CONNECTOR | | | | | |
| | 10 | 153-2541 | 1 | CONNECTOR | | | | | |
| | 11 | 155-2270 | 1 | PLUG KIT | | | | | |
| | 12 | 2L-8075 | 4 | TERMINAL | | | | | |
| | 13 | 7Y-3952 | 1 | CONNECTOR | | | | | |
| | 14 | 155-2274 | 1 | PLUG KIT | | | | | |
| | 15 | 102-8802 | 1 | RECEPTACLE KIT | | | | | |
| | 16 | 7Y-3963 | 1 | TERMINAL | | | | | |
| | | 7Y-3965 | 1 | TUBE | | | | | |
| | 17 | 7Y-3962 | 1 | TERMINAL | | | | | |
| | | 7Y-3964 | 1 | TUBE | | | | | |
| | 18 | 3S-2093 | 3 | STRAP | | | | | |

H88058E 01

## 251-0543 HARNESS AS

Part of 251-0542-Page143,251-0544-Page145

An Attachment

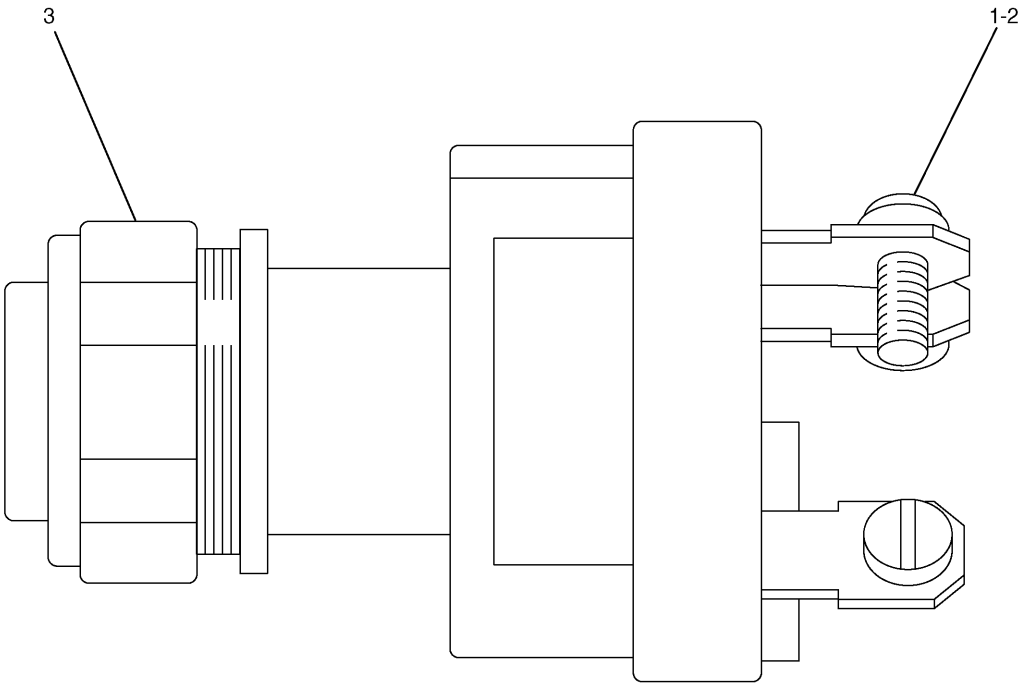


| NOTE | No. | PART No. | QTY | PART NAME | NOTE | No. | PART No. | QTY | PART NAME |
|---|---|---|---|---|---|---|---|---|---|
| | 1 | 6V-8362 | 4 | SCREW | | | | | |
| | 2 | 9B-7233 | 4 | LOCKWASHER | | | | | |
| | 3 | 7T-6799 | 1 | NUT | | | | | |

H67042E 06

## 9G-7641 SWITCH GP-START

Part of 251-0542-Page143,251-0544-Page145
An Attachment

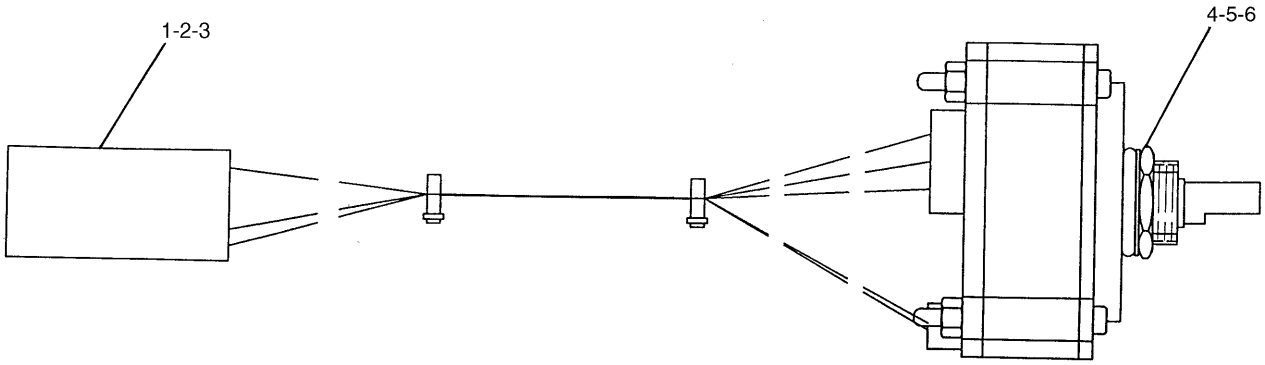


| NOTE | No. | PART No. | QTY | PART NAME | NOTE | No. | PART No. | QTY | PART NAME |
|---|---|---|---|---|---|---|---|---|---|
| | 1 | 8T-8737 | 1 | PLUG | | | | | |
| | 2 | 9X-3401 | 5 | PIN | | | | | |
| | 3 | 102-8805 | 1 | RECEPTACLE KIT | | | | | |
| | 4 | 106-0210 | 1 | SEAL | | | | | |
| | 5 | 7Y-5458 | 1 | NUT | | | | | |
| | 6 | 7Y-5464 | 1 | WASHER | | | | | |

H74274E 02

## 106-0107 SWITCH AS-ROTARY

Part of 251-0542-Page143,251-0544-Page145
An Attachment

# ELECTRICAL AND STARTING SYSTEM

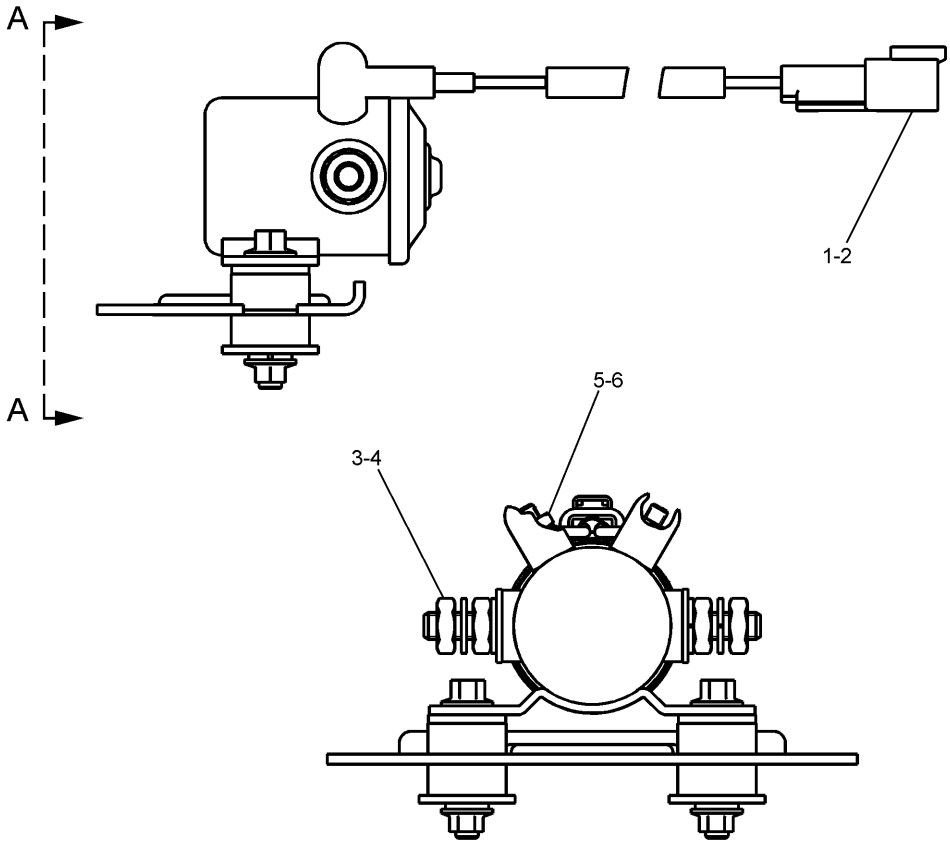


A – A

| NOTE | No. | PART No. | QTY | PART NAME | NOTE | No. | PART No. | QTY | PART NAME |
|---|---|---|---|---|---|---|---|---|---|
| | 1 | 102-8802 | 1 | RECEPTACLE KIT | | | | | |
| | 2 | 186-3735 | 2 | PIN | | | | | |
| | 3 | 3F-9556 | 2 | LOCKWASHER | | | | | |
| | 4 | 6V-8186 | 2 | NUT | | | | | |
| | 5 | 6V-8378 | 2 | NUT | | | | | |
| | 6 | 8F-1434 | 2 | LOCKWASHER | | | | | |

H96258E 03

**223-4453 SWITCH AS-MAGNETIC**
Part of 296-4652-Page58

# ELECTRICAL AND STARTING SYSTEM

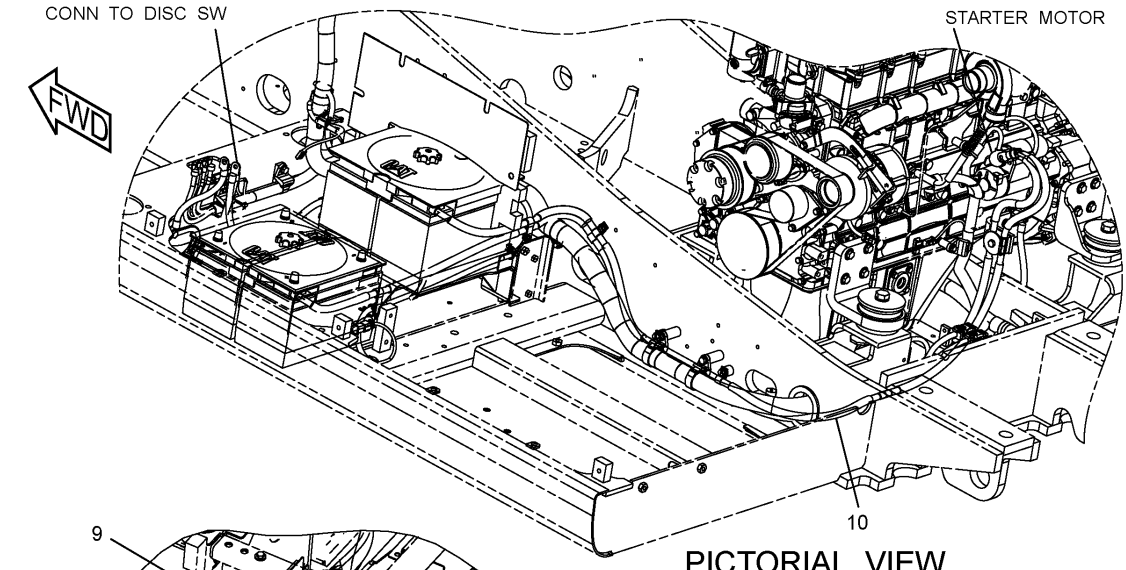


PICTORIAL VIEW

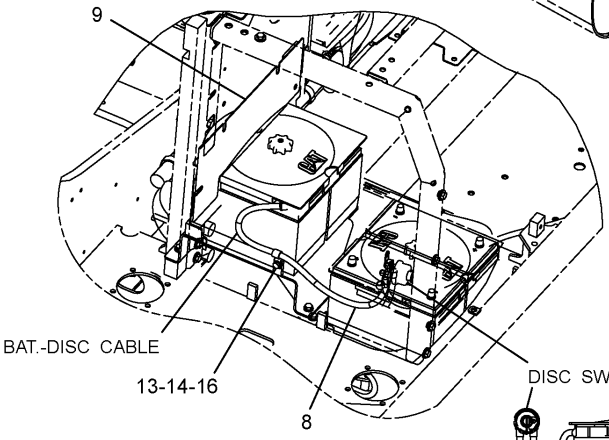


PICTORIAL VIEW

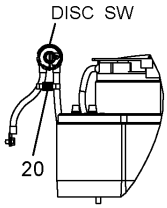


DETAIL OF DISC SW

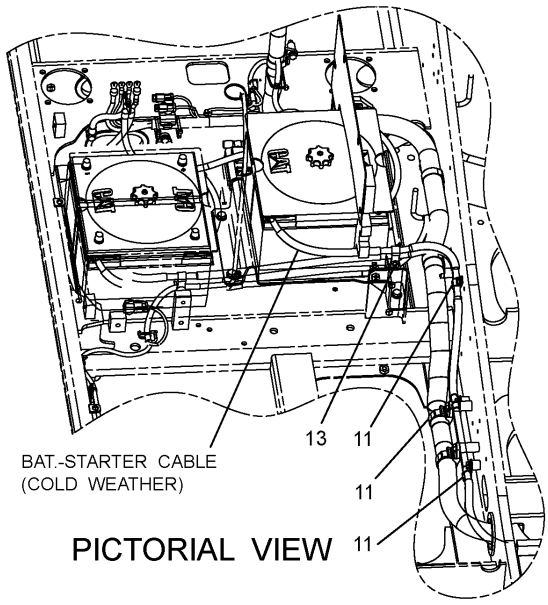


PICTORIAL VIEW

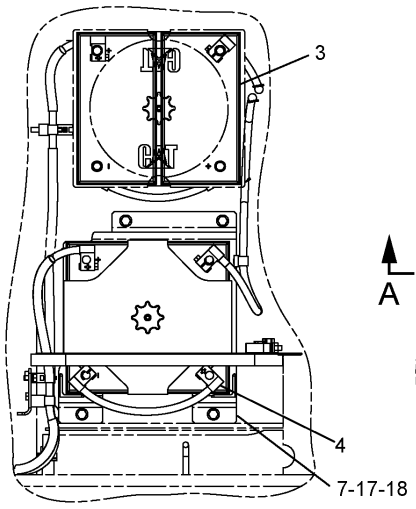


BATTERY ROOM

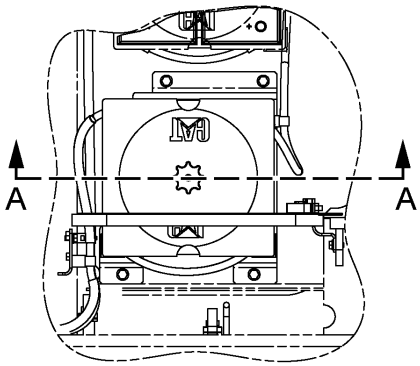


BATTERY ROOM

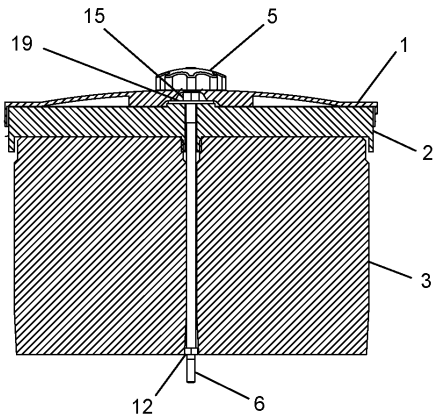


A – A

H98459E 01

## 299-2783 BATTERY & WIRING GP-COLD WEATH

170-6929-Page105,291-7592-Page152,259-5229-Page153,289-6712-Page248

An Attachment

# ELECTRICAL AND STARTING SYSTEM

| NOTE | No. | PART No. | QTY | PART NAME | NOTE | No. | PART No. | QTY | PART NAME |
|---|---|---|---|---|---|---|---|---|---|
| | 1 | 5I-8270 | 1 | COVER | | | | | |
| | 2 | 6W-6005 | 1 | HOLDDOWN | | | | | |
| | 3 | 9X-3404 | 4 | BATTERY | | | | | |
| Y | 4 | 170-6929 | 1 | CABLE AS | | | | | |
| | 5 | 238-2501 | 1 | KNOB | | | | | |
| | 6 | 238-2528 | 1 | ROD | | | | | |
| | 7 | 259-5225 | 1 | SUPPORT AS | | | | | |
| Y | 8 | 259-5229 | 1 | CABLE AS | | | | | |
| Y | 9 | 289-6712 | 1 | SHEET AS | | | | | |
| Y | 10 | 291-7592 | 1 | CABLE AS | | | | | |
| | 11 | 4K-8864 | 3 | CLIP | | | | | |
| | 12 | 5C-7261 | 1 | NUT | | | | | |
| | 13 | 6K-8178 | 2 | CLIP | | | | | |
| | 14 | 8T-4121 | 1 | WASHER | | | | | |
| | 15 | 8T-4133 | 1 | NUT | | | | | |
| | 16 | 8T-4191 | 1 | BOLT (L=16mm) | | | | | |
| | 17 | 8T-4192 | 4 | BOLT (L=25mm) | | | | | |
| | 18 | 8T-4223 | 4 | WASHER | | | | | |
| | 19 | 8T-4226 | 1 | WASHER | | | | | |
| | 20 | 204-1673 | 1 | STRAP | | | | | |

Y—SEE SEPARATE ILLUSTRATION

H98459E 01

## 299-2783 BATTERY & WIRING GP-COLD WEATH

170-6929-Page105,291-7592-Page152,259-5229-Page153,289-6712-Page248

An Attachment

# ELECTRICAL AND STARTING SYSTEM

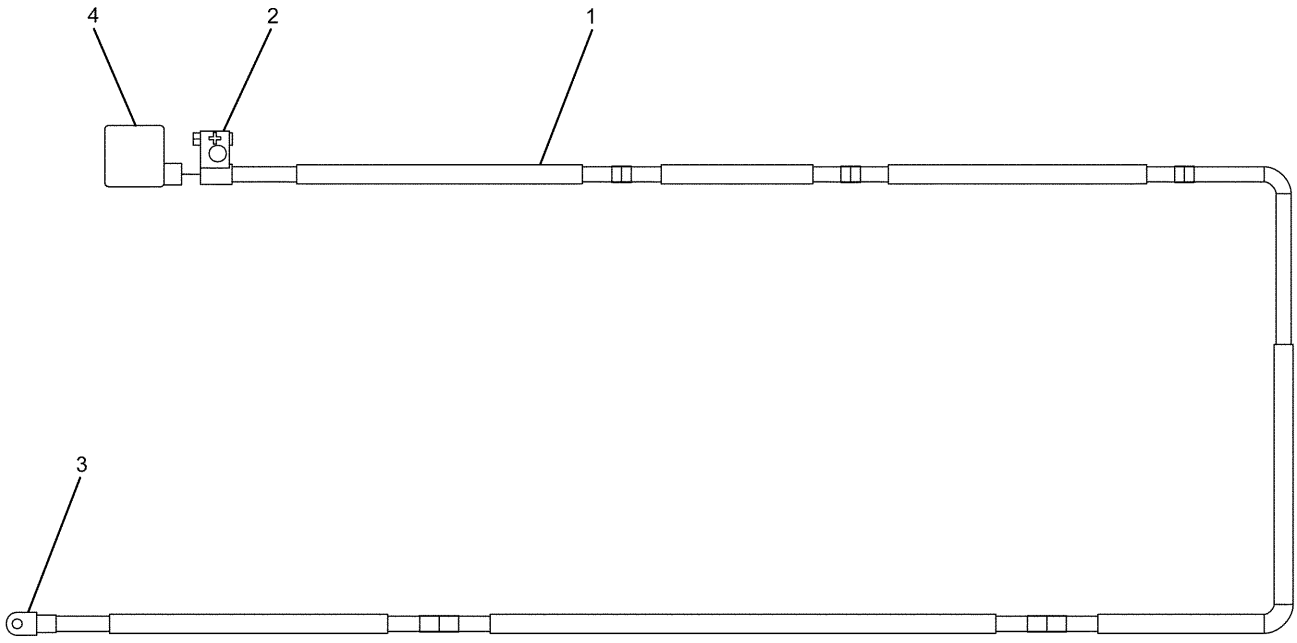


| NOTE | No. | PART No. | QTY | PART NAME | NOTE | No. | PART No. | QTY | PART NAME |
|---|---|---|---|---|---|---|---|---|---|
| E | 1 | 5P-0761 | | CABLE…(281cm) | | | | | |
| | 2 | 8C-5917 | 1 | TERMINAL AS | | | | | |
| | 3 | 1S-7252 | 1 | TERMINAL | | | | | |
| | 4 | 9G-0004 | 1 | COVER | | | | | |

E—ORDER BY THE CENTIMETER

H95277E 01

**291-7592 CABLE AS**
Part of 299-2783-Page151
An Attachment

# ELECTRICAL AND STARTING SYSTEM




| NOTE | No. | PART No. | QTY | PART NAME |
|---|---|---|---|---|
| | 1 | 9G-0003 | 1 | COVER |
| | 2 | 8T-9757 | 1 | TERMINAL AS |
| | 3 | 1S-7252 | 1 | TERMINAL |

H90045E 00

**259-5229 CABLE AS**
Part of 299-2783-Page151
An Attachment

# ELECTRICAL AND STARTING SYSTEM

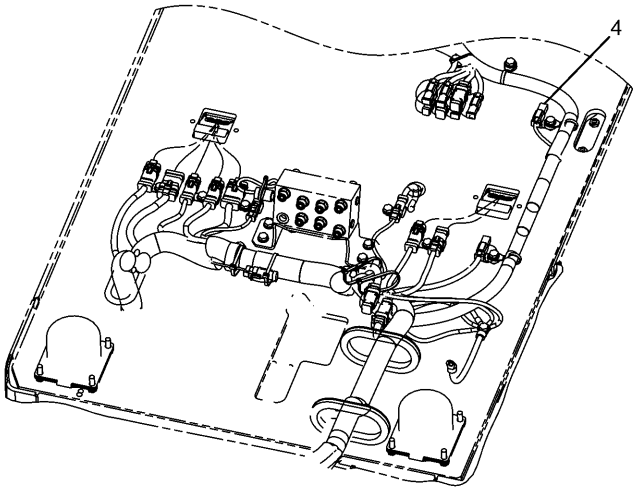


DETAIL OF UNDER PLATFORM

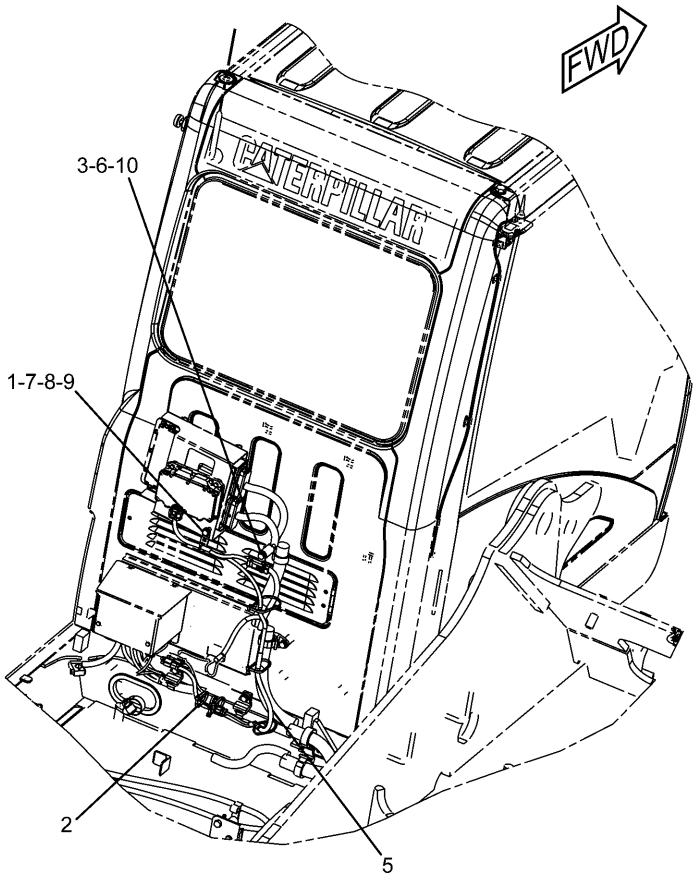


| NOTE | No. | PART No. | QTY | PART NAME | NOTE | No. | PART No. | QTY | PART NAME |
|---|---|---|---|---|---|---|---|---|---|
| | 1 | 3S-2093 | 1 | STRAP | | | | | |
| | 2 | 7K-1181 | 6 | STRAP | | | | | |
| | 3 | 116-0118 | 1 | CLIP | | | | | |
| | 4 | 145-0549 | 1 | RECEPTACLE AS | | | | | |
| | | 102-8802 | 1 | RECEPTACLE KIT | | | | | |
| | | 8T-8737 | 2 | PLUG | | | | | |
| Y | 5 | 275-6784 | 1 | HARNESS AS | | | | | |
| | 6 | 4I-7889 | 1 | SPACER | | | | | |
| | 7 | 4P-7581 | 1 | CLIP | | | | | |
| | 8 | 8T-4121 | 1 | WASHER | | | | | |
| | 9 | 8T-4137 | 1 | BOLT (L=20mm) | | | | | |
| | 10 | 8T-5005 | 1 | BOLT (L=70mm) | | | | | |

Y—SEE SEPARATE ILLUSTRATION

H90605E 00

**275-6783 WIRING GP**
Product Link Japan
Part of 275-3668-Page195
275-6784-Page155
An Attachment

# ELECTRICAL AND STARTING SYSTEM

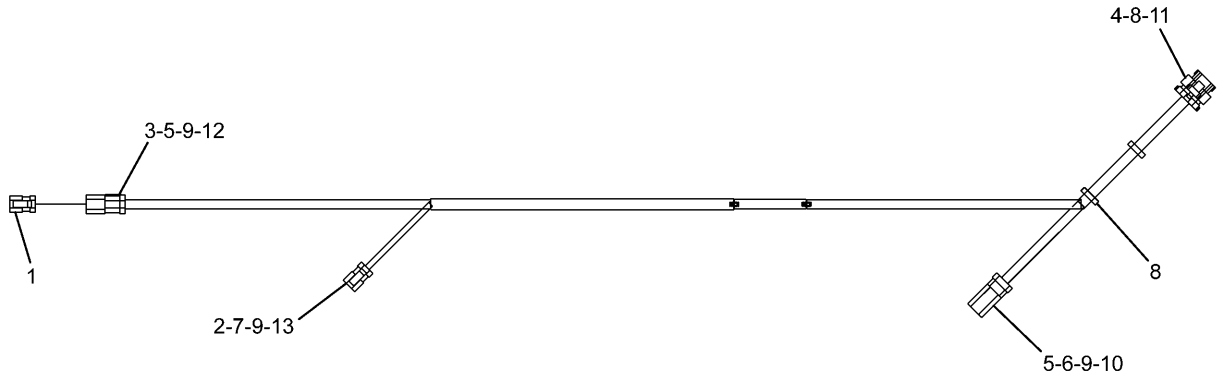


| NOTE | No. | PART No. | QTY | PART NAME | NOTE | No. | PART No. | QTY | PART NAME |
|---|---|---|---|---|---|---|---|---|---|
| | 1 | 174-3016 | 1 | PLUG AS | | | | | |
| | 2 | 155-2260 | 1 | PLUG KIT | | | | | |
| | 3 | 102-8803 | 1 | RECEPTACLE KIT | | | | | |
| | 4 | 275-6786 | 7 | TERMINAL | | | | | |
| | 5 | 9X-3401 | 5 | PIN | | | | | |
| | 6 | 186-3735 | 2 | PIN | | | | | |
| | 7 | 126-1768 | 2 | SOCKET | | | | | |
| | 8 | 3S-2093 | 2 | STRAP | | | | | |
| | 9 | 8T-8737 | 3 | PLUG | | | | | |
| | 10 | 243-4508 | 1 | RECEPTACLE AS | | | | | |
| | 11 | 275-6785 | 1 | PLUG AS | | | | | |
| | 12 | 133-0975 | 1 | WEDGE | | | | | |
| | 13 | 155-2266 | 1 | WEDGE | | | | | |

H91209E 01

**275-6784 HARNESS AS**
Part of 275-6783-Page154
An Attachment

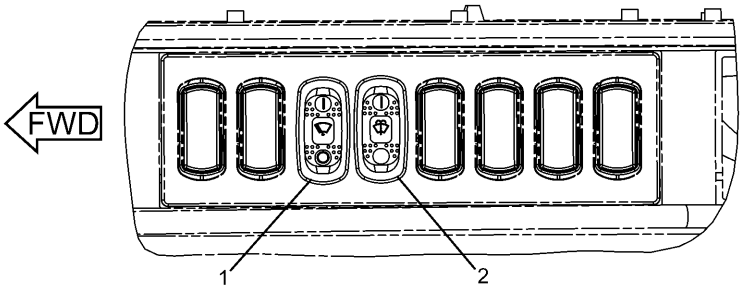


TOP VIEW

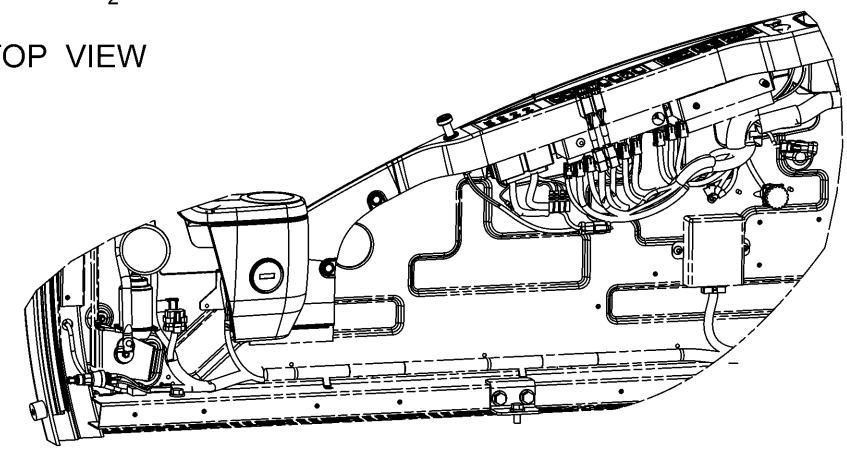

CAB SIDE PANEL

| NOTE | No. | PART No. | QTY | PART NAME | NOTE | No. | PART No. | QTY | PART NAME |
|---|---|---|---|---|---|---|---|---|---|
| | 1 | 238-2209 | 1 | SWITCH AS (LOWER WIPER) | | | | | |
| | | 167-3542 | 1 | CONNECTOR | | | | | |
| | | 167-3543 | 5 | TERMINAL | | | | | |
| | 2 | 238-2210 | 1 | SWITCH AS (LOWER WASHER) | | | | | |
| | | 167-3542 | 1 | CONNECTOR | | | | | |
| | | 167-3543 | 4 | TERMINAL | | | | | |

H88176E 01

**238-2208 WIRING GP-LOWER WIPER**
Part of 229-9086-Page642
An Attachment

# ELECTRICAL AND STARTING SYSTEM

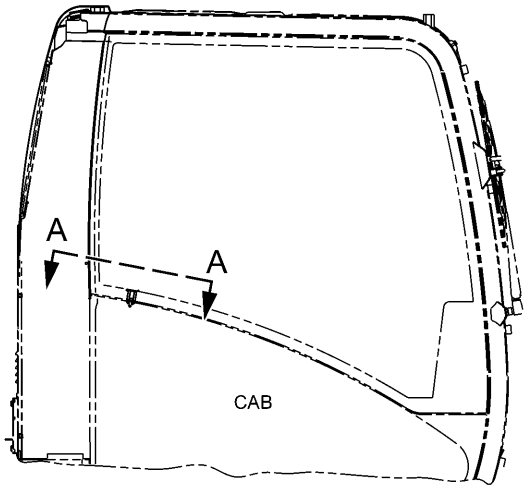


RIGHT SIDE VIEW

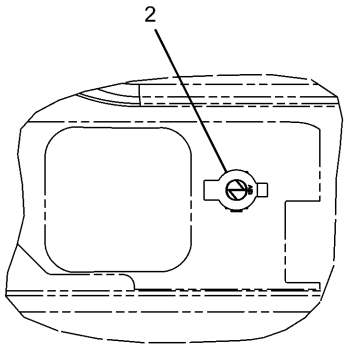


A – A

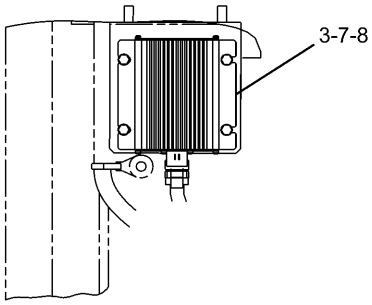


TOP VIEW OF THE CONVERTER

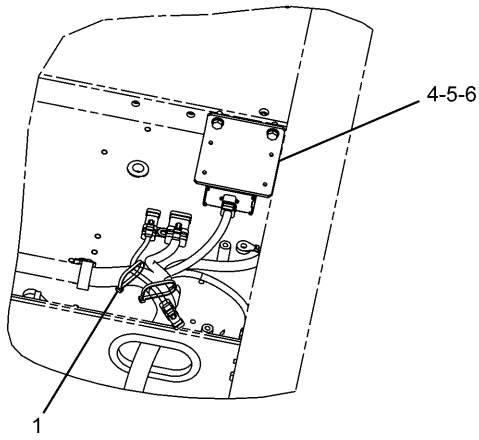


BOTTOM VIEW OF THE PLATFORM

| NOTE | No. | PART No. | QTY | PART NAME | NOTE | No. | PART No. | QTY | PART NAME |
|---|---|---|---|---|---|---|---|---|---|
| | 1 | 7K-1181 | 2 | STRAP | | | | | |
| | 2 | 121-0987 | 1 | SOCKET | | | | | |
| | 3 | 283-2783 | 1 | CONVERTER | | | | | |
| | 4 | 251-0483 | 1 | BRACKET | | | | | |
| | 5 | 8T-4121 | 2 | WASHER | | | | | |
| | 6 | 8T-4136 | 2 | BOLT (L=25mm) | | | | | |
| | 7 | 8T-4171 | 4 | BOLT (L=12mm) | | | | | |
| | 8 | 9X-8256 | 4 | WASHER | | | | | |

H93671E 01

**251-0482 WIRING GP**
12V-7A Power Supply
An Attachment

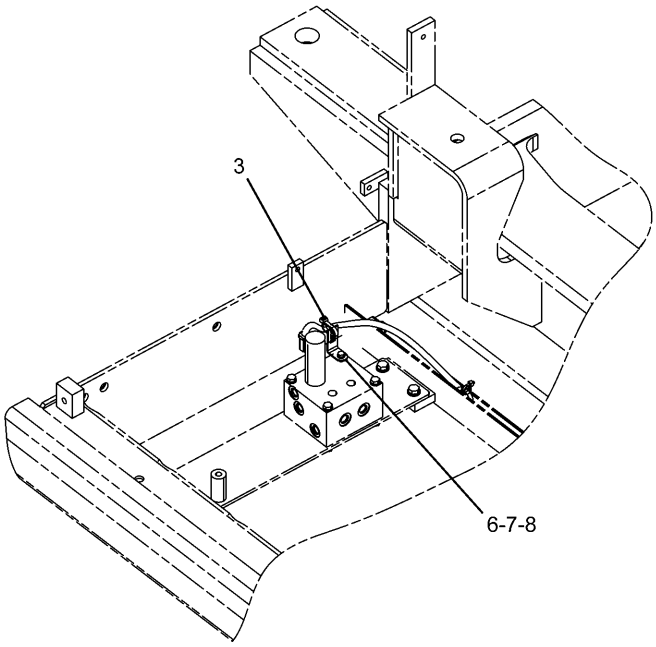


PUMP ROOM

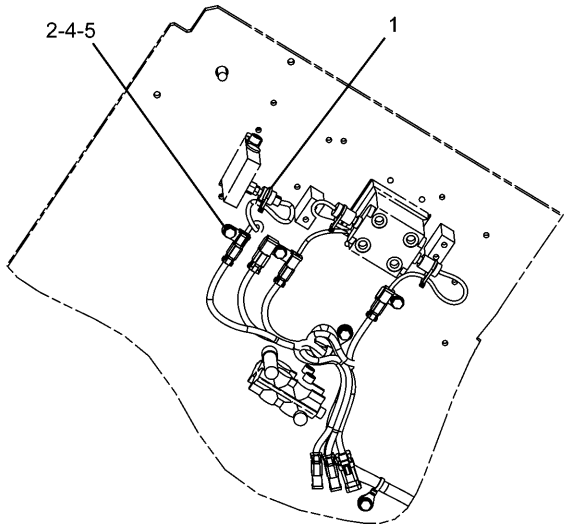


BOTTOM VIEW OF THE PLATFORM

| NOTE | No. | PART No. | QTY | PART NAME | NOTE | No. | PART No. | QTY | PART NAME |
|---|---|---|---|---|---|---|---|---|---|
| | 1 | 3S-2093 | 1 | STRAP | | | | | |
| | 2 | 116-0118 | 1 | CLIP | | | | | |
| | 3 | 7K-1181 | 1 | STRAP | | | | | |
| | 4 | 7X-2621 | 1 | BOLT (L=12mm) | | | | | |
| | 5 | 8T-4121 | 1 | WASHER | | | | | |
| | 6 | 8T-4171 | 1 | BOLT (L=12mm) | | | | | |
| | 7 | 156-6175 | 1 | CLIP | | | | | |
| | 8 | 9X-8256 | 1 | WASHER | | | | | |

H91573E 01

**251-0436 WIRING GP**
Part of 259-7492,259-7494-Page443
An Attachment

# MEMORANDA

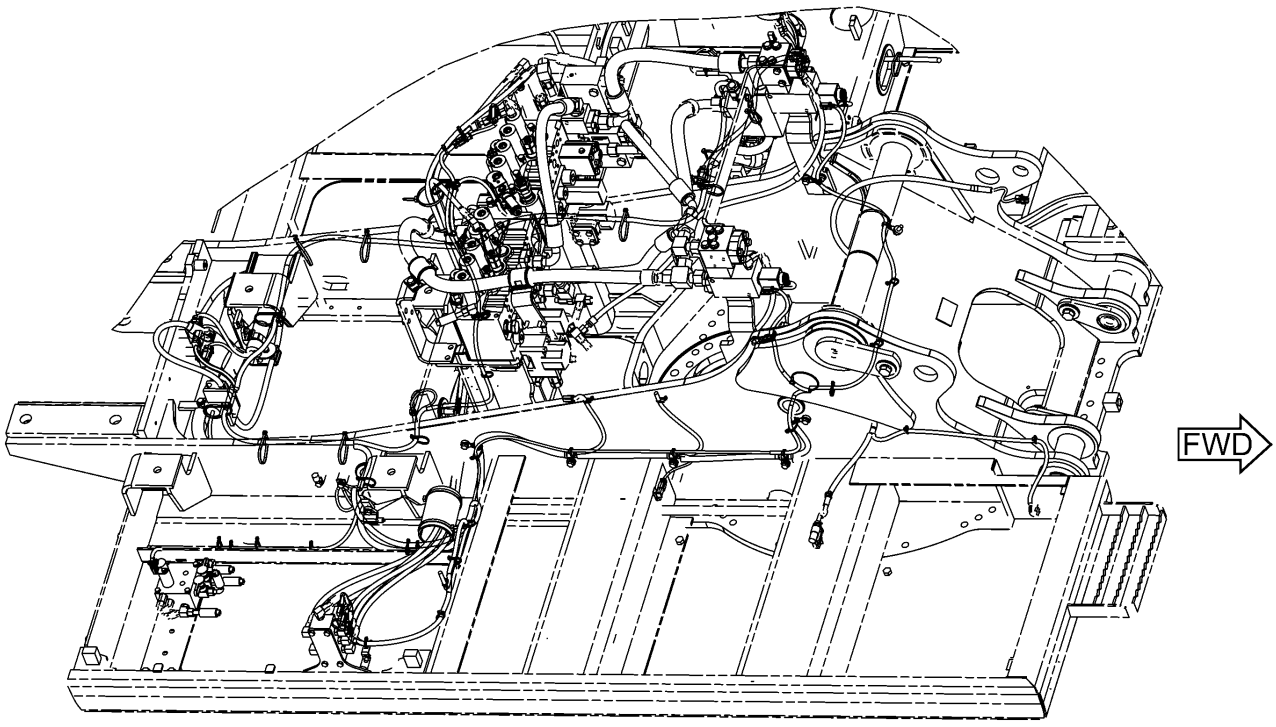


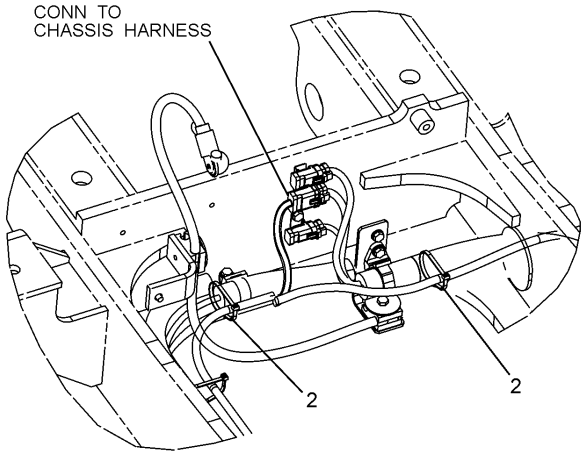


ENGINE ROOM

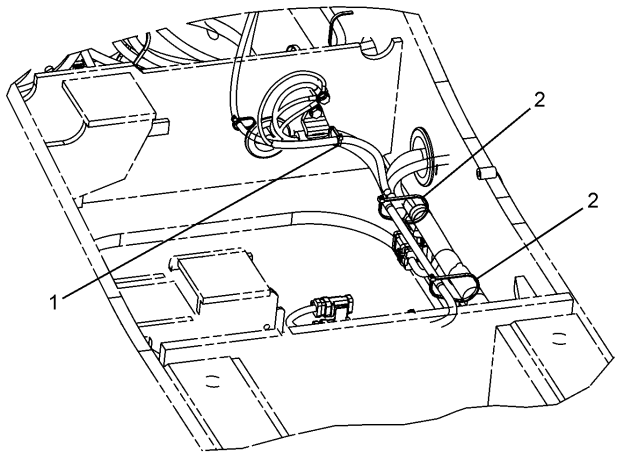


ENGINE ROOM

H95936E 01

**259-5045 WIRING GP (1/4)**
Part of 259-7493-Page444,259-7495-Page445
An Attachment

# ELECTRICAL AND STARTING SYSTEM

| NOTE | No. | PART No. | QTY | PART NAME | NOTE | No. | PART No. | QTY | PART NAME |
|---|---|---|---|---|---|---|---|---|---|
| | 1 | 3S-2093 | 1 | STRAP | | | | | |
| | 2 | 7K-1181 | 4 | STRAP | | | | | |

H95936E 01

## 259-5045 WIRING GP (1/4)

Part of 259-7493-Page444,259-7495-Page445

An Attachment

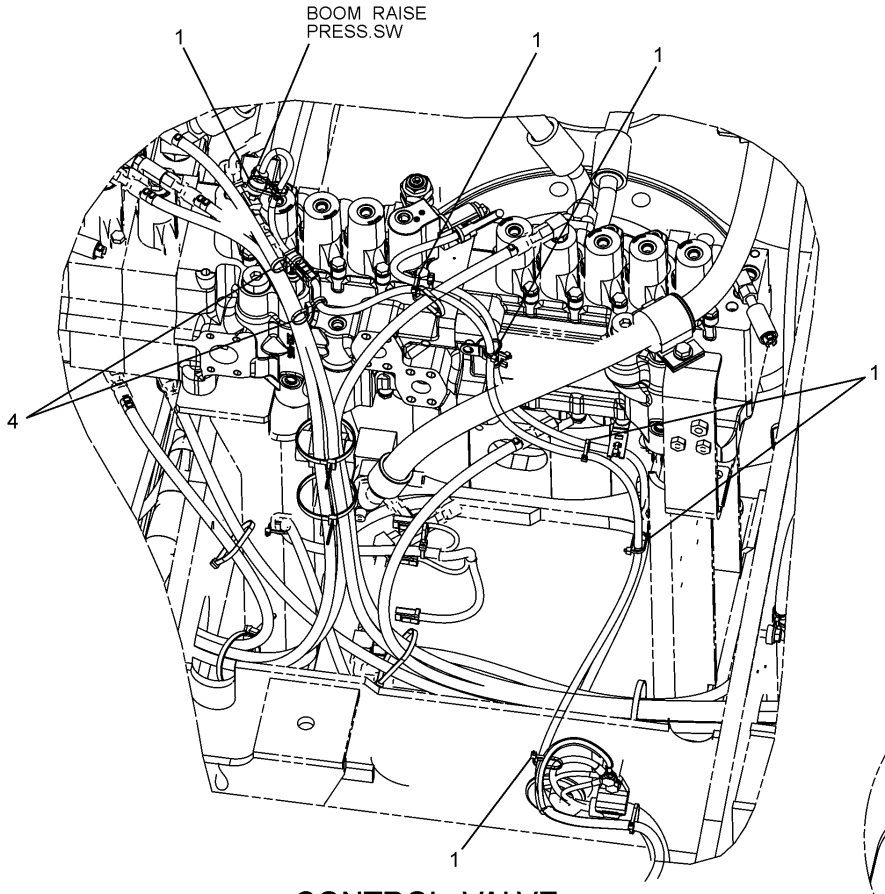


CONTROL VALVE

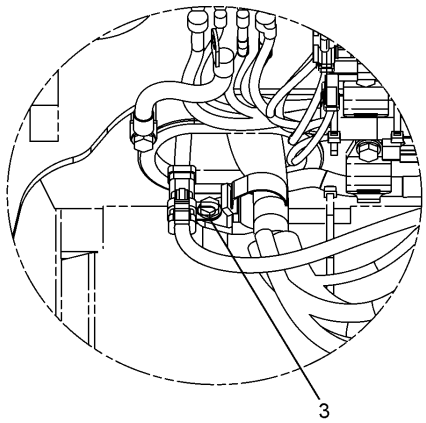


BATTERY ROOM

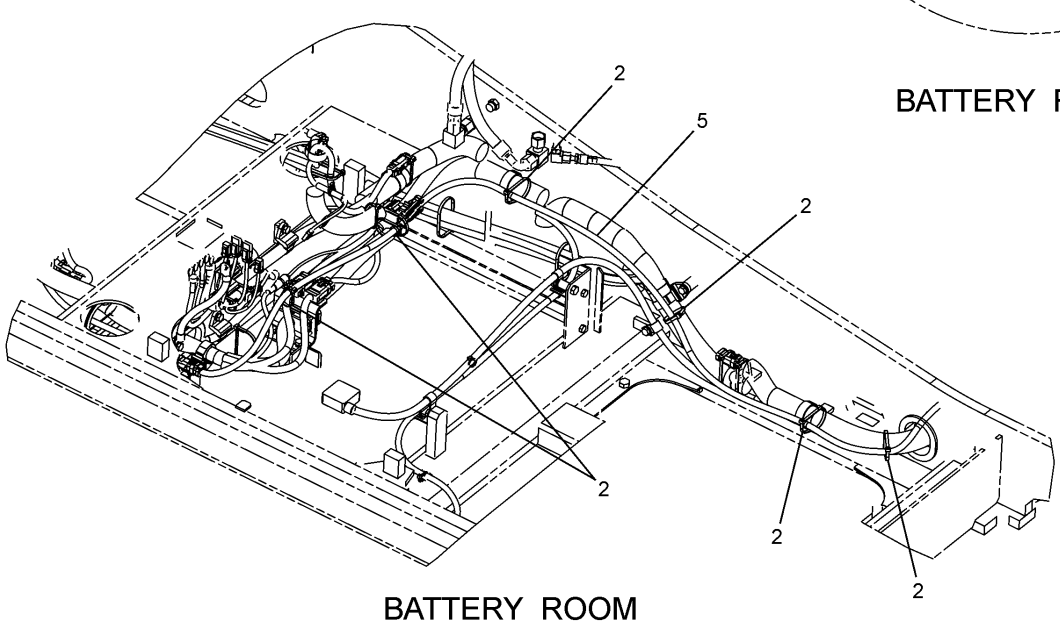


BATTERY ROOM

H95937E 01

**259-5045 WIRING GP (2/4)**
Part of 259-7493-Page444,259-7495-Page445
267-7636-Page168
An Attachment

# ELECTRICAL AND STARTING SYSTEM

| NOTE | No. | PART No. | QTY | PART NAME | NOTE | No. | PART No. | QTY | PART NAME |
|---|---|---|---|---|---|---|---|---|---|
| | 1 | 3S-2093 | 6 | STRAP | | | | | |
| | 2 | 7K-1181 | 6 | STRAP | | | | | |
| | 3 | 116-0118 | 1 | CLIP | | | | | |
| | 4 | 204-1611 | 2 | STRAP | | | | | |
| Y | 5 | 267-7636 | 1 | HARNESS AS | | | | | |

Y—SEE SEPARATE ILLUSTRATION

H95937E 01

## 259-5045 WIRING GP (2/4)

Part of 259-7493-Page444,259-7495-Page445
267-7636-Page168
An Attachment

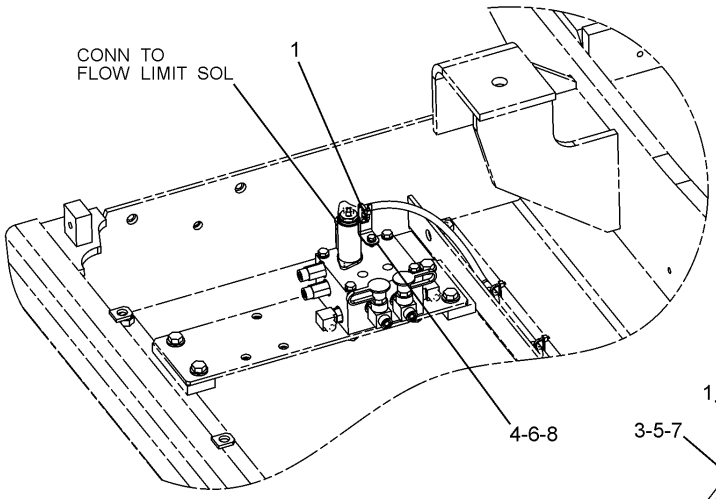


FLOW LIMIT SOL

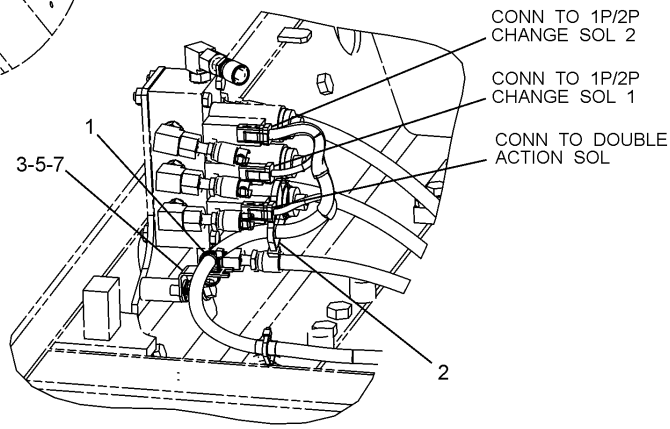


PUMP ROOM

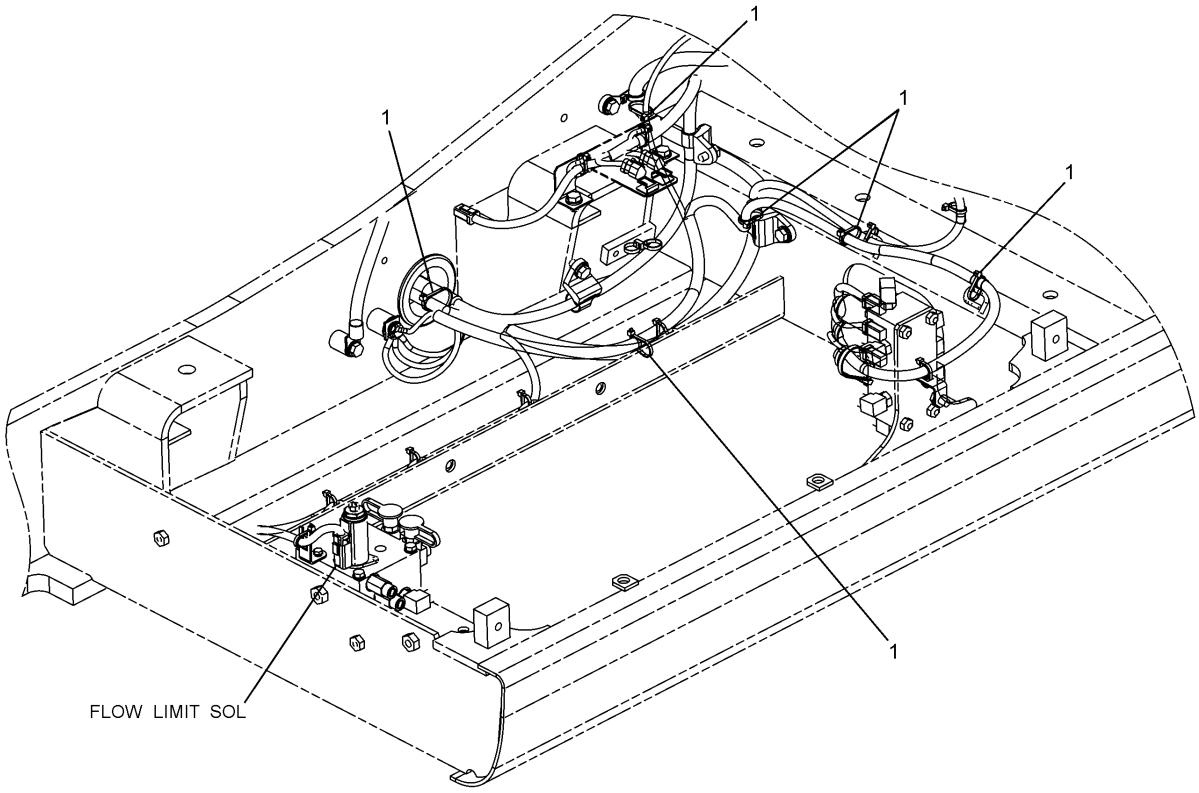


PUMP ROOM

H95938E 01

**259-5045 WIRING GP (3/4)**
Part of 259-7493-Page444,259-7495-Page445
An Attachment

# ELECTRICAL AND STARTING SYSTEM

| NOTE | No. | PART No. | QTY | PART NAME | NOTE | No. | PART No. | QTY | PART NAME |
|---|---|---|---|---|---|---|---|---|---|
| | 1 | 3S-2093 | 8 | STRAP | | | | | |
| | 2 | 7K-1181 | 1 | STRAP | | | | | |
| | 3 | 132-5789 | 1 | CLIP | | | | | |
| | 4 | 156-6175 | 1 | CLIP | | | | | |
| | 5 | 8T-4121 | 1 | WASHER | | | | | |
| | 6 | 8T-4171 | 1 | BOLT (L=12mm) | | | | | |
| | 7 | 8T-4191 | 1 | BOLT (L=16mm) | | | | | |
| | 8 | 9X-8256 | 1 | WASHER | | | | | |

H95938E 01

**259-5045 WIRING GP (3/4)**
Part of 259-7493-Page444,259-7495-Page445
An Attachment

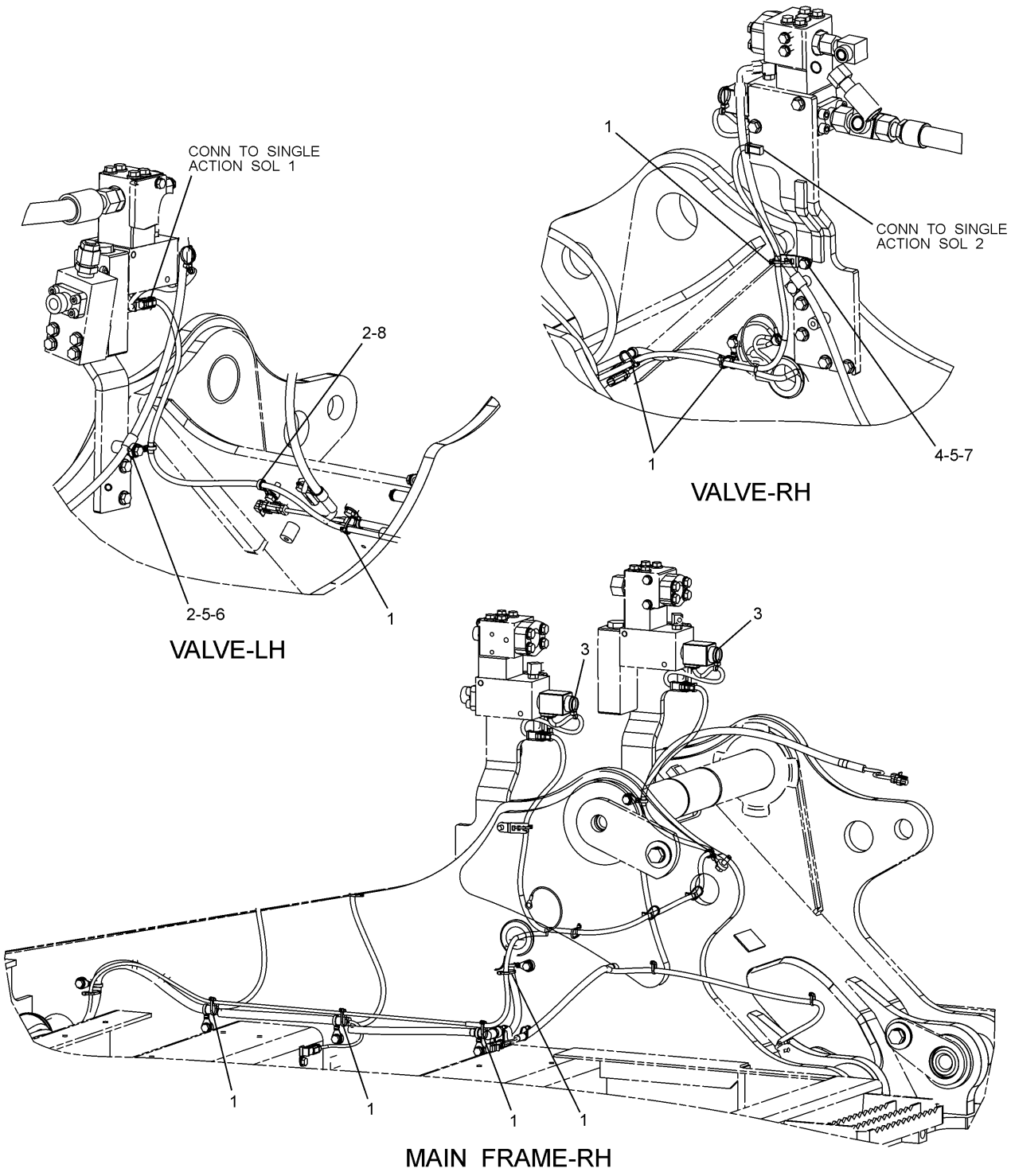


H95939E 01

**259-5045 WIRING GP (4/4)**
Part of 259-7493-Page444,259-7495-Page445
An Attachment

# ELECTRICAL AND STARTING SYSTEM

| NOTE | No. | PART No. | QTY | PART NAME | NOTE | No. | PART No. | QTY | PART NAME |
|---|---|---|---|---|---|---|---|---|---|
| | 1 | 3S-2093 | 8 | STRAP | | | | | |
| | 2 | 111-4836 | 2 | CLIP | | | | | |
| | 3 | 204-1611 | 2 | STRAP | | | | | |
| | 4 | 4P-7581 | 1 | CLIP | | | | | |
| | 5 | 8T-4121 | 2 | WASHER | | | | | |
| | 6 | 8T-4137 | 1 | BOLT (L=20mm) | | | | | |
| | 7 | 8T-4191 | 1 | BOLT (L=16mm) | | | | | |
| | 8 | 8T-4195 | 1 | BOLT (L=30mm) | | | | | |

H95939E 01

**259-5045 WIRING GP (4/4)**
Part of 259-7493-Page444,259-7495-Page445
An Attachment

# ELECTRICAL AND STARTING SYSTEM

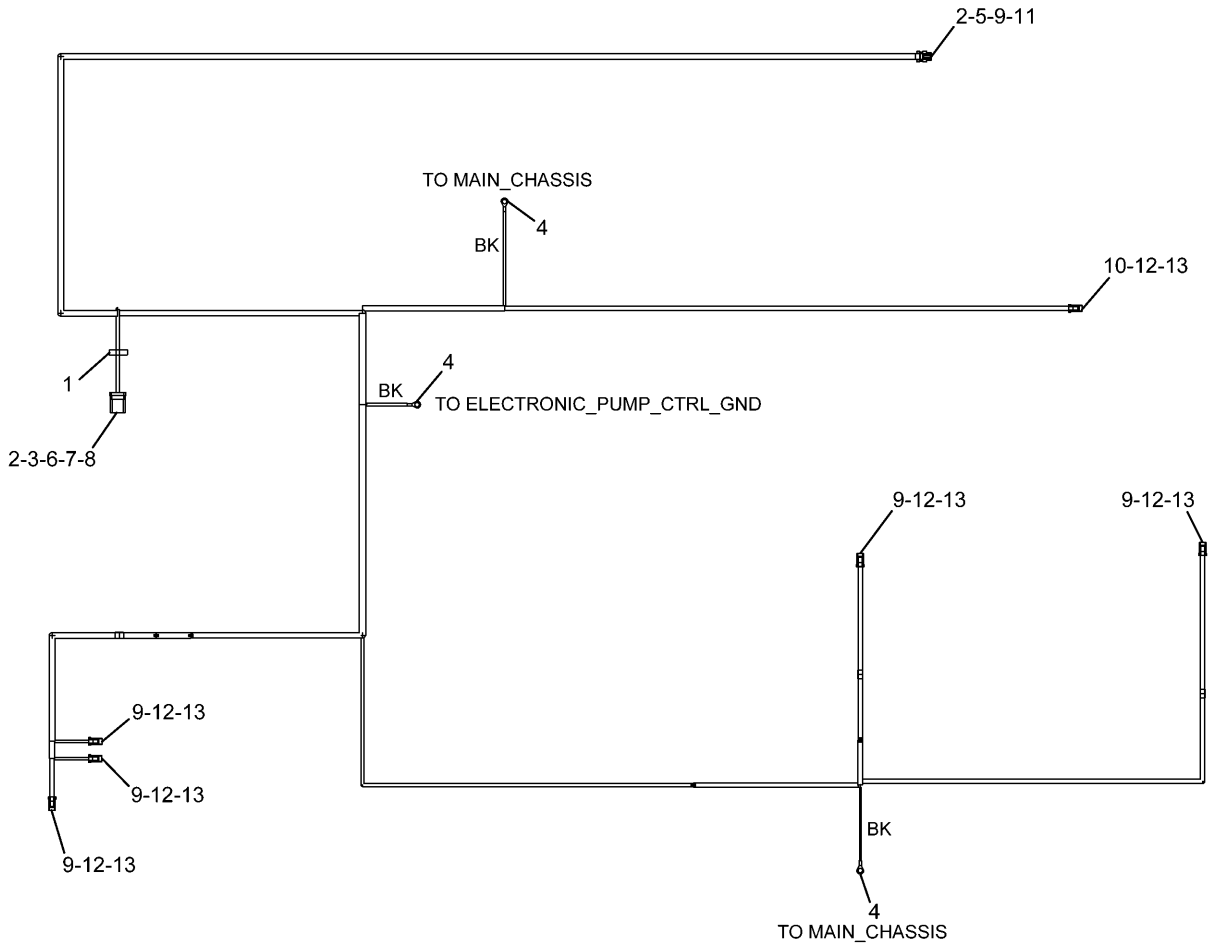


| NOTE | No. | PART No. | QTY | PART NAME | NOTE | No. | PART No. | QTY | PART NAME |
|---|---|---|---|---|---|---|---|---|---|
| | 1 | 3S-2093 | 1 | STRAP | | | | | |
| | 2 | 8T-8737 | 9 | PLUG | | | | | |
| | 3 | 243-4510 | 1 | RECEPTACLE AS | | | | | |
| | 4 | 2L-8079 | 3 | TERMINAL | | | | | |
| | 5 | 230-5010 | 1 | PLUG AS | | | | | |
| | 6 | 186-3735 | 2 | PIN | | | | | |
| | 7 | 9W-0852 | 1 | PIN | | | | | |
| | 8 | 9X-3401 | 1 | PIN | | | | | |
| | 9 | 186-3736 | 14 | SOCKET | | | | | |
| | 10 | 126-1768 | 2 | SOCKET | | | | | |
| | 11 | 9W-0844 | 1 | SOCKET | | | | | |
| | 12 | 155-2270 | 6 | PLUG KIT | | | | | |
| | 13 | 155-2261 | 6 | WEDGE | | | | | |

H89971E 00

**267-7636 HARNESS AS**
Part of 259-5045-Page163
An Attachment

# MEMORANDA

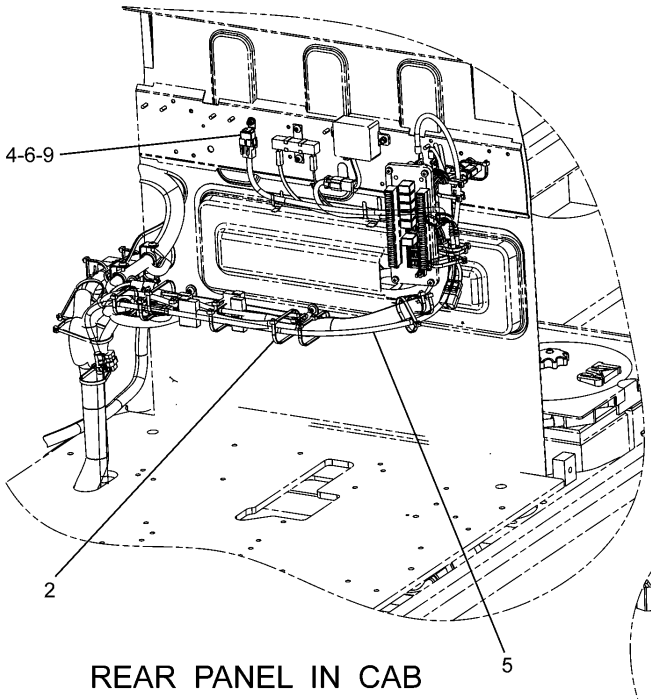


REAR PANEL IN CAB

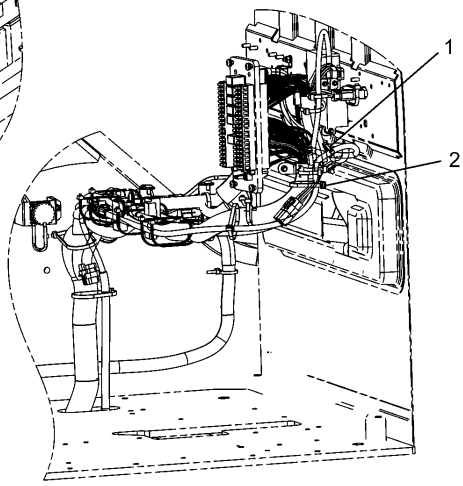


CAB LH SIDE

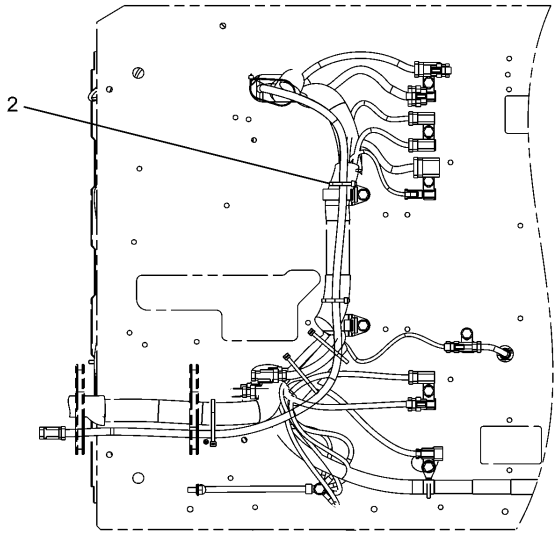


BOTTOM VIEW OF PLATFORM

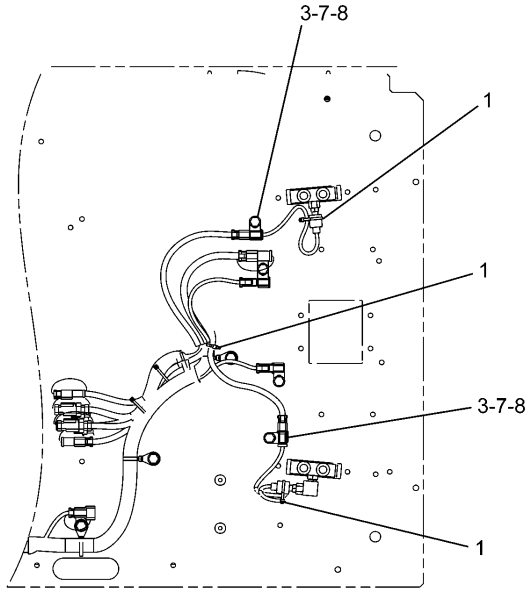


BOTTOM VIEW OF PLATFORM
(FOR MEDIUM PRESSURE LINES)

H90096E 00

**251-0529 WIRING GP-CAB**
Part of 259-7493-Page444,259-7495-Page445
251-0598-Page172
An Attachment

# ELECTRICAL AND STARTING SYSTEM

| NOTE | No. | PART No. | QTY | PART NAME | NOTE | No. | PART No. | QTY | PART NAME |
|---|---|---|---|---|---|---|---|---|---|
| | 1 | 3S-2093 | 4 | STRAP | | | | | |
| | 2 | 7K-1181 | 8 | STRAP | | | | | |
| | 3 | 116-0118 | 2 | CLIP | | | | | |
| | 4 | 149-5050 | 1 | RELAY | | | | | |
| Y | 5 | 251-0598 | 1 | HARNESS AS | | | | | |
| | 6 | 5C-2890 | 1 | NUT | | | | | |
| | 7 | 7X-2621 | 2 | BOLT (L=12mm) | | | | | |
| | 8 | 8T-4121 | 2 | WASHER | | | | | |
| | 9 | 9X-8256 | 1 | WASHER | | | | | |

Y—SEE SEPARATE ILLUSTRATION

H90096E 00

## 251-0529 WIRING GP-CAB

Part of 259-7493-Page444,259-7495-Page445
251-0598-Page172
An Attachment

# ELECTRICAL AND STARTING SYSTEM

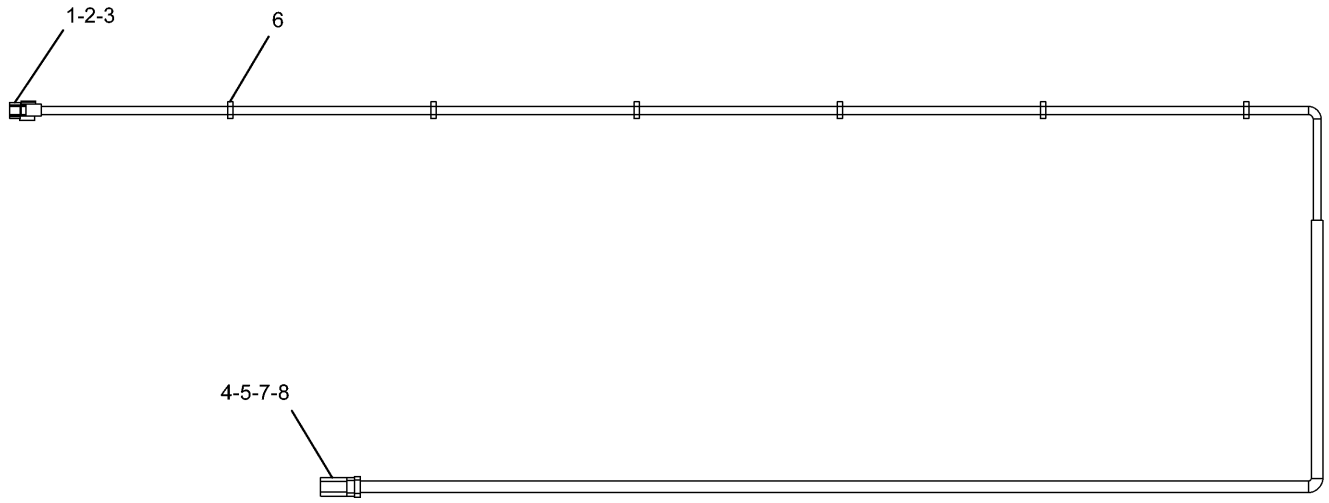


| NOTE | No. | PART No. | QTY | PART NAME | NOTE | No. | PART No. | QTY | PART NAME |
|---|---|---|---|---|---|---|---|---|---|
| | 1 | 149-5051 | 1 | CONNECTOR | | | | | |
| | 2 | 149-5070 | 3 | TERMINAL | | | | | |
| | 3 | 149-5069 | 2 | TERMINAL | | | | | |
| | 4 | 186-3735 | 4 | PIN | | | | | |
| | 5 | 9W-0852 | 1 | PIN | | | | | |
| | 6 | 3S-2093 | 6 | STRAP | | | | | |
| | 7 | 8T-8737 | 1 | PLUG | | | | | |
| | 8 | 243-4508 | 1 | RECEPTACLE AS | | | | | |

H89436E 00

**251-0598 HARNESS AS**
Part of 251-0529-Page171
An Attachment

# MEMORANDA

# ELECTRICAL AND STARTING SYSTEM

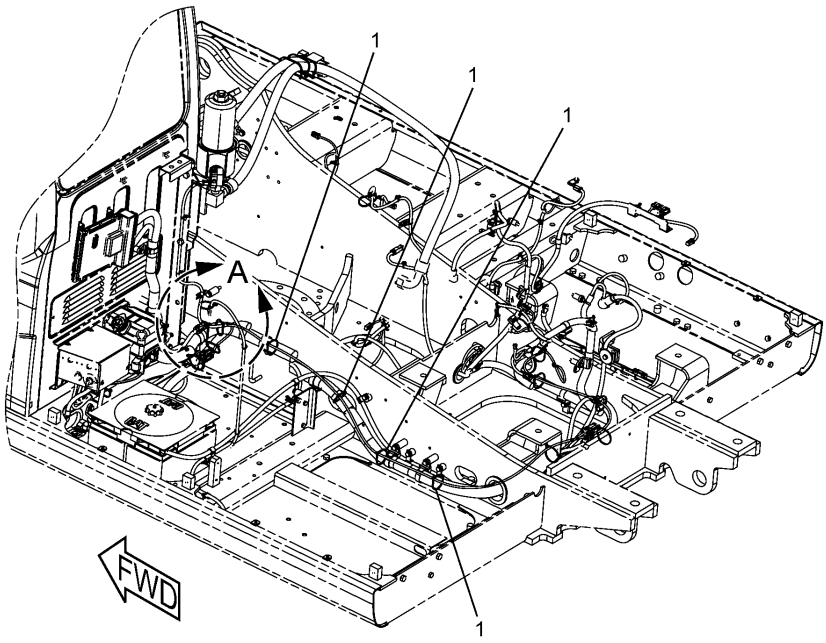


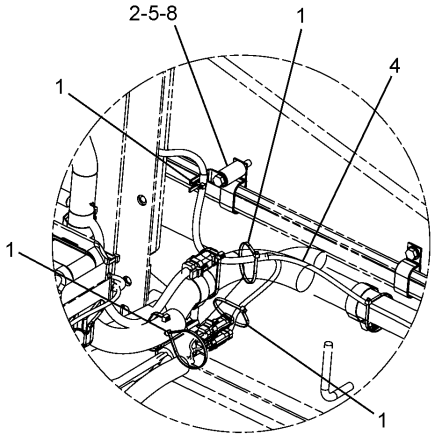


A

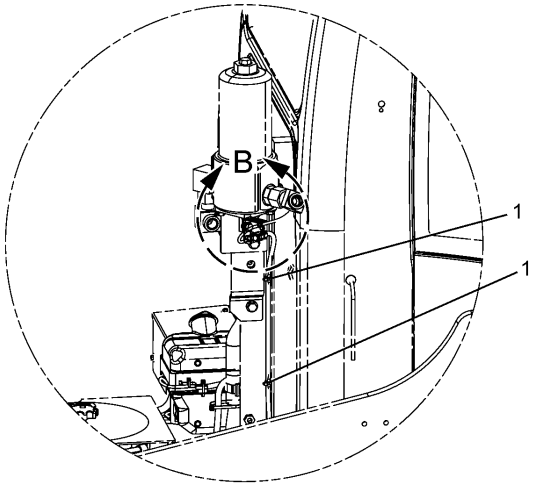


RETURN FILTER

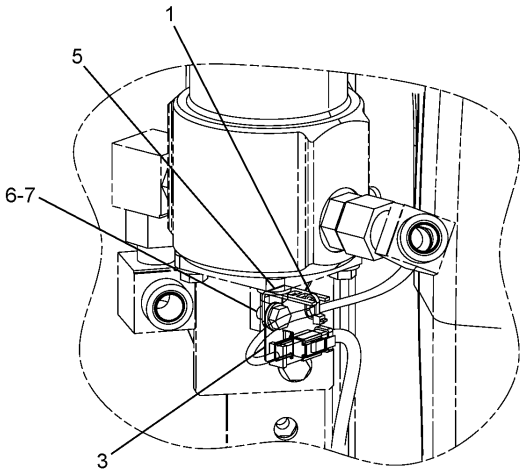


B

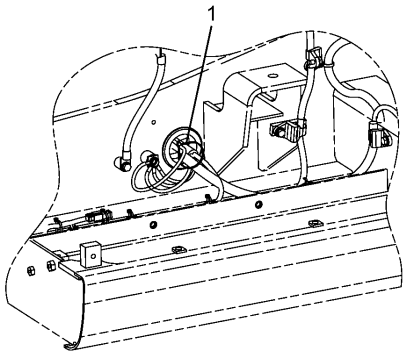


PUMP ROOM

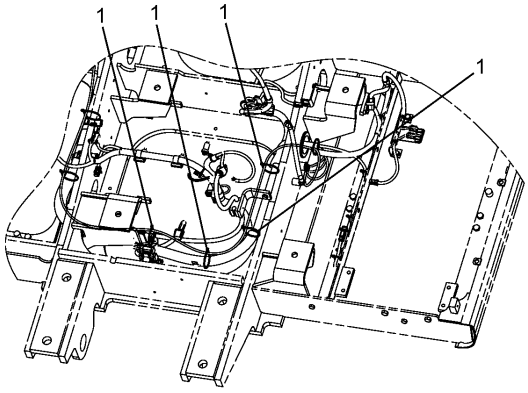


ENGINE ROOM

H89890E 01

**259-5046 WIRING GP**
Hammer Return Filter
Part of 247-7459-Page448
259-5344-Page183
An Attachment

# ELECTRICAL AND STARTING SYSTEM

| NOTE | No. | PART No. | QTY | PART NAME | NOTE | No. | PART No. | QTY | PART NAME |
|---|---|---|---|---|---|---|---|---|---|
| | 1 | 3S-2093 | 16 | STRAP | | | | | |
| | 2 | 4I-7889 | 1 | SPACER | | | | | |
| | 3 | 116-0118 | 1 | CLIP | | | | | |
| Y | 4 | 259-5344 | 1 | HARNESS AS | | | | | |
| | 5 | 132-5789 | 2 | CLIP | | | | | |
| | 6 | 8T-4121 | 1 | WASHER | | | | | |
| | 7 | 8T-4191 | 1 | BOLT (L=16mm) | | | | | |
| | 8 | 8T-5005 | 1 | BOLT (L=70mm) | | | | | |

Y—SEE SEPARATE ILLUSTRATION

H89890E 01

## 259-5046 WIRING GP

Hammer Return Filter
Part of 247-7459-Page448
259-5344-Page183
An Attachment

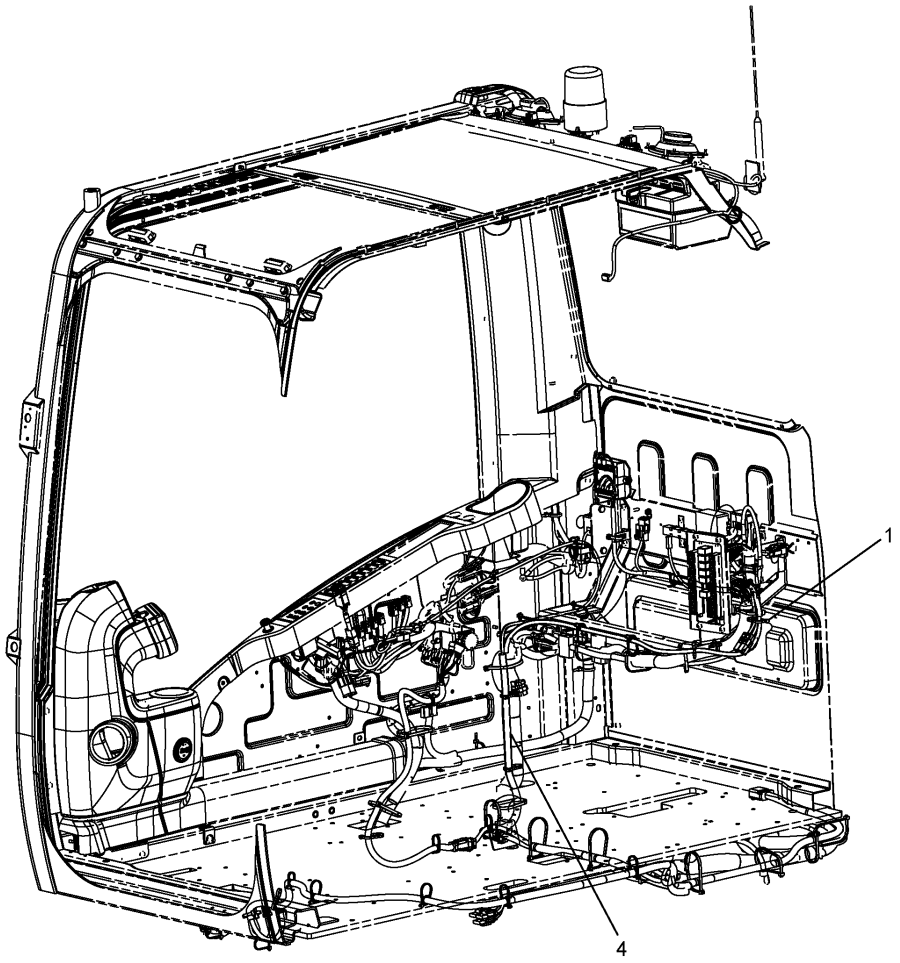


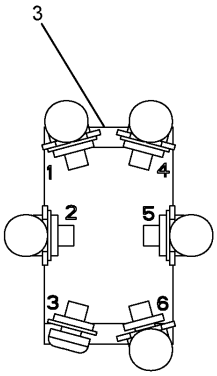


DETAIL OF BACKUP CRANE SW

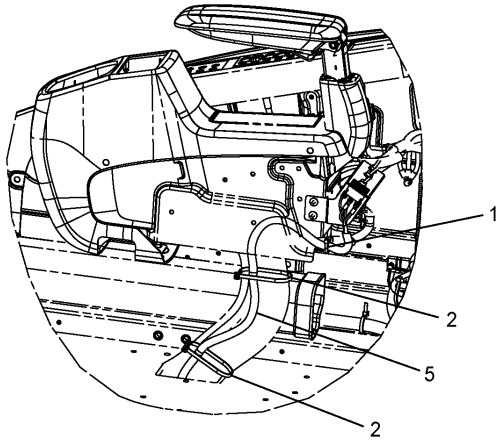


DETAIL OF CONSOLE-RH

H99612E 04

**267-7891 WIRING GP-CAB (1/2)**
S/N BWZ 1-Up, DFB 1-Up
Part of 279-2732-Page11,279-2733-Page12
275-6897-Page180,267-7955-Page182
An Attachment

# ELECTRICAL AND STARTING SYSTEM

| NOTE | No. | PART No. | QTY | PART NAME | NOTE | No. | PART No. | QTY | PART NAME |
|---|---|---|---|---|---|---|---|---|---|
| | 1 | 3S-2093 | 10 | STRAP | | | | | |
| | 2 | 7K-1181 | 2 | STRAP | | | | | |
| | 3 | 299-3040 | 1 | SWITCH AS (BACKUP) | | | | | |
| Y | 4 | 275-6897 | 1 | HARNESS AS | | | | | |
| Y | 5 | 267-7955 | 1 | HARNESS AS | | | | | |

Y—SEE SEPARATE ILLUSTRATION

H99612E 04

## 267-7891 WIRING GP-CAB (1/2)

S/N BWZ 1-Up, DFB 1-Up
Part of 279-2732-Page11,279-2733-Page12
275-6897-Page180,267-7955-Page182
An Attachment

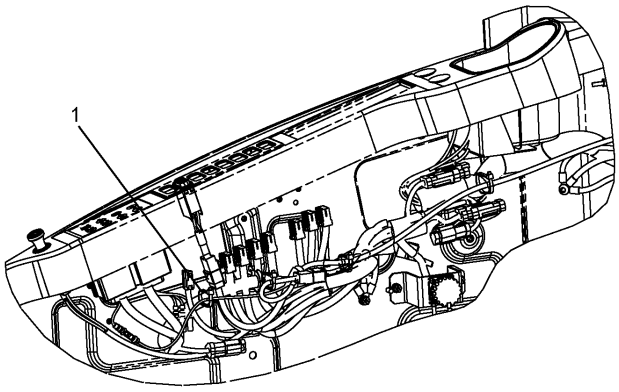


DETAIL OF CAB INSIDE

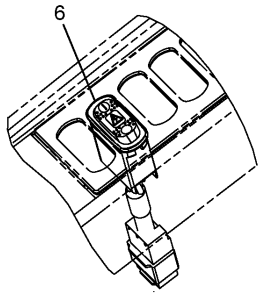


DETAIL OF CRANE CANCEL SW

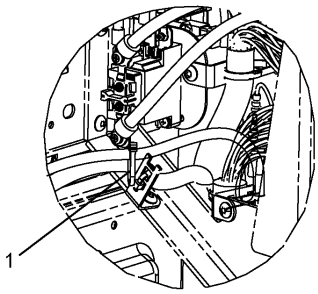


DETAIL OF CAB INSIDE

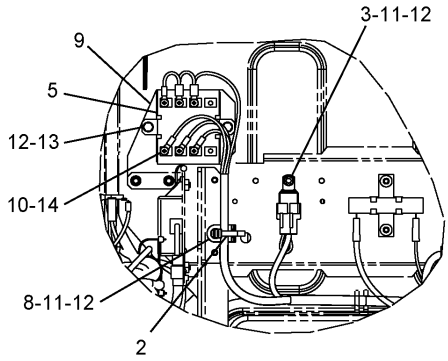


DETAIL OF CAB INSIDE

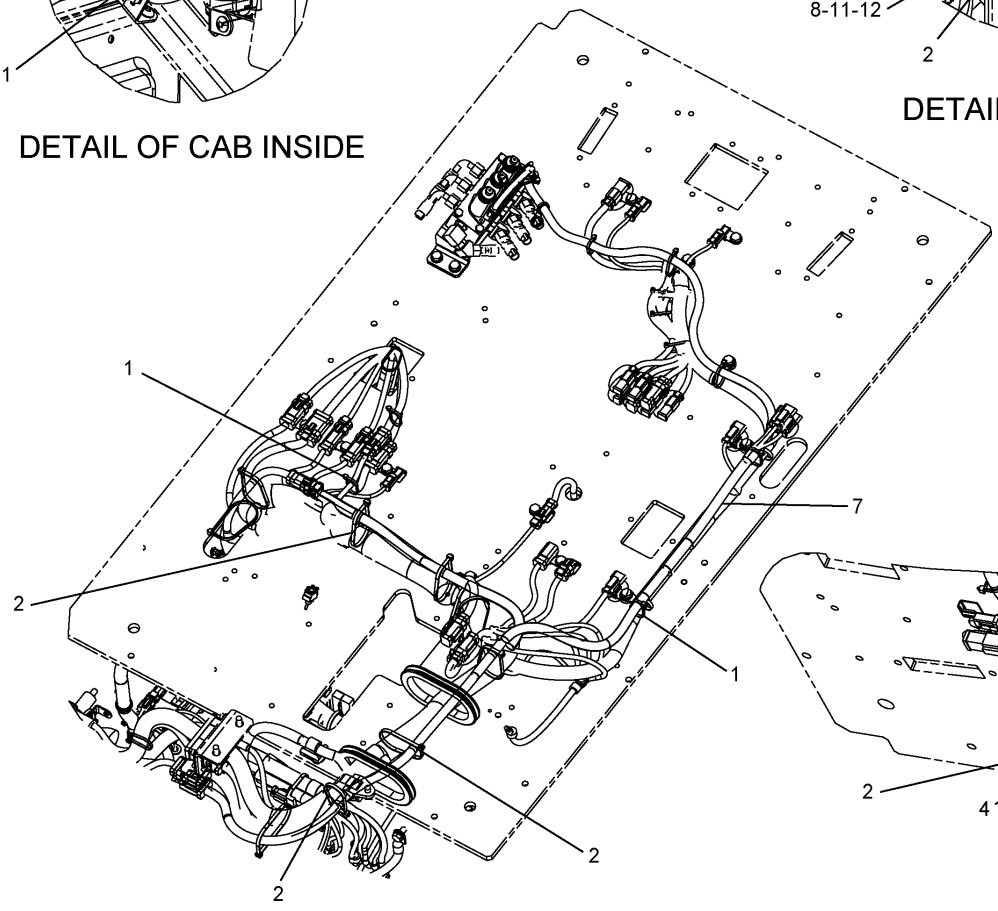


DETAIL OF PLATFORM

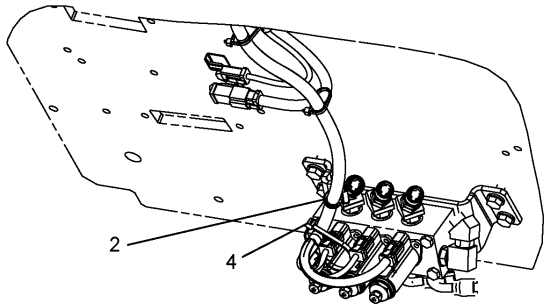


DETAIL OF VALVE

H99613E 04

**267-7891 WIRING GP-CAB (2/2)**
S/N BWZ 1-Up, DFB 1-Up
Part of 279-2732-Page11,279-2733-Page12
275-6896-Page181
An Attachment

# ELECTRICAL AND STARTING SYSTEM

| NOTE | No. | PART No. | QTY | PART NAME | NOTE | No. | PART No. | QTY | PART NAME |
|---|---|---|---|---|---|---|---|---|---|
| | 1 | 3S-2093 | 13 | STRAP | | | | | |
| | 2 | 7K-1181 | 10 | STRAP | | | | | |
| | 3 | 149-5050 | 1 | RELAY | | | | | |
| | 4 | 204-1611 | 1 | STRAP | | | | | |
| | 5 | 126-2941 | 1 | RESISTOR AS | | | | | |
| | 6 | 238-2219 | 1 | SWITCH AS | | | | | |
| | | 167-3542 | 1 | CONNECTOR | | | | | |
| | | 167-3543 | 4 | TERMINAL | | | | | |
| Y | 7 | 275-6896 | 1 | HARNESS AS | | | | | |
| | 8 | 156-6175 | 1 | CLIP | | | | | |
| | 9 | 275-6894 | 1 | STRIP AS | | | | | |
| | 10 | 095-0735 | 6 | SCREW | | | | | |
| | 11 | 5C-2890 | 2 | NUT | | | | | |
| | 12 | 9X-8256 | 4 | WASHER | | | | | |
| | 13 | 8T-4171 | 2 | BOLT (L=12mm) | | | | | |
| | 14 | 8T-0328 | 6 | WASHER | | | | | |

Y—SEE SEPARATE ILLUSTRATION

H99613E 04

**267-7891 WIRING GP-CAB (2/2)**
S/N BWZ 1-Up, DFB 1-Up
Part of 279-2732-Page11,279-2733-Page12
275-6896-Page181
An Attachment

# ELECTRICAL AND STARTING SYSTEM

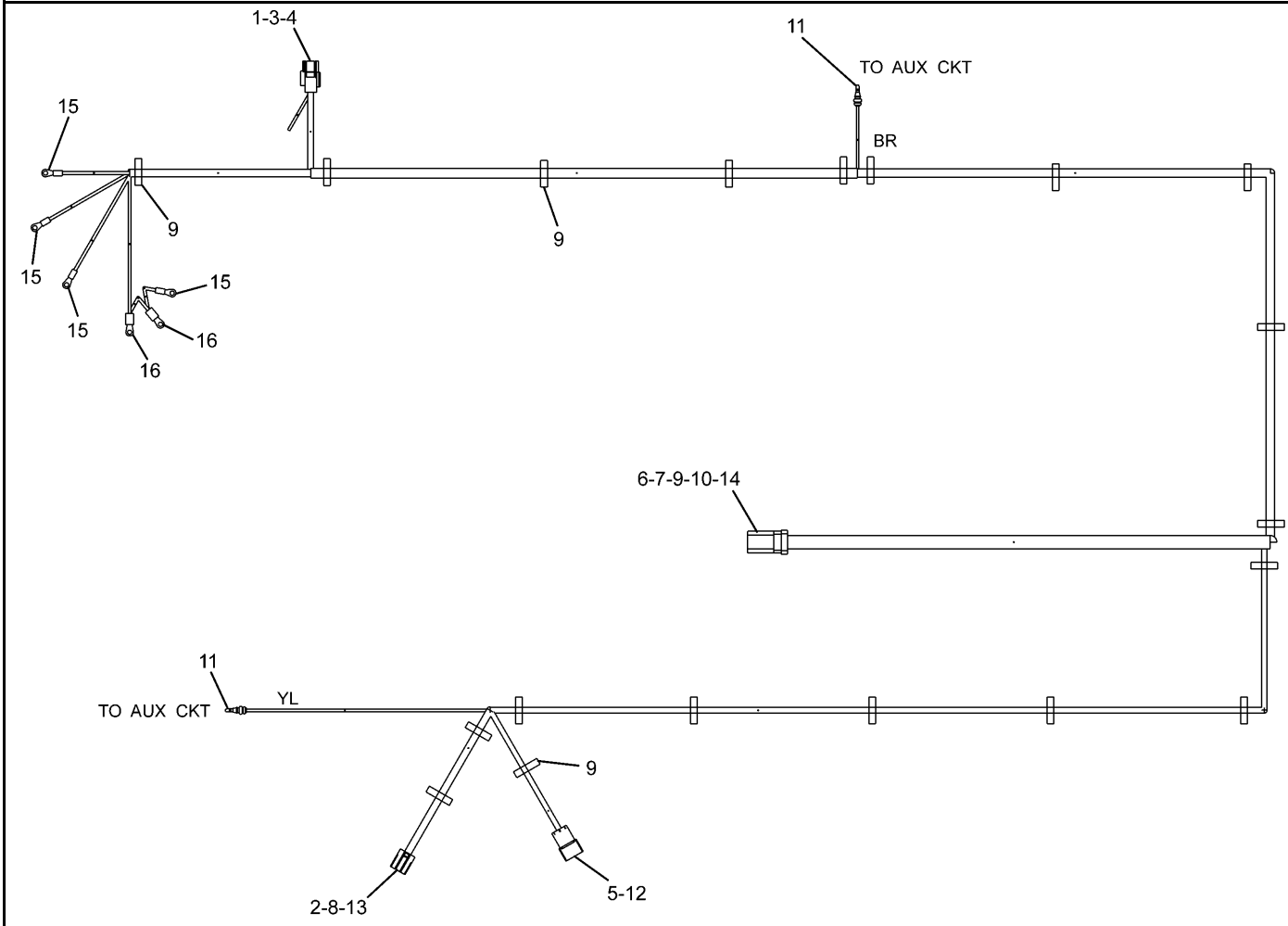


| NOTE | No. | PART No. | QTY | PART NAME | NOTE | No. | PART No. | QTY | PART NAME |
|---|---|---|---|---|---|---|---|---|---|
| | 1 | 149-5051 | 1 | CONNECTOR | | | | | |
| | 2 | 102-7965 | 4 | TERMINAL | | | | | |
| | 3 | 149-5069 | 2 | TERMINAL | | | | | |
| | 4 | 149-5070 | 2 | TERMINAL | | | | | |
| | 5 | 121-1173 | 2 | TERMINAL | | | | | |
| | 6 | 9W-0852 | 4 | PIN | | | | | |
| | 7 | 186-3735 | 3 | PIN | | | | | |
| | 8 | 167-3487 | 1 | WEDGE | | | | | |
| | 9 | 3S-2093 | 19 | STRAP | | | | | |
| | 10 | 8T-8737 | 1 | PLUG | | | | | |
| | 11 | 7Y-3962 | 2 | TERMINAL | | | | | |
| | | 7Y-3964 | 2 | TUBE | | | | | |
| | 12 | 167-3542 | 1 | CONNECTOR | | | | | |
| | 13 | 163-6803 | 1 | CONNECTOR | | | | | |
| | 14 | 243-4509 | 1 | RECEPTACLE AS | | | | | |
| | 15 | 2L-8076 | 4 | TERMINAL | | | | | |
| | 16 | 2L-8066 | 2 | TERMINAL | | | | | |

H99610E 01

**275-6897 HARNESS AS**
S/N BWZ 1-Up, DFB 1-Up
Part of 267-7891-Page177
An Attachment

# ELECTRICAL AND STARTING SYSTEM

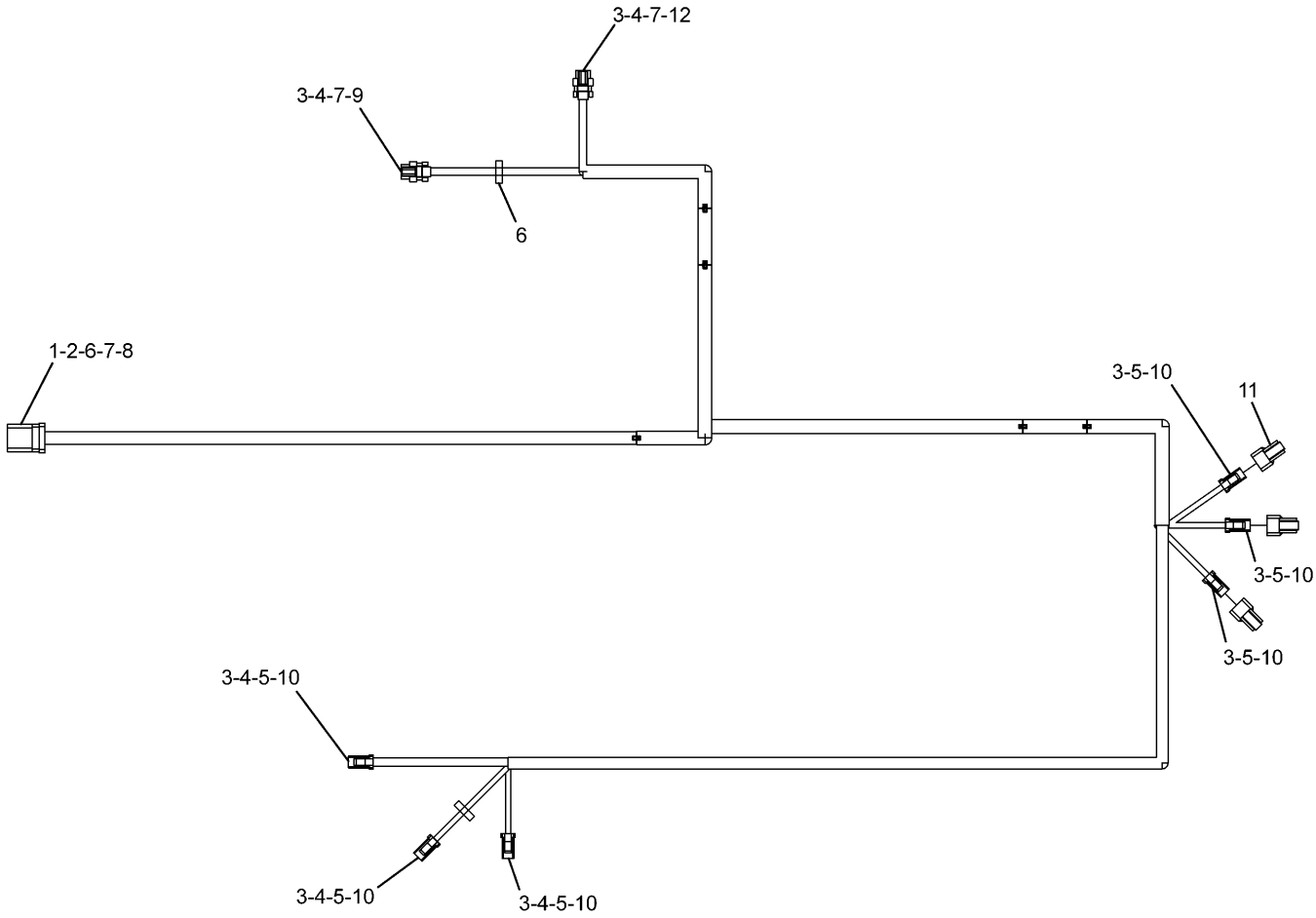


| NOTE | No. | PART No. | QTY | PART NAME | NOTE | No. | PART No. | QTY | PART NAME |
|---|---|---|---|---|---|---|---|---|---|
| | 1 | 9W-0852 | 5 | PIN | | | | | |
| | 2 | 186-3735 | 4 | PIN | | | | | |
| | 3 | 9W-0844 | 16 | SOCKET | | | | | |
| | 4 | 186-3736 | 8 | SOCKET | | | | | |
| | 5 | 155-2261 | 6 | WEDGE | | | | | |
| | 6 | 3S-2093 | 2 | STRAP | | | | | |
| | 7 | 8T-8737 | 5 | PLUG | | | | | |
| | 8 | 243-4510 | 1 | RECEPTACLE AS | | | | | |
| | 9 | 230-5010 | 1 | PLUG AS | | | | | |
| | 10 | 155-2270 | 6 | PLUG KIT | | | | | |
| | 11 | 197-4385 | 3 | DIODE | | | | | |
| | 12 | 231-2295 | 1 | PLUG AS | | | | | |

H91271E 00

**275-6896 HARNESS AS**
S/N BWZ 1-Up, DFB 1-Up
Part of 267-7891-Page179
An Attachment

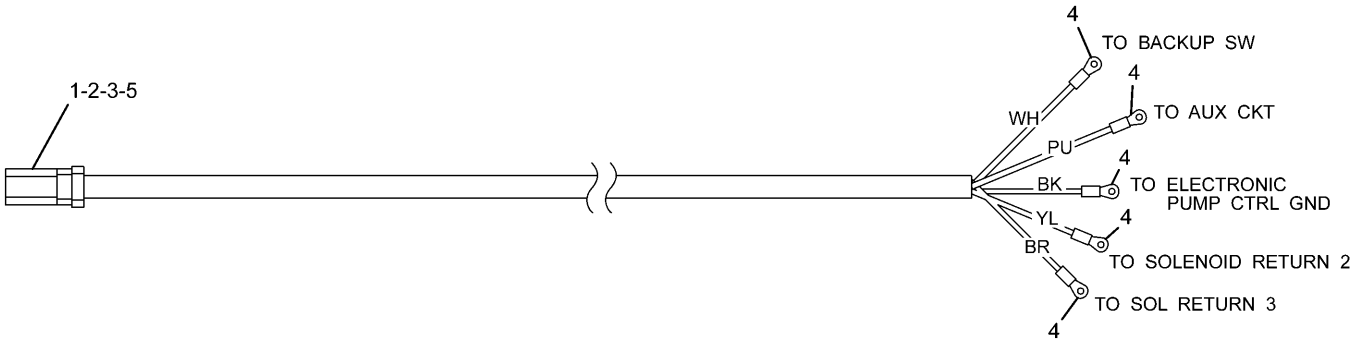


| NOTE | No. | PART No. | QTY | PART NAME | NOTE | No. | PART No. | QTY | PART NAME |
|---|---|---|---|---|---|---|---|---|---|
| | 1 | 186-3735 | 3 | PIN | | | | | |
| | 2 | 9W-0852 | 2 | PIN | | | | | |
| | 3 | 8T-8737 | 1 | PLUG | | | | | |
| | 4 | 2L-8074 | 5 | TERMINAL | | | | | |
| | 5 | 243-4508 | 1 | RECEPTACLE AS | | | | | |

H99423E 01

**267-7955 HARNESS AS**
S/N BWZ 1-Up, DFB 1-Up
Part of 267-7891-Page177
An Attachment

# ELECTRICAL AND STARTING SYSTEM

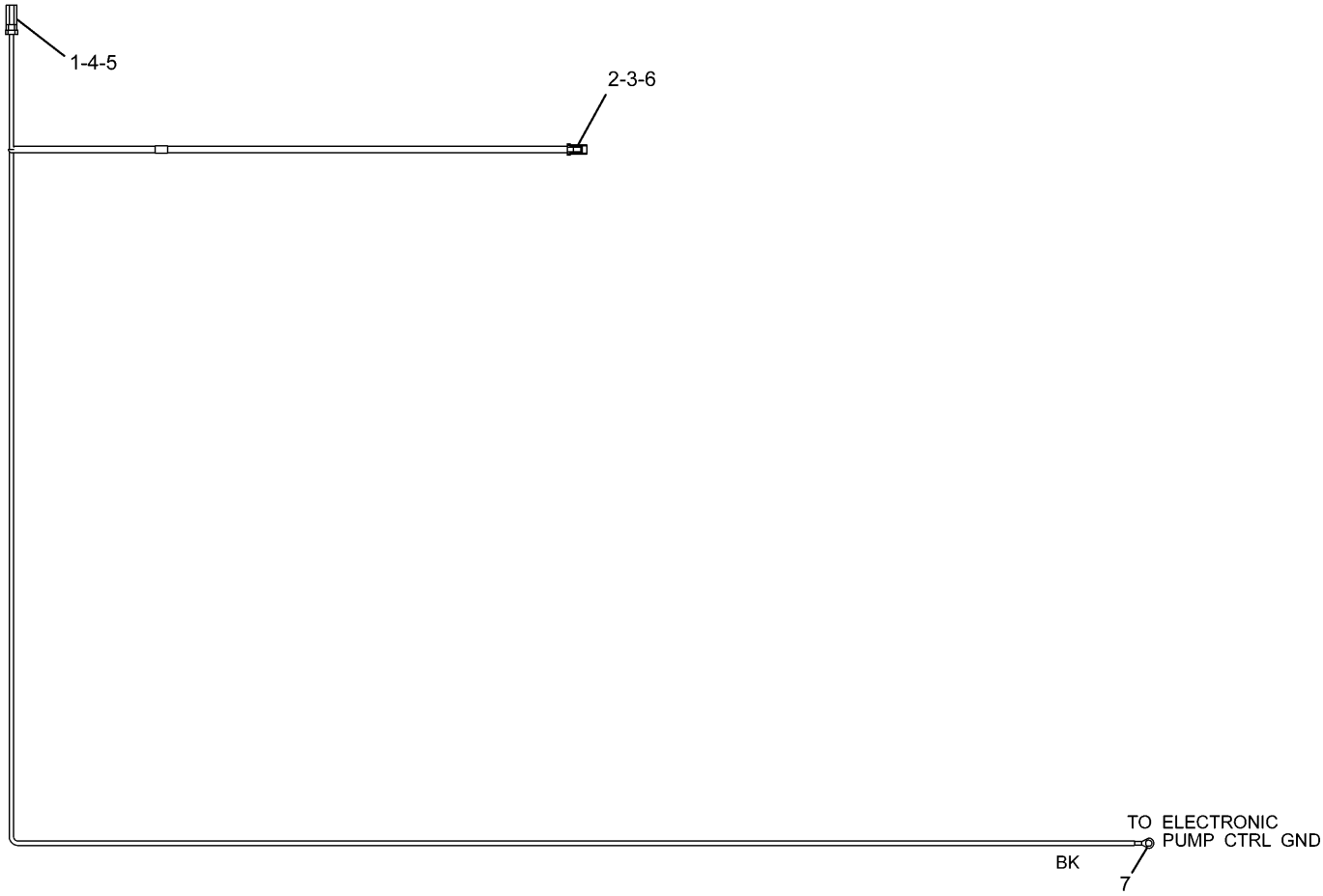


| NOTE | No. | PART No. | QTY | PART NAME | NOTE | No. | PART No. | QTY | PART NAME |
|---|---|---|---|---|---|---|---|---|---|
| | 1 | 9X-3401 | 1 | PIN | | | | | |
| | 2 | 126-1768 | 2 | SOCKET | | | | | |
| | 3 | 155-2261 | 1 | WEDGE | | | | | |
| | 4 | 8T-8737 | 1 | PLUG | | | | | |
| | 5 | 243-4505 | 1 | RECEPTACLE AS | | | | | |
| | 6 | 155-2270 | 1 | PLUG KIT | | | | | |
| | 7 | 2L-8079 | 1 | TERMINAL | | | | | |

H89883E 01

**259-5344 HARNESS AS**
Part of 259-5046-Page175
An Attachment

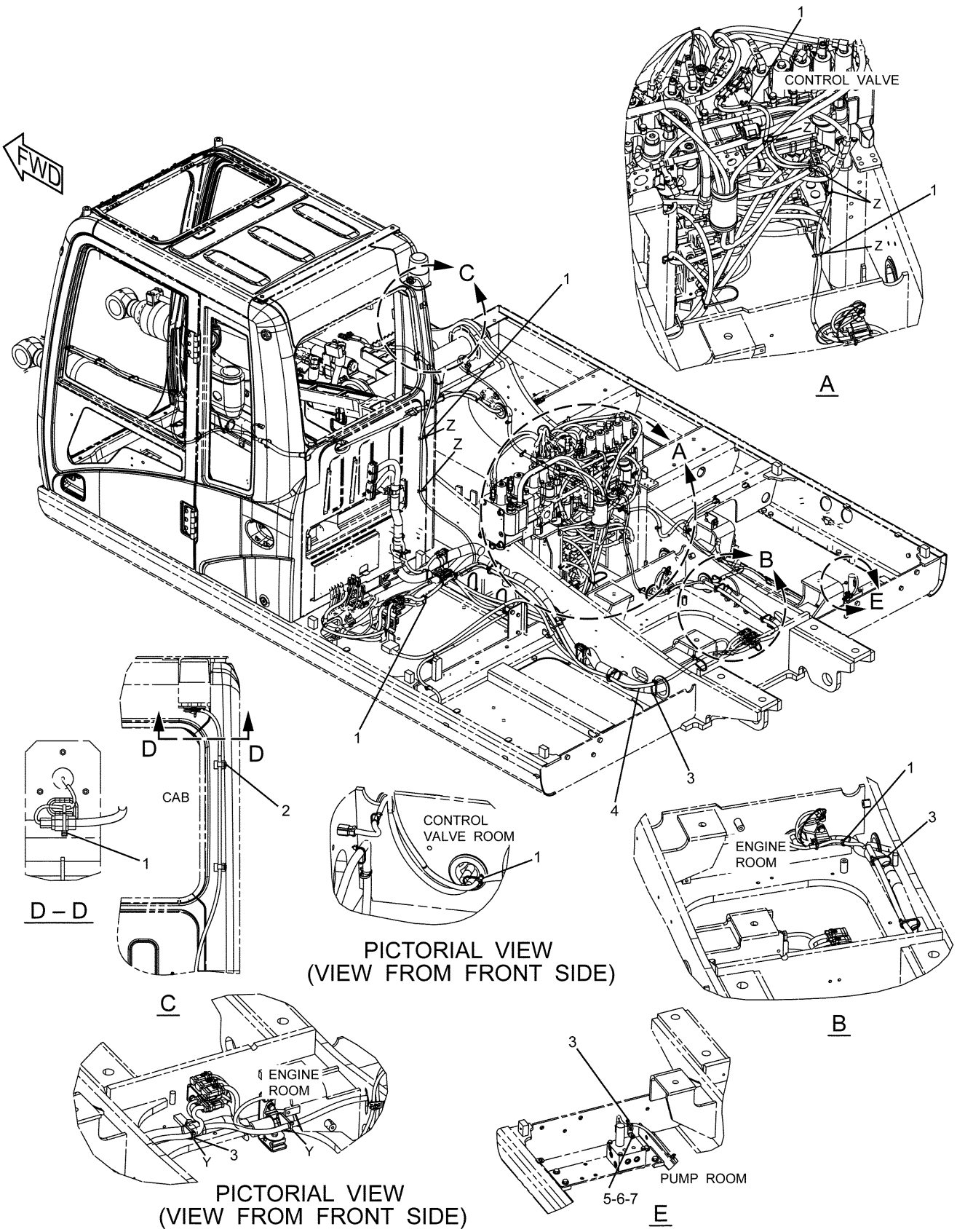


**267-7890 WIRING GP-BOOM (1/2)**
S/N BWZ 1-Up, DFB 1-Up
Part of 279-2732-Page11,279-2733-Page12
283-3042-Page188
An Attachment

# ELECTRICAL AND STARTING SYSTEM

| NOTE | No. | PART No. | QTY | PART NAME | NOTE | No. | PART No. | QTY | PART NAME |
|---|---|---|---|---|---|---|---|---|---|
| | 1 | 3S-2093 | 15 | STRAP | | | | | |
| | 2 | 5I-6959 | 2 | CLAMP | | | | | |
| | 3 | 7K-1181 | 10 | STRAP | | | | | |
| Y | 4 | 283-3042 | 1 | HARNESS AS | | | | | |
| | 5 | 156-6175 | 1 | CLIP | | | | | |
| | 6 | 8T-4171 | 1 | BOLT (L=12mm) | | | | | |
| | 7 | 9X-8256 | 1 | WASHER | | | | | |

Y—SEE SEPARATE ILLUSTRATION

H96106E 03

## 267-7890 WIRING GP-BOOM (1/2)

S/N BWZ 1-Up, DFB 1-Up
Part of 279-2732-Page11,279-2733-Page12
283-3042-Page188
An Attachment

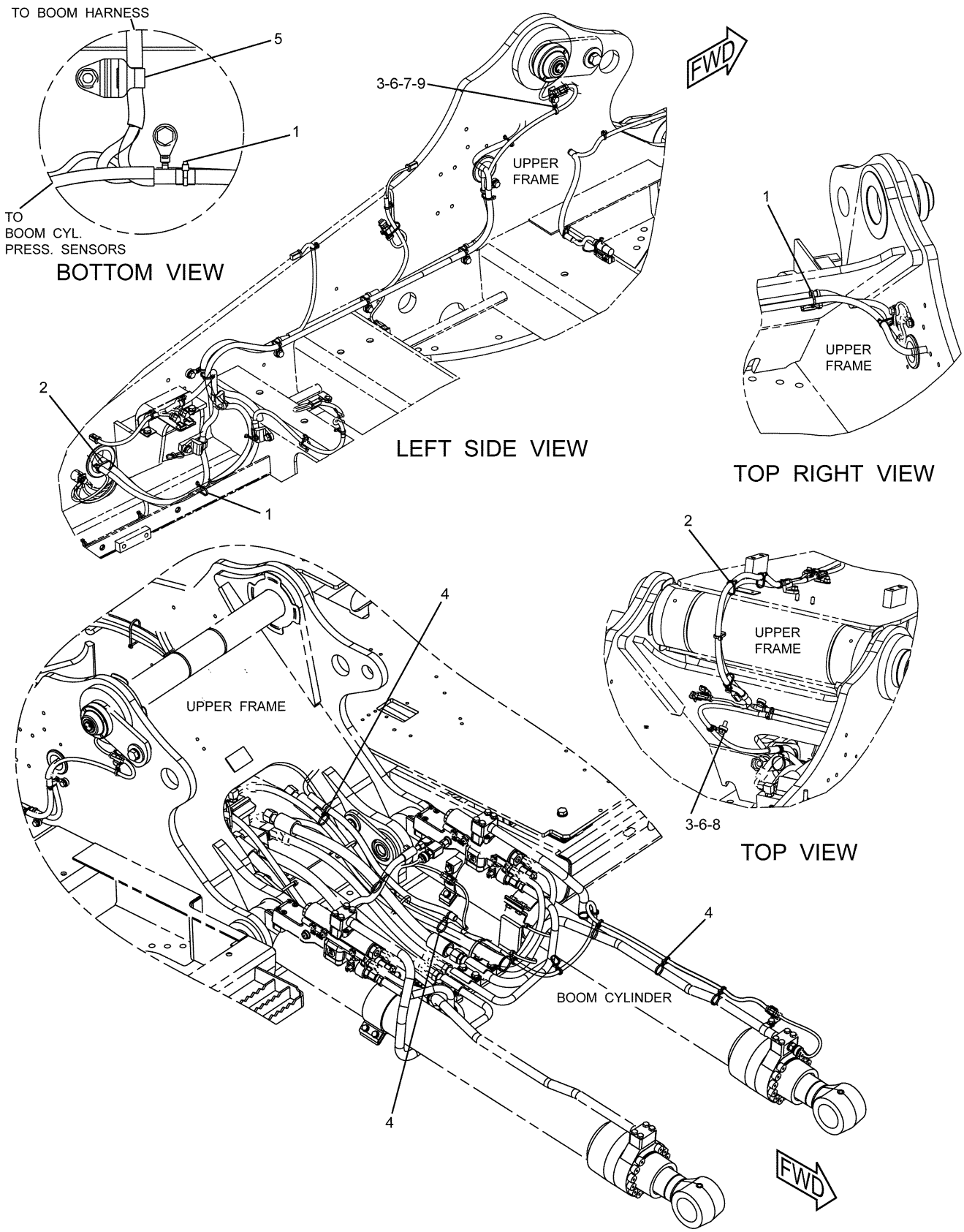


**267-7890 WIRING GP-BOOM (2/2)**
S/N BWZ 1-Up, DFB 1-Up
Part of 279-2732-Page11,279-2733-Page12
An Attachment

# ELECTRICAL AND STARTING SYSTEM

| NOTE | No. | PART No. | QTY | PART NAME | NOTE | No. | PART No. | QTY | PART NAME |
|---|---|---|---|---|---|---|---|---|---|
| | 1 | 3S-2093 | 10 | STRAP | | | | | |
| | 2 | 7K-1181 | 5 | STRAP | | | | | |
| | 3 | 111-4836 | 2 | CLIP | | | | | |
| | 4 | 204-1611 | 9 | STRAP | | | | | |
| | 5 | 111-4837 | 1 | CLIP | | | | | |
| | 6 | 8T-4121 | 2 | WASHER | | | | | |
| | 7 | 8T-4137 | 1 | BOLT (L=20mm) | | | | | |
| | 8 | 8T-4195 | 1 | BOLT (L=30mm) | | | | | |
| | 9 | 116-0118 | 1 | CLIP | | | | | |

H96107E 03

## 267-7890 WIRING GP-BOOM (2/2)

S/N BWZ 1-Up, DFB 1-Up
Part of 279-2732-Page11,279-2733-Page12
An Attachment

# ELECTRICAL AND STARTING SYSTEM

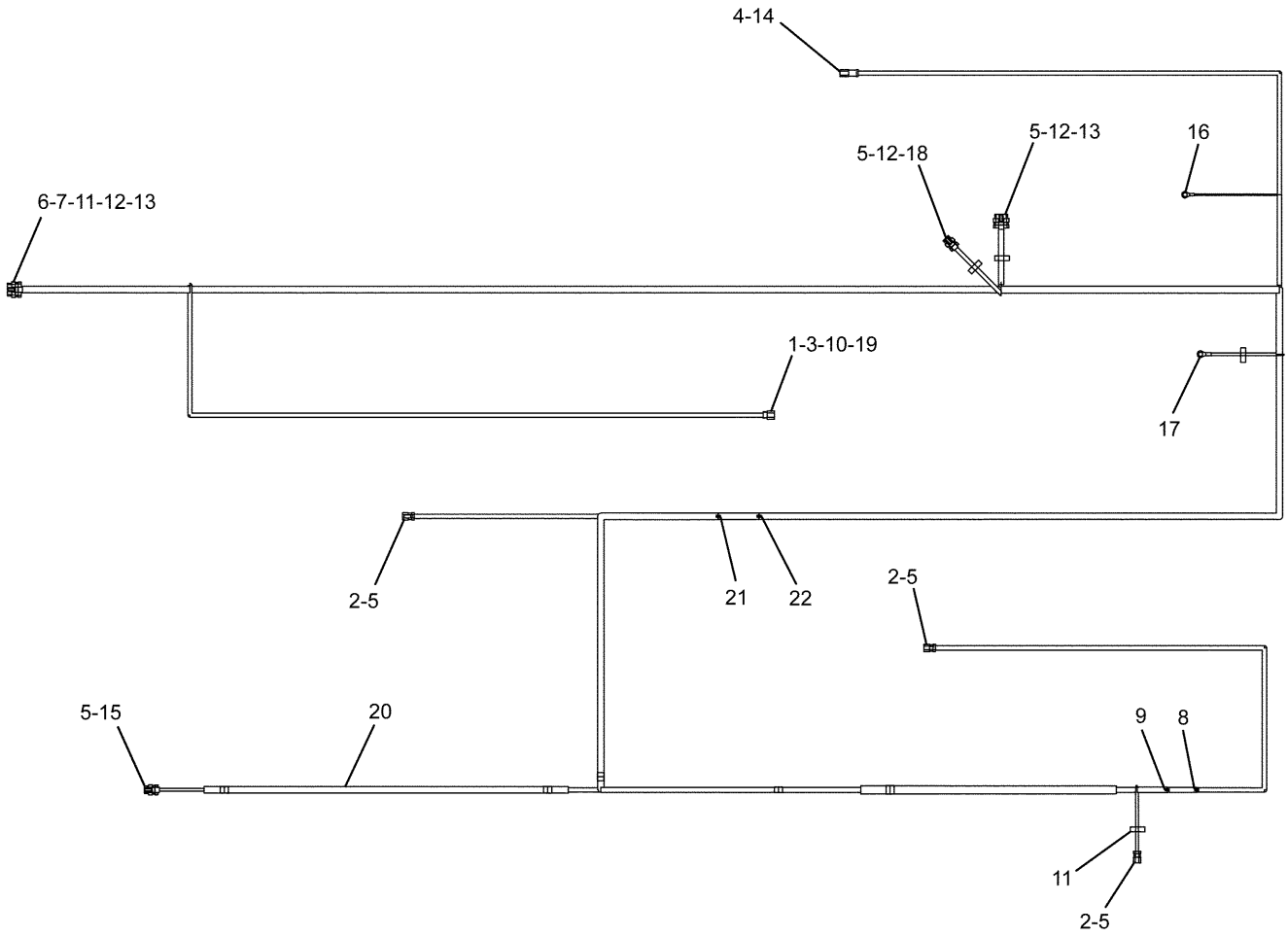


| NOTE | No. | PART No. | QTY | PART NAME | NOTE | No. | PART No. | QTY | PART NAME |
|---|---|---|---|---|---|---|---|---|---|
| | 1 | 187-6417 | 1 | CONNECTOR | E | 21 | 125-7874 | | TUBE…(5cm) |
| | 2 | 155-2260 | 3 | PLUG KIT | E | 22 | 125-7874 | | TUBE…(5cm) |
| | 3 | 187-6421 | 2 | TERMINAL | | | | | |
| | 4 | 126-1767 | 2 | PIN | | | | | |
| | 5 | 126-1768 | 27 | SOCKET | | | | | |
| | 6 | 9W-0844 | 4 | SOCKET | | | | | |
| | 7 | 8T-8730 | 5 | SOCKET | | | | | |
| E | 8 | 125-7874 | | TUBE…(5cm) | | | | | |
| E | 9 | 125-7875 | | TUBE…(5cm) | | | | | |
| | 10 | 187-6422 | 1 | WEDGE | | | | | |
| | 11 | 3S-2093 | 4 | STRAP | | | | | |
| | 12 | 8T-8737 | 6 | PLUG | | | | | |
| | 13 | 230-4009 | 2 | PLUG AS | | | | | |
| | 14 | 102-8802 | 1 | RECEPTACLE KIT | | | | | |
| | 15 | 230-4013 | 1 | PLUG AS | | | | | |
| | 16 | 2L-8079 | 1 | TERMINAL | | | | | |
| | 17 | 2L-8069 | 1 | TERMINAL | | | | | |
| | 18 | 230-5010 | 1 | PLUG AS | | | | | |
| | 19 | 117-1878 | 2 | SEAL | | | | | |
| E | 20 | 103-2529 | | HOSE…(90cm) | | | | | |

E—ORDER BY THE CENTIMETER

H96355E 01

## 283-3042 HARNESS AS

S/N BWZ 1-Up, DFB 1-Up
Part of 267-7890-Page185
An Attachment

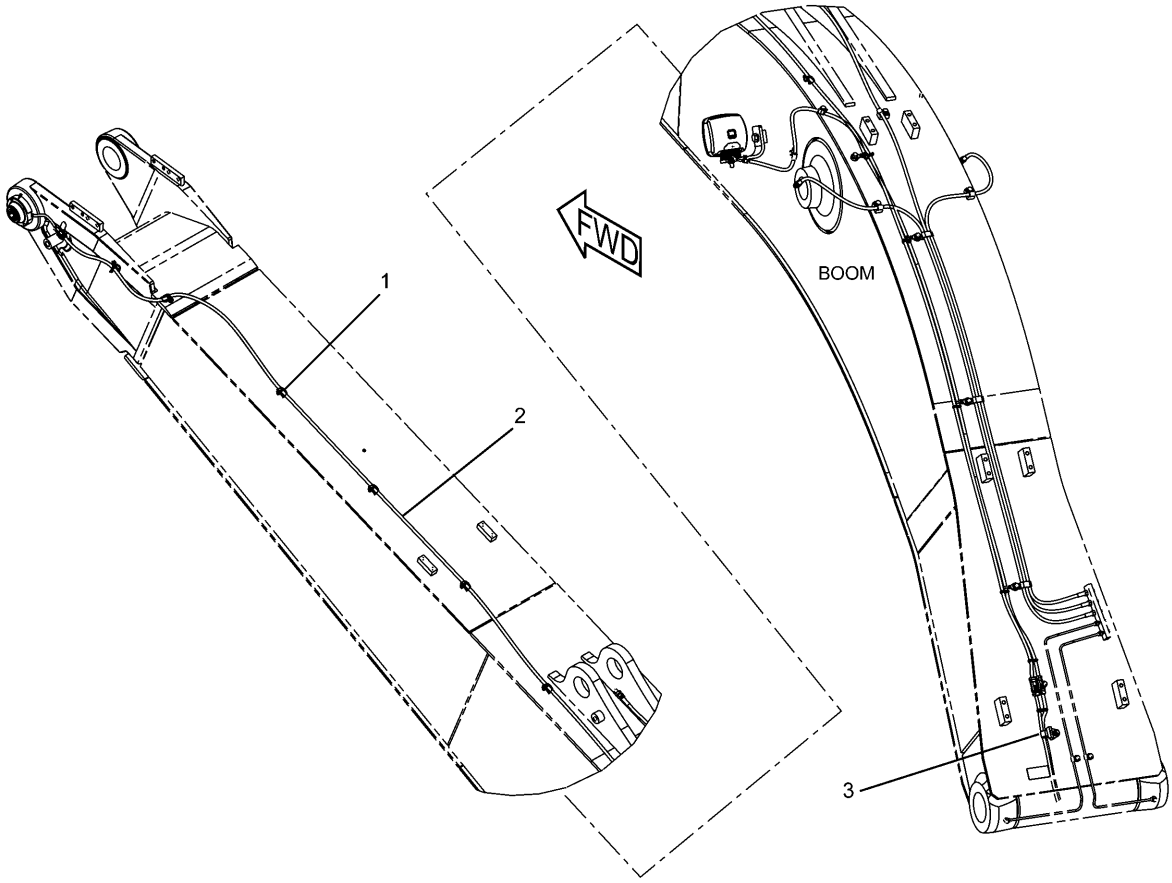


| NOTE | No. | PART No. | QTY | PART NAME | NOTE | No. | PART No. | QTY | PART NAME |
|---|---|---|---|---|---|---|---|---|---|
| | 1 | 3S-2093 | 13 | STRAP | | | | | |
| | 2 | 267-7925 | 1 | HARNESS AS | | | | | |
| | | 155-2260 | 1 | PLUG KIT | | | | | |
| | | 9X-3401 | 3 | PIN | | | | | |
| | | 126-1768 | 3 | SOCKET | | | | | |
| | | 243-4506 | 1 | RECEPTACLE AS | | | | | |
| | 3 | 111-4837 | 1 | CLIP | | | | | |

H90021E 00

## 267-7924 WIRING GP-BOOM

S/N BWZ 1-Up, DFB 1-Up
Part of 279-2732-Page11,279-2733-Page12
An Attachment

# ELECTRICAL AND STARTING SYSTEM

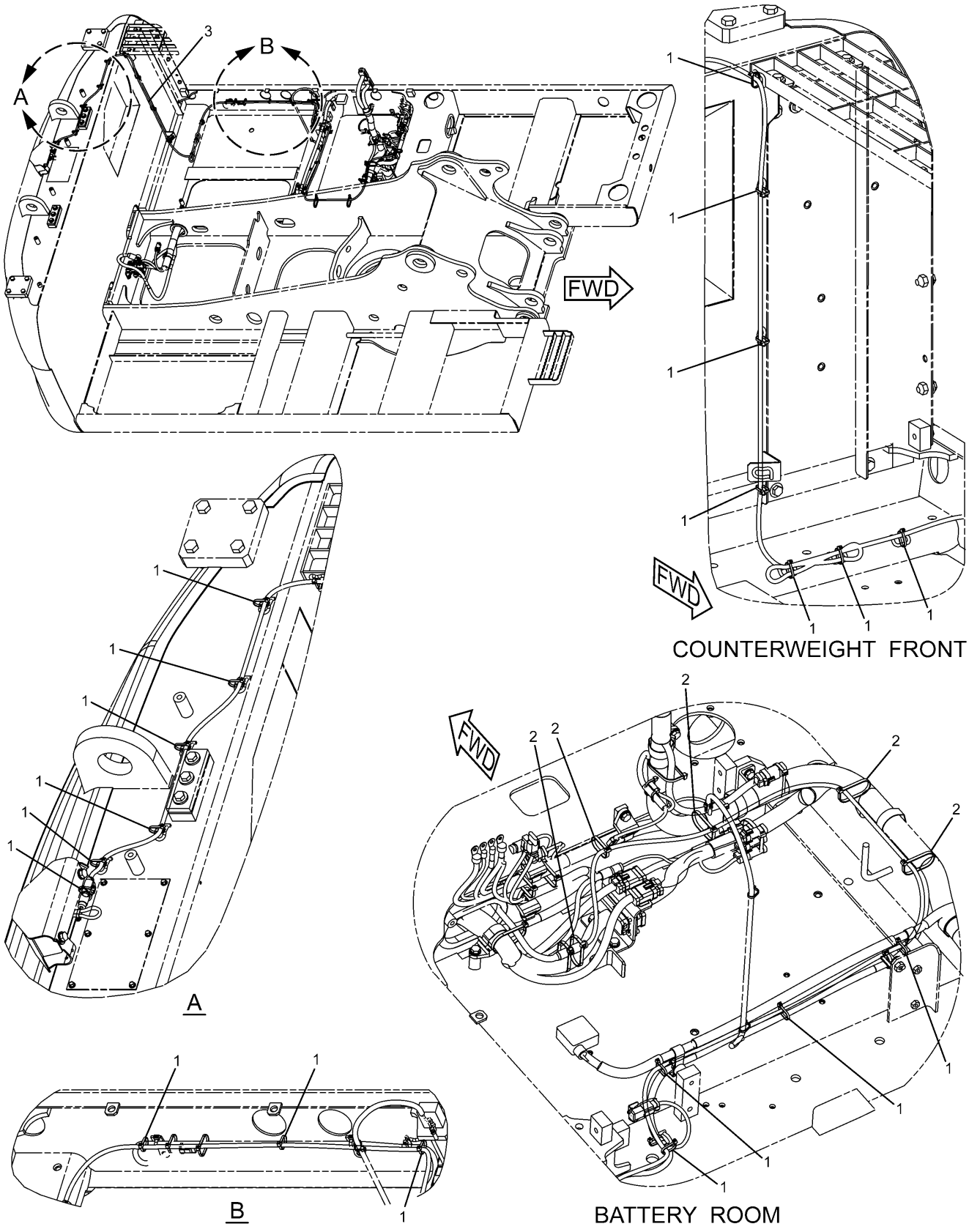


**324-5774 WIRING GP**
S/N BWZ 1-Up, DFB 1-Up
Part of 314-3740-Page665.05
An Attachment

# ELECTRICAL AND STARTING SYSTEM

| NOTE | No. | PART No. | QTY | PART NAME | NOTE | No. | PART No. | QTY | PART NAME |
|---|---|---|---|---|---|---|---|---|---|
| | 1 | 3S-2093 | 20 | STRAP | | | | | |
| | 2 | 7K-1181 | 5 | STRAP | | | | | |
| | 3 | 268-8643 | 1 | CABLE AS | | | | | |

HA0816E 00

**324-5774 WIRING GP**
S/N BWZ 1-Up, DFB 1-Up
Part of 314-3740-Page665.05
An Attachment

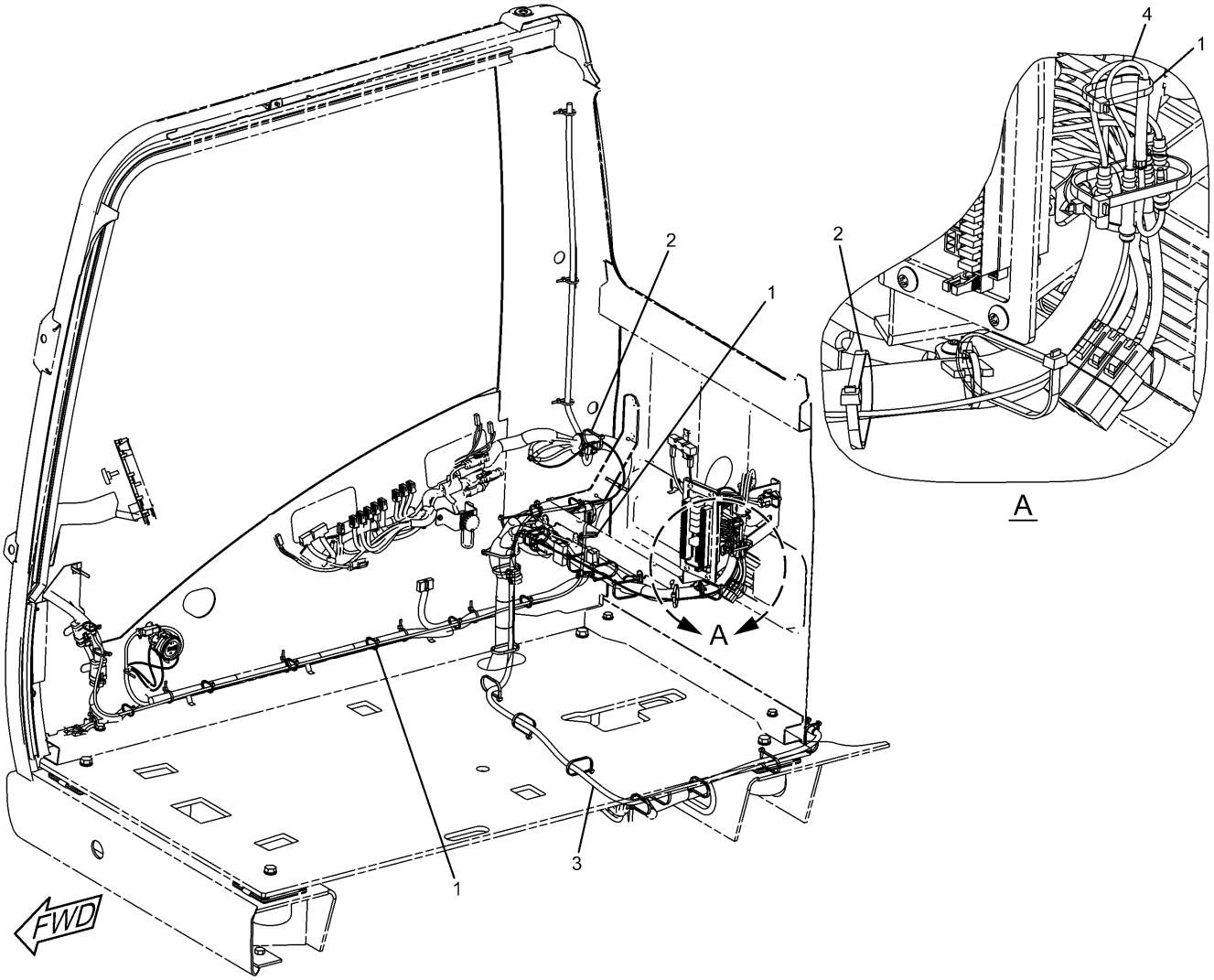


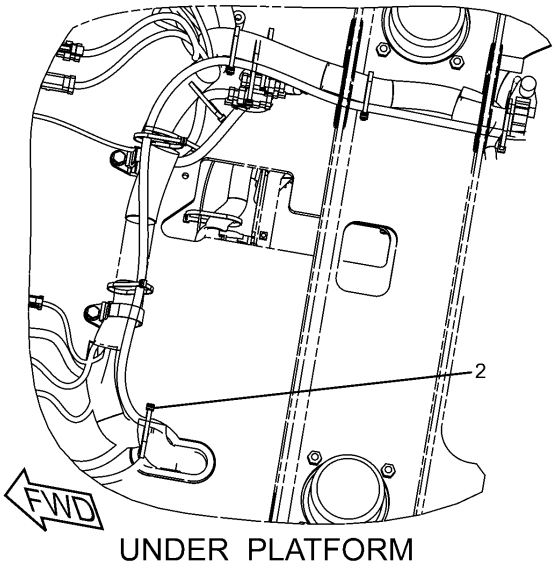


UNDER PLATFORM

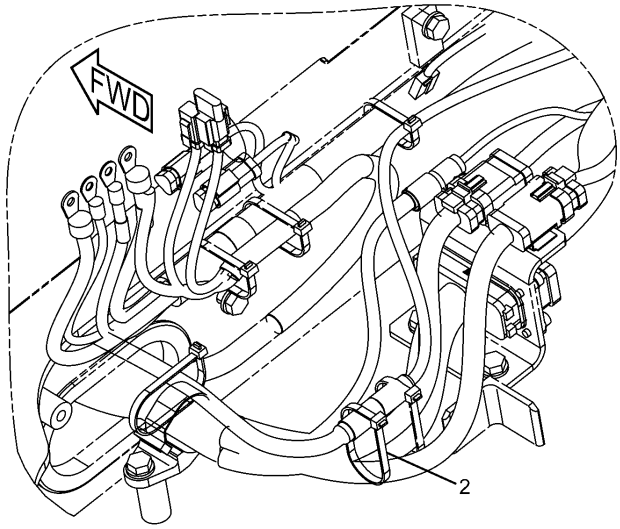


BATTERY ROOM

HA0790E 00

**328-0048 WIRING GP-CAB**
S/N BWZ 1-Up, DFB 1-Up
Part of 314-3740-Page665.05
327-9998-Page189.05
An Attachment

# ELECTRICAL AND STARTING SYSTEM

| NOTE | No. | PART No. | QTY | PART NAME | NOTE | No. | PART No. | QTY | PART NAME |
|---|---|---|---|---|---|---|---|---|---|
| | 1 | 3S-2093 | 13 | STRAP | | | | | |
| | 2 | 7K-1181 | 16 | STRAP | | | | | |
| | 3 | 306-8590 | 1 | HARNESS AS | | | | | |
| Y | 4 | 327-9998 | 1 | HARNESS AS | | | | | |

Y—SEE SEPARATE ILLUSTRATION

HA0790E 00

## 328-0048 WIRING GP-CAB

S/N BWZ 1-Up, DFB 1-Up
Part of 314-3740-Page665.05
327-9998-Page189.05
An Attachment

# ELECTRICAL AND STARTING SYSTEM

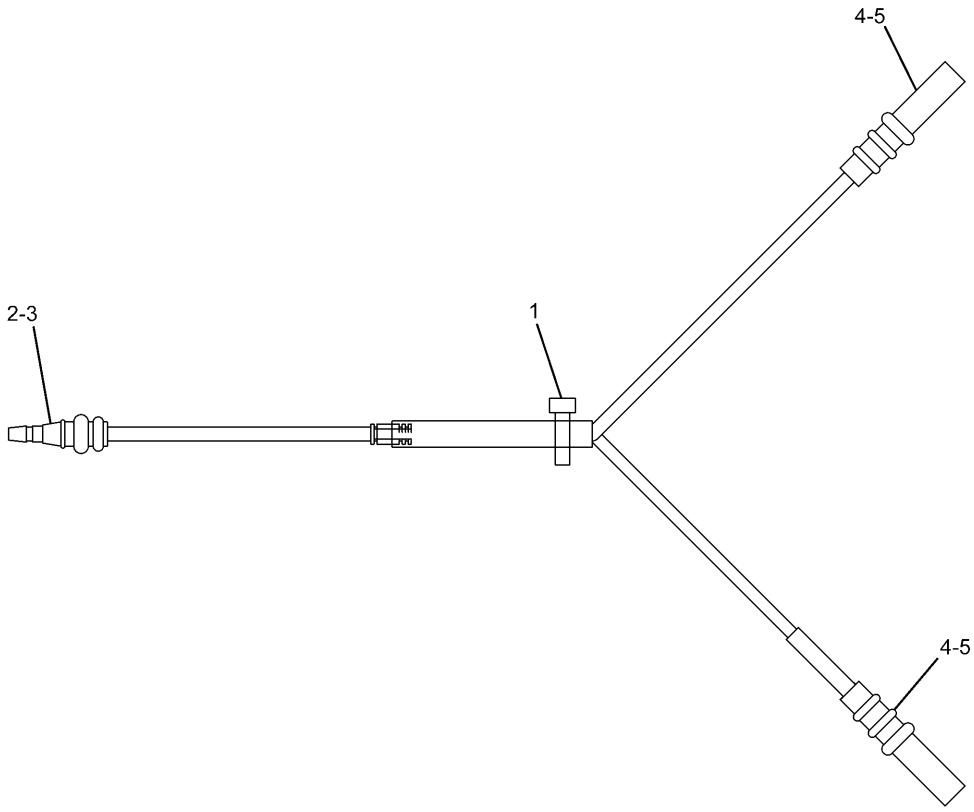


| NOTE | No. | PART No. | QTY | PART NAME | NOTE | No. | PART No. | QTY | PART NAME |
|---|---|---|---|---|---|---|---|---|---|
| | 1 | 3S-2093 | 1 | STRAP | | | | | |
| | 2 | 7Y-3962 | 1 | TERMINAL | | | | | |
| | 3 | 7Y-3964 | 1 | TUBE | | | | | |
| | 4 | 7Y-3963 | 2 | TERMINAL | | | | | |
| | 5 | 7Y-3965 | 2 | TUBE | | | | | |

HA0795E 00

**327-9998 HARNESS AS**
S/N BWZ 1-Up, DFB 1-Up
Part of 328-0048-Page189.04
An Attachment

# MEMORANDA

Consists of :

Page

1 309-5793 MONITOR GP-OPERATOR

H98819E 07

221-8861 ELECTRONICS GP

# ELECTRICAL AND STARTING SYSTEM

Consists of :

| | | | Page |
|---|---|---|---|
| 1 | 309-5757 | CONTROL GP-ELECTRONIC ..... | 192 |

H98011E 02

**270-5512 ELECTRONICS GP**

Consists of :

| | | | Page |
|---|---|---|---|
| 1 | 309-5707 | CONTROL GP-ELECTRONIC ..... | 192 |

H97306E 10

**270-5497 ELECTRONICS GP**

Product Link Japan
Part of 275-3668-Page195
An Attachment

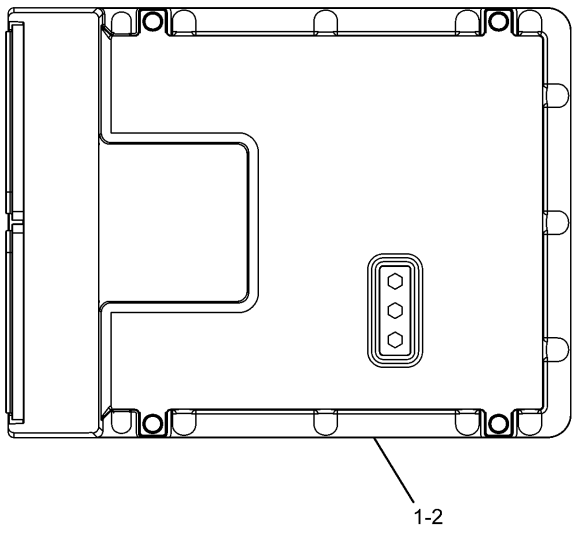


| NOTE | No. | PART No. | QTY | PART NAME |
|---|---|---|---|---|
| | 1 | 221-8874 | 1 | CONTROL GP |
| | 2 | 309-5756 | 1 | SOFTWARE GP |

H98012E 00

## 309-5757 CONTROL GP-ELECTRONIC

Part of 270-5512-Page191

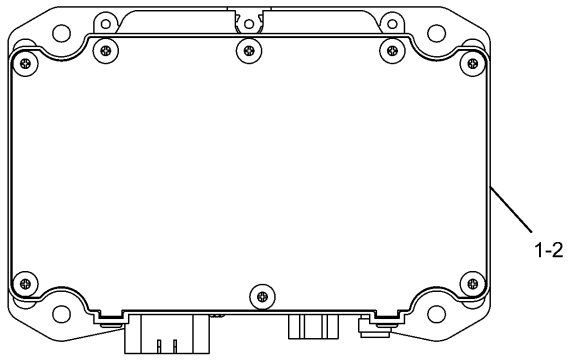


| NOTE | No. | PART No. | QTY | PART NAME |
|---|---|---|---|---|
| | 1 | 309-5706 | 1 | CONTROL GP |
| | 2 | 309-5705 | 1 | SOFTWARE GP |

H97307E 00

## 309-5707 CONTROL GP-ELECTRONIC

Product Link Japan

Part of 270-5497-Page191

An Attachment

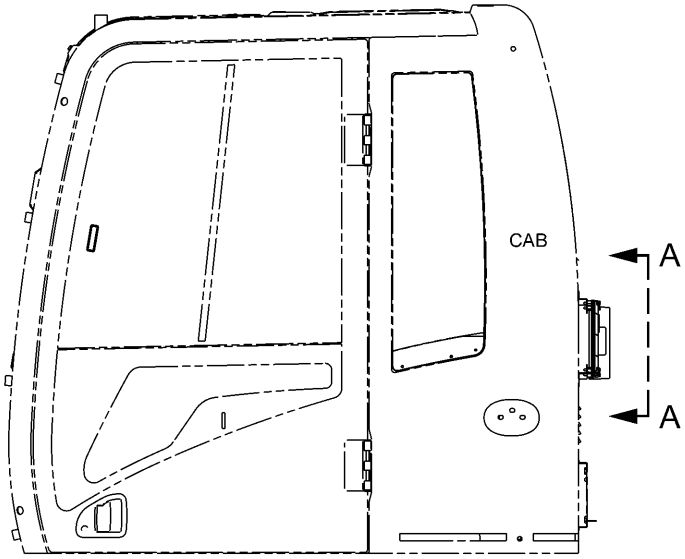


LEFT SIDE VIEW

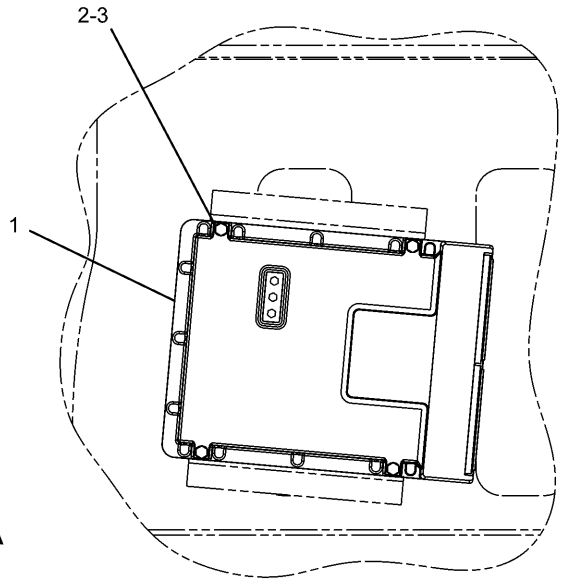


A – A

| NOTE | No. | PART No. | QTY | PART NAME | NOTE | No. | PART No. | QTY | PART NAME |
|---|---|---|---|---|---|---|---|---|---|
| | 1 | 221-8874 | 1 | CONTROL GP | | | | | |
| | 2 | 9X-2480 | 4 | BOLT (L=45mm) | | | | | |
| | 3 | 9X-8256 | 4 | WASHER | | | | | |

H88912E 01

221-8872 CONTROL & MTG GP-ELECTRONIC

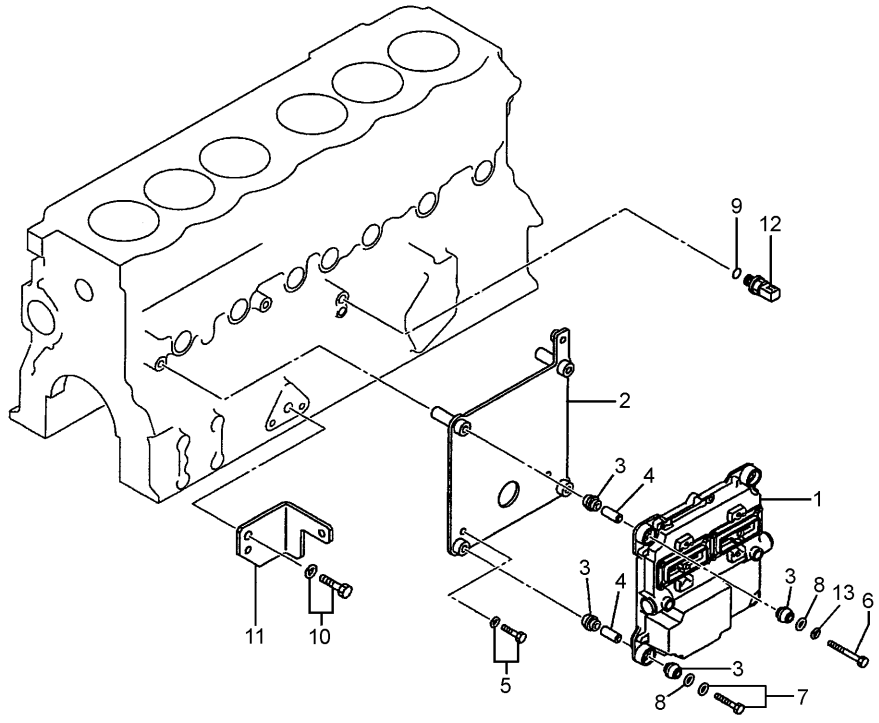


| NOTE | No. | PART No. | QTY | PART NAME | NOTE | No. | PART No. | QTY | PART NAME |
|---|---|---|---|---|---|---|---|---|---|
| | 1 | 286-3683 | 1 | CONTROL GP | | | | | |
| | 2 | 296-4632 | 1 | BRACKET | | | | | |
| | 3 | 155-0576 | 8 | MOUNT | | | | | |
| | 4 | 6I-1418 | 4 | SPACER | | | | | |
| | 5 | 294-1775 | 2 | BOLT AS | | | | | |
| | 6 | 178-6577 | 2 | BOLT (L=100mm) | | | | | |
| | 7 | 270-6259 | 2 | BOLT AS | | | | | |
| | 8 | 195-8497 | 4 | WASHER | | | | | |
| | 9 | 294-1804 | 1 | SEAL-O-RING | | | | | |
| | 10 | 5I-5597 | 1 | BOLT AS | | | | | |
| | 11 | 296-4635 | 1 | BRACKET | | | | | |
| | 12 | 274-6721 | 2 | SENSOR GP | | | | | |
| | 13 | 095-8638 | 2 | WASHER | | | | | |

H96488E 01

**296-4664 CONTROL & MTG GP-ELECTRONIC**

Part of 272-4677-Page16

# ELECTRICAL AND STARTING SYSTEM

Consists of :


| | | | Page |
|---|---|---|---|
| 1 | 270-5528 | MOUNTING GP | 196 |
| 1 | 275-6783 | WIRING GP | 154 |
| 1 | 278-3561 | COVER GP | 253 |
| 1 | 270-5497 | ELECTRONICS GP | 191 |


H91769E 01

**275-3668 CONTROL AR**
Product Link Japan
An Attachment

# ELECTRICAL AND STARTING SYSTEM

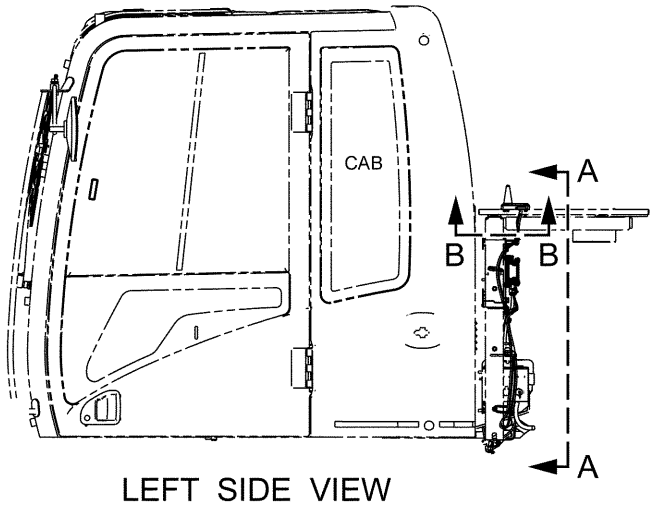


LEFT SIDE VIEW

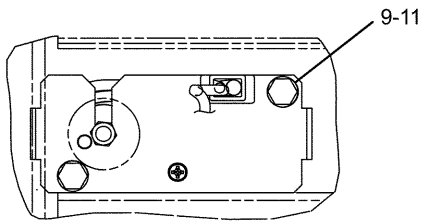


B – B

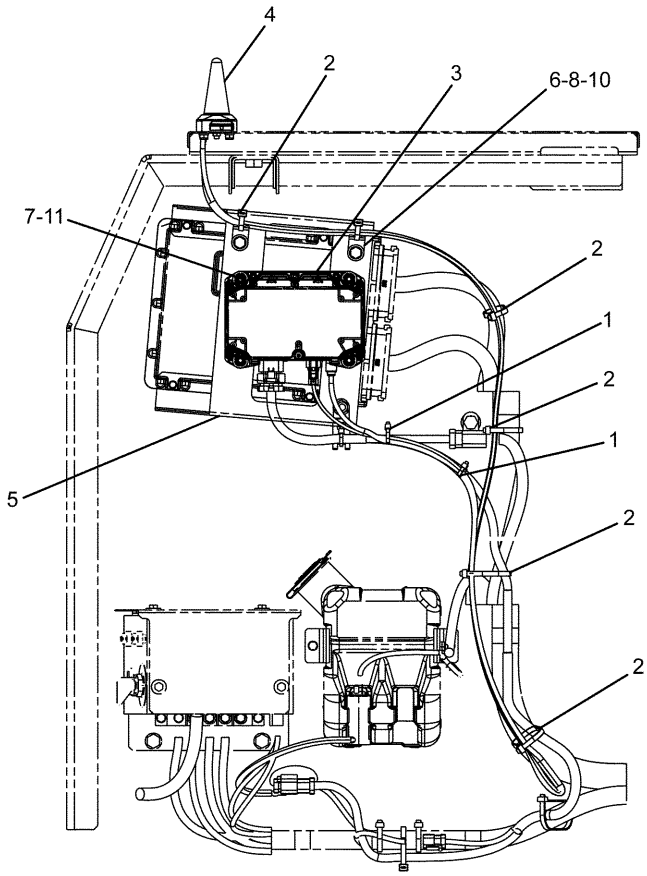


A – A

| NOTE | No. | PART No. | QTY | PART NAME | NOTE | No. | PART No. | QTY | PART NAME |
|---|---|---|---|---|---|---|---|---|---|
| | 1 | 3S-2093 | 2 | STRAP | | | | | |
| | 2 | 7K-1181 | 6 | STRAP | | | | | |
| | 3 | 309-5706 | 1 | CONTROL GP | | | | | |
| | 4 | 270-5501 | 1 | ANTENNA AS | | | | | |
| | 5 | 270-5526 | 1 | BRACKET AS | | | | | |
| | 6 | 132-5789 | 2 | CLIP | | | | | |
| | 7 | 3T-0849 | 4 | BOLT (L=25mm) | | | | | |
| | 8 | 7X-2536 | 2 | BOLT (L=14mm) | | | | | |
| | 9 | 8T-4171 | 2 | BOLT (L=12mm) | | | | | |
| | 10 | 8T-4224 | 2 | WASHER | | | | | |
| | 11 | 9X-8256 | 6 | WASHER | | | | | |

H97212E 03

## 270-5528 MOUNTING GP

Product Link Japan
Part of 275-3668-Page195
An Attachment

# ELECTRICAL AND STARTING SYSTEM

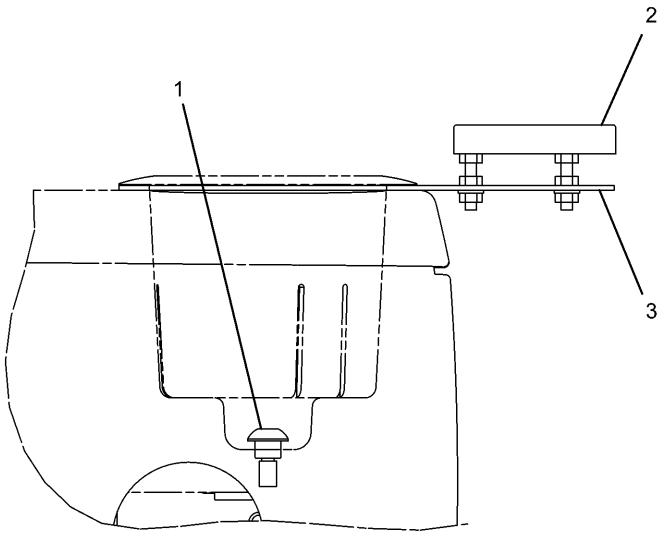


A

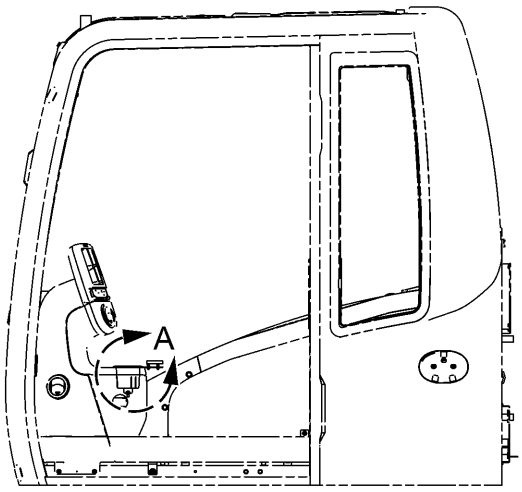


LEFT SIDE VIEW

| NOTE | No. | PART No. | QTY | PART NAME | NOTE | No. | PART No. | QTY | PART NAME |
|---|---|---|---|---|---|---|---|---|---|
| | 1 | 128-2136 | 1 | SCREW | | | | | |
| | 2 | 186-3792 | 1 | TILT | | | | | |
| | 3 | 257-2943 | 1 | PLATE | | | | | |

H89960E 00

**257-2929 SENSOR GP-LEVEL**
S/N BWZ 1-Up, DFB 1-Up
Part of 279-2732-Page11,279-2733-Page12
An Attachment

# ELECTRICAL AND STARTING SYSTEM

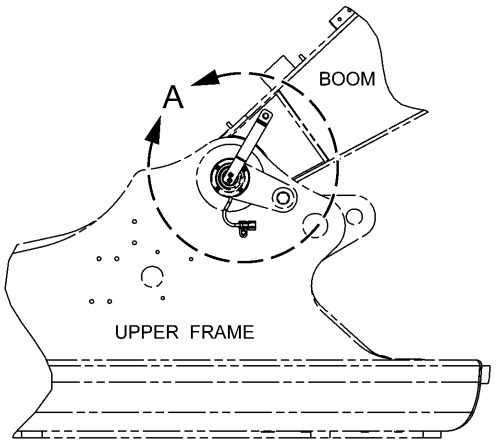


RIGHT SIDE VIEW

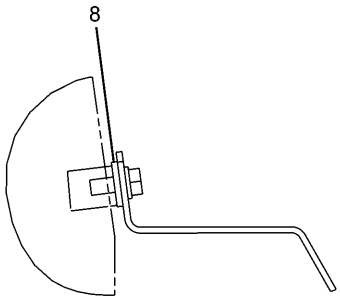


B – B

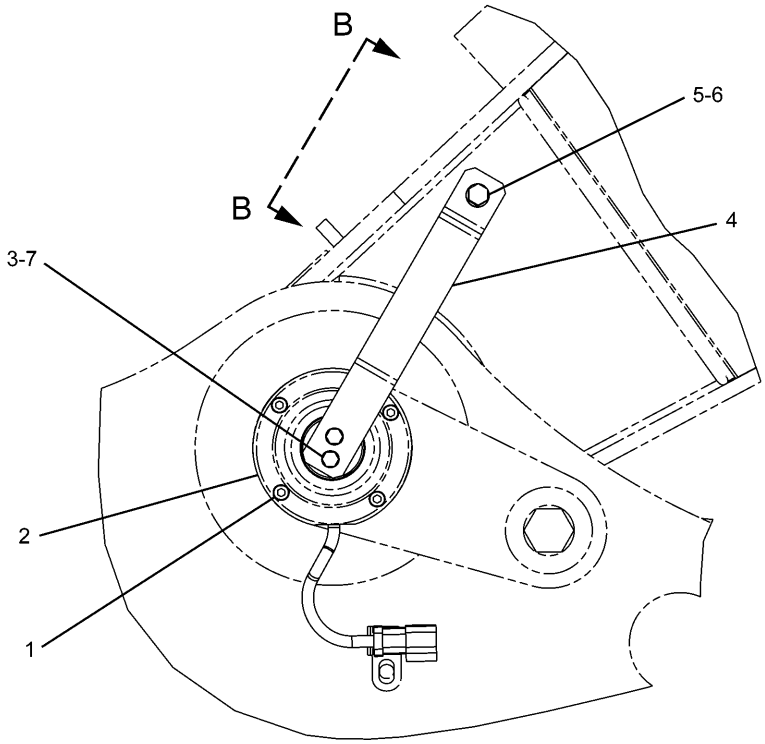


A

| NOTE | No. | PART No. | QTY | PART NAME | NOTE | No. | PART No. | QTY | PART NAME |
|---|---|---|---|---|---|---|---|---|---|
| | 1 | 9X-2328 | 4 | BOLT (L=25mm) | | | | | |
| | 2 | 120-0044 | 1 | SENSOR AS | | | | | |
| | | 102-8803 | 1 | RECEPTACLE KIT | | | | | |
| | | 186-3735 | 3 | PIN | | | | | |
| | 3 | 134-7721 | 2 | BOLT (L=12mm) | | | | | |
| | 4 | 257-2932 | 1 | LEVER | | | | | |
| | 5 | 134-7722 | 1 | BOLT (L=16mm) | | | | | |
| | 6 | 8T-4224 | 1 | WASHER | | | | | |
| | 7 | 9X-8256 | 2 | WASHER | | | | | |
| B | 8 | 5P-1076 | 2 | WASHER | | | | | |
| B | | 5P-4116 | 2 | WASHER | | | | | |

B—USE AS REQUIRED

H91772E 01

## 257-2927 SENSOR & MOUNTING GP

S/N BWZ 1-Up, DFB 1-Up
Part of 279-2732-Page11,279-2733-Page12
An Attachment

# ELECTRICAL AND STARTING SYSTEM

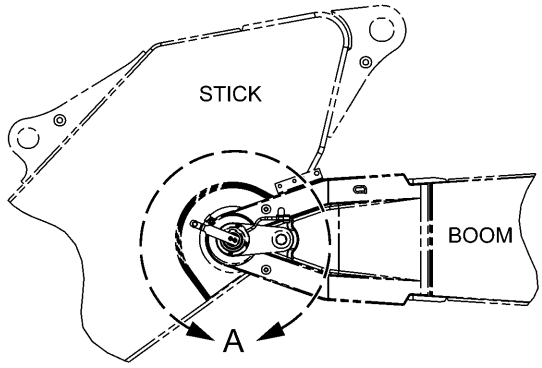


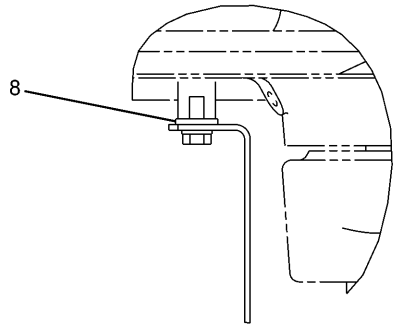


B – B

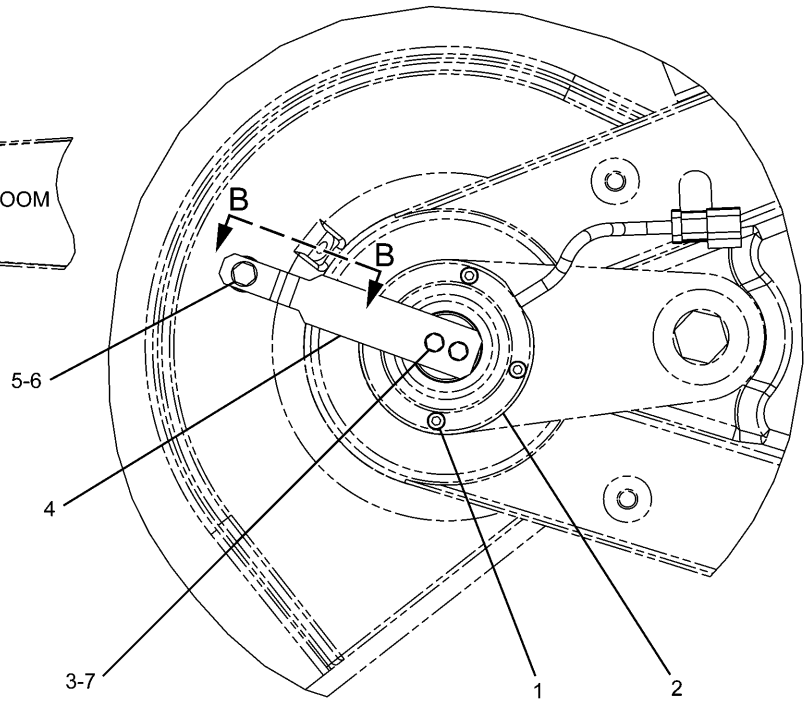


A

| NOTE | No. | PART No. | QTY | PART NAME | NOTE | No. | PART No. | QTY | PART NAME |
|---|---|---|---|---|---|---|---|---|---|
| | 1 | 9X-2328 | 4 | BOLT (L=25mm) | | | | | |
| | 2 | 120-0044 | 1 | SENSOR AS | | | | | |
| | | 102-8803 | 1 | RECEPTACLE KIT | | | | | |
| | | 186-3735 | 3 | PIN | | | | | |
| | 3 | 134-7721 | 2 | BOLT (L=12mm) | | | | | |
| | 4 | 257-2933 | 1 | LEVER | | | | | |
| | 5 | 134-7722 | 1 | BOLT (L=16mm) | | | | | |
| | 6 | 8T-4224 | 1 | WASHER | | | | | |
| | 7 | 9X-8256 | 2 | WASHER | | | | | |
| B | 8 | 5P-1076 | 2 | WASHER | | | | | |
| B | | 5P-4116 | 2 | WASHER | | | | | |

B—USE AS REQUIRED

H91771E 01

## 257-2928 SENSOR & MOUNTING GP

S/N BWZ 1-Up, DFB 1-Up
Part of 279-2732-Page11,279-2733-Page12
An Attachment

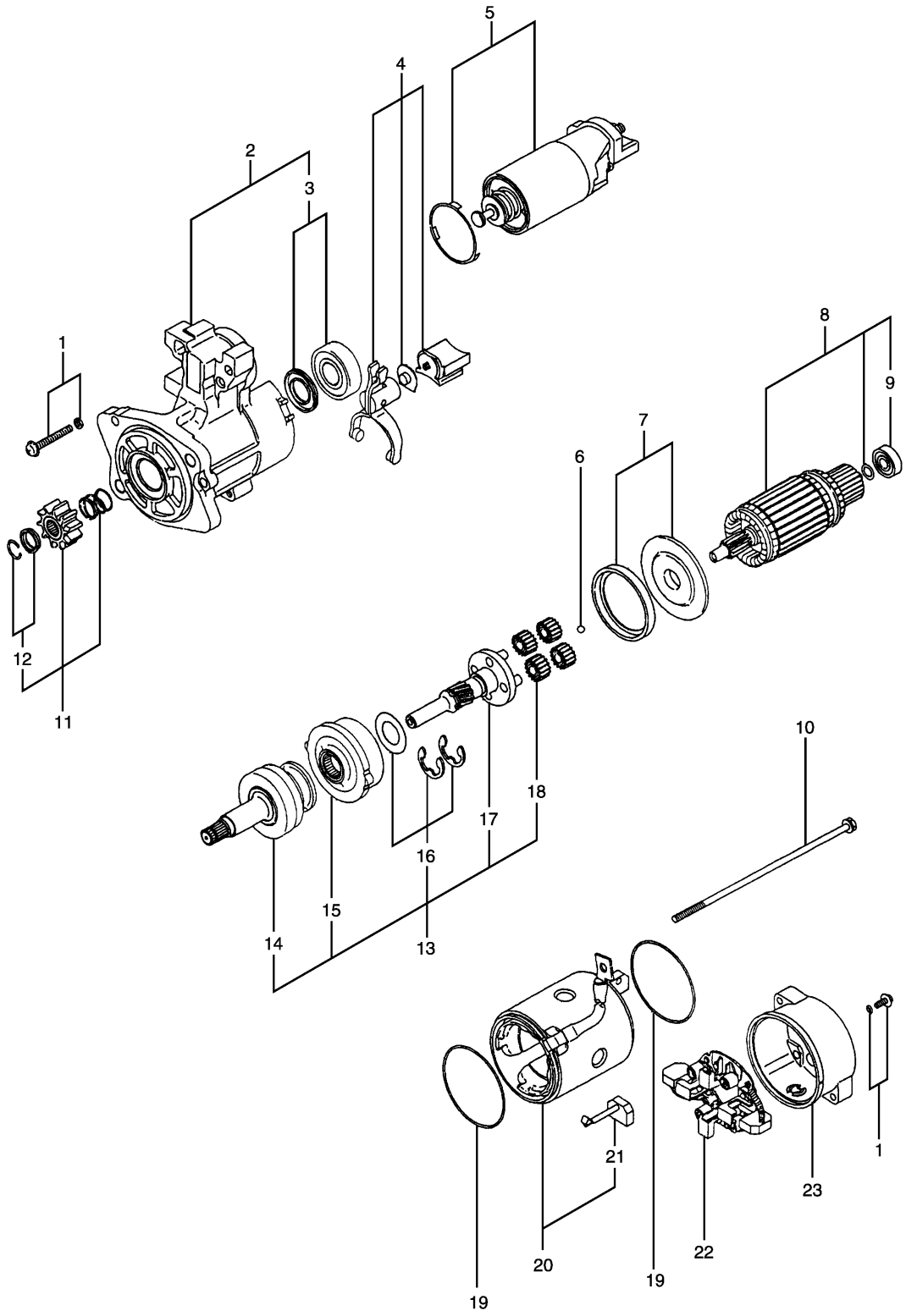


H98079E 01

**272-4774 STARTING MOTOR GP-ELECTRIC**
Part of 296-4637-Page203

# ELECTRICAL AND STARTING SYSTEM

| NOTE | No. | PART No. | QTY | PART NAME | NOTE | No. | PART No. | QTY | PART NAME |
|---|---|---|---|---|---|---|---|---|---|
| | 1 | 127-5947 | 1 | SETSCREW | | | | | |
| | 2 | 294-1855 | 1 | BRACKET AS | | | | | |
| | 3 | 294-1856 | 1 | BEARING AS | | | | | |
| | 4 | 127-5944 | 1 | LEVER AS | | | | | |
| | 5 | 294-1857 | 1 | SWITCH AS | | | | | |
| | 6 | 127-5948 | 1 | BALL | | | | | |
| | 7 | 127-5949 | 1 | PACKING AS | | | | | |
| | 8 | 127-5950 | 1 | ARMATURE AS | | | | | |
| | 9 | 095-0410 | 1 | BEARING | | | | | |
| | 10 | 095-0085 | 1 | BOLT SET | | | | | |
| | 11 | 279-7750 | 1 | PINION SET | | | | | |
| | 12 | 094-9950 | 1 | STOPPER SET | | | | | |
| | 13 | 233-1279 | 1 | SHAFT AS | | | | | |
| | 14 | 233-1280 | 1 | CLUTCH | | | | | |
| | 15 | 127-5941 | 1 | GEAR AS | | | | | |
| | 16 | 127-5940 | 1 | WASHER AS | | | | | |
| | 17 | 127-5939 | 1 | SHAFT AS | | | | | |
| | 18 | 127-5943 | 4 | GEAR AS | | | | | |
| | 19 | 094-9980 | 2 | GASKET | | | | | |
| | 20 | 127-5952 | 1 | YOKE AS | | | | | |
| | 21 | 127-5953 | 2 | BRUSH | | | | | |
| | 22 | 294-1858 | 1 | HOLDER AS | | | | | |
| | 23 | 135-2366 | 1 | BRACKET | | | | | |

H98079E 01

**272-4774 STARTING MOTOR GP-ELECTRIC**

Part of 296-4637-Page203

# ELECTRICAL AND STARTING SYSTEM

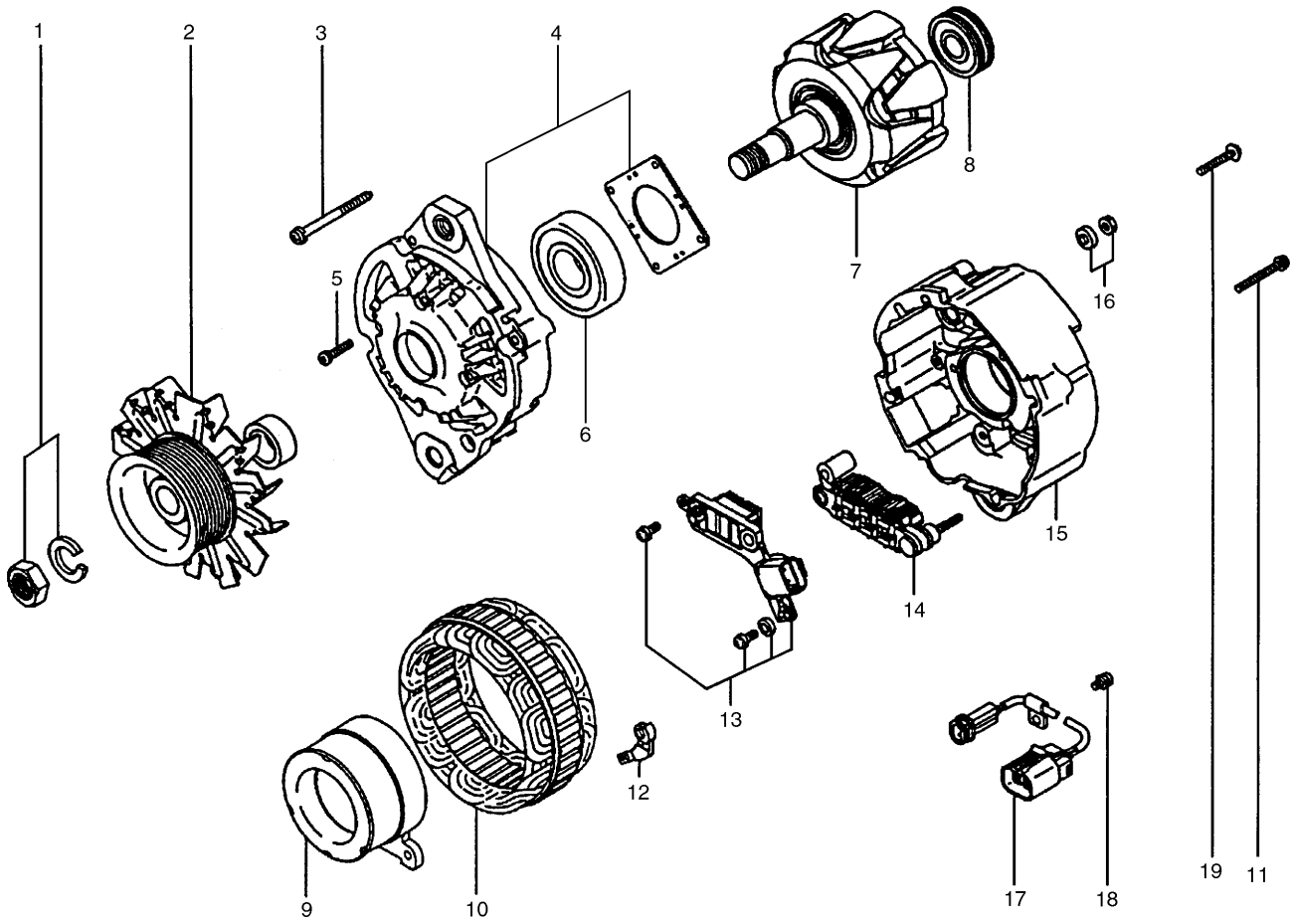


| NOTE | No. | PART No. | QTY | PART NAME | NOTE | No. | PART No. | QTY | PART NAME |
|---|---|---|---|---|---|---|---|---|---|
| | 1 | 099-3913 | 1 | NUT SET | | | | | |
| | 2 | 212-8613 | 1 | PULLEY | | | | | |
| | 3 | 5I-7985 | 1 | SETSCREW | | | | | |
| | 4 | 5I-8086 | 1 | BRACKET AS | | | | | |
| | 5 | 5I-7987 | 1 | SETSCREW | | | | | |
| | 6 | 5I-8087 | 1 | BEARING | | | | | |
| | 7 | 5I-8088 | 1 | ROTOR AS | | | | | |
| | 8 | 5I-8089 | 1 | BEARING | | | | | |
| | 9 | 5I-8098 | 1 | COIL AS | | | | | |
| | 10 | 5I-8090 | 1 | STATOR | | | | | |
| | 11 | 5I-7997 | 1 | SETSCREW | | | | | |
| | 12 | 135-2381 | 1 | PLATE | | | | | |
| | 13 | 239-6681 | 1 | REGULATOR AS | | | | | |
| | 14 | 5I-8095 | 1 | RECTIFIER AS | | | | | |
| | 15 | 212-8521 | 1 | BRACKET | | | | | |
| | 16 | 085-9429 | 1 | NUT SET | | | | | |
| | 17 | 5I-8080 | 1 | CONNECTOR AS | | | | | |
| | 18 | 5I-8094 | 1 | BOLT | | | | | |
| | 19 | 5I-8097 | 1 | SETSCREW | | | | | |

H88146E 01

## 212-8561 ALTERNATOR GP-CHARGING

Part of 296-4661-Page37

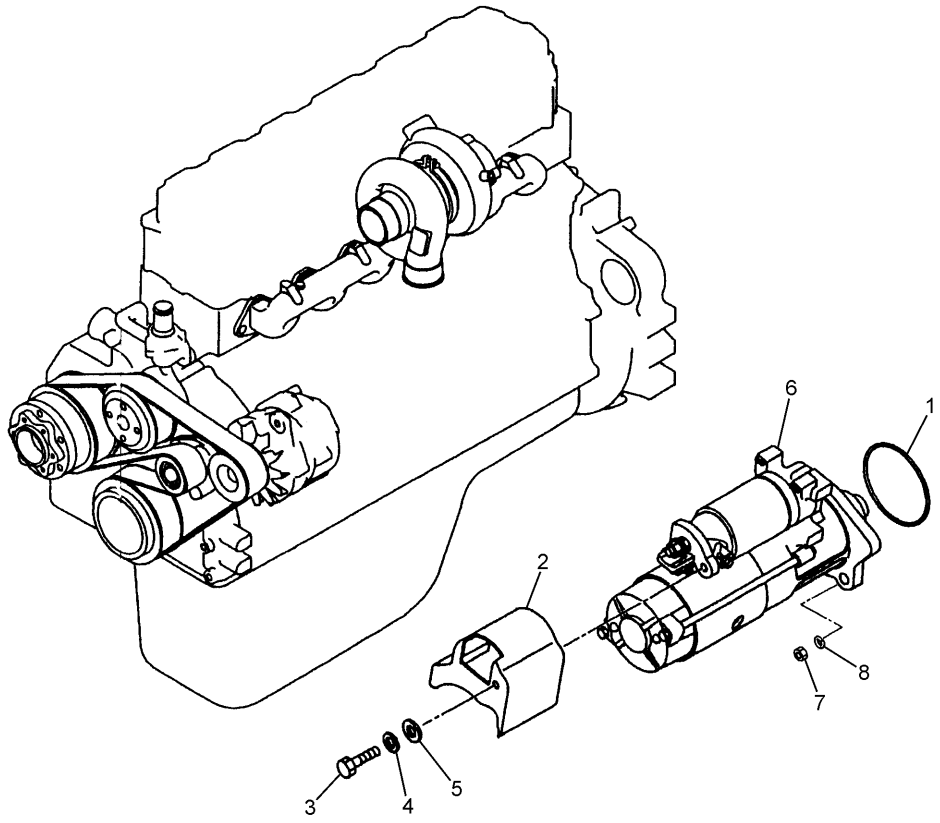


| NOTE | No. | PART No. | QTY | PART NAME | NOTE | No. | PART No. | QTY | PART NAME |
|---|---|---|---|---|---|---|---|---|---|
| | 1 | 5I-7599 | 1 | SEAL-O-RING (ID=79.50mm) | | | | | |
| | 2 | 135-2369 | 1 | COVER | | | | | |
| | 3 | 135-2370 | 1 | BOLT (L=25mm) | | | | | |
| | 4 | 294-1850 | 1 | WASHER | | | | | |
| | 5 | 294-1851 | 1 | WASHER | | | | | |
| Y | 6 | 272-4774 | 1 | MOTOR GP | | | | | |
| | 7 | 6V-8231 | 2 | NUT | | | | | |
| | 8 | 7X-0796 | 2 | LOCKWASHER | | | | | |

Y—SEE SEPARATE ILLUSTRATION

H98731E 02

## 296-4637 MOUNTING GP-STARTING MOTOR

Part of 272-4677-Page16
272-4774-Page200

# ELECTRICAL AND STARTING SYSTEM

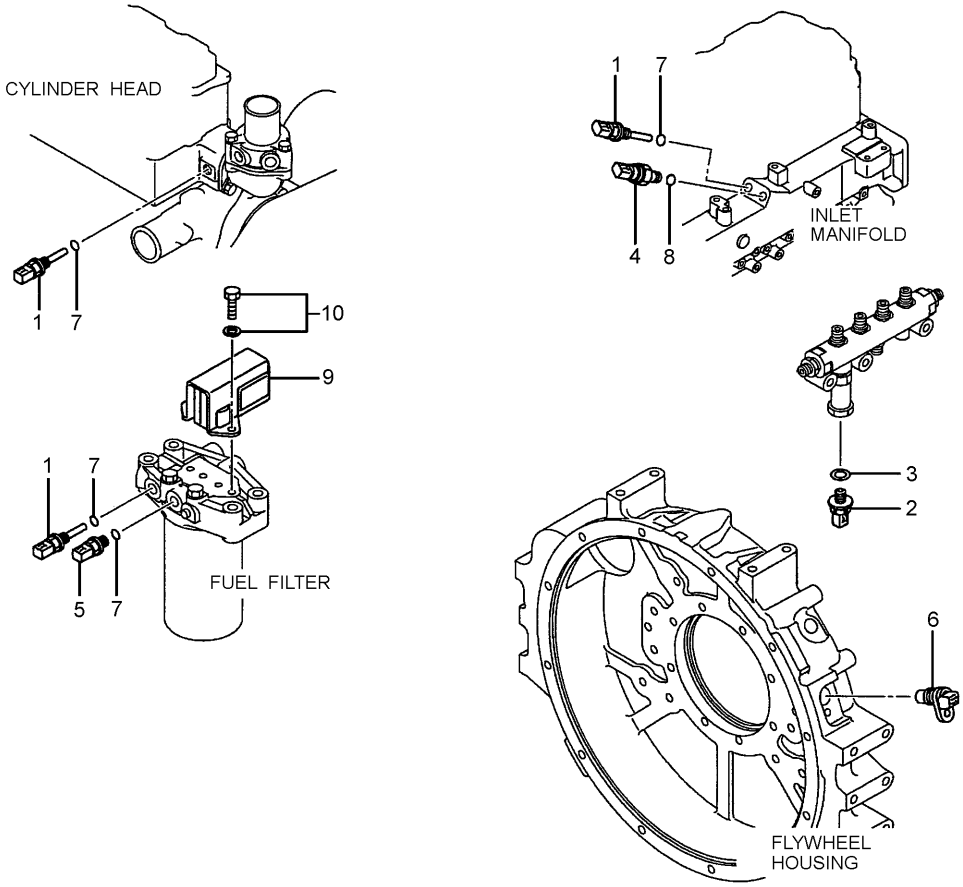


| NOTE | No. | PART No. | QTY | PART NAME | NOTE | No. | PART No. | QTY | PART NAME |
|---|---|---|---|---|---|---|---|---|---|
| | 1 | 238-0112 | 3 | SENSOR | | | | | |
| | 2 | 238-0118 | 1 | SENSOR GP | | | | | |
| | 3 | 296-4631 | 1 | WASHER | | | | | |
| | 4 | 274-6720 | 1 | SENSOR GP | | | | | |
| | 5 | 274-6721 | 1 | SENSOR GP | | | | | |
| | 6 | 238-0120 | 1 | SENSOR GP | | | | | |
| | 7 | 294-1804 | 4 | SEAL-O-RING | | | | | |
| | 8 | 296-4633 | 1 | SEAL-O-RING | | | | | |
| | 9 | 266-0136 | 1 | SENSOR GP | | | | | |
| | 10 | 296-4621 | 2 | BOLT | | | | | |

H96879E 00

## 296-4666 SENSOR GP-ELECTRONIC

Part of 272-4677-Page16

# MEMORANDA

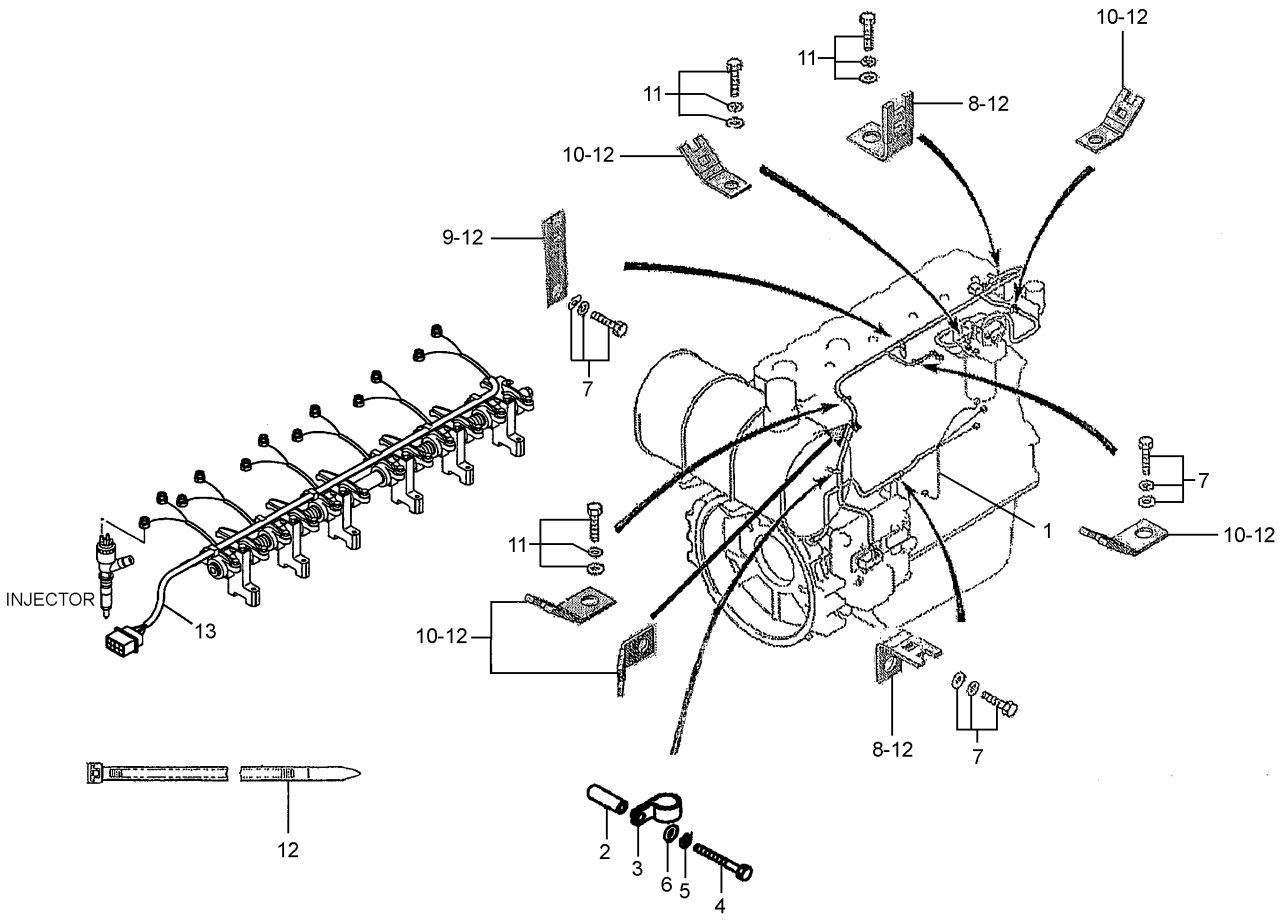


H97940E 03

**296-4665 WIRING GP-ELECTRONIC CONTROL**
Part of 272-4677-Page16

# ELECTRICAL AND STARTING SYSTEM

| NOTE | No. | PART No. | QTY | PART NAME | NOTE | No. | PART No. | QTY | PART NAME |
|---|---|---|---|---|---|---|---|---|---|
| | 1 | 296-4617 | 1 | HARNESS AS | | | | | |
| | 2 | 296-4618 | 1 | SPACER | | | | | |
| | 3 | 296-4619 | 1 | CLIP | | | | | |
| | 4 | 099-4460 | 1 | BOLT | | | | | |
| | 5 | 096-2501 | 1 | WASHER | | | | | |
| | 6 | 8T-4223 | 1 | WASHER | | | | | |
| | 7 | 296-4621 | 3 | BOLT | | | | | |
| | 8 | 305-4898 | 2 | CLIP | | | | | |
| | 9 | 305-4897 | 1 | CLIP | | | | | |
| | 10 | 305-4896 | 5 | CLIP | | | | | |
| | 11 | 282-8567 | 3 | BOLT AS | | | | | |
| | 12 | 305-4895 | 8 | STRAP | | | | | |
| | 13 | 305-4893 | 1 | HARNESS | | | | | |

H97940E 03

## 296-4665 WIRING GP-ELECTRONIC CONTROL

Part of 272-4677-Page16

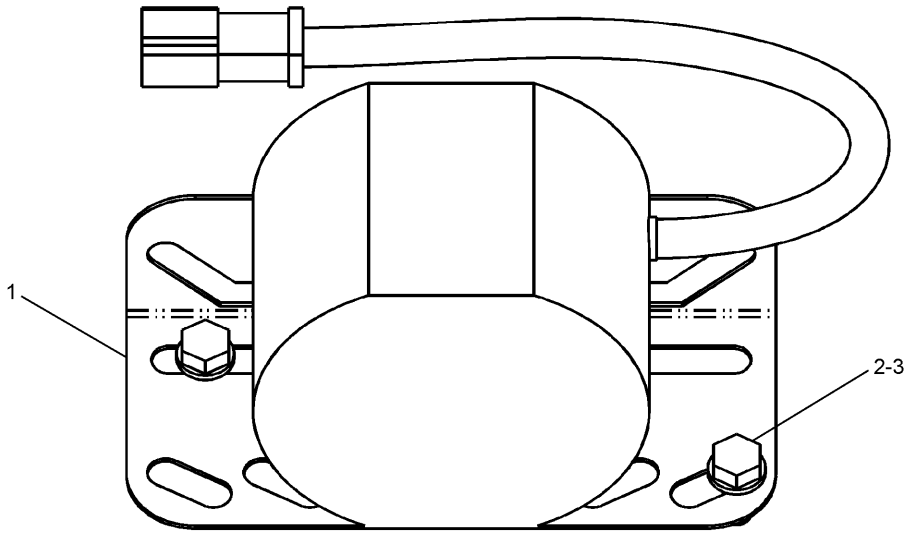


| NOTE | No. | PART No. | QTY | PART NAME | NOTE | No. | PART No. | QTY | PART NAME |
|---|---|---|---|---|---|---|---|---|---|
| | 1 | 213-9100 | 1 | ALARM AS | | | | | |
| | | 102-8802 | 1 | RECEPTACLE KIT | | | | | |
| | | 186-3735 | 2 | PIN | | | | | |
| | 2 | 8T-4189 | 2 | BOLT (L=20mm) | | | | | |
| | 3 | 5P-4116 | 2 | WASHER | | | | | |

H96105E 02

**231-1771 ALARM GP-TRAVEL**
An Attachment

# ELECTRICAL AND STARTING SYSTEM

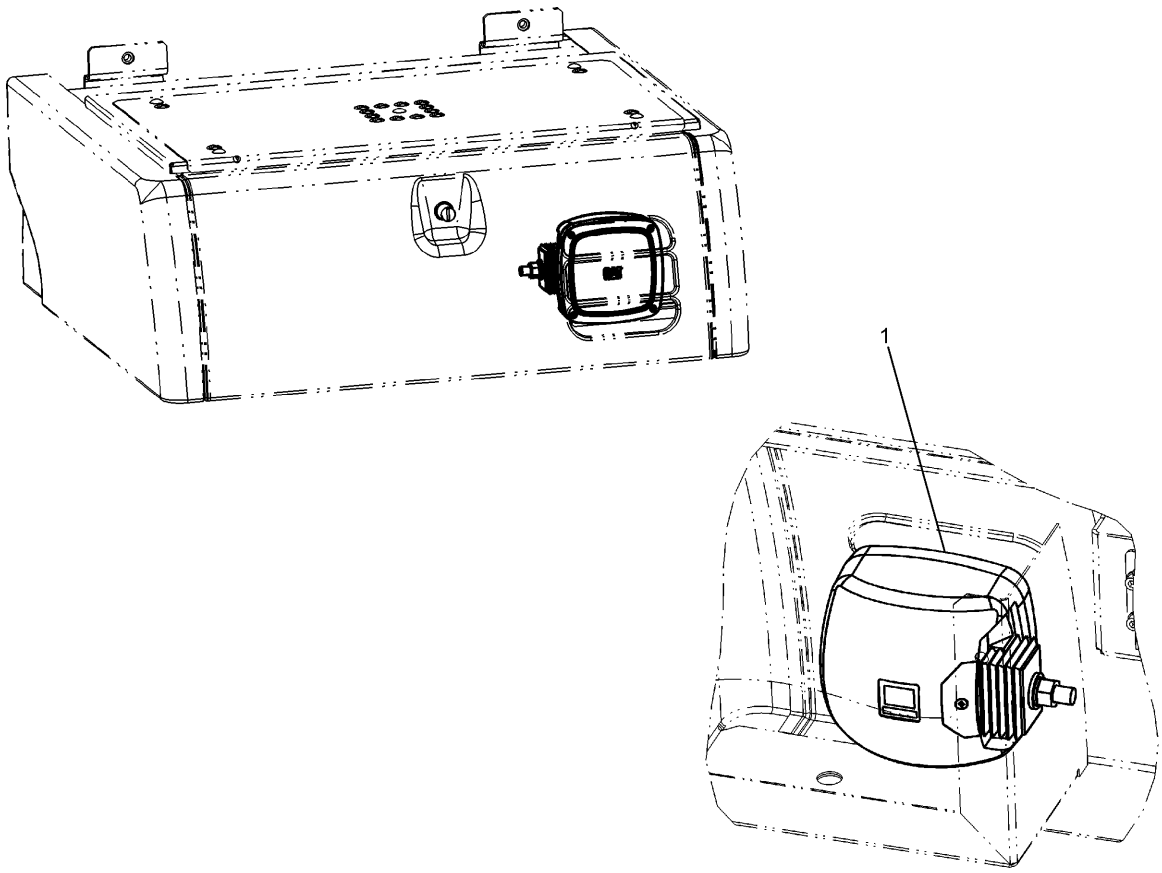


| NOTE | No. | PART No. | QTY | PART NAME | NOTE | No. | PART No. | QTY | PART NAME |
|---|---|---|---|---|---|---|---|---|---|
| Y | 1 | 153-2523 | 1 | LAMP GP | | | | | |

Y—SEE SEPARATE ILLUSTRATION

H87656E 04

## 4I-5409 LIGHTING GP-CHASSIS
153-2523-Page224

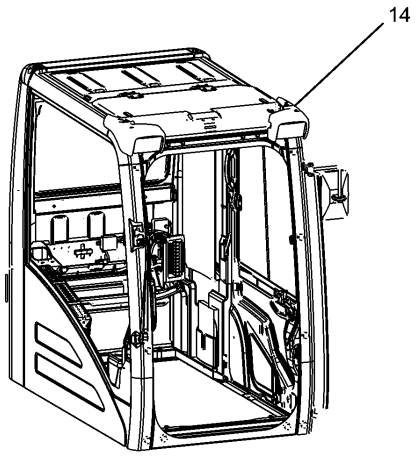


CAB-FRONT

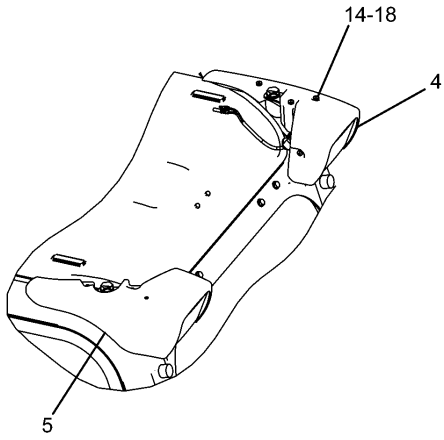


CAB-TOP

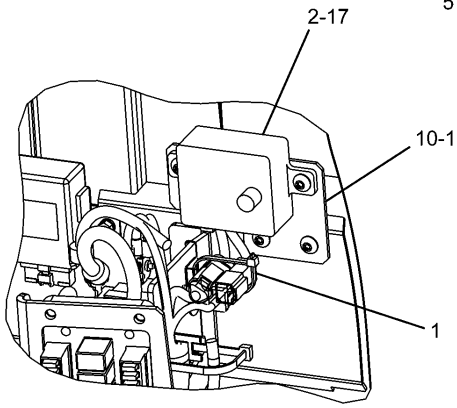


CAB REAR PANEL-INSIDE

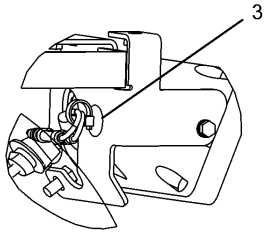


LIGHT BRACKET-REAR

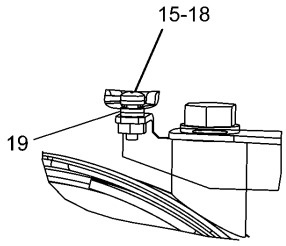


LIGHT BRACKET-LH SIDE

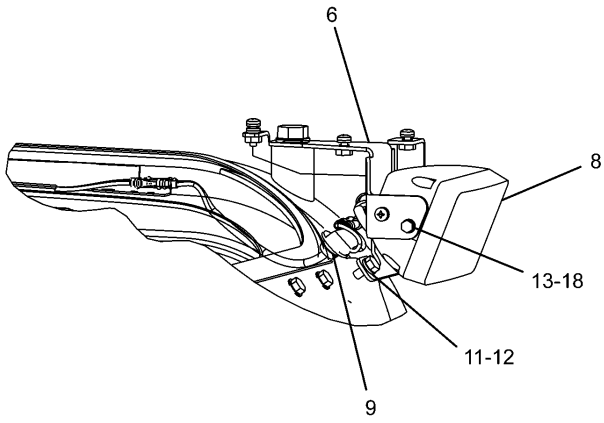


CAB LIGHT-LH SIDE

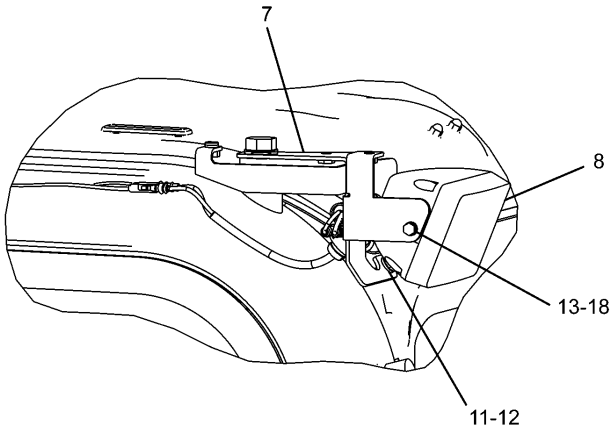


CAB LIGHT-RH SIDE

H91019E 00

**238-1627 LIGHTING GP-CAB**
167-3441-Page222,167-3456-Page225,163-6704-Page227
An Attachment

# ELECTRICAL AND STARTING SYSTEM

| NOTE | No. | PART No. | QTY | PART NAME | NOTE | No. | PART No. | QTY | PART NAME |
|---|---|---|---|---|---|---|---|---|---|
| | 1 | 3S-2093 | 1 | STRAP | | | | | |
| Y | 2 | 163-6704 | 1 | TIMER AS | | | | | |
| | 3 | 163-6795 | 2 | STRAP | | | | | |
| | 4 | 163-6813 | 1 | COVER | | | | | |
| | 5 | 163-6814 | 1 | COVER | | | | | |
| | 6 | 167-3437 | 1 | BRACKET AS | | | | | |
| | 7 | 167-3438 | 1 | BRACKET AS | | | | | |
| Y | 8 | 167-3441 | 2 | LAMP GP | | | | | |
| Y | 9 | 167-3456 | 2 | HARNESS AS | | | | | |
| | 10 | 238-2326 | 1 | STRIP AS | | | | | |
| | 11 | 8T-4200 | 2 | BOLT (L=16mm) | | | | | |
| | 12 | 8T-4224 | 2 | WASHER | | | | | |
| | 13 | 8T-4970 | 4 | BOLT (L=14mm) | | | | | |
| | 14 | 8T-6411 | 3 | SCREW | | | | | |
| | 15 | 8T-6412 | 1 | SCREW | | | | | |
| | 16 | 9X-2042 | 2 | SCREW | | | | | |
| | 17 | 9X-2043 | 2 | SCREW | | | | | |
| | 18 | 9X-8256 | 8 | WASHER | | | | | |
| B | 19 | 9X-8256 | 4 | WASHER | | | | | |

B—USE AS REQUIRED

Y—SEE SEPARATE ILLUSTRATION

H91019E 00

## 238-1627 LIGHTING GP-CAB

167-3441-Page222,167-3456-Page225,163-6704-Page227

An Attachment

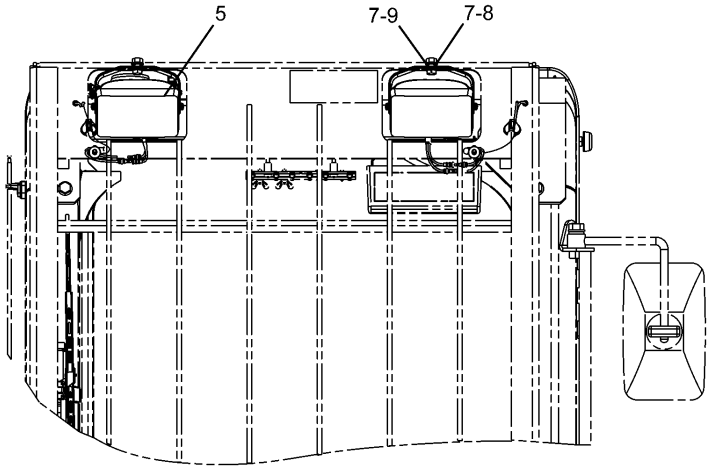


FRONT VIEW

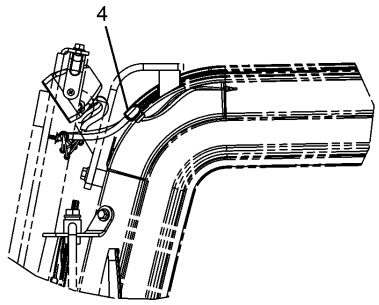


A – A

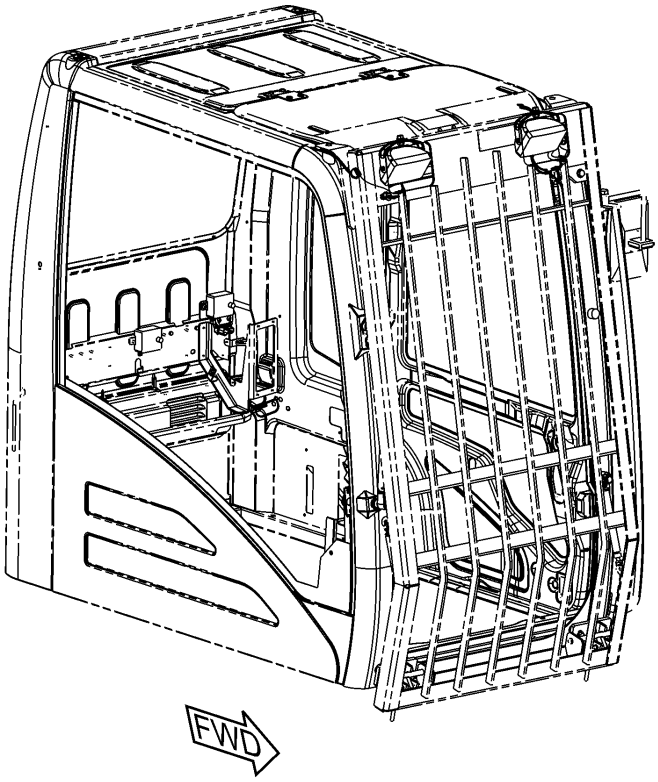


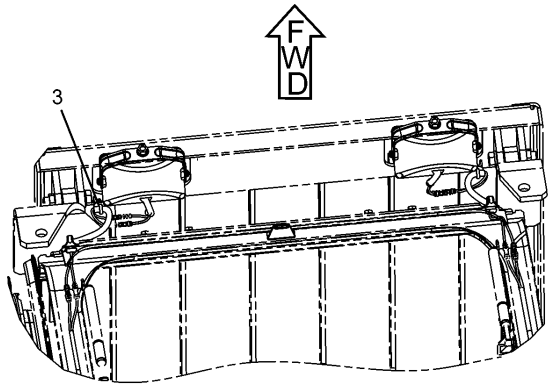


TOP VIEW

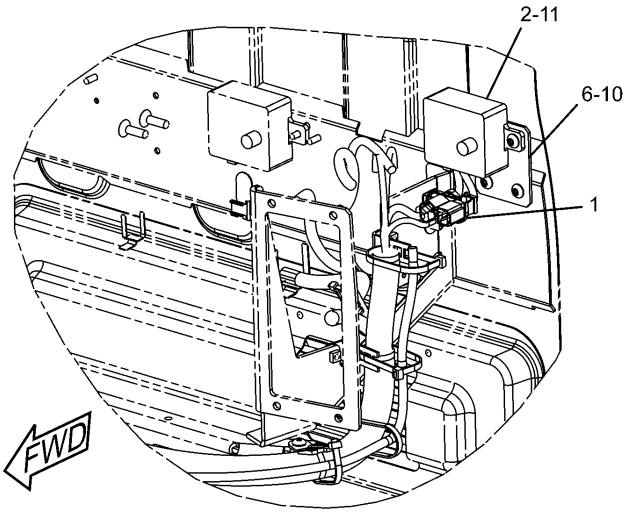


CAB REAR PANEL INSIDE

H91364E 01

**238-1628 LIGHTING GP-CAB**
Cab Guard
183-1035-Page222,170-9295-Page225,163-6704-Page227
An Attachment

# ELECTRICAL AND STARTING SYSTEM

| NOTE | No. | PART No. | QTY | PART NAME | NOTE | No. | PART No. | QTY | PART NAME |
|---|---|---|---|---|---|---|---|---|---|
| | 1 | 3S-2093 | 1 | STRAP | | | | | |
| Y | 2 | 163-6704 | 1 | TIMER AS | | | | | |
| | 3 | 163-6795 | 2 | STRAP | | | | | |
| Y | 4 | 170-9295 | 2 | HARNESS AS | | | | | |
| Y | 5 | 183-1035 | 2 | LAMP GP | | | | | |
| | 6 | 238-2326 | 1 | STRIP AS | | | | | |
| | 7 | 8T-4121 | 4 | WASHER | | | | | |
| | 8 | 8T-4133 | 2 | NUT | | | | | |
| | 9 | 8T-4137 | 2 | BOLT (L=20mm) | | | | | |
| | 10 | 9X-2042 | 2 | SCREW | | | | | |
| | 11 | 9X-2043 | 2 | SCREW | | | | | |

Y—SEE SEPARATE ILLUSTRATION

H91364E 01

## 238-1628 LIGHTING GP-CAB

Cab Guard

183-1035-Page222,170-9295-Page225,163-6704-Page227

An Attachment

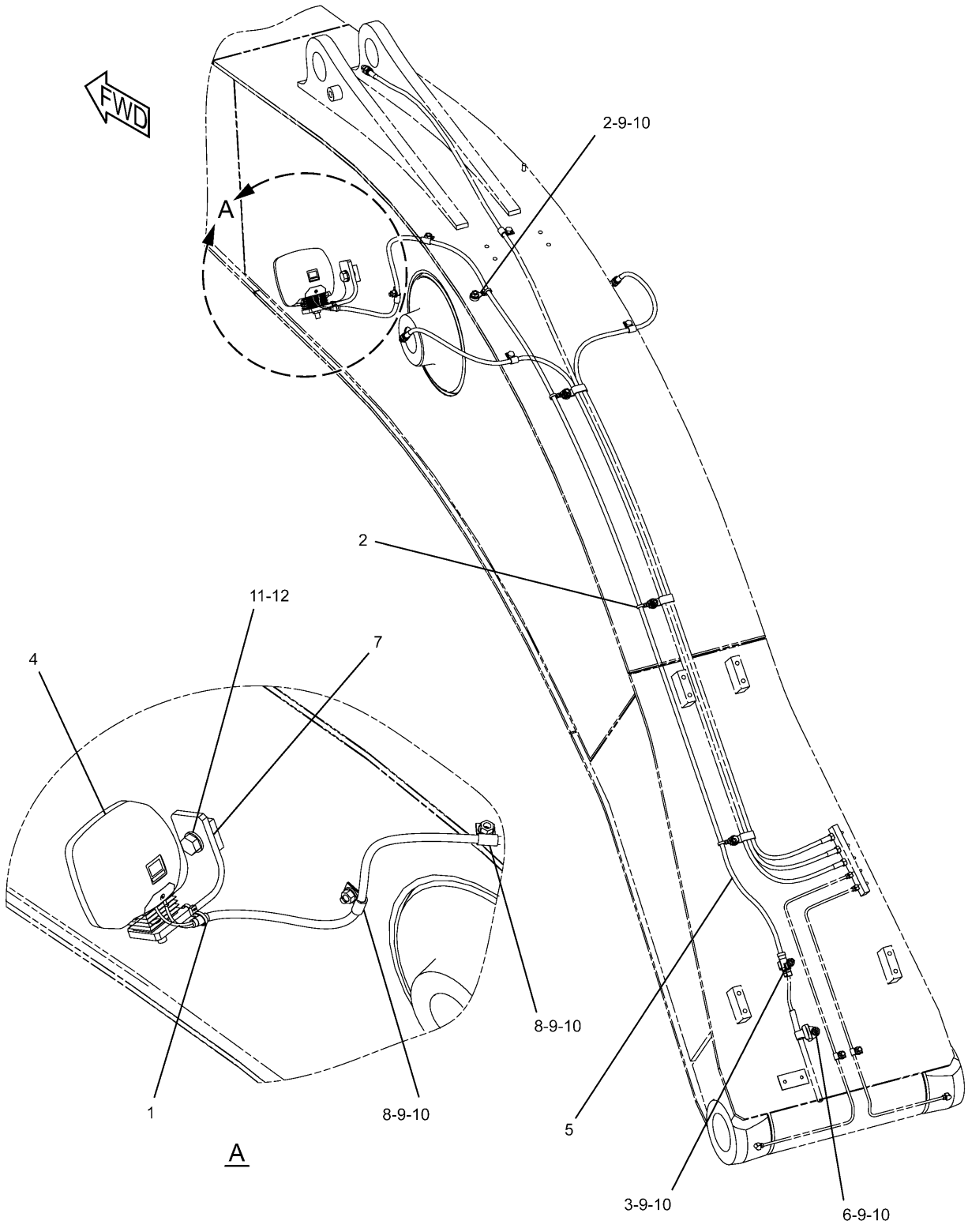


H89554E 00

## 259-5043 LIGHTING GP-BOOM

R-Boom Left Hand
Part of 240-3828,240-3830-Page731,302-9207-Page740
153-2521-Page223
An Attachment

# ELECTRICAL AND STARTING SYSTEM

| NOTE | No. | PART No. | QTY | PART NAME | NOTE | No. | PART No. | QTY | PART NAME |
|---|---|---|---|---|---|---|---|---|---|
| | 1 | 7I-2673 | 1 | STRAP | | | | | |
| | 2 | 111-4836 | 4 | CLIP | | | | | |
| | 3 | 116-0118 | 1 | CLIP | | | | | |
| Y | 4 | 153-2521 | 1 | LAMP GP | | | | | |
| | 5 | 259-5326 | 1 | HARNESS AS | | | | | |
| | | 9W-0852 | 2 | PIN | | | | | |
| | | 2L-8075 | 2 | TERMINAL | | | | | |
| | 6 | 111-4837 | 1 | CLIP | | | | | |
| | 7 | 134-3284 | 1 | BRACKET | | | | | |
| | 8 | 5P-9297 | 2 | CLIP | | | | | |
| | 9 | 8T-4121 | 5 | WASHER | | | | | |
| | 10 | 8T-4133 | 5 | NUT | | | | | |
| | 11 | 8T-4190 | 1 | BOLT (L=25mm) | | | | | |
| | 12 | 9X-8257 | 1 | WASHER | | | | | |

Y—SEE SEPARATE ILLUSTRATION

H89554E 00

## 259-5043 LIGHTING GP-BOOM

R-Boom Left Hand
Part of 240-3828,240-3830-Page731,302-9207-Page740
153-2521-Page223
An Attachment

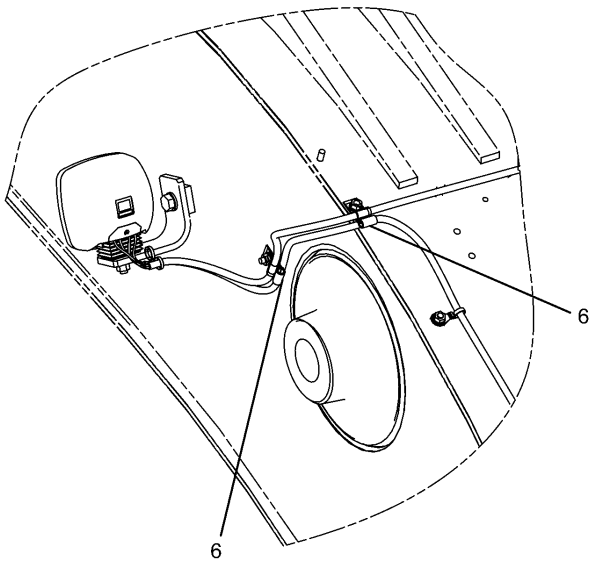


LEFT SIDE OF BOOM

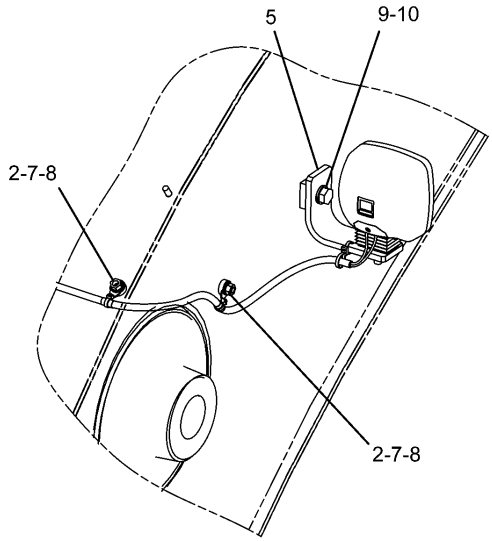


RIGHT SIDE OF BOOM

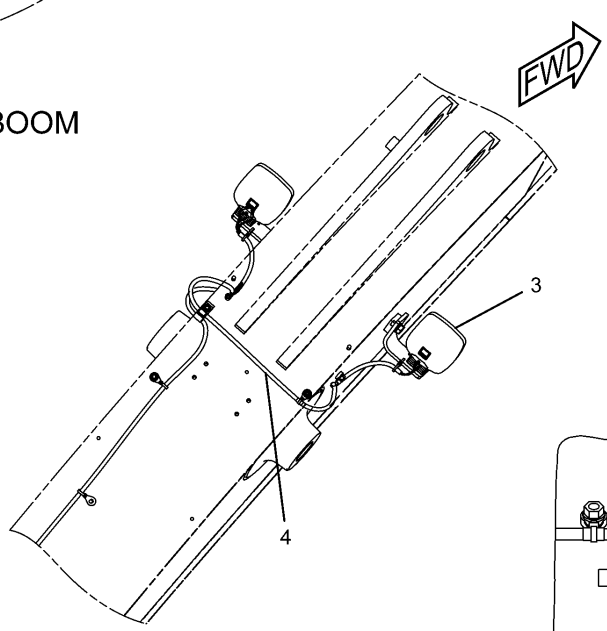


TOP VIEW OF THE BOOM

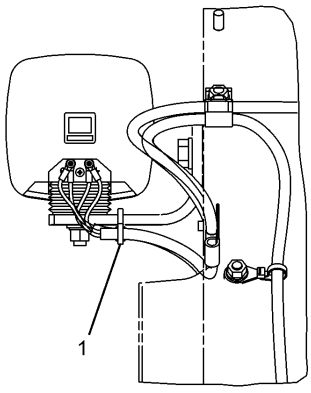


REAR VIEW OF THE LH LIGHT

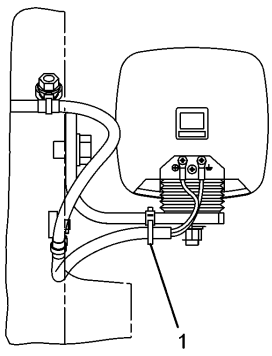


REAR VIEW OF THE RH LIGHT

H89858E 00

**259-5047 LIGHTING GP-BOOM**
R-Boom Right Hand
153-2521-Page223
An Attachment

# ELECTRICAL AND STARTING SYSTEM

| NOTE | No. | PART No. | QTY | PART NAME | NOTE | No. | PART No. | QTY | PART NAME |
|---|---|---|---|---|---|---|---|---|---|
| | 1 | 7I-2673 | 2 | STRAP | | | | | |
| | 2 | 111-4836 | 2 | CLIP | | | | | |
| Y | 3 | 153-2521 | 1 | LAMP GP | | | | | |
| | 4 | 259-5327 | 1 | HARNESS AS | | | | | |
| | | 2L-8075 | 4 | TERMINAL | | | | | |
| | 5 | 134-3284 | 1 | BRACKET | | | | | |
| | 6 | 7N-3718 | 2 | CLIP | | | | | |
| | 7 | 8T-4121 | 2 | WASHER | | | | | |
| | 8 | 8T-4133 | 2 | NUT | | | | | |
| | 9 | 8T-4190 | 1 | BOLT (L=25mm) | | | | | |
| | 10 | 9X-8257 | 1 | WASHER | | | | | |

Y—SEE SEPARATE ILLUSTRATION

H89858E 00

## 259-5047 LIGHTING GP-BOOM

R-Boom Right Hand
153-2521-Page223
An Attachment

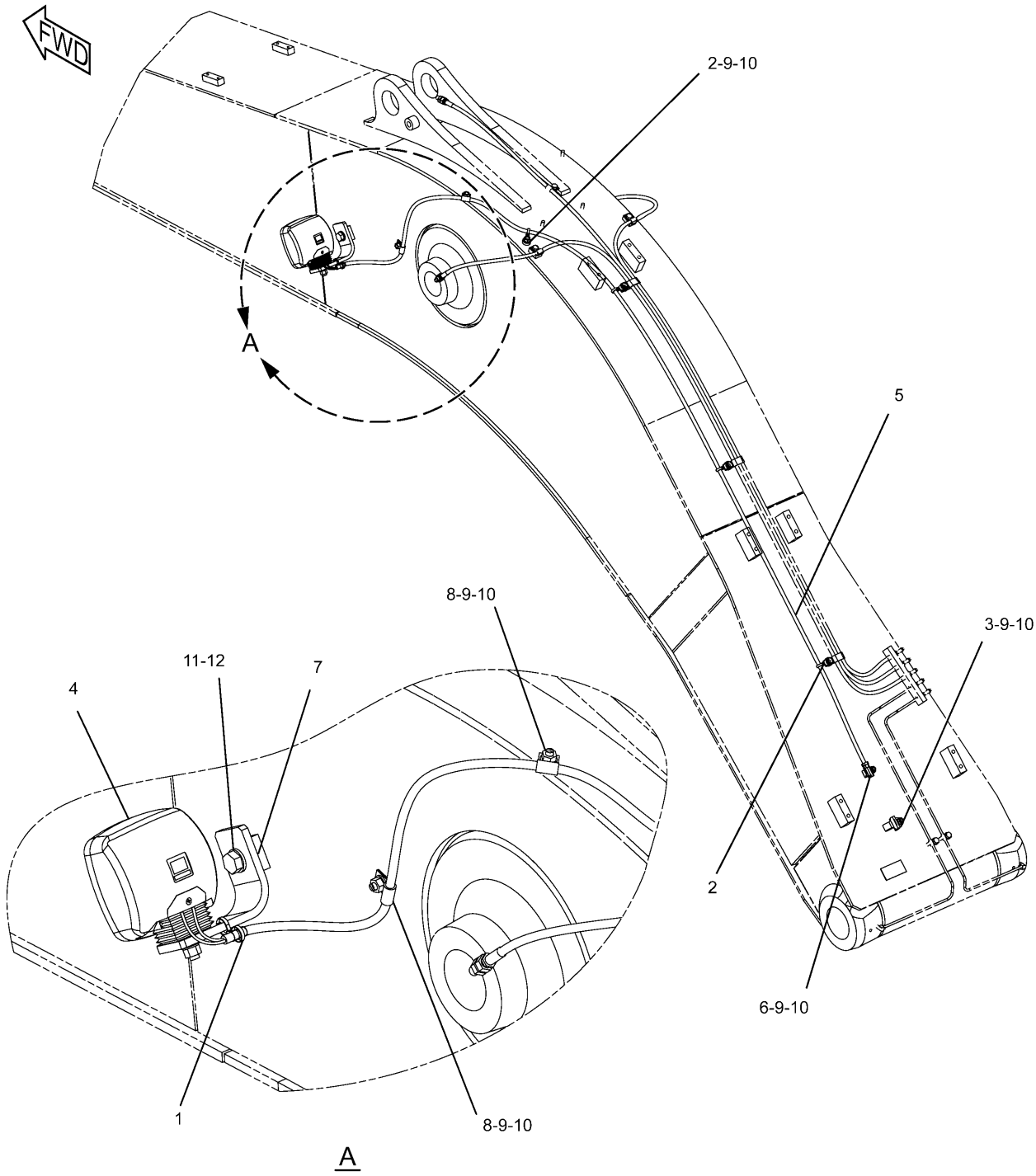


H89556E 00

## 267-7627 LIGHTING GP-BOOM

M-Boom Left Hand
S/N BWZ 1-Up, DFB 1-Up
Part of 240-3833-Page732
153-2521-Page223
An Attachment

# ELECTRICAL AND STARTING SYSTEM

| NOTE | No. | PART No. | QTY | PART NAME | NOTE | No. | PART No. | QTY | PART NAME |
|---|---|---|---|---|---|---|---|---|---|
| | 1 | 7I-2673 | 1 | STRAP | | | | | |
| | 2 | 111-4836 | 4 | CLIP | | | | | |
| | 3 | 116-0118 | 1 | CLIP | | | | | |
| Y | 4 | 153-2521 | 1 | LAMP GP | | | | | |
| | 5 | 267-7628 | 1 | HARNESS AS | | | | | |
| | | 9W-0852 | 2 | PIN | | | | | |
| | | 2L-8075 | 2 | TERMINAL | | | | | |
| | 6 | 111-4837 | 1 | CLIP | | | | | |
| | 7 | 134-3284 | 1 | BRACKET | | | | | |
| | 8 | 5P-9297 | 2 | CLIP | | | | | |
| | 9 | 8T-4121 | 5 | WASHER | | | | | |
| | 10 | 8T-4133 | 5 | NUT | | | | | |
| | 11 | 8T-4190 | 1 | BOLT (L=25mm) | | | | | |
| | 12 | 9X-8257 | 1 | WASHER | | | | | |

Y—SEE SEPARATE ILLUSTRATION

H89556E 00

## 267-7627 LIGHTING GP-BOOM

M-Boom Left Hand
S/N BWZ 1-Up, DFB 1-Up
Part of 240-3833-Page732
153-2521-Page223
An Attachment

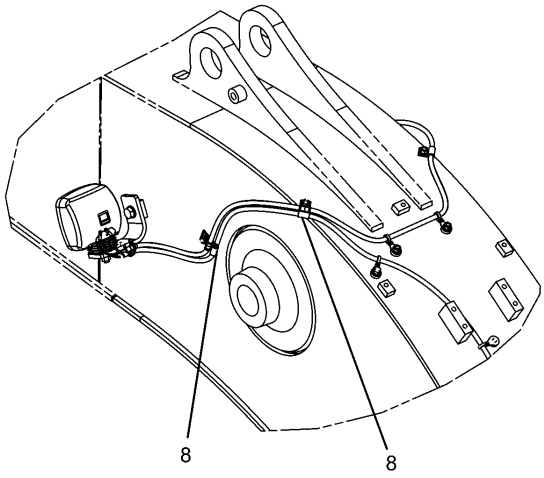


LEFT SIDE OF BOOM

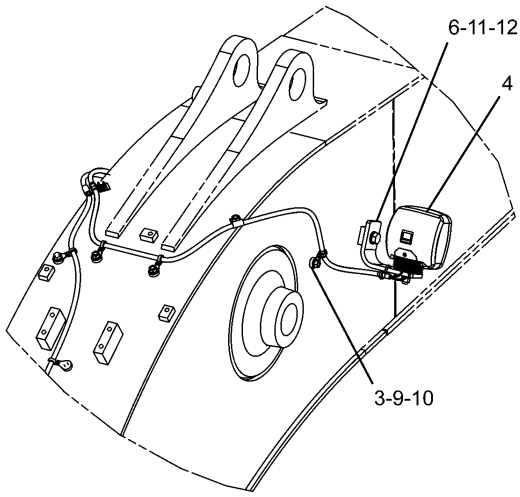


RIGHT SIDE OF BOOM




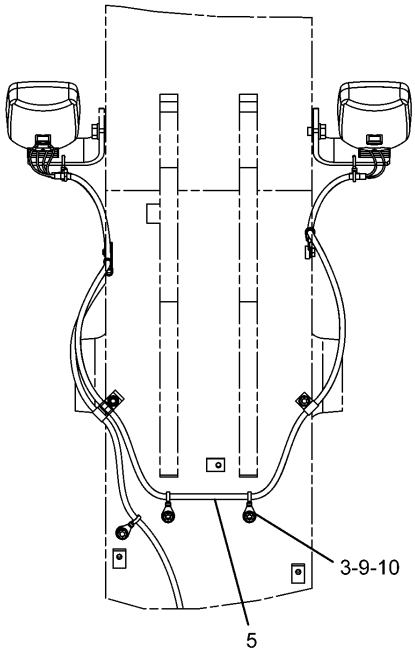


TOP VIEW OF THE BOOM

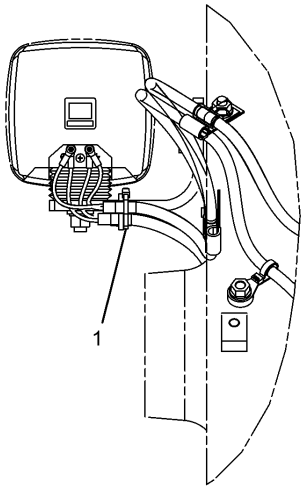


REAR VIEW OF THE LH LIGHT

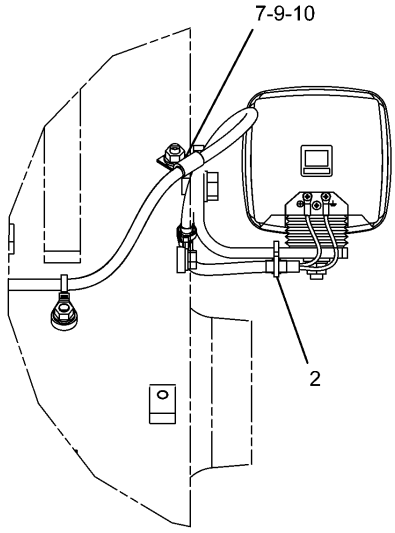


REAR VIEW OF THE RH LIGHT

H89857E 00

**259-5048 LIGHTING GP-BOOM**
M-Boom Right Hand
153-2521-Page223
An Attachment

# ELECTRICAL AND STARTING SYSTEM

| NOTE | No. | PART No. | QTY | PART NAME | NOTE | No. | PART No. | QTY | PART NAME |
|---|---|---|---|---|---|---|---|---|---|
| | 1 | 3S-2093 | 1 | STRAP | | | | | |
| | 2 | 7I-2673 | 1 | STRAP | | | | | |
| | 3 | 111-4836 | 3 | CLIP | | | | | |
| Y | 4 | 153-2521 | 1 | LAMP GP | | | | | |
| | 5 | 267-7626 | 1 | HARNESS AS | | | | | |
| | | 2L-8075 | 4 | TERMINAL | | | | | |
| | 6 | 134-3284 | 1 | BRACKET | | | | | |
| | 7 | 5P-9297 | 1 | CLIP | | | | | |
| | 8 | 7N-3718 | 2 | CLIP | | | | | |
| | 9 | 8T-4121 | 4 | WASHER | | | | | |
| | 10 | 8T-4133 | 4 | NUT | | | | | |
| | 11 | 8T-4190 | 1 | BOLT (L=25mm) | | | | | |
| | 12 | 9X-8257 | 1 | WASHER | | | | | |

Y—SEE SEPARATE ILLUSTRATION

H89857E 00

## 259-5048 LIGHTING GP-BOOM

M-Boom Right Hand
153-2521-Page223
An Attachment

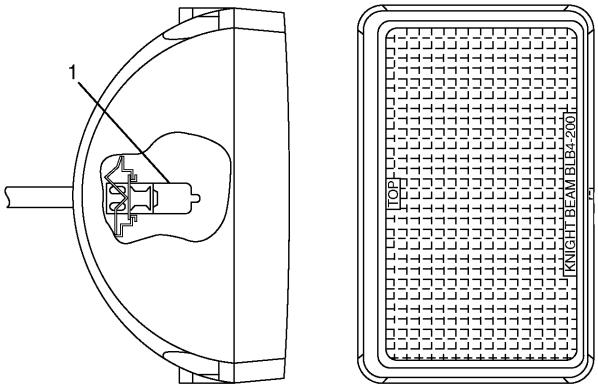


| NOTE | No. | PART No. | QTY | PART NAME |
|---|---|---|---|---|
| | 1 | 9X-3463 | 1 | BULB |

H81823E 03

## 167-3441 LAMP GP-FLOOD

Part of 238-1627-Page211
An Attachment

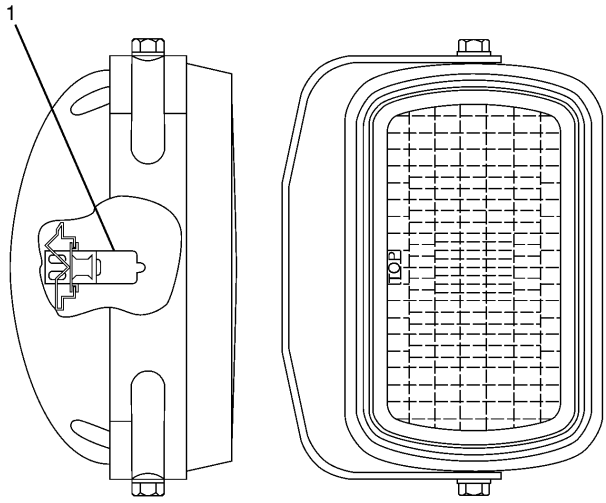


| NOTE | No. | PART No. | QTY | PART NAME |
|---|---|---|---|---|
| | 1 | 9X-3463 | 1 | BULB |

H81825E 01

## 183-1035 LAMP GP-FLOOD

Part of 238-1628-Page213
An Attachment

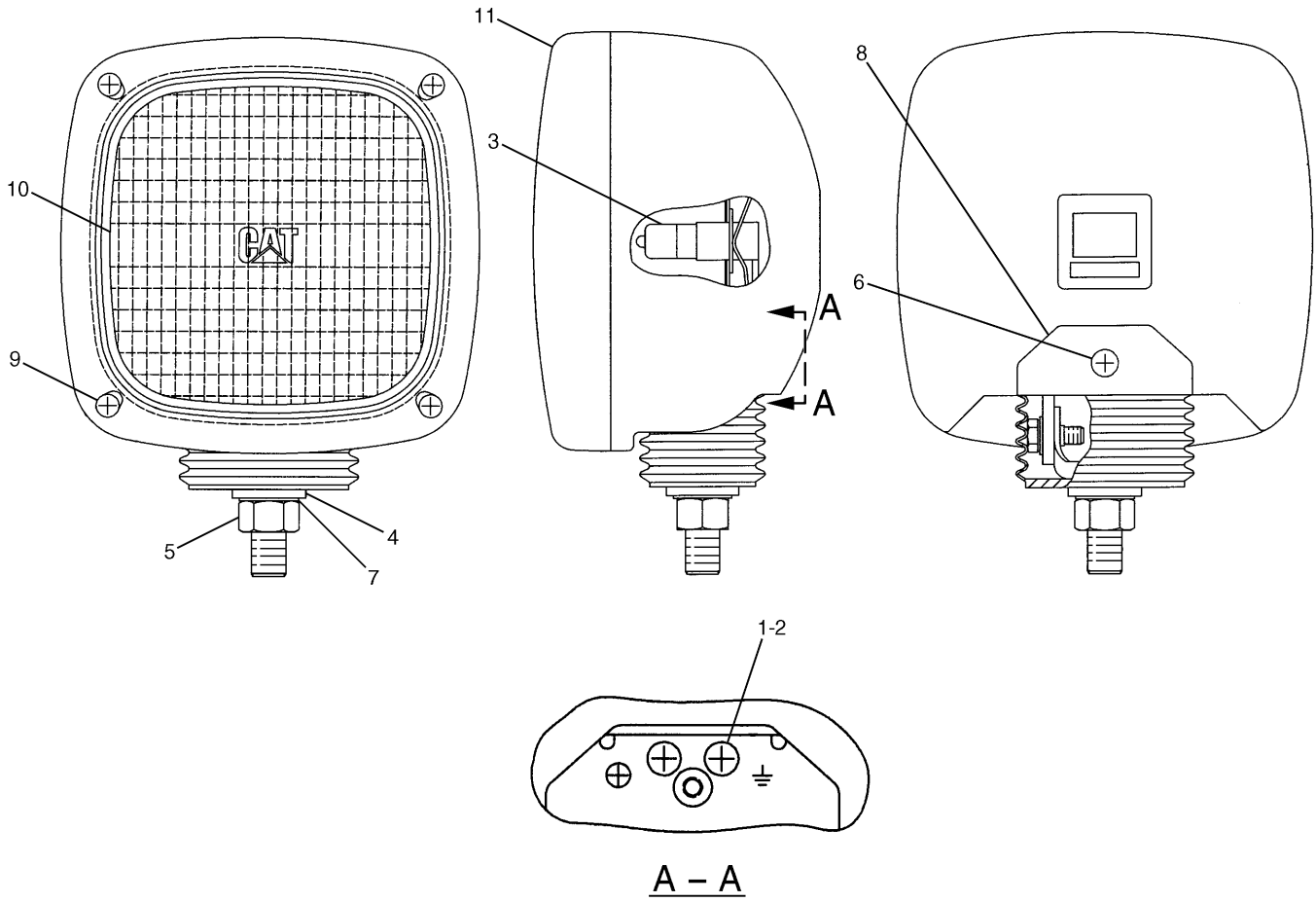


A – A

| NOTE | No. | PART No. | QTY | PART NAME | NOTE | No. | PART No. | QTY | PART NAME |
|---|---|---|---|---|---|---|---|---|---|
| | 1 | 6V-5210 | 2 | SCREW | | | | | |
| | 2 | 3B-4501 | 2 | LOCKWASHER | | | | | |
| | 3 | 9X-3463 | 1 | BULB | | | | | |
| | 4 | 8T-4223 | 1 | WASHER | | | | | |
| | 5 | 8T-4244 | 1 | NUT | | | | | |
| | 6 | 174-7791 | 1 | SCREW | | | | | |
| | 7 | 5C-2889 | 1 | LOCKWASHER | | | | | |
| | 8 | 170-6993 | 1 | COVER | | | | | |
| | 9 | 180-3861 | 4 | SCREW | | | | | |
| | 10 | 170-9417 | 1 | LENS AS | | | | | |
| | 11 | 170-9418 | 1 | BAND | | | | | |

H87353E 03

## 153-2521 LAMP GP-FLOOD

Part of 259-5043-Page215,259-5047-Page217,267-7627-Page219,259-5048-Page221
An Attachment

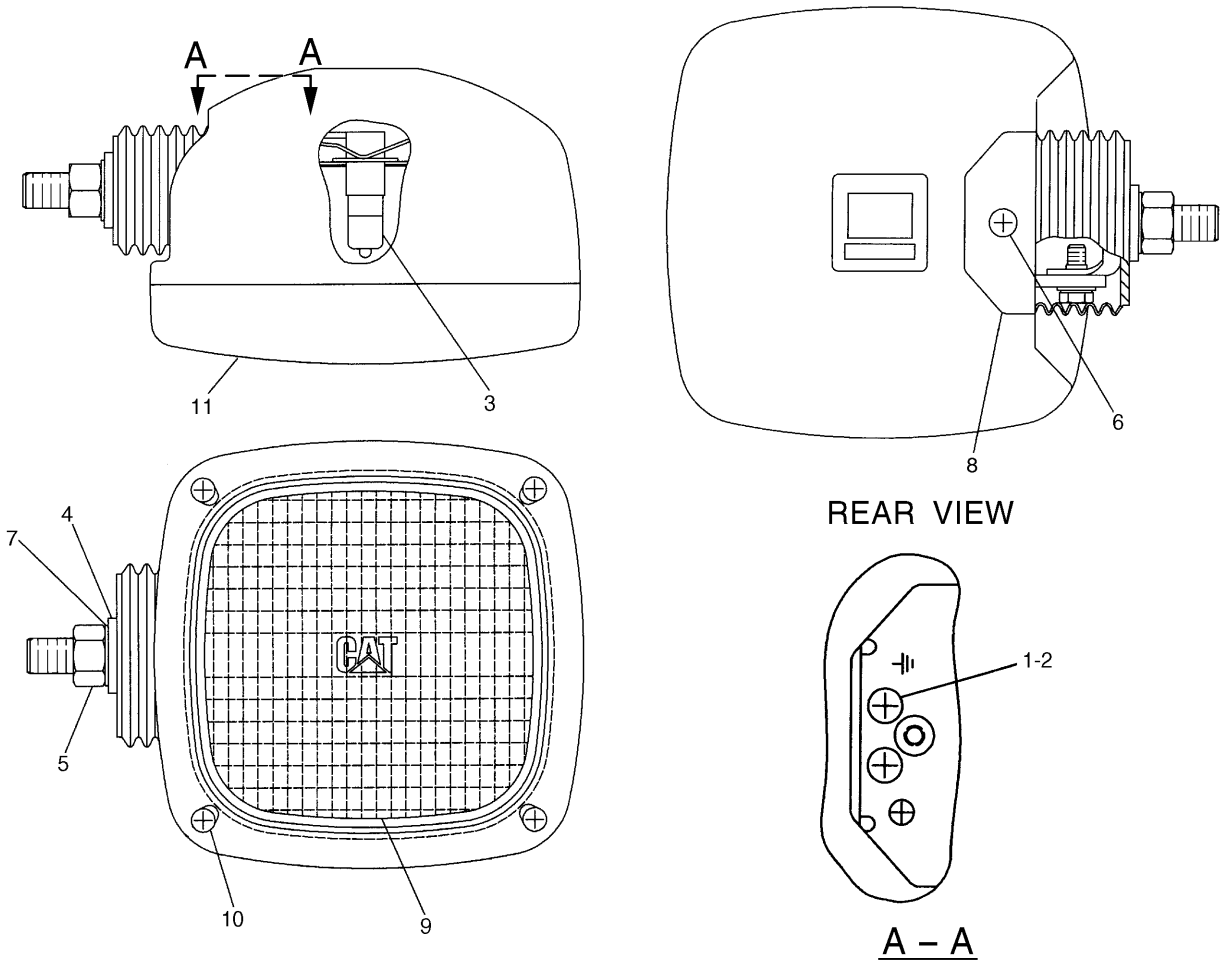


| NOTE | No. | PART No. | QTY | PART NAME | NOTE | No. | PART No. | QTY | PART NAME |
|---|---|---|---|---|---|---|---|---|---|
| | 1 | 6V-5210 | 2 | SCREW | | | | | |
| | 2 | 3B-4501 | 2 | LOCKWASHER | | | | | |
| | 3 | 9X-3463 | 1 | BULB | | | | | |
| | 4 | 8T-4223 | 1 | WASHER | | | | | |
| | 5 | 8T-4244 | 1 | NUT | | | | | |
| | 6 | 174-7791 | 1 | SCREW | | | | | |
| | 7 | 5C-2889 | 1 | LOCKWASHER | | | | | |
| | 8 | 170-6993 | 1 | COVER | | | | | |
| | 9 | 170-9417 | 1 | LENS AS | | | | | |
| | 10 | 180-3861 | 4 | SCREW | | | | | |
| | 11 | 170-9418 | 1 | BAND | | | | | |

H87354E 03

**153-2523 LAMP GP-FLOOD**
Part of 4I-5409-Page209

# ELECTRICAL AND STARTING SYSTEM

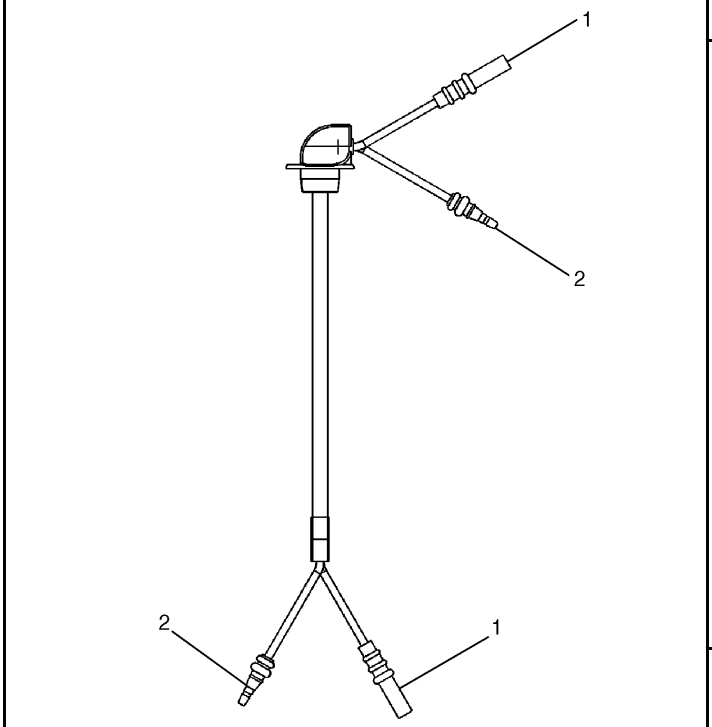


| NOTE | No. | PART No. | QTY | PART NAME |
|---|---|---|---|---|
| | 1 | 7Y-3963 | 2 | TERMINAL |
| | | 7Y-3965 | 2 | TUBE |
| | 2 | 7Y-3962 | 2 | TERMINAL |
| | | 7Y-3964 | 2 | TUBE |

H86647E 03

## 167-3456 HARNESS AS

Part of 238-1627-Page211
An Attachment

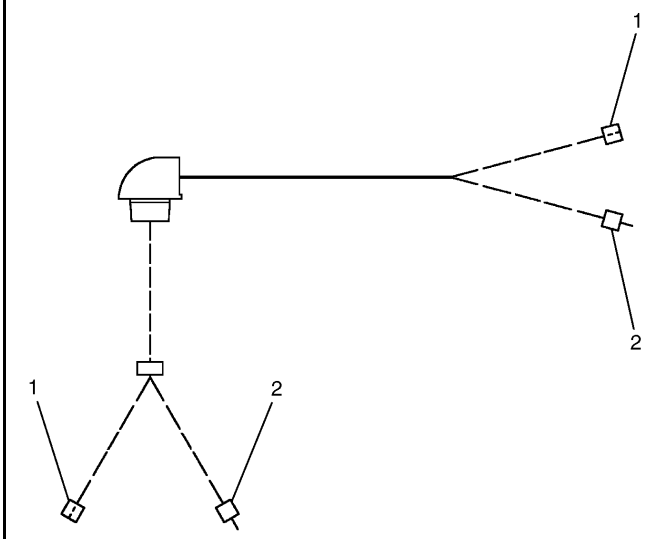


| NOTE | No. | PART No. | QTY | PART NAME |
|---|---|---|---|---|
| | 1 | 7Y-3963 | 2 | TERMINAL |
| | | 7Y-3965 | 2 | TUBE |
| | 2 | 7Y-3962 | 2 | TERMINAL |
| | | 7Y-3964 | 2 | TUBE |

H78595E 00

## 170-9295 HARNESS AS

Part of 238-1628-Page213
An Attachment

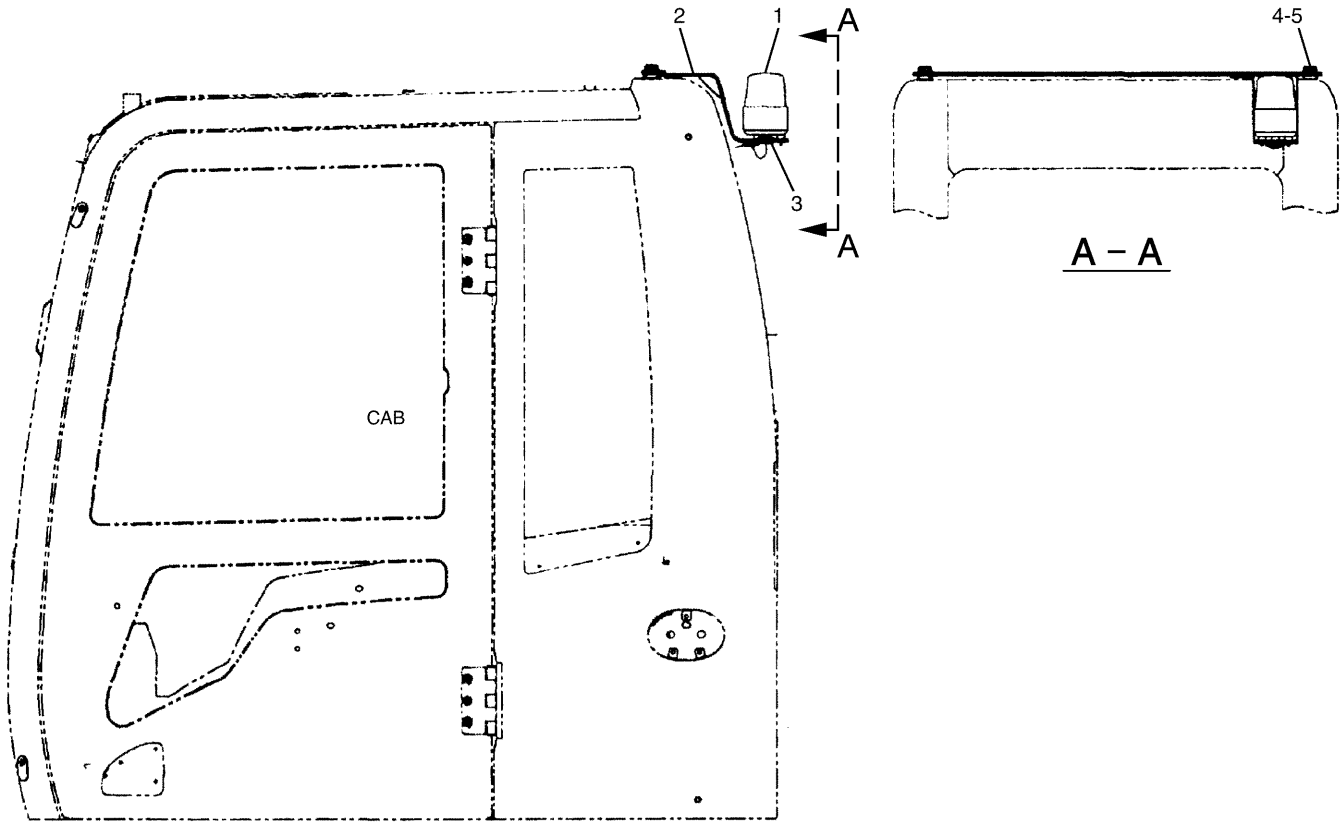


LEFT SIDE VIEW

| NOTE | No. | PART No. | QTY | PART NAME | NOTE | No. | PART No. | QTY | PART NAME |
|---|---|---|---|---|---|---|---|---|---|
| | 1 | 185-1257 | 1 | PATO LIGHT | | | | | |
| | 2 | 210-2922 | 1 | SUPPORT AS | | | | | |
| | 3 | 093-2069 | 1 | GROMMET | | | | | |
| | 4 | 7X-2553 | 3 | BOLT (L=40mm) | | | | | |
| | 5 | 9X-8257 | 3 | WASHER | | | | | |

H86793E 01

**210-2921 LIGHTING GP-WARNING**
S/N BWZ 1-Up, DFB 1-Up
Part of 279-2732-Page11,279-2733-Page12
An Attachment

# ELECTRICAL AND STARTING SYSTEM

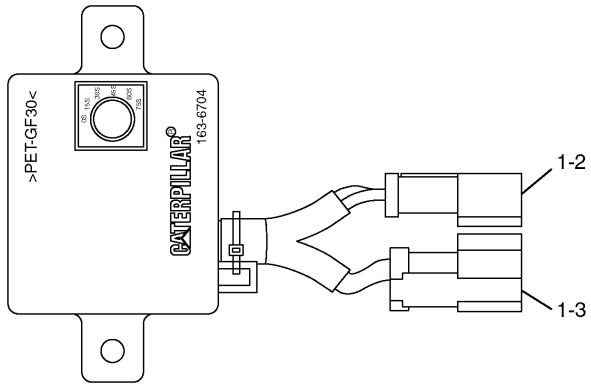


| NOTE | No. | PART No. | QTY | PART NAME |
|---|---|---|---|---|
| | 1 | 186-3735 | 5 | PIN |
| | 2 | 102-8802 | 1 | RECEPTACLE KIT |
| | 3 | 102-8803 | 1 | RECEPTACLE KIT |

H69865E 02

## 163-6704 TIMER AS

Part of 238-1627-Page211,238-1628-Page213
An Attachment

# ELECTRICAL AND STARTING SYSTEM

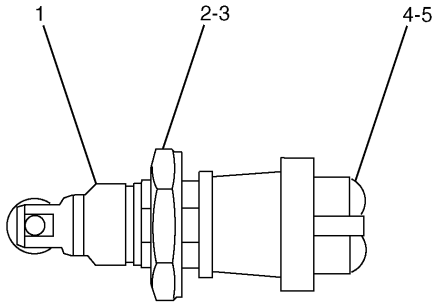


| NOTE | No. | PART No. | QTY | PART NAME |
|---|---|---|---|---|
| | 1 | 9X-0199 | 1 | BOOT |
| | 2 | 6V-8370 | 1 | NUT |
| | 3 | 2H-3922 | 1 | LOCKWASHER |
| | 4 | 6V-8363 | 2 | SCREW |
| | 5 | 8F-1434 | 2 | LOCKWASHER |

H74275E 01

## 129-6466 SWITCH AS-ROLLER

Part of 229-9087-Page645
An Attachment

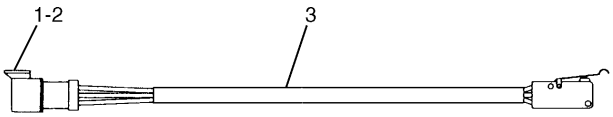


| NOTE | No. | PART No. | QTY | PART NAME |
|---|---|---|---|---|
| | 1 | 8T-8729 | 3 | PIN |
| | 2 | 102-8803 | 1 | RECEPTACLE KIT |
| D | 3 | 5P-5998 | | TUBE…(0.3m) |

D—ORDER BY THE METER

H72253E 04

## 111-4799 SWITCH AS

Limit
Part of 234-6613-Page678

# ELECTRICAL AND STARTING SYSTEM

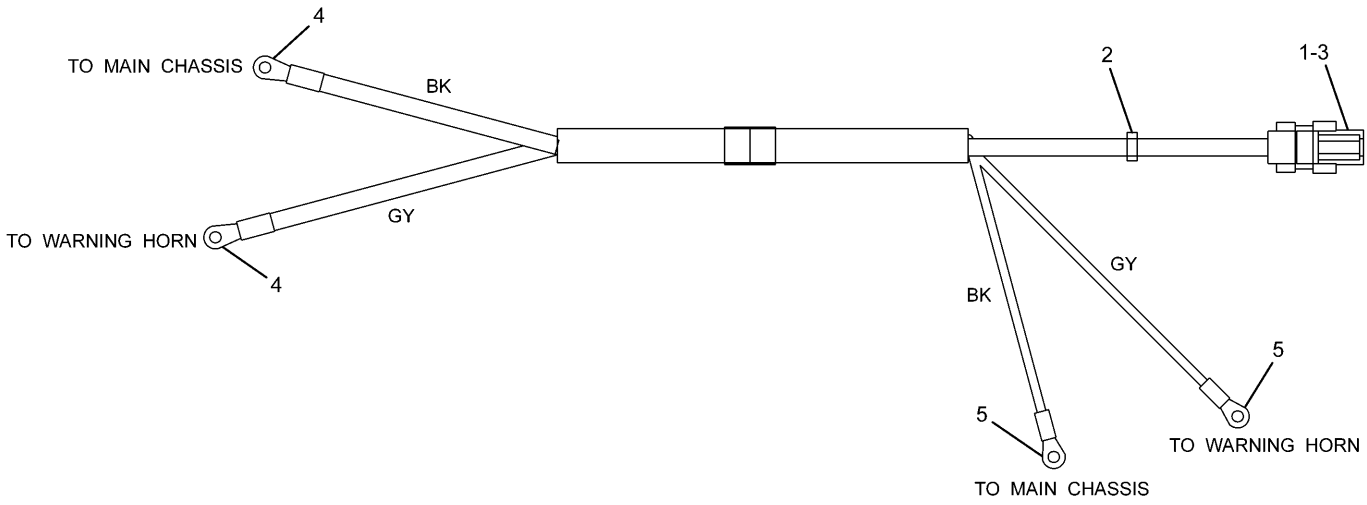


| NOTE | No. | PART No. | QTY | PART NAME | NOTE | No. | PART No. | QTY | PART NAME |
|---|---|---|---|---|---|---|---|---|---|
| | 1 | 9W-0844 | 2 | SOCKET | | | | | |
| | 2 | 3S-2093 | 1 | STRAP | | | | | |
| | 3 | 230-4011 | 1 | PLUG AS | | | | | |
| | 4 | 2L-8065 | 2 | TERMINAL | | | | | |
| | 5 | 2L-8075 | 2 | TERMINAL | | | | | |

H93544E 00

## 291-7560 HARNESS AS

Part of 291-7559-Page664

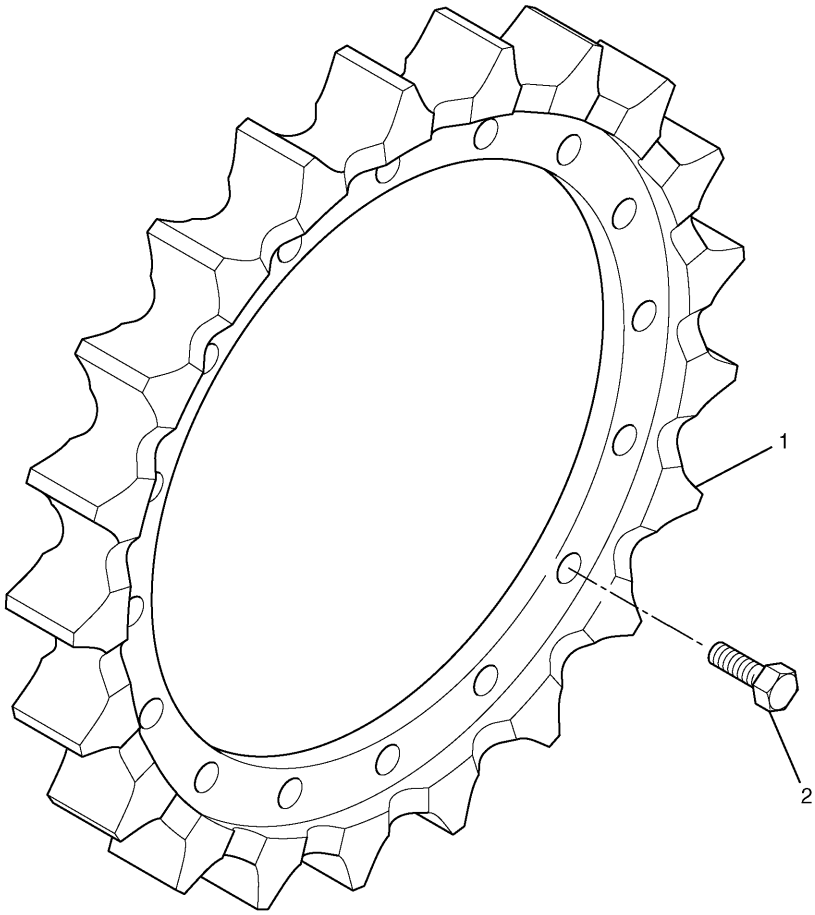


| NOTE | No. | PART No. | QTY | PART NAME | NOTE | No. | PART No. | QTY | PART NAME |
|---|---|---|---|---|---|---|---|---|---|
| | 1 | 8E-9805 | 1 | SPROCKET | | | | | |
| | 2 | 7X-2562 | 16 | BOLT (L=45mm) | | | | | |

H82503E 03

## 145-3042 SPROCKET GP-NONSEGMENTED
2 Required

# POWER TRAIN

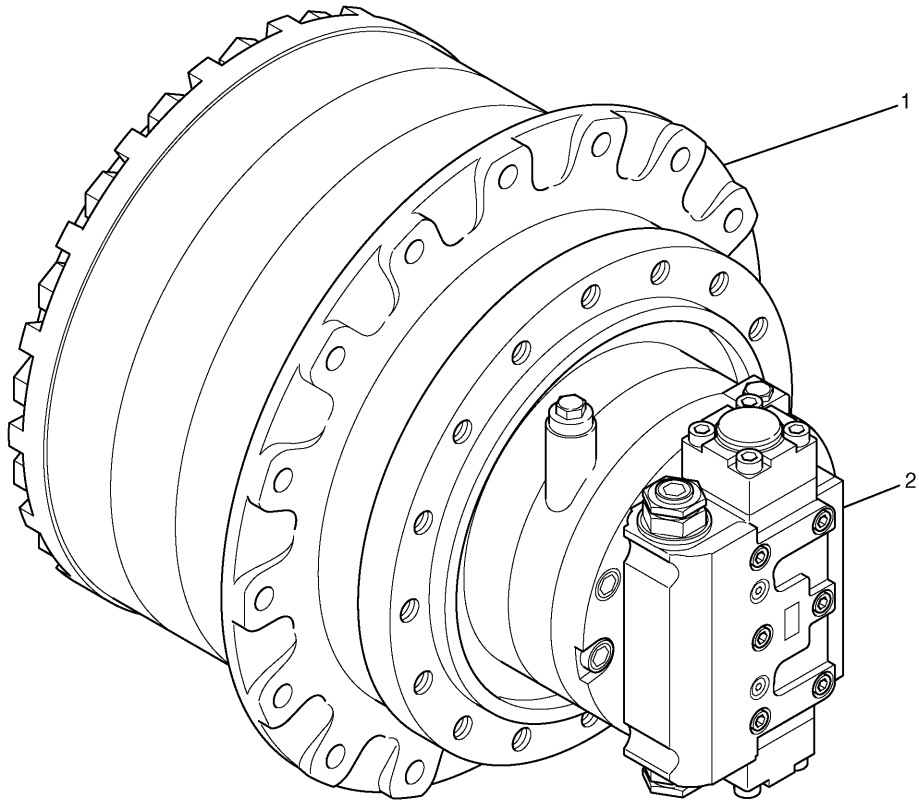


| NOTE | No. | PART No. | QTY | PART NAME | NOTE | No. | PART No. | QTY | PART NAME |
|---|---|---|---|---|---|---|---|---|---|
| Y | 1 | 227-6035 | 1 | DRIVE GP | | | | | |
| Y | 2 | 215-9982 | 1 | MOTOR GP | | | | | |

Y—SEE SEPARATE ILLUSTRATION

H93545E 00

## 227-6913 FINAL DRIVE GP

W/Motor-2 Required

227-6035-Page232,215-9982-Page510

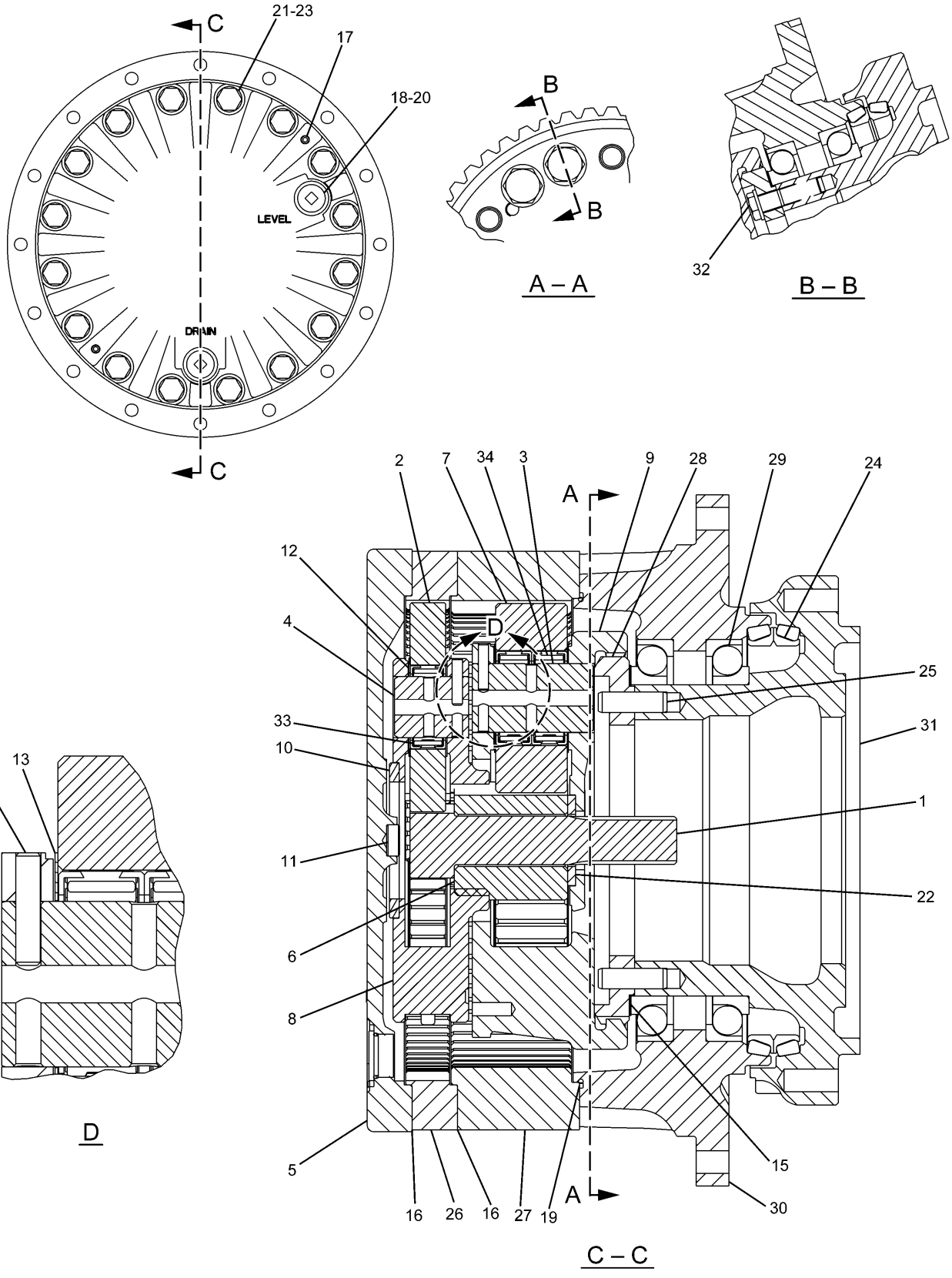


H99641E 02

**227-6035 FINAL DRIVE GP**
Part of 227-6913-Page231

# POWER TRAIN

| NOTE | No. | PART No. | QTY | PART NAME | NOTE | No. | PART No. | QTY | PART NAME |
|---|---|---|---|---|---|---|---|---|---|
| | 1 | 6I-6583 | 1 | GEAR | | | | | |
| | 2 | 6I-6585 | 3 | GEAR (Z=44) | | | | | |
| | 3 | 7Y-0223 | 3 | SHAFT | | | | | |
| | 4 | 7Y-0225 | 3 | SHAFT | | | | | |
| | 5 | 7Y-1426 | 1 | COVER | | | | | |
| | 6 | 7Y-1430 | 1 | GEAR (Z=17) | | | | | |
| | 7 | 7Y-1431 | 3 | GEAR (Z=30) | | | | | |
| | 8 | 7Y-1432 | 1 | CARRIER | | | | | |
| | 9 | 7Y-1433 | 1 | CARRIER | | | | | |
| | 10 | 7Y-1558 | 1 | SPACER | | | | | |
| | 11 | 094-0580 | 1 | PLATE (T=10.00mm) | | | | | |
| | 12 | 094-0611 | 6 | WASHER | | | | | |
| | 13 | 094-1528 | 6 | WASHER | | | | | |
| | 14 | 095-0891 | 6 | PIN | | | | | |
| B | 15 | 096-1773 | 1 | SHIM (T=0.15mm) | | | | | |
| B | | 096-1774 | 1 | SHIM (T=0.30mm) | | | | | |
| B | | 096-1775 | 1 | SHIM (T=0.40mm) | | | | | |
| B | | 096-1776 | 1 | SHIM (T=0.50mm) | | | | | |
| B | | 096-1777 | 1 | SHIM (T=0.60mm) | | | | | |
| B | | 096-1778 | 1 | SHIM (T=0.70mm) | | | | | |
| B | | 096-1779 | 1 | SHIM (T=0.80mm) | | | | | |
| B | | 096-1780 | 1 | SHIM (T=1.00mm) | | | | | |
| B | | 096-1781 | 1 | SHIM (T=1.60mm) | | | | | |
| B | 16 | 1U-8846 | | GASKET MAKER…(20ml) | | | | | |
| | 17 | 095-1270 | 2 | SETSCREW | | | | | |
| | 18 | 3E-2338 | 2 | PLUG | | | | | |
| | 19 | 6D-0692 | 1 | SEAL-O-RING (ID=367.89mm) | | | | | |
| | 20 | 7M-8485 | 2 | SEAL-O-RING (ID=29.74mm) | | | | | |
| | 21 | 7X-2568 | 16 | BOLT (L=180mm) | | | | | |
| | 22 | 7Y-1434 | 1 | SPACER | | | | | |
| | 23 | 8T-4123 | 16 | WASHER | | | | | |
| | 24 | 114-1497 | 1 | SEAL GP | | | | | |
| | 25 | 114-1539 | 6 | PIN | | | | | |
| | 26 | 148-4705 | 1 | GEAR (Z=104) | | | | | |
| | 27 | 148-4708 | 1 | GEAR (Z=79) | | | | | |
| | 28 | 148-4715 | 1 | GEAR (Z=55) | | | | | |
| | 29 | 168-8451 | 2 | BEARING | | | | | |
| | 30 | 191-3235 | 1 | HOUSING | | | | | |
| | 31 | 191-3236 | 1 | HOUSING | | | | | |
| | 32 | 227-6034 | 14 | BOLT (L=60mm) | | | | | |
| | 33 | 094-0616 | 3 | BEARING | | | | | |
| | 34 | 094-1542 | 6 | BEARING | | | | | |

B—USE AS REQUIRED

H99641E 02

## 227-6035 FINAL DRIVE GP

Part of 227-6913-Page231

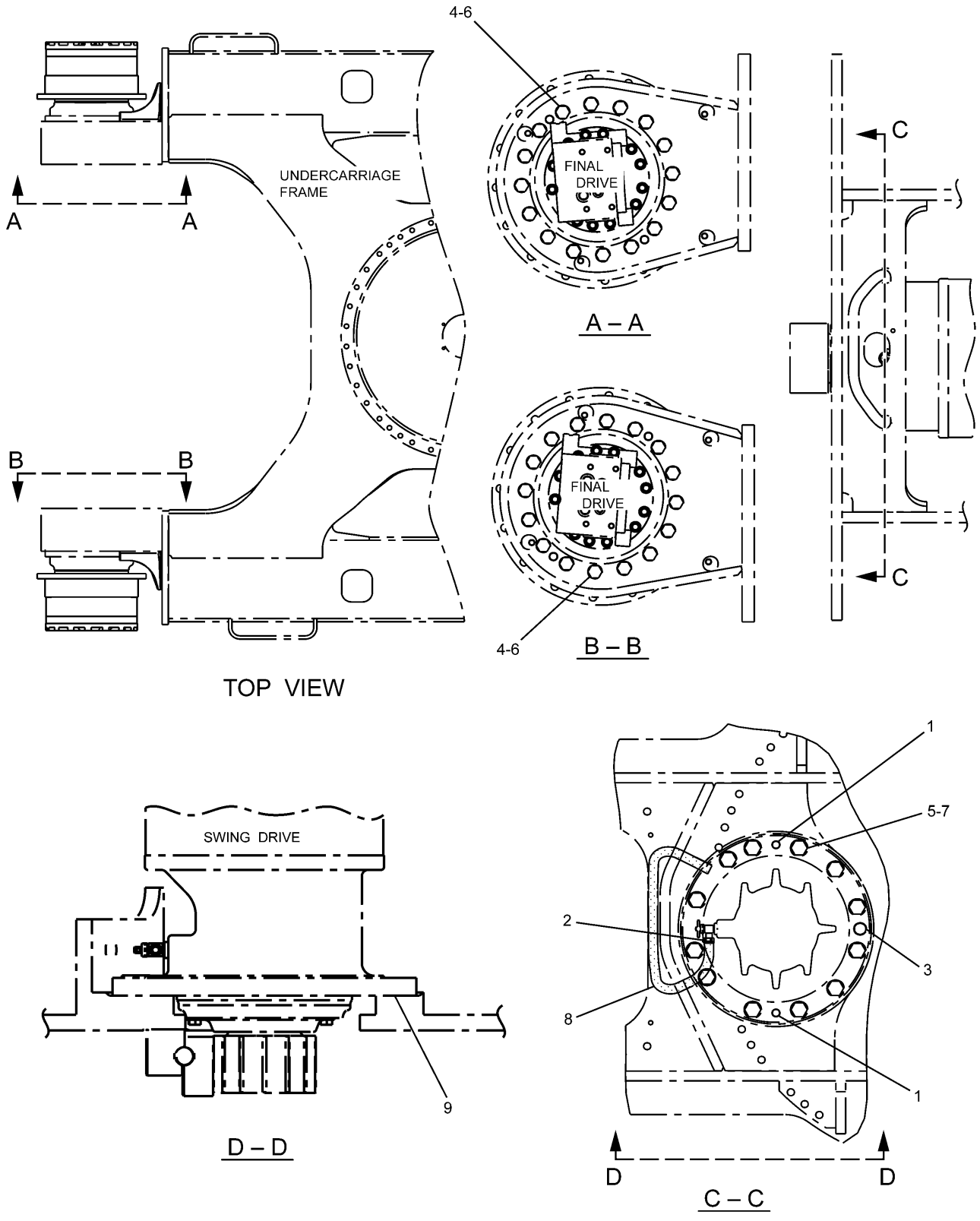


H89633E 01

227-6166 FASTENER GP-SWING & FINAL DR

# FRAME AND BODY

| NOTE | No. | PART No. | QTY | PART NAME | NOTE | No. | PART No. | QTY | PART NAME |
|---|---|---|---|---|---|---|---|---|---|
| | 1 | 2Y-5503 | 2 | CORK | | | | | |
| | 2 | 5D-1026 | 1 | CLAMP | | | | | |
| | 3 | 096-4755 | 1 | PIN | | | | | |
| | 4 | 7X-2563 | 32 | BOLT (L=60mm) | | | | | |
| | 5 | 7X-2576 | 12 | BOLT (L=70mm) | | | | | |
| | 6 | 8T-4123 | 32 | WASHER | | | | | |
| | 7 | 8T-4167 | 12 | WASHER | | | | | |
| E | 8 | 5P-0767 | | HOSE…(90cm) | | | | | |
| B | 9 | 1U-8846 | | GASKET MAKER…(15ml) | | | | | |

B—USE AS REQUIRED

E—ORDER BY THE CENTIMETER

H89633E 01

## 227-6166 FASTENER GP-SWING & FINAL DR

# FRAME AND BODY

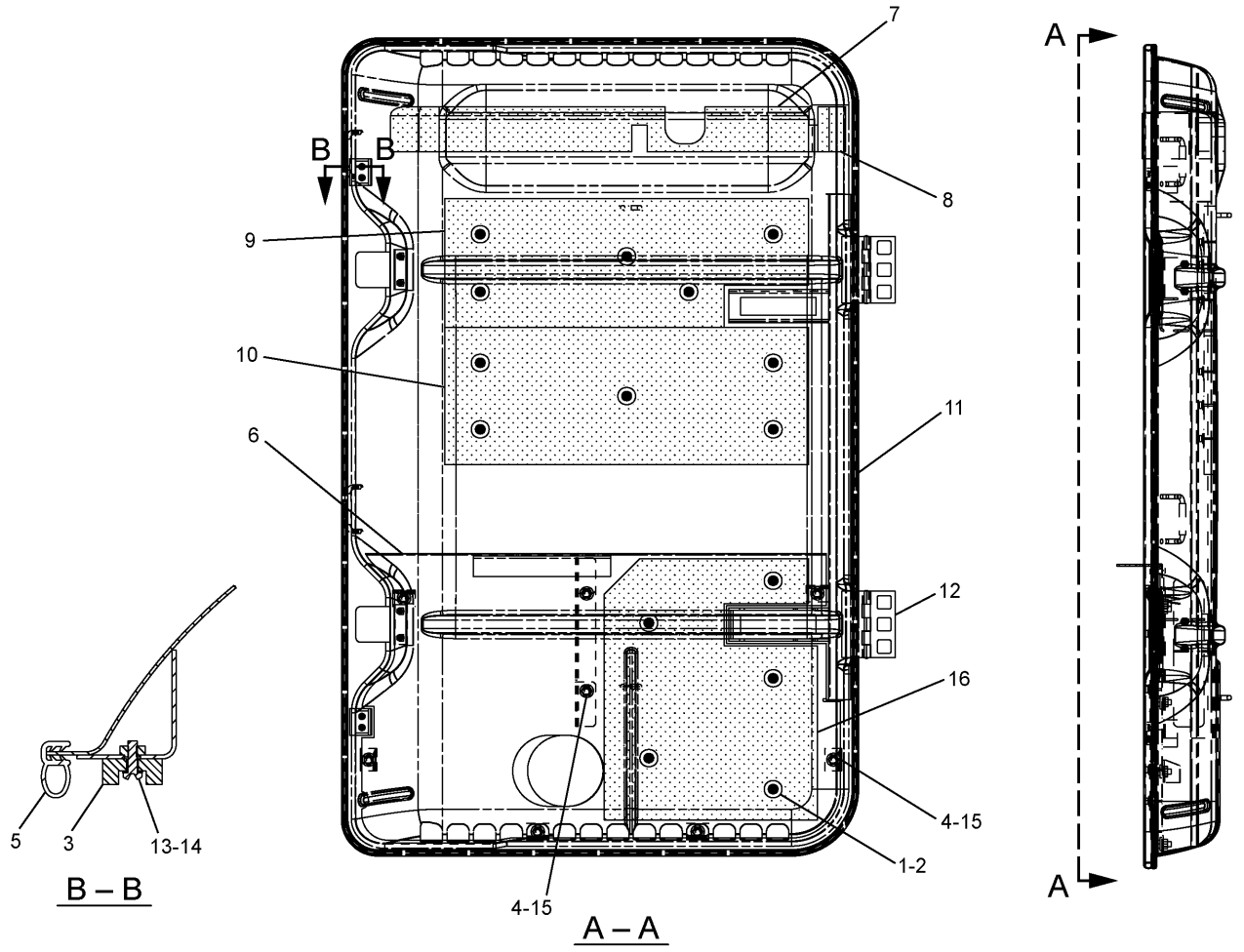


| NOTE | No. | PART No. | QTY | PART NAME | NOTE | No. | PART No. | QTY | PART NAME |
|---|---|---|---|---|---|---|---|---|---|
| | 1 | 4I-7924 | 15 | WASHER | | | | | |
| | 2 | 6P-2216 | 15 | CAP | | | | | |
| | 3 | 096-4129 | 2 | CUSHION | | | | | |
| | 4 | 8T-4192 | 8 | BOLT (L=25mm) | | | | | |
| D | 5 | 101-9848 | | SEAL…(6.2m) | | | | | |
| | 6 | 262-2420 | 1 | SHEET AS | | | | | |
| | | 6P-2215 | 5 | PIN | | | | | |
| | 7 | 262-2427 | 1 | LINER | | | | | |
| | 8 | 262-2428 | 1 | LINER | | | | | |
| | 9 | 262-2429 | 1 | LINER | | | | | |
| | 10 | 262-2430 | 1 | LINER | | | | | |
| | 11 | 259-3688 | 1 | HOOD AS | | | | | |
| | | 6P-2215 | 10 | PIN | | | | | |
| | 12 | 114-6289 | 2 | HINGE | | | | | |
| | 13 | 8T-0328 | 4 | WASHER | | | | | |
| | 14 | 8T-6693 | 4 | SCREW | | | | | |
| | 15 | 5P-1076 | 8 | WASHER | | | | | |
| | 16 | 262-2432 | 1 | LINER | | | | | |

D—ORDER BY THE METER

H95232E 04

**259-3687 HOOD GP-ENGINE**

Part of 273-7725-Page243

# MEMORANDA

# FRAME AND BODY

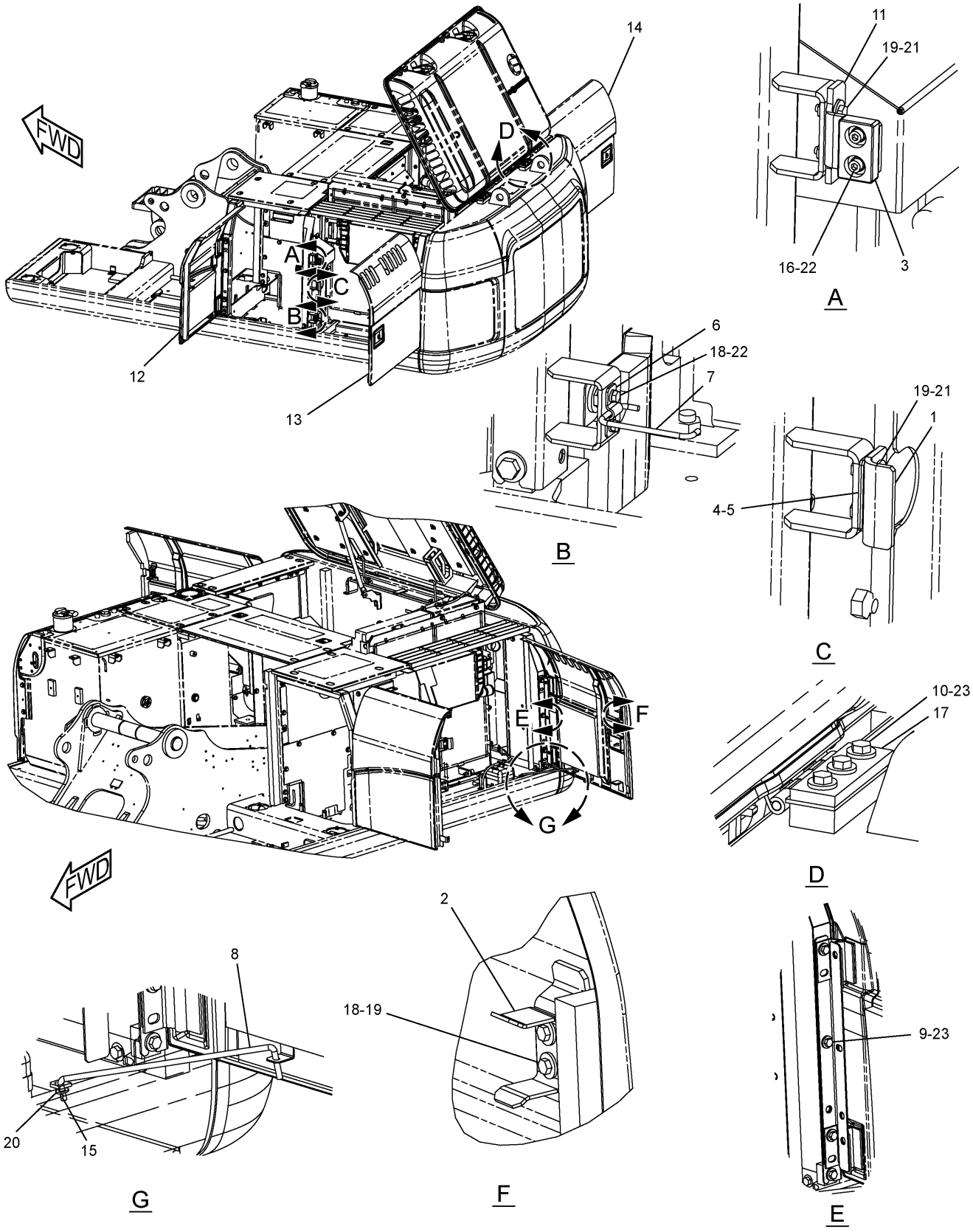


**273-7725 HOOD & GUARD GP (1/3)**

289-6913-Page244,289-6911-Page245,298-2977-Page246

# FRAME AND BODY

| NOTE | No. | PART No. | QTY | PART NAME | NOTE | No. | PART No. | QTY | PART NAME |
|---|---|---|---|---|---|---|---|---|---|
| | 1 | 4I-0232 | 2 | STRIKER | | | | | |
| | 2 | 4I-8019 | 3 | SUPPORT | | | | | |
| | 3 | 6I-6033 | 3 | STOPPER | | | | | |
| | 4 | 087-3908 | 4 | SHIM (T=1.00mm) | | | | | |
| | 5 | 087-3909 | 4 | SHIM (T=2.00mm) | | | | | |
| | 6 | 122-3979 | 1 | BAND | | | | | |
| | 7 | 122-3980 | 1 | ROD | | | | | |
| | 8 | 122-4120 | 3 | ROD | | | | | |
| | 9 | 8T-4139 | 9 | BOLT (L=30mm) | | | | | |
| | 10 | 8T-4183 | 6 | BOLT (L=40mm) | | | | | |
| | 11 | 190-6880 | 3 | SUPPORT AS | | | | | |
| Y | 12 | 298-2977 | 1 | DOOR AS | | | | | |
| Y | 13 | 289-6911 | 1 | DOOR GP | | | | | |
| Y | 14 | 289-6913 | 1 | DOOR GP | | | | | |
| | 15 | 3B-4618 | 3 | COTTER | | | | | |
| | 16 | 105-3487 | 6 | BOLT (L=20mm) | | | | | |
| | 17 | 114-6285 | 2 | BAR | | | | | |
| | 18 | 5C-9553 | 8 | BOLT (L=16mm) | | | | | |
| | 19 | 5P-4115 | 16 | WASHER | | | | | |
| | 20 | 8T-4121 | 3 | WASHER | | | | | |
| | 21 | 8T-4138 | 10 | BOLT (L=20mm) | | | | | |
| | 22 | 9X-8256 | 8 | WASHER | | | | | |
| | 23 | 5P-1076 | 15 | WASHER | | | | | |

Y—SEE SEPARATE ILLUSTRATION

H98034E 10

## 273-7725 HOOD & GUARD GP (1/3)

289-6913-Page244,289-6911-Page245,298-2977-Page246

# FRAME AND BODY

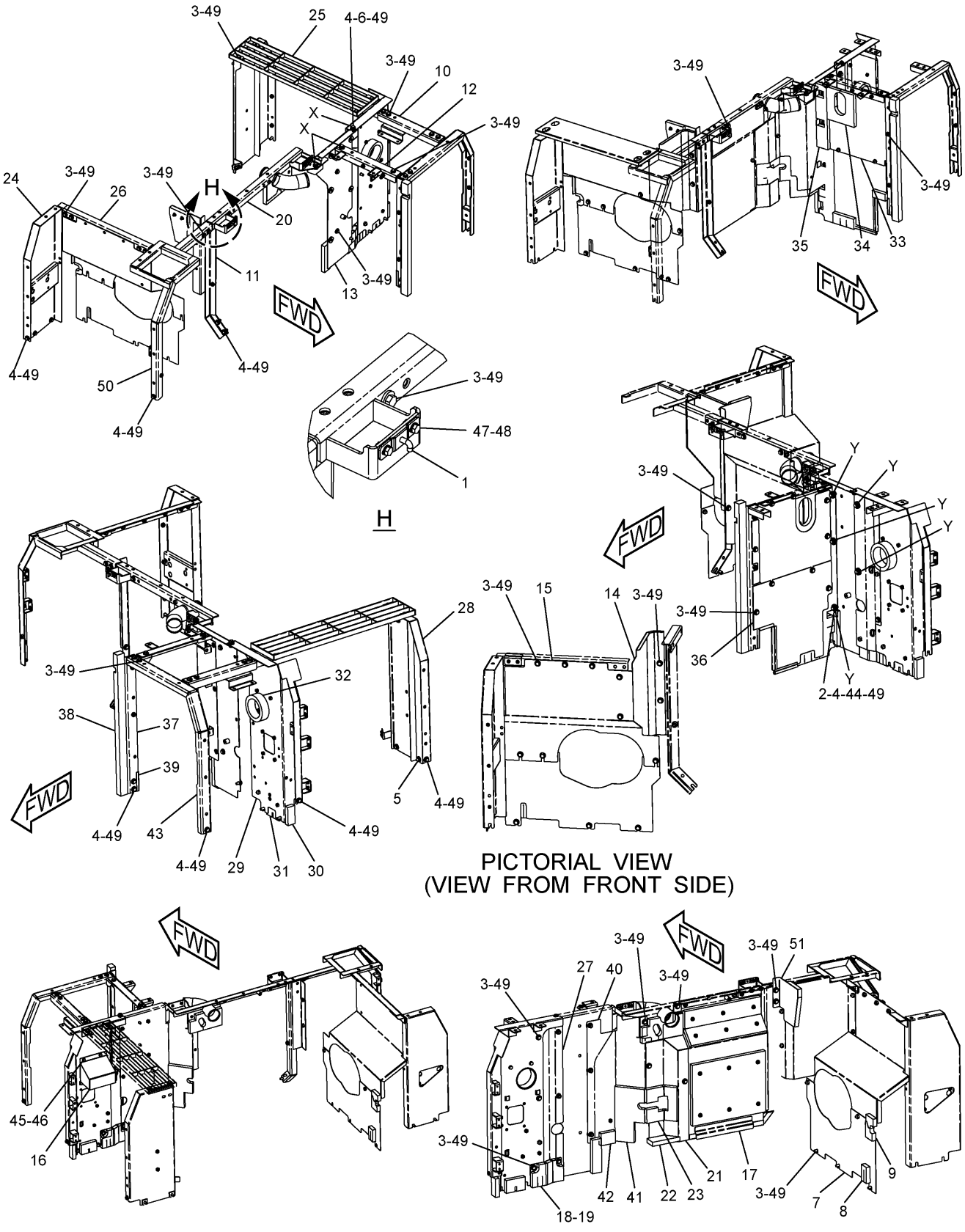


H98035E 10

**273-7725 HOOD & GUARD GP (2/3)**

289-6695-Page249,298-3033-Page250

# FRAME AND BODY

| NOTE | No. | PART No. | QTY | PART NAME | NOTE | No. | PART No. | QTY | PART NAME |
|---|---|---|---|---|---|---|---|---|---|
| | 1 | 4I-0118 | 2 | HOOK AS | | 51 | 307-7700 | 1 | SHEET AS |
| | 2 | 7Y-2853 | 5 | SPACER | | | 307-7702 | 1 | INSULATION |
| | 3 | 8T-4192 | 52 | BOLT (L=25mm) | | | 6P-2216 | 3 | CAP |
| | 4 | 8T-4139 | 21 | BOLT (L=30mm) | | | | | |
| | 5 | 8T-4956 | 2 | BOLT (L=35mm) | | | | | |
| | 6 | 170-3016 | 9 | SPACER | | | | | |
| | 7 | 289-6572 | 1 | SHEET AS | | | | | |
| | 8 | 283-3905 | 1 | LINER | | | | | |
| | 9 | 286-6277 | 1 | LINER | | | | | |
| | 10 | 244-8242 | 1 | SUPPORT AS | | | | | |
| | 11 | 298-3038 | 1 | SUPPORT AS | | | | | |
| | 12 | 244-8255 | 1 | SUPPORT AS | | | | | |
| | 13 | 248-8940 | 1 | SUPPORT AS | | | | | |
| | 14 | 293-6982 | 1 | SHEET AS | | | | | |
| | 15 | 286-6220 | 1 | SHEET AS | | | | | |
| | | 286-6276 | 1 | LINER | | | | | |
| | 16 | 262-2324 | 1 | COVER AS | | | | | |
| Y | 17 | 298-3033 | 1 | SHEET AS | | | | | |
| | 18 | 262-2363 | 1 | SHEET AS | | | | | |
| | 19 | 262-2365 | 1 | LINER | | | | | |
| | 20 | 298-3041 | 1 | SUPPORT AS | | | | | |
| | | 278-3832 | 1 | LINER | | | | | |
| | 21 | 278-3842 | 1 | SHEET AS | | | | | |
| | 22 | 204-3663 | 1 | LINER | | | | | |
| | 23 | 199-7398 | 1 | LINER | | | | | |
| | 24 | 286-6359 | 1 | SUPPORT AS | | | | | |
| | 25 | 244-8219 | 1 | SUPPORT AS | | | | | |
| | 26 | 244-8228 | 1 | SUPPORT AS | | | | | |
| | 27 | 283-3911 | 1 | SHEET AS | | | | | |
| | 28 | 289-6583 | 1 | SUPPORT AS | | | | | |
| | 29 | 307-7662 | 1 | SUPPORT AS | | | | | |
| | 30 | 244-8277 | 1 | LINER | | | | | |
| | 31 | 244-8278 | 1 | LINER | | | | | |
| | 32 | 244-8288 | 1 | LINER | | | | | |
| | 33 | 289-6588 | 1 | SHEET AS | | | | | |
| | 34 | 278-3837 | 1 | LINER | | | | | |
| | 35 | 262-2313 | 1 | LINER | | | | | |
| Y | 36 | 289-6695 | 1 | SHEET AS | | | | | |
| | 37 | 289-6698 | 1 | SUPPORT AS | | | | | |
| | 38 | 244-8198 | 1 | LINER | | | | | |
| | 39 | 129-3400 | 1 | GUARD | | | | | |
| | 40 | 289-6699 | 1 | SHEET AS | | | | | |
| | 41 | 262-2309 | 1 | LINER | | | | | |
| | 42 | 289-6700 | 1 | LINER | | | | | |
| | 43 | 289-6805 | 1 | SUPPORT AS | | | | | |
| | 44 | 7Y-2854 | 5 | SPACER | | | | | |
| | 45 | 8T-4121 | 2 | WASHER | | | | | |
| | 46 | 8T-4137 | 2 | BOLT (L=20mm) | | | | | |
| | 47 | 8T-4189 | 4 | BOLT (L=20mm) | | | | | |
| | 48 | 8T-4224 | 4 | WASHER | | | | | |
| | 49 | 5P-1076 | 73 | WASHER | | | | | |
| | 50 | 244-8234 | 1 | SUPPORT AS | | | | | |

Y—SEE SEPARATE ILLUSTRATION

H98035E 10

## 273-7725 HOOD & GUARD GP (2/3)

289-6695-Page249,298-3033-Page250

# FRAME AND BODY

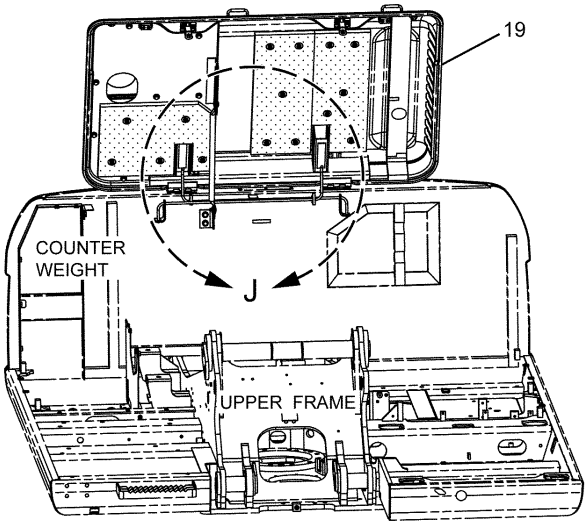


FRONT VIEW

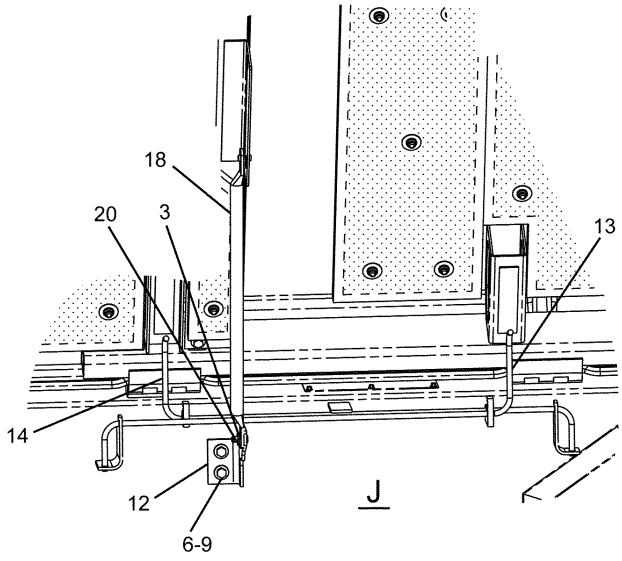


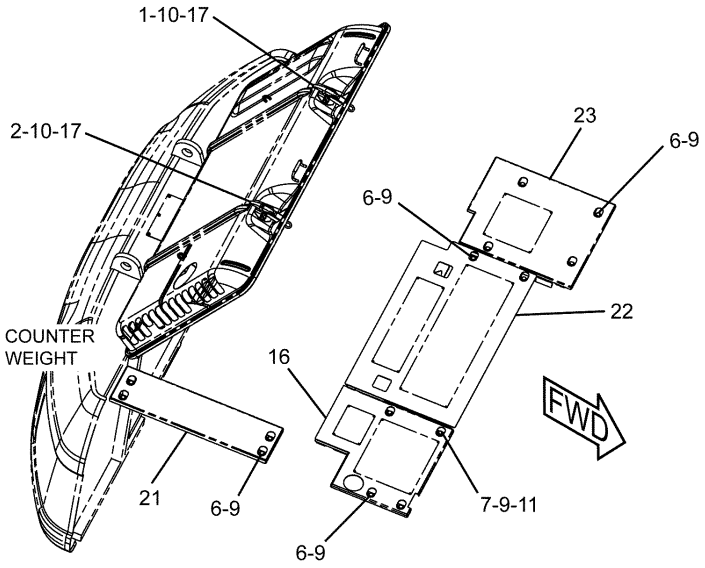


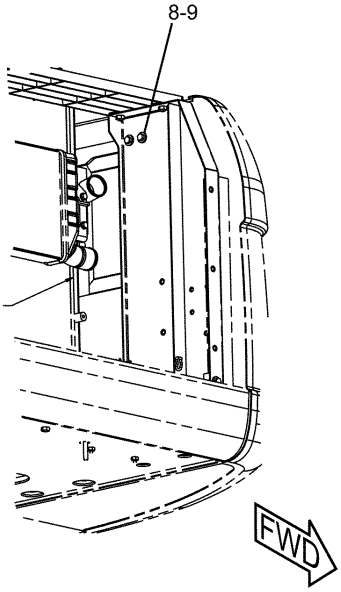


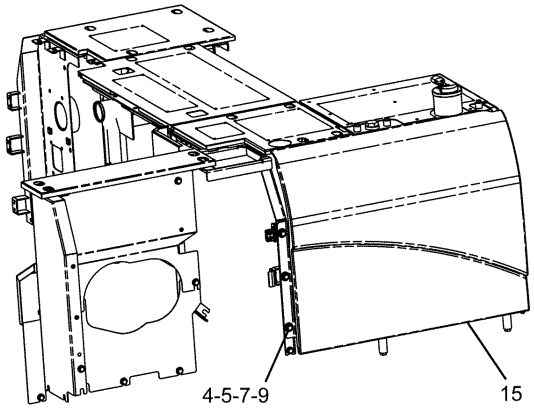


RIGHT SIDE VIEW

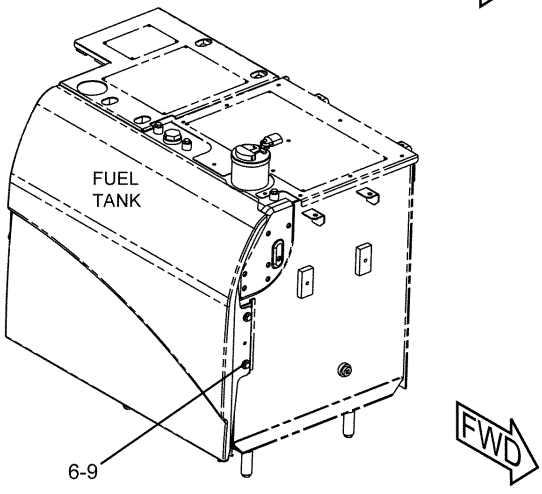


H98036E 10

**273-7725 HOOD & GUARD GP (3/3)**

259-3687-Page236,298-2979-Page247

# FRAME AND BODY

| NOTE | No. | PART No. | QTY | PART NAME | NOTE | No. | PART No. | QTY | PART NAME |
|---|---|---|---|---|---|---|---|---|---|
| | 1 | 1R-9958 | 1 | FASTENER | | | | | |
| | 2 | 4I-0117 | 1 | FASTENER | | | | | |
| | 3 | 8T-4223 | 2 | WASHER | | | | | |
| | 4 | 7Y-2853 | 3 | SPACER | | | | | |
| | 5 | 7Y-2854 | 3 | SPACER | | | | | |
| | 6 | 8T-4192 | 16 | BOLT (L=25mm) | | | | | |
| | 7 | 8T-4139 | 5 | BOLT (L=30mm) | | | | | |
| | 8 | 8T-4956 | 2 | BOLT (L=35mm) | | | | | |
| | 9 | 5P-1076 | 21 | WASHER | | | | | |
| | 10 | 8T-4224 | 4 | WASHER | | | | | |
| | 11 | 170-3016 | 6 | SPACER | | | | | |
| | 12 | 184-8423 | 1 | SUPPORT AS | | | | | |
| | 13 | 203-4889 | 1 | SPRING | | | | | |
| | 14 | 203-4890 | 1 | SPRING | | | | | |
| Y | 15 | 298-2979 | 1 | DOOR AS | | | | | |
| | 16 | 244-8207 | 1 | COVER AS | | | | | |
| | | 190-7081 | 2 | SHEET | | | | | |
| | 17 | 8T-4908 | 4 | BOLT (L=25mm) | | | | | |
| | 18 | 116-1628 | 1 | SUPPORT AS | | | | | |
| Y | 19 | 259-3687 | 1 | HOOD GP | | | | | |
| | 20 | 3B-4618 | 1 | COTTER | | | | | |
| | 21 | 262-2353 | 1 | COVER AS | | | | | |
| | 22 | 298-3044 | 1 | COVER AS | | | | | |
| | 23 | 244-8202 | 1 | COVER AS | | | | | |

Y—SEE SEPARATE ILLUSTRATION

H98036E 10

## 273-7725 HOOD & GUARD GP (3/3)

259-3687-Page236,298-2979-Page247

# FRAME AND BODY

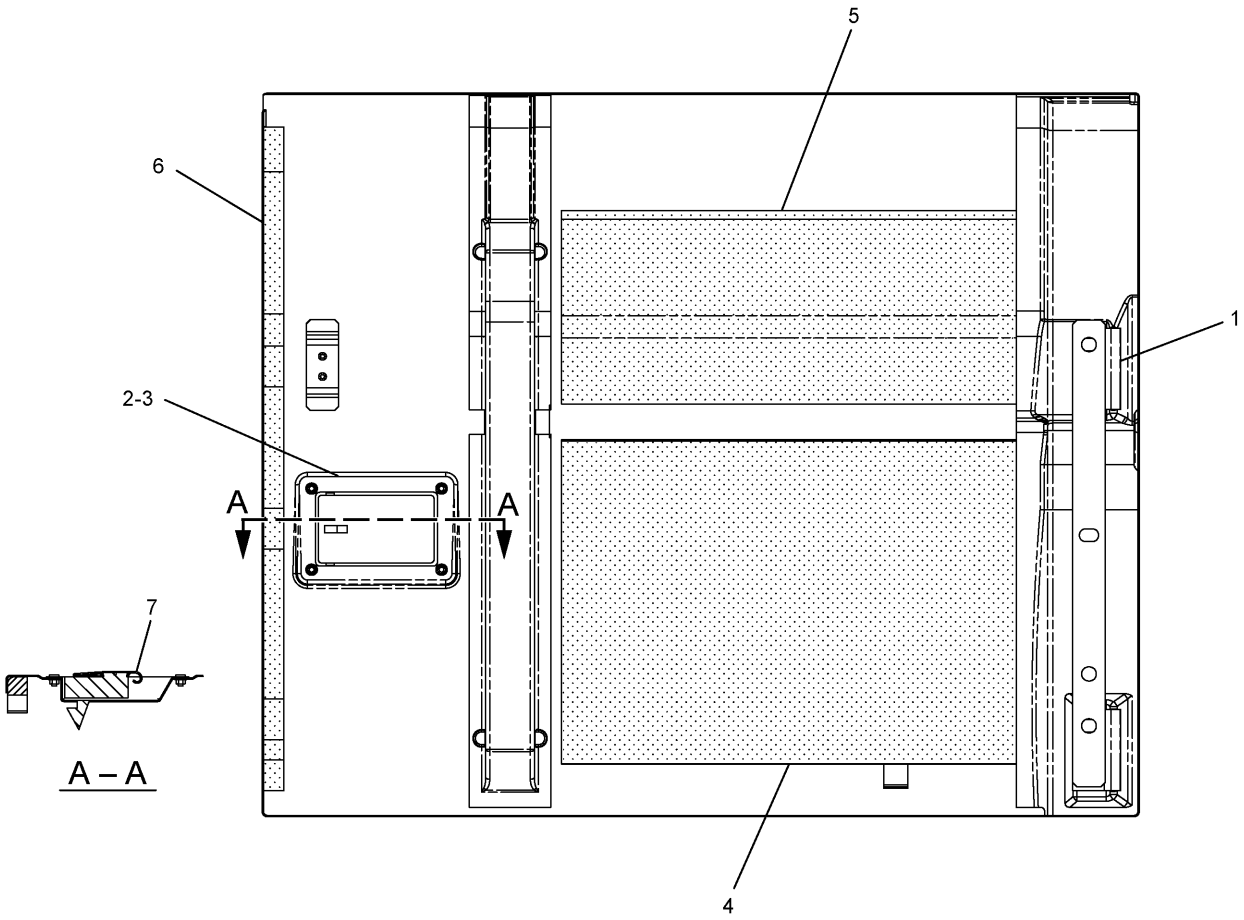


| NOTE | No. | PART No. | QTY | PART NAME | NOTE | No. | PART No. | QTY | PART NAME |
|---|---|---|---|---|---|---|---|---|---|
| | 1 | 165-2976 | 2 | HINGE | | | | | |
| | 2 | 298-2942 | 1 | LOCK AS | | | | | |
| | 3 | 099-6418 | 4 | NUT | | | | | |
| | 4 | 244-7928 | 1 | INSULATION | | | | | |
| | 5 | 244-7927 | 1 | INSULATION | | | | | |
| | 6 | 248-8961 | 1 | LINER | | | | | |
| | 7 | 184-8862 | 1 | COVER | | | | | |

H96906E 03

**289-6913 DOOR GP**
Part of 273-7725-Page239

# FRAME AND BODY

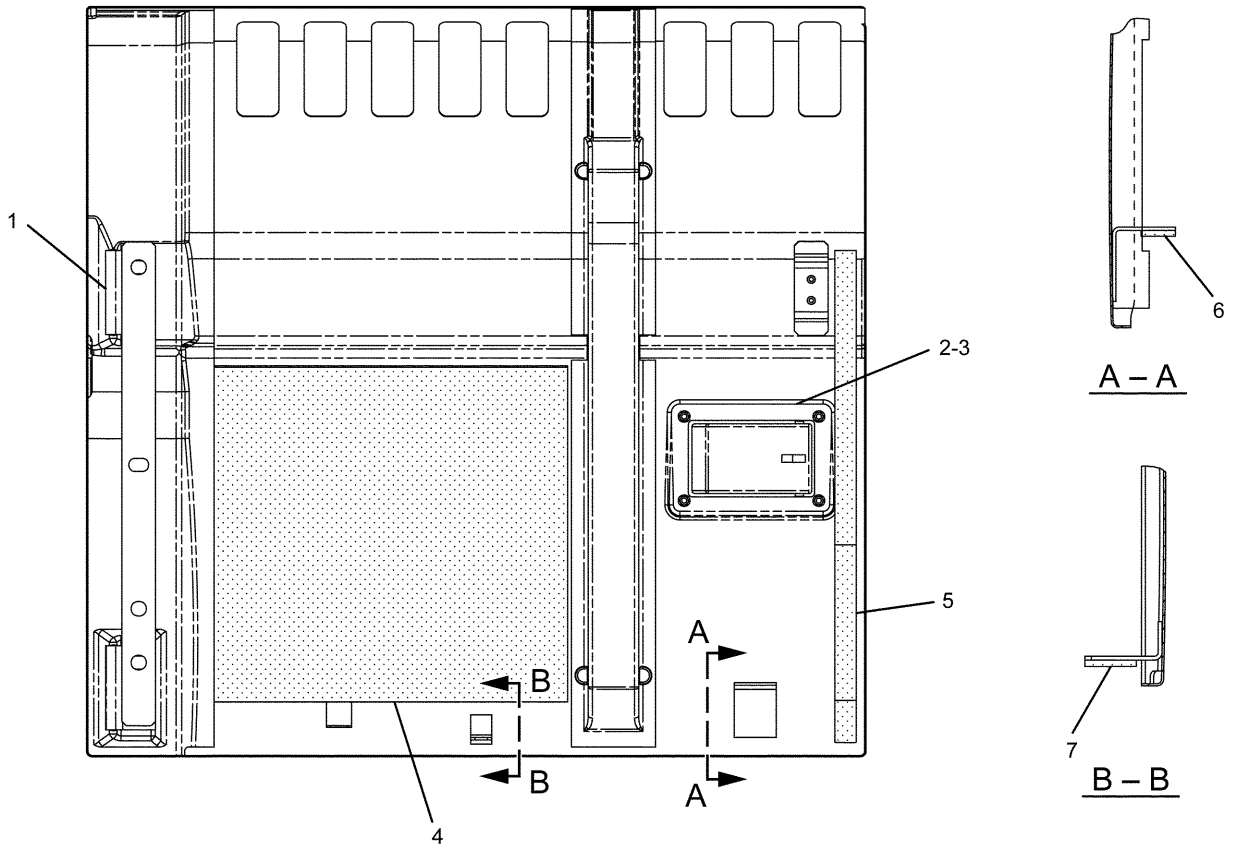


| NOTE | No. | PART No. | QTY | PART NAME | NOTE | No. | PART No. | QTY | PART NAME |
|---|---|---|---|---|---|---|---|---|---|
| | 1 | 165-2976 | 2 | HINGE | | | | | |
| | 2 | 298-2942 | 1 | LOCK AS | | | | | |
| | 3 | 099-6418 | 4 | NUT | | | | | |
| | 4 | 244-7929 | 1 | INSULATION | | | | | |
| | 5 | 177-6395 | 1 | LINER | | | | | |
| | 6 | 122-4101 | 1 | RUBBER | | | | | |
| | 7 | 208-4289 | 1 | CUSHION | | | | | |

H96907E 02

**289-6911 DOOR GP**
Part of 273-7725-Page239

# FRAME AND BODY

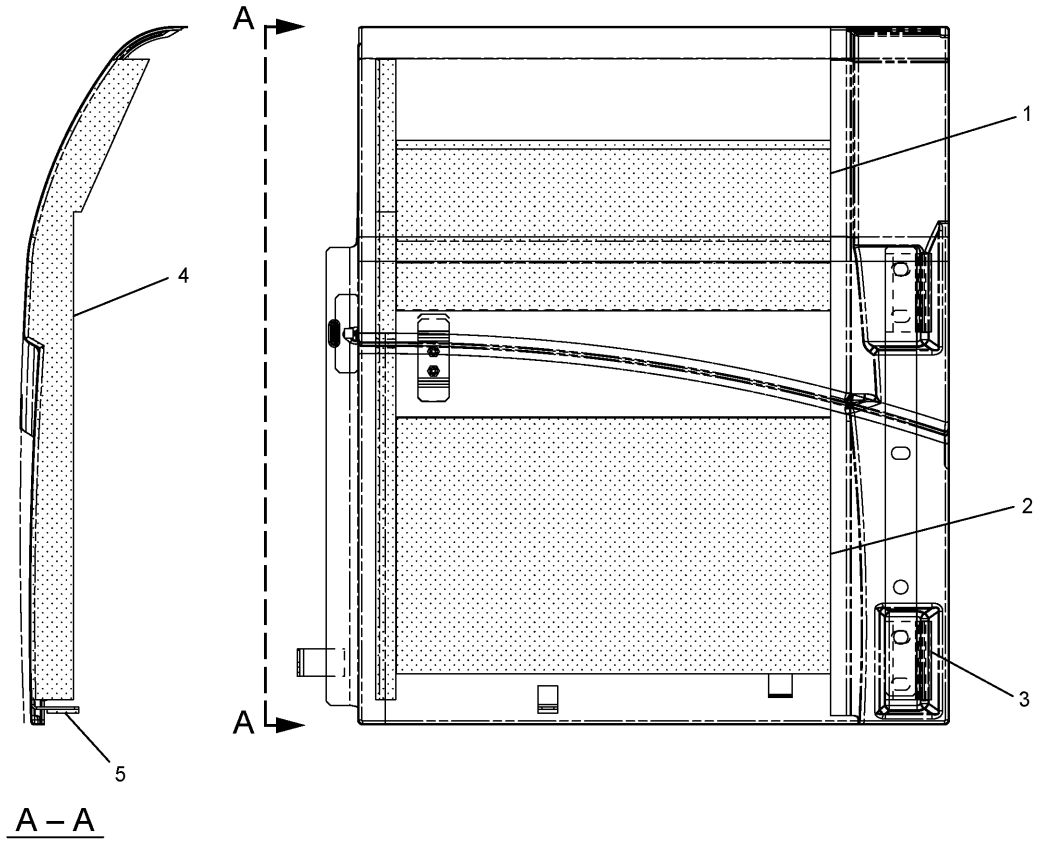


| NOTE | No. | PART No. | QTY | PART NAME | NOTE | No. | PART No. | QTY | PART NAME |
|---|---|---|---|---|---|---|---|---|---|
| | 1 | 236-3747 | 1 | INSULATION | | | | | |
| | 2 | 236-3748 | 1 | INSULATION | | | | | |
| | 3 | 165-2976 | 2 | HINGE | | | | | |
| | 4 | 250-5054 | 1 | LINER | | | | | |
| | 5 | 208-4289 | 1 | CUSHION | | | | | |

H96417E 01

**298-2977 DOOR AS**
Part of 273-7725-Page239

# FRAME AND BODY

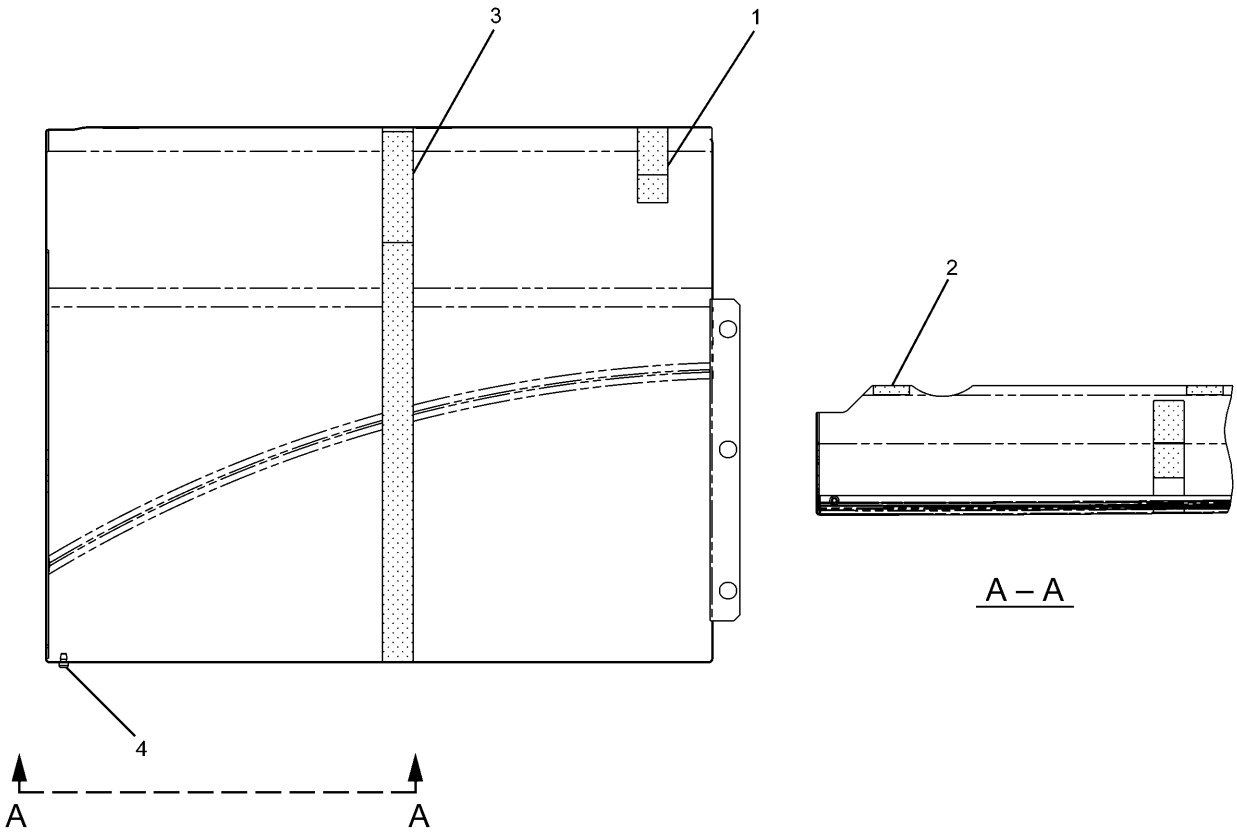


| NOTE | No. | PART No. | QTY | PART NAME | NOTE | No. | PART No. | QTY | PART NAME |
|---|---|---|---|---|---|---|---|---|---|
| | 1 | 177-5739 | 1 | LINER | | | | | |
| | 2 | 240-2978 | 2 | LINER | | | | | |
| | 3 | 240-2979 | 1 | LINER | | | | | |
| | 4 | 170-3015 | 1 | BUMPER | | | | | |

H95228E 00

**298-2979 DOOR AS**
Part of 273-7725-Page243

# FRAME AND BODY

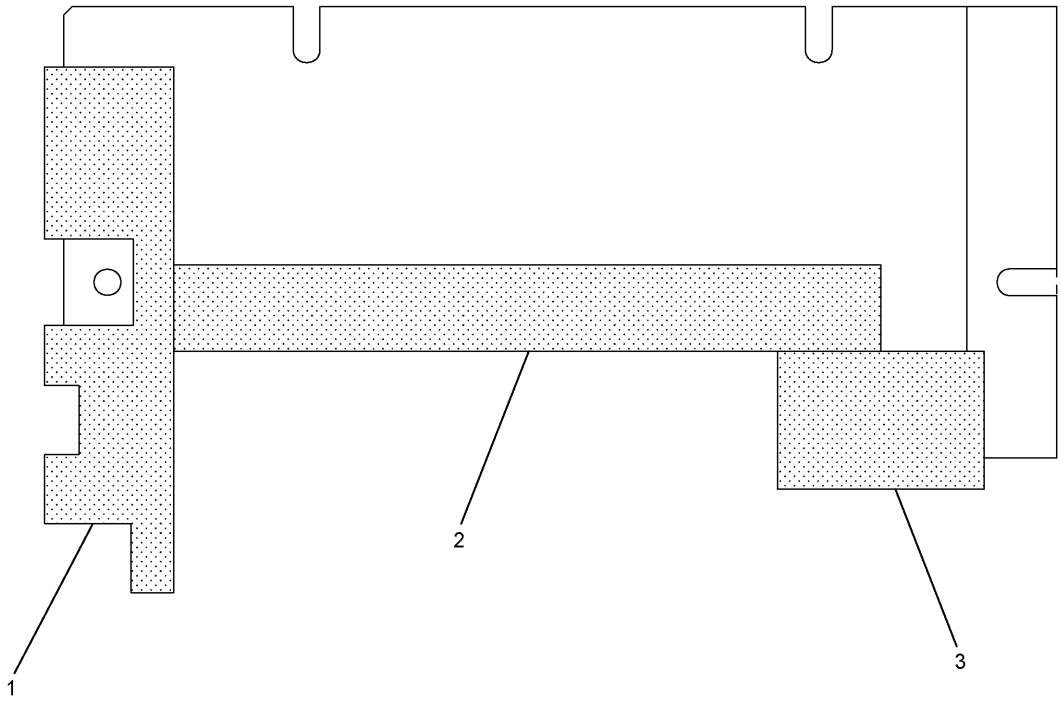


| NOTE | No. | PART No. | QTY | PART NAME | NOTE | No. | PART No. | QTY | PART NAME |
|---|---|---|---|---|---|---|---|---|---|
| | 1 | 289-6713 | 1 | LINER | | | | | |
| | 2 | 262-2333 | 1 | LINER | | | | | |
| | 3 | 262-2335 | 1 | LINER | | | | | |

H94464E 00

**289-6712 SHEET AS**
Part of 299-2783-Page151
An Attachment

# FRAME AND BODY

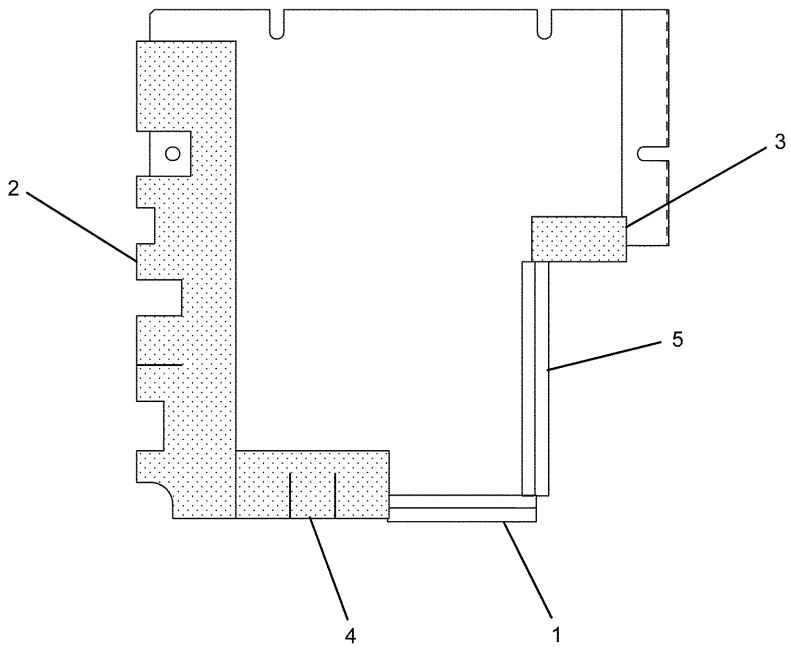


| NOTE | No. | PART No. | QTY | PART NAME | NOTE | No. | PART No. | QTY | PART NAME |
|---|---|---|---|---|---|---|---|---|---|
| D | 1 | 5P-8309 | | SEAL…(0.20m) | | | | | |
| | 2 | 289-6697 | 1 | LINER | | | | | |
| | 3 | 244-8284 | 1 | LINER | | | | | |
| | 4 | 262-2347 | 1 | LINER | | | | | |
| D | 5 | 5P-8309 | | SEAL…(0.30m) | | | | | |

D—ORDER BY THE METER

H93633E 00

**289-6695 SHEET AS**
Part of 273-7725-Page241

# FRAME AND BODY

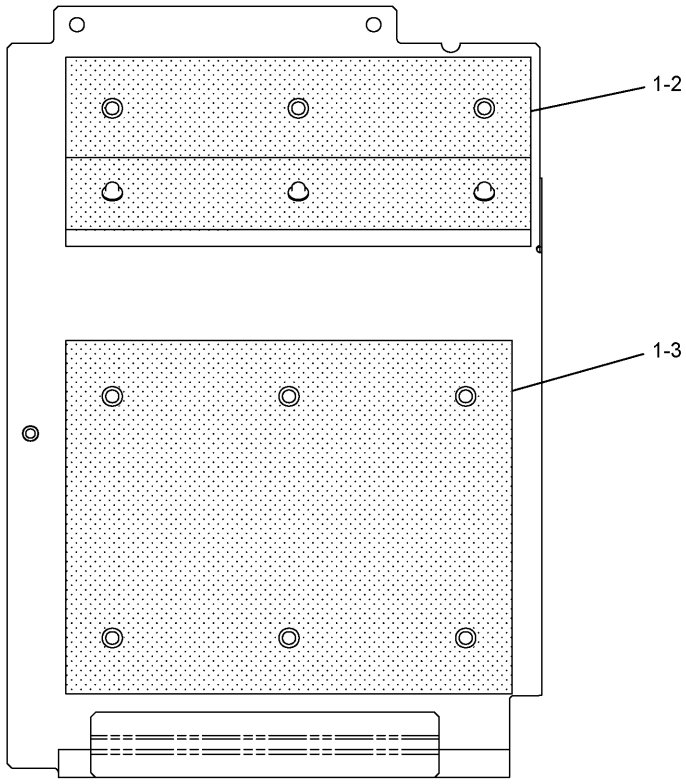


| NOTE | No. | PART No. | QTY | PART NAME | NOTE | No. | PART No. | QTY | PART NAME |
|---|---|---|---|---|---|---|---|---|---|
| | 1 | 6P-2216 | 12 | CAP | | | | | |
| | 2 | 262-2346 | 2 | INSULATION | | | | | |
| | 3 | 298-3037 | 1 | INSULATION | | | | | |

H95132E 00

**298-3033 SHEET AS**
Part of 273-7725-Page241

# FRAME AND BODY

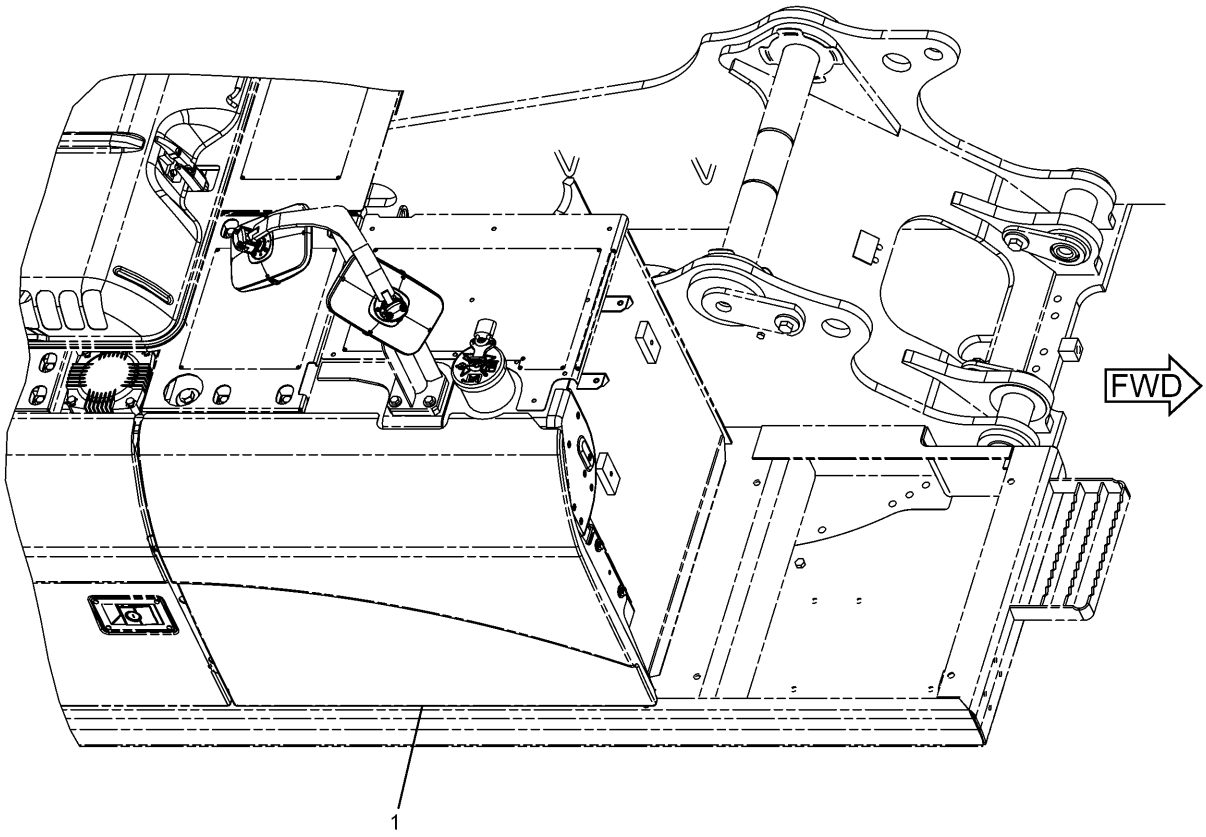


| NOTE | No. | PART No. | QTY | PART NAME | NOTE | No. | PART No. | QTY | PART NAME |
|---|---|---|---|---|---|---|---|---|---|
| Y | 1 | 330-1427 | 1 | DOOR AS | | | | | |

Y—SEE SEPARATE ILLUSTRATION

HA0834E 00

## 330-1426 HOOD GP

Part of 330-1194-Page665.01
330-1427-Page250.02
An Attachment

# FRAME AND BODY

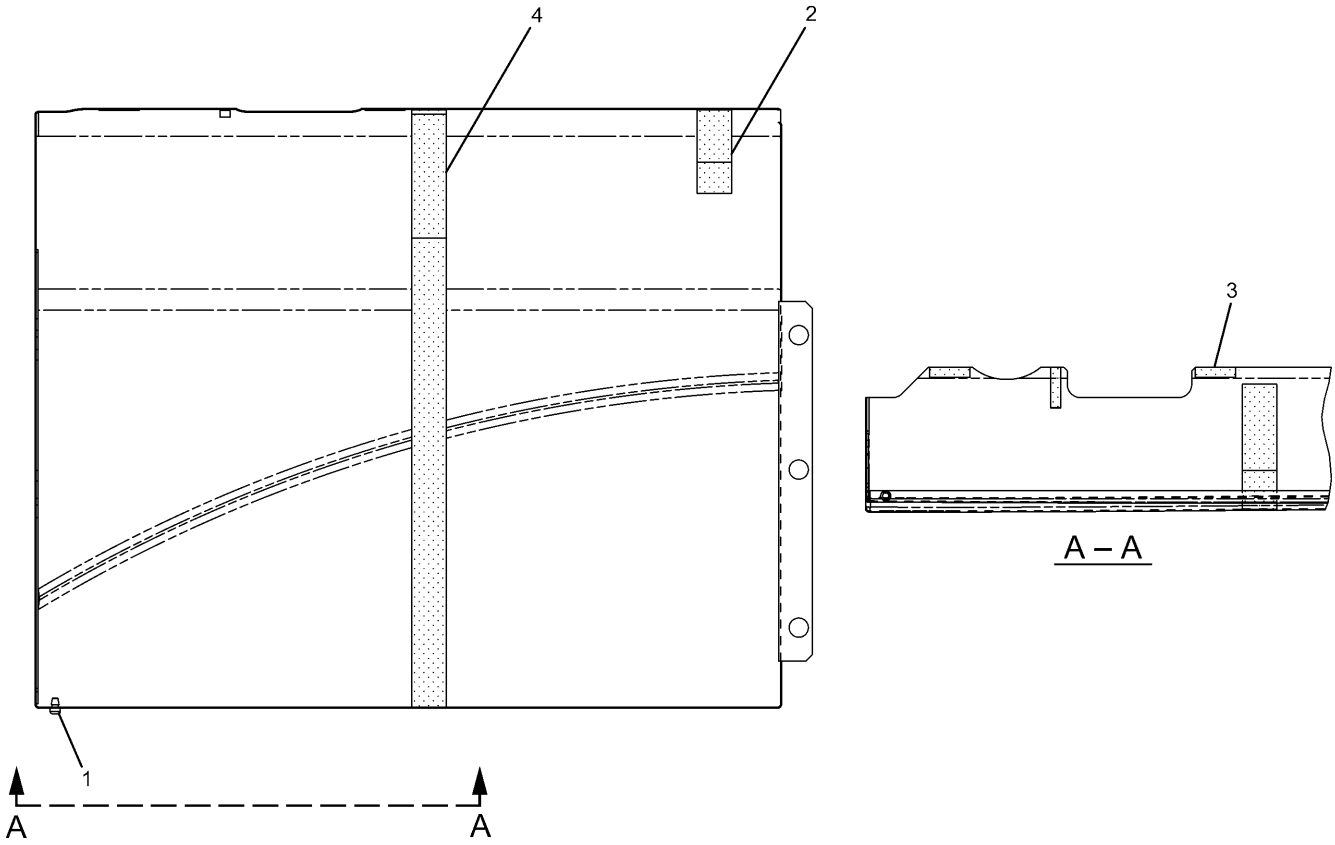


| NOTE | No. | PART No. | QTY | PART NAME | NOTE | No. | PART No. | QTY | PART NAME |
|---|---|---|---|---|---|---|---|---|---|
| | 1 | 170-3015 | 1 | BUMPER | | | | | |
| | 2 | 177-5739 | 1 | LINER | | | | | |
| | 3 | 240-2978 | 3 | LINER | | | | | |
| | 4 | 240-2979 | 1 | LINER | | | | | |

HA0835E 00

## 330-1427 DOOR AS

Part of 330-1426-Page250.01
An Attachment

# FRAME AND BODY

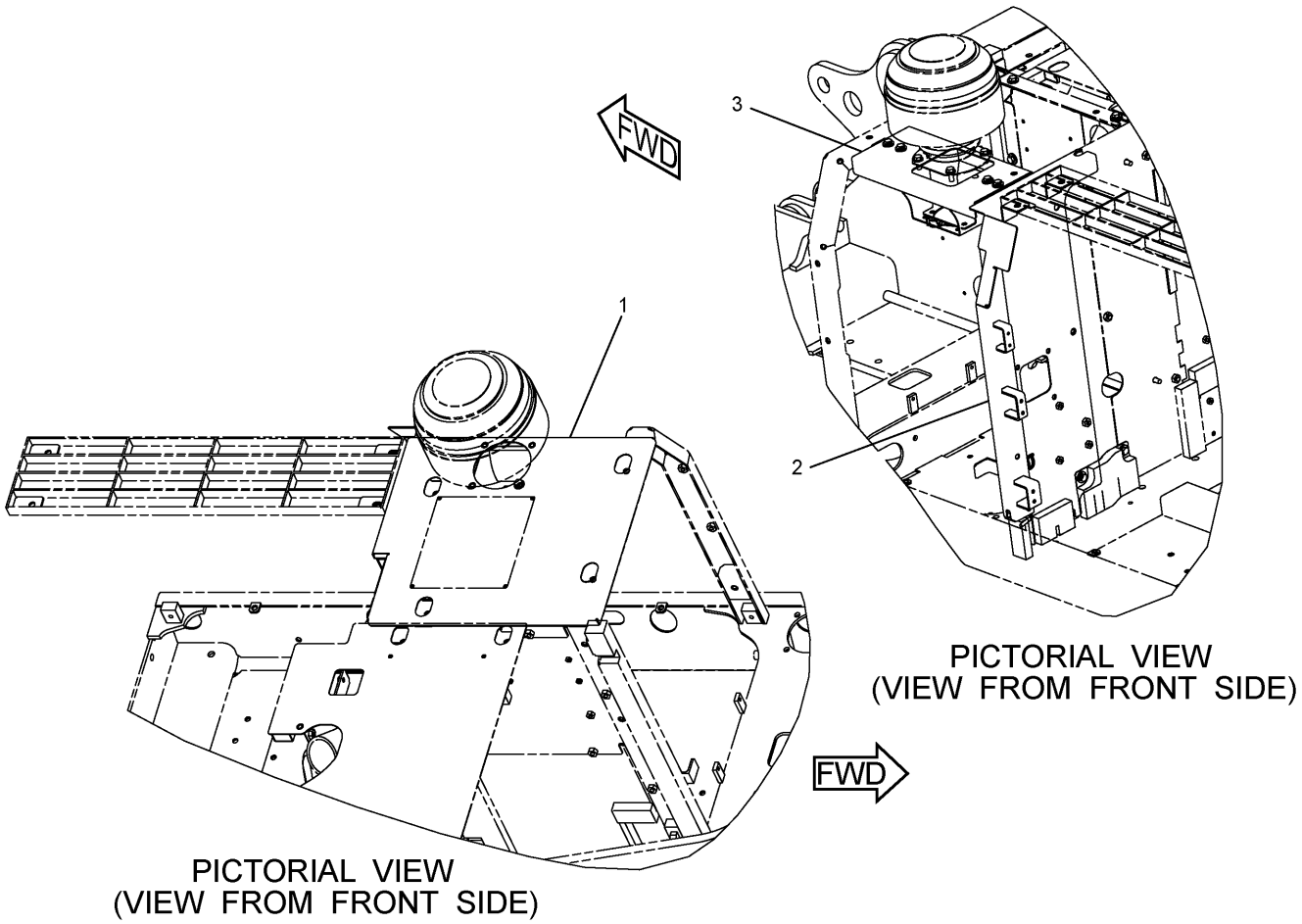


| NOTE | No. | PART No. | QTY | PART NAME | NOTE | No. | PART No. | QTY | PART NAME |
|---|---|---|---|---|---|---|---|---|---|
| Y | 1 | 268-0749 | 1 | COVER AS | | | | | |
| | 2 | 304-0093 | 1 | SUPPORT AS | | | | | |
| | 3 | 273-7774 | 1 | SUPPORT AS | | | | | |

Y—SEE SEPARATE ILLUSTRATION

H96923E 01

**278-3778 HOOD GP**
Precleaner
Part of 264-8671-Page66
268-0749-Page252
An Attachment

# FRAME AND BODY

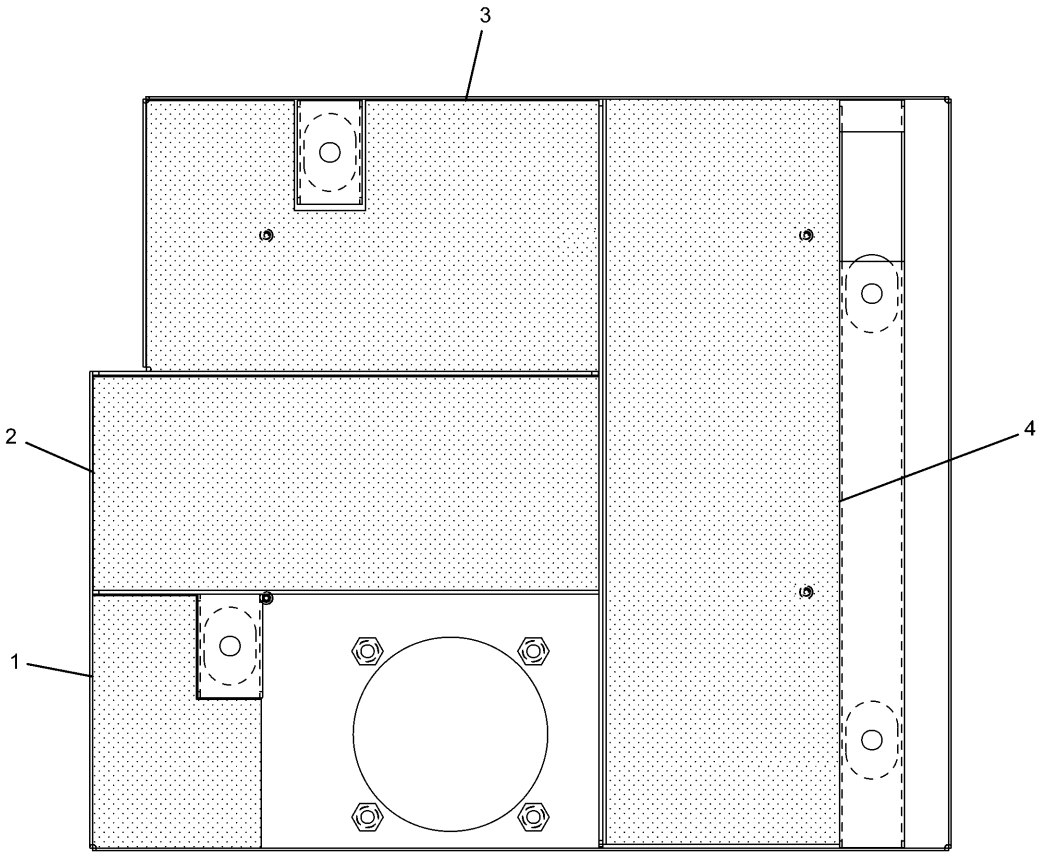


| NOTE | No. | PART No. | QTY | PART NAME | NOTE | No. | PART No. | QTY | PART NAME |
|---|---|---|---|---|---|---|---|---|---|
| | 1 | 273-7847 | 1 | INSULATION | | | | | |
| | 2 | 273-7848 | 1 | INSULATION | | | | | |
| | 3 | 273-7849 | 1 | INSULATION | | | | | |
| | 4 | 248-8930 | 1 | INSULATION | | | | | |

H95515E 02

**268-0749 COVER AS**
Part of 278-3778-Page251
An Attachment

# FRAME AND BODY

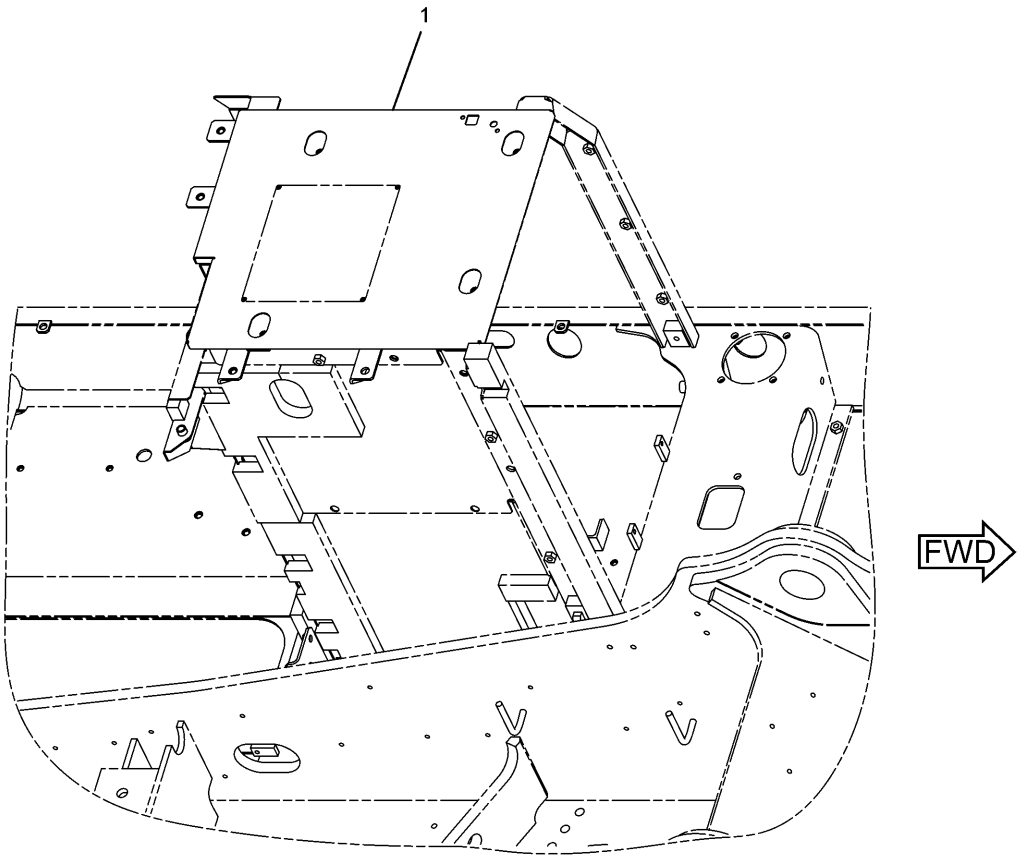


| NOTE | No. | PART No. | QTY | PART NAME | NOTE | No. | PART No. | QTY | PART NAME |
|---|---|---|---|---|---|---|---|---|---|
| | 1 | 278-3562 | 1 | COVER AS | | | | | |

H90626E 00

**278-3561 COVER GP**
Product Link Japan
Part of 275-3668-Page195
An Attachment

# FRAME AND BODY

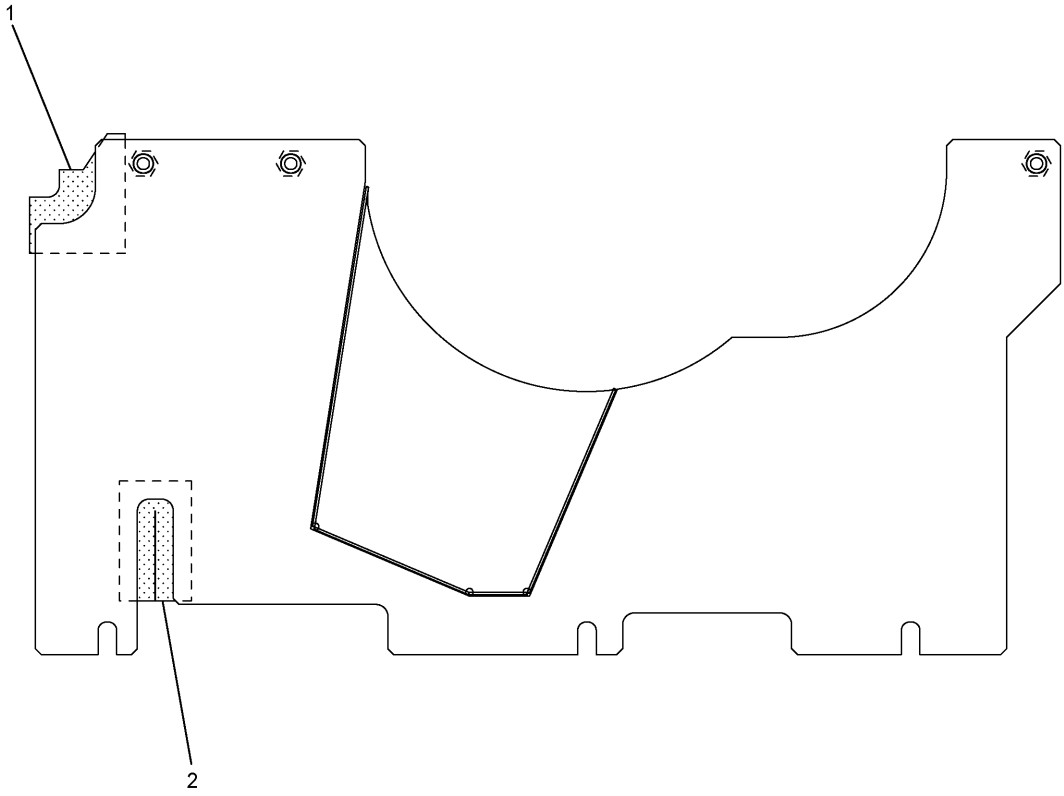


| NOTE | No. | PART No. | QTY | PART NAME | NOTE | No. | PART No. | QTY | PART NAME |
|---|---|---|---|---|---|---|---|---|---|
| | 1 | 286-6277 | 1 | LINER | | | | | |
| | 2 | 283-3905 | 1 | LINER | | | | | |

H94772E 00

**298-2995 SHEET AS**
Part of 290-1912-Page347
An Attachment

# FRAME AND BODY

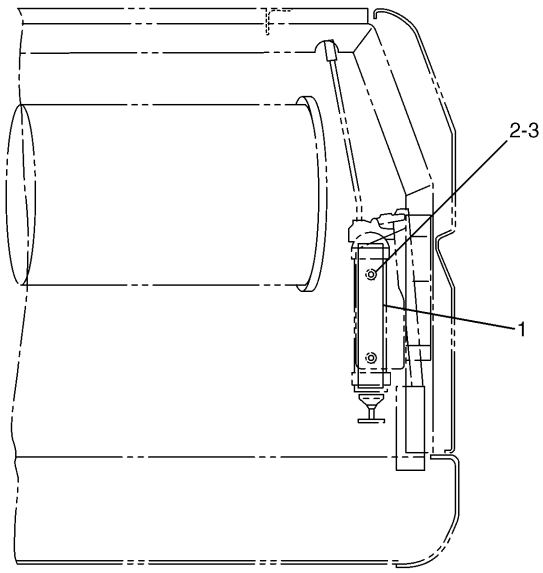


| NOTE | No. | PART No. | QTY | PART NAME |
|---|---|---|---|---|
| | 1 | 4I-8384 | 1 | SUPPORT |
| | 2 | 8T-4179 | 2 | BOLT (L=20mm) |
| | 3 | 8T-4223 | 2 | WASHER |

H52846E 01

## 7I-0800 MOUNTING GP-GREASE GUN

Part of 176-2676-Page825
An Attachment

# FRAME AND BODY

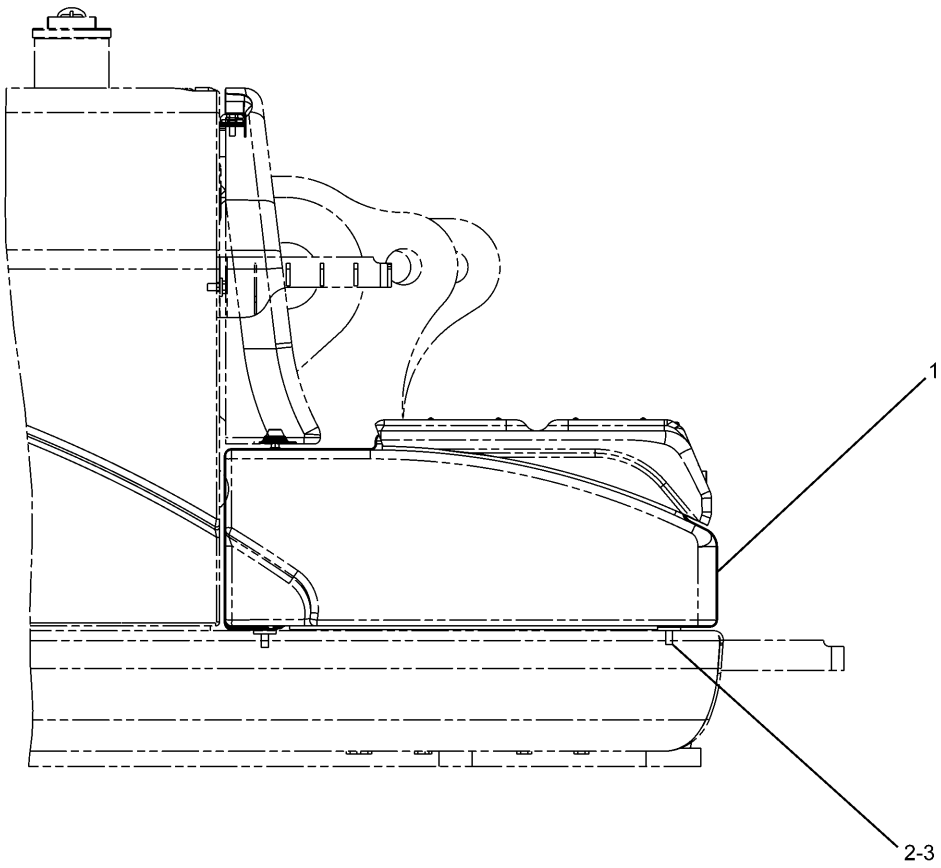


| NOTE | No. | PART No. | QTY | PART NAME | NOTE | No. | PART No. | QTY | PART NAME |
|---|---|---|---|---|---|---|---|---|---|
| Y | 1 | 223-3041 | 1 | BOX GP | | | | | |
| | 2 | 5P-1076 | 4 | WASHER | | | | | |
| | 3 | 8T-4956 | 4 | BOLT (L=35mm) | | | | | |

Y—SEE SEPARATE ILLUSTRATION

H89256E 02

**223-3040 BOX & MTG GP-STORAGE**
223-3041-Page258

# MEMORANDA

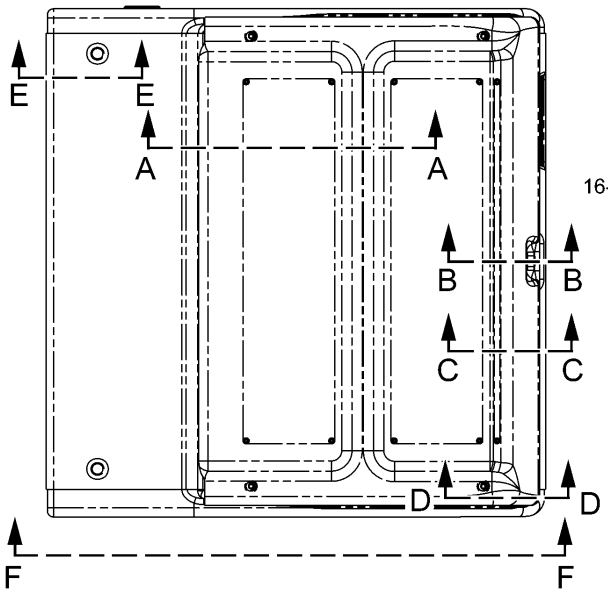


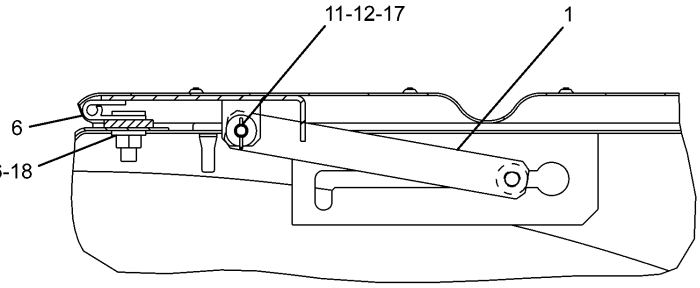


A – A

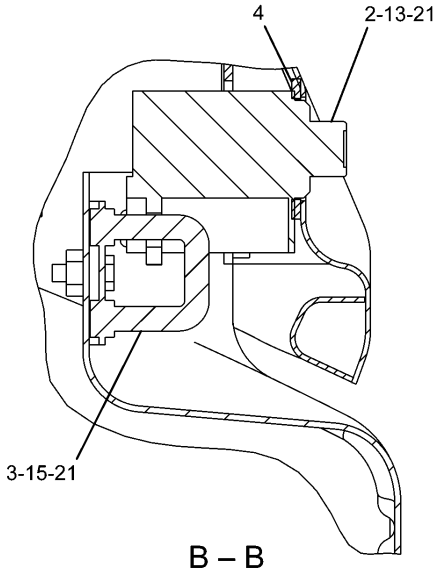


B – B

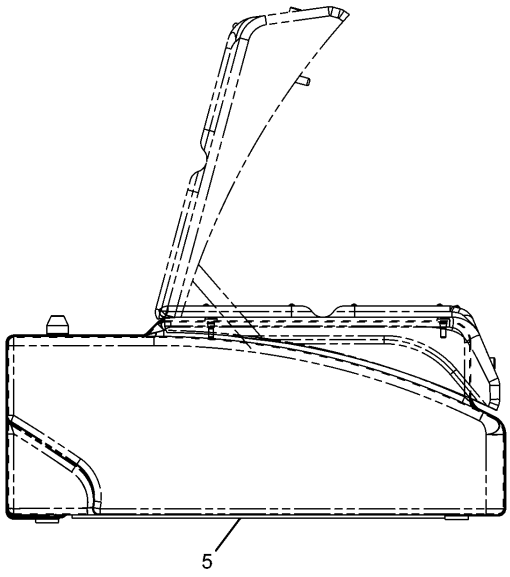


F – F

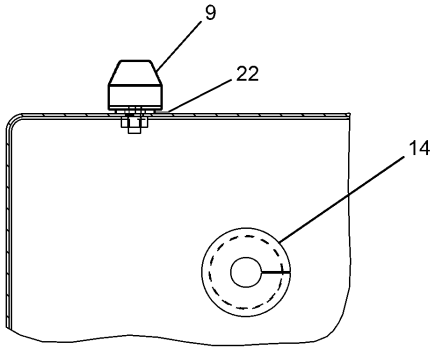


E – E

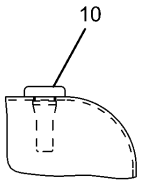


D – D

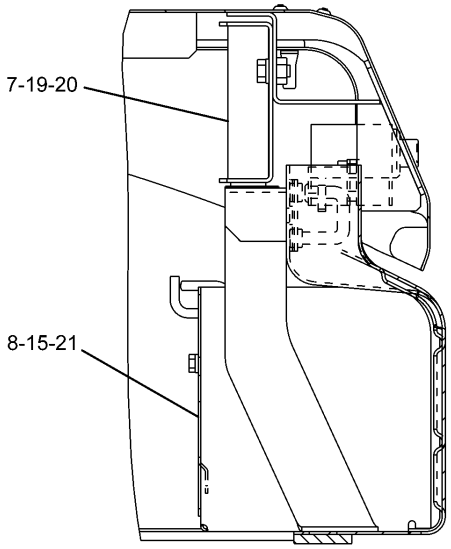


C – C

H92439E 08

**223-3041 BOX GP-STORAGE**
Part of 223-3040-Page256

# FRAME AND BODY

| NOTE | No. | PART No. | QTY | PART NAME | NOTE | No. | PART No. | QTY | PART NAME |
|---|---|---|---|---|---|---|---|---|---|
| | 1 | 41-2187 | 1 | SUPPORT AS | | | | | |
| | 2 | 236-3669 | 1 | LOCK AS | | | | | |
| | 3 | 236-3670 | 1 | STRIKER AS | | | | | |
| | 4 | 236-3671 | 1 | SEAL | | | | | |
| | 5 | 236-9435 | 1 | BOX AS | | | | | |
| | 6 | 3D-9143 | 2 | HINGE | | | | | |
| | 7 | 236-9438 | 1 | PLUNGER AS | | | | | |
| | 8 | 236-9440 | 1 | SHEET | | | | | |
| | 9 | 273-7964 | 2 | MOUNT | | | | | |
| | 10 | 278-3581 | 4 | CUSHION | | | | | |
| | 11 | 095-0843 | 1 | COTTER | | | | | |
| | 12 | 096-3780 | 1 | PIN | | | | | |
| | 13 | 105-3487 | 4 | BOLT (L=20mm) | | | | | |
| | 14 | 170-9360 | 1 | GROMMET | | | | | |
| | 15 | 5C-9553 | 3 | BOLT (L=16mm) | | | | | |
| | 16 | 5P-1075 | 4 | WASHER | | | | | |
| | 17 | 5P-4116 | 1 | WASHER | | | | | |
| | 18 | 8T-4133 | 4 | NUT | | | | | |
| | 19 | 8T-4200 | 2 | BOLT (L=16mm) | | | | | |
| | 20 | 8T-4224 | 2 | WASHER | | | | | |
| | 21 | 9X-8256 | 7 | WASHER | | | | | |
| B | 22 | 8T-4223 | 2 | WASHER | | | | | |

B—USE AS REQUIRED

H92439E 08

**223-3041 BOX GP-STORAGE**

Part of 223-3040-Page256

# FRAME AND BODY

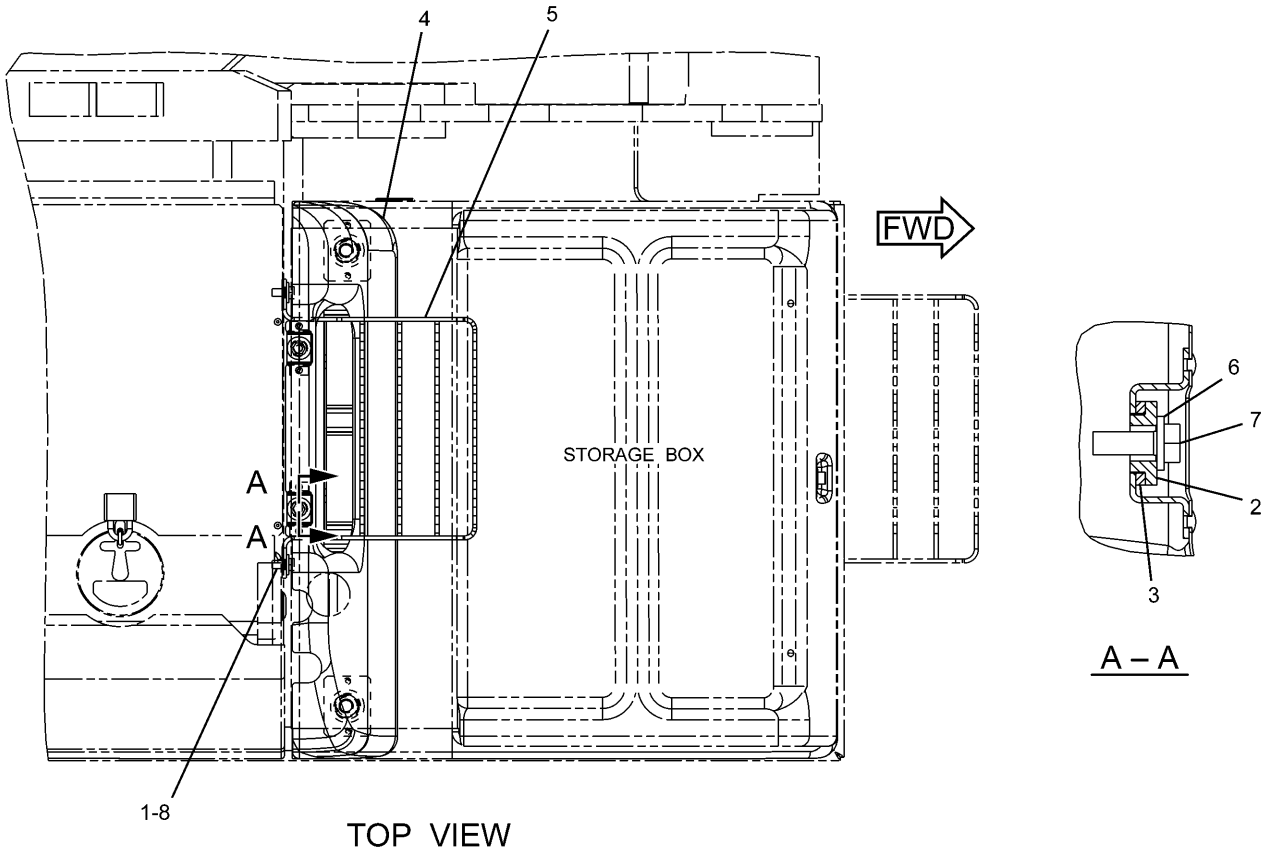


TOP VIEW

| NOTE | No. | PART No. | QTY | PART NAME | NOTE | No. | PART No. | QTY | PART NAME |
|---|---|---|---|---|---|---|---|---|---|
| | 1 | 8T-4192 | 2 | BOLT (L=25mm) | | | | | |
| | 2 | 236-3702 | 2 | SPACER | | | | | |
| | 3 | 236-3703 | 2 | WASHER | | | | | |
| | 4 | 236-9570 | 1 | COVER AS | | | | | |
| | | 278-3818 | 1 | LINER | | | | | |
| | 5 | 259-3543 | 1 | STEP AS | | | | | |
| | 6 | 5P-1075 | 2 | WASHER | | | | | |
| | 7 | 8T-4195 | 2 | BOLT (L=30mm) | | | | | |
| | 8 | 5P-1076 | 2 | WASHER | | | | | |

H91197E 03

223-3042 FENDER & COVER GP

# FRAME AND BODY

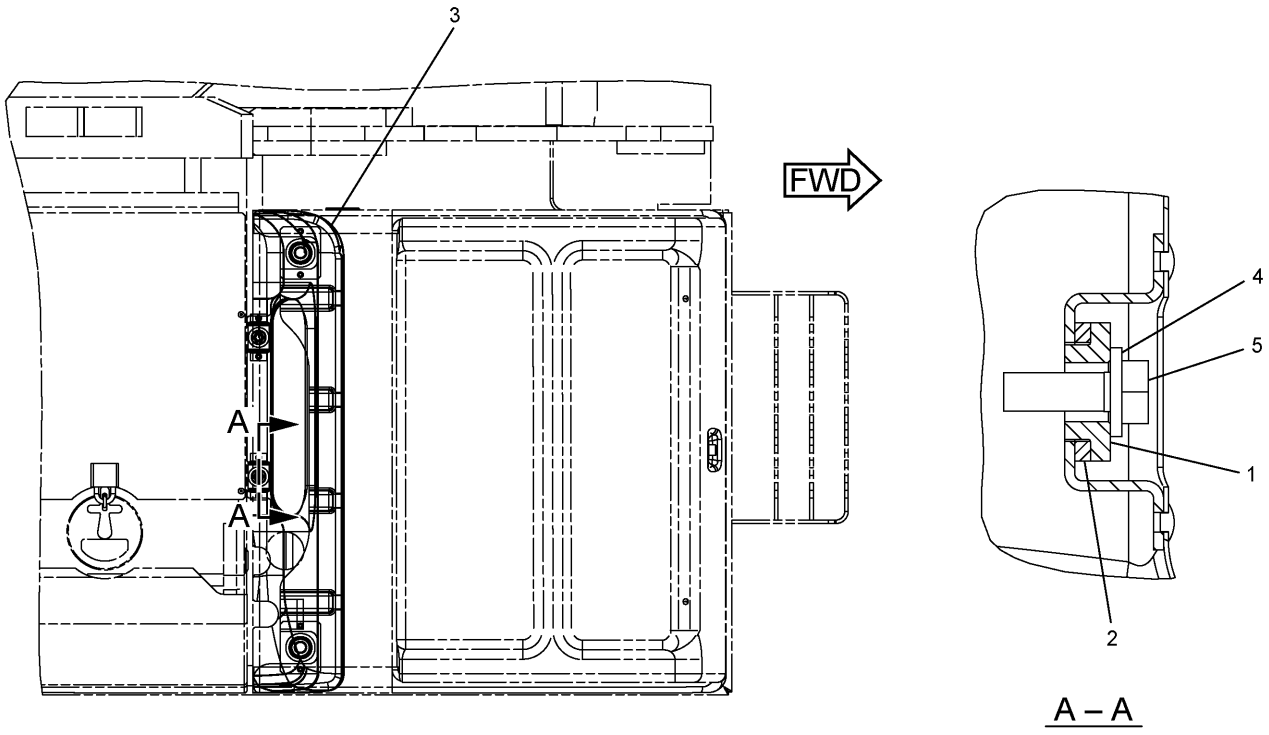


TOP VIEW

| NOTE | No. | PART No. | QTY | PART NAME | NOTE | No. | PART No. | QTY | PART NAME |
|---|---|---|---|---|---|---|---|---|---|
| | 1 | 236-3702 | 2 | SPACER | | | | | |
| | 2 | 236-3703 | 2 | WASHER | | | | | |
| | 3 | 270-9979 | 1 | COVER AS | | | | | |
| | | 278-3818 | 1 | LINER | | | | | |
| | 4 | 5P-1075 | 2 | WASHER | | | | | |
| | 5 | 8T-4195 | 2 | BOLT (L=30mm) | | | | | |

H96354E 01

**270-9972 FENDER & COVER GP**
S/N BWZ 1-Up, DFB 1-Up
Part of 279-2732-Page11,279-2733-Page12
An Attachment

# FRAME AND BODY

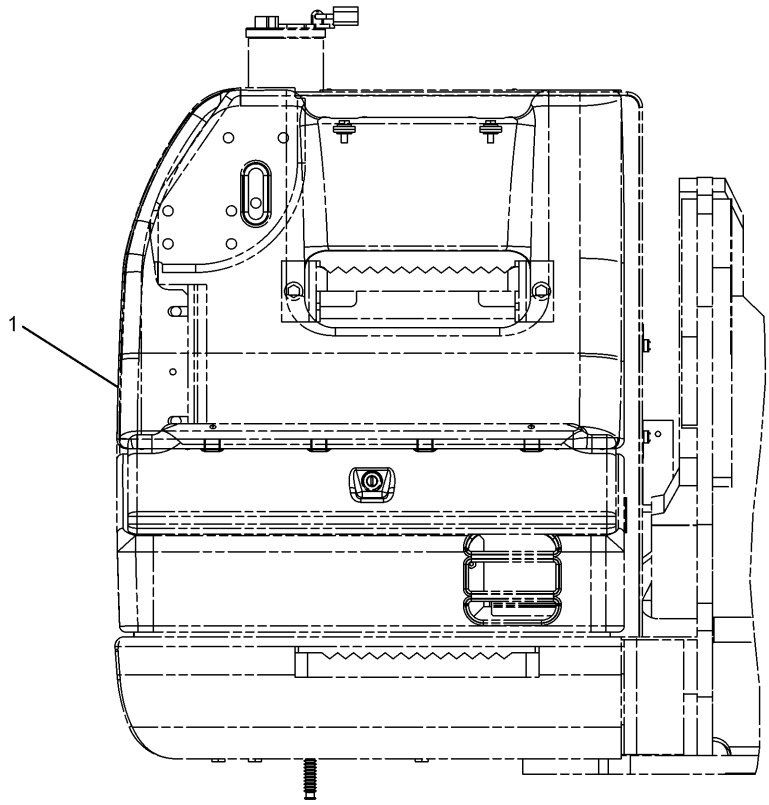


FRONT VIEW

| NOTE | No. | PART No. | QTY | PART NAME | NOTE | No. | PART No. | QTY | PART NAME |
|---|---|---|---|---|---|---|---|---|---|
| | 1 | 330-1167 | 1 | COVER AS | | | | | |
| | | 278-3818 | 1 | LINER | | | | | |

HA0833E 00

## 330-1166 FENDER & COVER GP

Part of 330-1194-Page665.01
An Attachment

# MEMORANDA

# FRAME AND BODY

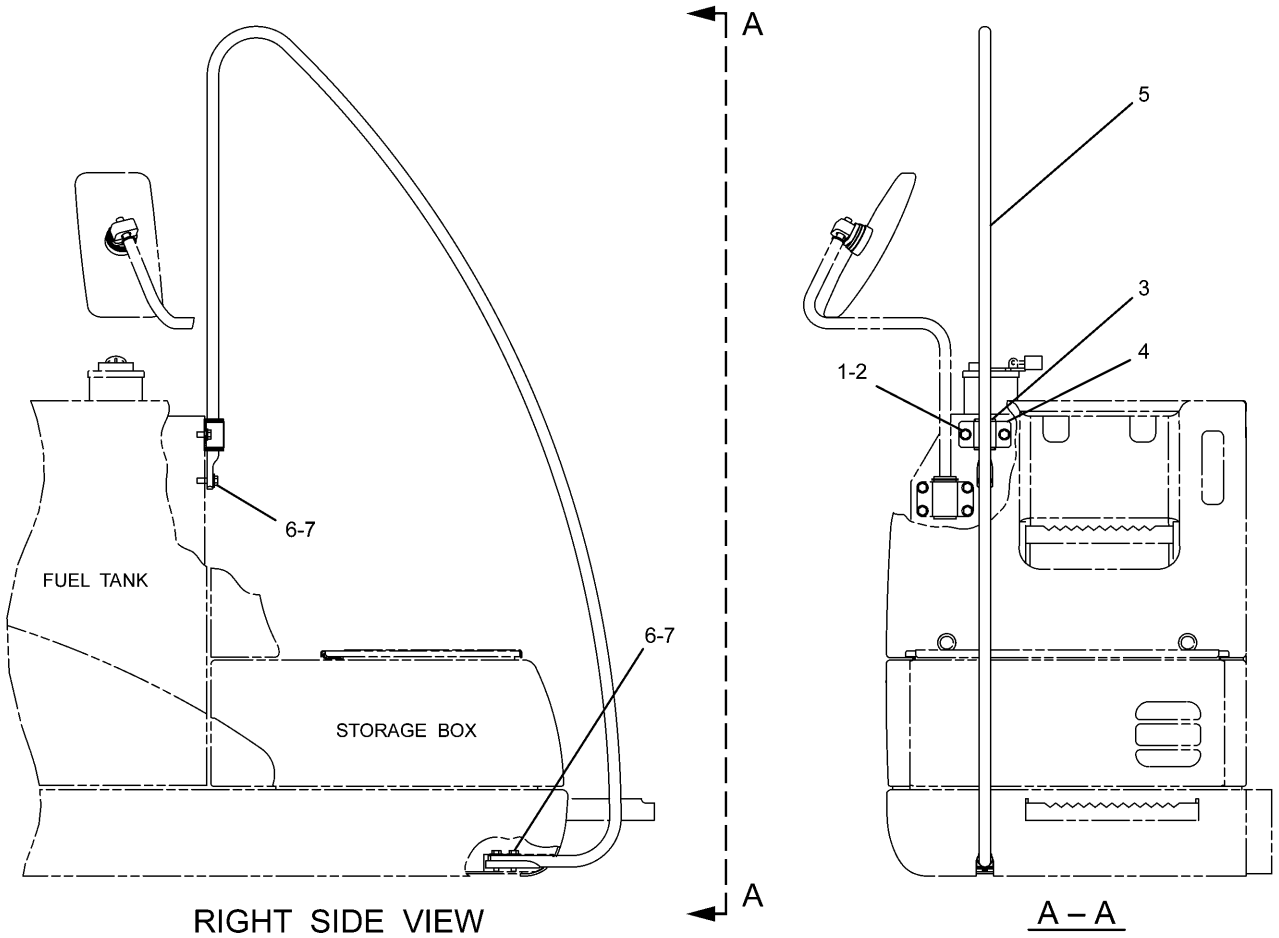


RIGHT SIDE VIEW

A – A

| NOTE | No. | PART No. | QTY | PART NAME | NOTE | No. | PART No. | QTY | PART NAME |
|---|---|---|---|---|---|---|---|---|---|
| | 1 | 8T-4223 | 2 | WASHER | | | | | |
| | 2 | 8T-4192 | 2 | BOLT (L=25mm) | | | | | |
| | 3 | 177-5880 | 2 | SLEEVE | | | | | |
| | 4 | 177-5879 | 1 | CLAMP | | | | | |
| | 5 | 177-5877 | 1 | HANDHOLD AS | | | | | |
| | 6 | 8T-4183 | 3 | BOLT (L=40mm) | | | | | |
| | 7 | 5P-1076 | 3 | WASHER | | | | | |

H89547E 08

142-3835 HANDHOLD GP

# FRAME AND BODY

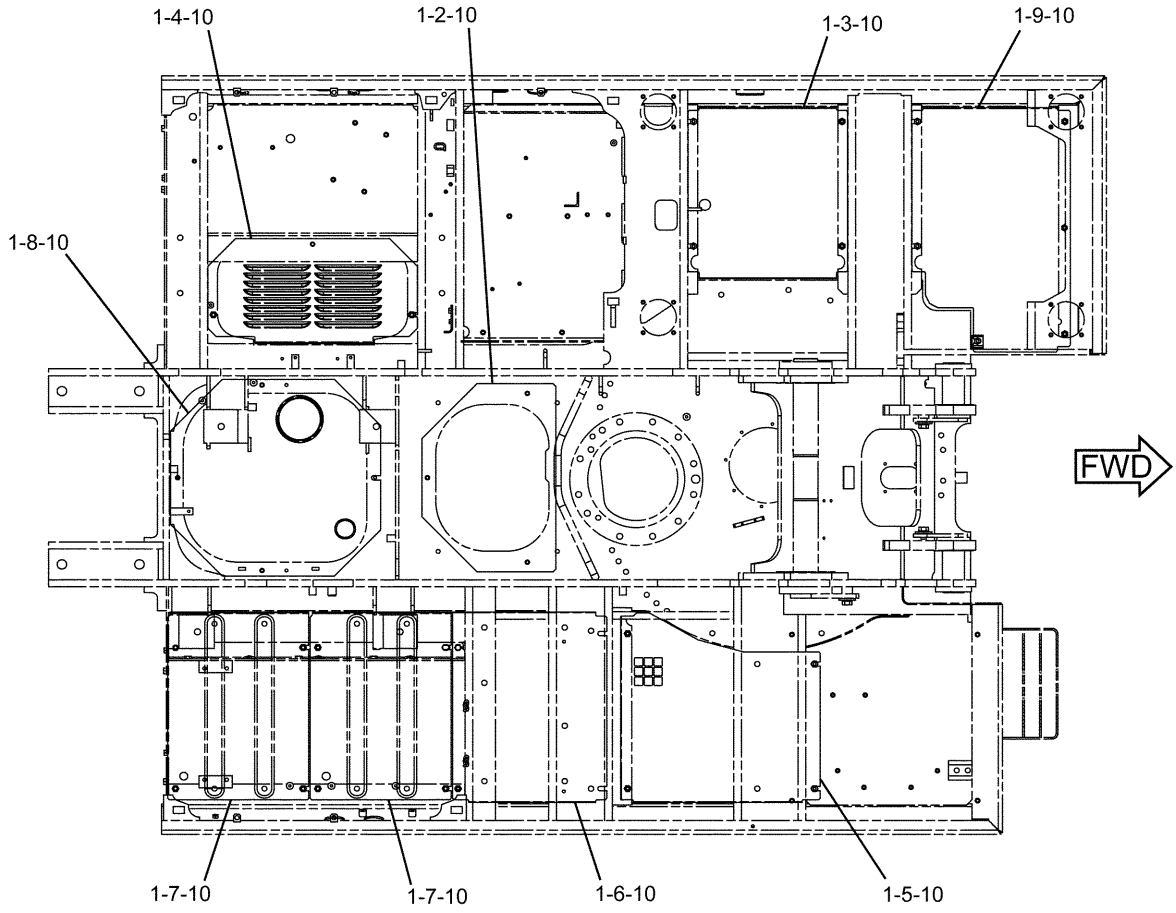


TOP VIEW

| NOTE | No. | PART No. | QTY | PART NAME | NOTE | No. | PART No. | QTY | PART NAME |
|---|---|---|---|---|---|---|---|---|---|
| | 1 | 8C-8992 | 36 | BOLT (L=30mm) | | | | | |
| | 2 | 165-2823 | 1 | SHEET | | | | | |
| | 3 | 248-8992 | 1 | SHEET | | | | | |
| | 4 | 248-8993 | 1 | SHEET | | | | | |
| | 5 | 248-8994 | 1 | SHEET | | | | | |
| | 6 | 248-8995 | 1 | SHEET | | | | | |
| | 7 | 273-7674 | 2 | SHEET | | | | | |
| | 8 | 286-6281 | 1 | SHEET AS | | | | | |
| | 9 | 289-6603 | 1 | SHEET | | | | | |
| | 10 | 5P-1076 | 36 | WASHER | | | | | |

H93722E 00

## 289-6424 GUARD GP-BOTTOM

S/N BWZ 1-Up, DFB 1-Up

# FRAME AND BODY

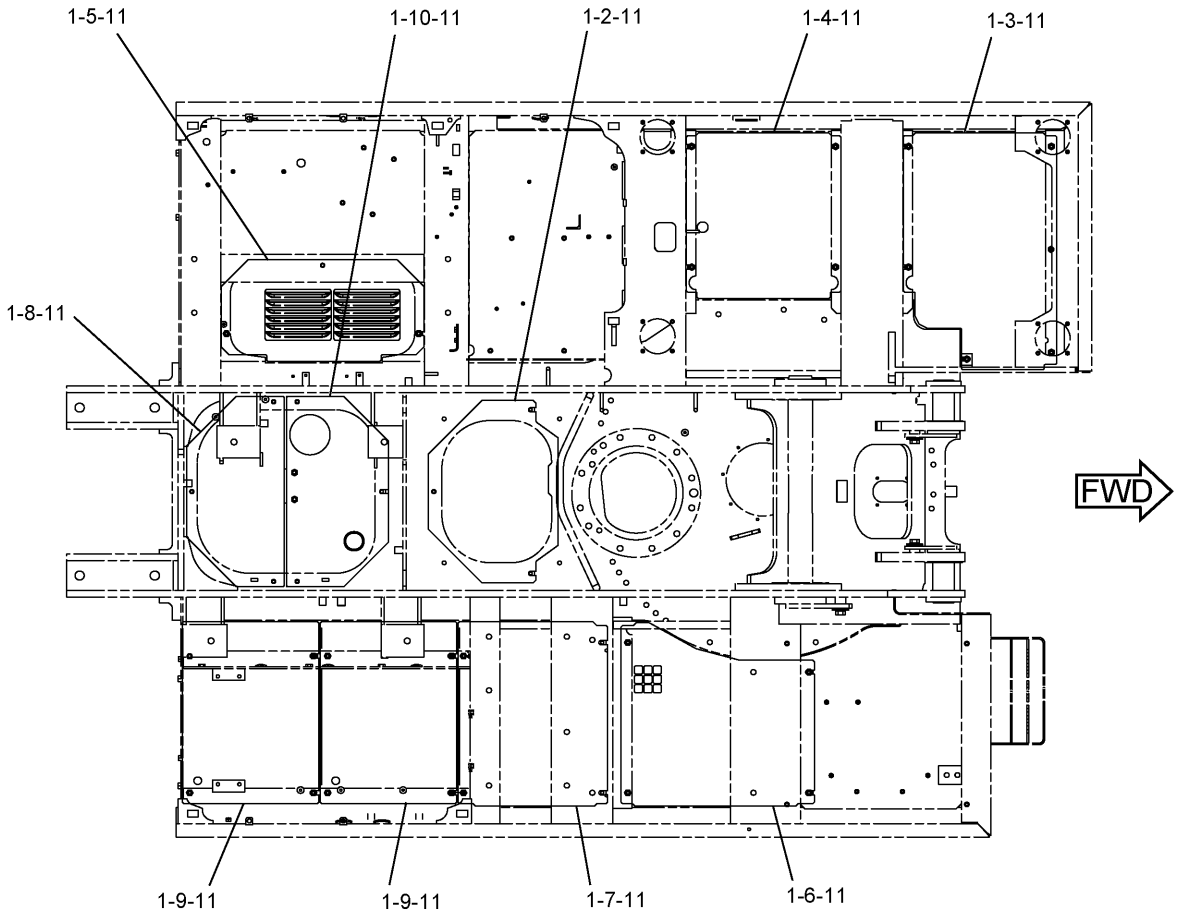


TOP VIEW

| NOTE | No. | PART No. | QTY | PART NAME | NOTE | No. | PART No. | QTY | PART NAME |
|---|---|---|---|---|---|---|---|---|---|
| | 1 | 8C-8992 | 40 | BOLT (L=30mm) | | | | | |
| | 2 | 165-2854 | 1 | PLATE AS | | | | | |
| | 3 | 248-9012 | 1 | SHEET AS | | | | | |
| | 4 | 248-9014 | 1 | SHEET AS | | | | | |
| | 5 | 248-9016 | 1 | SHEET AS | | | | | |
| | 6 | 248-9018 | 1 | SHEET AS | | | | | |
| | 7 | 248-9020 | 1 | SHEET AS | | | | | |
| | 8 | 262-2484 | 1 | SHEET AS | | | | | |
| | 9 | 273-7675 | 2 | SHEET AS | | | | | |
| | 10 | 286-6283 | 1 | SHEET AS | | | | | |
| | 11 | 5P-1076 | 40 | WASHER | | | | | |

H93724E 00

**289-6426 GUARD GP-BOTTOM**
S/N SNS 1-Up, WJN 1-Up

# FRAME AND BODY

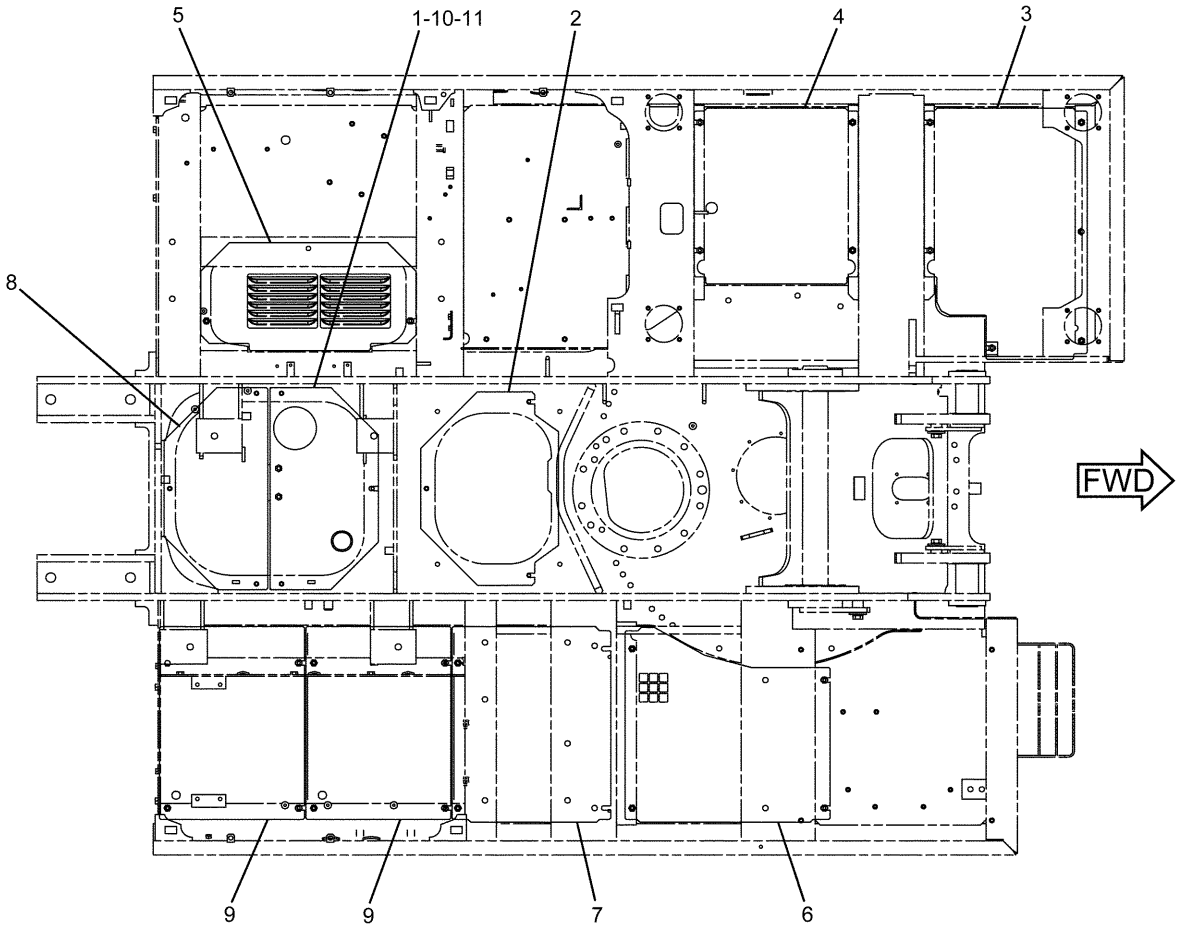


TOP VIEW

| NOTE | No. | PART No. | QTY | PART NAME | NOTE | No. | PART No. | QTY | PART NAME |
|---|---|---|---|---|---|---|---|---|---|
| | 1 | 8C-8992 | 4 | BOLT (L=30mm) | | | | | |
| | 2 | 165-2854 | 1 | PLATE AS | | | | | |
| | 3 | 248-9012 | 1 | SHEET AS | | | | | |
| | 4 | 248-9014 | 1 | SHEET AS | | | | | |
| | 5 | 248-9016 | 1 | SHEET AS | | | | | |
| | 6 | 248-9018 | 1 | SHEET AS | | | | | |
| | 7 | 248-9020 | 1 | SHEET AS | | | | | |
| | 8 | 262-2484 | 1 | SHEET AS | | | | | |
| | 9 | 273-7675 | 2 | SHEET AS | | | | | |
| | 10 | 286-6283 | 1 | SHEET AS | | | | | |
| | 11 | 5P-1076 | 4 | WASHER | | | | | |

H93723E 00

## 289-6425 GUARD GP-BOTTOM

Heavy Duty
S/N BWZ 1-Up, DFB 1-Up
An Attachment

# FRAME AND BODY

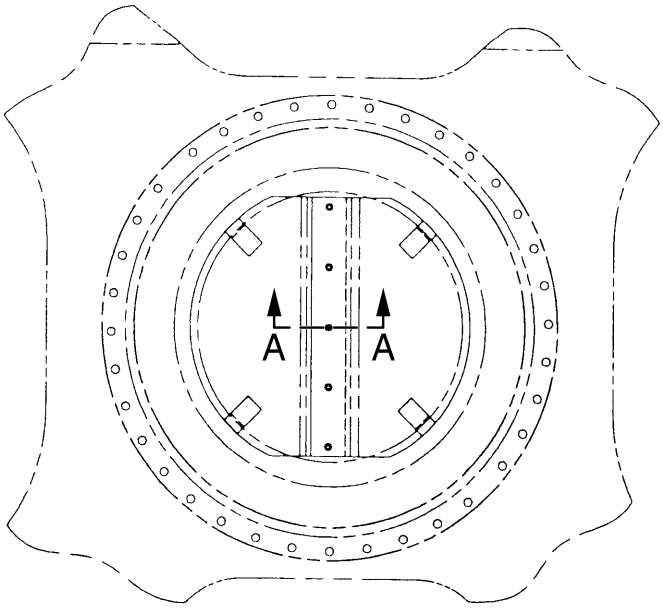


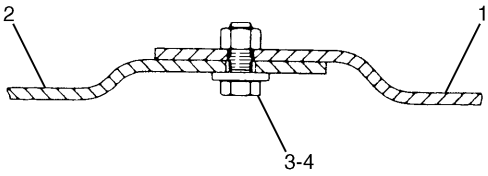


A – A

| NOTE | No. | PART No. | QTY | PART NAME | NOTE | No. | PART No. | QTY | PART NAME |
|---|---|---|---|---|---|---|---|---|---|
| | 1 | 134-8876 | 1 | PLATE AS | | | | | |
| | 2 | 134-8878 | 1 | PLATE AS | | | | | |
| | 3 | 8C-8992 | 5 | BOLT (L=30mm) | | | | | |
| | 4 | 5P-1076 | 5 | WASHER | | | | | |

H54516E 00

**134-8875 GUARD GP-SWIVEL**
S/N SNS 1-Up, WJN 1-Up

# FRAME AND BODY

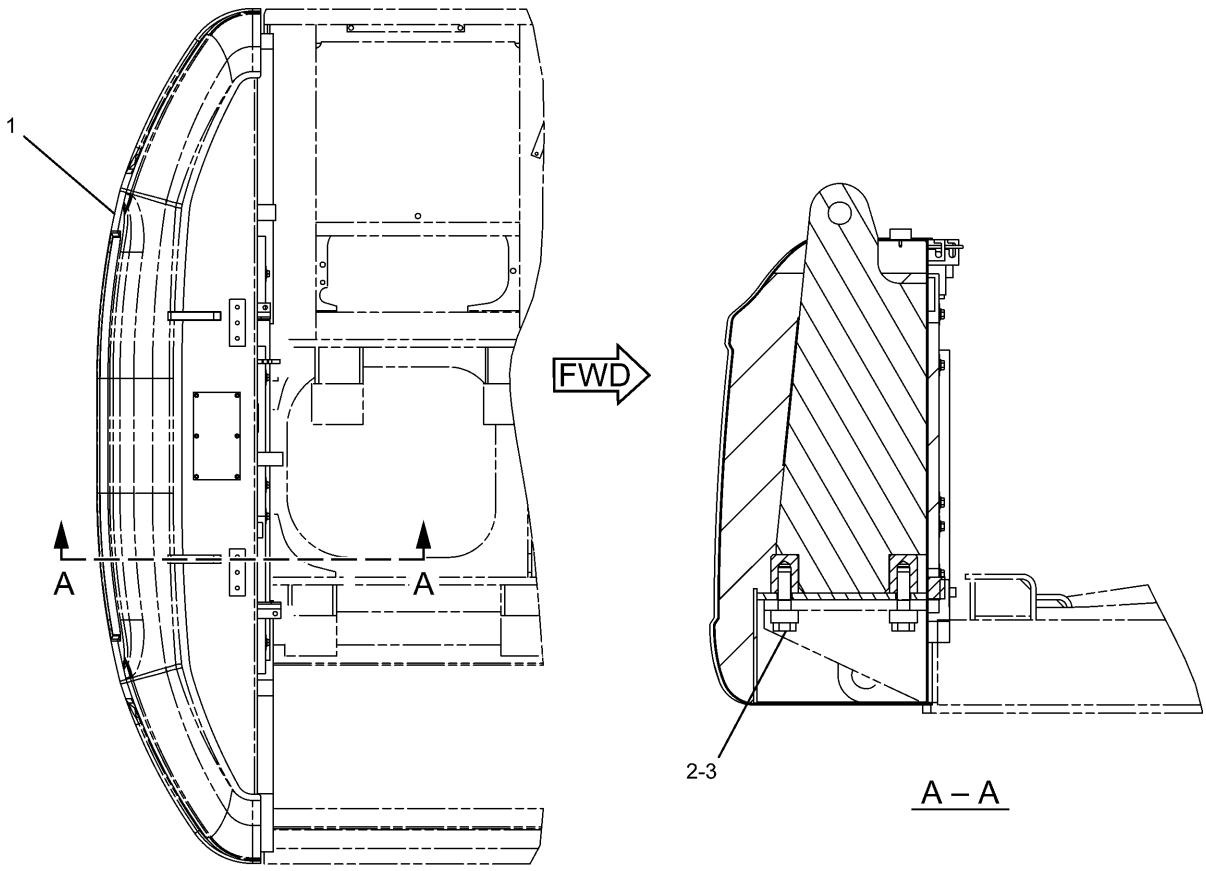


TOP VIEW

| NOTE | No. | PART No. | QTY | PART NAME | NOTE | No. | PART No. | QTY | PART NAME |
|---|---|---|---|---|---|---|---|---|---|
| Y | 1 | 241-2000 | 1 | COUNTERWEIGHT GP | | | | | |
| | 2 | 244-8194 | 4 | SPACER | | | | | |
| | 3 | 7X-2583 | 4 | BOLT (L=120mm) | | | | | |

Y—SEE SEPARATE ILLUSTRATION

H89535E 01

**241-1999 COUNTERWEIGHT GP**
S/N BWZ 1-Up, DFB 1-Up
241-2000-Page268

# FRAME AND BODY

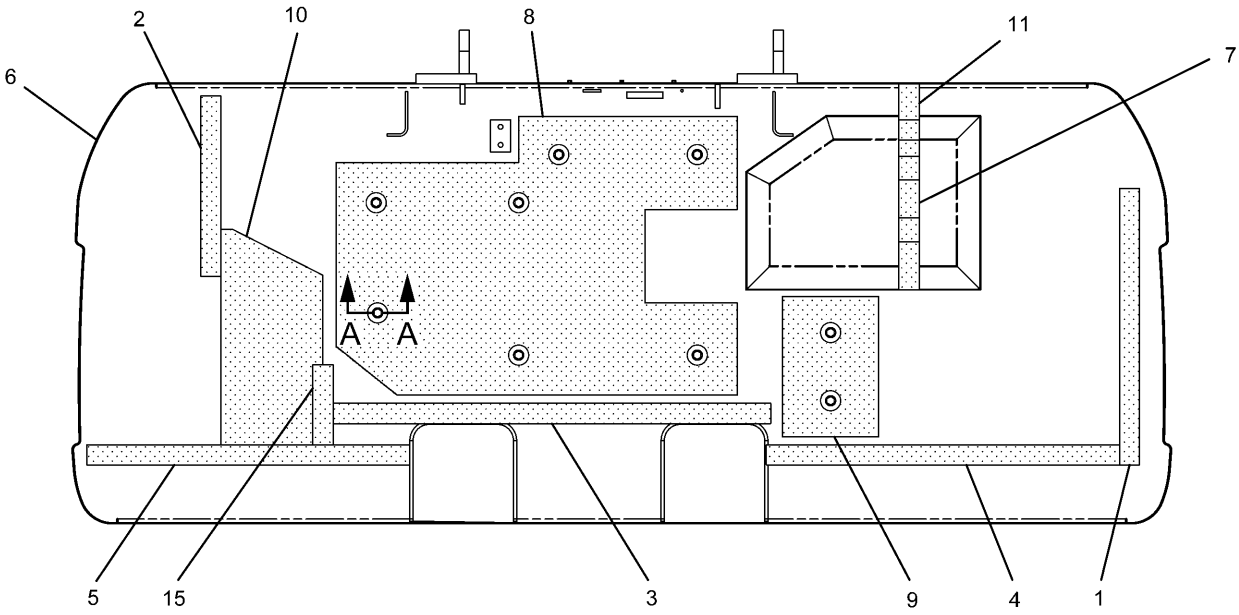


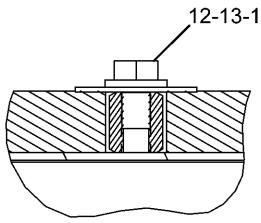


A – A

| NOTE | No. | PART No. | QTY | PART NAME | NOTE | No. | PART No. | QTY | PART NAME |
|---|---|---|---|---|---|---|---|---|---|
| | 1 | 7I-0717 | 1 | LINER | | | | | |
| | 2 | 116-1665 | 1 | LINER | | | | | |
| | 3 | 165-3102 | 1 | LINER | | | | | |
| | 4 | 165-3103 | 1 | LINER | | | | | |
| | 5 | 184-8722 | 1 | LINER | | | | | |
| | 6 | 286-6338 | 1 | COUNTERWEIGHT AS | | | | | |
| | 7 | 248-9061 | 1 | LINER | | | | | |
| | 8 | 286-6346 | 1 | INSULATION | | | | | |
| | 9 | 262-2405 | 1 | INSULATION | | | | | |
| | 10 | 262-2406 | 1 | LINER | | | | | |
| | 11 | 262-2417 | 1 | LINER | | | | | |
| | 12 | 7Y-2292 | 9 | WASHER | | | | | |
| | 13 | 8T-4179 | 9 | BOLT (L=20mm) | | | | | |
| | 14 | 8T-4223 | 9 | WASHER | | | | | |
| | 15 | 273-7677 | 1 | LINER | | | | | |

H93635E 03

## 241-2000 COUNTERWEIGHT GP

S/N BWZ 1-Up, DFB 1-Up
Part of 241-1999-Page267

# FRAME AND BODY

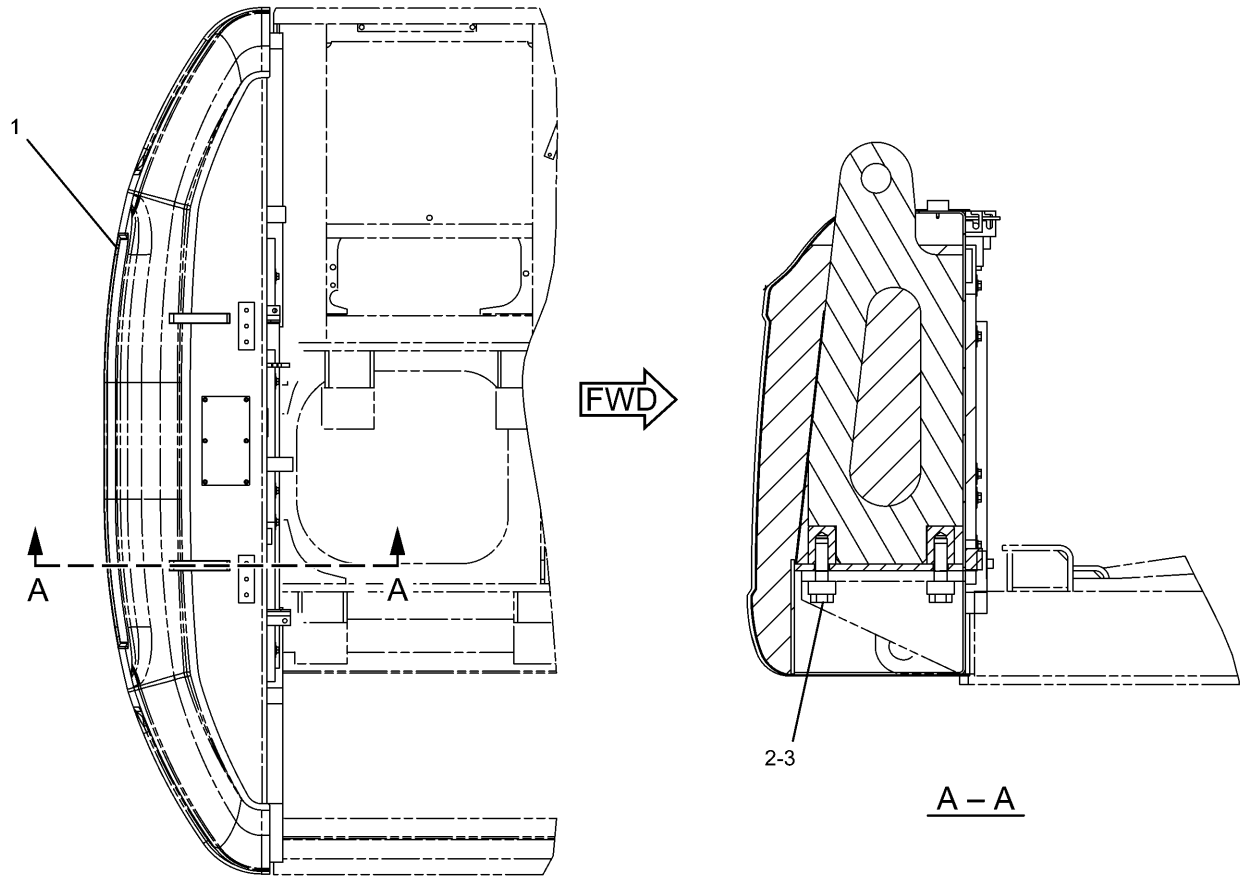


| NOTE | No. | PART No. | QTY | PART NAME | NOTE | No. | PART No. | QTY | PART NAME |
|---|---|---|---|---|---|---|---|---|---|
| Y | 1 | 241-2003 | 1 | COUNTERWEIGHT GP | | | | | |
| | 2 | 244-8194 | 4 | SPACER | | | | | |
| | 3 | 7X-2583 | 4 | BOLT (L=120mm) | | | | | |

Y—SEE SEPARATE ILLUSTRATION

H89829E 00

## 241-2002 COUNTERWEIGHT GP

Extra

Part of 302-9207-Page740
241-2003-Page270
An Attachment

# FRAME AND BODY

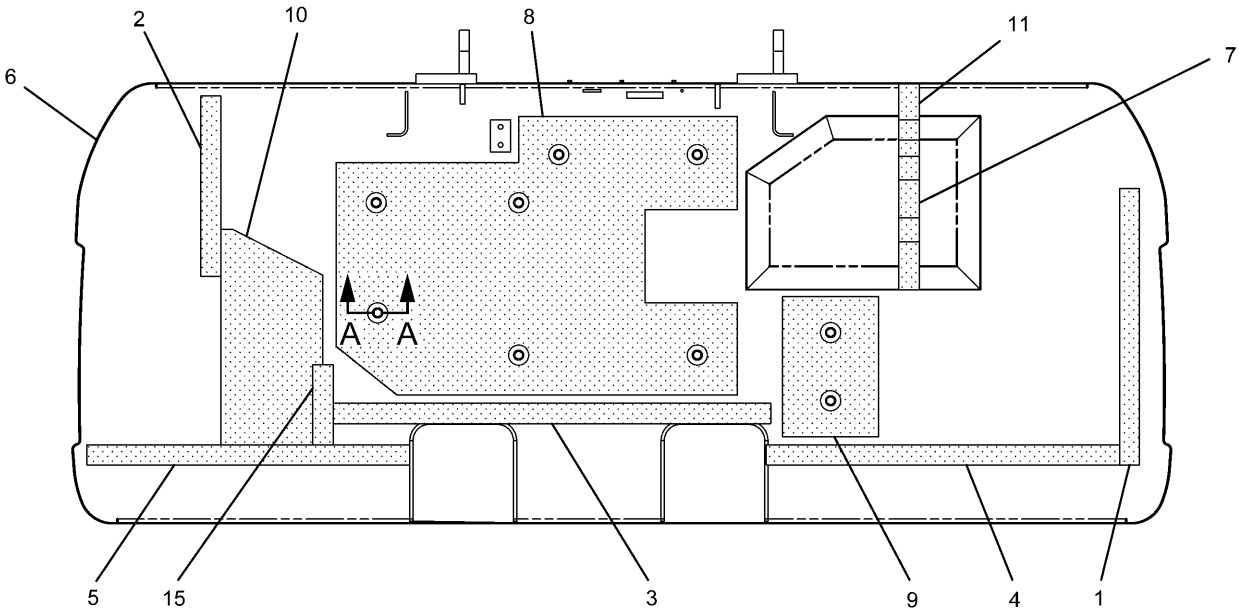


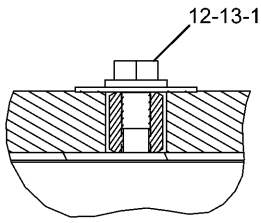


A – A

| NOTE | No. | PART No. | QTY | PART NAME | NOTE | No. | PART No. | QTY | PART NAME |
|---|---|---|---|---|---|---|---|---|---|
| | 1 | 7I-0717 | 1 | LINER | | | | | |
| | 2 | 116-1665 | 1 | LINER | | | | | |
| | 3 | 165-3102 | 1 | LINER | | | | | |
| | 4 | 165-3103 | 1 | LINER | | | | | |
| | 5 | 184-8722 | 1 | LINER | | | | | |
| | 6 | 286-6340 | 1 | COUNTERWEIGHT AS | | | | | |
| | 7 | 248-9061 | 1 | LINER | | | | | |
| | 8 | 286-6346 | 1 | INSULATION | | | | | |
| | 9 | 262-2405 | 1 | INSULATION | | | | | |
| | 10 | 262-2406 | 1 | LINER | | | | | |
| | 11 | 262-2417 | 1 | LINER | | | | | |
| | 12 | 8T-4223 | 9 | WASHER | | | | | |
| | 13 | 7Y-2292 | 9 | WASHER | | | | | |
| | 14 | 8T-4179 | 9 | BOLT (L=20mm) | | | | | |
| | 15 | 273-7677 | 1 | LINER | | | | | |

HA0912E 02

## 241-2003 COUNTERWEIGHT GP

Extra

Part of 241-2002-Page269

An Attachment

# FRAME AND BODY

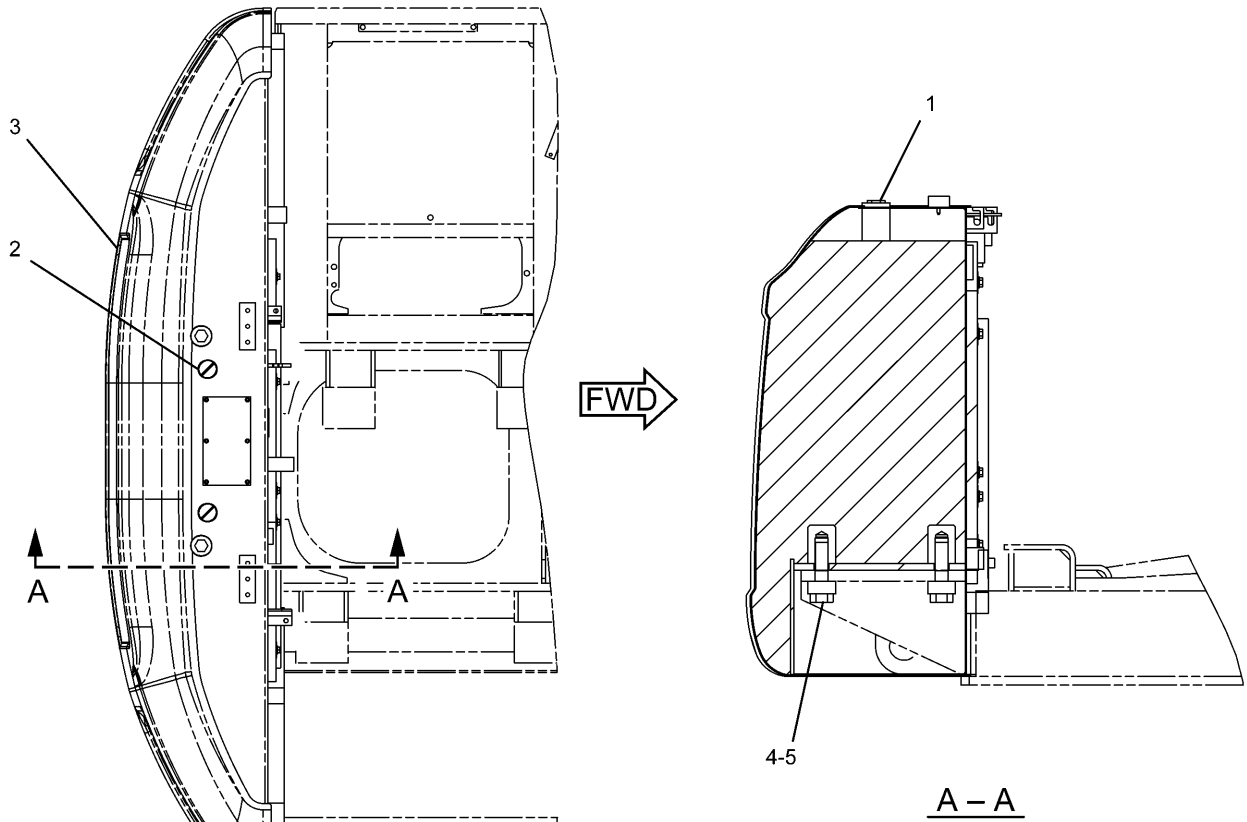


TOP VIEW

| NOTE | No. | PART No. | QTY | PART NAME | NOTE | No. | PART No. | QTY | PART NAME |
|---|---|---|---|---|---|---|---|---|---|
| | 1 | 41-0006 | 2 | CAP | | | | | |
| | 2 | 7Y-0063 | 2 | FILM (LIFT EYE) | | | | | |
| Y | 3 | 241-2006 | 1 | COUNTERWEIGHT GP | | | | | |
| | 4 | 244-8194 | 4 | SPACER | | | | | |
| | 5 | 7X-2583 | 4 | BOLT (L=120mm) | | | | | |

Y—SEE SEPARATE ILLUSTRATION

H89534E 00

**241-2005 COUNTERWEIGHT GP**
S/N BWZ 1-Up, DFB 1-Up
241-2006-Page272
An Attachment

# FRAME AND BODY

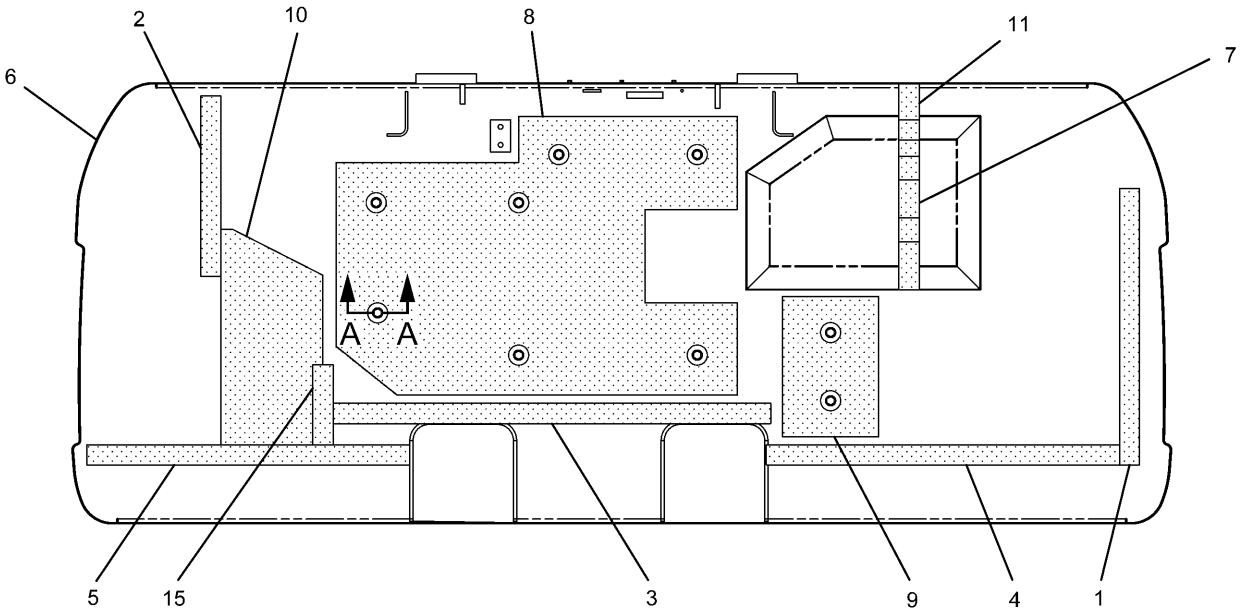


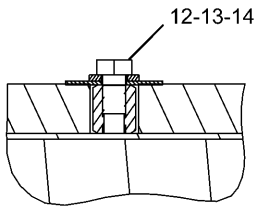


A – A

| NOTE | No. | PART No. | QTY | PART NAME | NOTE | No. | PART No. | QTY | PART NAME |
|---|---|---|---|---|---|---|---|---|---|
| | 1 | 71-0717 | 1 | LINER | | | | | |
| | 2 | 116-1665 | 1 | LINER | | | | | |
| | 3 | 165-3102 | 1 | LINER | | | | | |
| | 4 | 165-3103 | 1 | LINER | | | | | |
| | 5 | 184-8722 | 1 | LINER | | | | | |
| | 6 | 286-6342 | 1 | COUNTERWEIGHT AS | | | | | |
| | 7 | 248-9061 | 1 | LINER | | | | | |
| | 8 | 286-6346 | 1 | INSULATION | | | | | |
| | 9 | 262-2405 | 1 | INSULATION | | | | | |
| | 10 | 262-2406 | 1 | LINER | | | | | |
| | 11 | 262-2417 | 1 | LINER | | | | | |
| | 12 | 7Y-2292 | 9 | WASHER | | | | | |
| | 13 | 8T-4179 | 9 | BOLT (L=20mm) | | | | | |
| | 14 | 8T-4223 | 9 | WASHER | | | | | |
| | 15 | 273-7677 | 1 | LINER | | | | | |

H93638E 02

## 241-2006 COUNTERWEIGHT GP

S/N BWZ 1-Up, DFB 1-Up
Part of 241-2005-Page271
An Attachment

# MEMORANDA

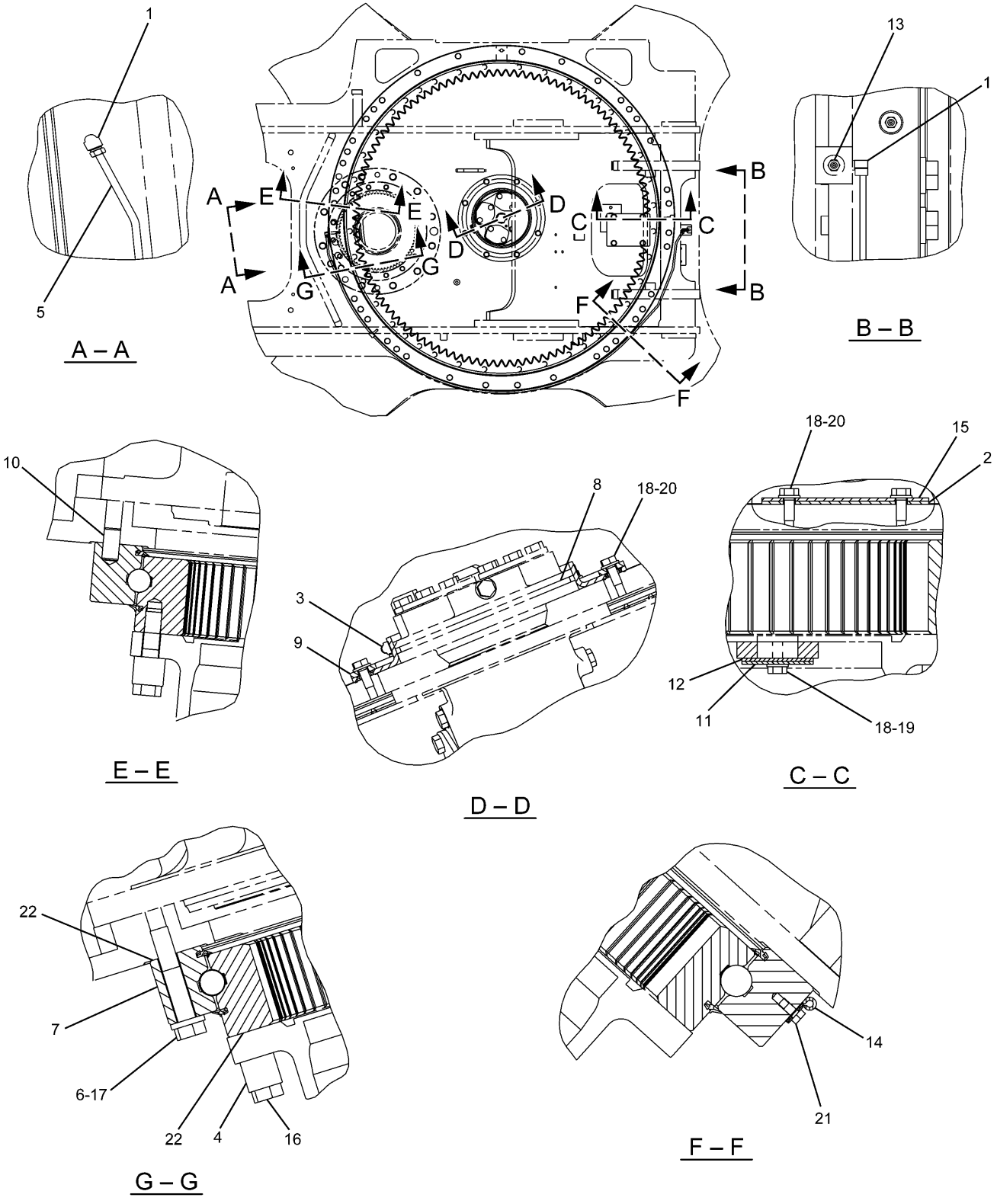


H91779E 02

**227-6147 GEAR & BEARING GP-SWING**
S/N BWZ 1-Up, DFB 1-Up
227-6081-Page278

# FRAME AND BODY

| NOTE | No. | PART No. | QTY | PART NAME | NOTE | No. | PART No. | QTY | PART NAME |
|---|---|---|---|---|---|---|---|---|---|
| | 1 | 5K-9243 | 2 | ELBOW | | | | | |
| | 2 | 7Y-1647 | 1 | GASKET | | | | | |
| | 3 | 7Y-1650 | 1 | CLAMP | | | | | |
| | 4 | 7Y-1863 | 40 | SPACER | | | | | |
| | 5 | 148-4689 | 1 | TUBE AS | | | | | |
| | 6 | 171-9464 | 37 | SPACER | | | | | |
| Y | 7 | 227-6081 | 1 | GEAR GP | | | | | |
| | 8 | 227-6105 | 1 | BOOT | | | | | |
| | 9 | 227-6106 | 1 | RETAINER | | | | | |
| | 10 | 096-4902 | 1 | DOWEL | | | | | |
| | 11 | 148-4703 | 1 | COVER | | | | | |
| | 12 | 148-4704 | 1 | GASKET | | | | | |
| | 13 | 3B-8489 | 1 | FITTING | | | | | |
| | 14 | 4N-9170 | 2 | CLIP | | | | | |
| | 15 | 7Y-1648 | 1 | STRIP | | | | | |
| | 16 | 8T-0360 | 40 | BOLT (L=90mm) | | | | | |
| | 17 | 8T-0362 | 37 | BOLT (L=110mm) | | | | | |
| | 18 | 8T-4121 | 14 | WASHER | | | | | |
| | 19 | 8T-4137 | 2 | BOLT (L=20mm) | | | | | |
| | 20 | 8T-4136 | 12 | BOLT (L=25mm) | | | | | |
| | 21 | 8T-4199 | 2 | BOLT (L=12mm) | | | | | |
| B | 22 | 1U-8846 | | GASKET MAKER…(96ml) | | | | | |

B—USE AS REQUIRED

Y—SEE SEPARATE ILLUSTRATION

H91779E 02

## 227-6147 GEAR & BEARING GP-SWING

S/N BWZ 1-Up, DFB 1-Up

227-6081-Page278

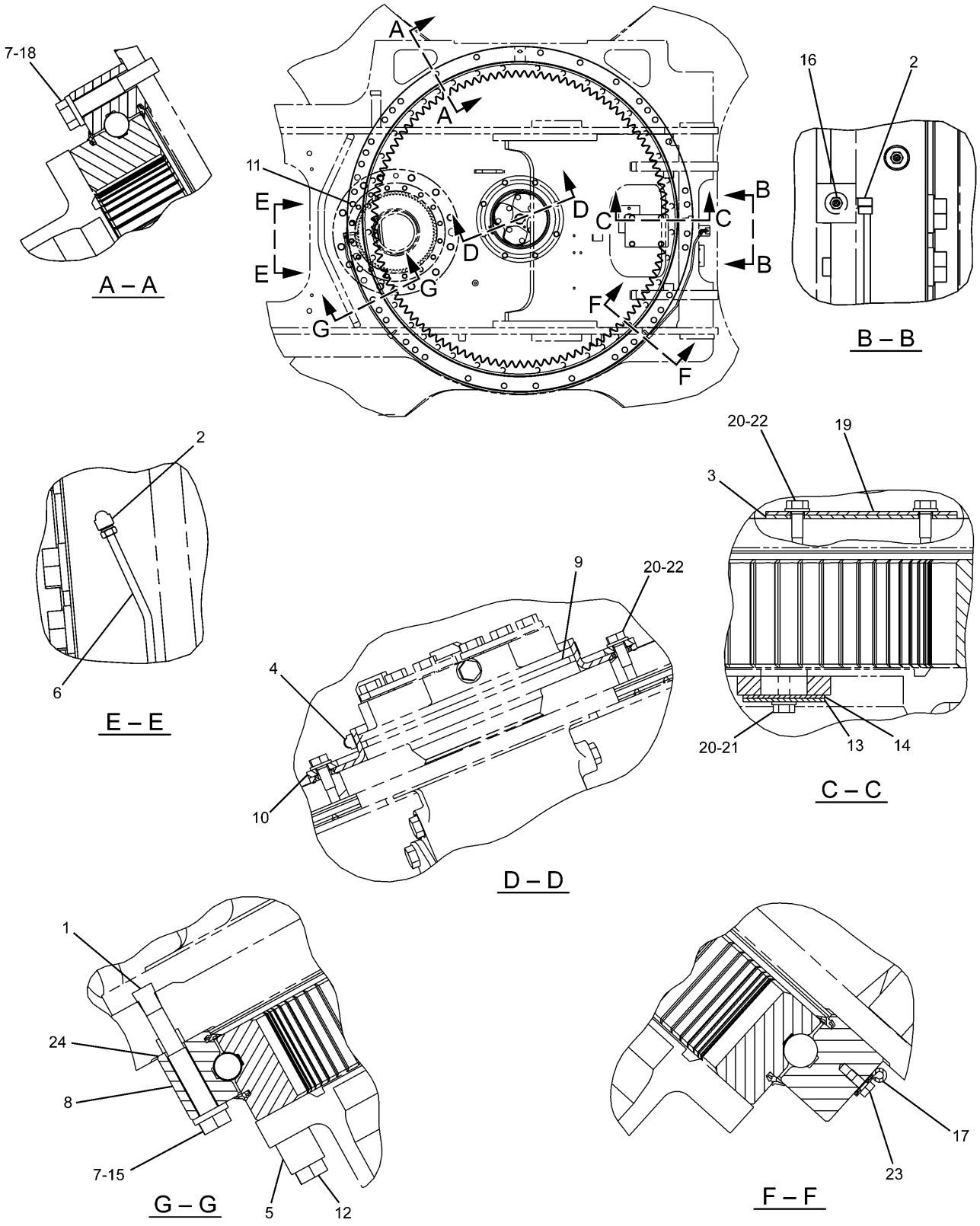


H91780E 02

**227-6148 GEAR & BEARING GP-SWING**
S/N SNS 1-Up, WJN 1-Up
227-6081-Page278

# FRAME AND BODY

| NOTE | No. | PART No. | QTY | PART NAME | NOTE | No. | PART No. | QTY | PART NAME |
|---|---|---|---|---|---|---|---|---|---|
| | 1 | 2B-7561 | 13 | CORK | | | | | |
| | 2 | 5K-9243 | 2 | ELBOW | | | | | |
| | 3 | 7Y-1647 | 1 | GASKET | | | | | |
| | 4 | 7Y-1650 | 1 | CLAMP | | | | | |
| | 5 | 7Y-1863 | 40 | SPACER | | | | | |
| | 6 | 148-4689 | 1 | TUBE AS | | | | | |
| | 7 | 171-9464 | 42 | SPACER | | | | | |
| Y | 8 | 227-6081 | 1 | GEAR GP | | | | | |
| | 9 | 227-6105 | 1 | BOOT | | | | | |
| | 10 | 227-6106 | 1 | RETAINER | | | | | |
| | 11 | 096-4902 | 1 | DOWEL | | | | | |
| | 12 | 145-9278 | 40 | BOLT (L=90mm) | | | | | |
| | 13 | 148-4703 | 1 | COVER | | | | | |
| | 14 | 148-4704 | 1 | GASKET | | | | | |
| | 15 | 165-9756 | 16 | BOLT (L=120mm) | | | | | |
| | 16 | 3B-8489 | 1 | FITTING | | | | | |
| | 17 | 4N-9170 | 2 | CLIP | | | | | |
| | 18 | 5Q-3560 | 26 | BOLT (L=110mm) | | | | | |
| | 19 | 7Y-1648 | 1 | STRIP | | | | | |
| | 20 | 8T-4121 | 14 | WASHER | | | | | |
| | 21 | 8T-4137 | 2 | BOLT (L=20mm) | | | | | |
| | 22 | 8T-4136 | 12 | BOLT (L=25mm) | | | | | |
| | 23 | 8T-4199 | 2 | BOLT (L=12mm) | | | | | |
| B | 24 | 1U-8846 | | GASKET MAKER…(96ml) | | | | | |

B—USE AS REQUIRED

Y—SEE SEPARATE ILLUSTRATION

H91780E 02

## 227-6148 GEAR & BEARING GP-SWING

S/N SNS 1-Up, WJN 1-Up

227-6081-Page278

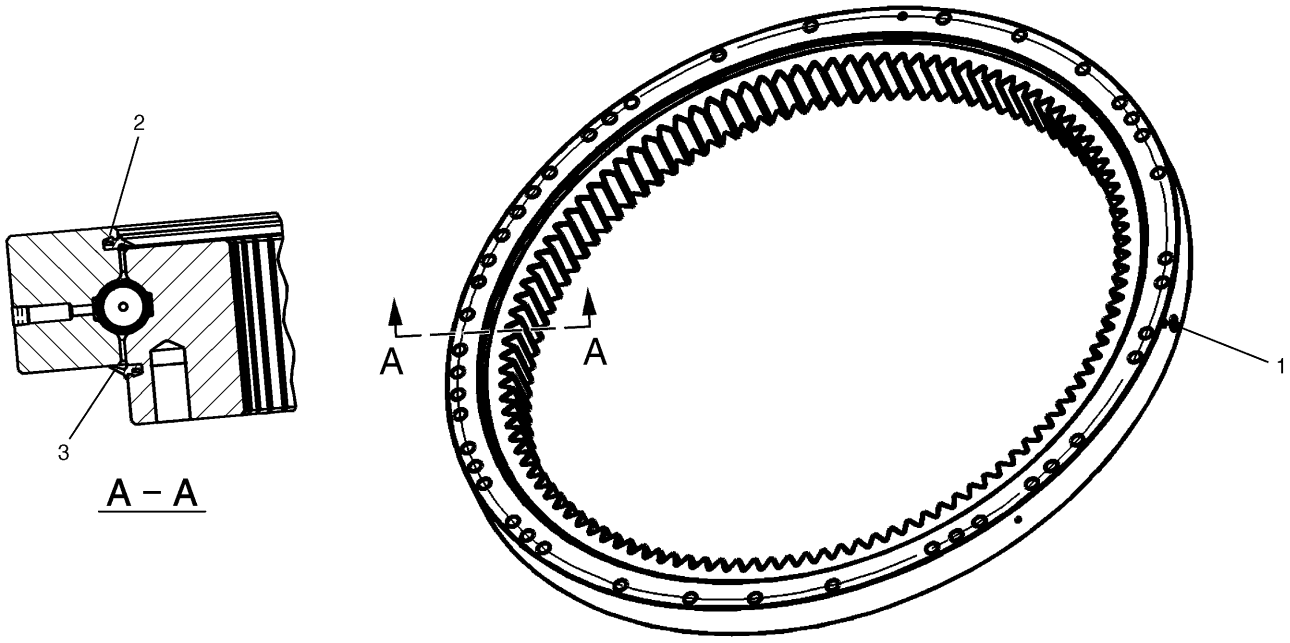


| NOTE | No. | PART No. | QTY | PART NAME | NOTE | No. | PART No. | QTY | PART NAME |
|---|---|---|---|---|---|---|---|---|---|
| | 1 | 3B-8489 | 1 | FITTING | | | | | |
| | 2 | 227-6071 | 1 | SEAL | | | | | |
| E | 3 | 148-4685 | | SEAL…(368cm) | | | | | |

E—ORDER BY THE CENTIMETER

H89660E 02

## 227-6081 GEAR & BEARING GP-SWING

Part of 227-6147-Page275,227-6148-Page277

# MEMORANDA

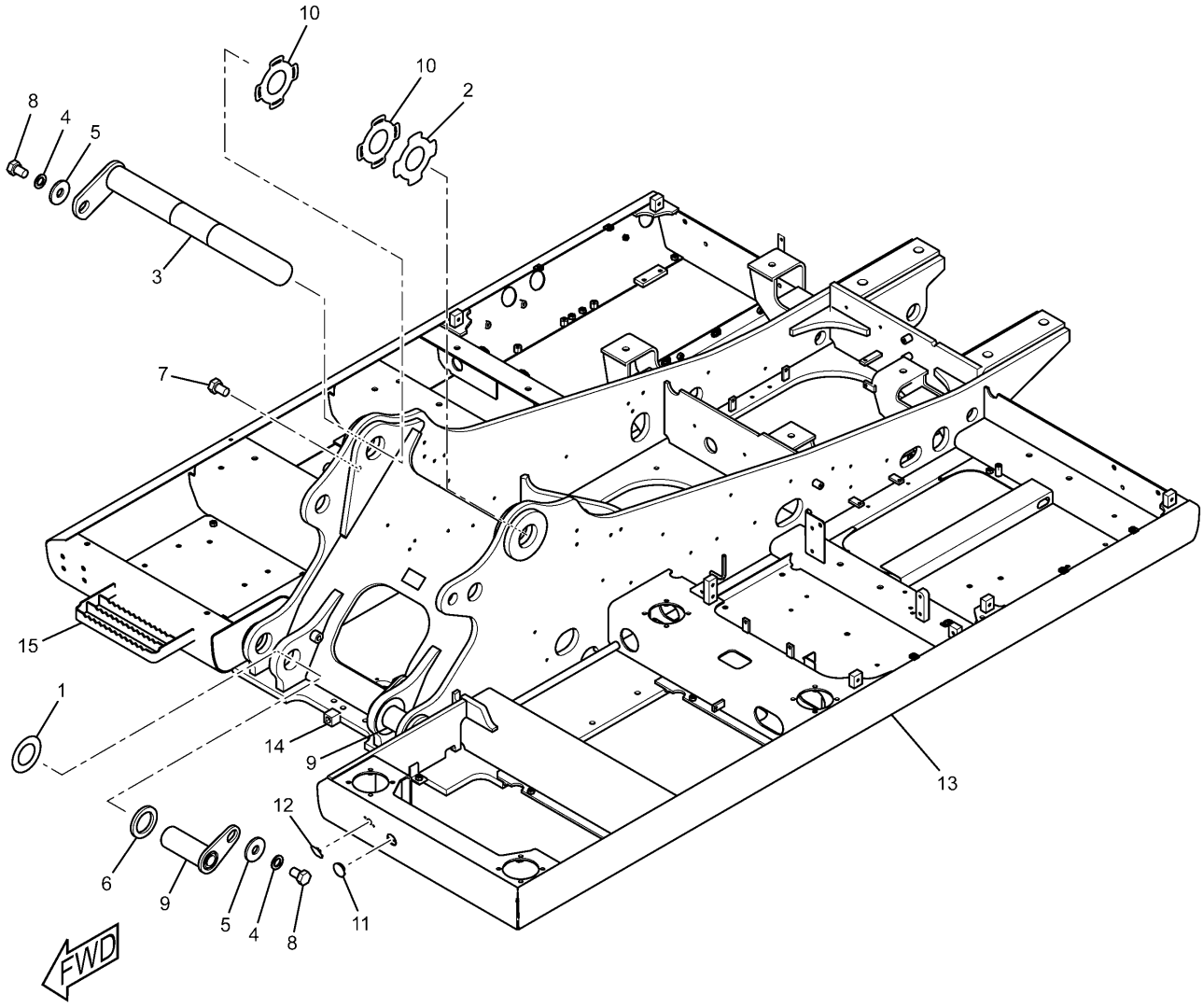


H99687E 01

**273-6716 FRAME GP-UPPER**
S/N BWZ 1-Up, DFB 1-Up

# FRAME AND BODY

| NOTE | No. | PART No. | QTY | PART NAME | NOTE | No. | PART No. | QTY | PART NAME |
|---|---|---|---|---|---|---|---|---|---|
| B | 1 | 133-2425 | 2 | SHIM (T=0.50mm) | | | | | |
| B | | 093-0083 | 4 | SHIM (T=1.00mm) | | | | | |
| B | | 093-0115 | 2 | SHIM (T=2.00mm) | | | | | |
| B | 2 | 308-8775 | 1 | SHIM (T=0.50mm) | | | | | |
| B | | 308-8776 | 2 | SHIM (T=1.00mm) | | | | | |
| B | | 308-8777 | 1 | SHIM (T=2.00mm) | | | | | |
| | 3 | 315-0800 | 1 | PIN AS | | | | | |
| | 4 | 8T-4123 | 3 | WASHER | | | | | |
| | 5 | 093-0349 | 3 | WASHER | | | | | |
| | 6 | 093-0363 | 2 | SPACER | | | | | |
| | 7 | 8T-4191 | 1 | BOLT (L=16mm) | | | | | |
| | 8 | 8T-4780 | 3 | BOLT (L=30mm) | | | | | |
| | 9 | 154-0480 | 2 | PIN AS | | | | | |
| | 10 | 212-2838 | 2 | SHIM (T=2.00mm) | | | | | |
| B | 11 | 245-7901 | 1 | CAP | | | | | |
| B | 12 | 245-7900 | 1 | CAP | | | | | |
| | 13 | 273-6717 | 1 | FRAME AS | | | | | |
| | 14 | 7Y-0633 | 1 | BOSS | | | | | |
| | 15 | 163-3729 | 1 | PLATE AS | | | | | |
| | | | | THE FOLLOWING SERVICE | | | | | |
| | | | | REPAIR ARE AVAILABLE: | | | | | |
| | | 178-0852 | 1 | PLATE (L=1100mm) | | | | | |
| | | 184-5724 | 1 | PLATE (L=2000mm) | | | | | |

B—USE AS REQUIRED

H99687E 01

**273-6716 FRAME GP-UPPER**
S/N BWZ 1-Up, DFB 1-Up

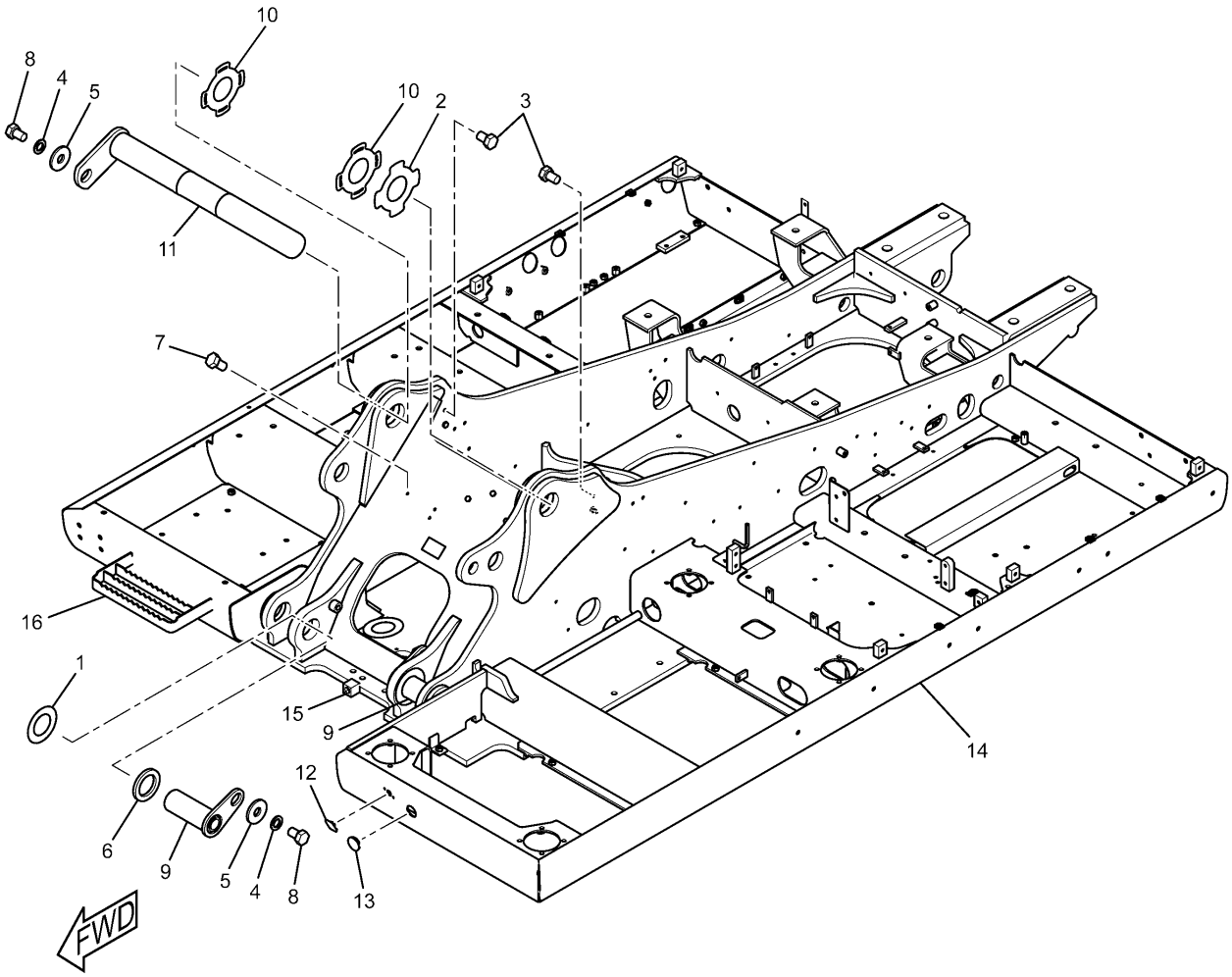


H99688E 01

**273-6721 FRAME GP-UPPER**
S/N SNS 1-Up, WJN 1-Up

# FRAME AND BODY

| NOTE | No. | PART No. | QTY | PART NAME |
|---|---|---|---|---|
| B | 1 | 133-2425 | 2 | SHIM (T=0.50mm) |
| B | | 093-0083 | 4 | SHIM (T=1.00mm) |
| B | | 093-0115 | 2 | SHIM (T=2.00mm) |
| B | 2 | 308-8775 | 1 | SHIM (T=0.50mm) |
| B | | 308-8776 | 2 | SHIM (T=1.00mm) |
| B | | 308-8777 | 1 | SHIM (T=2.00mm) |
| | 3 | 7X-2548 | 6 | BOLT (L=16mm) |
| | 4 | 8T-4123 | 3 | WASHER |
| | 5 | 093-0349 | 3 | WASHER |
| | 6 | 093-0363 | 2 | SPACER |
| | 7 | 8T-4191 | 3 | BOLT (L=16mm) |
| | 8 | 8T-4780 | 3 | BOLT (L=30mm) |
| | 9 | 4I-4812 | 2 | PIN AS |
| | 10 | 212-2838 | 2 | SHIM (T=2.00mm) |
| | 11 | 315-0800 | 1 | PIN AS |
| B | 12 | 245-7900 | 1 | CAP |
| B | 13 | 245-7901 | 1 | CAP |
| | 14 | 273-6722 | 1 | FRAME AS |
| | 15 | 7Y-0633 | 1 | BOSS |
| | 16 | 163-3729 | 1 | PLATE AS |
| | | | | THE FOLLOWING SERVICE REPAIR ARE AVAILABLE: |
| | | 178-0852 | 1 | PLATE (L=1100mm) |
| | | 184-5724 | 1 | PLATE (L=2000mm) |

B—USE AS REQUIRED

H99688E 01

## 273-6721 FRAME GP-UPPER
S/N SNS 1-Up, WJN 1-Up

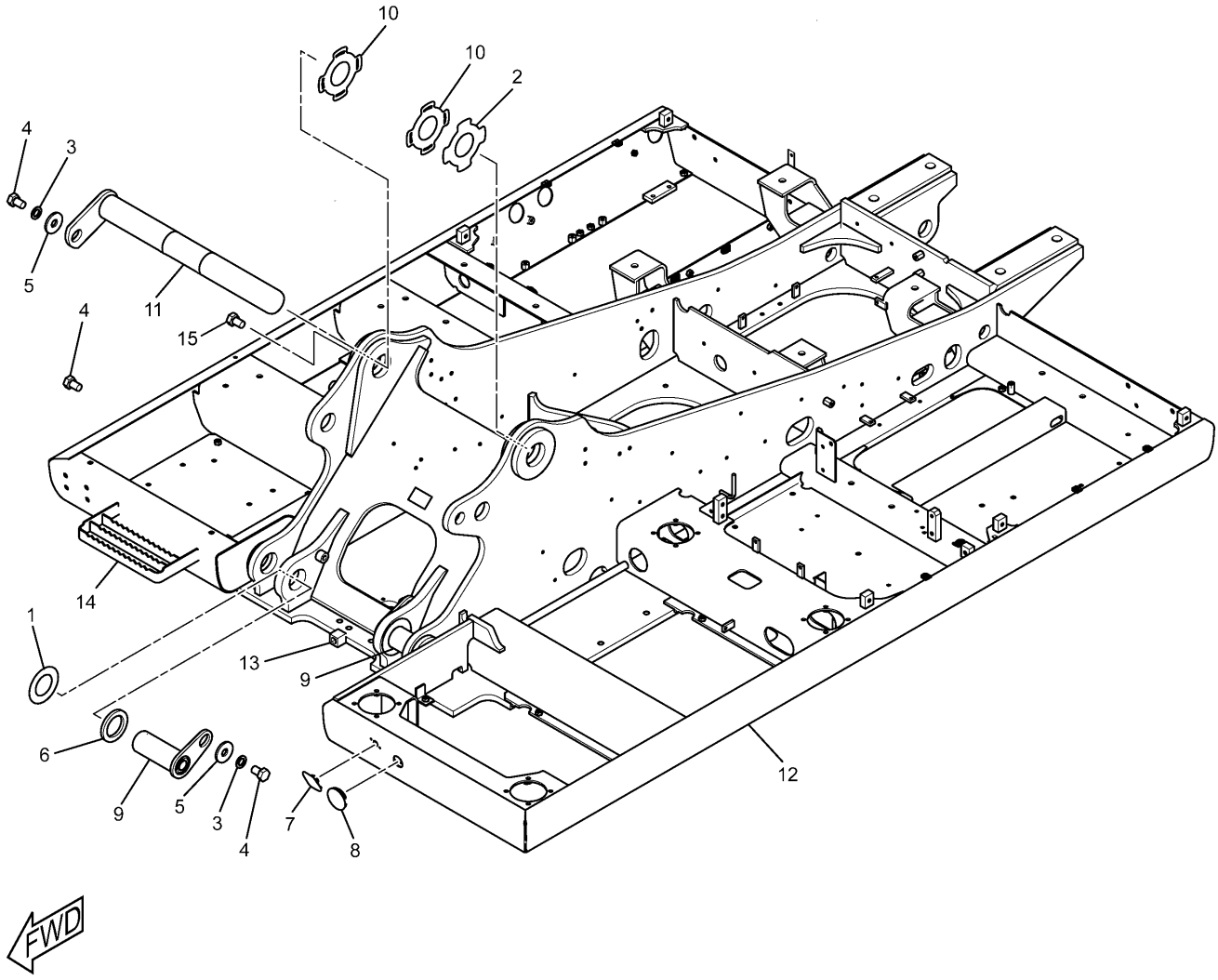


H99689E 01

**294-1436 FRAME GP-UPPER**
S/N BWZ 1-Up, DFB 1-Up
Part of 279-2732-Page11,279-2733-Page12
An Attachment

# FRAME AND BODY

| NOTE | No. | PART No. | QTY | PART NAME | NOTE | No. | PART No. | QTY | PART NAME |
|---|---|---|---|---|---|---|---|---|---|
| B | 1 | 133-2425 | 2 | SHIM (T=0.50mm) | | | | | |
| B | | 093-0083 | 4 | SHIM (T=1.00mm) | | | | | |
| B | | 093-0115 | 2 | SHIM (T=2.00mm) | | | | | |
| B | 2 | 308-8775 | 1 | SHIM (T=0.50mm) | | | | | |
| B | | 308-8776 | 2 | SHIM (T=1.00mm) | | | | | |
| B | | 308-8777 | 1 | SHIM (T=2.00mm) | | | | | |
| | 3 | 8T-4123 | 3 | WASHER | | | | | |
| | 4 | 8T-4780 | 3 | BOLT (L=30mm) | | | | | |
| | 5 | 093-0349 | 3 | WASHER | | | | | |
| | 6 | 093-0363 | 2 | SPACER | | | | | |
| B | 7 | 245-7900 | 1 | CAP | | | | | |
| B | 8 | 245-7901 | 1 | CAP | | | | | |
| | 9 | 4I-4812 | 1 | PIN AS | | | | | |
| | 10 | 212-2838 | 2 | SHIM (T=2.00mm) | | | | | |
| | 11 | 321-2055 | 1 | PIN AS | | | | | |
| | 12 | 273-6717 | 1 | FRAME AS | | | | | |
| | 13 | 7Y-0633 | 1 | BOSS | | | | | |
| | 14 | 111-9758 | 1 | PLATE | | | | | |
| | 15 | 8T-4191 | 1 | BOLT (L=16mm) | | | | | |
| | | | | THE FOLLOWING SERVICE | | | | | |
| | | | | REPAIR ARE AVAILABLE: | | | | | |
| | | 178-0852 | 1 | PLATE (L=1100mm) | | | | | |
| | | 184-5724 | 1 | PLATE (L=2000mm) | | | | | |

B—USE AS REQUIRED

H99689E 01

## 294-1436 FRAME GP-UPPER

S/N BWZ 1-Up, DFB 1-Up
Part of 279-2732-Page11,279-2733-Page12
An Attachment

# FRAME AND BODY

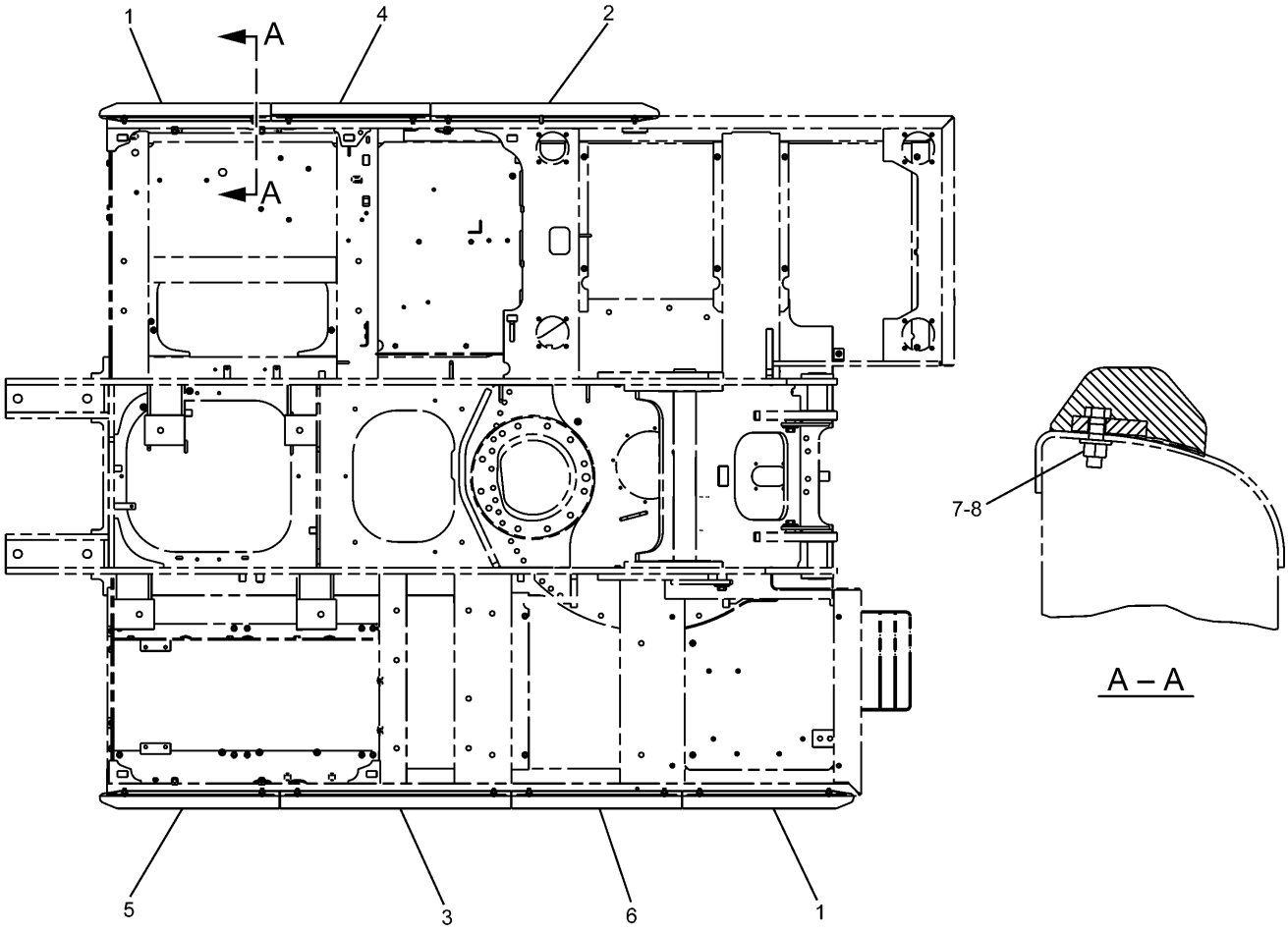


| NOTE | No. | PART No. | QTY | PART NAME | NOTE | No. | PART No. | QTY | PART NAME |
|---|---|---|---|---|---|---|---|---|---|
| | 1 | 180-7521 | 2 | BUMPER AS | | | | | |
| | 2 | 180-7525 | 1 | BUMPER AS | | | | | |
| | 3 | 180-7529 | 1 | BUMPER AS | | | | | |
| | 4 | 180-7533 | 1 | BUMPER AS | | | | | |
| | 5 | 218-5199 | 1 | BUMPER AS | | | | | |
| | 6 | 228-5463 | 1 | BUMPER AS | | | | | |
| | 7 | 8T-4223 | 14 | WASHER | | | | | |
| | 8 | 8T-4244 | 14 | NUT | | | | | |

H89623E 00

## 260-2326 BUMPER GP-SIDE

S/N SNS 1-Up, WJN 1-Up

# FRAME AND BODY

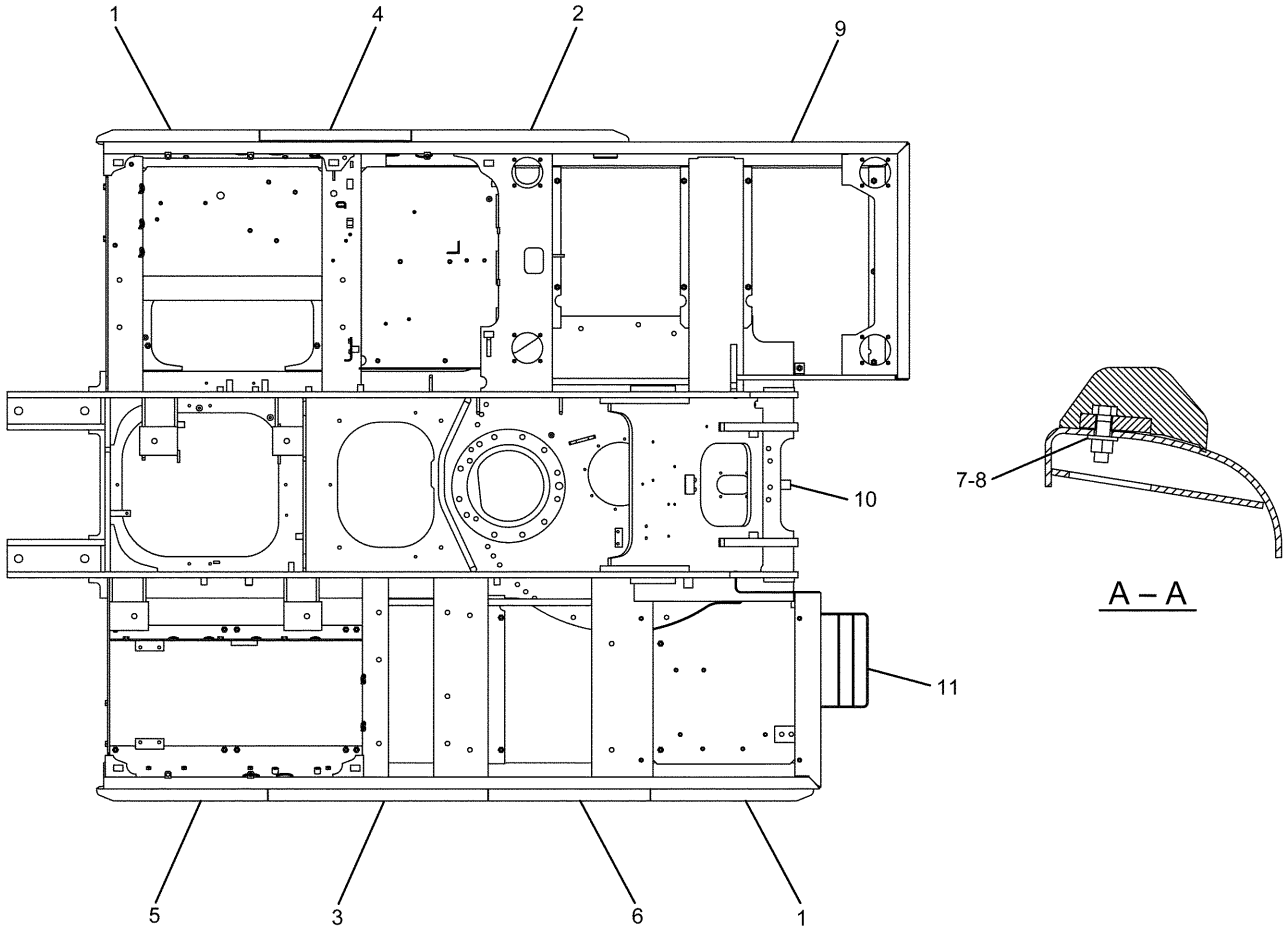


| NOTE | No. | PART No. | QTY | PART NAME | NOTE | No. | PART No. | QTY | PART NAME |
|---|---|---|---|---|---|---|---|---|---|
| | 1 | 180-7521 | 2 | BUMPER AS | | | | | |
| | 2 | 180-7525 | 1 | BUMPER AS | | | | | |
| | 3 | 180-7529 | 1 | BUMPER AS | | | | | |
| | 4 | 180-7533 | 1 | BUMPER AS | | | | | |
| | 5 | 218-5199 | 1 | BUMPER AS | | | | | |
| | 6 | 228-5463 | 1 | BUMPER AS | | | | | |
| | 7 | 8T-4223 | 14 | WASHER | | | | | |
| | 8 | 8T-4244 | 14 | NUT | | | | | |
| | 9 | 278-9258 | 1 | FRAME AS | | | | | |
| | | 273-6717 | 1 | FRAME AS | | | | | |
| | 10 | 7Y-0633 | 1 | BOSS | | | | | |
| | 11 | 163-3729 | 1 | PLATE AS | | | | | |
| | | | | THE FOLLOWING SERVICE | | | | | |
| | | | | REPAIR ARE AVAILABLE: | | | | | |
| | | 178-0852 | 1 | PLATE (L=1100mm) | | | | | |
| | | 184-5724 | 1 | PLATE (L=2000mm) | | | | | |

H94145E 00

**278-9257 BUMPER GP-SIDE**
S/N BWZ 1-Up, DFB 1-Up
An Attachment

# FRAME AND BODY

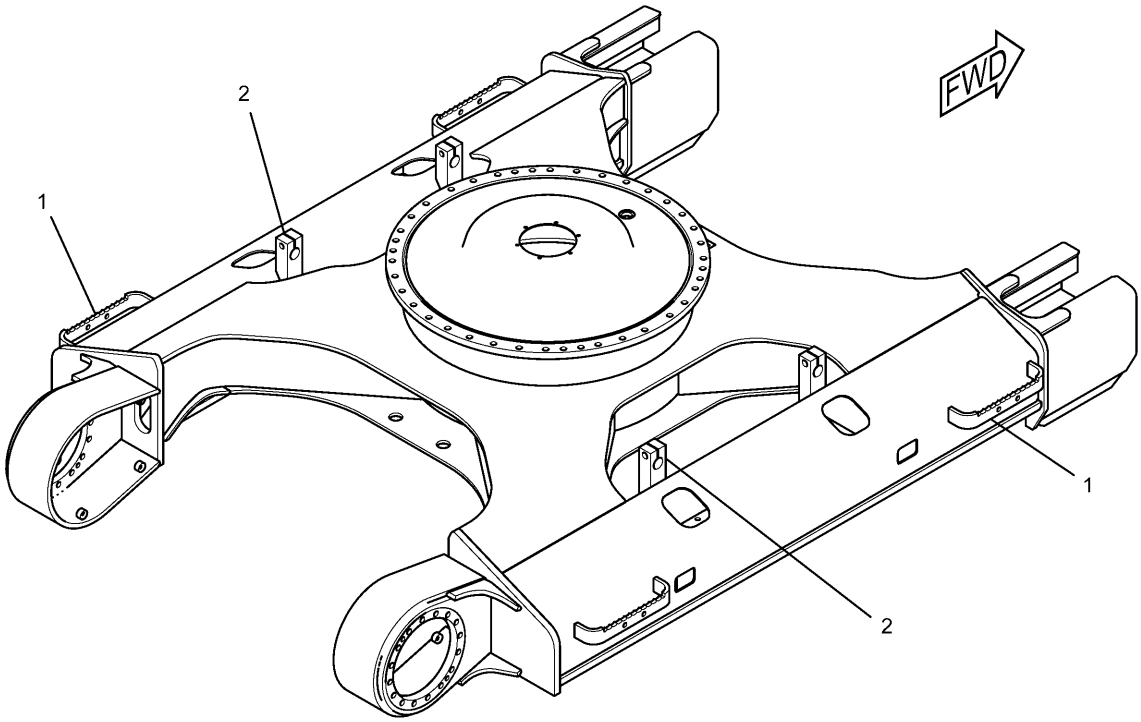


| NOTE | No. | PART No. | QTY | PART NAME | NOTE | No. | PART No. | QTY | PART NAME |
|---|---|---|---|---|---|---|---|---|---|
| | 1 | 235-7520 | 4 | STEP | | | | | |
| | 2 | 117-5540 | 4 | BRACKET | | | | | |

H92340E 03

**236-8340 FRAME AS-UNDERCARRIAGE**
S/N BWZ 1-Up

# FRAME AND BODY

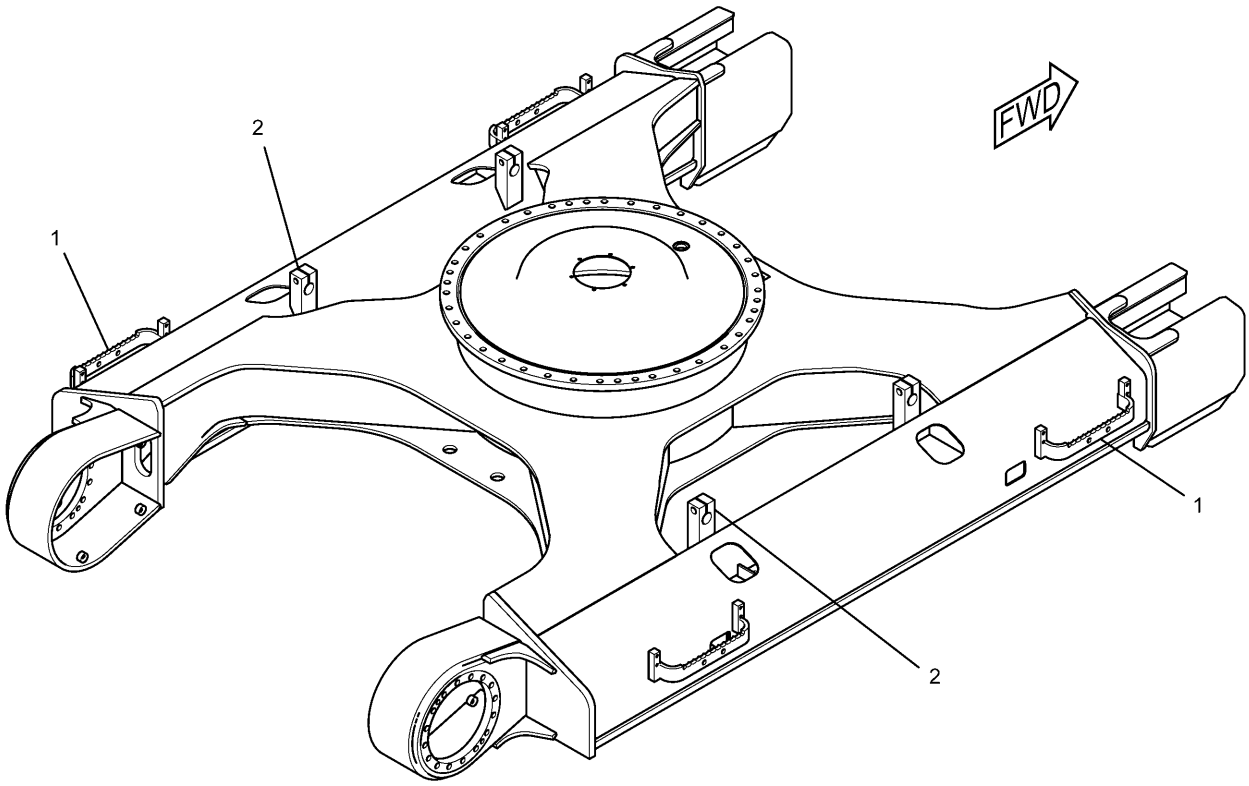


| NOTE | No. | PART No. | QTY | PART NAME | NOTE | No. | PART No. | QTY | PART NAME |
|---|---|---|---|---|---|---|---|---|---|
| | 1 | 235-7520 | 4 | STEP | | | | | |
| | 2 | 117-5540 | 4 | BRACKET | | | | | |

H92341E 04

## 236-8341 FRAME AS-UNDERCARRIAGE
S/N DFB 1-Up

# FRAME AND BODY

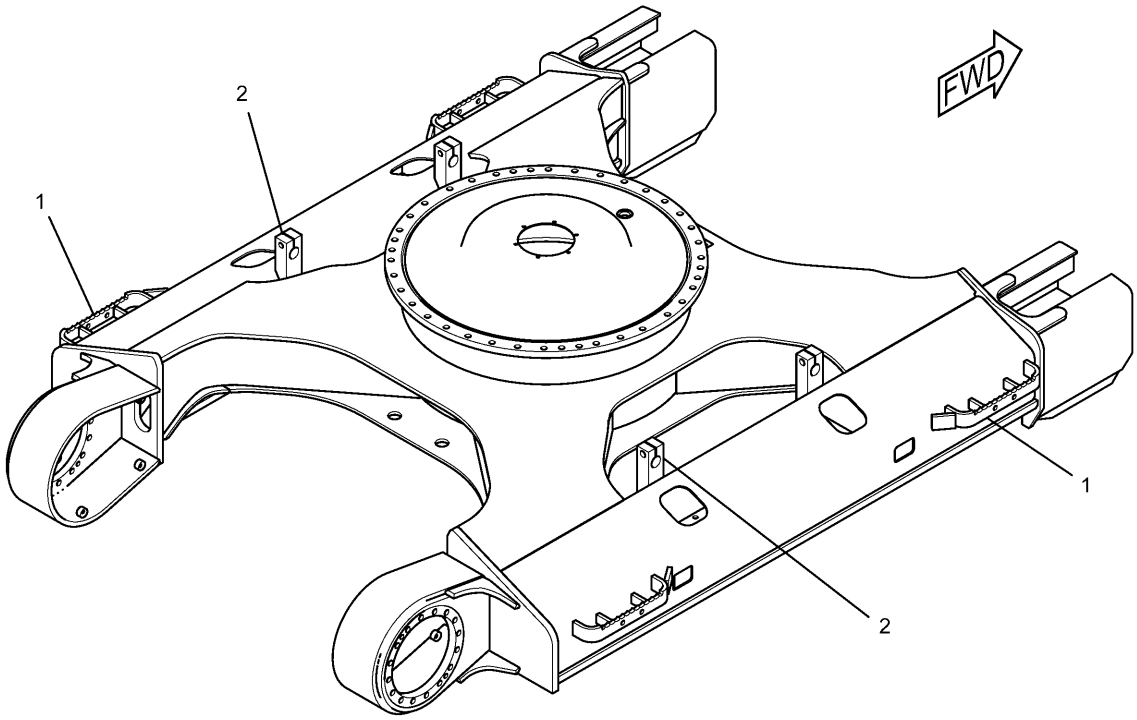


| NOTE | No. | PART No. | QTY | PART NAME | NOTE | No. | PART No. | QTY | PART NAME |
|---|---|---|---|---|---|---|---|---|---|
| | 1 | 235-7520 | 4 | STEP | | | | | |
| | 2 | 117-5540 | 4 | BRACKET | | | | | |

H96108E 01

## 241-7210 FRAME AS-UNDERCARRIAGE

Heavy Duty
S/N SNS 1-Up

# FRAME AND BODY

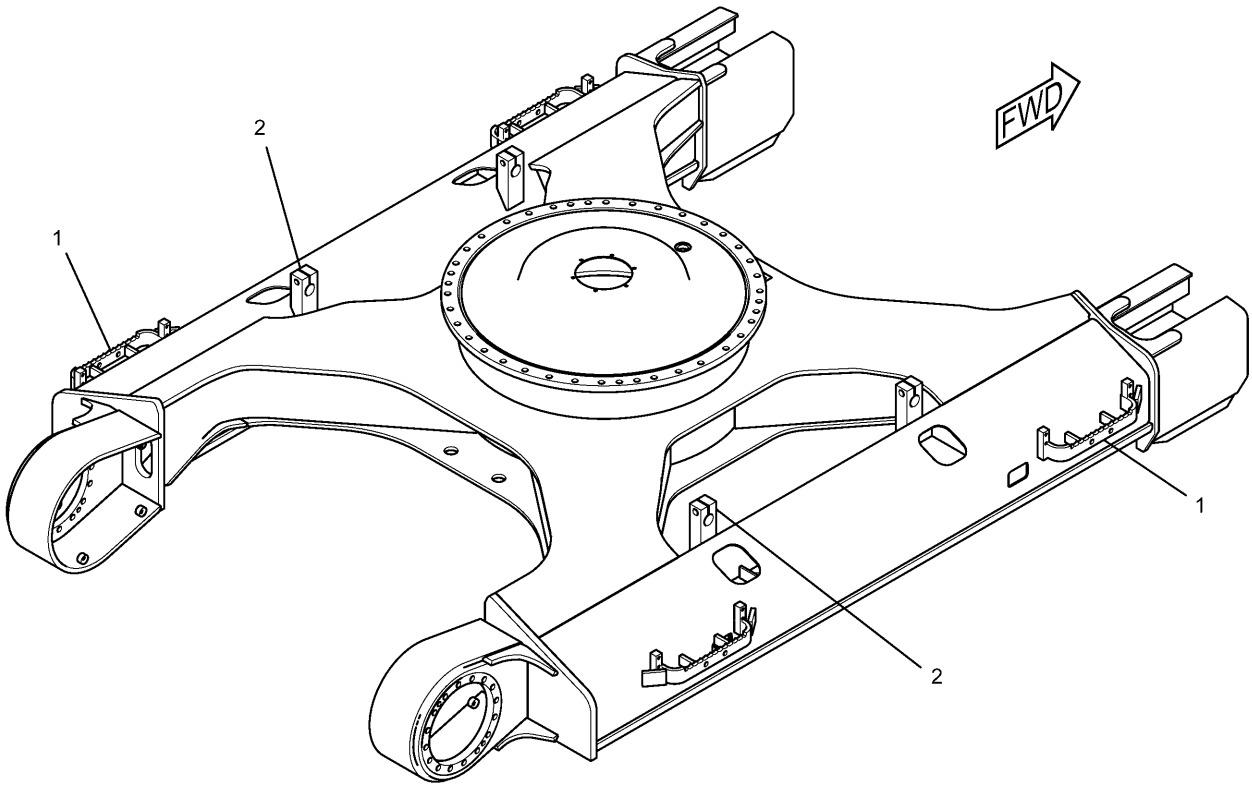


| NOTE | No. | PART No. | QTY | PART NAME | NOTE | No. | PART No. | QTY | PART NAME |
|---|---|---|---|---|---|---|---|---|---|
| | 1 | 235-7520 | 4 | STEP | | | | | |
| | 2 | 117-5540 | 4 | BRACKET | | | | | |

H89992E 00

## 241-7211 FRAME AS-UNDERCARRIAGE

Heavy Duty
S/N WJN 1-Up

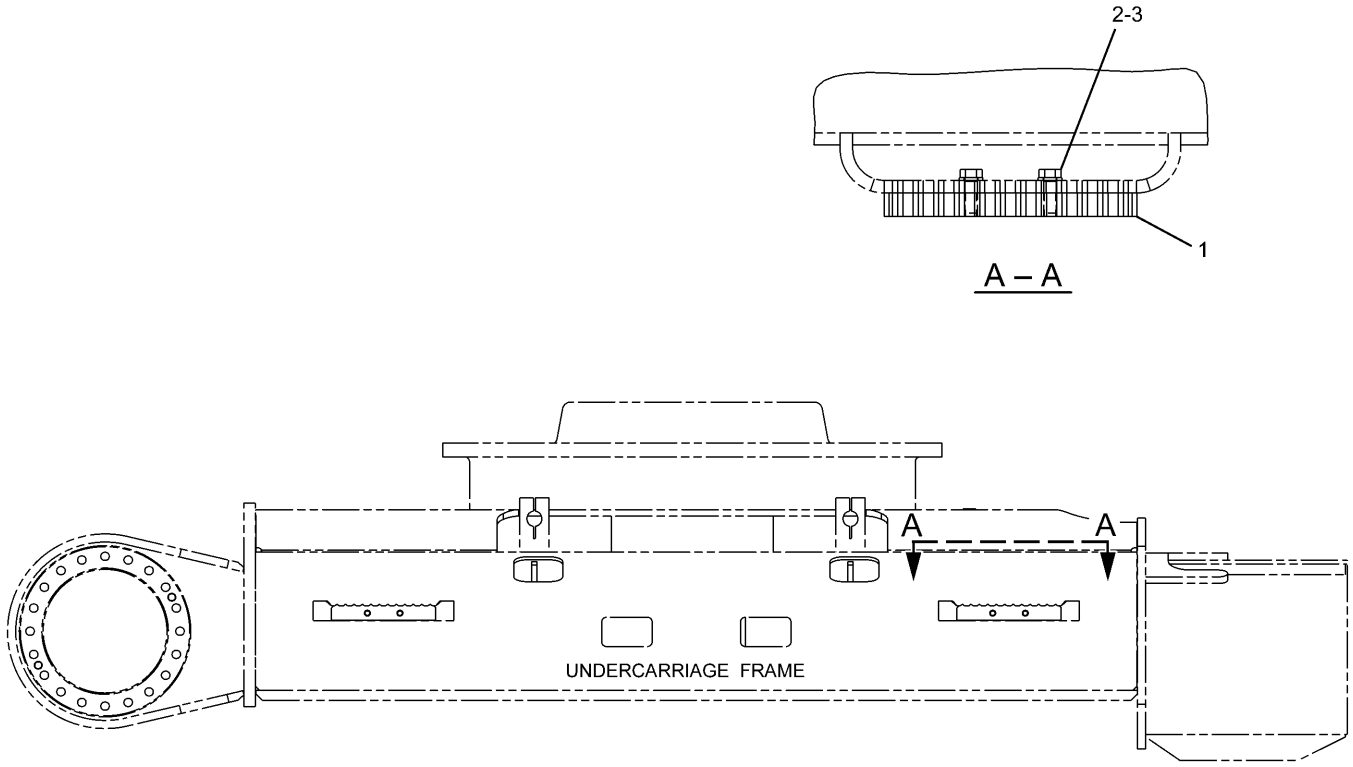


RIGHT SIDE VIEW

| NOTE | No. | PART No. | QTY | PART NAME | NOTE | No. | PART No. | QTY | PART NAME |
|---|---|---|---|---|---|---|---|---|---|
| | 1 | 235-7765 | 2 | STEP | | | | | |
| | 2 | 8T-7338 | 4 | BOLT (L=45mm) | | | | | |
| | 3 | 9X-8257 | 4 | WASHER | | | | | |

H91215E 03

## 235-7764 STEP GP

800MM Triple Grouser Shoe

Part of 247-7382-Page317,314-3797-Page317.01,247-7346-Page319,314-3798-Page319.01

An Attachment

# FRAME AND BODY

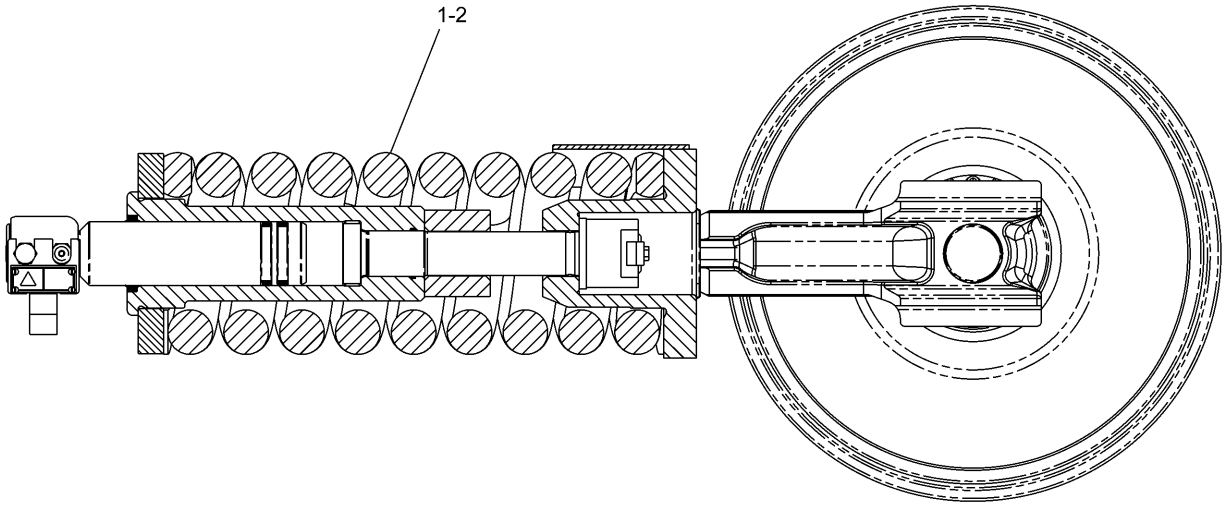


| NOTE | No. | PART No. | QTY | PART NAME | NOTE | No. | PART No. | QTY | PART NAME |
|---|---|---|---|---|---|---|---|---|---|
| Y | 1 | 239-4386 | 1 | IDLER GP (LH) | | | | | |
| Y | 2 | 239-4385 | 1 | IDLER GP (RH) | | | | | |

Y—SEE SEPARATE ILLUSTRATION

H89557E 02

## 239-4341 IDLER GP-FRONT

239-4386-Page294,239-4385-Page295

# FRAME AND BODY

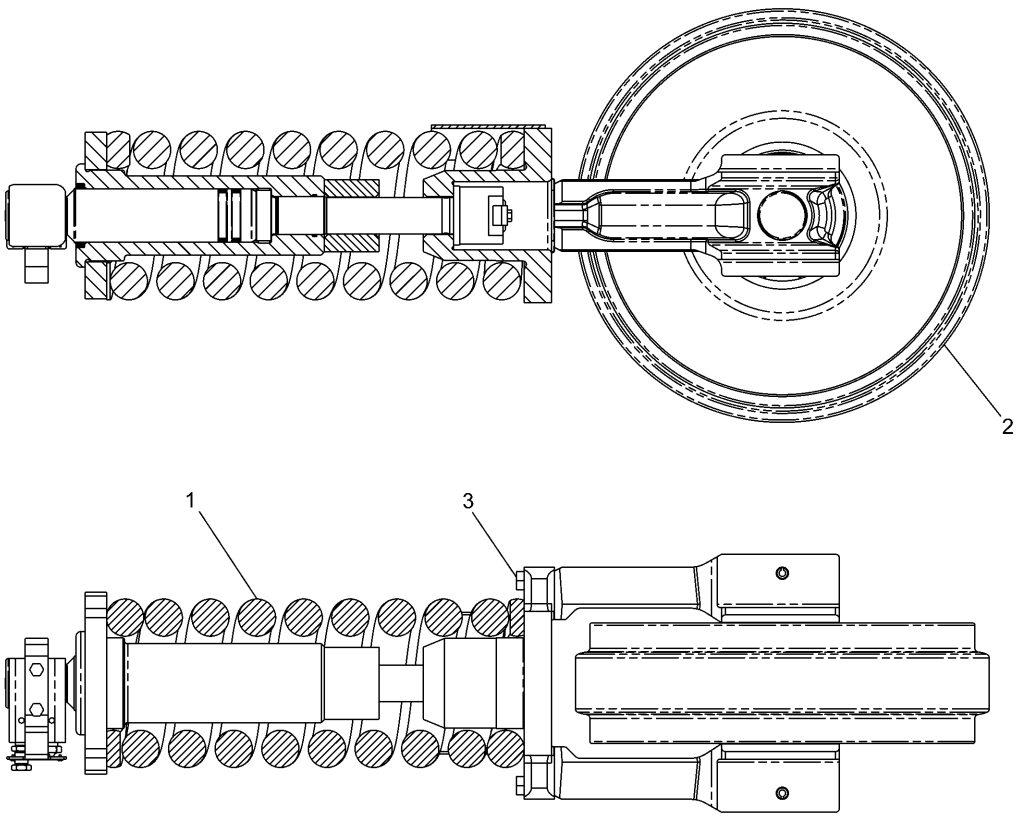


| NOTE | No. | PART No. | QTY | PART NAME | NOTE | No. | PART No. | QTY | PART NAME |
|---|---|---|---|---|---|---|---|---|---|
| Y | 1 | 239-4388 | 1 | RECOIL GP | | | | | |
| Y | 2 | 248-7143 | 1 | IDLER GP | | | | | |
| | 3 | 8T-4140 | 4 | BOLT (L=60mm) | | | | | |

Y—SEE SEPARATE ILLUSTRATION

H89575E 02

## 239-4386 IDLER GP-FRONT

Left Hand

Part of 239-4341-Page293
248-7143-Page296,239-4388-Page297

# FRAME AND BODY

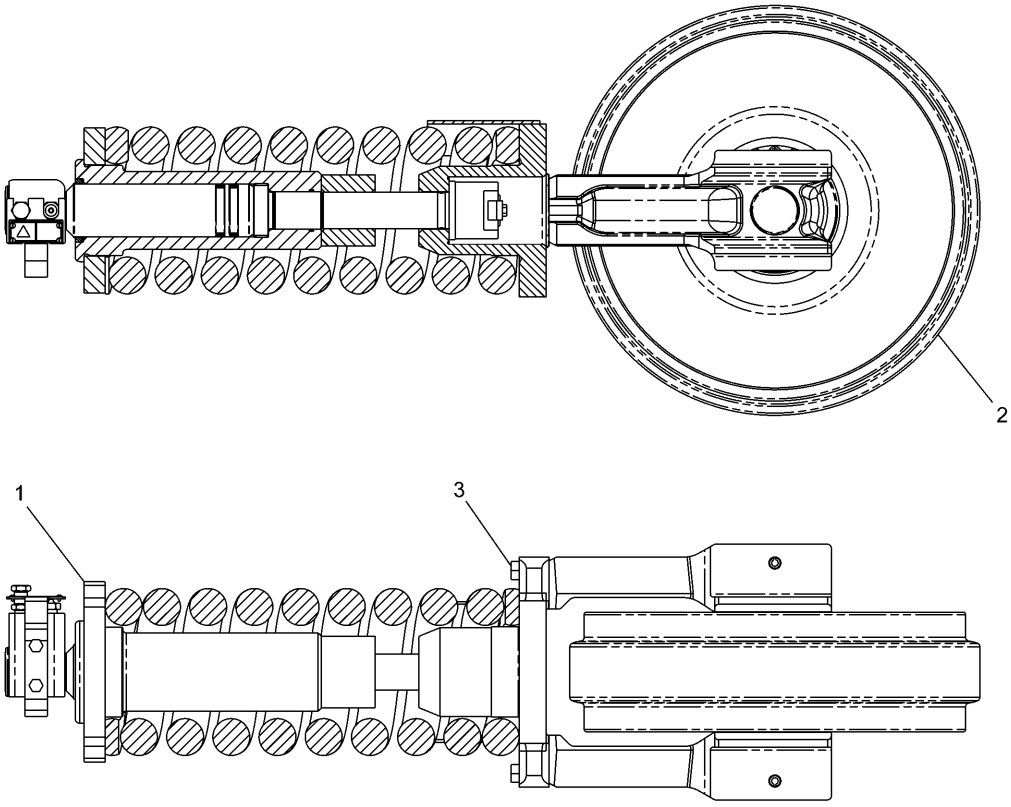


| NOTE | No. | PART No. | QTY | PART NAME | NOTE | No. | PART No. | QTY | PART NAME |
|---|---|---|---|---|---|---|---|---|---|
| Y | 1 | 239-4387 | 1 | RECOIL GP | | | | | |
| Y | 2 | 248-7143 | 1 | IDLER GP | | | | | |
| | 3 | 8T-4140 | 4 | BOLT (L=60mm) | | | | | |

Y—SEE SEPARATE ILLUSTRATION

H89558E 02

## 239-4385 IDLER GP-FRONT

Right Hand

Part of 239-4341-Page293
248-7143-Page296,239-4387-Page298

# FRAME AND BODY

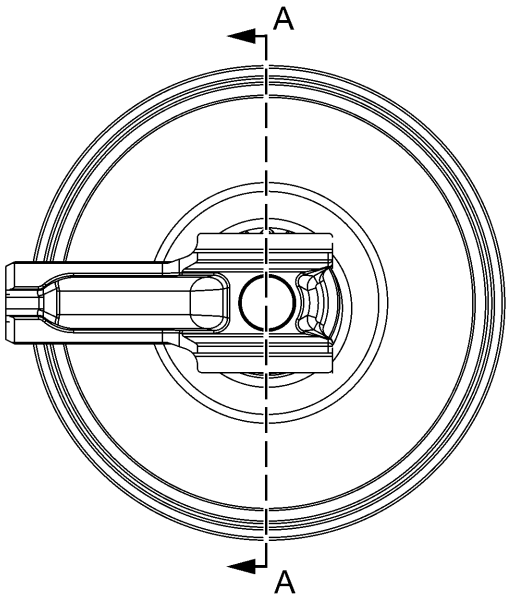


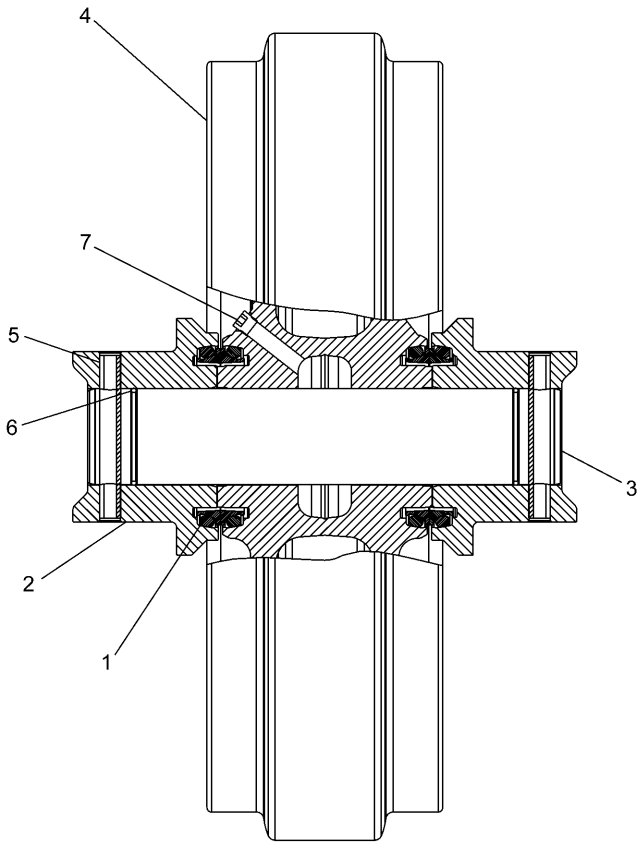


A – A

| NOTE | No. | PART No. | QTY | PART NAME | NOTE | No. | PART No. | QTY | PART NAME |
|---|---|---|---|---|---|---|---|---|---|
| | 1 | 9W-2201 | 2 | SEAL GP | | | | | |
| | 2 | 239-4362 | 2 | BEARING | | | | | |
| | 3 | 246-5425 | 1 | SHAFT | | | | | |
| | 4 | 262-4781 | 1 | IDLER AS | | | | | |
| | | 8E-4359 | 2 | BEARING | | | | | |
| | 5 | 9W-9455 | 2 | PIN | | | | | |
| | 6 | 6V-7658 | 2 | SEAL-O-RING (ID=59.40mm) | | | | | |
| | 7 | 7H-3171 | 1 | PLUG | | | | | |

H89550E 00

**248-7143 IDLER GP-FRONT**
Part of 239-4386-Page294,239-4385-Page295

# FRAME AND BODY

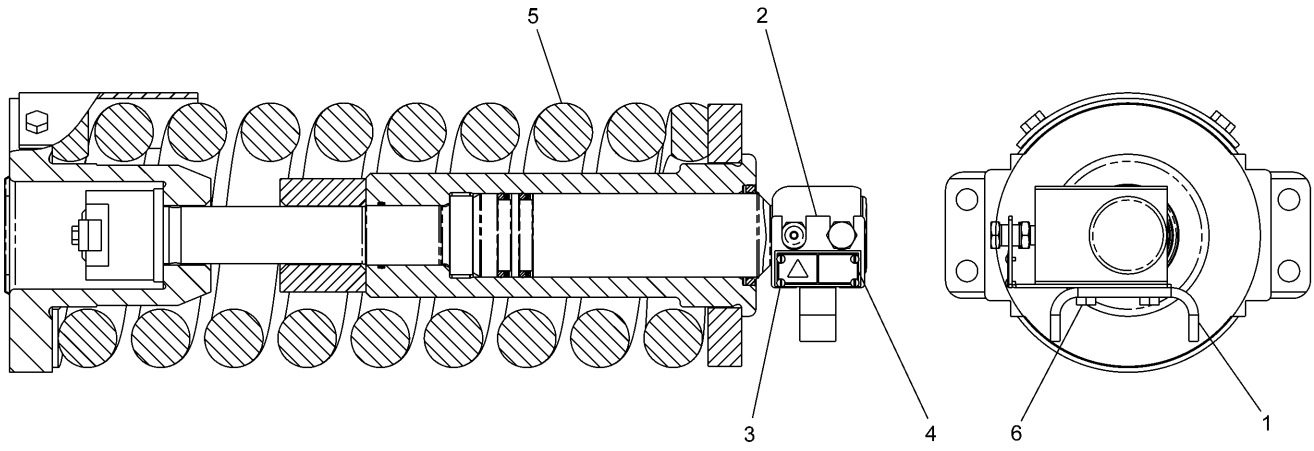


| NOTE | No. | PART No. | QTY | PART NAME | NOTE | No. | PART No. | QTY | PART NAME |
|---|---|---|---|---|---|---|---|---|---|
| | 1 | 7Y-1746 | 1 | PLATE | | | | | |
| | 2 | 168-6761 | 1 | PLATE AS | | | | | |
| | 3 | 4B-4158 | 4 | SCREW | | | | | |
| | 4 | 253-1346 | 1 | PLATE (WARNING) | | | | | |
| Y | 5 | 239-4389 | 1 | RECOIL GP | | | | | |
| | 6 | 8T-4137 | 2 | BOLT (L=20mm) | | | | | |

Y—SEE SEPARATE ILLUSTRATION

H89580E 01

## 239-4388 TRACK ADJUSTER & RECOIL GP

Left Hand

Part of 239-4386-Page294
239-4389-Page299

# FRAME AND BODY

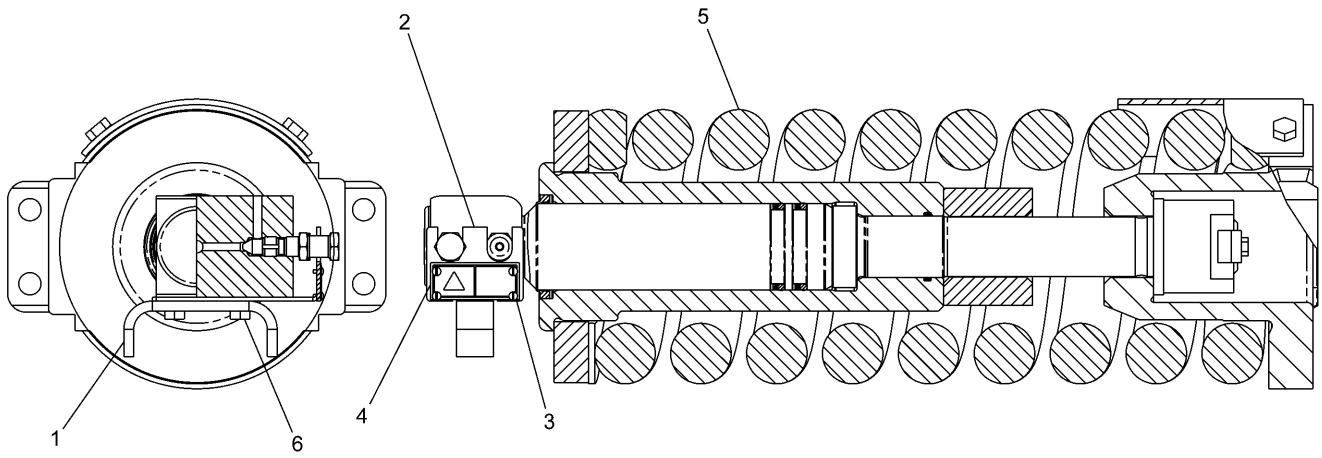


| NOTE | No. | PART No. | QTY | PART NAME | NOTE | No. | PART No. | QTY | PART NAME |
|---|---|---|---|---|---|---|---|---|---|
| | 1 | 7Y-1746 | 1 | PLATE | | | | | |
| | 2 | 168-6761 | 1 | PLATE AS | | | | | |
| | 3 | 4B-4158 | 4 | SCREW | | | | | |
| | 4 | 253-1346 | 1 | PLATE (WARNING) | | | | | |
| Y | 5 | 239-4389 | 1 | RECOIL GP | | | | | |
| | 6 | 8T-4137 | 2 | BOLT (L=20mm) | | | | | |

Y—SEE SEPARATE ILLUSTRATION

H89562E 01

## 239-4387 TRACK ADJUSTER & RECOIL GP

Right Hand

Part of 239-4385-Page295
239-4389-Page299

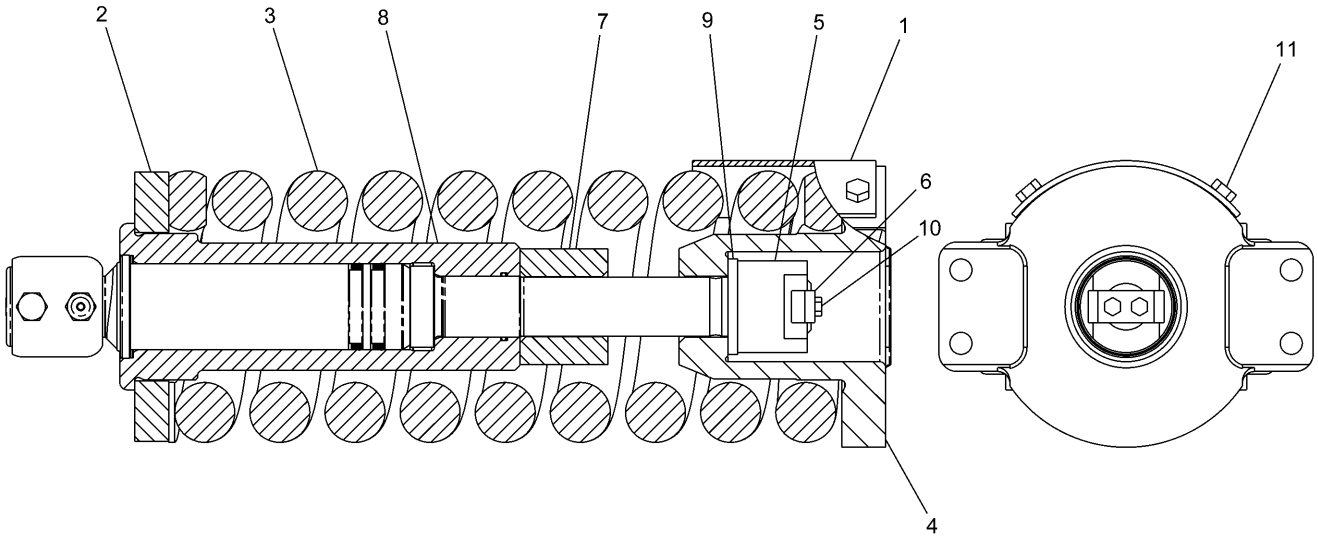


| NOTE | No. | PART No. | QTY | PART NAME | NOTE | No. | PART No. | QTY | PART NAME |
|---|---|---|---|---|---|---|---|---|---|
| | 1 | 7Y-1781 | 1 | COVER | | | | | |
| | 2 | 145-3035 | 1 | PLATE | | | | | |
| | 3 | 239-4350 | 1 | SPRING | | | | | |
| | 4 | 239-4378 | 1 | SUPPORT | | | | | |
| | 5 | 239-4382 | 1 | NUT | | | | | |
| | 6 | 239-4383 | 1 | STRIP | | | | | |
| | 7 | 239-4384 | 1 | SPACER | | | | | |
| Y | 8 | 239-4390 | 1 | RECOIL GP | | | | | |
| | 9 | 239-4393 | 1 | WASHER | | | | | |
| | 10 | 7X-2536 | 2 | BOLT (L=14mm) | | | | | |
| | 11 | 8T-4179 | 2 | BOLT (L=20mm) | | | | | |

Y—SEE SEPARATE ILLUSTRATION

H94763E 02

## 239-4389 TRACK ADJUSTER & RECOIL GP

Part of 239-4388-Page297,239-4387-Page298
239-4390-Page300

# FRAME AND BODY

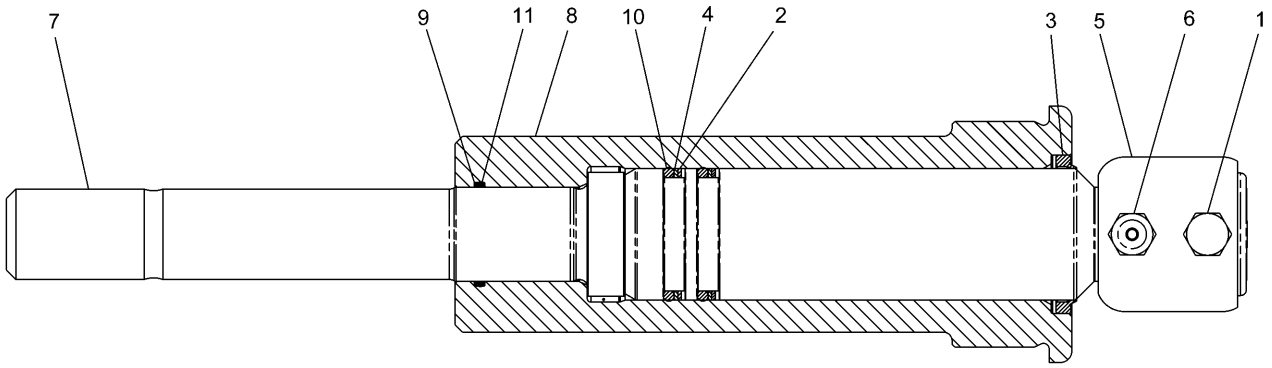


| NOTE | No. | PART No. | QTY | PART NAME | NOTE | No. | PART No. | QTY | PART NAME |
|---|---|---|---|---|---|---|---|---|---|
| | 1 | 2S-5926 | 1 | VALVE (RELIEF) | | | | | |
| | 2 | 7Y-0682 | 2 | RING | | | | | |
| | 3 | 093-1436 | 1 | SEAL | | | | | |
| | 4 | 093-1512 | 2 | RING | | | | | |
| | 5 | 145-3031 | 1 | PISTON AS | | | | | |
| | 6 | 095-2927 | 1 | VALVE (FILL) | | | | | |
| | 7 | 239-4391 | 1 | ROD | | | | | |
| | 8 | 239-4392 | 1 | CYLINDER | | | | | |
| | 9 | 239-4394 | 1 | RING | | | | | |
| | 10 | 248-7174 | 2 | SEAL (ID=59.20mm) | | | | | |
| | 11 | 095-1704 | 1 | SEAL-O-RING (ID=49.40mm) | | | | | |

H98037E 02

## 239-4390 TRACK ADJUSTER & RECOIL GP

Part of 239-4389-Page299

# FRAME AND BODY

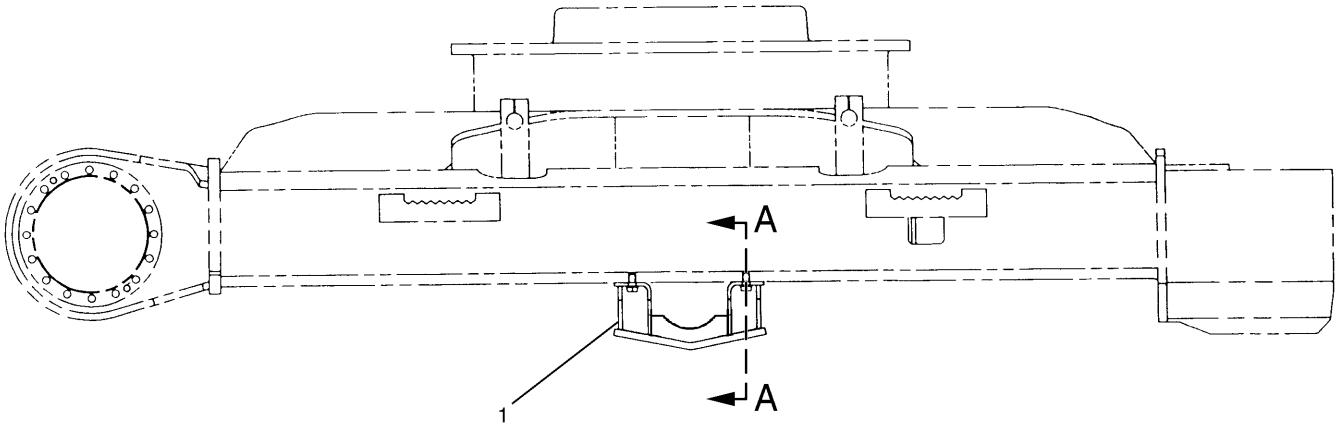


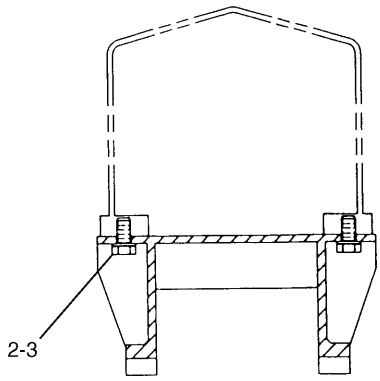


A – A

| NOTE | No. | PART No. | QTY | PART NAME | NOTE | No. | PART No. | QTY | PART NAME |
|---|---|---|---|---|---|---|---|---|---|
| | 1 | 240-2988 | 1 | GUARD AS | | | | | |
| | 2 | 8T-4123 | 4 | WASHER | | | | | |
| | 3 | 8T-5460 | 4 | BOLT (L=40mm) | | | | | |

H88204E 05

**087-5908 GUARD GP-TRACK GUIDE**
2 Required

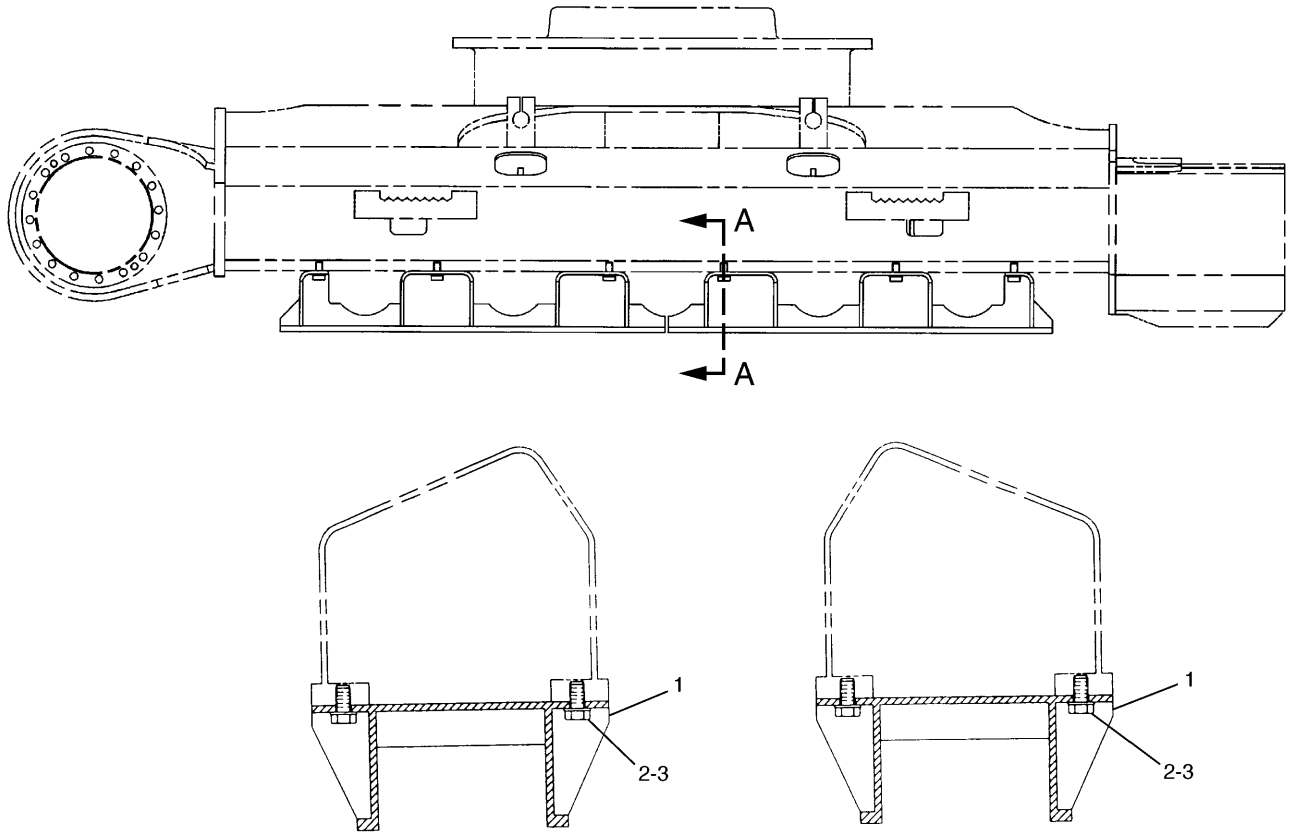


A – A

| NOTE | No. | PART No. | QTY | PART NAME | NOTE | No. | PART No. | QTY | PART NAME |
|---|---|---|---|---|---|---|---|---|---|
| | 1 | 219-8468 | 4 | GUARD AS | | | | | |
| | 2 | 8T-5460 | 24 | BOLT (L=40mm) | | | | | |
| | 3 | 8T-4123 | 24 | WASHER | | | | | |

H83525E 02

## 120-7165 GUARD GP-TRACK GUIDE

Full Length
S/N BWZ 1-Up
An Attachment

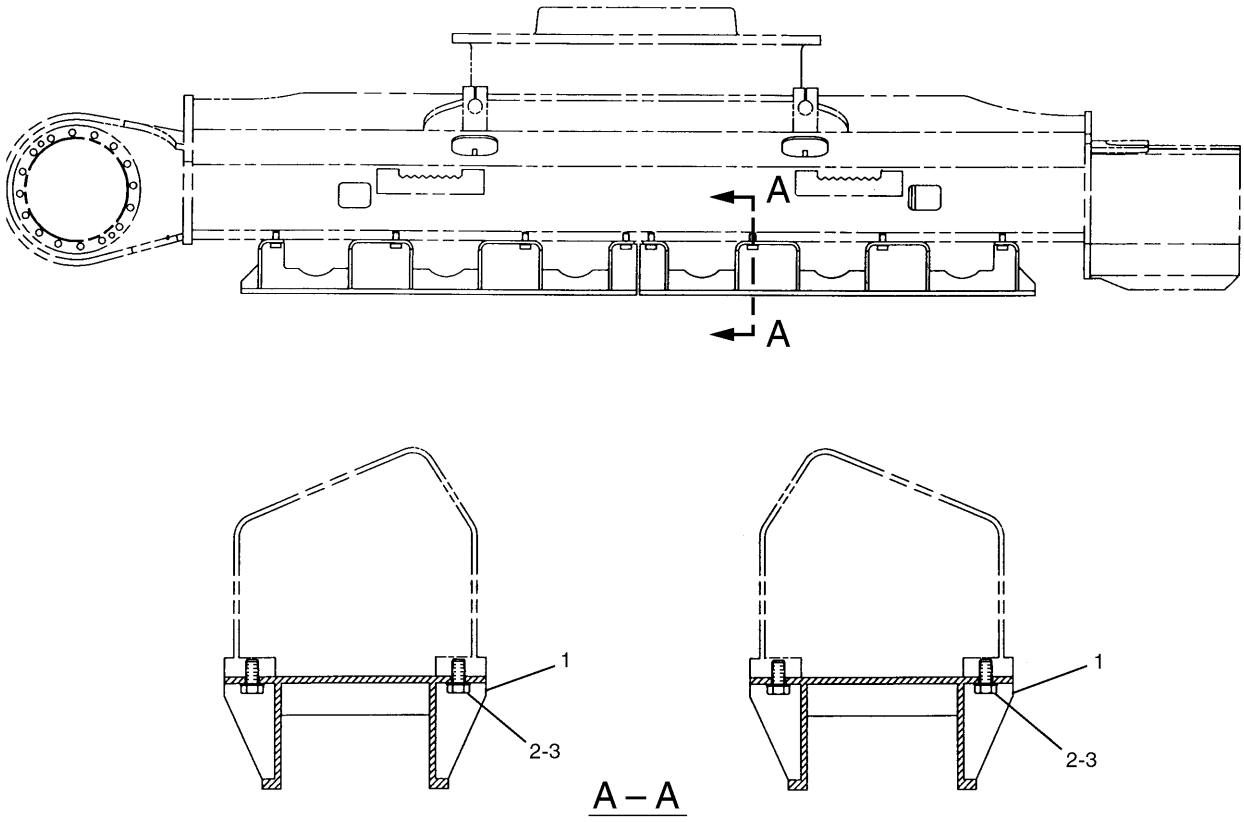


| NOTE | No. | PART No. | QTY | PART NAME | NOTE | No. | PART No. | QTY | PART NAME |
|---|---|---|---|---|---|---|---|---|---|
| | 1 | 219-8469 | 4 | GUARD AS | | | | | |
| | 2 | 8T-5460 | 32 | BOLT (L=40mm) | | | | | |
| | 3 | 8T-4123 | 32 | WASHER | | | | | |

H82207E 02

## 120-7168 GUARD GP-TRACK GUIDE

Full Length
S/N DFB 1-Up
An Attachment

# FRAME AND BODY

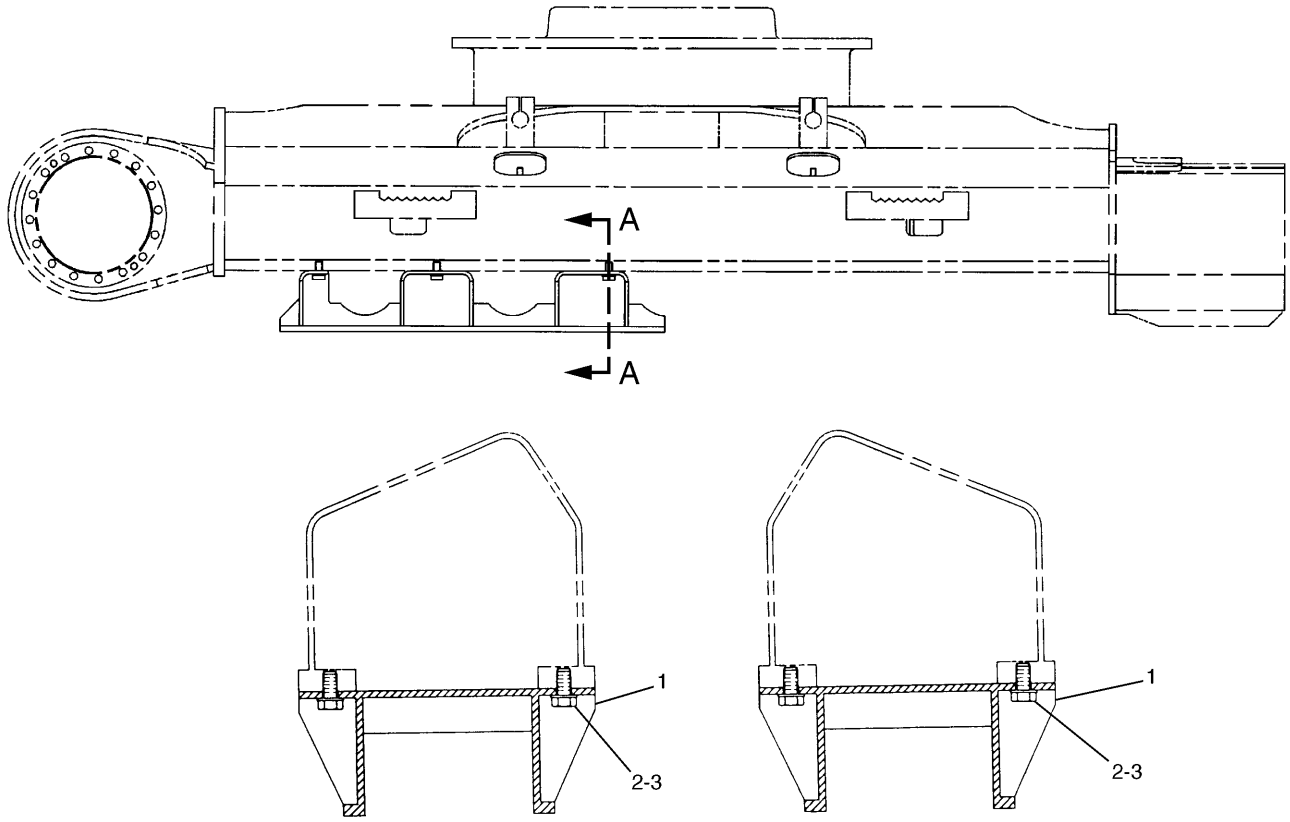


A – A

| NOTE | No. | PART No. | QTY | PART NAME | NOTE | No. | PART No. | QTY | PART NAME |
|---|---|---|---|---|---|---|---|---|---|
| | 1 | 219-8468 | 2 | GUARD AS | | | | | |
| | 2 | 8T-5460 | 12 | BOLT (L=40mm) | | | | | |
| | 3 | 8T-4123 | 12 | WASHER | | | | | |

H83524E 02

## 120-7164 GUARD GP-TRACK GUIDE

Sprocket
S/N BWZ 1-Up
An Attachment

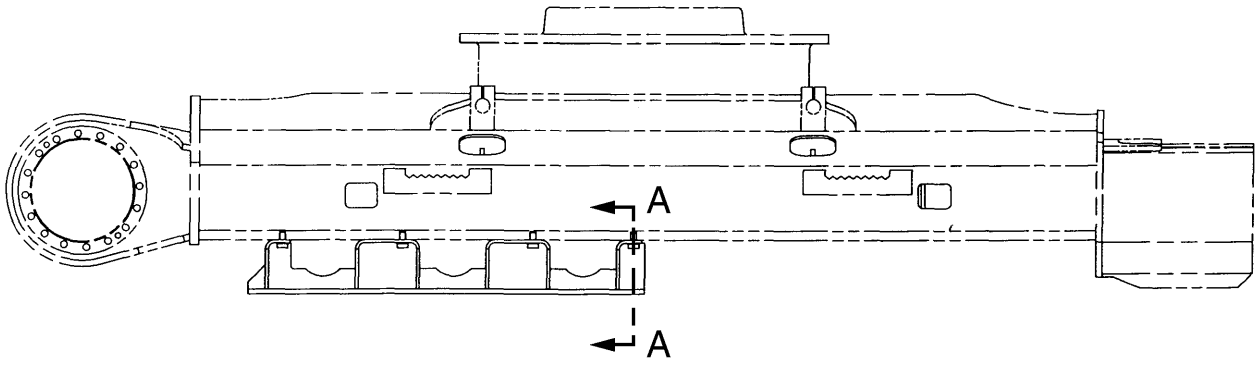


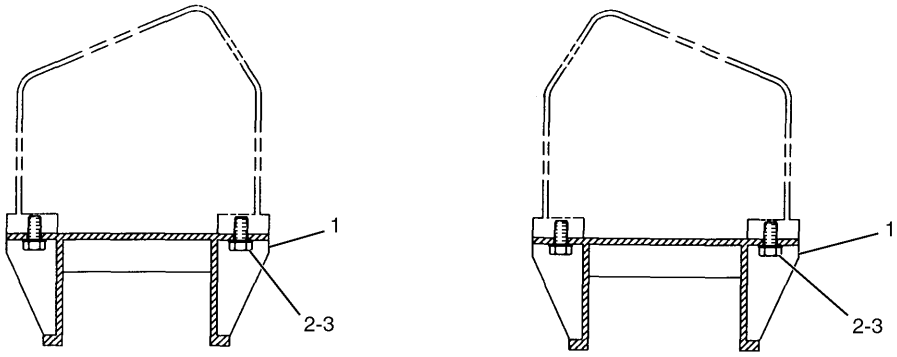


A – A

| NOTE | No. | PART No. | QTY | PART NAME | NOTE | No. | PART No. | QTY | PART NAME |
|---|---|---|---|---|---|---|---|---|---|
| | 1 | 219-8469 | 2 | GUARD AS | | | | | |
| | 2 | 8T-5460 | 16 | BOLT (L=40mm) | | | | | |
| | 3 | 8T-4123 | 16 | WASHER | | | | | |

H82206E 02

## 120-7167 GUARD GP-TRACK GUIDE

Sprocket
S/N DFB 1-Up
An Attachment

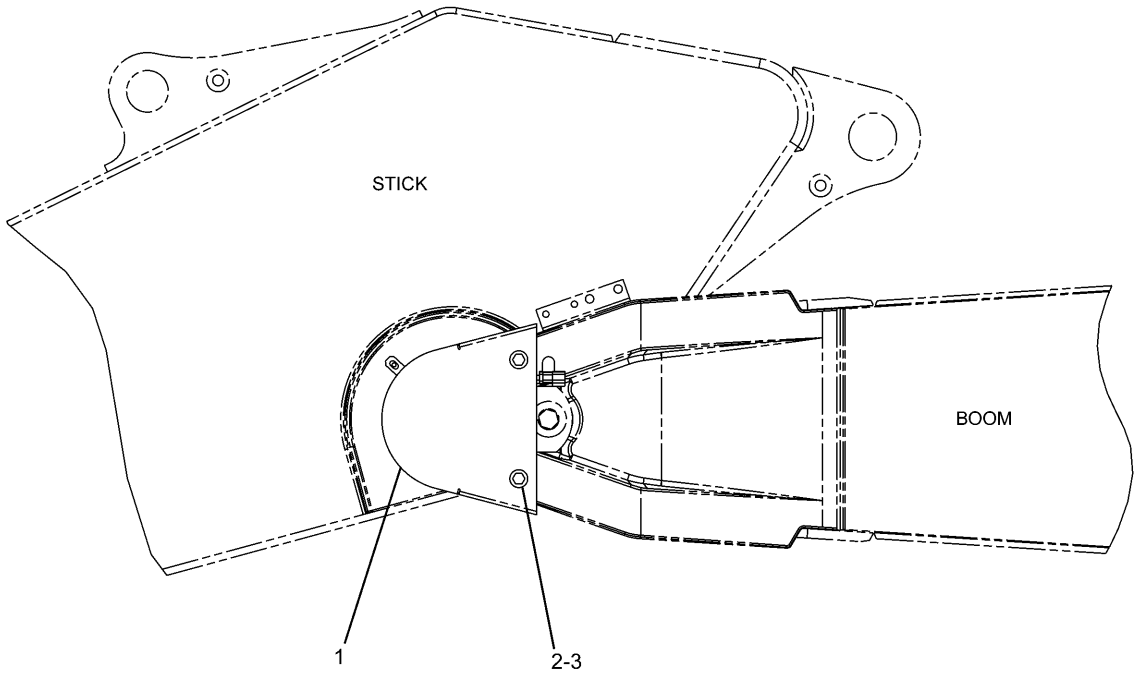


| NOTE | No. | PART No. | QTY | PART NAME | NOTE | No. | PART No. | QTY | PART NAME |
|---|---|---|---|---|---|---|---|---|---|
| | 1 | 161-9605 | 1 | COVER AS | | | | | |
| | 2 | 5P-1076 | 2 | WASHER | | | | | |
| | 3 | 8T-4179 | 2 | BOLT (L=20mm) | | | | | |

H89867E 03

## 161-9604 GUARD GP-FRONT

S/N BWZ 1-Up, DFB 1-Up
Part of 279-2732-Page11,279-2733-Page12
An Attachment

# FRAME AND BODY

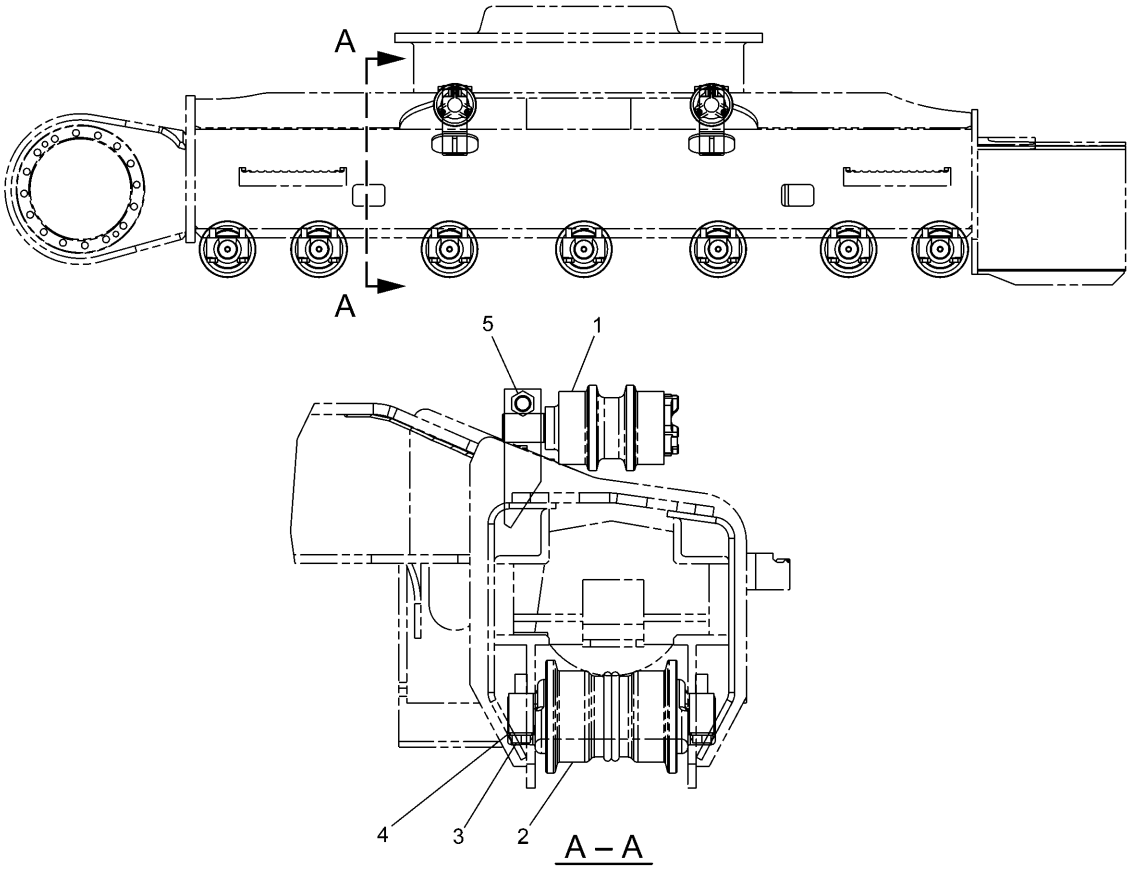


| NOTE | No. | PART No. | QTY | PART NAME | NOTE | No. | PART No. | QTY | PART NAME |
|---|---|---|---|---|---|---|---|---|---|
| Y | 1 | 8E-5600 | 4 | ROLLER GP | | | | | |
| Y | 2 | 163-4143 | 14 | ROLLER GP | | | | | |
| | 3 | 7X-2565 | 56 | BOLT (L=100mm) | | | | | |
| | 4 | 8T-4123 | 56 | WASHER | | | | | |
| | 5 | 8T-5878 | 4 | BOLT (L=80mm) | | | | | |

Y—SEE SEPARATE ILLUSTRATION

H89590E 08

## 7Y-1607 ROLLER AR-TRACK & CARRIER

S/N BWZ 1-Up

8E-5600-Page311,163-4143-Page312

# FRAME AND BODY

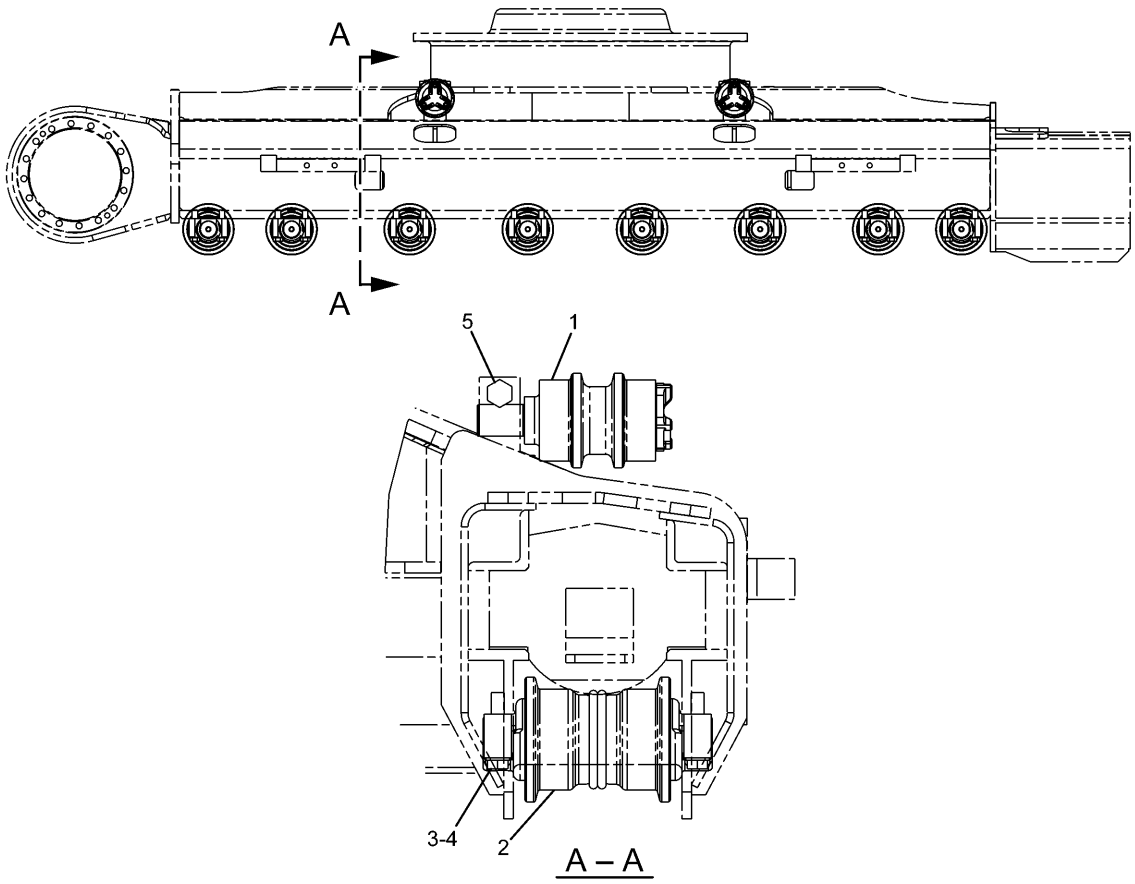


| NOTE | No. | PART No. | QTY | PART NAME | NOTE | No. | PART No. | QTY | PART NAME |
|---|---|---|---|---|---|---|---|---|---|
| Y | 1 | 8E-5600 | 4 | ROLLER GP | | | | | |
| Y | 2 | 163-4143 | 16 | ROLLER GP | | | | | |
| | 3 | 7X-2565 | 64 | BOLT (L=100mm) | | | | | |
| | 4 | 8T-4123 | 64 | WASHER | | | | | |
| | 5 | 8T-5878 | 4 | BOLT (L=80mm) | | | | | |

Y—SEE SEPARATE ILLUSTRATION

H89593E 08

## 7Y-1608 ROLLER AR-TRACK & CARRIER

S/N DFB 1-Up

8E-5600-Page311,163-4143-Page312

# FRAME AND BODY

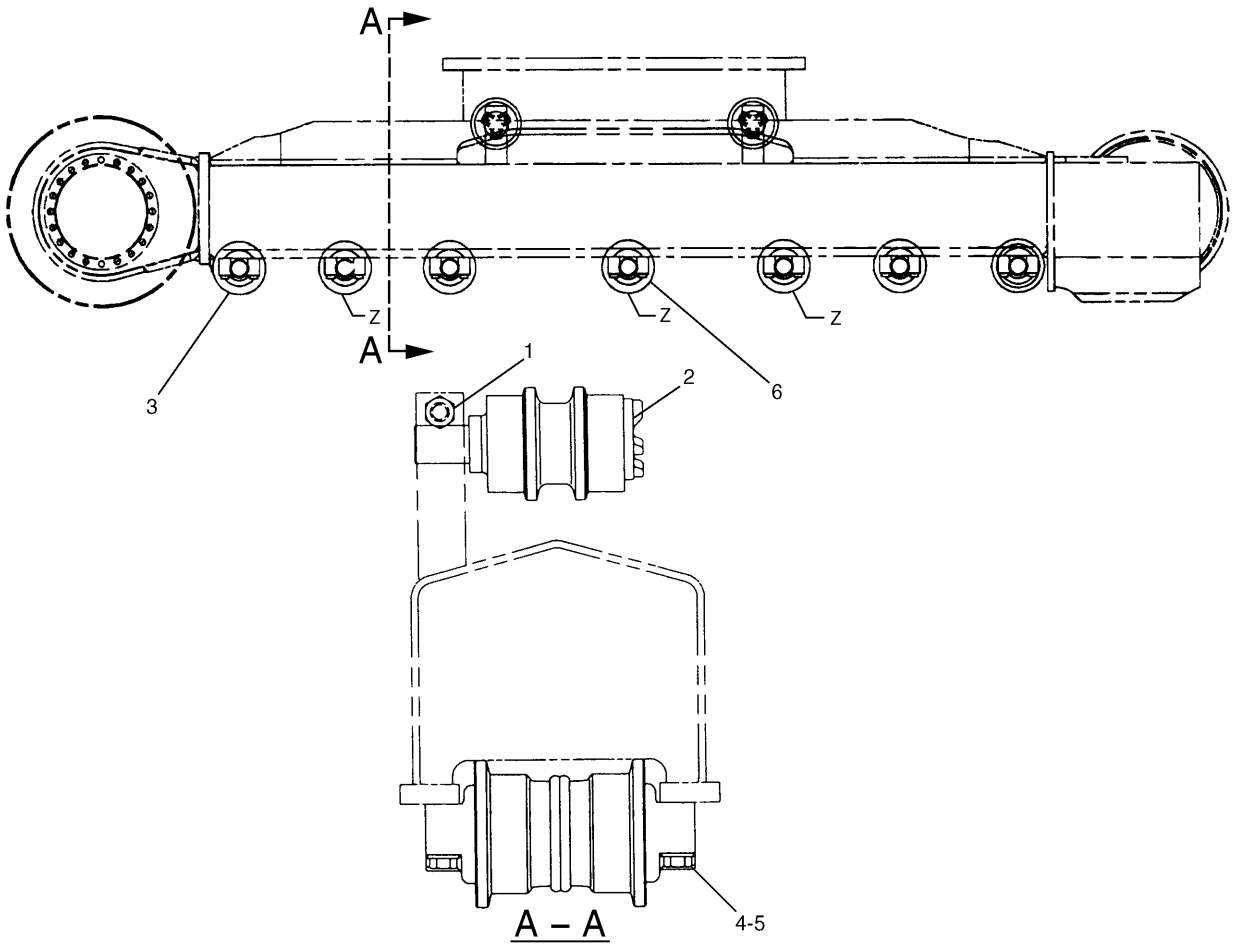


| NOTE | No. | PART No. | QTY | PART NAME | NOTE | No. | PART No. | QTY | PART NAME |
|---|---|---|---|---|---|---|---|---|---|
| | 1 | 8T-5878 | 4 | BOLT (L=80mm) | | | | | |
| Y | 2 | 8E-5600 | 4 | ROLLER GP | | | | | |
| Y | 3 | 163-4143 | 8 | ROLLER GP | | | | | |
| | 4 | 7X-2565 | 56 | BOLT (L=100mm) | | | | | |
| | 5 | 8T-4123 | 56 | WASHER | | | | | |
| Y | 6 | 163-4144 | 6 | ROLLER GP | | | | | |

Y—SEE SEPARATE ILLUSTRATION

H91784E 04

## 5Q-3226 ROLLER AR-TRACK & CARRIER

S/N BWZ 1-Up, SNS 1-Up
8E-5600-Page311,163-4143-Page312,163-4144-Page313
An Attachment

# FRAME AND BODY

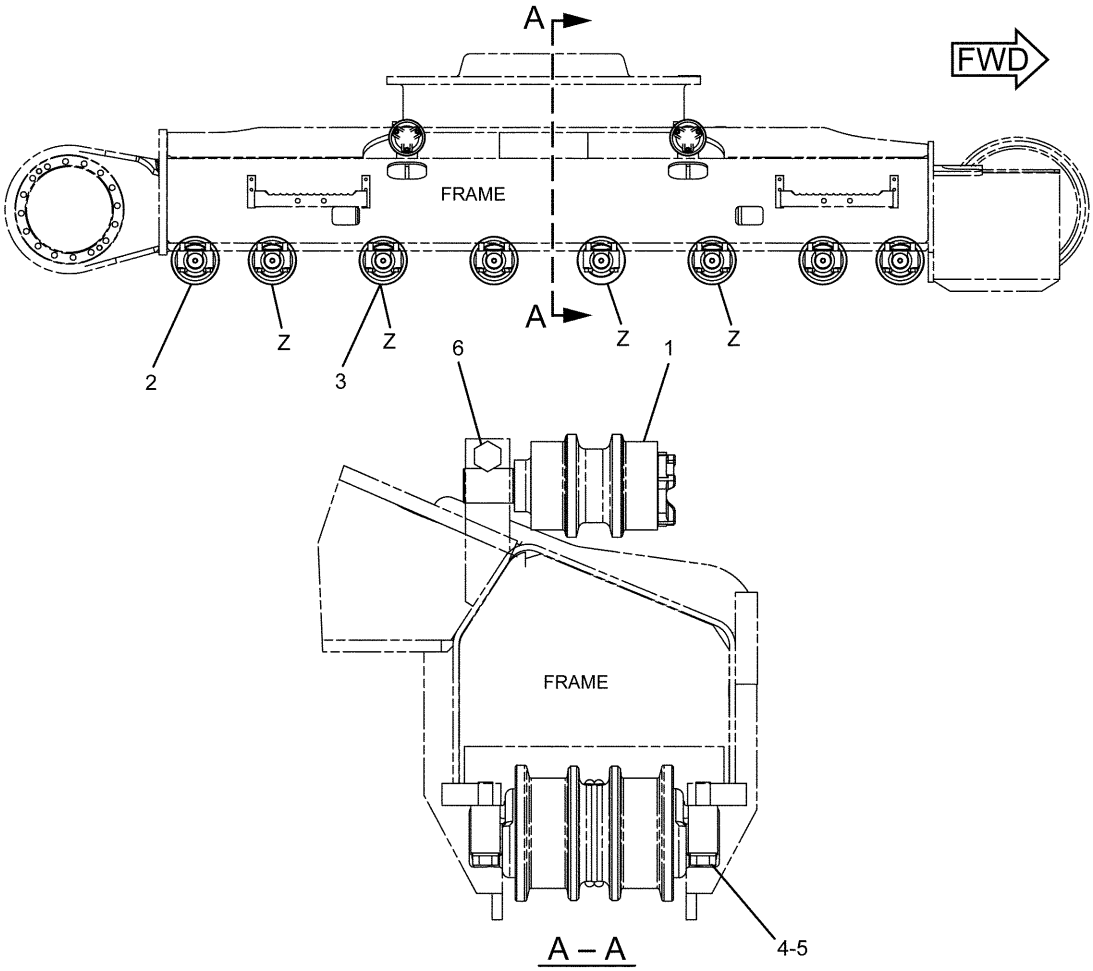


| NOTE | No. | PART No. | QTY | PART NAME | NOTE | No. | PART No. | QTY | PART NAME |
|---|---|---|---|---|---|---|---|---|---|
| Y | 1 | 8E-5600 | 4 | ROLLER GP | | | | | |
| Y | 2 | 163-4143 | 8 | ROLLER GP | | | | | |
| Y | 3 | 163-4144 | 8 | ROLLER GP | | | | | |
| | 4 | 7X-2565 | 64 | BOLT (L=100mm) | | | | | |
| | 5 | 8T-4123 | 64 | WASHER | | | | | |
| | 6 | 8T-5878 | 4 | BOLT (L=80mm) | | | | | |

Y—SEE SEPARATE ILLUSTRATION

H93543E 04

## 5Q-3227 ROLLER AR-TRACK & CARRIER

S/N DFB 1-Up, WJN 1-Up
8E-5600-Page311,163-4143-Page312,163-4144-Page313
An Attachment

# FRAME AND BODY

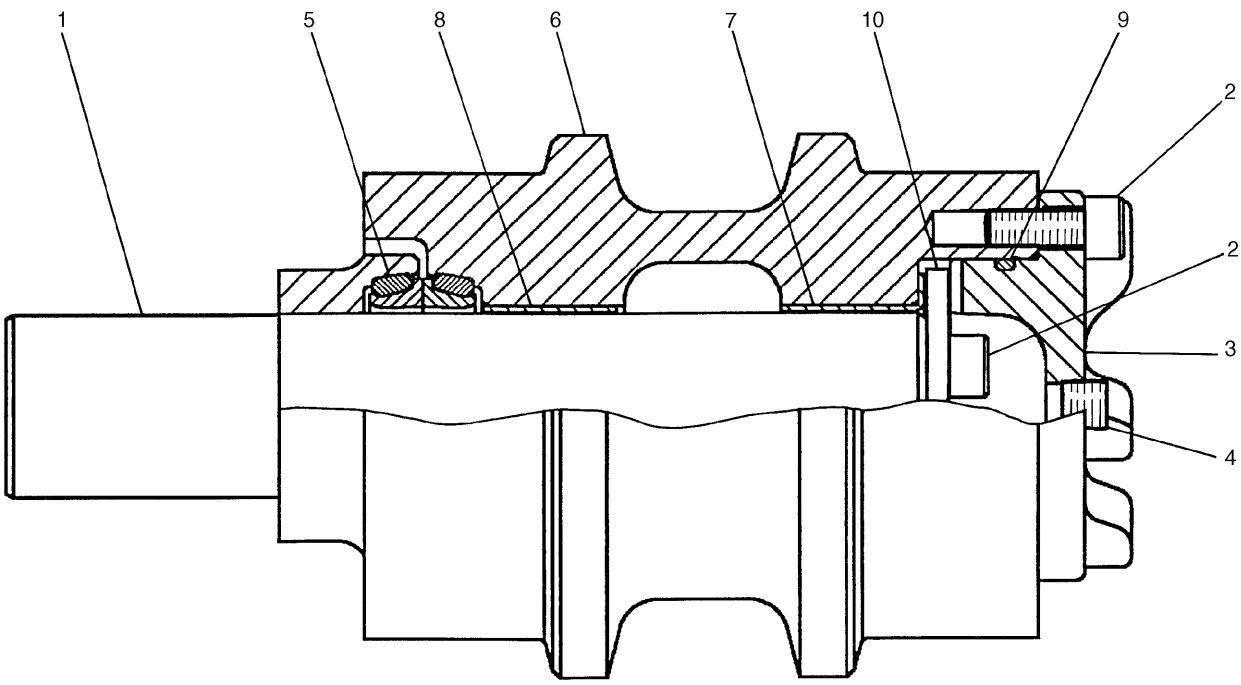


| NOTE | No. | PART No. | QTY | PART NAME | NOTE | No. | PART No. | QTY | PART NAME |
|---|---|---|---|---|---|---|---|---|---|
| | 1 | 8E-5601 | 1 | SHAFT AS | | | | | |
| | 2 | 8T-1159 | 5 | BOLT (L=25mm) | | | | | |
| | 3 | 8E-5605 | 1 | COVER | | | | | |
| | 4 | 7H-3171 | 1 | PLUG | | | | | |
| | 5 | 8E-5608 | 1 | SEAL GP | | | | | |
| | 6 | 8E-5602 | 1 | ROLLER AS | | | | | |
| | 7 | 8E-6793 | 1 | BEARING | | | | | |
| | 8 | 8E-6792 | 1 | BEARING | | | | | |
| | 9 | 6V-7661 | 1 | SEAL-O-RING (ID=69.40mm) | | | | | |
| | 10 | 8E-5606 | 1 | RETAINER | | | | | |

H67131E 03

## 8E-5600 ROLLER GP-TRACK CARRIER

Part of 7Y-1607-Page307,7Y-1608-Page308,5Q-3226-Page309,5Q-3227-Page310

# FRAME AND BODY

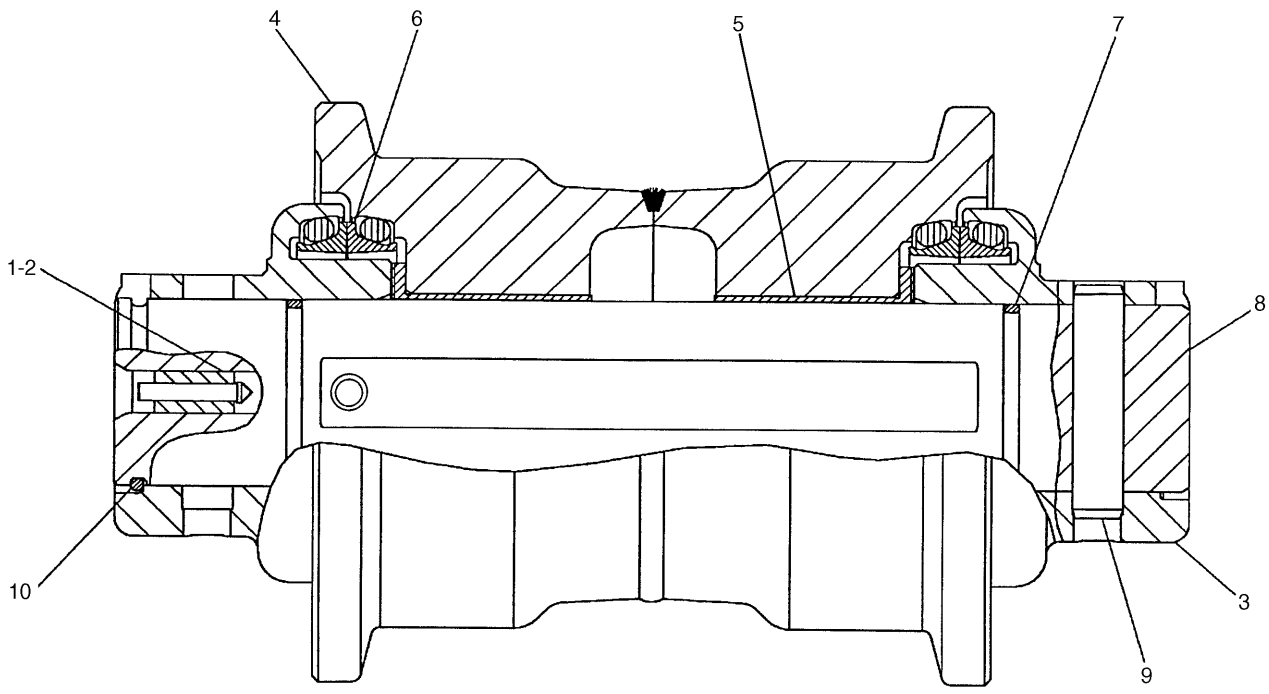


| NOTE | No. | PART No. | QTY | PART NAME | NOTE | No. | PART No. | QTY | PART NAME |
|---|---|---|---|---|---|---|---|---|---|
| | 1 | 5G-2247 | 1 | STOPPER | | | | | |
| | 2 | 6Y-0473 | 1 | PLUG | | | | | |
| | 3 | 8E-5037 | 2 | COLLAR | | | | | |
| | 4 | 8E-5032 | 1 | ROLLER AS | | | | | |
| | 5 | 8E-5599 | 2 | BEARING | | | | | |
| | 6 | 9W-2142 | 2 | SEAL GP | | | | | |
| | 7 | 7F-8268 | 2 | SEAL-O-RING (ID=53.57mm) | | | | | |
| | 8 | 8E-5035 | 1 | SHAFT | | | | | |
| | 9 | 3E-3217 | 1 | DOWEL | | | | | |
| | 10 | 8E-5031 | 2 | RING | | | | | |

H67172E 00

## 163-4143 ROLLER GP-TRACK-SINGLE FLANGE

Part of 7Y-1607-Page307,7Y-1608-Page308,5Q-3226-Page309,5Q-3227-Page310

# FRAME AND BODY

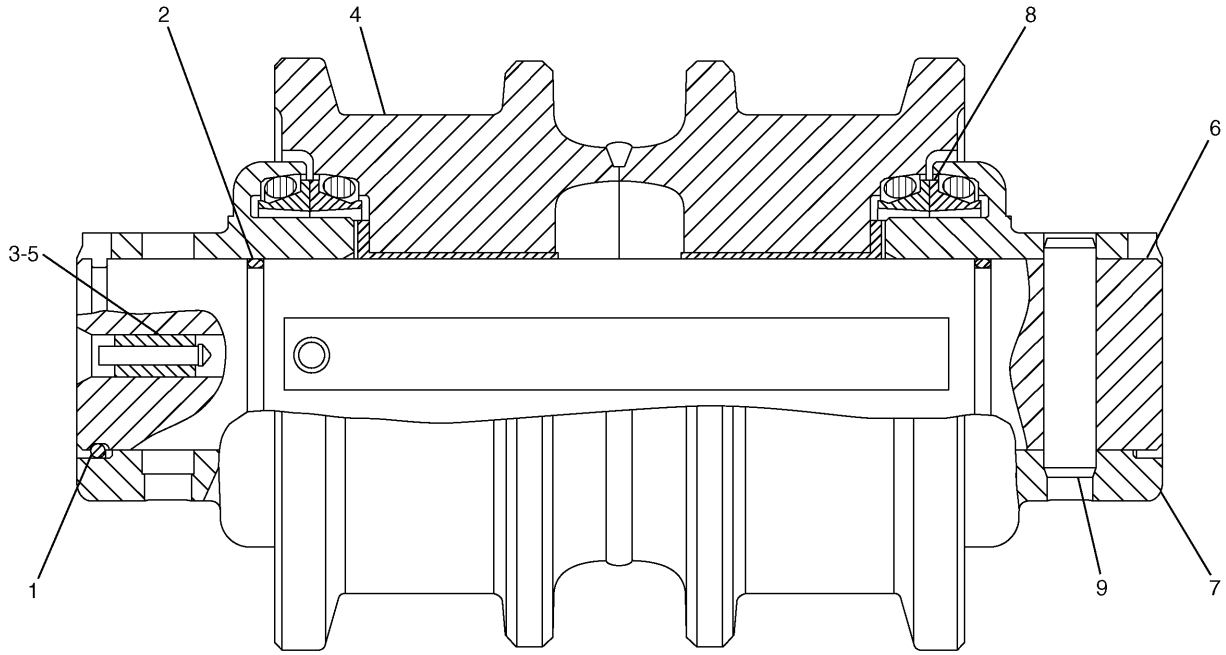


| NOTE | No. | PART No. | QTY | PART NAME | NOTE | No. | PART No. | QTY | PART NAME |
|---|---|---|---|---|---|---|---|---|---|
| | 1 | 8E-5031 | 2 | RING | | | | | |
| | 2 | 7F-8268 | 2 | SEAL-O-RING (ID=53.57mm) | | | | | |
| | 3 | 5G-2247 | 1 | STOPPER | | | | | |
| | 4 | 5Q-3215 | 1 | ROLLER AS | | | | | |
| | | 8E-5599 | 2 | BEARING | | | | | |
| | 5 | 6Y-0473 | 1 | PLUG | | | | | |
| | 6 | 8E-5035 | 1 | SHAFT | | | | | |
| | 7 | 8E-5037 | 2 | COLLAR | | | | | |
| | 8 | 9W-2142 | 2 | SEAL GP | | | | | |
| | 9 | 3E-3217 | 1 | DOWEL | | | | | |

H67173E 00

## 163-4144 ROLLER GP-TRACK-DOUBLE FLANGE

Part of 5Q-3226-Page309,5Q-3227-Page310
An Attachment

# FRAME AND BODY

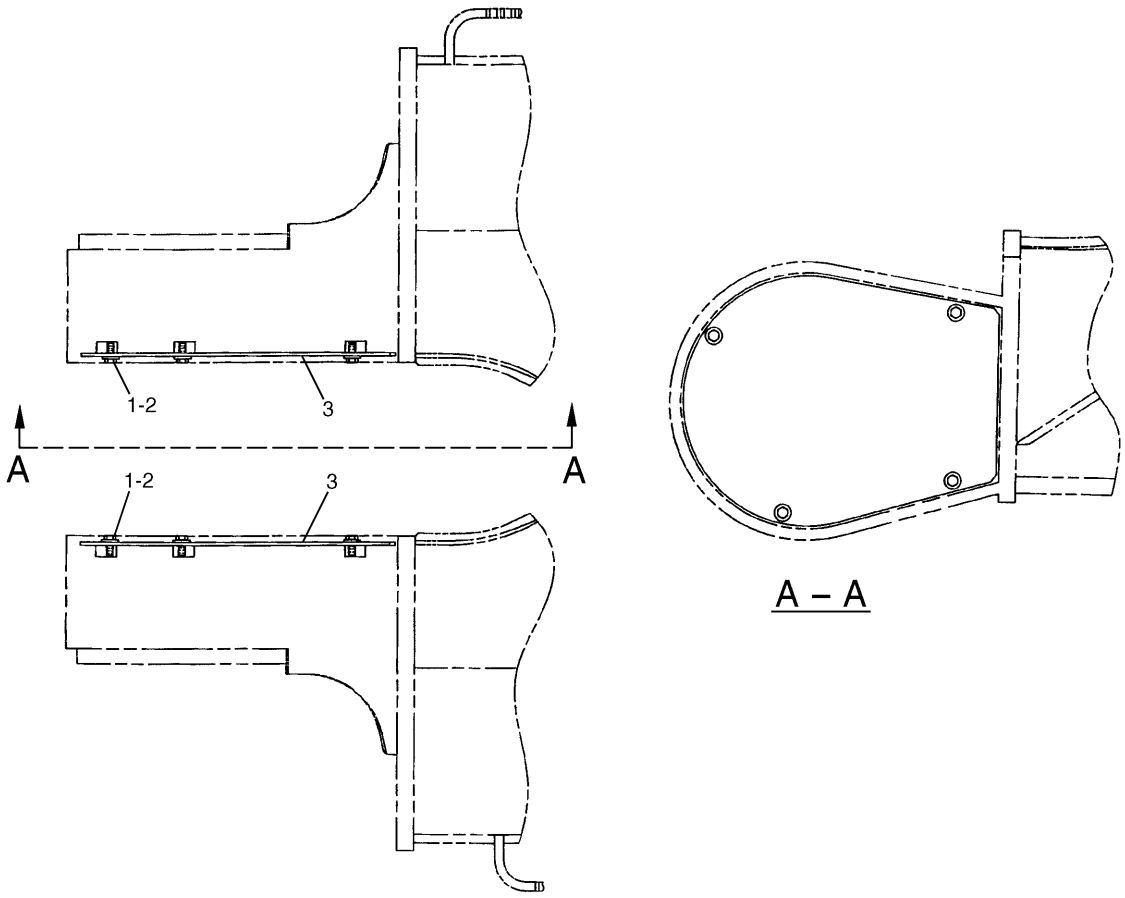


| NOTE | No. | PART No. | QTY | PART NAME | NOTE | No. | PART No. | QTY | PART NAME |
|---|---|---|---|---|---|---|---|---|---|
| | 1 | 8C-8992 | 8 | BOLT (L=30mm) | | | | | |
| | 2 | 5P-1076 | 8 | WASHER | | | | | |
| | 3 | 163-3755 | 2 | COVER | | | | | |

H67171E 01

**163-3754 GUARD GP-TRAVEL MOTOR**
S/N BWZ 1-Up, DFB 1-Up

# FRAME AND BODY

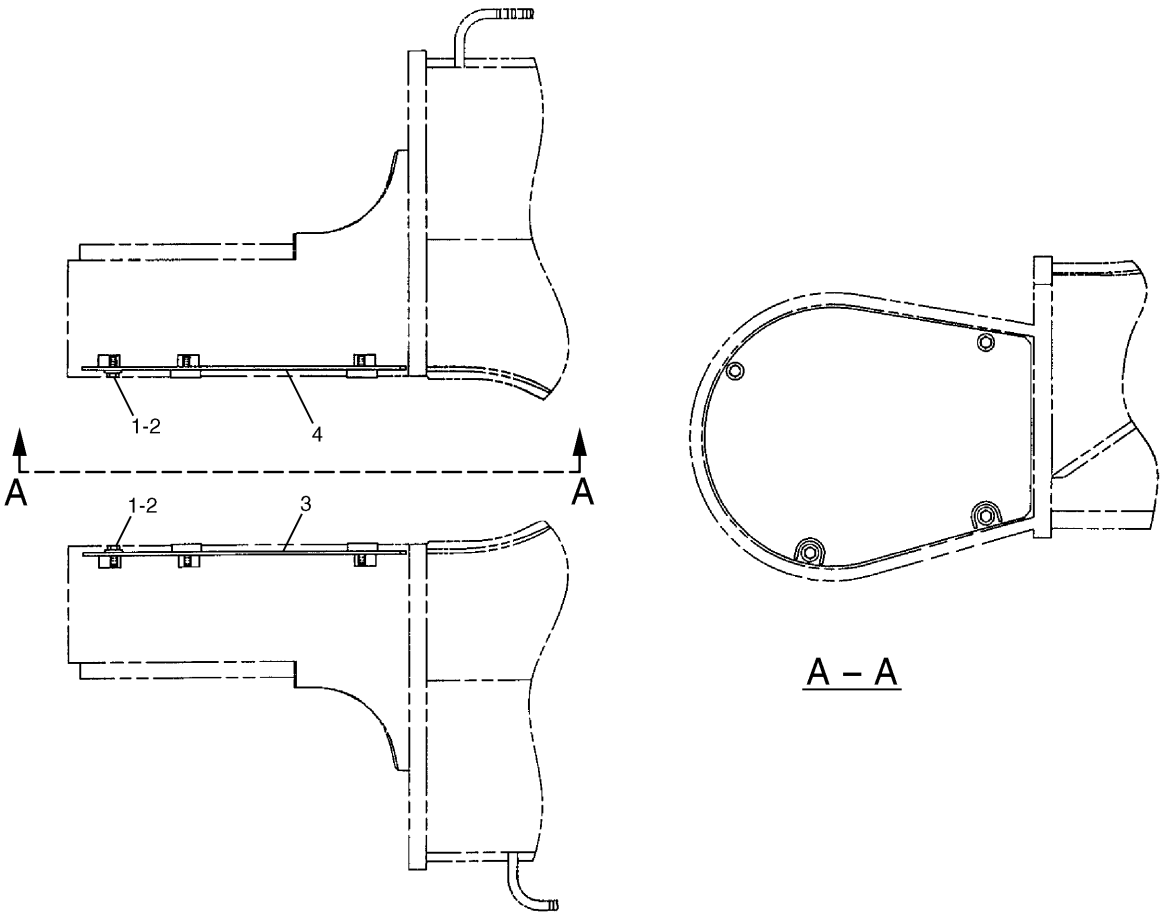


| NOTE | No. | PART No. | QTY | PART NAME | NOTE | No. | PART No. | QTY | PART NAME |
|---|---|---|---|---|---|---|---|---|---|
| | 1 | 5P-1076 | 8 | WASHER | | | | | |
| | 2 | 8C-8992 | 8 | BOLT (L=30mm) | | | | | |
| | 3 | 166-1512 | 1 | COVER AS | | | | | |
| | 4 | 166-1479 | 1 | COVER AS | | | | | |

H67469E 01

**166-1478 GUARD GP-TRAVEL MOTOR**
S/N SNS 1-Up, WJN 1-Up

Consists of :

| | | | Page |
|---|---|---|---|
| 1 | 194-1609 | LINK AS-TRACK | 320 |
| 180 | 9W-3361 | NUT | |
| 180 | 9W-3619 | BOLT | |
| 45 | 126-5062 | SHOE | |

H73083E 00

**194-1920 TRACK GP**
S/N BWZ 1-Up, SNS 1-Up
An Attachment

Consists of :

| | | | Page |
|---|---|---|---|
| 45 | 6I-9454 | SHOE | |
| 180 | 9W-3361 | NUT | |
| 180 | 9W-3619 | BOLT | |
| 1 | 194-1609 | LINK AS-TRACK | 320 |

H94025E 01

**194-1917 TRACK GP**
S/N BWZ 1-Up, SNS 1-Up
An Attachment

# FRAME AND BODY

Consists of :

| | | | Page |
|---|---|---|---|
| 1 | 194-1921 | TRACK GP ..... | 317 |
| 1 | 235-7764 | STEP GP ..... | 292 |

H90076E 00

## 247-7382 TRACK GP

800MM Triple Grouser Shoe-2 Required
S/N BWZ 1-(T08.08), SNS 1-(T08.08)
An Attachment

Consists of :

| | | | Page |
|---|---|---|---|
| 180 | 9W-3361 | NUT | |
| 180 | 9W-3619 | BOLT | |
| 45 | 9W-9351 | SHOE | |
| 1 | 194-1609 | LINK AS-TRACK ..... | 320 |

H94024E 01

## 194-1921 TRACK GP

S/N BWZ 1-(T08.08), SNS 1-(T08.08)
Part of 247-7382-Page317
An Attachment

# FRAME AND BODY

Consists of :

| | | | Page |
|---|---|---|---|
| 1 | 235-7764 | STEP GP | 292 |
| 1 | 332-8915 | TRACK GP | 317.01 |

HA1233E 00

## 314-3797 TRACK GP
790MM Triple Grouser Shoe-2 Required
S/N BWZ (T08.09)-Up, SNS (T08.09)-Up
An Attachment

Consists of :

| | | | Page |
|---|---|---|---|
| 180 | 9W-3361 | NUT | |
| 180 | 9W-3619 | BOLT | |
| 1 | 194-1609 | LINK AS-TRACK | 320 |
| 45 | 332-8903 | SHOE | |

HA1243E 00

## 332-8915 TRACK GP
790MM Triple Grouser Shoe
S/N BWZ (T08.09)-Up, SNS (T08.09)-Up
Part of 314-3797-Page317.01
An Attachment

# MEMORANDA

Consists of :

| | | | Page |
|---|---|---|---|
| 1 | 194-1608 | LINK AS-TRACK | 321 |
| 196 | 9W-3619 | BOLT | |
| 49 | 126-5062 | SHOE | |
| 196 | 9W-3361 | NUT | |

H74584E 00

**194-1910 TRACK GP**
S/N DFB 1-Up, WJN 1-Up
An Attachment

Consists of :

| | | | Page |
|---|---|---|---|
| 49 | 6I-9454 | SHOE | |
| 196 | 9W-3361 | NUT | |
| 196 | 9W-3619 | BOLT | |
| 1 | 194-1608 | LINK AS-TRACK | 321 |

H94026E 04

**194-1911 TRACK GP**
S/N DFB 1-Up, WJN 1-Up
An Attachment

Consists of :

| | | | Page |
|---|---|---|---|
| 1 | 194-1912 | TRACK GP | 319 |
| 1 | 235-7764 | STEP GP | 292 |

H90075E 00

## 247-7346 TRACK GP
800MM Triple Grouser Shoe-2 Required
S/N DFB 1-(T08.08), WJN 1-(T08.08)
An Attachment

Consists of :

| | | | Page |
|---|---|---|---|
| 196 | 9W-3361 | NUT | |
| 196 | 9W-3619 | BOLT | |
| 49 | 9W-9351 | SHOE | |
| 1 | 194-1608 | LINK AS-TRACK | 321 |

H94023E 03

## 194-1912 TRACK GP
S/N DFB 1-(T08.08), WJN 1-(T08.08)
Part of 247-7346-Page319
An Attachment

Consists of :

| | | | Page |
|---|---|---|---|
| 1 | 235-7764 | STEP GP | 292 |
| 1 | 332-8908 | TRACK GP | 319.01 |

HA1235E 00

## 314-3798 TRACK GP

790MM Triple Grouser Shoe-2 Required
S/N DFB (T08.09)-Up, WJN (T08.09)-Up
An Attachment

Consists of :

| | | | Page |
|---|---|---|---|
| 196 | 9W-3361 | NUT | |
| 196 | 9W-3619 | BOLT | |
| 1 | 194-1608 | LINK AS-TRACK | 321 |
| 49 | 332-8903 | SHOE | |

HA1240E 00

## 332-8908 TRACK GP

790MM Triple Grouser Shoe
S/N DFB (T08.09)-Up, WJN (T08.09)-Up
Part of 314-3798-Page319.01
An Attachment

# MEMORANDA

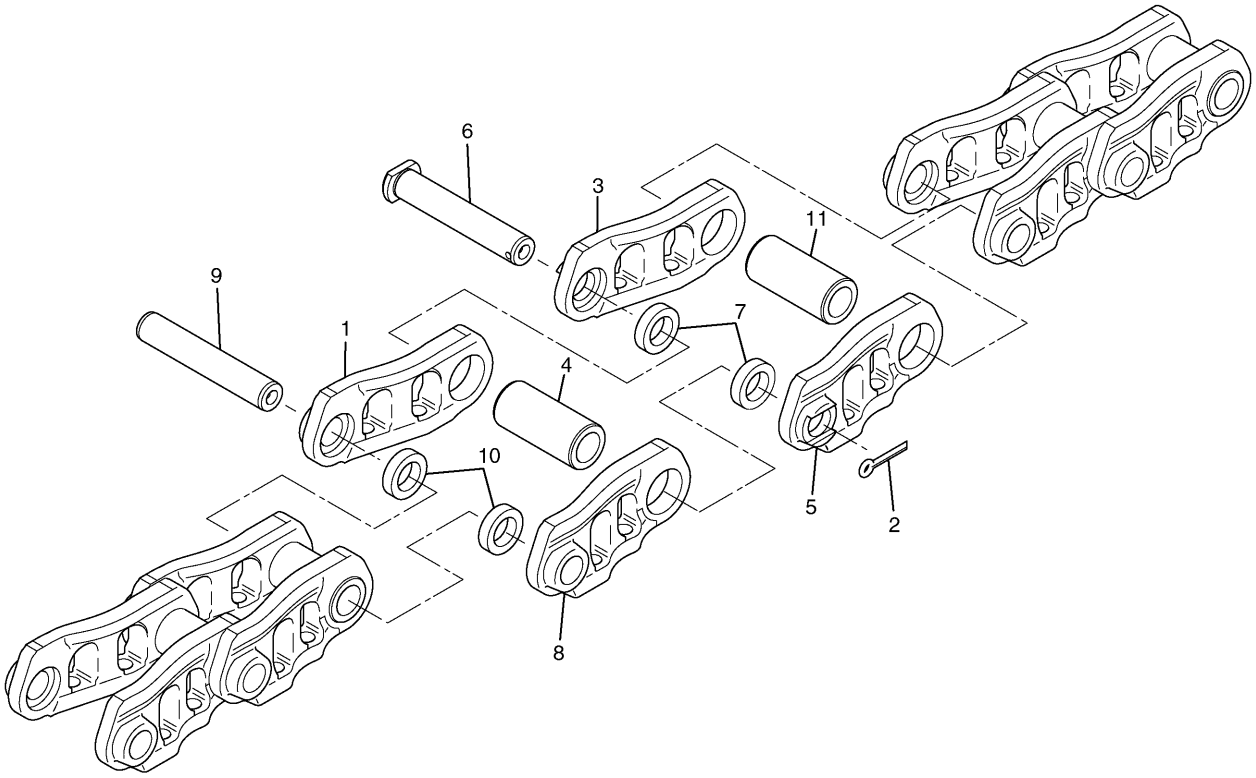


| NOTE | No. | PART No. | QTY | PART NAME | NOTE | No. | PART No. | QTY | PART NAME |
|---|---|---|---|---|---|---|---|---|---|
| | 1 | 9W-3138 | 44 | LINK | | | | | |
| | 2 | 095-0863 | 1 | COTTER | | | | | |
| | 3 | 8E-8586 | 1 | LINK | | | | | |
| | 4 | 190-3524 | 1 | BUSHING | | | | | |
| | 5 | 8E-8585 | 1 | LINK | | | | | |
| | 6 | 188-3064 | 1 | PIN | | | | | |
| | 7 | 158-4381 | 2 | SEAL | | | | | |
| | 8 | 9W-3137 | 44 | LINK | | | | | |
| | 9 | 6Y-8186 | 44 | PIN | | | | | |
| | 10 | 158-4380 | 88 | SEAL | | | | | |
| | 11 | 190-3523 | 44 | BUSHING | | | | | |

H73082E 00

## 194-1609 LINK AS-TRACK

Grease Lubricated
S/N BWZ 1-Up, SNS 1-Up
Part of 194-1917,194-1920-Page316,194-1921-Page317,332-8915-Page317.01
An Attachment

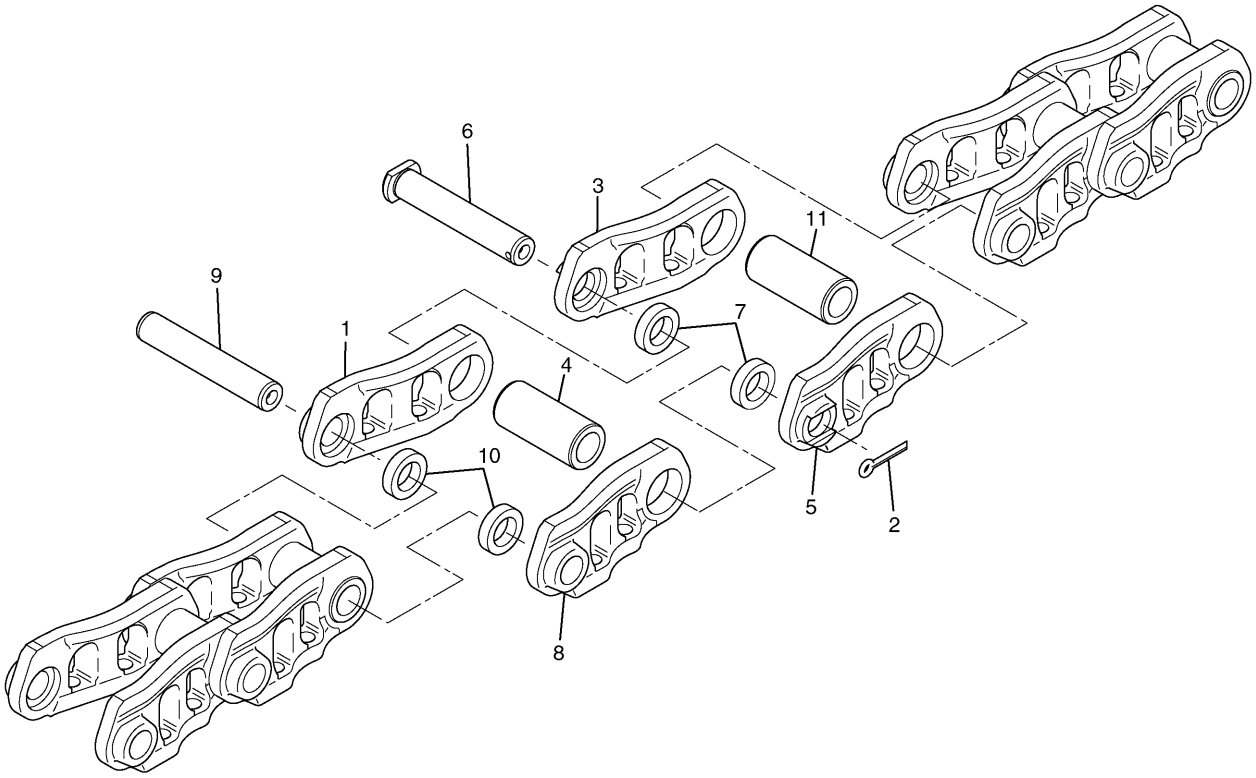


| NOTE | No. | PART No. | QTY | PART NAME | NOTE | No. | PART No. | QTY | PART NAME |
|---|---|---|---|---|---|---|---|---|---|
| | 1 | 9W-3138 | 48 | LINK | | | | | |
| | 2 | 095-0863 | 1 | COTTER | | | | | |
| | 3 | 8E-8586 | 1 | LINK | | | | | |
| | 4 | 190-3524 | 1 | BUSHING | | | | | |
| | 5 | 8E-8585 | 1 | LINK | | | | | |
| | 6 | 188-3064 | 1 | PIN | | | | | |
| | 7 | 158-4381 | 2 | SEAL | | | | | |
| | 8 | 9W-3137 | 48 | LINK | | | | | |
| | 9 | 6Y-8186 | 48 | PIN | | | | | |
| | 10 | 158-4380 | 96 | SEAL | | | | | |
| | 11 | 190-3523 | 48 | BUSHING | | | | | |

H74591E 00

## 194-1608 LINK AS-TRACK

Grease Lubricated
S/N DFB 1-Up, WJN 1-Up
Part of 194-1910,194-1911-Page318,194-1912-Page319,332-8908-Page319.01
An Attachment

# HYDRAULIC SYSTEM

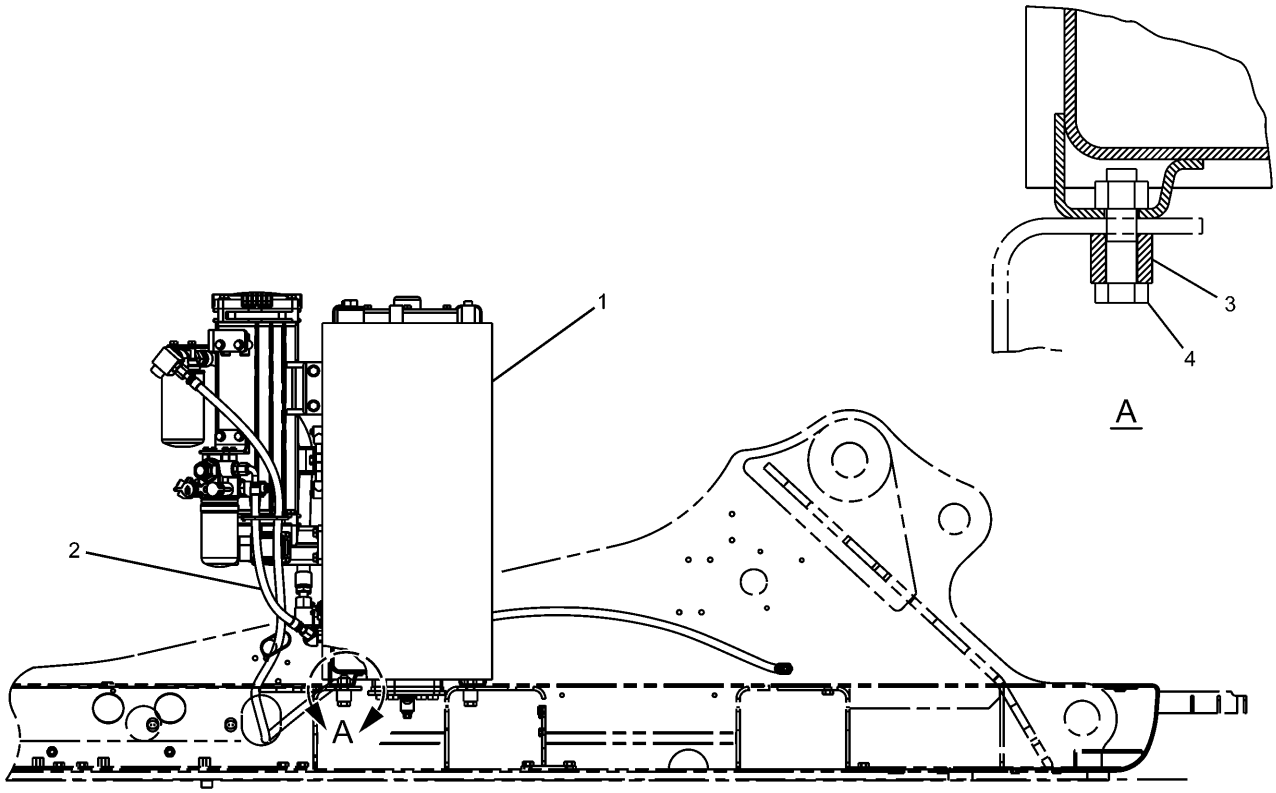


RIGHT SIDE VIEW

| NOTE | No. | PART No. | QTY | PART NAME | NOTE | No. | PART No. | QTY | PART NAME |
|---|---|---|---|---|---|---|---|---|---|
| Y | 1 | 239-1711 | 1 | TANK GP | | | | | |
| Y | 2 | 248-9853 | 1 | TANK GP (LINES) | | | | | |
| | 3 | 085-9310 | 6 | SPACER | | | | | |
| | 4 | 8T-4140 | 6 | BOLT (L=60mm) | | | | | |

Y—SEE SEPARATE ILLUSTRATION

H89533E 00

## 239-1710 TANK & MTG GP-HYDRAULIC

239-1711-Page324,248-9853-Page440

# MEMORANDA

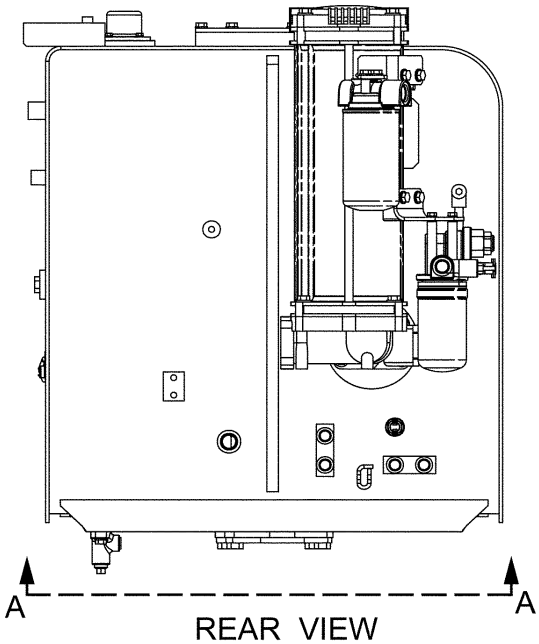


REAR VIEW

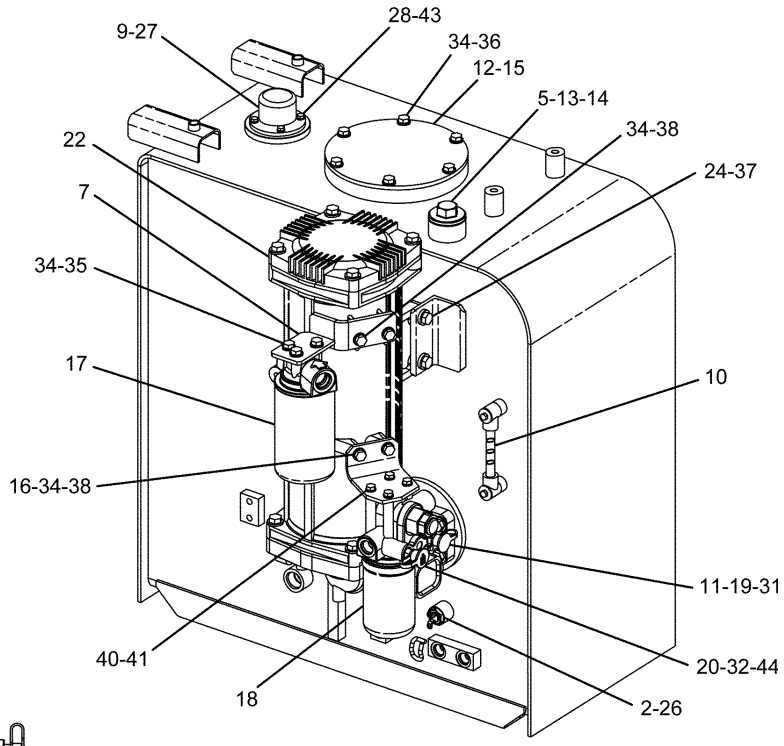


PICTORIAL VIEW
(VIEW FROM FRONT SIDE)

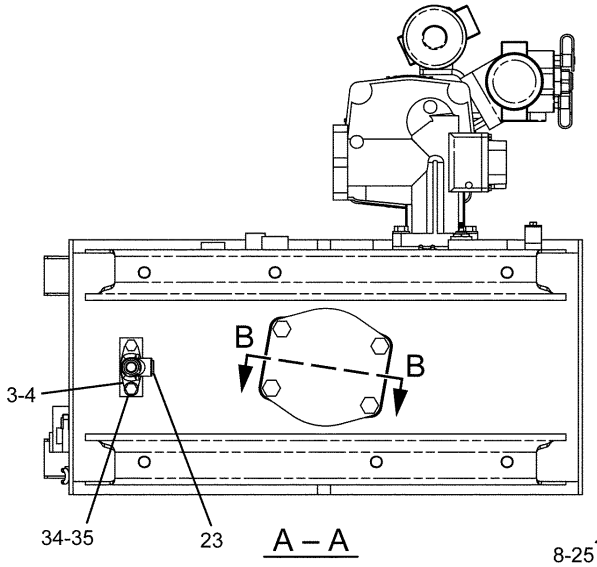


A – A

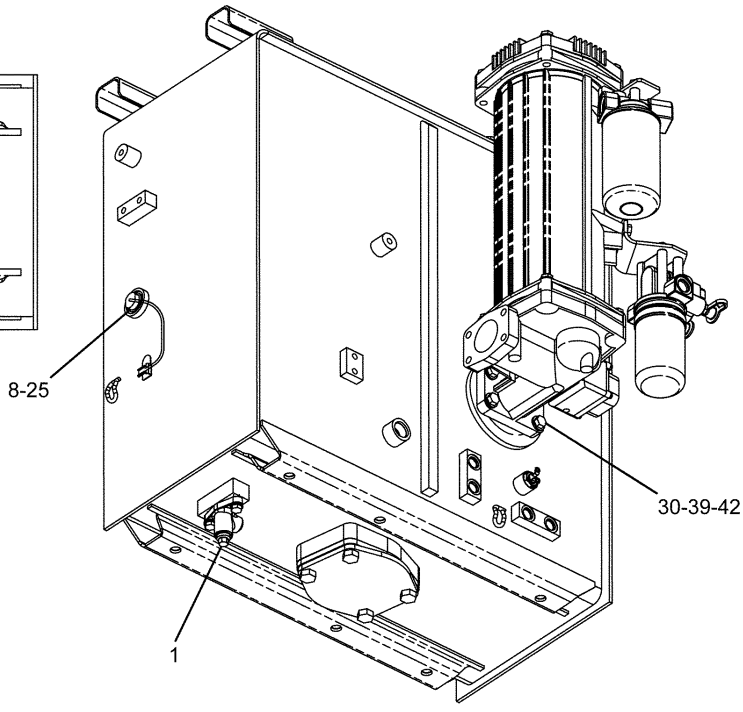


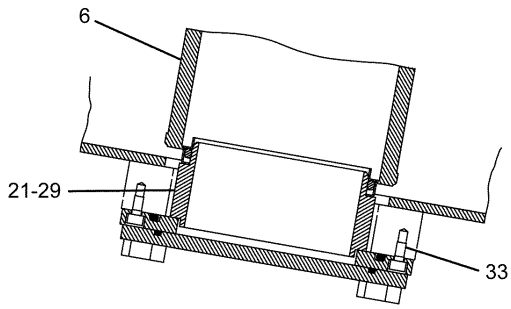


B – B

PICTORIAL VIEW
(VIEW FROM FRONT SIDE)

H99643E 06

## 239-1711 TANK & FILTER GP-HYDRAULIC

Capacity 210 Liters

Part of 239-1710-Page322
259-0922-Page326,227-0620-Page327,289-8194-Page329,158-8987-Page330,188-4140-Page333

# HYDRAULIC SYSTEM

| NOTE | No. | PART No. | QTY | PART NAME | NOTE | No. | PART No. | QTY | PART NAME |
|---|---|---|---|---|---|---|---|---|---|
| | 1 | 4B-7739 | 1 | PLUG | | | | | |
| | 2 | 4I-5394 | 1 | SENDER | | | | | |
| | | 4I-5490 | 2 | SCREW | | | | | |
| | | 095-0826 | 2 | LOCKWASHER | | | | | |
| | 3 | 4J-5267 | 1 | SEAL-O-RING (ID=24.99mm) | | | | | |
| | 4 | 8H-9819 | 1 | ADAPTER | | | | | |
| | 5 | 095-1608 | 1 | SEAL-O-RING (ID=44.70mm) | | | | | |
| Y | 6 | 259-0922 | 1 | SCREEN GP | | | | | |
| | 7 | 292-7297 | 1 | SUPPORT AS | | | | | |
| | 8 | 213-0677 | 1 | SWITCH AS | | | | | |
| | | 102-8802 | 1 | RECEPTACLE KIT | | | | | |
| | | 9X-3401 | 2 | PIN | | | | | |
| | 9 | 227-0590 | 1 | BREATHER GP | | | | | |
| Y | 10 | 227-0620 | 1 | GAUGE AS | | | | | |
| | 11 | 3J-1907 | 1 | SEAL-O-RING (ID=11.89mm) | | | | | |
| | 12 | 245-5402 | 1 | COVER AS | | | | | |
| | 13 | 207-6403 | 1 | PLUG | | | | | |
| | 14 | 207-6404 | 1 | WASHER | | | | | |
| | 15 | 095-1730 | 1 | SEAL-O-RING (ID=179.30mm) | | | | | |
| | 16 | 275-1362 | 1 | BRACKET | | | | | |
| Y | 17 | 289-8194 | 1 | FILTER GP | | | | | |
| Y | 18 | 158-8987 | 1 | FILTER GP | | | | | |
| | 19 | 6V-3965 | 1 | NIPPLE AS | | | | | |
| | 20 | 8C-3446 | 1 | VALVE | | | | | |
| | 21 | 165-3256 | 1 | PIPE AS | | | | | |
| Y | 22 | 188-4140 | 1 | FILTER GP | | | | | |
| | 23 | 2B-0858 | 1 | PLUG | | | | | |
| | 24 | 8T-7971 | 2 | WASHER | | | | | |
| | 25 | 3D-2824 | 1 | SEAL-O-RING (ID=23.47mm) | | | | | |
| | 26 | 3K-0360 | 1 | SEAL-O-RING (ID=16.36mm) | | | | | |
| | 27 | 4J-0527 | 1 | SEAL-O-RING (ID=56.74mm) | | | | | |
| | 28 | 5C-9553 | 4 | BOLT (L=16mm) | | | | | |
| | 29 | 6D-9157 | 1 | SEAL-O-RING (ID=142.24mm) | | | | | |
| | 30 | 6J-2680 | 1 | SEAL-O-RING (ID=69.44mm) | | | | | |
| | 31 | 6V-0852 | 1 | CAP | | | | | |
| | 32 | 8C-3451 | 1 | CAP | | | | | |
| | 33 | 8T-0267 | 2 | BOLT (L=12mm) | | | | | |
| | 34 | 8T-4121 | 15 | WASHER | | | | | |
| | 35 | 8T-4136 | 5 | BOLT (L=25mm) | | | | | |
| | 36 | 8T-4137 | 6 | BOLT (L=20mm) | | | | | |
| | 37 | 8T-4183 | 2 | BOLT (L=40mm) | | | | | |
| | 38 | 8T-4195 | 4 | BOLT (L=30mm) | | | | | |
| | 39 | 8T-4223 | 4 | WASHER | | | | | |
| | 40 | 8T-4224 | 4 | WASHER | | | | | |
| | 41 | 8T-4908 | 4 | BOLT (L=25mm) | | | | | |
| | 42 | 8T-4956 | 4 | BOLT (L=35mm) | | | | | |
| | 43 | 9X-8256 | 4 | WASHER | | | | | |
| | 44 | 3J-7354 | 1 | SEAL-O-RING (ID=8.92mm) | | | | | |

Y—SEE SEPARATE ILLUSTRATION

H99643E 06

## 239-1711 TANK & FILTER GP-HYDRAULIC

Capacity 210 Liters

Part of 239-1710-Page322

259-0922-Page326,227-0620-Page327,289-8194-Page329,158-8987-Page330,188-4140-Page333

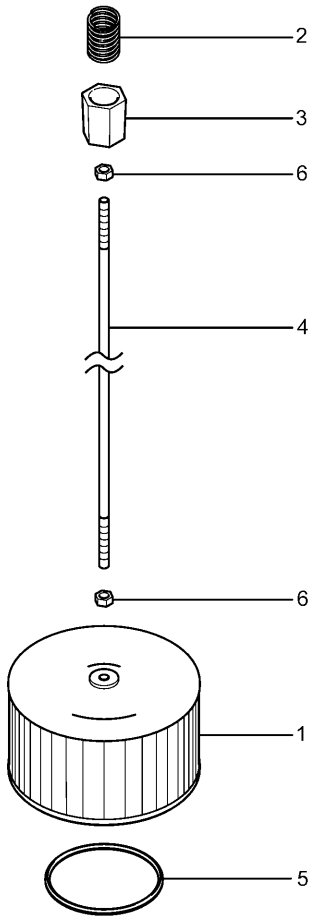


| NOTE | No. | PART No. | QTY | PART NAME | NOTE | No. | PART No. | QTY | PART NAME |
|---|---|---|---|---|---|---|---|---|---|
| | 1 | 209-6000 | 1 | SCREEN AS | | | | | |
| | 2 | 095-6639 | 1 | SPRING | | | | | |
| | 3 | 259-0918 | 1 | GUIDE | | | | | |
| | 4 | 129-7784 | 1 | ROD | | | | | |
| | 5 | 5H-5672 | 1 | SEAL-O-RING (ID=113.67mm) | | | | | |
| | 6 | 8T-4133 | 2 | NUT | | | | | |

H89283E 00

**259-0922 SCREEN GP**
Part of 239-1711-Page325

# HYDRAULIC SYSTEM

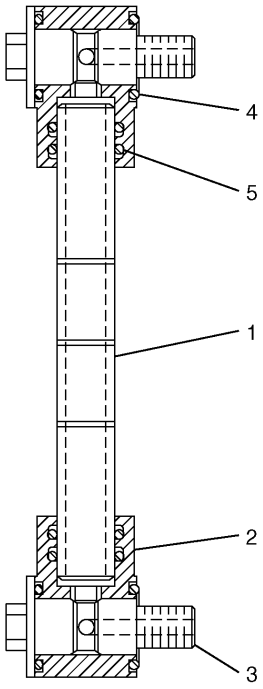


| NOTE | No. | PART No. | QTY | PART NAME |
|---|---|---|---|---|
| | 1 | 236-3257 | 1 | PIPE |
| | 2 | 236-3258 | 2 | BLOCK |
| | 3 | 236-3259 | 2 | BOLT |
| | 4 | 095-1519 | 4 | SEAL-O-RING (ID=15.80mm) |
| | 5 | 6F-4855 | 4 | SEAL-O-RING (ID=13.94mm) |

H85416E 01

## 227-0620 GAUGE AS

Part of 239-1711-Page325

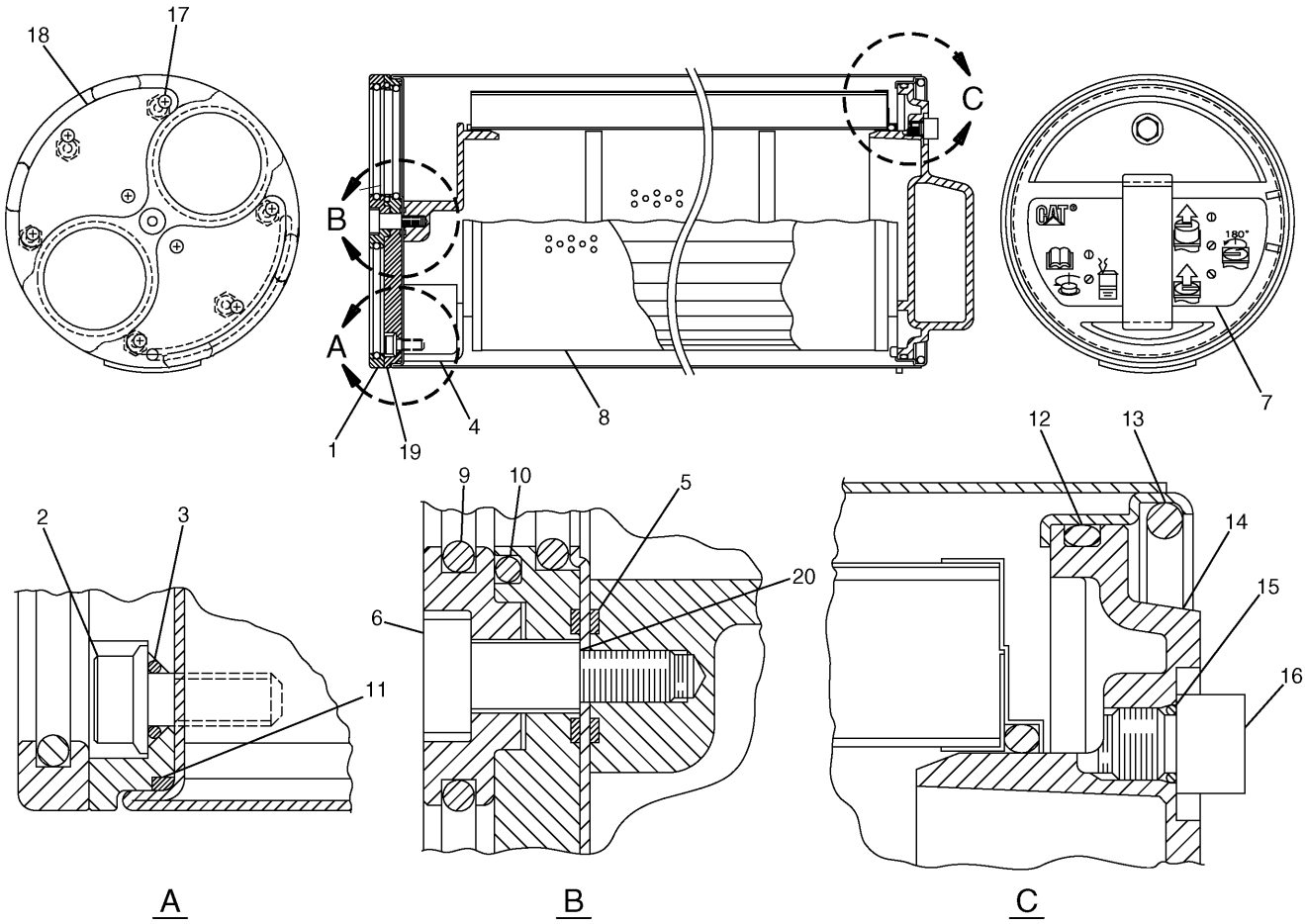


| NOTE | No. | PART No. | QTY | PART NAME | NOTE | No. | PART No. | QTY | PART NAME |
|---|---|---|---|---|---|---|---|---|---|
| | 1 | 204-2762 | 1 | PLATE | | | | | THE FOLLOWING REPAIR |
| J | 2 | 173-3529 | 6 | BOLT (L=15mm) | | | | | KIT IS AVAILABLE: |
| J | 3 | 3T-7528 | 6 | SEAL-O-RING (ID=5.80mm) | | | 201-9299 | 1 | SERVICE KIT |
| | 4 | 173-3513 | 1 | BASE | | | | | (INCLUDES PARTS MARKED J) |
| J | 5 | 3E-4297 | 2 | SEAL-O-RING (ID=10.00mm) | | | | | |
| | 6 | 137-3626 | 1 | BOLT | | | | | |
| | 7 | 188-4143 | 1 | FILM (INSTRUCTION) | | | | | |
| | 8 | 179-9806 | 1 | ELEMENT | | | | | |
| J | 9 | 137-3623 | 4 | SEAL-O-RING (ID=55.60mm) | | | | | |
| J | 10 | 6V-7658 | 2 | SEAL-O-RING (ID=59.40mm) | | | | | |
| J | 11 | 177-2553 | 1 | SEAL-O-RING (ID=149.50mm) | | | | | |
| J | 12 | 095-1681 | 1 | SEAL-O-RING (ID=144.40mm) | | | | | |
| | 13 | 173-3515 | 1 | RING | | | | | |
| | 14 | 173-3516 | 1 | HANDLE | | | | | |
| J | 15 | 4J-7533 | 1 | SEAL-O-RING (ID=6.07mm) | | | | | |
| J | 16 | 9S-4180 | 1 | PLUG | | | | | |
| J | 17 | 137-3624 | 8 | SCREW | | | | | |
| J | 18 | 137-3625 | 2 | PAD | | | | | |
| | 19 | 173-3517 | 1 | PLATE | | | | | |
| J | 20 | 137-3628 | 1 | SHIM (T=0.10mm) | | | | | |

H77561E 02

## 188-4142 FILTER GP-HYDRAULIC

Part of 188-4140-Page333

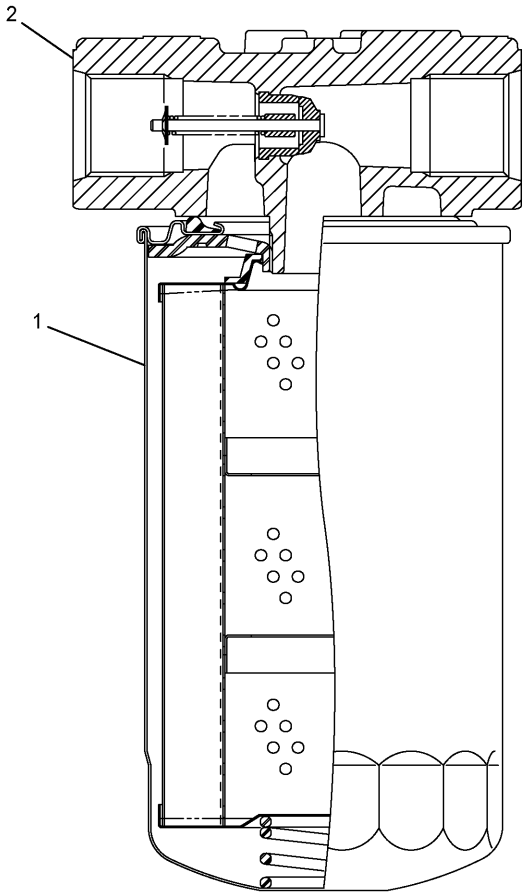


| NOTE | No. | PART No. | QTY | PART NAME | NOTE | No. | PART No. | QTY | PART NAME |
|---|---|---|---|---|---|---|---|---|---|
| | 1 | 093-7521 | 1 | FILTER | | | | | |
| | 2 | 289-8195 | 1 | HEAD AS | | | | | |

H94248E 00

## 289-8194 FILTER GP-HYDRAULIC

Part of 239-1711-Page325

# HYDRAULIC SYSTEM

Consists of :

| | | | Page |
|---|---|---|---|
| 1 | 188-2084 | FILTER GP-HYDRAULIC..... | 331 |
| | | -OR- | |
| 1 | 289-7836 | FILTER GP-HYDRAULIC..... | 332 |

H93564E 07

**158-8987 FILTER GP-HYDRAULIC**
Part of 239-1711-Page325

# HYDRAULIC SYSTEM

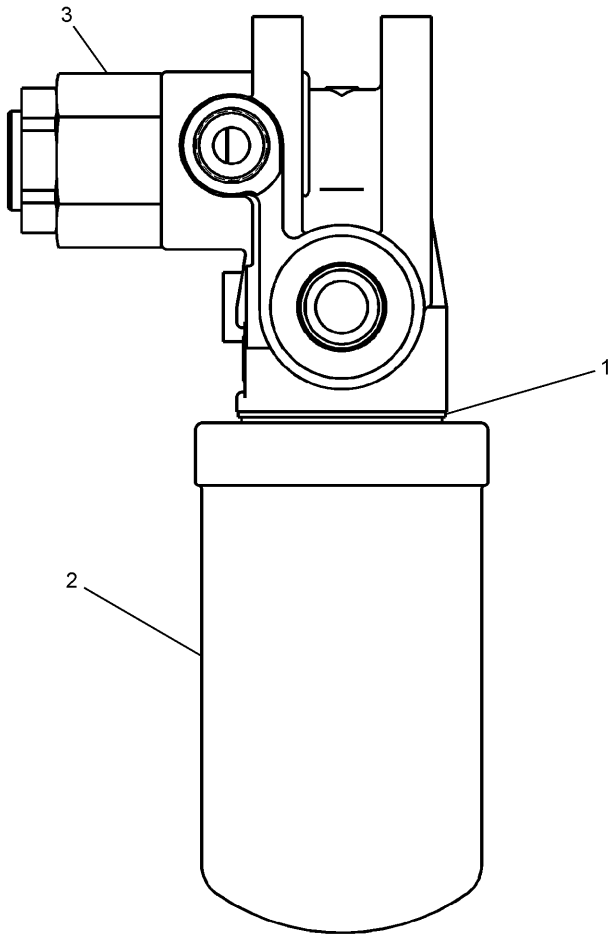


| NOTE | No. | PART No. | QTY | PART NAME | NOTE | No. | PART No. | QTY | PART NAME |
|---|---|---|---|---|---|---|---|---|---|
| | 1 | 103-8236 | 1 | RING | | | | | |
| | 2 | 126-1813 | 1 | FILTER AS | | | | | |
| Y | 3 | 215-4909 | 1 | VALVE GP | | | | | |

Y—SEE SEPARATE ILLUSTRATION

H93558E 04

## 188-2084 FILTER GP-HYDRAULIC

Part of 158-8987-Page330
215-4909-Page590

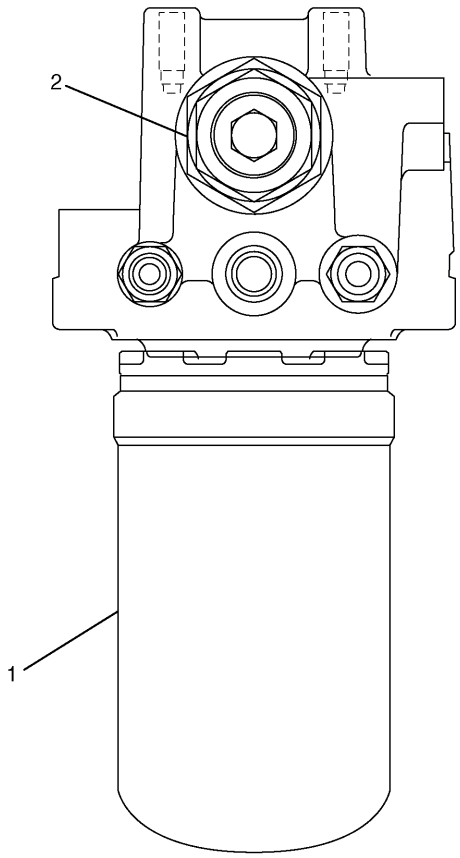


| NOTE | No. | PART No. | QTY | PART NAME | NOTE | No. | PART No. | QTY | PART NAME |
|---|---|---|---|---|---|---|---|---|---|
| | 1 | 5I-8670 | 1 | FILTER AS | | | | | |
| Y | 2 | 215-4909 | 1 | VALVE GP | | | | | |

Y—SEE SEPARATE ILLUSTRATION

H95450E 00

## 289-7836 FILTER GP-HYDRAULIC

Part of 158-8987-Page330
215-4909-Page590

# HYDRAULIC SYSTEM

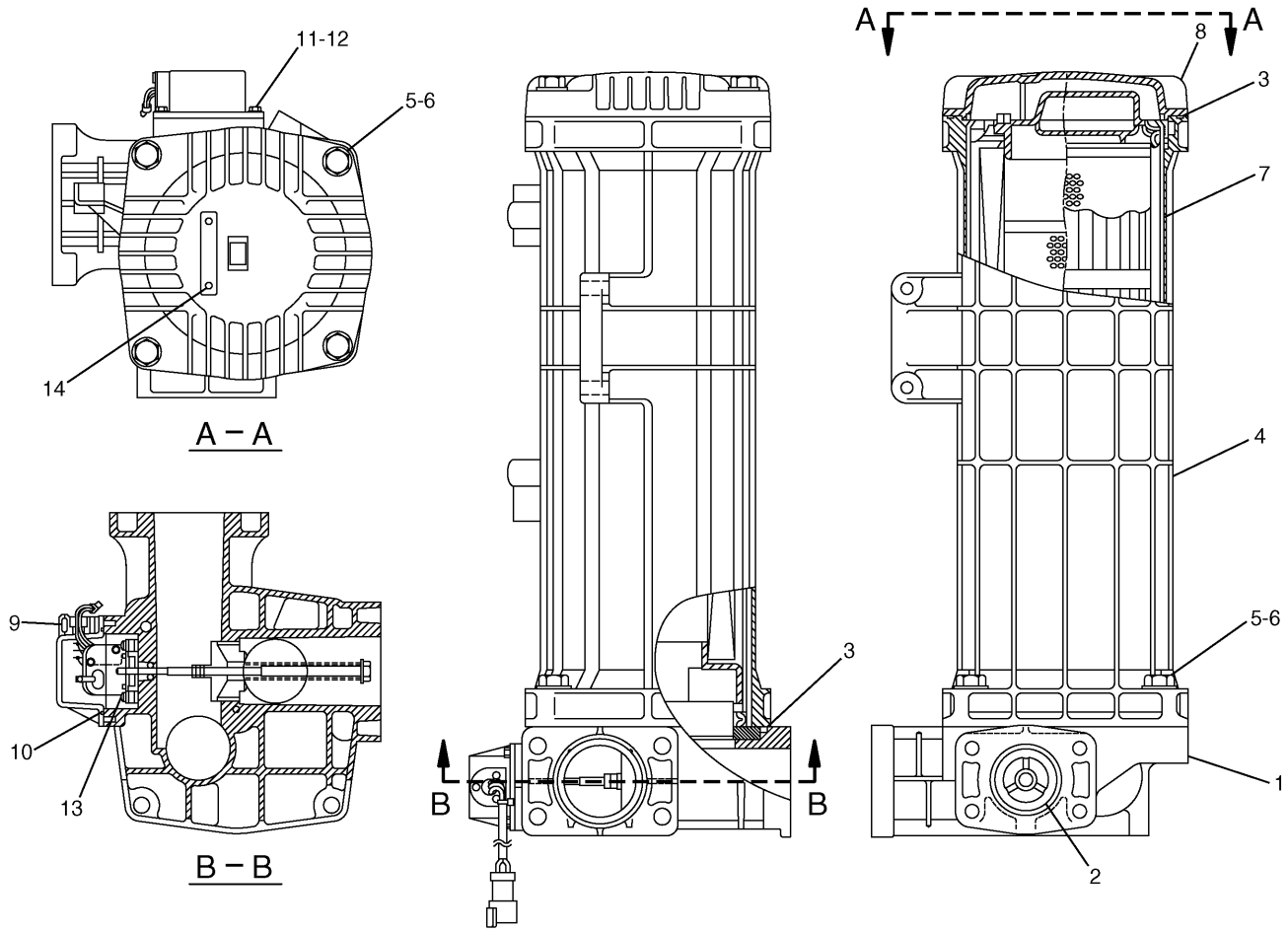


| NOTE | No. | PART No. | QTY | PART NAME | NOTE | No. | PART No. | QTY | PART NAME |
|---|---|---|---|---|---|---|---|---|---|
| Y | 1 | 173-3503 | 1 | BLOCK GP | | | | | |
| | 2 | 129-8034 | 1 | VALVE AS | | | | | |
| | 3 | 123-2003 | 2 | SEAL-O-RING (ID=185.00mm) | | | | | |
| | 4 | 173-3507 | 1 | HOUSING AS | | | | | |
| | 5 | 8T-4194 | 8 | BOLT (L=50mm) | | | | | |
| | 6 | 8T-4223 | 8 | WASHER | | | | | |
| Y | 7 | 188-4142 | 1 | FILTER GP | | | | | |
| | 8 | 173-3510 | 1 | COVER | | | | | |
| | 9 | 173-3518 | 1 | INDICATOR AS | | | | | |
| | 10 | 159-7784 | 1 | SEAL-O-RING | | | | | |
| | 11 | 6V-4298 | 4 | BOLT (L=16mm) | | | | | |
| | 12 | 8T-0328 | 4 | WASHER | | | | | |
| | 13 | 8T-6693 | 4 | SCREW | | | | | |
| | 14 | 116-3522 | 2 | SCREW | | | | | |

Y—SEE SEPARATE ILLUSTRATION

H77741E 01

## 188-4140 FILTER GP-HYDRAULIC

Part of 239-1711-Page325
188-4142-Page328,173-3503-Page335

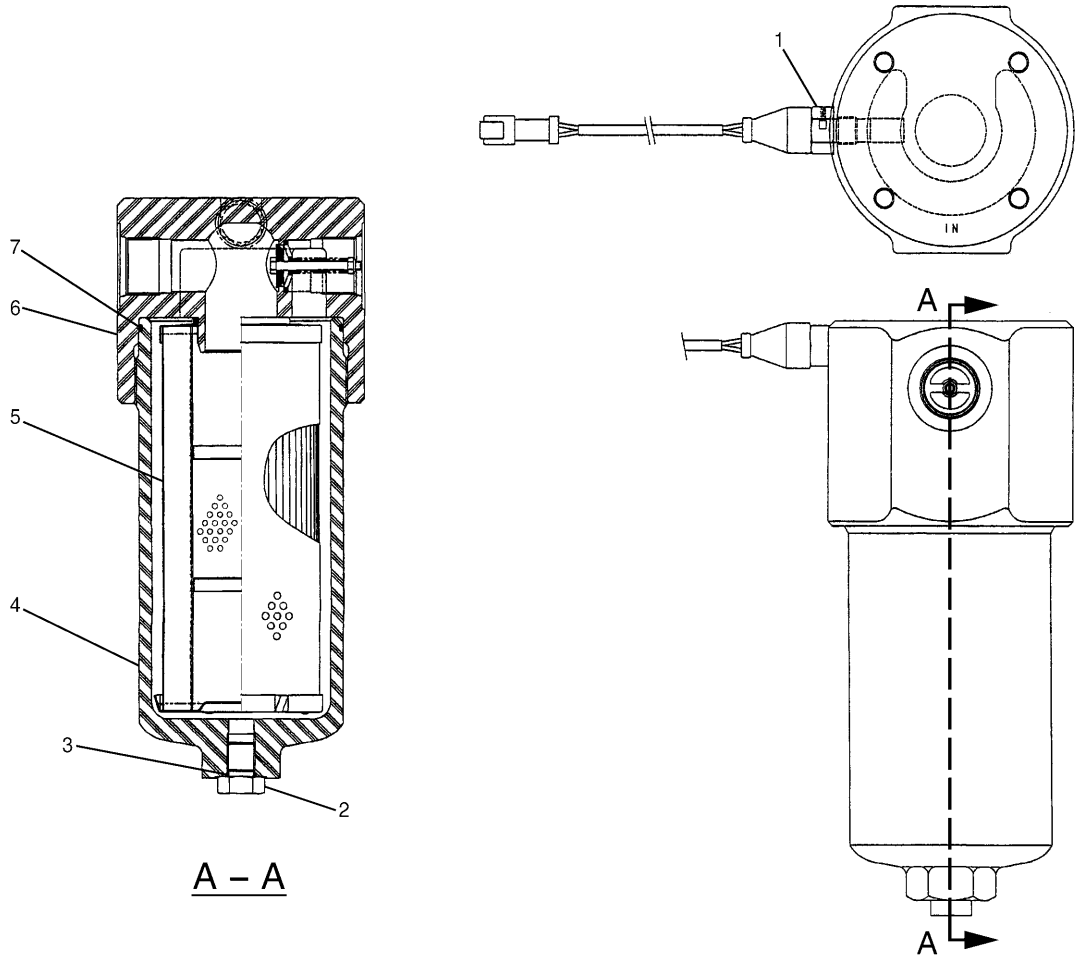


| NOTE | No. | PART No. | QTY | PART NAME | NOTE | No. | PART No. | QTY | PART NAME |
|---|---|---|---|---|---|---|---|---|---|
| | 1 | 224-1685 | 1 | INDICATOR AS | | | | | |
| | 2 | 096-6073 | 1 | PLUG | | | | | |
| | 3 | 095-1582 | 1 | SEAL-O-RING (ID=13.80mm) | | | | | |
| | 4 | 216-6678 | 1 | CASE | | | | | |
| | 5 | 216-6676 | 1 | ELEMENT AS | | | | | |
| | 6 | 216-6677 | 1 | HEAD AS | | | | | |
| | 7 | 095-1717 | 1 | SEAL-O-RING (ID=114.40mm) | | | | | |

H85839E 01

**224-1687 FILTER AS**
Part of 239-1726-Page495
An Attachment

# HYDRAULIC SYSTEM

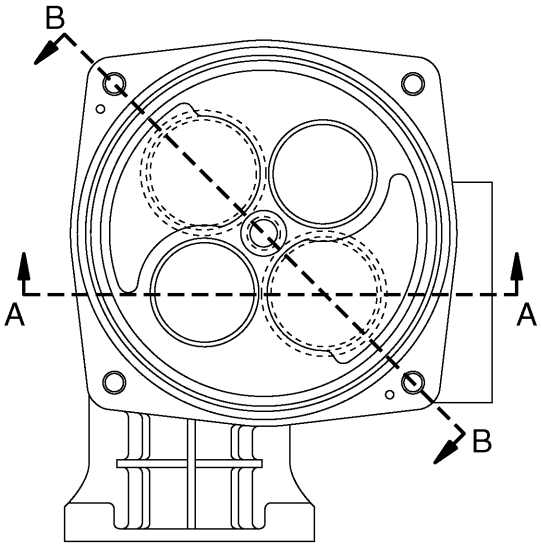


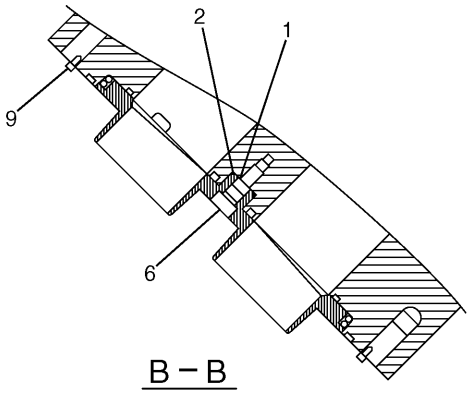


B – B

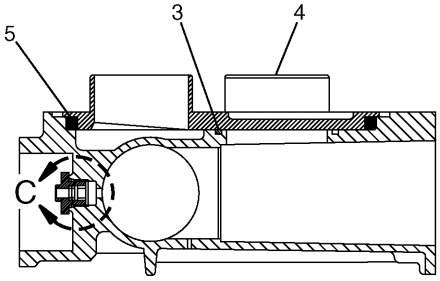


A – A

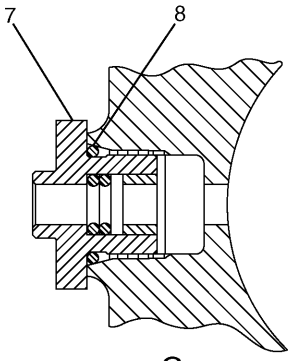


C

| NOTE | No. | PART No. | QTY | PART NAME | NOTE | No. | PART No. | QTY | PART NAME |
|---|---|---|---|---|---|---|---|---|---|
| | 1 | 137-3628 | 1 | SHIM (T=0.10mm) | | | | | |
| | 2 | 5L-4758 | 1 | SEAL-O-RING (ID=14.00mm) | | | | | |
| | 3 | 177-2619 | 2 | PACKING | | | | | |
| | 4 | 173-3505 | 1 | PLATE | | | | | |
| | 5 | 137-3631 | 1 | PACKING | | | | | |
| | 6 | 137-3626 | 1 | BOLT | | | | | |
| | 7 | 173-3506 | 1 | PLUG AS | | | | | |
| | 8 | 3J-1907 | 1 | SEAL-O-RING (ID=11.89mm) | | | | | |
| | 9 | 7Y-5272 | 2 | PIN | | | | | |

H77736E 01

**173-3503 BLOCK GP-HYDRAULIC**

Part of 188-4140-Page333

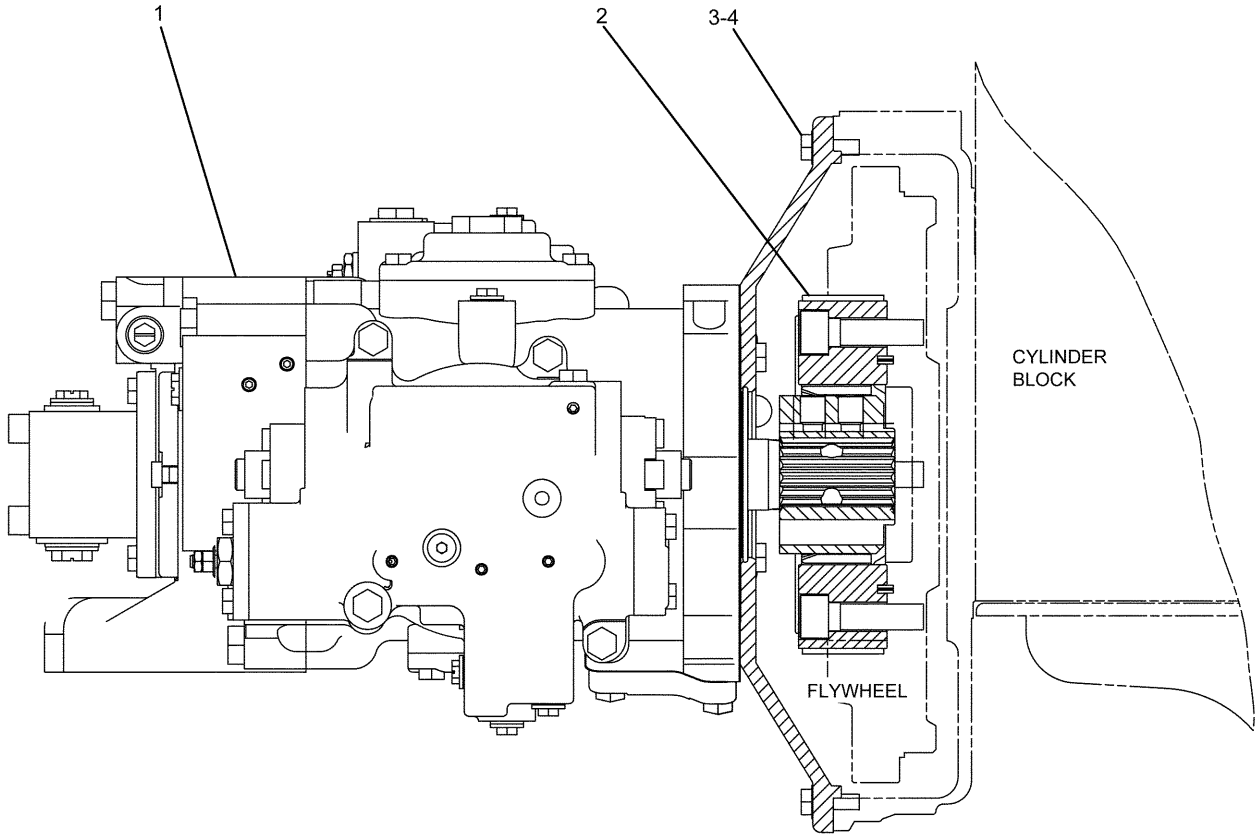


| NOTE | No. | PART No. | QTY | PART NAME | NOTE | No. | PART No. | QTY | PART NAME |
|---|---|---|---|---|---|---|---|---|---|
| Y | 1 | 272-6955 | 1 | PUMP GP | | | | | |
| Y | 2 | 279-7870 | 1 | COUPLING GP | | | | | |
| | 3 | 8T-4121 | 12 | WASHER | | | | | |
| | 4 | 8T-4195 | 12 | BOLT (L=30mm) | | | | | |

Y—SEE SEPARATE ILLUSTRATION

H93708E 00

## 279-7869 PUMP & MOUNTING GP

279-7870-Page337,272-6955-Page338

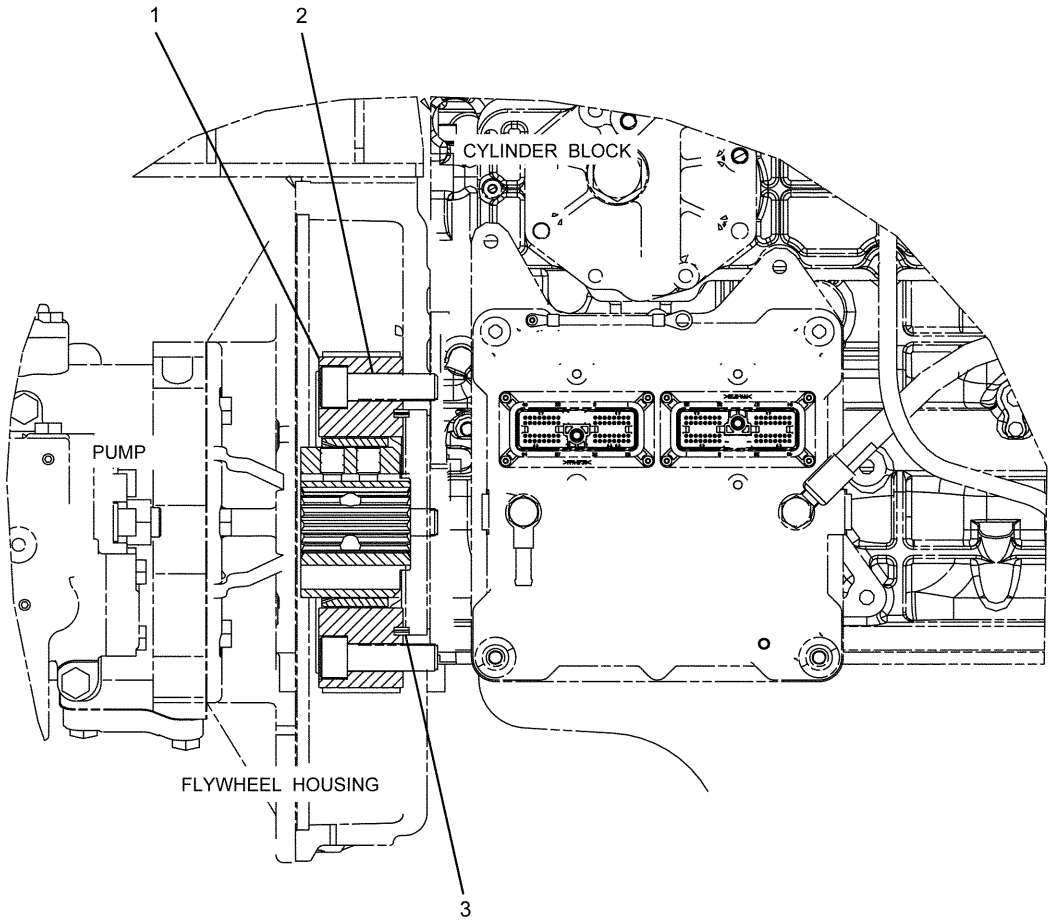


| NOTE | No. | PART No. | QTY | PART NAME | NOTE | No. | PART No. | QTY | PART NAME |
|---|---|---|---|---|---|---|---|---|---|
| Y | 1 | 279-7871 | 1 | COUPLING GP | | | | | |
| | 2 | 287-0047 | 4 | BOLT (L=60mm) | | | | | |
| | 3 | 7Y-0468 | 4 | PIN | | | | | |

Y—SEE SEPARATE ILLUSTRATION

H98363E 01

## 279-7870 COUPLING GP-PUMP

Part of 279-7869-Page336
279-7871-Page337.01

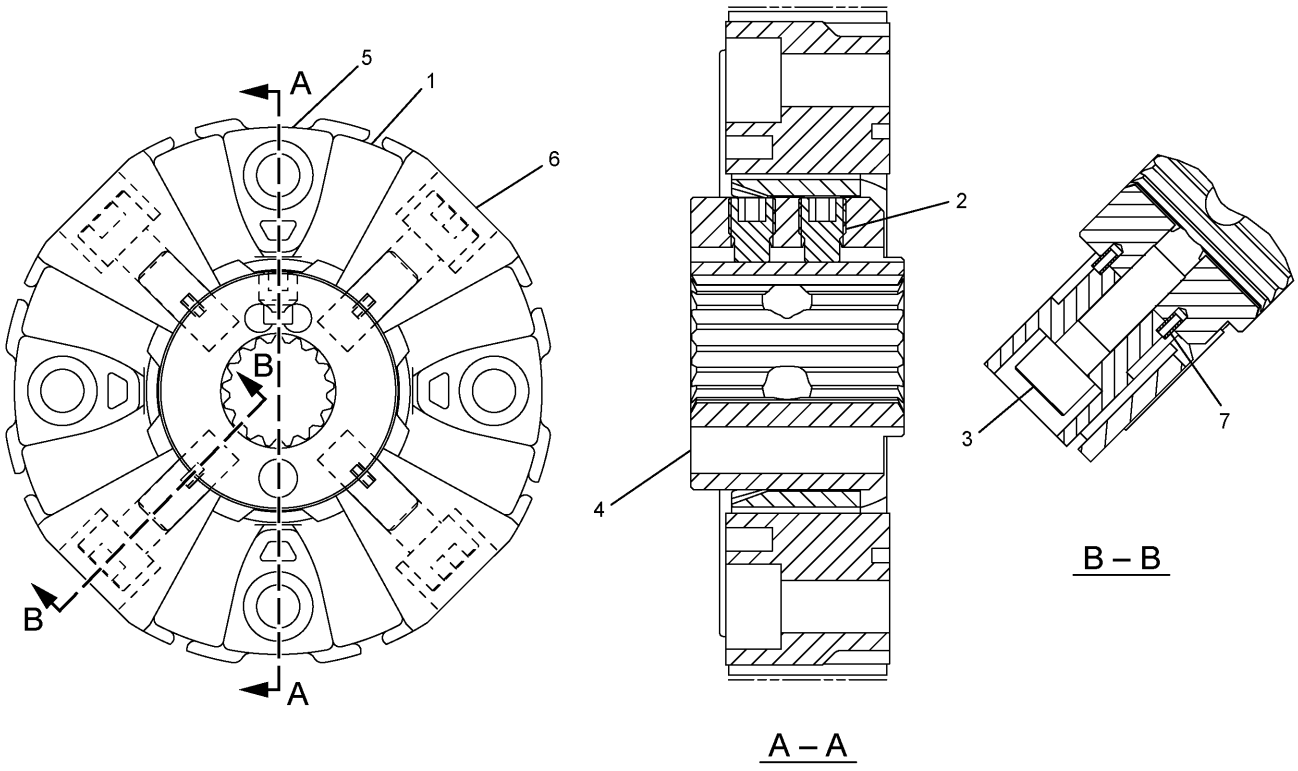


| NOTE | No. | PART No. | QTY | PART NAME | NOTE | No. | PART No. | QTY | PART NAME |
|---|---|---|---|---|---|---|---|---|---|
| | 1 | 7Y-0463 | 1 | ELEMENT | | | | | |
| | 2 | 7Y-0466 | 2 | SETSCREW | | | | | |
| | 3 | 7Y-0467 | 4 | BOLT (L=55mm) | | | | | |
| | 4 | 305-4950 | 1 | HUB | | | | | |
| | 5 | 305-4951 | 4 | INSERT | | | | | |
| | 6 | 305-4952 | 4 | INSERT | | | | | |
| | 7 | 7Y-0468 | 8 | PIN | | | | | |

H98365E 01

## 279-7871 COUPLING GP-FLEXIBLE

Part of 279-7870-Page337

# MEMORANDA

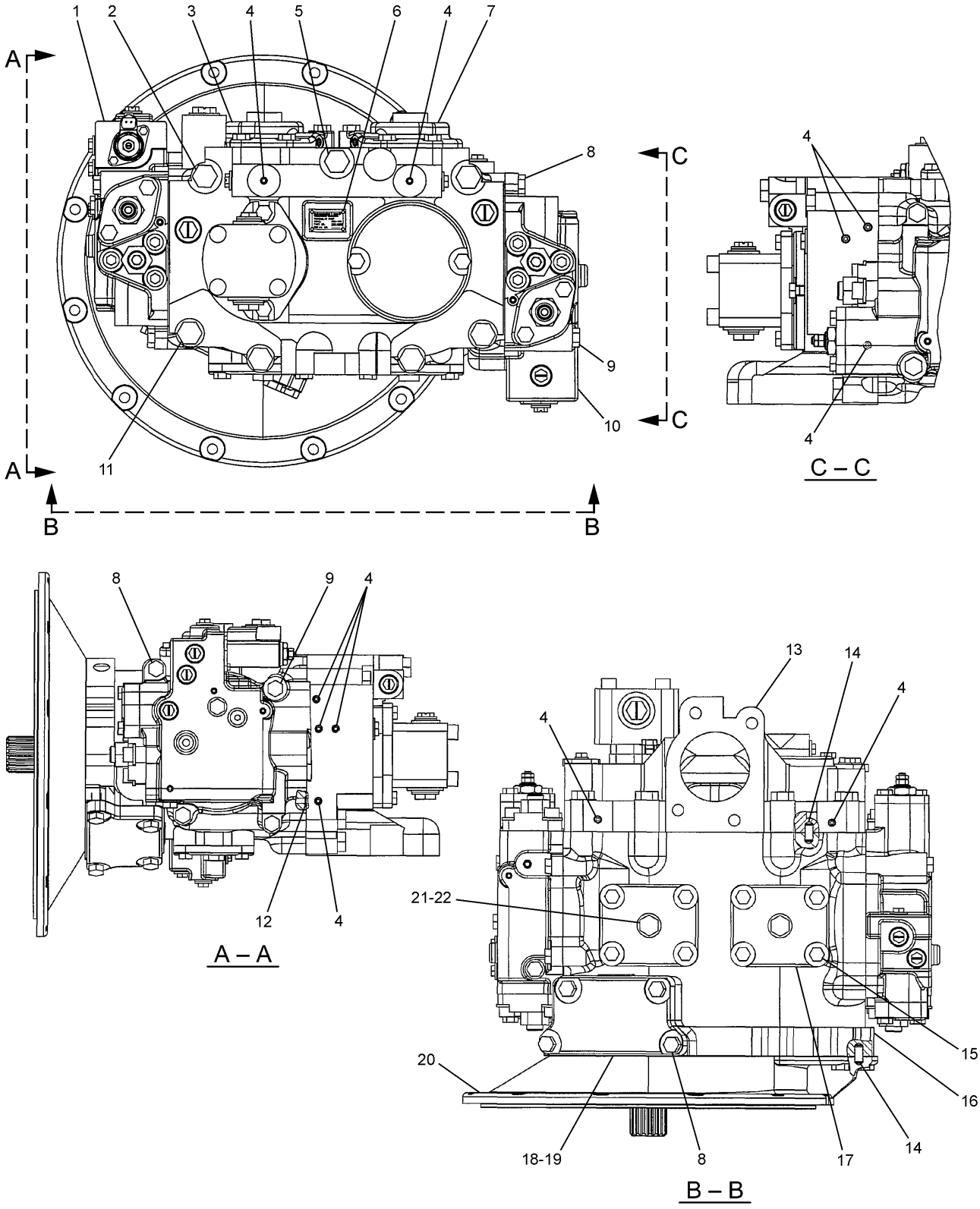


H94509E 04

**272–6955 PUMP GP–MAIN HYDRAULIC (1/2)**

Part of 279–7869–Page336
256–0093–Page342,256–0096–Page344

# HYDRAULIC SYSTEM

| NOTE | No. | PART No. | QTY | PART NAME | NOTE | No. | PART No. | QTY | PART NAME |
|---|---|---|---|---|---|---|---|---|---|
| Y | 1 | 256-0093 | 1 | HEAD GP | | | | | |
| | 2 | 8T-4175 | 2 | BOLT (L=90mm) | | | | | |
| | 3 | 177-2470 | 1 | COVER | | | | | |
| | 4 | 094-1882 | 11 | PLUG | | | | | |
| | 5 | 7X-2557 | 1 | BOLT (L=140mm) | | | | | |
| | 6 | 095-7419 | 4 | SCREW | | | | | |
| | 7 | 177-2471 | 1 | COVER | | | | | |
| | 8 | 8T-4139 | 10 | BOLT (L=30mm) | | | | | |
| | 9 | 8T-4176 | 2 | BOLT (L=90mm) | | | | | |
| Y | 10 | 256-0096 | 1 | HEAD GP | | | | | |
| | 11 | 8T-4140 | 4 | BOLT (L=60mm) | | | | | |
| | 12 | 189-9763 | 6 | SEAL-O-RING (ID=9.80mm) | | | | | |
| | 13 | 200-3333 | 1 | BLOCK | | | | | |
| | 14 | 129-7979 | 4 | DOWEL | | | | | |
| | 15 | 8T-4136 | 8 | BOLT (L=25mm) | | | | | |
| | 16 | 247-8782 | 1 | BODY | | | | | |
| | 17 | 150-5782 | 2 | COVER | | | | | |
| | 18 | 129-7863 | 1 | COVER | | | | | |
| | 19 | 129-7857 | 1 | GASKET | | | | | |
| | 20 | 179-9763 | 1 | FLANGE | | | | | |
| | 21 | 3K-0360 | 2 | SEAL-O-RING (ID=16.36mm) | | | | | |
| | 22 | 9S-4185 | 2 | PLUG | | | | | |

Y—SEE SEPARATE ILLUSTRATION

H94509E 04

## 272-6955 PUMP GP-MAIN HYDRAULIC (1/2)

Part of 279-7869-Page336
256-0093-Page342,256-0096-Page344

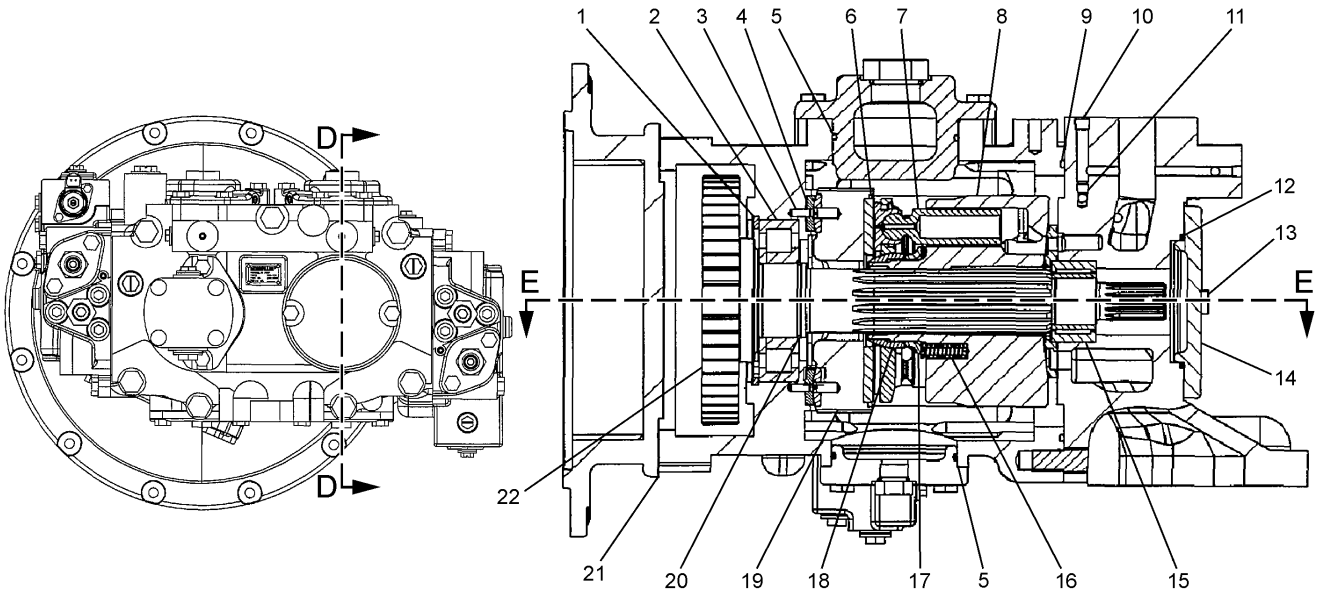


D – D

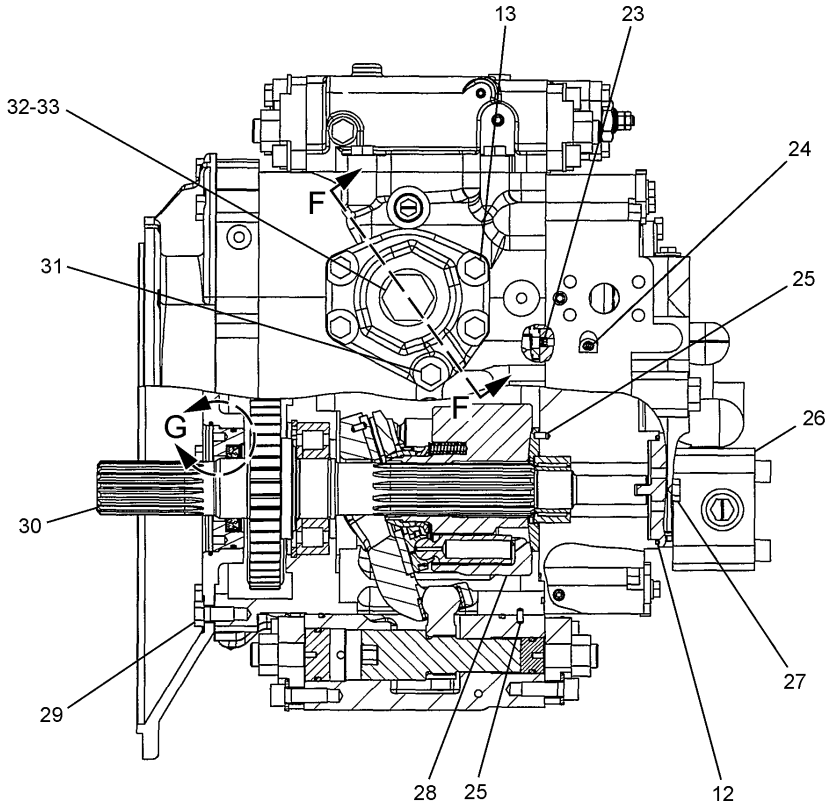


E – E

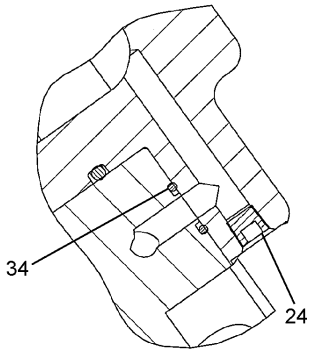


F – F

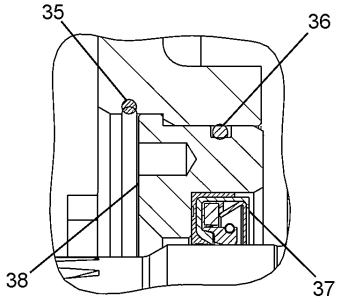


G

H94510E 04

**272–6955 PUMP GP–MAIN HYDRAULIC (2/2)**

Part of 279–7869–Page336
126–2016–Page346

# HYDRAULIC SYSTEM

| NOTE | No. | PART No. | QTY | PART NAME | NOTE | No. | PART No. | QTY | PART NAME |
|---|---|---|---|---|---|---|---|---|---|
| | 1 | 095-0946 | 2 | RING | | | | | |
| | 2 | 129-7927 | 2 | BEARING | | | | | |
| | 3 | 192-0573 | 4 | PIN | | | | | |
| | 4 | 242-6804 | 4 | BEARING | | | | | |
| | 5 | 193-1736 | 4 | SEAL-O-RING (ID=79.40mm) | | | | | |
| | 6 | 173-3473 | 2 | PLATE | | | | | |
| | 7 | 191-5709 | 2 | PISTON AS | | | | | |
| | 8 | 173-3498 | 1 | BARREL AS | | | | | |
| | 9 | 273-8314 | 1 | SEAL-O-RING (ID=285.60mm) | | | | | |
| | 10 | 190-4896 | 2 | PLUG | | | | | |
| | 11 | 247-8920 | 2 | ORIFICE | | | | | |
| | 12 | 273-8315 | 2 | SEAL-O-RING (ID=84.40mm) | | | | | |
| | 13 | 8T-4136 | 10 | BOLT (L=25mm) | | | | | |
| | 14 | 200-3334 | 1 | COVER | | | | | |
| | 15 | 129-7859 | 2 | BEARING SET | | | | | |
| | 16 | 118-4057 | 18 | SPRING | | | | | |
| | 17 | 7Y-4215 | 2 | SPACER | | | | | |
| | 18 | 173-3427 | 2 | GUIDE | | | | | |
| | 19 | 242-6801 | 2 | SWASHPLATE AS | | | | | |
| | | 094-1875 | 1 | DOWEL | | | | | |
| | | 173-3428 | 1 | BEARING | | | | | |
| | | 242-6803 | 2 | PIN | | | | | |
| | 20 | 129-7921 | 2 | RING | | | | | |
| | 21 | 129-7855 | 1 | GASKET | | | | | |
| | 22 | 225-4544 | 1 | SHAFT | | | | | |
| | 23 | 4I-1022 | 2 | ORIFICE | | | | | |
| | 24 | 094-1882 | 5 | PLUG | | | | | |
| | 25 | 094-1875 | 6 | DOWEL | | | | | |
| Y | 26 | 126-2016 | 1 | PUMP GP | | | | | |
| | 27 | 8T-4137 | 2 | BOLT (L=20mm) | | | | | |
| | 28 | 173-3496 | 1 | BARREL AS | | | | | |
| | 29 | 8T-4192 | 10 | BOLT (L=25mm) | | | | | |
| | 30 | 225-4543 | 1 | SHAFT | | | | | |
| | 31 | 8T-4196 | 2 | BOLT (L=35mm) | | | | | |
| | 32 | 7M-8485 | 2 | SEAL-O-RING (ID=29.74mm) | | | | | |
| | 33 | 8J-4645 | 2 | PLUG | | | | | |
| | 34 | 189-9763 | 2 | SEAL-O-RING (ID=9.80mm) | | | | | |
| | 35 | 096-3983 | 1 | RING | | | | | |
| | 36 | 096-3944 | 1 | SEAL-O-RING (ID=94.40mm) | | | | | |
| | 37 | 129-7925 | 1 | SEAL | | | | | |
| | 38 | 129-7854 | 1 | CASE | | | | | |

Y—SEE SEPARATE ILLUSTRATION

H94510E 04

## 272-6955 PUMP GP-MAIN HYDRAULIC (2/2)

Part of 279-7869-Page336
126-2016-Page346

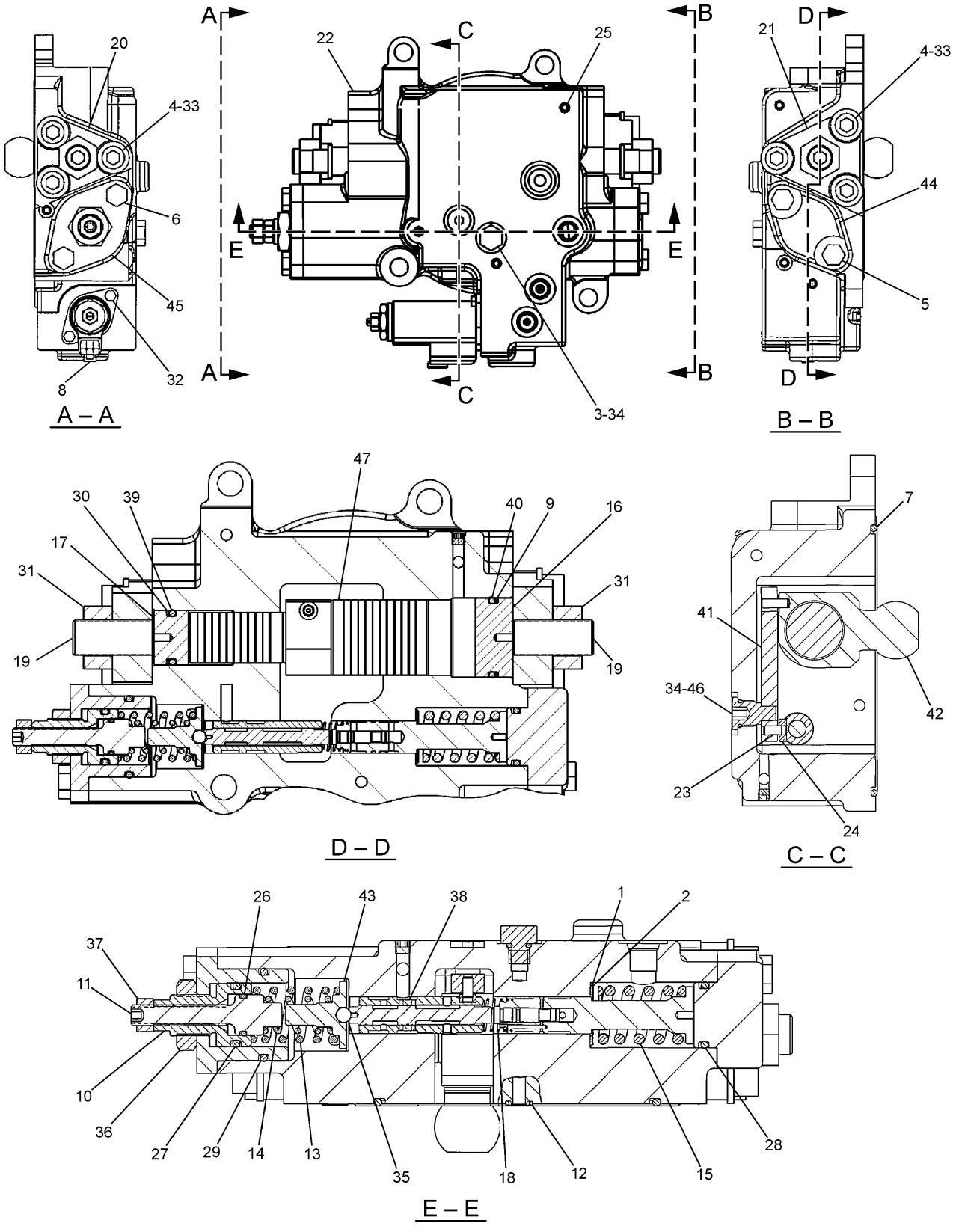


H95279E 07

**256-0093 HEAD GP-PUMP CONTROL**

Part of 272-6955-Page339
111-9916-Page576

# HYDRAULIC SYSTEM

| NOTE | No. | PART No. | QTY | PART NAME | NOTE | No. | PART No. | QTY | PART NAME |
|---|---|---|---|---|---|---|---|---|---|
| B | 1 | 099-3669 | 2 | SHIM (T=1.00mm) | | 36 | 200-3255 | 1 | NUT |
| B | | 099-6109 | 2 | SHIM (T=1.05mm) | | 37 | 8T-4133 | 1 | NUT |
| B | | 099-6110 | 2 | SHIM (T=1.10mm) | | 38 | 191-5707 | 1 | SPOOL AS |
| B | | 099-6111 | 2 | SHIM (T=1.15mm) | | 39 | 190-7674 | 1 | SEAL-O-RING (ID=23.70mm) |
| B | | 099-6112 | 2 | SHIM (T=1.20mm) | | 40 | 190-7673 | 1 | SEAL-O-RING (ID=37.70mm) |
| B | | 099-6113 | 2 | SHIM (T=1.25mm) | | 41 | 173-3397 | 1 | LEVER |
| B | | 099-6115 | 2 | SHIM (T=1.30mm) | | 42 | 185-0201 | 1 | PIN AS |
| B | | 099-6117 | 2 | SHIM (T=1.35mm) | | | 129-7978 | 1 | DOWEL |
| B | | 099-6118 | 2 | SHIM (T=1.40mm) | | 43 | 185-0169 | 1 | GUIDE |
| B | | 099-3670 | 2 | SHIM (T=1.95mm) | | 44 | 173-3413 | 1 | COVER |
| B | 2 | 099-6119 | 2 | SHIM (T=1.45mm) | | 45 | 173-3398 | 1 | COVER |
| B | | 099-6120 | 2 | SHIM (T=1.50mm) | | 46 | 150-5797 | 1 | PIN |
| B | | 099-6121 | 2 | SHIM (T=1.55mm) | | 47 | 173-3384 | 1 | PISTON |
| B | | 099-6122 | 2 | SHIM (T=1.60mm) | | | | | |
| B | | 099-6123 | 2 | SHIM (T=1.65mm) | | | | | |
| B | | 099-6124 | 2 | SHIM (T=1.70mm) | | | | | |
| B | | 099-6125 | 2 | SHIM (T=1.75mm) | | | | | |
| B | | 099-6126 | 2 | SHIM (T=1.80mm) | | | | | |
| B | | 099-6127 | 2 | SHIM (T=1.85mm) | | | | | |
| B | | 099-6128 | 2 | SHIM (T=1.90mm) | | | | | |
| | 3 | 9S-4191 | 1 | PLUG | | | | | |
| | 4 | 8T-4223 | 6 | WASHER | | | | | |
| | 5 | 8T-4196 | 2 | BOLT (L=35mm) | | | | | |
| | 6 | 8T-4136 | 2 | BOLT (L=25mm) | | | | | |
| | 7 | 285-4470 | 1 | SEAL-O-RING (ID=151.99mm) | | | | | |
| Y | 8 | 111-9916 | 1 | VALVE GP | | | | | |
| | 9 | 153-8623 | 1 | RING | | | | | |
| | 10 | 301-8294 | 1 | ADJUSTER | | | | | |
| | 11 | 301-6874 | 1 | RETAINER | | | | | |
| | 12 | 189-9763 | 3 | SEAL-O-RING (ID=9.80mm) | | | | | |
| | 13 | 200-3244 | 1 | SPRING | | | | | |
| | 14 | 200-3245 | 1 | SPRING | | | | | |
| | 15 | 200-3246 | 1 | SPRING | | | | | |
| | 16 | 215-9961 | 1 | STOPPER | | | | | |
| | 17 | 215-9962 | 1 | STOPPER | | | | | |
| | 18 | 099-3671 | 1 | SPRING | | | | | |
| | 19 | 225-4607 | 2 | SETSCREW | | | | | |
| | 20 | 234-4452 | 1 | COVER | | | | | |
| | 21 | 234-4453 | 1 | COVER | | | | | |
| | 22 | 300-9715 | 1 | BODY AS | | | | | |
| | 23 | 094-1875 | 1 | DOWEL | | | | | |
| | 24 | 094-1881 | 1 | PLATE | | | | | |
| | 25 | 094-1882 | 13 | PLUG | | | | | |
| | 26 | 273-8316 | 1 | SEAL-O-RING (ID=15.80mm) | | | | | |
| | 27 | 273-8317 | 1 | SEAL-O-RING (ID=24.70mm) | | | | | |
| | 28 | 273-8319 | 1 | SEAL-O-RING (ID=25.70mm) | | | | | |
| | 29 | 273-8318 | 1 | SEAL-O-RING (ID=38.70mm) | | | | | |
| | 30 | 095-1788 | 1 | RING | | | | | |
| | 31 | 096-4878 | 2 | NUT | | | | | |
| | 32 | 7I-2272 | 2 | BOLT (L=12mm) | | | | | |
| | 33 | 6V-8200 | 6 | BOLT (L=35mm) | | | | | |
| | 34 | 3J-1907 | 2 | SEAL-O-RING (ID=11.89mm) | | | | | |
| | 35 | 3D-2891 | 1 | BALL | | | | | |

B—USE AS REQUIRED

Y—SEE SEPARATE ILLUSTRATION

H95279E 07

## 256-0093 HEAD GP-PUMP CONTROL

Part of 272-6955-Page339
111-9916-Page576

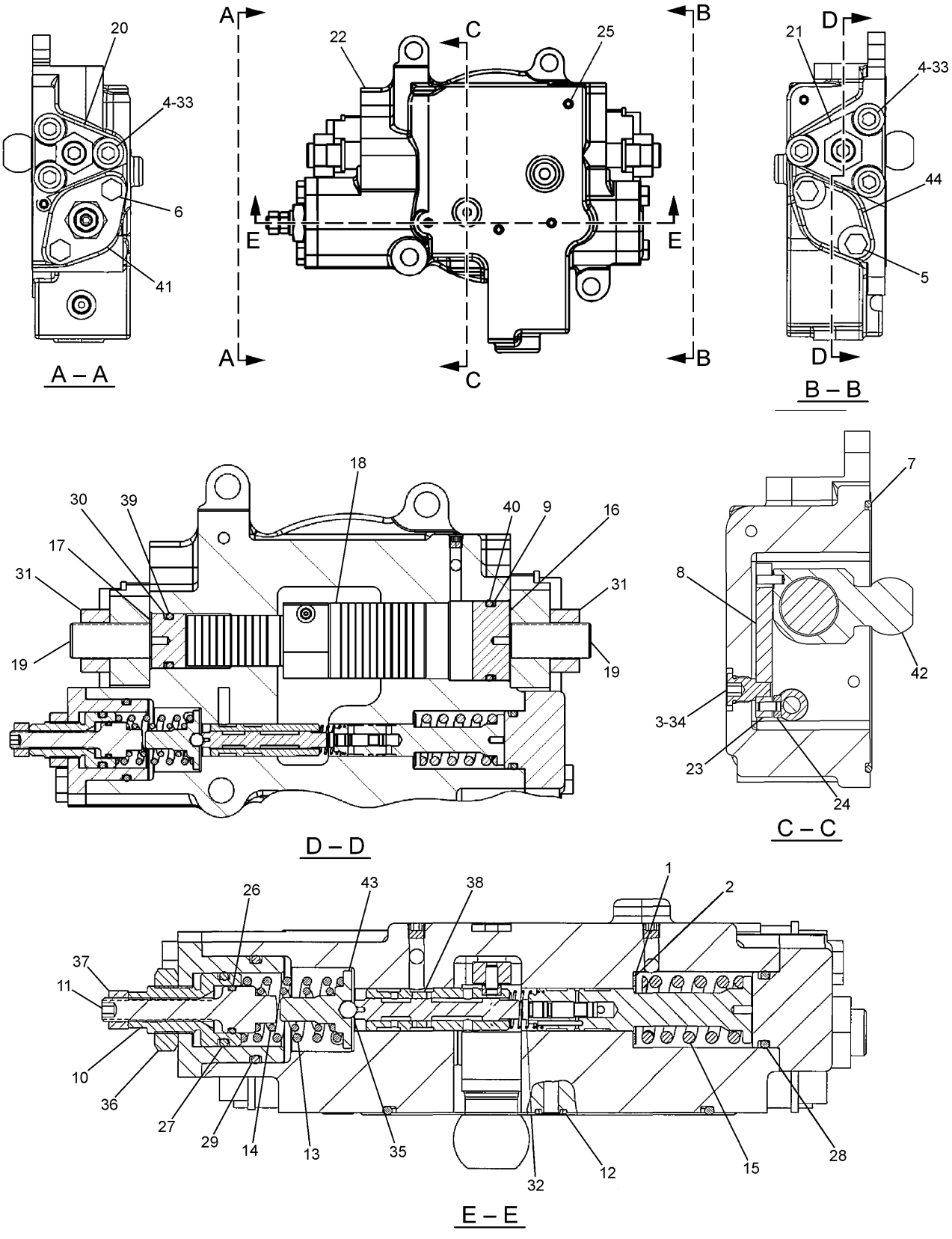


H95278E 07

**256-0096 HEAD GP-PUMP CONTROL**
Part of 272-6955-Page339

# HYDRAULIC SYSTEM

| NOTE | No. | PART No. | QTY | PART NAME | NOTE | No. | PART No. | QTY | PART NAME |
|---|---|---|---|---|---|---|---|---|---|
| B | 1 | 099-3669 | 2 | SHIM (T=1.00mm) | | 36 | 200-3255 | 1 | NUT |
| B | | 099-6109 | 2 | SHIM (T=1.05mm) | | 37 | 8T-4133 | 1 | NUT |
| B | | 099-6110 | 2 | SHIM (T=1.10mm) | | 38 | 191-5707 | 1 | SPOOL AS |
| B | | 099-6111 | 2 | SHIM (T=1.15mm) | | 39 | 190-7674 | 1 | SEAL-O-RING (ID=23.70mm) |
| B | | 099-6112 | 2 | SHIM (T=1.20mm) | | 40 | 190-7673 | 1 | SEAL-O-RING (ID=37.70mm) |
| B | | 099-6113 | 2 | SHIM (T=1.25mm) | | 41 | 173-3398 | 1 | COVER |
| B | | 099-6115 | 2 | SHIM (T=1.30mm) | | 42 | 185-0201 | 1 | PIN AS |
| B | | 099-6117 | 2 | SHIM (T=1.35mm) | | | 129-7978 | 1 | DOWEL |
| B | | 099-6118 | 2 | SHIM (T=1.40mm) | | 43 | 185-0169 | 1 | GUIDE |
| B | | 099-3670 | 2 | SHIM (T=1.95mm) | | 44 | 173-3413 | 1 | COVER |
| B | 2 | 099-6119 | 2 | SHIM (T=1.45mm) | | | | | |
| B | | 099-6120 | 2 | SHIM (T=1.50mm) | | | | | |
| B | | 099-6121 | 2 | SHIM (T=1.55mm) | | | | | |
| B | | 099-6122 | 2 | SHIM (T=1.60mm) | | | | | |
| B | | 099-6123 | 2 | SHIM (T=1.65mm) | | | | | |
| B | | 099-6124 | 2 | SHIM (T=1.70mm) | | | | | |
| B | | 099-6125 | 2 | SHIM (T=1.75mm) | | | | | |
| B | | 099-6126 | 2 | SHIM (T=1.80mm) | | | | | |
| B | | 099-6127 | 2 | SHIM (T=1.85mm) | | | | | |
| B | | 099-6128 | 2 | SHIM (T=1.90mm) | | | | | |
| | 3 | 150-5797 | 1 | PIN | | | | | |
| | 4 | 8T-4223 | 6 | WASHER | | | | | |
| | 5 | 8T-4196 | 2 | BOLT (L=35mm) | | | | | |
| | 6 | 8T-4136 | 2 | BOLT (L=25mm) | | | | | |
| | 7 | 285-4470 | 1 | SEAL-O-RING (ID=151.99mm) | | | | | |
| | 8 | 173-3397 | 1 | LEVER | | | | | |
| | 9 | 153-8623 | 1 | RING | | | | | |
| | 10 | 301-8294 | 1 | ADJUSTER | | | | | |
| | 11 | 301-6874 | 1 | RETAINER | | | | | |
| | 12 | 189-9763 | 3 | SEAL-O-RING (ID=9.80mm) | | | | | |
| | 13 | 200-3244 | 1 | SPRING | | | | | |
| | 14 | 200-3245 | 1 | SPRING | | | | | |
| | 15 | 200-3246 | 1 | SPRING | | | | | |
| | 16 | 215-9961 | 1 | STOPPER | | | | | |
| | 17 | 215-9962 | 1 | STOPPER | | | | | |
| | 18 | 173-3384 | 1 | PISTON | | | | | |
| | 19 | 225-4607 | 2 | SETSCREW | | | | | |
| | 20 | 234-4452 | 1 | COVER | | | | | |
| | 21 | 234-4453 | 1 | COVER | | | | | |
| | 22 | 300-9716 | 1 | BODY AS | | | | | |
| | 23 | 094-1875 | 1 | DOWEL | | | | | |
| | 24 | 094-1881 | 1 | PLATE | | | | | |
| | 25 | 094-1882 | 9 | PLUG | | | | | |
| | 26 | 273-8316 | 1 | SEAL-O-RING (ID=15.80mm) | | | | | |
| | 27 | 273-8317 | 1 | SEAL-O-RING (ID=24.70mm) | | | | | |
| | 28 | 273-8319 | 1 | SEAL-O-RING (ID=25.70mm) | | | | | |
| | 29 | 273-8318 | 1 | SEAL-O-RING (ID=38.70mm) | | | | | |
| | 30 | 095-1788 | 1 | RING | | | | | |
| | 31 | 096-4878 | 2 | NUT | | | | | |
| | 32 | 099-3671 | 1 | SPRING | | | | | |
| | 33 | 6V-8200 | 6 | BOLT (L=35mm) | | | | | |
| | 34 | 3J-1907 | 1 | SEAL-O-RING (ID=11.89mm) | | | | | |
| | 35 | 3D-2891 | 1 | BALL | | | | | |

B—USE AS REQUIRED

H95278E 07

## 256-0096 HEAD GP-PUMP CONTROL

Part of 272-6955-Page339

# HYDRAULIC SYSTEM

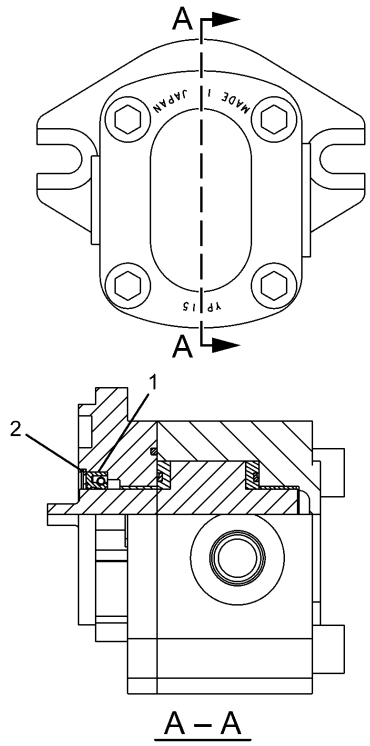


| NOTE | No. | PART No. | QTY | PART NAME |
|---|---|---|---|---|
| | 1 | 250-2503 | 1 | SEAL KIT |
| | 2 | 9T-0835 | 1 | RING |

H90268E 03

## 126-2016 PUMP GP-GEAR

Part of 272-6955-Page341

Consists of :


| | | | Page |
|---|---|---|---|
| 1 | 191-5537 | DRIVE GP-PUMP..... | 348 |
| 1 | 298-2995 | SHEET AS..... | 254 |


H95306E 01

**290-1912 DRIVE GP-PUMP**
An Attachment

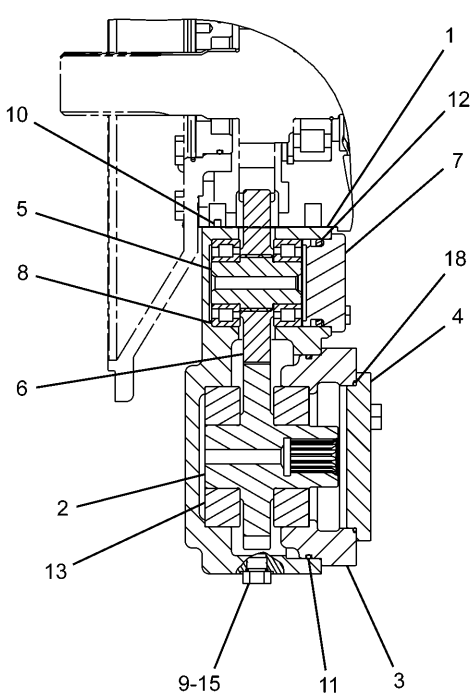


A – A

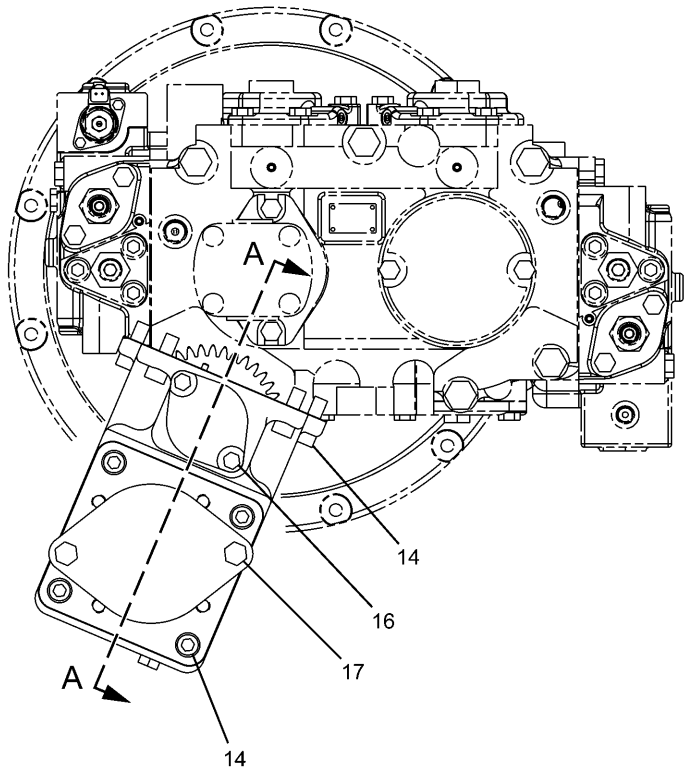


| NOTE | No. | PART No. | QTY | PART NAME | NOTE | No. | PART No. | QTY | PART NAME |
|---|---|---|---|---|---|---|---|---|---|
| | 1 | 129-7857 | 1 | GASKET | | | | | |
| | 2 | 173-3406 | 1 | SHAFT | | | | | |
| | 3 | 173-3436 | 1 | COVER | | | | | |
| | 4 | 177-2585 | 1 | COVER | | | | | |
| | 5 | 191-5539 | 1 | SHAFT | | | | | |
| | 6 | 191-5540 | 1 | GEAR (Z=18) | | | | | |
| | 7 | 191-5541 | 1 | COVER | | | | | |
| | 8 | 191-5601 | 2 | BEARING | | | | | |
| | 9 | 9S-4191 | 1 | PLUG | | | | | |
| | 10 | 094-1875 | 2 | DOWEL | | | | | |
| | 11 | 095-1680 | 1 | SEAL-O-RING (ID=139.40mm) | | | | | |
| | 12 | 096-0121 | 1 | SEAL-O-RING (ID=51.60mm) | | | | | |
| | 13 | 099-2096 | 2 | BEARING | | | | | |
| | 14 | 101-7402 | 8 | BOLT (L=30mm) | | | | | |
| | 15 | 3J-1907 | 1 | SEAL-O-RING (ID=11.89mm) | | | | | |
| | 16 | 8T-4189 | 2 | BOLT (L=20mm) | | | | | |
| | 17 | 8T-4192 | 2 | BOLT (L=25mm) | | | | | |
| | 18 | 8T-5049 | 1 | SEAL-O-RING (ID=101.27mm) | | | | | |

H88910E 03

## 191-5537 DRIVE GP-PUMP

Part of 290-1912-Page347
An Attachment

Consists of :

Page

| | | |
|---|---|---|
| 1 | 3K-0360 | SEAL-O-RING (ID=16.36mm) |
| 1 | 087-4456 | ACCUMULATOR GP |

H69979E 00

## 164-6981 ACCUMULATOR GP

Part of 248-9851-Page455

Consists of :

| | | | Page |
|---|---|---|---|
| 1 | 242-6731 | CYLINDER & SEAL GP-BOOM | 356 |
| 1 | 242-6732 | LINES GP-BOOM CYLINDER | 380 |

H89962E 01

## 242-6730 CYLINDER & LINES GP-BOOM

Left Hand
Part of 240-3828,240-3830-Page731,240-3833-Page732,302-9207-Page740
An Attachment

Consists of :

| | | | Page |
|---|---|---|---|
| 1 | 242-6731 | CYLINDER & SEAL GP-BOOM | 356 |
| 1 | 242-6737 | LINES GP-BOOM CYLINDER | 381 |

H89963E 01

## 242-6736 CYLINDER & LINES GP-BOOM

Right Hand
Part of 240-3828,240-3830-Page731,240-3833-Page732,302-9207-Page740
An Attachment

Consists of :

| | | | Page |
|---|---|---|---|
| 1 | 242-6734 | CYLINDER & SEAL GP-STICK | 358 |
| 1 | 242-6735 | LINES GP-STICK CYLINDER | 382 |

H89966E 01

**242-6733 CYLINDER & LINES GP-STICK**
Part of 240-3828-Page731
An Attachment

Consists of :

| | | | Page |
|---|---|---|---|
| 1 | 242-6735 | LINES GP-STICK CYLINDER | 382 |
| 1 | 242-6744 | CYLINDER & SEAL GP-STICK | 360 |

H89965E 00

**242-6743 CYLINDER & LINES GP-STICK**
R-Boom (Heavy Duty)
Part of 240-3830-Page731
An Attachment

Consists of :

| | | | Page |
|---|---|---|---|
| 1 | 242-6735 | LINES GP-STICK CYLINDER | 382 |
| 1 | 242-6751 | CYLINDER & SEAL GP-STICK | 362 |

H89964E 01

**242-6750 CYLINDER & LINES GP-STICK**
S/N BWZ 1-Up, DFB 1-Up
Part of 240-3833-Page732
An Attachment

Consists of :

| | | | Page |
|---|---|---|---|
| 1 | 225-4588 | CYLINDER & SEAL GP-STICK | 364 |
| 1 | 268-7257 | LINES GP-STICK CYLINDER | 384 |

H91295E 00

**268-7256 CYLINDER & LINES GP-STICK**
Long Reach Front
S/N DFB 1-Up
Part of 302-9207-Page740
An Attachment

Consists of :

| | | | Page |
|---|---|---|---|
| 1 | 242-6756 | CYLINDER & SEAL GP-BUCKET | 366 |
| 1 | 242-6757 | LINES GP-BUCKET CYLINDER | 385 |

H89952E 01

## 242-6755 CYLINDER & LINES GP-BUCKET

B Family
Part of 240-3860,247-7453-Page737,257-2926-Page739
An Attachment

Consists of :

| | | | Page |
|---|---|---|---|
| 1 | 225-4591 | CYLINDER & SEAL GP-BUCKET | 368 |
| 1 | 225-4592 | LINES GP-BUCKET CYLINDER | 386 |

H89370E 01

## 225-4590 CYLINDER & LINES GP-BUCKET

CB Family
Part of 229-1772-Page738
An Attachment

Consists of :

| | | | Page |
|---|---|---|---|
| 1 | 242-6770 | CYLINDER & SEAL GP-BUCKET | 370 |
| 1 | 242-6771 | LINES GP-BUCKET CYLINDER | 387 |

H90077E 00

## 242-6769 CYLINDER & LINES GP-BUCKET

Part of 240-3867-Page738
An Attachment

Consists of :

| | | | Page |
|---|---|---|---|
| 1 | 248-7854 | CYLINDER & SEAL GP-BUCKET | 372 |
| 1 | 127-6797 | LINES GP-BUCKET CYLINDER | 388 |

H88060E 00

## 253-6664 CYLINDER & LINES GP-BUCKET

Long Reach Front
S/N DFB 1-Up
Part of 302-9207-Page740
An Attachment

# MEMORANDA

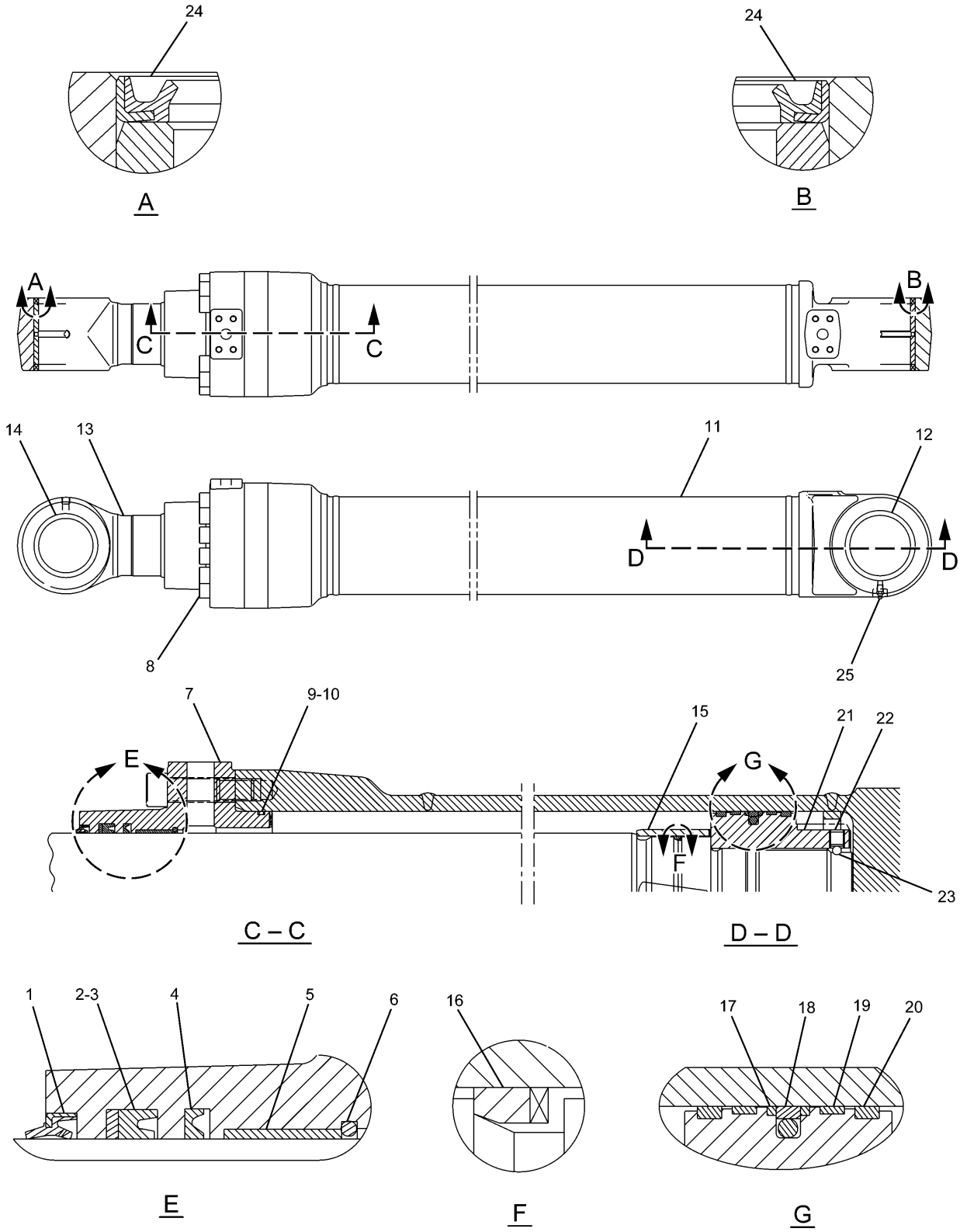


H96717E 02

**242-6731 CYLINDER & SEAL GP-BOOM**
Part of 242-6730,242-6736-Page350
An Attachment

# HYDRAULIC SYSTEM

| NOTE | No. | PART No. | QTY | PART NAME | NOTE | No. | PART No. | QTY | PART NAME |
|---|---|---|---|---|---|---|---|---|---|
| J | 1 | 121-1611 | 1 | SEAL | | | | | |
| J | 2 | 096-1568 | 1 | RING | | | | | |
| J | 3 | 096-1567 | 1 | SEAL | | | | | |
| J | 4 | 204-3622 | 1 | SEAL | | | | | |
| | 5 | 096-4402 | 1 | BEARING | | | | | |
| | 6 | 094-0747 | 1 | RING | | | | | |
| | 7 | 185-0334 | 1 | HEAD | | | | | |
| | 8 | 8T-1447 | 12 | BOLT (L=70mm) | | | | | |
| J | 9 | 095-1717 | 1 | SEAL-O-RING (ID=114.40mm) | | | | | |
| J | 10 | 096-3964 | 1 | RING | | | | | |
| | 11 | 247-8866 | 1 | CYLINDER AS | | | | | |
| | 12 | 241-7379 | 1 | BEARING | | | | | |
| | 13 | 247-8867 | 1 | ROD AS | | | | | |
| | 14 | 241-7380 | 1 | BEARING | | | | | |
| | 15 | 4I-8864 | 1 | STOP | | | | | |
| J | 16 | 126-1935 | 1 | RING | | | | | |
| J | 17 | 4I-3615 | 2 | RING | | | | | |
| J | 18 | 096-7803 | 1 | SEAL AS | | | | | |
| J | 19 | 247-8865 | 2 | RING | | | | | |
| J | 20 | 086-0255 | 2 | RING | | | | | |
| | 21 | 247-8864 | 1 | PISTON | | | | | |
| | 22 | 096-3216 | 1 | SETSCREW | | | | | |
| | 23 | 3D-2891 | 1 | BALL | | | | | |
| | 24 | 166-1494 | 4 | SEAL | | | | | |
| | 25 | 3B-8489 | 1 | FITTING | | | | | |
| | | | | THE FOLLOWING REPAIR KIT IS AVAILABLE: | | | | | |
| | | 247-8868 | 1 | SEAL KIT (INCLUDES PARTS MARKED J) | | | | | |

H96717E 02

## 242-6731 CYLINDER & SEAL GP-BOOM

Part of 242-6730,242-6736-Page350

An Attachment

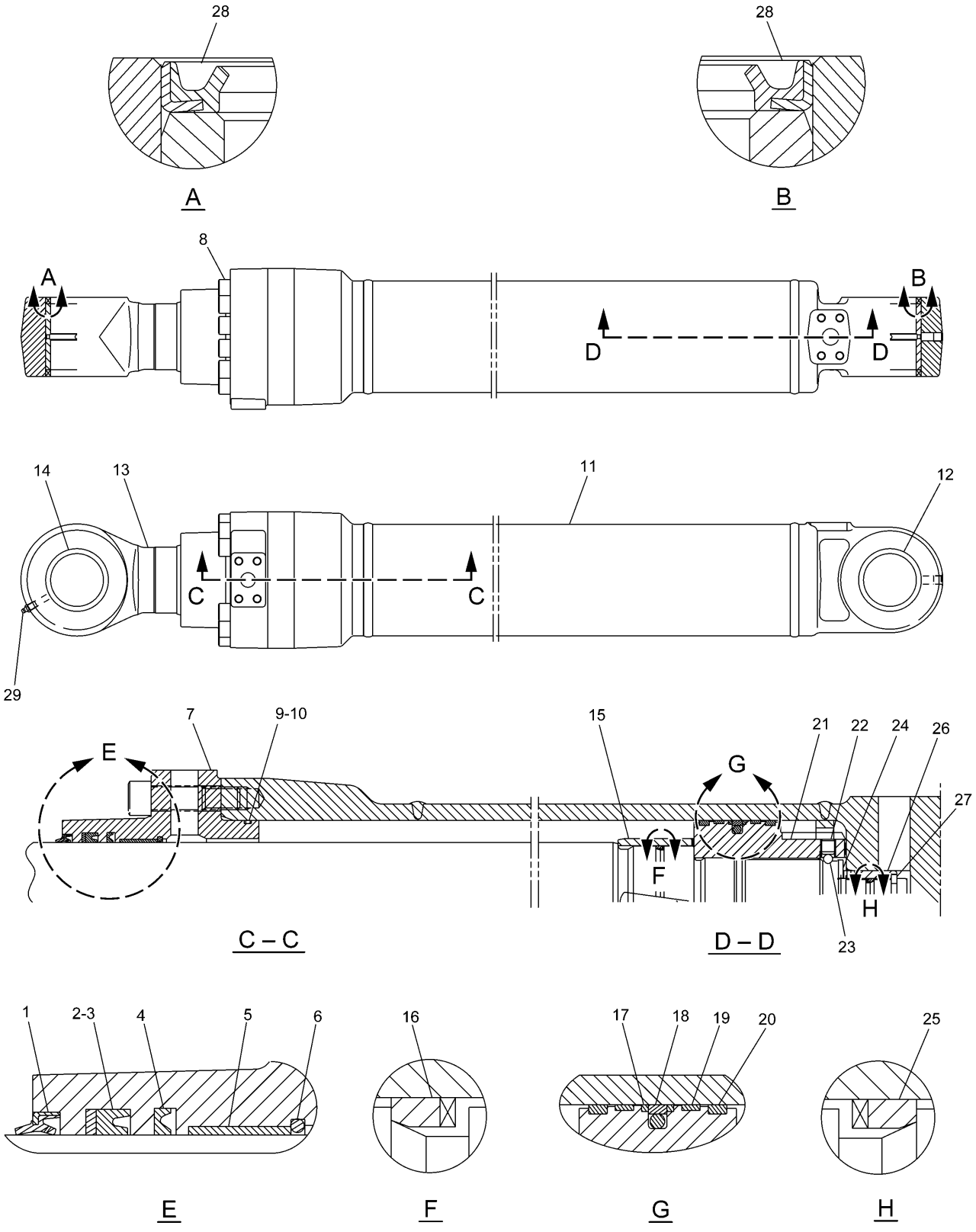


H89649E 01

**242-6734 CYLINDER & SEAL GP-STICK**
Part of 242-6733-Page351
An Attachment

# HYDRAULIC SYSTEM

| NOTE | No. | PART No. | QTY | PART NAME | NOTE | No. | PART No. | QTY | PART NAME |
|---|---|---|---|---|---|---|---|---|---|
| J | 1 | 133-6904 | 1 | SEAL | | | | | |
| J | 2 | 121-1372 | 1 | RING | | | | | |
| J | 3 | 121-1371 | 1 | SEAL | | | | | |
| J | 4 | 204-3623 | 1 | SEAL | | | | | |
| | 5 | 096-5625 | 1 | BEARING | | | | | |
| | 6 | 094-1931 | 1 | RING | | | | | |
| | 7 | 188-4181 | 1 | HEAD | | | | | |
| | 8 | 4I-3628 | 12 | BOLT (L=80mm) | | | | | |
| J | 9 | 095-1721 | 1 | SEAL-O-RING (ID=134.40mm) | | | | | |
| J | 10 | 4I-3627 | 1 | RING | | | | | |
| | 11 | 247-8876 | 1 | CYLINDER AS | | | | | |
| | 12 | 241-7381 | 1 | BEARING | | | | | |
| | 13 | 247-8877 | 1 | ROD AS | | | | | |
| | 14 | 241-7381 | 1 | BEARING | | | | | |
| | 15 | 4I-8869 | 1 | STOP | | | | | |
| J | 16 | 126-1876 | 1 | RING | | | | | |
| J | 17 | 4I-3631 | 2 | RING | | | | | |
| J | 18 | 096-1570 | 1 | SEAL AS | | | | | |
| J | 19 | 247-8874 | 2 | RING | | | | | |
| J | 20 | 096-1571 | 2 | RING | | | | | |
| | 21 | 247-8873 | 1 | PISTON | | | | | |
| | 22 | 096-6210 | 1 | SETSCREW | | | | | |
| | 23 | 4B-9880 | 1 | BALL | | | | | |
| | 24 | 085-8605 | 1 | RING | | | | | |
| J | 25 | 194-8359 | 1 | RING | | | | | |
| | 26 | 121-1549 | 1 | STOP | | | | | |
| | 27 | 085-8604 | 2 | RING | | | | | |
| | 28 | 166-1494 | 4 | SEAL | | | | | |
| | 29 | 3B-8489 | 1 | FITTING | | | | | |
| | | | | THE FOLLOWING REPAIR KIT IS AVAILABLE: | | | | | |
| | | 247-8878 | 1 | SEAL KIT (INCLUDES PARTS MARKED J) | | | | | |

H89649E 01

## 242-6734 CYLINDER & SEAL GP-STICK

Part of 242-6733-Page351
An Attachment

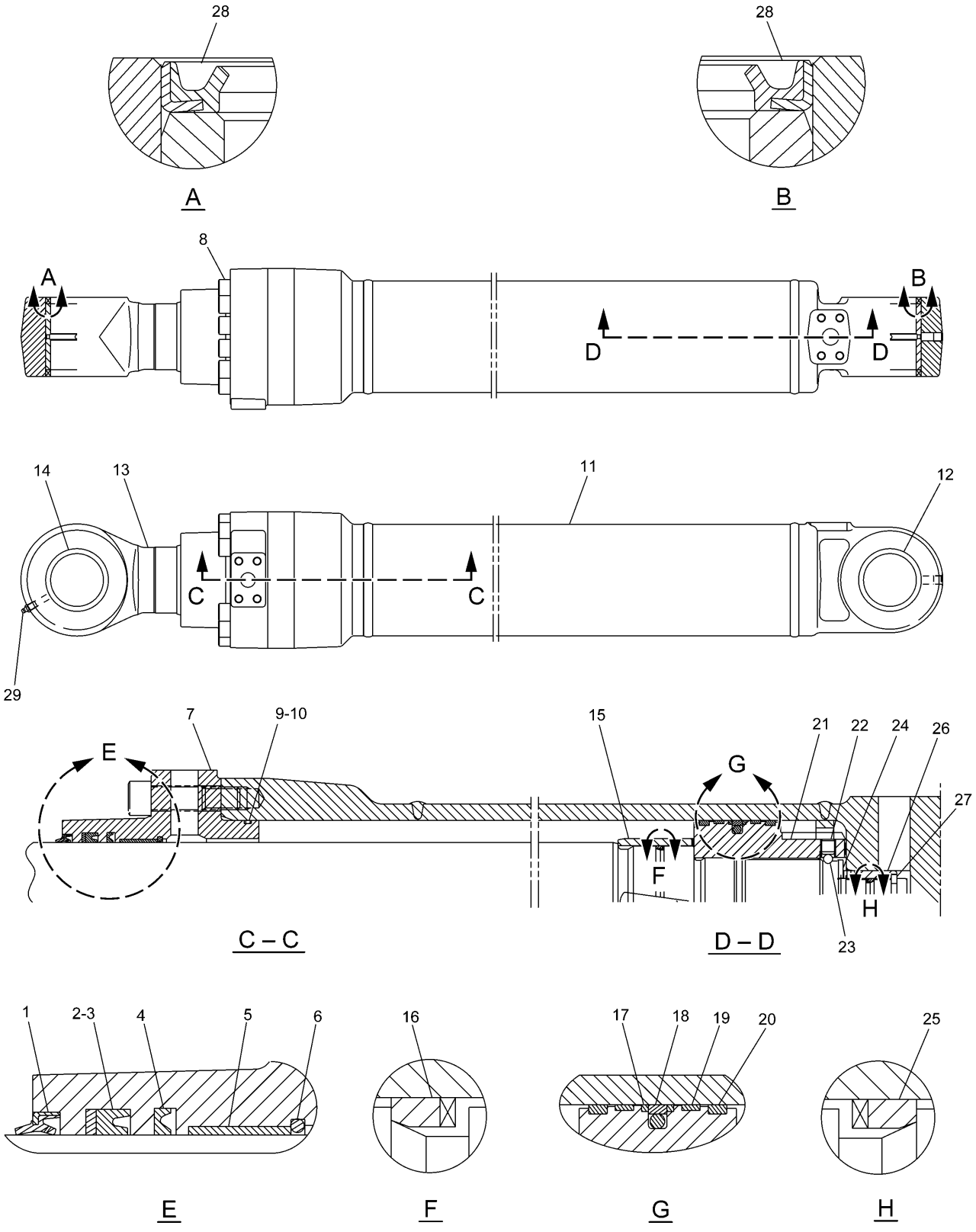


H89639E 00

**242-6744 CYLINDER & SEAL GP-STICK**
R-Boom (Heavy Duty)
Part of 242-6743-Page351
An Attachment

# HYDRAULIC SYSTEM

| NOTE | No. | PART No. | QTY | PART NAME | NOTE | No. | PART No. | QTY | PART NAME |
|---|---|---|---|---|---|---|---|---|---|
| J | 1 | 133-6904 | 1 | SEAL | | | | | |
| J | 2 | 121-1372 | 1 | RING | | | | | |
| J | 3 | 121-1371 | 1 | SEAL | | | | | |
| J | 4 | 204-3623 | 1 | SEAL | | | | | |
| | 5 | 096-5625 | 1 | BEARING | | | | | |
| | 6 | 094-1931 | 1 | RING | | | | | |
| | 7 | 188-4181 | 1 | HEAD | | | | | |
| | 8 | 4I-3628 | 12 | BOLT (L=80mm) | | | | | |
| J | 9 | 095-1721 | 1 | SEAL-O-RING (ID=134.40mm) | | | | | |
| J | 10 | 4I-3627 | 1 | RING | | | | | |
| | 11 | 247-8876 | 1 | CYLINDER AS | | | | | |
| | 12 | 241-7381 | 1 | BEARING | | | | | |
| | 13 | 247-8877 | 1 | ROD AS | | | | | |
| | 14 | 241-7381 | 1 | BEARING | | | | | |
| | 15 | 4I-8869 | 1 | STOP | | | | | |
| J | 16 | 214-4501 | 1 | RING | | | | | |
| J | 17 | 4I-3631 | 2 | RING | | | | | |
| J | 18 | 096-1570 | 1 | SEAL AS | | | | | |
| J | 19 | 247-8874 | 2 | RING | | | | | |
| J | 20 | 096-1571 | 2 | RING | | | | | |
| | 21 | 247-8873 | 1 | PISTON | | | | | |
| | 22 | 096-6210 | 1 | SETSCREW | | | | | |
| | 23 | 4B-9880 | 1 | BALL | | | | | |
| | 24 | 085-8605 | 1 | RING | | | | | |
| J | 25 | 194-8359 | 1 | RING | | | | | |
| | 26 | 121-1549 | 1 | STOP | | | | | |
| | 27 | 085-8604 | 2 | RING | | | | | |
| | 28 | 166-1494 | 4 | SEAL | | | | | |
| | 29 | 3B-8489 | 1 | FITTING | | | | | |
| | | | | THE FOLLOWING REPAIR | | | | | |
| | | | | KIT IS AVAILABLE: | | | | | |
| | | 247-8974 | 1 | SEAL KIT | | | | | |
| | | | | (INCLUDES PARTS MARKED J) | | | | | |

H89639E 00

## 242-6744 CYLINDER & SEAL GP-STICK

R-Boom (Heavy Duty)
Part of 242-6743-Page351
An Attachment

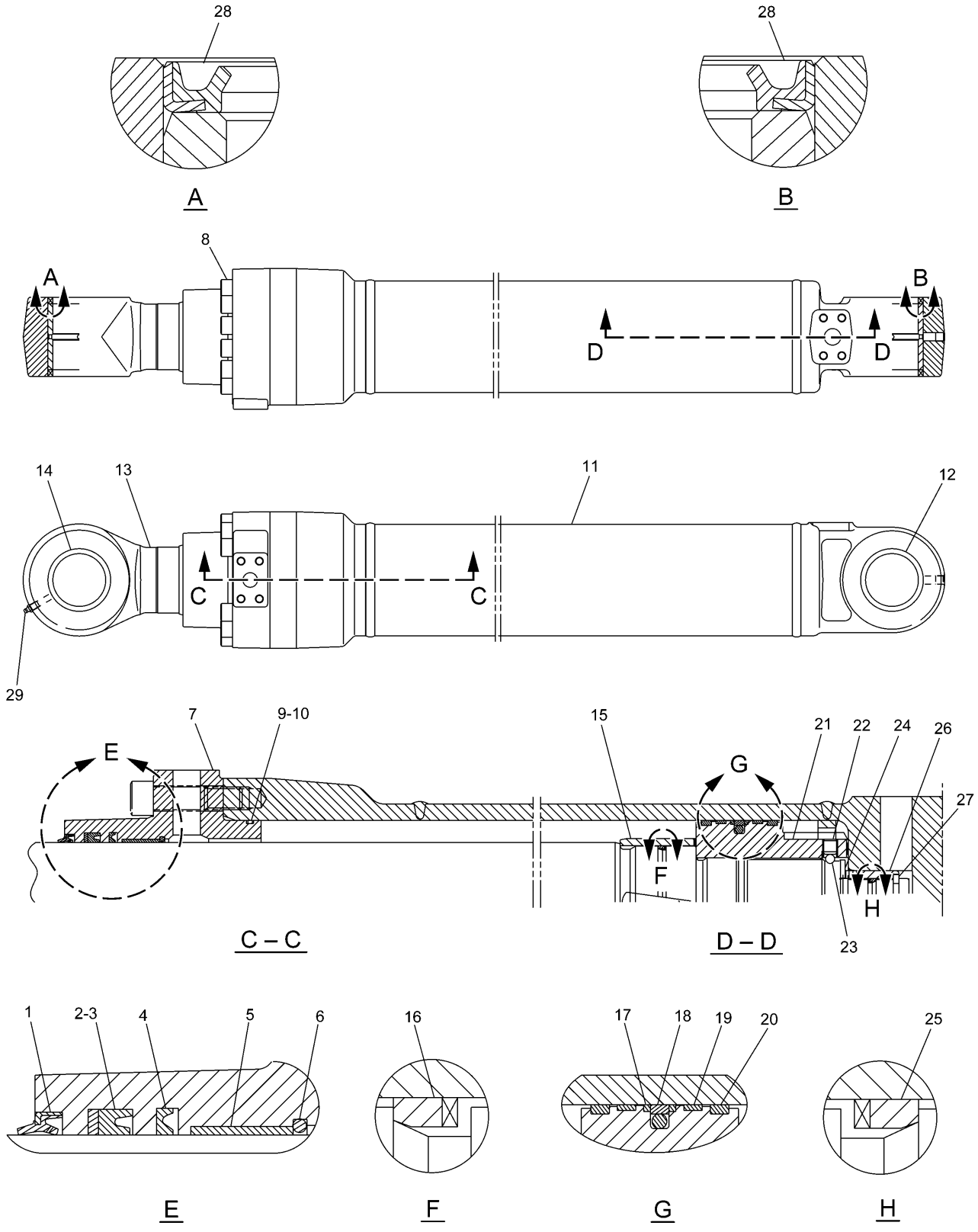


H89648E 01

**242-6751 CYLINDER & SEAL GP-STICK**

M-Boom
S/N BWZ 1-Up, DFB 1-Up
Part of 242-6750-Page352
An Attachment

# HYDRAULIC SYSTEM

| NOTE | No. | PART No. | QTY | PART NAME | NOTE | No. | PART No. | QTY | PART NAME |
|---|---|---|---|---|---|---|---|---|---|
| J | 1 | 133-6904 | 1 | SEAL | | | | | |
| J | 2 | 121-1372 | 1 | RING | | | | | |
| J | 3 | 121-1371 | 1 | SEAL | | | | | |
| J | 4 | 204-3623 | 1 | SEAL | | | | | |
| | 5 | 096-5625 | 1 | BEARING | | | | | |
| | 6 | 094-1931 | 1 | RING | | | | | |
| | 7 | 188-4181 | 1 | HEAD | | | | | |
| | 8 | 4I-3628 | 12 | BOLT (L=80mm) | | | | | |
| J | 9 | 095-1721 | 1 | SEAL-O-RING (ID=134.40mm) | | | | | |
| J | 10 | 4I-3627 | 1 | RING | | | | | |
| | 11 | 247-8881 | 1 | CYLINDER AS | | | | | |
| | 12 | 241-7381 | 1 | BEARING | | | | | |
| | 13 | 247-8882 | 1 | ROD AS | | | | | |
| | 14 | 241-7381 | 1 | BEARING | | | | | |
| | 15 | 4I-8869 | 1 | STOP | | | | | |
| J | 16 | 126-1876 | 1 | RING | | | | | |
| J | 17 | 4I-3631 | 2 | RING | | | | | |
| J | 18 | 096-1570 | 1 | SEAL AS | | | | | |
| J | 19 | 247-8874 | 2 | RING | | | | | |
| J | 20 | 096-1571 | 2 | RING | | | | | |
| | 21 | 247-8873 | 1 | PISTON | | | | | |
| | 22 | 096-6210 | 1 | SETSCREW | | | | | |
| | 23 | 4B-9880 | 1 | BALL | | | | | |
| | 24 | 085-8605 | 1 | RING | | | | | |
| J | 25 | 194-8359 | 1 | RING | | | | | |
| | 26 | 121-1549 | 1 | STOP | | | | | |
| | 27 | 085-8604 | 2 | RING | | | | | |
| | 28 | 166-1494 | 4 | SEAL | | | | | |
| | 29 | 3B-8489 | 1 | FITTING | | | | | |
| | | | | THE FOLLOWING REPAIR | | | | | |
| | | | | KIT IS AVAILABLE: | | | | | |
| | | 247-8878 | 1 | SEAL KIT | | | | | |
| | | | | (INCLUDES PARTS MARKED J) | | | | | |

H89648E 01

## 242-6751 CYLINDER & SEAL GP-STICK

M-Boom
S/N BWZ 1-Up, DFB 1-Up
Part of 242-6750-Page352
An Attachment

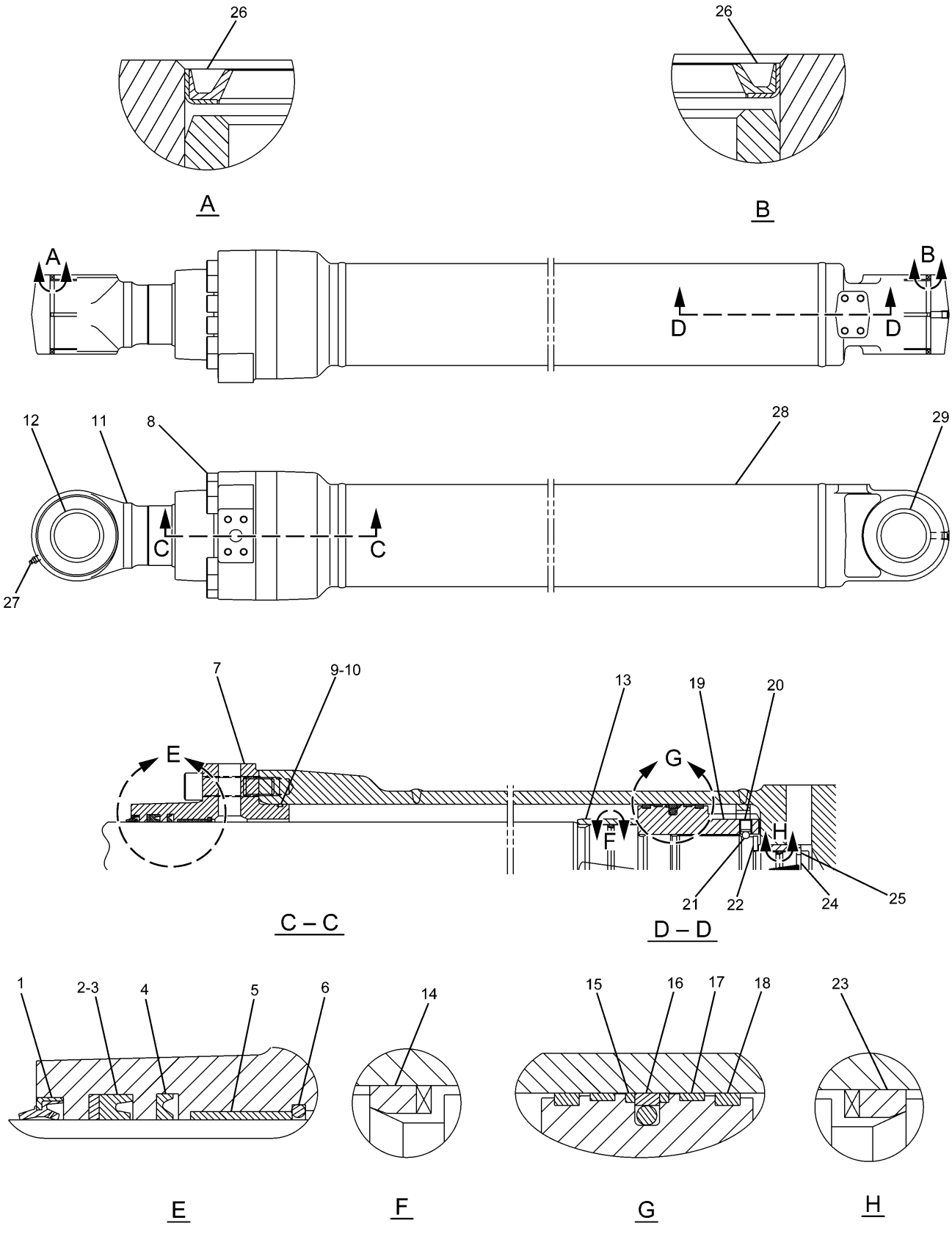


H89311E 01

**225-4588 CYLINDER & SEAL GP-STICK**
Long Reach Front
S/N DFB 1-Up
Part of 268-7256-Page352
An Attachment

# HYDRAULIC SYSTEM

| NOTE | No. | PART No. | QTY | PART NAME | NOTE | No. | PART No. | QTY | PART NAME |
|---|---|---|---|---|---|---|---|---|---|
| J | 1 | 133-6909 | 1 | SEAL | | | | | |
| J | 2 | 194-8355 | 1 | RING | | | | | |
| J | 3 | 194-8354 | 1 | SEAL | | | | | |
| J | 4 | 209-6009 | 1 | SEAL | | | | | |
| | 5 | 099-5572 | 1 | BEARING | | | | | |
| | 6 | 099-5573 | 1 | RING | | | | | |
| | 7 | 194-8353 | 1 | HEAD | | | | | |
| | 8 | 9X-2404 | 12 | BOLT (L=90mm) | | | | | |
| J | 9 | 095-1723 | 1 | SEAL-O-RING (ID=144.40mm) | | | | | |
| J | 10 | 114-0706 | 1 | RING | | | | | |
| | 11 | 234-4578 | 1 | ROD AS | | | | | |
| | 12 | 235-7770 | 1 | BEARING | | | | | |
| | 13 | 121-1548 | 1 | STOP | | | | | |
| J | 14 | 194-8356 | 1 | RING | | | | | |
| J | 15 | 114-0711 | 2 | RING | | | | | |
| J | 16 | 114-0710 | 1 | SEAL AS | | | | | |
| J | 17 | 234-4574 | 2 | RING | | | | | |
| J | 18 | 114-0713 | 2 | RING | | | | | |
| | 19 | 234-4573 | 1 | PISTON | | | | | |
| | 20 | 096-6210 | 1 | SETSCREW | | | | | |
| | 21 | 4B-9880 | 1 | BALL | | | | | |
| | 22 | 085-8605 | 1 | RING | | | | | |
| J | 23 | 194-8359 | 1 | RING | | | | | |
| | 24 | 121-1549 | 1 | STOP | | | | | |
| | 25 | 085-8604 | 2 | RING | | | | | |
| | 26 | 166-1494 | 4 | SEAL | | | | | |
| | 27 | 3B-8489 | 1 | FITTING | | | | | |
| | 28 | 234-4577 | 1 | CYLINDER AS | | | | | |
| | 29 | 235-7770 | 1 | BEARING | | | | | |
| | | | | THE FOLLOWING REPAIR KIT IS AVAILABLE: | | | | | |
| | | 234-4576 | 1 | SEAL KIT (INCLUDES PARTS MARKED J) | | | | | |

H89311E 01

## 225-4588 CYLINDER & SEAL GP-STICK

Long Reach Front
S/N DFB 1-Up
Part of 268-7256-Page352
An Attachment

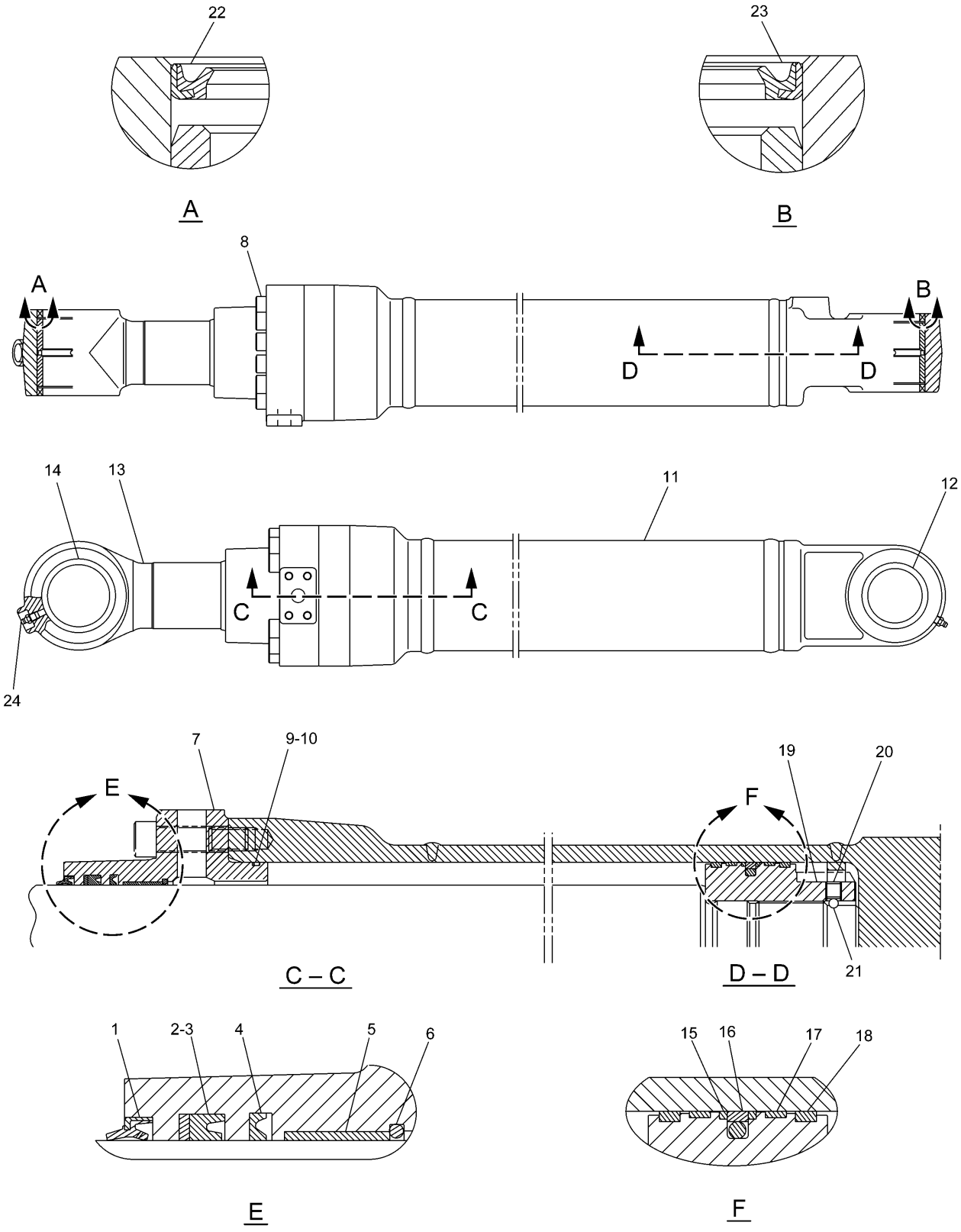


H96716E 02

**242-6756 CYLINDER & SEAL GP-BUCKET**
B Family
Part of 242-6755-Page353
An Attachment

# HYDRAULIC SYSTEM

| NOTE | No. | PART No. | QTY | PART NAME | NOTE | No. | PART No. | QTY | PART NAME |
|---|---|---|---|---|---|---|---|---|---|
| J | 1 | 121-1611 | 1 | SEAL | | | | | |
| J | 2 | 096-1568 | 1 | RING | | | | | |
| J | 3 | 096-1567 | 1 | SEAL | | | | | |
| J | 4 | 204-3622 | 1 | SEAL | | | | | |
| | 5 | 096-4402 | 1 | BEARING | | | | | |
| | 6 | 094-0747 | 1 | RING | | | | | |
| | 7 | 177-2611 | 1 | HEAD | | | | | |
| | 8 | 8T-1447 | 12 | BOLT (L=70mm) | | | | | |
| J | 9 | 095-1717 | 1 | SEAL-O-RING (ID=114.40mm) | | | | | |
| J | 10 | 096-3964 | 1 | RING | | | | | |
| | 11 | 247-8886 | 1 | CYLINDER AS | | | | | |
| | 12 | 235-7769 | 1 | BEARING | | | | | |
| | 13 | 247-8887 | 1 | ROD AS | | | | | |
| | 14 | 241-7382 | 1 | BEARING | | | | | |
| J | 15 | 4I-3615 | 2 | RING | | | | | |
| J | 16 | 096-7803 | 1 | SEAL AS | | | | | |
| J | 17 | 247-8865 | 2 | RING | | | | | |
| J | 18 | 086-0255 | 2 | RING | | | | | |
| | 19 | 247-8885 | 1 | PISTON | | | | | |
| | 20 | 096-3216 | 1 | SETSCREW | | | | | |
| | 21 | 3D-2891 | 1 | BALL | | | | | |
| | 22 | 166-1494 | 2 | SEAL | | | | | |
| | 23 | 235-7679 | 2 | SEAL | | | | | |
| | 24 | 3B-8489 | 2 | FITTING | | | | | |
| | | | | THE FOLLOWING REPAIR KIT IS AVAILABLE: | | | | | |
| | | 247-8888 | 1 | SEAL KIT (INCLUDES PARTS MARKED J) | | | | | |

H96716E 02

## 242-6756 CYLINDER & SEAL GP-BUCKET

B Family

Part of 242-6755-Page353

An Attachment

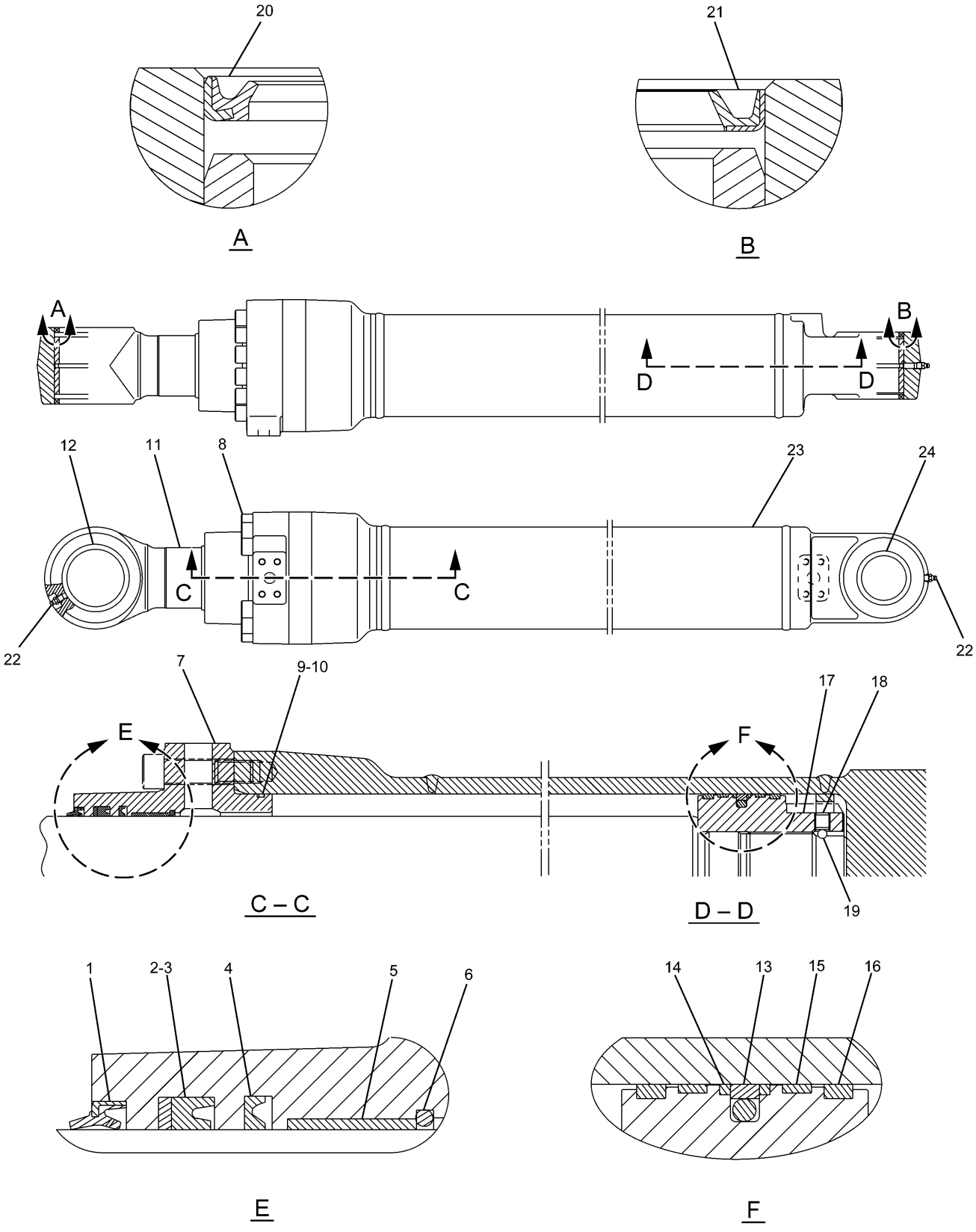


H89322E 01

**225-4591 CYLINDER & SEAL GP-BUCKET**

CB Family

Part of 225-4590-Page353

An Attachment

# HYDRAULIC SYSTEM

| NOTE | No. | PART No. | QTY | PART NAME | NOTE | No. | PART No. | QTY | PART NAME |
|---|---|---|---|---|---|---|---|---|---|
| J | 1 | 150-5828 | 1 | SEAL | | | | | |
| J | 2 | 150-5827 | 1 | RING | | | | | |
| J | 3 | 150-5826 | 1 | SEAL | | | | | |
| J | 4 | 209-5957 | 1 | SEAL | | | | | |
| | 5 | 096-4430 | 1 | BEARING | | | | | |
| | 6 | 7Y-4631 | 1 | RING | | | | | |
| | 7 | 234-4580 | 1 | HEAD | | | | | |
| | 8 | 4I-3628 | 12 | BOLT (L=80mm) | | | | | |
| J | 9 | 095-1720 | 1 | SEAL-O-RING (ID=129.40mm) | | | | | |
| J | 10 | 234-4581 | 1 | RING | | | | | |
| | 11 | 234-4589 | 1 | ROD AS | | | | | |
| | 12 | 228-5615 | 1 | BEARING | | | | | |
| J | 13 | 234-4583 | 1 | SEAL AS | | | | | |
| J | 14 | 234-4584 | 2 | RING | | | | | |
| J | 15 | 234-4585 | 2 | RING | | | | | |
| J | 16 | 234-4586 | 2 | RING | | | | | |
| | 17 | 234-4582 | 1 | PISTON | | | | | |
| | 18 | 096-6210 | 1 | SETSCREW | | | | | |
| | 19 | 4B-9880 | 1 | BALL | | | | | |
| | 20 | 166-1495 | 2 | SEAL | | | | | |
| | 21 | 235-7679 | 2 | SEAL | | | | | |
| | 22 | 3B-8489 | 2 | FITTING | | | | | |
| | 23 | 234-4588 | 1 | CYLINDER AS | | | | | |
| | 24 | 235-7769 | 1 | BEARING | | | | | |
| | | | | THE FOLLOWING REPAIR KIT IS AVAILABLE: | | | | | |
| | | 234-4587 | 1 | SEAL KIT (INCLUDES PARTS MARKED J) | | | | | |

H89322E 01

## 225-4591 CYLINDER & SEAL GP-BUCKET

CB Family

Part of 225-4590-Page353

An Attachment

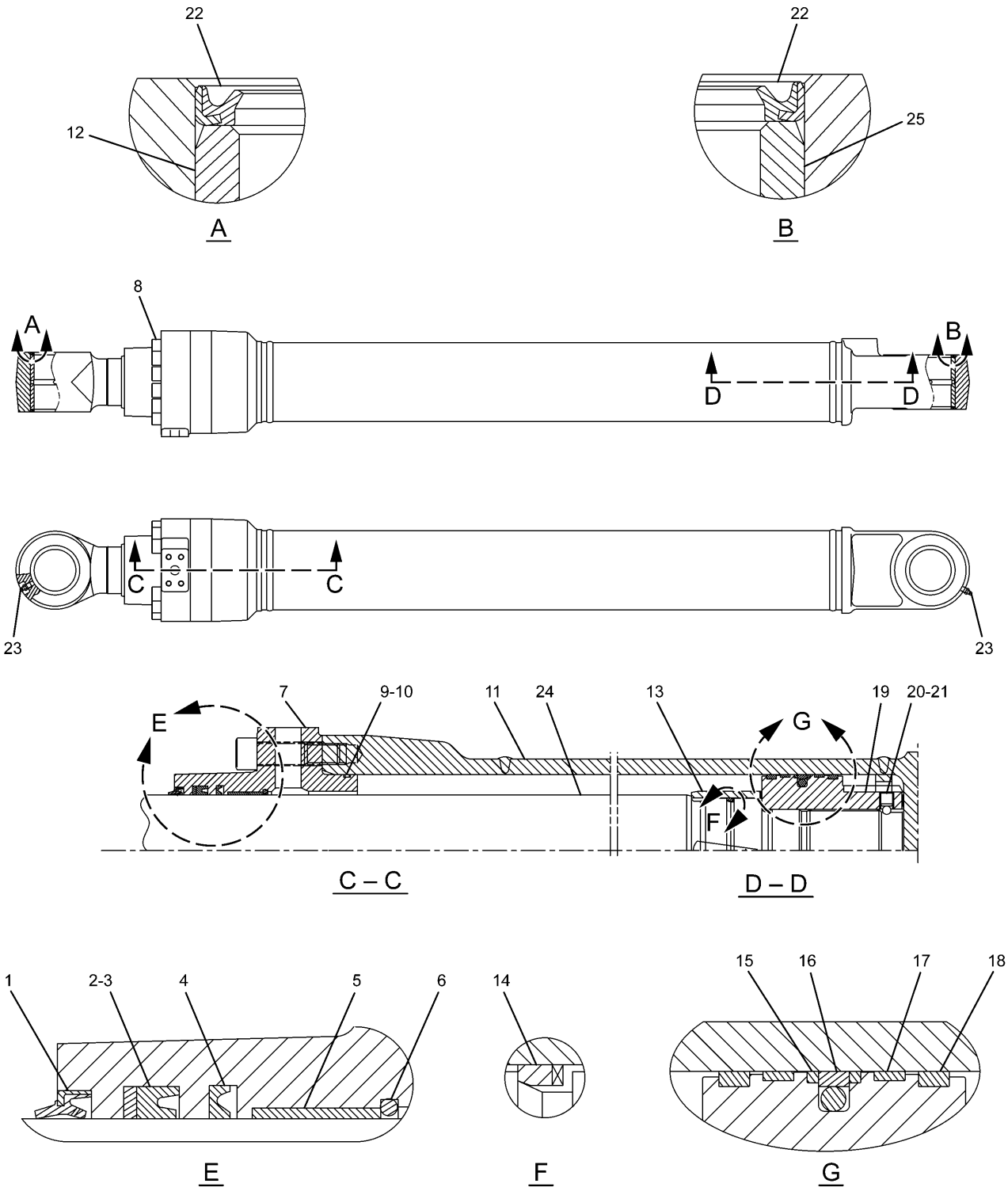


H96715E 01

**242-6770 CYLINDER & SEAL GP-BUCKET**
Part of 242-6769-Page354
An Attachment

# HYDRAULIC SYSTEM

| NOTE | No. | PART No. | QTY | PART NAME | NOTE | No. | PART No. | QTY | PART NAME |
|---|---|---|---|---|---|---|---|---|---|
| J | 1 | 126-1885 | 1 | SEAL | | | | | |
| J | 2 | 105-2578 | 1 | RING | | | | | |
| J | 3 | 105-2577 | 1 | SEAL | | | | | |
| J | 4 | 204-3624 | 1 | SEAL | | | | | |
| | 5 | 105-2575 | 1 | BEARING | | | | | |
| | 6 | 093-1571 | 1 | RING | | | | | |
| | 7 | 185-0194 | 1 | HEAD | | | | | |
| | 8 | 4I-3628 | 12 | BOLT (L=80mm) | | | | | |
| J | 9 | 095-1719 | 1 | SEAL-O-RING (ID=124.40mm) | | | | | |
| J | 10 | 105-2579 | 1 | RING | | | | | |
| | 11 | 266-7938 | 1 | CYLINDER AS | | | | | |
| | 12 | 184-5560 | 1 | BEARING | | | | | |
| | 13 | 266-7928 | 1 | STOP | | | | | |
| J | 14 | 126-1870 | 1 | RING | | | | | |
| J | 15 | 105-2583 | 2 | RING | | | | | |
| J | 16 | 086-1345 | 1 | SEAL AS | | | | | |
| J | 17 | 247-9006 | 2 | RING | | | | | |
| J | 18 | 086-1346 | 2 | RING | | | | | |
| | 19 | 259-0675 | 1 | PISTON | | | | | |
| | 20 | 160-8759 | 1 | SETSCREW | | | | | |
| | 21 | 3D-2891 | 1 | BALL | | | | | |
| | 22 | 096-0854 | 4 | SEAL | | | | | |
| | 23 | 3B-8489 | 2 | FITTING | | | | | |
| | 24 | 266-7939 | 1 | ROD AS | | | | | |
| | 25 | 240-2915 | 1 | BEARING | | | | | |
| | | | | THE FOLLOWING REPAIR | | | | | |
| | | | | KIT IS AVAILABLE: | | | | | |
| | | 266-7929 | 1 | SEAL KIT | | | | | |
| | | | | (INCLUDES PARTS MARKED J) | | | | | |

H96715E 01

## 242-6770 CYLINDER & SEAL GP-BUCKET

Part of 242-6769-Page354

An Attachment

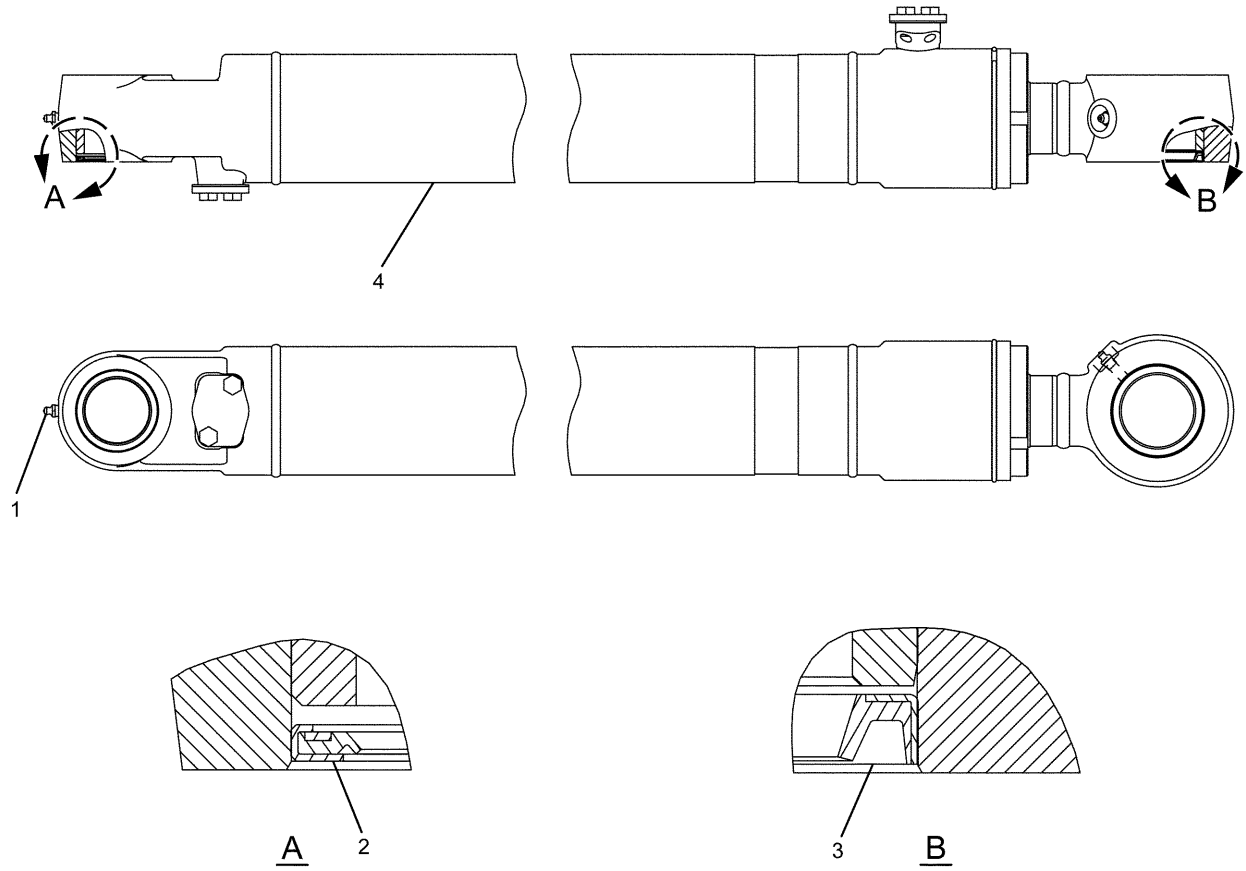


| NOTE | No. | PART No. | QTY | PART NAME | NOTE | No. | PART No. | QTY | PART NAME |
|---|---|---|---|---|---|---|---|---|---|
| | 1 | 3B-8489 | 2 | FITTING | | | | | |
| | 2 | 093-1433 | 2 | SEAL | | | | | |
| | 3 | 235-7679 | 2 | SEAL | | | | | |
| Y | 4 | 283-6118 | 1 | CYLINDER GP | | | | | |

Y—SEE SEPARATE ILLUSTRATION

H93663E 01

## 248-7854 CYLINDER & SEAL GP-BUCKET

Long Reach Front
S/N DFB 1-Up
Part of 253-6664-Page354
283-6118-Page374
An Attachment

# MEMORANDA

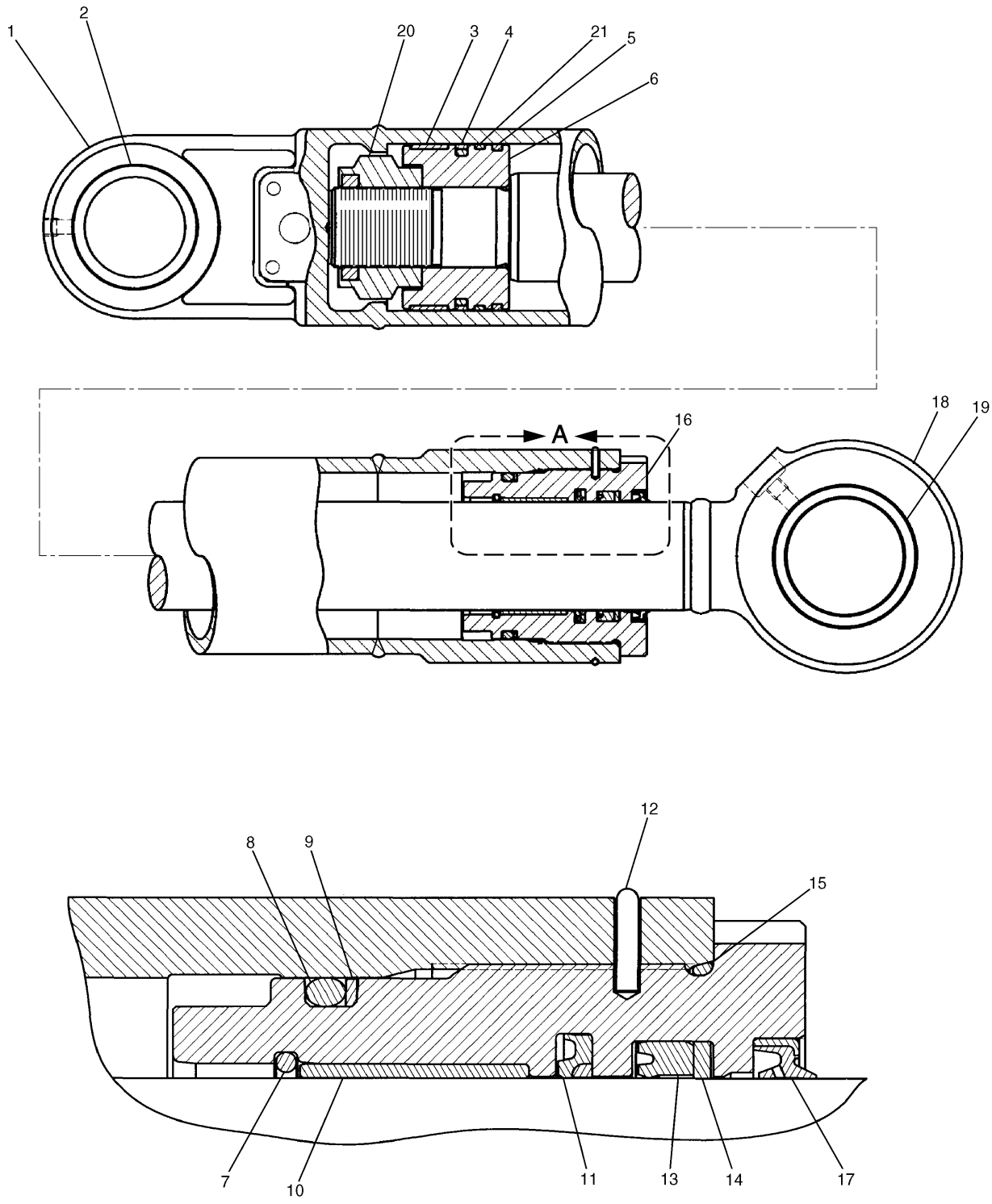


H93668E 00

**283-6118 CYLINDER GP-BUCKET**
S/N DFB 1-Up
Part of 248-7854-Page372
An Attachment

# HYDRAULIC SYSTEM

| NOTE | No. | PART No. | QTY | PART NAME | NOTE | No. | PART No. | QTY | PART NAME |
|---|---|---|---|---|---|---|---|---|---|
| | 1 | 170-9938 | 1 | CYLINDER AS | | | | | |
| | 2 | 229-1009 | 1 | BEARING | | | | | |
| J | 3 | 143-8024 | 1 | RING | | | | | |
| J | 4 | 9X-7298 | 1 | SEAL AS | | | | | |
| J | 5 | 143-8025 | 1 | RING | | | | | |
| | 6 | 143-8023 | 1 | PISTON | | | | | |
| | 7 | 099-0700 | 1 | RING | | | | | |
| J | 8 | 095-1625 | 1 | SEAL-O-RING (ID=89.60mm) | | | | | |
| J | 9 | 099-0699 | 1 | RING | | | | | |
| | 10 | 114-0754 | 1 | BEARING | | | | | |
| J | 11 | 170-9840 | 1 | SEAL | | | | | |
| | 12 | 099-0600 | 1 | RING | | | | | |
| J | 13 | 170-9856 | 1 | SEAL | | | | | |
| J | 14 | 096-1055 | 1 | RING | | | | | |
| J | 15 | 6V-8467 | 1 | SEAL-O-RING (ID=99.40mm) | | | | | |
| | 16 | 099-0596 | 1 | HEAD | | | | | |
| J | 17 | 165-9282 | 1 | SEAL | | | | | |
| | 18 | 283-6119 | 1 | ROD AS | | | | | |
| | 19 | 248-7857 | 1 | BEARING | | | | | |
| | 20 | 143-8149 | 1 | LOCKNUT | | | | | |
| J | 21 | 143-8033 | 1 | RING | | | | | |
| | | | | THE FOLLOWING REPAIR KIT IS AVAILABLE: | | | | | |
| | | 170-9941 | 1 | SEAL KIT (INCLUDES PARTS MARKED J) | | | | | |

H93668E 00

## 283-6118 CYLINDER GP-BUCKET

S/N DFB 1-Up
Part of 248-7854-Page372
An Attachment

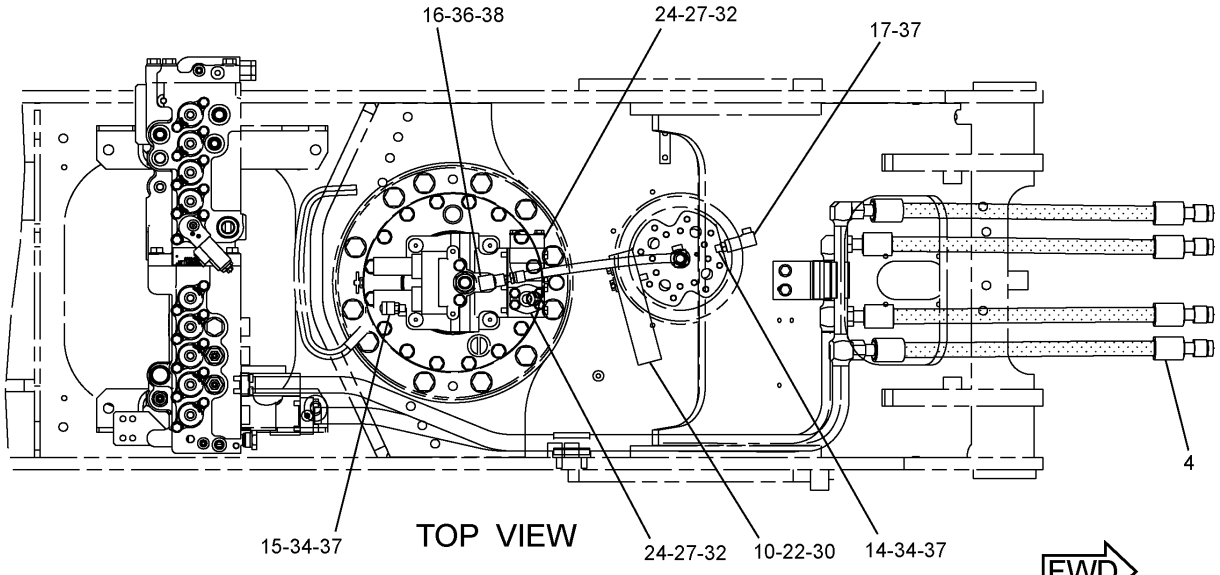


TOP VIEW

FWD

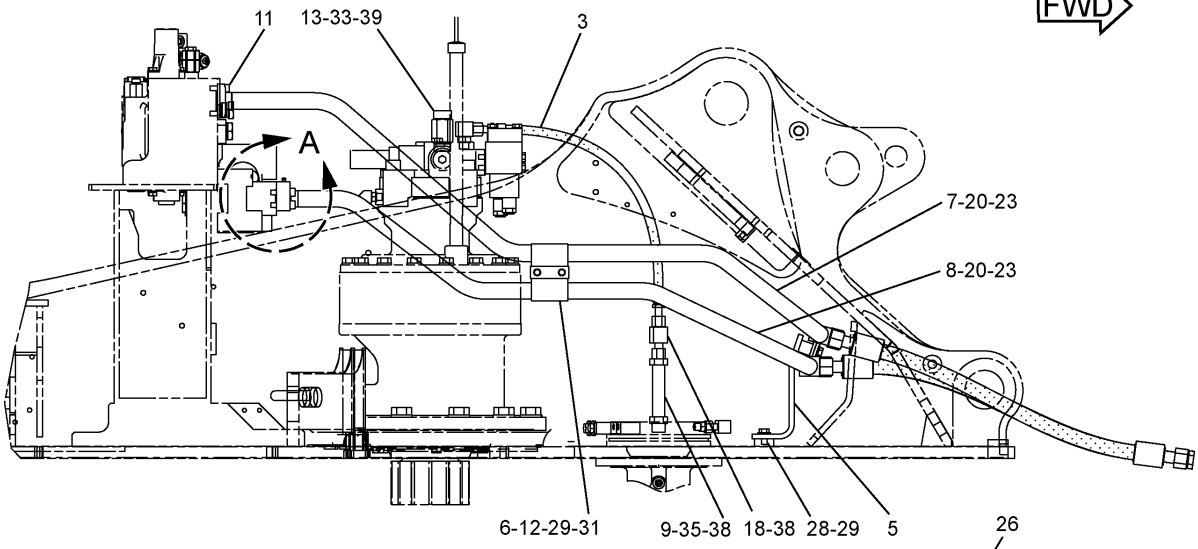


RIGHT SIDE VIEW

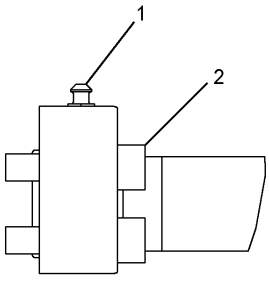


A

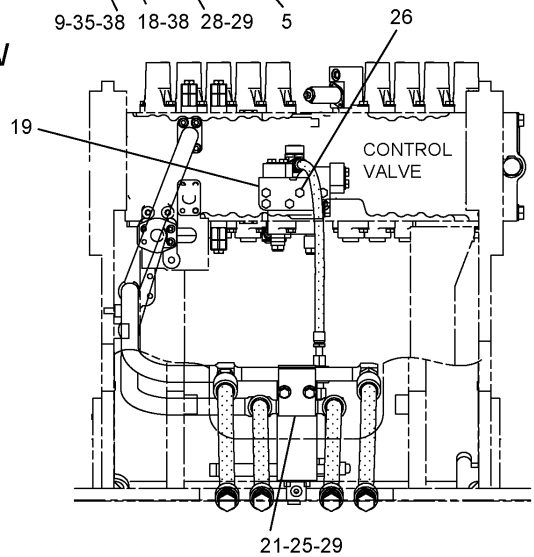


FRONT VIEW

H98044E 01

**302-2922 LINES GP-BOOM CYLINDER**
158-9085-Page584

# HYDRAULIC SYSTEM

| NOTE | No. | PART No. | QTY | PART NAME | NOTE | No. | PART No. | QTY | PART NAME |
|---|---|---|---|---|---|---|---|---|---|
| | 1 | 9F-2167 | 1 | SCREW | | | | | |
| | 2 | 101-7398 | 4 | BOLT (L=40mm) | | | | | |
| | 3 | 108-7354 | 1 | HOSE AS | | | | | |
| | 4 | 124-1047 | 4 | HOSE AS | | | | | |
| | 5 | 124-1062 | 1 | SUPPORT AS | | | | | |
| | 6 | 133-5828 | 1 | SUPPORT AS | | | | | |
| | 7 | 142-7768 | 1 | TUBE AS | | | | | |
| | 8 | 142-7769 | 1 | TUBE AS | | | | | |
| | 9 | 4I-7745 | 1 | CONNECTOR | | | | | |
| | 10 | 234-4492 | 1 | SUPPORT | | | | | |
| | 11 | 101-7404 | 4 | BOLT (L=30mm) | | | | | |
| | 12 | 108-7550 | 1 | CLIP | | | | | |
| | 13 | 307-4919 | 1 | CONNECTOR | | | | | |
| | 14 | 6V-8636 | 1 | CONNECTOR | | | | | |
| | 15 | 6V-9001 | 1 | ELBOW | | | | | |
| | 16 | 6V-8625 | 1 | ELBOW | | | | | |
| | 17 | 6V-9850 | 1 | ELBOW | | | | | |
| | 18 | 6V-9837 | 1 | TEE | | | | | |
| Y | 19 | 158-9085 | 1 | VALVE GP | | | | | |
| | 20 | 1P-3703 | 2 | SEAL | | | | | |
| | 21 | 4I-1674 | 2 | CLIP | | | | | |
| | 22 | 5P-1076 | 2 | WASHER | | | | | |
| | 23 | 6V-9746 | 4 | SEAL-O-RING (OD=22.50mm) | | | | | |
| | 24 | 8T-4121 | 8 | WASHER | | | | | |
| | 25 | 8T-4139 | 2 | BOLT (L=30mm) | | | | | |
| | 26 | 8T-4178 | 6 | BOLT (L=90mm) | | | | | |
| | 27 | 8T-4182 | 8 | BOLT (L=45mm) | | | | | |
| | 28 | 8T-4192 | 2 | BOLT (L=25mm) | | | | | |
| | 29 | 8T-4223 | 6 | WASHER | | | | | |
| | 30 | 8T-4648 | 2 | BOLT (L=70mm) | | | | | |
| | 31 | 8T-4910 | 2 | BOLT (L=60mm) | | | | | |
| | 32 | 8T-9403 | 4 | FLANGE | | | | | |
| | 33 | 5K-9090 | 1 | SEAL-O-RING (OD=27.22mm) | | | | | |
| | 34 | 3J-1907 | 2 | SEAL-O-RING (ID=11.89mm) | | | | | |
| | 35 | 3D-2824 | 1 | SEAL-O-RING (ID=23.47mm) | | | | | |
| | 36 | 3K-0360 | 1 | SEAL-O-RING (ID=16.36mm) | | | | | |
| | 37 | 6V-8397 | 3 | SEAL-O-RING (OD=12.83mm) | | | | | |
| | 38 | 6V-8398 | 4 | SEAL-O-RING (OD=16.03mm) | | | | | |
| | 39 | 7M-8485 | 1 | SEAL-O-RING (ID=29.74mm) | | | | | |

Y—SEE SEPARATE ILLUSTRATION

H98044E 01

## 302-2922 LINES GP-BOOM CYLINDER

158-9085-Page584

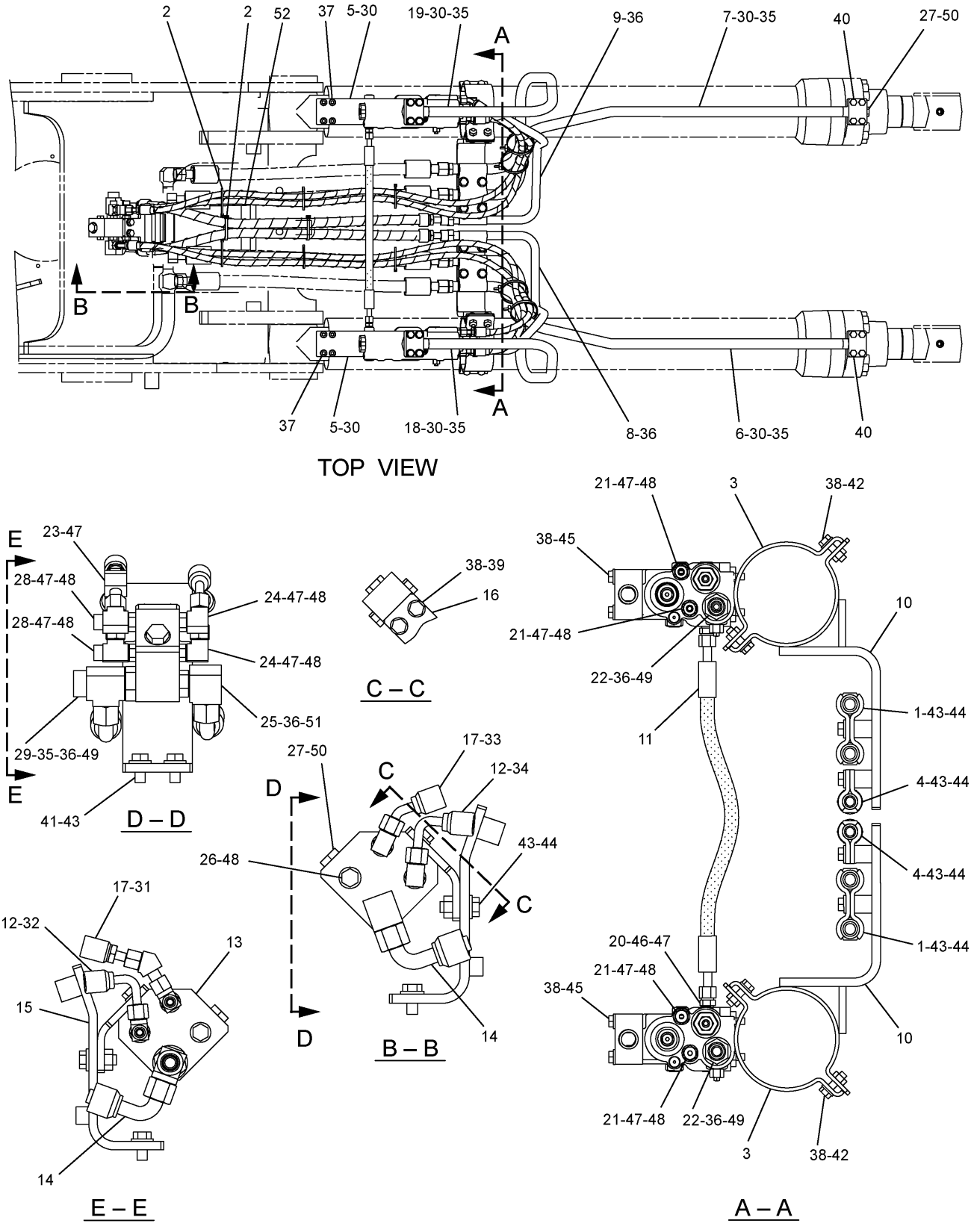


H98055E 02

## 286-6495 LINES GP-BOOM CYLINDER

BOOM LOWERING CONTROL
S/N BWZ 1-Up, DFB 1-Up
Part of 270-5974-Page447
225-4785-Page592
An Attachment

# HYDRAULIC SYSTEM

| NOTE | No. | PART No. | QTY | PART NAME | NOTE | No. | PART No. | QTY | PART NAME |
|---|---|---|---|---|---|---|---|---|---|
| | 1 | 4I-1674 | 4 | CLIP | | | | | |
| | 2 | 7K-1181 | 12 | STRAP | | | | | |
| | 3 | 119-2804 | 2 | SUPPORT AS | | | | | |
| | 4 | 149-1738 | 4 | CLIP | | | | | |
| Y | 5 | 225-4785 | 2 | VALVE GP | | | | | |
| | 6 | 266-1110 | 1 | TUBE AS | | | | | |
| | 7 | 266-1111 | 1 | TUBE AS | | | | | |
| | 8 | 266-1114 | 1 | PIPE AS | | | | | |
| | 9 | 266-1115 | 1 | PIPE AS | | | | | |
| | 10 | 266-1116 | 2 | SUPPORT AS | | | | | |
| | 11 | 266-1147 | 1 | HOSE AS | | | | | |
| | 12 | 275-1648 | 2 | HOSE AS | | | | | |
| | 13 | 278-6587 | 1 | BLOCK | | | | | |
| | 14 | 278-6593 | 2 | HOSE AS | | | | | |
| | 15 | 278-6875 | 1 | SUPPORT AS | | | | | |
| | 16 | 278-6877 | 1 | SUPPORT AS | | | | | |
| | 17 | 278-2568 | 2 | HOSE AS | | | | | |
| | 18 | 286-6720 | 1 | TUBE AS | | | | | |
| | 19 | 286-6721 | 1 | TUBE AS | | | | | |
| | 20 | 6V-9872 | 2 | CONNECTOR | | | | | |
| | 21 | 6V-8636 | 4 | CONNECTOR | | | | | |
| | 22 | 6V-8713 | 2 | CONNECTOR | | | | | |
| | 23 | 8C-8968 | 1 | ELBOW | | | | | |
| | 24 | 6V-8724 | 2 | ELBOW | | | | | |
| | 25 | 6V-8626 | 1 | ELBOW | | | | | |
| | 26 | 9S-4191 | 2 | PLUG | | | | | |
| | 27 | 9S-4185 | 2 | PLUG | | | | | |
| | 28 | 6V-8781 | 2 | TEE | | | | | |
| | 29 | 6V-9175 | 1 | TEE | | | | | |
| | 30 | 1P-3703 | 6 | SEAL | | | | | |
| | 31 | 4I-9521 | 2 | BAND (L1,RED) | | | | | |
| | 32 | 4I-9522 | 2 | BAND (L2,YELLOW) | | | | | |
| | 33 | 4I-9525 | 2 | BAND (R1,ORANGE) | | | | | |
| | 34 | 4I-9526 | 2 | BAND (R2,WHITE) | | | | | |
| | 35 | 6V-9746 | 5 | SEAL-O-RING (OD=22.50mm) | | | | | |
| | 36 | 7J-9108 | 6 | SEAL-O-RING (OD=19.28mm) | | | | | |
| | 37 | 8T-0341 | 8 | BOLT (L=60mm) | | | | | |
| | 38 | 8T-4121 | 18 | WASHER | | | | | |
| | 39 | 8T-4136 | 2 | BOLT (L=25mm) | | | | | |
| | 40 | 8T-4185 | 8 | BOLT (L=50mm) | | | | | |
| | 41 | 8T-4192 | 2 | BOLT (L=25mm) | | | | | |
| | 42 | 8T-4196 | 8 | BOLT (L=35mm) | | | | | |
| | 43 | 8T-4223 | 12 | WASHER | | | | | |
| | 44 | 8T-4956 | 10 | BOLT (L=35mm) | | | | | |
| | 45 | 8T-6466 | 8 | BOLT (L=60mm) | | | | | |
| | 46 | 3J-7354 | 2 | SEAL-O-RING (ID=8.92mm) | | | | | |
| | 47 | 6V-8397 | 11 | SEAL-O-RING (OD=12.83mm) | | | | | |
| | 48 | 3J-1907 | 10 | SEAL-O-RING (ID=11.89mm) | | | | | |
| | 49 | 3D-2824 | 3 | SEAL-O-RING (ID=23.47mm) | | | | | |
| | 50 | 3K-0360 | 2 | SEAL-O-RING (ID=16.36mm) | | | | | |
| | 51 | 2M-9780 | 1 | SEAL-O-RING (ID=19.18mm) | | | | | |
| | 52 | 307-5121 | 1 | GUARD | | | | | |

Y—SEE SEPARATE ILLUSTRATION

H98055E 02

## 286-6495 LINES GP-BOOM CYLINDER

BOOM LOWERING CONTROL
S/N BWZ 1-Up, DFB 1-Up
Part of 270-5974-Page447
225-4785-Page592
An Attachment

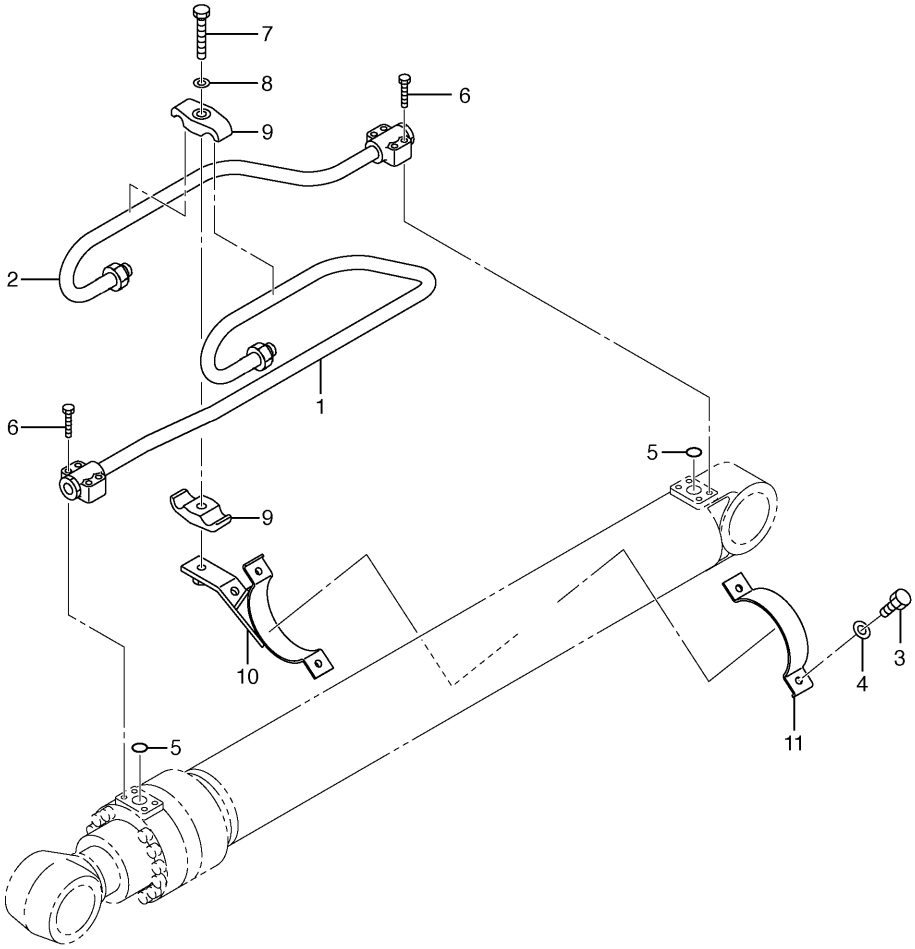


| NOTE | No. | PART No. | QTY | PART NAME | NOTE | No. | PART No. | QTY | PART NAME |
|---|---|---|---|---|---|---|---|---|---|
| | 1 | 247-8869 | 1 | TUBE AS | | | | | |
| | 2 | 222-0126 | 1 | TUBE AS | | | | | |
| | 3 | 8T-4196 | 2 | BOLT (L=35mm) | | | | | |
| | 4 | 8T-4896 | 2 | WASHER | | | | | |
| | 5 | 095-1597 | 2 | SEAL-O-RING (ID=29.70mm) | | | | | |
| | 6 | 9X-6032 | 8 | BOLT (L=30mm) | | | | | |
| | 7 | 8T-3653 | 1 | BOLT (L=80mm) | | | | | |
| | 8 | 3B-4509 | 1 | LOCKWASHER | | | | | |
| | 9 | 094-1920 | 2 | CLAMP | | | | | |
| | 10 | 137-3709 | 1 | SUPPORT AS | | | | | |
| | 11 | 4I-3621 | 1 | SUPPORT | | | | | |

H89768E 01

## 242-6732 LINES GP-BOOM CYLINDER

Left Hand

Part of 242-6730-Page350

An Attachment

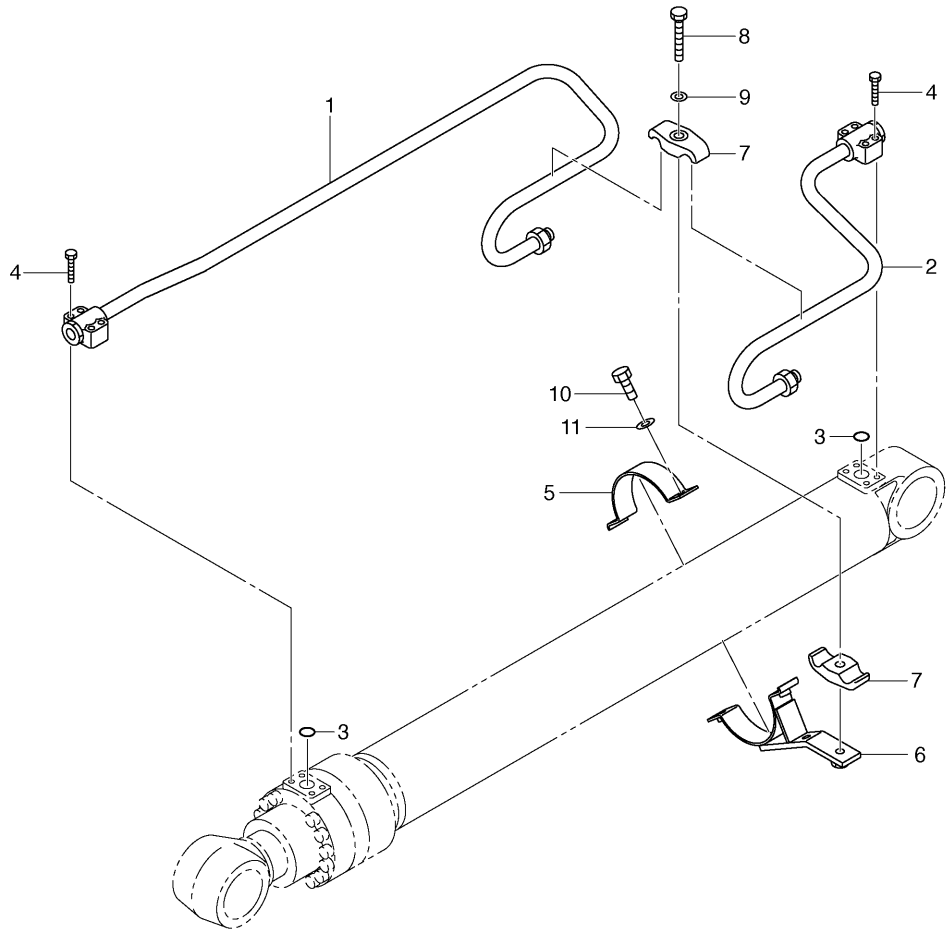


| NOTE | No. | PART No. | QTY | PART NAME | NOTE | No. | PART No. | QTY | PART NAME |
|---|---|---|---|---|---|---|---|---|---|
| | 1 | 247-8870 | 1 | TUBE AS | | | | | |
| | 2 | 222-0124 | 1 | TUBE AS | | | | | |
| | 3 | 095-1597 | 2 | SEAL-O-RING (ID=29.70mm) | | | | | |
| | 4 | 9X-6032 | 8 | BOLT (L=30mm) | | | | | |
| | 5 | 4I-3621 | 1 | SUPPORT | | | | | |
| | 6 | 137-3709 | 1 | SUPPORT AS | | | | | |
| | 7 | 094-1920 | 2 | CLAMP | | | | | |
| | 8 | 8T-3653 | 1 | BOLT (L=80mm) | | | | | |
| | 9 | 3B-4509 | 1 | LOCKWASHER | | | | | |
| | 10 | 8T-4196 | 2 | BOLT (L=35mm) | | | | | |
| | 11 | 8T-4896 | 2 | WASHER | | | | | |

H89770E 01

## 242-6737 LINES GP-BOOM CYLINDER

Right Hand

Part of 242-6736-Page350

An Attachment

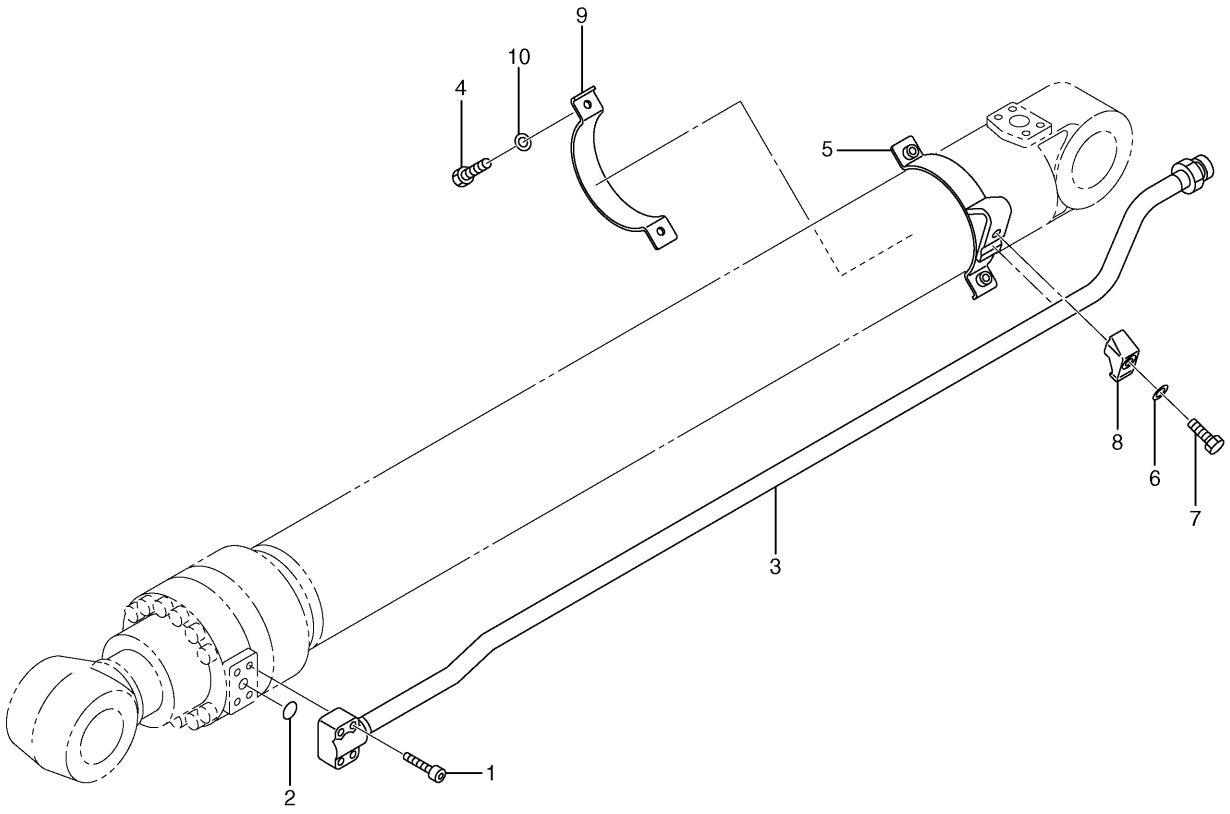


| NOTE | No. | PART No. | QTY | PART NAME | NOTE | No. | PART No. | QTY | PART NAME |
|---|---|---|---|---|---|---|---|---|---|
| | 1 | 6V-8200 | 4 | BOLT (L=35mm) | | | | | |
| | 2 | 095-1600 | 1 | SEAL-O-RING (ID=33.70mm) | | | | | |
| | 3 | 247-8883 | 1 | TUBE AS | | | | | |
| | 4 | 8T-4196 | 2 | BOLT (L=35mm) | | | | | |
| | 5 | 124-1019 | 1 | SUPPORT AS | | | | | |
| | 6 | 8T-4223 | 1 | WASHER | | | | | |
| | 7 | 8T-4910 | 1 | BOLT (L=60mm) | | | | | |
| | 8 | 096-4480 | 1 | CLAMP | | | | | |
| | 9 | 124-1020 | 1 | SUPPORT | | | | | |
| | 10 | 8T-4896 | 2 | WASHER | | | | | |

H89775E 01

## 242-6735 LINES GP-STICK CYLINDER

Part of 242-6733,242-6743-Page351,242-6750-Page352
An Attachment

# HYDRAULIC SYSTEM

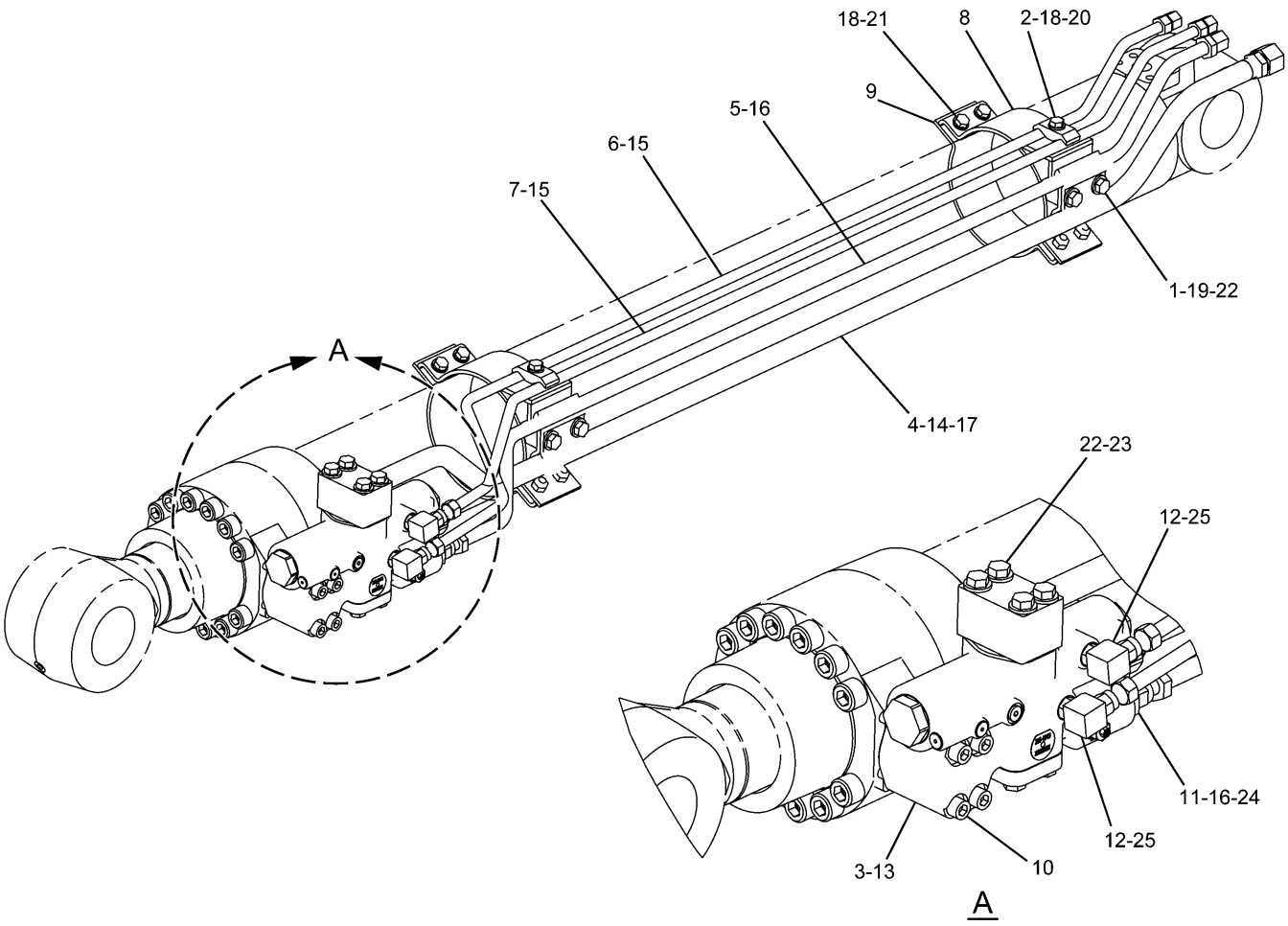


| NOTE | No. | PART No. | QTY | PART NAME | NOTE | No. | PART No. | QTY | PART NAME |
|---|---|---|---|---|---|---|---|---|---|
| | 1 | 5Q-4213 | 4 | CLIP | | 21 | 8T-4196 | 8 | BOLT (L=35mm) |
| | 2 | 093-1294 | 2 | CLAMP | | 22 | 8T-4223 | 8 | WASHER |
| Y | 3 | 225-4843 | 1 | VALVE GP | | 23 | 8T-4648 | 4 | BOLT (L=70mm) |
| | 4 | 247-9073 | 1 | TUBE AS | | 24 | 3D-2824 | 1 | SEAL-O-RING (ID=23.47mm) |
| | 5 | 247-9074 | 1 | PIPE AS | | 25 | 3J-1907 | 2 | SEAL-O-RING (ID=11.89mm) |
| | 6 | 247-9076 | 1 | PIPE AS | | | | | |
| | 7 | 247-9078 | 1 | PIPE AS | | | | | |
| | 8 | 268-7241 | 2 | SUPPORT AS | | | | | |
| | 9 | 119-2325 | 2 | SUPPORT AS | | | | | |
| | 10 | 108-1782 | 4 | BOLT (L=90mm) | | | | | |
| | 11 | 6V-8633 | 1 | CONNECTOR | | | | | |
| | 12 | 6V-8627 | 2 | ELBOW | | | | | |
| | 13 | 1P-3703 | 1 | SEAL | | | | | |
| | 14 | 1P-3704 | 1 | SEAL | | | | | |
| | 15 | 6V-8397 | 2 | SEAL-O-RING (OD=12.83mm) | | | | | |
| | 16 | 6V-8398 | 2 | SEAL-O-RING (OD=16.03mm) | | | | | |
| | 17 | 6V-9746 | 1 | SEAL-O-RING (OD=22.50mm) | | | | | |
| | 18 | 8T-4121 | 10 | WASHER | | | | | |
| | 19 | 8T-4139 | 4 | BOLT (L=30mm) | | | | | |
| | 20 | 8T-4186 | 2 | BOLT (L=40mm) | | | | | |

Y—SEE SEPARATE ILLUSTRATION

H91298E 03

## 262-3471 LINES GP-STICK CYLINDER

S/N BWZ 1-Up, DFB 1-Up
Part of 239-8677-Page447
225-4843-Page594
An Attachment

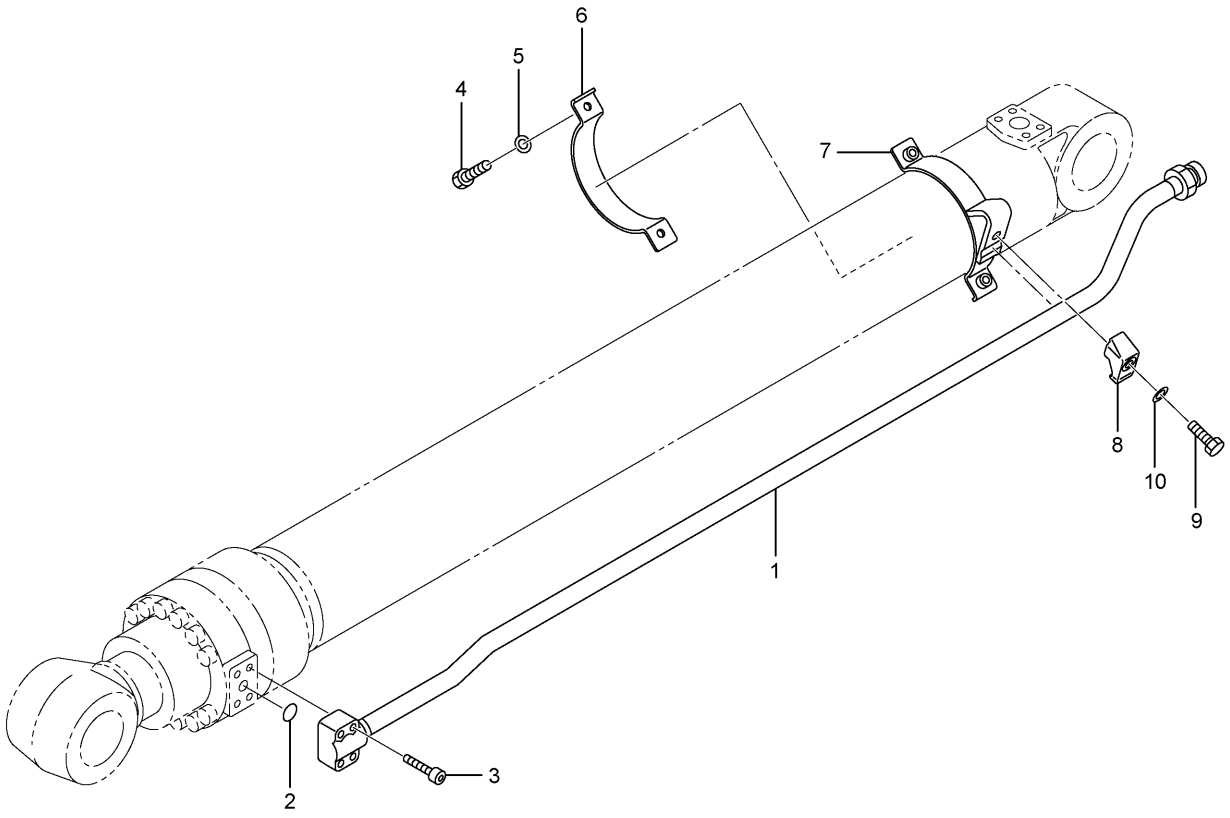


| NOTE | No. | PART No. | QTY | PART NAME | NOTE | No. | PART No. | QTY | PART NAME |
|---|---|---|---|---|---|---|---|---|---|
| | 1 | 227-6884 | 1 | TUBE AS | | | | | |
| | 2 | 095-1600 | 1 | SEAL-O-RING (ID=33.70mm) | | | | | |
| | 3 | 6V-8200 | 4 | BOLT (L=35mm) | | | | | |
| | 4 | 8T-4196 | 2 | BOLT (L=35mm) | | | | | |
| | 5 | 8T-4896 | 2 | WASHER | | | | | |
| | 6 | 124-0914 | 1 | SUPPORT | | | | | |
| | 7 | 194-8380 | 1 | SUPPORT AS | | | | | |
| | 8 | 096-4447 | 1 | CLAMP | | | | | |
| | 9 | 8T-4910 | 1 | BOLT (L=60mm) | | | | | |
| | 10 | 8T-4223 | 1 | WASHER | | | | | |

H91297E 00

## 268-7257 LINES GP-STICK CYLINDER

S/N DFB 1-Up
Part of 268-7256-Page352
An Attachment

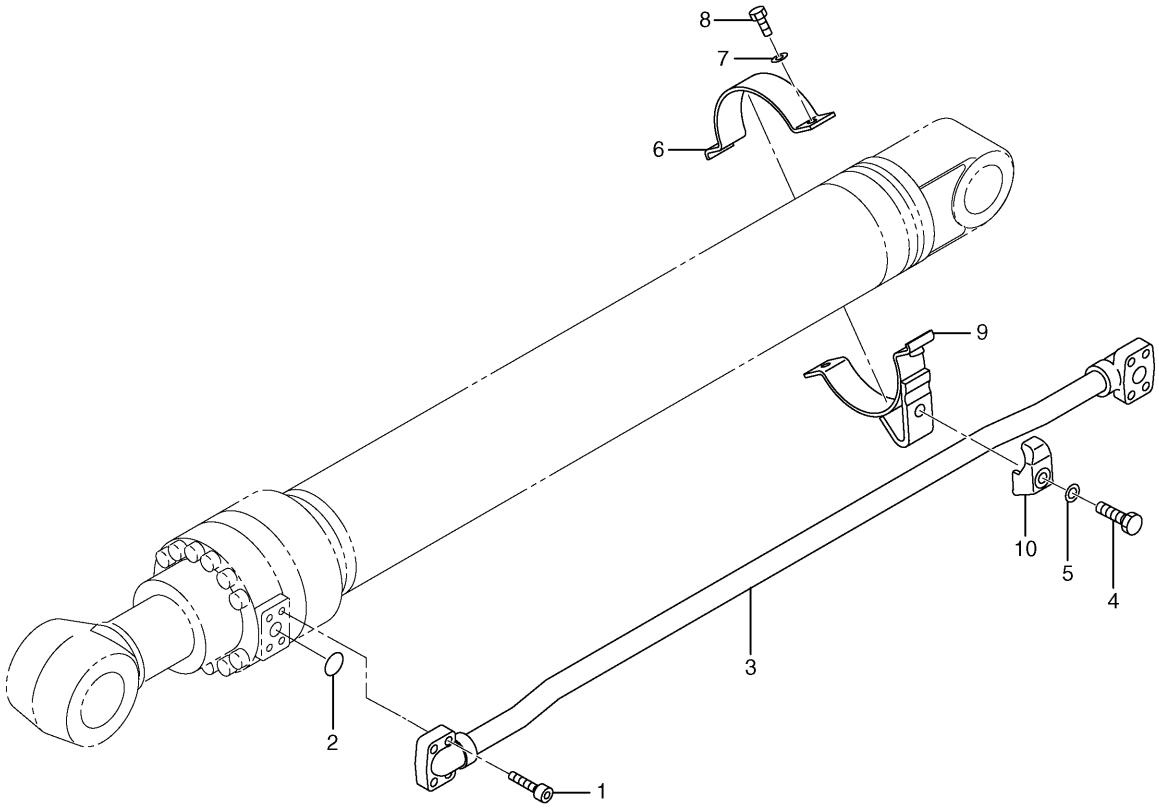


| NOTE | No. | PART No. | QTY | PART NAME | NOTE | No. | PART No. | QTY | PART NAME |
|---|---|---|---|---|---|---|---|---|---|
| | 1 | 9X-6032 | 4 | BOLT (L=30mm) | | | | | |
| | 2 | 095-1597 | 1 | SEAL-O-RING (ID=29.70mm) | | | | | |
| | 3 | 274-2547 | 1 | TUBE AS | | | | | |
| | 4 | 8T-4910 | 1 | BOLT (L=60mm) | | | | | |
| | 5 | 8T-4223 | 1 | WASHER | | | | | |
| | 6 | 096-4412 | 1 | SUPPORT | | | | | |
| | 7 | 8T-4896 | 2 | WASHER | | | | | |
| | 8 | 8T-4196 | 2 | BOLT (L=35mm) | | | | | |
| | 9 | 124-1034 | 1 | SUPPORT AS | | | | | |
| | 10 | 096-4480 | 1 | CLAMP | | | | | |

H90580E 02

## 242-6757 LINES GP-BUCKET CYLINDER

B Family

Part of 242-6755-Page353

An Attachment

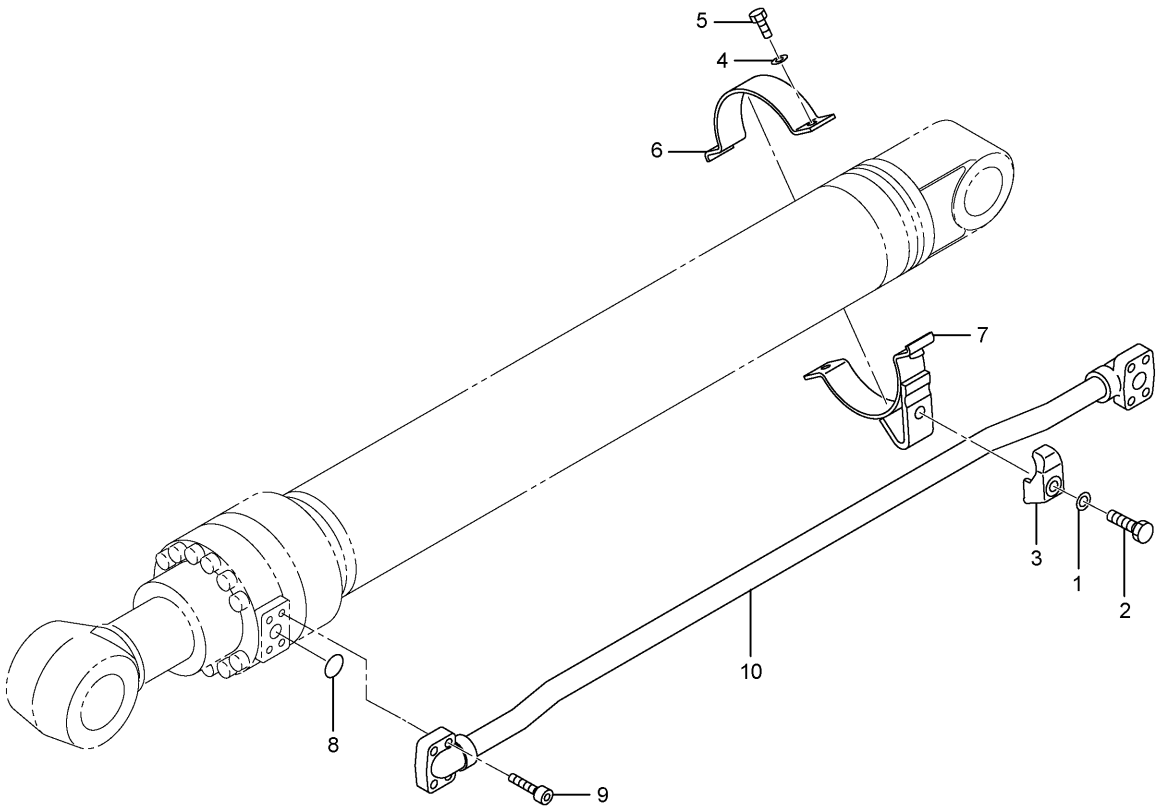


| NOTE | No. | PART No. | QTY | PART NAME | NOTE | No. | PART No. | QTY | PART NAME |
|---|---|---|---|---|---|---|---|---|---|
| | 1 | 8T-4223 | 1 | WASHER | | | | | |
| | 2 | 8T-4910 | 1 | BOLT (L=60mm) | | | | | |
| | 3 | 096-4480 | 1 | CLAMP | | | | | |
| | 4 | 8T-4896 | 2 | WASHER | | | | | |
| | 5 | 8T-4196 | 2 | BOLT (L=35mm) | | | | | |
| | 6 | 234-4592 | 1 | SUPPORT | | | | | |
| | 7 | 234-4591 | 1 | SUPPORT AS | | | | | |
| | 8 | 095-1597 | 1 | SEAL-O-RING (ID=29.70mm) | | | | | |
| | 9 | 9X-6032 | 4 | BOLT (L=30mm) | | | | | |
| | 10 | 259-0647 | 1 | TUBE AS | | | | | |

H89275E 01

## 225-4592 LINES GP-BUCKET CYLINDER

CB Family

Part of 225-4590-Page353

An Attachment

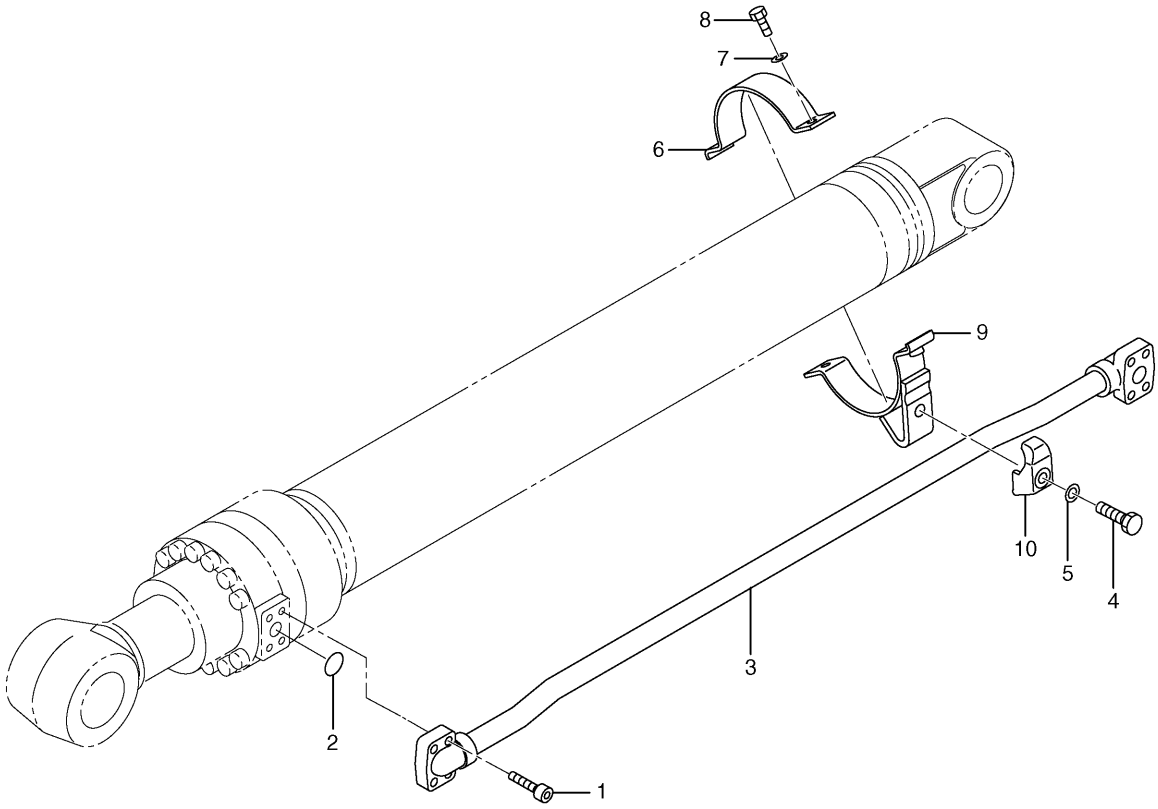


| NOTE | No. | PART No. | QTY | PART NAME | NOTE | No. | PART No. | QTY | PART NAME |
|---|---|---|---|---|---|---|---|---|---|
| | 1 | 9X-6032 | 4 | BOLT (L=30mm) | | | | | |
| | 2 | 095-1597 | 1 | SEAL-O-RING (ID=29.70mm) | | | | | |
| | 3 | 274-2547 | 1 | TUBE AS | | | | | |
| | 4 | 8T-4910 | 1 | BOLT (L=60mm) | | | | | |
| | 5 | 8T-4223 | 1 | WASHER | | | | | |
| | 6 | 096-4449 | 1 | SUPPORT | | | | | |
| | 7 | 8T-4896 | 2 | WASHER | | | | | |
| | 8 | 8T-4196 | 2 | BOLT (L=35mm) | | | | | |
| | 9 | 124-1021 | 1 | SUPPORT AS | | | | | |
| | 10 | 096-4480 | 1 | CLAMP | | | | | |

H90755E 01

## 242-6771 LINES GP-BUCKET CYLINDER

Part of 242-6769-Page354
An Attachment

# HYDRAULIC SYSTEM

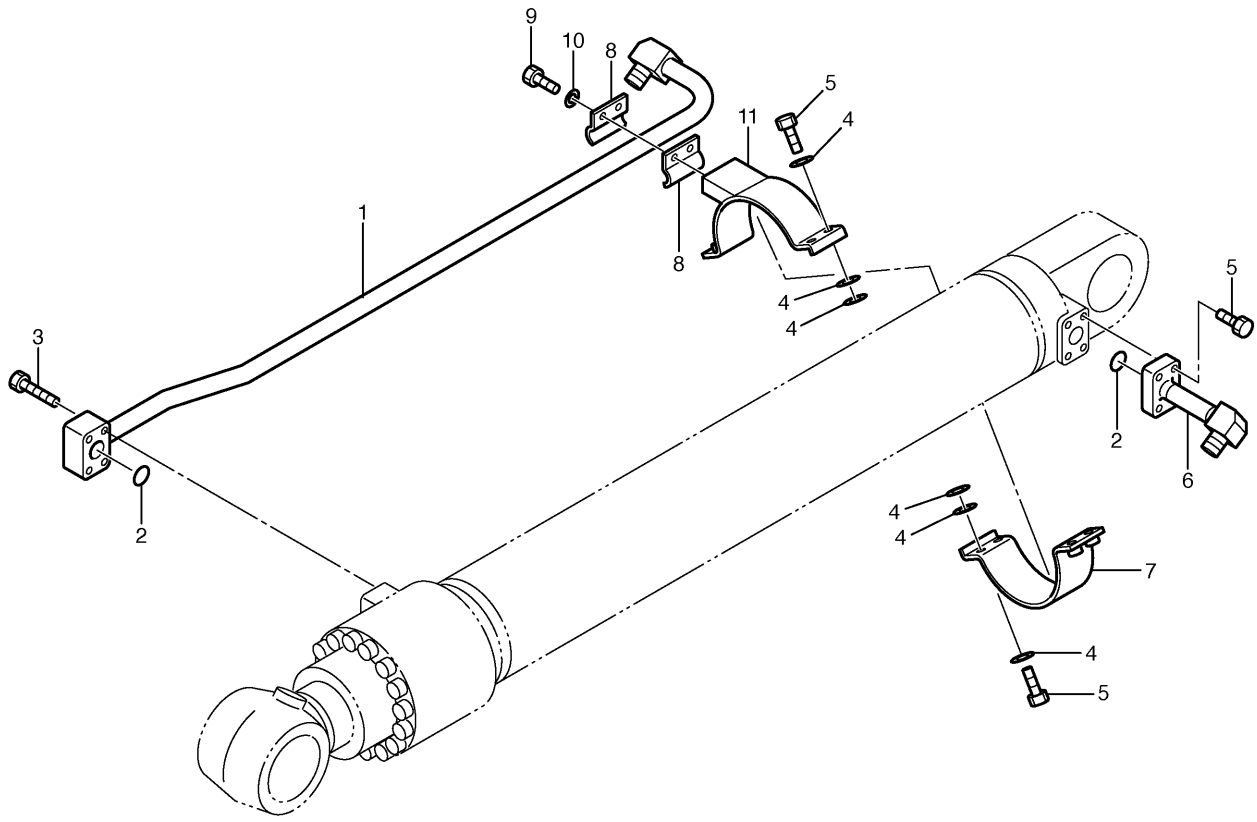


| NOTE | No. | PART No. | QTY | PART NAME | NOTE | No. | PART No. | QTY | PART NAME |
|---|---|---|---|---|---|---|---|---|---|
| | 1 | 116-9129 | 1 | TUBE AS | | | | | |
| | 2 | 4J-5267 | 2 | SEAL-O-RING (ID=24.99mm) | | | | | |
| | 3 | 8T-4185 | 4 | BOLT (L=50mm) | | | | | |
| | 4 | 8T-4121 | 12 | WASHER | | | | | |
| | 5 | 8T-4195 | 8 | BOLT (L=30mm) | | | | | |
| | 6 | 7Y-6442 | 1 | TUBE AS | | | | | |
| | 7 | 7Y-6510 | 1 | SUPPORT AS | | | | | |
| | 8 | 7Y-4868 | 2 | CLIP | | | | | |
| | 9 | 8T-4139 | 2 | BOLT (L=30mm) | | | | | |
| | 10 | 8T-4223 | 2 | WASHER | | | | | |
| | 11 | 7Y-6511 | 1 | SUPPORT AS | | | | | |

H53090E 00

## 127-6797 LINES GP-BUCKET CYLINDER

Long Reach Front
S/N DFB 1-Up
Part of 253-6664-Page354
An Attachment

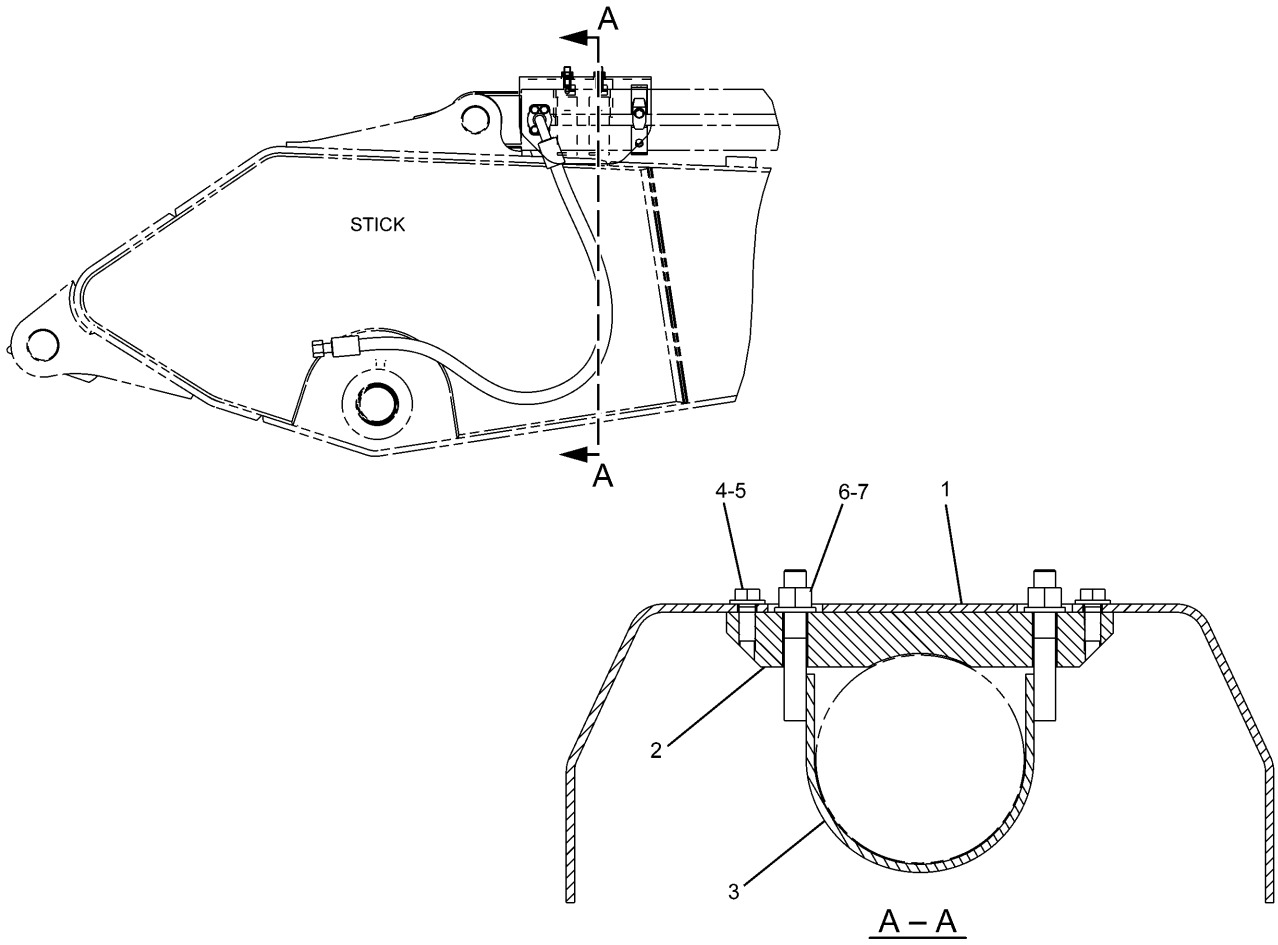


| NOTE | No. | PART No. | QTY | PART NAME | NOTE | No. | PART No. | QTY | PART NAME |
|---|---|---|---|---|---|---|---|---|---|
| | 1 | 274-2504 | 1 | GUARD AS | | | | | |
| | 2 | 274-2545 | 2 | SUPPORT | | | | | |
| | 3 | 274-2544 | 2 | SUPPORT AS | | | | | |
| | 4 | 8T-4139 | 4 | BOLT (L=30mm) | | | | | |
| | 5 | 8T-4223 | 4 | WASHER | | | | | |
| | 6 | 9X-8257 | 4 | WASHER | | | | | |
| | 7 | 8T-4132 | 4 | NUT | | | | | |

H90534E 00

**274-2503 GUARD GP-CYLINDER**
An Attachment

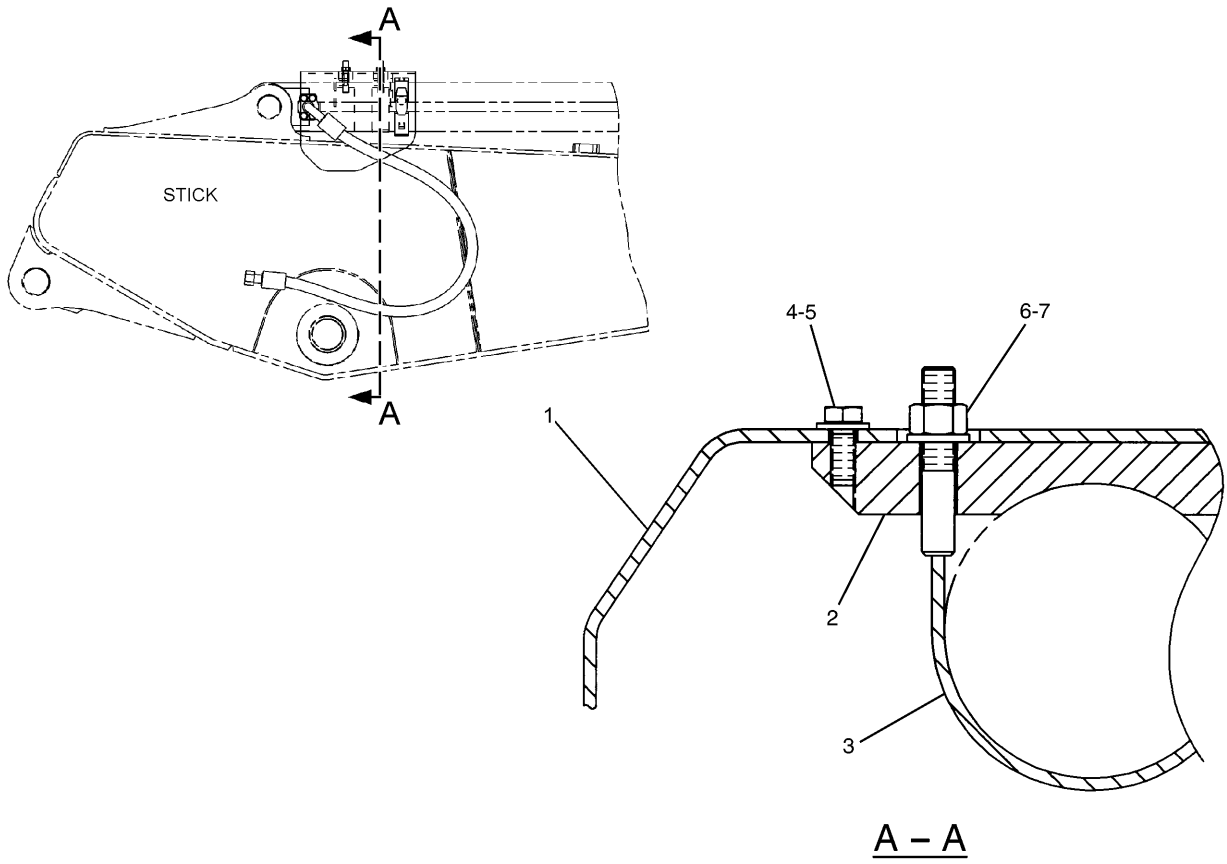


A – A

| NOTE | No. | PART No. | QTY | PART NAME | NOTE | No. | PART No. | QTY | PART NAME |
|---|---|---|---|---|---|---|---|---|---|
| | 1 | 191-3226 | 1 | GUARD AS | | | | | |
| | 2 | 214-4533 | 2 | SUPPORT | | | | | |
| | 3 | 214-4534 | 2 | SUPPORT AS | | | | | |
| | 4 | 8T-4139 | 4 | BOLT (L=30mm) | | | | | |
| | 5 | 8T-4223 | 4 | WASHER | | | | | |
| | 6 | 9X-8257 | 4 | WASHER | | | | | |
| | 7 | 8T-4132 | 4 | NUT | | | | | |

H90535E 00

**266-8035 GUARD GP-CYLINDER**
An Attachment

# HYDRAULIC SYSTEM

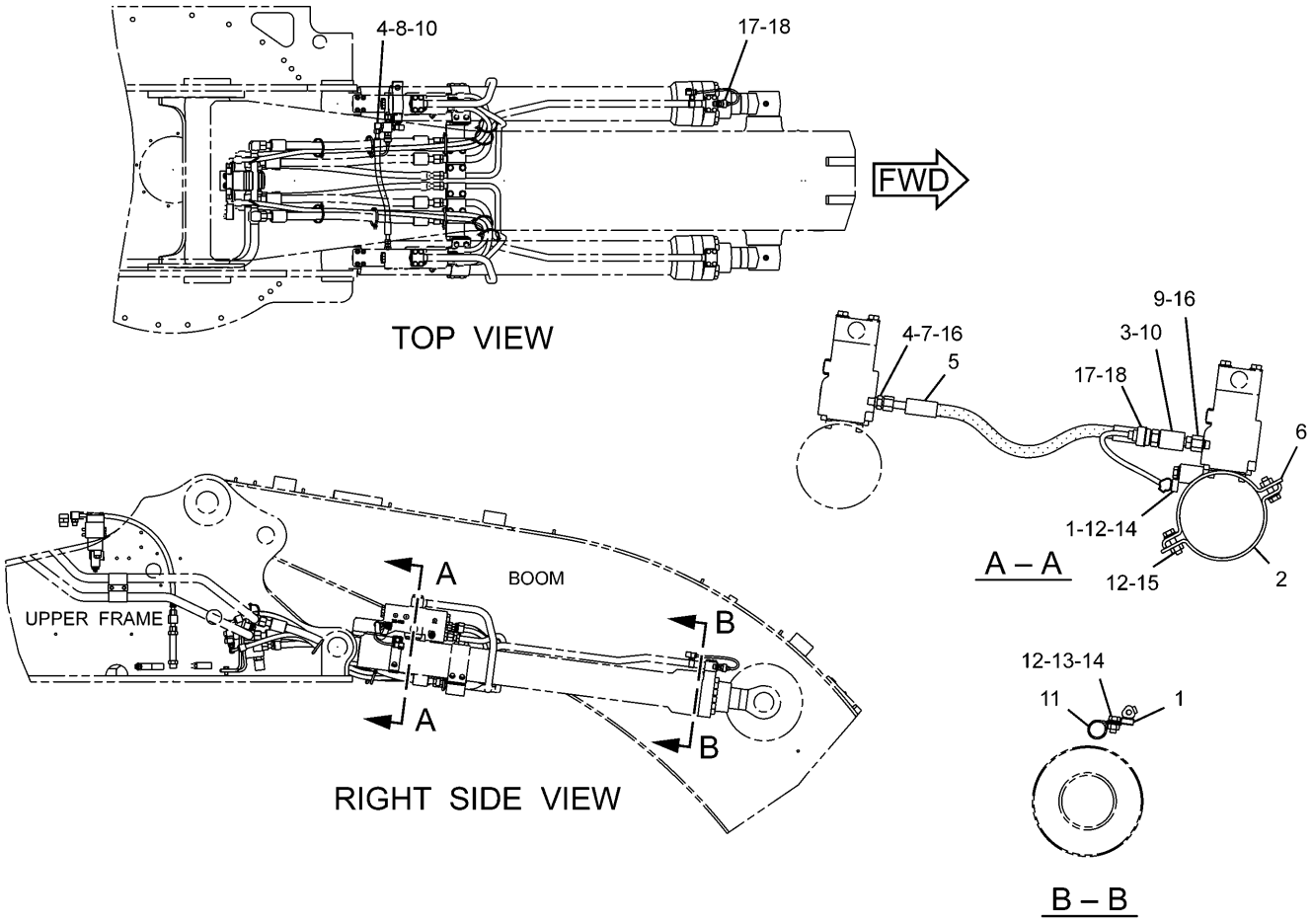


| NOTE | No. | PART No. | QTY | PART NAME | NOTE | No. | PART No. | QTY | PART NAME |
|---|---|---|---|---|---|---|---|---|---|
| | 1 | 116-0118 | 2 | CLIP | | | | | |
| | 2 | 122-5500 | 1 | SUPPORT AS | | | | | |
| | 3 | 220-9729 | 1 | FITTING | | | | | |
| | 4 | 6V-8397 | 2 | SEAL-O-RING (OD=12.83mm) | | | | | |
| | 5 | 223-7045 | 1 | HOSE AS | | | | | |
| | 6 | 272-4190 | 1 | SUPPORT AS | | | | | |
| | 7 | 6V-9872 | 1 | CONNECTOR | | | | | |
| | 8 | 6V-8724 | 1 | ELBOW | | | | | |
| | 9 | 8T-2353 | 1 | ADAPTER | | | | | |
| | 10 | 3J-1907 | 2 | SEAL-O-RING (ID=11.89mm) | | | | | |
| | 11 | 7C-4354 | 1 | CLIP | | | | | |
| | 12 | 8T-4121 | 4 | WASHER | | | | | |
| | 13 | 8T-4133 | 1 | NUT | | | | | |
| | 14 | 8T-4137 | 2 | BOLT (L=20mm) | | | | | |
| | 15 | 8T-4196 | 2 | BOLT (L=35mm) | | | | | |
| | 16 | 3J-7354 | 2 | SEAL-O-RING (ID=8.92mm) | | | | | |
| | 17 | 221-8859 | 2 | SENSOR AS | | | | | |
| | 18 | 3K-0360 | 2 | SEAL-O-RING (ID=16.36mm) | | | | | |

H93354E 00

## 272-4171 LINES GP-SENSOR

S/N BWZ 1-Up, DFB 1-Up
Part of 279-2732-Page11,279-2733-Page12
An Attachment

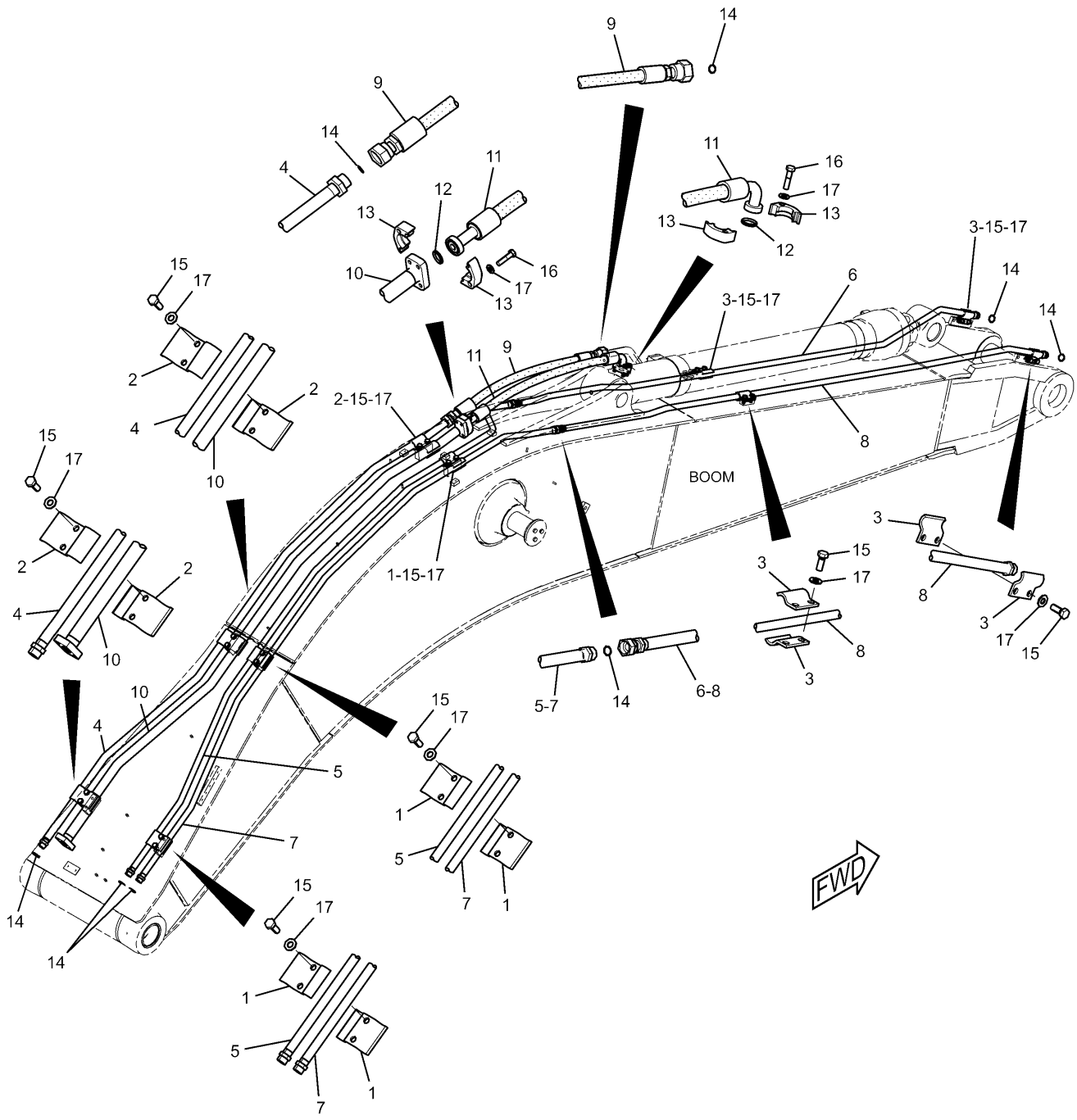


## 260-8010 LINES GP-BOOM

Part of 240-3828,240-3830-Page731
An Attachment

# HYDRAULIC SYSTEM

| NOTE | No. | PART No. | QTY | PART NAME | NOTE | No. | PART No. | QTY | PART NAME |
|---|---|---|---|---|---|---|---|---|---|
| | 1 | 4I-1674 | 6 | CLIP | | | | | |
| | 2 | 4I-1676 | 6 | CLIP | | | | | |
| | 3 | 7Y-4868 | 8 | CLIP | | | | | |
| | 4 | 307-5034 | 1 | TUBE AS | | | | | |
| | 5 | 202-3855 | 1 | TUBE AS | | | | | |
| | 6 | 202-3856 | 1 | TUBE AS | | | | | |
| | 7 | 202-3857 | 1 | TUBE AS | | | | | |
| | 8 | 202-3858 | 1 | TUBE AS | | | | | |
| | 9 | 202-6996 | 1 | HOSE AS | | | | | |
| | 10 | 260-8315 | 1 | TUBE AS | | | | | |
| | 11 | 260-8316 | 1 | HOSE AS | | | | | |
| | 12 | 1P-3703 | 2 | SEAL | | | | | |
| | 13 | 6V-0400 | 4 | FLANGE | | | | | |
| | 14 | 6V-9746 | 9 | SEAL-O-RING (OD=22.50mm) | | | | | |
| | 15 | 8T-4139 | 20 | BOLT (L=30mm) | | | | | |
| | 16 | 8T-4184 | 8 | BOLT (L=45mm) | | | | | |
| | 17 | 8T-4223 | 28 | WASHER | | | | | |

H98504E 02

## 260-8010 LINES GP-BOOM

Part of 240-3828,240-3830-Page731

An Attachment

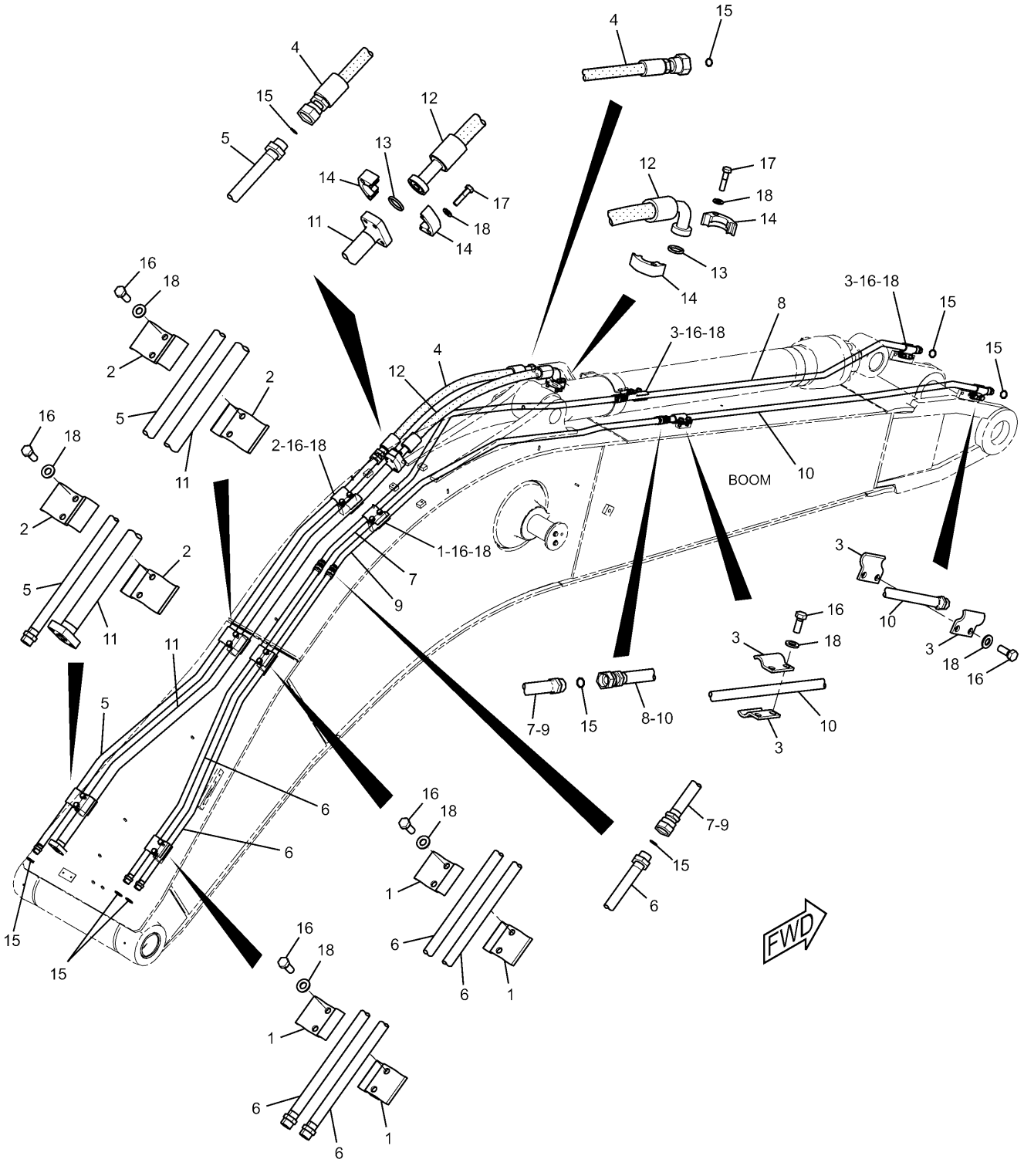


## 239-1732 LINES GP-BOOM

S/N BWZ 1-Up, DFB 1-Up
Part of 240-3833-Page732
An Attachment

# HYDRAULIC SYSTEM

| NOTE | No. | PART No. | QTY | PART NAME | NOTE | No. | PART No. | QTY | PART NAME |
|---|---|---|---|---|---|---|---|---|---|
| | 1 | 4I-1674 | 6 | CLIP | | | | | |
| | 2 | 4I-1676 | 6 | CLIP | | | | | |
| | 3 | 7Y-4868 | 8 | CLIP | | | | | |
| | 4 | 151-1846 | 1 | HOSE AS | | | | | |
| | 5 | 307-5035 | 1 | TUBE AS | | | | | |
| | 6 | 184-9253 | 2 | TUBE AS | | | | | |
| | 7 | 184-9254 | 1 | TUBE AS | | | | | |
| | 8 | 184-9255 | 1 | TUBE AS | | | | | |
| | 9 | 184-9256 | 1 | TUBE AS | | | | | |
| | 10 | 184-9257 | 1 | TUBE AS | | | | | |
| | 11 | 260-8320 | 1 | TUBE AS | | | | | |
| | 12 | 260-8321 | 1 | HOSE AS | | | | | |
| | 13 | 1P-3703 | 2 | SEAL | | | | | |
| | 14 | 6V-0400 | 4 | FLANGE | | | | | |
| | 15 | 6V-9746 | 11 | SEAL-O-RING (OD=22.50mm) | | | | | |
| | 16 | 8T-4139 | 20 | BOLT (L=30mm) | | | | | |
| | 17 | 8T-4184 | 8 | BOLT (L=45mm) | | | | | |
| | 18 | 8T-4223 | 28 | WASHER | | | | | |

H98505E 02

## 239-1732 LINES GP-BOOM

S/N BWZ 1-Up, DFB 1-Up
Part of 240-3833-Page732
An Attachment

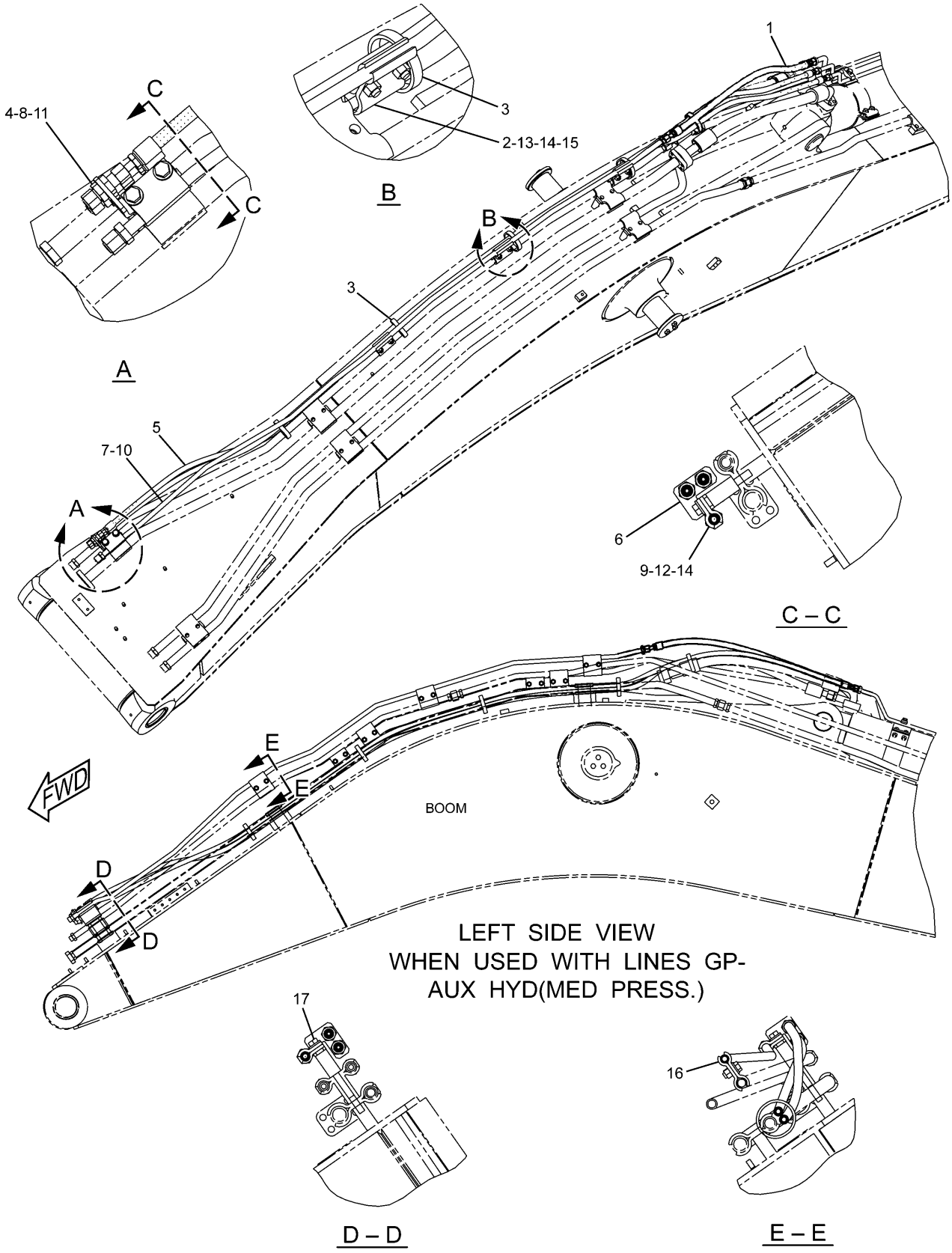


H98355E 07

**242-6505 LINES GP-BOOM**
R-Boom/Stick Lowering Control
S/N BWZ 1-Up, DFB 1-Up
Part of 239-8677-Page447
An Attachment

# HYDRAULIC SYSTEM

| NOTE | No. | PART No. | QTY | PART NAME | NOTE | No. | PART No. | QTY | PART NAME |
|---|---|---|---|---|---|---|---|---|---|
| | 1 | 5I-4393 | 1 | HOSE AS | | | | | |
| | 2 | 5Q-4213 | 6 | CLIP | | | | | |
| | 3 | 7K-1181 | 5 | STRAP | | | | | |
| | 4 | 6V-8397 | 2 | SEAL-O-RING (OD=12.83mm) | | | | | |
| | 5 | 268-6850 | 2 | HOSE AS | | | | | |
| | 6 | 282-5567 | 1 | PLATE | | | | | |
| | 7 | 288-7410 | 1 | PIPE AS | | | | | |
| | 8 | 6V-8994 | 2 | UNION | | | | | |
| | 9 | 5Q-4212 | 2 | CLIP | | | | | |
| | 10 | 6V-8398 | 2 | SEAL-O-RING (OD=16.03mm) | | | | | |
| | 11 | 6V-9168 | 2 | NUT | | | | | |
| | 12 | 7X-2549 | 2 | BOLT (L=100mm) | | | | | |
| | 13 | 8T-4139 | 6 | BOLT (L=30mm) | | | | | |
| | 14 | 8T-4223 | 8 | WASHER | | | | | |
| | 15 | 8T-4244 | 6 | NUT | | | | | |
| | 16 | 179-5030 | 6 | CLIP | | | | | |
| | 17 | 8T-7930 | 2 | BOLT (L=160mm) | | | | | |

H98355E 07

## 242-6505 LINES GP-BOOM

R-Boom/Stick Lowering Control
S/N BWZ 1-Up, DFB 1-Up
Part of 239-8677-Page447
An Attachment

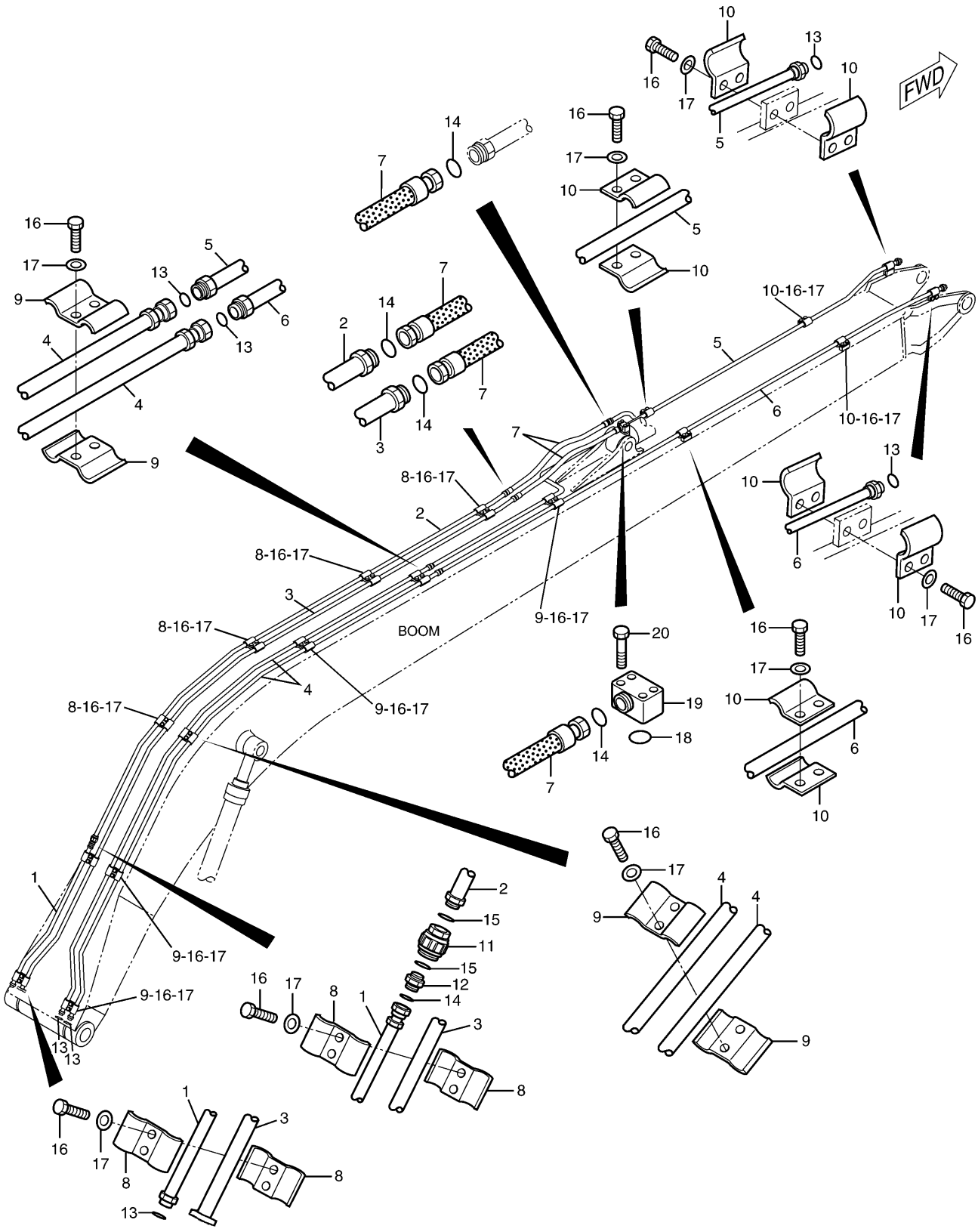


## 268-7046 LINES GP-BOOM

S/N DFB 1-Up
Part of 302-9207-Page740
An Attachment

# HYDRAULIC SYSTEM

| NOTE | No. | PART No. | QTY | PART NAME | NOTE | No. | PART No. | QTY | PART NAME |
|---|---|---|---|---|---|---|---|---|---|
| | 1 | 268-7047 | 1 | TUBE AS | | | | | |
| | 2 | 268-7048 | 1 | TUBE AS | | | | | |
| | 3 | 268-7049 | 1 | TUBE AS | | | | | |
| | 4 | 268-7238 | 2 | TUBE AS | | | | | |
| | 5 | 268-7039 | 1 | TUBE AS | | | | | |
| | 6 | 268-7240 | 1 | TUBE AS | | | | | |
| | 7 | 7Y-8036 | 2 | HOSE AS | | | | | |
| | 8 | 4I-1676 | 12 | CLIP | | | | | |
| | 9 | 4I-1674 | 12 | CLIP | | | | | |
| | 10 | 7Y-4868 | 12 | CLIP | | | | | |
| | 11 | 4I-8789 | 1 | VALVE GP | | | | | |
| | 12 | 6V-8635 | 1 | CONNECTOR | | | | | |
| | 13 | 6V-9746 | 7 | SEAL-O-RING (OD=22.50mm) | | | | | |
| | 14 | 5K-9090 | 5 | SEAL-O-RING (OD=27.22mm) | | | | | |
| | 15 | 7M-8485 | 2 | SEAL-O-RING (ID=29.74mm) | | | | | |
| | 16 | 8T-4139 | 36 | BOLT (L=30mm) | | | | | |
| | 17 | 8T-4223 | 36 | WASHER | | | | | |
| | 18 | 1P-3704 | 1 | SEAL | | | | | |
| | 19 | 6I-6721 | 1 | ELBOW | | | | | |
| | 20 | 8T-4648 | 4 | BOLT (L=70mm) | | | | | |

H90349E 00

## 268-7046 LINES GP-BOOM

S/N DFB 1-Up
Part of 302-9207-Page740
An Attachment

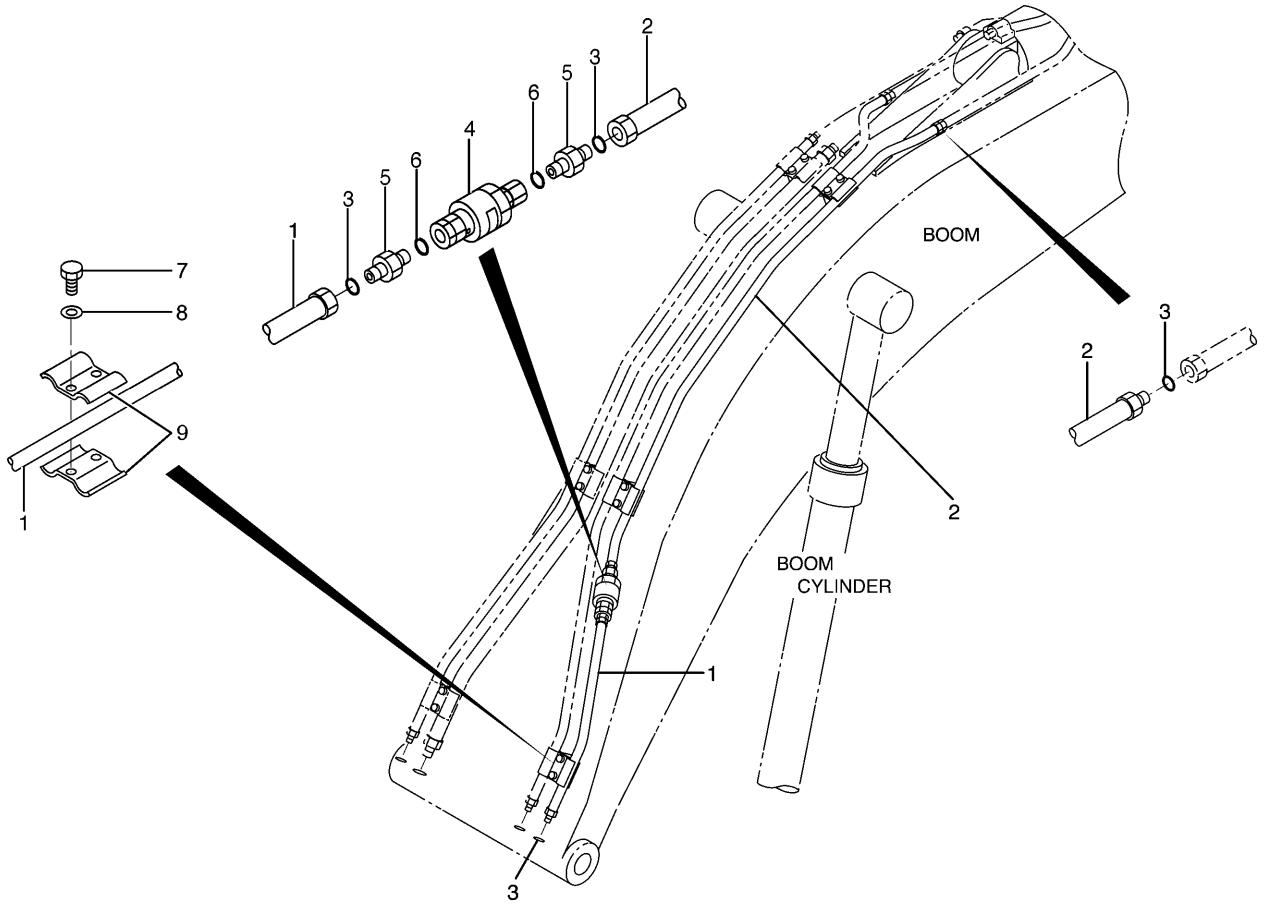


| NOTE | No. | PART No. | QTY | PART NAME | NOTE | No. | PART No. | QTY | PART NAME |
|---|---|---|---|---|---|---|---|---|---|
| | 1 | 179-5227 | 1 | TUBE AS | | | | | |
| | 2 | 210-9827 | 1 | TUBE AS | | | | | |
| | 3 | 6V-9746 | 4 | SEAL-O-RING (OD=22.50mm) | | | | | |
| Y | 4 | 127-6844 | 1 | VALVE GP | | | | | |
| | 5 | 6V-8716 | 2 | CONNECTOR | | | | | |
| | 6 | 7M-8485 | 2 | SEAL-O-RING (ID=29.74mm) | | | | | |
| | 7 | 8T-4139 | 6 | BOLT (L=30mm) | | | | | |
| | 8 | 8T-4223 | 6 | WASHER | | | | | |
| | 9 | 4I-1674 | 6 | CLIP | | | | | |
| | | | | THE FOLLOWING REPAIR | | | | | |
| | | | | KIT IS AVAILABLE: | | | | | |
| Y | | 193-6588 | 1 | SERVICE KIT | | | | | |

Y—SEE SEPARATE ILLUSTRATION

H83532E 04

## 179-5146 LINES GP-BOOM

S/N DFB 1-Up
193-6588-Page402,127-6844-Page596
An Attachment

# MEMORANDA

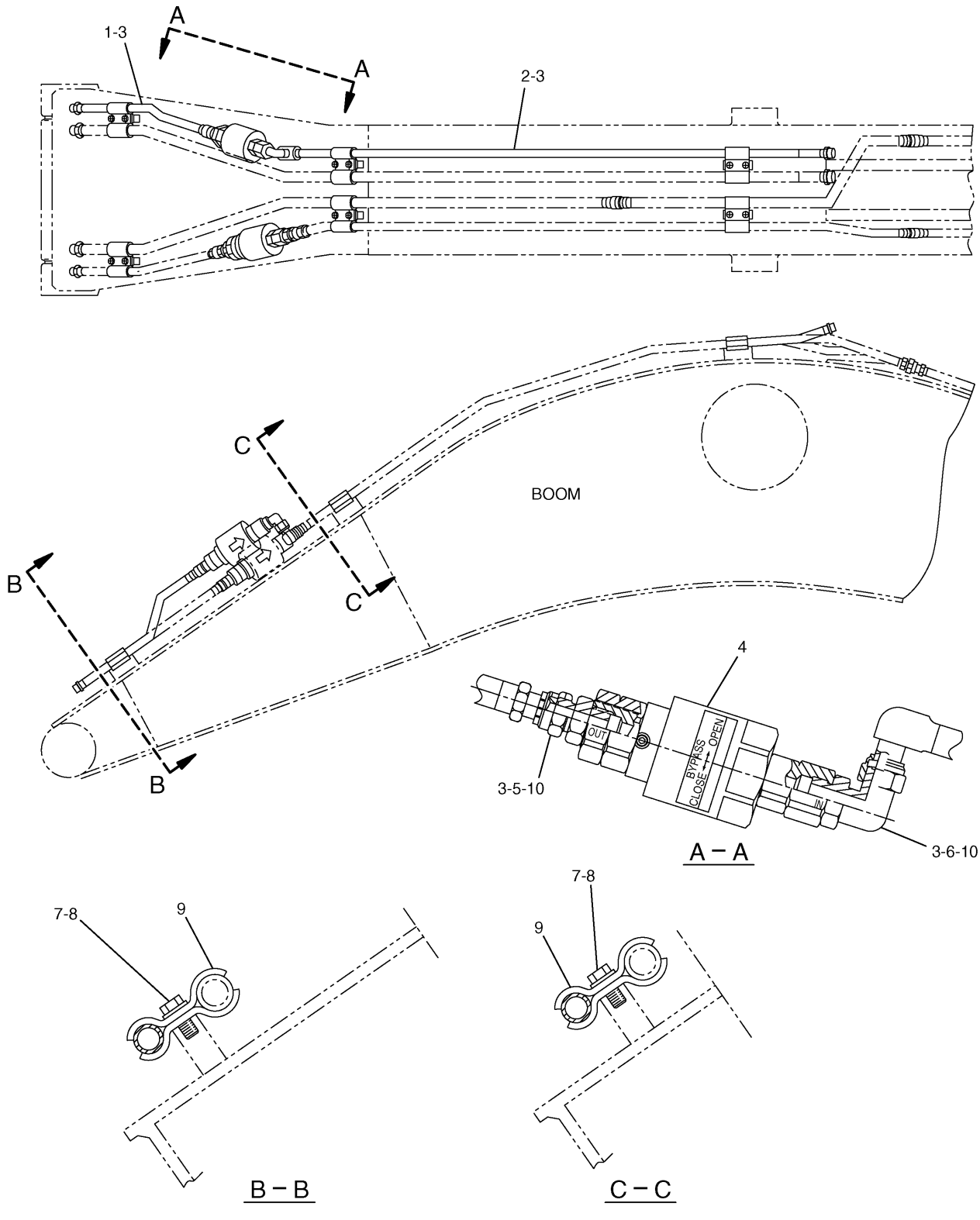


H77786E 00

**193-6588 SERVICE KIT**
Part of 179-5146-Page400
127-6844-Page596
An Attachment

# HYDRAULIC SYSTEM

| NOTE | No. | PART No. | QTY | PART NAME | NOTE | No. | PART No. | QTY | PART NAME |
|---|---|---|---|---|---|---|---|---|---|
| | 1 | 193-6589 | 1 | TUBE AS | | | | | |
| | 2 | 193-6590 | 1 | TUBE AS | | | | | |
| | 3 | 6V-9746 | 4 | SEAL-O-RING (OD=22.50mm) | | | | | |
| Y | 4 | 127-6844 | 1 | VALVE GP | | | | | |
| | 5 | 6V-8716 | 1 | CONNECTOR | | | | | |
| | 6 | 6V-9182 | 1 | ELBOW | | | | | |
| | 7 | 8T-4139 | 6 | BOLT (L=30mm) | | | | | |
| | 8 | 8T-4223 | 6 | WASHER | | | | | |
| | 9 | 4I-1676 | 6 | CLIP | | | | | |
| | 10 | 7M-8485 | 2 | SEAL-O-RING (ID=29.74mm) | | | | | |

Y—SEE SEPARATE ILLUSTRATION

H77786E 00

## 193-6588 SERVICE KIT

Part of 179-5146-Page400
127-6844-Page596
An Attachment

# HYDRAULIC SYSTEM

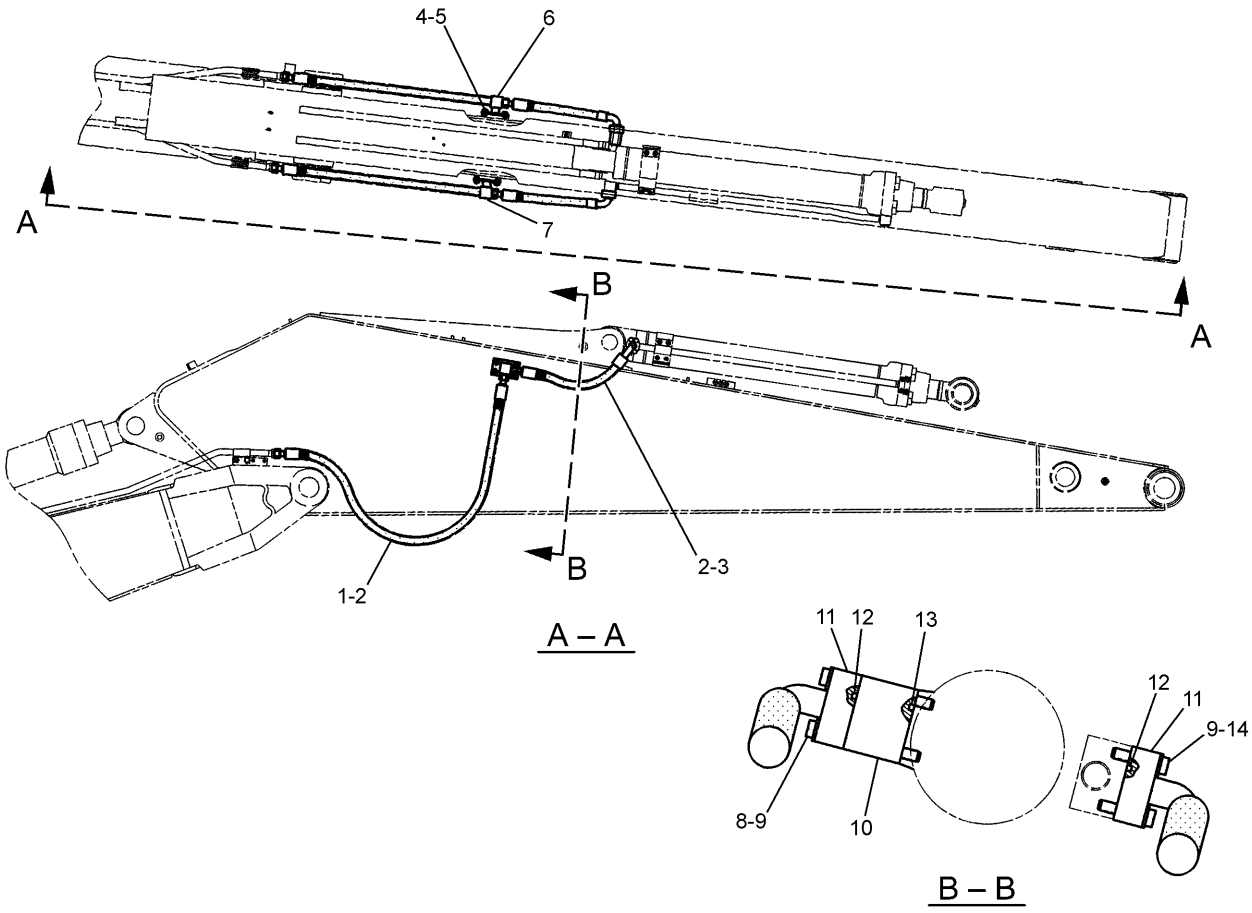


| NOTE | No. | PART No. | QTY | PART NAME | NOTE | No. | PART No. | QTY | PART NAME |
|---|---|---|---|---|---|---|---|---|---|
| | 1 | 102-1279 | 2 | HOSE AS | | | | | |
| | 2 | 6V-9746 | 4 | SEAL-O-RING (OD=22.50mm) | | | | | |
| | 3 | 187-6696 | 2 | HOSE AS | | | | | |
| | 4 | 8T-4223 | 8 | WASHER | | | | | |
| | 5 | 8T-4179 | 8 | BOLT (L=20mm) | | | | | |
| | 6 | 102-1291 | 1 | ELBOW AS | | | | | |
| | 7 | 102-1120 | 1 | ELBOW AS | | | | | |
| | 8 | 8T-4198 | 4 | BOLT (L=100mm) | | | | | |
| | 9 | 8T-4121 | 8 | WASHER | | | | | |
| | 10 | 5I-4174 | 1 | BLOCK | | | | | |
| | 11 | 1P-5765 | 4 | FLANGE | | | | | |
| | 12 | 1P-3702 | 2 | SEAL | | | | | |
| | 13 | 1P-3703 | 1 | SEAL | | | | | |
| | 14 | 8T-4182 | 4 | BOLT (L=45mm) | | | | | |

H89762E 00

## 187-5976 LINES GP-STICK

R3.9B Stick

Part of 240-3845-Page733

An Attachment

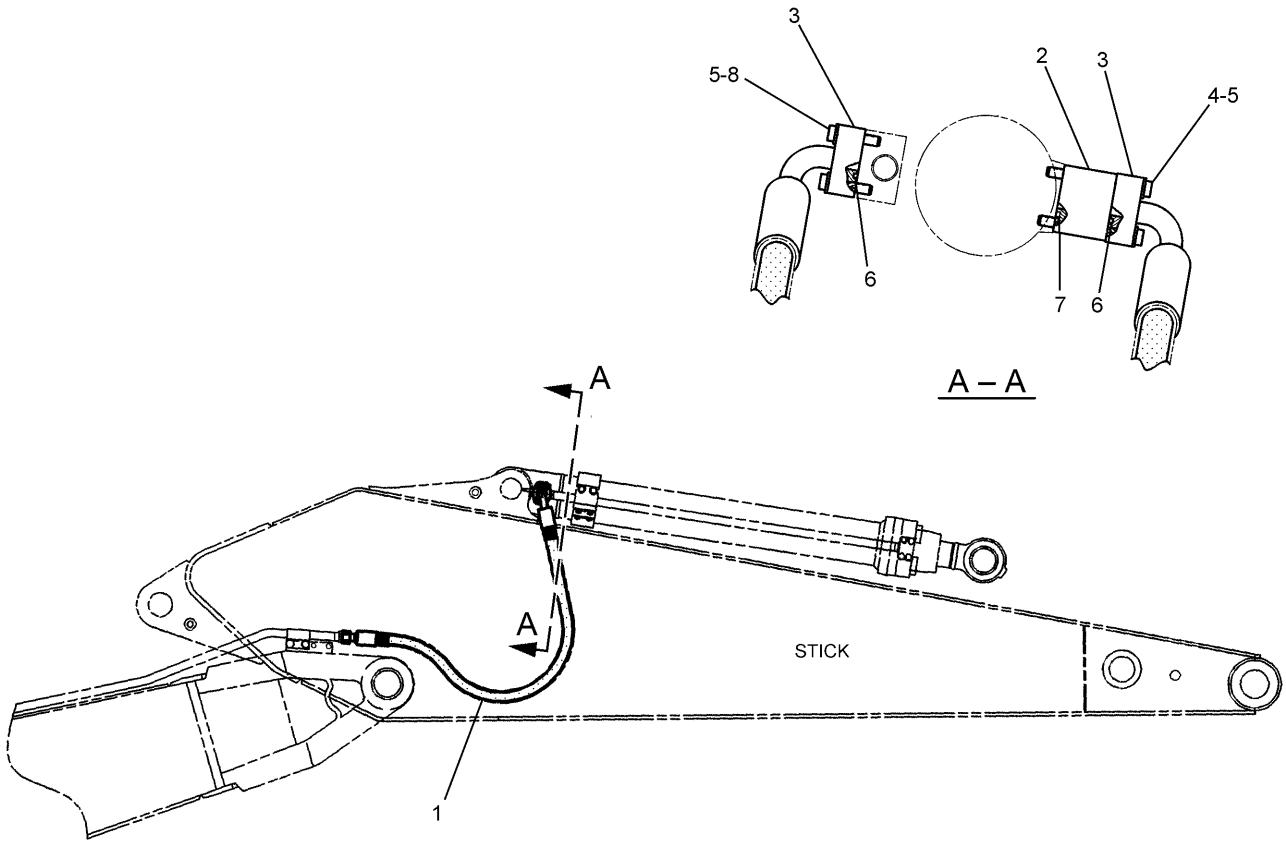


| NOTE | No. | PART No. | QTY | PART NAME | NOTE | No. | PART No. | QTY | PART NAME |
|---|---|---|---|---|---|---|---|---|---|
| | 1 | 4I-8785 | 2 | HOSE AS | | | | | |
| | 2 | 5I-4174 | 1 | BLOCK | | | | | |
| | 3 | 1P-5765 | 4 | FLANGE | | | | | |
| | 4 | 8T-4198 | 4 | BOLT (L=100mm) | | | | | |
| | 5 | 8T-4121 | 8 | WASHER | | | | | |
| | 6 | 1P-3702 | 2 | SEAL | | | | | |
| | 7 | 1P-3703 | 1 | SEAL | | | | | |
| | 8 | 8T-4182 | 4 | BOLT (L=45mm) | | | | | |

H89745E 00

## 187-5693 LINES GP-STICK

R2.9B Stick

Part of 240-3839-Page733,240-3849,240-3851-Page734,240-3852-Page735

An Attachment

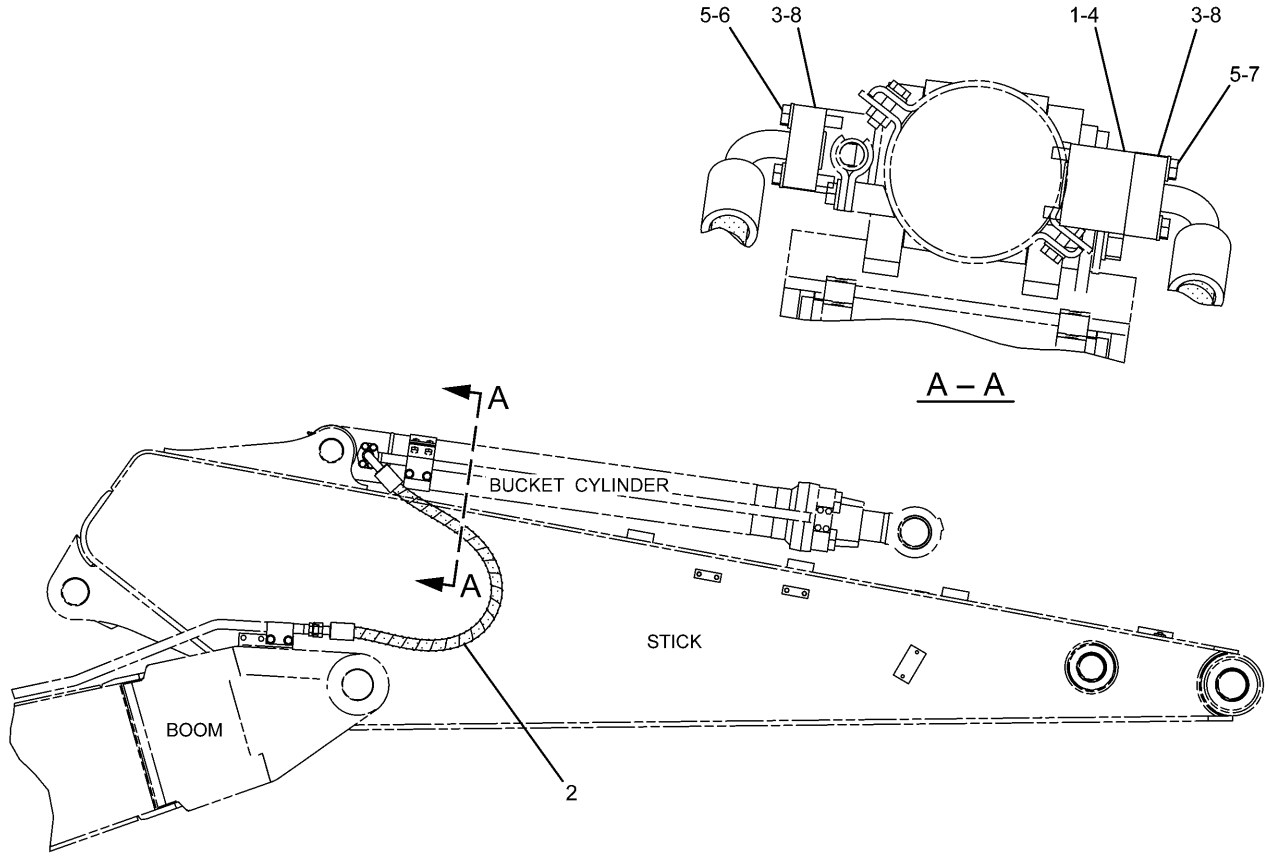


| NOTE | No. | PART No. | QTY | PART NAME | NOTE | No. | PART No. | QTY | PART NAME |
|---|---|---|---|---|---|---|---|---|---|
| | 1 | 5I-4174 | 1 | BLOCK | | | | | |
| | 2 | 187-6058 | 2 | HOSE AS | | | | | |
| | 3 | 1P-3702 | 2 | SEAL | | | | | |
| | 4 | 1P-3703 | 1 | SEAL | | | | | |
| | 5 | 8T-4121 | 8 | WASHER | | | | | |
| | 6 | 8T-4182 | 4 | BOLT (L=45mm) | | | | | |
| | 7 | 8T-4198 | 4 | BOLT (L=100mm) | | | | | |
| | 8 | 8T-9403 | 4 | FLANGE | | | | | |

H89636E 00

## 260-8011 LINES GP-STICK

Part of 240-3882-Page735,240-3854-Page736
An Attachment

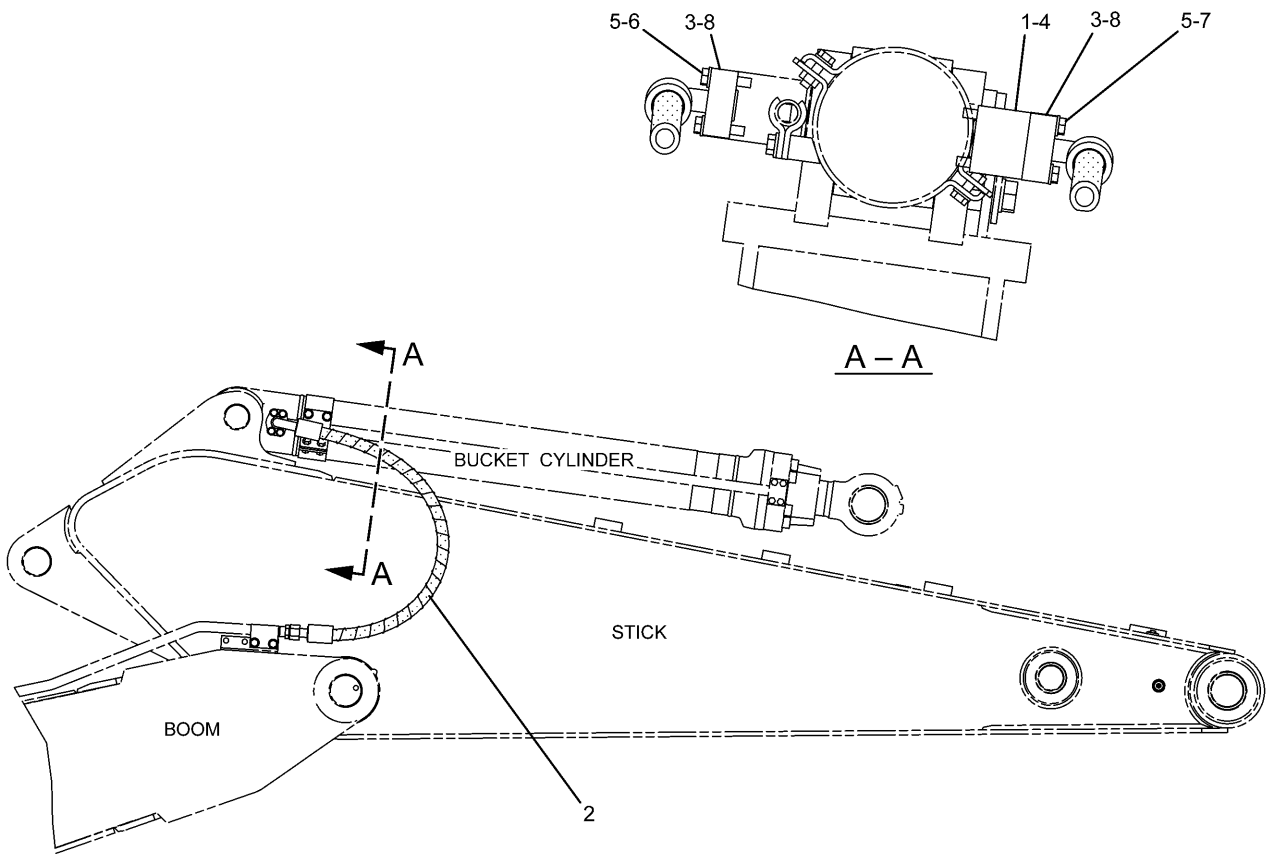


| NOTE | No. | PART No. | QTY | PART NAME | NOTE | No. | PART No. | QTY | PART NAME |
|---|---|---|---|---|---|---|---|---|---|
| | 1 | 5I-4174 | 1 | BLOCK | | | | | |
| | 2 | 187-6058 | 2 | HOSE AS | | | | | |
| | 3 | 1P-3702 | 2 | SEAL | | | | | |
| | 4 | 1P-3703 | 1 | SEAL | | | | | |
| | 5 | 8T-4121 | 8 | WASHER | | | | | |
| | 6 | 8T-4182 | 4 | BOLT (L=45mm) | | | | | |
| | 7 | 8T-4198 | 4 | BOLT (L=100mm) | | | | | |
| | 8 | 8T-9403 | 4 | FLANGE | | | | | |

H92316E 00

## 248-9633 LINES GP-STICK

M2.4CB Stick

Part of 240-3846-Page736

An Attachment

# HYDRAULIC SYSTEM

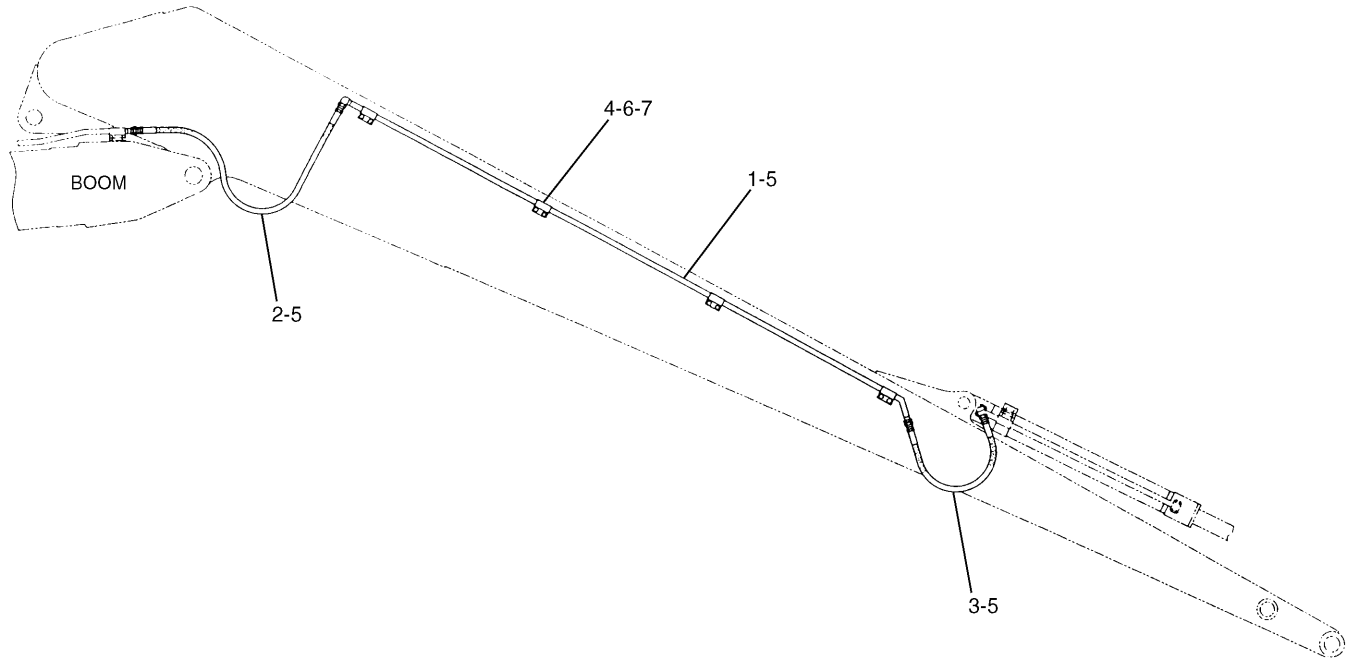


| NOTE | No. | PART No. | QTY | PART NAME | NOTE | No. | PART No. | QTY | PART NAME |
|---|---|---|---|---|---|---|---|---|---|
| | 1 | 5I-7233 | 2 | TUBE AS | | | | | |
| | 2 | 4I-5556 | 2 | HOSE AS | | | | | |
| E | | 5P-0200 | | HOSE…(147cm) | | | | | |
| | | 5P-1027 | 2 | SLEEVE | | | | | |
| E | | 6V-0745 | | GUARD…(203cm) | | | | | |
| | | 7X-1451 | 2 | STEM AS (STRAIGHT) | | | | | |
| | 3 | 7Y-7904 | 2 | HOSE AS | | | | | |
| E | | 5P-0200 | | HOSE…(73cm) | | | | | |
| | | 5P-1027 | 2 | SLEEVE | | | | | |
| | | 7X-1451 | 2 | STEM AS (STRAIGHT) | | | | | |
| | 4 | 7Y-4868 | 16 | CLIP | | | | | |
| | 5 | 6V-9746 | 8 | SEAL-O-RING (OD=22.50mm) | | | | | |
| | 6 | 8T-4139 | 16 | BOLT (L=30mm) | | | | | |
| | 7 | 8T-4223 | 16 | WASHER | | | | | |

E—ORDER BY THE CENTIMETER

H53107E 00

## 127-6624 LINES GP-STICK

Long Reach Front
S/N DFB 1-Up
Part of 302-9207-Page740
An Attachment

# MEMORANDA

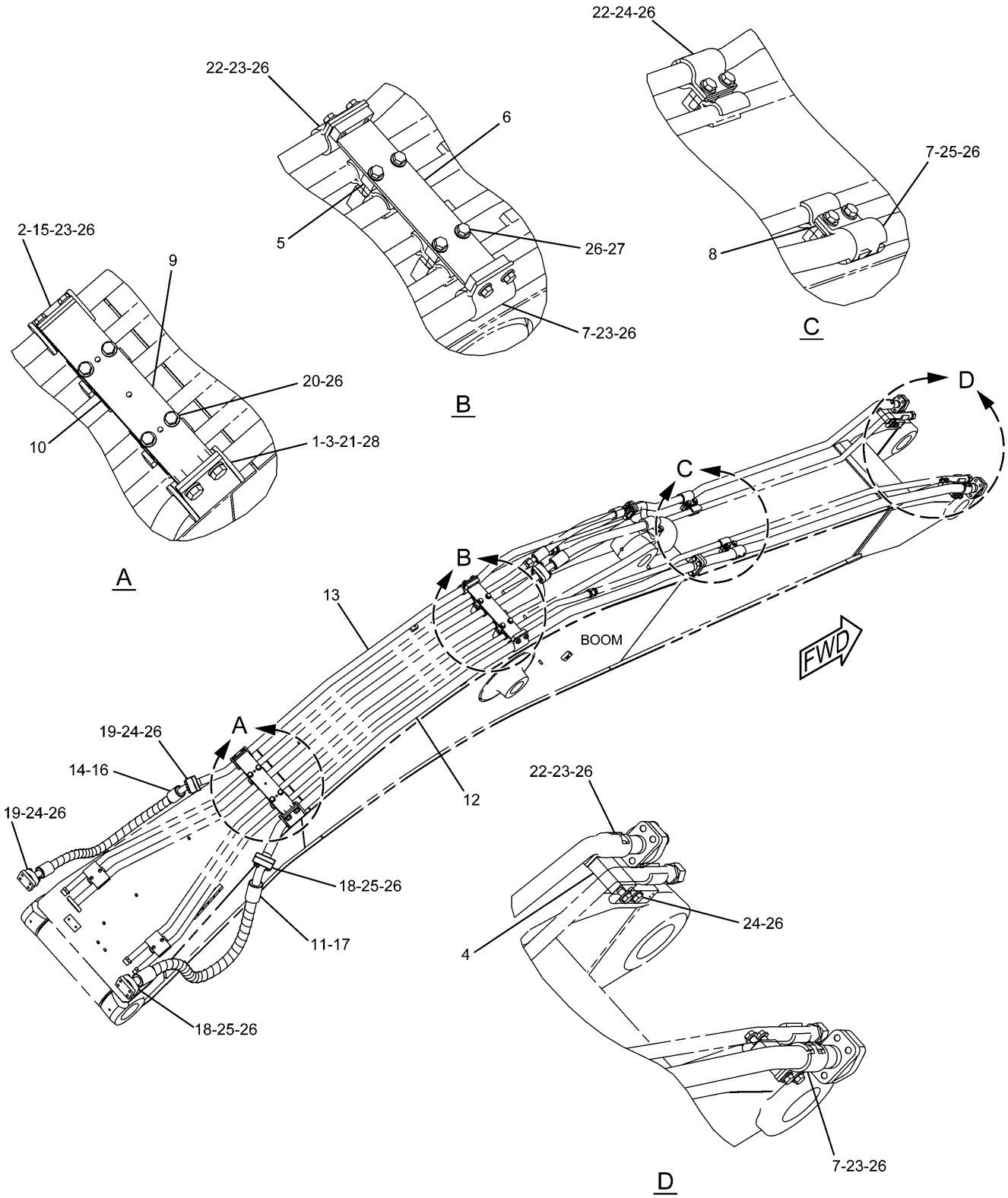


H98506E 05

**242-6475 LINES GP-AUXILIARY HYDRAULIC**
An Attachment

# HYDRAULIC SYSTEM

| NOTE | No. | PART No. | QTY | PART NAME | NOTE | No. | PART No. | QTY | PART NAME |
|---|---|---|---|---|---|---|---|---|---|
| | 1 | 124-1107 | 1 | GROMMET | | | | | |
| | 2 | 129-5874 | 1 | GROMMET | | | | | |
| | 3 | 138-5708 | 2 | CLIP | | | | | |
| | 4 | 153-8798 | 2 | PLATE | | | | | |
| | 5 | 193-6606 | 2 | PLATE | | | | | |
| | 6 | 277-0786 | 1 | SUPPORT AS | | | | | |
| | 7 | 173-7916 | 6 | CLAMP | | | | | |
| | 8 | 173-7995 | 1 | PLATE | | | | | |
| | 9 | 202-7127 | 1 | PLATE | | | | | |
| | 10 | 202-7128 | 2 | PLATE | | | | | |
| | 11 | 216-6589 | 1 | HOSE AS | | | | | |
| | 12 | 306-1611 | 1 | TUBE GP | | | | | |
| | 13 | 247-9030 | 1 | TUBE GP | | | | | |
| | 14 | 288-7502 | 1 | HOSE AS | | | | | |
| | 15 | 124-1108 | 2 | CLIP | | | | | |
| | 16 | 1P-3703 | 2 | SEAL | | | | | |
| | 17 | 1P-3704 | 2 | SEAL | | | | | |
| | 18 | 1P-5767 | 4 | FLANGE | | | | | |
| | 19 | 6V-0400 | 4 | FLANGE | | | | | |
| | 20 | 7X-2549 | 4 | BOLT (L=100mm) | | | | | |
| | 21 | 7X-2553 | 2 | BOLT (L=40mm) | | | | | |
| | 22 | 7Y-4538 | 6 | CLAMP | | | | | |
| | 23 | 8T-4139 | 10 | BOLT (L=30mm) | | | | | |
| | 24 | 8T-4184 | 14 | BOLT (L=45mm) | | | | | |
| | 25 | 8T-4194 | 10 | BOLT (L=50mm) | | | | | |
| | 26 | 8T-4223 | 42 | WASHER | | | | | |
| | 27 | 8T-4648 | 4 | BOLT (L=70mm) | | | | | |
| | 28 | 9X-8257 | 2 | WASHER | | | | | |

H98506E 05

## 242-6475 LINES GP-AUXILIARY HYDRAULIC
An Attachment

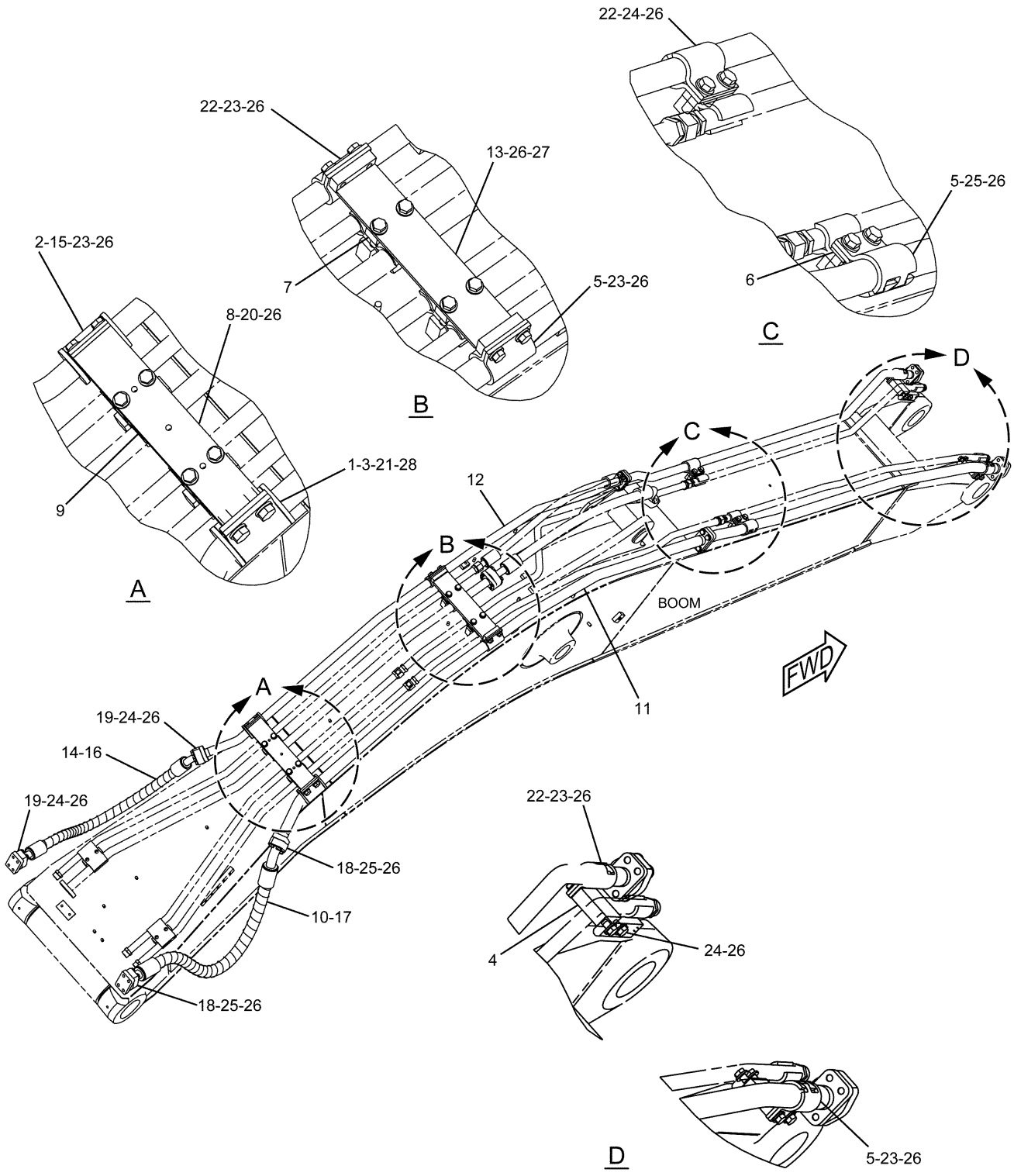


H96711E 03

**242-6479 LINES GP-AUXILIARY HYDRAULIC**
An Attachment

# HYDRAULIC SYSTEM

| NOTE | No. | PART No. | QTY | PART NAME | NOTE | No. | PART No. | QTY | PART NAME |
|---|---|---|---|---|---|---|---|---|---|
| | 1 | 124-1107 | 1 | GROMMET | | | | | |
| | 2 | 129-5874 | 1 | GROMMET | | | | | |
| | 3 | 138-5708 | 2 | CLIP | | | | | |
| | 4 | 153-8798 | 2 | PLATE | | | | | |
| | 5 | 173-7916 | 6 | CLAMP | | | | | |
| | 6 | 173-7995 | 1 | PLATE | | | | | |
| | 7 | 193-6606 | 2 | PLATE | | | | | |
| | 8 | 202-7127 | 1 | PLATE | | | | | |
| | 9 | 202-7128 | 2 | PLATE | | | | | |
| | 10 | 216-6589 | 1 | HOSE AS | | | | | |
| | 11 | 226-3065 | 1 | TUBE GP | | | | | |
| | 12 | 268-6966 | 1 | TUBE GP | | | | | |
| | 13 | 277-0786 | 1 | SUPPORT AS | | | | | |
| | 14 | 288-7502 | 1 | HOSE AS | | | | | |
| | 15 | 124-1108 | 2 | CLIP | | | | | |
| | 16 | 1P-3703 | 2 | SEAL | | | | | |
| | 17 | 1P-3704 | 2 | SEAL | | | | | |
| | 18 | 1P-5767 | 4 | FLANGE | | | | | |
| | 19 | 6V-0400 | 4 | FLANGE | | | | | |
| | 20 | 7X-2549 | 4 | BOLT (L=100mm) | | | | | |
| | 21 | 7X-2553 | 2 | BOLT (L=40mm) | | | | | |
| | 22 | 7Y-4538 | 6 | CLAMP | | | | | |
| | 23 | 8T-4139 | 10 | BOLT (L=30mm) | | | | | |
| | 24 | 8T-4184 | 14 | BOLT (L=45mm) | | | | | |
| | 25 | 8T-4194 | 10 | BOLT (L=50mm) | | | | | |
| | 26 | 8T-4223 | 42 | WASHER | | | | | |
| | 27 | 8T-4648 | 4 | BOLT (L=70mm) | | | | | |
| | 28 | 9X-8257 | 2 | WASHER | | | | | |

H96711E 03

## 242-6479 LINES GP-AUXILIARY HYDRAULIC
An Attachment

# HYDRAULIC SYSTEM

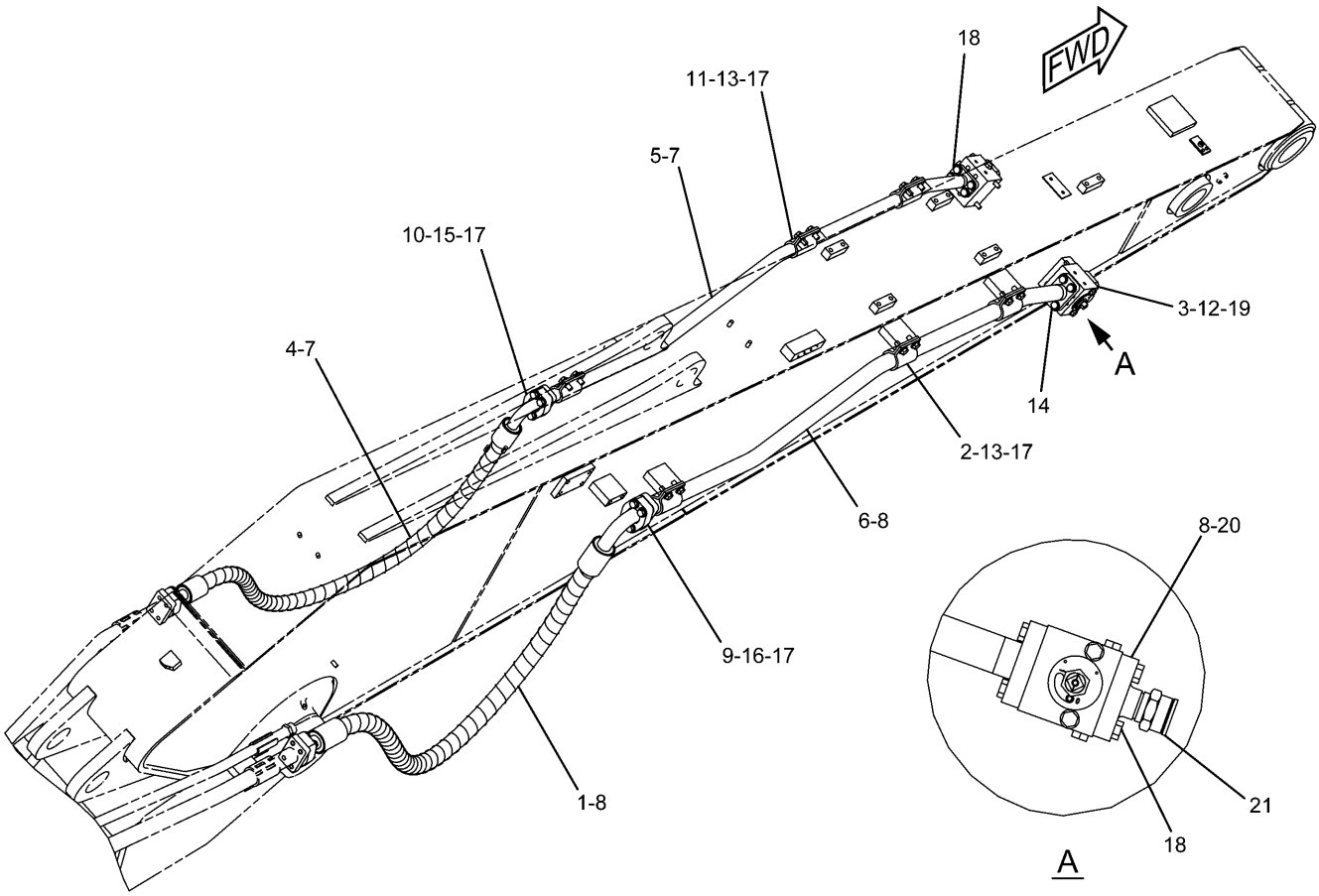


| NOTE | No. | PART No. | QTY | PART NAME | NOTE | No. | PART No. | QTY | PART NAME |
|---|---|---|---|---|---|---|---|---|---|
| | 1 | 104-8750 | 1 | HOSE AS | B | 21 | 096-1421 | 2 | CAP AS |
| | 2 | 173-7916 | 6 | CLAMP | | | | | |
| Y | 3 | 277-0954 | 2 | VALVE AS | | | | | |
| | 4 | 253-6621 | 1 | HOSE AS | | | | | |
| | 5 | 262-3402 | 1 | TUBE AS | | | | | |
| | 6 | 262-3403 | 1 | TUBE AS | | | | | |
| | 7 | 1P-3703 | 3 | SEAL | | | | | |
| | 8 | 1P-3704 | 5 | SEAL | | | | | |
| | 9 | 1P-5767 | 4 | FLANGE | | | | | |
| | 10 | 6V-0400 | 4 | FLANGE | | | | | |
| | 11 | 7Y-4538 | 6 | CLAMP | | | | | |
| | 12 | 8T-4121 | 4 | WASHER | | | | | |
| | 13 | 8T-4139 | 12 | BOLT (L=30mm) | | | | | |
| | 14 | 8T-4183 | 4 | BOLT (L=40mm) | | | | | |
| | 15 | 8T-4184 | 8 | BOLT (L=45mm) | | | | | |
| | 16 | 8T-4194 | 8 | BOLT (L=50mm) | | | | | |
| | 17 | 8T-4223 | 28 | WASHER | | | | | |
| | 18 | 8T-4956 | 12 | BOLT (L=35mm) | | | | | |
| | 19 | 8T-6685 | 4 | BOLT (L=110mm) | | | | | |
| | 20 | 135-4063 | 2 | FLANGE | | | | | |

B—USE AS REQUIRED

Y—SEE SEPARATE ILLUSTRATION

H93079E 01

## 242-6483 LINES GP-AUXILIARY HYDRAULIC

277-0954-Page602

An Attachment

# HYDRAULIC SYSTEM

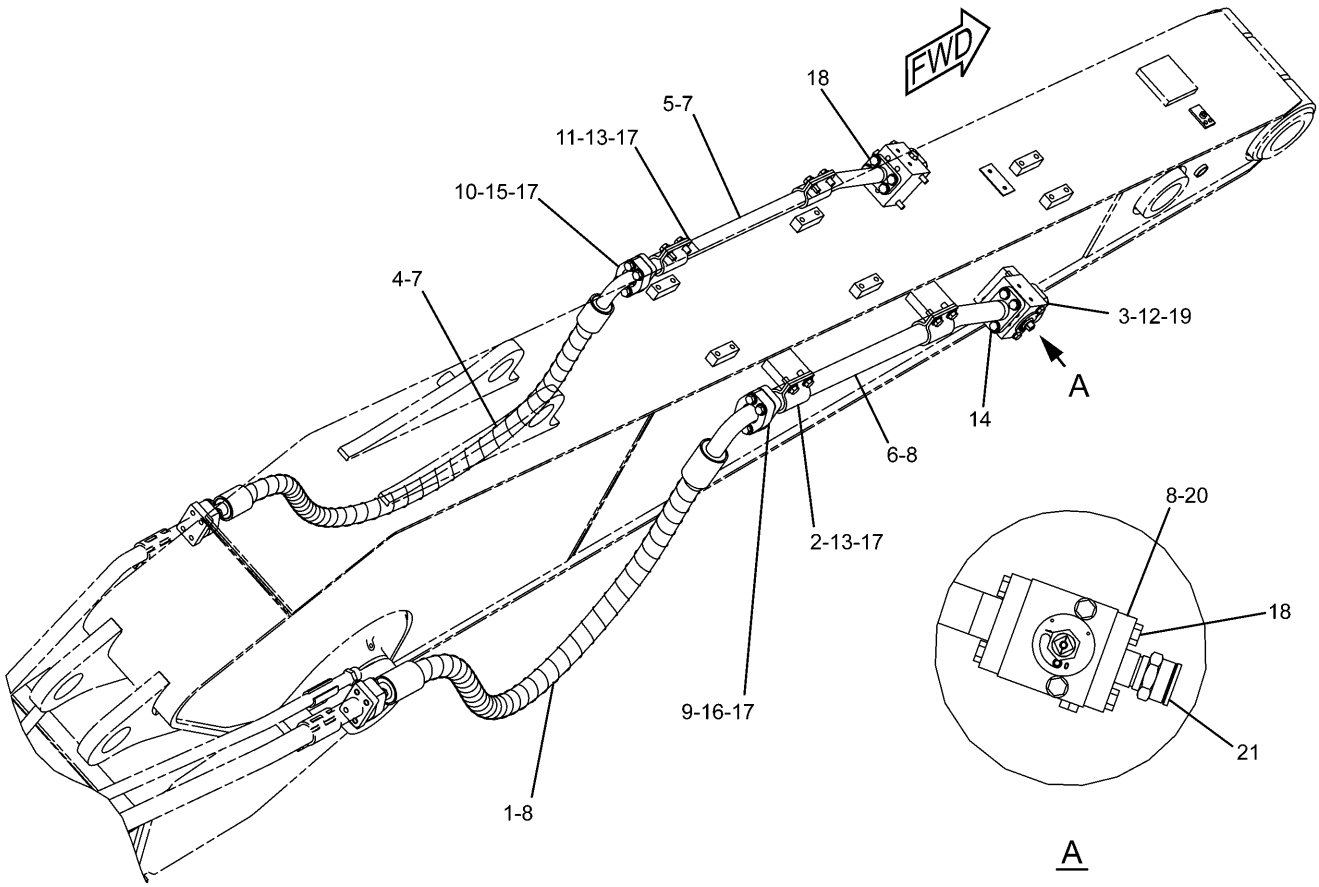


| NOTE | No. | PART No. | QTY | PART NAME | NOTE | No. | PART No. | QTY | PART NAME |
|---|---|---|---|---|---|---|---|---|---|
| | 1 | 5I-8510 | 1 | HOSE AS | B | 21 | 096-1421 | 2 | CAP AS |
| | 2 | 173-7916 | 4 | CLAMP | | | | | |
| Y | 3 | 277-0954 | 2 | VALVE AS | | | | | |
| | 4 | 253-6445 | 1 | HOSE AS | | | | | |
| | 5 | 253-6453 | 1 | TUBE AS | | | | | |
| | 6 | 253-6454 | 1 | TUBE AS | | | | | |
| | 7 | 1P-3703 | 3 | SEAL | | | | | |
| | 8 | 1P-3704 | 5 | SEAL | | | | | |
| | 9 | 1P-5767 | 4 | FLANGE | | | | | |
| | 10 | 6V-0400 | 4 | FLANGE | | | | | |
| | 11 | 7Y-4538 | 4 | CLAMP | | | | | |
| | 12 | 8T-4121 | 4 | WASHER | | | | | |
| | 13 | 8T-4139 | 8 | BOLT (L=30mm) | | | | | |
| | 14 | 8T-4183 | 4 | BOLT (L=40mm) | | | | | |
| | 15 | 8T-4184 | 8 | BOLT (L=45mm) | | | | | |
| | 16 | 8T-4194 | 8 | BOLT (L=50mm) | | | | | |
| | 17 | 8T-4223 | 24 | WASHER | | | | | |
| | 18 | 8T-4956 | 12 | BOLT (L=35mm) | | | | | |
| | 19 | 8T-6685 | 4 | BOLT (L=110mm) | | | | | |
| | 20 | 135-4063 | 2 | FLANGE | | | | | |

B—USE AS REQUIRED

Y—SEE SEPARATE ILLUSTRATION

H93080E 02

## 242-6487 LINES GP-AUXILIARY HYDRAULIC

277-0954-Page602

An Attachment

# HYDRAULIC SYSTEM

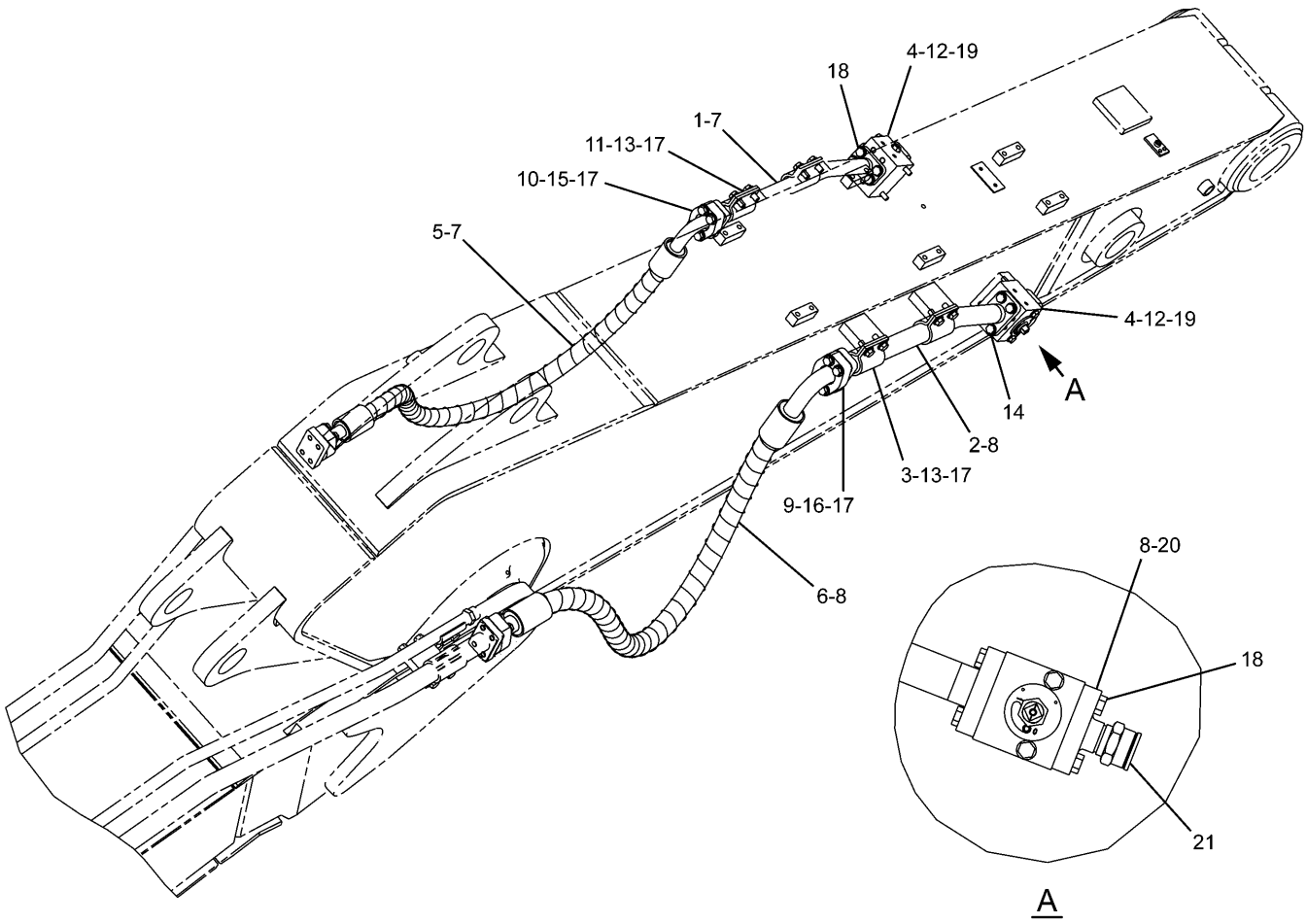


| NOTE | No. | PART No. | QTY | PART NAME | NOTE | No. | PART No. | QTY | PART NAME |
|---|---|---|---|---|---|---|---|---|---|
| | 1 | 127-6780 | 1 | TUBE AS | B | 21 | 096-1421 | 2 | CAP AS |
| | 2 | 142-6582 | 1 | TUBE AS | | | | | |
| | 3 | 173-7916 | 4 | CLAMP | | | | | |
| Y | 4 | 277-0954 | 2 | VALVE AS | | | | | |
| | 5 | 253-6694 | 1 | HOSE AS | | | | | |
| | 6 | 253-6697 | 1 | HOSE AS | | | | | |
| | 7 | 1P-3703 | 3 | SEAL | | | | | |
| | 8 | 1P-3704 | 5 | SEAL | | | | | |
| | 9 | 1P-5767 | 4 | FLANGE | | | | | |
| | 10 | 6V-0400 | 4 | FLANGE | | | | | |
| | 11 | 7Y-4538 | 4 | CLAMP | | | | | |
| | 12 | 8T-4121 | 4 | WASHER | | | | | |
| | 13 | 8T-4139 | 8 | BOLT (L=30mm) | | | | | |
| | 14 | 8T-4183 | 4 | BOLT (L=40mm) | | | | | |
| | 15 | 8T-4184 | 8 | BOLT (L=45mm) | | | | | |
| | 16 | 8T-4194 | 8 | BOLT (L=50mm) | | | | | |
| | 17 | 8T-4223 | 24 | WASHER | | | | | |
| | 18 | 8T-4956 | 12 | BOLT (L=35mm) | | | | | |
| | 19 | 8T-6685 | 4 | BOLT (L=110mm) | | | | | |
| | 20 | 135-4063 | 2 | FLANGE | | | | | |

B—USE AS REQUIRED

Y—SEE SEPARATE ILLUSTRATION

H92663E 01

## 237-3184 LINES GP-AUXILIARY HYDRAULIC

277-0954-Page602

An Attachment

# MEMORANDA

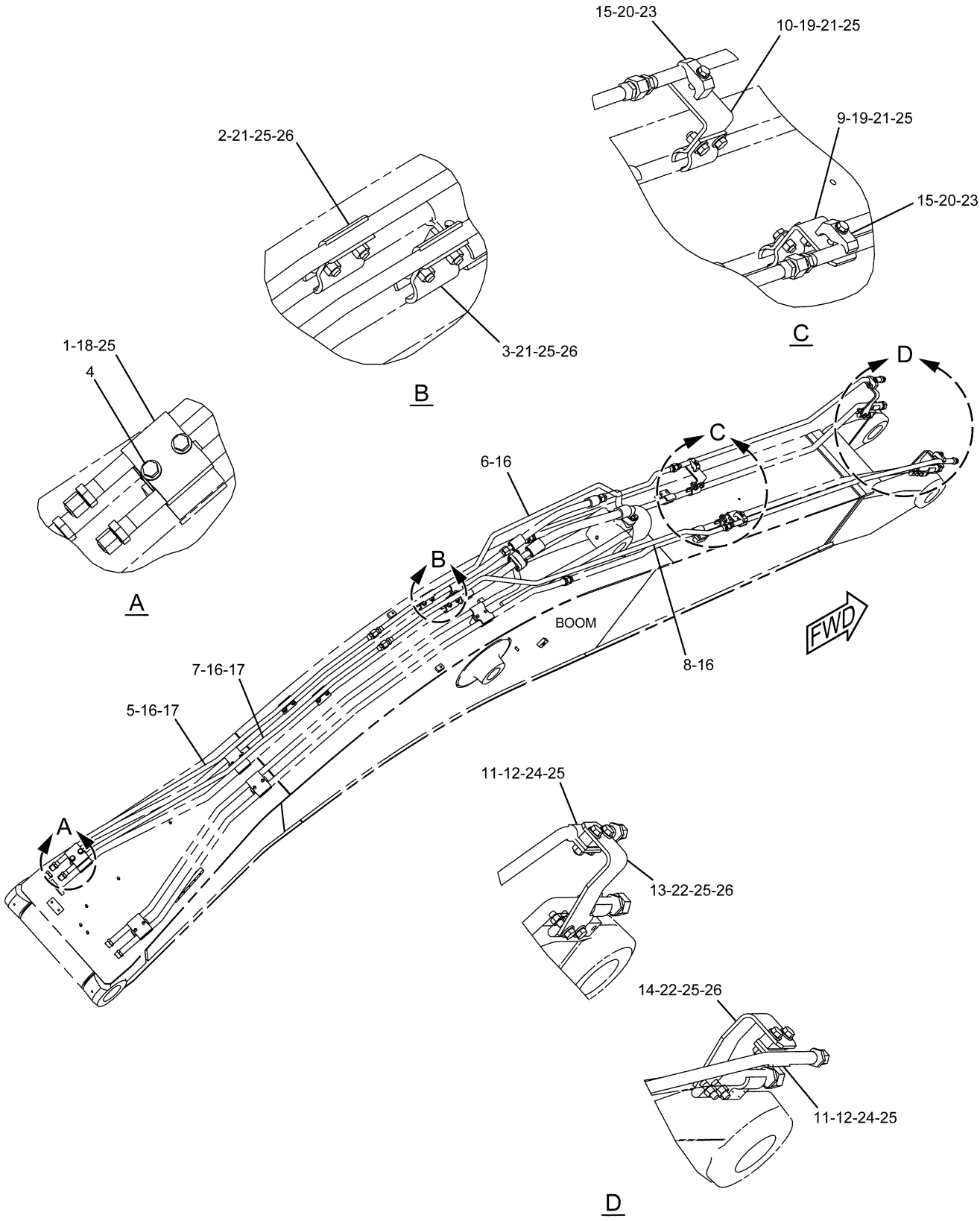


H94402E 04

**242-6476 LINES GP-AUXILIARY HYDRAULIC**
An Attachment

# HYDRAULIC SYSTEM

| NOTE | No. | PART No. | QTY | PART NAME | NOTE | No. | PART No. | QTY | PART NAME |
|---|---|---|---|---|---|---|---|---|---|
| | 1 | 153-8867 | 2 | CLIP | | | | | |
| | 2 | 173-7895 | 4 | CLIP | | | | | |
| | 3 | 179-5260 | 4 | CLIP | | | | | |
| | 4 | 202-3915 | 1 | PLATE | | | | | |
| | 5 | 247-9129 | 1 | TUBE AS | | | | | |
| | 6 | 247-9132 | 1 | TUBE GP | | | | | |
| | 7 | 247-9141 | 1 | TUBE AS | | | | | |
| | 8 | 247-9144 | 1 | TUBE GP | | | | | |
| | 9 | 247-9298 | 1 | CLIP AS | | | | | |
| | 10 | 268-6790 | 1 | CLIP AS | | | | | |
| | 11 | 294-3794 | 2 | CLIP AS | | | | | |
| | 12 | 294-3795 | 2 | CLIP AS | | | | | |
| | 13 | 294-3796 | 1 | PLATE | | | | | |
| | 14 | 294-3797 | 1 | PLATE | | | | | |
| | 15 | 093-1291 | 2 | CLAMP | | | | | |
| | 16 | 6V-8398 | 4 | SEAL-O-RING (OD=16.03mm) | | | | | |
| | 17 | 7J-9108 | 2 | SEAL-O-RING (OD=19.28mm) | | | | | |
| | 18 | 7X-2549 | 2 | BOLT (L=100mm) | | | | | |
| | 19 | 7Y-4868 | 2 | CLIP | | | | | |
| | 20 | 8T-4121 | 2 | WASHER | | | | | |
| | 21 | 8T-4139 | 12 | BOLT (L=30mm) | | | | | |
| | 22 | 8T-4184 | 4 | BOLT (L=45mm) | | | | | |
| | 23 | 8T-4185 | 2 | BOLT (L=50mm) | | | | | |
| | 24 | 8T-4194 | 4 | BOLT (L=50mm) | | | | | |
| | 25 | 8T-4223 | 22 | WASHER | | | | | |
| | 26 | 8T-4244 | 12 | NUT | | | | | |

H94402E 04

## 242-6476 LINES GP-AUXILIARY HYDRAULIC
An Attachment

# HYDRAULIC SYSTEM

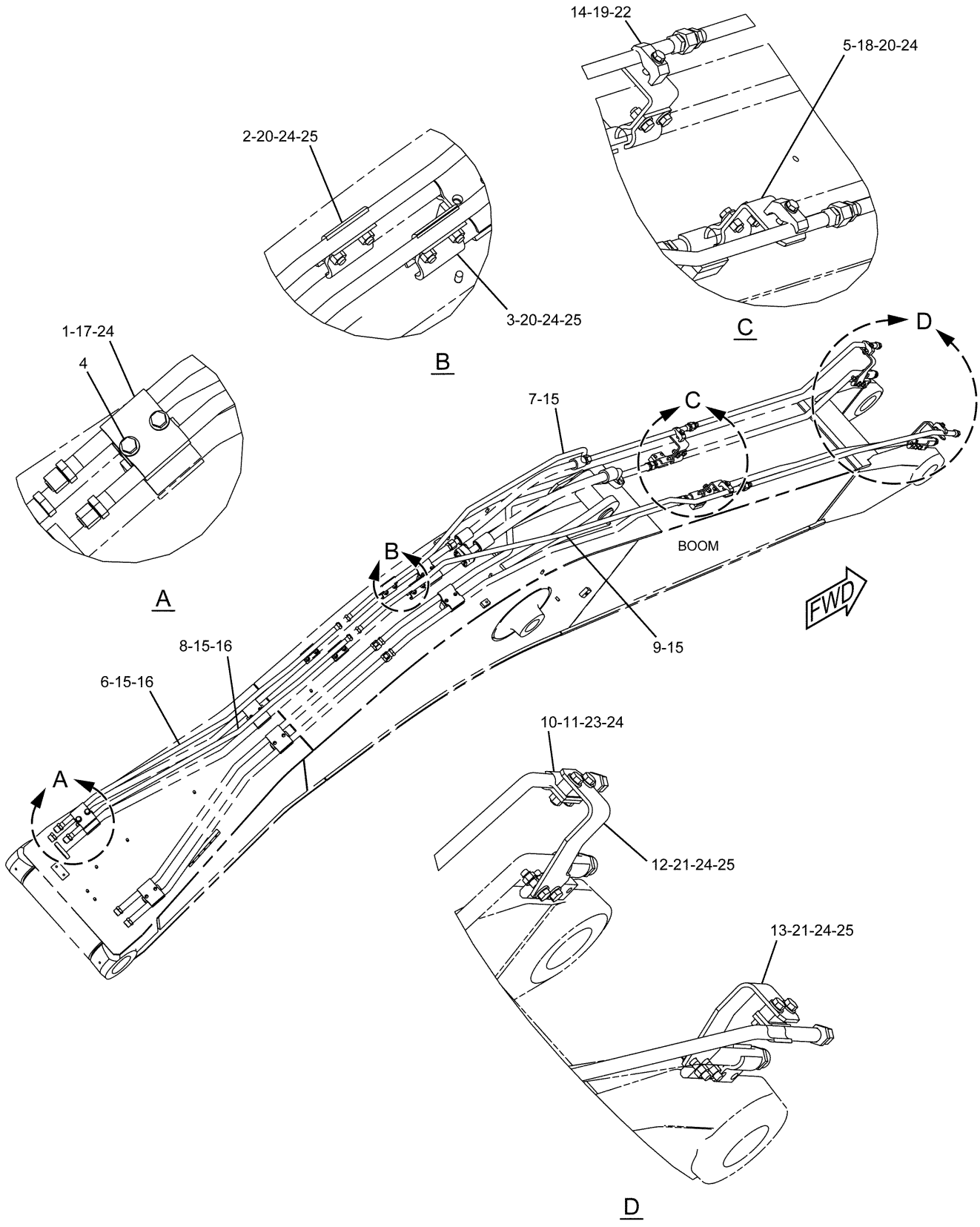


**242-6480 LINES GP-AUXILIARY HYDRAULIC**
An Attachment

# HYDRAULIC SYSTEM

| NOTE | No. | PART No. | QTY | PART NAME | NOTE | No. | PART No. | QTY | PART NAME |
|---|---|---|---|---|---|---|---|---|---|
| | 1 | 153-8867 | 2 | CLIP | | | | | |
| | 2 | 173-7895 | 4 | CLIP | | | | | |
| | 3 | 179-5260 | 4 | CLIP | | | | | |
| | 4 | 202-3915 | 1 | PLATE | | | | | |
| | 5 | 247-9298 | 2 | CLIP AS | | | | | |
| | 6 | 268-6989 | 1 | TUBE AS | | | | | |
| | 7 | 268-6992 | 1 | TUBE GP | | | | | |
| | 8 | 268-7001 | 1 | TUBE AS | | | | | |
| | 9 | 268-7004 | 1 | TUBE GP | | | | | |
| | 10 | 294-3794 | 2 | CLIP AS | | | | | |
| | 11 | 294-3795 | 2 | CLIP AS | | | | | |
| | 12 | 294-3796 | 1 | PLATE | | | | | |
| | 13 | 294-3797 | 1 | PLATE | | | | | |
| | 14 | 093-1291 | 2 | CLAMP | | | | | |
| | 15 | 6V-8398 | 4 | SEAL-O-RING (OD=16.03mm) | | | | | |
| | 16 | 7J-9108 | 2 | SEAL-O-RING (OD=19.28mm) | | | | | |
| | 17 | 7X-2549 | 2 | BOLT (L=100mm) | | | | | |
| | 18 | 7Y-4868 | 2 | CLIP | | | | | |
| | 19 | 8T-4121 | 2 | WASHER | | | | | |
| | 20 | 8T-4139 | 12 | BOLT (L=30mm) | | | | | |
| | 21 | 8T-4184 | 4 | BOLT (L=45mm) | | | | | |
| | 22 | 8T-4185 | 2 | BOLT (L=50mm) | | | | | |
| | 23 | 8T-4194 | 4 | BOLT (L=50mm) | | | | | |
| | 24 | 8T-4223 | 22 | WASHER | | | | | |
| | 25 | 8T-4244 | 12 | NUT | | | | | |

H94401E 03

## 242-6480 LINES GP-AUXILIARY HYDRAULIC
An Attachment

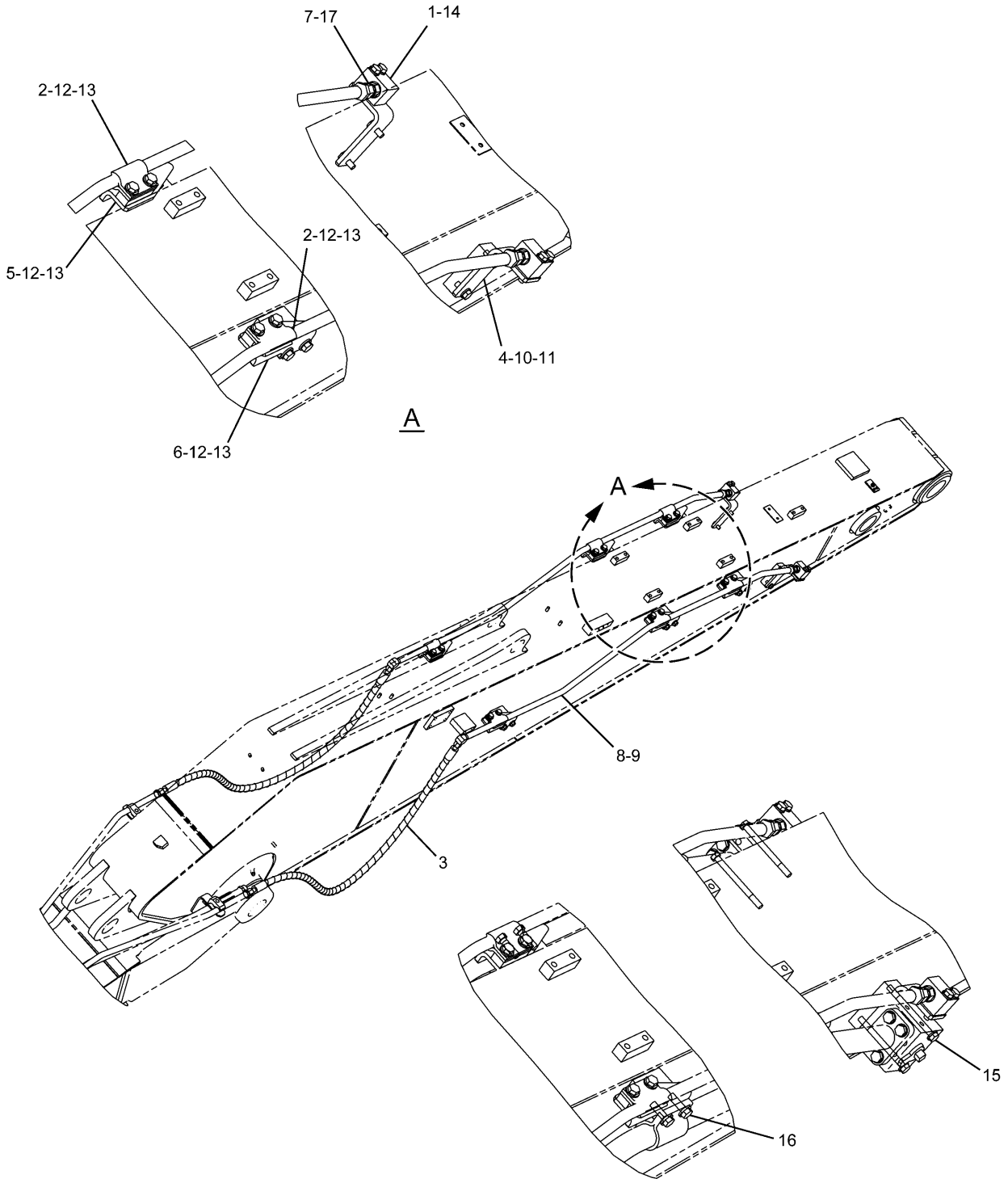


H90574E 01

**242-6484 LINES GP-AUXILIARY HYDRAULIC**
An Attachment

# HYDRAULIC SYSTEM

| NOTE | No. | PART No. | QTY | PART NAME | NOTE | No. | PART No. | QTY | PART NAME |
|---|---|---|---|---|---|---|---|---|---|
| | 1 | 6C-6760 | 2 | MANIFOLD | | | | | |
| | 2 | 149-1738 | 12 | CLIP | | | | | |
| | 3 | 177-8506 | 2 | HOSE AS | | | | | |
| | 4 | 187-9977 | 2 | PLATE | | | | | |
| | 5 | 187-9978 | 3 | SUPPORT AS | | | | | |
| | 6 | 187-9981 | 3 | SUPPORT AS | | | | | |
| | 7 | 7X-3164 | 2 | ADAPTER | | | | | |
| | 8 | 262-3404 | 2 | TUBE AS | | | | | |
| | 9 | 6V-8398 | 4 | SEAL-O-RING (OD=16.03mm) | | | | | |
| | 10 | 8T-4121 | 4 | WASHER | | | | | |
| | 11 | 8T-4136 | 4 | BOLT (L=25mm) | | | | | |
| | 12 | 8T-4139 | 24 | BOLT (L=30mm) | | | | | |
| | 13 | 8T-4223 | 24 | WASHER | | | | | |
| | 14 | 8T-4185 | 4 | BOLT (L=50mm) | | | | | |
| | 15 | 7X-2543 | 4 | BOLT (L=120mm) | | | | | |
| | 16 | 8T-4183 | 12 | BOLT (L=40mm) | | | | | |
| | 17 | 3K-0360 | 2 | SEAL-O-RING (ID=16.36mm) | | | | | |

H90574E 01

## 242-6484 LINES GP-AUXILIARY HYDRAULIC
An Attachment

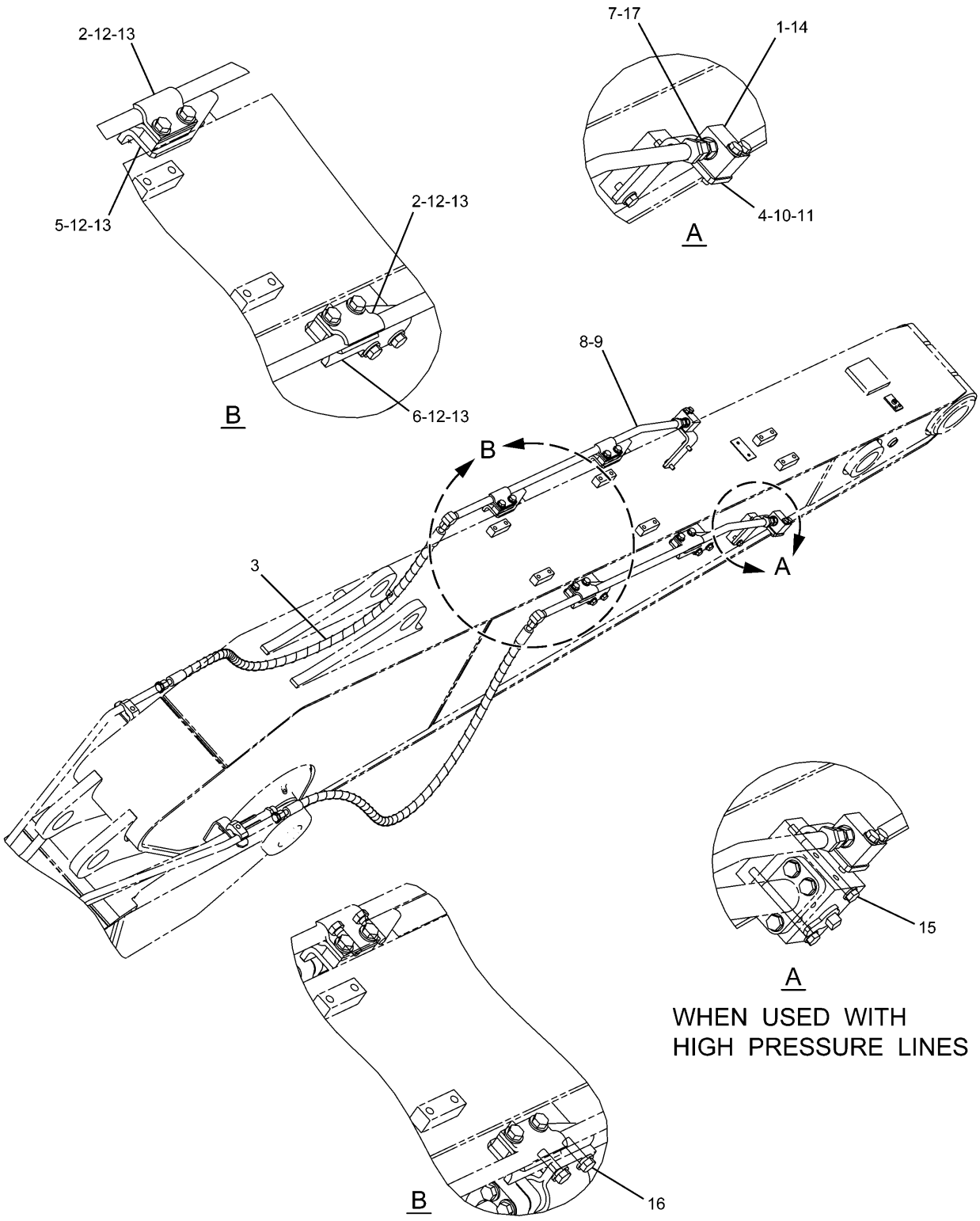


H90575E 02

**242-6488 LINES GP-AUXILIARY HYDRAULIC**
An Attachment

# HYDRAULIC SYSTEM

| NOTE | No. | PART No. | QTY | PART NAME | NOTE | No. | PART No. | QTY | PART NAME |
|---|---|---|---|---|---|---|---|---|---|
| | 1 | 6C-6760 | 2 | MANIFOLD | | | | | |
| | 2 | 149-1738 | 8 | CLIP | | | | | |
| | 3 | 177-8572 | 2 | HOSE AS | | | | | |
| | 4 | 187-9977 | 2 | PLATE | | | | | |
| | 5 | 187-9978 | 2 | SUPPORT AS | | | | | |
| | 6 | 187-9981 | 2 | SUPPORT AS | | | | | |
| | 7 | 7X-3164 | 2 | ADAPTER | | | | | |
| | 8 | 253-6455 | 2 | TUBE AS | | | | | |
| | 9 | 6V-8398 | 4 | SEAL-O-RING (OD=16.03mm) | | | | | |
| | 10 | 8T-4121 | 4 | WASHER | | | | | |
| | 11 | 8T-4136 | 4 | BOLT (L=25mm) | | | | | |
| | 12 | 8T-4139 | 16 | BOLT (L=30mm) | | | | | |
| | 13 | 8T-4223 | 16 | WASHER | | | | | |
| | 14 | 8T-4185 | 4 | BOLT (L=50mm) | | | | | |
| | 15 | 7X-2543 | 4 | BOLT (L=120mm) | | | | | |
| | 16 | 8T-4183 | 8 | BOLT (L=40mm) | | | | | |
| | 17 | 3K-0360 | 2 | SEAL-O-RING (ID=16.36mm) | | | | | |

H90575E 02

## 242-6488 LINES GP-AUXILIARY HYDRAULIC
An Attachment

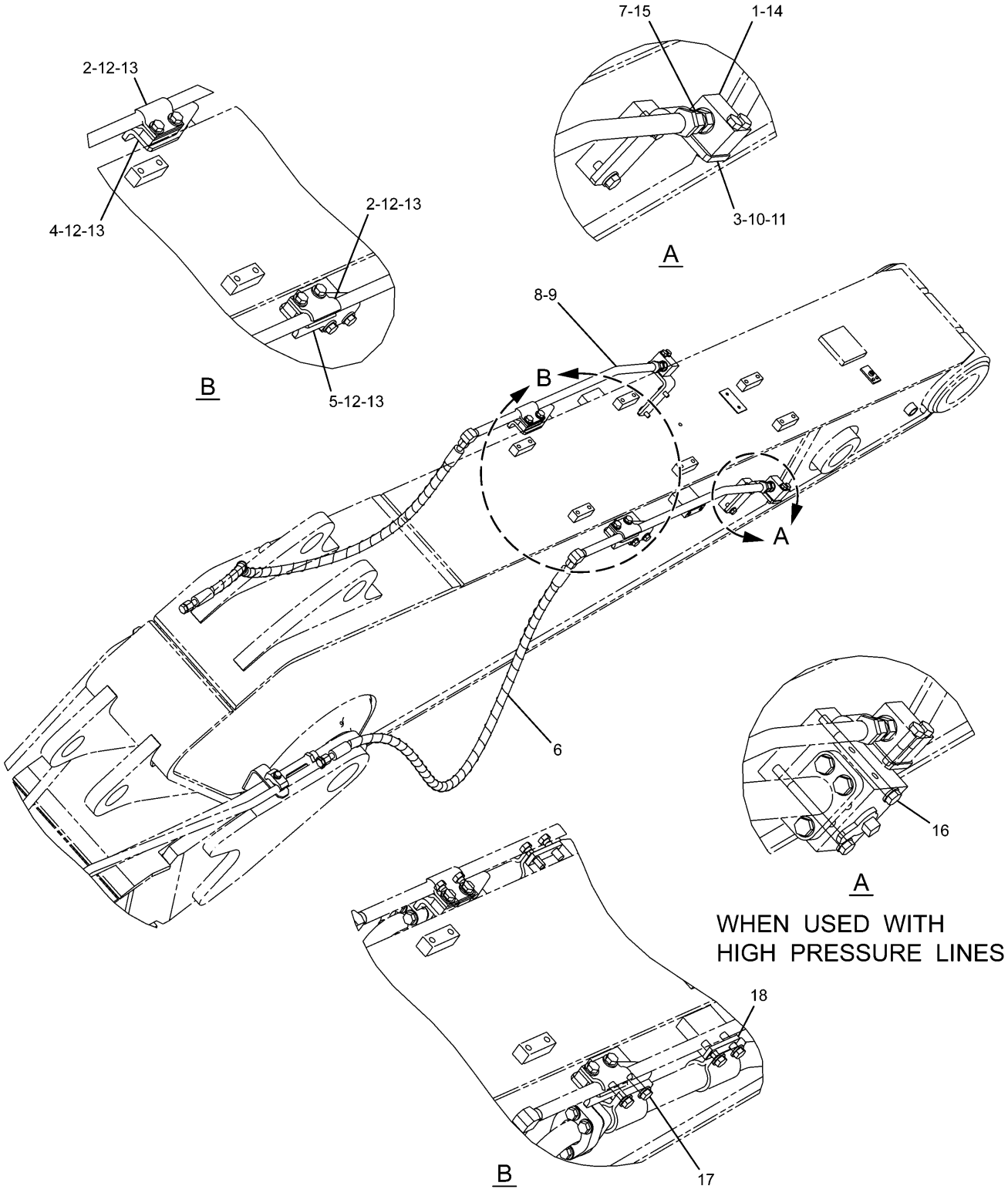


H90565E 01

**242-6492 LINES GP-AUXILIARY HYDRAULIC**
An Attachment

# HYDRAULIC SYSTEM

| NOTE | No. | PART No. | QTY | PART NAME | NOTE | No. | PART No. | QTY | PART NAME |
|---|---|---|---|---|---|---|---|---|---|
| | 1 | 6C-6760 | 2 | MANIFOLD | | | | | |
| | 2 | 149-1738 | 4 | CLIP | | | | | |
| | 3 | 187-9977 | 2 | PLATE | | | | | |
| | 4 | 187-9978 | 1 | SUPPORT AS | | | | | |
| | 5 | 187-9981 | 1 | SUPPORT AS | | | | | |
| | 6 | 216-6485 | 2 | HOSE AS | | | | | |
| | 7 | 7X-3164 | 2 | ADAPTER | | | | | |
| | 8 | 253-6685 | 2 | TUBE AS | | | | | |
| | 9 | 6V-8398 | 4 | SEAL-O-RING (OD=16.03mm) | | | | | |
| | 10 | 8T-4121 | 4 | WASHER | | | | | |
| | 11 | 8T-4136 | 4 | BOLT (L=25mm) | | | | | |
| | 12 | 8T-4139 | 8 | BOLT (L=30mm) | | | | | |
| | 13 | 8T-4223 | 8 | WASHER | | | | | |
| | 14 | 8T-4185 | 4 | BOLT (L=50mm) | | | | | |
| | 15 | 3K-0360 | 2 | SEAL-O-RING (ID=16.36mm) | | | | | |
| | 16 | 7X-2543 | 4 | BOLT (L=120mm) | | | | | |
| | 17 | 8T-4183 | 8 | BOLT (L=40mm) | | | | | |
| | 18 | 197-2362 | 2 | PLATE | | | | | |

H90565E 01

## 242-6492 LINES GP-AUXILIARY HYDRAULIC
An Attachment

# HYDRAULIC SYSTEM

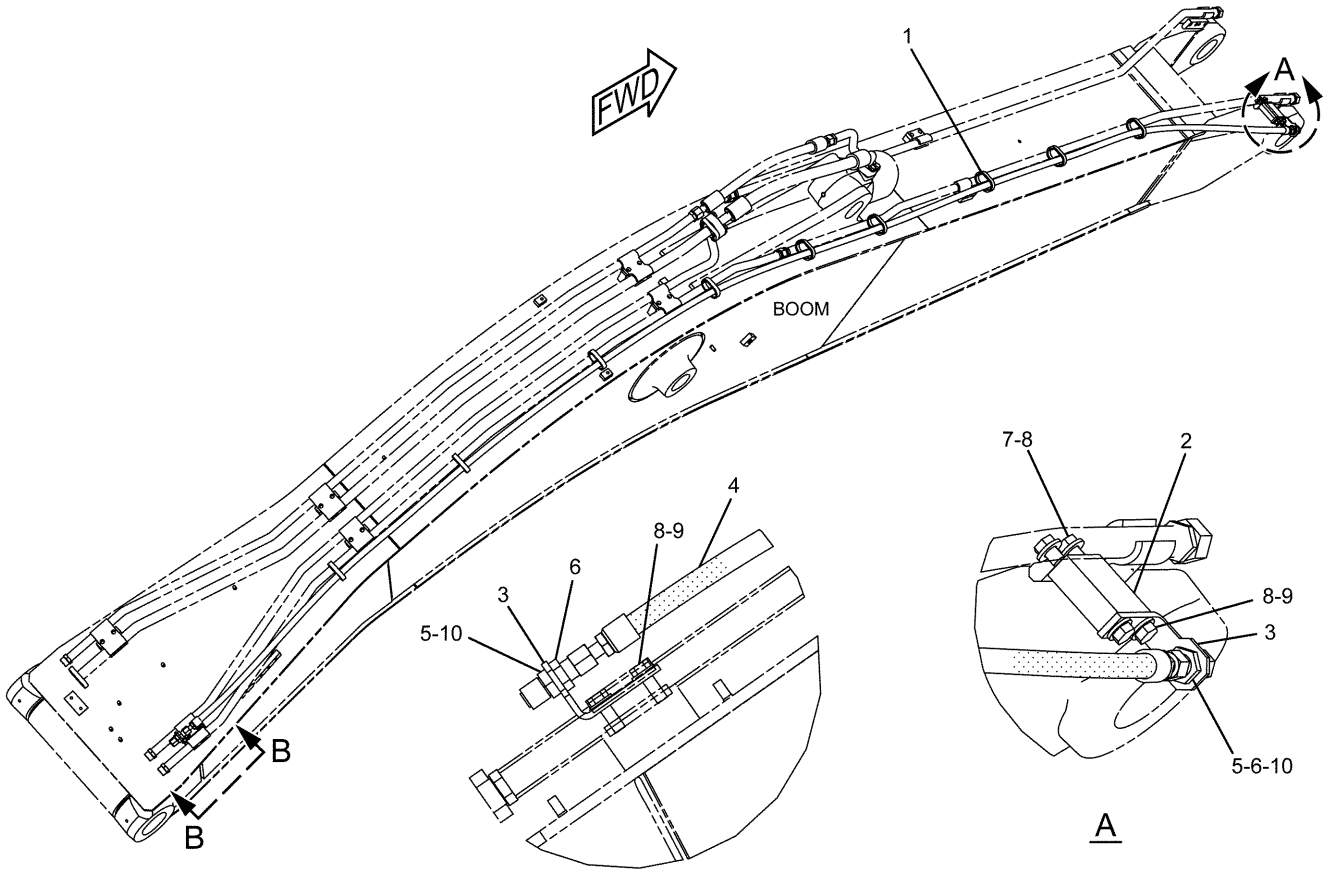


| NOTE | No. | PART No. | QTY | PART NAME | NOTE | No. | PART No. | QTY | PART NAME |
|---|---|---|---|---|---|---|---|---|---|
| | 1 | 7K-1181 | 9 | STRAP | | | | | |
| | 2 | 153-8798 | 1 | PLATE | | | | | |
| | 3 | 253-6417 | 2 | BRACKET | | | | | |
| | 4 | 268-6792 | 1 | HOSE AS | | | | | |
| | 5 | 6V-8995 | 2 | UNION | | | | | |
| | 6 | 6V-9169 | 2 | NUT | | | | | |
| | 7 | 8T-4184 | 2 | BOLT (L=45mm) | | | | | |
| | 8 | 8T-4223 | 6 | WASHER | | | | | |
| | 9 | 8T-4956 | 4 | BOLT (L=35mm) | | | | | |
| | 10 | 6V-8398 | 2 | SEAL-O-RING (OD=16.03mm) | | | | | |

H94403E 02

**242-6477 LINES GP-DRAIN**
R-Boom
An Attachment

# HYDRAULIC SYSTEM

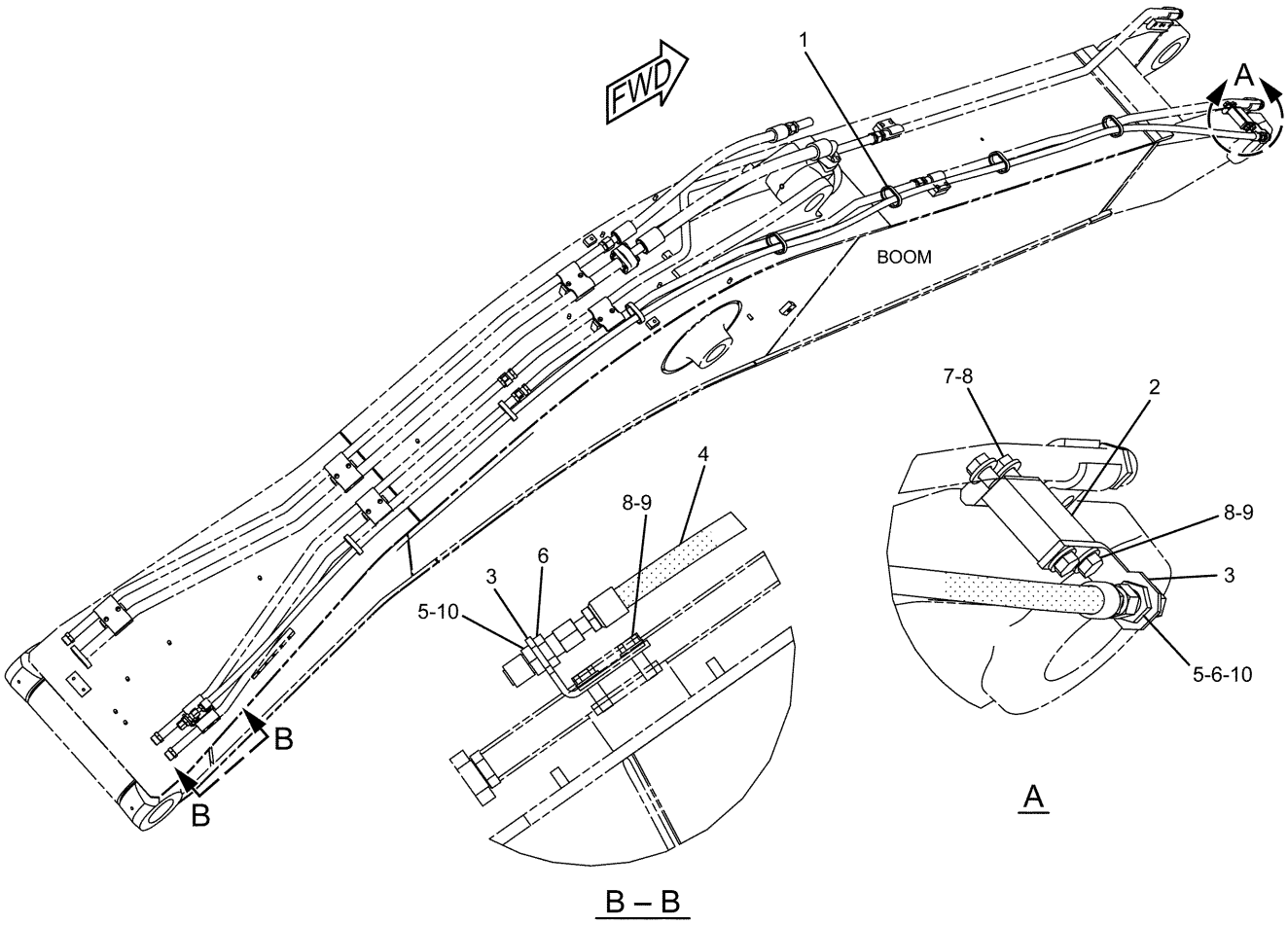


| NOTE | No. | PART No. | QTY | PART NAME | NOTE | No. | PART No. | QTY | PART NAME |
|---|---|---|---|---|---|---|---|---|---|
| | 1 | 7K-1181 | 7 | STRAP | | | | | |
| | 2 | 153-8798 | 1 | PLATE | | | | | |
| | 3 | 253-6417 | 2 | BRACKET | | | | | |
| | 4 | 262-3148 | 1 | HOSE AS | | | | | |
| | 5 | 6V-8995 | 2 | UNION | | | | | |
| | 6 | 6V-9169 | 2 | NUT | | | | | |
| | 7 | 8T-4184 | 2 | BOLT (L=45mm) | | | | | |
| | 8 | 8T-4223 | 6 | WASHER | | | | | |
| | 9 | 8T-4956 | 4 | BOLT (L=35mm) | | | | | |
| | 10 | 6V-8398 | 2 | SEAL-O-RING (OD=16.03mm) | | | | | |

H94404E 01

**242-6481 LINES GP-DRAIN**
M-Boom
An Attachment

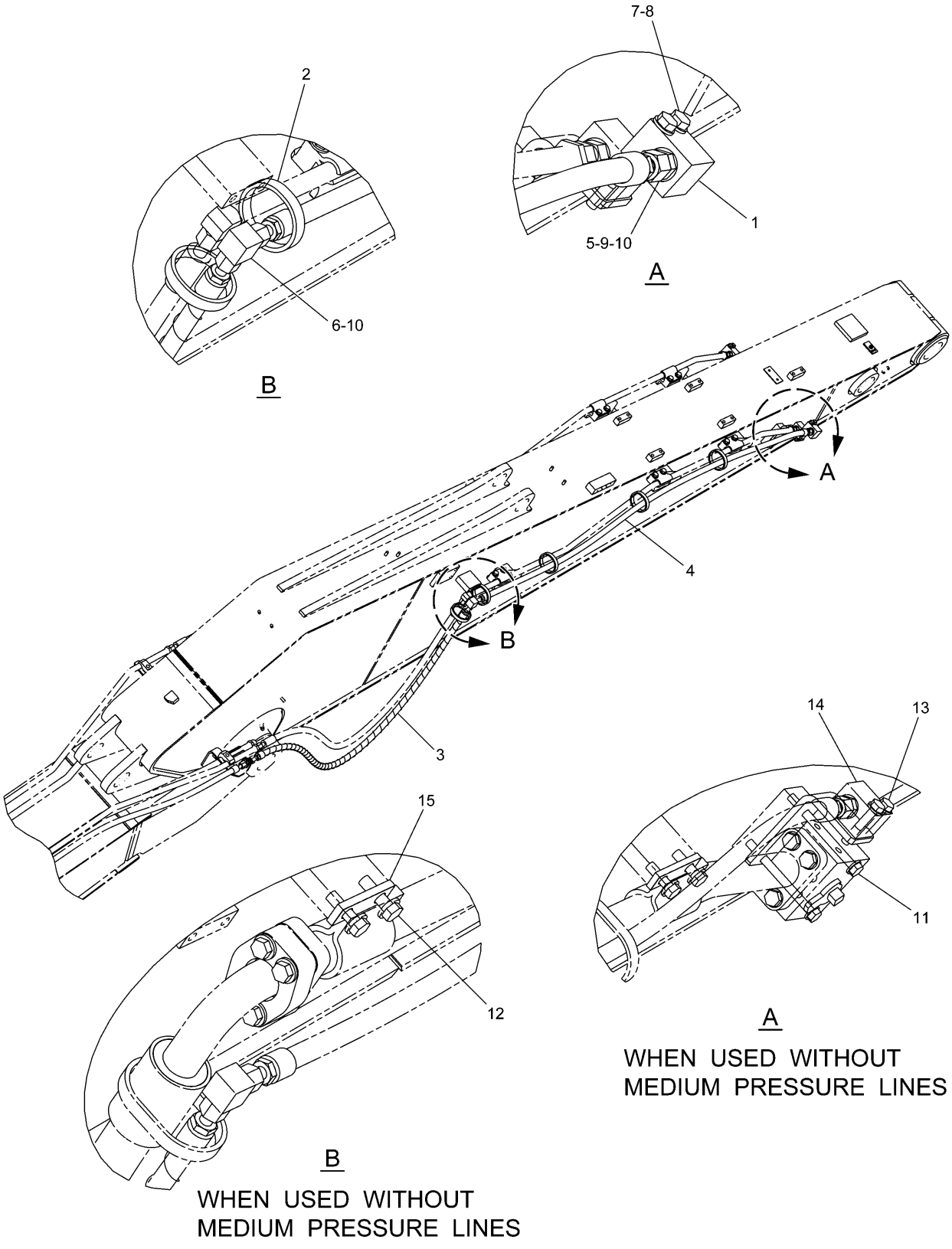


H89704E 00

**242-6485 LINES GP-DRAIN**
R3.9B Stick
An Attachment

# HYDRAULIC SYSTEM

| NOTE | No. | PART No. | QTY | PART NAME | NOTE | No. | PART No. | QTY | PART NAME |
|---|---|---|---|---|---|---|---|---|---|
| | 1 | 6C-6760 | 1 | MANIFOLD | | | | | |
| | 2 | 7K-1181 | 5 | STRAP | | | | | |
| | 3 | 262-3511 | 1 | HOSE AS | | | | | |
| | 4 | 268-6777 | 1 | HOSE AS | | | | | |
| | 5 | 6V-8639 | 1 | CONNECTOR | | | | | |
| | 6 | 6V-9808 | 1 | UNION | | | | | |
| | 7 | 8T-4121 | 2 | WASHER | | | | | |
| | 8 | 8T-4198 | 2 | BOLT (L=100mm) | | | | | |
| | 9 | 3K-0360 | 1 | SEAL-O-RING (ID=16.36mm) | | | | | |
| | 10 | 6V-8398 | 3 | SEAL-O-RING (OD=16.03mm) | | | | | |
| | 11 | 7X-2543 | 2 | BOLT (L=120mm) | | | | | |
| | 12 | 8T-4183 | 6 | BOLT (L=40mm) | | | | | |
| | 13 | 8T-6466 | 2 | BOLT (L=60mm) | | | | | |
| | 14 | 187-9977 | 1 | PLATE | | | | | |
| | 15 | 210-9907 | 2 | PLATE | | | | | |

H89704E 00

## 242-6485 LINES GP-DRAIN
R3.9B Stick
An Attachment

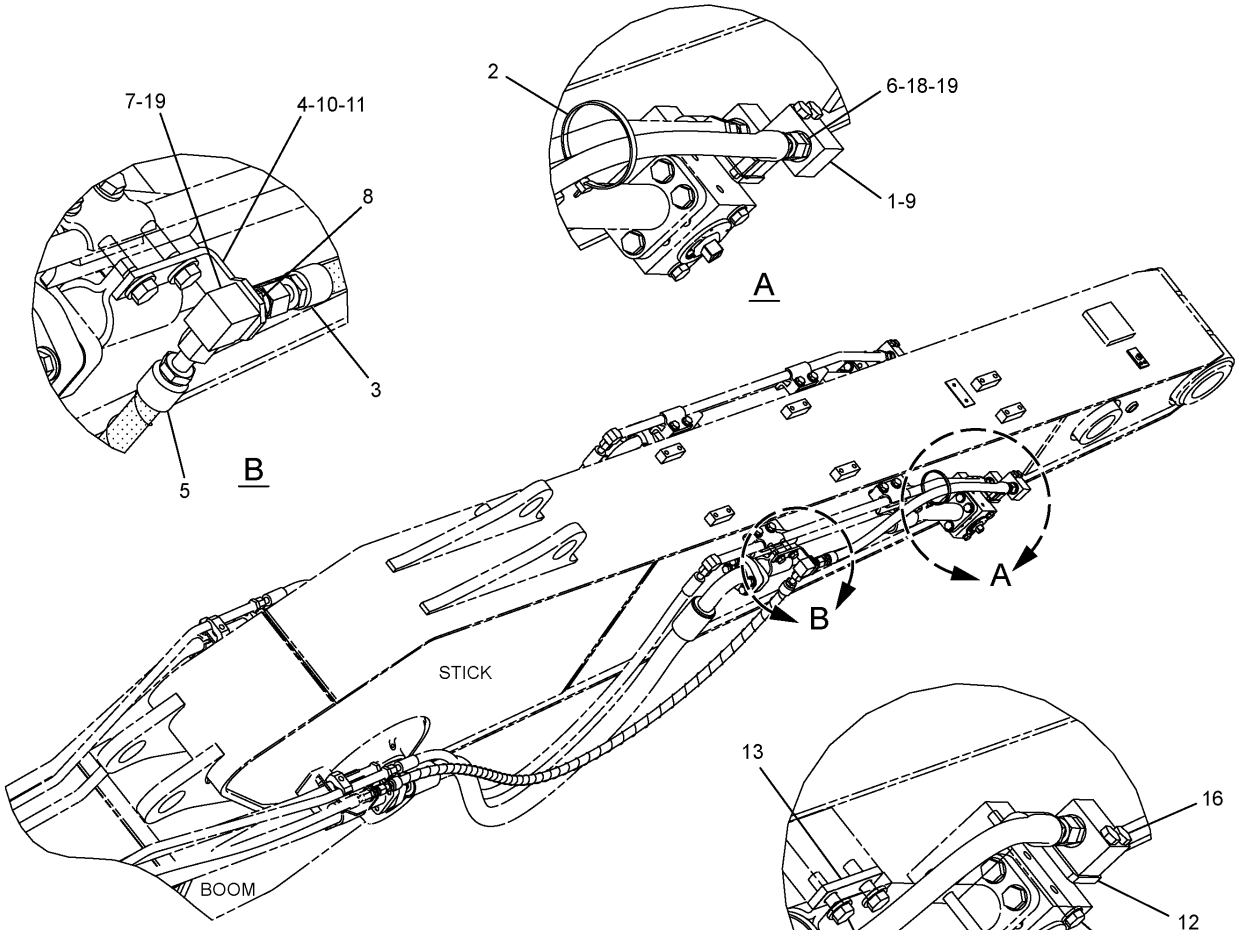





WHEN USED WITHOUT
MEDIUM PRESSURE LINES

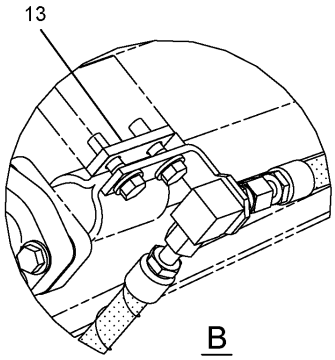


WHEN USED WITHOUT
MEDIUM PRESSURE LINES

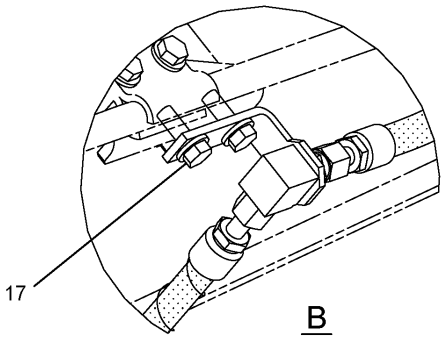


WHEN USED WITHOUT
HIGH PRESSURE LINES

H98465E 02

**242-6489 LINES GP-DRAIN**
R2.9B Stick
An Attachment

# HYDRAULIC SYSTEM

| NOTE | No. | PART No. | QTY | PART NAME | NOTE | No. | PART No. | QTY | PART NAME |
|---|---|---|---|---|---|---|---|---|---|
| | 1 | 6C-6760 | 1 | MANIFOLD | | | | | |
| | 2 | 7K-1181 | 1 | STRAP | | | | | |
| | 3 | 111-0982 | 1 | HOSE AS | | | | | |
| | 4 | 253-6417 | 1 | BRACKET | | | | | |
| | 5 | 262-3511 | 1 | HOSE AS | | | | | |
| | 6 | 6V-8639 | 1 | CONNECTOR | | | | | |
| | 7 | 6V-8981 | 1 | ELBOW | | | | | |
| | 8 | 6V-9169 | 1 | NUT | | | | | |
| | 9 | 8T-4178 | 2 | BOLT (L=90mm) | | | | | |
| | 10 | 8T-4184 | 2 | BOLT (L=45mm) | | | | | |
| | 11 | 8T-4223 | 2 | WASHER | | | | | |
| | 12 | 187-9977 | 1 | PLATE | | | | | |
| | 13 | 210-9907 | 2 | PLATE | | | | | |
| | 14 | 7X-2543 | 2 | BOLT (L=120mm) | | | | | |
| | 15 | 8T-4183 | 2 | BOLT (L=40mm) | | | | | |
| | 16 | 8T-4185 | 2 | BOLT (L=50mm) | | | | | |
| | 17 | 8T-4956 | 2 | BOLT (L=35mm) | | | | | |
| | 18 | 3K-0360 | 1 | SEAL-O-RING (ID=16.36mm) | | | | | |
| | 19 | 6V-8398 | 3 | SEAL-O-RING (OD=16.03mm) | | | | | |

H98465E 02

**242-6489 LINES GP-DRAIN**
R2.9B Stick
An Attachment

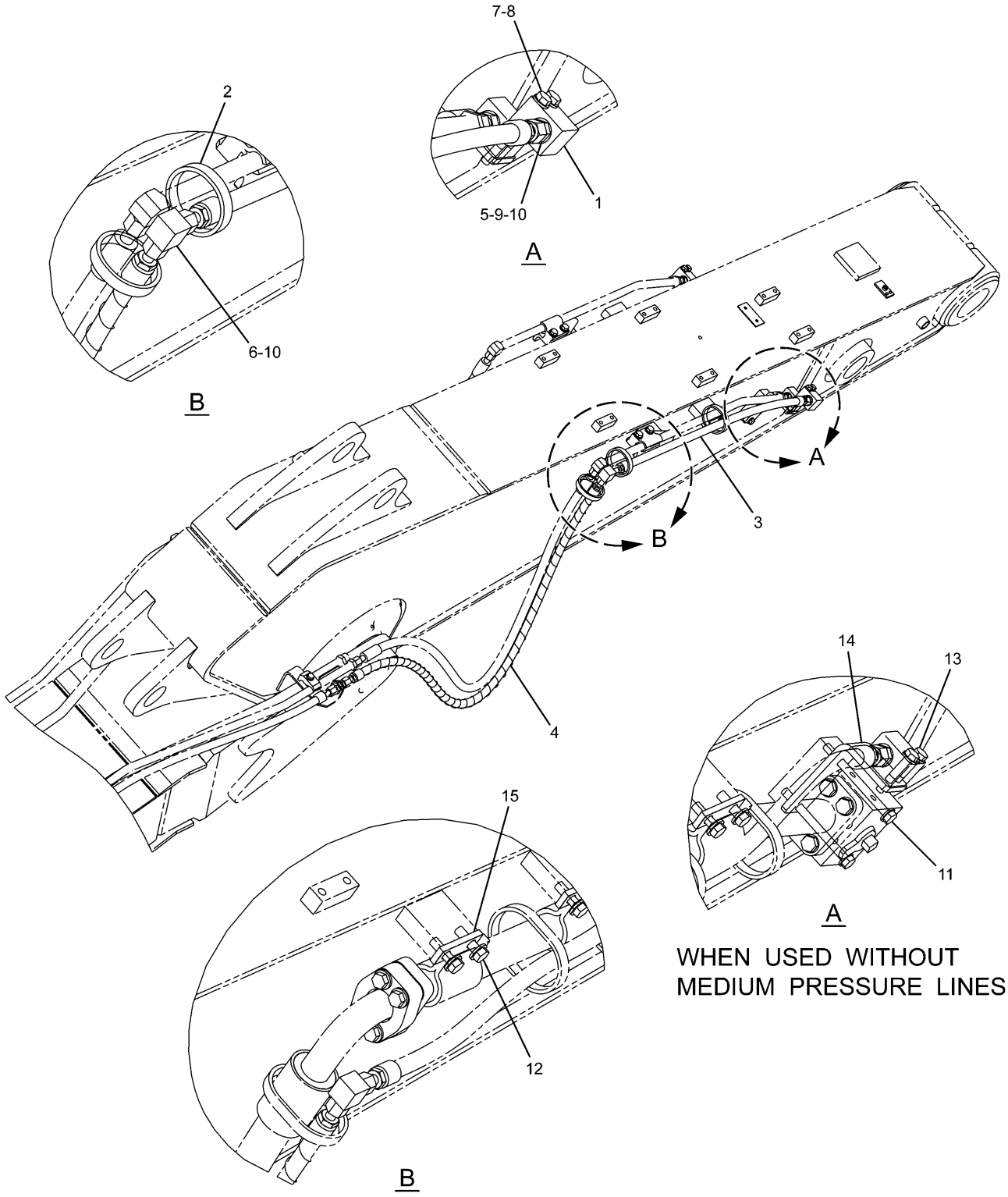


WHEN USED WITHOUT
MEDIUM PRESSURE LINES

WHEN USED WITHOUT
MEDIUM PRESSURE LINES

H89225E 00

**242-6493 LINES GP-DRAIN**
An Attachment

# HYDRAULIC SYSTEM

| NOTE | No. | PART No. | QTY | PART NAME | NOTE | No. | PART No. | QTY | PART NAME |
|---|---|---|---|---|---|---|---|---|---|
| | 1 | 6C-6760 | 1 | MANIFOLD | | | | | |
| | 2 | 7K-1181 | 3 | STRAP | | | | | |
| | 3 | 253-6754 | 1 | HOSE AS | | | | | |
| | 4 | 262-3161 | 1 | HOSE AS | | | | | |
| | 5 | 6V-8639 | 1 | CONNECTOR | | | | | |
| | 6 | 6V-9808 | 1 | UNION | | | | | |
| | 7 | 8T-4121 | 2 | WASHER | | | | | |
| | 8 | 8T-4198 | 2 | BOLT (L=100mm) | | | | | |
| | 9 | 3K-0360 | 1 | SEAL-O-RING (ID=16.36mm) | | | | | |
| | 10 | 6V-8398 | 3 | SEAL-O-RING (OD=16.03mm) | | | | | |
| | 11 | 7X-2543 | 2 | BOLT (L=120mm) | | | | | |
| | 12 | 8T-4183 | 4 | BOLT (L=40mm) | | | | | |
| | 13 | 8T-6466 | 2 | BOLT (L=60mm) | | | | | |
| | 14 | 187-9977 | 1 | PLATE | | | | | |
| | 15 | 210-9907 | 2 | PLATE | | | | | |

H89225E 00

## 242-6493 LINES GP-DRAIN
An Attachment

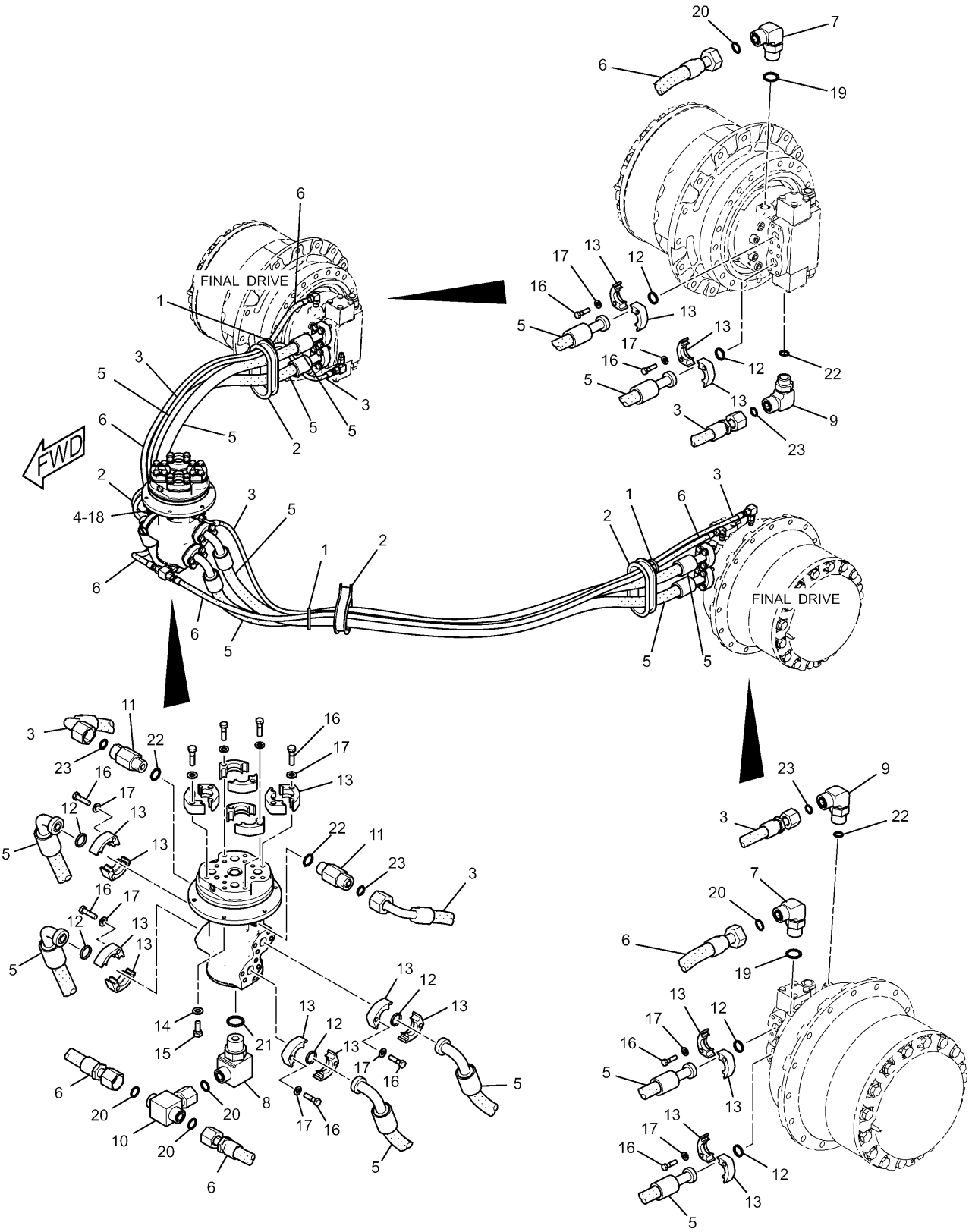


## 239-1716 LINES GP-TRAVEL MOTOR

S/N BWZ 1-Up, SNS 1-Up

234-4440-Page518

# HYDRAULIC SYSTEM

| NOTE | No. | PART No. | QTY | PART NAME | NOTE | No. | PART No. | QTY | PART NAME |
|---|---|---|---|---|---|---|---|---|---|
| | 1 | 7K-1181 | 4 | STRAP | | | | | |
| | 2 | 108-7118 | 4 | GROMMET | | | | | |
| | 3 | 111-6752 | 2 | HOSE AS | | | | | |
| Y | 4 | 234-4440 | 1 | SWIVEL GP | | | | | |
| | 5 | 245-5427 | 4 | HOSE AS | | | | | |
| | 6 | 248-9428 | 2 | HOSE AS | | | | | |
| | 7 | 6V-8625 | 2 | ELBOW | | | | | |
| | 8 | 6V-8721 | 1 | ELBOW | | | | | |
| | 9 | 6V-8724 | 2 | ELBOW | | | | | |
| | 10 | 6V-9844 | 1 | TEE | | | | | |
| | 11 | 8T-1779 | 2 | CONNECTOR | | | | | |
| | 12 | 1P-3703 | 8 | SEAL | | | | | |
| | 13 | 6V-0400 | 24 | FLANGE | | | | | |
| | 14 | 8T-4121 | 6 | WASHER | | | | | |
| | 15 | 8T-4136 | 6 | BOLT (L=25mm) | | | | | |
| | 16 | 8T-4184 | 48 | BOLT (L=45mm) | | | | | |
| | 17 | 8T-4223 | 48 | WASHER | | | | | |
| B | 18 | 1U-8846 | | GASKET MAKER…(2ml) | | | | | |
| | 19 | 3K-0360 | 2 | SEAL-O-RING (ID=16.36mm) | | | | | |
| | 20 | 6V-8398 | 5 | SEAL-O-RING (OD=16.03mm) | | | | | |
| | 21 | 2M-9780 | 1 | SEAL-O-RING (ID=19.18mm) | | | | | |
| | 22 | 3J-1907 | 4 | SEAL-O-RING (ID=11.89mm) | | | | | |
| | 23 | 6V-8397 | 4 | SEAL-O-RING (OD=12.83mm) | | | | | |

B—USE AS REQUIRED

Y—SEE SEPARATE ILLUSTRATION

H90003E 00

## 239-1716 LINES GP-TRAVEL MOTOR

S/N BWZ 1-Up, SNS 1-Up
234-4440-Page518

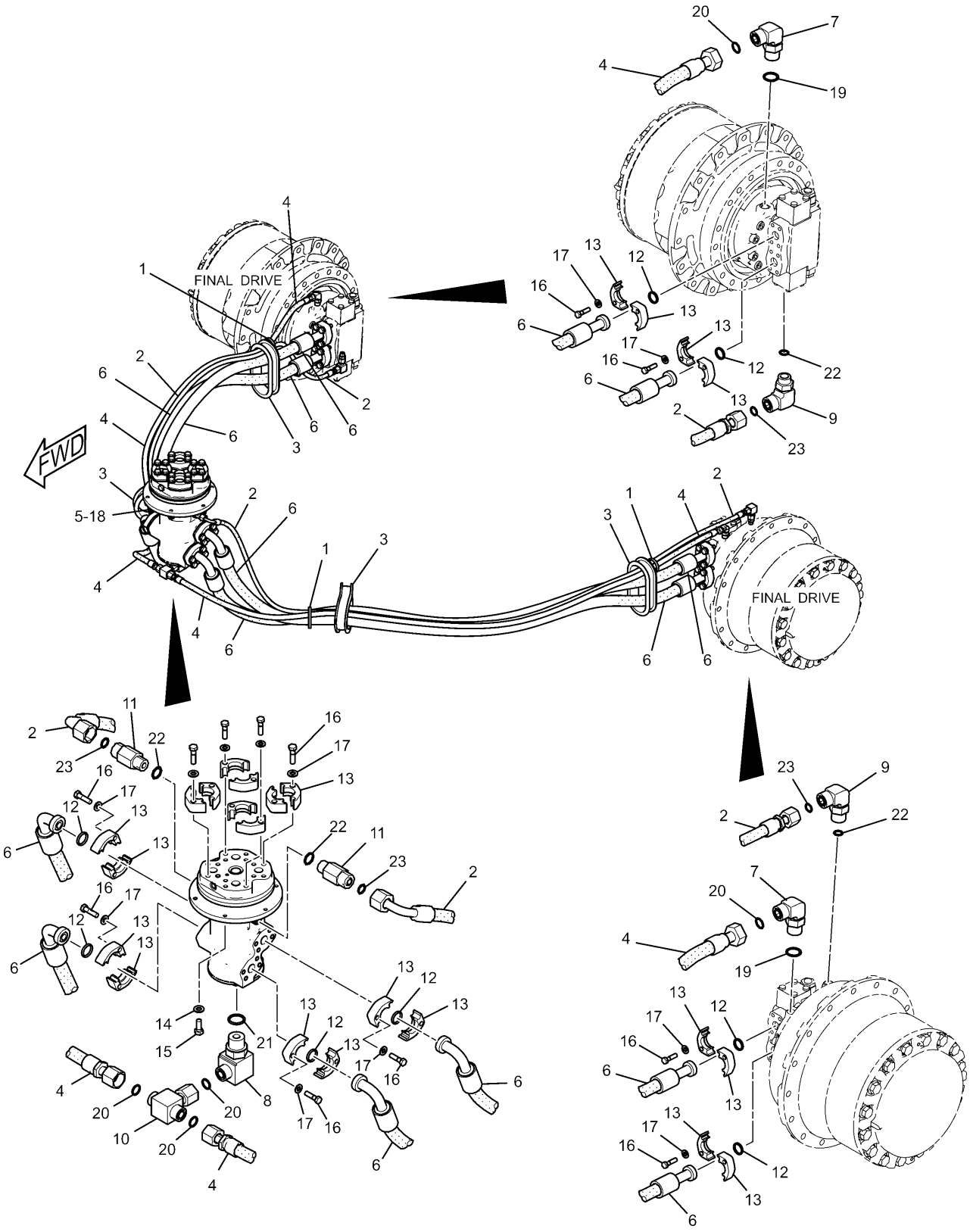


## 239-1717 LINES GP-TRAVEL MOTOR

S/N DFB 1-Up, WJN 1-Up
234-4440-Page518

# HYDRAULIC SYSTEM

| NOTE | No. | PART No. | QTY | PART NAME | NOTE | No. | PART No. | QTY | PART NAME |
|---|---|---|---|---|---|---|---|---|---|
| | 1 | 7K-1181 | 4 | STRAP | | | | | |
| | 2 | 7Y-4390 | 2 | HOSE AS | | | | | |
| | 3 | 108-7118 | 4 | GROMMET | | | | | |
| | 4 | 173-5089 | 2 | HOSE AS | | | | | |
| Y | 5 | 234-4440 | 1 | SWIVEL GP | | | | | |
| | 6 | 245-5416 | 4 | HOSE AS | | | | | |
| | 7 | 6V-8625 | 2 | ELBOW | | | | | |
| | 8 | 6V-8721 | 1 | ELBOW | | | | | |
| | 9 | 6V-8724 | 2 | ELBOW | | | | | |
| | 10 | 6V-9844 | 1 | TEE | | | | | |
| | 11 | 8T-1779 | 2 | CONNECTOR | | | | | |
| | 12 | 1P-3703 | 8 | SEAL | | | | | |
| | 13 | 6V-0400 | 24 | FLANGE | | | | | |
| | 14 | 8T-4121 | 6 | WASHER | | | | | |
| | 15 | 8T-4136 | 6 | BOLT (L=25mm) | | | | | |
| | 16 | 8T-4184 | 48 | BOLT (L=45mm) | | | | | |
| | 17 | 8T-4223 | 48 | WASHER | | | | | |
| B | 18 | 1U-8846 | | GASKET MAKER…(2ml) | | | | | |
| | 19 | 3K-0360 | 2 | SEAL-O-RING (ID=16.36mm) | | | | | |
| | 20 | 6V-8398 | 5 | SEAL-O-RING (OD=16.03mm) | | | | | |
| | 21 | 2M-9780 | 1 | SEAL-O-RING (ID=19.18mm) | | | | | |
| | 22 | 3J-1907 | 4 | SEAL-O-RING (ID=11.89mm) | | | | | |
| | 23 | 6V-8397 | 4 | SEAL-O-RING (OD=12.83mm) | | | | | |

B—USE AS REQUIRED

Y—SEE SEPARATE ILLUSTRATION

H90004E 02

## 239-1717 LINES GP-TRAVEL MOTOR

S/N DFB 1-Up, WJN 1-Up

234-4440-Page518

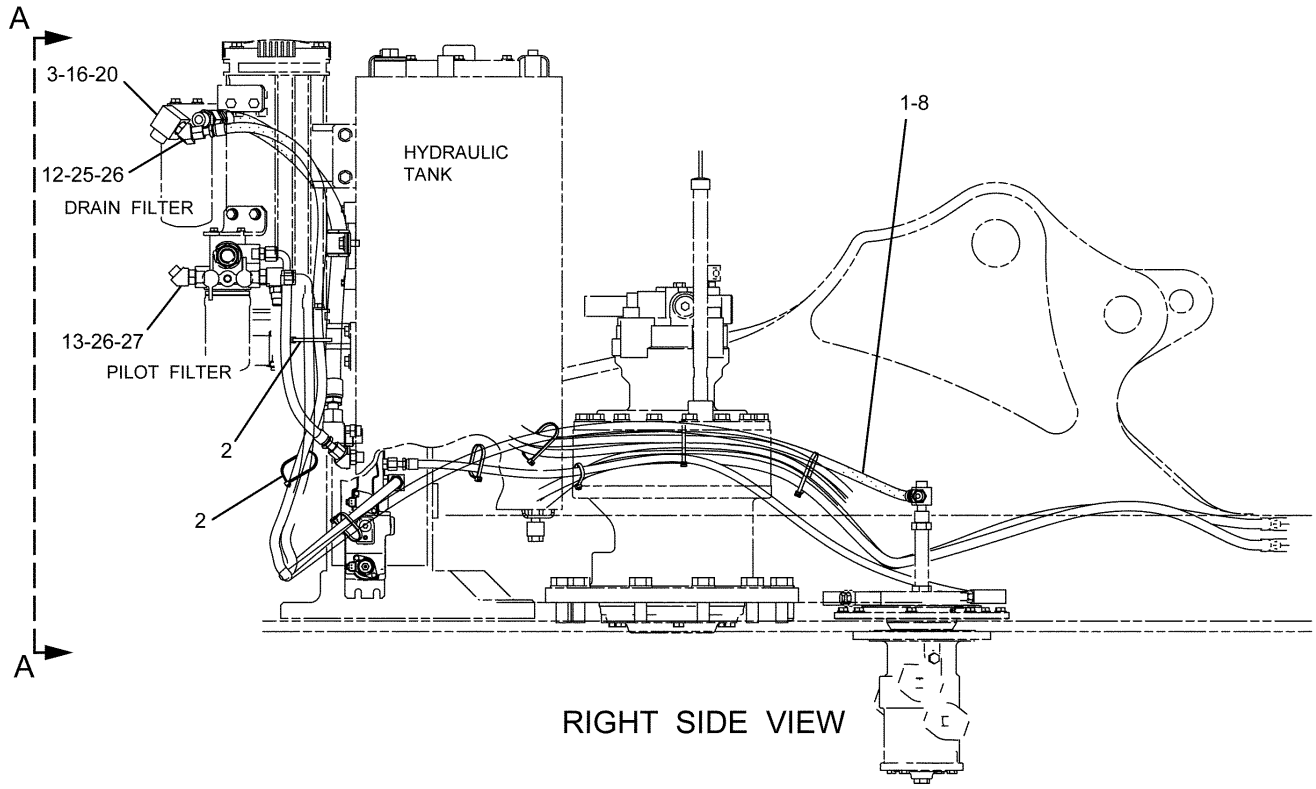


RIGHT SIDE VIEW

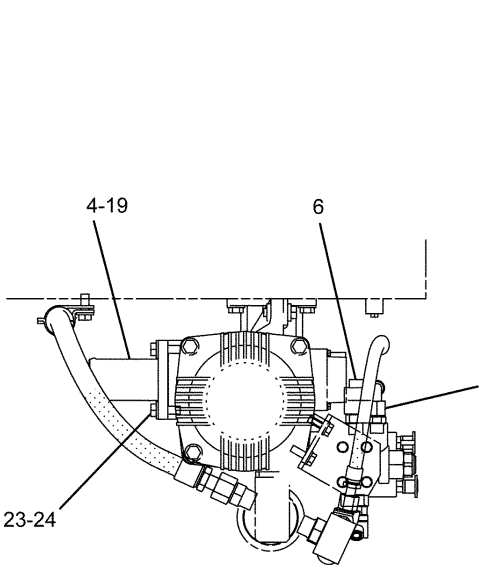


B – B

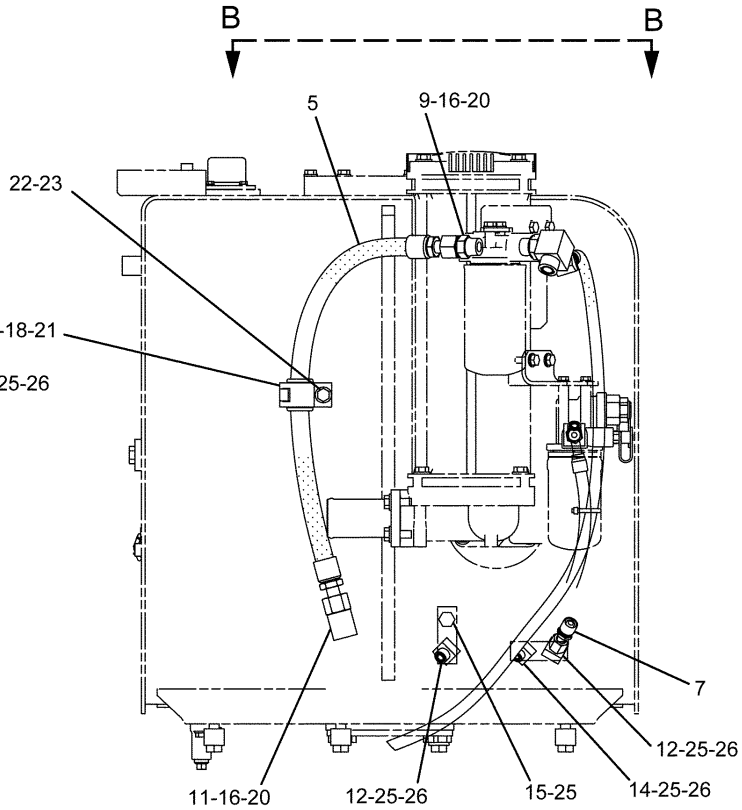


A – A

H93961E 03

**248-9853 TANK & LINES GP-HYDRAULIC**
S/N BWZ 1-01205, DFB 1-00254, SNS 1-00221, WJN 1-00144
Part of 239-1710-Page322

# HYDRAULIC SYSTEM

| NOTE | No. | PART No. | QTY | PART NAME | NOTE | No. | PART No. | QTY | PART NAME |
|---|---|---|---|---|---|---|---|---|---|
| | 1 | 4I-9527 | 2 | BAND (R3,GREEN) | | | | | |
| | 2 | 7K-1181 | 2 | STRAP | | | | | |
| | 3 | 124-1212 | 1 | FITTING | | | | | |
| | 4 | 165-3260 | 1 | PIPE AS | | | | | |
| | 5 | 176-4770 | 1 | HOSE AS | | | | | |
| | 6 | 214-4512 | 1 | TEE AS | | | | | |
| | 7 | 275-1361 | 1 | HOSE AS | | | | | |
| | 8 | 292-7153 | 1 | HOSE AS | | | | | |
| | 9 | 6V-8637 | 1 | CONNECTOR | | | | | |
| | 10 | 6V-8639 | 1 | CONNECTOR | | | | | |
| | 11 | 6V-9007 | 1 | ELBOW | | | | | |
| | 12 | 6V-9002 | 3 | ELBOW | | | | | |
| | 13 | 6V-8624 | 1 | ELBOW | | | | | |
| | 14 | 6V-9876 | 1 | ELBOW | | | | | |
| | 15 | 9S-4185 | 1 | PLUG | | | | | |
| | 16 | 3D-2824 | 3 | SEAL-O-RING (ID=23.47mm) | | | | | |
| | 17 | 5P-7464 | 1 | CLIP | | | | | |
| | 18 | 5P-7465 | 1 | CLIP | | | | | |
| | 19 | 6J-2680 | 1 | SEAL-O-RING (ID=69.44mm) | | | | | |
| | 20 | 6V-9746 | 3 | SEAL-O-RING (OD=22.50mm) | | | | | |
| | 21 | 8T-2920 | 1 | GROMMET | | | | | |
| | 22 | 8T-4139 | 1 | BOLT (L=30mm) | | | | | |
| | 23 | 8T-4223 | 5 | WASHER | | | | | |
| | 24 | 8T-4956 | 4 | BOLT (L=35mm) | | | | | |
| | 25 | 3K-0360 | 6 | SEAL-O-RING (ID=16.36mm) | | | | | |
| | 26 | 6V-8398 | 6 | SEAL-O-RING (OD=16.03mm) | | | | | |
| | 27 | 2M-9780 | 1 | SEAL-O-RING (ID=19.18mm) | | | | | |

H93961E 03

## 248-9853 TANK & LINES GP-HYDRAULIC

S/N BWZ 1-01205, DFB 1-00254, SNS 1-00221, WJN 1-00144

Part of 239-1710-Page322

# HYDRAULIC SYSTEM

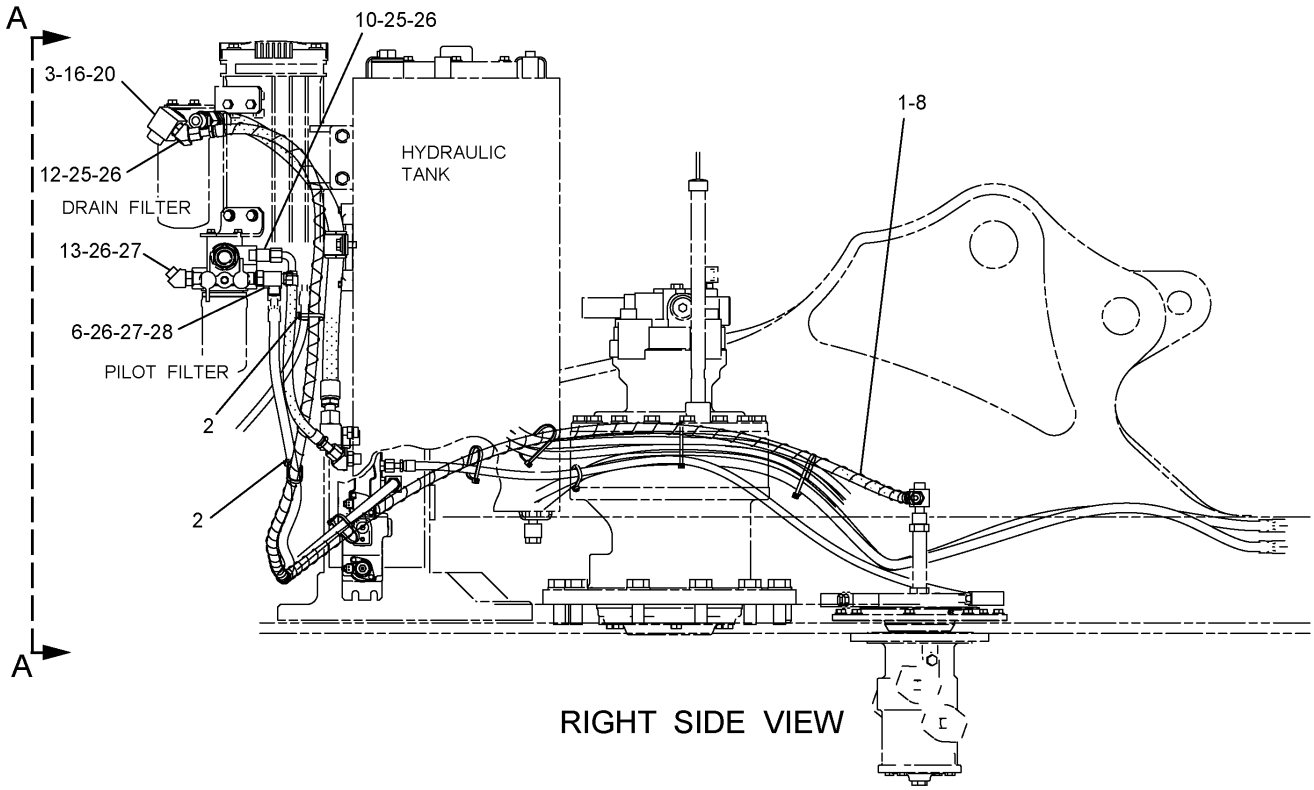


RIGHT SIDE VIEW

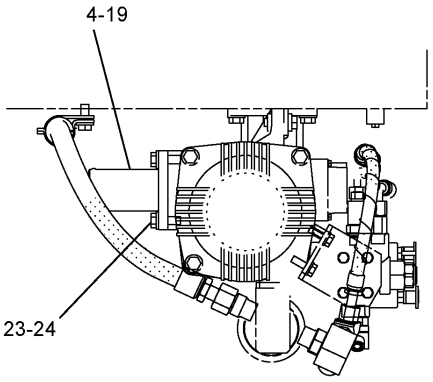


B – B

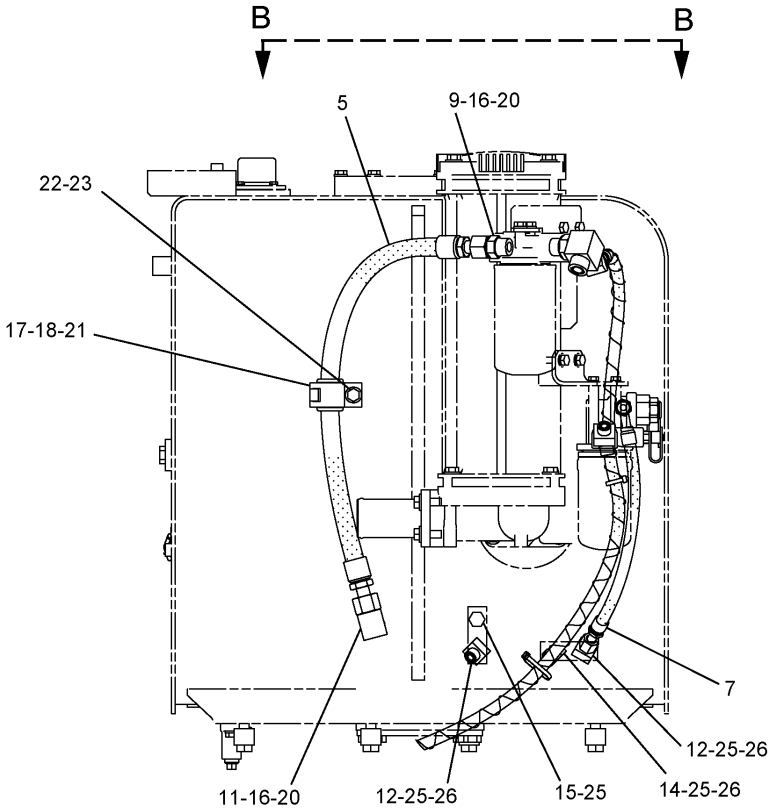


A – A

H98379E 04

**248-9853 TANK & LINES GP-HYDRAULIC**
S/N BWZ 01206-Up, DFB 00255-Up, SNS 00222-Up, WJN 00145-Up
Part of 239-1710-Page322

# HYDRAULIC SYSTEM

| NOTE | No. | PART No. | QTY | PART NAME | NOTE | No. | PART No. | QTY | PART NAME |
|---|---|---|---|---|---|---|---|---|---|
| | 1 | 4I-9527 | 2 | BAND (R3,GREEN) | | | | | |
| | 2 | 7K-1181 | 2 | STRAP | | | | | |
| | 3 | 124-1212 | 1 | FITTING | | | | | |
| | 4 | 165-3260 | 1 | PIPE AS | | | | | |
| | 5 | 176-4770 | 1 | HOSE AS | | | | | |
| | 6 | 307-5098 | 1 | TEE AS | | | | | |
| | 7 | 275-1361 | 1 | HOSE AS | | | | | |
| | 8 | 292-7153 | 1 | HOSE AS | | | | | |
| | 9 | 6V-8637 | 1 | CONNECTOR | | | | | |
| | 10 | 8T-1687 | 1 | CONNECTOR | | | | | |
| | 11 | 6V-9007 | 1 | ELBOW | | | | | |
| | 12 | 6V-9002 | 3 | ELBOW | | | | | |
| | 13 | 6V-8624 | 1 | ELBOW | | | | | |
| | 14 | 6V-9876 | 1 | ELBOW | | | | | |
| | 15 | 9S-4185 | 1 | PLUG | | | | | |
| | 16 | 3D-2824 | 3 | SEAL-O-RING (ID=23.47mm) | | | | | |
| | 17 | 5P-7464 | 1 | CLIP | | | | | |
| | 18 | 5P-7465 | 1 | CLIP | | | | | |
| | 19 | 6J-2680 | 1 | SEAL-O-RING (ID=69.44mm) | | | | | |
| | 20 | 6V-9746 | 3 | SEAL-O-RING (OD=22.50mm) | | | | | |
| | 21 | 8T-2920 | 1 | GROMMET | | | | | |
| | 22 | 8T-4139 | 1 | BOLT (L=30mm) | | | | | |
| | 23 | 8T-4223 | 5 | WASHER | | | | | |
| | 24 | 8T-4956 | 4 | BOLT (L=35mm) | | | | | |
| | 25 | 3K-0360 | 6 | SEAL-O-RING (ID=16.36mm) | | | | | |
| | 26 | 6V-8398 | 7 | SEAL-O-RING (OD=16.03mm) | | | | | |
| | 27 | 2M-9780 | 2 | SEAL-O-RING (ID=19.18mm) | | | | | |
| | 28 | 6V-8397 | 1 | SEAL-O-RING (OD=12.83mm) | | | | | |

H98379E 04

## 248-9853 TANK & LINES GP-HYDRAULIC

S/N BWZ 01206-Up, DFB 00255-Up, SNS 00222-Up, WJN 00145-Up

Part of 239-1710-Page322

# HYDRAULIC SYSTEM

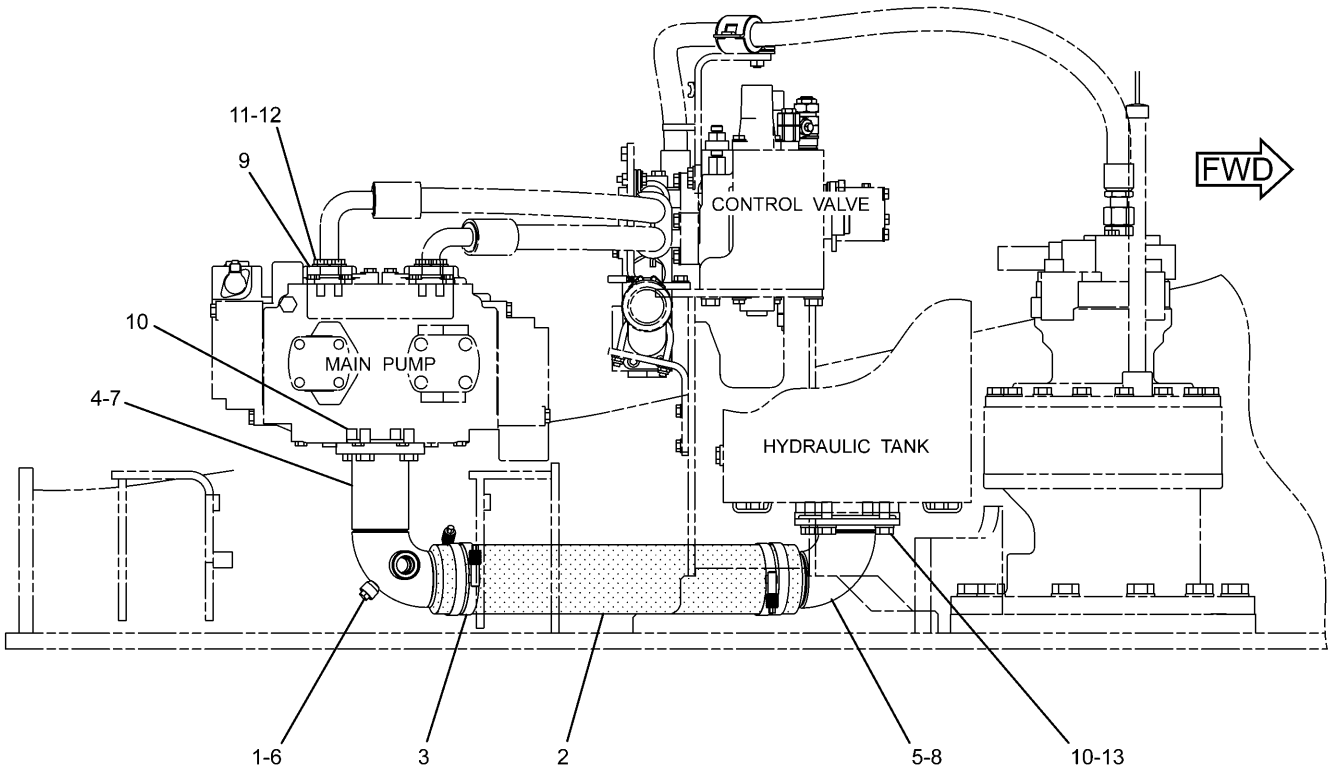


RIGHT SIDE VIEW

| NOTE | No. | PART No. | QTY | PART NAME | NOTE | No. | PART No. | QTY | PART NAME |
|---|---|---|---|---|---|---|---|---|---|
| | 1 | 9S-4182 | 1 | PLUG | | | | | |
| E | 2 | 7Y-4562 | | HOSE…(59cm) | | | | | |
| | 3 | 9X-2201 | 4 | CLAMP | | | | | |
| | 4 | 245-5285 | 1 | PIPE AS | | | | | |
| | 5 | 245-5287 | 1 | PIPE AS | | | | | |
| | 6 | 3J-7354 | 1 | SEAL-O-RING (ID=8.92mm) | | | | | |
| | 7 | 5H-8624 | 1 | SEAL-O-RING (ID=94.62mm) | | | | | |
| | 8 | 6D-9157 | 1 | SEAL-O-RING (ID=142.24mm) | | | | | |
| | 9 | 6V-0400 | 4 | FLANGE | | | | | |
| | 10 | 7X-2553 | 8 | BOLT (L=40mm) | | | | | |
| | 11 | 8T-4194 | 8 | BOLT (L=50mm) | | | | | |
| | 12 | 8T-4223 | 8 | WASHER | | | | | |
| | 13 | 9X-8257 | 4 | WASHER | | | | | |

E—ORDER BY THE CENTIMETER

H93440E 01

**248-9847 LINES GP-PUMP**

# HYDRAULIC SYSTEM

Consists of :

| | | | Page |
|---|---|---|---|
| 1 | 239-8693 | CONTROL GP-HYDRAULIC | 528 |
| 1 | 247-7420 | FILM GP | 840 |
| 1 | 251-0436 | WIRING GP | 158 |
| 1 | 255-1800 | LINES GP-PILOT | 459 |
| 1 | 260-7971 | LINES GP-PILOT | 460 |
| 1 | 260-8006 | LINES GP-FRONT | 486 |

H91304E 01

**259-7492 CONTROL AR-AUXILIARY**
An Attachment

Consists of :

| | | | Page |
|---|---|---|---|
| 1 | 239-8693 | CONTROL GP-HYDRAULIC | 528 |
| 1 | 247-7420 | FILM GP | 840 |
| 1 | 251-0436 | WIRING GP | 158 |
| 1 | 255-1800 | LINES GP-PILOT | 459 |
| 1 | 255-5713 | VALVE & MOUNTING GP | 534 |
| 1 | 260-7972 | LINES GP-PILOT | 462 |
| 1 | 260-8007 | LINES GP-FRONT | 488 |

H91305E 01

**259-7494 CONTROL AR-AUXILIARY**
An Attachment

Consists of :

| | | | Page |
|---|---|---|---|
| 1 | 239-8695 | CONTROL GP-HYDRAULIC | 530 |
| 1 | 247-7416 | FILM GP | 841 |
| 1 | 251-0529 | WIRING GP-CAB | 170 |
| 1 | 255-5713 | VALVE & MOUNTING GP | 534 |
| 1 | 259-5045 | WIRING GP | 160 |
| 1 | 255-1802 | LINES GP-PILOT | 464 |
| 1 | 260-7974 | LINES GP-PILOT | 466 |
| 1 | 260-8008 | LINES GP-FRONT | 490 |

H90484E 01

**259-7493 CONTROL AR-AUXILIARY**
An Attachment

Consists of :


| | | | Page |
|---|---|---|---|
| 1 | 239-8695 | CONTROL GP-HYDRAULIC | 530 |
| 1 | 247-7420 | FILM GP | 840 |
| 1 | 251-0529 | WIRING GP-CAB | 170 |
| 1 | 255-5716 | VALVE & MOUNTING GP | 535 |
| 1 | 259-5045 | WIRING GP | 160 |
| 1 | 255-1663 | LINES GP-PILOT | 468 |
| 1 | 260-7986 | LINES GP-PILOT | 470 |
| 1 | 260-8008 | LINES GP-FRONT | 490 |
| 1 | 260-8009 | LINES GP-FRONT | 492 |


H90485E 01

Consists of :

| | | | Page |
|---|---|---|---|
| 1 | 247-7491 | FILM GP | 848 |
| 1 | 260-7966 | LINES GP-PILOT | 478 |

H89978E 00

**259-7483 VALVE AR-4 WAY**
An Attachment

Consists of :

| | | | Page |
|---|---|---|---|
| 1 | 286-6495 | LINES GP-BOOM CYLINDER | 378 |
| 1 | 282-7161 | LINES GP-RETURN | 497 |
| 1 | 282-7162 | LINES GP-PILOT | 476 |

H94177E 00

## 270-5974 VALVE AR-CHECK & RELIEF

S/N BWZ 1-Up, DFB 1-Up
Part of 279-2732-Page11,279-2733-Page12
An Attachment

Consists of :

| | | | Page |
|---|---|---|---|
| 1 | 242-6505 | LINES GP-BOOM | 396 |
| 1 | 260-7970 | LINES GP-PILOT | 477 |
| 1 | 262-3471 | LINES GP-STICK CYLINDER | 383 |

H90479E 01

## 239-8677 VALVE AR-CHECK & RELIEF

S/N BWZ 1-Up, DFB 1-Up
Part of 279-2732-Page11,279-2733-Page12
An Attachment

Consists of :

| | | | Page |
|---|---|---|---|
| 1 | 239-1726 | LINES GP-FRONT | 494 |
| 1 | 259-5046 | WIRING GP | 174 |

H89982E 00

**247-7459 FILTER AR**
Hammer Return Filter
An Attachment

# MEMORANDA

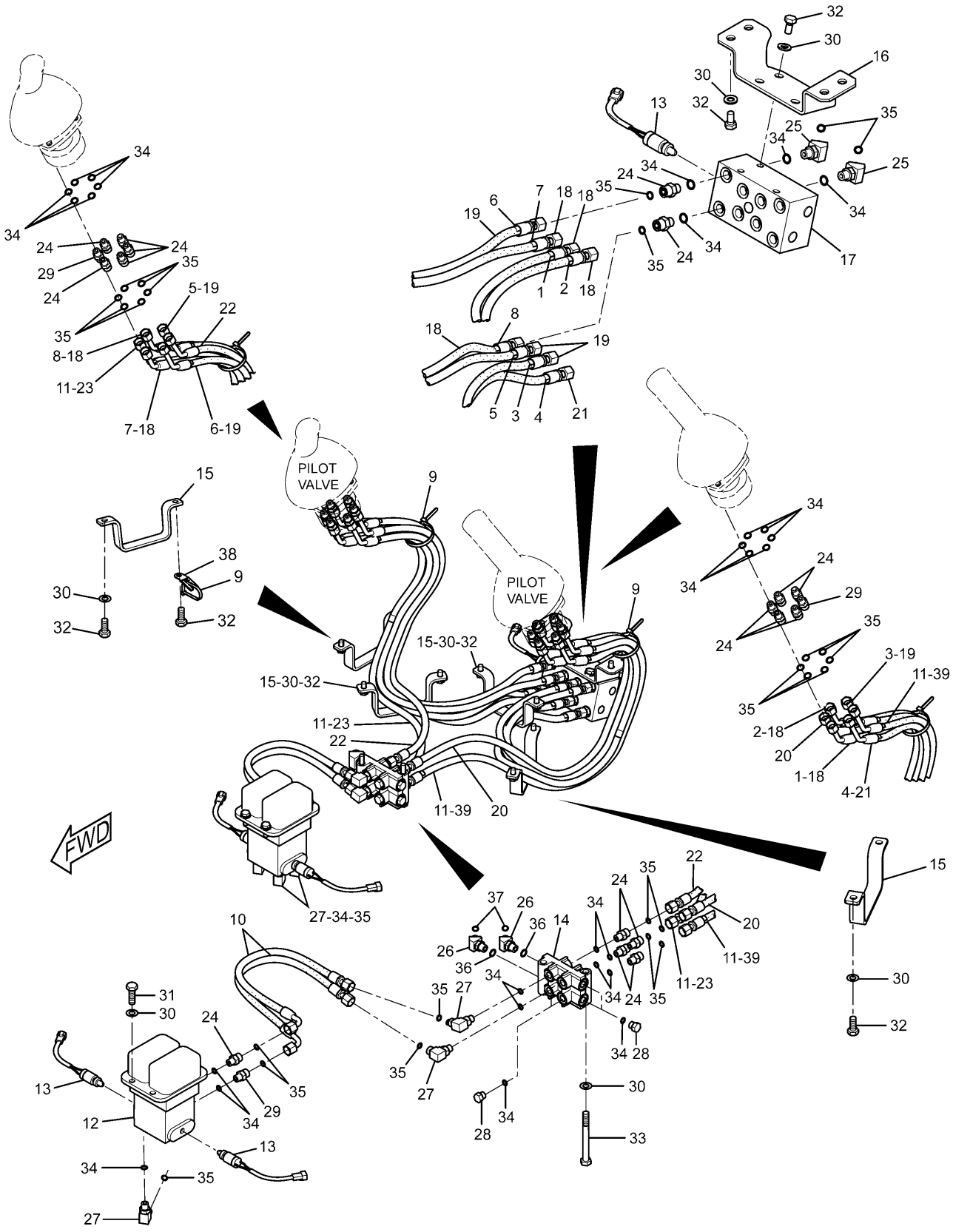


## 248-9825 LINES GP-PILOT

Cab

270-5947-Page566,185-0462-Page603

# HYDRAULIC SYSTEM

| NOTE | No. | PART No. | QTY | PART NAME | NOTE | No. | PART No. | QTY | PART NAME |
|---|---|---|---|---|---|---|---|---|---|
| | 1 | 4I-9521 | 2 | BAND (L1,RED) | | | | | |
| | 2 | 4I-9522 | 2 | BAND (L2,YELLOW) | | | | | |
| | 3 | 4I-9523 | 2 | BAND (L3,BLUE) | | | | | |
| | 4 | 4I-9524 | 2 | BAND (L4,BROWN) | | | | | |
| | 5 | 4I-9525 | 2 | BAND (R1,ORANGE) | | | | | |
| | 6 | 4I-9526 | 2 | BAND (R2,WHITE) | | | | | |
| | 7 | 4I-9527 | 2 | BAND (R3,GREEN) | | | | | |
| | 8 | 4I-9528 | 2 | BAND (R4,PURPLE) | | | | | |
| | 9 | 7K-1181 | 3 | STRAP | | | | | |
| | 10 | 087-4402 | 2 | HOSE AS (NOM 06, L=480mm) | | | | | |
| | 11 | 133-5813 | 4 | BAND (P,GRAY) | | | | | |
| Y | 12 | 270-5947 | 1 | VALVE GP | | | | | |
| | 13 | 309-5769 | 3 | SWITCH AS (PRESSURE) | | | | | |
| | | 102-8802 | 1 | RECEPTACLE KIT | | | | | |
| | | 9X-3401 | 2 | PIN | | | | | |
| | 14 | 168-9759 | 1 | BLOCK | | | | | |
| | 15 | 184-9336 | 4 | SUPPORT | | | | | |
| | 16 | 185-0383 | 1 | BRACKET | | | | | |
| Y | 17 | 185-0462 | 1 | VALVE GP | | | | | |
| | 18 | 236-2843 | 4 | HOSE AS (NOM 06, L=1200mm) | | | | | |
| | 19 | 236-2844 | 3 | HOSE AS (NOM 06, L=1200mm) | | | | | |
| | 20 | 236-2848 | 1 | HOSE AS (NOM 06, L=1090mm) | | | | | |
| | 21 | 245-5079 | 1 | HOSE AS (NOM 06, L=1210mm) | | | | | |
| | 22 | 255-1665 | 1 | HOSE AS (NOM 06, L=1050mm) | | | | | |
| | 23 | 255-1666 | 1 | HOSE AS (NOM 06, L=1130mm) | | | | | |
| | 24 | 6V-8636 | 23 | CONNECTOR | | | | | |
| | 25 | 6V-9001 | 8 | ELBOW | | | | | |
| | 26 | 6V-9002 | 2 | ELBOW | | | | | |
| | 27 | 6V-8724 | 6 | ELBOW | | | | | |
| | 28 | 9S-4191 | 4 | PLUG | | | | | |
| | 29 | 107-6631 | 3 | CONNECTOR | | | | | |
| | 30 | 8T-4121 | 20 | WASHER | | | | | |
| | 31 | 8T-4136 | 4 | BOLT (L=25mm) | | | | | |
| | 32 | 8T-4137 | 15 | BOLT (L=20mm) | | | | | |
| | 33 | 8T-4198 | 2 | BOLT (L=100mm) | | | | | |
| | 34 | 3J-1907 | 44 | SEAL-O-RING (ID=11.89mm) | | | | | |
| | 35 | 6V-8397 | 40 | SEAL-O-RING (OD=12.83mm) | | | | | |
| | 36 | 3K-0360 | 2 | SEAL-O-RING (ID=16.36mm) | | | | | |
| | 37 | 6V-8398 | 2 | SEAL-O-RING (OD=16.03mm) | | | | | |
| | 38 | 4P-7581 | 1 | CLIP | | | | | |
| | 39 | 289-5657 | 1 | HOSE AS (NOM 06, L=1090mm) | | | | | |

Y—SEE SEPARATE ILLUSTRATION

H99593E 05

## 248-9825 LINES GP-PILOT

Cab

270-5947-Page566,185-0462-Page603

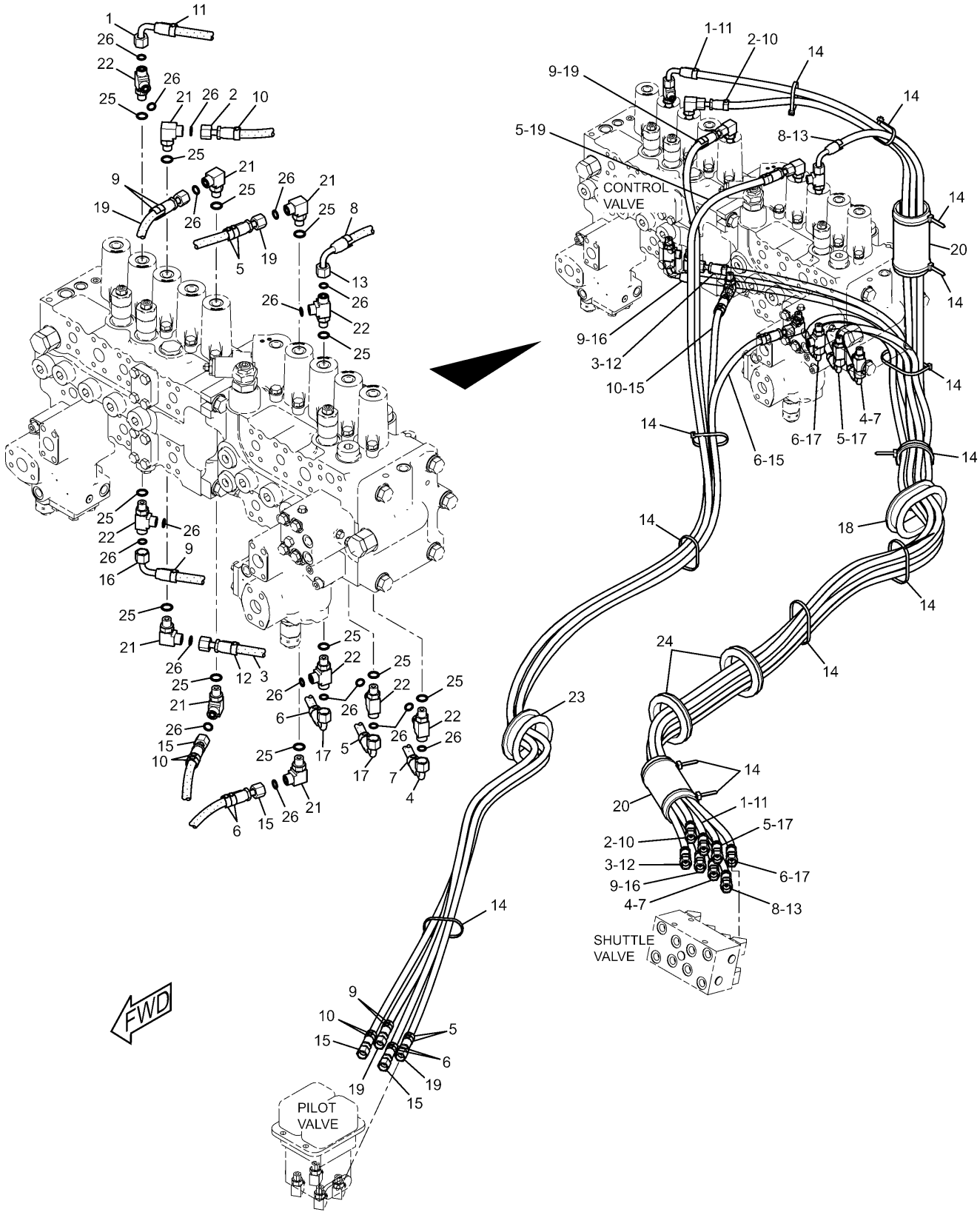


**248-9850 LINES GP-PILOT**
Control Valve

# HYDRAULIC SYSTEM

| NOTE | No. | PART No. | QTY | PART NAME | NOTE | No. | PART No. | QTY | PART NAME |
|---|---|---|---|---|---|---|---|---|---|
| | 1 | 4I-1631 | 1 | HOSE AS (NOM 06, L=2850mm) | | | | | |
| | 2 | 4I-3981 | 1 | HOSE AS (NOM 06, L=2750mm) | | | | | |
| | 3 | 4I-3994 | 1 | HOSE AS (NOM 06, L=2300mm) | | | | | |
| | 4 | 4I-6054 | 1 | HOSE AS (NOM 06, L=2350mm) | | | | | |
| | 5 | 4I-9521 | 6 | BAND (L1,RED) | | | | | |
| | 6 | 4I-9522 | 6 | BAND (L2,YELLOW) | | | | | |
| | 7 | 4I-9523 | 2 | BAND (L3,BLUE) | | | | | |
| | 8 | 4I-9524 | 2 | BAND (L4,BROWN) | | | | | |
| | 9 | 4I-9525 | 6 | BAND (R1,ORANGE) | | | | | |
| | 10 | 4I-9526 | 6 | BAND (R2,WHITE) | | | | | |
| | 11 | 4I-9527 | 2 | BAND (R3,GREEN) | | | | | |
| | 12 | 4I-9528 | 2 | BAND (R4,PURPLE) | | | | | |
| | 13 | 5I-8853 | 1 | HOSE AS (NOM 06, L=2750mm) | | | | | |
| | 14 | 7K-1181 | 13 | STRAP | | | | | |
| | 15 | 7Y-4193 | 2 | HOSE AS (NOM 06, L=2500mm) | | | | | |
| | 16 | 7Y-4390 | 1 | HOSE AS (NOM 06, L=2400mm) | | | | | |
| | 17 | 087-5303 | 2 | HOSE AS (NOM 06, L=2300mm) | | | | | |
| | 18 | 176-4708 | 1 | GROMMET | | | | | |
| | 19 | 221-4883 | 2 | HOSE AS (NOM 06, L=2870mm) | | | | | |
| | 20 | 115-8645 | 2 | GUARD | | | | | |
| | 21 | 6V-8724 | 6 | ELBOW | | | | | |
| | 22 | 6V-8781 | 6 | TEE | | | | | |
| | 23 | 202-4004 | 1 | GROMMET | | | | | |
| | 24 | 4I-3953 | 2 | GROMMET | | | | | |
| | 25 | 3J-1907 | 12 | SEAL-O-RING (ID=11.89mm) | | | | | |
| | 26 | 6V-8397 | 18 | SEAL-O-RING (OD=12.83mm) | | | | | |

H91792E 01

**248-9850 LINES GP-PILOT**
Control Valve

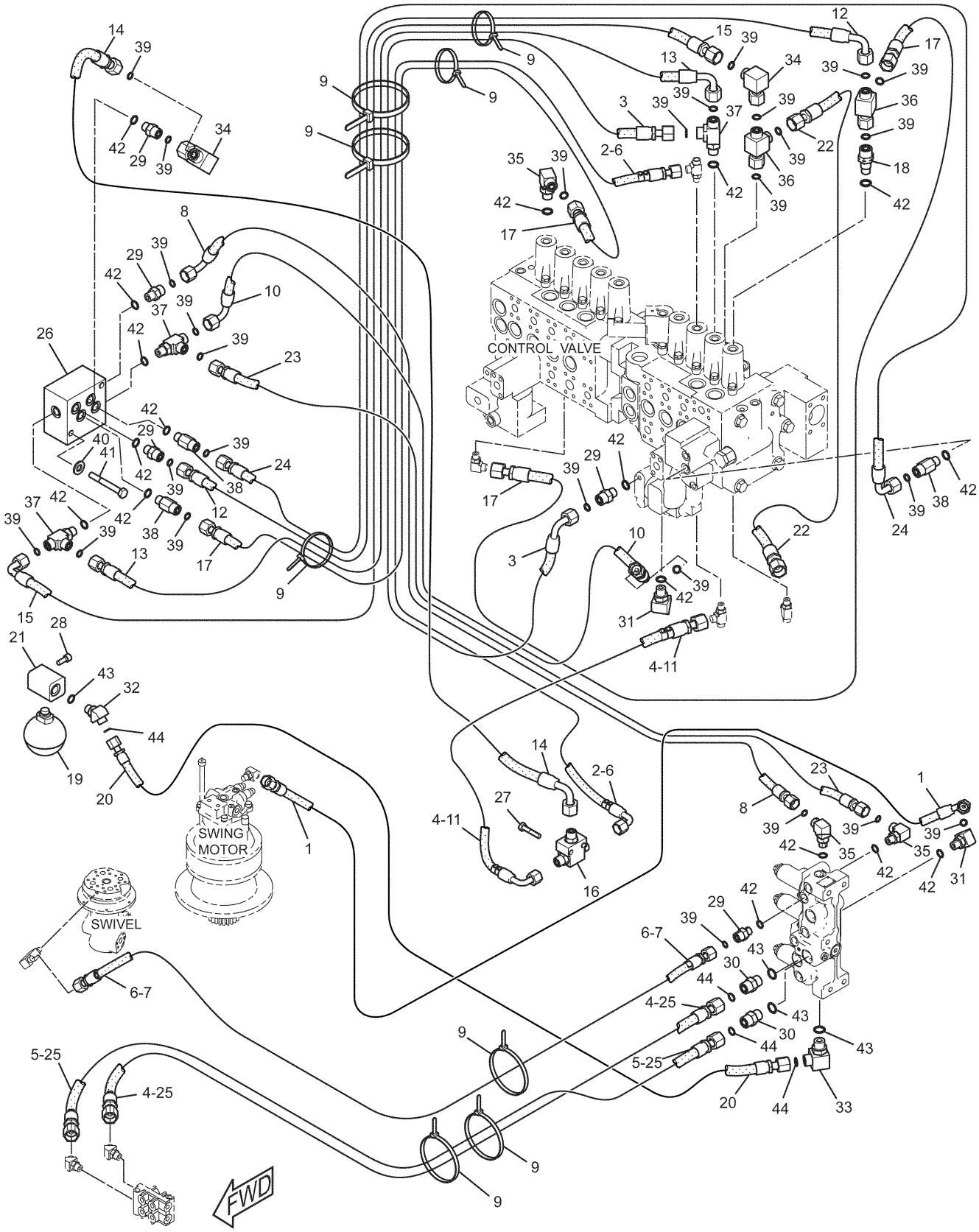


## 248-9851 LINES GP-PILOT (1/2)

Control Valve

S/N BWZ 1-01205, DFB 1-00254, SNS 1-00221, WJN 1-00144
164-6981-Page349,232-4102-Page582,259-7732-Page604

# HYDRAULIC SYSTEM

| NOTE | No. | PART No. | QTY | PART NAME | NOTE | No. | PART No. | QTY | PART NAME |
|---|---|---|---|---|---|---|---|---|---|
| | 1 | 4I-0818 | 1 | HOSE AS (NOM 06, L=820mm) | | | | | |
| | 2 | 4I-0836 | 1 | HOSE AS (NOM 06, L=1200mm) | | | | | |
| E | | 205-3717 | | HOSE…(114cm) | | | | | |
| | 3 | 4I-1739 | 1 | HOSE AS (NOM 06, L=1020mm) | | | | | |
| | 4 | 4I-9522 | 6 | BAND (L2,YELLOW) | | | | | |
| | 5 | 4I-9523 | 2 | BAND (L3,BLUE) | | | | | |
| | 6 | 4I-9524 | 6 | BAND (L4,BROWN) | | | | | |
| | 7 | 5I-4076 | 1 | HOSE AS (NOM 06, L=1350mm) | | | | | |
| | 8 | 5I-4396 | 1 | HOSE AS (NOM 06, L=400mm) | | | | | |
| | 9 | 7K-1181 | 8 | STRAP | | | | | |
| | 10 | 087-4411 | 1 | HOSE AS (NOM 06, L=450mm) | | | | | |
| | 11 | 087-4531 | 1 | HOSE AS (NOM 06, L=600mm) | | | | | |
| | 12 | 087-4534 | 1 | HOSE AS (NOM 06, L=1190mm) | | | | | |
| | 13 | 087-5774 | 1 | HOSE AS (NOM 06, L=1060mm) | | | | | |
| | 14 | 104-8838 | 1 | HOSE AS (NOM 06, L=720mm) | | | | | |
| | 15 | 110-5496 | 1 | HOSE AS (NOM 06, L=1330mm) | | | | | |
| Y | 16 | 259-7732 | 1 | VALVE GP | | | | | |
| | 17 | 143-4254 | 2 | HOSE AS (NOM 06, L=1160mm) | | | | | |
| | 18 | 285-1465 | 1 | CONNECTOR | | | | | |
| Y | 19 | 164-6981 | 1 | ACCUMULATOR GP | | | | | |
| | 20 | 164-8977 | 1 | HOSE AS (NOM 08, L=410mm) | | | | | |
| | 21 | 176-4469 | 1 | BLOCK | | | | | |
| | 22 | 176-4472 | 1 | HOSE AS (NOM 06, L=680mm) | | | | | |
| | 23 | 176-4768 | 1 | HOSE AS (NOM 06, L=320mm) | | | | | |
| | 24 | 4I-1780 | 1 | HOSE AS (NOM 06, L=1450mm) | | | | | |
| | 25 | 187-7070 | 2 | HOSE AS (NOM 08, L=2180mm) | | | | | |
| Y | 26 | 232-4102 | 1 | VALVE GP | | | | | |
| | 27 | 099-3649 | 2 | BOLT (L=40mm) | | | | | |
| | 28 | 105-3484 | 2 | BOLT (L=25mm) | | | | | |
| | 29 | 6V-8636 | 5 | CONNECTOR | | | | | |
| | 30 | 6V-8639 | 2 | CONNECTOR | | | | | |
| | 31 | 6V-9001 | 2 | ELBOW | | | | | |
| | 32 | 6V-9002 | 1 | ELBOW | | | | | |
| | 33 | 6V-8625 | 1 | ELBOW | | | | | |
| | 34 | 6V-9850 | 2 | ELBOW | | | | | |
| | 35 | 6V-8724 | 3 | ELBOW | | | | | |
| | 36 | 6V-9836 | 2 | TEE | | | | | |
| | 37 | 6V-8781 | 3 | TEE | | | | | |
| | 38 | 8T-1779 | 3 | CONNECTOR | | | | | |
| | 39 | 6V-8397 | 27 | SEAL-O-RING (OD=12.83mm) | | | | | |
| | 40 | 8T-4121 | 2 | WASHER | | | | | |
| | 41 | 8T-4172 | 2 | BOLT (L=80mm) | | | | | |
| | 42 | 3J-1907 | 17 | SEAL-O-RING (ID=11.89mm) | | | | | |
| | 43 | 3K-0360 | 4 | SEAL-O-RING (ID=16.36mm) | | | | | |
| | 44 | 6V-8398 | 4 | SEAL-O-RING (OD=16.03mm) | | | | | |

E—ORDER BY THE CENTIMETER

Y—SEE SEPARATE ILLUSTRATION

H99600E 05

## 248-9851 LINES GP-PILOT (1/2)

Control Valve

S/N BWZ 1-01205, DFB 1-00254, SNS 1-00221, WJN 1-00144

164-6981-Page349,232-4102-Page582,259-7732-Page604

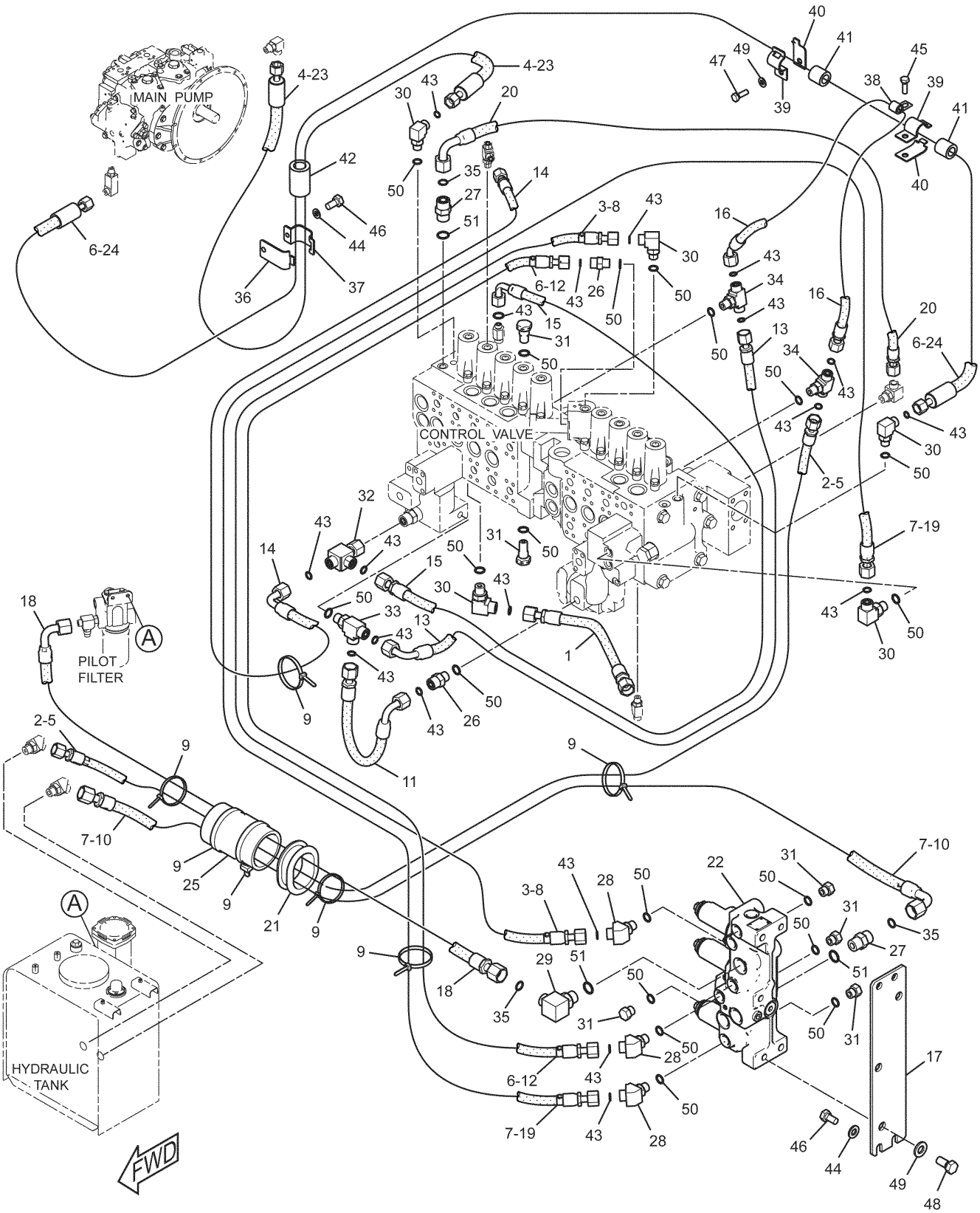


## 248-9851 LINES GP-PILOT (2/2)

Control Valve

S/N BWZ 1-01205, DFB 1-00254, SNS 1-00221, WJN 1-00144

215-5037-Page577

# HYDRAULIC SYSTEM

| NOTE | No. | PART No. | QTY | PART NAME | NOTE | No. | PART No. | QTY | PART NAME |
|---|---|---|---|---|---|---|---|---|---|
| | 1 | 4I-5906 | 1 | HOSE AS (NOM 06, L=600mm) | | | | | |
| | 2 | 4I-5933 | 1 | HOSE AS (NOM 06, L=1600mm) | | | | | |
| | 3 | 4I-9521 | 2 | BAND (L1,RED) | | | | | |
| | 4 | 4I-9523 | 2 | BAND (L3,BLUE) | | | | | |
| | 5 | 4I-9525 | 2 | BAND (R1,ORANGE) | | | | | |
| | 6 | 4I-9527 | 4 | BAND (R3,GREEN) | | | | | |
| | 7 | 4I-9528 | 4 | BAND (R4,PURPLE) | | | | | |
| | 8 | 5I-8708 | 1 | HOSE AS (NOM 06, L=950mm) | | | | | |
| | 9 | 7K-1181 | 7 | STRAP | | | | | |
| | 10 | 7Y-8487 | 1 | HOSE AS (NOM 08, L=1165mm) | | | | | |
| | 11 | 087-4531 | 1 | HOSE AS (NOM 06, L=600mm) | | | | | |
| | 12 | 087-5760 | 1 | HOSE AS (NOM 06, L=1030mm) | | | | | |
| | 13 | 087-5762 | 1 | HOSE AS (NOM 06, L=440mm) | | | | | |
| | 14 | 087-5772 | 1 | HOSE AS (NOM 06, L=1000mm) | | | | | |
| | 15 | 087-5774 | 1 | HOSE AS (NOM 06, L=1060mm) | | | | | |
| | 16 | 164-8983 | 1 | HOSE AS (NOM 06, L=720mm) | | | | | |
| | 17 | 176-4463 | 1 | PLATE | | | | | |
| | 18 | 176-4471 | 1 | HOSE AS (NOM 08, L=1750mm) | | | | | |
| | 19 | 4I-1037 | 1 | HOSE AS (NOM 06, L=1400mm) | | | | | |
| | 20 | 302-3168 | 1 | HOSE AS (NOM 08, L=800mm) | | | | | |
| | 21 | 202-4004 | 1 | GROMMET | | | | | |
| Y | 22 | 215-5037 | 1 | VALVE GP | | | | | |
| | 23 | 266-1098 | 1 | HOSE AS (NOM 06, L=1700mm) | | | | | |
| | 24 | 286-6760 | 1 | HOSE AS (NOM 06, L=1850mm) | | | | | |
| | 25 | 115-8645 | 1 | GUARD | | | | | |
| | 26 | 6V-8636 | 2 | CONNECTOR | | | | | |
| | 27 | 6V-8639 | 2 | CONNECTOR | | | | | |
| | 28 | 6V-9001 | 3 | ELBOW | | | | | |
| | 29 | 6V-8625 | 1 | ELBOW | | | | | |
| | 30 | 6V-8724 | 5 | ELBOW | | | | | |
| | 31 | 9S-4191 | 6 | PLUG | | | | | |
| | 32 | 6V-9836 | 1 | TEE | | | | | |
| | 33 | 6V-8781 | 1 | TEE | | | | | |
| | 34 | 6V-8774 | 2 | TEE | | | | | |
| | 35 | 6V-8398 | 3 | SEAL-O-RING (OD=16.03mm) | | | | | |
| | 36 | 275-1442 | 1 | CLIP | | | | | |
| | 37 | 275-1443 | 1 | CLIP | | | | | |
| | 38 | 4K-8864 | 1 | CLIP | | | | | |
| | 39 | 5P-7462 | 2 | CLIP | | | | | |
| | 40 | 5P-7463 | 2 | CLIP | | | | | |
| | 41 | 6V-0683 | 2 | GROMMET | | | | | |
| | 42 | 275-1444 | 1 | GROMMET | | | | | |
| | 43 | 6V-8397 | 19 | SEAL-O-RING (OD=12.83mm) | | | | | |
| | 44 | 8T-4121 | 5 | WASHER | | | | | |
| | 45 | 8T-4136 | 1 | BOLT (L=25mm) | | | | | |
| | 46 | 8T-4137 | 5 | BOLT (L=20mm) | | | | | |
| | 47 | 8T-4183 | 1 | BOLT (L=40mm) | | | | | |
| | 48 | 8T-4192 | 3 | BOLT (L=25mm) | | | | | |
| | 49 | 8T-4223 | 4 | WASHER | | | | | |
| | 50 | 3J-1907 | 19 | SEAL-O-RING (ID=11.89mm) | | | | | |
| | 51 | 3K-0360 | 3 | SEAL-O-RING (ID=16.36mm) | | | | | |

Y—SEE SEPARATE ILLUSTRATION

H99601E 05

## 248-9851 LINES GP-PILOT (2/2)

Control Valve

S/N BWZ 1-01205, DFB 1-00254, SNS 1-00221, WJN 1-00144

215-5037-Page577

# HYDRAULIC SYSTEM

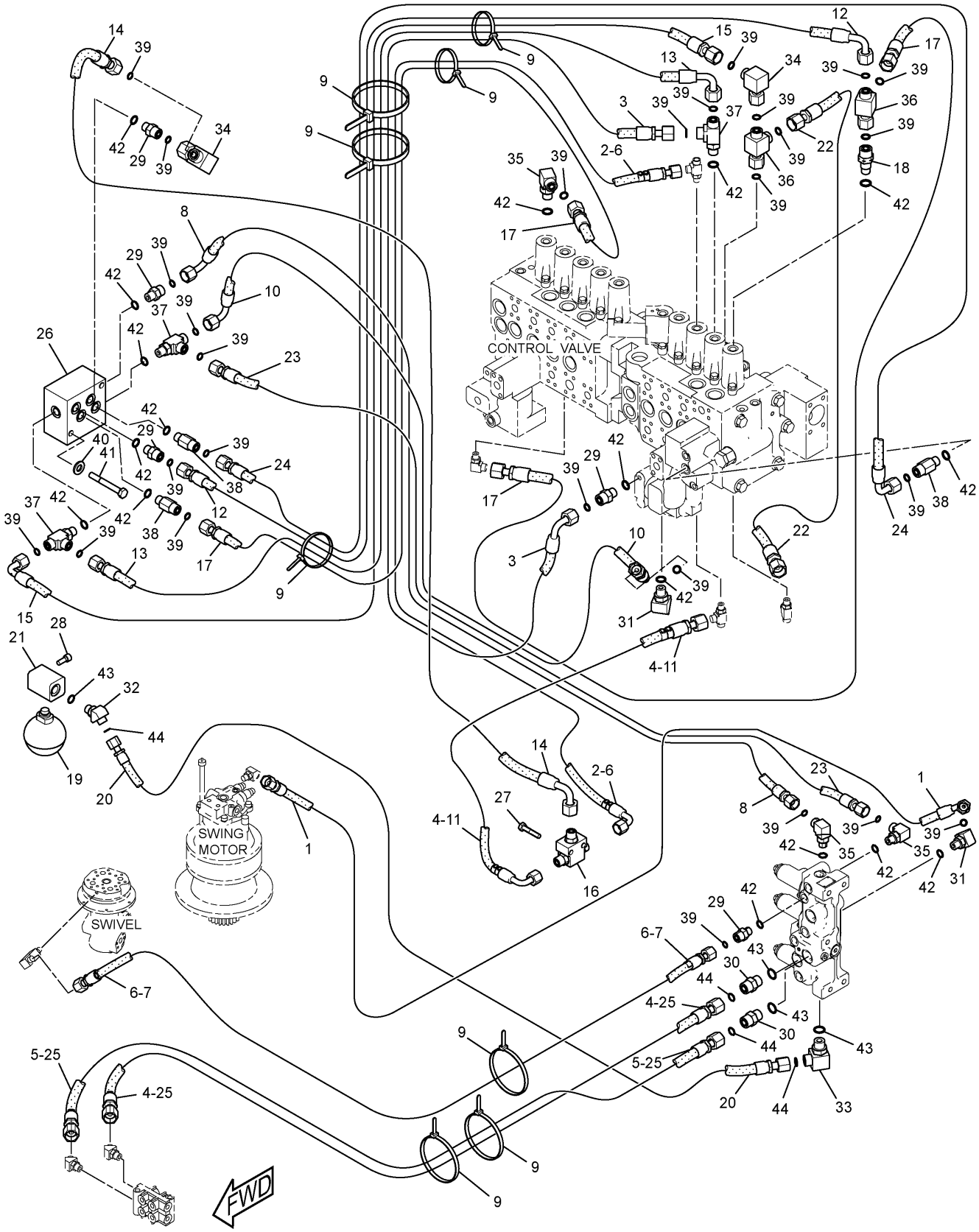


## 248-9851 LINES GP-PILOT (1/2)

Control Valve

S/N BWZ 01206-Up, DFB 00255-Up, SNS 00222-Up, WJN 00145-Up

164-6981-Page349,232-4102-Page582,259-7732-Page604

# HYDRAULIC SYSTEM

| NOTE | No. | PART No. | QTY | PART NAME | NOTE | No. | PART No. | QTY | PART NAME |
|---|---|---|---|---|---|---|---|---|---|
| | 1 | 4I-0818 | 1 | HOSE AS (NOM 06, L=820mm) | | | | | |
| | 2 | 4I-0836 | 1 | HOSE AS (NOM 06, L=1200mm) | | | | | |
| | 3 | 4I-1739 | 1 | HOSE AS (NOM 06, L=1020mm) | | | | | |
| | 4 | 4I-9522 | 6 | BAND (L2,YELLOW) | | | | | |
| | 5 | 4I-9523 | 2 | BAND (L3,BLUE) | | | | | |
| | 6 | 4I-9524 | 6 | BAND (L4,BROWN) | | | | | |
| | 7 | 5I-4076 | 1 | HOSE AS (NOM 06, L=1350mm) | | | | | |
| | 8 | 5I-4396 | 1 | HOSE AS (NOM 06, L=400mm) | | | | | |
| | 9 | 7K-1181 | 8 | STRAP | | | | | |
| | 10 | 087-4411 | 1 | HOSE AS (NOM 06, L=450mm) | | | | | |
| | 11 | 087-4531 | 1 | HOSE AS (NOM 06, L=600mm) | | | | | |
| | 12 | 087-4534 | 1 | HOSE AS (NOM 06, L=1190mm) | | | | | |
| | 13 | 087-5774 | 1 | HOSE AS (NOM 06, L=1060mm) | | | | | |
| | 14 | 104-8838 | 1 | HOSE AS (NOM 06, L=720mm) | | | | | |
| | 15 | 110-5496 | 1 | HOSE AS (NOM 06, L=1330mm) | | | | | |
| Y | 16 | 259-7732 | 1 | VALVE GP | | | | | |
| | 17 | 143-4254 | 2 | HOSE AS (NOM 06, L=1160mm) | | | | | |
| | 18 | 285-1465 | 1 | CONNECTOR | | | | | |
| Y | 19 | 164-6981 | 1 | ACCUMULATOR GP | | | | | |
| | 20 | 164-8977 | 1 | HOSE AS (NOM 08, L=410mm) | | | | | |
| | 21 | 176-4469 | 1 | BLOCK | | | | | |
| | 22 | 176-4472 | 1 | HOSE AS (NOM 06, L=680mm) | | | | | |
| | 23 | 176-4768 | 1 | HOSE AS (NOM 06, L=320mm) | | | | | |
| | 24 | 4I-1780 | 1 | HOSE AS (NOM 06, L=1450mm) | | | | | |
| | 25 | 187-7070 | 2 | HOSE AS (NOM 08, L=2180mm) | | | | | |
| Y | 26 | 232-4102 | 1 | VALVE GP | | | | | |
| | 27 | 099-3649 | 2 | BOLT (L=40mm) | | | | | |
| | 28 | 105-3484 | 2 | BOLT (L=25mm) | | | | | |
| | 29 | 6V-8636 | 5 | CONNECTOR | | | | | |
| | 30 | 6V-8639 | 2 | CONNECTOR | | | | | |
| | 31 | 6V-9001 | 2 | ELBOW | | | | | |
| | 32 | 6V-9002 | 1 | ELBOW | | | | | |
| | 33 | 6V-8625 | 1 | ELBOW | | | | | |
| | 34 | 6V-9850 | 2 | ELBOW | | | | | |
| | 35 | 6V-8724 | 3 | ELBOW | | | | | |
| | 36 | 6V-9836 | 2 | TEE | | | | | |
| | 37 | 6V-8781 | 3 | TEE | | | | | |
| | 38 | 8T-1779 | 3 | CONNECTOR | | | | | |
| | 39 | 6V-8397 | 27 | SEAL-O-RING (OD=12.83mm) | | | | | |
| | 40 | 8T-4121 | 2 | WASHER | | | | | |
| | 41 | 8T-4172 | 2 | BOLT (L=80mm) | | | | | |
| | 42 | 3J-1907 | 17 | SEAL-O-RING (ID=11.89mm) | | | | | |
| | 43 | 3K-0360 | 4 | SEAL-O-RING (ID=16.36mm) | | | | | |
| | 44 | 6V-8398 | 4 | SEAL-O-RING (OD=16.03mm) | | | | | |

Y—SEE SEPARATE ILLUSTRATION

H98393E 07

## 248-9851 LINES GP-PILOT (1/2)

Control Valve

S/N BWZ 01206-Up, DFB 00255-Up, SNS 00222-Up, WJN 00145-Up

164-6981-Page349,232-4102-Page582,259-7732-Page604

# HYDRAULIC SYSTEM

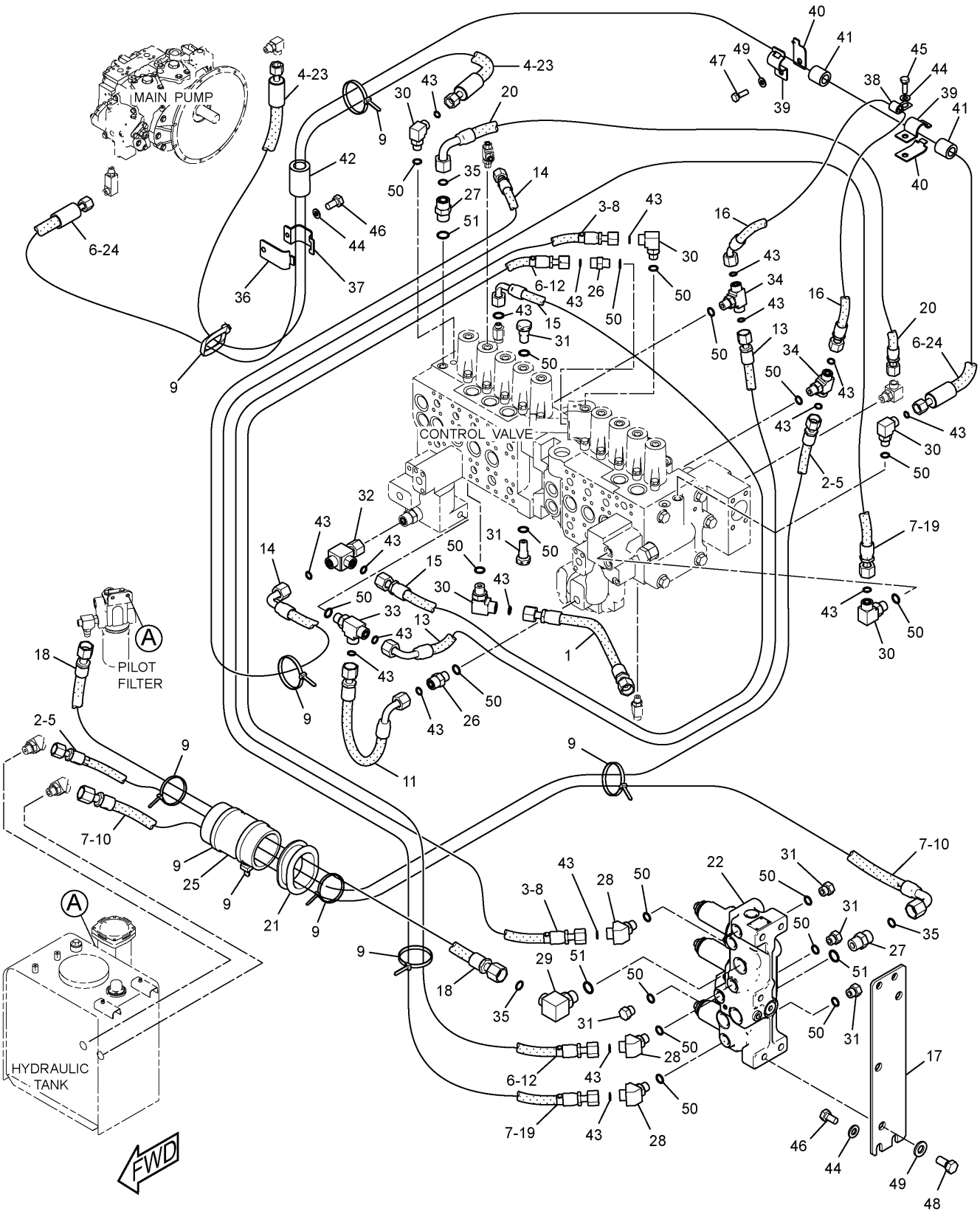


## 248-9851 LINES GP-PILOT (2/2)

Control Valve

S/N BWZ 01206-Up, DFB 00255-Up, SNS 00222-Up, WJN 00145-Up

215-5037-Page577

# HYDRAULIC SYSTEM

| NOTE | No. | PART No. | QTY | PART NAME | NOTE | No. | PART No. | QTY | PART NAME |
|---|---|---|---|---|---|---|---|---|---|
| | 1 | 4I-5906 | 1 | HOSE AS (NOM 06, L=600mm) | | | | | |
| | 2 | 4I-5933 | 1 | HOSE AS (NOM 06, L=1600mm) | | | | | |
| | 3 | 4I-9521 | 2 | BAND (L1,RED) | | | | | |
| | 4 | 4I-9523 | 2 | BAND (L3,BLUE) | | | | | |
| | 5 | 4I-9525 | 2 | BAND (R1,ORANGE) | | | | | |
| | 6 | 4I-9527 | 4 | BAND (R3,GREEN) | | | | | |
| | 7 | 4I-9528 | 4 | BAND (R4,PURPLE) | | | | | |
| | 8 | 5I-8708 | 1 | HOSE AS (NOM 06, L=950mm) | | | | | |
| | 9 | 7K-1181 | 9 | STRAP | | | | | |
| | 10 | 7Y-8487 | 1 | HOSE AS (NOM 08, L=1165mm) | | | | | |
| | 11 | 087-4531 | 1 | HOSE AS (NOM 06, L=600mm) | | | | | |
| | 12 | 087-5760 | 1 | HOSE AS (NOM 06, L=1030mm) | | | | | |
| | 13 | 087-5762 | 1 | HOSE AS (NOM 06, L=440mm) | | | | | |
| | 14 | 087-5772 | 1 | HOSE AS (NOM 06, L=1000mm) | | | | | |
| | 15 | 087-5774 | 1 | HOSE AS (NOM 06, L=1060mm) | | | | | |
| | 16 | 164-8983 | 1 | HOSE AS (NOM 06, L=720mm) | | | | | |
| | 17 | 176-4463 | 1 | PLATE | | | | | |
| | 18 | 199-1965 | 1 | HOSE AS (NOM 08, L=1750mm) | | | | | |
| | 19 | 4I-1037 | 1 | HOSE AS (NOM 06, L=1400mm) | | | | | |
| | 20 | 314-8128 | 1 | HOSE AS (NOM 08, L=780mm) | | | | | |
| | 21 | 202-4004 | 1 | GROMMET | | | | | |
| Y | 22 | 215-5037 | 1 | VALVE GP | | | | | |
| | 23 | 266-1098 | 1 | HOSE AS (NOM 06, L=1700mm) | | | | | |
| | 24 | 286-6760 | 1 | HOSE AS (NOM 06, L=1850mm) | | | | | |
| | 25 | 115-8645 | 1 | GUARD | | | | | |
| | 26 | 6V-8636 | 2 | CONNECTOR | | | | | |
| | 27 | 6V-8639 | 2 | CONNECTOR | | | | | |
| | 28 | 6V-9001 | 3 | ELBOW | | | | | |
| | 29 | 6V-8625 | 1 | ELBOW | | | | | |
| | 30 | 6V-8724 | 5 | ELBOW | | | | | |
| | 31 | 9S-4191 | 6 | PLUG | | | | | |
| | 32 | 6V-9836 | 1 | TEE | | | | | |
| | 33 | 6V-8781 | 1 | TEE | | | | | |
| | 34 | 6V-8774 | 2 | TEE | | | | | |
| | 35 | 6V-8398 | 3 | SEAL-O-RING (OD=16.03mm) | | | | | |
| | 36 | 275-1442 | 1 | CLIP | | | | | |
| | 37 | 275-1443 | 1 | CLIP | | | | | |
| | 38 | 4K-8864 | 1 | CLIP | | | | | |
| | 39 | 5P-7462 | 2 | CLIP | | | | | |
| | 40 | 5P-7463 | 2 | CLIP | | | | | |
| | 41 | 6V-0683 | 2 | GROMMET | | | | | |
| | 42 | 275-1444 | 1 | GROMMET | | | | | |
| | 43 | 6V-8397 | 19 | SEAL-O-RING (OD=12.83mm) | | | | | |
| | 44 | 8T-4121 | 6 | WASHER | | | | | |
| | 45 | 8T-4136 | 1 | BOLT (L=25mm) | | | | | |
| | 46 | 8T-4137 | 5 | BOLT (L=20mm) | | | | | |
| | 47 | 8T-4183 | 1 | BOLT (L=40mm) | | | | | |
| | 48 | 8T-4192 | 3 | BOLT (L=25mm) | | | | | |
| | 49 | 8T-4223 | 4 | WASHER | | | | | |
| | 50 | 3J-1907 | 19 | SEAL-O-RING (ID=11.89mm) | | | | | |
| | 51 | 3K-0360 | 3 | SEAL-O-RING (ID=16.36mm) | | | | | |

Y—SEE SEPARATE ILLUSTRATION

H98394E 07

## 248-9851 LINES GP-PILOT (2/2)

Control Valve

S/N BWZ 01206-Up, DFB 00255-Up, SNS 00222-Up, WJN 00145-Up

215-5037-Page577

# HYDRAULIC SYSTEM

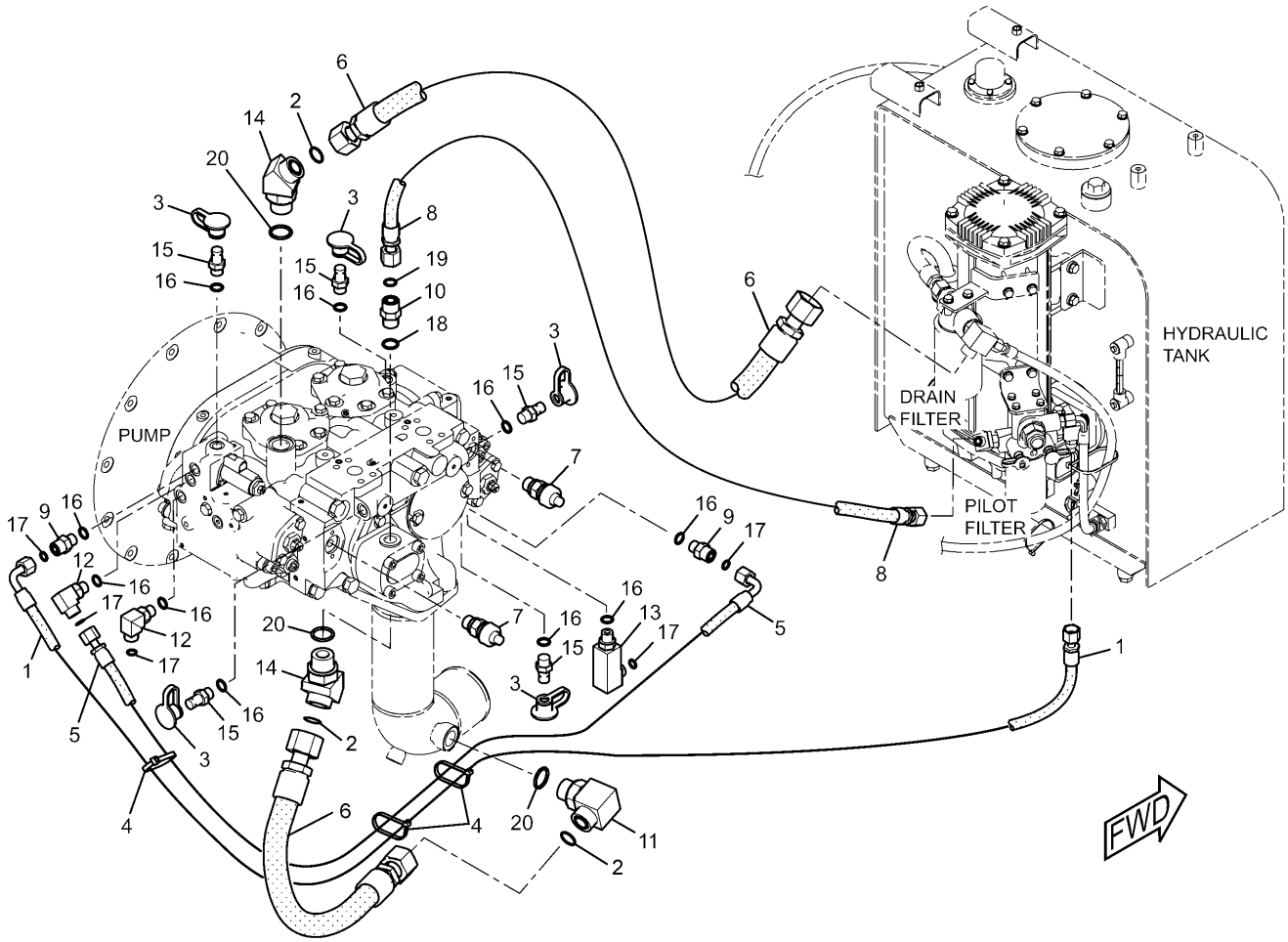


| NOTE | No. | PART No. | QTY | PART NAME | NOTE | No. | PART No. | QTY | PART NAME |
|---|---|---|---|---|---|---|---|---|---|
| | 1 | 4I-5795 | 1 | HOSE AS (NOM 06, L=1250mm) | | 19 | 6V-8398 | 1 | SEAL-O-RING (OD=16.03mm) |
| | 2 | 6V-9746 | 3 | SEAL-O-RING (OD=22.50mm) | | 20 | 3D-2824 | 3 | SEAL-O-RING (ID=23.47mm) |
| | 3 | 6V-0852 | 5 | CAP | | | | | |
| | 4 | 7K-1181 | 3 | STRAP | | | | | |
| | 5 | 7Y-8379 | 1 | HOSE AS (NOM 06, L=800mm) | | | | | |
| | 6 | 176-4743 | 2 | HOSE AS (NOM 12, L=450mm) | | | | | |
| | 7 | 221-8859 | 2 | SENSOR AS | | | | | |
| | | 3K-0360 | 1 | SEAL-O-RING (ID=16.36mm) | | | | | |
| | | 9X-3401 | 3 | PIN | | | | | |
| | 8 | 266-1028 | 1 | HOSE AS (NOM 08, L=500mm) | | | | | |
| | 9 | 6V-8636 | 2 | CONNECTOR | | | | | |
| | 10 | 6V-8639 | 1 | CONNECTOR | | | | | |
| | 11 | 6V-9007 | 1 | ELBOW | | | | | |
| | 12 | 6V-8724 | 2 | ELBOW | | | | | |
| | 13 | 8T-1905 | 1 | ELBOW | | | | | |
| | 14 | 6V-9004 | 2 | ELBOW | | | | | |
| | 15 | 6V-3965 | 5 | NIPPLE AS | | | | | |
| | 16 | 3J-1907 | 10 | SEAL-O-RING (ID=11.89mm) | | | | | |
| | 17 | 6V-8397 | 5 | SEAL-O-RING (OD=12.83mm) | | | | | |
| | 18 | 3K-0360 | 1 | SEAL-O-RING (ID=16.36mm) | | | | | |

H96436E 04

## 248-9852 LINES GP-PILOT

Pump

S/N BWZ 1-01205, DFB 1-00254, SNS 1-00221, WJN 1-00144

# HYDRAULIC SYSTEM

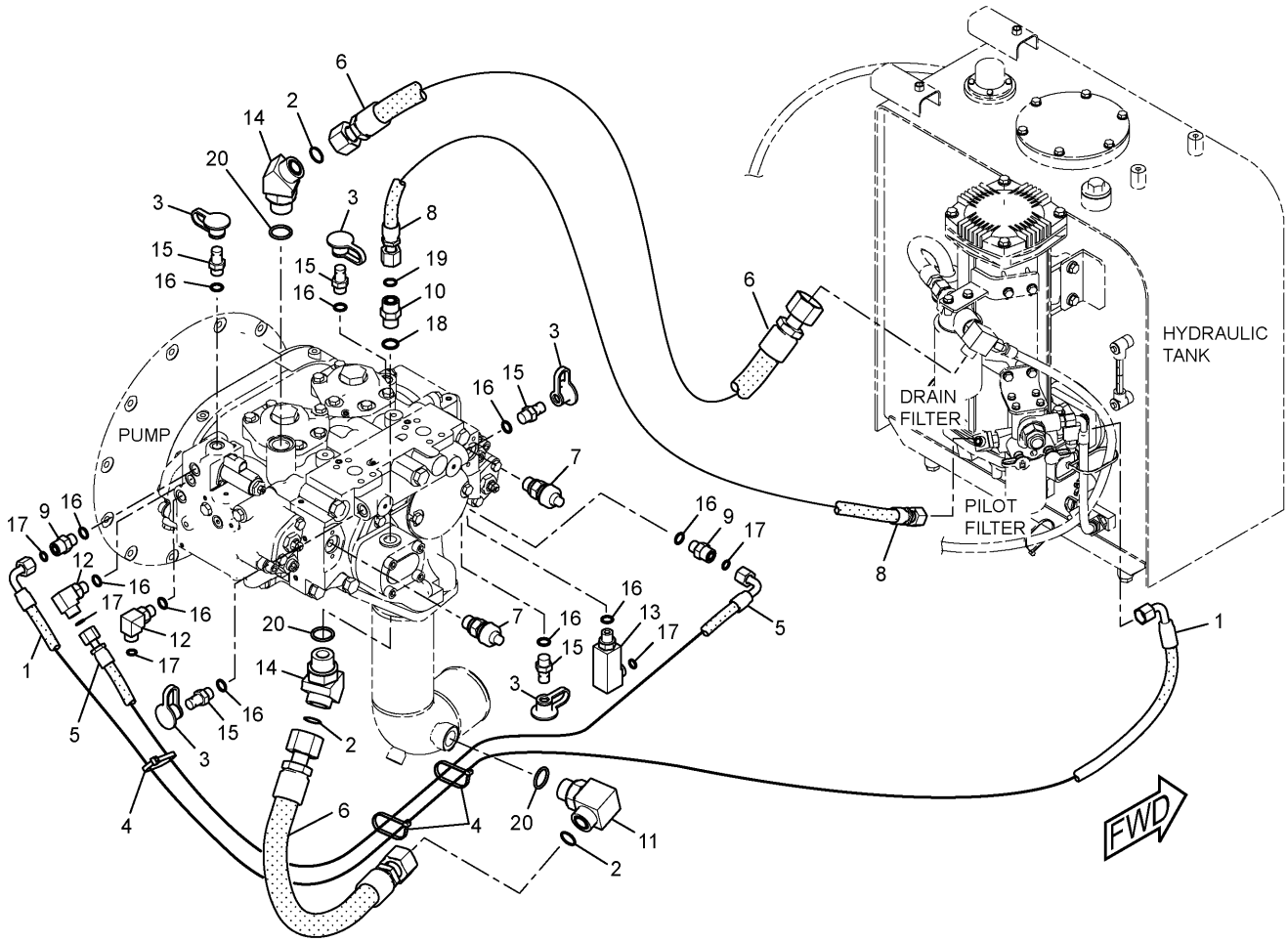


| NOTE | No. | PART No. | QTY | PART NAME | NOTE | No. | PART No. | QTY | PART NAME |
|---|---|---|---|---|---|---|---|---|---|
| | 1 | 307-5120 | 1 | HOSE AS (NOM 06, L=1350mm) | | 19 | 6V-8398 | 1 | SEAL-O-RING (OD=16.03mm) |
| | 2 | 6V-9746 | 3 | SEAL-O-RING (OD=22.50mm) | | 20 | 3D-2824 | 3 | SEAL-O-RING (ID=23.47mm) |
| | 3 | 6V-0852 | 5 | CAP | | | | | |
| | 4 | 7K-1181 | 3 | STRAP | | | | | |
| | 5 | 7Y-8379 | 1 | HOSE AS (NOM 06, L=800mm) | | | | | |
| | 6 | 176-4743 | 2 | HOSE AS (NOM 12, L=450mm) | | | | | |
| | 7 | 221-8859 | 2 | SENSOR AS | | | | | |
| | | 3K-0360 | 1 | SEAL-O-RING (ID=16.36mm) | | | | | |
| | | 9X-3401 | 3 | PIN | | | | | |
| | 8 | 266-1028 | 1 | HOSE AS (NOM 08, L=500mm) | | | | | |
| | 9 | 6V-8636 | 2 | CONNECTOR | | | | | |
| | 10 | 6V-8639 | 1 | CONNECTOR | | | | | |
| | 11 | 6V-9007 | 1 | ELBOW | | | | | |
| | 12 | 6V-8724 | 2 | ELBOW | | | | | |
| | 13 | 8T-1905 | 1 | ELBOW | | | | | |
| | 14 | 6V-9004 | 2 | ELBOW | | | | | |
| | 15 | 6V-3965 | 5 | NIPPLE AS | | | | | |
| | 16 | 3J-1907 | 10 | SEAL-O-RING (ID=11.89mm) | | | | | |
| | 17 | 6V-8397 | 5 | SEAL-O-RING (OD=12.83mm) | | | | | |
| | 18 | 3K-0360 | 1 | SEAL-O-RING (ID=16.36mm) | | | | | |

HA1996E 06

## 248-9852 LINES GP-PILOT

Pump

S/N BWZ 01206-Up, DFB 00255-Up, SNS 00222-Up, WJN 00145-Up

# MEMORANDA

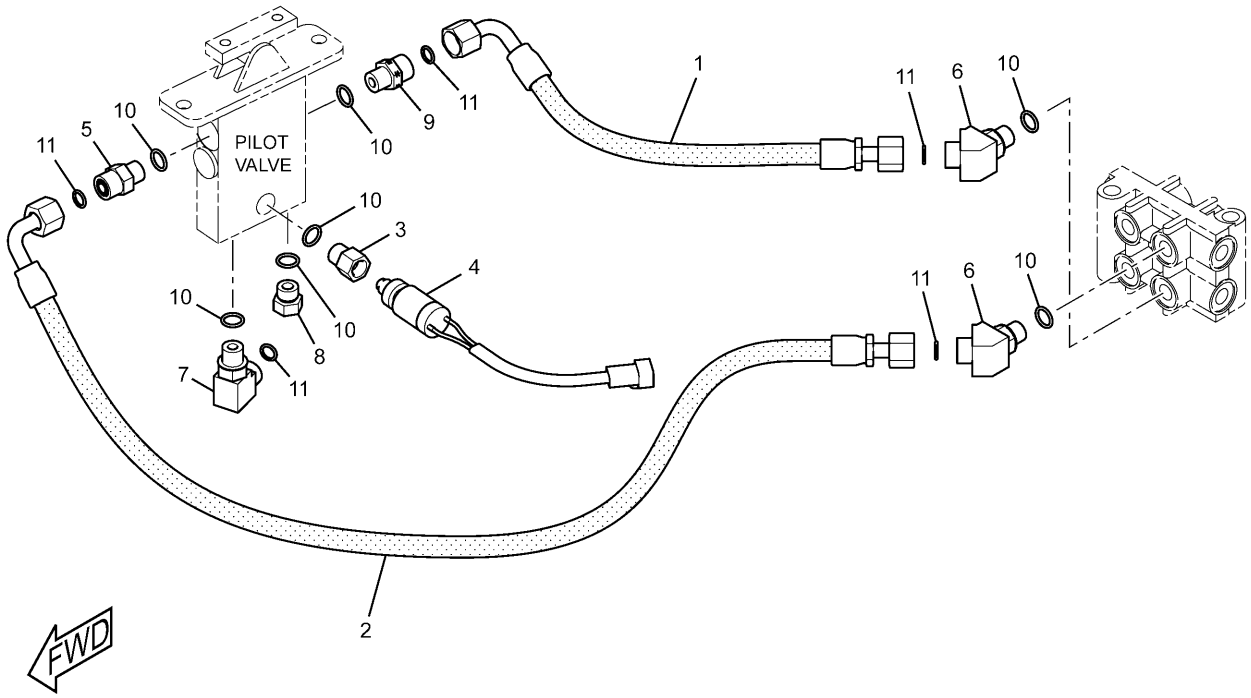


| NOTE | No. | PART No. | QTY | PART NAME | NOTE | No. | PART No. | QTY | PART NAME |
|---|---|---|---|---|---|---|---|---|---|
| | 1 | 4I-1704 | 1 | HOSE AS (NOM 06, L=330mm) | | | | | |
| | 2 | 087-4402 | 1 | HOSE AS (NOM 06, L=480mm) | | | | | |
| | 3 | 108-7516 | 1 | FITTING | | | | | |
| | 4 | 309-5769 | 1 | SWITCH AS (PRESSURE) | | | | | |
| | | 102-8802 | 1 | RECEPTACLE KIT | | | | | |
| | | 9X-3401 | 2 | PIN | | | | | |
| | 5 | 6V-8636 | 1 | CONNECTOR | | | | | |
| | 6 | 6V-9001 | 2 | ELBOW | | | | | |
| | 7 | 6V-8724 | 1 | ELBOW | | | | | |
| | 8 | 9S-4191 | 1 | PLUG | | | | | |
| | 9 | 107-6631 | 1 | CONNECTOR | | | | | |
| | 10 | 3J-1907 | 7 | SEAL-O-RING (ID=11.89mm) | | | | | |
| | 11 | 6V-8397 | 5 | SEAL-O-RING (OD=12.83mm) | | | | | |

H99595E 03

## 255-1800 LINES GP-PILOT

Part of 259-7492,259-7494-Page443
An Attachment

# HYDRAULIC SYSTEM

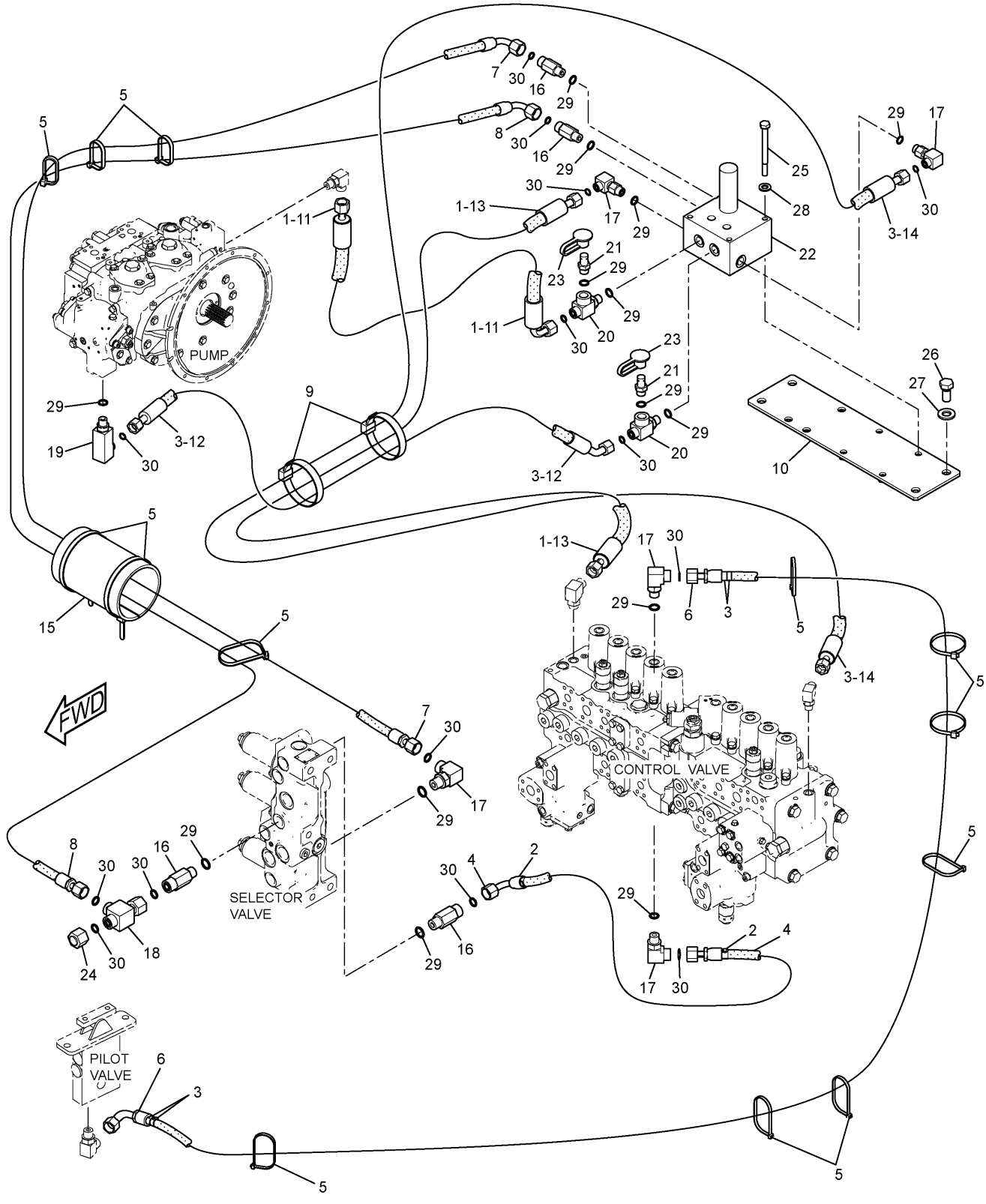


## 260-7971 LINES GP-PILOT

Part of 259-7492-Page443
171-0188-Page575
An Attachment

# HYDRAULIC SYSTEM

| NOTE | No. | PART No. | QTY | PART NAME | NOTE | No. | PART No. | QTY | PART NAME |
|---|---|---|---|---|---|---|---|---|---|
| | 1 | 4I-9523 | 4 | BAND (L3,BLUE) | | | | | |
| | 2 | 4I-9524 | 2 | BAND (L4,BROWN) | | | | | |
| | 3 | 4I-9527 | 8 | BAND (R3,GREEN) | | | | | |
| | 4 | 5I-4396 | 1 | HOSE AS (NOM 06, L=400mm) | | | | | |
| | 5 | 7K-1181 | 13 | STRAP | | | | | |
| | 6 | 7Y-4399 | 1 | HOSE AS (NOM 06, L=3550mm) | | | | | |
| | 7 | 108-7375 | 1 | HOSE AS (NOM 06, L=1800mm) | | | | | |
| | 8 | 111-0988 | 1 | HOSE AS (NOM 06, L=1950mm) | | | | | |
| | 9 | 136-0207 | 2 | STRAP | | | | | |
| | 10 | 266-1108 | 1 | SUPPORT AS | | | | | |
| | 11 | 266-1133 | 1 | HOSE AS (NOM 06, L=420mm) | | | | | |
| | 12 | 278-6470 | 1 | HOSE AS (NOM 06, L=550mm) | | | | | |
| | 13 | 266-1139 | 1 | HOSE AS (NOM 06, L=1640mm) | | | | | |
| | 14 | 296-6975 | 1 | HOSE AS (NOM 06, L=2350mm) | | | | | |
| | 15 | 124-1008 | 1 | GUARD | | | | | |
| | 16 | 8T-0075 | 4 | CONNECTOR | | | | | |
| | 17 | 6V-8724 | 5 | ELBOW | | | | | |
| | 18 | 6V-9836 | 1 | TEE | | | | | |
| | 19 | 8T-1905 | 1 | ELBOW | | | | | |
| | 20 | 3E-2310 | 2 | TEE | | | | | |
| | 21 | 6V-3965 | 2 | NIPPLE AS | | | | | |
| Y | 22 | 171-0188 | 1 | VALVE GP | | | | | |
| | 23 | 6V-0852 | 2 | CAP | | | | | |
| | 24 | 6V-9829 | 1 | CAP AS | | | | | |
| | 25 | 8T-4177 | 4 | BOLT (L=90mm) | | | | | |
| | 26 | 8T-4192 | 4 | BOLT (L=25mm) | | | | | |
| | 27 | 8T-4223 | 4 | WASHER | | | | | |
| | 28 | 8T-4224 | 4 | WASHER | | | | | |
| | 29 | 3J-1907 | 14 | SEAL-O-RING (ID=11.89mm) | | | | | |
| | 30 | 6V-8397 | 14 | SEAL-O-RING (OD=12.83mm) | | | | | |

Y—SEE SEPARATE ILLUSTRATION

H99652E 05

## 260-7971 LINES GP-PILOT

Part of 259-7492-Page443
171-0188-Page575
An Attachment

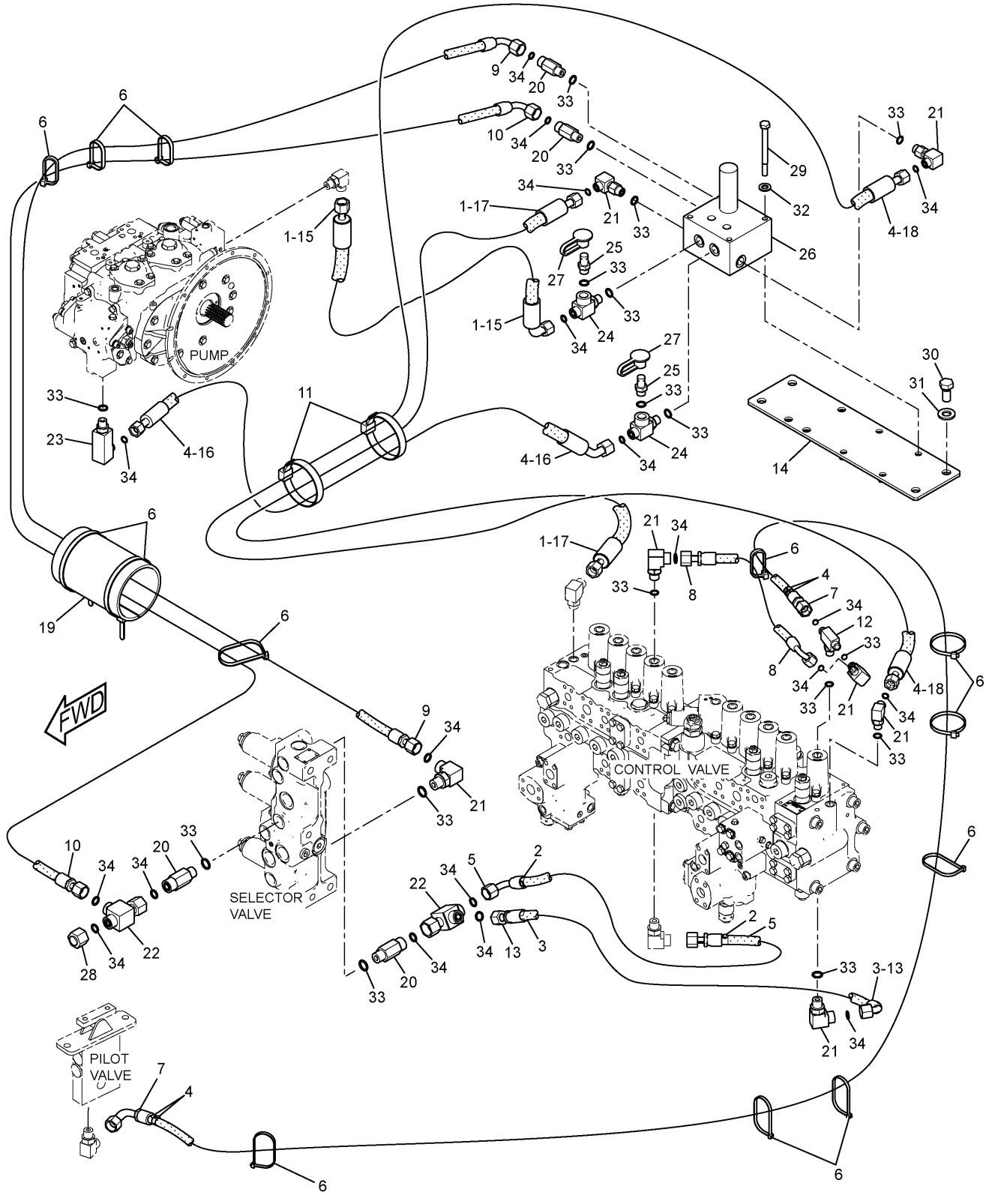


## 260-7972 LINES GP-PILOT

Part of 259-7494-Page443
171-0188-Page575
An Attachment

# HYDRAULIC SYSTEM

| NOTE | No. | PART No. | QTY | PART NAME | NOTE | No. | PART No. | QTY | PART NAME |
|---|---|---|---|---|---|---|---|---|---|
| | 1 | 4I-9523 | 4 | BAND (L3,BLUE) | | | | | |
| | 2 | 4I-9524 | 2 | BAND (L4,BROWN) | | | | | |
| | 3 | 4I-9525 | 2 | BAND (R1,ORANGE) | | | | | |
| | 4 | 4I-9527 | 8 | BAND (R3,GREEN) | | | | | |
| | 5 | 5I-4396 | 1 | HOSE AS (NOM 06, L=400mm) | | | | | |
| | 6 | 7K-1181 | 13 | STRAP | | | | | |
| | 7 | 7Y-4399 | 1 | HOSE AS (NOM 06, L=3550mm) | | | | | |
| | 8 | 087-5766 | 1 | HOSE AS (NOM 06, L=680mm) | | | | | |
| | 9 | 108-7375 | 1 | HOSE AS (NOM 06, L=1800mm) | | | | | |
| | 10 | 111-0988 | 1 | HOSE AS (NOM 06, L=1950mm) | | | | | |
| | 11 | 136-0207 | 2 | STRAP | | | | | |
| | 12 | 7X-2459 | 1 | TEE | | | | | |
| | 13 | 4I-1671 | 1 | HOSE AS (NOM 06, L=370mm) | | | | | |
| | 14 | 266-1108 | 1 | SUPPORT AS | | | | | |
| | 15 | 266-1133 | 1 | HOSE AS (NOM 06, L=420mm) | | | | | |
| | 16 | 278-6470 | 1 | HOSE AS (NOM 06, L=550mm) | | | | | |
| | 17 | 266-1139 | 1 | HOSE AS (NOM 06, L=1640mm) | | | | | |
| | 18 | 266-1142 | 1 | HOSE AS (NOM 06, L=2400mm) | | | | | |
| | 19 | 124-1008 | 1 | GUARD | | | | | |
| | 20 | 8T-0075 | 4 | CONNECTOR | | | | | |
| | 21 | 6V-8724 | 8 | ELBOW | | | | | |
| | 22 | 6V-9836 | 2 | TEE | | | | | |
| | 23 | 8T-1905 | 1 | ELBOW | | | | | |
| | 24 | 3E-2310 | 2 | TEE | | | | | |
| | 25 | 6V-3965 | 2 | NIPPLE AS | | | | | |
| Y | 26 | 171-0188 | 1 | VALVE GP | | | | | |
| | 27 | 6V-0852 | 2 | CAP | | | | | |
| | 28 | 6V-9829 | 1 | CAP AS | | | | | |
| | 29 | 8T-4177 | 4 | BOLT (L=90mm) | | | | | |
| | 30 | 8T-4192 | 4 | BOLT (L=25mm) | | | | | |
| | 31 | 8T-4223 | 4 | WASHER | | | | | |
| | 32 | 8T-4224 | 4 | WASHER | | | | | |
| | 33 | 3J-1907 | 17 | SEAL-O-RING (ID=11.89mm) | | | | | |
| | 34 | 6V-8397 | 19 | SEAL-O-RING (OD=12.83mm) | | | | | |

Y—SEE SEPARATE ILLUSTRATION

H99656E 05

## 260-7972 LINES GP-PILOT

Part of 259-7494-Page443
171-0188-Page575
An Attachment

# HYDRAULIC SYSTEM

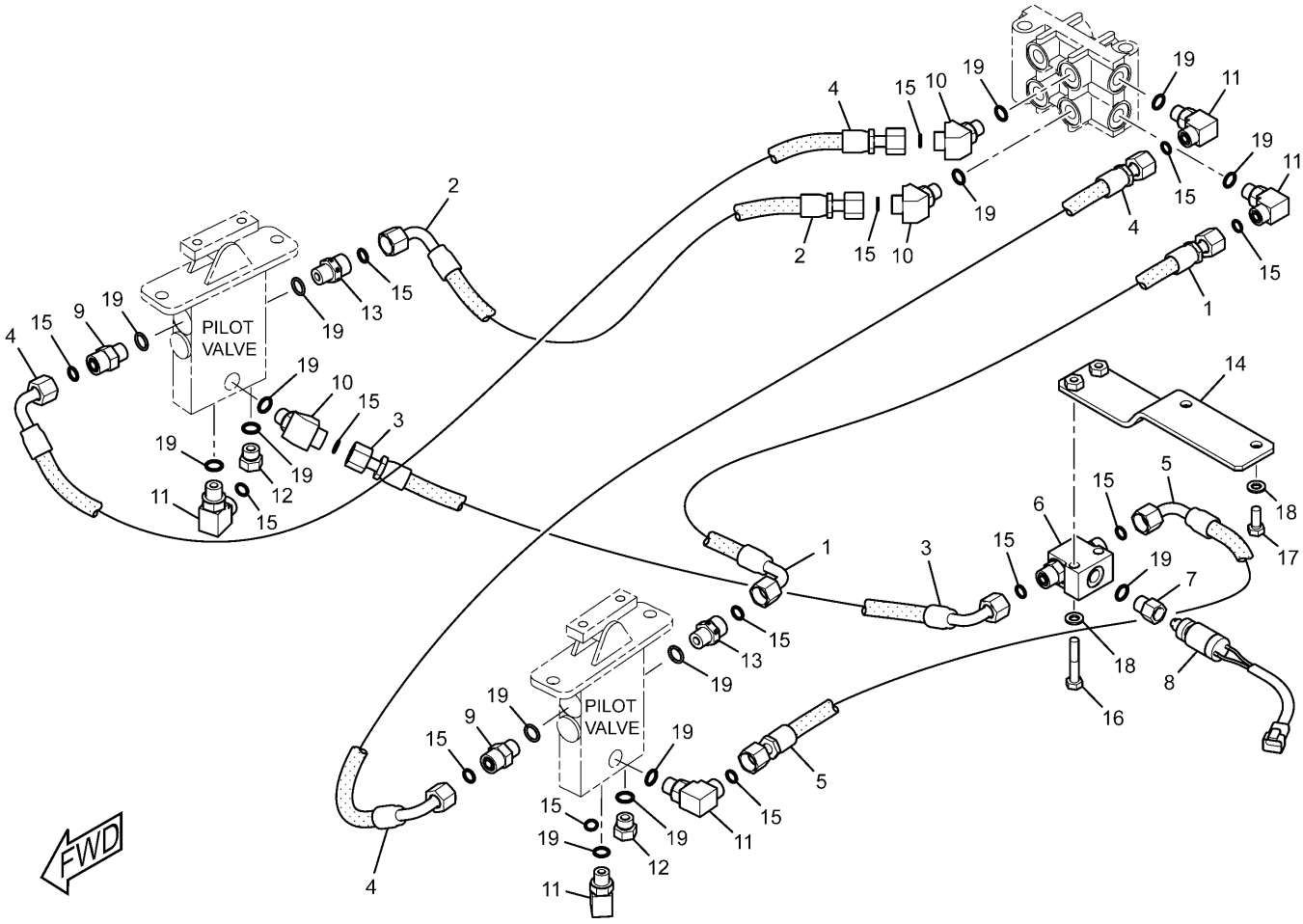


| NOTE | No. | PART No. | QTY | PART NAME | NOTE | No. | PART No. | QTY | PART NAME |
|---|---|---|---|---|---|---|---|---|---|
| | 1 | 4I-1025 | 1 | HOSE AS (NOM 06, L=300mm) | | 19 | 3J-1907 | 15 | SEAL-O-RING (ID=11.89mm) |
| | 2 | 4I-1704 | 1 | HOSE AS (NOM 06, L=330mm) | | | | | |
| | 3 | 5I-4396 | 1 | HOSE AS (NOM 06, L=400mm) | | | | | |
| | 4 | 087-4402 | 2 | HOSE AS (NOM 06, L=480mm) | | | | | |
| | 5 | 087-6585 | 1 | HOSE AS (NOM 06, L=350mm) | | | | | |
| Y | 6 | 123-2430 | 1 | VALVE GP | | | | | |
| | 7 | 108-7516 | 1 | FITTING | | | | | |
| | 8 | 309-5769 | 1 | SWITCH AS (PRESSURE) | | | | | |
| | | 102-8802 | 1 | RECEPTACLE KIT | | | | | |
| | | 9X-3401 | 2 | PIN | | | | | |
| | 9 | 6V-8636 | 2 | CONNECTOR | | | | | |
| | 10 | 6V-9001 | 3 | ELBOW | | | | | |
| | 11 | 6V-8724 | 5 | ELBOW | | | | | |
| | 12 | 9S-4191 | 2 | PLUG | | | | | |
| | 13 | 107-6631 | 2 | CONNECTOR | | | | | |
| | 14 | 179-7578 | 1 | SUPPORT AS | | | | | |
| | 15 | 6V-8397 | 14 | SEAL-O-RING (OD=12.83mm) | | | | | |
| | 16 | 7X-0818 | 2 | BOLT (L=45mm) | | | | | |
| | 17 | 8T-4189 | 2 | BOLT (L=20mm) | | | | | |
| | 18 | 8T-4224 | 4 | WASHER | | | | | |

Y—SEE SEPARATE ILLUSTRATION

H99596E 03

## 255-1802 LINES GP-PILOT

Combined Function/2 Pumps
Part of 259-7493-Page444
123-2430-Page605
An Attachment

# MEMORANDA

# HYDRAULIC SYSTEM

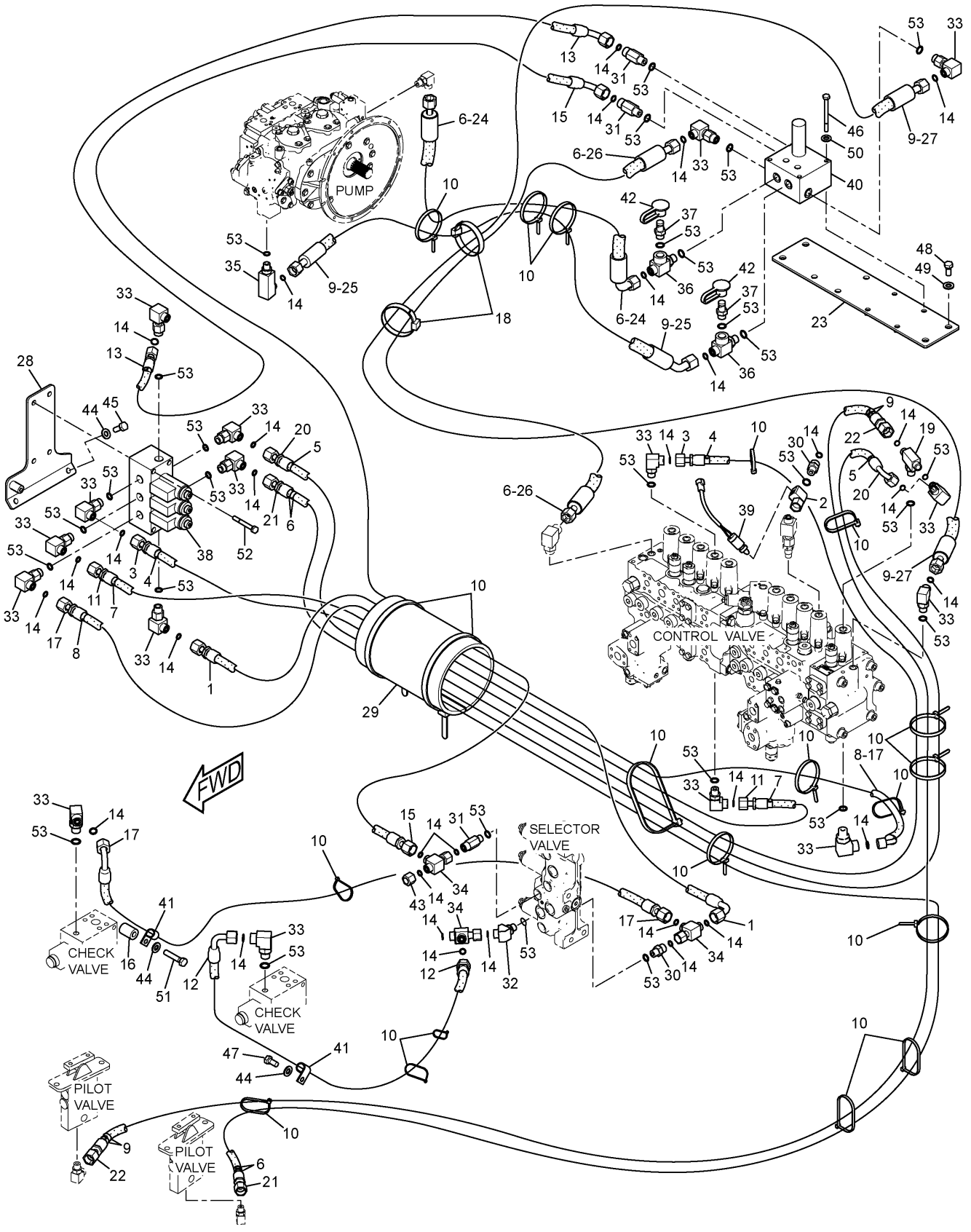


## 260-7974 LINES GP-PILOT

Part of 259-7493-Page444
171-0188-Page575,165-9549-Page586
An Attachment

# HYDRAULIC SYSTEM

| NOTE | No. | PART No. | QTY | PART NAME | NOTE | No. | PART No. | QTY | PART NAME |
|---|---|---|---|---|---|---|---|---|---|
| | 1 | 4I-1878 | 1 | HOSE AS (NOM 06, L=1380mm) | | 52 | 8T-6870 | 4 | BOLT (L=70mm) |
| | 2 | 4I-3941 | 1 | FITTING AS | | 53 | 3J-1907 | 27 | SEAL-O-RING (ID=11.89mm) |
| | 3 | 4I-3988 | 1 | HOSE AS (NOM 06, L=2250mm) | | | | | |
| | 4 | 4I-9521 | 2 | BAND (L1,RED) | | | | | |
| | 5 | 4I-9522 | 2 | BAND (L2,YELLOW) | | | | | |
| | 6 | 4I-9523 | 8 | BAND (L3,BLUE) | | | | | |
| | 7 | 4I-9524 | 2 | BAND (L4,BROWN) | | | | | |
| | 8 | 4I-9525 | 2 | BAND (R1,ORANGE) | | | | | |
| | 9 | 4I-9527 | 8 | BAND (R3,GREEN) | | | | | |
| | 10 | 7K-1181 | 19 | STRAP | | | | | |
| | 11 | 7Y-4199 | 1 | HOSE AS (NOM 06, L=1800mm) | | | | | |
| | 12 | 087-5764 | 1 | HOSE AS (NOM 06, L=1550mm) | | | | | |
| | 13 | 087-5772 | 1 | HOSE AS (NOM 06, L=1000mm) | | | | | |
| | 14 | 6V-8397 | 31 | SEAL-O-RING (OD=12.83mm) | | | | | |
| | 15 | 111-0988 | 1 | HOSE AS (NOM 06, L=1950mm) | | | | | |
| | 16 | 118-9902 | 1 | SPACER | | | | | |
| | 17 | 108-7313 | 2 | HOSE AS (NOM 06, L=1900mm) | | | | | |
| | 18 | 136-0207 | 2 | STRAP | | | | | |
| | 19 | 7X-2459 | 1 | TEE | | | | | |
| | 20 | 179-7616 | 1 | HOSE AS (NOM 06, L=2500mm) | | | | | |
| | 21 | 212-5419 | 1 | HOSE AS (NOM 06, L=4300mm) | | | | | |
| | 22 | 212-5423 | 1 | HOSE AS (NOM 06, L=3450mm) | | | | | |
| | 23 | 266-1108 | 1 | SUPPORT AS | | | | | |
| | 24 | 266-1133 | 1 | HOSE AS (NOM 06, L=420mm) | | | | | |
| | 25 | 278-6470 | 1 | HOSE AS (NOM 06, L=550mm) | | | | | |
| | 26 | 266-1139 | 1 | HOSE AS (NOM 06, L=1640mm) | | | | | |
| | 27 | 266-1142 | 1 | HOSE AS (NOM 06, L=2400mm) | | | | | |
| | 28 | 286-6561 | 1 | SUPPORT AS | | | | | |
| | 29 | 124-1008 | 1 | GUARD | | | | | |
| | 30 | 6V-8636 | 2 | CONNECTOR | | | | | |
| | 31 | 8T-0075 | 3 | CONNECTOR | | | | | |
| | 32 | 6V-9001 | 1 | ELBOW | | | | | |
| | 33 | 6V-8724 | 16 | ELBOW | | | | | |
| | 34 | 6V-9836 | 3 | TEE | | | | | |
| | 35 | 8T-1905 | 1 | ELBOW | | | | | |
| | 36 | 3E-2310 | 2 | TEE | | | | | |
| | 37 | 6V-3965 | 2 | NIPPLE AS | | | | | |
| Y | 38 | 165-9549 | 1 | VALVE GP | | | | | |
| | 39 | 309-5769 | 1 | SWITCH AS (PRESSURE) | | | | | |
| | | 102-8802 | 1 | RECEPTACLE KIT | | | | | |
| | | 9X-3401 | 2 | PIN | | | | | |
| Y | 40 | 171-0188 | 1 | VALVE GP | | | | | |
| | 41 | 6D-3479 | 2 | CLIP | | | | | |
| | 42 | 6V-0852 | 2 | CAP | | | | | |
| | 43 | 6V-9829 | 1 | CAP AS | | | | | |
| | 44 | 8T-4121 | 4 | WASHER | | | | | |
| | 45 | 8T-4136 | 2 | BOLT (L=25mm) | | | | | |
| | 46 | 8T-4177 | 4 | BOLT (L=90mm) | | | | | |
| | 47 | 8T-4191 | 1 | BOLT (L=16mm) | | | | | |
| | 48 | 8T-4192 | 4 | BOLT (L=25mm) | | | | | |
| | 49 | 8T-4223 | 4 | WASHER | | | | | |
| | 50 | 8T-4224 | 4 | WASHER | | | | | |
| | 51 | 8T-6466 | 1 | BOLT (L=60mm) | | | | | |

Y—SEE SEPARATE ILLUSTRATION

H99655E 08

## 260-7974 LINES GP-PILOT

Part of 259-7493-Page444
171-0188-Page575,165-9549-Page586
An Attachment

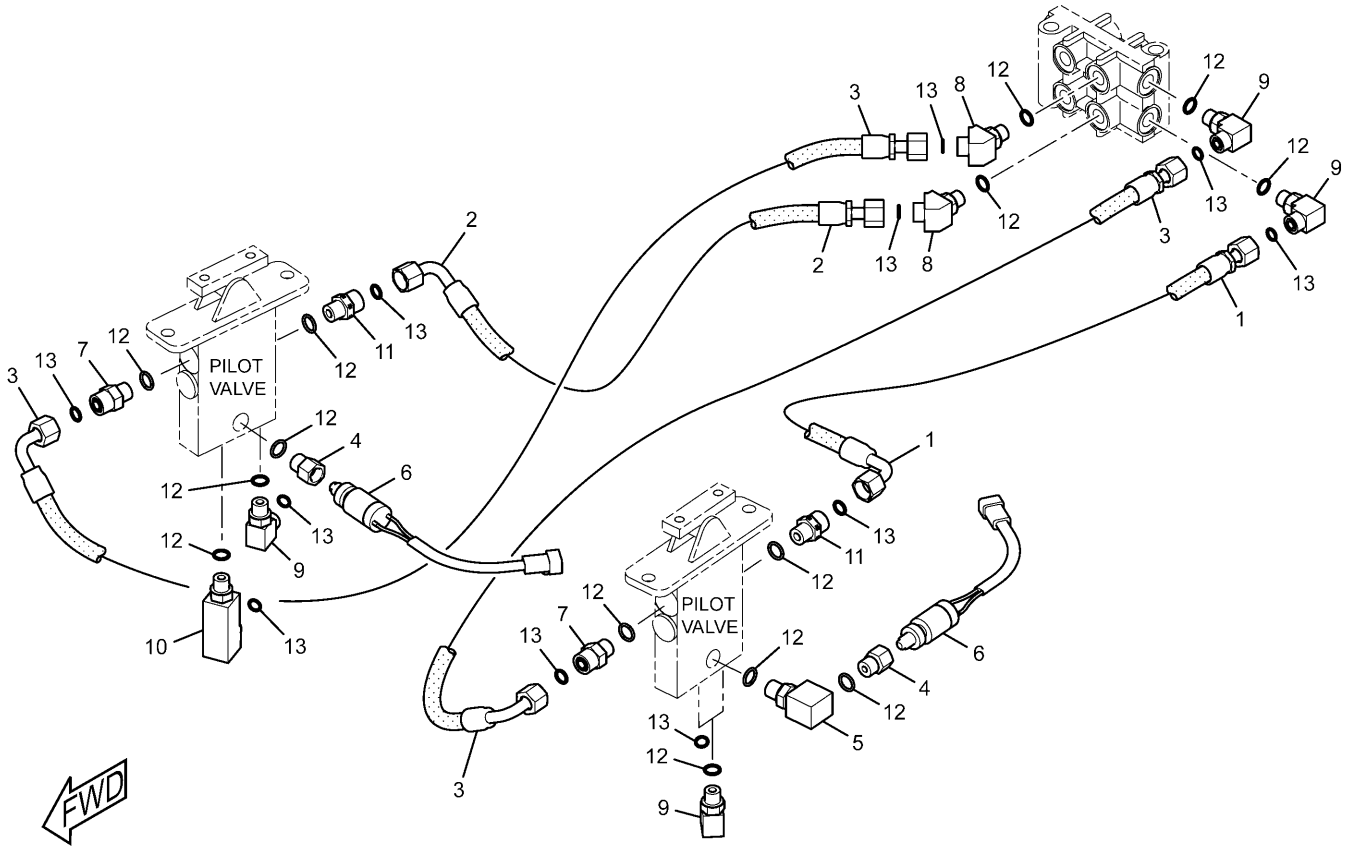


| NOTE | No. | PART No. | QTY | PART NAME | NOTE | No. | PART No. | QTY | PART NAME |
|---|---|---|---|---|---|---|---|---|---|
| | 1 | 4I-1025 | 1 | HOSE AS (NOM 06, L=300mm) | | | | | |
| | 2 | 4I-1704 | 1 | HOSE AS (NOM 06, L=330mm) | | | | | |
| | 3 | 087-4402 | 2 | HOSE AS (NOM 06, L=480mm) | | | | | |
| | 4 | 108-7516 | 2 | FITTING | | | | | |
| | 5 | 085-7356 | 1 | FITTING | | | | | |
| | 6 | 309-5769 | 2 | SWITCH AS (PRESSURE) | | | | | |
| | | 102-8802 | 1 | RECEPTACLE KIT | | | | | |
| | | 9X-3401 | 2 | PIN | | | | | |
| | 7 | 6V-8636 | 2 | CONNECTOR | | | | | |
| | 8 | 6V-9001 | 2 | ELBOW | | | | | |
| | 9 | 6V-8724 | 5 | ELBOW | | | | | |
| | 10 | 8T-1905 | 1 | ELBOW | | | | | |
| | 11 | 107-6631 | 2 | CONNECTOR | | | | | |
| | 12 | 3J-1907 | 15 | SEAL-O-RING (ID=11.89mm) | | | | | |
| | 13 | 6V-8397 | 12 | SEAL-O-RING (OD=12.83mm) | | | | | |

H99594E 03

## 255-1663 LINES GP-PILOT

Combined Function/2 Pumps (Medium Pressure)

Part of 259-7495-Page445

An Attachment

# MEMORANDA

# HYDRAULIC SYSTEM

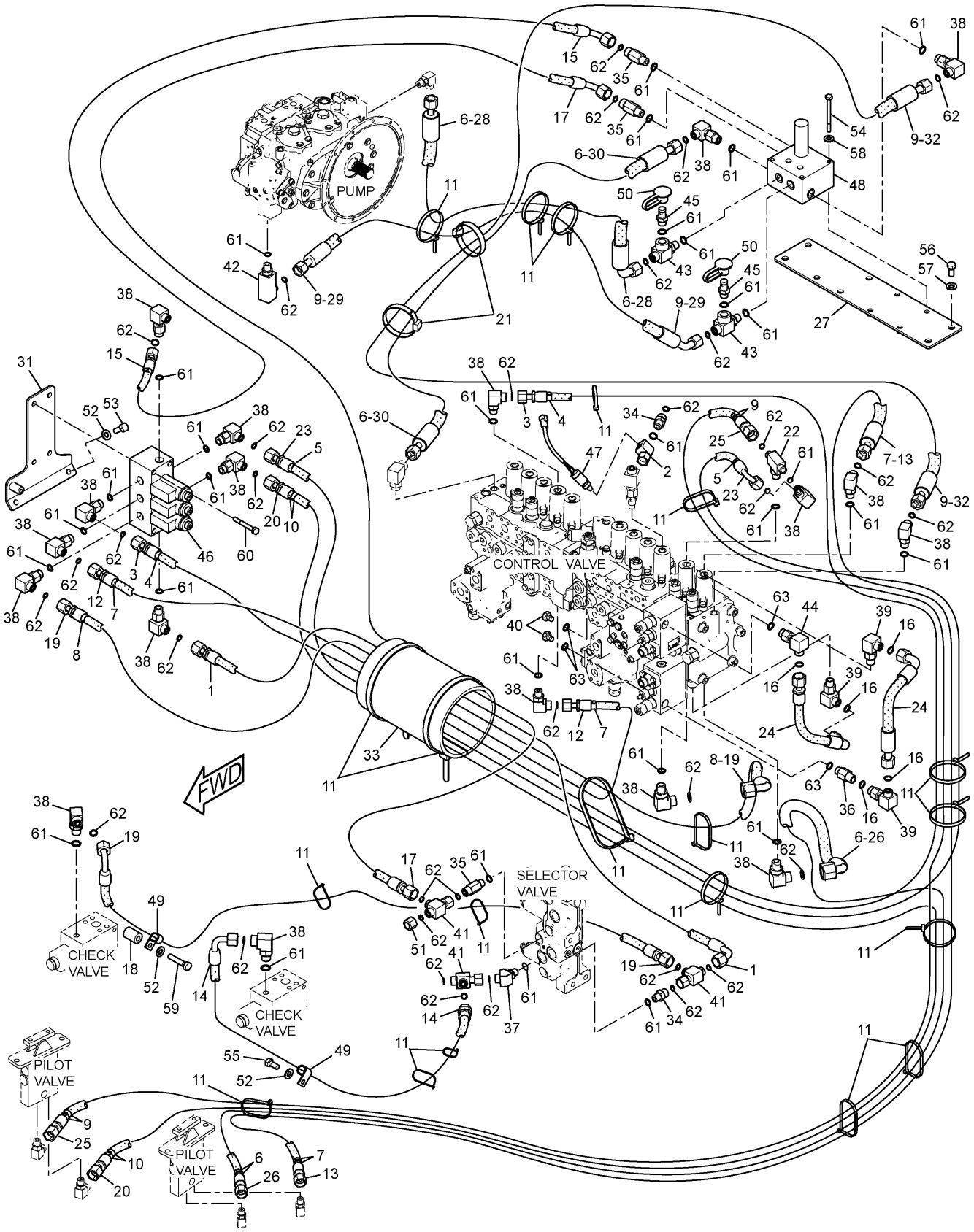


## 260-7986 LINES GP-PILOT

Part of 259-7495-Page445
171-0188-Page575,165-9549-Page586
An Attachment

# HYDRAULIC SYSTEM

| NOTE | No. | PART No. | QTY | PART NAME |
|---|---|---|---|---|
| | 1 | 4I-1878 | 1 | HOSE AS (NOM 06, L=1380mm) |
| | 2 | 4I-3941 | 1 | FITTING AS |
| | 3 | 4I-3988 | 1 | HOSE AS (NOM 06, L=2250mm) |
| | 4 | 4I-9521 | 2 | BAND (L1,RED) |
| | 5 | 4I-9522 | 2 | BAND (L2,YELLOW) |
| | 6 | 4I-9523 | 8 | BAND (L3,BLUE) |
| | 7 | 4I-9524 | 6 | BAND (L4,BROWN) |
| | 8 | 4I-9525 | 2 | BAND (R1,ORANGE) |
| | 9 | 4I-9527 | 8 | BAND (R3,GREEN) |
| | 10 | 4I-9528 | 4 | BAND (R4,PURPLE) |
| | 11 | 7K-1181 | 19 | STRAP |
| | 12 | 7Y-4199 | 1 | HOSE AS (NOM 06, L=1800mm) |
| | 13 | 7Y-8309 | 1 | HOSE AS (NOM 06, L=3850mm) |
| | 14 | 087-5764 | 1 | HOSE AS (NOM 06, L=1550mm) |
| | 15 | 087-5772 | 1 | HOSE AS (NOM 06, L=1000mm) |
| | 16 | 7J-9108 | 5 | SEAL-O-RING (OD=19.28mm) |
| | 17 | 111-0988 | 1 | HOSE AS (NOM 06, L=1950mm) |
| | 18 | 118-9902 | 1 | SPACER |
| | 19 | 108-7313 | 2 | HOSE AS (NOM 06, L=1900mm) |
| | 20 | 134-6921 | 1 | HOSE AS (NOM 06, L=3950mm) |
| | 21 | 136-0207 | 2 | STRAP |
| | 22 | 7X-2459 | 1 | TEE |
| | 23 | 179-7616 | 1 | HOSE AS (NOM 06, L=2500mm) |
| | 24 | 199-1609 | 2 | HOSE AS (NOM 10, L=430mm) |
| | 25 | 212-5423 | 1 | HOSE AS (NOM 06, L=3450mm) |
| | 26 | 7I-1105 | 1 | HOSE AS (NOM 06, L=3250mm) |
| | 27 | 266-1108 | 1 | SUPPORT AS |
| | 28 | 266-1133 | 1 | HOSE AS (NOM 06, L=420mm) |
| | 29 | 278-6470 | 1 | HOSE AS (NOM 06, L=550mm) |
| | 30 | 266-1139 | 1 | HOSE AS (NOM 06, L=1640mm) |
| | 31 | 286-6561 | 1 | SUPPORT AS |
| | 32 | 266-1179 | 1 | HOSE AS (NOM 06, L=2470mm) |
| | 33 | 124-1008 | 1 | GUARD |
| | 34 | 6V-8636 | 2 | CONNECTOR |
| | 35 | 8T-0075 | 3 | CONNECTOR |
| | 36 | 6V-8632 | 1 | CONNECTOR |
| | 37 | 6V-9001 | 1 | ELBOW |
| | 38 | 6V-8724 | 18 | ELBOW |
| | 39 | 6V-9852 | 3 | ELBOW |
| | 40 | 9S-4185 | 2 | PLUG |
| | 41 | 6V-9836 | 3 | TEE |
| | 42 | 8T-1905 | 1 | ELBOW |
| | 43 | 3E-2310 | 2 | TEE |
| | 44 | 6V-8722 | 1 | ELBOW |
| | 45 | 6V-3965 | 2 | NIPPLE AS |
| Y | 46 | 165-9549 | 1 | VALVE GP |
| | 47 | 309-5769 | 1 | SWITCH AS (PRESSURE) |
| | | 102-8802 | 1 | RECEPTACLE KIT |
| | | 9X-3401 | 2 | PIN |
| Y | 48 | 171-0188 | 1 | VALVE GP |
| | 49 | 6D-3479 | 2 | CLIP |
| | 50 | 6V-0852 | 2 | CAP |
| | 51 | 6V-9829 | 1 | CAP AS |
| | 52 | 8T-4121 | 4 | WASHER |
| | 53 | 8T-4136 | 2 | BOLT (L=25mm) |
| | 54 | 8T-4177 | 4 | BOLT (L=90mm) |
| | 55 | 8T-4191 | 1 | BOLT (L=16mm) |
| | 56 | 8T-4192 | 4 | BOLT (L=25mm) |
| | 57 | 8T-4223 | 4 | WASHER |
| | 58 | 8T-4224 | 4 | WASHER |
| | 59 | 8T-6466 | 1 | BOLT (L=60mm) |
| | 60 | 8T-6870 | 4 | BOLT (L=70mm) |
| | 61 | 3J-1907 | 30 | SEAL-O-RING (ID=11.89mm) |
| | 62 | 6V-8397 | 34 | SEAL-O-RING (OD=12.83mm) |
| | 63 | 3K-0360 | 4 | SEAL-O-RING (ID=16.36mm) |

Y—SEE SEPARATE ILLUSTRATION

H99661E 09

## 260-7986 LINES GP-PILOT

Part of 259-7495-Page445
171-0188-Page575,165-9549-Page586
An Attachment

# HYDRAULIC SYSTEM

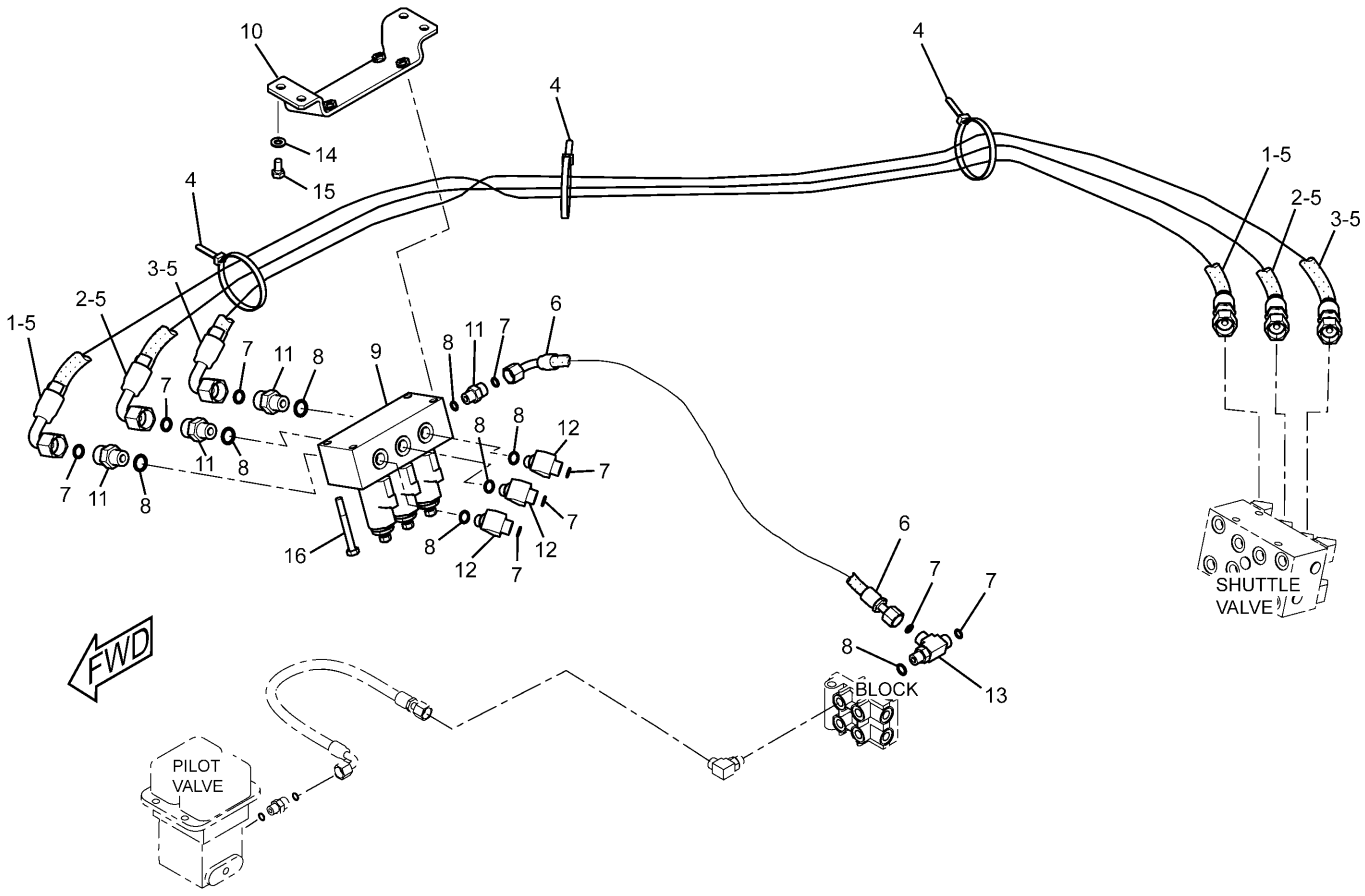


| NOTE | No. | PART No. | QTY | PART NAME | NOTE | No. | PART No. | QTY | PART NAME |
|---|---|---|---|---|---|---|---|---|---|
| | 1 | 4I-9521 | 2 | BAND (L1,RED) | | | | | |
| | 2 | 4I-9525 | 2 | BAND (R1,ORANGE) | | | | | |
| | 3 | 4I-9528 | 2 | BAND (R4,PURPLE) | | | | | |
| | 4 | 7K-1181 | 3 | STRAP | | | | | |
| | 5 | 087-5774 | 3 | HOSE AS (NOM 06, L=1060mm) | | | | | |
| | 6 | 4I-1025 | 1 | HOSE AS (NOM 06, L=300mm) | | | | | |
| | 7 | 6V-8397 | 9 | SEAL-O-RING (OD=12.83mm) | | | | | |
| | 8 | 3J-1907 | 8 | SEAL-O-RING (ID=11.89mm) | | | | | |
| Y | 9 | 260-4444 | 1 | VALVE GP | | | | | |
| | 10 | 275-1619 | 1 | SUPPORT AS | | | | | |
| | 11 | 6V-8636 | 4 | CONNECTOR | | | | | |
| | 12 | 6V-9001 | 3 | ELBOW | | | | | |
| | 13 | 6V-8781 | 1 | TEE | | | | | |
| | 14 | 8T-4121 | 4 | WASHER | | | | | |
| | 15 | 8T-4137 | 4 | BOLT (L=20mm) | | | | | |
| | 16 | 8T-6870 | 4 | BOLT (L=70mm) | | | | | |

Y—SEE SEPARATE ILLUSTRATION

H92346E 03

## 272-4170 LINES GP-PILOT

S/N BWZ 1-Up, DFB 1-Up
Part of 279-2732-Page11,279-2733-Page12
260-4444-Page587
An Attachment

# MEMORANDA

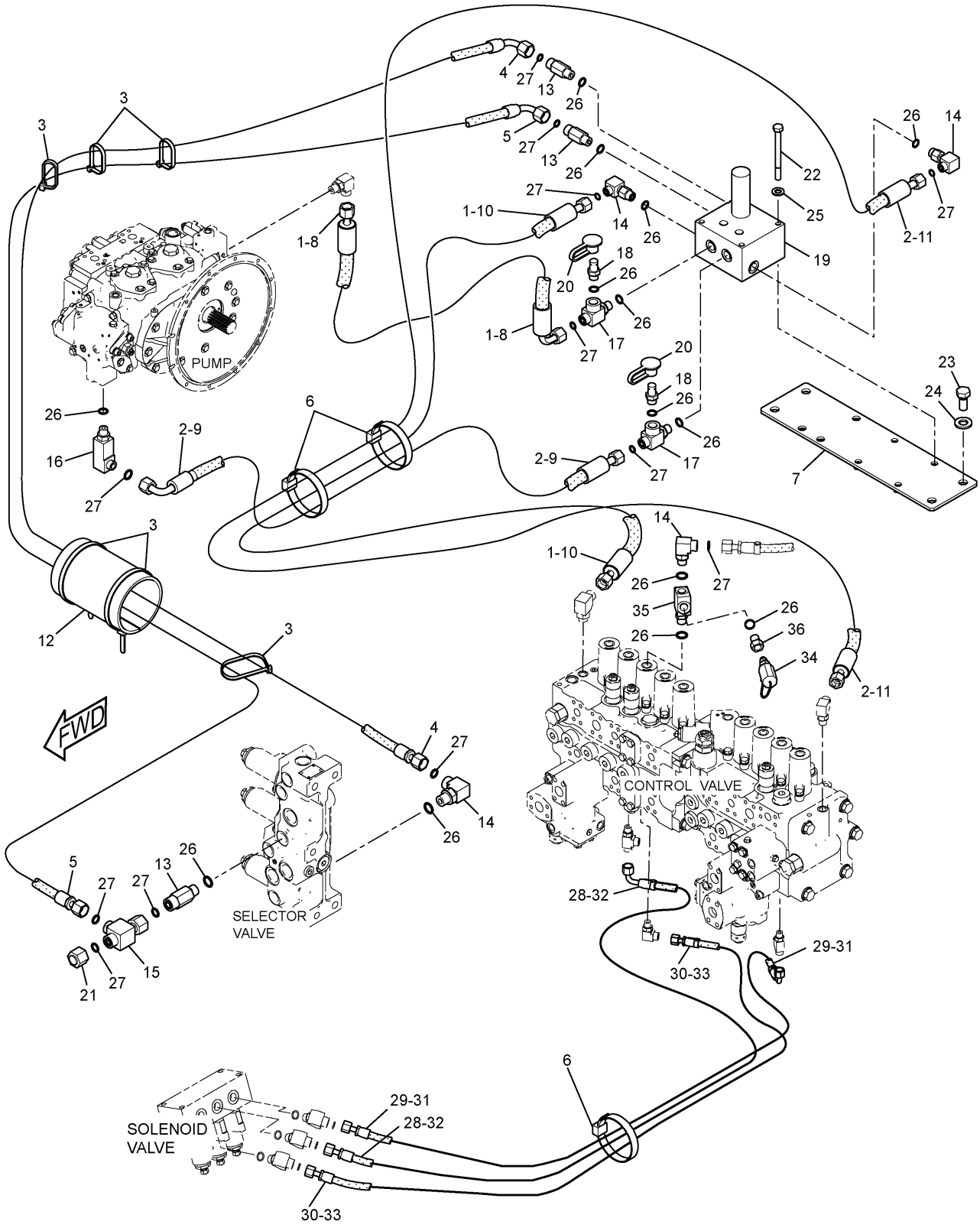


## 275-1539 LINES GP-PILOT

S/N BWZ 1-Up, DFB 1-Up
Part of 279-2732-Page11,279-2733-Page12
171-0188-Page575
An Attachment

# HYDRAULIC SYSTEM

| NOTE | No. | PART No. | QTY | PART NAME | NOTE | No. | PART No. | QTY | PART NAME |
|---|---|---|---|---|---|---|---|---|---|
| | 1 | 4I-9523 | 4 | BAND (L3,BLUE) | | | | | |
| | 2 | 4I-9527 | 4 | BAND (R3,GREEN) | | | | | |
| | 3 | 7K-1181 | 6 | STRAP | | | | | |
| | 4 | 108-7375 | 1 | HOSE AS (NOM 06, L=1800mm) | | | | | |
| | 5 | 111-0988 | 1 | HOSE AS (NOM 06, L=1950mm) | | | | | |
| | 6 | 136-0207 | 2 | STRAP | | | | | |
| | 7 | 266-1108 | 1 | SUPPORT AS | | | | | |
| | 8 | 266-1133 | 1 | HOSE AS (NOM 06, L=420mm) | | | | | |
| | 9 | 266-1136 | 1 | HOSE AS (NOM 06, L=570mm) | | | | | |
| | 10 | 266-1139 | 1 | HOSE AS (NOM 06, L=1640mm) | | | | | |
| | 11 | 266-1179 | 1 | HOSE AS (NOM 06, L=2470mm) | | | | | |
| | 12 | 124-1008 | 1 | GUARD | | | | | |
| | 13 | 8T-0075 | 3 | CONNECTOR | | | | | |
| | 14 | 6V-8724 | 4 | ELBOW | | | | | |
| | 15 | 6V-9836 | 1 | TEE | | | | | |
| | 16 | 8T-1905 | 1 | ELBOW | | | | | |
| | 17 | 3E-2310 | 2 | TEE | | | | | |
| | 18 | 6V-3965 | 2 | NIPPLE AS | | | | | |
| Y | 19 | 171-0188 | 1 | VALVE GP | | | | | |
| | 20 | 6V-0852 | 2 | CAP | | | | | |
| | 21 | 6V-9829 | 1 | CAP AS | | | | | |
| | 22 | 8T-4177 | 4 | BOLT (L=90mm) | | | | | |
| | 23 | 8T-4192 | 4 | BOLT (L=25mm) | | | | | |
| | 24 | 8T-4223 | 4 | WASHER | | | | | |
| | 25 | 8T-4224 | 4 | WASHER | | | | | |
| | 26 | 3J-1907 | 14 | SEAL-O-RING (ID=11.89mm) | | | | | |
| | 27 | 6V-8397 | 12 | SEAL-O-RING (OD=12.83mm) | | | | | |
| | 28 | 4I-0716 | 1 | HOSE AS (NOM 06, L=3000mm) | | | | | |
| E | | 205-3717 | | HOSE…(294cm) | | | | | |
| | 29 | 5I-8853 | 1 | HOSE AS (NOM 06, L=2750mm) | | | | | |
| | 30 | 102-7685 | 1 | HOSE AS (NOM 06, L=3000mm) | | | | | |
| | 31 | 4I-9521 | 2 | BAND (L1,RED) | | | | | |
| | 32 | 4I-9525 | 2 | BAND (R1,ORANGE) | | | | | |
| | 33 | 4I-9528 | 2 | BAND (R4,PURPLE) | | | | | |
| | 34 | 309-5795 | 1 | SWITCH AS (PRESSURE) | | | | | |
| | | 102-8802 | 1 | RECEPTACLE KIT | | | | | |
| | | 9X-3401 | 2 | PIN | | | | | |
| | 35 | 4I-1694 | 1 | CONNECTOR | | | | | |
| | 36 | 108-7516 | 1 | FITTING | | | | | |

E—ORDER BY THE CENTIMETER

Y—SEE SEPARATE ILLUSTRATION

H99662E 03

## 275-1539 LINES GP-PILOT

S/N BWZ 1-Up, DFB 1-Up

Part of 279-2732-Page11,279-2733-Page12

171-0188-Page575

An Attachment

# HYDRAULIC SYSTEM

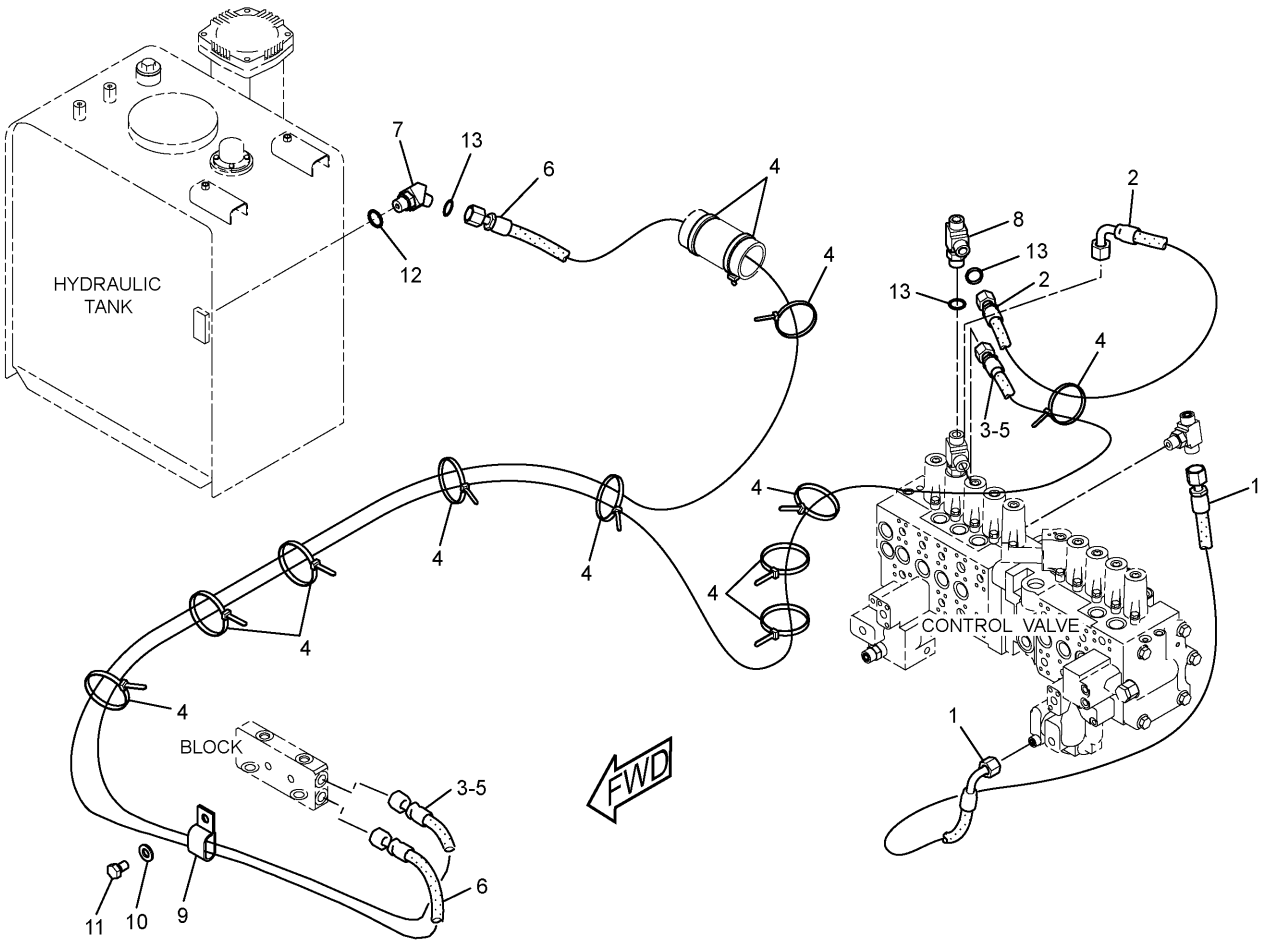


| NOTE | No. | PART No. | QTY | PART NAME | NOTE | No. | PART No. | QTY | PART NAME |
|---|---|---|---|---|---|---|---|---|---|
| | 1 | 4I-0800 | 1 | HOSE AS (NOM 06, L=1300mm) | | | | | |
| | 2 | 5I-8825 | 1 | HOSE AS (NOM 06, L=750mm) | | | | | |
| | 3 | 4I-3981 | 1 | HOSE AS (NOM 06, L=2750mm) | | | | | |
| | 4 | 7K-1181 | 12 | STRAP | | | | | |
| | 5 | 133-5813 | 2 | BAND (P,GRAY) | | | | | |
| | 6 | 199-1863 | 1 | HOSE AS (NOM 06, L=3380mm) | | | | | |
| | 7 | 6V-9876 | 1 | ELBOW | | | | | |
| | 8 | 6V-9836 | 1 | TEE | | | | | |
| | 9 | 5K-8451 | 1 | CLIP | | | | | |
| | 10 | 8T-4121 | 1 | WASHER | | | | | |
| | 11 | 8T-4191 | 1 | BOLT (L=16mm) | | | | | |
| | 12 | 3K-0360 | 1 | SEAL-O-RING (ID=16.36mm) | | | | | |
| | 13 | 6V-8397 | 3 | SEAL-O-RING (OD=12.83mm) | | | | | |

H98063E 01

## 282-7162 LINES GP-PILOT

BOOM LOWERING CONTROL
S/N BWZ 1-Up, DFB 1-Up
Part of 270-5974-Page447
An Attachment

# HYDRAULIC SYSTEM

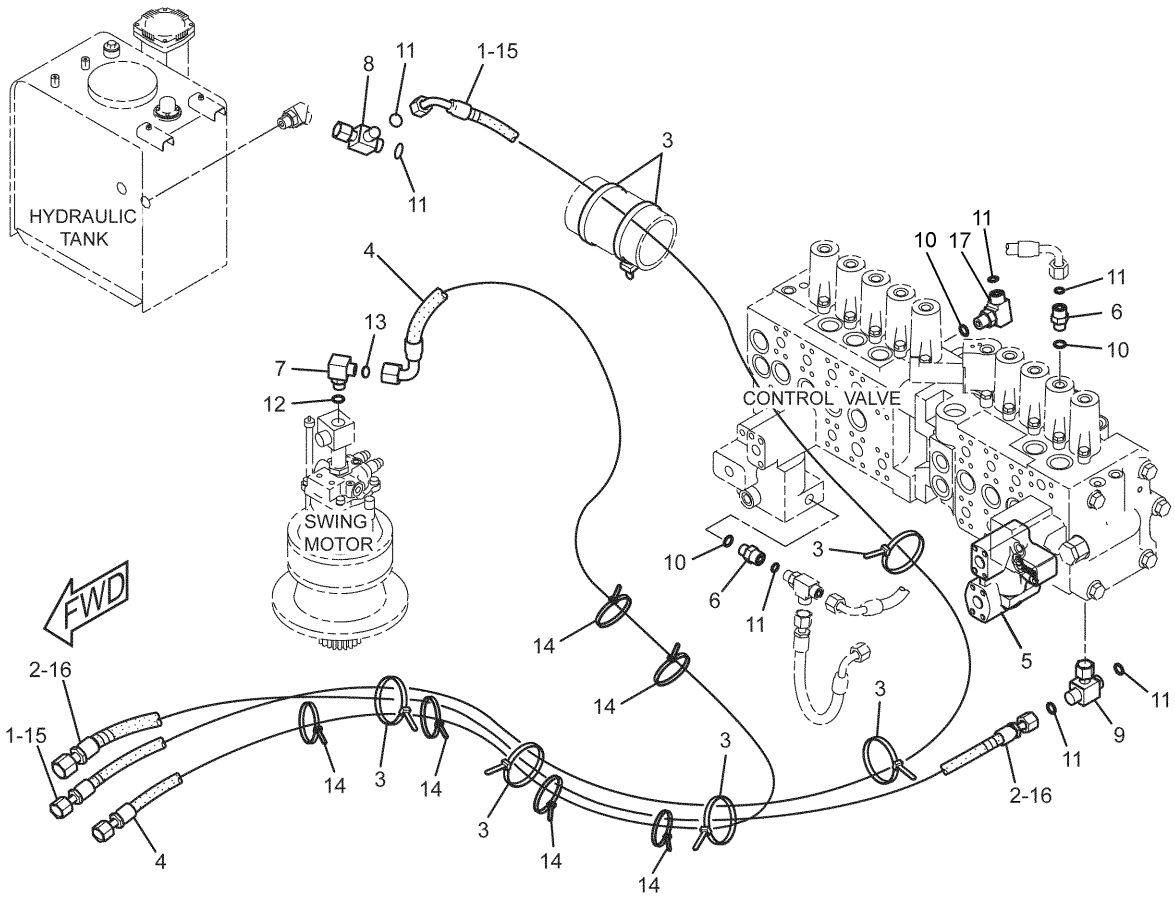


| NOTE | No. | PART No. | QTY | PART NAME | NOTE | No. | PART No. | QTY | PART NAME |
|---|---|---|---|---|---|---|---|---|---|
| | 1 | 275-1712 | 1 | HOSE AS (NOM 06, L=3000mm) | | | | | |
| E | | 7I-7439 | | GUARD…(139cm) | | | | | |
| | 2 | 275-1713 | 1 | HOSE AS (NOM 06, L=1600mm) | | | | | |
| E | | 7I-7439 | | GUARD…(160cm) | | | | | |
| | 3 | 7K-1181 | 7 | STRAP | | | | | |
| | 4 | 282-7079 | 1 | HOSE AS | | | | | |
| E | | 7I-7439 | | GUARD…(220cm) | | | | | |
| | 5 | 201-9379 | 1 | BLOCK | | | | | |
| | 6 | 6V-8636 | 2 | CONNECTOR | | | | | |
| | 7 | 6V-8625 | 1 | ELBOW | | | | | |
| | 8 | 6V-9836 | 1 | TEE | | | | | |
| | 9 | 6V-9843 | 1 | TEE | | | | | |
| | 10 | 3J-1907 | 3 | SEAL-O-RING (ID=11.89mm) | | | | | |
| | 11 | 6V-8397 | 7 | SEAL-O-RING (OD=12.83mm) | | | | | |
| | 12 | 3K-0360 | 1 | SEAL-O-RING (ID=16.36mm) | | | | | |
| | 13 | 6V-8398 | 1 | SEAL-O-RING (OD=16.03mm) | | | | | |
| | 14 | 136-0207 | 6 | STRAP | | | | | |
| | 15 | 133-5813 | 2 | BAND (P,GRAY) | | | | | |
| | 16 | 4I-9523 | 4 | BAND (L3,BLUE) | | | | | |
| | 17 | 6V-8724 | 1 | ELBOW | | | | | |

E—ORDER BY THE CENTIMETER

H96784E 05

## 260-7970 LINES GP-PILOT

S/N BWZ 1-Up, DFB 1-Up
Part of 239-8677-Page447
An Attachment

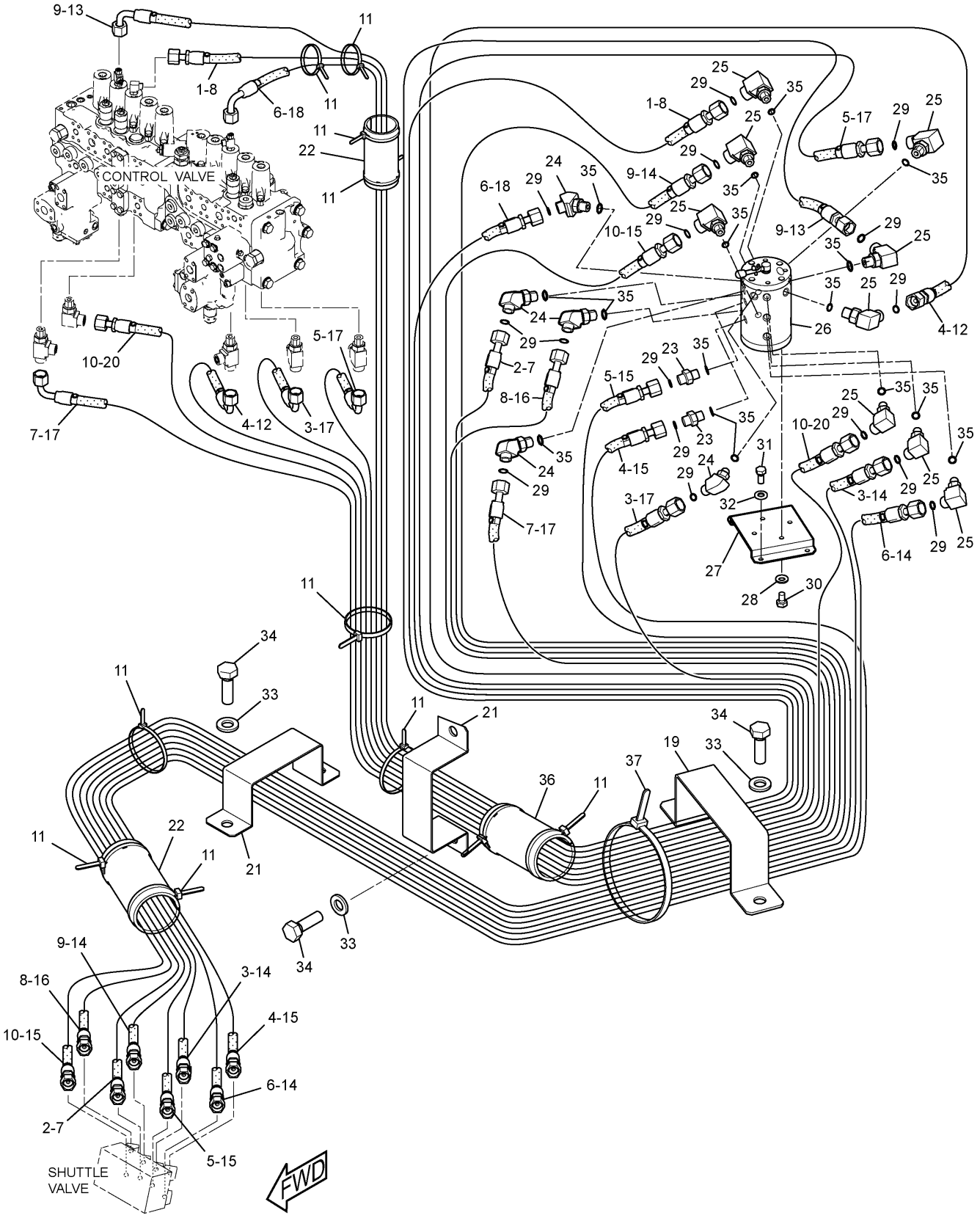


## 260-7966 LINES GP-PILOT

4 Way Valve

Part of 259-7483-Page446

165-9470-Page572

An Attachment

# HYDRAULIC SYSTEM

| NOTE | No. | PART No. | QTY | PART NAME | NOTE | No. | PART No. | QTY | PART NAME |
|---|---|---|---|---|---|---|---|---|---|
| | 1 | 4I-3988 | 1 | HOSE AS (NOM 06, L=2250mm) | | | | | |
| | 2 | 4I-3991 | 1 | HOSE AS (NOM 06, L=2100mm) | | | | | |
| | 3 | 4I-9521 | 4 | BAND (L1,RED) | | | | | |
| | 4 | 4I-9522 | 4 | BAND (L2,YELLOW) | | | | | |
| | 5 | 4I-9523 | 4 | BAND (L3,BLUE) | | | | | |
| | 6 | 4I-9524 | 4 | BAND (L4,BROWN) | | | | | |
| | 7 | 4I-9525 | 4 | BAND (R1,ORANGE) | | | | | |
| | 8 | 4I-9526 | 4 | BAND (R2,WHITE) | | | | | |
| | 9 | 4I-9527 | 4 | BAND (R3,GREEN) | | | | | |
| | 10 | 4I-9528 | 4 | BAND (R4,PURPLE) | | | | | |
| | 11 | 7K-1181 | 11 | STRAP | | | | | |
| | 12 | 7Y-8478 | 1 | HOSE AS (NOM 06, L=2100mm) | | | | | |
| | 13 | 087-5780 | 1 | HOSE AS (NOM 06, L=2550mm) | | | | | |
| | 14 | 104-8774 | 3 | HOSE AS (NOM 06, L=2200mm) | | | | | |
| | 15 | 104-8783 | 3 | HOSE AS (NOM 06, L=2150mm) | | | | | |
| | 16 | 108-7360 | 1 | HOSE AS (NOM 06, L=2050mm) | | | | | |
| | 17 | 108-7375 | 3 | HOSE AS (NOM 06, L=1800mm) | | | | | |
| | 18 | 111-6752 | 1 | HOSE AS (NOM 06, L=2200mm) | | | | | |
| | 19 | 176-4366 | 1 | SUPPORT | | | | | |
| | 20 | 184-9156 | 1 | HOSE AS (NOM 06, L=1830mm) | | | | | |
| | 21 | 255-1781 | 2 | SUPPORT | | | | | |
| | 22 | 115-8645 | 2 | GUARD | | | | | |
| | 23 | 6V-8636 | 2 | CONNECTOR | | | | | |
| | 24 | 6V-9001 | 5 | ELBOW | | | | | |
| | 25 | 6V-8724 | 9 | ELBOW | | | | | |
| Y | 26 | 165-9470 | 1 | VALVE GP | | | | | |
| | 27 | 176-4684 | 1 | SUPPORT | | | | | |
| | 28 | 8T-4121 | 4 | WASHER | | | | | |
| | 29 | 6V-8397 | 16 | SEAL-O-RING (OD=12.83mm) | | | | | |
| | 30 | 8T-4191 | 4 | BOLT (L=16mm) | | | | | |
| | 31 | 8T-4192 | 4 | BOLT (L=25mm) | | | | | |
| | 32 | 8T-4223 | 4 | WASHER | | | | | |
| | 33 | 8T-4224 | 6 | WASHER | | | | | |
| | 34 | 8T-4908 | 6 | BOLT (L=25mm) | | | | | |
| | 35 | 3J-1907 | 16 | SEAL-O-RING (ID=11.89mm) | | | | | |
| | 36 | 104-8903 | 1 | GUARD | | | | | |
| | 37 | 136-0207 | 1 | STRAP | | | | | |

Y—SEE SEPARATE ILLUSTRATION

H96114E 03

## 260-7966 LINES GP-PILOT

4 Way Valve
Part of 259-7483-Page446
165-9470-Page572
An Attachment

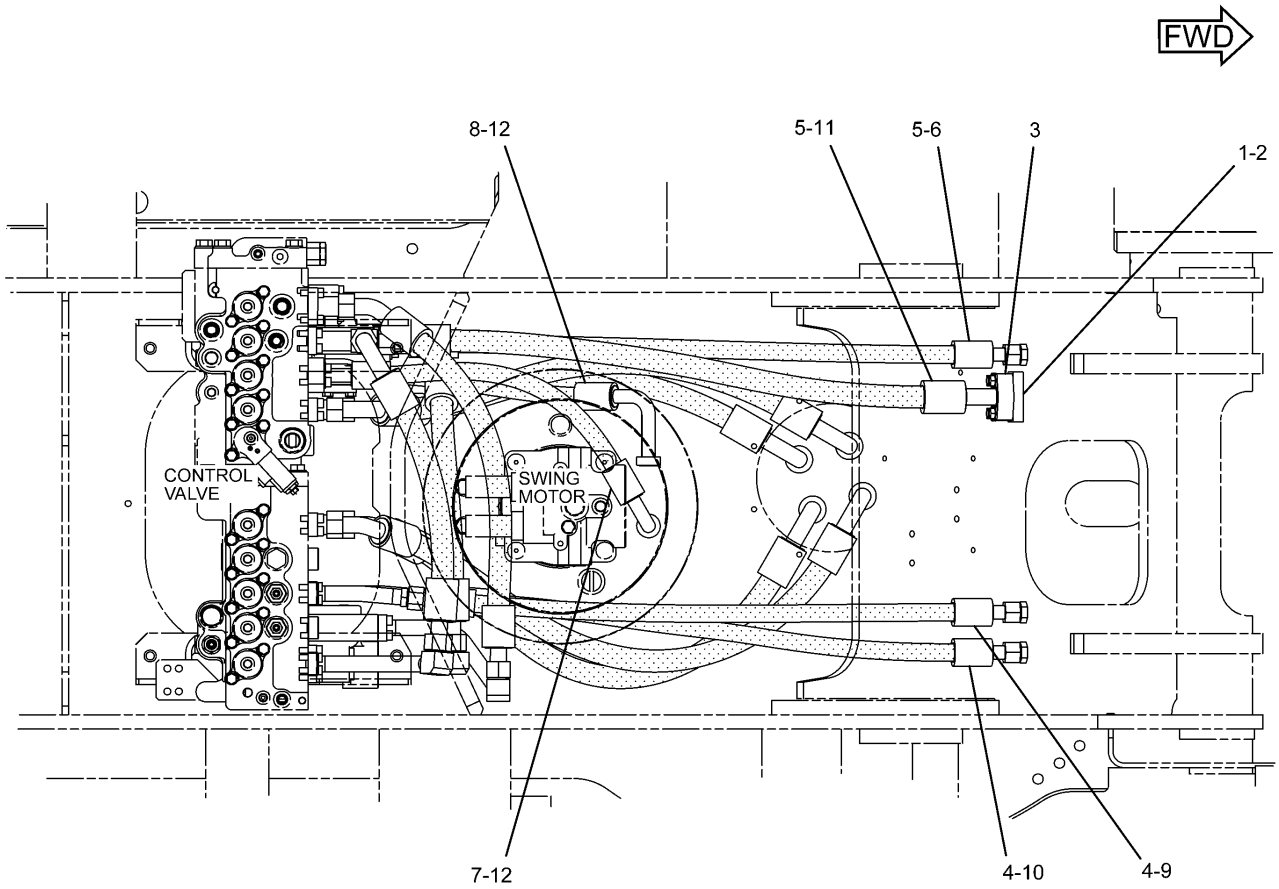


TOP VIEW

H93657E 02

239-1714 LINES & CONTROL GP-FRONT (1/2)

# HYDRAULIC SYSTEM

| NOTE | No. | PART No. | QTY | PART NAME | NOTE | No. | PART No. | QTY | PART NAME |
|---|---|---|---|---|---|---|---|---|---|
| | 1 | 8T-4223 | 4 | WASHER | | | | | |
| | 2 | 8T-4194 | 4 | BOLT (L=50mm) | | | | | |
| | 3 | 6V-0400 | 2 | FLANGE | | | | | |
| | 4 | 4J-5267 | 2 | SEAL-O-RING (ID=24.99mm) | | | | | |
| | 5 | 1P-3703 | 2 | SEAL | | | | | |
| | 6 | 165-3185 | 1 | HOSE AS | | | | | |
| | 7 | 165-3190 | 1 | HOSE AS | | | | | |
| | 8 | 165-3194 | 1 | HOSE AS | | | | | |
| | 9 | 236-3212 | 1 | HOSE GP | | | | | |
| E | | 7Y-5074 | | GUARD···(154cm) | | | | | |
| | 10 | 236-3213 | 1 | HOSE GP | | | | | |
| E | | 7Y-5074 | | GUARD···(162cm) | | | | | |
| | 11 | 260-8000 | 1 | HOSE AS | | | | | |
| | 12 | 1P-3702 | 4 | SEAL | | | | | |

E—ORDER BY THE CENTIMETER

H93657E 02

## 239-1714 LINES & CONTROL GP-FRONT (1/2)

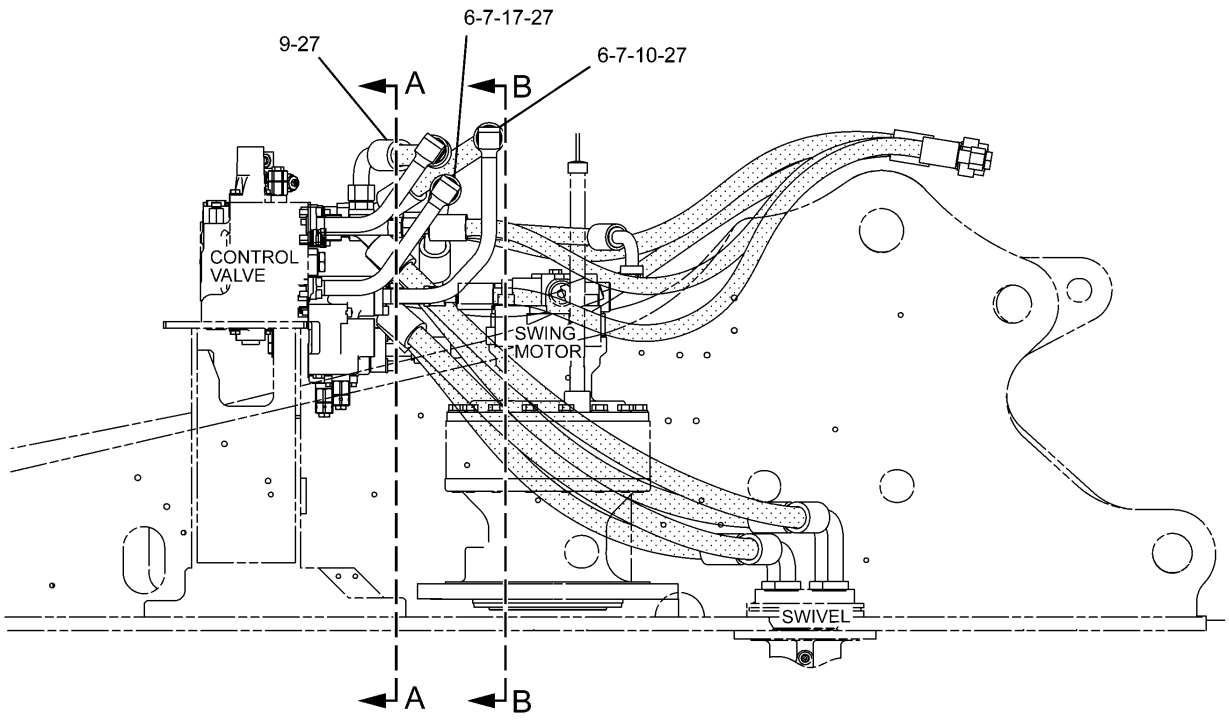


RIGHT SIDE VIEW

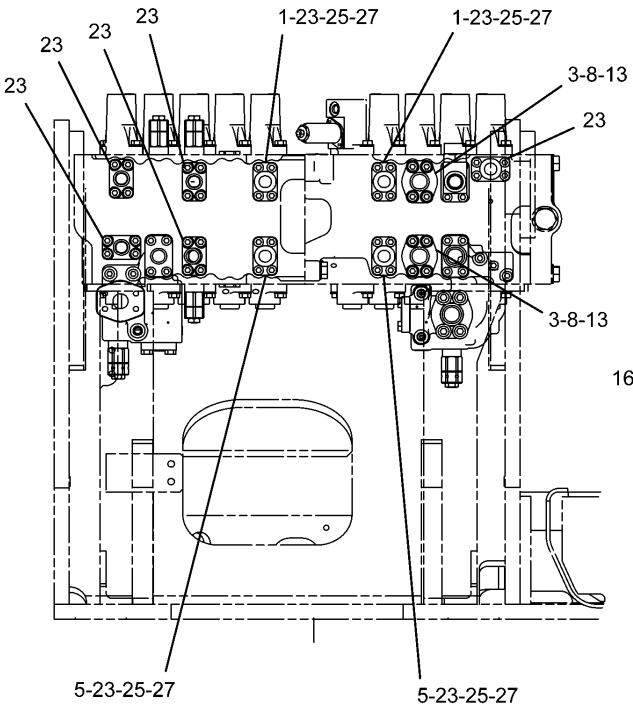


A – A

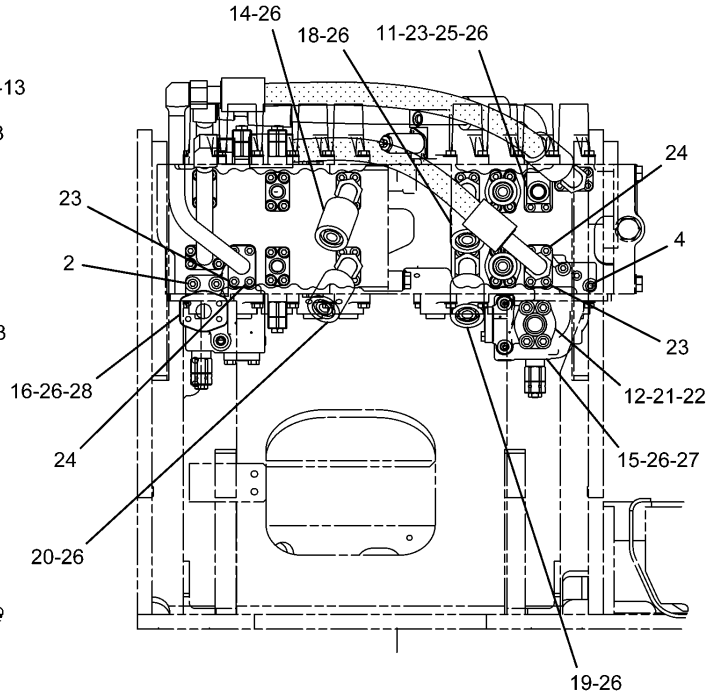


B – B

H93658E 02

**239-1714 LINES & CONTROL GP-FRONT (2/2)**

255-5680-Page568,255-5683-Page570

# HYDRAULIC SYSTEM

| NOTE | No. | PART No. | QTY | PART NAME | NOTE | No. | PART No. | QTY | PART NAME |
|---|---|---|---|---|---|---|---|---|---|
| | 1 | 7Y-3730 | 2 | FLANGE | | | | | |
| | 2 | 101-7403 | 2 | BOLT (L=80mm) | | | | | |
| | 3 | 105-3477 | 8 | BOLT (L=45mm) | | | | | |
| | 4 | 105-3483 | 2 | BOLT (L=70mm) | | | | | |
| | 5 | 113-6479 | 2 | FLANGE | | | | | |
| | 6 | 4J-0520 | 2 | SEAL-O-RING (ID=32.92mm) | | | | | |
| | 7 | 1P-4577 | 4 | FLANGE | | | | | |
| | 8 | 8T-9403 | 4 | FLANGE | | | | | |
| | 9 | 168-9760 | 1 | HOSE AS | | | | | |
| | 10 | 168-9762 | 1 | HOSE AS | | | | | |
| | 11 | 214-4511 | 1 | FLANGE AS | | | | | |
| | | 5K-9090 | 1 | SEAL-O-RING (OD=27.22mm) | | | | | |
| | 12 | 8T-4223 | 4 | WASHER | | | | | |
| | 13 | 8T-4121 | 8 | WASHER | | | | | |
| | 14 | 298-5672 | 1 | HOSE AS | | | | | |
| Y | 15 | 255-5680 | 1 | VALVE GP | | | | | |
| Y | 16 | 255-5683 | 1 | VALVE GP | | | | | |
| | 17 | 260-7912 | 1 | HOSE AS | | | | | |
| | 18 | 260-7988 | 1 | HOSE AS | | | | | |
| | 19 | 260-7992 | 1 | HOSE AS | | | | | |
| | 20 | 260-7996 | 1 | HOSE AS | | | | | |
| | 21 | 6V-0400 | 2 | FLANGE | | | | | |
| | 22 | 101-7397 | 4 | BOLT (L=50mm) | | | | | |
| | 23 | 101-7404 | 42 | BOLT (L=30mm) | | | | | |
| | 24 | 199-1286 | 6 | BOLT (L=150mm) | | | | | |
| | 25 | 5K-9090 | 5 | SEAL-O-RING (OD=27.22mm) | | | | | |
| | 26 | 1P-3703 | 7 | SEAL | | | | | |
| | 27 | 4J-5267 | 8 | SEAL-O-RING (ID=24.99mm) | | | | | |
| | 28 | 4J-5268 | 1 | SEAL-O-RING (ID=13.94mm) | | | | | |

Y—SEE SEPARATE ILLUSTRATION

H93658E 02

## 239-1714 LINES & CONTROL GP-FRONT (2/2)

255-5680-Page568,255-5683-Page570

# HYDRAULIC SYSTEM

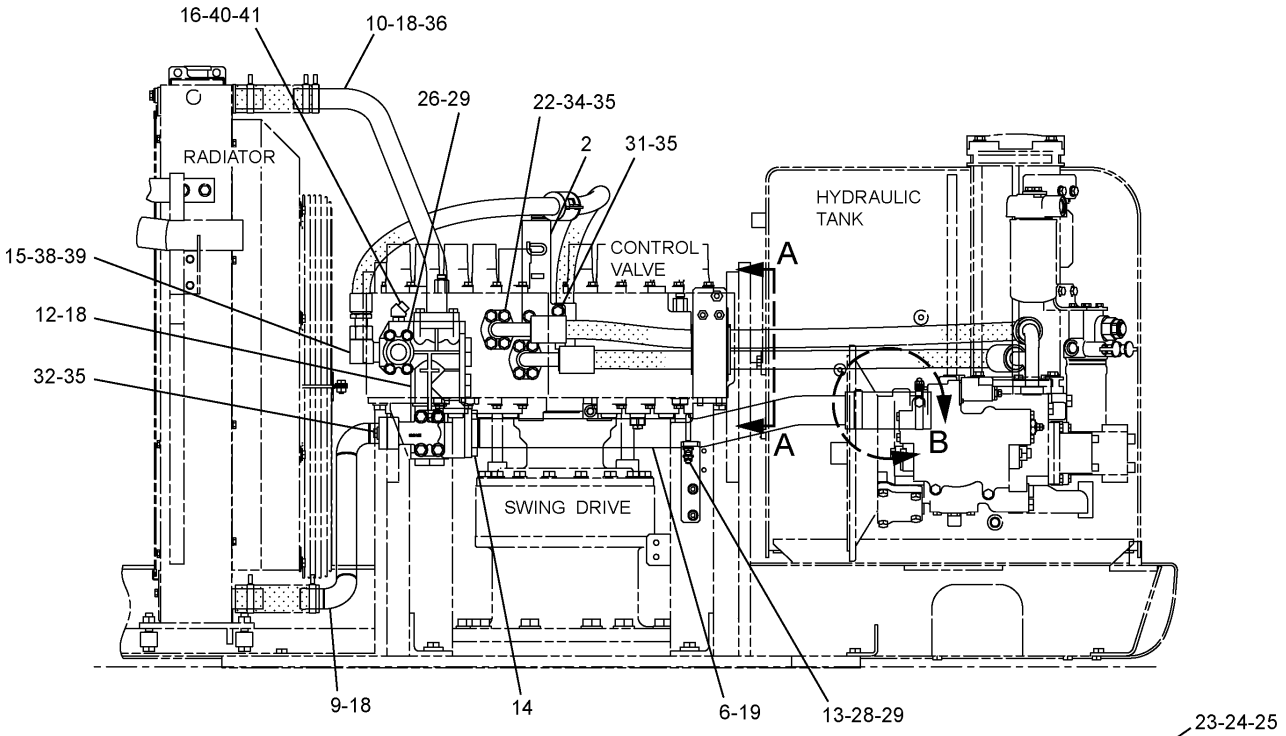


REAR VIEW

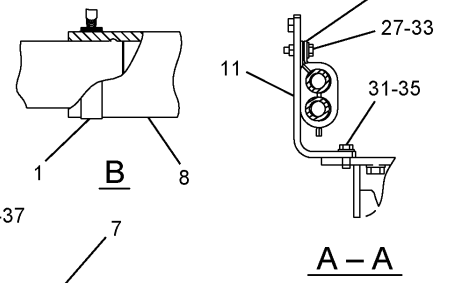





RIGHT SIDE VIEW

H98366E 08

**248-9846 LINES & CONTROL GP-REAR**
297-0462-Page600

# HYDRAULIC SYSTEM

| NOTE | No. | PART No. | QTY | PART NAME | NOTE | No. | PART No. | QTY | PART NAME |
|---|---|---|---|---|---|---|---|---|---|
| | 1 | 144-0367 | 2 | CLAMP | | | | | |
| | 2 | 173-4816 | 1 | SUPPORT AS | | | | | |
| | 3 | 179-7863 | 1 | HOSE AS | | | | | |
| | 4 | 179-7867 | 1 | HOSE AS | | | | | |
| | 5 | 196-0807 | 1 | PLATE | | | | | |
| | 6 | 199-7394 | 1 | PIPE AS | | | | | |
| | 7 | 199-7403 | 1 | HOSE AS | | | | | |
| | 8 | 227-0581 | 1 | HOSE | | | | | |
| | 9 | 266-1037 | 1 | PIPE AS | | | | | |
| | 10 | 266-1045 | 1 | PIPE AS | | | | | |
| | 11 | 266-1055 | 1 | SUPPORT AS | | | | | |
| Y | 12 | 297-0462 | 1 | VALVE GP | | | | | |
| | 13 | 096-4883 | 2 | NUT | | | | | |
| | 14 | 101-7402 | 4 | BOLT (L=30mm) | | | | | |
| | 15 | 6V-9008 | 1 | ELBOW | | | | | |
| | 16 | 6V-9002 | 1 | ELBOW | | | | | |
| | 17 | 1P-3703 | 4 | SEAL | | | | | |
| | 18 | 4J-0524 | 3 | SEAL-O-RING (ID=47.22mm) | | | | | |
| | 19 | 4J-0527 | 1 | SEAL-O-RING (ID=56.74mm) | | | | | |
| | 20 | 5P-7468 | 1 | CLIP | | | | | |
| | 21 | 5P-7469 | 1 | CLIP | | | | | |
| | 22 | 6V-0400 | 4 | FLANGE | | | | | |
| | 23 | 7G-5984 | 1 | CLIP | | | | | |
| | 24 | 7G-5985 | 1 | CLIP | | | | | |
| | 25 | 7G-5986 | 1 | GROMMET | | | | | |
| | 26 | 7X-2544 | 4 | BOLT (L=140mm) | | | | | |
| | 27 | 7X-7729 | 2 | WASHER | | | | | |
| | 28 | 7Y-5247 | 1 | U-BOLT | | | | | |
| | 29 | 8T-4121 | 8 | WASHER | | | | | |
| | 30 | 8T-4136 | 2 | BOLT (L=25mm) | | | | | |
| | 31 | 8T-4139 | 4 | BOLT (L=30mm) | | | | | |
| | 32 | 8T-4183 | 2 | BOLT (L=40mm) | | | | | |
| | 33 | 8T-4186 | 2 | BOLT (L=40mm) | | | | | |
| | 34 | 8T-4194 | 8 | BOLT (L=50mm) | | | | | |
| | 35 | 8T-4223 | 15 | WASHER | | | | | |
| | 36 | 8T-4956 | 5 | BOLT (L=35mm) | | | | | |
| | 37 | 8T-7087 | 1 | GROMMET | | | | | |
| | 38 | 5K-9090 | 1 | SEAL-O-RING (OD=27.22mm) | | | | | |
| | 39 | 7M-8485 | 1 | SEAL-O-RING (ID=29.74mm) | | | | | |
| | 40 | 3K-0360 | 1 | SEAL-O-RING (ID=16.36mm) | | | | | |
| | 41 | 6V-8398 | 1 | SEAL-O-RING (OD=16.03mm) | | | | | |

Y—SEE SEPARATE ILLUSTRATION

H98366E 08

## 248-9846 LINES & CONTROL GP-REAR

297-0462-Page600

# HYDRAULIC SYSTEM

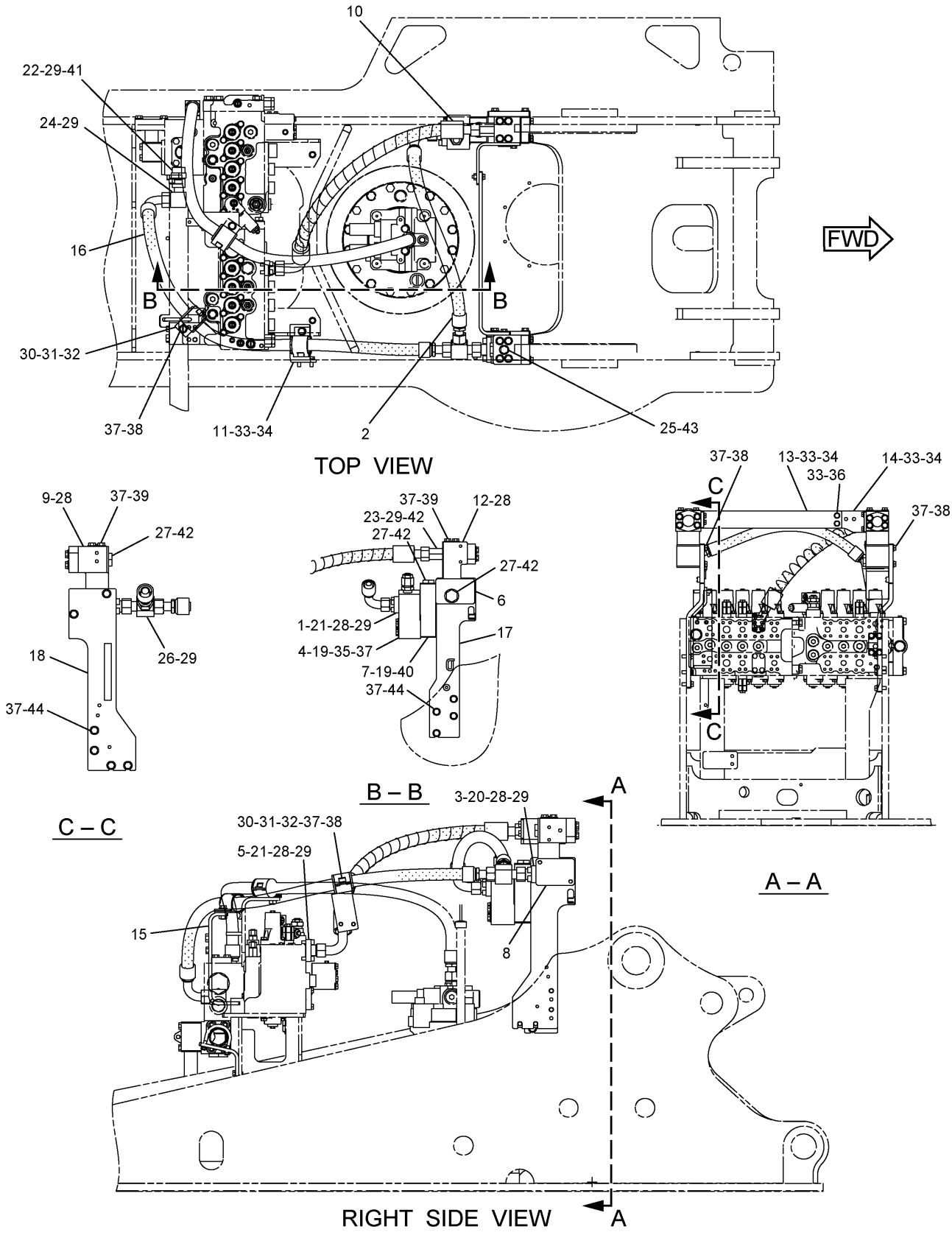


H99592E 05

**260-8006 LINES GP-FRONT**
Part of 259-7492-Page443
177-2653-Page589
An Attachment

# HYDRAULIC SYSTEM

| NOTE | No. | PART No. | QTY | PART NAME | NOTE | No. | PART No. | QTY | PART NAME |
|---|---|---|---|---|---|---|---|---|---|
| | 1 | 7Y-3731 | 1 | FLANGE | | | | | |
| | 2 | 102-1248 | 1 | HOSE AS | | | | | |
| | 3 | 173-4664 | 1 | FLANGE | | | | | |
| Y | 4 | 177-2653 | 1 | VALVE GP | | | | | |
| | 5 | 204-3737 | 1 | FLANGE | | | | | |
| | 6 | 204-8137 | 1 | BLOCK | | | | | |
| | 7 | 207-6222 | 1 | BLOCK | | | | | |
| | 8 | 212-5148 | 1 | BLOCK | | | | | |
| | 9 | 218-1139 | 1 | BLOCK | | | | | |
| | 10 | 314-8252 | 1 | HOSE AS | | | | | |
| | 11 | 260-7872 | 1 | SUPPORT AS | | | | | |
| | 12 | 260-8043 | 1 | BLOCK | | | | | |
| | 13 | 266-0912 | 1 | BRACKET | | | | | |
| | 14 | 266-0913 | 1 | SUPPORT AS | | | | | |
| | 15 | 266-1071 | 1 | SUPPORT AS | | | | | |
| | 16 | 266-1217 | 1 | HOSE AS | | | | | |
| | 17 | 296-7067 | 1 | SUPPORT AS | | | | | |
| | 18 | 296-7069 | 1 | SUPPORT AS | | | | | |
| | 19 | 099-8232 | 2 | SEAL-O-RING (ID=28.24mm) | | | | | |
| | 20 | 101-7402 | 4 | BOLT (L=30mm) | | | | | |
| | 21 | 101-7404 | 8 | BOLT (L=30mm) | | | | | |
| | 22 | 6V-9875 | 1 | CONNECTOR | | | | | |
| | 23 | 8T-0198 | 1 | CONNECTOR | | | | | |
| | 24 | 6V-9854 | 1 | ELBOW | | | | | |
| | 25 | 9S-4185 | 1 | PLUG | | | | | |
| | 26 | 6V-9840 | 1 | TEE | | | | | |
| | 27 | 9S-4181 | 3 | PLUG | | | | | |
| | 28 | 1P-3703 | 5 | SEAL | | | | | |
| | 29 | 5K-9090 | 8 | SEAL-O-RING (OD=27.22mm) | | | | | |
| | 30 | 5P-7468 | 2 | CLIP | | | | | |
| | 31 | 5P-7469 | 2 | CLIP | | | | | |
| | 32 | 6V-1874 | 2 | GROMMET | | | | | |
| | 33 | 8T-4121 | 8 | WASHER | | | | | |
| | 34 | 8T-4136 | 6 | BOLT (L=25mm) | | | | | |
| | 35 | 8T-4176 | 4 | BOLT (L=90mm) | | | | | |
| | 36 | 8T-4196 | 2 | BOLT (L=35mm) | | | | | |
| | 37 | 8T-4223 | 26 | WASHER | | | | | |
| | 38 | 8T-4956 | 6 | BOLT (L=35mm) | | | | | |
| | 39 | 8T-5092 | 8 | BOLT (L=150mm) | | | | | |
| | 40 | 101-7397 | 4 | BOLT (L=50mm) | | | | | |
| | 41 | 2S-4078 | 1 | SEAL-O-RING (ID=37.47mm) | | | | | |
| | 42 | 7M-8485 | 3 | SEAL-O-RING (ID=29.74mm) | | | | | |
| | 43 | 3K-0360 | 1 | SEAL-O-RING (ID=16.36mm) | | | | | |
| | 44 | 8T-4183 | 8 | BOLT (L=40mm) | | | | | |

Y—SEE SEPARATE ILLUSTRATION

H99592E 05

## 260-8006 LINES GP-FRONT

Part of 259-7492-Page443
177-2653-Page589
An Attachment

# HYDRAULIC SYSTEM

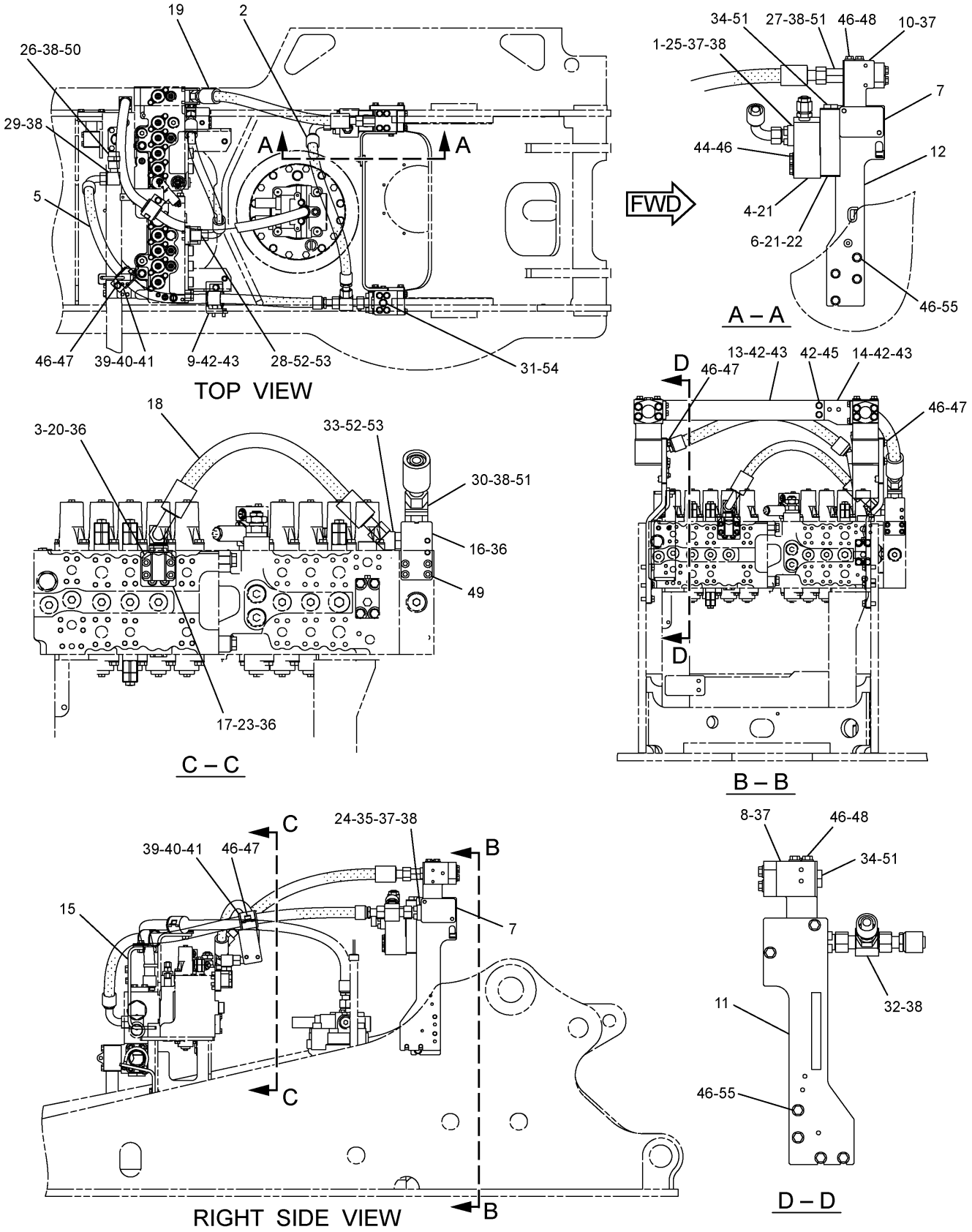


H99589E 06

**260-8007 LINES GP-FRONT**
Part of 259-7494-Page443
177-2653-Page589
An Attachment

# HYDRAULIC SYSTEM

| NOTE | No. | PART No. | QTY | PART NAME | NOTE | No. | PART No. | QTY | PART NAME |
|---|---|---|---|---|---|---|---|---|---|
| | 1 | 7Y-3731 | 1 | FLANGE | | 52 | 3D-2824 | 2 | SEAL-O-RING (ID=23.47mm) |
| | 2 | 102-1248 | 1 | HOSE AS | | 53 | 6V-9746 | 2 | SEAL-O-RING (OD=22.50mm) |
| | 3 | 105-3477 | 4 | BOLT (L=45mm) | | 54 | 3K-0360 | 1 | SEAL-O-RING (ID=16.36mm) |
| Y | 4 | 177-2653 | 1 | VALVE GP | | 55 | 8T-4183 | 8 | BOLT (L=40mm) |
| | 5 | 266-1217 | 1 | HOSE AS | | | | | |
| | 6 | 207-6222 | 1 | BLOCK | | | | | |
| | 7 | 212-5148 | 2 | BLOCK | | | | | |
| | 8 | 218-1139 | 1 | BLOCK | | | | | |
| | 9 | 260-7872 | 1 | SUPPORT AS | | | | | |
| | 10 | 260-8043 | 1 | BLOCK | | | | | |
| | 11 | 296-7069 | 1 | SUPPORT AS | | | | | |
| | 12 | 296-7067 | 1 | SUPPORT AS | | | | | |
| | 13 | 266-0912 | 1 | BRACKET | | | | | |
| | 14 | 266-0913 | 1 | SUPPORT AS | | | | | |
| | 15 | 266-1071 | 1 | SUPPORT AS | | | | | |
| | 16 | 266-1278 | 1 | BLOCK | | | | | |
| | 17 | 266-1279 | 1 | FLANGE | | | | | |
| | 18 | 266-1303 | 1 | HOSE AS | | | | | |
| | 19 | 317-4712 | 1 | HOSE AS | | | | | |
| | 20 | 275-1439 | 1 | BLOCK | | | | | |
| | 21 | 099-8232 | 2 | SEAL-O-RING (ID=28.24mm) | | | | | |
| | 22 | 101-7397 | 4 | BOLT (L=50mm) | | | | | |
| | 23 | 101-7401 | 4 | BOLT (L=20mm) | | | | | |
| | 24 | 101-7402 | 4 | BOLT (L=30mm) | | | | | |
| | 25 | 101-7404 | 4 | BOLT (L=30mm) | | | | | |
| | 26 | 6V-9875 | 1 | CONNECTOR | | | | | |
| | 27 | 8T-0198 | 1 | CONNECTOR | | | | | |
| | 28 | 6V-9007 | 1 | ELBOW | | | | | |
| | 29 | 6V-9854 | 1 | ELBOW | | | | | |
| | 30 | 6V-9005 | 1 | ELBOW | | | | | |
| | 31 | 9S-4185 | 1 | PLUG | | | | | |
| | 32 | 6V-9840 | 1 | TEE | | | | | |
| | 33 | 6V-9004 | 1 | ELBOW | | | | | |
| | 34 | 9S-4181 | 2 | PLUG | | | | | |
| | 35 | 173-4664 | 1 | FLANGE | | | | | |
| | 36 | 1P-3702 | 3 | SEAL | | | | | |
| | 37 | 1P-3703 | 4 | SEAL | | | | | |
| | 38 | 5K-9090 | 7 | SEAL-O-RING (OD=27.22mm) | | | | | |
| | 39 | 5P-7468 | 2 | CLIP | | | | | |
| | 40 | 5P-7469 | 2 | CLIP | | | | | |
| | 41 | 6V-1874 | 2 | GROMMET | | | | | |
| | 42 | 8T-4121 | 8 | WASHER | | | | | |
| | 43 | 8T-4136 | 6 | BOLT (L=25mm) | | | | | |
| | 44 | 8T-4176 | 4 | BOLT (L=90mm) | | | | | |
| | 45 | 8T-4196 | 2 | BOLT (L=35mm) | | | | | |
| | 46 | 8T-4223 | 26 | WASHER | | | | | |
| | 47 | 8T-4956 | 6 | BOLT (L=35mm) | | | | | |
| | 48 | 8T-5092 | 8 | BOLT (L=150mm) | | | | | |
| | 49 | 280-2747 | 4 | BOLT (L=60mm) | | | | | |
| | 50 | 2S-4078 | 1 | SEAL-O-RING (ID=37.47mm) | | | | | |
| | 51 | 7M-8485 | 3 | SEAL-O-RING (ID=29.74mm) | | | | | |

Y—SEE SEPARATE ILLUSTRATION

H99589E 06

## 260-8007 LINES GP-FRONT

Part of 259-7494-Page443
177-2653-Page589
An Attachment

# HYDRAULIC SYSTEM

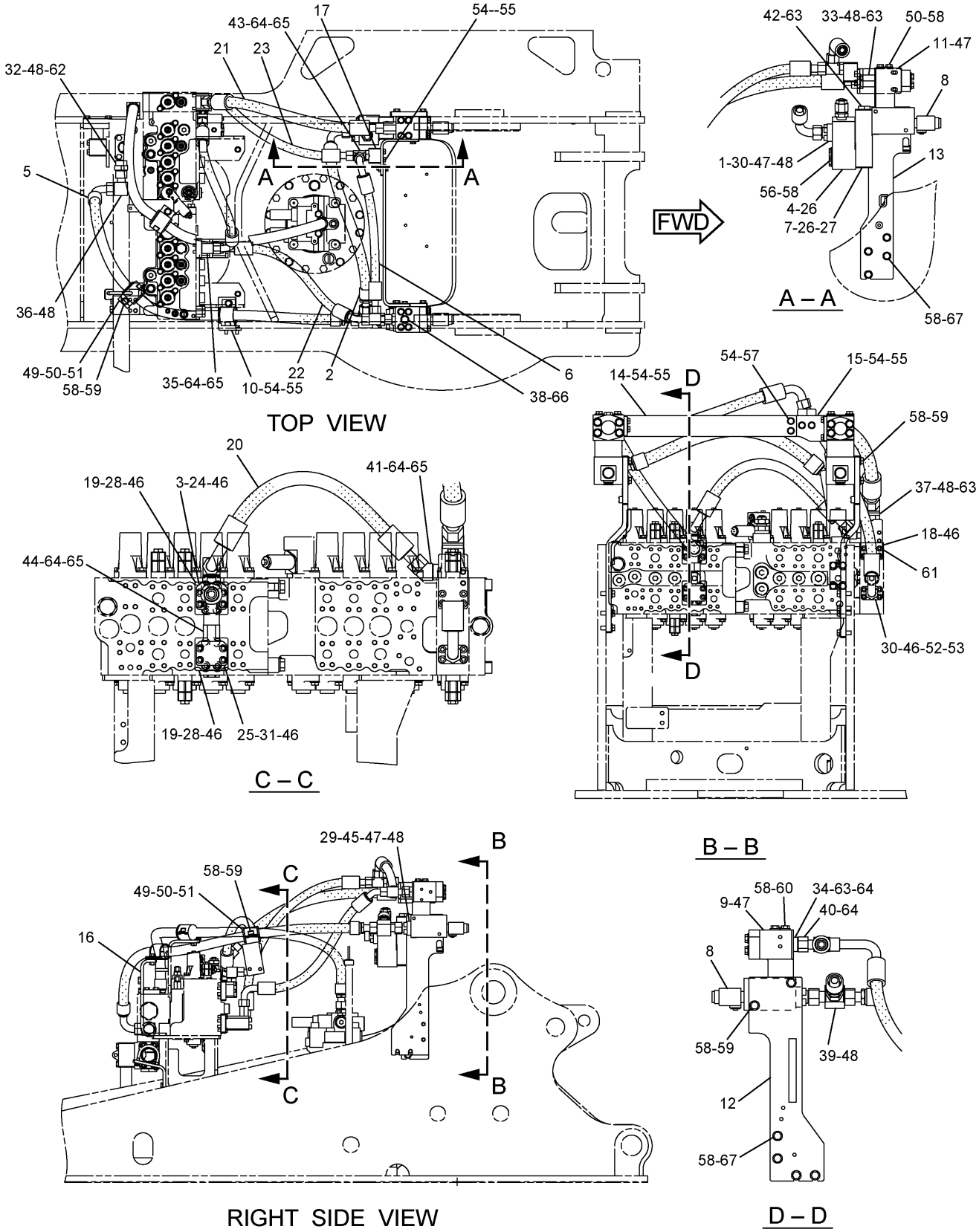


H99591E 12

**260-8008 LINES GP-FRONT**

Part of 259-7493-Page444,259-7495-Page445
177-2653-Page589,297-0370-Page598
An Attachment

# HYDRAULIC SYSTEM

| NOTE | No. | PART No. | QTY | PART NAME | NOTE | No. | PART No. | QTY | PART NAME |
|---|---|---|---|---|---|---|---|---|---|
| | 1 | 7Y-3731 | 1 | FLANGE | | 52 | 6V-9746 | 1 | SEAL-O-RING (OD=22.50mm) |
| | 2 | 102-1248 | 1 | HOSE AS | | 53 | 7Y-3729 | 1 | FLANGE |
| | 3 | 105-3477 | 4 | BOLT (L=45mm) | | 54 | 8T-4121 | 10 | WASHER |
| Y | 4 | 177-2653 | 1 | VALVE GP | | 55 | 8T-4136 | 8 | BOLT (L=25mm) |
| | 5 | 266-1217 | 1 | HOSE AS | | 56 | 8T-4176 | 4 | BOLT (L=90mm) |
| | | | | | | 57 | 8T-4196 | 2 | BOLT (L=35mm) |
| | | | | | | 58 | 8T-4223 | 26 | WASHER |
| | 6 | 278-6756 | 1 | HOSE AS | | 59 | 8T-4956 | 6 | BOLT (L=35mm) |
| | 7 | 207-6222 | 1 | BLOCK | | 60 | 8T-5092 | 8 | BOLT (L=150mm) |
| Y | 8 | 297-0370 | 2 | VALVE GP | | 61 | 280-2747 | 4 | BOLT (L=60mm) |
| | 9 | 218-1139 | 1 | BLOCK | | 62 | 2S-4078 | 1 | SEAL-O-RING (ID=37.47mm) |
| | 10 | 260-7872 | 1 | SUPPORT AS | | 63 | 7M-8485 | 4 | SEAL-O-RING (ID=29.74mm) |
| | 11 | 260-8043 | 1 | BLOCK | | 64 | 6V-9746 | 6 | SEAL-O-RING (OD=22.50mm) |
| | 12 | 296-7069 | 1 | SUPPORT AS | | 65 | 3D-2824 | 4 | SEAL-O-RING (ID=23.47mm) |
| | 13 | 296-7067 | 1 | SUPPORT AS | | 66 | 3K-0360 | 1 | SEAL-O-RING (ID=16.36mm) |
| | 14 | 266-0912 | 1 | BRACKET | | 67 | 8T-4183 | 8 | BOLT (L=40mm) |
| | 15 | 266-0913 | 1 | SUPPORT AS | | | | | |
| | 16 | 266-1071 | 1 | SUPPORT AS | | | | | |
| | 17 | 266-1266 | 1 | BLOCK | | | | | |
| | 18 | 266-1278 | 1 | BLOCK | | | | | |
| | 19 | 266-1279 | 2 | FLANGE | | | | | |
| | 20 | 266-1303 | 1 | HOSE AS | | | | | |
| | 21 | 317-4712 | 1 | HOSE AS | | | | | |
| | 22 | 314-8205 | 1 | HOSE AS | | | | | |
| | 23 | 266-1315 | 1 | HOSE AS | | | | | |
| | 24 | 275-1439 | 1 | BLOCK | | | | | |
| | 25 | 275-1440 | 1 | BLOCK | | | | | |
| | 26 | 099-8232 | 2 | SEAL-O-RING (ID=28.24mm) | | | | | |
| | 27 | 101-7397 | 4 | BOLT (L=50mm) | | | | | |
| | 28 | 101-7401 | 8 | BOLT (L=20mm) | | | | | |
| | 29 | 101-7402 | 4 | BOLT (L=30mm) | | | | | |
| | 30 | 101-7404 | 8 | BOLT (L=30mm) | | | | | |
| | 31 | 108-4282 | 4 | BOLT (L=100mm) | | | | | |
| | 32 | 6V-9875 | 1 | CONNECTOR | | | | | |
| | 33 | 8T-0198 | 1 | CONNECTOR | | | | | |
| | 34 | 6V-8716 | 1 | CONNECTOR | | | | | |
| | 35 | 6V-9007 | 1 | ELBOW | | | | | |
| | 36 | 6V-9854 | 1 | ELBOW | | | | | |
| | 37 | 6V-9005 | 1 | ELBOW | | | | | |
| | 38 | 9S-4185 | 1 | PLUG | | | | | |
| | 39 | 6V-9840 | 1 | TEE | | | | | |
| | 40 | 6V-9839 | 1 | TEE | | | | | |
| | 41 | 6V-9004 | 1 | ELBOW | | | | | |
| | 42 | 9S-4181 | 1 | PLUG | | | | | |
| | 43 | 6V-8784 | 1 | TEE | | | | | |
| | 44 | 8T-0078 | 1 | CONNECTOR | | | | | |
| | 45 | 173-4664 | 1 | FLANGE | | | | | |
| | 46 | 1P-3702 | 6 | SEAL | | | | | |
| | 47 | 1P-3703 | 4 | SEAL | | | | | |
| | 48 | 5K-9090 | 7 | SEAL-O-RING (OD=27.22mm) | | | | | |
| | 49 | 5P-7468 | 2 | CLIP | | | | | |
| | 50 | 5P-7469 | 2 | CLIP | | | | | |
| | 51 | 6V-1874 | 2 | GROMMET | | | | | |

Y—SEE SEPARATE ILLUSTRATION

H99591E 12

## 260-8008 LINES GP-FRONT

Part of 259-7493-Page444,259-7495-Page445
177-2653-Page589,297-0370-Page598
An Attachment

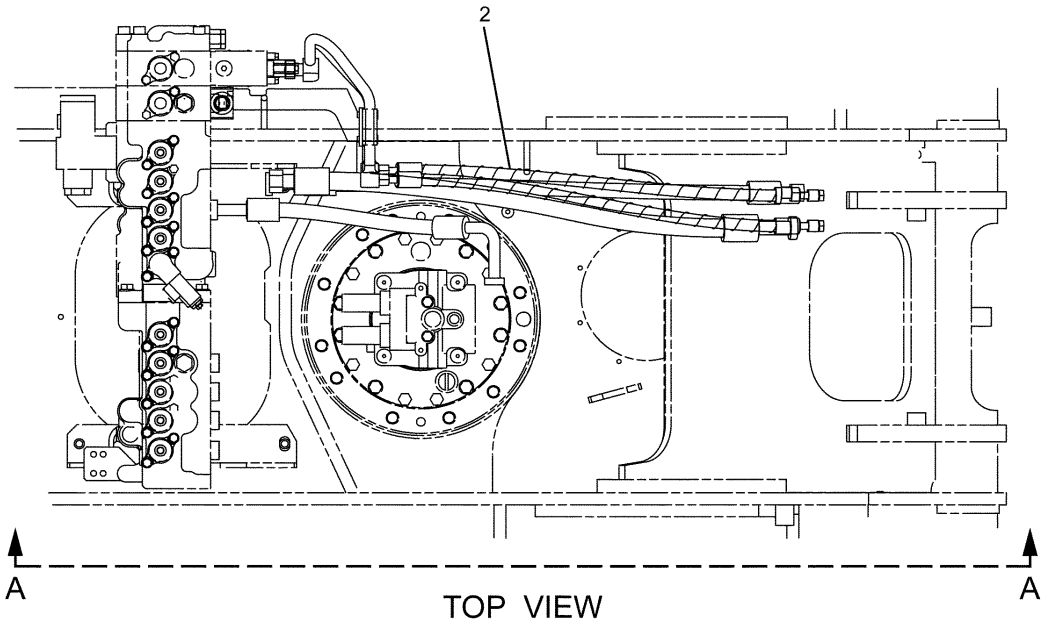


TOP VIEW

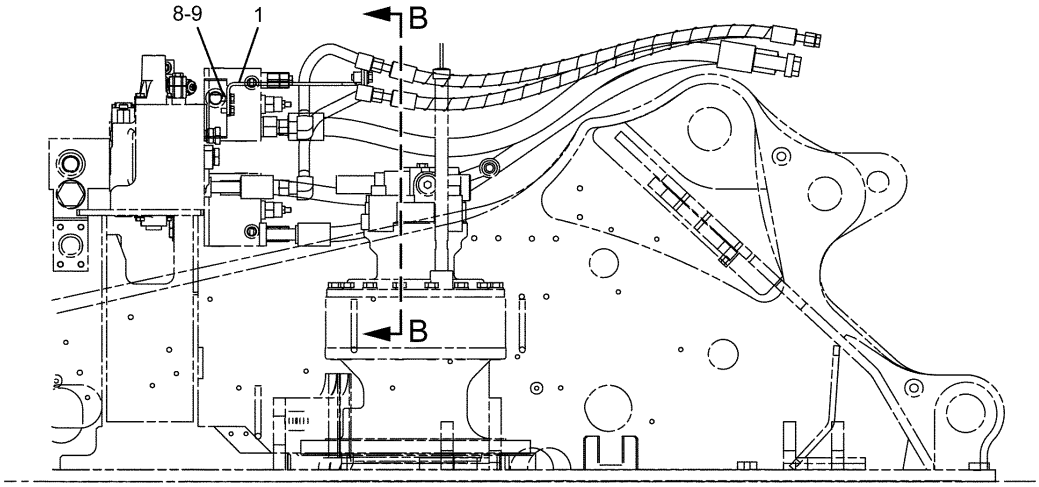


A – A

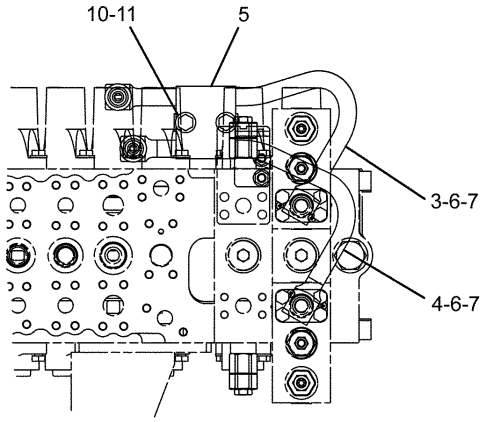


B – B

H93682E 02

**260-8009 LINES GP-FRONT**
Part of 259-7495-Page445
An Attachment

# HYDRAULIC SYSTEM

| NOTE | No. | PART No. | QTY | PART NAME | NOTE | No. | PART No. | QTY | PART NAME |
|---|---|---|---|---|---|---|---|---|---|
| | 1 | 282-7086 | 1 | SUPPORT AS | | | | | |
| | 2 | 282-7088 | 2 | HOSE AS | | | | | |
| | 3 | 282-7096 | 1 | TUBE AS | | | | | |
| | 4 | 282-7097 | 1 | TUBE AS | | | | | |
| | 5 | 153-8867 | 2 | CLIP | | | | | |
| | 6 | 6V-8398 | 2 | SEAL-O-RING (OD=16.03mm) | | | | | |
| | 7 | 6V-9746 | 2 | SEAL-O-RING (OD=22.50mm) | | | | | |
| | 8 | 8T-4121 | 2 | WASHER | | | | | |
| | 9 | 8T-4137 | 2 | BOLT (L=20mm) | | | | | |
| | 10 | 8T-4223 | 2 | WASHER | | | | | |
| | 11 | 8T-4956 | 2 | BOLT (L=35mm) | | | | | |

H93682E 02

## 260-8009 LINES GP-FRONT

Part of 259-7495-Page445
An Attachment

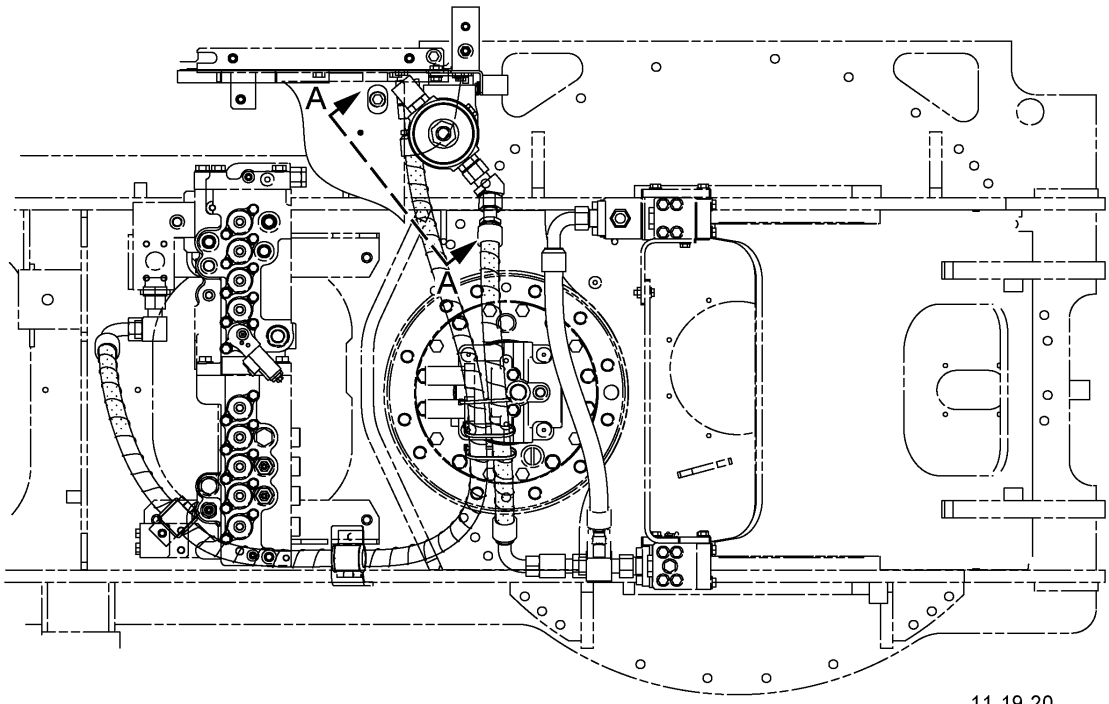


TOP VIEW

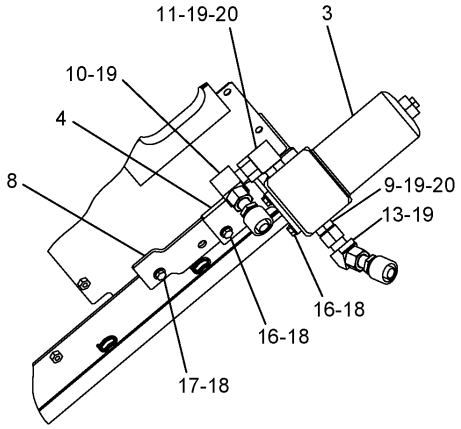


A – A

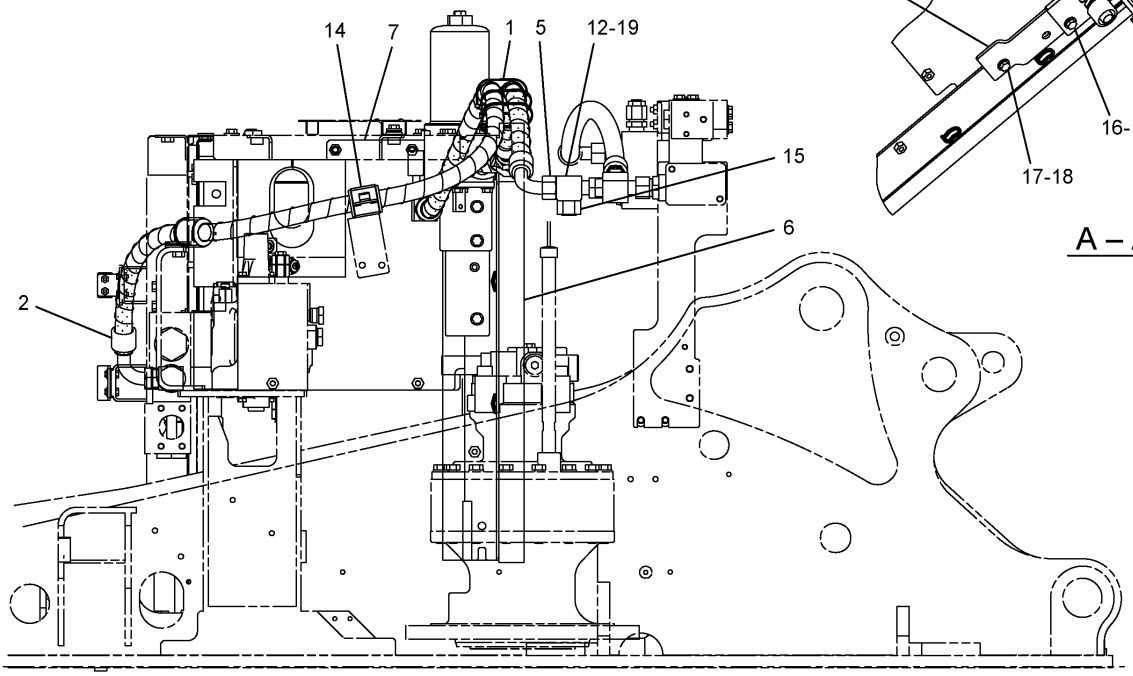


RIGHT SIDE VIEW

H98343E 04

**239-1726 LINES GP-FRONT**
Hammer Return Filter
Part of 247-7459-Page448
224-1687-Page334
An Attachment

# HYDRAULIC SYSTEM

| NOTE | No. | PART No. | QTY | PART NAME | NOTE | No. | PART No. | QTY | PART NAME |
|---|---|---|---|---|---|---|---|---|---|
| | 1 | 7K-1181 | 3 | STRAP | | | | | |
| | 2 | 196-0877 | 1 | HOSE AS | | | | | |
| Y | 3 | 224-1687 | 1 | FILTER AS | | | | | |
| | 4 | 266-1258 | 1 | SUPPORT AS | | | | | |
| | 5 | 282-7135 | 1 | HOSE AS | | | | | |
| | 6 | 313-7878 | 1 | SUPPORT AS | | | | | |
| | | 244-8198 | 1 | LINER | | | | | |
| | | 129-3400 | 1 | GUARD | | | | | |
| | 7 | 313-7881 | 1 | SHEET AS | | | | | |
| | 8 | 314-8124 | 1 | SUPPORT AS | | | | | |
| | 9 | 6V-8635 | 1 | CONNECTOR | | | | | |
| | 10 | 6V-9854 | 1 | ELBOW | | | | | |
| | 11 | 6V-9008 | 1 | ELBOW | | | | | |
| | 12 | 6V-9840 | 1 | TEE | | | | | |
| | 13 | 142-0038 | 1 | ELBOW | | | | | |
| | 14 | 5P-8444 | 2 | GROMMET | | | | | |
| | 15 | 6V-9833 | 1 | CAP AS | | | | | |
| | 16 | 8T-4139 | 6 | BOLT (L=30mm) | | | | | |
| | 17 | 8T-4192 | 3 | BOLT (L=25mm) | | | | | |
| | 18 | 8T-4223 | 9 | WASHER | | | | | |
| | 19 | 5K-9090 | 6 | SEAL-O-RING (OD=27.22mm) | | | | | |
| | 20 | 7M-8485 | 2 | SEAL-O-RING (ID=29.74mm) | | | | | |

Y—SEE SEPARATE ILLUSTRATION

H98343E 04

## 239-1726 LINES GP-FRONT

Hammer Return Filter
Part of 247-7459-Page448
224-1687-Page334
An Attachment

# HYDRAULIC SYSTEM

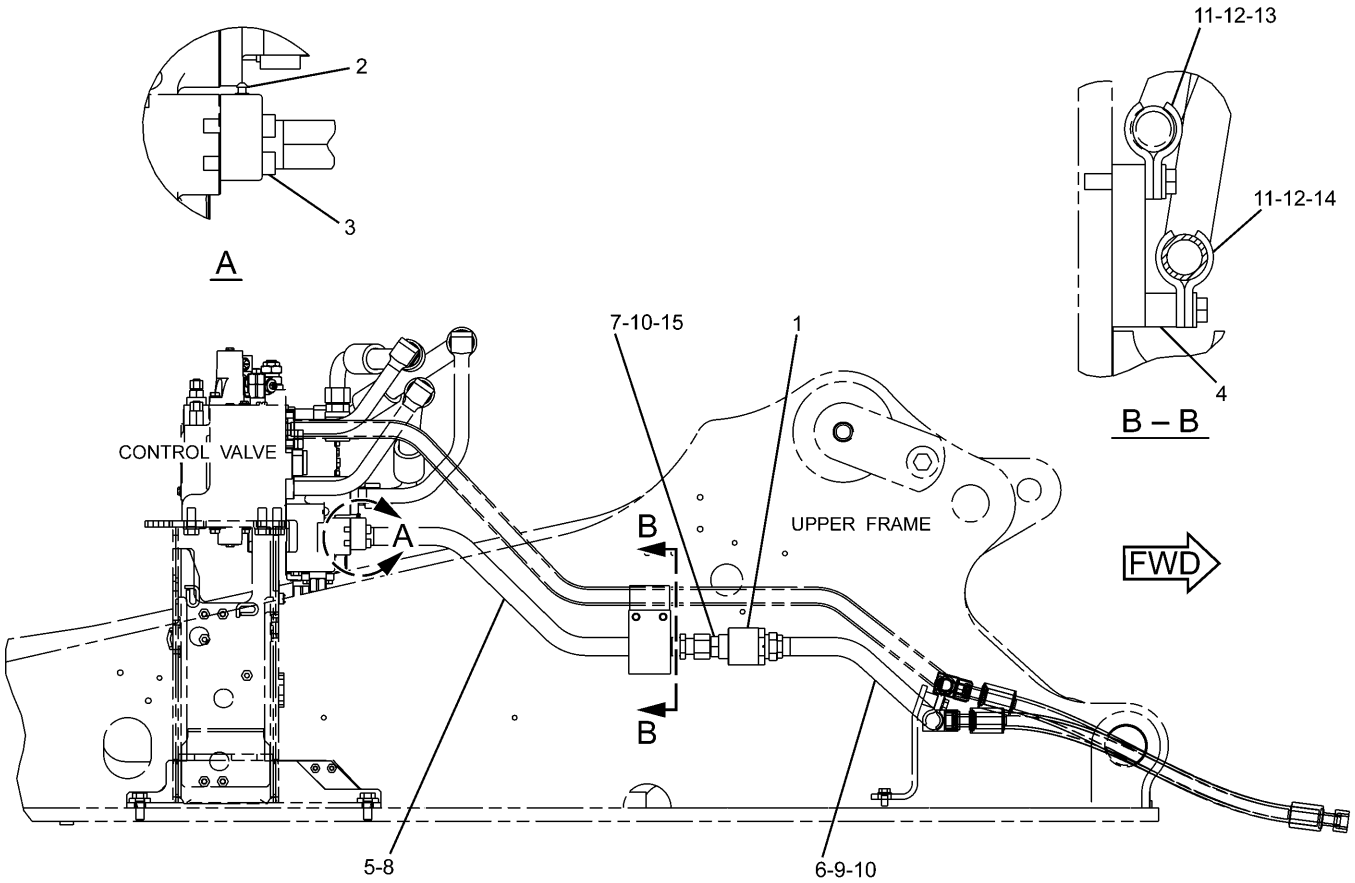


RIGHT SIDE VIEW

| NOTE | No. | PART No. | QTY | PART NAME | NOTE | No. | PART No. | QTY | PART NAME |
|---|---|---|---|---|---|---|---|---|---|
| | 1 | 4I-8789 | 1 | VALVE GP | | | | | |
| | 2 | 9F-2167 | 1 | SCREW | | | | | |
| | 3 | 101-7398 | 4 | BOLT (L=40mm) | | | | | |
| | 4 | 268-7183 | 1 | PLATE AS | | | | | |
| | 5 | 268-7185 | 1 | TUBE AS | | | | | |
| | 6 | 268-7186 | 1 | TUBE AS | | | | | |
| | 7 | 6V-8635 | 1 | CONNECTOR | | | | | |
| | 8 | 1P-3703 | 1 | SEAL | | | | | |
| | 9 | 6V-9746 | 2 | SEAL-O-RING (OD=22.50mm) | | | | | |
| | 10 | 7M-8485 | 2 | SEAL-O-RING (ID=29.74mm) | | | | | |
| | 11 | 7Y-3732 | 4 | CLIP | | | | | |
| | 12 | 8T-4223 | 4 | WASHER | | | | | |
| | 13 | 8T-4910 | 2 | BOLT (L=60mm) | | | | | |
| | 14 | 8T-4956 | 2 | BOLT (L=35mm) | | | | | |
| | 15 | 5K-9090 | 1 | SEAL-O-RING (OD=27.22mm) | | | | | |

H90266E 00

## 268-7074 LINES GP-FRONT

S/N DFB 1-Up
Part of 302-9207-Page740
An Attachment

# HYDRAULIC SYSTEM

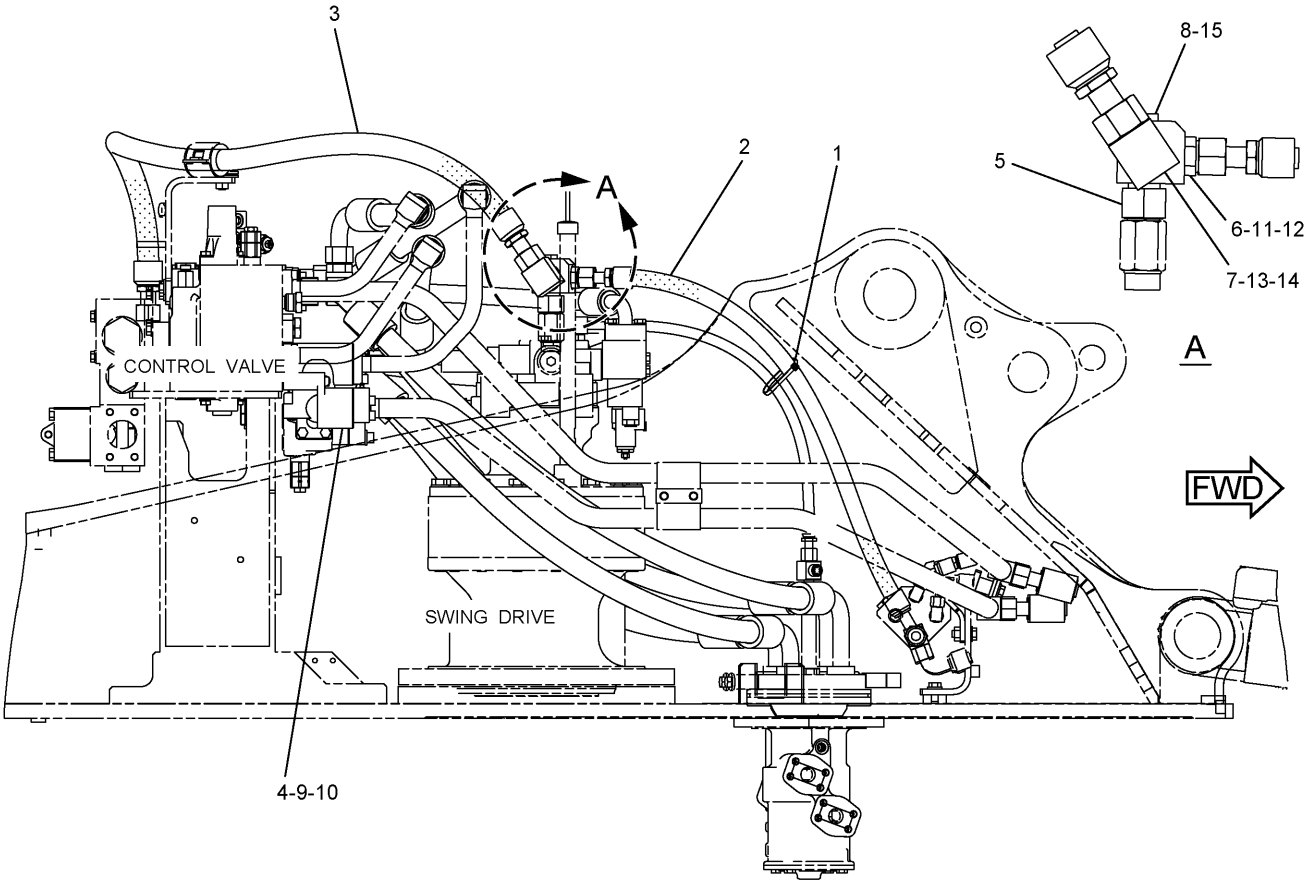


RIGHT SIDE VIEW

| NOTE | No. | PART No. | QTY | PART NAME | NOTE | No. | PART No. | QTY | PART NAME |
|---|---|---|---|---|---|---|---|---|---|
| | 1 | 7K-1181 | 1 | STRAP | | | | | |
| | 2 | 107-1567 | 1 | HOSE AS | | | | | |
| | 3 | 319-9845 | 1 | HOSE AS | | | | | |
| | 4 | 201-9378 | 1 | BLOCK | | | | | |
| | 5 | 307-4920 | 1 | FITTING | | | | | |
| | 6 | 6V-8637 | 1 | CONNECTOR | | | | | |
| | 7 | 6V-9008 | 1 | ELBOW | | | | | |
| | 8 | 9S-4185 | 1 | PLUG | | | | | |
| | 9 | 1P-3703 | 1 | SEAL | | | | | |
| | 10 | 4J-5268 | 1 | SEAL-O-RING (ID=13.94mm) | | | | | |
| | 11 | 3D-2824 | 1 | SEAL-O-RING (ID=23.47mm) | | | | | |
| | 12 | 6V-9746 | 1 | SEAL-O-RING (OD=22.50mm) | | | | | |
| | 13 | 5K-9090 | 1 | SEAL-O-RING (OD=27.22mm) | | | | | |
| | 14 | 7M-8485 | 1 | SEAL-O-RING (ID=29.74mm) | | | | | |
| | 15 | 3K-0360 | 1 | SEAL-O-RING (ID=16.36mm) | | | | | |

H99585E 03

## 282-7161 LINES GP-RETURN

BOOM LOWERING CONTROL
S/N BWZ 1-Up, DFB 1-Up
Part of 270-5974-Page447
An Attachment

# HYDRAULIC SYSTEM

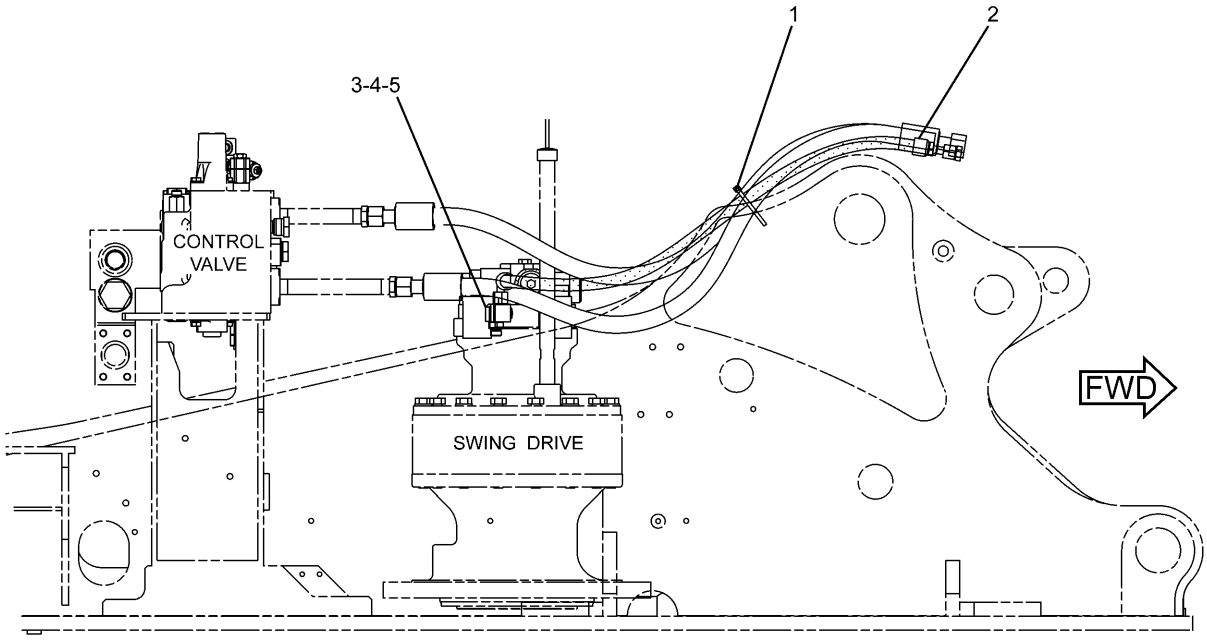


RIGHT SIDE VIEW

| NOTE | No. | PART No. | QTY | PART NAME | NOTE | No. | PART No. | QTY | PART NAME |
|---|---|---|---|---|---|---|---|---|---|
| | 1 | 7K-1181 | 1 | STRAP | | | | | |
| | 2 | 236-3087 | 1 | HOSE AS | | | | | |
| | 3 | 3K-0360 | 1 | SEAL-O-RING (ID=16.36mm) | | | | | |
| | 4 | 6V-8398 | 1 | SEAL-O-RING (OD=16.03mm) | | | | | |
| | 5 | 286-6656 | 1 | FITTING | | | | | |

H93454E 01

**260-8012 LINES GP-DRAIN**
An Attachment

# MEMORANDA

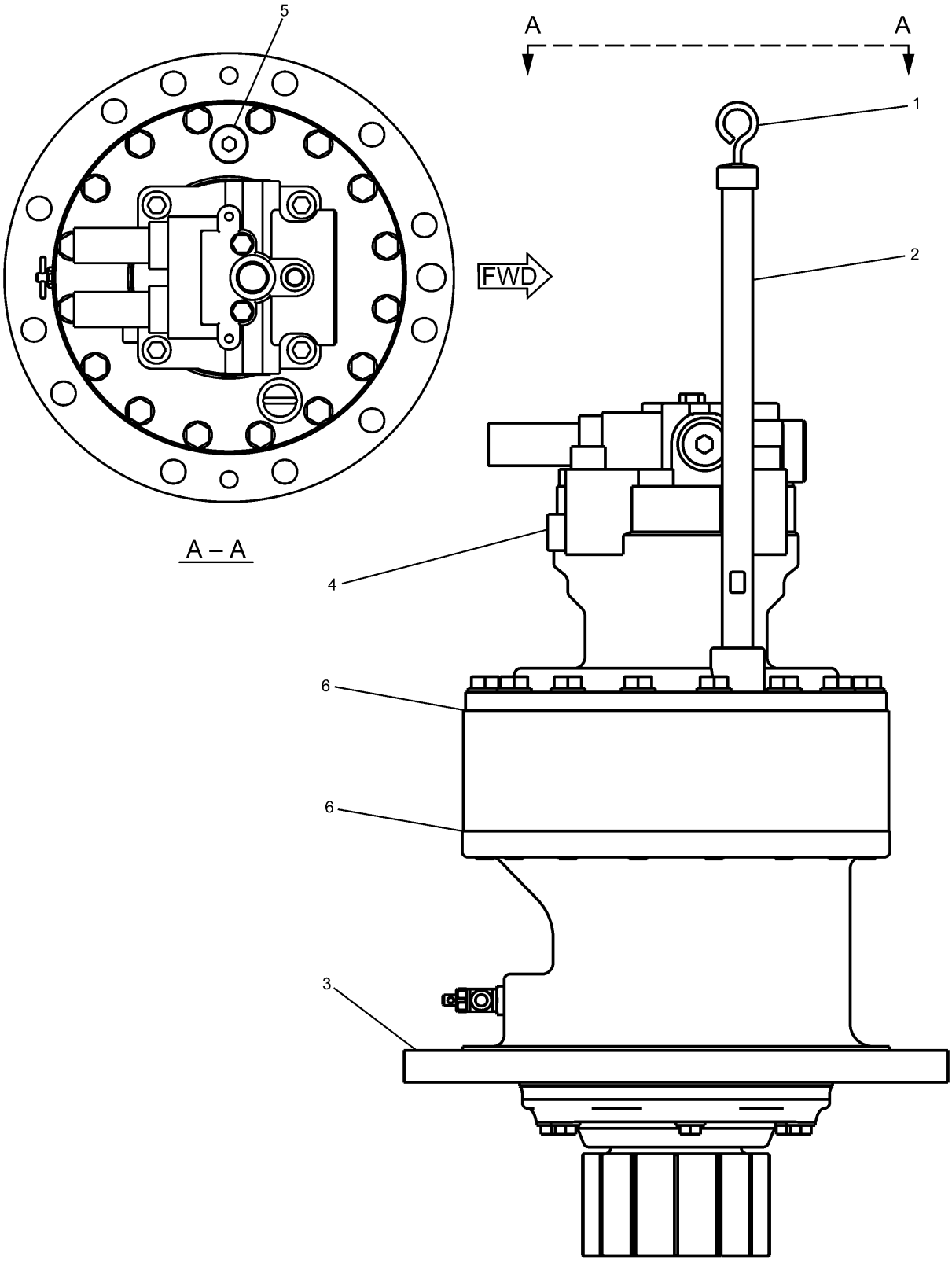


H91402E 05

148-4679 DRIVE GP-SWING
148-4644-Page502,158-8985-Page504

# HYDRAULIC SYSTEM

| NOTE | No. | PART No. | QTY | PART NAME | NOTE | No. | PART No. | QTY | PART NAME |
|---|---|---|---|---|---|---|---|---|---|
| | 1 | 114-1398 | 1 | GAUGE | | | | | |
| | 2 | 114-1399 | 1 | PIPE | | | | | |
| Y | 3 | 148-4644 | 1 | DRIVE GP | | | | | |
| Y | 4 | 158-8985 | 1 | MOTOR GP | | | | | |
| | 5 | 227-6221 | 1 | BREATHER AS | | | | | |
| | | 4H-6112 | 1 | BREATHER AS | | | | | |
| | | 227-6215 | 1 | BOSS | | | | | |
| | | 267-6785 | 1 | NIPPLE | | | | | |
| B | 6 | 1U-8846 | | GASKET MAKER…(10ml) | | | | | |

B—USE AS REQUIRED

Y—SEE SEPARATE ILLUSTRATION

H91402E 05

## 148-4679 DRIVE GP-SWING

148-4644-Page502,158-8985-Page504

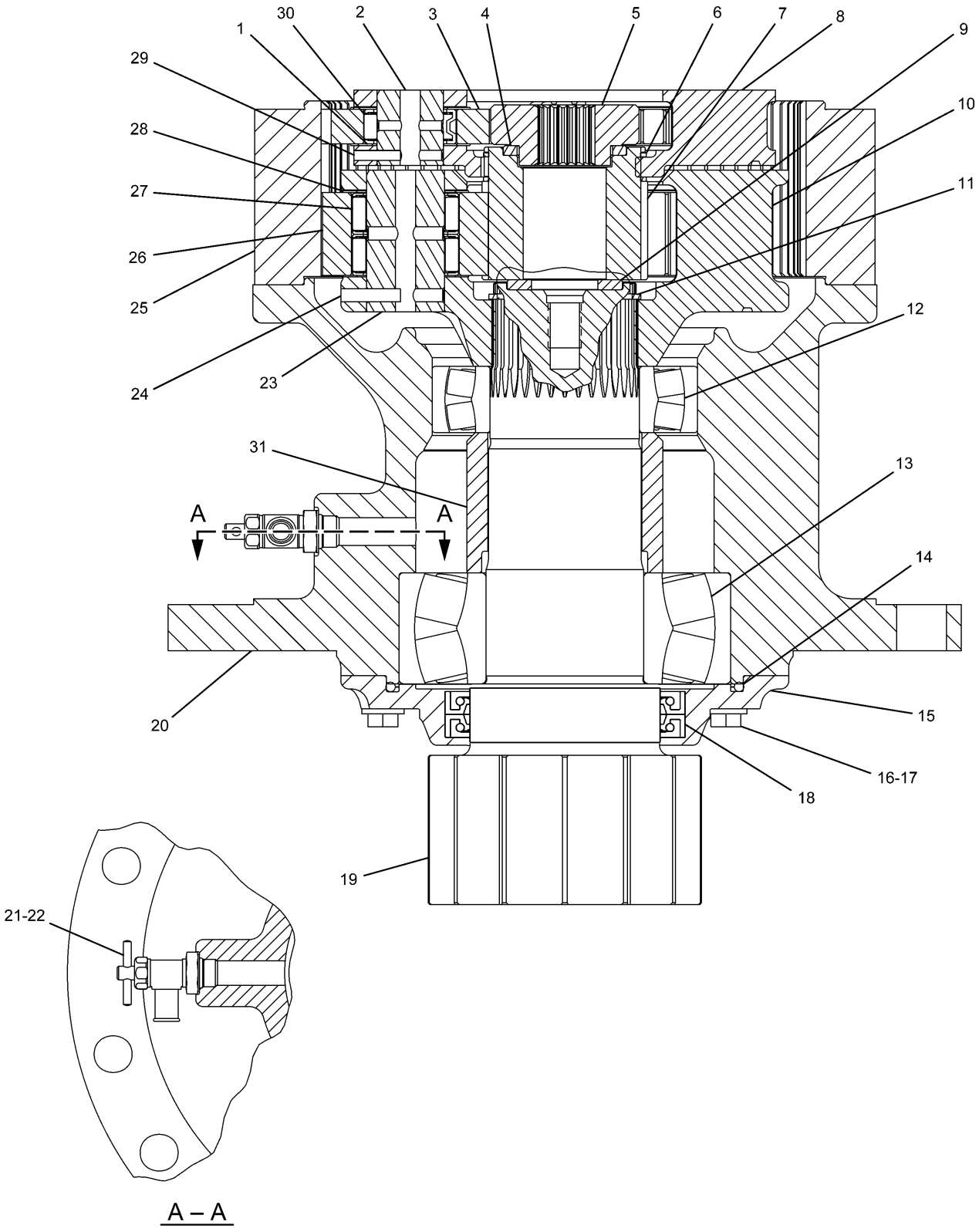


H90571E 11

**148-4644 DRIVE GP-SWING**
Part of 148-4679-Page501

# HYDRAULIC SYSTEM

| NOTE | No. | PART No. | QTY | PART NAME | NOTE | No. | PART No. | QTY | PART NAME |
|---|---|---|---|---|---|---|---|---|---|
| | 1 | 094-0584 | 6 | WASHER | | | | | |
| | 2 | 094-1509 | 3 | SHAFT | | | | | |
| | 3 | 148-4733 | 3 | GEAR (Z=26) | | | | | |
| | 4 | 114-1581 | 1 | SPACER | | | | | |
| | 5 | 148-4732 | 1 | GEAR (Z=20) | | | | | |
| | 6 | 093-1729 | 2 | RING | | | | | |
| | 7 | 148-4632 | 1 | GEAR (Z=23) | | | | | |
| | 8 | 191-2578 | 1 | CARRIER | | | | | |
| | 9 | 7Y-1434 | 1 | SPACER | | | | | |
| | 10 | 148-4637 | 1 | CARRIER | | | | | |
| | 11 | 148-4640 | 1 | RING | | | | | |
| | 12 | 148-4643 | 1 | BEARING | | | | | |
| | 13 | 095-1022 | 1 | BEARING | | | | | |
| | 14 | 148-4642 | 1 | SEAL-O-RING (ID=204.30mm) | | | | | |
| | 15 | 227-6228 | 1 | CAGE | | | | | |
| | 16 | 8T-4183 | 6 | BOLT (L=40mm) | | | | | |
| | 17 | 8T-4223 | 6 | WASHER | | | | | |
| | 18 | 199-4561 | 2 | SEAL | | | | | |
| | 19 | 148-4636 | 1 | SHAFT | | | | | |
| | 20 | 148-4638 | 1 | HOUSING | | | | | |
| | 21 | 3K-0360 | 1 | SEAL-O-RING (ID=16.36mm) | | | | | |
| | 22 | 6V-7238 | 1 | VALVE | | | | | |
| | 23 | 148-4634 | 3 | SHAFT | | | | | |
| | 24 | 095-0891 | 3 | PIN | | | | | |
| | 25 | 148-4635 | 1 | GEAR (Z=73) | | | | | |
| | 26 | 148-4633 | 3 | GEAR (Z=25) | | | | | |
| | 27 | 7Y-0252 | 6 | BEARING | | | | | |
| | 28 | 094-0611 | 6 | WASHER | | | | | |
| | 29 | 095-0886 | 3 | PIN | | | | | |
| | 30 | 094-1516 | 3 | BEARING | | | | | |
| | 31 | 171-9383 | 1 | SPACER | | | | | |



## 148-4644 DRIVE GP-SWING
Part of 148-4679-Page501

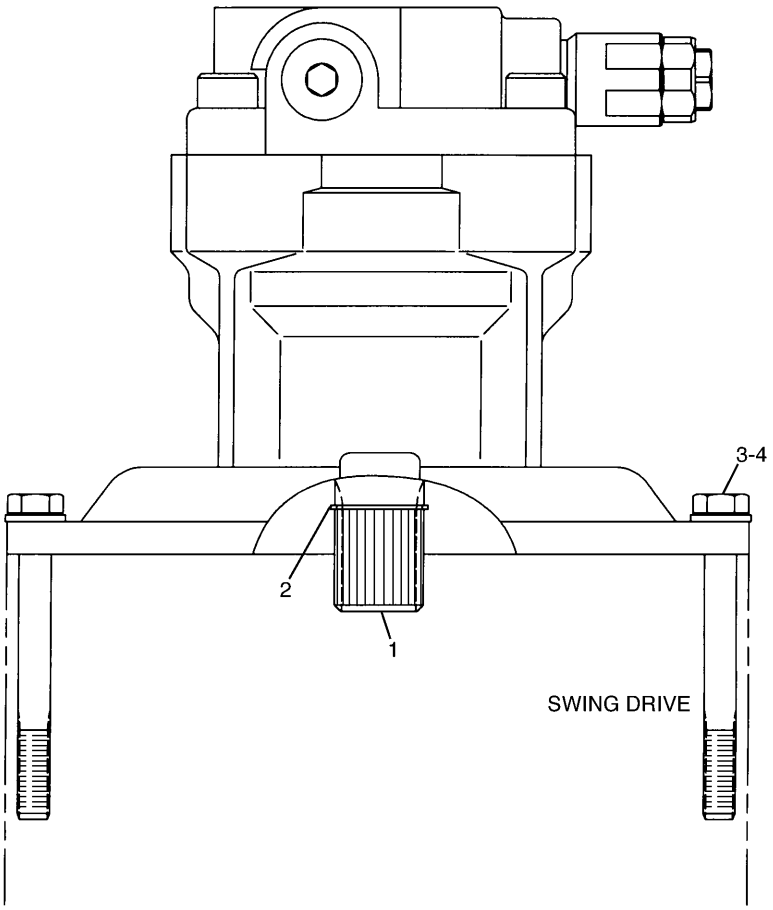


| NOTE | No. | PART No. | QTY | PART NAME | NOTE | No. | PART No. | QTY | PART NAME |
|---|---|---|---|---|---|---|---|---|---|
| Y | 1 | 158-8986 | 1 | MOTOR GP | | | | | |
| | 2 | 6V-5200 | 1 | RING | | | | | |
| | 3 | 7X-2558 | 16 | BOLT (L=150mm) | | | | | |
| | 4 | 9X-8257 | 16 | WASHER | | | | | |

Y—SEE SEPARATE ILLUSTRATION

H67319E 02

## 158-8985 MOTOR & MTG GP-SWING

Part of 148-4679-Page501
158-8986-Page508

# MEMORANDA

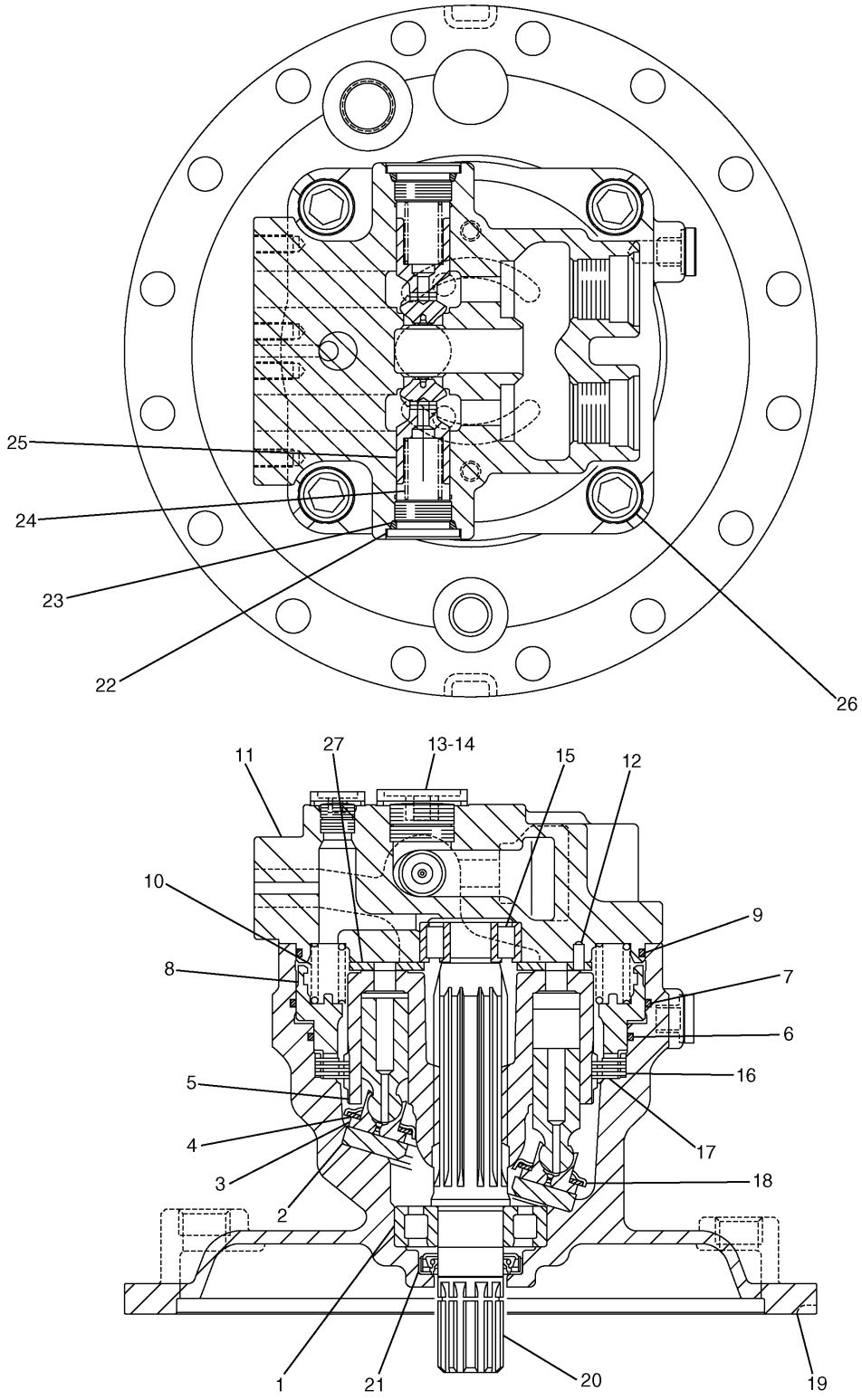


H99584E 02

**191-5542 MOTOR GP-SWING**
Part of 158-8986-Page508

# HYDRAULIC SYSTEM

| NOTE | No. | PART No. | QTY | PART NAME |
|---|---|---|---|---|
| | 1 | 122-5318 | 1 | BEARING |
| | 2 | 173-3444 | 1 | PLATE |
| | 3 | 295-9685 | 1 | PISTON AS |
| | 4 | 173-3443 | 1 | PLATE |
| | 5 | 173-3441 | 1 | BARREL |
| J | 6 | 5I-8426 | 1 | SEAL-O-RING |
| J | 7 | 5I-8417 | 1 | SEAL-O-RING |
| | 8 | 177-2584 | 1 | PISTON |
| J | 9 | 5I-8623 | 1 | SEAL-O-RING |
| | 10 | 126-2055 | 20 | SPRING |
| | 11 | 173-3439 | 1 | HEAD GP |
| | 12 | 095-0882 | 2 | PIN |
| | 13 | 110-5525 | 2 | PLUG |
| J | 14 | 3J-1907 | 2 | SEAL-O-RING (ID=11.89mm) |
| | 15 | 5I-8625 | 1 | BEARING |
| | 16 | 173-3451 | 4 | PLATE |
| | 17 | 173-3450 | 3 | PLATE |
| | 18 | 173-3442 | 1 | SPRING |
| | 19 | 191-5543 | 1 | BODY |
| | 20 | 173-3440 | 1 | SHAFT |
| J | 21 | 173-3447 | 1 | SEAL |
| | 22 | 094-1900 | 2 | PLUG |
| J | 23 | 095-1595 | 2 | SEAL-O-RING (ID=27.70mm) |
| | 24 | 7Y-4268 | 2 | SPRING |
| | 25 | 7Y-4267 | 2 | VALVE |
| | 26 | 7Y-5221 | 4 | BOLT (L=45mm) |
| | 27 | 173-3445 | 1 | PLATE |
| | | | | THE FOLLOWING REPAIR KIT IS AVAILABLE: |
| | | 173-3454 | 1 | SEAL KIT (INCLUDES PARTS MARKED J) |

H99584E 02

## 191-5542 MOTOR GP-SWING

Part of 158-8986-Page508

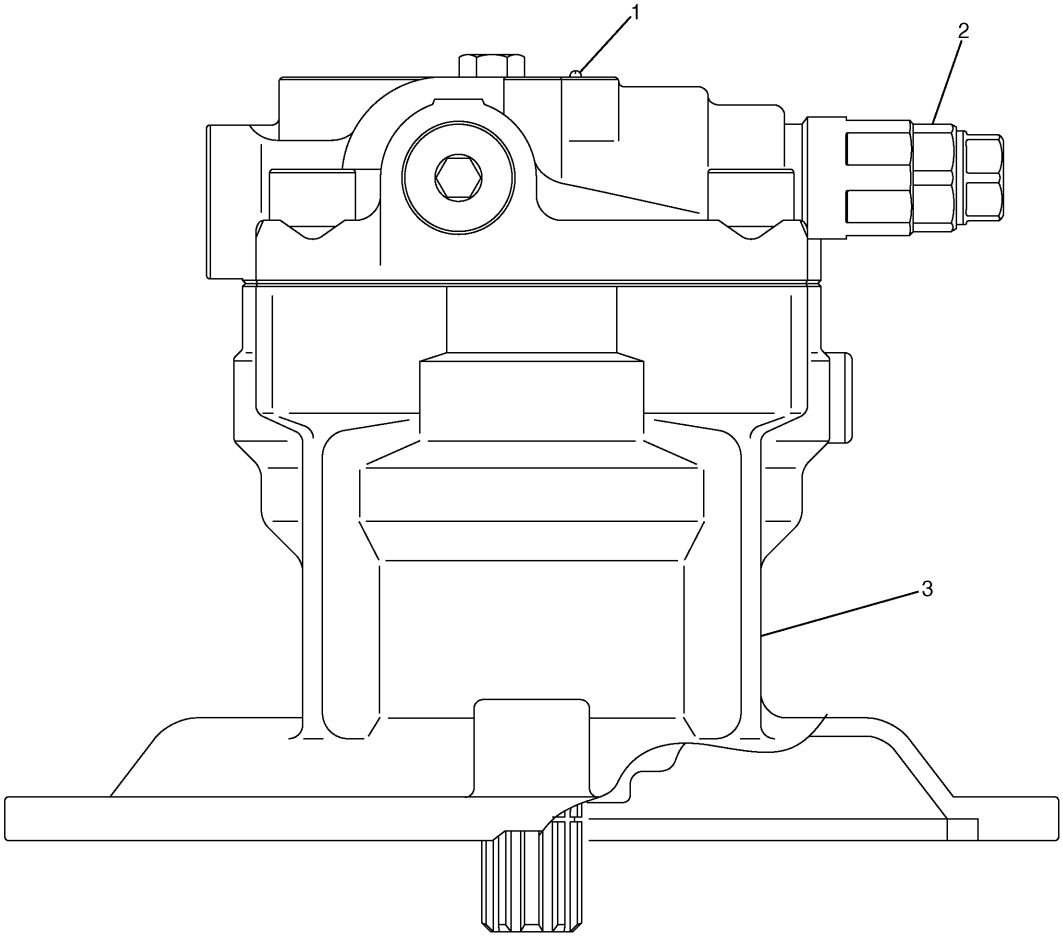


| NOTE | No. | PART No. | QTY | PART NAME | NOTE | No. | PART No. | QTY | PART NAME |
|---|---|---|---|---|---|---|---|---|---|
| | 1 | 5B-9304 | 2 | SCREW | | | | | |
| Y | 2 | 173-3452 | 2 | VALVE GP | | | | | |
| Y | 3 | 191-5542 | 1 | MOTOR GP | | | | | |

Y—SEE SEPARATE ILLUSTRATION

H77819E 05

## 158-8986 MOTOR GP-SWING

Part of 158-8985-Page504
191-5542-Page506,173-3452-Page509

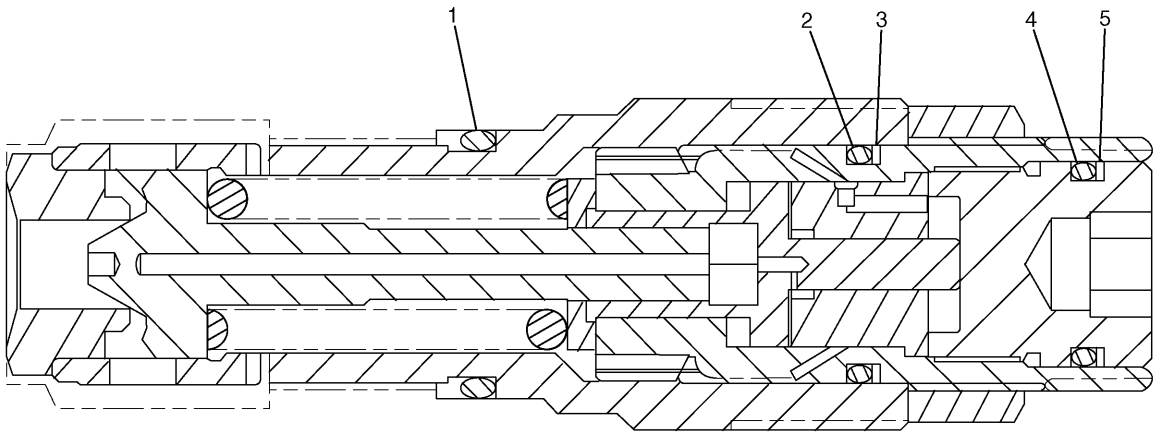


| NOTE | No. | PART No. | QTY | PART NAME | NOTE | No. | PART No. | QTY | PART NAME |
|---|---|---|---|---|---|---|---|---|---|
| | 1 | 095-1698 | 1 | SEAL-O-RING (ID=29.40mm) | | | | | |
| | 2 | 6V-5556 | 1 | SEAL-O-RING (ID=25.07mm) | | | | | |
| | 3 | 7I-0966 | 1 | RING | | | | | |
| | 4 | 7J-9933 | 1 | SEAL-O-RING (ID=21.89mm) | | | | | |
| | 5 | 168-0765 | 1 | RING | | | | | |

H67331E 00

## 173-3452 VALVE GP-RELIEF

Part of 158-8986-Page508

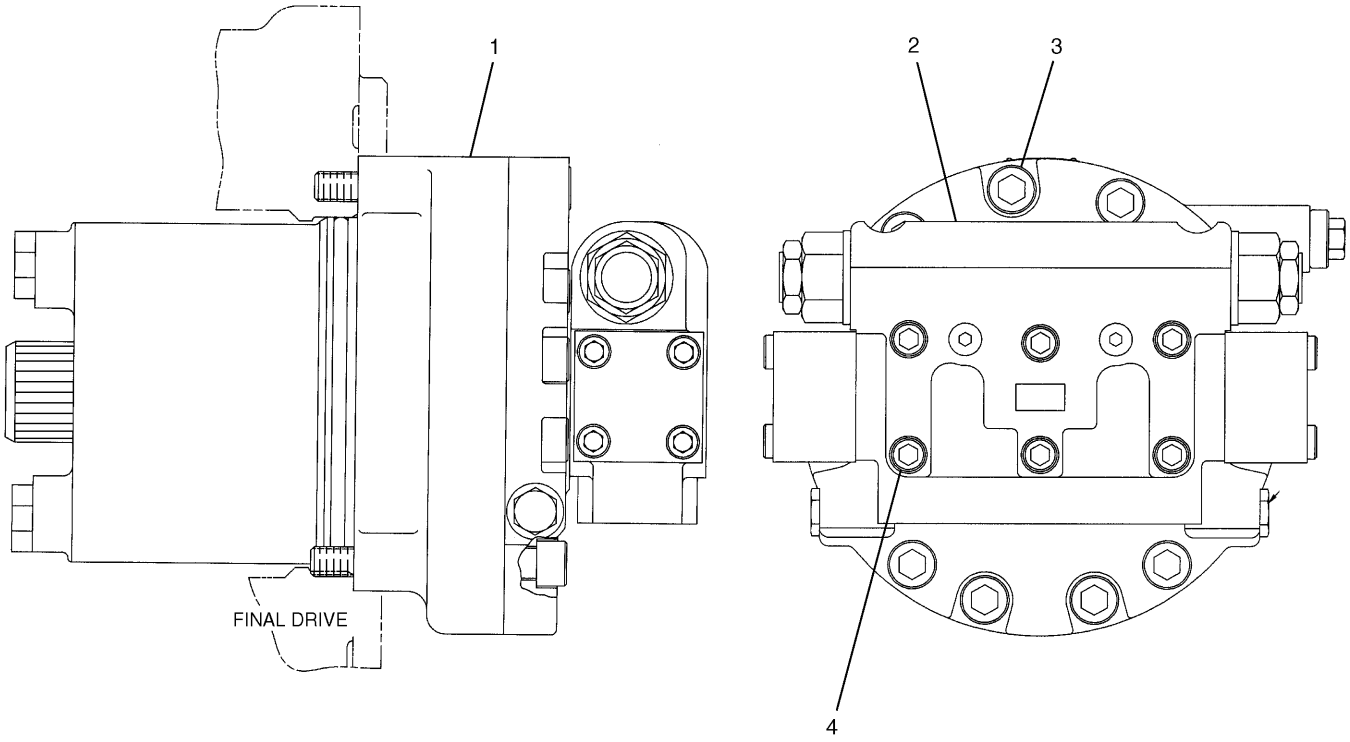


| NOTE | No. | PART No. | QTY | PART NAME | NOTE | No. | PART No. | QTY | PART NAME |
|---|---|---|---|---|---|---|---|---|---|
| Y | 1 | 209-5992 | 1 | MOTOR GP | | | | | |
| Y | 2 | 204-2819 | 1 | VALVE GP | | | | | |
| | 3 | 095-0707 | 3 | BOLT (L=120mm) | | | | | |
| | 4 | 3E-6910 | 6 | BOLT (L=70mm) | | | | | |

Y—SEE SEPARATE ILLUSTRATION

H84513E 00

## 215-9982 MOTOR & MTG GP-TRAVEL

Part of 227-6913-Page231
209-5992-Page512,204-2819-Page516

# MEMORANDA

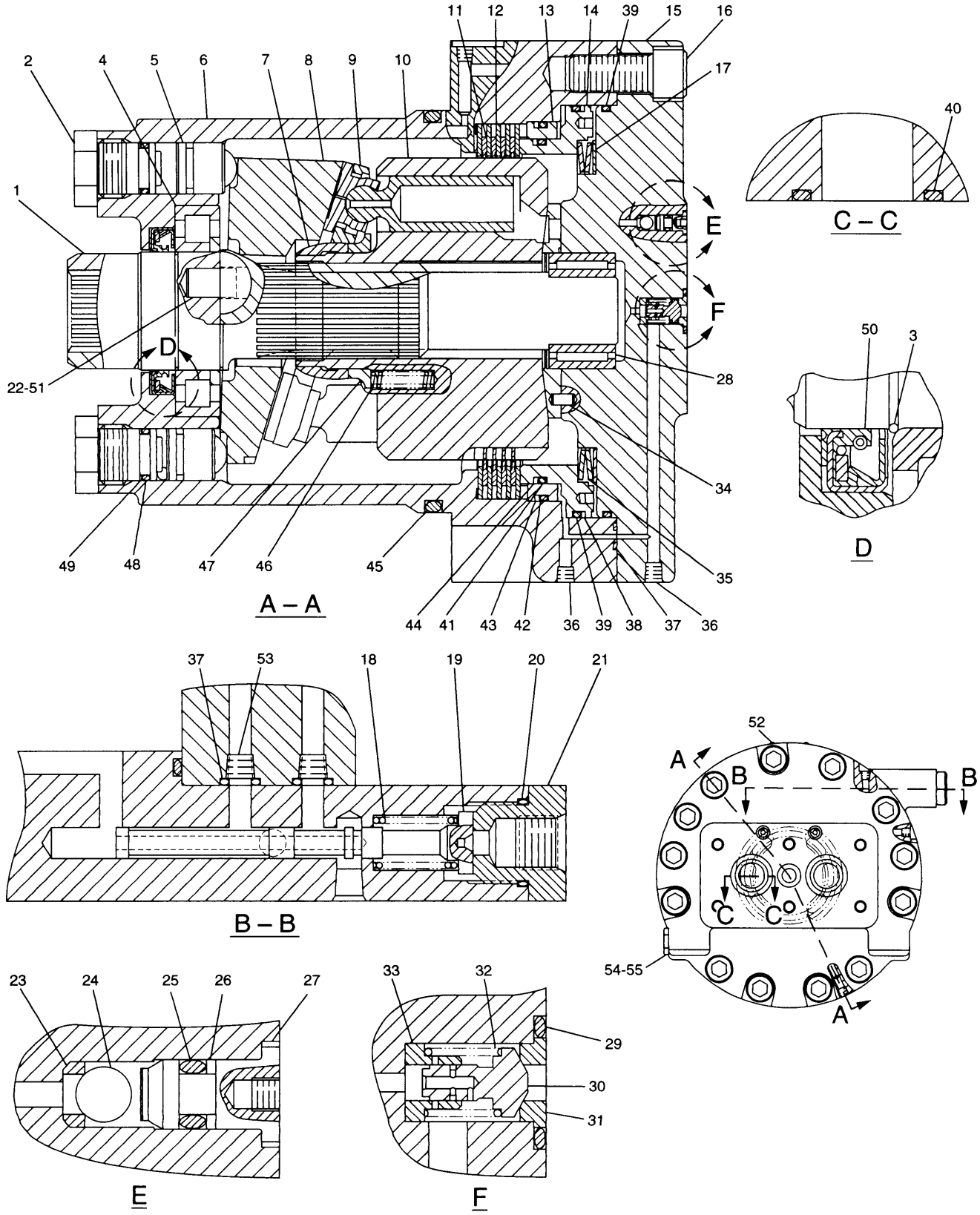


H87363E 02

**209-5992 MOTOR GP-TRAVEL**
Part of 215-9982-Page510

# HYDRAULIC SYSTEM

| NOTE | No. | PART No. | QTY | PART NAME | NOTE | No. | PART No. | QTY | PART NAME |
|---|---|---|---|---|---|---|---|---|---|
| | 1 | 209-5894 | 1 | SHAFT | J | 49 | 7Y-4217 | 2 | RING |
| | 2 | 087-4743 | 2 | STOPPER | J | 50 | 096-4376 | 1 | SEAL |
| | 3 | 094-1399 | 1 | RING | | 51 | 123-2008 | 2 | KEY |
| | 4 | 7Y-4212 | 1 | BEARING | | 52 | 095-7419 | 4 | SCREW |
| | 5 | 087-4757 | 2 | PISTON | | 53 | 7Y-4224 | 2 | ORIFICE |
| | 6 | 107-6969 | 1 | BODY | J | 54 | 3K-0360 | 1 | SEAL-O-RING (ID=16.36mm) |
| | 7 | 122-5114 | 1 | GUIDE | | 55 | 9S-4185 | 1 | PLUG |
| | 8 | 209-5909 | 1 | PLATE | | | | | |
| | 9 | 147-5860 | 1 | PISTON AS | | | | | THE FOLLOWING REPAIR |
| | 10 | 133-6777 | 1 | BARREL AS | | | | | KIT IS AVAILABLE: |
| | 11 | 107-6954 | 4 | PLATE | | | 7Y-4222 | 1 | SEAL KIT |
| | 12 | 107-6955 | 5 | PLATE | | | | | (INCLUDES PARTS MARKED J) |
| | 13 | 096-1523 | 1 | GUIDE | | | | | |
| | 14 | 7Y-4213 | 1 | PISTON | | | | | THE FOLLOWING SERVICE |
| | 15 | 7Y-4202 | 1 | HEAD | | | | | REPAIR IS AVAILABLE: |
| | 16 | 8T-4944 | 10 | BOLT (L=40mm) | | | 142-5515 | 2 | RING |
| B | 17 | 096-1521 | 1 | SHIM (T=1.00mm) | | | | | |
| B | | 096-3785 | 1 | SHIM (T=1.20mm) | | | | | |
| B | | 096-3786 | 1 | SHIM (T=1.40mm) | | | | | |
| B | | 096-3787 | 1 | SHIM (T=1.60mm) | | | | | |
| B | | 096-3788 | 1 | SHIM (T=1.80mm) | | | | | |
| B | | 096-1522 | 1 | SHIM (T=2.00mm) | | | | | |
| | 18 | 096-3978 | 1 | SPRING | | | | | |
| | 19 | 7Y-4216 | 1 | SPOOL | | | | | |
| J | 20 | 2M-9780 | 1 | SEAL-O-RING (ID=19.18mm) | | | | | |
| | 21 | 087-4786 | 1 | ADAPTER | | | | | |
| | 22 | 121-1558 | 2 | PIN | | | | | |
| | 23 | 096-5916 | 2 | SEAT | | | | | |
| | 24 | 2D-6642 | 2 | BALL | | | | | |
| J | 25 | 095-1572 | 2 | SEAL-O-RING (ID=4.80mm) | | | | | |
| J | 26 | 096-5919 | 2 | RING | | | | | |
| | 27 | 096-5915 | 2 | RETAINER | | | | | |
| | 28 | 096-4003 | 1 | BEARING SET | | | | | |
| J | 29 | 095-1585 | 1 | SEAL-O-RING (ID=17.80mm) | | | | | |
| | 30 | 087-4742 | 1 | VALVE | | | | | |
| | 31 | 096-1519 | 1 | SEAT | | | | | |
| | 32 | 095-7380 | 1 | SPRING | | | | | |
| | 33 | 095-7382 | 1 | RETAINER | | | | | |
| | 34 | 094-1875 | 1 | DOWEL | | | | | |
| | 35 | 095-7378 | 1 | WASHER SET | | | | | |
| | 36 | 094-1882 | 11 | PLUG | | | | | |
| J | 37 | 095-1575 | 3 | SEAL-O-RING (ID=7.80mm) | | | | | |
| J | 38 | 096-4378 | 1 | RING | | | | | |
| J | 39 | 096-4377 | 2 | SEAL-O-RING (ID=190.00mm) | | | | | |
| J | 40 | 095-1700 | 2 | SEAL-O-RING (ID=34.40mm) | | | | | |
| J | 41 | 095-7384 | 1 | SEAL-O-RING (ID=160.00mm) | | | | | |
| J | 42 | 095-7383 | 1 | SEAL-O-RING (ID=174.00mm) | | | | | |
| J | 43 | 095-7386 | 1 | RING | | | | | |
| J | 44 | 095-7387 | 1 | RING | | | | | |
| J | 45 | 095-1685 | 1 | SEAL-O-RING (ID=179.30mm) | | | | | |
| | 46 | 118-4057 | 9 | SPRING | | | | | |
| | 47 | 7Y-4215 | 1 | SPACER | | | | | |
| J | 48 | 095-1586 | 2 | SEAL-O-RING (ID=19.80mm) | | | | | |

B—USE AS REQUIRED

H87363E 02

## 209-5992 MOTOR GP-TRAVEL

Part of 215-9982-Page510

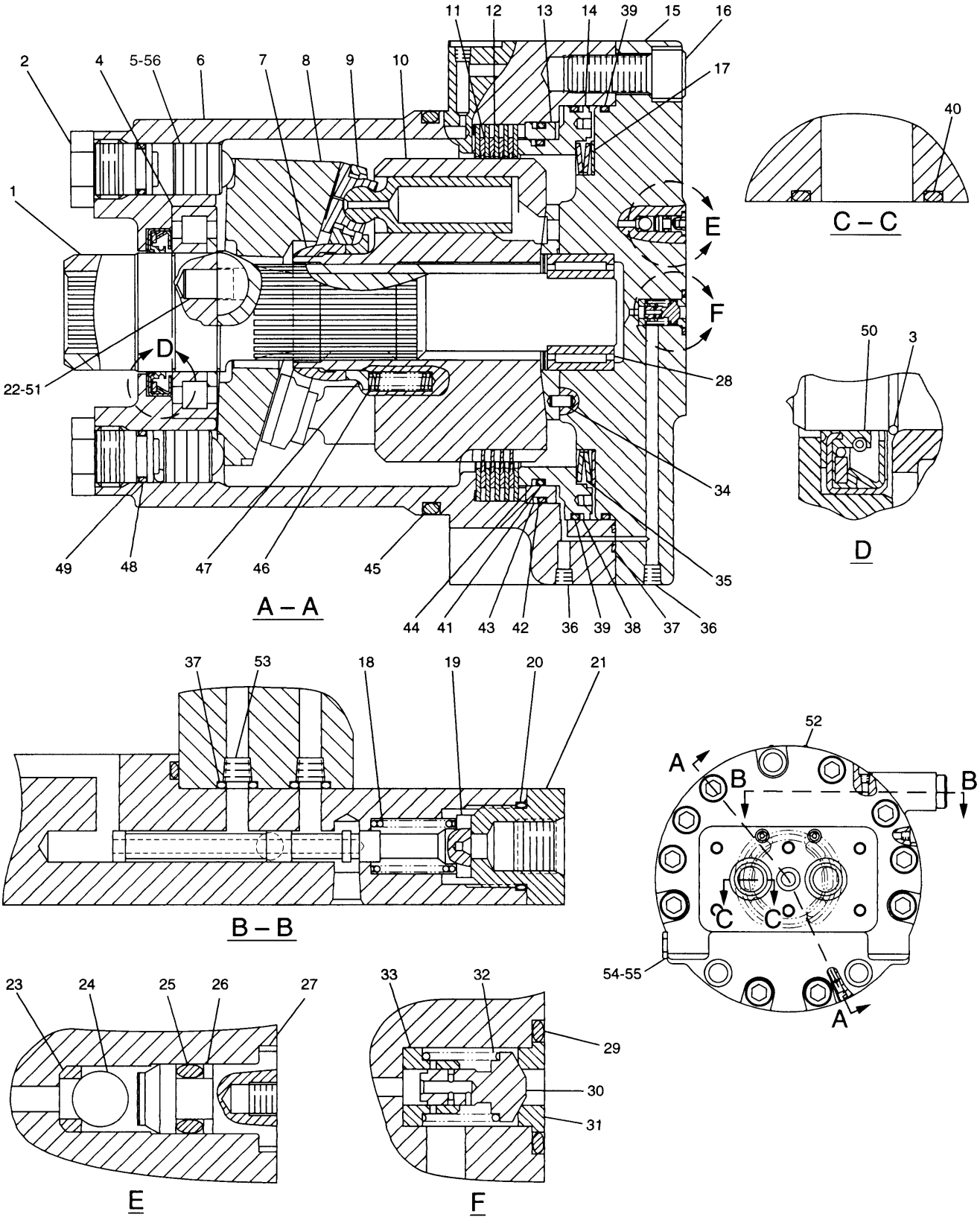


H87076E 01

215-9952 MOTOR GP-TRAVEL

# HYDRAULIC SYSTEM

| NOTE | No. | PART No. | QTY | PART NAME | NOTE | No. | PART No. | QTY | PART NAME |
|---|---|---|---|---|---|---|---|---|---|
| | 1 | 209-5894 | 1 | SHAFT | J | 49 | 7Y-4217 | 2 | RING |
| | 2 | 087-4743 | 2 | STOPPER | J | 50 | 096-4376 | 1 | SEAL |
| | 3 | 094-1399 | 1 | RING | | 51 | 123-2008 | 2 | KEY |
| | 4 | 7Y-4212 | 1 | BEARING | | 52 | 095-7419 | 4 | SCREW |
| | 5 | 087-4757 | 2 | PISTON | | 53 | 7Y-4224 | 2 | ORIFICE |
| | 6 | 107-6969 | 1 | BODY | J | 54 | 3K-0360 | 1 | SEAL-O-RING (ID=16.36mm) |
| | 7 | 122-5114 | 1 | GUIDE | | 55 | 9S-4185 | 1 | PLUG |
| | 8 | 209-5909 | 1 | PLATE | | 56 | 142-5515 | 2 | RING |
| | 9 | 147-5860 | 1 | PISTON AS | | | | | |
| | 10 | 234-4629 | 1 | BARREL AS | | | | | THE FOLLOWING REPAIR |
| | 11 | 107-6954 | 4 | PLATE | | | | | KIT IS AVAILABLE: |
| | 12 | 107-6955 | 5 | PLATE | | | 7Y-4222 | 1 | SEAL KIT |
| | 13 | 096-1523 | 1 | GUIDE | | | | | (INCLUDES PARTS MARKED J) |
| | 14 | 7Y-4213 | 1 | PISTON | | | | | |
| | 15 | 7Y-4202 | 1 | HEAD | | | | | |
| | 16 | 8T-4944 | 10 | BOLT (L=40mm) | | | | | |
| B | 17 | 096-1521 | 1 | SHIM (T=1.00mm) | | | | | |
| B | | 096-3785 | 1 | SHIM (T=1.20mm) | | | | | |
| B | | 096-3786 | 1 | SHIM (T=1.40mm) | | | | | |
| B | | 096-3787 | 1 | SHIM (T=1.60mm) | | | | | |
| B | | 096-3788 | 1 | SHIM (T=1.80mm) | | | | | |
| B | | 096-1522 | 1 | SHIM (T=2.00mm) | | | | | |
| | 18 | 096-3978 | 1 | SPRING | | | | | |
| | 19 | 7Y-4216 | 1 | SPOOL | | | | | |
| J | 20 | 2M-9780 | 1 | SEAL-O-RING (ID=19.18mm) | | | | | |
| | 21 | 087-4786 | 1 | ADAPTER | | | | | |
| | 22 | 121-1558 | 2 | PIN | | | | | |
| | 23 | 096-5916 | 2 | SEAT | | | | | |
| | 24 | 2D-6642 | 2 | BALL | | | | | |
| J | 25 | 095-1572 | 2 | SEAL-O-RING (ID=4.80mm) | | | | | |
| J | 26 | 096-5919 | 2 | RING | | | | | |
| | 27 | 096-5915 | 2 | RETAINER | | | | | |
| | 28 | 096-4003 | 1 | BEARING SET | | | | | |
| J | 29 | 095-1585 | 1 | SEAL-O-RING (ID=17.80mm) | | | | | |
| | 30 | 087-4742 | 1 | VALVE | | | | | |
| | 31 | 096-1519 | 1 | SEAT | | | | | |
| | 32 | 095-7380 | 1 | SPRING | | | | | |
| | 33 | 095-7382 | 1 | RETAINER | | | | | |
| | 34 | 094-1875 | 1 | DOWEL | | | | | |
| | 35 | 095-7378 | 1 | WASHER SET | | | | | |
| | 36 | 094-1882 | 11 | PLUG | | | | | |
| J | 37 | 095-1575 | 3 | SEAL-O-RING (ID=7.80mm) | | | | | |
| J | 38 | 096-4378 | 1 | RING | | | | | |
| J | 39 | 096-4377 | 2 | SEAL-O-RING (ID=190.00mm) | | | | | |
| J | 40 | 095-1700 | 2 | SEAL-O-RING (ID=34.40mm) | | | | | |
| J | 41 | 095-7384 | 1 | SEAL-O-RING (ID=160.00mm) | | | | | |
| J | 42 | 095-7383 | 1 | SEAL-O-RING (ID=174.00mm) | | | | | |
| J | 43 | 095-7386 | 1 | RING | | | | | |
| J | 44 | 095-7387 | 1 | RING | | | | | |
| J | 45 | 095-1685 | 1 | SEAL-O-RING (ID=179.30mm) | | | | | |
| | 46 | 096-4389 | 9 | SPRING | | | | | |
| | 47 | 7Y-4215 | 1 | SPACER | | | | | |
| J | 48 | 095-1586 | 2 | SEAL-O-RING (ID=19.80mm) | | | | | |

B—USE AS REQUIRED

H87076E 01

## 215-9952 MOTOR GP-TRAVEL

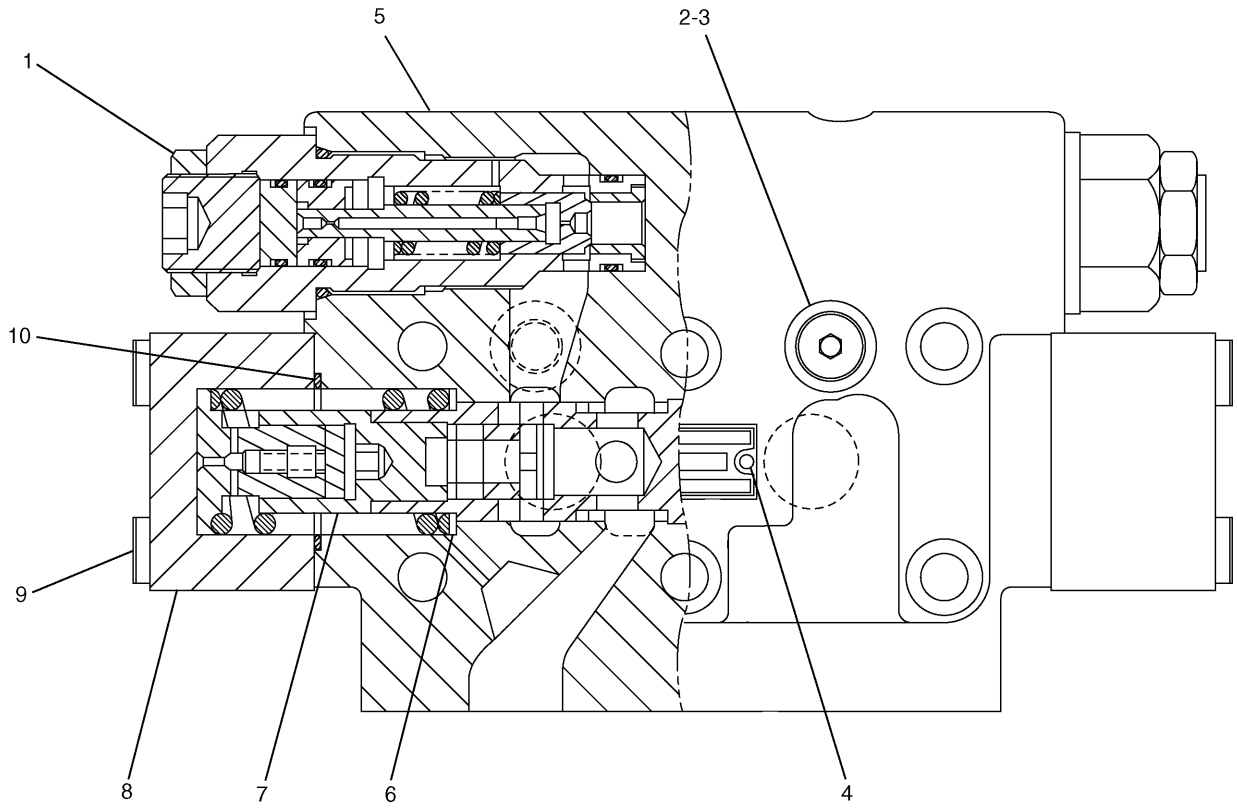


| NOTE | No. | PART No. | QTY | PART NAME | NOTE | No. | PART No. | QTY | PART NAME |
|---|---|---|---|---|---|---|---|---|---|
| Y | 1 | 204-2755 | 2 | VALVE GP | | | | | |
| | 2 | 9S-8004 | 2 | PLUG | | | | | |
| | 3 | 3J-1907 | 2 | SEAL-O-RING (ID=11.89mm) | | | | | |
| | 4 | 5B-9304 | 2 | SCREW | | | | | |
| | 5 | 209-5917 | 1 | VALVE GP | | | | | |
| | 6 | 096-1545 | 2 | WASHER | | | | | |
| | 7 | 209-5920 | 2 | SPRING | | | | | |
| | 8 | 204-2756 | 2 | COVER | | | | | |
| | 9 | 8T-7811 | 8 | BOLT (L=50mm) | | | | | |
| | 10 | 5P-2568 | 2 | SEAL-O-RING (ID=44.12mm) | | | | | |

Y—SEE SEPARATE ILLUSTRATION

HA1822E 02

## 204-2819 VALVE GP-TRACTION CONTROL

Part of 215-9982-Page510
204-2755-Page517

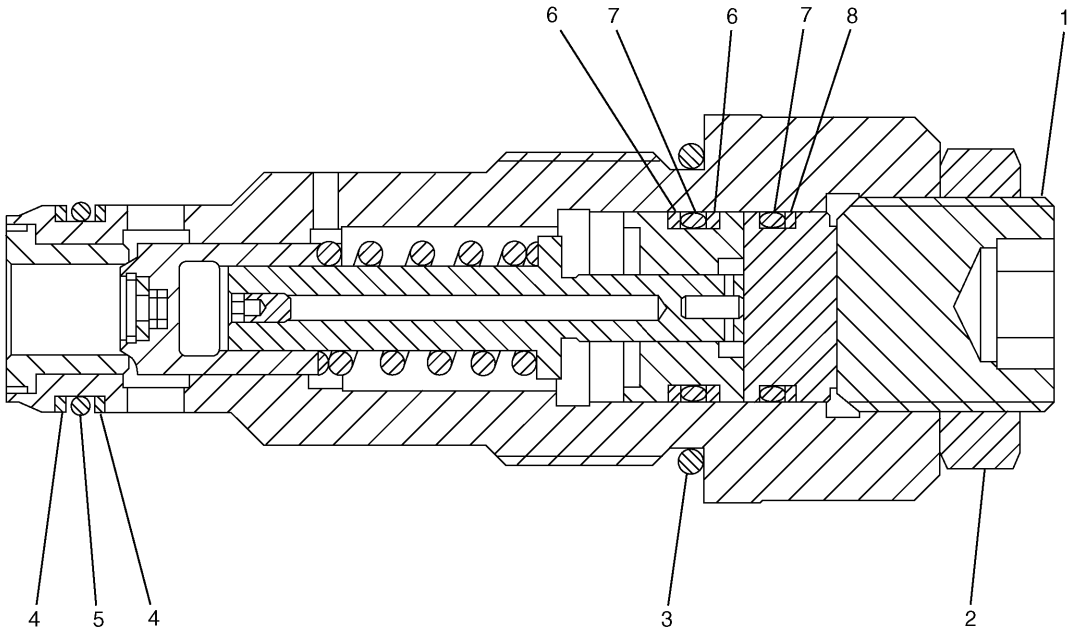


| NOTE | No. | PART No. | QTY | PART NAME | NOTE | No. | PART No. | QTY | PART NAME |
|---|---|---|---|---|---|---|---|---|---|
| | 1 | 7Y-8436 | 1 | SCREW | | | | | |
| | 2 | 7Y-8437 | 1 | NUT | | | | | |
| | 3 | 095-1601 | 1 | SEAL-O-RING (ID=34.70mm) | | | | | |
| | 4 | 095-1587 | 2 | SEAL-O-RING (ID=20.80mm) | | | | | |
| | 5 | 095-1590 | 1 | SEAL-O-RING (ID=21.80mm) | | | | | |
| | 6 | 121-1459 | 2 | RING | | | | | |
| | 7 | 095-1586 | 2 | SEAL-O-RING (ID=19.80mm) | | | | | |
| | 8 | 095-1785 | 1 | RING | | | | | |

H84550E 00

## 204-2755 VALVE GP-RELIEF

Part of 204-2819-Page516

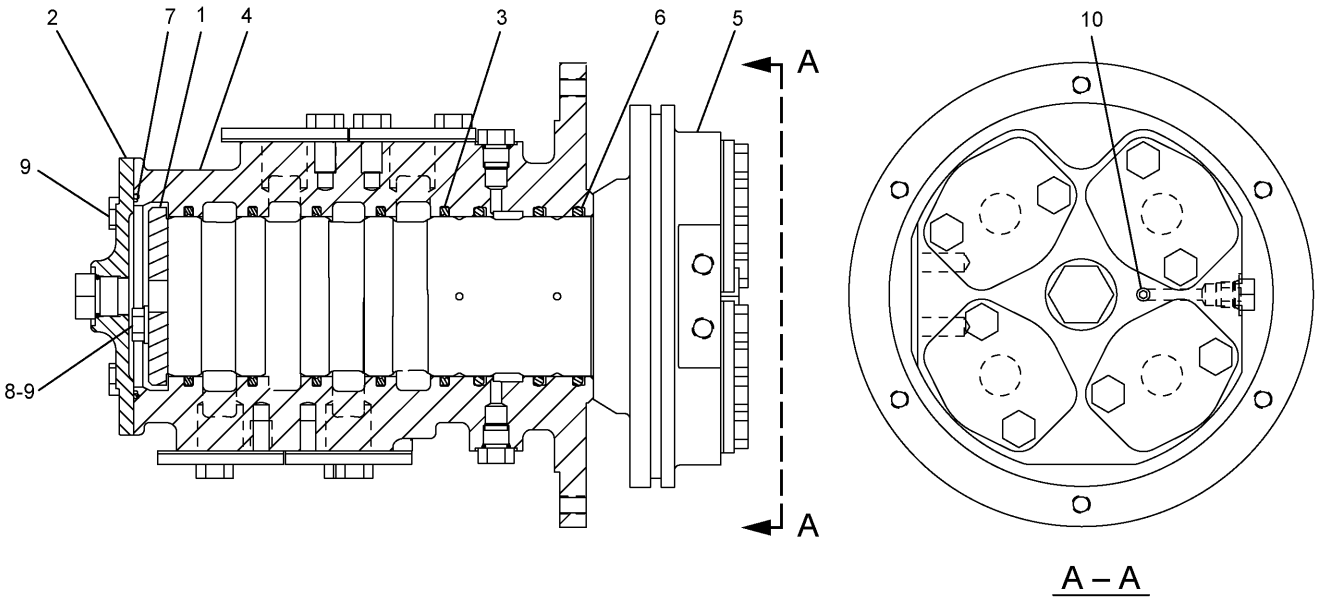


| NOTE | No. | PART No. | QTY | PART NAME | NOTE | No. | PART No. | QTY | PART NAME |
|---|---|---|---|---|---|---|---|---|---|
| | 1 | 7I-7131 | 1 | RETAINER | | | | | |
| | 2 | 7Y-4817 | 1 | COVER | | | | | |
| | 3 | 159-7782 | 5 | SEAL | | | | | |
| | 4 | 225-4548 | 1 | HOUSING | | | | | |
| | 5 | 225-4549 | 1 | ROTOR | | | | | |
| | 6 | 095-1625 | 3 | SEAL-O-RING (ID=89.60mm) | | | | | |
| | 7 | 095-1716 | 1 | SEAL-O-RING (ID=109.40mm) | | | | | |
| | 8 | 8T-4121 | 2 | WASHER | | | | | |
| | 9 | 8T-4136 | 6 | BOLT (L=25mm) | | | | | |
| | 10 | 8T-6759 | 1 | PLUG | | | | | |

H96707E 03

**234-4440 SWIVEL GP**

Part of 239-1716-Page437,239-1717-Page439

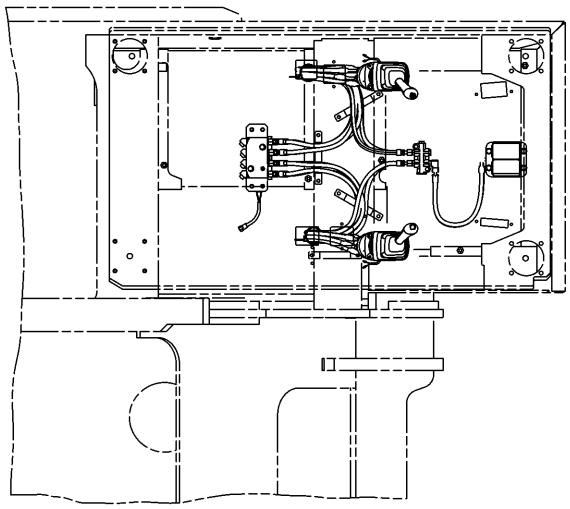

TOP VIEW

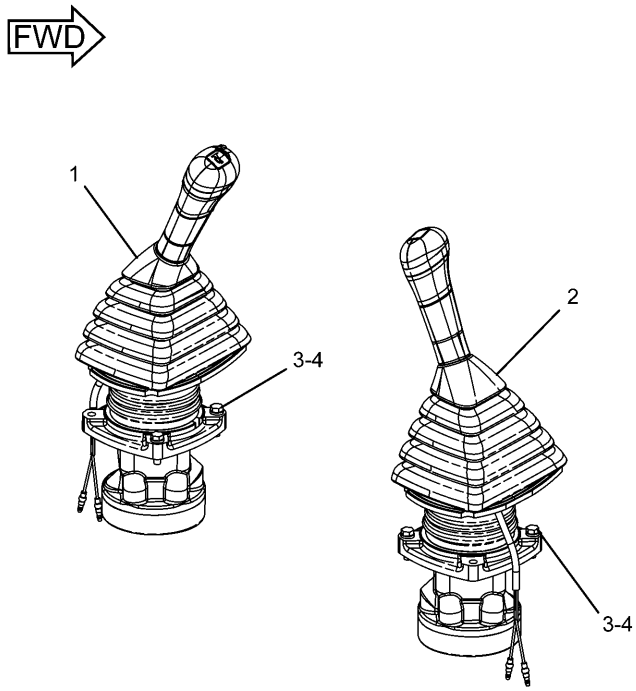


PICTORIAL VIEW

| NOTE | No. | PART No. | QTY | PART NAME | NOTE | No. | PART No. | QTY | PART NAME |
|---|---|---|---|---|---|---|---|---|---|
| Y | 1 | 270-5951 | 1 | VALVE GP (WORKING CONTROL) | | | | | |
| Y | 2 | 270-5952 | 1 | VALVE GP (WORKING CONTROL) | | | | | |
| | 3 | 6V-7357 | 6 | BOLT (L=25mm) | | | | | |
| | 4 | 9X-8256 | 6 | WASHER | | | | | |

Y—SEE SEPARATE ILLUSTRATION

H92597E 01

## 259-7707 CONTROL & MTG GP-JOYSTICK

270-5951-Page520,270-5952-Page521
An Attachment

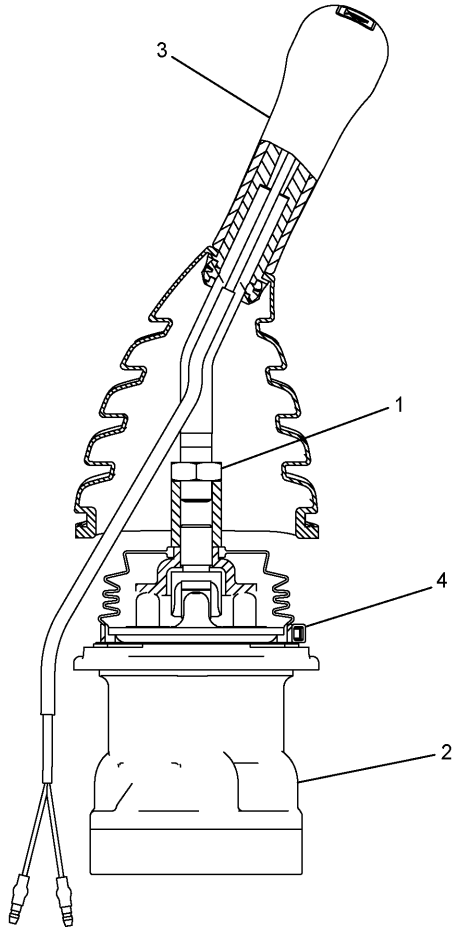


| NOTE | No. | PART No. | QTY | PART NAME | NOTE | No. | PART No. | QTY | PART NAME |
|---|---|---|---|---|---|---|---|---|---|
| | 1 | 7Y-8463 | 1 | NUT | | | | | |
| Y | 2 | 285-1327 | 1 | VALVE GP | | | | | |
| Y | 3 | 235-8969 | 1 | CONTROL GP | | | | | |
| | 4 | 6K-0806 | 1 | STRAP | | | | | |

Y—SEE SEPARATE ILLUSTRATION

H98492E 01

## 270-5951 VALVE GP-PILOT

Left Unit

Part of 259-7707-Page519
235-8969-Page522,285-1327-Page524
An Attachment

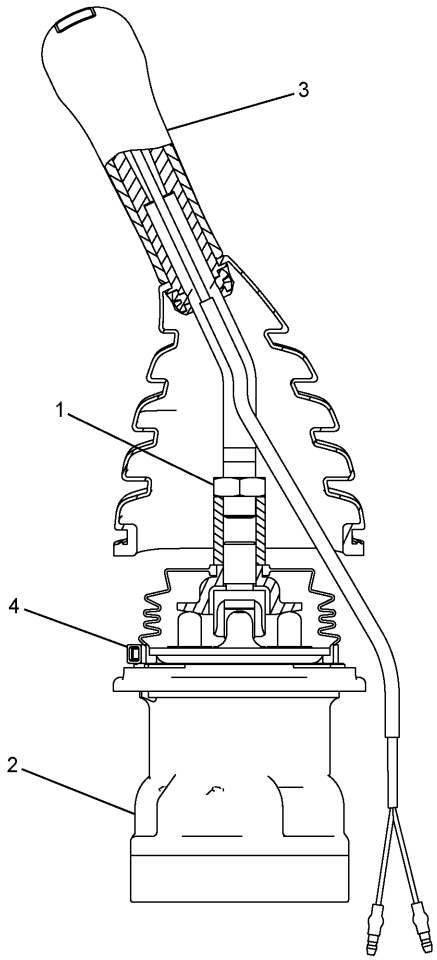


| NOTE | No. | PART No. | QTY | PART NAME | NOTE | No. | PART No. | QTY | PART NAME |
|---|---|---|---|---|---|---|---|---|---|
| | 1 | 7Y-8463 | 1 | NUT | | | | | |
| Y | 2 | 285-1327 | 1 | VALVE GP | | | | | |
| Y | 3 | 235-8970 | 1 | CONTROL GP | | | | | |
| | 4 | 6K-0806 | 1 | STRAP | | | | | |

Y—SEE SEPARATE ILLUSTRATION

H98493E 01

## 270-5952 VALVE GP-PILOT

Right Unit

Part of 259-7707-Page519
235-8970-Page522,285-1327-Page524
An Attachment

# HYDRAULIC SYSTEM

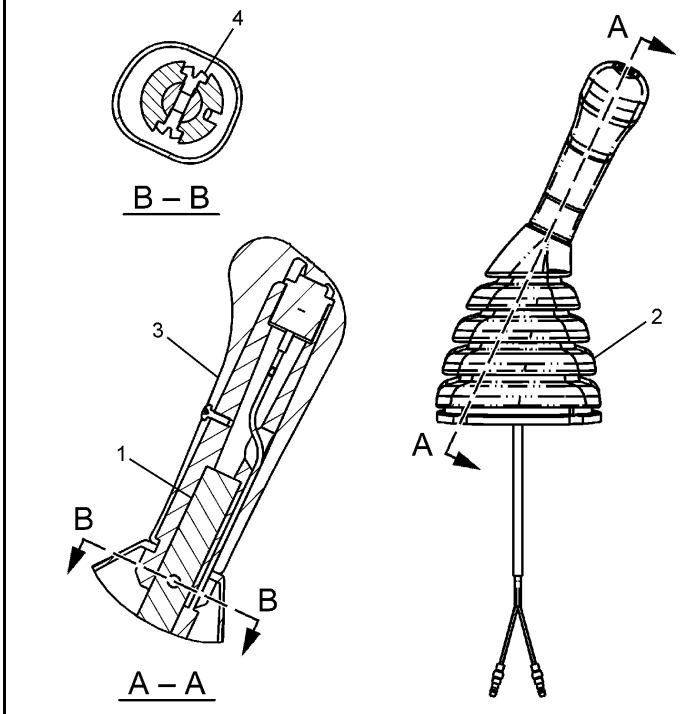


| NOTE | No. | PART No. | QTY | PART NAME |
|---|---|---|---|---|
| | 1 | 124-4010 | 1 | LEVER |
| | 2 | 235-8971 | 1 | BOOT |
| Y | 3 | 245-7842 | 1 | KNOB AS |
| | 4 | 096-2617 | 2 | SCREW |

Y—SEE SEPARATE ILLUSTRATION

H87373E 03

## 235-8969 CONTROL GP-PILOT OPERATED HYD

Part of 270-5951-Page520
245-7842-Page523
An Attachment

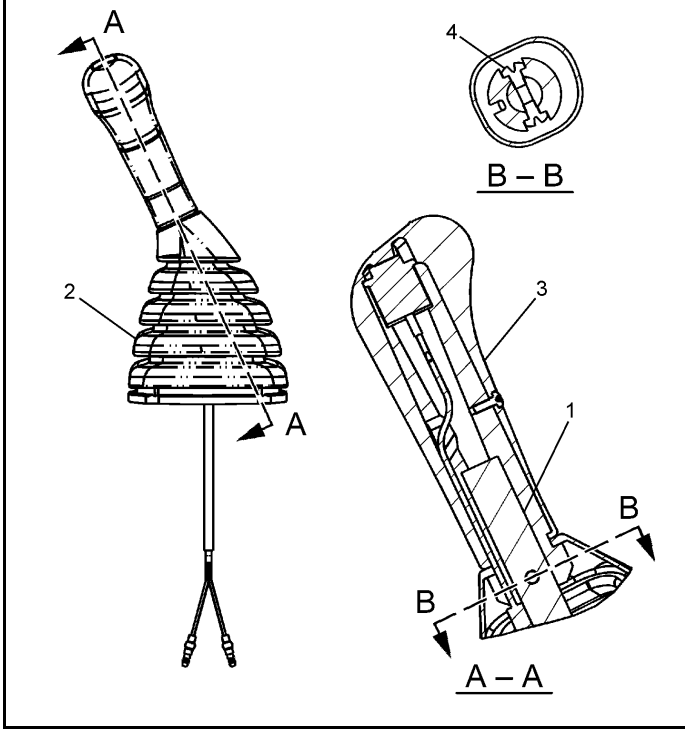


| NOTE | No. | PART No. | QTY | PART NAME |
|---|---|---|---|---|
| | 1 | 124-4010 | 1 | LEVER |
| | 2 | 235-8972 | 1 | BOOT |
| Y | 3 | 245-7844 | 1 | KNOB AS |
| | 4 | 096-2617 | 2 | SCREW |

Y—SEE SEPARATE ILLUSTRATION

H87366E 03

## 235-8970 CONTROL GP-PILOT OPERATED HYD

Part of 270-5952-Page521
245-7844-Page523
An Attachment

# HYDRAULIC SYSTEM

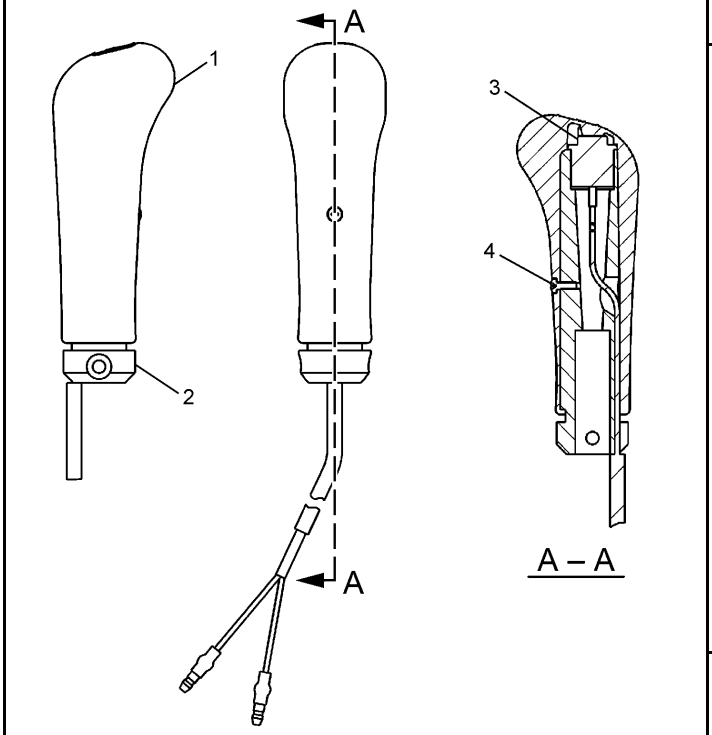


| NOTE | No. | PART No. | QTY | PART NAME |
|---|---|---|---|---|
| | 1 | 245-7843 | 1 | KNOB |
| | 2 | 124-4009 | 1 | SHAFT |
| | 3 | 222-0225 | 1 | SWITCH AS |
| | 4 | 6I-5298 | 1 | SCREW |

H87384E 00

**245-7842 KNOB AS**
Part of 235-8969-Page522
An Attachment

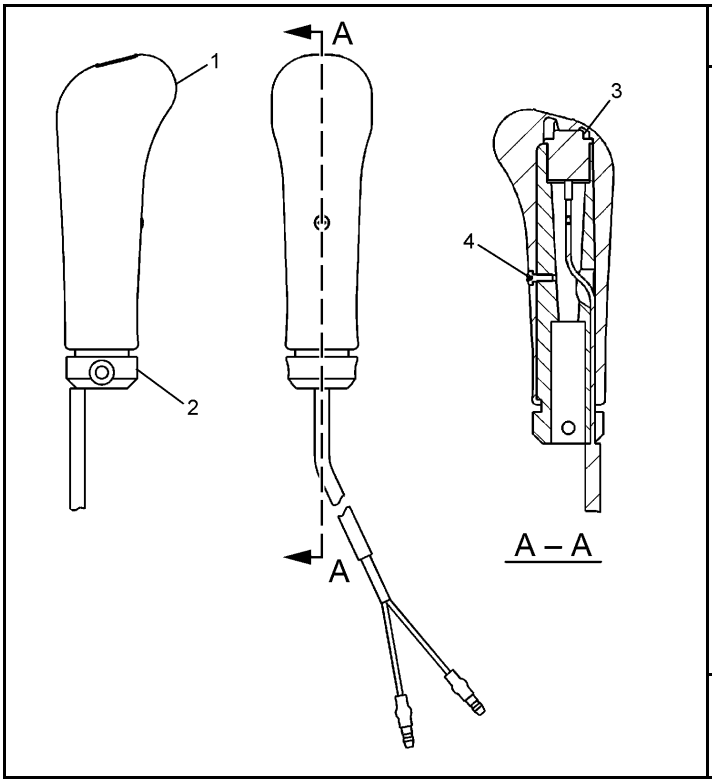


| NOTE | No. | PART No. | QTY | PART NAME |
|---|---|---|---|---|
| | 1 | 245-7845 | 1 | KNOB |
| | 2 | 124-4009 | 1 | SHAFT |
| | 3 | 222-0225 | 1 | SWITCH AS |
| | 4 | 6I-5298 | 1 | SCREW |

H87391E 00

**245-7844 KNOB AS**
Part of 235-8970-Page522
An Attachment

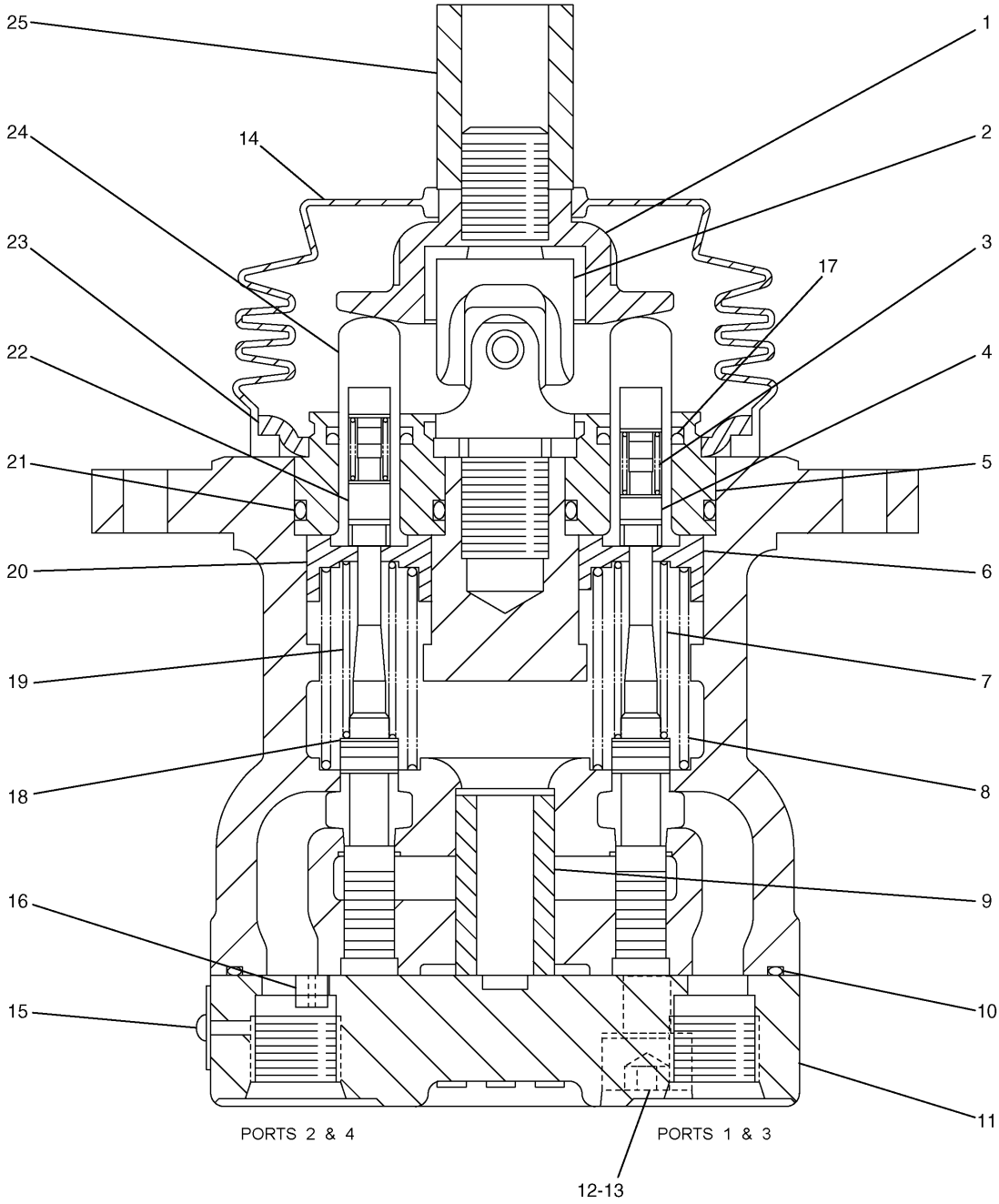


H92602E 00

**285-1327 VALVE GP-PILOT**
Part of 270-5951-Page520,270-5952-Page521
An Attachment

# HYDRAULIC SYSTEM

| NOTE | No. | PART No. | QTY | PART NAME | NOTE | No. | PART No. | QTY | PART NAME |
|---|---|---|---|---|---|---|---|---|---|
| | 1 | 165-9431 | 1 | PLATE | | | | | |
| | 2 | 4I-6365 | 1 | JOINT | | | | | |
| | 3 | 118-4087 | 4 | SPRING | | | | | |
| | 4 | 165-9444 | 2 | SEAT | | | | | |
| | 5 | 096-1628 | 4 | PLUG | | | | | |
| | 6 | 165-9436 | 2 | SEAT | | | | | |
| | 7 | 165-9460 | 2 | SPRING | | | | | |
| | 8 | 270-5953 | 4 | SPRING | | | | | |
| | 9 | 165-9439 | 1 | BUSHING | | | | | |
| | 10 | 165-9448 | 1 | SEAL-O-RING (ID=84.50mm) | | | | | |
| | 11 | 168-0794 | 1 | PLATE | | | | | |
| | 12 | 096-4498 | 2 | WASHER | | | | | |
| | 13 | 6V-8337 | 2 | BOLT (L=35mm) | | | | | |
| | 14 | 171-0087 | 1 | BELLOW | | | | | |
| | 15 | 5B-9304 | 2 | SCREW | | | | | |
| | 16 | 7Y-0468 | 1 | PIN | | | | | |
| | 17 | 094-0876 | 4 | SEAL | | | | | |
| B | 18 | 099-6137 | 4 | WASHER (T=0.2mm) | | | | | |
| | 19 | 165-9442 | 2 | SPRING | | | | | |
| | 20 | 165-9435 | 2 | SEAT | | | | | |
| | 21 | 095-1586 | 4 | SEAL-O-RING (ID=19.80mm) | | | | | |
| | 22 | 165-9443 | 2 | SEAT | | | | | |
| | 23 | 165-9438 | 1 | PLATE | | | | | |
| | 24 | 118-4086 | 4 | ROD | | | | | |
| | 25 | 131-5915 | 1 | NUT | | | | | |

B—USE AS REQUIRED

H92602E 00

## 285-1327 VALVE GP-PILOT

Part of 270-5951-Page520,270-5952-Page521

An Attachment

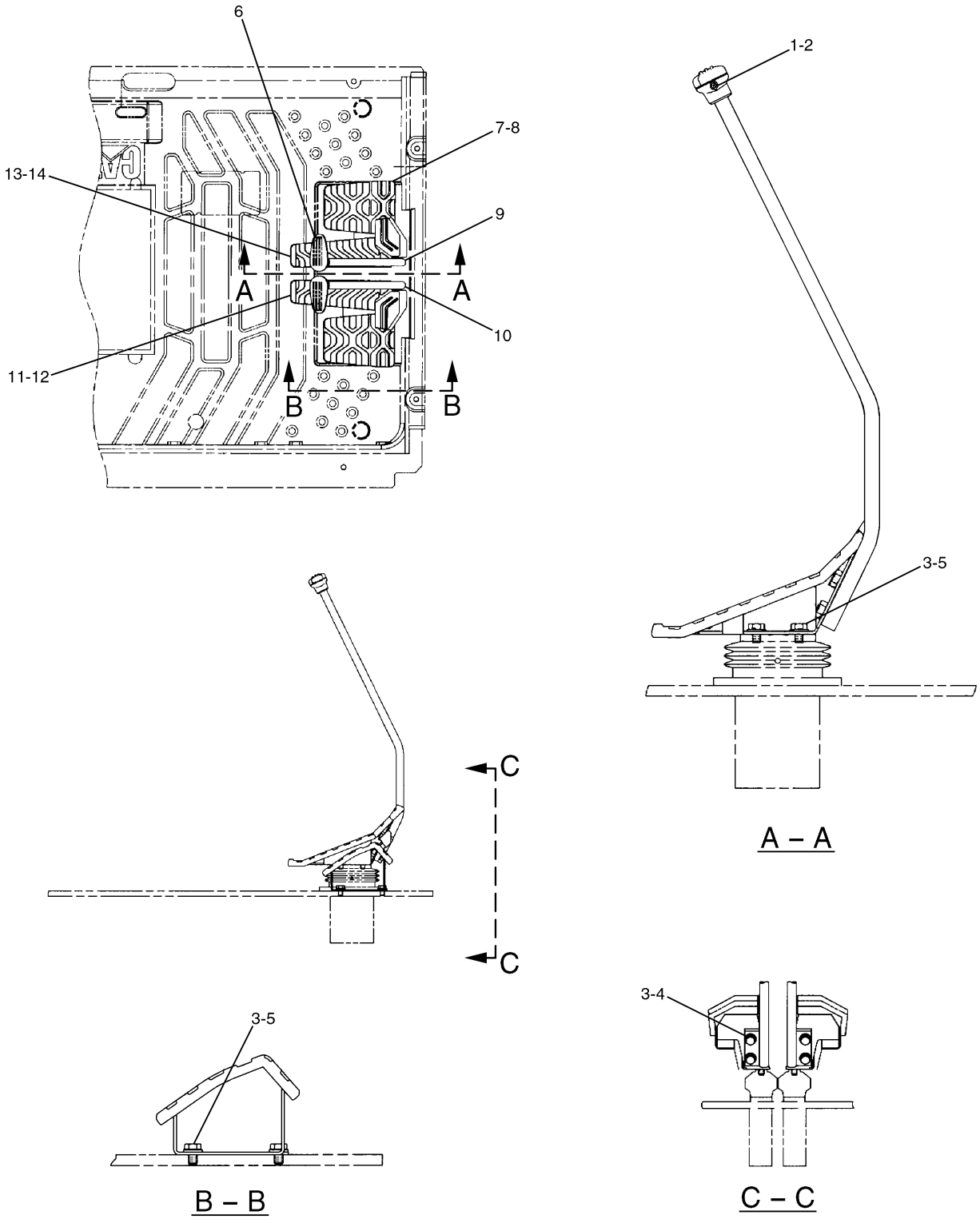


H70098E 02

170-9497 CONTROL GP-PILOT OPERATED HYD

# HYDRAULIC SYSTEM

| NOTE | No. | PART No. | QTY | PART NAME | NOTE | No. | PART No. | QTY | PART NAME |
|---|---|---|---|---|---|---|---|---|---|
| | 1 | 096-6166 | 2 | WASHER | | | | | |
| | 2 | 095-0728 | 2 | SCREW | | | | | |
| | 3 | 8T-4121 | 12 | WASHER | | | | | |
| | 4 | 8T-4136 | 4 | BOLT (L=25mm) | | | | | |
| | 5 | 8T-4191 | 8 | BOLT (L=16mm) | | | | | |
| | 6 | 142-5546 | 2 | KNOB | | | | | |
| | 7 | 117-6356 | 2 | STEP AS | | | | | |
| | 8 | 122-9610 | 2 | STEP | | | | | |
| | 9 | 170-9499 | 1 | LEVER AS (LH) | | | | | |
| | 10 | 170-9498 | 1 | LEVER AS (RH) | | | | | |
| | 11 | 122-9608 | 1 | PEDAL | | | | | |
| | 12 | 117-6350 | 1 | PEDAL AS (RH) | | | | | |
| | 13 | 122-9609 | 1 | PEDAL | | | | | |
| | 14 | 117-6349 | 1 | PEDAL AS (LH) | | | | | |

H70098E 02

## 170-9497 CONTROL GP-PILOT OPERATED HYD

# HYDRAULIC SYSTEM

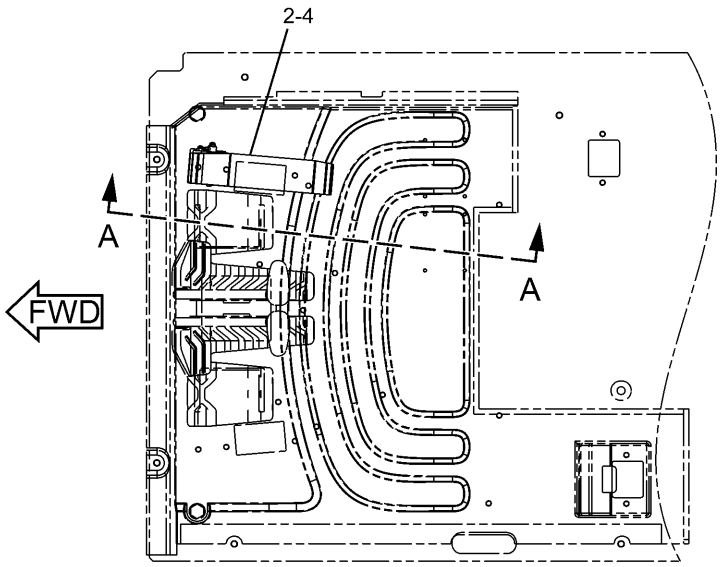


TOP VIEW

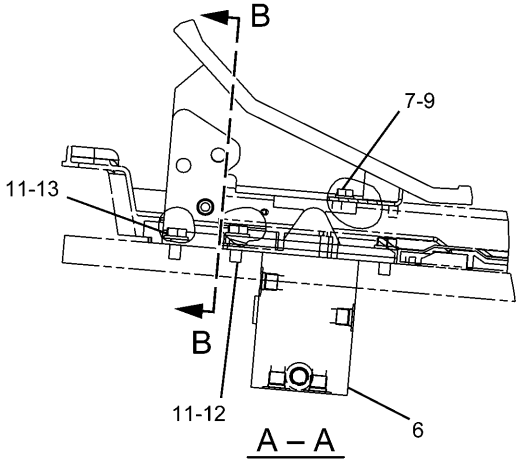


A – A

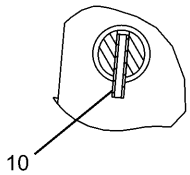


C – C

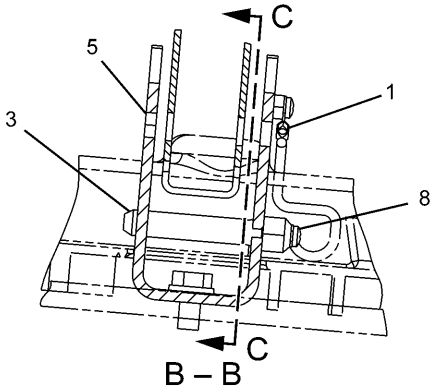


B – B

| NOTE | No. | PART No. | QTY | PART NAME | NOTE | No. | PART No. | QTY | PART NAME |
|---|---|---|---|---|---|---|---|---|---|
| | 1 | 5I-7090 | 1 | CHAIN AS | | | | | |
| | 2 | 122-9611 | 1 | PEDAL | | | | | |
| | 3 | 128-2173 | 1 | PIN | | | | | |
| | 4 | 153-8762 | 1 | PEDAL AS | | | | | |
| | 5 | 153-8763 | 1 | SUPPORT AS | | | | | |
| Y | 6 | 206-3336 | 1 | VALVE GP | | | | | |
| | 7 | 8T-4224 | 2 | WASHER | | | | | |
| | 8 | 095-0735 | 2 | SCREW | | | | | |
| | 9 | 7X-2536 | 2 | BOLT (L=14mm) | | | | | |
| | 10 | 8T-0114 | 1 | PIN | | | | | |
| | 11 | 8T-4121 | 3 | WASHER | | | | | |
| | 12 | 8T-4136 | 2 | BOLT (L=25mm) | | | | | |
| | 13 | 8T-4137 | 1 | BOLT (L=20mm) | | | | | |

Y—SEE SEPARATE ILLUSTRATION

H88485E 01

## 239-8693 CONTROL GP-HYDRAULIC

Single Function/1 Pump
Part of 259-7492,259-7494-Page443
206-3336-Page532
An Attachment

# MEMORANDA

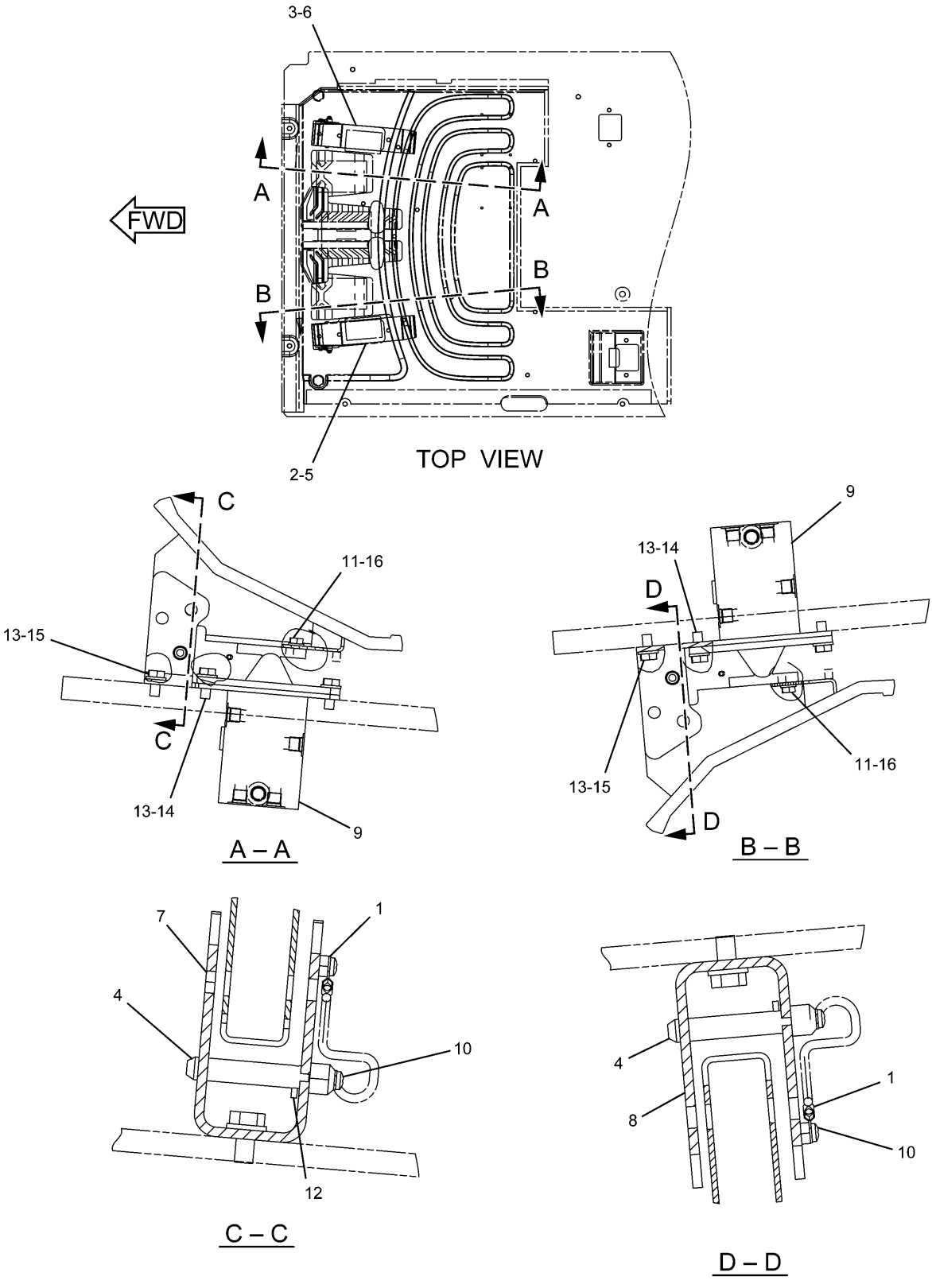


H89801E 02

**239-8695 CONTROL GP-HYDRAULIC**
Part of 259-7493-Page444,259-7495-Page445
206-3336-Page532
An Attachment

# HYDRAULIC SYSTEM

| NOTE | No. | PART No. | QTY | PART NAME | NOTE | No. | PART No. | QTY | PART NAME |
|---|---|---|---|---|---|---|---|---|---|
| | 1 | 5I-7090 | 2 | CHAIN AS | | | | | |
| | 2 | 121-1865 | 1 | PEDAL | | | | | |
| | 3 | 122-9611 | 1 | PEDAL | | | | | |
| | 4 | 128-2173 | 2 | PIN | | | | | |
| | 5 | 153-8753 | 1 | PEDAL AS | | | | | |
| | 6 | 153-8762 | 1 | PEDAL AS | | | | | |
| | 7 | 153-8763 | 1 | SUPPORT AS | | | | | |
| | 8 | 259-7877 | 1 | SUPPORT AS | | | | | |
| Y | 9 | 206-3336 | 2 | VALVE GP | | | | | |
| | 10 | 095-0735 | 4 | SCREW | | | | | |
| | 11 | 7X-2536 | 4 | BOLT (L=14mm) | | | | | |
| | 12 | 8T-0114 | 2 | PIN | | | | | |
| | 13 | 8T-4121 | 6 | WASHER | | | | | |
| | 14 | 8T-4136 | 4 | BOLT (L=25mm) | | | | | |
| | 15 | 8T-4137 | 2 | BOLT (L=20mm) | | | | | |
| | 16 | 8T-4224 | 4 | WASHER | | | | | |

Y—SEE SEPARATE ILLUSTRATION

H89801E 02

## 239-8695 CONTROL GP-HYDRAULIC

Part of 259-7493-Page444,259-7495-Page445
206-3336-Page532
An Attachment

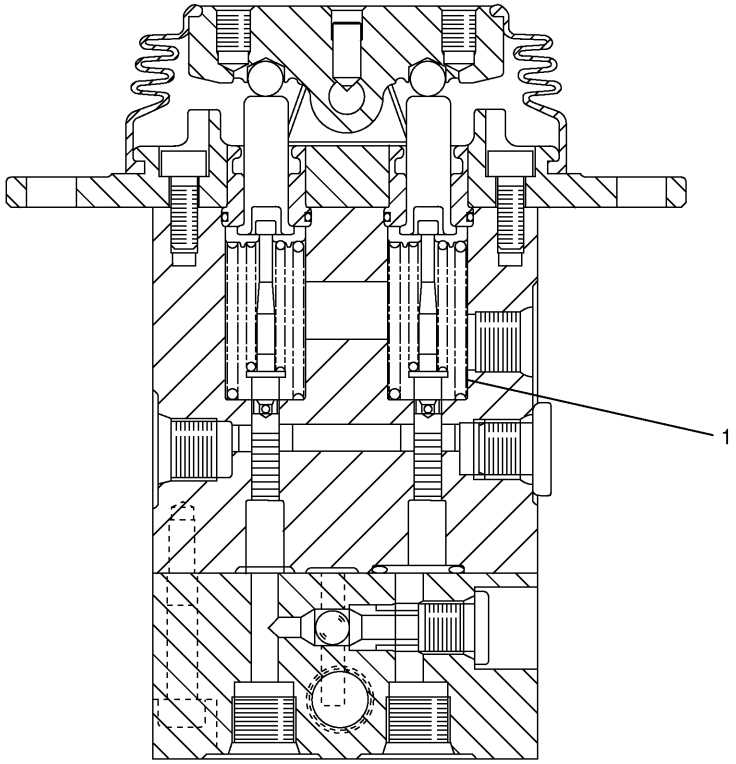


| NOTE | No. | PART No. | QTY | PART NAME | NOTE | No. | PART No. | QTY | PART NAME |
|---|---|---|---|---|---|---|---|---|---|
| | 1 | 190-7819 | 2 | SPRING | | | | | |

H78639E 00

## 206-3336 VALVE GP-PILOT

Part of 239-8693-Page528,239-8695-Page531
An Attachment

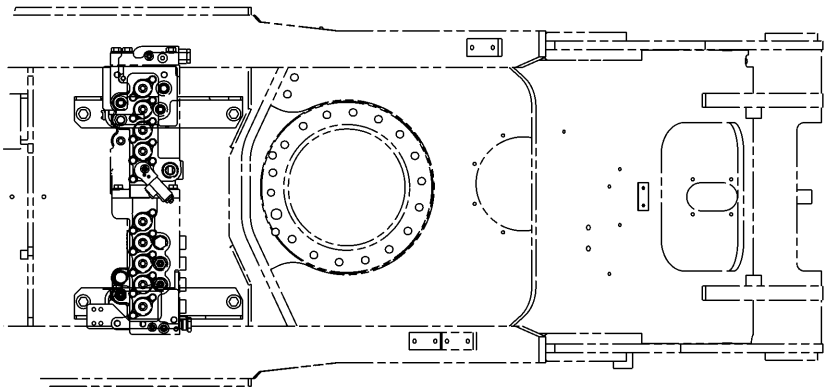

TOP VIEW

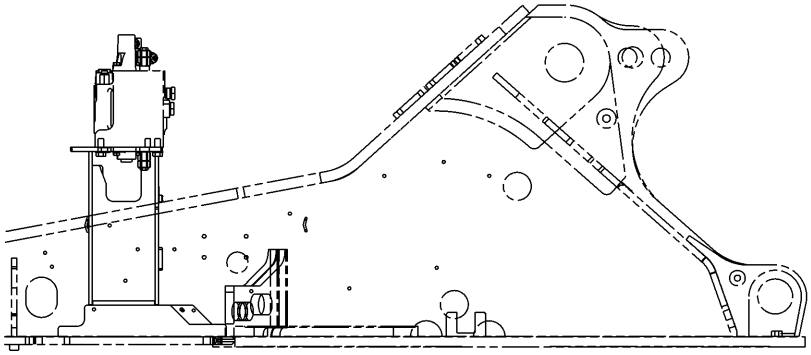

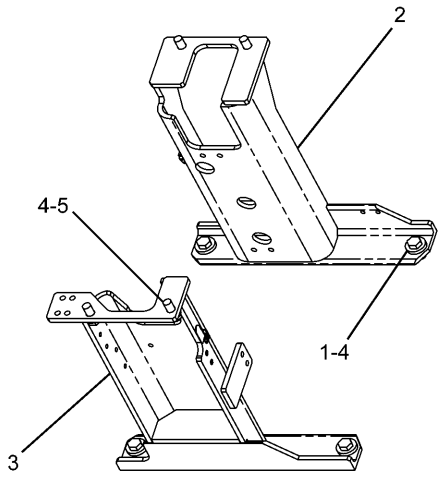


PICTORIAL VIEW
(VIEW FROM FRONT SIDE)

| NOTE | No. | PART No. | QTY | PART NAME | NOTE | No. | PART No. | QTY | PART NAME |
|---|---|---|---|---|---|---|---|---|---|
| | 1 | 196-0711 | 4 | WASHER | | | | | |
| | 2 | 260-7904 | 1 | SUPPORT AS | | | | | |
| | 3 | 260-7906 | 1 | SUPPORT AS | | | | | |
| | 4 | 100-3866 | 8 | BOLT (L=40mm) | | | | | |
| | 5 | 9X-8257 | 4 | WASHER | | | | | |

H89270E 00

260-7868 MOUNTING GP-VALVE

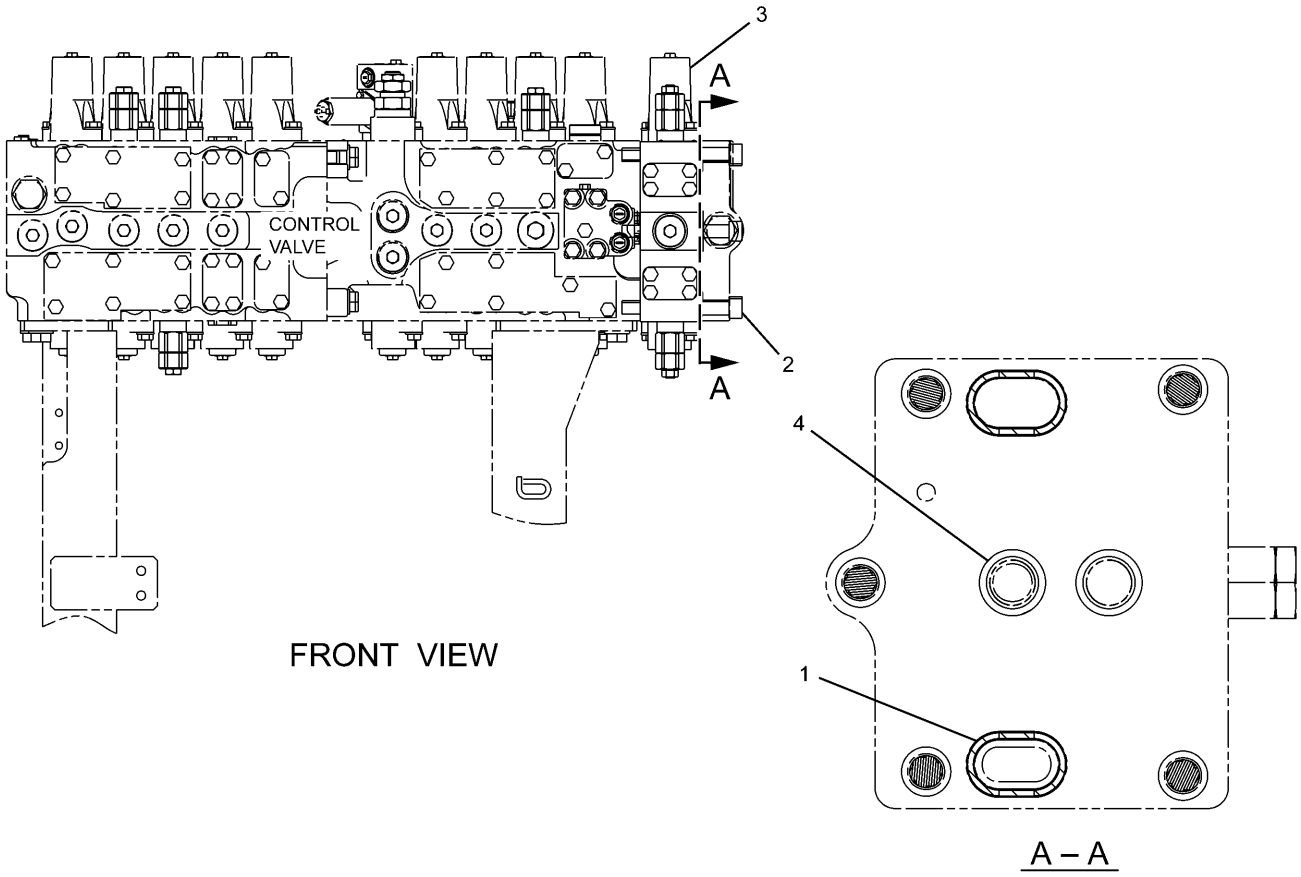


| NOTE | No. | PART No. | QTY | PART NAME | NOTE | No. | PART No. | QTY | PART NAME |
|---|---|---|---|---|---|---|---|---|---|
| | 1 | 4J-8998 | 2 | SEAL-O-RING (ID=36.09mm) | | | | | |
| | 2 | 7I-1026 | 5 | BOLT (L=130mm) | | | | | |
| Y | 3 | 259-7378 | 1 | VALVE GP | | | | | |
| | 4 | 1P-3702 | 2 | SEAL | | | | | |

Y—SEE SEPARATE ILLUSTRATION

H88948E 00

## 255-5713 VALVE & MOUNTING GP

Part of 259-7494-Page443,259-7493-Page444
259-7378-Page556
An Attachment

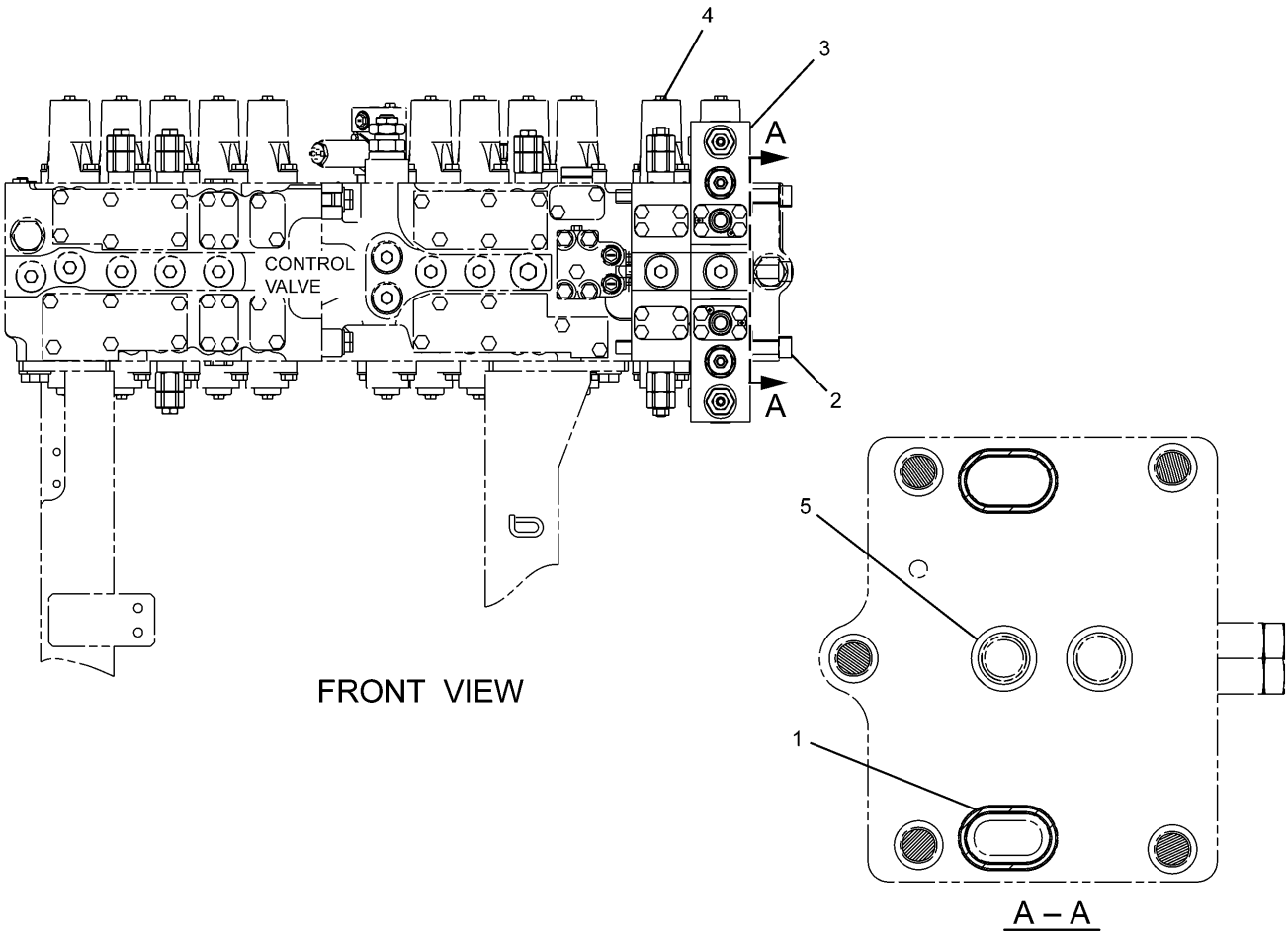


| NOTE | No. | PART No. | QTY | PART NAME | NOTE | No. | PART No. | QTY | PART NAME |
|---|---|---|---|---|---|---|---|---|---|
| | 1 | 4J-8998 | 2 | SEAL-O-RING (ID=36.09mm) | | | | | |
| | 2 | 7Y-5243 | 5 | BOLT (L=200mm) | | | | | |
| Y | 3 | 244-8419 | 1 | VALVE GP | | | | | |
| Y | 4 | 259-7378 | 1 | VALVE GP | | | | | |
| | 5 | 1P-3702 | 2 | SEAL | | | | | |

Y—SEE SEPARATE ILLUSTRATION

H88949E 00

## 255-5716 VALVE & MOUNTING GP

Part of 259-7495-Page445
259-7378-Page556,244-8419-Page558
An Attachment

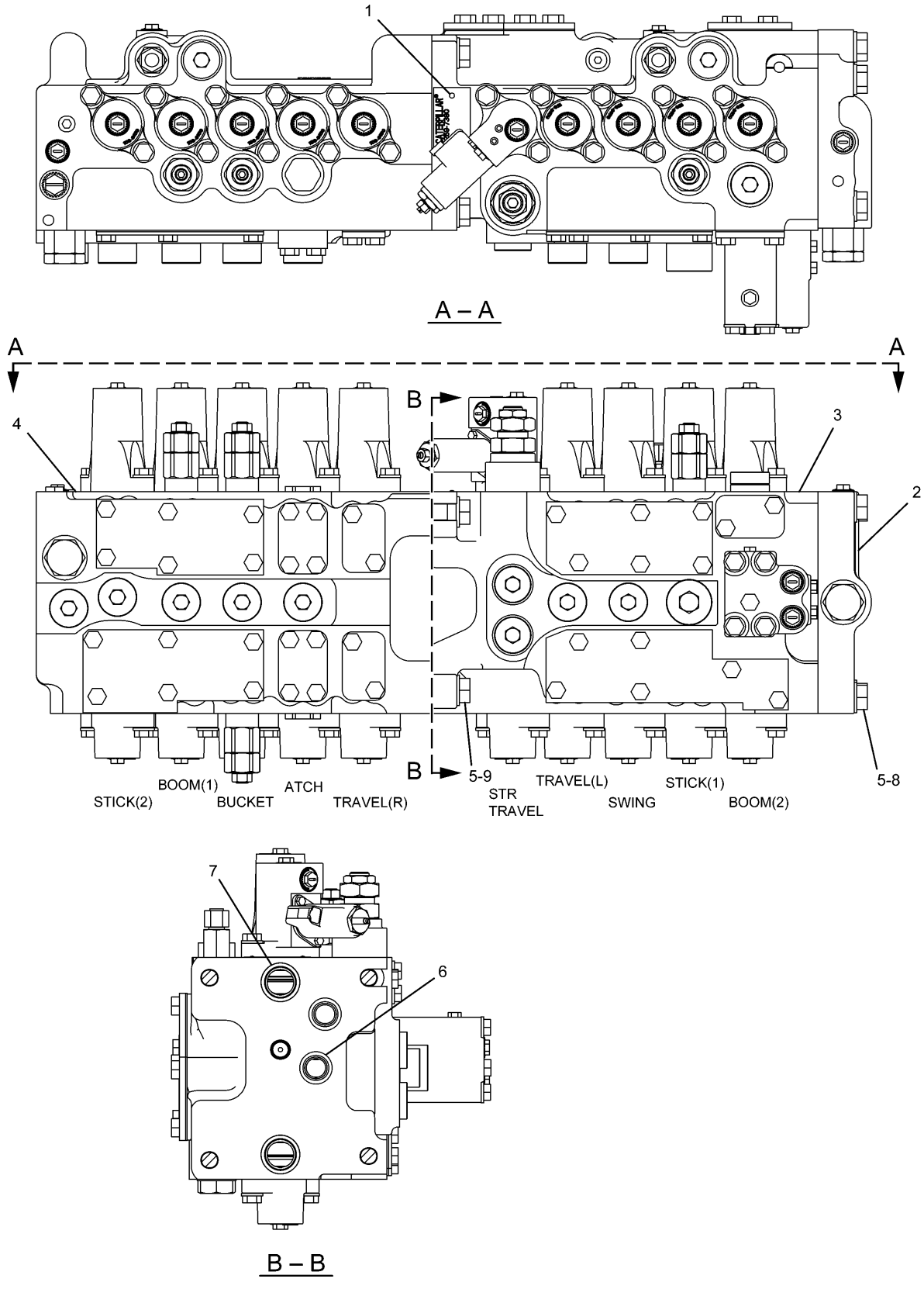


H89498E 00

**259-7464 VALVE GP-MAIN CONTROL**

153-5313-Page538,259-7465-Page540,259-7466-Page548

# HYDRAULIC SYSTEM

| NOTE | No. | PART No. | QTY | PART NAME | NOTE | No. | PART No. | QTY | PART NAME |
|---|---|---|---|---|---|---|---|---|---|
| | 1 | 4B-4158 | 2 | SCREW | | | | | |
| Y | 2 | 153-5313 | 1 | VALVE GP | | | | | |
| Y | 3 | 259-7466 | 1 | VALVE GP | | | | | |
| Y | 4 | 259-7465 | 1 | VALVE GP | | | | | |
| | 5 | 9X-8257 | 9 | WASHER | | | | | |
| | 6 | 1P-3702 | 2 | SEAL | | | | | |
| | 7 | 4J-0519 | 2 | SEAL-O-RING (ID=31.34mm) | | | | | |
| | 8 | 8T-4140 | 5 | BOLT (L=60mm) | | | | | |
| | 9 | 8T-4193 | 4 | BOLT (L=50mm) | | | | | |

Y—SEE SEPARATE ILLUSTRATION

H89498E 00

## 259-7464 VALVE GP-MAIN CONTROL

153-5313-Page538,259-7465-Page540,259-7466-Page548

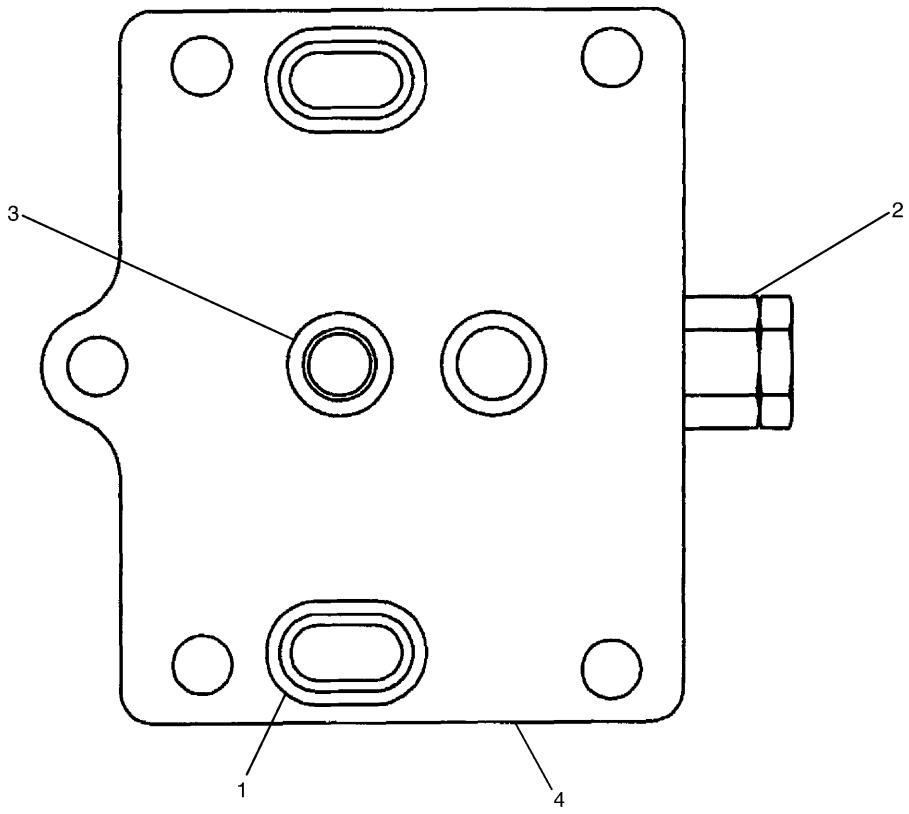


| NOTE | No. | PART No. | QTY | PART NAME | NOTE | No. | PART No. | QTY | PART NAME |
|---|---|---|---|---|---|---|---|---|---|
| | 1 | 4J-8998 | 2 | SEAL-O-RING (ID=36.09mm) | | | | | |
| Y | 2 | 109-2667 | 1 | VALVE GP | | | | | |
| | 3 | 1P-3702 | 2 | SEAL | | | | | |
| | 4 | 153-5239 | 1 | COVER | | | | | |

Y—SEE SEPARATE ILLUSTRATION

H81334E 02

## 153-5313 VALVE GP-RELIEF

Part of 259-7464-Page537
109-2667-Page539

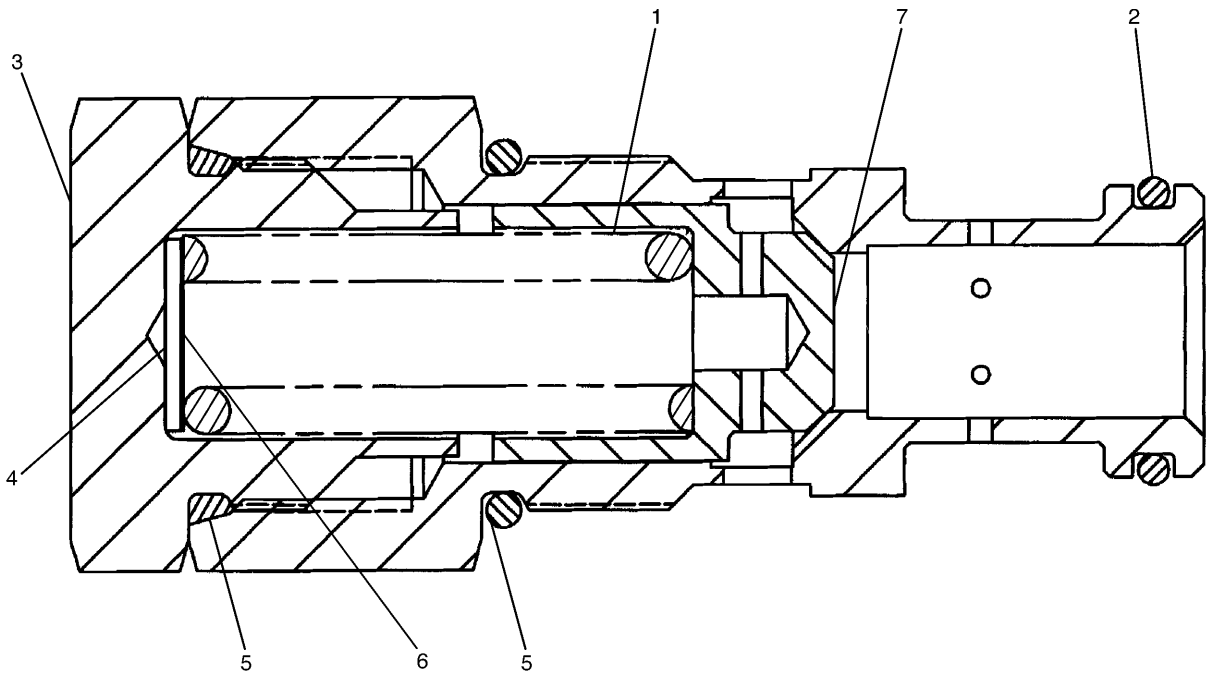


| NOTE | No. | PART No. | QTY | PART NAME | NOTE | No. | PART No. | QTY | PART NAME |
|---|---|---|---|---|---|---|---|---|---|
| | 1 | 107-6370 | 1 | SPRING | | | | | |
| | 2 | 5P-3108 | 1 | SEAL-O-RING (ID=20.30mm) | | | | | |
| | 3 | 5I-4111 | 1 | PLUG | | | | | |
| B | 4 | 4J-7386 | 5 | SHIM (T=0.254mm) | | | | | |
| | 5 | 4K-1388 | 2 | SEAL-O-RING (ID=26.59mm) | | | | | |
| B | 6 | 4J-7385 | 1 | SHIM (T=1.219mm) | | | | | |
| | 7 | 107-6371 | 1 | VALVE | | | | | |

B—USE AS REQUIRED

H67278E 00

## 109-2667 VALVE GP-RELIEF

Direct Operated

Part of 153-5313-Page538

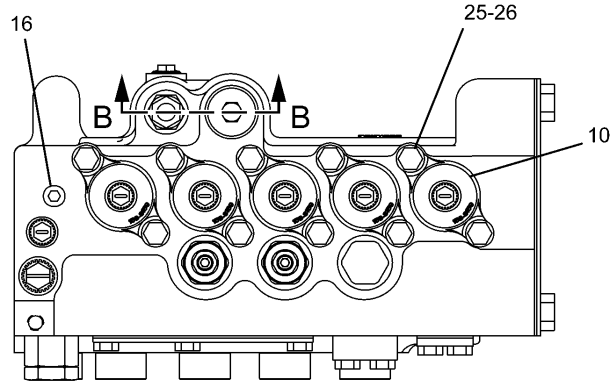


A – A

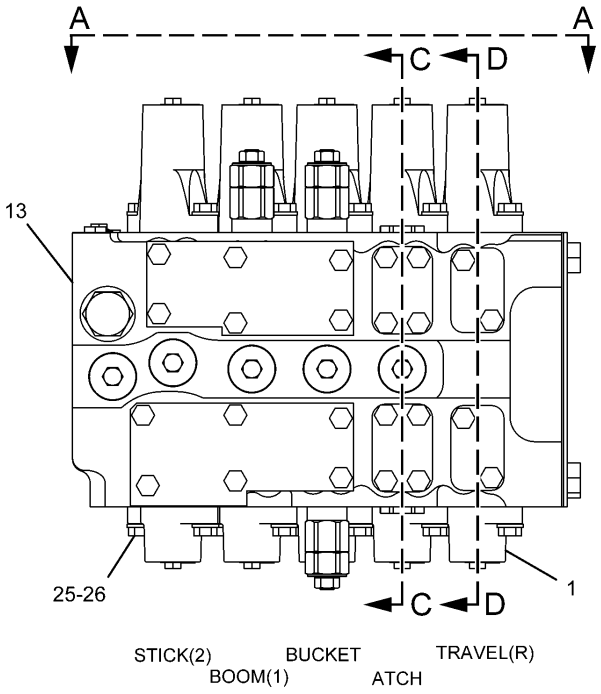


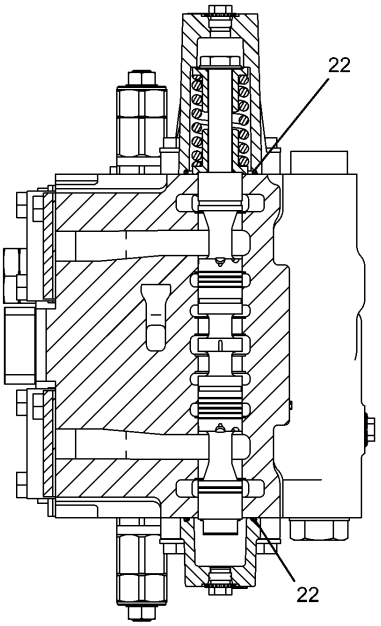


D – D

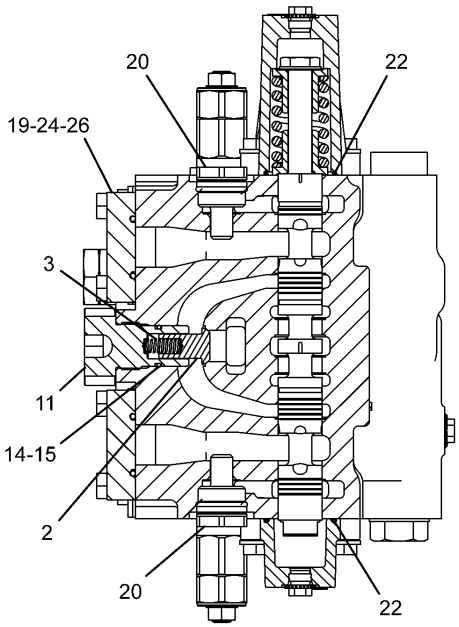


C – C

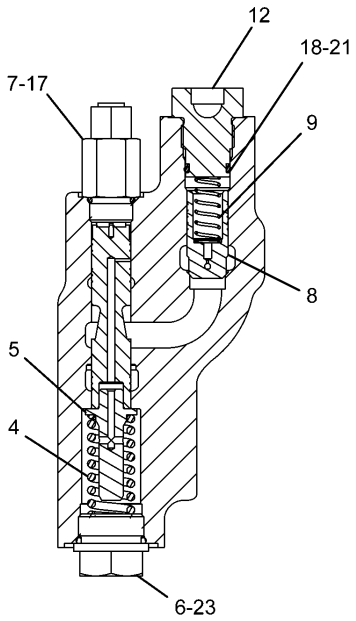


B – B

H97919E 01

**259-7465 VALVE GP-CONTROL (1/2)**

Part of 259-7464-Page537
259-7631-Page544

# HYDRAULIC SYSTEM

| NOTE | No. | PART No. | QTY | PART NAME | NOTE | No. | PART No. | QTY | PART NAME |
|---|---|---|---|---|---|---|---|---|---|
| | 1 | 6E-2274 | 5 | COVER | | | | | |
| | 2 | 6E-5731 | 1 | VALVE | | | | | |
| | 3 | 7I-1248 | 1 | SPRING | | | | | |
| | 4 | 153-5288 | 1 | SPRING | | | | | |
| | 5 | 153-5289 | 1 | GUIDE | | | | | |
| | 6 | 153-5290 | 1 | PLUG | | | | | |
| | 7 | 153-5291 | 1 | CONNECTOR | | | | | |
| | 8 | 153-5292 | 1 | VALVE | | | | | |
| | 9 | 153-5293 | 1 | SPRING | | | | | |
| | 10 | 158-8159 | 5 | HOUSING | | | | | |
| | 11 | 236-6419 | 1 | PLUG | | | | | |
| | 12 | 236-6421 | 1 | PLUG | | | | | |
| Y | 13 | 259-7631 | 1 | VALVE GP | | | | | |
| | 14 | 095-1590 | 1 | SEAL-O-RING (ID=21.80mm) | | | | | |
| | 15 | 095-1787 | 1 | RING | | | | | |
| | 16 | 111-9959 | 1 | PLUG | | | | | |
| | 17 | 2M-9780 | 1 | SEAL-O-RING (ID=19.18mm) | | | | | |
| | 18 | 4I-6397 | 1 | RING | | | | | |
| | 19 | 4J-0520 | 2 | SEAL-O-RING (ID=32.92mm) | | | | | |
| | 20 | 6E-4816 | 2 | PLUG GP | | | | | |
| | 21 | 6V-3922 | 1 | SEAL-O-RING (ID=18.72mm) | | | | | |
| | 22 | 6V-5597 | 4 | SEAL-O-RING (ID=40.94mm) | | | | | |
| | 23 | 7M-8485 | 1 | SEAL-O-RING (ID=29.74mm) | | | | | |
| | 24 | 7Y-8099 | 2 | COVER | | | | | |
| | 25 | 8T-4121 | 20 | WASHER | | | | | |
| | 26 | 8T-4195 | 28 | BOLT (L=30mm) | | | | | |

Y—SEE SEPARATE ILLUSTRATION

H97919E 01

## 259-7465 VALVE GP-CONTROL (1/2)

Part of 259-7464-Page537
259-7631-Page544

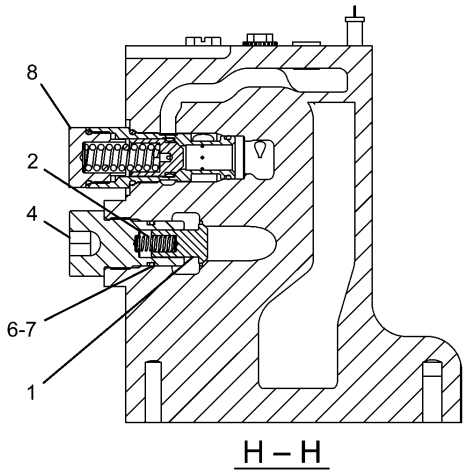


H – H

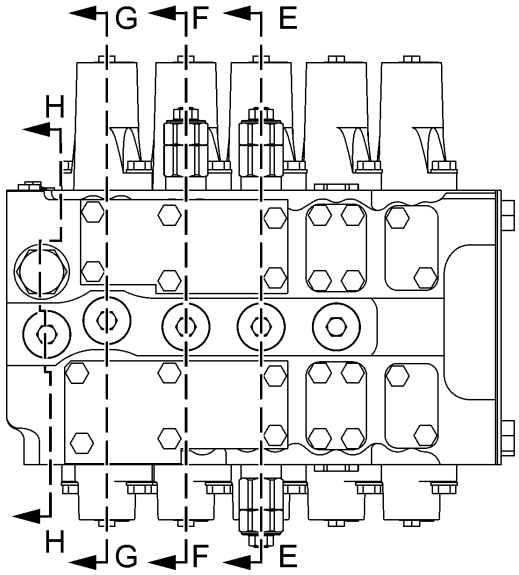


STICK(2) BUCKET TRAVEL(R)
BOOM(1) ATCH

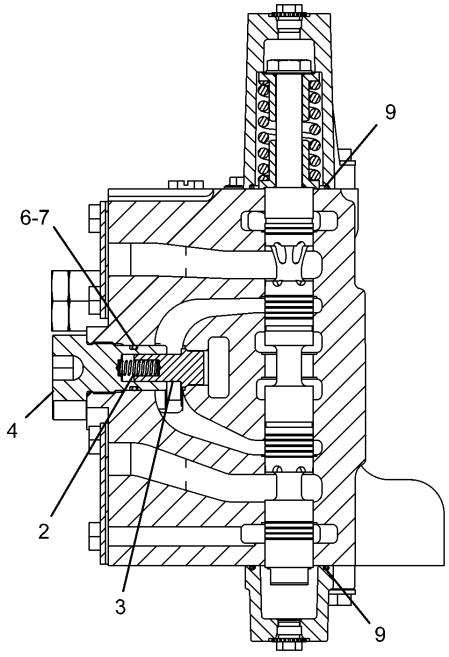


G – G

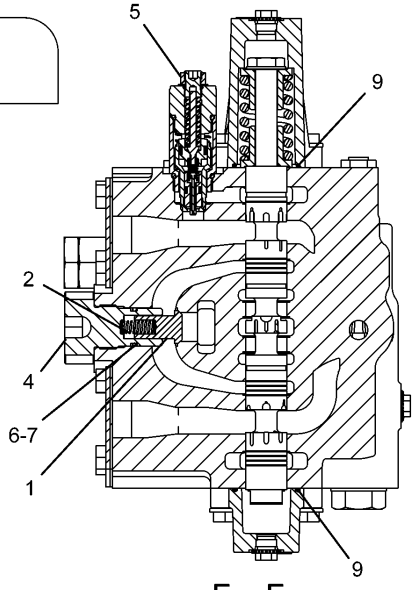


F – F

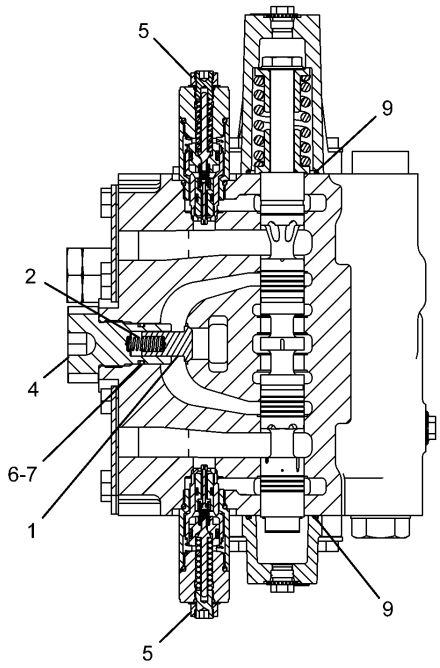


E – E

H97920E 01

**259-7465 VALVE GP-CONTROL (2/2)**

Part of 259-7464-Page537
109-5152-Page546,255-5661-Page547

# HYDRAULIC SYSTEM

| NOTE | No. | PART No. | QTY | PART NAME | NOTE | No. | PART No. | QTY | PART NAME |
|---|---|---|---|---|---|---|---|---|---|
| | 1 | 6E-5731 | 3 | VALVE | | | | | |
| | 2 | 7I-1248 | 4 | SPRING | | | | | |
| | 3 | 153-5286 | 1 | VALVE | | | | | |
| | 4 | 236-6419 | 4 | PLUG | | | | | |
| Y | 5 | 255-5661 | 3 | VALVE GP | | | | | |
| | 6 | 095-1590 | 4 | SEAL-O-RING (ID=21.80mm) | | | | | |
| | 7 | 095-1787 | 4 | RING | | | | | |
| Y | 8 | 109-5152 | 1 | VALVE GP | | | | | |
| | 9 | 6V-5597 | 6 | SEAL-O-RING (ID=40.94mm) | | | | | |

Y—SEE SEPARATE ILLUSTRATION

H97920E 01

## 259-7465 VALVE GP-CONTROL (2/2)

Part of 259-7464-Page537
109-5152-Page546,255-5661-Page547

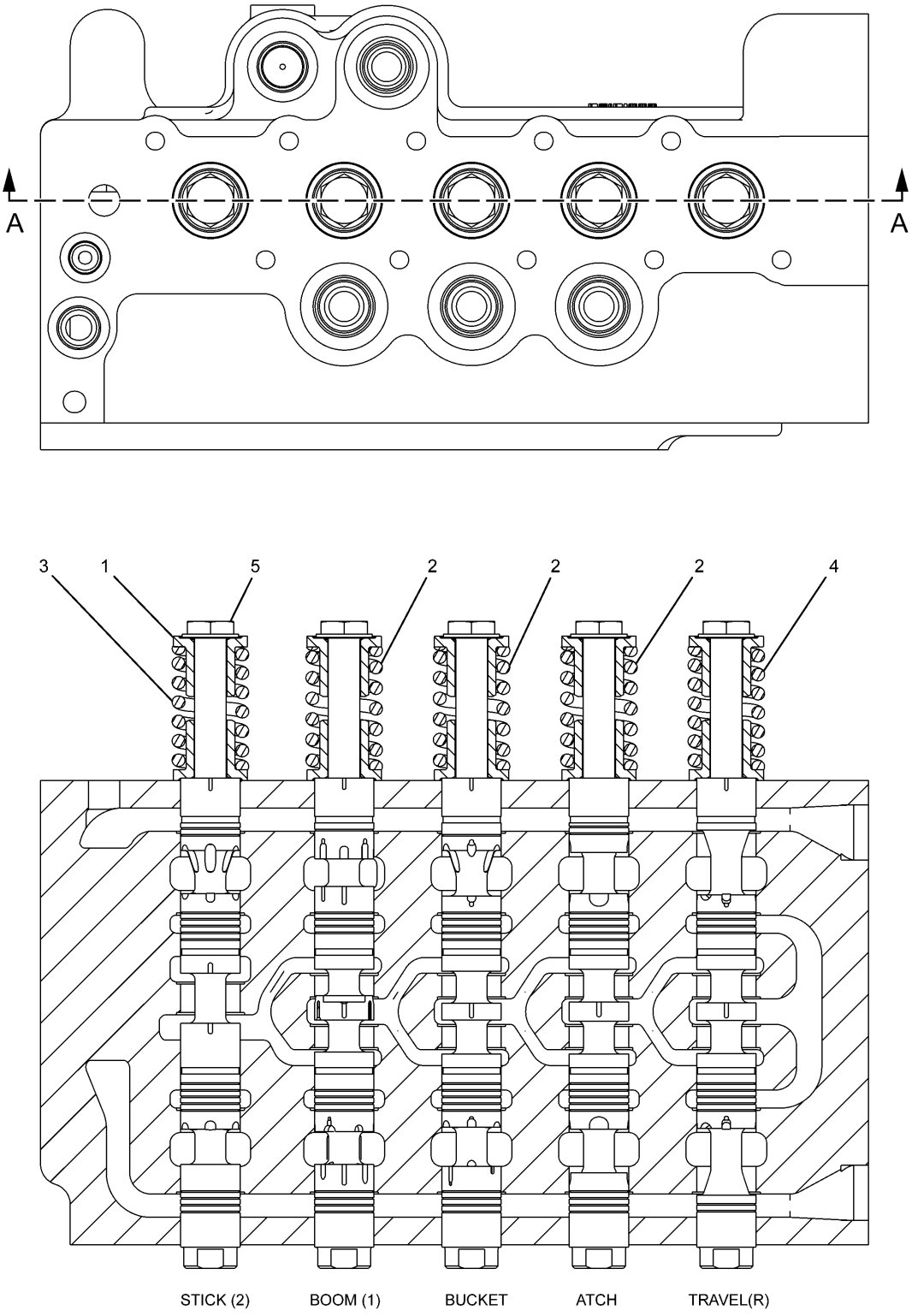


A – A

H89813E 01

**259-7631 VALVE GP-CONTROL**
Part of 259-7465-Page541

# HYDRAULIC SYSTEM

| NOTE | No. | PART No. | QTY | PART NAME | NOTE | No. | PART No. | QTY | PART NAME |
|---|---|---|---|---|---|---|---|---|---|
| | 1 | 6E-2271 | 10 | RETAINER | | | | | |
| | 2 | 104-7293 | 3 | SPRING | | | | | |
| | 3 | 104-7294 | 1 | SPRING | | | | | |
| | 4 | 104-7296 | 1 | SPRING | | | | | |
| | 5 | 153-5276 | 5 | BOLT | | | | | |

H89813E 01

## 259-7631 VALVE GP-CONTROL

Part of 259-7465-Page541

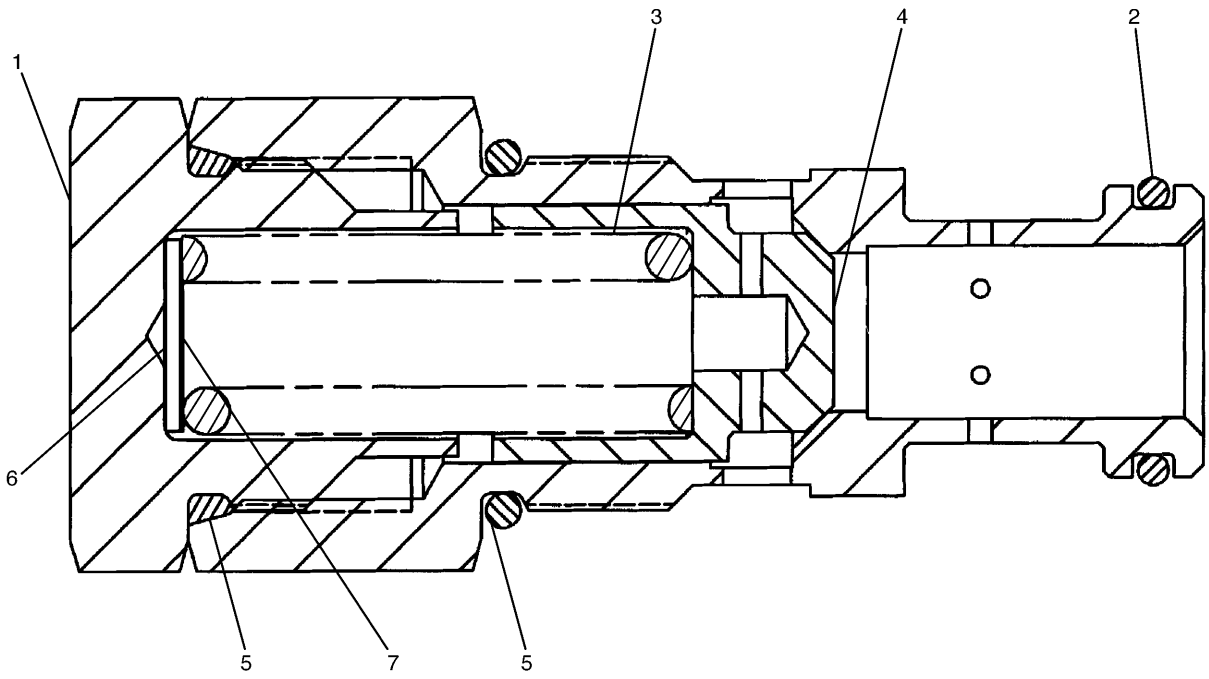


| NOTE | No. | PART No. | QTY | PART NAME | NOTE | No. | PART No. | QTY | PART NAME |
|---|---|---|---|---|---|---|---|---|---|
| | 1 | 5I-4111 | 1 | PLUG | | | | | |
| | 2 | 5P-3108 | 1 | SEAL-O-RING (ID=20.30mm) | | | | | |
| | 3 | 107-6370 | 1 | SPRING | | | | | |
| | 4 | 107-6371 | 1 | VALVE | | | | | |
| | 5 | 4K-1388 | 2 | SEAL-O-RING (ID=26.59mm) | | | | | |
| B | 6 | 4J-7385 | 1 | SHIM (T=1.219mm) | | | | | |
| B | 7 | 4J-7386 | 1 | SHIM (T=0.254mm) | | | | | |

B—USE AS REQUIRED

H67279E 00

## 109-5152 VALVE GP-RELIEF

Direct Operated

Part of 259-7465-Page543

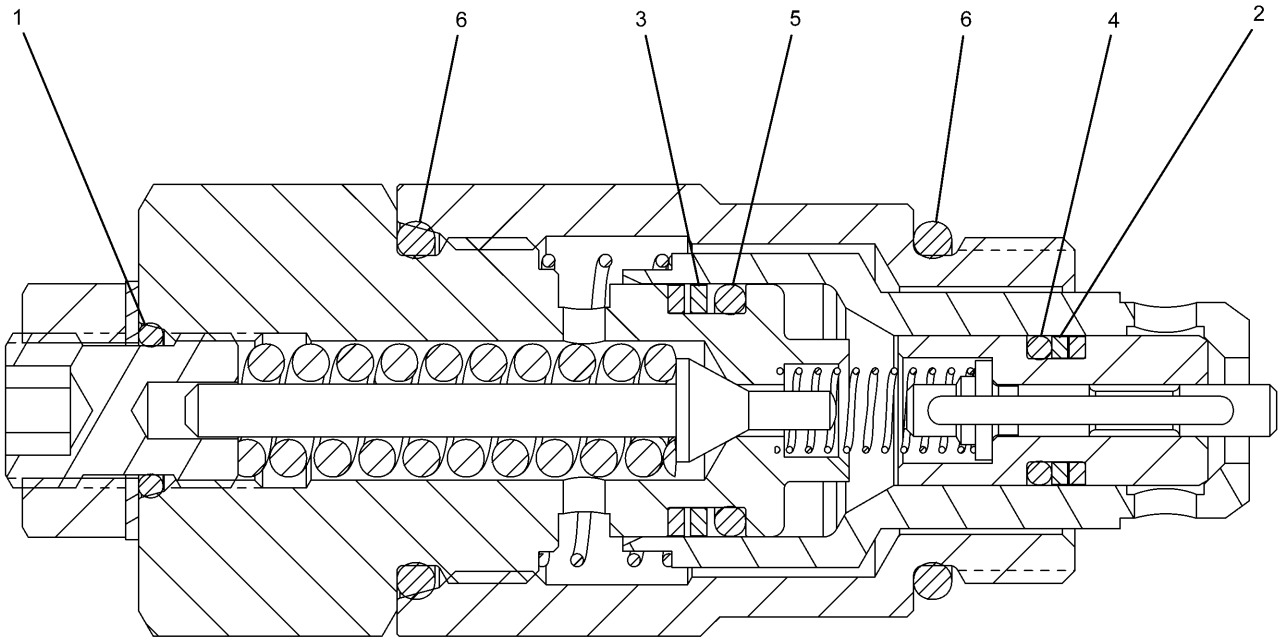


| NOTE | No. | PART No. | QTY | PART NAME | NOTE | No. | PART No. | QTY | PART NAME |
|---|---|---|---|---|---|---|---|---|---|
| | 1 | 095-1578 | 1 | SEAL-O-RING (ID=9.80mm) | | | | | |
| | 2 | 103-8252 | 2 | RING | | | | | |
| | 3 | 103-8253 | 2 | RING | | | | | |
| | 4 | 103-8254 | 1 | SEAL-O-RING (ID=7.80mm) | | | | | |
| | 5 | 103-8255 | 1 | SEAL-O-RING (ID=14.80mm) | | | | | |
| | 6 | 3D-2824 | 2 | SEAL-O-RING (ID=23.47mm) | | | | | |

H89460E 00

## 255-5661 VALVE GP-PILOT RELIEF

Part of 259-7465-Page543,259-7466-Page549,259-7378-Page556

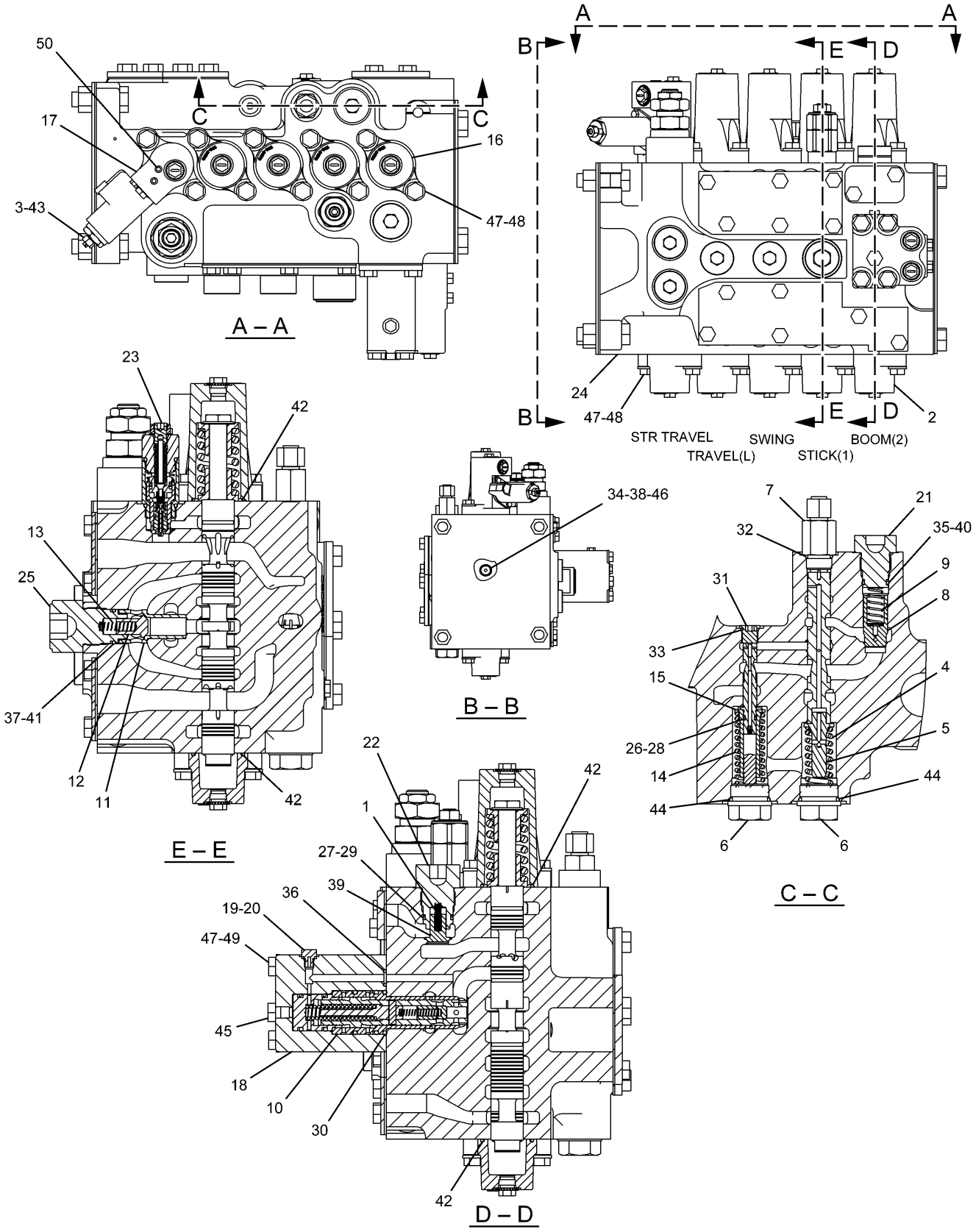


**259-7466 VALVE GP-CONTROL (1/2)**

Part of 259-7464-Page537

255-5661-Page547,259-7632-Page552,121-1491-Page555

# HYDRAULIC SYSTEM

| NOTE | No. | PART No. | QTY | PART NAME | NOTE | No. | PART No. | QTY | PART NAME |
|---|---|---|---|---|---|---|---|---|---|
| | 1 | 4T-3148 | 1 | SPRING | | | | | |
| | 2 | 6E-2274 | 5 | COVER | | | | | |
| Y | 3 | 121-1491 | 1 | VALVE GP | | | | | |
| | 4 | 153-5288 | 1 | SPRING | | | | | |
| | 5 | 153-5289 | 1 | GUIDE | | | | | |
| | 6 | 153-5290 | 2 | PLUG | | | | | |
| | 7 | 153-5291 | 1 | CONNECTOR | | | | | |
| | 8 | 153-5292 | 1 | VALVE | | | | | |
| | 9 | 153-5293 | 1 | SPRING | | | | | |
| | 10 | 153-5295 | 1 | VALVE GP | | | | | |
| | 11 | 153-5298 | 1 | SLEEVE | | | | | |
| | 12 | 153-5299 | 1 | VALVE | | | | | |
| | 13 | 153-5306 | 1 | SPRING | | | | | |
| | 14 | 153-5311 | 1 | SPRING | | | | | |
| | 15 | 158-8150 | 1 | VALVE GP | | | | | |
| | 16 | 158-8159 | 4 | HOUSING | | | | | |
| | 17 | 158-8206 | 1 | HOUSING | | | | | |
| | 18 | 165-9595 | 1 | COVER | | | | | |
| | 19 | 9S-4180 | 3 | PLUG | | | | | |
| | 20 | 4J-7533 | 3 | SEAL-O-RING (ID=6.07mm) | | | | | |
| | 21 | 236-6421 | 1 | PLUG | | | | | |
| | 22 | 250-2446 | 1 | PLUG | | | | | |
| Y | 23 | 255-5661 | 1 | VALVE GP | | | | | |
| Y | 24 | 259-7632 | 1 | VALVE GP | | | | | |
| | 25 | 264-9961 | 1 | PLUG | | | | | |
| | 26 | 095-1575 | 1 | SEAL-O-RING (ID=7.80mm) | | | | | |
| | 27 | 095-1590 | 1 | SEAL-O-RING (ID=21.80mm) | | | | | |
| | 28 | 095-1778 | 1 | RING | | | | | |
| | 29 | 095-1787 | 1 | RING | | | | | |
| | 30 | 103-8173 | 1 | SEAL-O-RING (ID=31.70mm) | | | | | |
| | 31 | 123-2485 | 1 | PLUG | | | | | |
| | 32 | 2M-9780 | 1 | SEAL-O-RING (ID=19.18mm) | | | | | |
| | 33 | 3J-1907 | 1 | SEAL-O-RING (ID=11.89mm) | | | | | |
| | 34 | 4I-3569 | 1 | RING | | | | | |
| | 35 | 4I-6397 | 1 | RING | | | | | |
| | 36 | 4J-5309 | 1 | SEAL-O-RING (ID=9.19mm) | | | | | |
| | 37 | 4T-5074 | 1 | RING | | | | | |
| | 38 | 6E-3653 | 1 | PLUG | | | | | |
| | 39 | 6E-5643 | 3 | VALVE | | | | | |
| | 40 | 6V-3922 | 1 | SEAL-O-RING (ID=18.72mm) | | | | | |
| | 41 | 6V-5556 | 1 | SEAL-O-RING (ID=25.07mm) | | | | | |
| | 42 | 6V-5597 | 4 | SEAL-O-RING (ID=40.94mm) | | | | | |
| | 43 | 7I-2272 | 2 | BOLT (L=12mm) | | | | | |
| | 44 | 7M-8485 | 2 | SEAL-O-RING (ID=29.74mm) | | | | | |
| | 45 | 7X-2621 | 1 | BOLT (L=12mm) | | | | | |
| | 46 | 7Y-5219 | 1 | SEAL-O-RING (ID=12.37mm) | | | | | |
| | 47 | 8T-4121 | 24 | WASHER | | | | | |
| | 48 | 8T-4195 | 20 | BOLT (L=30mm) | | | | | |
| | 49 | 8T-6685 | 4 | BOLT (L=110mm) | | | | | |
| | 50 | 8T-6759 | 2 | PLUG | | | | | |

Y—SEE SEPARATE ILLUSTRATION

H99629E 04

## 259-7466 VALVE GP-CONTROL (1/2)

Part of 259-7464-Page537
255-5661-Page547,259-7632-Page552,121-1491-Page555

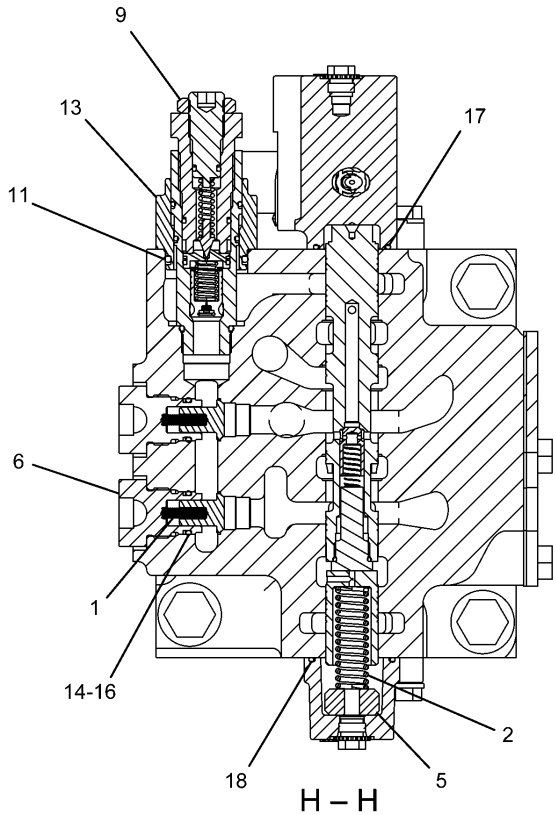


H – H

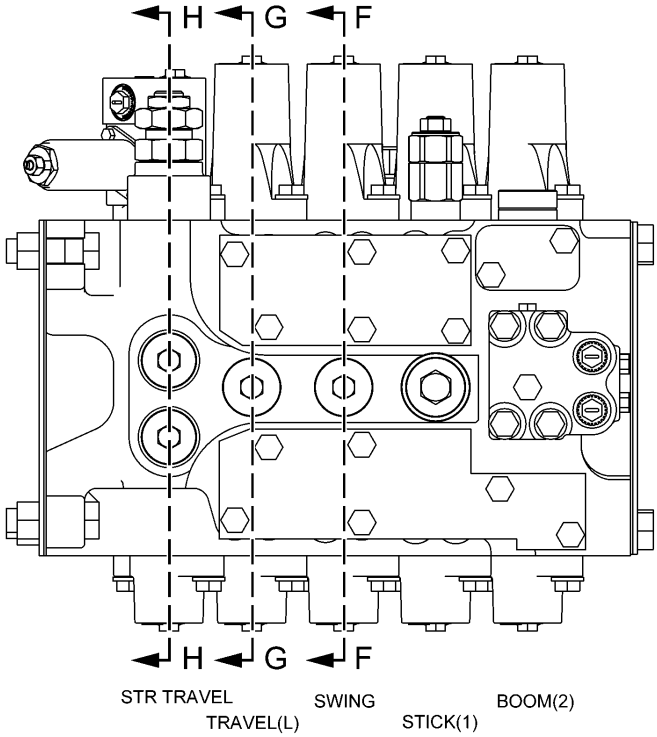


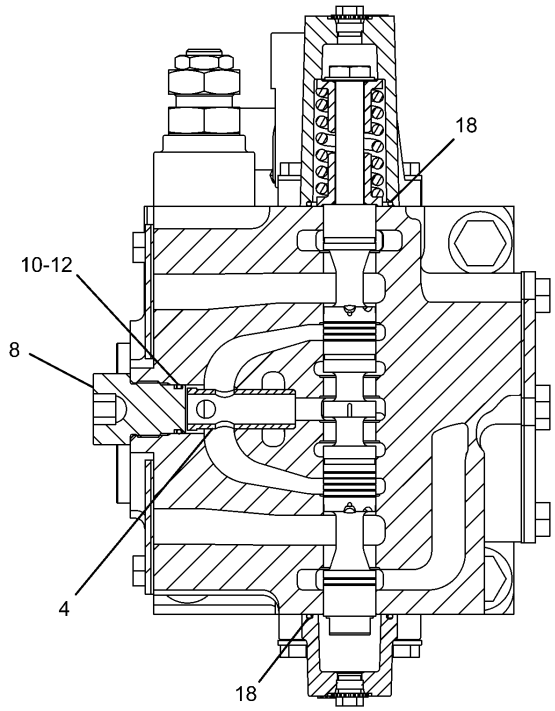


G – G

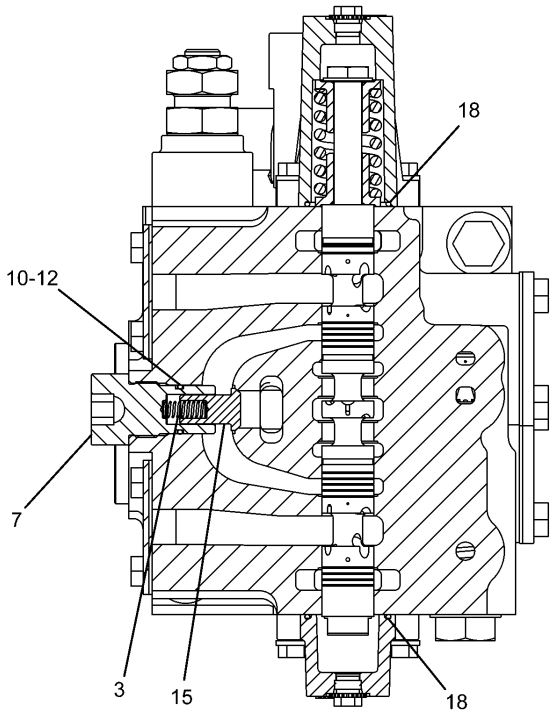


F – F

H99630E 04

**259-7466 VALVE GP-CONTROL (2/2)**

Part of 259-7464-Page537
310-0390-Page554

# HYDRAULIC SYSTEM

| NOTE | No. | PART No. | QTY | PART NAME | NOTE | No. | PART No. | QTY | PART NAME |
|---|---|---|---|---|---|---|---|---|---|
| | 1 | 4T-3148 | 2 | SPRING | | | | | |
| | 2 | 6E-5169 | 1 | SPRING | | | | | |
| | 3 | 7I-1248 | 1 | SPRING | | | | | |
| | 4 | 153-5309 | 1 | SLEEVE | | | | | |
| | 5 | 158-8207 | 1 | STOPPER | | | | | |
| | 6 | 201-9263 | 2 | PLUG | | | | | |
| | 7 | 236-6419 | 1 | PLUG | | | | | |
| | 8 | 250-2447 | 1 | PLUG | | | | | |
| Y | 9 | 310-0390 | 1 | VALVE GP | | | | | |
| | 10 | 095-1590 | 2 | SEAL-O-RING (ID=21.80mm) | | | | | |
| | 11 | 095-1603 | 1 | SEAL-O-RING (ID=37.70mm) | | | | | |
| | 12 | 095-1787 | 2 | RING | | | | | |
| | 13 | 103-8177 | 1 | ADAPTER | | | | | |
| | 14 | 4I-6397 | 2 | RING | | | | | |
| | 15 | 6E-5731 | 1 | VALVE | | | | | |
| | 16 | 6V-3922 | 2 | SEAL-O-RING (ID=18.72mm) | | | | | |
| | 17 | 6V-5393 | 1 | SEAL-O-RING (ID=36.17mm) | | | | | |
| | 18 | 6V-5597 | 5 | SEAL-O-RING (ID=40.94mm) | | | | | |

Y—SEE SEPARATE ILLUSTRATION

H99630E 04

## 259-7466 VALVE GP-CONTROL (2/2)

Part of 259-7464-Page537
310-0390-Page554

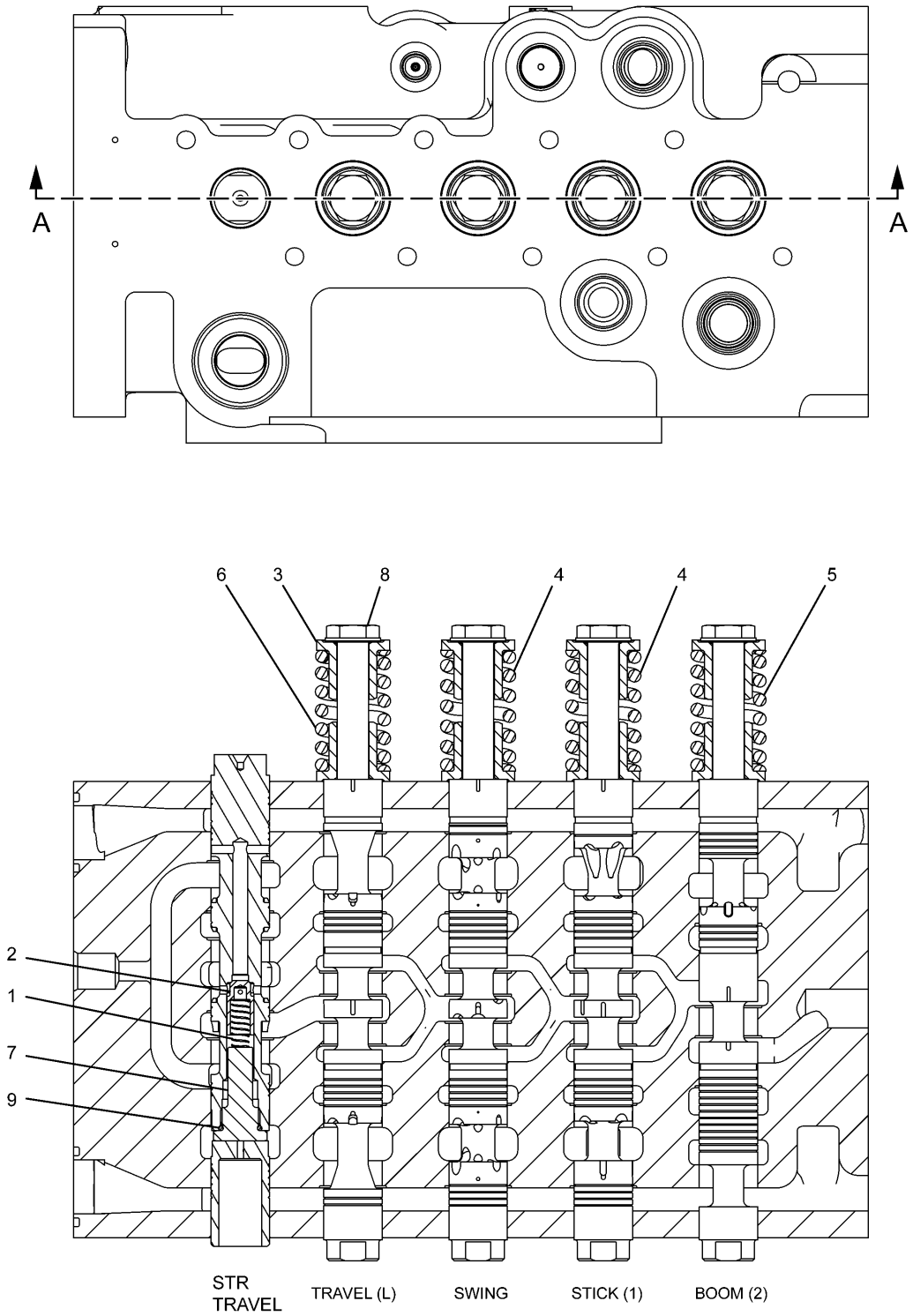


A – A

H89814E 01

**259-7632 VALVE GP-CONTROL**
Part of 259-7466-Page549

# HYDRAULIC SYSTEM

| NOTE | No. | PART No. | QTY | PART NAME | NOTE | No. | PART No. | QTY | PART NAME |
|---|---|---|---|---|---|---|---|---|---|
| | 1 | 2S-2596 | 1 | SPRING | | | | | |
| | 2 | 6E-2163 | 1 | VALVE | | | | | |
| | 3 | 6E-2271 | 8 | RETAINER | | | | | |
| | 4 | 104-7293 | 2 | SPRING | | | | | |
| | 5 | 104-7294 | 1 | SPRING | | | | | |
| | 6 | 104-7296 | 1 | SPRING | | | | | |
| | 7 | 158-8135 | 1 | GUIDE | | | | | |
| | 8 | 153-5276 | 4 | BOLT | | | | | |
| | 9 | 3K-0360 | 1 | SEAL-O-RING (ID=16.36mm) | | | | | |

H89814E 01

## 259-7632 VALVE GP-CONTROL

Part of 259-7466-Page549

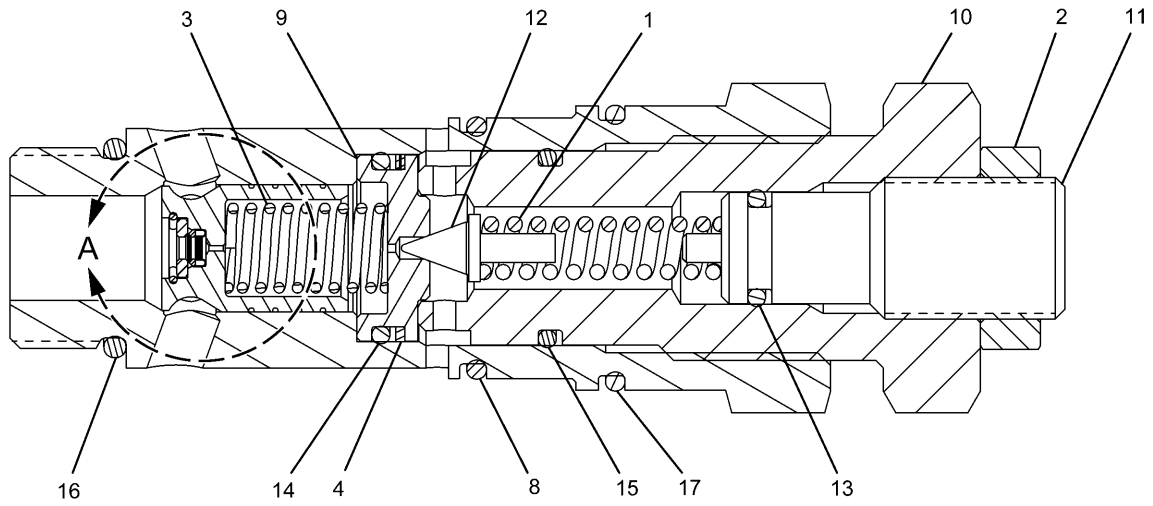


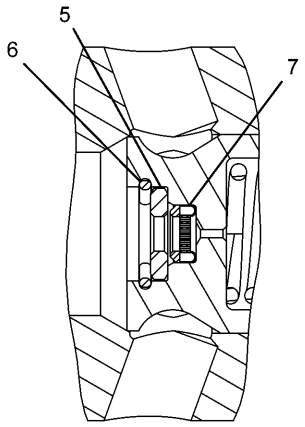


A

| NOTE | No. | PART No. | QTY | PART NAME | NOTE | No. | PART No. | QTY | PART NAME |
|---|---|---|---|---|---|---|---|---|---|
| | 1 | 4I-3510 | 1 | SPRING | | | | | |
| | 2 | 4I-7714 | 1 | NUT | | | | | |
| | 3 | 6I-6795 | 1 | SPRING | | | | | |
| | 4 | 095-1786 | 1 | RING | | | | | |
| | 5 | 107-6540 | 1 | COLLAR | | | | | |
| | 6 | 107-6541 | 1 | RING | | | | | |
| | 7 | 119-5398 | 1 | FILTER | | | | | |
| | 8 | 6V-8978 | 1 | SEAL-O-RING (ID=29.82mm) | | | | | |
| | 9 | 171-0034 | 1 | SEAT | | | | | |
| | 10 | 171-0035 | 1 | HOLDER | | | | | |
| | 11 | 171-0036 | 1 | ADJUSTER | | | | | |
| | 12 | 171-0037 | 1 | VALVE | | | | | |
| | 13 | 095-1579 | 1 | SEAL-O-RING (ID=10.80mm) | | | | | |
| | 14 | 095-1587 | 1 | SEAL-O-RING (ID=20.80mm) | | | | | |
| | 15 | 095-1590 | 1 | SEAL-O-RING (ID=21.80mm) | | | | | |
| | 16 | 3D-2824 | 1 | SEAL-O-RING (ID=23.47mm) | | | | | |
| | 17 | 6V-8218 | 1 | SEAL-O-RING (ID=32.99mm) | | | | | |

H99599E 00

## 310-0390 VALVE GP-RELIEF

Part of 259-7466-Page551

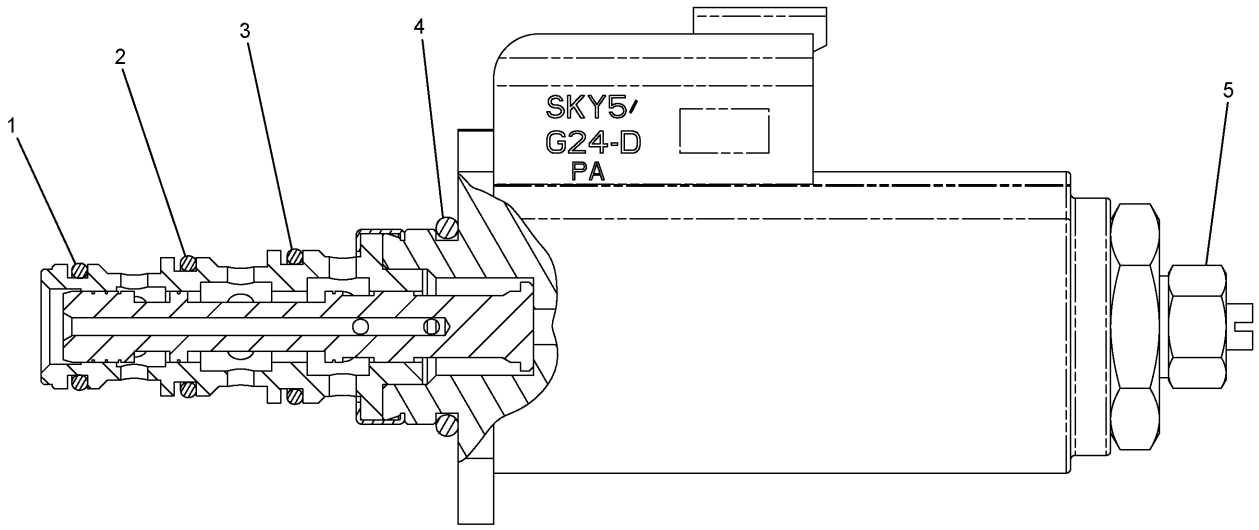


| NOTE | No. | PART No. | QTY | PART NAME | NOTE | No. | PART No. | QTY | PART NAME |
|---|---|---|---|---|---|---|---|---|---|
| | 1 | 095-1750 | 1 | SEAL-O-RING (ID=10.82mm) | | | | | |
| | 2 | 6V-8398 | 1 | SEAL-O-RING (OD=16.03mm) | | | | | |
| | 3 | 095-1751 | 1 | SEAL-O-RING (ID=14.00mm) | | | | | |
| | 4 | 095-1586 | 1 | SEAL-O-RING (ID=19.80mm) | | | | | |
| | 5 | 114-0623 | 1 | NUT AS | | | | | |

H94765E 07

## 121-1491 VALVE GP-SOLENOID

Part of 259-7466-Page549,239-8697-Page579,239-8998-Page581,165-9549-Page586

# HYDRAULIC SYSTEM

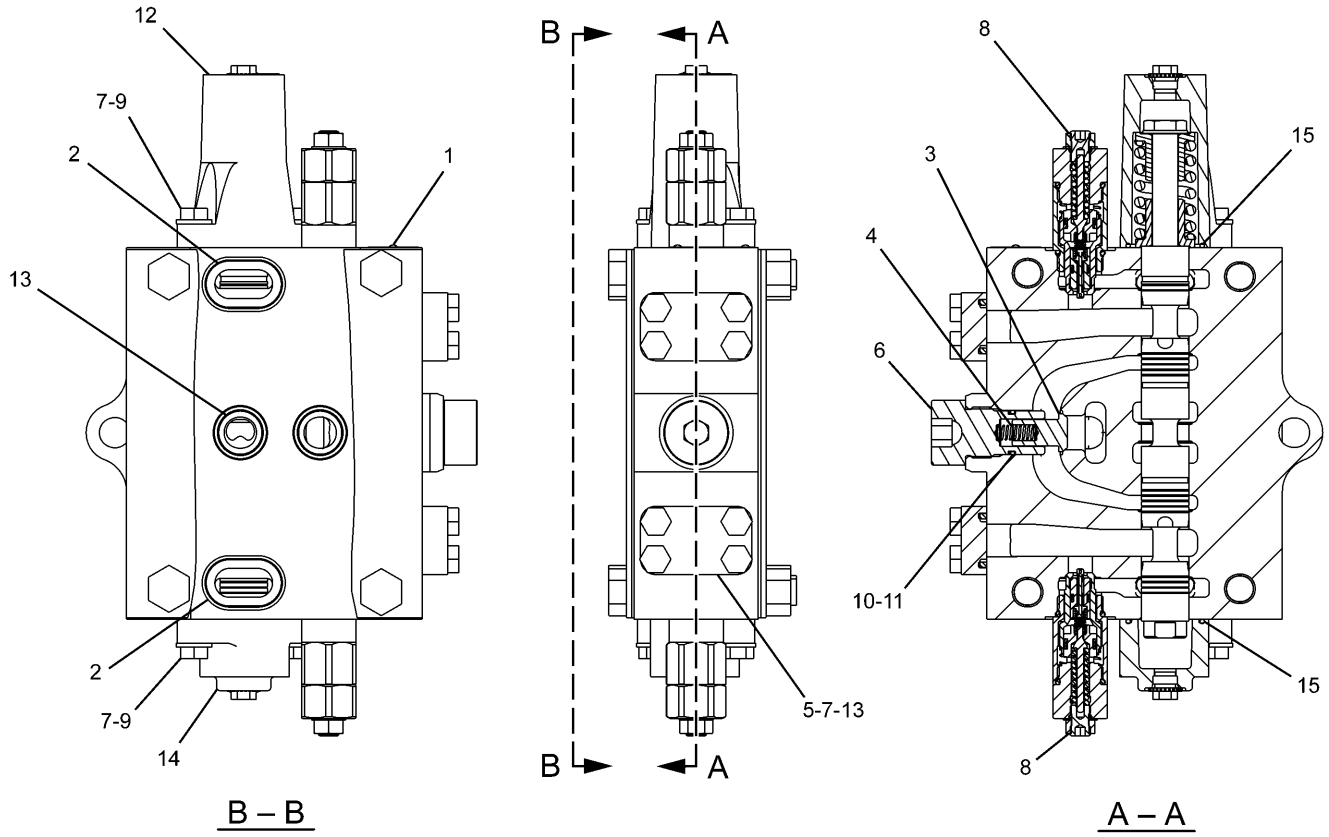


| NOTE | No. | PART No. | QTY | PART NAME | NOTE | No. | PART No. | QTY | PART NAME |
|---|---|---|---|---|---|---|---|---|---|
| | 1 | 4B-4158 | 2 | SCREW | | | | | |
| | 2 | 4J-8998 | 2 | SEAL-O-RING (ID=36.09mm) | | | | | |
| | 3 | 6E-5731 | 1 | VALVE | | | | | |
| | 4 | 7I-1248 | 1 | SPRING | | | | | |
| | 5 | 171-0150 | 2 | COVER | | | | | |
| | 6 | 236-6419 | 1 | PLUG | | | | | |
| | 7 | 8T-4195 | 12 | BOLT (L=30mm) | | | | | |
| Y | 8 | 255-5661 | 2 | VALVE GP | | | | | |
| | 9 | 8T-4121 | 4 | WASHER | | | | | |
| | 10 | 095-1590 | 1 | SEAL-O-RING (ID=21.80mm) | | | | | |
| | 11 | 095-1787 | 1 | RING | | | | | |
| | 12 | 158-8159 | 1 | HOUSING | | | | | |
| | 13 | 1P-3702 | 4 | SEAL | | | | | |
| | 14 | 6E-2274 | 1 | COVER | | | | | |
| | 15 | 6V-5597 | 2 | SEAL-O-RING (ID=40.94mm) | | | | | |

Y—SEE SEPARATE ILLUSTRATION

H91381E 01

## 259-7378 VALVE GP-CONTROL

Part of 255-5713-Page534,255-5716-Page535
255-5661-Page547
An Attachment

# MEMORANDA

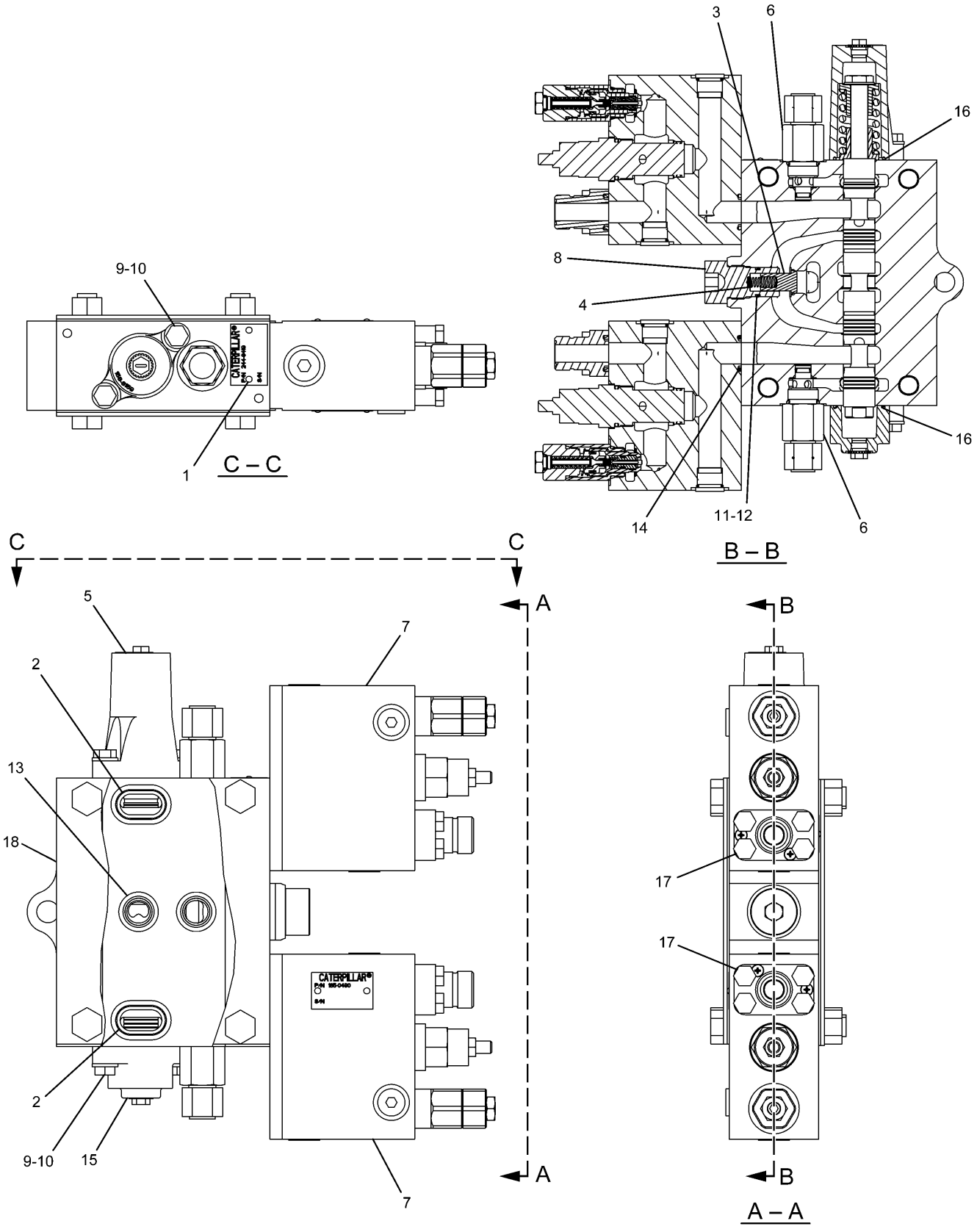


**244-8419 VALVE GP-CONTROL**
Part of 255-5716-Page535
165-9473-Page560,185-0490-Page561
An Attachment

# HYDRAULIC SYSTEM

| NOTE | No. | PART No. | QTY | PART NAME | NOTE | No. | PART No. | QTY | PART NAME |
|---|---|---|---|---|---|---|---|---|---|
| | 1 | 4B-4158 | 2 | SCREW | | | | | |
| | 2 | 4J-8998 | 2 | SEAL-O-RING (ID=36.09mm) | | | | | |
| | 3 | 6E-5731 | 1 | VALVE | | | | | |
| | 4 | 7I-1248 | 1 | SPRING | | | | | |
| | 5 | 158-8159 | 1 | HOUSING | | | | | |
| Y | 6 | 165-9473 | 2 | PLUG GP | | | | | |
| Y | 7 | 185-0490 | 2 | VALVE GP | | | | | |
| | 8 | 236-6419 | 1 | PLUG | | | | | |
| | 9 | 8T-4121 | 4 | WASHER | | | | | |
| | 10 | 8T-4195 | 4 | BOLT (L=30mm) | | | | | |
| | 11 | 095-1590 | 1 | SEAL-O-RING (ID=21.80mm) | | | | | |
| | 12 | 095-1787 | 1 | RING | | | | | |
| | 13 | 1P-3702 | 2 | SEAL | | | | | |
| | 14 | 4J-5267 | 2 | SEAL-O-RING (ID=24.99mm) | | | | | |
| | 15 | 6E-2274 | 1 | COVER | | | | | |
| | 16 | 6V-5597 | 2 | SEAL-O-RING (ID=40.94mm) | | | | | |
| | 17 | 7X-2545 | 8 | BOLT (L=150mm) | | | | | |
| | 18 | 244-8400 | 1 | VALVE GP | | | | | |

Y—SEE SEPARATE ILLUSTRATION

H89514E 00

## 244-8419 VALVE GP-CONTROL

Part of 255-5716-Page535
165-9473-Page560,185-0490-Page561
An Attachment

# HYDRAULIC SYSTEM

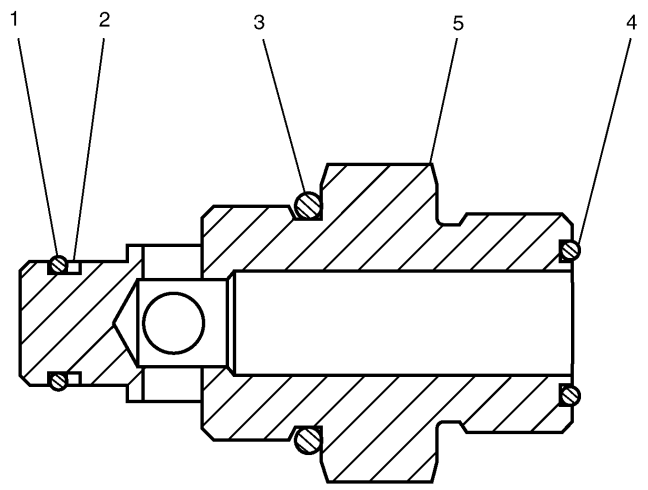


| NOTE | No. | PART No. | QTY | PART NAME |
|---|---|---|---|---|
| | 1 | 6M-5062 | 1 | SEAL-O-RING (ID=10.82mm) |
| | 2 | 9J-0705 | 1 | RING |
| | 3 | 3D-2824 | 1 | SEAL-O-RING (ID=23.47mm) |
| | 4 | 7J-9108 | 1 | SEAL-O-RING (OD=19.28mm) |
| | 5 | 165-9474 | 1 | PLUG |

H67658E 01

**165-9473 PLUG GP**
Part of 244-8419-Page559
An Attachment

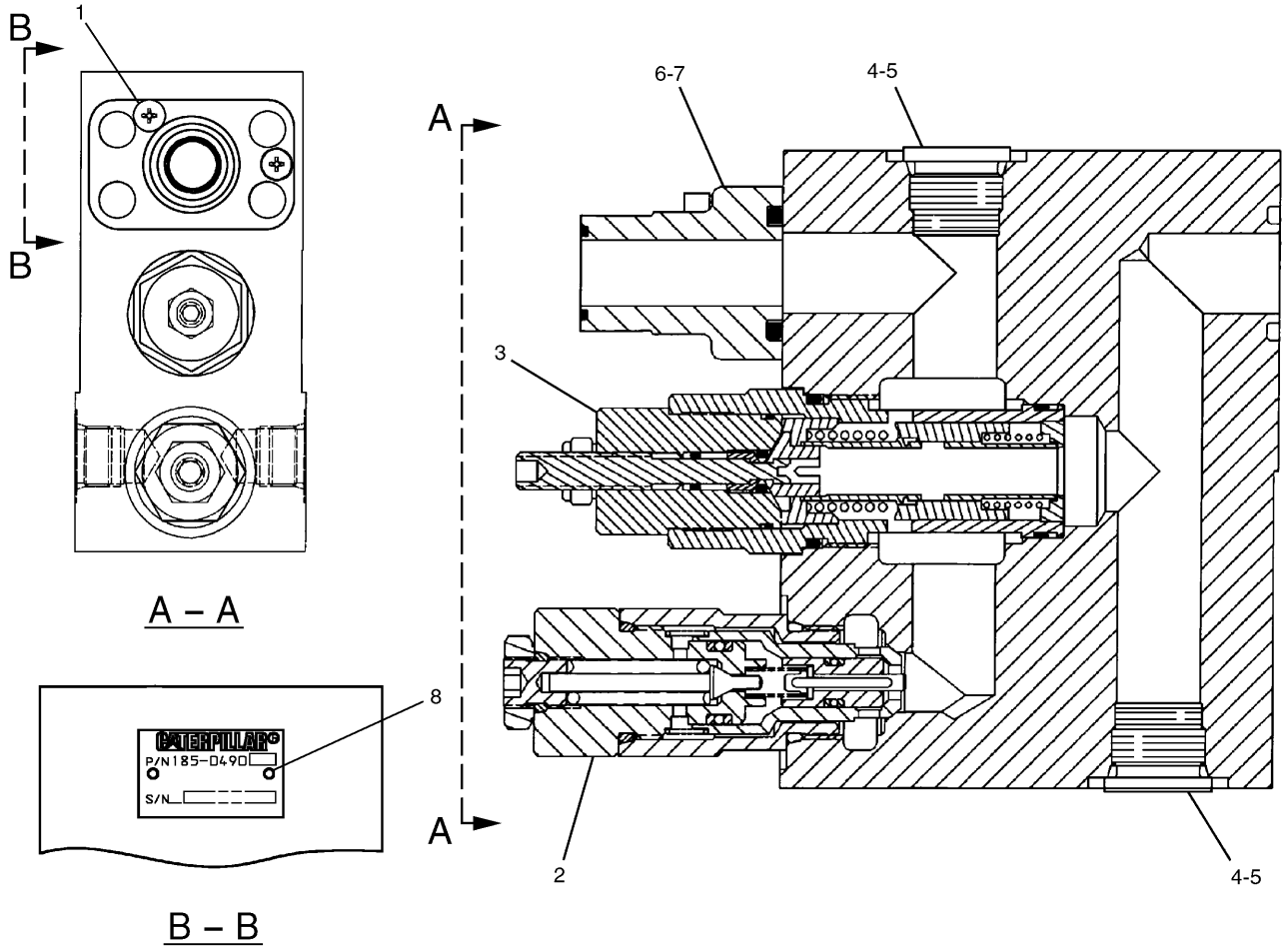


| NOTE | No. | PART No. | QTY | PART NAME | NOTE | No. | PART No. | QTY | PART NAME |
|---|---|---|---|---|---|---|---|---|---|
| | 1 | 096-3773 | 2 | SCREW | | | | | |
| Y | 2 | 201-9352 | 1 | VALVE GP | | | | | |
| | 3 | 165-9497 | 1 | VALVE GP | | | | | |
| | | 185-0400 | 1 | SEAL KIT | | | | | |
| | 4 | 9S-8006 | 2 | PLUG | | | | | |
| | 5 | 2M-9780 | 2 | SEAL-O-RING (ID=19.18mm) | | | | | |
| | 6 | 123-2423 | 1 | FLANGE | | | | | |
| | 7 | 1P-3702 | 1 | SEAL | | | | | |
| | 8 | 4B-4158 | 2 | SCREW | | | | | |

Y—SEE SEPARATE ILLUSTRATION

H75996E 02

## 185-0490 VALVE GP-FLOW CONTROL & RELIEF

Part of 244-8419-Page559
201-9352-Page562
An Attachment

Consists of :


| | | | Page |
|---|---|---|---|
| 1 | 105-1321 | VALVE GP-RELIEF ..... | 563 |
| | | -OR- | |
| 1 | 201-9353 | VALVE GP-PILOT RELIEF ..... | 564 |


H74578E 00

**201-9352 VALVE GP-RELIEF**
Part of 185-0490-Page561
An Attachment

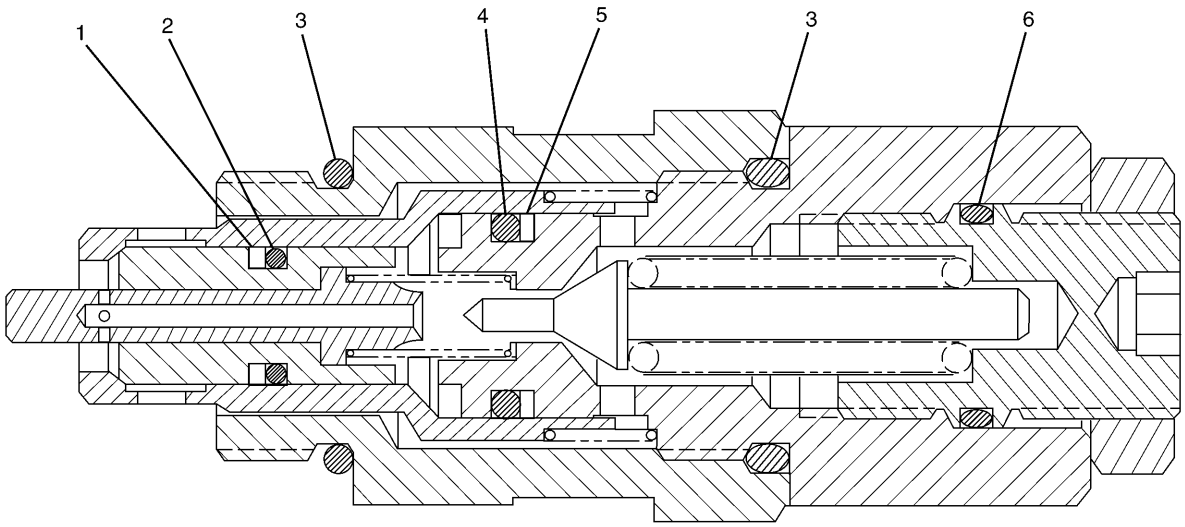


| NOTE | No. | PART No. | QTY | PART NAME | NOTE | No. | PART No. | QTY | PART NAME |
|---|---|---|---|---|---|---|---|---|---|
| | 1 | 030-0167 | 1 | RING | | | | | |
| | 2 | 8L-2779 | 1 | SEAL-O-RING (ID=9.25mm) | | | | | |
| | 3 | 033-6036 | 2 | SEAL-O-RING (ID=23.47mm) | | | | | |
| | 4 | 3P-0647 | 1 | SEAL-O-RING (ID=13.94mm) | | | | | |
| | 5 | 9J-0707 | 1 | RING | | | | | |
| | 6 | 8T-7877 | 1 | SEAL-O-RING (ID=17.40mm) | | | | | |

H74537E 01

## 105-1321 VALVE GP-RELIEF

Part of 201-9352-Page562
An Attachment

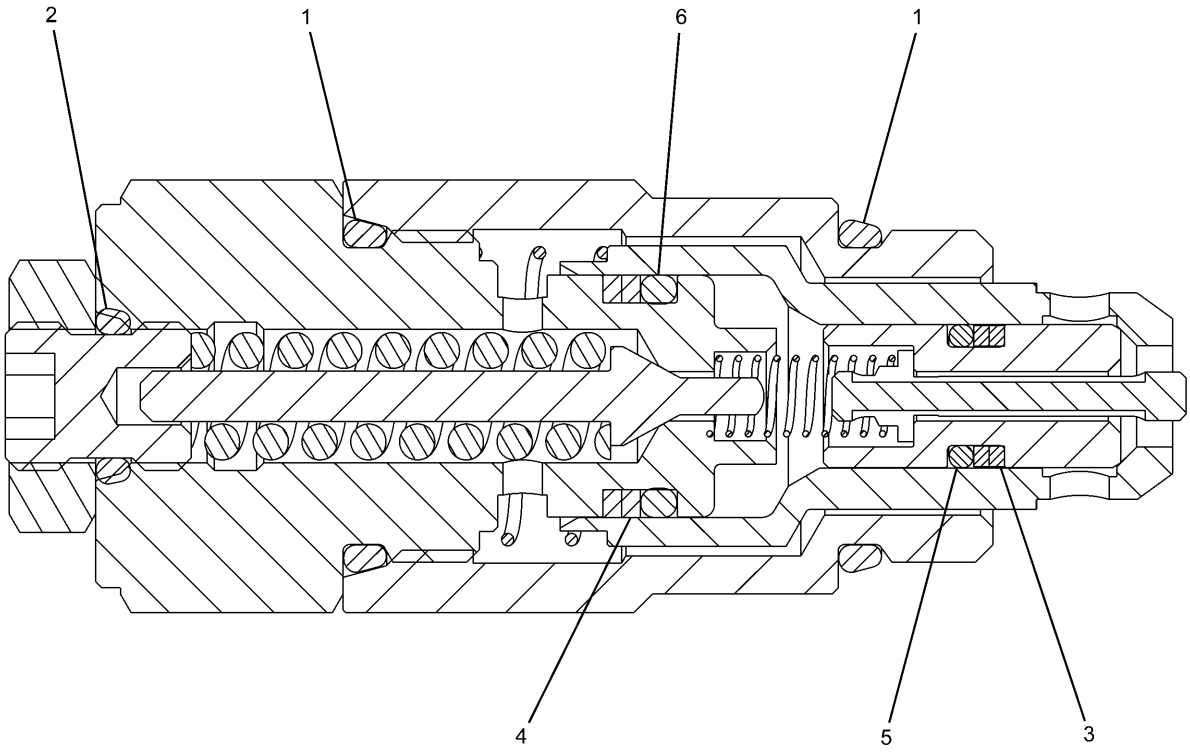


| NOTE | No. | PART No. | QTY | PART NAME | NOTE | No. | PART No. | QTY | PART NAME |
|---|---|---|---|---|---|---|---|---|---|
| | 1 | 3D-2824 | 2 | SEAL-O-RING (ID=23.47mm) | | | | | |
| | 2 | 095-1578 | 1 | SEAL-O-RING (ID=9.80mm) | | | | | |
| | 3 | 103-8252 | 2 | RING | | | | | |
| | 4 | 103-8253 | 2 | RING | | | | | |
| | 5 | 103-8254 | 1 | SEAL-O-RING (ID=7.80mm) | | | | | |
| | 6 | 103-8255 | 1 | SEAL-O-RING (ID=14.80mm) | | | | | |

H88905E 01

## 201-9353 VALVE GP-PILOT RELIEF

Part of 201-9352-Page562
An Attachment

# MEMORANDA

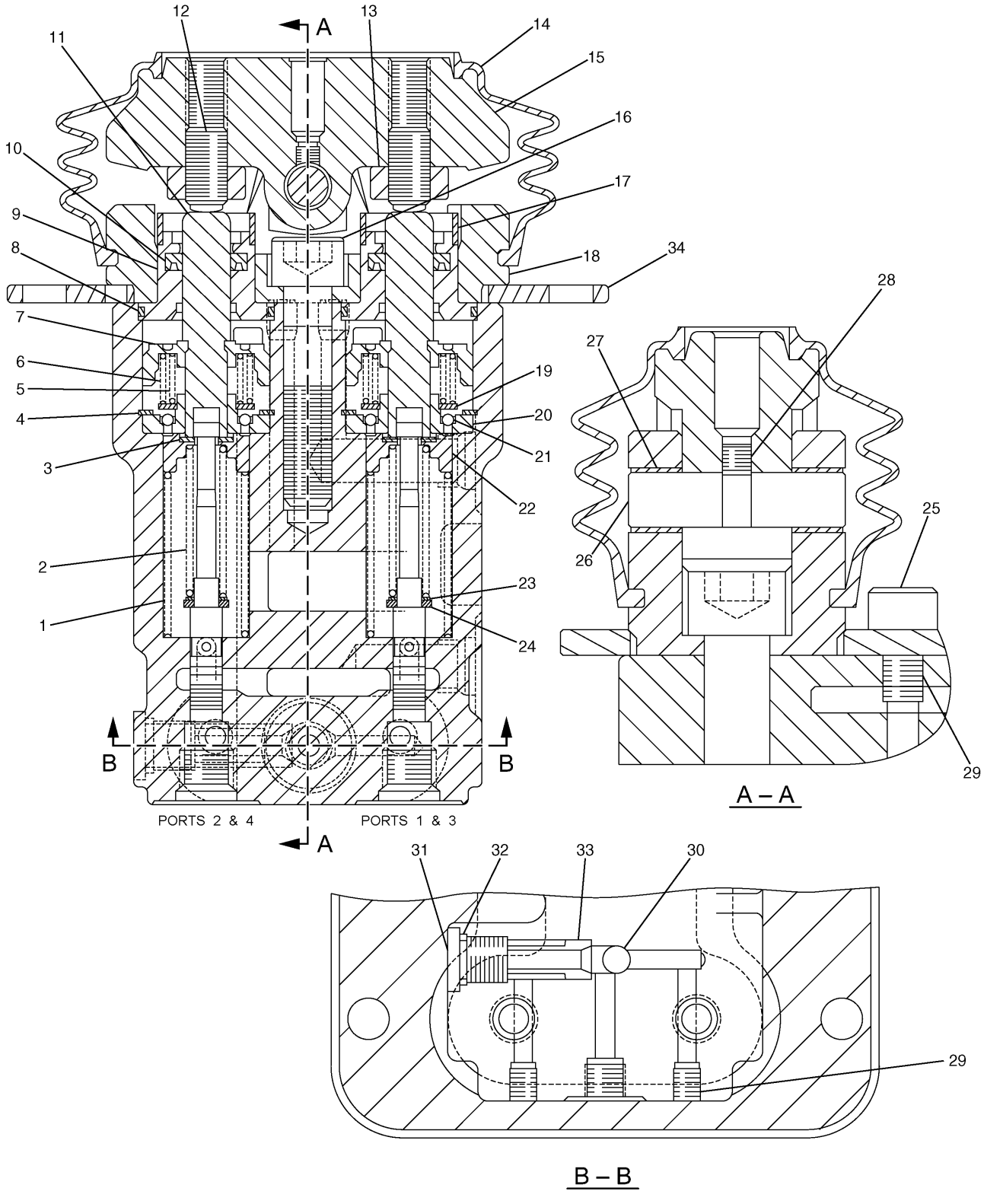


**270–5947 VALVE GP–PILOT**
Part of 248–9825–Page451

# HYDRAULIC SYSTEM

| NOTE | No. | PART No. | QTY | PART NAME | NOTE | No. | PART No. | QTY | PART NAME |
|---|---|---|---|---|---|---|---|---|---|
| | 1 | 270-5950 | 4 | SPRING | | | | | |
| | 2 | 131-5818 | 4 | SPRING | | | | | |
| | 3 | 099-6136 | 8 | WASHER | | | | | |
| | 4 | 095-0936 | 4 | RING | | | | | |
| | 5 | 126-1865 | 4 | SPRING | | | | | |
| | 6 | 126-1866 | 4 | SPRING | | | | | |
| | 7 | 270-5949 | 4 | PISTON | | | | | |
| | 8 | 6V-8400 | 4 | SEAL-O-RING (ID=30.01mm) | | | | | |
| | 9 | 165-9554 | 4 | PLUG | | | | | |
| | 10 | 119-5389 | 4 | PACKING | | | | | |
| | 11 | 165-9552 | 4 | PUSHROD | | | | | |
| | 12 | 087-4710 | 4 | SETSCREW | | | | | |
| | 13 | 8T-4133 | 4 | NUT | | | | | |
| | 14 | 087-5709 | 2 | BELLOW | | | | | |
| | 15 | 087-5708 | 2 | PEDAL | | | | | |
| | 16 | 8T-0343 | 2 | BOLT (L=55mm) | | | | | |
| | 17 | 119-5388 | 4 | CAP | | | | | |
| | 18 | 165-9463 | 2 | COVER | | | | | |
| | 19 | 119-5391 | 4 | SEAT | | | | | |
| | 20 | 119-5392 | 4 | BUSHING | | | | | |
| | 21 | 153-5223 | 12 | BALL | | | | | |
| | 22 | 165-9551 | 4 | SEAT | | | | | |
| | 23 | 099-6137 | 4 | WASHER | | | | | |
| | 24 | 099-6141 | 4 | WASHER | | | | | |
| | 25 | 8T-1158 | 2 | BOLT (L=20mm) | | | | | |
| | 26 | 099-6145 | 2 | CAMSHAFT | | | | | |
| | 27 | 099-6144 | 4 | BUSHING | | | | | |
| | 28 | 095-1260 | 2 | SETSCREW | | | | | |
| | 29 | 8T-6759 | 6 | PLUG | | | | | |
| | 30 | 9M-5590 | 2 | BALL | | | | | |
| | 31 | 107-6479 | 2 | PLUG | | | | | |
| | 32 | 095-1578 | 2 | SEAL-O-RING (ID=9.80mm) | | | | | |
| | 33 | 165-9464 | 2 | SEAT | | | | | |
| | 34 | 165-9553 | 1 | COVER | | | | | |

H92135E 00

## 270-5947 VALVE GP-PILOT

Part of 248-9825-Page451

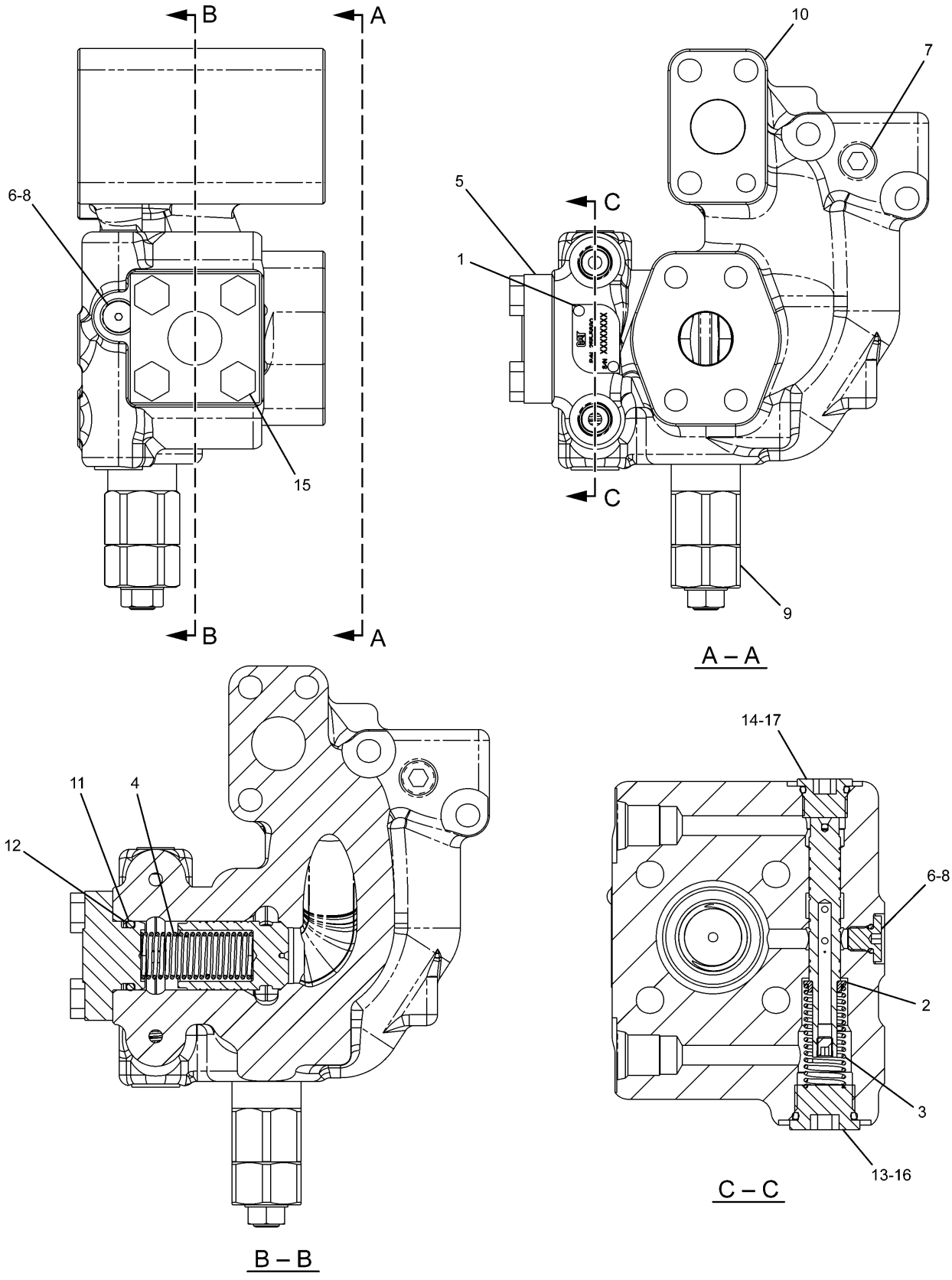


**255–5680 VALVE GP–PILOT**

Part of 239–1714–Page483
255–5662–Page574

# HYDRAULIC SYSTEM

| NOTE | No. | PART No. | QTY | PART NAME | NOTE | No. | PART No. | QTY | PART NAME |
|---|---|---|---|---|---|---|---|---|---|
| | 1 | 4B-4158 | 2 | SCREW | | | | | |
| | 2 | 4I-8965 | 1 | GUIDE | | | | | |
| | 3 | 5I-8511 | 1 | SPRING | | | | | |
| | 4 | 087-5166 | 1 | SPRING | | | | | |
| | 5 | 118-4044 | 1 | COVER | | | | | |
| | 6 | 4J-7533 | 2 | SEAL-O-RING (ID=6.07mm) | | | | | |
| | 7 | 147-4184 | 1 | PLUG | | | | | |
| | 8 | 225-4804 | 2 | PLUG | | | | | |
| Y | 9 | 255-5662 | 1 | VALVE GP | | | | | |
| | 10 | 255-5883 | 1 | VALVE GP | | | | | |
| | 11 | 095-1594 | 1 | SEAL-O-RING (ID=25.70mm) | | | | | |
| | 12 | 095-1789 | 1 | RING | | | | | |
| | 13 | 9S-8005 | 1 | PLUG | | | | | |
| | 14 | 9S-8004 | 1 | PLUG | | | | | |
| | 15 | 8T-4136 | 4 | BOLT (L=25mm) | | | | | |
| | 16 | 3K-0360 | 1 | SEAL-O-RING (ID=16.36mm) | | | | | |
| | 17 | 3J-1907 | 1 | SEAL-O-RING (ID=11.89mm) | | | | | |

Y—SEE SEPARATE ILLUSTRATION

H91388E 01

## 255-5680 VALVE GP-PILOT

Part of 239-1714-Page483
255-5662-Page574

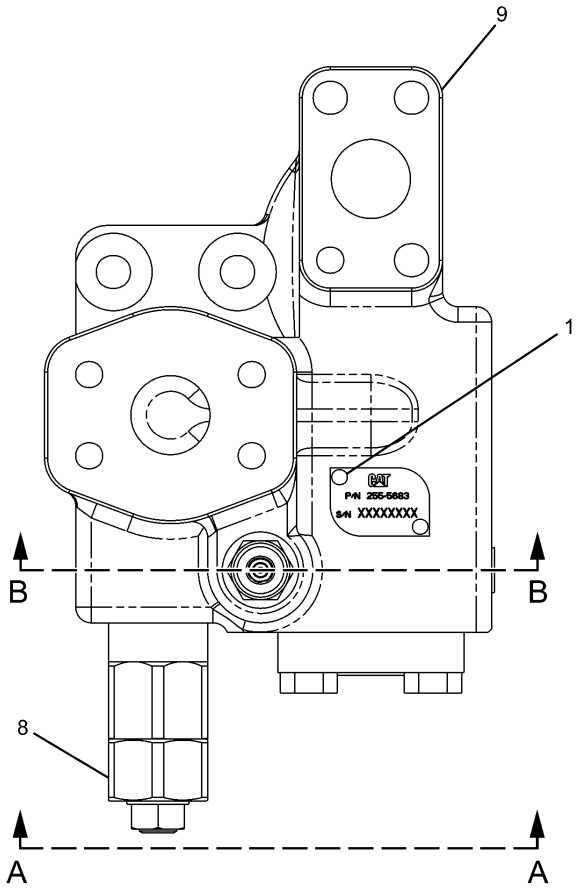


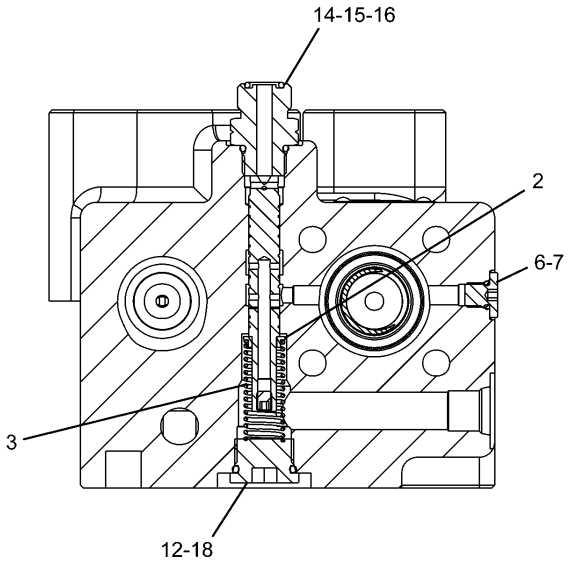


B – B

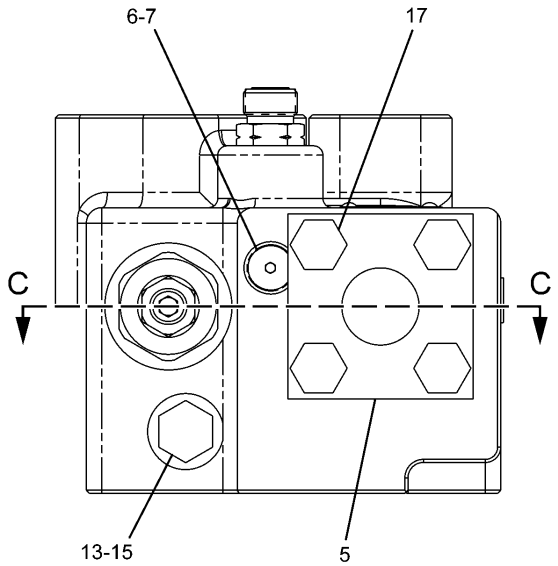


A – A

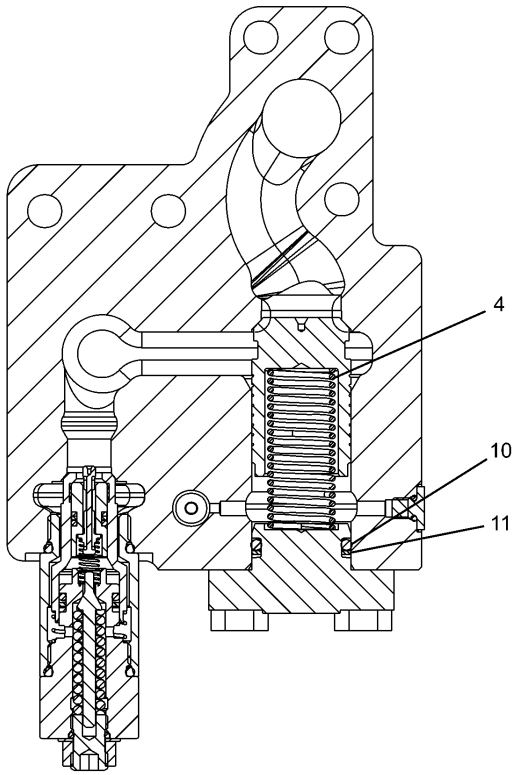


C – C

H91389E 01

**255-5683 VALVE GP-PILOT**

Part of 239-1714-Page483
255-5662-Page574

# HYDRAULIC SYSTEM

| NOTE | No. | PART No. | QTY | PART NAME | NOTE | No. | PART No. | QTY | PART NAME |
|---|---|---|---|---|---|---|---|---|---|
| | 1 | 4B-4158 | 2 | SCREW | | | | | |
| | 2 | 4I-8965 | 1 | GUIDE | | | | | |
| | 3 | 5I-8511 | 1 | SPRING | | | | | |
| | 4 | 087-5166 | 1 | SPRING | | | | | |
| | 5 | 118-4044 | 1 | COVER | | | | | |
| | 6 | 4J-7533 | 2 | SEAL-O-RING (ID=6.07mm) | | | | | |
| | 7 | 225-4804 | 2 | PLUG | | | | | |
| Y | 8 | 255-5662 | 1 | VALVE GP | | | | | |
| | 9 | 255-5882 | 1 | VALVE GP | | | | | |
| | 10 | 095-1594 | 1 | SEAL-O-RING (ID=25.70mm) | | | | | |
| | 11 | 095-1789 | 1 | RING | | | | | |
| | 12 | 9S-8005 | 1 | PLUG | | | | | |
| | 13 | 9S-4191 | 1 | PLUG | | | | | |
| | 14 | 190-7865 | 1 | CONNECTOR | | | | | |
| | 15 | 3J-1907 | 2 | SEAL-O-RING (ID=11.89mm) | | | | | |
| | 16 | 6V-8397 | 1 | SEAL-O-RING (OD=12.83mm) | | | | | |
| | 17 | 8T-4136 | 4 | BOLT (L=25mm) | | | | | |
| | 18 | 3K-0360 | 1 | SEAL-O-RING (ID=16.36mm) | | | | | |

Y—SEE SEPARATE ILLUSTRATION

H91389E 01

## 255-5683 VALVE GP-PILOT

Part of 239-1714-Page483
255-5662-Page574

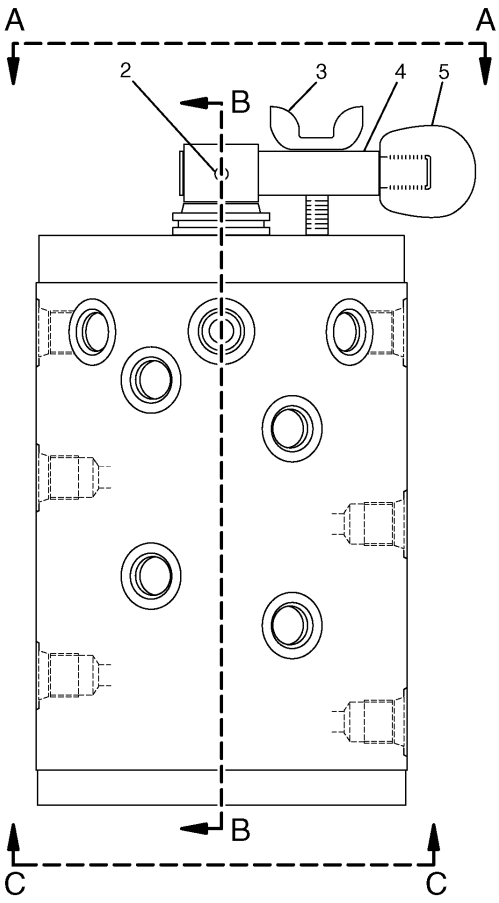


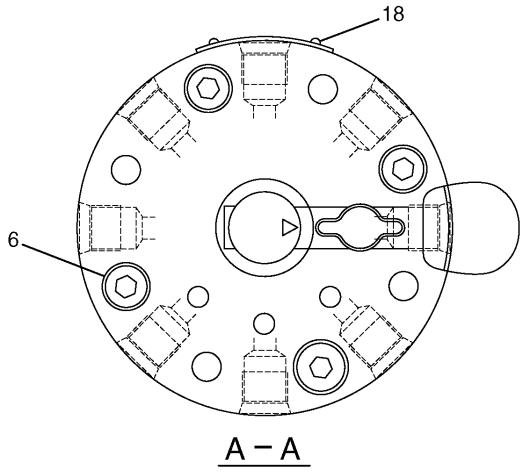


A – A

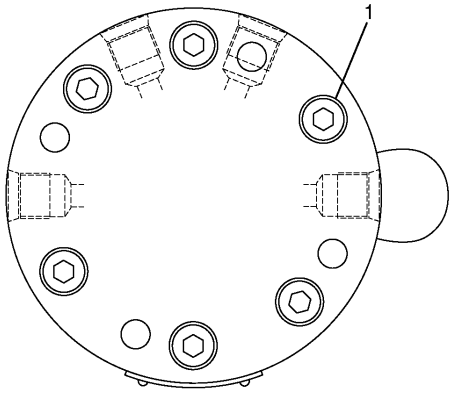


C – C

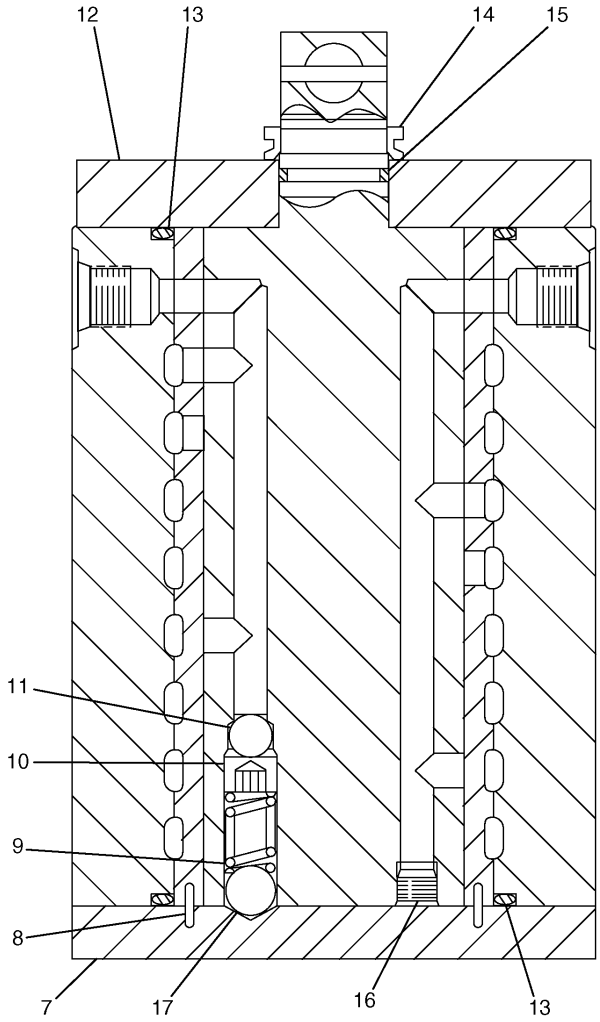


B – B

H67326E 01

**165-9470 VALVE GP-PILOT**
Part of 260-7966-Page479
An Attachment

# HYDRAULIC SYSTEM

| NOTE | No. | PART No. | QTY | PART NAME | NOTE | No. | PART No. | QTY | PART NAME |
|---|---|---|---|---|---|---|---|---|---|
| | 1 | 6V-8202 | 6 | BOLT (L=16mm) | | | | | |
| | 2 | 085-7083 | 1 | PIN | | | | | |
| | 3 | 085-7084 | 1 | BOLT | | | | | |
| | 4 | 085-7080 | 1 | LEVER | | | | | |
| | 5 | 085-7079 | 1 | GRIP | | | | | |
| | 6 | 6V-3938 | 4 | BOLT (L=20mm) | | | | | |
| | 7 | 171-0185 | 1 | COVER | | | | | |
| | 8 | 085-7081 | 4 | NEEDLE | | | | | |
| | 9 | 171-0184 | 1 | SPRING | | | | | |
| | 10 | 8T-9533 | 1 | SETSCREW | | | | | |
| | 11 | 006-6803 | 1 | BALL | | | | | |
| | 12 | 171-0183 | 1 | COVER | | | | | |
| | 13 | 095-1710 | 2 | SEAL-O-RING (ID=79.40mm) | | | | | |
| | 14 | 6I-6923 | 1 | SEAL | | | | | |
| | 15 | 095-1590 | 1 | SEAL-O-RING (ID=21.80mm) | | | | | |
| | 16 | 095-0965 | 7 | PLUG | | | | | |
| | 17 | 1F-0425 | 1 | BALL | | | | | |
| | 18 | 126-9993 | 2 | SCREW | | | | | |

H67326E 01

## 165-9470 VALVE GP-PILOT

Part of 260-7966-Page479
An Attachment

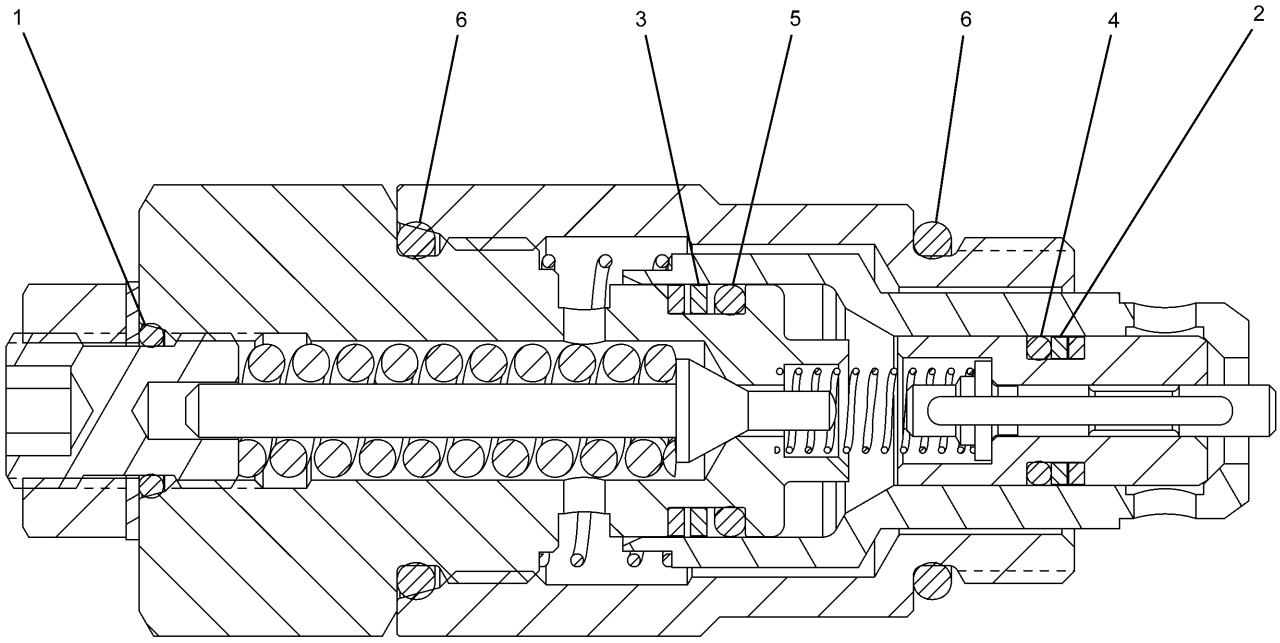


| NOTE | No. | PART No. | QTY | PART NAME | NOTE | No. | PART No. | QTY | PART NAME |
|---|---|---|---|---|---|---|---|---|---|
| | 1 | 095-1578 | 1 | SEAL-O-RING (ID=9.80mm) | | | | | |
| | 2 | 103-8252 | 2 | RING | | | | | |
| | 3 | 103-8253 | 2 | RING | | | | | |
| | 4 | 103-8254 | 1 | SEAL-O-RING (ID=7.80mm) | | | | | |
| | 5 | 103-8255 | 1 | SEAL-O-RING (ID=14.80mm) | | | | | |
| | 6 | 3D-2824 | 2 | SEAL-O-RING (ID=23.47mm) | | | | | |

H89459E 00

## 255-5662 VALVE GP-PILOT RELIEF

Part of 255-5680-Page569,255-5683-Page571,225-4785-Page593,225-4843-Page595

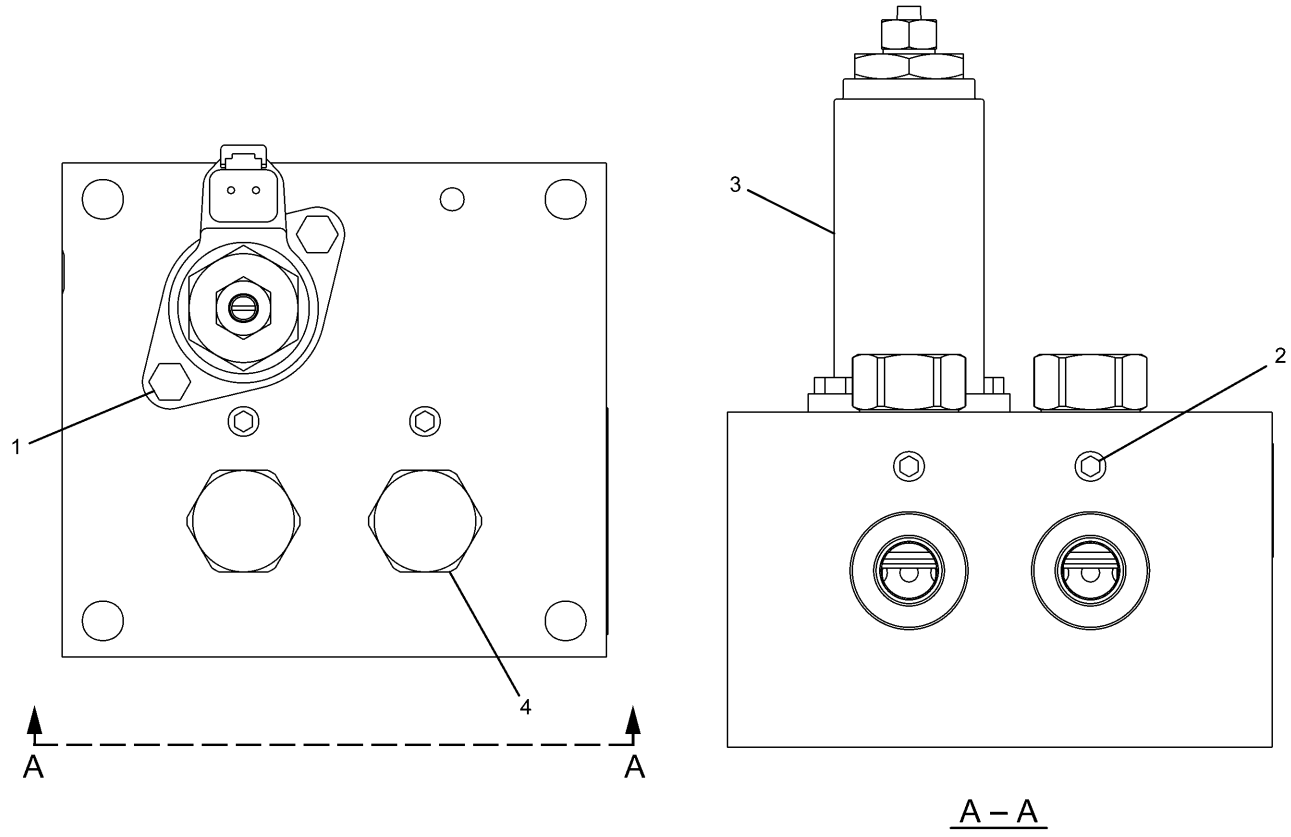


| NOTE | No. | PART No. | QTY | PART NAME | NOTE | No. | PART No. | QTY | PART NAME |
|---|---|---|---|---|---|---|---|---|---|
| | 1 | 8T-0288 | 2 | BOLT (L=12mm) | | | | | |
| | 2 | 71-8084 | 6 | PLUG | | | | | |
| Y | 3 | 111-9916 | 1 | VALVE GP | | | | | |
| | 4 | 171-0198 | 2 | VALVE GP | | | | | |
| | | 185-0407 | 1 | SEAL KIT | | | | | |

Y—SEE SEPARATE ILLUSTRATION

H91450E 02

## 171-0188 VALVE GP-CONTROL

Part of 260-7971-Page461,260-7972-Page463,260-7974-Page467,260-7986-Page471,275-1539-Page475
111-9916-Page576
An Attachment

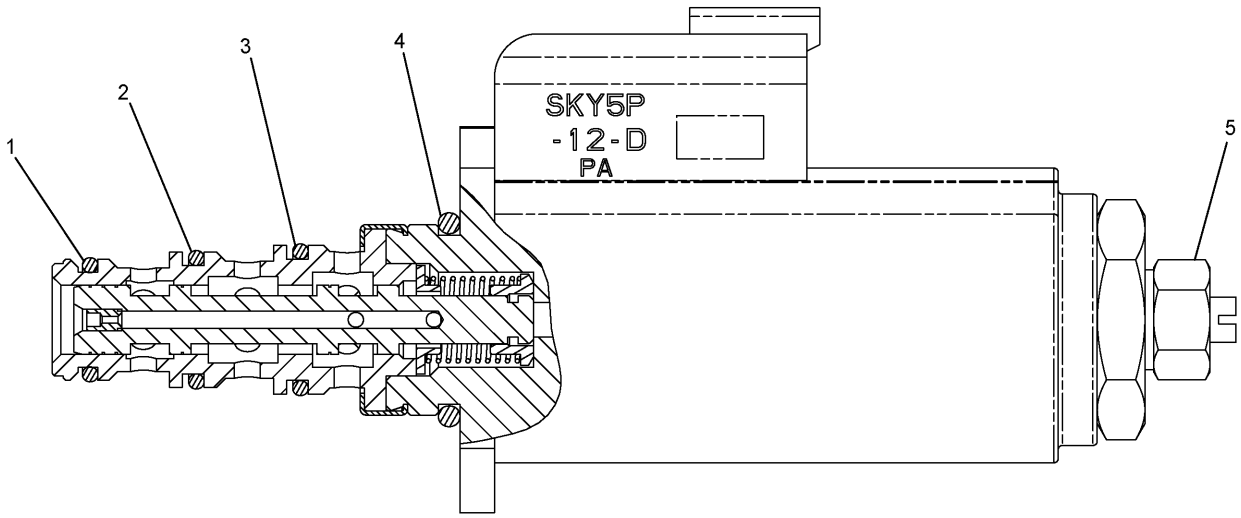


| NOTE | No. | PART No. | QTY | PART NAME | NOTE | No. | PART No. | QTY | PART NAME |
|---|---|---|---|---|---|---|---|---|---|
| | 1 | 095-1750 | 1 | SEAL-O-RING (ID=10.82mm) | | | | | |
| | 2 | 6V-8398 | 1 | SEAL-O-RING (OD=16.03mm) | | | | | |
| | 3 | 095-1751 | 1 | SEAL-O-RING (ID=14.00mm) | | | | | |
| | 4 | 095-1586 | 1 | SEAL-O-RING (ID=19.80mm) | | | | | |
| | 5 | 114-0623 | 1 | NUT AS | | | | | |

H94764E 03

## 111-9916 VALVE GP-PRESS REDUCING SOL

Part of 256-0093-Page343,171-0188-Page575,260-4444-Page587

Consists of :

| | | | Page |
|---|---|---|---|
| 1 | 239-8697 | VALVE GP-SELECTOR..... | 578 |
| | | -OR- | |
| 1 | 239-8998 | VALVE GP-SELECTOR..... | 580 |

H87213E 02

**215-5037 VALVE GP-SELECTOR**
Part of 248-9851-Page457

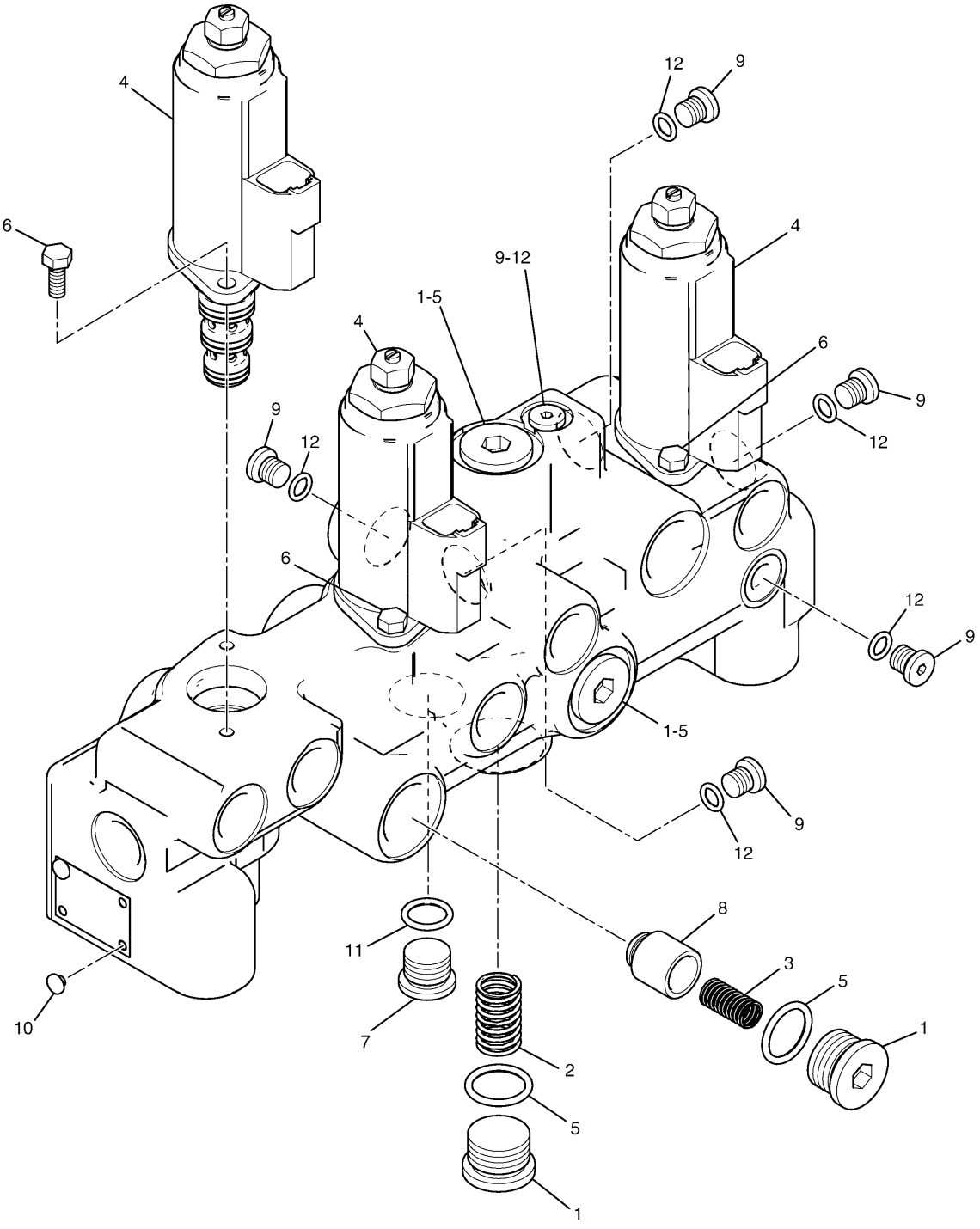


H87214E 00

**239-8697 VALVE GP-SELECTOR**
Part of 215-5037-Page577
121-1491-Page555

# HYDRAULIC SYSTEM

| NOTE | No. | PART No. | QTY | PART NAME | NOTE | No. | PART No. | QTY | PART NAME |
|---|---|---|---|---|---|---|---|---|---|
| | 1 | 9S-8005 | 4 | PLUG | | | | | |
| | 2 | 197-0273 | 1 | SPRING | | | | | |
| | 3 | 197-0199 | 1 | SPRING | | | | | |
| Y | 4 | 121-1491 | 3 | VALVE GP | | | | | |
| | 5 | 3K-0360 | 4 | SEAL-O-RING (ID=16.36mm) | | | | | |
| | 6 | 7I-2272 | 6 | BOLT (L=12mm) | | | | | |
| | 7 | 9S-8004 | 1 | PLUG | | | | | |
| | 8 | 197-0196 | 1 | VALVE | | | | | |
| | 9 | 9S-8001 | 6 | PLUG | | | | | |
| | 10 | 4B-4158 | 2 | SCREW | | | | | |
| | 11 | 3J-1907 | 1 | SEAL-O-RING (ID=11.89mm) | | | | | |
| | 12 | 4J-7533 | 6 | SEAL-O-RING (ID=6.07mm) | | | | | |

Y—SEE SEPARATE ILLUSTRATION

H87214E 00

## 239-8697 VALVE GP-SELECTOR

Part of 215-5037-Page577
121-1491-Page555

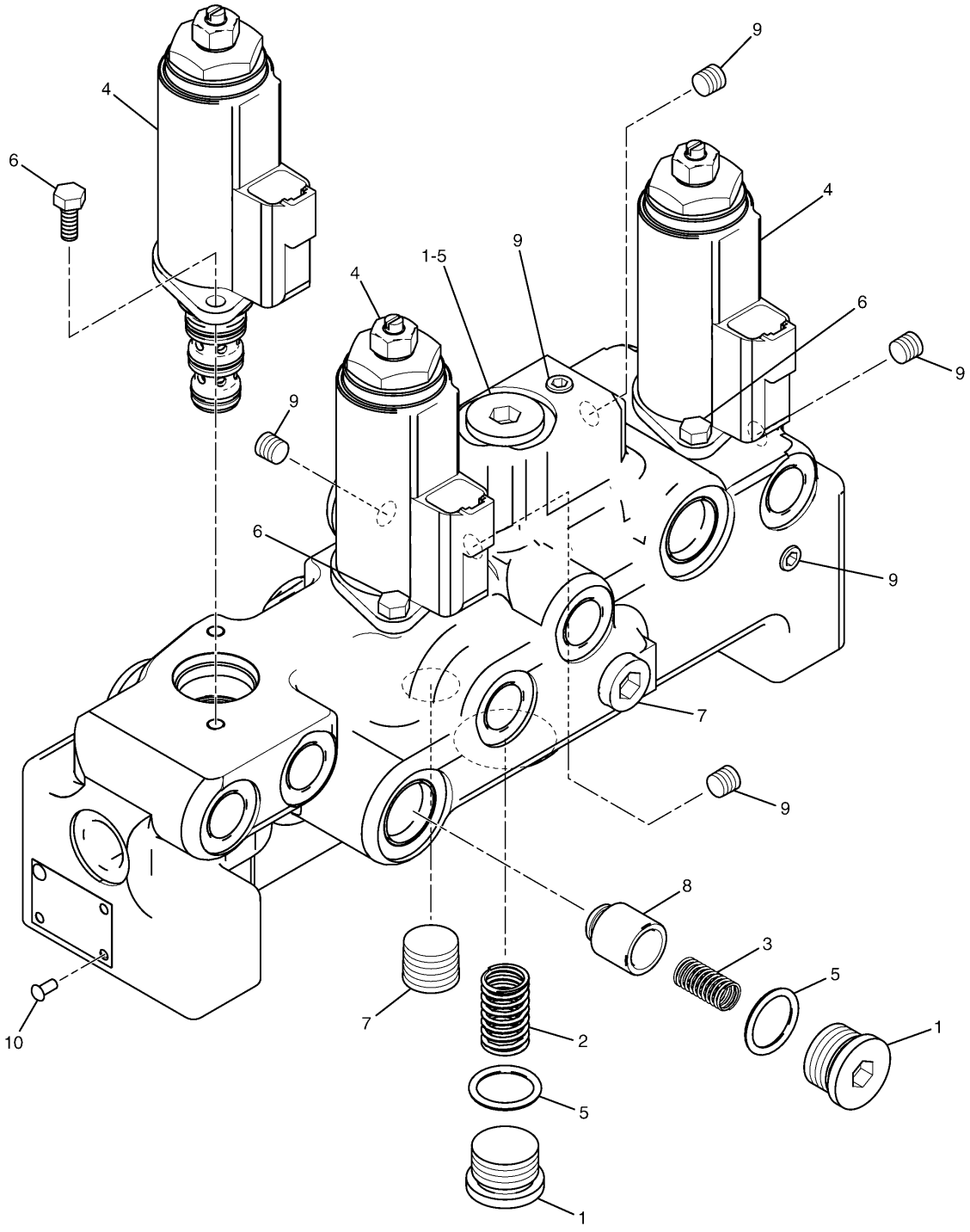


H87218E 00

**239-8998 VALVE GP-SELECTOR**
Part of 215-5037-Page577
121-1491-Page555

# HYDRAULIC SYSTEM

| NOTE | No. | PART No. | QTY | PART NAME | NOTE | No. | PART No. | QTY | PART NAME |
|---|---|---|---|---|---|---|---|---|---|
| | 1 | 9S-8005 | 3 | PLUG | | | | | |
| | 2 | 197-0273 | 1 | SPRING | | | | | |
| | 3 | 197-0199 | 1 | SPRING | | | | | |
| Y | 4 | 121-1491 | 3 | VALVE GP | | | | | |
| | 5 | 3K-0360 | 3 | SEAL-O-RING (ID=16.36mm) | | | | | |
| | 6 | 7I-2272 | 6 | BOLT (L=12mm) | | | | | |
| | 7 | 7M-7410 | 2 | PLUG | | | | | |
| | 8 | 197-0196 | 1 | VALVE | | | | | |
| | 9 | 8T-6759 | 6 | PLUG | | | | | |
| | 10 | 4B-4158 | 2 | SCREW | | | | | |

Y—SEE SEPARATE ILLUSTRATION

H87218E 00

## 239-8998 VALVE GP-SELECTOR

Part of 215-5037-Page577
121-1491-Page555

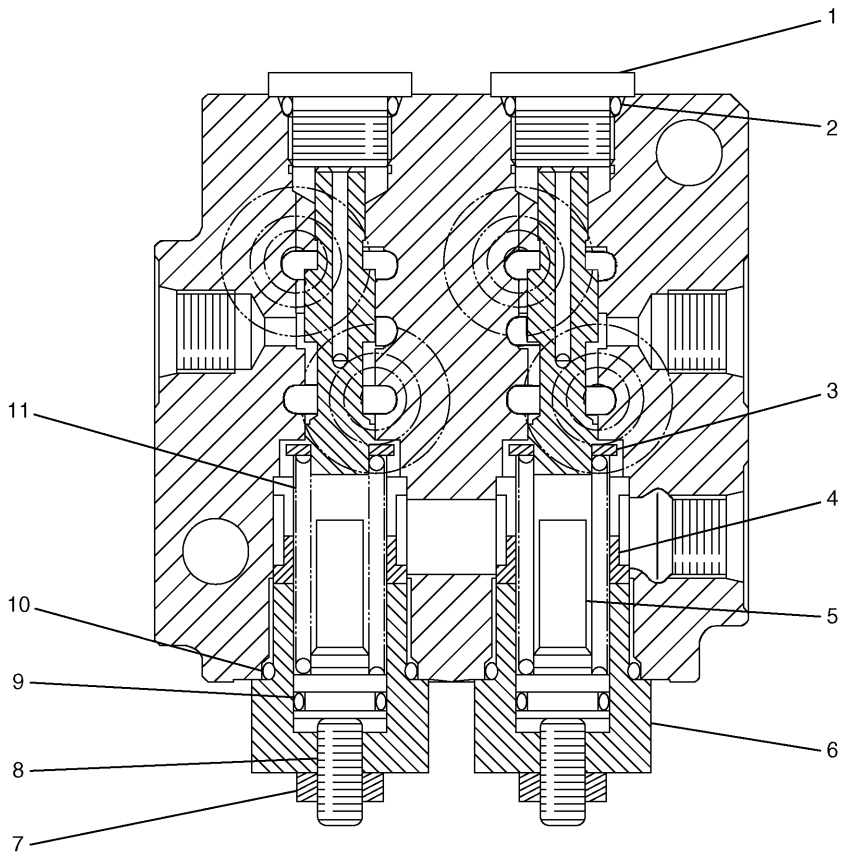


| NOTE | No. | PART No. | QTY | PART NAME | NOTE | No. | PART No. | QTY | PART NAME |
|---|---|---|---|---|---|---|---|---|---|
| | 1 | 111-9998 | 2 | PLUG | | | | | |
| | 2 | 095-1582 | 2 | SEAL-O-RING (ID=13.80mm) | | | | | |
| | 3 | 171-0127 | 2 | SEAT | | | | | |
| | 4 | 185-0423 | 2 | STOPPER | | | | | |
| | 5 | 171-0126 | 2 | SEAT | | | | | |
| | 6 | 171-0123 | 2 | PLUG | | | | | |
| | 7 | 5C-7261 | 2 | NUT | | | | | |
| | 8 | 171-0124 | 2 | SETSCREW | | | | | |
| | 9 | 095-1580 | 2 | SEAL-O-RING (ID=11.80mm) | | | | | |
| | 10 | 095-1590 | 2 | SEAL-O-RING (ID=21.80mm) | | | | | |
| | 11 | 171-0128 | 2 | SPRING | | | | | |

H85396E 00

## 232-4102 VALVE GP-PRESSURE REDUCING

Part of 248-9851-Page455

# MEMORANDA

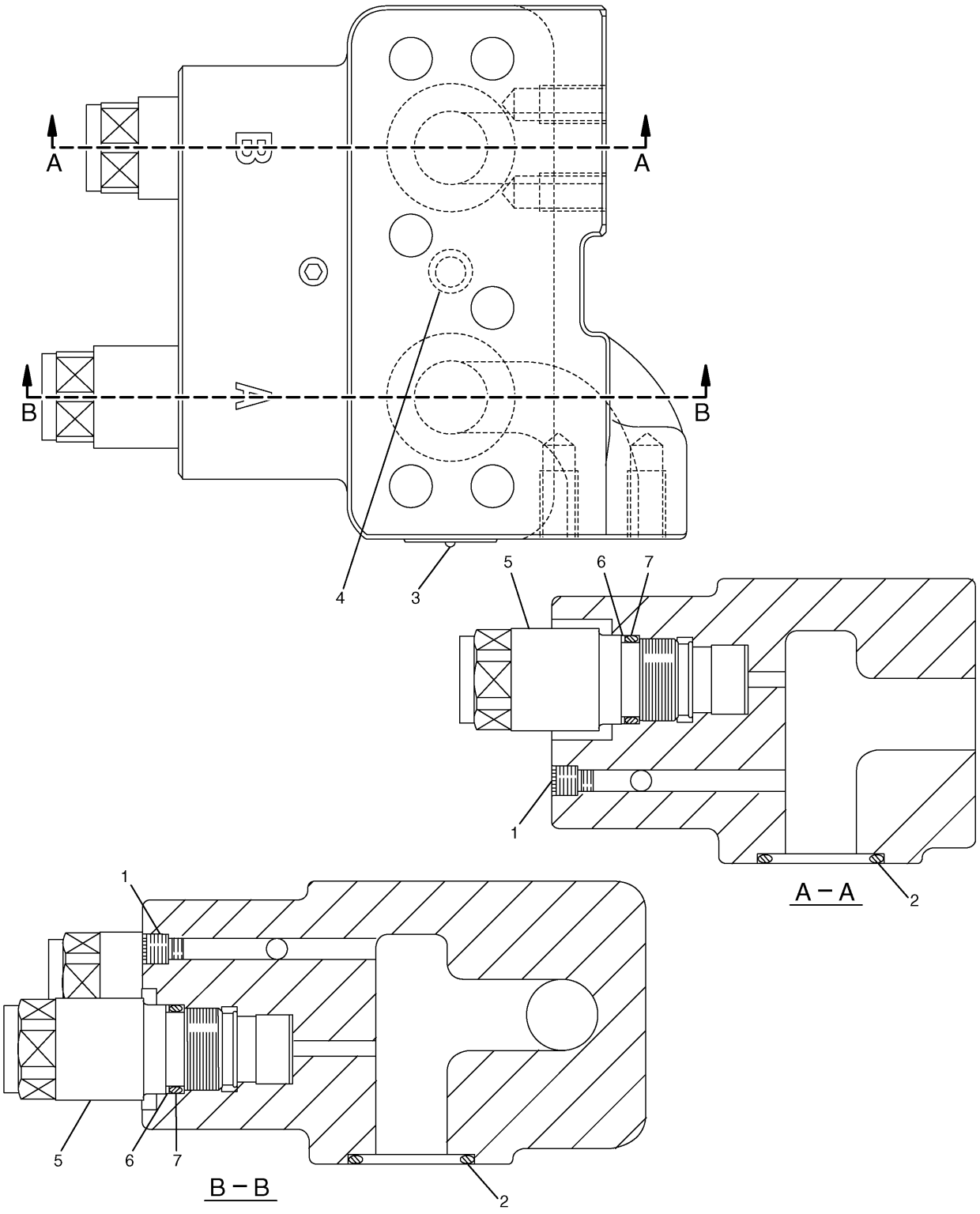


H67322E 01

**158-9085 VALVE GP-CUSHION CROSSOVER RLF**
Part of 302-2922-Page377

# HYDRAULIC SYSTEM

| NOTE | No. | PART No. | QTY | PART NAME | NOTE | No. | PART No. | QTY | PART NAME |
|---|---|---|---|---|---|---|---|---|---|
| | 1 | 8T-6759 | 4 | PLUG | | | | | |
| | 2 | 095-1698 | 2 | SEAL-O-RING (ID=29.40mm) | | | | | |
| | 3 | 5B-9304 | 2 | SCREW | | | | | |
| | 4 | 095-1576 | 1 | SEAL-O-RING (ID=8.80mm) | | | | | |
| | 5 | 173-3536 | 2 | VALVE GP | | | | | |
| | 6 | 095-1785 | 1 | RING | | | | | |
| | 7 | 095-1586 | 1 | SEAL-O-RING (ID=19.80mm) | | | | | |

H67322E 01

## 158-9085 VALVE GP-CUSHION CROSSOVER RLF

Part of 302-2922-Page377

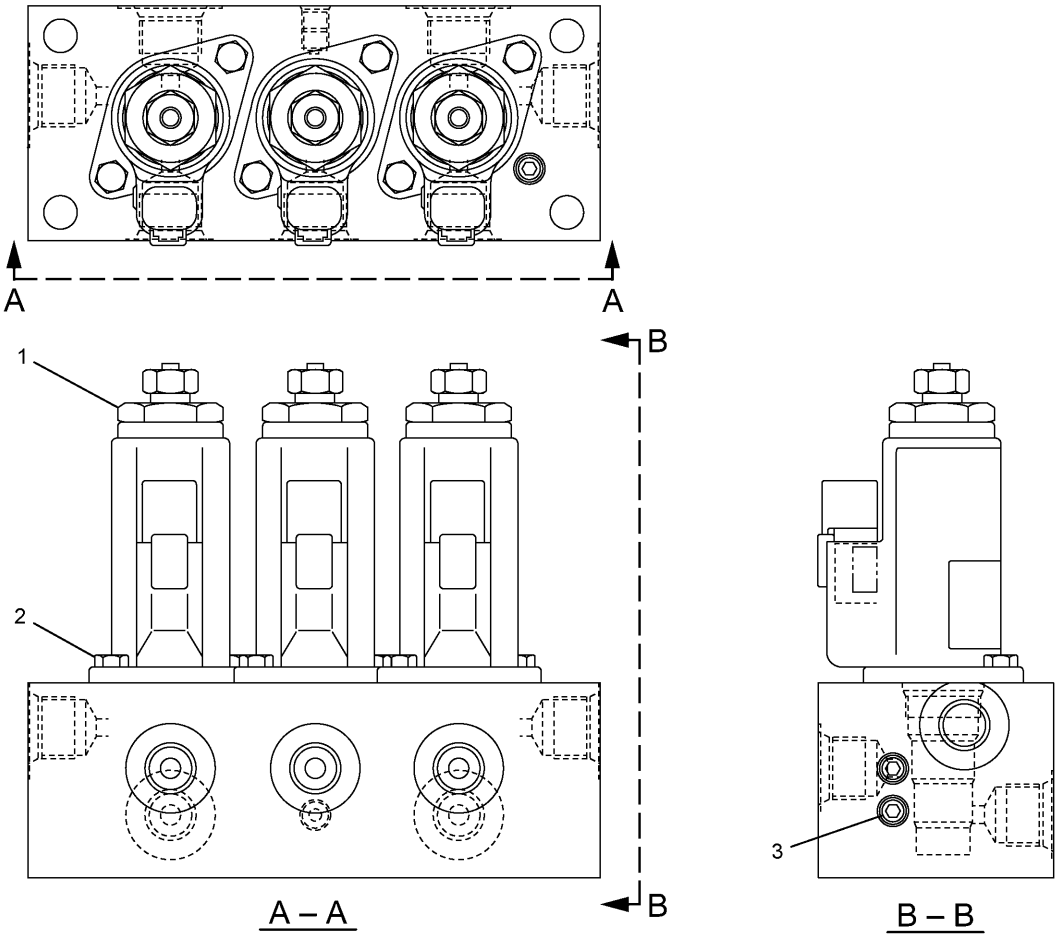


| NOTE | No. | PART No. | QTY | PART NAME | NOTE | No. | PART No. | QTY | PART NAME |
|---|---|---|---|---|---|---|---|---|---|
| Y | 1 | 121-1491 | 3 | VALVE GP | | | | | |
| | 2 | 8T-0288 | 6 | BOLT (L=12mm) | | | | | |
| | 3 | 7I-8084 | 4 | PLUG | | | | | |

Y—SEE SEPARATE ILLUSTRATION

H90190E 03

## 165-9549 VALVE GP-SOLENOID

Part of 260-7974-Page467,260-7986-Page471
121-1491-Page555
An Attachment

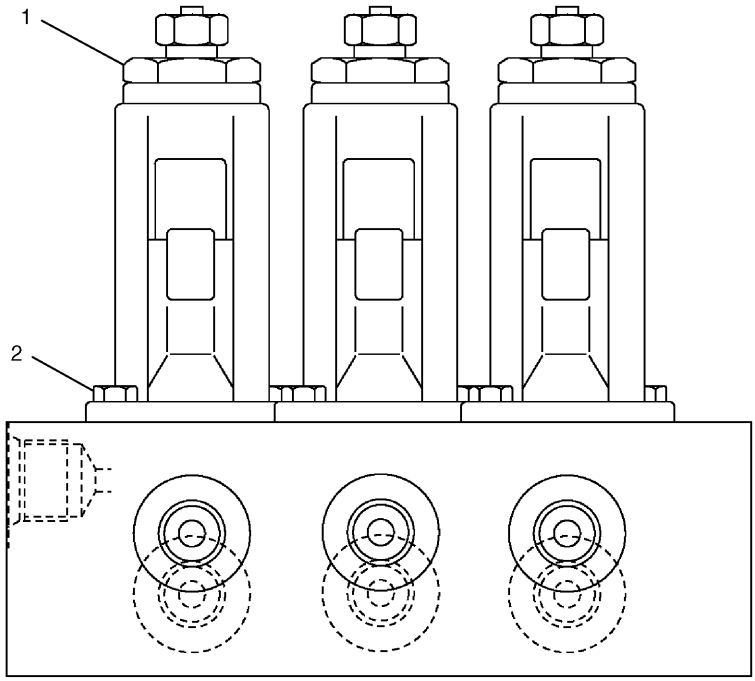


| NOTE | No. | PART No. | QTY | PART NAME | NOTE | No. | PART No. | QTY | PART NAME |
|---|---|---|---|---|---|---|---|---|---|
| Y | 1 | 111-9916 | 3 | VALVE GP | | | | | |
| | 2 | 8T-0288 | 6 | BOLT (L=12mm) | | | | | |

Y—SEE SEPARATE ILLUSTRATION

H90056E 00

## 260-4444 VALVE GP-SOLENOID

S/N BWZ 1-Up, DFB 1-Up
Part of 272-4170-Page472
111-9916-Page576
An Attachment

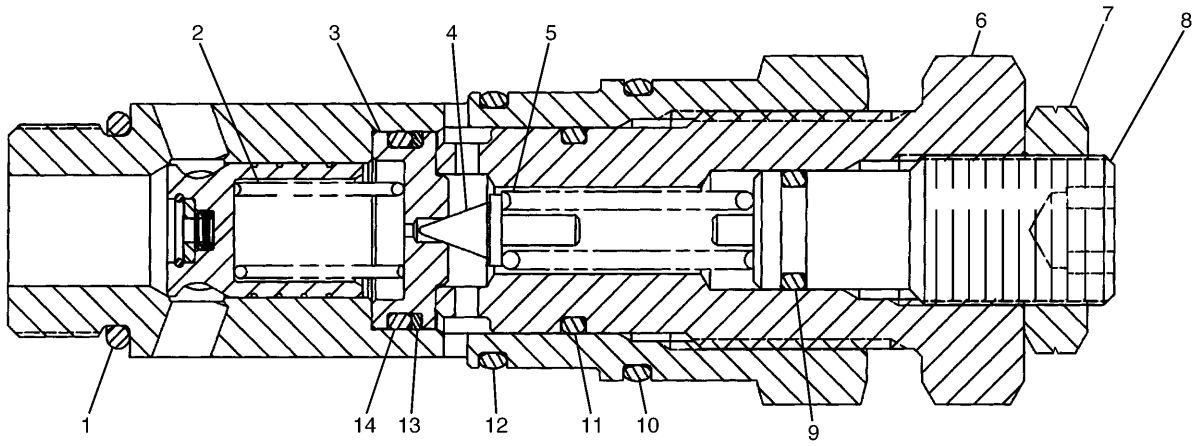


| NOTE | No. | PART No. | QTY | PART NAME | NOTE | No. | PART No. | QTY | PART NAME |
|---|---|---|---|---|---|---|---|---|---|
| | 1 | 3D-2824 | 1 | SEAL-O-RING (ID=23.47mm) | | | | | |
| | 2 | 6I-6795 | 1 | SPRING | | | | | |
| | 3 | 171-0034 | 1 | SEAT | | | | | |
| | 4 | 171-0037 | 1 | VALVE | | | | | |
| | 5 | 4I-3510 | 1 | SPRING | | | | | |
| | 6 | 171-0035 | 1 | HOLDER | | | | | |
| | 7 | 222-0085 | 1 | NUT | | | | | |
| | 8 | 171-0036 | 1 | ADJUSTER | | | | | |
| | 9 | 095-1579 | 1 | SEAL-O-RING (ID=10.80mm) | | | | | |
| | 10 | 6V-8218 | 1 | SEAL-O-RING (ID=32.99mm) | | | | | |
| | 11 | 095-1590 | 1 | SEAL-O-RING (ID=21.80mm) | | | | | |
| | 12 | 6V-8978 | 1 | SEAL-O-RING (ID=29.82mm) | | | | | |
| | 13 | 095-1786 | 1 | RING | | | | | |
| | 14 | 095-1587 | 1 | SEAL-O-RING (ID=20.80mm) | | | | | |

H81813E 00

## 222-0084 VALVE GP-RELIEF

Pilot Operated

Part of 177-2653-Page589

An Attachment

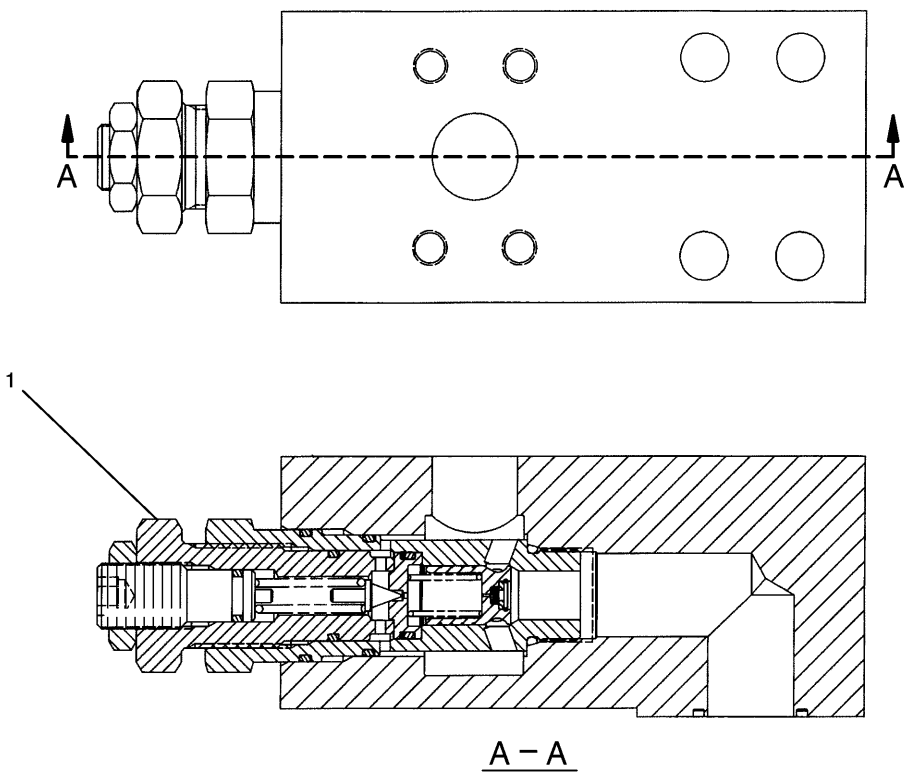


A – A

| NOTE | No. | PART No. | QTY | PART NAME | NOTE | No. | PART No. | QTY | PART NAME |
|---|---|---|---|---|---|---|---|---|---|
| Y | 1 | 222-0084 | 1 | VALVE GP | | | | | |

Y—SEE SEPARATE ILLUSTRATION

H81788E 01

## 177-2653 VALVE GP-RELIEF

Part of 260-8006-Page487,260-8007-Page489,260-8008-Page491
222-0084-Page588
An Attachment

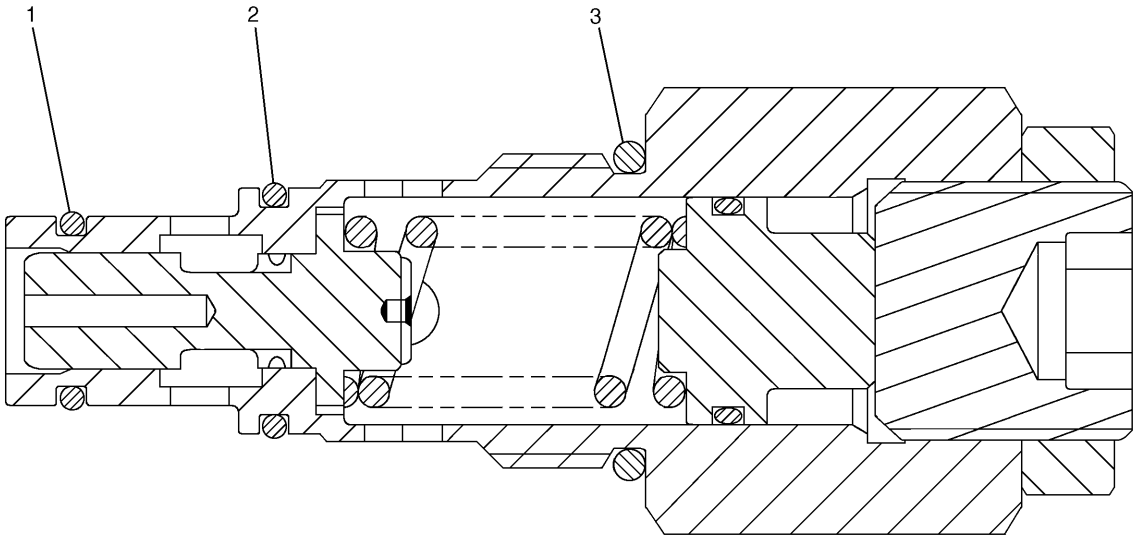


| NOTE | No. | PART No. | QTY | PART NAME | NOTE | No. | PART No. | QTY | PART NAME |
|---|---|---|---|---|---|---|---|---|---|
| | 1 | 095-1584 | 1 | SEAL-O-RING (ID=15.80mm) | | | | | |
| | 2 | 095-1590 | 1 | SEAL-O-RING (ID=21.80mm) | | | | | |
| | 3 | 095-1596 | 1 | SEAL-O-RING (ID=28.70mm) | | | | | |

H81796E 00

## 215-4909 VALVE GP-RELIEF

Direct Operated

Part of 188-2084-Page331,289-7836-Page332

# MEMORANDA

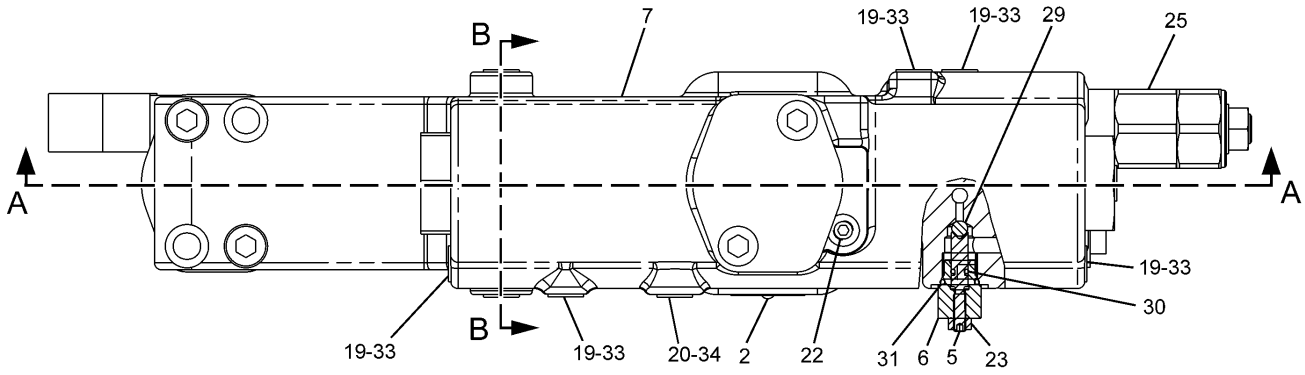


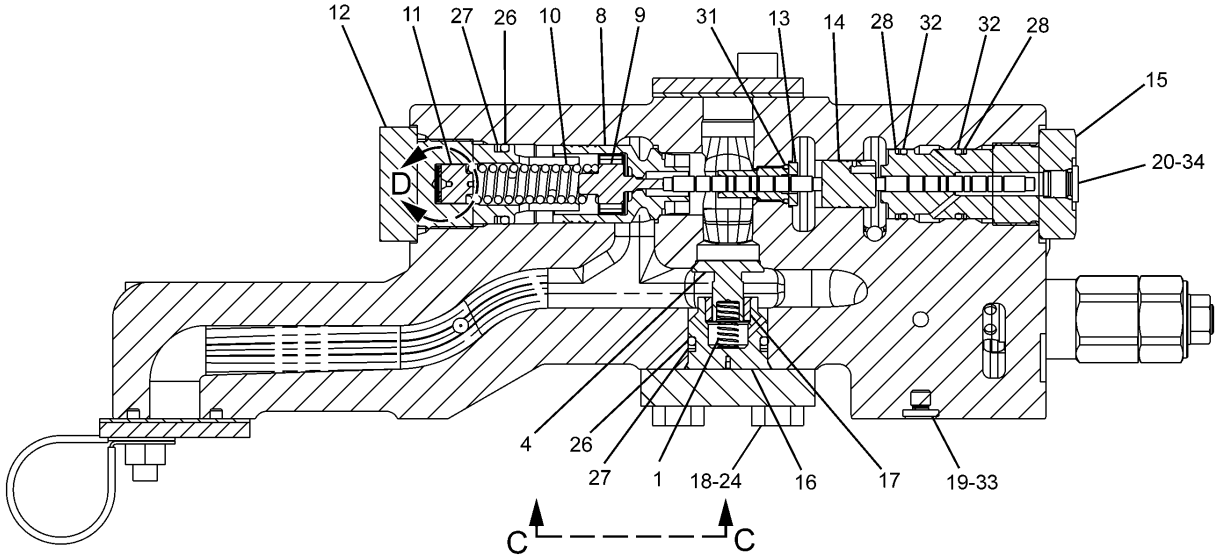


A – A

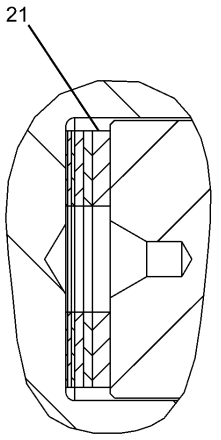


D

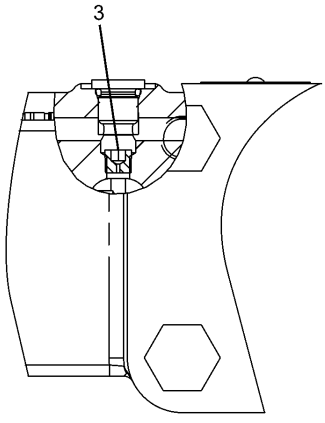


C – C

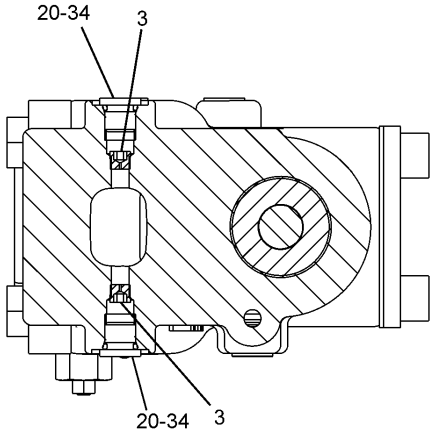


B – B

HA0914E 04

**225-4785 VALVE GP-CHECK & RELIEF**
BOOM LOWERING CONTROL
S/N BWZ 1-Up, DFB 1-Up
Part of 286-6495-Page379
255-5662-Page574
An Attachment

# HYDRAULIC SYSTEM

| NOTE | No. | PART No. | QTY | PART NAME | NOTE | No. | PART No. | QTY | PART NAME |
|---|---|---|---|---|---|---|---|---|---|
| | 1 | 2S-2596 | 1 | SPRING | | | | | |
| | 2 | 4B-4158 | 1 | SCREW | | | | | |
| | 3 | 114-8229 | 3 | ORIFICE | | | | | |
| | 4 | 9T-1614 | 1 | VALVE | | | | | |
| | 5 | 165-9513 | 1 | SEAT | | | | | |
| | 6 | 165-9514 | 1 | PLUG | | | | | |
| | 7 | 225-4786 | 1 | BODY | | | | | |
| | 8 | 225-4787 | 1 | VALVE | | | | | |
| | 9 | 225-4789 | 1 | VALVE | | | | | |
| | 10 | 225-4790 | 1 | SPRING | | | | | |
| | 11 | 225-4791 | 1 | GUIDE | | | | | |
| | 12 | 225-4792 | 1 | PLUG | | | | | |
| | 13 | 225-4793 | 1 | VALVE GP | | | | | |
| | 14 | 225-4796 | 1 | PISTON | | | | | |
| | 15 | 225-4797 | 1 | VALVE GP | | | | | |
| | 16 | 259-7788 | 1 | GUIDE AS | | | | | |
| | 17 | 4T-0987 | 1 | BEARING | | | | | |
| | 18 | 225-4803 | 1 | COVER | | | | | |
| | 19 | 225-4804 | 7 | PLUG | | | | | |
| | 20 | 225-4821 | 4 | PLUG | | | | | |
| B | 21 | 225-4830 | 1 | SHIM (T=1.0mm) | | | | | |
| B | | 225-4831 | 2 | SHIM (T=0.5mm) | | | | | |
| B | | 225-4832 | 2 | SHIM (T=0.2mm) | | | | | |
| B | | 225-4833 | 1 | SHIM (T=0.1mm) | | | | | |
| | 22 | 8T-6759 | 1 | PLUG | | | | | |
| | 23 | 7Y-5226 | 1 | NUT | | | | | |
| | 24 | 8T-4139 | 4 | BOLT (L=30mm) | | | | | |
| Y | 25 | 255-5662 | 1 | VALVE GP | | | | | |
| | 26 | 095-1594 | 2 | SEAL-O-RING (ID=25.70mm) | | | | | |
| | 27 | 095-1789 | 2 | RING | | | | | |
| | 28 | 122-7797 | 2 | RING | | | | | |
| | 29 | 2D-6642 | 1 | BALL | | | | | |
| | 30 | 3H-0442 | 1 | SEAL-O-RING (ID=3.68mm) | | | | | |
| | 31 | 3J-1907 | 2 | SEAL-O-RING (ID=11.89mm) | | | | | |
| | 32 | 6V-5326 | 2 | SEAL-O-RING (ID=23.47mm) | | | | | |
| | 33 | 4J-7533 | 7 | SEAL-O-RING (ID=6.07mm) | | | | | |
| | 34 | 3J-7354 | 4 | SEAL-O-RING (ID=8.92mm) | | | | | |

B—USE AS REQUIRED

Y—SEE SEPARATE ILLUSTRATION

HA0914E 04

## 225-4785 VALVE GP-CHECK & RELIEF

BOOM LOWERING CONTROL
S/N BWZ 1-Up, DFB 1-Up
Part of 286-6495-Page379
255-5662-Page574
An Attachment

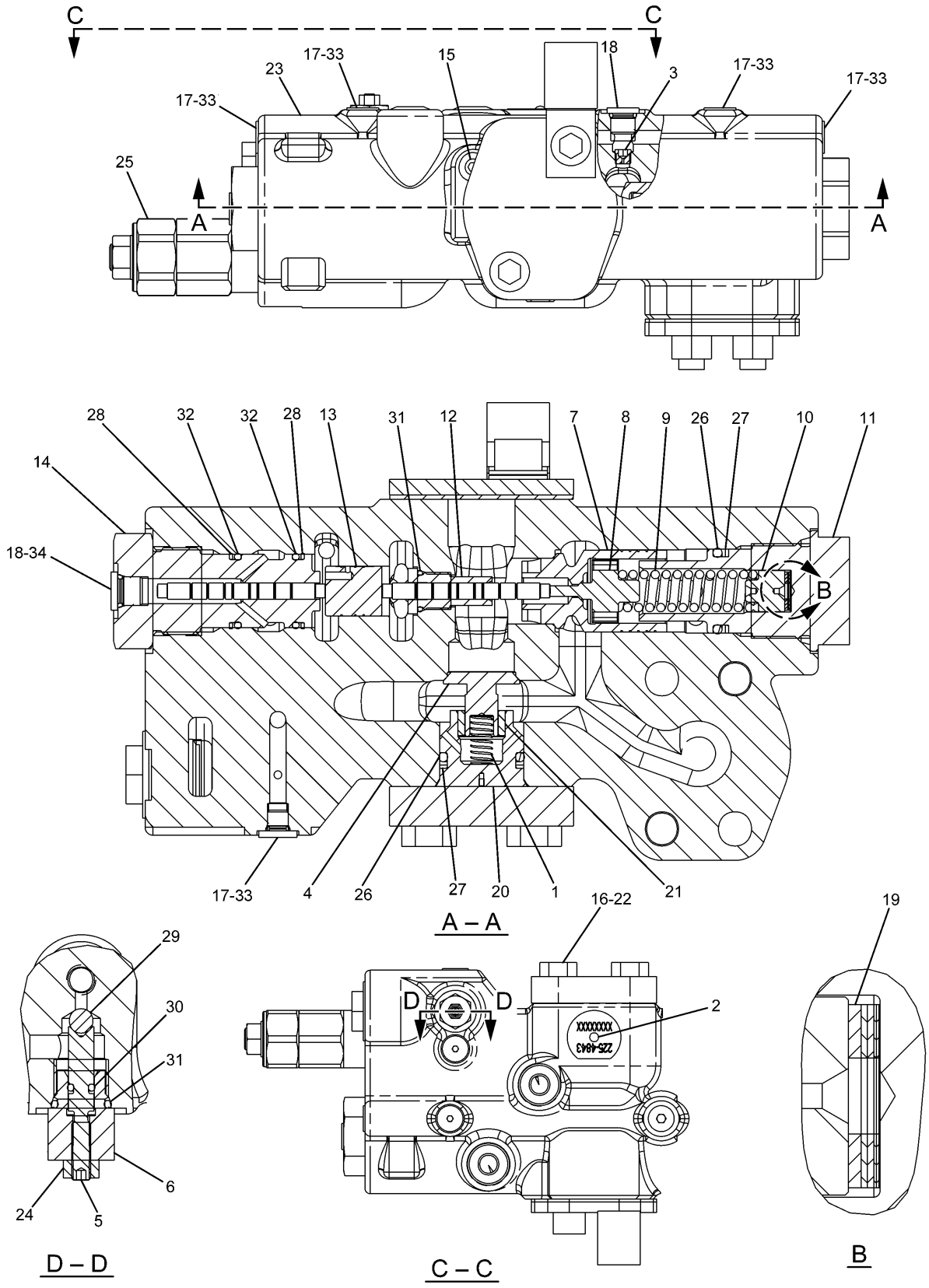


HA0915E 04

**225-4843 VALVE GP-CHECK & RELIEF**
S/N BWZ 1-Up, DFB 1-Up
Part of 262-3471-Page383
255-5662-Page574
An Attachment

# HYDRAULIC SYSTEM

| NOTE | No. | PART No. | QTY | PART NAME | NOTE | No. | PART No. | QTY | PART NAME |
|---|---|---|---|---|---|---|---|---|---|
| | 1 | 2S-2596 | 1 | SPRING | | | | | |
| | 2 | 4B-4158 | 1 | SCREW | | | | | |
| | 3 | 114-8229 | 1 | ORIFICE | | | | | |
| | 4 | 9T-1614 | 1 | VALVE | | | | | |
| | 5 | 165-9513 | 1 | SEAT | | | | | |
| | 6 | 165-9514 | 1 | PLUG | | | | | |
| | 7 | 225-4787 | 1 | VALVE | | | | | |
| | 8 | 225-4789 | 1 | VALVE | | | | | |
| | 9 | 225-4790 | 1 | SPRING | | | | | |
| | 10 | 225-4791 | 1 | GUIDE | | | | | |
| | 11 | 225-4792 | 1 | PLUG | | | | | |
| | 12 | 225-4793 | 1 | VALVE GP | | | | | |
| | 13 | 225-4796 | 1 | PISTON | | | | | |
| | 14 | 225-4797 | 1 | VALVE GP | | | | | |
| | 15 | 8T-6759 | 1 | PLUG | | | | | |
| | 16 | 225-4803 | 1 | COVER | | | | | |
| | 17 | 225-4804 | 6 | PLUG | | | | | |
| | 18 | 225-4821 | 2 | PLUG | | | | | |
| B | 19 | 225-4830 | 1 | SHIM (T=1.0mm) | | | | | |
| B | | 225-4831 | 2 | SHIM (T=0.5mm) | | | | | |
| B | | 225-4832 | 2 | SHIM (T=0.2mm) | | | | | |
| B | | 225-4833 | 1 | SHIM (T=0.1mm) | | | | | |
| | 20 | 259-7788 | 1 | GUIDE AS | | | | | |
| | 21 | 4T-0987 | 1 | BEARING | | | | | |
| | 22 | 8T-4139 | 4 | BOLT (L=30mm) | | | | | |
| | 23 | 225-4844 | 1 | BODY | | | | | |
| | 24 | 7Y-5226 | 1 | NUT | | | | | |
| Y | 25 | 255-5662 | 1 | VALVE GP | | | | | |
| | 26 | 095-1594 | 2 | SEAL-O-RING (ID=25.70mm) | | | | | |
| | 27 | 095-1789 | 2 | RING | | | | | |
| | 28 | 122-7797 | 2 | RING | | | | | |
| | 29 | 2D-6642 | 1 | BALL | | | | | |
| | 30 | 3H-0442 | 1 | SEAL-O-RING (ID=3.68mm) | | | | | |
| | 31 | 3J-1907 | 2 | SEAL-O-RING (ID=11.89mm) | | | | | |
| | 32 | 6V-5326 | 2 | SEAL-O-RING (ID=23.47mm) | | | | | |
| | 33 | 4J-7533 | 6 | SEAL-O-RING (ID=6.07mm) | | | | | |
| | 34 | 3J-7354 | 2 | SEAL-O-RING (ID=8.92mm) | | | | | |

B—USE AS REQUIRED

Y—SEE SEPARATE ILLUSTRATION

HA0915E 04

## 225-4843 VALVE GP-CHECK & RELIEF

S/N BWZ 1-Up, DFB 1-Up
Part of 262-3471-Page383
255-5662-Page574
An Attachment

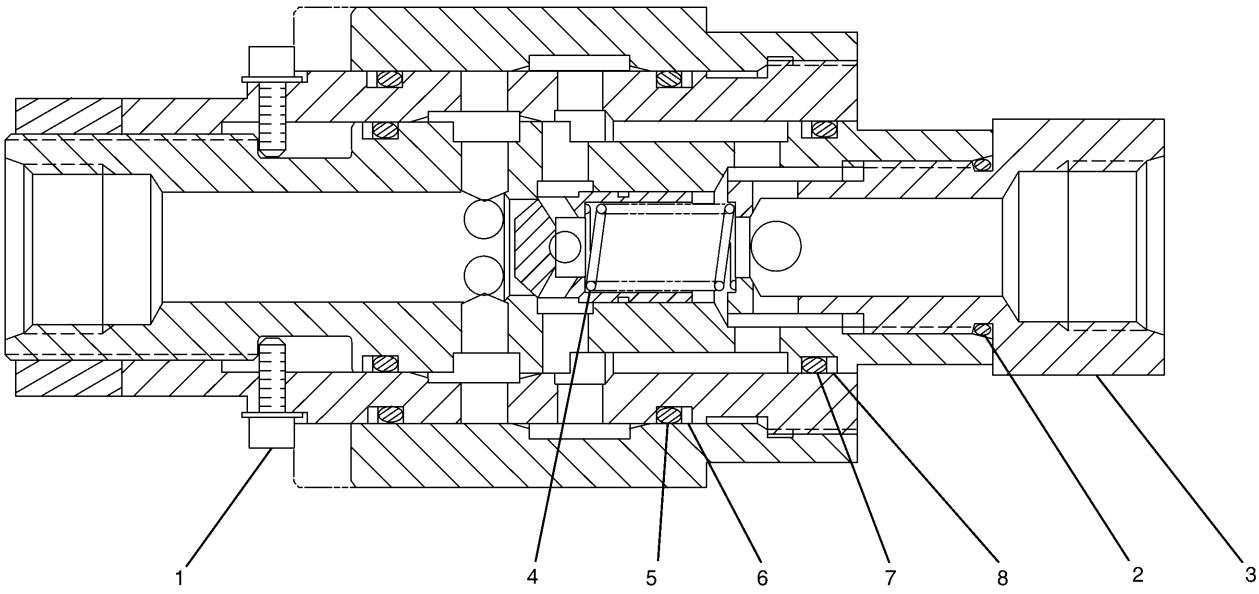


| NOTE | No. | PART No. | QTY | PART NAME | NOTE | No. | PART No. | QTY | PART NAME |
|---|---|---|---|---|---|---|---|---|---|
| | 1 | 153-8630 | 2 | BOLT | | | | | |
| | 2 | 095-1596 | 1 | SEAL-O-RING (ID=28.70mm) | | | | | |
| | 3 | 153-8626 | 1 | RETAINER | | | | | |
| | 4 | 153-8627 | 1 | SPRING | | | | | |
| | 5 | 095-1707 | 2 | SEAL-O-RING (ID=64.40mm) | | | | | |
| | 6 | 153-8629 | 2 | RING | | | | | |
| | 7 | 095-1703 | 2 | SEAL-O-RING (ID=44.40mm) | | | | | |
| | 8 | 153-8628 | 2 | RING | | | | | |

H65627E 02

## 127-6844 VALVE GP-CHECK

Part of 179-5146-Page400,193-6588-Page403
An Attachment

# MEMORANDA

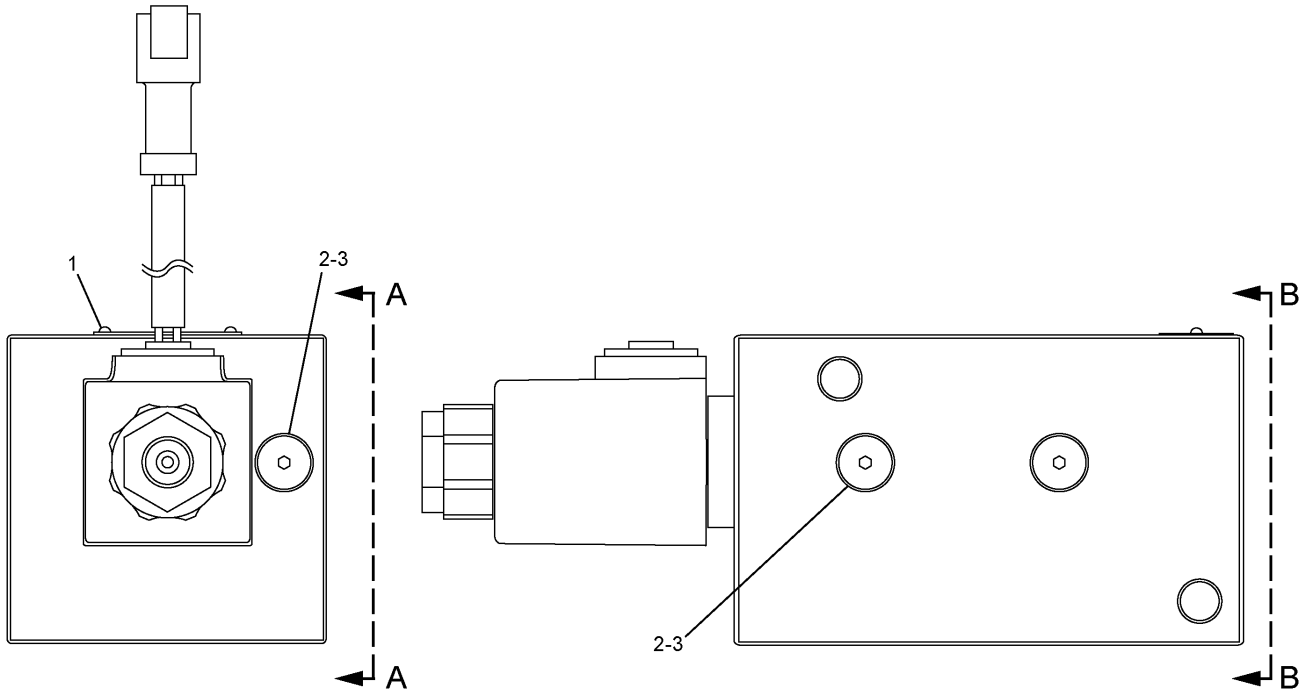


A – A

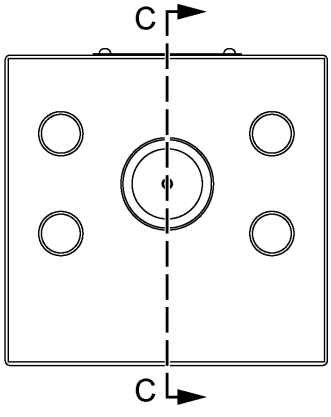


B – B

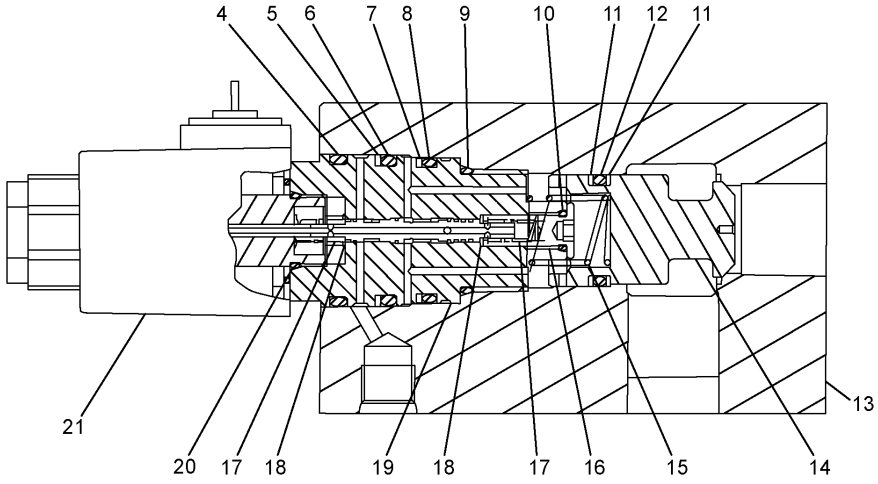


C – C

H96334E 00

**297-0370 VALVE GP-CHECK**
Part of 260-8008-Page491
An Attachment

# HYDRAULIC SYSTEM

| NOTE | No. | PART No. | QTY | PART NAME | NOTE | No. | PART No. | QTY | PART NAME |
|---|---|---|---|---|---|---|---|---|---|
| | 1 | 197-0758 | 2 | SCREW | | | | | |
| | 2 | 225-4804 | 3 | PLUG | | | | | |
| | 3 | 4J-7533 | 3 | SEAL-O-RING (ID=6.07mm) | | | | | |
| | 4 | 095-1602 | 1 | SEAL-O-RING (ID=35.70mm) | | | | | |
| | 5 | 232-4113 | 1 | RING | | | | | |
| | 6 | 095-1601 | 1 | SEAL-O-RING (ID=34.70mm) | | | | | |
| | 7 | 8T-3008 | 1 | RING | | | | | |
| | 8 | 095-1700 | 1 | SEAL-O-RING (ID=34.40mm) | | | | | |
| | 9 | 7M-8485 | 1 | SEAL-O-RING (ID=29.74mm) | | | | | |
| | 10 | 095-1575 | 1 | SEAL-O-RING (ID=7.80mm) | | | | | |
| | 11 | 232-4114 | 2 | RING | | | | | |
| | 12 | 095-1657 | 1 | SEAL-O-RING (ID=24.40mm) | | | | | |
| | 13 | 297-0408 | 1 | BODY | | | | | |
| | 14 | 232-4110 | 1 | PLUNGER | | | | | |
| | 15 | 232-4111 | 1 | SPRING | | | | | |
| | 16 | 158-8284 | 1 | PLUG | | | | | |
| | 17 | 232-4112 | 2 | SPRING | | | | | |
| | 18 | 136-0156 | 2 | WASHER | | | | | |
| | 19 | 232-4117 | 1 | SLEEVE AS | | | | | |
| | 20 | 095-1585 | 1 | SEAL-O-RING (ID=17.80mm) | | | | | |
| | 21 | 297-0406 | 1 | SOLENOID AS | | | | | |

H96334E 00

## 297-0370 VALVE GP-CHECK

Part of 260-8008-Page491
An Attachment

Consists of :

| | | | Page |
|---|---|---|---|
| 1 | 297-0503 | VALVE GP-CHECK..... | 600.01 |
| | | -OR- | |
| 1 | 297-0504 | VALVE GP-CHECK..... | 600.02 |

H96779E 01

**297-0462 VALVE GP-CHECK**
Part of 248-9846-Page485

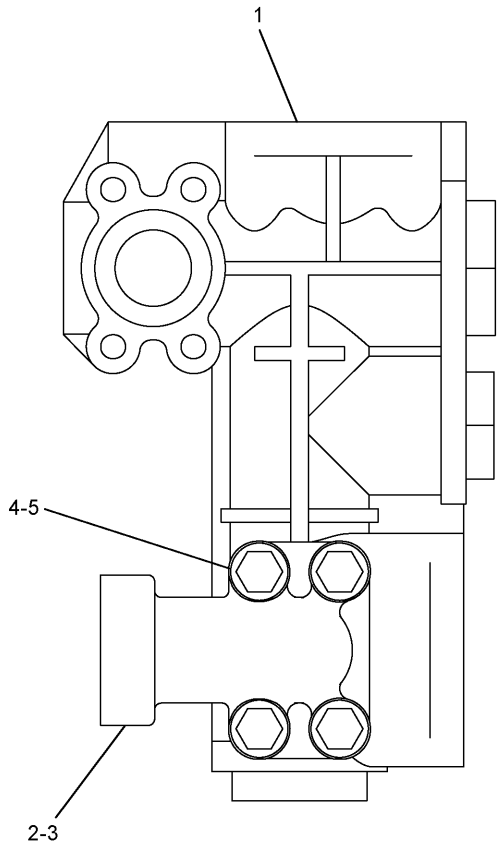


| NOTE | No. | PART No. | QTY | PART NAME | NOTE | No. | PART No. | QTY | PART NAME |
|---|---|---|---|---|---|---|---|---|---|
| Y | 1 | 201-9329 | 1 | VALVE GP | | | | | |
| | 2 | 204-3796 | 1 | PIPE AS | | | | | |
| | 3 | 4J-0524 | 1 | SEAL-O-RING (ID=47.22mm) | | | | | |
| | 4 | 8T-4223 | 4 | WASHER | | | | | |
| | 5 | 8T-6868 | 4 | BOLT (L=80mm) | | | | | |

Y—SEE SEPARATE ILLUSTRATION

H96776E 00

## 297-0503 VALVE GP-CHECK

Part of 297-0462-Page600
201-9329-Page601

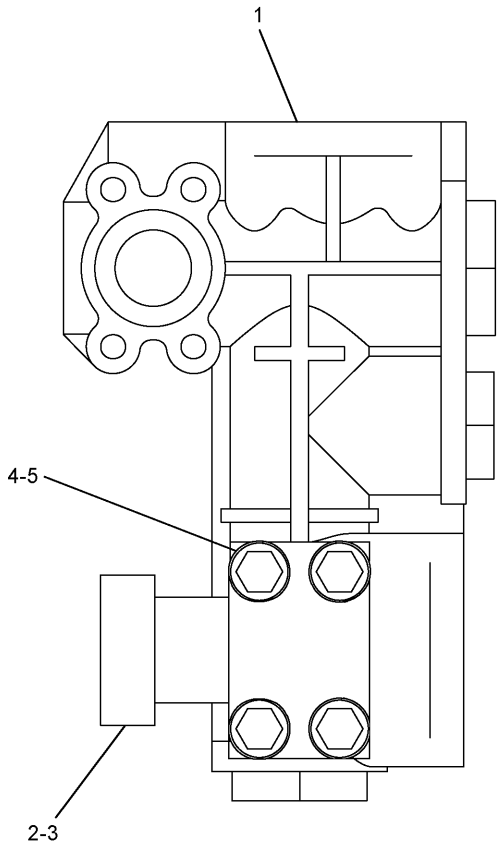


| NOTE | No. | PART No. | QTY | PART NAME | NOTE | No. | PART No. | QTY | PART NAME |
|---|---|---|---|---|---|---|---|---|---|
| Y | 1 | 201-9329 | 1 | VALVE GP | | | | | |
| | 2 | 302-3196 | 1 | PIPE AS | | | | | |
| | 3 | 4J-0524 | 1 | SEAL-O-RING (ID=47.22mm) | | | | | |
| | 4 | 8T-4223 | 4 | WASHER | | | | | |
| | 5 | 8T-6868 | 4 | BOLT (L=80mm) | | | | | |

Y—SEE SEPARATE ILLUSTRATION

H96777E 00

## 297-0504 VALVE GP-CHECK

Part of 297-0462-Page600
201-9329-Page601

# HYDRAULIC SYSTEM

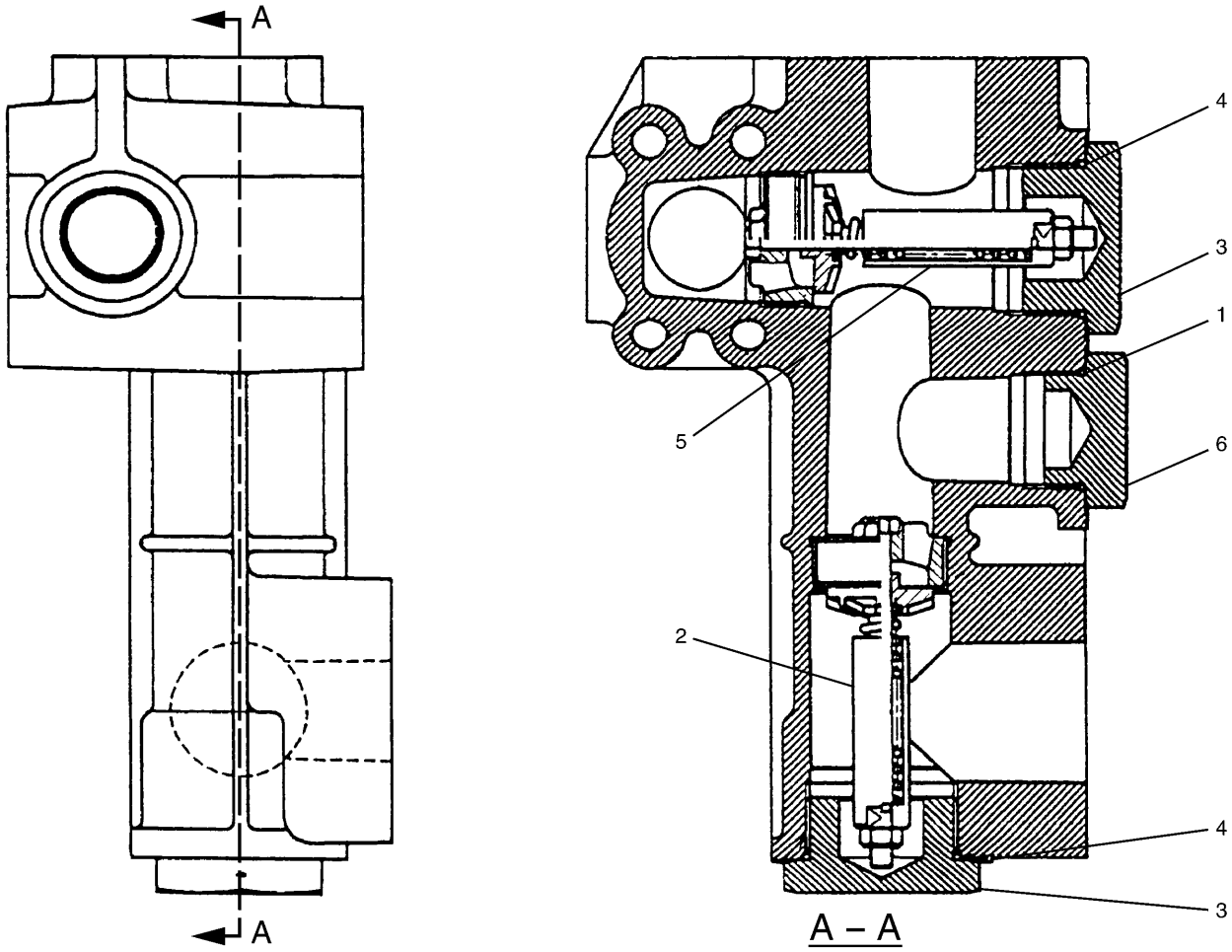


| NOTE | No. | PART No. | QTY | PART NAME | NOTE | No. | PART No. | QTY | PART NAME |
|---|---|---|---|---|---|---|---|---|---|
| | 1 | 2S-4078 | 1 | SEAL-O-RING (ID=37.47mm) | | | | | |
| | 2 | 184-3833 | 1 | VALVE AS | | | | | |
| | 3 | 190-7826 | 2 | PLUG | | | | | |
| | 4 | 095-1547 | 2 | SEAL-O-RING (ID=49.70mm) | | | | | |
| | 5 | 177-2713 | 1 | VALVE AS | | | | | |
| | 6 | 9S-6130 | 1 | PLUG | | | | | |

H77823E 00

## 201-9329 VALVE GP-CHECK

Part of 297-0503-Page600.01,297-0504-Page600.02

# HYDRAULIC SYSTEM

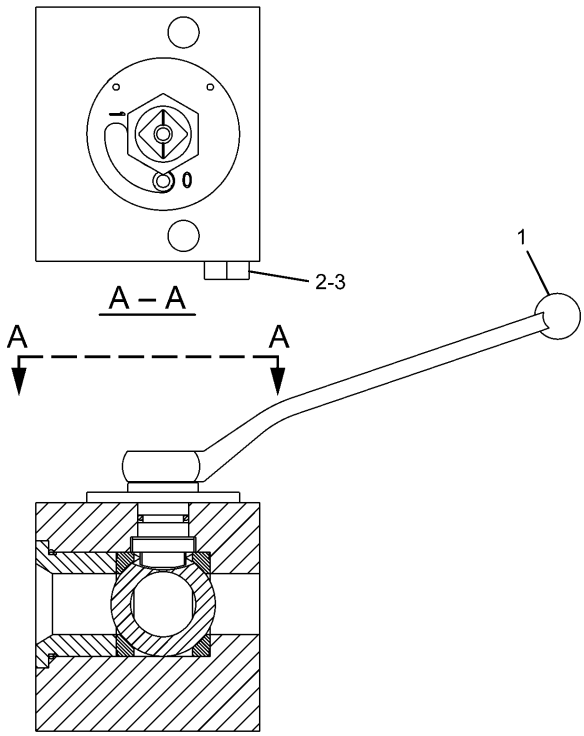


| NOTE | No. | PART No. | QTY | PART NAME |
|---|---|---|---|---|
| | 1 | 302-9466 | 1 | HANDLE |
| | 2 | 3J-1907 | 1 | SEAL-O-RING (ID=11.89mm) |
| | 3 | 9S-4191 | 1 | PLUG |

H97097E 01

## 277-0954 VALVE AS-BALL

Part of 242-6483-Page414,242-6487-Page415,237-3184-Page416
An Attachment

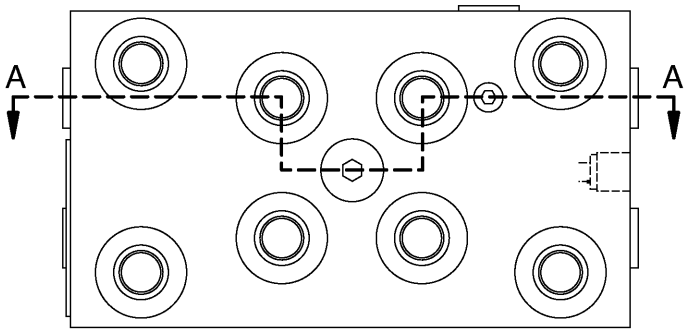


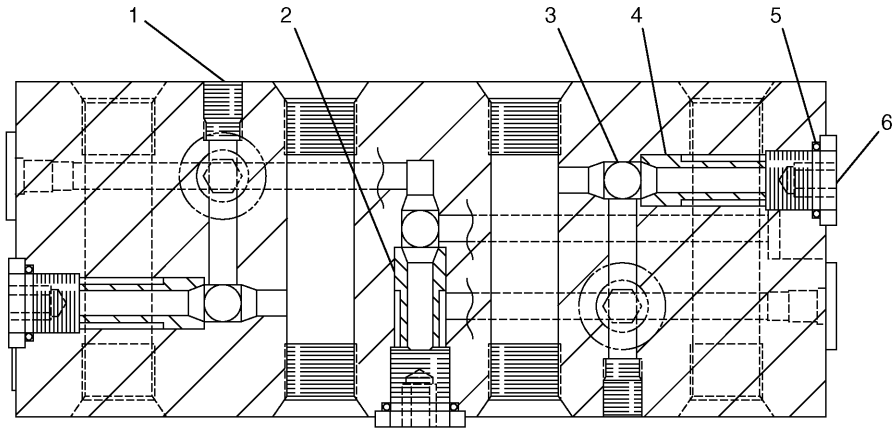


A – A

| NOTE | No. | PART No. | QTY | PART NAME | NOTE | No. | PART No. | QTY | PART NAME |
|---|---|---|---|---|---|---|---|---|---|
| | 1 | 71-8084 | 4 | PLUG | | | | | |
| | 2 | 185-0463 | 1 | SEAT | | | | | |
| | 3 | 4B-9880 | 7 | BALL | | | | | |
| | 4 | 165-9464 | 6 | SEAT | | | | | |
| | 5 | 095-1578 | 7 | SEAL-O-RING (ID=9.80mm) | | | | | |
| | 6 | 107-6479 | 7 | PLUG | | | | | |

H77601E 01

**185-0462 VALVE GP-SHUTTLE**
Part of 248-9825-Page451

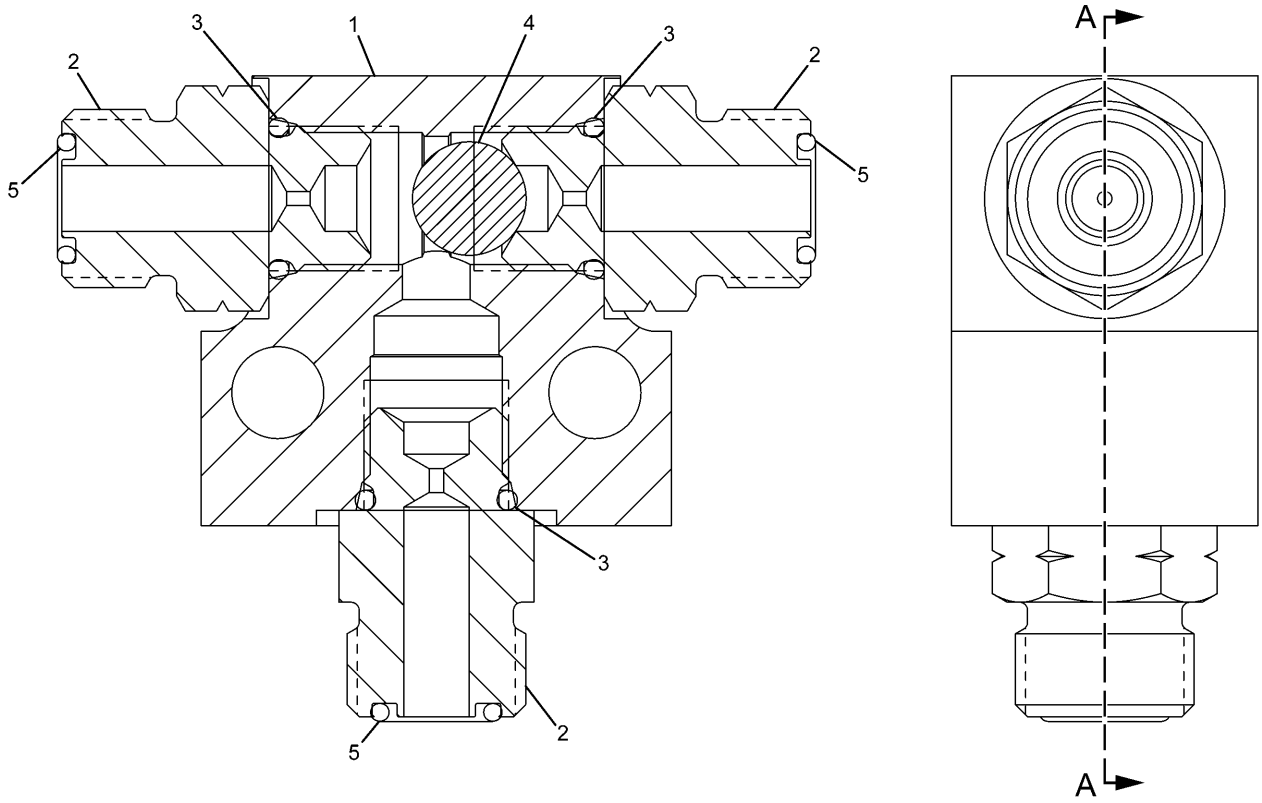


| NOTE | No. | PART No. | QTY | PART NAME | NOTE | No. | PART No. | QTY | PART NAME |
|---|---|---|---|---|---|---|---|---|---|
| | 1 | 123-2431 | 1 | BODY | | | | | |
| | 2 | 259-7733 | 3 | CONNECTOR | | | | | |
| | 3 | 3J-1907 | 3 | SEAL-O-RING (ID=11.89mm) | | | | | |
| | 4 | 4B-9783 | 1 | BALL | | | | | |
| | 5 | 6V-8397 | 3 | SEAL-O-RING (OD=12.83mm) | | | | | |

H93366E 00

## 259-7732 VALVE GP-SHUTTLE

Part of 248-9851-Page455

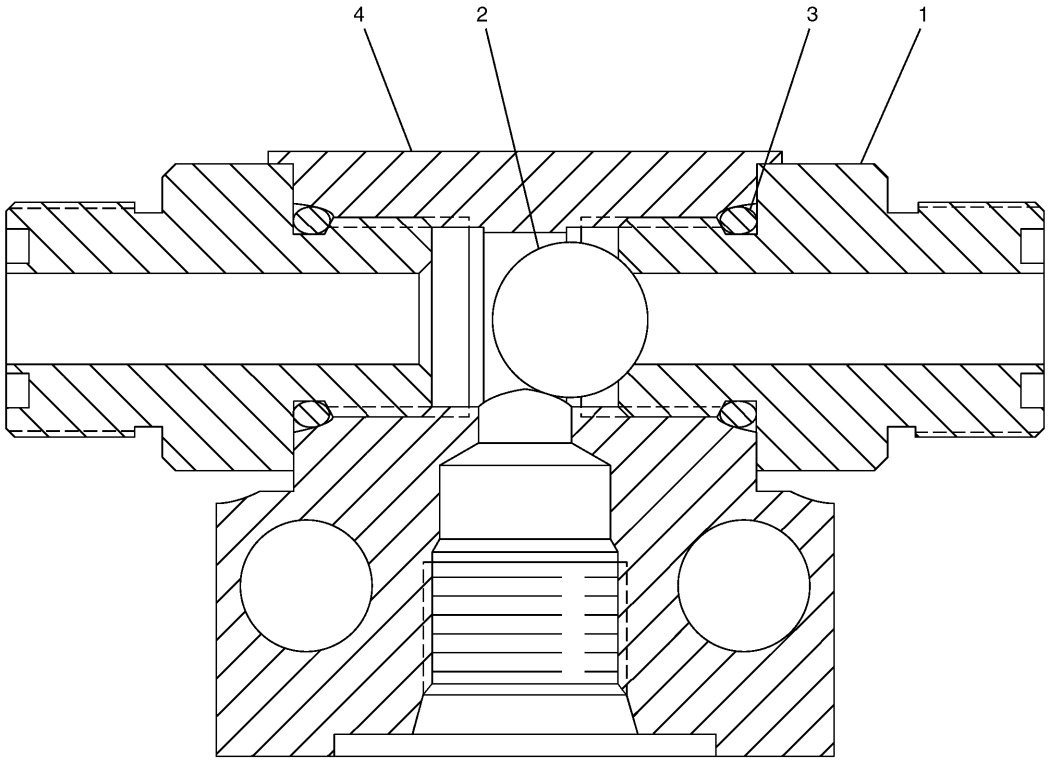


| NOTE | No. | PART No. | QTY | PART NAME | NOTE | No. | PART No. | QTY | PART NAME |
|---|---|---|---|---|---|---|---|---|---|
| | 1 | 123-2552 | 2 | CONNECTOR | | | | | |
| | 2 | 4B-9783 | 1 | BALL | | | | | |
| | 3 | 3J-1907 | 2 | SEAL-O-RING (ID=11.89mm) | | | | | |
| | 4 | 123-2431 | 1 | BODY | | | | | |

H67282E 00

## 123-2430 VALVE GP-SHUTTLE

Part of 255-1802-Page464
An Attachment

# OPERATOR STATION

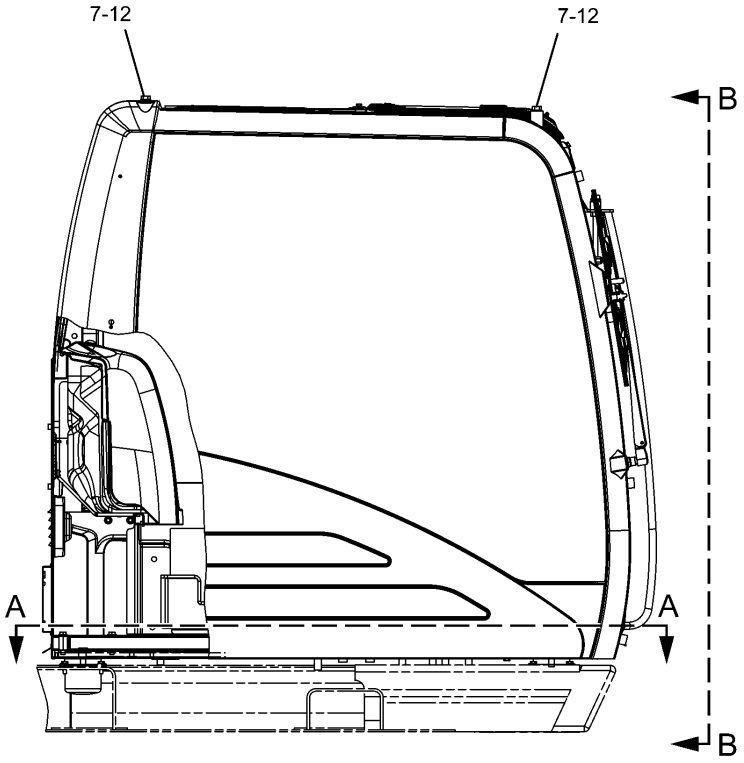


RIGHT SIDE VIEW

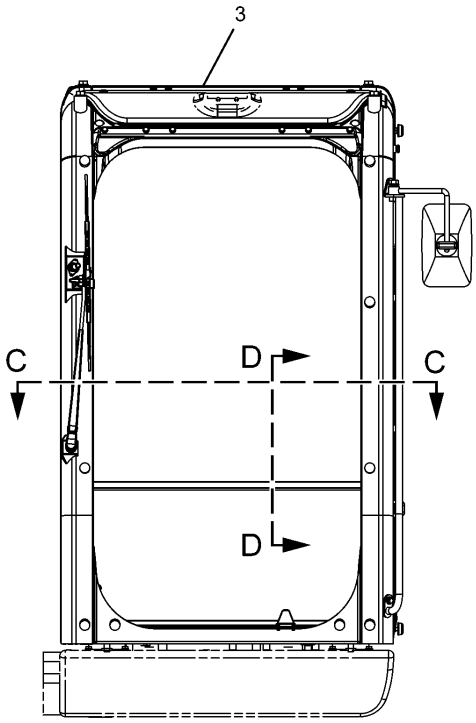


B – B

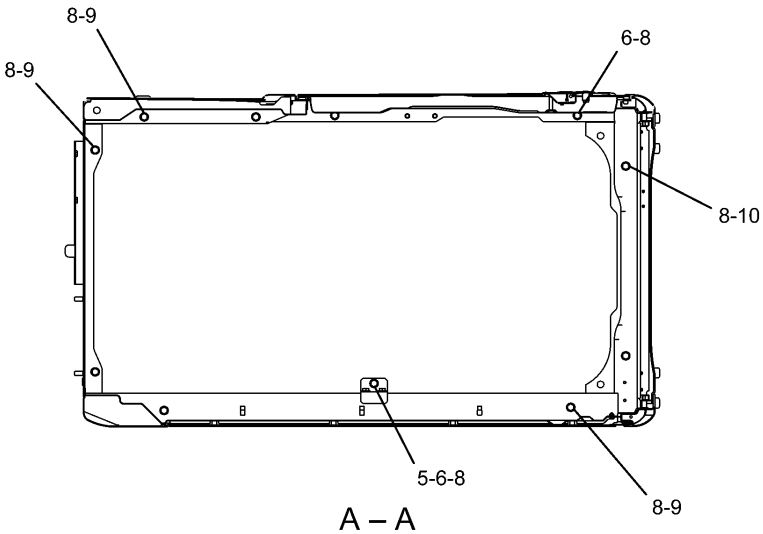


A – A

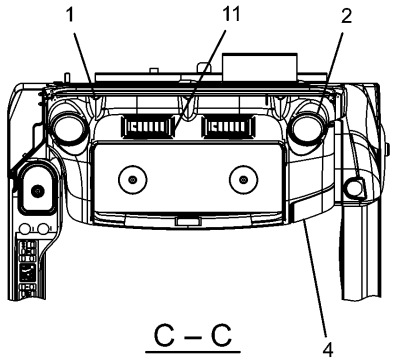


C – C

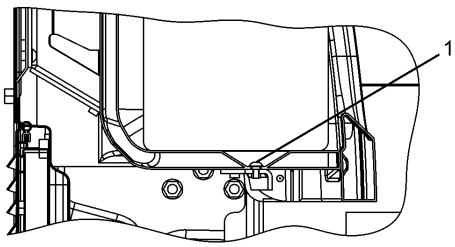


D – D

H90583E 03

**229–9096 CAB GP**
229–9097–Page610,234–6501–Page638
An Attachment

# OPERATOR STATION

| NOTE | No. | PART No. | QTY | PART NAME | NOTE | No. | PART No. | QTY | PART NAME |
|---|---|---|---|---|---|---|---|---|---|
| | 1 | 128-2135 | 5 | SCREW | | | | | |
| | 2 | 164-8474 | 2 | LOUVER AS | | | | | |
| Y | 3 | 229-9097 | 1 | CAB GP | | | | | |
| Y | 4 | 234-6501 | 1 | COVER GP | | | | | |
| | 5 | 235-9001 | 1 | SUPPORT | | | | | |
| | 6 | 8T-4179 | 5 | BOLT (L=20mm) | | | | | |
| | 7 | 8T-4190 | 4 | BOLT (L=25mm) | | | | | |
| | 8 | 8T-4223 | 13 | WASHER | | | | | |
| | 9 | 8T-4910 | 6 | BOLT (L=60mm) | | | | | |
| | 10 | 8T-6868 | 2 | BOLT (L=80mm) | | | | | |
| | 11 | 8Y-6967 | 2 | LOUVER AS | | | | | |
| | 12 | 9X-8257 | 6 | WASHER | | | | | |

Y—SEE SEPARATE ILLUSTRATION

H90583E 03

## 229-9096 CAB GP

229-9097-Page610,234-6501-Page638
An Attachment

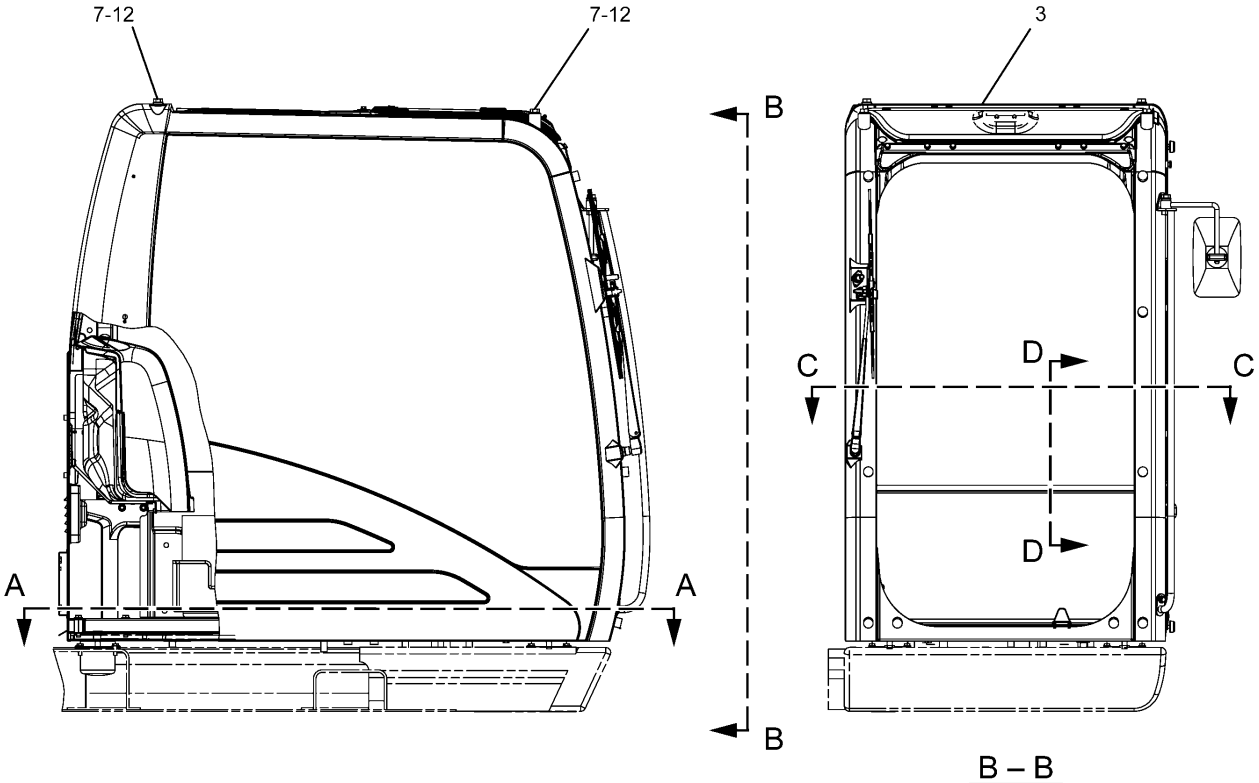


B – B

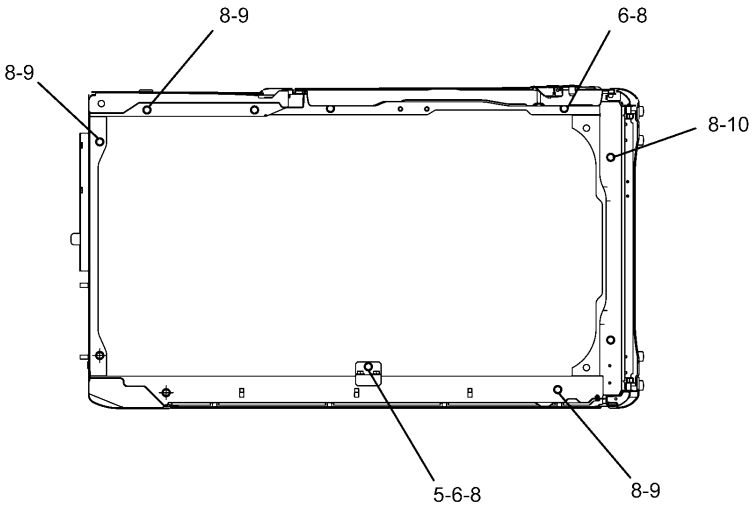


A – A

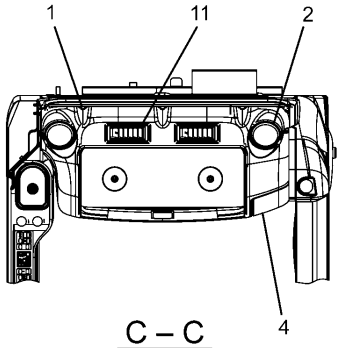


C – C

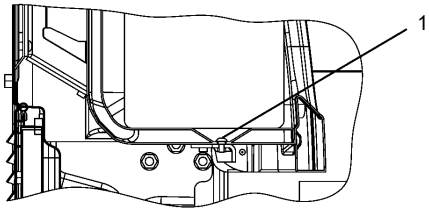


D – D

H90582E 02

**229–9108 CAB GP**
Metal Loof Hatch
S/N BWZ 1–Up, DFB 1–Up
229–9109–Page612,234–6501–Page638
An Attachment

# OPERATOR STATION

| NOTE | No. | PART No. | QTY | PART NAME | NOTE | No. | PART No. | QTY | PART NAME |
|---|---|---|---|---|---|---|---|---|---|
| | 1 | 128-2135 | 5 | SCREW | | | | | |
| | 2 | 164-8474 | 2 | LOUVER AS | | | | | |
| Y | 3 | 229-9109 | 1 | CAB GP | | | | | |
| Y | 4 | 234-6501 | 1 | COVER GP | | | | | |
| | 5 | 235-9001 | 1 | SUPPORT | | | | | |
| | 6 | 8T-4179 | 5 | BOLT (L=20mm) | | | | | |
| | 7 | 8T-4190 | 4 | BOLT (L=25mm) | | | | | |
| | 8 | 8T-4223 | 13 | WASHER | | | | | |
| | 9 | 8T-4910 | 6 | BOLT (L=60mm) | | | | | |
| | 10 | 8T-6868 | 2 | BOLT (L=80mm) | | | | | |
| | 11 | 8Y-6967 | 2 | LOUVER AS | | | | | |
| | 12 | 9X-8257 | 6 | WASHER | | | | | |

Y—SEE SEPARATE ILLUSTRATION

H90582E 02

## 229-9108 CAB GP

Metal Loof Hatch
S/N BWZ 1-Up, DFB 1-Up
229-9109-Page612,234-6501-Page638
An Attachment

# OPERATOR STATION

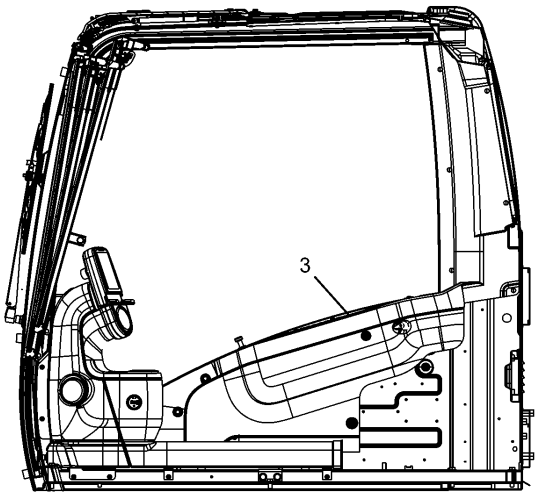


D – D

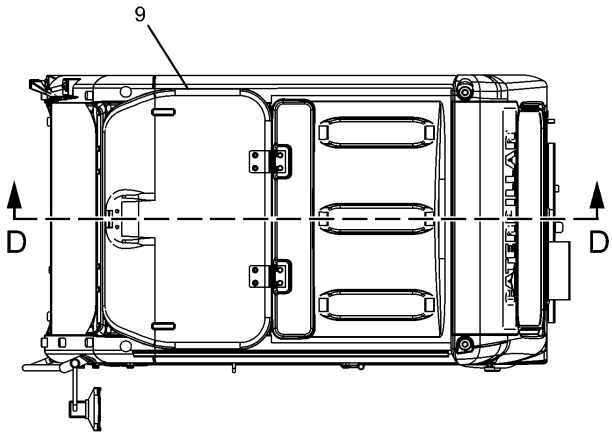


B – B

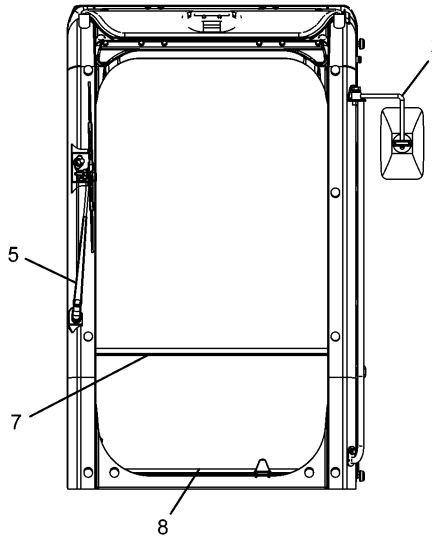


A – A

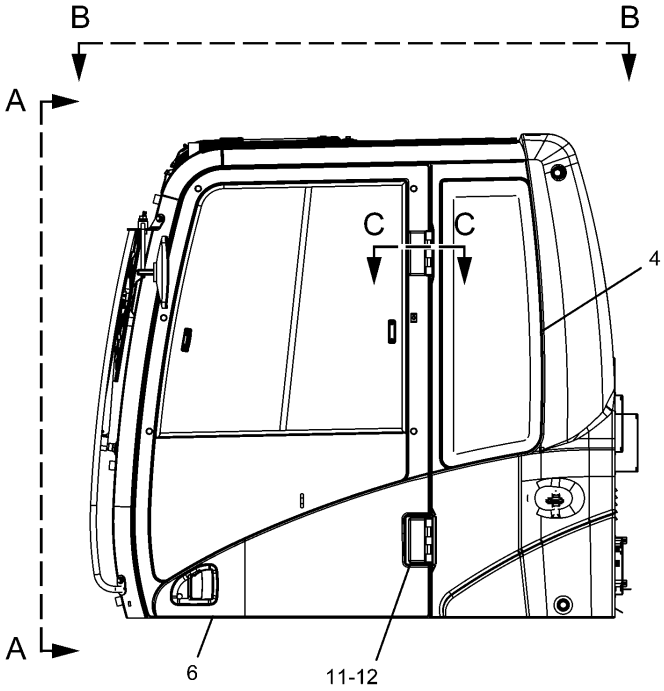


LEFT SIDE VIEW

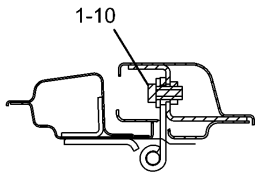


C – C

H93553E 03

**229–9097 CAB GP (BASIC)**

Part of 229–9096–Page607

235–8908–Page614,235–8910–Page618,139–7100–Page622,139–7101–Page626,176–1958–Page628,235–8909–Page629 ,139–7099–Page632,234–6594–Page635

An Attachment

# OPERATOR STATION

| NOTE | No. | PART No. | QTY | PART NAME | NOTE | No. | PART No. | QTY | PART NAME |
|---|---|---|---|---|---|---|---|---|---|
| | 1 | 185-8182 | 6 | BOLT (L=20mm) | | | | | |
| Y | 2 | 235-8910 | 1 | CAB GP | | | | | |
| Y | 3 | 235-8908 | 1 | CAB GP | | | | | |
| Y | 4 | 235-8909 | 1 | WINDOW GP | | | | | |
| Y | 5 | 234-6594 | 1 | WIPER GP | | | | | |
| Y | 6 | 139-7100 | 1 | DOOR GP | | | | | |
| Y | 7 | 139-7101 | 1 | WINDOW GP | | | | | |
| Y | 8 | 176-1958 | 1 | WINDOW GP | | | | | |
| Y | 9 | 139-7099 | 1 | HATCH GP | | | | | |
| | 10 | 185-8187 | 6 | WASHER | | | | | |
| | 11 | 151-6777 | 2 | HINGE | | | | | |
| | 12 | 9X-2041 | 6 | SCREW | | | | | |

Y—SEE SEPARATE ILLUSTRATION

H93553E 03

## 229-9097 CAB GP (BASIC)

Part of 229-9096-Page607
235-8908-Page614,235-8910-Page618,139-7100-Page622,139-7101-Page626,176-1958-Page628,235-8909-Page629
,139-7099-Page632,234-6594-Page635
An Attachment

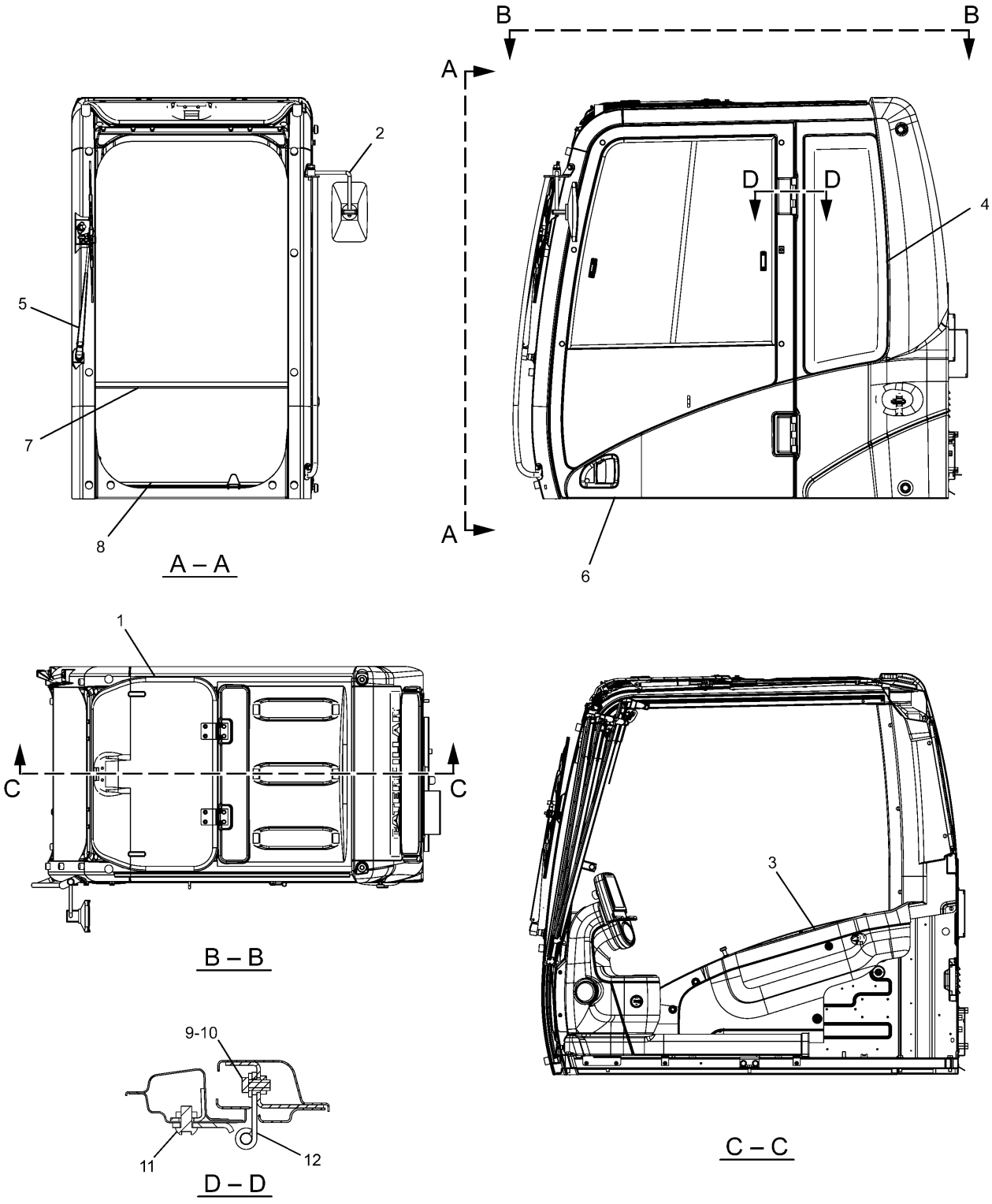


H93554E 03

**229–9109 CAB GP (BASIC)**
Metal Loof Hatch
S/N BWZ 1–Up, DFB 1–Up
Part of 229–9108–Page609
235–8917–Page616,235–8910–Page618,139–7100–Page622,139–7101–Page626,176–1958–Page628,235–8909–Page629
,259–7350–Page634,234–6594–Page635

# OPERATOR STATION

| NOTE | No. | PART No. | QTY | PART NAME | NOTE | No. | PART No. | QTY | PART NAME |
|---|---|---|---|---|---|---|---|---|---|
| Y | 1 | 259-7350 | 1 | HATCH GP | | | | | |
| Y | 2 | 235-8910 | 1 | CAB GP | | | | | |
| Y | 3 | 235-8917 | 1 | CAB GP | | | | | |
| Y | 4 | 235-8909 | 1 | WINDOW GP | | | | | |
| Y | 5 | 234-6594 | 1 | WIPER GP | | | | | |
| Y | 6 | 139-7100 | 1 | DOOR GP | | | | | |
| Y | 7 | 139-7101 | 1 | WINDOW GP | | | | | |
| Y | 8 | 176-1958 | 1 | WINDOW GP | | | | | |
| | 9 | 185-8182 | 6 | BOLT (L=20mm) | | | | | |
| | 10 | 185-8187 | 6 | WASHER | | | | | |
| | 11 | 9X-2041 | 6 | SCREW | | | | | |
| | 12 | 151-6777 | 2 | HINGE | | | | | |

Y—SEE SEPARATE ILLUSTRATION

H93554E 03

## 229-9109 CAB GP (BASIC)

Metal Loof Hatch
S/N BWZ 1-Up, DFB 1-Up
Part of 229-9108-Page609
235-8917-Page616,235-8910-Page618,139-7100-Page622,139-7101-Page626,176-1958-Page628,235-8909-Page629
,259-7350-Page634,234-6594-Page635
An Attachment

# OPERATOR STATION

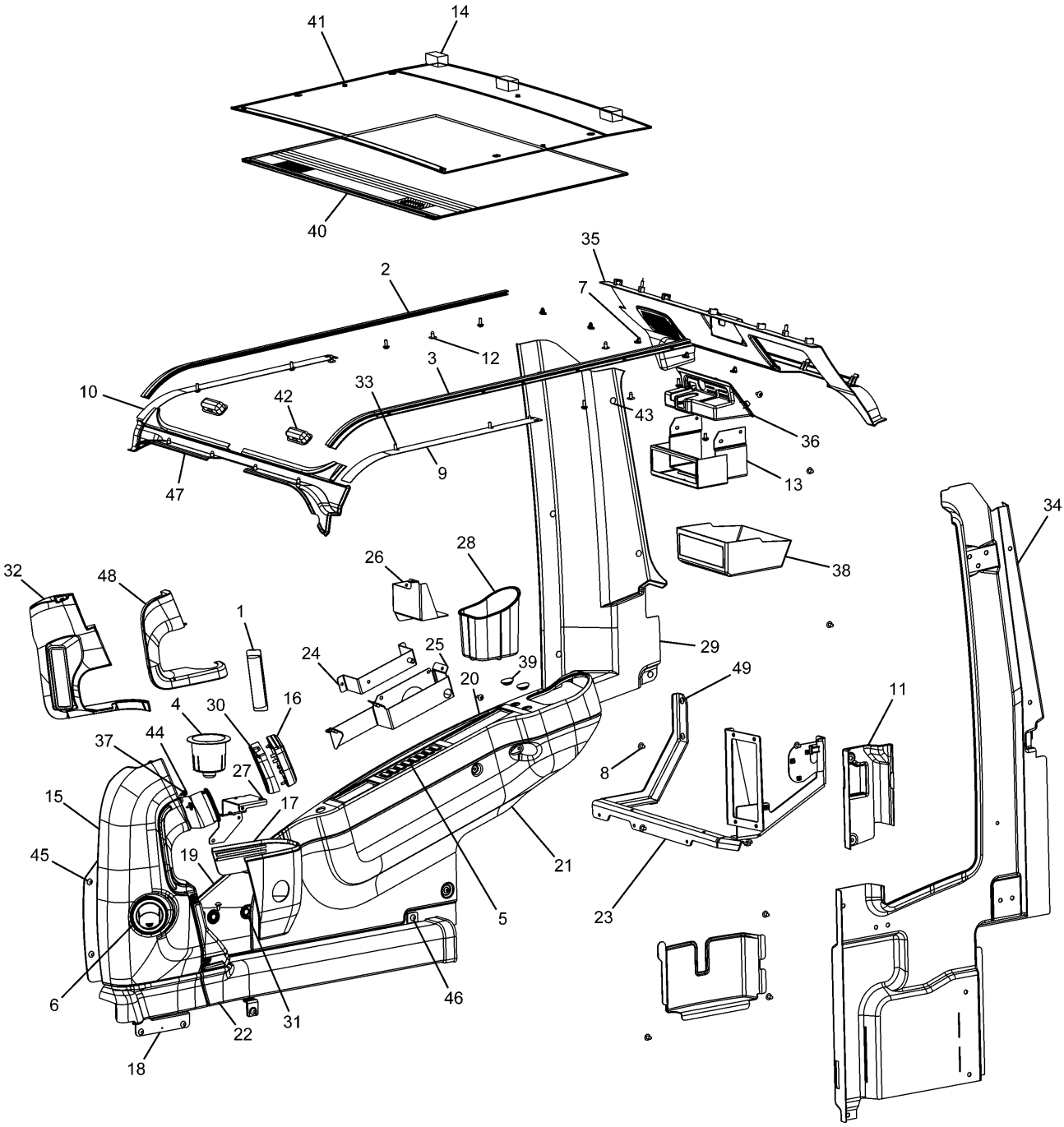


H91590E 03

**235-8908 CAB GP-INTERIOR**
Part of 229-9097-Page611
An Attachment

# OPERATOR STATION

| NOTE | No. | PART No. | QTY | PART NAME | NOTE | No. | PART No. | QTY | PART NAME |
|---|---|---|---|---|---|---|---|---|---|
| | 1 | 8Y-6352 | 1 | LOUVER AS | | | | | |
| | 2 | 156-6656 | 1 | RAIL | | | | | |
| | 3 | 156-6657 | 1 | RAIL | | | | | |
| | 4 | 164-0646 | 1 | CUP | | | | | |
| | 5 | 164-0655 | 1 | PANEL | | | | | |
| | 6 | 164-8474 | 2 | LOUVER AS | | | | | |
| | 7 | 170-9724 | 5 | CLIP | | | | | |
| | 8 | 171-7420 | 6 | CLIP | | | | | |
| | 9 | 176-1946 | 1 | PLATE | | | | | |
| | 10 | 176-1947 | 1 | PLATE | | | | | |
| | 11 | 176-1972 | 1 | COVER | | | | | |
| | 12 | 185-8205 | 5 | CLIP | | | | | |
| | 13 | 185-8214 | 1 | BRACKET AS | | | | | |
| | 14 | 189-2678 | 3 | SPACER | | | | | |
| | 15 | 234-6468 | 1 | COVER AS | | | | | |
| | | 259-7353 | 4 | CLIP | | | | | |
| | 16 | 234-6470 | 1 | COVER | | | | | |
| | 17 | 234-6471 | 1 | COVER | | | | | |
| | 18 | 234-6472 | 1 | COVER | | | | | |
| | 19 | 234-6473 | 1 | COVER | | | | | |
| | 20 | 234-6474 | 1 | COVER | | | | | |
| | 21 | 234-6475 | 1 | COVER | | | | | |
| | 22 | 234-6476 | 1 | DUCT | | | | | |
| | 23 | 234-6477 | 1 | BRACKET AS | | | | | |
| | 24 | 234-6478 | 1 | BRACKET AS | | | | | |
| | 25 | 234-6480 | 1 | BRACKET AS | | | | | |
| | 26 | 234-6483 | 1 | BRACKET AS | | | | | |
| | 27 | 234-6485 | 1 | BRACKET AS | | | | | |
| | 28 | 234-6490 | 1 | CUP | | | | | |
| | 29 | 234-6491 | 1 | COVER | | | | | |
| | 30 | 234-6497 | 1 | COVER | | | | | |
| | 31 | 234-6498 | 3 | RIVET | | | | | |
| | 32 | 234-6521 | 1 | COVER | | | | | |
| | 33 | 9X-2044 | 8 | SCREW | | | | | |
| | 34 | 234-6548 | 1 | COVER | | | | | |
| | 35 | 234-6549 | 1 | COVER | | | | | |
| | 36 | 234-6550 | 1 | COVER | | | | | |
| | 37 | 234-6579 | 2 | NUT | | | | | |
| | 38 | 235-8922 | 1 | COVER | | | | | |
| | 39 | 235-8923 | 2 | CAP | | | | | |
| | 40 | 235-8926 | 1 | VISOR | | | | | |
| | 41 | 235-8928 | 1 | LINER | | | | | |
| | 42 | 235-8929 | 2 | HANDLE | | | | | |
| | 43 | 235-8950 | 12 | CLIP | | | | | |
| | 44 | 245-7790 | 2 | SCREW | | | | | |
| | 45 | 128-2135 | 13 | SCREW | | | | | |
| | 46 | 128-2136 | 1 | SCREW | | | | | |
| | 47 | 189-2855 | 1 | COVER | | | | | |
| | 48 | 234-6469 | 1 | COVER | | | | | |
| | 49 | 9X-2042 | 23 | SCREW | | | | | |

H91590E 03

## 235-8908 CAB GP-INTERIOR

Part of 229-9097-Page611
An Attachment

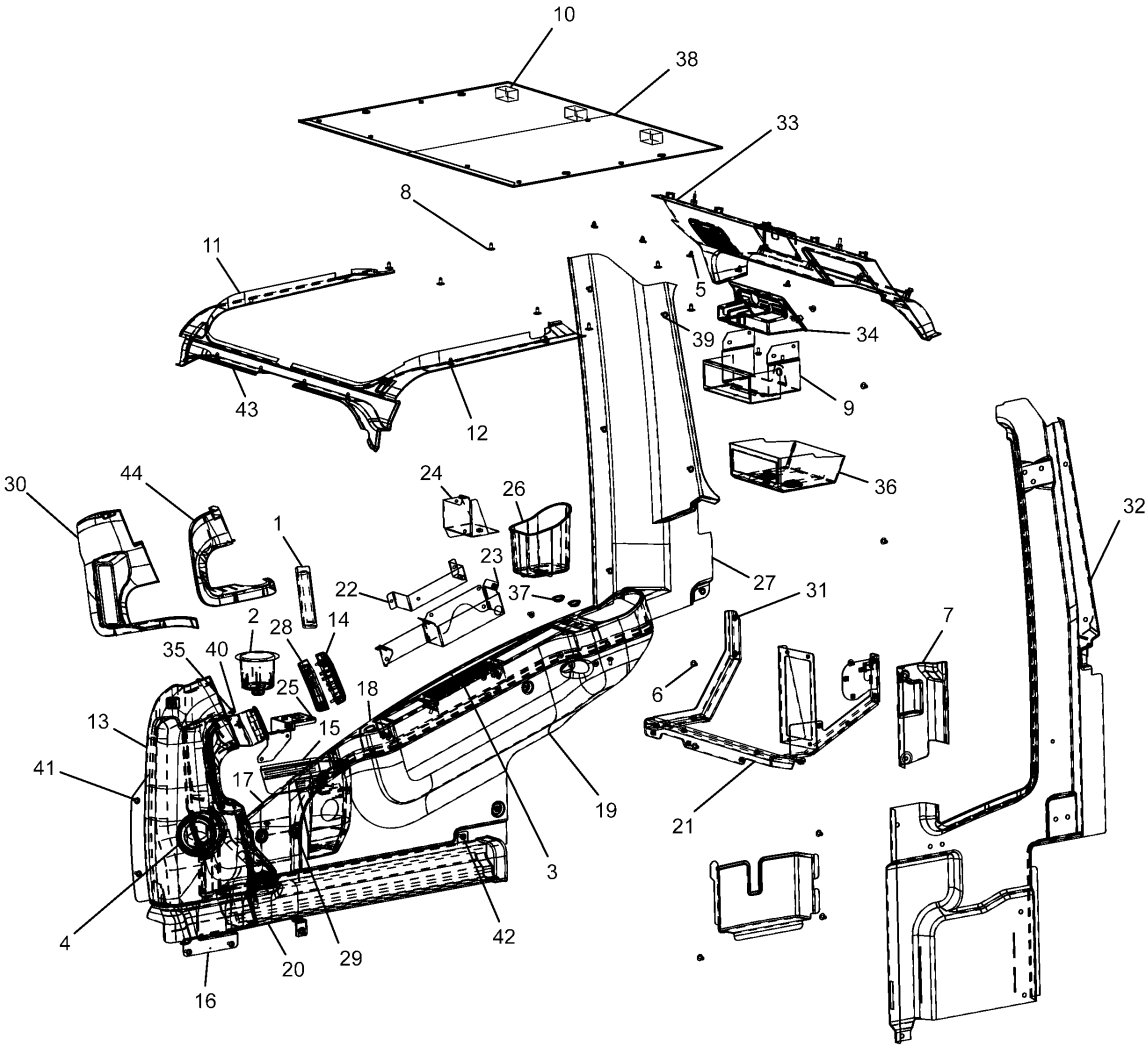


H91318E 02

## 235-8917 CAB GP-INTERIOR

Metal Loof Hatch
S/N BWZ 1-Up, DFB 1-Up
Part of 229-9109-Page613
An Attachment

# OPERATOR STATION

| NOTE | No. | PART No. | QTY | PART NAME | NOTE | No. | PART No. | QTY | PART NAME |
|---|---|---|---|---|---|---|---|---|---|
| | 1 | 8Y-6352 | 1 | LOUVER AS | | | | | |
| | 2 | 164-0646 | 1 | CUP | | | | | |
| | 3 | 164-0655 | 1 | PANEL | | | | | |
| | 4 | 164-8474 | 2 | LOUVER AS | | | | | |
| | 5 | 170-9724 | 5 | CLIP | | | | | |
| | 6 | 171-7420 | 10 | CLIP | | | | | |
| | 7 | 176-1972 | 1 | COVER | | | | | |
| | 8 | 185-8205 | 7 | CLIP | | | | | |
| | 9 | 185-8214 | 1 | BRACKET AS | | | | | |
| | 10 | 189-2678 | 3 | SPACER | | | | | |
| | 11 | 189-2853 | 1 | COVER | | | | | |
| | 12 | 189-2854 | 1 | COVER | | | | | |
| | 13 | 234-6468 | 1 | COVER AS | | | | | |
| | | 259-7353 | 4 | CLIP | | | | | |
| | 14 | 234-6470 | 1 | COVER | | | | | |
| | 15 | 234-6471 | 1 | COVER | | | | | |
| | 16 | 234-6472 | 1 | COVER | | | | | |
| | 17 | 234-6473 | 1 | COVER | | | | | |
| | 18 | 234-6474 | 1 | COVER | | | | | |
| | 19 | 234-6475 | 1 | COVER | | | | | |
| | 20 | 234-6476 | 1 | DUCT | | | | | |
| | 21 | 234-6477 | 1 | BRACKET AS | | | | | |
| | 22 | 234-6478 | 1 | BRACKET AS | | | | | |
| | 23 | 234-6480 | 1 | BRACKET AS | | | | | |
| | 24 | 234-6483 | 1 | BRACKET AS | | | | | |
| | 25 | 234-6485 | 1 | BRACKET AS | | | | | |
| | 26 | 234-6490 | 1 | CUP | | | | | |
| | 27 | 234-6491 | 1 | COVER | | | | | |
| | 28 | 234-6497 | 1 | COVER | | | | | |
| | 29 | 234-6498 | 3 | RIVET | | | | | |
| | 30 | 234-6521 | 1 | COVER | | | | | |
| | 31 | 9X-2042 | 23 | SCREW | | | | | |
| | 32 | 234-6548 | 1 | COVER | | | | | |
| | 33 | 234-6549 | 1 | COVER | | | | | |
| | 34 | 234-6550 | 1 | COVER | | | | | |
| | 35 | 234-6579 | 2 | NUT | | | | | |
| | 36 | 235-8922 | 1 | COVER | | | | | |
| | 37 | 235-8923 | 2 | CAP | | | | | |
| | 38 | 235-8930 | 1 | LINER | | | | | |
| | 39 | 235-8950 | 12 | CLIP | | | | | |
| | 40 | 245-7790 | 2 | SCREW | | | | | |
| | 41 | 128-2135 | 13 | SCREW | | | | | |
| | 42 | 128-2136 | 1 | SCREW | | | | | |
| | 43 | 189-2855 | 1 | COVER | | | | | |
| | 44 | 234-6469 | 1 | COVER | | | | | |

H91318E 02

## 235-8917 CAB GP-INTERIOR

Metal Loof Hatch
S/N BWZ 1-Up, DFB 1-Up
Part of 229-9109-Page613
An Attachment

# OPERATOR STATION

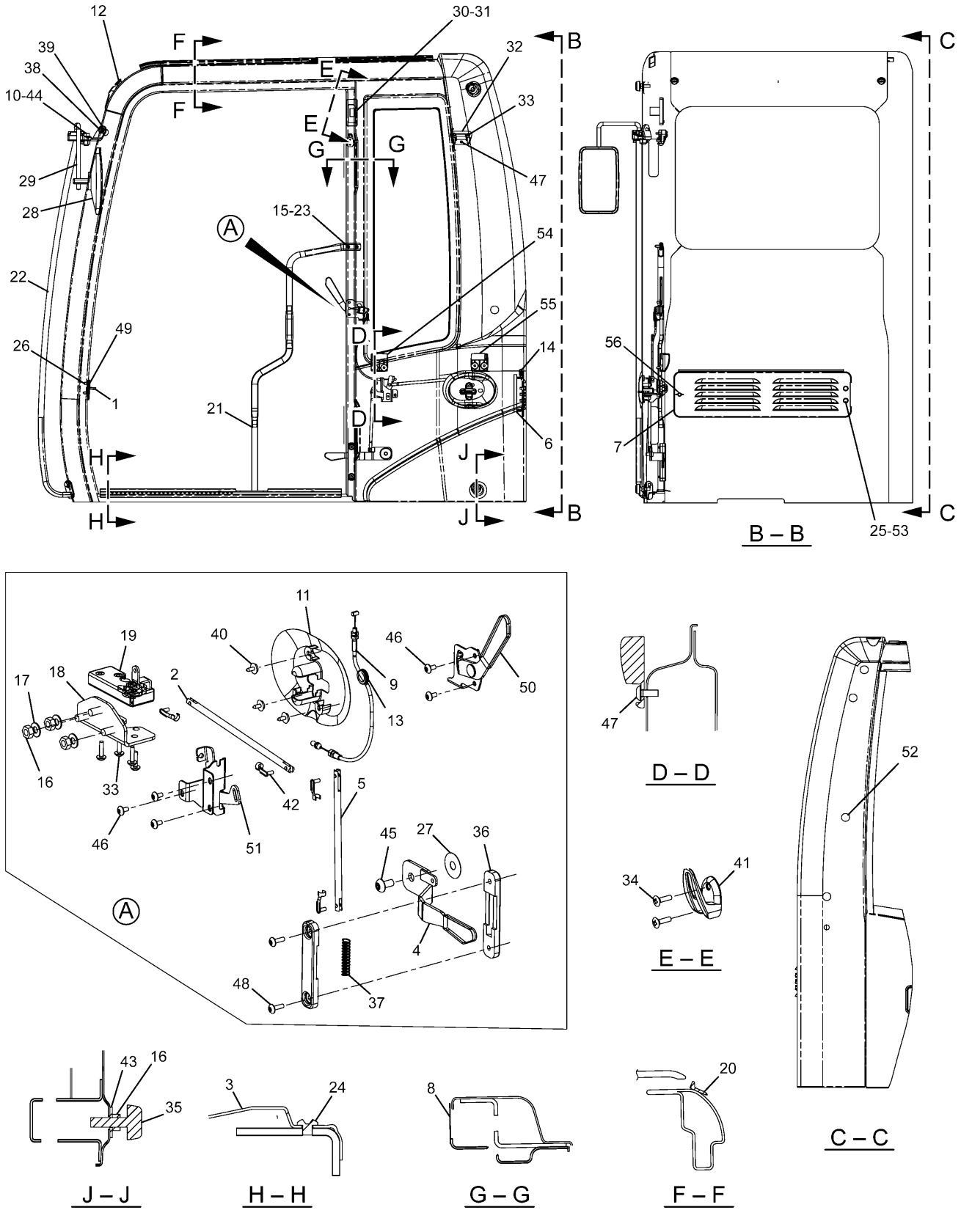


H93598E 08

## 235-8910 CAB GP-EXTERIOR

Skylight

Part of 229-9097-Page611,229-9109-Page613
164-0528,176-1939-Page620,259-7295-Page621

An Attachment

# OPERATOR STATION

| NOTE | No. | PART No. | QTY | PART NAME | NOTE | No. | PART No. | QTY | PART NAME |
|---|---|---|---|---|---|---|---|---|---|
| | 1 | 156-6599 | 1 | STRIKER | | 54 | 139-7126 | 1 | HOLDER |
| | 2 | 161-3685 | 1 | ROD | | 55 | 139-7127 | 1 | HOLDER |
| | 3 | 161-3697 | 1 | GUARD | | 56 | 284-4426 | 1 | BOLT |
| | 4 | 164-0523 | 1 | LEVER AS | | | | | |
| | 5 | 164-0527 | 1 | ROD | | | | | |
| E | 6 | 6I-5470 | | SEAL…(150cm) | | | | | |
| | 7 | 167-7018 | 1 | COVER AS | | | | | |
| | 8 | 167-7042 | 2 | SEAL | | | | | |
| | 9 | 171-7426 | 1 | CABLE AS | | | | | |
| | 10 | 9X-8257 | 1 | WASHER | | | | | |
| | 11 | 176-1942 | 1 | COVER | | | | | |
| | 12 | 178-5570 | 2 | GROMMET | | | | | |
| | 13 | 185-8196 | 1 | GROMMET | | | | | |
| | 14 | 189-2704 | 1 | SEAL | | | | | |
| | 15 | 189-2864 | 2 | SCREW | | | | | |
| | 16 | 189-3396 | 5 | NUT | | | | | |
| | 17 | 4B-4278 | 3 | WASHER | | | | | |
| | 18 | 201-4530 | 1 | BRACKET AS | | | | | |
| | 19 | 205-6295 | 1 | LATCH AS | | | | | |
| | 20 | 210-5808 | 1 | SEAL | | | | | |
| | 21 | 235-8912 | 1 | HANDLE AS | | | | | |
| | 22 | 235-8933 | 1 | HANDLE AS | | | | | |
| | 23 | 085-6452 | 2 | WASHER | | | | | |
| | 24 | 099-0823 | 3 | SCREW | | | | | |
| | 25 | 8T-4200 | 2 | BOLT (L=16mm) | | | | | |
| | 26 | 127-0580 | 2 | SCREW | | | | | |
| | 27 | 133-8016 | 1 | PACKING | | | | | |
| | 28 | 156-6617 | 1 | MIRROR | | | | | |
| Y | 29 | 259-7295 | 1 | MOUNTING GP | | | | | |
| | 30 | 176-1986 | 1 | LIGHT | | | | | |
| | 31 | 201-4417 | 1 | BULB | | | | | |
| | 32 | 4I-4270 | 1 | HOLDER | | | | | |
| | 33 | 3E-8020 | 6 | SCREW | | | | | |
| | 34 | 095-0755 | 2 | SCREW | | | | | |
| | 35 | 4I-1205 | 2 | BUMPER | | | | | |
| | 36 | 4I-1206 | 2 | GUIDE | | | | | |
| | 37 | 4I-3063 | 1 | SPRING | | | | | |
| | 38 | 8T-4137 | 2 | BOLT (L=20mm) | | | | | |
| | 39 | 4I-3144 | 2 | WASHER | | | | | |
| | 40 | 4I-4392 | 3 | CLIP | | | | | |
| | 41 | 5C-7793 | 1 | HOOK | | | | | |
| | 42 | 6V-7636 | 4 | PIN AS | | | | | |
| | 43 | 7X-0578 | 2 | WASHER | | | | | |
| | 44 | 8T-4779 | 1 | BOLT (L=35mm) | | | | | |
| | 45 | 9X-2041 | 1 | SCREW | | | | | |
| | 46 | 9X-2042 | 5 | SCREW | | | | | |
| | 47 | 9X-2044 | 5 | SCREW | | | | | |
| | 48 | 9X-2045 | 2 | SCREW | | | | | |
| | 49 | 1R-5998 | 2 | LOCKWASHER | | | | | |
| Y | 50 | 164-0528 | 1 | LEVER AS | | | | | |
| Y | 51 | 176-1939 | 1 | LEVER AS | | | | | |
| | 52 | 4I-3090 | 4 | SEAL | | | | | |
| | 53 | 8T-4224 | 2 | WASHER | | | | | |

E—ORDER BY THE CENTIMETER

Y—SEE SEPARATE ILLUSTRATION

H93598E 08

## 235-8910 CAB GP-EXTERIOR

Skylight

Part of 229-9097-Page611,229-9109-Page613
164-0528,176-1939-Page620,259-7295-Page621

An Attachment

# OPERATOR STATION

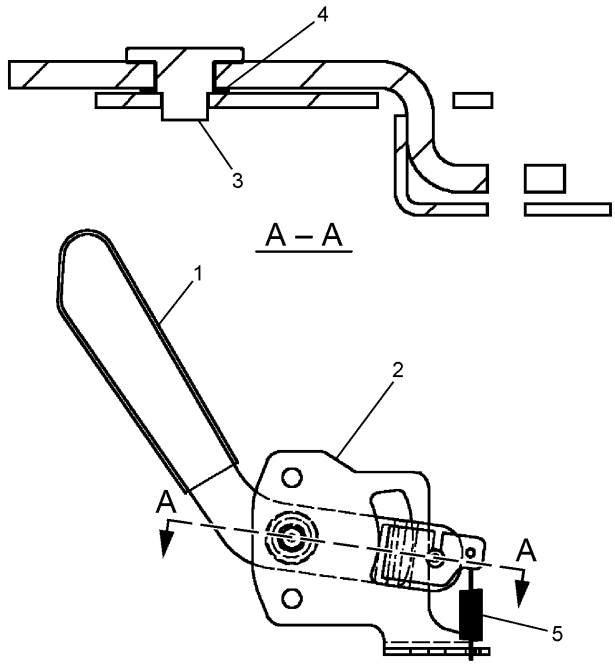


| NOTE | No. | PART No. | QTY | PART NAME |
|---|---|---|---|---|
| | 1 | 156-6642 | 1 | LEVER AS |
| | 2 | 164-0664 | 1 | BRACKET |
| | 3 | 176-1941 | 1 | PIN |
| | 4 | 185-8280 | 1 | WASHER |
| | 5 | 185-8281 | 1 | SPRING |

H87920E 02

**164-0528 LEVER AS**
Part of 235-8910-Page619
An Attachment

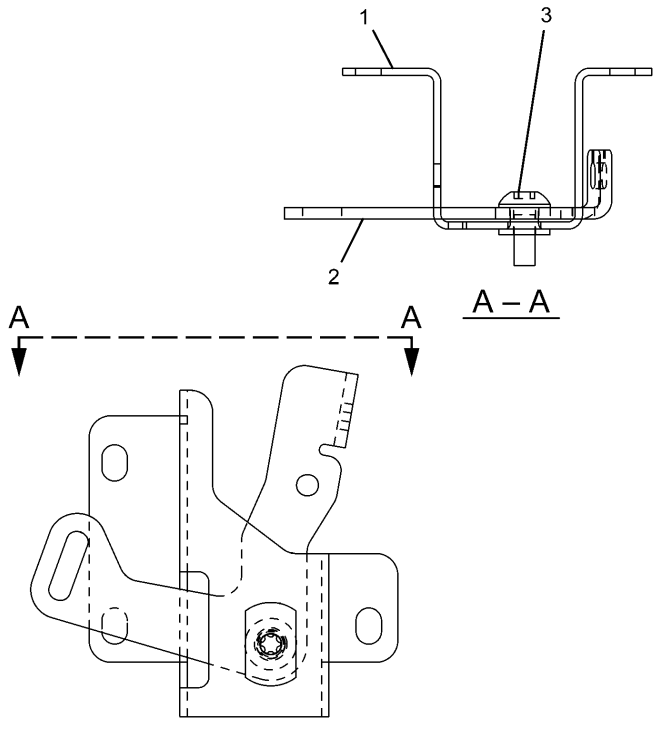


| NOTE | No. | PART No. | QTY | PART NAME |
|---|---|---|---|---|
| | 1 | 176-1937 | 1 | BRACKET AS |
| | 2 | 176-1938 | 1 | LEVER |
| | 3 | 9X-2044 | 1 | SCREW |

H91144E 01

**176-1939 LEVER AS**
Part of 235-8910-Page619
An Attachment

# OPERATOR STATION

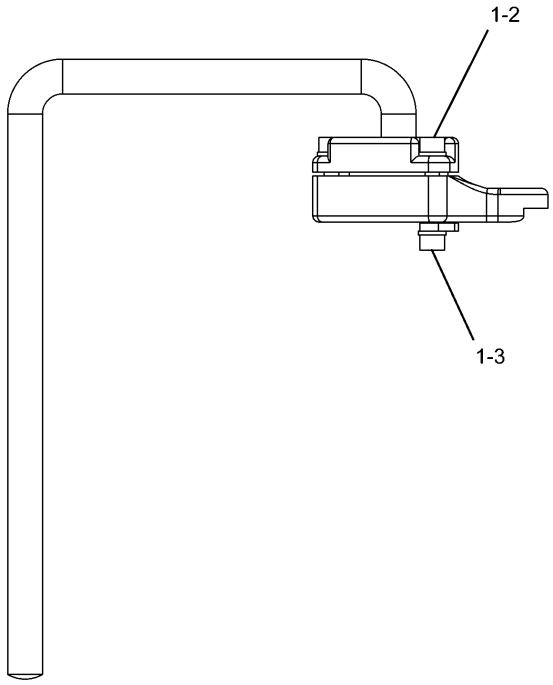


| NOTE | No. | PART No. | QTY | PART NAME |
|---|---|---|---|---|
| | 1 | 2U-2552 | 5 | LOCKWASHER |
| | 2 | 6V-5683 | 3 | BOLT (L=16mm) |
| | 3 | 9X-6153 | 2 | BOLT (L=10mm) |

H89491E 00

## 259-7295 MOUNTING GP

Mirror

Part of 235-8910-Page619

An Attachment

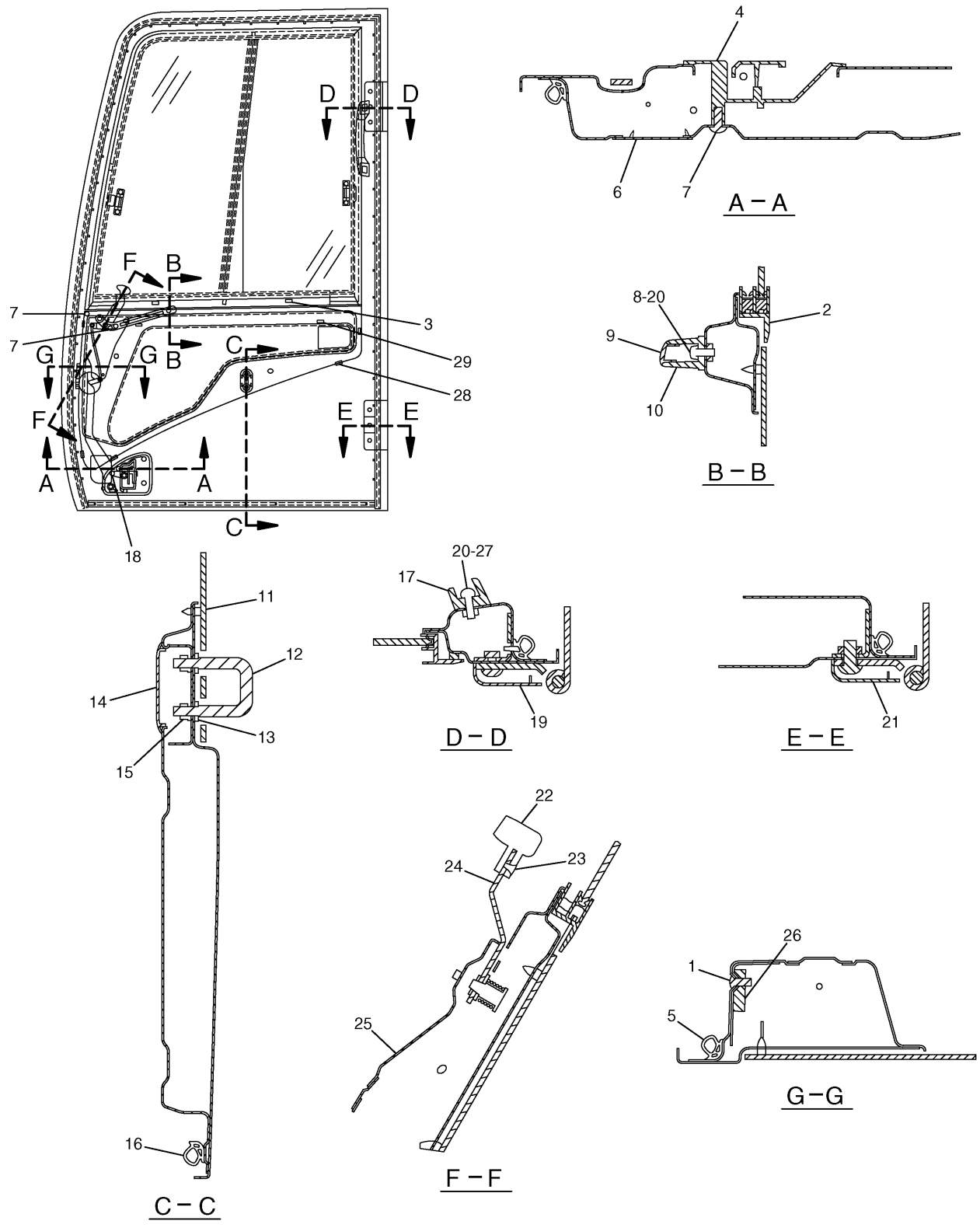


H93559E 06

## 139-7100 DOOR GP-CAB

Part of 229-9097-Page611,229-9109-Page613,189-2768-Page624
151-6792-Page625
An Attachment

# OPERATOR STATION

| NOTE | No. | PART No. | QTY | PART NAME | NOTE | No. | PART No. | QTY | PART NAME |
|---|---|---|---|---|---|---|---|---|---|
| | 1 | 185-8180 | 3 | SCREW | | | | | |
| Y | 2 | 151-6792 | 1 | WINDOW GP | | | | | |
| | 3 | 151-9461 | 4 | SPACER | | | | | |
| | 4 | 156-6645 | 1 | HANDLE AS | | | | | |
| | | 201-4391 | 1 | CLIP | | | | | |
| | 5 | 161-3663 | 1 | SEAL AS | | | | | |
| | | 151-9497 | 45 | CLIP | | | | | |
| | 6 | 259-7354 | 1 | COVER | | | | | |
| | 7 | 9X-2042 | 8 | SCREW | | | | | |
| | 8 | 095-0742 | 2 | SCREW | | | | | |
| | 9 | 151-6704 | 2 | CAP | | | | | |
| | 10 | 151-6703 | 1 | HANDLE | | | | | |
| | 11 | 156-6471 | 1 | GLASS | | | | | |
| | 12 | 156-6598 | 1 | HOOK | | | | | |
| | 13 | 8T-4224 | 2 | WASHER | | | | | |
| | 14 | 167-7039 | 1 | GROMMET | | | | | |
| | 15 | 096-3884 | 2 | NUT | | | | | |
| | 16 | 161-3665 | 1 | SEAL | | | | | |
| | 17 | 189-2690 | 1 | HANDLE | | | | | |
| | 18 | 164-0515 | 1 | JOINT | | | | | |
| | 19 | 156-6643 | 1 | COVER | | | | | |
| | 20 | 095-0827 | 4 | LOCKWASHER | | | | | |
| | 21 | 156-6644 | 1 | COVER | | | | | |
| | 22 | 4I-4286 | 1 | KNOB | | | | | |
| | 23 | 096-2622 | 2 | SCREW | | | | | |
| | 24 | 161-3639 | 1 | HANDLE AS | | | | | |
| | 25 | 161-3650 | 1 | COVER AS | | | | | |
| | 26 | 156-6600 | 1 | LOCK AS | | | | | |
| | | 164-0514 | 1 | CLIP | | | | | |
| | | 164-0519 | 1 | CLIP | | | | | |
| | 27 | 8T-6412 | 2 | SCREW | | | | | |
| | 28 | 178-5573 | 4 | SPACER | | | | | |
| | 29 | 178-5574 | 2 | SPACER | | | | | |

Y—SEE SEPARATE ILLUSTRATION

H93559E 06

## 139-7100 DOOR GP-CAB

Part of 229-9097-Page611,229-9109-Page613,189-2768-Page624
151-6792-Page625
An Attachment

# OPERATOR STATION

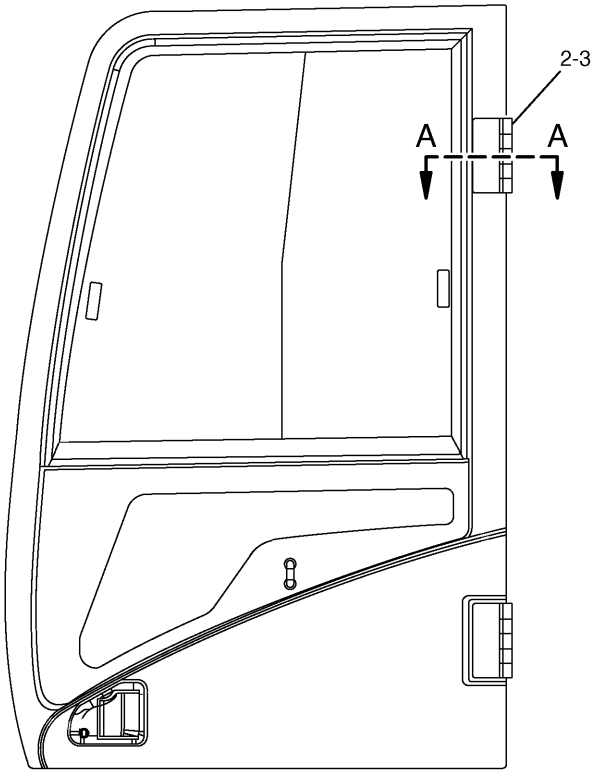


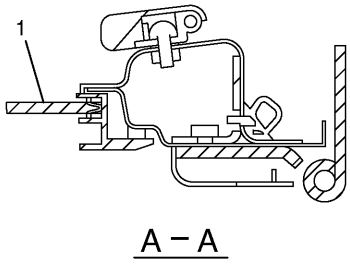


A – A

| NOTE | No. | PART No. | QTY | PART NAME | NOTE | No. | PART No. | QTY | PART NAME |
|---|---|---|---|---|---|---|---|---|---|
| Y | 1 | 139-7100 | 1 | DOOR GP | | | | | |
| | 2 | 151-6777 | 2 | HINGE | | | | | |
| | 3 | 9X-2041 | 6 | SCREW | | | | | |

Y—SEE SEPARATE ILLUSTRATION

H84456E 01

## 189-2768 DOOR GP-CAB

139-7100-Page622
An Attachment

# OPERATOR STATION

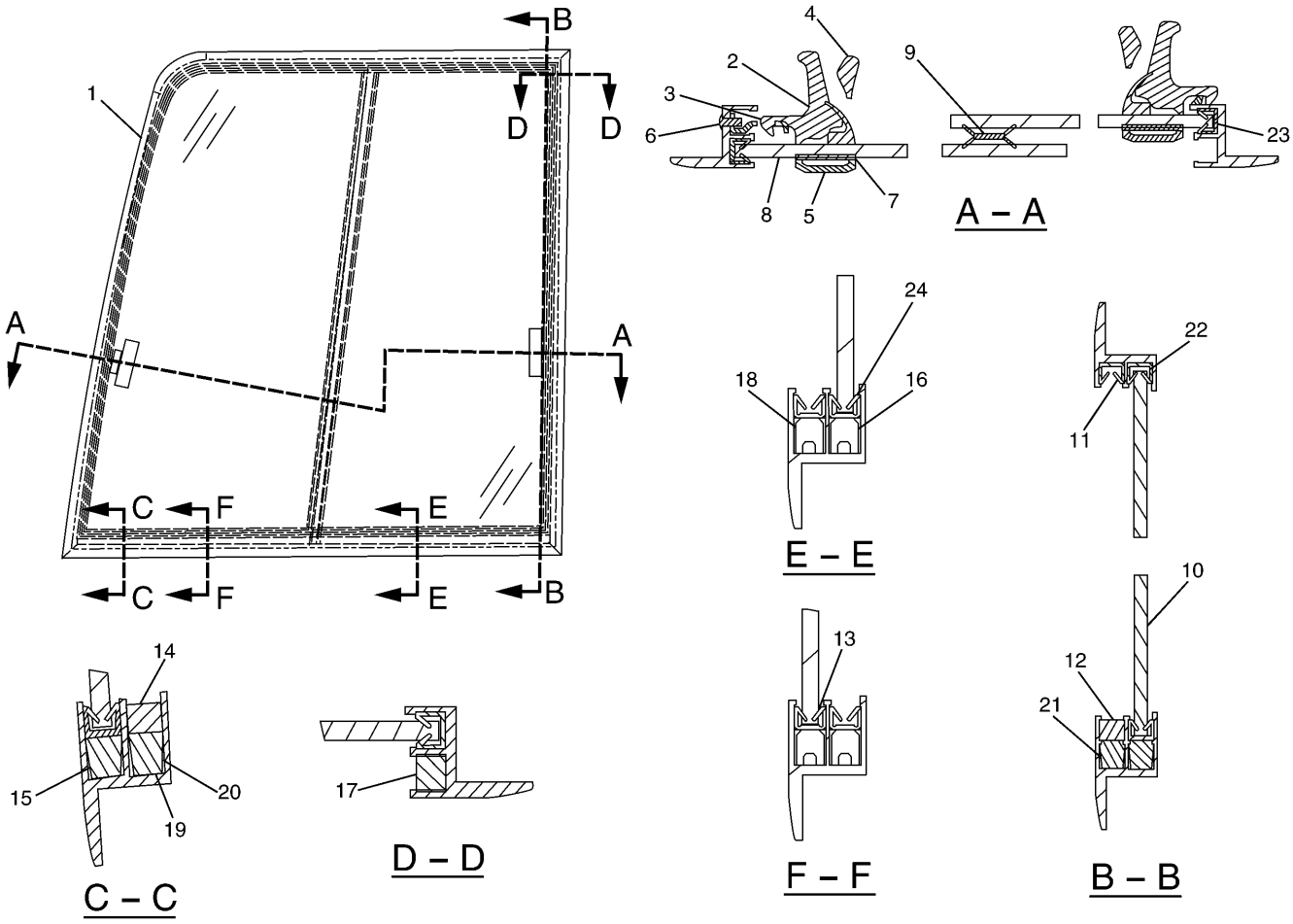


| NOTE | No. | PART No. | QTY | PART NAME | NOTE | No. | PART No. | QTY | PART NAME |
|---|---|---|---|---|---|---|---|---|---|
| | 1 | 151-6793 | 1 | FRAME AS | | 19 | 176-1952 | 1 | SPACER |
| | | 41-4300 | 1 | CATCH | | 20 | 176-1953 | 1 | STOPPER |
| | | 099-0139 | 3 | RIVET | | 21 | 176-1954 | 1 | RUBBER |
| | 2 | 085-6444 | 2 | LOCK AS | | 22 | 176-1955 | 1 | SEAL |
| | 3 | 085-6445 | 1 | LOCK | | 23 | 176-1956 | 1 | SEAL |
| | 4 | 085-6446 | 1 | LOCK | | 24 | 176-1957 | 1 | SEAL |
| | 5 | 085-6447 | 1 | RETAINER | | | | | |
| | 6 | 085-6448 | 1 | SCREW | | | | | |
| | 7 | 085-6449 | 1 | PACKING | | | | | |
| | 8 | 156-6475 | 1 | GLASS | | | | | |
| | 9 | 161-3705 | 1 | SEAL | | | | | |
| | 10 | 156-6474 | 1 | GLASS | | | | | |
| | 11 | 151-6841 | 1 | SEAL | | | | | |
| | 12 | 164-0516 | 1 | RUBBER | | | | | |
| | 13 | 161-3695 | 1 | SEAL | | | | | |
| | 14 | 164-0518 | 1 | RUBBER | | | | | |
| | 15 | 171-7413 | 1 | SPACER | | | | | |
| | 16 | 171-7414 | 1 | SPACER | | | | | |
| | 17 | 164-0517 | 1 | RUBBER | | | | | |
| | 18 | 176-1951 | 1 | SPACER | | | | | |

H78640E 03

## 151-6792 WINDOW GP-DOOR

Part of 139-7100-Page623
An Attachment

# OPERATOR STATION

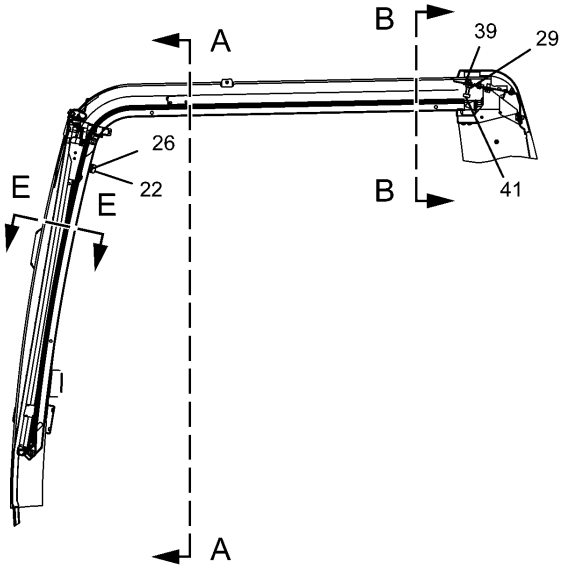


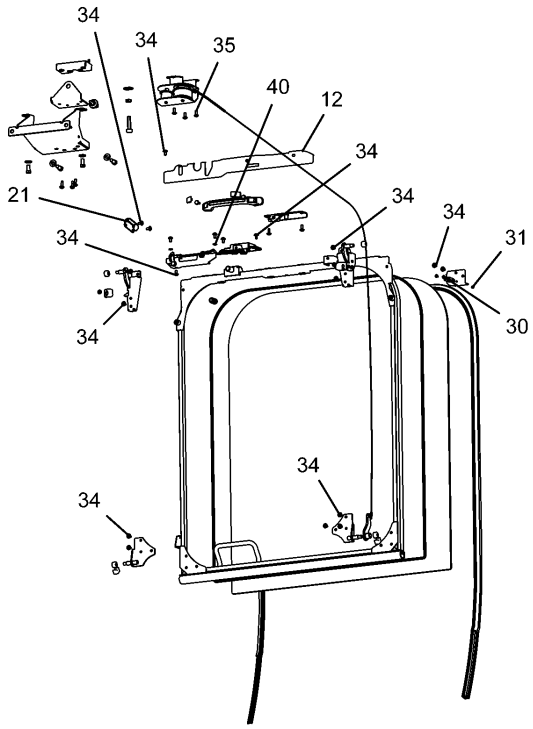


PICTORIAL VIEW

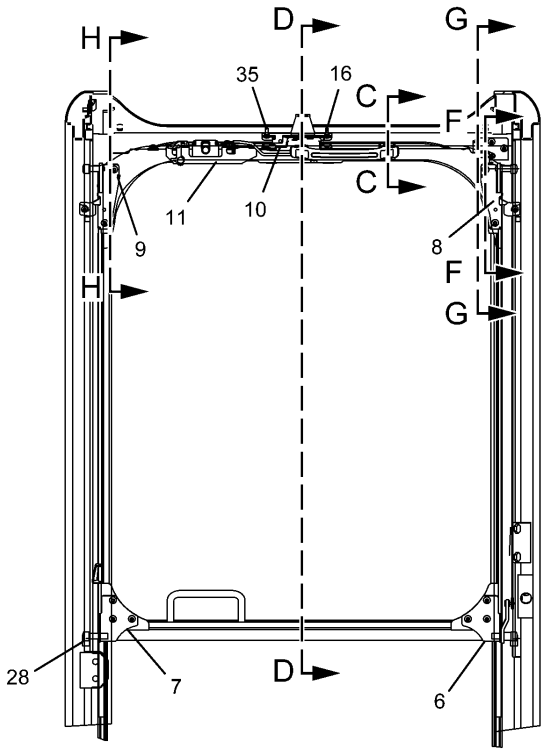


A – A

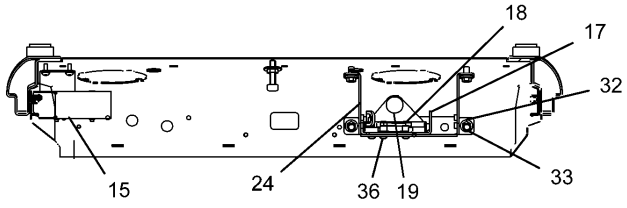


B – B

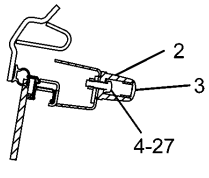


C – C

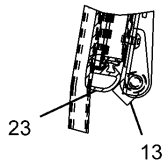


D – D

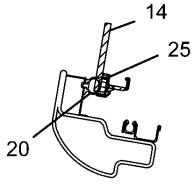


E – E

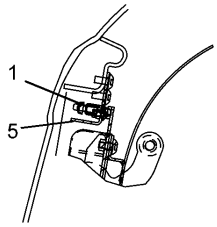


F – F

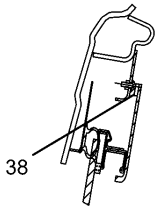


G – G

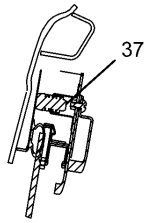


H – H

H93574E 06

**139-7101 WINDOW GP**
Part of 229-9097-Page611,229-9109-Page613
An Attachment

# OPERATOR STATION

| NOTE | No. | PART No. | QTY | PART NAME | NOTE | No. | PART No. | QTY | PART NAME |
|---|---|---|---|---|---|---|---|---|---|
| | 1 | 117-6306 | 1 | SWITCH | | | | | |
| | 2 | 151-6703 | 1 | HANDLE | | | | | |
| | 3 | 151-6704 | 2 | CAP | | | | | |
| | 4 | 095-0827 | 2 | LOCKWASHER | | | | | |
| | 5 | 151-6785 | 1 | BRACKET AS | | | | | |
| | 6 | 151-6813 | 1 | BRACKET AS | | | | | |
| | 7 | 151-6815 | 1 | BRACKET AS | | | | | |
| | 8 | 273-5345 | 1 | LINK AS | | | | | |
| | 9 | 273-5346 | 1 | LINK AS | | | | | |
| | 10 | 151-6831 | 1 | LOCK AS | | | | | |
| | 11 | 151-6832 | 1 | LEVER AS | | | | | |
| | 12 | 151-6844 | 1 | COVER | | | | | |
| | 13 | 151-9557 | 2 | STOPPER | | | | | |
| | 14 | 156-6472 | 1 | GLASS | | | | | |
| | 15 | 156-6554 | 1 | CABLE AS | | | | | |
| | 16 | 156-6555 | 1 | STRIKER AS | | | | | |
| | 17 | 156-6562 | 1 | BRACKET | | | | | |
| | 18 | 273-5274 | 1 | CATCH AS | | | | | |
| | 19 | 156-6579 | 1 | STOPPER | | | | | |
| | 20 | 156-6601 | 1 | SEAL AS | | | | | |
| | 21 | 156-6627 | 1 | STOPPER AS | | | | | |
| | 22 | 161-3684 | 2 | STOPPER | | | | | |
| | 23 | 161-3698 | 1 | SEAL | | | | | |
| | 24 | 164-0648 | 1 | BRACKET AS | | | | | |
| | 25 | 170-9722 | 1 | CUSHION | | | | | |
| | 26 | 099-0823 | 2 | SCREW | | | | | |
| | 27 | 8T-6412 | 2 | SCREW | | | | | |
| | 28 | 151-9576 | 4 | ROLLER | | | | | |
| | 29 | 185-8197 | 1 | NUT | | | | | |
| | 30 | 185-8181 | 2 | SCREW | | | | | |
| | 31 | 185-8183 | 1 | NUT | | | | | |
| | 32 | 185-8187 | 4 | WASHER | | | | | |
| | 33 | 185-8182 | 4 | BOLT (L=20mm) | | | | | |
| | 34 | 9X-2042 | 20 | SCREW | | | | | |
| | 35 | 9X-2044 | 5 | SCREW | | | | | |
| | 36 | 9X-2045 | 3 | SCREW | | | | | |
| | 37 | 185-8221 | 1 | STOPPER | | | | | |
| | 38 | 4I-0420 | 1 | STRIP | | | | | |
| | 39 | 7X-0578 | 1 | WASHER | | | | | |
| | 40 | 9X-8256 | 2 | WASHER | | | | | |
| | 41 | 178-5576 | 1 | STOPPER | | | | | |

H93574E 06

## 139-7101 WINDOW GP

Part of 229-9097-Page611,229-9109-Page613

An Attachment

# OPERATOR STATION

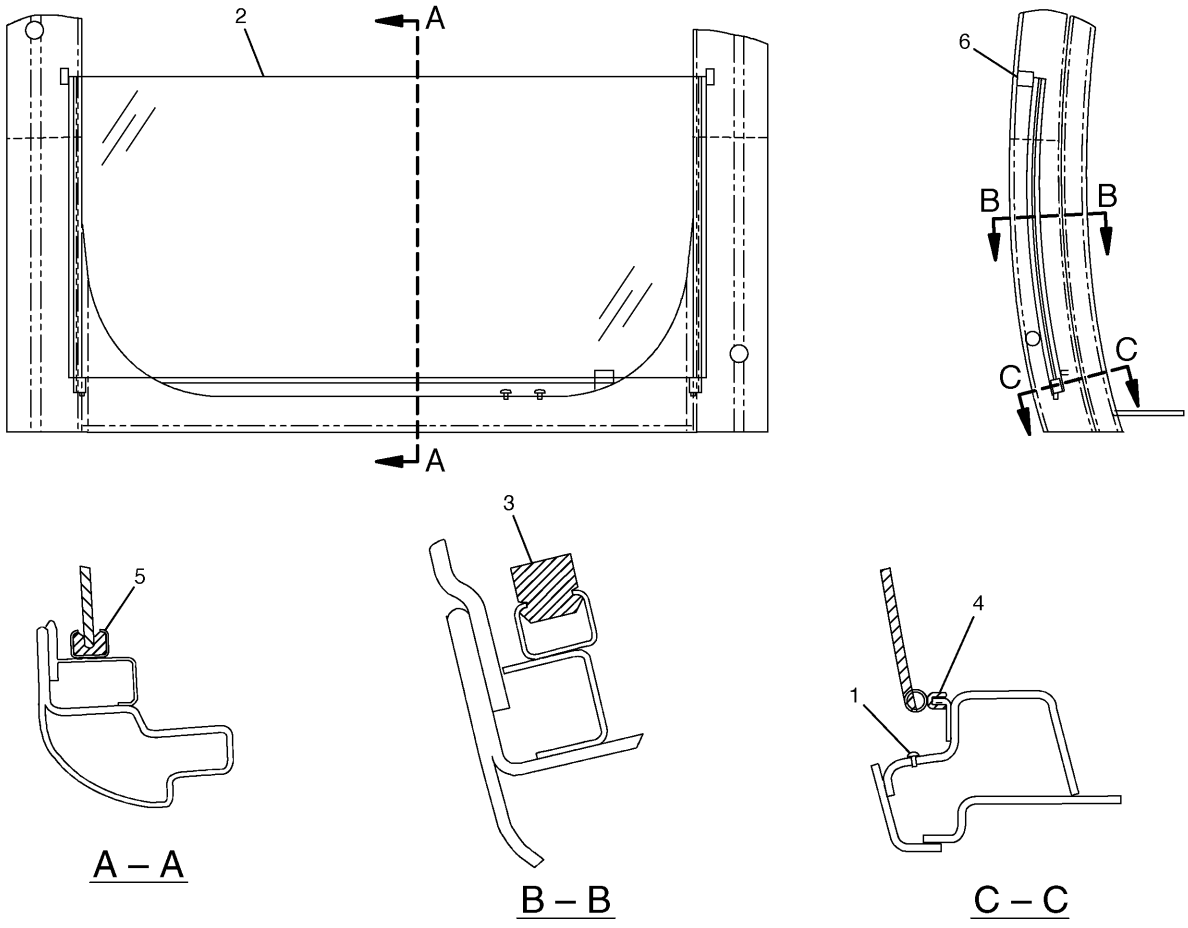


| NOTE | No. | PART No. | QTY | PART NAME | NOTE | No. | PART No. | QTY | PART NAME |
|---|---|---|---|---|---|---|---|---|---|
| | 1 | 139-7119 | 2 | PLUG | | | | | |
| | 2 | 156-6473 | 1 | GLASS | | | | | |
| | 3 | 156-6631 | 2 | STOPPER | | | | | |
| | 4 | 161-3683 | 1 | SEAL | | | | | |
| | 5 | 178-5569 | 2 | SEAL | | | | | |
| | 6 | 189-2702 | 2 | SEAL | | | | | |

H74712E 01

## 176-1958 WINDOW GP

Lower

Part of 229-9097-Page611,229-9109-Page613

An Attachment

# OPERATOR STATION

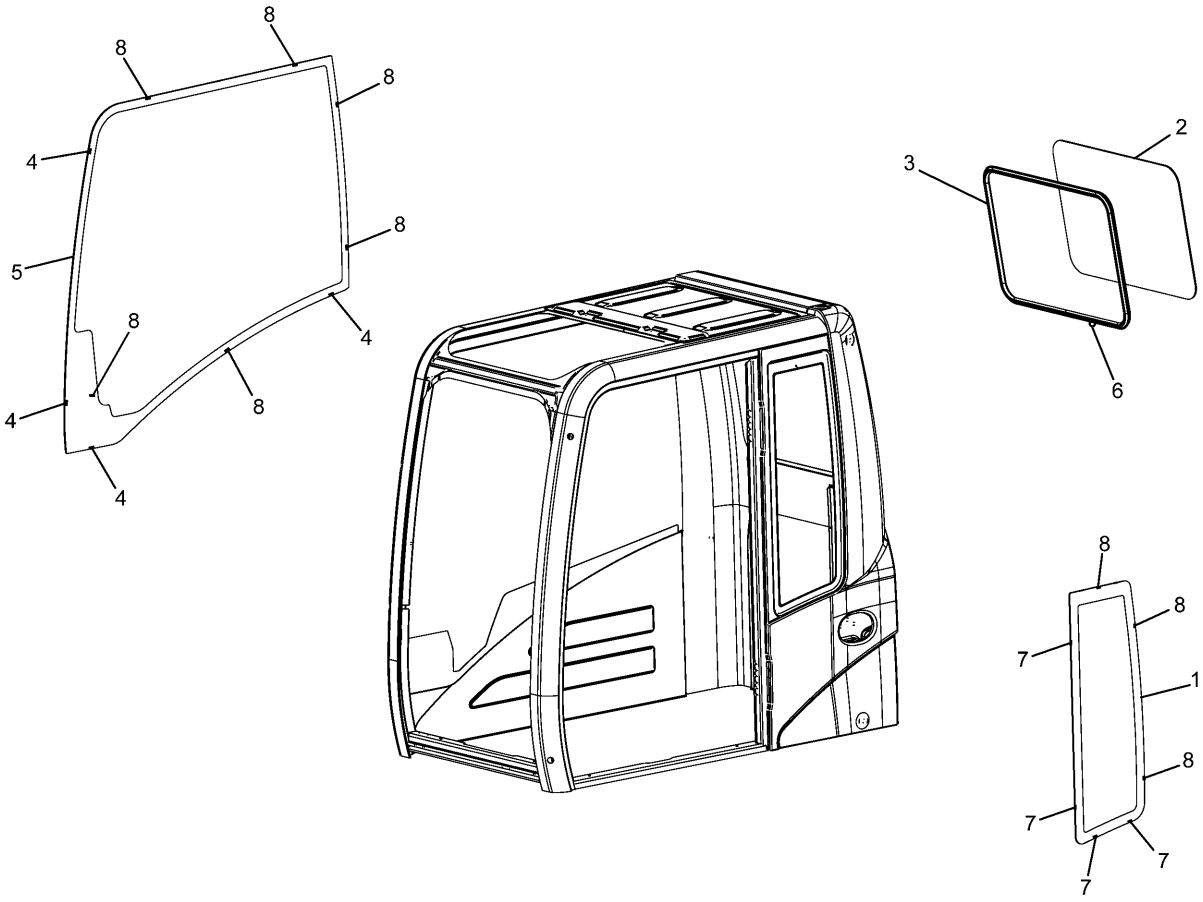


| NOTE | No. | PART No. | QTY | PART NAME | NOTE | No. | PART No. | QTY | PART NAME |
|---|---|---|---|---|---|---|---|---|---|
| | 1 | 151-6790 | 1 | GLASS | | | | | |
| | 2 | 156-6469 | 1 | GLASS | | | | | |
| | 3 | 164-0666 | 1 | SEAL | | | | | |
| | 4 | 178-5572 | 4 | SPACER | | | | | |
| | 5 | 234-6489 | 1 | GLASS | | | | | |
| | 6 | 099-3629 | 1 | RING | | | | | |
| | 7 | 178-5573 | 4 | SPACER | | | | | |
| | 8 | 178-5574 | 9 | SPACER | | | | | |

H97152E 01

## 235-8909 WINDOW GP-CAB

Part of 229-9097-Page611,229-9109-Page613
An Attachment

# OPERATOR STATION

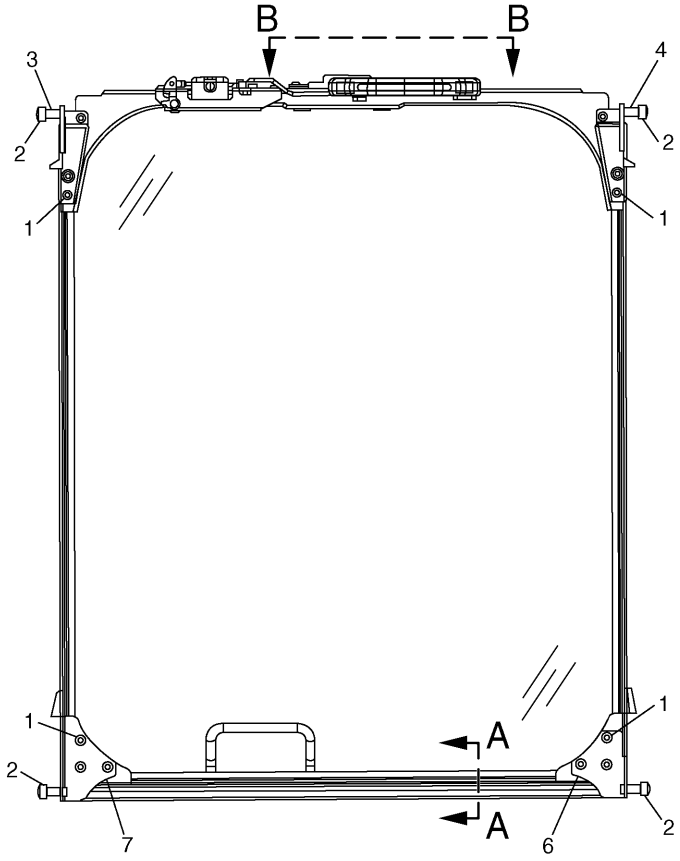


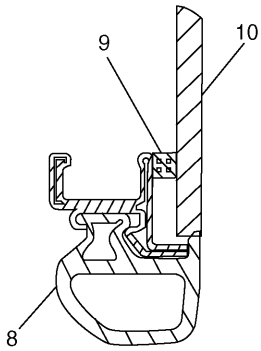


A – A

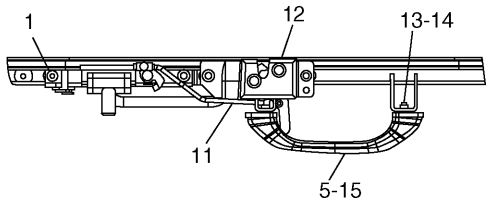


B – B

| NOTE | No. | PART No. | QTY | PART NAME | NOTE | No. | PART No. | QTY | PART NAME |
|---|---|---|---|---|---|---|---|---|---|
| | 1 | 9X-2042 | 15 | SCREW | | | | | |
| | 2 | 151-9576 | 4 | ROLLER | | | | | |
| | 3 | 273-5346 | 1 | LINK AS | | | | | |
| | 4 | 273-5345 | 1 | LINK AS | | | | | |
| | 5 | 151-6704 | 2 | CAP | | | | | |
| | 6 | 151-6813 | 1 | BRACKET AS | | | | | |
| | 7 | 151-6815 | 1 | BRACKET AS | | | | | |
| | 8 | 161-3698 | 1 | SEAL | | | | | |
| | 9 | 170-9722 | 1 | CUSHION | | | | | |
| | 10 | 156-6472 | 1 | GLASS | | | | | |
| | 11 | 151-6832 | 1 | LEVER AS | | | | | |
| | 12 | 151-6831 | 1 | LOCK AS | | | | | |
| | 13 | 095-0827 | 2 | LOCKWASHER | | | | | |
| | 14 | 8T-6412 | 2 | SCREW | | | | | |
| | 15 | 151-6703 | 1 | HANDLE | | | | | |

H93555E 03

**171-7503 WINDOW GP**
An Attachment

# OPERATOR STATION

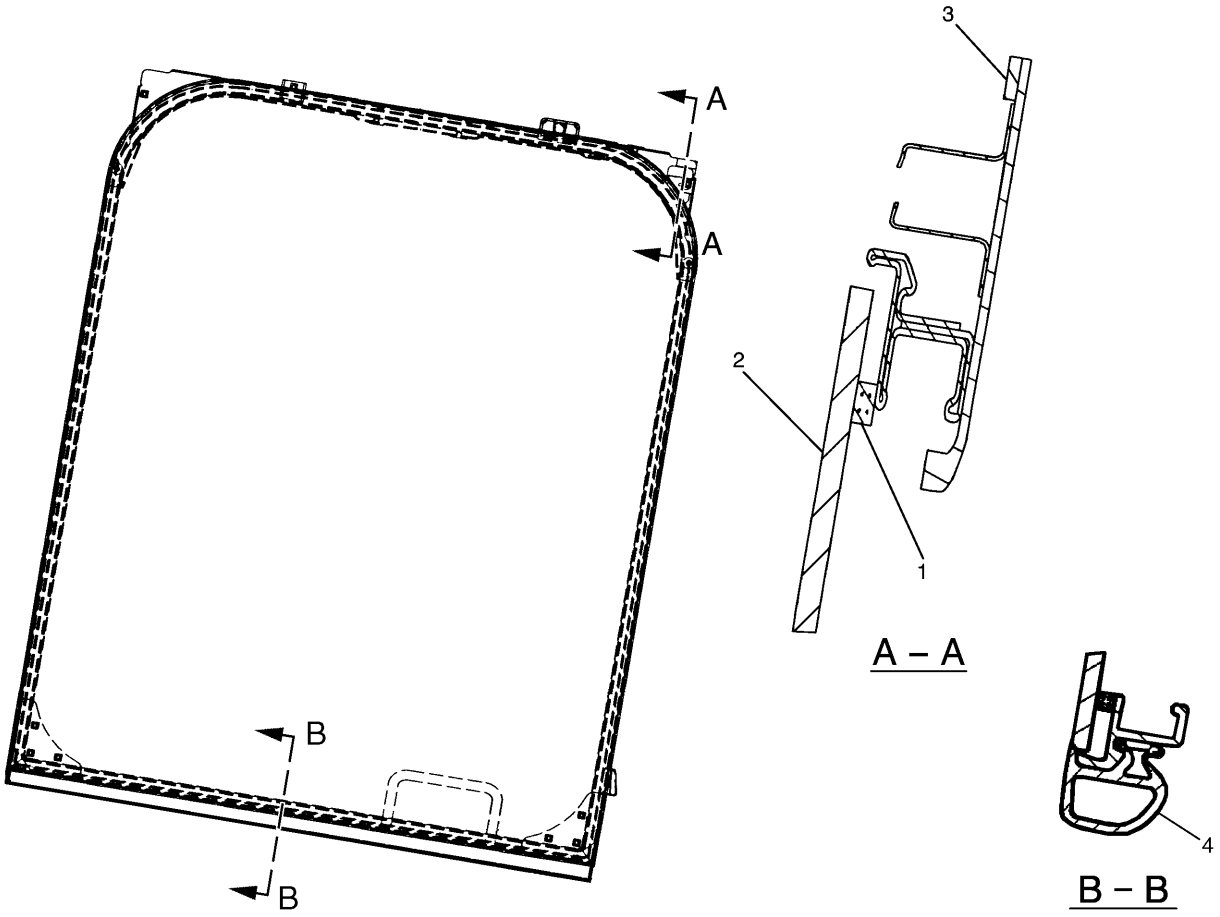


| NOTE | No. | PART No. | QTY | PART NAME | NOTE | No. | PART No. | QTY | PART NAME |
|---|---|---|---|---|---|---|---|---|---|
| | 1 | 170-9722 | 1 | CUSHION | | | | | |
| | 2 | 156-6472 | 1 | GLASS | | | | | |
| | 3 | 41-0420 | 1 | STRIP | | | | | |
| | 4 | 161-3698 | 1 | SEAL | | | | | |

H83151E 01

**207-0144 WINDOW AS**
An Attachment

# OPERATOR STATION

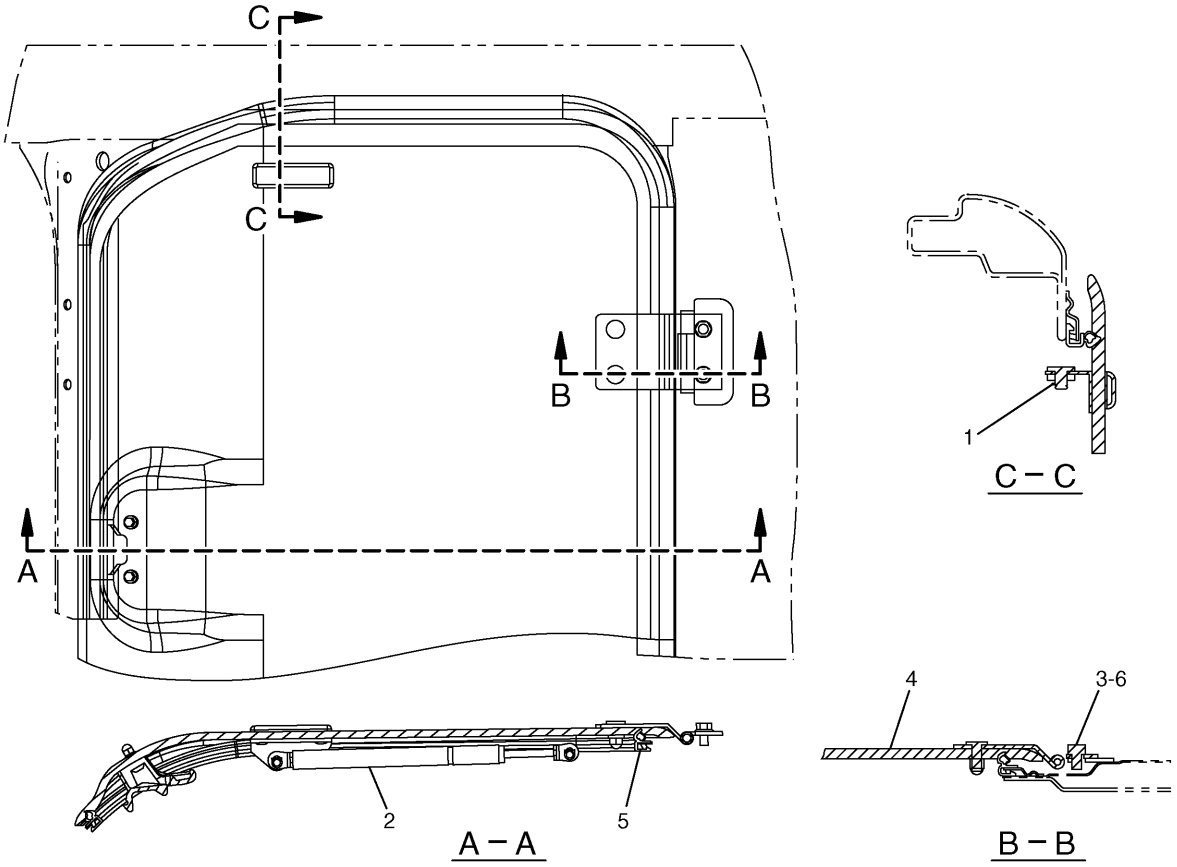


| NOTE | No. | PART No. | QTY | PART NAME | NOTE | No. | PART No. | QTY | PART NAME |
|---|---|---|---|---|---|---|---|---|---|
| | 1 | 2Y-5685 | 4 | RING | | | | | |
| | 2 | 099-3506 | 2 | SPRING AS | | | | | |
| | 3 | 8T-4200 | 4 | BOLT (L=16mm) | | | | | |
| Y | 4 | 189-2849 | 1 | HATCH AS | | | | | |
| | 5 | 189-2847 | 1 | SEAL | | | | | |
| | 6 | 8T-4224 | 4 | WASHER | | | | | |

Y—SEE SEPARATE ILLUSTRATION

H71324E 03

## 139-7099 HATCH GP

Part of 229-9097-Page611
189-2849-Page633
An Attachment

# OPERATOR STATION

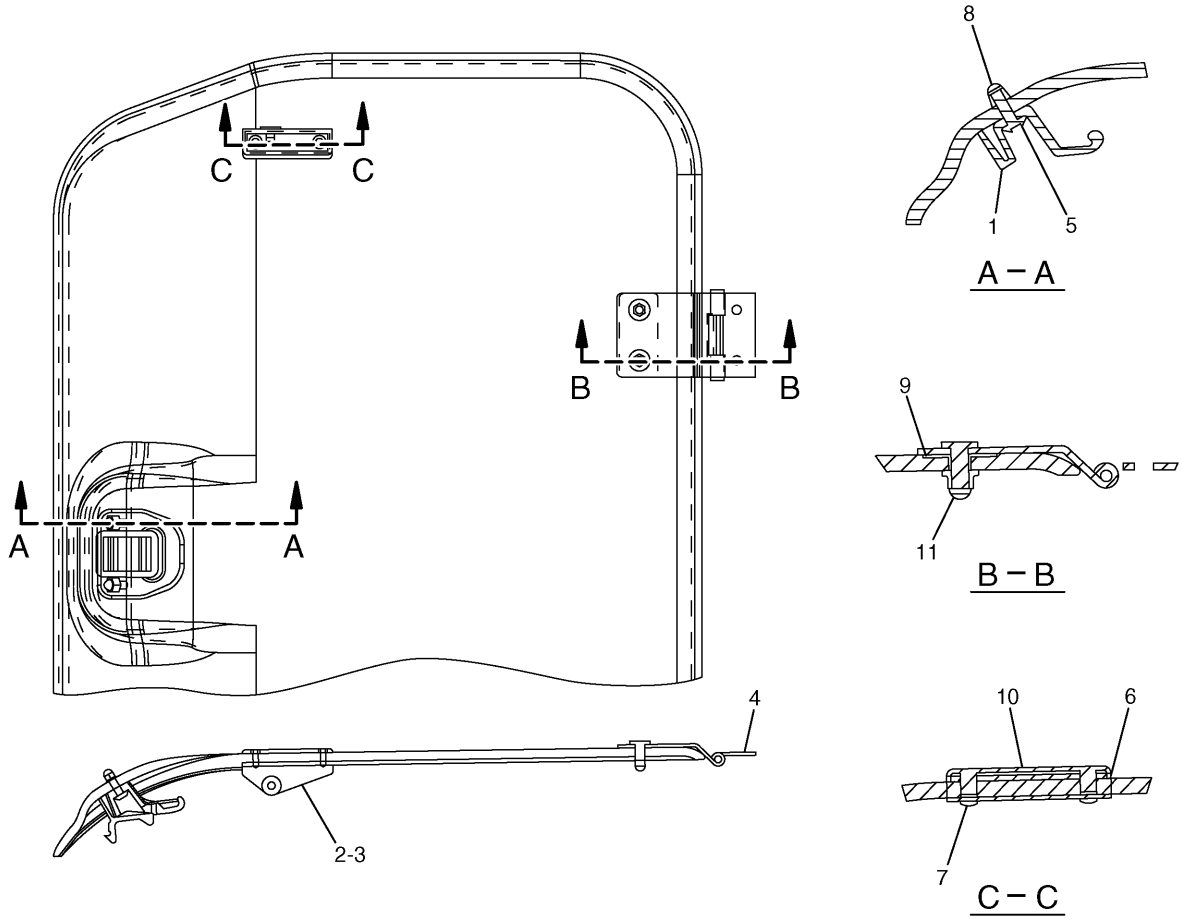


| NOTE | No. | PART No. | QTY | PART NAME | NOTE | No. | PART No. | QTY | PART NAME |
|---|---|---|---|---|---|---|---|---|---|
| | 1 | 161-3694 | 1 | CATCH | | | | | |
| | 2 | 189-2693 | 1 | BRACKET AS (RH) | | | | | |
| | 3 | 189-2694 | 1 | BRACKET AS (LH) | | | | | |
| | 4 | 189-2716 | 2 | HINGE AS | | | | | |
| | 5 | 9X-2045 | 2 | SCREW | | | | | |
| | 6 | 085-6449 | 2 | PACKING | | | | | |
| | 7 | 100-2881 | 4 | SCREW | | | | | |
| | 8 | 171-7477 | 2 | NUT | | | | | |
| | 9 | 4I-1260 | 2 | PACKING | | | | | |
| | 10 | 4I-4361 | 2 | RETAINER | | | | | |
| | 11 | 6I-5342 | 4 | NUT | | | | | |

H71325E 00

**189-2849 HATCH AS**
Part of 139-7099-Page632
An Attachment

# OPERATOR STATION

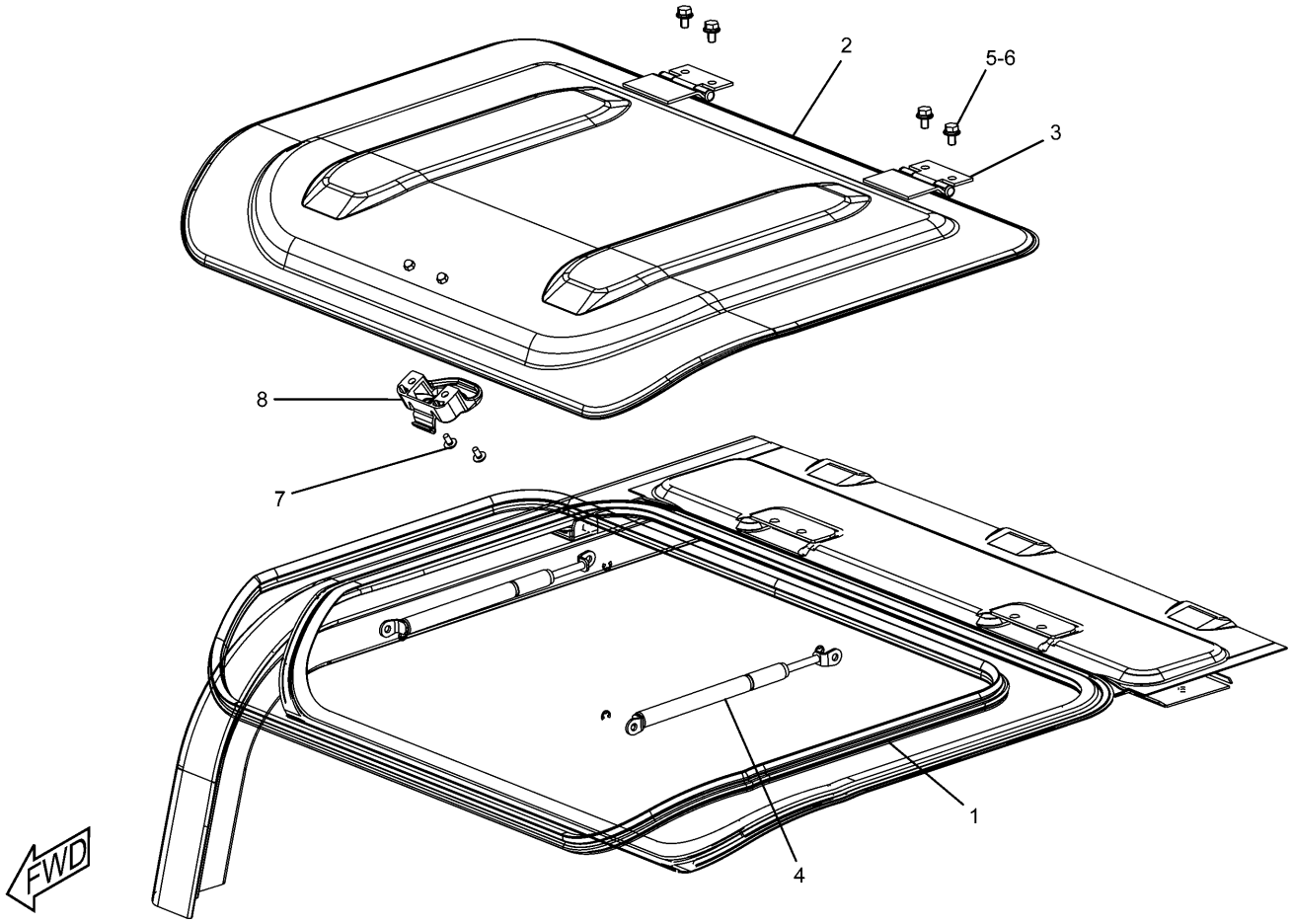


| NOTE | No. | PART No. | QTY | PART NAME | NOTE | No. | PART No. | QTY | PART NAME |
|---|---|---|---|---|---|---|---|---|---|
| | 1 | 189-2847 | 1 | SEAL | | | | | |
| | 2 | 259-7351 | 1 | HATCH AS | | | | | |
| | 3 | 189-2717 | 1 | HINGE AS | | | | | |
| | 4 | 099-3506 | 2 | SPRING AS | | | | | |
| | 5 | 8T-4200 | 4 | BOLT (L=16mm) | | | | | |
| | 6 | 8T-4224 | 4 | WASHER | | | | | |
| | 7 | 9X-2042 | 2 | SCREW | | | | | |
| | 8 | 259-7352 | 1 | CATCH | | | | | |

H91229E 00

**259-7350 HATCH GP**
Metal Loof Hatch
S/N BWZ 1-Up, DFB 1-Up
Part of 229-9109-Page613
An Attachment

# OPERATOR STATION

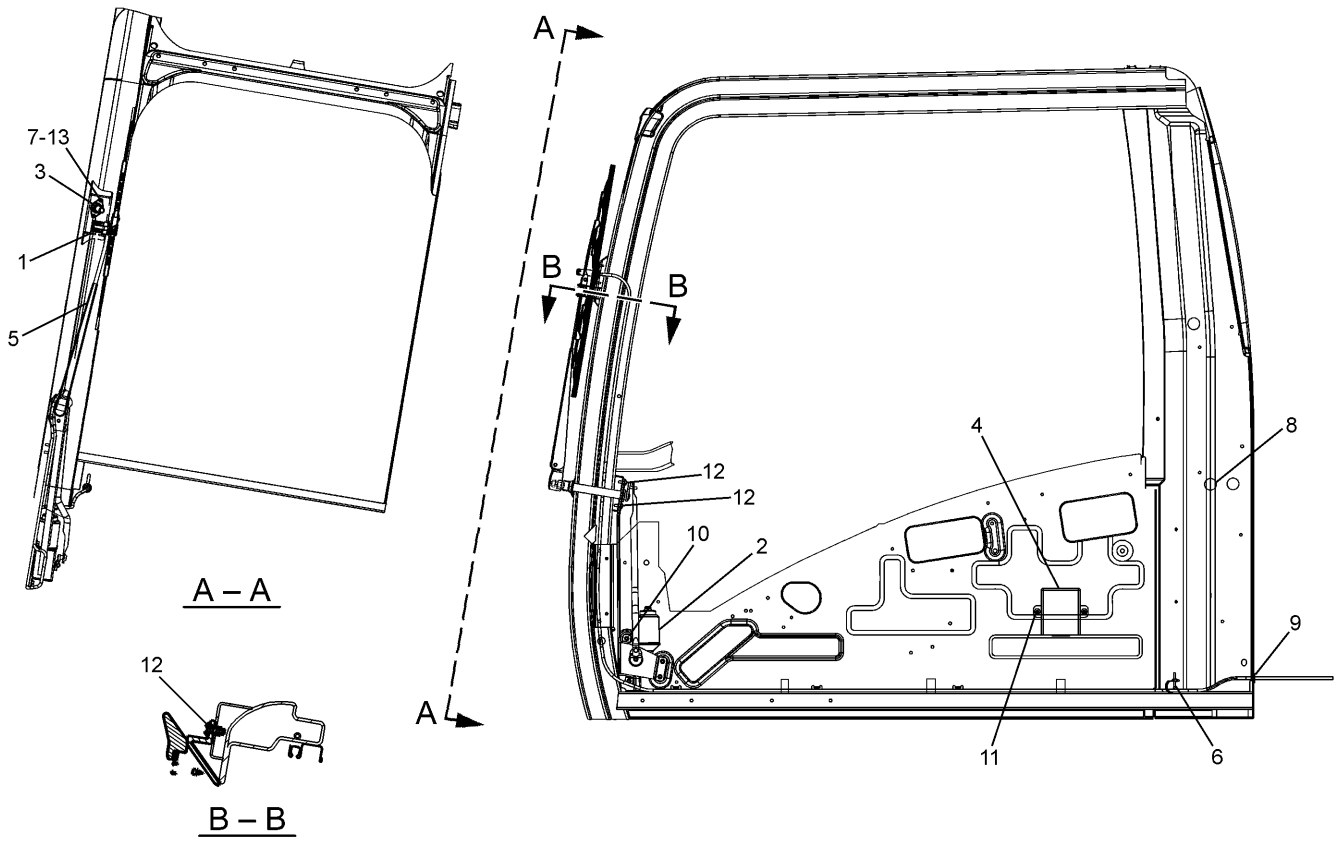


| NOTE | No. | PART No. | QTY | PART NAME | NOTE | No. | PART No. | QTY | PART NAME |
|---|---|---|---|---|---|---|---|---|---|
| | 1 | 161-3677 | 1 | HOLDER | | | | | |
| Y | 2 | 245-7931 | 1 | MOTOR AS | | | | | |
| | 3 | 235-8932 | 1 | NOZZLE AS | | | | | |
| | 4 | 155-7042 | 1 | RELAY AS | | | | | |
| Y | 5 | 161-3668 | 1 | ARM AS | | | | | |
| | 6 | 163-6795 | 1 | STRAP | | | | | |
| | 7 | 095-0728 | 2 | SCREW | | | | | |
| | 8 | 4I-3090 | 1 | SEAL | | | | | |
| | 9 | 7Y-7364 | 1 | GROMMET | | | | | |
| | 10 | 8T-4134 | 4 | NUT | | | | | |
| | 11 | 9X-2042 | 2 | SCREW | | | | | |
| | 12 | 9X-2044 | 3 | SCREW | | | | | |
| | 13 | 096-6166 | 2 | WASHER | | | | | |

Y—SEE SEPARATE ILLUSTRATION

H93556E 03

## 234-6594 WIPER GP-WINDOW

Part of 229-9097-Page611,229-9109-Page613
161-3668-Page636,245-7931-Page637
An Attachment

# OPERATOR STATION

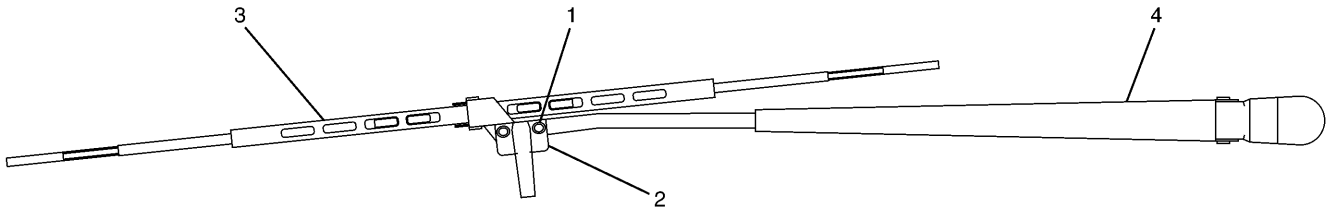


| NOTE | No. | PART No. | QTY | PART NAME | NOTE | No. | PART No. | QTY | PART NAME |
|---|---|---|---|---|---|---|---|---|---|
| | 1 | 185-8290 | 1 | SCREW KIT | | | | | |
| | 2 | 161-3669 | 1 | GUIDE | | | | | |
| | 3 | 161-3670 | 1 | BLADE AS | | | | | |
| | 4 | 161-3671 | 1 | ARM AS | | | | | |

H77606E 02

## 161-3668 ARM AS-WIPER

Part of 234-6594-Page635
An Attachment

# OPERATOR STATION

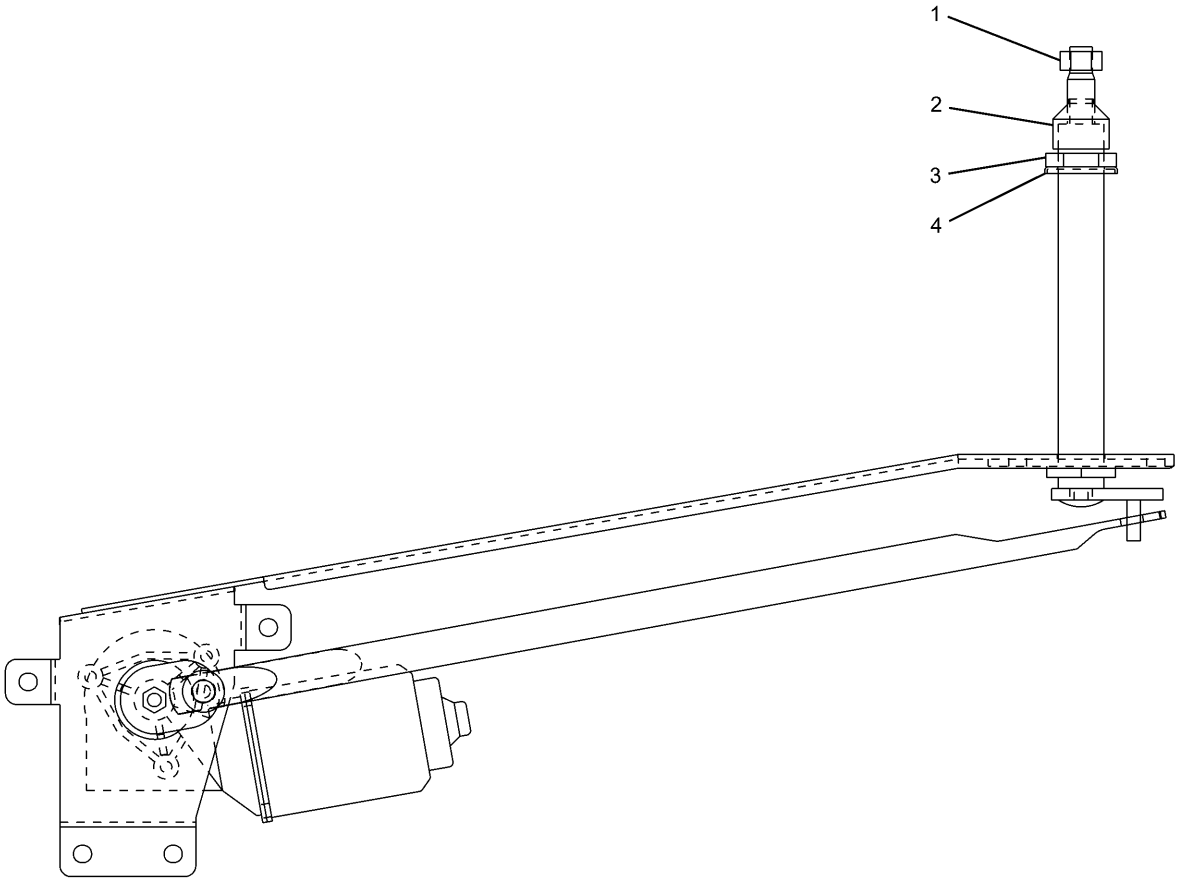


| NOTE | No. | PART No. | QTY | PART NAME | NOTE | No. | PART No. | QTY | PART NAME |
|---|---|---|---|---|---|---|---|---|---|
| | 1 | 6V-8231 | 1 | NUT | | | | | |
| | 2 | 7Y-3472 | 1 | CAP | | | | | |
| | 3 | 7Y-3470 | 1 | NUT | | | | | |
| | 4 | 124-3953 | 1 | WASHER | | | | | |

H88676E 00

## 245-7931 MOTOR AS-WINDOW WIPER

Part of 234-6594-Page635
An Attachment

# OPERATOR STATION

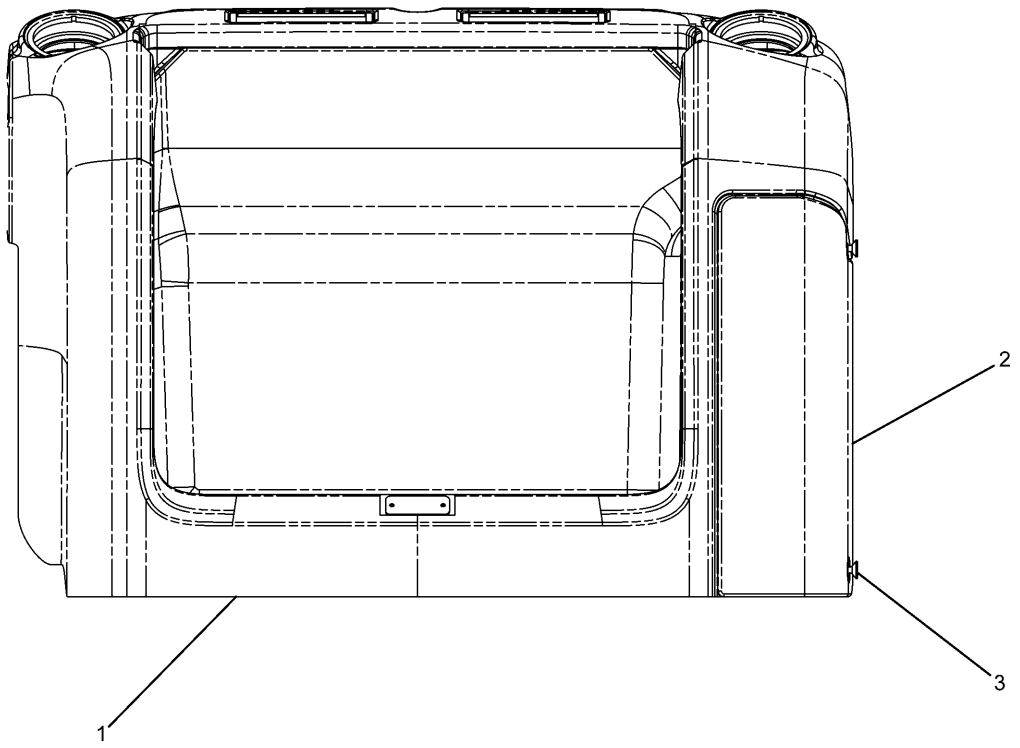


| NOTE | No. | PART No. | QTY | PART NAME | NOTE | No. | PART No. | QTY | PART NAME |
|---|---|---|---|---|---|---|---|---|---|
| | 1 | 234-6499 | 1 | COVER AS | | | | | |
| | 2 | 234-6502 | 1 | COVER | | | | | |
| | 3 | 245-7929 | 2 | CLIP | | | | | |

H87659E 05

## 234-6501 COVER GP

Part of 229-9096-Page607,229-9108-Page609
An Attachment

# OPERATOR STATION

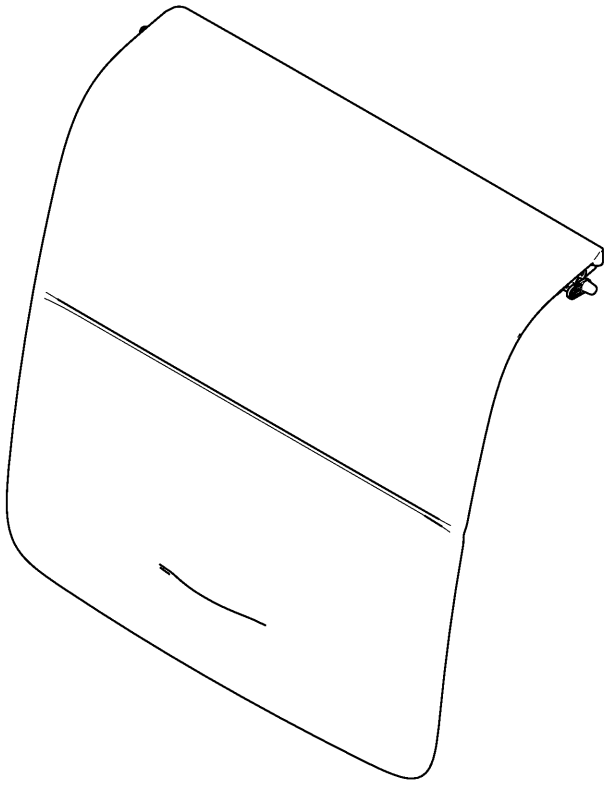

| NOTE | No. | PART No. | QTY | PART NAME | NOTE | No. | PART No. | QTY | PART NAME |
|---|---|---|---|---|---|---|---|---|---|
| | | | | | | | | | |

H88770E 05

**234-6500 COVER AS**
An Attachment

# OPERATOR STATION

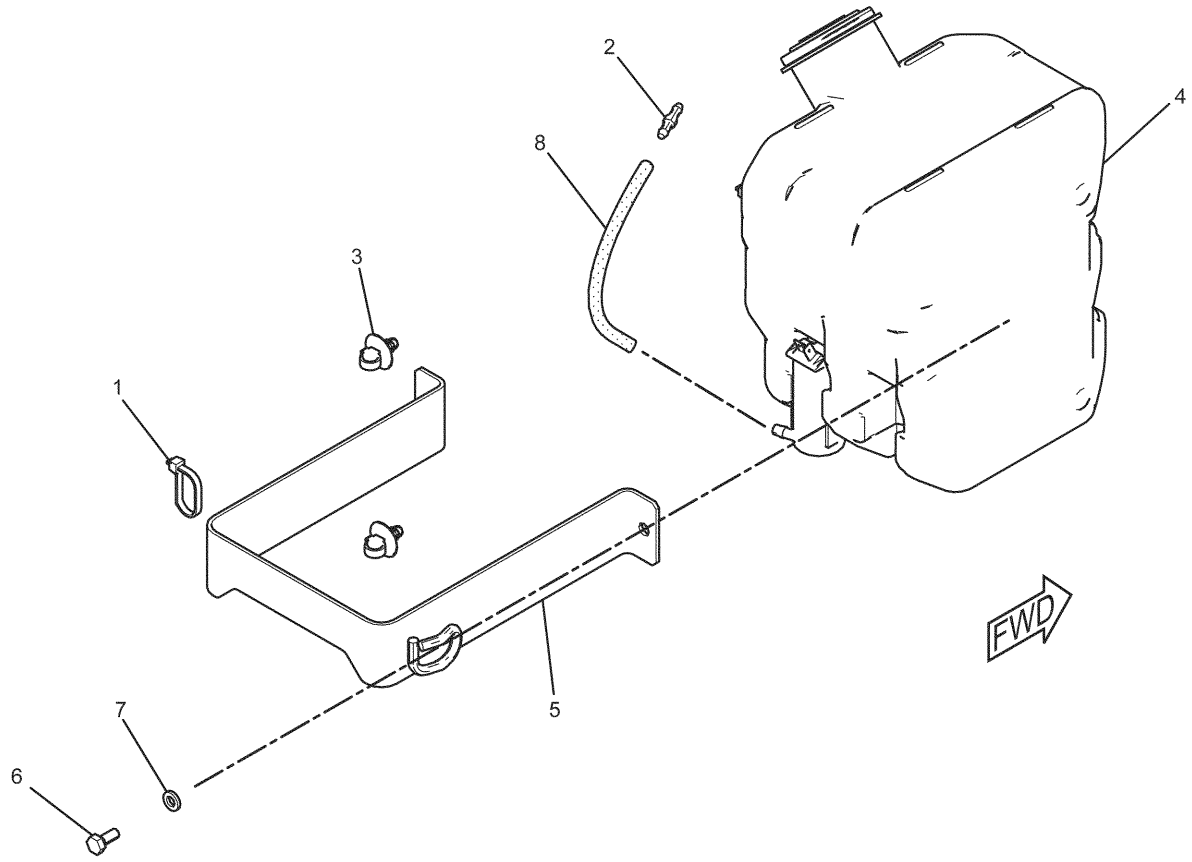


| NOTE | No. | PART No. | QTY | PART NAME | NOTE | No. | PART No. | QTY | PART NAME |
|---|---|---|---|---|---|---|---|---|---|
| | 1 | 3S-2093 | 1 | STRAP | | | | | |
| | 2 | 7Y-3474 | 1 | VALVE AS | | | | | |
| | 3 | 163-6795 | 2 | STRAP | | | | | |
| Y | 4 | 176-1931 | 1 | TANK AS | | | | | |
| | 5 | 235-9012 | 1 | SUPPORT AS | | | | | |
| | 6 | 8T-4970 | 2 | BOLT (L=14mm) | | | | | |
| | 7 | 9X-8256 | 2 | WASHER | | | | | |
| E | 8 | 144-0195 | | HOSE…(13cm) | | | | | |

E—ORDER BY THE CENTIMETER

Y—SEE SEPARATE ILLUSTRATION

H93557E 05

## 229-9070 WASHER GP-WINDOW

176-1931-Page641

An Attachment

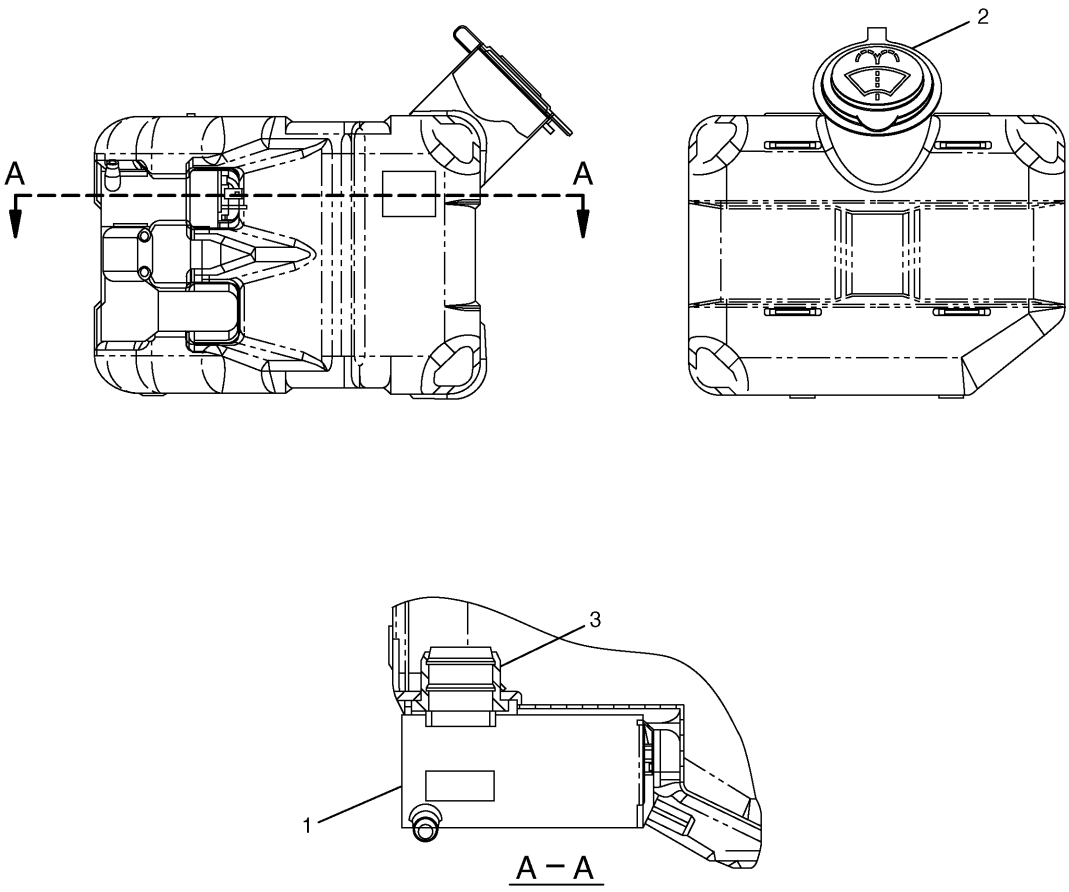


| NOTE | No. | PART No. | QTY | PART NAME | NOTE | No. | PART No. | QTY | PART NAME |
|---|---|---|---|---|---|---|---|---|---|
| | 1 | 7T-8890 | 1 | PUMP AS | | | | | |
| | 2 | 178-5431 | 1 | CAP AS | | | | | |
| | | 3W-6399 | 1 | PACKING | | | | | |
| | 3 | 5C-8138 | 1 | GROMMET | | | | | |

H70149E 02

## 176-1931 TANK AS-WINDOW WASHER

Part of 229-9070-Page640
An Attachment

# OPERATOR STATION

Consists of :

| | | | Page |
|---|---|---|---|
| 1 | 229-9087 | WIPER & WASHER GP-WINDOW | 644 |
| 1 | 229-9088 | WASHER GP-WINDOW | 646 |
| 1 | 238-2208 | WIRING GP-LOWER WIPER | 156 |

H87747E 01

**229-9086 WIPER AR-WINDOW**
Lower/Skylight Hatch Cab
An Attachment

# MEMORANDA

# OPERATOR STATION

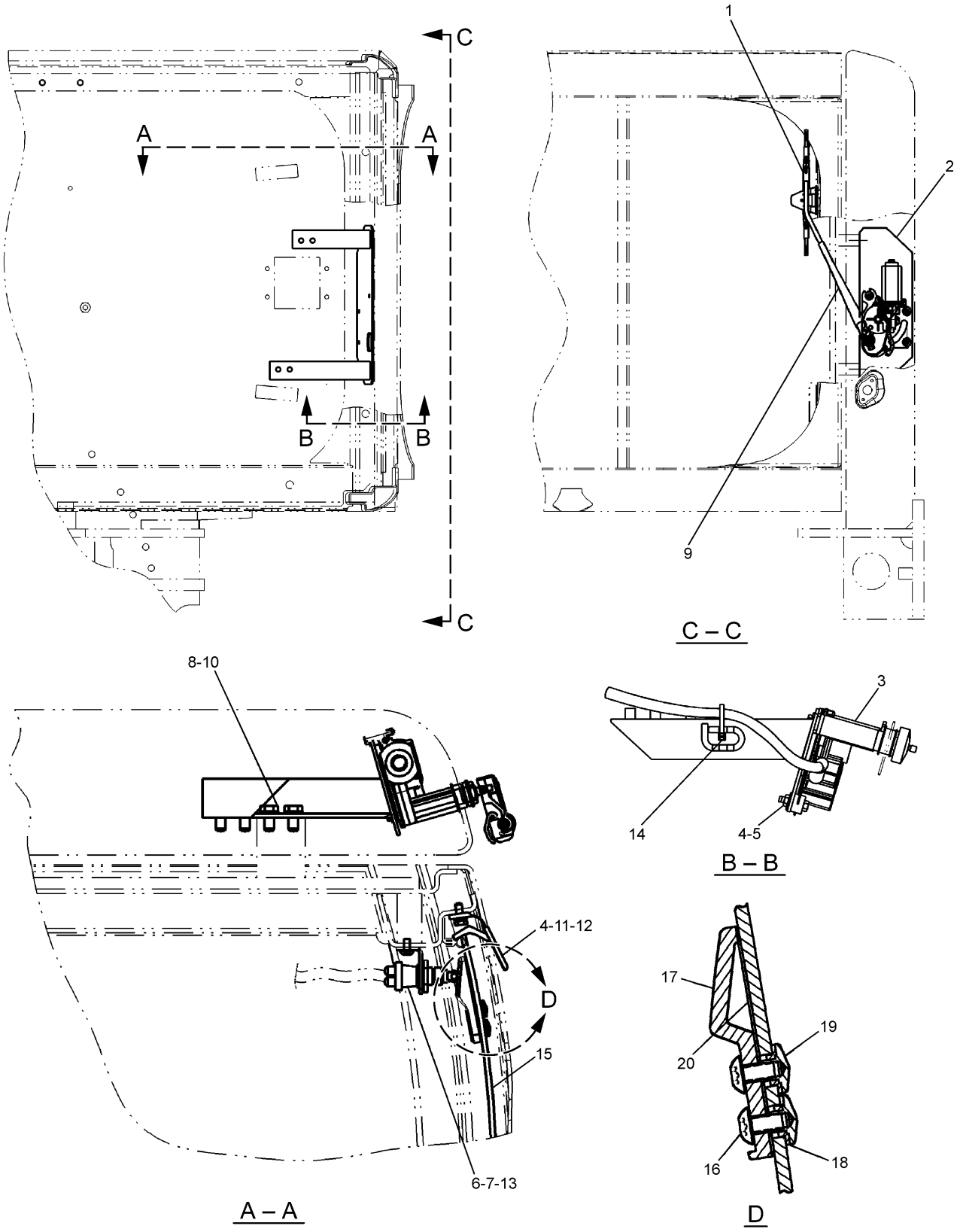


H99941E 04

**229–9087 WIPER & WASHER GP–WINDOW**
Lower/Skylight Hatch Cab
Part of 229–9086–Page642
129–6466–Page228
An Attachment

# OPERATOR STATION

| NOTE | No. | PART No. | QTY | PART NAME | NOTE | No. | PART No. | QTY | PART NAME |
|---|---|---|---|---|---|---|---|---|---|
| | 1 | 4I-5021 | 1 | BLADE AS | | | | | |
| | 2 | 235-8974 | 1 | BRACKET AS | | | | | |
| | 3 | 293-1140 | 1 | MOTOR AS | | | | | |
| | 4 | 9X-8256 | 5 | WASHER | | | | | |
| | 5 | 5C-2890 | 3 | NUT | | | | | |
| | 6 | 9X-2044 | 2 | SCREW | | | | | |
| | 7 | 156-6646 | 1 | BRACKET | | | | | |
| | 8 | 8T-4121 | 4 | WASHER | | | | | |
| | 9 | 4I-5020 | 1 | ARM AS | | | | | |
| | 10 | 8T-4191 | 4 | BOLT (L=16mm) | | | | | |
| | 11 | 4I-1163 | 1 | BRACKET | | | | | |
| | 12 | 5C-9553 | 2 | BOLT (L=16mm) | | | | | |
| Y | 13 | 129-6466 | 1 | SWITCH AS | | | | | |
| | 14 | 3S-2093 | 1 | STRAP | | | | | |
| | 15 | 156-6647 | 1 | GLASS AS | | | | | |
| | 16 | 9X-2042 | 2 | SCREW | | | | | |
| | 17 | 124-3966 | 1 | STOPPER | | | | | |
| | 18 | 144-9691 | 2 | PACKING | | | | | |
| | 19 | 144-9692 | 2 | RETAINER | | | | | |
| | 20 | 151-6705 | 1 | PACKING | | | | | |

Y—SEE SEPARATE ILLUSTRATION

H99941E 04

## 229-9087 WIPER & WASHER GP-WINDOW

Lower/Skylight Hatch Cab
Part of 229-9086-Page642
129-6466-Page228
An Attachment

# OPERATOR STATION

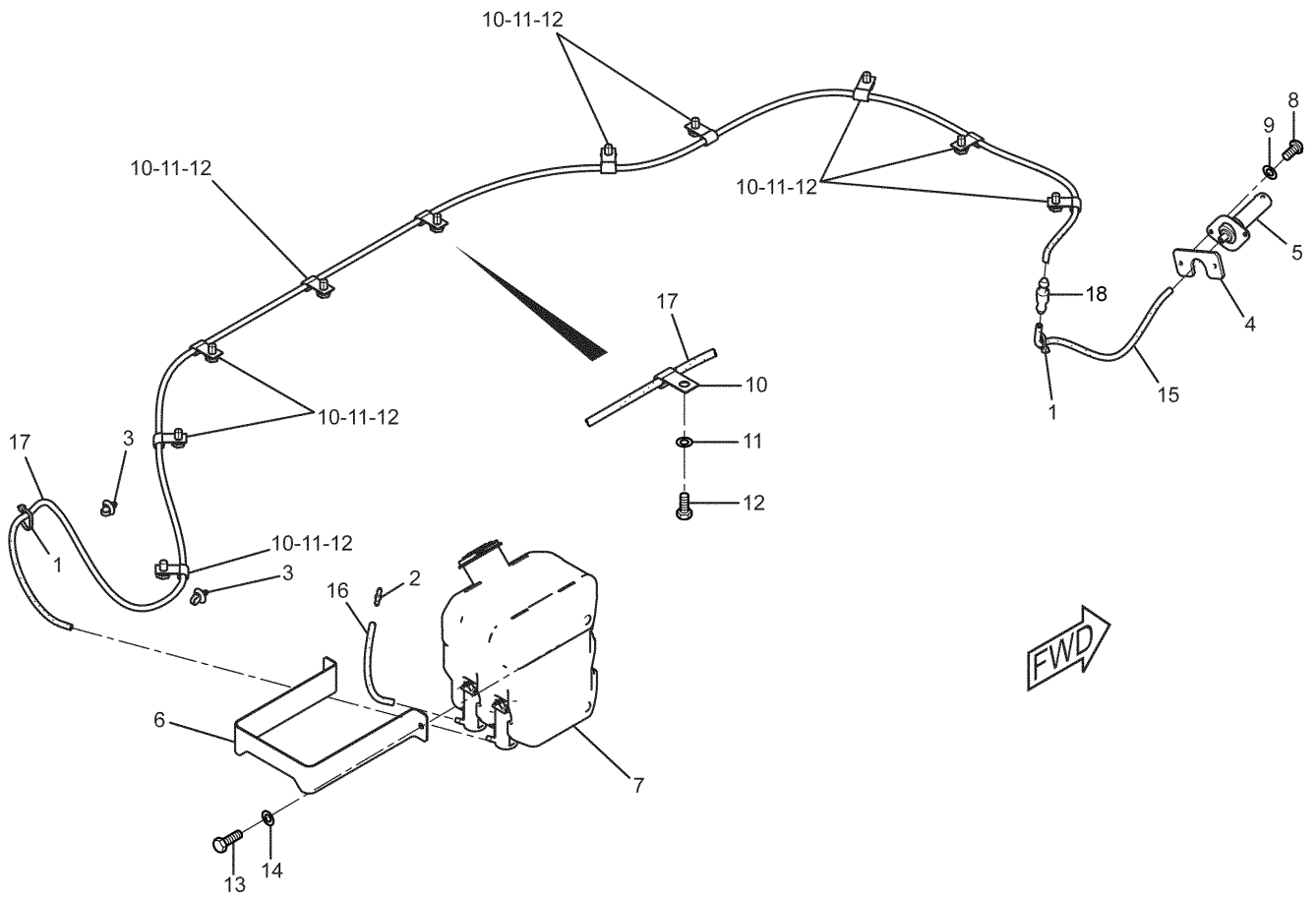


| NOTE | No. | PART No. | QTY | PART NAME | NOTE | No. | PART No. | QTY | PART NAME |
|---|---|---|---|---|---|---|---|---|---|
| | 1 | 3S-2093 | 2 | STRAP | | 18 | 293-1256 | 1 | VALVE AS |
| | 2 | 7Y-3474 | 1 | VALVE AS | | | | | |
| | 3 | 163-6795 | 2 | STRAP | | | | | |
| | 4 | 170-9492 | 1 | PLATE | | | | | |
| | 5 | 178-5500 | 1 | NOZZLE AS | | | | | |
| | | 085-8037 | 1 | NOZZLE | | | | | |
| | | 105-9526 | 1 | ADAPTER | | | | | |
| | | 105-9527 | 1 | PACKING | | | | | |
| | 6 | 235-9012 | 1 | SUPPORT AS | | | | | |
| | 7 | 176-1932 | 1 | TANK AS | | | | | |
| | 8 | 095-0728 | 2 | SCREW | | | | | |
| | 9 | 096-6166 | 2 | WASHER | | | | | |
| | 10 | 6V-3265 | 10 | CLIP | | | | | |
| | 11 | 8T-4121 | 10 | WASHER | | | | | |
| | 12 | 8T-4191 | 10 | BOLT (L=16mm) | | | | | |
| | 13 | 8T-4970 | 2 | BOLT (L=14mm) | | | | | |
| | 14 | 9X-8256 | 2 | WASHER | | | | | |
| E | 15 | 144-0195 | | HOSE…(30cm) | | | | | |
| E | 16 | 144-0195 | | HOSE…(13cm) | | | | | |
| E | 17 | 144-0195 | | HOSE…(290cm) | | | | | |

E—ORDER BY THE CENTIMETER

H95210E 09

## 229-9088 WASHER GP-WINDOW

Lower

Part of 229-9086-Page642

An Attachment

# OPERATOR STATION

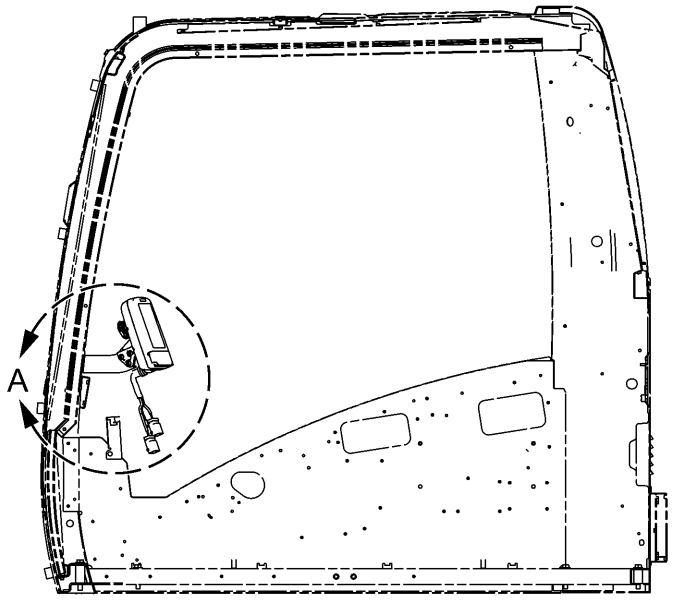


LEFT SIDE VIEW

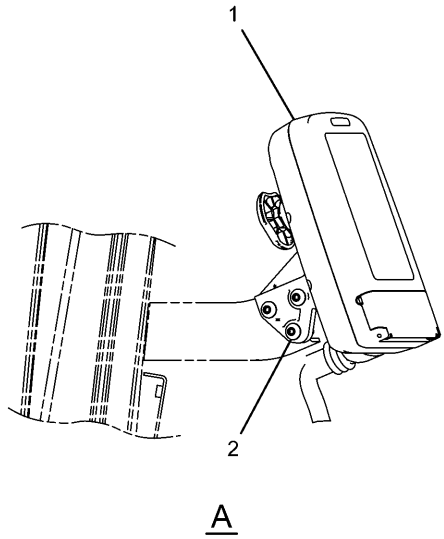


| NOTE | No. | PART No. | QTY | PART NAME | NOTE | No. | PART No. | QTY | PART NAME |
|---|---|---|---|---|---|---|---|---|---|
| Y | 1 | 260-2193 | 1 | MONITOR GP | | | | | |
| | 2 | 9X-2046 | 3 | SCREW | | | | | |

Y—SEE SEPARATE ILLUSTRATION

H89482E 03

## 221-8813 MONITOR & MTG GP-OPERATOR

260-2193-Page648

# OPERATOR STATION

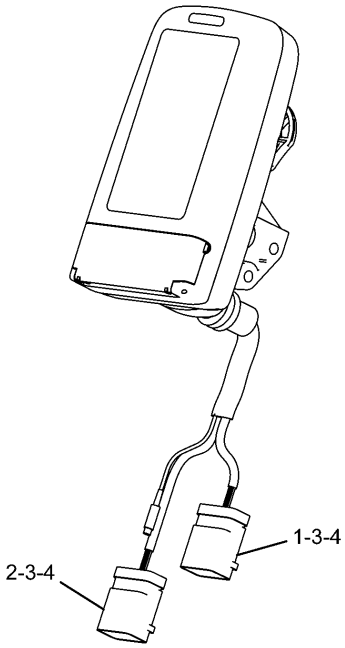


| NOTE | No. | PART No. | QTY | PART NAME |
|---|---|---|---|---|
| | 1 | 247-2694 | 1 | RECEPTACLE AS |
| | 2 | 247-2695 | 1 | RECEPTACLE AS |
| | 3 | 9X-3401 | 17 | PIN |
| | 4 | 8T-8737 | 7 | PLUG |

H89483E 00

## 260-2193 MONITOR GP-OPERATOR

Part of 221-8813-Page647

# MEMORANDA

# OPERATOR STATION

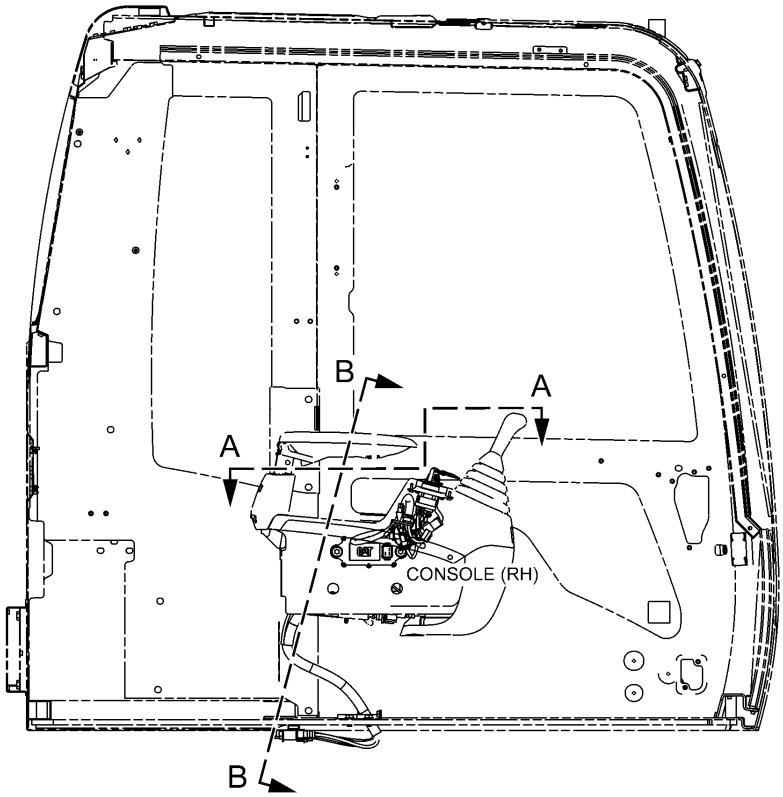


RH SIDE VIEW OF CAB

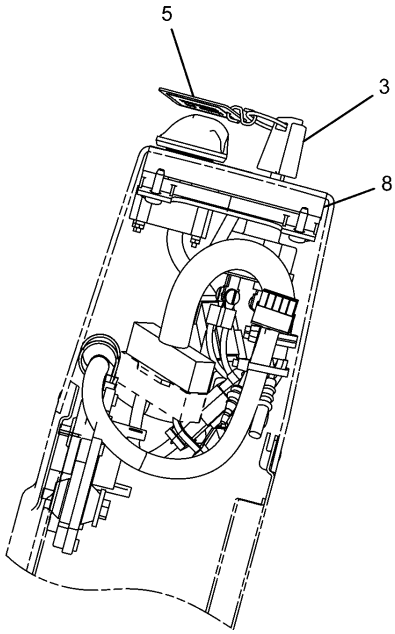


B – B

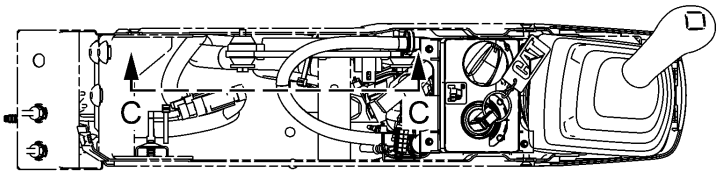


A – A

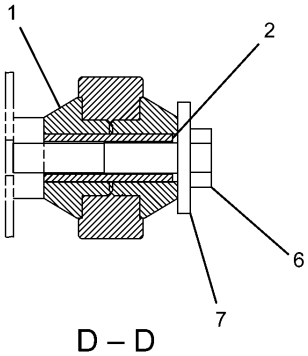


D – D

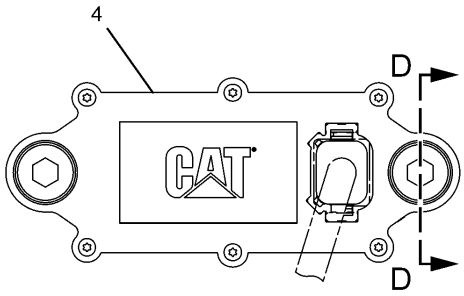


C – C

H96589E 00

**299-2831 CONTROL GP**
Machine Security System
251-0544-Page144
An Attachment

# OPERATOR STATION

| NOTE | No. | PART No. | QTY | PART NAME | NOTE | No. | PART No. | QTY | PART NAME |
|---|---|---|---|---|---|---|---|---|---|
| | 1 | 8C-5607 | 4 | MOUNT | | | | | |
| | 2 | 8C-5608 | 2 | SPACER | | | | | |
| | 3 | 206-5162 | 2 | KEY AS | | | | | |
| B | | 206-5165 | 1 | KEY AS | | | | | |
| | 4 | 218-0404 | 1 | CONTROL GP | | | | | |
| | | 6V-6715 | 1 | SCREW | | | | | |
| | | 8C-3095 | 1 | SEAL-O-RING (ID=2.57mm) | | | | | |
| | 5 | 219-6314 | 2 | TAG | | | | | |
| | 6 | 7X-2533 | 2 | BOLT (L=35mm) | | | | | |
| | 7 | 9X-6165 | 2 | WASHER | | | | | |
| Y | 8 | 251-0544 | 1 | PANEL GP | | | | | |

B—USE AS REQUIRED

Y—SEE SEPARATE ILLUSTRATION

H96589E 00

## 299-2831 CONTROL GP

Machine Security System

251-0544-Page144

An Attachment

# OPERATOR STATION

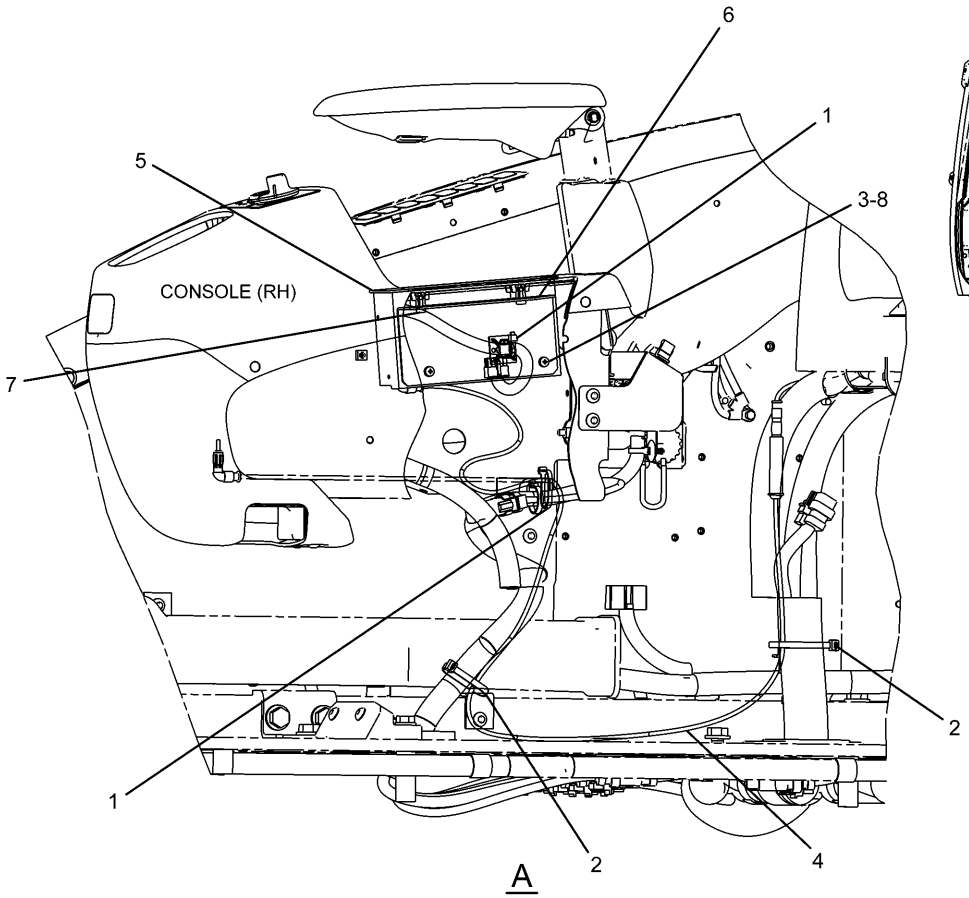


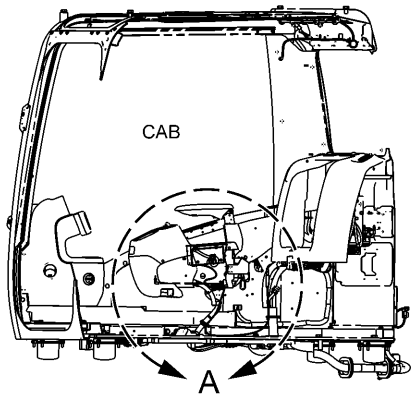


LEFT SIDE VIEW

| NOTE | No. | PART No. | QTY | PART NAME | NOTE | No. | PART No. | QTY | PART NAME |
|---|---|---|---|---|---|---|---|---|---|
| | 1 | 3S-2093 | 2 | STRAP | | | | | |
| | 2 | 7K-1181 | 2 | STRAP | | | | | |
| | 3 | 095-0736 | 2 | SCREW | | | | | |
| | 4 | 238-2260 | 1 | CABLE | | | | | |
| | 5 | 251-0537 | 1 | RADIO | | | | | |
| | 6 | 259-4914 | 1 | BRACKET AS | | | | | |
| | 7 | 119-5026 | 2 | SCREW | | | | | |
| | 8 | 8T-0328 | 2 | WASHER | | | | | |

H91219E 01

**251-0536 RADIO GP-AM/FM**
An Attachment

# OPERATOR STATION

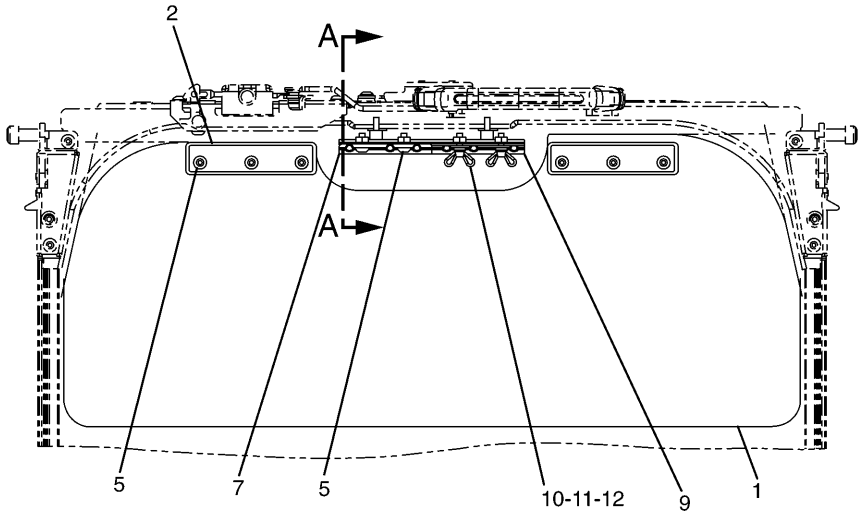


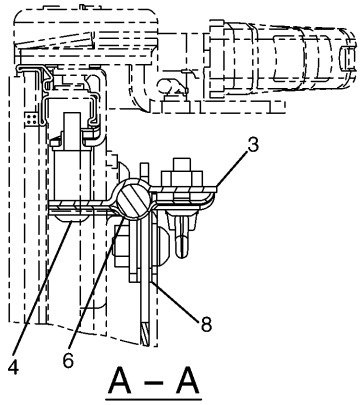


A – A

| NOTE | No. | PART No. | QTY | PART NAME | NOTE | No. | PART No. | QTY | PART NAME |
|---|---|---|---|---|---|---|---|---|---|
| | 1 | 210-5836 | 1 | VISOR | | | | | |
| | 2 | 210-5837 | 2 | STRIP | | | | | |
| | 3 | 164-0639 | 1 | BRACKET AS | | | | | |
| | 4 | 9X-2046 | 2 | SCREW | | | | | |
| | 5 | 9X-2044 | 8 | SCREW | | | | | |
| | 6 | 210-5834 | 1 | BRACKET AS | | | | | |
| | 7 | 210-5828 | 1 | PLATE | | | | | |
| | 8 | 210-5838 | 4 | PACKING | | | | | |
| | 9 | 210-5827 | 1 | PLATE | | | | | |
| | 10 | 210-5829 | 2 | BOLT | | | | | |
| | 11 | 8H-3481 | 2 | LOCKWASHER | | | | | |
| | 12 | 9X-8256 | 2 | WASHER | | | | | |

H78643E 04

**161-3751 VISOR GP-SUN**
An Attachment

# OPERATOR STATION

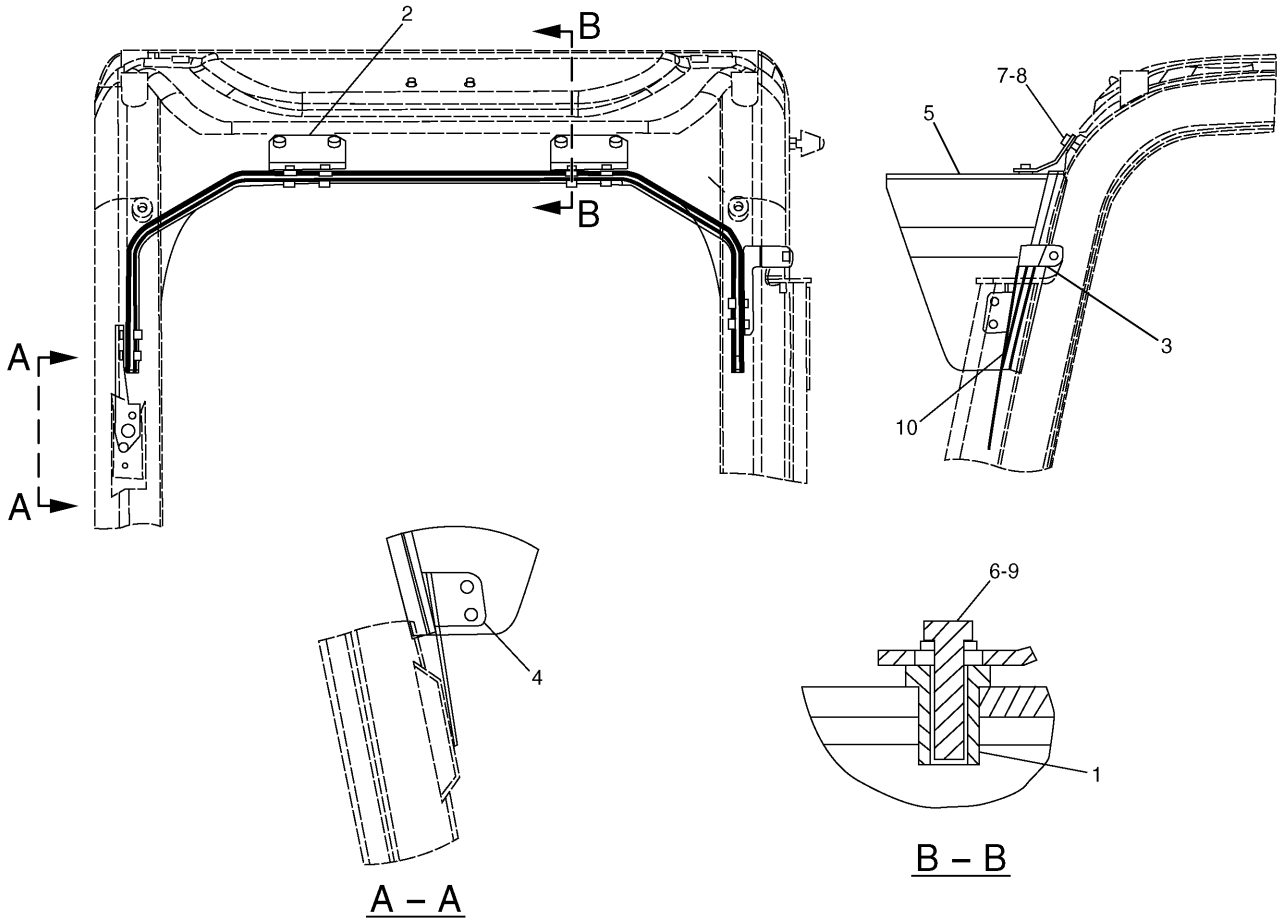


| NOTE | No. | PART No. | QTY | PART NAME | NOTE | No. | PART No. | QTY | PART NAME |
|---|---|---|---|---|---|---|---|---|---|
| | 1 | 4I-5049 | 8 | NUT | | | | | |
| | 2 | 164-0618 | 2 | BRACKET | | | | | |
| | 3 | 164-0619 | 1 | BRACKET | | | | | |
| | 4 | 164-0620 | 1 | BRACKET | | | | | |
| | 5 | 164-0621 | 1 | VISOR | | | | | |
| | 6 | 6V-7357 | 8 | BOLT (L=25mm) | | | | | |
| | 7 | 8T-4189 | 4 | BOLT (L=20mm) | | | | | |
| | 8 | 8T-4224 | 4 | WASHER | | | | | |
| | 9 | 9X-8256 | 8 | WASHER | | | | | |
| D | 10 | 5P-8292 | | SEAL…(1.4m) | | | | | |

D—ORDER BY THE METER

H72014E 03

**161-3750 VISOR GP-PROTECTION-RAIN**
An Attachment

# OPERATOR STATION

Consists of :

| | | | Page |
|---|---|---|---|
| 1 | 164-0497 | GUARD GP-OVERHEAD ..... | 656 |
| 1 | 171-7485 | GUARD GP-FRONT WINDOW ..... | 658 |

H68609E 00

**178-5549 GUARD AR-OVERHEAD**
An Attachment

# OPERATOR STATION

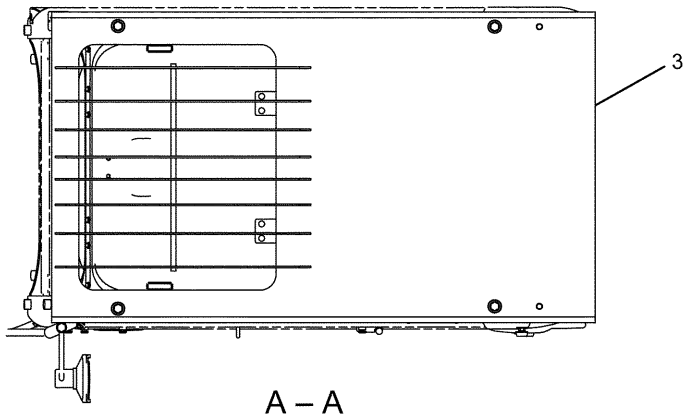


A – A

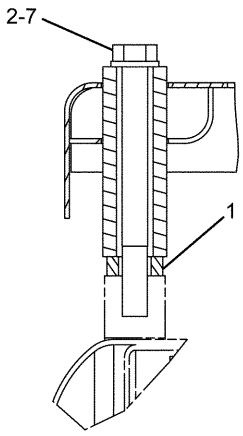


B – B

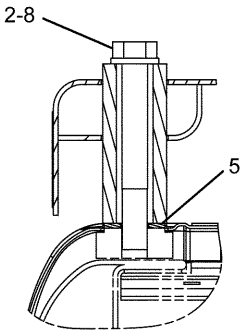


C – C

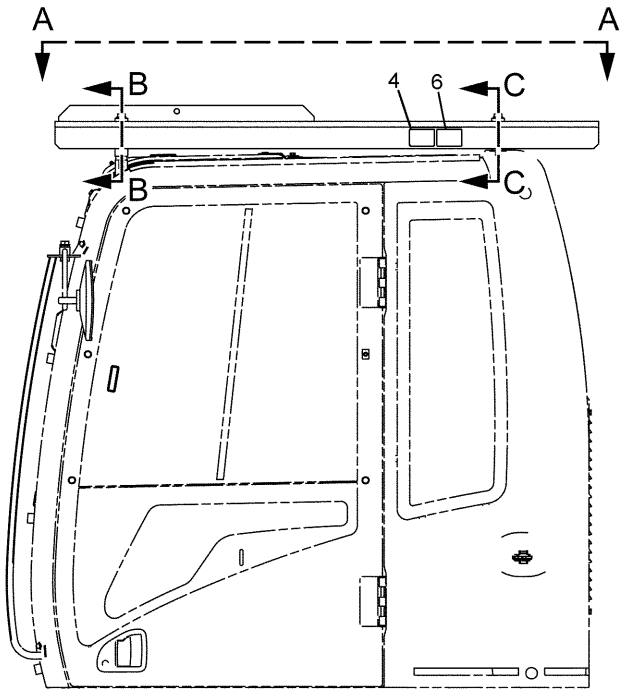


LEFT SIDE VIEW

| NOTE | No. | PART No. | QTY | PART NAME | NOTE | No. | PART No. | QTY | PART NAME |
|---|---|---|---|---|---|---|---|---|---|
| | 1 | 8V-1715 | 2 | SPACER | | | | | |
| | 2 | 9X-8257 | 4 | WASHER | | | | | |
| | 3 | 167-7141 | 1 | GUARD AS | | | | | |
| B | 5 | 090-8865 | 2 | SPACER | | | | | |
| | 6 | 298-4255 | 1 | FILM (TOP GUARD) | | | | | |
| | 7 | 7X-2559 | 2 | BOLT (L=160mm) | | | | | |
| | 8 | 8T-4174 | 2 | BOLT (L=120mm) | | | | | |

B—USE AS REQUIRED

H96770E 03

## 164-0497 GUARD GP-OVERHEAD

Part of 178-5549-Page655
An Attachment

# MEMORANDA

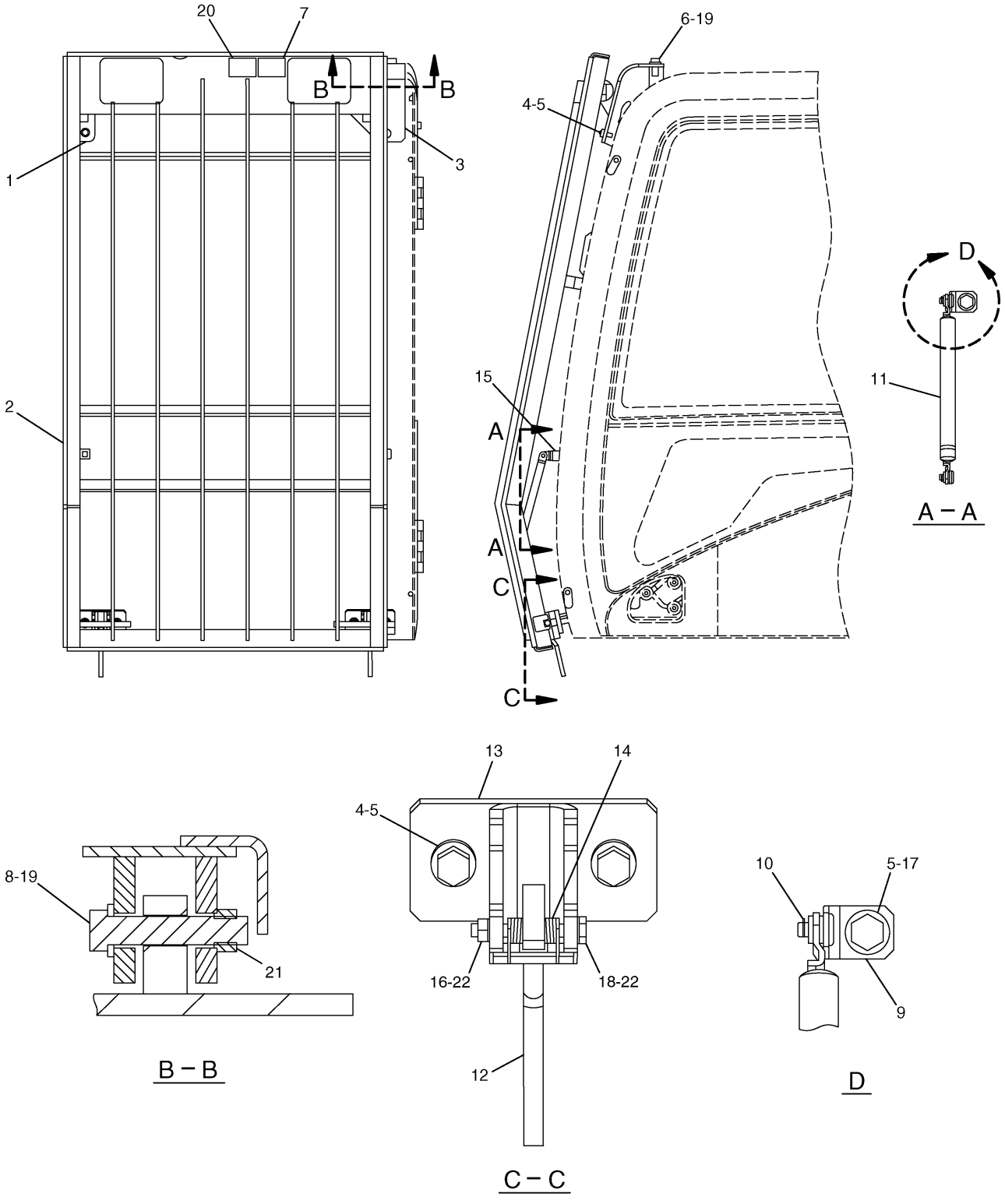


H96802E 07

**171-7485 GUARD GP-FRONT WINDOW**
Part of 178-5549-Page655
An Attachment

# OPERATOR STATION

| NOTE | No. | PART No. | QTY | PART NAME | NOTE | No. | PART No. | QTY | PART NAME |
|---|---|---|---|---|---|---|---|---|---|
| | 1 | 196-1571 | 1 | SUPPORT AS | | | | | |
| | 2 | 171-7486 | 1 | GUARD AS | | | | | |
| | 3 | 196-1569 | 1 | SUPPORT AS | | | | | |
| | 4 | 8T-4139 | 6 | BOLT (L=30mm) | | | | | |
| | 5 | 8T-4223 | 8 | WASHER | | | | | |
| | 6 | 7X-2553 | 2 | BOLT (L=40mm) | | | | | |
| | 7 | 298-4254 | 1 | FILM (FRONT GUARD) | | | | | |
| | 8 | 201-4534 | 2 | PIN | | | | | |
| | 9 | 176-1928 | 2 | BRACKET AS | | | | | |
| | 10 | 5D-4822 | 4 | RING | | | | | |
| | 11 | 176-1925 | 2 | SPRING AS | | | | | |
| | 12 | 196-1572 | 2 | LATCH AS | | | | | |
| | 13 | 258-0330 | 2 | BRACKET AS | | | | | |
| | 14 | 6C-8382 | 2 | SPRING | | | | | |
| | 16 | 096-4882 | 2 | NUT | | | | | |
| | 17 | 8T-4192 | 2 | BOLT (L=25mm) | | | | | |
| | 18 | 201-4535 | 2 | PIN | | | | | |
| | 19 | 9X-8257 | 4 | WASHER | | | | | |
| | 20 | 219-0305 | 1 | FILM (WARNING) | | | | | |
| | 21 | 7Y-0623 | 2 | NUT | | | | | |
| | 22 | 8T-4224 | 4 | WASHER | | | | | |

H96802E 07

## 171-7485 GUARD GP-FRONT WINDOW

Part of 178-5549-Page655
An Attachment

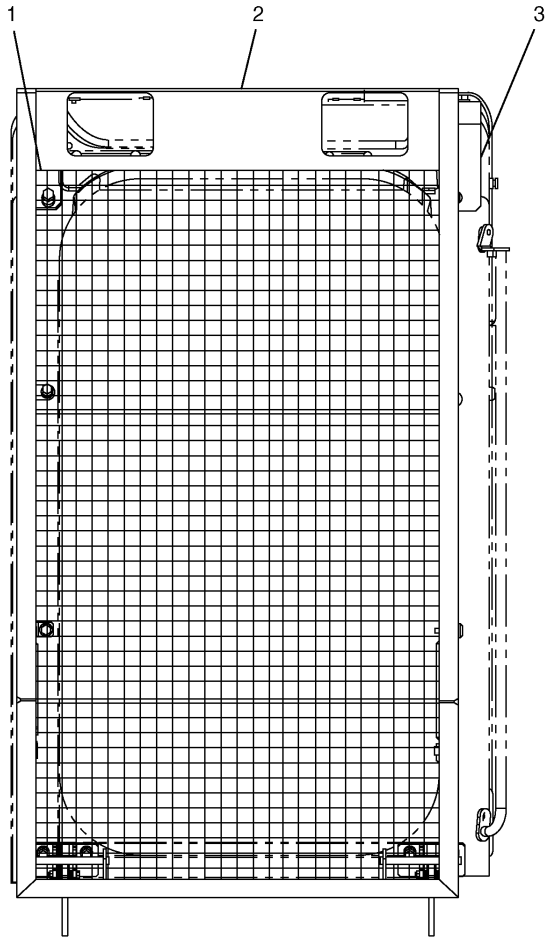


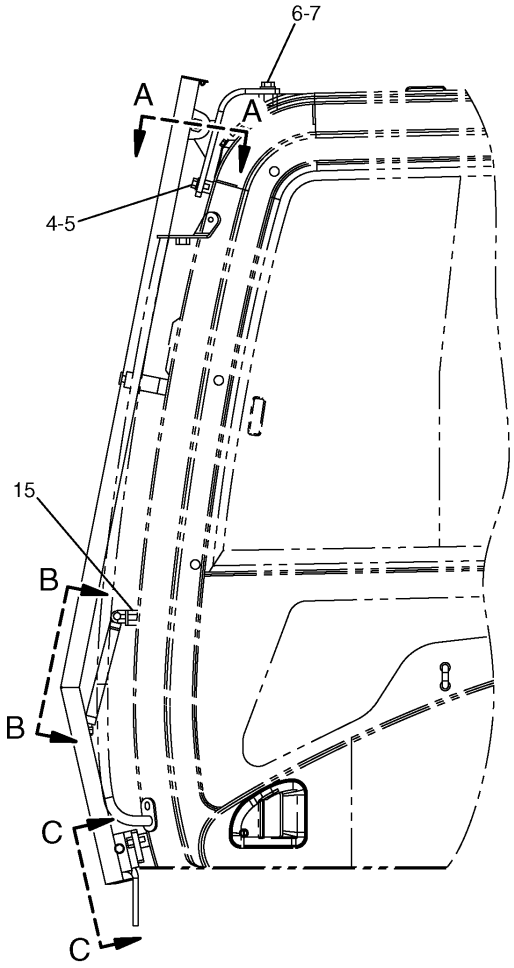


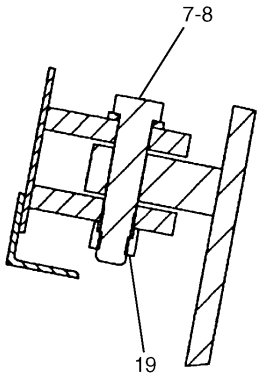


A – A

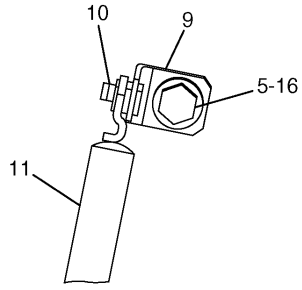


B – B

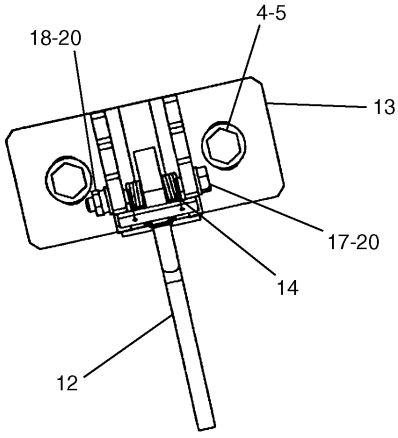


C – C

H88095E 06

**164-0534 GUARD GP-FRONT WINDOW**
An Attachment

# OPERATOR STATION

| NOTE | No. | PART No. | QTY | PART NAME | NOTE | No. | PART No. | QTY | PART NAME |
|---|---|---|---|---|---|---|---|---|---|
| | 1 | 196-1571 | 1 | SUPPORT AS | | | | | |
| | 2 | 196-1599 | 1 | FRAME AS | | | | | |
| | 3 | 196-1569 | 1 | SUPPORT AS | | | | | |
| | 4 | 8T-4139 | 6 | BOLT (L=30mm) | | | | | |
| | 5 | 8T-4223 | 8 | WASHER | | | | | |
| | 6 | 7X-2553 | 2 | BOLT (L=40mm) | | | | | |
| | 7 | 9X-8257 | 4 | WASHER | | | | | |
| | 8 | 201-4534 | 2 | PIN | | | | | |
| | 9 | 176-1928 | 2 | BRACKET AS | | | | | |
| | 10 | 5D-4822 | 4 | RING | | | | | |
| | 11 | 207-0216 | 2 | SPRING AS | | | | | |
| | 12 | 196-1572 | 2 | LATCH AS | | | | | |
| | 13 | 258-0330 | 2 | BRACKET AS | | | | | |
| | 14 | 6C-8382 | 2 | SPRING | | | | | |
| | 15 | 4I-6602 | 8 | BOSS | | | | | |
| | 16 | 8T-4192 | 2 | BOLT (L=25mm) | | | | | |
| | 17 | 201-4535 | 2 | PIN | | | | | |
| | 18 | 096-4882 | 2 | NUT | | | | | |
| | 19 | 7Y-0623 | 2 | NUT | | | | | |
| | 20 | 8T-4224 | 4 | WASHER | | | | | |

H88095E 06

## 164-0534 GUARD GP-FRONT WINDOW
An Attachment

# OPERATOR STATION

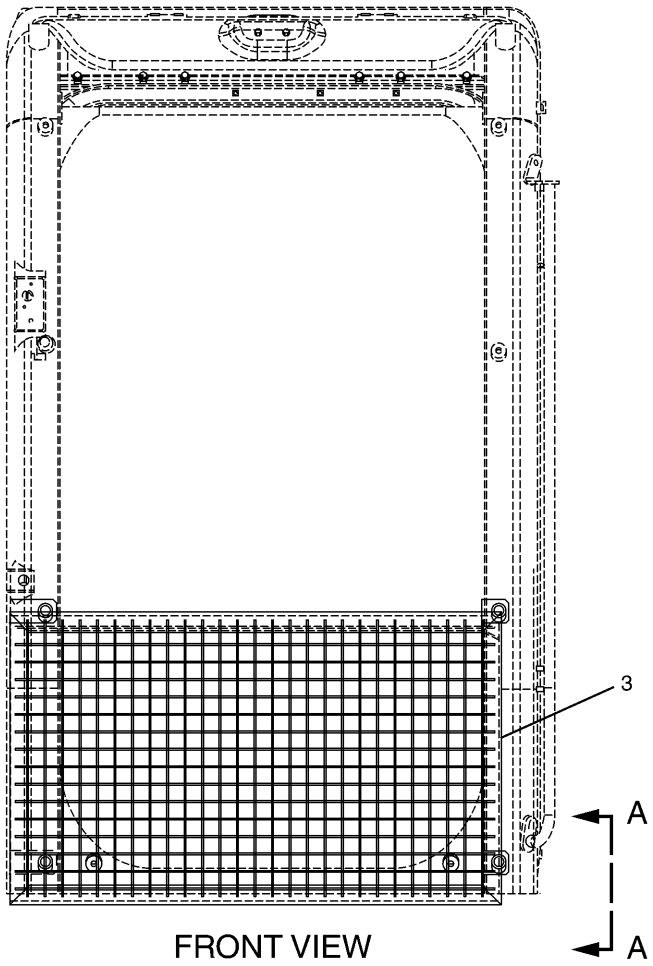


FRONT VIEW

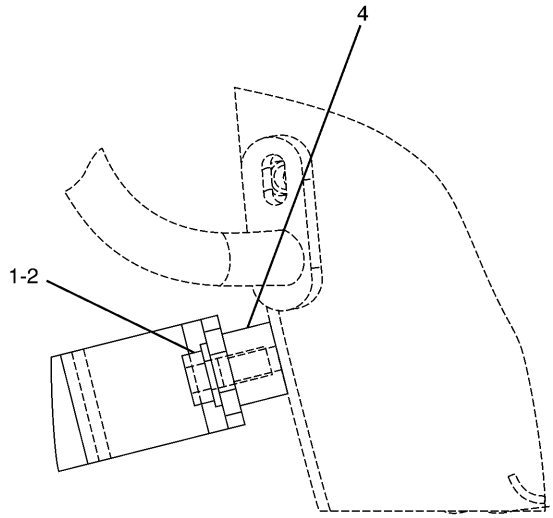


A – A

| NOTE | No. | PART No. | QTY | PART NAME | NOTE | No. | PART No. | QTY | PART NAME |
|---|---|---|---|---|---|---|---|---|---|
| | 1 | 8T-4192 | 4 | BOLT (L=25mm) | | | | | |
| | 2 | 8T-4223 | 4 | WASHER | | | | | |
| | 3 | 167-7055 | 1 | FRAME AS | | | | | |
| | 4 | 4I-6602 | 4 | BOSS | | | | | |

H74610E 02

**164-0535 GUARD GP-FRONT WINDOW**
An Attachment

# OPERATOR STATION

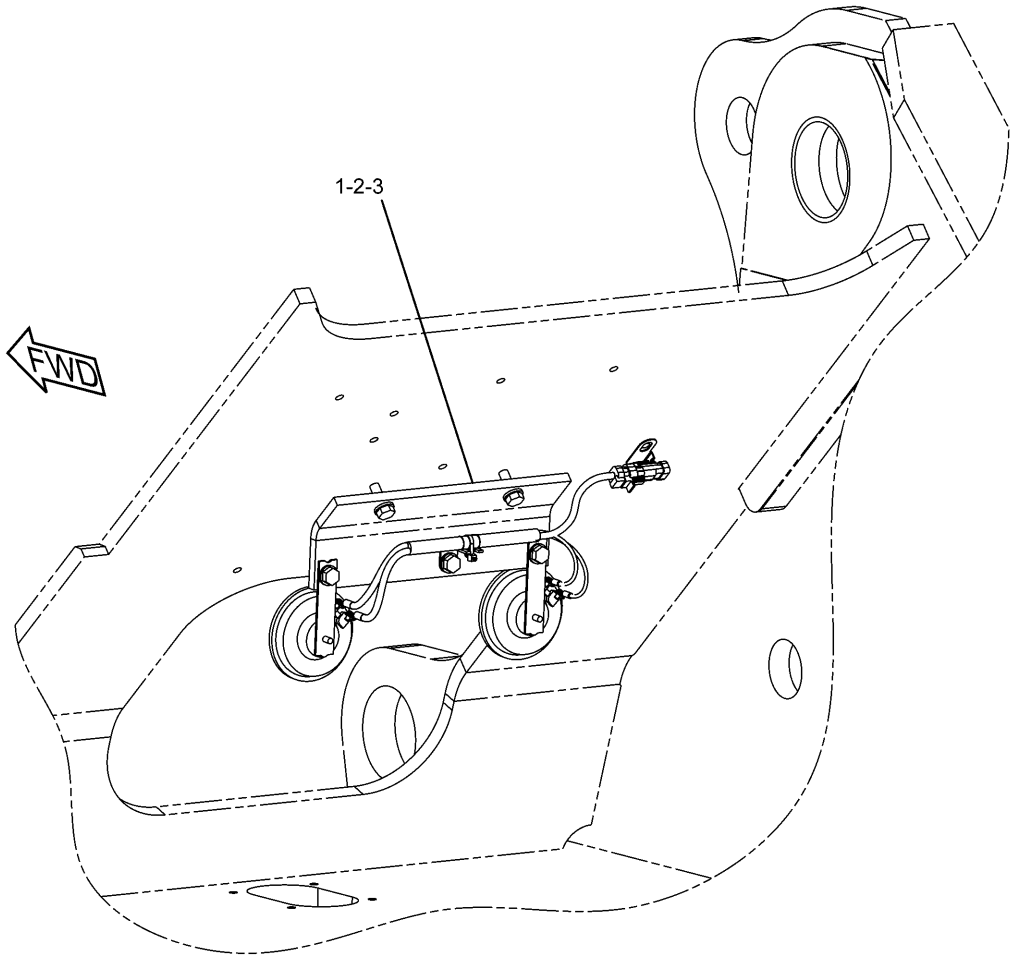


| NOTE | No. | PART No. | QTY | PART NAME | NOTE | No. | PART No. | QTY | PART NAME |
|---|---|---|---|---|---|---|---|---|---|
| Y | 1 | 291-7559 | 1 | HORN GP | | | | | |
| | 2 | 8T-4121 | 2 | WASHER | | | | | |
| | 3 | 8T-4195 | 2 | BOLT (L=30mm) | | | | | |

Y—SEE SEPARATE ILLUSTRATION

H93537E 01

**267-8071 HORN GP-ELECTRIC**
291-7559-Page664

# OPERATOR STATION

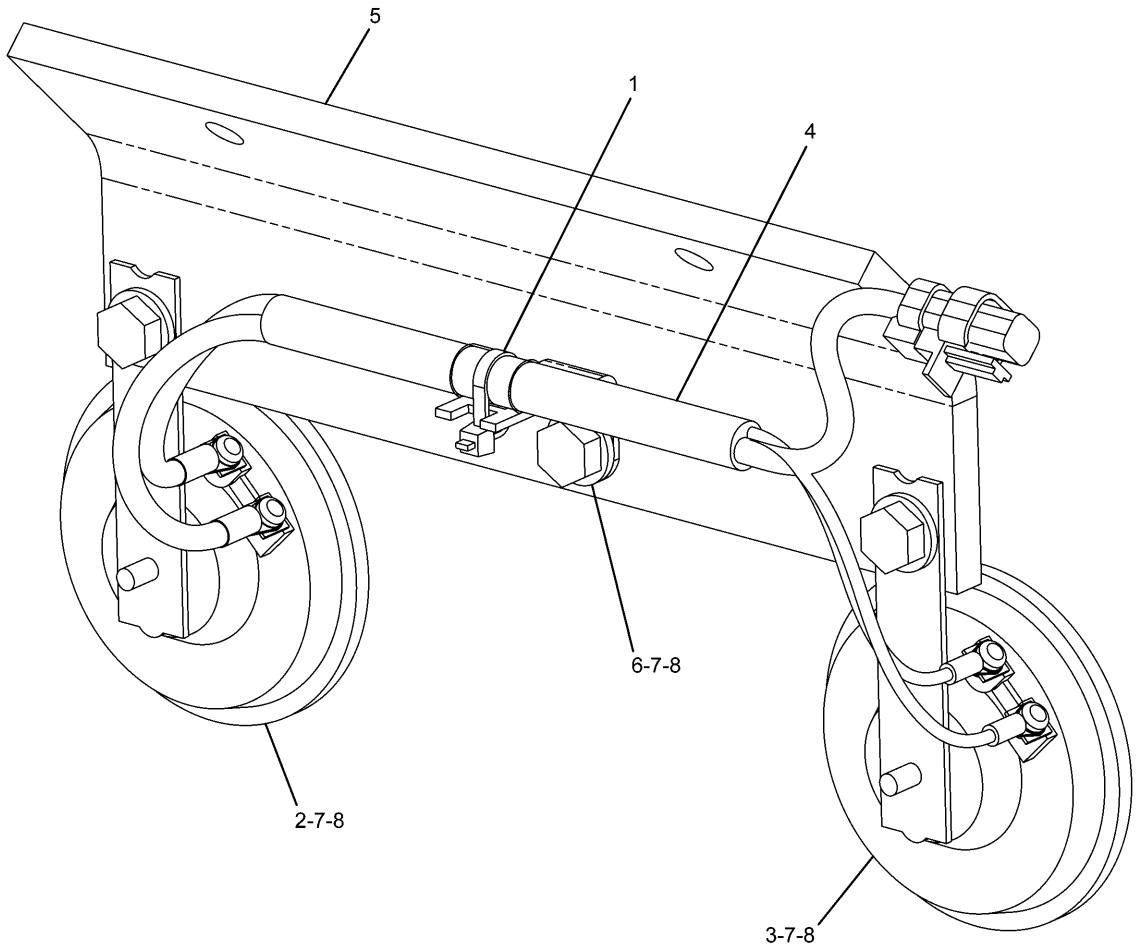


| NOTE | No. | PART No. | QTY | PART NAME | NOTE | No. | PART No. | QTY | PART NAME |
|---|---|---|---|---|---|---|---|---|---|
| | 1 | 3S-2093 | 1 | STRAP | | | | | |
| | 2 | 7Y-3919 | 1 | HORN AS | | | | | |
| | | 095-0826 | 2 | LOCKWASHER | | | | | |
| | | 095-7930 | 2 | SCREW | | | | | |
| | 3 | 7Y-3920 | 1 | HORN AS | | | | | |
| | | 095-0826 | 2 | LOCKWASHER | | | | | |
| | | 095-7930 | 2 | SCREW | | | | | |
| Y | 4 | 291-7560 | 1 | HARNESS AS | | | | | |
| | 5 | 291-7561 | 1 | BRACKET | | | | | |
| | 6 | 132-5789 | 1 | CLIP | | | | | |
| | 7 | 8T-4121 | 3 | WASHER | | | | | |
| | 8 | 8T-4191 | 3 | BOLT (L=16mm) | | | | | |

Y—SEE SEPARATE ILLUSTRATION

H93540E 00

## 291-7559 HORN GP-ELECTRIC

Part of 267-8071-Page663
291-7560-Page229

# OPERATOR STATION

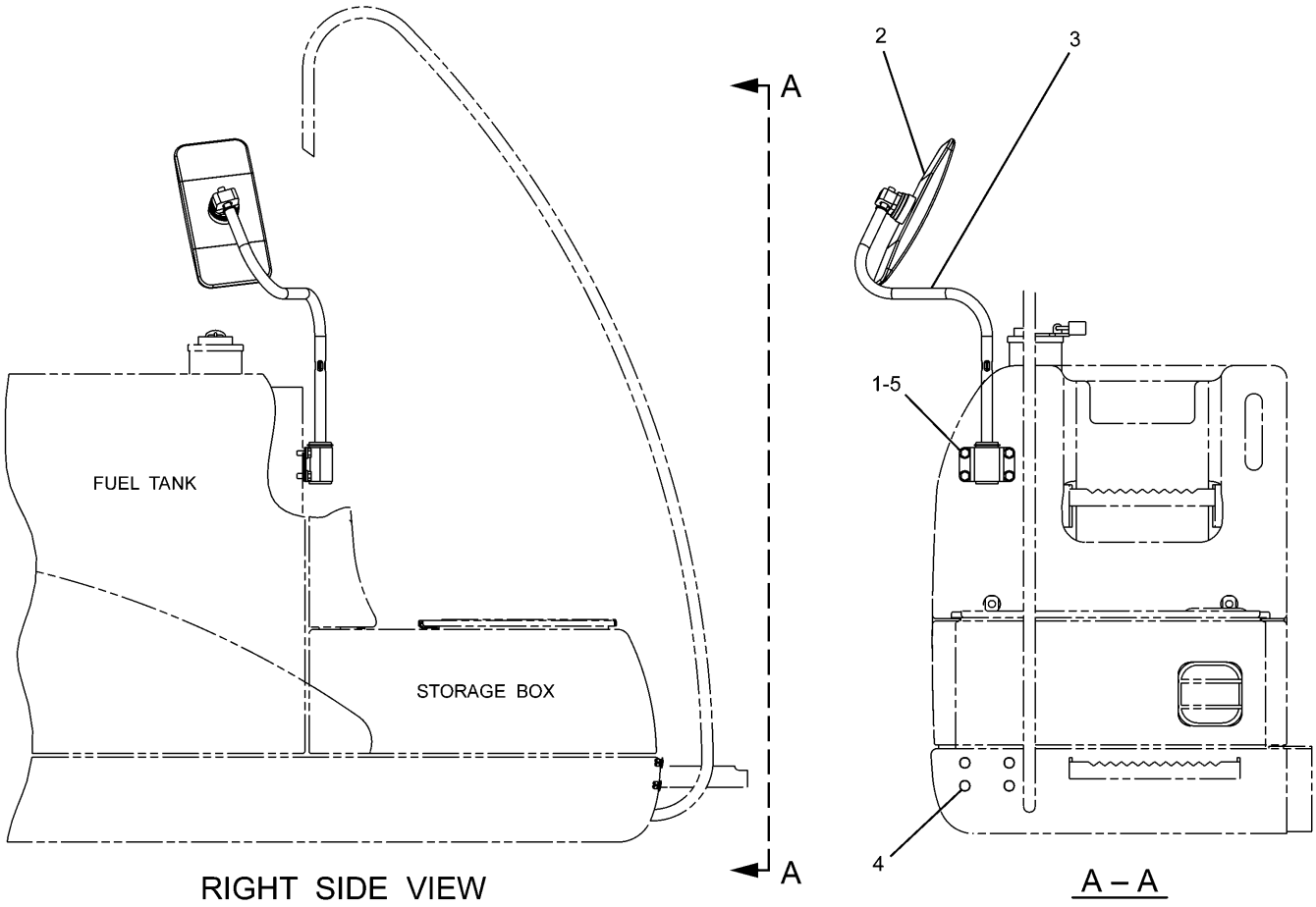


RIGHT SIDE VIEW

A – A

| NOTE | No. | PART No. | QTY | PART NAME | NOTE | No. | PART No. | QTY | PART NAME |
|---|---|---|---|---|---|---|---|---|---|
| | 1 | 2M-0849 | 4 | WASHER | | | | | |
| | 2 | 137-2270 | 1 | MIRROR | | | | | |
| | 3 | 165-3065 | 1 | BAR AS | | | | | |
| | 4 | 177-6315 | 4 | PLUG | | | | | |
| | 5 | 8T-4192 | 4 | BOLT (L=25mm) | | | | | |

H88913E 08

142-3836 MIRROR GP-REAR VIEW

# OPERATOR STATION

Consists of :

| | | | Page |
|---|---|---|---|
| 1 | 327-3191 | TANK & MTG GP-FUEL | 84.01 |
| 1 | 330-1162 | MIRROR GP | 665.02 |
| 1 | 330-1166 | FENDER & COVER GP | 261.01 |
| 1 | 330-1426 | HOOD GP | 250.01 |

HA0903E 00

**330-1194 MIRROR AR**
Part of 314-3734-Page665.05
An Attachment

# OPERATOR STATION

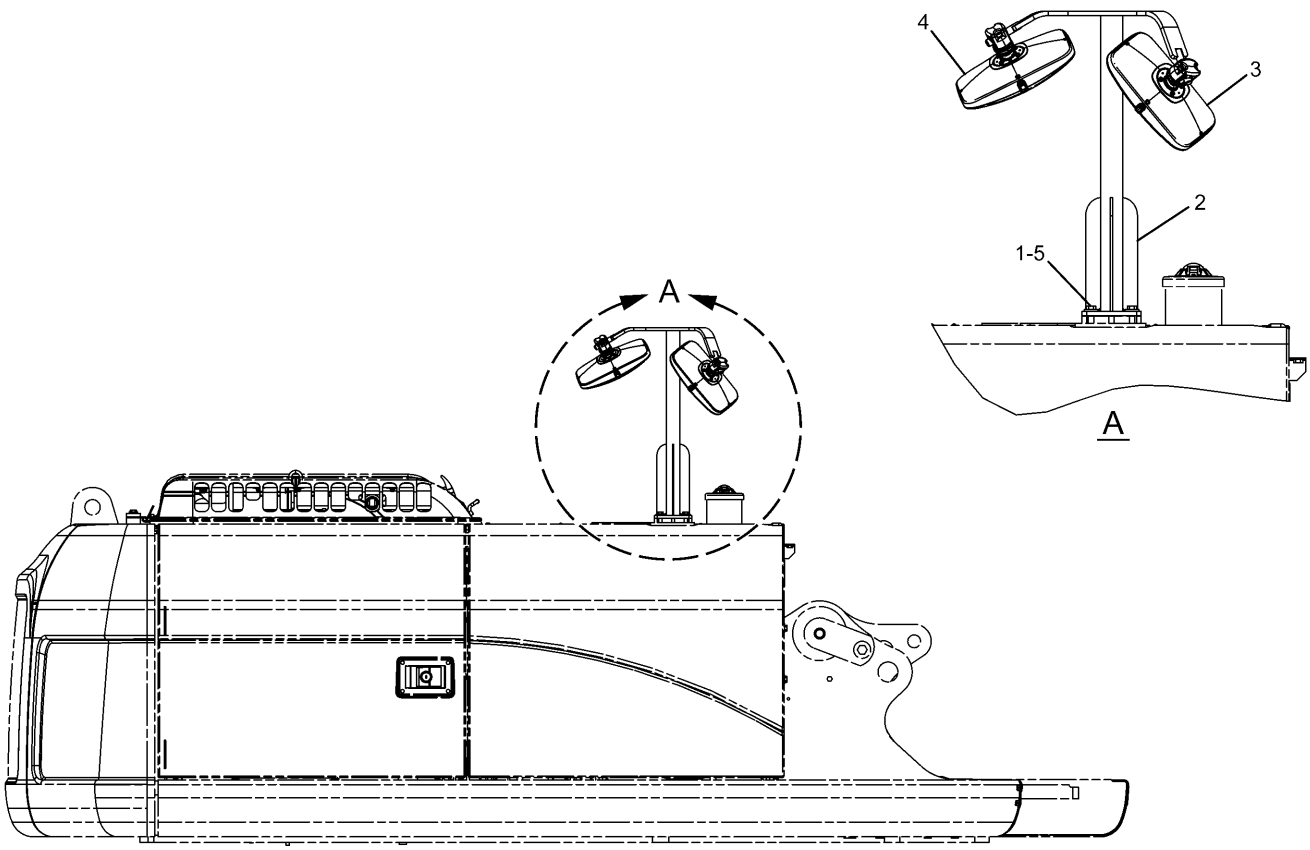


RIGHT SIDE VIEW

| NOTE | No. | PART No. | QTY | PART NAME | NOTE | No. | PART No. | QTY | PART NAME |
|---|---|---|---|---|---|---|---|---|---|
| | 1 | 8T-4139 | 3 | BOLT (L=30mm) | | | | | |
| | 2 | 320-5525 | 1 | PIPE AS | | | | | |
| | 3 | 327-3062 | 1 | MIRROR GP | | | | | |
| | | 8T-0269 | 2 | BOLT (L=20mm) | | | | | |
| | | 9X-8256 | 2 | WASHER | | | | | |
| | 4 | 327-3063 | 1 | MIRROR GP | | | | | |
| | | 8T-0269 | 2 | BOLT (L=20mm) | | | | | |
| | | 9X-8256 | 2 | WASHER | | | | | |
| | 5 | 5P-1076 | 3 | WASHER | | | | | |

HA0818E 00

**330-1162 MIRROR GP**
Side
Part of 330-1194-Page665.01
An Attachment

# OPERATOR STATION

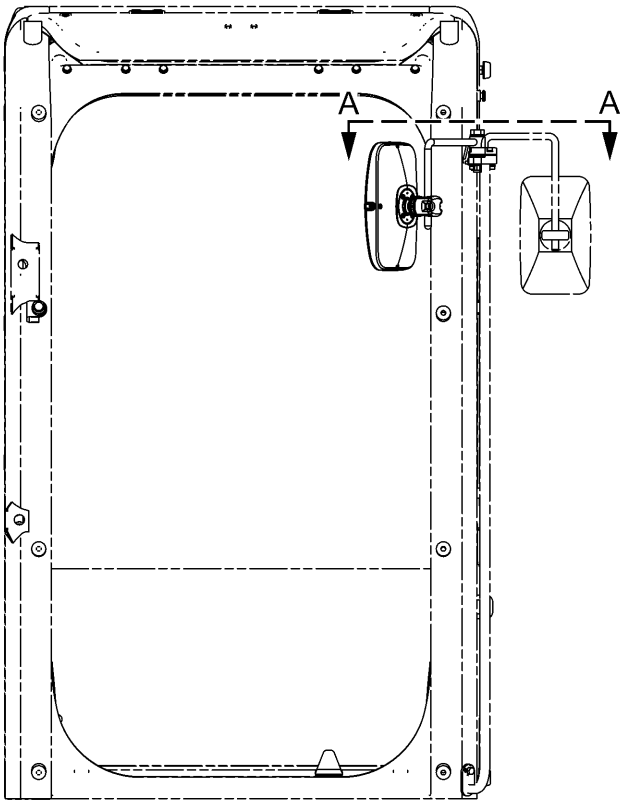


FRONT VIEW

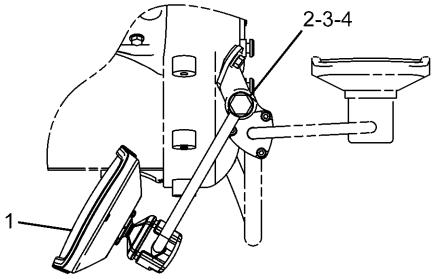


A – A

| NOTE | No. | PART No. | QTY | PART NAME | NOTE | No. | PART No. | QTY | PART NAME |
|---|---|---|---|---|---|---|---|---|---|
| | 1 | 327-6550 | 1 | MIRROR GP | | | | | |
| | | 8T-0269 | 2 | BOLT (L=20mm) | | | | | |
| | | 9X-8256 | 2 | WASHER | | | | | |
| | 2 | 327-6576 | 1 | SUPPORT AS | | | | | |
| | 3 | 7X-2555 | 1 | BOLT (L=80mm) | | | | | |
| | 4 | 9X-8257 | 1 | WASHER | | | | | |

HA0801E 00

**327-6552 MIRROR GP**
With Out Cab Guard
An Attachment

# OPERATOR STATION

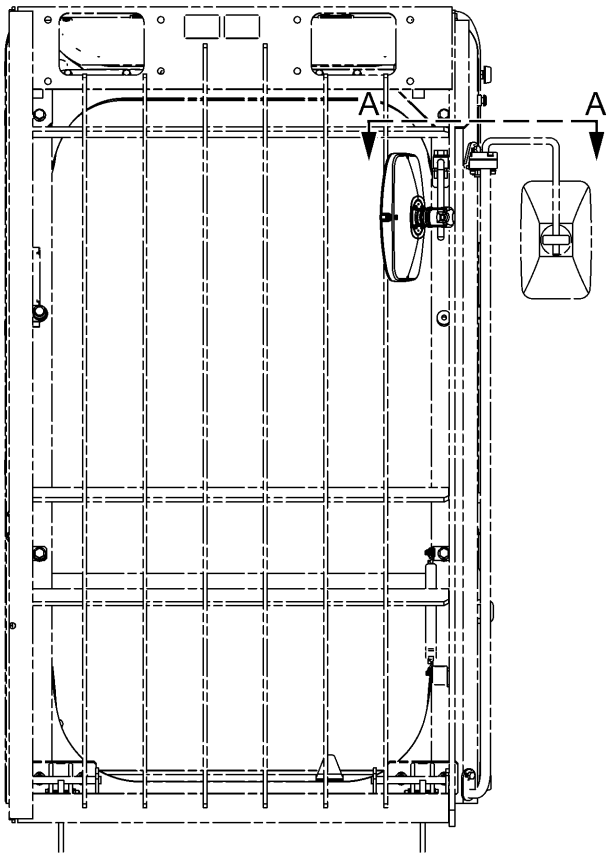


FRONT VIEW

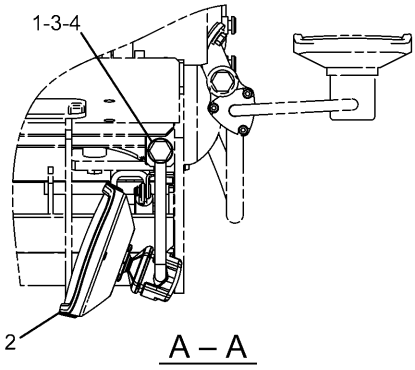


A – A

| NOTE | No. | PART No. | QTY | PART NAME | NOTE | No. | PART No. | QTY | PART NAME |
|---|---|---|---|---|---|---|---|---|---|
| | 1 | 316-8989 | 1 | SUPPORT AS | | | | | |
| | 2 | 327-6550 | 1 | MIRROR GP | | | | | |
| | | 8T-0269 | 2 | BOLT (L=20mm) | | | | | |
| | | 9X-8256 | 2 | WASHER | | | | | |
| | 3 | 8T-4193 | 1 | BOLT (L=50mm) | | | | | |
| | 4 | 9X-8257 | 1 | WASHER | | | | | |

HA0802E 00

**327-6553 MIRROR GP**
With Cab Guard
An Attachment

# OPERATOR STATION

Consists of :

| | | | Page |
|---|---|---|---|
| 1 | 314-3740 | INSTALLATION AR | 665.05 |
| 1 | 330-1194 | MIRROR AR | 665.01 |

HA1566E 00

## 314-3734 INSTALLATION AR
An Attachment

Consists of :

| | | | Page |
|---|---|---|---|
| 1 | 324-5774 | WIRING GP | 189.01 |
| 1 | 327-3329 | MOUNTING GP | 665.06 |
| 1 | 328-0048 | WIRING GP-CAB | 189.03 |

HA0902E 00

## 314-3740 INSTALLATION AR
Part of 314-3734-Page665.05
An Attachment

# OPERATOR STATION

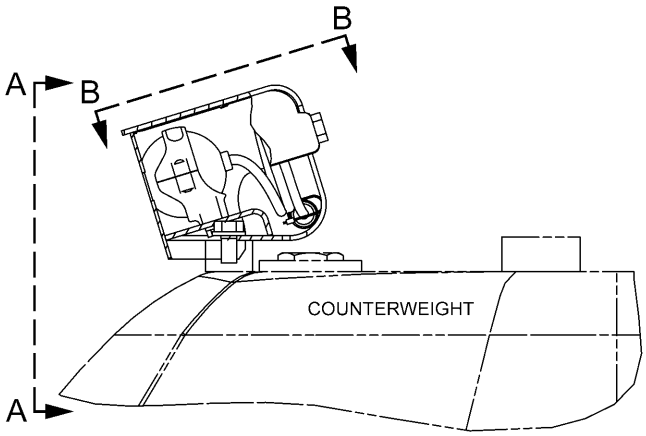


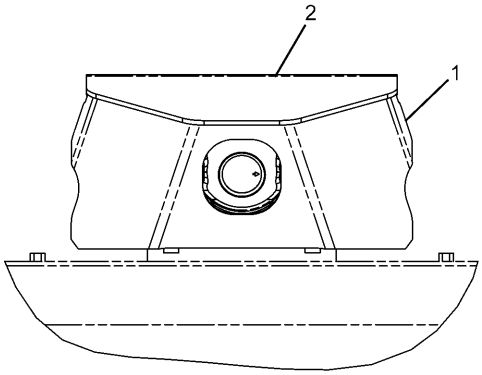


A – A

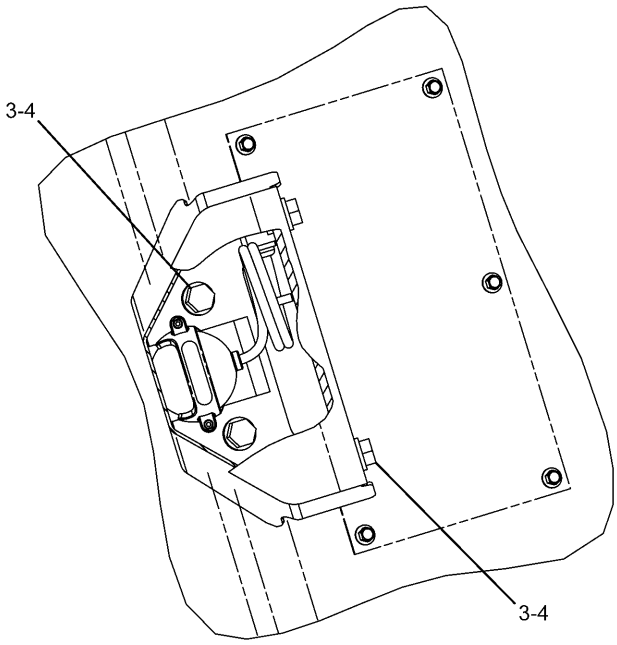


B – B

| NOTE | No. | PART No. | QTY | PART NAME | NOTE | No. | PART No. | QTY | PART NAME |
|---|---|---|---|---|---|---|---|---|---|
| Y | 1 | 313-7833 | 1 | BRACKET GP | | | | | |
| | 2 | 320-5396 | 1 | COVER | | | | | |
| | 3 | 8T-4121 | 4 | WASHER | | | | | |
| | 4 | 8T-4137 | 4 | BOLT (L=20mm) | | | | | |

Y—SEE SEPARATE ILLUSTRATION

HA0797E 00

## 327-3329 MOUNTING GP

Part of 314-3740-Page665.05
313-7833-Page665.07
An Attachment

# OPERATOR STATION

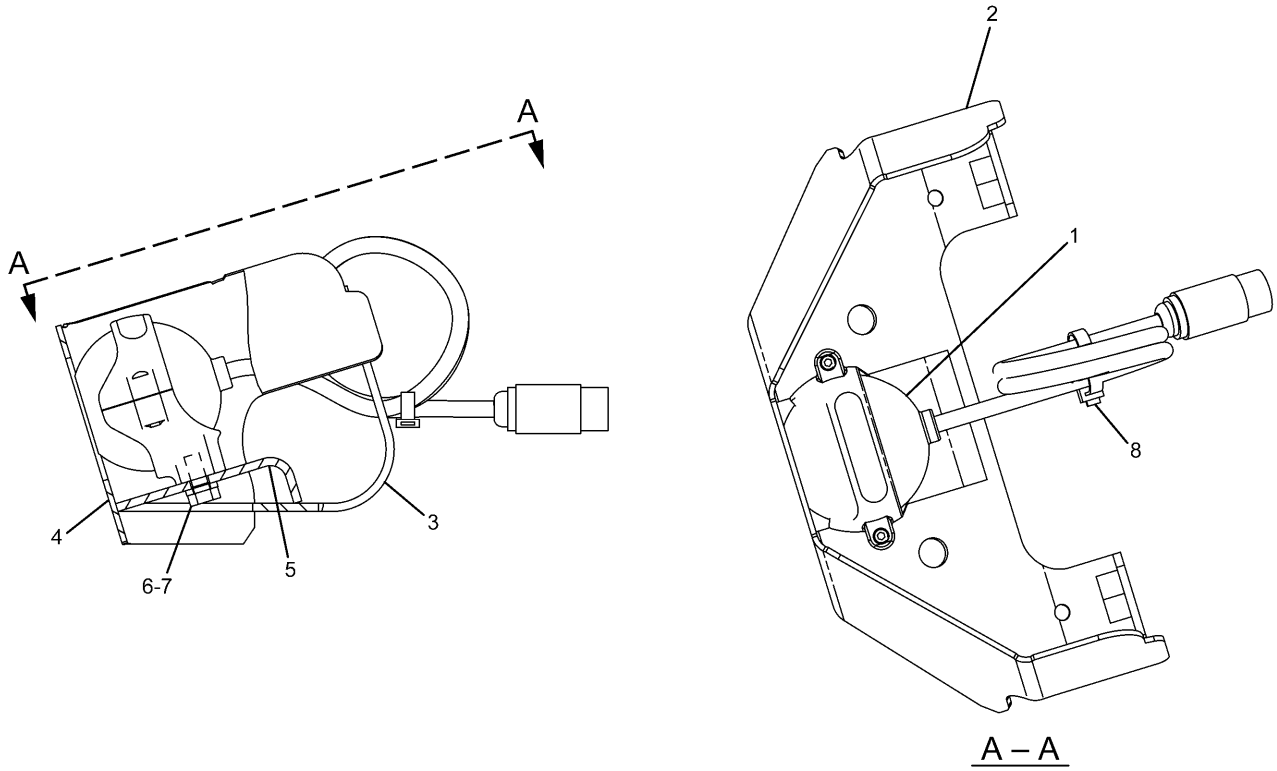


| NOTE | No. | PART No. | QTY | PART NAME | NOTE | No. | PART No. | QTY | PART NAME |
|---|---|---|---|---|---|---|---|---|---|
| | 1 | 286-4271 | 1 | CAMERA GP | | | | | |
| | | 251-4162 | 1 | CAMERA KIT | | | | | |
| | 2 | 320-5392 | 1 | BRACKET AS | | | | | |
| | 3 | 320-5393 | 1 | SHEET | | | | | |
| | 4 | 320-5394 | 1 | SHEET | | | | | |
| | 5 | 320-5395 | 1 | SHEET | | | | | |
| | 6 | 8T-4970 | 2 | BOLT (L=14mm) | | | | | |
| | 7 | 9X-8256 | 2 | WASHER | | | | | |
| | 8 | 096-0061 | 1 | STRAP | | | | | |

HA0798E 03

**313-7833 BRACKET GP-MTG**
Part of 327-3329-Page665.06
An Attachment

# MEMORANDA

# OPERATOR STATION

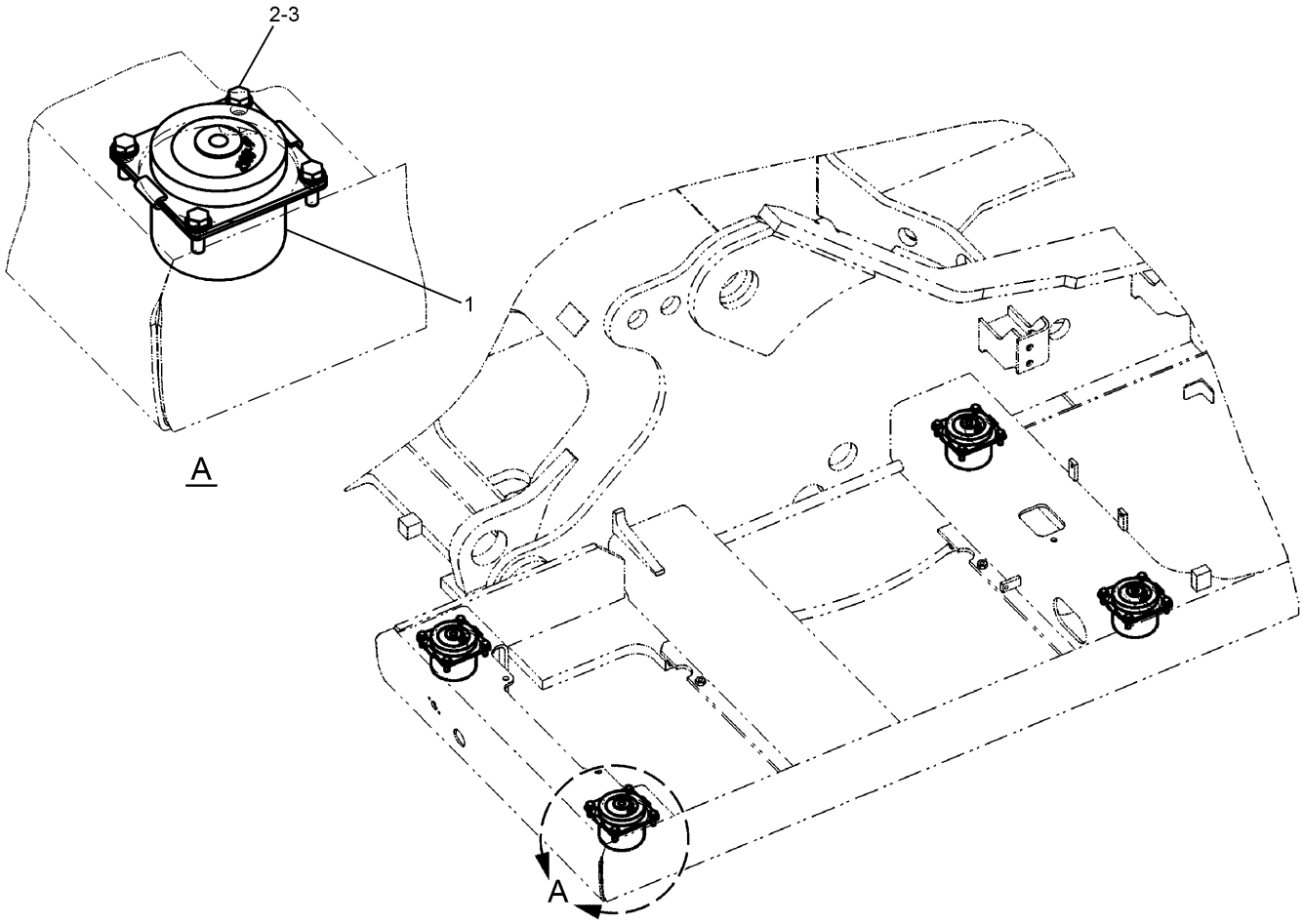


| NOTE | No. | PART No. | QTY | PART NAME | NOTE | No. | PART No. | QTY | PART NAME |
|---|---|---|---|---|---|---|---|---|---|
| | 1 | 235-8862 | 4 | MOUNT AS | | | | | |
| | 2 | 8T-4121 | 16 | WASHER | | | | | |
| | 3 | 8T-4195 | 16 | BOLT (L=30mm) | | | | | |

H87527E 00

## 245-7811 MOUNTING GP-PLATFORM

# OPERATOR STATION

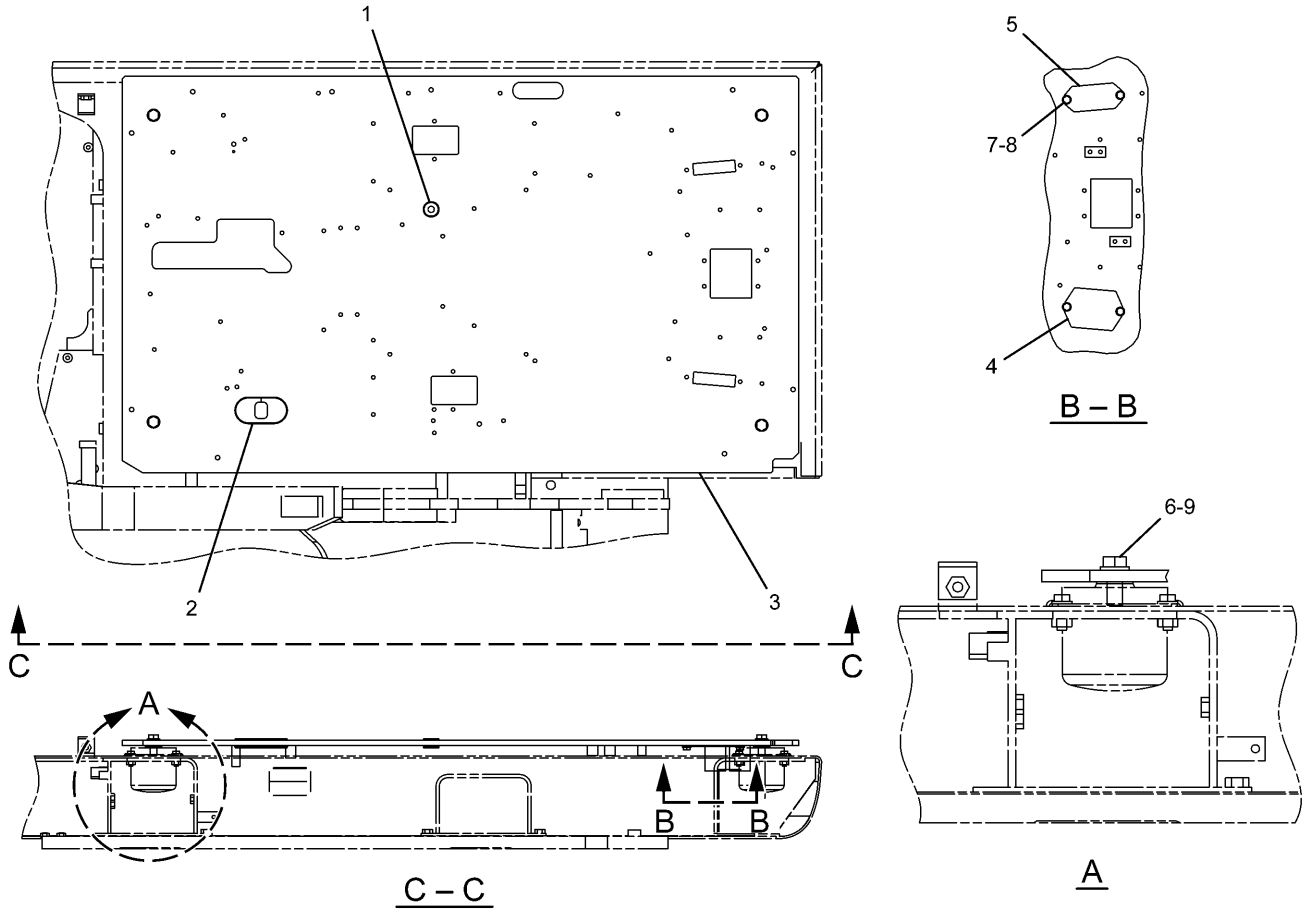


| NOTE | No. | PART No. | QTY | PART NAME | NOTE | No. | PART No. | QTY | PART NAME |
|---|---|---|---|---|---|---|---|---|---|
| | 1 | 135-8965 | 1 | GROMMET | | | | | |
| | 2 | 135-8966 | 1 | GROMMET | | | | | |
| | 3 | 245-7916 | 1 | PLATFORM AS | | | | | |
| | 4 | 161-3717 | 1 | STRIP | | | | | |
| | 5 | 4I-3266 | 1 | STRIP | | | | | |
| | 6 | 7X-2553 | 4 | BOLT (L=40mm) | | | | | |
| | 7 | 8T-4121 | 4 | WASHER | | | | | |
| | 8 | 8T-4191 | 4 | BOLT (L=16mm) | | | | | |
| | 9 | 9X-8257 | 4 | WASHER | | | | | |

H90249E 04

229-9078 PLATFORM GP-OPERATOR

# OPERATOR STATION

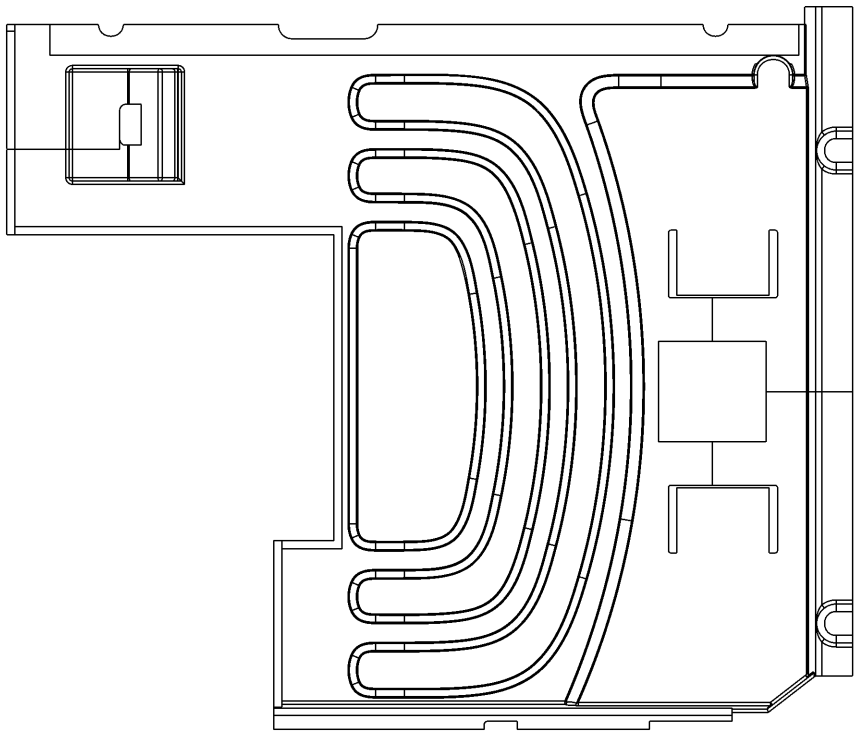

| NOTE | No. | PART No. | QTY | PART NAME | NOTE | No. | PART No. | QTY | PART NAME |
|---|---|---|---|---|---|---|---|---|---|
| | | | | | | | | | |

H93531E 04

**240-5071 FLOORMAT**
An Attachment

# OPERATOR STATION

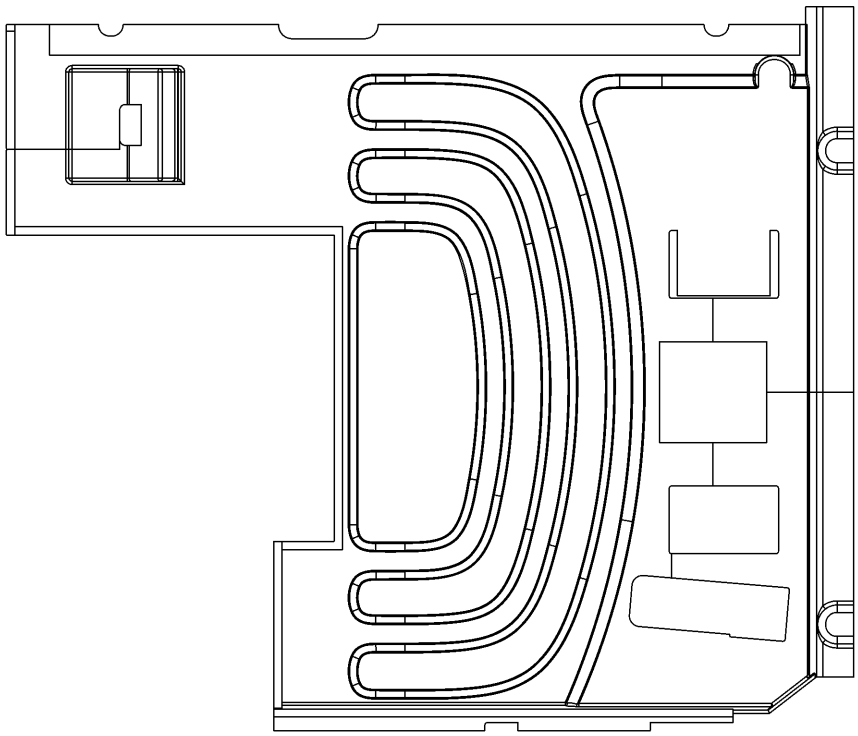

| NOTE | No. | PART No. | QTY | PART NAME | NOTE | No. | PART No. | QTY | PART NAME |
|---|---|---|---|---|---|---|---|---|---|
| | | | | | | | | | |

H93532E 05

**240-5073 FLOORMAT**
An Attachment

# OPERATOR STATION

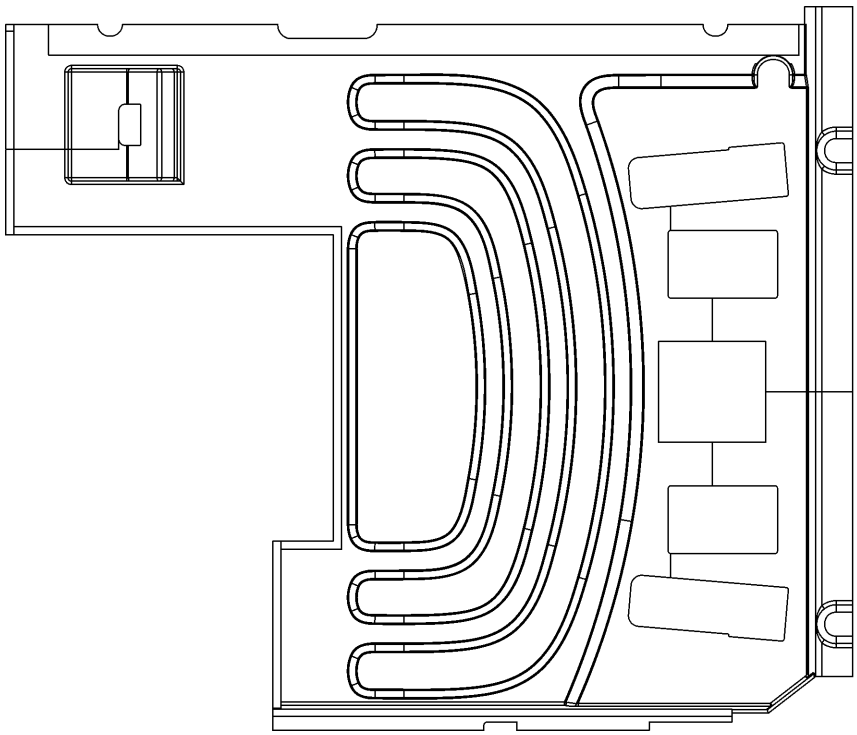

| NOTE | No. | PART No. | QTY | PART NAME | NOTE | No. | PART No. | QTY | PART NAME |
|---|---|---|---|---|---|---|---|---|---|
| | | | | | | | | | |

H93530E 04

**245-7794 FLOORMAT**
An Attachment

# OPERATOR STATION

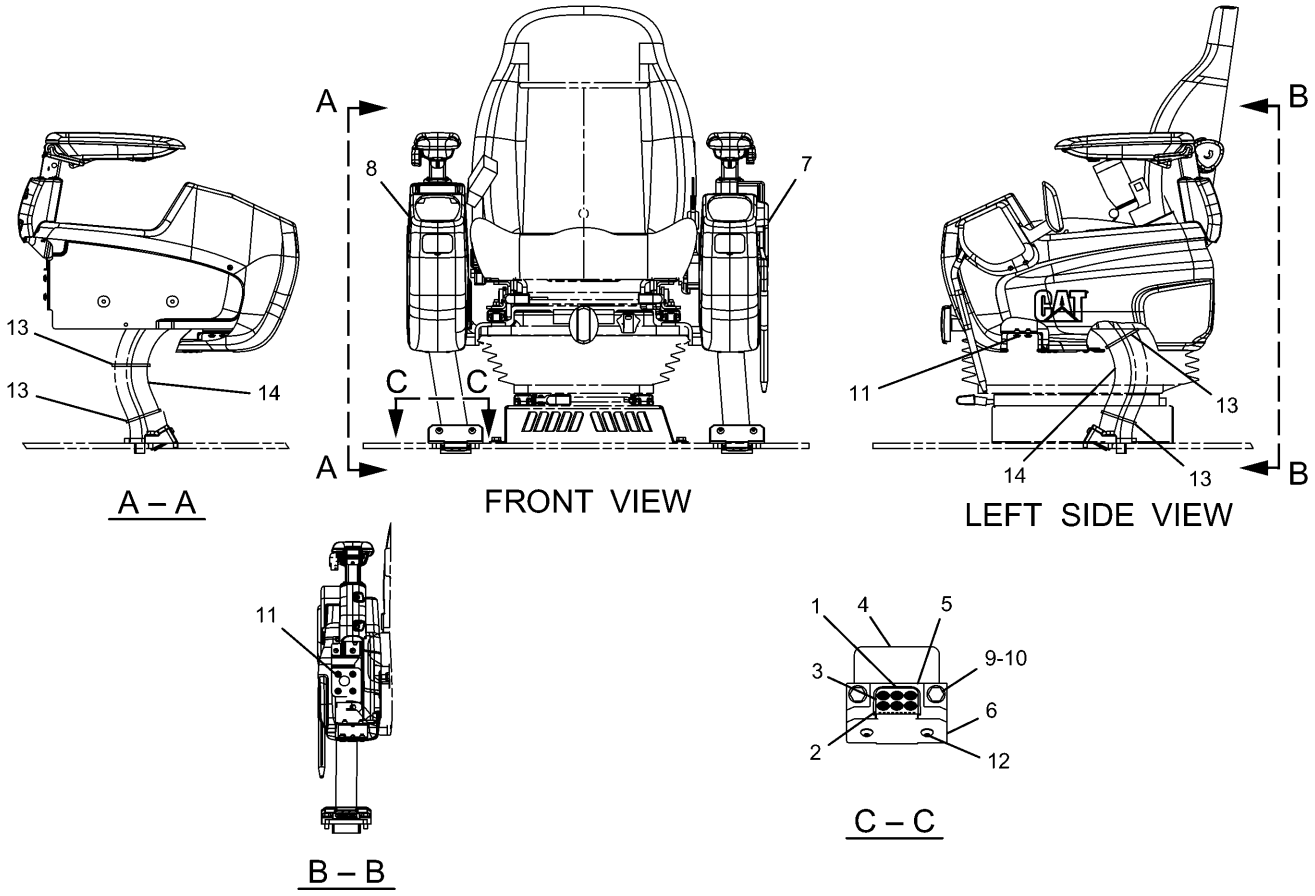


| NOTE | No. | PART No. | QTY | PART NAME | NOTE | No. | PART No. | QTY | PART NAME |
|---|---|---|---|---|---|---|---|---|---|
| | 1 | 176-1916 | 2 | GROMMET | | | | | |
| | 2 | 178-5422 | 2 | GROMMET | | | | | |
| | 3 | 178-5423 | 2 | GROMMET | | | | | |
| | 4 | 185-8161 | 2 | INSULATOR | | | | | |
| | 5 | 235-8893 | 2 | SUPPORT | | | | | |
| | 6 | 235-8894 | 2 | SUPPORT | | | | | |
| Y | 7 | 259-7349 | 1 | CONSOLE GP | | | | | |
| Y | 8 | 259-7348 | 1 | CONSOLE GP | | | | | |
| | 9 | 8T-4121 | 4 | WASHER | | | | | |
| | 10 | 8T-4195 | 4 | BOLT (L=30mm) | | | | | |
| | 11 | 9X-2043 | 16 | SCREW | | | | | |
| | 12 | 9X-2045 | 4 | SCREW | | | | | |
| | 13 | 7K-1181 | 4 | STRAP | | | | | |
| | 14 | 122-9617 | 2 | GUARD | | | | | |

Y—SEE SEPARATE ILLUSTRATION

H90257E 01

## 245-7922 CONSOLE GP-OPERATOR

259-7349-Page672,259-7348-Page674

# OPERATOR STATION

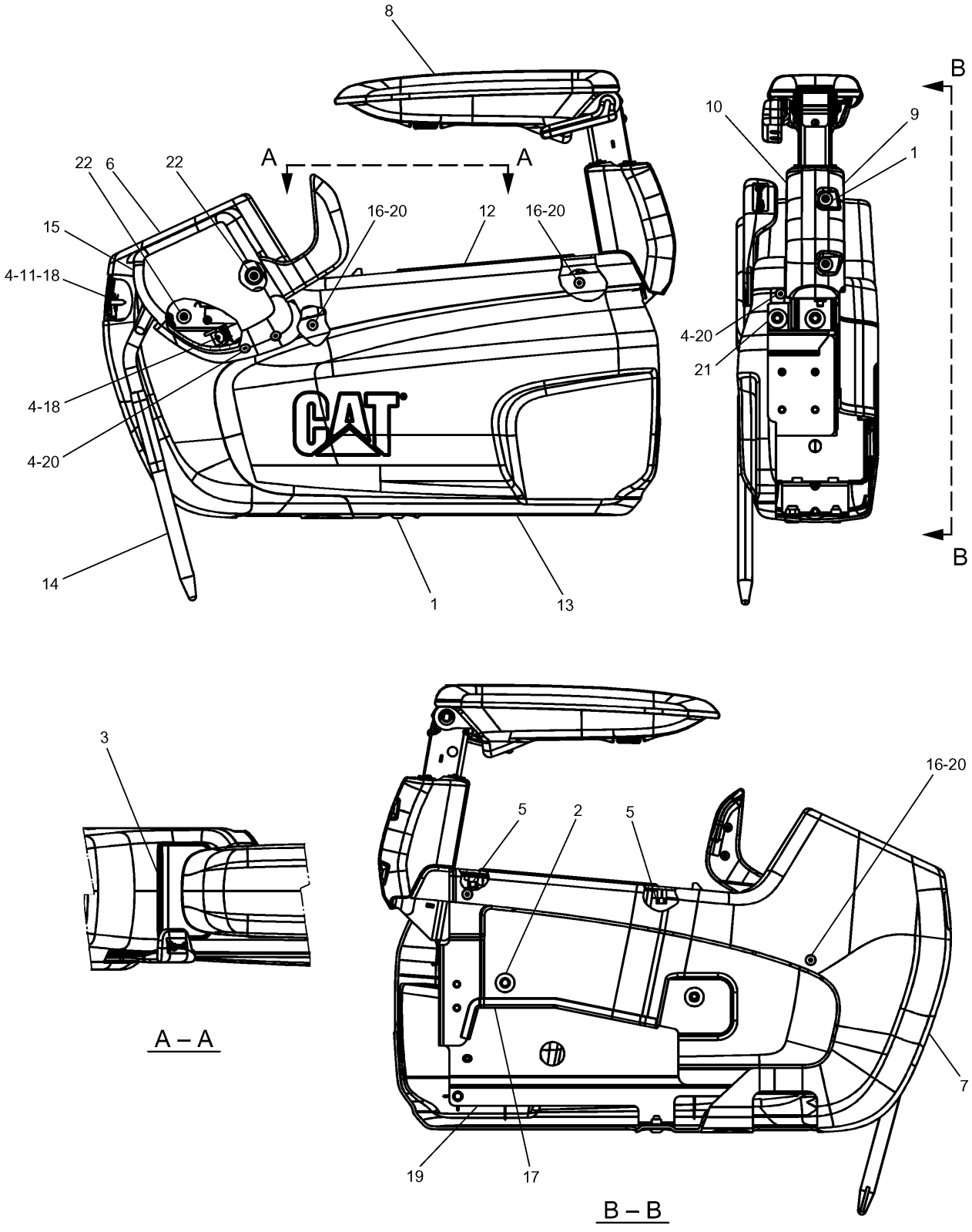


H90478E 00

**259-7349 CONSOLE GP**
Left Hand
Part of 245-7922-Page671
259-7347-Page676,234-6613-Page678

# OPERATOR STATION

| NOTE | No. | PART No. | QTY | PART NAME | NOTE | No. | PART No. | QTY | PART NAME |
|---|---|---|---|---|---|---|---|---|---|
| | 1 | 128-2135 | 5 | SCREW | | | | | |
| | 2 | 171-7325 | 3 | SCREW | | | | | |
| | 3 | 259-7202 | 1 | ASHTRAY | | | | | |
| | 4 | 234-6579 | 6 | NUT | | | | | |
| | 5 | 234-6580 | 4 | CAP | | | | | |
| | 6 | 234-6603 | 1 | COVER | | | | | |
| | 7 | 234-6605 | 1 | COVER | | | | | |
| Y | 8 | 259-7347 | 1 | ARMREST GP | | | | | |
| | 9 | 234-6608 | 1 | COVER | | | | | |
| | 10 | 234-6609 | 1 | COVER | | | | | |
| | 11 | 234-6610 | 1 | COVER | | | | | |
| | 12 | 234-6611 | 1 | CASE | | | | | |
| | 13 | 234-6612 | 1 | COVER | | | | | |
| Y | 14 | 234-6613 | 1 | LEVER AS | | | | | |
| | 15 | 234-6614 | 1 | COVER | | | | | |
| | 16 | 235-8914 | 4 | NUT | | | | | |
| | 17 | 235-8965 | 1 | GUARD | | | | | |
| | 18 | 245-7790 | 3 | SCREW | | | | | |
| | 19 | 245-7925 | 1 | SUPPORT AS | | | | | |
| | 20 | 245-7948 | 7 | SCREW | | | | | |
| | 21 | 9X-2041 | 3 | SCREW | | | | | |
| | 22 | 9X-2042 | 2 | SCREW | | | | | |

Y—SEE SEPARATE ILLUSTRATION

H90478E 00

## 259-7349 CONSOLE GP

Left Hand

Part of 245-7922-Page671

259-7347-Page676,234-6613-Page678

# OPERATOR STATION

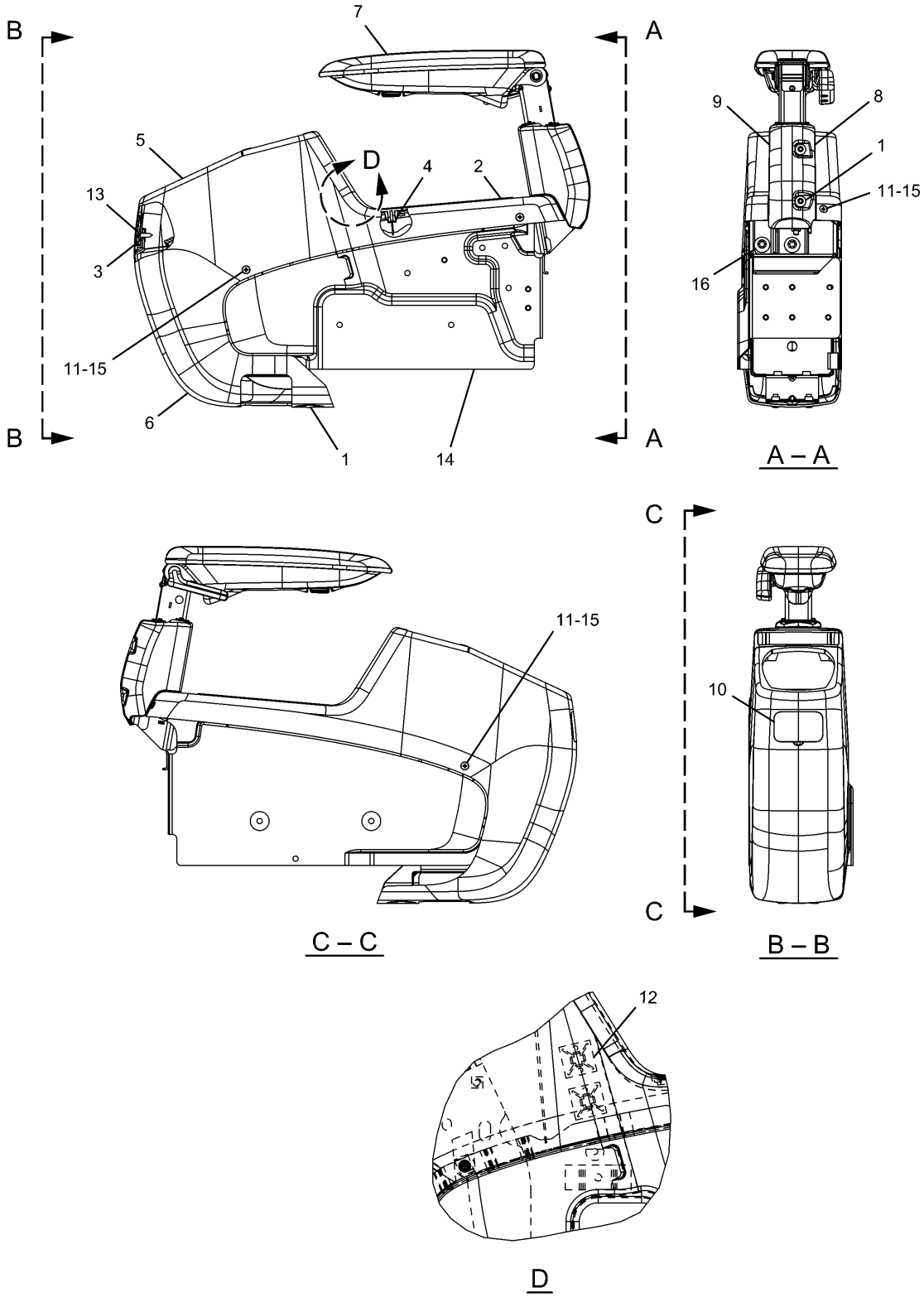


H90477E 00

**259-7348 CONSOLE GP**
Right Hand
Part of 245-7922-Page671
259-7346-Page677

# OPERATOR STATION

| NOTE | No. | PART No. | QTY | PART NAME | NOTE | No. | PART No. | QTY | PART NAME |
|---|---|---|---|---|---|---|---|---|---|
| | 1 | 128-2135 | 4 | SCREW | | | | | |
| | 2 | 185-8284 | 1 | COVER | | | | | |
| | 3 | 234-6579 | 2 | NUT | | | | | |
| | 4 | 234-6580 | 2 | CAP | | | | | |
| | 5 | 234-6602 | 1 | COVER | | | | | |
| | 6 | 234-6604 | 1 | COVER | | | | | |
| Y | 7 | 259-7346 | 1 | ARMREST GP | | | | | |
| | 8 | 234-6608 | 1 | COVER | | | | | |
| | 9 | 234-6609 | 1 | COVER | | | | | |
| | 10 | 234-6610 | 1 | COVER | | | | | |
| | 11 | 235-8914 | 4 | NUT | | | | | |
| | 12 | 235-8966 | 2 | BASE | | | | | |
| | 13 | 245-7790 | 2 | SCREW | | | | | |
| | 14 | 245-7926 | 1 | SUPPORT AS | | | | | |
| | 15 | 245-7948 | 4 | SCREW | | | | | |
| | 16 | 9X-2041 | 3 | SCREW | | | | | |

Y—SEE SEPARATE ILLUSTRATION

H90477E 00

## 259-7348 CONSOLE GP

Right Hand

Part of 245-7922-Page671
259-7346-Page677

# OPERATOR STATION

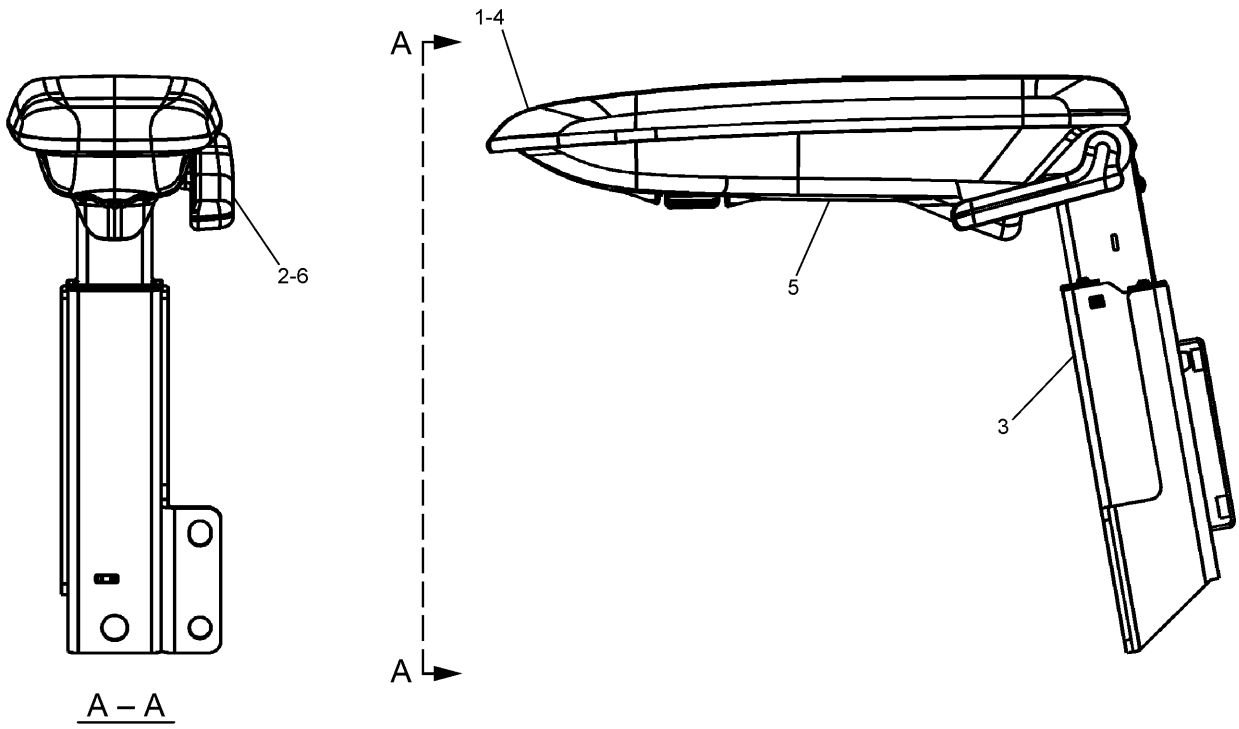


| NOTE | No. | PART No. | QTY | PART NAME | NOTE | No. | PART No. | QTY | PART NAME |
|---|---|---|---|---|---|---|---|---|---|
| | 1 | 171-7325 | 3 | SCREW | | | | | |
| | 2 | 185-8286 | 2 | SCREW | | | | | |
| | 3 | 235-8952 | 1 | SUPPORT AS | | | | | |
| | 4 | 259-7345 | 1 | CUSHION | | | | | |
| | 5 | 235-8996 | 1 | COVER | | | | | |
| | 6 | 235-8998 | 1 | KNOB | | | | | |

H90361E 00

**259-7347 ARMREST GP**
Part of 259-7349-Page673

# OPERATOR STATION

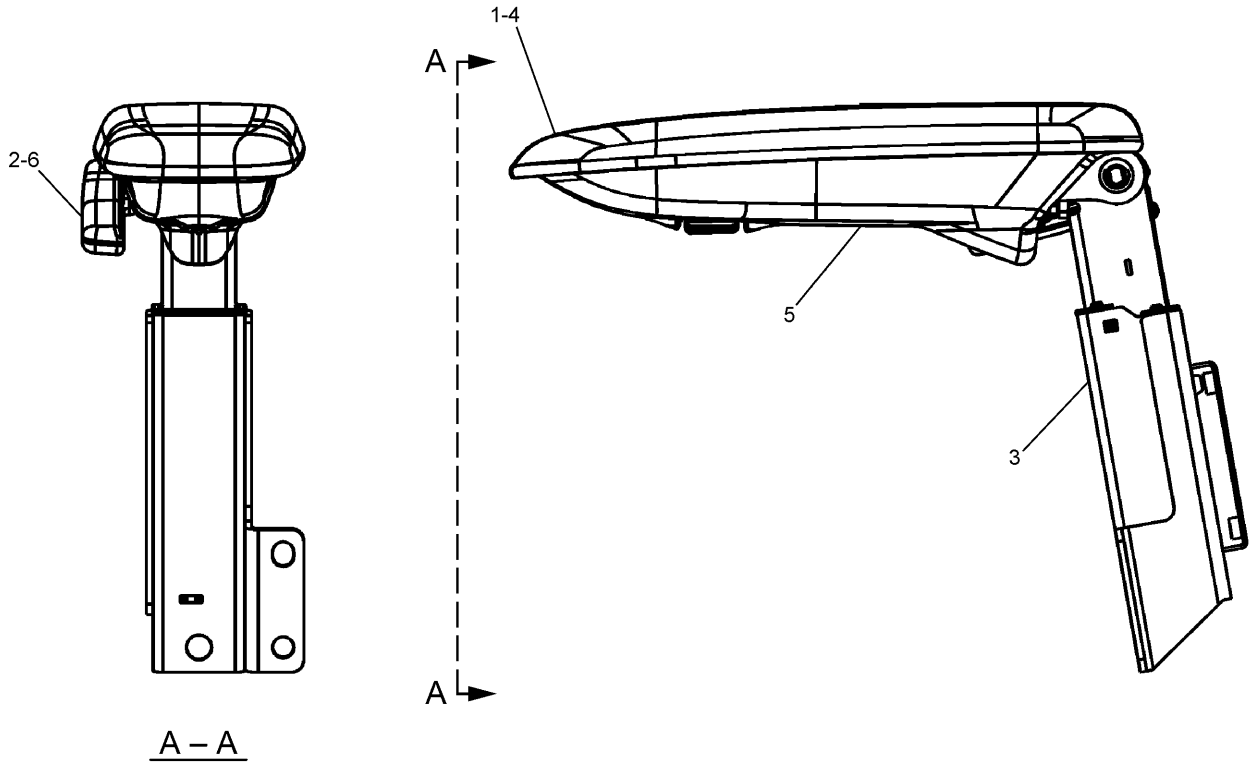


A – A

| NOTE | No. | PART No. | QTY | PART NAME | NOTE | No. | PART No. | QTY | PART NAME |
|---|---|---|---|---|---|---|---|---|---|
| | 1 | 171-7325 | 3 | SCREW | | | | | |
| | 2 | 185-8286 | 2 | SCREW | | | | | |
| | 3 | 235-8951 | 1 | SUPPORT AS | | | | | |
| | 4 | 259-7345 | 1 | CUSHION | | | | | |
| | 5 | 235-8996 | 1 | COVER | | | | | |
| | 6 | 235-8997 | 1 | KNOB | | | | | |

H90360E 00

**259-7346 ARMREST GP**
Part of 259-7348-Page675

# OPERATOR STATION

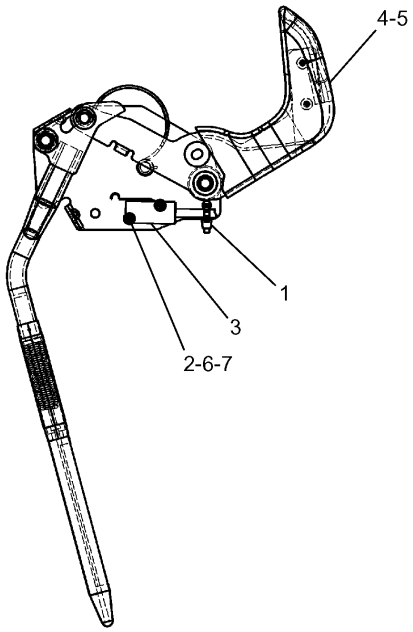


| NOTE | No. | PART No. | QTY | PART NAME |
|---|---|---|---|---|
| | 1 | 3S-2093 | 1 | STRAP |
| | 2 | 4I-3038 | 2 | WASHER |
| Y | 3 | 111-4799 | 1 | SWITCH AS |
| | 4 | 185-8286 | 2 | SCREW |
| | 5 | 234-6615 | 1 | KNOB |
| | 6 | 087-4683 | 2 | LOCKWASHER |
| | 7 | 120-9027 | 2 | SCREW |

Y—SEE SEPARATE ILLUSTRATION

H93582E 05

**234-6613 LEVER AS**

Part of 259-7349-Page673
111-4799-Page228

# OPERATOR STATION

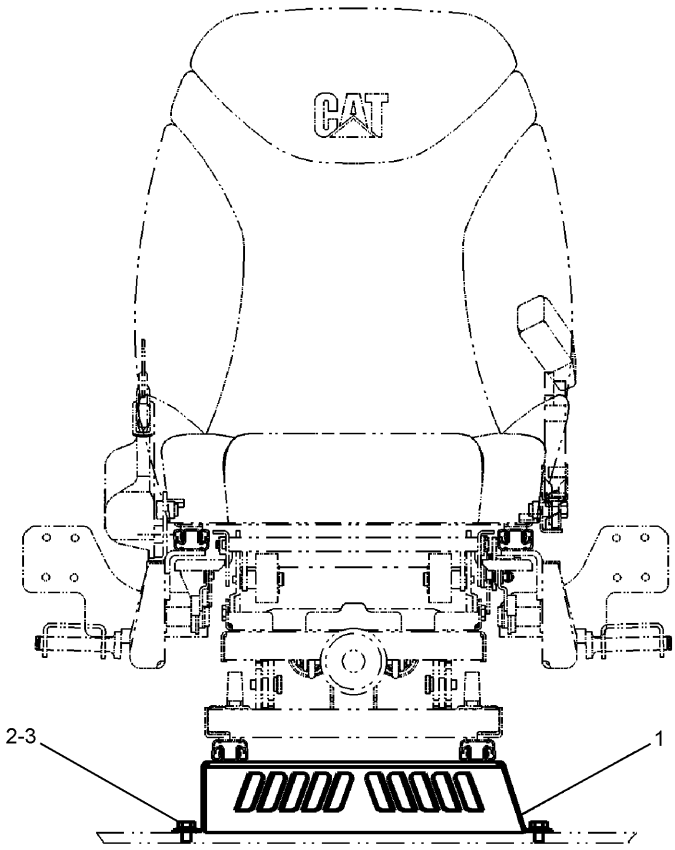


FRONT VIEW

| NOTE | No. | PART No. | QTY | PART NAME | NOTE | No. | PART No. | QTY | PART NAME |
|---|---|---|---|---|---|---|---|---|---|
| | 1 | 235-8857 | 1 | SUPPORT AS | | | | | |
| | 2 | 8T-4121 | 4 | WASHER | | | | | |
| | 3 | 8T-4191 | 4 | BOLT (L=16mm) | | | | | |

H87531E 01

235-8856 SUPPORT GP-SEAT

# OPERATOR STATION

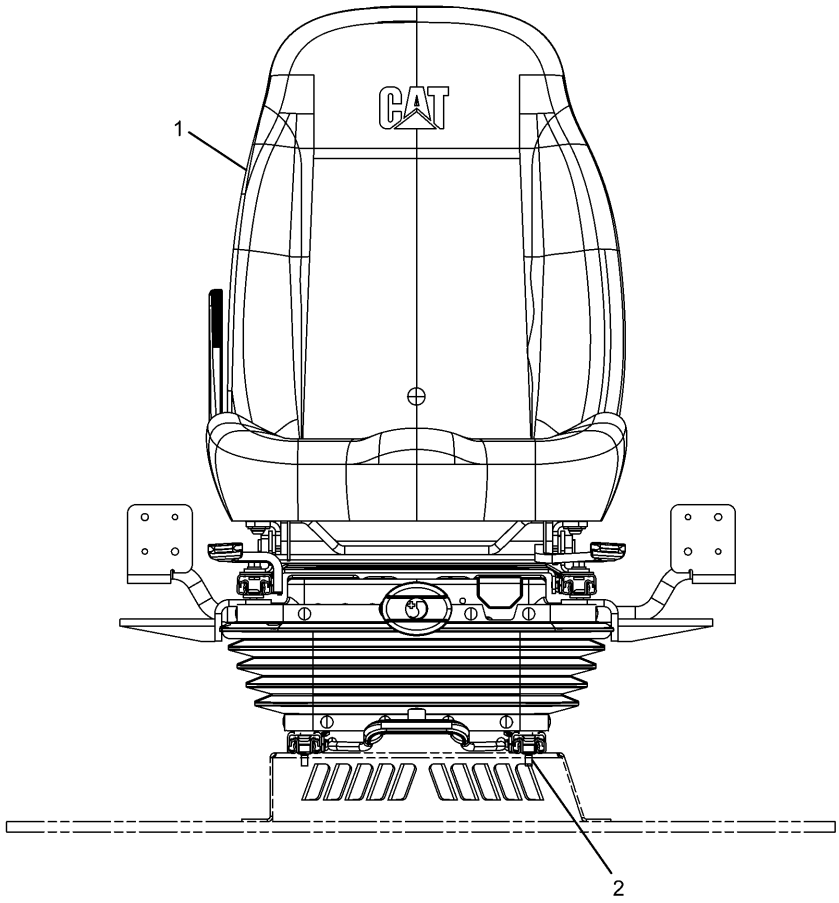


| NOTE | No. | PART No. | QTY | PART NAME | NOTE | No. | PART No. | QTY | PART NAME |
|---|---|---|---|---|---|---|---|---|---|
| Y | 1 | 235-9028 | 1 | SEAT GP | | | | | |
| | 2 | 6V-8202 | 4 | BOLT (L=16mm) | | | | | |

Y—SEE SEPARATE ILLUSTRATION

H89874E 00

## 240-5001 SEAT GP

S/N BWZ 1-(T08.12), DFB 1-(T08.12), SNS 1-(T08.12), WJN 1-(T08.12)

235-9028-Page681

An Attachment

# OPERATOR STATION

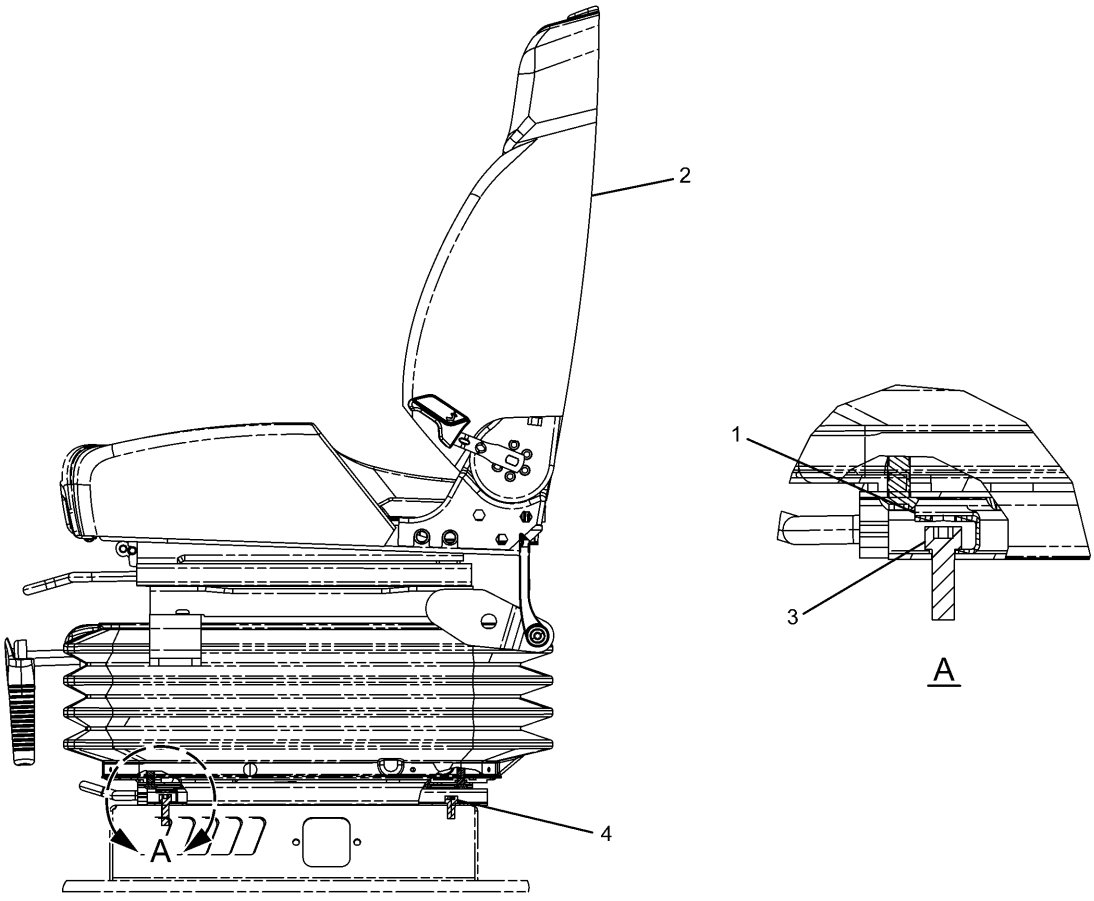


LEFT SIDE VIEW

| NOTE | No. | PART No. | QTY | PART NAME | NOTE | No. | PART No. | QTY | PART NAME |
|---|---|---|---|---|---|---|---|---|---|
| | 1 | 316-8987 | 2 | BRACKET | | | | | |
| Y | 2 | 327-6505 | 1 | SEAT GP | | | | | |
| | 3 | 5A-3604 | 2 | BOLT (L=25mm) | | | | | |
| | 4 | 6V-8202 | 2 | BOLT (L=16mm) | | | | | |

Y—SEE SEPARATE ILLUSTRATION

HA1699E 01

## 327-6499 SEAT GP

KAB K1
S/N BWZ (T09.01)-Up, DFB (T09.01)-Up, SNS (T09.01)-Up, WJN (T09.01)-Up
327-6505-Page681.01
An Attachment

# MEMORANDA

# OPERATOR STATION

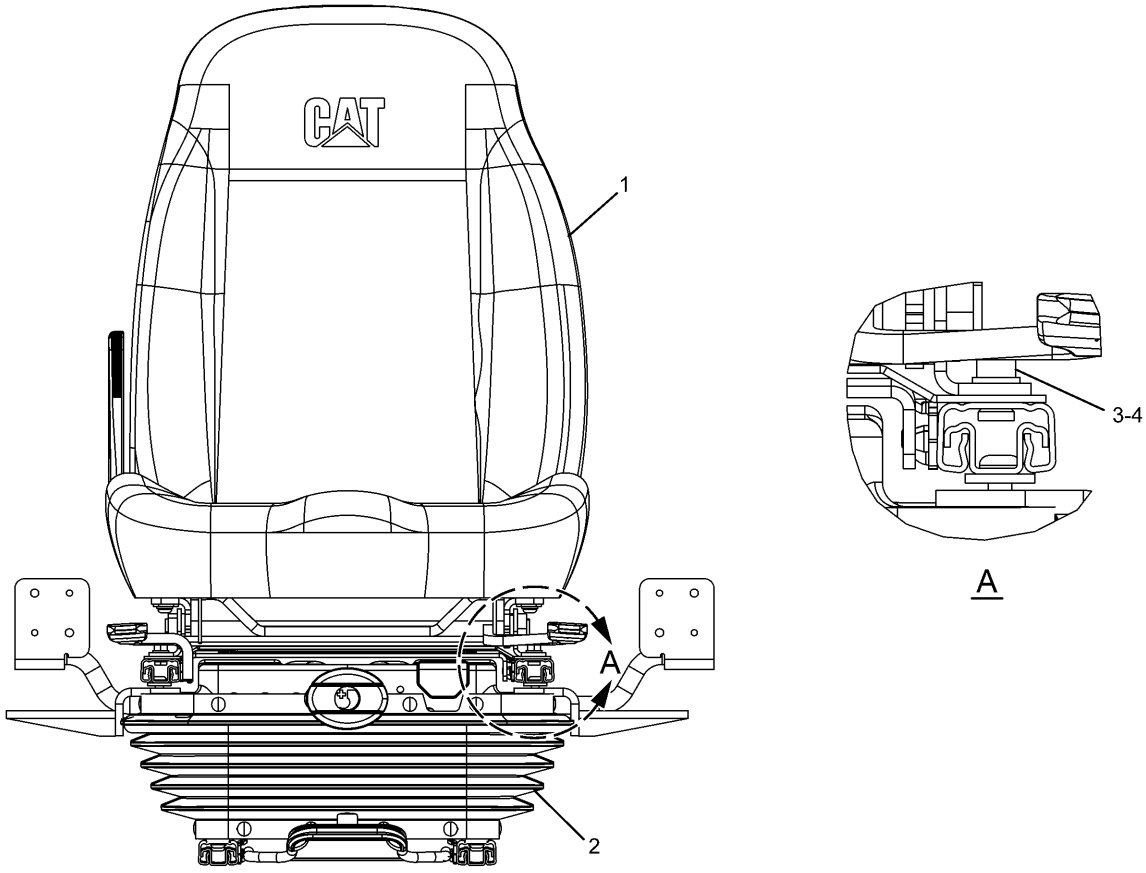


| NOTE | No. | PART No. | QTY | PART NAME | NOTE | No. | PART No. | QTY | PART NAME |
|---|---|---|---|---|---|---|---|---|---|
| Y | 1 | 229-9076 | 1 | SEAT GP | | | | | |
| Y | 2 | 229-9095 | 1 | SUPPORT GP | | | | | |
| | 3 | 5C-7261 | 4 | NUT | | | | | |
| | 4 | 8T-4224 | 4 | WASHER | | | | | |

Y—SEE SEPARATE ILLUSTRATION

H91456E 01

## 235-9028 SEAT GP

S/N BWZ 1-(T08.12), DFB 1-(T08.12), SNS 1-(T08.12), WJN 1-(T08.12)
Part of 240-5001-Page680
229-9076-Page682,229-9095-Page685
An Attachment

# OPERATOR STATION

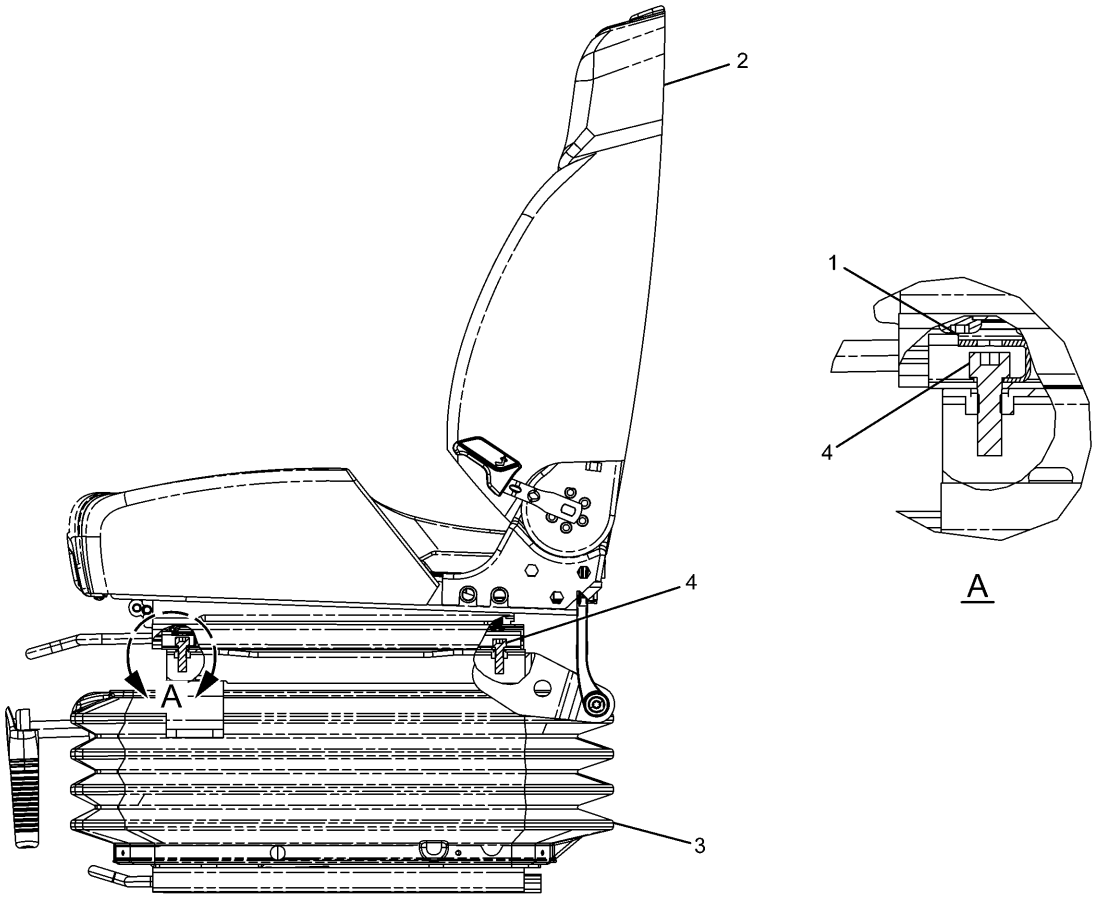


LEFT SIDE VIEW

| NOTE | No. | PART No. | QTY | PART NAME | NOTE | No. | PART No. | QTY | PART NAME |
|---|---|---|---|---|---|---|---|---|---|
| | 1 | 316-8987 | 2 | BRACKET | | | | | |
| Y | 2 | 327-6511 | 1 | SEAT GP | | | | | |
| Y | 3 | 327-6517 | 1 | SUPPORT GP | | | | | |
| | 4 | 5A-3604 | 4 | BOLT (L=25mm) | | | | | |

Y—SEE SEPARATE ILLUSTRATION

HA1504E 00

## 327-6505 SEAT GP

KAB K1
S/N BWZ (T09.01)-Up, DFB (T09.01)-Up, SNS (T09.01)-Up, WJN (T09.01)-Up
Part of 327-6499-Page680.01
327-6511-Page682.01,327-6517-Page685.01
An Attachment

# MEMORANDA

# OPERATOR STATION

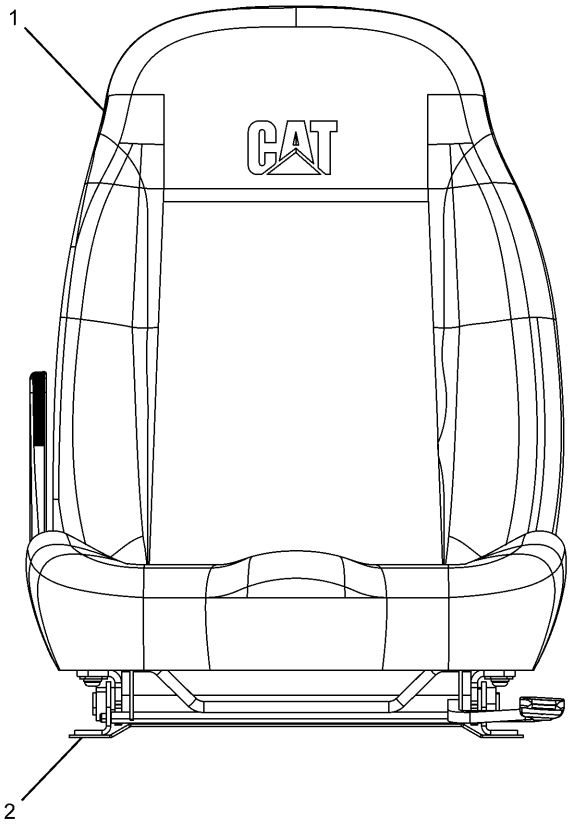


| NOTE | No. | PART No. | QTY | PART NAME | NOTE | No. | PART No. | QTY | PART NAME |
|---|---|---|---|---|---|---|---|---|---|
| Y | 1 | 245-7883 | 1 | SEAT KIT | | | | | |
| Y | 2 | 245-7888 | 1 | SUPPORT KIT | | | | | |

Y—SEE SEPARATE ILLUSTRATION

H89522E 01

## 229-9076 SEAT GP

S/N BWZ 1-(T08.12), DFB 1-(T08.12), SNS 1-(T08.12), WJN 1-(T08.12)
Part of 235-9028-Page681,229-9075-Page695
245-7883-Page683,245-7888-Page684
An Attachment

# OPERATOR STATION

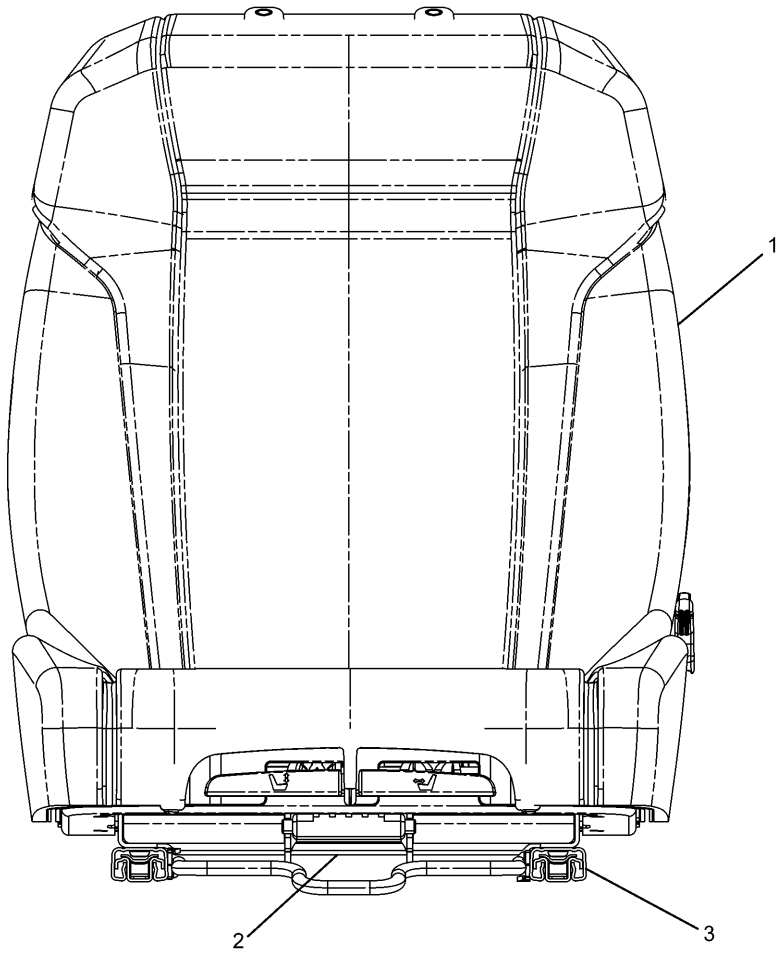


| NOTE | No. | PART No. | QTY | PART NAME | NOTE | No. | PART No. | QTY | PART NAME |
|---|---|---|---|---|---|---|---|---|---|
| | 1 | 327-6639 | 1 | SEAT KIT | | | | | |
| | 2 | 327-6642 | 1 | ADJUSTER KIT | | | | | |
| | 3 | 327-6643 | 1 | ADJUSTER KIT | | | | | |

HA1481E 01

## 327-6511 SEAT GP

S/N BWZ (T09.01)-Up, DFB (T09.01)-Up, SNS (T09.01)-Up, WJN (T09.01)-Up
Part of 327-6505-Page681.01,327-6506-Page695.01
An Attachment

# MEMORANDA

# OPERATOR STATION

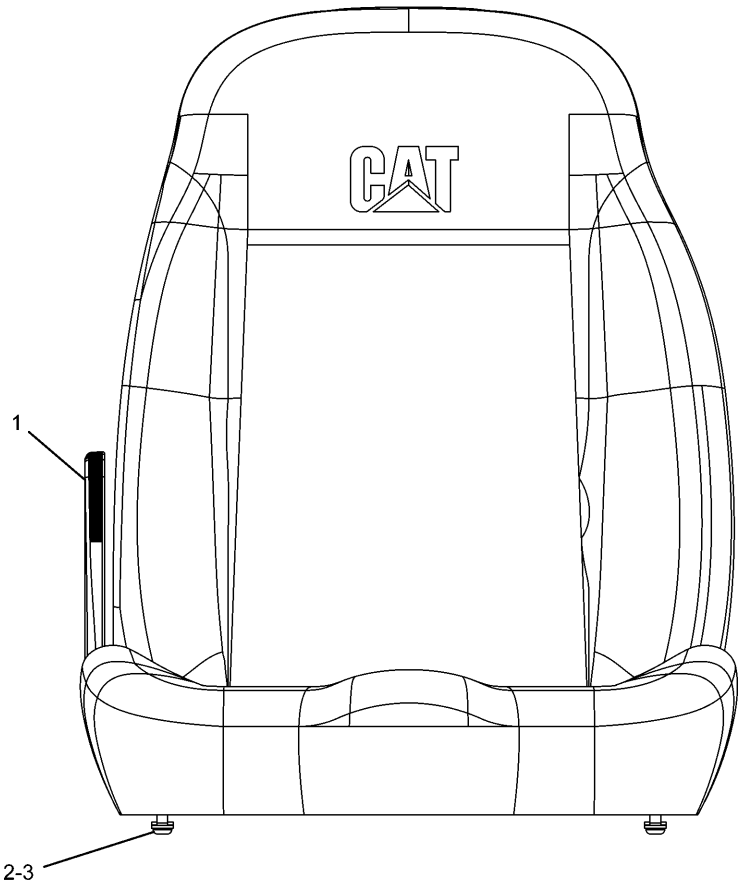


| NOTE | No. | PART No. | QTY | PART NAME | NOTE | No. | PART No. | QTY | PART NAME |
|---|---|---|---|---|---|---|---|---|---|
| | 1 | 245-7887 | 1 | LEVER KIT | | | | | |
| | 2 | 245-7898 | 4 | SCREW | | | | | |
| | 3 | 8T-4224 | 4 | WASHER | | | | | |

H89524E 00

## 245-7883 SEAT KIT

S/N BWZ 1-(T08.12), DFB 1-(T08.12), SNS 1-(T08.12), WJN 1-(T08.12)
Part of 229-9076-Page682
An Attachment

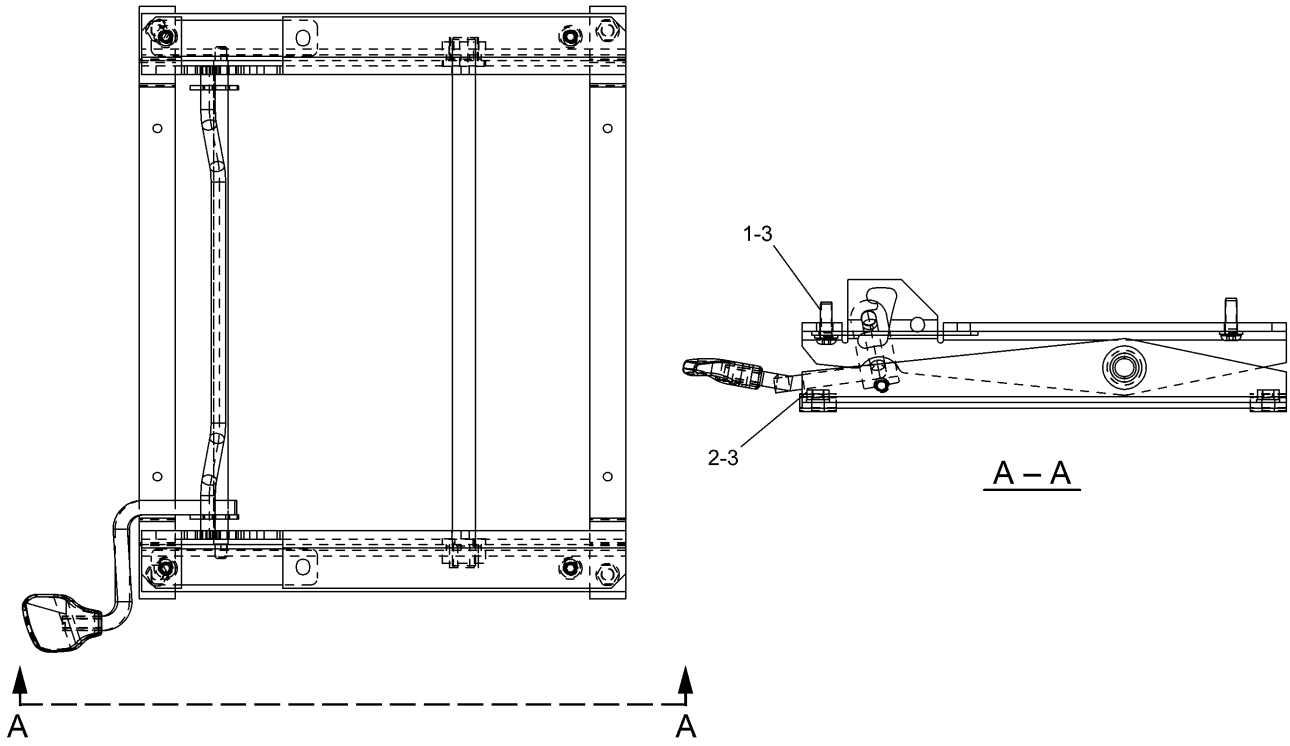


| NOTE | No. | PART No. | QTY | PART NAME | NOTE | No. | PART No. | QTY | PART NAME |
|---|---|---|---|---|---|---|---|---|---|
| | 1 | 245-7898 | 4 | SCREW | | | | | |
| | 2 | 5C-7261 | 4 | NUT | | | | | |
| | 3 | 8T-4224 | 8 | WASHER | | | | | |

H88069E 00

## 245-7888 SUPPORT KIT-TILT

S/N BWZ 1-(T08.12), DFB 1-(T08.12), SNS 1-(T08.12), WJN 1-(T08.12)
Part of 229-9076-Page682,240-5058-Page692,229-9093-Page701
An Attachment

# OPERATOR STATION

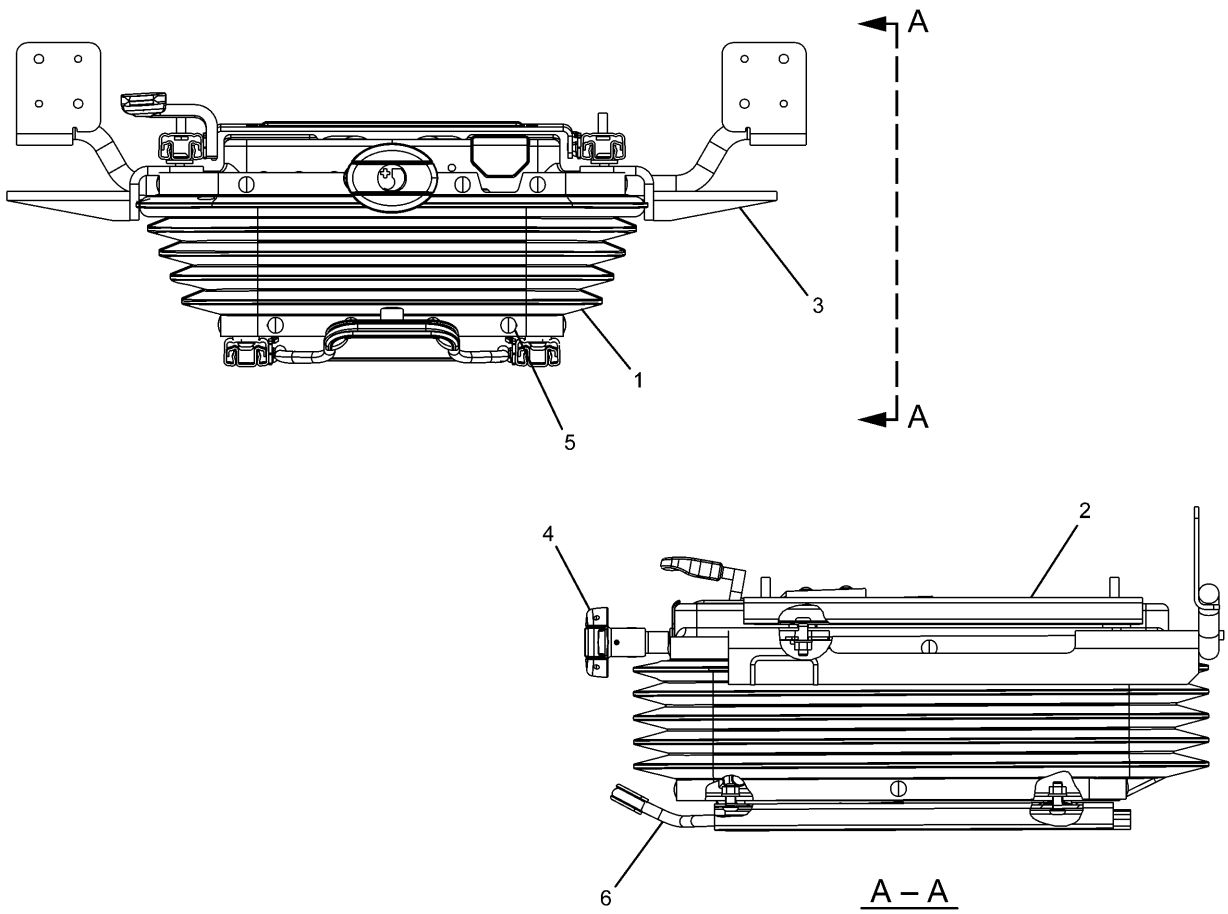


| NOTE | No. | PART No. | QTY | PART NAME | NOTE | No. | PART No. | QTY | PART NAME |
|---|---|---|---|---|---|---|---|---|---|
| | 1 | 242-8768 | 1 | COVER AS | | | | | |
| | | 147-4921 | 1 | CLIP KIT | | | | | |
| Y | 2 | 245-7889 | 1 | ADJUSTER KIT | | | | | |
| Y | 3 | 245-7890 | 1 | BRACKET KIT | | | | | |
| Y | 4 | 245-7891 | 1 | SUPPORT KIT | | | | | |
| | 5 | 245-7895 | 1 | CLIP KIT | | | | | |
| Y | 6 | 245-7896 | 1 | ADJUSTER KIT | | | | | |

Y—SEE SEPARATE ILLUSTRATION

H93591E 03

## 229-9095 SUPPORT GP-SEAT

S/N BWZ 1-(T08.12), DFB 1-(T08.12), SNS 1-(T08.12), WJN 1-(T08.12)
Part of 235-9028-Page681,240-5057-Page691
245-7889-Page686,245-7896-Page687,245-7890-Page688,245-7891-Page689
An Attachment

# OPERATOR STATION

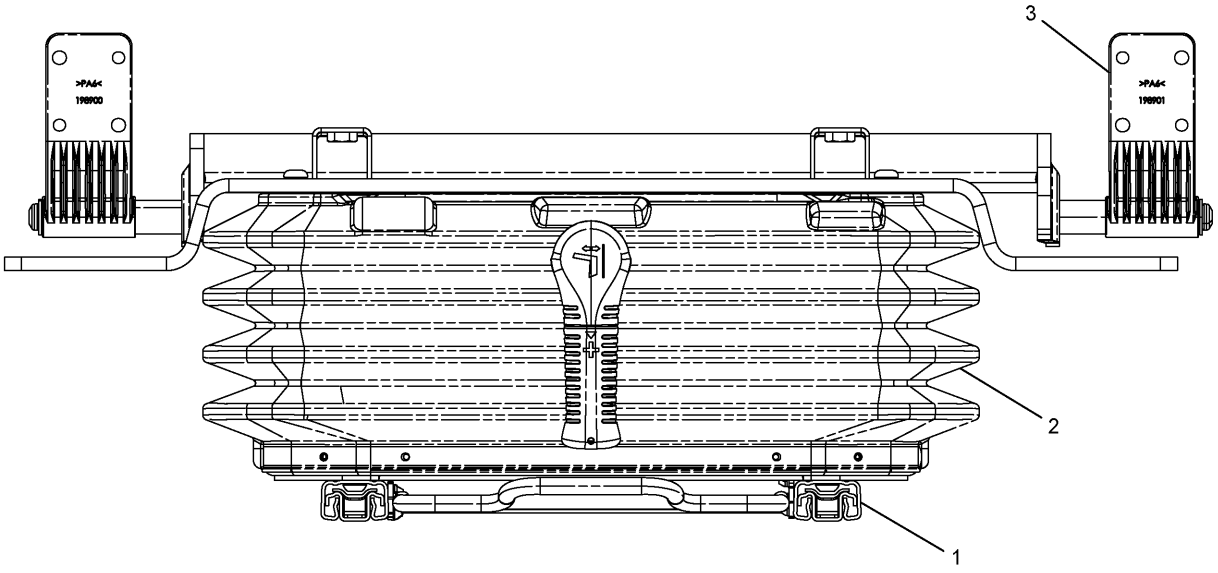


FRONT VIEW

| NOTE | No. | PART No. | QTY | PART NAME | NOTE | No. | PART No. | QTY | PART NAME |
|---|---|---|---|---|---|---|---|---|---|
| | 1 | 327-6648 | 1 | ADJUSTER KIT | | | | | |
| | 2 | 333-4173 | 1 | SUPPORT KIT | | | | | |
| | 3 | 333-4175 | 1 | BRACKET KIT | | | | | |

HA1428E 00

## 327-6517 SUPPORT GP-SEAT

S/N BWZ (T09.01)-Up, DFB (T09.01)-Up, SNS (T09.01)-Up, WJN (T09.01)-Up
Part of 327-6505-Page681.01,327-6504-Page691.01
An Attachment

# MEMORANDA

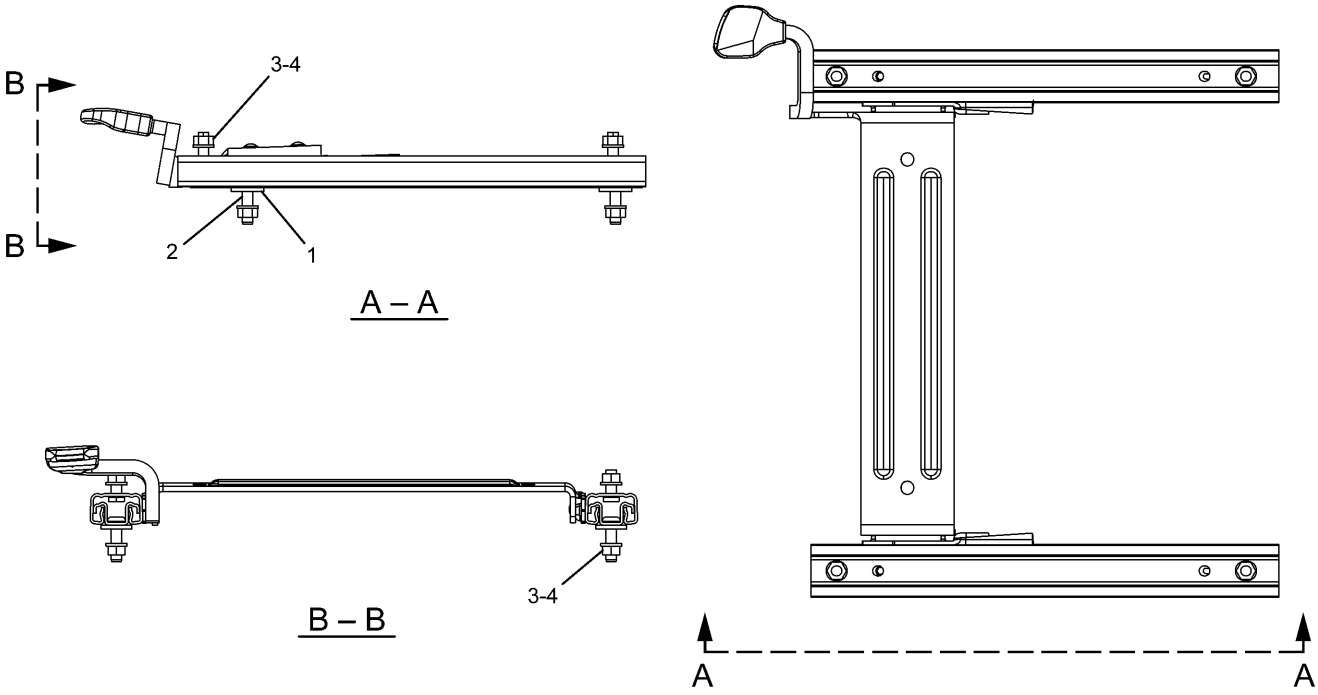


| NOTE | No. | PART No. | QTY | PART NAME | NOTE | No. | PART No. | QTY | PART NAME |
|---|---|---|---|---|---|---|---|---|---|
| | 1 | 245-7897 | 4 | PLATE | | | | | |
| | 2 | 245-7899 | 4 | SCREW | | | | | |
| | 3 | 5C-7261 | 8 | NUT | | | | | |
| | 4 | 8T-4224 | 8 | WASHER | | | | | |

H88074E 00

## 245-7889 ADJUSTER KIT-UPPER SLIDE

S/N BWZ 1-(T08.12), DFB 1-(T08.12), SNS 1-(T08.12), WJN 1-(T08.12)
Part of 229-9095-Page685,229-9077-Page696,240-5063-Page697
An Attachment

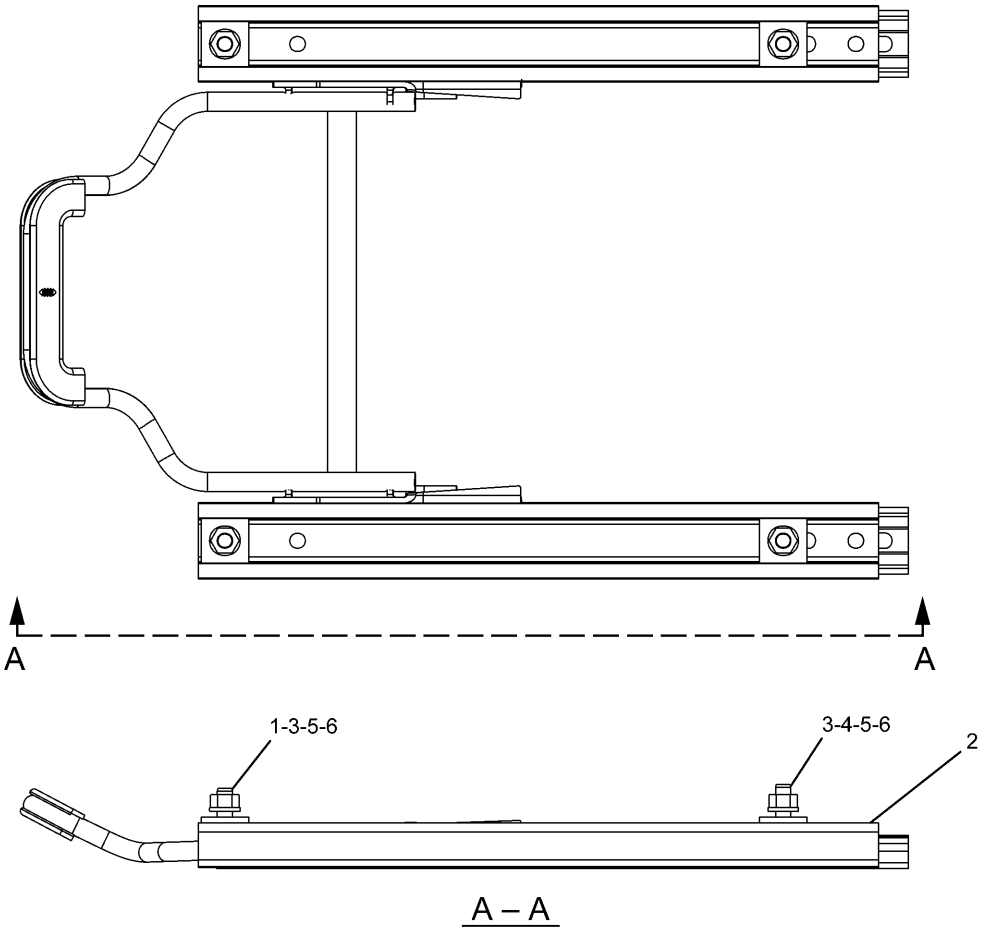


A – A

| NOTE | No. | PART No. | QTY | PART NAME | NOTE | No. | PART No. | QTY | PART NAME |
|---|---|---|---|---|---|---|---|---|---|
| | 1 | 198-3899 | 2 | SCREW | | | | | |
| | 2 | 245-7886 | 2 | PLATE | | | | | |
| | 3 | 245-7897 | 4 | PLATE | | | | | |
| | 4 | 245-7898 | 2 | SCREW | | | | | |
| | 5 | 5C-7261 | 4 | NUT | | | | | |
| | 6 | 8T-4224 | 4 | WASHER | | | | | |

H91454E 01

## 245-7896 ADJUSTER KIT-LOWER SLIDE

S/N BWZ 1-(T08.12), DFB 1-(T08.12), SNS 1-(T08.12), WJN 1-(T08.12)
Part of 229-9095-Page685,229-9077-Page696,240-5063-Page697
An Attachment

# OPERATOR STATION

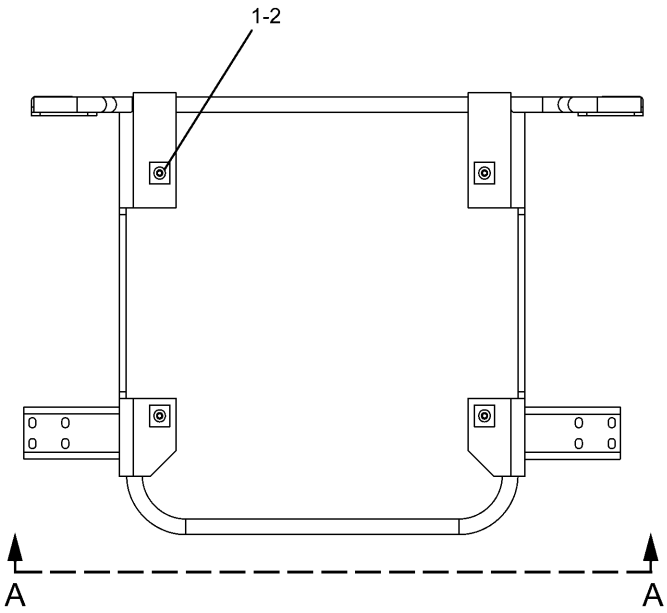


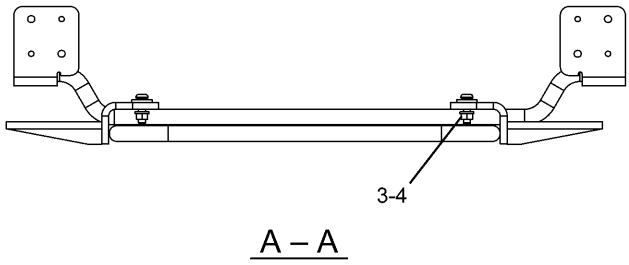


A – A

| NOTE | No. | PART No. | QTY | PART NAME | NOTE | No. | PART No. | QTY | PART NAME |
|---|---|---|---|---|---|---|---|---|---|
| | 1 | 245-7897 | 4 | PLATE | | | | | |
| | 2 | 245-7899 | 4 | SCREW | | | | | |
| | 3 | 5C-7261 | 4 | NUT | | | | | |
| | 4 | 8T-4224 | 4 | WASHER | | | | | |

H88076E 00

## 245-7890 BRACKET KIT-CONSOLE

S/N BWZ 1-(T08.12), DFB 1-(T08.12), SNS 1-(T08.12), WJN 1-(T08.12)
Part of 229-9095-Page685,229-9077-Page696,240-5063-Page697
An Attachment

# OPERATOR STATION

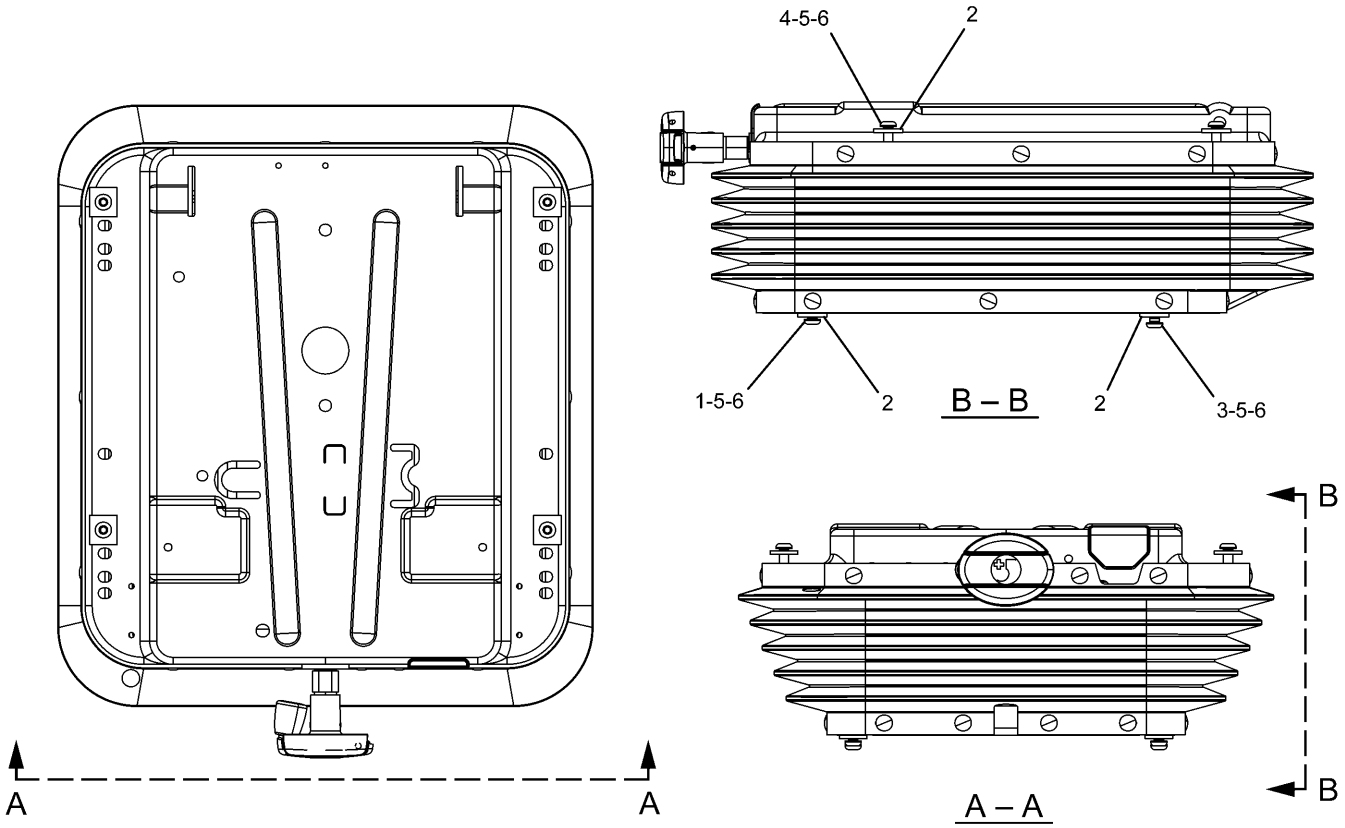


| NOTE | No. | PART No. | QTY | PART NAME | NOTE | No. | PART No. | QTY | PART NAME |
|---|---|---|---|---|---|---|---|---|---|
| | 1 | 198-3899 | 2 | SCREW | | | | | |
| | 2 | 245-7897 | 8 | PLATE | | | | | |
| | 3 | 245-7898 | 2 | SCREW | | | | | |
| | 4 | 245-7899 | 4 | SCREW | | | | | |
| | 5 | 5C-7261 | 8 | NUT | | | | | |
| | 6 | 8T-4224 | 8 | WASHER | | | | | |

H88970E 00

## 245-7891 SUPPORT KIT-SEAT

S/N BWZ 1-(T08.12), DFB 1-(T08.12), SNS 1-(T08.12), WJN 1-(T08.12)

Part of 229-9095-Page685

An Attachment

# OPERATOR STATION

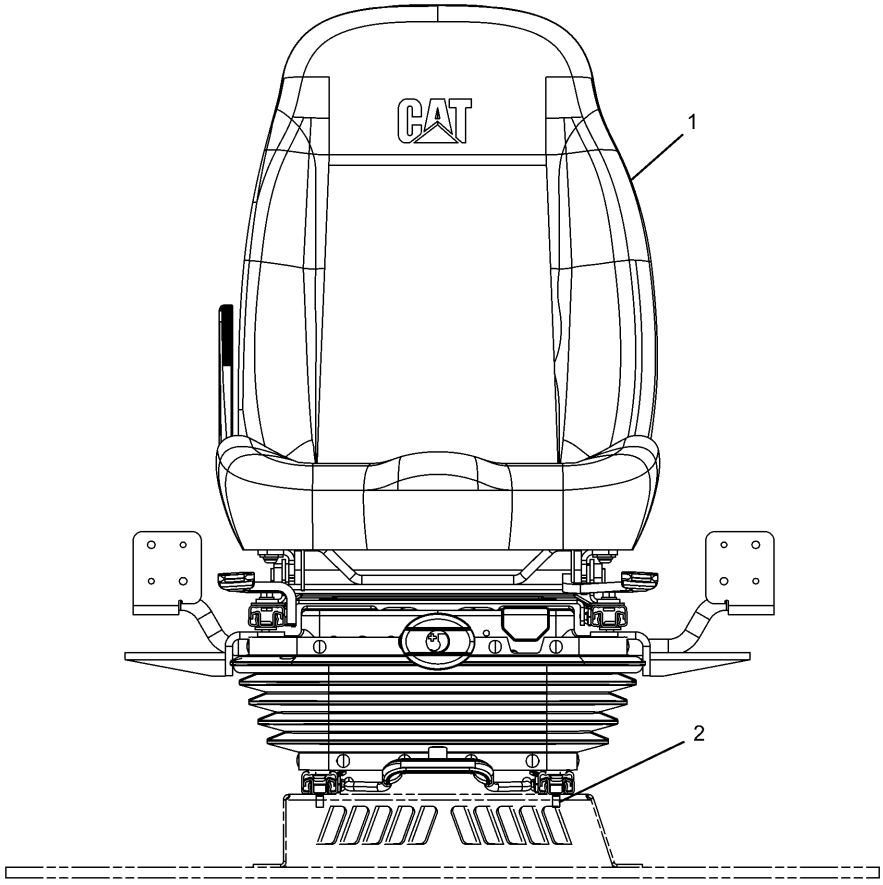


| NOTE | No. | PART No. | QTY | PART NAME | NOTE | No. | PART No. | QTY | PART NAME |
|---|---|---|---|---|---|---|---|---|---|
| Y | 1 | 240-5057 | 1 | SEAT GP | | | | | |
| | 2 | 6V-8202 | 4 | BOLT (L=16mm) | | | | | |

Y—SEE SEPARATE ILLUSTRATION

H88965E 01

## 240-5056 SEAT GP

S/N BWZ 1-(T08.12), DFB 1-(T08.12), SNS 1-(T08.12), WJN 1-(T08.12)

240-5057-Page691

An Attachment

# OPERATOR STATION

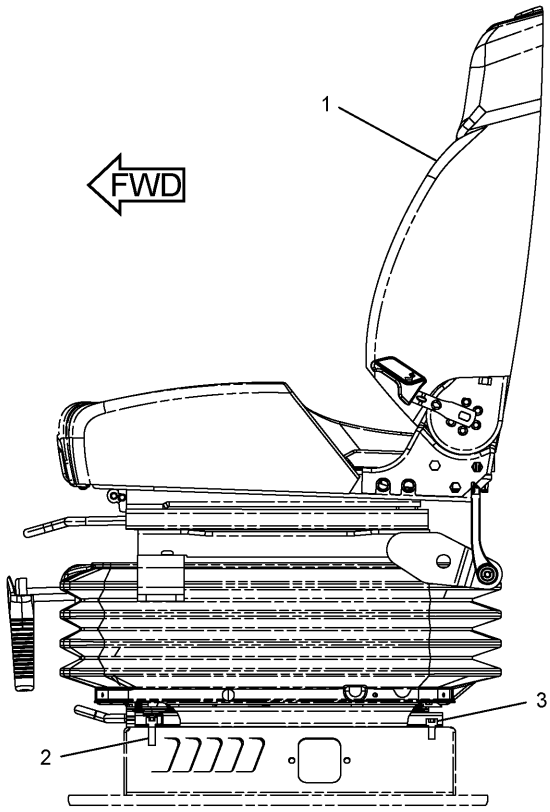


LEFT SIDE VIEW

| NOTE | No. | PART No. | QTY | PART NAME | NOTE | No. | PART No. | QTY | PART NAME |
|---|---|---|---|---|---|---|---|---|---|
| Y | 1 | 327-6504 | 1 | SEAT GP | | | | | |
| | 2 | 5A-3604 | 2 | BOLT (L=25mm) | | | | | |
| | 3 | 6V-8202 | 2 | BOLT (L=16mm) | | | | | |

Y—SEE SEPARATE ILLUSTRATION

HA1702E 01

## 327-6498 SEAT GP

KAB K1(Vinyl)
S/N BWZ (T09.01)-Up, DFB (T09.01)-Up, SNS (T09.01)-Up, WJN (T09.01)-Up
327-6504-Page691.01
An Attachment

# MEMORANDA

# OPERATOR STATION

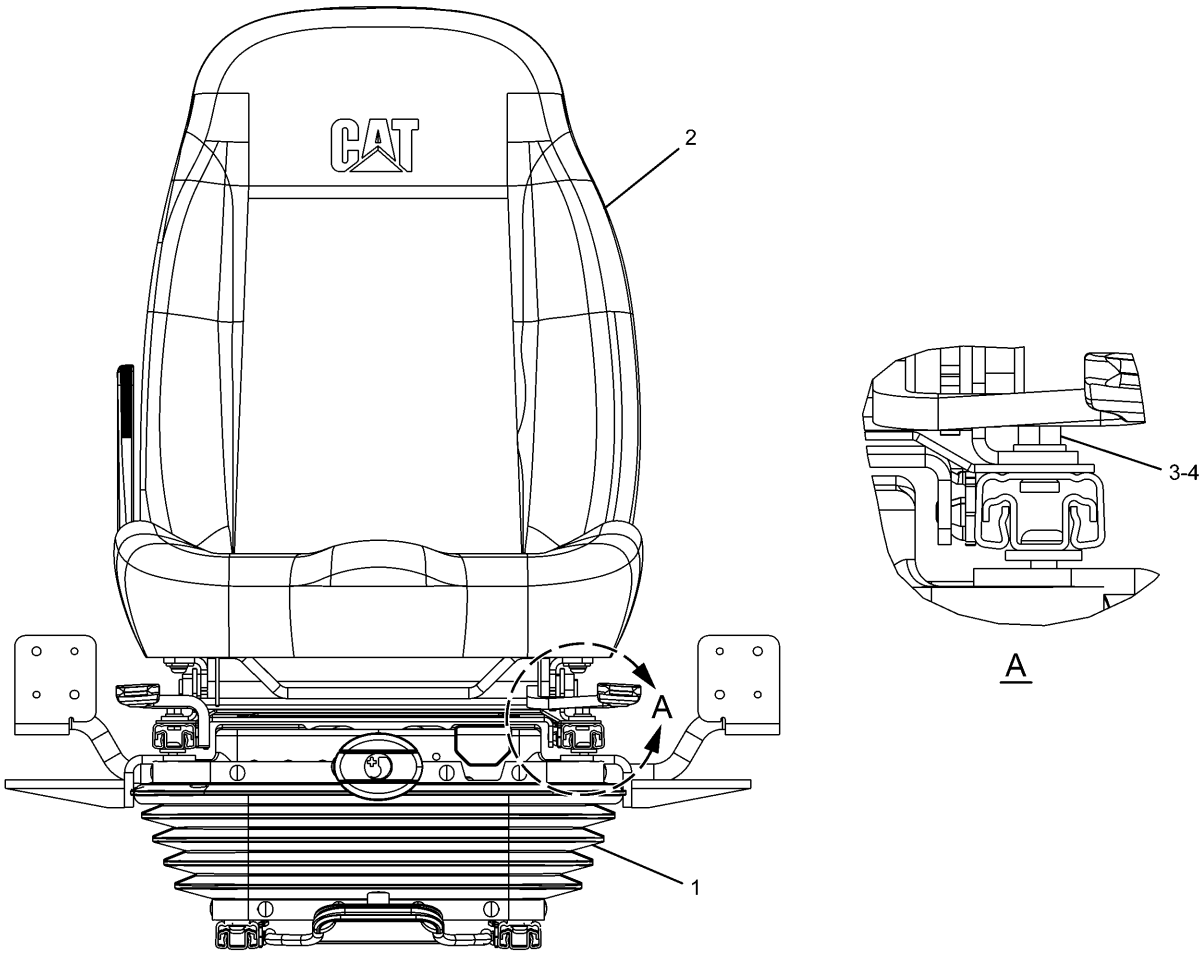


| NOTE | No. | PART No. | QTY | PART NAME | NOTE | No. | PART No. | QTY | PART NAME |
|---|---|---|---|---|---|---|---|---|---|
| Y | 1 | 229-9095 | 1 | SUPPORT GP | | | | | |
| Y | 2 | 240-5058 | 1 | SEAT GP | | | | | |
| | 3 | 5C-7261 | 4 | NUT | | | | | |
| | 4 | 8T-4224 | 4 | WASHER | | | | | |

Y—SEE SEPARATE ILLUSTRATION

H91447E 02

## 240-5057 SEAT GP

S/N BWZ 1-(T08.12), DFB 1-(T08.12), SNS 1-(T08.12), WJN 1-(T08.12)
Part of 240-5056-Page690
229-9095-Page685,240-5058-Page692
An Attachment

# OPERATOR STATION

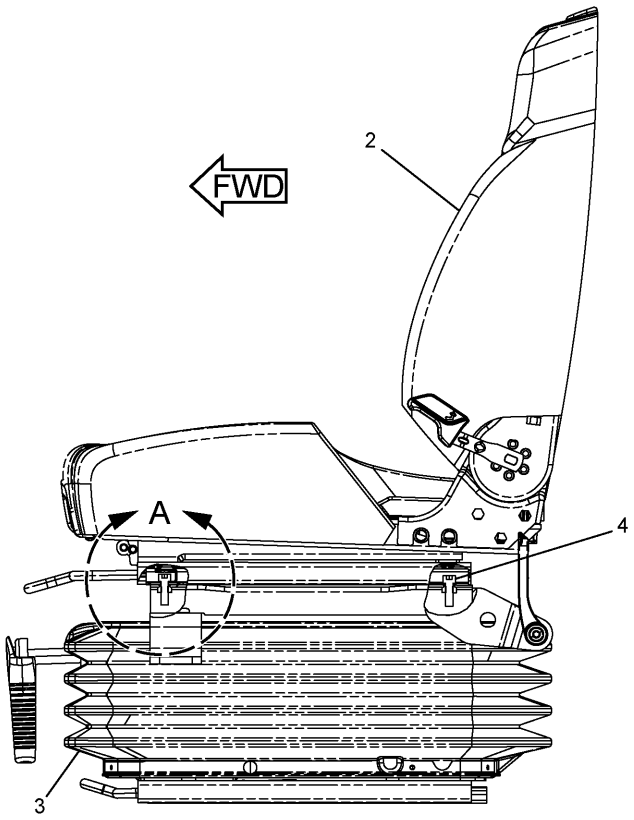


LEFT SIDE VIEW

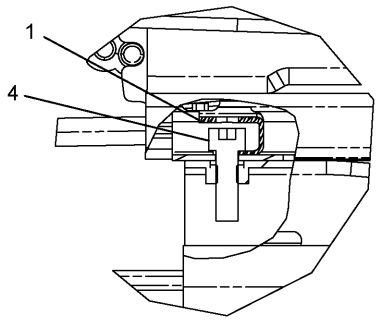


A

| NOTE | No. | PART No. | QTY | PART NAME | NOTE | No. | PART No. | QTY | PART NAME |
|---|---|---|---|---|---|---|---|---|---|
| | 1 | 316-8987 | 2 | BRACKET | | | | | |
| Y | 2 | 327-6510 | 1 | SEAT GP | | | | | |
| Y | 3 | 327-6517 | 1 | SUPPORT GP | | | | | |
| | 4 | 5A-3604 | 4 | BOLT (L=25mm) | | | | | |

Y—SEE SEPARATE ILLUSTRATION

HA1735E 00

## 327-6504 SEAT GP

KAB K1(Vinyl)
S/N BWZ (T09.01)-Up, DFB (T09.01)-Up, SNS (T09.01)-Up, WJN (T09.01)-Up
Part of 327-6498-Page690.01
327-6517-Page685.01,327-6510-Page692.01
An Attachment

# MEMORANDA

# OPERATOR STATION

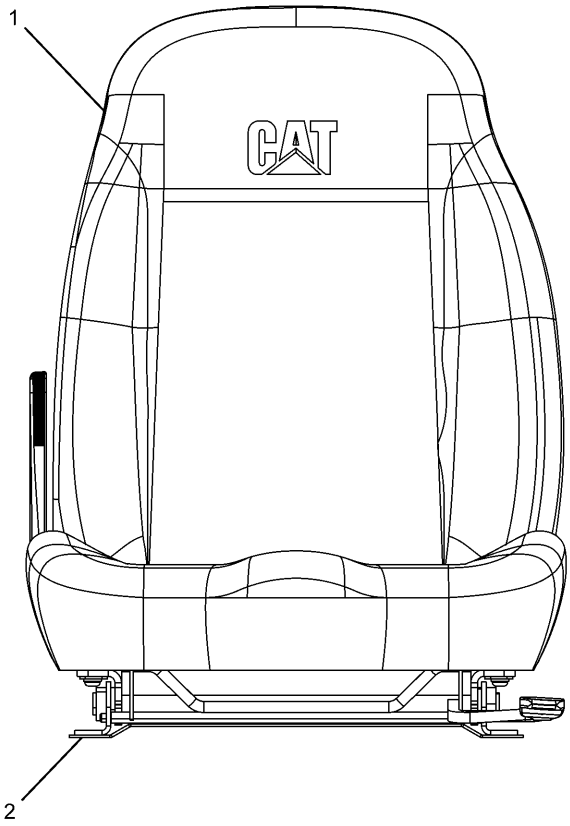


| NOTE | No. | PART No. | QTY | PART NAME | NOTE | No. | PART No. | QTY | PART NAME |
|---|---|---|---|---|---|---|---|---|---|
| Y | 1 | 245-7882 | 1 | SEAT KIT | | | | | |
| Y | 2 | 245-7888 | 1 | SUPPORT KIT | | | | | |

Y—SEE SEPARATE ILLUSTRATION

H89155E 01

## 240-5058 SEAT GP

S/N BWZ 1-(T08.12), DFB 1-(T08.12), SNS 1-(T08.12), WJN 1-(T08.12)
Part of 240-5057-Page691
245-7888-Page684,245-7882-Page693
An Attachment

# OPERATOR STATION

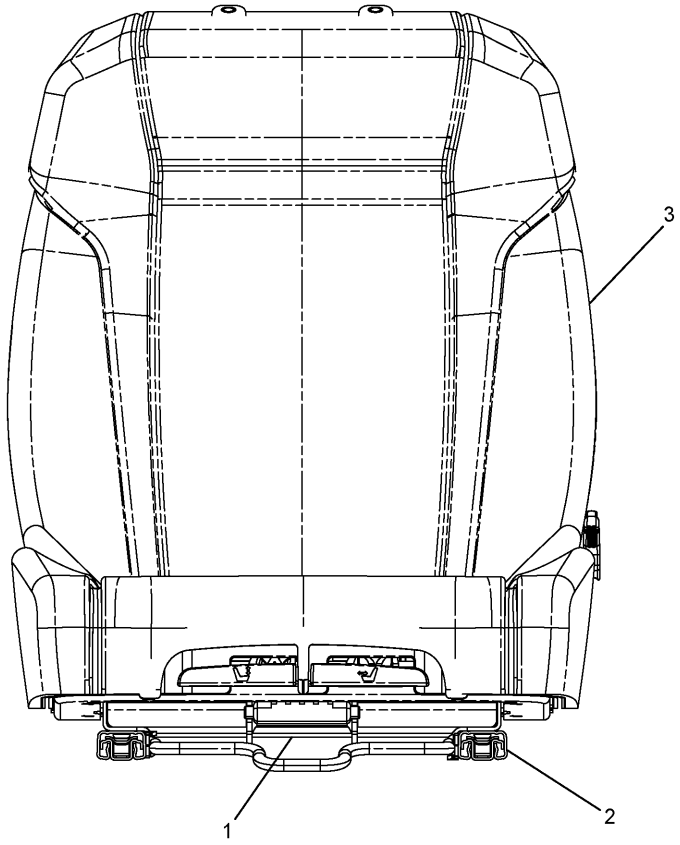


FRONT VIEW

| NOTE | No. | PART No. | QTY | PART NAME | NOTE | No. | PART No. | QTY | PART NAME |
|---|---|---|---|---|---|---|---|---|---|
| | 1 | 327-6642 | 1 | ADJUSTER KIT | | | | | |
| | 2 | 327-6643 | 1 | ADJUSTER KIT | | | | | |
| | 3 | 333-4172 | 1 | SEAT KIT | | | | | |

HA1427E 00

## 327-6510 SEAT GP

KAB K1(Vinyl)
S/N BWZ (T09.01)-Up, DFB (T09.01)-Up, SNS (T09.01)-Up, WJN (T09.01)-Up
Part of 327-6504-Page691.01
An Attachment

# MEMORANDA

# OPERATOR STATION

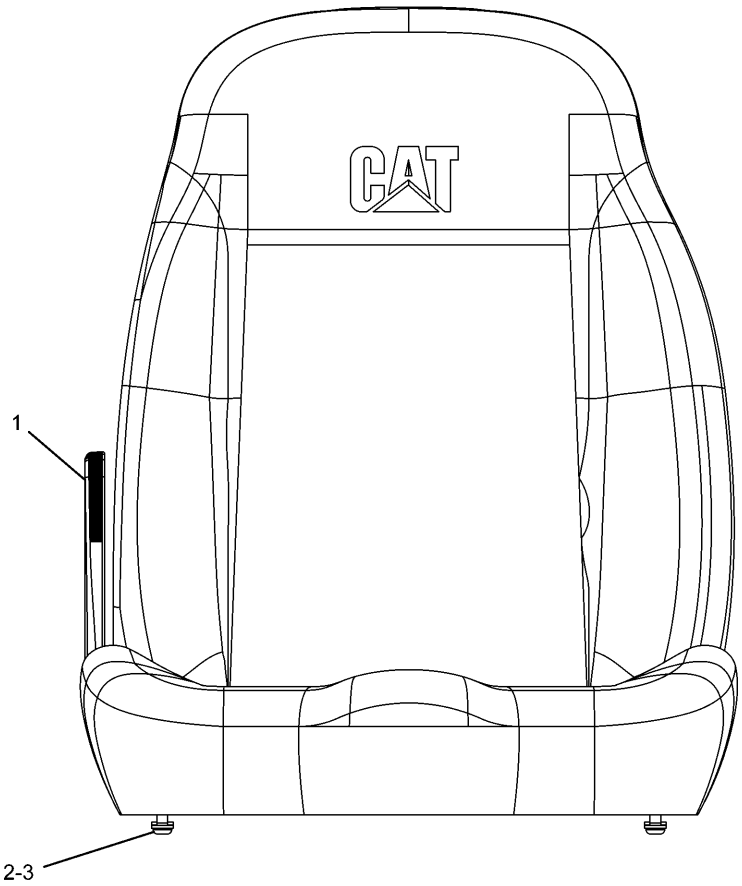


| NOTE | No. | PART No. | QTY | PART NAME | NOTE | No. | PART No. | QTY | PART NAME |
|---|---|---|---|---|---|---|---|---|---|
| | 1 | 245-7887 | 1 | LEVER KIT | | | | | |
| | 2 | 245-7898 | 4 | SCREW | | | | | |
| | 3 | 8T-4224 | 4 | WASHER | | | | | |

H89164E 00

## 245-7882 SEAT KIT

S/N BWZ 1-(T08.12), DFB 1-(T08.12), SNS 1-(T08.12), WJN 1-(T08.12)
Part of 240-5058-Page692
An Attachment

# OPERATOR STATION

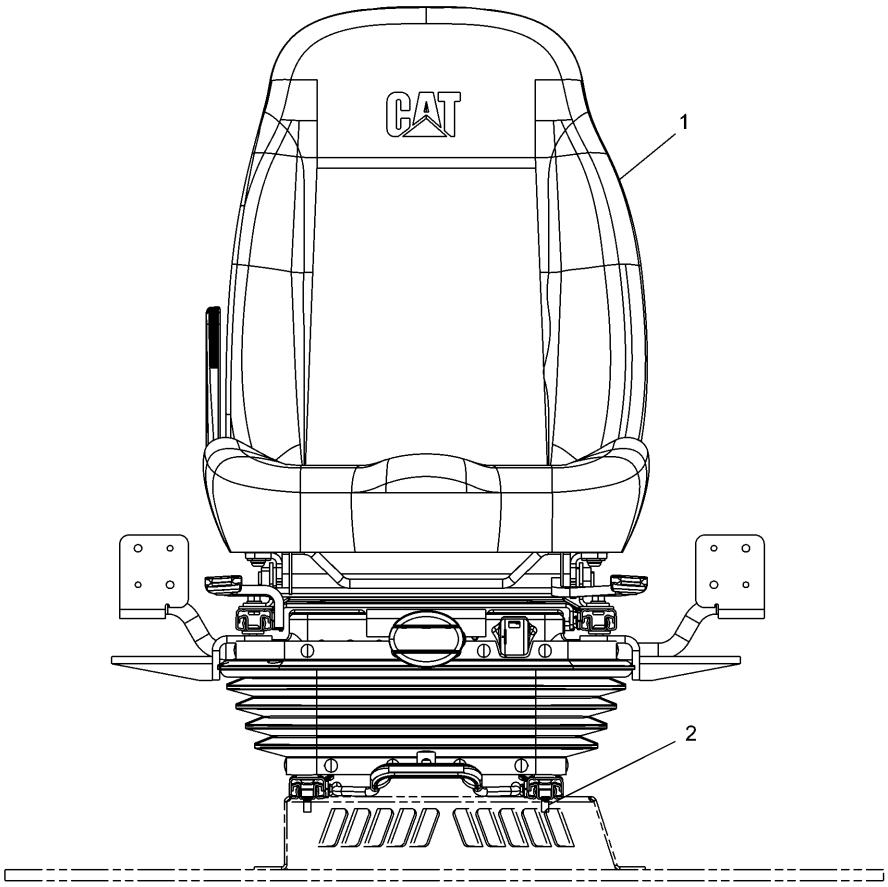


| NOTE | No. | PART No. | QTY | PART NAME | NOTE | No. | PART No. | QTY | PART NAME |
|---|---|---|---|---|---|---|---|---|---|
| Y | 1 | 229-9075 | 1 | SEAT GP | | | | | |
| | 2 | 6V-8202 | 4 | BOLT (L=16mm) | | | | | |

Y—SEE SEPARATE ILLUSTRATION

H89506E 01

## 240-4999 SEAT GP

S/N BWZ 1-(T08.12), DFB 1-(T08.12), SNS 1-(T08.12), WJN 1-(T08.12)

229-9075-Page695

An Attachment

# OPERATOR STATION

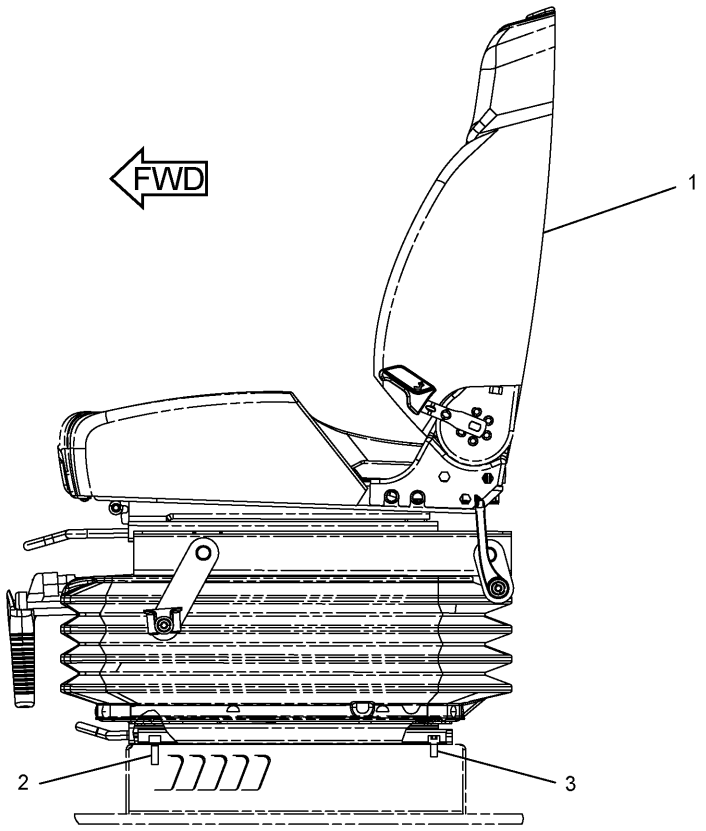


LEFT SIDE VIEW

| NOTE | No. | PART No. | QTY | PART NAME | NOTE | No. | PART No. | QTY | PART NAME |
|---|---|---|---|---|---|---|---|---|---|
| Y | 1 | 327-6506 | 1 | SEAT GP | | | | | |
| | 2 | 5A-3604 | 2 | BOLT (L=25mm) | | | | | |
| | 3 | 6V-8202 | 2 | BOLT (L=16mm) | | | | | |

Y—SEE SEPARATE ILLUSTRATION

HA1697E 02

## 327-6500 SEAT GP

S/N BWZ (T09.01)-Up, DFB (T09.01)-Up, SNS (T09.01)-Up, WJN (T09.01)-Up
327-6506-Page695.01
An Attachment

# MEMORANDA

# OPERATOR STATION

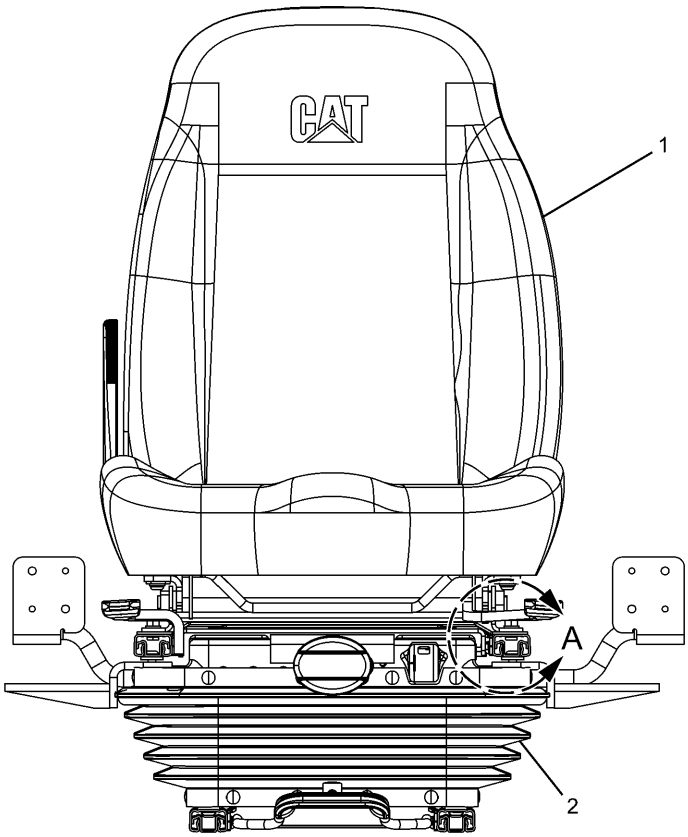


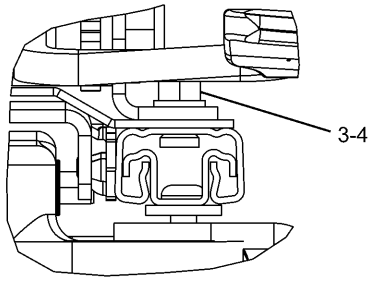


A

| NOTE | No. | PART No. | QTY | PART NAME | NOTE | No. | PART No. | QTY | PART NAME |
|---|---|---|---|---|---|---|---|---|---|
| Y | 1 | 229-9076 | 1 | SEAT GP | | | | | |
| Y | 2 | 229-9077 | 1 | SUSPENSION GP | | | | | |
| | 3 | 5C-7261 | 4 | NUT | | | | | |
| | 4 | 8T-4224 | 4 | WASHER | | | | | |

Y—SEE SEPARATE ILLUSTRATION

H91457E 04

## 229-9075 SEAT GP

S/N BWZ 1-(T08.12), DFB 1-(T08.12), SNS 1-(T08.12), WJN 1-(T08.12)
Part of 240-4999-Page694
229-9076-Page682,229-9077-Page696
An Attachment

# OPERATOR STATION

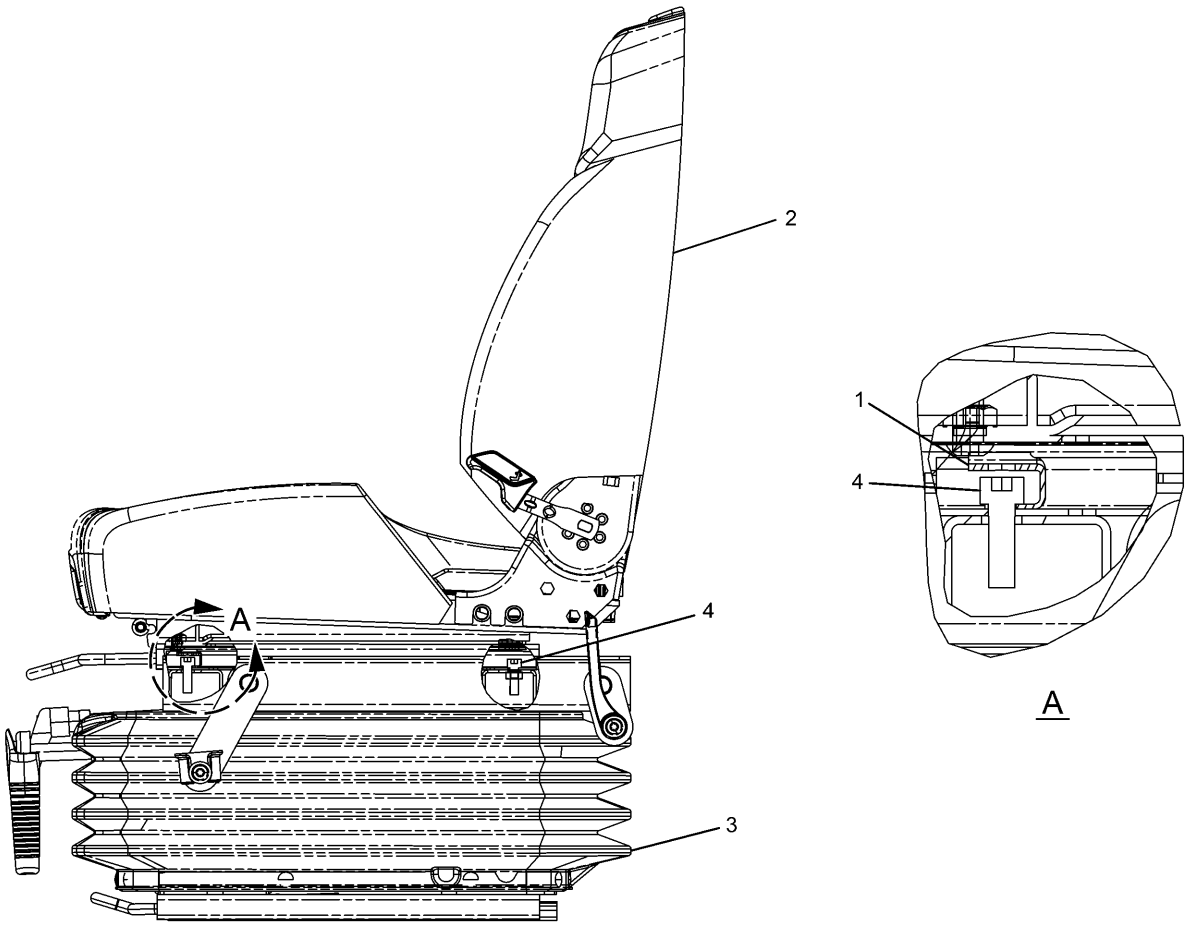


LEFT SIDE VIEW

| NOTE | No. | PART No. | QTY | PART NAME | NOTE | No. | PART No. | QTY | PART NAME |
|---|---|---|---|---|---|---|---|---|---|
| | 1 | 316-8987 | 2 | BRACKET | | | | | |
| Y | 2 | 327-6511 | 1 | SEAT GP | | | | | |
| Y | 3 | 327-6520 | 1 | SUSPENSION GP | | | | | |
| | 4 | 5A-3604 | 4 | BOLT (L=25mm) | | | | | |

Y—SEE SEPARATE ILLUSTRATION

HA1736E 00

## 327-6506 SEAT GP

S/N BWZ (T09.01)-Up, DFB (T09.01)-Up, SNS (T09.01)-Up, WJN (T09.01)-Up
Part of 327-6500-Page694.01
327-6511-Page682.01,327-6520-Page696.01
An Attachment

# MEMORANDA

# OPERATOR STATION

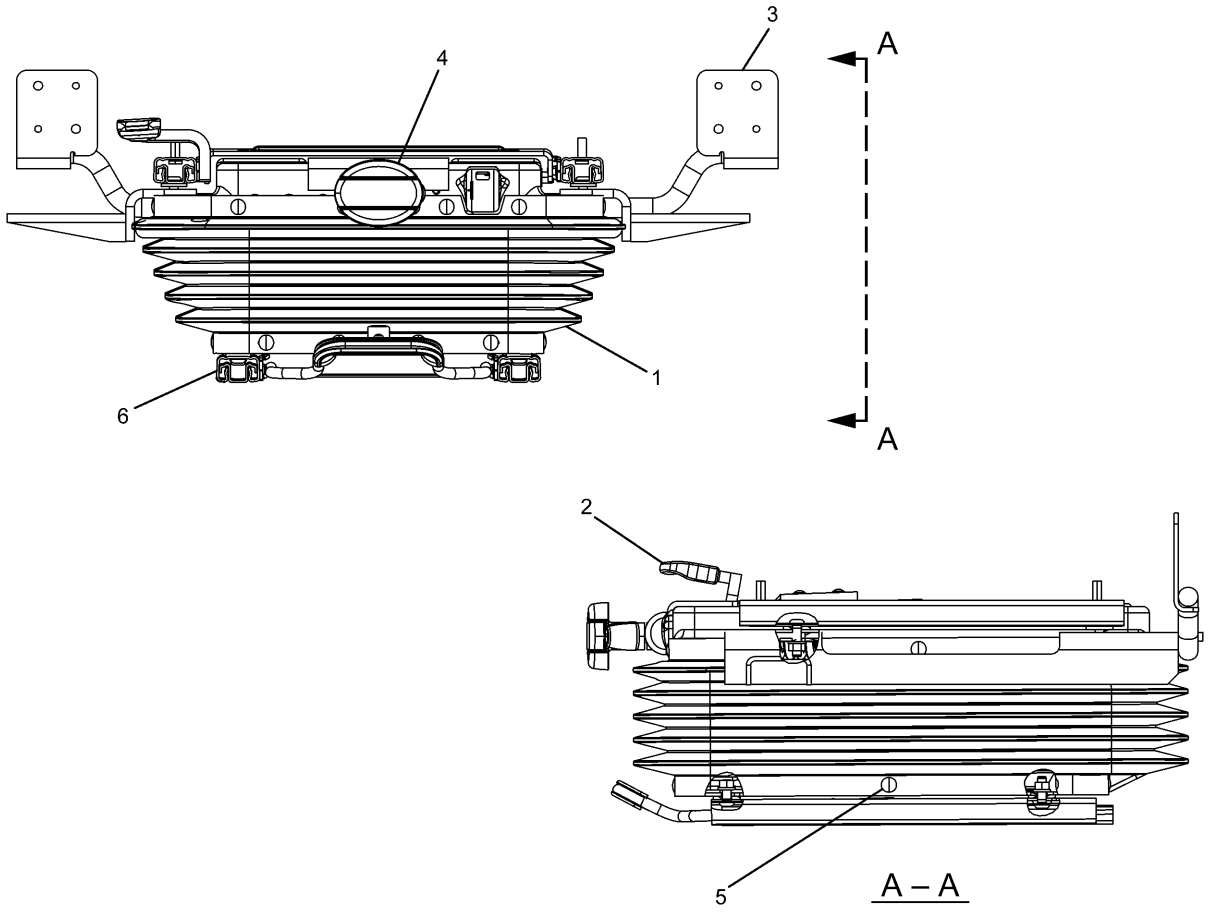


| NOTE | No. | PART No. | QTY | PART NAME | NOTE | No. | PART No. | QTY | PART NAME |
|---|---|---|---|---|---|---|---|---|---|
| | 1 | 242-8768 | 1 | COVER AS | | | | | |
| | | 147-4921 | 1 | CLIP KIT | | | | | |
| Y | 2 | 245-7889 | 1 | ADJUSTER KIT | | | | | |
| Y | 3 | 245-7890 | 1 | BRACKET KIT | | | | | |
| Y | 4 | 245-7892 | 1 | SUSPENSION KIT | | | | | |
| | 5 | 245-7895 | 1 | CLIP KIT | | | | | |
| Y | 6 | 245-7896 | 1 | ADJUSTER KIT | | | | | |

Y—SEE SEPARATE ILLUSTRATION

H91455E 04

## 229-9077 SUSPENSION GP-SEAT

S/N BWZ 1-(T08.12), DFB 1-(T08.12), SNS 1-(T08.12), WJN 1-(T08.12)
Part of 229-9075-Page695
245-7889-Page686,245-7896-Page687,245-7890-Page688,245-7892-Page698
An Attachment

# OPERATOR STATION

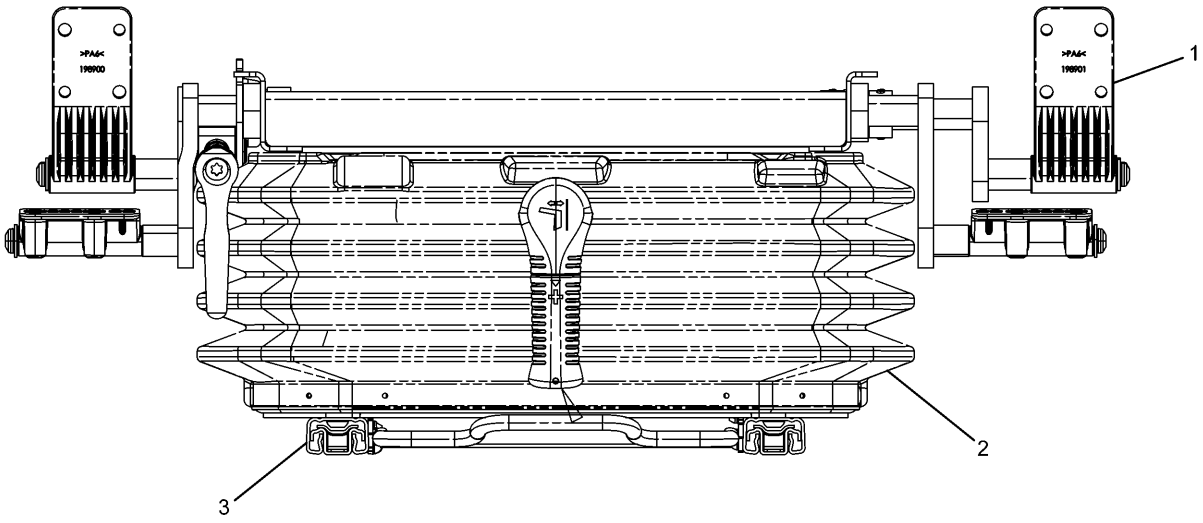


| NOTE | No. | PART No. | QTY | PART NAME | NOTE | No. | PART No. | QTY | PART NAME |
|---|---|---|---|---|---|---|---|---|---|
| | 1 | 327-6644 | 1 | BRACKET KIT | | | | | |
| | 2 | 327-6645 | 1 | SUSPENSION KIT | | | | | |
| | 3 | 327-6648 | 1 | ADJUSTER KIT | | | | | |

HA1498E 01

## 327-6520 SUSPENSION GP-SEAT

S/N BWZ (T09.01)-Up, DFB (T09.01)-Up, SNS (T09.01)-Up, WJN (T09.01)-Up
Part of 327-6506-Page695.01
An Attachment

# MEMORANDA

# OPERATOR STATION

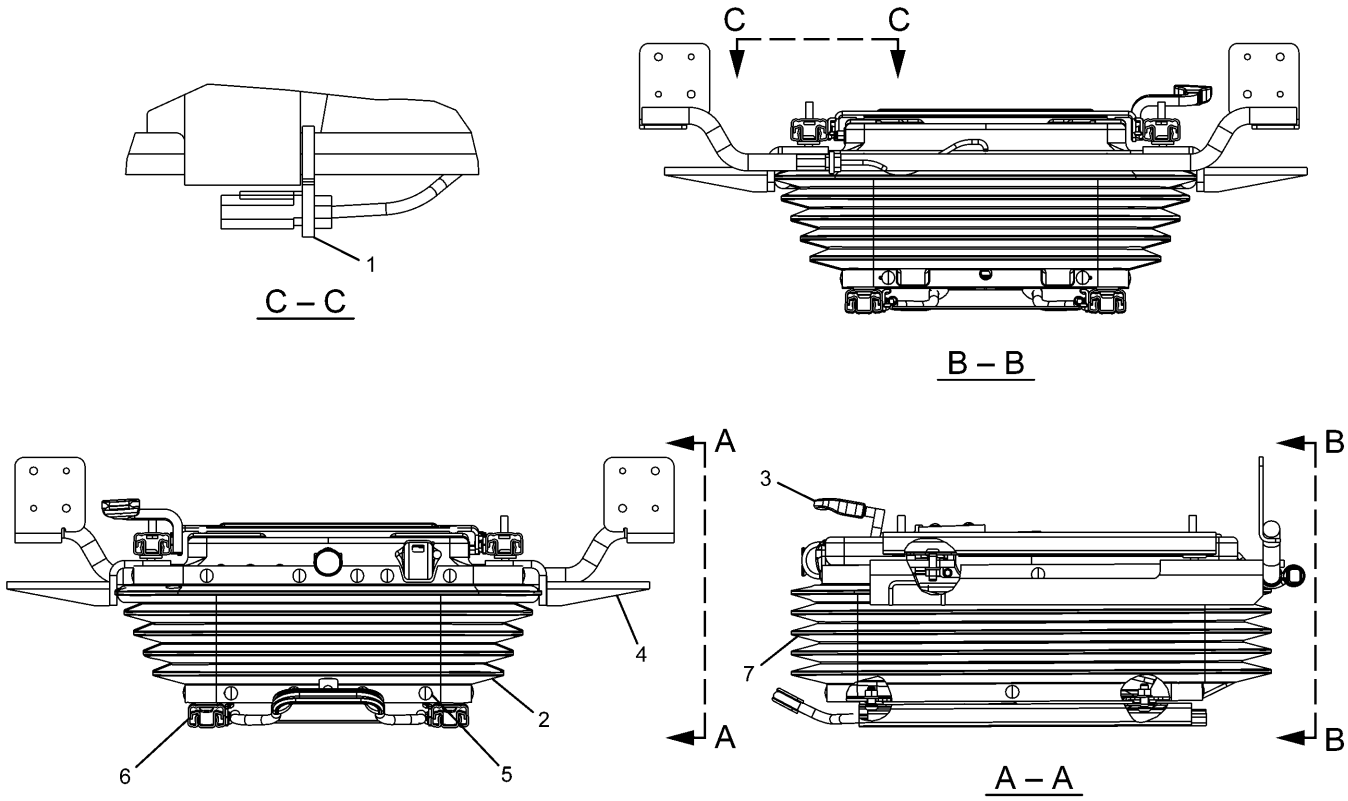


| NOTE | No. | PART No. | QTY | PART NAME | NOTE | No. | PART No. | QTY | PART NAME |
|---|---|---|---|---|---|---|---|---|---|
| | 1 | 71-2673 | 1 | STRAP | | | | | |
| | 2 | 242-8768 | 1 | COVER AS | | | | | |
| | | 147-4921 | 1 | CLIP KIT | | | | | |
| Y | 3 | 245-7889 | 1 | ADJUSTER KIT | | | | | |
| Y | 4 | 245-7890 | 1 | BRACKET KIT | | | | | |
| | 5 | 245-7895 | 1 | CLIP KIT | | | | | |
| Y | 6 | 245-7896 | 1 | ADJUSTER KIT | | | | | |
| | 7 | 273-5384 | 1 | SUSPENSION SEAT KIT | | | | | |

Y—SEE SEPARATE ILLUSTRATION

H91449E 06

## 240-5063 SUSPENSION GP-SEAT

S/N BWZ 1-(T08.12), DFB 1-(T08.12), SNS 1-(T08.12), WJN 1-(T08.12)
Part of 240-5065-Page700
245-7889-Page686,245-7896-Page687,245-7890-Page688
An Attachment

# OPERATOR STATION

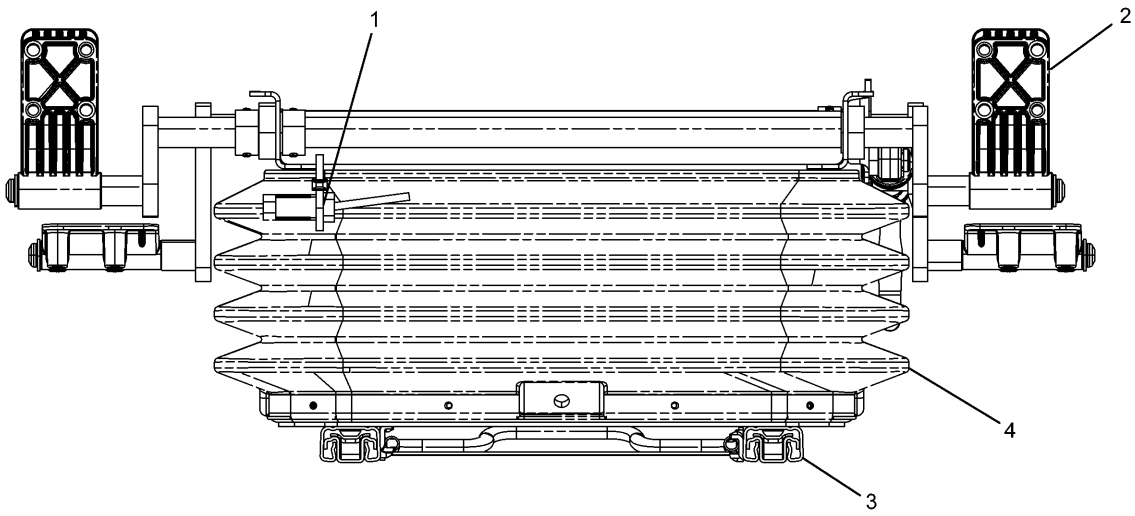


REAR VIEW

| NOTE | No. | PART No. | QTY | PART NAME | NOTE | No. | PART No. | QTY | PART NAME |
|---|---|---|---|---|---|---|---|---|---|
| | 1 | 7I-2673 | 1 | STRAP | | | | | |
| | 2 | 327-6644 | 1 | BRACKET KIT | | | | | |
| | 3 | 327-6648 | 1 | ADJUSTER KIT | | | | | |
| | 4 | 333-4157 | 1 | SUSPENSION KIT | | | | | |

HA1499E 01

## 327-6521 SUSPENSION GP-SEAT

S/N BWZ (T09.01)-Up, DFB (T09.01)-Up, SNS (T09.01)-Up, WJN (T09.01)-Up
Part of 327-6509-Page700.01
An Attachment

# MEMORANDA

# OPERATOR STATION

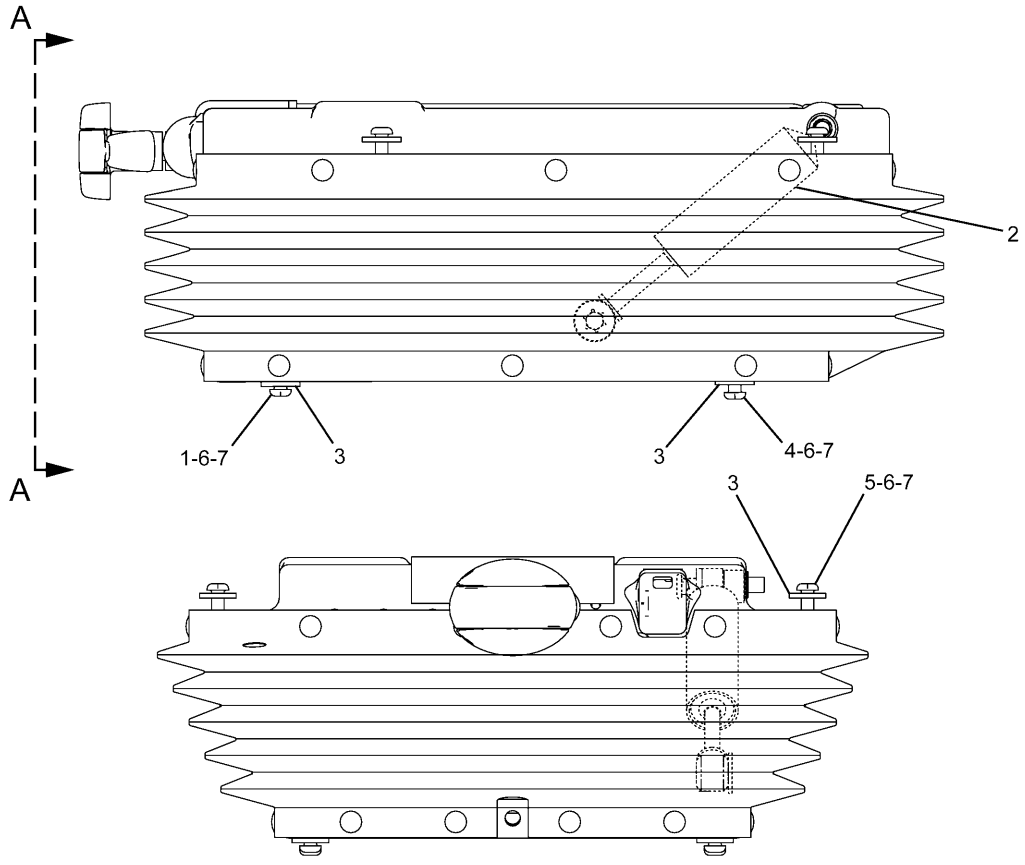


A – A

| NOTE | No. | PART No. | QTY | PART NAME | NOTE | No. | PART No. | QTY | PART NAME |
|---|---|---|---|---|---|---|---|---|---|
| | 1 | 198-3899 | 2 | SCREW | | | | | |
| | 2 | 209-4280 | 1 | DAMPER | | | | | |
| | 3 | 245-7897 | 8 | PLATE | | | | | |
| | 4 | 245-7898 | 2 | SCREW | | | | | |
| | 5 | 245-7899 | 4 | SCREW | | | | | |
| | 6 | 5C-7261 | 8 | NUT | | | | | |
| | 7 | 8T-4224 | 8 | WASHER | | | | | |

H90179E 00

## 245-7892 SUSPENSION KIT-SEAT

S/N BWZ 1-(T08.12), DFB 1-(T08.12), SNS 1-(T08.12), WJN 1-(T08.12)

Part of 229-9077-Page696

An Attachment

# OPERATOR STATION

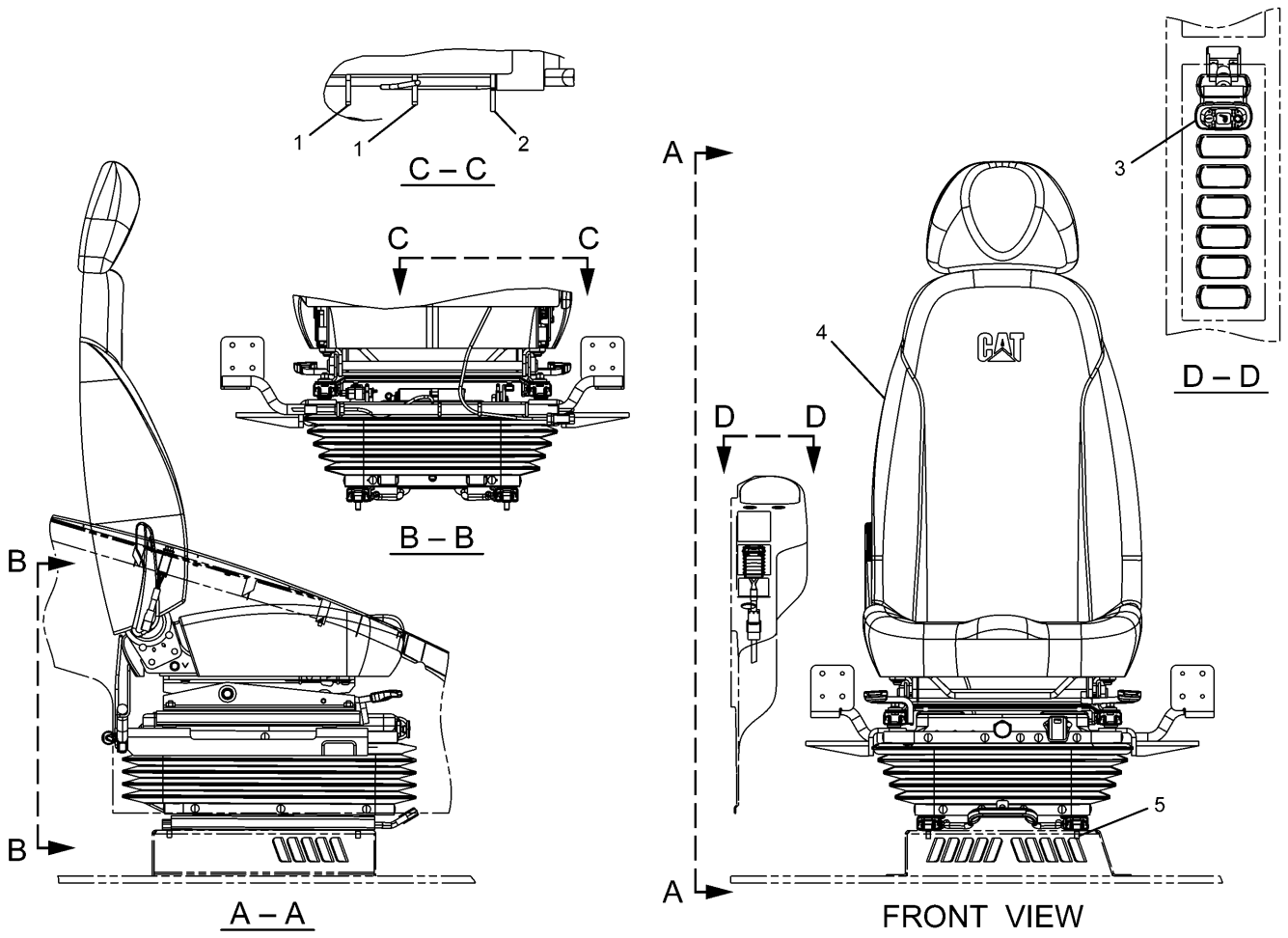


| NOTE | No. | PART No. | QTY | PART NAME | NOTE | No. | PART No. | QTY | PART NAME |
|---|---|---|---|---|---|---|---|---|---|
| | 1 | 3S-2093 | 2 | STRAP | | | | | |
| | 2 | 7I-2673 | 1 | STRAP | | | | | |
| | 3 | 238-2211 | 1 | SWITCH AS | | | | | |
| | | 167-3542 | 1 | CONNECTOR | | | | | |
| | | 167-3543 | 4 | TERMINAL | | | | | |
| Y | 4 | 240-5065 | 1 | SEAT GP | | | | | |
| | 5 | 6V-8202 | 4 | BOLT (L=16mm) | | | | | |

Y—SEE SEPARATE ILLUSTRATION

H91211E 05

## 240-5064 SEAT GP

S/N BWZ 1-(T08.12), DFB 1-(T08.12), SNS 1-(T08.12), WJN 1-(T08.12)

240-5065-Page700

An Attachment

# OPERATOR STATION

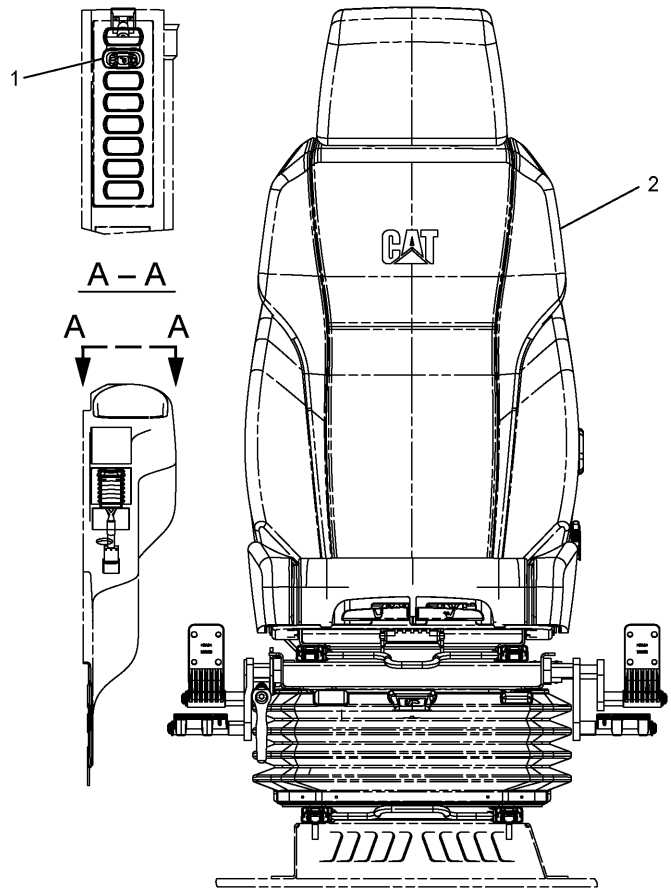


FRONT VIEW

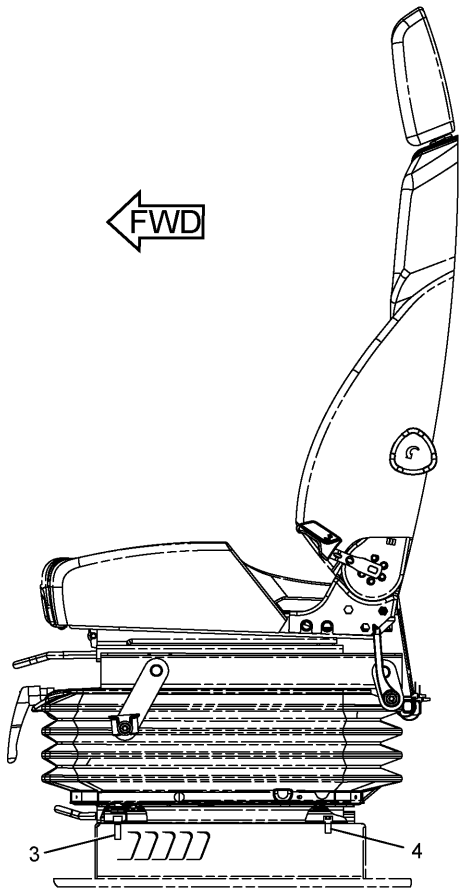


LEFT SIDE VIEW

| NOTE | No. | PART No. | QTY | PART NAME | NOTE | No. | PART No. | QTY | PART NAME |
|---|---|---|---|---|---|---|---|---|---|
| | 1 | 238-2211 | 1 | SWITCH AS | | | | | |
| | | 167-3542 | 1 | CONNECTOR | | | | | |
| | | 167-3543 | 4 | TERMINAL | | | | | |
| Y | 2 | 327-6509 | 1 | SEAT GP | | | | | |
| | 3 | 5A-3604 | 2 | BOLT (L=25mm) | | | | | |
| | 4 | 6V-8202 | 2 | BOLT (L=16mm) | | | | | |

Y—SEE SEPARATE ILLUSTRATION

HA1704E 03

## 327-6503 SEAT GP

65K4 With seat heater
S/N BWZ (T09.01)-Up, DFB (T09.01)-Up, SNS (T09.01)-Up, WJN (T09.01)-Up
327-6509-Page700.01
An Attachment

# MEMORANDA

# OPERATOR STATION

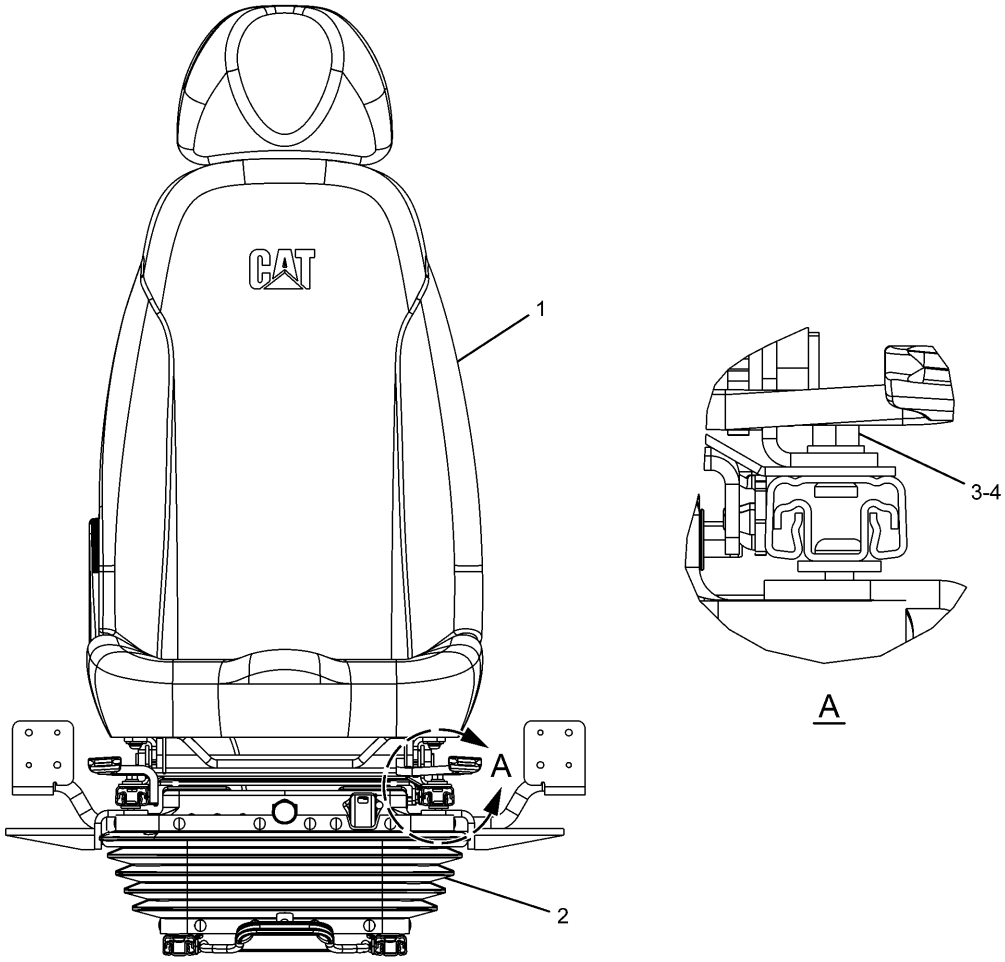


| NOTE | No. | PART No. | QTY | PART NAME | NOTE | No. | PART No. | QTY | PART NAME |
|---|---|---|---|---|---|---|---|---|---|
| Y | 1 | 229-9093 | 1 | SEAT GP | | | | | |
| Y | 2 | 240-5063 | 1 | SUSPENSION GP | | | | | |
| | 3 | 5C-7261 | 4 | NUT | | | | | |
| | 4 | 8T-4224 | 4 | WASHER | | | | | |

Y—SEE SEPARATE ILLUSTRATION

H91446E 05

## 240-5065 SEAT GP

S/N BWZ 1-(T08.12), DFB 1-(T08.12), SNS 1-(T08.12), WJN 1-(T08.12)
Part of 240-5064-Page699
240-5063-Page697,229-9093-Page701
An Attachment

# OPERATOR STATION

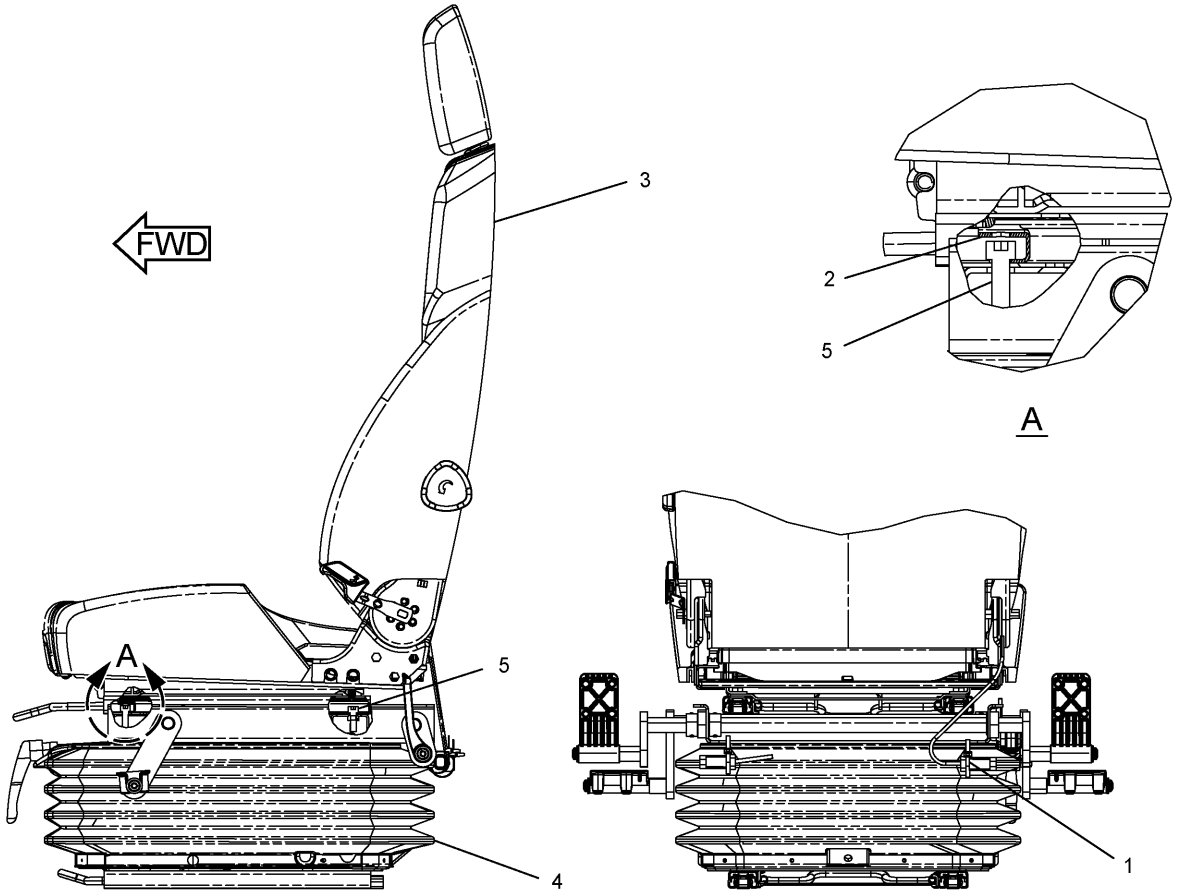


LEFT SIDE VIEW

REAR VIEW

| NOTE | No. | PART No. | QTY | PART NAME | NOTE | No. | PART No. | QTY | PART NAME |
|---|---|---|---|---|---|---|---|---|---|
| | 1 | 71-2673 | 1 | STRAP | | | | | |
| | 2 | 316-8987 | 2 | BRACKET | | | | | |
| Y | 3 | 327-6513 | 1 | SEAT GP | | | | | |
| Y | 4 | 327-6521 | 1 | SUSPENSION GP | | | | | |
| | 5 | 5A-3604 | 4 | BOLT (L=25mm) | | | | | |

Y—SEE SEPARATE ILLUSTRATION

HA1705E 01

## 327-6509 SEAT GP

S/N BWZ (T09.01)-Up, DFB (T09.01)-Up, SNS (T09.01)-Up, WJN (T09.01)-Up
Part of 327-6503-Page699.01
327-6521-Page697.01,327-6513-Page701.01
An Attachment

# MEMORANDA

# OPERATOR STATION

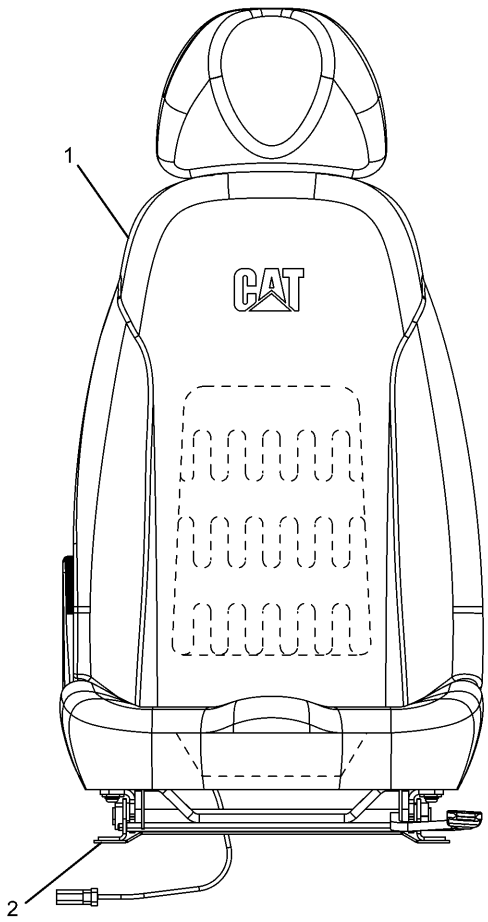


| NOTE | No. | PART No. | QTY | PART NAME | NOTE | No. | PART No. | QTY | PART NAME |
|---|---|---|---|---|---|---|---|---|---|
| Y | 1 | 245-7885 | 1 | SEAT KIT | | | | | |
| Y | 2 | 245-7888 | 1 | SUPPORT KIT | | | | | |

Y—SEE SEPARATE ILLUSTRATION

H88079E 03

## 229-9093 SEAT GP

S/N BWZ 1-(T08.12), DFB 1-(T08.12), SNS 1-(T08.12), WJN 1-(T08.12)
Part of 240-5065-Page700
245-7888-Page684,245-7885-Page702
An Attachment

# OPERATOR STATION

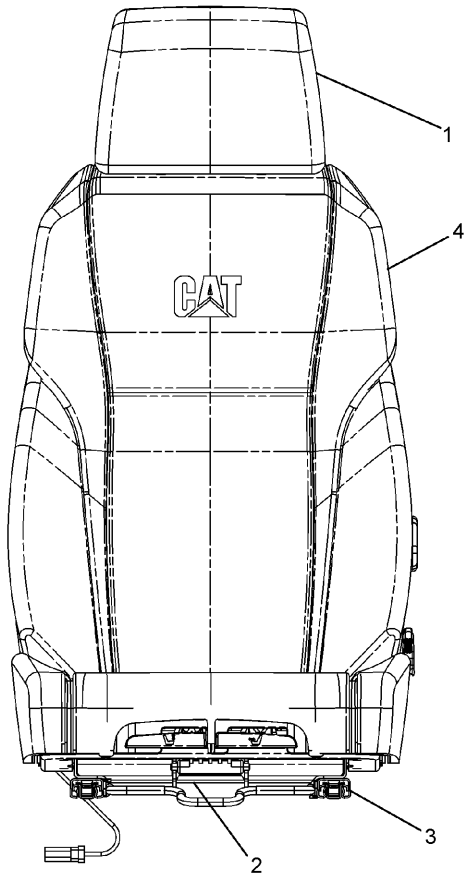


FRONT VIEW

| NOTE | No. | PART No. | QTY | PART NAME | NOTE | No. | PART No. | QTY | PART NAME |
|---|---|---|---|---|---|---|---|---|---|
| | 1 | 327-6515 | 1 | HEADREST AS | | | | | |
| | 2 | 327-6642 | 1 | ADJUSTER KIT | | | | | |
| | 3 | 327-6643 | 1 | ADJUSTER KIT | | | | | |
| | 4 | 327-6649 | 1 | SEAT KIT | | | | | |

HA1482E 01

## 327-6513 SEAT GP

65K4 With seat heater
S/N BWZ (T09.01)-Up, DFB (T09.01)-Up, SNS (T09.01)-Up, WJN (T09.01)-Up
Part of 327-6509-Page700.01
An Attachment

# MEMORANDA

# OPERATOR STATION

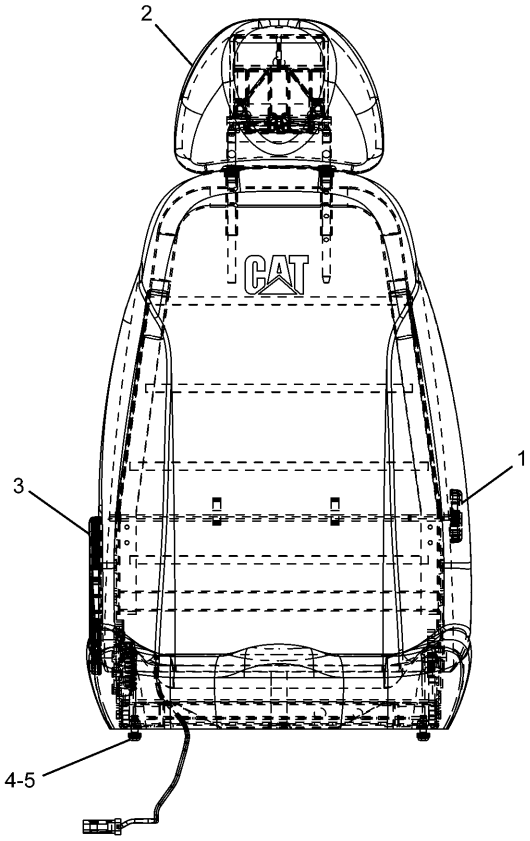


| NOTE | No. | PART No. | QTY | PART NAME | NOTE | No. | PART No. | QTY | PART NAME |
|---|---|---|---|---|---|---|---|---|---|
| | 1 | 178-5659 | 1 | HANDLE KIT (ADJUSTER) | | | | | |
| | 2 | 229-9094 | 1 | HEADREST AS | | | | | |
| | 3 | 245-7887 | 1 | LEVER KIT | | | | | |
| | 4 | 245-7898 | 4 | SCREW | | | | | |
| | 5 | 8T-4224 | 4 | WASHER | | | | | |

H88068E 00

## 245-7885 SEAT KIT

S/N BWZ 1-(T08.12), DFB 1-(T08.12), SNS 1-(T08.12), WJN 1-(T08.12)

Part of 229-9093-Page701

An Attachment

# OPERATOR STATION

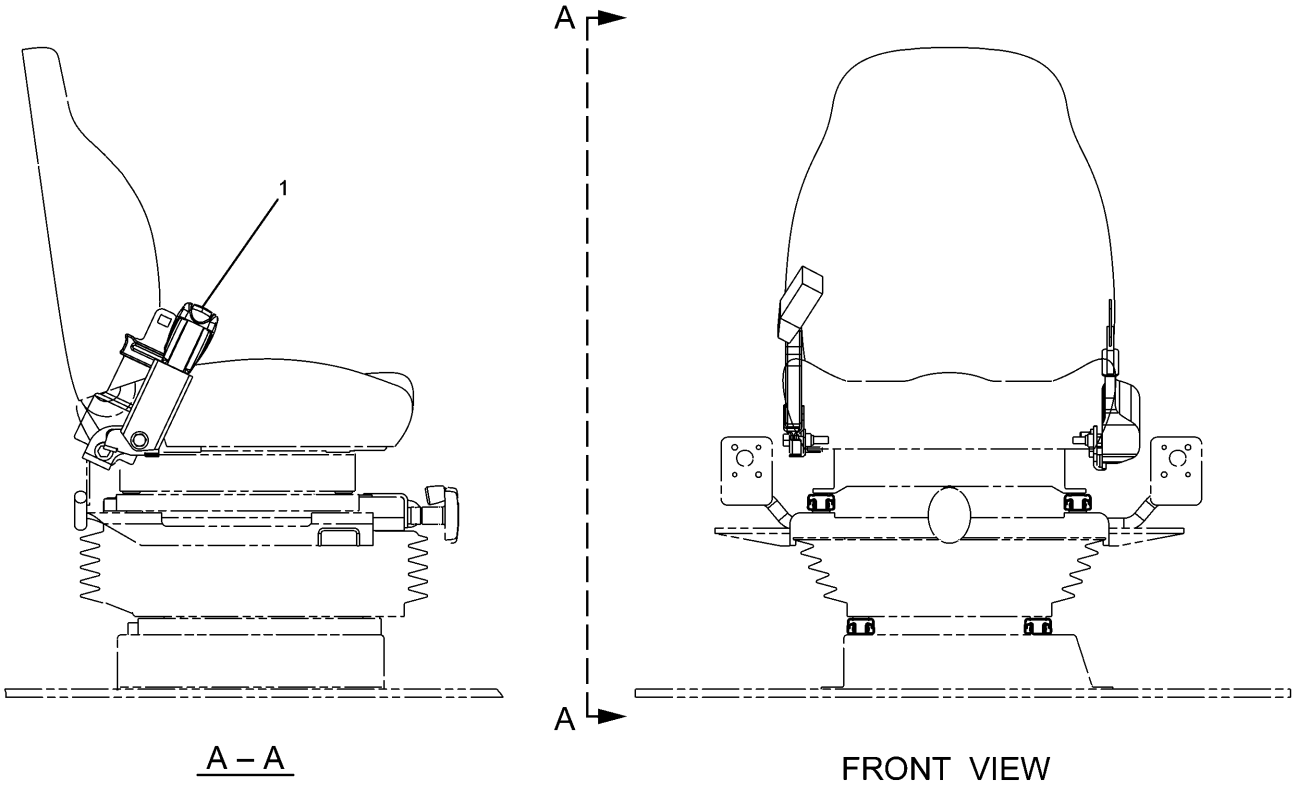


| NOTE | No. | PART No. | QTY | PART NAME | NOTE | No. | PART No. | QTY | PART NAME |
|---|---|---|---|---|---|---|---|---|---|
| Y | 1 | 273-5446 | 1 | BELT GP | | | | | |

Y—SEE SEPARATE ILLUSTRATION

H92382E 03

## 240-5037 SEAT BELT GP

2 Inches Width
S/N BWZ 1-(T08.12), DFB 1-(T08.12), SNS 1-(T08.12), WJN 1-(T08.12)
273-5446-Page704
An Attachment

# OPERATOR STATION

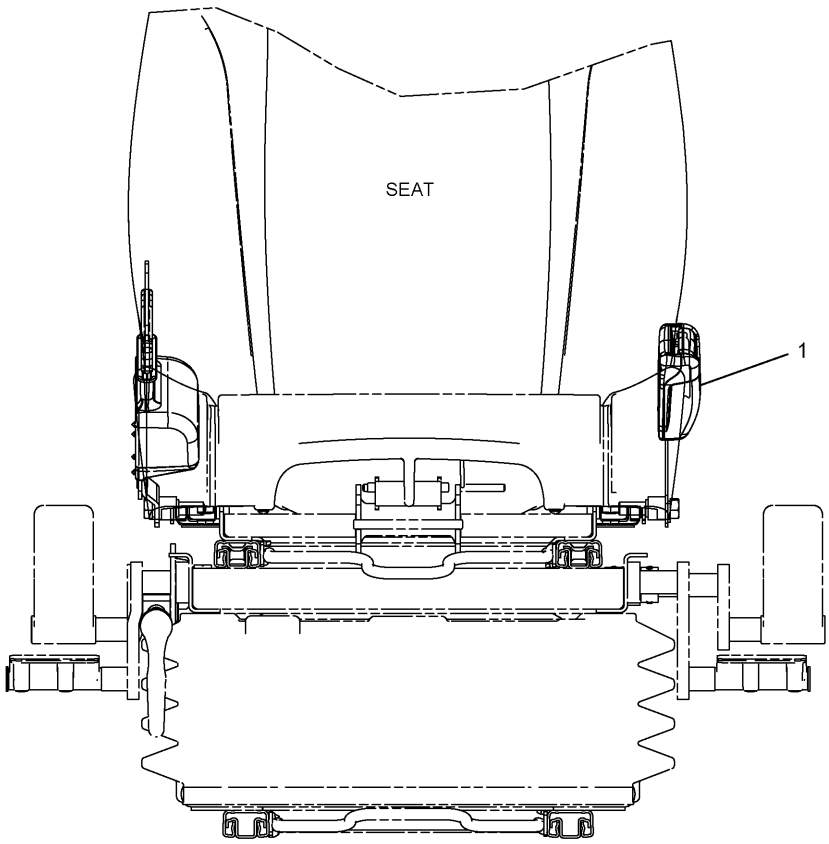


FRONT VIEW

| NOTE | No. | PART No. | QTY | PART NAME | NOTE | No. | PART No. | QTY | PART NAME |
|---|---|---|---|---|---|---|---|---|---|
| | 1 | 327-6541 | 1 | BELT GP | | | | | |

HA1177E 00

## 305-0467 SEAT BELT GP

2 Inches Width

S/N BWZ (T09.01)-Up, DFB (T09.01)-Up, SNS (T09.01)-Up, WJN (T09.01)-Up

An Attachment

# MEMORANDA

# OPERATOR STATION

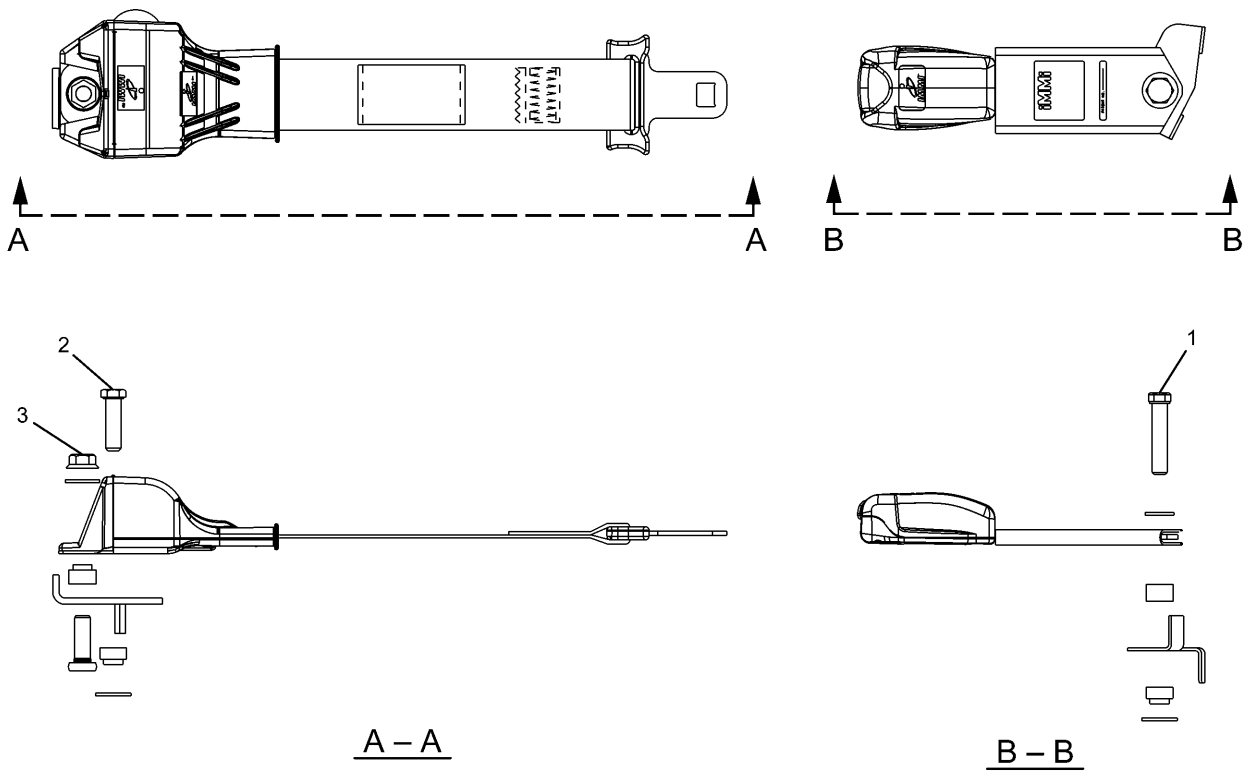


| NOTE | No. | PART No. | QTY | PART NAME | NOTE | No. | PART No. | QTY | PART NAME |
|---|---|---|---|---|---|---|---|---|---|
| | 1 | 8S-4724 | 1 | BOLT (L=57mm) | | | | | |
| | 2 | 8S-4723 | 1 | BOLT (L=38mm) | | | | | |
| | 3 | 8S-0934 | 1 | LOCKNUT | | | | | |

H92385E 00

## 273-5446 SEAT BELT GP

2 Inches Width
S/N BWZ 1-(T08.12), DFB 1-(T08.12), SNS 1-(T08.12), WJN 1-(T08.12)
Part of 240-5037-Page703
An Attachment

# OPERATOR STATION

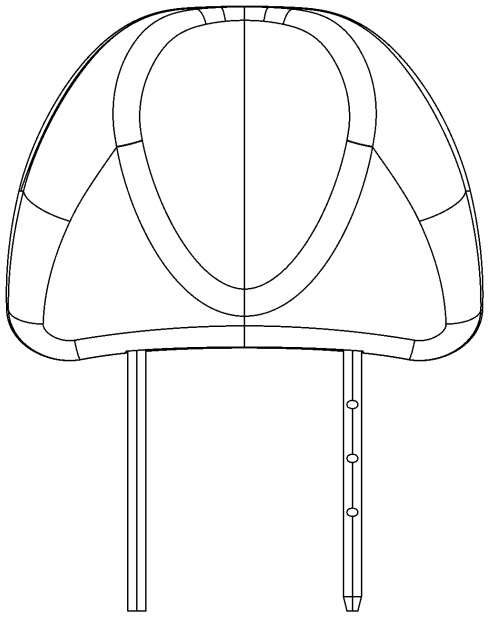

| NOTE | No. | PART No. | QTY | PART NAME |
|---|---|---|---|---|
| | | | | |

H87907E 01

## 229-9094 HEADREST AS

S/N BWZ 1-(T08.12), DFB 1-(T08.12), SNS 1-(T08.12), WJN 1-(T08.12)
An Attachment

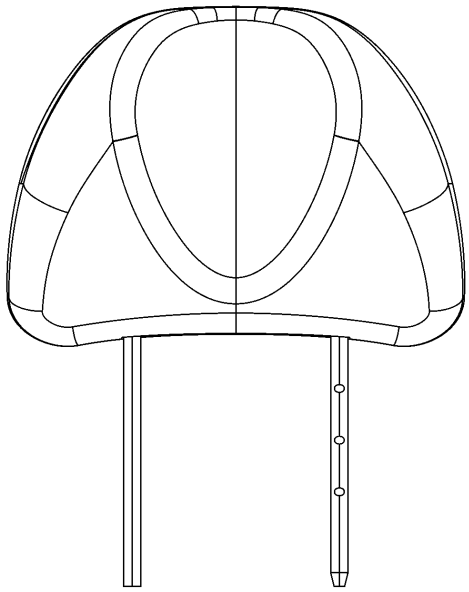

| NOTE | No. | PART No. | QTY | PART NAME |
|---|---|---|---|---|
| | | | | |

H88976E 01

## 240-5060 HEADREST AS

S/N BWZ 1-(T08.12), DFB 1-(T08.12), SNS 1-(T08.12), WJN 1-(T08.12)
An Attachment

# OPERATOR STATION

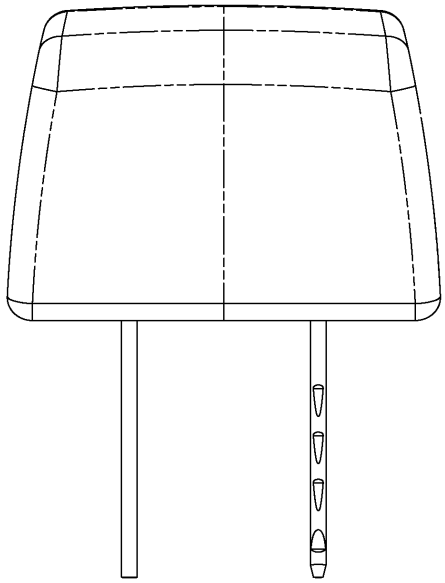

| NOTE | No. | PART No. | QTY | PART NAME |
|---|---|---|---|---|
| | | | | |

HA1178E 00

## 327-6515 HEADREST AS

S/N BWZ (T09.01)-Up, DFB (T09.01)-Up, SNS (T09.01)-Up, WJN (T09.01)-Up
An Attachment

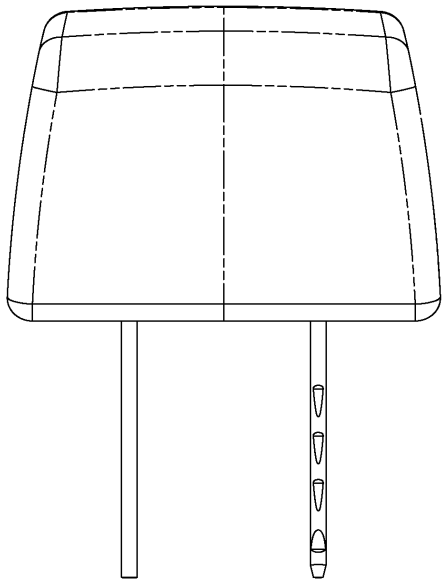

| NOTE | No. | PART No. | QTY | PART NAME |
|---|---|---|---|---|
| | | | | |

HA1406E 00

## 327-6514 HEADREST AS

KAB K1(Vinyl)
S/N BWZ (T09.01)-Up, DFB (T09.01)-Up, SNS (T09.01)-Up, WJN (T09.01)-Up
An Attachment

# MEMORANDA

# OPERATOR STATION

Consists of :

Page

| | | |
|---|---|---|
| 2 | 5P-7958 | SLEEVE |
| 1 | 099-3645 | CABLE |
| 2 | 278-1585 | KEY |

H92032E 01

275-3667 LITERATURE GP

# OPERATOR STATION

Consists of :

| | | | Page |
|---|---|---|---|
| 1 | 229-9082 | DUCT GP-AIR | 716 |
| 1 | 235-9004 | AIR CONDITIONER & MOUNTING GP | 712 |

H89680E 02

**235-9003 AIR CONDITIONER AR**
An Attachment

Consists of :

| | | | Page |
|---|---|---|---|
| 1 | 273-5166 | LINES GP-AIR CONDITIONER | 720 |
| 1 | 273-5167 | CONDENSER & MTG GP-REFRIGERANT | 725 |

H94168E 00

**284-4442 AIR CONDITIONER AR**
Swing Type
An Attachment

# OPERATOR STATION

Consists of :

| | | | Page |
|---|---|---|---|
| 1 | 229-9082 | DUCT GP-AIR | 716 |
| 1 | 229-9084 | HEATER & MTG GP-CAB | 714 |
| 1 | 273-5169 | LINES GP-HEATER | 722 |

H94144E 00

**273-5168 HEATER AR-CAB**
An Attachment

# MEMORANDA

# OPERATOR STATION

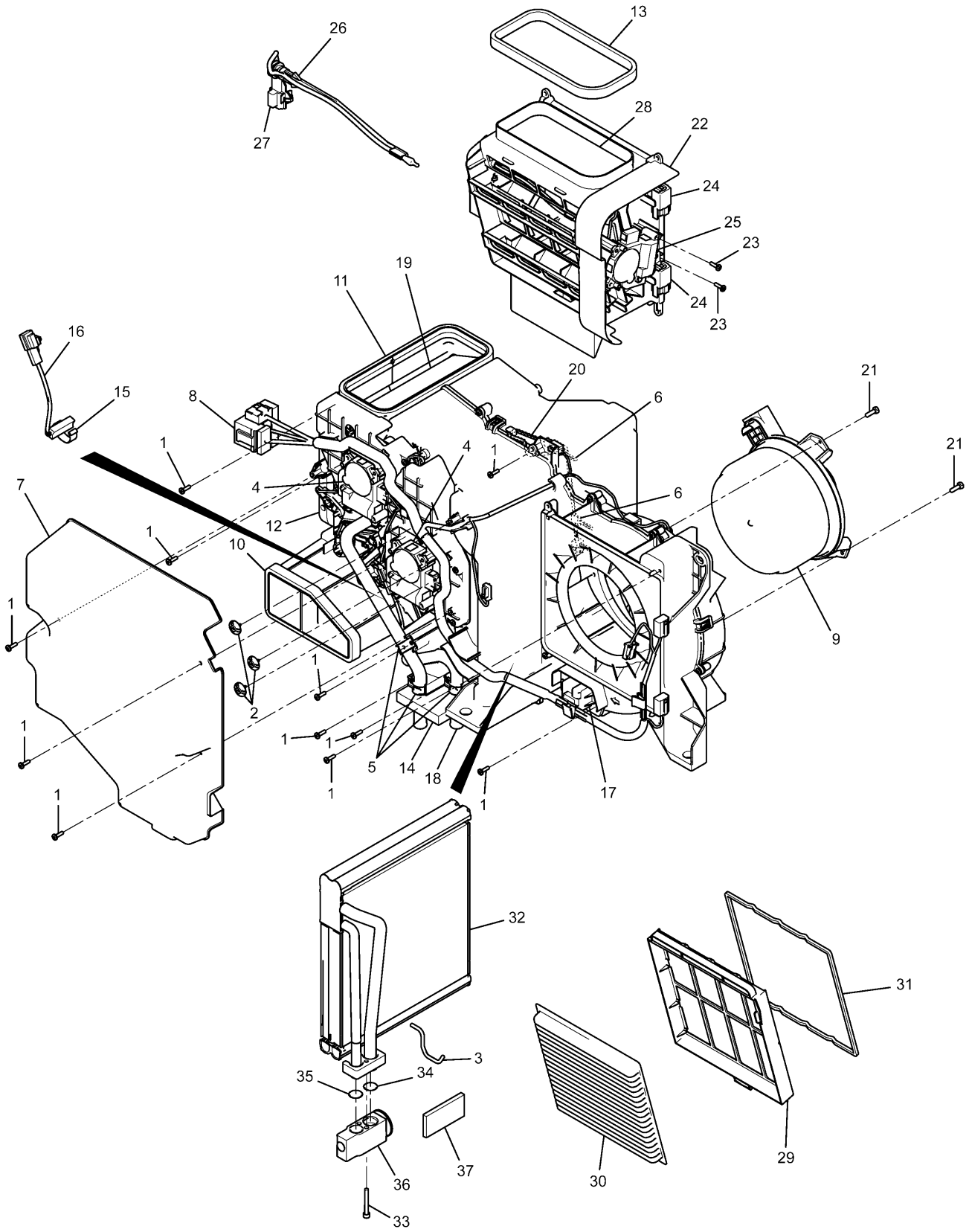


**316-8811 AIR CONDITIONER GP**
Part of 235-9004-Page713,229-9084-Page715
An Attachment

# OPERATOR STATION

| NOTE | No. | PART No. | QTY | PART NAME | NOTE | No. | PART No. | QTY | PART NAME |
|---|---|---|---|---|---|---|---|---|---|
| | 1 | 185-8300 | 35 | SCREW | | | | | |
| | 2 | 185-8302 | 3 | SCREW AS | | | | | |
| | 3 | 245-7838 | 1 | PACKING | | | | | |
| | 4 | 245-7817 | 2 | MOTOR AS | | | | | |
| | 5 | 245-7818 | 3 | CLIP | | | | | |
| | 6 | 245-7819 | 2 | CLIP | | | | | |
| | 7 | 245-7820 | 1 | COVER | | | | | |
| | 8 | 245-7847 | 1 | HARNESS AS | | | | | |
| | 9 | 245-7839 | 1 | MOTOR AS | | | | | |
| | 10 | 245-7825 | 1 | INSULATOR | | | | | |
| | 11 | 245-7826 | 1 | INSULATOR | | | | | |
| | 12 | 245-7827 | 1 | INSULATOR | | | | | |
| | 13 | 245-7828 | 1 | INSULATOR | | | | | |
| | 14 | 245-7829 | 1 | PACKING | | | | | |
| | 15 | 245-7830 | 1 | CLIP | | | | | |
| | 16 | 245-7831 | 1 | SENSOR AS | | | | | |
| | 17 | 245-7832 | 1 | CONTROL AS | | | | | |
| | 18 | 245-7833 | 1 | CORE AS | | | | | |
| | 19 | 245-7834 | 1 | DAMPER AS | | | | | |
| | 20 | 245-7835 | 1 | SENSOR AS | | | | | |
| | 21 | 245-7856 | 3 | SCREW AS | | | | | |
| | 22 | 245-7846 | 1 | BOX AS | | | | | |
| | 23 | 185-8300 | 4 | SCREW | | | | | |
| | 24 | 196-1666 | 2 | RELAY | | | | | |
| | 25 | 245-7813 | 1 | MOTOR AS | | | | | |
| | 26 | 245-7814 | 1 | BRACKET | | | | | |
| | 27 | 245-7815 | 1 | SENSOR AS | | | | | |
| | 28 | 245-7816 | 1 | DAMPER AS | | | | | |
| | 29 | 293-1137 | 1 | FILTER AS | | | | | |
| | 30 | 245-7823 | 1 | FILTER | | | | | |
| | 31 | 245-7824 | 1 | PACKING | | | | | |
| | 32 | 245-7836 | 1 | CORE AS | | | | | |
| | 33 | 8T-0266 | 2 | BOLT (L=40mm) | | | | | |
| | 34 | 121-7136 | 1 | SEAL-O-RING (ID=13.40mm) | | | | | |
| | 35 | 121-7138 | 1 | SEAL-O-RING (ID=6.70mm) | | | | | |
| | 36 | 245-7837 | 1 | VALVE AS | | | | | |
| | 37 | 245-7905 | 1 | INSULATOR | | | | | |

H99409E 00

## 316-8811 AIR CONDITIONER GP

Part of 235-9004-Page713,229-9084-Page715

An Attachment

# OPERATOR STATION

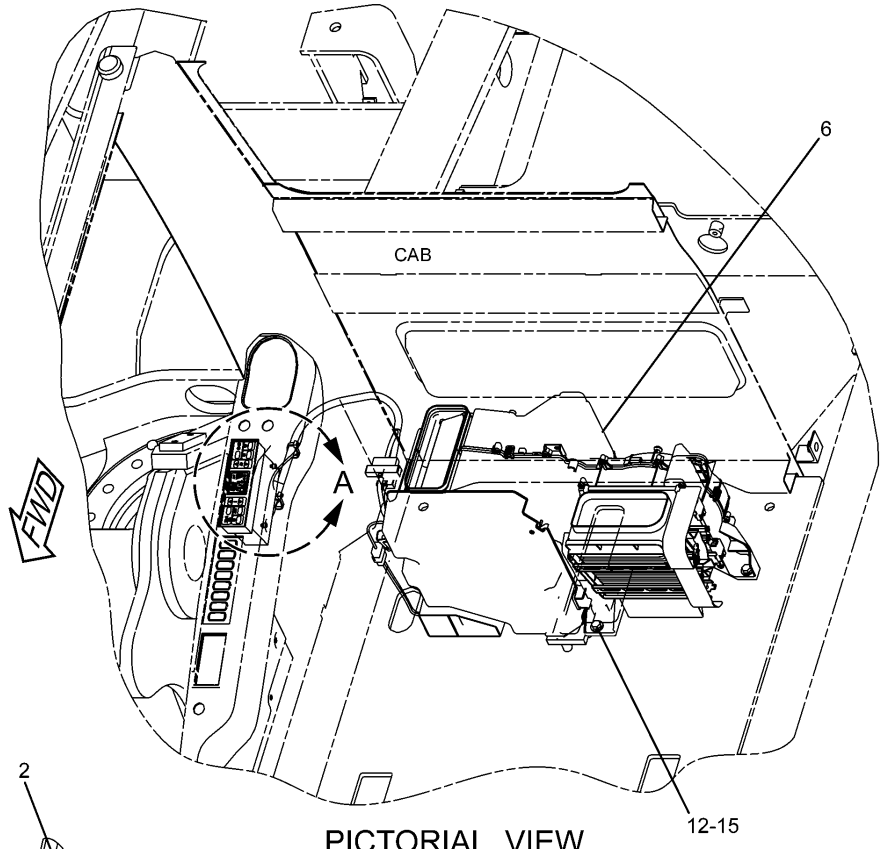


PICTORIAL VIEW

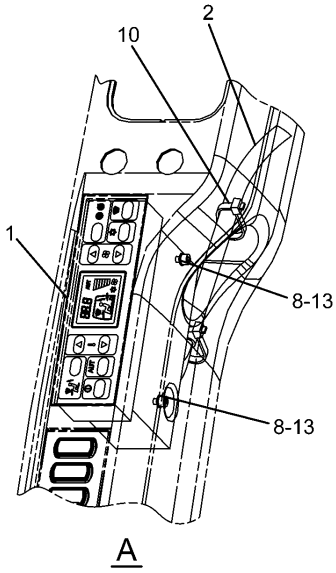


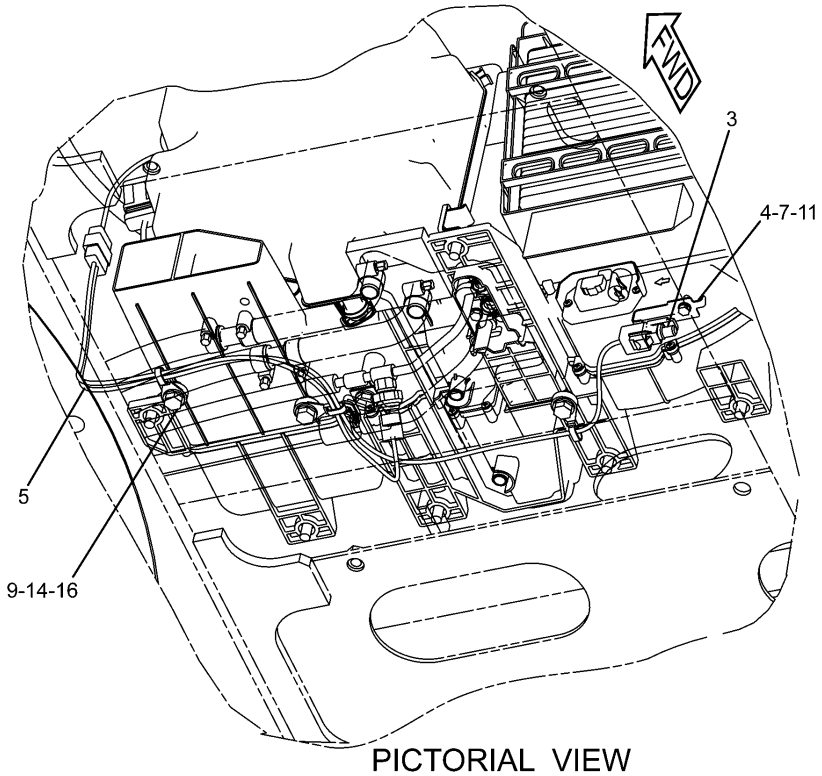


PICTORIAL VIEW
(PLATFORM THE BACK)

H99408E 06

**235-9004 AIR CONDITIONER & MOUNTING GP**
Part of 235-9003-Page707
316-8811-Page710
An Attachment

# OPERATOR STATION

| NOTE | No. | PART No. | QTY | PART NAME | NOTE | No. | PART No. | QTY | PART NAME |
|---|---|---|---|---|---|---|---|---|---|
| | 1 | 293-1136 | 1 | PANEL AS | | | | | |
| | 2 | 235-8873 | 1 | HARNESS AS | | | | | |
| | 3 | 235-8874 | 1 | SENSOR | | | | | |
| | 4 | 235-8875 | 1 | BRACKET | | | | | |
| | 5 | 235-9005 | 1 | HARNESS AS | | | | | |
| Y | 6 | 316-8811 | 1 | CONDITIONER GP | | | | | |
| | 7 | 9X-8256 | 1 | WASHER | | | | | |
| | 8 | 099-2374 | 2 | BOLT (L=12mm) | | | | | |
| | 9 | 111-4836 | 3 | CLIP | | | | | |
| | 10 | 3S-2093 | 2 | STRAP | | | | | |
| | 11 | 5C-9553 | 1 | BOLT (L=16mm) | | | | | |
| | 12 | 7X-7729 | 7 | WASHER | | | | | |
| | 13 | 8T-0328 | 2 | WASHER | | | | | |
| | 14 | 8T-4121 | 3 | WASHER | | | | | |
| | 15 | 8T-4136 | 7 | BOLT (L=25mm) | | | | | |
| | 16 | 8T-4137 | 3 | BOLT (L=20mm) | | | | | |

Y—SEE SEPARATE ILLUSTRATION

H99408E 06

## 235-9004 AIR CONDITIONER & MOUNTING GP

Part of 235-9003-Page707
316-8811-Page710
An Attachment

# OPERATOR STATION

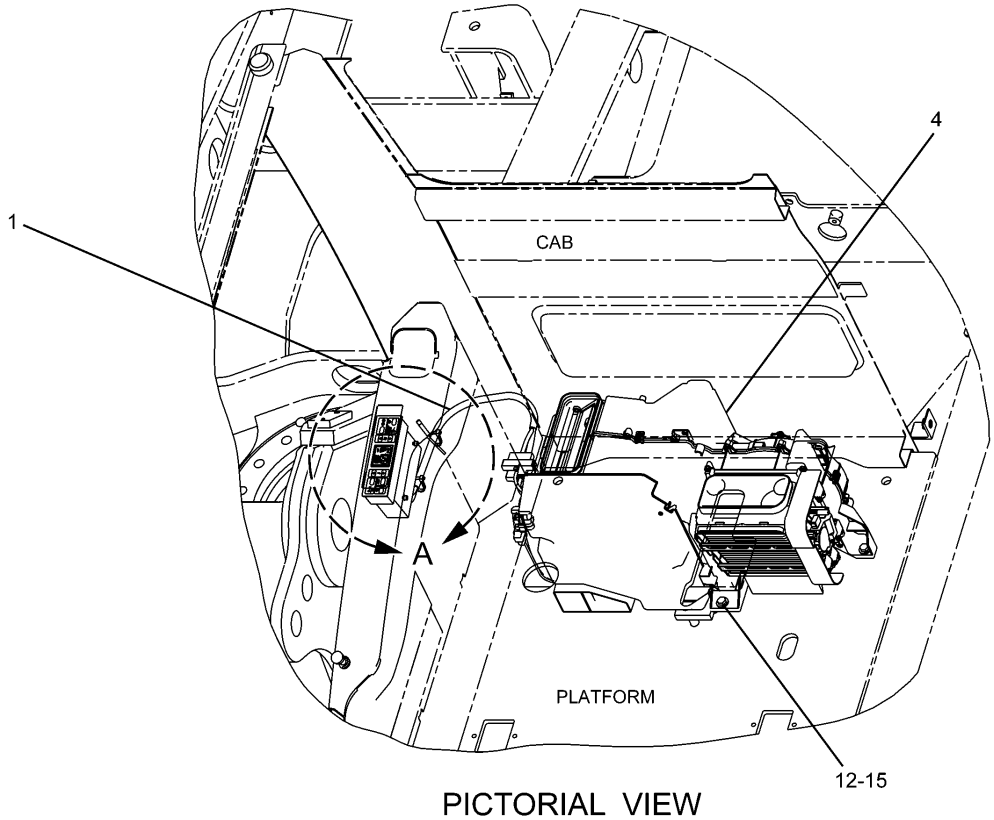


PICTORIAL VIEW
(VIEW FROM FRONT SIDE)

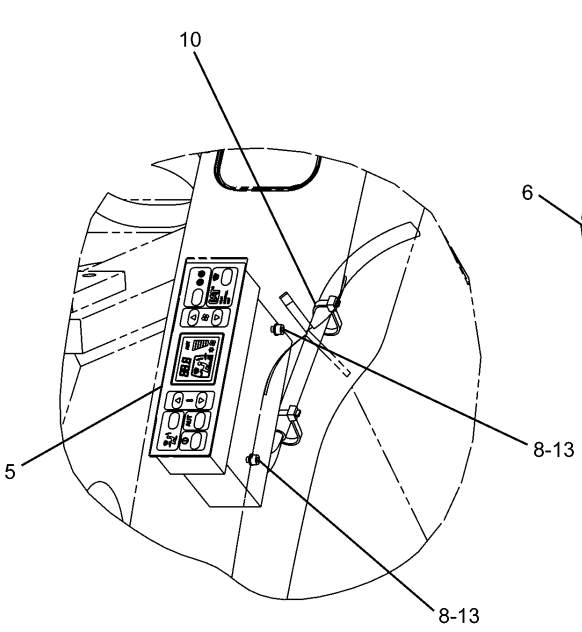


A

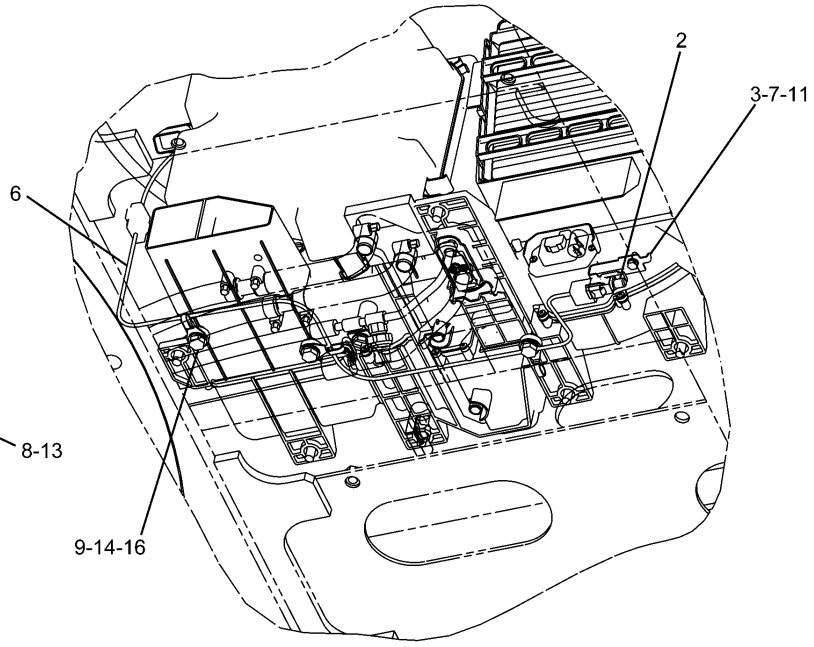


PICTORIAL VIEW
(VIEW FROM FRONT SIDE)

H99567E 04

**229-9084 HEATER & MTG GP-CAB**
Part of 273-5168-Page708
316-8811-Page710
An Attachment

# OPERATOR STATION

| NOTE | No. | PART No. | QTY | PART NAME | NOTE | No. | PART No. | QTY | PART NAME |
|---|---|---|---|---|---|---|---|---|---|
| | 1 | 235-8873 | 1 | HARNESS AS | | | | | |
| | 2 | 235-8874 | 1 | SENSOR | | | | | |
| | 3 | 235-8875 | 1 | BRACKET | | | | | |
| Y | 4 | 316-8811 | 1 | CONDITIONER GP | | | | | |
| | 5 | 293-1138 | 1 | PANEL AS | | | | | |
| | 6 | 245-7858 | 1 | HARNESS AS | | | | | |
| | 7 | 9X-8256 | 1 | WASHER | | | | | |
| | 8 | 099-2374 | 2 | BOLT (L=12mm) | | | | | |
| | 9 | 111-4836 | 3 | CLIP | | | | | |
| | 10 | 3S-2093 | 2 | STRAP | | | | | |
| | 11 | 5C-9553 | 1 | BOLT (L=16mm) | | | | | |
| | 12 | 7X-7729 | 7 | WASHER | | | | | |
| | 13 | 8T-0328 | 2 | WASHER | | | | | |
| | 14 | 8T-4121 | 3 | WASHER | | | | | |
| | 15 | 8T-4136 | 7 | BOLT (L=25mm) | | | | | |
| | 16 | 8T-4137 | 3 | BOLT (L=20mm) | | | | | |

Y—SEE SEPARATE ILLUSTRATION

H99567E 04

## 229-9084 HEATER & MTG GP-CAB

Part of 273-5168-Page708
316-8811-Page710
An Attachment

# OPERATOR STATION

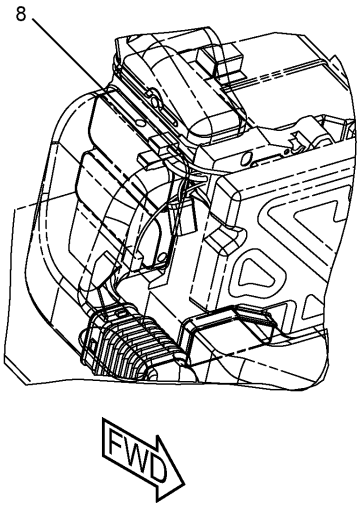


A/C UNIT

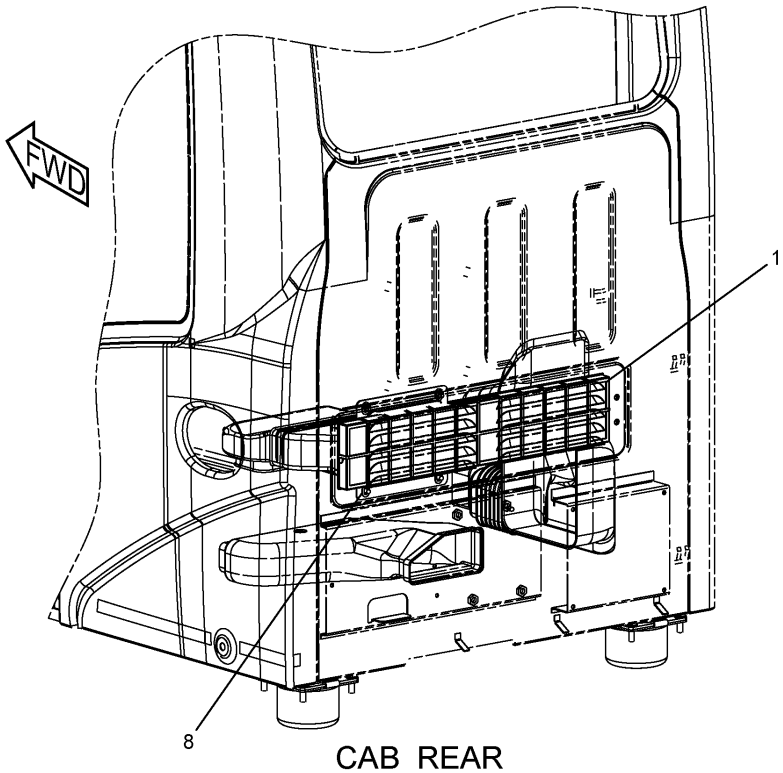


CAB REAR

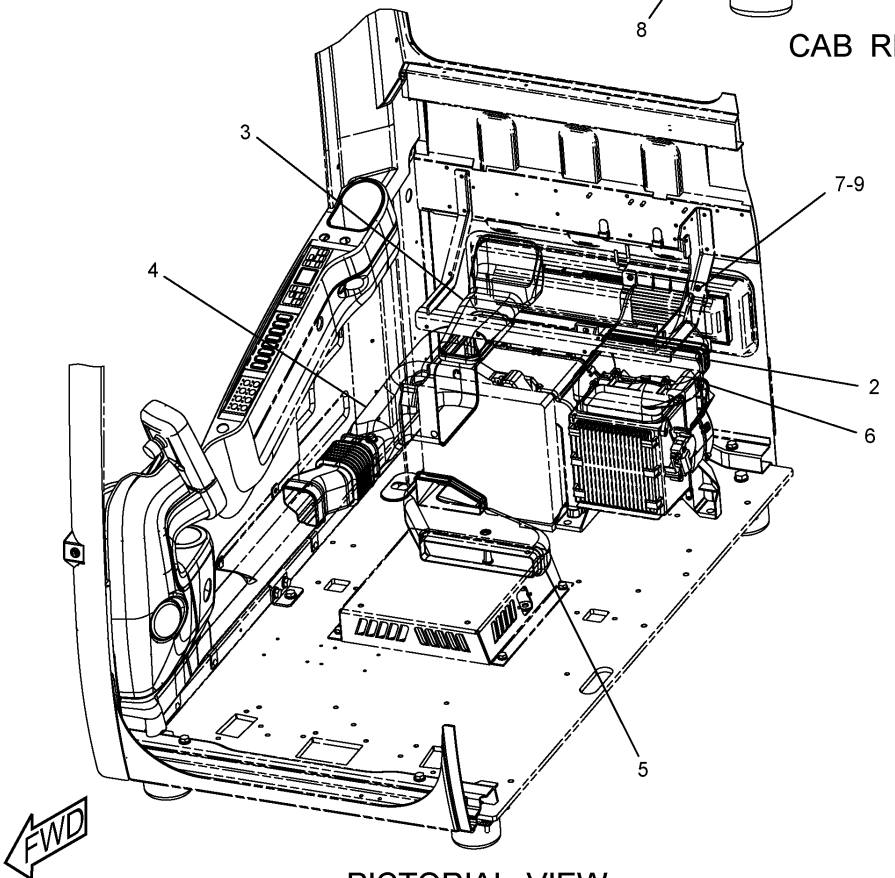


PICTORIAL VIEW

H97214E 06

**229-9082 DUCT GP-AIR**
Part of 235-9003-Page707,273-5168-Page708
An Attachment

# OPERATOR STATION

| NOTE | No. | PART No. | QTY | PART NAME | NOTE | No. | PART No. | QTY | PART NAME |
|---|---|---|---|---|---|---|---|---|---|
| | 1 | 305-0329 | 1 | FILTER AS | | | | | |
| | | 293-1184 | 1 | FILTER | | | | | |
| | 2 | 235-8876 | 1 | DUCT AS | | | | | |
| | | 245-7872 | 1 | INSULATOR | | | | | |
| | 3 | 235-8877 | 1 | DUCT AS | | | | | |
| | | 245-7792 | 1 | INSULATOR | | | | | |
| | 4 | 235-8878 | 1 | DUCT AS | | | | | |
| | | 245-7793 | 1 | INSULATOR | | | | | |
| | 5 | 235-8879 | 1 | DUCT AS | | | | | |
| | | 245-7873 | 1 | INSULATOR | | | | | |
| | 6 | 240-5074 | 1 | DUCT AS | | | | | |
| | | 245-7791 | 1 | INSULATOR | | | | | |
| | 7 | 095-0742 | 2 | SCREW | | | | | |
| | 8 | 176-1996 | 5 | CLIP | | | | | |
| | 9 | 095-0827 | 2 | LOCKWASHER | | | | | |

H97214E 06

## 229-9082 DUCT GP-AIR

Part of 235-9003-Page707,273-5168-Page708

An Attachment

# OPERATOR STATION

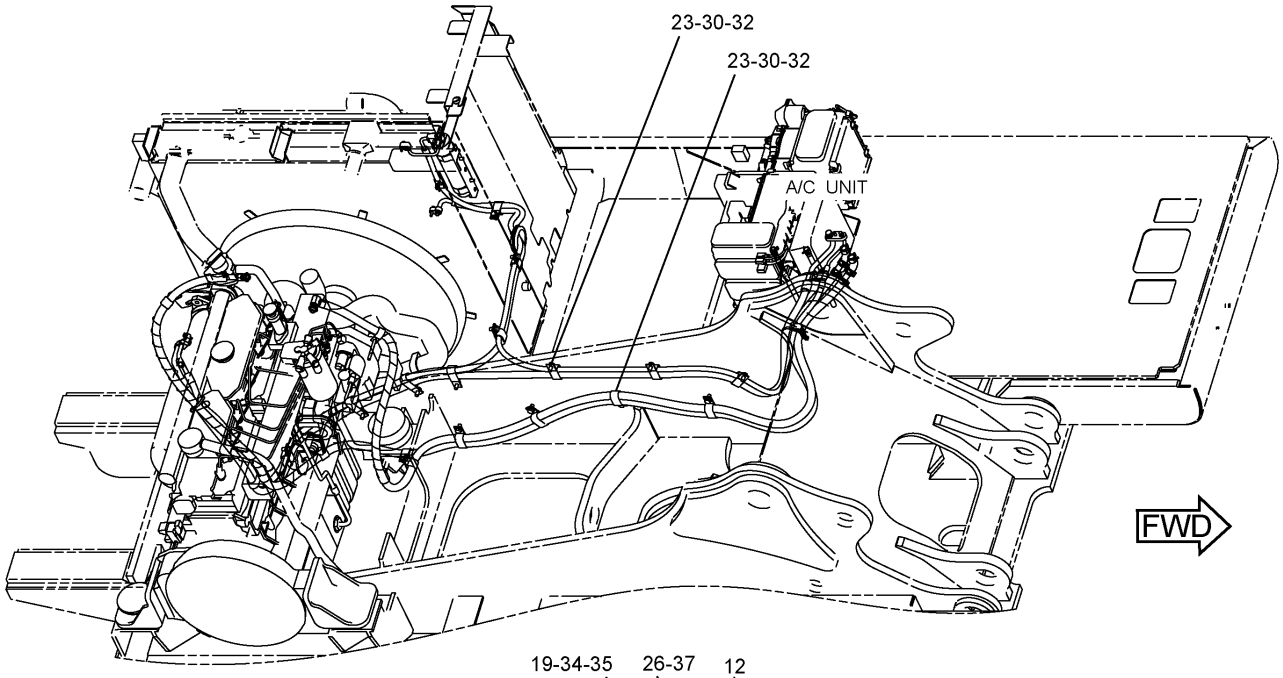


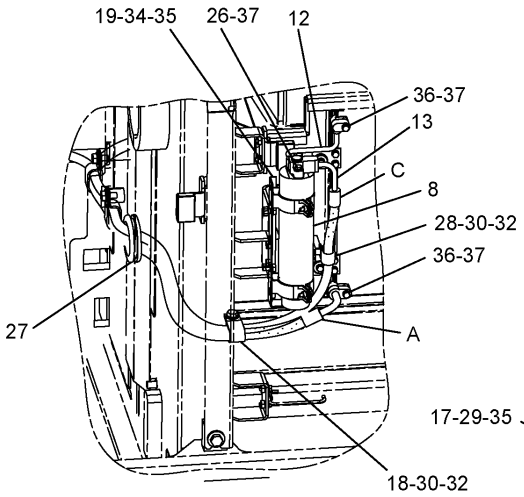


DETAIL OF CONDENSER

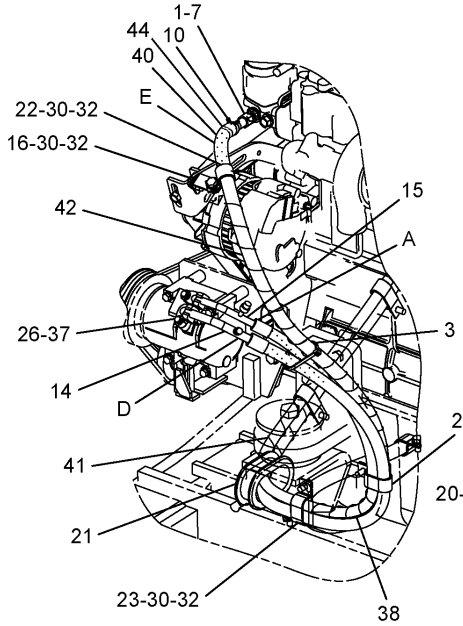


DETAIL OF COMPRESSOR

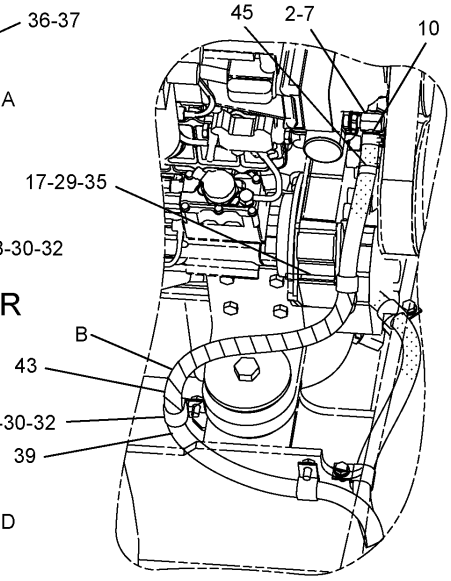


DETAIL OF ENGINE

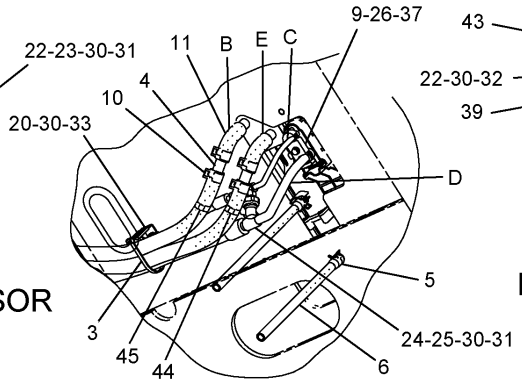


DETAIL OF A/C UNIT

H99581E 04

**284-4386 LINES GP-AIR CONDITIONER**

# OPERATOR STATION

| NOTE | No. | PART No. | QTY | PART NAME | NOTE | No. | PART No. | QTY | PART NAME |
|---|---|---|---|---|---|---|---|---|---|
| | 1 | 4I-4580 | 1 | NIPPLE | | | | | |
| | 2 | 7I-0375 | 1 | ELBOW | | | | | |
| | 3 | 7K-1181 | 2 | STRAP | | | | | |
| | 4 | 122-9605 | 2 | JOINT | | | | | |
| | 5 | 122-9657 | 2 | CLAMP | | | | | |
| | 6 | 130-0252 | 2 | HOSE | | | | | |
| | 7 | 155-7024 | 2 | SPACER | | | | | |
| | 8 | 176-1902 | 1 | RECEIVER AS | | | | | |
| | 9 | 235-8891 | 1 | PLATE | | | | | |
| | 10 | 235-9014 | 8 | CLAMP | | | | | |
| | 11 | 235-9015 | 2 | HOSE | | | | | |
| | 12 | 245-7756 | 1 | TUBE AS | | | | | |
| | | 121-7138 | 2 | SEAL-O-RING (ID=6.70mm) | | | | | |
| | 13 | 245-7757 | 1 | HOSE AS | | | | | |
| | | 121-7138 | 2 | SEAL-O-RING (ID=6.70mm) | | | | | |
| | | 130-0270 | 1 | SWITCH AS (PRESSURE) | | | | | |
| | | 185-8293 | 1 | SEAL-O-RING (ID=10.60mm) | | | | | |
| | 14 | 245-7758 | 1 | HOSE AS | | | | | |
| | | 121-7136 | 2 | SEAL-O-RING (ID=13.40mm) | | | | | |
| | | 245-7851 | 1 | PLUG | | | | | |
| | 15 | 273-5400 | 1 | HOSE AS | | | | | |
| | | 121-7137 | 2 | SEAL-O-RING (ID=10.80mm) | | | | | |
| | | 245-7850 | 1 | PLUG | | | | | |
| | 16 | 293-1230 | 1 | SUPPORT AS | | | | | |
| | 17 | 095-0913 | 1 | CLIP | | | | | |
| | 18 | 100-4336 | 3 | CLIP | | | | | |
| | 19 | 121-7098 | 1 | BRACKET AS | | | | | |
| | 20 | 132-5789 | 1 | CLIP | | | | | |
| | 21 | 4I-3503 | 1 | GROMMET | | | | | |
| | 22 | 4S-1962 | 6 | CLIP | | | | | |
| | 23 | 6D-1641 | 12 | CLIP | | | | | |
| | 24 | 6D-3479 | 1 | CLIP | | | | | |
| | 25 | 6V-3265 | 1 | CLIP | | | | | |
| | 26 | 6V-7357 | 5 | BOLT (L=25mm) | | | | | |
| | 27 | 6W-7293 | 1 | GROMMET | | | | | |
| | 28 | 8M-2773 | 1 | CLIP | | | | | |
| | 29 | 8T-3647 | 1 | BOLT (L=80mm) | | | | | |
| | 30 | 8T-4121 | 24 | WASHER | | | | | |
| | 31 | 8T-4136 | 2 | BOLT (L=25mm) | | | | | |
| | 32 | 8T-4137 | 21 | BOLT (L=20mm) | | | | | |
| | 33 | 8T-4191 | 1 | BOLT (L=16mm) | | | | | |
| | 34 | 8T-4200 | 2 | BOLT (L=16mm) | | | | | |
| | 35 | 8T-4224 | 3 | WASHER | | | | | |
| | 36 | 8T-4971 | 2 | BOLT (L=30mm) | | | | | |
| | 37 | 9X-8256 | 7 | WASHER | | | | | |
| E | 38 | 225-5707 | | GUARD…(52cm) | | | | | |
| E | 39 | 5P-0767 | | HOSE…(310cm) | | | | | |
| E | 40 | 5P-0767 | | HOSE…(380cm) | | | | | |
| E | 41 | 225-5707 | | GUARD…(15cm × 2) | | | | | |
| E | 42 | 225-5714 | | GUARD…(75cm) | | | | | |
| E | 43 | 225-5714 | | GUARD…(55cm) | | | | | |
| | 44 | 305-0441 | 2 | BAND (HS) | | | | | |
| | 45 | 305-0442 | 2 | BAND (HR) | | | | | |

E—ORDER BY THE CENTIMETER

H99581E 04

## 284-4386 LINES GP-AIR CONDITIONER

# OPERATOR STATION

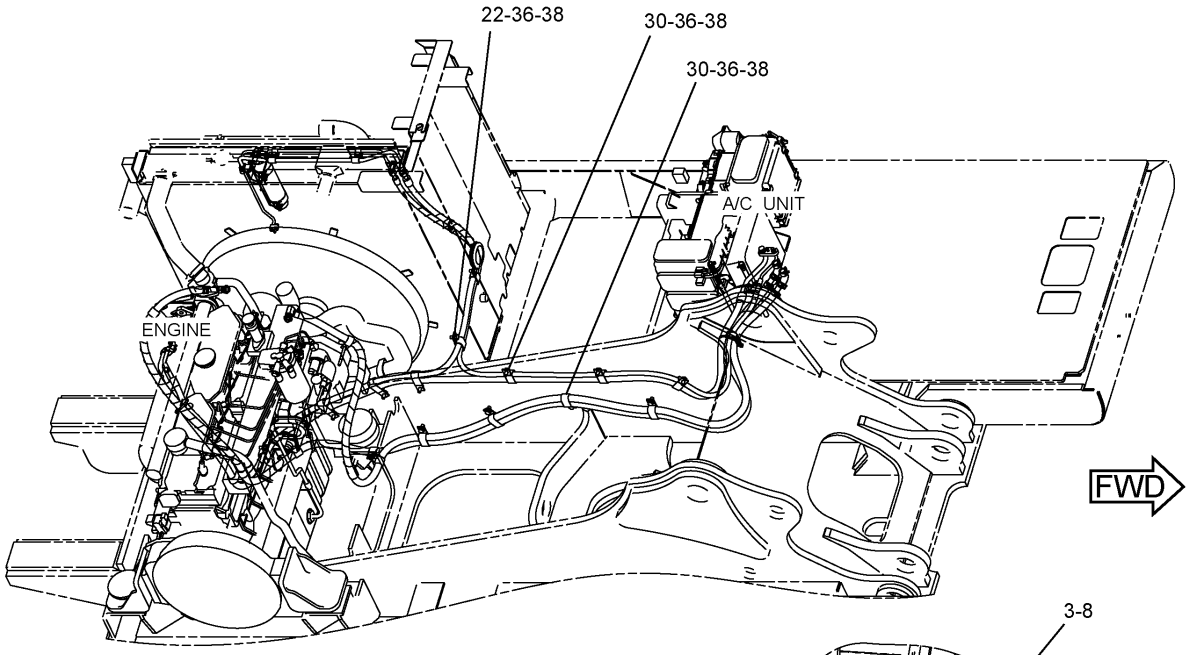


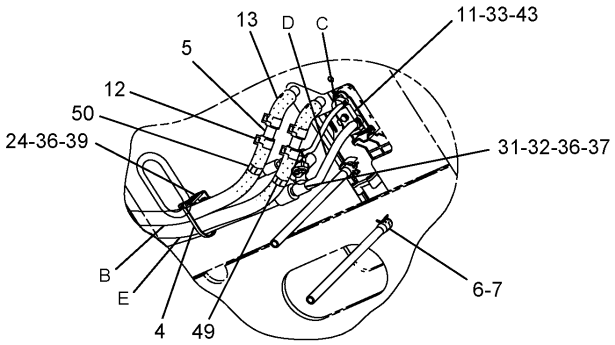


DETAIL OF A/C UNIT

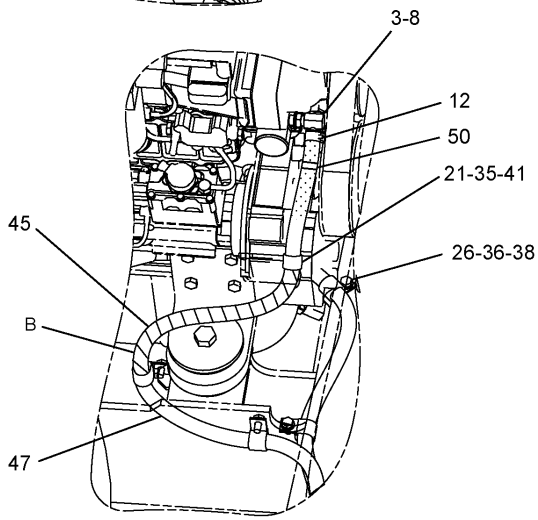


DETAIL OF ENGINE

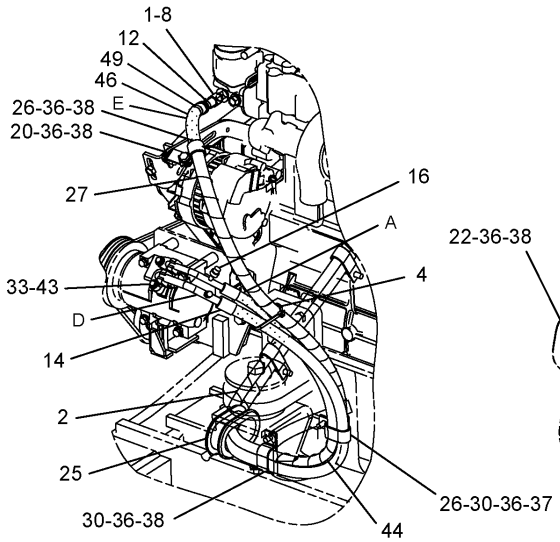


DETAIL OF COMPRESSOR

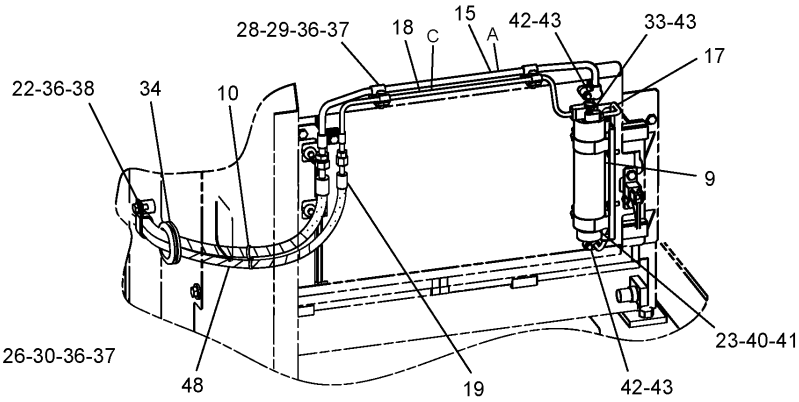


DETAIL OF CONDENSER

H99583E 06

**273-5166 LINES GP-AIR CONDITIONER**
Part of 284-4442-Page707
An Attachment

# OPERATOR STATION

| NOTE | No. | PART No. | QTY | PART NAME | NOTE | No. | PART No. | QTY | PART NAME |
|---|---|---|---|---|---|---|---|---|---|
| | 1 | 4I-4580 | 1 | NIPPLE | | 40 | 8T-4200 | 2 | BOLT (L=16mm) |
| E | 2 | 225-5707 | | GUARD…(15cm × 2) | | 41 | 8T-4224 | 3 | WASHER |
| | 3 | 7I-0375 | 1 | ELBOW | | 42 | 8T-4971 | 2 | BOLT (L=30mm) |
| | 4 | 7K-1181 | 2 | STRAP | | 43 | 9X-8256 | 7 | WASHER |
| | 5 | 122-9605 | 2 | JOINT | E | 44 | 225-5707 | | GUARD…(22cm) |
| | 6 | 122-9657 | 2 | CLAMP | E | 45 | 225-5714 | | GUARD…(55cm) |
| | 7 | 130-0252 | 2 | HOSE | E | 46 | 5P-0767 | | HOSE…(380cm) |
| | 8 | 155-7024 | 2 | SPACER | E | 47 | 5P-0767 | | HOSE…(310cm) |
| | 9 | 176-1902 | 1 | RECEIVER AS | E | 48 | 225-5707 | | GUARD…(30cm × 2) |
| | 10 | 204-1611 | 1 | STRAP | | 49 | 305-0441 | 2 | BAND (HS) |
| | 11 | 235-8891 | 1 | PLATE | | 50 | 305-0442 | 2 | BAND (HR) |
| | 12 | 235-9014 | 8 | CLAMP | | | | | |
| | 13 | 235-9015 | 2 | HOSE | | | | | |
| | 14 | 245-7758 | 1 | HOSE AS | | | | | |
| | | 121-7136 | 2 | SEAL-O-RING (ID=13.40mm) | | | | | |
| | | 245-7851 | 1 | PLUG | | | | | |
| | 15 | 284-4552 | 1 | TUBE AS | | | | | |
| | | 121-7137 | 1 | SEAL-O-RING (ID=10.80mm) | | | | | |
| | 16 | 293-1117 | 1 | HOSE AS | | | | | |
| | | 121-7137 | 2 | SEAL-O-RING (ID=10.80mm) | | | | | |
| | | 245-7850 | 1 | PLUG | | | | | |
| | 17 | 293-1118 | 1 | TUBE AS | | | | | |
| | | 121-7138 | 2 | SEAL-O-RING (ID=6.70mm) | | | | | |
| | 18 | 293-1119 | 1 | TUBE AS | | | | | |
| | | 121-7138 | 2 | SEAL-O-RING (ID=6.70mm) | | | | | |
| | | 130-0270 | 1 | SWITCH AS (PRESSURE) | | | | | |
| | | 185-8293 | 1 | SEAL-O-RING (ID=10.60mm) | | | | | |
| | 19 | 293-1120 | 1 | HOSE AS | | | | | |
| | | 121-7138 | 2 | SEAL-O-RING (ID=6.70mm) | | | | | |
| | | 130-0270 | 1 | SWITCH AS (PRESSURE) | | | | | |
| | | 185-8293 | 1 | SEAL-O-RING (ID=10.60mm) | | | | | |
| | 20 | 293-1230 | 1 | SUPPORT AS | | | | | |
| | 21 | 095-0913 | 1 | CLIP | | | | | |
| | 22 | 100-4336 | 2 | CLIP | | | | | |
| | 23 | 121-7098 | 1 | BRACKET AS | | | | | |
| | | 8T-4138 | 2 | BOLT (L=20mm) | | | | | |
| | | 9X-8256 | 2 | WASHER | | | | | |
| | 24 | 132-5789 | 1 | CLIP | | | | | |
| | 25 | 4I-3503 | 1 | GROMMET | | | | | |
| | 26 | 4S-1962 | 6 | CLIP | | | | | |
| E | 27 | 225-5714 | | GUARD…(75cm) | | | | | |
| | 28 | 5K-3294 | 3 | CLIP | | | | | |
| | 29 | 5P-9085 | 3 | CLIP | | | | | |
| | 30 | 6D-1641 | 12 | CLIP | | | | | |
| | 31 | 6D-3479 | 1 | CLIP | | | | | |
| | 32 | 6V-3265 | 1 | CLIP | | | | | |
| | 33 | 6V-7357 | 5 | BOLT (L=25mm) | | | | | |
| | 34 | 6W-7293 | 1 | GROMMET | | | | | |
| | 35 | 8T-3647 | 1 | BOLT (L=80mm) | | | | | |
| | 36 | 8T-4121 | 25 | WASHER | | | | | |
| | 37 | 8T-4136 | 5 | BOLT (L=25mm) | | | | | |
| | 38 | 8T-4137 | 19 | BOLT (L=20mm) | | | | | |
| | 39 | 8T-4191 | 1 | BOLT (L=16mm) | | | | | |

E—ORDER BY THE CENTIMETER

H99583E 06

## 273-5166 LINES GP-AIR CONDITIONER

Part of 284-4442-Page707

An Attachment

# OPERATOR STATION

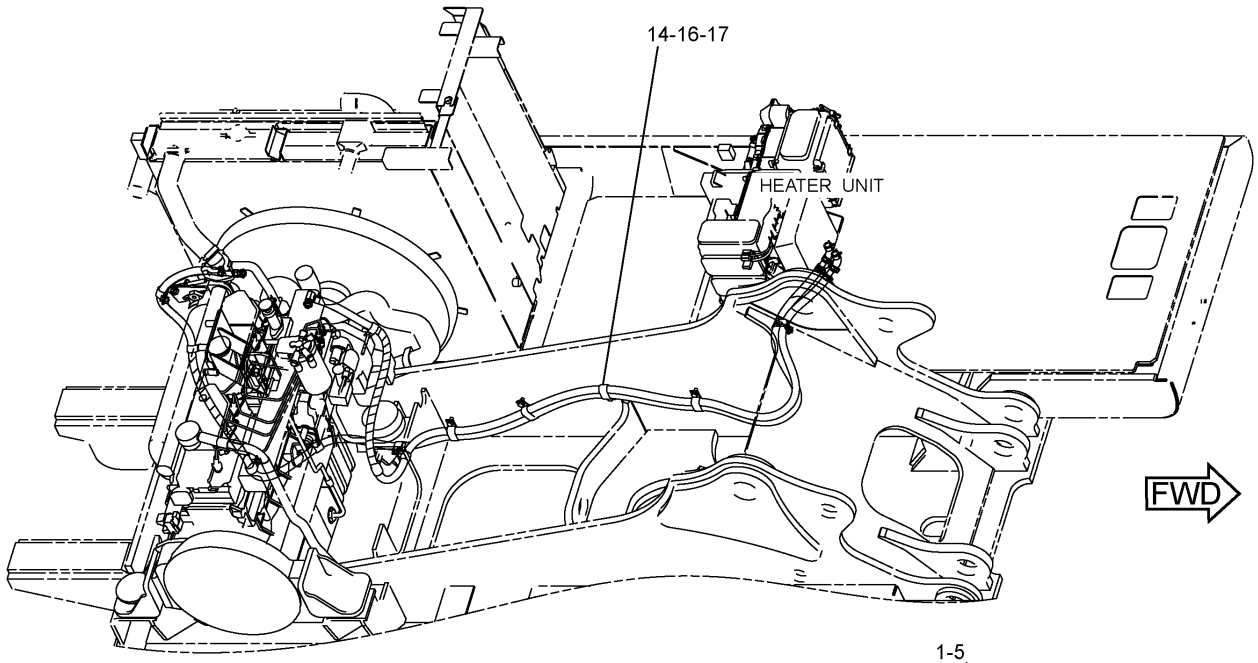


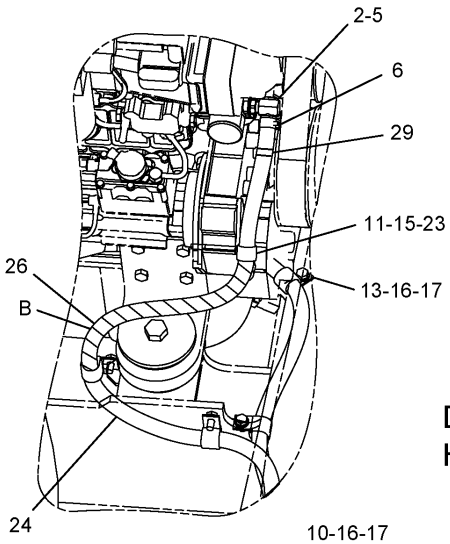


DETAIL OF ENGINE

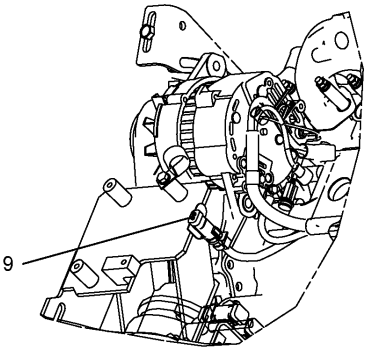


DETAIL OF
HARNESS CONNECTOR

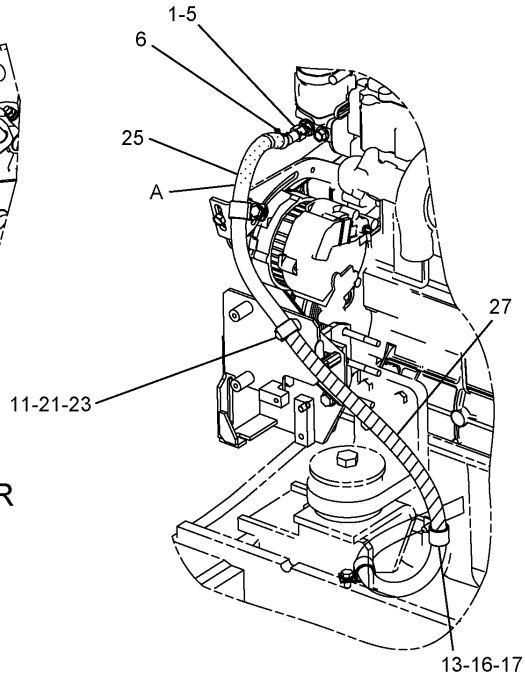


DETAIL OF ENGINE

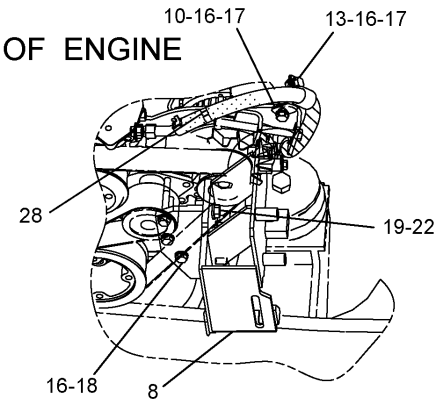


DETAIL OF COMPRESSOR BRACKET

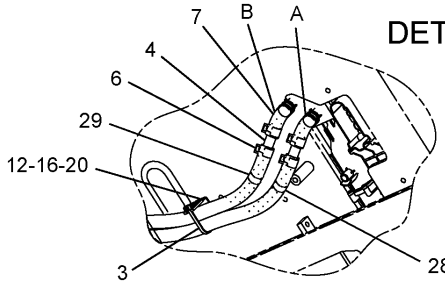


DETAIL OF HEATER UNIT

H99582E 03

**273-5169 LINES GP-HEATER**
Part of 273-5168-Page708
An Attachment

# OPERATOR STATION

| NOTE | No. | PART No. | QTY | PART NAME | NOTE | No. | PART No. | QTY | PART NAME |
|---|---|---|---|---|---|---|---|---|---|
| | 1 | 4I-4580 | 1 | NIPPLE | | | | | |
| | 2 | 7I-0375 | 1 | ELBOW | | | | | |
| | 3 | 7K-1181 | 1 | STRAP | | | | | |
| | 4 | 122-9605 | 2 | JOINT | | | | | |
| | 5 | 155-7024 | 2 | SPACER | | | | | |
| | 6 | 235-9014 | 8 | CLAMP | | | | | |
| | 7 | 235-9015 | 2 | HOSE | | | | | |
| | 8 | 266-6207 | 1 | BRACKET AS | | | | | |
| | 9 | 283-2893 | 1 | RECEPTACLE AS | | | | | |
| | | 8T-8737 | 2 | PLUG | | | | | |
| | | 243-4505 | 1 | RECEPTACLE AS | | | | | |
| | 10 | 293-1230 | 1 | SUPPORT AS | | | | | |
| | 11 | 095-0913 | 2 | CLIP | | | | | |
| | 12 | 132-5789 | 1 | CLIP | | | | | |
| | 13 | 4S-1962 | 6 | CLIP | | | | | |
| | 14 | 6D-1641 | 4 | CLIP | | | | | |
| | 15 | 8T-3647 | 1 | BOLT (L=80mm) | | | | | |
| | 16 | 8T-4121 | 15 | WASHER | | | | | |
| | 17 | 8T-4137 | 11 | BOLT (L=20mm) | | | | | |
| | 18 | 8T-4172 | 3 | BOLT (L=80mm) | | | | | |
| | 19 | 8T-4184 | 2 | BOLT (L=45mm) | | | | | |
| | 20 | 8T-4191 | 1 | BOLT (L=16mm) | | | | | |
| | 21 | 8T-4200 | 1 | BOLT (L=16mm) | | | | | |
| | 22 | 8T-4223 | 2 | WASHER | | | | | |
| | 23 | 8T-4224 | 2 | WASHER | | | | | |
| E | 24 | 5P-0767 | | HOSE…(310cm) | | | | | |
| E | 25 | 5P-0767 | | HOSE…(380cm) | | | | | |
| E | 26 | 225-5714 | | GUARD…(55cm) | | | | | |
| E | 27 | 225-5714 | | GUARD…(43cm) | | | | | |
| | 28 | 305-0441 | 2 | BAND (HS) | | | | | |
| | 29 | 305-0442 | 2 | BAND (HR) | | | | | |

E—ORDER BY THE CENTIMETER

H99582E 03

## 273-5169 LINES GP-HEATER

Part of 273-5168-Page708
An Attachment

# OPERATOR STATION

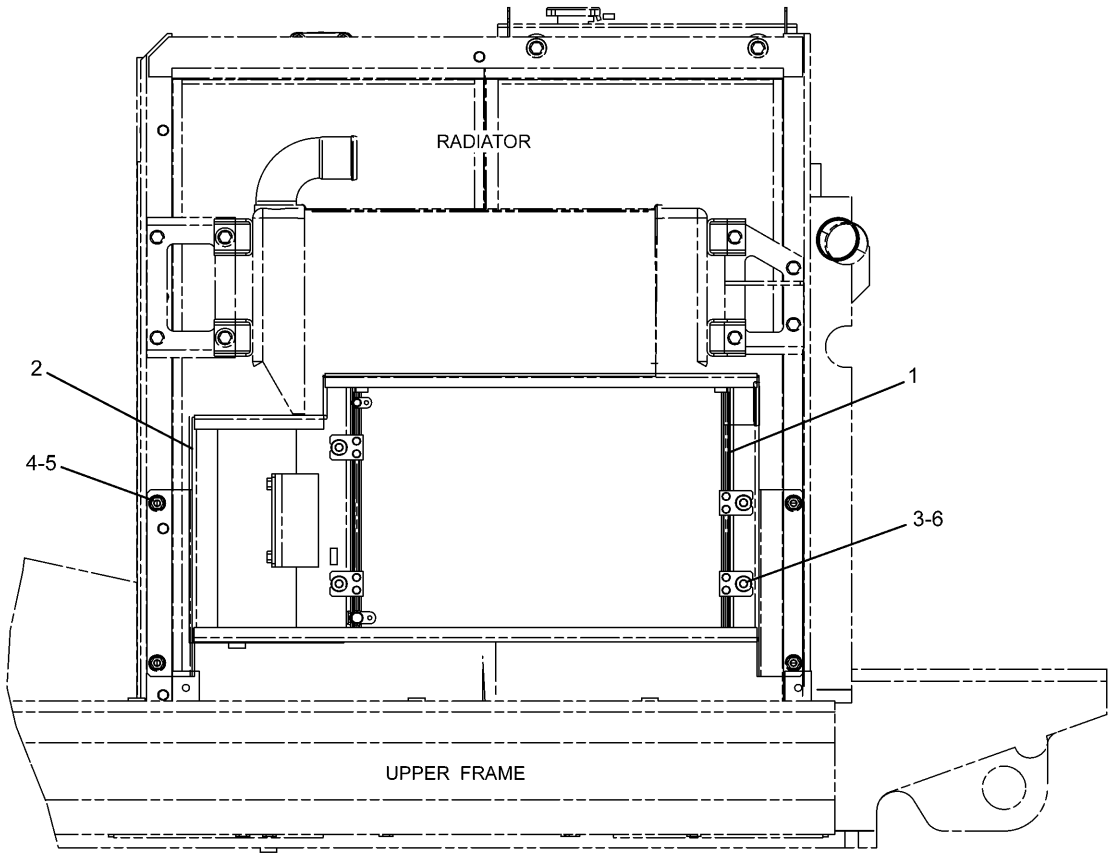


LEFT SIDE VIEW

| NOTE | No. | PART No. | QTY | PART NAME | NOTE | No. | PART No. | QTY | PART NAME |
|---|---|---|---|---|---|---|---|---|---|
| Y | 1 | 245-7749 | 1 | CONDENSER GP | | | | | |
| | 2 | 259-7207 | 1 | SUPPORT AS | | | | | |
| | 3 | 7X-2533 | 4 | BOLT (L=35mm) | | | | | |
| | 4 | 8T-4121 | 4 | WASHER | | | | | |
| | 5 | 8T-4137 | 4 | BOLT (L=20mm) | | | | | |
| | 6 | 9X-8256 | 4 | WASHER | | | | | |

Y—SEE SEPARATE ILLUSTRATION

H93949E 01

**259-7184 CONDENSER & MTG GP-REFRIGERANT**

245-7749-Page726

# OPERATOR STATION

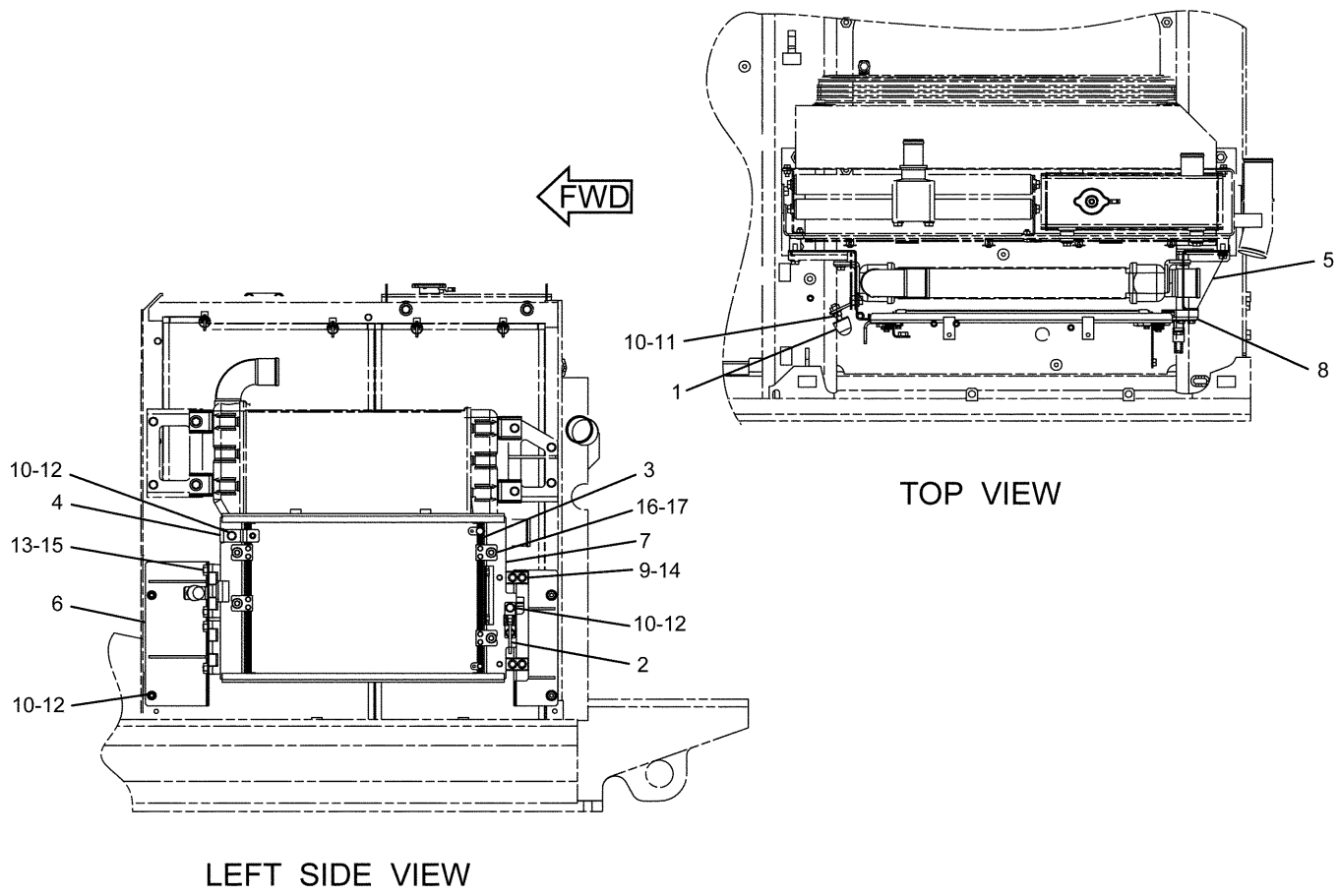


| NOTE | No. | PART No. | QTY | PART NAME | NOTE | No. | PART No. | QTY | PART NAME |
|---|---|---|---|---|---|---|---|---|---|
| | 1 | 7Y-8561 | 1 | BUMPER | | | | | |
| | 2 | 193-2764 | 1 | HANDLE AS | | | | | |
| Y | 3 | 245-7749 | 1 | CONDENSER GP | | | | | |
| | 4 | 273-5399 | 1 | BRACKET AS | | | | | |
| | 5 | 293-1121 | 1 | SUPPORT AS | | | | | |
| | 6 | 293-1124 | 1 | SUPPORT AS | | | | | |
| | 7 | 293-1127 | 2 | SUPPORT AS | | | | | |
| | 8 | 193-2765 | 2 | SUPPORT AS | | | | | |
| | 9 | 5P-4116 | 4 | WASHER | | | | | |
| | 10 | 8T-4121 | 8 | WASHER | | | | | |
| | 11 | 8T-4133 | 1 | NUT | | | | | |
| | 12 | 8T-4137 | 7 | BOLT (L=20mm) | | | | | |
| | 13 | 8T-4179 | 4 | BOLT (L=20mm) | | | | | |
| | 14 | 8T-4189 | 4 | BOLT (L=20mm) | | | | | |
| | 15 | 8T-4223 | 4 | WASHER | | | | | |
| | 16 | 8T-4971 | 4 | BOLT (L=30mm) | | | | | |
| | 17 | 9X-8256 | 4 | WASHER | | | | | |

Y—SEE SEPARATE ILLUSTRATION

H94170E 01

## 273-5167 CONDENSER & MTG GP-REFRIGERANT

Part of 284-4442-Page707
245-7749-Page726
An Attachment

# OPERATOR STATION

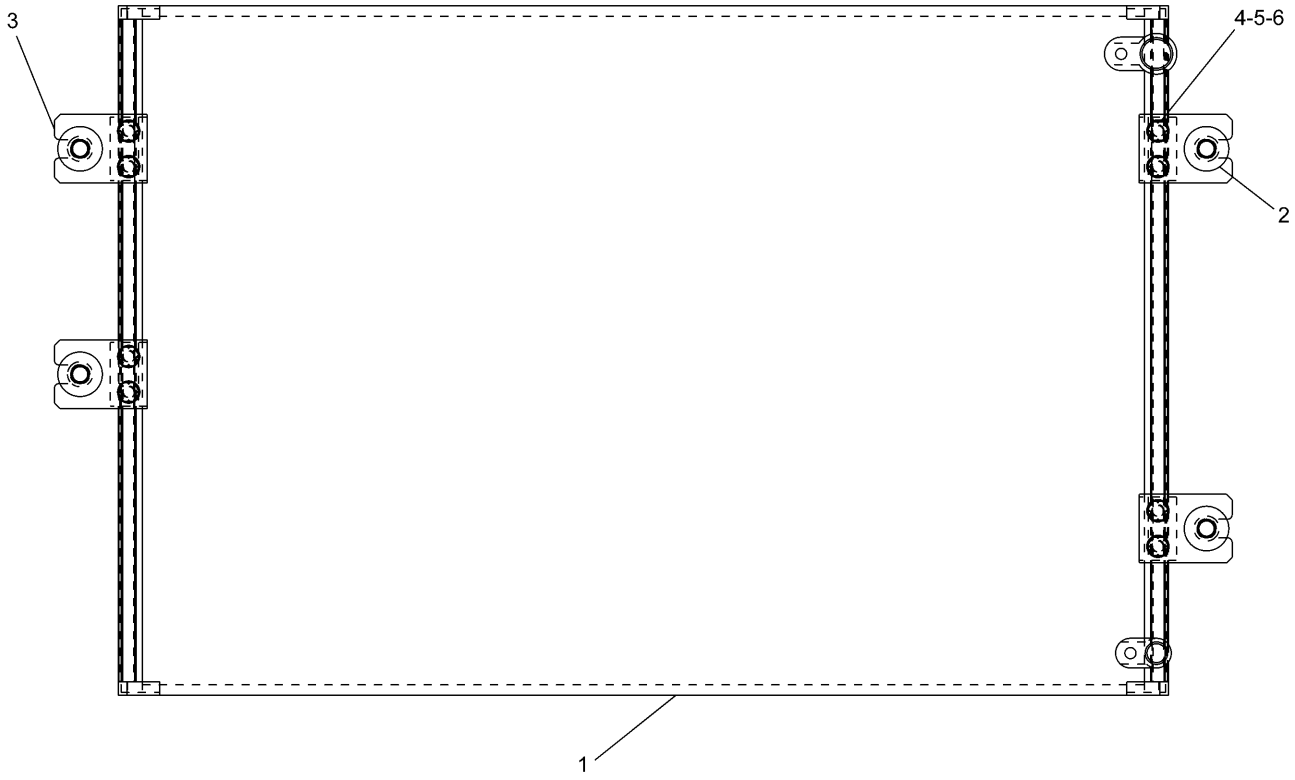


| NOTE | No. | PART No. | QTY | PART NAME | NOTE | No. | PART No. | QTY | PART NAME |
|---|---|---|---|---|---|---|---|---|---|
| | 1 | 235-8880 | 1 | CONDENSER AS | | | | | |
| | 2 | 245-7750 | 4 | BUSHING | | | | | |
| | 3 | 245-7751 | 4 | BRACKET | | | | | |
| | 4 | 095-0827 | 8 | LOCKWASHER | | | | | |
| | 5 | 8T-4171 | 8 | BOLT (L=12mm) | | | | | |
| | 6 | 9X-8256 | 8 | WASHER | | | | | |

H89634E 01

## 245-7749 CONDENSER GP-REFRIGERANT

Part of 259-7184-Page724,273-5167-Page725

# MEMORANDA

# OPERATOR STATION

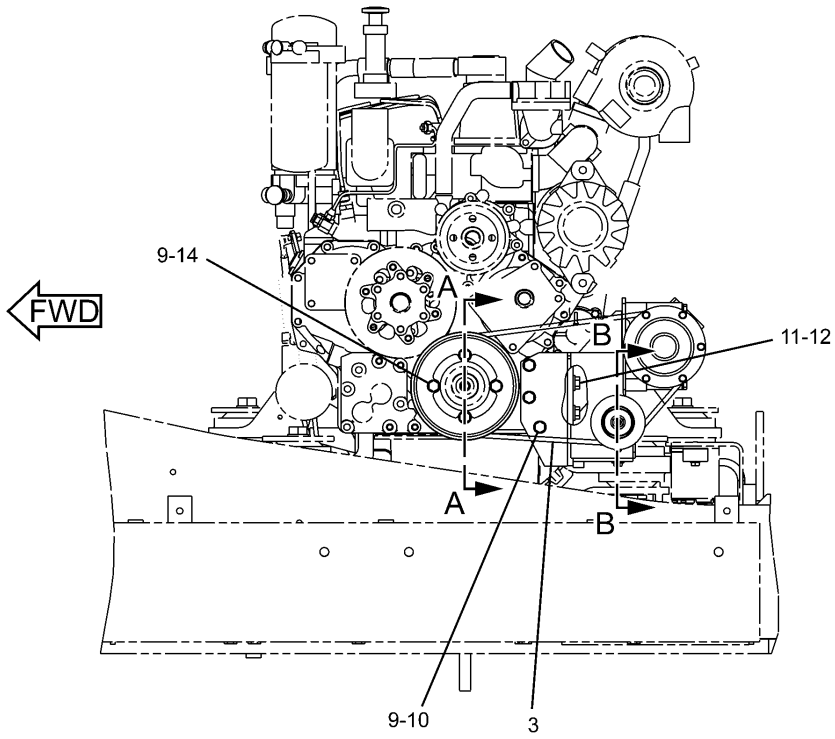


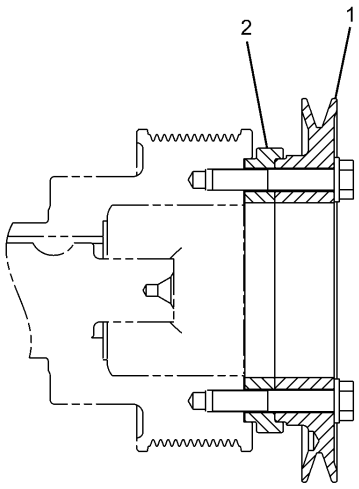


A – A

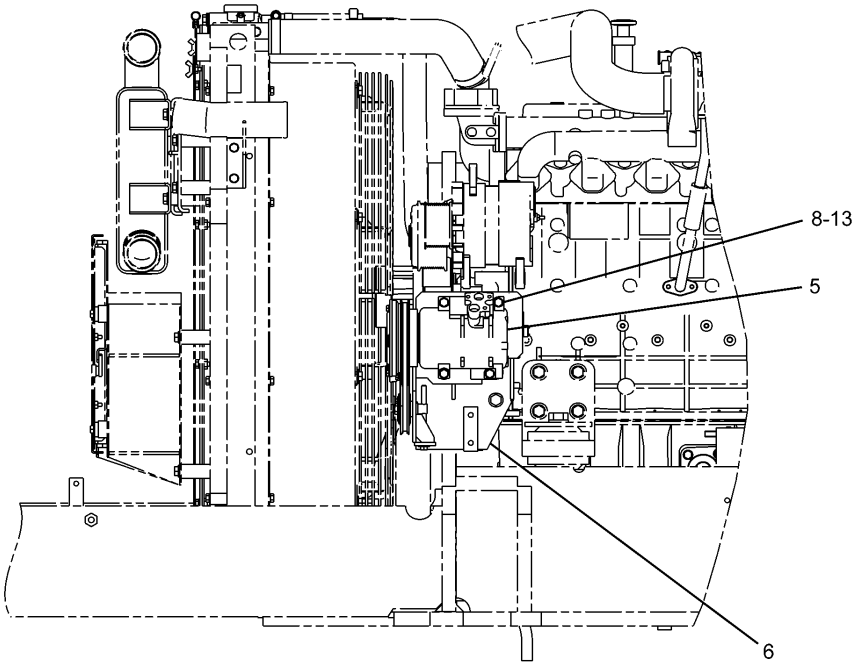


LEFT SIDE VIEW OF ENGINE

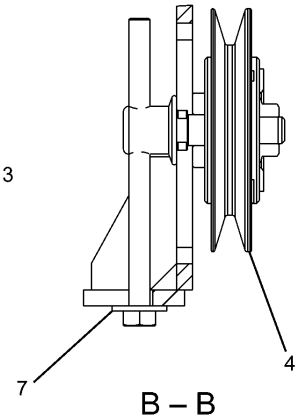


B – B

H98066E 07

**239-6507 COMPRESSOR GP-REFRIGERANT**
255-3018-Page730

# OPERATOR STATION

| NOTE | No. | PART No. | QTY | PART NAME | NOTE | No. | PART No. | QTY | PART NAME |
|---|---|---|---|---|---|---|---|---|---|
| | 1 | 118-9863 | 1 | PULLEY | | | | | |
| | 2 | 201-3888 | 1 | SPACER | | | | | |
| | 3 | 255-2927 | 1 | V-BELT | | | | | |
| Y | 4 | 255-3018 | 1 | PULLEY AS | | | | | |
| | 5 | 259-7244 | 1 | COMPRESSOR GP | | | | | |
| | | 259-7286 | 1 | COIL AS | | | | | |
| B | | 264-9982 | 1 | WASHER | | | | | |
| B | | 264-9983 | 1 | WASHER | | | | | |
| B | | 264-9984 | 1 | WASHER | | | | | |
| | 6 | 266-6207 | 1 | BRACKET AS | | | | | |
| | 7 | 5P-4116 | 1 | WASHER | | | | | |
| | 8 | 8T-3647 | 4 | BOLT (L=80mm) | | | | | |
| | 9 | 8T-4121 | 7 | WASHER | | | | | |
| | 10 | 8T-4172 | 3 | BOLT (L=80mm) | | | | | |
| | 11 | 8T-4184 | 2 | BOLT (L=45mm) | | | | | |
| | 12 | 8T-4223 | 2 | WASHER | | | | | |
| | 13 | 8T-4224 | 4 | WASHER | | | | | |
| | 14 | 8T-6466 | 4 | BOLT (L=60mm) | | | | | |

B—USE AS REQUIRED

Y—SEE SEPARATE ILLUSTRATION

H98066E 07

## 239-6507 COMPRESSOR GP-REFRIGERANT

255-3018-Page730

# OPERATOR STATION

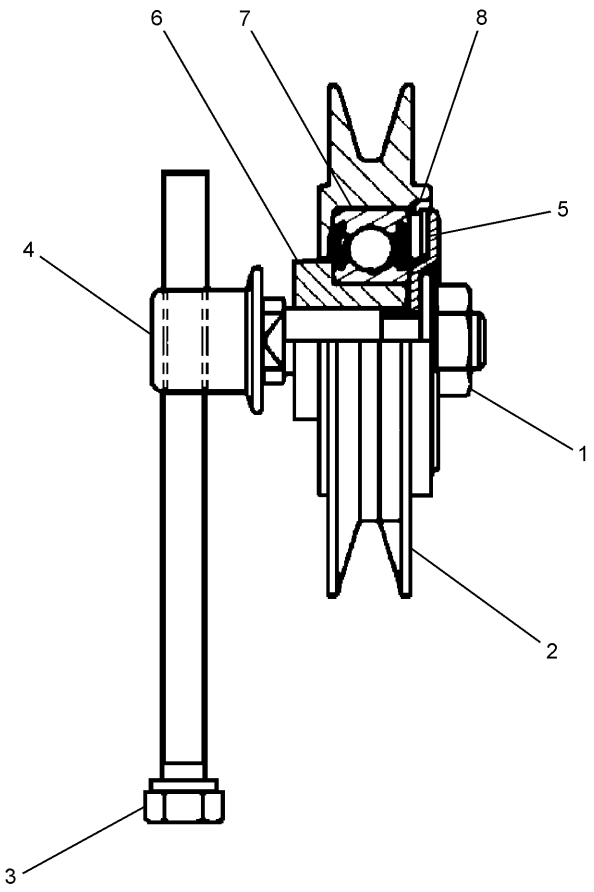


| NOTE | No. | PART No. | QTY | PART NAME | NOTE | No. | PART No. | QTY | PART NAME |
|---|---|---|---|---|---|---|---|---|---|
| | 1 | 255-3022 | 1 | NUT | | | | | |
| | 2 | 239-6626 | 1 | PULLEY | | | | | |
| | 3 | 239-6627 | 1 | BOLT (L=110mm) | | | | | |
| | 4 | 255-3020 | 1 | SHAFT | | | | | |
| | 5 | 255-3021 | 1 | WASHER | | | | | |
| | 6 | 239-6630 | 1 | COLLAR | | | | | |
| | 7 | 239-6631 | 1 | BEARING AS | | | | | |
| | 8 | 239-6632 | 1 | RING | | | | | |

H96308E 03

## 255-3018 PULLEY AS

Part of 239-6507-Page729

Consists of :

| | | | Page |
|---|---|---|---|
| 1 | 241-7282 | BOOM GP | 742 |
| 1 | 241-7286 | LINES GP-GREASE | 762 |
| 1 | 242-6730 | CYLINDER & LINES GP-BOOM | 350 |
| 1 | 242-6733 | CYLINDER & LINES GP-STICK | 351 |
| 1 | 242-6736 | CYLINDER & LINES GP-BOOM | 350 |
| 1 | 259-5043 | LIGHTING GP-BOOM | 214 |
| 1 | 260-8010 | LINES GP-BOOM | 392 |

H89690E 02

**240-3828 BOOM AR-1 PIECE LONG**
R-Boom
An Attachment

Consists of :

| | | | Page |
|---|---|---|---|
| 1 | 241-7286 | LINES GP-GREASE | 762 |
| 1 | 241-7287 | BOOM GP | 744 |
| 1 | 242-6730 | CYLINDER & LINES GP-BOOM | 350 |
| 1 | 242-6736 | CYLINDER & LINES GP-BOOM | 350 |
| 1 | 242-6743 | CYLINDER & LINES GP-STICK | 351 |
| 1 | 259-5043 | LIGHTING GP-BOOM | 214 |
| 1 | 260-8010 | LINES GP-BOOM | 392 |

H89692E 02

**240-3830 BOOM AR-1 PIECE LONG**
R-Boom (Heavy Duty)
An Attachment

# IMPLEMENTS

Consists of :

| | | | Page |
|---|---|---|---|
| 1 | 172-2939 | LINES GP-GREASE | 763 |
| 1 | 239-1732 | LINES GP-BOOM | 394 |
| 1 | 241-7291 | BOOM GP | 750 |
| 1 | 242-6730 | CYLINDER & LINES GP-BOOM | 350 |
| 1 | 242-6736 | CYLINDER & LINES GP-BOOM | 350 |
| 1 | 242-6750 | CYLINDER & LINES GP-STICK | 352 |
| 1 | 267-7627 | LIGHTING GP-BOOM | 218 |

H89967E 03

**240-3833 BOOM AR**
M-Boom
S/N BWZ 1-Up, DFB 1-Up
An Attachment

Consists of :

| | | | Page |
|---|---|---|---|
| 1 | 187-5976 | LINES GP-STICK | 404 |
| 1 | 241-7296 | STICK GP-HOE | 752 |
| 1 | 267-0138 | LINES GP-GREASE | 765 |

H89969E 01

**240-3845 STICK AR**
An Attachment

Consists of :

| | | | Page |
|---|---|---|---|
| 1 | 187-5693 | LINES GP-STICK | 405 |
| 1 | 241-7300 | STICK GP-HOE | 753 |

H89968E 01

**240-3839 STICK AR-HOE**
An Attachment

Consists of :

| | | | Page |
|---|---|---|---|
| 1 | 187-5693 | LINES GP-STICK | 405 |
| 1 | 242-6463 | STICK GP-HOE | 754 |

H89955E 02

**240-3849 STICK AR**
An Attachment

Consists of :

| | | | Page |
|---|---|---|---|
| 1 | 187-5693 | LINES GP-STICK | 405 |
| 1 | 241-7303 | STICK GP-HOE | 755 |

H89973E 01

**240-3851 STICK AR**
An Attachment

Consists of :


| | | | Page |
|---|---|---|---|
| 1 | 187-5693 | LINES GP-STICK | 405 |
| 1 | 241-7330 | STICK GP-HOE | 756 |


H89958E 01

**240-3852 STICK AR**
An Attachment

Consists of :


| | | | Page |
|---|---|---|---|
| 1 | 241-7306 | STICK GP-HOE | 757 |
| 1 | 260-8011 | LINES GP-STICK | 406 |


H89972E 00

**240-3882 STICK AR**
An Attachment

Consists of :

| | | | Page |
|---|---|---|---|
| 1 | 241-7309 | STICK GP-HOE | 758 |
| 1 | 260-8011 | LINES GP-STICK | 406 |

H89970E 00

**240-3854 STICK AR**
An Attachment

Consists of :

| | | | Page |
|---|---|---|---|
| 1 | 241-7315 | STICK GP-HOE | 759 |
| 1 | 248-9633 | LINES GP-STICK | 407 |

H89974E 01

**240-3846 STICK AR**
An Attachment

Consists of :

| | | | Page |
|---|---|---|---|
| 1 | 241-7318 | LINKAGE GP-BUCKET | 768 |
| 1 | 242-6755 | CYLINDER & LINES GP-BUCKET | 353 |

H89975E 00

**247-7453 LINKAGE AR-BUCKET**
An Attachment

Consists of :

| | | | Page |
|---|---|---|---|
| 1 | 241-7324 | LINKAGE GP-BUCKET | 770 |
| 1 | 242-6755 | CYLINDER & LINES GP-BUCKET | 353 |

H89977E 01

**240-3860 LINKAGE AR-BUCKET**
An Attachment

# IMPLEMENTS

Consists of :

| | | | Page |
|---|---|---|---|
| 1 | 225-4590 | CYLINDER & LINES GP-BUCKET..... | 353 |
| 1 | 228-5528 | LINKAGE GP-BUCKET..... | 772 |

H89383E 01

**229-1772 LINKAGE AR-BUCKET**
CB Family
An Attachment

Consists of :

| | | | Page |
|---|---|---|---|
| 1 | 241-7321 | LINKAGE GP-BUCKET..... | 774 |
| 1 | 242-6769 | CYLINDER & LINES GP-BUCKET..... | 354 |

H90091E 01

**240-3867 LINKAGE AR-BUCKET**
An Attachment

Consists of :

| | | | Page |
|---|---|---|---|
| 1 | 242-6755 | CYLINDER & LINES GP-BUCKET..... | 353 |
| 1 | 269-1598 | LINKAGE GP-BUCKET..... | 776 |

H90042E 00

## 257-2926 LINKAGE AR

S/N BWZ 1-Up, DFB 1-Up
Part of 279-2732-Page11,279-2733-Page12
An Attachment

Consists of :

| | | | Page |
|---|---|---|---|
| 1 | 5I-7235 | LINES GP-GREASE | 764 |
| 1 | 259-5043 | LIGHTING GP-BOOM | 214 |
| 1 | 116-9115 | LOCK GP-TRANSPORT | 767 |
| 1 | 127-6624 | LINES GP-STICK | 408 |
| 1 | 127-6625 | LINES GP-GREASE | 766 |
| 1 | 268-7256 | CYLINDER & LINES GP-STICK | 352 |
| 1 | 230-0280 | STICK GP-HOE | 761 |
| 1 | 241-2002 | COUNTERWEIGHT GP | 269 |
| 1 | 242-6730 | CYLINDER & LINES GP-BOOM | 350 |
| 1 | 242-6736 | CYLINDER & LINES GP-BOOM | 350 |
| 1 | 248-7837 | LINKAGE GP-BUCKET | 778 |
| 1 | 253-6664 | CYLINDER & LINES GP-BUCKET | 354 |
| 1 | 268-7043 | BOOM GP | 748 |
| 1 | 268-7046 | LINES GP-BOOM | 398 |
| 1 | 268-7074 | LINES GP-FRONT | 496 |
| 1 | 302-9209 | FILM GP | 850 |

H95907E 00

**302-9207 LINKAGE AR-FRONT**
Long Reach Front
S/N DFB 1-Up
An Attachment

# MEMORANDA

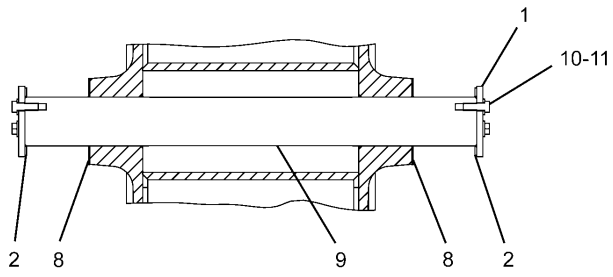


B – B

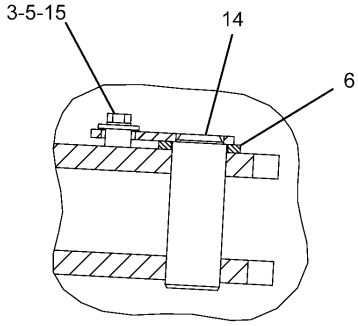


C – C

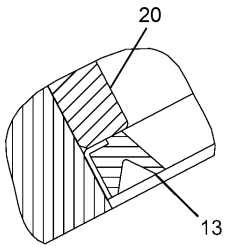


A – A

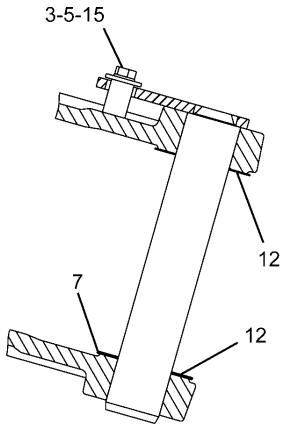


D – D

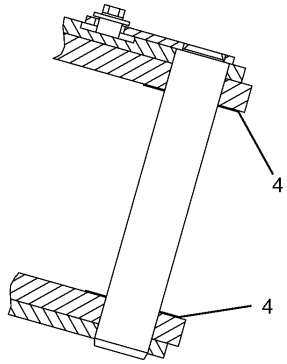


OPTIONAL DESIGN

D – D

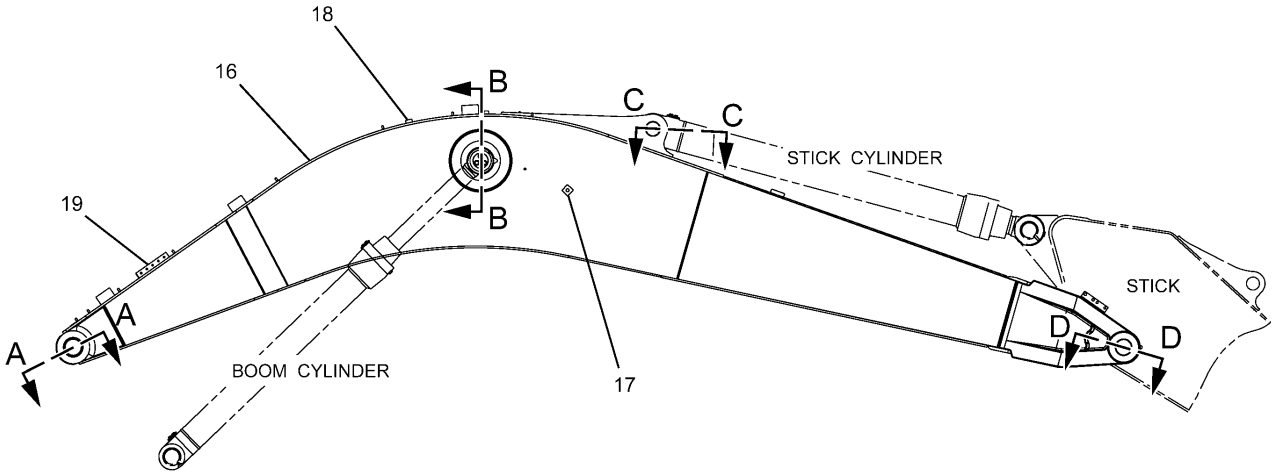


H93648E 01

**241-7282 BOOM GP**
R-Boom (5.7m)
Part of 240-3828-Page731
An Attachment

# IMPLEMENTS

| NOTE | No. | PART No. | QTY | PART NAME | NOTE | No. | PART No. | QTY | PART NAME |
|---|---|---|---|---|---|---|---|---|---|
| | 1 | 4I-3308 | 2 | PLATE | | | | | |
| | 2 | 4I-3309 | 2 | SPACER | | | | | |
| | 3 | 8T-4780 | 2 | BOLT (L=30mm) | | | | | |
| | 4 | 093-0116 | 2 | SHIM (T=2.00mm) | | | | | |
| | 5 | 093-0349 | 2 | WASHER | | | | | |
| | 6 | 093-0363 | 1 | SPACER | | | | | |
| B | 7 | 113-2127 | 1 | SHIM (T=0.50mm) | | | | | |
| B | | 093-0084 | 2 | SHIM (T=1.00mm) | | | | | |
| | 8 | 166-1486 | 2 | SHIM (T=2.00mm) | | | | | |
| | 9 | 176-2278 | 1 | PIN | | | | | |
| | 10 | 8T-4223 | 6 | WASHER | | | | | |
| | 11 | 8T-4956 | 6 | BOLT (L=35mm) | | | | | |
| | 12 | 166-1487 | 2 | SHIM (T=2.00mm) | | | | | |
| | 13 | 166-1495 | 2 | SEAL | | | | | |
| | 14 | 4I-4809 | 1 | PIN AS | | | | | |
| | 15 | 8T-4123 | 2 | WASHER | | | | | |
| | 16 | 241-7283 | 1 | BOOM AS | | | | | |
| | 17 | 7Y-2579 | 2 | BAR | | | | | |
| | 18 | 087-5841 | 3 | PLATE | | | | | |
| | 19 | 113-2276 | 1 | MANIFOLD | | | | | |
| | 20 | 244-4277 | 2 | BEARING | | | | | |

B—USE AS REQUIRED

H93648E 01

## 241-7282 BOOM GP

R-Boom (5.7m)

Part of 240-3828-Page731

An Attachment

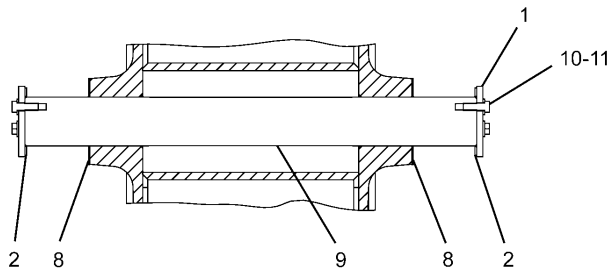


B – B

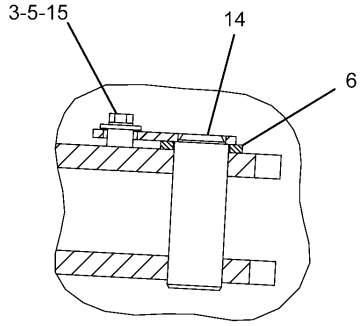


C – C

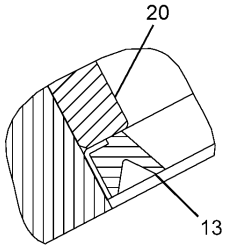


A – A

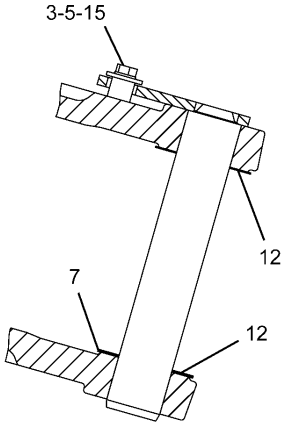


D – D

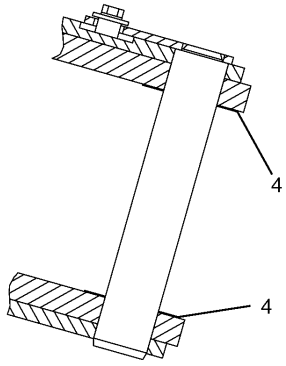


OPTIONAL DESIGN

D – D

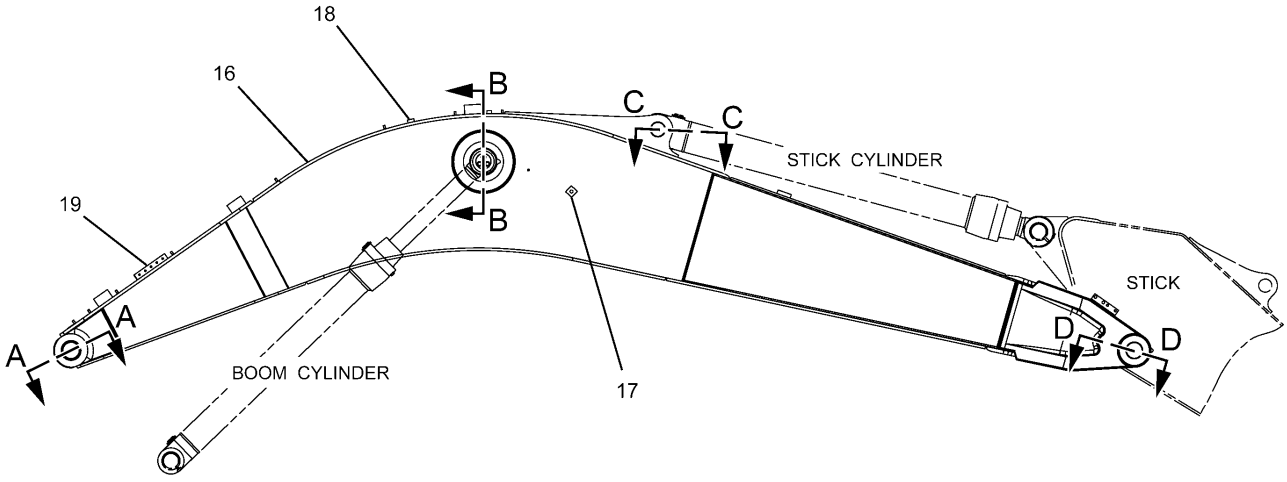


H93647E 00

**241-7287 BOOM GP**
Part of 240-3830-Page731
An Attachment

# IMPLEMENTS

| NOTE | No. | PART No. | QTY | PART NAME | NOTE | No. | PART No. | QTY | PART NAME |
|---|---|---|---|---|---|---|---|---|---|
| | 1 | 4I-3308 | 2 | PLATE | | | | | |
| | 2 | 4I-3309 | 2 | SPACER | | | | | |
| | 3 | 8T-4780 | 2 | BOLT (L=30mm) | | | | | |
| | 4 | 093-0116 | 2 | SHIM (T=2.00mm) | | | | | |
| | 5 | 093-0349 | 2 | WASHER | | | | | |
| | 6 | 093-0363 | 1 | SPACER | | | | | |
| B | 7 | 113-2127 | 1 | SHIM (T=0.50mm) | | | | | |
| B | | 093-0084 | 2 | SHIM (T=1.00mm) | | | | | |
| | 8 | 166-1486 | 2 | SHIM (T=2.00mm) | | | | | |
| | 9 | 176-2278 | 1 | PIN | | | | | |
| | 10 | 8T-4223 | 6 | WASHER | | | | | |
| | 11 | 8T-4956 | 6 | BOLT (L=35mm) | | | | | |
| | 12 | 166-1487 | 2 | SHIM (T=2.00mm) | | | | | |
| | 13 | 166-1495 | 2 | SEAL | | | | | |
| | 14 | 4I-4809 | 1 | PIN AS | | | | | |
| | 15 | 8T-4123 | 2 | WASHER | | | | | |
| | 16 | 241-7288 | 1 | BOOM AS | | | | | |
| | 17 | 7Y-2579 | 2 | BAR | | | | | |
| | 18 | 087-5841 | 3 | PLATE | | | | | |
| | 19 | 113-2276 | 1 | MANIFOLD | | | | | |
| | 20 | 244-4277 | 2 | BEARING | | | | | |

B—USE AS REQUIRED

H93647E 00

## 241-7287 BOOM GP

Part of 240-3830-Page731

An Attachment

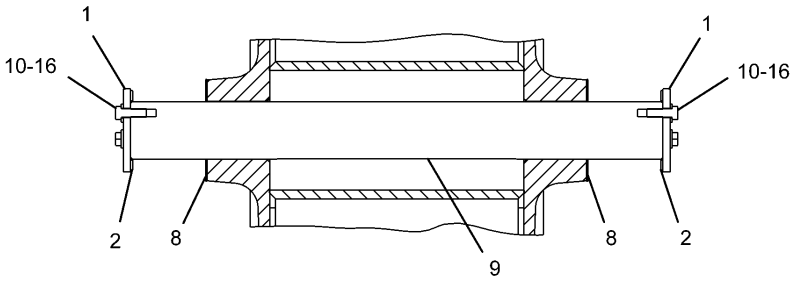


B – B

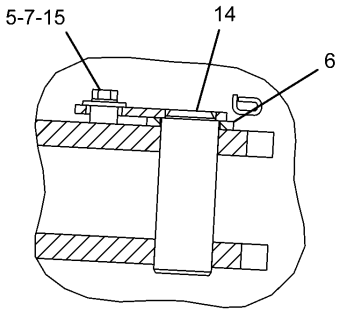


C – C

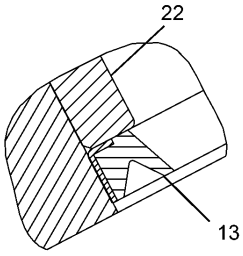


A – A

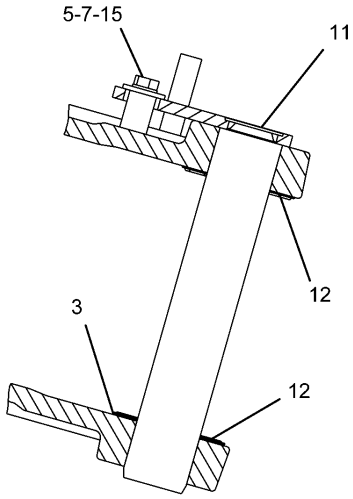


D – D

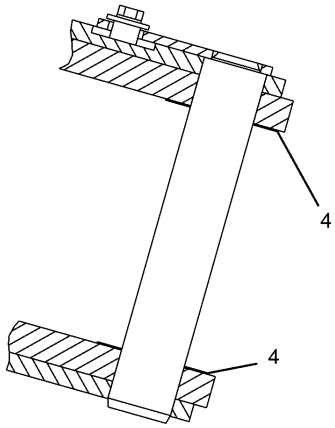


OPTIONAL DESIGN
D – D

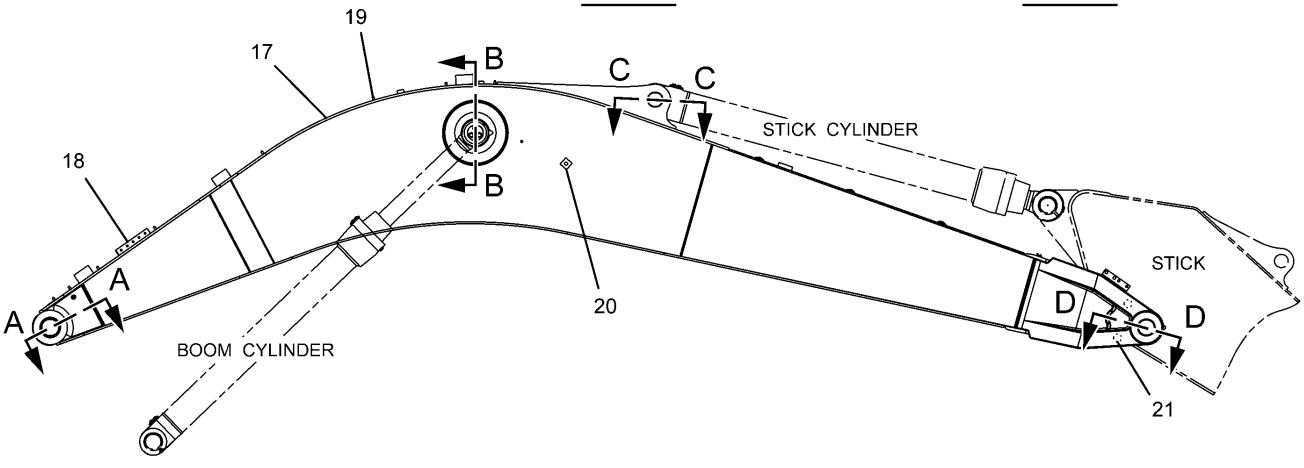


H93649E 00

**269-1596 BOOM GP**
S/N BWZ 1-Up, DFB 1-Up
Part of 279-2732-Page11,279-2733-Page12
An Attachment

# IMPLEMENTS

| NOTE | No. | PART No. | QTY | PART NAME | NOTE | No. | PART No. | QTY | PART NAME |
|---|---|---|---|---|---|---|---|---|---|
| | 1 | 4I-3308 | 2 | PLATE | | | | | |
| | 2 | 4I-3309 | 2 | SPACER | | | | | |
| B | 3 | 113-2127 | 1 | SHIM (T=0.50mm) | | | | | |
| B | | 093-0084 | 2 | SHIM (T=1.00mm) | | | | | |
| B | 4 | 093-0116 | 2 | SHIM (T=2.00mm) | | | | | |
| | 5 | 093-0349 | 2 | WASHER | | | | | |
| | 6 | 093-0363 | 1 | SPACER | | | | | |
| | 7 | 8T-4780 | 2 | BOLT (L=30mm) | | | | | |
| | 8 | 166-1486 | 2 | SHIM (T=2.00mm) | | | | | |
| | 9 | 176-2278 | 1 | PIN | | | | | |
| | 10 | 8T-4956 | 6 | BOLT (L=35mm) | | | | | |
| | 11 | 269-1635 | 1 | PIN AS | | | | | |
| | 12 | 166-1487 | 2 | SHIM (T=2.00mm) | | | | | |
| | 13 | 166-1495 | 2 | SEAL | | | | | |
| | 14 | 4I-4809 | 1 | PIN AS | | | | | |
| | 15 | 8T-4123 | 2 | WASHER | | | | | |
| | 16 | 8T-4223 | 6 | WASHER | | | | | |
| | 17 | 269-1622 | 1 | BOOM AS | | | | | |
| | 18 | 113-2276 | 1 | MANIFOLD | | | | | |
| | 19 | 087-5841 | 3 | PLATE | | | | | |
| | 20 | 7Y-2579 | 2 | BAR | | | | | |
| | 21 | 125-1938 | 2 | BOSS | | | | | |
| | 22 | 244-4277 | 2 | BEARING | | | | | |

B—USE AS REQUIRED

H93649E 00

## 269-1596 BOOM GP

S/N BWZ 1-Up, DFB 1-Up

Part of 279-2732-Page11,279-2733-Page12

An Attachment

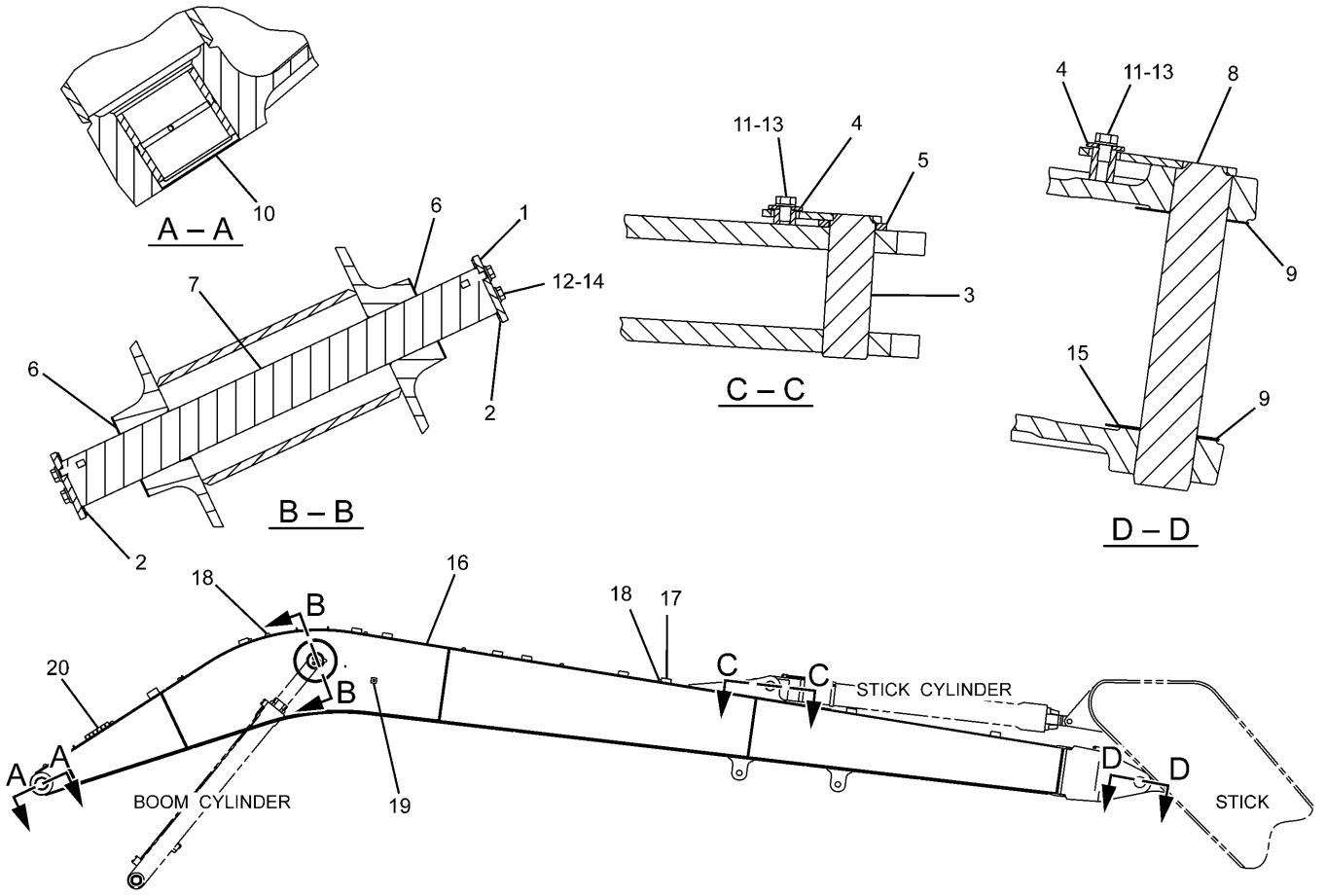


| NOTE | No. | PART No. | QTY | PART NAME | NOTE | No. | PART No. | QTY | PART NAME |
|---|---|---|---|---|---|---|---|---|---|
| | 1 | 4I-3308 | 2 | PLATE | | 20 | 7Y-2580 | 1 | MANIFOLD |
| | 2 | 4I-3309 | 2 | SPACER | | | | | |
| | 3 | 4I-4618 | 1 | PIN AS | | | | | |
| | 4 | 093-0349 | 2 | WASHER | | | | | |
| | 5 | 093-0363 | 1 | SPACER | | | | | |
| | 6 | 166-1486 | 2 | SHIM (T=2.00mm) | | | | | |
| | 7 | 176-2278 | 1 | PIN | | | | | |
| | 8 | 250-2402 | 1 | PIN AS | | | | | |
| | 9 | 166-1487 | 2 | SHIM (T=2.00mm) | | | | | |
| | 10 | 166-1495 | 2 | SEAL | | | | | |
| | 11 | 8T-4123 | 2 | WASHER | | | | | |
| | 12 | 8T-4223 | 6 | WASHER | | | | | |
| | 13 | 8T-4780 | 2 | BOLT (L=30mm) | | | | | |
| | 14 | 8T-4956 | 6 | BOLT (L=35mm) | | | | | |
| B | 15 | 093-0084 | 2 | SHIM (T=1.00mm) | | | | | |
| B | | 113-2127 | 1 | SHIM (T=0.50mm) | | | | | |
| | 16 | 268-7044 | 1 | BOOM AS | | | | | |
| | 17 | 7Y-4594 | 8 | PLATE | | | | | |
| | 18 | 087-5841 | 8 | PLATE | | | | | |
| | 19 | 7Y-2579 | 2 | BAR | | | | | |

B—USE AS REQUIRED

H90332E 00

**268-7043 BOOM GP**
S/N DFB 1-Up
Part of 302-9207-Page740
An Attachment

# MEMORANDA

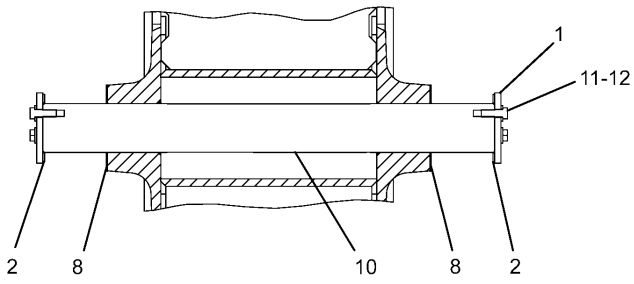


B – B

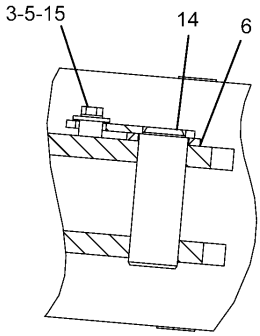


C – C

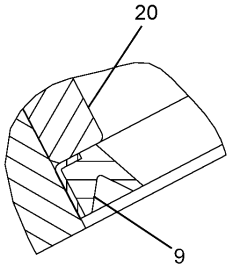


A – A

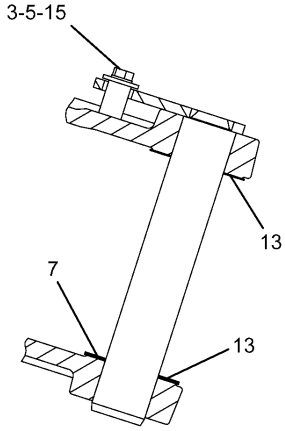


D – D

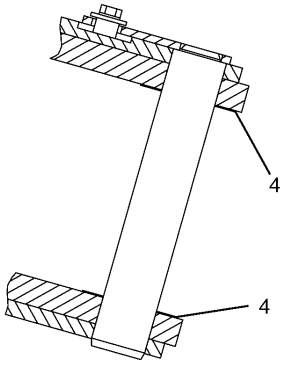


OPTIONAL DESIGN

D – D

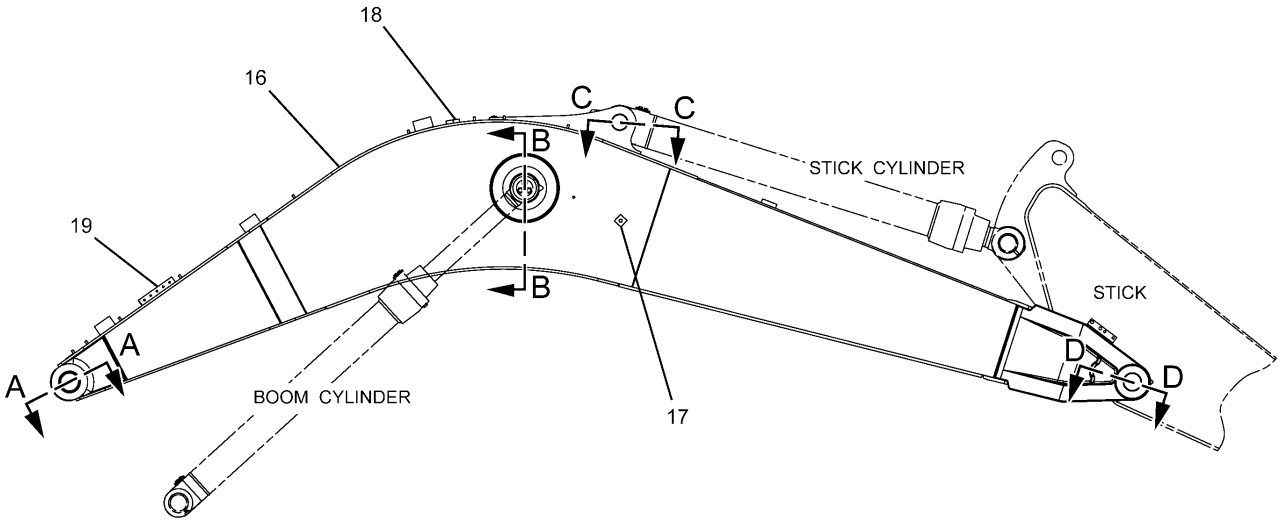


H93650E 00

**241-7291 BOOM GP**
S/N BWZ 1-Up, DFB 1-Up
Part of 240-3833-Page732
An Attachment

# IMPLEMENTS

| NOTE | No. | PART No. | QTY | PART NAME | NOTE | No. | PART No. | QTY | PART NAME |
|---|---|---|---|---|---|---|---|---|---|
| | 1 | 4I-3308 | 2 | PLATE | | | | | |
| | 2 | 4I-3309 | 2 | SPACER | | | | | |
| | 3 | 8T-4780 | 2 | BOLT (L=30mm) | | | | | |
| | 4 | 093-0116 | 2 | SHIM (T=2.00mm) | | | | | |
| | 5 | 093-0349 | 2 | WASHER | | | | | |
| | 6 | 093-0363 | 1 | SPACER | | | | | |
| B | 7 | 113-2127 | 1 | SHIM (T=0.50mm) | | | | | |
| B | | 093-0084 | 2 | SHIM (T=1.00mm) | | | | | |
| | 8 | 166-1486 | 2 | SHIM (T=2.00mm) | | | | | |
| | 9 | 166-1495 | 2 | SEAL | | | | | |
| | 10 | 176-2278 | 1 | PIN | | | | | |
| | 11 | 8T-4223 | 6 | WASHER | | | | | |
| | 12 | 8T-4956 | 6 | BOLT (L=35mm) | | | | | |
| | 13 | 166-1487 | 2 | SHIM (T=2.00mm) | | | | | |
| | 14 | 4I-4809 | 1 | PIN AS | | | | | |
| | 15 | 8T-4123 | 2 | WASHER | | | | | |
| | 16 | 241-7292 | 1 | BOOM AS | | | | | |
| | 17 | 7Y-2579 | 2 | BAR | | | | | |
| | 18 | 087-5841 | 3 | PLATE | | | | | |
| | 19 | 113-2276 | 1 | MANIFOLD | | | | | |
| | 20 | 244-4277 | 2 | BEARING | | | | | |

B—USE AS REQUIRED

H93650E 00

## 241-7291 BOOM GP

S/N BWZ 1-Up, DFB 1-Up

Part of 240-3833-Page732

An Attachment

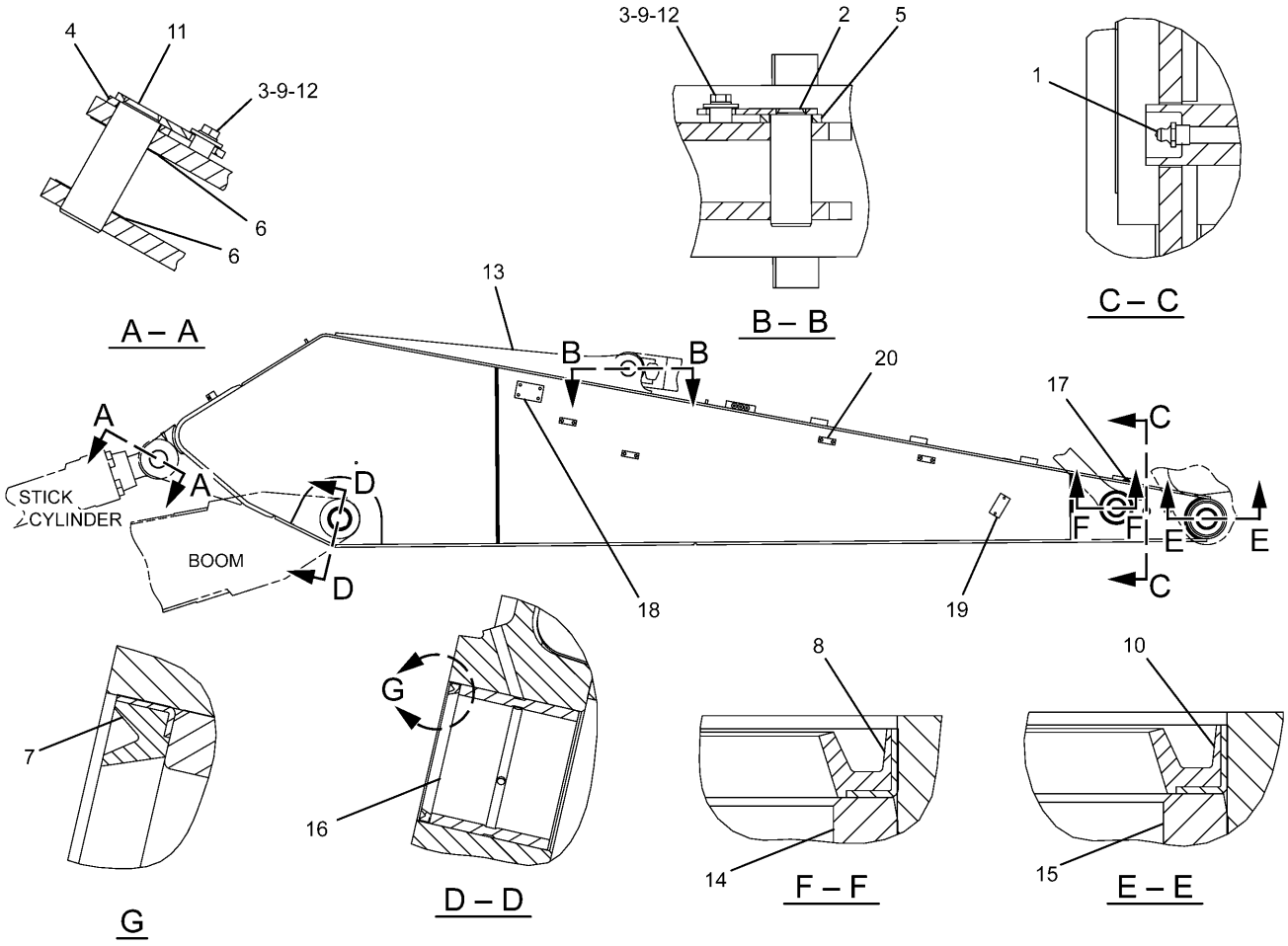


| NOTE | No. | PART No. | QTY | PART NAME | NOTE | No. | PART No. | QTY | PART NAME |
|---|---|---|---|---|---|---|---|---|---|
| | 1 | 3B-8489 | 1 | FITTING | | | | | |
| | 2 | 4I-4811 | 1 | PIN AS | | | | | |
| | 3 | 093-0349 | 2 | WASHER | | | | | |
| | 4 | 093-0363 | 1 | SPACER | | | | | |
| | 5 | 118-5982 | 1 | SPACER | | | | | |
| | 6 | 166-1486 | 2 | SHIM (T=2.00mm) | | | | | |
| | 7 | 166-1495 | 2 | SEAL | | | | | |
| | 8 | 235-7679 | 2 | SEAL | | | | | |
| | 9 | 8T-4780 | 2 | BOLT (L=30mm) | | | | | |
| | 10 | 166-1494 | 2 | SEAL | | | | | |
| | 11 | 4I-4809 | 1 | PIN AS | | | | | |
| | 12 | 8T-4123 | 2 | WASHER | | | | | |
| | 13 | 290-9101 | 1 | STICK AS | | | | | |
| | 14 | 229-1096 | 2 | BEARING | | | | | |
| | 15 | 240-2913 | 2 | BEARING | | | | | |
| | 16 | 244-4277 | 2 | BEARING | | | | | |
| | 17 | 7V-2882 | 1 | PLATE AS | | | | | |
| | 18 | 102-1119 | 2 | PLATE | | | | | |
| | 19 | 121-1760 | 2 | PLATE | | | | | |
| | 20 | 188-0046 | 8 | PLATE | | | | | |

H93595E 01

**241-7296 STICK GP-HOE**
Part of 240-3845-Page733
An Attachment

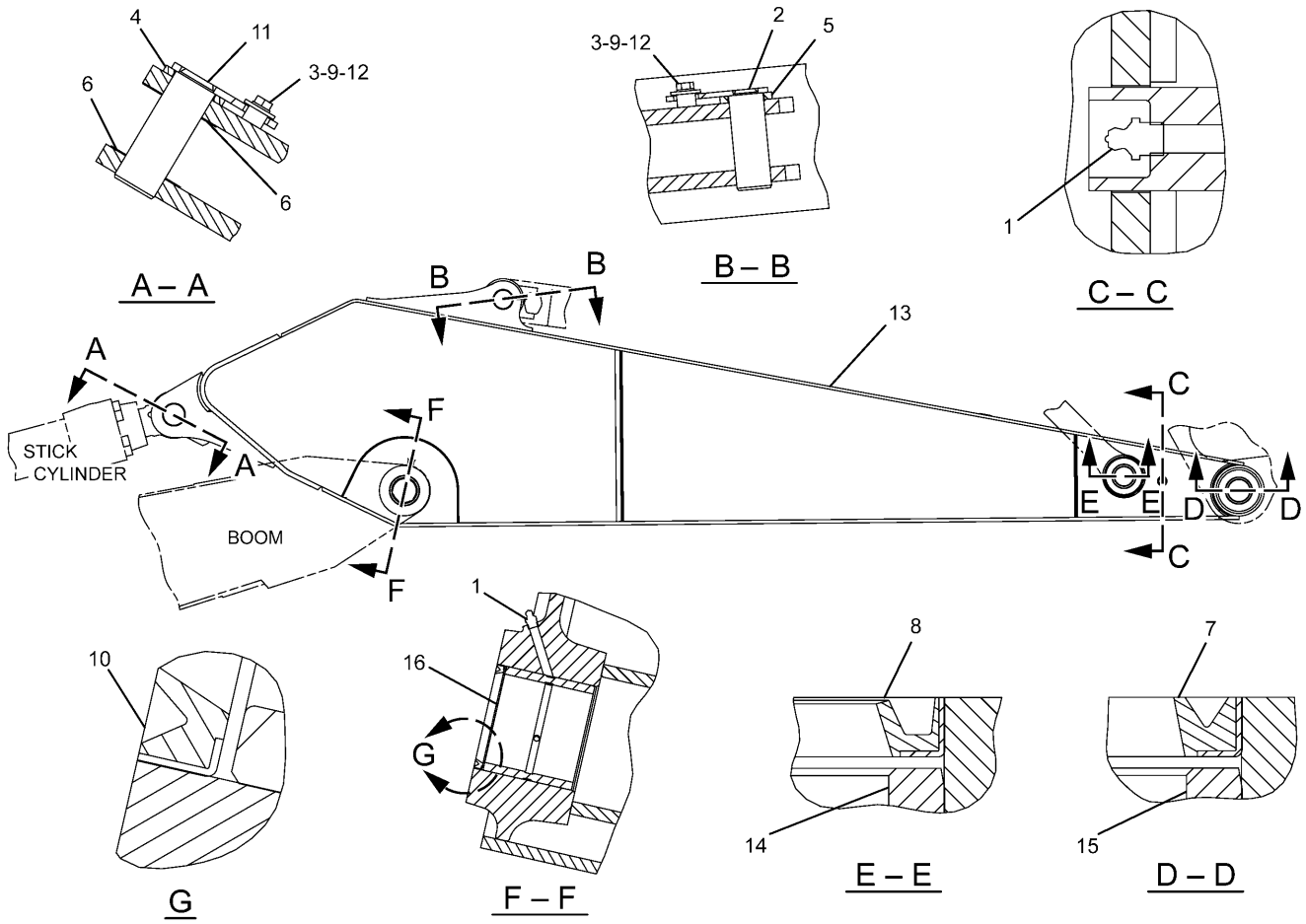


| NOTE | No. | PART No. | QTY | PART NAME | NOTE | No. | PART No. | QTY | PART NAME |
|---|---|---|---|---|---|---|---|---|---|
| | 1 | 3B-8489 | 3 | FITTING | | | | | |
| | 2 | 4I-4811 | 1 | PIN AS | | | | | |
| | 3 | 093-0349 | 2 | WASHER | | | | | |
| | 4 | 093-0363 | 1 | SPACER | | | | | |
| | 5 | 118-5982 | 1 | SPACER | | | | | |
| | 6 | 166-1486 | 2 | SHIM (T=2.00mm) | | | | | |
| | 7 | 166-1494 | 2 | SEAL | | | | | |
| | 8 | 235-7679 | 2 | SEAL | | | | | |
| | 9 | 8T-4780 | 2 | BOLT (L=30mm) | | | | | |
| | 10 | 166-1495 | 2 | SEAL | | | | | |
| | 11 | 4I-4809 | 1 | PIN AS | | | | | |
| | 12 | 8T-4123 | 2 | WASHER | | | | | |
| | 13 | 241-7301 | 1 | STICK AS | | | | | |
| | 14 | 229-1096 | 2 | BEARING | | | | | |
| | 15 | 240-2913 | 2 | BEARING | | | | | |
| | 16 | 244-4277 | 2 | BEARING | | | | | |

H89656E 01

**241-7300 STICK GP-HOE**
Part of 240-3839-Page733
An Attachment

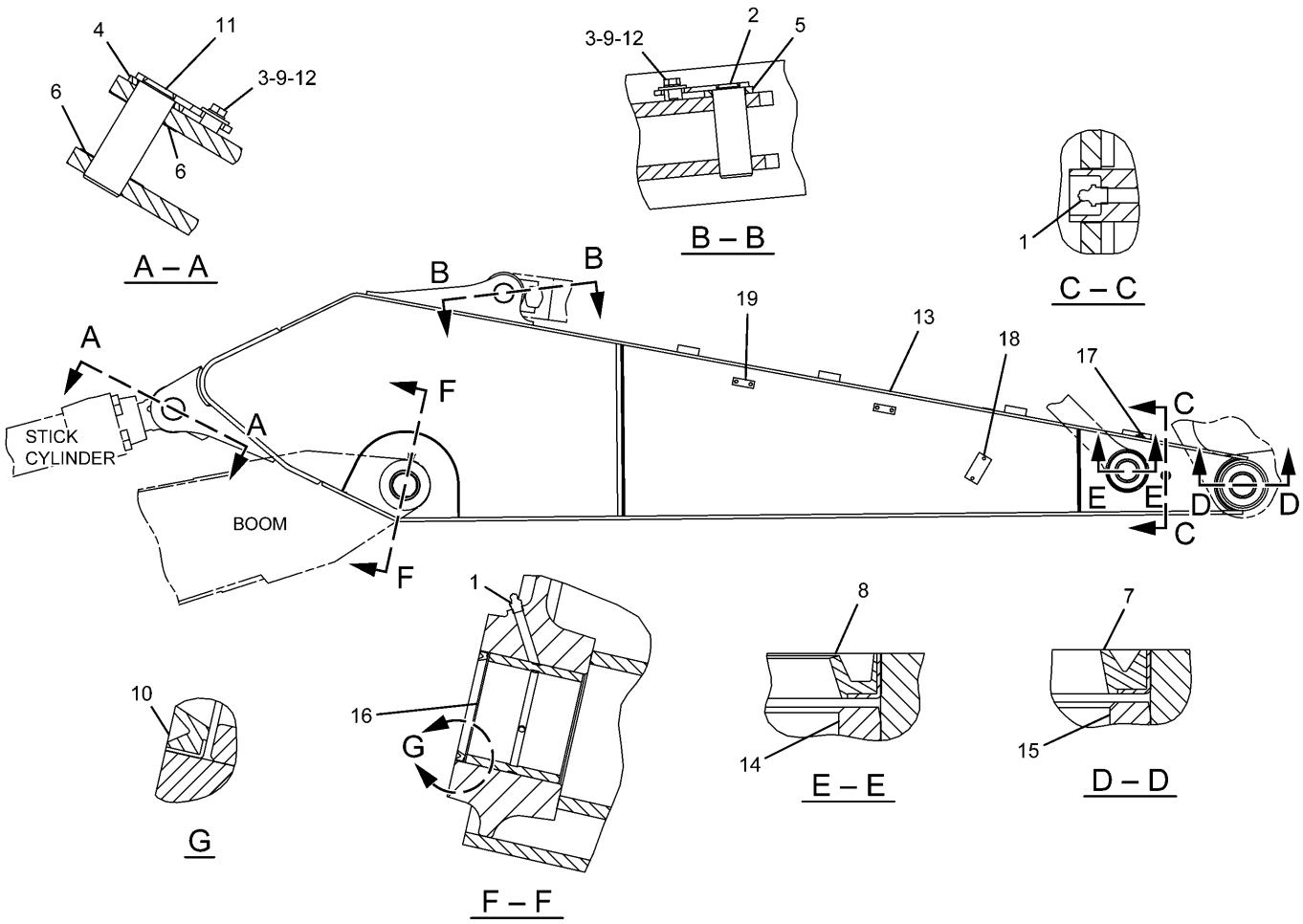


| NOTE | No. | PART No. | QTY | PART NAME | NOTE | No. | PART No. | QTY | PART NAME |
|---|---|---|---|---|---|---|---|---|---|
| | 1 | 3B-8489 | 3 | FITTING | | | | | |
| | 2 | 4I-4811 | 1 | PIN AS | | | | | |
| | 3 | 093-0349 | 2 | WASHER | | | | | |
| | 4 | 093-0363 | 1 | SPACER | | | | | |
| | 5 | 118-5982 | 1 | SPACER | | | | | |
| | 6 | 166-1486 | 2 | SHIM (T=2.00mm) | | | | | |
| | 7 | 166-1494 | 2 | SEAL | | | | | |
| | 8 | 235-7679 | 2 | SEAL | | | | | |
| | 9 | 8T-4780 | 2 | BOLT (L=30mm) | | | | | |
| | 10 | 166-1495 | 2 | SEAL | | | | | |
| | 11 | 4I-4809 | 1 | PIN AS | | | | | |
| | 12 | 8T-4123 | 2 | WASHER | | | | | |
| | 13 | 242-6464 | 1 | STICK AS | | | | | |
| | 14 | 229-1096 | 2 | BEARING | | | | | |
| | 15 | 240-2913 | 2 | BEARING | | | | | |
| | 16 | 244-4277 | 2 | BEARING | | | | | |
| | 17 | 7V-2882 | 1 | PLATE AS | | | | | |
| | 18 | 121-1760 | 2 | PLATE | | | | | |
| | 19 | 188-0046 | 4 | PLATE | | | | | |

H89897E 01

## 242-6463 STICK GP-HOE

Part of 240-3849-Page734
An Attachment

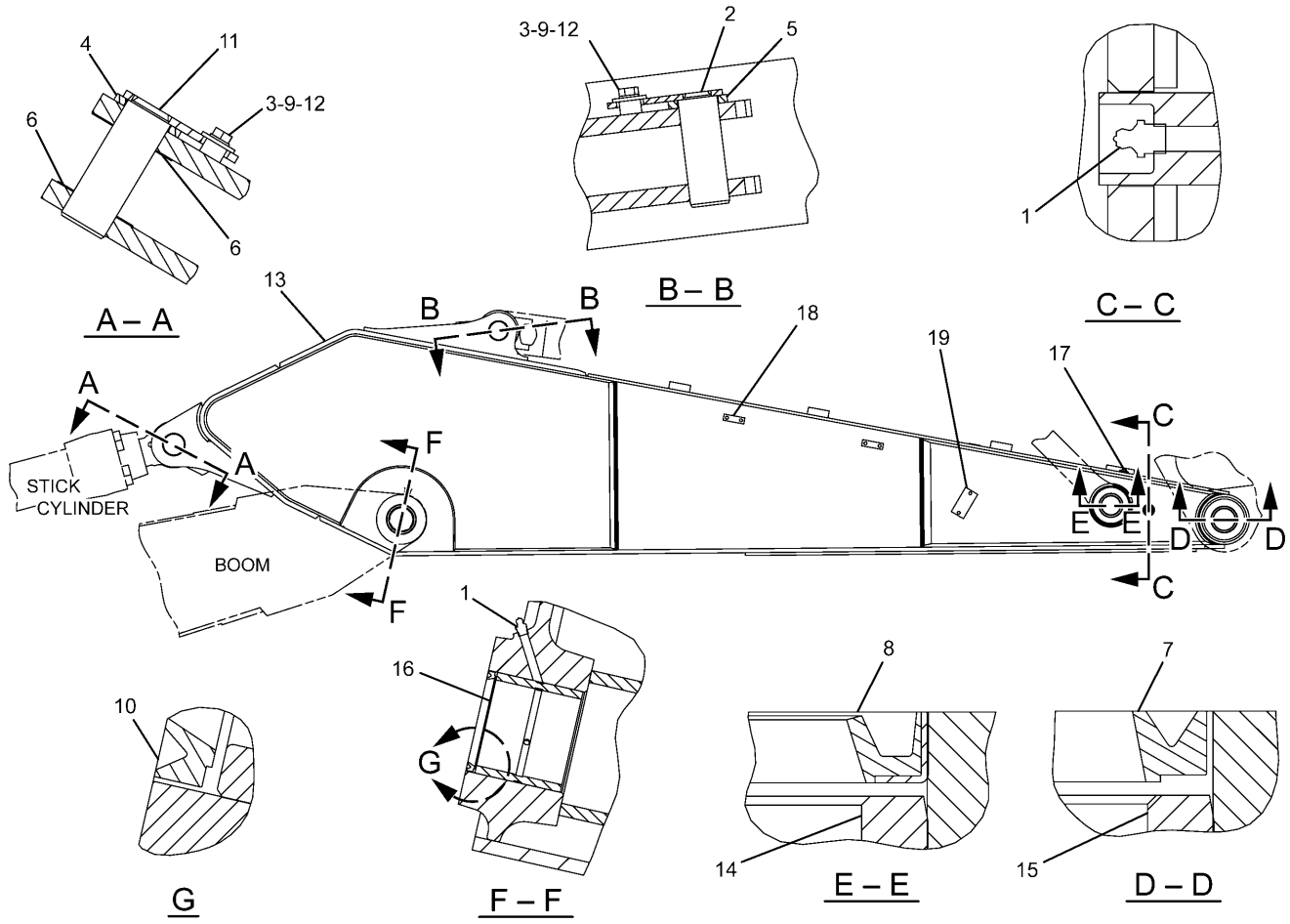


| NOTE | No. | PART No. | QTY | PART NAME | NOTE | No. | PART No. | QTY | PART NAME |
|---|---|---|---|---|---|---|---|---|---|
| | 1 | 3B-8489 | 3 | FITTING | | | | | |
| | 2 | 4I-4811 | 1 | PIN AS | | | | | |
| | 3 | 093-0349 | 2 | WASHER | | | | | |
| | 4 | 093-0363 | 1 | SPACER | | | | | |
| | 5 | 118-5982 | 1 | SPACER | | | | | |
| | 6 | 166-1486 | 2 | SHIM (T=2.00mm) | | | | | |
| | 7 | 166-1494 | 2 | SEAL | | | | | |
| | 8 | 235-7679 | 2 | SEAL | | | | | |
| | 9 | 8T-4780 | 2 | BOLT (L=30mm) | | | | | |
| | 10 | 166-1495 | 2 | SEAL | | | | | |
| | 11 | 4I-4809 | 1 | PIN AS | | | | | |
| | 12 | 8T-4123 | 2 | WASHER | | | | | |
| | 13 | 241-7304 | 1 | STICK AS | | | | | |
| | 14 | 229-1096 | 2 | BEARING | | | | | |
| | 15 | 240-2913 | 2 | BEARING | | | | | |
| | 16 | 244-4277 | 2 | BEARING | | | | | |
| | 17 | 7V-2882 | 1 | PLATE AS | | | | | |
| | 18 | 119-5592 | 4 | PLATE | | | | | |
| | 19 | 121-1760 | 2 | PLATE | | | | | |

H89733E 00

**241-7303 STICK GP-HOE**
Part of 240-3851-Page734
An Attachment

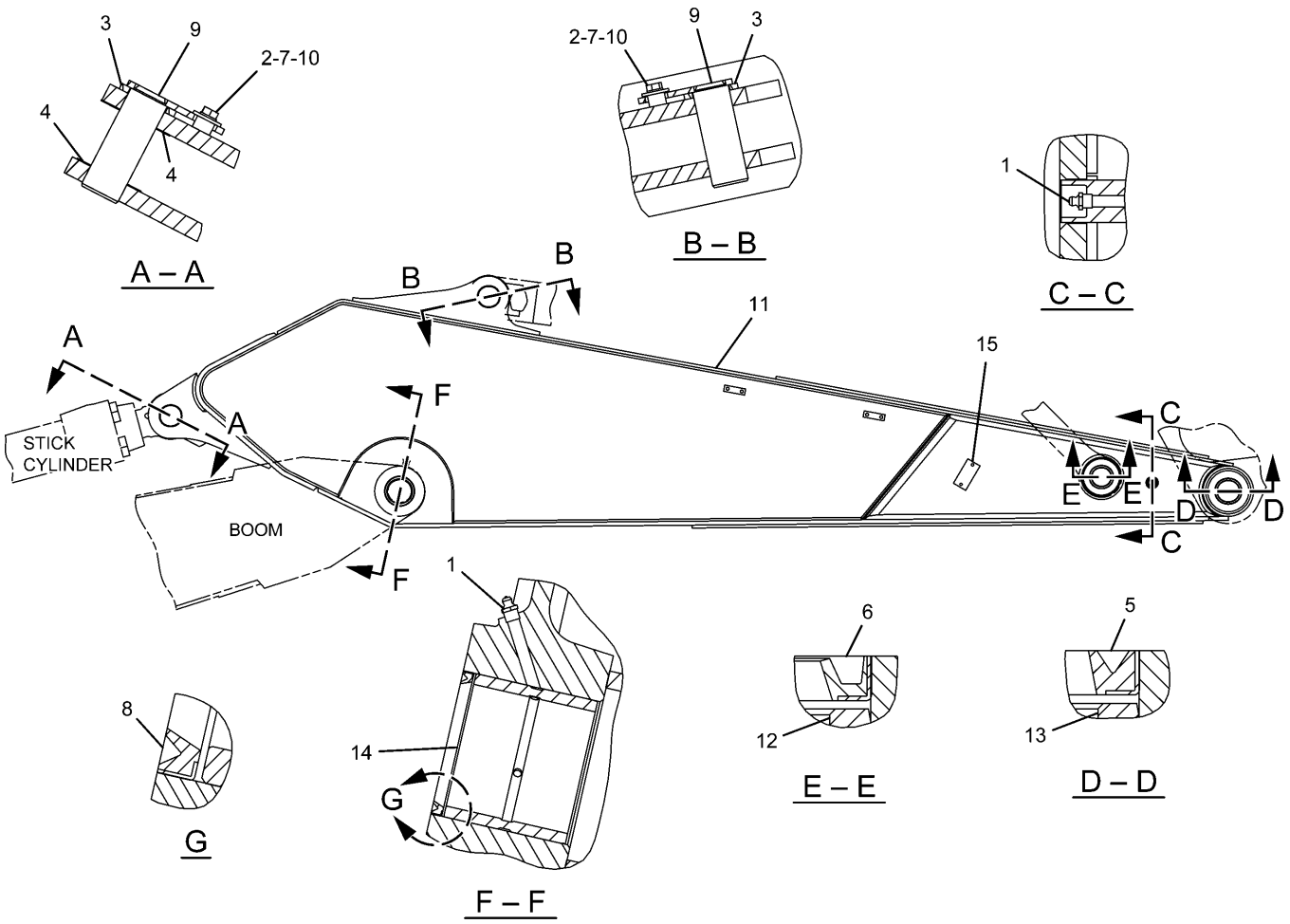


| NOTE | No. | PART No. | QTY | PART NAME | NOTE | No. | PART No. | QTY | PART NAME |
|---|---|---|---|---|---|---|---|---|---|
| | 1 | 3B-8489 | 3 | FITTING | | | | | |
| | 2 | 093-0349 | 2 | WASHER | | | | | |
| | 3 | 093-0363 | 2 | SPACER | | | | | |
| | 4 | 166-1486 | 2 | SHIM (T=2.00mm) | | | | | |
| | 5 | 166-1494 | 2 | SEAL | | | | | |
| | 6 | 235-7679 | 2 | SEAL | | | | | |
| | 7 | 8T-4780 | 2 | BOLT (L=30mm) | | | | | |
| | 8 | 166-1495 | 2 | SEAL | | | | | |
| | 9 | 4I-4809 | 2 | PIN AS | | | | | |
| | 10 | 8T-4123 | 2 | WASHER | | | | | |
| | 11 | 241-7331 | 1 | STICK AS | | | | | |
| | 12 | 229-1096 | 2 | BEARING | | | | | |
| | 13 | 240-2913 | 2 | BEARING | | | | | |
| | 14 | 244-4277 | 2 | BEARING | | | | | |
| | 15 | 121-1760 | 2 | PLATE | | | | | |

H89896E 00

**241-7330 STICK GP-HOE**
Part of 240-3852-Page735
An Attachment

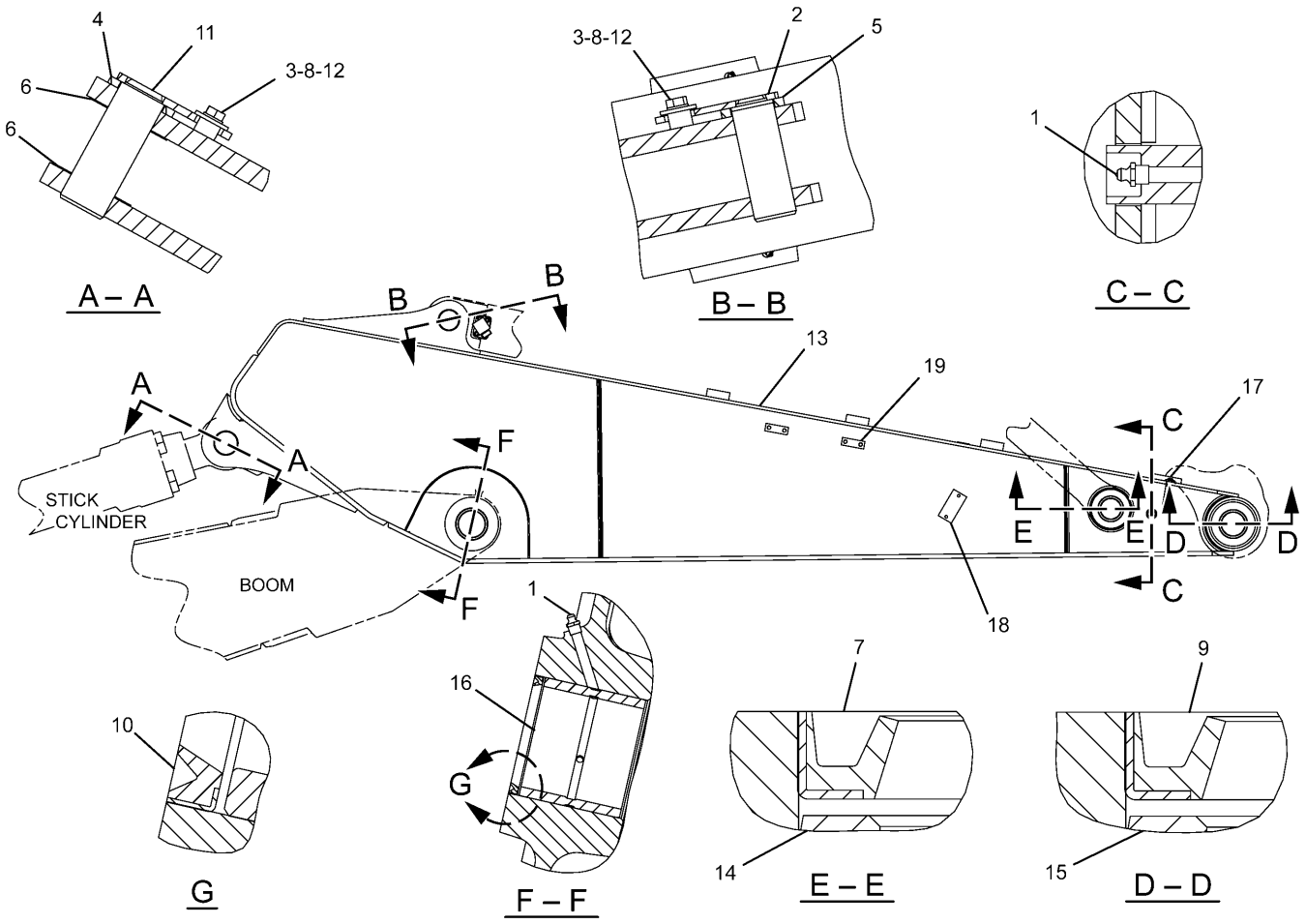


| NOTE | No. | PART No. | QTY | PART NAME | NOTE | No. | PART No. | QTY | PART NAME |
|---|---|---|---|---|---|---|---|---|---|
| | 1 | 3B-8489 | 3 | FITTING | | | | | |
| | 2 | 4I-4811 | 1 | PIN AS | | | | | |
| | 3 | 093-0349 | 2 | WASHER | | | | | |
| | 4 | 093-0363 | 1 | SPACER | | | | | |
| | 5 | 118-5982 | 1 | SPACER | | | | | |
| | 6 | 166-1486 | 2 | SHIM (T=2.00mm) | | | | | |
| | 7 | 235-7679 | 2 | SEAL | | | | | |
| | 8 | 8T-4780 | 2 | BOLT (L=30mm) | | | | | |
| | 9 | 166-1494 | 2 | SEAL | | | | | |
| | 10 | 166-1495 | 2 | SEAL | | | | | |
| | 11 | 4I-4809 | 1 | PIN AS | | | | | |
| | 12 | 8T-4123 | 2 | WASHER | | | | | |
| | 13 | 284-7317 | 1 | STICK AS | | | | | |
| | 14 | 229-1096 | 2 | BEARING | | | | | |
| | 15 | 240-2913 | 2 | BEARING | | | | | |
| | 16 | 244-4277 | 2 | BEARING | | | | | |
| | 17 | 7V-2882 | 1 | PLATE AS | | | | | |
| | 18 | 121-1760 | 2 | PLATE | | | | | |
| | 19 | 188-0046 | 4 | PLATE | | | | | |

H93596E 01

**241-7306 STICK GP-HOE**
Part of 240-3882-Page735
An Attachment

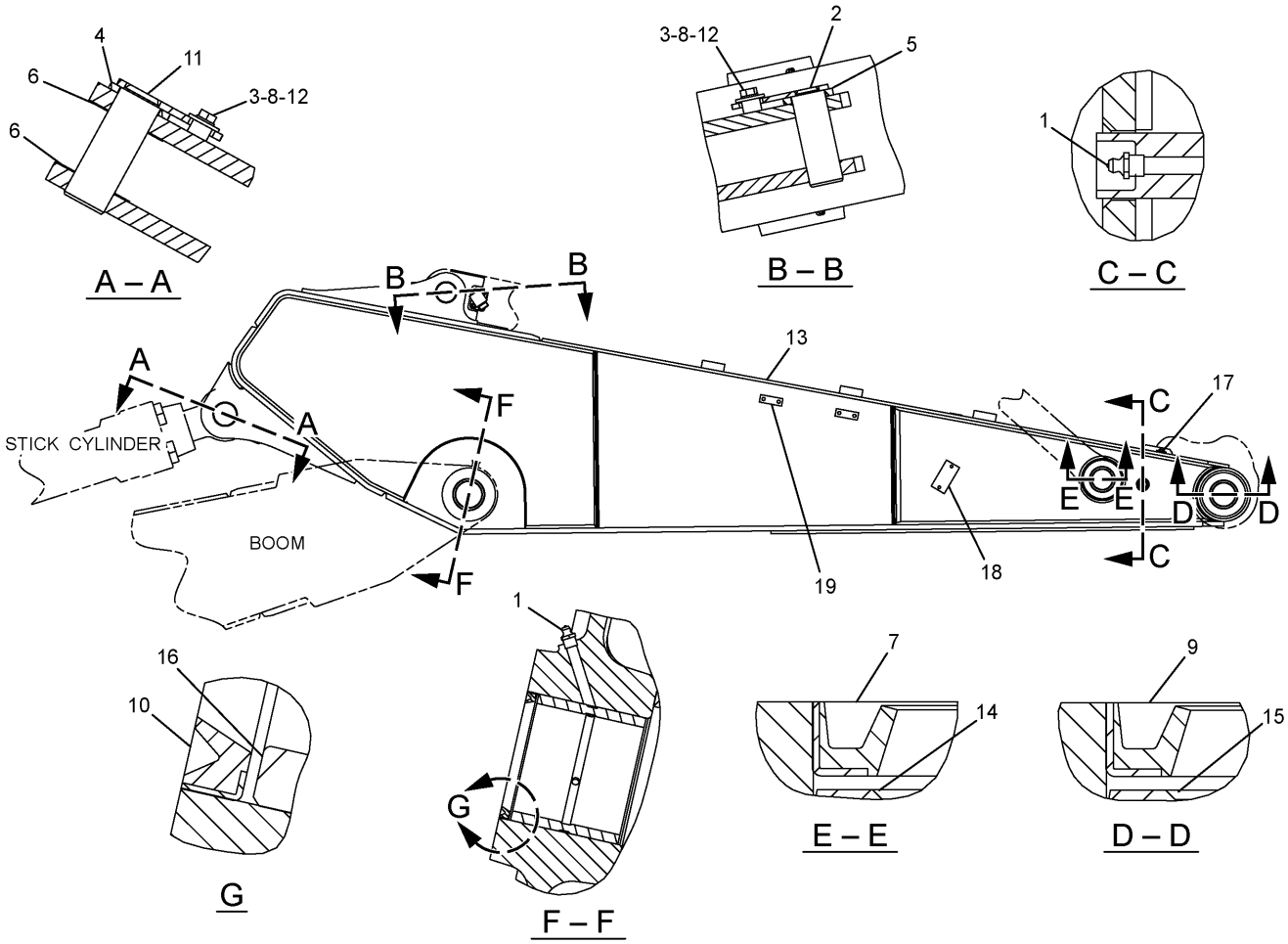


| NOTE | No. | PART No. | QTY | PART NAME | NOTE | No. | PART No. | QTY | PART NAME |
|---|---|---|---|---|---|---|---|---|---|
| | 1 | 3B-8489 | 3 | FITTING | | | | | |
| | 2 | 4I-4811 | 1 | PIN AS | | | | | |
| | 3 | 093-0349 | 2 | WASHER | | | | | |
| | 4 | 093-0363 | 1 | SPACER | | | | | |
| | 5 | 118-5982 | 1 | SPACER | | | | | |
| | 6 | 166-1486 | 2 | SHIM (T=2.00mm) | | | | | |
| | 7 | 235-7679 | 2 | SEAL | | | | | |
| | 8 | 8T-4780 | 2 | BOLT (L=30mm) | | | | | |
| | 9 | 166-1494 | 2 | SEAL | | | | | |
| | 10 | 166-1495 | 2 | SEAL | | | | | |
| | 11 | 4I-4809 | 1 | PIN AS | | | | | |
| | 12 | 8T-4123 | 2 | WASHER | | | | | |
| | 13 | 284-7325 | 1 | STICK AS | | | | | |
| | 14 | 229-1096 | 2 | BEARING | | | | | |
| | 15 | 240-2913 | 2 | BEARING | | | | | |
| | 16 | 244-4277 | 2 | BEARING | | | | | |
| | 17 | 7V-2882 | 1 | PLATE AS | | | | | |
| | 18 | 121-1760 | 2 | PLATE | | | | | |
| | 19 | 264-1708 | 4 | PLATE | | | | | |

H93848E 01

**241-7309 STICK GP-HOE**
Part of 240-3854-Page736
An Attachment

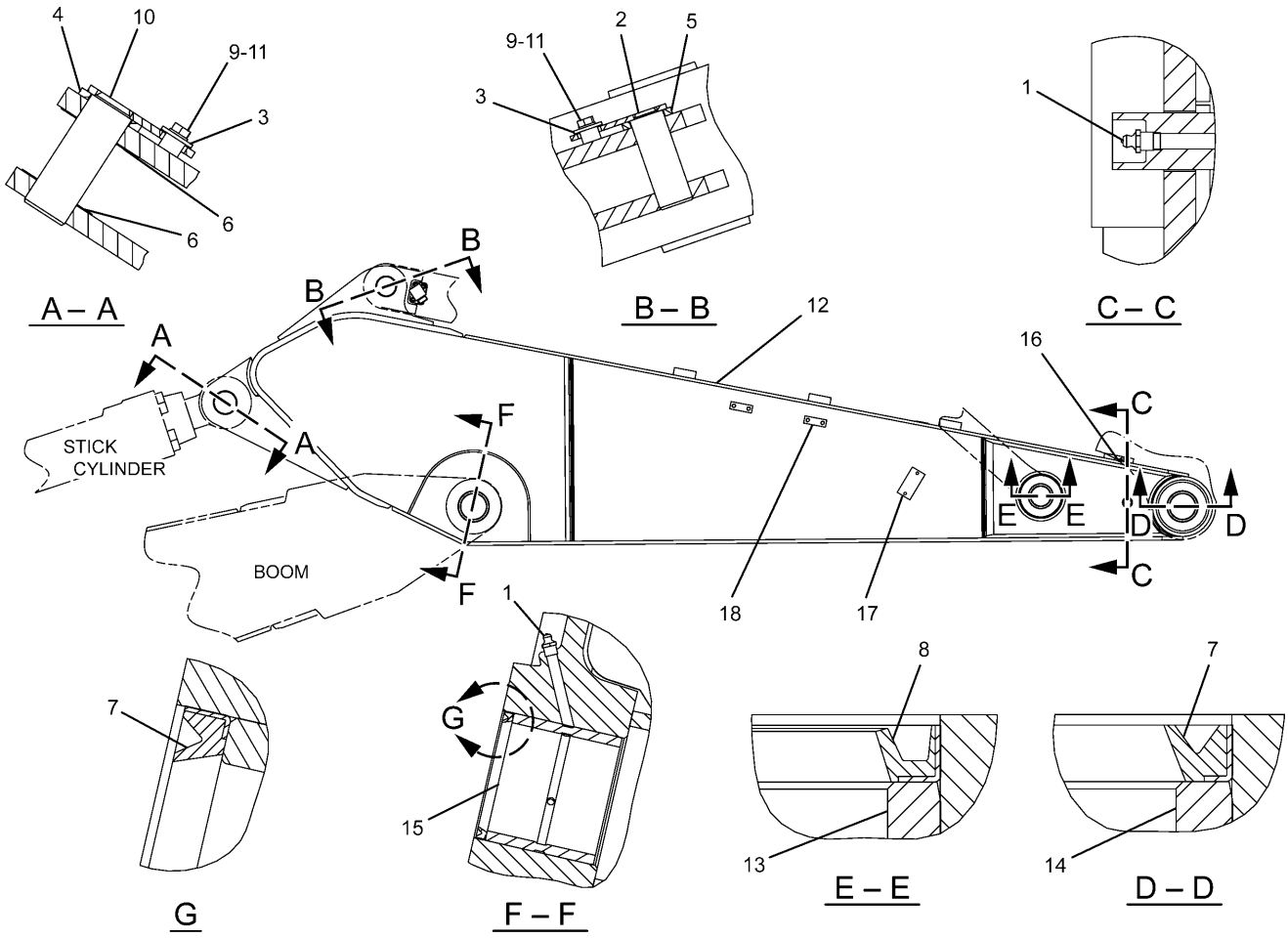


| NOTE | No. | PART No. | QTY | PART NAME | NOTE | No. | PART No. | QTY | PART NAME |
|---|---|---|---|---|---|---|---|---|---|
| | 1 | 3B-8489 | 3 | FITTING | | | | | |
| | 2 | 4I-4811 | 1 | PIN AS | | | | | |
| | 3 | 093-0349 | 2 | WASHER | | | | | |
| | 4 | 093-0363 | 1 | SPACER | | | | | |
| | 5 | 118-5982 | 1 | SPACER | | | | | |
| | 6 | 166-1486 | 2 | SHIM (T=2.00mm) | | | | | |
| | 7 | 166-1495 | 4 | SEAL | | | | | |
| | 8 | 235-7679 | 2 | SEAL | | | | | |
| | 9 | 8T-4780 | 2 | BOLT (L=30mm) | | | | | |
| | 10 | 4I-4809 | 1 | PIN AS | | | | | |
| | 11 | 8T-4123 | 2 | WASHER | | | | | |
| | 12 | 241-7316 | 1 | STICK AS | | | | | |
| | 13 | 228-5614 | 2 | BEARING | | | | | |
| | 14 | 228-5615 | 2 | BEARING | | | | | |
| | 15 | 244-4277 | 2 | BEARING | | | | | |
| | 16 | 7V-2882 | 1 | PLATE AS | | | | | |
| | 17 | 121-1760 | 2 | PLATE | | | | | |
| | 18 | 188-0046 | 4 | PLATE | | | | | |

H89728E 00

**241-7315 STICK GP-HOE**
Part of 240-3846-Page736
An Attachment

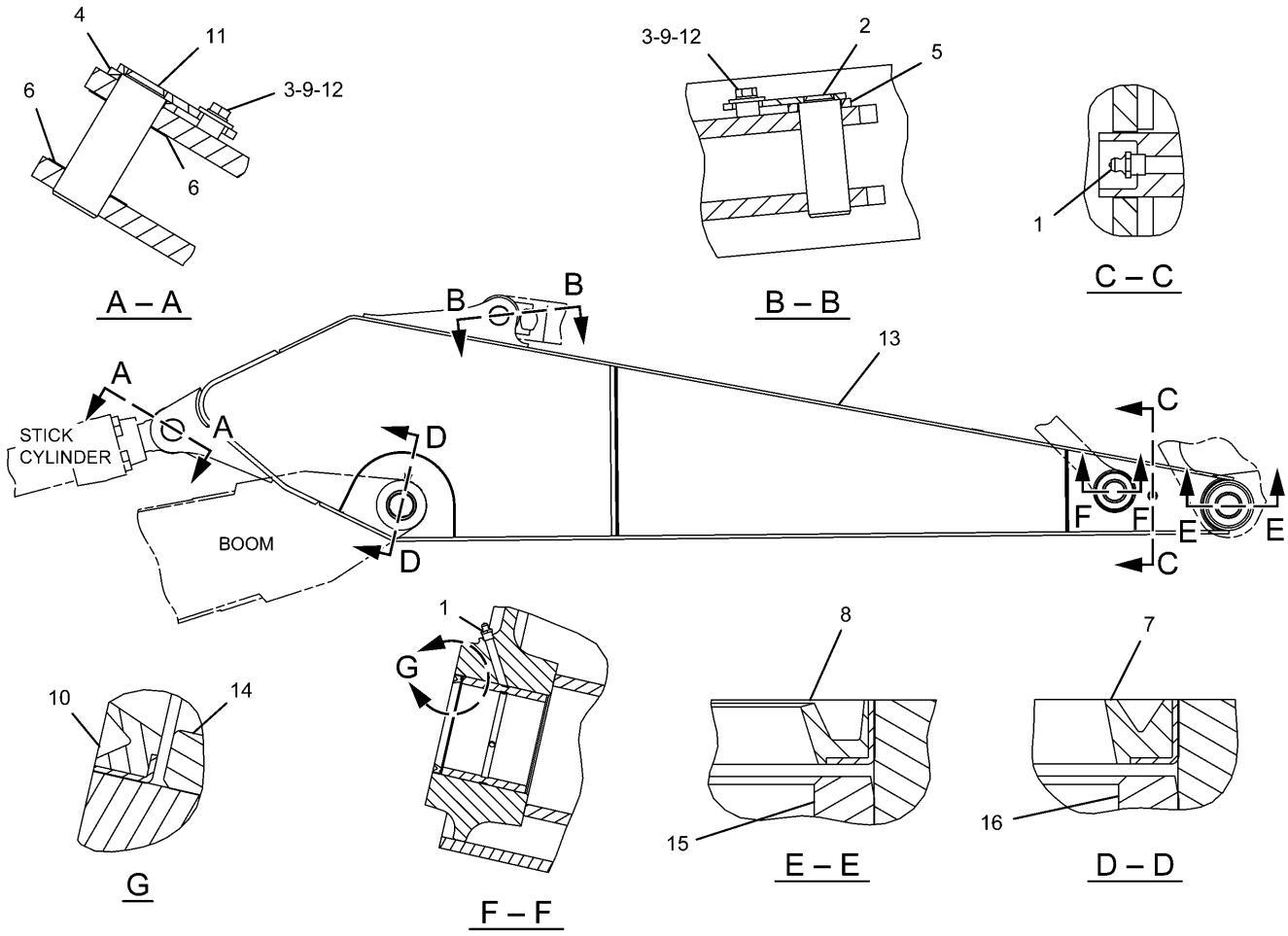


| NOTE | No. | PART No. | QTY | PART NAME | NOTE | No. | PART No. | QTY | PART NAME |
|---|---|---|---|---|---|---|---|---|---|
| | 1 | 3B-8489 | 3 | FITTING | | | | | |
| | 2 | 4I-4811 | 1 | PIN AS | | | | | |
| | 3 | 093-0349 | 2 | WASHER | | | | | |
| | 4 | 093-0363 | 1 | SPACER | | | | | |
| | 5 | 118-5982 | 1 | SPACER | | | | | |
| | 6 | 166-1486 | 2 | SHIM (T=2.00mm) | | | | | |
| | 7 | 166-1494 | 2 | SEAL | | | | | |
| | 8 | 235-7679 | 2 | SEAL | | | | | |
| | 9 | 8T-4780 | 2 | BOLT (L=30mm) | | | | | |
| | 10 | 166-1495 | 2 | SEAL | | | | | |
| | 11 | 4I-4809 | 1 | PIN AS | | | | | |
| | 12 | 8T-4123 | 2 | WASHER | | | | | |
| | 13 | 269-1624 | 1 | STICK AS | | | | | |
| | 14 | 244-4277 | 2 | BEARING | | | | | |
| | 15 | 229-1096 | 2 | BEARING | | | | | |
| | 16 | 240-2913 | 2 | BEARING | | | | | |

H89983E 00

## 269-1597 STICK GP-HOE

S/N BWZ 1-Up, DFB 1-Up
Part of 279-2732-Page11,279-2733-Page12
An Attachment

# IMPLEMENTS

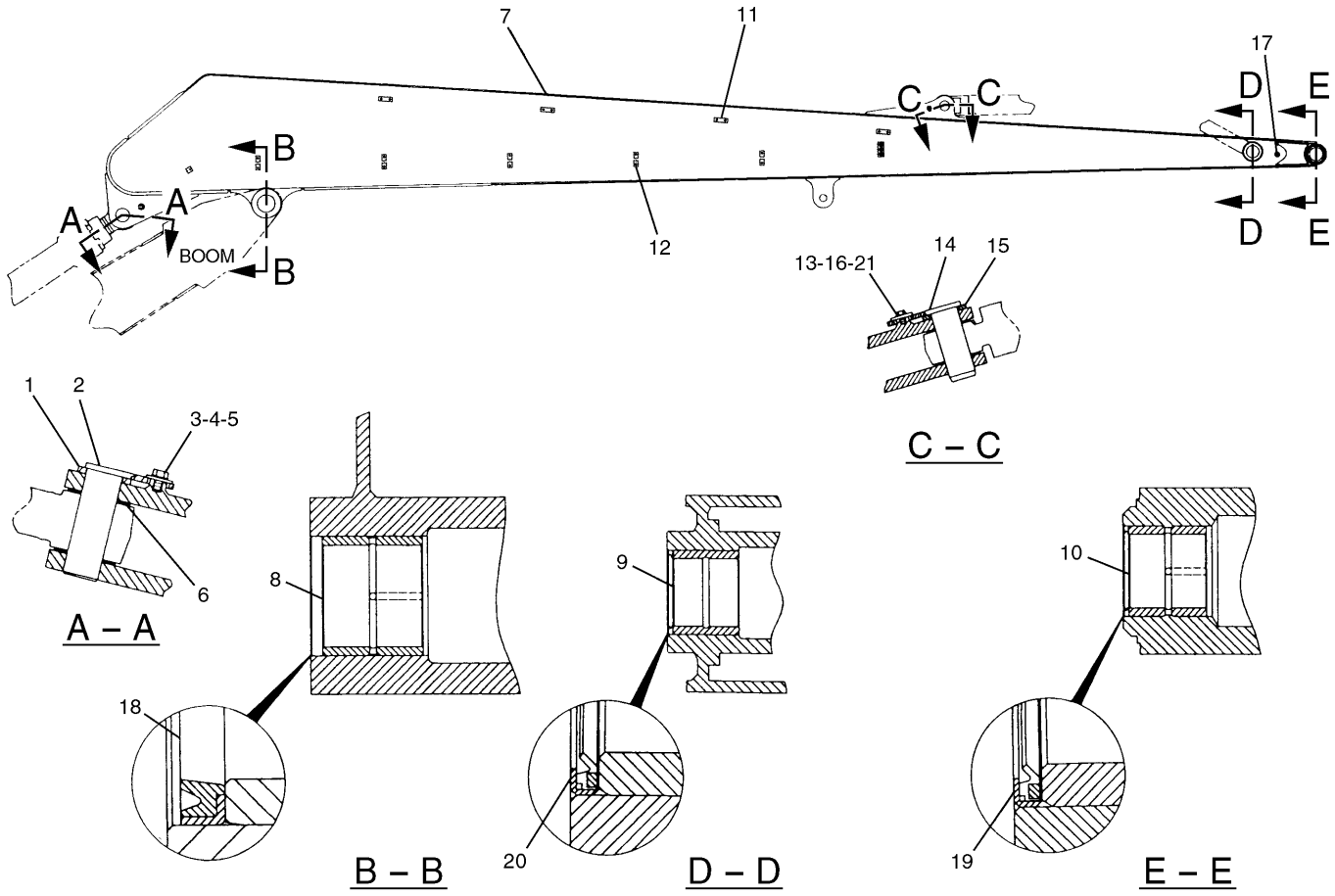


| NOTE | No. | PART No. | QTY | PART NAME | NOTE | No. | PART No. | QTY | PART NAME |
|---|---|---|---|---|---|---|---|---|---|
| | 1 | 093-0363 | 1 | SPACER | | 21 | 093-0352 | 1 | WASHER |
| | 2 | 4I-4618 | 1 | PIN AS | | | | | |
| | 3 | 8T-4780 | 1 | BOLT (L=30mm) | | | | | |
| | 4 | 093-0349 | 1 | WASHER | | | | | |
| | 5 | 8T-4123 | 1 | WASHER | | | | | |
| | 6 | 166-1486 | 2 | SHIM (T=2.00mm) | | | | | |
| | 7 | 237-3106 | 1 | STICK AS | | | | | |
| | 8 | 244-4277 | 2 | BEARING | | | | | |
| | 9 | 229-1095 | 2 | BEARING | | | | | |
| | 10 | 229-1091 | 2 | BEARING | | | | | |
| | 11 | 7Y-2522 | 8 | PLATE | | | | | |
| | 12 | 087-5841 | 10 | PLATE | | | | | |
| | 13 | 8T-4223 | 1 | WASHER | | | | | |
| | 14 | 7Y-6627 | 1 | PIN AS | | | | | |
| | 15 | 093-0357 | 1 | WASHER | | | | | |
| | 16 | 8T-4179 | 1 | BOLT (L=20mm) | | | | | |
| | 17 | 3B-8489 | 1 | FITTING | | | | | |
| | 18 | 166-1495 | 2 | SEAL | | | | | |
| | 19 | 096-0131 | 2 | SEAL | | | | | |
| | 20 | 093-1433 | 2 | SEAL | | | | | |

H94800E 02

## 230-0280 STICK GP-HOE

Long Reach Front
S/N DFB 1-Up
Part of 302-9207-Page740
An Attachment

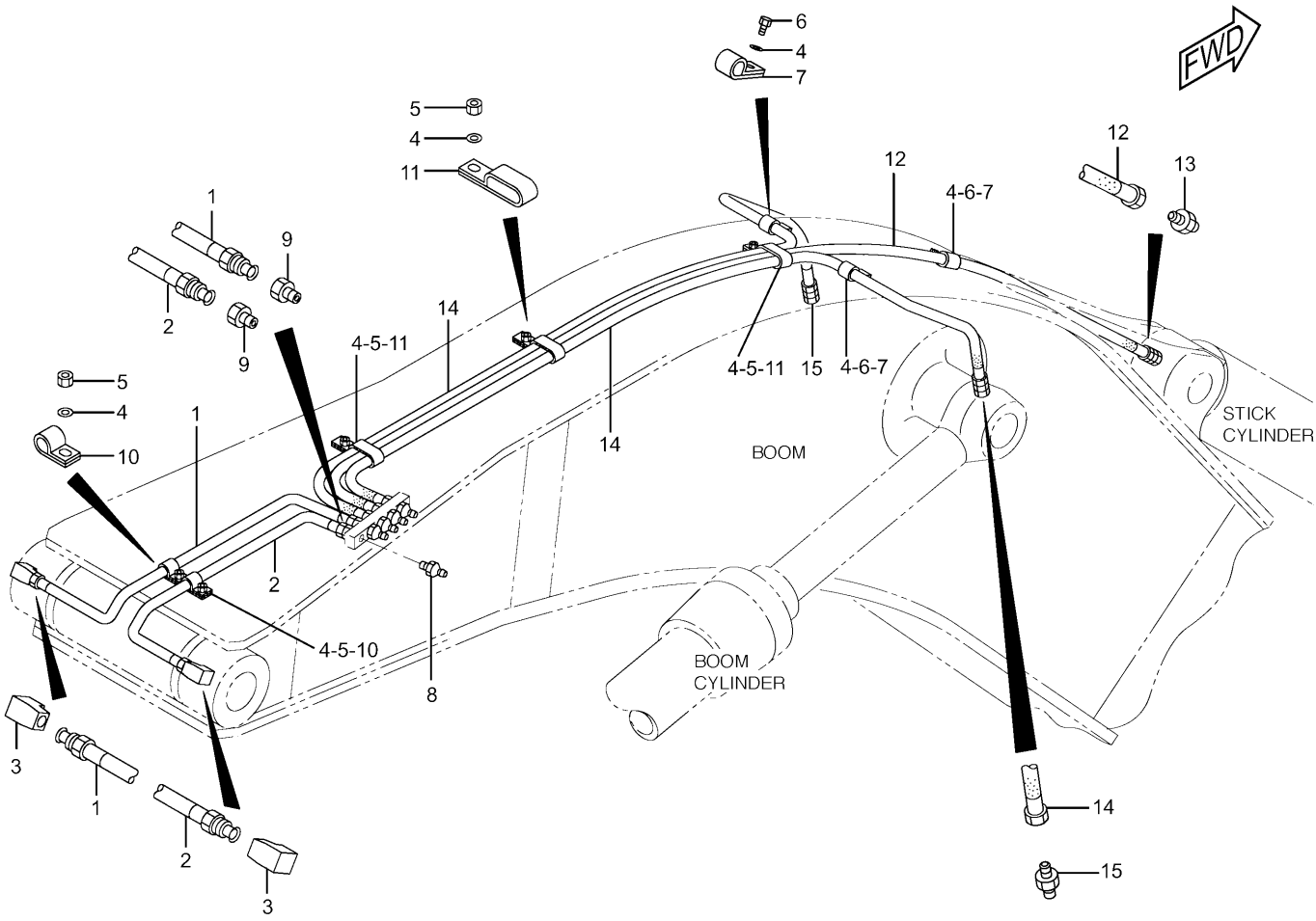


| NOTE | No. | PART No. | QTY | PART NAME | NOTE | No. | PART No. | QTY | PART NAME |
|---|---|---|---|---|---|---|---|---|---|
| | 1 | 4I-4543 | 1 | TUBE AS | | | | | |
| | 2 | 4I-4544 | 1 | TUBE AS | | | | | |
| | 3 | 5K-9243 | 2 | ELBOW | | | | | |
| | 4 | 8T-4121 | 8 | WASHER | | | | | |
| | 5 | 8T-4133 | 5 | NUT | | | | | |
| | 6 | 8T-4191 | 3 | BOLT (L=16mm) | | | | | |
| | 7 | 033-8248 | 3 | CLIP | | | | | |
| | 8 | 3B-8489 | 5 | FITTING | | | | | |
| | 9 | 6L-3616 | 2 | CONNECTOR | | | | | |
| | 10 | 8M-2772 | 2 | CLIP | | | | | |
| | 11 | 166-1579 | 3 | CLIP | | | | | |
| | 12 | 120-7226 | 1 | HOSE AS | | | | | |
| | 13 | 105-6431 | 1 | CONNECTOR | | | | | |
| | 14 | 166-3152 | 2 | HOSE AS | | | | | |
| | 15 | 105-6431 | 1 | CONNECTOR | | | | | |

H89769E 02

## 241-7286 LINES GP-GREASE

R-Boom

Part of 240-3828,240-3830-Page731

An Attachment

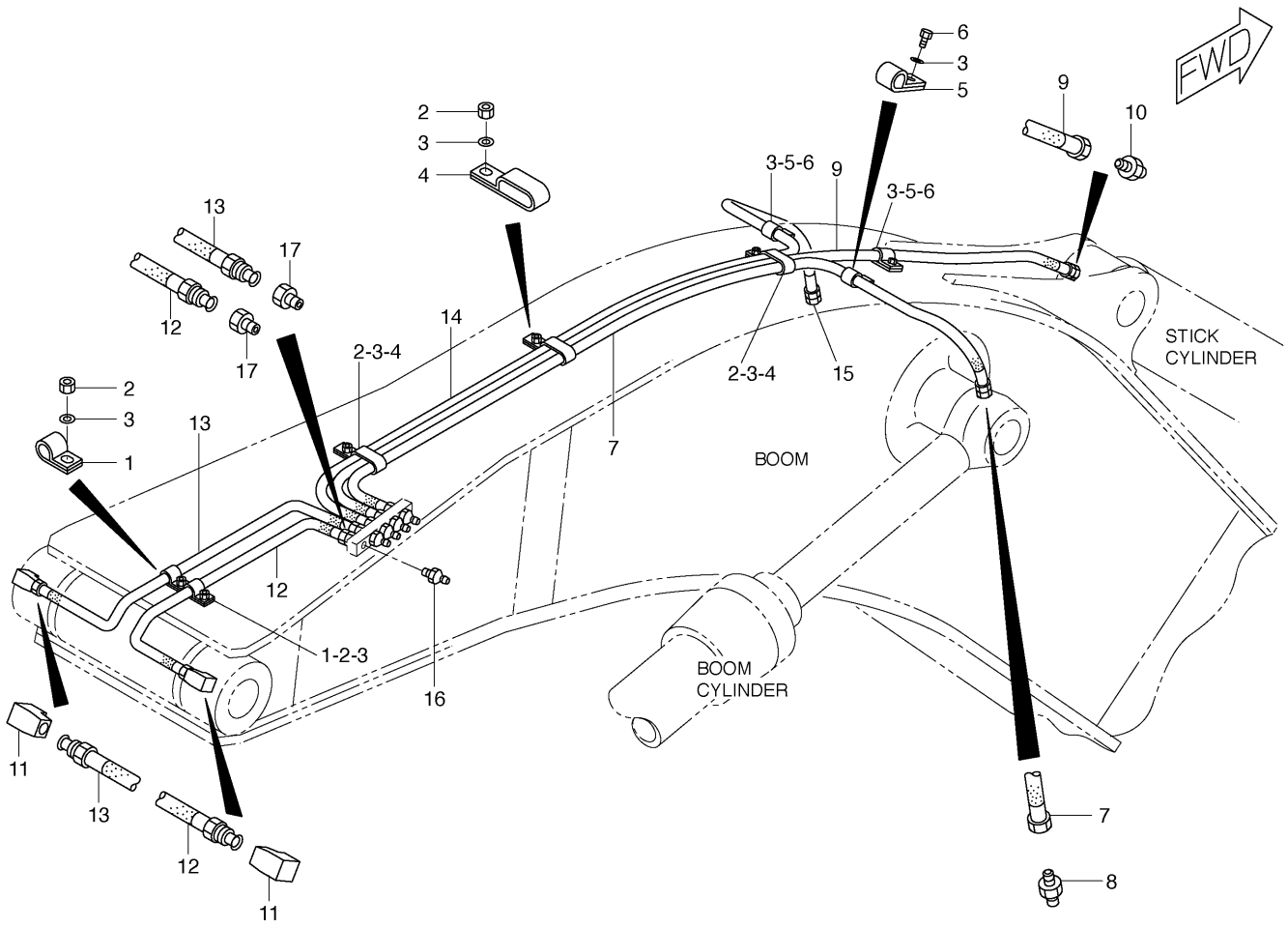


| NOTE | No. | PART No. | QTY | PART NAME | NOTE | No. | PART No. | QTY | PART NAME |
|---|---|---|---|---|---|---|---|---|---|
| | 1 | 8M-2772 | 2 | CLIP | | | | | |
| | 2 | 8T-4133 | 5 | NUT | | | | | |
| | 3 | 8T-4121 | 8 | WASHER | | | | | |
| | 4 | 166-1579 | 3 | CLIP | | | | | |
| | 5 | 033-8248 | 3 | CLIP | | | | | |
| | 6 | 8T-4191 | 3 | BOLT (L=16mm) | | | | | |
| | 7 | 166-3152 | 1 | HOSE AS | | | | | |
| | 8 | 105-6431 | 1 | CONNECTOR | | | | | |
| | 9 | 115-2678 | 1 | HOSE AS | | | | | |
| | 10 | 105-6431 | 1 | CONNECTOR | | | | | |
| | 11 | 5K-9243 | 2 | ELBOW | | | | | |
| | 12 | 4I-4544 | 1 | TUBE AS | | | | | |
| | 13 | 4I-4543 | 1 | TUBE AS | | | | | |
| | 14 | 115-2677 | 1 | HOSE AS | | | | | |
| | 15 | 105-6431 | 1 | CONNECTOR | | | | | |
| | 16 | 3B-8489 | 5 | FITTING | | | | | |
| | 17 | 6L-3616 | 2 | CONNECTOR | | | | | |

H86755E 00

## 172-2939 LINES GP-GREASE

S/N BWZ 1-Up, DFB 1-Up
Part of 240-3833-Page732
An Attachment

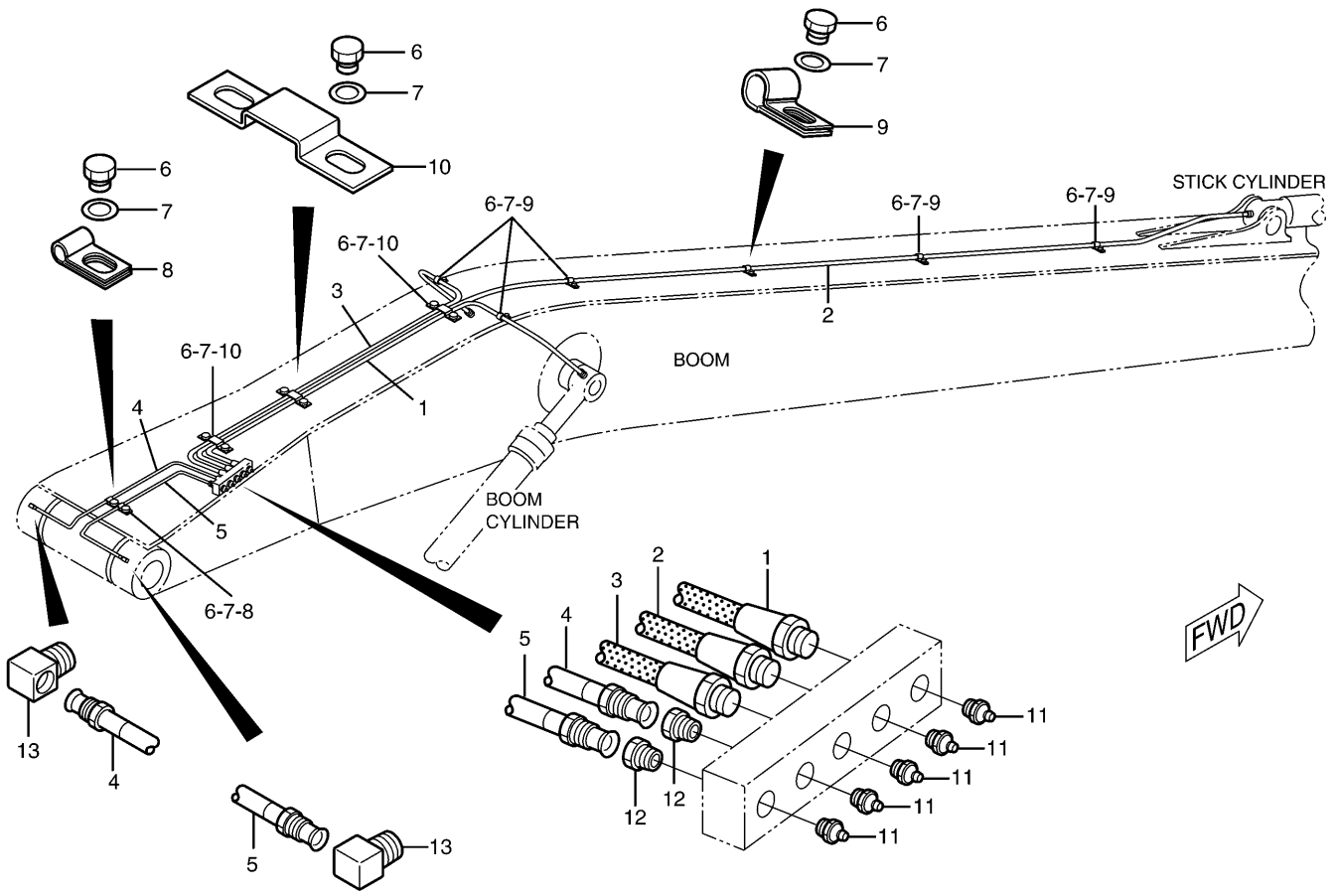


| NOTE | No. | PART No. | QTY | PART NAME | NOTE | No. | PART No. | QTY | PART NAME |
|---|---|---|---|---|---|---|---|---|---|
| | 1 | 4I-6610 | 1 | HOSE AS | | | | | |
| | 2 | 5I-7236 | 1 | HOSE AS | | | | | |
| | 3 | 4I-6608 | 1 | HOSE AS | | | | | |
| | 4 | 4I-4543 | 1 | TUBE AS | | | | | |
| | 5 | 4I-4544 | 1 | TUBE AS | | | | | |
| | 6 | 8T-4191 | 14 | BOLT (L=16mm) | | | | | |
| | 7 | 8T-4121 | 14 | WASHER | | | | | |
| | 8 | 8M-2772 | 2 | CLIP | | | | | |
| | 9 | 033-8248 | 6 | CLIP | | | | | |
| | 10 | 087-5840 | 3 | PLATE | | | | | |
| | 11 | 3B-8489 | 5 | FITTING | | | | | |
| | 12 | 6L-3616 | 2 | CONNECTOR | | | | | |
| | 13 | 5K-9243 | 2 | ELBOW | | | | | |

H53448E 00

## 5I-7235 LINES GP-GREASE

Boom/Long Reach Front
S/N DFB 1-Up
Part of 302-9207-Page740
An Attachment

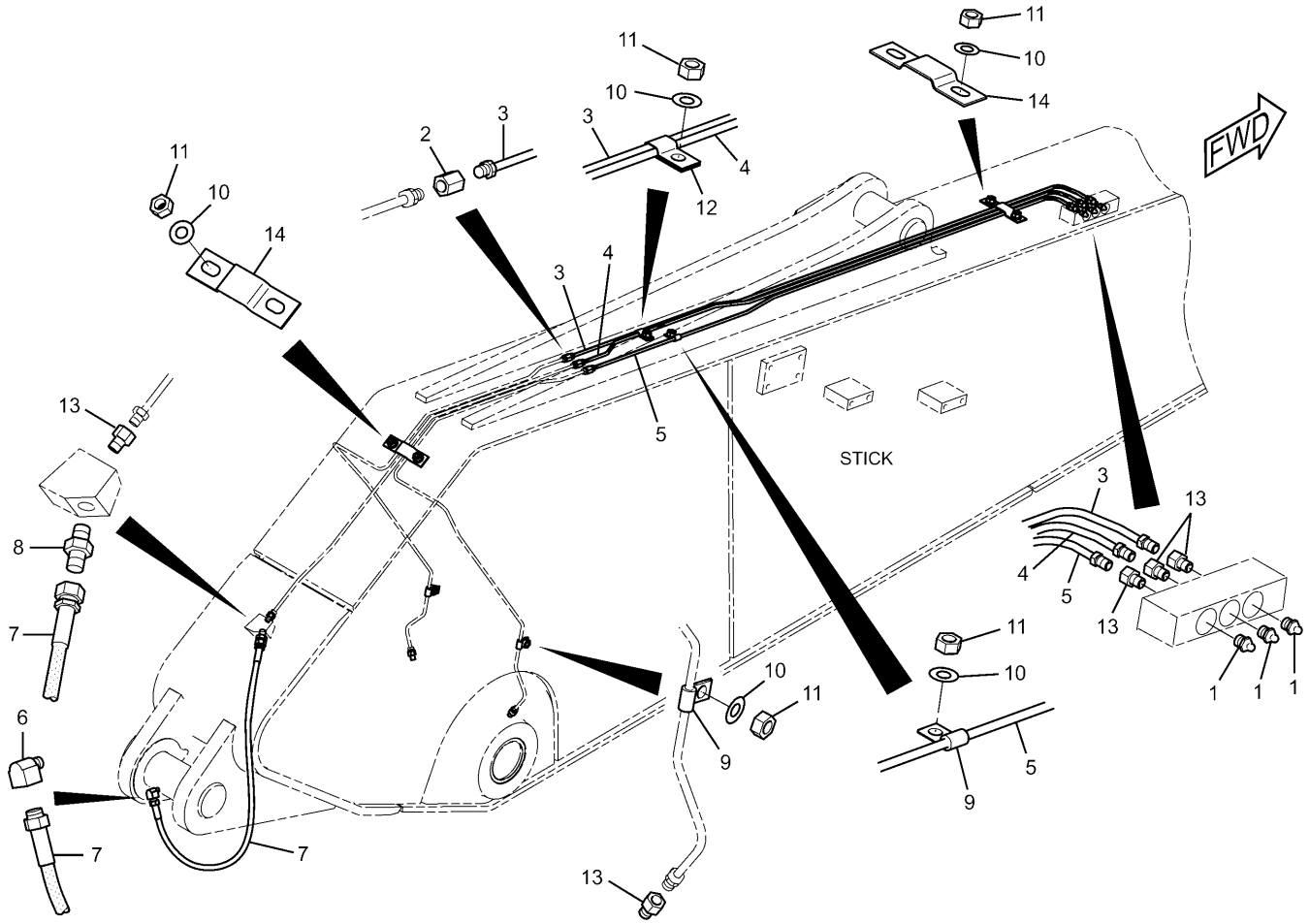


| NOTE | No. | PART No. | QTY | PART NAME | NOTE | No. | PART No. | QTY | PART NAME |
|---|---|---|---|---|---|---|---|---|---|
| | 1 | 3B-8489 | 3 | FITTING | | | | | |
| | 2 | 5K-9242 | 3 | UNION | | | | | |
| | 3 | 6I-5134 | 1 | TUBE AS | | | | | |
| | 4 | 6I-5135 | 1 | TUBE AS | | | | | |
| | 5 | 6I-5136 | 1 | TUBE AS | | | | | |
| | 6 | 6V-3342 | 1 | ELBOW | | | | | |
| | 7 | 7Y-2670 | 1 | HOSE AS | | | | | |
| | 8 | 105-6431 | 1 | CONNECTOR | | | | | |
| | 9 | 8M-2772 | 3 | CLIP | | | | | |
| | 10 | 8T-4121 | 8 | WASHER | | | | | |
| | 11 | 8T-4133 | 8 | NUT | | | | | |
| | 12 | 5K-2298 | 1 | CLIP | | | | | |
| | 13 | 6L-3616 | 6 | CONNECTOR | | | | | |
| | 14 | 087-5838 | 2 | PLATE | | | | | |

H89772E 00

## 267-0138 LINES GP-GREASE

R3.9B Stick

Part of 240-3845-Page733

An Attachment

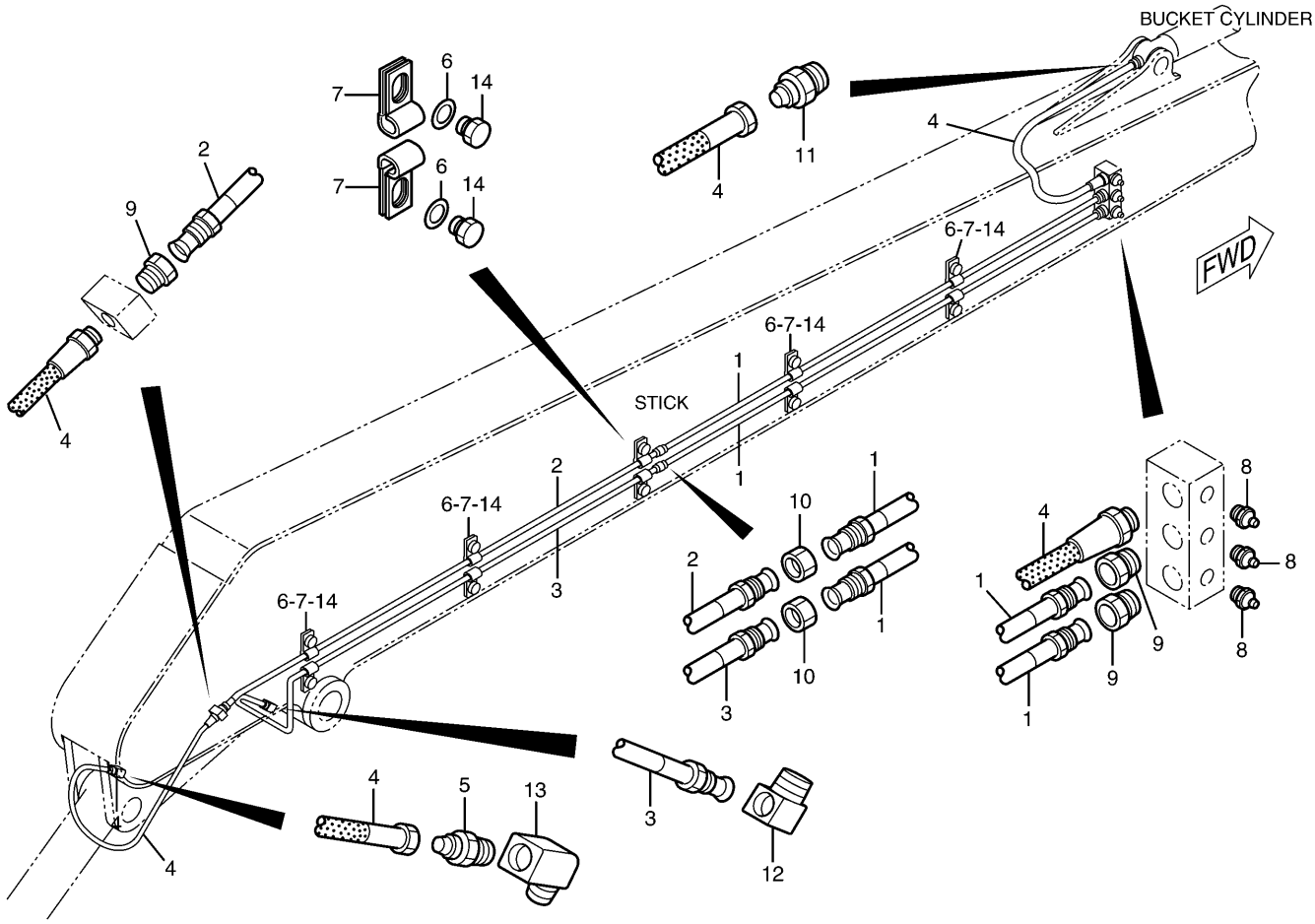


| NOTE | No. | PART No. | QTY | PART NAME | NOTE | No. | PART No. | QTY | PART NAME |
|---|---|---|---|---|---|---|---|---|---|
| | 1 | 5I-7238 | 2 | TUBE AS | | | | | |
| | 2 | 5I-7239 | 1 | TUBE AS | | | | | |
| | 3 | 132-1531 | 1 | TUBE AS | | | | | |
| | 4 | 087-5966 | 2 | HOSE AS | | | | | |
| | 5 | 105-6431 | 1 | CONNECTOR | | | | | |
| | 6 | 8T-4121 | 10 | WASHER | | | | | |
| | 7 | 8M-2772 | 10 | CLIP | | | | | |
| | 8 | 3B-8489 | 3 | FITTING | | | | | |
| | 9 | 6L-3616 | 3 | CONNECTOR | | | | | |
| | 10 | 5K-9242 | 2 | UNION | | | | | |
| | 11 | 5H-8936 | 1 | ADAPTER | | | | | |
| | 12 | 5K-9243 | 1 | ELBOW | | | | | |
| | 13 | 6V-3342 | 1 | ELBOW | | | | | |
| | 14 | 8T-4191 | 10 | BOLT (L=16mm) | | | | | |

H53097E 00

## 127-6625 LINES GP-GREASE

Stick/Long Reach Front
S/N DFB 1-Up
Part of 302-9207-Page740
An Attachment

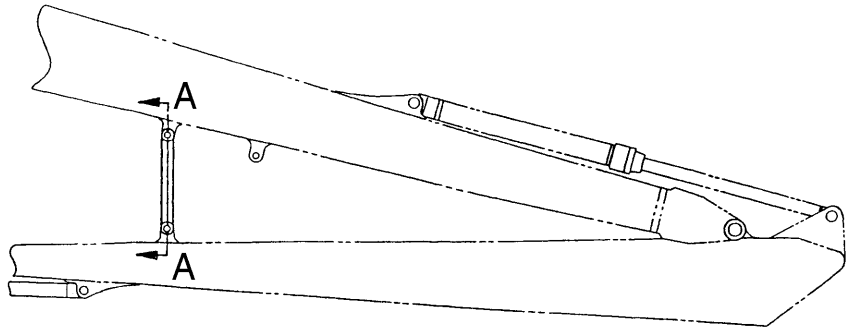


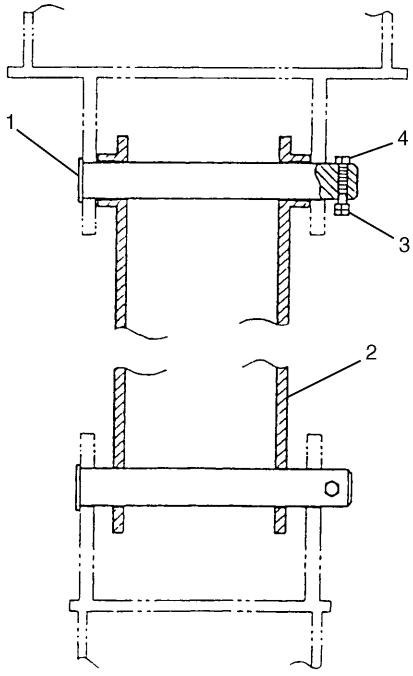


A – A

| NOTE | No. | PART No. | QTY | PART NAME | NOTE | No. | PART No. | QTY | PART NAME |
|---|---|---|---|---|---|---|---|---|---|
| | 1 | 7Y-6649 | 2 | PIN | | | | | |
| | 2 | 7Y-6641 | 1 | ROD AS | | | | | |
| | 3 | 8T-4133 | 4 | NUT | | | | | |
| | 4 | 8T-6466 | 2 | BOLT (L=60mm) | | | | | |

H53284E 00

## 116-9115 LOCK GP-TRANSPORT

Long Reach Front
S/N DFB 1-Up
Part of 302-9207-Page740
An Attachment

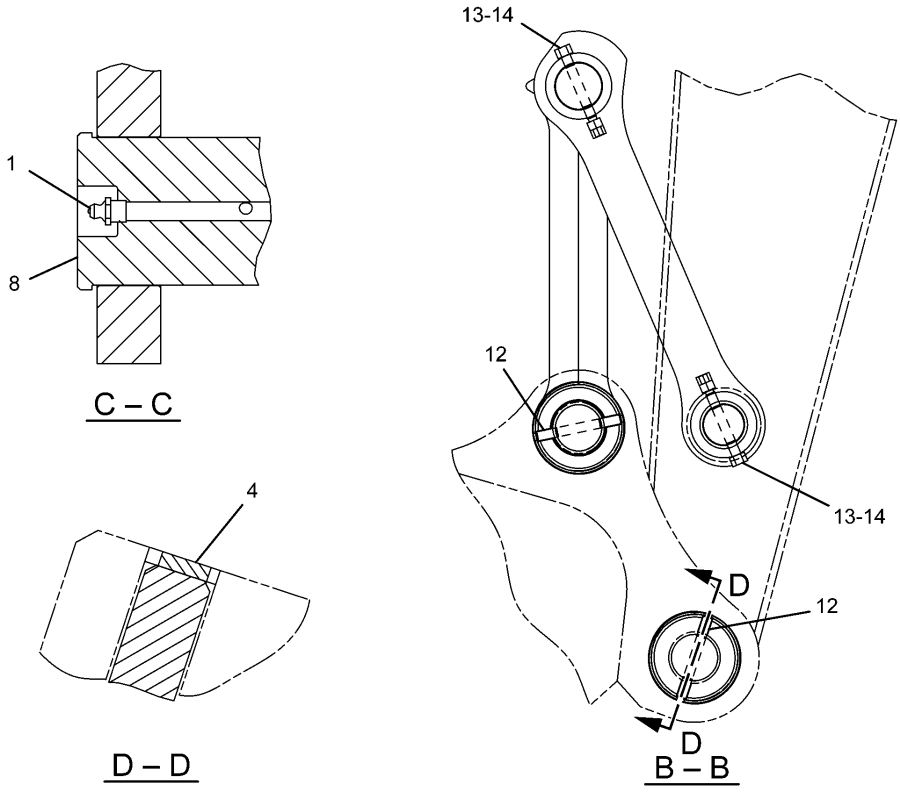


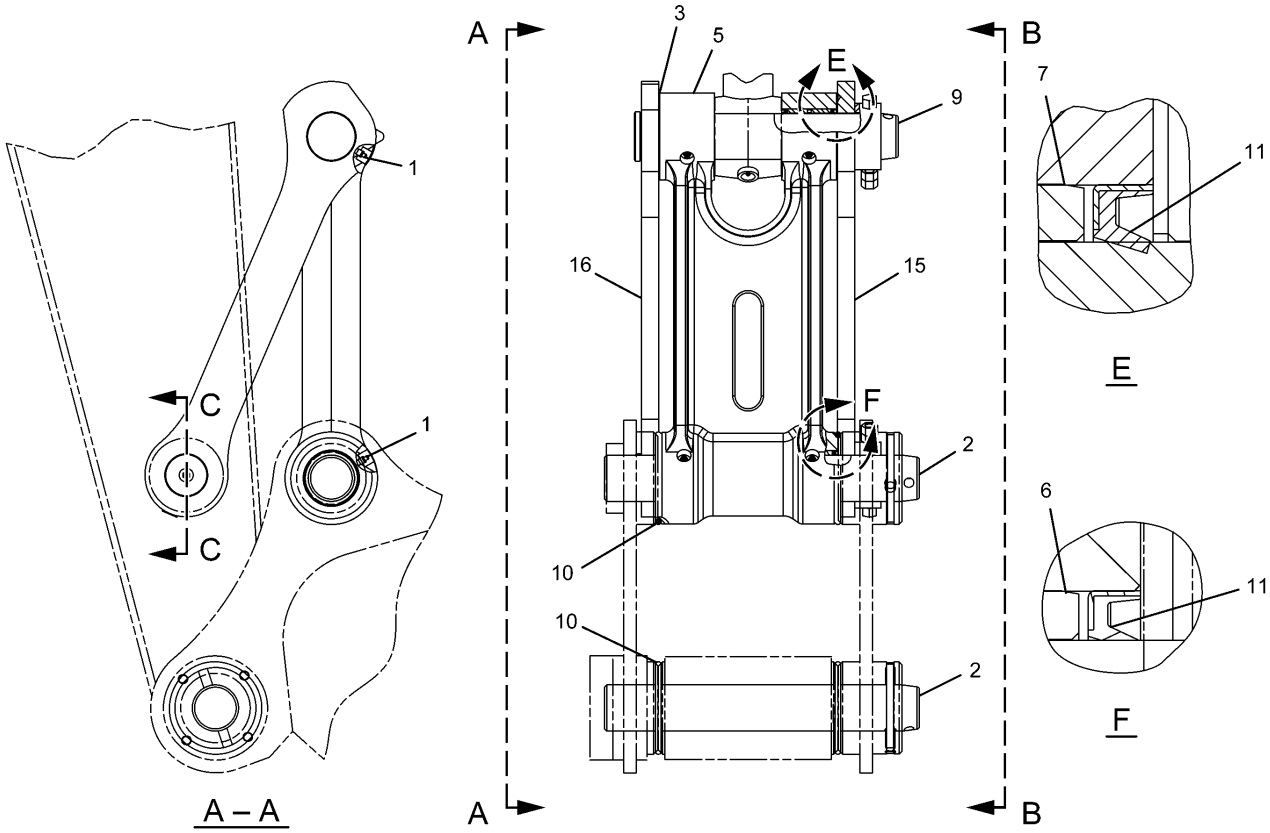


H89529E 01

**241-7318 LINKAGE GP-BUCKET**
Part of 247-7453-Page737
An Attachment

# IMPLEMENTS

| NOTE | No. | PART No. | QTY | PART NAME | NOTE | No. | PART No. | QTY | PART NAME |
|---|---|---|---|---|---|---|---|---|---|
| | 1 | 3B-8489 | 5 | FITTING | | | | | |
| | 2 | 087-5805 | 2 | PIN | | | | | |
| | 3 | 166-1486 | 2 | SHIM (T=2.00mm) | | | | | |
| | 4 | 168-2629 | 2 | RING | | | | | |
| | 5 | 241-7319 | 1 | LINK AS | | | | | |
| | 6 | 240-2912 | 2 | BEARING | | | | | |
| | 7 | 244-4360 | 2 | BEARING | | | | | |
| | 8 | 254-3052 | 1 | PIN | | | | | |
| | 9 | 254-3053 | 1 | PIN | | | | | |
| | 10 | 093-1344 | 4 | SEAL-O-RING (ID=140.00mm) | | | | | |
| | 11 | 166-1494 | 6 | SEAL | | | | | |
| | 12 | 168-2628 | 2 | PIN | | | | | |
| | 13 | 186-5644 | 2 | BOLT (L=150mm) | | | | | |
| | 14 | 8T-4132 | 4 | NUT | | | | | |
| | 15 | 244-4254 | 1 | LINK AS | | | | | |
| | 16 | 244-4255 | 1 | LINK | | | | | |

H89529E 01

## 241-7318 LINKAGE GP-BUCKET

Part of 247-7453-Page737
An Attachment

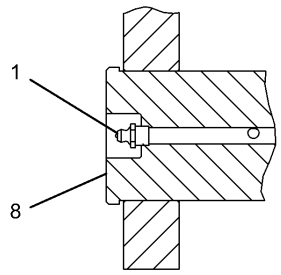


C – C

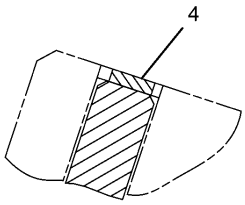


D – D

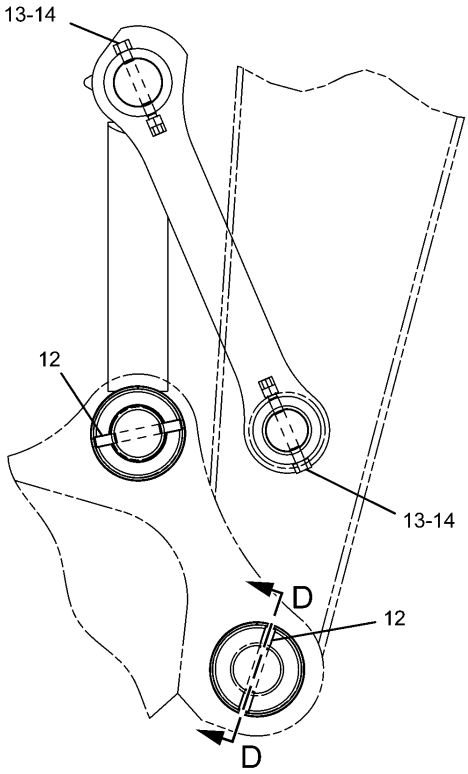


B – B

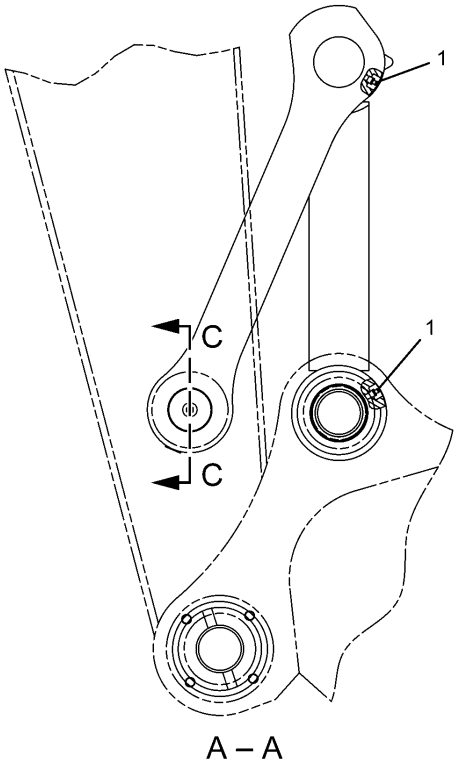


A – A

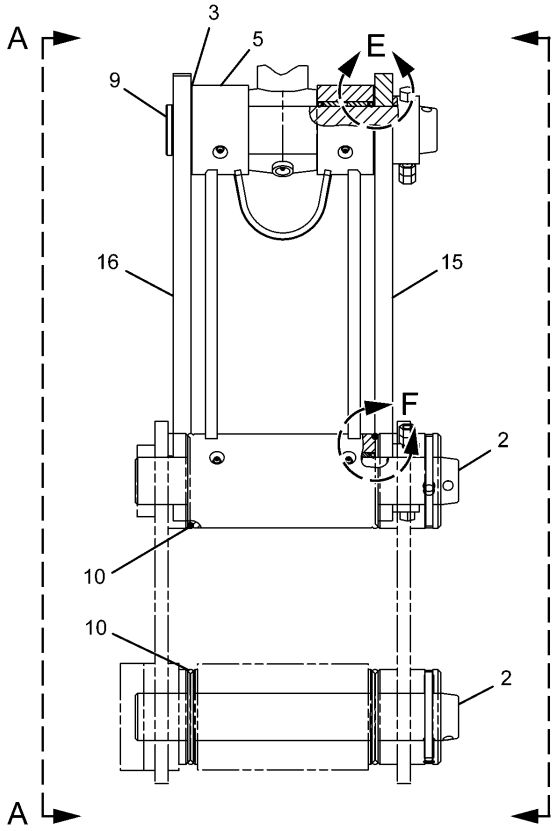


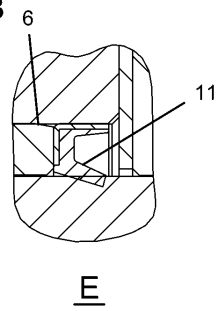


E

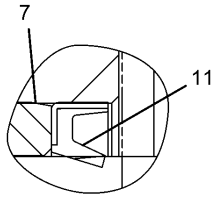


F

H89531E 01

**241-7324 LINKAGE GP-BUCKET**
Part of 240-3860-Page737
An Attachment

# IMPLEMENTS

| NOTE | No. | PART No. | QTY | PART NAME | NOTE | No. | PART No. | QTY | PART NAME |
|---|---|---|---|---|---|---|---|---|---|
| | 1 | 3B-8489 | 5 | FITTING | | | | | |
| | 2 | 087-5805 | 2 | PIN | | | | | |
| | 3 | 166-1486 | 2 | SHIM (T=2.00mm) | | | | | |
| | 4 | 168-2629 | 2 | RING | | | | | |
| | 5 | 241-7325 | 1 | LINK AS | | | | | |
| | 6 | 244-4360 | 2 | BEARING | | | | | |
| | 7 | 240-2912 | 2 | BEARING | | | | | |
| | 8 | 254-3052 | 1 | PIN | | | | | |
| | 9 | 254-3053 | 1 | PIN | | | | | |
| | 10 | 093-1344 | 4 | SEAL-O-RING (ID=140.00mm) | | | | | |
| | 11 | 166-1494 | 6 | SEAL | | | | | |
| | 12 | 168-2628 | 2 | PIN | | | | | |
| | 13 | 186-5644 | 2 | BOLT (L=150mm) | | | | | |
| | 14 | 8T-4132 | 4 | NUT | | | | | |
| | 15 | 244-4254 | 1 | LINK AS | | | | | |
| | 16 | 244-4255 | 1 | LINK | | | | | |

H89531E 01

## 241-7324 LINKAGE GP-BUCKET

Part of 240-3860-Page737

An Attachment

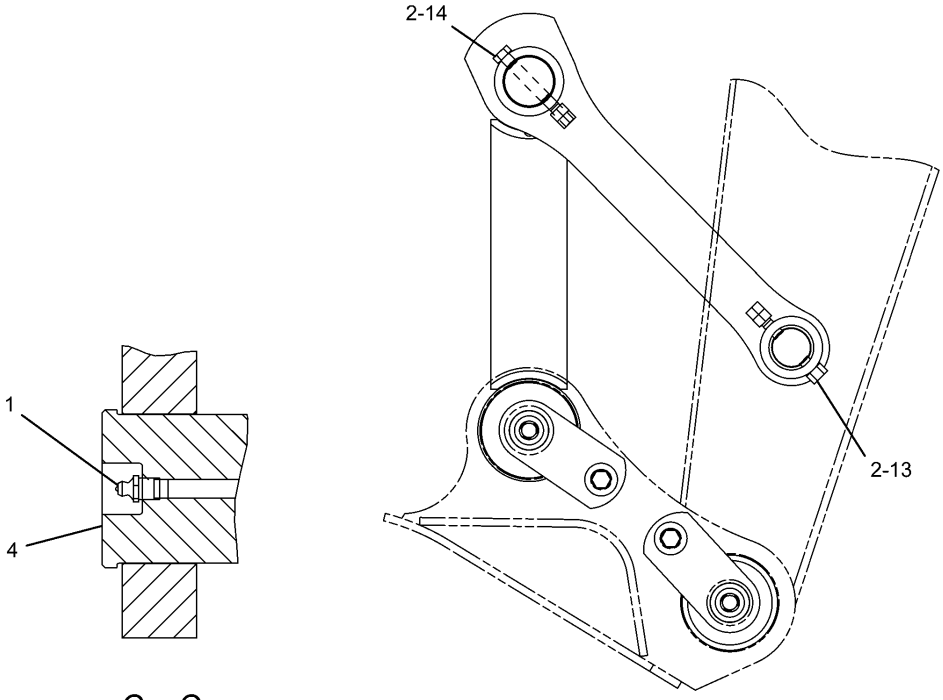


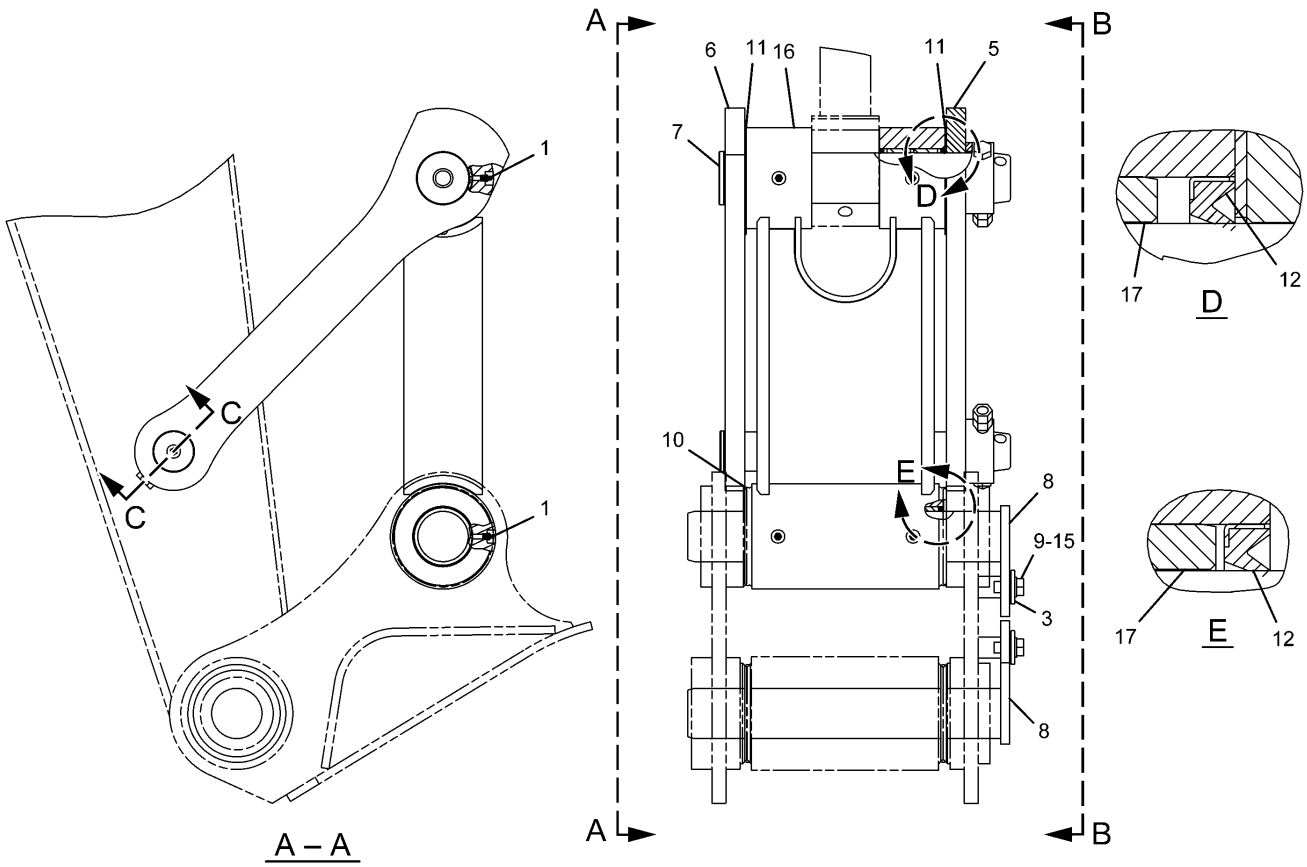


H93594E 03

**228–5528 LINKAGE GP–BUCKET**
CB Family
Part of 229–1772–Page738
An Attachment

# IMPLEMENTS

| NOTE | No. | PART No. | QTY | PART NAME | NOTE | No. | PART No. | QTY | PART NAME |
|---|---|---|---|---|---|---|---|---|---|
| | 1 | 3B-8489 | 5 | FITTING | | | | | |
| | 2 | 8T-4131 | 4 | NUT | | | | | |
| | 3 | 093-0349 | 2 | WASHER | | | | | |
| | 4 | 186-5662 | 1 | PIN | | | | | |
| | 5 | 234-3927 | 1 | LINK AS | | | | | |
| | 6 | 234-3928 | 1 | LINK | | | | | |
| | 7 | 234-3930 | 1 | PIN | | | | | |
| | 8 | 234-3931 | 2 | PIN AS | | | | | |
| | 9 | 8T-5460 | 2 | BOLT (L=40mm) | | | | | |
| | 10 | 093-1345 | 4 | SEAL-O-RING (ID=155.00mm) | | | | | |
| | 11 | 166-1487 | 2 | SHIM (T=2.00mm) | | | | | |
| | 12 | 166-1495 | 6 | SEAL | | | | | |
| | 13 | 186-5649 | 1 | BOLT (L=160mm) | | | | | |
| | 14 | 189-3925 | 1 | BOLT (L=170mm) | | | | | |
| | 15 | 8T-4123 | 2 | WASHER | | | | | |
| | 16 | 248-1842 | 1 | LINK AS | | | | | |
| | 17 | 228-5615 | 4 | BEARING | | | | | |

H93594E 03

## 228-5528 LINKAGE GP-BUCKET

CB Family

Part of 229-1772-Page738

An Attachment

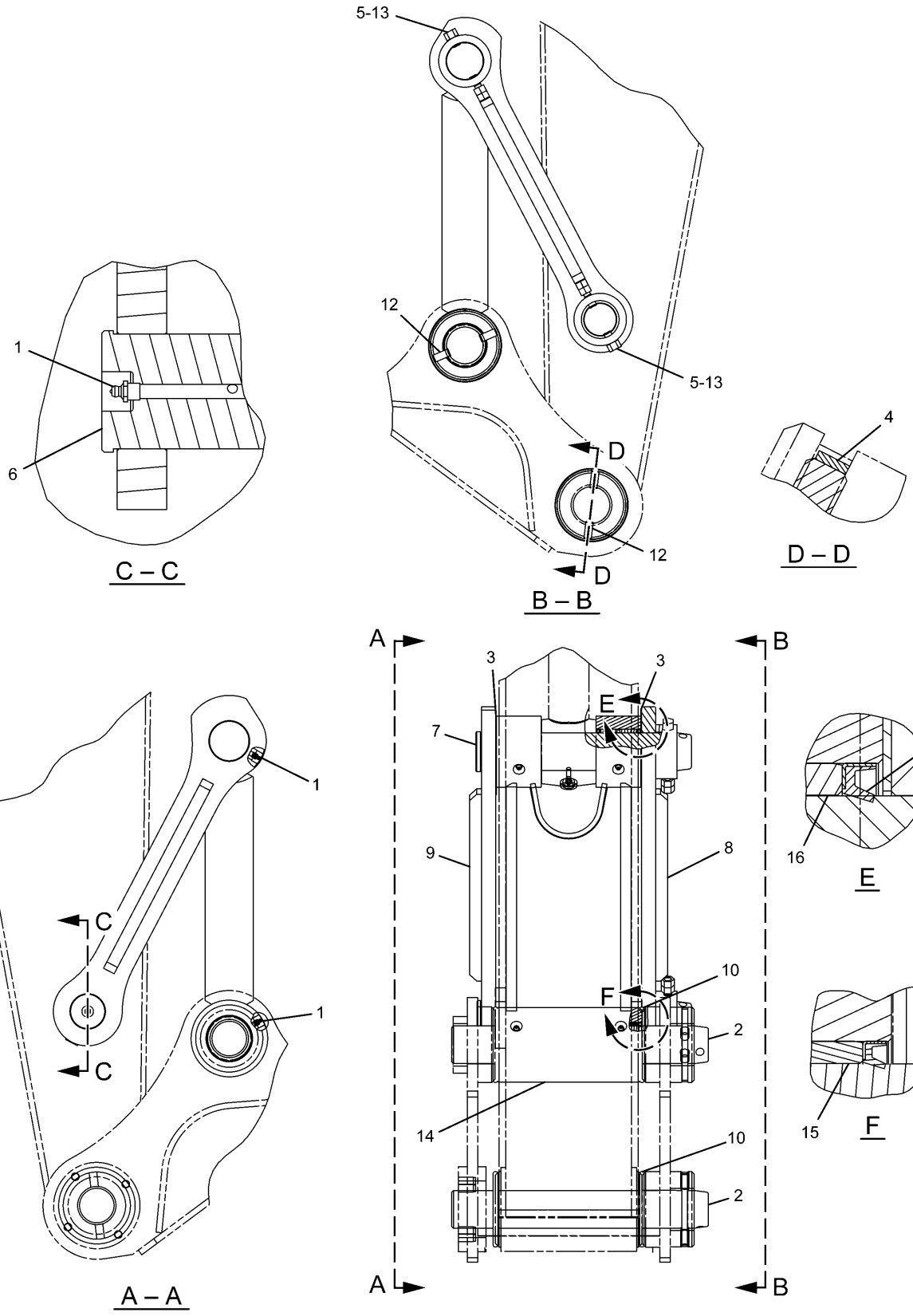


**241-7321 LINKAGE GP-BUCKET**
Part of 240-3867-Page738
An Attachment

# IMPLEMENTS

| NOTE | No. | PART No. | QTY | PART NAME | NOTE | No. | PART No. | QTY | PART NAME |
|---|---|---|---|---|---|---|---|---|---|
| | 1 | 3B-8489 | 5 | FITTING | | | | | |
| | 2 | 087-5805 | 2 | PIN | | | | | |
| | 3 | 166-1486 | 2 | SHIM (T=2.00mm) | | | | | |
| | 4 | 168-2629 | 2 | RING | | | | | |
| | 5 | 8T-4132 | 4 | NUT | | | | | |
| | 6 | 254-3052 | 1 | PIN | | | | | |
| | 7 | 254-3053 | 1 | PIN | | | | | |
| | 8 | 264-1622 | 1 | LINK AS | | | | | |
| | 9 | 264-1623 | 1 | LINK AS | | | | | |
| | 10 | 093-1344 | 4 | SEAL-O-RING (ID=140.00mm) | | | | | |
| | 11 | 166-1494 | 6 | SEAL | | | | | |
| | 12 | 168-2628 | 2 | PIN | | | | | |
| | 13 | 186-5644 | 2 | BOLT (L=150mm) | | | | | |
| | 14 | 241-7322 | 1 | LINK AS | | | | | |
| | 15 | 240-2912 | 2 | BEARING | | | | | |
| | 16 | 244-4360 | 2 | BEARING | | | | | |

H89834E 00

## 241-7321 LINKAGE GP-BUCKET

Part of 240-3867-Page738
An Attachment

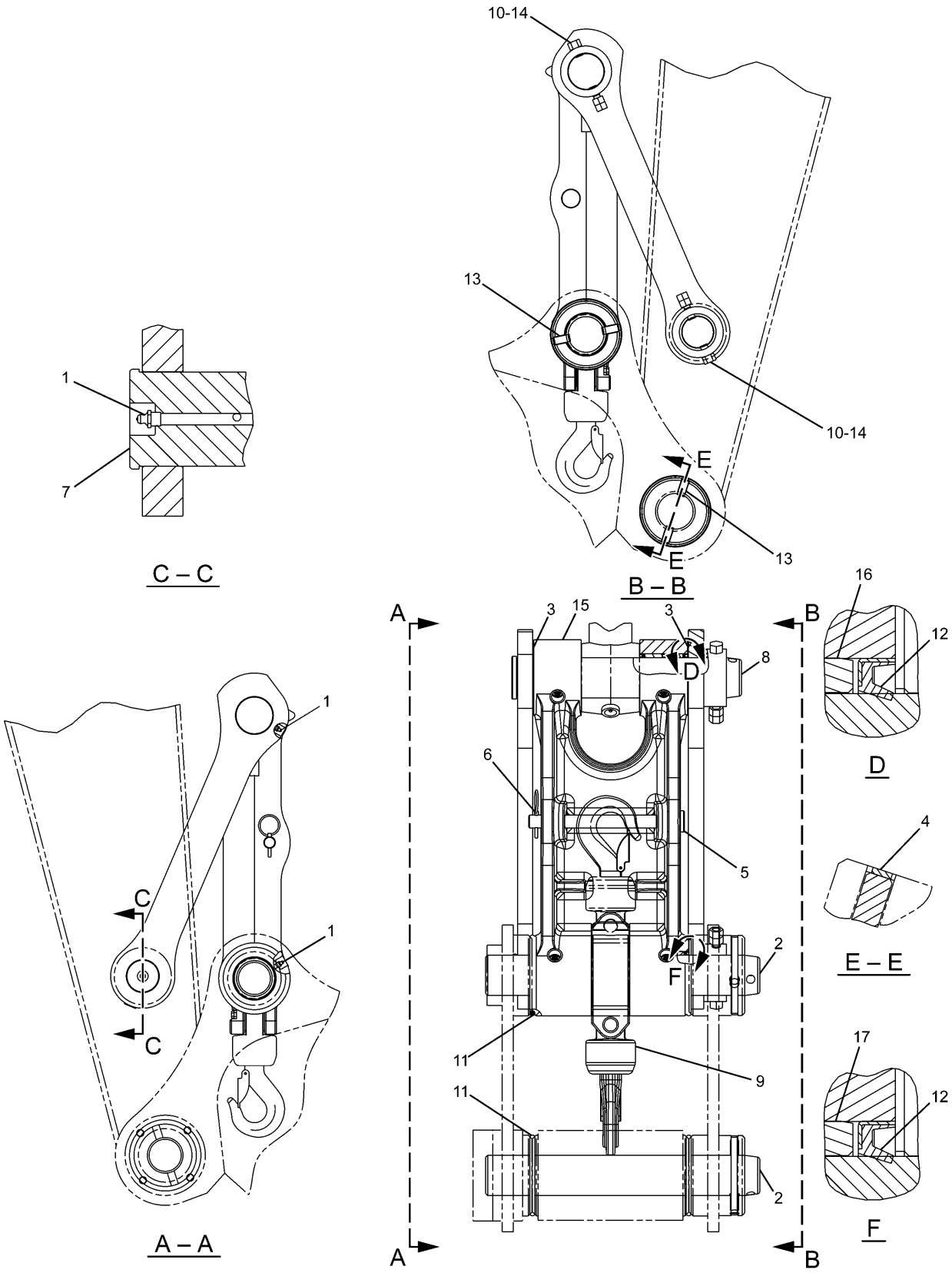


**269-1598 LINKAGE GP-BUCKET**
S/N BWZ 1-Up, DFB 1-Up
Part of 257-2926-Page739
An Attachment

# IMPLEMENTS

| NOTE | No. | PART No. | QTY | PART NAME | NOTE | No. | PART No. | QTY | PART NAME |
|---|---|---|---|---|---|---|---|---|---|
| | 1 | 3B-8489 | 5 | FITTING | | | | | |
| | 2 | 087-5805 | 2 | PIN | | | | | |
| | 3 | 166-1486 | 2 | SHIM (T=2.00mm) | | | | | |
| | 4 | 168-2629 | 2 | RING | | | | | |
| | 5 | 210-2956 | 1 | PIN | | | | | |
| | 6 | 210-2957 | 1 | PIN | | | | | |
| | 7 | 254-3052 | 1 | PIN | | | | | |
| | 8 | 254-3053 | 1 | PIN | | | | | |
| | 9 | 331-2027 | 1 | HOOK GP | | | | | |
| | | 257-2931 | 1 | LATCH KIT | | | | | |
| | 10 | 8T-4132 | 4 | NUT | | | | | |
| | 11 | 093-1344 | 4 | SEAL-O-RING (ID=140.00mm) | | | | | |
| | 12 | 166-1494 | 8 | SEAL | | | | | |
| | 13 | 168-2628 | 2 | PIN | | | | | |
| | 14 | 186-5644 | 2 | BOLT (L=150mm) | | | | | |
| | 15 | 308-8936 | 1 | LINK AS | | | | | |
| | 16 | 244-4360 | 2 | BEARING | | | | | |
| | 17 | 240-2912 | 2 | BEARING | | | | | |

HA1763E 03

## 269-1598 LINKAGE GP-BUCKET

S/N BWZ 1-Up, DFB 1-Up
Part of 257-2926-Page739
An Attachment

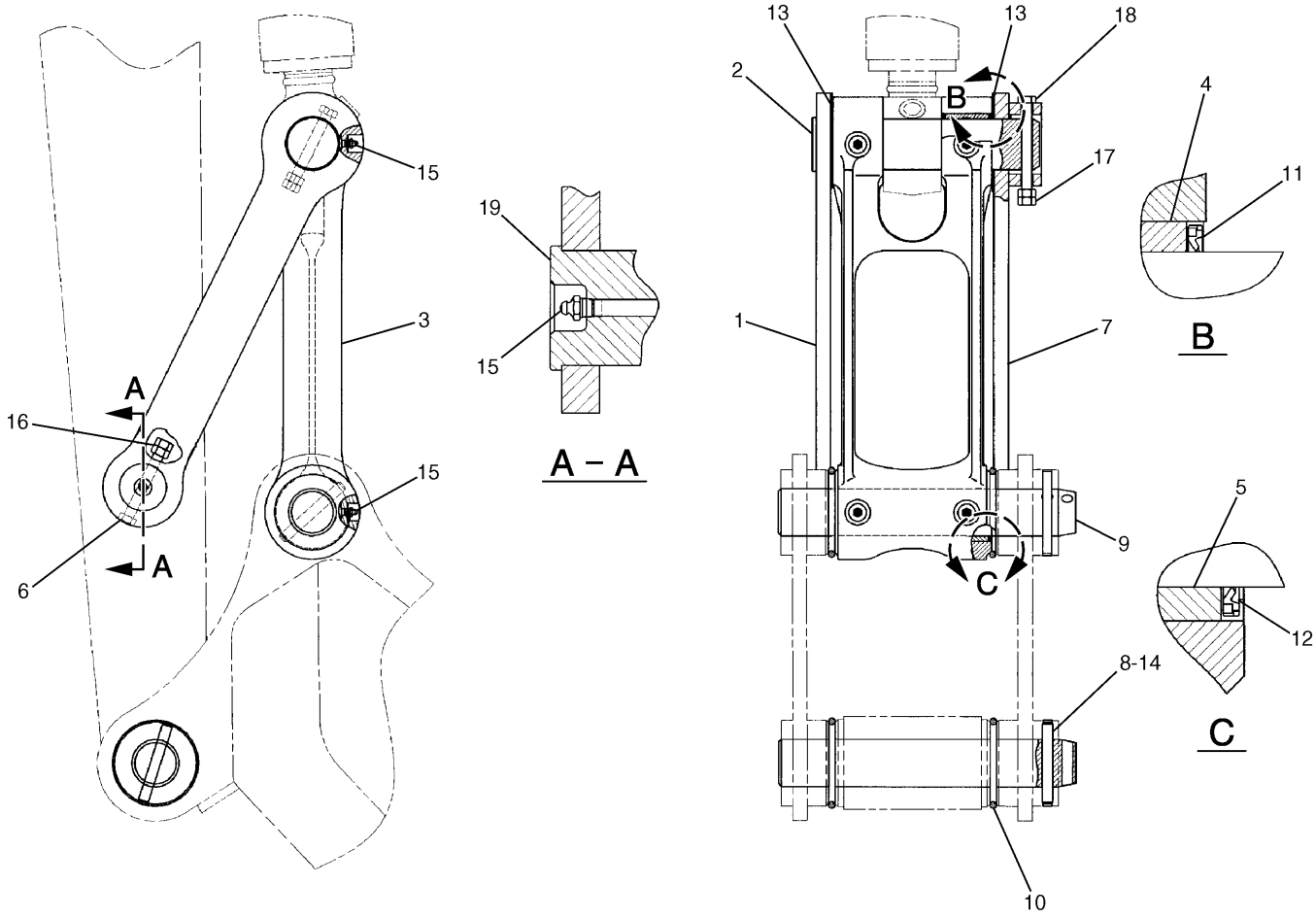


| NOTE | No. | PART No. | QTY | PART NAME | NOTE | No. | PART No. | QTY | PART NAME |
|---|---|---|---|---|---|---|---|---|---|
| | 1 | 248-7822 | 1 | LINK | | | | | |
| | 2 | 248-7820 | 1 | PIN | | | | | |
| | 3 | 248-7838 | 1 | LINK AS | | | | | |
| | 4 | 248-7835 | 2 | BEARING | | | | | |
| | 5 | 229-1092 | 2 | BEARING | | | | | |
| | 6 | 099-0707 | 1 | BOLT (L=115mm) | | | | | |
| | 7 | 248-7823 | 1 | LINK AS | | | | | |
| | 8 | 134-7178 | 2 | PIN | | | | | |
| | 9 | 086-0523 | 2 | PIN | | | | | |
| | 10 | 093-1342 | 4 | SEAL-O-RING (ID=96.00mm) | | | | | |
| | 11 | 235-7679 | 4 | SEAL | | | | | |
| | 12 | 248-7836 | 2 | SEAL | | | | | |
| | 13 | 166-1482 | 2 | SHIM (T=2.00mm) | | | | | |
| | 14 | 134-7179 | 2 | RING | | | | | |
| | 15 | 3B-8489 | 5 | FITTING | | | | | |
| | 16 | 096-4876 | 2 | NUT | | | | | |
| | 17 | 8T-4132 | 2 | NUT | | | | | |
| | 18 | 186-5644 | 1 | BOLT (L=150mm) | | | | | |
| | 19 | 7I-6843 | 1 | PIN | | | | | |

H87156E 00

## 248-7837 LINKAGE GP-BUCKET

S/N DFB 1-Up
Part of 302-9207-Page740
An Attachment

# IMPLEMENTS

Consists of :

| | | | Page |
|---|---|---|---|
| 1 | 7Y-0729 | SIDECUTTER GP | 804 |
| 5 | 9J-3167 | TIP GP-LONG | 805 |
| 1 | 239-2684 | BUCKET & ADJUSTER GP | 786 |

H89686E 01

**239-2683 BUCKET AR**
An Attachment

Consists of :

| | | | Page |
|---|---|---|---|
| 1 | 7Y-0729 | SIDECUTTER GP | 804 |
| 5 | 9J-3167 | TIP GP-LONG | 805 |
| 1 | 239-2687 | BUCKET & ADJUSTER GP | 786 |

H89683E 01

**239-2686 BUCKET AR**
B Family
An Attachment

Consists of :

| | | | Page |
|---|---|---|---|
| 1 | 7Y-0729 | SIDECUTTER GP | 804 |
| 5 | 9J-3167 | TIP GP-LONG | 805 |
| 1 | 239-2580 | BUCKET & ADJUSTER GP | 787 |

H89685E 00

**239-2579 BUCKET AR**
An Attachment

Consists of :

| | | | Page |
|---|---|---|---|
| 1 | 7Y-0366 | SIDECUTTER GP | 804 |
| 5 | 127-0716 | TIP GP-LONG | 813 |
| 1 | 239-2565 | BUCKET & ADJUSTER GP | 788 |

H92036E 02

**239-2564 BUCKET AR**
An Attachment

Consists of :

| | | | Page |
|---|---|---|---|
| 1 | 7Y-0366 | SIDECUTTER GP | 804 |
| 5 | 127-0716 | TIP GP-LONG | 813 |
| 1 | 239-2696 | BUCKET & ADJUSTER GP | 788 |

H92042E 02

**239-2695 BUCKET AR**
An Attachment

Consists of :

| | | | Page |
|---|---|---|---|
| 1 | 7Y-0729 | SIDECUTTER GP | 804 |
| 5 | 8J-4955 | TIP GP-LONG | 809 |
| 1 | 239-2693 | BUCKET & ADJUSTER GP | 789 |

H89947E 00

**239-2692 BUCKET AR**
An Attachment

Consists of :

| | | | Page |
|---|---|---|---|
| 1 | 7Y-0729 | SIDECUTTER GP | 804 |
| 5 | 8J-4955 | TIP GP-LONG | 809 |
| 1 | 239-2690 | BUCKET & ADJUSTER GP | 789 |

H89946E 00

**239-2689 BUCKET AR**
An Attachment

Consists of :

| | | | Page |
|---|---|---|---|
| 1 | 7Y-0729 | SIDECUTTER GP | 804 |
| 5 | 229-6969 | TIP GP | 820 |
| 1 | 239-2574 | BUCKET & ADJUSTER GP | 790 |

H89948E 01

**239-2573 BUCKET AR**
An Attachment

Consists of :

| | | | Page |
|---|---|---|---|
| 1 | 7Y-0729 | SIDECUTTER GP | 804 |
| 5 | 229-6969 | TIP GP | 820 |
| 1 | 239-2577 | BUCKET & ADJUSTER GP | 790 |

H89949E 01

**239-2576 BUCKET AR**
An Attachment

Consists of :

| | | | Page |
|---|---|---|---|
| 1 | 7Y-0729 | SIDECUTTER GP | 804 |
| 1 | 255-0396 | BUCKET & ADJUSTER GP | 791 |
| 5 | 177-8068 | TIP | |
| 5 | 095-2623 | PIN | |
| 5 | 095-5564 | PIN | |

H95998E 00

**255-0395 BUCKET AR**
An Attachment

Consists of :

| | | | Page |
|---|---|---|---|
| 1 | 7Y-0729 | SIDECUTTER GP | 804 |
| 1 | 255-0399 | BUCKET & ADJUSTER GP | 791 |
| 5 | 177-8068 | TIP | |
| 5 | 095-2623 | PIN | |
| 5 | 095-5564 | PIN | |

H96000E 00

**255-0398 BUCKET AR**
An Attachment

# IMPLEMENTS

Consists of :

| | | | Page |
|---|---|---|---|
| 1 | 7Y-0729 | SIDECUTTER GP | 804 |
| 5 | 217-4896 | TIP GP | 824 |
| 1 | 239-2583 | BUCKET & ADJUSTER GP | 792 |

H89950E 00

**239-2582 BUCKET AR**
An Attachment

Consists of :

| | | | Page |
|---|---|---|---|
| 1 | 7Y-0729 | SIDECUTTER GP | 804 |
| 5 | 217-4896 | TIP GP | 824 |
| 1 | 239-2586 | BUCKET & ADJUSTER GP | 792 |

H89951E 00

**239-2585 BUCKET AR**
An Attachment

Consists of :

| | | | Page |
|---|---|---|---|
| 1 | 7Y-2219 | ADJUSTER GP-BUCKET | 802 |
| 1 | 239-2685 | BUCKET AS-EXCAVATION | 793 |

H89688E 01

## 239-2684 BUCKET & ADJUSTER GP

Part of 239-2683-Page779
An Attachment

Consists of :

| | | | Page |
|---|---|---|---|
| 1 | 7Y-2219 | ADJUSTER GP-BUCKET | 802 |
| 1 | 239-2688 | BUCKET AS-EXCAVATION | 793 |

H89689E 01

## 239-2687 BUCKET & ADJUSTER GP

B Family
Part of 239-2686-Page779
An Attachment

Consists of :

| | | | Page |
|---|---|---|---|
| 1 | 7Y-2219 | ADJUSTER GP-BUCKET | 802 |
| 1 | 239-2581 | BUCKET AS-EXCAVATION | 794 |

H89687E 00

## 239-2580 BUCKET & ADJUSTER GP

Part of 239-2579-Page780
An Attachment

Consists of :

| | | | Page |
|---|---|---|---|
| 1 | 250-6415 | BUCKET AS-EXCAVATION | 795 |
| 1 | 250-6418 | ADJUSTER GP-BUCKET | 803 |

H92046E 03

## 239-2565 BUCKET & ADJUSTER GP

Part of 239-2564-Page780
An Attachment

Consists of :

| | | | Page |
|---|---|---|---|
| 1 | 239-2697 | BUCKET AS-EXCAVATION | 795 |
| 1 | 250-6418 | ADJUSTER GP-BUCKET | 803 |

H92049E 02

## 239-2696 BUCKET & ADJUSTER GP

Part of 239-2695-Page781
An Attachment

Consists of :

| | | | Page |
|---|---|---|---|
| 1 | 7Y-2219 | ADJUSTER GP-BUCKET | 802 |
| 1 | 239-2694 | BUCKET AS-EXCAVATION | 796 |

H89939E 00

## 239-2693 BUCKET & ADJUSTER GP

Part of 239-2692-Page782
An Attachment

Consists of :

| | | | Page |
|---|---|---|---|
| 1 | 7Y-2219 | ADJUSTER GP-BUCKET | 802 |
| 1 | 239-2691 | BUCKET AS-EXCAVATION | 796 |

H89938E 00

## 239-2690 BUCKET & ADJUSTER GP

Part of 239-2689-Page782
An Attachment

Consists of :

| | | | Page |
|---|---|---|---|
| 1 | 7Y-2219 | ADJUSTER GP-BUCKET | 802 |
| 1 | 239-2575 | BUCKET AS-EXCAVATION | 797 |

H89940E 01

## 239-2574 BUCKET & ADJUSTER GP

Part of 239-2573-Page783
An Attachment

Consists of :

| | | | Page |
|---|---|---|---|
| 1 | 7Y-2219 | ADJUSTER GP-BUCKET | 802 |
| 1 | 239-2578 | BUCKET AS-EXCAVATION | 797 |

H89941E 01

## 239-2577 BUCKET & ADJUSTER GP

Part of 239-2576-Page783
An Attachment

Consists of :

| | | | Page |
|---|---|---|---|
| 1 | 7Y-2219 | ADJUSTER GP-BUCKET | 802 |
| 1 | 255-0397 | BUCKET AS-EXCAVATION | 798 |

H96001E 00

## 255-0396 BUCKET & ADJUSTER GP

Part of 255-0395-Page784
An Attachment

Consists of :

| | | | Page |
|---|---|---|---|
| 1 | 7Y-2219 | ADJUSTER GP-BUCKET | 802 |
| 1 | 255-0400 | BUCKET AS-EXCAVATION | 798 |

H96002E 00

## 255-0399 BUCKET & ADJUSTER GP

Part of 255-0398-Page784
An Attachment

Consists of :

| | | | Page |
|---|---|---|---|
| 1 | 7Y-2219 | ADJUSTER GP-BUCKET | 802 |
| 1 | 239-2584 | BUCKET AS-EXCAVATION | 799 |

H89943E 00

## 239-2583 BUCKET & ADJUSTER GP

Part of 239-2582-Page785
An Attachment

Consists of :

| | | | Page |
|---|---|---|---|
| 1 | 7Y-2219 | ADJUSTER GP-BUCKET | 802 |
| 1 | 239-2587 | BUCKET AS-EXCAVATION | 799 |

H89944E 00

## 239-2586 BUCKET & ADJUSTER GP

Part of 239-2585-Page785
An Attachment

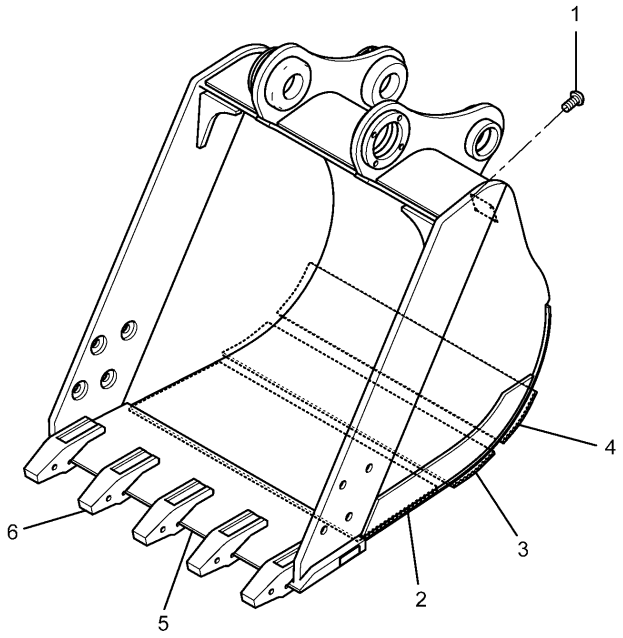


| NOTE | No. | PART No. | QTY | PART NAME |
|---|---|---|---|---|
| B | 1 | 4B-4158 | 4 | SCREW |
| | 2 | 255-0418 | 1 | PLATE |
| | 3 | 255-0419 | 1 | PLATE |
| | 4 | 255-0424 | 1 | PLATE |
| | 5 | 239-2641 | 1 | EDGE AS |
| | 6 | 8E-9490 | 5 | ADAPTER |

B—USE AS REQUIRED

H89878E 02

## 239-2685 BUCKET AS-EXCAVATION

B Family
972MM Wide--0.8Cu.M.-Adapter Size J300
Part of 239-2684-Page786
An Attachment

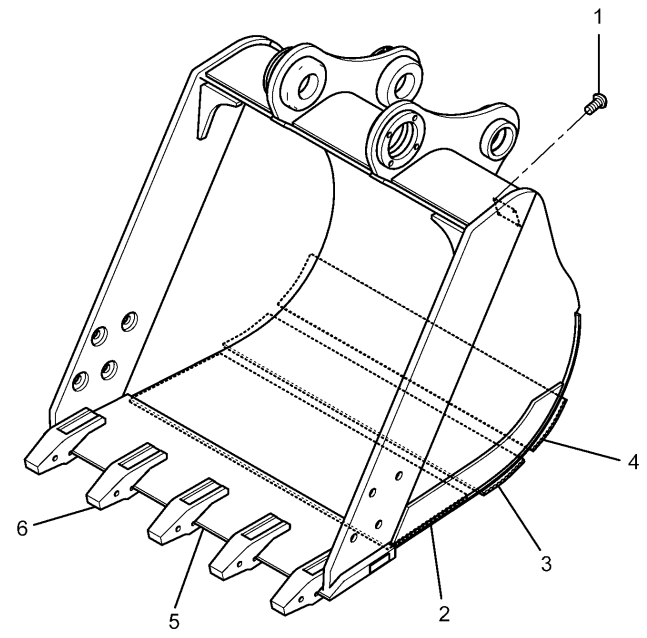


| NOTE | No. | PART No. | QTY | PART NAME |
|---|---|---|---|---|
| B | 1 | 4B-4158 | 4 | SCREW |
| | 2 | 255-0420 | 1 | PLATE |
| | 3 | 255-0421 | 1 | PLATE |
| | 4 | 255-0425 | 1 | PLATE |
| | 5 | 239-2649 | 1 | EDGE AS |
| | 6 | 8E-9490 | 5 | ADAPTER |

B—USE AS REQUIRED

H89885E 02

## 239-2688 BUCKET AS-EXCAVATION

B Family
1092MM Wide--0.9Cu.M.-Adapter Size J300
Part of 239-2687-Page786
An Attachment

# IMPLEMENTS

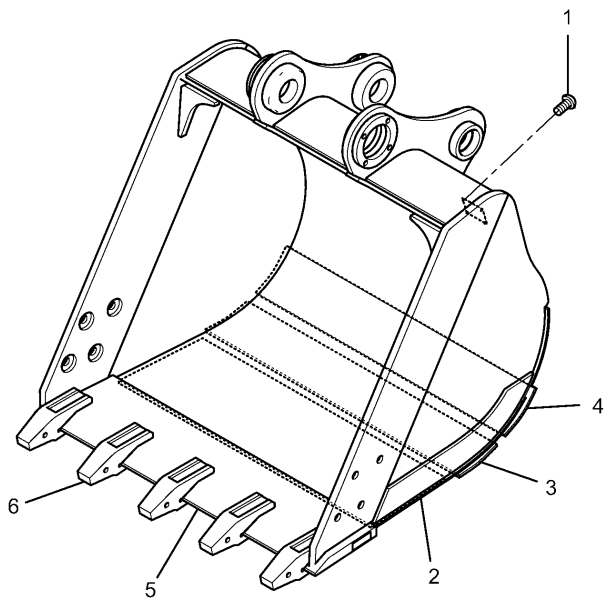


| NOTE | No. | PART No. | QTY | PART NAME |
|---|---|---|---|---|
| B | 1 | 4B-4158 | 4 | SCREW |
| | 2 | 255-0422 | 1 | PLATE |
| | 3 | 255-0423 | 1 | PLATE |
| | 4 | 255-0430 | 1 | PLATE |
| | 5 | 255-0377 | 1 | EDGE AS |
| | 6 | 8E-9490 | 5 | ADAPTER |

B—USE AS REQUIRED

H90099E 01

## 239-2581 BUCKET AS-EXCAVATION

B Family
1150MM Wide--1.0Cu.M.-Adapter Size J300
Part of 239-2580-Page787
An Attachment

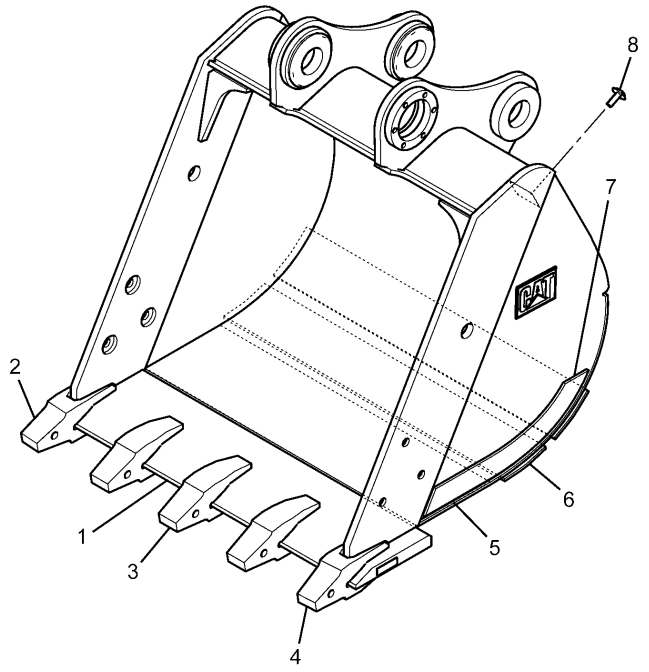


| NOTE | No. | PART No. | QTY | PART NAME |
|---|---|---|---|---|
| | 1 | 255-0493 | 1 | EDGE AS |
| | 2 | 6I-6406 | 1 | ADAPTER |
| | 3 | 6I-6404 | 3 | ADAPTER |
| | 4 | 6I-6405 | 1 | ADAPTER |
| | 5 | 255-0497 | 1 | PLATE |
| | 6 | 255-0496 | 2 | PLATE |
| | 7 | 239-2733 | 2 | PLATE |
| B | 8 | 4B-4158 | 4 | SCREW |

B—USE AS REQUIRED

H91341E 01

## 250-6415 BUCKET AS-EXCAVATION

CB Family
1345MM Wide--1.1Cu.M.-Adapter Size J400
Part of 239-2565-Page788
An Attachment

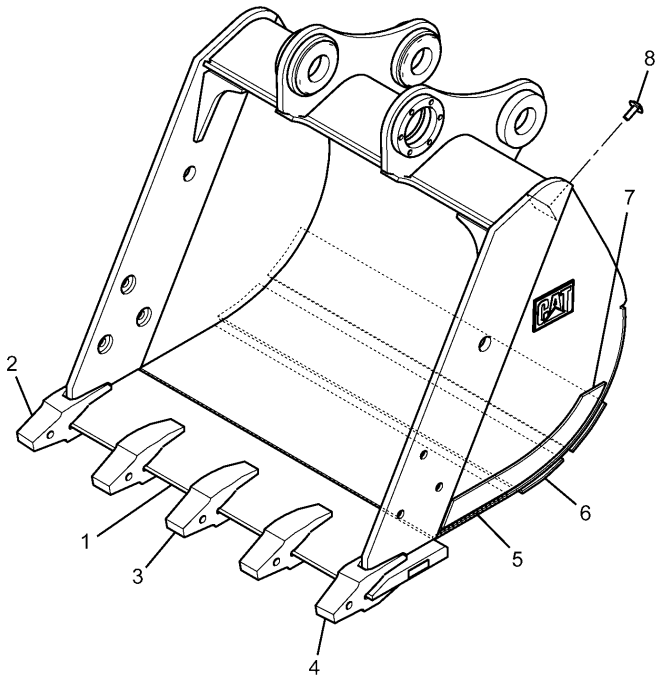


| NOTE | No. | PART No. | QTY | PART NAME |
|---|---|---|---|---|
| | 1 | 255-0475 | 1 | EDGE AS |
| | 2 | 6I-6406 | 1 | ADAPTER |
| | 3 | 6I-6404 | 3 | ADAPTER |
| | 4 | 6I-6405 | 1 | ADAPTER |
| | 5 | 255-0479 | 1 | PLATE |
| | 6 | 255-0478 | 2 | PLATE |
| | 7 | 239-2733 | 2 | PLATE |
| B | 8 | 4B-4158 | 4 | SCREW |

B—USE AS REQUIRED

H91343E 02

## 239-2697 BUCKET AS-EXCAVATION

CB Family
1435MM Wide--1.2Cu.M.-Adapter Size J400
Part of 239-2696-Page788
An Attachment

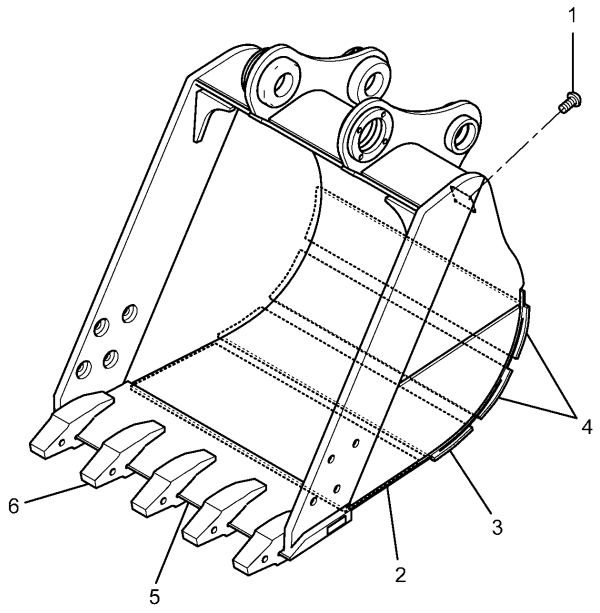


| NOTE | No. | PART No. | QTY | PART NAME |
|---|---|---|---|---|
| B | 1 | 4B-4158 | 4 | SCREW |
| | 2 | 239-2876 | 1 | PLATE |
| | 3 | 255-0353 | 1 | PLATE |
| | 4 | 255-0354 | 2 | PLATE |
| | 5 | 255-0351 | 1 | EDGE AS |
| | 6 | 6I-6354 | 5 | ADAPTER |

B—USE AS REQUIRED

H89913E 01

## 239-2691 BUCKET AS-EXCAVATION

980MM Wide--0.8Cu.M.-Adapter Size J350
Part of 239-2690-Page789
An Attachment

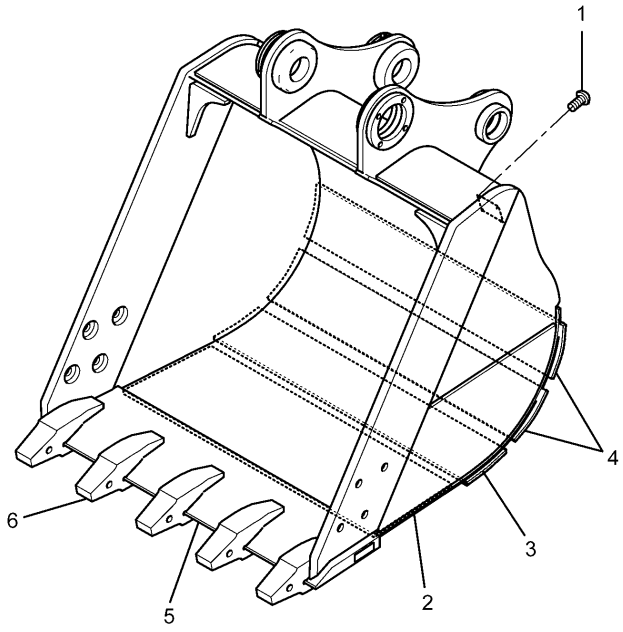


| NOTE | No. | PART No. | QTY | PART NAME |
|---|---|---|---|---|
| B | 1 | 4B-4158 | 4 | SCREW |
| | 2 | 255-0386 | 1 | PLATE |
| | 3 | 255-0387 | 1 | PLATE |
| | 4 | 255-0388 | 2 | PLATE |
| | 5 | 255-0383 | 1 | EDGE AS |
| | 6 | 6I-6354 | 5 | ADAPTER |

B—USE AS REQUIRED

H89929E 00

## 239-2694 BUCKET AS-EXCAVATION

1100MM Wide--0.9Cu.M.-Adapter Size J350
Part of 239-2693-Page789
An Attachment

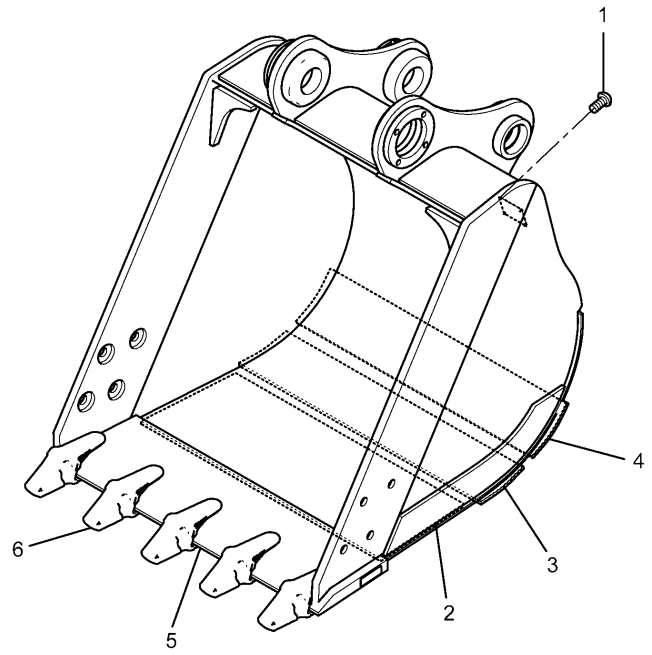


| NOTE | No. | PART No. | QTY | PART NAME |
|---|---|---|---|---|
| B | 1 | 4B-4158 | 4 | SCREW |
| | 2 | 255-0418 | 1 | PLATE |
| | 3 | 255-0419 | 1 | PLATE |
| | 4 | 255-0424 | 1 | PLATE |
| | 5 | 239-2659 | 1 | EDGE AS |
| | 6 | 220-9084 | 5 | ADAPTER |

B—USE AS REQUIRED

H89906E 02

## 239-2575 BUCKET AS-EXCAVATION

B Family
1000MM Wide--0.8Cu.M.-Adapter Size K80
Part of 239-2574-Page790
An Attachment

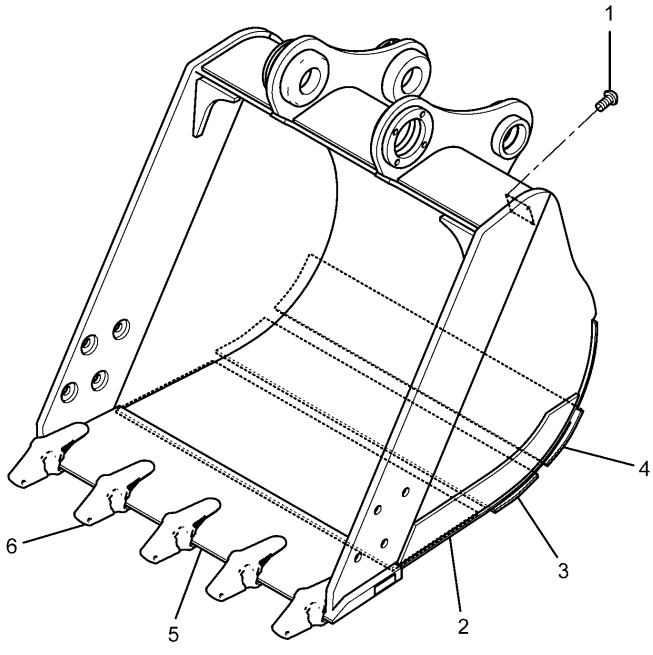


| NOTE | No. | PART No. | QTY | PART NAME |
|---|---|---|---|---|
| B | 1 | 4B-4158 | 4 | SCREW |
| | 2 | 255-0420 | 1 | PLATE |
| | 3 | 255-0421 | 1 | PLATE |
| | 4 | 255-0425 | 1 | PLATE |
| | 5 | 239-2599 | 1 | EDGE AS |
| | 6 | 220-9084 | 5 | ADAPTER |

B—USE AS REQUIRED

H89915E 02

## 239-2578 BUCKET AS-EXCAVATION

B Family
1120MM Wide--0.9Cu.M.-Adapter Size K80
Part of 239-2577-Page790
An Attachment

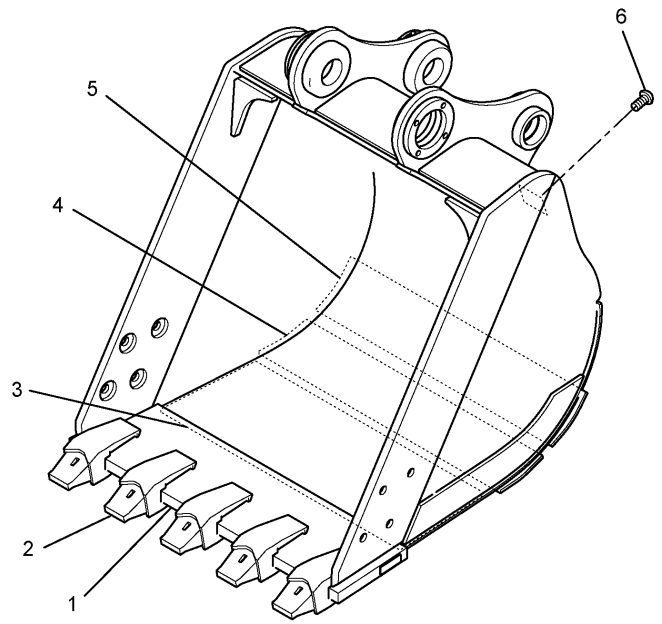


| NOTE | No. | PART No. | QTY | PART NAME |
|---|---|---|---|---|
| | 1 | 255-0406 | 1 | EDGE AS |
| | 2 | 255-0401 | 5 | ADAPTER |
| | 3 | 255-0418 | 1 | PLATE |
| | 4 | 255-0419 | 1 | PLATE |
| | 5 | 255-0424 | 1 | PLATE |
| B | 6 | 4B-4158 | 4 | SCREW |

B—USE AS REQUIRED

H96004E 01

## 255-0397 BUCKET AS-EXCAVATION

Part of 255-0396-Page791

An Attachment

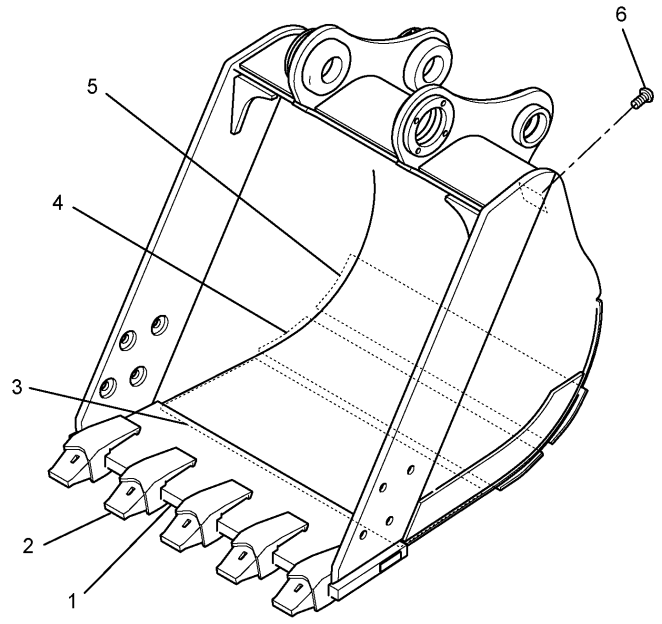


| NOTE | No. | PART No. | QTY | PART NAME |
|---|---|---|---|---|
| | 1 | 255-0414 | 1 | EDGE AS |
| | 2 | 255-0401 | 5 | ADAPTER |
| | 3 | 255-0420 | 1 | PLATE |
| | 4 | 255-0421 | 1 | PLATE |
| | 5 | 255-0425 | 1 | PLATE |
| B | 6 | 4B-4158 | 4 | SCREW |

B—USE AS REQUIRED

H96005E 01

## 255-0400 BUCKET AS-EXCAVATION

Part of 255-0399-Page791

An Attachment

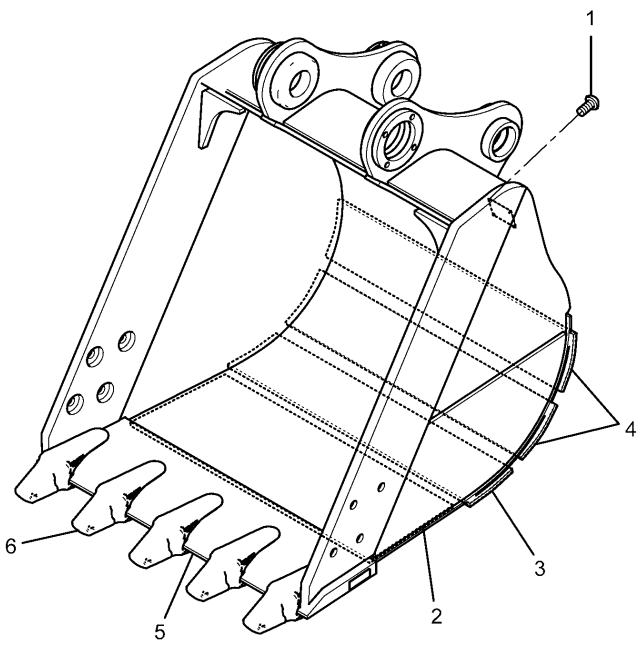


| NOTE | No. | PART No. | QTY | PART NAME |
|---|---|---|---|---|
| B | 1 | 4B-4158 | 4 | SCREW |
| | 2 | 239-2876 | 1 | PLATE |
| | 3 | 255-0353 | 1 | PLATE |
| | 4 | 255-0354 | 2 | PLATE |
| | 5 | 255-0372 | 1 | EDGE AS |
| | 6 | 220-9094 | 5 | ADAPTER |

B—USE AS REQUIRED

H89926E 00

## 239-2584 BUCKET AS-EXCAVATION

990MM Wide--0.8Cu.M.-Adapter Size K90
Part of 239-2583-Page792
An Attachment

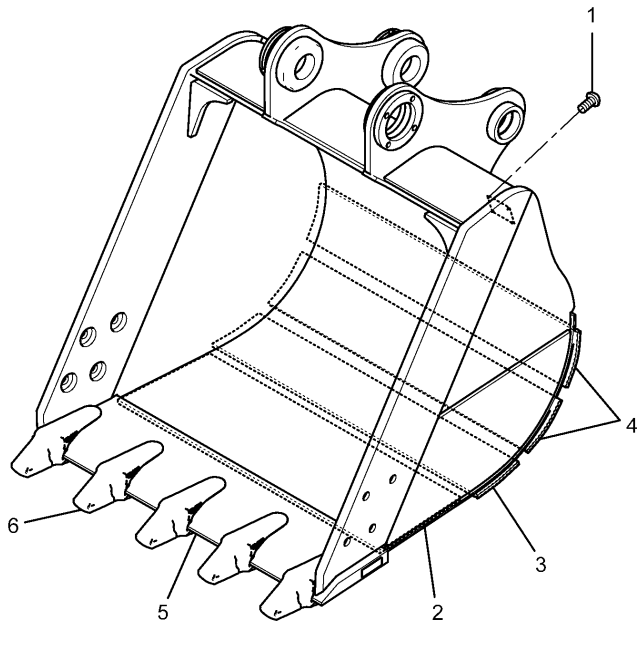


| NOTE | No. | PART No. | QTY | PART NAME |
|---|---|---|---|---|
| B | 1 | 4B-4158 | 4 | SCREW |
| | 2 | 255-0386 | 1 | PLATE |
| | 3 | 255-0387 | 1 | PLATE |
| | 4 | 255-0388 | 2 | PLATE |
| | 5 | 255-0385 | 1 | EDGE AS |
| | 6 | 220-9094 | 5 | ADAPTER |

B—USE AS REQUIRED

H89925E 00

## 239-2587 BUCKET AS-EXCAVATION

1110MM Wide--0.9Cu.M.-Adapter Size K90
Part of 239-2586-Page792
An Attachment

# IMPLEMENTS

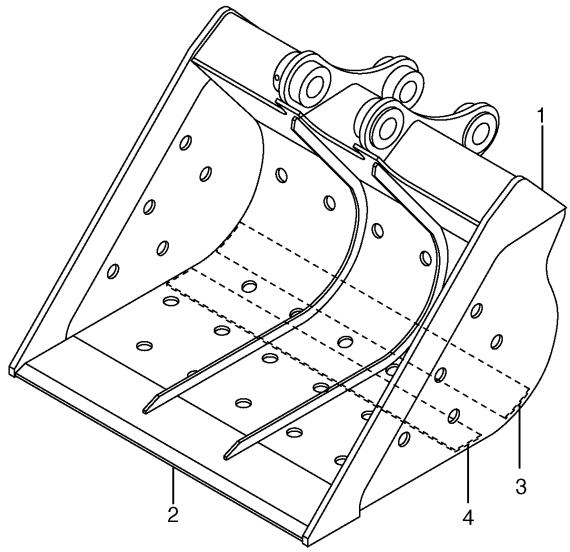


| NOTE | No. | PART No. | QTY | PART NAME |
|---|---|---|---|---|
| | 1 | 121-1809 | 2 | PLATE |
| | 2 | 7Y-6601 | 1 | EDGE |
| | 3 | 121-1813 | 1 | PLATE |
| | 4 | 127-6792 | 1 | PLATE |

H54620E 02

## 121-1807 BUCKET AS-DITCH CLEANING

1140MM Wide--0.6Cu.M.
S/N DFB 1-Up
An Attachment

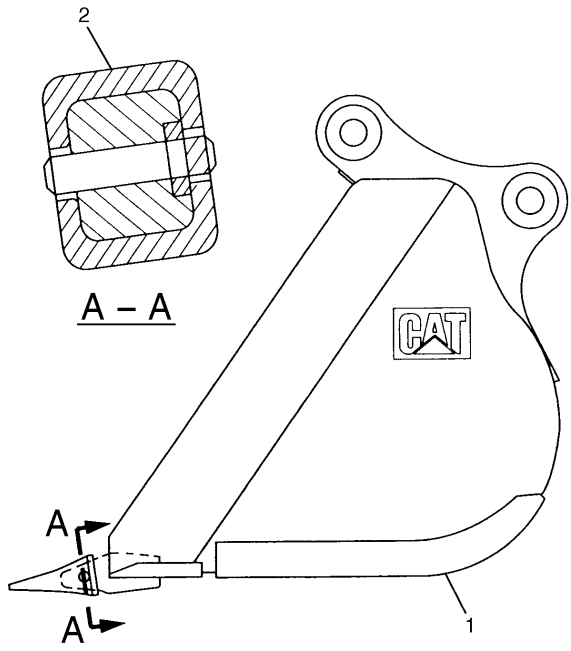


| NOTE | No. | PART No. | QTY | PART NAME |
|---|---|---|---|---|
| Y | 1 | 7Y-6660 | 1 | BUCKET AS |
| Y | 2 | 9J-3169 | 5 | TIP GP |

Y—SEE SEPARATE ILLUSTRATION

H54614E 03

## 7Y-6402 BUCKET GP

General Purpose (0.45 Long Reach)
S/N DFB 1-Up
7Y-6660-Page801,9J-3169-Page813
An Attachment

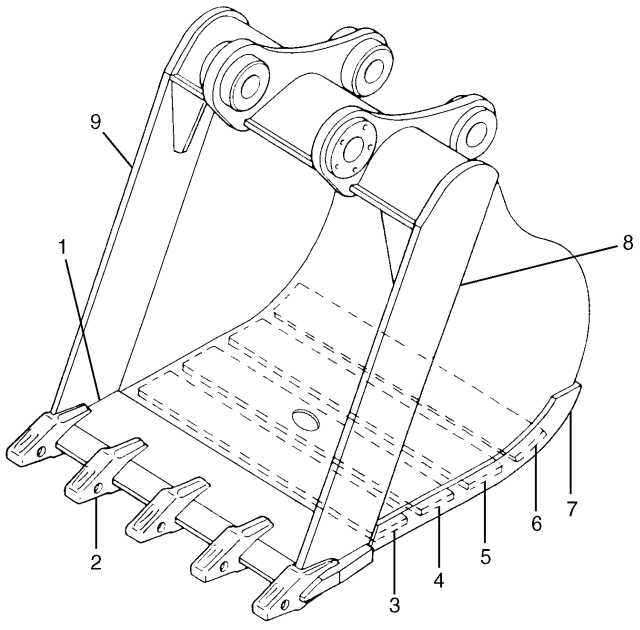


| NOTE | No. | PART No. | QTY | PART NAME |
|---|---|---|---|---|
| | 1 | 7Y-6664 | 1 | EDGE AS |
| | 2 | 7Y-0254 | 5 | ADAPTER |
| | 3 | 7Y-6665 | 1 | PLATE |
| | 4 | 7Y-6666 | 1 | PLATE |
| | 5 | 7Y-6667 | 1 | PLATE |
| | 6 | 7Y-6668 | 1 | PLATE |
| | 7 | 7Y-6673 | 2 | PLATE |
| | 8 | 7Y-6671 | 1 | PLATE |
| | 9 | 7Y-6674 | 1 | PLATE |

H54615E 02

## 7Y-6660 BUCKET AS-GENERAL PURPOSE

Long Reach Front
810MM Wide--0.45Cu.M.-Adapter Size J250
S/N DFB 1-Up
Part of 7Y-6402-Page801
An Attachment

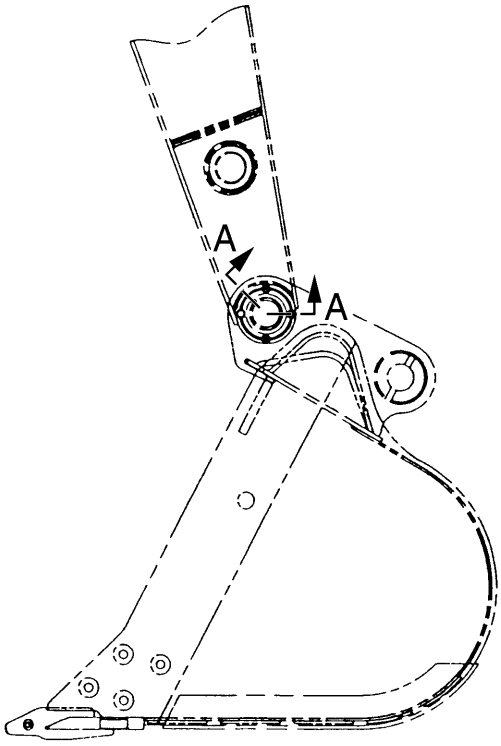


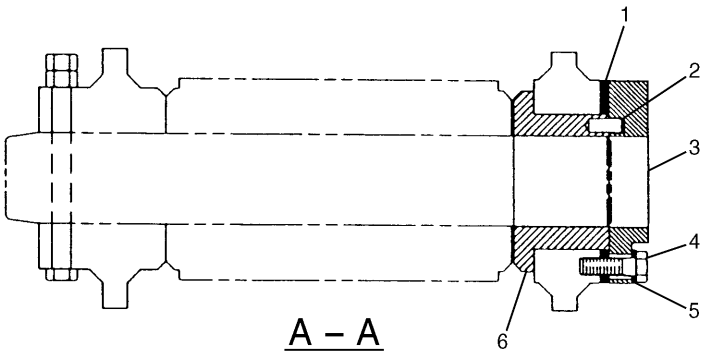


A – A

| NOTE | No. | PART No. | QTY | PART NAME | NOTE | No. | PART No. | QTY | PART NAME |
|---|---|---|---|---|---|---|---|---|---|
| B | 1 | 086-0321 | 4 | SHIM (T=0.50mm) | | | | | |
| B | | 086-0322 | 6 | SHIM (T=1.00mm) | | | | | |
| | 2 | 193-5014 | 1 | PIN | | | | | |
| | 3 | 134-8948 | 1 | PLATE | | | | | |
| | 4 | 8T-4193 | 4 | BOLT (L=50mm) | | | | | |
| | 5 | 9X-8257 | 4 | WASHER | | | | | |
| | 6 | 193-5015 | 1 | FLANGE | | | | | |

B—USE AS REQUIRED

H82941E 05

## 7Y-2219 ADJUSTER GP-BUCKET

B Family

Part of 239-2684,239-2687-Page786,239-2580-Page787,239-2690,239-2693-Page789,239-2574,239-2577-Page790,255-0396 ,255-0399-Page791,239-2583,239-2586-Page792

An Attachment

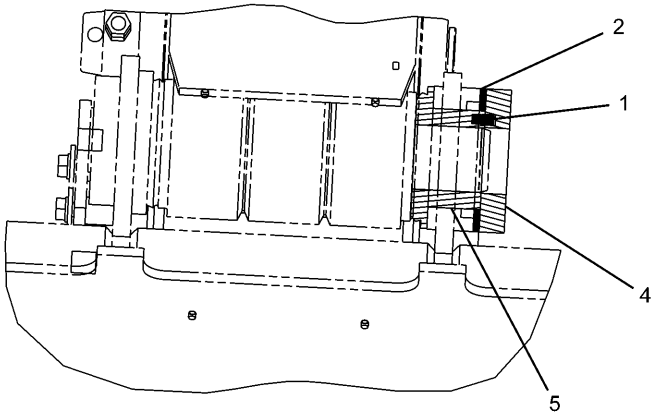


A – A

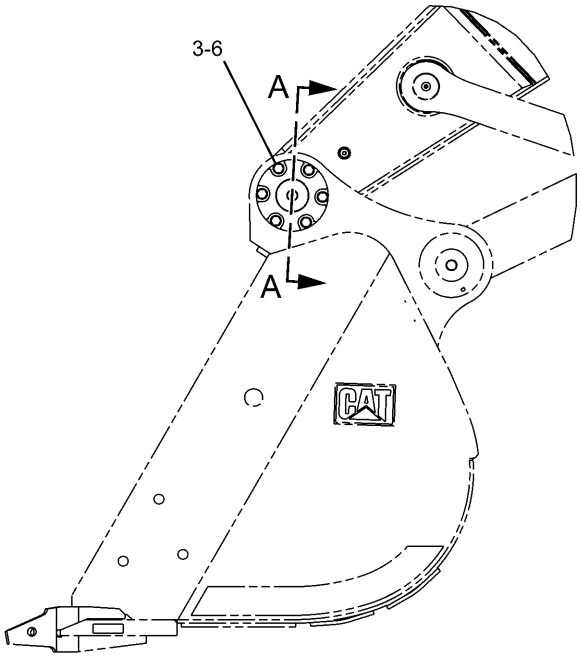


| NOTE | No. | PART No. | QTY | PART NAME | NOTE | No. | PART No. | QTY | PART NAME |
|---|---|---|---|---|---|---|---|---|---|
| | 1 | 087-5974 | 1 | PIN | | | | | |
| B | 2 | 087-5975 | 4 | SHIM (T=0.50mm) | | | | | |
| B | | 087-5976 | 6 | SHIM (T=1.00mm) | | | | | |
| | 3 | 9X-8257 | 6 | WASHER | | | | | |
| | 4 | 134-8950 | 1 | PLATE | | | | | |
| | 5 | 250-6417 | 1 | FLANGE | | | | | |
| | 6 | 8T-4193 | 6 | BOLT (L=50mm) | | | | | |

B—USE AS REQUIRED

H88907E 00

## 250-6418 ADJUSTER GP-BUCKET

CB Family

Part of 239-2565,239-2696-Page788

An Attachment

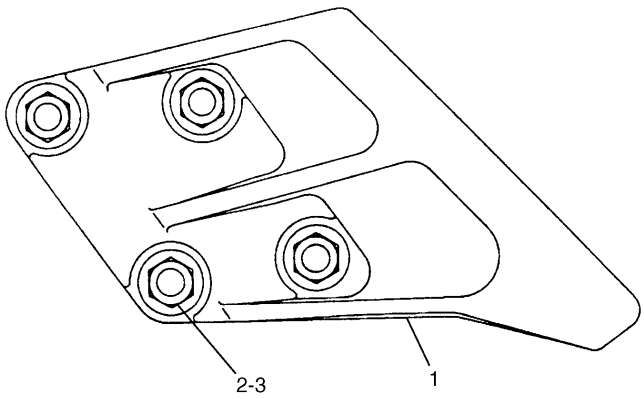


| NOTE | No. | PART No. | QTY | PART NAME |
|---|---|---|---|---|
| | 1 | 096-4747 | 1 | SIDECUTTER (LH) |
| | | 096-4748 | 1 | SIDECUTTER (RH) |
| | 2 | 8T-0380 | 8 | BOLT (L=60mm) |
| | 3 | 7X-0851 | 8 | NUT |

H89739E 05

## 7Y-0729 SIDECUTTER GP

B Family

Part of 239-2683,239-2686-Page779,239-2579-Page780,239-2689,239-2692-Page782,239-2573,239-2576-Page783,255-0395 ,255-0398-Page784,239-2582,239-2585-Page785

An Attachment

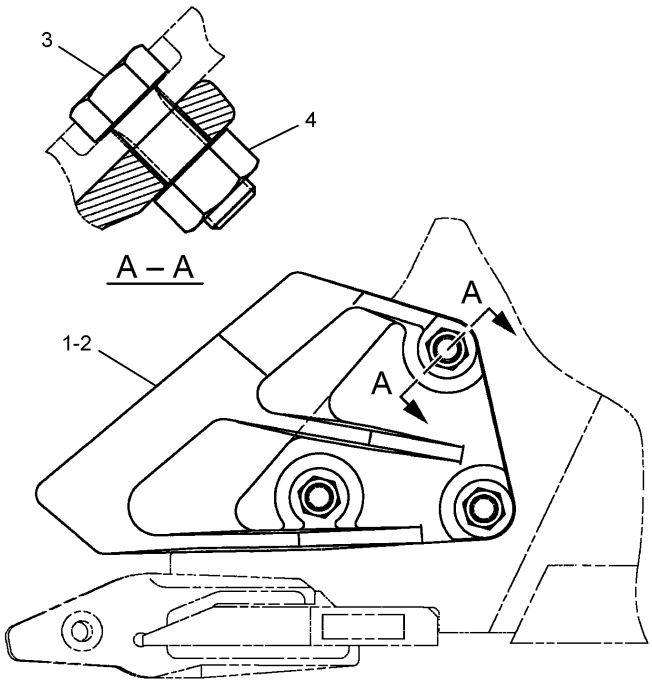


| NOTE | No. | PART No. | QTY | PART NAME |
|---|---|---|---|---|
| | 1 | 7Y-0357 | 1 | SIDECUTTER (RH) |
| | 2 | 7Y-0358 | 1 | SIDECUTTER (LH) |
| | 3 | 6I-6371 | 6 | BOLT (L=64mm) |
| | 4 | 2J-3507 | 6 | NUT |

H88894E 05

## 7Y-0366 SIDECUTTER GP

C Family

Part of 239-2564-Page780,239-2695-Page781

An Attachment

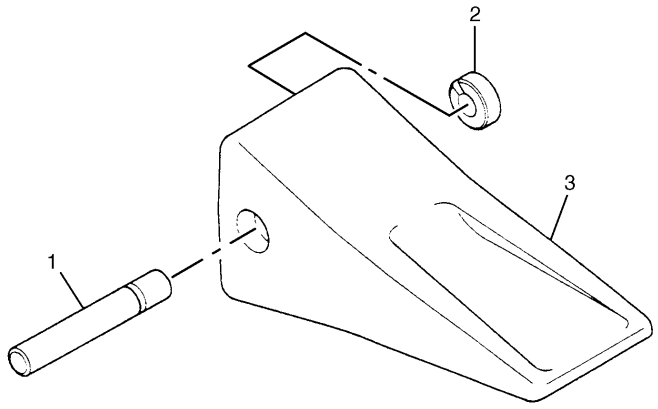


| NOTE | No. | PART No. | QTY | PART NAME |
|---|---|---|---|---|
| | 1 | 107-3308 | 1 | PIN |
| | 2 | 8E-6259 | 1 | RETAINER AS |
| | 3 | 1U-3302 | 1 | TIP |

H79788E 10

## 9J-3167 TIP GP-LONG

Adapter Size J300
Part of 239-2683,239-2686-Page779,239-2579-Page780
An Attachment

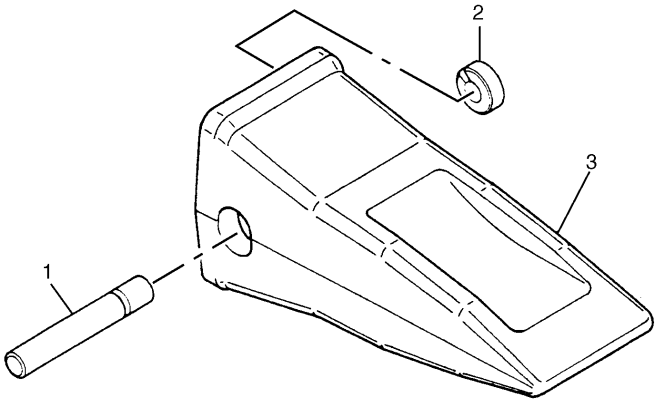


| NOTE | No. | PART No. | QTY | PART NAME |
|---|---|---|---|---|
| | 1 | 107-3308 | 1 | PIN |
| | 2 | 8E-6259 | 1 | RETAINER AS |
| | 3 | 9N-4302 | 1 | TIP |

H79480E 05

## 8E-3751 TIP GP-LONG

Heavy Duty
Adapter Size J300
An Attachment

# IMPLEMENTS

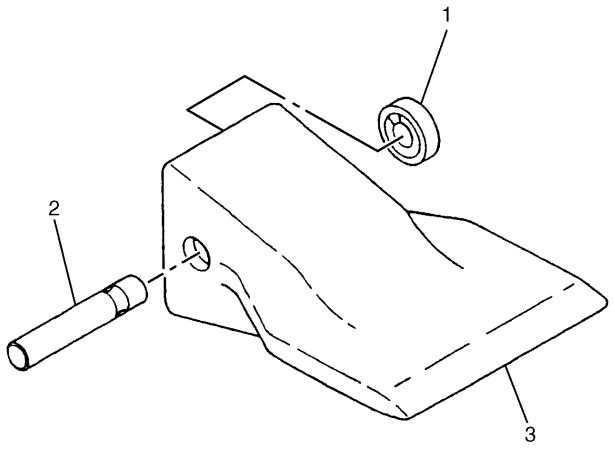


| NOTE | No. | PART No. | QTY | PART NAME |
|---|---|---|---|---|
| | 1 | 8E-6259 | 1 | RETAINER AS |
| | 2 | 107-3308 | 1 | PIN |
| | 3 | 107-3300 | 1 | TIP |

H79479E 06

**4T-2215 TIP GP-WIDE**
Adapter Size J300
An Attachment

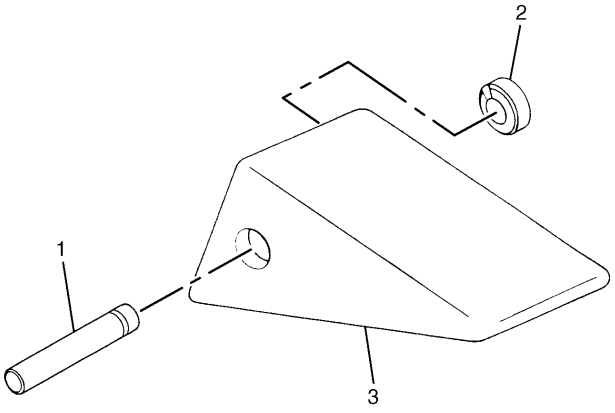


| NOTE | No. | PART No. | QTY | PART NAME |
|---|---|---|---|---|
| | 1 | 107-3308 | 1 | PIN |
| | 2 | 8E-6259 | 1 | RETAINER AS |
| | 3 | 1U-3301 | 1 | TIP |

H79481E 11

**9J-3175 TIP GP-SHORT**
Adapter Size J300
An Attachment

# IMPLEMENTS

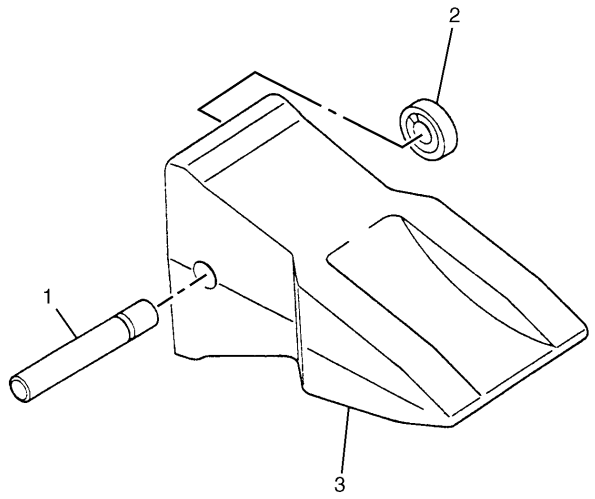


| NOTE | No. | PART No. | QTY | PART NAME |
|---|---|---|---|---|
| | 1 | 107-3308 | 1 | PIN |
| | 2 | 8E-6259 | 1 | RETAINER AS |
| | 3 | 9N-4303 | 1 | TIP |

H79484E 05

## 8E-3756 TIP GP-ABRASION

Heavy Duty
Adapter Size J300
An Attachment

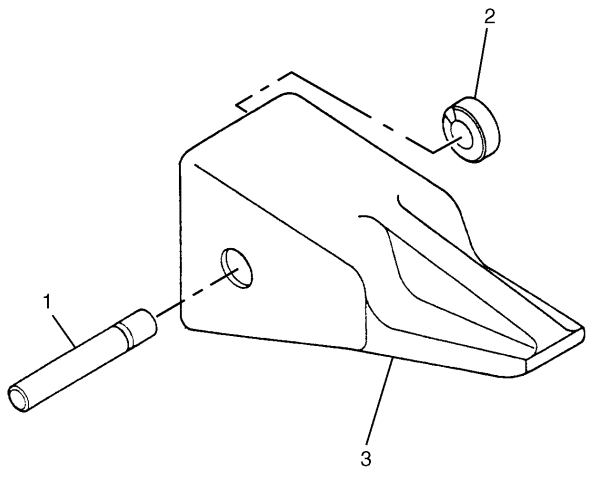


| NOTE | No. | PART No. | QTY | PART NAME |
|---|---|---|---|---|
| | 1 | 107-3308 | 1 | PIN |
| | 2 | 8E-6259 | 1 | RETAINER AS |
| | 3 | 9J-4309 | 1 | TIP |

H79478E 06

## 3G-3237 TIP GP-PENETRATION

Adapter Size J300
An Attachment

# IMPLEMENTS

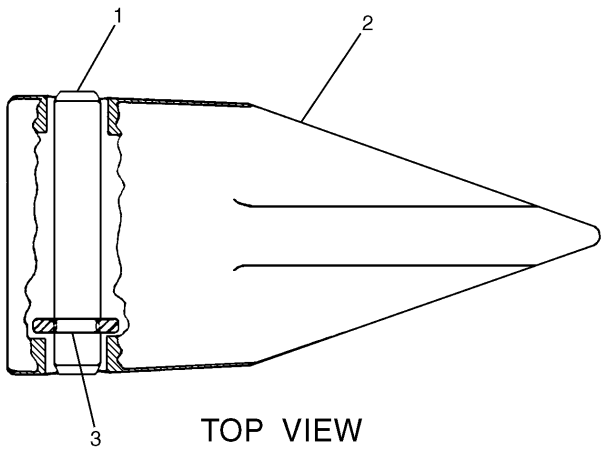


TOP VIEW

| NOTE | No. | PART No. | QTY | PART NAME |
|---|---|---|---|---|
| | 1 | 107-3308 | 1 | PIN |
| | 2 | 9W-8309 | 1 | TIP |
| | 3 | 8E-6259 | 1 | RETAINER AS |

H79482E 05

**9W-9188 TIP GP**
Sharp Center
Adapter Size J300
An Attachment

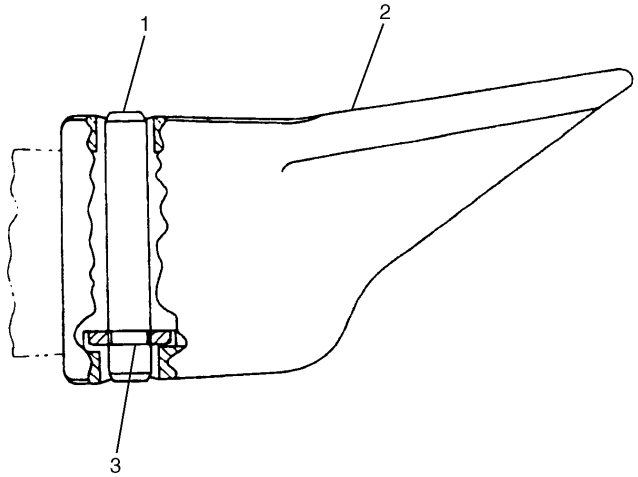


TOP VIEW

| NOTE | No. | PART No. | QTY | PART NAME |
|---|---|---|---|---|
| | 1 | 107-3308 | 1 | PIN |
| | 2 | 9W-8308 | 1 | TIP |
| | 3 | 8E-6259 | 1 | RETAINER AS |

H79483E 05

**9W-9189 TIP GP**
Sharp Corner
Adapter Size J300
An Attachment

# IMPLEMENTS

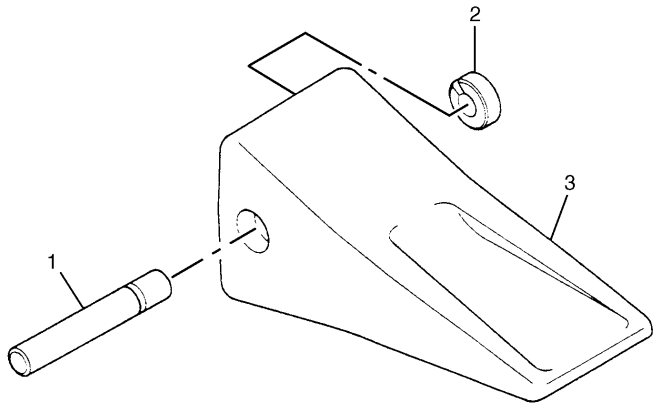


| NOTE | No. | PART No. | QTY | PART NAME |
|---|---|---|---|---|
| | 1 | 114-0358 | 1 | PIN |
| | 2 | 114-0359 | 1 | RETAINER AS |
| | 3 | 1U-3352 | 1 | TIP |

H53784E 06

## 8J-4955 TIP GP-LONG

Adapter Size J350
Part of 239-2689,239-2692-Page782
An Attachment

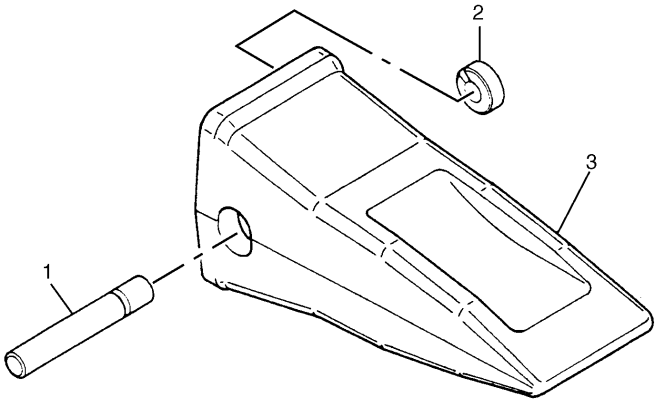


| NOTE | No. | PART No. | QTY | PART NAME |
|---|---|---|---|---|
| | 1 | 114-0358 | 1 | PIN |
| | 2 | 114-0359 | 1 | RETAINER AS |
| | 3 | 9N-4352 | 1 | TIP |

H53782E 03

## 8E-3752 TIP GP-LONG

Heavy Duty
Adapter Size J350
An Attachment

# IMPLEMENTS

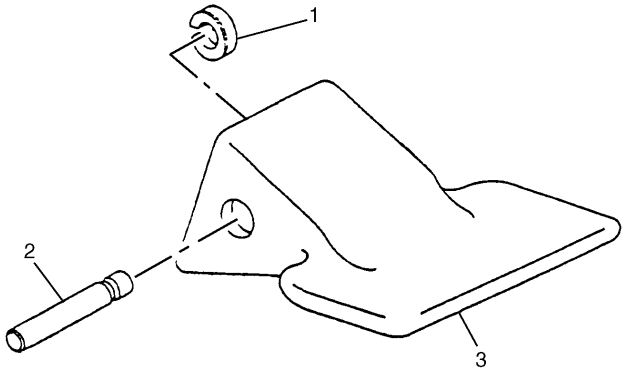


| NOTE | No. | PART No. | QTY | PART NAME |
|---|---|---|---|---|
| | 1 | 114-0359 | 1 | RETAINER AS |
| | 2 | 114-0358 | 1 | PIN |
| | 3 | 107-3350 | 1 | TIP |

H57350E 08

**8J-4953 TIP GP-WIDE**
Adapter Size J350
An Attachment

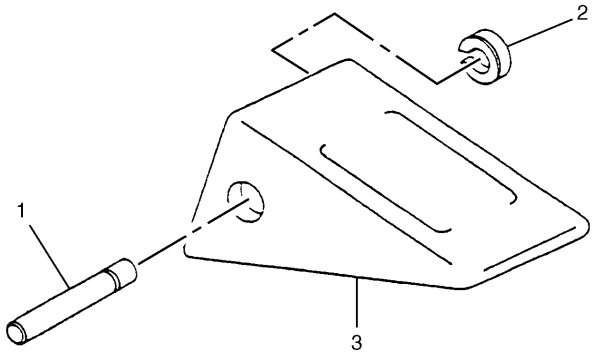


| NOTE | No. | PART No. | QTY | PART NAME |
|---|---|---|---|---|
| | 1 | 114-0358 | 1 | PIN |
| | 2 | 114-0359 | 1 | RETAINER AS |
| | 3 | 1U-3351 | 1 | TIP |

H53551E 07

**8J-4954 TIP GP-SHORT**
Adapter Size J350
An Attachment

# IMPLEMENTS

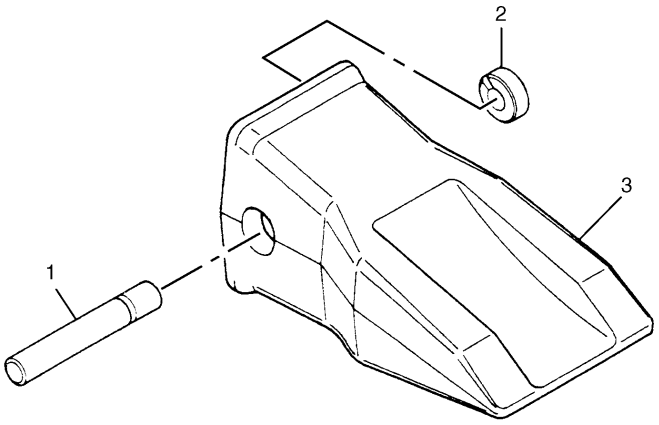


| NOTE | No. | PART No. | QTY | PART NAME |
|---|---|---|---|---|
| | 1 | 114-0358 | 1 | PIN |
| | 2 | 114-0359 | 1 | RETAINER AS |
| | 3 | 9N-4353 | 1 | TIP |

H53783E 03

## 8E-3757 TIP GP-ABRASION

Heavy Duty
Adapter Size J350
An Attachment

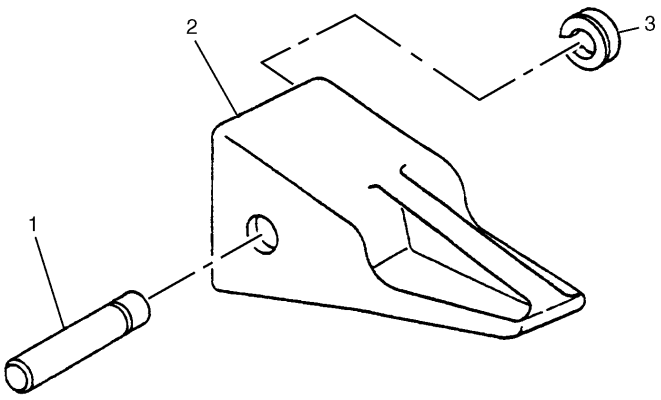


| NOTE | No. | PART No. | QTY | PART NAME |
|---|---|---|---|---|
| | 1 | 114-0358 | 1 | PIN |
| | 2 | 9J-4359 | 1 | TIP |
| | 3 | 114-0359 | 1 | RETAINER AS |

H53771E 05

## 3G-3236 TIP GP-PENETRATION

Adapter Size J350
An Attachment

# IMPLEMENTS

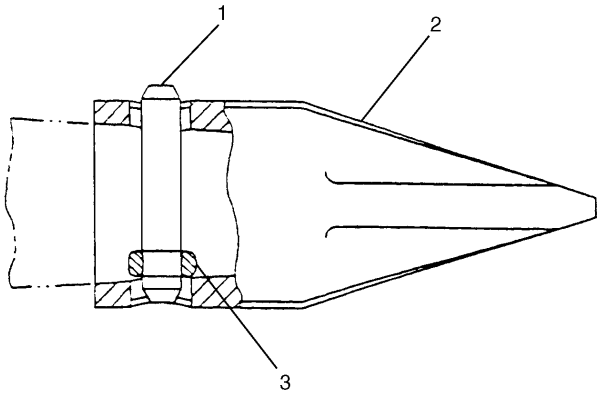


TOP VIEW

| NOTE | No. | PART No. | QTY | PART NAME |
|---|---|---|---|---|
| | 1 | 114-0358 | 1 | PIN |
| | 2 | 9W-2359 | 1 | TIP |
| | 3 | 114-0359 | 1 | RETAINER AS |

H53785E 03

**9W-6472 TIP GP**
Sharp Center
Adapter Size J350
An Attachment

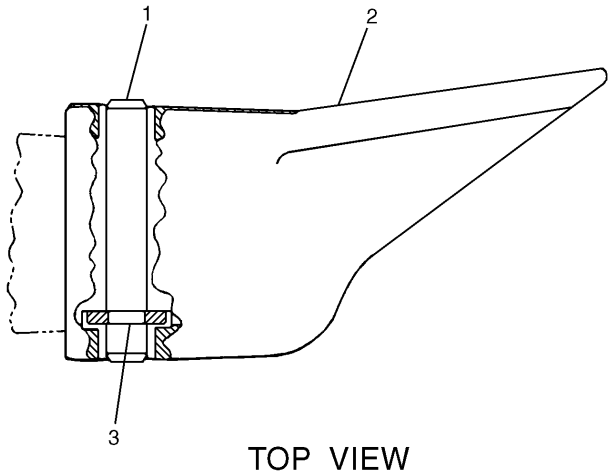


TOP VIEW

| NOTE | No. | PART No. | QTY | PART NAME |
|---|---|---|---|---|
| | 1 | 114-0358 | 1 | PIN |
| | 2 | 9W-2358 | 1 | TIP |
| | 3 | 114-0359 | 1 | RETAINER AS |

H53786E 03

**9W-6473 TIP GP**
Sharp Corner
Adapter Size J350
An Attachment

# IMPLEMENTS

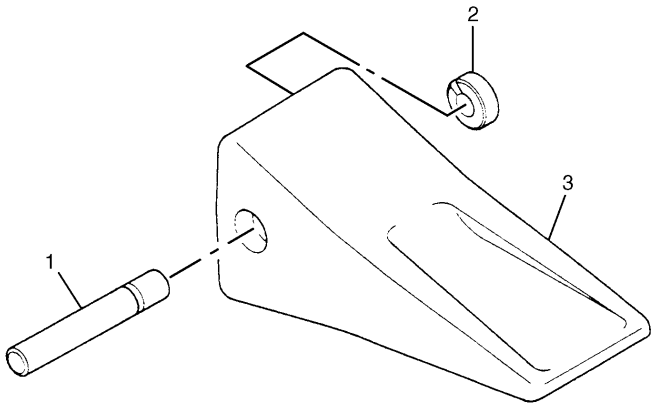


| NOTE | No. | PART No. | QTY | PART NAME |
|---|---|---|---|---|
| | 1 | 116-7408 | 1 | PIN |
| | 2 | 116-7409 | 1 | RETAINER AS |
| | 3 | 7T-3402 | 1 | TIP |

H65611E 00

## 127-0716 TIP GP-LONG

Adapter Size J400
Part of 239-2564-Page780,239-2695-Page781
An Attachment

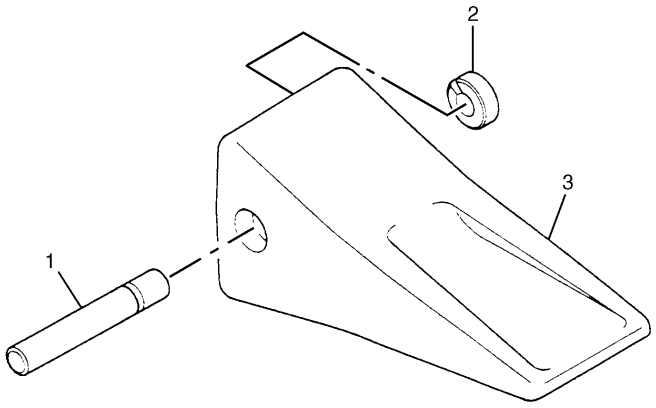


| NOTE | No. | PART No. | QTY | PART NAME |
|---|---|---|---|---|
| | 1 | 8E-6258 | 1 | PIN |
| | 2 | 8E-6259 | 1 | RETAINER AS |
| | 3 | 1U-3252 | 1 | TIP |

H78935E 06

## 9J-3169 TIP GP-LONG

Adapter Size J250
S/N DFB 1-Up
Part of 7Y-6402-Page801
An Attachment

# IMPLEMENTS

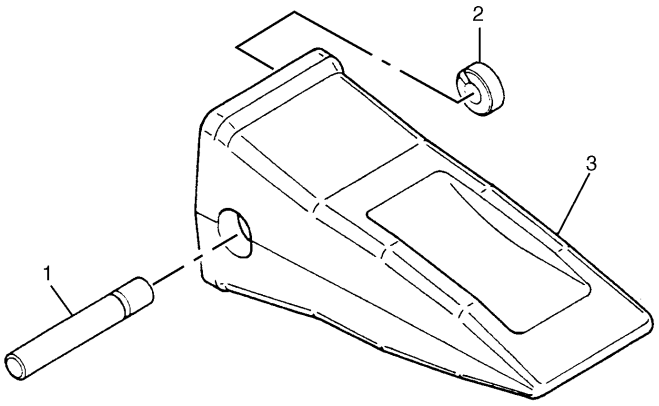


| NOTE | No. | PART No. | QTY | PART NAME |
|---|---|---|---|---|
| | 1 | 116-7408 | 1 | PIN |
| | 2 | 116-7409 | 1 | RETAINER AS |
| | 3 | 8E-4402 | 1 | TIP |

H53774E 01

## 6Y-5472 TIP GP-LONG

Heavy Duty
Adapter Size J400
An Attachment

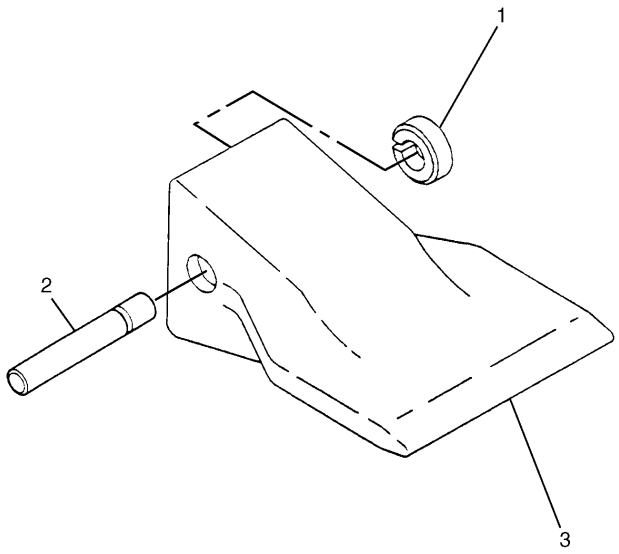


| NOTE | No. | PART No. | QTY | PART NAME |
|---|---|---|---|---|
| | 1 | 116-7409 | 1 | RETAINER AS |
| | 2 | 116-7408 | 1 | PIN |
| | 3 | 107-3400 | 1 | TIP |

H58870E 04

## 8E-0836 TIP GP-WIDE

Adapter Size J400
An Attachment

# IMPLEMENTS

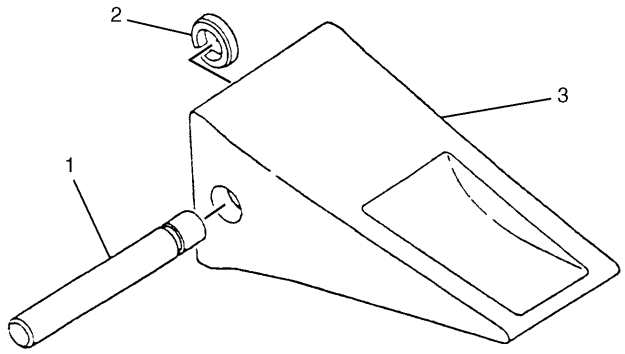


| NOTE | No. | PART No. | QTY | PART NAME |
|---|---|---|---|---|
| | 1 | 116-7408 | 1 | PIN |
| | 2 | 116-7409 | 1 | RETAINER AS |
| | 3 | 7T-3401 | 1 | TIP |

H65610E 00

## 127-0715 TIP GP-SHORT
Adapter Size J400
An Attachment

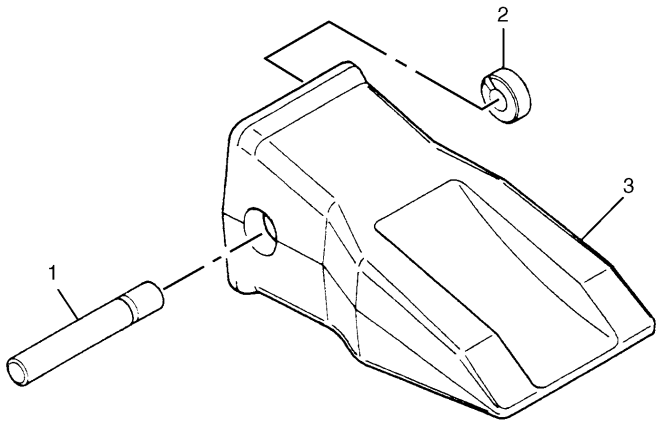


| NOTE | No. | PART No. | QTY | PART NAME |
|---|---|---|---|---|
| | 1 | 116-7408 | 1 | PIN |
| | 2 | 116-7409 | 1 | RETAINER AS |
| | 3 | 7T-3403 | 1 | TIP |

H53778E 03

## 8E-0837 TIP GP-ABRASION
Heavy Duty
Adapter Size J400
An Attachment

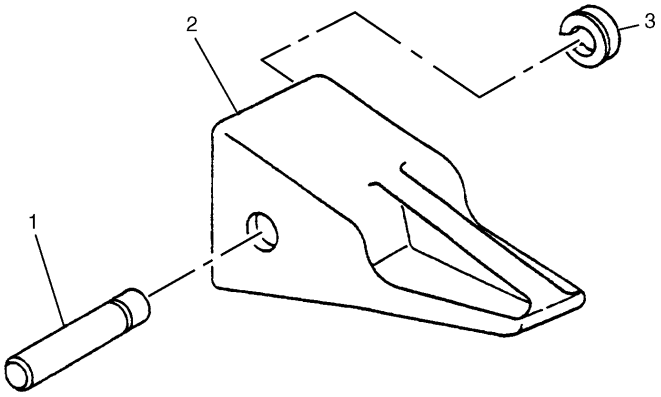


| NOTE | No. | PART No. | QTY | PART NAME |
|---|---|---|---|---|
| | 1 | 116-7408 | 1 | PIN |
| | 2 | 6Y-7409 | 1 | TIP |
| | 3 | 116-7409 | 1 | RETAINER AS |

H53779E 03

**8E-0838 TIP GP-PENETRATION**
Adapter Size J400
An Attachment

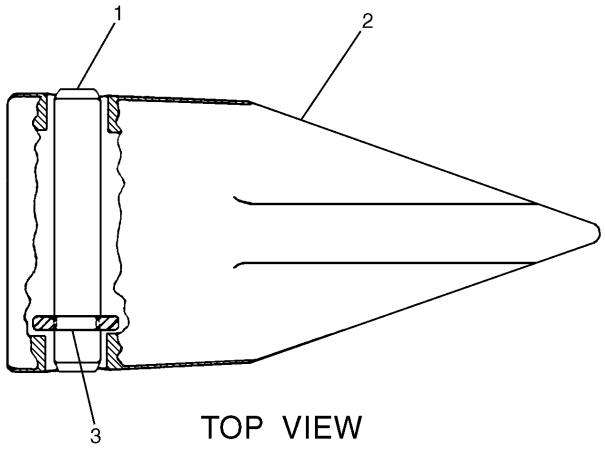


| NOTE | No. | PART No. | QTY | PART NAME |
|---|---|---|---|---|
| | 1 | 116-7408 | 1 | PIN |
| | 2 | 6Y-5409 | 1 | TIP |
| | 3 | 116-7409 | 1 | RETAINER AS |

H53781E 03

**8E-0840 TIP GP**
Sharp Center
Adapter Size J400
An Attachment

# IMPLEMENTS

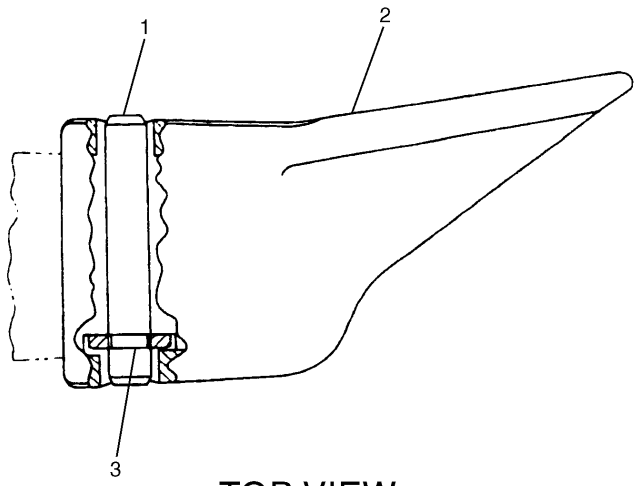


TOP VIEW

| NOTE | No. | PART No. | QTY | PART NAME |
|---|---|---|---|---|
| | 1 | 116-7408 | 1 | PIN |
| | 2 | 6Y-5408 | 1 | TIP |
| | 3 | 116-7409 | 1 | RETAINER AS |

H53780E 03

**8E-0839 TIP GP**
Sharp Corner
Adapter Size J400
An Attachment

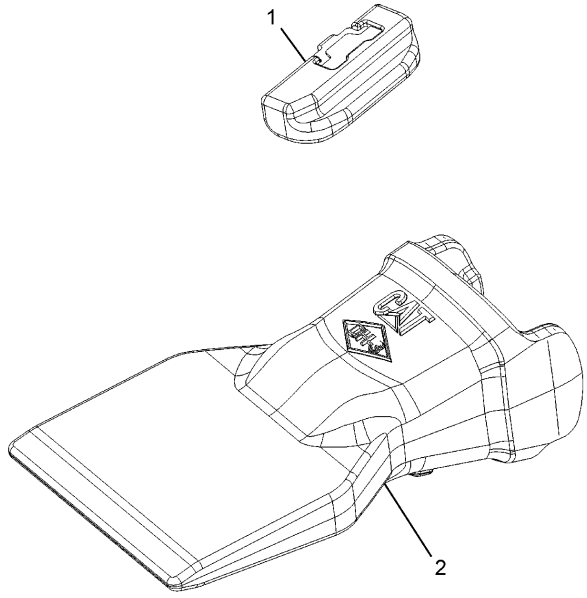


| NOTE | No. | PART No. | QTY | PART NAME |
|---|---|---|---|---|
| | 1 | 220-9090 | 1 | RETAINER |
| | 2 | 222-1080 | 1 | TIP |

H89931E 00

**229-6963 TIP GP-WIDE**
Adapter Size K80
An Attachment

# IMPLEMENTS

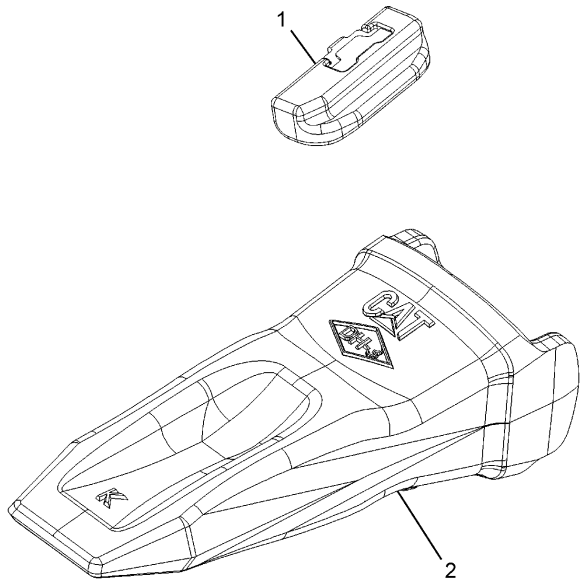


| NOTE | No. | PART No. | QTY | PART NAME |
|---|---|---|---|---|
| | 1 | 220-9090 | 1 | RETAINER |
| | 2 | 220-9081 | 1 | TIP |

H89930E 00

**229-6964 TIP GP**
Adapter Size K80
An Attachment

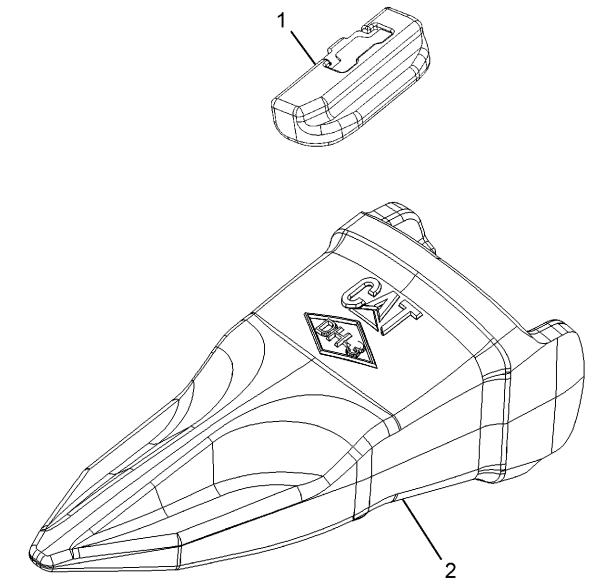


| NOTE | No. | PART No. | QTY | PART NAME |
|---|---|---|---|---|
| | 1 | 220-9090 | 1 | RETAINER |
| | 2 | 220-9082 | 1 | TIP |

H89932E 00

**229-6965 TIP GP-PENETRATION**
Adapter Size K80
An Attachment

# IMPLEMENTS

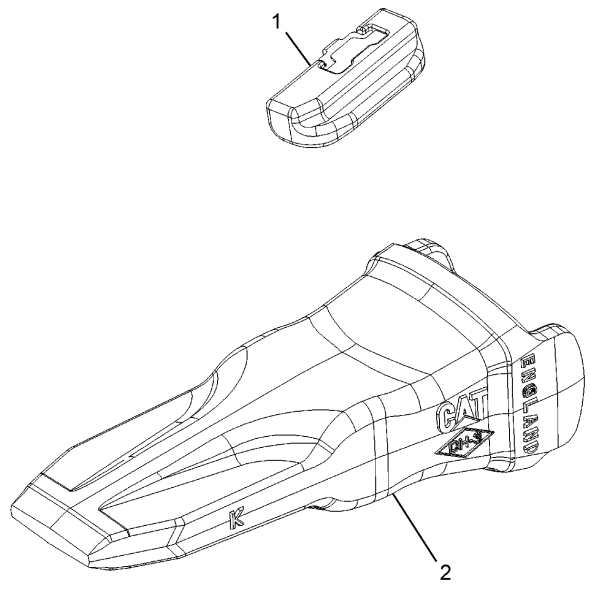


| NOTE | No. | PART No. | QTY | PART NAME |
|---|---|---|---|---|
| | 1 | 220-9090 | 1 | RETAINER |
| | 2 | 220-9083 | 1 | TIP |

H89924E 00

**229-6966 TIP GP**
Adapter Size K80
An Attachment

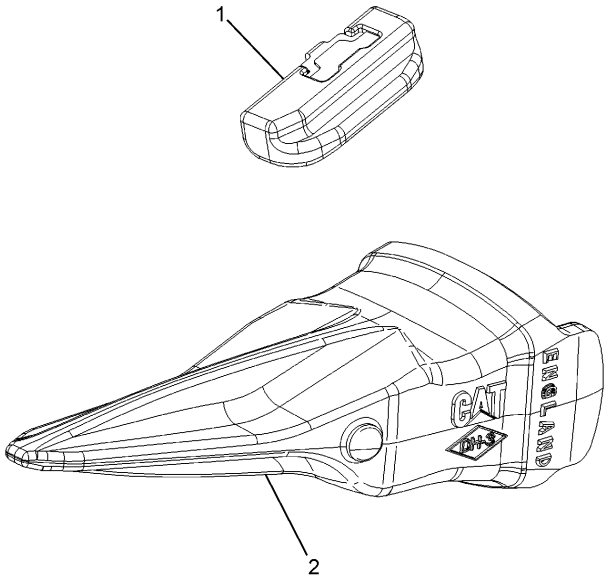


| NOTE | No. | PART No. | QTY | PART NAME |
|---|---|---|---|---|
| | 1 | 220-9090 | 1 | RETAINER |
| | 2 | 220-9087 | 1 | TIP |

H93522E 00

**229-6967 TIP GP**
Adapter Size K80
An Attachment

# IMPLEMENTS

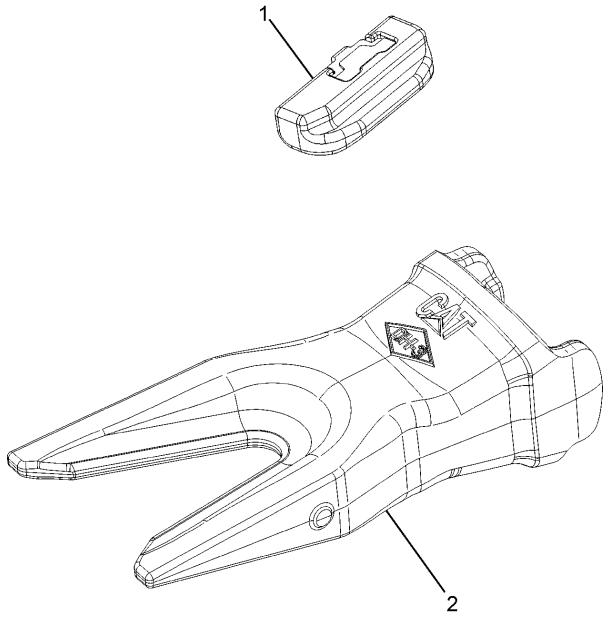


| NOTE | No. | PART No. | QTY | PART NAME |
|---|---|---|---|---|
| | 1 | 220-9090 | 1 | RETAINER |
| | 2 | 220-9088 | 1 | TIP |

H93523E 00

**229-6968 TIP GP**
Adapter Size K80
An Attachment

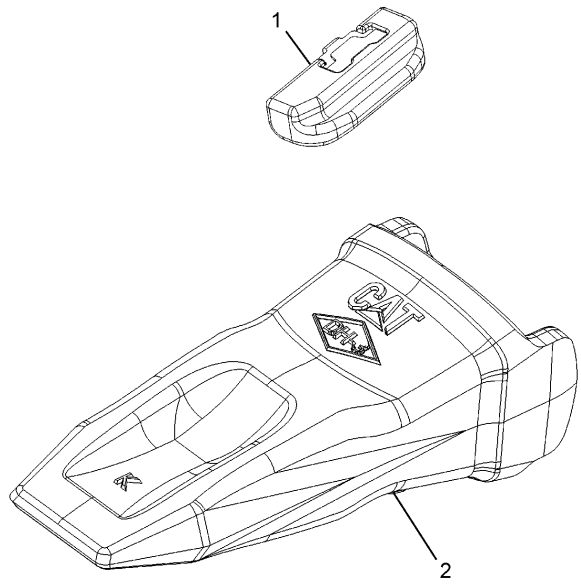


| NOTE | No. | PART No. | QTY | PART NAME |
|---|---|---|---|---|
| | 1 | 220-9090 | 1 | RETAINER |
| | 2 | 220-9089 | 1 | TIP |

H89927E 00

**229-6969 TIP GP**
Adapter Size K80
Part of 239-2573,239-2576-Page783
An Attachment

# IMPLEMENTS

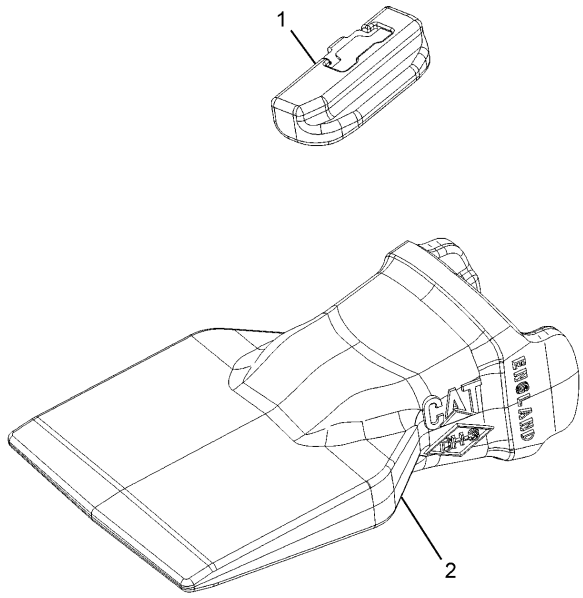


| NOTE | No. | PART No. | QTY | PART NAME |
|---|---|---|---|---|
| | 1 | 220-9090 | 1 | RETAINER |
| | 2 | 222-1090 | 1 | TIP |

H89921E 00

**217-4890 TIP GP-WIDE**
Adapter Size K90
An Attachment

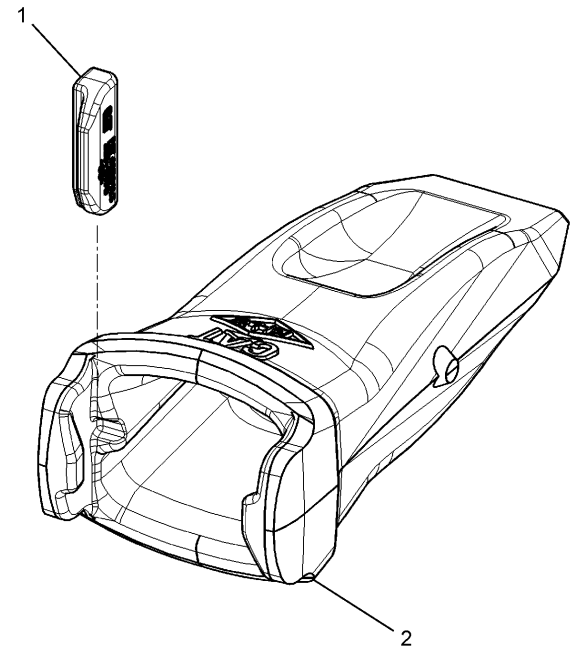


| NOTE | No. | PART No. | QTY | PART NAME |
|---|---|---|---|---|
| | 1 | 220-9090 | 1 | RETAINER |
| | 2 | 220-9091 | 1 | TIP |

H89912E 01

**217-4891 TIP GP**
Adapter Size K90
An Attachment

# IMPLEMENTS

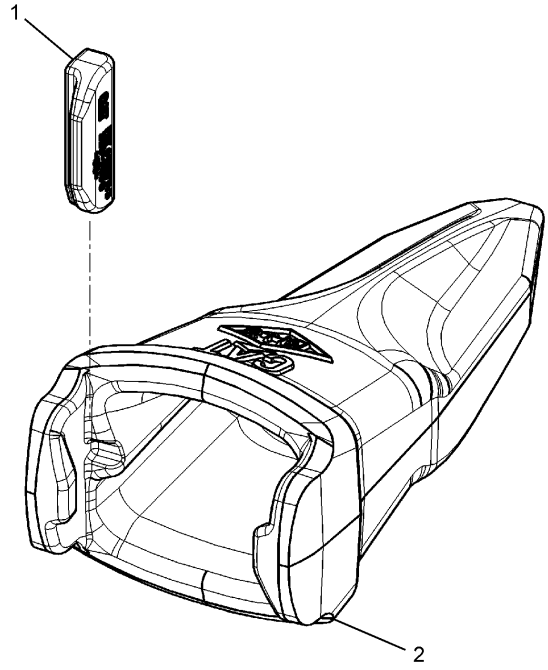


| NOTE | No. | PART No. | QTY | PART NAME |
|---|---|---|---|---|
| | 1 | 220-9090 | 1 | RETAINER |
| | 2 | 220-9092 | 1 | TIP |

H89911E 01

**217-4892 TIP GP-PENETRATION**
Adapter Size K90
An Attachment

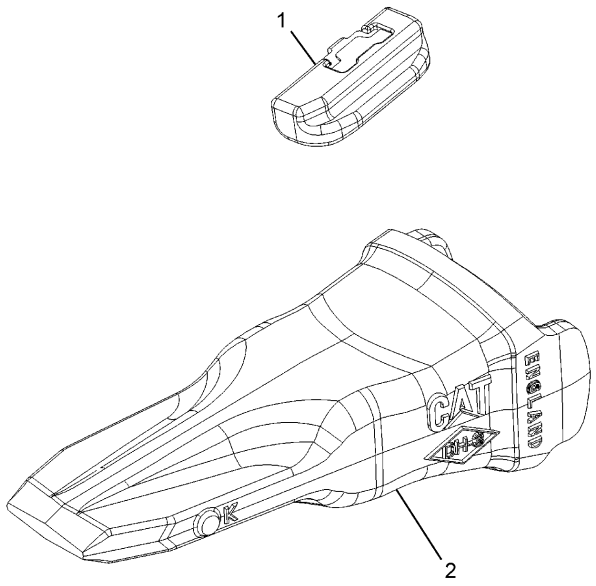


| NOTE | No. | PART No. | QTY | PART NAME |
|---|---|---|---|---|
| | 1 | 220-9090 | 1 | RETAINER |
| | 2 | 220-9093 | 1 | TIP |

H89916E 00

**217-4893 TIP GP**
Adapter Size K90
An Attachment

# IMPLEMENTS

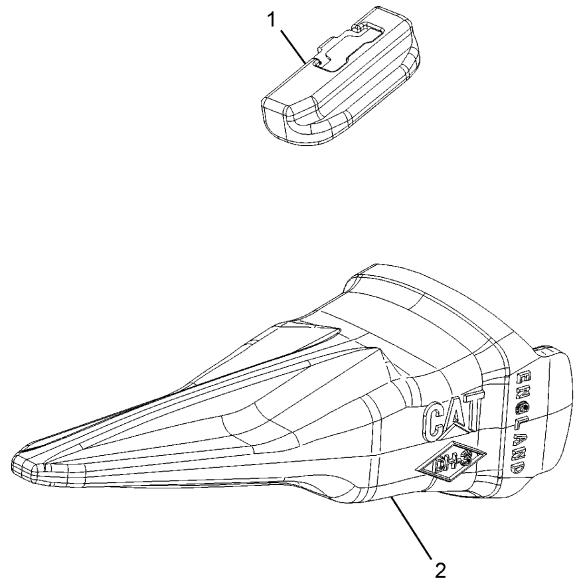


| NOTE | No. | PART No. | QTY | PART NAME |
|---|---|---|---|---|
| | 1 | 220-9090 | 1 | RETAINER |
| | 2 | 220-9097 | 1 | TIP |

H89917E 00

**217-4894 TIP GP**
Adapter Size K90
An Attachment

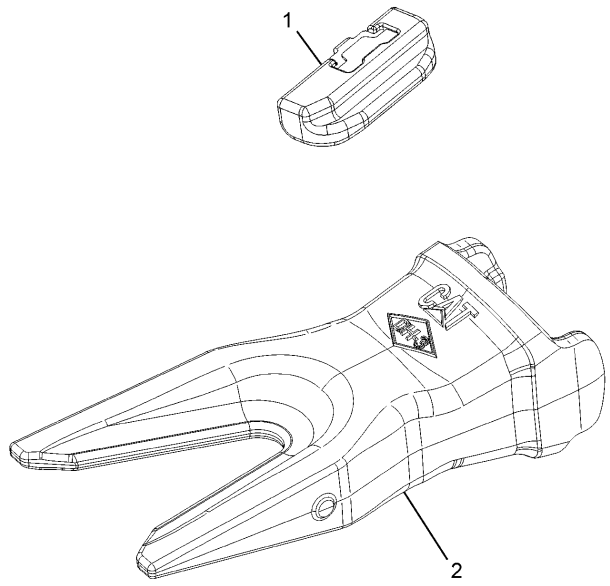


| NOTE | No. | PART No. | QTY | PART NAME |
|---|---|---|---|---|
| | 1 | 220-9090 | 1 | RETAINER |
| | 2 | 220-9098 | 1 | TIP |

H89919E 00

**217-4895 TIP GP**
Adapter Size K90
An Attachment

# IMPLEMENTS

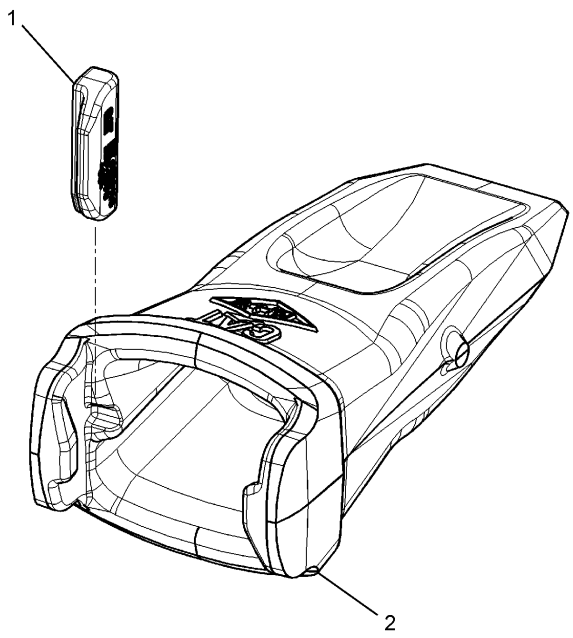


| NOTE | No. | PART No. | QTY | PART NAME |
|---|---|---|---|---|
| | 1 | 220-9090 | 1 | RETAINER |
| | 2 | 220-9099 | 1 | TIP |

H89914E 01

**217-4896 TIP GP**
Adapter Size K90
Part of 239-2582,239-2585-Page785
An Attachment

# SERVICE EQUIPMENT AND SUPPLIES

Consists of :

| | | | Page |
|---|---|---|---|
| 1 | 7I-0800 | MOUNTING GP-GREASE GUN | 255 |
| 1 | 176-2677 | TOOL GP | 826 |

H67456E 00

**176-2676 TOOL AR**
An Attachment

# SERVICE EQUIPMENT AND SUPPLIES

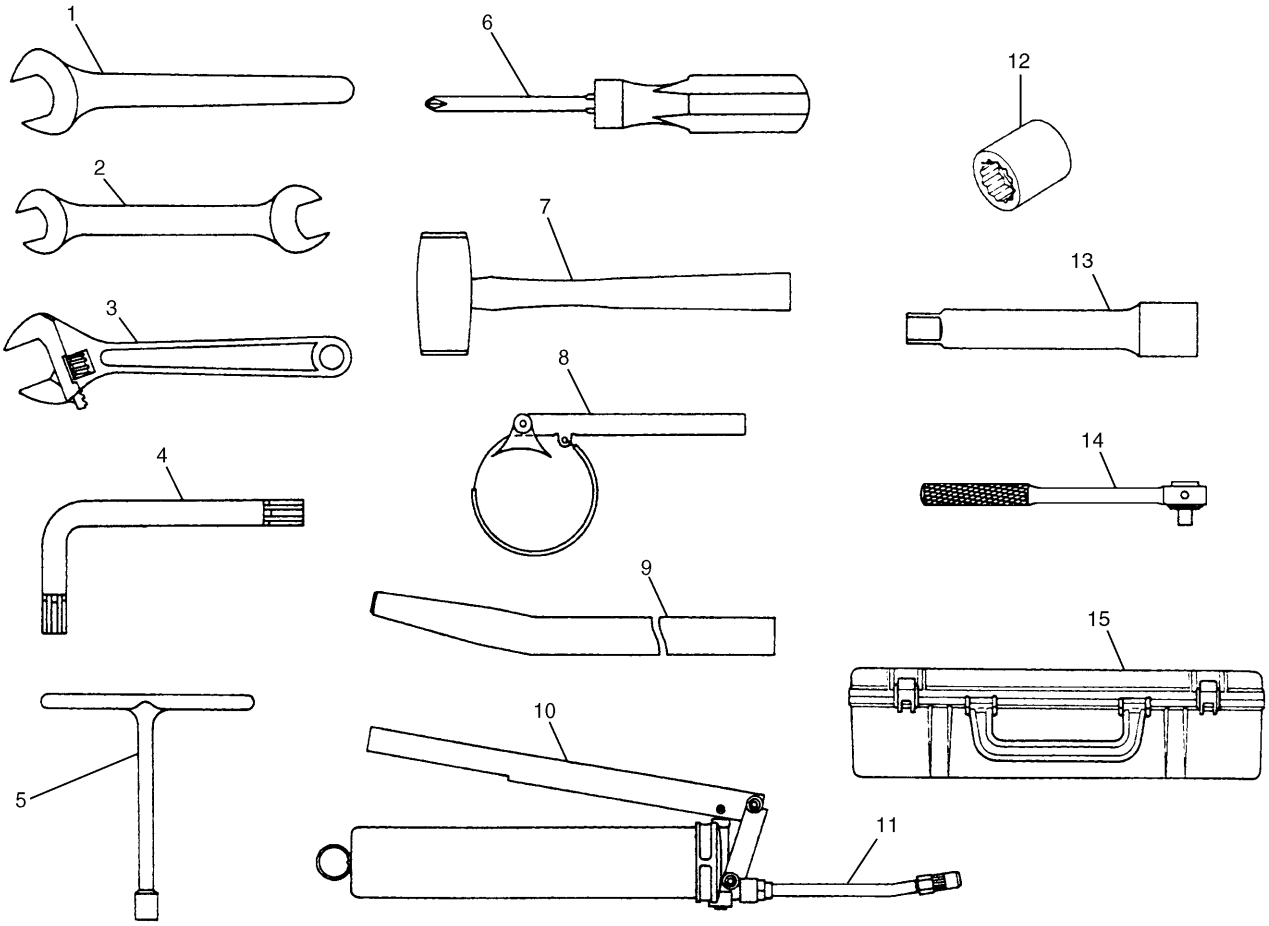


| NOTE | No. | PART No. | QTY | PART NAME | NOTE | No. | PART No. | QTY | PART NAME |
|---|---|---|---|---|---|---|---|---|---|
| | 1 | 095-1056 | 1 | WRENCH (36MM) | | 12 | 095-1066 | 1 | SOCKET (13MM) |
| | | 095-1057 | 1 | WRENCH (41MM) | | | 099-3249 | 1 | SOCKET (18MM) |
| | 2 | 099-3246 | 1 | WRENCH (21MM × 24MM) | | | 095-1070 | 1 | SOCKET (22MM) |
| | 3 | 7I-6395 | 1 | WRENCH (200MM) | | 13 | 099-3250 | 1 | EXTENSION |
| | 4 | 4I-2604 | 1 | WRENCH (6MM) | | 14 | 095-1852 | 1 | RATCHET |
| | | 4I-2605 | 1 | WRENCH (10MM) | | 15 | 7Y-0070 | 1 | TOOLBOX |
| | 5 | 7Y-6108 | 1 | WRENCH (11MM) | | | | | |
| | 6 | 095-1855 | 1 | SCREWDRIVER | | | | | |
| | 7 | 095-1857 | 1 | HAMMER | | | | | |
| | 8 | 2P-8250 | 1 | WRENCH AS | | | | | |
| | | 1P-0551 | 1 | PIN | | | | | |
| | | 2P-8253 | 1 | STRAP | | | | | |
| | | 6H-7378 | 1 | RING | | | | | |
| | 9 | 093-7638 | 1 | BAR | | | | | |
| | 10 | 099-7464 | 1 | GREASE GUN | | | | | |
| | 11 | 199-7371 | 1 | TUBE AS | | | | | |
| A | | 4Y-0426 | 1 | GREASE (BELLOWS) | | | | | |
| A | | 3Y-7597 | 1 | GREASE (FOR WINTER TIME) | | | | | |
| A | | 1P-0808 | 1 | GREASE (PAPER TUBE) | | | | | |

A—NOT PART OF THIS GROUP

H81149E 01

## 176-2677 TOOL GP

Part of 176-2676-Page825

An Attachment

# SERVICE EQUIPMENT AND SUPPLIES

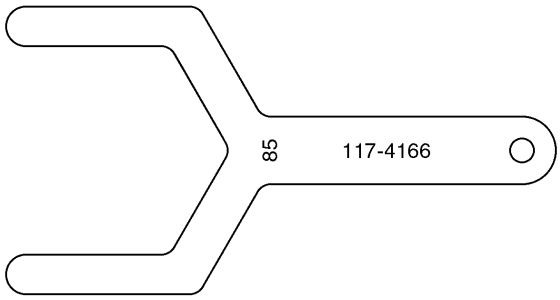


| NOTE | No. | PART No. | QTY | PART NAME |
|---|---|---|---|---|
| | | | | |

H67956E 00

**117-4166 WRENCH**
An Attachment

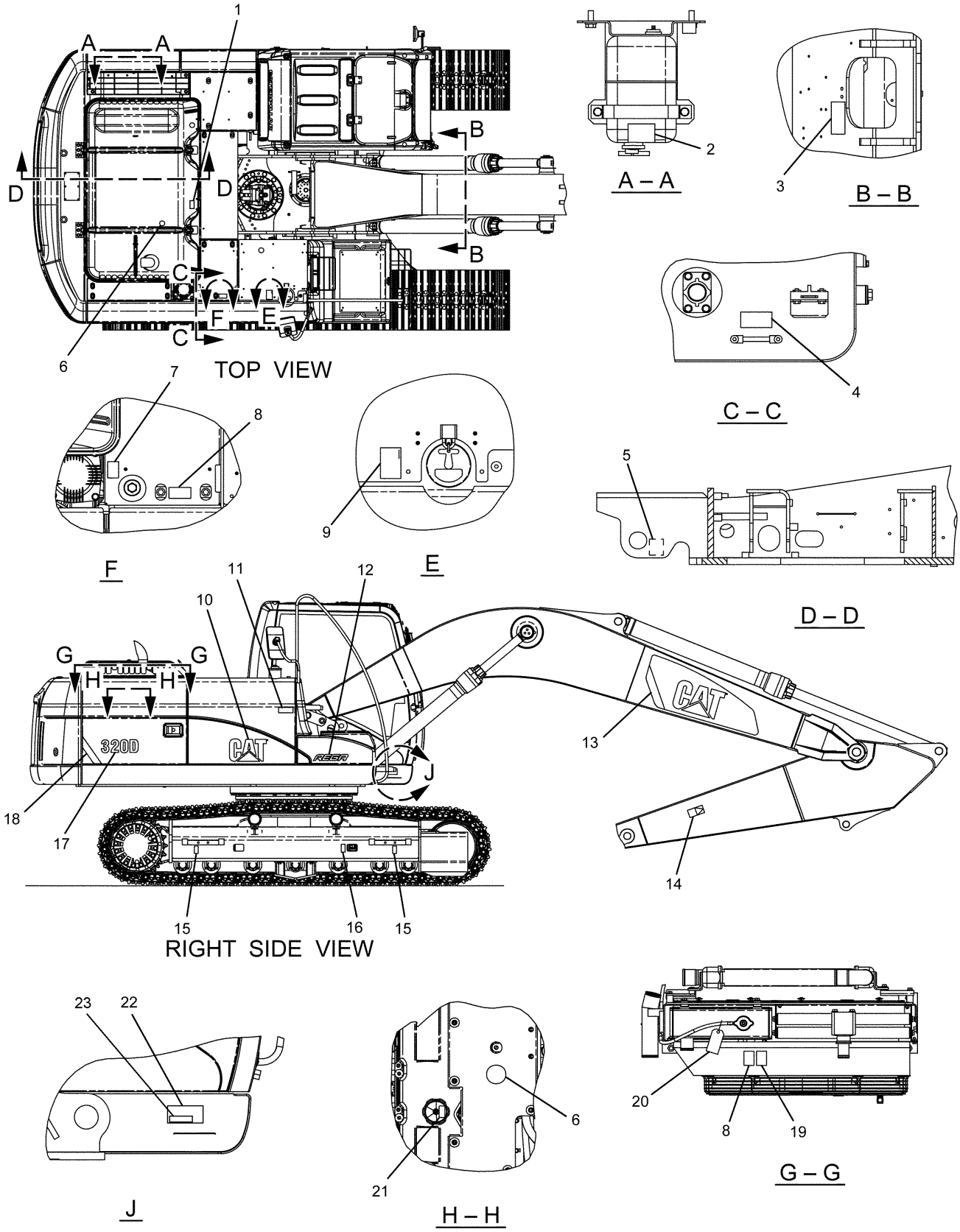


HA1445E 15

**275-3681 PLATE & FILM GP (1/3)**
S/N BWZ 1-(T08.08), SNS 1-(T08.08)

# SERVICE EQUIPMENT AND SUPPLIES

| NOTE | No. | PART No. | QTY | PART NAME | NOTE | No. | PART No. | QTY | PART NAME |
|---|---|---|---|---|---|---|---|---|---|
| | 1 | 228-7316 | 2 | FILM (WARNING) | | | | | |
| | 2 | 134-7258 | 1 | FILM (ELC) | | | | | |
| | 3 | 264-8502 | 1 | FILM (NOTICE) | | | | | |
| | 4 | 242-1510 | 1 | FILM (INSTRUCTION) | | | | | |
| | 5 | 7X-7644 | 2 | FILM (TIE DOWN) | | | | | |
| | 6 | 167-7270 | 2 | FILM (NO STEP) | | | | | |
| | 7 | 186-1131 | 1 | FILM | | | | | |
| | 8 | 160-6822 | 2 | FILM (WARNING) | | | | | |
| | 9 | 291-9334 | 1 | FILM (DIESEL FUEL) | | | | | |
| | 10 | 290-1729 | 1 | FILM (CAT) | | | | | |
| | 11 | 253-0861 | 1 | FILM (CAT POWER)) | | | | | |
| | 12 | 186-1147 | 1 | FILM (REGA) | | | | | |
| | 13 | 290-1727 | 1 | FILM (CAT) | | | | | |
| | 14 | 160-6853 | 1 | FILM (DANGER) | | | | | |
| | 15 | 1P-2807 | 2 | FILM (LIFT) | | | | | |
| | 16 | 160-6832 | 1 | FILM (WARNING) | | | | | |
| | 17 | 290-1742 | 1 | FILM (320D) | | | | | |
| E | 18 | 290-1906 | | FILM (STRIPE)…(90cm) | | | | | |
| | 19 | 160-6841 | 1 | FILM (WARNING) | | | | | |
| | 20 | 235-0346 | 1 | TAG (ELC) | | | | | |
| | 21 | 144-9126 | 1 | FILM (INSTRUCTION) | | | | | |
| Z | 22 | | 1 | PLATE (PIN) | | | | | |
| | 23 | 298-4157 | 1 | PLATE (IDENT) | | | | | |

E—ORDER BY THE CENTIMETER

Z—NOT SERVICED

HA1445E 15

**275-3681 PLATE & FILM GP (1/3)**

S/N BWZ 1-(T08.08), SNS 1-(T08.08)

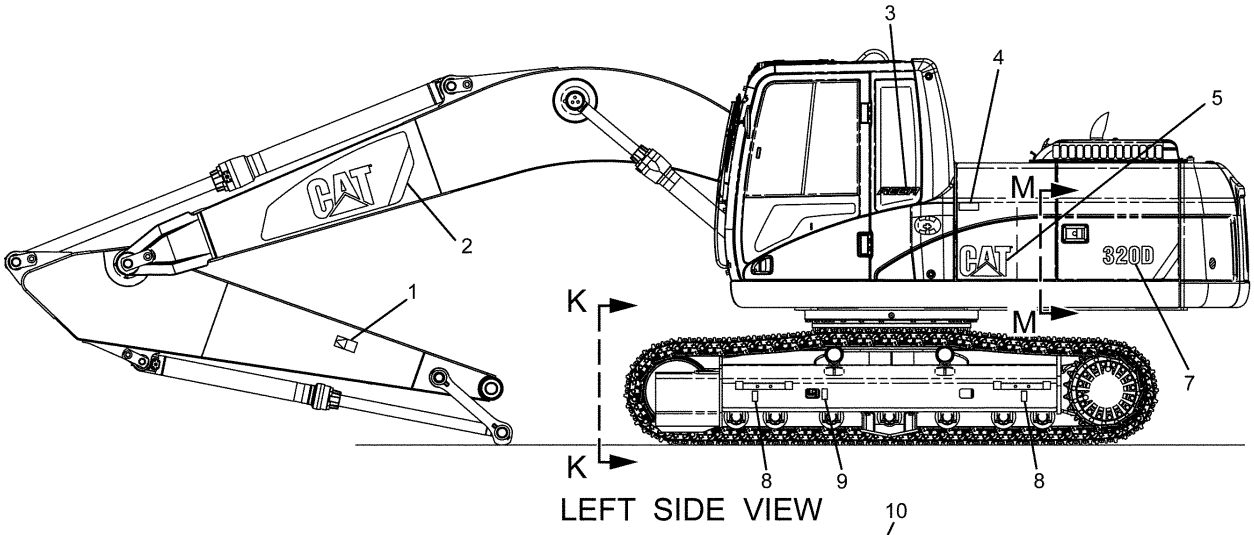


LEFT SIDE VIEW

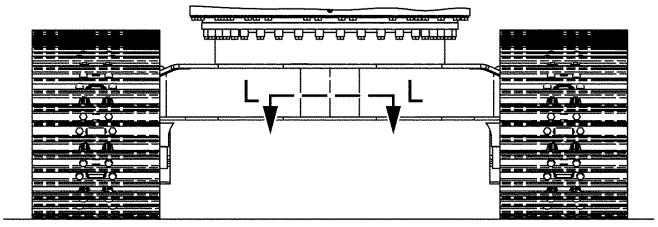


K – K

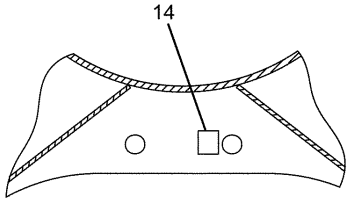


L – L

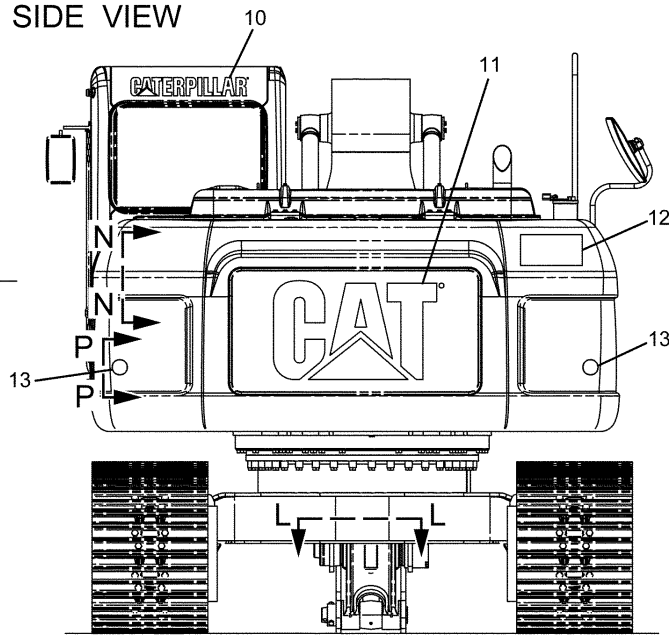


REAR VIEW

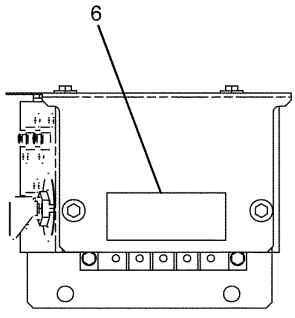


R – R

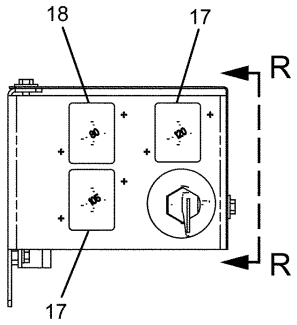


P – P

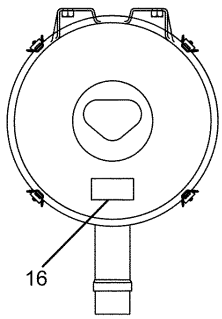


N – N

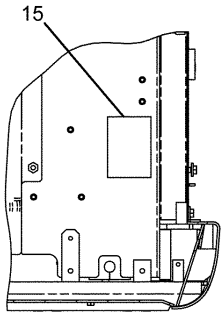


M – M

HA1446E 15

**275-3681 PLATE & FILM GP (2/3)**
S/N BWZ 1-(T08.08), SNS 1-(T08.08)

# SERVICE EQUIPMENT AND SUPPLIES

| NOTE | No. | PART No. | QTY | PART NAME | NOTE | No. | PART No. | QTY | PART NAME |
|---|---|---|---|---|---|---|---|---|---|
| | 1 | 160-6853 | 1 | FILM (DANGER) | | | | | |
| | 2 | 290-1728 | 1 | FILM (CAT) | | | | | |
| | 3 | 257-4503 | 1 | FILM (REGA) | | | | | |
| | 4 | 253-0861 | 1 | FILM (CAT POWER)) | | | | | |
| | 5 | 290-1729 | 1 | FILM (CAT) | | | | | |
| | 6 | 7I-6508 | 1 | FILM (NOTICE) | | | | | |
| | 7 | 290-1742 | 1 | FILM (320D) | | | | | |
| | 8 | 1P-2807 | 2 | FILM (LIFT) | | | | | |
| | 9 | 160-6832 | 1 | FILM (WARNING) | | | | | |
| | 10 | 257-4502 | 1 | FILM (CAT) | | | | | |
| | 11 | 247-7436 | 1 | FILM (CAT) | | | | | |
| | 12 | 160-6884 | 1 | FILM (DANGER) | | | | | |
| | 13 | 190-5386 | 2 | FILM (SAFETY) | | | | | |
| | 14 | 7X-7644 | 2 | FILM (TIE DOWN) | | | | | |
| | 15 | 3Y-8905 | 1 | FILM (WARNING) | | | | | |
| | 16 | 224-8946 | 1 | FILM (WARNING) | | | | | |
| | 17 | 247-7438 | 2 | FILM (CIRCUIT BREAKER) | | | | | |
| | 18 | 247-7437 | 1 | FILM (CIRCUIT BREAKER) | | | | | |



**275-3681 PLATE & FILM GP (2/3)**
S/N BWZ 1-(T08.08), SNS 1-(T08.08)

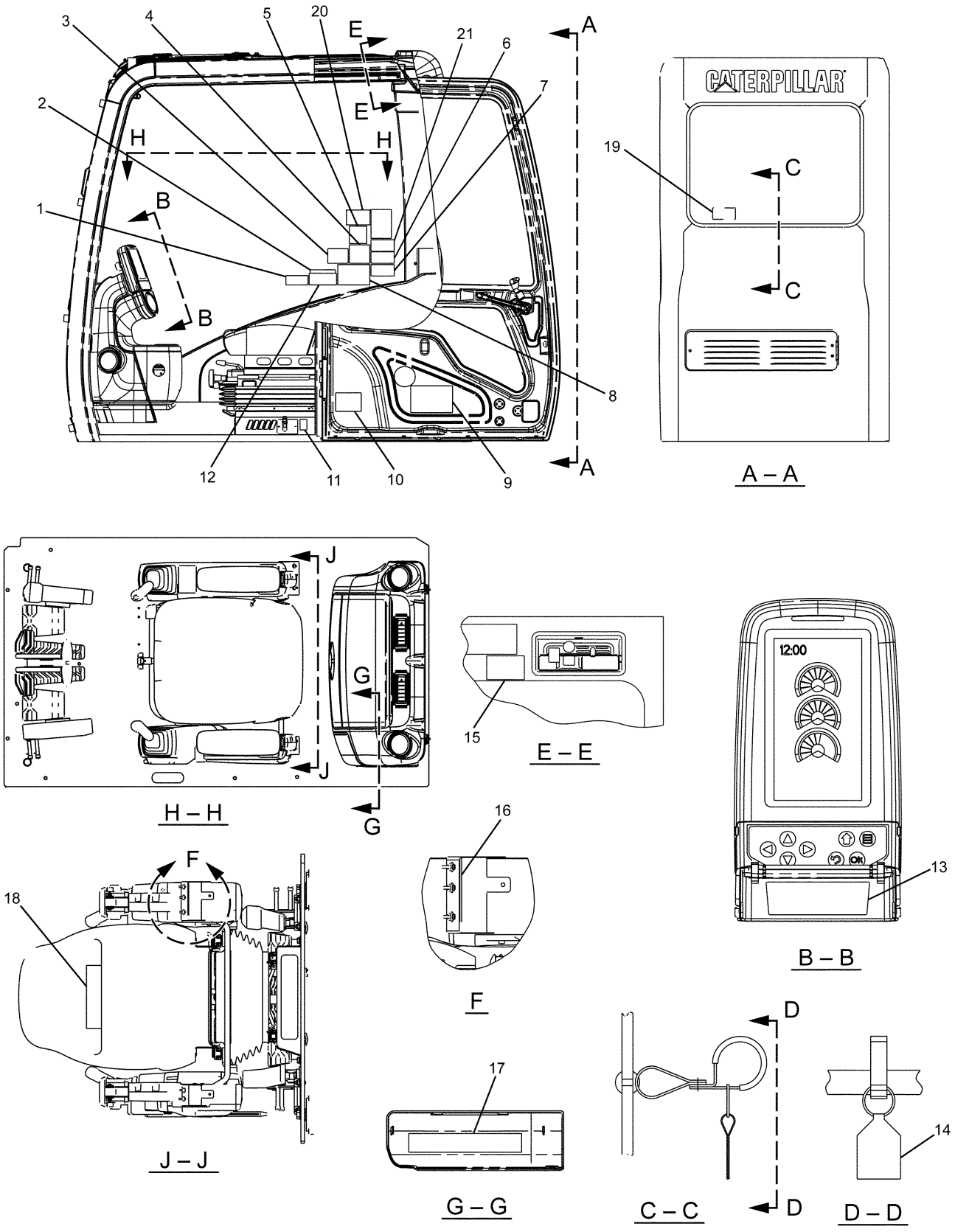


HA1447E 15

**275-3681 PLATE & FILM GP (3/3)**
S/N BWZ 1-(T08.08), SNS 1-(T08.08)

# SERVICE EQUIPMENT AND SUPPLIES

| NOTE | No. | PART No. | QTY | PART NAME | NOTE | No. | PART No. | QTY | PART NAME |
|---|---|---|---|---|---|---|---|---|---|
| | 1 | 186-1214 | 1 | FILM (NOTICE) | | | | | |
| | 2 | 71-1533 | 1 | PLATE (INSTRUCTION) | | | | | |
| | 3 | 127-5272 | 1 | FILM (WARNING) | | | | | |
| | 4 | 127-5295 | 1 | FILM (WARNING) | | | | | |
| | 5 | 219-3148 | 1 | FILM (NOTICE) | | | | | |
| | 6 | 266-5431 | 1 | FILM (WARNING) | | | | | |
| | 7 | 221-8045 | 1 | FILM (WARNING) | | | | | |
| | 8 | 244-5747 | 1 | FILM (WARNING) | | | | | |
| | 9 | 209-2864 | 1 | FILM (LUBRICANT CHART) | | | | | |
| | 10 | 314-3787 | 1 | FILM (REGISTRATION) | | | | | |
| | 11 | 214-7915 | 1 | FILM (ENGINE SHUT OFF) | | | | | |
| | 12 | 41-2885 | 1 | CASE | | | | | |
| | 13 | 319-9148 | 1 | FILM (INSTRUCTION) | | | | | |
| | 14 | 8T-6842 | 1 | FILM (ALTERNATE EXIT) | | | | | |
| | 15 | 186-1149 | 1 | FILM (WARNING) | | | | | |
| | 16 | 245-5457 | 1 | FILM (INSTRUCTION) | | | | | |
| | 17 | 298-4142 | 1 | FILM (FUSE PANEL) | | | | | |
| | 18 | 257-4506 | 1 | CASE | | | | | |
| | 19 | 187-0661 | 1 | FILM (ALTERNATE EXIT) | | | | | |
| | 20 | 283-8827 | 1 | FILM (WARNING) | | | | | |
| | 21 | 310-6252 | 1 | FILM (BACK-UP CONTROL) | | | | | |



**275-3681 PLATE & FILM GP (3/3)**
S/N BWZ 1-(T08.08), SNS 1-(T08.08)

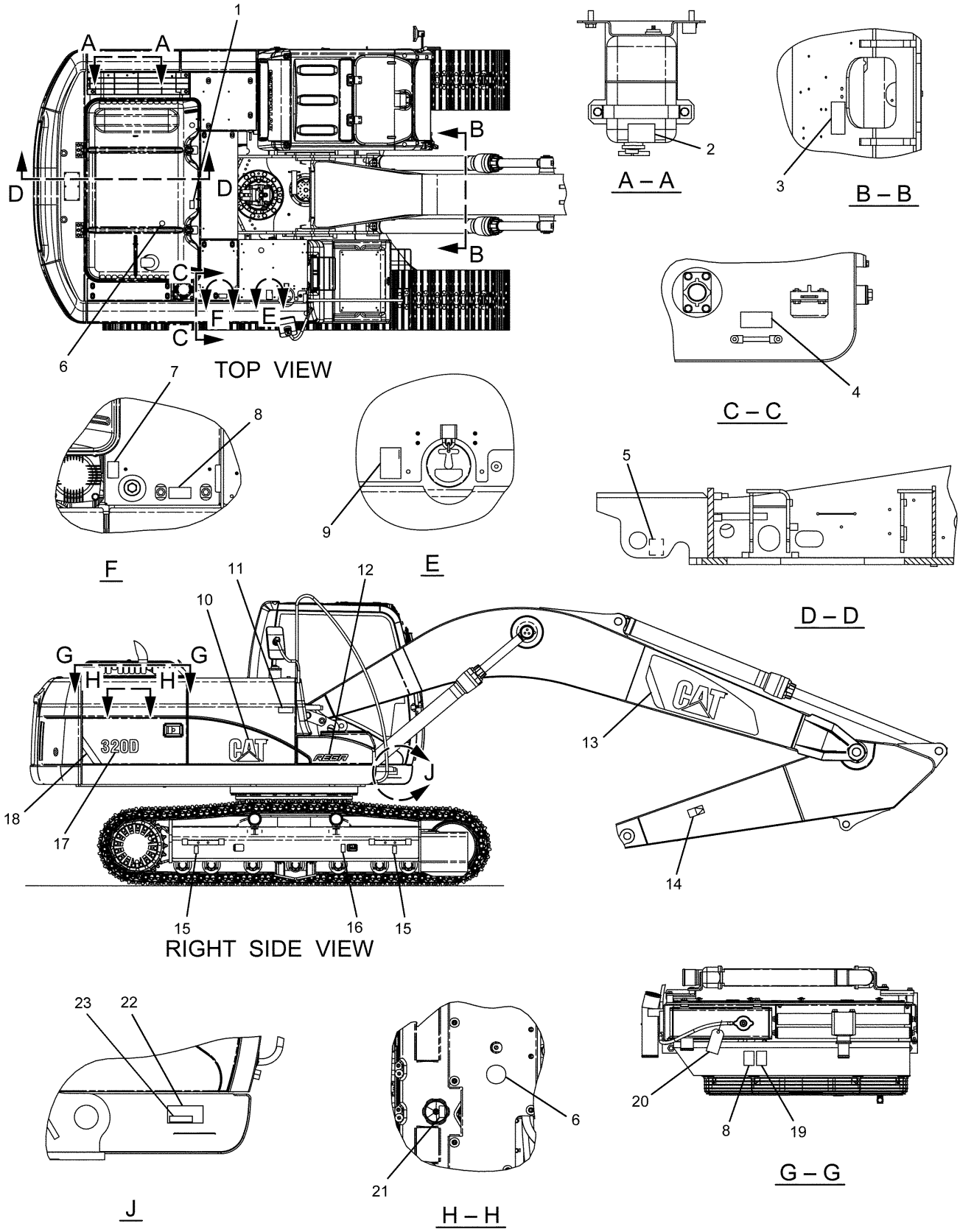


HA1451E 16

**275-3681 PLATE & FILM GP (1/3)**
S/N BWZ (T08.09)-Up, SNS (T08.09)-Up

# SERVICE EQUIPMENT AND SUPPLIES

| NOTE | No. | PART No. | QTY | PART NAME | NOTE | No. | PART No. | QTY | PART NAME |
|---|---|---|---|---|---|---|---|---|---|
| | 1 | 228-7316 | 2 | FILM (WARNING) | | | | | |
| | 2 | 134-7258 | 1 | FILM (ELC) | | | | | |
| | 3 | 264-8502 | 1 | FILM (NOTICE) | | | | | |
| | 4 | 242-1510 | 1 | FILM (INSTRUCTION) | | | | | |
| | 5 | 7X-7644 | 2 | FILM (TIE DOWN) | | | | | |
| | 6 | 167-7270 | 2 | FILM (NO STEP) | | | | | |
| | 7 | 186-1131 | 1 | FILM | | | | | |
| | 8 | 160-6822 | 2 | FILM (WARNING) | | | | | |
| | 9 | 291-9334 | 1 | FILM (DIESEL FUEL) | | | | | |
| | 10 | 290-1729 | 1 | FILM (CAT) | | | | | |
| | 11 | 253-0861 | 1 | FILM (CAT POWER)) | | | | | |
| | 12 | 186-1147 | 1 | FILM (REGA) | | | | | |
| | 13 | 290-1727 | 1 | FILM (CAT) | | | | | |
| | 14 | 160-6853 | 1 | FILM (DANGER) | | | | | |
| | 15 | 1P-2807 | 2 | FILM (LIFT) | | | | | |
| | 16 | 160-6832 | 1 | FILM (WARNING) | | | | | |
| | 17 | 290-1742 | 1 | FILM (320D) | | | | | |
| E | 18 | 290-1906 | | FILM (STRIPE)…(90cm) | | | | | |
| | 19 | 160-6841 | 1 | FILM (WARNING) | | | | | |
| | 20 | 235-0346 | 1 | TAG (ELC) | | | | | |
| | 21 | 144-9126 | 1 | FILM (INSTRUCTION) | | | | | |
| Z | 22 | | 1 | PLATE (PIN) | | | | | |
| | 23 | 298-4157 | 1 | PLATE (IDENT) | | | | | |

E—ORDER BY THE CENTIMETER

Z—NOT SERVICED

HA1451E 16

## 275-3681 PLATE & FILM GP (1/3)

S/N BWZ (T08.09)-Up, SNS (T08.09)-Up

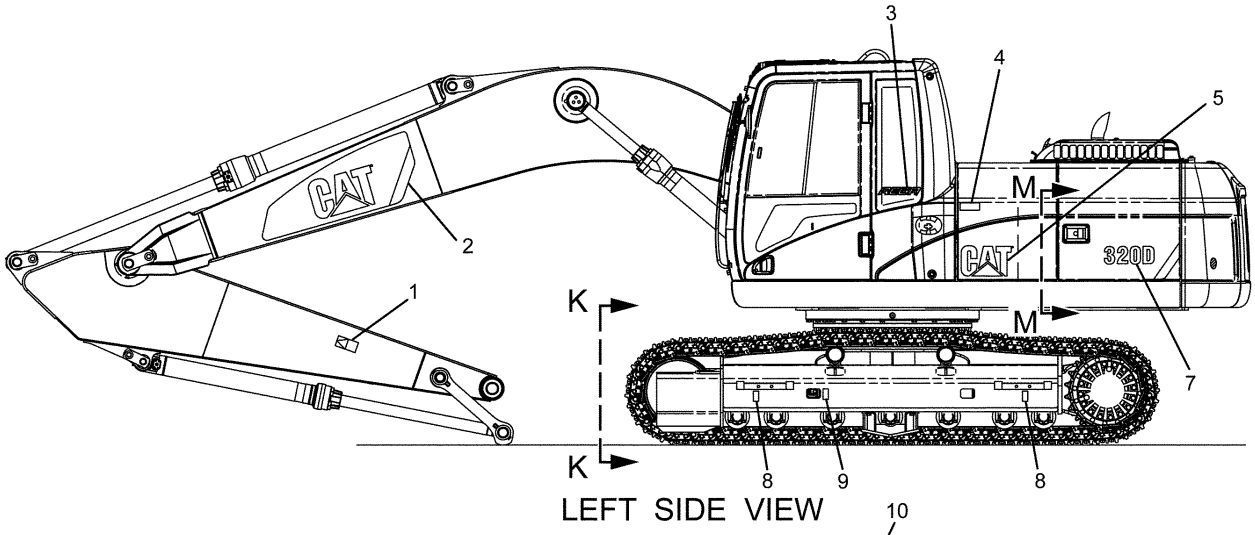


LEFT SIDE VIEW

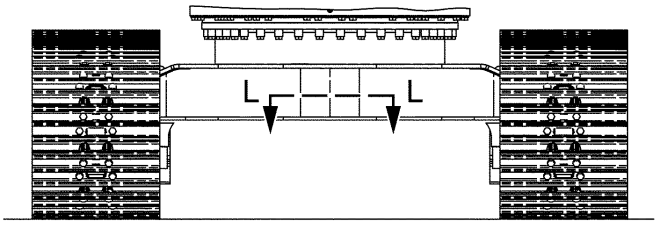


K – K

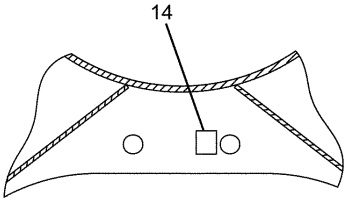


L – L

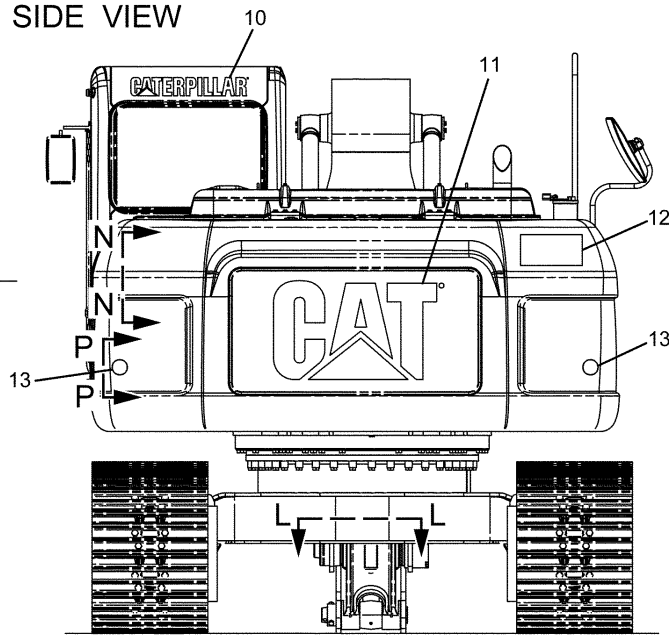


REAR VIEW

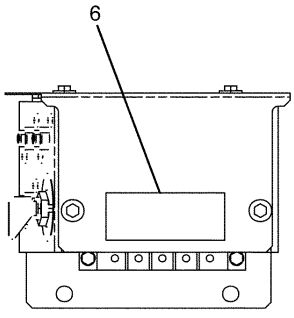


R – R

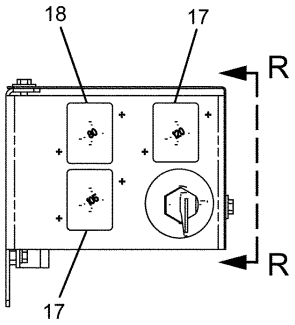


P – P

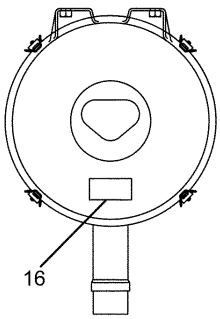


N – N

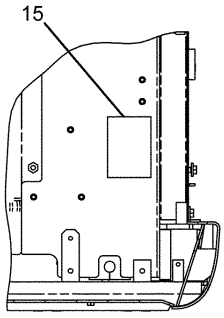


M – M

HA1452E 16

**275-3681 PLATE & FILM GP (2/3)**
S/N BWZ (T08.09)-Up, SNS (T08.09)-Up

# SERVICE EQUIPMENT AND SUPPLIES

| NOTE | No. | PART No. | QTY | PART NAME | NOTE | No. | PART No. | QTY | PART NAME |
|---|---|---|---|---|---|---|---|---|---|
| | 1 | 160-6853 | 1 | FILM (DANGER) | | | | | |
| | 2 | 290-1728 | 1 | FILM (CAT) | | | | | |
| | 3 | 257-4503 | 1 | FILM (REGA) | | | | | |
| | 4 | 253-0861 | 1 | FILM (CAT POWER)) | | | | | |
| | 5 | 290-1729 | 1 | FILM (CAT) | | | | | |
| | 6 | 7I-6508 | 1 | FILM (NOTICE) | | | | | |
| | 7 | 290-1742 | 1 | FILM (320D) | | | | | |
| | 8 | 1P-2807 | 2 | FILM (LIFT) | | | | | |
| | 9 | 160-6832 | 1 | FILM (WARNING) | | | | | |
| | 10 | 257-4502 | 1 | FILM (CAT) | | | | | |
| | 11 | 247-7436 | 1 | FILM (CAT) | | | | | |
| | 12 | 160-6884 | 1 | FILM (DANGER) | | | | | |
| | 13 | 190-5386 | 2 | FILM (SAFETY) | | | | | |
| | 14 | 7X-7644 | 2 | FILM (TIE DOWN) | | | | | |
| | 15 | 3Y-8905 | 1 | FILM (WARNING) | | | | | |
| | 16 | 224-8946 | 1 | FILM (WARNING) | | | | | |
| | 17 | 247-7438 | 2 | FILM (CIRCUIT BREAKER) | | | | | |
| | 18 | 247-7437 | 1 | FILM (CIRCUIT BREAKER) | | | | | |



**275-3681 PLATE & FILM GP (2/3)**
S/N BWZ (T08.09)-Up, SNS (T08.09)-Up

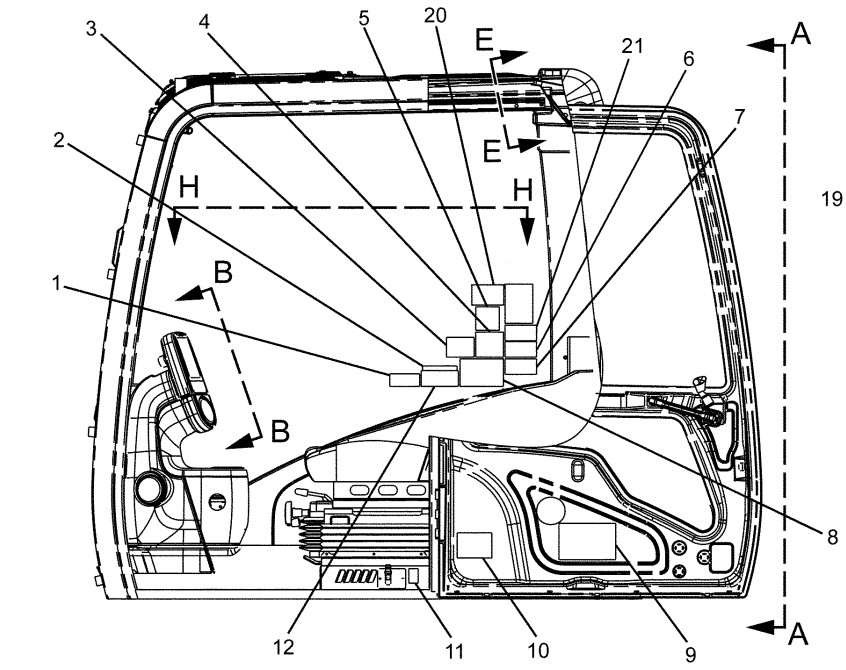


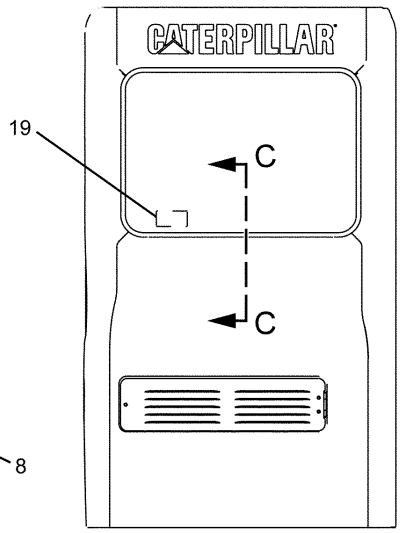


A – A

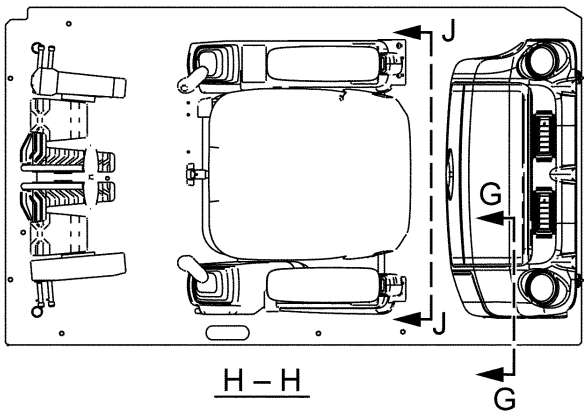


H – H

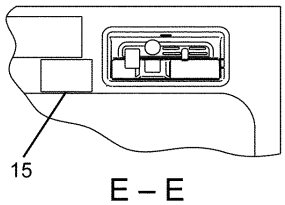


E – E

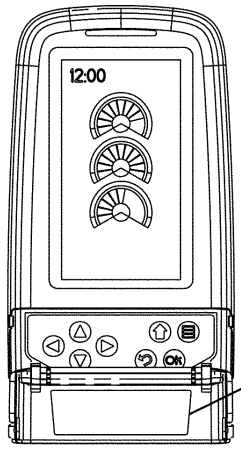


B – B

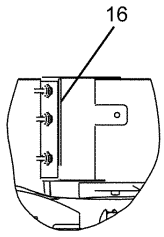


F

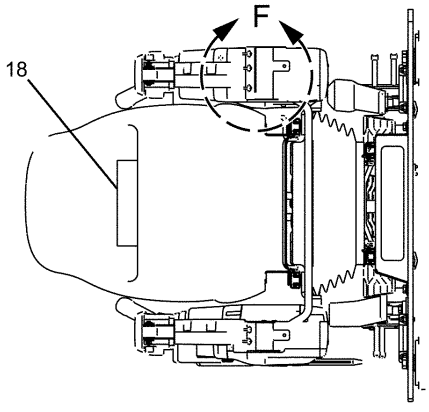


J – J

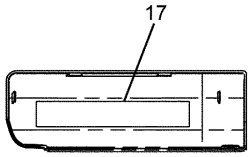


G – G

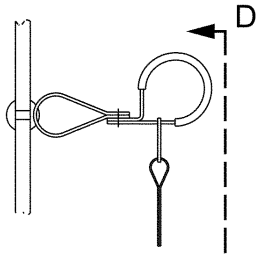


C – C

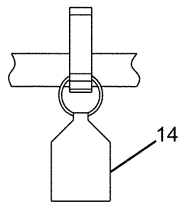


D – D

HA1453E 16

**275-3681 PLATE & FILM GP (3/3)**
S/N BWZ (T08.09)-Up, SNS (T08.09)-Up

# SERVICE EQUIPMENT AND SUPPLIES

| NOTE | No. | PART No. | QTY | PART NAME | NOTE | No. | PART No. | QTY | PART NAME |
|---|---|---|---|---|---|---|---|---|---|
| | 1 | 186-1214 | 1 | FILM (NOTICE) | | | | | |
| | 2 | 71-1533 | 1 | PLATE (INSTRUCTION) | | | | | |
| | 3 | 127-5272 | 1 | FILM (WARNING) | | | | | |
| | 4 | 127-5295 | 1 | FILM (WARNING) | | | | | |
| | 5 | 219-3148 | 1 | FILM (NOTICE) | | | | | |
| | 6 | 266-5431 | 1 | FILM (WARNING) | | | | | |
| | 7 | 221-8045 | 1 | FILM (WARNING) | | | | | |
| | 8 | 244-5747 | 1 | FILM (WARNING) | | | | | |
| | 9 | 209-2864 | 1 | FILM (LUBRICANT CHART) | | | | | |
| | 10 | 314-3744 | 1 | FILM (REGISTRATION) | | | | | |
| | 11 | 214-7915 | 1 | FILM (ENGINE SHUT OFF) | | | | | |
| | 12 | 41-2885 | 1 | CASE | | | | | |
| | 13 | 319-9148 | 1 | FILM (INSTRUCTION) | | | | | |
| | 14 | 8T-6842 | 1 | FILM (ALTERNATE EXIT) | | | | | |
| | 15 | 186-1149 | 1 | FILM (WARNING) | | | | | |
| | 16 | 245-5457 | 1 | FILM (INSTRUCTION) | | | | | |
| | 17 | 298-4142 | 1 | FILM (FUSE PANEL) | | | | | |
| | 18 | 257-4506 | 1 | CASE | | | | | |
| | 19 | 187-0661 | 1 | FILM (ALTERNATE EXIT) | | | | | |
| | 20 | 283-8827 | 1 | FILM (WARNING) | | | | | |
| | 21 | 310-6252 | 1 | FILM (BACK-UP CONTROL) | | | | | |



**275-3681 PLATE & FILM GP (3/3)**
S/N BWZ (T08.09)-Up, SNS (T08.09)-Up

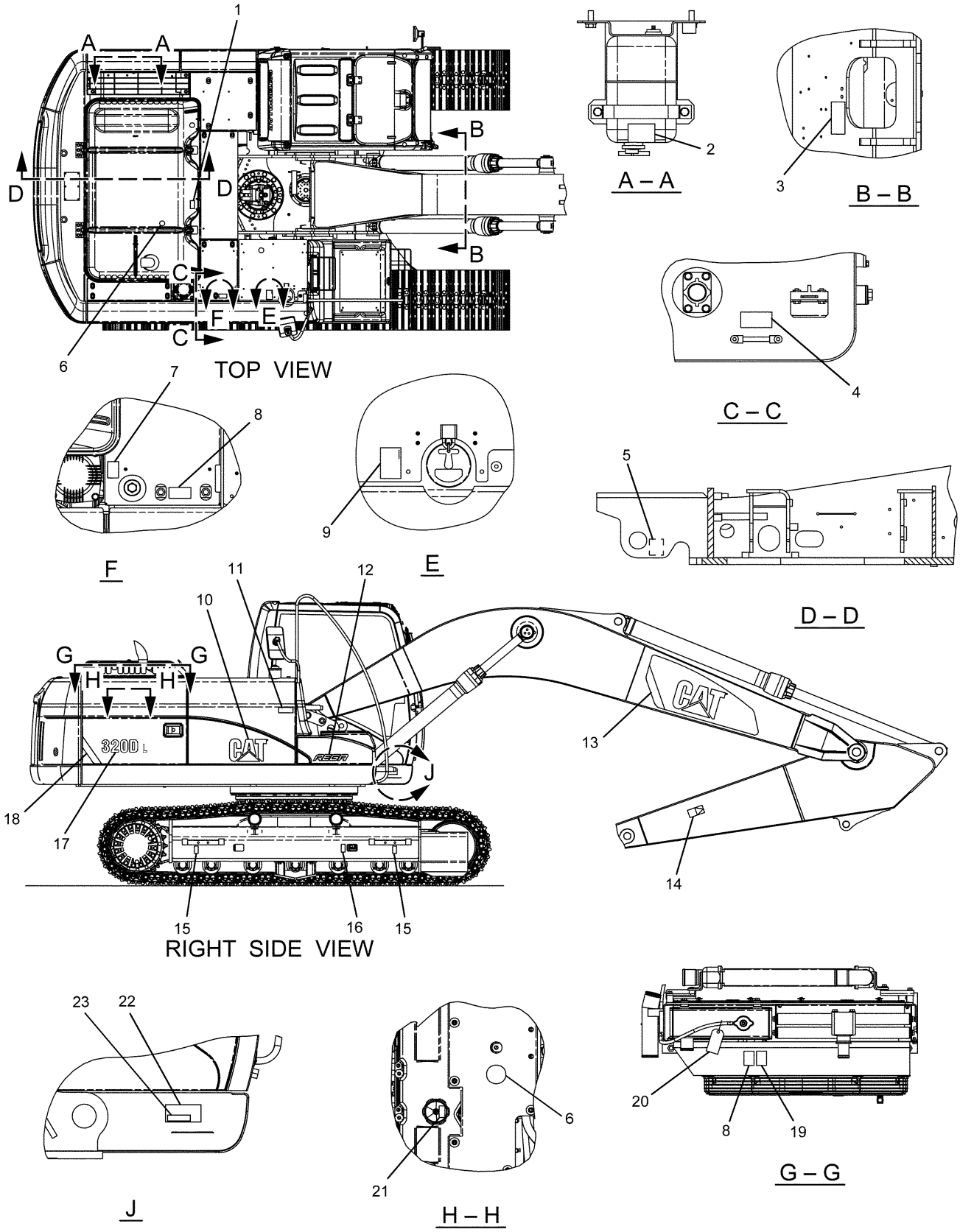


HA1448E 15

**275-3682 PLATE & FILM GP (1/3)**
S/N DFB 1-(T08.08), WJN 1-(T08.08)

# SERVICE EQUIPMENT AND SUPPLIES

| NOTE | No. | PART No. | QTY | PART NAME | NOTE | No. | PART No. | QTY | PART NAME |
|---|---|---|---|---|---|---|---|---|---|
| | 1 | 228-7316 | 2 | FILM (WARNING) | | | | | |
| | 2 | 134-7258 | 1 | FILM (ELC) | | | | | |
| | 3 | 264-8502 | 1 | FILM (NOTICE) | | | | | |
| | 4 | 242-1510 | 1 | FILM (INSTRUCTION) | | | | | |
| | 5 | 7X-7644 | 2 | FILM (TIE DOWN) | | | | | |
| | 6 | 167-7270 | 2 | FILM (NO STEP) | | | | | |
| | 7 | 186-1131 | 1 | FILM | | | | | |
| | 8 | 160-6822 | 2 | FILM (WARNING) | | | | | |
| | 9 | 291-9334 | 1 | FILM (DIESEL FUEL) | | | | | |
| | 10 | 290-1729 | 1 | FILM (CAT) | | | | | |
| | 11 | 253-0861 | 1 | FILM (CAT POWER)) | | | | | |
| | 12 | 186-1147 | 1 | FILM (REGA) | | | | | |
| | 13 | 290-1727 | 1 | FILM (CAT) | | | | | |
| | 14 | 160-6853 | 1 | FILM (DANGER) | | | | | |
| | 15 | 1P-2807 | 2 | FILM (LIFT) | | | | | |
| | 16 | 160-6832 | 1 | FILM (WARNING) | | | | | |
| | 17 | 290-1743 | 1 | FILM (320DL) | | | | | |
| E | 18 | 290-1906 | | FILM (STRIPE)…(90cm) | | | | | |
| | 19 | 160-6841 | 1 | FILM (WARNING) | | | | | |
| | 20 | 235-0346 | 1 | TAG (ELC) | | | | | |
| | 21 | 144-9126 | 1 | FILM (INSTRUCTION) | | | | | |
| Z | 22 | | 1 | PLATE (PIN) | | | | | |
| | 23 | 298-4158 | 1 | PLATE (IDENT) | | | | | |

E—ORDER BY THE CENTIMETER

Z—NOT SERVICED

HA1448E 15

## 275-3682 PLATE & FILM GP (1/3)

S/N DFB 1-(T08.08), WJN 1-(T08.08)

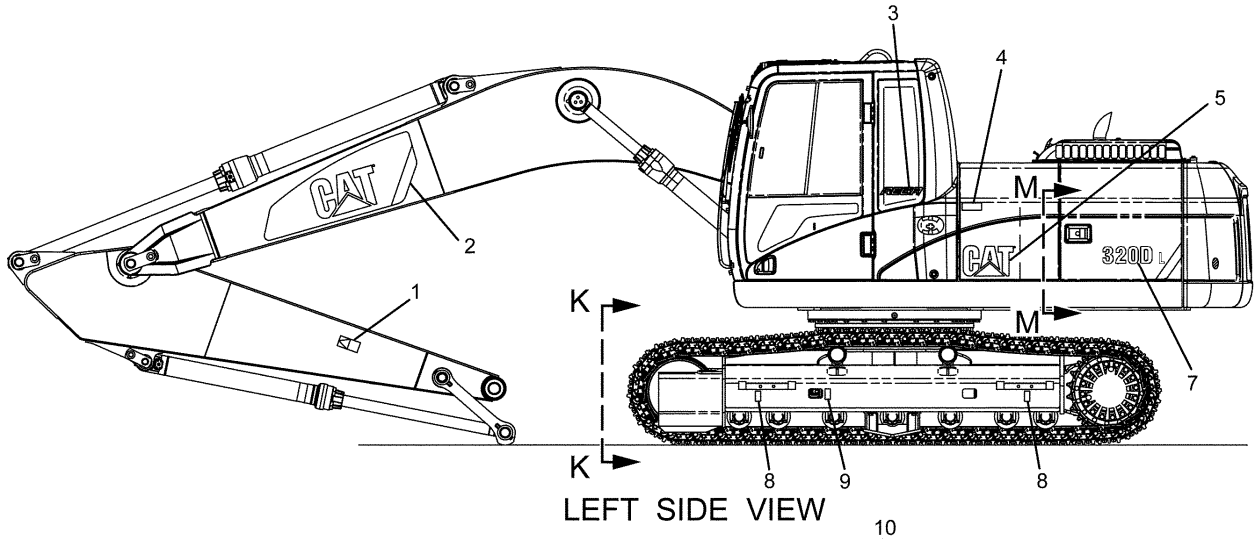


LEFT SIDE VIEW

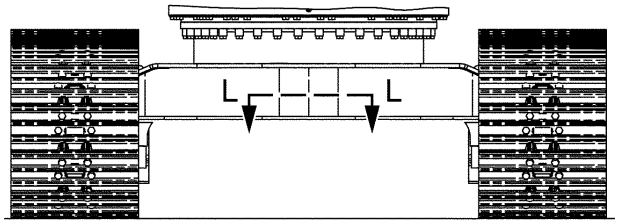


K – K

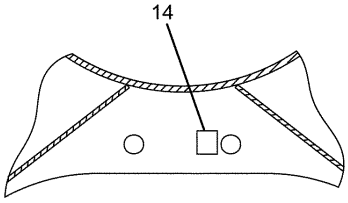


L – L

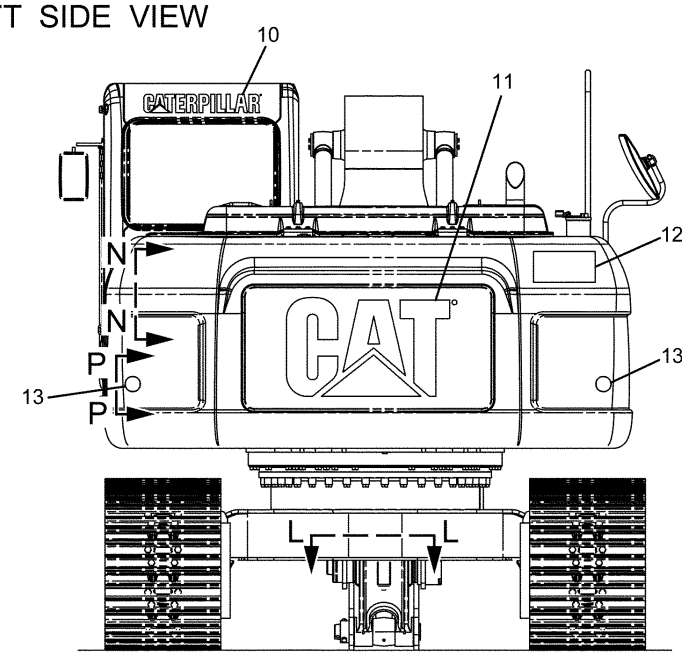


REAR VIEW

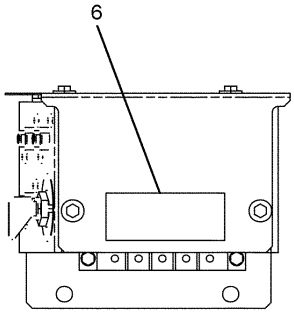


R – R

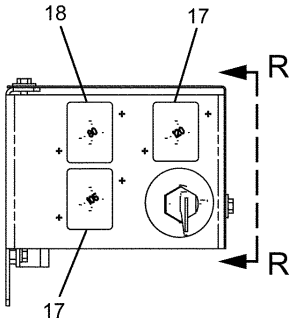


P – P

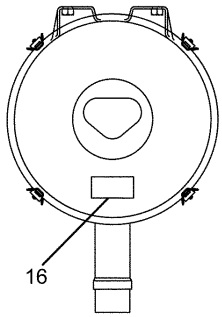


N – N

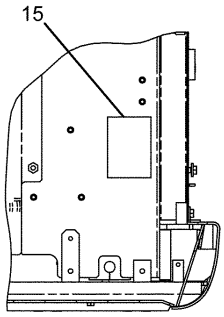


M – M

HA1449E 15

**275-3682 PLATE & FILM GP (2/3)**
S/N DFB 1-(T08.08), WJN 1-(T08.08)

# SERVICE EQUIPMENT AND SUPPLIES

| NOTE | No. | PART No. | QTY | PART NAME | NOTE | No. | PART No. | QTY | PART NAME |
|---|---|---|---|---|---|---|---|---|---|
| | 1 | 160-6853 | 1 | FILM (DANGER) | | | | | |
| | 2 | 290-1728 | 1 | FILM (CAT) | | | | | |
| | 3 | 257-4503 | 1 | FILM (REGA) | | | | | |
| | 4 | 253-0861 | 1 | FILM (CAT POWER)) | | | | | |
| | 5 | 290-1729 | 1 | FILM (CAT) | | | | | |
| | 6 | 7I-6508 | 1 | FILM (NOTICE) | | | | | |
| | 7 | 290-1743 | 1 | FILM (320DL) | | | | | |
| | 8 | 1P-2807 | 2 | FILM (LIFT) | | | | | |
| | 9 | 160-6832 | 1 | FILM (WARNING) | | | | | |
| | 10 | 257-4502 | 1 | FILM (CAT) | | | | | |
| | 11 | 247-7436 | 1 | FILM (CAT) | | | | | |
| | 12 | 160-6884 | 1 | FILM (DANGER) | | | | | |
| | 13 | 190-5386 | 2 | FILM (SAFETY) | | | | | |
| | 14 | 7X-7644 | 2 | FILM (TIE DOWN) | | | | | |
| | 15 | 3Y-8905 | 1 | FILM (WARNING) | | | | | |
| | 16 | 224-8946 | 1 | FILM (WARNING) | | | | | |
| | 17 | 247-7438 | 2 | FILM (CIRCUIT BREAKER) | | | | | |
| | 18 | 247-7437 | 1 | FILM (CIRCUIT BREAKER) | | | | | |



**275-3682 PLATE & FILM GP (2/3)**
S/N DFB 1-(T08.08), WJN 1-(T08.08)

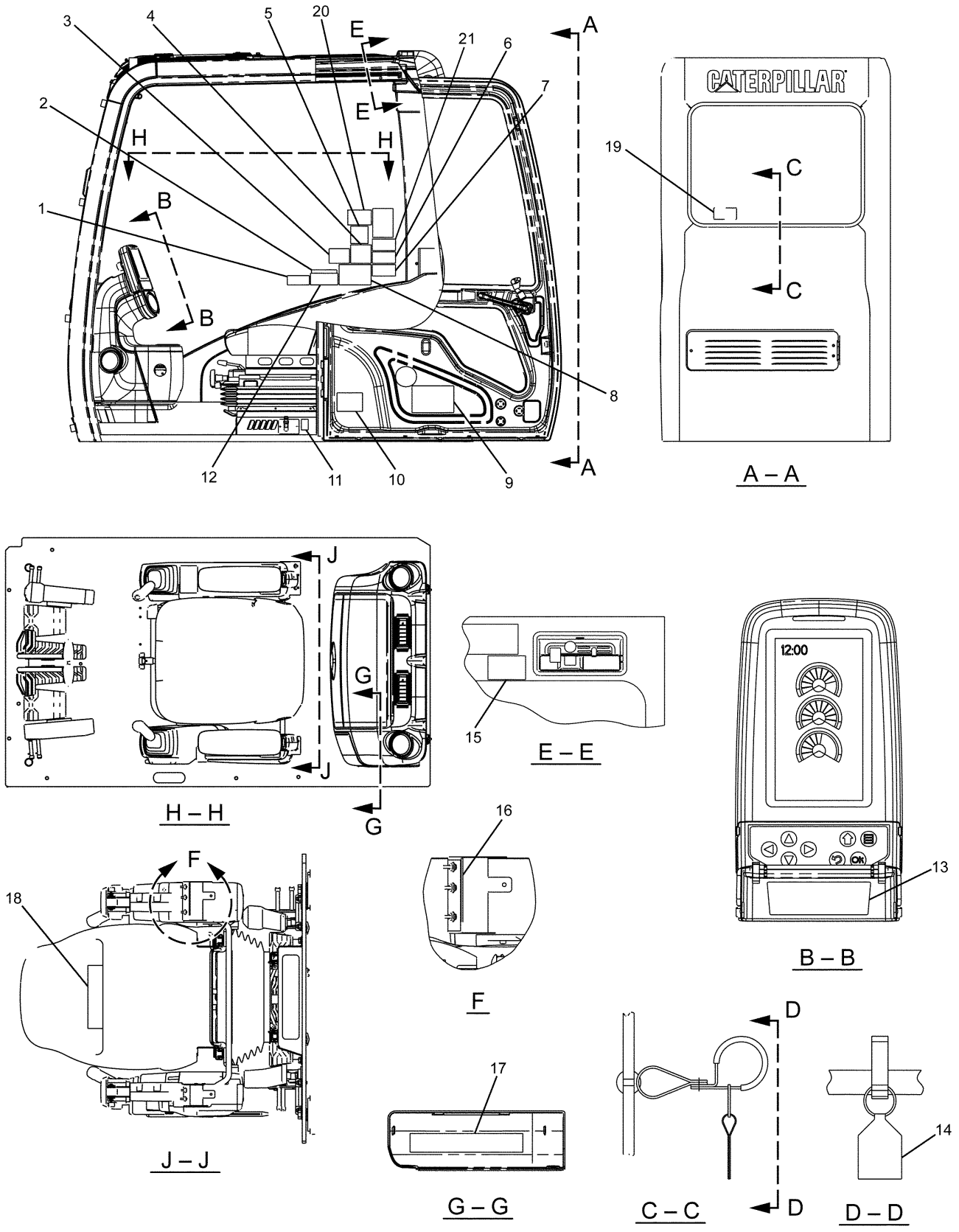


HA1450E 15

**275-3682 PLATE & FILM GP (3/3)**
S/N DFB 1-(T08.08), WJN 1-(T08.08)

# SERVICE EQUIPMENT AND SUPPLIES

| NOTE | No. | PART No. | QTY | PART NAME | NOTE | No. | PART No. | QTY | PART NAME |
|---|---|---|---|---|---|---|---|---|---|
| | 1 | 186-1214 | 1 | FILM (NOTICE) | | | | | |
| | 2 | 71-1533 | 1 | PLATE (INSTRUCTION) | | | | | |
| | 3 | 127-5272 | 1 | FILM (WARNING) | | | | | |
| | 4 | 127-5295 | 1 | FILM (WARNING) | | | | | |
| | 5 | 219-3148 | 1 | FILM (NOTICE) | | | | | |
| | 6 | 266-5431 | 1 | FILM (WARNING) | | | | | |
| | 7 | 221-8045 | 1 | FILM (WARNING) | | | | | |
| | 8 | 244-5747 | 1 | FILM (WARNING) | | | | | |
| | 9 | 209-2864 | 1 | FILM (LUBRICANT CHART) | | | | | |
| | 10 | 314-3789 | 1 | FILM (REGISTRATION) | | | | | |
| | 11 | 214-7915 | 1 | FILM (ENGINE SHUT OFF) | | | | | |
| | 12 | 41-2885 | 1 | CASE | | | | | |
| | 13 | 319-9148 | 1 | FILM (INSTRUCTION) | | | | | |
| | 14 | 8T-6842 | 1 | FILM (ALTERNATE EXIT) | | | | | |
| | 15 | 186-1149 | 1 | FILM (WARNING) | | | | | |
| | 16 | 245-5457 | 1 | FILM (INSTRUCTION) | | | | | |
| | 17 | 298-4142 | 1 | FILM (FUSE PANEL) | | | | | |
| | 18 | 257-4506 | 1 | CASE | | | | | |
| | 19 | 187-0661 | 1 | FILM (ALTERNATE EXIT) | | | | | |
| | 20 | 283-8827 | 1 | FILM (WARNING) | | | | | |
| | 21 | 310-6252 | 1 | FILM (BACK-UP CONTROL) | | | | | |



**275-3682 PLATE & FILM GP (3/3)**
S/N DFB 1-(T08.08), WJN 1-(T08.08)

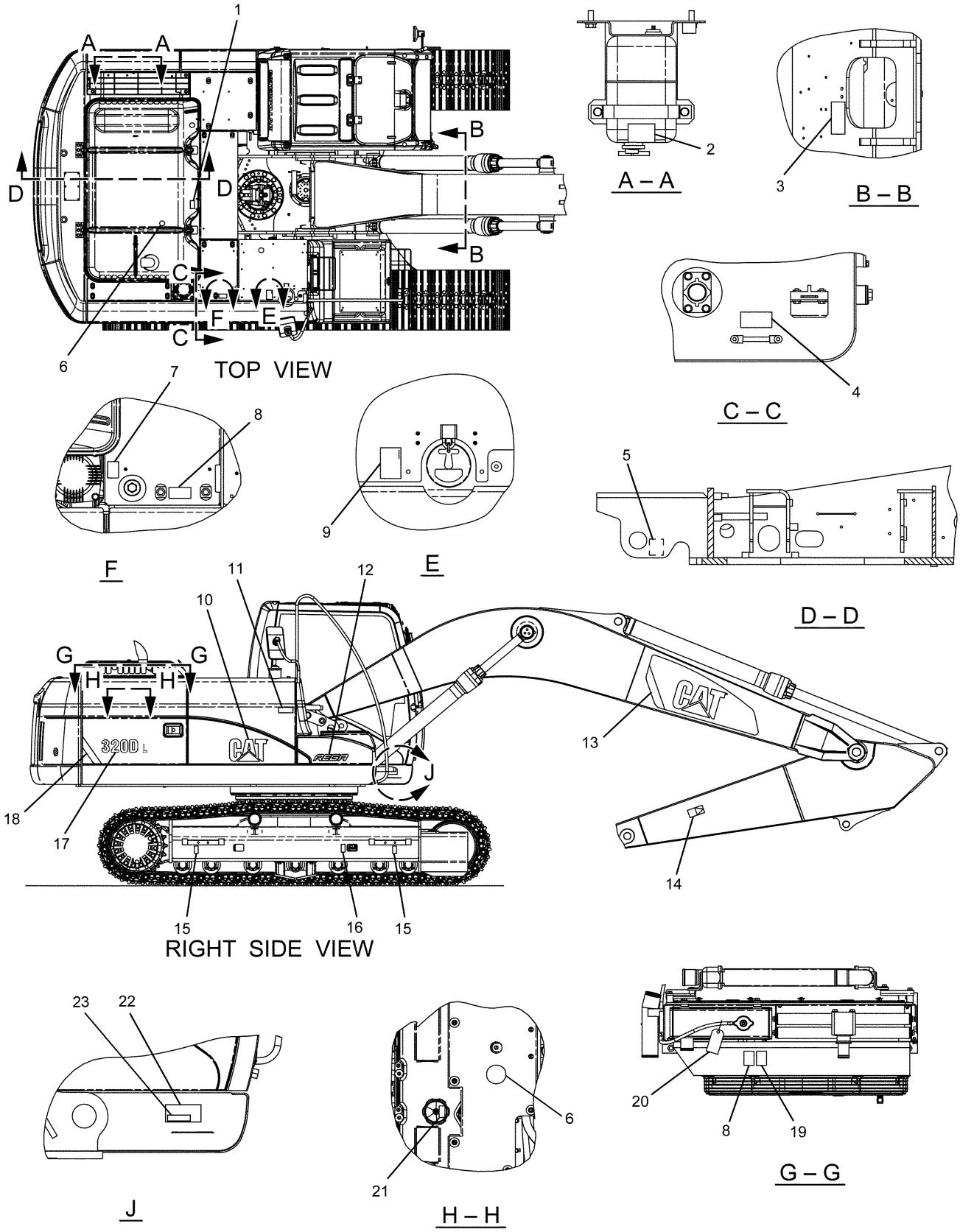


HA1454E 16

**275-3682 PLATE & FILM GP (1/3)**
S/N DFB (T08.09)-Up, WJN (T08.09)-Up

# SERVICE EQUIPMENT AND SUPPLIES

| NOTE | No. | PART No. | QTY | PART NAME | NOTE | No. | PART No. | QTY | PART NAME |
|---|---|---|---|---|---|---|---|---|---|
| | 1 | 228-7316 | 2 | FILM (WARNING) | | | | | |
| | 2 | 134-7258 | 1 | FILM (ELC) | | | | | |
| | 3 | 264-8502 | 1 | FILM (NOTICE) | | | | | |
| | 4 | 242-1510 | 1 | FILM (INSTRUCTION) | | | | | |
| | 5 | 7X-7644 | 2 | FILM (TIE DOWN) | | | | | |
| | 6 | 167-7270 | 2 | FILM (NO STEP) | | | | | |
| | 7 | 186-1131 | 1 | FILM | | | | | |
| | 8 | 160-6822 | 2 | FILM (WARNING) | | | | | |
| | 9 | 291-9334 | 1 | FILM (DIESEL FUEL) | | | | | |
| | 10 | 290-1729 | 1 | FILM (CAT) | | | | | |
| | 11 | 253-0861 | 1 | FILM (CAT POWER)) | | | | | |
| | 12 | 186-1147 | 1 | FILM (REGA) | | | | | |
| | 13 | 290-1727 | 1 | FILM (CAT) | | | | | |
| | 14 | 160-6853 | 1 | FILM (DANGER) | | | | | |
| | 15 | 1P-2807 | 2 | FILM (LIFT) | | | | | |
| | 16 | 160-6832 | 1 | FILM (WARNING) | | | | | |
| | 17 | 290-1743 | 1 | FILM (320DL) | | | | | |
| E | 18 | 290-1906 | | FILM (STRIPE)…(90cm) | | | | | |
| | 19 | 160-6841 | 1 | FILM (WARNING) | | | | | |
| | 20 | 235-0346 | 1 | TAG (ELC) | | | | | |
| | 21 | 144-9126 | 1 | FILM (INSTRUCTION) | | | | | |
| Z | 22 | | 1 | PLATE (PIN) | | | | | |
| | 23 | 298-4158 | 1 | PLATE (IDENT) | | | | | |

E—ORDER BY THE CENTIMETER

Z—NOT SERVICED

HA1454E 16

## 275-3682 PLATE & FILM GP (1/3)

S/N DFB (T08.09)-Up, WJN (T08.09)-Up

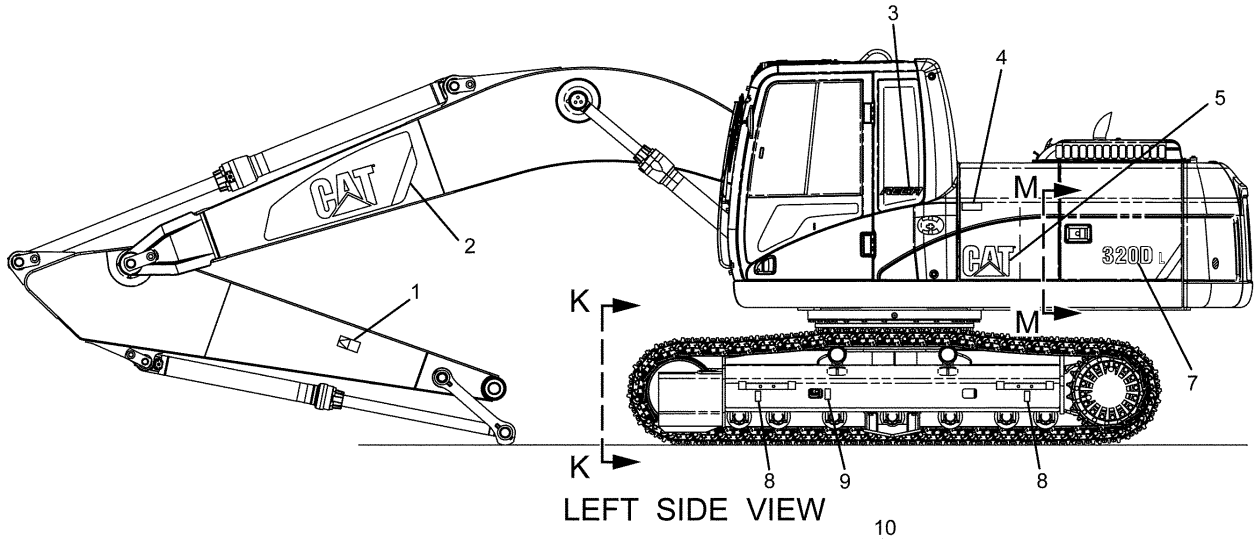


LEFT SIDE VIEW

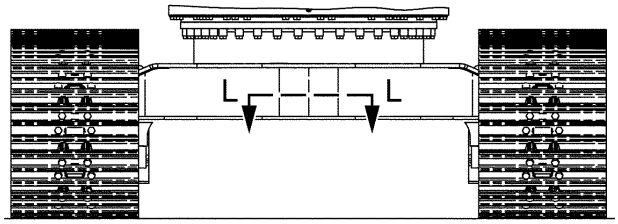


K – K

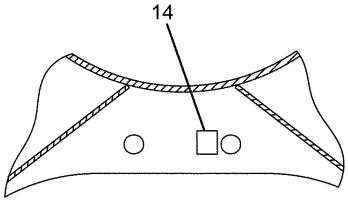


L – L

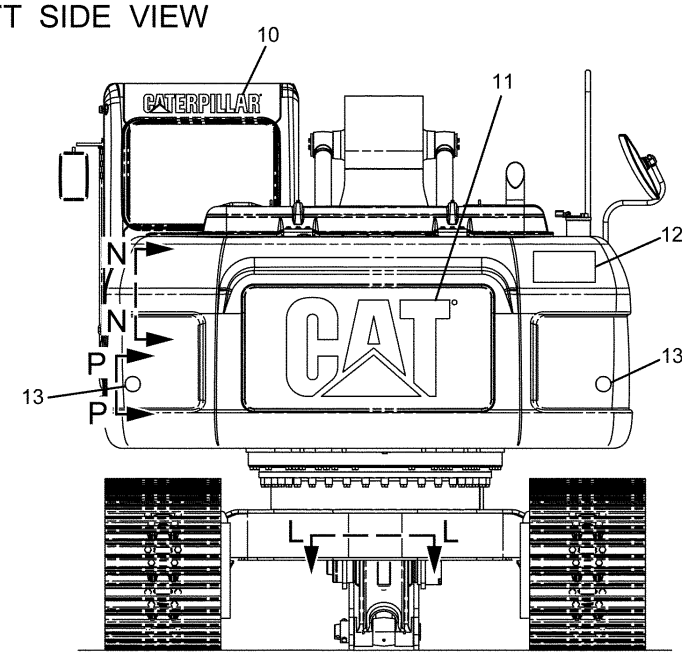


REAR VIEW

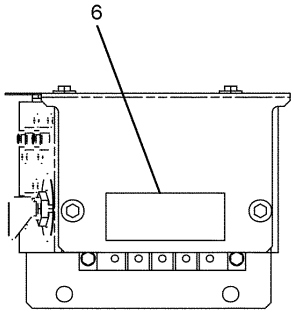


R – R

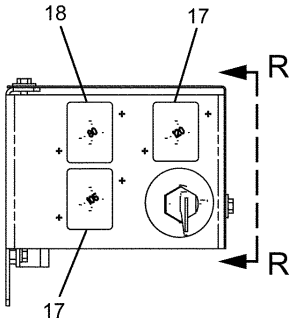


P – P

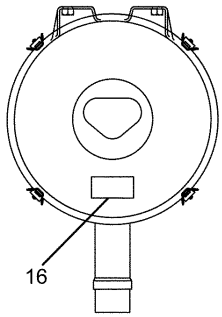


N – N

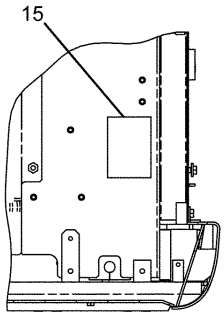


M – M

HA1455E 16

**275-3682 PLATE & FILM GP (2/3)**
S/N DFB (T08.09)-Up, WJN (T08.09)-Up

# SERVICE EQUIPMENT AND SUPPLIES

| NOTE | No. | PART No. | QTY | PART NAME | NOTE | No. | PART No. | QTY | PART NAME |
|---|---|---|---|---|---|---|---|---|---|
| | 1 | 160-6853 | 1 | FILM (DANGER) | | | | | |
| | 2 | 290-1728 | 1 | FILM (CAT) | | | | | |
| | 3 | 257-4503 | 1 | FILM (REGA) | | | | | |
| | 4 | 253-0861 | 1 | FILM (CAT POWER)) | | | | | |
| | 5 | 290-1729 | 1 | FILM (CAT) | | | | | |
| | 6 | 7I-6508 | 1 | FILM (NOTICE) | | | | | |
| | 7 | 290-1743 | 1 | FILM (320DL) | | | | | |
| | 8 | 1P-2807 | 2 | FILM (LIFT) | | | | | |
| | 9 | 160-6832 | 1 | FILM (WARNING) | | | | | |
| | 10 | 257-4502 | 1 | FILM (CAT) | | | | | |
| | 11 | 247-7436 | 1 | FILM (CAT) | | | | | |
| | 12 | 160-6884 | 1 | FILM (DANGER) | | | | | |
| | 13 | 190-5386 | 2 | FILM (SAFETY) | | | | | |
| | 14 | 7X-7644 | 2 | FILM (TIE DOWN) | | | | | |
| | 15 | 3Y-8905 | 1 | FILM (WARNING) | | | | | |
| | 16 | 224-8946 | 1 | FILM (WARNING) | | | | | |
| | 17 | 247-7438 | 2 | FILM (CIRCUIT BREAKER) | | | | | |
| | 18 | 247-7437 | 1 | FILM (CIRCUIT BREAKER) | | | | | |



**275-3682 PLATE & FILM GP (2/3)**
S/N DFB (T08.09)-Up, WJN (T08.09)-Up

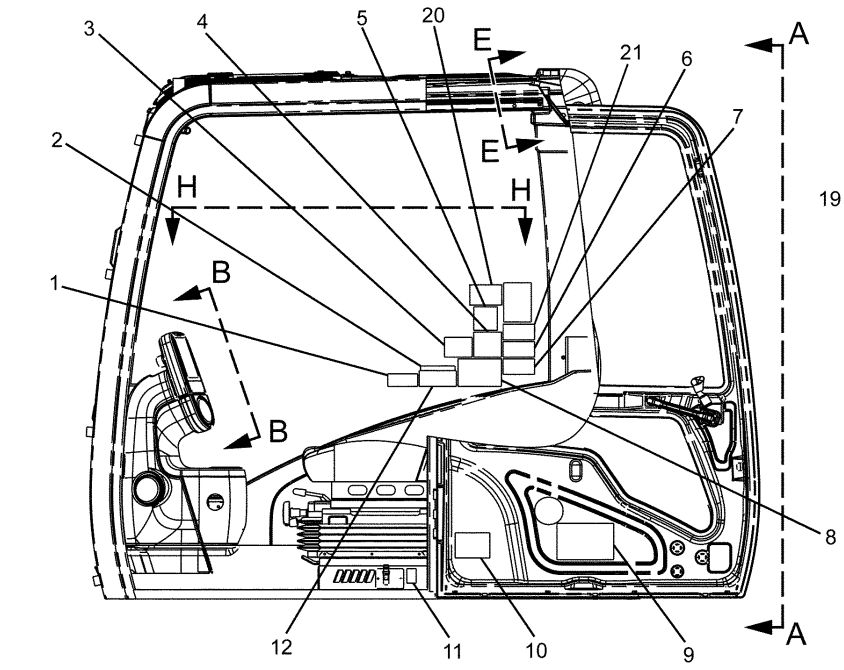


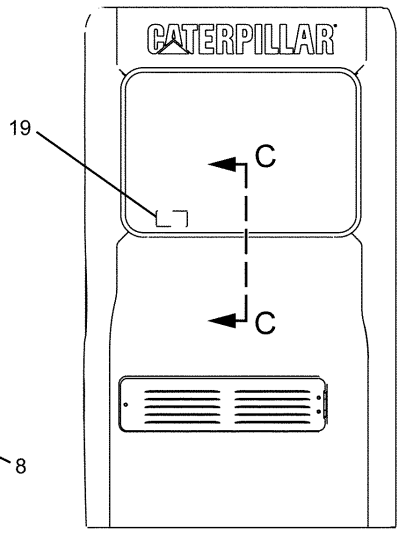


A – A

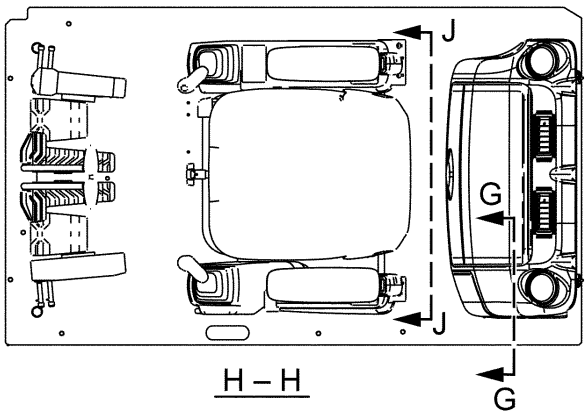


H – H

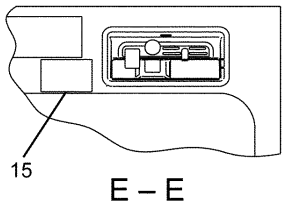


E – E

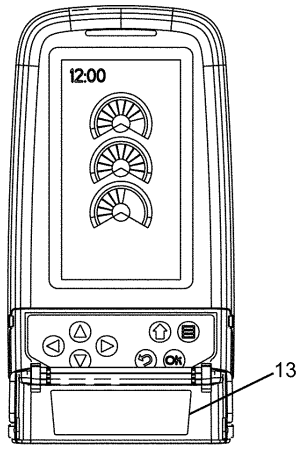


B – B

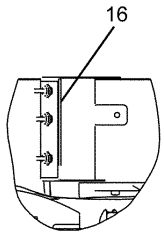


F

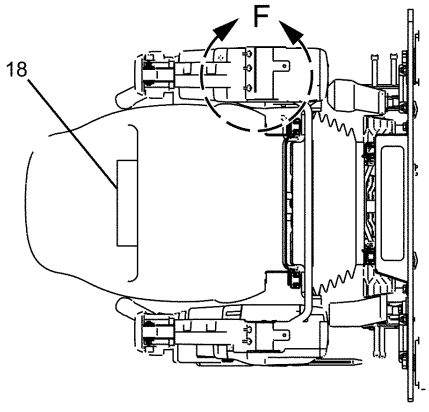


J – J

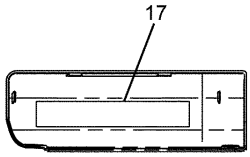


G – G

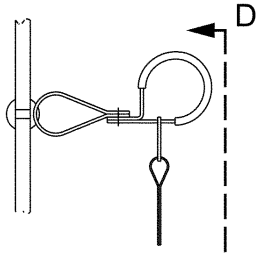


C – C

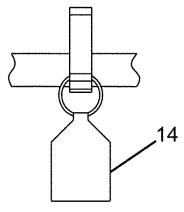


D – D

HA1456E 16

**275-3682 PLATE & FILM GP (3/3)**
S/N DFB (T08.09)-Up, WJN (T08.09)-Up

# SERVICE EQUIPMENT AND SUPPLIES

| NOTE | No. | PART No. | QTY | PART NAME | NOTE | No. | PART No. | QTY | PART NAME |
|---|---|---|---|---|---|---|---|---|---|
| | 1 | 186-1214 | 1 | FILM (NOTICE) | | | | | |
| | 2 | 71-1533 | 1 | PLATE (INSTRUCTION) | | | | | |
| | 3 | 127-5272 | 1 | FILM (WARNING) | | | | | |
| | 4 | 127-5295 | 1 | FILM (WARNING) | | | | | |
| | 5 | 219-3148 | 1 | FILM (NOTICE) | | | | | |
| | 6 | 266-5431 | 1 | FILM (WARNING) | | | | | |
| | 7 | 221-8045 | 1 | FILM (WARNING) | | | | | |
| | 8 | 244-5747 | 1 | FILM (WARNING) | | | | | |
| | 9 | 209-2864 | 1 | FILM (LUBRICANT CHART) | | | | | |
| | 10 | 314-3746 | 1 | FILM (REGISTRATION) | | | | | |
| | 11 | 214-7915 | 1 | FILM (ENGINE SHUT OFF) | | | | | |
| | 12 | 41-2885 | 1 | CASE | | | | | |
| | 13 | 319-9148 | 1 | FILM (INSTRUCTION) | | | | | |
| | 14 | 8T-6842 | 1 | FILM (ALTERNATE EXIT) | | | | | |
| | 15 | 186-1149 | 1 | FILM (WARNING) | | | | | |
| | 16 | 245-5457 | 1 | FILM (INSTRUCTION) | | | | | |
| | 17 | 298-4142 | 1 | FILM (FUSE PANEL) | | | | | |
| | 18 | 257-4506 | 1 | CASE | | | | | |
| | 19 | 187-0661 | 1 | FILM (ALTERNATE EXIT) | | | | | |
| | 20 | 283-8827 | 1 | FILM (WARNING) | | | | | |
| | 21 | 310-6252 | 1 | FILM (BACK-UP CONTROL) | | | | | |



**275-3682 PLATE & FILM GP (3/3)**
S/N DFB (T08.09)-Up, WJN (T08.09)-Up

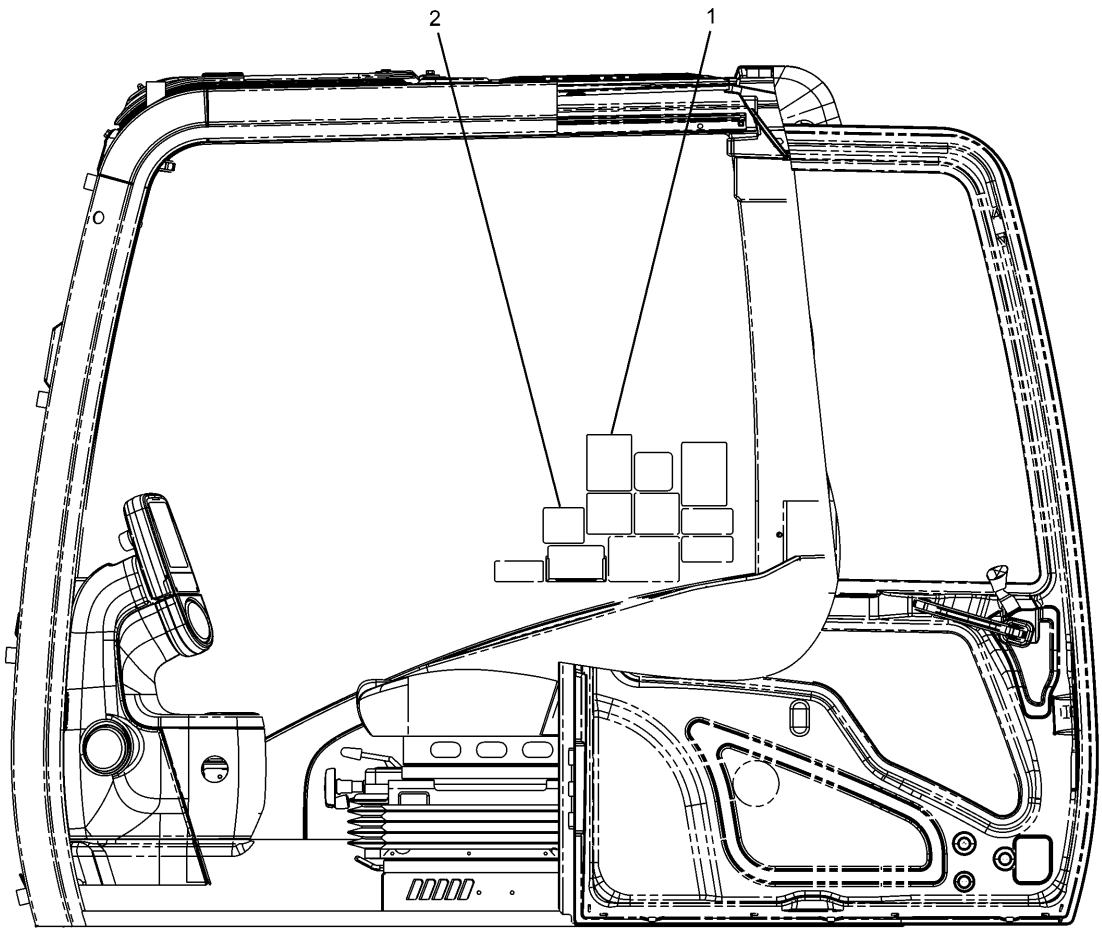


| NOTE | No. | PART No. | QTY | PART NAME | NOTE | No. | PART No. | QTY | PART NAME |
|---|---|---|---|---|---|---|---|---|---|
| | 1 | 118-6054 | 1 | FILM (NOTICE) | | | | | |
| | 2 | 260-6945 | 1 | FILM (CONTROLS) | | | | | |

H89264E 00

## 247-7420 FILM GP

Part of 259-7492,259-7494-Page443,259-7495-Page445
An Attachment

# SERVICE EQUIPMENT AND SUPPLIES

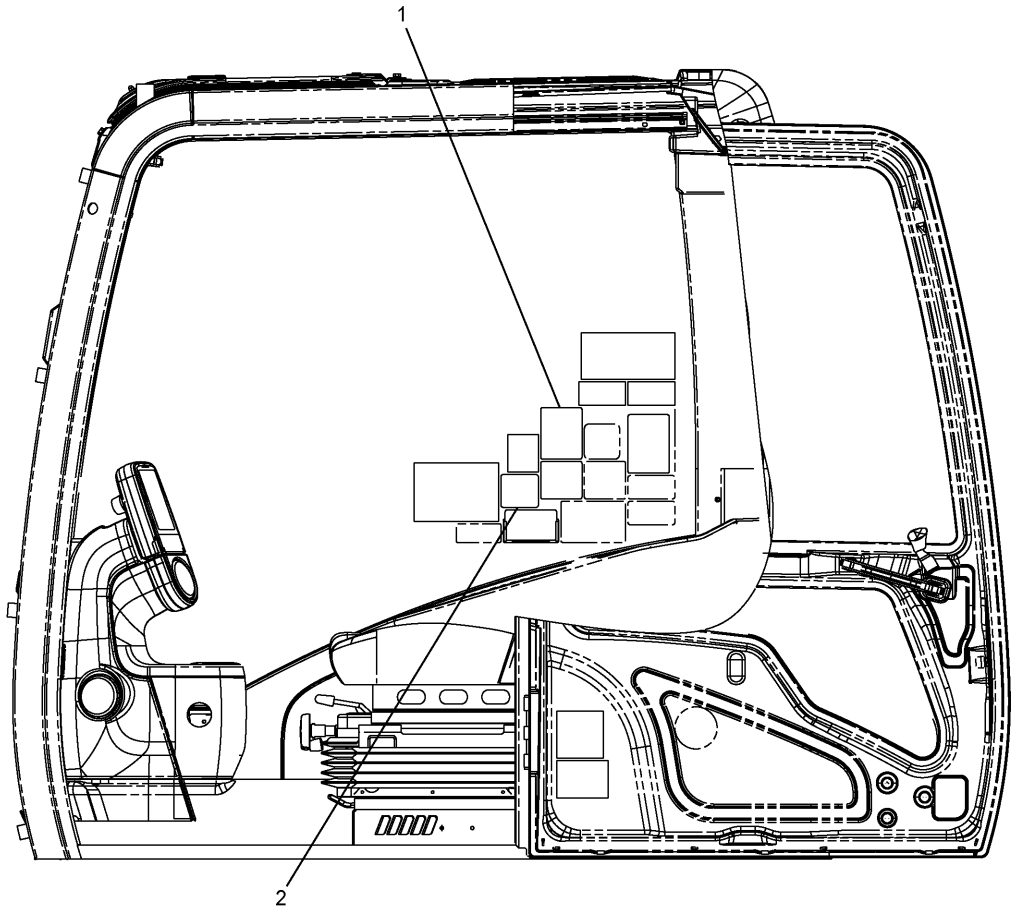


| NOTE | No. | PART No. | QTY | PART NAME | NOTE | No. | PART No. | QTY | PART NAME |
|---|---|---|---|---|---|---|---|---|---|
| | 1 | 118-6054 | 1 | FILM (NOTICE) | | | | | |
| | 2 | 260-6946 | 1 | FILM (CONTROLS) | | | | | |

H99559E 00

**247-7416 FILM GP**
Combined Function/2 Pumps
Part of 259-7493-Page444
An Attachment

# SERVICE EQUIPMENT AND SUPPLIES

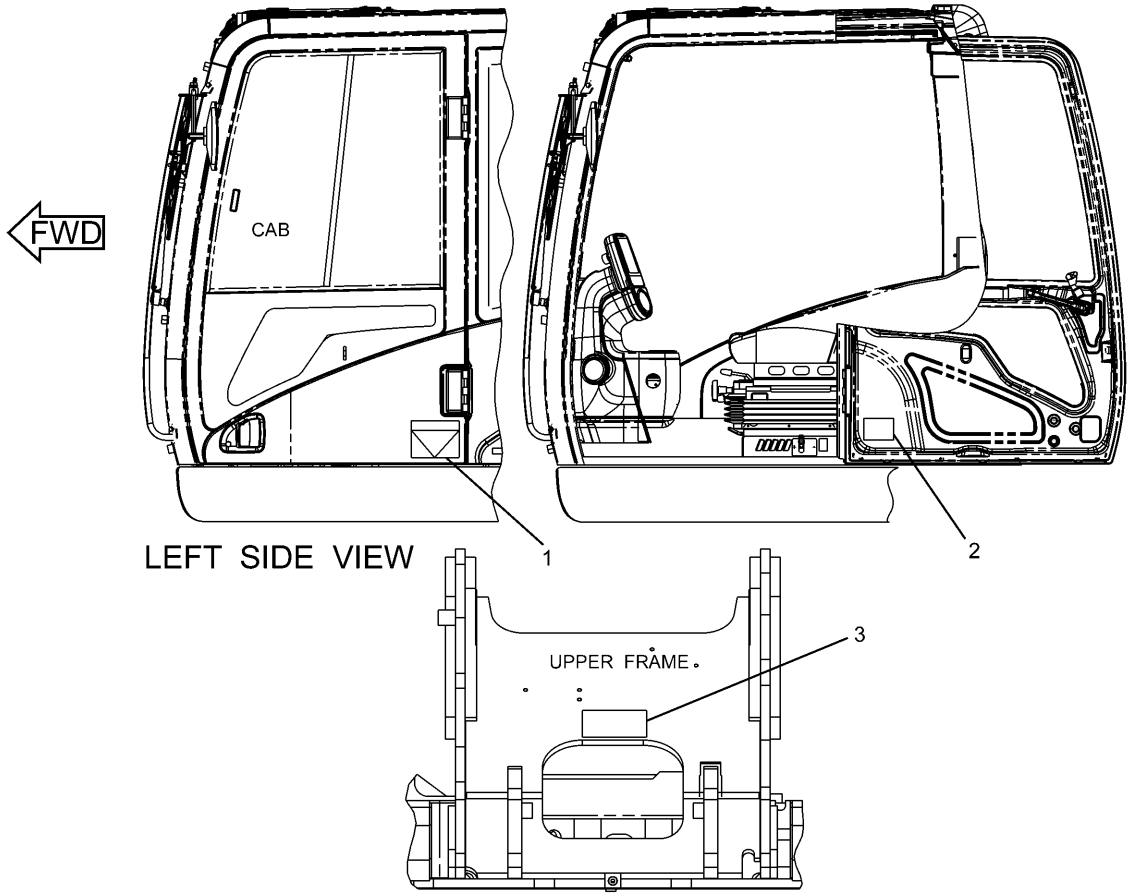


LEFT SIDE VIEW

FRONT VIEW

| NOTE | No. | PART No. | QTY | PART NAME | NOTE | No. | PART No. | QTY | PART NAME |
|---|---|---|---|---|---|---|---|---|---|
| | 1 | 127-5278 | 1 | FILM (HAMMER) | | | | | |
| | 2 | 314-3788 | 1 | FILM | | | | | |
| | 3 | 264-8744 | 1 | FILM (NOTICE) | | | | | |

HA1468E 02

**240-3896 FILM GP**
S/N BWZ 1-(T08.08), SNS 1-(T08.08)
An Attachment

# SERVICE EQUIPMENT AND SUPPLIES

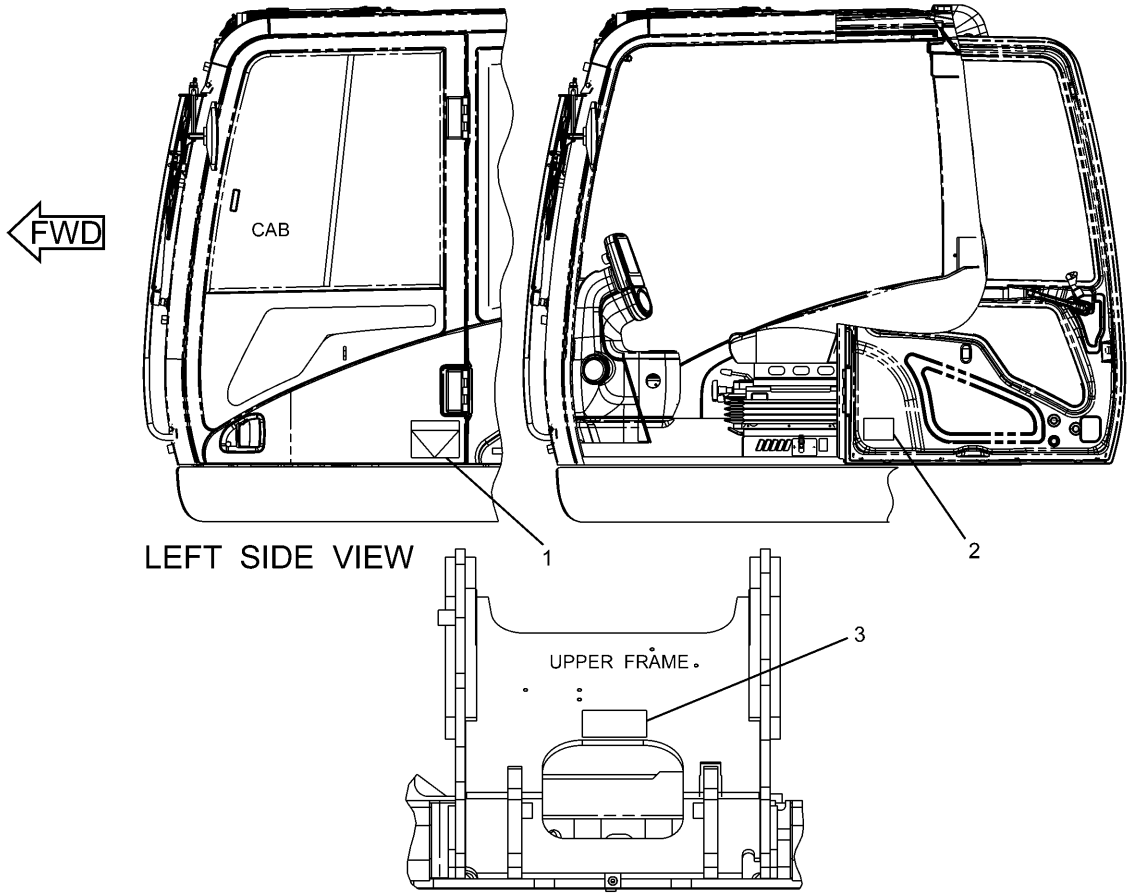


LEFT SIDE VIEW

FRONT VIEW

| NOTE | No. | PART No. | QTY | PART NAME | NOTE | No. | PART No. | QTY | PART NAME |
|---|---|---|---|---|---|---|---|---|---|
| | 1 | 127-5278 | 1 | FILM (HAMMER) | | | | | |
| | 2 | 314-3745 | 1 | FILM | | | | | |
| | 3 | 264-8744 | 1 | FILM (NOTICE) | | | | | |

HA1469E 03

**240-3896 FILM GP**
S/N BWZ (T08.09)-Up, SNS (T08.09)-Up
An Attachment

# MEMORANDA

# SERVICE EQUIPMENT AND SUPPLIES

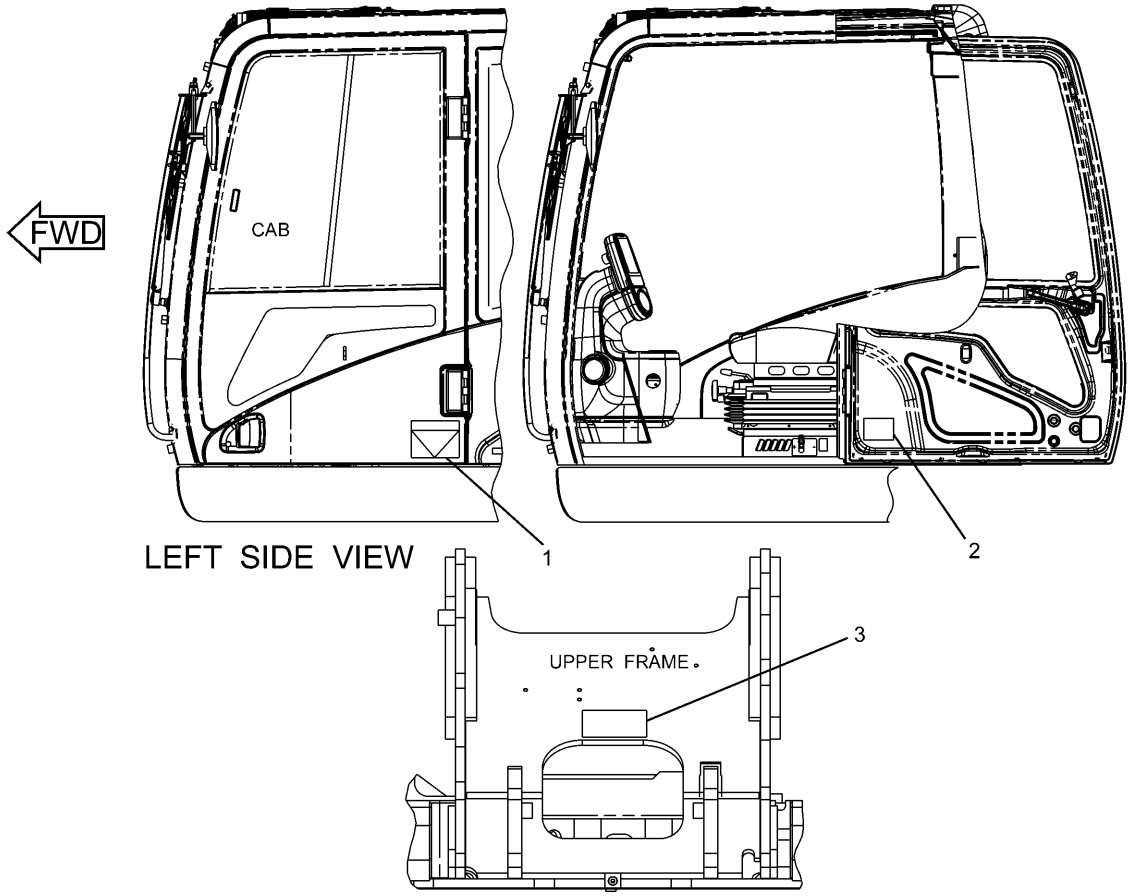


LEFT SIDE VIEW

FRONT VIEW

| NOTE | No. | PART No. | QTY | PART NAME | NOTE | No. | PART No. | QTY | PART NAME |
|---|---|---|---|---|---|---|---|---|---|
| | 1 | 127-5278 | 1 | FILM (HAMMER) | | | | | |
| | 2 | 314-3790 | 1 | FILM | | | | | |
| | 3 | 264-8744 | 1 | FILM (NOTICE) | | | | | |

HA1470E 02

**240-3897 FILM GP**
S/N DFB 1-(T08.08), WJN 1-(T08.08)
An Attachment

# SERVICE EQUIPMENT AND SUPPLIES

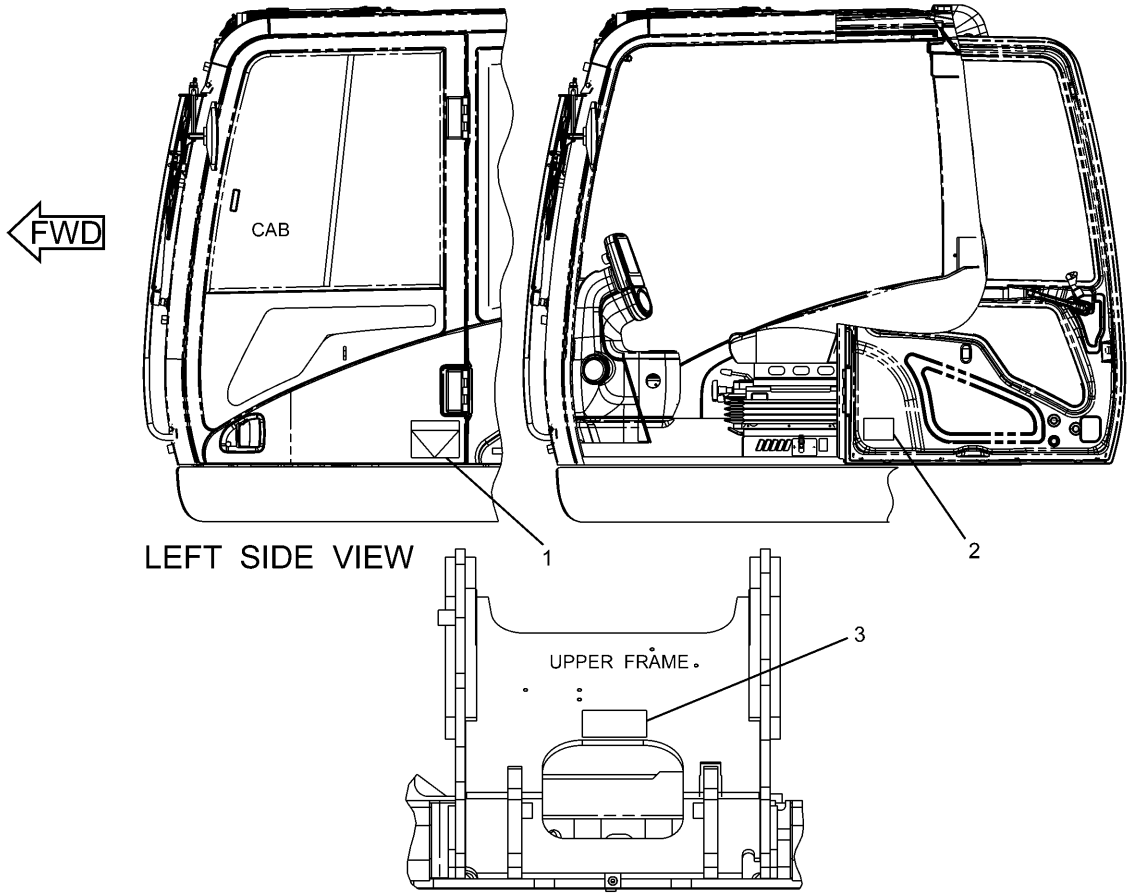


| NOTE | No. | PART No. | QTY | PART NAME | NOTE | No. | PART No. | QTY | PART NAME |
|---|---|---|---|---|---|---|---|---|---|
| | 1 | 127-5278 | 1 | FILM (HAMMER) | | | | | |
| | 2 | 314-3747 | 1 | FILM | | | | | |
| | 3 | 264-8744 | 1 | FILM (NOTICE) | | | | | |

HA1471E 03

**240-3897 FILM GP**
S/N DFB (T08.09)-Up, WJN (T08.09)-Up
An Attachment

# MEMORANDA

# SERVICE EQUIPMENT AND SUPPLIES

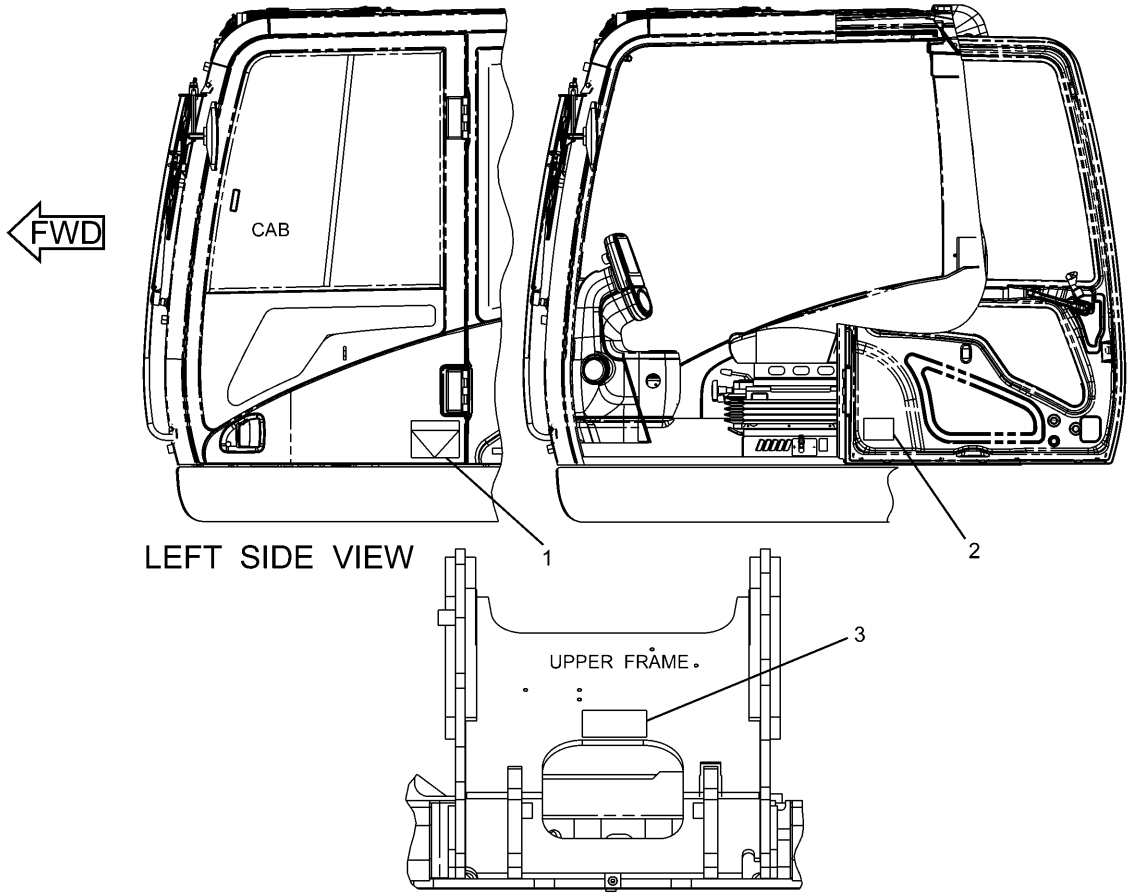


LEFT SIDE VIEW

FRONT VIEW

| NOTE | No. | PART No. | QTY | PART NAME | NOTE | No. | PART No. | QTY | PART NAME |
|---|---|---|---|---|---|---|---|---|---|
| | 1 | 127-5277 | 1 | FILM (DEMOLITION) | | | | | |
| | 2 | 314-3788 | 1 | FILM | | | | | |
| | 3 | 264-8744 | 1 | FILM (NOTICE) | | | | | |

HA1464E 02

**240-3894 FILM GP**
S/N BWZ 1-(T08.08), SNS 1-(T08.08)
An Attachment

# SERVICE EQUIPMENT AND SUPPLIES

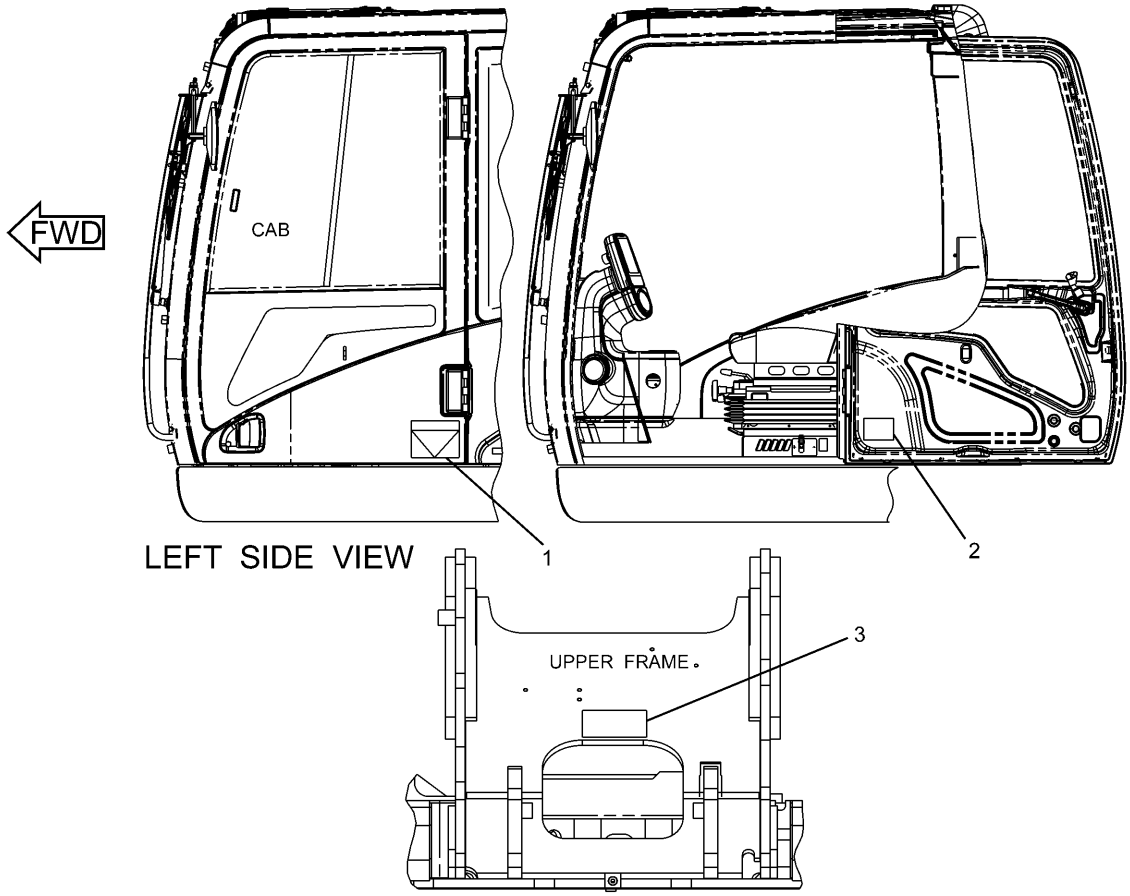


| NOTE | No. | PART No. | QTY | PART NAME | NOTE | No. | PART No. | QTY | PART NAME |
|---|---|---|---|---|---|---|---|---|---|
| | 1 | 127-5277 | 1 | FILM (DEMOLITION) | | | | | |
| | 2 | 314-3745 | 1 | FILM | | | | | |
| | 3 | 264-8744 | 1 | FILM (NOTICE) | | | | | |

HA1465E 03

**240-3894 FILM GP**
S/N BWZ (T08.09)-Up, SNS (T08.09)-Up
An Attachment

# MEMORANDA

# SERVICE EQUIPMENT AND SUPPLIES

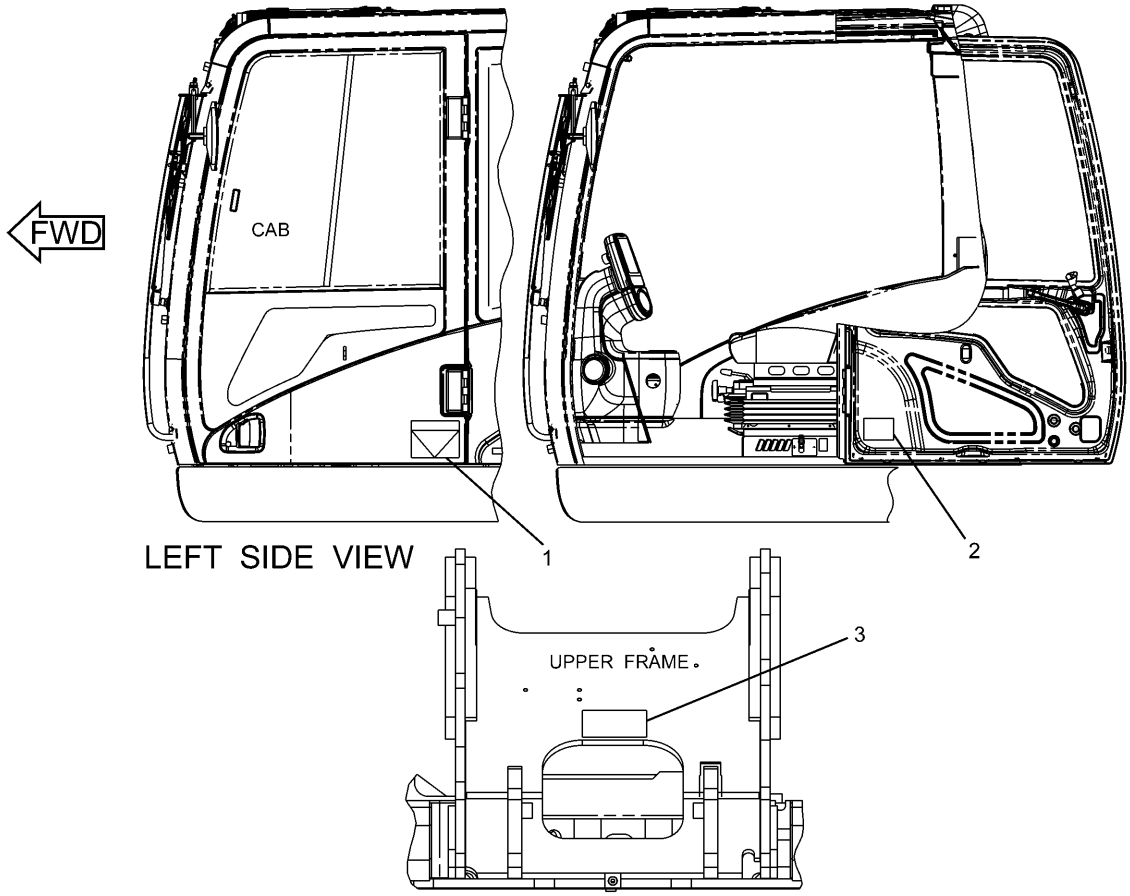


| NOTE | No. | PART No. | QTY | PART NAME | NOTE | No. | PART No. | QTY | PART NAME |
|---|---|---|---|---|---|---|---|---|---|
| | 1 | 127-5277 | 1 | FILM (DEMOLITION) | | | | | |
| | 2 | 314-3790 | 1 | FILM | | | | | |
| | 3 | 264-8744 | 1 | FILM (NOTICE) | | | | | |

HA1466E 02

**240-3895 FILM GP**
S/N DFB 1-(T08.08), WJN 1-(T08.08)
An Attachment

# SERVICE EQUIPMENT AND SUPPLIES

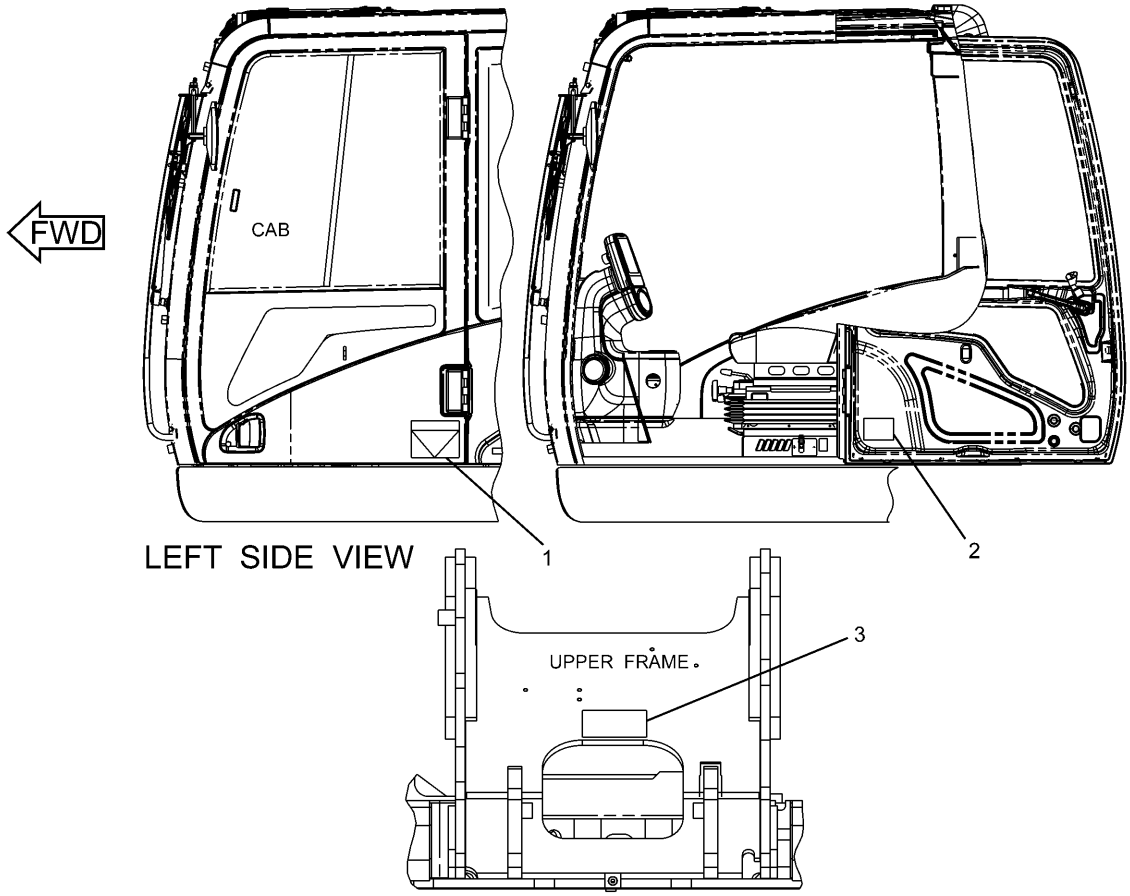


LEFT SIDE VIEW

FRONT VIEW

| NOTE | No. | PART No. | QTY | PART NAME | NOTE | No. | PART No. | QTY | PART NAME |
|---|---|---|---|---|---|---|---|---|---|
| | 1 | 127-5277 | 1 | FILM (DEMOLITION) | | | | | |
| | 2 | 314-3747 | 1 | FILM | | | | | |
| | 3 | 264-8744 | 1 | FILM (NOTICE) | | | | | |

HA1467E 03

**240-3895 FILM GP**
S/N DFB (T08.09)-Up, WJN (T08.09)-Up
An Attachment

# MEMORANDA

# SERVICE EQUIPMENT AND SUPPLIES

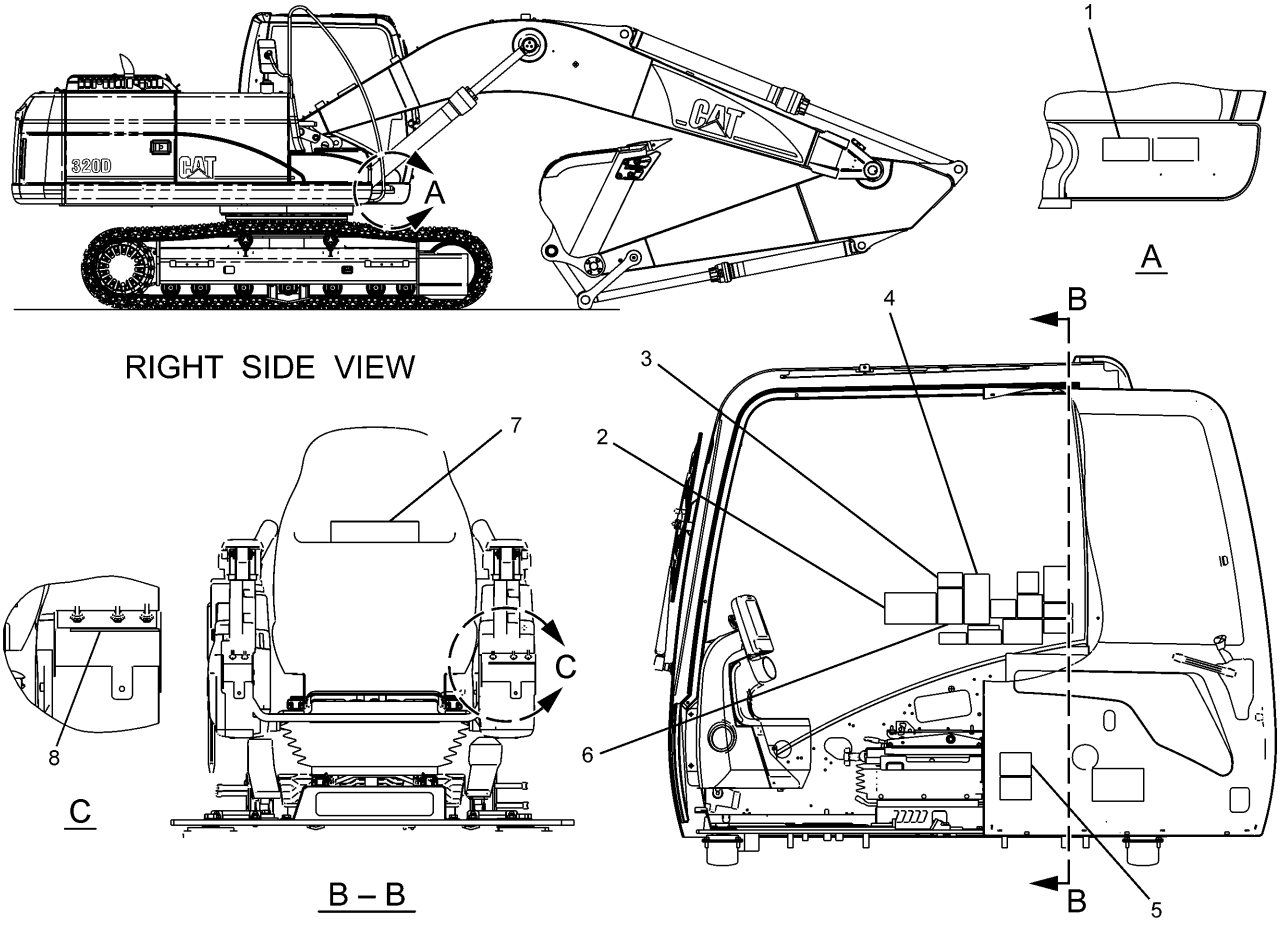


| NOTE | No. | PART No. | QTY | PART NAME | NOTE | No. | PART No. | QTY | PART NAME |
|---|---|---|---|---|---|---|---|---|---|
| | 1 | 329-6420 | 1 | PLATE | | | | | |
| | 2 | 279-2861 | 1 | FILM (LIFTING CAP) | | | | | |
| | 3 | 185-1276 | 1 | FILM (WARNING) | | | | | |
| | 4 | 237-1062 | 1 | FILM (WARNING) | | | | | |
| | 5 | 329-6434 | 1 | FILM (REGISTRATION) | | | | | |
| | 6 | 257-3028 | 1 | FILM (WARNING) | | | | | |
| | 7 | 329-6435 | 1 | PLATE | | | | | |
| | 8 | 279-2869 | 1 | FILM (THROTTLE SWITCH) | | | | | |

HA0965E 01

**279-2860 FILM GP**
New Shovel Crane
S/N BWZ 1-Up
Part of 279-2732-Page11
An Attachment

# SERVICE EQUIPMENT AND SUPPLIES

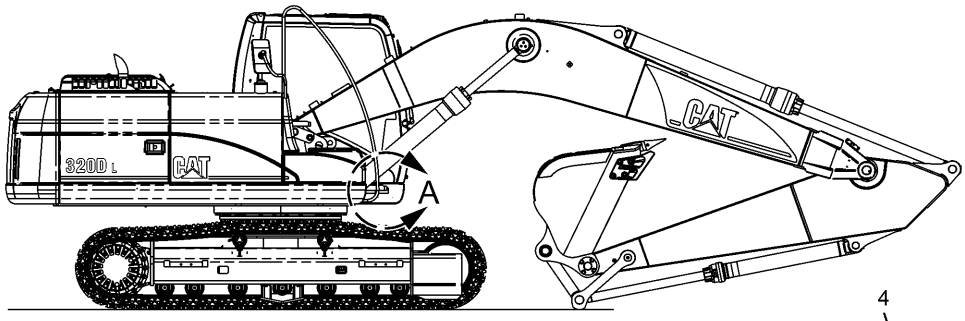


RIGHT SIDE VIEW

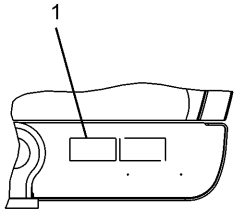


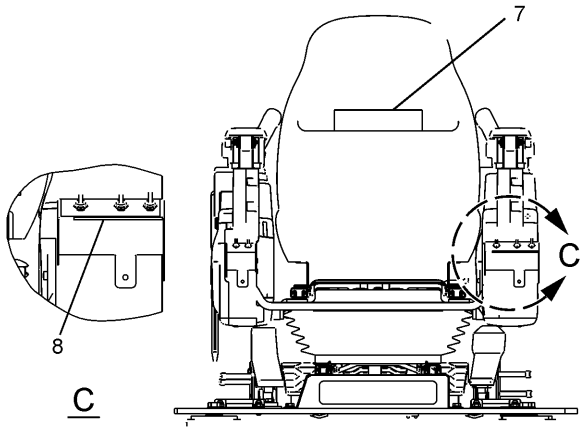


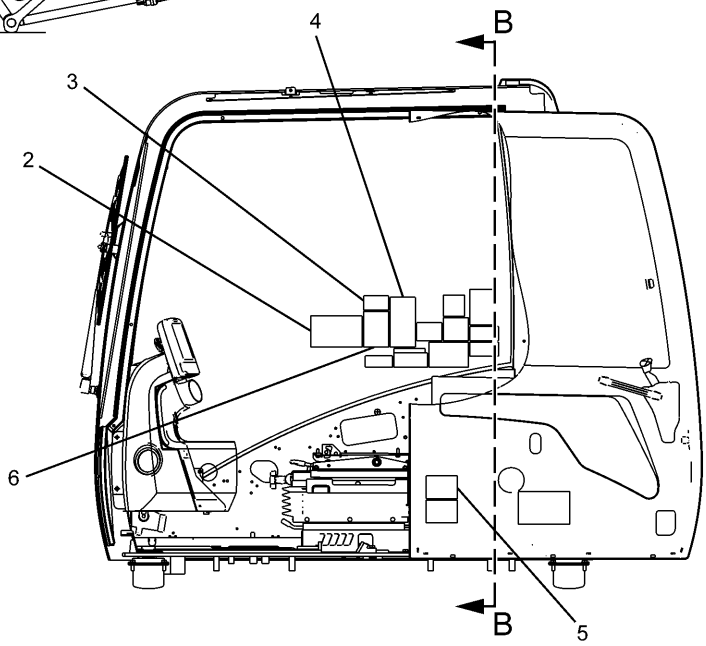


| NOTE | No. | PART No. | QTY | PART NAME | NOTE | No. | PART No. | QTY | PART NAME |
|---|---|---|---|---|---|---|---|---|---|
| | 1 | 329-6420 | 1 | PLATE | | | | | |
| | 2 | 279-2865 | 1 | FILM (LIFTING CAP) | | | | | |
| | 3 | 185-1276 | 1 | FILM (WARNING) | | | | | |
| | 4 | 237-1062 | 1 | FILM (WARNING) | | | | | |
| | 5 | 329-6437 | 1 | FILM (REGISTRATION) | | | | | |
| | 6 | 257-3028 | 1 | FILM (WARNING) | | | | | |
| | 7 | 329-6438 | 1 | PLATE | | | | | |
| | 8 | 279-2869 | 1 | FILM (THROTTLE SWITCH) | | | | | |

HA0966E 01

**279-2864 FILM GP**
New Shovel Crane
S/N DFB 1-Up
Part of 279-2733-Page12
An Attachment

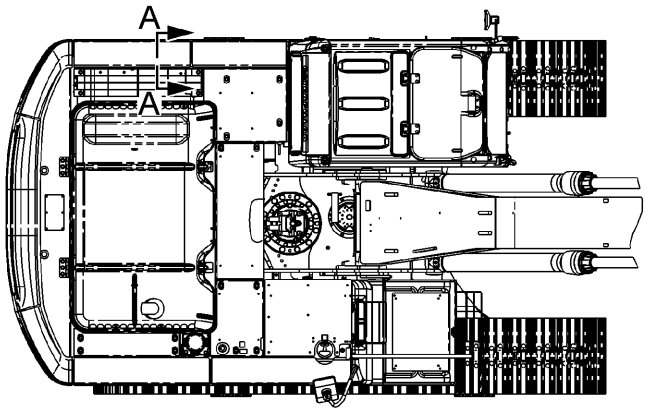


TOP VIEW

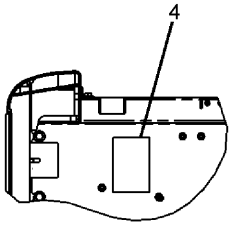


A – A

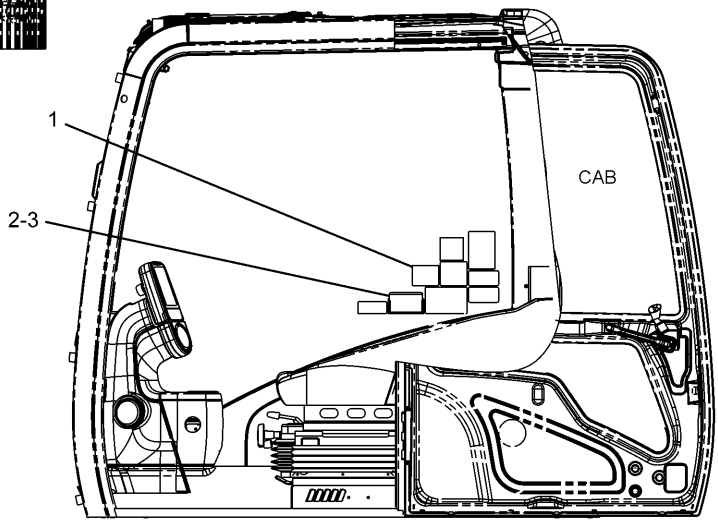


| NOTE | No. | PART No. | QTY | PART NAME | NOTE | No. | PART No. | QTY | PART NAME |
|---|---|---|---|---|---|---|---|---|---|
| | 1 | 120-5054 | 1 | FILM (WARNING) | | | | | |
| | 2 | 102-4861 | 1 | PLATE | | | | | |
| | 3 | 102-4862 | 1 | PLATE (KOB,JIS/SCM) | | | | | |
| | 4 | 176-2687 | 1 | FILM (INSTRUCTION) | | | | | |

H94074E 03

**247-7491 FILM GP**
4 Way Valve
Part of 259-7483-Page446
An Attachment

# SERVICE EQUIPMENT AND SUPPLIES

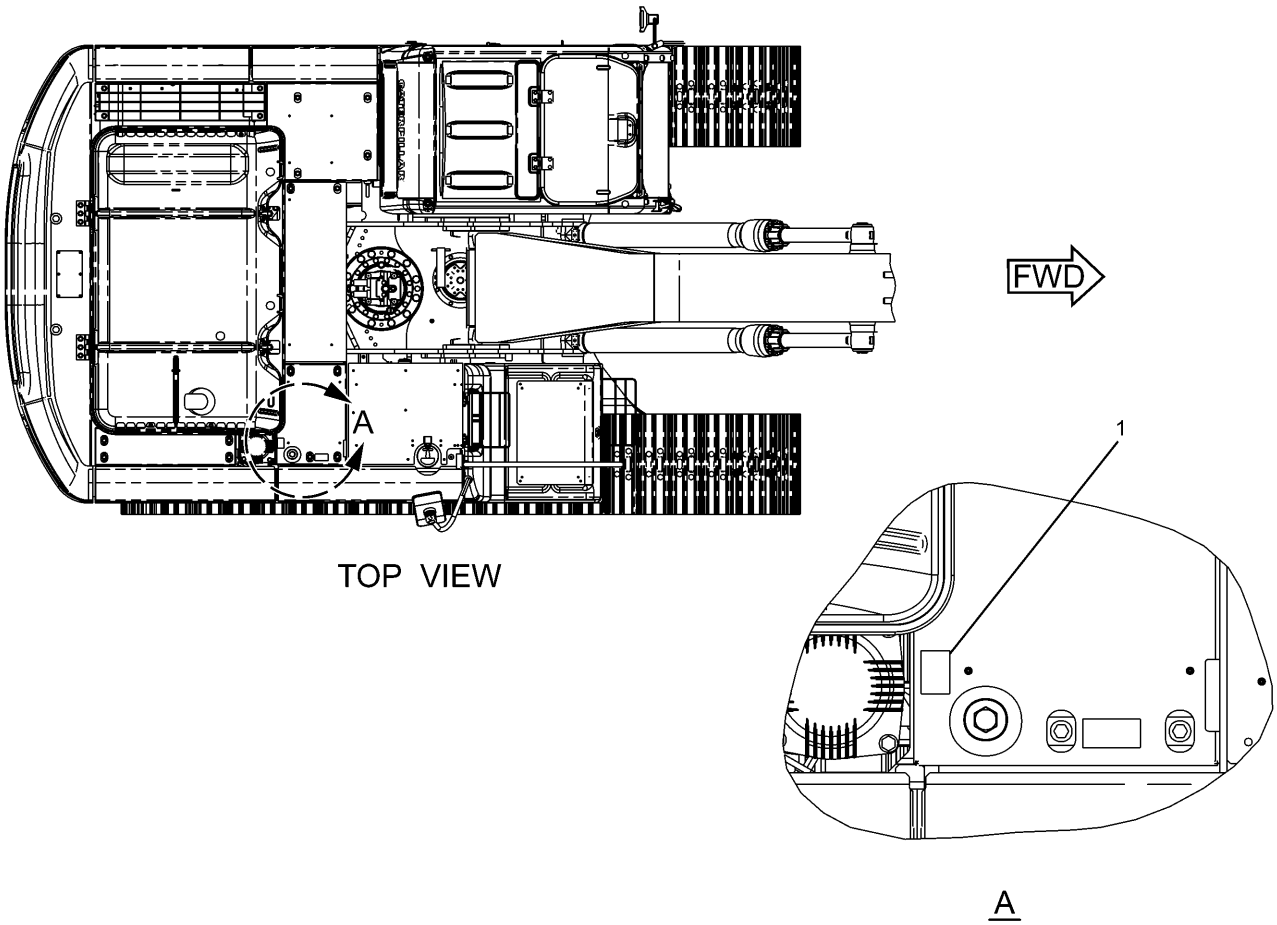


| NOTE | No. | PART No. | QTY | PART NAME | NOTE | No. | PART No. | QTY | PART NAME |
|---|---|---|---|---|---|---|---|---|---|
| | 1 | 186-1133 | 1 | FILM | | | | | |

H90064E 00

**240-3893 FILM GP**
An Attachment

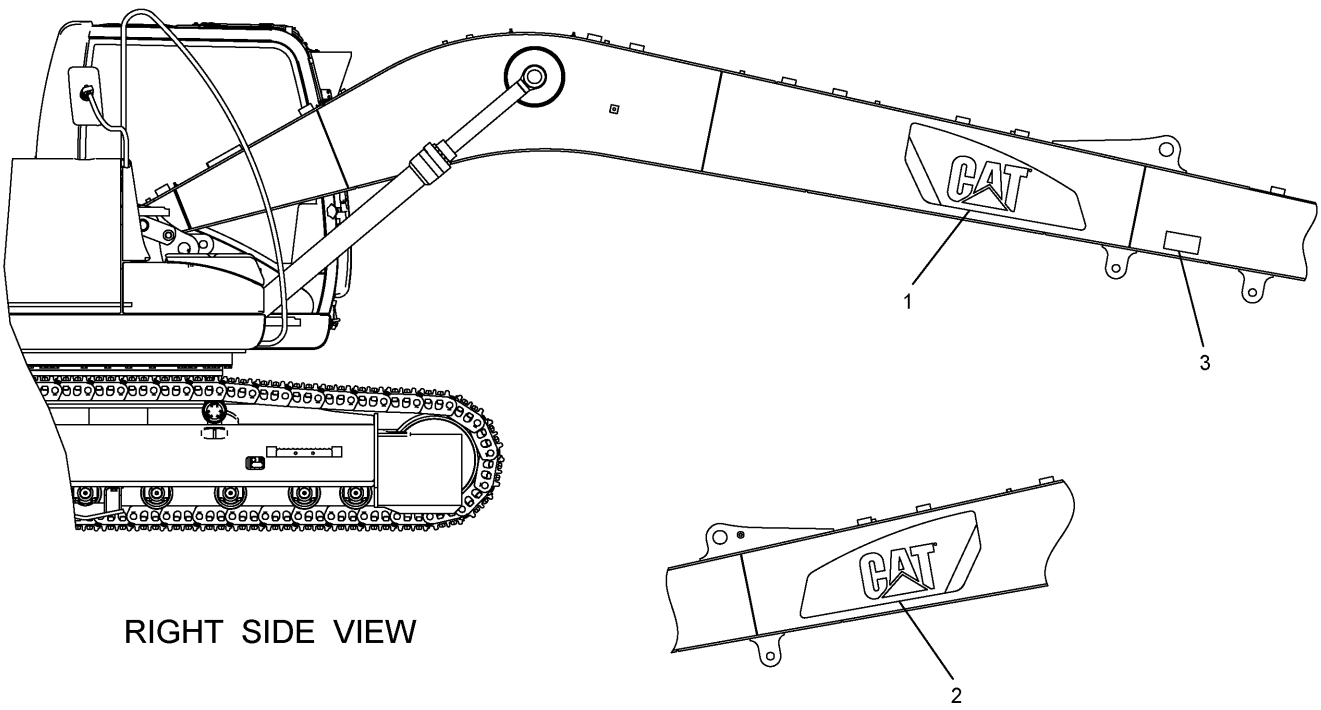


RIGHT SIDE VIEW

| NOTE | No. | PART No. | QTY | PART NAME | NOTE | No. | PART No. | QTY | PART NAME |
|---|---|---|---|---|---|---|---|---|---|
| | 1 | 283-8982 | 1 | FILM (CAT) | | | | | |
| | 2 | 283-8983 | 1 | FILM (CAT) | | | | | |
| | 3 | 116-9135 | 1 | FILM (TRANSPORT) | | | | | |

HA0969E 02

**302-9209 FILM GP (1/2)**
Long Reach Front
S/N DFB 1-Up
Part of 302-9207-Page740
An Attachment

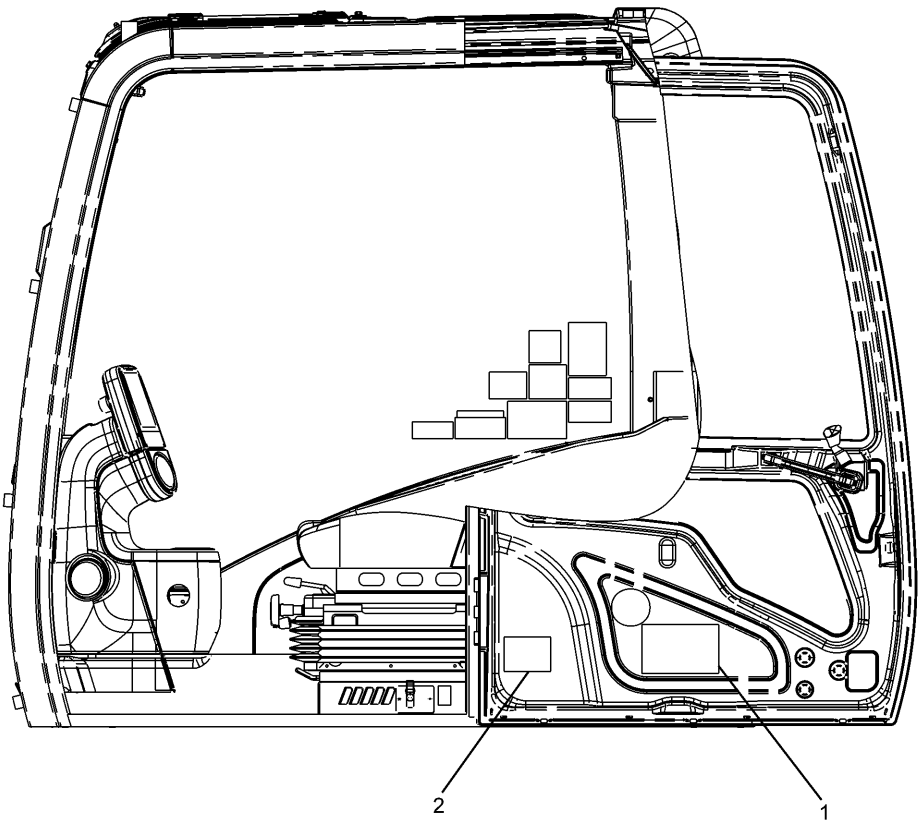


| NOTE | No. | PART No. | QTY | PART NAME | NOTE | No. | PART No. | QTY | PART NAME |
|---|---|---|---|---|---|---|---|---|---|
| | 1 | 186-1156 | 1 | FILM (LUBRICANT CHART) | | | | | |
| | 2 | 331-2233 | 1 | FILM | | | | | |

HA0970E 02

## 302-9209 FILM GP (2/2)

Long Reach Front
S/N DFB 1-Up
Part of 302-9207-Page740
An Attachment

# PART NUMBER INDEX


| Part.No | Page | Part.No | Page | Part.No | Page |
|---|---|---|---|---|---|
| 1 | | | 481 | | 501 |
| | | | 483 | | |
| 1F-0425 . . . . . | 573 | | 485 | | |
| 1H-3338 . . . . . | 134 | | 487 | 2 | |
| 1P-0551 . . . . . | 826 | | 489 | | |
| 1P-0808 . . . . . | 826 | | 491 | 2A-5222 . . . . . | 41 |
| 1P-2807 . . . . . | 829 | | 496 | 2B-0858 . . . . . | 325 |
| | 831 | | 497 | 2B-7561 . . . . . | 277 |
| | 833.02 | 1P-3704 . . . . . | 383 | 2D-6642 . . . . . | 513 |
| | 833.04 | | 399 | | 515 |
| | 835 | | 411 | | 593 |
| | 837 | | 413 | | 595 |
| | 839.02 | | 414 | 2G-8767 . . . . . | 95 |
| | 839.04 | | 415 | | 97 |
| 1P-3702 . . . . . | 404 | | 416 | 2H-3814 . . . . . | 48 |
| | 405 | 1P-4577 . . . . . | 483 | 2H-3922 . . . . . | 135 |
| | 406 | 1P-5765 . . . . . | 404 | | 228 |
| | 407 | | 405 | 2J-3507 . . . . . | 804 |
| | 481 | 1P-5767 . . . . . | 411 | 2L-8049 . . . . . | 101 |
| | 489 | | 413 | 2L-8050 . . . . . | 101 |
| | 491 | | 414 | | 103 |
| | 534 | | 415 | | 129 |
| | 535 | | 416 | | 133 |
| | 537 | 1R-0739 . . . . . | 45 | 2L-8052 . . . . . | 101 |
| | 538 | 1R-0751 . . . . . | 79 | | 129 |
| | 556 | 1R-0770 . . . . . | 83 | 2L-8065 . . . . . | 115 |
| | 559 | 1R-5998 . . . . . | 619 | | 229 |
| | 561 | 1R-6573 . . . . . | 77.01 | 2L-8066 . . . . . | 113 |
| 1P-3703 . . . . . | 377 | 1R-9958 . . . . . | 243 | | 180 |
| | 379 | 1S-7252 . . . . . | 104 | 2L-8067 . . . . . | 117 |
| | 383 | | 105 | 2L-8069 . . . . . | 101 |
| | 393 | | 152 | | 103 |
| | 395 | | 153 | | 129 |
| | 404 | 1U-3252 . . . . . | 813 | | 188 |
| | 405 | 1U-3301 . . . . . | 806 | 2L-8074 . . . . . | 123 |
| | 406 | 1U-3302 . . . . . | 805 | | 130 |
| | 407 | 1U-3351 . . . . . | 810 | | 182 |
| | 411 | 1U-3352 . . . . . | 809 | 2L-8075 . . . . . | 101 |
| | 413 | 1U-8846 . . . . . | 233 | | 113 |
| | 414 | | 235 | | 117 |
| | 415 | | 275 | | 146 |
| | 416 | | 277 | | 215 |
| | 437 | | 437 | | 217 |
| | 439 | | 439 | | 219 |

# PART NUMBER INDEX


| Part.No | Page |
|---|---|
| | 221 |
| | 229 |
| 2L-8076 | 113 |
| | 180 |
| 2L-8078 | 95 |
| 2L-8079 | 103 |
| | 168 |
| | 183 |
| | 188 |
| 2M-0849 | 665 |
| 2M-9780 | 379 |
| | 437 |
| | 439 |
| | 441 |
| | 441.02 |
| | 513 |
| | 515 |
| | 541 |
| | 549 |
| | 561 |
| 2P-8250 | 826 |
| 2P-8253 | 826 |
| 2R-1498 | 81 |
| 2S-2596 | 553 |
| | 593 |
| | 595 |
| 2S-3440 | 43 |
| | 49 |
| 2S-4078 | 487 |
| | 489 |
| | 491 |
| | 601 |
| 2S-5926 | 300 |
| 2T-2991 | 45 |
| 2U-2552 | 621 |
| 2Y-5503 | 235 |
| 2Y-5685 | 632 |
| | |
| 3 | |
| | |
| 3B-4501 | 223 |
| | 224 |
| 3B-4509 | 380 |
| | 381 |
| 3B-4618 | 239 |
| | 243 |
| 3B-8489 | 275 |
| | 277 |
| | 278 |
| | 357 |
| | 359 |
| | 361 |
| | 363 |
| | 365 |
| | 367 |
| | 369 |
| | 371 |
| | 372 |
| | 752 |
| | 753 |
| | 754 |
| | 755 |
| | 756 |
| | 757 |
| | 758 |
| | 759 |
| | 760 |
| | 761 |
| | 762 |
| | 763 |
| | 764 |
| | 765 |
| | 766 |
| | 769 |
| | 771 |
| | 773 |
| | 775 |
| | 777 |
| | 778 |
| 3D-2824 | 325 |
| | 377 |
| | 379 |
| | 383 |
| | 441 |
| | 441.02 |
| | 458 |
| | 458.01 |
| | 489 |
| | 491 |
| | 497 |
| | 547 |
| | 554 |
| | 560 |
| | 564 |
| | 574 |
| | 588 |
| 3D-2891 | 343 |
| | 345 |
| | 357 |
| | 367 |
| | 371 |
| 3D-9143 | 259 |
| 3E-2310 | 461 |
| | 463 |
| | 467 |
| | 471 |
| | 475 |
| 3E-2338 | 233 |
| 3E-3217 | 312 |
| | 313 |
| 3E-3371 | 137 |
| 3E-4297 | 328 |
| 3E-5169 | 127 |
| 3E-6910 | 510 |
| 3E-8020 | 619 |
| 3E-8320 | 133 |
| 3F-9556 | 149 |
| 3G-3236 | 811 |
| 3G-3237 | 807 |
| 3H-0442 | 593 |
| | 595 |
| 3J-1907 | 81 |
| | 82 |
| | 87 |
| | 89 |
| | 89.01 |
| | 89.02 |
| | 325 |
| | 335 |
| | 343 |
| | 345 |

# PART NUMBER INDEX


| Part.No | Page | Part.No | Page | Part.No | Page |
|---|---|---|---|---|---|
| | 348 | | 339 | | 75 |
| | 377 | | 349 | | 93 |
| | 379 | | 377 | | 95 |
| | 383 | | 379 | | 97 |
| | 391 | | 391 | | 99 |
| | 437 | | 423 | | 101 |
| | 439 | | 425 | | 103 |
| | 451 | | 427 | | 107 |
| | 453 | | 431 | | 109 |
| | 455 | | 433 | | 111 |
| | 457 | | 435 | | 113 |
| | 457.02 | | 437 | | 115 |
| | 457.04 | | 439 | | 117 |
| | 458 | | 441 | | 120 |
| | 458.01 | | 441.02 | | 123 |
| | 459 | | 451 | | 124 |
| | 461 | | 455 | | 125 |
| | 463 | | 457 | | 127 |
| | 464 | | 457.02 | | 129 |
| | 467 | | 457.04 | | 137 |
| | 468 | | 458 | | 138 |
| | 471 | | 458.01 | | 139 |
| | 472 | | 471 | | 141 |
| | 475 | | 476 | | 143 |
| | 477 | | 477 | | 145 |
| | 479 | | 485 | | 146 |
| | 507 | | 487 | | 154 |
| | 516 | | 489 | | 155 |
| | 549 | | 491 | | 158 |
| | 569 | | 497 | | 161 |
| | 571 | | 498 | | 163 |
| | 579 | | 503 | | 165 |
| | 593 | | 513 | | 167 |
| | 595 | | 515 | | 168 |
| | 602 | | 553 | | 171 |
| | 604 | | 569 | | 172 |
| | 605 | | 571 | | 175 |
| 3J-7354 . . . . . | 325 | | 579 | | 177 |
| | 379 | | 581 | | 179 |
| | 391 | 3P-0647 . . . . . | 563 | | 180 |
| | 442 | 3P-1896 . . . . . | 19 | | 181 |
| | 593 | 3P-9847 . . . . . | 55 | | 185 |
| | 595 | 3S-2093 . . . . . | 55 | | 187 |
| 3K-0360 . . . . . | 325 | | 70 | | 188 |

# PART NUMBER INDEX


| Part.No | Page | Part.No | Page | Part.No | Page |
|---|---|---|---|---|---|
| | 189 | | 794 | | 457.04 |
| | 189.02 | | 795 | 4I-1163 | 645 |
| | 189.04 | | 796 | 4I-1205 | 619 |
| | 189.05 | | 797 | 4I-1206 | 619 |
| | 196 | | 798 | 4I-1260 | 633 |
| | 211 | | 799 | 4I-1631 | 453 |
| | 213 | 4B-4278 | 619 | 4I-1671 | 463 |
| | 221 | 4B-7739 | 325 | 4I-1674 | 377 |
| | 229 | 4B-9783 | 604 | | 379 |
| | 640 | | 605 | | 393 |
| | 645 | 4B-9880 | 359 | | 395 |
| | 646 | | 361 | | 399 |
| | 652 | | 363 | | 400 |
| | 664 | | 365 | 4I-1676 | 393 |
| | 678 | | 369 | | 395 |
| | 699 | | 603 | | 399 |
| | 713 | 4D-1836 | 127 | | 403 |
| | 715 | 4H-6112 | 501 | 4I-1694 | 475 |
| 3T-0849 | 196 | 4I-0006 | 271 | 4I-1704 | 459 |
| 3T-5760 | 93 | 4I-0050 | 87 | | 464 |
| 3T-7528 | 328 | | 89 | | 468 |
| 3W-6399 | 641 | | 89.01 | 4I-1739 | 455 |
| 3Y-7597 | 826 | | 89.02 | | 457.02 |
| 3Y-8905 | 831 | 4I-0117 | 243 | 4I-1780 | 455 |
| | 833.04 | 4I-0118 | 241 | | 457.02 |
| | 837 | 4I-0232 | 239 | 4I-1878 | 467 |
| | 839.04 | 4I-0378 | 87 | | 471 |
| | | | 89 | 4I-2187 | 259 |
| | | | 89.01 | 4I-2604 | 826 |
| 4 | | | 89.02 | 4I-2605 | 826 |
| | | 4I-0379 | 81 | 4I-2885 | 833 |
| 4B-4158 | 297 | 4I-0420 | 627 | | 833.06 |
| | 298 | | 631 | | 839 |
| | 537 | 4I-0716 | 475 | | 839.06 |
| | 556 | 4I-0800 | 476 | 4I-3038 | 678 |
| | 559 | 4I-0818 | 455 | 4I-3063 | 619 |
| | 561 | | 457.02 | 4I-3090 | 619 |
| | 569 | 4I-0836 | 455 | | 635 |
| | 571 | | 457.02 | 4I-3144 | 619 |
| | 579 | 4I-1022 | 341 | 4I-3266 | 667 |
| | 581 | 4I-1025 | 464 | 4I-3308 | 743 |
| | 593 | | 468 | | 745 |
| | 595 | | 472 | | 747 |
| | 793 | 4I-1037 | 457 | | 748 |

# PART NUMBER INDEX


| Part.No | Page |
|---|---|
| | 751 |
| 4I-3309 | 743 |
| | 745 |
| | 747 |
| | 748 |
| | 751 |
| 4I-3503 | 719 |
| | 721 |
| 4I-3510 | 554 |
| | 588 |
| 4I-3569 | 549 |
| 4I-3615 | 357 |
| | 367 |
| 4I-3621 | 380 |
| | 381 |
| 4I-3627 | 359 |
| | 361 |
| | 363 |
| 4I-3628 | 359 |
| | 361 |
| | 363 |
| | 369 |
| | 371 |
| 4I-3631 | 359 |
| | 361 |
| | 363 |
| 4I-3941 | 467 |
| | 471 |
| 4I-3953 | 453 |
| 4I-3981 | 453 |
| | 476 |
| 4I-3988 | 467 |
| | 471 |
| | 479 |
| 4I-3991 | 479 |
| 4I-3994 | 453 |
| 4I-4270 | 619 |
| 4I-4286 | 623 |
| 4I-4300 | 625 |
| 4I-4361 | 633 |
| 4I-4392 | 619 |
| 4I-4543 | 762 |
| | 763 |
| | 764 |
| 4I-4544 | 762 |
| | 763 |
| | 764 |
| 4I-4580 | 719 |
| | 721 |
| | 723 |
| 4I-4618 | 748 |
| | 761 |
| 4I-4809 | 743 |
| | 745 |
| | 747 |
| | 751 |
| | 752 |
| | 753 |
| | 754 |
| | 755 |
| | 756 |
| | 757 |
| | 758 |
| | 759 |
| | 760 |
| 4I-4811 | 752 |
| | 753 |
| | 754 |
| | 755 |
| | 757 |
| | 758 |
| | 759 |
| | 760 |
| 4I-4812 | 283 |
| | 285 |
| 4I-5020 | 645 |
| 4I-5021 | 645 |
| 4I-5049 | 654 |
| 4I-5394 | 325 |
| 4I-5409 | 209 |
| 4I-5490 | 325 |
| 4I-5556 | 408 |
| 4I-5795 | 458 |
| 4I-5906 | 457 |
| | 457.04 |
| 4I-5933 | 457 |
| | 457.04 |
| 4I-6054 | 453 |
| 4I-6365 | 525 |
| 4I-6397 | 541 |
| | 549 |
| | 551 |
| 4I-6602 | 661 |
| | 662 |
| 4I-6608 | 764 |
| 4I-6610 | 764 |
| 4I-7714 | 554 |
| 4I-7745 | 377 |
| 4I-7889 | 154 |
| | 175 |
| 4I-7924 | 236 |
| 4I-8019 | 239 |
| 4I-8384 | 255 |
| 4I-8785 | 405 |
| 4I-8789 | 399 |
| | 496 |
| 4I-8864 | 357 |
| 4I-8869 | 359 |
| | 361 |
| | 363 |
| 4I-8965 | 569 |
| | 571 |
| 4I-9521 | 81 |
| | 379 |
| | 451 |
| | 453 |
| | 457 |
| | 457.04 |
| | 467 |
| | 471 |
| | 472 |
| | 475 |
| | 479 |
| 4I-9522 | 81 |
| | 379 |
| | 451 |
| | 453 |
| | 455 |
| | 457.02 |
| | 467 |
| | 471 |
| | 479 |

# PART NUMBER INDEX


| Part.No | Page |
|---|---|
| 4I-9523 | 81 |
| | 451 |
| | 453 |
| | 455 |
| | 457 |
| | 457.02 |
| | 457.04 |
| | 461 |
| | 463 |
| | 467 |
| | 471 |
| | 475 |
| | 477 |
| | 479 |
| 4I-9524 | 451 |
| | 453 |
| | 455 |
| | 457.02 |
| | 461 |
| | 463 |
| | 467 |
| | 471 |
| | 479 |
| 4I-9525 | 81 |
| | 379 |
| | 451 |
| | 453 |
| | 457 |
| | 457.04 |
| | 463 |
| | 467 |
| | 471 |
| | 472 |
| | 475 |
| | 479 |
| 4I-9526 | 379 |
| | 451 |
| | 453 |
| | 479 |
| 4I-9527 | 81 |
| | 441 |
| | 441.02 |
| | 451 |
| | 453 |
| | 457 |
| | 457.04 |
| | 461 |
| | 463 |
| | 467 |
| | 471 |
| | 475 |
| | 479 |
| 4I-9528 | 451 |
| | 453 |
| | 457 |
| | 457.04 |
| | 471 |
| | 472 |
| | 475 |
| | 479 |
| 4I-9664 | 19 |
| | 25 |
| 4J-0519 | 537 |
| 4J-0520 | 483 |
| | 541 |
| 4J-0524 | 485 |
| | 600.01 |
| | 600.02 |
| 4J-0527 | 325 |
| | 485 |
| 4J-5267 | 325 |
| | 388 |
| | 481 |
| | 483 |
| | 559 |
| 4J-5268 | 483 |
| | 497 |
| 4J-5309 | 549 |
| 4J-7385 | 539 |
| | 546 |
| 4J-7386 | 539 |
| | 546 |
| 4J-7533 | 328 |
| | 549 |
| | 569 |
| | 571 |
| | 579 |
| | 593 |
| | 595 |
| | 599 |
| 4J-8998 | 534 |
| | 535 |
| | 538 |
| | 556 |
| | 559 |
| 4K-1388 | 539 |
| | 546 |
| 4K-8864 | 93 |
| | 151 |
| | 457 |
| | 457.04 |
| 4N-9170 | 275 |
| | 277 |
| 4P-7428 | 97 |
| 4P-7581 | 93 |
| | 95 |
| | 109 |
| | 154 |
| | 167 |
| | 451 |
| 4S-1962 | 719 |
| | 721 |
| | 723 |
| 4T-0987 | 593 |
| | 595 |
| 4T-2215 | 806 |
| 4T-3148 | 549 |
| | 551 |
| 4T-5074 | 549 |
| 4Y-0426 | 826 |


5


| Part.No | Page |
|---|---|
| 5A-3604 | 680.01 |
| | 681.01 |
| | 690.01 |
| | 691.01 |
| | 694.01 |
| | 695.01 |
| | 699.01 |
| | 700.01 |

# PART NUMBER INDEX


| Part.No | Page | Part.No | Page | Part.No | Page |
|---|---|---|---|---|---|
| 5B-5947 | 39 | | 313 | | 39 |
| 5B-9304 | 60 | 5H-5672 | 326 | 5I-7523 | 19 |
| | 508 | 5H-8624 | 442 | 5I-7525 | 19 |
| | 516 | 5H-8936 | 766 | 5I-7528 | 19 |
| | 525 | 5I-3878 | 97 | 5I-7529 | 19 |
| | 585 | 5I-4076 | 455 | 5I-7540 | 35 |
| 5C-2889 | 223 | | 457.02 | 5I-7549 | 59 |
| | 224 | 5I-4111 | 539 | 5I-7550 | 59 |
| 5C-2890 | 107 | | 546 | 5I-7558 | 31 |
| | 109 | 5I-4174 | 404 | 5I-7559 | 31 |
| | 134 | | 405 | 5I-7561 | 41 |
| | 171 | | 406 | 5I-7587 | 60 |
| | 179 | | 407 | 5I-7588 | 19 |
| | 645 | 5I-4393 | 397 | 5I-7589 | 60 |
| 5C-7261 | 46 | 5I-4396 | 455 | | 61 |
| | 93 | | 457.02 | 5I-7599 | 203 |
| | 151 | | 461 | 5I-7601 | 59 |
| | 582 | | 463 | 5I-7602 | 60 |
| | 681 | | 464 | 5I-7610 | 31 |
| | 684 | 5I-4915 | 25 | 5I-7623 | 41 |
| | 686 | 5I-4940 | 43 | 5I-7630 | 27 |
| | 687 | 5I-4983 | 34 | 5I-7632 | 31 |
| | 688 | 5I-4993 | 36 | 5I-7633 | 59.01 |
| | 689 | 5I-5005 | 33 | | 62 |
| | 691 | 5I-5038 | 40 | 5I-7642 | 40 |
| | 695 | 5I-5078 | 77 | 5I-7645 | 43 |
| | 698 | | 79 | 5I-7646 | 49 |
| | 700 | 5I-5181 | 19 | 5I-7650 | 21 |
| 5C-7793 | 619 | 5I-5597 | 31 | 5I-7654 | 19 |
| 5C-7883 | 93 | | 34 | 5I-7655 | 49 |
| 5C-8138 | 641 | | 37 | 5I-7656 | 31 |
| 5C-8312 | 109 | | 43 | 5I-7660 | 34 |
| 5C-9553 | 133 | | 58 | 5I-7666 | 36 |
| | 239 | | 194 | 5I-7667 | 22 |
| | 259 | 5I-6959 | 185 | 5I-7677 | 58 |
| | 325 | 5I-7090 | 528 | 5I-7678 | 58 |
| | 645 | | 531 | 5I-7679 | 62 |
| | 713 | 5I-7233 | 408 | 5I-7683 | 31 |
| | 715 | 5I-7235 | 740 | 5I-7690 | 46 |
| 5D-1026 | 235 | | 764 | 5I-7691 | 46 |
| 5D-4822 | 659 | 5I-7236 | 764 | 5I-7696 | 48 |
| | 661 | 5I-7238 | 766 | 5I-7697 | 48 |
| 5D-8159 | 57 | 5I-7239 | 766 | 5I-7724 | 19 |
| 5G-2247 | 312 | 5I-7505 | 19 | 5I-7725 | 43 |

# PART NUMBER INDEX


| Part.No | Page |
|---|---|
| 5I-7735 | 49 |
| 5I-7742 | 59.01 |
| 5I-7750 | 37 |
| 5I-7784 | 19 |
| 5I-7785 | 19 |
| 5I-7786 | 19 |
| 5I-7787 | 19 |
| 5I-7788 | 19 |
| 5I-7789 | 19 |
| 5I-7867 | 49 |
| 5I-7985 | 202 |
| 5I-7987 | 202 |
| 5I-7997 | 202 |
| 5I-8009 | 19 |
| 5I-8010 | 49 |
| 5I-8021 | 58 |
| 5I-8022 | 58 |
| 5I-8023 | 58 |
| 5I-8040 | 62 |
| 5I-8056 | 49 |
| 5I-8058 | 41 |
| | 79 |
| 5I-8066 | 39 |
| 5I-8067 | 36 |
| 5I-8080 | 202 |
| 5I-8086 | 202 |
| 5I-8087 | 202 |
| 5I-8088 | 202 |
| 5I-8089 | 202 |
| 5I-8090 | 202 |
| 5I-8094 | 202 |
| 5I-8095 | 202 |
| 5I-8097 | 202 |
| 5I-8098 | 202 |
| 5I-8270 | 93 |
| | 151 |
| 5I-8417 | 507 |
| 5I-8426 | 507 |
| 5I-8510 | 415 |
| 5I-8511 | 569 |
| | 571 |
| 5I-8623 | 507 |
| 5I-8625 | 507 |
| 5I-8670 | 332 |
| 5I-8708 | 457 |
| | 457.04 |
| 5I-8825 | 476 |
| 5I-8853 | 453 |
| | 475 |
| 5I-9368 | 95 |
| 5K-2298 | 765 |
| 5K-3294 | 721 |
| 5K-8451 | 81 |
| | 476 |
| 5K-9090 | 377 |
| | 399 |
| | 483 |
| | 485 |
| | 487 |
| | 489 |
| | 491 |
| | 495 |
| | 496 |
| | 497 |
| 5K-9242 | 765 |
| | 766 |
| 5K-9243 | 275 |
| | 277 |
| | 762 |
| | 763 |
| | 764 |
| | 766 |
| 5L-3233 | 65 |
| | 68 |
| 5L-4758 | 335 |
| 5L-6326 | 48 |
| 5P-0200 | 408 |
| 5P-0743 | 42 |
| 5P-0761 | 104 |
| | 152 |
| 5P-0767 | 235 |
| | 719 |
| | 721 |
| | 723 |
| 5P-1027 | 408 |
| 5P-1072 | 81 |
| 5P-1075 | 259 |
| | 260 |
| | 261 |
| 5P-1076 | 75 |
| | 198 |
| | 199 |
| | 236 |
| | 239 |
| | 241 |
| | 243 |
| | 256 |
| | 260 |
| | 262 |
| | 263 |
| | 264 |
| | 265 |
| | 266 |
| | 306 |
| | 314 |
| | 315 |
| | 377 |
| | 665.02 |
| 5P-1442 | 70 |
| | 81 |
| 5P-2321 | 113 |
| 5P-2568 | 516 |
| 5P-3108 | 539 |
| | 546 |
| 5P-3454 | 101 |
| 5P-4115 | 133 |
| | 239 |
| 5P-4116 | 95 |
| | 198 |
| | 199 |
| | 208 |
| | 259 |
| | 725 |
| | 729 |
| 5P-4924 | 81 |
| | 87 |
| | 89 |
| | 89.01 |
| | 89.02 |
| 5P-4961 | 70 |
| 5P-5998 | 228 |
| 5P-6271 | 117 |

# PART NUMBER INDEX


| Part.No | Page |
|---|---|
| 5P-7175 | 81 |
| 5P-7462 | 457 |
| | 457.04 |
| 5P-7463 | 457 |
| | 457.04 |
| 5P-7464 | 441 |
| | 441.02 |
| 5P-7465 | 441 |
| | 441.02 |
| 5P-7468 | 485 |
| | 487 |
| | 489 |
| | 491 |
| 5P-7469 | 485 |
| | 487 |
| | 489 |
| | 491 |
| 5P-7958 | 706 |
| 5P-8196 | 45 |
| 5P-8292 | 654 |
| 5P-8309 | 249 |
| 5P-8444 | 495 |
| 5P-9085 | 721 |
| 5P-9297 | 215 |
| | 219 |
| | 221 |
| 5P-9617 | 45 |
| 5P-9909 | 55 |
| 5Q-3215 | 313 |
| 5Q-3226 | 309 |
| 5Q-3227 | 310 |
| 5Q-3560 | 277 |
| 5Q-4212 | 397 |
| 5Q-4213 | 383 |
| | 397 |

6

| Part.No | Page |
|---|---|
| 6C-6760 | 423 |
| | 425 |
| | 427 |
| | 431 |
| | 433 |
| | 435 |
| 6C-8382 | 659 |
| | 661 |
| 6D-0692 | 233 |
| 6D-1641 | 45 |
| | 719 |
| | 721 |
| | 723 |
| 6D-3479 | 467 |
| | 471 |
| | 719 |
| | 721 |
| 6D-4636 | 81 |
| 6D-9157 | 325 |
| | 442 |
| 6E-2163 | 553 |
| 6E-2271 | 545 |
| | 553 |
| 6E-2274 | 541 |
| | 549 |
| | 556 |
| | 559 |
| 6E-3653 | 549 |
| 6E-4816 | 541 |
| 6E-5169 | 551 |
| 6E-5643 | 549 |
| 6E-5731 | 541 |
| | 543 |
| | 551 |
| | 556 |
| | 559 |
| 6F-4855 | 327 |
| 6F-7045 | 135 |
| 6F-7556 | 31 |
| 6F-7557 | 31 |
| 6G-2256 | 95 |
| | 97 |
| 6G-2263 | 93 |
| | 95 |
| | 97 |
| 6H-7378 | 826 |
| 6I-1418 | 194 |
| 6I-2501 | 68 |
| 6I-2502 | 68 |
| 6I-5134 | 765 |
| 6I-5135 | 765 |
| 6I-5136 | 765 |
| 6I-5298 | 523 |
| 6I-5342 | 633 |
| 6I-5470 | 619 |
| 6I-6033 | 239 |
| 6I-6354 | 796 |
| 6I-6371 | 804 |
| 6I-6404 | 795 |
| 6I-6405 | 795 |
| 6I-6406 | 795 |
| 6I-6583 | 233 |
| 6I-6585 | 233 |
| 6I-6721 | 399 |
| 6I-6795 | 554 |
| | 588 |
| 6I-6923 | 573 |
| 6I-9454 | 316 |
| | 318 |
| 6J-2680 | 325 |
| | 441 |
| | 441.02 |
| 6K-0806 | 520 |
| | 521 |
| 6K-8178 | 91 |
| | 93 |
| | 151 |
| 6L-3616 | 762 |
| | 763 |
| | 764 |
| | 765 |
| | 766 |
| 6M-5062 | 560 |
| 6P-2215 | 236 |
| 6P-2216 | 236 |
| | 241 |
| | 250 |
| 6V-0400 | 393 |
| | 395 |
| | 411 |
| | 413 |
| | 414 |
| | 415 |

# PART NUMBER INDEX


| Part.No | Page | Part.No | Page | Part.No | Page |
|---|---|---|---|---|---|
| | 416 | | 31 | | 203 |
| | 437 | | 79 | | 637 |
| | 439 | 6V-5266 | 45 | 6V-8236 | 31 |
| | 442 | 6V-5326 | 593 | 6V-8337 | 525 |
| | 481 | | 595 | 6V-8362 | 147 |
| | 483 | 6V-5393 | 551 | 6V-8363 | 228 |
| | 485 | 6V-5556 | 509 | 6V-8370 | 228 |
| 6V-0683 | 457 | | 549 | 6V-8378 | 149 |
| | 457.04 | 6V-5597 | 541 | 6V-8397 | 377 |
| 6V-0745 | 408 | | 543 | | 379 |
| 6V-0852 | 325 | | 549 | | 383 |
| | 458 | | 551 | | 391 |
| | 458.01 | | 556 | | 397 |
| | 461 | | 559 | | 437 |
| | 463 | 6V-5645 | 133 | | 439 |
| | 467 | 6V-5683 | 621 | | 441.02 |
| | 471 | 6V-6715 | 651 | | 451 |
| | 475 | 6V-7238 | 503 | | 453 |
| 6V-1874 | 487 | 6V-7357 | 519 | | 455 |
| | 489 | | 654 | | 457 |
| | 491 | | 719 | | 457.02 |
| 6V-3265 | 646 | | 721 | | 457.04 |
| | 719 | 6V-7636 | 619 | | 458 |
| | 721 | 6V-7658 | 296 | | 458.01 |
| 6V-3342 | 765 | | 328 | | 459 |
| | 766 | 6V-7661 | 311 | | 461 |
| 6V-3922 | 541 | 6V-8186 | 149 | | 463 |
| | 549 | 6V-8187 | 133 | | 464 |
| | 551 | 6V-8200 | 343 | | 467 |
| 6V-3938 | 573 | | 345 | | 468 |
| 6V-3965 | 325 | | 382 | | 471 |
| | 458 | | 384 | | 472 |
| | 458.01 | 6V-8202 | 573 | | 475 |
| | 461 | | 680 | | 476 |
| | 463 | | 680.01 | | 477 |
| | 467 | | 690 | | 479 |
| | 471 | | 690.01 | | 571 |
| | 475 | | 694 | | 604 |
| 6V-4298 | 333 | | 694.01 | 6V-8398 | 377 |
| 6V-5200 | 504 | | 699 | | 383 |
| 6V-5210 | 111 | | 699.01 | | 397 |
| | 223 | 6V-8218 | 554 | | 419 |
| | 224 | | 588 | | 421 |
| 6V-5215 | 21 | 6V-8231 | 62 | | 423 |

# PART NUMBER INDEX


| Part.No | Page | Part.No | Page | Part.No | Page |
|---|---|---|---|---|---|
| | 425 | | 379 | | 457 |
| | 427 | | 451 | | 457.02 |
| | 428 | | 455 | | 457.04 |
| | 429 | | 457 | | 458 |
| | 431 | | 457.02 | | 458.01 |
| | 433 | | 457.04 | | 459 |
| | 435 | | 458 | | 461 |
| | 437 | | 458.01 | | 463 |
| | 439 | | 459 | | 464 |
| | 441 | | 464 | | 467 |
| | 441.02 | | 467 | | 468 |
| | 451 | | 468 | | 471 |
| | 455 | | 471 | | 475 |
| | 457 | | 472 | | 477 |
| | 457.02 | | 477 | | 479 |
| | 457.04 | | 479 | 6V-8774 . . . . . | 457 |
| | 458 | 6V-8637 . . . . . | 441 | | 457.04 |
| | 458.01 | | 441.02 | 6V-8781 . . . . . | 379 |
| | 477 | | 497 | | 453 |
| | 485 | 6V-8639 . . . . . | 431 | | 455 |
| | 493 | | 433 | | 457 |
| | 498 | | 435 | | 457.02 |
| | 555 | | 441 | | 457.04 |
| | 576 | | 455 | | 472 |
| 6V-8400 . . . . . | 567 | | 457 | 6V-8784 . . . . . | 491 |
| 6V-8467 . . . . . | 375 | | 457.02 | 6V-8978 . . . . . | 554 |
| 6V-8624 . . . . . | 441 | | 457.04 | | 588 |
| | 441.02 | | 458 | 6V-8981 . . . . . | 433 |
| 6V-8625 . . . . . | 377 | | 458.01 | 6V-8994 . . . . . | 397 |
| | 437 | 6V-8713 . . . . . | 45 | 6V-8995 . . . . . | 428 |
| | 439 | | 379 | | 429 |
| | 455 | 6V-8716 . . . . . | 400 | 6V-9001 . . . . . | 377 |
| | 457 | | 403 | | 451 |
| | 457.02 | | 491 | | 455 |
| | 457.04 | 6V-8721 . . . . . | 437 | | 457 |
| | 477 | | 439 | | 457.02 |
| 6V-8626 . . . . . | 379 | 6V-8722 . . . . . | 471 | | 457.04 |
| 6V-8627 . . . . . | 383 | 6V-8724 . . . . . | 379 | | 459 |
| 6V-8632 . . . . . | 471 | | 391 | | 464 |
| 6V-8633 . . . . . | 383 | | 437 | | 467 |
| 6V-8635 . . . . . | 399 | | 439 | | 468 |
| | 495 | | 451 | | 471 |
| | 496 | | 453 | | 472 |
| 6V-8636 . . . . . | 377 | | 455 | | 479 |

# PART NUMBER INDEX


| Part.No | Page |
|---|---|
| 6V-9002 | 441 |
| | 441.02 |
| | 451 |
| | 455 |
| | 457.02 |
| | 485 |
| 6V-9004 | 458 |
| | 458.01 |
| | 489 |
| | 491 |
| 6V-9005 | 489 |
| | 491 |
| 6V-9007 | 441 |
| | 441.02 |
| | 458 |
| | 458.01 |
| | 489 |
| | 491 |
| 6V-9008 | 485 |
| | 495 |
| | 497 |
| 6V-9168 | 397 |
| 6V-9169 | 428 |
| | 429 |
| | 433 |
| 6V-9175 | 379 |
| 6V-9182 | 403 |
| 6V-9491 | 143 |
| | 145 |
| 6V-9672 | 111 |
| 6V-9746 | 377 |
| | 379 |
| | 383 |
| | 393 |
| | 395 |
| | 399 |
| | 400 |
| | 403 |
| | 404 |
| | 408 |
| | 441 |
| | 441.02 |
| | 458 |
| | 458.01 |
| | 489 |
| | 491 |
| | 493 |
| | 496 |
| | 497 |
| 6V-9808 | 431 |
| | 435 |
| 6V-9829 | 461 |
| | 463 |
| | 467 |
| | 471 |
| | 475 |
| 6V-9833 | 495 |
| 6V-9836 | 455 |
| | 457 |
| | 457.02 |
| | 457.04 |
| | 461 |
| | 463 |
| | 467 |
| | 471 |
| | 475 |
| | 476 |
| | 477 |
| 6V-9837 | 377 |
| 6V-9839 | 491 |
| 6V-9840 | 487 |
| | 489 |
| | 491 |
| | 495 |
| 6V-9843 | 477 |
| 6V-9844 | 437 |
| | 439 |
| 6V-9850 | 377 |
| | 455 |
| | 457.02 |
| 6V-9852 | 471 |
| 6V-9854 | 487 |
| | 489 |
| | 491 |
| | 495 |
| 6V-9872 | 379 |
| | 391 |
| 6V-9875 | 487 |
| | 489 |
| | 491 |
| 6V-9876 | 441 |
| | 441.02 |
| | 476 |
| 6W-6005 | 93 |
| | 151 |
| 6W-7293 | 719 |
| | 721 |
| 6Y-0473 | 312 |
| | 313 |
| 6Y-5408 | 817 |
| 6Y-5409 | 816 |
| 6Y-5472 | 814 |
| 6Y-7409 | 816 |
| 6Y-8186 | 320 |
| | 321 |
| 7C-1493 | 45 |
| 7C-4354 | 391 |
| 7F-8268 | 312 |
| | 313 |
| 7G-1060 | 127 |
| 7G-5984 | 485 |
| 7G-5985 | 485 |
| 7G-5986 | 485 |
| 7H-3171 | 296 |
| | 311 |
| 7I-0375 | 719 |
| | 721 |
| | 723 |
| 7I-0717 | 268 |
| | 270 |
| | 272 |
| 7I-0800 | 255 |
| | 825 |
| 7I-0966 | 509 |
| 7I-1026 | 534 |
| 7I-1105 | 471 |
| 7I-1248 | 541 |
| | 543 |


7

# PART NUMBER INDEX


| Part.No | Page | Part.No | Page | Part.No | Page |
|---|---|---|---|---|---|
| | 551 | | 97 | | 475 |
| | 556 | | 120 | | 476 |
| | 559 | | 124 | | 477 |
| 7I-1533 | 833 | | 127 | | 479 |
| | 833.06 | | 137 | | 495 |
| | 839 | | 139 | | 497 |
| | 839.06 | | 154 | | 498 |
| 7I-2272 | 343 | | 157 | | 652 |
| | 549 | | 158 | | 671 |
| | 579 | | 161 | | 719 |
| | 581 | | 163 | | 721 |
| 7I-2673 | 55 | | 165 | | 723 |
| | 95 | | 171 | 7M-7410 | 581 |
| | 97 | | 177 | 7M-8485 | 233 |
| | 99 | | 179 | | 341 |
| | 215 | | 185 | | 377 |
| | 217 | | 187 | | 399 |
| | 219 | | 189.02 | | 400 |
| | 221 | | 189.04 | | 403 |
| | 697 | | 196 | | 485 |
| | 697.01 | | 379 | | 487 |
| | 699 | | 397 | | 489 |
| | 700.01 | | 428 | | 491 |
| 7I-6395 | 826 | | 429 | | 495 |
| 7I-6508 | 831 | | 431 | | 496 |
| | 833.04 | | 433 | | 497 |
| | 837 | | 435 | | 541 |
| | 839.04 | | 437 | | 549 |
| 7I-6843 | 778 | | 439 | | 599 |
| 7I-7131 | 518 | | 441 | 7N-0719 | 133 |
| 7I-7439 | 477 | | 441.02 | | 135 |
| 7I-8084 | 575 | | 451 | 7N-3718 | 217 |
| | 586 | | 453 | | 221 |
| | 603 | | 455 | 7T-3401 | 815 |
| 7J-9108 | 379 | | 457 | 7T-3402 | 813 |
| | 419 | | 457.02 | 7T-3403 | 815 |
| | 421 | | 457.04 | 7T-6799 | 147 |
| | 471 | | 458 | 7T-8890 | 641 |
| | 560 | | 458.01 | 7V-2882 | 752 |
| 7J-9933 | 509 | | 461 | | 754 |
| 7K-1181 | 45 | | 463 | | 755 |
| | 91 | | 467 | | 757 |
| | 93 | | 471 | | 758 |
| | 95 | | 472 | | 759 |

# PART NUMBER INDEX


| Part.No | Page | Part.No | Page | Part.No | Page |
|---|---|---|---|---|---|
| 7W-3556 | 36 | | 667 | 7Y-0252 | 503 |
| 7W-9028 | 45 | 7X-2554 | 55 | 7Y-0254 | 801 |
| 7X-0578 | 619 | 7X-2555 | 665.03 | 7Y-0357 | 804 |
| | 627 | 7X-2557 | 339 | 7Y-0358 | 804 |
| 7X-0796 | 31 | 7X-2558 | 504 | 7Y-0366 | 780 |
| | 39 | 7X-2559 | 656 | | 781 |
| | 203 | 7X-2562 | 230 | | 804 |
| 7X-0818 | 50 | 7X-2563 | 235 | 7Y-0463 | 337.01 |
| | 95 | 7X-2565 | 307 | 7Y-0466 | 337.01 |
| | 464 | | 308 | 7Y-0467 | 337.01 |
| 7X-0851 | 804 | | 309 | 7Y-0468 | 337 |
| 7X-1451 | 408 | | 310 | | 337.01 |
| 7X-2459 | 463 | 7X-2568 | 233 | | 525 |
| | 467 | 7X-2576 | 235 | 7Y-0623 | 659 |
| | 471 | 7X-2583 | 267 | | 661 |
| 7X-2532 | 38 | | 269 | 7Y-0633 | 281 |
| 7X-2533 | 95 | | 271 | | 283 |
| | 651 | 7X-2619 | 95 | | 285 |
| | 724 | 7X-2621 | 95 | | 287 |
| 7X-2535 | 75 | | 99 | 7Y-0682 | 300 |
| 7X-2536 | 196 | | 127 | 7Y-0729 | 779 |
| | 299 | | 158 | | 780 |
| | 528 | | 171 | | 782 |
| | 531 | | 549 | | 783 |
| 7X-2543 | 423 | 7X-3164 | 423 | | 784 |
| | 425 | | 425 | | 785 |
| | 427 | | 427 | | 804 |
| | 431 | 7X-7644 | 829 | 7Y-1426 | 233 |
| | 433 | | 831 | 7Y-1430 | 233 |
| | 435 | | 833.02 | 7Y-1431 | 233 |
| 7X-2544 | 485 | | 833.04 | 7Y-1432 | 233 |
| 7X-2545 | 559 | | 835 | 7Y-1433 | 233 |
| 7X-2548 | 283 | | 837 | 7Y-1434 | 233 |
| 7X-2549 | 397 | | 839.02 | | 503 |
| | 411 | | 839.04 | 7Y-1558 | 233 |
| | 413 | 7X-7729 | 55 | 7Y-1607 | 307 |
| | 419 | | 75 | 7Y-1608 | 308 |
| | 421 | | 485 | 7Y-1647 | 275 |
| 7X-2553 | 226 | | 713 | | 277 |
| | 411 | | 715 | 7Y-1648 | 275 |
| | 413 | 7Y-0063 | 271 | | 277 |
| | 442 | 7Y-0070 | 826 | 7Y-1650 | 275 |
| | 659 | 7Y-0223 | 233 | | 277 |
| | 661 | 7Y-0225 | 233 | 7Y-1746 | 297 |

# PART NUMBER INDEX


| Part.No | Page | Part.No | Page | Part.No | Page |
|---|---|---|---|---|---|
| | 298 | 7Y-3951 | 111 | | 515 |
| 7Y-1781 | 299 | | 113 | 7Y-4212 | 513 |
| 7Y-1863 | 275 | | 115 | | 515 |
| | 277 | | 117 | 7Y-4213 | 513 |
| 7Y-1924 | 95 | | 146 | | 515 |
| 7Y-1976 | 55 | 7Y-3952 | 115 | 7Y-4215 | 341 |
| | 57 | | 117 | | 513 |
| 7Y-2219 | 786 | | 146 | | 515 |
| | 787 | 7Y-3954 | 111 | 7Y-4216 | 513 |
| | 789 | 7Y-3958 | 113 | | 515 |
| | 790 | | 117 | 7Y-4217 | 513 |
| | 791 | 7Y-3962 | 101 | | 515 |
| | 792 | | 113 | 7Y-4222 | 513 |
| | 802 | | 146 | | 515 |
| 7Y-2292 | 268 | | 180 | 7Y-4224 | 513 |
| | 270 | | 189.05 | | 515 |
| | 272 | | 225 | 7Y-4267 | 507 |
| 7Y-2522 | 761 | 7Y-3963 | 101 | 7Y-4268 | 507 |
| 7Y-2579 | 743 | | 113 | 7Y-4390 | 439 |
| | 745 | | 117 | | 453 |
| | 747 | | 123 | 7Y-4399 | 461 |
| | 748 | | 125 | | 463 |
| | 751 | | 146 | 7Y-4538 | 411 |
| 7Y-2580 | 748 | | 189.05 | | 413 |
| 7Y-2670 | 765 | | 225 | | 414 |
| 7Y-2853 | 241 | 7Y-3964 | 101 | | 415 |
| | 243 | | 113 | | 416 |
| 7Y-2854 | 241 | | 146 | 7Y-4562 | 442 |
| | 243 | | 180 | 7Y-4594 | 748 |
| 7Y-3470 | 637 | | 189.05 | 7Y-4631 | 369 |
| 7Y-3472 | 637 | | 225 | 7Y-4817 | 518 |
| 7Y-3474 | 640 | 7Y-3965 | 101 | 7Y-4868 | 388 |
| | 646 | | 113 | | 393 |
| 7Y-3729 | 491 | | 117 | | 395 |
| 7Y-3730 | 483 | | 123 | | 399 |
| 7Y-3731 | 487 | | 125 | | 408 |
| | 489 | | 146 | | 419 |
| | 491 | | 189.05 | | 421 |
| 7Y-3732 | 496 | | 225 | 7Y-5074 | 481 |
| 7Y-3820 | 101 | 7Y-3995 | 101 | 7Y-5219 | 549 |
| 7Y-3821 | 101 | 7Y-4193 | 453 | 7Y-5221 | 507 |
| 7Y-3919 | 664 | 7Y-4199 | 467 | 7Y-5226 | 95 |
| 7Y-3920 | 664 | | 471 | | 593 |
| 7Y-3950 | 113 | 7Y-4202 | 513 | | 595 |

# PART NUMBER INDEX


| Part.No | Page |
|---|---|
| 7Y-5243 | 535 |
| 7Y-5247 | 485 |
| 7Y-5272 | 335 |
| 7Y-5280 | 82 |
| 7Y-5456 | 91 |
| | 93 |
| 7Y-5458 | 148 |
| 7Y-5464 | 148 |
| 7Y-5505 | 111 |
| 7Y-6108 | 826 |
| 7Y-6402 | 801 |
| 7Y-6442 | 388 |
| 7Y-6510 | 388 |
| 7Y-6511 | 388 |
| 7Y-6601 | 800 |
| 7Y-6627 | 761 |
| 7Y-6641 | 767 |
| 7Y-6649 | 767 |
| 7Y-6660 | 801 |
| 7Y-6664 | 801 |
| 7Y-6665 | 801 |
| 7Y-6666 | 801 |
| 7Y-6667 | 801 |
| 7Y-6668 | 801 |
| 7Y-6671 | 801 |
| 7Y-6673 | 801 |
| 7Y-6674 | 801 |
| 7Y-7364 | 635 |
| 7Y-7904 | 408 |
| 7Y-8036 | 399 |
| 7Y-8099 | 541 |
| 7Y-8165 | 97 |
| 7Y-8167 | 81 |
| | 99 |
| 7Y-8309 | 471 |
| 7Y-8379 | 458 |
| | 458.01 |
| 7Y-8436 | 517 |
| 7Y-8437 | 517 |
| 7Y-8463 | 520 |
| | 521 |
| 7Y-8478 | 479 |
| 7Y-8487 | 457 |
| | 457.04 |
| 7Y-8561 | 725 |
| 7Y-8737 | 87 |
| | 89 |
| | 89.01 |
| | 89.02 |

## 8

| Part.No | Page |
|---|---|
| 8C-3095 | 651 |
| 8C-3445 | 45 |
| 8C-3446 | 45 |
| | 325 |
| 8C-3451 | 325 |
| 8C-5607 | 651 |
| 8C-5608 | 651 |
| 8C-5917 | 104 |
| | 152 |
| 8C-5918 | 105 |
| 8C-6354 | 117 |
| 8C-8968 | 379 |
| 8C-8992 | 263 |
| | 264 |
| | 265 |
| | 266 |
| | 314 |
| | 315 |
| 8E-0836 | 814 |
| 8E-0837 | 815 |
| 8E-0838 | 816 |
| 8E-0839 | 817 |
| 8E-0840 | 816 |
| 8E-3751 | 805 |
| 8E-3752 | 809 |
| 8E-3756 | 807 |
| 8E-3757 | 811 |
| 8E-4359 | 296 |
| 8E-4402 | 814 |
| 8E-5031 | 312 |
| | 313 |
| 8E-5032 | 312 |
| 8E-5035 | 312 |
| | 313 |
| 8E-5037 | 312 |
| | 313 |
| 8E-5599 | 312 |
| | 313 |
| 8E-5600 | 307 |
| | 308 |
| | 309 |
| | 310 |
| | 311 |
| 8E-5601 | 311 |
| 8E-5602 | 311 |
| 8E-5605 | 311 |
| 8E-5606 | 311 |
| 8E-5608 | 311 |
| 8E-6258 | 813 |
| 8E-6259 | 805 |
| | 806 |
| | 807 |
| | 808 |
| | 813 |
| 8E-6792 | 311 |
| 8E-6793 | 311 |
| 8E-8585 | 320 |
| | 321 |
| 8E-8586 | 320 |
| | 321 |
| 8E-9490 | 793 |
| | 794 |
| 8E-9805 | 230 |
| 8F-1434 | 149 |
| | 228 |
| 8H-3481 | 653 |
| 8H-5303 | 135 |
| 8H-5306 | 135 |
| 8H-9819 | 325 |
| 8J-1256 | 95 |
| 8J-4645 | 341 |
| 8J-4953 | 810 |
| 8J-4954 | 810 |
| 8J-4955 | 782 |
| | 809 |
| 8L-2779 | 563 |
| 8M-2772 | 762 |
| | 763 |
| | 764 |

# PART NUMBER INDEX


| Part.No | Page | Part.No | Page | Part.No | Page |
|---|---|---|---|---|---|
| | 765 | 8T-0360 | 275 | | 99 |
| | 766 | 8T-0362 | 275 | | 127 |
| 8M-2773 | 719 | 8T-0380 | 804 | | 131 |
| 8N-0869 | 104 | 8T-1158 | 567 | | 139 |
| 8S-0934 | 704 | 8T-1159 | 311 | | 151 |
| 8S-4723 | 704 | 8T-1447 | 357 | | 154 |
| 8S-4724 | 704 | | 367 | | 157 |
| 8T-0075 | 461 | 8T-1687 | 441.02 | | 158 |
| | 463 | 8T-1779 | 437 | | 165 |
| | 467 | | 439 | | 167 |
| | 471 | | 455 | | 171 |
| | 475 | | 457.02 | | 175 |
| 8T-0078 | 491 | 8T-1905 | 458 | | 187 |
| 8T-0114 | 528 | | 458.01 | | 213 |
| | 531 | | 461 | | 215 |
| 8T-0198 | 487 | | 463 | | 217 |
| | 489 | | 467 | | 219 |
| | 491 | | 468 | | 221 |
| 8T-0266 | 711 | | 471 | | 239 |
| 8T-0267 | 325 | | 475 | | 241 |
| 8T-0269 | 665.02 | 8T-2353 | 391 | | 275 |
| | 665.03 | 8T-2920 | 441 | | 277 |
| | 665.04 | | 441.02 | | 325 |
| 8T-0286 | 95 | 8T-3008 | 599 | | 336 |
| 8T-0288 | 575 | 8T-3647 | 719 | | 377 |
| | 586 | | 721 | | 379 |
| | 587 | | 723 | | 383 |
| 8T-0328 | 82 | | 729 | | 388 |
| | 87 | 8T-3653 | 380 | | 391 |
| | 89 | | 381 | | 404 |
| | 89.01 | 8T-4121 | 43 | | 405 |
| | 89.02 | | 45 | | 406 |
| | 95 | | 47 | | 407 |
| | 109 | | 53 | | 414 |
| | 111 | | 55 | | 415 |
| | 133 | | 57 | | 416 |
| | 179 | | 64 | | 419 |
| | 236 | | 70 | | 421 |
| | 333 | | 75 | | 423 |
| | 652 | | 81 | | 425 |
| | 713 | | 91 | | 427 |
| | 715 | | 93 | | 431 |
| 8T-0341 | 379 | | 95 | | 435 |
| 8T-0343 | 567 | | 97 | | 437 |

# PART NUMBER INDEX


| Part.No | Page | Part.No | Page | Part.No | Page |
|---|---|---|---|---|---|
| | 439 | | 764 | | 81 |
| | 451 | | 765 | | 93 |
| | 455 | | 766 | | 151 |
| | 457 | 8T-4123 . . . . . | 38 | | 213 |
| | 457.02 | | 233 | | 215 |
| | 457.04 | | 235 | | 217 |
| | 467 | | 281 | | 219 |
| | 471 | | 283 | | 221 |
| | 472 | | 285 | | 259 |
| | 476 | | 301 | | 326 |
| | 479 | | 302 | | 343 |
| | 483 | | 303 | | 345 |
| | 485 | | 304 | | 391 |
| | 487 | | 305 | | 567 |
| | 489 | | 307 | | 725 |
| | 491 | | 308 | | 762 |
| | 493 | | 309 | | 763 |
| | 518 | | 310 | | 765 |
| | 527 | | 743 | | 767 |
| | 528 | | 745 | 8T-4134 . . . . . | 635 |
| | 531 | | 747 | 8T-4136 . . . . . | 45 |
| | 541 | | 748 | | 53 |
| | 549 | | 751 | | 55 |
| | 556 | | 752 | | 81 |
| | 559 | | 753 | | 91 |
| | 645 | | 754 | | 93 |
| | 646 | | 755 | | 95 |
| | 663 | | 756 | | 157 |
| | 664 | | 757 | | 275 |
| | 665.06 | | 758 | | 277 |
| | 666 | | 759 | | 325 |
| | 667 | | 760 | | 339 |
| | 671 | | 761 | | 341 |
| | 679 | | 773 | | 343 |
| | 713 | 8T-4127 . . . . . | 109 | | 345 |
| | 715 | 8T-4131 . . . . . | 773 | | 379 |
| | 719 | 8T-4132 . . . . . | 389 | | 423 |
| | 721 | | 390 | | 425 |
| | 723 | | 769 | | 427 |
| | 724 | | 771 | | 437 |
| | 725 | | 775 | | 439 |
| | 729 | | 777 | | 451 |
| | 762 | | 778 | | 457 |
| | 763 | 8T-4133 . . . . . | 75 | | 457.04 |

# PART NUMBER INDEX


| Part.No | Page | Part.No | Page | Part.No | Page |
|---|---|---|---|---|---|
| | 467 | | 457.04 | | 425 |
| | 471 | | 472 | | 427 |
| | 485 | | 493 | | 441 |
| | 487 | | 528 | | 441.02 |
| | 489 | | 531 | | 485 |
| | 491 | | 619 | | 495 |
| | 518 | | 665.06 | | 593 |
| | 527 | | 713 | | 595 |
| | 528 | | 715 | | 659 |
| | 531 | | 719 | | 661 |
| | 569 | | 721 | | 665.02 |
| | 571 | | 723 | 8T-4140 . . . . . | 84 |
| | 713 | | 724 | | 84.01 |
| | 715 | | 725 | | 294 |
| | 719 | 8T-4138 . . . . . | 239 | | 295 |
| | 721 | | 721 | | 322 |
| 8T-4137 . . . . . | 45 | 8T-4139 . . . . . | 38 | | 339 |
| | 53 | | 55 | | 537 |
| | 55 | | 67 | 8T-4167 . . . . . | 235 |
| | 57 | | 75 | 8T-4171 . . . . . | 133 |
| | 64 | | 239 | | 157 |
| | 75 | | 241 | | 158 |
| | 81 | | 243 | | 165 |
| | 91 | | 339 | | 179 |
| | 93 | | 377 | | 185 |
| | 95 | | 383 | | 196 |
| | 97 | | 388 | | 726 |
| | 99 | | 389 | 8T-4172 . . . . . | 31 |
| | 127 | | 390 | | 455 |
| | 131 | | 393 | | 457.02 |
| | 154 | | 395 | | 723 |
| | 167 | | 397 | | 729 |
| | 187 | | 399 | 8T-4174 . . . . . | 656 |
| | 213 | | 400 | 8T-4175 . . . . . | 339 |
| | 241 | | 403 | 8T-4176 . . . . . | 339 |
| | 275 | | 408 | | 487 |
| | 277 | | 411 | | 489 |
| | 297 | | 413 | | 491 |
| | 298 | | 414 | 8T-4177 . . . . . | 461 |
| | 325 | | 415 | | 463 |
| | 341 | | 416 | | 467 |
| | 391 | | 419 | | 471 |
| | 451 | | 421 | | 475 |
| | 457 | | 423 | 8T-4178 . . . . . | 377 |

# PART NUMBER INDEX


| Part.No | Page | Part.No | Page | Part.No | Page |
|---|---|---|---|---|---|
| | 433 | | 413 | | 151 |
| 8T-4179 . . . . . | 81 | | 414 | | 165 |
| | 255 | | 415 | | 167 |
| | 268 | | 416 | | 175 |
| | 270 | | 419 | | 281 |
| | 272 | | 421 | | 283 |
| | 299 | | 428 | | 285 |
| | 306 | | 429 | | 467 |
| | 404 | | 433 | | 471 |
| | 607 | | 437 | | 476 |
| | 609 | | 439 | | 479 |
| | 725 | | 723 | | 527 |
| | 761 | | 729 | | 645 |
| 8T-4182 . . . . . | 75 | 8T-4185 . . . . . | 93 | | 646 |
| | 93 | | 97 | | 664 |
| | 95 | | 379 | | 667 |
| | 377 | | 388 | | 679 |
| | 404 | | 419 | | 719 |
| | 405 | | 421 | | 721 |
| | 406 | | 423 | | 723 |
| | 407 | | 425 | | 762 |
| 8T-4183 . . . . . | 38 | | 427 | | 763 |
| | 239 | | 433 | | 764 |
| | 262 | 8T-4186 . . . . . | 45 | | 766 |
| | 325 | | 383 | 8T-4192 . . . . . | 151 |
| | 414 | | 485 | | 236 |
| | 415 | 8T-4189 . . . . . | 50 | | 241 |
| | 416 | | 57 | | 243 |
| | 423 | | 208 | | 260 |
| | 425 | | 241 | | 262 |
| | 427 | | 348 | | 341 |
| | 431 | | 464 | | 348 |
| | 433 | | 654 | | 377 |
| | 435 | | 725 | | 379 |
| | 457 | 8T-4190 . . . . . | 215 | | 457 |
| | 457.04 | | 217 | | 457.04 |
| | 485 | | 219 | | 461 |
| | 487 | | 221 | | 463 |
| | 489 | | 607 | | 467 |
| | 491 | | 609 | | 471 |
| | 503 | 8T-4191 . . . . . | 19 | | 475 |
| 8T-4184 . . . . . | 393 | | 70 | | 479 |
| | 395 | | 99 | | 495 |
| | 411 | | 139 | | 659 |

# PART NUMBER INDEX


| Part.No | Page | Part.No | Page | Part.No | Page |
|---|---|---|---|---|---|
| | 661 | | 382 | | 268 |
| | 662 | | 383 | | 270 |
| | 665 | | 384 | | 272 |
| 8T-4193 . . . . . | 537 | | 385 | | 286 |
| | 665.04 | | 386 | | 287 |
| | 802 | | 387 | | 325 |
| | 803 | | 391 | | 333 |
| 8T-4194 . . . . . | 333 | | 487 | | 343 |
| | 411 | | 489 | | 345 |
| | 413 | | 491 | | 377 |
| | 414 | 8T-4197 . . . . . | 45 | | 379 |
| | 415 | 8T-4198 . . . . . | 404 | | 382 |
| | 416 | | 405 | | 383 |
| | 419 | | 406 | | 384 |
| | 421 | | 407 | | 385 |
| | 442 | | 431 | | 386 |
| | 481 | | 435 | | 387 |
| | 485 | | 451 | | 388 |
| 8T-4195 . . . . . | 57 | 8T-4199 . . . . . | 95 | | 389 |
| | 81 | | 275 | | 390 |
| | 93 | | 277 | | 393 |
| | 99 | 8T-4200 . . . . . | 50 | | 395 |
| | 167 | | 55 | | 397 |
| | 187 | | 211 | | 399 |
| | 260 | | 259 | | 400 |
| | 261 | | 619 | | 403 |
| | 325 | | 632 | | 404 |
| | 336 | | 634 | | 408 |
| | 388 | | 719 | | 411 |
| | 541 | | 721 | | 413 |
| | 549 | | 723 | | 414 |
| | 556 | 8T-4205 . . . . . | 133 | | 415 |
| | 559 | 8T-4223 . . . . . | 37 | | 416 |
| | 663 | | 38 | | 419 |
| | 666 | | 55 | | 421 |
| | 671 | | 67 | | 423 |
| 8T-4196 . . . . . | 57 | | 151 | | 425 |
| | 93 | | 207 | | 427 |
| | 341 | | 223 | | 428 |
| | 343 | | 224 | | 429 |
| | 345 | | 243 | | 433 |
| | 379 | | 255 | | 437 |
| | 380 | | 259 | | 439 |
| | 381 | | 262 | | 441 |

# PART NUMBER INDEX


| Part.No | Page | Part.No | Page | Part.No | Page |
|---|---|---|---|---|---|
| | 441.02 | | 211 | | 397 |
| | 442 | | 241 | | 419 |
| | 457 | | 243 | | 421 |
| | 457.04 | | 259 | 8T-4648 . . . . . | 377 |
| | 461 | | 325 | | 383 |
| | 463 | | 461 | | 399 |
| | 467 | | 463 | | 411 |
| | 471 | | 464 | | 413 |
| | 475 | | 467 | 8T-4779 . . . . . | 619 |
| | 479 | | 471 | 8T-4780 . . . . . | 281 |
| | 481 | | 475 | | 283 |
| | 483 | | 479 | | 285 |
| | 485 | | 528 | | 743 |
| | 487 | | 531 | | 745 |
| | 489 | | 619 | | 747 |
| | 491 | | 623 | | 748 |
| | 493 | | 632 | | 751 |
| | 495 | | 634 | | 752 |
| | 496 | | 654 | | 753 |
| | 503 | | 659 | | 754 |
| | 600.01 | | 661 | | 755 |
| | 600.02 | | 681 | | 756 |
| | 607 | | 683 | | 757 |
| | 609 | | 684 | | 758 |
| | 659 | | 686 | | 759 |
| | 661 | | 687 | | 760 |
| | 662 | | 688 | | 761 |
| | 723 | | 689 | 8T-4896 . . . . . | 380 |
| | 725 | | 691 | | 381 |
| | 729 | | 693 | | 382 |
| | 743 | | 695 | | 384 |
| | 745 | | 698 | | 385 |
| | 747 | | 700 | | 386 |
| | 748 | | 702 | | 387 |
| | 751 | | 719 | 8T-4908 . . . . . | 243 |
| | 761 | | 721 | | 325 |
| 8T-4224 . . . . . | 45 | | 723 | | 479 |
| | 50 | | 729 | 8T-4910 . . . . . | 377 |
| | 55 | 8T-4226 . . . . . | 93 | | 382 |
| | 57 | | 151 | | 384 |
| | 75 | 8T-4244 . . . . . | 223 | | 385 |
| | 196 | | 224 | | 386 |
| | 198 | | 286 | | 387 |
| | 199 | | 287 | | 496 |

# PART NUMBER INDEX


| Part.No | Page |
|---|---|
| | 607 |
| | 609 |
| 8T-4944 | 513 |
| | 515 |
| 8T-4956 | 241 |
| | 243 |
| | 256 |
| | 325 |
| | 379 |
| | 414 |
| | 415 |
| | 416 |
| | 428 |
| | 429 |
| | 433 |
| | 441 |
| | 441.02 |
| | 485 |
| | 487 |
| | 489 |
| | 491 |
| | 493 |
| | 496 |
| | 743 |
| | 745 |
| | 747 |
| | 748 |
| | 751 |
| 8T-4970 | 133 |
| | 211 |
| | 640 |
| | 646 |
| | 665.07 |
| 8T-4971 | 719 |
| | 721 |
| | 725 |
| 8T-4984 | 53 |
| | 55 |
| 8T-4986 | 63 |
| 8T-4987 | 67 |
| 8T-5005 | 154 |
| | 175 |
| 8T-5049 | 348 |
| 8T-5092 | 487 |
| | 489 |
| | 491 |
| 8T-5460 | 301 |
| | 302 |
| | 303 |
| | 304 |
| | 305 |
| | 773 |
| 8T-5878 | 307 |
| | 308 |
| | 309 |
| | 310 |
| 8T-6411 | 211 |
| 8T-6412 | 211 |
| | 623 |
| | 627 |
| | 630 |
| 8T-6466 | 75 |
| | 97 |
| | 379 |
| | 431 |
| | 435 |
| | 467 |
| | 471 |
| | 729 |
| | 767 |
| 8T-6685 | 31 |
| | 414 |
| | 415 |
| | 416 |
| | 549 |
| 8T-6693 | 111 |
| | 236 |
| | 333 |
| 8T-6703 | 51 |
| | 53 |
| | 55 |
| 8T-6759 | 518 |
| | 549 |
| | 567 |
| | 581 |
| | 585 |
| | 593 |
| | 595 |
| 8T-6842 | 833 |
| | 833.06 |
| | 839 |
| | 839.06 |
| 8T-6868 | 600.01 |
| | 600.02 |
| | 607 |
| | 609 |
| 8T-6870 | 467 |
| | 471 |
| | 472 |
| 8T-6912 | 95 |
| 8T-7087 | 485 |
| 8T-7338 | 292 |
| 8T-7547 | 45 |
| 8T-7811 | 516 |
| 8T-7877 | 563 |
| 8T-7930 | 397 |
| 8T-7964 | 27 |
| 8T-7971 | 325 |
| 8T-8729 | 89.01 |
| | 89.02 |
| | 118 |
| | 141.01 |
| | 228 |
| 8T-8730 | 188 |
| 8T-8737 | 95 |
| | 101 |
| | 103 |
| | 113 |
| | 115 |
| | 117 |
| | 123 |
| | 125 |
| | 129 |
| | 138 |
| | 140 |
| | 146 |
| | 148 |
| | 154 |
| | 155 |
| | 168 |
| | 172 |
| | 180 |

# PART NUMBER INDEX


| Part.No | Page |
|---|---|
| | 181 |
| | 182 |
| | 183 |
| | 188 |
| | 648 |
| | 723 |
| 8T-8799 | 101 |
| 8T-9403 | 377 |
| | 406 |
| | 407 |
| | 483 |
| 8T-9533 | 573 |
| 8T-9598 | 35 |
| | 48 |
| 8T-9756 | 105 |
| 8T-9757 | 105 |
| | 153 |
| 8V-1715 | 656 |
| 8Y-6352 | 615 |
| | 617 |
| 8Y-6967 | 607 |
| | 609 |
| **9** | |
| 9B-7233 | 109 |
| | 147 |
| 9F-2167 | 377 |
| | 496 |
| 9F-5644 | 135 |
| 9G-0002 | 105 |
| 9G-0003 | 105 |
| | 153 |
| 9G-0004 | 104 |
| | 152 |
| 9G-0005 | 105 |
| 9G-4336 | 101 |
| 9G-4343 | 103 |
| | 109 |
| | 133 |
| 9G-7641 | 143 |
| | 145 |
| | 147 |
| 9G-8909 | 105 |
| 9J-0705 | 560 |
| 9J-0707 | 563 |
| 9J-3167 | 779 |
| | 780 |
| | 805 |
| 9J-3169 | 801 |
| | 813 |
| 9J-3175 | 806 |
| 9J-4309 | 807 |
| 9J-4359 | 811 |
| 9L-9188 | 45 |
| 9M-5590 | 567 |
| 9M-8406 | 81 |
| 9N-4302 | 805 |
| 9N-4303 | 807 |
| 9N-4352 | 809 |
| 9N-4353 | 811 |
| 9S-4180 | 328 |
| | 549 |
| 9S-4181 | 487 |
| | 489 |
| | 491 |
| 9S-4182 | 442 |
| 9S-4185 | 339 |
| | 379 |
| | 441 |
| | 441.02 |
| | 471 |
| | 487 |
| | 489 |
| | 491 |
| | 497 |
| | 513 |
| | 515 |
| 9S-4188 | 45 |
| 9S-4191 | 343 |
| | 348 |
| | 379 |
| | 451 |
| | 457 |
| | 457.04 |
| | 459 |
| | 464 |
| | 571 |
| | 602 |
| 9S-6130 | 601 |
| 9S-8001 | 579 |
| 9S-8004 | 81 |
| | 516 |
| | 569 |
| | 579 |
| 9S-8005 | 569 |
| | 571 |
| | 579 |
| | 581 |
| 9S-8006 | 561 |
| 9T-0835 | 346 |
| 9T-1614 | 593 |
| | 595 |
| 9W-0844 | 101 |
| | 103 |
| | 115 |
| | 123 |
| | 125 |
| | 129 |
| | 168 |
| | 181 |
| | 188 |
| | 229 |
| 9W-0852 | 101 |
| | 103 |
| | 123 |
| | 125 |
| | 129 |
| | 168 |
| | 172 |
| | 180 |
| | 181 |
| | 182 |
| | 215 |
| | 219 |
| 9W-1951 | 117 |
| 9W-2142 | 312 |
| | 313 |
| 9W-2201 | 296 |
| 9W-2358 | 812 |
| 9W-2359 | 812 |

# PART NUMBER INDEX


| Part.No | Page |
|---|---|
| 9W-3137 | 320 |
| | 321 |
| 9W-3138 | 320 |
| | 321 |
| 9W-3361 | 316 |
| | 317 |
| | 317.01 |
| | 318 |
| | 319 |
| | 319.01 |
| 9W-3619 | 316 |
| | 317 |
| | 317.01 |
| | 318 |
| | 319 |
| | 319.01 |
| 9W-6472 | 812 |
| 9W-6473 | 812 |
| 9W-8308 | 808 |
| 9W-8309 | 808 |
| 9W-9188 | 808 |
| 9W-9189 | 808 |
| 9W-9351 | 317 |
| | 319 |
| 9W-9455 | 296 |
| 9X-0196 | 103 |
| 9X-0199 | 228 |
| 9X-2041 | 611 |
| | 613 |
| | 619 |
| | 624 |
| | 673 |
| | 675 |
| 9X-2042 | 107 |
| | 109 |
| | 111 |
| | 120 |
| | 211 |
| | 213 |
| | 615 |
| | 617 |
| | 619 |
| | 623 |
| | 627 |
| | 630 |
| | 634 |
| | 635 |
| | 645 |
| | 673 |
| 9X-2043 | 211 |
| | 213 |
| | 671 |
| 9X-2044 | 107 |
| | 109 |
| | 615 |
| | 619 |
| | 620 |
| | 627 |
| | 635 |
| | 645 |
| | 653 |
| 9X-2045 | 619 |
| | 627 |
| | 633 |
| | 671 |
| 9X-2046 | 647 |
| | 653 |
| 9X-2201 | 63 |
| | 442 |
| 9X-2206 | 87 |
| | 89 |
| | 89.01 |
| | 89.02 |
| 9X-2328 | 198 |
| | 199 |
| 9X-2404 | 365 |
| 9X-2480 | 193 |
| 9X-3401 | 36 |
| | 103 |
| | 117 |
| | 123 |
| | 129 |
| | 130 |
| | 138 |
| | 140 |
| | 148 |
| | 155 |
| | 168 |
| | 183 |
| | 189 |
| | 325 |
| | 451 |
| | 458 |
| | 458.01 |
| | 459 |
| | 464 |
| | 467 |
| | 468 |
| | 471 |
| | 475 |
| | 648 |
| 9X-3402 | 138 |
| 9X-3404 | 151 |
| 9X-3463 | 222 |
| | 223 |
| | 224 |
| 9X-6032 | 380 |
| | 381 |
| | 385 |
| | 386 |
| | 387 |
| 9X-6153 | 621 |
| 9X-6165 | 651 |
| 9X-7298 | 375 |
| 9X-8256 | 75 |
| | 77 |
| | 79 |
| | 93 |
| | 95 |
| | 107 |
| | 109 |
| | 133 |
| | 157 |
| | 158 |
| | 165 |
| | 171 |
| | 179 |
| | 185 |
| | 193 |
| | 196 |
| | 198 |
| | 199 |

# PART NUMBER INDEX


| Part.No | Page | Part.No | Page | Part.No | Page |
|---|---|---|---|---|---|
| | 211 | | 667 | | 361 |
| | 239 | | 802 | | 363 |
| | 259 | | 803 | | 365 |
| | 325 | 9X-8600 . . . . . | 87 | 085-9310 . . . . . | 84 |
| | 519 | | 89 | | 84.01 |
| | 627 | | | | 322 |
| | 640 | | | 085-9429 . . . . . | 202 |
| | 645 | 0 | | 085-9513 . . . . . | 20 |
| | 646 | | | 086-0255 . . . . . | 357 |
| | 653 | 003-7764 . . . . . | 81 | | 367 |
| | 654 | | 87 | 086-0321 . . . . . | 802 |
| | 665.02 | | 89 | 086-0322 . . . . . | 802 |
| | 665.03 | | 89.01 | 086-0523 . . . . . | 778 |
| | 665.04 | | 89.02 | 086-1345 . . . . . | 371 |
| | 665.07 | 006-6803 . . . . . | 573 | 086-1346 . . . . . | 371 |
| | 713 | 012-0380 . . . . . | 134 | 087-3908 . . . . . | 239 |
| | 715 | 030-0167 . . . . . | 563 | 087-3909 . . . . . | 239 |
| | 719 | 033-5853 . . . . . | 45 | 087-4402 . . . . . | 451 |
| | 721 | 033-6036 . . . . . | 563 | | 459 |
| | 724 | 033-6038 . . . . . | 45 | | 464 |
| | 725 | 033-8248 . . . . . | 762 | | 468 |
| | 726 | | 763 | 087-4411 . . . . . | 455 |
| 9X-8257 . . . . . | 215 | | 764 | | 457.02 |
| | 217 | 085-6444 . . . . . | 625 | 087-4456 . . . . . | 349 |
| | 219 | 085-6445 . . . . . | 625 | 087-4531 . . . . . | 455 |
| | 221 | 085-6446 . . . . . | 625 | | 457 |
| | 226 | 085-6447 . . . . . | 625 | | 457.02 |
| | 292 | 085-6448 . . . . . | 625 | | 457.04 |
| | 389 | 085-6449 . . . . . | 625 | 087-4534 . . . . . | 455 |
| | 390 | | 633 | | 457.02 |
| | 411 | 085-6452 . . . . . | 619 | 087-4683 . . . . . | 678 |
| | 413 | 085-7079 . . . . . | 573 | 087-4710 . . . . . | 567 |
| | 442 | 085-7080 . . . . . | 573 | 087-4742 . . . . . | 513 |
| | 504 | 085-7081 . . . . . | 573 | | 515 |
| | 533 | 085-7083 . . . . . | 573 | 087-4743 . . . . . | 513 |
| | 537 | 085-7084 . . . . . | 573 | | 515 |
| | 607 | 085-7329 . . . . . | 95 | 087-4757 . . . . . | 513 |
| | 609 | 085-7356 . . . . . | 468 | | 515 |
| | 619 | 085-8037 . . . . . | 646 | 087-4786 . . . . . | 513 |
| | 656 | 085-8604 . . . . . | 359 | | 515 |
| | 659 | | 361 | 087-5166 . . . . . | 569 |
| | 661 | | 363 | | 571 |
| | 665.03 | | 365 | 087-5303 . . . . . | 453 |
| | 665.04 | 085-8605 . . . . . | 359 | 087-5708 . . . . . | 567 |

# PART NUMBER INDEX


| Part.No | Page |
|---|---|
| 087-5709 | 567 |
| 087-5760 | 457 |
| | 457.04 |
| 087-5762 | 457 |
| | 457.04 |
| 087-5764 | 467 |
| | 471 |
| 087-5766 | 463 |
| 087-5772 | 457 |
| | 457.04 |
| | 467 |
| | 471 |
| 087-5774 | 455 |
| | 457 |
| | 457.02 |
| | 457.04 |
| | 472 |
| 087-5780 | 479 |
| 087-5805 | 769 |
| | 771 |
| | 775 |
| | 777 |
| 087-5838 | 765 |
| 087-5840 | 764 |
| 087-5841 | 743 |
| | 745 |
| | 747 |
| | 748 |
| | 751 |
| | 761 |
| 087-5908 | 301 |
| 087-5966 | 766 |
| 087-5974 | 803 |
| 087-5975 | 803 |
| 087-5976 | 803 |
| 087-6585 | 464 |
| 090-8865 | 656 |
| 091-3474 | 27 |
| | 59 |
| 091-9035 | 93 |
| 093-0083 | 281 |
| | 283 |
| | 285 |
| 093-0084 | 743 |
| | 745 |
| | 747 |
| | 748 |
| | 751 |
| | 752 |
| | 753 |
| | 754 |
| | 755 |
| 093-0115 | 281 |
| | 283 |
| | 285 |
| 093-0116 | 743 |
| | 745 |
| | 747 |
| | 751 |
| 093-0349 | 281 |
| | 283 |
| | 285 |
| | 743 |
| | 745 |
| | 747 |
| | 748 |
| | 751 |
| | 761 |
| 093-0352 | 761 |
| 093-0357 | 761 |
| 093-0363 | 281 |
| | 283 |
| | 285 |
| | 743 |
| | 745 |
| | 747 |
| | 748 |
| | 751 |
| | 752 |
| | 753 |
| | 754 |
| | 755 |
| | 756 |
| | 757 |
| | 758 |
| | 759 |
| | 760 |
| | 761 |
| 093-1291 | 419 |
| | 421 |
| 093-1294 | 383 |
| 093-1342 | 778 |
| 093-1344 | 769 |
| | 771 |
| | 775 |
| | 777 |
| 093-1345 | 773 |
| 093-1433 | 372 |
| | 761 |
| 093-1436 | 300 |
| 093-1512 | 300 |
| 093-1571 | 371 |
| 093-1729 | 503 |
| 093-2069 | 226 |
| 093-5432 | 57 |
| 093-7521 | 329 |
| 093-7638 | 826 |
| 094-0580 | 233 |
| 094-0584 | 503 |
| 094-0611 | 233 |
| | 503 |
| 094-0616 | 233 |
| 094-0747 | 357 |
| | 367 |
| 094-0876 | 525 |
| 094-1399 | 513 |
| | 515 |
| 094-1509 | 503 |
| 094-1516 | 503 |
| 094-1528 | 233 |
| 094-1542 | 233 |
| 094-1875 | 341 |
| | 343 |
| | 345 |
| | 348 |
| | 513 |

# PART NUMBER INDEX


| Part.No | Page | Part.No | Page | Part.No | Page |
|---|---|---|---|---|---|
| | 515 | | 89.02 | 095-1578 | 547 |
| 094-1881 | 343 | | 652 | | 564 |
| | 345 | 095-0742 | 623 | | 567 |
| 094-1882 | 339 | | 717 | | 574 |
| | 341 | 095-0755 | 619 | | 603 |
| | 343 | 095-0826 | 325 | 095-1579 | 554 |
| | 345 | | 664 | | 588 |
| | 513 | 095-0827 | 623 | 095-1580 | 582 |
| | 515 | | 627 | 095-1582 | 334 |
| 094-1900 | 507 | | 630 | | 582 |
| 094-1920 | 380 | | 717 | 095-1584 | 590 |
| | 381 | | 726 | 095-1585 | 513 |
| 094-1931 | 359 | 095-0843 | 259 | | 515 |
| | 361 | 095-0863 | 320 | | 599 |
| | 363 | | 321 | 095-1586 | 513 |
| 094-2080 | 109 | 095-0882 | 507 | | 515 |
| 094-4628 | 20 | 095-0886 | 503 | | 517 |
| | 21 | 095-0891 | 233 | | 525 |
| 094-7134 | 22 | | 503 | | 555 |
| 094-7154 | 22 | 095-0913 | 719 | | 576 |
| 094-7516 | 22 | | 721 | | 585 |
| 094-7583 | 62 | | 723 | 095-1587 | 517 |
| 094-7741 | 19 | 095-0936 | 567 | | 554 |
| 094-9266 | 46 | 095-0946 | 341 | | 588 |
| 094-9267 | 46 | 095-0965 | 573 | 095-1590 | 517 |
| 094-9424 | 19 | 095-1022 | 503 | | 541 |
| 094-9525 | 27 | 095-1056 | 826 | | 543 |
| 094-9725 | 79 | 095-1057 | 826 | | 549 |
| 094-9950 | 201 | 095-1066 | 826 | | 551 |
| 094-9980 | 201 | 095-1070 | 826 | | 554 |
| 095-0085 | 201 | 095-1260 | 567 | | 556 |
| 095-0410 | 201 | 095-1270 | 233 | | 559 |
| 095-0707 | 510 | 095-1386 | 81 | | 573 |
| 095-0723 | 107 | 095-1388 | 42 | | 582 |
| 095-0728 | 127 | 095-1519 | 327 | | 588 |
| | 527 | 095-1543 | 57 | | 590 |
| | 635 | 095-1547 | 601 | 095-1594 | 569 |
| | 646 | 095-1572 | 513 | | 571 |
| 095-0735 | 179 | | 515 | | 593 |
| | 528 | 095-1575 | 513 | | 595 |
| | 531 | | 515 | 095-1595 | 507 |
| 095-0736 | 87 | | 549 | 095-1596 | 590 |
| | 89 | | 599 | | 596 |
| | 89.01 | 095-1576 | 585 | 095-1597 | 380 |

# PART NUMBER INDEX


| Part.No | Page | Part.No | Page | Part.No | Page |
|---|---|---|---|---|---|
| | 381 | | 585 | 095-8638 | 27 |
| | 385 | 095-1786 | 554 | | 46 |
| | 386 | | 588 | | 49 |
| | 387 | 095-1787 | 541 | | 59 |
| 095-1600 | 382 | | 543 | | 194 |
| | 384 | | 549 | 095-8799 | 29 |
| 095-1601 | 517 | | 551 | | 75.01 |
| | 599 | | 556 | 096-0061 | 665.07 |
| 095-1602 | 599 | | 559 | 096-0121 | 348 |
| 095-1603 | 551 | 095-1788 | 343 | 096-0131 | 761 |
| 095-1608 | 325 | | 345 | 096-0854 | 371 |
| 095-1625 | 375 | 095-1789 | 569 | 096-1055 | 375 |
| | 518 | | 571 | 096-1421 | 414 |
| 095-1657 | 599 | | 593 | | 415 |
| 095-1680 | 348 | | 595 | | 416 |
| 095-1681 | 328 | 095-1852 | 826 | 096-1519 | 513 |
| 095-1685 | 513 | 095-1855 | 826 | | 515 |
| | 515 | 095-1857 | 826 | 096-1521 | 513 |
| 095-1698 | 509 | 095-2005 | 19 | | 515 |
| | 585 | 095-2038 | 79 | 096-1522 | 513 |
| 095-1700 | 513 | 095-2039 | 19 | | 515 |
| | 515 | | 77 | 096-1523 | 513 |
| | 599 | 095-2623 | 784 | | 515 |
| 095-1703 | 596 | 095-2927 | 300 | 096-1545 | 516 |
| 095-1704 | 300 | 095-5564 | 784 | 096-1567 | 357 |
| 095-1707 | 596 | 095-6639 | 326 | | 367 |
| 095-1710 | 573 | 095-7378 | 513 | 096-1568 | 357 |
| 095-1716 | 518 | | 515 | | 367 |
| 095-1717 | 334 | 095-7380 | 513 | 096-1570 | 359 |
| | 357 | | 515 | | 361 |
| | 367 | 095-7382 | 513 | | 363 |
| 095-1719 | 371 | | 515 | 096-1571 | 359 |
| 095-1720 | 369 | 095-7383 | 513 | | 361 |
| 095-1721 | 359 | | 515 | | 363 |
| | 361 | 095-7384 | 513 | 096-1628 | 525 |
| | 363 | | 515 | 096-1773 | 233 |
| 095-1723 | 365 | 095-7386 | 513 | 096-1774 | 233 |
| 095-1730 | 325 | | 515 | 096-1775 | 233 |
| 095-1750 | 555 | 095-7387 | 513 | 096-1776 | 233 |
| | 576 | | 515 | 096-1777 | 233 |
| 095-1751 | 555 | 095-7419 | 339 | 096-1778 | 233 |
| | 576 | | 513 | 096-1779 | 233 |
| 095-1778 | 549 | | 515 | 096-1780 | 233 |
| 095-1785 | 517 | 095-7930 | 664 | 096-1781 | 233 |

# PART NUMBER INDEX


| Part.No | Page | Part.No | Page | Part.No | Page |
|---|---|---|---|---|---|
| 096-2500 | 79 | 096-4447 | 384 | 096-8490 | 58 |
| 096-2501 | 19 | 096-4449 | 387 | 096-8569 | 29 |
| | 33 | 096-4480 | 382 | 096-8619 | 49 |
| | 207 | | 385 | 096-9435 | 31 |
| 096-2617 | 522 | | 386 | 096-9528 | 31 |
| 096-2622 | 623 | | 387 | 096-9532 | 31 |
| 096-3216 | 357 | 096-4498 | 525 | | 49 |
| | 367 | 096-4747 | 804 | 099-0139 | 625 |
| 096-3321 | 46 | 096-4748 | 804 | 099-0596 | 375 |
| 096-3741 | 19 | 096-4755 | 235 | 099-0600 | 375 |
| | 27 | 096-4876 | 778 | 099-0699 | 375 |
| 096-3773 | 561 | 096-4878 | 343 | 099-0700 | 375 |
| 096-3780 | 259 | | 345 | 099-0707 | 778 |
| 096-3785 | 513 | 096-4882 | 659 | 099-0823 | 619 |
| | 515 | | 661 | | 627 |
| 096-3786 | 513 | 096-4883 | 485 | 099-2096 | 348 |
| | 515 | 096-4902 | 275 | 099-2374 | 713 |
| 096-3787 | 513 | | 277 | | 715 |
| | 515 | 096-5625 | 359 | 099-2503 | 77 |
| 096-3788 | 513 | | 361 | 099-3246 | 826 |
| | 515 | | 363 | 099-3249 | 826 |
| 096-3884 | 623 | 096-5915 | 513 | 099-3250 | 826 |
| 096-3944 | 341 | | 515 | 099-3506 | 632 |
| 096-3964 | 357 | 096-5916 | 513 | | 634 |
| | 367 | | 515 | 099-3629 | 629 |
| 096-3978 | 513 | 096-5919 | 513 | 099-3645 | 706 |
| | 515 | | 515 | 099-3649 | 455 |
| 096-3983 | 341 | 096-5962 | 107 | | 457.02 |
| 096-4003 | 513 | 096-6073 | 334 | 099-3669 | 343 |
| | 515 | 096-6166 | 109 | | 345 |
| 096-4035 | 55 | | 111 | 099-3670 | 343 |
| | 57 | | 127 | | 345 |
| 096-4129 | 236 | | 143 | 099-3671 | 343 |
| 096-4376 | 513 | | 145 | | 345 |
| | 515 | | 527 | 099-3913 | 202 |
| 096-4377 | 513 | | 635 | 099-4420 | 19 |
| | 515 | | 646 | 099-4437 | 77 |
| 096-4378 | 513 | 096-6210 | 359 | | 79 |
| | 515 | | 361 | 099-4460 | 207 |
| 096-4389 | 515 | | 363 | 099-4643 | 39 |
| 096-4402 | 357 | | 365 | 099-5041 | 77 |
| | 367 | | 369 | | 79 |
| 096-4412 | 385 | 096-7803 | 357 | 099-5572 | 365 |
| 096-4430 | 369 | | 367 | 099-5573 | 365 |

# PART NUMBER INDEX


| Part.No | Page |
|---|---|
| 099-6109 | 343 |
| | 345 |
| 099-6110 | 343 |
| | 345 |
| 099-6111 | 343 |
| | 345 |
| 099-6112 | 343 |
| | 345 |
| 099-6113 | 343 |
| | 345 |
| 099-6115 | 343 |
| | 345 |
| 099-6117 | 343 |
| | 345 |
| 099-6118 | 343 |
| | 345 |
| 099-6119 | 343 |
| | 345 |
| 099-6120 | 343 |
| | 345 |
| 099-6121 | 343 |
| | 345 |
| 099-6122 | 343 |
| | 345 |
| 099-6123 | 343 |
| | 345 |
| 099-6124 | 343 |
| | 345 |
| 099-6125 | 343 |
| | 345 |
| 099-6126 | 343 |
| | 345 |
| 099-6127 | 343 |
| | 345 |
| 099-6128 | 343 |
| | 345 |
| 099-6136 | 567 |
| 099-6137 | 525 |
| | 567 |
| 099-6141 | 567 |
| 099-6144 | 567 |
| 099-6145 | 567 |
| 099-6418 | 244 |
| | 245 |
| 099-7127 | 111 |
| 099-7464 | 826 |
| 099-8232 | 487 |
| | 489 |
| | 491 |
| 1 | |
| 100-2881 | 633 |
| 100-3866 | 533 |
| 100-4336 | 719 |
| | 721 |
| 101-2846 | 111 |
| 101-7397 | 483 |
| | 487 |
| | 489 |
| | 491 |
| 101-7398 | 377 |
| | 496 |
| 101-7401 | 489 |
| | 491 |
| 101-7402 | 348 |
| | 485 |
| | 487 |
| | 489 |
| | 491 |
| 101-7403 | 483 |
| 101-7404 | 377 |
| | 483 |
| | 487 |
| | 489 |
| | 491 |
| 101-9848 | 236 |
| 102-1119 | 752 |
| 102-1120 | 404 |
| 102-1248 | 487 |
| | 489 |
| | 491 |
| 102-1279 | 404 |
| 102-1291 | 404 |
| 102-4861 | 848 |
| 102-4862 | 848 |
| 102-7685 | 475 |
| 102-7964 | 113 |
| | 117 |
| | 123 |
| | 129 |
| 102-7965 | 113 |
| | 117 |
| | 123 |
| | 129 |
| | 180 |
| 102-8016 | 111 |
| 102-8802 | 36 |
| | 87 |
| | 89 |
| | 89.01 |
| | 89.02 |
| | 101 |
| | 109 |
| | 118 |
| | 129 |
| | 134 |
| | 141.01 |
| | 145 |
| | 146 |
| | 149 |
| | 154 |
| | 188 |
| | 208 |
| | 227 |
| | 325 |
| | 451 |
| | 459 |
| | 464 |
| | 467 |
| | 468 |
| | 471 |
| | 475 |
| 102-8803 | 103 |
| | 115 |
| | 117 |
| | 137 |
| | 155 |
| | 198 |
| | 199 |
| | 227 |

# PART NUMBER INDEX


| Part.No | Page | Part.No | Page | Part.No | Page |
|---|---|---|---|---|---|
| | 228 | | 491 | 108-4282 | 491 |
| 102-8804 | 129 | 105-3483 | 483 | 108-7118 | 437 |
| 102-8805 | 50 | 105-3484 | 455 | | 439 |
| | 148 | | 457.02 | 108-7313 | 467 |
| 102-8806 | 123 | 105-3487 | 239 | | 471 |
| 103-2529 | 101 | | 259 | 108-7354 | 377 |
| | 188 | 105-6431 | 762 | 108-7360 | 479 |
| 103-8173 | 549 | | 763 | 108-7375 | 461 |
| 103-8177 | 551 | | 765 | | 463 |
| 103-8236 | 331 | | 766 | | 475 |
| 103-8252 | 547 | 105-9526 | 646 | | 479 |
| | 564 | 105-9527 | 646 | 108-7516 | 459 |
| | 574 | 106-0107 | 143 | | 464 |
| 103-8253 | 547 | | 145 | | 468 |
| | 564 | | 148 | | 475 |
| | 574 | 106-0210 | 148 | 108-7550 | 377 |
| 103-8254 | 547 | 107-1567 | 497 | 109-2667 | 538 |
| | 564 | 107-3300 | 806 | | 539 |
| | 574 | 107-3308 | 805 | 109-5152 | 543 |
| 103-8255 | 547 | | 806 | | 546 |
| | 564 | | 807 | 109-9313 | 64 |
| | 574 | | 808 | 109-9329 | 38 |
| 103-9011 | 25 | 107-3350 | 810 | 110-5496 | 455 |
| 104-7293 | 545 | 107-3400 | 814 | | 457.02 |
| | 553 | 107-6370 | 539 | 110-5525 | 507 |
| 104-7294 | 545 | | 546 | 111-0982 | 433 |
| | 553 | 107-6371 | 539 | 111-0988 | 461 |
| 104-7296 | 545 | | 546 | | 463 |
| | 553 | 107-6479 | 567 | | 467 |
| 104-8750 | 414 | | 603 | | 471 |
| 104-8774 | 479 | 107-6540 | 554 | | 475 |
| 104-8783 | 479 | 107-6541 | 554 | 111-4799 | 228 |
| 104-8838 | 455 | 107-6631 | 451 | | 678 |
| | 457.02 | | 459 | 111-4816 | 113 |
| 104-8903 | 479 | | 464 | 111-4836 | 93 |
| 105-1321 | 562 | | 468 | | 95 |
| | 563 | 107-6954 | 513 | | 97 |
| 105-2575 | 371 | | 515 | | 99 |
| 105-2577 | 371 | 107-6955 | 513 | | 127 |
| 105-2578 | 371 | | 515 | | 167 |
| 105-2579 | 371 | 107-6969 | 513 | | 187 |
| 105-2583 | 371 | | 515 | | 215 |
| 105-3477 | 483 | 107-8618 | 137 | | 217 |
| | 489 | 108-1782 | 383 | | 219 |

# PART NUMBER INDEX


| Part.No | Page |
|---|---|
| | 221 |
| | 713 |
| | 715 |
| 111-4837 | 93 |
| | 95 |
| | 97 |
| | 99 |
| | 187 |
| | 189 |
| | 215 |
| | 219 |
| 111-4838 | 91 |
| | 93 |
| | 97 |
| | 127 |
| 111-4839 | 91 |
| | 93 |
| | 97 |
| | 127 |
| 111-6752 | 437 |
| | 479 |
| 111-9758 | 285 |
| 111-9916 | 343 |
| | 575 |
| | 576 |
| | 587 |
| 111-9959 | 541 |
| 111-9998 | 582 |
| 112-4550 | 137 |
| 112-9717 | 65 |
| 113-2127 | 743 |
| | 745 |
| | 747 |
| | 748 |
| | 751 |
| 113-2276 | 743 |
| | 745 |
| | 747 |
| | 751 |
| 113-6479 | 483 |
| 113-8490 | 109 |
| 113-8491 | 109 |
| 113-8492 | 109 |
| 113-8493 | 109 |
| 114-0358 | 809 |
| | 810 |
| | 811 |
| | 812 |
| 114-0359 | 809 |
| | 810 |
| | 811 |
| | 812 |
| 114-0623 | 555 |
| | 576 |
| 114-0706 | 365 |
| 114-0710 | 365 |
| 114-0711 | 365 |
| 114-0713 | 365 |
| 114-0754 | 375 |
| 114-1398 | 501 |
| 114-1399 | 501 |
| 114-1497 | 233 |
| 114-1539 | 233 |
| 114-1581 | 503 |
| 114-6285 | 239 |
| 114-6289 | 236 |
| 114-8229 | 593 |
| | 595 |
| 115-2677 | 763 |
| 115-2678 | 763 |
| 115-8645 | 453 |
| | 457 |
| | 457.04 |
| | 479 |
| 116-0118 | 75 |
| | 93 |
| | 95 |
| | 97 |
| | 99 |
| | 127 |
| | 139 |
| | 141 |
| | 154 |
| | 158 |
| | 163 |
| | 171 |
| | 175 |
| | 187 |
| | 215 |
| | 219 |
| | 391 |
| 116-0210 | 111 |
| 116-1628 | 243 |
| 116-1665 | 268 |
| | 270 |
| | 272 |
| 116-2659 | 67 |
| 116-3522 | 333 |
| 116-7408 | 813 |
| | 814 |
| | 815 |
| | 816 |
| | 817 |
| 116-7409 | 813 |
| | 814 |
| | 815 |
| | 816 |
| | 817 |
| 116-9115 | 740 |
| | 767 |
| 116-9129 | 388 |
| 116-9135 | 850 |
| 117-1878 | 188 |
| 117-4166 | 827 |
| 117-5540 | 288 |
| | 289 |
| | 290 |
| | 291 |
| 117-6306 | 627 |
| 117-6349 | 527 |
| 117-6350 | 527 |
| 117-6356 | 527 |
| 118-4044 | 569 |
| | 571 |
| 118-4057 | 341 |
| | 513 |
| 118-4086 | 525 |
| 118-4087 | 525 |
| 118-5982 | 752 |
| | 753 |
| | 754 |
| | 755 |

# PART NUMBER INDEX


| Part.No | Page |
|---|---|
| | 757 |
| | 758 |
| | 759 |
| | 760 |
| 118-6054 | 840 |
| | 841 |
| 118-9784 | 38 |
| 118-9785 | 38 |
| 118-9863 | 729 |
| 118-9902 | 467 |
| | 471 |
| 118-9930 | 38 |
| 119-2325 | 383 |
| 119-2804 | 379 |
| 119-3662 | 103 |
| | 129 |
| 119-5026 | 143 |
| | 145 |
| | 652 |
| 119-5388 | 567 |
| 119-5389 | 567 |
| 119-5391 | 567 |
| 119-5392 | 567 |
| 119-5398 | 554 |
| 119-5592 | 755 |
| 120-0044 | 198 |
| | 199 |
| 120-5054 | 848 |
| 120-7164 | 304 |
| 120-7165 | 302 |
| 120-7167 | 305 |
| 120-7168 | 303 |
| 120-7226 | 762 |
| 120-9027 | 678 |
| 121-0307 | 45 |
| 121-0987 | 157 |
| 121-1022 | 115 |
| 121-1023 | 133 |
| 121-1168 | 117 |
| | 129 |
| | 146 |
| 121-1173 | 113 |
| | 117 |
| | 129 |
| | 146 |
| | 180 |
| 121-1241 | 109 |
| 121-1371 | 359 |
| | 361 |
| | 363 |
| 121-1372 | 359 |
| | 361 |
| | 363 |
| 121-1459 | 517 |
| 121-1491 | 549 |
| | 555 |
| | 579 |
| | 581 |
| | 586 |
| 121-1548 | 365 |
| 121-1549 | 359 |
| | 361 |
| | 363 |
| | 365 |
| 121-1558 | 513 |
| | 515 |
| 121-1611 | 357 |
| | 367 |
| 121-1760 | 752 |
| | 754 |
| | 755 |
| | 756 |
| | 757 |
| | 758 |
| | 759 |
| 121-1807 | 800 |
| 121-1809 | 800 |
| 121-1813 | 800 |
| 121-1865 | 531 |
| 121-7098 | 719 |
| | 721 |
| 121-7136 | 711 |
| | 719 |
| | 721 |
| 121-7137 | 719 |
| | 721 |
| 121-7138 | 711 |
| | 719 |
| | 721 |
| 122-3979 | 239 |
| 122-3980 | 239 |
| 122-4101 | 245 |
| 122-4120 | 239 |
| 122-5114 | 513 |
| | 515 |
| 122-5318 | 507 |
| 122-5500 | 391 |
| 122-7797 | 593 |
| | 595 |
| 122-9605 | 719 |
| | 721 |
| | 723 |
| 122-9608 | 527 |
| 122-9609 | 527 |
| 122-9610 | 527 |
| 122-9611 | 528 |
| | 531 |
| 122-9617 | 671 |
| 122-9657 | 719 |
| | 721 |
| 123-2003 | 333 |
| 123-2008 | 513 |
| | 515 |
| 123-2423 | 561 |
| 123-2430 | 464 |
| | 605 |
| 123-2431 | 604 |
| | 605 |
| 123-2485 | 549 |
| 123-2552 | 605 |
| 124-0914 | 384 |
| 124-1008 | 461 |
| | 463 |
| | 467 |
| | 471 |
| | 475 |
| 124-1019 | 382 |
| 124-1020 | 382 |
| 124-1021 | 387 |
| 124-1034 | 385 |
| 124-1047 | 377 |
| 124-1062 | 377 |

# PART NUMBER INDEX


| Part.No | Page | Part.No | Page | Part.No | Page |
|---|---|---|---|---|---|
| 124-1107 | 411 | | 168 | 127-5944 | 201 |
| | 413 | | 183 | 127-5947 | 201 |
| 124-1108 | 411 | | 188 | 127-5948 | 201 |
| | 413 | | 189 | 127-5949 | 201 |
| 124-1212 | 441 | 126-1813 | 331 | 127-5950 | 201 |
| | 441.02 | 126-1865 | 567 | 127-5952 | 201 |
| 124-1711 | 64 | 126-1866 | 567 | 127-5953 | 201 |
| | 65 | 126-1870 | 371 | 127-6624 | 408 |
| 124-3953 | 637 | 126-1876 | 359 | | 740 |
| 124-3966 | 645 | | 363 | 127-6625 | 740 |
| 124-4003 | 143 | 126-1885 | 371 | | 766 |
| | 145 | 126-1935 | 357 | 127-6780 | 416 |
| 124-4009 | 523 | 126-2016 | 341 | 127-6792 | 800 |
| 124-4010 | 522 | | 346 | 127-6797 | 354 |
| 125-1938 | 747 | 126-2055 | 507 | | 388 |
| 125-2947 | 48 | 126-2941 | 179 | 127-6844 | 400 |
| 125-2950 | 31 | 126-5062 | 316 | | 403 |
| 125-2968 | 36 | | 318 | | 596 |
| 125-2970 | 46 | 126-9993 | 573 | 128-2135 | 607 |
| 125-2983 | 77 | 127-0580 | 619 | | 609 |
| 125-4840 | 113 | 127-0715 | 815 | | 615 |
| 125-4841 | 113 | 127-0716 | 780 | | 617 |
| | 117 | | 781 | | 673 |
| | 123 | | 813 | | 675 |
| | 129 | 127-5272 | 833 | 128-2136 | 197 |
| 125-7874 | 95 | | 833.06 | | 615 |
| | 101 | | 839 | | 617 |
| | 103 | | 839.06 | 128-2173 | 528 |
| | 129 | 127-5277 | 844 | | 531 |
| | 141.01 | | 844.01 | 128-4411 | 87 |
| | 188 | | 845 | | 89 |
| 125-7875 | 101 | | 845.01 | | 89.01 |
| | 103 | 127-5278 | 842 | | 89.02 |
| | 129 | | 842.01 | 128-8950 | 113 |
| | 188 | | 843 | 128-8952 | 129 |
| 126-1767 | 188 | | 843.01 | 129-3400 | 241 |
| 126-1768 | 101 | 127-5295 | 833 | | 495 |
| | 103 | | 833.06 | 129-5874 | 411 |
| | 113 | | 839 | | 413 |
| | 123 | | 839.06 | 129-6466 | 228 |
| | 129 | 127-5939 | 201 | | 645 |
| | 140 | 127-5940 | 201 | 129-7784 | 326 |
| | 146 | 127-5941 | 201 | 129-7854 | 341 |
| | 155 | 127-5943 | 201 | 129-7855 | 341 |

# PART NUMBER INDEX


| Part.No | Page | Part.No | Page | Part.No | Page |
|---|---|---|---|---|---|
| 129-7857 | 339 | | 721 | 135-2350 | 61 |
| | 348 | | 723 | 135-2351 | 61 |
| 129-7859 | 341 | 133-0975 | 117 | 135-2352 | 60 |
| 129-7863 | 339 | | 155 | | 61 |
| 129-7921 | 341 | 133-2425 | 281 | 135-2354 | 61 |
| 129-7925 | 341 | | 283 | 135-2355 | 61 |
| 129-7927 | 341 | | 285 | 135-2356 | 61 |
| 129-7978 | 343 | 133-5813 | 81 | 135-2358 | 61 |
| | 345 | | 451 | 135-2359 | 61 |
| 129-7979 | 339 | | 476 | 135-2360 | 61 |
| 129-8034 | 333 | | 477 | 135-2366 | 201 |
| 130-0252 | 719 | 133-5828 | 377 | 135-2369 | 203 |
| | 721 | 133-6777 | 513 | 135-2370 | 203 |
| 130-0270 | 719 | 133-6904 | 359 | 135-2381 | 202 |
| | 721 | | 361 | 135-4063 | 414 |
| 130-3280 | 67 | | 363 | | 415 |
| 130-7596 | 20 | 133-6909 | 365 | | 416 |
| 131-5818 | 567 | 133-8016 | 619 | 135-8965 | 667 |
| 131-5915 | 525 | 134-3284 | 215 | 135-8966 | 667 |
| 131-7501 | 87 | | 217 | 136-0156 | 599 |
| | 89 | | 219 | 136-0207 | 461 |
| | 89.01 | | 221 | | 463 |
| | 89.02 | 134-3299 | 81 | | 467 |
| 131-8821 | 65 | 134-6921 | 471 | | 471 |
| 131-8822 | 65 | 134-7089 | 67 | | 475 |
| 131-8826 | 65 | 134-7178 | 778 | | 477 |
| | 68 | 134-7179 | 778 | | 479 |
| 131-8932 | 65 | 134-7258 | 829 | 137-2270 | 665 |
| 132-1531 | 766 | | 833.02 | 137-3623 | 328 |
| 132-1805 | 91 | | 835 | 137-3624 | 328 |
| 132-1806 | 99 | | 839.02 | 137-3625 | 328 |
| 132-1829 | 109 | 134-7721 | 198 | 137-3626 | 328 |
| | 118 | | 199 | | 335 |
| 132-5789 | 75 | 134-7722 | 198 | 137-3628 | 328 |
| | 93 | | 199 | | 335 |
| | 107 | 134-8875 | 266 | 137-3631 | 335 |
| | 109 | 134-8876 | 266 | 137-3709 | 380 |
| | 111 | 134-8878 | 266 | | 381 |
| | 139 | 134-8948 | 802 | 137-5541 | 79 |
| | 165 | 134-8950 | 803 | 138-5708 | 411 |
| | 175 | 135-2346 | 61 | | 413 |
| | 196 | 135-2347 | 61 | 139-7099 | 611 |
| | 664 | 135-2348 | 61 | | 632 |
| | 719 | 135-2349 | 61 | 139-7100 | 611 |

# PART NUMBER INDEX


| Part.No | Page | Part.No | Page | Part.No | Page |
|---|---|---|---|---|---|
| | 613 | | 696 | 149-5071 | 113 |
| | 622 | | 697 | | 115 |
| | 624 | 147-5860 | 513 | 150-5782 | 339 |
| 139-7101 | 611 | | 515 | 150-5797 | 343 |
| | 613 | 148-4632 | 503 | | 345 |
| | 626 | 148-4633 | 503 | 150-5826 | 369 |
| 139-7119 | 628 | 148-4634 | 503 | 150-5827 | 369 |
| 139-7126 | 619 | 148-4635 | 503 | 150-5828 | 369 |
| 139-7127 | 619 | 148-4636 | 503 | 151-1846 | 395 |
| 139-7814 | 19 | 148-4637 | 503 | 151-6703 | 623 |
| 141-2759 | 109 | 148-4638 | 503 | | 627 |
| 142-0038 | 495 | 148-4640 | 503 | | 630 |
| 142-3835 | 262 | 148-4642 | 503 | 151-6704 | 623 |
| 142-3836 | 665 | 148-4643 | 503 | | 627 |
| 142-5515 | 513 | 148-4644 | 501 | | 630 |
| | 515 | | 502 | 151-6705 | 645 |
| 142-5546 | 527 | 148-4679 | 500 | 151-6777 | 611 |
| 142-6582 | 416 | 148-4685 | 278 | | 613 |
| 142-7768 | 377 | 148-4689 | 275 | | 624 |
| 142-7769 | 377 | | 277 | 151-6785 | 627 |
| 143-4254 | 455 | 148-4703 | 275 | 151-6790 | 629 |
| | 457.02 | | 277 | 151-6792 | 623 |
| 143-8023 | 375 | 148-4704 | 275 | | 625 |
| 143-8024 | 375 | | 277 | 151-6793 | 625 |
| 143-8025 | 375 | 148-4705 | 233 | 151-6813 | 627 |
| 143-8033 | 375 | 148-4708 | 233 | | 630 |
| 143-8149 | 375 | 148-4715 | 233 | 151-6815 | 627 |
| 144-0195 | 640 | 148-4732 | 503 | | 630 |
| | 646 | 148-4733 | 503 | 151-6831 | 627 |
| 144-0367 | 63 | 149-1738 | 379 | | 630 |
| | 485 | | 423 | 151-6832 | 627 |
| 144-9126 | 829 | | 425 | | 630 |
| | 833.02 | | 427 | 151-6841 | 625 |
| | 835 | 149-5050 | 171 | 151-6844 | 627 |
| | 839.02 | | 179 | 151-9461 | 623 |
| 144-9691 | 645 | 149-5051 | 172 | 151-9497 | 623 |
| 144-9692 | 645 | | 180 | 151-9557 | 627 |
| 145-0549 | 154 | 149-5069 | 115 | 151-9576 | 627 |
| 145-3031 | 300 | | 172 | | 630 |
| 145-3035 | 299 | | 180 | 152-2938 | 45 |
| 145-3042 | 230 | 149-5070 | 113 | 152-2939 | 45 |
| 145-9278 | 277 | | 115 | 153-2521 | 215 |
| 147-4184 | 569 | | 172 | | 217 |
| 147-4921 | 685 | | 180 | | 219 |

# PART NUMBER INDEX


| Part.No | Page | Part.No | Page | Part.No | Page |
|---|---|---|---|---|---|
| | 221 | 153-8629 | 596 | 155-2274 | 140 |
| | 223 | 153-8630 | 596 | | 146 |
| 153-2523 | 209 | 153-8753 | 531 | 155-7024 | 719 |
| | 224 | 153-8762 | 528 | | 721 |
| 153-2540 | 146 | | 531 | | 723 |
| 153-2541 | 146 | 153-8763 | 528 | 155-7042 | 635 |
| 153-2602 | 113 | | 531 | 156-3103 | 61 |
| | 117 | 153-8798 | 411 | 156-6175 | 158 |
| 153-2620 | 103 | | 413 | | 165 |
| | 129 | | 428 | | 179 |
| 153-2630 | 103 | | 429 | | 185 |
| 153-2631 | 113 | 153-8867 | 419 | 156-6469 | 629 |
| | 117 | | 421 | 156-6471 | 623 |
| 153-4906 | 45 | | 493 | 156-6472 | 627 |
| 153-5223 | 567 | 154-0480 | 281 | | 630 |
| 153-5239 | 538 | 154-9024 | 49 | | 631 |
| 153-5276 | 545 | 155-0576 | 194 | 156-6473 | 628 |
| | 553 | 155-2259 | 123 | 156-6474 | 625 |
| 153-5286 | 543 | 155-2260 | 101 | 156-6475 | 625 |
| 153-5288 | 541 | | 115 | 156-6554 | 627 |
| | 549 | | 125 | 156-6555 | 627 |
| 153-5289 | 541 | | 138 | 156-6562 | 627 |
| | 549 | | 155 | 156-6579 | 627 |
| 153-5290 | 541 | | 188 | 156-6598 | 623 |
| | 549 | | 189 | 156-6599 | 619 |
| 153-5291 | 541 | 155-2261 | 113 | 156-6600 | 623 |
| | 549 | | 115 | 156-6601 | 627 |
| 153-5292 | 541 | | 146 | 156-6617 | 619 |
| | 549 | | 168 | 156-6627 | 627 |
| 153-5293 | 541 | | 181 | 156-6631 | 628 |
| | 549 | | 183 | 156-6642 | 620 |
| 153-5295 | 549 | 155-2263 | 146 | 156-6643 | 623 |
| 153-5298 | 549 | 155-2265 | 123 | 156-6644 | 623 |
| 153-5299 | 549 | 155-2266 | 155 | 156-6645 | 623 |
| 153-5306 | 549 | 155-2270 | 101 | 156-6646 | 645 |
| 153-5309 | 551 | | 113 | 156-6647 | 645 |
| 153-5311 | 549 | | 115 | 156-6656 | 615 |
| 153-5313 | 537 | | 129 | 156-6657 | 615 |
| | 538 | | 141.01 | 157-0670 | 49 |
| 153-8623 | 343 | | 146 | 158-4380 | 320 |
| | 345 | | 168 | | 321 |
| 153-8626 | 596 | | 181 | 158-4381 | 320 |
| 153-8627 | 596 | | 183 | | 321 |
| 153-8628 | 596 | 155-2271 | 129 | 158-8135 | 553 |

# PART NUMBER INDEX


| Part.No | Page | Part.No | Page | Part.No | Page |
|---|---|---|---|---|---|
| 158-8150 | 549 | | 837 | 163-6637 | 103 |
| 158-8159 | 541 | | 839.04 | 163-6659 | 117 |
| | 549 | 160-8759 | 371 | 163-6699 | 117 |
| | 556 | 161-3128 | 109 | 163-6700 | 87 |
| | 559 | 161-3639 | 623 | | 89 |
| 158-8206 | 549 | 161-3650 | 623 | | 89.01 |
| 158-8207 | 551 | 161-3663 | 623 | | 89.02 |
| 158-8284 | 599 | 161-3665 | 623 | 163-6704 | 211 |
| 158-8985 | 501 | 161-3668 | 635 | | 213 |
| | 504 | | 636 | | 227 |
| 158-8986 | 504 | 161-3669 | 636 | 163-6711 | 120 |
| | 508 | 161-3670 | 636 | 163-6758 | 109 |
| 158-8987 | 325 | 161-3671 | 636 | 163-6759 | 103 |
| | 330 | 161-3677 | 635 | | 129 |
| 158-9085 | 377 | 161-3683 | 628 | 163-6790 | 117 |
| | 584 | 161-3684 | 627 | 163-6795 | 107 |
| 159-7782 | 518 | 161-3685 | 619 | | 111 |
| 159-7784 | 333 | 161-3694 | 633 | | 120 |
| 160-6822 | 829 | 161-3695 | 625 | | 124 |
| | 833.02 | 161-3697 | 619 | | 211 |
| | 835 | 161-3698 | 627 | | 213 |
| | 839.02 | | 630 | | 635 |
| 160-6832 | 829 | | 631 | | 640 |
| | 831 | 161-3705 | 625 | | 646 |
| | 833.02 | 161-3717 | 667 | 163-6803 | 117 |
| | 833.04 | 161-3750 | 654 | | 180 |
| | 835 | 161-3751 | 653 | 163-6813 | 211 |
| | 837 | 161-9604 | 11 | 163-6814 | 211 |
| | 839.02 | | 12 | 164-0497 | 655 |
| | 839.04 | | 306 | | 656 |
| 160-6841 | 829 | 161-9605 | 306 | 164-0514 | 623 |
| | 833.02 | 163-3729 | 281 | 164-0515 | 623 |
| | 835 | | 283 | 164-0516 | 625 |
| | 839.02 | | 287 | 164-0517 | 625 |
| 160-6853 | 829 | 163-3754 | 314 | 164-0518 | 625 |
| | 831 | 163-3755 | 314 | 164-0519 | 623 |
| | 833.02 | 163-4143 | 307 | 164-0523 | 619 |
| | 833.04 | | 308 | 164-0527 | 619 |
| | 835 | | 309 | 164-0528 | 619 |
| | 837 | | 310 | | 620 |
| | 839.02 | | 312 | 164-0534 | 660 |
| | 839.04 | 163-4144 | 309 | 164-0535 | 662 |
| 160-6884 | 831 | | 310 | 164-0618 | 654 |
| | 833.04 | | 313 | 164-0619 | 654 |

# PART NUMBER INDEX


| Part.No | Page |
|---|---|
| 164-0620 | 654 |
| 164-0621 | 654 |
| 164-0639 | 653 |
| 164-0646 | 615 |
| | 617 |
| 164-0648 | 627 |
| 164-0655 | 615 |
| | 617 |
| 164-0664 | 620 |
| 164-0666 | 629 |
| 164-4858 | 87 |
| | 89 |
| | 89.01 |
| | 89.02 |
| 164-6981 | 349 |
| | 455 |
| | 457.02 |
| 164-8474 | 607 |
| | 609 |
| | 615 |
| | 617 |
| 164-8977 | 455 |
| | 457.02 |
| 164-8983 | 457 |
| | 457.04 |
| 165-2823 | 263 |
| 165-2854 | 264 |
| | 265 |
| 165-2976 | 244 |
| | 245 |
| | 246 |
| 165-3065 | 665 |
| 165-3102 | 268 |
| | 270 |
| | 272 |
| 165-3103 | 268 |
| | 270 |
| | 272 |
| 165-3185 | 481 |
| 165-3190 | 481 |
| 165-3194 | 481 |
| 165-3256 | 325 |
| 165-3260 | 441 |
| | 441.02 |
| 165-9282 | 375 |
| 165-9431 | 525 |
| 165-9435 | 525 |
| 165-9436 | 525 |
| 165-9438 | 525 |
| 165-9439 | 525 |
| 165-9442 | 525 |
| 165-9443 | 525 |
| 165-9444 | 525 |
| 165-9448 | 525 |
| 165-9460 | 525 |
| 165-9463 | 567 |
| 165-9464 | 567 |
| | 603 |
| 165-9470 | 479 |
| | 572 |
| 165-9473 | 559 |
| | 560 |
| 165-9474 | 560 |
| 165-9497 | 561 |
| 165-9513 | 593 |
| | 595 |
| 165-9514 | 593 |
| | 595 |
| 165-9549 | 467 |
| | 471 |
| | 586 |
| 165-9551 | 567 |
| 165-9552 | 567 |
| 165-9553 | 567 |
| 165-9554 | 567 |
| 165-9595 | 549 |
| 165-9756 | 277 |
| 166-1478 | 315 |
| 166-1479 | 315 |
| 166-1482 | 778 |
| 166-1486 | 743 |
| | 745 |
| | 747 |
| | 748 |
| | 751 |
| | 752 |
| | 753 |
| | 754 |
| | 755 |
| | 756 |
| | 757 |
| | 758 |
| | 759 |
| | 760 |
| | 761 |
| | 769 |
| | 771 |
| | 775 |
| | 777 |
| 166-1487 | 743 |
| | 745 |
| | 747 |
| | 748 |
| | 751 |
| | 773 |
| 166-1494 | 357 |
| | 359 |
| | 361 |
| | 363 |
| | 365 |
| | 367 |
| | 752 |
| | 753 |
| | 754 |
| | 755 |
| | 756 |
| | 757 |
| | 758 |
| | 760 |
| | 769 |
| | 771 |
| | 775 |
| | 777 |
| 166-1495 | 369 |
| | 743 |
| | 745 |
| | 747 |
| | 748 |
| | 751 |
| | 752 |
| | 753 |
| | 754 |

# PART NUMBER INDEX


| Part.No | Page | Part.No | Page | Part.No | Page |
|---|---|---|---|---|---|
| | 755 | 168-0765 | 509 | 170-9499 | 527 |
| | 756 | 168-0792 | 65 | 170-9722 | 627 |
| | 757 | 168-0794 | 525 | | 630 |
| | 758 | 168-2628 | 769 | | 631 |
| | 759 | | 771 | 170-9724 | 615 |
| | 760 | | 775 | | 617 |
| | 761 | | 777 | 170-9840 | 375 |
| | 773 | 168-2629 | 769 | 170-9856 | 375 |
| 166-1512 | 315 | | 771 | 170-9938 | 375 |
| 166-1579 | 762 | | 775 | 170-9941 | 375 |
| | 763 | | 777 | 171-0034 | 554 |
| 166-3152 | 762 | 168-5057 | 58 | | 588 |
| | 763 | 168-6761 | 297 | 171-0035 | 554 |
| 167-3437 | 211 | | 298 | | 588 |
| 167-3438 | 211 | 168-8451 | 233 | 171-0036 | 554 |
| 167-3441 | 211 | 168-9759 | 451 | | 588 |
| | 222 | 168-9760 | 483 | 171-0037 | 554 |
| 167-3456 | 211 | 168-9762 | 483 | | 588 |
| | 225 | 170-2901 | 81 | 171-0087 | 525 |
| 167-3487 | 117 | 170-3015 | 247 | 171-0123 | 582 |
| | 180 | | 250.02 | 171-0124 | 582 |
| 167-3542 | 107 | 170-3016 | 241 | 171-0126 | 582 |
| | 156 | | 243 | 171-0127 | 582 |
| | 179 | 170-6888 | 109 | 171-0128 | 582 |
| | 180 | 170-6890 | 115 | 171-0150 | 556 |
| | 699 | 170-6891 | 113 | 171-0183 | 573 |
| | 699.01 | | 115 | 171-0184 | 573 |
| 167-3543 | 107 | 170-6929 | 93 | 171-0185 | 573 |
| | 156 | | 105 | 171-0188 | 461 |
| | 179 | | 151 | | 463 |
| | 699 | 170-6993 | 223 | | 467 |
| | 699.01 | | 224 | | 471 |
| 167-3593 | 107 | 170-9295 | 213 | | 475 |
| 167-3630 | 113 | | 225 | | 575 |
| 167-3631 | 113 | 170-9324 | 143 | 171-0198 | 575 |
| 167-7018 | 619 | 170-9336 | 99 | 171-2208 | 133 |
| 167-7039 | 623 | 170-9360 | 259 | 171-2210 | 133 |
| 167-7042 | 619 | 170-9417 | 223 | 171-3254 | 61 |
| 167-7055 | 662 | | 224 | 171-3369 | 55 |
| 167-7141 | 656 | 170-9418 | 223 | 171-7325 | 673 |
| 167-7270 | 829 | | 224 | | 676 |
| | 833.02 | 170-9492 | 646 | | 677 |
| | 835 | 170-9497 | 526 | 171-7413 | 625 |
| | 839.02 | 170-9498 | 527 | 171-7414 | 625 |

# PART NUMBER INDEX


| Part.No | Page | Part.No | Page | Part.No | Page |
|---|---|---|---|---|---|
| 171-7420 | 615 | 173-3503 | 333 | | 641 |
| | 617 | | 335 | 176-1932 | 646 |
| 171-7426 | 619 | 173-3505 | 335 | 176-1937 | 620 |
| 171-7477 | 633 | 173-3506 | 335 | 176-1938 | 620 |
| 171-7485 | 655 | 173-3507 | 333 | 176-1939 | 619 |
| | 658 | 173-3510 | 333 | | 620 |
| 171-7486 | 659 | 173-3513 | 328 | 176-1941 | 620 |
| 171-7503 | 630 | 173-3515 | 328 | 176-1942 | 619 |
| 171-9073 | 70 | 173-3516 | 328 | 176-1946 | 615 |
| 171-9077 | 55 | 173-3517 | 328 | 176-1947 | 615 |
| 171-9383 | 503 | 173-3518 | 333 | 176-1951 | 625 |
| 171-9464 | 275 | 173-3529 | 328 | 176-1952 | 625 |
| | 277 | 173-3536 | 585 | 176-1953 | 625 |
| 171-9892 | 68 | 173-4664 | 487 | 176-1954 | 625 |
| 172-2939 | 732 | | 489 | 176-1955 | 625 |
| | 763 | | 491 | 176-1956 | 625 |
| 173-3384 | 343 | 173-4816 | 485 | 176-1957 | 625 |
| | 345 | 173-5089 | 439 | 176-1958 | 611 |
| 173-3397 | 343 | 173-7126 | 83 | | 613 |
| | 345 | 173-7895 | 419 | | 628 |
| 173-3398 | 343 | | 421 | 176-1972 | 615 |
| | 345 | 173-7916 | 411 | | 617 |
| 173-3406 | 348 | | 413 | 176-1986 | 619 |
| 173-3413 | 343 | | 414 | 176-1996 | 717 |
| | 345 | | 415 | 176-2278 | 743 |
| 173-3427 | 341 | | 416 | | 745 |
| 173-3428 | 341 | 173-7995 | 411 | | 747 |
| 173-3436 | 348 | | 413 | | 748 |
| 173-3439 | 507 | 173-8073 | 45 | | 751 |
| 173-3440 | 507 | 174-3016 | 103 | 176-2676 | 825 |
| 173-3441 | 507 | | 117 | 176-2677 | 825 |
| 173-3442 | 507 | | 155 | | 826 |
| 173-3443 | 507 | 174-5415 | 67 | 176-2687 | 848 |
| 173-3444 | 507 | 174-7791 | 223 | 176-4366 | 479 |
| 173-3445 | 507 | | 224 | 176-4463 | 457 |
| 173-3447 | 507 | 174-9570 | 81 | | 457.04 |
| 173-3450 | 507 | | 83 | 176-4469 | 455 |
| 173-3451 | 507 | 176-1902 | 719 | | 457.02 |
| 173-3452 | 508 | | 721 | 176-4471 | 457 |
| | 509 | 176-1916 | 671 | 176-4472 | 455 |
| 173-3454 | 507 | 176-1925 | 659 | | 457.02 |
| 173-3473 | 341 | 176-1928 | 659 | 176-4684 | 479 |
| 173-3496 | 341 | | 661 | 176-4708 | 453 |
| 173-3498 | 341 | 176-1931 | 640 | 176-4743 | 458 |

# PART NUMBER INDEX


| Part.No | Page | Part.No | Page | Part.No | Page |
|---|---|---|---|---|---|
| | 458.01 | 178-5576 | 627 | 183-1035 | 213 |
| 176-4768 | 455 | 178-5659 | 702 | | 222 |
| | 457.02 | 178-6450 | 55 | 183-1049 | 95 |
| 176-4770 | 441 | 178-6537 | 31 | 183-5916 | 19 |
| | 441.02 | 178-6538 | 31 | 183-8176 | 36 |
| 177-2470 | 339 | 178-6543 | 22 | 183-8177 | 36 |
| 177-2471 | 339 | 178-6544 | 22 | 183-8224 | 79 |
| 177-2553 | 328 | 178-6545 | 22 | 184-3833 | 601 |
| 177-2584 | 507 | 178-6552 | 59 | 184-3983 | 65 |
| 177-2585 | 348 | 178-6554 | 59 | 184-5560 | 371 |
| 177-2611 | 367 | | 62 | 184-5724 | 281 |
| 177-2619 | 335 | 178-6563 | 40 | | 283 |
| 177-2653 | 487 | 178-6577 | 194 | | 285 |
| | 489 | 178-6598 | 37 | | 287 |
| | 491 | 178-6599 | 37 | 184-8423 | 243 |
| | 589 | 178-6600 | 37 | 184-8722 | 268 |
| 177-2713 | 601 | 178-6601 | 37 | | 270 |
| 177-5739 | 247 | 178-6633 | 47 | | 272 |
| | 250.02 | | 48 | 184-8862 | 244 |
| 177-5877 | 262 | 178-6634 | 48 | 184-9156 | 479 |
| 177-5879 | 262 | 178-6635 | 48 | 184-9253 | 395 |
| 177-5880 | 262 | 178-6636 | 48 | 184-9254 | 395 |
| 177-6315 | 665 | 179-5030 | 397 | 184-9255 | 395 |
| 177-6395 | 245 | 179-5146 | 400 | 184-9256 | 395 |
| 177-8068 | 784 | 179-5227 | 400 | 184-9257 | 395 |
| 177-8506 | 423 | 179-5260 | 419 | 184-9336 | 451 |
| 177-8572 | 425 | | 421 | 185-0169 | 343 |
| 177-9778 | 81 | 179-7578 | 464 | | 345 |
| 178-0852 | 281 | 179-7616 | 467 | 185-0194 | 371 |
| | 283 | | 471 | 185-0201 | 343 |
| | 285 | 179-7863 | 485 | | 345 |
| | 287 | 179-7867 | 485 | 185-0334 | 357 |
| 178-5422 | 671 | 179-9763 | 339 | 185-0383 | 451 |
| 178-5423 | 671 | 179-9806 | 328 | 185-0400 | 561 |
| 178-5431 | 641 | 180-3861 | 223 | 185-0407 | 575 |
| 178-5500 | 646 | | 224 | 185-0423 | 582 |
| 178-5549 | 655 | 180-7521 | 286 | 185-0462 | 451 |
| 178-5569 | 628 | | 287 | | 603 |
| 178-5570 | 619 | 180-7525 | 286 | 185-0463 | 603 |
| 178-5572 | 629 | | 287 | 185-0490 | 559 |
| 178-5573 | 623 | 180-7529 | 286 | | 561 |
| | 629 | | 287 | 185-1257 | 226 |
| 178-5574 | 623 | 180-7533 | 286 | 185-1276 | 846 |
| | 629 | | 287 | | 847 |

# PART NUMBER INDEX


| Part.No | Page |
|---|---|
| 185-2793 | 39 |
| 185-8161 | 671 |
| 185-8180 | 623 |
| 185-8181 | 627 |
| 185-8182 | 611 |
| | 613 |
| | 627 |
| 185-8183 | 627 |
| 185-8187 | 611 |
| | 613 |
| | 627 |
| 185-8196 | 619 |
| 185-8197 | 627 |
| 185-8205 | 615 |
| | 617 |
| 185-8214 | 615 |
| | 617 |
| 185-8221 | 627 |
| 185-8280 | 620 |
| 185-8281 | 620 |
| 185-8284 | 675 |
| 185-8286 | 676 |
| | 677 |
| | 678 |
| 185-8290 | 636 |
| 185-8293 | 719 |
| | 721 |
| 185-8300 | 711 |
| 185-8302 | 711 |
| 185-9208 | 143 |
| | 145 |
| 185-9209 | 143 |
| | 145 |
| 186-1131 | 829 |
| | 833.02 |
| | 835 |
| | 839.02 |
| 186-1133 | 849 |
| 186-1147 | 829 |
| | 833.02 |
| | 835 |
| | 839.02 |
| 186-1149 | 833 |
| | 833.06 |
| | 839 |
| 186-1156 | 851 |
| 186-1214 | 833 |
| | 833.06 |
| | 839 |
| | 839.06 |
| 186-3735 | 50 |
| | 87 |
| | 89 |
| | 95 |
| | 103 |
| | 109 |
| | 123 |
| | 125 |
| | 129 |
| | 134 |
| | 137 |
| | 149 |
| | 155 |
| | 168 |
| | 172 |
| | 180 |
| | 181 |
| | 182 |
| | 198 |
| | 199 |
| | 208 |
| | 227 |
| 186-3736 | 101 |
| | 103 |
| | 113 |
| | 115 |
| | 123 |
| | 125 |
| | 129 |
| | 141.01 |
| | 168 |
| | 181 |
| 186-3792 | 197 |
| 186-5644 | 769 |
| | 771 |
| | 775 |
| | 777 |
| | 778 |
| 186-5649 | 773 |
| 186-5662 | 773 |
| 187-0661 | 833 |
| | 833.06 |
| | 839 |
| | 839.06 |
| 187-5693 | 405 |
| | 733 |
| | 734 |
| | 735 |
| 187-5976 | 404 |
| | 733 |
| 187-6058 | 406 |
| | 407 |
| 187-6417 | 188 |
| 187-6421 | 188 |
| 187-6422 | 188 |
| 187-6696 | 404 |
| 187-7070 | 455 |
| | 457.02 |
| 187-9977 | 423 |
| | 425 |
| | 427 |
| | 431 |
| | 433 |
| | 435 |
| 187-9978 | 423 |
| | 425 |
| | 427 |
| 187-9981 | 423 |
| | 425 |
| | 427 |
| 188-0046 | 752 |
| | 754 |
| | 757 |
| | 759 |
| 188-2084 | 330 |
| | 331 |
| 188-3064 | 320 |
| | 321 |
| 188-4140 | 325 |
| | 333 |
| 188-4142 | 328 |

# PART NUMBER INDEX


| Part.No | Page | Part.No | Page | Part.No | Page |
|---|---|---|---|---|---|
| | 333 | | 345 | 194-1910 | 318 |
| 188-4143 | 328 | 190-7674 | 343 | 194-1911 | 318 |
| 188-4181 | 359 | | 345 | 194-1912 | 319 |
| | 361 | 190-7819 | 532 | 194-1917 | 316 |
| | 363 | 190-7826 | 601 | 194-1920 | 316 |
| 189-2678 | 615 | 190-7865 | 571 | 194-1921 | 317 |
| | 617 | 190-9775 | 87 | 194-8353 | 365 |
| 189-2690 | 623 | | 89 | 194-8354 | 365 |
| 189-2693 | 633 | 191-2578 | 503 | 194-8355 | 365 |
| 189-2694 | 633 | 191-3226 | 390 | 194-8356 | 365 |
| 189-2702 | 628 | 191-3235 | 233 | 194-8359 | 359 |
| 189-2704 | 619 | 191-3236 | 233 | | 361 |
| 189-2716 | 633 | 191-5537 | 347 | | 363 |
| 189-2717 | 634 | | 348 | | 365 |
| 189-2768 | 624 | 191-5539 | 348 | 194-8380 | 384 |
| 189-2847 | 632 | 191-5540 | 348 | 195-8212 | 19 |
| | 634 | 191-5541 | 348 | 195-8225 | 31 |
| 189-2849 | 632 | 191-5542 | 506 | 195-8322 | 41 |
| | 633 | | 508 | 195-8351 | 40 |
| 189-2853 | 617 | 191-5543 | 507 | 195-8497 | 29 |
| 189-2854 | 617 | 191-5601 | 348 | | 194 |
| 189-2855 | 615 | 191-5707 | 343 | 196-0711 | 533 |
| | 617 | | 345 | 196-0807 | 485 |
| 189-2864 | 619 | 191-5709 | 341 | 196-0877 | 495 |
| 189-3396 | 619 | 192-0573 | 341 | 196-1569 | 659 |
| 189-3925 | 773 | 193-1736 | 341 | | 661 |
| 189-9377 | 45 | 193-2764 | 725 | 196-1571 | 659 |
| 189-9763 | 339 | 193-2765 | 725 | | 661 |
| | 341 | 193-5014 | 802 | 196-1572 | 659 |
| | 343 | 193-5015 | 802 | | 661 |
| | 345 | 193-6588 | 400 | 196-1599 | 661 |
| 190-3523 | 320 | | 402 | 196-1666 | 711 |
| | 321 | 193-6589 | 403 | 196-7973 | 34 |
| 190-3524 | 320 | 193-6590 | 403 | 196-8217 | 79 |
| | 321 | 193-6606 | 411 | 196-8366 | 31 |
| 190-4896 | 341 | | 413 | | 36 |
| 190-5386 | 831 | 194-1608 | 318 | | 41 |
| | 833.04 | | 319 | | 46 |
| | 837 | | 319.01 | 197-0196 | 579 |
| | 839.04 | | 321 | | 581 |
| 190-5830 | 79 | 194-1609 | 316 | 197-0199 | 579 |
| 190-6880 | 239 | | 317 | | 581 |
| 190-7081 | 243 | | 317.01 | 197-0273 | 579 |
| 190-7673 | 343 | | 320 | | 581 |

# PART NUMBER INDEX


| Part.No | Page |
|---|---|
| 197-0758 | 599 |
| 197-2362 | 427 |
| 197-4385 | 129 |
| | 141.01 |
| | 181 |
| 198-3899 | 687 |
| | 689 |
| | 698 |
| 198-5389 | 145 |
| 199-1286 | 483 |
| 199-1609 | 471 |
| 199-1863 | 476 |
| 199-1965 | 457.04 |
| 199-2178 | 36 |
| 199-2187 | 27 |
| 199-2188 | 27 |
| 199-2189 | 27 |
| 199-2241 | 79 |
| 199-4561 | 503 |
| 199-7371 | 826 |
| 199-7394 | 485 |
| 199-7398 | 241 |
| 199-7403 | 485 |
| 2 | |
| 200-3244 | 343 |
| | 345 |
| 200-3245 | 343 |
| | 345 |
| 200-3246 | 343 |
| | 345 |
| 200-3255 | 343 |
| | 345 |
| 200-3333 | 339 |
| 200-3334 | 341 |
| 200-5125 | 145 |
| 201-3888 | 729 |
| 201-4391 | 623 |
| 201-4417 | 619 |
| 201-4530 | 619 |
| 201-4534 | 659 |
| | 661 |
| 201-4535 | 659 |
| | 661 |
| 201-9263 | 551 |
| 201-9299 | 328 |
| 201-9329 | 600.01 |
| | 600.02 |
| | 601 |
| 201-9352 | 561 |
| | 562 |
| 201-9353 | 562 |
| | 564 |
| 201-9378 | 497 |
| 201-9379 | 477 |
| 202-3855 | 393 |
| 202-3856 | 393 |
| 202-3857 | 393 |
| 202-3858 | 393 |
| 202-3915 | 419 |
| | 421 |
| 202-4004 | 453 |
| | 457 |
| | 457.04 |
| 202-6996 | 393 |
| 202-7127 | 411 |
| | 413 |
| 202-7128 | 411 |
| | 413 |
| 203-4889 | 243 |
| 203-4890 | 243 |
| 204-1611 | 163 |
| | 167 |
| | 179 |
| | 187 |
| | 721 |
| 204-1673 | 151 |
| 204-2755 | 516 |
| | 517 |
| 204-2756 | 516 |
| 204-2762 | 328 |
| 204-2819 | 510 |
| | 516 |
| 204-3622 | 357 |
| | 367 |
| 204-3623 | 359 |
| | 361 |
| | 363 |
| 204-3624 | 371 |
| 204-3663 | 241 |
| 204-3737 | 487 |
| 204-3796 | 600.01 |
| 204-8137 | 487 |
| 205-0826 | 145 |
| 205-3717 | 455 |
| | 475 |
| 205-6295 | 619 |
| 205-6788 | 33 |
| 205-8257 | 145 |
| 206-3336 | 528 |
| | 531 |
| | 532 |
| 206-5162 | 651 |
| 206-5165 | 651 |
| 207-0144 | 631 |
| 207-0216 | 661 |
| 207-6222 | 487 |
| | 489 |
| | 491 |
| 207-6403 | 325 |
| 207-6404 | 325 |
| 208-4289 | 245 |
| | 246 |
| 209-2864 | 833 |
| | 833.06 |
| | 839 |
| | 839.06 |
| 209-4280 | 698 |
| 209-5894 | 513 |
| | 515 |
| 209-5909 | 513 |
| | 515 |
| 209-5917 | 516 |
| 209-5920 | 516 |
| 209-5957 | 369 |
| 209-5992 | 510 |
| | 512 |
| 209-6000 | 326 |
| 209-6009 | 365 |
| 210-2921 | 11 |

# PART NUMBER INDEX


| Part.No | Page | Part.No | Page | Part.No | Page |
|---|---|---|---|---|---|
| | 12 | 214-4511 | 483 | 219-0305 | 659 |
| | 226 | 214-4512 | 441 | 219-3148 | 833 |
| 210-2922 | 226 | 214-4533 | 390 | | 833.06 |
| 210-2956 | 777 | 214-4534 | 390 | | 839 |
| 210-2957 | 777 | 214-7915 | 833 | | 839.06 |
| 210-5808 | 619 | | 833.06 | 219-6314 | 651 |
| 210-5827 | 653 | | 839 | 219-8468 | 302 |
| 210-5828 | 653 | | 839.06 | | 304 |
| 210-5829 | 653 | 215-4909 | 331 | 219-8469 | 303 |
| 210-5834 | 653 | | 332 | | 305 |
| 210-5836 | 653 | | 590 | 220-8678 | 83 |
| 210-5837 | 653 | 215-5037 | 457 | 220-9081 | 818 |
| 210-5838 | 653 | | 457.04 | 220-9082 | 818 |
| 210-8012 | 53 | | 577 | 220-9083 | 819 |
| 210-8117 | 57 | 215-9952 | 514 | 220-9084 | 797 |
| 210-8128 | 57 | 215-9961 | 343 | 220-9087 | 819 |
| 210-9827 | 400 | | 345 | 220-9088 | 820 |
| 210-9907 | 431 | 215-9962 | 343 | 220-9089 | 820 |
| | 433 | | 345 | 220-9090 | 817 |
| | 435 | 215-9982 | 231 | | 818 |
| 212-2838 | 281 | | 510 | | 819 |
| | 283 | 216-4970 | 133 | | 820 |
| | 285 | 216-6485 | 427 | | 821 |
| 212-5148 | 487 | 216-6589 | 411 | | 822 |
| | 489 | | 413 | | 823 |
| 212-5419 | 467 | 216-6676 | 334 | | 824 |
| 212-5423 | 467 | 216-6677 | 334 | 220-9091 | 821 |
| | 471 | 216-6678 | 334 | 220-9092 | 822 |
| 212-8489 | 59 | 217-4890 | 821 | 220-9093 | 822 |
| 212-8521 | 202 | 217-4891 | 821 | 220-9094 | 799 |
| 212-8561 | 37 | 217-4892 | 822 | 220-9097 | 823 |
| | 202 | 217-4893 | 822 | 220-9098 | 823 |
| 212-8571 | 31 | 217-4894 | 823 | 220-9099 | 824 |
| 212-8572 | 31 | 217-4895 | 823 | 220-9729 | 391 |
| 212-8584 | 35 | 217-4896 | 785 | 221-4883 | 453 |
| 212-8596 | 35 | | 824 | 221-8045 | 833 |
| 212-8613 | 202 | 217-5469 | 42 | | 833.06 |
| 213-0677 | 36 | 217-5589 | 46 | | 839 |
| | 325 | 218-0404 | 651 | | 839.06 |
| 213-0772 | 109 | 218-1139 | 487 | 221-8813 | 647 |
| 213-9100 | 208 | | 489 | 221-8859 | 391 |
| 213-9433 | 35 | | 491 | | 458 |
| | 79 | 218-5199 | 286 | | 458.01 |
| 214-4501 | 361 | | 287 | 221-8861 | 190 |

# PART NUMBER INDEX


| Part.No | Page |
|---|---|
| 221-8872 | 193 |
| 221-8874 | 192 |
| | 193 |
| 222-0084 | 588 |
| | 589 |
| 222-0085 | 588 |
| 222-0124 | 381 |
| 222-0126 | 380 |
| 222-0225 | 523 |
| 222-1080 | 817 |
| 222-1090 | 821 |
| 222-8238 | 46 |
| 222-8292 | 31 |
| 223-3040 | 256 |
| 223-3041 | 256 |
| | 258 |
| 223-3042 | 260 |
| 223-4453 | 58 |
| | 149 |
| 223-7045 | 391 |
| 224-1685 | 334 |
| 224-1687 | 334 |
| | 495 |
| 224-8946 | 831 |
| | 833.04 |
| | 837 |
| | 839.04 |
| 225-4543 | 341 |
| 225-4544 | 341 |
| 225-4548 | 518 |
| 225-4549 | 518 |
| 225-4588 | 352 |
| | 364 |
| 225-4590 | 353 |
| | 738 |
| 225-4591 | 353 |
| | 368 |
| 225-4592 | 353 |
| | 386 |
| 225-4607 | 343 |
| | 345 |
| 225-4785 | 379 |
| | 592 |
| 225-4786 | 593 |
| 225-4787 | 593 |
| | 595 |
| 225-4789 | 593 |
| | 595 |
| 225-4790 | 593 |
| | 595 |
| 225-4791 | 593 |
| | 595 |
| 225-4792 | 593 |
| | 595 |
| 225-4793 | 593 |
| | 595 |
| 225-4796 | 593 |
| | 595 |
| 225-4797 | 593 |
| | 595 |
| 225-4803 | 593 |
| | 595 |
| 225-4804 | 569 |
| | 571 |
| | 593 |
| | 595 |
| | 599 |
| 225-4821 | 593 |
| | 595 |
| 225-4830 | 593 |
| | 595 |
| 225-4831 | 593 |
| | 595 |
| 225-4832 | 593 |
| | 595 |
| 225-4833 | 593 |
| | 595 |
| 225-4843 | 383 |
| | 594 |
| 225-4844 | 595 |
| 225-5707 | 719 |
| | 721 |
| 225-5714 | 719 |
| | 721 |
| | 723 |
| 226-3065 | 413 |
| 227-0265 | 51 |
| 227-0581 | 485 |
| 227-0590 | 325 |
| 227-0620 | 325 |
| | 327 |
| 227-6034 | 233 |
| 227-6035 | 231 |
| | 232 |
| 227-6071 | 278 |
| 227-6081 | 275 |
| | 277 |
| | 278 |
| 227-6105 | 275 |
| | 277 |
| 227-6106 | 275 |
| | 277 |
| 227-6147 | 274 |
| 227-6148 | 276 |
| 227-6166 | 234 |
| 227-6215 | 501 |
| 227-6221 | 501 |
| 227-6228 | 503 |
| 227-6884 | 384 |
| 227-6913 | 231 |
| 227-7575 | 107 |
| 228-5463 | 286 |
| | 287 |
| 228-5528 | 738 |
| | 772 |
| 228-5614 | 759 |
| 228-5615 | 369 |
| | 759 |
| | 773 |
| 228-7092 | 45 |
| 228-7316 | 829 |
| | 833.02 |
| | 835 |
| | 839.02 |
| 229-1009 | 375 |
| 229-1091 | 761 |
| 229-1092 | 778 |
| 229-1095 | 761 |
| 229-1096 | 752 |
| | 753 |
| | 754 |
| | 755 |

# PART NUMBER INDEX


| Part.No | Page | Part.No | Page | Part.No | Page |
|---|---|---|---|---|---|
| | 756 | | 612 | 234-1038 | 133 |
| | 757 | 230-0280 | 740 | 234-1097 | 107 |
| | 758 | | 761 | 234-1122 | 127 |
| | 760 | 230-2979 | 13 | 234-1156 | 143 |
| 229-1772 | 738 | | 50 | | 145 |
| 229-6963 | 817 | 230-4009 | 103 | 234-1158 | 143 |
| 229-6964 | 818 | | 113 | 234-3927 | 773 |
| 229-6965 | 818 | | 123 | 234-3928 | 773 |
| 229-6966 | 819 | | 129 | 234-3930 | 773 |
| 229-6967 | 819 | | 188 | 234-3931 | 773 |
| 229-6968 | 820 | 230-4011 | 101 | 234-4440 | 437 |
| 229-6969 | 783 | | 103 | | 439 |
| | 820 | | 123 | | 518 |
| 229-9070 | 640 | | 125 | 234-4452 | 343 |
| 229-9075 | 694 | | 129 | | 345 |
| | 695 | | 229 | 234-4453 | 343 |
| 229-9076 | 681 | 230-4013 | 188 | | 345 |
| | 682 | 230-5010 | 103 | 234-4492 | 377 |
| | 695 | | 123 | 234-4573 | 365 |
| 229-9077 | 695 | | 129 | 234-4574 | 365 |
| | 696 | | 138 | 234-4576 | 365 |
| 229-9078 | 667 | | 168 | 234-4577 | 365 |
| 229-9082 | 707 | | 181 | 234-4578 | 365 |
| | 708 | | 188 | 234-4580 | 369 |
| | 716 | 231-1771 | 208 | 234-4581 | 369 |
| 229-9084 | 708 | 231-1827 | 93 | 234-4582 | 369 |
| | 714 | | 105 | 234-4583 | 369 |
| 229-9086 | 642 | 231-2295 | 103 | 234-4584 | 369 |
| 229-9087 | 642 | | 123 | 234-4585 | 369 |
| | 644 | | 181 | 234-4586 | 369 |
| 229-9088 | 642 | 232-4102 | 455 | 234-4587 | 369 |
| | 646 | | 457.02 | 234-4588 | 369 |
| 229-9093 | 700 | | 582 | 234-4589 | 369 |
| | 701 | 232-4110 | 599 | 234-4591 | 386 |
| 229-9094 | 702 | 232-4111 | 599 | 234-4592 | 386 |
| | 705 | 232-4112 | 599 | 234-4629 | 515 |
| 229-9095 | 681 | 232-4113 | 599 | 234-4796 | 40 |
| | 685 | 232-4114 | 599 | 234-6468 | 615 |
| | 691 | 232-4117 | 599 | | 617 |
| 229-9096 | 606 | 233-1277 | 20 | 234-6469 | 615 |
| 229-9097 | 607 | 233-1279 | 201 | | 617 |
| | 610 | 233-1280 | 201 | 234-6470 | 615 |
| 229-9108 | 608 | 234-1035 | 133 | | 617 |
| 229-9109 | 609 | 234-1037 | 133 | 234-6471 | 615 |

# PART NUMBER INDEX


| Part.No | Page |
|---|---|
| | 617 |
| 234-6472 | 615 |
| | 617 |
| 234-6473 | 615 |
| | 617 |
| 234-6474 | 615 |
| | 617 |
| 234-6475 | 615 |
| | 617 |
| 234-6476 | 615 |
| | 617 |
| 234-6477 | 615 |
| | 617 |
| 234-6478 | 615 |
| | 617 |
| 234-6480 | 615 |
| | 617 |
| 234-6483 | 615 |
| | 617 |
| 234-6485 | 615 |
| | 617 |
| 234-6489 | 629 |
| 234-6490 | 615 |
| | 617 |
| 234-6491 | 615 |
| | 617 |
| 234-6497 | 615 |
| | 617 |
| 234-6498 | 615 |
| | 617 |
| 234-6499 | 638 |
| 234-6500 | 639 |
| 234-6501 | 607 |
| | 609 |
| | 638 |
| 234-6502 | 638 |
| 234-6521 | 615 |
| | 617 |
| 234-6548 | 615 |
| | 617 |
| 234-6549 | 615 |
| | 617 |
| 234-6550 | 615 |
| | 617 |
| 234-6579 | 615 |
| | 617 |
| | 673 |
| | 675 |
| 234-6580 | 673 |
| | 675 |
| 234-6594 | 611 |
| | 613 |
| | 635 |
| 234-6602 | 675 |
| 234-6603 | 673 |
| 234-6604 | 675 |
| 234-6605 | 673 |
| 234-6608 | 673 |
| | 675 |
| 234-6609 | 673 |
| | 675 |
| 234-6610 | 673 |
| | 675 |
| 234-6611 | 673 |
| 234-6612 | 673 |
| 234-6613 | 673 |
| | 678 |
| 234-6614 | 673 |
| 234-6615 | 678 |
| 235-0346 | 829 |
| | 833.02 |
| | 835 |
| | 839.02 |
| 235-7520 | 288 |
| | 289 |
| | 290 |
| | 291 |
| 235-7679 | 367 |
| | 369 |
| | 372 |
| | 752 |
| | 753 |
| | 754 |
| | 755 |
| | 756 |
| | 757 |
| | 758 |
| | 759 |
| | 760 |
| | 778 |
| 235-7764 | 292 |
| | 317 |
| | 317.01 |
| | 319 |
| | 319.01 |
| 235-7765 | 292 |
| 235-7769 | 367 |
| | 369 |
| 235-7770 | 365 |
| 235-8856 | 679 |
| 235-8857 | 679 |
| 235-8862 | 666 |
| 235-8873 | 713 |
| | 715 |
| 235-8874 | 713 |
| | 715 |
| 235-8875 | 713 |
| | 715 |
| 235-8876 | 717 |
| 235-8877 | 717 |
| 235-8878 | 717 |
| 235-8879 | 717 |
| 235-8880 | 726 |
| 235-8891 | 719 |
| | 721 |
| 235-8893 | 671 |
| 235-8894 | 671 |
| 235-8908 | 611 |
| | 614 |
| 235-8909 | 611 |
| | 613 |
| | 629 |
| 235-8910 | 611 |
| | 613 |
| | 618 |
| 235-8912 | 619 |
| 235-8914 | 673 |
| | 675 |
| 235-8917 | 613 |
| | 616 |
| 235-8922 | 615 |
| | 617 |

# PART NUMBER INDEX


| Part.No | Page | Part.No | Page | Part.No | Page |
|---|---|---|---|---|---|
| 235-8923 | 615 | 236-3087 | 498 | 238-2219 | 179 |
| | 617 | 236-3212 | 481 | 238-2260 | 652 |
| 235-8926 | 615 | 236-3213 | 481 | 238-2279 | 133 |
| 235-8928 | 615 | 236-3257 | 327 | 238-2280 | 133 |
| 235-8929 | 615 | 236-3258 | 327 | 238-2318 | 107 |
| 235-8930 | 617 | 236-3259 | 327 | 238-2319 | 113 |
| 235-8932 | 635 | 236-3669 | 259 | 238-2326 | 211 |
| 235-8933 | 619 | 236-3670 | 259 | | 213 |
| 235-8950 | 615 | 236-3671 | 259 | 238-2363 | 117 |
| | 617 | 236-3702 | 260 | | 123 |
| 235-8951 | 677 | | 261 | | 129 |
| 235-8952 | 676 | 236-3703 | 260 | 238-2366 | 117 |
| 235-8965 | 673 | | 261 | | 129 |
| 235-8966 | 675 | 236-3747 | 246 | | 146 |
| 235-8969 | 520 | 236-3748 | 246 | 238-2390 | 109 |
| | 522 | 236-6419 | 541 | 238-2391 | 109 |
| 235-8970 | 521 | | 543 | 238-2501 | 93 |
| | 522 | | 551 | | 151 |
| 235-8971 | 522 | | 556 | 238-2528 | 93 |
| 235-8972 | 522 | | 559 | | 151 |
| 235-8974 | 645 | 236-6421 | 541 | 239-1710 | 322 |
| 235-8996 | 676 | | 549 | 239-1711 | 322 |
| | 677 | 236-8340 | 288 | | 324 |
| 235-8997 | 677 | 236-8341 | 289 | 239-1714 | 480 |
| 235-8998 | 676 | 236-9435 | 259 | | 482 |
| 235-9001 | 607 | 236-9438 | 259 | 239-1716 | 436 |
| | 609 | 236-9440 | 259 | 239-1717 | 438 |
| 235-9003 | 707 | 236-9570 | 260 | 239-1726 | 448 |
| 235-9004 | 707 | 237-1062 | 846 | | 494 |
| | 712 | | 847 | 239-1732 | 394 |
| 235-9005 | 713 | 237-3106 | 761 | | 732 |
| 235-9012 | 640 | 237-3184 | 416 | 239-2564 | 780 |
| | 646 | 238-0112 | 204 | 239-2565 | 780 |
| 235-9014 | 719 | 238-0118 | 204 | | 788 |
| | 721 | 238-0120 | 204 | 239-2573 | 783 |
| | 723 | 238-1506 | 133 | 239-2574 | 783 |
| 235-9015 | 719 | 238-1627 | 210 | | 790 |
| | 721 | 238-1628 | 212 | 239-2575 | 790 |
| | 723 | 238-2208 | 156 | | 797 |
| 235-9028 | 680 | | 642 | 239-2576 | 783 |
| | 681 | 238-2209 | 156 | 239-2577 | 783 |
| 236-2843 | 451 | 238-2210 | 156 | | 790 |
| 236-2844 | 451 | 238-2211 | 699 | 239-2578 | 790 |
| 236-2848 | 451 | | 699.01 | | 797 |

# PART NUMBER INDEX


| Part.No | Page | Part.No | Page | Part.No | Page |
|---|---|---|---|---|---|
| 239-2579 | 780 | 239-2733 | 795 | | 445 |
| 239-2580 | 780 | 239-2876 | 796 | | 530 |
| | 787 | | 799 | 239-8697 | 577 |
| 239-2581 | 787 | 239-4341 | 293 | | 578 |
| | 794 | 239-4350 | 299 | 239-8998 | 577 |
| 239-2582 | 785 | 239-4362 | 296 | | 580 |
| 239-2583 | 785 | 239-4378 | 299 | 240-2912 | 769 |
| | 792 | 239-4382 | 299 | | 771 |
| 239-2584 | 792 | 239-4383 | 299 | | 775 |
| | 799 | 239-4384 | 299 | | 777 |
| 239-2585 | 785 | 239-4385 | 293 | 240-2913 | 752 |
| 239-2586 | 785 | | 295 | | 753 |
| | 792 | 239-4386 | 293 | | 754 |
| 239-2587 | 792 | | 294 | | 755 |
| | 799 | 239-4387 | 295 | | 756 |
| 239-2599 | 797 | | 298 | | 757 |
| 239-2641 | 793 | 239-4388 | 294 | | 758 |
| 239-2649 | 793 | | 297 | | 760 |
| 239-2659 | 797 | 239-4389 | 297 | 240-2915 | 371 |
| 239-2683 | 779 | | 298 | 240-2978 | 247 |
| 239-2684 | 779 | | 299 | | 250.02 |
| | 786 | 239-4390 | 299 | 240-2979 | 247 |
| 239-2685 | 786 | | 300 | | 250.02 |
| | 793 | 239-4391 | 300 | 240-2988 | 301 |
| 239-2686 | 779 | 239-4392 | 300 | 240-3828 | 731 |
| 239-2687 | 779 | 239-4393 | 299 | 240-3830 | 731 |
| | 786 | 239-4394 | 300 | 240-3833 | 732 |
| 239-2688 | 786 | 239-6395 | 67 | 240-3839 | 733 |
| | 793 | 239-6507 | 728 | 240-3845 | 733 |
| 239-2689 | 782 | 239-6604 | 59 | 240-3846 | 736 |
| 239-2690 | 782 | 239-6612 | 67 | 240-3849 | 734 |
| | 789 | | 68 | 240-3851 | 734 |
| 239-2691 | 789 | 239-6626 | 730 | 240-3852 | 735 |
| | 796 | 239-6627 | 730 | 240-3854 | 736 |
| 239-2692 | 782 | 239-6630 | 730 | 240-3860 | 737 |
| 239-2693 | 782 | 239-6631 | 730 | 240-3867 | 738 |
| | 789 | 239-6632 | 730 | 240-3882 | 735 |
| 239-2694 | 789 | 239-6681 | 202 | 240-3893 | 849 |
| | 796 | 239-8677 | 11 | 240-3894 | 844 |
| 239-2695 | 781 | | 12 | | 844.01 |
| 239-2696 | 781 | | 447 | 240-3895 | 845 |
| | 788 | 239-8693 | 443 | | 845.01 |
| 239-2697 | 788 | | 528 | 240-3896 | 842 |
| | 795 | 239-8695 | 444 | | 842.01 |

# PART NUMBER INDEX


| Part.No | Page | Part.No | Page | Part.No | Page |
|---|---|---|---|---|---|
| 240-3897 | 843 | 241-7300 | 733 | 242-6483 | 414 |
| | 843.01 | | 753 | 242-6484 | 422 |
| 240-4999 | 694 | 241-7301 | 753 | 242-6485 | 430 |
| 240-5001 | 680 | 241-7303 | 734 | 242-6487 | 415 |
| 240-5037 | 703 | | 755 | 242-6488 | 424 |
| 240-5056 | 690 | 241-7304 | 755 | 242-6489 | 432 |
| 240-5057 | 690 | 241-7306 | 735 | 242-6492 | 426 |
| | 691 | | 757 | 242-6493 | 434 |
| 240-5058 | 691 | 241-7309 | 736 | 242-6505 | 396 |
| | 692 | | 758 | | 447 |
| 240-5060 | 705 | 241-7315 | 736 | 242-6730 | 350 |
| 240-5063 | 697 | | 759 | | 731 |
| | 700 | 241-7316 | 759 | | 732 |
| 240-5064 | 699 | 241-7318 | 737 | | 740 |
| 240-5065 | 699 | | 768 | 242-6731 | 350 |
| | 700 | 241-7319 | 769 | | 356 |
| 240-5071 | 668 | 241-7321 | 738 | 242-6732 | 350 |
| 240-5073 | 669 | | 774 | | 380 |
| 240-5074 | 717 | 241-7322 | 775 | 242-6733 | 351 |
| 241-1999 | 267 | 241-7324 | 737 | | 731 |
| 241-2000 | 267 | | 770 | 242-6734 | 351 |
| | 268 | 241-7325 | 771 | | 358 |
| 241-2002 | 269 | 241-7330 | 735 | 242-6735 | 351 |
| | 740 | | 756 | | 352 |
| 241-2003 | 269 | 241-7331 | 756 | | 382 |
| | 270 | 241-7379 | 357 | 242-6736 | 350 |
| 241-2005 | 271 | 241-7380 | 357 | | 731 |
| 241-2006 | 271 | 241-7381 | 359 | | 732 |
| | 272 | | 361 | | 740 |
| 241-7210 | 290 | | 363 | 242-6737 | 350 |
| 241-7211 | 291 | 241-7382 | 367 | | 381 |
| 241-7282 | 731 | 242-1510 | 829 | 242-6743 | 351 |
| | 742 | | 833.02 | | 731 |
| 241-7283 | 743 | | 835 | 242-6744 | 351 |
| 241-7286 | 731 | | 839.02 | | 360 |
| | 762 | 242-6463 | 734 | 242-6750 | 352 |
| 241-7287 | 731 | | 754 | | 732 |
| | 744 | 242-6464 | 754 | 242-6751 | 352 |
| 241-7288 | 745 | 242-6475 | 410 | | 362 |
| 241-7291 | 732 | 242-6476 | 418 | 242-6755 | 353 |
| | 750 | 242-6477 | 428 | | 737 |
| 241-7292 | 751 | 242-6479 | 412 | | 739 |
| 241-7296 | 733 | 242-6480 | 420 | 242-6756 | 353 |
| | 752 | 242-6481 | 429 | | 366 |

# PART NUMBER INDEX


| Part.No | Page | Part.No | Page | Part.No | Page |
|---|---|---|---|---|---|
| 242-6757 | 353 | | 745 | 245-1044 | 101 |
| | 385 | | 747 | 245-1045 | 101 |
| 242-6769 | 354 | | 751 | 245-1048 | 101 |
| | 738 | | 752 | 245-5079 | 451 |
| 242-6770 | 354 | | 753 | 245-5285 | 442 |
| | 370 | | 754 | 245-5287 | 442 |
| 242-6771 | 354 | | 755 | 245-5402 | 325 |
| | 387 | | 756 | 245-5416 | 439 |
| 242-6801 | 341 | | 757 | 245-5427 | 437 |
| 242-6803 | 341 | | 758 | 245-5457 | 833 |
| 242-6804 | 341 | | 759 | | 833.06 |
| 242-8768 | 685 | | 760 | | 839 |
| | 696 | | 761 | | 839.06 |
| | 697 | 244-4360 | 769 | 245-7749 | 724 |
| 243-4505 | 95 | | 771 | | 725 |
| | 101 | | 775 | | 726 |
| | 103 | | 777 | 245-7750 | 726 |
| | 125 | 244-5747 | 833 | 245-7751 | 726 |
| | 129 | | 833.06 | 245-7756 | 719 |
| | 130 | | 839 | 245-7757 | 719 |
| | 183 | | 839.06 | 245-7758 | 719 |
| | 723 | 244-7927 | 244 | | 721 |
| 243-4506 | 189 | 244-7928 | 244 | 245-7760 | 111 |
| 243-4508 | 103 | 244-7929 | 245 | 245-7790 | 615 |
| | 125 | 244-8194 | 267 | | 617 |
| | 129 | | 269 | | 673 |
| | 140 | | 271 | | 675 |
| | 155 | 244-8198 | 241 | 245-7791 | 717 |
| | 172 | | 495 | 245-7792 | 717 |
| | 182 | 244-8202 | 243 | 245-7793 | 717 |
| 243-4509 | 103 | 244-8207 | 243 | 245-7794 | 670 |
| | 129 | 244-8219 | 241 | 245-7811 | 666 |
| | 138 | 244-8228 | 241 | 245-7813 | 711 |
| | 180 | 244-8234 | 241 | 245-7814 | 711 |
| 243-4510 | 103 | 244-8242 | 241 | 245-7815 | 711 |
| | 123 | 244-8255 | 241 | 245-7816 | 711 |
| | 129 | 244-8277 | 241 | 245-7817 | 711 |
| | 168 | 244-8278 | 241 | 245-7818 | 711 |
| | 181 | 244-8284 | 249 | 245-7819 | 711 |
| 244-4254 | 769 | 244-8288 | 241 | 245-7820 | 711 |
| | 771 | 244-8400 | 559 | 245-7823 | 711 |
| 244-4255 | 769 | 244-8419 | 535 | 245-7824 | 711 |
| | 771 | | 558 | 245-7825 | 711 |
| 244-4277 | 743 | 245-1042 | 101 | 245-7826 | 711 |

# PART NUMBER INDEX


| Part.No | Page | Part.No | Page | Part.No | Page |
|---|---|---|---|---|---|
| 245-7827 | 711 | | 686 | 245-7926 | 675 |
| 245-7828 | 711 | | 696 | 245-7929 | 638 |
| 245-7829 | 711 | | 697 | 245-7931 | 635 |
| 245-7830 | 711 | 245-7890 | 685 | | 637 |
| 245-7831 | 711 | | 688 | 245-7948 | 673 |
| 245-7832 | 711 | | 696 | | 675 |
| 245-7833 | 711 | | 697 | 245-9178 | 55 |
| 245-7834 | 711 | 245-7891 | 685 | 245-9185 | 55 |
| 245-7835 | 711 | | 689 | 245-9191 | 55 |
| 245-7836 | 711 | 245-7892 | 696 | 245-9205 | 55 |
| 245-7837 | 711 | | 698 | 245-9212 | 57 |
| 245-7838 | 711 | 245-7895 | 685 | 245-9216 | 57 |
| 245-7839 | 711 | | 696 | 245-9217 | 57 |
| 245-7842 | 522 | | 697 | 245-9218 | 57 |
| | 523 | 245-7896 | 685 | 245-9276 | 57 |
| 245-7843 | 523 | | 687 | 245-9344 | 50 |
| 245-7844 | 522 | | 696 | 245-9348 | 55 |
| | 523 | | 697 | 245-9349 | 55 |
| 245-7845 | 523 | 245-7897 | 686 | 245-9352 | 55 |
| 245-7846 | 711 | | 687 | 246-2641 | 84 |
| 245-7847 | 711 | | 688 | | 84.01 |
| 245-7850 | 719 | | 689 | 246-5425 | 296 |
| | 721 | | 698 | 247-2694 | 648 |
| 245-7851 | 719 | 245-7898 | 683 | 247-2695 | 648 |
| | 721 | | 684 | 247-7346 | 319 |
| 245-7856 | 711 | | 687 | 247-7382 | 317 |
| 245-7858 | 715 | | 689 | 247-7416 | 444 |
| 245-7872 | 717 | | 693 | | 841 |
| 245-7873 | 717 | | 698 | 247-7420 | 443 |
| 245-7882 | 692 | | 702 | | 445 |
| | 693 | 245-7899 | 686 | | 840 |
| 245-7883 | 682 | | 688 | 247-7436 | 831 |
| | 683 | | 689 | | 833.04 |
| 245-7885 | 701 | | 698 | | 837 |
| | 702 | 245-7900 | 281 | | 839.04 |
| 245-7886 | 687 | | 283 | 247-7437 | 831 |
| 245-7887 | 683 | | 285 | | 833.04 |
| | 693 | 245-7901 | 281 | | 837 |
| | 702 | | 283 | | 839.04 |
| 245-7888 | 682 | | 285 | 247-7438 | 831 |
| | 684 | 245-7905 | 711 | | 833.04 |
| | 692 | 245-7916 | 667 | | 837 |
| | 701 | 245-7922 | 671 | | 839.04 |
| 245-7889 | 685 | 245-7925 | 673 | 247-7453 | 737 |

# PART NUMBER INDEX


| Part.No | Page | Part.No | Page | Part.No | Page |
|---|---|---|---|---|---|
| 247-7459 | 448 | | 421 | 248-9850 | 452 |
| 247-7491 | 446 | 248-1842 | 773 | 248-9851 | 454 |
| | 848 | 248-7143 | 294 | | 456 |
| 247-8782 | 339 | | 295 | | 457.01 |
| 247-8864 | 357 | | 296 | | 457.03 |
| 247-8865 | 357 | 248-7174 | 300 | 248-9852 | 458 |
| | 367 | 248-7820 | 778 | | 458.01 |
| 247-8866 | 357 | 248-7822 | 778 | 248-9853 | 322 |
| 247-8867 | 357 | 248-7823 | 778 | | 440 |
| 247-8868 | 357 | 248-7835 | 778 | | 441.01 |
| 247-8869 | 380 | 248-7836 | 778 | 250-2402 | 748 |
| 247-8870 | 381 | 248-7837 | 740 | 250-2446 | 549 |
| 247-8873 | 359 | | 778 | 250-2447 | 551 |
| | 361 | 248-7838 | 778 | 250-2503 | 346 |
| | 363 | 248-7854 | 354 | 250-5054 | 246 |
| 247-8874 | 359 | | 372 | 250-6415 | 788 |
| | 361 | 248-7857 | 375 | | 795 |
| | 363 | 248-8930 | 252 | 250-6417 | 803 |
| 247-8876 | 359 | 248-8940 | 241 | 250-6418 | 788 |
| | 361 | 248-8961 | 244 | | 803 |
| 247-8877 | 359 | 248-8992 | 263 | 251-0299 | 127 |
| | 361 | 248-8993 | 263 | | 130 |
| 247-8878 | 359 | 248-8994 | 263 | 251-0303 | 133 |
| | 363 | 248-8995 | 263 | 251-0304 | 133 |
| 247-8881 | 363 | 248-9012 | 264 | 251-0436 | 158 |
| 247-8882 | 363 | | 265 | | 443 |
| 247-8883 | 382 | 248-9014 | 264 | 251-0467 | 93 |
| 247-8885 | 367 | | 265 | 251-0482 | 157 |
| 247-8886 | 367 | 248-9016 | 264 | 251-0483 | 157 |
| 247-8887 | 367 | | 265 | 251-0529 | 170 |
| 247-8888 | 367 | 248-9018 | 264 | | 444 |
| 247-8920 | 341 | | 265 | | 445 |
| 247-8974 | 361 | 248-9020 | 264 | 251-0536 | 652 |
| 247-9006 | 371 | | 265 | 251-0537 | 652 |
| 247-9030 | 411 | 248-9061 | 268 | 251-0542 | 142 |
| 247-9073 | 383 | | 270 | 251-0543 | 143 |
| 247-9074 | 383 | | 272 | | 145 |
| 247-9076 | 383 | 248-9428 | 437 | | 146 |
| 247-9078 | 383 | 248-9633 | 407 | 251-0544 | 144 |
| 247-9129 | 419 | | 736 | | 651 |
| 247-9132 | 419 | 248-9825 | 450 | 251-0579 | 123 |
| 247-9141 | 419 | 248-9846 | 484 | 251-0598 | 171 |
| 247-9144 | 419 | 248-9847 | 442 | | 172 |
| 247-9298 | 419 | 248-9848 | 51 | 251-0602 | 120 |

# PART NUMBER INDEX


| Part.No | Page |
|---|---|
| 251-0637 | 111 |
| 251-4162 | 665.07 |
| 253-0861 | 829 |
| | 831 |
| | 833.02 |
| | 833.04 |
| | 835 |
| | 837 |
| | 839.02 |
| | 839.04 |
| 253-1346 | 297 |
| | 298 |
| 253-2111 | 133 |
| 253-6417 | 428 |
| | 429 |
| | 433 |
| 253-6445 | 415 |
| 253-6453 | 415 |
| 253-6454 | 415 |
| 253-6455 | 425 |
| 253-6621 | 414 |
| 253-6664 | 354 |
| | 740 |
| 253-6685 | 427 |
| 253-6694 | 416 |
| 253-6697 | 416 |
| 253-6754 | 435 |
| 254-3052 | 769 |
| | 771 |
| | 775 |
| | 777 |
| 254-3053 | 769 |
| | 771 |
| | 775 |
| | 777 |
| 255-0351 | 796 |
| 255-0353 | 796 |
| | 799 |
| 255-0354 | 796 |
| | 799 |
| 255-0372 | 799 |
| 255-0377 | 794 |
| 255-0383 | 796 |
| 255-0385 | 799 |
| 255-0386 | 796 |
| | 799 |
| 255-0387 | 796 |
| | 799 |
| 255-0388 | 796 |
| | 799 |
| 255-0395 | 784 |
| 255-0396 | 784 |
| | 791 |
| 255-0397 | 791 |
| | 798 |
| 255-0398 | 784 |
| 255-0399 | 784 |
| | 791 |
| 255-0400 | 791 |
| | 798 |
| 255-0401 | 798 |
| 255-0406 | 798 |
| 255-0414 | 798 |
| 255-0418 | 793 |
| | 797 |
| | 798 |
| 255-0419 | 793 |
| | 797 |
| | 798 |
| 255-0420 | 793 |
| | 797 |
| | 798 |
| 255-0421 | 793 |
| | 797 |
| | 798 |
| 255-0422 | 794 |
| 255-0423 | 794 |
| 255-0424 | 793 |
| | 797 |
| | 798 |
| 255-0425 | 793 |
| | 797 |
| | 798 |
| 255-0430 | 794 |
| 255-0475 | 795 |
| 255-0478 | 795 |
| 255-0479 | 795 |
| 255-0493 | 795 |
| 255-0496 | 795 |
| 255-0497 | 795 |
| 255-1663 | 445 |
| | 468 |
| 255-1665 | 451 |
| 255-1666 | 451 |
| 255-1781 | 479 |
| 255-1800 | 443 |
| | 459 |
| 255-1802 | 444 |
| | 464 |
| 255-2904 | 46 |
| 255-2927 | 729 |
| 255-2966 | 65 |
| | 68 |
| 255-3018 | 729 |
| | 730 |
| 255-3020 | 730 |
| 255-3021 | 730 |
| 255-3022 | 730 |
| 255-3160 | 81 |
| 255-5661 | 543 |
| | 547 |
| | 549 |
| | 556 |
| 255-5662 | 569 |
| | 571 |
| | 574 |
| | 593 |
| | 595 |
| 255-5680 | 483 |
| | 568 |
| 255-5683 | 483 |
| | 570 |
| 255-5713 | 443 |
| | 444 |
| | 534 |
| 255-5716 | 445 |
| | 535 |
| 255-5882 | 571 |
| 255-5883 | 569 |
| 256-0093 | 339 |
| | 342 |
| 256-0096 | 339 |

# PART NUMBER INDEX


| Part.No | Page | Part.No | Page | Part.No | Page |
|---|---|---|---|---|---|
| | 344 | 259-5043 | 214 | | 674 |
| 257-2926 | 11 | | 731 | 259-7349 | 671 |
| | 12 | | 740 | | 672 |
| | 739 | 259-5045 | 160 | 259-7350 | 613 |
| 257-2927 | 11 | | 162 | | 634 |
| | 12 | | 164 | 259-7351 | 634 |
| | 198 | | 166 | 259-7352 | 634 |
| 257-2928 | 11 | | 444 | 259-7353 | 615 |
| | 12 | | 445 | | 617 |
| | 199 | 259-5046 | 174 | 259-7354 | 623 |
| 257-2929 | 11 | | 448 | 259-7378 | 534 |
| | 12 | 259-5047 | 216 | | 535 |
| | 197 | 259-5048 | 220 | | 556 |
| 257-2931 | 777 | 259-5081 | 111 | 259-7464 | 536 |
| 257-2932 | 198 | 259-5082 | 111 | 259-7465 | 537 |
| 257-2933 | 199 | 259-5176 | 131 | | 540 |
| 257-2943 | 197 | 259-5177 | 131 | | 542 |
| 257-3028 | 846 | | 132 | 259-7466 | 537 |
| | 847 | 259-5225 | 151 | | 548 |
| 257-4502 | 831 | 259-5229 | 151 | | 550 |
| | 833.04 | | 153 | 259-7483 | 446 |
| | 837 | 259-5267 | 97 | 259-7492 | 443 |
| | 839.04 | 259-5274 | 133 | 259-7493 | 444 |
| 257-4503 | 831 | | 134 | 259-7494 | 443 |
| | 833.04 | 259-5290 | 109 | 259-7495 | 445 |
| | 837 | 259-5317 | 97 | 259-7631 | 541 |
| | 839.04 | 259-5326 | 215 | | 544 |
| 257-4506 | 833 | 259-5327 | 217 | 259-7632 | 549 |
| | 833.06 | 259-5344 | 175 | | 552 |
| | 839 | | 183 | 259-7707 | 519 |
| | 839.06 | 259-7184 | 724 | 259-7732 | 455 |
| 258-0330 | 659 | 259-7202 | 673 | | 457.02 |
| | 661 | 259-7207 | 724 | | 604 |
| 259-0647 | 386 | 259-7244 | 729 | 259-7733 | 604 |
| 259-0675 | 371 | 259-7286 | 729 | 259-7788 | 593 |
| 259-0918 | 326 | 259-7295 | 619 | | 595 |
| 259-0922 | 325 | | 621 | 259-7877 | 531 |
| | 326 | 259-7345 | 676 | 260-2193 | 647 |
| 259-3543 | 260 | | 677 | | 648 |
| 259-3687 | 236 | 259-7346 | 675 | 260-2326 | 286 |
| | 243 | | 677 | 260-4444 | 472 |
| 259-3688 | 236 | 259-7347 | 673 | | 587 |
| 259-4883 | 111 | | 676 | 260-5656 | 77.01 |
| 259-4914 | 652 | 259-7348 | 671 | 260-6692 | 82 |

# PART NUMBER INDEX


| Part.No | Page | Part.No | Page | Part.No | Page |
|---|---|---|---|---|---|
| 260-6945 | 840 | 260-8316 | 393 | | 833.02 |
| 260-6946 | 841 | 260-8320 | 395 | | 835 |
| 260-7868 | 533 | 260-8321 | 395 | | 839.02 |
| 260-7872 | 487 | 262-2309 | 241 | 264-8671 | 66 |
| | 489 | 262-2313 | 241 | 264-8744 | 842 |
| | 491 | 262-2324 | 241 | | 842.01 |
| 260-7904 | 533 | 262-2333 | 248 | | 843 |
| 260-7906 | 533 | 262-2335 | 248 | | 843.01 |
| 260-7912 | 483 | 262-2346 | 250 | | 844 |
| 260-7966 | 446 | 262-2347 | 249 | | 844.01 |
| | 478 | 262-2353 | 243 | | 845 |
| 260-7970 | 447 | 262-2363 | 241 | | 845.01 |
| | 477 | 262-2365 | 241 | 264-9961 | 549 |
| 260-7971 | 443 | 262-2405 | 268 | 264-9982 | 729 |
| | 460 | | 270 | 264-9983 | 729 |
| 260-7972 | 443 | | 272 | 264-9984 | 729 |
| | 462 | 262-2406 | 268 | 265-3504 | 52 |
| 260-7974 | 444 | | 270 | 265-3557 | 50 |
| | 466 | | 272 | 265-3581 | 53 |
| 260-7986 | 445 | 262-2417 | 268 | 265-3585 | 53 |
| | 470 | | 270 | 265-3586 | 53 |
| 260-7988 | 483 | | 272 | 265-3587 | 53 |
| 260-7992 | 483 | 262-2420 | 236 | 265-3590 | 53 |
| 260-7996 | 483 | 262-2427 | 236 | 265-3591 | 53 |
| 260-8000 | 481 | 262-2428 | 236 | 265-3599 | 53 |
| 260-8006 | 443 | 262-2429 | 236 | 265-3600 | 54 |
| | 486 | 262-2430 | 236 | 265-3602 | 55 |
| 260-8007 | 443 | 262-2432 | 236 | 265-3624 | 57 |
| | 488 | 262-2484 | 264 | 265-3625 | 57 |
| 260-8008 | 444 | | 265 | 265-3628 | 57 |
| | 445 | 262-3148 | 429 | 265-3629 | 57 |
| | 490 | 262-3161 | 435 | 265-3630 | 57 |
| 260-8009 | 445 | 262-3402 | 414 | 265-3631 | 57 |
| | 492 | 262-3403 | 414 | 265-3632 | 57 |
| 260-8010 | 392 | 262-3404 | 423 | 265-3633 | 57 |
| | 731 | 262-3471 | 383 | 265-3634 | 57 |
| 260-8011 | 406 | | 447 | 265-3635 | 57 |
| | 735 | 262-3511 | 431 | 265-3637 | 57 |
| | 736 | | 433 | 265-3638 | 57 |
| 260-8012 | 498 | 262-4781 | 296 | 265-3639 | 57 |
| 260-8043 | 487 | 264-1622 | 775 | 265-3642 | 57 |
| | 489 | 264-1623 | 775 | 265-3643 | 57 |
| | 491 | 264-1708 | 758 | 266-0136 | 204 |
| 260-8315 | 393 | 264-8502 | 829 | 266-0912 | 487 |

# PART NUMBER INDEX


| Part.No | Page | Part.No | Page | Part.No | Page |
|---|---|---|---|---|---|
| | 489 | 266-1258 | 495 | | 732 |
| | 491 | 266-1266 | 491 | 267-7628 | 219 |
| 266-0913 | 487 | 266-1278 | 489 | 267-7629 | 113 |
| | 489 | | 491 | 267-7630 | 113 |
| | 491 | 266-1279 | 489 | 267-7636 | 163 |
| 266-1028 | 458 | | 491 | | 168 |
| | 458.01 | 266-1303 | 489 | 267-7890 | 11 |
| 266-1037 | 485 | | 491 | | 12 |
| 266-1045 | 485 | 266-1315 | 491 | | 184 |
| 266-1055 | 485 | 266-3317 | 101 | | 186 |
| 266-1071 | 487 | 266-5431 | 833 | 267-7891 | 11 |
| | 489 | | 833.06 | | 12 |
| | 491 | | 839 | | 176 |
| 266-1098 | 457 | | 839.06 | | 178 |
| | 457.04 | 266-6207 | 723 | 267-7924 | 11 |
| 266-1108 | 461 | | 729 | | 12 |
| | 463 | 266-6297 | 38 | | 189 |
| | 467 | 266-6298 | 38 | 267-7925 | 189 |
| | 471 | 266-6299 | 38 | 267-7955 | 177 |
| | 475 | 266-6300 | 38 | | 182 |
| 266-1110 | 379 | 266-6301 | 38 | 267-7976 | 143 |
| 266-1111 | 379 | 266-6319 | 62 | 267-7977 | 145 |
| 266-1114 | 379 | 266-6320 | 62 | 267-8071 | 663 |
| 266-1115 | 379 | 266-6321 | 62 | 268-0749 | 251 |
| 266-1116 | 379 | 266-6326 | 35 | | 252 |
| 266-1133 | 461 | 266-6332 | 35 | 268-3317 | 101 |
| | 463 | 266-6333 | 35 | 268-6777 | 431 |
| | 467 | 266-6334 | 35 | 268-6790 | 419 |
| | 471 | 266-6335 | 35 | 268-6792 | 428 |
| | 475 | 266-6336 | 35 | 268-6850 | 397 |
| 266-1136 | 475 | 266-6337 | 35 | 268-6966 | 413 |
| 266-1139 | 461 | 266-6338 | 35 | 268-6989 | 421 |
| | 463 | 266-7928 | 371 | 268-6992 | 421 |
| | 467 | 266-7929 | 371 | 268-7001 | 421 |
| | 471 | 266-7938 | 371 | 268-7004 | 421 |
| | 475 | 266-7939 | 371 | 268-7039 | 399 |
| 266-1142 | 463 | 266-8035 | 390 | 268-7043 | 740 |
| | 467 | 267-0138 | 733 | | 748 |
| 266-1147 | 379 | | 765 | 268-7044 | 748 |
| 266-1179 | 471 | 267-6785 | 501 | 268-7046 | 398 |
| | 475 | 267-7207 | 101 | | 740 |
| 266-1217 | 487 | 267-7208 | 101 | 268-7047 | 399 |
| | 489 | 267-7626 | 221 | 268-7048 | 399 |
| | 491 | 267-7627 | 218 | 268-7049 | 399 |

# PART NUMBER INDEX


| Part.No | Page |
|---|---|
| 268-7074 | 496 |
| | 740 |
| 268-7183 | 496 |
| 268-7185 | 496 |
| 268-7186 | 496 |
| 268-7238 | 399 |
| 268-7240 | 399 |
| 268-7241 | 383 |
| 268-7256 | 352 |
| | 740 |
| 268-7257 | 352 |
| | 384 |
| 268-8643 | 189.02 |
| 269-1596 | 11 |
| | 12 |
| | 746 |
| 269-1597 | 11 |
| | 12 |
| | 760 |
| 269-1598 | 739 |
| | 776 |
| 269-1622 | 747 |
| 269-1624 | 760 |
| 269-1635 | 747 |
| 270-5497 | 191 |
| | 195 |
| 270-5501 | 196 |
| 270-5512 | 191 |
| 270-5526 | 196 |
| 270-5528 | 195 |
| | 196 |
| 270-5947 | 451 |
| | 566 |
| 270-5949 | 567 |
| 270-5950 | 567 |
| 270-5951 | 519 |
| | 520 |
| 270-5952 | 519 |
| | 521 |
| 270-5953 | 525 |
| 270-5974 | 11 |
| | 12 |
| | 447 |
| 270-6259 | 77 |
| | 194 |
| 270-6338 | 49 |
| 270-9972 | 11 |
| | 12 |
| | 261 |
| 270-9979 | 261 |
| 272-4170 | 11 |
| | 12 |
| | 472 |
| 272-4171 | 11 |
| | 12 |
| | 391 |
| 272-4190 | 391 |
| 272-4675 | 13 |
| 272-4676 | 13 |
| 272-4677 | 13 |
| | 14 |
| | 15 |
| | 16 |
| 272-4744 | 63 |
| 272-4773 | 66 |
| | 67 |
| 272-4774 | 200 |
| | 203 |
| 272-6955 | 336 |
| | 338 |
| | 340 |
| 273-5166 | 707 |
| | 720 |
| 273-5167 | 707 |
| | 725 |
| 273-5168 | 708 |
| 273-5169 | 708 |
| | 722 |
| 273-5274 | 627 |
| 273-5345 | 627 |
| | 630 |
| 273-5346 | 627 |
| | 630 |
| 273-5384 | 697 |
| 273-5399 | 725 |
| 273-5400 | 719 |
| 273-5446 | 703 |
| | 704 |
| 273-6716 | 280 |
| 273-6717 | 281 |
| | 285 |
| | 287 |
| 273-6721 | 282 |
| 273-6722 | 283 |
| 273-7674 | 263 |
| 273-7675 | 264 |
| | 265 |
| 273-7677 | 268 |
| | 270 |
| | 272 |
| 273-7725 | 238 |
| | 240 |
| | 242 |
| 273-7735 | 80 |
| 273-7774 | 251 |
| 273-7847 | 252 |
| 273-7848 | 252 |
| 273-7849 | 252 |
| 273-7964 | 259 |
| 273-8314 | 341 |
| 273-8315 | 341 |
| 273-8316 | 343 |
| | 345 |
| 273-8317 | 343 |
| | 345 |
| 273-8318 | 343 |
| | 345 |
| 273-8319 | 343 |
| | 345 |
| 274-2503 | 389 |
| 274-2504 | 389 |
| 274-2544 | 389 |
| 274-2545 | 389 |
| 274-2547 | 385 |
| | 387 |
| 274-6720 | 204 |
| 274-6721 | 194 |
| | 204 |
| 275-1361 | 441 |
| | 441.02 |
| 275-1362 | 325 |
| 275-1439 | 489 |

# PART NUMBER INDEX


| Part.No | Page | Part.No | Page | Part.No | Page |
|---|---|---|---|---|---|
| | 491 | 277-0786 | 411 | | 847 |
| 275-1440 | 491 | | 413 | 279-2865 | 847 |
| 275-1442 | 457 | 277-0954 | 414 | 279-2869 | 846 |
| | 457.04 | | 415 | | 847 |
| 275-1443 | 457 | | 416 | 279-7750 | 201 |
| | 457.04 | | 602 | 279-7859 | 21 |
| 275-1444 | 457 | 278-1585 | 706 | 279-7869 | 336 |
| | 457.04 | 278-2568 | 379 | 279-7870 | 336 |
| 275-1539 | 11 | 278-3561 | 195 | | 337 |
| | 12 | | 253 | 279-7871 | 337 |
| | 474 | 278-3562 | 253 | | 337.01 |
| 275-1619 | 472 | 278-3581 | 259 | 279-7907 | 63 |
| 275-1648 | 379 | 278-3778 | 66 | 279-7909 | 67 |
| 275-1712 | 477 | | 251 | 279-7911 | 44 |
| 275-1713 | 477 | 278-3818 | 260 | 280-2747 | 489 |
| 275-3667 | 706 | | 261 | | 491 |
| 275-3668 | 195 | | 261.01 | 281-3488 | 57 |
| 275-3681 | 828 | 278-3832 | 241 | 281-3534 | 57 |
| | 830 | 278-3837 | 241 | 281-3535 | 57 |
| | 832 | 278-3842 | 241 | 281-3568 | 57 |
| | 833.01 | 278-3896 | 84 | 281-3588 | 50 |
| | 833.03 | 278-3897 | 84 | 281-3602 | 55 |
| | 833.05 | | 85 | | 56 |
| 275-3682 | 834 | 278-3898 | 85 | 281-3605 | 57 |
| | 836 | | 86 | 282-5567 | 397 |
| | 838 | 278-3899 | 85 | 282-7079 | 477 |
| | 839.01 | | 88 | 282-7086 | 493 |
| | 839.03 | 278-6470 | 461 | 282-7088 | 493 |
| | 839.05 | | 463 | 282-7096 | 493 |
| 275-6783 | 154 | | 467 | 282-7097 | 493 |
| | 195 | | 471 | 282-7135 | 495 |
| 275-6784 | 154 | 278-6587 | 379 | 282-7161 | 447 |
| | 155 | 278-6593 | 379 | | 497 |
| 275-6785 | 155 | 278-6756 | 491 | 282-7162 | 447 |
| 275-6786 | 155 | 278-6875 | 379 | | 476 |
| 275-6803 | 137 | 278-6877 | 379 | 282-8567 | 36 |
| | 138 | 278-9257 | 287 | | 207 |
| 275-6846 | 139 | 278-9258 | 287 | 283-2783 | 157 |
| | 140 | 279-2732 | 11 | 283-2893 | 723 |
| 275-6894 | 179 | 279-2733 | 12 | 283-3042 | 185 |
| 275-6896 | 179 | 279-2860 | 11 | | 188 |
| | 181 | | 846 | 283-3074 | 120 |
| 275-6897 | 177 | 279-2861 | 846 | 283-3905 | 241 |
| | 180 | 279-2864 | 12 | | 254 |

# PART NUMBER INDEX


| Part.No | Page |
|---|---|
| 283-3911 | 241 |
| 283-6118 | 372 |
| | 374 |
| 283-6119 | 375 |
| 283-8827 | 833 |
| | 833.06 |
| | 839 |
| | 839.06 |
| 283-8982 | 850 |
| 283-8983 | 850 |
| 284-4386 | 718 |
| 284-4426 | 619 |
| 284-4442 | 707 |
| 284-4552 | 721 |
| 284-7317 | 757 |
| 284-7325 | 758 |
| 285-1327 | 520 |
| | 521 |
| | 524 |
| 285-1465 | 455 |
| | 457.02 |
| 285-4470 | 343 |
| | 345 |
| 286-3683 | 194 |
| 286-4271 | 665.07 |
| 286-6186 | 81 |
| 286-6220 | 241 |
| 286-6276 | 241 |
| 286-6277 | 241 |
| | 254 |
| 286-6281 | 263 |
| 286-6283 | 264 |
| | 265 |
| 286-6338 | 268 |
| 286-6340 | 270 |
| 286-6342 | 272 |
| 286-6346 | 268 |
| | 270 |
| | 272 |
| 286-6359 | 241 |
| 286-6495 | 378 |
| | 447 |
| 286-6561 | 467 |
| | 471 |
| 286-6656 | 498 |
| 286-6720 | 379 |
| 286-6721 | 379 |
| 286-6760 | 457 |
| | 457.04 |
| 287-0047 | 337 |
| 287-0049 | 59.01 |
| | 60 |
| 287-0171 | 70 |
| 287-0183 | 70 |
| 287-0211 | 63 |
| 288-7410 | 397 |
| 288-7502 | 411 |
| | 413 |
| 289-5657 | 451 |
| 289-6424 | 263 |
| 289-6425 | 265 |
| 289-6426 | 264 |
| 289-6572 | 241 |
| 289-6583 | 241 |
| 289-6588 | 241 |
| 289-6603 | 263 |
| 289-6695 | 241 |
| | 249 |
| 289-6697 | 249 |
| 289-6698 | 241 |
| 289-6699 | 241 |
| 289-6700 | 241 |
| 289-6712 | 151 |
| | 248 |
| 289-6713 | 248 |
| 289-6805 | 241 |
| 289-6911 | 239 |
| | 245 |
| 289-6913 | 239 |
| | 244 |
| 289-7836 | 330 |
| | 332 |
| 289-8194 | 325 |
| | 329 |
| 289-8195 | 329 |
| 290-1727 | 829 |
| | 833.02 |
| | 835 |
| | 839.02 |
| 290-1728 | 831 |
| | 833.04 |
| | 837 |
| | 839.04 |
| 290-1729 | 829 |
| | 831 |
| | 833.02 |
| | 833.04 |
| | 835 |
| | 837 |
| | 839.02 |
| | 839.04 |
| 290-1742 | 829 |
| | 831 |
| | 833.02 |
| | 833.04 |
| | 835 |
| | 837 |
| | 839.02 |
| | 839.04 |
| 290-1906 | 829 |
| | 833.02 |
| | 835 |
| | 839.02 |
| 290-1912 | 347 |
| 290-9101 | 752 |
| 291-7463 | 136 |
| | 139 |
| 291-7547 | 133 |
| 291-7559 | 663 |
| | 664 |
| 291-7560 | 229 |
| | 664 |
| 291-7561 | 664 |
| 291-7591 | 93 |
| | 104 |
| 291-7592 | 151 |
| | 152 |
| 291-7593 | 91 |
| 291-7716 | 136 |
| | 137 |
| 291-7920 | 90 |
| | 92 |

# PART NUMBER INDEX


| Part.No | Page | Part.No | Page | Part.No | Page |
|---|---|---|---|---|---|
| | 94 | 293-1256 | 646 | | 35 |
| | 96 | 293-6789 | 81 | | 39 |
| | 98 | 293-6982 | 241 | 294-1727 | 31 |
| 291-7921 | 126 | 294-1436 | 11 | 294-1728 | 31 |
| 291-7922 | 106 | | 12 | 294-1729 | 31 |
| | 108 | | 284 | 294-1730 | 31 |
| | 110 | 294-1678 | 25 | 294-1731 | 31 |
| 291-7923 | 119 | 294-1679 | 25 | 294-1732 | 31 |
| 291-7924 | 119 | 294-1680 | 25 | 294-1733 | 31 |
| | 124 | 294-1682 | 25 | 294-1734 | 31 |
| 291-7925 | 119 | 294-1683 | 25 | 294-1736 | 34 |
| | 120 | 294-1684 | 27 | 294-1737 | 34 |
| 291-7927 | 127 | 294-1685 | 27 | 294-1738 | 34 |
| | 128 | 294-1686 | 27 | | 46 |
| 291-7928 | 107 | 294-1687 | 27 | | 47 |
| | 112 | 294-1688 | 27 | | 58 |
| | 114 | 294-1689 | 27 | | 62 |
| | 116 | 294-1693 | 27 | 294-1739 | 34 |
| 291-7929 | 124 | 294-1698 | 27 | 294-1740 | 34 |
| | 125 | 294-1699 | 27 | 294-1741 | 36 |
| 291-7930 | 120 | 294-1700 | 29 | 294-1742 | 36 |
| | 122 | | 58 | 294-1743 | 36 |
| 291-9334 | 829 | 294-1702 | 27 | 294-1747 | 22 |
| | 833.02 | 294-1703 | 29 | 294-1748 | 22 |
| | 835 | 294-1704 | 29 | 294-1749 | 20 |
| | 839.02 | 294-1705 | 29 | 294-1751 | 20 |
| 292-7153 | 441 | 294-1706 | 29 | 294-1752 | 33 |
| | 441.02 | 294-1707 | 29 | 294-1753 | 32 |
| 292-7297 | 325 | 294-1708 | 29 | 294-1754 | 32 |
| 293-1117 | 721 | 294-1709 | 29 | 294-1755 | 32 |
| 293-1118 | 721 | 294-1710 | 29 | 294-1756 | 32 |
| 293-1119 | 721 | 294-1711 | 29 | 294-1757 | 32 |
| 293-1120 | 721 | 294-1712 | 29 | 294-1758 | 58 |
| 293-1121 | 725 | 294-1713 | 29 | 294-1760 | 58 |
| 293-1124 | 725 | 294-1714 | 29 | 294-1761 | 59 |
| 293-1127 | 725 | 294-1716 | 21 | 294-1763 | 60 |
| 293-1136 | 713 | 294-1720 | 19 | 294-1764 | 41 |
| 293-1137 | 711 | 294-1721 | 19 | 294-1765 | 41 |
| 293-1138 | 715 | 294-1722 | 19 | 294-1766 | 41 |
| 293-1140 | 645 | 294-1723 | 19 | 294-1767 | 40 |
| 293-1184 | 717 | 294-1724 | 19 | 294-1768 | 40 |
| 293-1230 | 719 | 294-1725 | 19 | 294-1769 | 39 |
| | 721 | 294-1726 | 31 | 294-1770 | 39 |
| | 723 | | 34 | 294-1771 | 39 |

# PART NUMBER INDEX


| Part.No | Page | Part.No | Page | Part.No | Page |
|---|---|---|---|---|---|
| 294-1772 | 39 | | 75.01 | | 421 |
| 294-1773 | 43 | | 79 | 294-7251 | 31 |
| 294-1774 | 43 | 294-1822 | 79 | 295-9126 | 75.01 |
| 294-1775 | 43 | 294-1823 | 79 | 295-9685 | 507 |
| | 194 | 294-1825 | 79 | 296-4617 | 207 |
| 294-1776 | 43 | 294-1826 | 79 | 296-4618 | 207 |
| 294-1777 | 49 | 294-1827 | 79 | 296-4619 | 207 |
| 294-1778 | 49 | 294-1828 | 79 | 296-4621 | 204 |
| 294-1780 | 49 | 294-1830 | 79 | | 207 |
| 294-1781 | 35 | 294-1831 | 75 | 296-4631 | 204 |
| 294-1784 | 35 | | 79 | 296-4632 | 194 |
| 294-1785 | 35 | 294-1833 | 79 | 296-4633 | 204 |
| 294-1786 | 27 | 294-1834 | 75.01 | 296-4635 | 194 |
| | 35 | 294-1835 | 75.01 | 296-4636 | 14 |
| 294-1787 | 77 | 294-1836 | 75.01 | | 41 |
| 294-1788 | 77 | 294-1837 | 79 | 296-4637 | 16 |
| 294-1789 | 77 | 294-1838 | 79 | | 203 |
| 294-1790 | 77 | 294-1839 | 75.01 | 296-4638 | 14 |
| 294-1791 | 77 | 294-1841 | 75.01 | | 43 |
| 294-1792 | 77 | 294-1842 | 75.01 | 296-4640 | 14 |
| 294-1793 | 77 | 294-1843 | 75.01 | | 36 |
| 294-1794 | 77 | 294-1844 | 79 | 296-4641 | 14 |
| 294-1795 | 77 | 294-1845 | 79 | | 40 |
| 294-1796 | 77.01 | 294-1846 | 75.01 | 296-4642 | 15 |
| 294-1800 | 77.01 | 294-1848 | 79 | | 46 |
| 294-1801 | 77 | 294-1849 | 79 | 296-4643 | 14 |
| 294-1802 | 77 | 294-1850 | 203 | | 34 |
| 294-1803 | 77.01 | 294-1851 | 203 | 296-4644 | 14 |
| 294-1804 | 77 | 294-1853 | 58 | | 33 |
| | 79 | 294-1854 | 58 | 296-4645 | 14 |
| | 194 | 294-1855 | 201 | | 24 |
| | 204 | 294-1856 | 201 | 296-4647 | 14 |
| 294-1805 | 77.01 | 294-1857 | 201 | | 28 |
| 294-1806 | 77 | 294-1858 | 201 | 296-4648 | 14 |
| 294-1808 | 77 | 294-1859 | 37 | | 18 |
| 294-1809 | 77 | 294-1860 | 37 | 296-4649 | 14 |
| 294-1811 | 77 | 294-1861 | 37 | | 30 |
| | 79 | 294-3794 | 419 | 296-4650 | 14 |
| 294-1812 | 77 | | 421 | | 20 |
| 294-1814 | 77 | 294-3795 | 419 | 296-4651 | 14 |
| 294-1815 | 77 | | 421 | | 32 |
| 294-1819 | 79 | 294-3796 | 419 | 296-4652 | 15 |
| 294-1820 | 79 | | 421 | | 58 |
| 294-1821 | 29 | 294-3797 | 419 | 296-4653 | 15 |

# PART NUMBER INDEX


| Part.No | Page |
|---|---|
| | 59 |
| 296-4654 | 14 |
| | 39 |
| 296-4655 | 15 |
| | 47 |
| 296-4656 | 15 |
| | 76 |
| 296-4658 | 15 |
| | 49 |
| 296-4659 | 14 |
| | 22 |
| 296-4661 | 14 |
| | 37 |
| 296-4663 | 22 |
| 296-4664 | 16 |
| | 194 |
| 296-4665 | 16 |
| | 206 |
| 296-4666 | 16 |
| | 204 |
| 296-4667 | 13 |
| | 35 |
| 296-4673 | 32 |
| 296-4733 | 49 |
| 296-4812 | 77 |
| 296-6975 | 461 |
| 296-7067 | 487 |
| | 489 |
| | 491 |
| 296-7069 | 487 |
| | 489 |
| | 491 |
| 297-0370 | 491 |
| | 598 |
| 297-0406 | 599 |
| 297-0408 | 599 |
| 297-0462 | 485 |
| | 600 |
| 297-0503 | 600 |
| | 600.01 |
| 297-0504 | 600 |
| | 600.02 |
| 297-1735 | 31 |
| 297-7644 | 25 |
| 297-7645 | 25 |
| 297-7646 | 31 |
| 297-7647 | 31 |
| 297-7648 | 22 |
| 297-7649 | 22 |
| 297-7650 | 22 |
| 297-7655 | 49 |
| 297-7656 | 77 |
| 297-7657 | 77 |
| 297-7658 | 77 |
| 297-7660 | 79 |
| 297-7671 | 74 |
| 297-7672 | 75 |
| 297-7673 | 75 |
| 297-7674 | 75 |
| 297-7706 | 79 |
| 297-7745 | 15 |
| | 62 |
| 297-7791 | 62 |
| 297-7822 | 79 |
| 298-2942 | 244 |
| | 245 |
| 298-2977 | 239 |
| | 246 |
| 298-2979 | 243 |
| | 247 |
| 298-2995 | 254 |
| | 347 |
| 298-3033 | 241 |
| | 250 |
| 298-3037 | 250 |
| 298-3038 | 241 |
| 298-3041 | 241 |
| 298-3044 | 243 |
| 298-3147 | 81 |
| | 82 |
| 298-4142 | 833 |
| | 833.06 |
| | 839 |
| | 839.06 |
| 298-4157 | 829 |
| | 833.02 |
| 298-4158 | 835 |
| | 839.02 |
| 298-4254 | 659 |
| 298-4255 | 656 |
| 298-5672 | 483 |
| 299-2767 | 95 |
| 299-2783 | 150 |
| 299-2831 | 650 |
| 299-3040 | 177 |
| 300-4003 | 16 |
| 300-9715 | 343 |
| 300-9716 | 345 |
| 301-6874 | 343 |
| | 345 |
| 301-8294 | 343 |
| | 345 |
| 302-2922 | 376 |
| 302-3168 | 457 |
| 302-3196 | 600.02 |
| 302-9207 | 740 |
| 302-9209 | 740 |
| | 850 |
| | 851 |
| 302-9466 | 602 |
| 303-6261 | 58 |
| 303-9933 | 87 |
| | 89 |
| | 89.01 |
| | 89.02 |
| 303-9937 | 87 |
| | 89 |
| | 89.01 |
| | 89.02 |
| 304-0093 | 251 |
| 305-0329 | 717 |
| 305-0441 | 719 |
| | 721 |
| | 723 |
| 305-0442 | 719 |
| | 721 |
| | 723 |
| 305-0467 | 703.01 |


3

# PART NUMBER INDEX


| Part.No | Page |
|---|---|
| 305-4678 | 15 |
| | 75.01 |
| 305-4744 | 14 |
| | 21 |
| 305-4745 | 15 |
| | 78 |
| 305-4746 | 27 |
| 305-4747 | 27 |
| 305-4750 | 27 |
| 305-4751 | 27 |
| 305-4756 | 21 |
| 305-4781 | 45 |
| 305-4887 | 79 |
| 305-4889 | 79 |
| 305-4892 | 39 |
| 305-4893 | 207 |
| 305-4895 | 207 |
| 305-4896 | 207 |
| 305-4897 | 207 |
| 305-4898 | 207 |
| 305-4900 | 79 |
| 305-4901 | 79 |
| 305-4902 | 79 |
| 305-4905 | 35 |
| 305-4906 | 35 |
| 305-4907 | 35 |
| 305-4908 | 35 |
| 305-4910 | 14 |
| | 26 |
| 305-4927 | 27 |
| 305-4928 | 27 |
| 305-4929 | 27 |
| 305-4930 | 27 |
| 305-4950 | 337.01 |
| 305-4951 | 337.01 |
| 305-4952 | 337.01 |
| 306-1611 | 411 |
| 306-8401 | 93 |
| 306-8453 | 91 |
| | 100 |
| | 102 |
| 306-8501 | 136 |
| 306-8590 | 189.04 |
| 306-8690 | 141 |
| 306-8691 | 141 |
| | 141.01 |
| 307-4919 | 377 |
| 307-4920 | 497 |
| 307-5034 | 393 |
| 307-5035 | 395 |
| 307-5098 | 441.02 |
| 307-5120 | 458.01 |
| 307-5121 | 379 |
| 307-7662 | 241 |
| 307-7700 | 241 |
| 307-7702 | 241 |
| 307-7803 | 81 |
| 307-7804 | 81 |
| 308-8775 | 281 |
| | 283 |
| | 285 |
| 308-8776 | 281 |
| | 283 |
| | 285 |
| 308-8777 | 281 |
| | 283 |
| | 285 |
| 308-8936 | 777 |
| 309-5705 | 192 |
| 309-5706 | 192 |
| | 196 |
| 309-5707 | 191 |
| | 192 |
| 309-5756 | 192 |
| 309-5757 | 191 |
| | 192 |
| 309-5769 | 451 |
| | 459 |
| | 464 |
| | 467 |
| | 468 |
| | 471 |
| 309-5793 | 190 |
| 309-5795 | 475 |
| 310-0390 | 551 |
| | 554 |
| 310-6252 | 833 |
| | 833.06 |
| | 839 |
| | 839.06 |
| 310-9498 | 45 |
| 310-9500 | 45 |
| 310-9509 | 22 |
| 310-9510 | 22 |
| 310-9511 | 22 |
| 310-9533 | 77 |
| | 79 |
| 310-9534 | 79 |
| 310-9536 | 79 |
| 310-9537 | 77 |
| 310-9582 | 42 |
| 310-9606 | 15 |
| | 77.01 |
| 310-9617 | 15 |
| | 59.01 |
| 311-6632 | 77 |
| 313-7833 | 665.06 |
| | 665.07 |
| 313-7878 | 495 |
| 313-7881 | 495 |
| 314-3734 | 665.05 |
| 314-3740 | 665.05 |
| 314-3744 | 833.06 |
| 314-3745 | 842.01 |
| | 844.01 |
| 314-3746 | 839.06 |
| 314-3747 | 843.01 |
| | 845.01 |
| 314-3787 | 833 |
| 314-3788 | 842 |
| | 844 |
| 314-3789 | 839 |
| 314-3790 | 843 |
| | 845 |
| 314-3797 | 317.01 |
| 314-3798 | 319.01 |
| 314-4007 | 77 |
| 314-8124 | 495 |
| 314-8128 | 457.04 |
| 314-8205 | 491 |
| 314-8252 | 487 |
| 315-0800 | 281 |

# PART NUMBER INDEX


| Part.No | Page |
|---|---|
| | 283 |
| 316-8811 | 710 |
| | 713 |
| | 715 |
| 316-8987 | 680.01 |
| | 681.01 |
| | 691.01 |
| | 695.01 |
| | 700.01 |
| 316-8989 | 665.04 |
| 317-4712 | 489 |
| | 491 |
| 319-9148 | 833 |
| | 833.06 |
| | 839 |
| | 839.06 |
| 319-9845 | 497 |
| 320-5392 | 665.07 |
| 320-5393 | 665.07 |
| 320-5394 | 665.07 |
| 320-5395 | 665.07 |
| 320-5396 | 665.06 |
| 320-5525 | 665.02 |
| 321-2055 | 285 |
| 324-5774 | 189.01 |
| | 665.05 |
| 327-3062 | 665.02 |
| 327-3063 | 665.02 |
| 327-3191 | 84.01 |
| | 665.01 |
| 327-3192 | 84.01 |
| | 85 |
| 327-3193 | 85 |
| | 89.01 |
| 327-3196 | 85 |
| | 89.02 |
| 327-3329 | 665.05 |
| | 665.06 |
| 327-6498 | 690.01 |
| 327-6499 | 680.01 |
| 327-6500 | 694.01 |
| 327-6503 | 699.01 |
| 327-6504 | 690.01 |
| | 691.01 |
| 327-6505 | 680.01 |
| | 681.01 |
| 327-6506 | 694.01 |
| | 695.01 |
| 327-6509 | 699.01 |
| | 700.01 |
| 327-6510 | 691.01 |
| | 692.01 |
| 327-6511 | 681.01 |
| | 682.01 |
| | 695.01 |
| 327-6513 | 700.01 |
| | 701.01 |
| 327-6514 | 705.01 |
| 327-6515 | 701.01 |
| | 705.01 |
| 327-6517 | 681.01 |
| | 685.01 |
| | 691.01 |
| 327-6520 | 695.01 |
| | 696.01 |
| 327-6521 | 697.01 |
| | 700.01 |
| 327-6541 | 703.01 |
| 327-6550 | 665.03 |
| | 665.04 |
| 327-6552 | 665.03 |
| 327-6553 | 665.04 |
| 327-6576 | 665.03 |
| 327-6639 | 682.01 |
| 327-6642 | 682.01 |
| | 692.01 |
| | 701.01 |
| 327-6643 | 682.01 |
| | 692.01 |
| | 701.01 |
| 327-6644 | 696.01 |
| | 697.01 |
| 327-6645 | 696.01 |
| 327-6648 | 685.01 |
| | 696.01 |
| | 697.01 |
| 327-6649 | 701.01 |
| 327-9998 | 189.04 |
| | 189.05 |
| 328-0048 | 189.03 |
| | 665.05 |
| 329-6420 | 846 |
| | 847 |
| 329-6434 | 846 |
| 329-6435 | 846 |
| 329-6437 | 847 |
| 329-6438 | 847 |
| 330-1162 | 665.01 |
| | 665.02 |
| 330-1166 | 261.01 |
| | 665.01 |
| 330-1167 | 261.01 |
| 330-1194 | 665.01 |
| | 665.05 |
| 330-1426 | 250.01 |
| | 665.01 |
| 330-1427 | 250.01 |
| | 250.02 |
| 331-2027 | 777 |
| 331-2233 | 851 |
| 332-8903 | 317.01 |
| | 319.01 |
| 332-8908 | 319.01 |
| 332-8915 | 317.01 |
| 333-4157 | 697.01 |
| 333-4172 | 692.01 |
| 333-4173 | 685.01 |
| 333-4175 | 685.01 |