CATERPILLAR®

SEBP4874-07
September 2008

VOLUME I
Pages 1-530

RUTHZIL TRATOR COMERCIAL DE PEÇAS LTDA 11 97083-6812 ROLANDO

Parts Manual

SIS

See “General Information” for New Parts Manual Features.

320D & 320D L Excavators

FAL1-Up (Machine)
KGF1-Up (Machine)
GDC1-Up (Engine)

Powered By C6.4 Engine

Product and Dealer Information

Note: For product identification plate locations, see the section “Product Identification Information” in the Operation and Maintenance Manual.

Delivery Date: _____

Product Information

Model: _____

Product Identification Number: _____

Engine Serial Number: _____

Transmission Serial Number: _____

Generator Serial Number: _____

Attachment Serial Numbers: _____

Attachment Information: _____

Customer Equipment Number: _____

Dealer Equipment Number: _____

Dealer Information

Name: _____ Branch: _____

Address: _____

_____

_____

	Dealer Contact	Phone Number	Hours
Sales:	_____	_____	_____
Parts:	_____	_____	_____
Service:	_____	_____	_____

MEMORANDA

TABLE OF CONTENTS

Name	Page
GENERAL INFORMATION	A5
REPAIR ALTERNATIVES	A8
SUPPLEMENTAL COOLANT ADDITIVES	A9
MAINTENANCE PARTS	A10
INDEX	A14
MACHINE ARRANGEMENT	1
CHASSIS AR	1
CONVERSION AR-MACHINE	2
GENERAL AR	3
MACHINE AR	4
SPECIAL AR	4
ENGINE ARRANGEMENT	7
ENGINE AR	7
ENGINE AR-COMPLETE	15
INSTALLATION AR-ENGINE	26
BASIC ENGINE	27
CAMSHAFT GP	27
COVER GP-VALVE MECHANISM	30
CRANKSHAFT GP	32
CYLINDER BLOCK GP	33
CYLINDER HEAD AS	38
CYLINDER HEAD GP	39
FLYWHEEL GP	40
GEAR GP-FRONT	41
HOUSING GP-FLYWHEEL	42
HOUSING GP-FRONT	43
MOUNTING GP-ALTERNATOR	46
MOUNTING GP-ENGINE	47
MOUNTING GP-STARTING MOTOR	48
PAN GP-OIL	49
PISTON & ROD GP	51
PULLEY AS-IDLER	53
PULLEY GP-ENGINE	54
PULLEY GP-IDLER	63
VALVE MECHANISM GP	64
LUBRICATION SYSTEM	70
ADAPTER GP-REMOTE OIL FILTER	70
BREATHER GP	72
FILTER & MTG GP-ENGINE OIL	73
LINES GP-ENGINE OIL	75
LINES GP-ENGINE OIL DRAIN	76
LINES GP-TURBOCHARGER OIL	78
COOLING SYSTEM	79
COOLER GP-ENGINE OIL	79
COOLING AR-HIGH AMBIENT TEMP	80
FAN GP-BLOWER	82
FAN GP-SUCTION	84
LINES GP-WATER	87
PUMP GP-WATER	88
RADIATOR & HYD OIL COOLER GP	90
AIR INLET AND EXHAUST SYSTEM	108
AIR CLEANER & MOUNTING GP	108
AIR CLEANER AR	110
AIR CLEANER GP	111
CARTRIDGE AS-TURBOCHARGER	120
EXTENSION GP-EXHAUST	121
LINES GP-AIR	122
LINES GP-MUFFLER DRAIN	126
MANIFOLD GP-EXHAUST	127
MANIFOLD GP-INLET	129
MUFFLER GP	131
TURBOCHARGER GP	135
FUEL SYSTEM	138
CAP GP-FUEL FILLER	138
FILTER GP-FUEL	139
FILTER GP-WATER SEP & FUEL	142
INJECTOR GP-FUEL	143
LINES GP-FUEL	147
MOUNTING GP-FUEL FILTER	151
MOUNTING GP-PUMP	152
PUMP & MOTOR GP-REFUELING	153
PUMP & MTG GP-UNIT INJ HYD	154
PUMP AR-FUEL TRANSFER	155
PUMP GP-FUEL	156
PUMP GP-REFUELING	157
STRAINER GP-FUEL	161
TANK & MTG GP-FUEL	162
TANK GP-FUEL	168
VALVE GP-FUEL SHUTOFF	188
ELECTRICAL AND STARTING SYSTEM	189
ALARM GP	189
ALARM GP-TRAVEL	190
ALTERNATOR GP-CHARGING	191
BATTERY & WIRING GP	193
BLOCK GP-JUNCTION	218
CAMERA & MOUNTING GP	219
CAMERA AR	220
CAMERA GP	221
CONTROL & MTG GP-COMMUNICATION	224
CONTROL & MTG GP-ENGINE ELEK	225
CONTROL & MTG GP-MACHINE	226
CONTROL GP-UNPROGRAMMED	227
ELECTRONICS GP-COMMUNICATION	228
ELECTRONICS GP-MACHINE	228
ELECTRONICS GP-MONITOR	229
FASTENER GP-WIRING HARNESS	230

TABLE OF CONTENTS

Name	Page
INSTALLATION AR-COMMUNICATION	237
INSTALLATION GP-COMMUNICATION	238
INSTALLATION GP-SECURITY	239
KIT-BRACKET	241
LAMP GP-FLOOD	242
LIGHTING GP-CHASSIS	245
LIGHTING GP-FLOOD	246
PANEL & MTG GP-CIRCUIT BREAKER	256
PANEL GP-CIRCUIT BREAKER	258
PANEL GP-SWITCH	263
SENSOR GP-ENGINE	271
SENSOR GP-LIQUID LEVEL	272
STARTING MOTOR GP-ELECTRIC	274
SWITCH GP-DISCONNECT	276
SWITCH GP-MAGNETIC	277
SWITCH GP-POSITION	279
SWITCH GP-PUSH BUTTON	280
SWITCH GP-REFUELING	282
SWITCH GP-ROTARY	283
SWITCH GP-START	285
SWITCH GP-TOGGLE	286
SWITCH GP-WIPER	288
WARNING AR-OVERLOAD	289
WARNING GP-OVERLOAD	289
WIRING GP-AUXILIARY CONTROL	290
WIRING GP-CAB	294
WIRING GP-CAMERA	310
WIRING GP-CHASSIS	311
WIRING GP-COMBINED FLOW	313
WIRING GP-COMMUNICATION	316
WIRING GP-CONSOLE	326
WIRING GP-CONVERTER	330
WIRING GP-ELECTRONIC CONTROL	332
WIRING GP-ENGINE	334
WIRING GP-FAN	336
WIRING GP-FINE SWING	341
WIRING GP-FUEL SYSTEM	342
WIRING GP-HEATER	346
WIRING GP-HYDRAULIC CONTROL	349
WIRING GP-MEDIUM PRESSURE	351
WIRING GP-OVERLOAD WARNING	352
WIRING GP-PLATFORM	354
WIRING GP-QUICK COUPLER	356
WIRING GP-RADIO	359
POWER TRAIN	361
DRIVE GP-FINAL	361
FINAL DRIVE GP	363
DRIVE GP-FINAL	365
POWER TRAIN AR	368
SPROCKET GP	369
FRAME AND BODY	370
BOX & MTG GP-STORAGE	370
BOX GP-STORAGE	371
BUMPER GP	373
COUNTERWEIGHT AR	374
COUNTERWEIGHT GP	375
COVER AS-ACCESS	400
COVER AS-SOUND SUPPRESSION	401
COVER GP-HOOD	403
DOOR AS-ACCESS	404
DOOR GP-ACCESS	407
FENDER & COVER GP	413
FRAME GP-UPPER	415
GEAR & BEARING GP-SWING	417
GUARD GP-BOTTOM	420
GUARD GP-SWIVEL	422
HANDRAIL GP	424
HOOD & GUARD GP	425
HOOD GP	468
HOOD GP-ENGINE	470
SHEET AS-SOUND SUPPRESSION	475
STEP GP	485
STORAGE GP-VANDALISM GUARD	487
SUPPORT AS-ENCLOSURE	488
UNDERCARRIAGE	493
FRAME AR-UNDERCARRIAGE	493
FRAME AS-UNDERCARRIAGE	494
GUARD GP-TRACK GUIDE	495
GUARD GP-TRAVEL MOTOR	500
IDLER GP-FRONT	502
LINK AS-TRACK	506
ROLLER AR-TRACK & CARRIER	508
ROLLER GP-TRACK CARRIER	512
ROLLER GP-TRACK-DOUBLE FLANGE	513
ROLLER GP-TRACK-SINGLE FLANGE	514
TRACK ADJUSTER & RECOIL GP	515
TRACK AR	519
TRACK GP	520
HYDRAULIC SYSTEM	531
ACCUMULATOR GP-HYDRAULIC	531
BASE GP-OIL FILTER	539
CONTROL AR-AUXILIARY	540
CONTROL AR-COUPLER	545
COUPLING GP-FLEXIBLE	546
COUPLING GP-PUMP	547
CYLINDER & LINES GP-BOOM	548
CYLINDER & LINES GP-BUCKET	549
CYLINDER & LINES GP-STICK	551
CYLINDER & SEAL GP-BOOM	554
CYLINDER & SEAL GP-BUCKET	560
CYLINDER & SEAL GP-STICK	573
CYLINDER AR-HYDRAULIC	590
CYLINDER GP-BUCKET	591
CYLINDER GP-COUPLER	593
DRIVE GP-AUXILIARY PUMP	594

TABLE OF CONTENTS

Name	Page
DRIVE GP-PUMP	596
DRIVE GP-SWING	597
FASTENER GP-SWING & FINAL DR	600
FILTER & VALVE GP-PILOT	602
FILTER AR-HYDRAULIC	606
FILTER GP-OIL	607
FITTING GP-HYDRAULIC	613
GAUGE GP-SIGHT	614
HEAD GP-PUMP	615
HOSE GP-HYDRAULIC	638
HYDRAULIC AR	647
LINES GP-AUXILIARY HYDRAULIC	648
LINES GP-BOOM	669
LINES GP-BOOM CYLINDER	682
LINES GP-BUCKET CYLINDER	693
LINES GP-COUPLER	705
LINES GP-FRONT	714
LINES GP-HYDRAULIC OIL COOLER	782
LINES GP-PILOT	789
LINES GP-PUMP	896
LINES GP-RETURN	904
LINES GP-RETURN & FILTER	913
LINES GP-SENSOR	917
LINES GP-STICK CYLINDER	918
LINES GP-TRAVEL MOTOR	923
MANIFOLD GP-CONTROL	928
MOTOR & MTG GP-SWING	931
MOTOR & MTG GP-TRAVEL	932
MOTOR GP-SWING	933
MOTOR GP-TRAVEL	936
MOUNTING GP-MAIN CONTROL VALVE	943
PLUG GP-CONTROL VALVE	944
PUMP & MTG GP-AUXILIARY	946
PUMP & MTG GP-MAIN HYDRAULIC	947
PUMP GP-GEAR	948
PUMP GP-MAIN HYDRAULIC	949
SCREEN GP-HYDRAULIC	954
SWIVEL GP	955
TANK & FILTER GP-HYDRAULIC	957
TANK & MTG GP-HYDRAULIC	959
VALVE & LINES GP-HEAVY LIFT	960
VALVE & MTG GP-CONTROL	961
VALVE AR-ALT PATTERN CONTROL	963
VALVE AR-CHECK & RELIEF	963
VALVE AR-LOAD CONTROL	963
VALVE AR-SWING	964
VALVE GP-CHECK	965
VALVE GP-CONTROL	972
VALVE GP-COUPLER	1002
VALVE GP-FLOW CONTROL & RELIEF	1004
VALVE GP-LOAD CONTROL	1006
VALVE GP-MAIN CONTROL	1015
VALVE GP-MANUAL	1017
VALVE GP-PILOT	1018
VALVE GP-PILOT RELIEF	1034
VALVE GP-PRESSURE REDUCING	1036
VALVE GP-PRIORITY	1039
VALVE GP-RELIEF	1040
VALVE GP-SELECTOR	1064
VALVE GP-SHUTTLE	1066
VALVE GP-SOLENOID	1072
VALVE GP-SOLENOID & MANIFOLD	1081
VALVE GP-SOLENOID & RELIEF	1083
VALVE GP-SWING CUSHION	1088
VALVE GP-TRAVEL COUNTERBALANCE	1091
IMPLEMENTS	1092
BOOM AR	1092
BOOM AR-1 PIECE LONG	1092
BOOM AR-1 PIECE SHORT	1094
BOOM GP	1095
BOOM GP-1 PIECE	1097
BOOM GP	1099
LINES GP-GREASE	1105
LINKAGE AR	1112
LINKAGE AR-BUCKET	1112
LINKAGE GP-BUCKET	1114
LOCK GP-TRANSPORT	1121
PIN GP	1122
STICK AR	1123
STICK AR-HOE	1123
STICK GP-HOE	1126
WORK TOOLS	1142
ADJUSTER GP-BUCKET	1142
BUCKET & ADJUSTER GP	1143
BUCKET AR-EXCAVATION	1147
COUPLER AR-QUICK	1148
COUPLER GP-QUICK	1149
SIDECUTTER GP	1150
TIP GP	1151
TIP GP-ABRASION	1153
TIP GP-DOUBLE SPIKE	1154
TIP GP-EXTRA-DUTY	1155
TIP GP-GENERAL PURPOSE	1156
TIP GP-LONG	1157
TIP GP-PENETRATION	1159
TIP GP-PENETRATION PLUS	1161
TIP GP-SHORT	1162
TIP GP-SPIKE	1163
TIP GP-WIDE	1164
TIP-LEVELING EDGE	1166
OPERATOR STATION	1167
ADJUSTER GP-SEAT	1167
AIR CONDITIONER & MOUNTING GP	1169
AIR CONDITIONER AR	1173
AIR CONDITIONER GP	1174

TABLE OF CONTENTS

Name	Page
ARMREST GP	1180
BRACKET GP-MIRROR	1182
BRACKET GP-MOUNTING	1183
CAB GP	1184
COIL GP-EVAPORATOR	1214
COMPRESSOR GP-REFRIGERANT	1216
CONDENSER & MTG GP-REFRIGERANT	1219
CONDENSER GP-REFRIGERANT	1222
CONSOLE GP-OPERATOR	1223
CONTROL & MTG GP-JOYSTICK	1231
CONTROL & MTG GP-PEDAL	1237
CONTROL GP-FOOT	1239
CONTROL GP-HANDLE	1242
CONTROL GP-HEAT & AIR COND	1249
CONTROL GP-HYDRAULIC PEDAL	1250
CONTROL GP-JOYSTICK	1255
CONTROL GP-PEDAL	1267
COVER GP-CAB	1269
COVER GP-STORAGE	1270
DOOR & MTG GP-CAB	1271
DOOR GP-CAB	1272
DUCT GP-CAB AIR	1283
FLOOR MAT	1284
FLOOR MAT GP	1286
FRAME GP-UPPER FRONT WINDOW	1292
GUARD AR-OVERHEAD	1294
GUARD AR-VANDALISM	1294
GUARD GP-FRONT WINDOW	1295
GUARD GP-OVERHEAD	1302
GUARD GP-VANDALISM	1304
HATCH GP-ROOF	1306
HEADREST AS-SEAT	1309
HEATER & MTG GP-CAB	1312
HEATER AR-CAB	1316
HORN GP-ELECTRIC	1317
INSTALLATION GP-RADIO	1319
KIT-CONSOLE ADJUSTMENT	1322
KIT-SEAT SUSPENSION	1323
LEVER GP-AIR & TEMP CONTROL	1326
LINES GP-AIR CONDITIONER	1327
LINES GP-HEATER	1334
LITERATURE GP	1339
MIRROR GP	1340
MIRROR GP-REAR VIEW	1341
MONITOR & MTG GP-OPERATOR	1345
MONITOR GP-OPERATOR	1346
MOUNTING GP-ANTENNA	1347
MOUNTING GP-PLATFORM	1351
OPERATOR AR	1353
PEDAL AR-AUXILIARY	1353
PLATFORM GP-OPERATOR	1354
RADIO GP-COMMUNICATION	1355
SCREEN GP-SUN	1356
SEAT & MOUNTING GP	1357
SEAT BELT GP	1362
SEAT GP	1366
SEAT GP-SUSPENSION	1379
SUPPORT GP-SEAT	1391
SUSPENSION GP-SEAT	1394
VISOR GP-CAB	1402
VISOR GP-PROTECTION	1403
WASHER GP-WINDOW	1404
WINDOW AS-FRONT	1407
WINDOW GP-CAB	1408
WINDOW GP-DOOR	1416
WIPER & WASHER GP-WINDOW	1418
WIPER AR-WINDOW	1420
WIPER GP-WINDOW	1421
SERVICE EQUIPMENT AND SUPPLIES	1423
FILM GP	1423
PLATE & FILM GP	1441
PART NUMBER INDEX	B1

GENERAL INFORMATION

1. MACHINE IDENTIFICATION

Caterpillar machines are identified by Product Identification Numbers (PIN). Some components included in a machine may be identified by Serial Numbers (S/N). Typical components that will be serialized include engines, transmissions, bulldozers, and rippers. The machine and engine are further identified by arrangement numbers and in some cases modification numbers. These numbers are shown on the product identification plate(s) and on the master plate in the operator's compartment.

Caterpillar dealers need all of these numbers to determine accurate parts identification.

SIS *New Feature*

Effective First Quarter 2001 the Caterpillar Product Identification Number (PIN) changed from 8 to 17 characters. In an effort to provide uniform equipment identification, Caterpillar and other construction equipment manufacturers are moving to comply with the latest version of the product identification numbering standard. Non-road machine PINs are defined by ISO 10261. The new PIN format will apply to all Caterpillar machines and generator sets. The PIN plates and frame marking will display the 17 character PIN. The new format will look like the following:

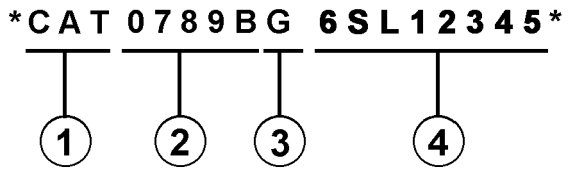

Where:

1. Caterpillar's World Manufacturing Code (characters 1-3)

2. Machine Descriptor (characters 4-8)

3. Check Character (character 9)

4. Machine Indicator Section (MIS) or Product Sequence Number (characters 10-17). These were previously referred to as the Serial Number.

Machines and generator sets produced before First Quarter 2001 will maintain their 8 character PIN format.

Components such as engines, transmissions, axles, etc. and work tools will continue to use an 8 character Serial Number (S/N).

2. ORDERING PARTS

⚠ WARNING

When replacement parts are required for this product Caterpillar recommends using Caterpillar replacement parts or parts with equivalent specifications including, but not limited to, physical dimensions, type, strength and material.

Failure to heed this warning can lead to premature failures, product damage, personal injury or death.

Quality Caterpillar replacement parts are available from Caterpillar dealers throughout the world. Their parts inventories are up to date and include all parts normally required to protect your investment in Caterpillar machines. Dealers may offer repair kits or remanufactured parts to allow selection of the most effective repair alternative for a particular situation. When ordering parts, your order should specify the quantity, part number, part name, and the serial number/product identification number of the machine for which the parts are needed.

3. PARTS MANUAL ORGANIZATION

Product information in this manual is presented as "information elements" that represent all of the components for the specific model. Engine Arrangement and Seat Group are examples of information elements. The information elements are organized alphabetically by part name and secondarily by part number within each major section of the manual.

4. TABLE OF CONTENTS

A table of contents (TOC) is found at the beginning of the manual. The TOC lists each section of the manual with a complete list of all information elements organized as they appear in the manual. Page numbers are provided for quick reference to detailed parts identification illustrations and serviceable consist lists.

5. MAINTENANCE PARTS INDEX

The Maintenance Parts Index, located near the beginning of the manual, references most frequently used maintenance part numbers, providing description, quantity, usage and page number. This information is organized alphabetically by part description.

6. INDEX

The index located near the front of the manual is an alphabetical listing of all information elements included in the manual. Page numbers are provided for quick reference to detailed parts identification illustrations and serviceable consist lists.

7. PART NUMBER INDEX

A numerical index listing all part numbers and the corresponding page number(s) appears at the back of the manual.

8. CAPTIONS

Captions located at the beginning of each information element identify the part number and part name along with additional descriptive information. PIN and S/N information found in each caption should be used to select correct information for a specific machine. Field replacement options, identification of optional attachment components, and where used ("part of") information is also provided.

The first line of a caption is shown in larger type font to indicate the beginning of an information element. Captions for additional pages that may be required to illustrate an information element will be shown in standard type font and will include the term *(contd.)* .

9. NON-SERVICED PARTS

In some instances it is necessary to display non-serviced parts that are a link to a lower level serviceable consist lists. These non-serviced part numbers are shown in *italic* type indicating that they are not available.

10. PARTS LIST REFERENCE NUMBERS

Numbers shown in the Ref No column correspond to numbers used in the associated graphic(s). An alphabetic suffix may be added to a reference number to identify lower level consist items. Numbers shown in the Graphic Ref column refer to the graphic number identifier displayed in the lower left corner of each illustration. The Graphic Ref number may be used in combination with the item Ref No to determine the correct part number. There may be intentional omission of a Ref No in a consist list as information is updated to reflect the latest serviceable part numbers.

11. INDENTED PART NAMES

When a part name is indented in a parts list, it is part of (included in) the group or assembly under which it is indented.

12. ILLUSTRATION REFERENCE LETTERS

When necessary, illustrations contain reference letters (A, B, C etc.) that are intended to track lines and harnesses from one point to another. They are also used to show where to reconnect illustrations that have been separated.

13. ABBREVIATIONS AND SYMBOLS

O.D. – Outside Diameter
I.D. – Inside Diameter
A – Not Part Of This Group
B – Use As Required
C – Change From Previous Type
D – Order By The Meter
E – Order By The Centimeter
F – Not Shown
G – Order By The Inch
I – Refer To Hydraulic Information System
M – Metric Part
R – Remfg Part May Be Available
Y – Separate Illustration
Z – Not Serviced Separately

SIS *New Feature*

14. DESCRIPTION OF TYPE CHANGES

Type - A type is defined as any configuration change that requires an additional Information Element for an Arrangement, Group, or Assembly. If serial number breaks for types are not available, a type # (Type 1, Type 2, etc.) will be displayed in the caption. These "type" changes are identified with a "C" note (change from previous type) in the Parts List. Only the "types" that apply to this Parts Manual will be included. Additional types may exist causing "C" notes to appear on an Information Element when no other types are shown.

15.<END>

This symbol indicates the end of an information element.

NOTE:

Continuing improvement and advancement of product design may cause changes to your machine which may not be included in this publication. Whenever a question arises regarding your caterpillar product or this publication, please consult your caterpillar dealer for the latest available information.

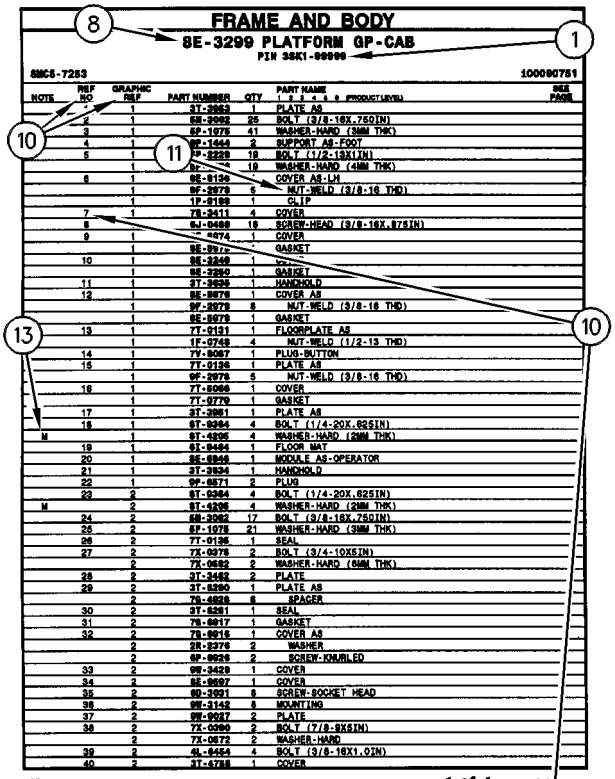
FRAME AND BODY
8E-3299 PLATFORM GP-CAB
PIN 3SK1-99999
SMCS-7253
100090751
NOTE | REF NO | GRAPHIC REF | PART NUMBER | QTY | PART NAME | SEE PAGE
1 | 3T-2953 | PLATE AS
2 | 6E-2992 | 25 | BOLT (3/8-16X.750IN)
3 | 6F-1076 | 41 | WASHER-HARD (38MM THK)
4 | 9F-1444 | 2 | SUPPORT AS-FOOT
5 | 7P-2229 | 18 | BOLT (1/2-13X1IN)
19 | WASHER-HARD (41MM THK)
6 | 8E-9136 | COVER AS-LH
6 | 9F-2978 | 5 | NUT-WELD (3/8-16 THD)
1P-9188 | 1 | CLIP
7 | 7B-3411 | 4 | COVER
6J-0488 | 18 | SCREW-HEAD (3/8-16X.875IN)
9 | 4474 | 1 | COVER
GASKET
10 | 8E-3249 | 1
GASKET
11 | 3T-3638 | 1 | HANDHOLD
12 | 8E-9078 | 1 | COVER AS
9F-2978 | 8 | NUT-WELD (3/8-16 THD)
8E-9079 | 1 | GASKET
13 | 7T-0131 | 1 | FLOORPLATE AS
1F-0748 | 4 | NUT-WELD (1/2-13 THD)
14 | 7V-8067 | 1 | PLUG-BUTTON
15 | 7T-0136 | 1 | PLATE AS
9F-2978 | 5 | NUT-WELD (3/8-16 THD)
16 | 7T-8066 | 1 | COVER
7T-9779 | 1 | GASKET
17 | 3T-3861 | 1 | PLATE AS
18 | 6T-8364 | 4 | BOLT (1/4-20X.625IN)
M | 9T-4295 | 4 | WASHER-HARD (20MM THK)
61-8494 | 1 | FLOOR MAT
20 | 8E-8846 | 1 | MODULE AS-OPERATOR
21 | 3T-3834 | 1 | HANDHOLD
22 | 9P-8871 | 2 | PLUG
23 | 2 | 6T-8364 | 4 | BOLT (1/4-20X.625IN)
M | 2 | 9T-4295 | 4 | WASHER-HARD (20MM THK)
24 | 2 | 6B-3062 | 17 | BOLT (3/8-16X.750IN)
26 | 2 | 6F-1076 | 21 | WASHER-HARD (38MM THK)
26 | 2 | 7T-0135 | 1 | SEAL
27 | 2 | 7X-0075 | 2 | BOLT (3/4-10X5IN)
2 | 7X-0682 | 2 | WASHER-HARD (64MM THK)
28 | 2 | 3T-3462 | 2 | PLATE
29 | 2 | 3T-8290 | 1 | PLATE AS
2 | 7B-4828 | 8 | SPACER
30 | 2 | 3T-8281 | 1 | SEAL
31 | 2 | 7B-8817 | 1 | GASKET
32 | 2 | 7B-9615 | 1 | COVER AS
2 | 2R-3276 | 2 | WASHER
2 | 6F-9926 | 2 | SCREW-KNURLED
33 | 2 | 9W-3429 | 1 | COVER
34 | 2 | 8E-9697 | 1 | COVER
35 | 2 | 6D-3931 | 8 | SCREW-SOCKET HEAD
36 | 2 | 9W-3142 | 8 | MOUNTING
37 | 2 | 9W-9027 | 2 | PLATE
38 | 2 | 7X-0990 | 2 | BOLT (7/8-9X5IN)
2 | 7X-0672 | 2 | WASHER-HARD
39 | 2 | 4L-8454 | 4 | BOLT (3/8-16X1.0IN)
40 | 2 | 3T-4788 | 1 | COVER
12 FRAME AND BODY
1 of 4
SELP4570-01

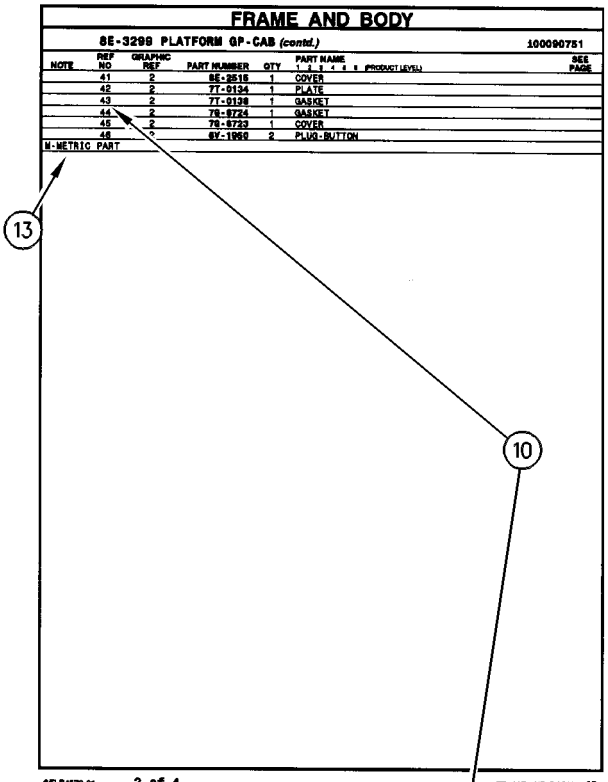
FRAME AND BODY
8E-3299 PLATFORM GP-CAB (contd.)
100090751
NOTE | REF NO | GRAPHIC REF | PART NUMBER | QTY | PART NAME | SEE PAGE
41 | 2 | 8E-2516 | 1 | COVER
42 | 2 | 7T-0134 | 1 | PLATE
43 | 2 | 7T-0138 | 1 | GASKET
44 | 2 | 7B-9724 | 1 | GASKET
45 | 2 | 7B-8723 | 1 | COVER
46 | 6V-1950 | 2 | PLUG-BUTTON
M-METRIC PART
SELP4570-01
2 of 4
FRAME AND BODY 13

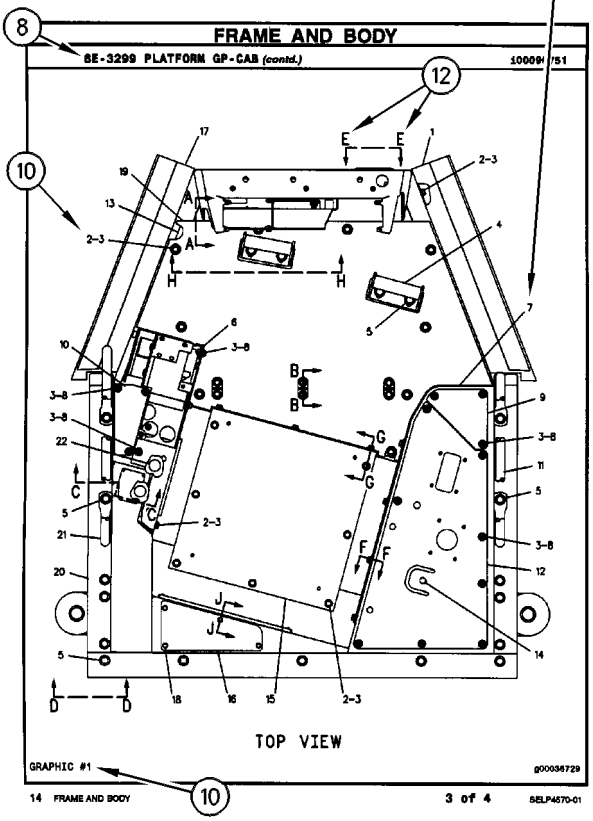
FRAME AND BODY
8E-3299 PLATFORM GP-CAB (contd.)
100090751
TOP VIEW
GRAPHIC #1
g00036729
14 FRAME AND BODY
3 of 4
SELP4570-01

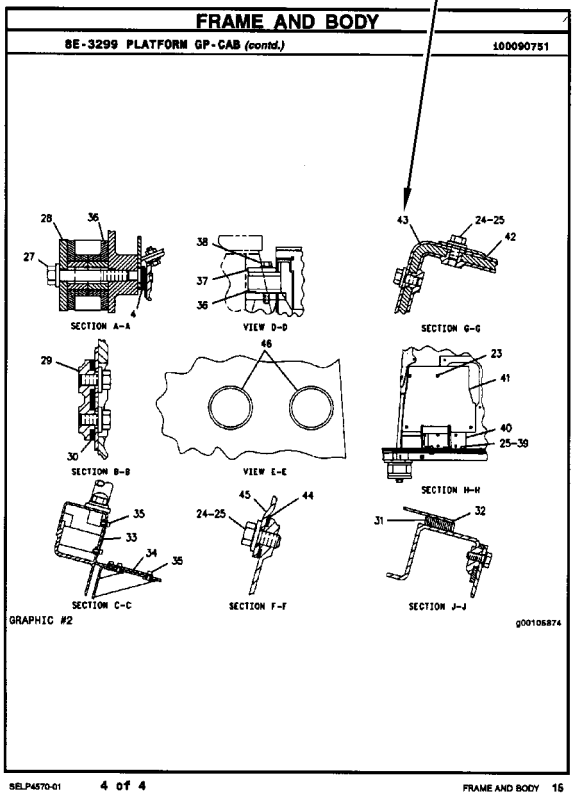
FRAME AND BODY
8E-3299 PLATFORM GP-CAB (contd.)
100090751
SECTION A-A
VIEW D-D
SECTION G-G
SECTION B-B
VIEW E-E
SECTION H-H
SECTION C-C
SECTION F-F
SECTION J-J
GRAPHIC #2
g00105874
SELP4570-01
4 of 4
FRAME AND BODY 15

REPAIR ALTERNATIVES

REMANUFACTURED COMPONENTS

As an option when making repairs consider Caterpillar Remanufactured Components. Components that are available through the Caterpillar Remanufactured Program are identified three ways in the parts book:

- with the letter R in the note field of the parts list
- with an R* at the beginning of the first line of the caption
- with an *R at the end of the first line of the caption

Typical components included in the Remanufacturing Program include:

ALTERNATORS
CONNECTING RODS
CRANKSHAFTS - UNDERSIZE
CRANKSHAFTS - UPGRADE TO NEW
CYLINDER HEADS
ELECTRONIC CONTROL MODULES (ECM)
ELECTRONIC SENSORS
FUEL INJECTORS
FUEL NOZZLES
FUEL PUMPS
GOVERNORS
OIL PUMPS
PISTONS
SHORT BLOCKS
STARTERS
TURBOCHARGERS - COMPLETE
TURBOCHARGER CARTRIDGES
WATER PUMPS

Caterpillar Remanufactured engines for many engine arrangements are also available.

SUPPLEMENTAL COOLANT ADDITIVES

CUSTOMER BENEFITS:

Protects against cavitation, foam, erosion, corrosion, and scale buildup in cooling systems.

- Provides measured coolant conditioner.

DESCRIPTION:

Additives deplete from the coolant with normal operation. For this reason, Supplemental Coolant Additives (SCA) must be added to all heavy duty coolants at regular intervals. In addition, when not using a fully formulated, pre-charged antifreeze, like Caterpillar's DEAC, an initial charge of SCA must be added to the cooling system. The amount of SCA added to the system is dependent on the capacity of the system.

The SCA for initial fill is provided as a liquid. SCA's for maintenance intervals are available in liquid form and as a spin-on element. (No Spin-on available for 3600 Family of Engines)

NOTE:

The amount of SCA added at initial fill is not the same as the amount added at maintenance intervals.

The coolant additive elements can be used with any ethylene or propylene glycol type antifreeze which meets ASTM D4985 or ASTM D5345 Specifications.

NOTE:

For use with standard heavy duty coolant only, not for use with Extended Life Coolant.

PARTS NEEDED:

Cooling System Capacity		Liquid SCA at Initial Fill	Liquid SCA at Maintenance*	Spin-on SCA Maintenance Element*
Liters	Gallons			
22-30	(6-8)	3P-2044 (1)	6V-3542 (1)	111-2370 (1)
30-38	(8-10)	3P-2044 (1) 6V-3542 (1)	111-2372 (1)	111-2369 (1)
38-49	(10-13)	3P-2044 (1) 8T-1589 (1)	111-2372 (1)	111-2369 (1)
49-64	(13-17)	3P-2044 (2)	8T-1589 (1)	9N-3368 (1)
64-83	(17-22)	3P-2044 (2) 8T-1589 (1)	111-2372 (1) 6V-3542 (1)	111-2371 (1)
83-114	(22-30)	3P-2044 (3) 8T-1589 (1)	3P-2044 (1)	9N-3718 (1)
114-163	(30-43)	3P-2044 (5)	3P-2044 (1) 6V-3542 (1)	111-2371 (2)
163-242	(43-64)	3P-2044 (8)	3P-2044 (2)	9N-3718 (2)

** Normal maintenance period is 250 hrs. See your Operation and Maintenance Manual for complete coolant maintenance instructions.*

( ) Indicates quantity required.

MAINTENANCE PARTS

DESCRIPTION	PART NUMBER	QTY	WHERE USED	PAGE
AIR INLET AND EXHAUST SYSTEM				
FILTER ELEMENT AS-AIR (PRIMARY)	131-8822	1	AIR CLEANER GP	111
		1	AIR CLEANER GP	118
FILTER ELEMENT AS-AIR (PRIMARY, STANDARD EFFICIENCY)	6I-2501	1	AIR CLEANER GP	112
		1	AIR CLEANER GP	119
FILTER ELEMENT AS-AIR (PRIMARY, ULTRA HIGH EFFICIENCY)	128-2686	1	AIR CLEANER GP	119
FILTER ELEMENT AS-AIR (SECONDARY)	131-8821	1	AIR CLEANER GP	111
		1	AIR CLEANER GP	118
	6I-2502	1	AIR CLEANER GP	112
		1	AIR CLEANER GP	119
FILTER ELEMENT AS-AIR (ULTRA HIGH EFFICIENCY) (PRIMARY)	134-0685	1	AIR CLEANER GP	118
BASIC ENGINE				
BELT-SERPENTINE	212-8585	1	PULLEY GP-ENGINE	54
		1	PULLEY GP-ENGINE	59
	294-1781	1	PULLEY GP-ENGINE	55
	297-7825	1	PULLEY GP-ENGINE	57
CAP (ENGINE OIL FILLER)	294-1708	1	COVER GP-VALVE MECHANISM	30
KEY (CRANKSHAFT)	094-4628	1	CAMSHAFT GP	27
COOLING SYSTEM				
CAP AS (COOLANT RECOVERY)	171-3369	1	RADIATOR & HYD OIL COOLER GP	90
		1	RADIATOR & HYD OIL COOLER GP	92
		1	RADIATOR & HYD OIL COOLER GP	96
		1	RADIATOR & HYD OIL COOLER GP	99
CAP AS-RADIATOR	245-9212	1	RADIATOR & HYD OIL COOLER GP	94
		1	RADIATOR & HYD OIL COOLER GP	101
		1	RADIATOR & HYD OIL COOLER GP	104
		1	RADIATOR & HYD OIL COOLER GP	106
GASKET (WATER TEMPERATURE REGULATOR)	294-1780	1	LINES GP-WATER	87
	5I-7735	1	LINES GP-WATER	87
HOSE (LOWER RADIATOR)	245-9178	1	RADIATOR & HYD OIL COOLER GP	90
		1	RADIATOR & HYD OIL COOLER GP	92
		1	RADIATOR & HYD OIL COOLER GP	96
		1	RADIATOR & HYD OIL COOLER GP	99
HOSE-UPPER RADIATOR	265-3602	1	RADIATOR & HYD OIL COOLER GP	90
		1	RADIATOR & HYD OIL COOLER GP	92
		1	RADIATOR & HYD OIL COOLER GP	96
		1	RADIATOR & HYD OIL COOLER GP	99
REGULATOR-TEMPERATURE (COOLANT)	5I-8010	1	LINES GP-WATER	87

MAINTENANCE PARTS

DESCRIPTION	PART NUMBER	QTY	WHERE USED	PAGE
ELECTRICAL AND STARTING SYSTEM				
BATTERY (12-VOLT, MAINTENANCE FREE)	263-9574	4	BATTERY & WIRING GP	216
BATTERY (12-VOLT, MAINTENANCE FREE, WET)	3T-5760	2	BATTERY & WIRING GP	193
		2	BATTERY & WIRING GP	195
		2	BATTERY & WIRING GP	202
		2	BATTERY & WIRING GP	209
CIRCUIT BREAKER AS (120-AMPERE) (HEATER)	216-4970	1	PANEL GP-CIRCUIT BREAKER	258
		1	PANEL GP-CIRCUIT BREAKER	260
CIRCUIT BREAKER AS (60-AMPERE) (ALTERNATOR)	171-2208	1	PANEL GP-CIRCUIT BREAKER	258
		1	PANEL GP-CIRCUIT BREAKER	260
CIRCUIT BREAKER AS (80-AMPERE) (MAIN)	171-2210	1	PANEL GP-CIRCUIT BREAKER	258
		1	PANEL GP-CIRCUIT BREAKER	260
FUSE (10-AMPERE)	113-8490	20	WIRING GP-CAB	298
FUSE (15-AMPERE)	113-8491	5	WIRING GP-CAB	298
		1	WIRING GP-CAB	306
		1	WIRING GP-CAB	307
		1	WIRING GP-CAB	308
FUSE (20-AMPERE)	113-8492	3	WIRING GP-CAB	298
FUSE (25-AMPERE)	113-8493	3	WIRING GP-CAB	298
FUSE (30-AMPERE)	124-3548	2	WIRING GP-CAB	298
FUSE (5-AMPERE)	141-2759	7	WIRING GP-CAB	298
KEY (BATTERY DISCONNECT)	8H-5306	1	SWITCH GP-DISCONNECT	276
KEY AS-ELECTRONIC (SECURITY)	206-5162	2	INSTALLATION GP-SECURITY	239
LAMP AS (24-VOLT, 3-WATT)	170-9324	1	PANEL GP-SWITCH	263
		1	PANEL GP-SWITCH	265
LAMP-HALOGEN (24-VOLT, 65-WATT)	9X-3463	1	LAMP GP-FLOOD	242
		1	LAMP GP-FLOOD	243
		1	LAMP GP-FLOOD	244
		1	LIGHTING GP-FLOOD	248
ENGINE ARRANGEMENT				
FILTER AS-ENGINE OIL (STANDARD EFFICIENCY) (STANDARD EFFICIENCY)	1R-0739	1	ENGINE AR-COMPLETE	15

MAINTENANCE PARTS

DESCRIPTION	PART NUMBER	QTY	WHERE USED	PAGE
FUEL SYSTEM				
CAP GP-FUEL FILLER (EXTREME SERVICE, LOCKABLE)	164-4858	1	TANK & MTG GP-FUEL	165
		1	TANK & MTG GP-FUEL	166
		1	TANK GP-FUEL	169
		1	TANK GP-FUEL	170
		1	TANK GP-FUEL	171
		1	TANK GP-FUEL	172
		1	TANK GP-FUEL	175
		1	TANK GP-FUEL	177
		1	TANK GP-FUEL	179
		1	TANK GP-FUEL	181
		1	TANK GP-FUEL	184
		1	TANK GP-FUEL	186
FILTER (ADVANCED EFFICIENCY) (FUEL)	1R-0751	2	FILTER GP-FUEL	139
FILTER AS-WATER SEP & FUEL (PRIMARY)	326-1644	1	FILTER GP-WATER SEP & FUEL	142
GASKET (FUEL PRIMING PUMP)	294-1820	1	FILTER GP-FUEL	139
KEY (FUEL TANK FILL CAP)	5P-8500	1	TANK & MTG GP-FUEL	163
STRAINER AS-FUEL	229-1860	1	PUMP GP-REFUELING	157
		1	PUMP GP-REFUELING	159
STRAINER AS-FUEL (FLOAT GAUGE)	303-9933	1	TANK & MTG GP-FUEL	165
		1	TANK & MTG GP-FUEL	166
		1	TANK GP-FUEL	170
		1	TANK GP-FUEL	172
		1	TANK GP-FUEL	177
		1	TANK GP-FUEL	181
		1	TANK GP-FUEL	184
		1	TANK GP-FUEL	186
STRAINER GP-FUEL (FLOAT GAUGE)	262-9372	1	TANK GP-FUEL	169
		1	TANK GP-FUEL	171
		1	TANK GP-FUEL	175
		1	TANK GP-FUEL	179
HYDRAULIC SYSTEM				
BREATHER (SWING DRIVE)	4H-6112	1	DRIVE GP-SWING	599
BREATHER AS (SWING DRIVE)	227-6221	1	DRIVE GP-SWING	599
BREATHER GP (HYDRAULIC TANK)	227-0590	1	TANK & FILTER GP-HYDRAULIC	957
FILTER ELEMENT AS-OIL (HYDRAULIC RETURN)	179-9806	1	FILTER GP-OIL	609
FILTER ELEMENT AS-OIL (HYDRAULIC)	216-6676	1	FILTER GP-OIL	611
FILTER-OIL (ADVANCED EFFICIENCY) (HYDRAULIC)	5I-8670	1	FILTER & VALVE GP-PILOT	603
FILTER-OIL (ADVANCED EFFICIENCY) (HYDRAULIC, CASE DRAIN)	093-7521	1	FILTER GP-OIL	612
FILTER-OIL (ADVANCED EFFICIENCY) (HYDRAULIC, PILOT)	5I-8670	1	FILTER & VALVE GP-PILOT	605
FILTER-OIL (ULTRA HIGH EFFICIENCY) (HYDRAULIC, PILOT)	126-1813	1	FILTER & VALVE GP-PILOT	604
PLUG-DRAIN (HYDRAULIC OIL)	4B-7739	1	TANK & FILTER GP-HYDRAULIC	957
SCREEN AS (HYDRAULIC TANK)	209-6000	1	SCREEN GP-HYDRAULIC	954

MAINTENANCE PARTS

DESCRIPTION	PART NUMBER	QTY	WHERE USED	PAGE
LUBRICATION SYSTEM				
BREATHER (CRANKCASE)	5I-7725	1	BREATHER GP	72
FILTER AS-ENGINE OIL (STANDARD EFFICIENCY)	1R-0739	1	FILTER & MTG GP-ENGINE OIL	73
OPERATOR STATION				
BLADE AS-WIPER (275-MM) (LOWER)	4I-5021	1	WIPER & WASHER GP-WINDOW	1418
BLADE AS-WIPER (600-MM) (UPPER)	161-3670	1	WIPER GP-WINDOW	1421
CAP AS (WINDOW WASHER)	178-5431	1	WASHER GP-WINDOW	1404
FILTER ELEMENT-CAB AIR	293-1184	1	DUCT GP-CAB AIR	1283
FILTER ELEMENT-CAB AIR (AIR CONDITIONER)	245-7823	1	AIR CONDITIONER GP	1174
		1	AIR CONDITIONER GP	1177
LAMP (24-VOLT, 10-WATT) (DOME)	201-4417	1	CAB GP	1202
		1	CAB GP	1206
LAMP AS-DOME	176-1986	1	CAB GP	1202
		1	CAB GP	1206
RECEIVER DRYER AS (REFRIGERANT)	176-1902	1	LINES GP-AIR CONDITIONER	1327
		1	LINES GP-AIR CONDITIONER	1331
SEAT BELT GP (RETRACTABLE, 3-IN)	235-9020	1	SEAT BELT GP	1364
SEAT BELT GP (RETRACTABLE, 46-MM)	273-5446	1	SEAT BELT GP	1363
V-BELT (AIR CONDITIONER COMPRESSOR)	255-2927	1	COMPRESSOR GP-REFRIGERANT	1216

INDEX

Name	Page

A

ACCUMULATOR GP-HYDRAULIC–CHARGED 531, 532, 533, 534, 535, 536
ACCUMULATOR GP-HYDRAULIC–UNCHARGED 537, 538
ADAPTER GP-REMOTE OIL FILTER–ENGINE . . . 70
ADJUSTER GP-BUCKET–B-FAMILY 1142
ADJUSTER GP-SEAT (UPPER SLIDE) 1394, 1395, 1396
ADJUSTER GP-SEAT–LOWER SLIDE 1168
ADJUSTER GP-SEAT–UPPER SLIDE 1167
AFTERCOOLER AS 94, 101, 104, 106
AIR CLEANER & MOUNTING GP 108, 109
AIR CLEANER AR–PRECLEANER 110
AIR CLEANER GP 111, 112, 114, 116, 118, 119
AIR CONDITIONER & MOUNTING GP 1169, 1171
AIR CONDITIONER AR 1173
AIR CONDITIONER AR–CHASSIS 1173
AIR CONDITIONER GP 1174, 1177
ALARM GP 189, 190
ALARM GP-TRAVEL 190
ALTERNATOR GP-CHARGING 191
ARMREST GP–LH 1181
ARMREST GP–RH 1180

B

BASE GP-OIL FILTER–HYDRAULIC 539
BATTERY & WIRING GP 195, 202, 209
BATTERY & WIRING GP–COLD WEATHER 193, 216
BATTERY (12-VOLT, MAINTENANCE FREE) 216
BATTERY (12-VOLT, MAINTENANCE FREE, WET) 193, 195, 202, 209
BELT-SERPENTINE 54, 55, 57, 59
BLADE AS-WIPER (275-MM) (LOWER) 1418
BLADE AS-WIPER (600-MM) (UPPER) 1421
BLOCK GP-JUNCTION–BATTERY 218
BOOM AR–1-PIECE SHORT BOOM 1092
BOOM AR-1 PIECE LONG 1092, 1093
BOOM AR-1 PIECE LONG–HEAVY-DUTY 1092, 1093
BOOM AR-1 PIECE SHORT 1094
BOOM GP 1095, 1099, 1101
BOOM GP–ACCUGRADE 1103
BOOM GP-1 PIECE 1097
BOX & MTG GP-STORAGE 370
BOX GP-STORAGE 371
BRACKET GP-MIRROR 1182
BRACKET GP-MOUNTING 1394, 1395
BRACKET GP-MOUNTING (SUSPENSION SEAT) 1396
BRACKET GP-MOUNTING–SUSPENSION SEAT 1183
BREATHER (CRANKCASE) 72
BREATHER (SWING DRIVE) 599
BREATHER AS (SWING DRIVE) 599
BREATHER GP (HYDRAULIC TANK) 957
BREATHER GP–CRANKCASE 72
BUCKET & ADJUSTER GP–DEMOLITION, HAMMER, B-FAMILY 1143
BUCKET & ADJUSTER GP–EXCAVATION, B-FAMILY 1144, 1145, 1146
BUCKET AR-EXCAVATION–DEMOLITION, HAMMER, B-FAMILY 1147, 1148
BUMPER GP 373

C

CAB GP 1184, 1186, 1188, 1190, 1192

INDEX

Name	Page
	1194
	1196
	1198
CAB GP–EXTERIOR	1202
	1206
CAB GP–INTERIOR	1200
	1210
	1212
CAMERA & MOUNTING GP	219
CAMERA AR	220
CAMERA GP	221
	222
CAMSHAFT GP	27
	28
	29
CAP (ENGINE OIL FILLER)	30
CAP AS (COOLANT RECOVERY)	90
	92
	96
	99
CAP AS (WINDOW WASHER)	1404
CAP AS-RADIATOR	94
	101
	104
	106
CAP GP-FUEL FILLER (EXTREME SERVICE, LOCKABLE)	165
	166
	169
	170
	171
	172
	175
	177
	179
	181
	184
	186
CAP GP-FUEL FILLER–EXTREME SERVICE, LOCKABLE	138
CARTRIDGE AS-TURBOCHARGER	120
CHASSIS AR	1
	2
CIRCUIT BREAKER AS (120-AMPERE) (HEATER)	258
	260
CIRCUIT BREAKER AS (60-AMPERE) (ALTERNATOR)	258
	260
CIRCUIT BREAKER AS (80-AMPERE) (MAIN)	258
	260
COIL AS	1086
COIL AS (1-WAY/2-WAY FLOW)	1084
COIL GP-EVAPORATOR	1214
COMPRESSOR GP-REFRIGERANT	1216
	1218
CONDENSER & MTG GP-REFRIGERANT	1219
	1220
CONDENSER GP-REFRIGERANT	1222
CONSOLE GP-OPERATOR	1223
	1225
CONSOLE GP-OPERATOR–LH	1229
CONSOLE GP-OPERATOR–RH	1227
CONTROL & MTG GP-COMMUNICATION–PRODUCT LINK	224
CONTROL & MTG GP-ENGINE ELEK	225
CONTROL & MTG GP-JOYSTICK	1235
	1236
CONTROL & MTG GP-JOYSTICK–3-BUTTON, TRIGGER SWITCH	1233
	1234
CONTROL & MTG GP-JOYSTICK–WITH SLIDE CONTROL	1231
	1232
CONTROL & MTG GP-MACHINE	226
CONTROL & MTG GP-PEDAL–LH	1237
	1238
CONTROL AR-AUXILIARY–1-PUMP, 1-WAY, PEDAL	541
CONTROL AR-AUXILIARY–2-PUMP, 1-WAY, 1-HYD PEDAL	541
CONTROL AR-AUXILIARY–COMBINED FUNC, MEDIUM PRESSURE	542
CONTROL AR-AUXILIARY–FOOT SWITCH	543
CONTROL AR-AUXILIARY–HAMMER, FOOT SWITCH	540
CONTROL AR-AUXILIARY–JOYSTICK WITH SLIDE CONTROL	540
CONTROL AR-AUXILIARY–JOYSTICK, 3-BUTTON, TRIGGER SW	540
CONTROL AR-AUXILIARY–MEDIUM PRESSURE	543
CONTROL AR-AUXILIARY–SYSTEM 14, COMBINED FUNCTION	543
CONTROL AR-AUXILIARY–SYSTEM 2, COMBINED FUNCTION	541
CONTROL AR-AUXILIARY–SYSTEM 3, 1-WAY, 2-PUMP	542
	544
CONTROL AR-AUXILIARY–SYSTEM 5, 2-WAY, 1-PUMP	542
	544
CONTROL AR-COUPLER	545
CONTROL GP-FOOT–LH	1241
CONTROL GP-FOOT–WORK TOOL	1239
CONTROL GP-HANDLE–JOYSTICK, LH	1242
	1245
	1246
	1248
CONTROL GP-HANDLE–JOYSTICK, RH	1243

INDEX

Name	Page
	1244
	1247
CONTROL GP-HEAT & AIR COND–AIR INLET	1249
CONTROL GP-HYDRAULIC PEDAL	1251
	1252
	1253
CONTROL GP-HYDRAULIC PEDAL–TRAVEL	1250
CONTROL GP-JOYSTICK–LH	1256
	1258
	1259
	1262
	1264
	1266
CONTROL GP-JOYSTICK–RH	1255
	1257
	1260
	1261
	1263
	1265
CONTROL GP-PEDAL–ELECTRIC	1267
	1268
CONTROL GP-UNPROGRAMMED	225
	226
	227
CONVERSION AR-MACHINE	2
CONVERSION AR-MACHINE–ACCUGRADE READY	3
COOLER GP-ENGINE OIL	79
COOLING AR-HIGH AMBIENT TEMP	80
	81
COOLING AR-HIGH AMBIENT TEMP–HIGH AMBIENT	80
CORE AS-HEATER	1174
	1177
CORE AS-OIL COOLER (ENGINE)	79
CORE AS-OIL COOLER (HYDRAULIC)	94
	101
	104
	106
CORE AS-RADIATOR	94
	101
	104
	106
COUNTERWEIGHT AR	374
COUNTERWEIGHT GP	375
	376
	377
	378
	379
	380
	381
	382
	383
	384
	385
	386
	387
	388
	389
	390
	391
	392
	393
	394
	395
	396
	397
	398
	399
COUPLER AR-QUICK–B1-FAMILY	1148
COUPLER GP-QUICK	1149
COUPLING GP-FLEXIBLE	546
COUPLING GP-PUMP	547
COVER AS-ACCESS–HYDRAULIC TANK, SIDE	400
COVER AS-SOUND SUPPRESSION	401
	402
COVER GP-CAB–REAR	1269
COVER GP-HOOD–PRECLEANER	403
COVER GP-STORAGE	1270
COVER GP-VALVE MECHANISM	30
CRANKSHAFT GP	32
CYLINDER & LINES GP-BOOM–LH	548
	549
CYLINDER & LINES GP-BOOM–RH	548
	549
CYLINDER & LINES GP-BUCKET	549
	550
	551
CYLINDER & LINES GP-STICK	551
	552
	553
CYLINDER & SEAL GP-BOOM	554
	556
	558
CYLINDER & SEAL GP-BUCKET	560
	562
	564
	566
	568
	569
	571
CYLINDER & SEAL GP-STICK	573
	576
	578
	580
	582
	584
	586
	588

INDEX

Name	Page
CYLINDER AR-HYDRAULIC– COLD WEATHER, B1-FAM, LONG STK	590
CYLINDER AR-HYDRAULIC– COLD WEATHER, CB2-FAM, SRT STK	590
CYLINDER BLOCK GP	33
	36
CYLINDER GP-BUCKET	591
CYLINDER GP-COUPLER	593
CYLINDER HEAD AS	38
CYLINDER HEAD GP	39
D	
DOOR & MTG GP-CAB	1271
DOOR AS-ACCESS	406
DOOR AS-ACCESS–AIR CLEANER	404
DOOR AS-ACCESS–LEFT SIDE, FRONT	405
DOOR GP-ACCESS– HYDRAULIC TANK, SIDE	412
DOOR GP-ACCESS–PUMP	409
DOOR GP-ACCESS–RADIATOR	407
	410
	411
DOOR GP-ACCESS– RADIATOR, AFTCLR, HYD COOLER	408
DOOR GP-CAB	1272
	1274
	1276
	1279
	1282
DRIVE GP-AUXILIARY PUMP	594
DRIVE GP-FINAL–WITHOUT MOTOR	361
	365
DRIVE GP-PUMP	596
DRIVE GP-SWING–WITH MOTOR	599
DRIVE GP-SWING–WITHOUT MOTOR	597
DUCT GP-CAB AIR	1283
E	
ELECTRONICS GP-COMMUNICATION– PRODUCT LINK 300	228
ELECTRONICS GP-MACHINE	228
ELECTRONICS GP-MACHINE–HIGH POWER	228
ELECTRONICS GP-MONITOR	229
ENGINE AR	7
	8
	9
	10
	11
	12
	13
	14
ENGINE AR-COMPLETE	15
	16
	17
	18
	19
	20
	21
	22
	23
	24
	25
EXTENSION GP-EXHAUST	121
F	
FAN GP-BLOWER	82
FAN GP-SUCTION	84
	85
FASTENER GP-SWING & FINAL DR	600
FASTENER GP-WIRING HARNESS	230
FASTENER GP-WIRING HARNESS– FOOT SWITCH	235
FASTENER GP-WIRING HARNESS– HEAVY LIFT	233
FASTENER GP-WIRING HARNESS– JOYSTICK	236
FASTENER GP-WIRING HARNESS– PEDAL CONTROL	234
FASTENER GP-WIRING HARNESS– STRAIGHT TRAVEL	232
FENDER & COVER GP	413
	414
FILM GP	1436
	1437
	1440
FILM GP– ALT PATTERN CONTROL, WARNING	1430
FILM GP– CONTROL PATTERN CHANGE, 4-WAY	1431
FILM GP–FUEL TRANSFER PUMP	1435
FILM GP– HAMMER CONTROL, FOOT SWITCH	1429
FILM GP–OPERATOR CONTROLS	1427
FILM GP–OPERATOR CONTROLS, NOTICE	1423
	1425
	1428
FILM GP–OVERLOAD WARNING DEVICE	1439
FILM GP–PEDAL, LH	1426
FILM GP–QUICK COUPLER	1433
	1434
FILM GP– WORK AREA VISUAL SYSTEM, REAR	1438
FILM-CERTIFICATION (OPS GUARD, READ OMM)	1302
FILM-CERTIFICATION (OPS GUARD, READ OMM, ENGLISH)	1300

INDEX

Name	Page
FILM-IDENTIFICATION (ELECTRONIC CONTROL MODULE)	228
FILM-INFORMATION (24-VOLT)	1441, 1446, 1451, 1456
FILM-INFORMATION (DO NOT LIFT)	384, 385
FILM-INSTRUCTION (HYDRAULIC OIL RETURN FILTER)	609
FILM-INSTRUCTION (MACHINE SECURITY, CONSOLE)	267, 269
FILM-INSTRUCTION (OPERATOR CONTROLS, READ OMM)	1426
FILM-INSTRUCTION (PULL RING, ALTERNATE EXIT)	1441, 1446, 1451, 1456
FILM-INSTRUCTION (REFUELING PUMP)	157, 159
FILM-INSTRUCTION (TOP, AIR CLEANER COVER)	111, 112, 118, 119
FILM-INSTRUCTION (TRAVEL CONTROLS)	1353
FILM-WARNING (HIGH PRESSURE CYLINDER)	535
FILM-WARNING (HOT SURFACE, HANDS CLEAR)	1441, 1446, 1451, 1456
FILM-WARNING (NO WELD, NO DRILL, READ OMM)	1300
FILM-WARNING (PRODUCT LINK RADIO, INTL)	238
FILM-WARNING (PRODUCT LINK RADIO, U.S.)	238
FILTER & MTG GP-ENGINE OIL	73
FILTER & VALVE GP-PILOT–HYDRAULIC OIL	602, 603, 604, 605
FILTER (ADVANCED EFFICIENCY) (FUEL)	139
FILTER AR-HYDRAULIC	606
FILTER AS-ENGINE OIL (STANDARD EFFICIENCY)	73
FILTER AS-ENGINE OIL (STANDARD EFFICIENCY) (STANDARD EFFICIENCY)	15
FILTER AS-WATER SEP & FUEL (PRIMARY)	142
FILTER ELEMENT AS-AIR (PRIMARY)	111, 118
FILTER ELEMENT AS-AIR (PRIMARY, STANDARD EFFICIENCY)	112, 119
FILTER ELEMENT AS-AIR (PRIMARY, ULTRA HIGH EFFICIENCY)	119
FILTER ELEMENT AS-AIR (SECONDARY)	111, 112, 118, 119
FILTER ELEMENT AS-AIR (ULTRA HIGH EFFICIENCY) (PRIMARY)	118
FILTER ELEMENT AS-OIL (HYDRAULIC RETURN)	609
FILTER ELEMENT AS-OIL (HYDRAULIC)	611
FILTER ELEMENT-CAB AIR	1283
FILTER ELEMENT-CAB AIR (AIR CONDITIONER)	1174, 1177
FILTER GP-FUEL	139
FILTER GP-OIL–HYDRAULIC	611
FILTER GP-OIL–HYDRAULIC RETURN	607, 609
FILTER GP-OIL–HYDRAULIC, CASE DRAIN	612
FILTER GP-WATER SEP & FUEL	142
FILTER-OIL (ADVANCED EFFICIENCY) (HYDRAULIC)	603
FILTER-OIL (ADVANCED EFFICIENCY) (HYDRAULIC, CASE DRAIN)	612
FILTER-OIL (ADVANCED EFFICIENCY) (HYDRAULIC, PILOT)	605
FILTER-OIL (ULTRA HIGH EFFICIENCY) (HYDRAULIC, PILOT)	604
FINAL DRIVE GP	361, 365
FINAL DRIVE GP–WITH MOTOR	364
FINAL DRIVE GP–WITHOUT MOTOR	363
FITTING GP-HYDRAULIC	613
FLOOR MAT	1284, 1285
FLOOR MAT GP	1286, 1287, 1288, 1289, 1290, 1291
FLYWHEEL GP	40
FRAME AR-UNDERCARRIAGE–LONG	493
FRAME AR-UNDERCARRIAGE–STANDARD	493
FRAME AS-UNDERCARRIAGE	494
FRAME GP-UPPER	415
FRAME GP-UPPER FRONT WINDOW	1292
FUSE (10-AMPERE)	298
FUSE (15-AMPERE)	298, 306

INDEX

Name	Page
	307
	308
FUSE (20-AMPERE)	298
FUSE (25-AMPERE)	298
FUSE (30-AMPERE)	298
FUSE (5-AMPERE)	298

G

GASKET (FUEL PRIMING PUMP)	139
GASKET (WATER TEMPERATURE REGULATOR)	87
GAUGE AS-OIL LEVEL (DIPSTICK) (ENGINE)	49
GAUGE GP-SIGHT–HYDRAULIC OIL LEVEL	614
GAUGE-OIL LEVEL (SWING DRIVE)	599
GEAR & BEARING GP-SWING	417
	418
GEAR GP-FRONT	41
GENERAL AR	3
GUARD AR-OVERHEAD–FOG	1294
GUARD AR-VANDALISM	1294
GUARD GP-BOTTOM	420
GUARD GP-BOTTOM–HEAVY-DUTY	421
GUARD GP-FRONT WINDOW	1300
GUARD GP-FRONT WINDOW–FULL	1295
	1297
GUARD GP-FRONT WINDOW–LOWER	1299
GUARD GP-OVERHEAD	1302
GUARD GP-SWIVEL	422
	423
GUARD GP-TRACK GUIDE	495
	496
	497
	498
	499
GUARD GP-TRAVEL MOTOR	500
GUARD GP-TRAVEL MOTOR–HEAVY-DUTY	501
GUARD GP-VANDALISM–CAB	1304
	1305

H

HANDRAIL GP	424
HARNESS AS-AUXILIARY	290
	292
	309
	313
HARNESS AS-CAB	298
HARNESS AS-CHASSIS	195
	202
	209
HARNESS AS-CHASSIS (HORN)	1318
HARNESS AS-CONSOLE (LH)	326
HARNESS AS-CONSOLE (RH)	263
	265
	267
	269
	328
HARNESS AS-CONTROL	308
	324
HARNESS AS-CONTROL (BLADE)	311
HARNESS AS-CONTROL (BODY TILT SENSOR, GPS RECEIVER)	311
HARNESS AS-CONTROL (DISPLAY)	306
	307
HARNESS AS-CONTROL (DISPLAY, GPS RADIO)	311
HARNESS AS-CONTROL (ENGINE START, PUMP CONTROL)	312
HARNESS AS-CONTROL (ENGINE START, PUMP CONTROL) (HEATER)	347
HARNESS AS-CONTROL (PRODUCT LINK 121SR)	316
	318
	320
	322
HARNESS AS-CONTROL (PRODUCT LINK)	316
	318
HARNESS AS-ENGINE (ELECTRONIC CONTROL MODULE)	332
HARNESS AS-ENGINE (FUEL INJECTION)	332
HARNESS AS-HEATER	1312
	1314
HARNESS AS-HEATER & AIR COND	1174
	1177
HARNESS AS-HEATER & AIR COND (AIR CONDITIONER, LOW SIDE)	1169
	1171
HARNESS AS-HEATER & AIR COND (CONTROL PANEL SWITCHES)	1169
	1171
	1312
	1314
HARNESS AS-LIGHTING (BOOM)	251
HARNESS AS-LIGHTING (BOOM, LH)	249
HARNESS AS-LIGHTING (CAB FLOODLIGHT)	246
HARNESS AS-LIGHTING (CAB FLOODLIGHTS, FRONT)	248
HARNESS AS-LIGHTING (SHORT BOOM, LH)	254
HARNESS AS-LIGHTING (SHORT BOOM, RH)	252
HARNESS AS-OPERATOR CONTROLS	1239
	1241
HARNESS AS-PLATFORM	354
HARNESS AS-PUMP (FAN CONTROL)	337
	339
HARNESS AS-PUMP (REFUELING)	342
	344

INDEX

Name	Page
HARNESS AS-QUICK COUPLER	304
HARNESS AS-RADIO	359
	1319
HARNESS AS-SENSOR	352
	353
HARNESS AS-SOLENOID	351
HARNESS AS-SOLENOID (1-WAY/2-WAY FLOW)	294
HARNESS AS-SOLENOID (COUPLER)	357
HARNESS AS-SOLENOID (FAN)	338
HARNESS AS-SOLENOID (FINE SWING)	341
HARNESS AS-SOLENOID (HEATER)	346
HARNESS AS-SOLENOID (QUICK COUPLER)	356
HARNESS AS-SWITCH	280
	281
HARNESS AS-SWITCH (SECONDARY SHUTDOWN)	354
HARNESS AS-WIRING	241
	309
	344
HARNESS AS-WIRING (CAB)	304
HARNESS AS-WIRING (QUICK COUPLER SWITCH)	286
HARNESS AS-WIRING (SERVICE CONNECTOR)	316
	318
	320
	322
HATCH GP-ROOF	1306
	1307
	1308
HEAD GP-PUMP–DRIVE	615
	619
	623
HEAD GP-PUMP–DRIVEN	626
	630
	634
HEADREST AS-SEAT	1310
	1311
HEADREST AS-SEAT–CLOTH	1309
HEATER & MTG GP-CAB	1312
	1314
HEATER AR-CAB	1316
HOOD & GUARD GP	425
	430
	435
	441
	447
	453
	458
	463
HOOD GP	469
HOOD GP–ACCUGRADE READY	468
HOOD GP-ENGINE	470
	471
	472
	473
HORN GP-ELECTRIC	1317
	1318
HOSE (LOWER RADIATOR)	90
	92
	96
	99
HOSE GP-HYDRAULIC	643
	645
	646
HOSE GP-HYDRAULIC–CONTROL VALVE, BOOM	640
HOSE GP-HYDRAULIC–CONTROL VALVE, STICK	638
HOSE GP-HYDRAULIC–FRONT	639
	641
	642
	643
	644
HOSE-UPPER RADIATOR	90
	92
	96
	99
HOUSING GP-FLYWHEEL	42
HOUSING GP-FRONT	43
HYDRAULIC AR	647

I

IDLER GP-FRONT	502
	505
IDLER GP-FRONT–LH	504
IDLER GP-FRONT–RH	503
INDICATOR AS (HYDRAULIC RETURN FILTER)	607
INDICATOR AS-AIR FILTER CHANGE (AIR RESTRICTION)	111
	112
	118
	119
INJECTOR GP-FUEL	143
	144
	145
	146
INSTALLATION AR-COMMUNICATION–PRODUCT LINK 121SR	237
INSTALLATION AR-COMMUNICATION–PRODUCT LINK 321SR	237
INSTALLATION AR-ENGINE	26
INSTALLATION GP-COMMUNICATION–PRODUCT LINK 121SR	238
INSTALLATION GP-RADIO	1319
	1321

INDEX

Name	Page
INSTALLATION GP-SECURITY	239

K

Name	Page
KEY (BATTERY DISCONNECT)	276
KEY (CRANKSHAFT)	27
KEY (FUEL TANK FILL CAP)	163
KEY AS-ELECTRONIC (SECURITY)	239
KIT-BRACKET– PRODUCT LINK 121SR, 321SR	241
KIT-CONSOLE ADJUSTMENT	1322
KIT-SEAT SUSPENSION	1324 1325
KIT-SEAT SUSPENSION–SEAT HEIGHT	1323

L

Name	Page
LAMP (24-VOLT, 10-WATT) (DOME)	1202 1206
LAMP AS (24-VOLT, 3-WATT)	263 265
LAMP AS-DOME	1202 1206
LAMP GP-FLOOD	242 243 244 246 248
LAMP-HALOGEN (24-VOLT, 65-WATT)	242 243 244 248
LEVER GP-AIR & TEMP CONTROL	1326
LIGHTING GP-CHASSIS–FRONT, RH	245
LIGHTING GP-FLOOD–BOOM, LH	249
LIGHTING GP-FLOOD–BOOM, RH	251
LIGHTING GP-FLOOD–CAB	246
LIGHTING GP-FLOOD–CAB GUARD	248
LIGHTING GP-FLOOD–SHORT BOOM, LH	254
LIGHTING GP-FLOOD–SHORT BOOM, RH	252
LINES GP-AIR	122
LINES GP-AIR CONDITIONER	1327 1331
LINES GP-AIR– TURBOCHARGER, AIR CLEANER	125
LINES GP-AUXILIARY HYDRAULIC	648 659 667
LINES GP-AUXILIARY HYDRAULIC– HIGH PRESSURE	663
LINES GP-AUXILIARY HYDRAULIC– MASS BOOM, HIGH PRESSURE	654
LINES GP-AUXILIARY HYDRAULIC– MASS BOOM, MEDIUM PRESSURE	657
LINES GP-AUXILIARY HYDRAULIC– MEDIUM FLOW	661
LINES GP-AUXILIARY HYDRAULIC– MEDIUM PRESSURE	665
LINES GP-AUXILIARY HYDRAULIC– REACH BOOM	650 652
LINES GP-BOOM	669 678 680
LINES GP-BOOM CYLINDER	682 684
LINES GP-BOOM CYLINDER– BOOM LOWERING CONTROL	690
LINES GP-BOOM CYLINDER–LH	686 688
LINES GP-BOOM CYLINDER–RH	687 689
LINES GP-BOOM– MASS BOOM, MEDIUM FLOW	676
LINES GP-BOOM– REACH BOOM, STICK LOAD CONTROL	670 672 674
LINES GP-BUCKET CYLINDER	693 694 695 696 697 699 700 701 702 703 704
LINES GP-COUPLER	710 711
LINES GP-COUPLER–B1-FAMILY LINKAGE	712 713
LINES GP-COUPLER–MASS BOOM	707
LINES GP-COUPLER–REACH	709
LINES GP-COUPLER–REACH BOOM	705
LINES GP-ENGINE OIL	75
LINES GP-ENGINE OIL DRAIN	76 77
LINES GP-FRONT	714 750
LINES GP-FRONT– 1-PUMP/2-PUMP, 1-WAY FLOW	726 730
LINES GP-FRONT–AUXILIARY	716 720 723
LINES GP-FRONT–COMBINATION	757 761

INDEX

Name	Page
LINES GP-FRONT–MEDIUM PRESSURE	746, 748
LINES GP-FRONT–QUICK COUPLER	765, 769, 773, 776, 779
LINES GP-FRONT– SYSTEM 11, COMBINED FN, MED PR	742, 744
LINES GP-FRONT– SYSTEM 2, COMBINED FUNCTION	734, 738
LINES GP-FRONT– SYSTEM 5, 2-WAY, 1-PUMP	751, 754
LINES GP-FUEL	147, 149
LINES GP-GREASE	1105, 1106
LINES GP-GREASE–BOOM	1107, 1109
LINES GP-GREASE–STICK	1110
LINES GP-HEATER	1334, 1336
LINES GP-HYDRAULIC OIL COOLER	788
LINES GP-HYDRAULIC OIL COOLER– CONTROL VALVE, PUMP	782, 785
LINES GP-MUFFLER DRAIN	126
LINES GP-PILOT	865, 869, 873
LINES GP-PILOT–1-WAY FLOW	858, 862
LINES GP-PILOT–2-WAY PATTERN	830
LINES GP-PILOT–4-WAY PATTERN	827
LINES GP-PILOT–AUXILIARY SYSTEM	844, 847
LINES GP-PILOT– BOOM LOWERING CONTROL VALVE	891, 893
LINES GP-PILOT–CONTROL VALVE	799, 803
LINES GP-PILOT– CONTROL VALVE, TRAVEL VALVE	825
LINES GP-PILOT–DRAIN, HEAVY LIFT	895
LINES GP-PILOT–FILTER, PILOT PUMP	807, 809
LINES GP-PILOT–HEAVY LIFT	811, 813
LINES GP-PILOT–JOYSTICK, PEDALS	789, 793
LINES GP-PILOT– LOAD CONTROL, STICK CYLINDER	832, 835
LINES GP-PILOT–MAIN CONTROL VALVE	797
LINES GP-PILOT–MEDIUM PRESSURE	875
LINES GP-PILOT–PEDAL CONTROLS	815, 817, 821
LINES GP-PILOT–PEDAL, RH	819
LINES GP-PILOT–PILOT OIL PRESSURE	877
LINES GP-PILOT– SYSTEM 1, 1-WAY, 1-PUMP	838, 841
LINES GP-PILOT–SYSTEM 11, COMBINED FN, MEDIUM PRESSURE	879, 885
LINES GP-PILOT– SYSTEM 2, COMBINED FUNCTION	850, 854
LINES GP-PILOT– THIRD PEDAL, PILOT VALVE	823
LINES GP-PUMP– HYD OIL COOLER, PILOT SYSTEM	897, 900
LINES GP-PUMP–SUPPLY, MAIN PUMP	896
LINES GP-RETURN & FILTER–HAMMER	913, 915
LINES GP-RETURN– BOOM LOWERING CONTROL	908, 909, 911
LINES GP-RETURN–HYDRAULIC TANK	904, 906
LINES GP-SENSOR– OVERLOAD WARNING DEVICE	917
LINES GP-STICK CYLINDER	918, 921, 922
LINES GP-STICK CYLINDER– STICK LOWERING CONTROL	919
LINES GP-TRAVEL MOTOR	923
LINES GP-TRAVEL MOTOR– LONG UNDERCARRIAGE	925
LINES GP-TURBOCHARGER OIL	78
LINES GP-WATER	87
LINK AS-TRACK	506, 507
LINKAGE AR–LONG REACH	1112
LINKAGE AR-BUCKET– B1-FAMILY, WITH LIFTING EYE	1112, 1113
LINKAGE AR-BUCKET–CB2-FAMILY	1113
LINKAGE GP-BUCKET	1114
LINKAGE GP-BUCKET–B1-FAMILY	1120
LINKAGE GP-BUCKET– B1-FAMILY, QUICK COUPLER	1119

INDEX

Name	Page
LINKAGE GP-BUCKET–B1-FAMILY, WITH LIFTING EYE	1118
LINKAGE GP-BUCKET–CB2-FAMILY	1116
LITERATURE GP	1339
LOCK GP-TRANSPORT	1121
M	
MACHINE AR	4
MACHINE AR–HIGH AMBIENT, HIGH POWER	4
MANIFOLD GP-CONTROL–PILOT OIL SUPPLY	928
	929
	930
MANIFOLD GP-EXHAUST	127
MANIFOLD GP-INLET	129
MIRROR GP	1340
MIRROR GP-REAR VIEW	1342
	1343
	1344
MIRROR GP-REAR VIEW–FRONT, RH	1341
MODULE GP-INTERFACE (KEY)	239
MONITOR & MTG GP-OPERATOR	1345
MONITOR GP-OPERATOR	1346
MOTOR & MTG GP-SWING	931
MOTOR & MTG GP-TRAVEL	932
MOTOR AS (WIPER)	1421
MOTOR GP-SWING	933
	934
MOTOR GP-TRAVEL	936
	940
MOUNTING GP-ALTERNATOR	46
MOUNTING GP-ANTENNA	1347
	1349
MOUNTING GP-ENGINE	47
MOUNTING GP-FUEL FILTER	151
MOUNTING GP-MAIN CONTROL VALVE	943
MOUNTING GP-PLATFORM	1351
MOUNTING GP-PUMP–FUEL INJECTION	152
MOUNTING GP-STARTING MOTOR	48
MUFFLER GP	131
	133
O	
OPERATOR AR	1353
P	
PADLOCK GP	162
	164
	167
PADLOCK GP (FUEL TANK FILL CAP)	163
PAN GP-OIL	49
PANEL & MTG GP-CIRCUIT BREAKER	256
	257
PANEL GP-CIRCUIT BREAKER	258
	260
PANEL GP-SWITCH–ENGINE SPEED, START	263
	265
	267
	269
PEDAL AR-AUXILIARY–LH	1353
PEDAL AR-AUXILIARY–THIRD PEDAL, STRAIGHT TRAVEL	1353
PIN GP–COUPLER	1122
PISTON & ROD GP	51
PLATE & FILM GP	1441
	1446
	1451
	1456
PLATE-INSTRUCTION (BATTERY)	260
PLATE-WARNING (HIGH PRESSURE CYLINDER)	515
	516
PLATFORM GP-OPERATOR	1354
PLUG GP-CONTROL VALVE	944
	945
PLUG-DRAIN (HYDRAULIC OIL)	957
POWER TRAIN AR	368
PROBE AS-LIQUID LEVEL (WATER SEPARATOR)	272
PULLEY AS-IDLER	53
PULLEY GP-ENGINE	54
	55
	57
	59
	61
PULLEY GP-IDLER	63
PUMP & MOTOR GP-REFUELING	153
PUMP & MTG GP-AUXILIARY	946
PUMP & MTG GP-MAIN HYDRAULIC	947
PUMP & MTG GP-UNIT INJ HYD	154
PUMP AR-FUEL TRANSFER	155
PUMP GP-FUEL	156
PUMP GP-FUEL TRANSFER	154
	156
PUMP GP-GEAR	948
PUMP GP-GEAR (PILOT)	949
PUMP GP-MAIN HYDRAULIC	949
PUMP GP-REFUELING	157
	159
PUMP GP-WATER	88
R	
RADIATOR & HYD OIL COOLER GP	90
	92
	94
	96

INDEX

Name	Page
	99
	101
	104
	106
RADIO GP-COMMUNICATION– PRODUCT LINK 121SR	1355
RECEIVER DRYER AS (REFRIGERANT)	1327
	1331
REGULATOR-TEMPERATURE (COOLANT)	87
RELAY (24-VOLT) (1-WAY/2-WAY SOLENOID)	294
RELAY (24-VOLT) (BOOM FLOODLIGHT)	298
RELAY (24-VOLT) (CAB FLOODLIGHT)	298
RELAY (24-VOLT) (CHASSIS LIGHT)	298
RELAY (24-VOLT) (HORN)	298
RELAY (24-VOLT) (NEUTRAL START)	298
RELAY (24-VOLT) (QUICK COUPLER LOCK ON)	304
RELAY (24-VOLT) (QUICK COUPLER LOCK PRIORITY)	304
RELAY (24-VOLT) (QUICK COUPLER LOCK)	304
RELAY (24-VOLT) (REFUELING PUMP, START)	342
	344
RELAY (24-VOLT) (REFUELING PUMP, STOP)	342
	344
RELAY (24-VOLT) (SPEAKERS)	359
RELAY (24-VOLT) (START CONTROL)	324
RELAY (24-VOLT) (TRAVEL ALARM)	298
RELAY (BLOWER)	1249
RELAY (COMPRESSOR CLUTCH)	1249
RELAY AS (WIPER)	1421
ROLLER AR-TRACK & CARRIER	508
	509
	510
	511
ROLLER GP-TRACK CARRIER	512
ROLLER GP-TRACK-DOUBLE FLANGE	513
ROLLER GP-TRACK-SINGLE FLANGE	514

S

Name	Page
SCREEN AS (HYDRAULIC TANK)	954
SCREEN GP-HYDRAULIC–TANK	954
SCREEN GP-SUN	1356
SEAL GP-DUO-CONE	361
	365
SEAT & MOUNTING GP–AIR SUSPENSION	1359
SEAT & MOUNTING GP–HIGH BACK, TILT	1358
	1360
	1361
SEAT & MOUNTING GP– LOW BACK WITH TILT	1357
SEAT BELT GP (RETRACTABLE, 3-IN)	1364
SEAT BELT GP (RETRACTABLE, 46-MM)	1363
SEAT BELT GP–RETRACTABLE	1362
SEAT BELT GP–RETRACTABLE, 3-IN	1364
SEAT BELT GP–RETRACTABLE, 46-MM	1363
	1365
SEAT GP	1388
	1389
SEAT GP–HIGH BACK, TILT	1367
	1377
SEAT GP–HIGH BACK, WITH HEATER	1368
	1378
SEAT GP–LOW BACK WITH TILT	1366
SEAT GP–LOW BACK, TILT	1369
	1370
	1372
	1374
	1376
SEAT GP–LOW BACK, VINYL	1371
	1373
	1375
SEAT GP-SUSPENSION– AIR SUSP, HIGH BACK, WITH HTR	1382
	1384
SEAT GP-SUSPENSION–AIR SUSPENSION	1381
SEAT GP-SUSPENSION–HIGH BACK, TILT	1380
	1388
	1389
SEAT GP-SUSPENSION– HIGH BACK, WITH HEATER	1386
	1390
SEAT GP-SUSPENSION–LOW BACK, TILT	1379
	1385
	1387
SENDER AS-TEMPERATURE (HYDRAULIC OIL)	957
SENSOR AS (AMBIENT AIR TEMP)	1174
	1177
SENSOR AS-LIQUID LEVEL (WATER SEPARATOR)	272
SENSOR AS-PRESSURE (MAIN PUMP)	807
	809
SENSOR AS-PRESSURE (OVERLOAD WARNING)	917
SENSOR AS-PRESSURE (WORK TOOL)	757
	761
SENSOR AS-TEMPERATURE (AIR)	1249
SENSOR AS-TEMPERATURE (COOLANT)	1174
	1177
SENSOR GP-ENGINE	8
	10
	12
	14
	271
SENSOR GP-FUEL LEVEL	165
	166
	169
	170

INDEX

Name	Page
	171
	172
	175
	177
	179
	181
	184
	186
SENSOR GP-LIQUID LEVEL (WATER SEPARATOR)	273
SENSOR GP-LIQUID LEVEL–WATER IN FUEL	272
SENSOR GP-LIQUID LEVEL–WATER SEPARATOR	273
SENSOR GP-PRESSURE (AIR INLET MANIFOLD)	271
SENSOR GP-PRESSURE (ENGINE OIL)	225
SENSOR GP-PRESSURE (FUEL MANIFOLD)	271
SENSOR GP-PRESSURE (FUEL)	271
SENSOR GP-SPEED (ENGINE)	42
	271
SENSOR GP-SPEED (FUEL PUMP)	154
SENSOR GP-SPEED (SECONDARY, TIMING)	156
SENSOR GP-TEMPERATURE (AIR INLET MANIFOLD)	271
SENSOR GP-TEMPERATURE (AMBIENT AIR, RAD FAN CLUTCH)	339
SENSOR GP-TEMPERATURE (ENGINE OIL)	271
SENSOR GP-TEMPERATURE (FUEL)	271
SENSOR GP-TEMPERATURE (INLET AIR)	337
SENSOR-TEMPERATURE (AMBIENT AIR)	1169
	1171
	1312
	1314
SERVICE GP-COMMUNICATION (PRODUCT LINK 300)	228
SHAFT GP-MOTOR	274
SHEET AS-SOUND SUPPRESSION	475
	476
	477
	478
	479
	480
	481
	482
	483
	484
SIDECUTTER GP	1150
SOFTWARE GP-COMMUNICATION (PRODUCT LINK 121SR)	1355
SOFTWARE GP-COMMUNICATION (PRODUCT LINK 300)	228
SOFTWARE GP-MACHINE	228
SOFTWARE GP-MONITOR	229
SPECIAL AR	5
	6
SPECIAL AR–TIER II SOUND, TIER III ENGINE	4
SPRING AS-GAS	1300
SPROCKET GP	369
STARTING MOTOR GP-ELECTRIC	274
STEP GP	485
	486
STICK AR–B1-FAMILY	1123
STICK AR–B1-FAMILY, HEAVY-DUTY	1123
STICK AR–REACH	1123
STICK AR-HOE–MASS	1124
STICK AR-HOE–REACH	1123
	1124
	1125
STICK AR-HOE–REACH, ACCUGRADE READY	1125
STICK GP-HOE	1128
	1129
	1131
	1138
	1139
STICK GP-HOE–ACCUGRADE READY	1141
STICK GP-HOE–AUXILIARY, COUPLER	1130
	1137
STICK GP-HOE–B1-FAMILY	1140
STICK GP-HOE–LONG REACH	1126
STICK GP-HOE–MASS	1135
STICK GP-HOE–REACH	1132
	1134
STORAGE GP-VANDALISM GUARD	487
STRAINER AS-FUEL	157
	159
STRAINER AS-FUEL (FLOAT GAUGE)	165
	166
	170
	172
	177
	181
	184
	186
STRAINER GP-FUEL (FLOAT GAUGE)	169
	171
	175
	179
STRAINER GP-FUEL–FLOAT GAUGE	161
SUN VISOR	1402
SUPPORT AS-ENCLOSURE	488
	489
	490
	491
	492
SUPPORT GP-SEAT	1391
	1392
	1393

INDEX

Name	Page
SUSPENSION GP-SEAT	1387, 1388, 1389, 1390, 1394, 1395, 1397, 1398, 1399, 1400, 1401
SUSPENSION GP-SEAT–AIR	1396
SWITCH (LIQUID LEVEL) (FUEL)	282
SWITCH (WINDOW LOWER LIMIT)	1408
SWITCH AS (FILTER BYPASS)	611
SWITCH AS (NORMALLY CLOSED)	281
SWITCH AS (NORMALLY OPEN)	280
SWITCH AS (REFUELING PUMP, STOP)	281
SWITCH AS-FOOT (WORK TOOL)	1241
SWITCH AS-LIMIT (HYDRAULIC LOCKOUT)	279
SWITCH AS-LIQUID LEVEL (ENGINE OIL)	49
SWITCH AS-LIQUID LEVEL (FUEL TANK SHUTOFF)	159
SWITCH AS-LIQUID LEVEL (HYDRAULIC OIL)	957
SWITCH AS-MAGNETIC (24-VOLT) (HEATER RELAY)	260, 347
SWITCH AS-MAGNETIC (24-VOLT) (MAIN RELAY)	298, 342, 344
SWITCH AS-PRESSURE (ACTION INPUT, MEDIUM PRESSURE)	817
SWITCH AS-PRESSURE (ACTION INPUT, WORK TOOL)	819
SWITCH AS-PRESSURE (AUXILIARY, COMBINED FUNCTION)	817
SWITCH AS-PRESSURE (COMBINED FUNC, MEDIUM PRESSURE)	815
SWITCH AS-PRESSURE (IMPLEMENT, SWING)	789, 793
SWITCH AS-PRESSURE (PILOT, BOOM UP)	821, 851, 855, 880, 886
SWITCH AS-PRESSURE (REFRIGERANT)	1327, 1331
SWITCH AS-PRESSURE (THIRD PEDAL, STRAIGHT TRAVEL)	823
SWITCH AS-PRESSURE (TRAVEL, LH)	789, 793
SWITCH AS-PRESSURE (TRAVEL, RH)	789, 793
SWITCH AS-PUSH BUTTON (HORN)	1242
SWITCH AS-PUSH BUTTON (MANUAL LOW IDLE)	1243
SWITCH AS-ROCKER (FINE SWING)	298
SWITCH AS-ROCKER (HEATED SEAT)	1382, 1386
SWITCH AS-ROCKER (LEVELING)	299
SWITCH AS-ROCKER (LOWER WASHER)	288
SWITCH AS-ROCKER (OVERLOAD WARNING)	352, 353
SWITCH AS-ROCKER (RADIO MUTE)	1319
SWITCH AS-ROCKER (WIPER, LOWER)	288
SWITCH AS-ROLLER (WIPER, LOWER)	1418
SWITCH AS-TOGGLE (AUTO/MANUAL ENG SPEED CONTROL)	328
SWITCH AS-TOGGLE (MANUAL ENGINE SPEED CONTROL)	328
SWITCH AS-TOGGLE (QUICK COUPLER)	286, 304
SWITCH AS-TOGGLE (SECONDARY SHUTDOWN)	354
SWITCH GP-DISCONNECT–BATTERY	276
SWITCH GP-MAGNETIC	277
SWITCH GP-MAGNETIC–START RELAY	278
SWITCH GP-POSITION–HYDRAULIC LOCKOUT	279
SWITCH GP-PUSH BUTTON (REFUELING PUMP, START)	342
SWITCH GP-PUSH BUTTON (REFUELING PUMP, STOP)	342
SWITCH GP-PUSH BUTTON–REFUELING PUMP, START	280
SWITCH GP-PUSH BUTTON–REFUELING PUMP, STOP	281
SWITCH GP-PUSHBUTTON (REFUELING PUMP, START)	280
SWITCH GP-REFUELING–FUEL TANK SHUTOFF	282
SWITCH GP-ROTARY (THROTTLE POSITION)	263, 265, 267, 269
SWITCH GP-ROTARY–THROTTLE POSITION	283, 284
SWITCH GP-START–ENGINE, KEY	285
SWITCH GP-TOGGLE	287
SWITCH GP-TOGGLE (12-VOLT, 24-VOLT SPEAKER)	359
SWITCH GP-TOGGLE (QUICK COUPLER)	304
SWITCH GP-TOGGLE–QUICK COUPLER	286
SWITCH GP-WIPER–LOWER	288

INDEX

Name	Page
SWITCH-MAGNETIC (24-VOLT) (START RELAY)	298
SWIVEL GP	955

T

TANK & FILTER GP-HYDRAULIC	957
TANK & MTG GP-FUEL	162
	163
	164
	165
	166
	167
TANK & MTG GP-HYDRAULIC	959
TANK GP-FUEL	168
	169
	170
	171
	172
	174
	175
	177
	179
	181
	183
	184
	186
TIP GP–SHARP-CENTER	1151
TIP GP–SHARP-CORNER	1152
TIP GP-ABRASION–HEAVY-DUTY	1153
TIP GP-DOUBLE SPIKE–K-90	1154
TIP GP-EXTRA-DUTY–K-90	1155
TIP GP-GENERAL PURPOSE–K-90	1156
TIP GP-LONG	1157
	1158
TIP GP-PENETRATION	1159
TIP GP-PENETRATION–K-90	1160
TIP GP-PENETRATION PLUS–K-90	1161
TIP GP-SHORT	1162
TIP GP-SPIKE–K-90	1163
TIP GP-WIDE	1164
TIP GP-WIDE–K-90	1165
TIP-LEVELING EDGE–K-90	1166
TRACK ADJUSTER & RECOIL GP	517
	518
TRACK ADJUSTER & RECOIL GP–LH	516
TRACK ADJUSTER & RECOIL GP–RH	515
TRACK AR–2-REQUIRED	519
TRACK GP–2-REQUIRED	520
	521
	522
	523
	524
	525
	526
	527
	528
	529
	530
TURBOCHARGER GP	135
	137

V

V-BELT (AIR CONDITIONER COMPRESSOR)	1216
VALVE & LINES GP-HEAVY LIFT	960
VALVE & MTG GP-CONTROL–AUXILIARY	961
	962
VALVE AR-ALT PATTERN CONTROL–2-WAY	963
VALVE AR-ALT PATTERN CONTROL–4-WAY	963
VALVE AR-CHECK & RELIEF– BOOM LOWERING CONTROL VALVE	963
VALVE AR-LOAD CONTROL– STICK CYLINDER, MASS BOOM	964
VALVE AR-LOAD CONTROL– STICK CYLINDER, REACH BOOM	963
VALVE AR-SWING–WITHOUT FINE SWING	964
VALVE AS-RELIEF (ENGINE OIL PRESSURE)	70
VALVE GP-CHECK	750
	965
	966
	967
	969
	970
	971
VALVE GP-CHECK (HYD CYLINDER, QUICK COUPLER)	593
VALVE GP-CHECK (SOLENOID CONTROLLED) (1-WAY/2-WAY, CHECK)	734
	738
	761
VALVE GP-CONTROL–AUXILIARY	976
VALVE GP-CONTROL–LH	981
	986
	993
	997
VALVE GP-CONTROL–MEDIUM FLOW	974
VALVE GP-CONTROL–MEDIUM PRESSURE	972
	1001
VALVE GP-CONTROL–RH	978
VALVE GP-CONTROL– WITHOUT COVERS, HOUSINGS	973
VALVE GP-CONTROL–WITHOUT HOUSINGS	991
VALVE GP-COUPLER–QUICK COUPLER	1002
VALVE GP-FLOW CONTROL & RELIEF– MEDIUM FLOW, ROTATOR MOTOR	1004
VALVE GP-FUEL SHUTOFF	188
VALVE GP-LOAD CONTROL– BOOM CYLINDER	1006

INDEX

Name	Page
VALVE GP-LOAD CONTROL– BOOM DRIFT RED, LINE RELIEF	1013
VALVE GP-LOAD CONTROL– STICK CYLINDER	1009
VALVE GP-LOAD CONTROL– STICK DRIFT RED, LINE RELIEF	1011
VALVE GP-MAIN CONTROL	1015
VALVE GP-MAIN CONTROL–HEAVY LIFT	1016
VALVE GP-MANUAL–AUXILIARY, SHUTOFF	1017
VALVE GP-PILOT	1251
	1252
VALVE GP-PILOT (THIRD PEDAL, STRAIGHT TRAVEL)	1253
VALVE GP-PILOT– ALT PATTERN CONTROL, 2-WAY	1026
VALVE GP-PILOT–JOYSTICK	1018
	1023
	1028
	1030
VALVE GP-PILOT RELIEF	1034
	1035
VALVE GP-PILOT RELIEF (HYDRAULIC FILTER)	603
	604
	605
VALVE GP-PILOT–TRAVEL	1021
	1032
VALVE GP-PRESSURE REDUCING (QUICK COUPLER)	1002
VALVE GP-PRESSURE REDUCING– BOOM, SWING PRIORITY	1036
	1037
VALVE GP-PRIORITY–SWING	1039
VALVE GP-RELIEF	1040
	1043
	1048
	1058
	1059
	1088
	1091
VALVE GP-RELIEF (160-BAR (2321-PSI))	1001
VALVE GP-RELIEF (230-BAR (3336-PSI))	1001
VALVE GP-RELIEF (80-BAR (1161-PSI))	1001
VALVE GP-RELIEF (CUSHION CROSSOVER)	1089
VALVE GP-RELIEF (LINE)	751
	976
	978
	1006
	1011
	1013
VALVE GP-RELIEF (LINE) (STICK CYLINDER)	1009
VALVE GP-RELIEF–CUSHION CROSSOVER	1044
VALVE GP-RELIEF– CUSHION, ROTATOR MOTOR	1057
VALVE GP-RELIEF–LINE	1047
	1052
	1054
	1055
VALVE GP-RELIEF–MAIN	1053
	1060
VALVE GP-RELIEF–MAIN, HEAVY LIFT	1050
	1061
VALVE GP-RELIEF–MEDIUM PRESSURE	1056
VALVE GP-RELIEF– NEGATIVE FLOW CONTROL	1041
	1042
VALVE GP-RELIEF–PILOT OPERATED	1049
	1063
VALVE GP-RELIEF–WITH BLOCK	1045
	1046
VALVE GP-SELECTOR– ALT PATTERN CONTROL, 4-WAY	1064
VALVE GP-SHUTTLE	1066
	1067
	1069
	1070
VALVE GP-SHUTTLE–1-PUMP/2-PUMP	1068
VALVE GP-SHUTTLE–SWING	1071
VALVE GP-SOLENOID	615
	619
	623
	1073
	1074
	1075
	1076
VALVE GP-SOLENOID & MANIFOLD	1081
VALVE GP-SOLENOID & MANIFOLD (QUICK COUPLER)	773
	776
	779
VALVE GP-SOLENOID & MANIFOLD– QUICK COUPLER	1082
VALVE GP-SOLENOID & RELIEF	757
	1083
	1084
	1086
VALVE GP-SOLENOID & RELIEF (1-WAY/2-WAY FLOW)	761
VALVE GP-SOLENOID & RELIEF– WITH BLOCK	1085
VALVE GP-SOLENOID (AUXILIARY, COMBINED FUNCTION)	851
	855
VALVE GP-SOLENOID (AUXILIARY, COMBINED FUNCTION) (1-PUMP/2-PUMP, 1-WAY/2-WAY FLW)	880
	886
VALVE GP-SOLENOID (HEAVY LIFT)	811
	813

INDEX

Name	Page
VALVE GP-SOLENOID (HYDRAULIC LOCKOUT)	929, 930
VALVE GP-SOLENOID (NEG FLOW CONT, PROPN RED VALVE)	838, 841, 844, 847, 851, 855, 859, 863, 866, 870, 880, 886
VALVE GP-SOLENOID (PRESSURE REDUCING)	1077, 1080
VALVE GP-SOLENOID (PRESSURE REDUCING) (PUMP FLOW CONTROL, PILOT)	858, 862, 873
VALVE GP-SOLENOID (PRESSURE REDUCING) (ROTATOR)	875
VALVE GP-SOLENOID (QUICK COUPLER PIN)	1078
VALVE GP-SOLENOID (QUICK COUPLER)	1002
VALVE GP-SOLENOID (STRAIGHT TRAVEL)	981, 986, 993, 997
VALVE GP-SOLENOID (SWING BRAKE RELEASE)	929, 930
VALVE GP-SOLENOID (TRAVEL SPEED)	929, 930
VALVE GP-SOLENOID (WORK TOOL, 4-FUNCTION)	865, 869, 1079
VALVE GP-SOLENOID–COMBINED FCTN, MEDIUM PRESSURE	1076
VALVE GP-SOLENOID–NEG FLOW CONT, PROPN RED VALVE	1077
VALVE GP-SOLENOID–PRESSURE REDUCING	1072, 1080
VALVE GP-SOLENOID–QUICK COUPLER	1078
VALVE GP-SOLENOID–WORK TOOL, 4-FUNCTION	1079
VALVE GP-SWING CUSHION	1088, 1090
VALVE GP-SWING CUSHION–FINE SWING	1089
VALVE GP-TRAVEL COUNTERBALANCE	1091
VALVE GP-UNLOADING	981, 986, 993, 997
VALVE MECHANISM GP	64, 66, 68
VISOR GP-CAB	1402
VISOR GP-PROTECTION–RAIN	1403

W

Name	Page
WARNING AR-OVERLOAD–BOOM LOWERING CONTROL VALVE	289
WARNING GP-OVERLOAD–OVERLOAD WARNING DEVICE	289
WASHER GP-WINDOW	1404
WASHER GP-WINDOW–LOWER	1405
WINDOW AS-FRONT–UPPER	1407
WINDOW GP-CAB	1415
WINDOW GP-CAB–FRONT, LOWER	1411
WINDOW GP-CAB–FRONT, UPPER	1408
WINDOW GP-CAB–LOWER	1412
WINDOW GP-CAB–SIDE, REAR	1414
WINDOW GP-DOOR	1416
WIPER & WASHER GP-WINDOW–LOWER	1418
WIPER AR-WINDOW	1420
WIPER GP-WINDOW–FRONT, UPPER	1421
WIRING GP-AUXILIARY CONTROL	290
WIRING GP-AUXILIARY CONTROL–SYSTEMS 3, 5	292
WIRING GP-CAB	298, 306, 307
WIRING GP-CAB–1-WAY/2-WAY FLOW	294
WIRING GP-CAB–ACCUGRADE READY	308
WIRING GP-CAB–COUPLER	304
WIRING GP-CAB–REAR VISION CAMERA	309
WIRING GP-CAMERA–REAR VISION CAMERA	310
WIRING GP-CHASSIS	312
WIRING GP-CHASSIS–ACCUGRADE READY	311
WIRING GP-COMBINED FLOW	313
WIRING GP-COMMUNICATION	324
WIRING GP-COMMUNICATION–PRODUCT LINK 121SR	320, 322
WIRING GP-COMMUNICATION–PRODUCT LINK 321SR	316, 318
WIRING GP-CONSOLE	327
WIRING GP-CONSOLE–LH	326
WIRING GP-CONSOLE–RH	328
WIRING GP-CONVERTER	330, 331

INDEX

Name	Page	Name	Page
WIRING GP-ELECTRONIC CONTROL	332		
WIRING GP-ENGINE–JUMP START	334		
WIRING GP-FAN–FAN CLUTCH	338		
WIRING GP-FAN–FLUID CLUTCH	336		
	340		
WIRING GP-FAN–			
HYD FAN CTL, AIR TEMP CTL	337		
	339		
WIRING GP-FINE SWING	341		
WIRING GP-FUEL SYSTEM–REFUELING	342		
	344		
WIRING GP-HEATER	346		
	347		
WIRING GP-HYDRAULIC CONTROL–			
RETURN FILTER	349		
WIRING GP-MEDIUM PRESSURE	351		
WIRING GP-OVERLOAD WARNING	353		
WIRING GP-OVERLOAD WARNING–			
OVERLOAD WARNING	352		
WIRING GP-PLATFORM	354		
WIRING GP-QUICK COUPLER	356		
	357		
WIRING GP-RADIO	359		

MACHINE ARRANGEMENT

264-8638 CHASSIS AR

S/N: FAL1-UP

PART OF 264-8626 GENERAL AR

SMCS-7000 **i03016138**

NOTE	PART NUMBER	QTY	PART NAME 1 2 3 4 5 6 (PRODUCT LEVEL)	SEE PAGE
Y	*267-8000*	1	BATTERY & WIRING GP	195
Y	*223-3040*	1	BOX & MTG GP-STORAGE	370
Y	*262-2607*	1	COUNTERWEIGHT GP	382
Y	*223-3042*	1	FENDER & COVER GP	413
Y	*273-6716*	1	FRAME GP-UPPER	415
Y	*289-6424*	1	GUARD GP-BOTTOM	420
Y	*142-3835*	1	HANDRAIL GP	424
Y	*273-7726*	1	HOOD & GUARD GP	435
Y	*267-8071*	1	HORN GP-ELECTRIC	1317
Y	*4I-5409*	1	LIGHTING GP-CHASSIS (FRONT, RH)	245
Y	*284-4386*	1	LINES GP-AIR CONDITIONER	1331
Y	*273-7735*	1	LINES GP-FUEL	147
Y	*7Y-0059*	1	LITERATURE GP	1339
Y	*142-3836*	1	MIRROR GP-REAR VIEW (FRONT, RH)	1341
Y	*245-7811*	1	MOUNTING GP-PLATFORM	1351
Y	*273-5387*	1	OPERATOR AR	1353
Y	*275-3683*	1	PLATE & FILM GP	1441
Y	*278-3896*	1	TANK & MTG GP-FUEL	162
Y	*319-1387*	1	WIRING GP-CHASSIS (CAB, REAR)	312
			S/N: FAL842-UP	
Y	*259-5052*	1	WIRING GP-FINE SWING	341
Y	*306-8690*	1	WIRING GP-HEATER	346

Y-SEPARATE ILLUSTRATION

<END>

MACHINE ARRANGEMENT

264-8639 CHASSIS AR

S/N: KGF1-UP

PART OF 264-8627 GENERAL AR

SMCS-7000 **i03016135**

NOTE	PART NUMBER	QTY	PART NAME 1 2 3 4 5 6 (PRODUCT LEVEL)	SEE PAGE
Y	*267-8000*	1	BATTERY & WIRING GP	195
Y	*223-3040*	1	BOX & MTG GP-STORAGE	370
Y	*262-2607*	1	COUNTERWEIGHT GP	382
Y	*223-3042*	1	FENDER & COVER GP	413
Y	*273-6716*	1	FRAME GP-UPPER	415
Y	*289-6424*	1	GUARD GP-BOTTOM	420
Y	*142-3835*	1	HANDRAIL GP	424
Y	*273-7726*	1	HOOD & GUARD GP	435
Y	*267-8071*	1	HORN GP-ELECTRIC	1317
Y	*4I-5409*	1	LIGHTING GP-CHASSIS (FRONT, RH)	245
Y	*284-4386*	1	LINES GP-AIR CONDITIONER	1331
Y	*273-7735*	1	LINES GP-FUEL	147
Y	*7Y-0059*	1	LITERATURE GP	1339
Y	*142-3836*	1	MIRROR GP-REAR VIEW (FRONT, RH)	1341
Y	*245-7811*	1	MOUNTING GP-PLATFORM	1351
Y	*273-5387*	1	OPERATOR AR	1353
Y	*275-3684*	1	PLATE & FILM GP	1451
Y	*278-3896*	1	TANK & MTG GP-FUEL	162
Y	*319-1387*	1	WIRING GP-CHASSIS (CAB, REAR)	312
			S/N: KGF1258-UP	
Y	*259-5052*	1	WIRING GP-FINE SWING	341
Y	*306-8690*	1	WIRING GP-HEATER	346

Y-SEPARATE ILLUSTRATION

<END>

290-1774 CONVERSION AR-MACHINE

S/N: KGF1-UP; FAL1-UP

AN ATTACHMENT

SMCS-7000 **i03022382**

NOTE	PART NUMBER	QTY	PART NAME 1 2 3 4 5 6 (PRODUCT LEVEL)	SEE PAGE
Y	*273-5358*	1	FLOOR MAT GP	1291
Y	*303-9859*	1	HOOD GP	468
Y	*270-5603*	1	MOUNTING GP-ANTENNA (ACCUGRADE)	1347
Y	*306-8349*	1	WIRING GP-CAB (ACCUGRADE READY)	308
Y	*299-2954*	1	WIRING GP-CHASSIS (ACCUGRADE READY)	311

Y-SEPARATE ILLUSTRATION

<END>

MACHINE ARRANGEMENT

290-1775 CONVERSION AR-MACHINE–ACCUGRADE READY

S/N: KGF1-UP

AN ATTACHMENT

SMCS-7000 **i02889074**

NOTE	PART NUMBER	QTY	PART NAME 1 2 3 4 5 6 (PRODUCT LEVEL)	SEE PAGE
Y	*273-5358*	1	FLOOR MAT GP	1291
Y	*303-9860*	1	HOOD GP (ACCUGRADE READY)	469
Y	*270-5603*	1	MOUNTING GP-ANTENNA (ACCUGRADE)	1347
Y	*299-2792*	1	WIRING GP-CAB	306
			–OR–	
Y	*306-8349*	1	WIRING GP-CAB (ACCUGRADE READY)	308
Y	*299-2954*	1	WIRING GP-CHASSIS (ACCUGRADE READY)	311

Y-SEPARATE ILLUSTRATION

<END>

264-8626 GENERAL AR

S/N: FAL1-UP

SMCS-7000 **i02579645**

NOTE	PART NUMBER	QTY	PART NAME 1 2 3 4 5 6 (PRODUCT LEVEL)	SEE PAGE
Y	*264-8638*	1	CHASSIS AR	1
Y	*270-5512*	1	ELECTRONICS GP-MACHINE (MACHINE CONTROL)	228
Y	*221-8861*	1	ELECTRONICS GP-MONITOR	229
Y	*272-4681*	1	ENGINE AR	9
Y	*247-7454*	1	FRAME AR-UNDERCARRIAGE	493
Y	*285-1354*	1	HYDRAULIC AR	647
Y	*272-4742*	1	INSTALLATION AR-ENGINE	26
Y	*267-6767*	1	POWER TRAIN AR	368

Y-SEPARATE ILLUSTRATION

<END>

264-8627 GENERAL AR

S/N: KGF1-UP

SMCS-7000 **i02579646**

NOTE	PART NUMBER	QTY	PART NAME 1 2 3 4 5 6 (PRODUCT LEVEL)	SEE PAGE
Y	*264-8639*	1	CHASSIS AR	2
Y	*270-5512*	1	ELECTRONICS GP-MACHINE (MACHINE CONTROL)	228
Y	*221-8861*	1	ELECTRONICS GP-MONITOR	229
Y	*272-4681*	1	ENGINE AR	9
Y	*240-3822*	1	FRAME AR-UNDERCARRIAGE	493
Y	*285-1355*	1	HYDRAULIC AR	647
Y	*272-4742*	1	INSTALLATION AR-ENGINE	26
Y	*267-6767*	1	POWER TRAIN AR	368

Y-SEPARATE ILLUSTRATION

<END>

MACHINE ARRANGEMENT

290-1910 MACHINE AR—HIGH AMBIENT, HIGH POWER

S/N: KGF1-UP; FAL1-UP
AN ATTACHMENT

SMCS-7000 **i02814514**

NOTE	PART NUMBER	QTY	PART NAME 1 2 3 4 5 6 (PRODUCT LEVEL)	SEE PAGE
Y	*289-6910*	1	DOOR GP-ACCESS (RADIATOR)	407
Y	*270-5514*	1	ELECTRONICS GP-MACHINE (HIGH POWER)	228
Y	*296-4678*	1	ENGINE AR-COMPLETE	21

Y-SEPARATE ILLUSTRATION

<END>

330-1194 MACHINE AR

S/N: KGF1-UP; FAL1-UP
PART OF 314-3735 CAMERA AR
AN ATTACHMENT

SMCS-7000 **i03164740**

NOTE	PART NUMBER	QTY	PART NAME 1 2 3 4 5 6 (PRODUCT LEVEL)	SEE PAGE
Y	*330-1426*	1	DOOR AS-ACCESS	406
Y	*330-1166*	1	FENDER & COVER GP	414
Y	*330-1162*	1	MIRROR GP	1340
Y	*327-3191*	1	TANK & MTG GP-FUEL	164

Y-SEPARATE ILLUSTRATION

<END>

290-1892 SPECIAL AR—TIER II SOUND, TIER III ENGINE

S/N: KGF1-UP
AN ATTACHMENT

SMCS-7000 **i03078282**

NOTE	PART NUMBER	QTY	PART NAME 1 2 3 4 5 6 (PRODUCT LEVEL)	SEE PAGE
Y	*241-1999*	1	COUNTERWEIGHT GP	375
Y	*272-4675*	1	ENGINE AR	7
			—OR—	
Y	*305-4763*	1	ENGINE AR	13
Y	*273-7725*	1	HOOD & GUARD GP	425
			—OR—	
Y	*320-5732*	1	HOOD & GUARD GP	453
Y	*265-3600*	1	RADIATOR & HYD OIL COOLER GP	90
Y	*275-6798*	1	WIRING GP-FAN (FLUID CLUTCH)	336
			—OR—	
Y	*306-8501*	1	WIRING GP-FAN (FLUID CLUTCH)	340

Y-SEPARATE ILLUSTRATION

<END>

MACHINE ARRANGEMENT

298-4286 SPECIAL AR

S/N: KGF1-UP; FAL1-UP
CHINA
FOR USE WITH 600-MM (23.6-IN) TRACK SHOES
AN ATTACHMENT

SMCS-7000 **i02842543**

NOTE	PART NUMBER	QTY	PART NAME 1 2 3 4 5 6 (PRODUCT LEVEL)	SEE PAGE
Y	*298-4281*	1	FILM GP	1436
	305-0395	1	HANDLE AS	
Y-SEPARATE ILLUSTRATION				

<END>

298-4287 SPECIAL AR

S/N: KGF1-UP; FAL1-UP
CHINA
FOR USE WITH 700-MM (27.5-IN) TRACK SHOES
AN ATTACHMENT

SMCS-7000 **i02843434**

NOTE	PART NUMBER	QTY	PART NAME 1 2 3 4 5 6 (PRODUCT LEVEL)	SEE PAGE
Y	*298-4281*	1	FILM GP	1436
Y	*235-7764*	2	STEP GP	485
	305-0395	1	HANDLE AS	
Y-SEPARATE ILLUSTRATION				

<END>

298-4288 SPECIAL AR

S/N: KGF1-UP; FAL1-UP
CHINA
FOR USE WITH 800-MM (31.5-IN) TRACK SHOES
AN ATTACHMENT

SMCS-7000 **i02843491**

NOTE	PART NUMBER	QTY	PART NAME 1 2 3 4 5 6 (PRODUCT LEVEL)	SEE PAGE
Y	*298-4281*	1	FILM GP	1436
Y	*308-8881*	2	STEP GP	486
	305-0395	1	HANDLE AS	
Y-SEPARATE ILLUSTRATION				

<END>

MACHINE ARRANGEMENT

314-3574 SPECIAL AR

S/N: KGF1-UP; FAL1-UP
CHINA MARKET
FOR USE WITH 600-MM (23.6-IN) TRACK SHOES
AN ATTACHMENT

SMCS-7000 **i03001022**

NOTE	PART NUMBER	QTY	PART NAME 1 2 3 4 5 6 (PRODUCT LEVEL)	SEE PAGE
Y	*298-4281*	1	FILM GP	1436
Y-SEPARATE ILLUSTRATION				

<END>

314-3575 SPECIAL AR

S/N: KGF1-UP; FAL1-UP
CHINA MARKET
FOR USE WITH 700-MM (27.6-IN) TRACK SHOES
AN ATTACHMENT

SMCS-7000 **i03001023**

NOTE	PART NUMBER	QTY	PART NAME 1 2 3 4 5 6 (PRODUCT LEVEL)	SEE PAGE
Y	*298-4281*	1	FILM GP	1436
Y	*235-7764*	2	STEP GP	485
Y-SEPARATE ILLUSTRATION				

<END>

314-3576 SPECIAL AR

S/N: KGF1-UP; FAL1-UP
CHINA MARKET
FOR USE WITH 800-MM (31.5-IN) TRACK SHOES
AN ATTACHMENT

SMCS-7000 **i03001024**

NOTE	PART NUMBER	QTY	PART NAME 1 2 3 4 5 6 (PRODUCT LEVEL)	SEE PAGE
Y	*298-4281*	1	FILM GP	1436
Y	*308-8881*	2	STEP GP	486
Y-SEPARATE ILLUSTRATION				

<END>

314-3846 SPECIAL AR

S/N: KGF1-UP; FAL1-UP
CHINA
FOR USE WITH 700-MM (27.5-IN) TRACK SHOE
AN ATTACHMENT

SMCS-7000 **i03207788**

NOTE	PART NUMBER	QTY	PART NAME 1 2 3 4 5 6 (PRODUCT LEVEL)	SEE PAGE
Y	*314-3848*	1	FILM GP	1440
Y	*235-7764*	2	STEP GP	485
Y-SEPARATE ILLUSTRATION				

<END>

ENGINE ARRANGEMENT

272-4675 ENGINE AR

S/N: KGF1-UP
PART OF 290-1892 SPECIAL AR
AN ATTACHMENT

SMCS-1000 **i02690531**

NOTE	PART NUMBER	QTY	PART NAME 1 2 3 4 5 6 (PRODUCT LEVEL)	SEE PAGE
Y	*272-4676*	1	ENGINE AR-COMPLETE	15
Y	*230-2979*	1	FAN GP-BLOWER	82

Y-SEPARATE ILLUSTRATION

ENGINE ARRANGEMENT

272-4677 ENGINE AR

S/N: GDC1-7001

PART OF 272-4676 ENGINE AR-COMPLETE

AN ATTACHMENT

SMCS-1000 **i02927718**

NOTE	PART NUMBER	QTY	PART NAME 1 2 3 4 5 6 (PRODUCT LEVEL)	SEE PAGE
Y	**212-8561**	1	ALTERNATOR GP-CHARGING	191
Y	*296-4638*	1	BREATHER GP (CRANKCASE)	72
Y	*305-4744*	1	CAMSHAFT GP	29
Y	*296-4664*	1	CONTROL & MTG GP-ENGINE ELEK	225
Y	*296-4642*	1	COOLER GP-ENGINE OIL	79
Y	*296-4647*	1	COVER GP-VALVE MECHANISM	30
Y	*296-4650*	1	CRANKSHAFT GP	32
Y	*296-4648*	1	CYLINDER BLOCK GP	36
Y	*296-4645*	1	CYLINDER HEAD GP	39
Y	*296-4654*	1	ADAPTER GP-REMOTE OIL FILTER	70
Y	*305-4745*	1	FILTER GP-FUEL	139
Y	*296-4644*	1	FLYWHEEL GP	40
Y	*296-4651*	1	GEAR GP-FRONT	41
Y	*296-4643*	1	HOUSING GP-FLYWHEEL	42
Y	*296-4649*	1	HOUSING GP-FRONT	43
Y	**260-5656**	6	INJECTOR GP-FUEL	143
			S/N: GDC1-1846	
Y	*310-9606*	1	INJECTOR GP-FUEL	145
			S/N: GDC1847-7001	
Y	*296-4641*	1	LINES GP-ENGINE OIL	75
Y	*296-4656*	1	LINES GP-FUEL	149
Y	*296-4636*	1	LINES GP-TURBOCHARGER OIL	78
Y	*296-4658*	1	LINES GP-WATER	87
Y	*296-4653*	1	MANIFOLD GP-EXHAUST	127
Y	*296-4652*	1	MANIFOLD GP-INLET	129
Y	*296-4661*	1	MOUNTING GP-ALTERNATOR	46
Y	*305-4678*	1	MOUNTING GP-PUMP	152
			S/N: GDC1847-7001	
Y	*296-4637*	1	MOUNTING GP-STARTING MOTOR	48
Y	*296-4662*	1	MUFFLER GP	131
Y	*296-4640*	1	PAN GP-OIL	49
Y	*296-4659*	1	PISTON & ROD GP	51
Y	*296-4655*	1	PUMP GP-WATER	88
Y	*296-4666*	1	SENSOR GP-ENGINE	271
Y	**272-4774**	1	STARTING MOTOR GP-ELECTRIC	274
Y	**287-0049**	1	TURBOCHARGER GP	135
Y	*305-4910*	1	VALVE MECHANISM GP	68
Y	*296-4665*	1	WIRING GP-ELECTRONIC CONTROL	332
	297-7738	1	ELECTRONICS GP-ENGINE RATINGS	

Y-SEPARATE ILLUSTRATION

ENGINE ARRANGEMENT

272-4681 ENGINE AR

S/N: KGF1-UP; FAL1-UP

PART OF 264-8626, 264-8627 GENERAL AR

SMCS-1000 **i02579632**

NOTE	PART NUMBER	QTY	PART NAME 1 2 3 4 5 6 (PRODUCT LEVEL)	SEE PAGE
Y	**272-4682**	1	ENGINE AR-COMPLETE	16
Y	*245-9313*	1	FAN GP-SUCTION	84

Y-SEPARATE ILLUSTRATION

ENGINE ARRANGEMENT

272-4683 ENGINE AR

S/N: GDC1-UP

PART OF 272-4682, 272-4685, 272-4687, 296-4680, 310-9484, 310-9485 ENGINE AR-COMPLETE

ALSO AN ATTACHMENT

SMCS-1000 **i03177583**

NOTE	PART NUMBER	QTY	PART NAME 1 2 3 4 5 6 (PRODUCT LEVEL)	SEE PAGE
YR	**212-8561**	1	ALTERNATOR GP-CHARGING	191
Y	*296-4638*	1	BREATHER GP (CRANKCASE)	72
Y	*296-4639*	1	CAMSHAFT GP	27
			S/N: GDC1-162, 164-228	
Y	*305-4743*	1	CAMSHAFT GP	28
			S/N: GDC163, 229-258	
Y	*305-4744*	1	CAMSHAFT GP	29
			S/N: GDC259-UP	
Y	*296-4664*	1	CONTROL & MTG GP-ENGINE ELEK	225
Y	*296-4642*	1	COOLER GP-ENGINE OIL	79
Y	*296-4647*	1	COVER GP-VALVE MECHANISM	30
Y	*296-4650*	1	CRANKSHAFT GP	32
Y	*296-4648*	1	CYLINDER BLOCK GP	36
Y	*296-4645*	1	CYLINDER HEAD GP	39
Y	*296-4654*	1	ADAPTER GP-REMOTE OIL FILTER	70
Y	*305-4745*	1	FILTER GP-FUEL	139
Y	*296-4644*	1	FLYWHEEL GP	40
Y	*296-4651*	1	GEAR GP-FRONT	41
Y	*296-4643*	1	HOUSING GP-FLYWHEEL	42
Y	*296-4649*	1	HOUSING GP-FRONT	43
Y	*310-9607*	1	INJECTOR GP-FUEL	146
			S/N: GDC1847-UP	
Y	*296-4641*	1	LINES GP-ENGINE OIL	75
Y	*296-4656*	1	LINES GP-FUEL	149
Y	*296-4636*	1	LINES GP-TURBOCHARGER OIL	78
Y	*296-4658*	1	LINES GP-WATER	87
Y	*296-4653*	1	MANIFOLD GP-EXHAUST	127
Y	*296-4652*	1	MANIFOLD GP-INLET	129
Y	*296-4661*	1	MOUNTING GP-ALTERNATOR	46
Y	*305-4678*	1	MOUNTING GP-PUMP	152
			S/N: GDC1847-UP	
Y	*296-4637*	1	MOUNTING GP-STARTING MOTOR	48
Y	*296-4662*	1	MUFFLER GP	131
Y	*296-4640*	1	PAN GP-OIL	49
Y	*296-4659*	1	PISTON & ROD GP	51
Y	*296-4655*	1	PUMP GP-WATER	88
Y	*296-4666*	1	SENSOR GP-ENGINE	271
YR	**272-4774**	1	STARTING MOTOR GP-ELECTRIC	274
Y	**287-0049**	1	TURBOCHARGER GP	135
Y	*296-4646*	1	VALVE MECHANISM GP	64
			S/N: GDC1-162, 164-228	
Y	*305-4742*	1	VALVE MECHANISM GP	66
			S/N: GDC163, 229-258	
Y	*305-4910*	1	VALVE MECHANISM GP	68
			S/N: GDC259-UP	
Y	*296-4665*	1	WIRING GP-ELECTRONIC CONTROL	332
	297-7736	1	ELECTRONICS GP	
R	**295-9130**	6	INJECTOR GP-FUEL	
			S/N: GDC1-1846	

R-REMFG PART MAY BE AVAILABLE
Y-SEPARATE ILLUSTRATION

ENGINE ARRANGEMENT

272-4684 ENGINE AR

S/N: KGF1-UP; FAL1-UP
AN ATTACHMENT

SMCS-1000 **i02586038**

NOTE	PART NUMBER	QTY	PART NAME 1 2 3 4 5 6 (PRODUCT LEVEL)	SEE PAGE
Y	**272-4685**	1	ENGINE AR-COMPLETE	17

Y-SEPARATE ILLUSTRATION

ENGINE ARRANGEMENT

296-4676 ENGINE AR

S/N: GDC1-UP

PART OF 296-4675, 296-4678 ENGINE AR-COMPLETE

AN ATTACHMENT

SMCS-1000 **i02942918**

NOTE	PART NUMBER	QTY	PART NAME 1 2 3 4 5 6 (PRODUCT LEVEL)	SEE PAGE
Y	*296-4654*	1	ADAPTER GP-REMOTE OIL FILTER	70
Y	*296-4638*	1	BREATHER GP (CRANKCASE)	72
Y	*305-4744*	1	CAMSHAFT GP	29
Y	*296-4664*	1	CONTROL & MTG GP-ENGINE ELEK	225
Y	*296-4642*	1	COOLER GP-ENGINE OIL	79
Y	*296-4647*	1	COVER GP-VALVE MECHANISM	30
Y	*296-4650*	1	CRANKSHAFT GP	32
Y	*296-4648*	1	CYLINDER BLOCK GP	36
Y	*296-4645*	1	CYLINDER HEAD GP	39
Y	*305-4745*	1	FILTER GP-FUEL	139
Y	*296-4644*	1	FLYWHEEL GP	40
Y	*296-4651*	1	GEAR GP-FRONT	41
Y	*296-4643*	1	HOUSING GP-FLYWHEEL	42
Y	*296-4649*	1	HOUSING GP-FRONT	43
Y	**295-9130**	1	INJECTOR GP-FUEL	144
			S/N: GDC1-1846	
Y	*310-9607*	1	INJECTOR GP-FUEL	146
			S/N: GDC1847-UP	
Y	*296-4641*	1	LINES GP-ENGINE OIL	75
Y	*296-4656*	1	LINES GP-FUEL	149
Y	*296-4636*	1	LINES GP-TURBOCHARGER OIL	78
Y	*296-4658*	1	LINES GP-WATER	87
Y	*296-4653*	1	MANIFOLD GP-EXHAUST	127
Y	*296-4652*	1	MANIFOLD GP-INLET	129
Y	*296-4661*	1	MOUNTING GP-ALTERNATOR	46
Y	*305-4678*	1	MOUNTING GP-PUMP	152
			S/N: GDC1847-UP	
Y	*296-4637*	1	MOUNTING GP-STARTING MOTOR	48
Y	*296-4662*	1	MUFFLER GP	131
			S/N: GDC1-7001	
Y	*297-7745*	1	MUFFLER GP	133
			S/N: GDC7002-UP	
Y	*296-4640*	1	PAN GP-OIL	49
Y	*296-4659*	1	PISTON & ROD GP	51
Y	*296-4655*	1	PUMP GP-WATER	88
Y	*296-4666*	1	SENSOR GP-ENGINE	271
Y	*310-9617*	1	TURBOCHARGER GP	137
Y	*305-4910*	1	VALVE MECHANISM GP	68
Y	*296-4665*	1	WIRING GP-ELECTRONIC CONTROL	332
	299-1425	1	ELECTRONICS GP-ENGINE RATINGS	

Y-SEPARATE ILLUSTRATION

ENGINE ARRANGEMENT

305-4763 ENGINE AR

S/N: KGF1-UP
PART OF 290-1892 SPECIAL AR
AN ATTACHMENT

SMCS-1000 **i02890157**

NOTE	PART NUMBER	QTY	PART NAME 1 2 3 4 5 6 (PRODUCT LEVEL)	SEE PAGE
Y	**305-4776**	1	ENGINE AR-COMPLETE	23
Y	*230-2979*	1	FAN GP-BLOWER	82

Y-SEPARATE ILLUSTRATION

ENGINE ARRANGEMENT

305-4777 ENGINE AR

S/N: KGF1-UP

PART OF 305-4776 ENGINE AR-COMPLETE

AN ATTACHMENT

SMCS-1000 **i02854552**

NOTE	PART NUMBER	QTY	PART NAME 1 2 3 4 5 6 (PRODUCT LEVEL)	SEE PAGE
Y	*296-4654*	1	ADAPTER GP-REMOTE OIL FILTER	70
Y	**212-8561**	1	ALTERNATOR GP-CHARGING	191
Y	*296-4638*	1	BREATHER GP (CRANKCASE)	72
Y	*305-4743*	1	CAMSHAFT GP	28
Y	*296-4664*	1	CONTROL & MTG GP-ENGINE ELEK	225
Y	*296-4642*	1	COOLER GP-ENGINE OIL	79
Y	*296-4647*	1	COVER GP-VALVE MECHANISM	30
Y	*296-4650*	1	CRANKSHAFT GP	32
Y	*296-4648*	1	CYLINDER BLOCK GP	36
Y	*296-4645*	1	CYLINDER HEAD GP	39
Y	*305-4745*	1	FILTER GP-FUEL	139
Y	*296-4644*	1	FLYWHEEL GP	40
Y	*296-4651*	1	GEAR GP-FRONT	41
Y	*296-4643*	1	HOUSING GP-FLYWHEEL	42
Y	*296-4649*	1	HOUSING GP-FRONT	43
Y	*296-4641*	1	LINES GP-ENGINE OIL	75
Y	*296-4656*	1	LINES GP-FUEL	149
Y	*296-4636*	1	LINES GP-TURBOCHARGER OIL	78
Y	*296-4658*	1	LINES GP-WATER	87
Y	*296-4653*	1	MANIFOLD GP-EXHAUST	127
Y	*296-4652*	1	MANIFOLD GP-INLET	129
Y	*296-4661*	1	MOUNTING GP-ALTERNATOR	46
Y	*296-4637*	1	MOUNTING GP-STARTING MOTOR	48
Y	*296-4662*	1	MUFFLER GP	131
Y	*296-4640*	1	PAN GP-OIL	49
Y	*296-4659*	1	PISTON & ROD GP	51
Y	*296-4655*	1	PUMP GP-WATER	88
Y	*296-4666*	1	SENSOR GP-ENGINE	271
Y	**272-4774**	1	STARTING MOTOR GP-ELECTRIC	274
Y	**287-0049**	1	TURBOCHARGER GP	135
Y	*305-4742*	1	VALVE MECHANISM GP	66
Y	*296-4665*	1	WIRING GP-ELECTRONIC CONTROL	332
	295-9130	6	INJECTOR GP-FUEL	

Y-SEPARATE ILLUSTRATION

ENGINE ARRANGEMENT

272-4676 ENGINE AR-COMPLETE

S/N: KGF1-UP
PART OF 272-4675 ENGINE AR
AN ATTACHMENT

SMCS-1000 **i02819797**

NOTE	PART NUMBER	QTY	PART NAME 1 2 3 4 5 6 (PRODUCT LEVEL)	SEE PAGE
Y	*272-4677*	1	ENGINE AR	8
Y	*296-4667*	1	PULLEY GP-ENGINE	55
	1R-0739	1	FILTER AS-ENGINE OIL (STANDARD EFFICIENCY) (STANDARD EFFICIENCY)	

Y-SEPARATE ILLUSTRATION

ENGINE ARRANGEMENT

272-4682 ENGINE AR-COMPLETE

S/N: KGF1-UP; FAL1-UP

PART OF 272-4681 ENGINE AR

SMCS-1000 **i02762376**

NOTE	PART NUMBER	QTY	PART NAME 1 2 3 4 5 6 (PRODUCT LEVEL)	SEE PAGE
Y	*272-4683*	1	ENGINE AR	10
Y	*297-7747*	1	PULLEY GP-ENGINE	57

Y-SEPARATE ILLUSTRATION

ENGINE ARRANGEMENT

272-4685 ENGINE AR-COMPLETE

S/N: KGF1-UP; FAL1-UP

PART OF 298-4256 COOLING AR-HIGH AMBIENT TEMP, 272-4684 ENGINE AR

AN ATTACHMENT

SMCS-1000 **i02762396**

NOTE	PART NUMBER	QTY	PART NAME 1 2 3 4 5 6 (PRODUCT LEVEL)	SEE PAGE
Y	*272-4683*	1	ENGINE AR	10
Y	*297-7748*	1	PULLEY GP	59

Y-SEPARATE ILLUSTRATION

ENGINE ARRANGEMENT

272-4687 ENGINE AR-COMPLETE

S/N: KGF1-UP; FAL1-UP
PART OF 264-8651 COOLING AR-HIGH AMBIENT TEMP
AN ATTACHMENT

SMCS-1000 **i02585774**

NOTE	PART NUMBER	QTY	PART NAME 1 2 3 4 5 6 (PRODUCT LEVEL)	SEE PAGE
Y	*272-4683*	1	ENGINE AR	10
Y	*266-6317*	1	PULLEY GP-ENGINE	54

Y-SEPARATE ILLUSTRATION

ENGINE ARRANGEMENT

290-1909 ENGINE AR-COMPLETE

S/N: KGF1-UP; FAL1-UP
AN ATTACHMENT

SMCS-1000 **i02814467**

NOTE	PART NUMBER	QTY	PART NAME 1 2 3 4 5 6 (PRODUCT LEVEL)	SEE PAGE
Y	*270-5514*	1	ELECTRONICS GP-MACHINE (HIGH POWER)	228
Y	*296-4675*	1	ENGINE AR-COMPLETE	20

Y-SEPARATE ILLUSTRATION

ENGINE ARRANGEMENT

296-4675 ENGINE AR-COMPLETE

S/N: KGF1-UP; FAL1-UP
PART OF 290-1909 ENGINE AR-COMPLETE
AN ATTACHMENT

SMCS-1000 **i02814482**

NOTE	PART NUMBER	QTY	PART NAME 1 2 3 4 5 6 (PRODUCT LEVEL)	SEE PAGE
Y	*296-4676*	1	ENGINE AR	12
Y	*297-7747*	1	PULLEY GP-ENGINE	57

Y-SEPARATE ILLUSTRATION

ENGINE ARRANGEMENT

296-4678 ENGINE AR-COMPLETE

S/N: KGF1-UP; FAL1-UP
PART OF 290-1910 MACHINE AR
AN ATTACHMENT

SMCS-1000 **i02814524**

NOTE	PART NUMBER	QTY	PART NAME 1 2 3 4 5 6 (PRODUCT LEVEL)	SEE PAGE
Y	*296-4676*	1	ENGINE AR	12
Y	*266-6317*	1	PULLEY GP-ENGINE	54

Y-SEPARATE ILLUSTRATION

ENGINE ARRANGEMENT

296-4680 ENGINE AR-COMPLETE

S/N: KGF1-UP; FAL1-UP
PART OF 290-1911 COOLING AR-HIGH AMBIENT TEMP
AN ATTACHMENT

SMCS-1000 **i02656425**

NOTE	PART NUMBER	QTY	PART NAME 1 2 3 4 5 6 (PRODUCT LEVEL)	SEE PAGE
Y	*272-4683*	1	ENGINE AR	10
Y	*296-4667*	1	PULLEY GP-ENGINE	55

Y-SEPARATE ILLUSTRATION

ENGINE ARRANGEMENT

305-4776 ENGINE AR-COMPLETE

S/N: KGF1-UP
PART OF 305-4763 ENGINE AR
AN ATTACHMENT

SMCS-1000 **i02890158**

NOTE	PART NUMBER	QTY	PART NAME 1 2 3 4 5 6 (PRODUCT LEVEL)	SEE PAGE
Y	*305-4777*	1	ENGINE AR	14
Y	*296-4667*	1	PULLEY GP-ENGINE	55

Y-SEPARATE ILLUSTRATION

ENGINE ARRANGEMENT

310-9484 ENGINE AR-COMPLETE

S/N: KGF1-UP; FAL1-UP
PART OF 298-4271 COOLING AR-HIGH AMBIENT TEMP
AN ATTACHMENT

SMCS-1000 **i02762629**

NOTE	PART NUMBER	QTY	PART NAME 1 2 3 4 5 6 (PRODUCT LEVEL)	SEE PAGE
Y	*272-4683*	1	ENGINE AR	10
Y	*296-4667*	1	PULLEY GP-ENGINE	55

Y-SEPARATE ILLUSTRATION

ENGINE ARRANGEMENT

310-9485 ENGINE AR-COMPLETE

S/N: KGF1-UP; FAL1-UP
PART OF 298-4272 COOLING AR-HIGH AMBIENT TEMP
AN ATTACHMENT

SMCS-1000 **i02784736**

NOTE	PART NUMBER	QTY	PART NAME 1 2 3 4 5 6 (PRODUCT LEVEL)	SEE PAGE
Y	*272-4683*	1	ENGINE AR	10
Y	*296-4667*	1	PULLEY GP-ENGINE	55

Y-SEPARATE ILLUSTRATION

ENGINE ARRANGEMENT

272-4742 INSTALLATION AR-ENGINE

S/N: KGF1-UP; FAL1-UP

PART OF 264-8626, 264-8627 GENERAL AR

SMCS-1000 **i02988351**

NOTE	PART NUMBER	QTY	PART NAME 1 2 3 4 5 6 (PRODUCT LEVEL)	SEE PAGE
Y	*109-9313*	1	AIR CLEANER & MOUNTING GP	108
Y	*239-6507*	1	COMPRESSOR GP-REFRIGERANT	1216
Y	*259-7184*	1	CONDENSER & MTG GP-REFRIGERANT	1219
Y	*255-3044*	1	EXTENSION GP-EXHAUST	121
			S/N: FAL1-709; KGF1-1005	
Y	*279-7911*	1	FILTER & MTG GP-ENGINE OIL	73
Y	*272-4744*	1	LINES GP-AIR	125
Y	*265-3504*	1	LINES GP-AIR	122
Y	*162-6185*	1	LINES GP-ENGINE OIL DRAIN	76
			S/N: FAL1-709; KGF1-1005	
Y	*310-9582*	1	LINES GP-ENGINE OIL DRAIN	77
			S/N: FAL710-UP; KGF1006-UP	
Y	*287-0183*	1	LINES GP-MUFFLER DRAIN	126
Y	*266-6297*	1	MOUNTING GP-ENGINE	47
Y	*297-7671*	1	MOUNTING GP-FUEL FILTER	151
Y	*265-3616*	1	RADIATOR & HYD OIL COOLER GP	96

Y-SEPARATE ILLUSTRATION

296-4639 CAMSHAFT GP

S/N: GDC1-162
PART OF 272-4683 ENGINE AR
ALSO AN ATTACHMENT

SMCS-1210 **i02618447**

NOTE	REF NO	GRAPHIC REF	PART NUMBER	QTY	PART NAME 1 2 3 4 5 6 (PRODUCT LEVEL)	SEE PAGE
	1	1	**294-1715**	1	CAMSHAFT	
	2	1	**279-7859**	12	TAPPET	
	3	1	**294-1716**	12	PUSHROD	
	4	1	**094-4628**	1	KEY (CRANKSHAFT)	
	5	1	**5I-7650**	1	PLATE	
M	6	1	**6V-5215**	2	BOLT (M8X1.25X16-MM)	

M-METRIC PART

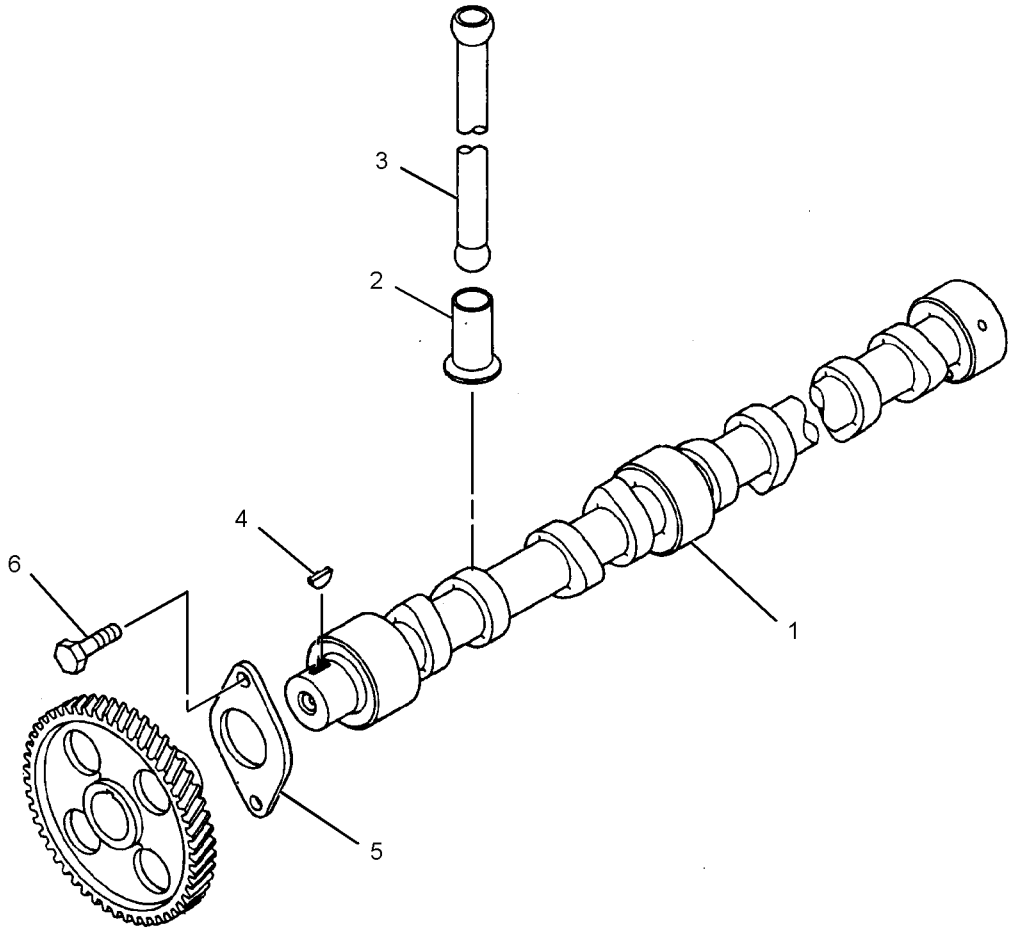

GRAPHIC #1 **<END>** g01316640

BASIC ENGINE

305-4743 CAMSHAFT GP

S/N: GDC163, 229-258; KGF1-UP
PART OF 272-4683, 305-4777 ENGINE AR
ALSO AN ATTACHMENT

SMCS-1210 **i02739643**

NOTE	REF NO	GRAPHIC REF	PART NUMBER	QTY	PART NAME 1 2 3 4 5 6 (PRODUCT LEVEL)	SEE PAGE
	1	1	**305-4748**	1	CAMSHAFT	
	2	1	**279-7859**	12	TAPPET	
	3	1	**294-1716**	12	PUSHROD	
	4	1	**094-4628**	1	KEY	
	5	1	**5I-7650**	1	PLATE	
M	6	1	**6V-5215**	2	BOLT (M8X1.25X16-MM)	

M-METRIC PART

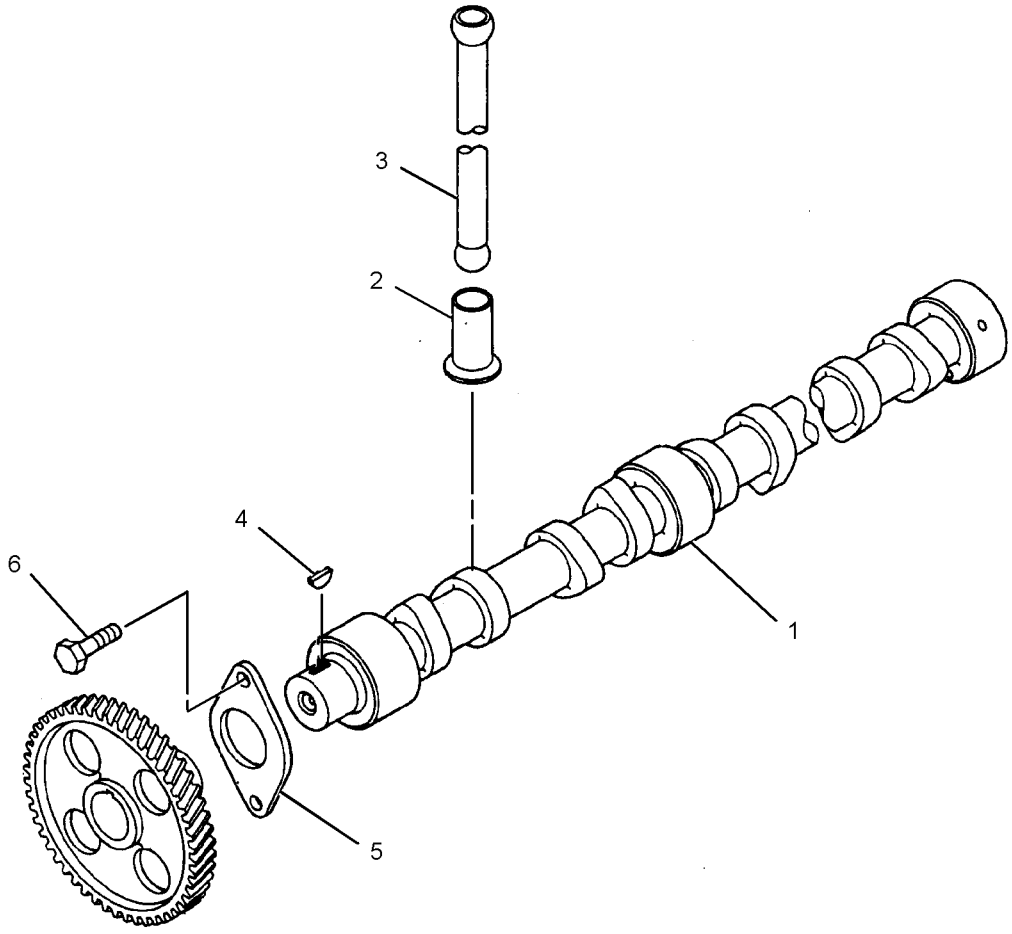

GRAPHIC #1 **<END>** g01316640

305-4744 CAMSHAFT GP

S/N: GDC259-UP
PART OF 272-4677, 272-4683, 296-4676 ENGINE AR
ALSO AN ATTACHMENT

SMCS-1210 **i02739642**

NOTE	REF NO	GRAPHIC REF	PART NUMBER	QTY	PART NAME 1 2 3 4 5 6 (PRODUCT LEVEL)	SEE PAGE
	1	1	**305-4756**	1	CAMSHAFT	
	2	1	**279-7859**	12	TAPPET	
	3	1	**294-1716**	12	PUSHROD	
	4	1	**094-4628**	1	KEY	
	5	1	**5I-7650**	1	PLATE	
M	6	1	**6V-5215**	2	BOLT (M8X1.25X16-MM)	

M-METRIC PART

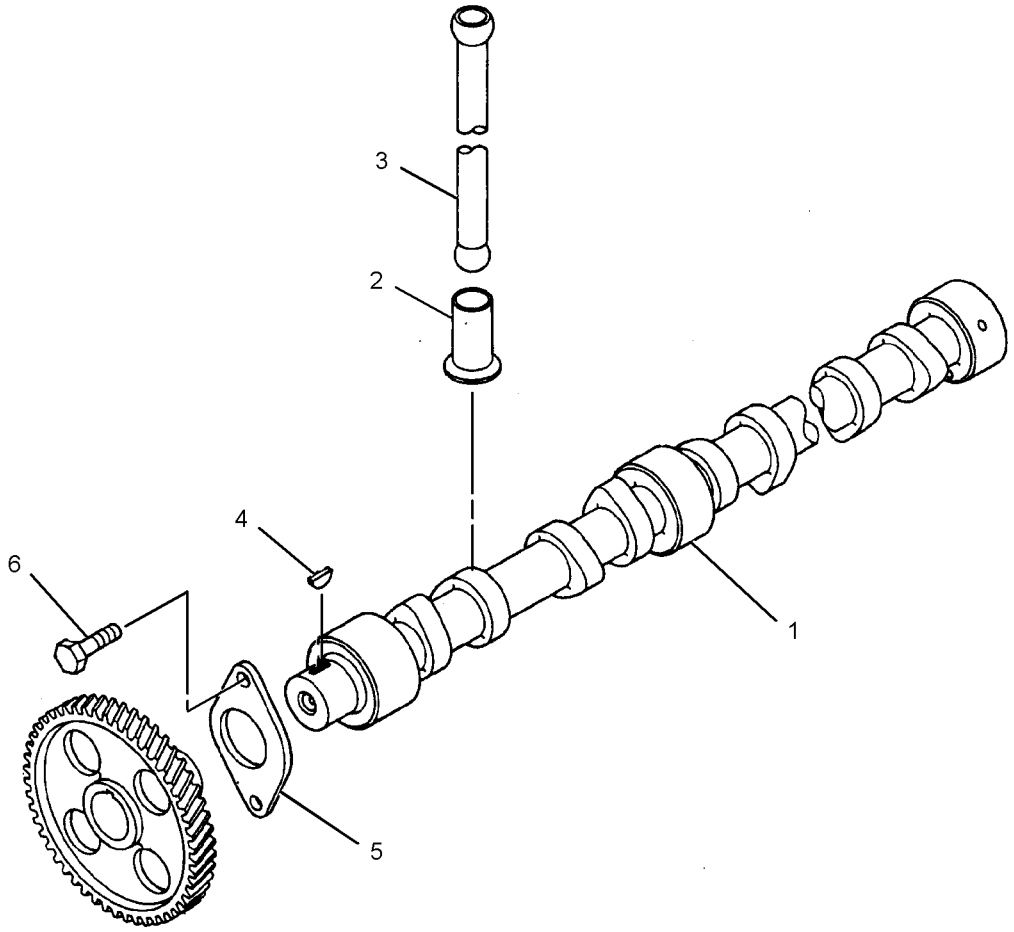

GRAPHIC #1 **<END>** g01316640

BASIC ENGINE

296-4647 COVER GP-VALVE MECHANISM

S/N: GDC1-UP; KGF1-UP
PART OF 272-4677, 272-4683, 296-4676, 305-4777 ENGINE AR
ALSO AN ATTACHMENT

SMCS-1107 **i03086241**

NOTE	REF NO	GRAPHIC REF	PART NUMBER	QTY	PART NAME 1 2 3 4 5 6 (PRODUCT LEVEL)	SEE PAGE
	1	1	**294-1703**	1	COVER-ROCKER	
	2	1	**294-1704**	1	COVER-ROCKER	
	3	1	**294-1705**	1	GASKET (VALVE COVER BASE)	
	4	1	**294-1706**	1	GASKET (VALVE COVER)	
	5	1	**294-1707**	1	COVER	
	6	1	**294-1708**	1	CAP (ENGINE OIL FILLER)	
	7	1	**294-1709**	1	BRACKET	
	8	1	**294-1710**	8	BOLT (M6X1X16.2-MM)	
	9	1	**294-1711**	16	WASHER	
	10	1	**096-8569**	2	BOLT (140-MM LG)	
	11	1	**294-1712**	1	SEAL	
	12	1	**8T-4224**	9	WASHER-HARD (8.8X16X2-MM THK)	
	13	1	**294-1713**	16	BOLT (M8X1.25X38.3-MM)	
	14	1	**294-1700**	16	BOLT (M8X1.25X108.3-MM)	
	15	1	**095-8799**	7	BOLT (M8X1.25X30.5-MM)	
	16	1	**294-1714**	2	STUD	
	17	1	**294-1821**	2	BOLT (M8X1.25X35.5-MM)	

296-4647 **COVER GP-VALVE MECHANISM** *(contd.)* **i03086241**

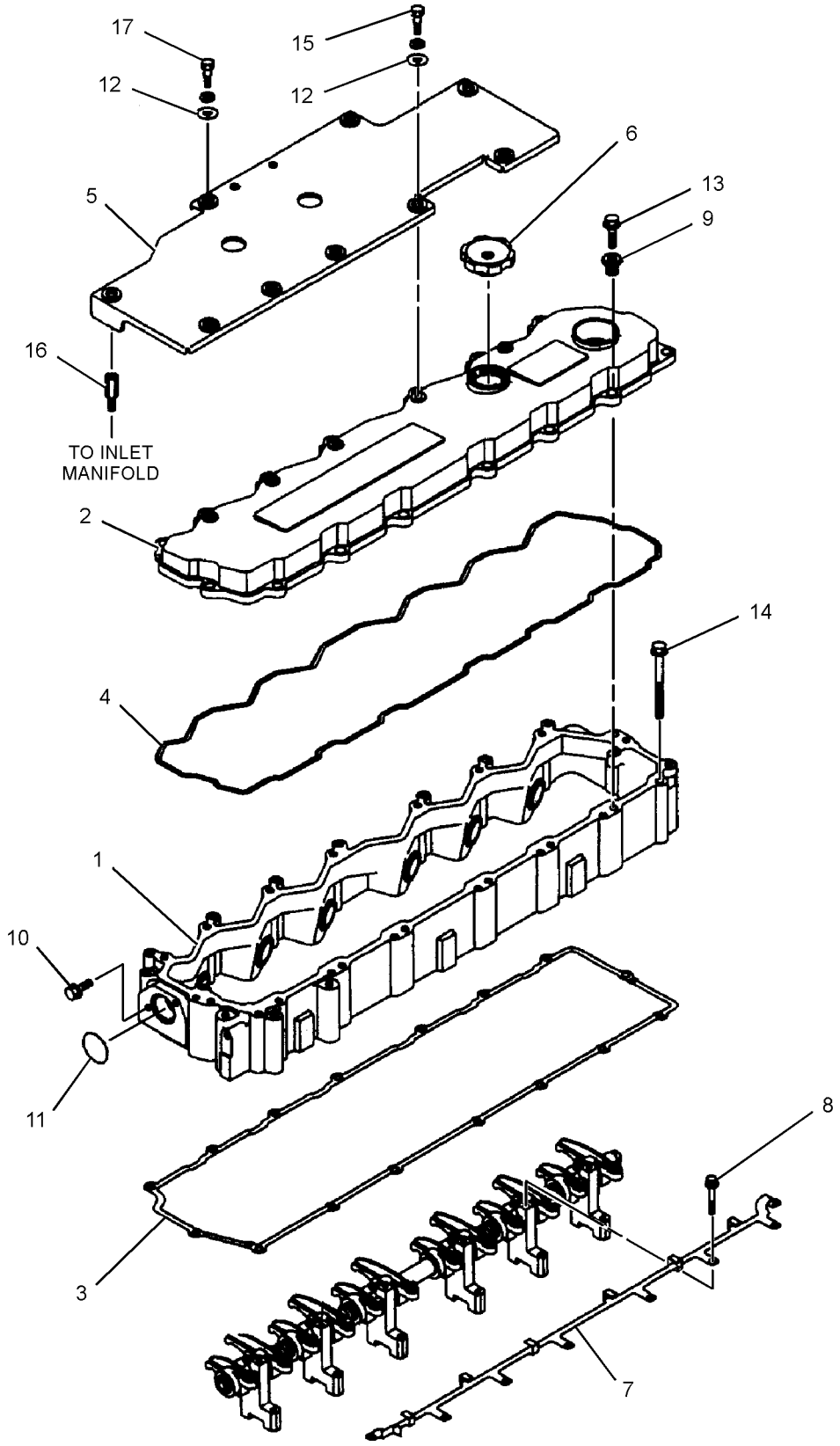

GRAPHIC #1 **<END>** g01356344

BASIC ENGINE

296-4650 CRANKSHAFT GP

S/N: GDC1-UP; KGF1-UP
PART OF 272-4677, 272-4683, 296-4676, 305-4777 ENGINE AR
ALSO AN ATTACHMENT

SMCS-1202 **i02836317**

NOTE	REF NO	GRAPHIC REF	PART NUMBER	QTY	PART NAME 1 2 3 4 5 6 (PRODUCT LEVEL)	SEE PAGE
	1	1	**294-1749**	1	CRANKSHAFT AS	
	1A	1	**085-9513**	2	PIN	
	1B	1	**094-4628**	2	KEY (CRANKSHAFT)	
	1C	1	**130-7596**	1	NUT	
	1D	1	**294-1751**	1	GEAR (31-TEETH)	
	2	1	**233-1277**	1	PLATE	

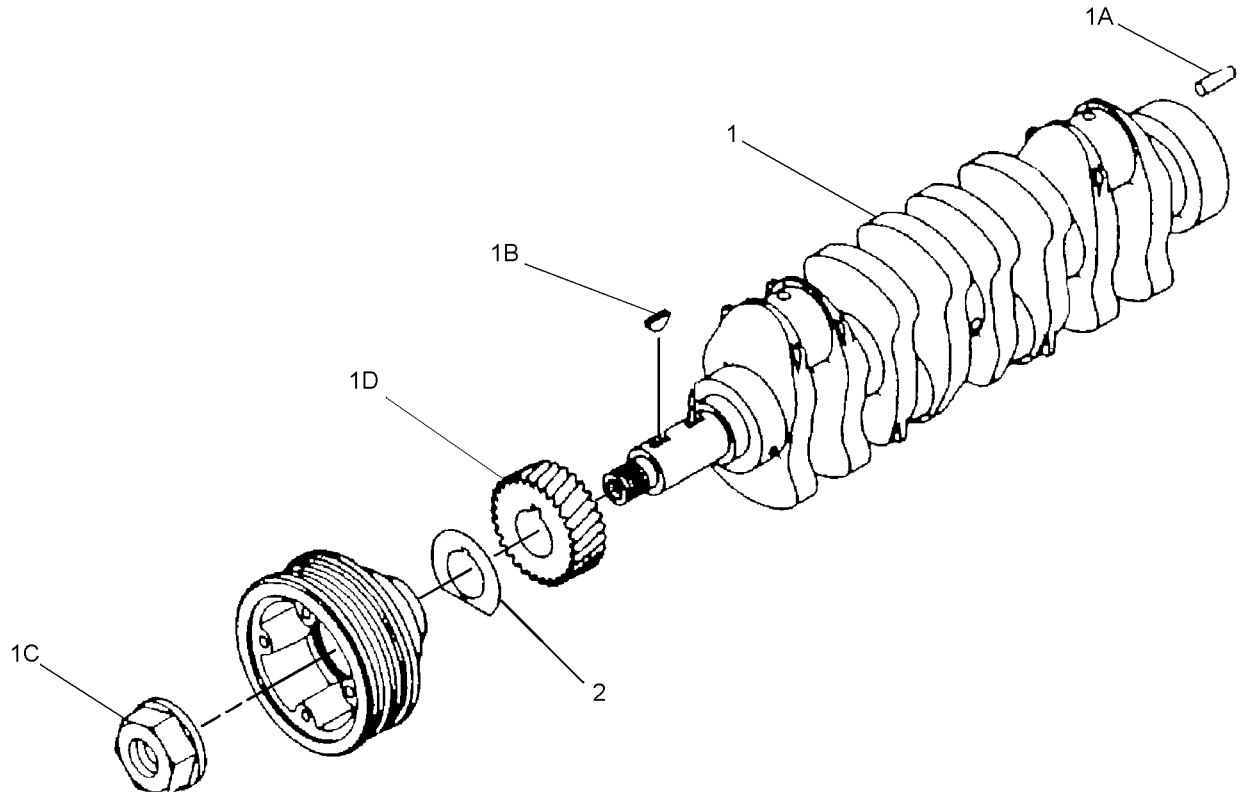

GRAPHIC #1 **<END>** g01340092

294-1725 CYLINDER BLOCK GP

S/N: GDC1-UP; KGF1-UP
PART OF 296-4648 CYLINDER BLOCK GP
ALSO AN ATTACHMENT

SMCS-1201 **i02975420**

NOTE	REF NO	GRAPHIC REF	PART NUMBER	QTY	PART NAME 1 2 3 4 5 6 (PRODUCT LEVEL)	SEE PAGE
	1	2	**5I-7505**	12	PLUG	
	5	1	**5I-8009**	1	BUSHING	
	6	1	**5I-7528**	2	BUSHING	
	7	1	**5I-7529**	1	BUSHING	
	8	1	**3P-1896**	14	PLUG-CUP	
M	9	1	**094-7741**	14	BOLT-BEARING CAP (M14X2X120-MM)	
	10	2	**095-2005**	2	CAP	
	11	1	**096-3741**	7	CAP	
	12	1	**294-1720**	2	SEAL	
	13	2	**294-1722**	6	JET	
	14	1	**5I-7525**	1	PLUG	
	15	2	**195-8212**	1	PLUG	
	16	2	**294-1721**	1	SHAFT	
	17	2	**5I-7724**	2	PIN	
	18	2	**095-2039**	1	WASHER-SPECIAL	
M	19	2	**8T-4191**	1	BOLT (M10X1.5X16-MM)	
	20	1	**4I-9664**	2	PIN	
	21	2	**099-4420**	2	PIN	
	22	1	**183-5916**	6	PIN-SPRING	
	23	2	**139-7814**	6	VALVE	
	24	2	**094-9424**	12	GASKET	

M-METRIC PART

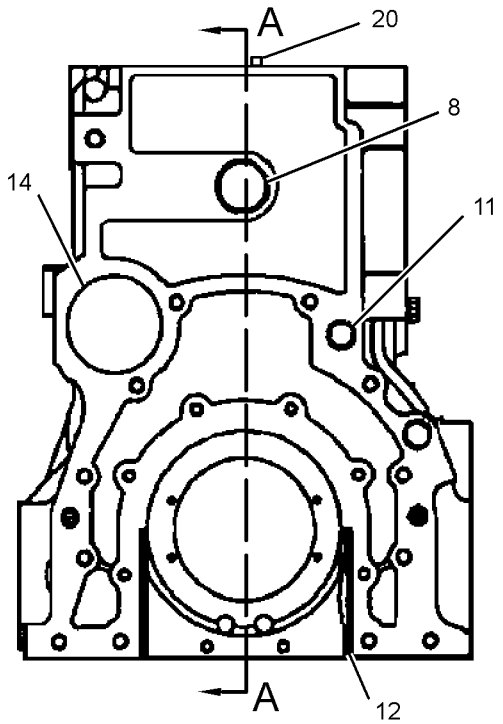

REAR VIEW OF ENGINE

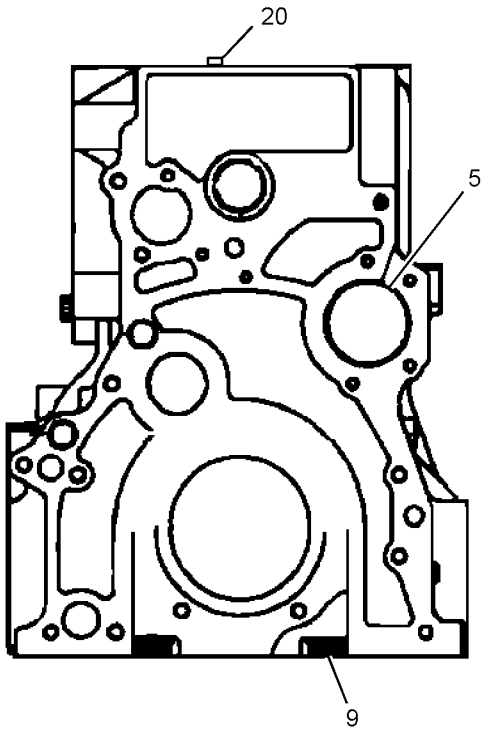

FRONT VIEW OF ENGINE

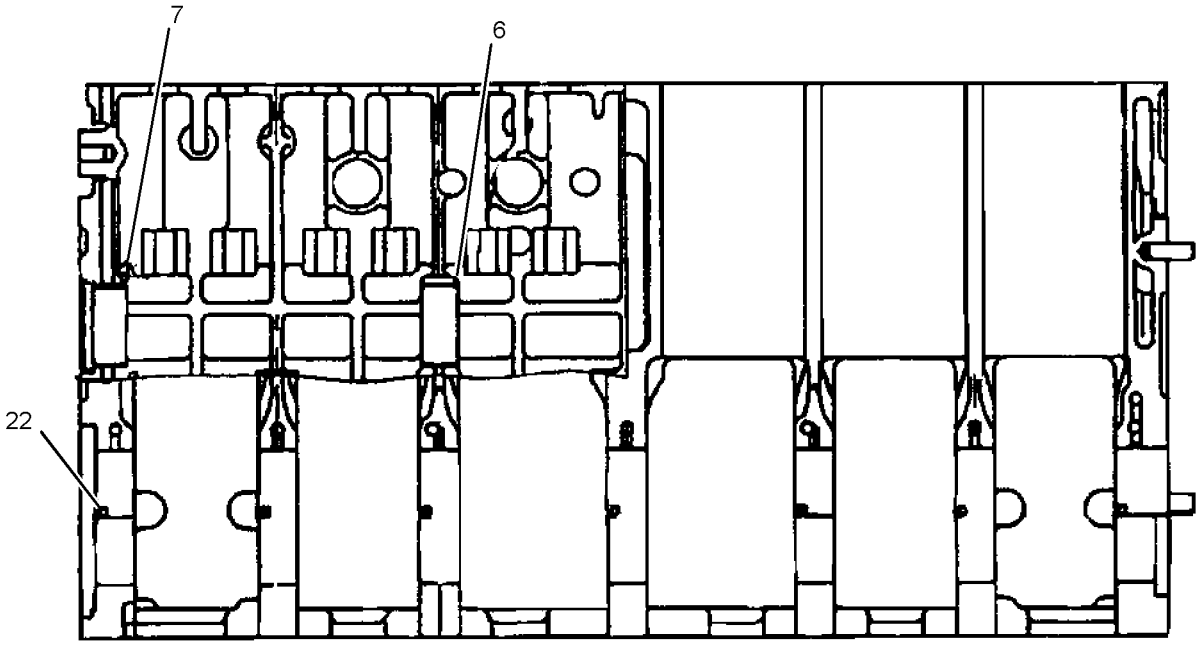

SECTION A-A

GRAPHIC #1 g01513043

294-1725 CYLINDER BLOCK GP *(contd.)* **i02975420**

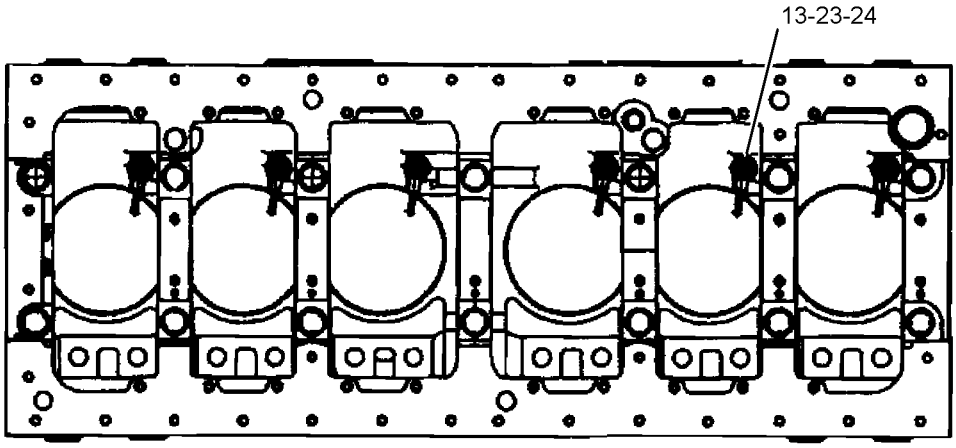

BOTTOM VIEW OF ENGINE

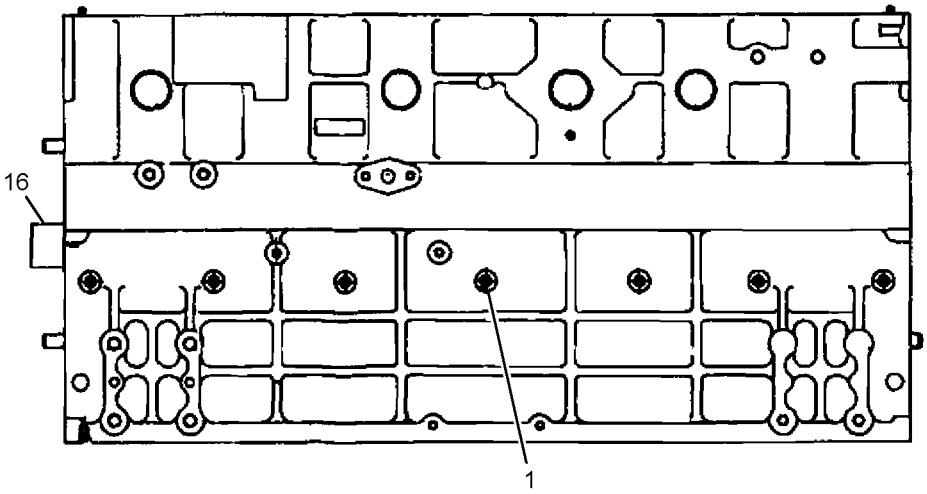

LEFT SIDE VIEW OF ENGINE

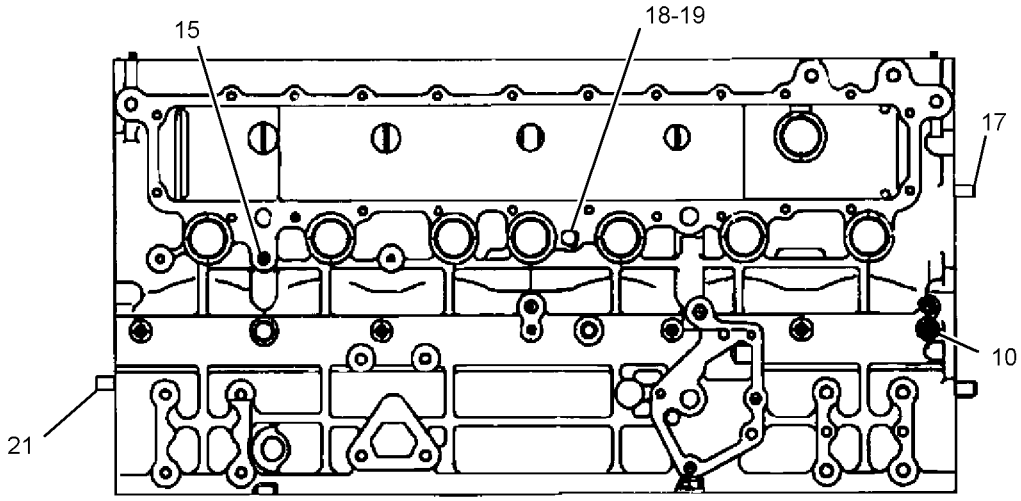

RIGHT SIDE VIEW OF ENGINE

GRAPHIC #2 **<END>** g01357617

BASIC ENGINE

296-4648 CYLINDER BLOCK GP

S/N: GDC1-UP; KGF1-UP
PART OF 272-4677, 272-4683, 296-4676, 305-4777 ENGINE AR
ALSO AN ATTACHMENT

SMCS-1201 **i02702018**

NOTE	REF NO	GRAPHIC REF	PART NUMBER	QTY	PART NAME 1 2 3 4 5 6 (PRODUCT LEVEL)	SEE PAGE
	1	1	**294-1723**	1	EYE	
	2	1	**294-1724**	1	EYE	
	3	1	**5I-5181**	4	BOLT	
	4	1	**096-2501**	4	LOCKWASHER	
	7	1	**5I-7654**	3	PLATE (STANDARD)	
AB			**5I-7787**		PLATE (0.15-MM OS)	
AB			**5I-7788**		PLATE (0.3-MM OS)	
AB			**5I-7789**		PLATE (0.45-MM OS)	
	8	1	**5I-7588**	7	SET-BEARING (STANDARD)	
AB			**5I-7784**		SET-BEARING (0.25-MM US)	
AB			**5I-7785**		SET-BEARING (0.5-MM US)	
AB			**5I-7786**		SET-BEARING (0.75-MM US)	
Y	9	1	**294-1725**	1	CYLINDER BLOCK GP	33

A-NOT PART OF THIS GROUP
B-USE AS REQUIRED
Y-SEPARATE ILLUSTRATION

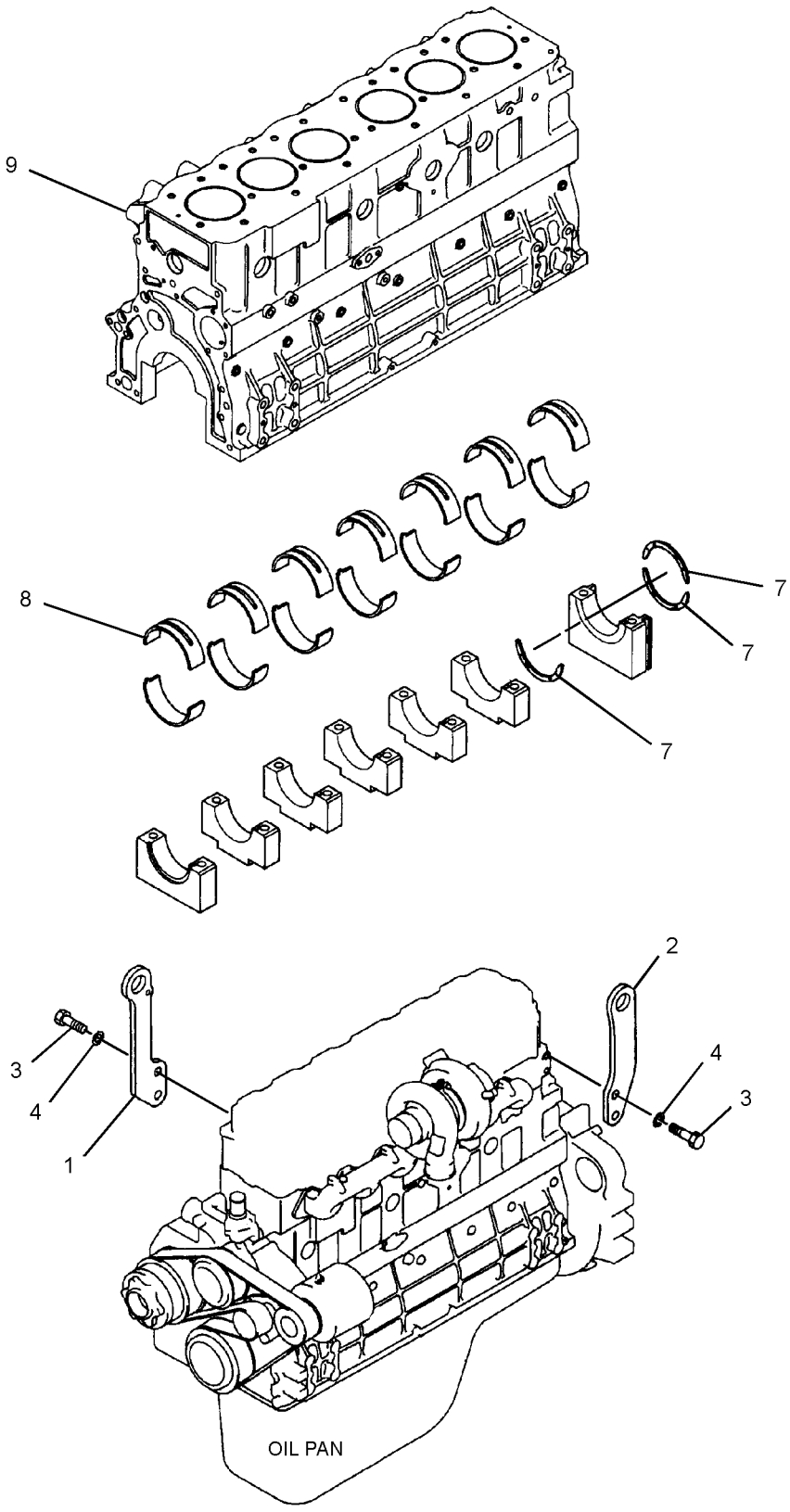

GRAPHIC #1 **<END>** g01355154

297-7644 CYLINDER HEAD AS

S/N: GDC1-UP; KGF1-UP
PART OF 296-4645 CYLINDER HEAD GP
ALSO AN ATTACHMENT

SMCS-1100 **i02702523**

NOTE	REF NO	GRAPHIC REF	PART NUMBER	QTY	PART NAME 1 2 3 4 5 6 (PRODUCT LEVEL)	SEE PAGE
	1	1	**4I-9664**	2	PIN	
	2	1	**294-1679**	12	SEAT	
	3	1	**294-1680**	12	SEAT	
	4	1	**294-1678**	24	GUIDE	
	5	1	**103-9011**	13	CAP-SEALING	
	6	1	**5I-4915**	9	CAP	

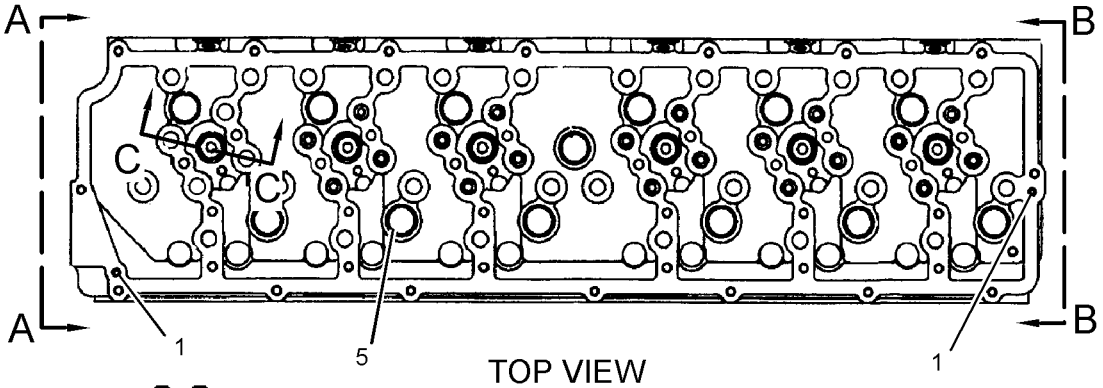

TOP VIEW

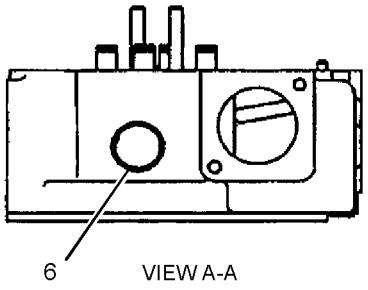

VIEW A-A

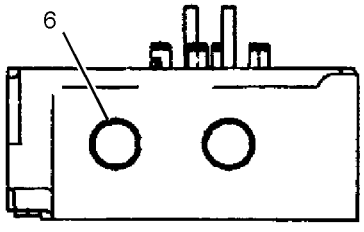

VIEW B-B

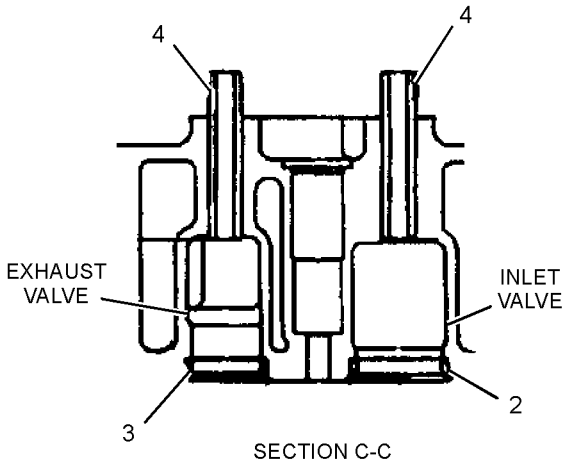

SECTION C-C

GRAPHIC #1 **<END>** g01356657

296-4645 CYLINDER HEAD GP

S/N: GDC1-UP; KGF1-UP
PART OF 272-4677, 272-4683, 296-4676, 305-4777 ENGINE AR
ALSO AN ATTACHMENT

SMCS-1100 **i02702380**

NOTE	REF NO	GRAPHIC REF	PART NUMBER	QTY	PART NAME 1 2 3 4 5 6 (PRODUCT LEVEL)	SEE PAGE
Y	1	1	**297-7644**	1	CYLINDER HEAD AS	38
	2	1	**4I-9664**	2	PIN	
	3	1	**294-1682**	1	GASKET	
	4	1	**294-1683**	26	BOLT	
	5	1	**297-7645**	12	GUIDE	

Y-SEPARATE ILLUSTRATION

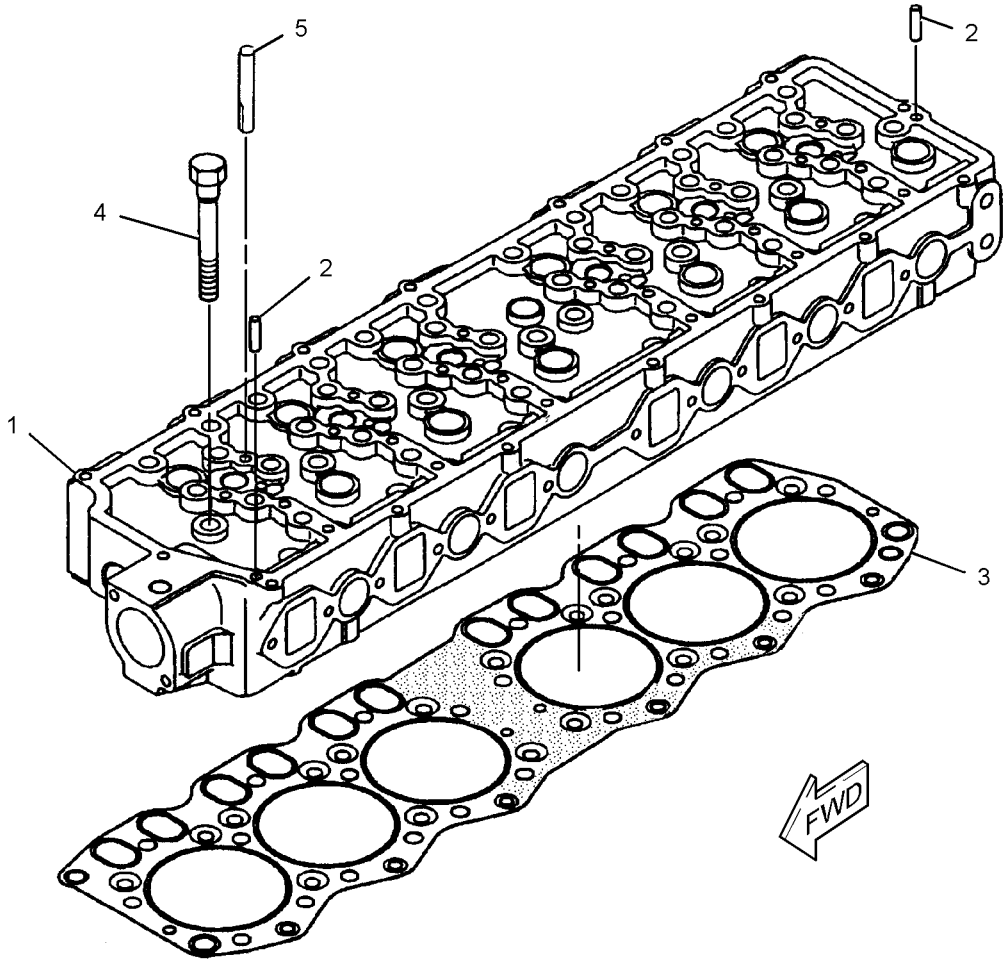

GRAPHIC #1 **<END>** g01313571

296-4644 FLYWHEEL GP

S/N: GDC1-UP; KGF1-UP
PART OF 272-4677, 272-4683, 296-4676, 305-4777 ENGINE AR
ALSO AN ATTACHMENT

SMCS-1156 **i02618435**

NOTE	REF NO	GRAPHIC REF	PART NUMBER	QTY	PART NAME 1 2 3 4 5 6 (PRODUCT LEVEL)	SEE PAGE
	1	1	**294-1752**	1	FLYWHEEL AS	
	1A	1	**205-6788**	1	GEAR (127-TEETH)	
	2	1	**5I-5005**	6	BOLT (M12X1.25X35-MM)	
	3	1	**096-2501**	6	LOCKWASHER	

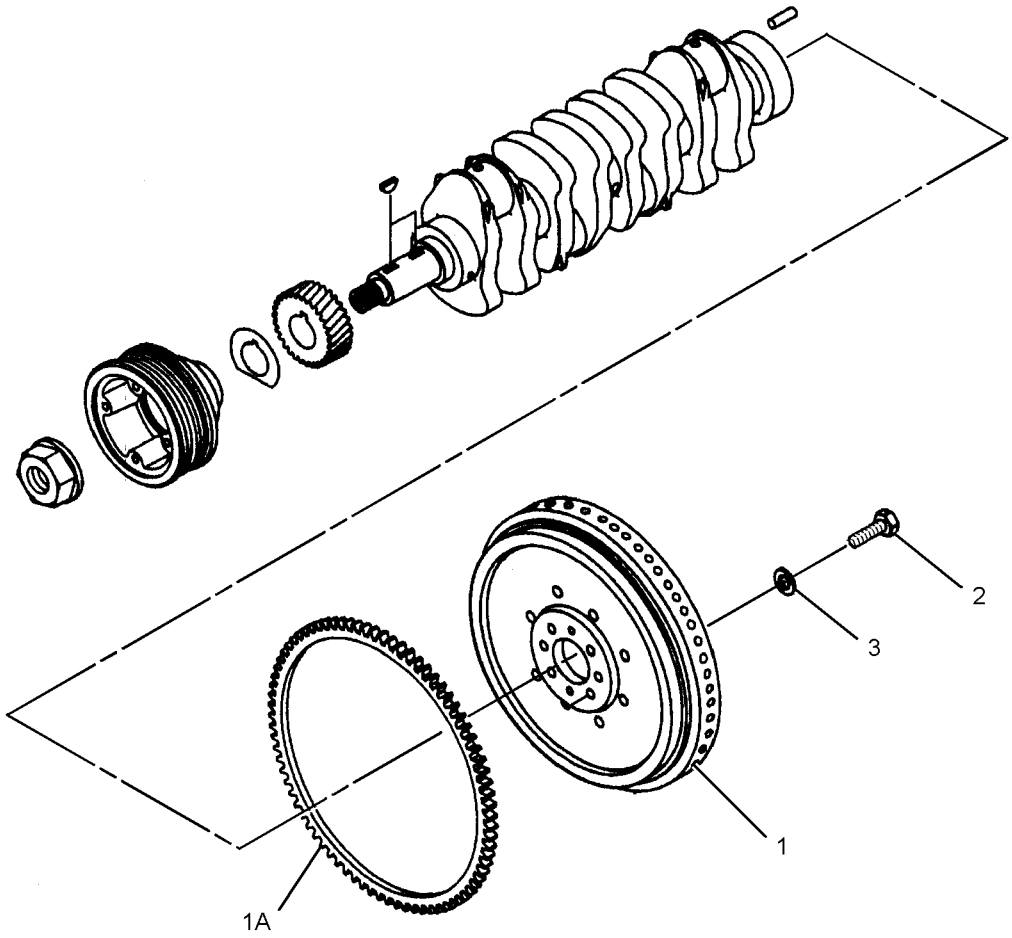

GRAPHIC #1 **<END>** g01312147

BASIC ENGINE

296-4651 GEAR GP-FRONT

S/N: GDC1-UP; KGF1-UP
PART OF 272-4677, 272-4683, 296-4676, 305-4777 ENGINE AR
ALSO AN ATTACHMENT

SMCS-1151, 1162, 1206 **i02981450**

NOTE	REF NO	GRAPHIC REF	PART NUMBER	QTY	PART NAME 1 2 3 4 5 6 (PRODUCT LEVEL)	SEE PAGE
	1	1	*294-1753*	1	GEAR AS-IDLER (69-TEETH)	
	1A	1	**296-4673**	1	BUSHING	
	2	1	**294-1754**	1	GEAR (62-TEETH)	
	3	1	**294-1755**	1	GEAR (62-TEETH)	
	4	1	**294-1756**	1	PLATE	
	5	1	**294-1757**	1	BOLT	

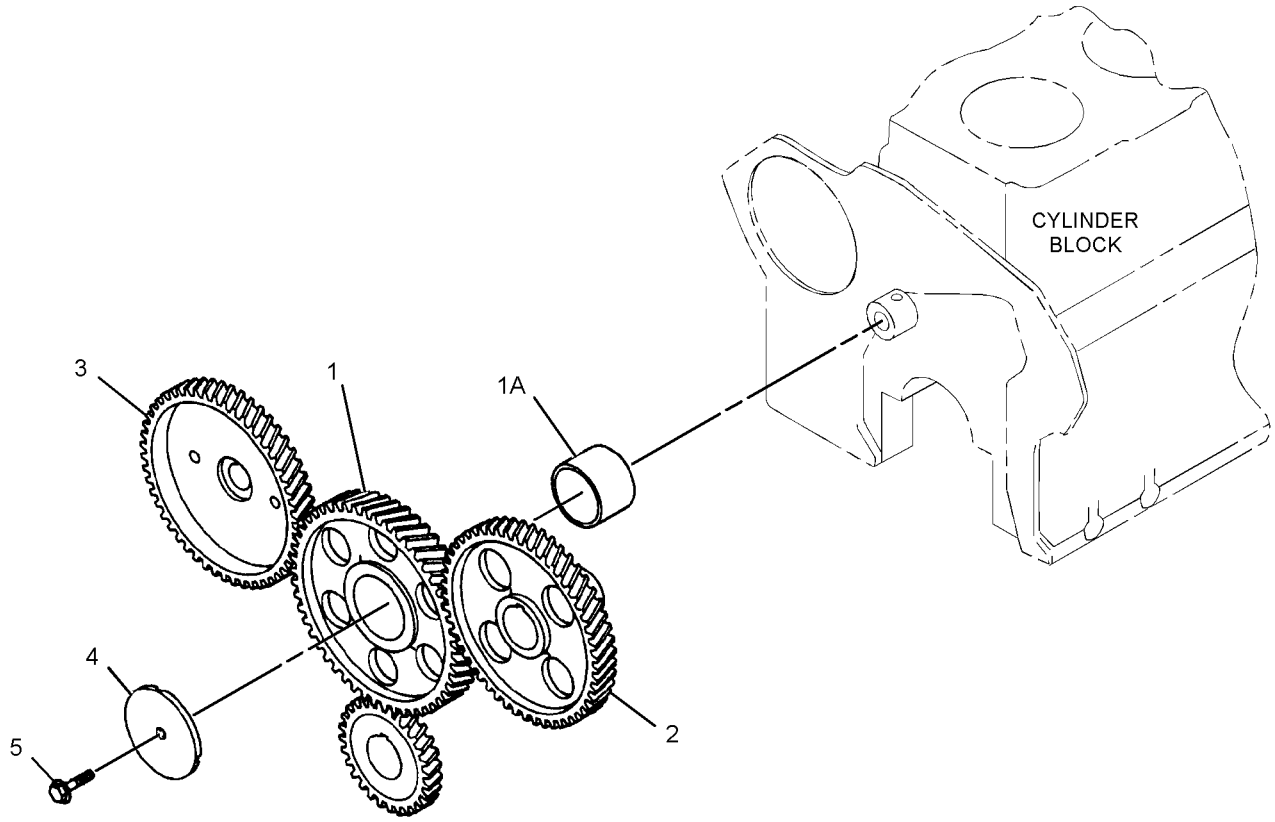

GRAPHIC #1 **<END>** g01317830

296-4643 HOUSING GP-FLYWHEEL

S/N: GDC1-UP; KGF1-UP
PART OF 272-4677, 272-4683, 296-4676, 305-4777 ENGINE AR
ALSO AN ATTACHMENT

SMCS-1157 **i02953139**

NOTE	REF NO	GRAPHIC REF	PART NUMBER	QTY	PART NAME 1 2 3 4 5 6 (PRODUCT LEVEL)	SEE PAGE
	1	1	**294-1736**	1	HOUSING	
	2	1	**5I-7660**	1	SEAL AS	
	4	1	**5I-4983**	2	STUD	
	6	1	**294-1737**	8	BOLT (M8X1.25X35.5-MM)	
	7	1	**294-1738**	2	BOLT (M10X1.5X32-MM)	
M	8	1	**294-1726**	10	BOLT (M10X1.5X37-MM)	
	9	1	**294-1739**	1	GASKET	
	10	1	**294-1740**	1	BRACKET	
M	11	1	**8T-4137**	2	BOLT (M10X1.5X20-MM)	
	12	1	**196-7973**	1	SENSOR GP-SPEED (ENGINE)	

M-METRIC PART

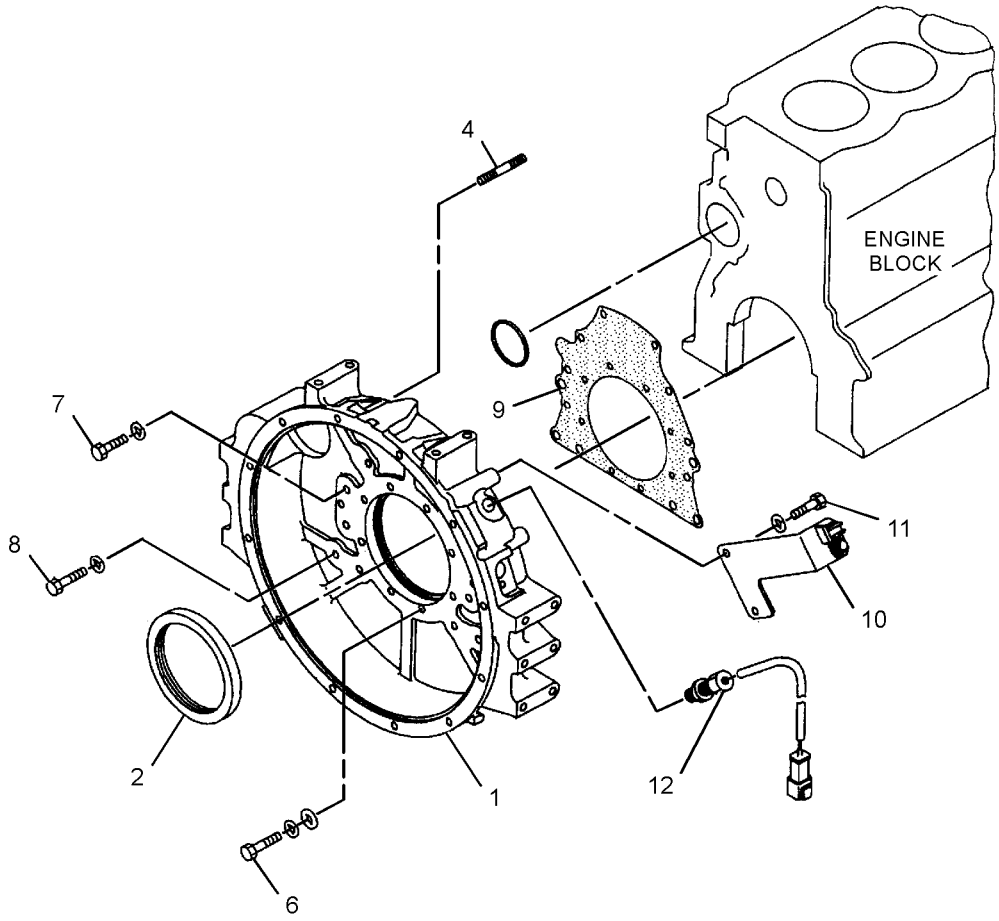

GRAPHIC #1 **<END>** g01468627

296-4649 HOUSING GP-FRONT

S/N: GDC1-UP; KGF1-UP
PART OF 272-4677, 272-4683, 296-4676, 305-4777 ENGINE AR
ALSO AN ATTACHMENT

SMCS-1151, 1162, 1206 **i02989877**

NOTE	REF NO	GRAPHIC REF	PART NUMBER	QTY	PART NAME 1 2 3 4 5 6 (PRODUCT LEVEL)	SEE PAGE
	1	2	**222-8292**	1	POINTER	
	2	2	**294-1731**	1	BOLT (M8X1.25X19.5-MM)	
	3	2	**6V-8236**	1	PIN-SPRING	
	4	2	**294-1732**	1	PLATE	
M	5	2	**6V-5215**	2	BOLT (M8X1.25X16-MM)	
	6	2	**297-7646**	2	BOLT (M8X1.25X95.5-MM)	
M	8	2	**8T-4137**	6	BOLT (M10X1.5X20-MM)	
M	9	2	**5I-7610**	1	BOLT (M10X1.5X20-MM)	
	10	2	**297-7647**	6	BOLT (M10X1.5X77-MM)	
M	11	2	**8T-4172**	2	BOLT (M10X1.5X80-MM)	
M	12	2	**8T-6685**	4	BOLT (M10X1.5X110-MM)	
	13	2	**7X-0796**	6	LOCKWASHER	
	14	2	**294-1733**	1	GASKET	
	15	2	**294-1734**	1	GASKET	
	16	2	**212-8571**	1	COVER	
	17	2	**212-8572**	1	GASKET	
	18	2	**196-8366**	1	BOLT	
	19	2	**294-1735**	5	BOLT (M8X1.25X90.5-MM)	
M	20	1	**294-7251**	6	BOLT AS	
M	21	1	**294-1726**	4	BOLT (M10X1.5X37-MM)	
	22	1	**096-9435**	1	PLUG	
	23	1	**096-9532**	1	WASHER (15.8X22.5X2-MM THK)	
	24	1	**096-9528**	1	SEAL-O-RING	
	25	1	**6F-7556**	2	COVER	
	26	1	**5I-7632**	1	PIPE	
	27	1	**294-1727**	1	BODY AS	
	30	1	**294-1729**	1	GEAR AS (33-TEETH)	
	31	1	**5I-7656**	1	SEAL	
	32	1	**6F-7557**	2	GASKET	
	33	1	**5I-7683**	1	SPINDLE	
	34	1	**178-6537**	1	GASKET	
	35	1	**5I-7558**	1	GEAR AS (9-TEETH)	
	36	1	**5I-7559**	1	VALVE AS	
	37	1	**178-6538**	1	COVER AS	

M-METRIC PART

296-4649 **HOUSING GP-FRONT** *(contd.)* **i02989877**

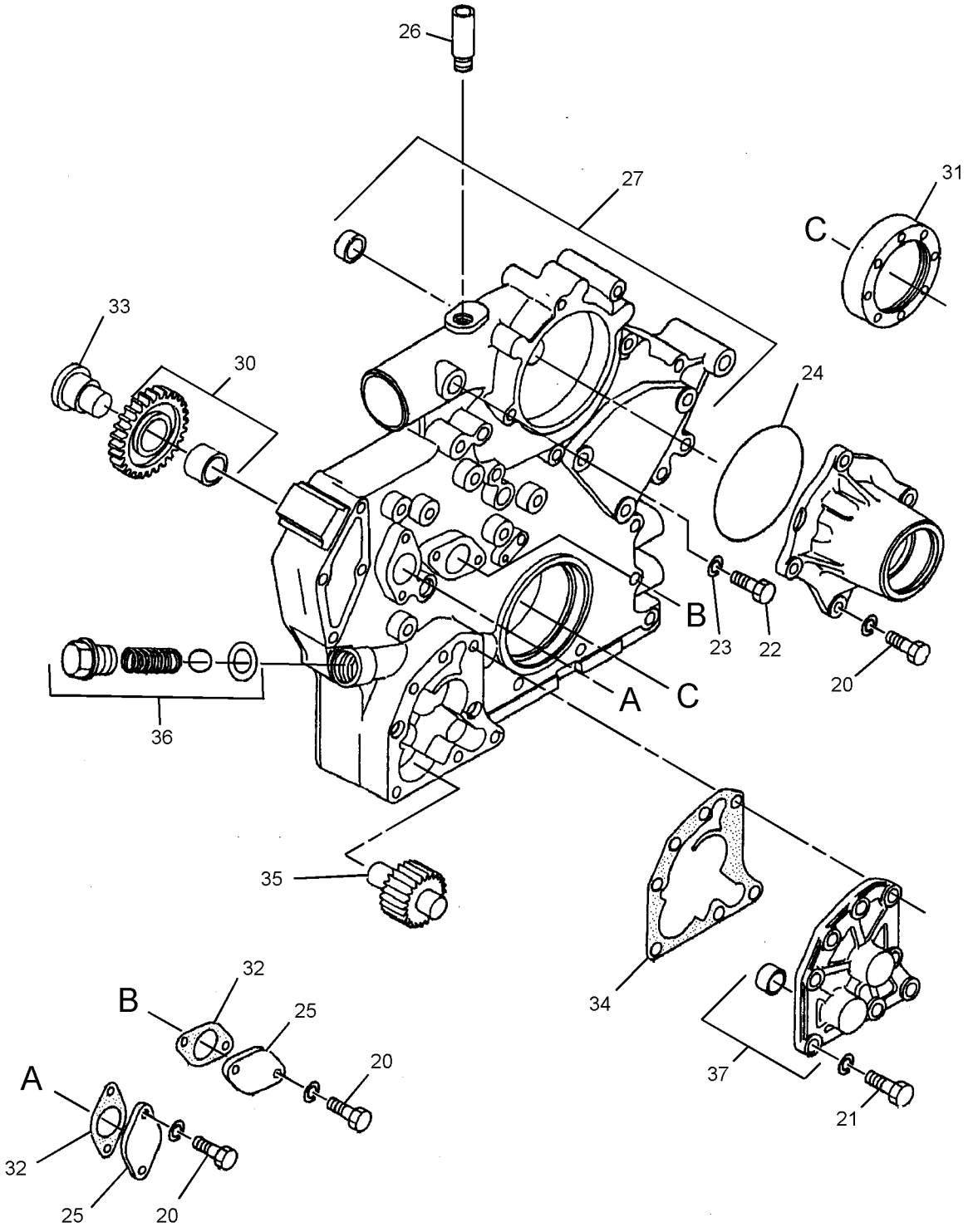

GRAPHIC #1 g01469892

296-4649 **HOUSING GP-FRONT** *(contd.)* **i02989877**

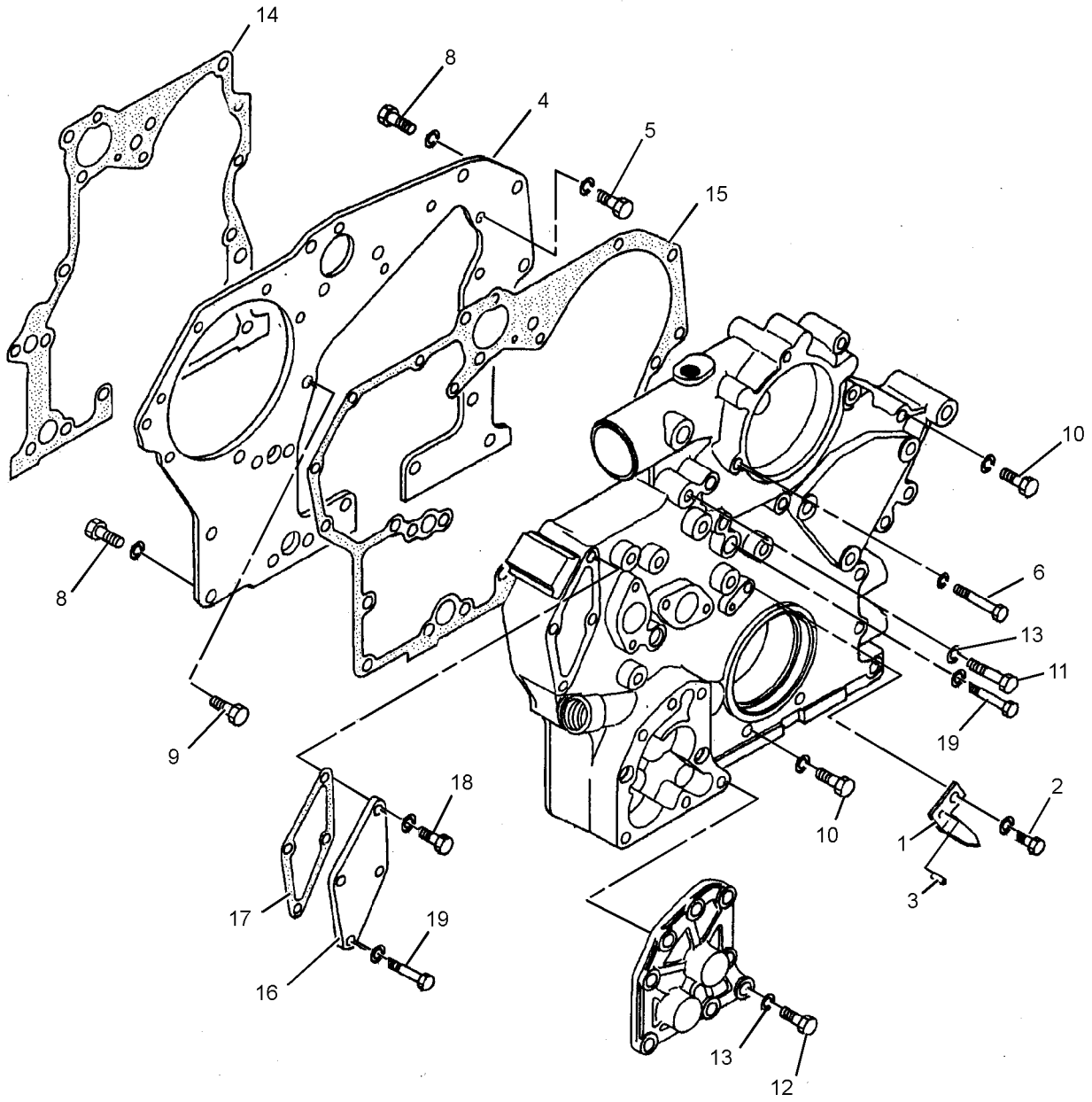

GRAPHIC #2 **<END>** g01469894

296-4661 MOUNTING GP-ALTERNATOR

S/N: GDC1-UP; KGF1-UP
PART OF 272-4677, 272-4683, 296-4676, 305-4777 ENGINE AR
ALSO AN ATTACHMENT

SMCS-1405 **i02934258**

NOTE	REF NO	GRAPHIC REF	PART NUMBER	QTY	PART NAME 1 2 3 4 5 6 (PRODUCT LEVEL)	SEE PAGE
	1	1	**178-6600**	1	PULLER	
	2	1	**294-1859**	1	PLATE	
	3	1	**5I-7750**	2	WASHER (12.5X25X8-MM THK)	
	4	1	**294-1860**	1	BOLT	
	5	1	**5I-5597**	1	BOLT (M14X1.5X10-MM)	
M	6	1	**294-1861**	2	BOLT (M12X1.75X30-MM)	
	7	1	**8T-4223**	1	WASHER-HARD (13.5X25.5X3-MM THK)	
M	8	1	**178-6598**	1	BOLT (M12X1.25X135-MM)	
	9	1	**178-6599**	1	WASHER	
	10	1	**178-6601**	1	RING	
Y	11	1	**212-8561**	1	ALTERNATOR GP-CHARGING	191

M-METRIC PART
Y-SEPARATE ILLUSTRATION

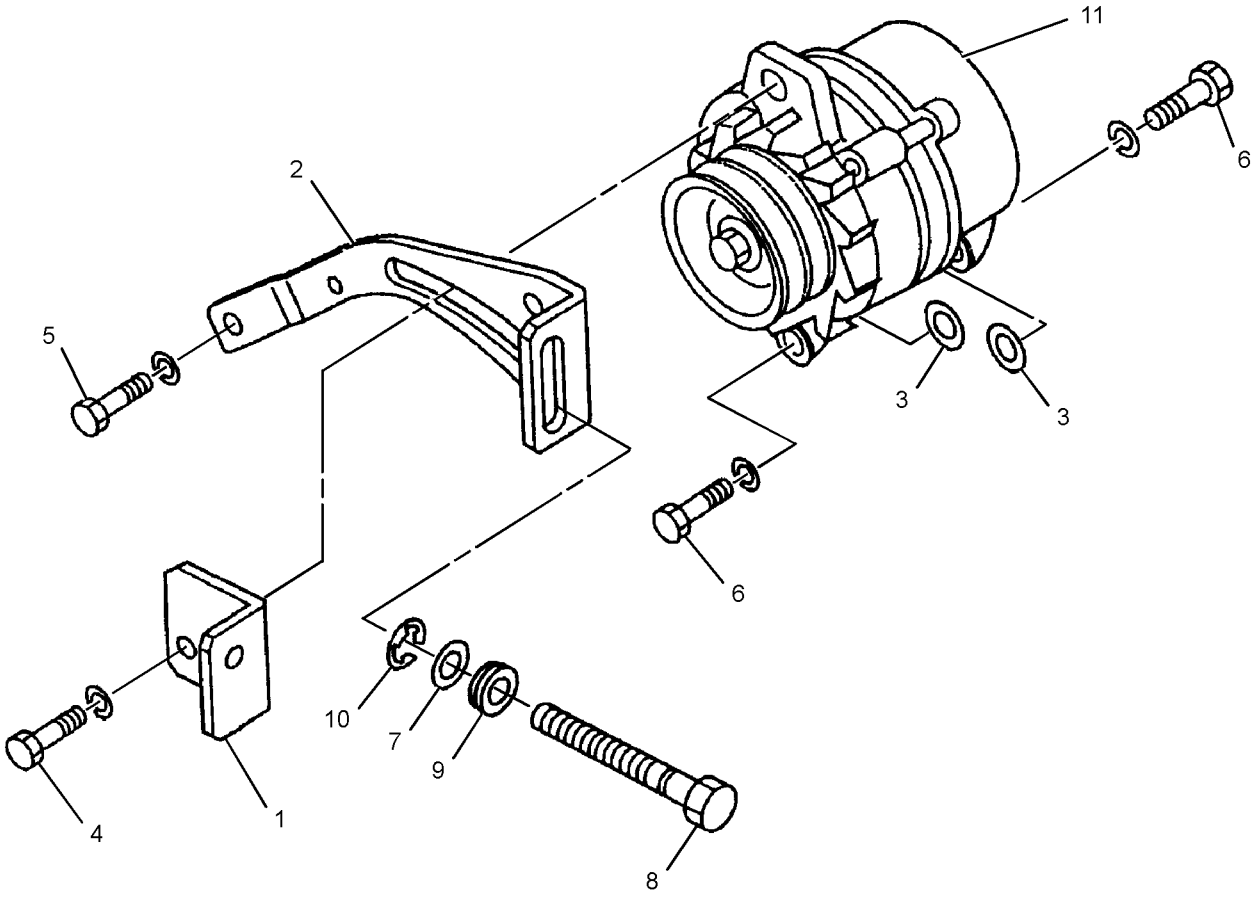

GRAPHIC #1 **<END>** g01455222

266-6297 MOUNTING GP-ENGINE

S/N: KGF1-UP; FAL1-UP

PART OF 272-4742 INSTALLATION AR-ENGINE

SMCS-1152 **i02417345**

NOTE	REF NO	GRAPHIC REF	PART NUMBER	QTY	PART NAME 1 2 3 4 5 6 (PRODUCT LEVEL)	SEE PAGE
	1	1	**109-9329**	4	WASHER (21.5X120X8-MM THK)	
	2	1	**118-9784**	2	BRACKET-REAR	
	3	1	**118-9785**	2	BRACKET-FRONT	
	4	1	**118-9930**	4	SUPPORT AS	
	5	1	**266-6298**	2	MOUNT-RUBBER	
	6	1	**266-6299**	2	MOUNT-RUBBER	
	7	1	**266-6300**	2	MOUNT-RUBBER	
	8	1	**266-6301**	2	MOUNT-RUBBER	
M	9	1	**7X-2532**	4	BOLT (M20X2.5X130-MM)	
	10	1	**8T-4123**	8	WASHER (22X35X3.5-MM THK)	
M	11	1	**8T-4139**	8	BOLT (M12X1.75X30-MM)	
M	12	1	**8T-4183**	8	BOLT (M12X1.75X40-MM)	
	13	1	**8T-4223**	16	WASHER-HARD (13.5X25.5X3-MM THK)	

M-METRIC PART

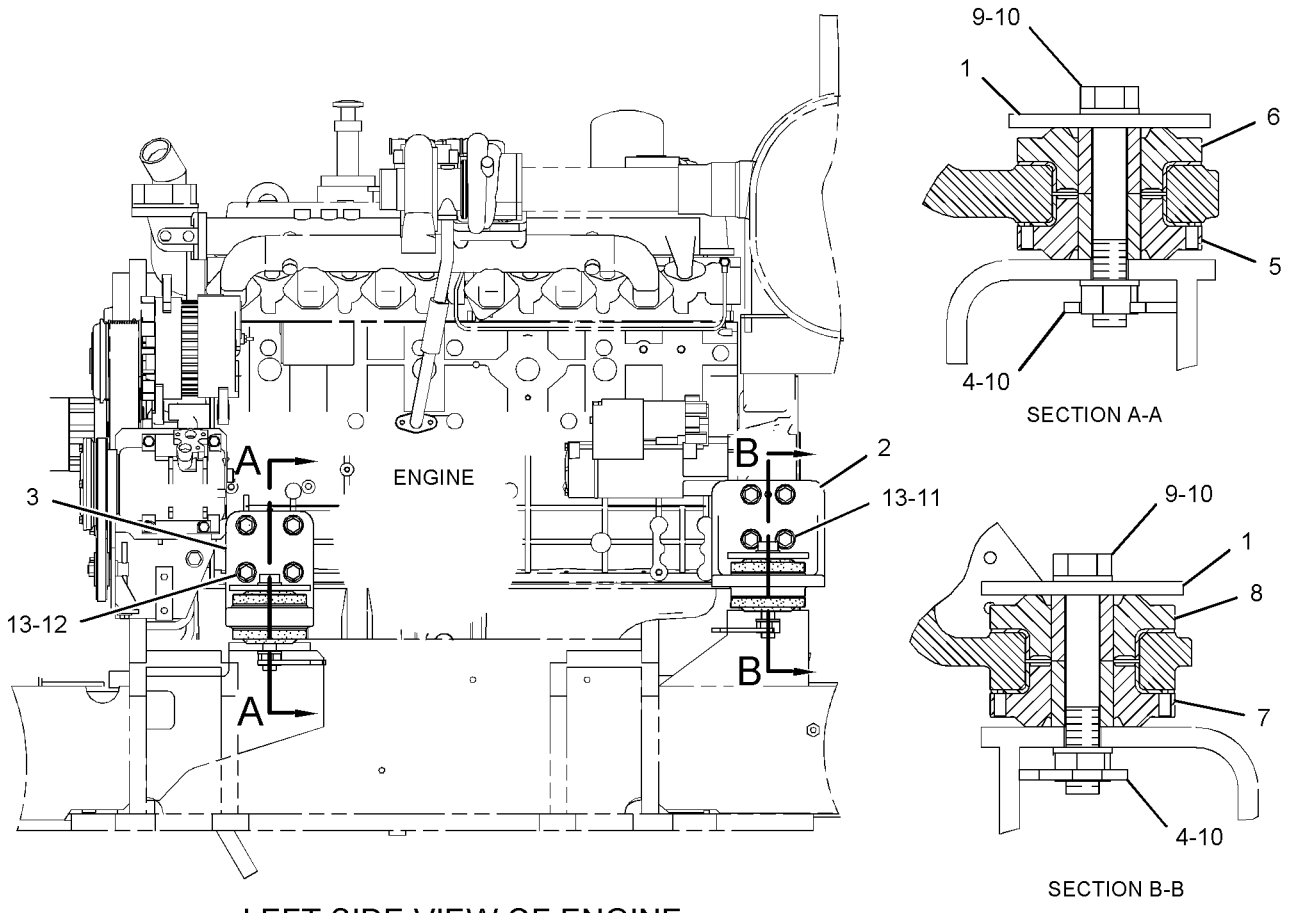

LEFT SIDE VIEW OF ENGINE

GRAPHIC #1 **<END>** g01222807

296-4637 MOUNTING GP-STARTING MOTOR

S/N: GDC1-UP; KGF1-UP
PART OF 272-4677, 272-4683, 296-4676, 305-4777 ENGINE AR
ALSO AN ATTACHMENT

SMCS-1453 **i02936172**

NOTE	REF NO	GRAPHIC REF	PART NUMBER	QTY	PART NAME 1 2 3 4 5 6 (PRODUCT LEVEL)	SEE PAGE
	1	1	**5I-7599**	1	SEAL-O-RING	
	2	1	**135-2369**	1	COVER	
M	3	1	**135-2370**	1	BOLT (M5X0.8X25-MM)	
	4	1	**294-1850**	1	WASHER	
	5	1	**294-1851**	1	WASHER	
Y	6	1	**272-4774**	1	STARTING MOTOR GP-ELECTRIC	274
M	7	1	**6V-8231**	2	NUT (M10X1.25-THD)	
	8	1	**7X-0796**	2	LOCKWASHER	

M-METRIC PART
Y-SEPARATE ILLUSTRATION

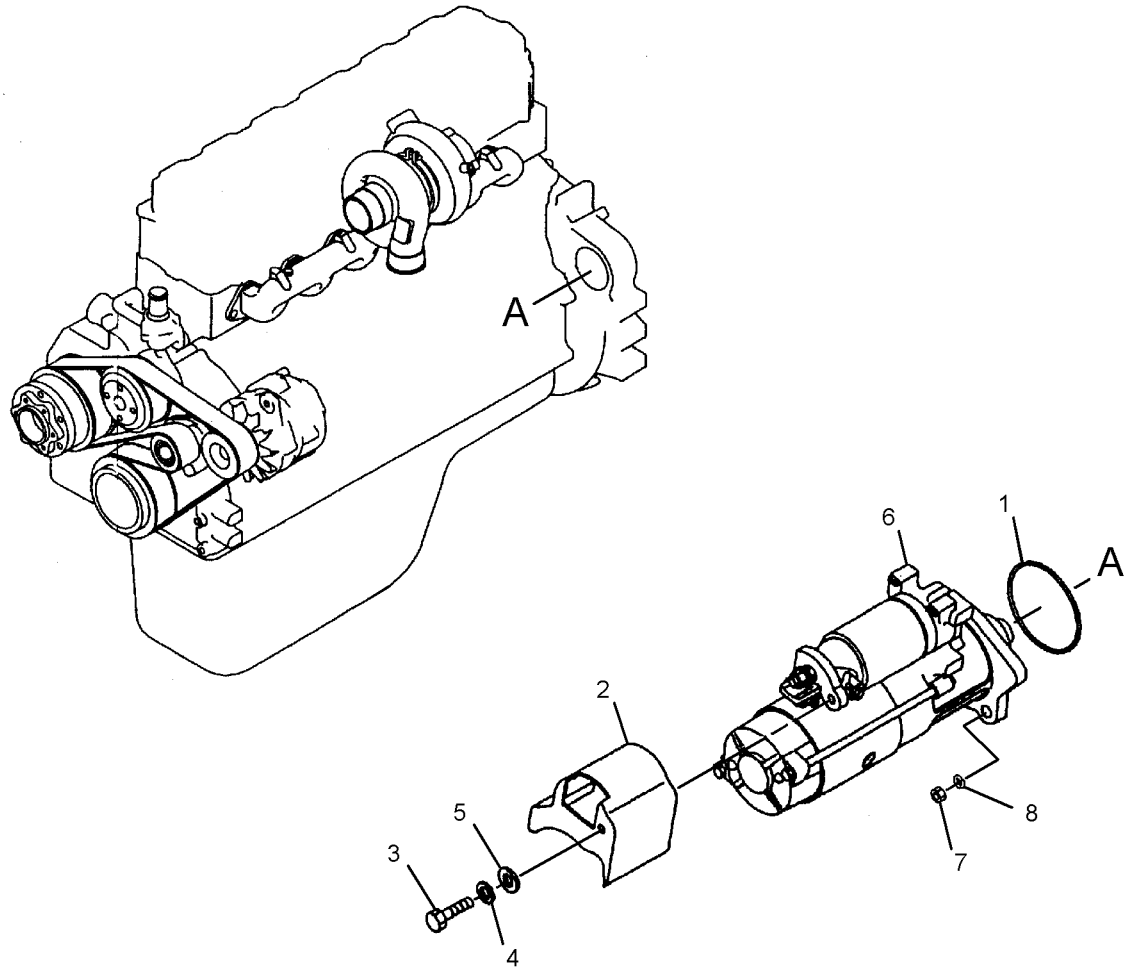

GRAPHIC #1 **<END>** g01456158

296-4640 PAN GP-OIL

S/N: GDC1-UP; KGF1-UP
PART OF 272-4677, 272-4683, 296-4676, 305-4777 ENGINE AR
ALSO AN ATTACHMENT

SMCS-1302 **i02702138**

NOTE	REF NO	GRAPHIC REF	PART NUMBER	QTY	PART NAME 1 2 3 4 5 6 (PRODUCT LEVEL)	SEE PAGE
	1	1	**294-1741**	1	GUIDE	
	2	1	**196-8366**	37	BOLT	
	3	1	**199-2178**	1	BOLT (M10X1.25X20-MM)	
	4	1	**125-2968**	1	SEAL	
	5	1	**5I-8067**	1	WASHER-SEALING	
	6	1	**7W-3556**	1	WASHER (14.27X20.57X1.5-MM THK)	
	7	1	**183-8177**	1	PLUG	
	8	1	**183-8176**	1	VALVE (ENGINE OIL PAN)	
	9	1	**294-1742**	1	PAN AS	
		1	**287-0187**	1	BOSS	
		1	**287-0188**	1	PLATE	
		1	**287-0189**	1	SEAL	
		1	**287-0190**	1	BOLT	
	10	1	**213-0677**	1	SWITCH AS-LIQUID LEVEL (ENGINE OIL)	
		1	**102-8802**	2	KIT-RECEPTACLE (2-PIN)	
					(EACH INCLUDES RECEPTACLE AS & WEDGE)	
		1	**9X-3401**	2	PIN-CONNECTOR (16-GA TO 18-GA)	
	11	1	**294-1743**	1	GAUGE AS-OIL LEVEL (DIPSTICK) (ENGINE)	
	12	1	**5I-4993**	1	SEAL	
	13	1	**5I-7666**	1	GASKET	
	14	1	**282-8567**	1	BOLT	

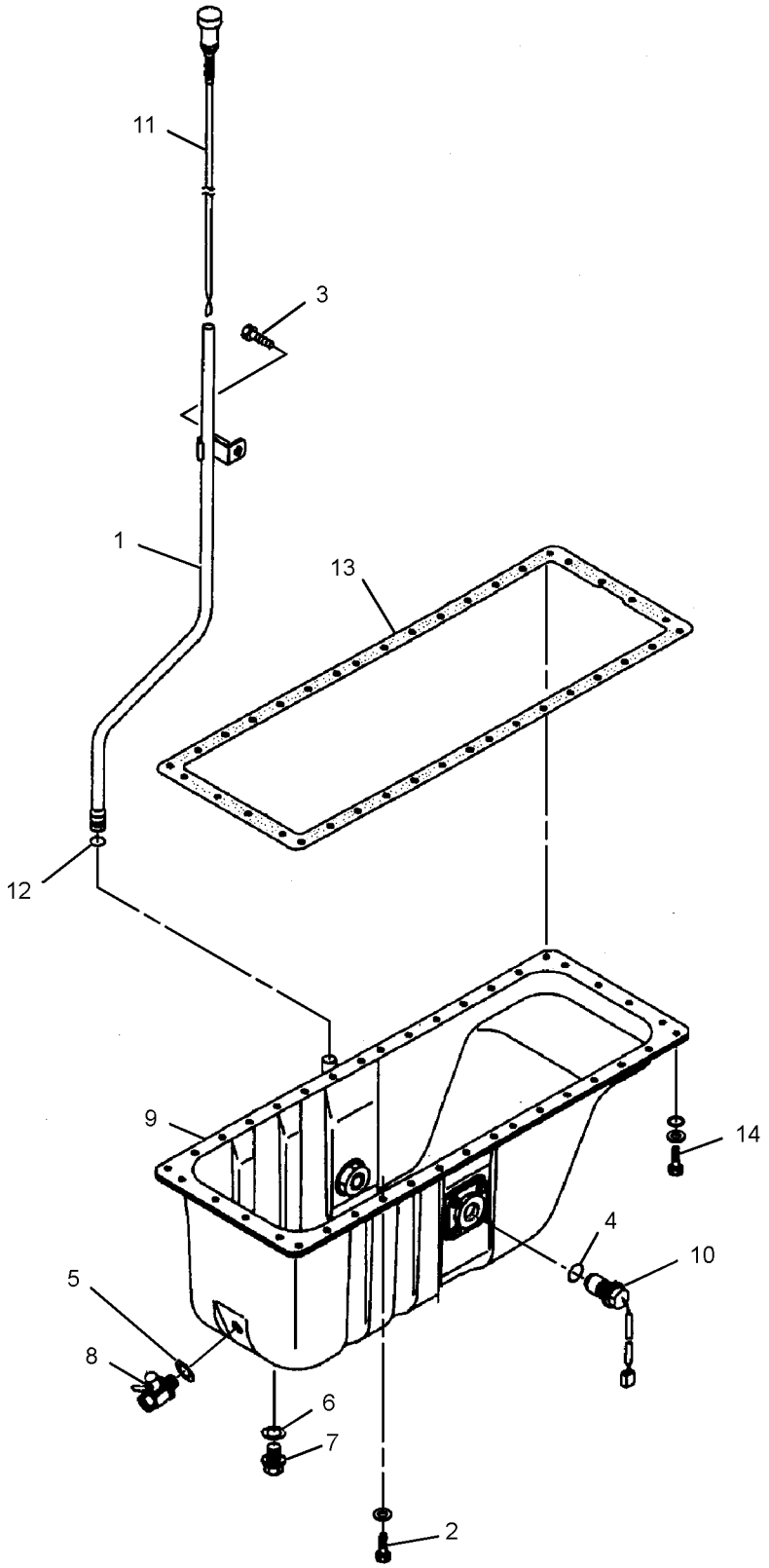

GRAPHIC #1 **<END>** g01356947

296-4659 PISTON & ROD GP

S/N: GDC1-UP; KGF1-UP
PART OF 272-4677, 272-4683, 296-4676, 305-4777 ENGINE AR
ALSO AN ATTACHMENT

SMCS-1225 **i02785748**

NOTE	REF NO	GRAPHIC REF	PART NUMBER	QTY	PART NAME 1 2 3 4 5 6 (PRODUCT LEVEL)	SEE PAGE
	1	1	**310-9509**	6	PISTON (STANDARD)	
AB		1	**310-9510**		PISTON (0.25-MM OS)	
AB		1	**310-9511**		PISTON (0.5-MM OS)	
	2	1	**094-7134**	6	PIN	
	3	1	**5I-7667**	12	RING	
J	4	1	**178-6543**	6	SET-PISTON RING (STANDARD)	
ABJ		1	**178-6544**		SET-PISTON RING (0.25-MM OS)	
ABJ		1	**178-6545**		SET-PISTON RING (0.5-MM OS)	
	5	1	**294-1747**	6	ROD AS	
					(EACH INCLUDES)	
	5A	1	**094-7154**	2	BOLT (M12X1.25-1X85-MM)	
	5B	1	**094-7516**	2	NUT (M12X1.25-THD)	
	5C	1	**296-4663**	1	BUSHING	
	6	1	**294-1748**	12	BEARING (STANDARD)	
AB		1	**297-7648**		BEARING (0.25-MM US)	
AB		1	**297-7649**		BEARING (0.50-MM US)	
AB		1	**297-7650**		BEARING (0.75-MM US)	

A-NOT PART OF THIS GROUP
B-USE AS REQUIRED
J-INCLUDES A COMPLETE SET OF RINGS FOR ONE PISTON

296-4659 **PISTON & ROD GP** *(contd.)* **i02785748**

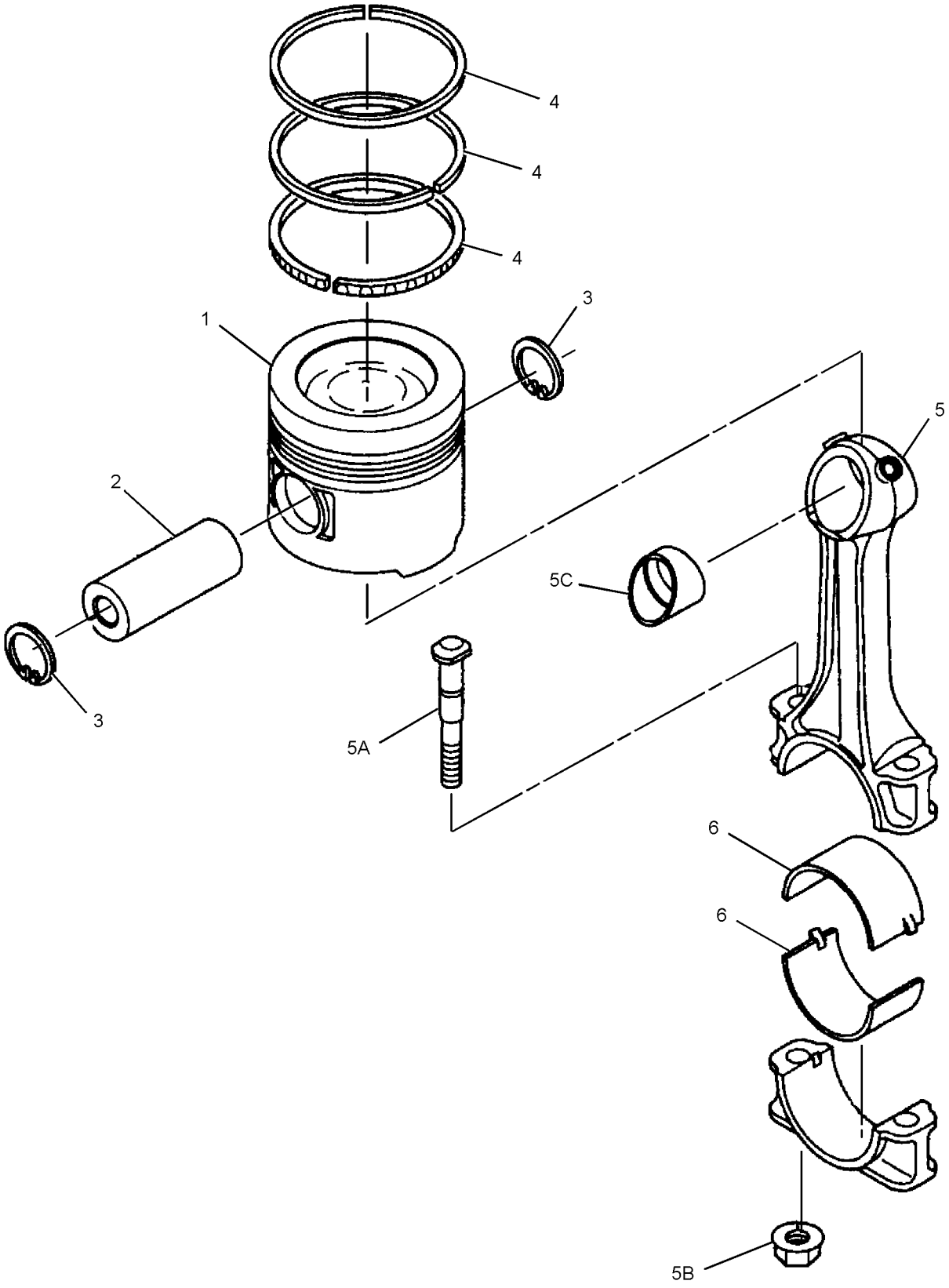

GRAPHIC #1 **<END>** g01317861

305-4908 PULLEY AS-IDLER

S/N: KGF1-UP; FAL1-UP

PART OF 266-6317, 296-4667, 297-7747, 297-7748 PULLEY GP-ENGINE

ALSO AN ATTACHMENT

SMCS-1358 **i02762390**

NOTE	REF NO	GRAPHIC REF	PART NUMBER	QTY	PART NAME 1 2 3 4 5 6 (PRODUCT LEVEL)	SEE PAGE
	1	1	**305-4907**	1	BRACKET	
	2	1	**294-1784**	1	PULLEY	
	3	1	**294-1785**	2	BEARING	
	4	1	**294-1786**	1	RING	
	5	1	**8T-9598**	2	RING-RETAINING	
	6	1	**305-4906**	1	COVER	
	7	1	**305-4905**	1	BOLT (M10X1.25X20-MM)	

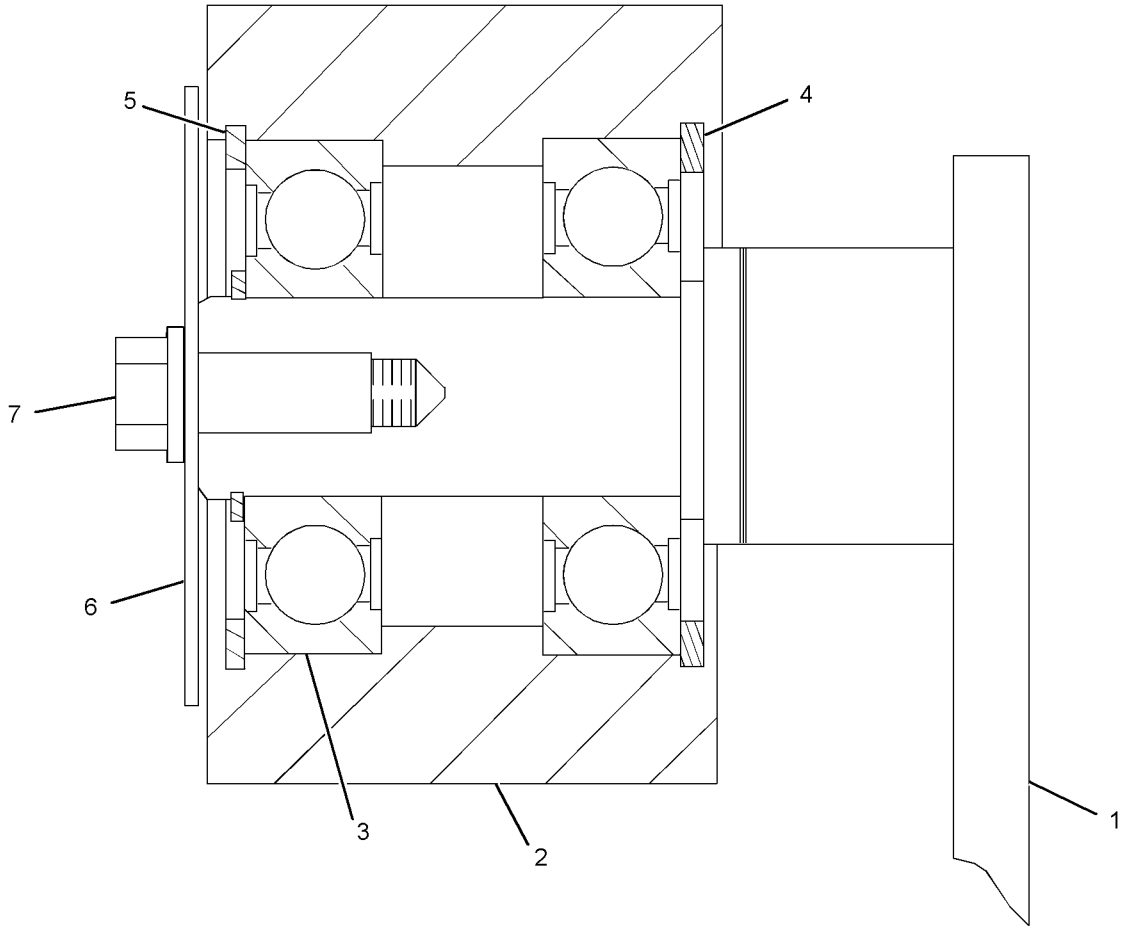

GRAPHIC #1 **<END>** g01383446

266-6317 PULLEY GP-ENGINE

S/N: KGF1-UP; FAL1-UP
PART OF 272-4687, 296-4678 ENGINE AR-COMPLETE
AN ATTACHMENT

SMCS-1205, 1207, 1359, 1384, 1425 **i02816645**

NOTE	REF NO	GRAPHIC REF	PART NUMBER	QTY	PART NAME 1 2 3 4 5 6 (PRODUCT LEVEL)	SEE PAGE
Y	1	1	**305-4908**	1	PULLEY AS-IDLER (BELT TENSIONING)	53
	2	1	**212-8584**	1	PULLEY (WATER PUMP)	
	3	1	**212-8585**	1	BELT-SERPENTINE	
	4	1	**266-6326**	1	PULLEY AS (DRIVE)	
		1	**5I-7540**	1	SLEEVE	
	5	1	**266-6327**	1	PULLEY	

Y-SEPARATE ILLUSTRATION

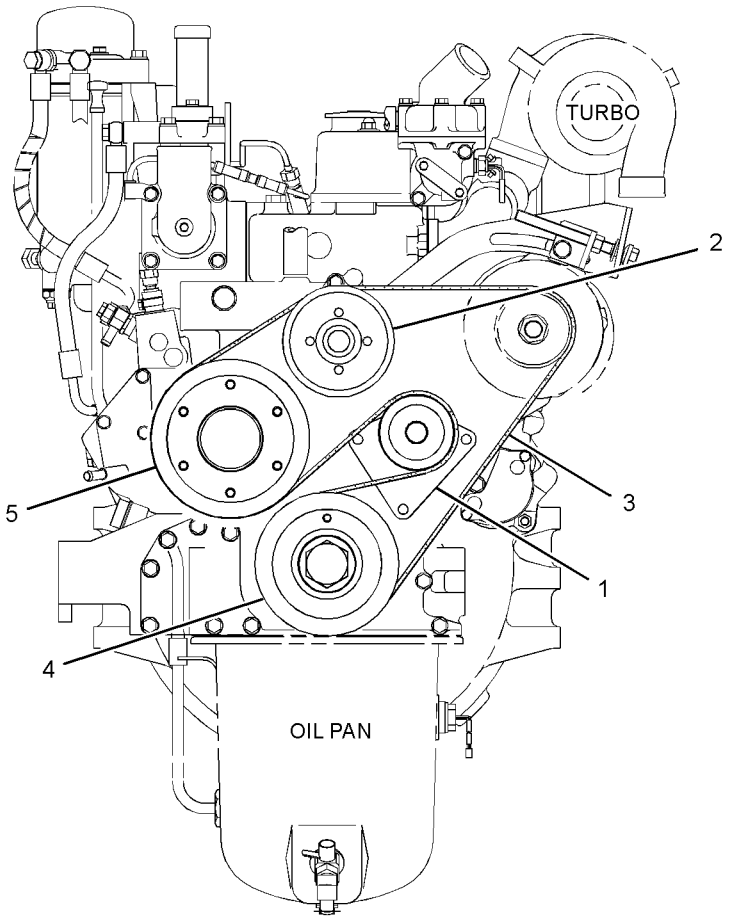

FRONT VIEW OF ENGINE

GRAPHIC #1 **<END>** g01338650

296-4667 PULLEY GP-ENGINE

S/N: KGF1-UP; FAL1-UP

PART OF 272-4676, 296-4680, 305-4776, 310-9484, 310-9485 ENGINE AR-COMPLETE

AN ATTACHMENT

SMCS-1205, 1207, 1359, 1384, 1425 **i02762967**

NOTE	REF NO	GRAPHIC REF	PART NUMBER	QTY	PART NAME 1 2 3 4 5 6 (PRODUCT LEVEL)	SEE PAGE
	1	1	**212-8584**	1	PULLEY	
	2	1	**266-6326**	1	PULLEY AS	
		1	**5I-7540**	1	SLEEVE	
Y	3	1	**305-4908**	1	PULLEY AS-IDLER	53
	4	1	**294-1781**	1	BELT-SERPENTINE	
	5	1	**266-6332**	1	BRACKET	
	6	1	**266-6333**	1	COVER	
	7	1	**266-6337**	1	PULLEY	
	8	1	**266-6334**	2	BEARING	
	9	1	**212-8596**	2	BUSHING	
	10	1	**266-6335**	1	SPACER (40.8X50.8X27-MM THK)	
	11	1	**266-6336**	1	WASHER (13X49X8-MM THK)	
M	12	1	**266-6338**	1	BOLT (M12X1.25X25-MM)	
M	13	1	**294-1726**	6	BOLT (M10X1.5X37-MM)	
M	14	1	**213-9433**	4	BOLT (M10X1.5X45-MM)	

M-METRIC PART
Y-SEPARATE ILLUSTRATION

296-4667 **PULLEY GP-ENGINE** *(contd.)* **i02762967**

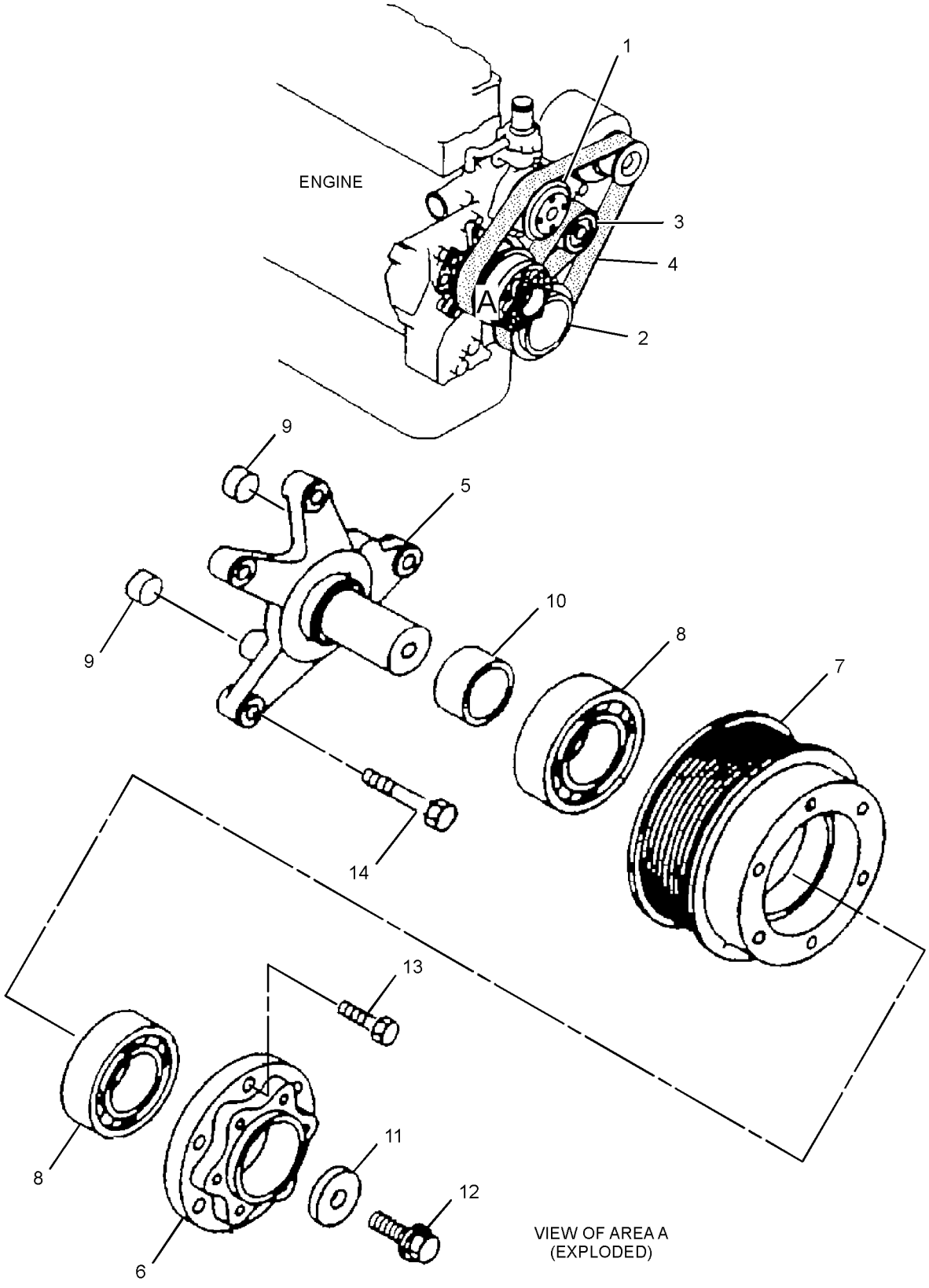

GRAPHIC #1 **<END>** g01376966

297-7747 PULLEY GP-ENGINE

S/N: KGF1-UP; FAL1-UP
PART OF 272-4682, 296-4675 ENGINE AR-COMPLETE
ALSO AN ATTACHMENT

SMCS-1205, 1207, 1359, 1384, 1425 **i02784900**

NOTE	REF NO	GRAPHIC REF	PART NUMBER	QTY	PART NAME 1 2 3 4 5 6 (PRODUCT LEVEL)	SEE PAGE
Y	1	1	**305-4908**	1	PULLEY AS-IDLER	53
M	2	1	**297-7824**	11	BOLT AS	
	3	1	**7X-0796**	6	LOCKWASHER	
	4	1	**266-6230**	1	SPACER-FAN	
	5	1	**212-8593**	1	PLATE	
M	6	1	**266-6231**	6	BOLT (M10X1.5X120-MM)	
	7	1	**212-8584**	1	PULLEY	
	8	1	**297-7825**	1	BELT-SERPENTINE	
	9	1	**266-6228**	1	COVER	
	10	1	**222-8371**	1	PULLEY AS (DRIVE)	
		1	**5I-7540**	1	SLEEVE	
Y	11	1	**305-4775**	1	FAN GP-SUCTION	85

M-METRIC PART
Y-SEPARATE ILLUSTRATION

297-7747 **PULLEY GP-ENGINE** *(contd.)* **i02784900**

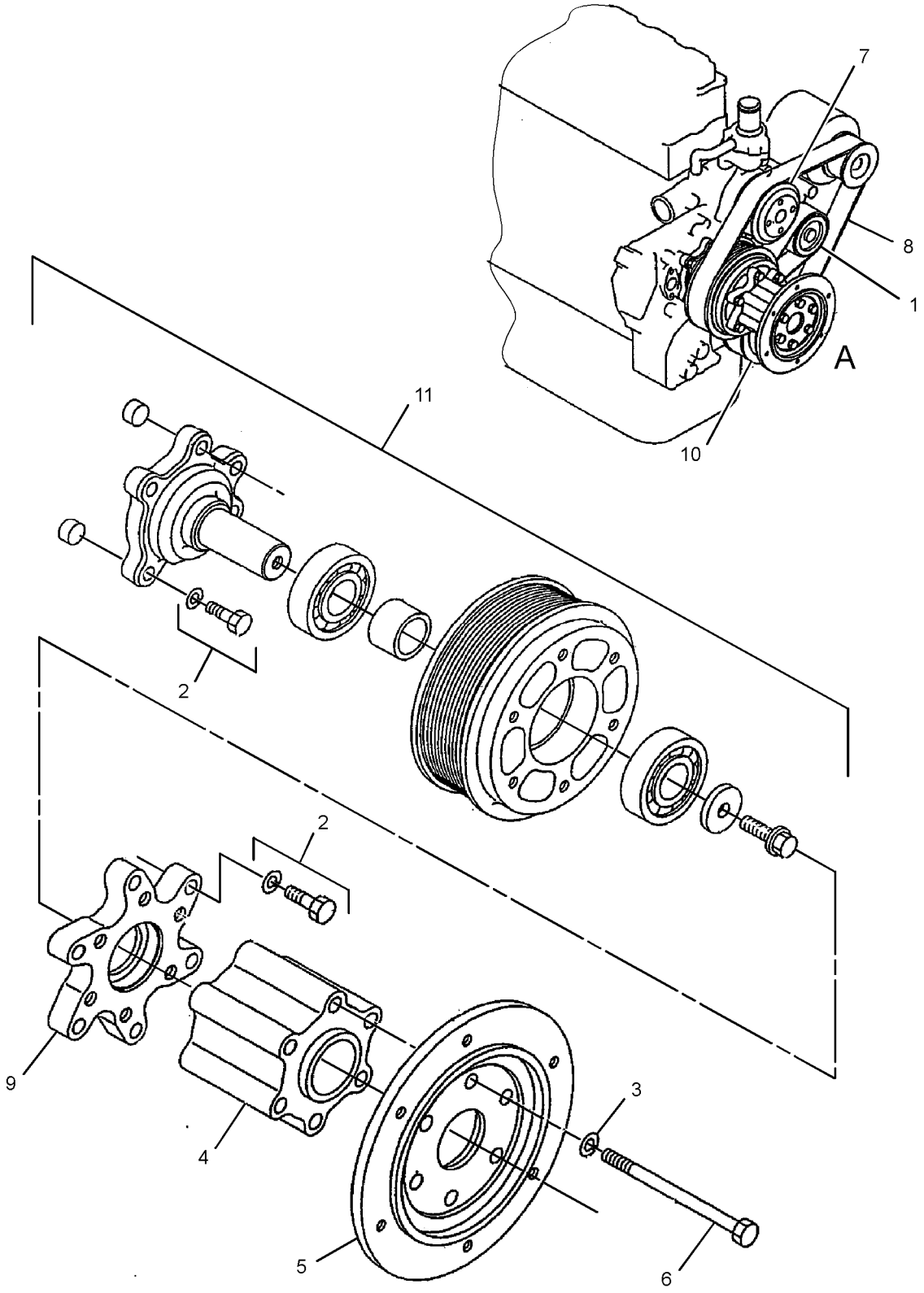

VIEW OF AREA A
(EXPLODED)

GRAPHIC #1 **<END>** g01393227

297-7748 PULLEY GP-ENGINE

S/N: KGF1-UP; FAL1-UP
PART OF 272-4685 ENGINE AR-COMPLETE
AN ATTACHMENT

SMCS-1205, 1207, 1359, 1384, 1425 **i02762389**

NOTE	REF NO	GRAPHIC REF	PART NUMBER	QTY	PART NAME 1 2 3 4 5 6 (PRODUCT LEVEL)	SEE PAGE
Y	1	1	**305-4908**	1	PULLEY AS-IDLER	53
M	2	1	**297-7824**	11	BOLT AS	
	3	1	**7X-0796**	6	LOCKWASHER	
	4	1	**266-6230**	1	SPACER-FAN	
	5	1	**212-8593**	1	PLATE	
M	6	1	**266-6231**	6	BOLT (M10X1.5X120-MM)	
	7	1	**212-8584**	1	PULLEY	
	8	1	**212-8585**	1	BELT-SERPENTINE	
	9	1	**266-6326**	1	PULLEY AS	
		1	**5I-7540**	1	SLEEVE	
	10	1	**266-6228**	1	COVER	
Y	11	1	**305-4774**	1	PULLEY GP-ENGINE	61

M-METRIC PART
Y-SEPARATE ILLUSTRATION

297-7748 **PULLEY GP-ENGINE** *(contd.)* **i02762389**

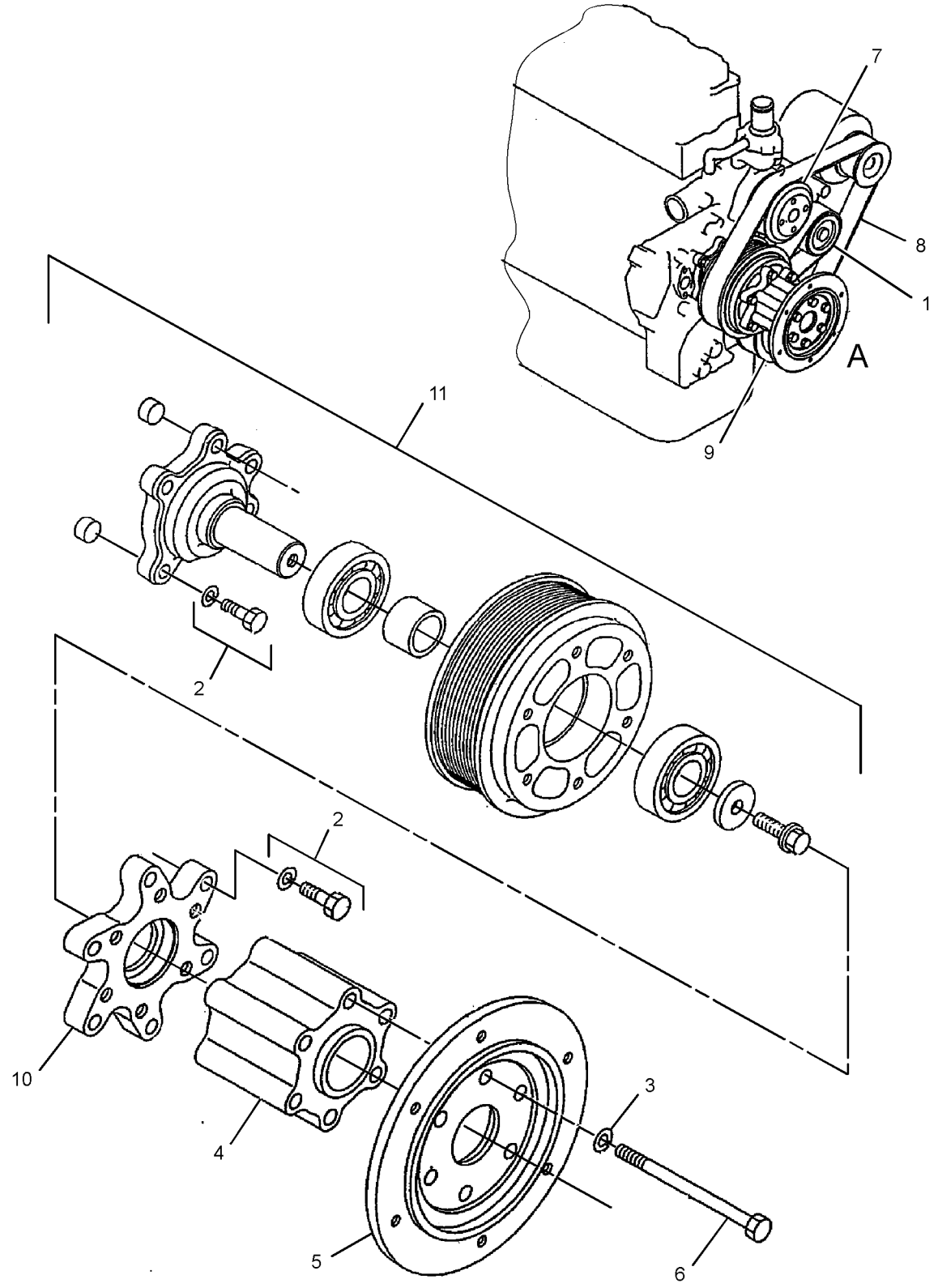

VIEW OF AREA A
(EXPLODED)

GRAPHIC #1 **<END>** g01383581

305-4774 PULLEY GP-ENGINE

S/N: KGF1-UP; FAL1-UP
PART OF 297-7748 PULLEY GP-ENGINE
AN ATTACHMENT

SMCS-1205, 1207, 1359, 1384, 1425 **i02762391**

NOTE	REF NO	GRAPHIC REF	PART NUMBER	QTY	PART NAME 1 2 3 4 5 6 (PRODUCT LEVEL)	SEE PAGE
	1	1	**266-6227**	1	BRACKET	
M	2	1	**255-2873**	1	BOLT AS	
	3	1	**266-6327**	1	PULLEY	
	4	1	**255-2926**	2	BEARING	
	5	1	**212-8596**	2	BUSHING	
	6	1	**266-6232**	1	SPACER (31.1X38.1X28.4-MM THK)	
	7	1	**255-2871**	1	WASHER (10.5X38X7-MM THK)	

M-METRIC PART

305-4774 **PULLEY GP-ENGINE** *(contd.)* **i02762391**

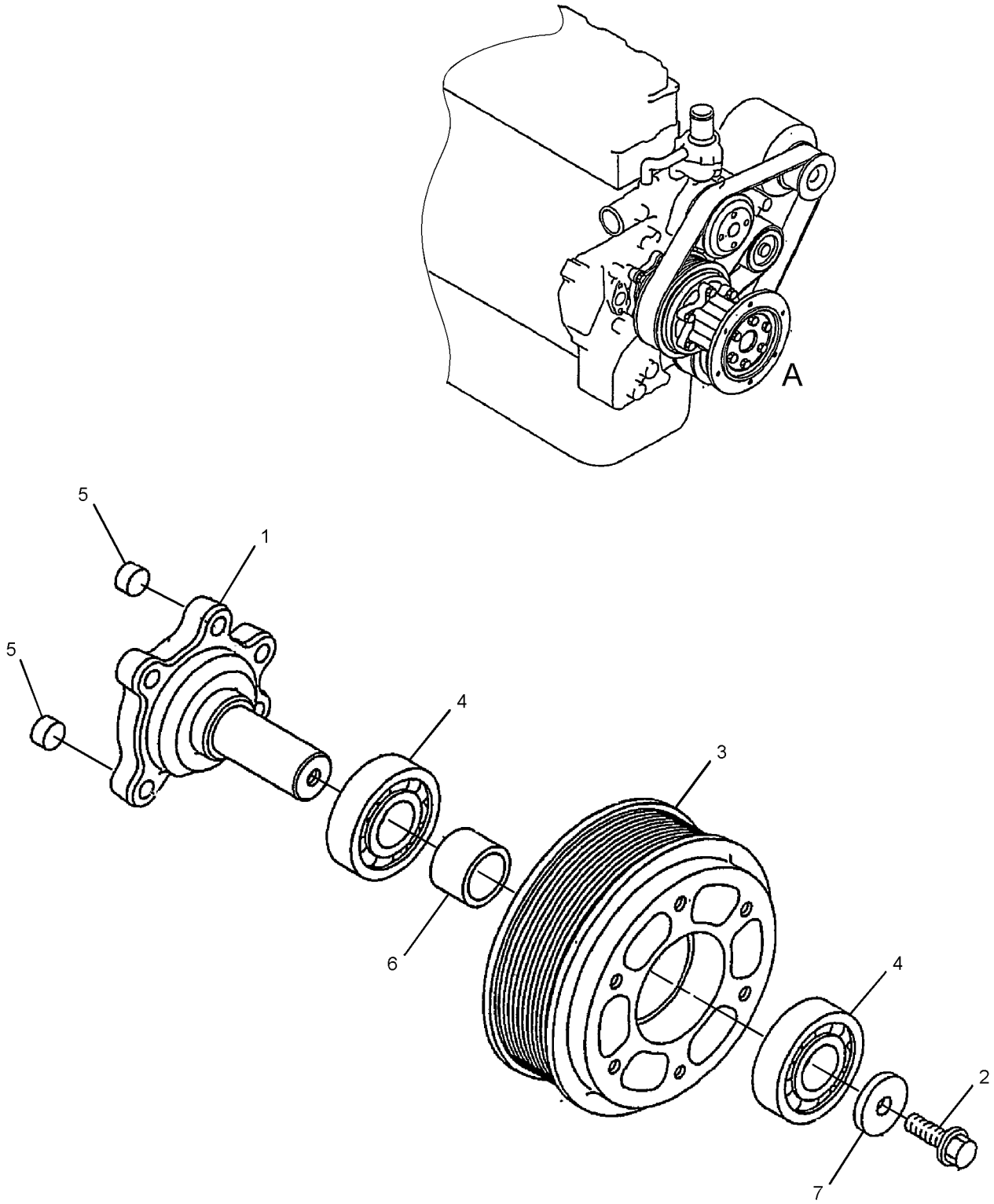

VIEW OF AREA A
(EXPLODED)

GRAPHIC #1 **<END>** g01383554

255-3018 PULLEY GP-IDLER

S/N: KGF1-UP; FAL1-UP

PART OF 239-6507 COMPRESSOR GP-REFRIGERANT

SMCS-1358 **i02674719**

NOTE	REF NO	GRAPHIC REF	PART NUMBER	QTY	PART NAME 1 2 3 4 5 6 (PRODUCT LEVEL)	SEE PAGE
M	1	1	**255-3022**	1	NUT (M10X1.25-THD)	
	2	1	**239-6626**	1	PULLEY-IDLER	
M	3	1	**239-6627**	1	BOLT (M8X1.25X110-MM)	
	4	1	**239-6632**	1	RING-SNAP	
	5	1	**255-3020**	1	SHAFT	
	6	1	**255-3021**	1	WASHER	
	7	1	**239-6630**	1	COLLAR	
	8	1	**239-6631**	1	BEARING AS-BALL	

M-METRIC PART

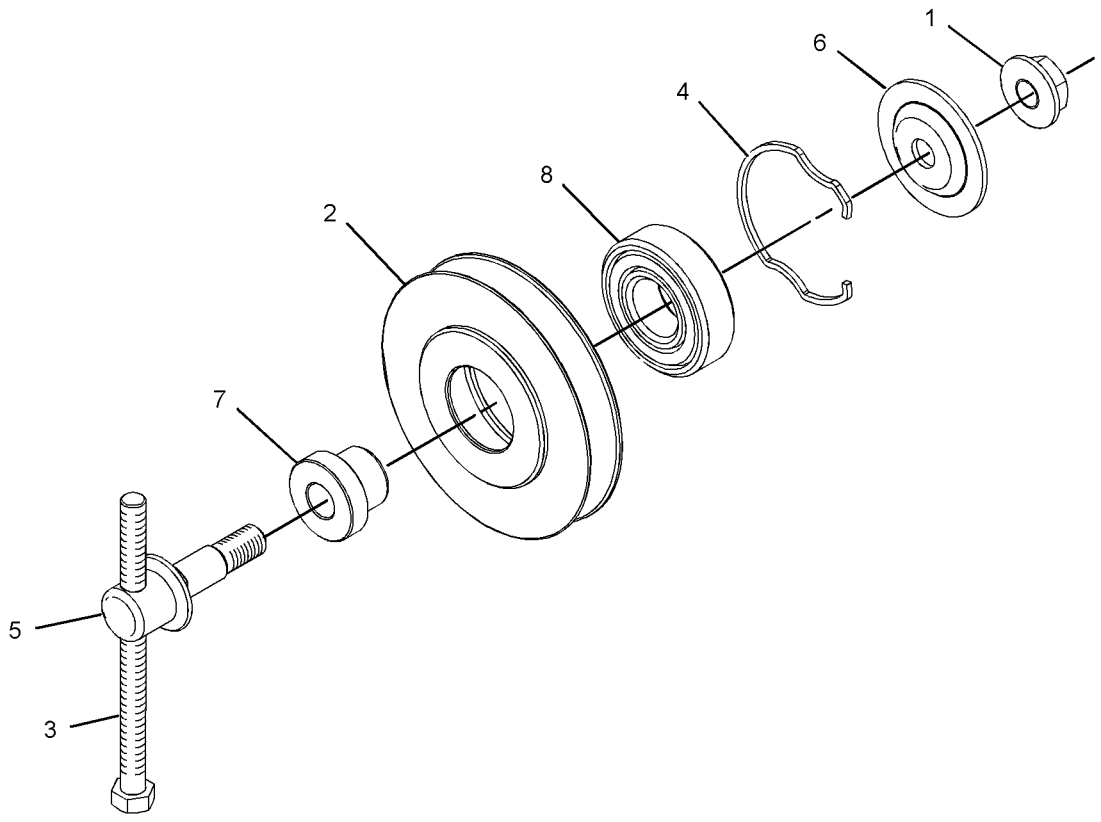

GRAPHIC #1 **<END>** g01277313

BASIC ENGINE

296-4646 VALVE MECHANISM GP

S/N: GDC1-162
PART OF 272-4683 ENGINE AR
ALSO AN ATTACHMENT

SMCS-1209 **i02618443**

NOTE	REF NO	GRAPHIC REF	PART NUMBER	QTY	PART NAME 1 2 3 4 5 6 (PRODUCT LEVEL)	SEE PAGE
	1	1	**294-1684**	12	VALVE-INLET	
	2	1	**294-1685**	12	VALVE-EXHAUST	
	3	1	**294-1686**	6	BASE-ROCKER ARM	
	4	1	**294-1687**	6	BRIDGE-EXHAUST	
	5	1	**5I-7630**	12	CAP	
	6	1	**294-1688**	24	SPRING	
	7	1	**294-1689**	12	SCREW	
M	8	1	**8T-7964**	12	NUT (M6X1-THD)	
	9	1	**199-2188**	48	PIN-COTTER	
	10	1	**294-1690**	24	SEAL	
	11	1	**199-2187**	24	RETAINER	
	12	1	**294-1691**	6	BRACKET	
	13	1	**294-1692**	4	SPRING	
	14	1	**294-1693**	1	PIPE	
	15	1	**294-1694**	1	SHAFT AS-ROCKER ARM	
	15A	1	**096-3741**	1	CAP	
	16	1	**294-1695**	6	ROCKER ARM AS	
					(EACH INCLUDES)	
M	16A	1	**091-3474**	1	NUT (M8X1.25-THD)	
	16B	1	**094-9525**	1	SCREW	
	16C	1	**294-1696**	1	BUSHING	
	17	1	**294-1697**	6	ROCKER ARM AS	
					(EACH INCLUDES)	
M	17A	1	**091-3474**	1	NUT (M8X1.25-THD)	
	17B	1	**094-9525**	1	SCREW	
	17C	1	**294-1696**	1	BUSHING	
	18	1	**294-1698**	4	WASHER	
	19	1	**294-1699**	6	BOLT	
	20	1	**294-1700**	6	BOLT (M8X1.25X108.3-MM)	
	21	1	**294-1786**	4	RING	
	22	1	**294-1702**	1	BOLT	

M-METRIC PART

296-4646 **VALVE MECHANISM GP** *(contd.)* **i02618443**

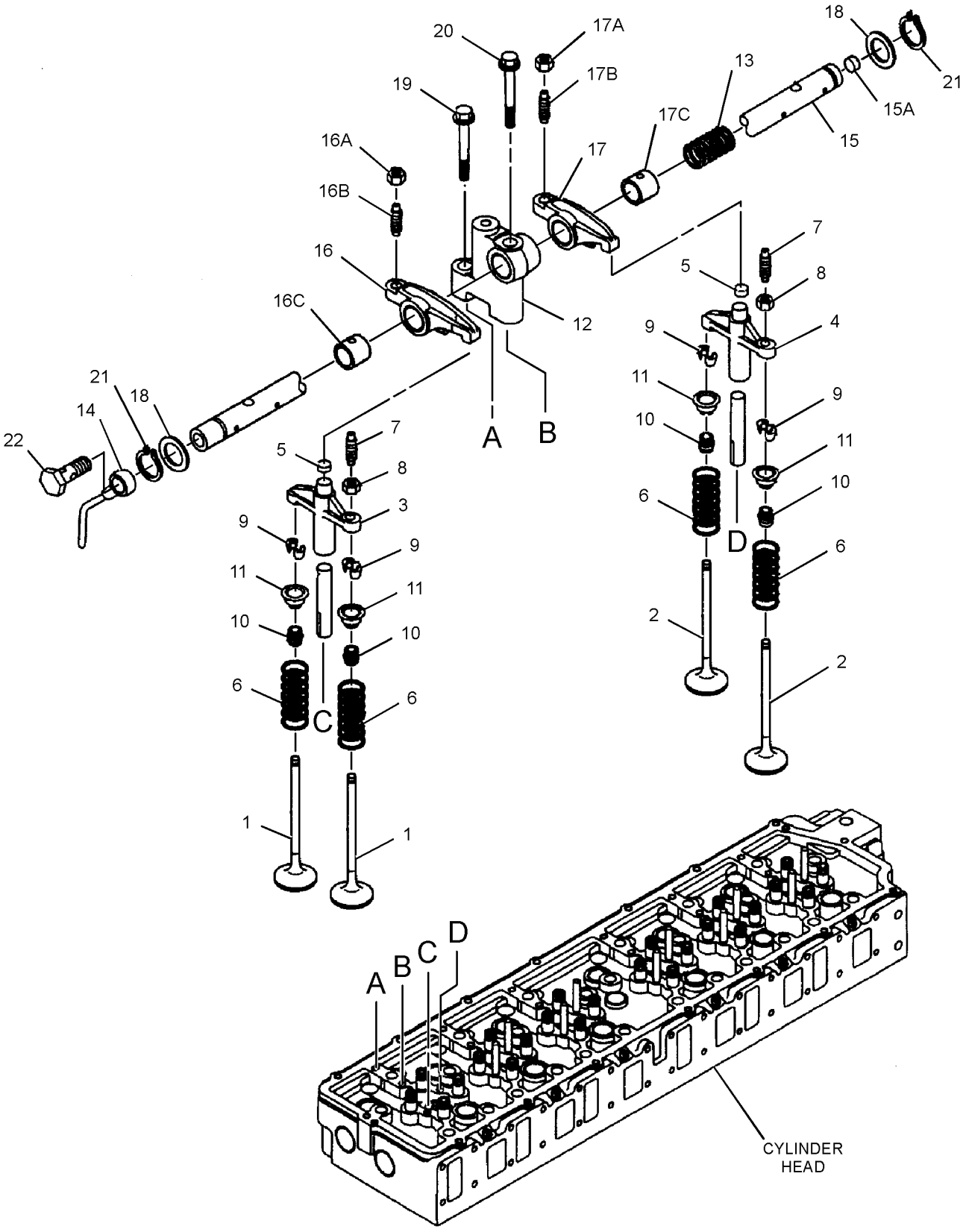

GRAPHIC #1 **<END>** g01316799

BASIC ENGINE

305-4742 VALVE MECHANISM GP

S/N: GDC163, 229-258; KGF1-UP
PART OF 272-4683, 305-4777 ENGINE AR
ALSO AN ATTACHMENT

SMCS-1209 **i02739641**

NOTE	REF NO	GRAPHIC REF	PART NUMBER	QTY	PART NAME 1 2 3 4 5 6 (PRODUCT LEVEL)	SEE PAGE
	1	1	**294-1684**	12	VALVE-INLET	
	2	1	**294-1685**	12	VALVE-EXHAUST	
	3	1	**294-1686**	6	BASE-ROCKER ARM	
	4	1	**294-1687**	6	BRIDGE-EXHAUST	
	5	1	**5I-7630**	12	CAP	
	6	1	**294-1688**	24	SPRING	
	7	1	**294-1689**	12	SCREW	
M	8	1	**8T-7964**	12	NUT (M6X1-THD)	
	9	1	**199-2188**	48	PIN-COTTER	
	10	1	**199-2189**	24	SEAL-VALVE STEM	
	11	1	**199-2187**	24	RETAINER	
	12	1	**294-1691**	6	BRACKET	
	13	1	**294-1692**	4	SPRING	
	14	1	**294-1693**	1	PIPE	
	15	1	**294-1694**	1	SHAFT AS-ROCKER ARM	
	15A	1	**096-3741**		CAP	
	16	1	**294-1695**	6	ROCKER ARM AS	
					(EACH INCLUDES)	
M	16A	1	**091-3474**	1	NUT (M8X1.25-THD)	
	16B	1	**094-9525**	1	SCREW	
	16C	1	**294-1696**	1	BUSHING	
	17	1	**294-1697**	6	ROCKER ARM AS	
					(EACH INCLUDES)	
M	17A	1	**091-3474**	1	NUT (M8X1.25-THD)	
	17B	1	**094-9525**	1	SCREW	
	17C	1	**294-1696**	1	BUSHING	
	18	1	**294-1698**	4	WASHER	
	19	1	**294-1699**	6	BOLT	
	20	1	**305-4746**	6	BOLT	
	21	1	**294-1786**	4	RING	
	22	1	**294-1702**	1	BOLT	
	23	1	**3B-4505**	4	LOCKWASHER	
	24	1	**305-4747**	4	WASHER	

M-METRIC PART

305-4742 **VALVE MECHANISM GP** *(contd.)* **i02739641**

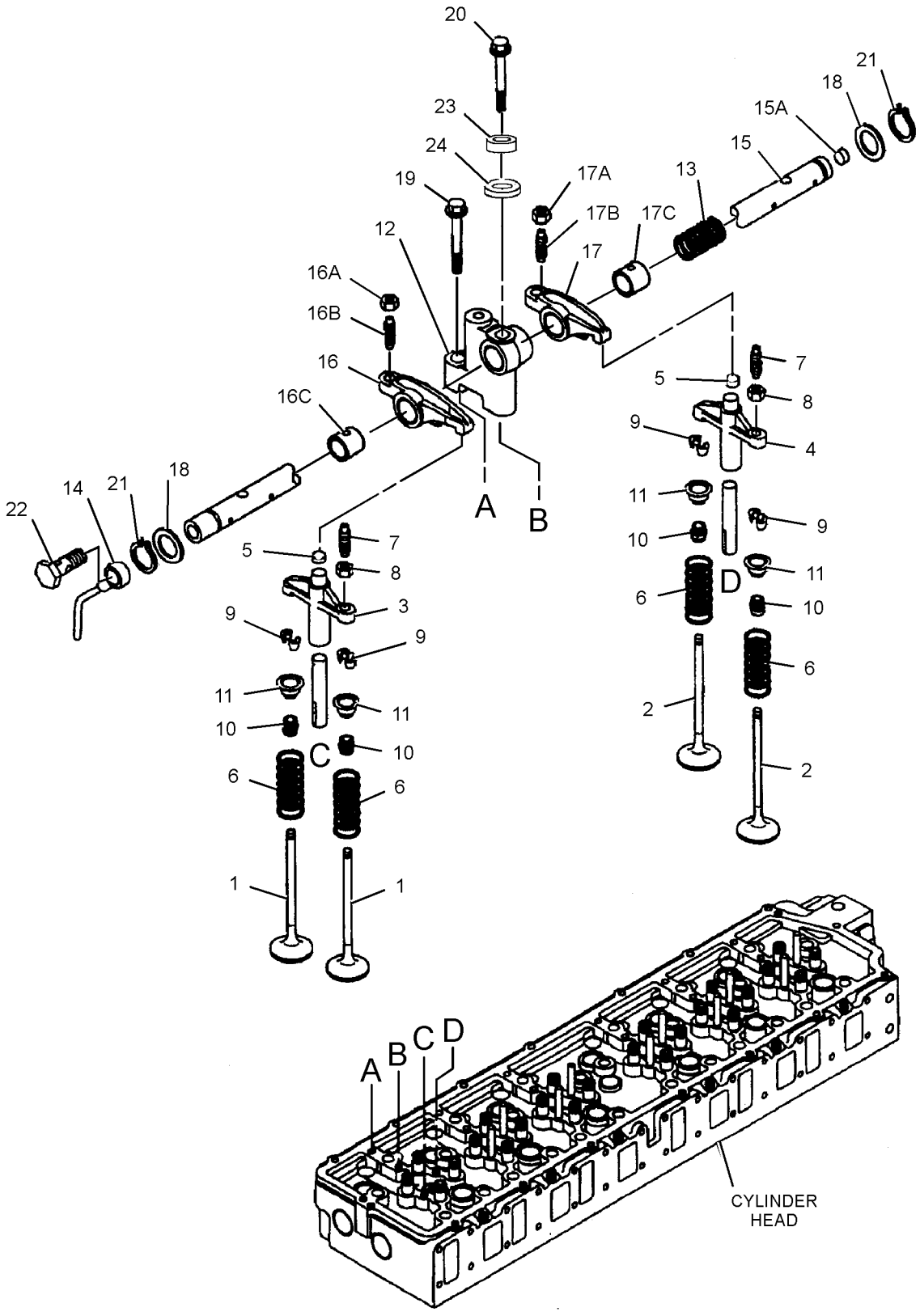

GRAPHIC #1 **<END>** g01368787

305-4910 VALVE MECHANISM GP

S/N: GDC259-UP
PART OF 272-4677, 272-4683, 296-4676 ENGINE AR
ALSO AN ATTACHMENT

SMCS-1209 **i02739638**

NOTE	REF NO	GRAPHIC REF	PART NUMBER	QTY	PART NAME 1 2 3 4 5 6 (PRODUCT LEVEL)	SEE PAGE
	1	1	**294-1684**	12	VALVE-INLET	
	2	1	**294-1685**	12	VALVE-EXHAUST	
	3	1	**294-1686**	6	BASE-ROCKER ARM	
	4	1	**294-1687**	6	BRIDGE-EXHAUST	
	5	1	**5I-7630**	12	CAP	
	6	1	**294-1688**	24	SPRING	
	7	1	**294-1689**	12	SCREW	
M	8	1	**8T-7964**	12	NUT (M6X1-THD)	
	9	1	**199-2188**	48	PIN-COTTER	
	10	1	**199-2189**	24	SEAL-VALVE STEM	
	11	1	**199-2187**	24	RETAINER	
	12	1	**305-4750**	6	BRACKET	
	13	1	**305-4751**	4	SPRING	
	14	1	**294-1693**	1	PIPE	
	15	1	**305-4930**	1	SHAFT AS-ROCKER ARM	
	15A	1	**096-3741**	1	CAP	
	16	1	**305-4929**	6	ROCKER ARM AS	
					(EACH INCLUDES)	
M	16A	1	**091-3474**	1	NUT (M8X1.25-THD)	
	16B	1	**094-9525**	1	SCREW	
	16C	1	**305-4928**	1	BUSHING	
	17	1	**305-4927**	6	ROCKER ARM AS	
					(EACH INCLUDES)	
M	17A	1	**091-3474**	1	NUT (M8X1.25-THD)	
	17B	1	**094-9525**	1	SCREW	
	17C	1	**305-4928**	1	BUSHING	
	18	1	**294-1698**	4	WASHER	
	19	1	**294-1699**	6	BOLT	
	20	1	**305-4746**	6	BOLT	
	21	1	**294-1786**	4	RING	
	22	1	**294-1702**	1	BOLT	
	23	1	**3B-4505**	4	LOCKWASHER	
	24	1	**305-4747**	4	WASHER	

M-METRIC PART

305-4910 **VALVE MECHANISM GP** *(contd.)* **i02739638**

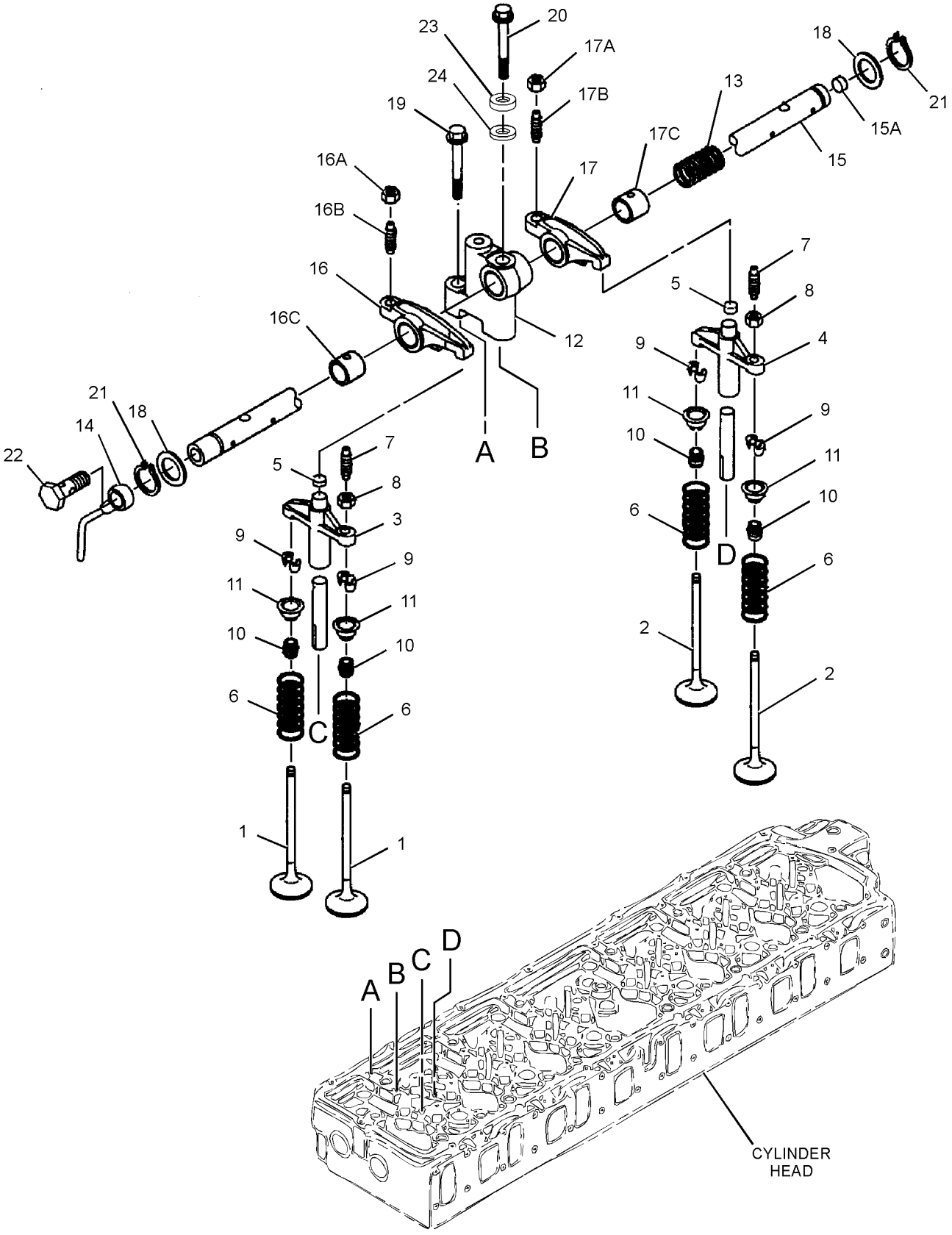

GRAPHIC #1 **<END>** g01369661

296-4654 ADAPTER GP-REMOTE OIL FILTER—ENGINE

S/N: GDC1-UP; KGF1-UP

PART OF 272-4677, 272-4683, 296-4676, 305-4777 ENGINE AR

ALSO AN ATTACHMENT

SMCS-1308 **i02851402**

NOTE	REF NO	GRAPHIC REF	PART NUMBER	QTY	PART NAME 1 2 3 4 5 6 (PRODUCT LEVEL)	SEE PAGE
	1	1	**294-1769**	1	GASKET	
	2	1	**294-1770**	1	COVER AS-FILTER	
	2A	1	**185-2791**	2	SEAL	
	2B	1	**185-2793**	2	ELBOW	
	2C	1	**294-1771**	1	COVER	
M	3	1	**8T-4185**	1	BOLT (M10X1.5X50-MM)	
	4	1	**7X-0796**	1	LOCKWASHER	
M	5	1	**294-1726**	3	BOLT (M10X1.5X37-MM)	
	6	1	**294-1772**	2	BOLT	
	7	1	**5I-8066**	1	VALVE AS-RELIEF (ENGINE OIL PRESSURE)	
	8	1	**5B-5947**	1	GASKET	
	9	1	**5I-7505**	1	PLUG	

M-METRIC PART

296-4654 **ADAPTER GP-REMOTE OIL FILTER** *(contd.)* **i02851402**

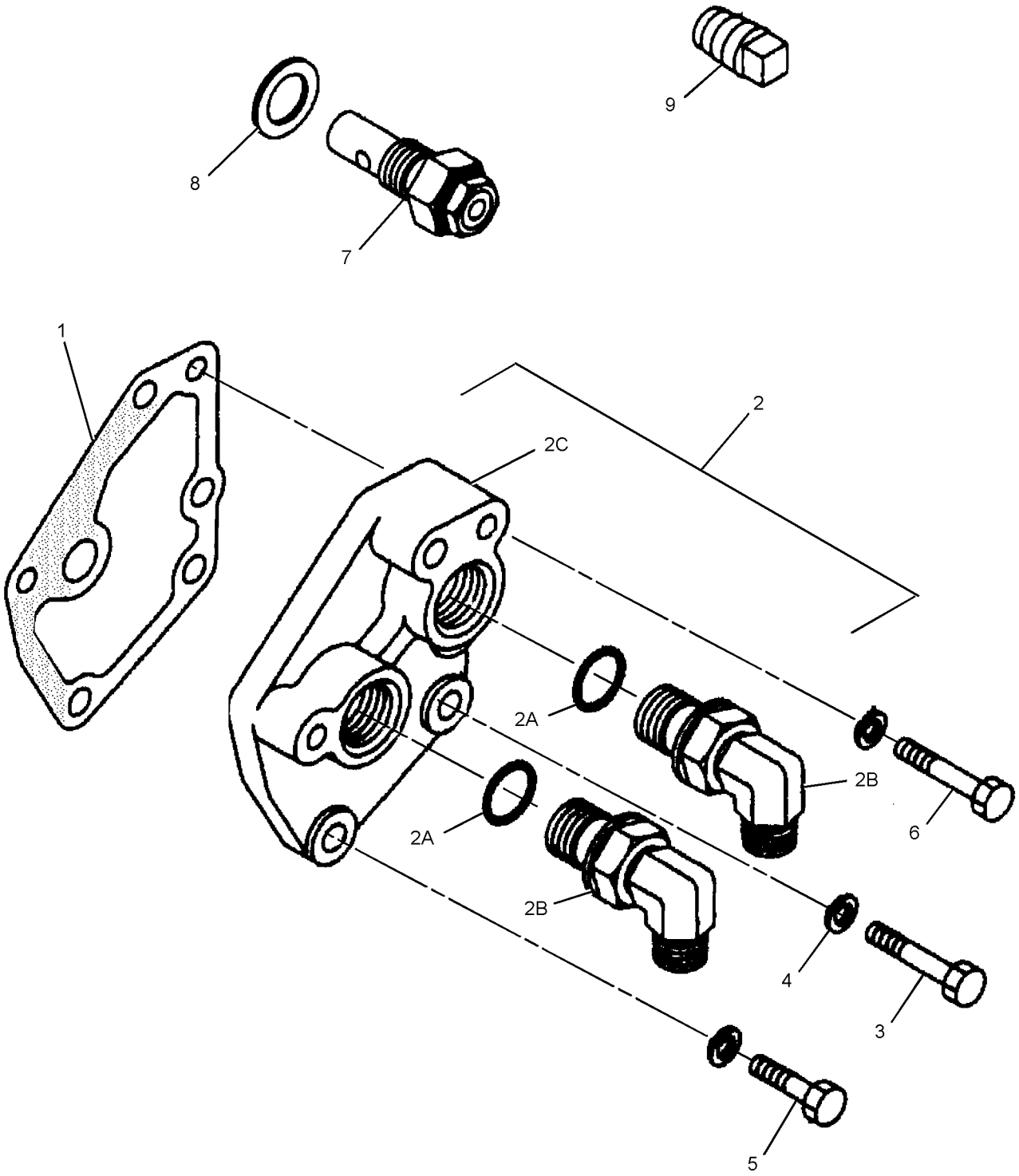

GRAPHIC #1 **<END>** g01316771

296-4638 BREATHER GP–CRANKCASE

S/N: GDC1-UP; KGF1-UP
PART OF 272-4677, 272-4683, 296-4676, 305-4777 ENGINE AR
ALSO AN ATTACHMENT

SMCS-1317 **i02704925**

NOTE	REF NO	GRAPHIC REF	PART NUMBER	QTY	PART NAME 1 2 3 4 5 6 (PRODUCT LEVEL)	SEE PAGE
	1	1	**294-1773**	1	HOSE	
	2	1	**294-1774**	1	SEAL-O-RING	
	3	1	**5I-7725**	1	BREATHER (CRANKCASE)	
	4	1	**2S-3440**	3	CLAMP-HOSE	
	5	1	**5I-7645**	1	PIPE	
	6	1	**5I-5597**	2	BOLT (M14X1.5X10-MM)	
	7	1	**5I-4940**	1	TUBE (FUMES DISPOSAL)	
	8	1	**294-1775**	2	BOLT (M10X1.5X23-MM)	
	9	1	**294-1776**	3	CLIP	
	10	1	**8T-4121**	1	WASHER-HARD (11X21X2.5-MM THK)	

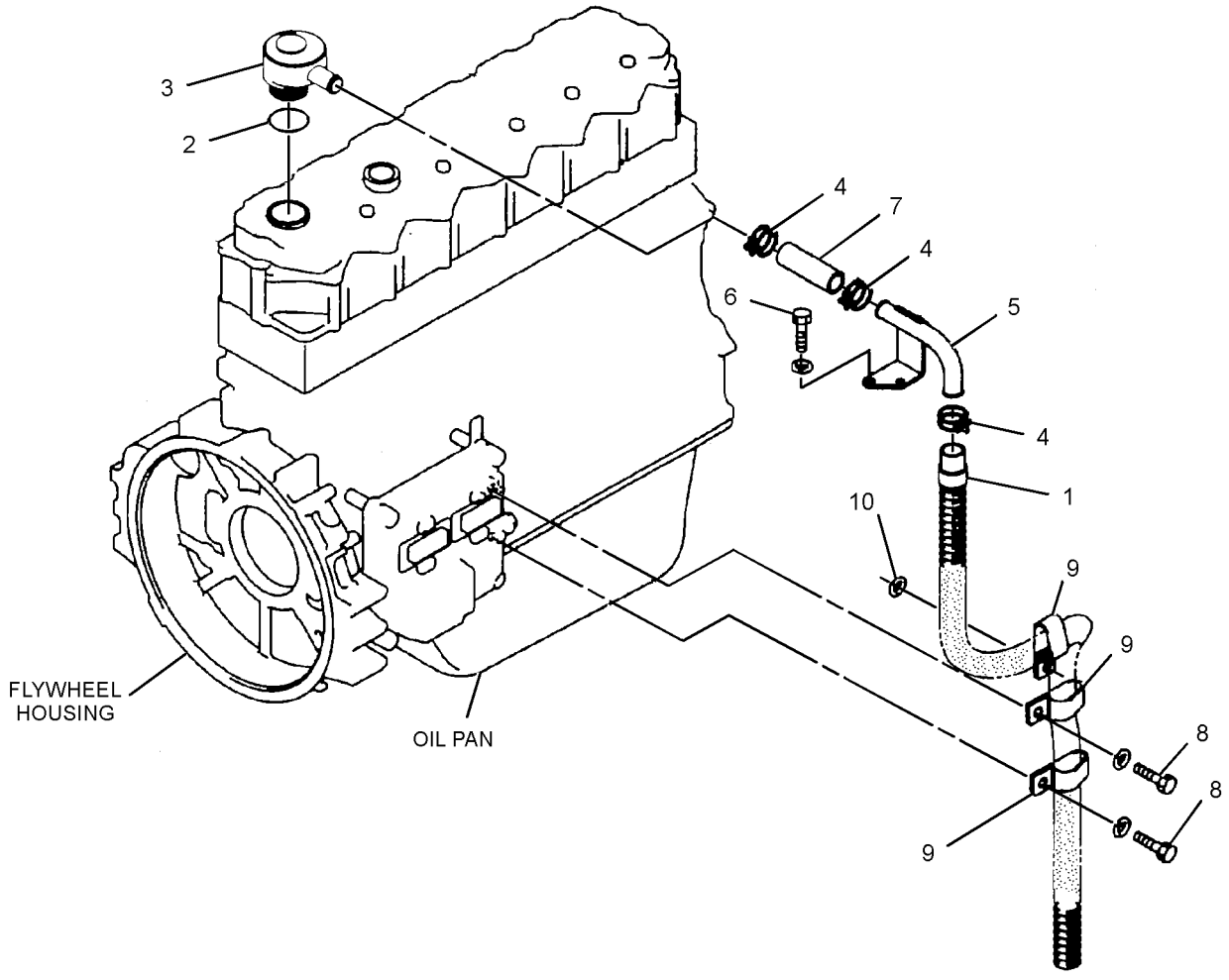

GRAPHIC #1 **<END>** g01356353

279-7911 FILTER & MTG GP-ENGINE OIL

S/N: KGF1-UP; FAL1-UP

PART OF 272-4742 INSTALLATION AR-ENGINE

SMCS-1306, 1308 **i02978807**

NOTE	REF NO	GRAPHIC REF	PART NUMBER	QTY	PART NAME 1 2 3 4 5 6 (PRODUCT LEVEL)	SEE PAGE
	1	1	**6V-5266**	3	SEAL-O-RING	
	2	1	**7C-1493**	1	VALVE AS-BYPASS	
	3	1	**7W-9028**	1	BASE AS-OIL FILTER	
		1	**2P-2537**	1	STUD-HOLLOW	
	4	1	**8C-3445**	1	CAP-DUST	
	5	1	**9L-9188**	1	SPRING-VALVE	
	6	1	**121-0307**	1	BASE	
	7	1	**305-4781**	1	PLATE AS	
I	8	1	**310-9498**	1	HOSE AS	
I	9	1	**310-9500**	1	HOSE AS	
	10	1	**1R-0739**	1	FILTER AS-ENGINE OIL (STANDARD EFFICIENCY)	
	11	1	**152-2939**	1	SEAL-O-RING	
	12	1	**2T-2991**	1	CONNECTOR	
	13	1	**189-9377**	1	SEAL-O-RING	
	14	1	**153-4906**	1	SEAL-O-RING	
	15	1	**033-5853**	1	SEAL-O-RING	
	16	1	**033-6038**	2	SEAL-O-RING	
M	17	1	**5P-8196**	1	PLUG	
	18	1	**5P-9617**	1	ADAPTER	
	19	1	**6D-1641**	4	CLIP	
	20	1	**6V-8713**	1	CONNECTOR	
	21	1	**228-7092**	1	SEAL-O-RING	
	22	1	**152-2938**	3	SEAL-O-RING	
	23	1	**8C-3446**	1	VALVE-FLUID SAMPLING (ENGINE OIL)	
	24	1	**8T-4121**	10	WASHER-HARD (11X21X2.5-MM THK)	
M	25	1	**8T-4136**	3	BOLT (M10X1.5X25-MM)	
M	26	1	**8T-4137**	3	BOLT (M10X1.5X20-MM)	
M	27	1	**8T-4186**	4	BOLT (M10X1.5X40-MM)	
M	28	1	**8T-4197**	3	BOLT (M8X1.25X40-MM)	
	29	1	**8T-4224**	5	WASHER-HARD (8.8X16X2-MM THK)	
M	30	1	**8T-7547**	2	BOLT (M8X1.25X30-MM)	
	31	1	**9S-4188**	1	PLUG	
	32	1	**173-8073**	1	SPACER (11X25X20-MM THK)	
	33	1	**7K-1181**	1	STRAP-CABLE	

I-REFER TO HYDRAULIC INFORMATION SYSTEM
M-METRIC PART

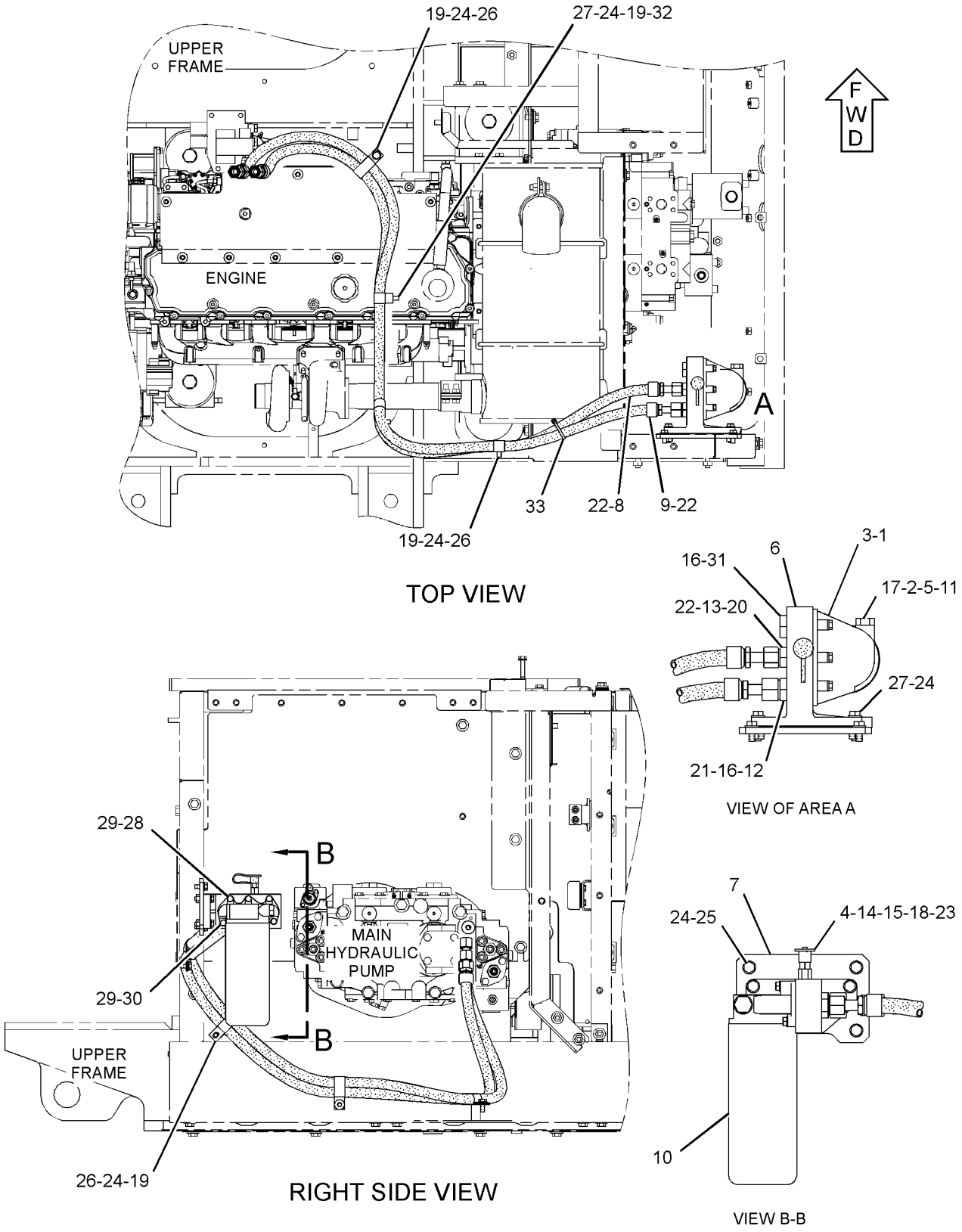

GRAPHIC #1 **<END>** g01511594

296-4641 LINES GP-ENGINE OIL

S/N: GDC1-UP; KGF1-UP
PART OF 272-4677, 272-4683, 296-4676, 305-4777 ENGINE AR
ALSO AN ATTACHMENT

SMCS-1307 **i02702813**

NOTE	REF NO	GRAPHIC REF	PART NUMBER	QTY	PART NAME 1 2 3 4 5 6 (PRODUCT LEVEL)	SEE PAGE
	1	1	**294-1767**	1	VALVE	
	2	1	**178-6563**	1	STRAINER	
	3	1	**5I-7642**	1	PLATE	
M	5	1	**195-8351**	1	BOLT AS	
	6	1	**294-1768**	3	BOLT	
	7	1	**5I-5038**	1	SEAL-O-RING	
	8	1	**234-4796**	1	GASKET	

M-METRIC PART

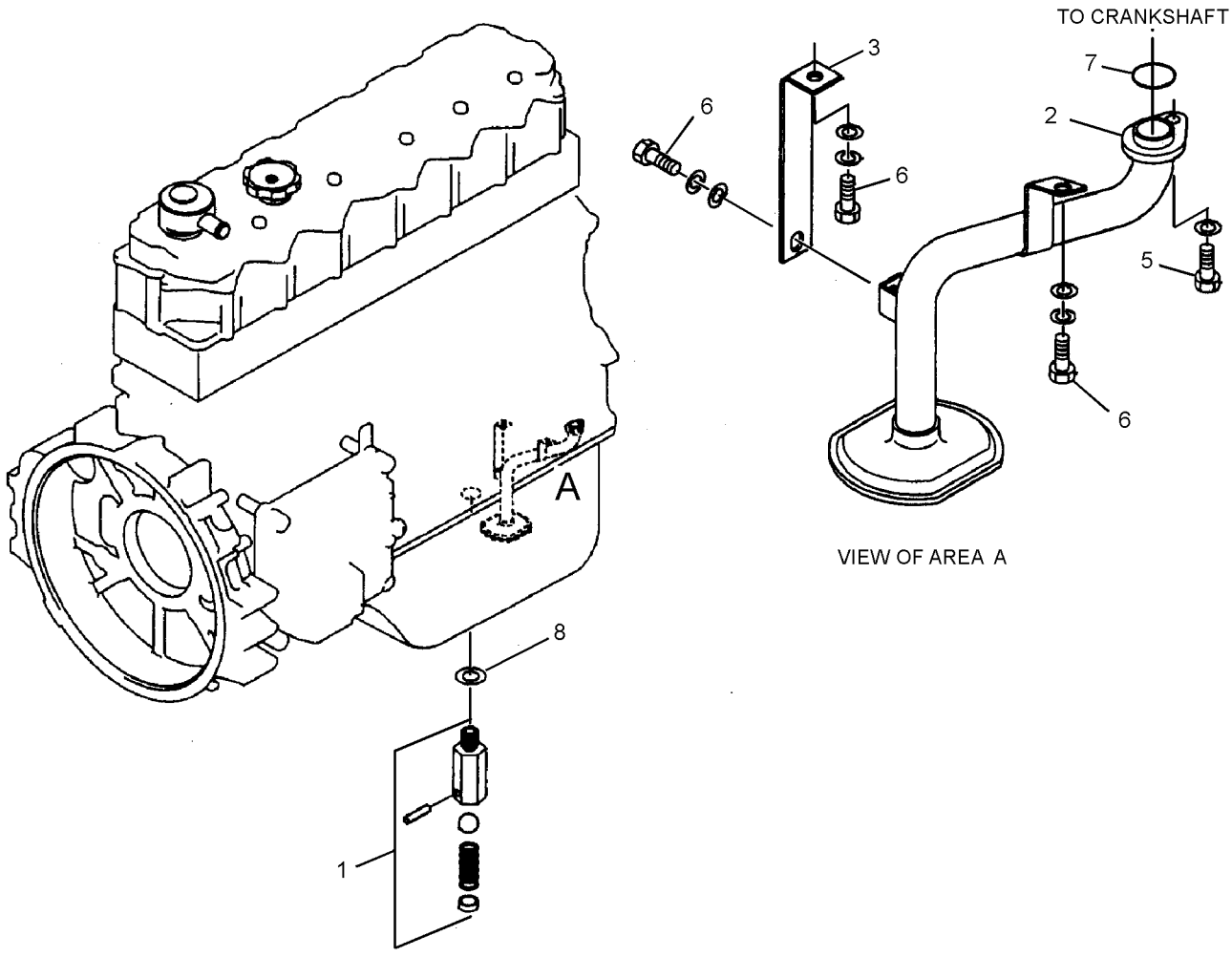

GRAPHIC #1 **<END>** g01355663

LUBRICATION SYSTEM

162-6185 LINES GP-ENGINE OIL DRAIN

S/N: KGF1-1005; FAL1-709

PART OF 272-4742 INSTALLATION AR-ENGINE

SMCS-1307 **i02707634**

NOTE	REF NO	GRAPHIC REF	PART NUMBER	QTY	PART NAME 1 2 3 4 5 6 (PRODUCT LEVEL)	SEE PAGE
	1	1	**096-0061**	1	STRAP-CABLE	
	2	1	**095-1388**	1	CLAMP-HOSE	
E	3	1	**5P-0743**		HOSE (17CM)	
	4	1	**217-5469**	1	ELBOW	

E-ORDER BY THE CENTIMETER

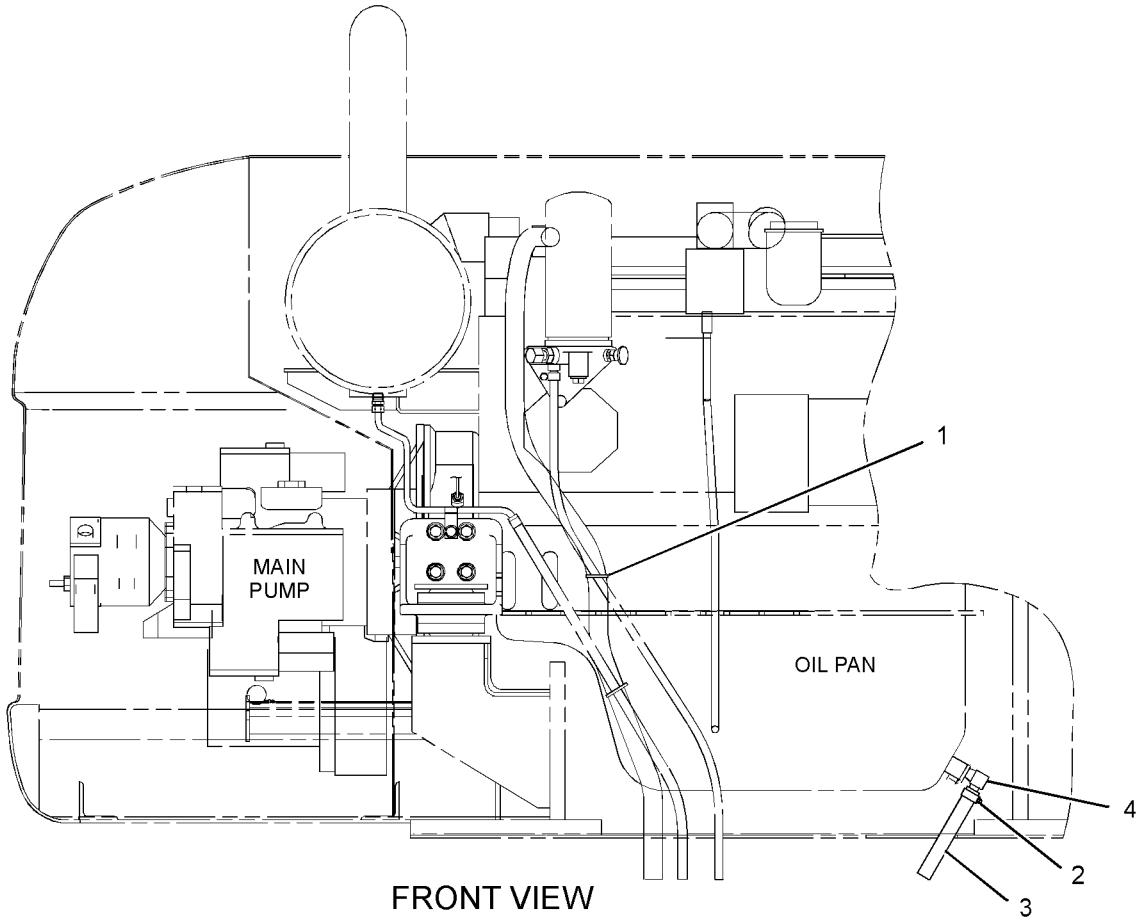

FRONT VIEW

GRAPHIC #1 **<END>** g01358666

310-9582 LINES GP-ENGINE OIL DRAIN

S/N: KGF1006-UP; FAL710-UP

PART OF 272-4742 INSTALLATION AR-ENGINE

SMCS-1307 **i02945306**

NOTE	REF NO	GRAPHIC REF	PART NUMBER	QTY	PART NAME 1 2 3 4 5 6 (PRODUCT LEVEL)	SEE PAGE
	1	1	**095-1388**	1	CLAMP-HOSE	
	2	1	**217-5469**	1	ELBOW	
E	3	1	**5P-0743**		HOSE (17-CM)	

E-ORDER BY THE CENTIMETER

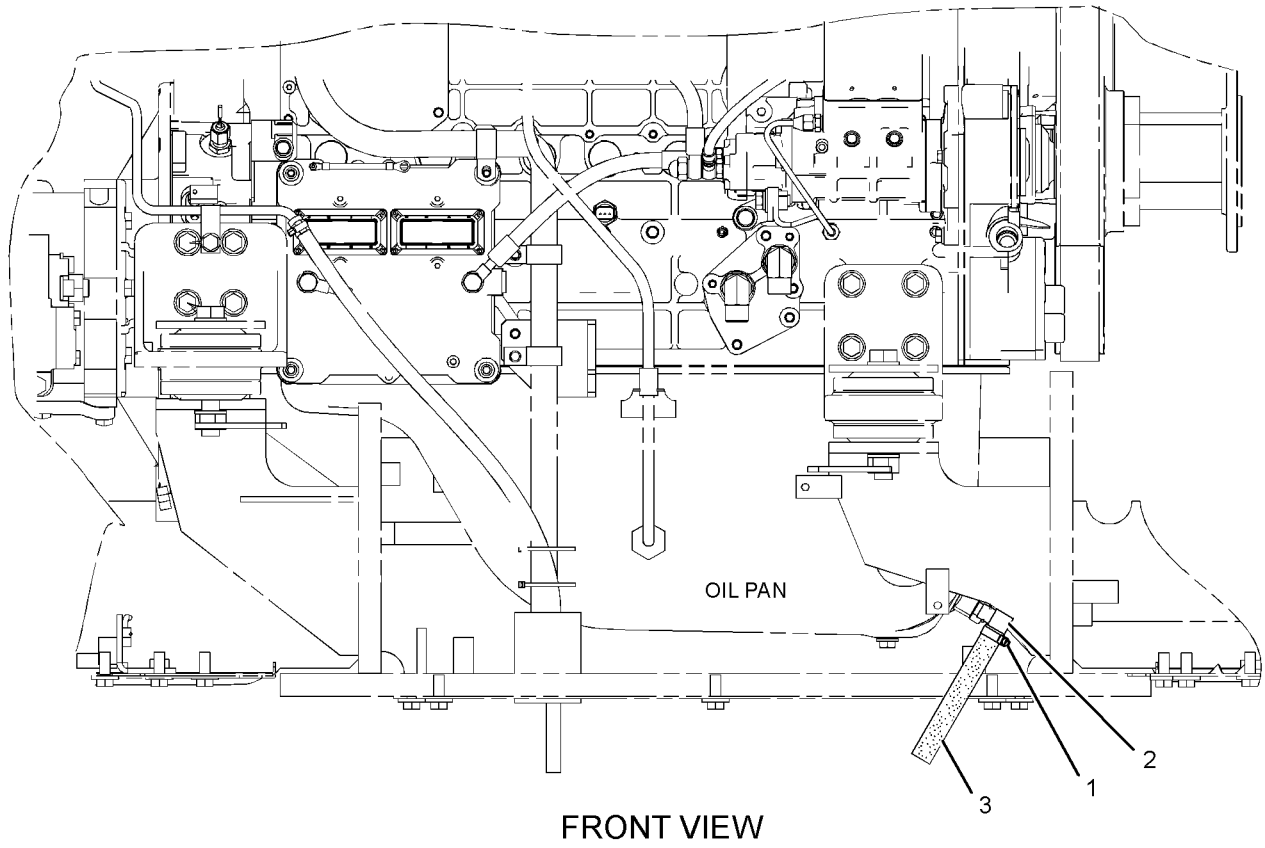

FRONT VIEW

GRAPHIC #1 **<END>** g01460734

296-4636 LINES GP-TURBOCHARGER OIL

S/N: GDC1-UP; KGF1-UP
PART OF 272-4677, 272-4683, 296-4676, 305-4777 ENGINE AR
ALSO AN ATTACHMENT

SMCS-1052 **i02618405**

NOTE	REF NO	GRAPHIC REF	PART NUMBER	QTY	PART NAME 1 2 3 4 5 6 (PRODUCT LEVEL)	SEE PAGE
	1	1	**294-1764**	1	PIPE	
	2	1	**294-1765**	1	PIPE	
	3	1	**294-1766**	1	GASKET	
	4	1	**195-8322**	2	BOLT (M6X1X16-MM)	
	5	1	**2A-5222**	2	WASHER (10.3X15.9X1-IN)	
	6	1	**5I-7623**	1	BOLT	
	7	1	**5I-8058**	1	CONNECTOR	
	8	1	**5I-7561**	1	GASKET	
	9	1	**196-8366**	2	BOLT	

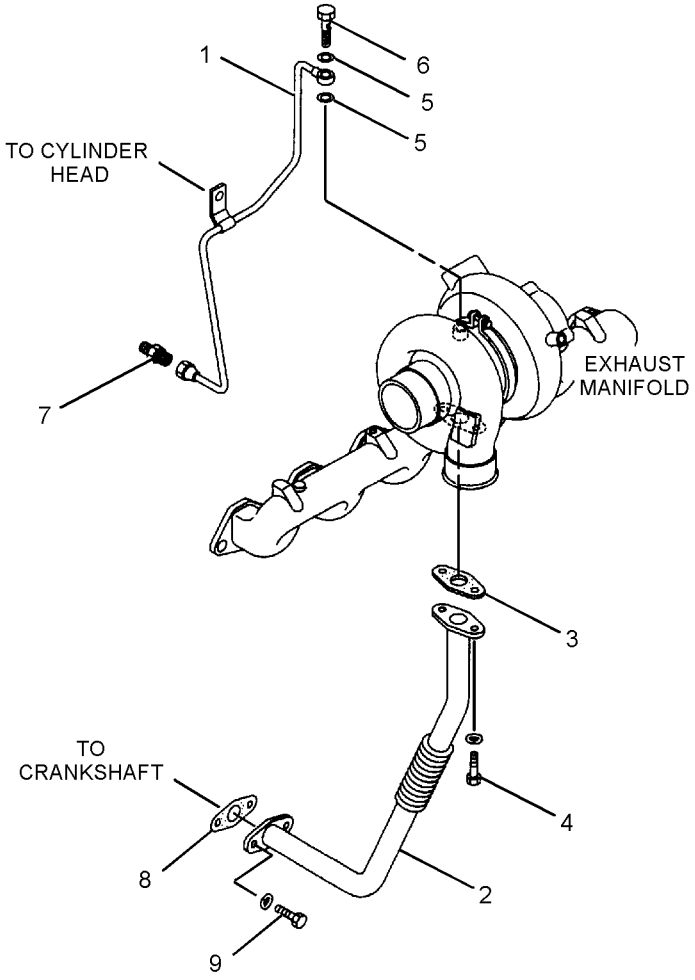

GRAPHIC #1 **<END>** g01319518

296-4642 COOLER GP-ENGINE OIL

S/N: GDC1-UP; KGF1-UP
PART OF 272-4677, 272-4683, 296-4676, 305-4777 ENGINE AR
ALSO AN ATTACHMENT

SMCS-1378 **i02851398**

NOTE	REF NO	GRAPHIC REF	PART NUMBER	QTY	PART NAME 1 2 3 4 5 6 (PRODUCT LEVEL)	SEE PAGE
	1	1	**196-8366**	6	BOLT	
	2	1	**094-9266**	14	BOLT	
	3	1	**255-2904**	1	COVER AS	
	3A	1	**096-3321**	2	PLUG	
	4	1	**094-9267**	4	BOLT (M8X1.25X60.5-MM)	
	5	1	**294-1738**	4	BOLT (M10X1.5X32-MM)	
R	6	1	**125-2970**	1	CORE AS-OIL COOLER (ENGINE)	
M	7	1	**5C-7261**	4	NUT (M8X1.25-THD)	
	8	1	**3B-4505**	4	LOCKWASHER	
	9	1	**5I-7690**	1	GASKET	
	10	1	**5I-7691**	2	GASKET	
	11	1	**222-8238**	1	COVER	
	12	1	**217-5589**	1	GASKET	

M-METRIC PART
R-REMFG PART MAY BE AVAILABLE

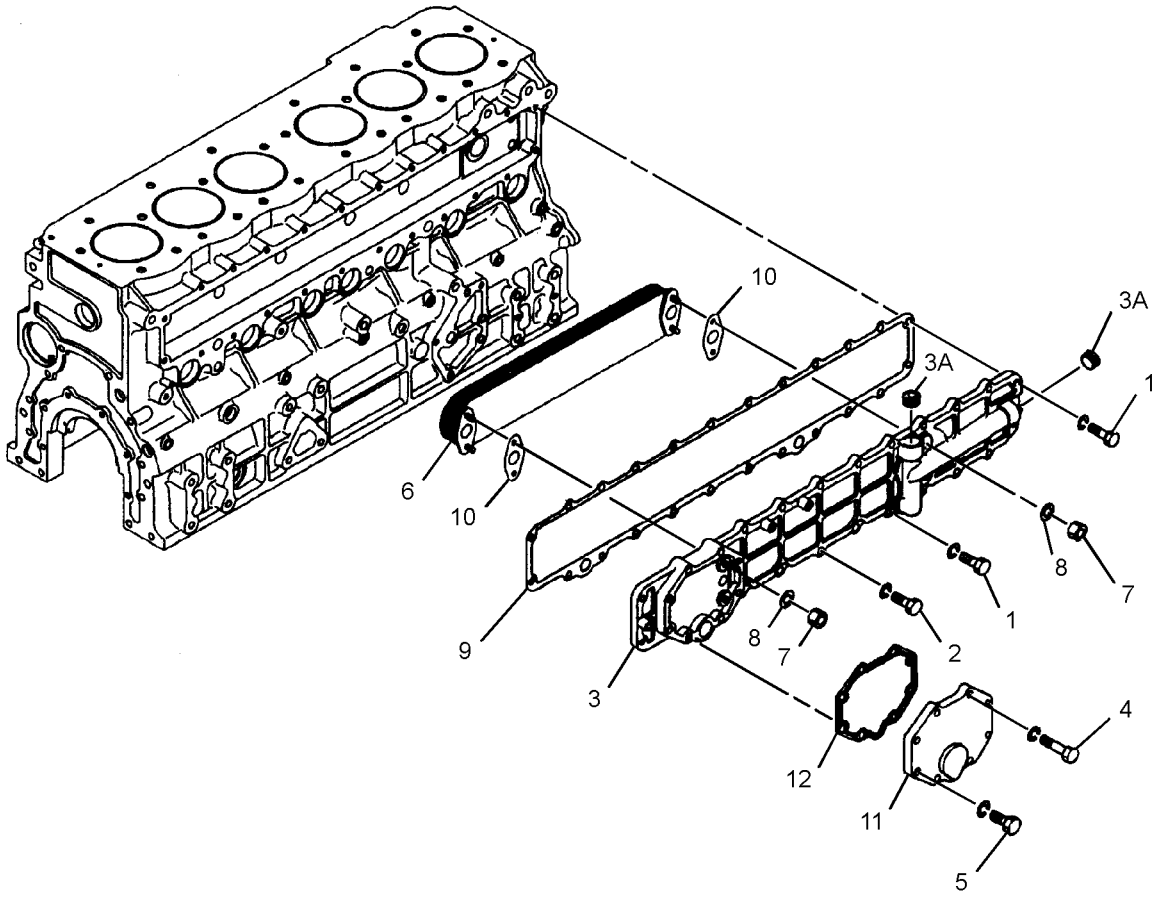

GRAPHIC #1 **<END>** g01316658

COOLING SYSTEM

264-8651 COOLING AR-HIGH AMBIENT TEMP—HIGH AMBIENT

S/N: KGF1-UP; FAL1-UP
AN ATTACHMENT

SMCS-1350 **i02611055**

NOTE	PART NUMBER	QTY	PART NAME 1 2 3 4 5 6 (PRODUCT LEVEL)	SEE PAGE
Y	*272-4687*	1	ENGINE AR-COMPLETE	18
Y	*289-6910*	1	DOOR GP-ACCESS (RADIATOR)	407

Y-SEPARATE ILLUSTRATION

<END>

290-1911 COOLING AR-HIGH AMBIENT TEMP

S/N: KGF1-UP; FAL1-UP
AN ATTACHMENT

SMCS-1350 **i02757968**

NOTE	PART NUMBER	QTY	PART NAME 1 2 3 4 5 6 (PRODUCT LEVEL)	SEE PAGE
Y	*296-4680*	1	ENGINE AR-COMPLETE	22
Y	*230-2979*	1	FAN GP-BLOWER	82
Y	*289-6910*	1	DOOR GP-ACCESS (RADIATOR)	407
Y	*265-3600*	1	RADIATOR & HYD OIL COOLER GP	90
Y	*275-6798*	1	WIRING GP-FAN (FLUID CLUTCH)	336
			—OR—	
Y	*306-8501*	1	WIRING GP-FAN (FLUID CLUTCH)	340

Y-SEPARATE ILLUSTRATION

<END>

298-4256 COOLING AR-HIGH AMBIENT TEMP—HIGH AMBIENT

S/N: KGF1-UP; FAL1-UP
AN ATTACHMENT

SMCS-1350 **i02753077**

NOTE	PART NUMBER	QTY	PART NAME 1 2 3 4 5 6 (PRODUCT LEVEL)	SEE PAGE
Y	**272-4685**	1	ENGINE AR-COMPLETE	17
Y	*289-6910*	1	DOOR GP-ACCESS (RADIATOR)	407

Y-SEPARATE ILLUSTRATION

<END>

298-4271 COOLING AR-HIGH AMBIENT TEMP

S/N: KGF1-UP; FAL1-UP
CHINA
AN ATTACHMENT

SMCS-1350 **i02762628**

NOTE	PART NUMBER	QTY	PART NAME 1 2 3 4 5 6 (PRODUCT LEVEL)	SEE PAGE
Y	*310-9484*	1	ENGINE AR-COMPLETE	24
Y	*230-2979*	1	FAN GP-BLOWER	82
Y	*289-6910*	1	DOOR GP-ACCESS (RADIATOR)	407
Y	*265-3600*	1	RADIATOR & HYD OIL COOLER GP	90
Y	*306-8501*	1	WIRING GP-FAN (FLUID CLUTCH)	340

Y-SEPARATE ILLUSTRATION

<END>

298-4272 COOLING AR-HIGH AMBIENT TEMP

S/N: KGF1-UP; FAL1-UP
AN ATTACHMENT

SMCS-1350 **i02797637**

NOTE	PART NUMBER	QTY	PART NAME 1 2 3 4 5 6 (PRODUCT LEVEL)	SEE PAGE
Y	*289-6910*	1	DOOR GP-ACCESS (RADIATOR)	407
Y	**310-9485**	1	ENGINE AR-COMPLETE	25
Y	*230-2979*	1	FAN GP-BLOWER	82
Y	*265-3600*	1	RADIATOR & HYD OIL COOLER GP	90
Y	*306-8501*	1	WIRING GP-FAN (FLUID CLUTCH)	340

Y-SEPARATE ILLUSTRATION

<END>

COOLING SYSTEM

230-2979 FAN GP-BLOWER

S/N: KGF1-UP; FAL1-UP
PART OF 290-1911, 298-4271, 298-4272 COOLING AR-HIGH AMBIENT TEMP, 272-4675, 305-4763 ENGINE AR
AN ATTACHMENT

SMCS-1356, 1360 **i02762211**

NOTE	REF NO	GRAPHIC REF	PART NUMBER	QTY	PART NAME 1 2 3 4 5 6 (PRODUCT LEVEL)	SEE PAGE
	1	1	**245-9344**	1	FAN AS (10-BLADE)	
	2	1	**265-3557**	1	PLATE AS	
	3	1	**281-3588**	1	DRIVE AS-FAN	
		1	**102-8805**	1	KIT-RECEPTACLE (6-PIN)	
					(INCLUDES RECEPTACLE AS & WEDGE)	
M	4	1	**7X-0818**	6	BOLT (M8X1.25X45-MM)	
M	5	1	**8T-4189**	6	BOLT (M8X1.25X20-MM)	
M	6	1	**8T-4200**	3	BOLT (M8X1.25X16-MM)	
	7	1	**8T-4224**	15	WASHER-HARD (8.8X16X2-MM THK)	

M-METRIC PART

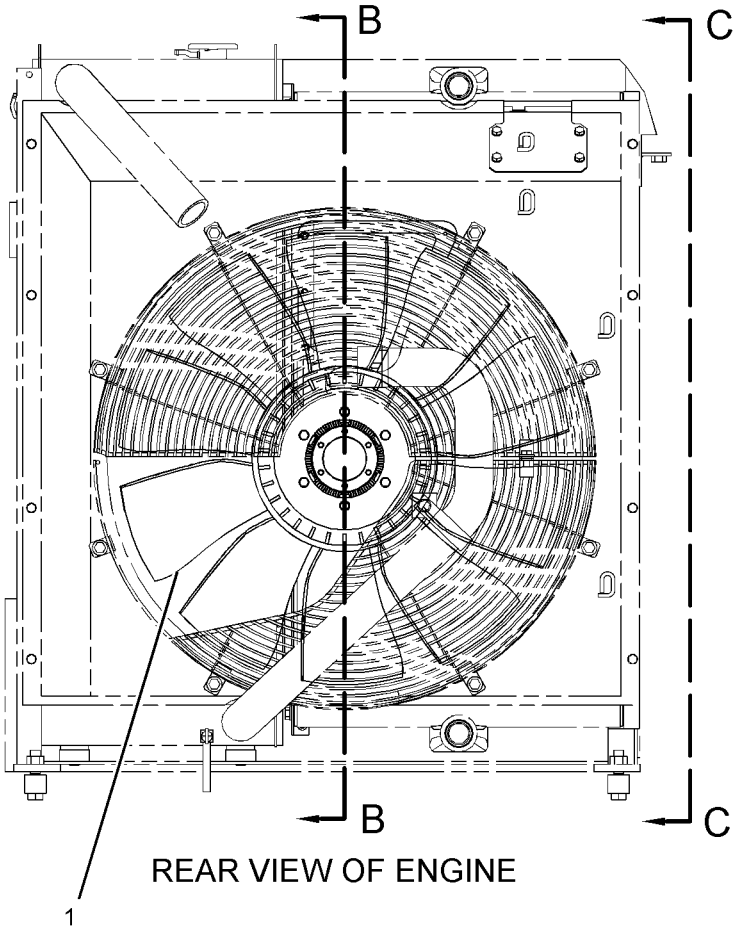

REAR VIEW OF ENGINE

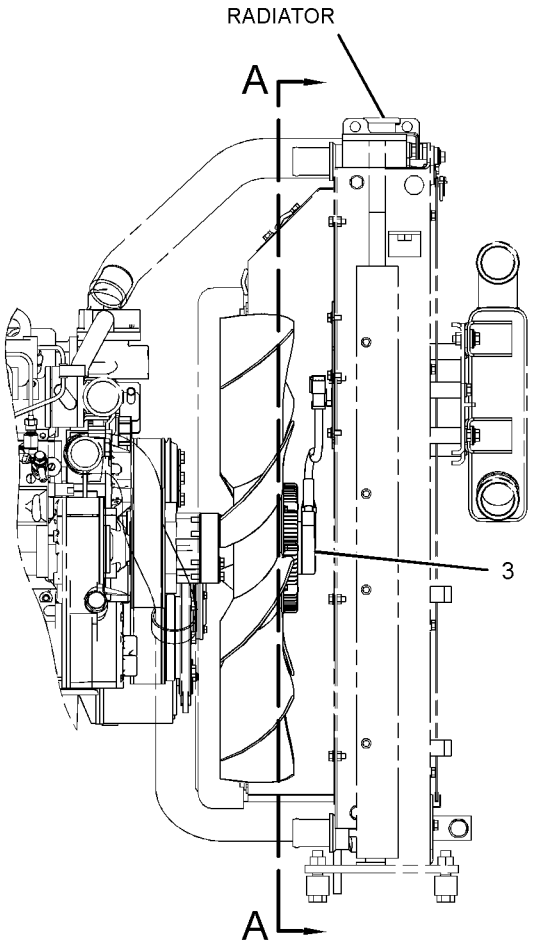

VIEW C-C

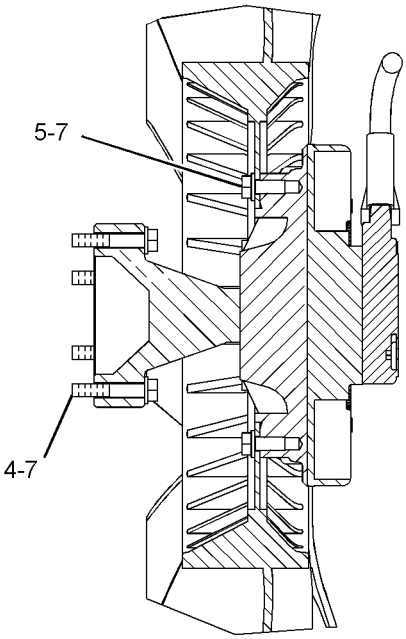

SECTION B-B

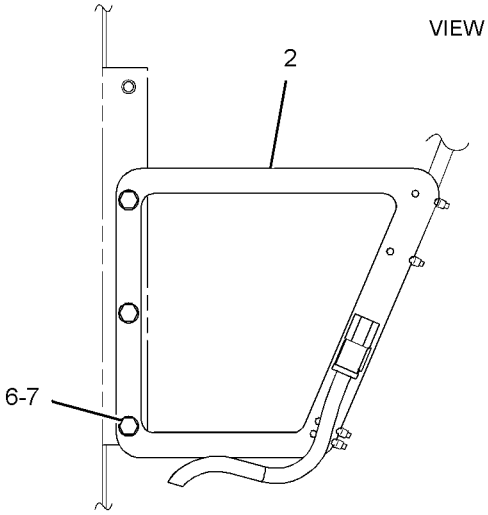

VIEW A-A

GRAPHIC #1 **<END>** g01381523

COOLING SYSTEM

245-9313 FAN GP-SUCTION

S/N: KGF1-UP; FAL1-UP
PART OF 272-4681 ENGINE AR

SMCS-1356 **i02424080**

NOTE	REF NO	GRAPHIC REF	PART NUMBER	QTY	PART NAME 1 2 3 4 5 6 (PRODUCT LEVEL)	SEE PAGE
	1	1	**245-9343**	1	FAN AS	
M	2	1	**8T-4189**	6	BOLT (M8X1.25X20-MM)	
	3	1	**8T-4224**	6	WASHER-HARD (8.8X16X2-MM THK)	

M-METRIC PART

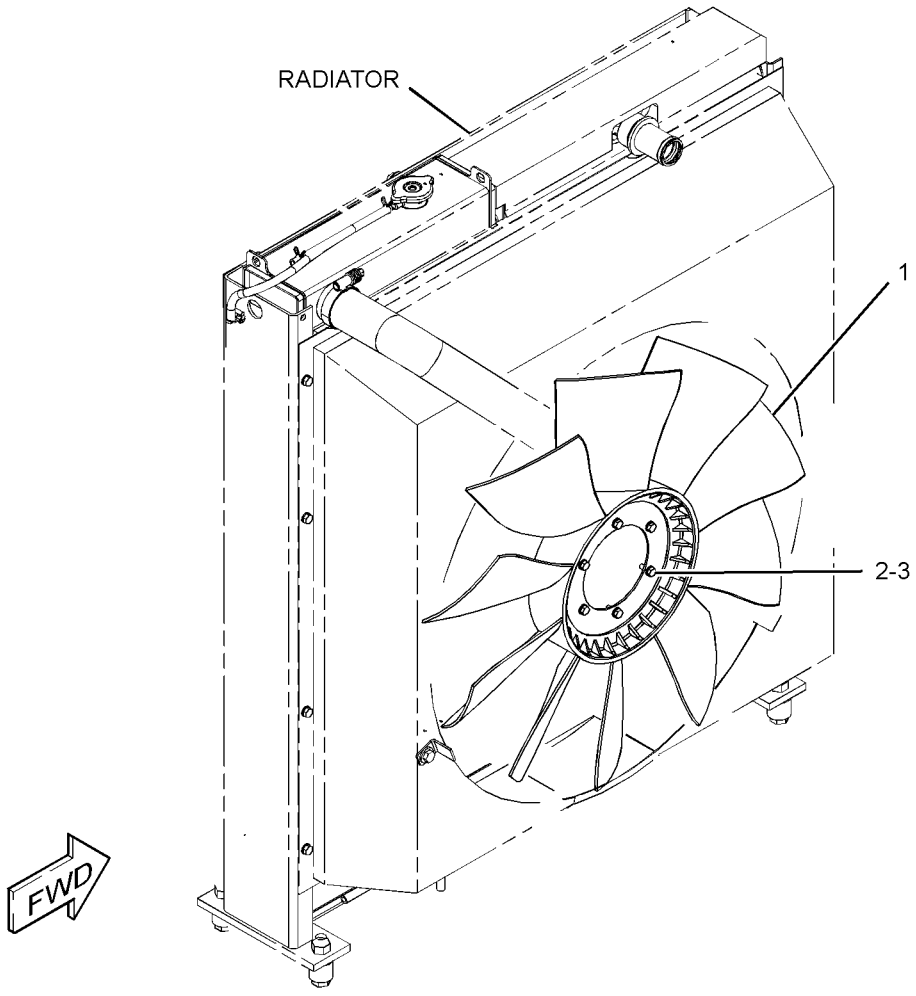

GRAPHIC #1 **<END>** g01222744

COOLING SYSTEM

305-4775 FAN GP-SUCTION

S/N: KGF1-UP; FAL1-UP
PART OF 297-7747 PULLEY GP-ENGINE
ALSO AN ATTACHMENT

SMCS-1356 **i02737576**

NOTE	REF NO	GRAPHIC REF	PART NUMBER	QTY	PART NAME 1 2 3 4 5 6 (PRODUCT LEVEL)	SEE PAGE
	1	1	**266-6227**	1	BRACKET	
M	2	1	**255-2873**	1	BOLT AS	
	3	1	**266-6229**	1	PULLEY-FAN DRIVE	
	4	1	**255-2926**	2	BEARING	
	5	1	**212-8596**	2	BUSHING	
	6	1	**266-6232**	1	SPACER (31.1X38.1X28.4-MM THK)	
	7	1	**255-2871**	1	WASHER (10.5X38X7-MM THK)	

M-METRIC PART

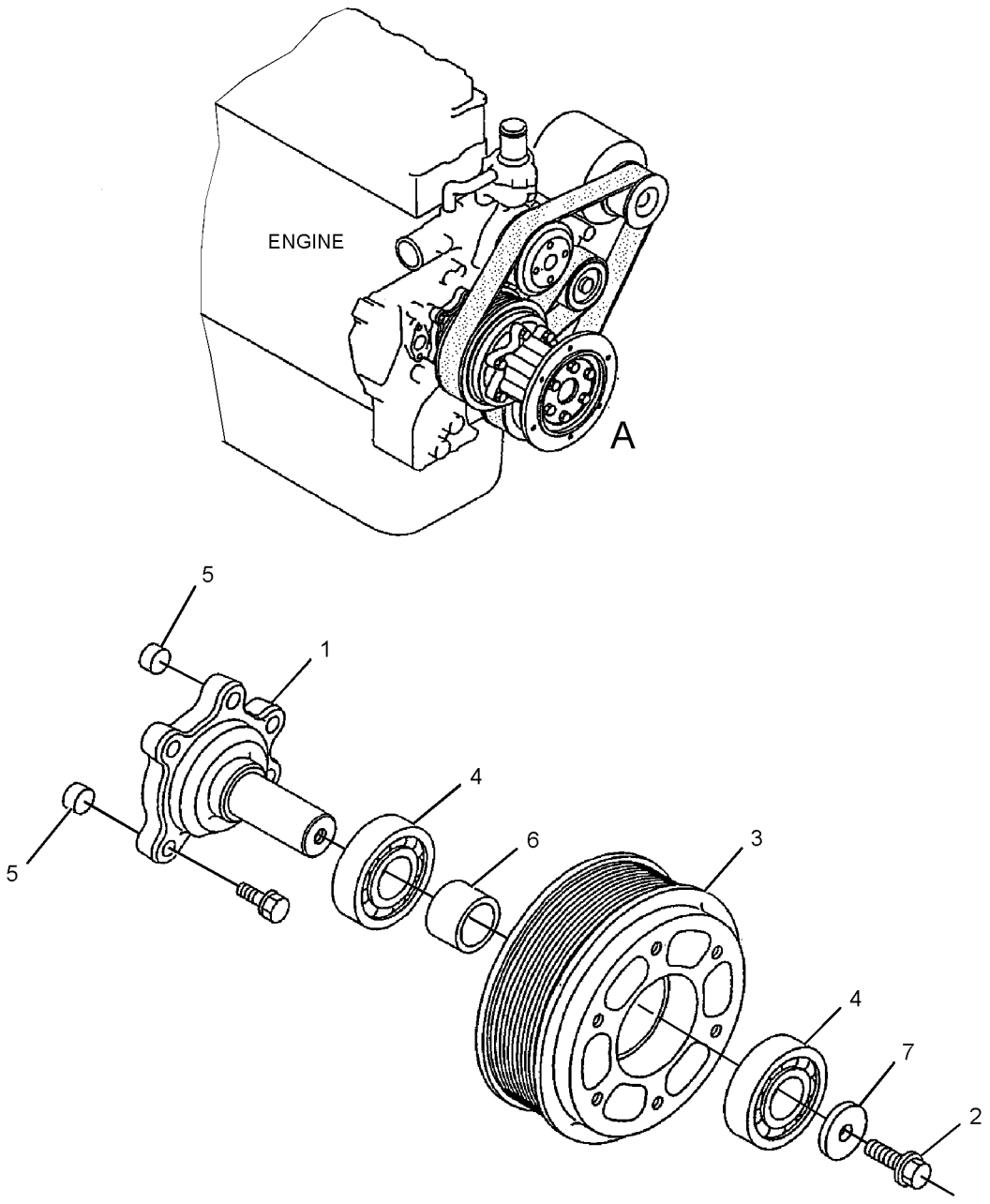

VIEW OF AREA A

GRAPHIC #1 **<END>** g01376577

COOLING SYSTEM

296-4658 LINES GP-WATER

S/N: GDC1-UP; KGF1-UP
PART OF 272-4677, 272-4683, 296-4676, 305-4777 ENGINE AR
ALSO AN ATTACHMENT

SMCS-1355, 1380 **i02989904**

NOTE	REF NO	GRAPHIC REF	PART NUMBER	QTY	PART NAME 1 2 3 4 5 6 (PRODUCT LEVEL)	SEE PAGE
	1	1	**5I-7867**	1	COVER AS	
	1A	1	**5I-7655**	1	PIPE	
	2	1	**154-9024**	1	VALVE GP-FLUID SAMPLING (ENGINE COOLANT)	
	3	1	**157-0670**	1	CAP-DUST	
	4	1	**5I-7646**	1	ELBOW	
	5	1	**294-1777**	2	GASKET	
	6	1	**5I-8056**	2	PLUG	
	7	1	**096-9532**	2	WASHER (15.8X22.5X2-MM THK)	
	8	1	**270-6338**	1	BOLT AS	
	8A	1	**3B-4505**	1	LOCKWASHER	
	9	1	**294-1778**	1	HOSE	
	10	1	**5I-8010**	1	REGULATOR-TEMPERATURE (COOLANT)	
	11	1	**5I-7735**	1	GASKET (WATER TEMPERATURE REGULATOR)	
	12	1	**096-8619**	3	BOLT	
	13	1	**297-7655**	1	BOLT	
	14	1	**3B-4505**	1	LOCKWASHER	
	15	1	**2S-3440**	2	CLAMP-HOSE	
	16	1	**294-1780**	1	GASKET (WATER TEMPERATURE REGULATOR)	
	18	1	**296-4733**	1	SPACER	

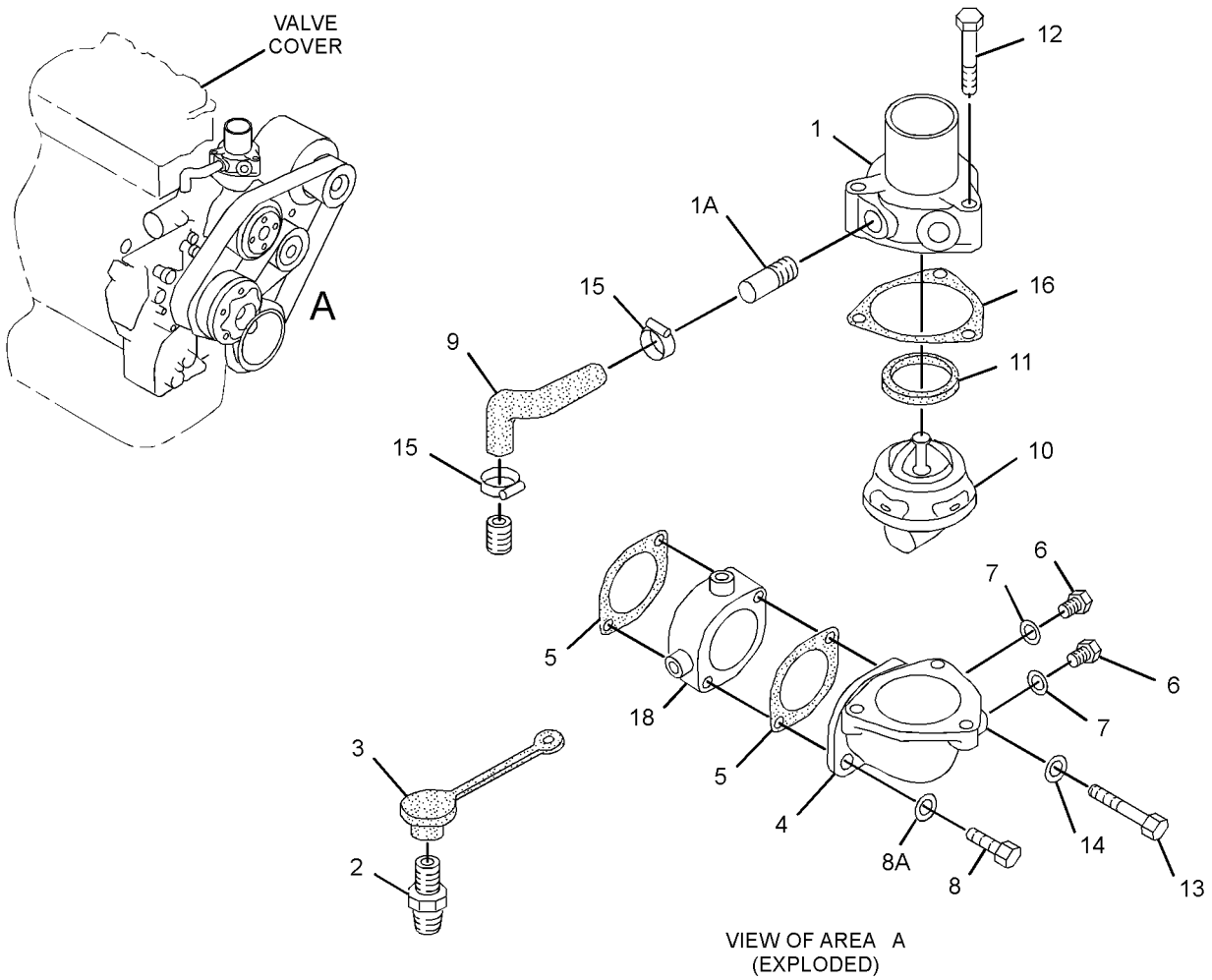

VIEW OF AREA A
(EXPLODED)

GRAPHIC #1 **<END>** g01357120

COOLING SYSTEM

296-4655 PUMP GP-WATER

S/N: GDC1-UP; KGF1-UP
PART OF 272-4677, 272-4683, 296-4676, 305-4777 ENGINE AR
ALSO AN ATTACHMENT

SMCS-1361 **i02618456**

NOTE	REF NO	GRAPHIC REF	PART NUMBER	QTY	PART NAME 1 2 3 4 5 6 (PRODUCT LEVEL)	SEE PAGE
	1	1	**178-6633**	1	PUMP GP-WATER	
	1A	1	**5I-7696**	1	FLANGE	
	1B	1	**178-6635**	1	SHAFT	
	1C	1	**8T-9598**	1	RING-RETAINING	
	1D	1	**5L-6326**	1	BALL BEARING (62-MM OD)	
	1E	1	**178-6634**	1	IMPELLER	
	1F	1	**5I-7697**	1	SPACER (28-MM)	
	1G	1	**2H-3814**	1	BALL BEARING (52-MM OD)	
	1H	1	**125-2947**	1	WASHER (1-MM THK)	
	1J	1	**178-6636**	1	SEAL	
	2	1	**294-1738**	7	BOLT	
	3	1	**8T-4121**	4	WASHER-HARD (11X21X2.5-MM THK)	

296-4655 **PUMP GP-WATER** *(contd.)* **i02618456**

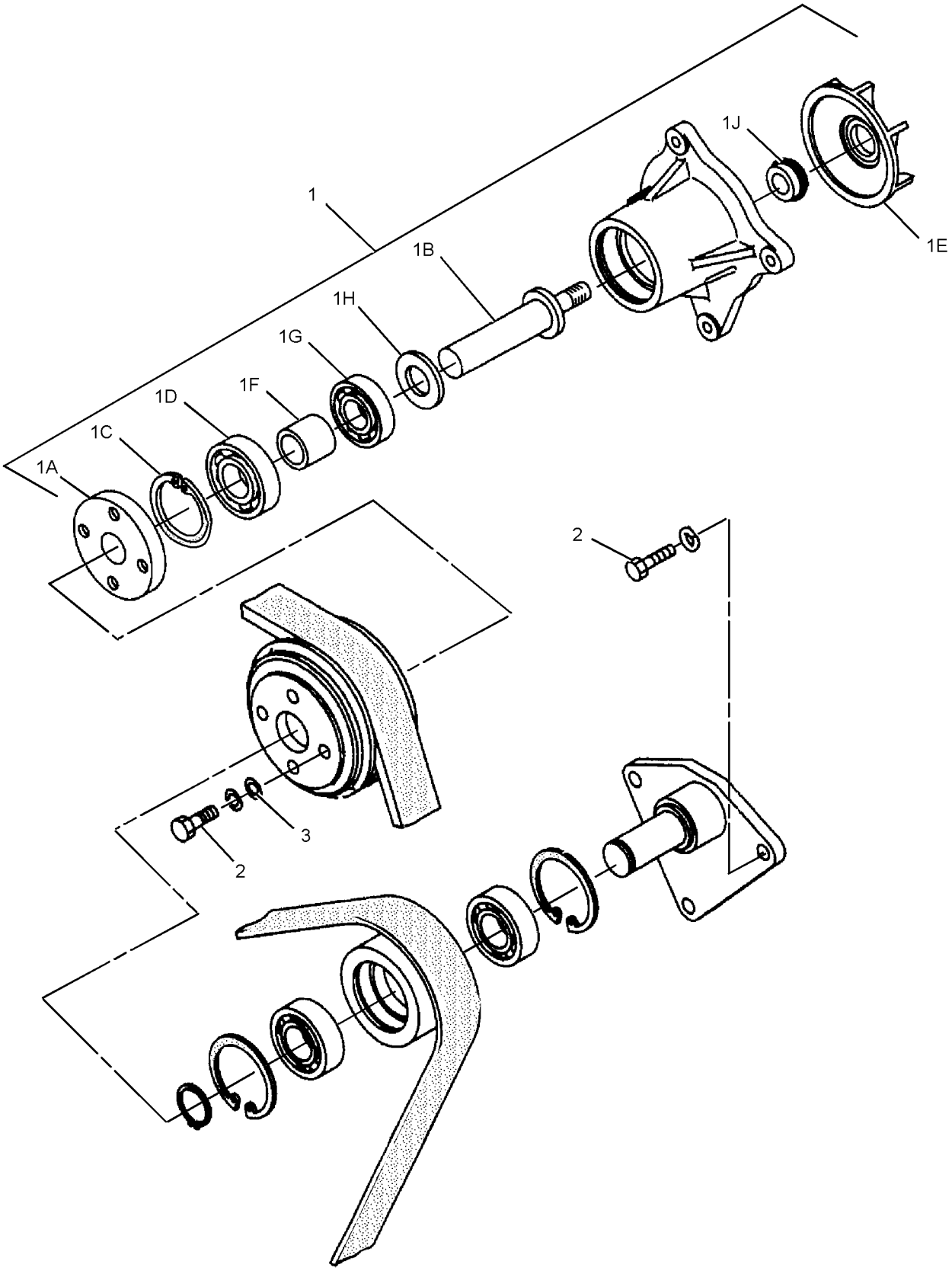

GRAPHIC #1 **<END>** g01316735

265-3600 RADIATOR & HYD OIL COOLER GP

S/N: KGF1-UP; FAL1-UP
PART OF 290-1911 COOLING AR-HIGH AMBIENT TEMP, 290-1892 SPECIAL AR
AN ATTACHMENT
TYPE 1

SMCS-1351 **i02612570**

NOTE	REF NO	GRAPHIC REF	PART NUMBER	QTY	PART NAME 1 2 3 4 5 6 (PRODUCT LEVEL)	SEE PAGE
	1	1	**3S-2093**	3	STRAP-CABLE	
	2	1	**7I-2673**	1	STRAP-CABLE	
	3	1	**8T-4984**	1	CLAMP-HOSE	
	4	1	**096-4035**	1	CLIP	
	5	1	**171-9077**	1	BAND	
	6	1	**178-6450**	4	SPACER (17X35X30-MM THK)	
	7	1	**245-9178**	1	HOSE (LOWER RADIATOR)	
	8	1	**245-9185**	1	BRACKET AS	
	9	1	**245-9191**	1	PLATE AS	
	10	1	**245-9205**	1	TANK AS-COOLANT (RECOVERY)	
		1	**171-3369**	1	CAP AS (COOLANT RECOVERY)	
	11	1	**245-9348**	1	GUARD AS (UPPER)	
	12	1	**245-9349**	1	GUARD AS (LOWER)	
	13	1	**245-9352**	1	SEAL	
Y	14	1	**265-3601**	1	RADIATOR & HYD OIL COOLER GP	94
	15	1	**265-3602**	1	HOSE-UPPER RADIATOR	
	16	1	**3P-9847**	1	CLIP	
M	17	1	**7X-2554**	4	BOLT (M16X2X70-MM)	
	18	1	**7X-7729**	11	WASHER (11X25X3-MM THK)	
	19	1	**8T-4121**	1	WASHER-HARD (11X21X2.5-MM THK)	
M	20	1	**8T-4136**	2	BOLT (M10X1.5X25-MM)	
M	21	1	**8T-4137**	10	BOLT (M10X1.5X20-MM)	
M	22	1	**8T-4139**	2	BOLT (M12X1.75X30-MM)	
M	23	1	**8T-4200**	2	BOLT (M8X1.25X16-MM)	
	24	1	**8T-4223**	2	WASHER-HARD (13.5X25.5X3-MM THK)	
	25	1	**8T-4224**	2	WASHER-HARD (8.8X16X2-MM THK)	
E	26	1	**7Y-1976**		HOSE-WATER (40-CM)	
D	27	1	**5P-9909**		SEAL (1.1-M)	
	28	1	**8T-6703**	3	CLAMP-HOSE	

D-ORDER BY THE METER
E-ORDER BY THE CENTIMETER
M-METRIC PART
Y-SEPARATE ILLUSTRATION

265 - 3600 **RADIATOR & HYD OIL COOLER GP** *(contd.)* **i02612570**

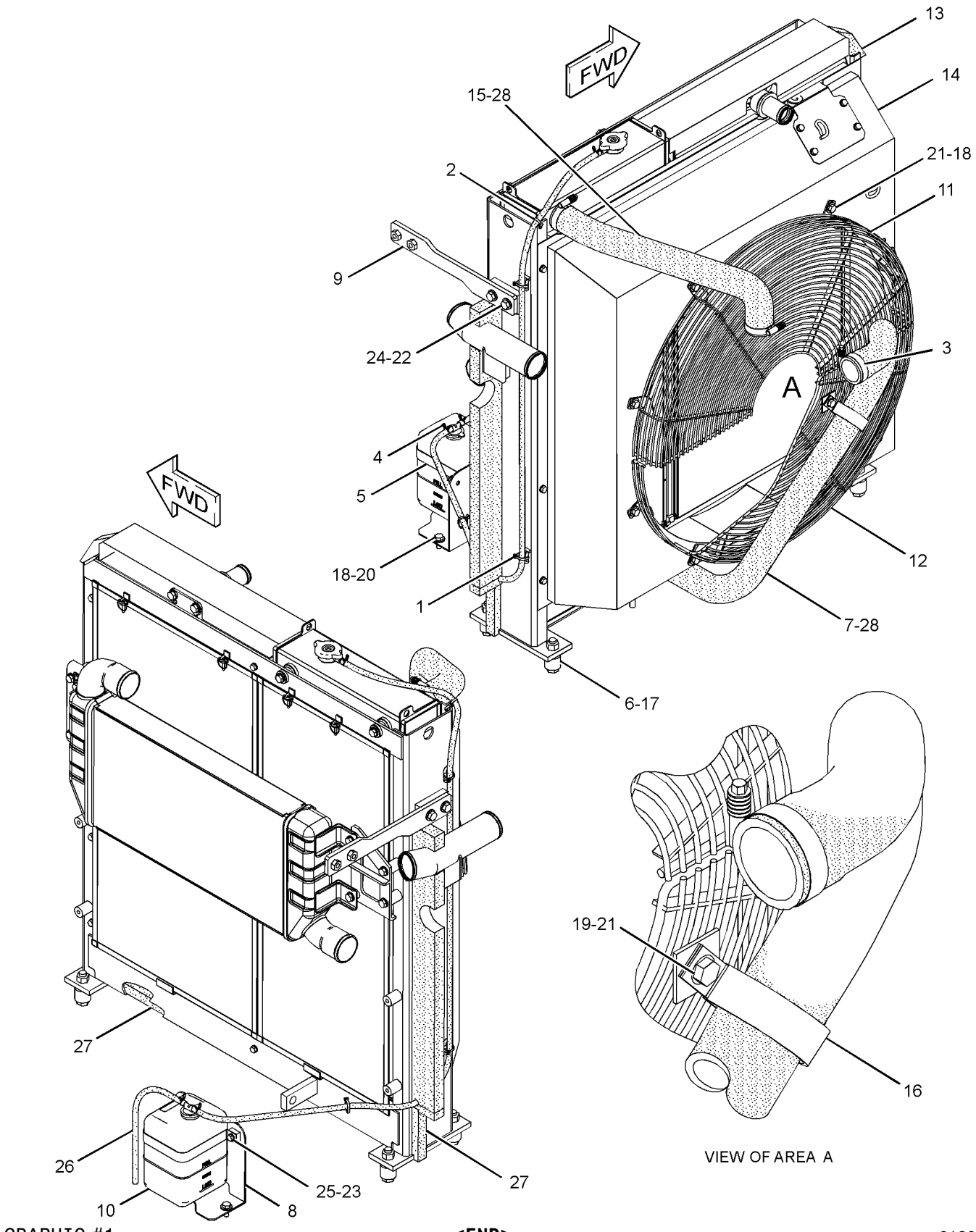

GRAPHIC #1 **<END>** g01306893

COOLING SYSTEM

265-3600 RADIATOR & HYD OIL COOLER GP

S/N: KGF1-UP; FAL1-UP
PART OF 290-1911, 298-4271, 298-4272 COOLING AR-HIGH AMBIENT TEMP, 290-1892
SPECIAL AR
AN ATTACHMENT
TYPE 2

SMCS-1351 **i02754438**

NOTE	REF NO	GRAPHIC REF	PART NUMBER	QTY	PART NAME 1 2 3 4 5 6 (PRODUCT LEVEL)	SEE PAGE
	1	1	**3S-2093**	3	STRAP-CABLE	
	2	1	**7I-2673**	1	STRAP-CABLE	
	3	1	**8T-4984**	1	CLAMP-HOSE	
	4	1	**096-4035**	1	CLIP	
	5	1	**171-9077**	1	BAND	
	6	1	**178-6450**	4	SPACER (17X35X30-MM THK)	
	7	1	**245-9178**	1	HOSE (LOWER RADIATOR)	
	8	1	**245-9185**	1	BRACKET AS	
	9	1	**245-9191**	1	PLATE AS	
	10	1	**245-9205**	1	TANK AS-COOLANT (RECOVERY)	
		1	**171-3369**	1	CAP AS (COOLANT RECOVERY)	
	11	1	**245-9348**	1	GUARD AS (UPPER)	
	12	1	**245-9349**	1	GUARD AS (LOWER)	
	13	1	**245-9352**	1	SEAL	
CY	14	1	**281-3602**	1	RADIATOR & HYD OIL COOLER GP	106
	15	1	**265-3602**	1	HOSE-UPPER RADIATOR	
	16	1	**3P-9847**	1	CLIP	
M	17	1	**7X-2554**	4	BOLT (M16X2X70-MM)	
	18	1	**7X-7729**	11	WASHER (11X25X3-MM THK)	
	19	1	**8T-4121**	1	WASHER-HARD (11X21X2.5-MM THK)	
M	20	1	**8T-4136**	2	BOLT (M10X1.5X25-MM)	
M	21	1	**8T-4137**	10	BOLT (M10X1.5X20-MM)	
M	22	1	**8T-4139**	2	BOLT (M12X1.75X30-MM)	
M	23	1	**8T-4200**	2	BOLT (M8X1.25X16-MM)	
	24	1	**8T-4223**	2	WASHER-HARD (13.5X25.5X3-MM THK)	
	25	1	**8T-4224**	2	WASHER-HARD (8.8X16X2-MM THK)	
E	26	1	**7Y-1976**		HOSE-WATER (40-CM)	
D	27	1	**5P-9909**		SEAL (0.14-M)	
D	27A	1	**5P-9909**		SEAL (0.87-M)	
	28	1	**8T-6703**	3	CLAMP-HOSE	

C-CHANGE FROM PREVIOUS TYPE
D-ORDER BY THE METER
E-ORDER BY THE CENTIMETER
M-METRIC PART
Y-SEPARATE ILLUSTRATION

265 - 3600 **RADIATOR & HYD OIL COOLER GP** *(contd.)* **i02754438**

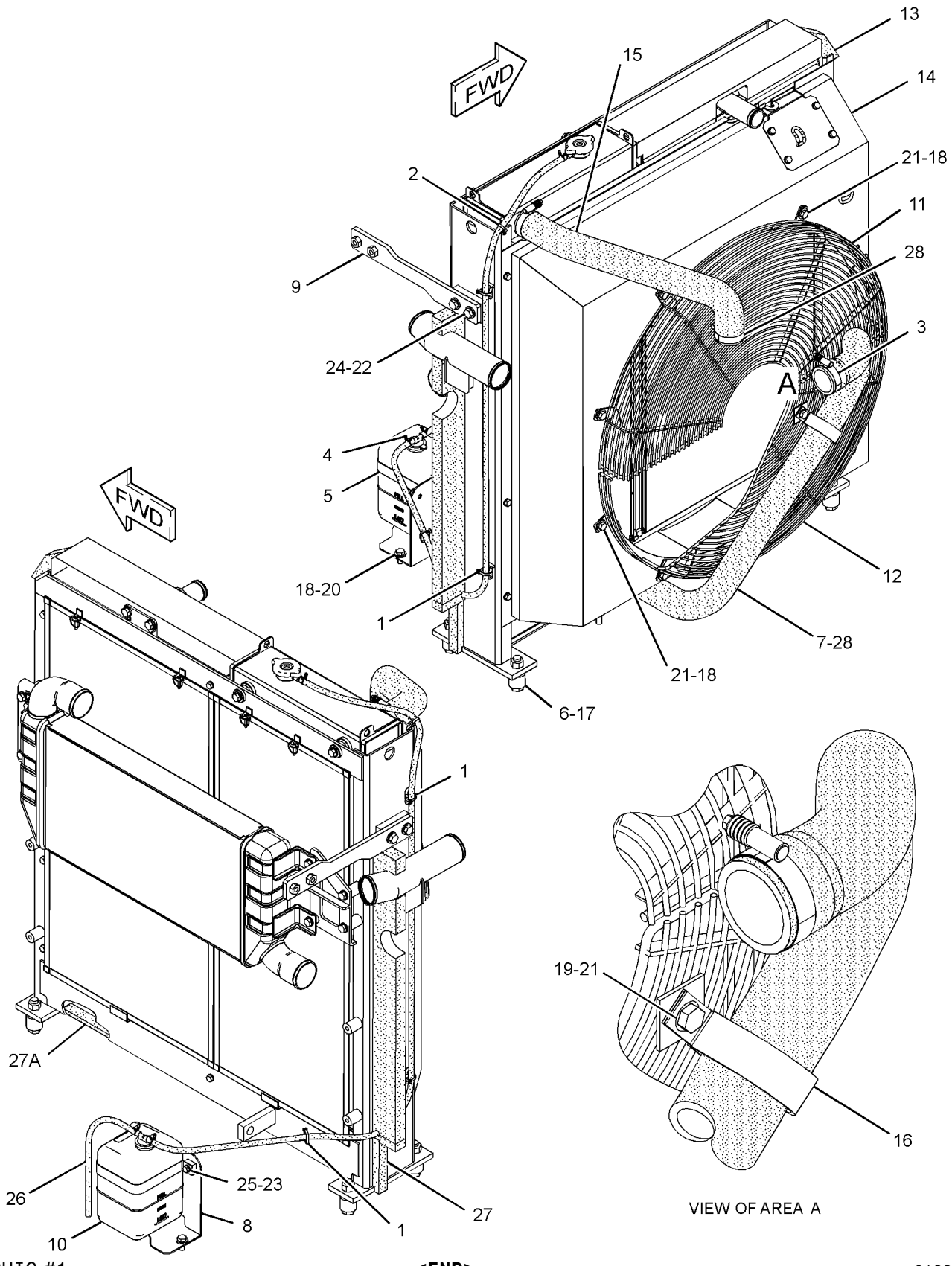

GRAPHIC #1 **<END>** g01380034

COOLING SYSTEM

265-3601 RADIATOR & HYD OIL COOLER GP

S/N: KGF1-UP; FAL1-UP
PART OF 265-3600 RADIATOR & HYD OIL COOLER GP
AN ATTACHMENT

SMCS-1351 **i02638677**

NOTE	REF NO	GRAPHIC REF	PART NUMBER	QTY	PART NAME 1 2 3 4 5 6 (PRODUCT LEVEL)	SEE PAGE
	1	1	**5D-8159**	4	PIN AS	
M	2	1	**093-5432**	1	VALVE AS-DRAIN (COOLANT)	
	3	1	**096-4035**	2	CLIP	
	4	1	**210-8117**	2	SEAL	
	5	1	**210-8128**	1	PLATE AS	
	6	1	**245-9212**	1	CAP AS-RADIATOR	
	7	1	**245-9216**	2	BOSS	
	8	1	**245-9217**	2	CUSHION-RUBBER	
	9	1	**245-9218**	2	CUSHION-RUBBER	
	10	1	**245-9276**	2	SEAL	
	11	1	**265-3624**	1	CORE AS-RADIATOR	
	12	1	**265-3625**	1	CORE AS-OIL COOLER (HYDRAULIC)	
	13	1	**265-3627**	1	FRAME AS	
	14	1	**265-3628**	1	SHROUD AS-RADIATOR	
	15	1	**265-3629**	2	SEAL	
	16	1	**265-3630**	2	SEAL	
	17	1	**265-3631**	2	SEAL	
	18	1	**265-3632**	3	SEAL	
	19	1	**265-3633**	1	SEAL	
	20	1	**265-3634**	1	SCREEN AS (OIL COOLER)	
	21	1	**265-3635**	1	SCREEN AS (RADIATOR)	
	22	1	**265-3637**	1	TUBE AS	
	23	1	**265-3638**	1	SEAL	
	24	1	**265-3639**	1	PLATE AS	
	25	1	**265-3642**	1	SEAL	
	26	1	**265-3643**	1	SEAL	
	27	1	**281-3488**	2	SHEET-RUBBER	
	28	1	**281-3534**	1	AFTERCOOLER AS	
	29	1	**281-3535**	1	PLATE AS	
	30	1	**281-3568**	2	SEAL	
	31	1	**095-1543**	2	SEAL-O-RING	
	32	1	**8T-4121**	10	WASHER-HARD (11X21X2.5-MM THK)	
M	33	1	**8T-4137**	6	BOLT (M10X1.5X20-MM)	
M	34	1	**8T-4189**	20	BOLT (M8X1.25X20-MM)	
M	35	1	**8T-4195**	2	BOLT (M10X1.5X30-MM)	
M	36	1	**8T-4196**	2	BOLT (M10X1.5X35-MM)	
	37	1	**8T-4224**	20	WASHER-HARD (8.8X16X2-MM THK)	
E	38	1	**7Y-1976**		HOSE-WATER (190-CM)	
E	38A	1	**7Y-1976**		HOSE-WATER (8-CM)	

E-ORDER BY THE CENTIMETER
M-METRIC PART

265-3601 RADIATOR & HYD OIL COOLER GP *(contd.)* i02638677

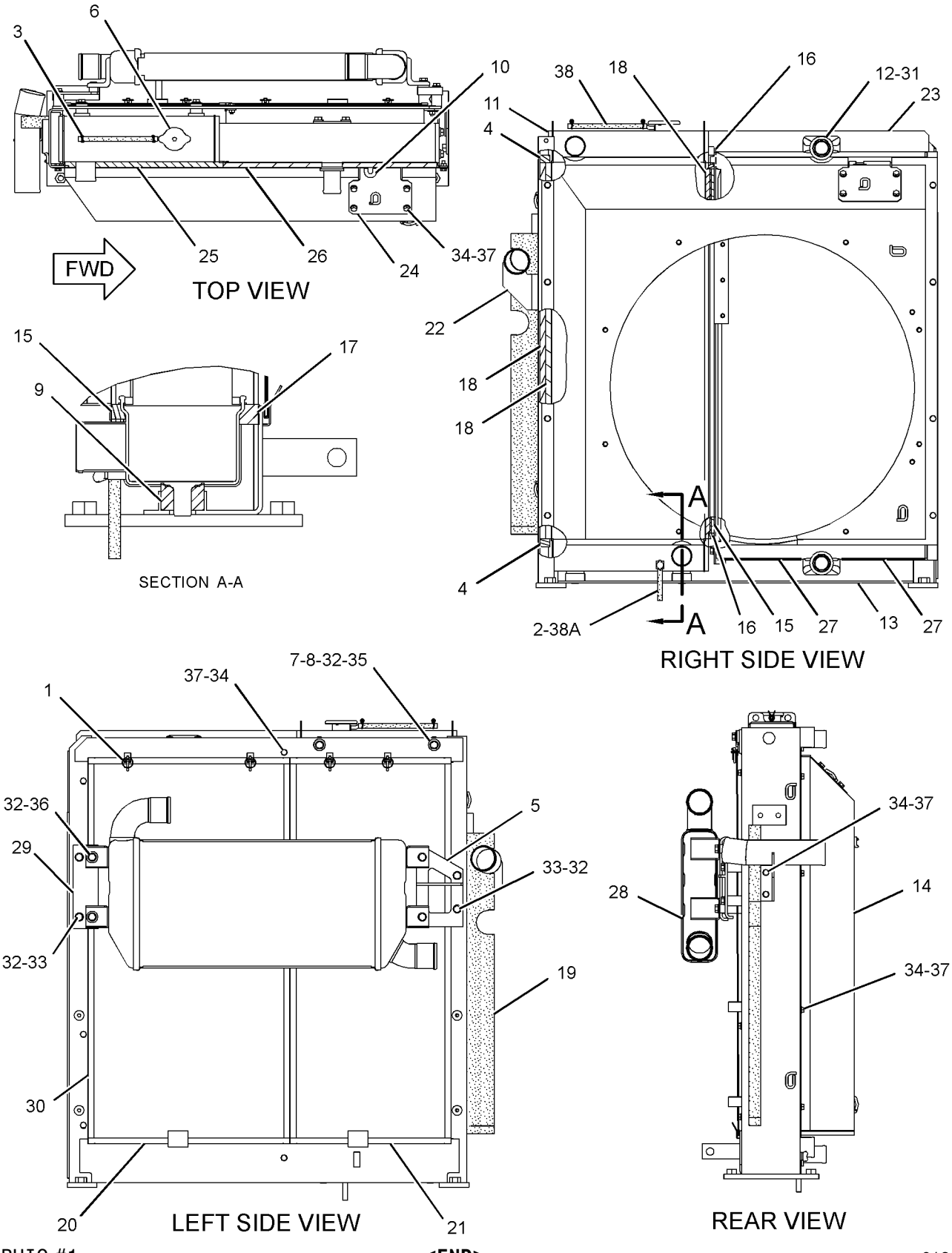

GRAPHIC #1 **<END>** g01324240

COOLING SYSTEM

265-3616 RADIATOR & HYD OIL COOLER GP

S/N: KGF1-105; FAL1-182

PART OF 272-4742 INSTALLATION AR-ENGINE

SMCS-1351 **i02762181**

NOTE	REF NO	GRAPHIC REF	PART NUMBER	QTY	PART NAME 1 2 3 4 5 6 (PRODUCT LEVEL)	SEE PAGE
	1	2	**3S-2093**	3	STRAP-CABLE	
	2	2	**7I-2673**	1	STRAP-CABLE	
	3	2	**8T-4984**	1	CLAMP-HOSE	
	4	1	**096-4035**	1	CLIP	
	5	2	**171-9077**	1	BAND	
	6	1	**178-6450**	4	SPACER (17X35X30-MM THK)	
	7	1	**245-9178**	1	HOSE (LOWER RADIATOR)	
	8	2	**245-9185**	1	BRACKET AS	
	9	2	**245-9191**	1	PLATE AS	
	10	1	**245-9205**	1	TANK AS-COOLANT (RECOVERY)	
		1	**171-3369**	1	CAP AS (COOLANT RECOVERY)	
	11	2	**245-9348**	1	GUARD AS (UPPER)	
	12	2	**245-9349**	1	GUARD AS (LOWER)	
	13	2	**245-9352**	1	SEAL	
	14	1	**265-3602**	1	HOSE-UPPER RADIATOR	
Y	15	1	**265-3617**	1	RADIATOR & HYD OIL COOLER GP	101
	16	2	**3P-9847**	1	CLIP	
M	17	1	**7X-2554**	4	BOLT (M16X2X70-MM)	
	18	2	**7X-7729**	11	WASHER (11X25X3-MM THK)	
	19	2	**8T-4121**	1	WASHER-HARD (11X21X2.5-MM THK)	
M	20	2	**8T-4136**	2	BOLT (M10X1.5X25-MM)	
M	21	2	**8T-4137**	10	BOLT (M10X1.5X20-MM)	
M	22	2	**8T-4139**	2	BOLT (M12X1.75X30-MM)	
M	23	2	**8T-4200**	2	BOLT (M8X1.25X16-MM)	
	24	2	**8T-4223**	2	WASHER-HARD (13.5X25.5X3-MM THK)	
	25	2	**8T-4224**	2	WASHER-HARD (8.8X16X2-MM THK)	
E	26	1	**7Y-1976**		HOSE-WATER (40-CM)	
D	27	2	**5P-9909**		SEAL (.87-M)	
D	27A	2	**5P-9909**		SEAL (.15-M)	
	28	1,2	**8T-6703**	3	CLAMP-HOSE	

D-ORDER BY THE METER
E-ORDER BY THE CENTIMETER
M-METRIC PART
Y-SEPARATE ILLUSTRATION

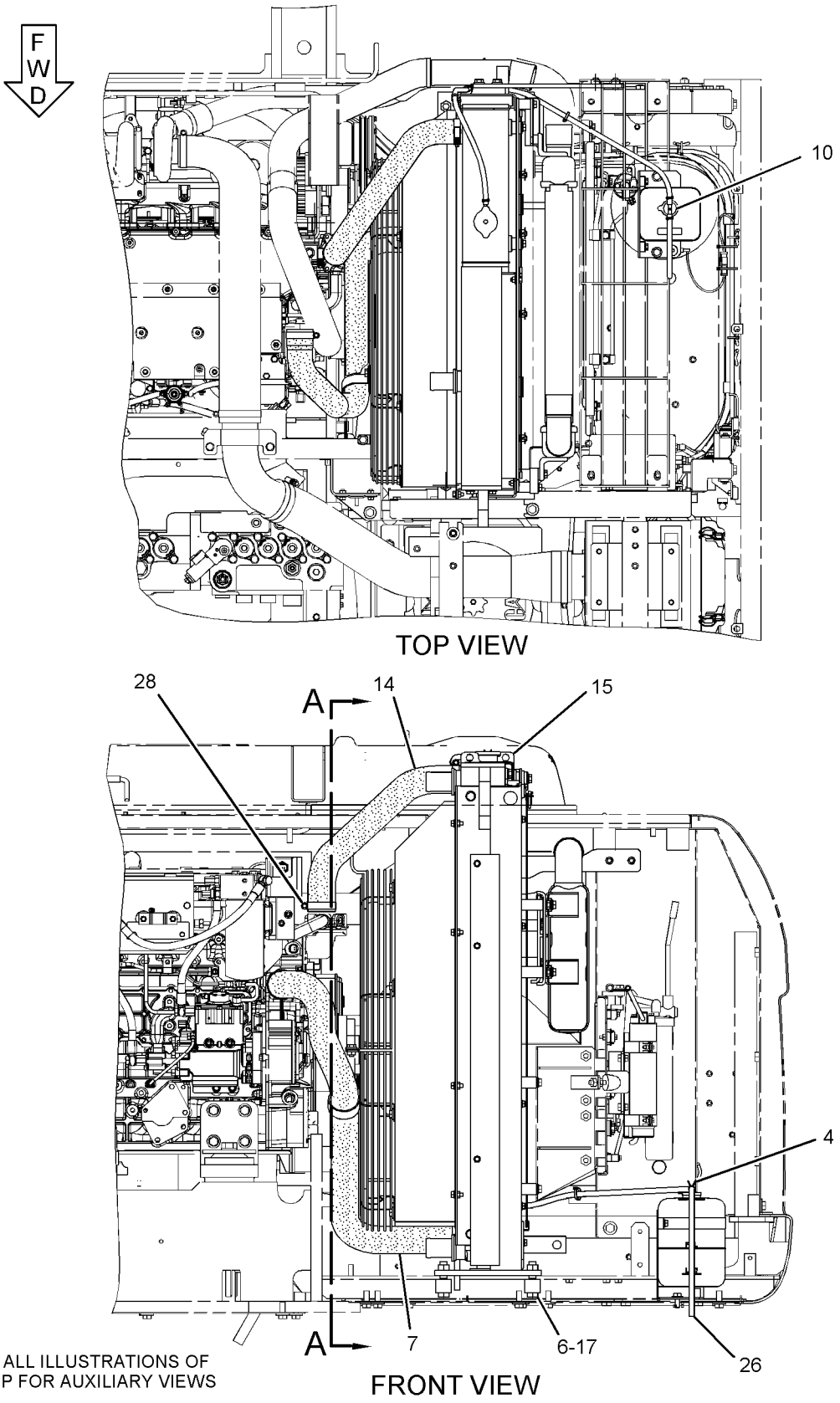

REFER TO ALL ILLUSTRATIONS OF THIS GROUP FOR AUXILIARY VIEWS

GRAPHIC #1

g01395782

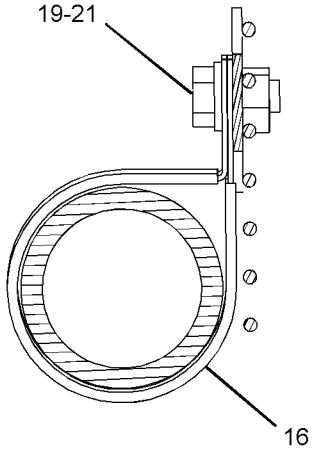

SECTION D-D

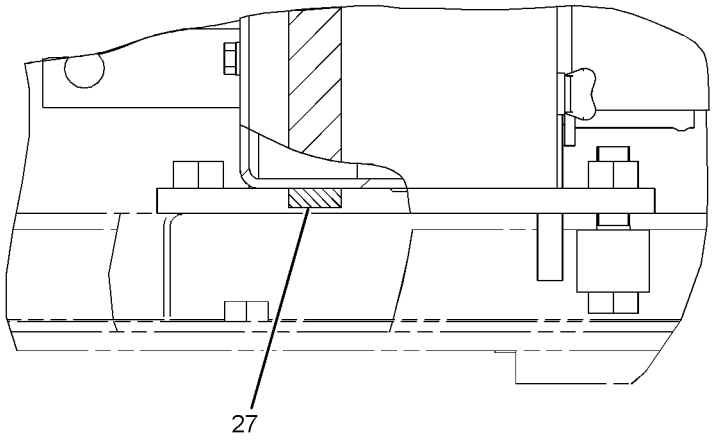

SECTION F-F

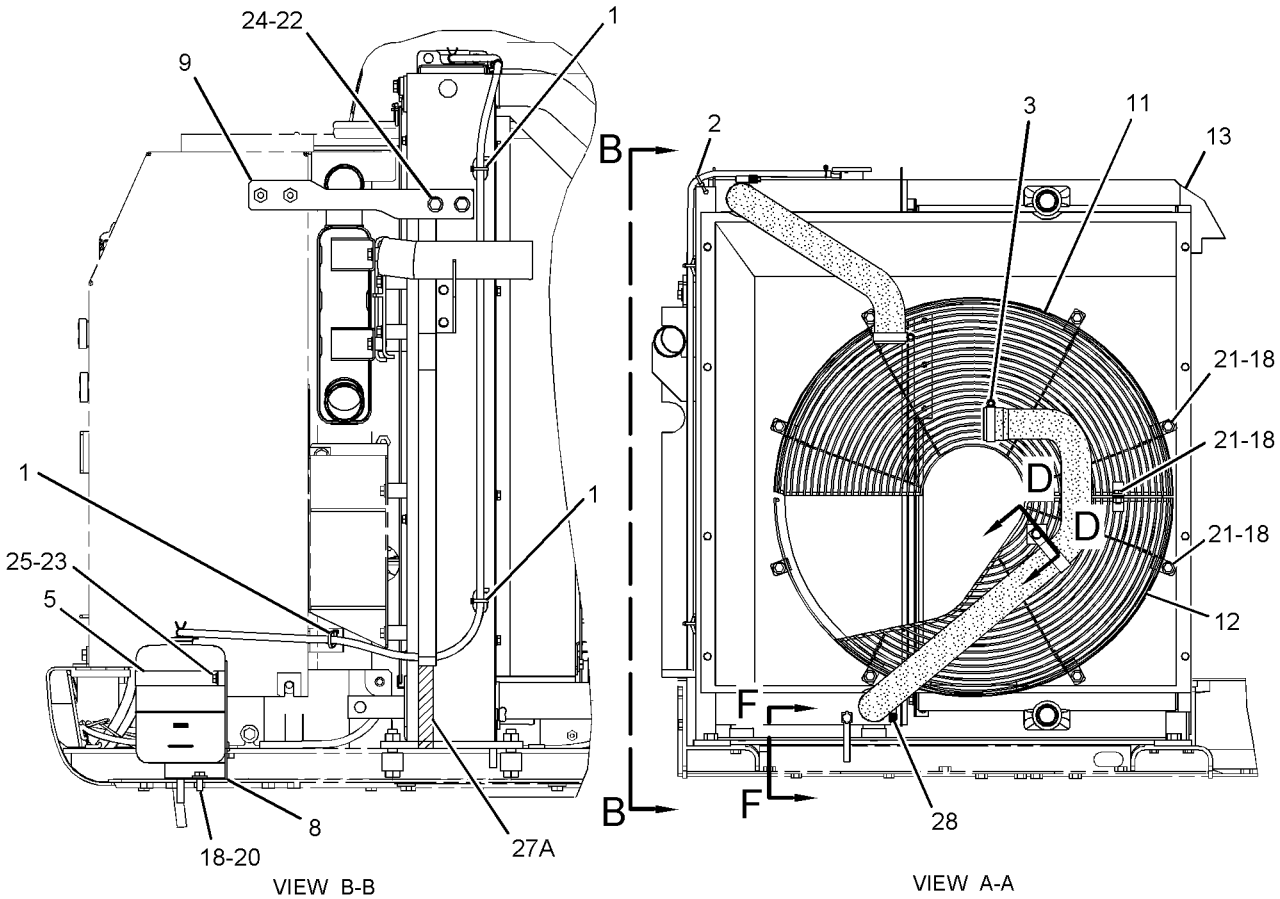

VIEW B-B

VIEW A-A

GRAPHIC #2 **<END>** g01395781

265-3616 RADIATOR & HYD OIL COOLER GP

S/N: KGF106-UP; FAL183-UP

PART OF 272-4742 INSTALLATION AR-ENGINE

SMCS-1351 **i02794908**

NOTE	REF NO	GRAPHIC REF	PART NUMBER	QTY	PART NAME 1 2 3 4 5 6 (PRODUCT LEVEL)	SEE PAGE
	1	1	**3S-2093**	3	STRAP-CABLE	
	2	1	**7I-2673**	1	STRAP-CABLE	
	3	1	**8T-4984**	1	CLAMP-HOSE	
	4	1	**096-4035**	1	CLIP	
	5	1	**171-9077**	1	BAND	
	6	1	**178-6450**	4	SPACER (17X35X30-MM THK)	
	7	1	**245-9178**	1	HOSE (LOWER RADIATOR)	
	8	1	**245-9185**	1	BRACKET AS	
	9	1	**245-9191**	1	PLATE AS	
M		1	**8T-3597**	2	NUT-WELD (M12X1.75-THD)	
	10	1	**245-9205**	1	TANK AS-COOLANT (RECOVERY)	
		1	**171-3369**	1	CAP AS (COOLANT RECOVERY)	
	11	1	**245-9348**	1	GUARD AS (UPPER)	
	12	1	**245-9349**	1	GUARD AS (LOWER)	
M		1	**8T-3490**	2	NUT-WELD (M10X1.5-THD)	
	13	1	**245-9352**	1	SEAL	
	14	1	**265-3602**	1	HOSE-UPPER RADIATOR	
CY	15	1	**281-3601**	1	RADIATOR & HYD OIL COOLER GP	104
	16	1	**3P-9847**	1	CLIP	
M	17	1	**7X-2554**	4	BOLT (M16X2X70-MM)	
	18	1	**7X-7729**	11	WASHER (11X25X3-MM THK)	
	19	1	**8T-4121**	1	WASHER-HARD (11X21X2.5-MM THK)	
M	20	1	**8T-4136**	2	BOLT (M10X1.5X25-MM)	
M	21	1	**8T-4137**	10	BOLT (M10X1.5X20-MM)	
M	22	1	**8T-4139**	2	BOLT (M12X1.75X30-MM)	
M	23	1	**8T-4200**	2	BOLT (M8X1.25X16-MM)	
	24	1	**8T-4223**	2	WASHER-HARD (13.5X25.5X3-MM THK)	
	25	1	**8T-4224**	2	WASHER-HARD (8.8X16X2-MM THK)	
E	26	1	**7Y-1976**		HOSE-WATER (40-CM)	
D	27	1	**5P-9909**		SEAL (.87-M)	
D	27A	1	**5P-9909**		SEAL (.15-M)	
	28	1	**8T-6703**	3	CLAMP-HOSE	

C-CHANGE FROM PREVIOUS TYPE
D-ORDER BY THE METER
E-ORDER BY THE CENTIMETER
M-METRIC PART
Y-SEPARATE ILLUSTRATION

265-3616 **RADIATOR & HYD OIL COOLER GP** *(contd.)* **i02794908**

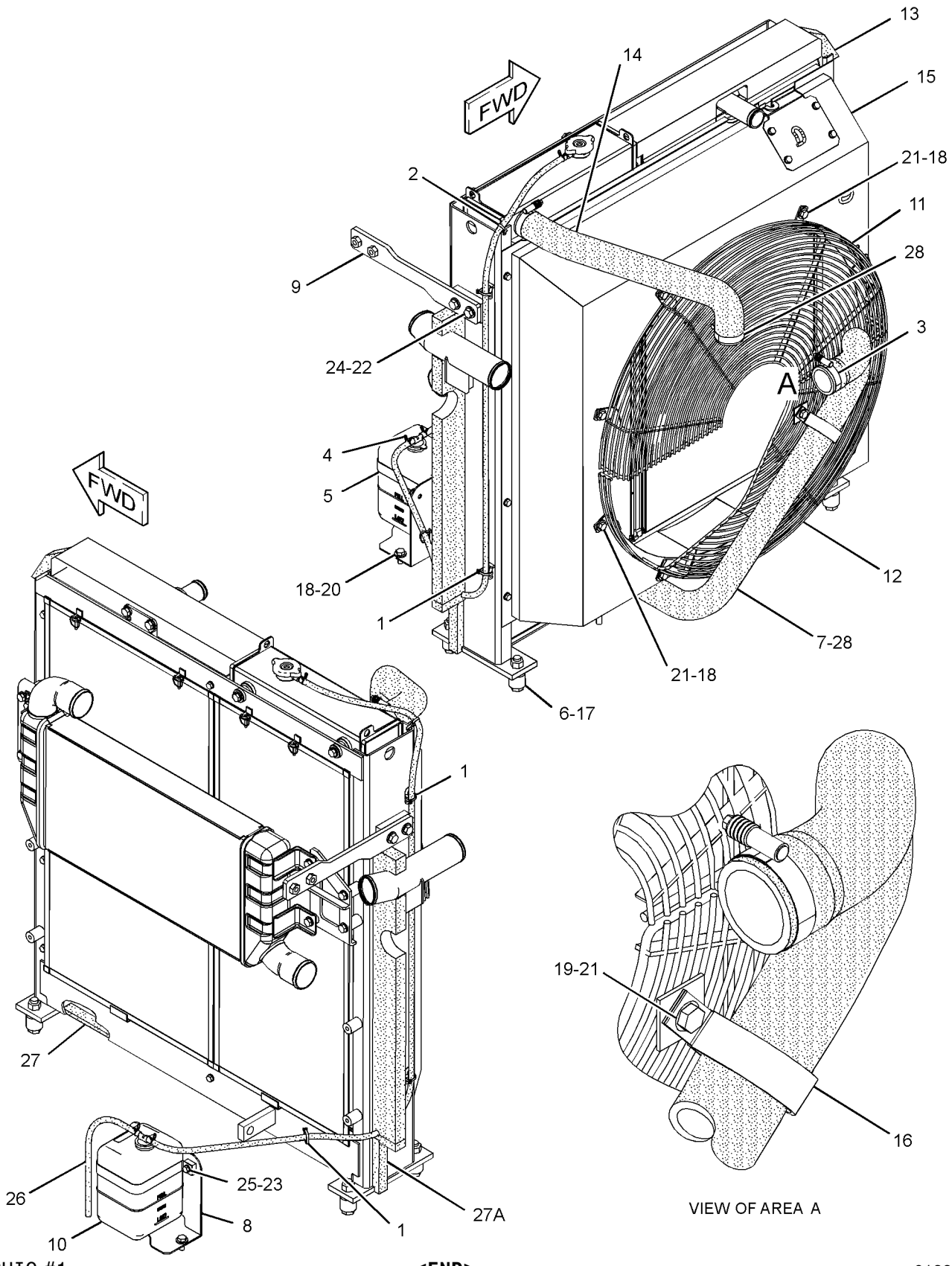

GRAPHIC #1 **<END>** g01380068

265-3617 RADIATOR & HYD OIL COOLER GP

S/N: KGF1-105; FAL1-182

PART OF 265-3616 RADIATOR & HYD OIL COOLER GP

SMCS-1351 **i02762188**

NOTE	REF NO	GRAPHIC REF	PART NUMBER	QTY	PART NAME 1 2 3 4 5 6 (PRODUCT LEVEL)	SEE PAGE
	1	2	**5D-8159**	4	PIN AS	
M	2	2	**093-5432**	1	VALVE AS-DRAIN (COOLANT)	
	3	1	**096-4035**	2	CLIP	
	4	1	**210-8117**	2	SEAL	
	5	2	**210-8128**	1	PLATE AS	
	6	1	**245-9212**	1	CAP AS-RADIATOR	
	7	2	**245-9216**	2	BOSS	
	8	2	**245-9217**	2	CUSHION-RUBBER	
	9	2	**245-9218**	2	CUSHION-RUBBER	
	10	1	**265-3624**	1	CORE AS-RADIATOR	
	11	1	**265-3625**	1	CORE AS-OIL COOLER (HYDRAULIC)	
	12	1	**265-3627**	1	FRAME AS	
	13	1,2	**265-3629**	3	SEAL	
	14	1	**265-3630**	2	SEAL	
	15	2	**265-3631**	2	SEAL	
	16	1	**265-3632**	3	SEAL	
	17	1	**265-3633**	1	SEAL	
	18	2	**265-3634**	1	SCREEN AS (OIL COOLER)	
	19	2	**265-3635**	1	SCREEN AS (RADIATOR)	
	20	1	**265-3637**	1	TUBE AS	
	21	1	**265-3638**	1	SEAL	
	22	1	**265-3640**	1	SHROUD AS-RADIATOR	
	23	1	**281-3488**	2	SHEET-RUBBER	
	24	1	**281-3534**	1	AFTERCOOLER AS	
	25	2	**281-3535**	1	PLATE AS	
	26	2	**095-1543**	2	SEAL-O-RING	
	27	2	**8T-4121**	10	WASHER-HARD (11X21X2.5-MM THK)	
M	28	2	**8T-4137**	6	BOLT (M10X1.5X20-MM)	
M	29	2	**8T-4189**	16	BOLT (M8X1.25X20-MM)	
M	30	2	**8T-4195**	2	BOLT (M10X1.5X30-MM)	
M	31	2	**8T-4196**	2	BOLT (M10X1.5X35-MM)	
	32	2	**8T-4224**	16	WASHER-HARD (8.8X16X2-MM THK)	
E	33	1	**7Y-1976**		HOSE-WATER (190-CM)	
E	33A	1	**7Y-1976**		HOSE-WATER (8-CM)	
	34	2	**281-3568**	2	SEAL	

E-ORDER BY THE CENTIMETER
M-METRIC PART

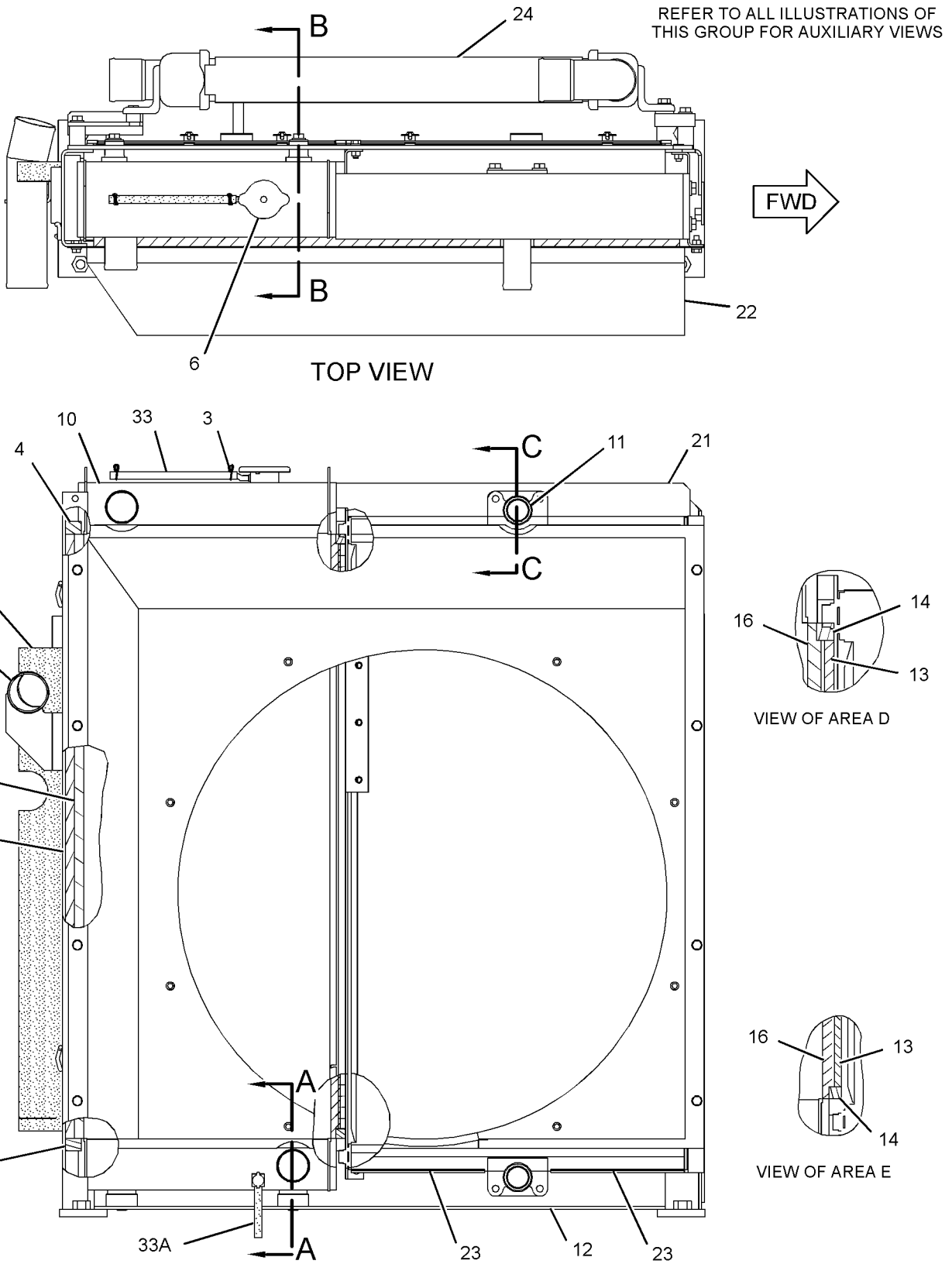

GRAPHIC #1

g01386220

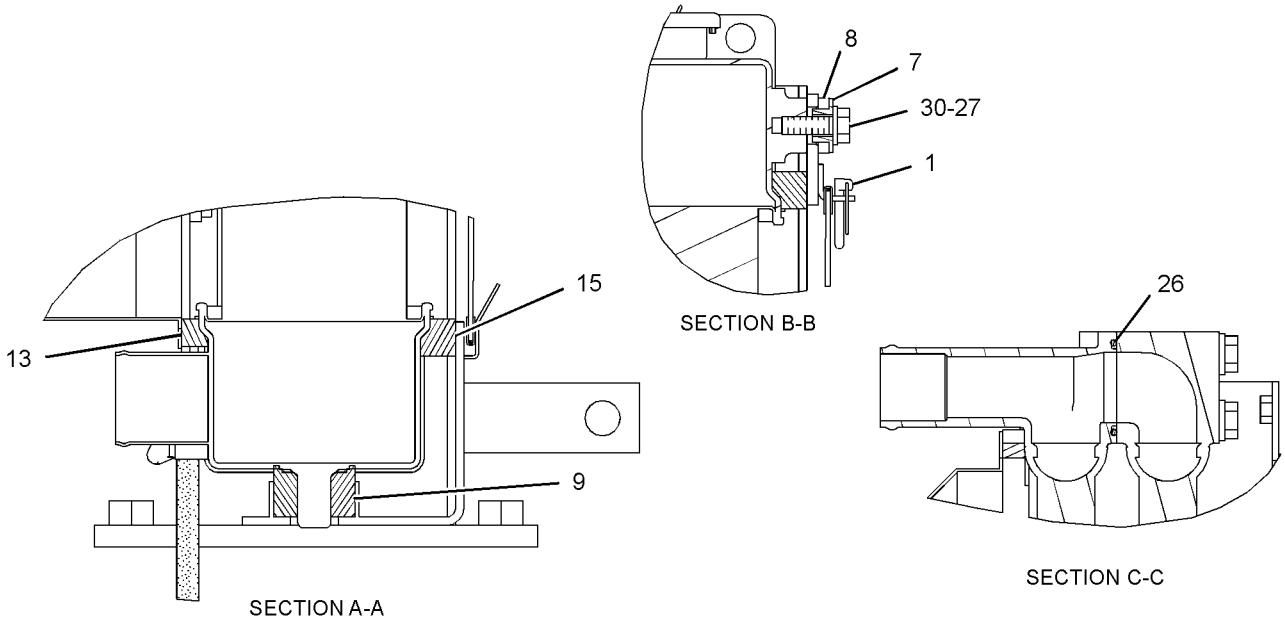

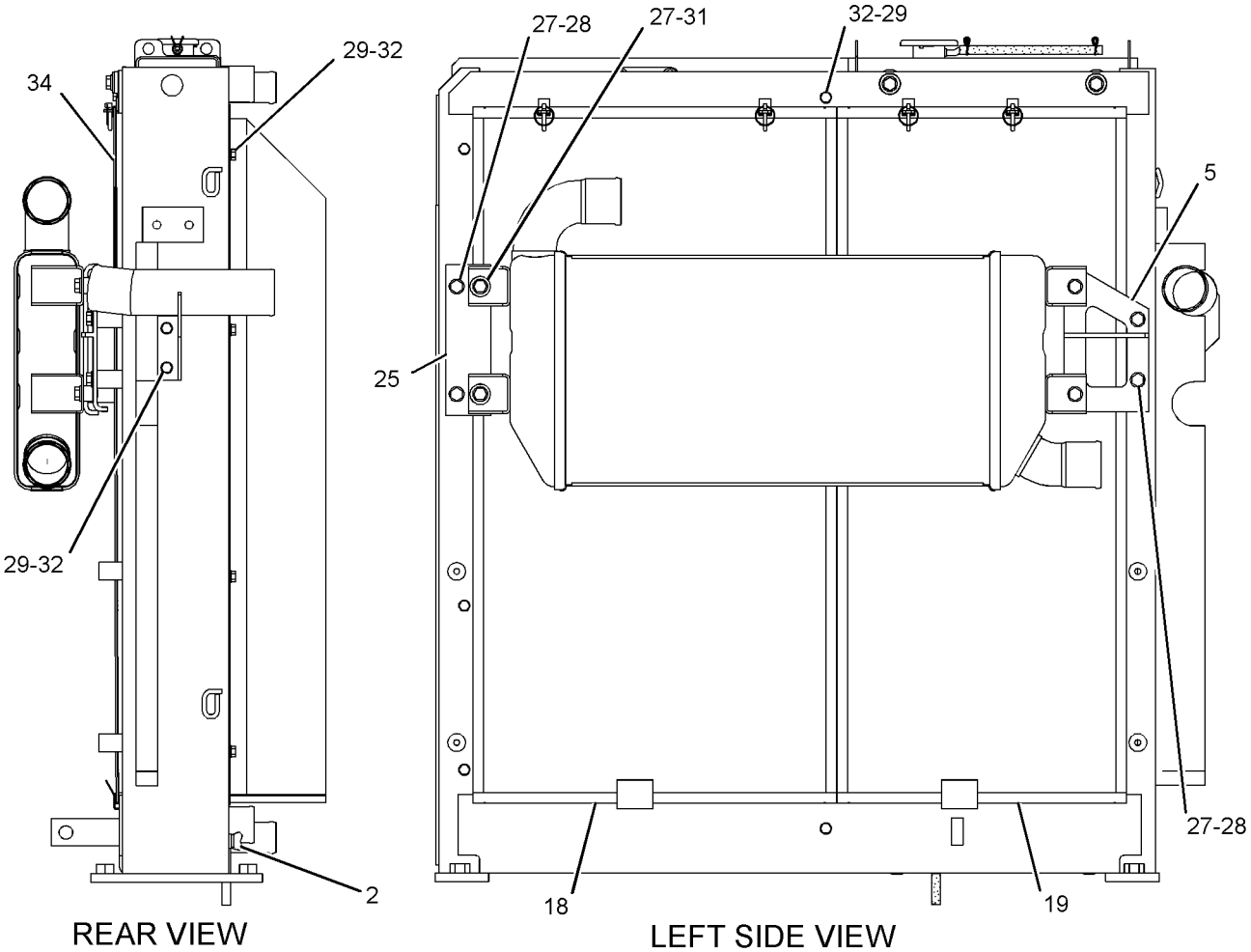

GRAPHIC #2 **<END>** g01386221

COOLING SYSTEM

281-3601 RADIATOR & HYD OIL COOLER GP

S/N: KGF106-UP; FAL183-UP

PART OF 265-3616 RADIATOR & HYD OIL COOLER GP

SMCS-1351 **i02794909**

NOTE	REF NO	GRAPHIC REF	PART NUMBER	QTY	PART NAME 1 2 3 4 5 6 (PRODUCT LEVEL)	SEE PAGE
	1	1	**5D-8159**	4	PIN AS	
M	2	1	**093-5432**	1	VALVE AS-DRAIN (COOLANT)	
	3	1	**096-4035**	2	CLIP	
	4	1	**210-8117**	2	SEAL	
	5	1	**210-8128**	1	PLATE AS	
	6	1	**245-9212**	1	CAP AS-RADIATOR	
	7	1	**245-9216**	2	BOSS	
	8	1	**245-9217**	2	CUSHION-RUBBER	
	9	1	**245-9218**	2	CUSHION-RUBBER	
	10	1	**265-3624**	1	CORE AS-RADIATOR	
	11	1	**265-3625**	1	CORE AS-OIL COOLER (HYDRAULIC)	
	12	1	**281-3605**	1	FRAME AS	
	13	1	**265-3629**	3	SEAL	
	14	1	**265-3630**	2	SEAL	
	15	1	**265-3631**	2	SEAL	
	16	1	**265-3632**	3	SEAL	
	17	1	**265-3633**	1	SEAL	
	18	1	**265-3634**	1	SCREEN AS (OIL COOLER)	
	19	1	**265-3635**	1	SCREEN AS (RADIATOR)	
	20	1	**265-3637**	1	TUBE AS	
	21	1	**265-3638**	1	SEAL	
	22	1	**265-3640**	1	SHROUD AS-RADIATOR	
	23	1	**281-3488**	2	SHEET-RUBBER	
	24	1	**281-3534**	1	AFTERCOOLER AS	
	25	1	**281-3535**	1	PLATE AS	
	26	1	**095-1543**	2	SEAL-O-RING	
	27	1	**8T-4121**	10	WASHER-HARD (11X21X2.5-MM THK)	
M	28	1	**8T-4137**	6	BOLT (M10X1.5X20-MM)	
M	29	1	**8T-4189**	16	BOLT (M8X1.25X20-MM)	
M	30	1	**8T-4195**	2	BOLT (M10X1.5X30-MM)	
M	31	1	**8T-4196**	2	BOLT (M10X1.5X35-MM)	
	32	1	**8T-4224**	16	WASHER-HARD (8.8X16X2-MM THK)	
E	33	1	**7Y-1976**		HOSE-WATER (190-CM)	
E	33A	1	**7Y-1976**		HOSE-WATER (8-CM)	
	34	1	**281-3568**	2	SEAL	

E-ORDER BY THE CENTIMETER
M-METRIC PART

281-3601 RADIATOR & HYD OIL COOLER GP *(contd.)* i02794909

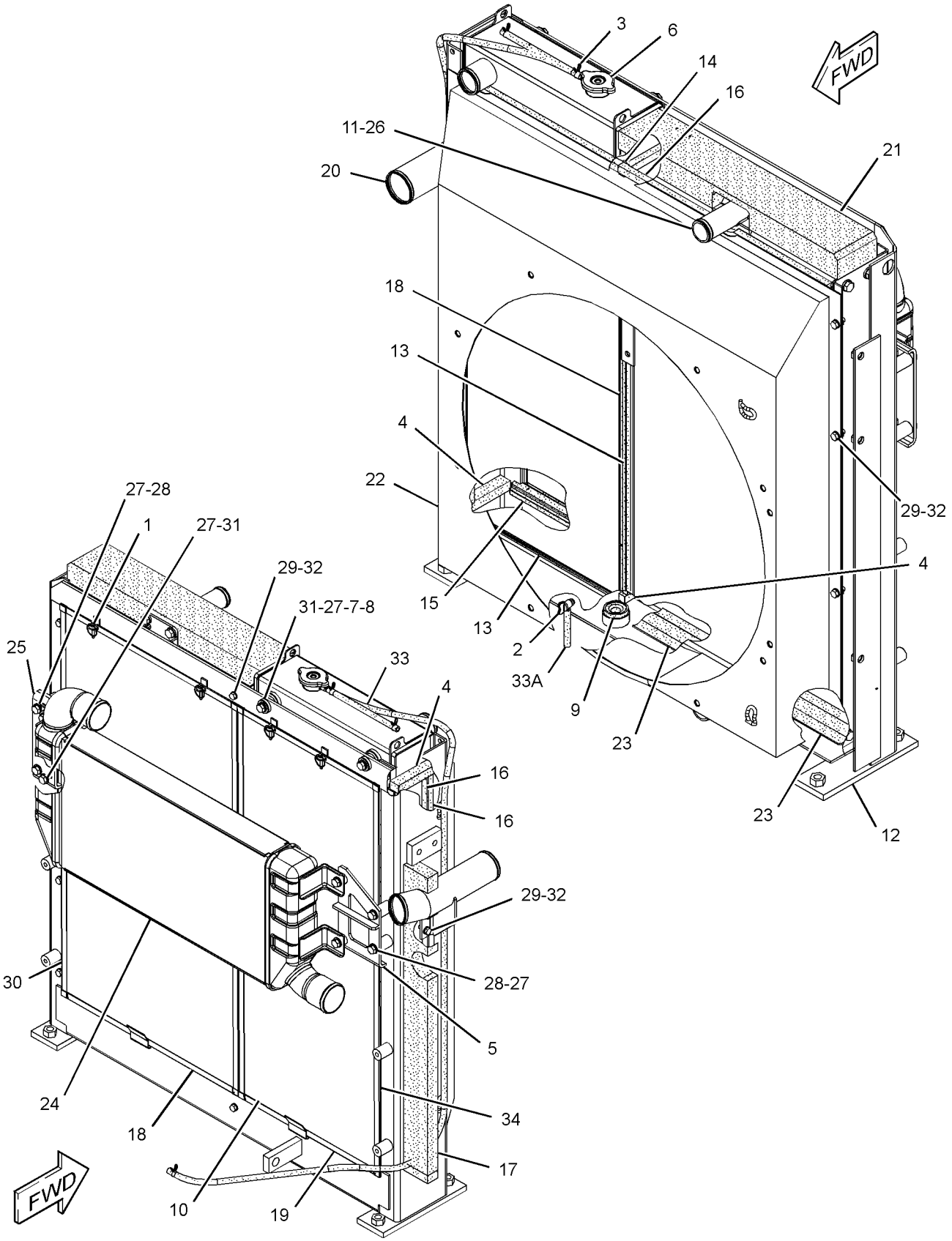

GRAPHIC #1 **<END>** g01380073

COOLING SYSTEM

281-3602 RADIATOR & HYD OIL COOLER GP

S/N: KGF1-UP; FAL1-UP
PART OF 265-3600 RADIATOR & HYD OIL COOLER GP
AN ATTACHMENT

SMCS-1351 **i02763398**

NOTE	REF NO	GRAPHIC REF	PART NUMBER	QTY	PART NAME 1 2 3 4 5 6 (PRODUCT LEVEL)	SEE PAGE
	1	1	**5D-8159**	4	PIN AS	
M	2	1	**093-5432**	1	VALVE AS-DRAIN (COOLANT)	
	3	1	**095-1543**	2	SEAL-O-RING	
	4	1	**096-4035**	2	CLIP	
	5	1	**210-8117**	2	SEAL	
	6	1	**210-8128**	1	PLATE AS	
	7	1	**245-9212**	1	CAP AS-RADIATOR	
	8	1	**245-9216**	2	BOSS	
	9	1	**245-9217**	2	CUSHION-RUBBER	
	10	1	**245-9218**	2	CUSHION-RUBBER	
	11	1	**245-9276**	2	SEAL	
	12	1	**265-3624**	1	CORE AS-RADIATOR	
	13	1	**265-3625**	1	CORE AS-OIL COOLER (HYDRAULIC)	
	14	1	**265-3628**	1	SHROUD AS-RADIATOR	
	15	1	**265-3629**	2	SEAL	
	16	1	**265-3630**	2	SEAL	
	17	1	**265-3631**	2	SEAL	
	18	1	**265-3632**	3	SEAL	
	19	1	**265-3633**	1	SEAL	
	20	1	**265-3634**	1	SCREEN AS (OIL COOLER)	
	21	1	**265-3635**	1	SCREEN AS (RADIATOR)	
	22	1	**265-3637**	1	TUBE AS	
	23	1	**265-3638**	1	SEAL	
	24	1	**265-3639**	1	PLATE AS	
	25	1	**265-3642**	1	SEAL	
	26	1	**265-3643**	1	SEAL	
	27	1	**281-3488**	2	SHEET-RUBBER	
	28	1	**281-3534**	1	AFTERCOOLER AS	
	29	1	**281-3535**	1	PLATE AS	
	30	1	**281-3568**	2	SEAL	
	31	1	**281-3605**	1	FRAME AS	
	32	1	**8T-4121**	10	WASHER-HARD (11X21X2.5-MM THK)	
M	33	1	**8T-4137**	6	BOLT (M10X1.5X20-MM)	
M	34	1	**8T-4189**	20	BOLT (M8X1.25X20-MM)	
M	35	1	**8T-4195**	2	BOLT (M10X1.5X30-MM)	
M	36	1	**8T-4196**	2	BOLT (M10X1.5X35-MM)	
	37	1	**8T-4224**	20	WASHER-HARD (8.8X16X2-MM THK)	
E	38	1	**7Y-1976**		HOSE-WATER (190-CM)	
E	38A	1	**7Y-1976**		HOSE-WATER (8-CM)	

E-ORDER BY THE CENTIMETER
M-METRIC PART

281-3602 **RADIATOR & HYD OIL COOLER GP** *(contd.)* **i02763398**

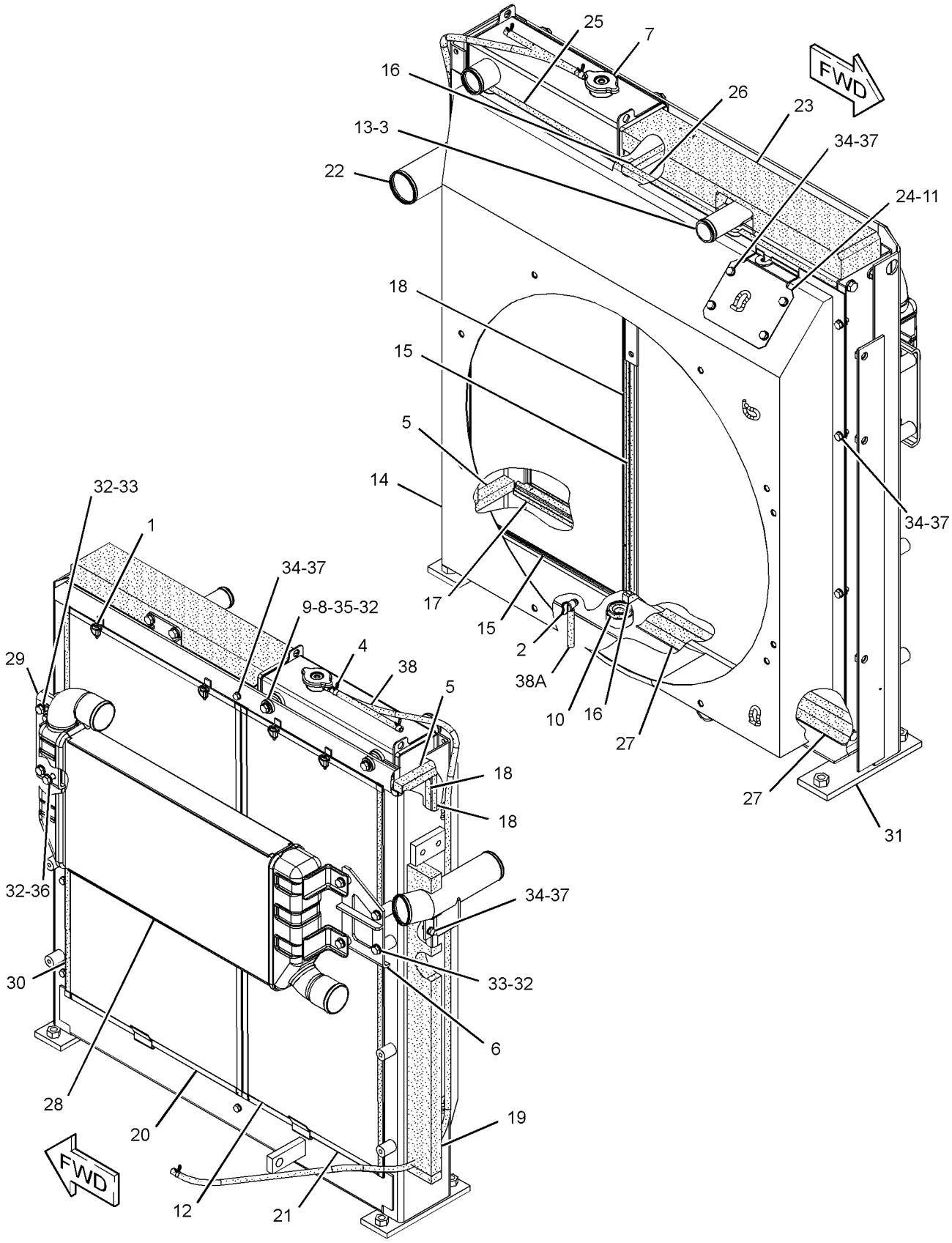

GRAPHIC #1 **<END>** g01383218

AIR INLET AND EXHAUST SYSTEM

109-9313 AIR CLEANER & MOUNTING GP

S/N: KGF1-1471; FAL1-1266

PART OF 272-4742 INSTALLATION AR-ENGINE

SMCS-1051, 1054, 7452 **i01074037**

NOTE	REF NO	GRAPHIC REF	PART NUMBER	QTY	PART NAME 1 2 3 4 5 6 (PRODUCT LEVEL)	SEE PAGE
	1	1	**8T-4121**	4	WASHER-HARD (11X21X2.5-MM THK)	
M	2	1	**8T-4137**	4	BOLT (M10X1.5X20-MM)	
Y	3	1	**124-1711**	1	AIR CLEANER GP	111

M-METRIC PART
Y-SEPARATE ILLUSTRATION

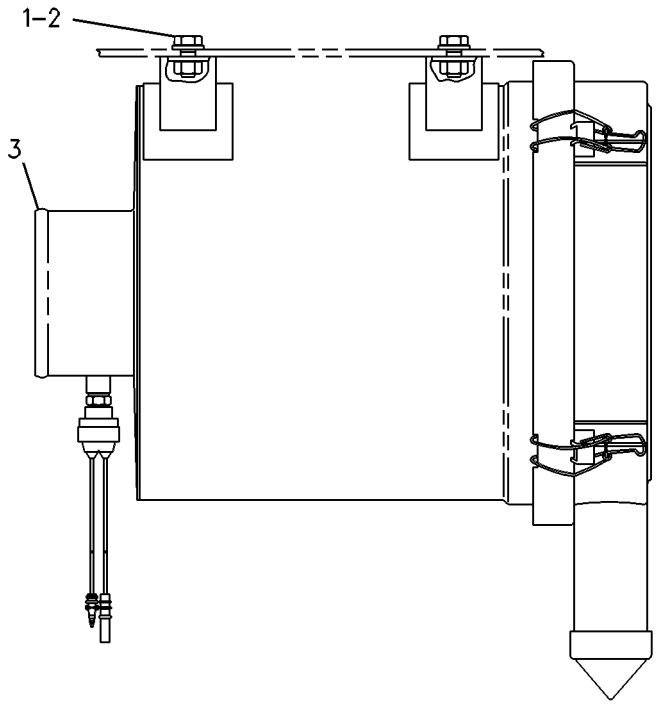

GRAPHIC #1 **<END>** g00259005

AIR INLET AND EXHAUST SYSTEM

109-9313 AIR CLEANER & MOUNTING GP

S/N: KGF1472-UP; FAL1267-UP

PART OF 272-4742 INSTALLATION AR-ENGINE

SMCS-1051, 1054, 7452 **i03016240**

NOTE	REF NO	GRAPHIC REF	PART NUMBER	QTY	PART NAME 1 2 3 4 5 6 (PRODUCT LEVEL)	SEE PAGE
	1	1	**8T-4121**	4	WASHER-HARD (11X21X2.5-MM THK)	
M	2	1	**8T-4137**	4	BOLT (M10X1.5X20-MM)	
CY	3	1	**310-9667**	1	AIR CLEANER GP	118

C-CHANGE FROM PREVIOUS TYPE
M-METRIC PART
Y-SEPARATE ILLUSTRATION

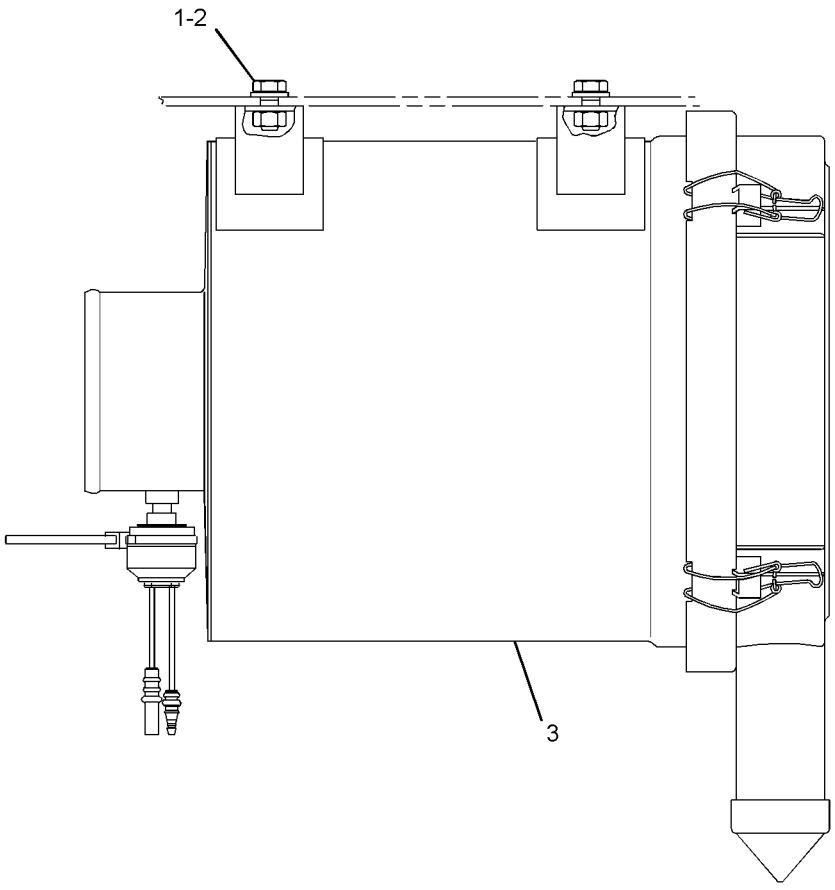

GRAPHIC #1 **<END>** g01528299

AIR INLET AND EXHAUST SYSTEM

264-8671 AIR CLEANER AR—PRECLEANER

S/N: KGF1-UP; FAL1-UP

AN ATTACHMENT

SMCS-1051 **i02563191**

NOTE	PART NUMBER	QTY	PART NAME 1 2 3 4 5 6 (PRODUCT LEVEL)	SEE PAGE
Y	*272-4773*	1	AIR CLEANER GP	114
Y	*278-3778*	1	COVER GP-HOOD (PRECLEANER)	403

Y-SEPARATE ILLUSTRATION

<END>

AIR INLET AND EXHAUST SYSTEM

124-1711 AIR CLEANER GP

S/N: KGF1-1471; FAL1-1266

PART OF 109-9313 AIR CLEANER & MOUNTING GP

SMCS-1051, 1054 **i02412207**

NOTE	REF NO	GRAPHIC REF	PART NUMBER	QTY	PART NAME 1 2 3 4 5 6 (PRODUCT LEVEL)	SEE PAGE
	1	1	**5L-3233**	1	FITTING	
	2	1	**112-9717**	1	VALVE-VACUATOR	
	3	1	**131-8821**	1	FILTER ELEMENT AS-AIR (SECONDARY)	
	4	1	**131-8822**	1	FILTER ELEMENT AS-AIR (PRIMARY)	
	5	1	**131-8826**	1	FILM-INSTRUCTION (TOP, AIR CLEANER COVER)	
	6	1	**131-8932**	4	LATCH	
	7	1	**184-3983**	1	COVER AS	
		1	**131-8824**	1	SEAL (266.7-MM ID X 6.9-MM THK)	
					–OR–	
		1	**168-0792**	1	SEAL (280.1-MM ID X 5-MM THK)	
	8	1	**255-2966**	1	INDICATOR AS-AIR FILTER CHANGE (AIR RESTRICTION)	

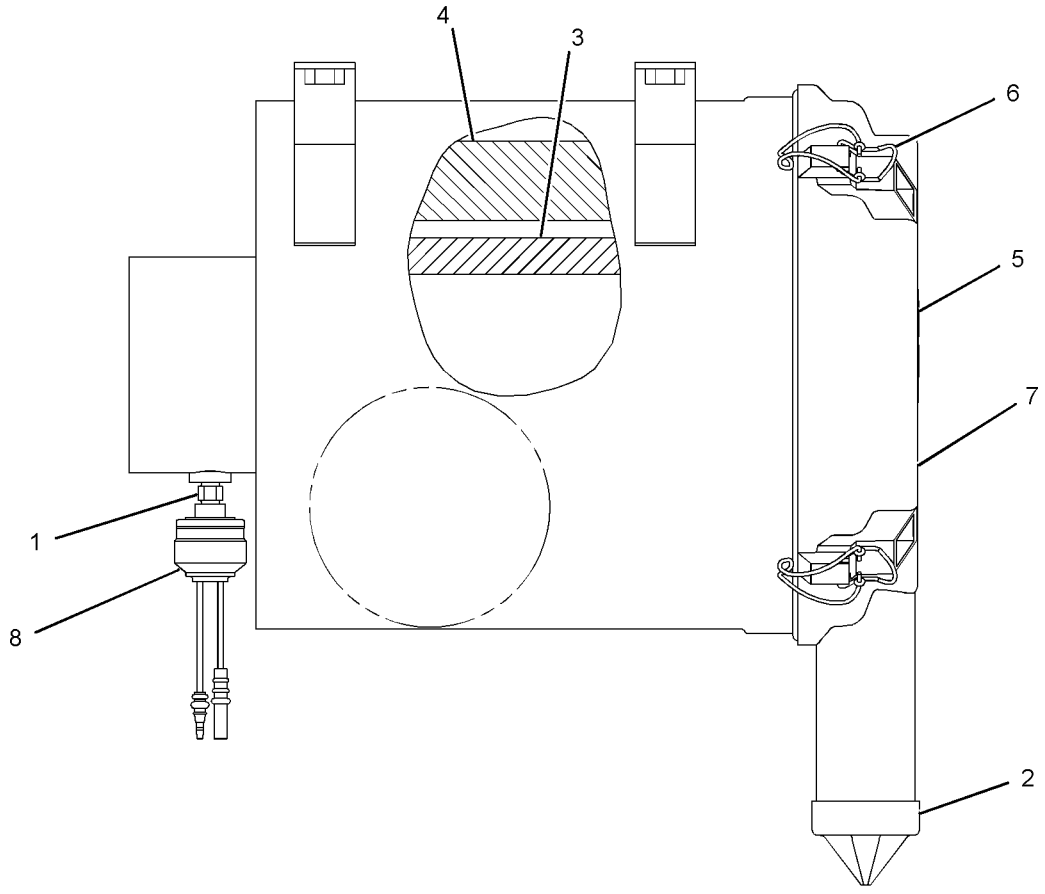

GRAPHIC #1 **<END>** g01223093

AIR INLET AND EXHAUST SYSTEM

239-6612 AIR CLEANER GP

S/N: KGF1-UP; FAL1-UP
PART OF 272-4773 AIR CLEANER GP
AN ATTACHMENT

SMCS-1051, 1054 **i02981204**

NOTE	REF NO	GRAPHIC REF	PART NUMBER	QTY	PART NAME 1 2 3 4 5 6 (PRODUCT LEVEL)	SEE PAGE
	1	1	**5L-3233**	1	FITTING	
	2	1	**6I-2501**	1	FILTER ELEMENT AS-AIR (PRIMARY, STANDARD EFFICIENCY)	
	3	1	**6I-2502**	1	FILTER ELEMENT AS-AIR (SECONDARY)	
	4	1	**131-8826**	1	FILM-INSTRUCTION (TOP, AIR CLEANER COVER)	
	5	1	**255-2966**	1	INDICATOR AS-AIR FILTER CHANGE (AIR RESTRICTION)	
	6	1	**171-9892**	1	COVER AS	

239-6612 AIR CLEANER GP *(contd.)* **i02981204**

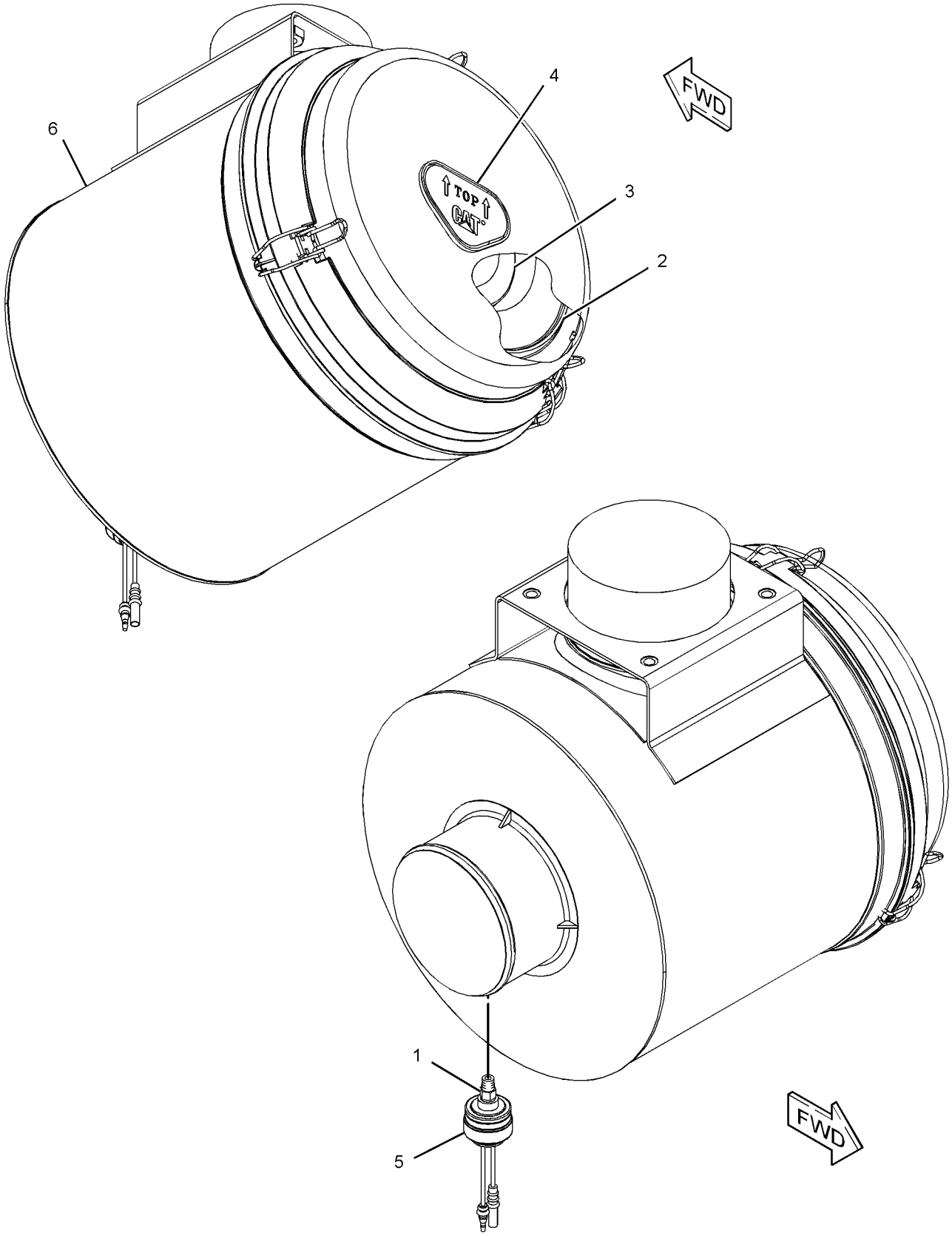

GRAPHIC #1 **<END>** g01221472

AIR INLET AND EXHAUST SYSTEM

272-4773 AIR CLEANER GP

S/N: KGF1-UP; FAL1-UP
PART OF 264-8671 AIR CLEANER AR
AN ATTACHMENT
TYPE 1

SMCS-1051, 1054 **i02563243**

NOTE	REF NO	GRAPHIC REF	PART NUMBER	QTY	PART NAME 1 2 3 4 5 6 (PRODUCT LEVEL)	SEE PAGE
	1	1	**8T-4987**	1	CLAMP-HOSE	
	2	1	**116-2659**	1	DAMPER	
	3	1	**130-3280**	1	PRECLEANER AS	
		1	**174-5415**	1	CLAMP	
	4	1	**134-7089**	1	CLAMP	
	5	1	**239-6395**	1	TUBE AS	
Y	6	1	**239-6612**	1	AIR CLEANER GP	112
	7	1	**279-7909**	1	HOSE-AIR	
M	8	1	**8T-4139**	4	BOLT (M12X1.75X30-MM)	
	9	1	**8T-4223**	4	WASHER-HARD (13.5X25.5X3-MM THK)	

M-METRIC PART
Y-SEPARATE ILLUSTRATION

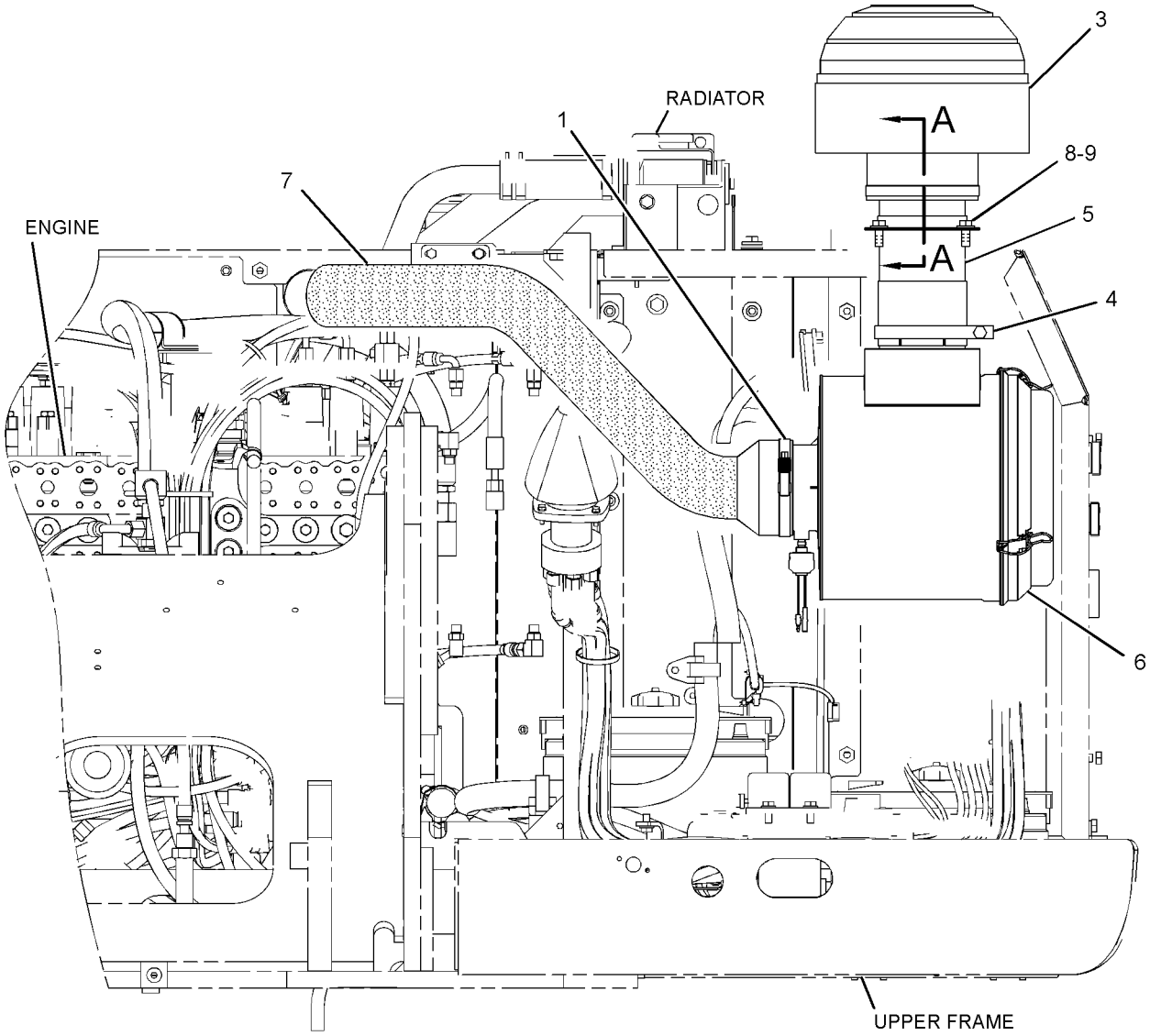

FRONT VIEW

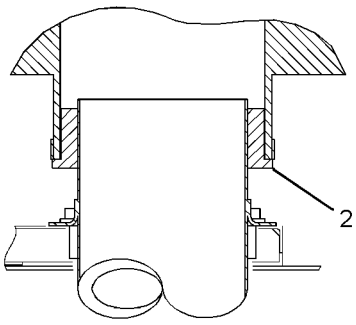

VIEW OF SECTION A-A

GRAPHIC #1 **<END>** g01227584

AIR INLET AND EXHAUST SYSTEM

272-4773 AIR CLEANER GP

S/N: KGF1-UP; FAL1-UP
PART OF 264-8671 AIR CLEANER AR
AN ATTACHMENT
TYPE 2

SMCS-1051, 1054 **i03091743**

NOTE	REF NO	GRAPHIC REF	PART NUMBER	QTY	PART NAME 1 2 3 4 5 6 (PRODUCT LEVEL)	SEE PAGE
	1	1	**8T-4987**	1	CLAMP-HOSE	
	2	1	**116-2659**	1	DAMPER	
	3	1	**130-3280**	1	PRECLEANER AS	
		1	**174-5415**	1	CLAMP	
	4	1	**134-7089**	1	CLAMP	
	5	1	**239-6395**	1	TUBE AS	
CY	6	1	**310-9676**	1	AIR CLEANER GP	119
	7	1	**279-7909**	1	HOSE-AIR	
M	8	1	**8T-4139**	4	BOLT (M12X1.75X30-MM)	
	9	1	**8T-4223**	4	WASHER-HARD (13.5X25.5X3-MM THK)	

C-CHANGE FROM PREVIOUS TYPE
M-METRIC PART
Y-SEPARATE ILLUSTRATION

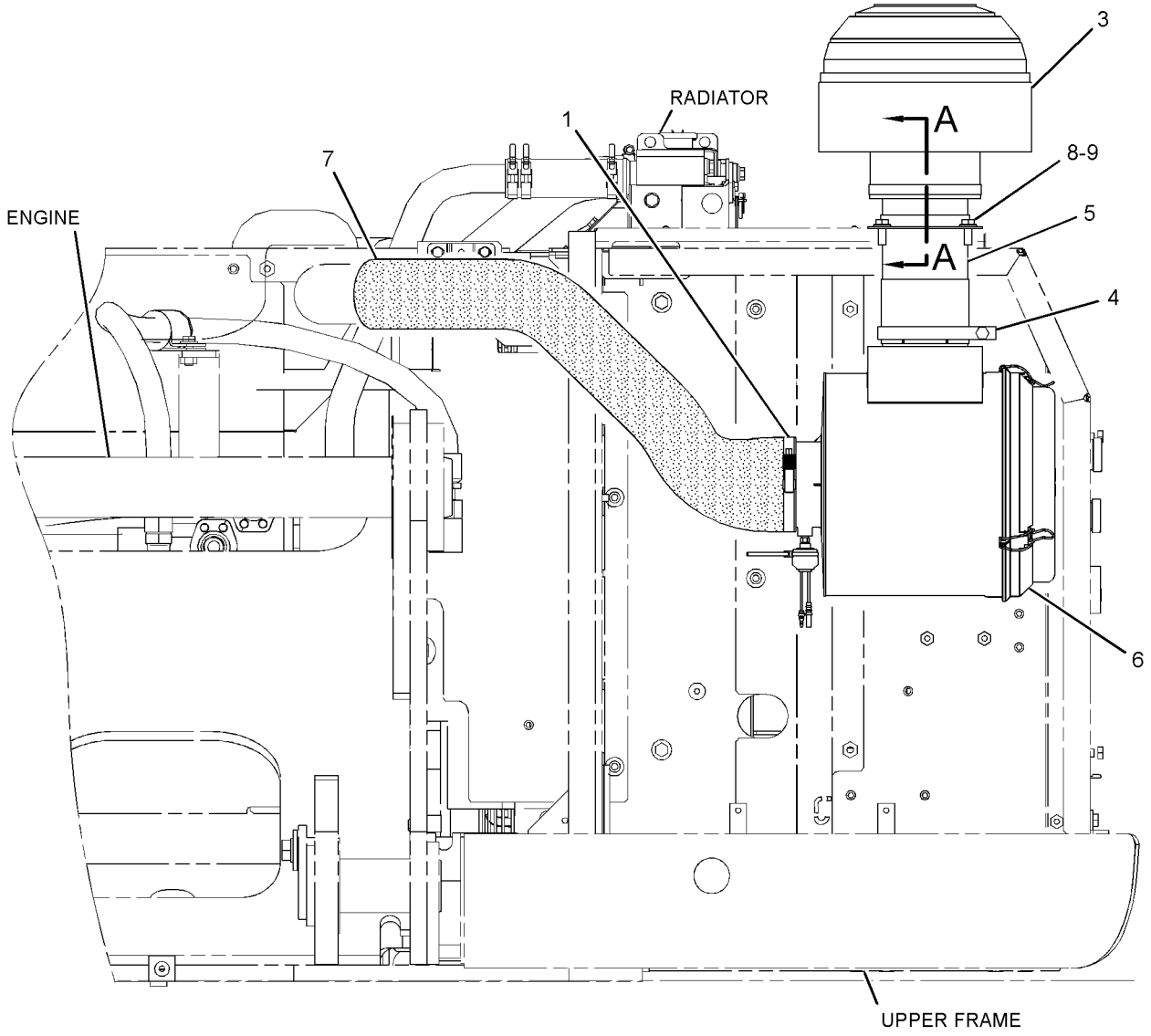

FRONT VIEW

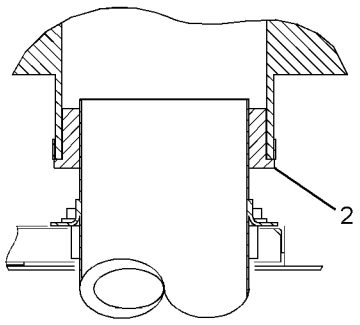

SECTION A-A

GRAPHIC #1 **<END>** g01502634

AIR INLET AND EXHAUST SYSTEM

310-9667 AIR CLEANER GP

S/N: KGF1472-UP; FAL1267-UP

PART OF 109-9313 AIR CLEANER & MOUNTING GP

SMCS-1051, 1054 **i02998202**

NOTE	REF NO	GRAPHIC REF	PART NUMBER	QTY	PART NAME 1 2 3 4 5 6 (PRODUCT LEVEL)	SEE PAGE
	1	1	**5L-3233**	1	FITTING	
	2	1	**7I-2673**	1	STRAP-CABLE	
	3	1	**112-9717**	1	VALVE-VACUATOR	
	4	1	**131-8821**	1	FILTER ELEMENT AS-AIR (SECONDARY)	
	5	1	**131-8822**	1	FILTER ELEMENT AS-AIR (PRIMARY)	
					—OR—	
		1	**134-0685**	1	FILTER ELEMENT AS-AIR (ULTRA HIGH EFFICIENCY) (PRIMARY)	
	6	1	**131-8826**	1	FILM-INSTRUCTION (TOP, AIR CLEANER COVER)	
	7	1	**131-8932**	4	LATCH	
	8	1	**184-3983**	1	COVER AS	
	9	1	**255-2966**	1	INDICATOR AS-AIR FILTER CHANGE (AIR RESTRICTION)	

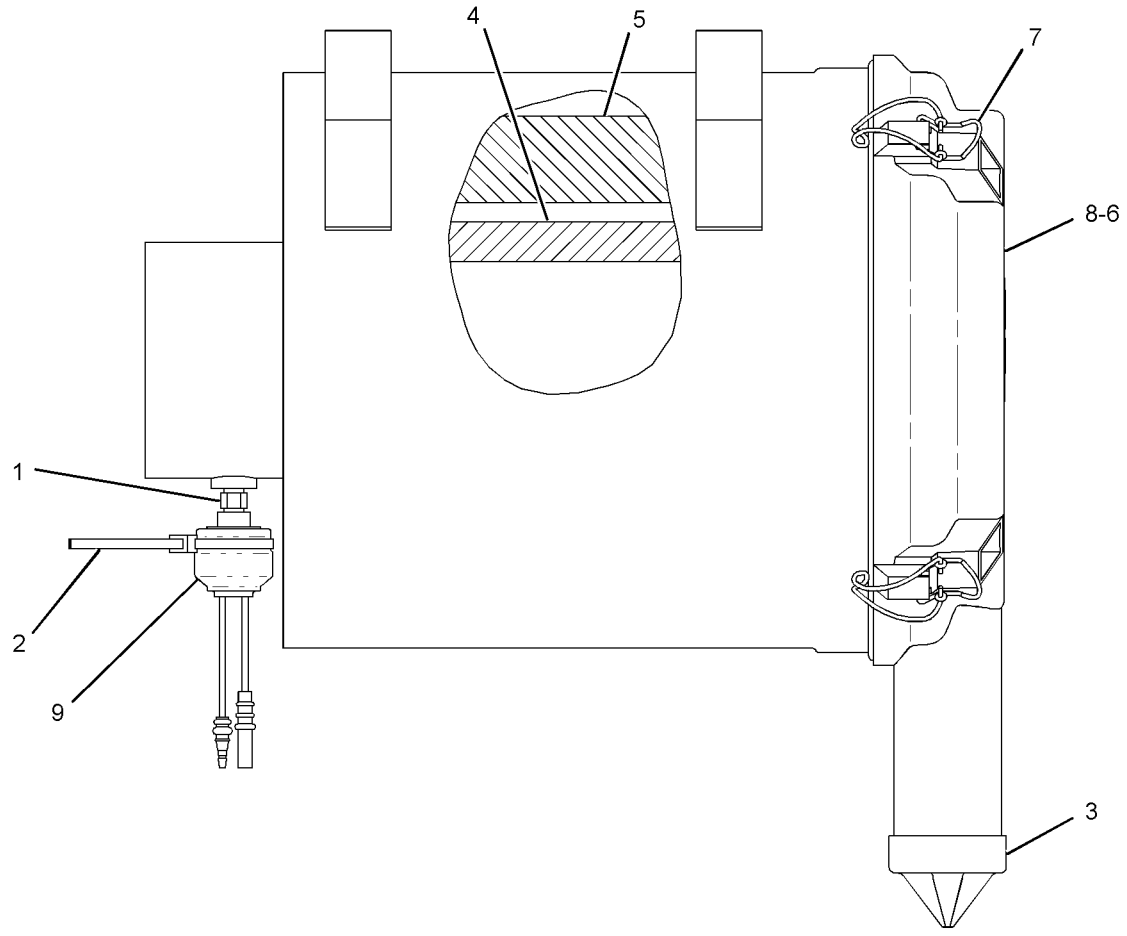

GRAPHIC #1 **<END>** g01504054

310-9676 AIR CLEANER GP

S/N: KGF1-UP; FAL1-UP
PART OF 272-4773 AIR CLEANER GP
AN ATTACHMENT

SMCS-1051, 1054 **i03011889**

NOTE	REF NO	GRAPHIC REF	PART NUMBER	QTY	PART NAME 1 2 3 4 5 6 (PRODUCT LEVEL)	SEE PAGE
	1	1	**5L-3233**	1	FITTING	
	2	1	**6I-2501**	1	FILTER ELEMENT AS-AIR (PRIMARY, STANDARD EFFICIENCY)	
					—OR—	
		1	**128-2686**	1	FILTER ELEMENT AS-AIR (PRIMARY, ULTRA HIGH EFFICIENCY)	
	3	1	**6I-2502**	1	FILTER ELEMENT AS-AIR (SECONDARY)	
	4	1	**7I-2673**	1	STRAP-CABLE	
	5	1	**131-8826**	1	FILM-INSTRUCTION (TOP, AIR CLEANER COVER)	
	6	1	**255-2966**	1	INDICATOR AS-AIR FILTER CHANGE (AIR RESTRICTION)	
	7	1	**171-9892**	1	COVER AS	

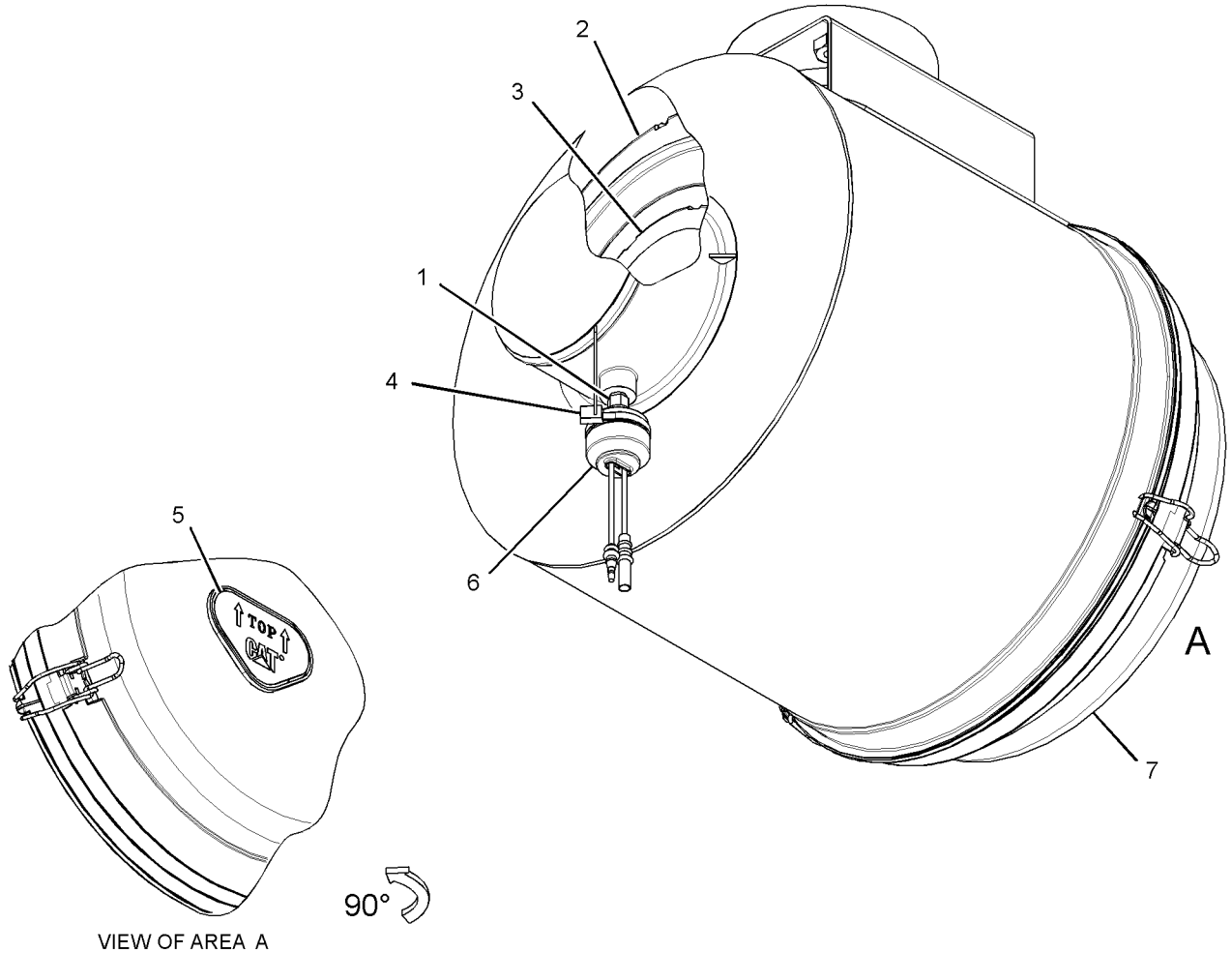

VIEW OF AREA A

GRAPHIC #1 **<END>** g01506593

AIR INLET AND EXHAUST SYSTEM

5I-7589 CARTRIDGE AS-TURBOCHARGER

S/N: GDC1-UP; KGF1-UP
PART OF 287-0049 TURBOCHARGER GP
ALSO AN ATTACHMENT

SMCS-1053 **i02853748**

NOTE	REF NO	GRAPHIC REF	PART NUMBER	QTY	PART NAME 1 2 3 4 5 6 (PRODUCT LEVEL)	SEE PAGE
	1	1	**135-2351**	1	INSERT	
	2	1	**135-2352**	1	RING-RETAINING	
	3	1	**135-2355**	1	SEAL-O-RING	
	4	1	**135-2347**	1	BEARING-THRUST	
	5	1	**135-2356**	1	RING-THRUST	
	6	1	**135-2359**	1	HOUSING	
	7	1	**135-2346**	1	PLATE	
	8	1	**135-2354**	1	RING-PISTON (17.5MM ID)	
	9	1	**171-3254**	1	WHEEL AS	
	10	1	**135-2358**	2	BEARING (9.036MM ID)	
	11	1	**135-2348**	1	DEFLECTOR-OIL	
	12	1	**135-2349**	1	SLEEVE	
	13	1	**135-2350**	1	RING-PISTON (12.4MM ID)	
	14	1	**135-2360**	1	WHEEL-COMPRESSOR (SHAFT & TURBINE)	
	15	1	**156-3103**	1	NUT (1/4-28-THD)	

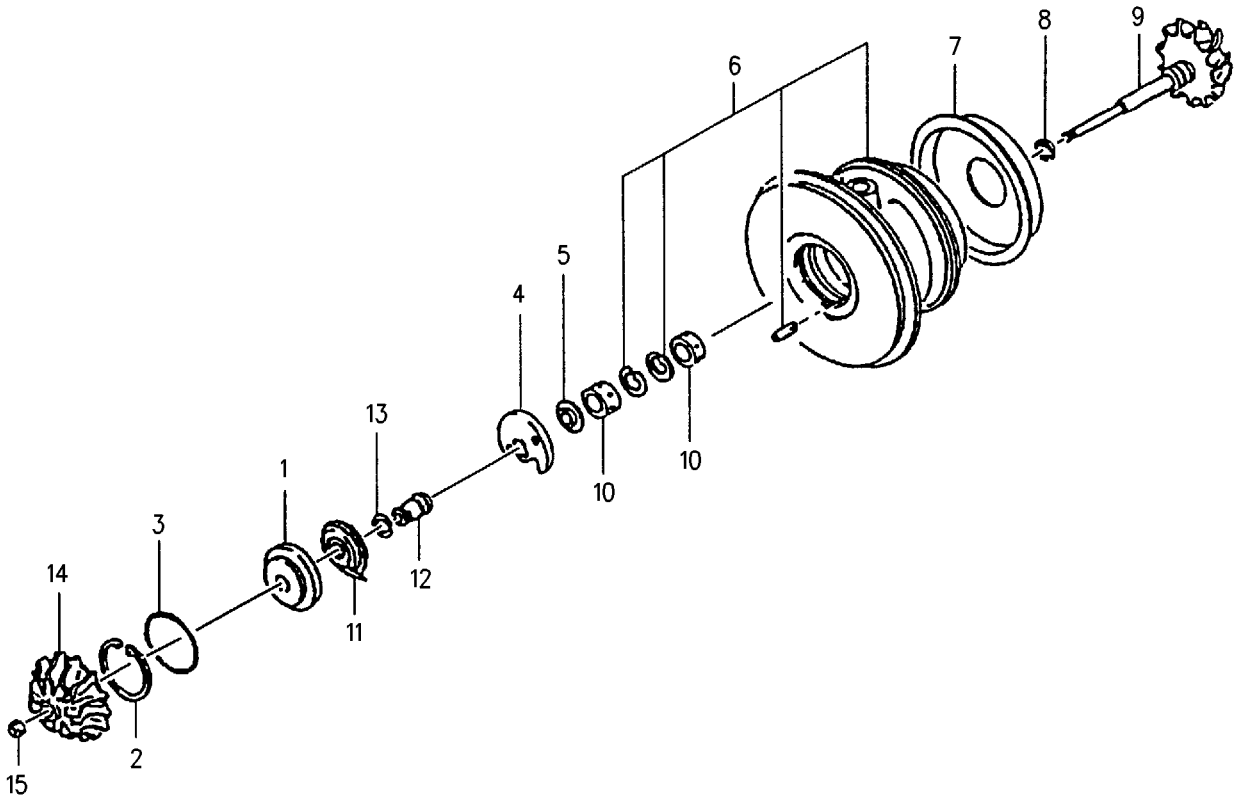

GRAPHIC #1 **<END>** g00680423

255-3044 EXTENSION GP-EXHAUST

S/N: KGF1-1005; FAL1-709

PART OF 272-4742 INSTALLATION AR-ENGINE

SMCS-1061 **i02417324**

NOTE	REF NO	GRAPHIC REF	PART NUMBER	QTY	PART NAME 1 2 3 4 5 6 (PRODUCT LEVEL)	SEE PAGE
	1	1	**4I-7554**	1	CLAMP	
	2	1	**266-6346**	1	PIPE	
M	3	1	**8T-4183**	1	BOLT (M12X1.75X40-MM)	
	4	1	**8T-4223**	1	WASHER-HARD (13.5X25.5X3-MM THK)	
M	5	1	**8T-4244**	1	NUT (M12X1.75-THD)	

M-METRIC PART

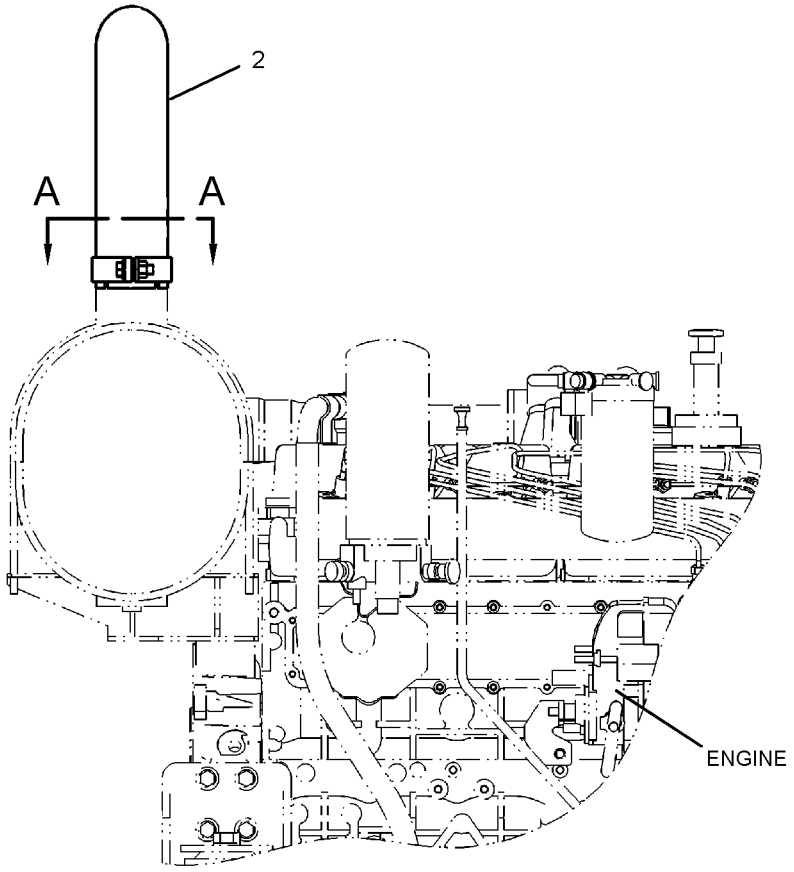

RIGHT SIDE VIEW
(ENGINE)

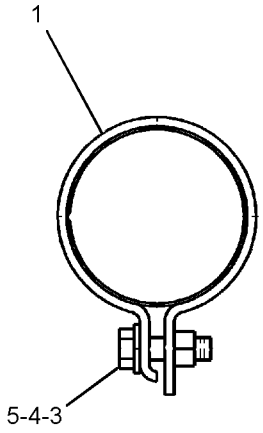

SECTION A-A

GRAPHIC #1 **<END>** g01214871

AIR INLET AND EXHAUST SYSTEM

265-3504 LINES GP-AIR

S/N: KGF1-UP; FAL1-UP

PART OF 272-4742 INSTALLATION AR-ENGINE

SMCS-1071 **i02577724**

NOTE	REF NO	GRAPHIC REF	PART NUMBER	QTY	PART NAME 1 2 3 4 5 6 (PRODUCT LEVEL)	SEE PAGE
	1	1,2	**8T-4984**	9	CLAMP-HOSE	
	2	1	**8T-6703**	1	CLAMP-HOSE	
	3	2	**210-8012**	1	SUPPORT	
	4	2	**265-3581**	1	TUBE AS	
	5	2	**265-3585**	1	HOSE	
	6	1	**265-3586**	1	HOSE	
	7	1	**265-3587**	1	TUBE AS	
	8	1	**265-3590**	1	HOSE	
	9	1	**265-3591**	1	HOSE	
	10	2	**265-3599**	1	HOSE	
	11	1,2	**8T-4121**	6	WASHER-HARD (11X21X2.5-MM THK)	
M	12	1,2	**8T-4136**	4	BOLT (M10X1.5X25-MM)	
M	13	2	**8T-4137**	2	BOLT (M10X1.5X20-MM)	

M-METRIC PART

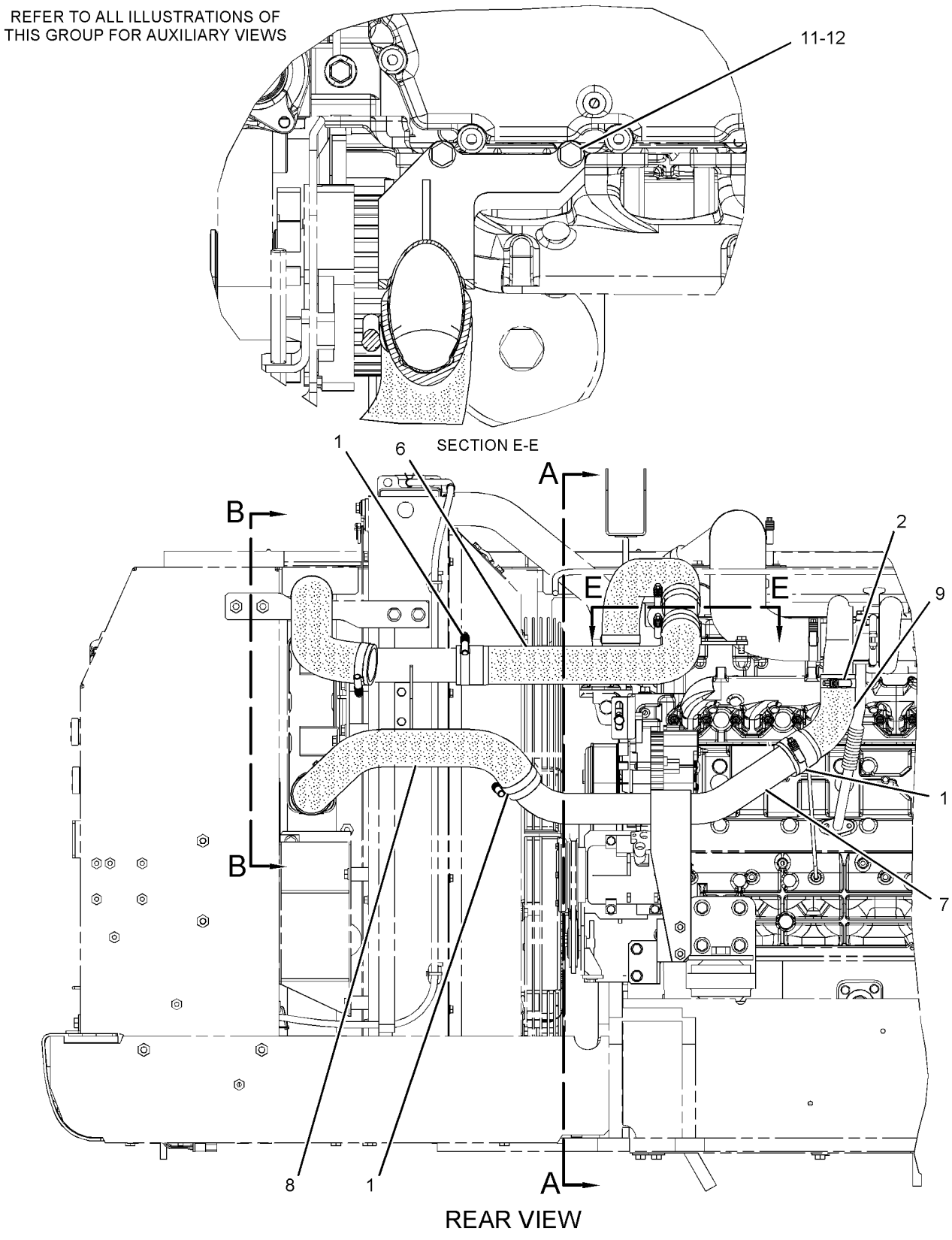

GRAPHIC #1

g01288146

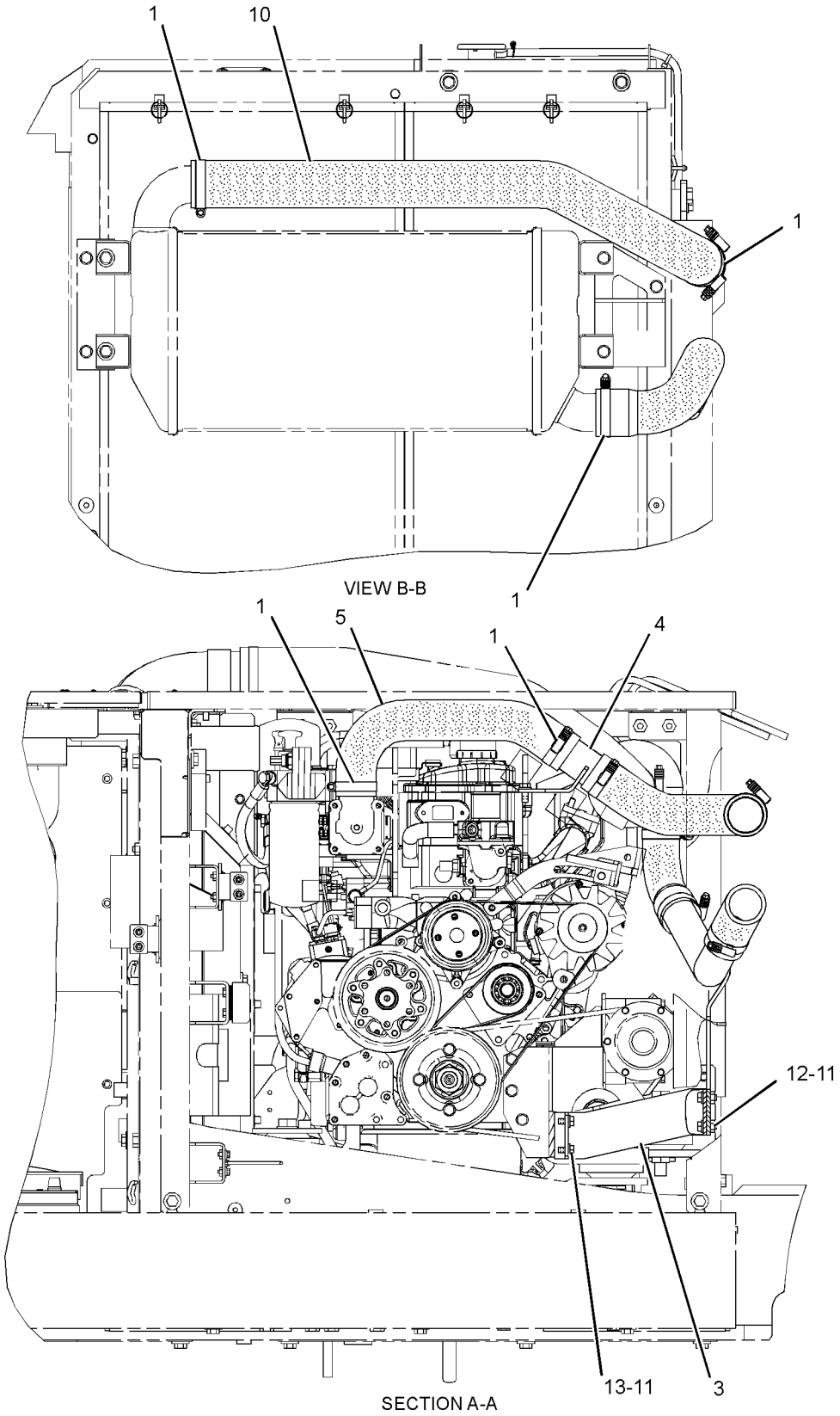

GRAPHIC #2 **<END>** g01288629

272-4744 LINES GP-AIR–TURBOCHARGER, AIR CLEANER

S/N: KGF1-UP; FAL1-UP

PART OF 272-4742 INSTALLATION AR-ENGINE

SMCS-1071 **i02683858**

NOTE	REF NO	GRAPHIC REF	PART NUMBER	QTY	PART NAME 1 2 3 4 5 6 (PRODUCT LEVEL)	SEE PAGE
	1	1	**144-0367**	1	CLAMP-HOSE	
	2	1	**8T-4986**	1	CLAMP-HOSE	
	3	1	**9X-2201**	2	CLAMP-HOSE	
	4	1	**279-7907**	1	HOSE-AIR	
	5	1	**287-0211**	1	HOSE-AIR	

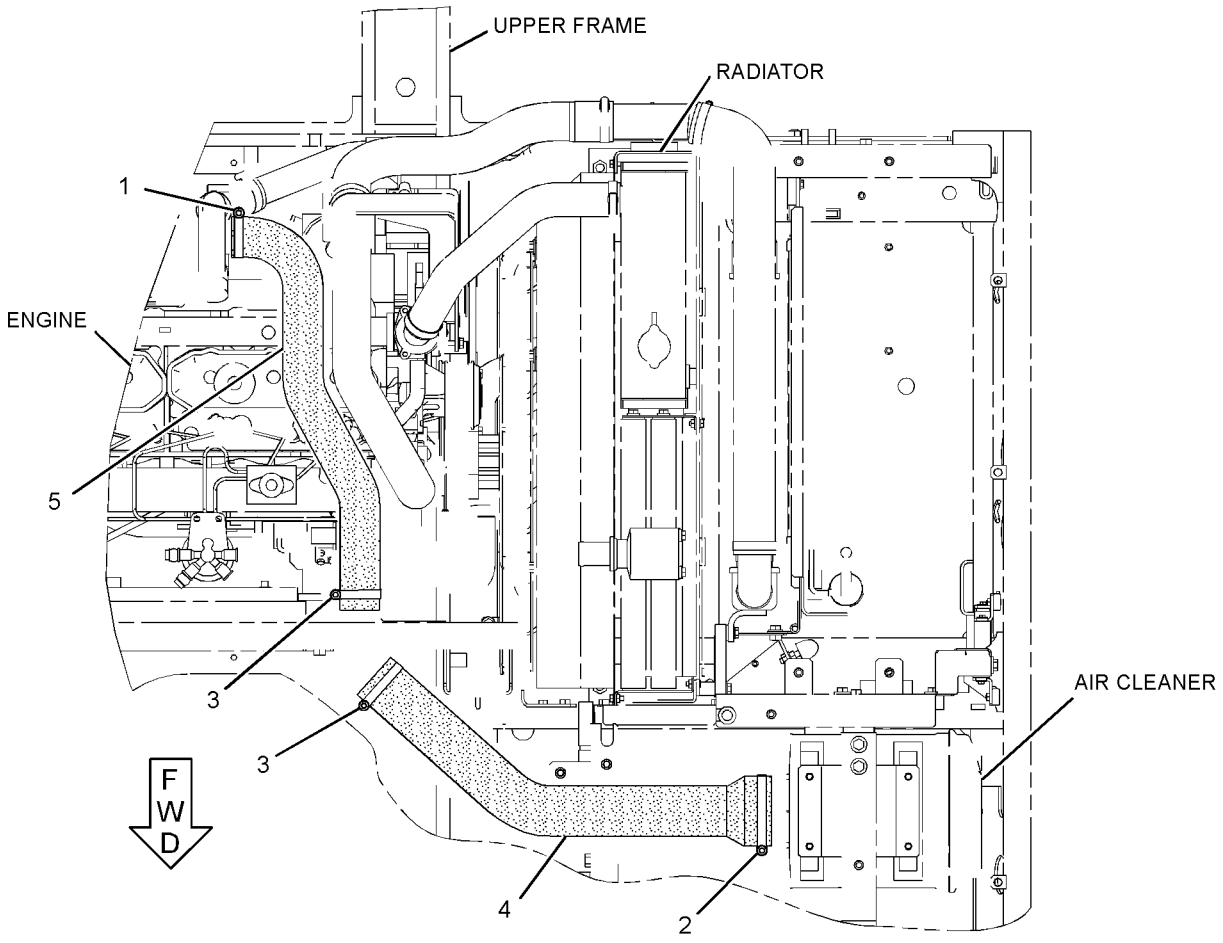

TOP VIEW

GRAPHIC #1 **<END>** g01350645

AIR INLET AND EXHAUST SYSTEM

287-0183 LINES GP-MUFFLER DRAIN

S/N: KGF1-UP; FAL1-UP

PART OF 272-4742 INSTALLATION AR-ENGINE

SMCS-1062 **i02646608**

NOTE	REF NO	GRAPHIC REF	PART NUMBER	QTY	PART NAME 1 2 3 4 5 6 (PRODUCT LEVEL)	SEE PAGE
	1	1	**3S-2093**	3	STRAP-CABLE	
	2	1	**287-0171**	1	TUBE AS	
		1	**287-0118**	1	ADAPTER AS	
	3	1	**171-9073**	1	CLIP	
	4	1	**5P-4961**	1	CLAMP-HOSE	
	5	1	**8T-4121**	1	WASHER-HARD (11X21X2.5-MM THK)	
M	6	1	**8T-4191**	1	BOLT (M10X1.5X16-MM)	
E	7	1	**5P-1442**		HOSE (72-CM)	

E-ORDER BY THE CENTIMETER
M-METRIC PART

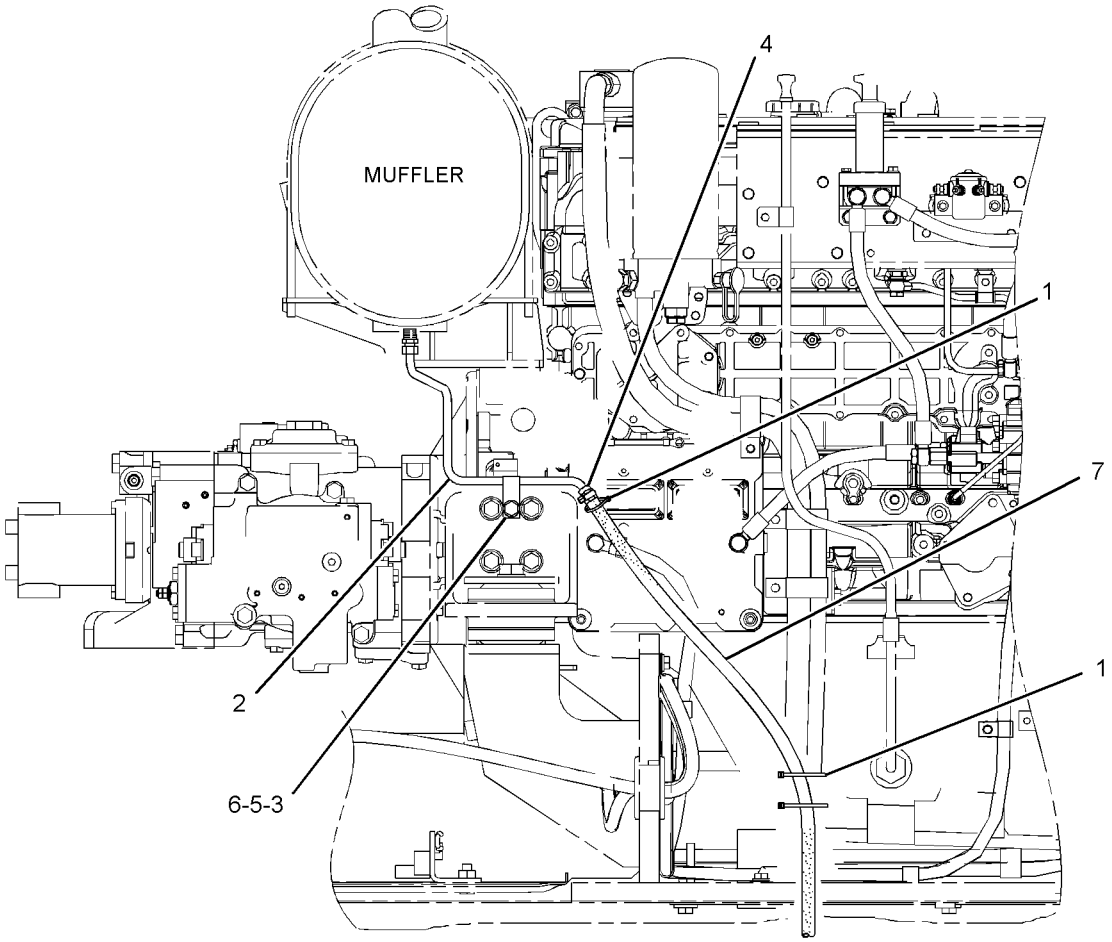

RIGHT SIDE VIEW OF ENGINE

GRAPHIC #1 **<END>** g01354840

296-4653 MANIFOLD GP-EXHAUST

S/N: GDC1-UP; KGF1-UP
PART OF 272-4677, 272-4683, 296-4676, 305-4777 ENGINE AR
ALSO AN ATTACHMENT

SMCS-1059 **i02953234**

NOTE	REF NO	GRAPHIC REF	PART NUMBER	QTY	PART NAME 1 2 3 4 5 6 (PRODUCT LEVEL)	SEE PAGE
	1	1	**178-6552**	1	MANIFOLD	
	2	1	**294-1761**	2	GASKET	
M	3	1	**178-6554**	4	STUD (M10X1.5X15-MM, M10X1.25X20-MM)	
	6	1	**5I-7549**	12	STUD (M8X1.25X86-MM)	
	7	1	**5I-7550**	11	SPACER	
	8	1	**239-6604**	12	WASHER	
	9	1	**212-8489**	12	NUT	
	10	1	**3B-4505**	13	LOCKWASHER	
	11	1	**5I-7601**	1	SPACER	
M	12	1	**091-3474**	1	NUT (M8X1.25-THD)	

M-METRIC PART

296-4653 **MANIFOLD GP-EXHAUST** *(contd.)* **i02953234**

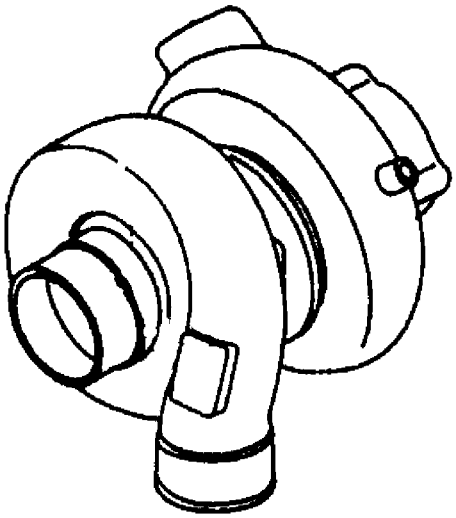

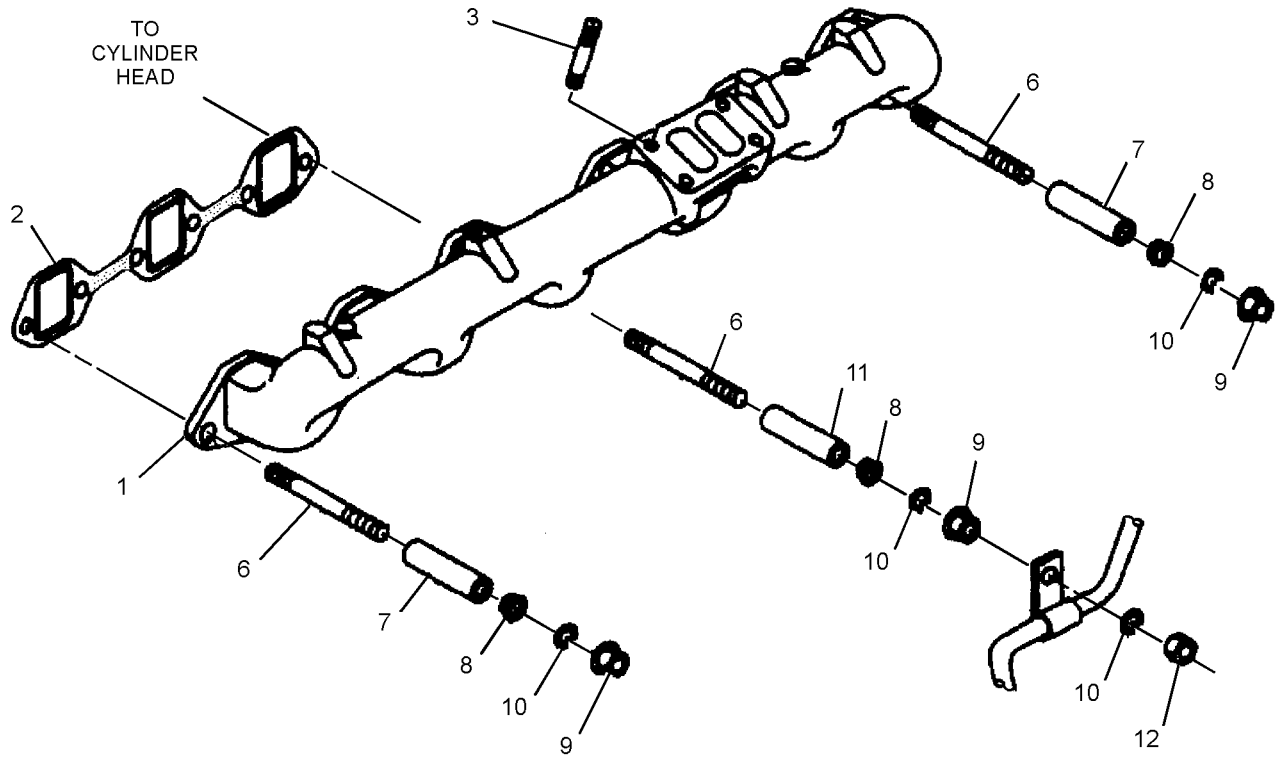

GRAPHIC #1 **<END>** g01469974

296-4652 MANIFOLD GP-INLET

S/N: GDC1-UP; KGF1-UP
PART OF 272-4677, 272-4683, 296-4676, 305-4777 ENGINE AR
ALSO AN ATTACHMENT

SMCS-1058, 1090 **i03022557**

NOTE	REF NO	GRAPHIC REF	PART NUMBER	QTY	PART NAME 1 2 3 4 5 6 (PRODUCT LEVEL)	SEE PAGE
	1	1	**294-1758**	2	GASKET	
	2	1	**096-8490**	12	BOLT	
	3	1	**294-1700**	16	BOLT (M8X1.25X108.3-MM)	
	4	1	**5I-8021**	1	ELBOW AS	
	4A	1	**5I-8023**	1	PLUG	
	5	1	**294-1854**	1	BRACKET	
	6	1	**294-1738**	2	BOLT (M10X1.5X32-MM)	
	7	1	**5I-7678**	1	GASKET (INLET MANIFOLD)	
	8	1	**303-6261**	4	BOLT	
	9	1	**294-1760**	1	MANIFOLD	
	10	1	**5I-7677**	1	GASKET	
	11	1	**305-4691**	1	HEATER	
Y	12	1	**223-4453**	1	SWITCH GP-MAGNETIC (24-VOLT) (STARTING AID HEATER)	277
	13	1	**294-1853**	1	CABLE	
	14	1	**5I-5597**	2	BOLT (M14X1.5X10-MM)	

Y-SEPARATE ILLUSTRATION

296-4652 **MANIFOLD GP-INLET** *(contd.)* **i03022557**

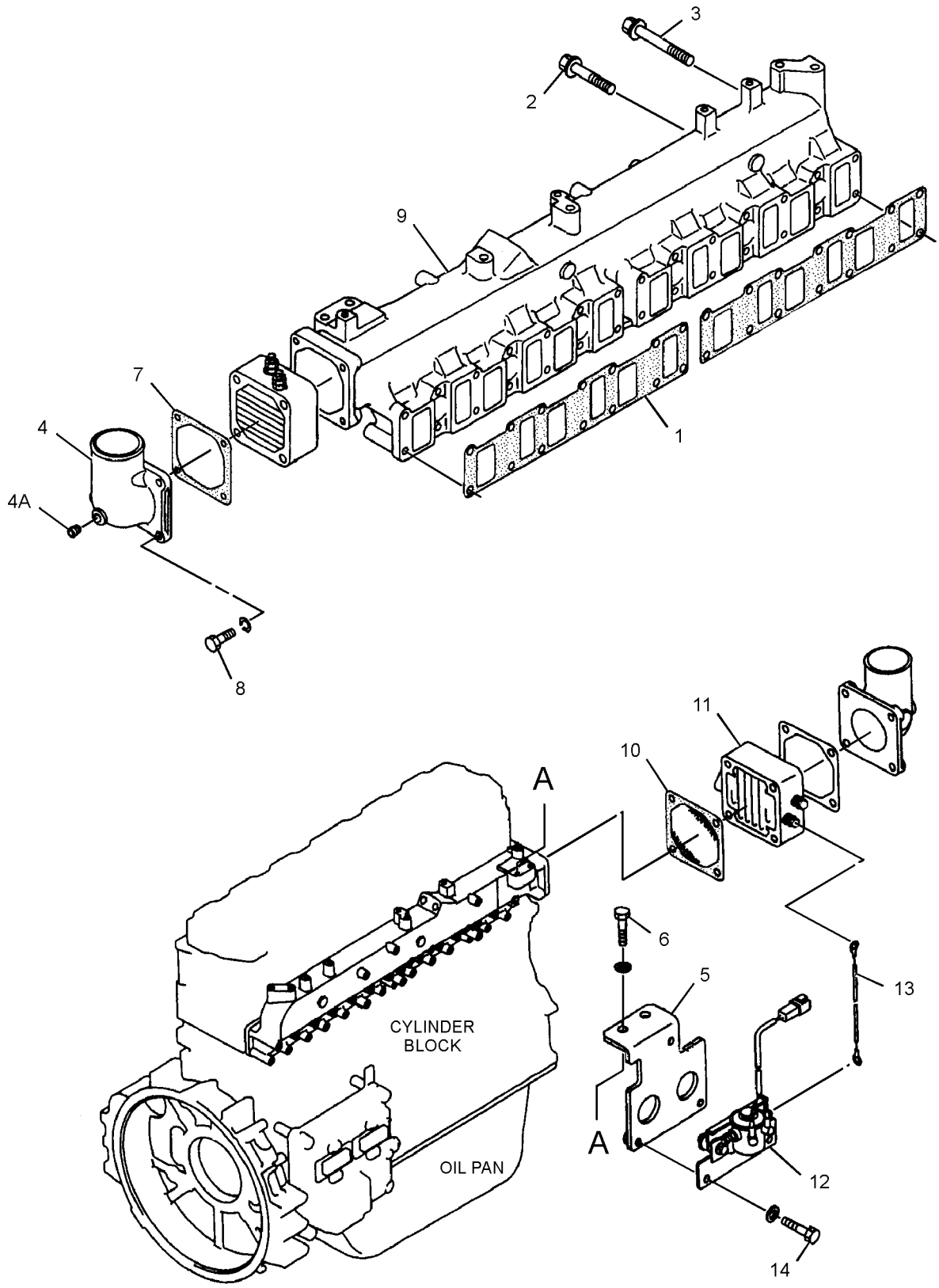

GRAPHIC #1 **<END>** g01317367

296-4662 MUFFLER GP

S/N: GDC1-UP; KGF1-UP
PART OF 272-4677, 272-4683, 296-4676, 305-4777 ENGINE AR
ALSO AN ATTACHMENT

SMCS-1062 **i02618452**

NOTE	REF NO	GRAPHIC REF	PART NUMBER	QTY	PART NAME 1 2 3 4 5 6 (PRODUCT LEVEL)	SEE PAGE
	1	1	**294-1762**	1	MUFFLER	
	2	1	**266-6321**	2	U-BOLT	
	3	1	**266-6319**	1	BRACKET	
	4	1	**266-6320**	1	BRACKET	
	5	1	**294-1738**	4	BOLT	
M	6	1	**6V-8231**	8	NUT (M10X1.25-THD)	
	7	1	**5I-8040**	1	PIPE	
	8	1	**5I-7679**	1	GASKET	
M	9	1	**178-6554**	3	STUD (M10X1.5X15-MM, M10X1.25X20-MM)	
	10	1	**5I-7633**	6	NUT (M10X1.25-THD)	
	11	1	**094-7583**	1	CLAMP AS	

M-METRIC PART

296-4662 **MUFFLER GP** ***(contd.)*** **i02618452**

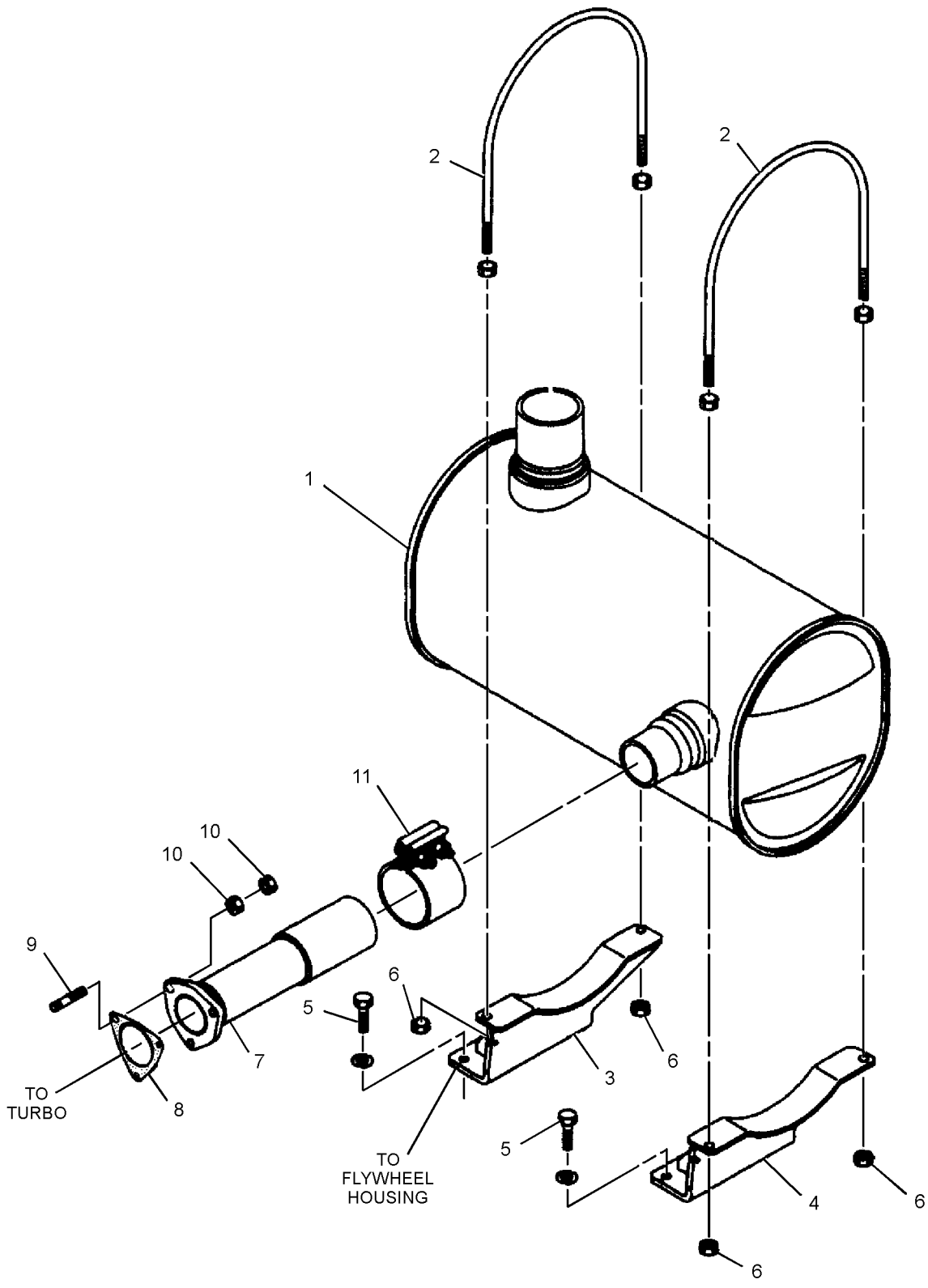

GRAPHIC #1 **<END>** g01317750

AIR INLET AND EXHAUST SYSTEM

297-7745 MUFFLER GP

S/N: GDC7002-UP
PART OF 296-4676 ENGINE AR
AN ATTACHMENT

SMCS-1062 **i02776259**

NOTE	REF NO	GRAPHIC REF	PART NUMBER	QTY	PART NAME 1 2 3 4 5 6 (PRODUCT LEVEL)	SEE PAGE
	1	1	**297-7791**	1	MUFFLER	
	2	1	**266-6321**	2	U-BOLT	
	3	1	**266-6319**	1	BRACKET	
	4	1	**266-6320**	1	BRACKET	
	5	1	**294-1738**	4	BOLT (M10X1.5X32-MM)	
M	6	1	**6V-8231**	8	NUT (M10X1.25-THD)	
	7	1	**5I-8040**	1	PIPE	
	8	1	**5I-7679**	1	GASKET	
M	9	1	**178-6554**	3	STUD (M10X1.5X15-MM, M10X1.25X20-MM)	
	10	1	**5I-7633**	6	NUT (M10X1.25-THD)	
	11	1	**094-7583**	1	CLAMP AS	

M-METRIC PART

297-7745 **MUFFLER GP** *(contd.)* **i02776259**

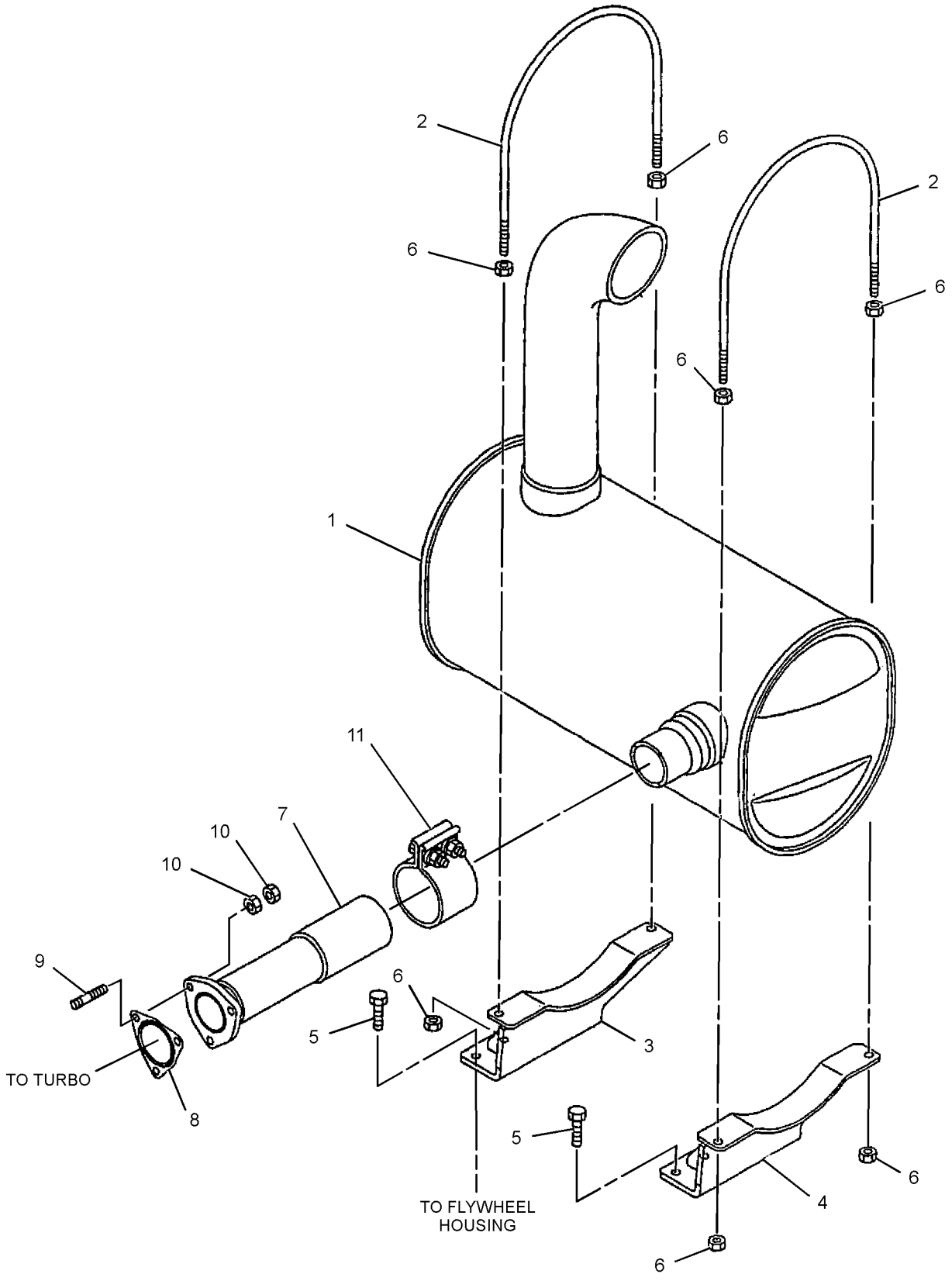

GRAPHIC #1 **<END>** g01371133

AIR INLET AND EXHAUST SYSTEM

287-0049 TURBOCHARGER GP

S/N: GDC1-UP; KGF1-UP

PART OF 272-4677, 272-4683, 296-4676, 305-4777 ENGINE AR, 310-9617 TURBOCHARGER GP

ALSO AN ATTACHMENT

SMCS-1052, 1053 **i02618441**

NOTE	REF NO	GRAPHIC REF	PART NUMBER	QTY	PART NAME 1 2 3 4 5 6 (PRODUCT LEVEL)	SEE PAGE
	1	1	**5B-9304**	2	SCREW-DRIVE (NO 2X3/16-IN)	
	2	1	**5I-7587**	1	COVER	
Y	3	1	**5I-7589**	1	CARTRIDGE AS-TURBOCHARGER	120
	4	1	**135-2352**	1	RING-RETAINING	
	5	1	**5I-7602**	1	COUPLING AS	
	6	1	**294-1763**	1	HOUSING	

Y-SEPARATE ILLUSTRATION

287-0049 **TURBOCHARGER GP** *(contd.)* **i02618441**

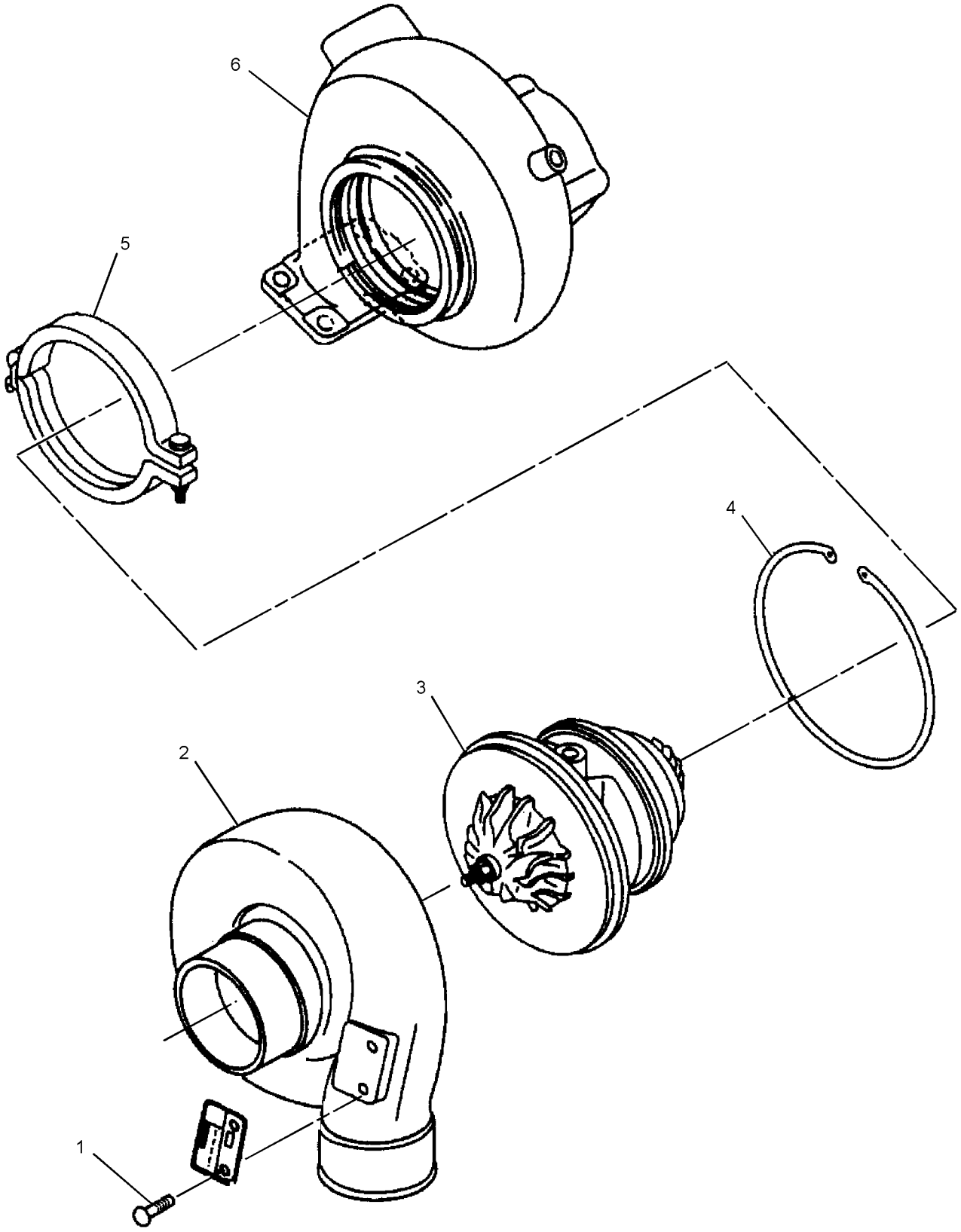

GRAPHIC #1 **<END>** g01317715

310-9617 TURBOCHARGER GP

S/N: GDC7002-UP
PART OF 296-4676 ENGINE AR
AN ATTACHMENT

SMCS-1052, 1053 **i02934560**

NOTE	REF NO	GRAPHIC REF	PART NUMBER	QTY	PART NAME 1 2 3 4 5 6 (PRODUCT LEVEL)	SEE PAGE
Y	1	1	**287-0049**	1	TURBOCHARGER GP	135
	2	1	**5I-7742**	1	GASKET	
	3	1	**5I-7633**	8	NUT (M10X1.25-THD)	

Y-SEPARATE ILLUSTRATION

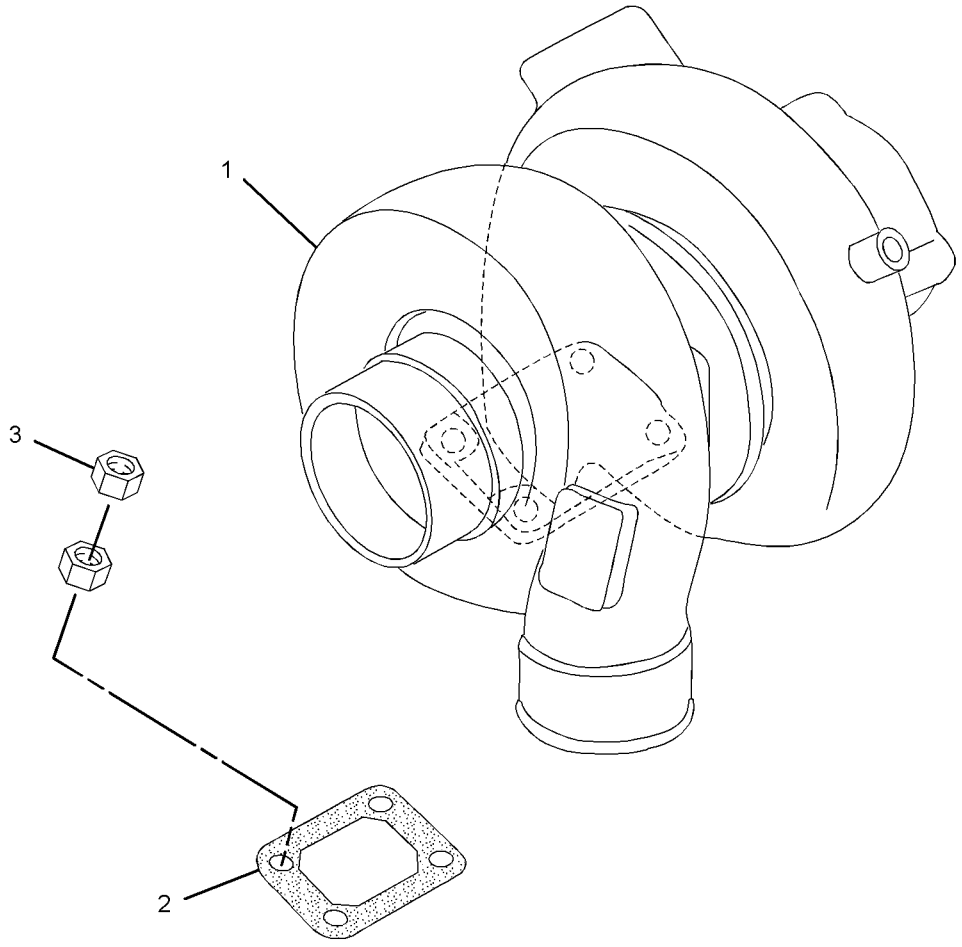

GRAPHIC #1 **<END>** g01459595

164-4858 CAP GP-FUEL FILLER–EXTREME SERVICE, LOCKABLE

S/N: KGF1-UP; FAL1-UP

PART OF 327-3193, 327-3196 TANK & MTG GP-FUEL, 278-3898, 278-3899, 278-3902, 278-3903, 327-3200, 327-3203 TANK GP-FUEL

ALSO AN ATTACHMENT

SMCS-1273 **i02959244**

NOTE	REF NO	GRAPHIC REF	PART NUMBER	QTY	PART NAME 1 2 3 4 5 6 (PRODUCT LEVEL)	SEE PAGE
	1	1	**9X-8600**	1	SEAL-O-RING	
	2	1	**190-9775**	1	COVER AS-FILTER	

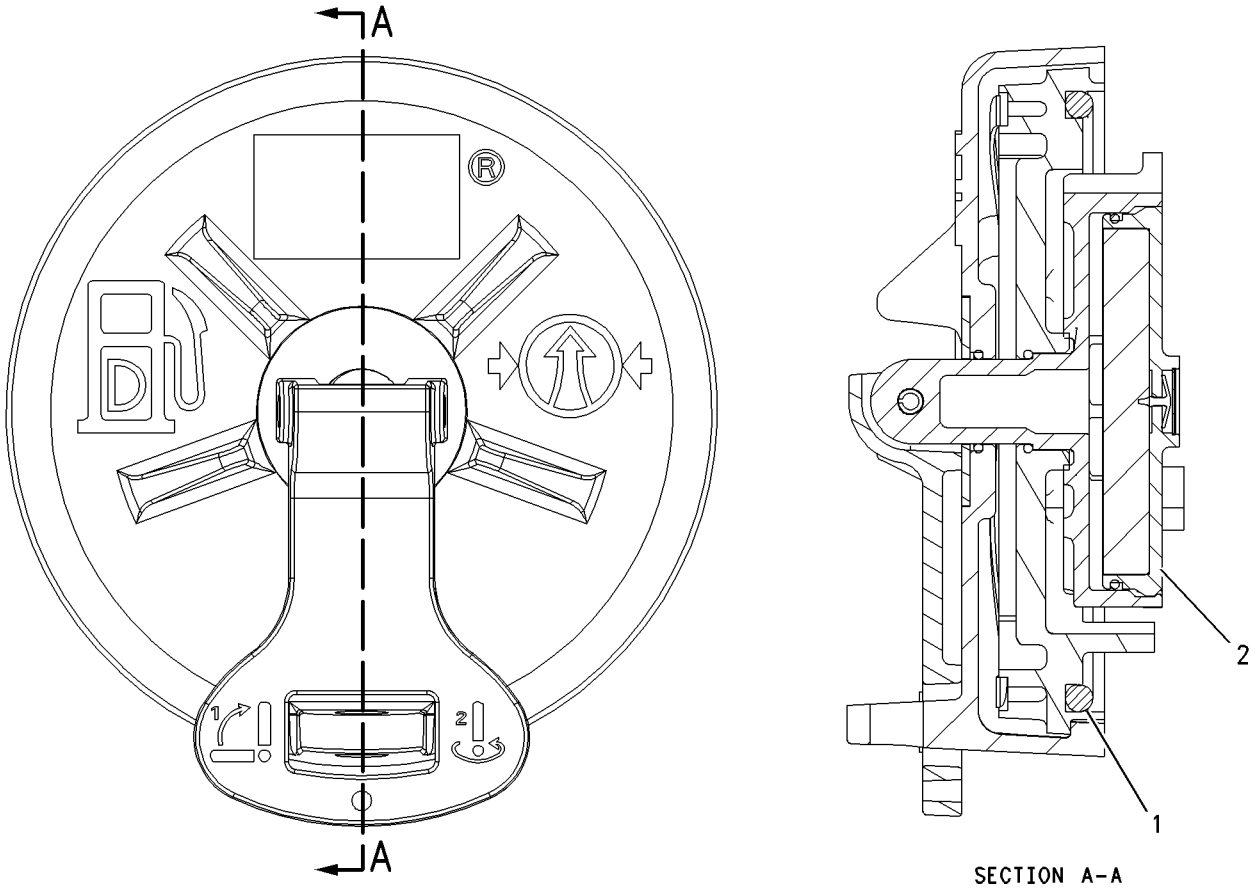

GRAPHIC #1 **<END>** g00849812

FUEL SYSTEM

305-4745 FILTER GP-FUEL

S/N: GDC1-UP; KGF1-UP
PART OF 272-4677, 272-4683, 296-4676, 305-4777 ENGINE AR
ALSO AN ATTACHMENT

SMCS-1261 **i03086242**

NOTE	REF NO	GRAPHIC REF	PART NUMBER	QTY	PART NAME 1 2 3 4 5 6 (PRODUCT LEVEL)	SEE PAGE
	1	1	**099-4437**	17	GASKET	
	2	1	**099-5041**	7	BOLT (M14X1.5X27-MM)	
	3	1	**294-1811**	1	WASHER	
	4	1	**294-1819**	1	HOSE	
	5	1	**137-5541**	1	PUMP AS-FUEL PRIMING	
		1	**061-7539**	1	SEAL-O-RING	
		1	**229-3218**	2	VALVE AS	
	6	1	**294-1820**	1	GASKET (FUEL PRIMING PUMP)	
	7	1	**199-2241**	1	BOLT	
	8	1	**294-1821**	1	BOLT (M8X1.25X35.5-MM)	
	9	1	**294-1822**	1	BASE	
	10	1	**288-9297**	4	BOLT	
	11	1	**1R-0751**	2	FILTER (ADVANCED EFFICIENCY) (FUEL)	
	12	1	**294-1825**	1	HOSE	
	13	1	**294-1826**	1	HOSE	
	14	1	**294-1827**	1	BRACKET	
	15	1	**294-1828**	2	BOLT (M10X1.5X62-MM)	
	16	1	**183-8224**	1	TUBE	
	17	1	**196-8217**	1	TUBE	
	18	1	**305-4889**	1	HOSE	
	19	1	**190-5830**	1	TUBE	
	20	1	**294-1830**	1	TUBE	
	21	1	**094-9725**	2	PLUG	
M	22	1	**5C-2890**	4	NUT (M6X1-THD)	
	23	1	**9X-8256**	4	WASHER (6.6X12X2-MM THK)	
	24	1	**294-1831**	4	CLAMP	
	25	1	**294-1833**	2	CLAMP	
	26	1	**297-7822**	2	BOLT (M6X1X44-MM)	
	27	1	**096-2500**	4	LOCKWASHER	
	28	1	**297-7706**	2	BOLT (M6X1X64-MM)	
	29	2	**310-9534**	1	CONNECTOR	
	30	1	**305-4887**	1	HOSE	
M	31	1	**213-9433**	2	BOLT (M10X1.5X45-MM)	
	32	1	**095-2038**	1	WASHER (7.8X13.5X2-MM THK)	
	33	1	**310-9536**	1	BRACKET	
	38	2	**294-1837**	1	BRACKET	
	39	2	**294-1838**	1	BRACKET	
	41	2	**305-4901**	1	SEAL-O-RING	
	42	2	**294-1804**	2	SEAL-O-RING	
	47	2	**294-1844**	1	BOLT (M12X1.75X28-MM)	
	48	2	**294-1845**	1	BOLT (M12X1.25X38-MM)	
	49	2	**305-4902**	1	CONNECTOR	
	50	2	**5I-8058**	1	CONNECTOR	
	51	2	**310-9533**	1	CONNECTOR	
M	52	2	**6V-5215**	2	BOLT (M8X1.25X16-MM)	
	54	2	**305-4900**	1	PIPE	
	55	2	**294-1848**	1	CONNECTOR	
	56	2	**294-1849**	1	SEAL-O-RING	
	57	2	**297-7660**	1	NUT	

M-METRIC PART

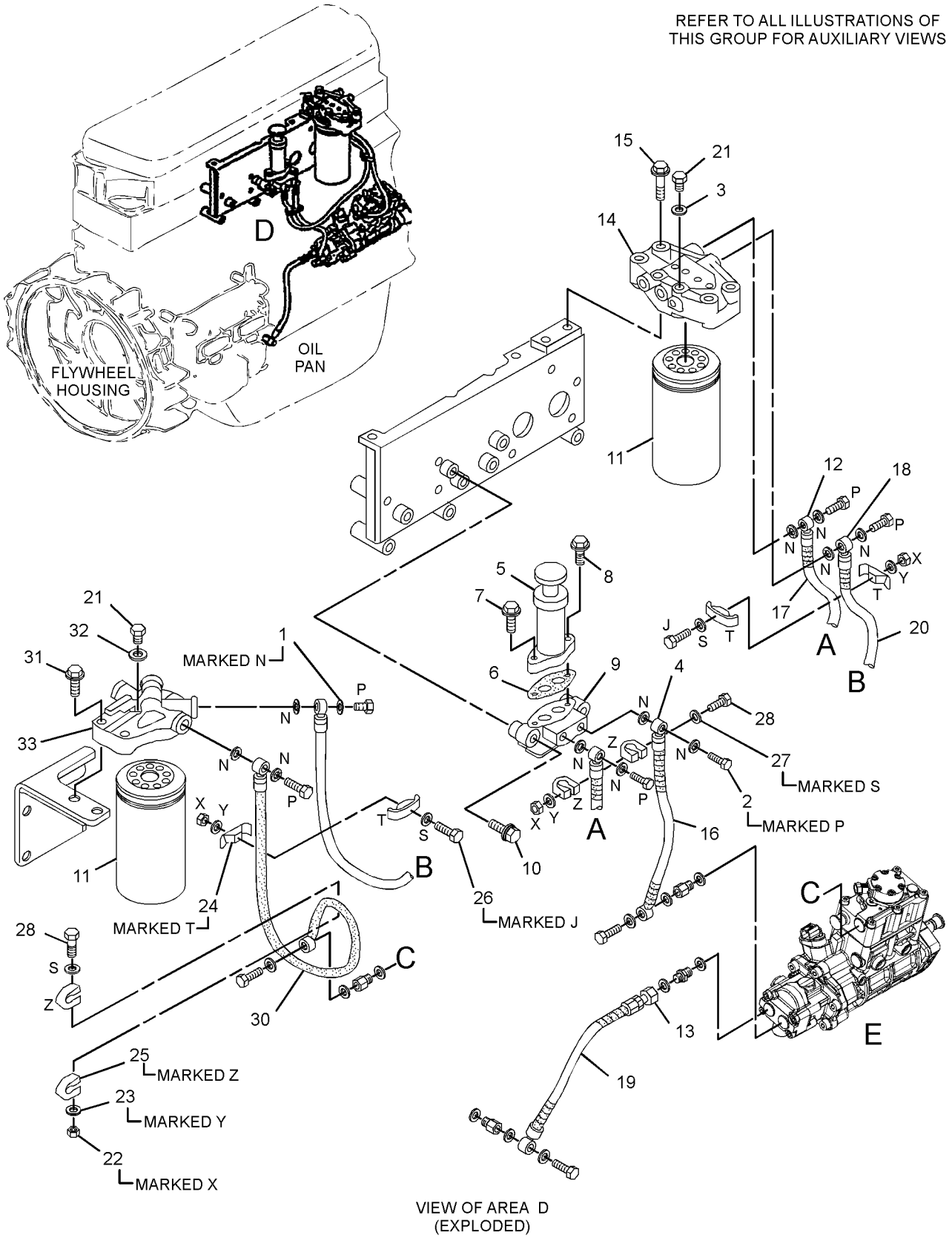

VIEW OF AREA D
(EXPLODED)

GRAPHIC #1 g01469827

305-4745 **FILTER GP-FUEL** *(contd.)* **i03086242**

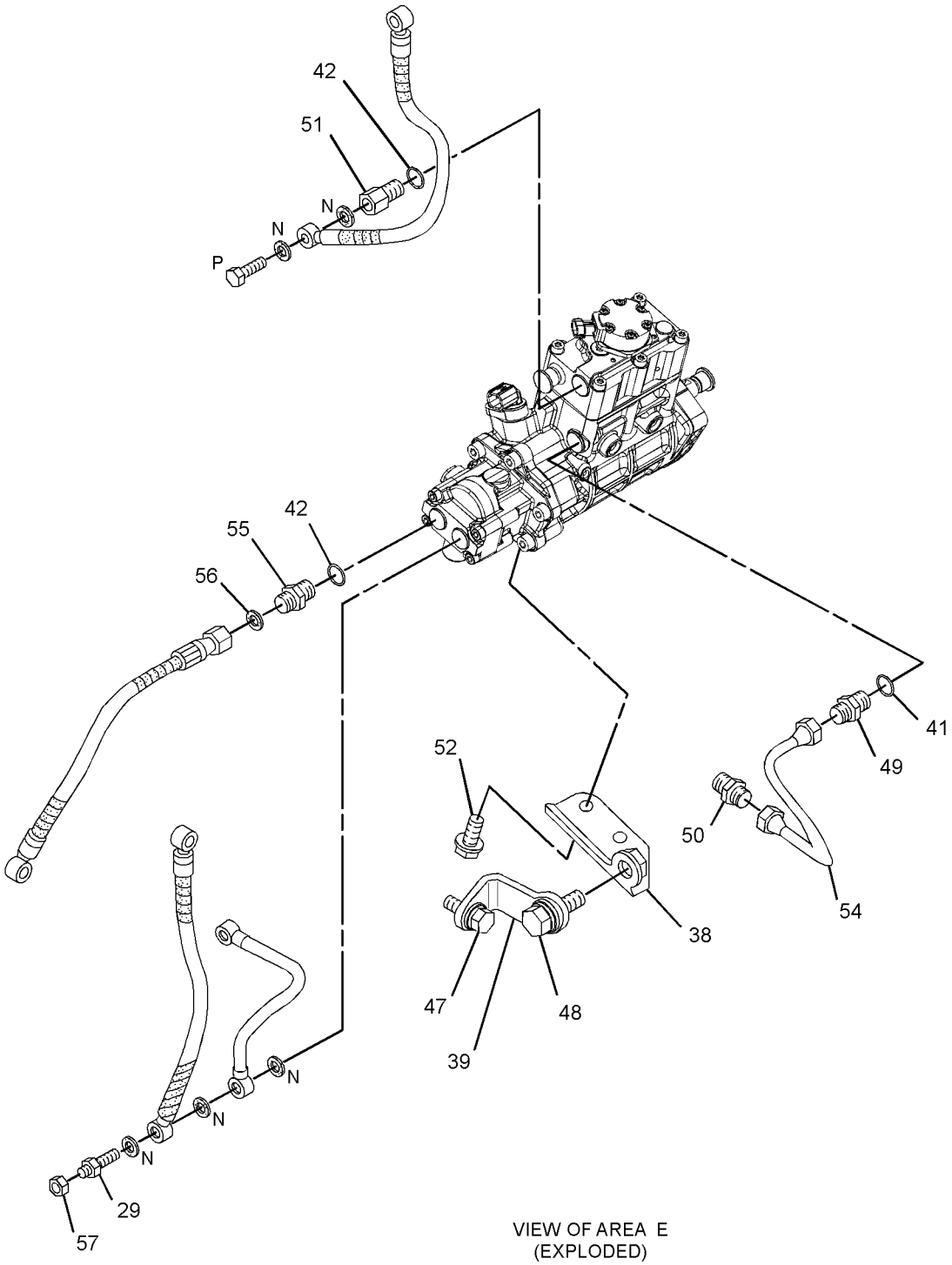

VIEW OF AREA E
(EXPLODED)

GRAPHIC #2 **<END>** g01469828

174-9570 FILTER GP-WATER SEP & FUEL

S/N: KGF1-UP; FAL1-UP

PART OF 273-7735 LINES GP-FUEL

SMCS-1261, 1263 **i03181950**

NOTE	REF NO	GRAPHIC REF	PART NUMBER	QTY	PART NAME 1 2 3 4 5 6 (PRODUCT LEVEL)	SEE PAGE
	1	1	**326-1644**	1	FILTER AS-WATER SEP & FUEL (PRIMARY)	
	1A	1	**220-8678**	1	SEAL-RING (FUEL, WATER SEPARATOR)	
	2	1	**270-5320**	1	BOWL AS (FUEL, WATER SEPARATOR)	

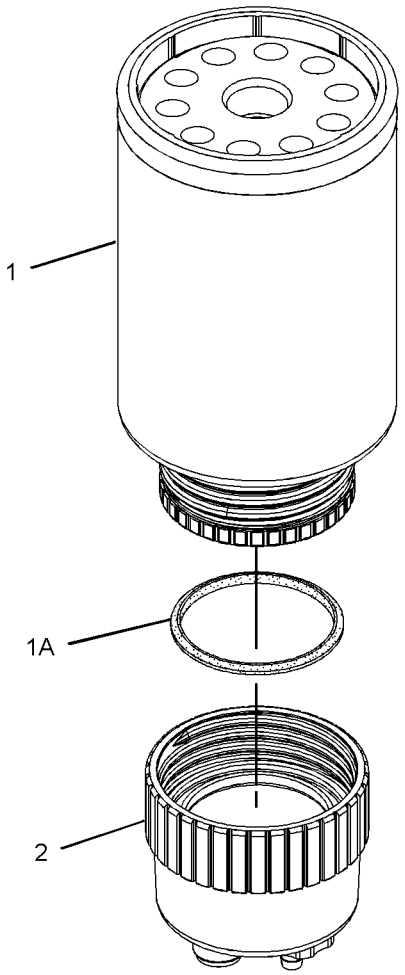

GRAPHIC #1

<END>

g01179858

FUEL SYSTEM

260-5656 INJECTOR GP-FUEL

S/N: GDC1-1846
PART OF 272-4677 ENGINE AR
AN ATTACHMENT

SMCS-1251, 1254, 1290, 1713 **i02618662**

NOTE	PART NUMBER	QTY	PART NAME 1 2 3 4 5 6 (PRODUCT LEVEL)	SEE PAGE
			(NO SERVICED PARTS)	

<END>

FUEL SYSTEM

295-9130 INJECTOR GP-FUEL

S/N: GDC1-1846
PART OF 296-4676 ENGINE AR
AN ATTACHMENT

SMCS-1251, 1254, 1290, 1713 **i02715538**

NOTE	REF NO	GRAPHIC REF	PART NUMBER	QTY	PART NAME 1 2 3 4 5 6 (PRODUCT LEVEL)	SEE PAGE
					(NO SERVICED PARTS)	

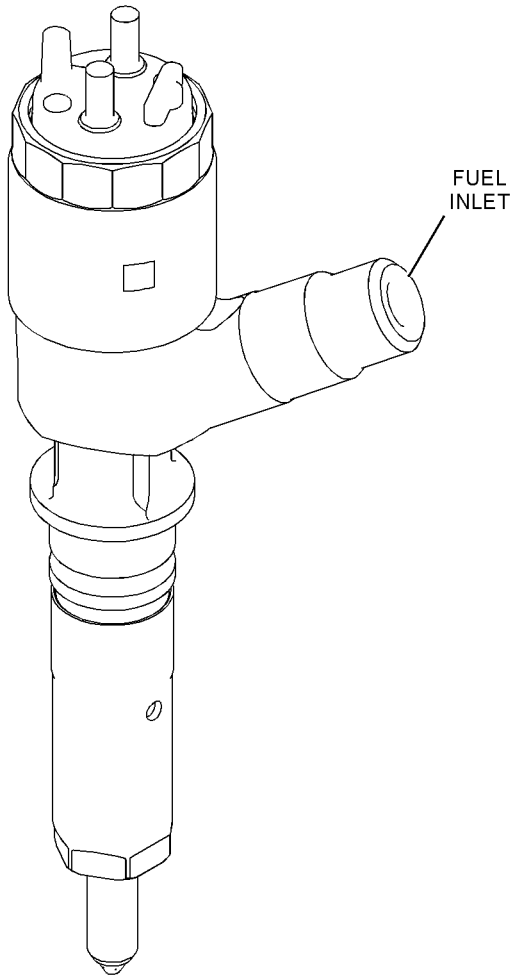

GRAPHIC #1

<END>

g01367386

310-9606 INJECTOR GP-FUEL

S/N: GDC1847-7001
PART OF 272-4677 ENGINE AR
AN ATTACHMENT

SMCS-1251, 1254, 1290, 1713 **i02932998**

NOTE	REF NO	GRAPHIC REF	PART NUMBER	QTY	PART NAME 1 2 3 4 5 6 (PRODUCT LEVEL)	SEE PAGE
	1	1	**301-7756**	6	INJECTOR GP-FUEL	
	2	1	**294-1796**	6	WASHER-SPECIAL	
	3	1	**294-1800**	6	SUPPORT	
	4	1	**294-1803**	6	SEAL-O-RING	
	5	1	**1R-6573**	6	GASKET	
M	6	1	**294-1805**	6	BOLT (M8X1.25X43-MM)	

M-METRIC PART

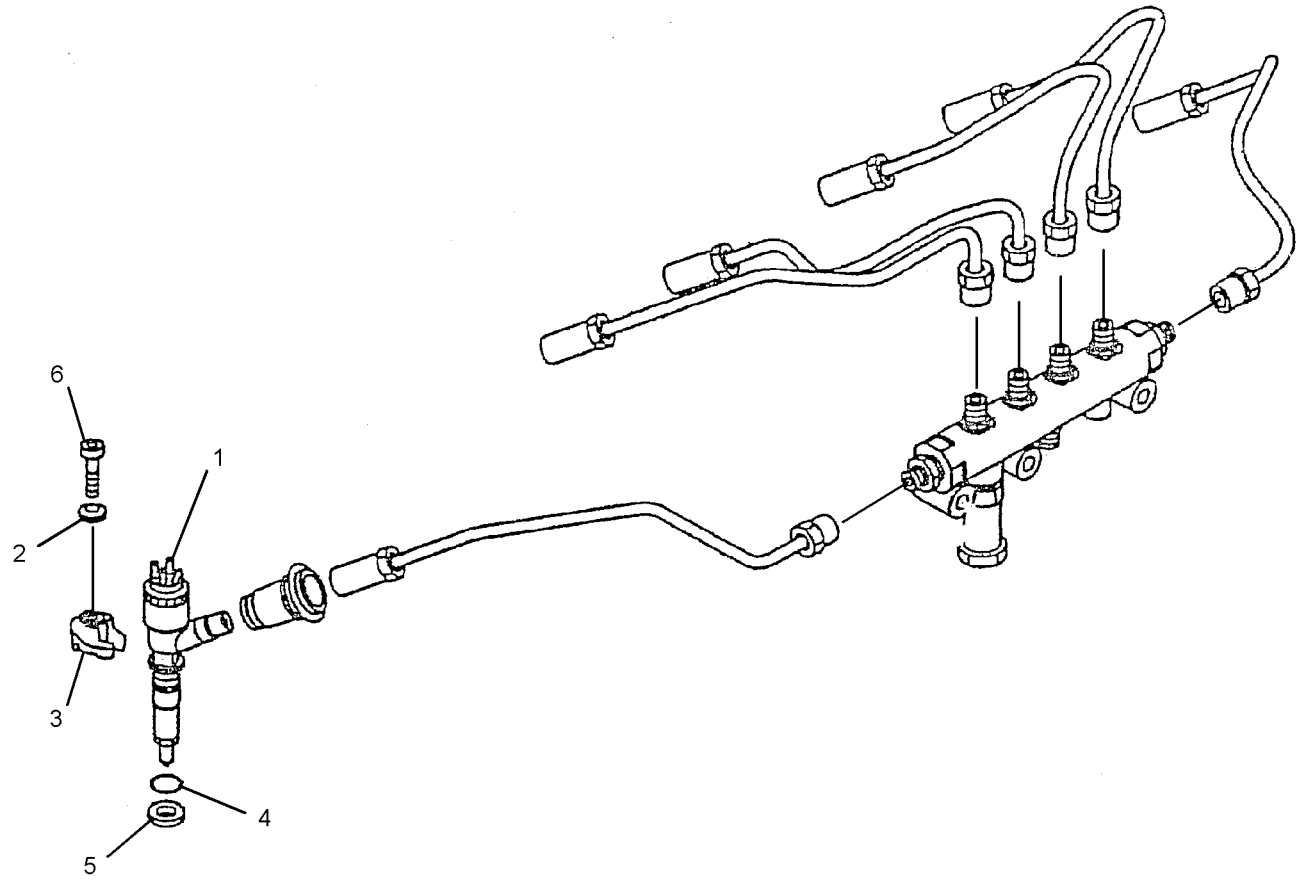

GRAPHIC #1 **<END>** g01618287

310-9607 INJECTOR GP-FUEL

S/N: GDC1847-UP
PART OF 272-4683, 296-4676 ENGINE AR
ALSO AN ATTACHMENT

SMCS-1251, 1254, 1290, 1713 **i02853603**

NOTE	REF NO	GRAPHIC REF	PART NUMBER	QTY	PART NAME 1 2 3 4 5 6 (PRODUCT LEVEL)	SEE PAGE
	1	1	**295-9130**	6	INJECTOR GP-FUEL	
	2	1	**294-1796**	6	WASHER-SPECIAL	
	3	1	**294-1800**	6	SUPPORT	
	4	1	**294-1803**	6	SEAL-O-RING	
	5	1	**1R-6573**	6	GASKET	
M	6	1	**294-1805**	6	BOLT (M8X1.25X43-MM)	

M-METRIC PART

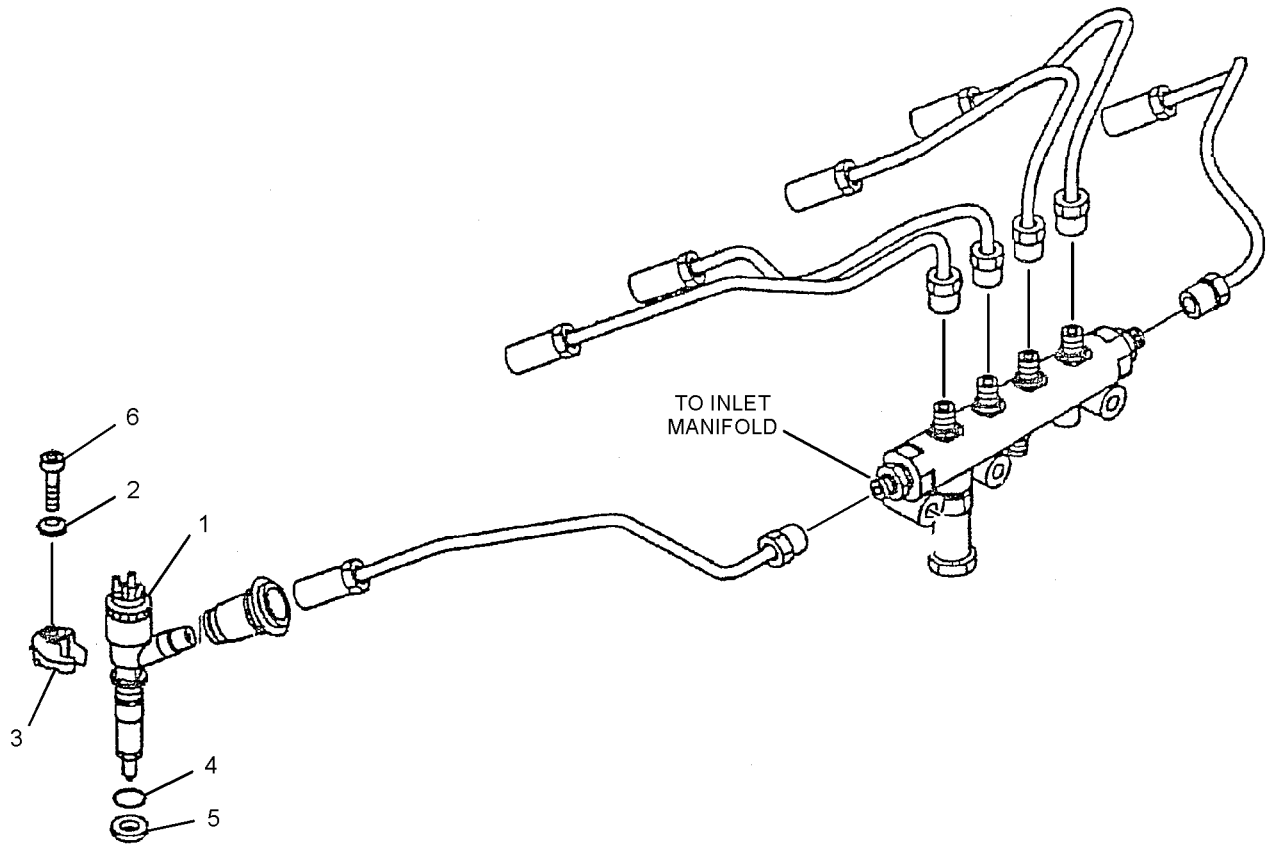

GRAPHIC #1 **<END>** g01421547

273-7735 LINES GP-FUEL

S/N: KGF1-UP; FAL1-UP

PART OF 264-8638, 264-8639 CHASSIS AR

SMCS-1274 **i03100085**

NOTE	REF NO	GRAPHIC REF	PART NUMBER	QTY	PART NAME 1 2 3 4 5 6 (PRODUCT LEVEL)	SEE PAGE
	1	1	**4I-0379**	1	VALVE-MANUAL (DRAIN, FUEL TANK)	
	2	1	**5P-7175**	1	FITTING-STRAIGHT	
	3	1	**003-7764**	2	END-HOSE	
	4	1	**095-1386**	9	CLAMP-HOSE	
	5	1	*150-3024*	1	ELBOW AS	
		1	**3J-1907**	1	SEAL-O-RING	
		1	**5P-4924**	1	ELBOW	
	6	1	**170-2901**	1	GROMMET	
Y	7	1	*174-9570*	1	FILTER GP-WATER SEP & FUEL (PRIMARY)	142
	8	1	**177-9778**	1	BASE AS	
		1	**9S-4167**	1	STUD-HOLLOW (1-14X1.47-IN)	
	9	1	**255-3160**	1	HOSE	
	10	1	**286-6186**	1	SHEET AS	
	11	1	**293-6789**	1	BRACKET AS	
Y	12	1	**298-3147**	1	VALVE GP-FUEL SHUTOFF	188
	13	1	**134-3299**	1	GROMMET	
	14	1	**2R-1498**	3	GROMMET	
	15	1	**3J-1907**	5	SEAL-O-RING	
	16	1	**5K-8451**	13	CLIP	
	17	1	**7Y-8167**	1	GROMMET	
	18	1	**8T-4121**	32	WASHER-HARD (11X21X2.5-MM THK)	
M	19	1	**8T-4133**	1	NUT (M10X1.5-THD)	
M	20	1	**8T-4136**	4	BOLT (M10X1.5X25-MM)	
M	21	1	**8T-4137**	22	BOLT (M10X1.5X20-MM)	
M	22	1	**135-8572**	1	BOLT AS	
M	23	1	**8T-4195**	5	BOLT (M10X1.5X30-MM)	
	24	1	**6D-4636**	3	CLIP	
	25	1	**9M-8406**	8	CLIP	
	26	1	**9S-8004**	5	PLUG-O-RING	
E	27	1	**5P-1442**		HOSE (30-CM)	
E	27A	1	**5P-1442**		HOSE (160-CM)	
E	27B	1	**5P-1442**		HOSE (519-CM)	
	28	1	**133-5813**	2	BAND-MARKER (GRAY, P)	
	29	1	**307-7804**	1	HOSE AS	
	30	1	**307-7803**	1	HOSE AS	
	31	1	**4I-9521**	2	BAND-MARKER (RED, L1)	

E-ORDER BY THE CENTIMETER
M-METRIC PART
Y-SEPARATE ILLUSTRATION

273-7735 **LINES GP-FUEL** *(contd.)* **i03100085**

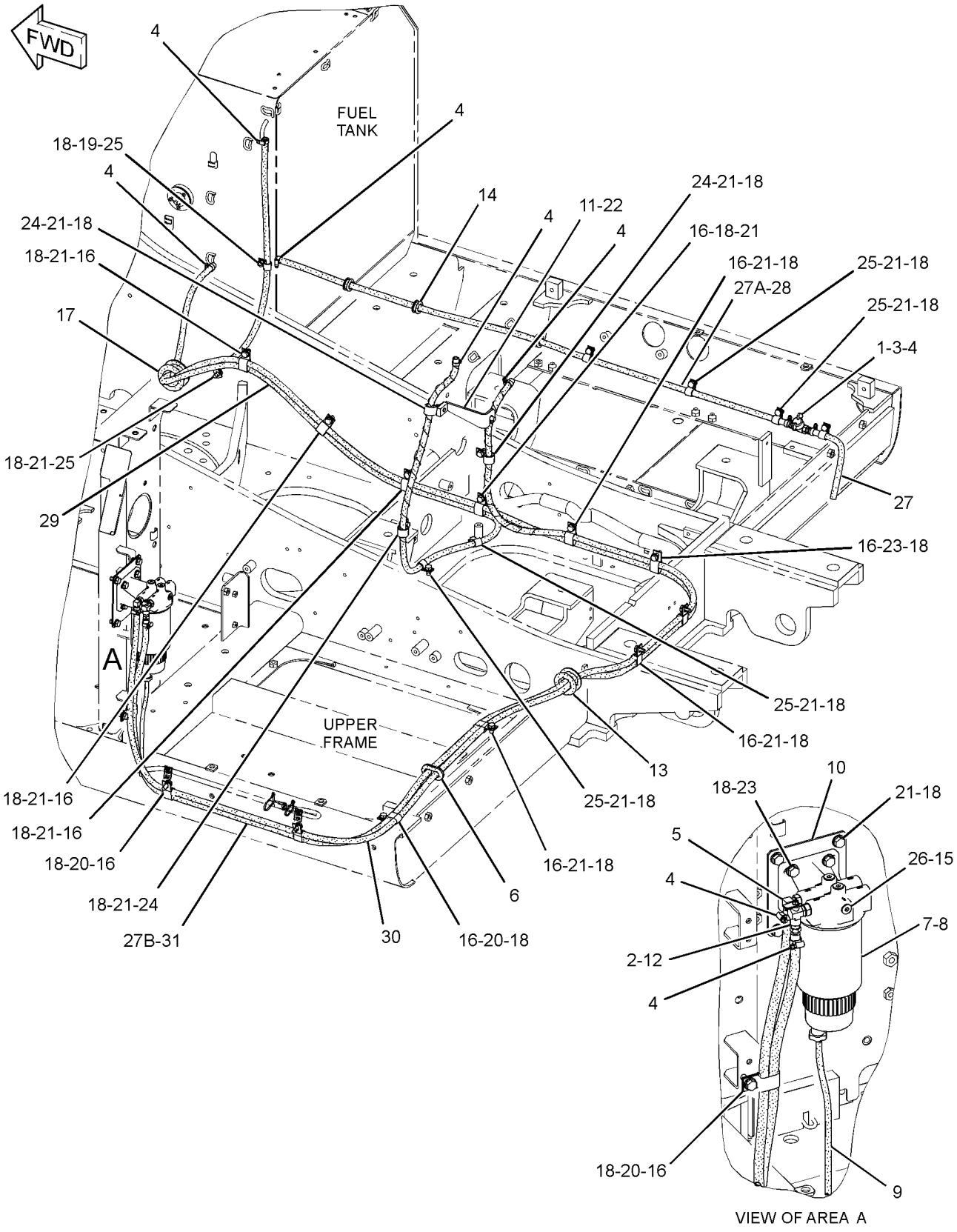

GRAPHIC #1 **<END>** g01625100

FUEL SYSTEM

296-4656 LINES GP-FUEL

S/N: GDC1-UP; KGF1-UP
PART OF 272-4677, 272-4683, 296-4676, 305-4777 ENGINE AR
ALSO AN ATTACHMENT

SMCS-1274 **i02953218**

NOTE	REF NO	GRAPHIC REF	PART NUMBER	QTY	PART NAME 1 2 3 4 5 6 (PRODUCT LEVEL)	SEE PAGE
	1	1	**294-1787**	1	SUPPORT	
	2	1	**294-1788**	6	SEAL	
	3	1	**095-2039**	12	WASHER-SPECIAL	
	4	1	**294-1789**	1	PIPE	
	5	1	**311-6632**	1	RAIL AS-FUEL	
	6	1	**294-1790**	1	PIPE	
	7	1	**294-1791**	1	PIPE	
	8	1	**294-1792**	1	PIPE	
	9	1	**294-1793**	1	PIPE	
	10	1	**294-1794**	1	PIPE	
	11	1	**294-1795**	1	PIPE	
	13	1	**297-7656**	1	PIPE	
	15	1	**297-7658**	1	BLOCK	
	17	1	**294-1801**	1	CLAMP	
	18	1	**294-1802**	3	CLAMP	
	20	1	**125-2983**	1	FITTING	
	22	1	**296-4812**	6	BOLT	
	23	1	**294-1804**	2	SEAL-O-RING	
	25	1	**294-1806**	1	BOLT AS	
	26	1	**270-6259**	5	BOLT (M8X1.25X40-MM)	
M	27	1	**5C-2890**	3	NUT (M6X1-THD)	
	28	1	**9X-8256**	3	WASHER (6.6X12X2-MM THK)	
	29	1	**099-4437**	8	GASKET	
	31	1	**099-5041**	4	BOLT (M14X1.5X27-MM)	
	33	1	**294-1808**	4	BOLT AS	
	34	1	**294-1809**	1	BOLT	
	35	1	**310-9533**	2	CONNECTOR	
	36	1	**294-1811**	2	WASHER	
	37	1	**294-1812**	2	WASHER	
	38	1	**310-9537**	1	VALVE AS	
	39	1	**294-1814**	1	PIPE	
	40	1	**294-1815**	1	BRACKET	
M	41	1	**099-2503**	6	BOLT (M8X1.25X75.5-MM)	
	45	1	**297-7657**	1	HOSE	

M-METRIC PART

296-4656 **LINES GP-FUEL** *(contd.)* **i02953218**

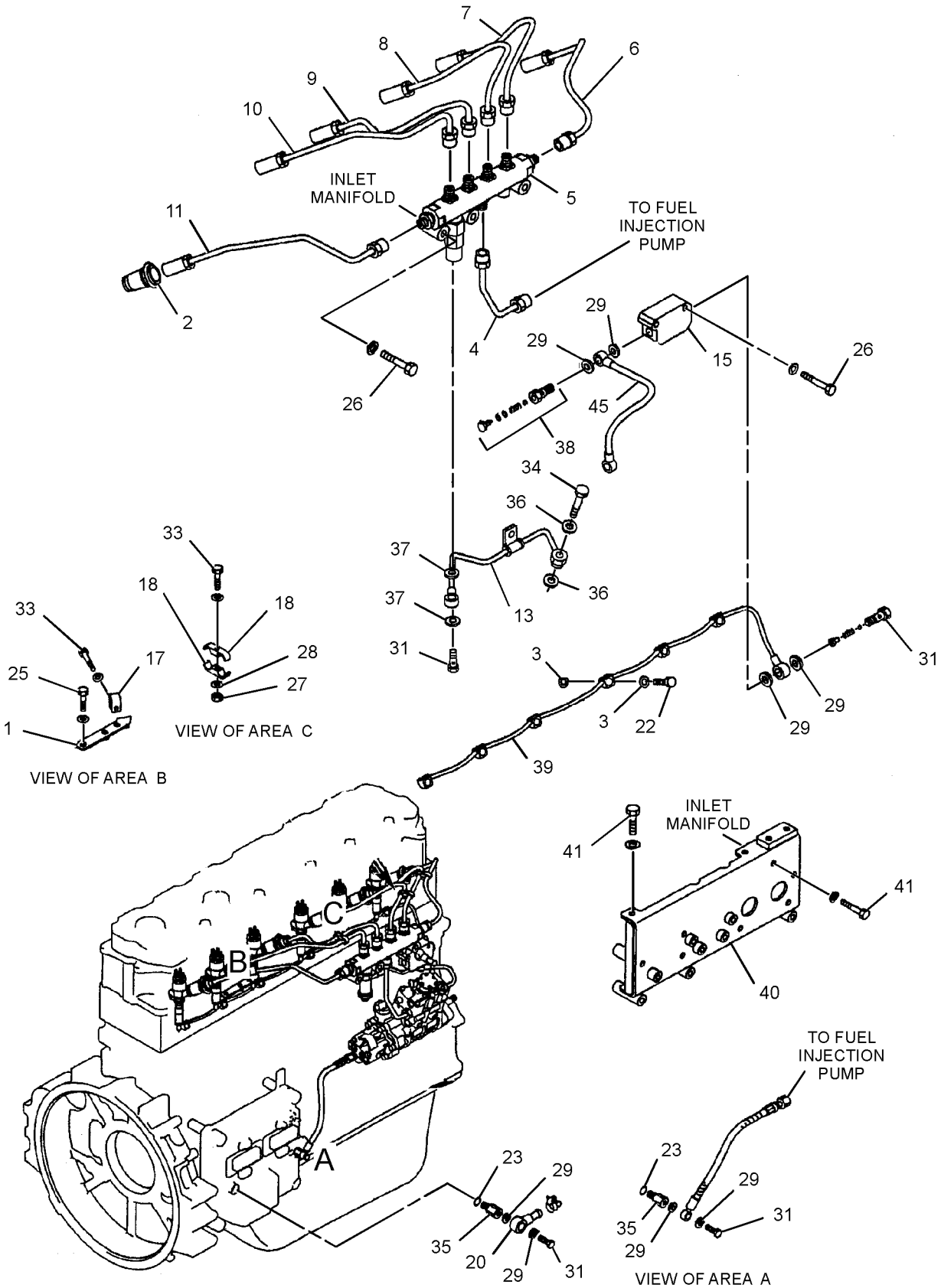

GRAPHIC #1

<END>

g01469947

297-7671 MOUNTING GP-FUEL FILTER

S/N: KGF1-UP; FAL1-UP

PART OF 272-4742 INSTALLATION AR-ENGINE

SMCS-1261 **i03099951**

NOTE	REF NO	GRAPHIC REF	PART NUMBER	QTY	PART NAME 1 2 3 4 5 6 (PRODUCT LEVEL)	SEE PAGE
	1	1	**3S-2093**	1	STRAP-CABLE	
	2	1	**116-0118**	1	CLIP	
M	3	1	**135-8575**	4	BOLT AS-LOCKING (M12X1.75X30-MM)	
	4	1	**294-1831**	2	CLAMP	
	5	1	**297-7672**	1	PLATE AS	
	6	1	**297-7673**	1	PLATE AS	
	7	1	**297-7674**	1	PLATE AS	
	8	1	**132-5789**	1	CLIP	
M	9	1	**7X-2535**	1	BOLT (M6X1X60-MM)	
	10	1	**7X-7729**	1	WASHER (11X25X3-MM THK)	
	11	1	**8T-4121**	7	WASHER-HARD (11X21X2.5-MM THK)	
M	12	1	**8T-4133**	1	NUT (M10X1.5-THD)	
M	13	1	**8T-4137**	2	BOLT (M10X1.5X20-MM)	
M	14	1	**8T-4182**	2	BOLT (M10X1.5X45-MM)	
	15	1	**8T-4224**	6	WASHER-HARD (8.8X16X2-MM THK)	
M	16	1	**8T-6466**	3	BOLT (M10X1.5X60-MM)	
	17	1	**9X-8256**	2	WASHER (6.6X12X2-MM THK)	

M-METRIC PART

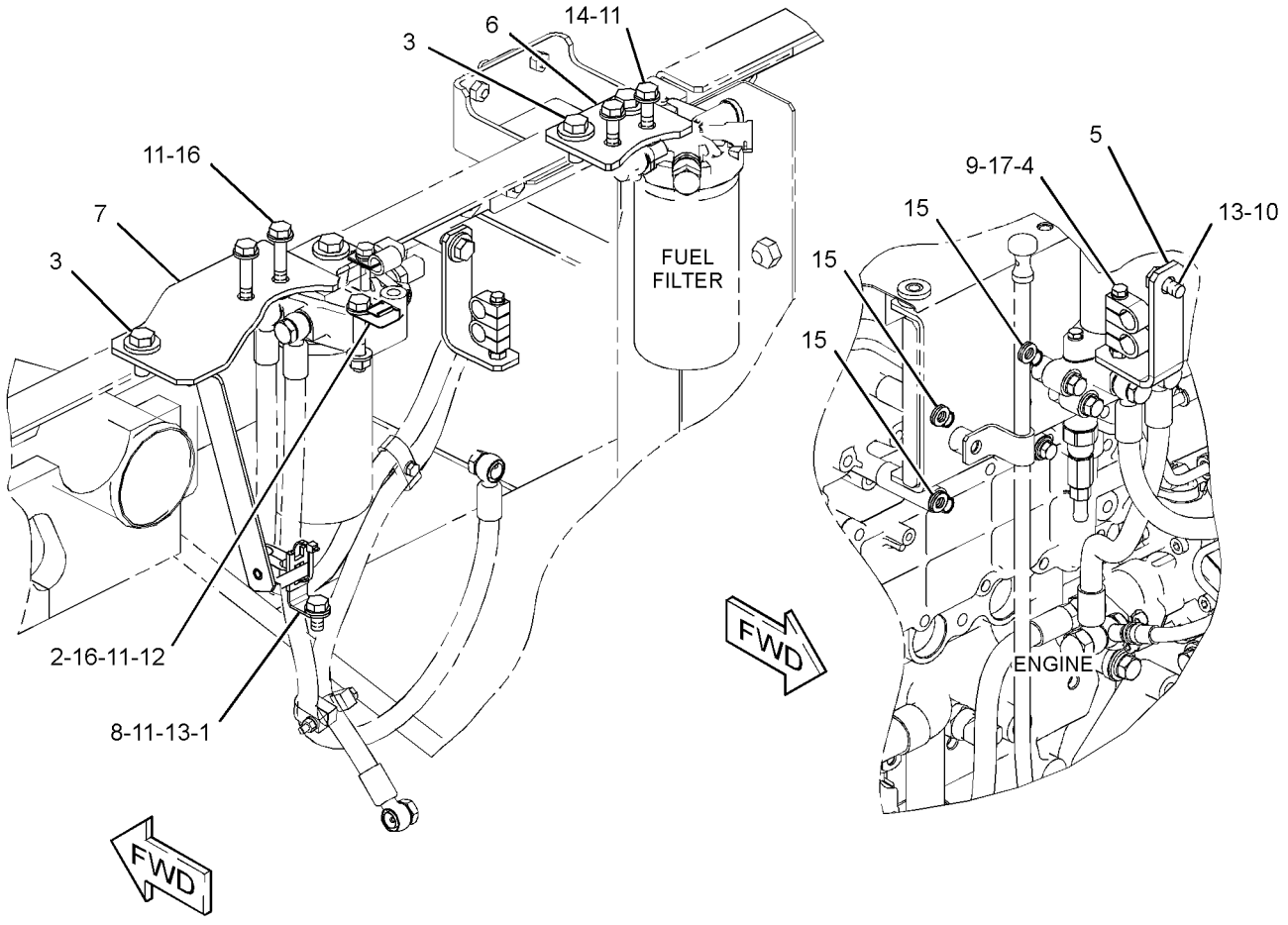

GRAPHIC #1 **<END>** g01626068

305-4678 MOUNTING GP-PUMP—FUEL INJECTION

S/N: GDC1847-UP
PART OF 272-4677, 272-4683, 296-4676 ENGINE AR
ALSO AN ATTACHMENT

SMCS-1256 **i03016939**

NOTE	REF NO	GRAPHIC REF	PART NUMBER	QTY	PART NAME 1 2 3 4 5 6 (PRODUCT LEVEL)	SEE PAGE
YR	1	1	**295-9126**	1	PUMP GP-FUEL	156
	2	1	**294-1834**	1	NUT	
	4	1	**294-1836**	1	KEY-WOODRUFF	
	5	1	**294-1839**	1	FLANGE	
	6	1	**294-1841**	1	GASKET	
	7	1	**294-1842**	1	SEAL-O-RING	
	8	1	**095-8799**	1	BOLT (M8X1.25X30.5-MM)	
	9	1	**294-1843**	1	BOLT (M10X1.5X47-MM)	
	10	1	**294-1821**	3	BOLT (M8X1.25X35.5-MM)	
	11	1	**294-1846**	1	SEAL-O-RING	

R-REMFG PART MAY BE AVAILABLE
Y-SEPARATE ILLUSTRATION

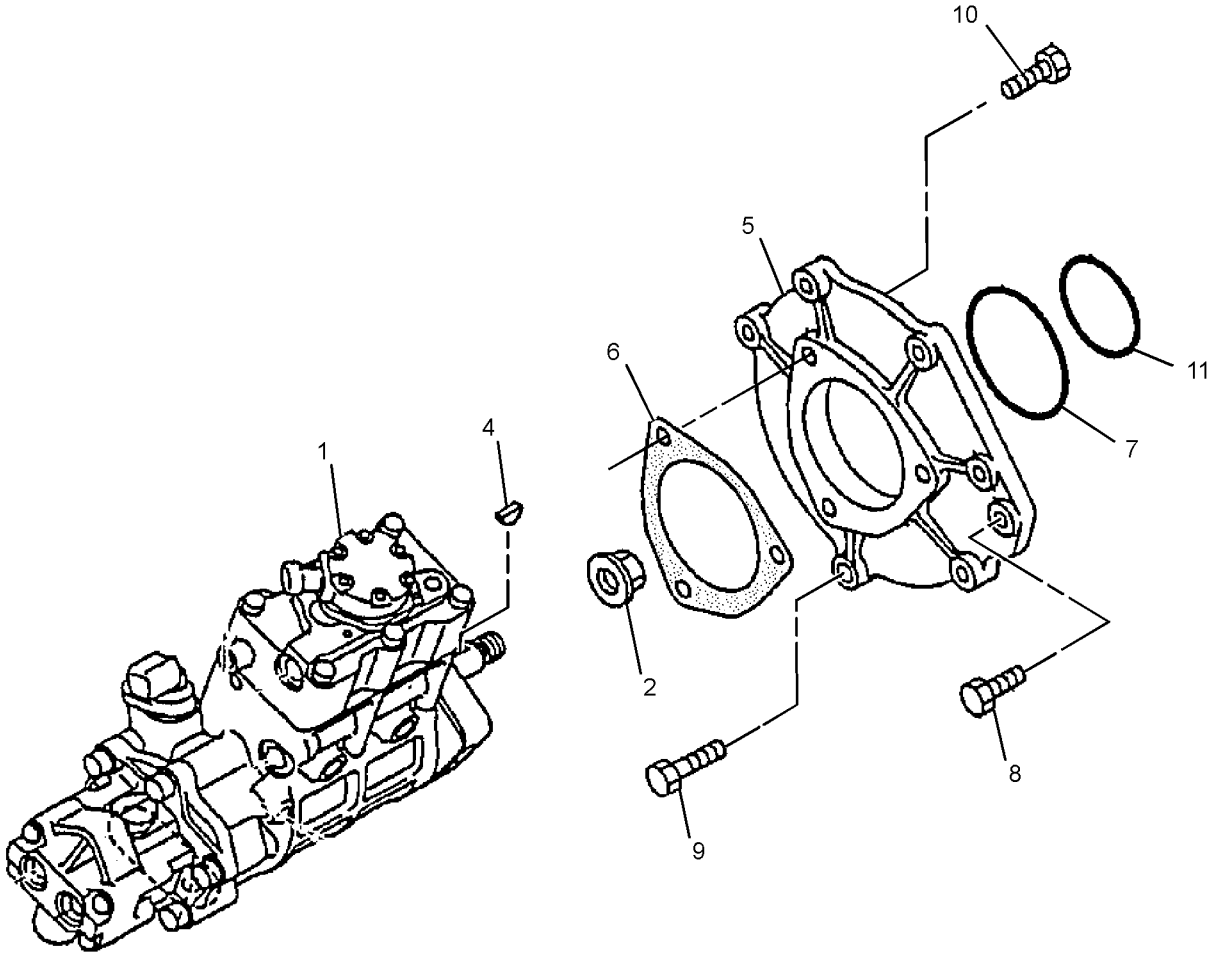

GRAPHIC #1 **<END>** g01527287

229-1859 PUMP & MOTOR GP-REFUELING

S/N: KGF1-UP; FAL1-UP
PART OF 229-1785 PUMP GP-REFUELING
AN ATTACHMENT

SMCS-1295 **i02213969**

NOTE	REF NO	GRAPHIC REF	PART NUMBER	QTY	PART NAME 1 2 3 4 5 6 (PRODUCT LEVEL)	SEE PAGE
	1	1	**121-1038**	1	HOUSING-RECEPTACLE	
	2	1	**116-0128**	1	SEAL	
	3	1	**121-1039**	2	TERMINAL (MALE)	

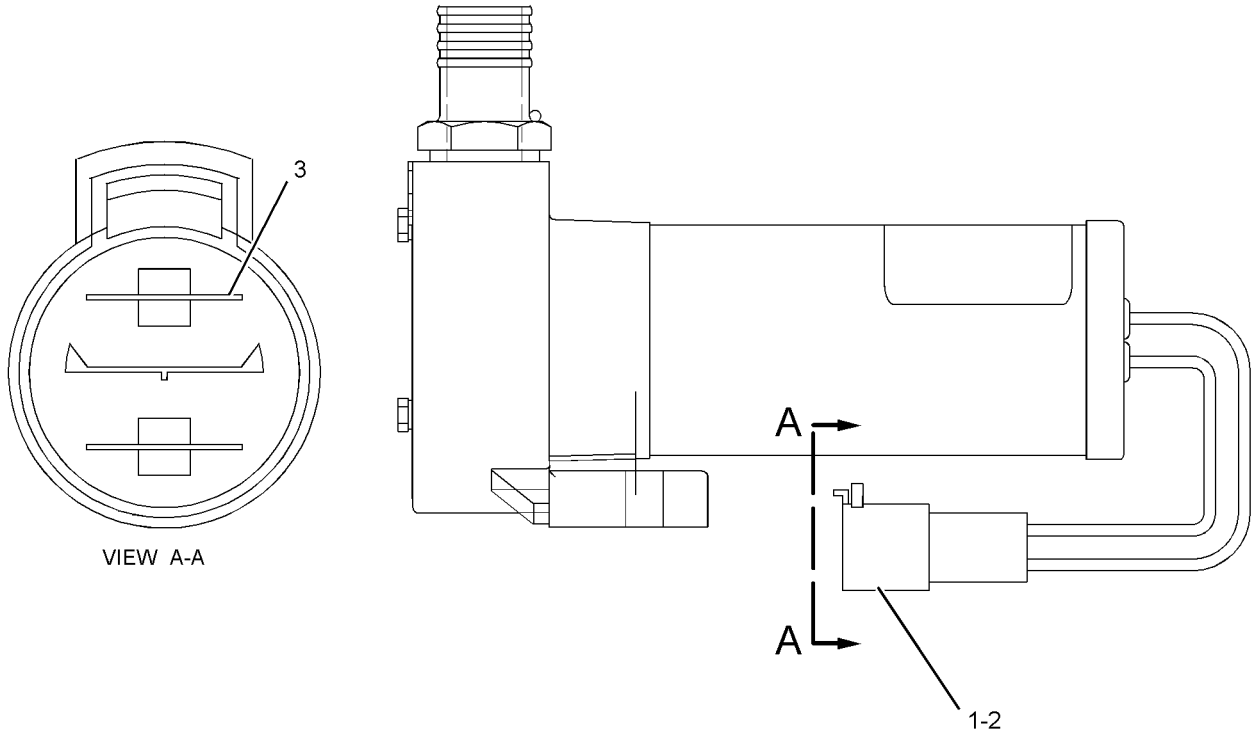

GRAPHIC #1 **<END>** g01104176

292-3750 PUMP & MTG GP-UNIT INJ HYD

S/N: GDC1-162
PART OF 272-4683 ENGINE AR
ALSO AN ATTACHMENT

SMCS-1714 **i02903173**

NOTE	REF NO	GRAPHIC REF	PART NUMBER	QTY	PART NAME 1 2 3 4 5 6 (PRODUCT LEVEL)	SEE PAGE
M	1	1	**5A-3604**	5	BOLT-SOCKET HEAD (M8X1.25X25-MM)	
	2	1	**6D-7889**	1	SEAL-O-RING	
	3	1	**117-1385**	1	SEAL-O-RING	
	4	1	**238-0120**	1	SENSOR GP-SPEED (FUEL PUMP)	
	5	1	**247-6019**	1	SEAL	
	6	1	**292-3751**	1	PUMP GP-FUEL TRANSFER	
	7	1	**260-5618**	1	BOLT	
	8	1	**260-5619**	1	WASHER	
	9	1	**260-5620**	1	SEAL-O-RING	
M	10	1	**8T-4200**	1	BOLT (M8X1.25X16-MM)	

M-METRIC PART

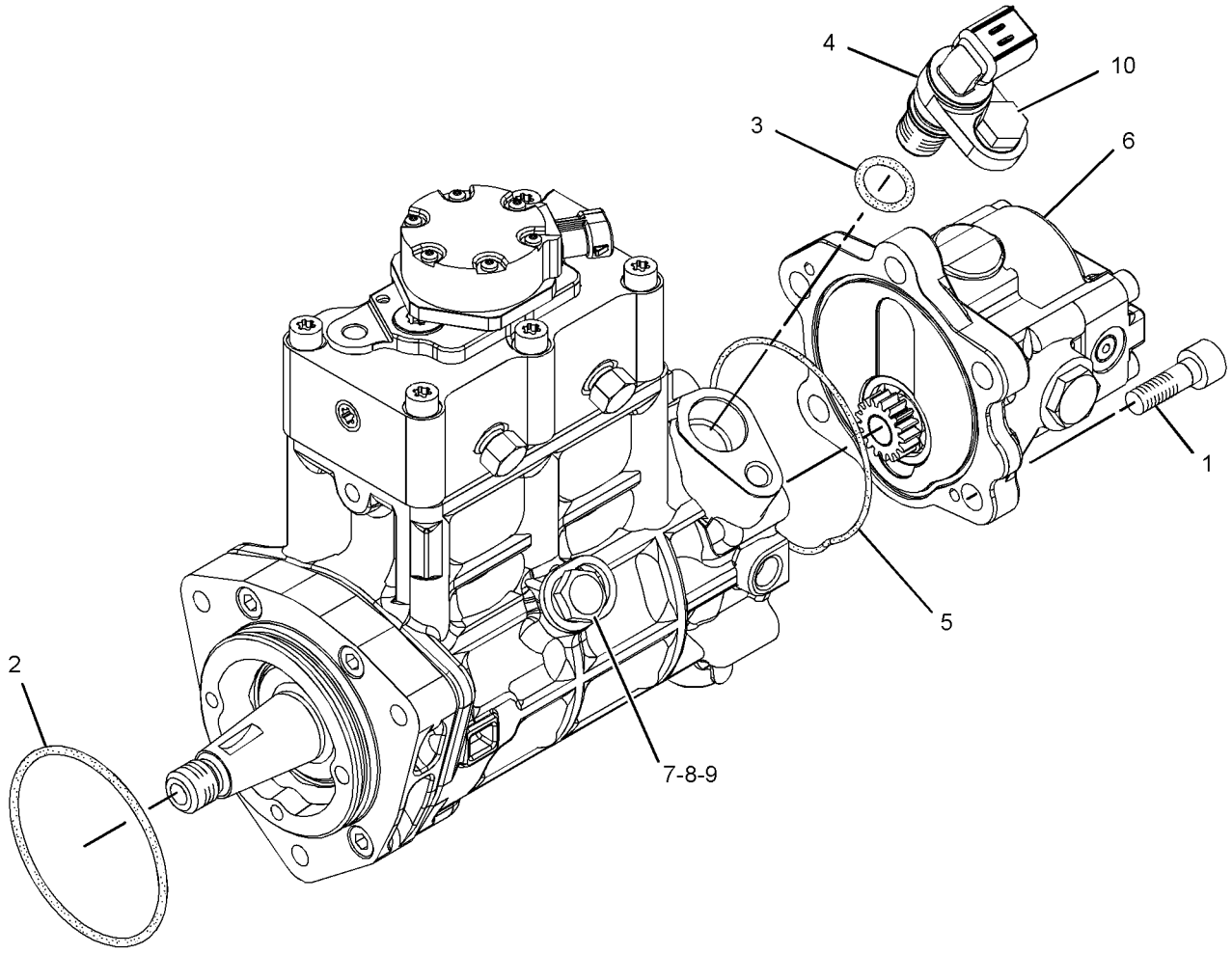

GRAPHIC #1 **<END>** g01445184

264-8770 PUMP AR-FUEL TRANSFER

S/N: KGF1-UP; FAL1-UP
AN ATTACHMENT

SMCS-1256 **i02563274**

NOTE	PART NUMBER	QTY	PART NAME 1 2 3 4 5 6 (PRODUCT LEVEL)	SEE PAGE
Y	*229-1785*	1	PUMP GP-REFUELING	157
Y	*278-3900*	1	TANK & MTG GP-FUEL	163
Y	*238-1570*	1	WIRING GP-FUEL SYSTEM (REFUELING)	342

Y-SEPARATE ILLUSTRATION

<END>

314-3785 PUMP AR-FUEL TRANSFER

S/N: KGF1-UP; FAL1-UP
AN ATTACHMENT

SMCS-1256 **i03164741**

NOTE	PART NUMBER	QTY	PART NAME 1 2 3 4 5 6 (PRODUCT LEVEL)	SEE PAGE
Y	*330-1426*	1	DOOR AS-ACCESS	406
Y	*298-4258*	1	FILM GP (FUEL TRANSFER PUMP)	1435
Y	*229-1785*	1	PUMP GP-REFUELING	157
Y	*327-3198*	1	TANK & MTG GP-FUEL	167
Y	*238-1570*	1	WIRING GP-FUEL SYSTEM (REFUELING)	342

Y-SEPARATE ILLUSTRATION

<END>

295-9126 PUMP GP-FUEL

S/N: GDC1847-UP
PART OF 305-4678 MOUNTING GP-PUMP
ALSO AN ATTACHMENT

SMCS-1256 **i02989973**

NOTE	REF NO	GRAPHIC REF	PART NUMBER	QTY	PART NAME 1 2 3 4 5 6 (PRODUCT LEVEL)	SEE PAGE
M	1	1	**5A-3604**	5	BOLT-SOCKET HEAD (M8X1.25X25-MM)	
	2	1	**6D-7889**	1	SEAL-O-RING	
	3	1	**117-1385**	1	SEAL-O-RING	
	4	1	**238-0120**	1	SENSOR GP-SPEED (SECONDARY, TIMING)	
	5	1	**247-6019**	1	SEAL	
	6	1	**292-3751**	1	PUMP GP-FUEL TRANSFER	
	7	1	**294-3031**	1	BOLT	
	8	1	**294-3032**	1	WASHER	
	9	1	**8L-2779**	1	SEAL-O-RING	
M	10	1	**8T-4200**	1	BOLT (M8X1.25X16-MM)	

M-METRIC PART

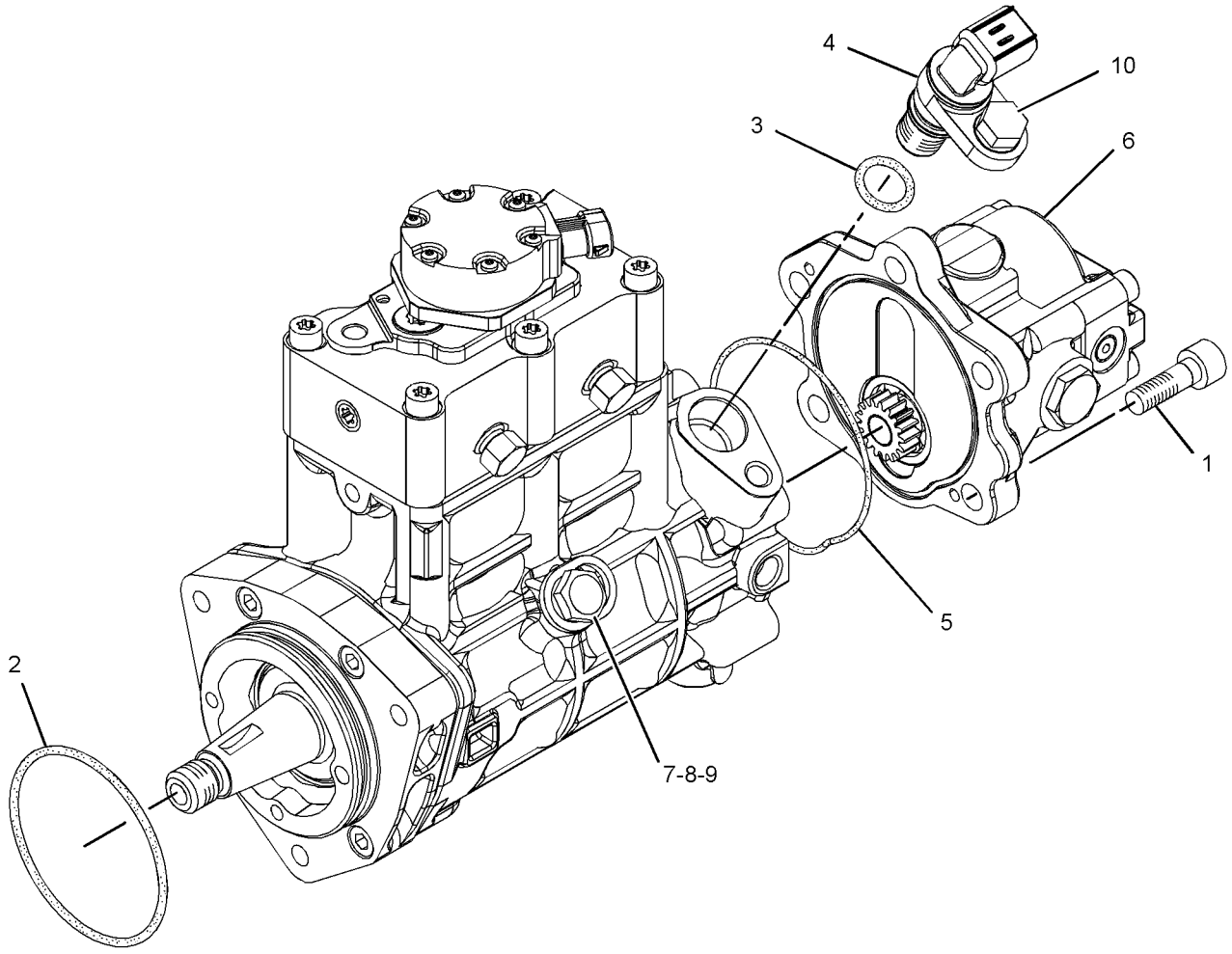

GRAPHIC #1 **<END>** g01445184

229-1785 PUMP GP-REFUELING

S/N: KGF1-UP; FAL1-UP
PART OF 264-8770 PUMP AR-FUEL TRANSFER
AN ATTACHMENT
TYPE 1

SMCS-1295 **i02706815**

NOTE	REF NO	GRAPHIC REF	PART NUMBER	QTY	PART NAME 1 2 3 4 5 6 (PRODUCT LEVEL)	SEE PAGE
Y	1	1	**5C-6108**	1	SWITCH GP-REFUELING (FUEL TANK SHUTOFF)	282
	2	1	**7K-1181**	1	STRAP-CABLE	
	3	1	**9M-7958**	4	CLAMP-HOSE	
	4	1	**120-5114**	1	FILM-INSTRUCTION (REFUELING PUMP)	
	5	1	**122-4021**	1	COVER	
M	6	1	**135-8572**	2	BOLT AS	
M	7	1	**135-8573**	4	BOLT AS (M12X1.75X25-MM)	
Y	8	1	**229-1859**	1	PUMP & MOTOR GP-REFUELING	153
	9	1	**229-1860**	1	STRAINER AS-FUEL	
	10	1	**229-1861**	1	CONNECTOR-HOSE	
	11	1	**240-3920**	1	SUPPORT AS	
M	12	1	**8T-4194**	2	BOLT (M12X1.75X50-MM)	
	13	1	**8T-4223**	4	WASHER-HARD (13.5X25.5X3-MM THK)	
M	14	1	**8T-4244**	2	NUT (M12X1.75-THD)	
E	15	1	**229-1857**		HOSE (430-CM)	
E	15A	1	**229-1857**		HOSE (38-CM)	

E-ORDER BY THE CENTIMETER
M-METRIC PART
Y-SEPARATE ILLUSTRATION

229-1785 **PUMP GP-REFUELING** *(contd.)* **i02706815**

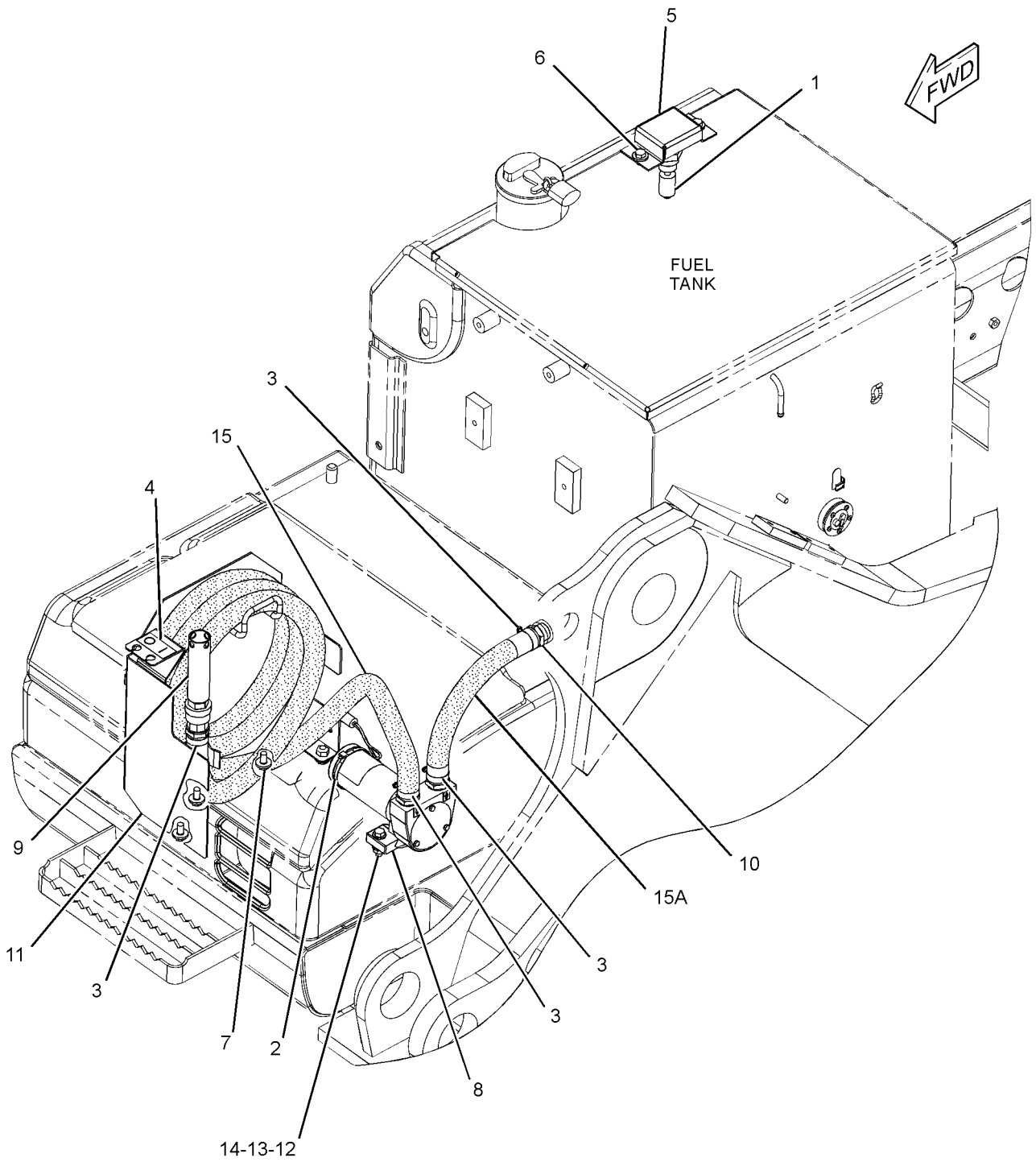

GRAPHIC #1 **<END>** g01236403

229-1785 PUMP GP-REFUELING

S/N: KGF1-UP; FAL1-UP
PART OF 264-8770, 314-3785 PUMP AR-FUEL TRANSFER
AN ATTACHMENT
TYPE 2

SMCS-1295 **i03089681**

NOTE	REF NO	GRAPHIC REF	PART NUMBER	QTY	PART NAME 1 2 3 4 5 6 (PRODUCT LEVEL)	SEE PAGE
C	1	1	**312-2645**	1	SWITCH AS-LIQUID LEVEL (FUEL TANK SHUTOFF)	
		1	**2S-4078**	1	SEAL-O-RING	
		1	**186-3735**	2	PIN-CONNECTOR (16-GA TO 18-GA)	
		1	**243-4505**	1	RECEPTACLE AS-CONNECTOR (2-PIN)	
	2	1	**7K-1181**	1	STRAP-CABLE	
	3	1	**9M-7958**	4	CLAMP-HOSE	
	4	1	**120-5114**	1	FILM-INSTRUCTION (REFUELING PUMP)	
C	5	1	**324-5761**	1	COVER AS	
M	6	1	**135-8572**	2	BOLT AS	
M	7	1	**135-8573**	4	BOLT AS (M12X1.75X25-MM)	
Y	8	1	**229-1859**	1	PUMP & MOTOR GP-REFUELING	153
	9	1	**229-1860**	1	STRAINER AS-FUEL	
	10	1	**229-1861**	1	CONNECTOR-HOSE	
	11	1	**240-3920**	1	SUPPORT AS	
M	12	1	**8T-4194**	2	BOLT (M12X1.75X50-MM)	
	13	1	**8T-4223**	4	WASHER-HARD (13.5X25.5X3-MM THK)	
M	14	1	**8T-4244**	2	NUT (M12X1.75-THD)	
E	15	1	**229-1857**		HOSE (430-CM)	
E	15A	1	**229-1857**		HOSE (38-CM)	

C-CHANGE FROM PREVIOUS TYPE
E-ORDER BY THE CENTIMETER
M-METRIC PART
Y-SEPARATE ILLUSTRATION

229-1785 **PUMP GP-REFUELING** *(contd.)* **i03089681**

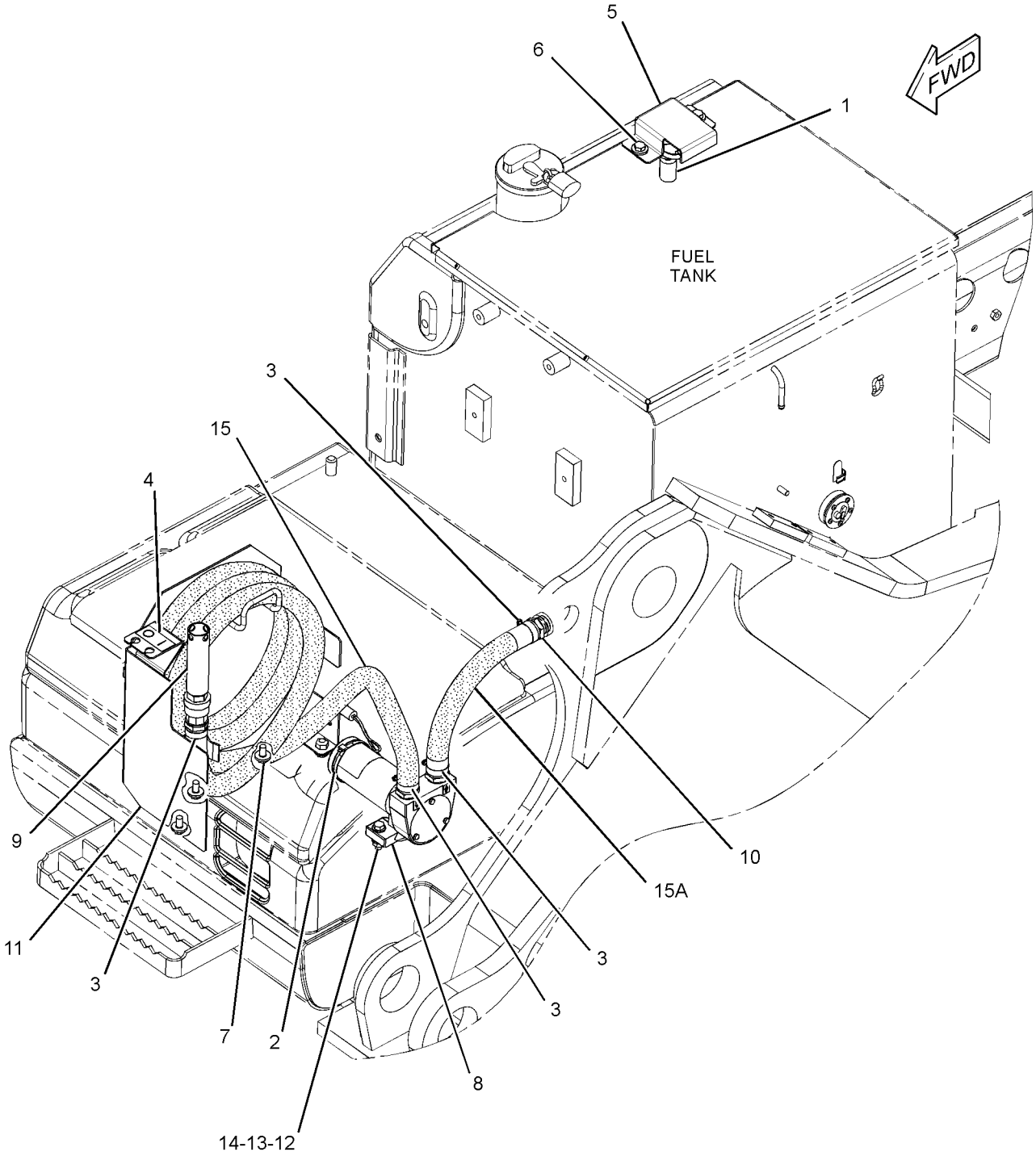

GRAPHIC #1 **<END>** g01582453

262-9372 STRAINER GP-FUEL–FLOAT GAUGE

S/N: KGF1-UP; FAL1-UP

PART OF 278-3898, 278-3899, 278-3902, 278-3903 TANK GP-FUEL

ALSO AN ATTACHMENT

SMCS-1261 **i03201561**

NOTE	REF NO	GRAPHIC REF	PART NUMBER	QTY	PART NAME 1 2 3 4 5 6 (PRODUCT LEVEL)	SEE PAGE
					INDIVIDUAL PARTS ARE NOT SERVICED SEPARATELY	
					AVAILABLE REPAIR KIT(S):	
J			**278-3970**	1	KIT-GAUGE (FUEL STRAINER)	
J-KIT MARKED J SERVICES PART(S) MARKED J IN GRAPHIC						

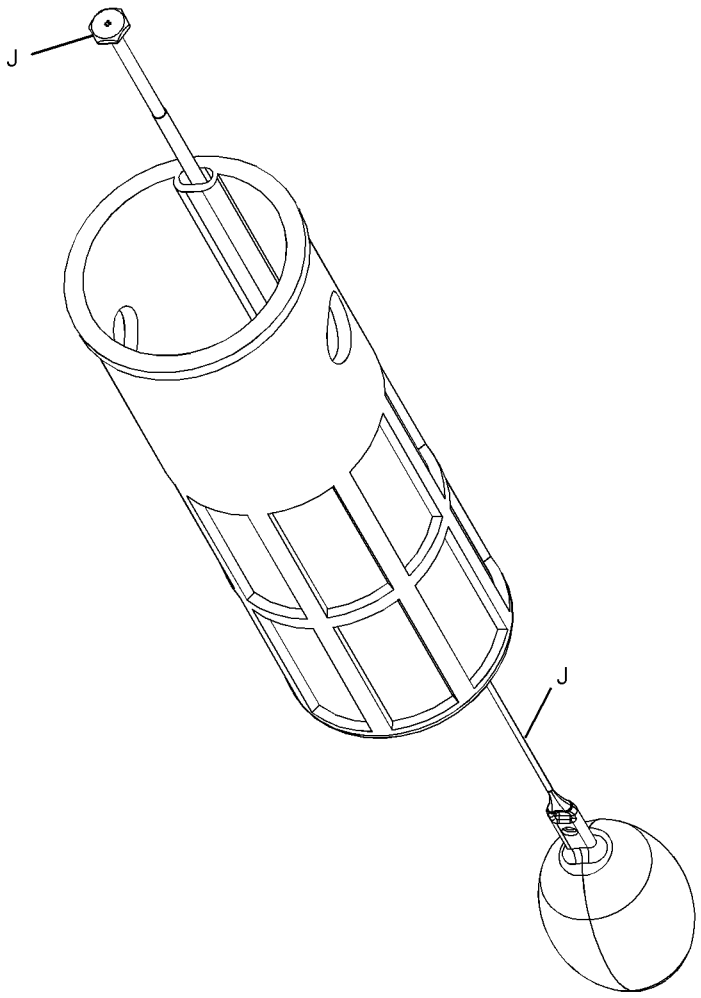

GRAPHIC #1 **<END>** g01387510

278-3896 TANK & MTG GP-FUEL

S/N: KGF1-UP; FAL1-UP

PART OF 264-8638, 264-8639 CHASSIS AR

SMCS-1273 **i02783626**

NOTE	REF NO	GRAPHIC REF	PART NUMBER	QTY	PART NAME 1 2 3 4 5 6 (PRODUCT LEVEL)	SEE PAGE
	1	1	**246-2641**	1	PADLOCK GP	
		1	**5P-8500**	1	KEY	
Y	2	1	**278-3897**	1	TANK GP-FUEL	168
	3	1	**085-9310**	4	SPACER (16.6X32X26-MM THK)	
M	4	1	**8T-4140**	4	BOLT (M16X2X60-MM)	

M-METRIC PART
Y-SEPARATE ILLUSTRATION

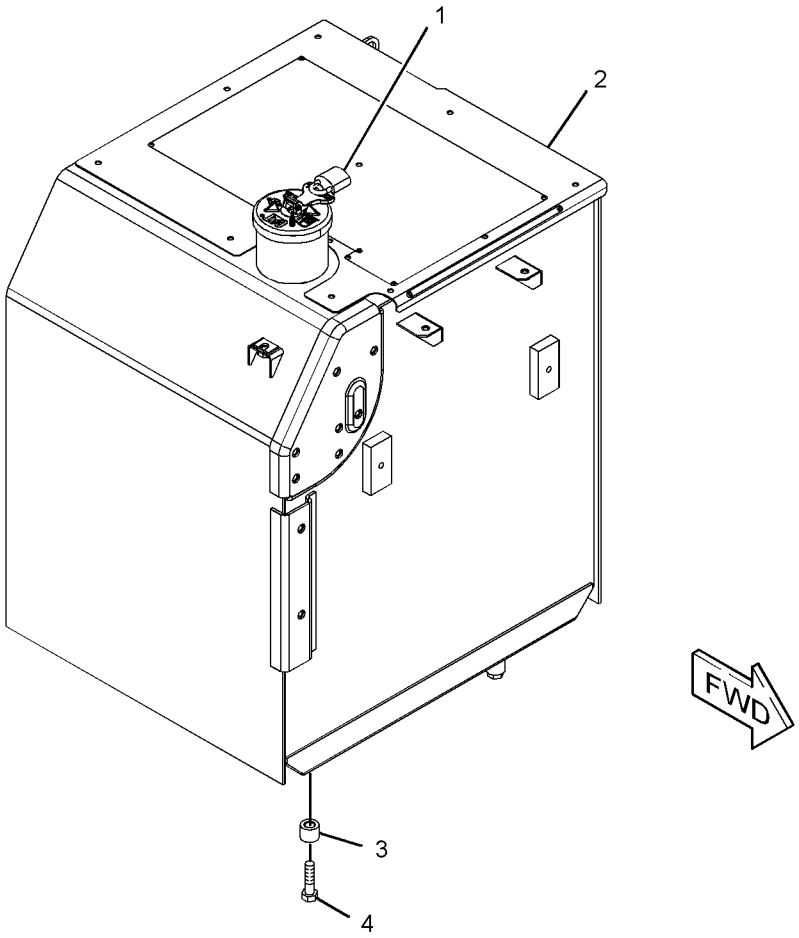

GRAPHIC #1 **<END>** g01392682

278-3900 TANK & MTG GP-FUEL

S/N: KGF1-UP; FAL1-UP
PART OF 264-8770 PUMP AR-FUEL TRANSFER
AN ATTACHMENT

SMCS-1273 **i02991030**

NOTE	REF NO	GRAPHIC REF	PART NUMBER	QTY	PART NAME 1 2 3 4 5 6 (PRODUCT LEVEL)	SEE PAGE
	1	1	**246-2641**	1	PADLOCK GP (FUEL TANK FILL CAP)	
		1	**5P-8500**	1	KEY (FUEL TANK FILL CAP)	
Y	2	1	**278-3901**	1	TANK GP-FUEL	174
	3	1	**085-9310**	4	SPACER (16.6X32X26-MM THK)	
M	4	1	**8T-4140**	4	BOLT (M16X2X60-MM)	

M-METRIC PART
Y-SEPARATE ILLUSTRATION

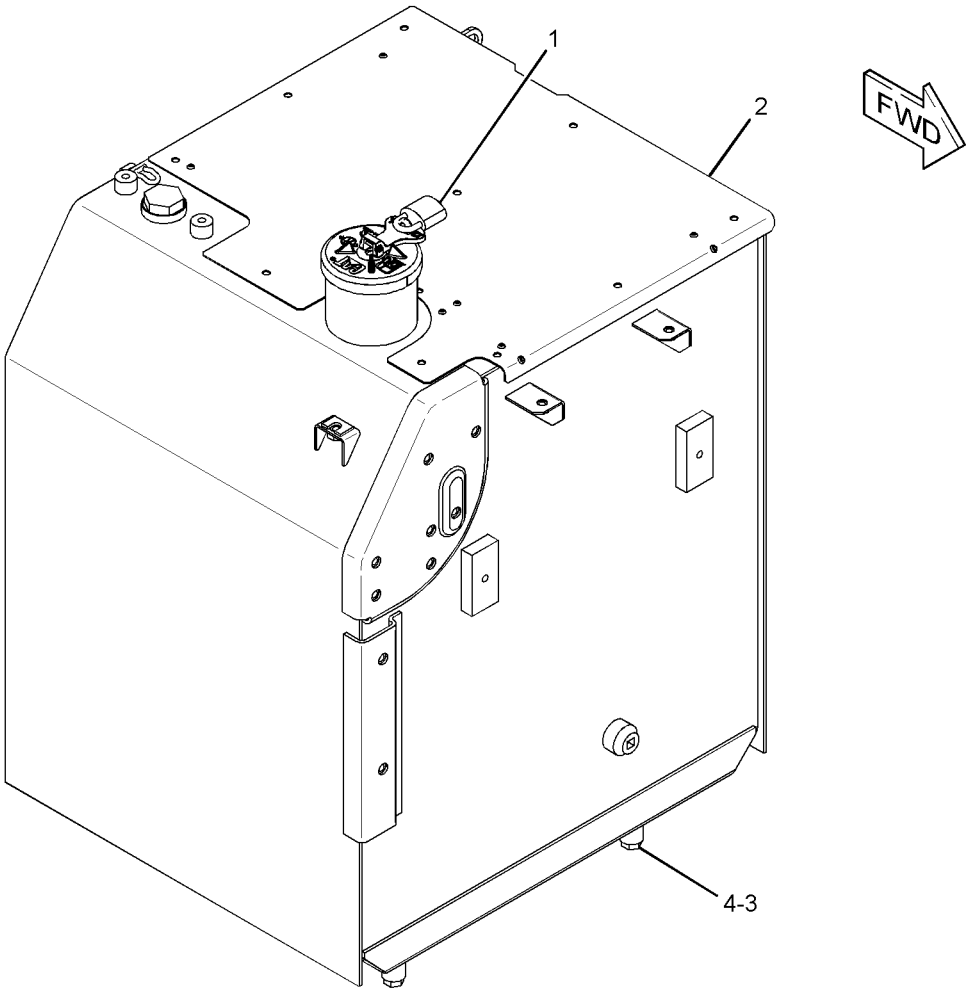

GRAPHIC #1 **<END>** g01381022

FUEL SYSTEM

327-3191 TANK & MTG GP-FUEL

S/N: KGF1-UP; FAL1-UP
PART OF 330-1194 MACHINE AR
AN ATTACHMENT

SMCS-1273 **i03142579**

NOTE	REF NO	GRAPHIC REF	PART NUMBER	QTY	PART NAME 1 2 3 4 5 6 (PRODUCT LEVEL)	SEE PAGE
	1	1	**246-2641**	1	PADLOCK GP	
		1	**5P-8500**	1	KEY	
	2	1	**085-9310**	4	SPACER (16.6X32X26-MM THK)	
Y	3	1	**327-3192**	1	TANK GP-FUEL	183
M	4	1	**8T-4140**	4	BOLT (M16X2X60-MM)	

M-METRIC PART
Y-SEPARATE ILLUSTRATION

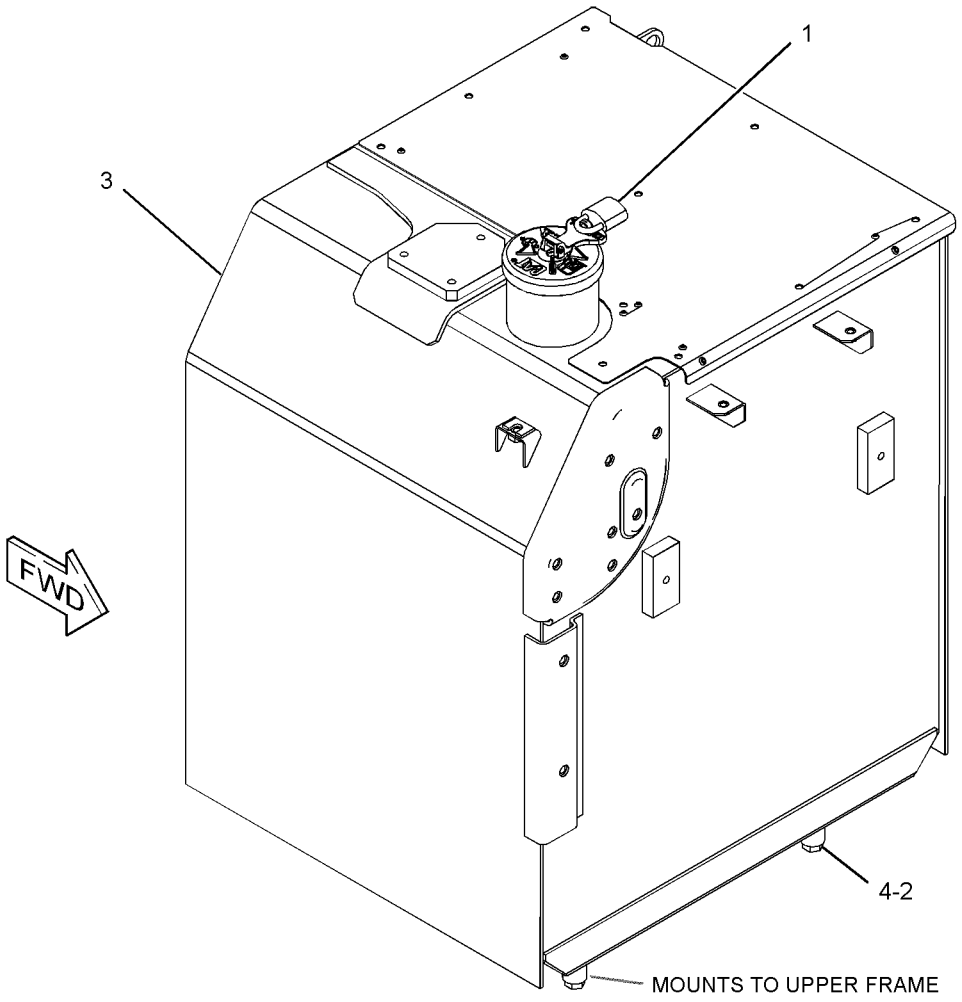

GRAPHIC #1 **<END>** g01627855

327-3193 TANK & MTG GP-FUEL

S/N: KGF1-UP; FAL1-UP
410-L (108.3-US GAL)
PART OF 327-3192 TANK GP-FUEL
AN ATTACHMENT

SMCS-1273 **i03142583**

NOTE	REF NO	GRAPHIC REF	PART NUMBER	QTY	PART NAME 1 2 3 4 5 6 (PRODUCT LEVEL)	SEE PAGE
	1	1	**4I-0378**	1	GASKET-RUBBER	
	2	1	**5P-4924**	1	ELBOW	
	3	1	**003-7764**	1	END-HOSE	
	4	1	**128-4411**	1	VALVE AS (FUEL SHUTOFF)	
	5	1	**163-6700**	1	SENSOR GP-FUEL LEVEL	
		1	**186-3735**	2	PIN-CONNECTOR (16-GA TO 18-GA)	
		1	**102-8802**	1	KIT-RECEPTACLE (2-PIN)	
					(INCLUDES RECEPTACLE AS & WEDGE)	
Y	6	1	**164-4858**	1	CAP GP-FUEL FILLER (EXTREME SERVICE, LOCKABLE)	138
J	7	1	**303-9933**	1	STRAINER AS-FUEL (FLOAT GAUGE)	
	8	1	**8T-0328**	5	WASHER-HARD (5.5X10X1-MM THK)	
M	9	1	**095-0736**	5	SCREW-MACHINE (M5X0.8X10-MM)	
	10	1	**3J-1907**	1	SEAL-O-RING	
					AVAILABLE REPAIR KIT(S):	
J			**303-9937**	1	KIT-GAUGE (FUEL STRAINER)	
					(INCLUDES STOPPER & GAUGE FLOAT)	

J-KIT MARKED J SERVICES PART(S) MARKED J
M-METRIC PART
Y-SEPARATE ILLUSTRATION

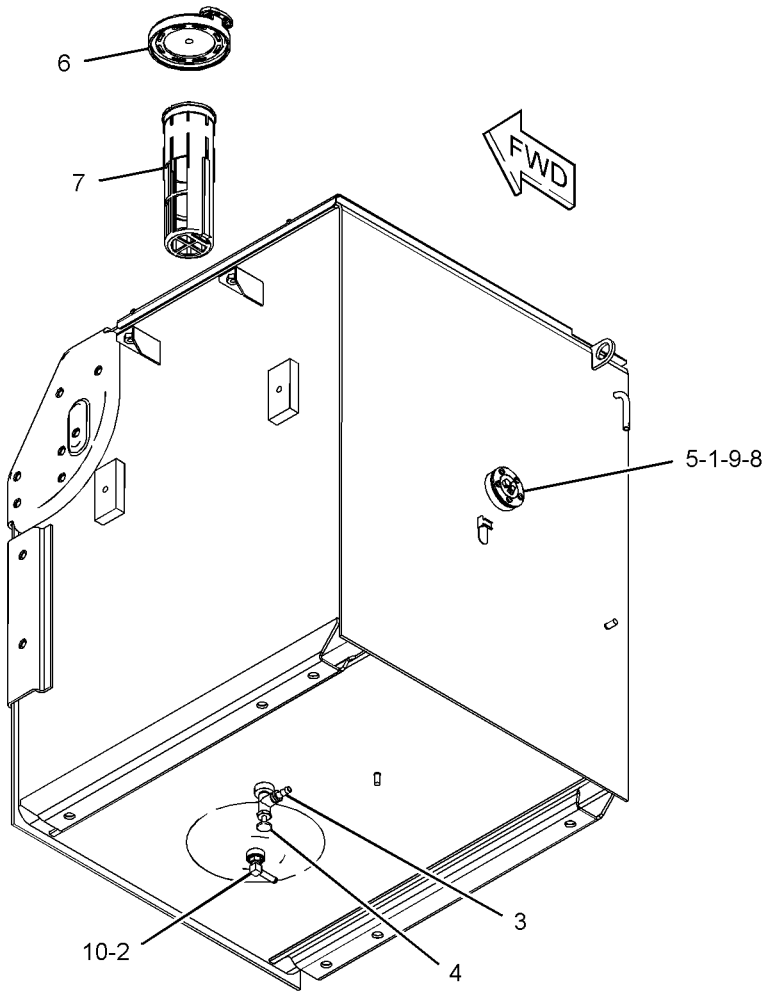

GRAPHIC #1 **<END>** g01627881

FUEL SYSTEM

327-3196 TANK & MTG GP-FUEL

S/N: KGF1-UP; FAL1-UP
410-L (108.3-US GAL)
PART OF 327-3192 TANK GP-FUEL
AN ATTACHMENT

SMCS-1273 **i03142584**

NOTE	REF NO	GRAPHIC REF	PART NUMBER	QTY	PART NAME 1 2 3 4 5 6 (PRODUCT LEVEL)	SEE PAGE
	1	1	**4I-0378**	1	GASKET-RUBBER	
	2	1	**5P-4924**	1	ELBOW	
	3	1	**003-7764**	1	END-HOSE	
	4	1	**128-4411**	1	VALVE AS (FUEL SHUTOFF)	
	5	1	**163-6700**	1	SENSOR GP-FUEL LEVEL	
		1	**186-3735**	1	PIN-CONNECTOR (16-GA TO 18-GA)	
		1	**102-8802**	1	KIT-RECEPTACLE (2-PIN)	
					(INCLUDES RECEPTACLE AS & WEDGE)	
Y	6	1	**164-4858**	1	CAP GP-FUEL FILLER (EXTREME SERVICE, LOCKABLE)	138
J	7	1	**303-9933**	1	STRAINER AS-FUEL (FLOAT GAUGE)	
	8	1	**8T-0328**	5	WASHER-HARD (5.5X10X1-MM THK)	
M	9	1	**095-0736**	5	SCREW-MACHINE (M5X0.8X10-MM)	
	10	1	**3J-1907**	1	SEAL-O-RING	
					AVAILABLE REPAIR KIT(S):	
J			**303-9937**	1	KIT-GAUGE (FUEL STRAINER)	
					(INCLUDES STOPPER & GAUGE FLOAT)	

J-KIT MARKED J SERVICES PART(S) MARKED J
M-METRIC PART
Y-SEPARATE ILLUSTRATION

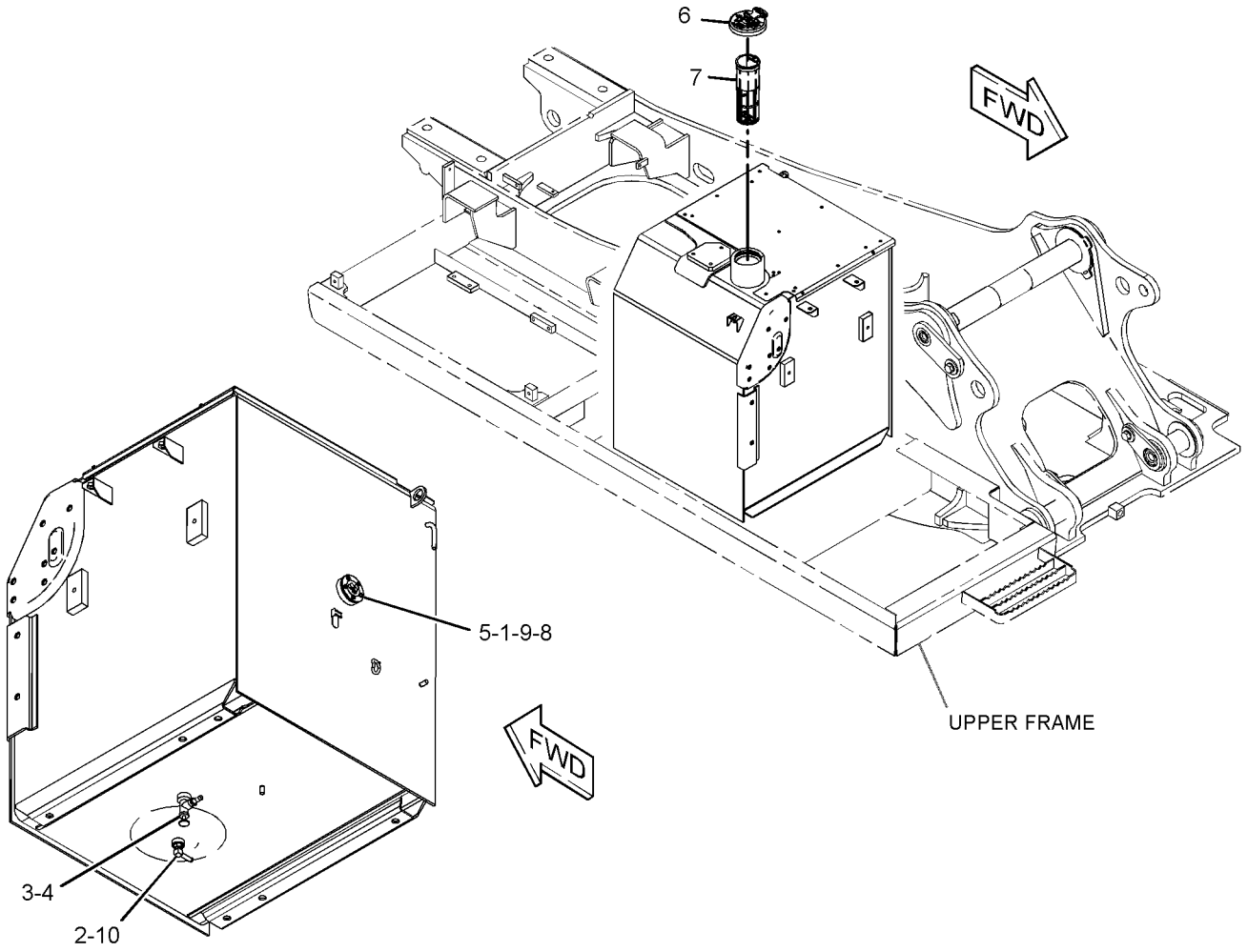

GRAPHIC #1 **<END>** g01627938

FUEL SYSTEM

327-3198 TANK & MTG GP-FUEL

S/N: KGF1-UP; FAL1-UP
PART OF 314-3785 PUMP AR-FUEL TRANSFER
AN ATTACHMENT

SMCS-1273 **i03127843**

NOTE	REF NO	GRAPHIC REF	PART NUMBER	QTY	PART NAME 1 2 3 4 5 6 (PRODUCT LEVEL)	SEE PAGE
	1	1	**246-2641**	1	PADLOCK GP	
		1	**5P-8500**	1	KEY	
Y	2	1	**327-3199**	1	TANK GP-FUEL	183
	3	1	**085-9310**	4	SPACER (16.6X32X26-MM THK)	
M	4	1	**8T-4140**	4	BOLT (M16X2X60-MM)	

M-METRIC PART
Y-SEPARATE ILLUSTRATION

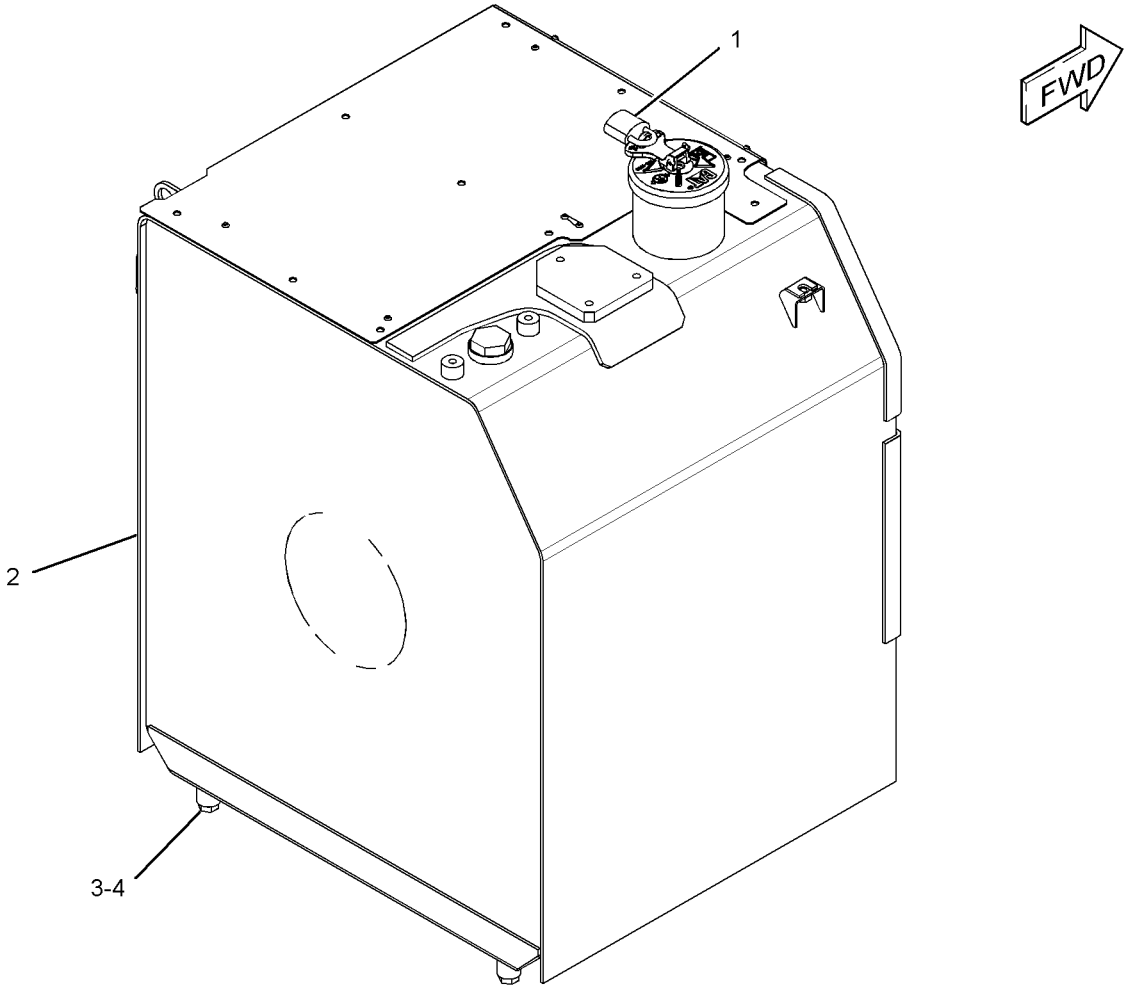

GRAPHIC #1 **<END>** g01623053

FUEL SYSTEM

278-3897 TANK GP-FUEL

S/N: KGF1-UP; FAL1-UP
410-L (108.3-US GAL)
PART OF 278-3896 TANK & MTG GP-FUEL

SMCS-1273 **i02562631**

NOTE	PART NUMBER	QTY	PART NAME 1 2 3 4 5 6 (PRODUCT LEVEL)	SEE PAGE
Y	*278-3898*	1	TANK GP-FUEL	169
			—OR—	
Y	*278-3899*	1	TANK GP-FUEL	171

Y-SEPARATE ILLUSTRATION

<END>

278-3898 TANK GP-FUEL

S/N: KGF1-673; FAL1-429
410-L (108.3-US GAL)
PART OF 278-3897 TANK GP-FUEL

SMCS-1273 **i02962782**

NOTE	REF NO	GRAPHIC REF	PART NUMBER	QTY	PART NAME 1 2 3 4 5 6 (PRODUCT LEVEL)	SEE PAGE
	1	1	**4I-0378**	1	GASKET-RUBBER	
	2	1	**5P-4924**	1	ELBOW	
Y	3	1	**164-4858**	1	CAP GP-FUEL FILLER (EXTREME SERVICE, LOCKABLE)	138
	4	1	**003-7764**	1	END-HOSE	
	5	1	**128-4411**	1	VALVE AS (FUEL SHUTOFF)	
	6	1	**163-6700**	1	SENSOR GP-FUEL LEVEL	
		1	**186-3735**	2	PIN-CONNECTOR (16-GA TO 18-GA)	
		1	**102-8802**	1	KIT-RECEPTACLE (2-PIN)	
					(INCLUDES RECEPTACLE AS & WEDGE)	
Y	8	1	**262-9372**	1	STRAINER GP-FUEL (FLOAT GAUGE)	161
M	9	1	**095-0736**	5	SCREW-MACHINE (M5X0.8X10-MM)	
	10	1	**3J-1907**	1	SEAL-O-RING	
	11	1	**8T-0328**	5	WASHER-HARD (5.5X10X1-MM THK)	

M-METRIC PART
Y-SEPARATE ILLUSTRATION

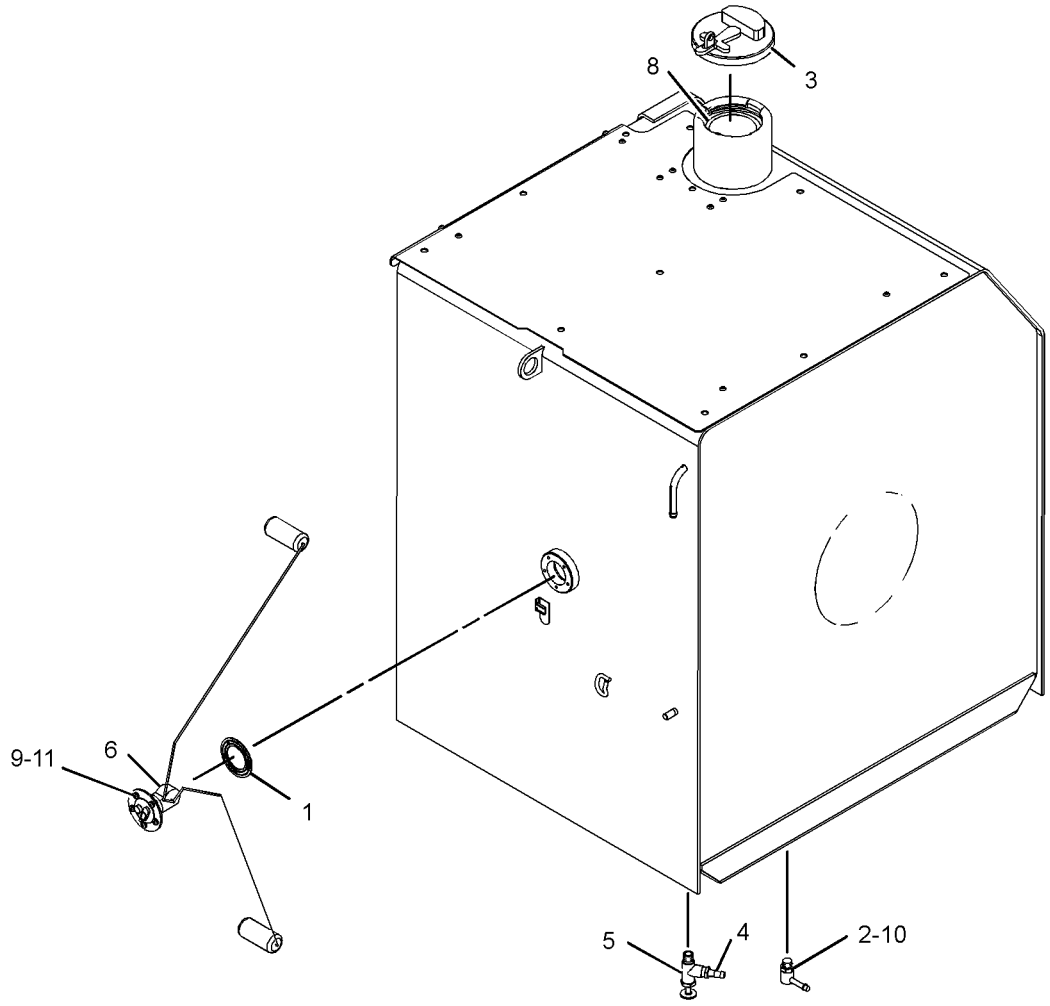

GRAPHIC #1 **<END>** g01392222

FUEL SYSTEM

278-3898 TANK GP-FUEL

S/N: KGF674-UP; FAL430-UP
410-L (108.3-US GAL)
PART OF 278-3897 TANK GP-FUEL

SMCS-1273 **i02998163**

NOTE	REF NO	GRAPHIC REF	PART NUMBER	QTY	PART NAME 1 2 3 4 5 6 (PRODUCT LEVEL)	SEE PAGE
	1	1	**4I-0378**	1	GASKET-RUBBER	
	2	1	**5P-4924**	1	ELBOW	
Y	3	1	**164-4858**	1	CAP GP-FUEL FILLER (EXTREME SERVICE, LOCKABLE)	138
	4	1	**003-7764**	1	END-HOSE	
	5	1	**128-4411**	1	VALVE AS (FUEL SHUTOFF)	
	6	1	**163-6700**	1	SENSOR GP-FUEL LEVEL	
		1	**186-3735**	2	PIN-CONNECTOR (16-GA TO 18-GA)	
		1	**102-8802**	1	KIT-RECEPTACLE (2-PIN)	
					(INCLUDES RECEPTACLE AS & WEDGE)	
CJ	8	1	**303-9933**	1	STRAINER AS-FUEL (FLOAT GAUGE)	
M	9	1	**095-0736**	5	SCREW-MACHINE (M5X0.8X10-MM)	
	10	1	**3J-1907**	1	SEAL-O-RING	
	11	1	**8T-0328**	5	WASHER-HARD (5.5X10X1-MM THK)	
					AVAILABLE REPAIR KIT(S):	
J			**303-9937**	1	KIT-GAUGE (FUEL STRAINER)	
					(INCLUDES STOPPER & GAUGE)	

C-CHANGE FROM PREVIOUS TYPE
J-(NULL)
M-METRIC PART
Y-SEPARATE ILLUSTRATION

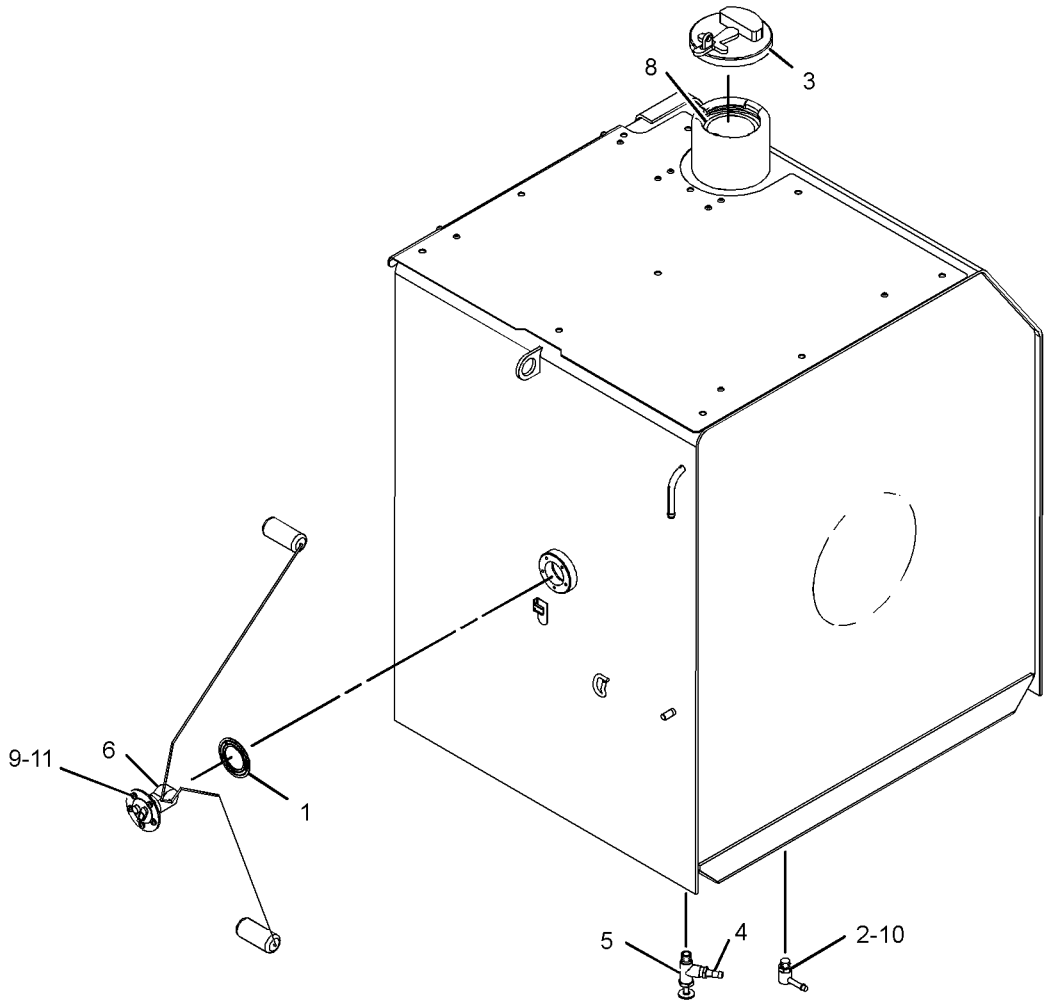

GRAPHIC #1 **<END>** g01392222

FUEL SYSTEM

278-3899 TANK GP-FUEL

S/N: KGF1-UP; FAL1-UP
410-L (108.3-US GAL)
PART OF 278-3897 TANK GP-FUEL
TYPE 1

SMCS-1273 **i02959317**

NOTE	REF NO	GRAPHIC REF	PART NUMBER	QTY	PART NAME 1 2 3 4 5 6 (PRODUCT LEVEL)	SEE PAGE
	1	1	**4I-0378**	1	GASKET-RUBBER	
	2	1	**5P-4924**	1	ELBOW	
	3	1	**003-7764**	1	END-HOSE	
	4	1	**128-4411**	1	VALVE AS (FUEL SHUTOFF)	
	5	1	**163-6700**	1	SENSOR GP-FUEL LEVEL	
		1	**186-3735**	2	PIN-CONNECTOR (16-GA TO 18-GA)	
		1	**102-8802**	1	KIT-RECEPTACLE (2-PIN)	
					(INCLUDES RECEPTACLE AS & WEDGE)	
Y	6	1	**164-4858**	1	CAP GP-FUEL FILLER (EXTREME SERVICE, LOCKABLE)	138
Y	7	1	**262-9372**	1	STRAINER GP-FUEL (FLOAT GAUGE)	161
M	9	1	**095-0736**	5	SCREW-MACHINE (M5X0.8X10-MM)	
	10	1	**3J-1907**	1	SEAL-O-RING	
	11	1	**8T-0328**	5	WASHER-HARD (5.5X10X1-MM THK)	

M-METRIC PART
Y-SEPARATE ILLUSTRATION

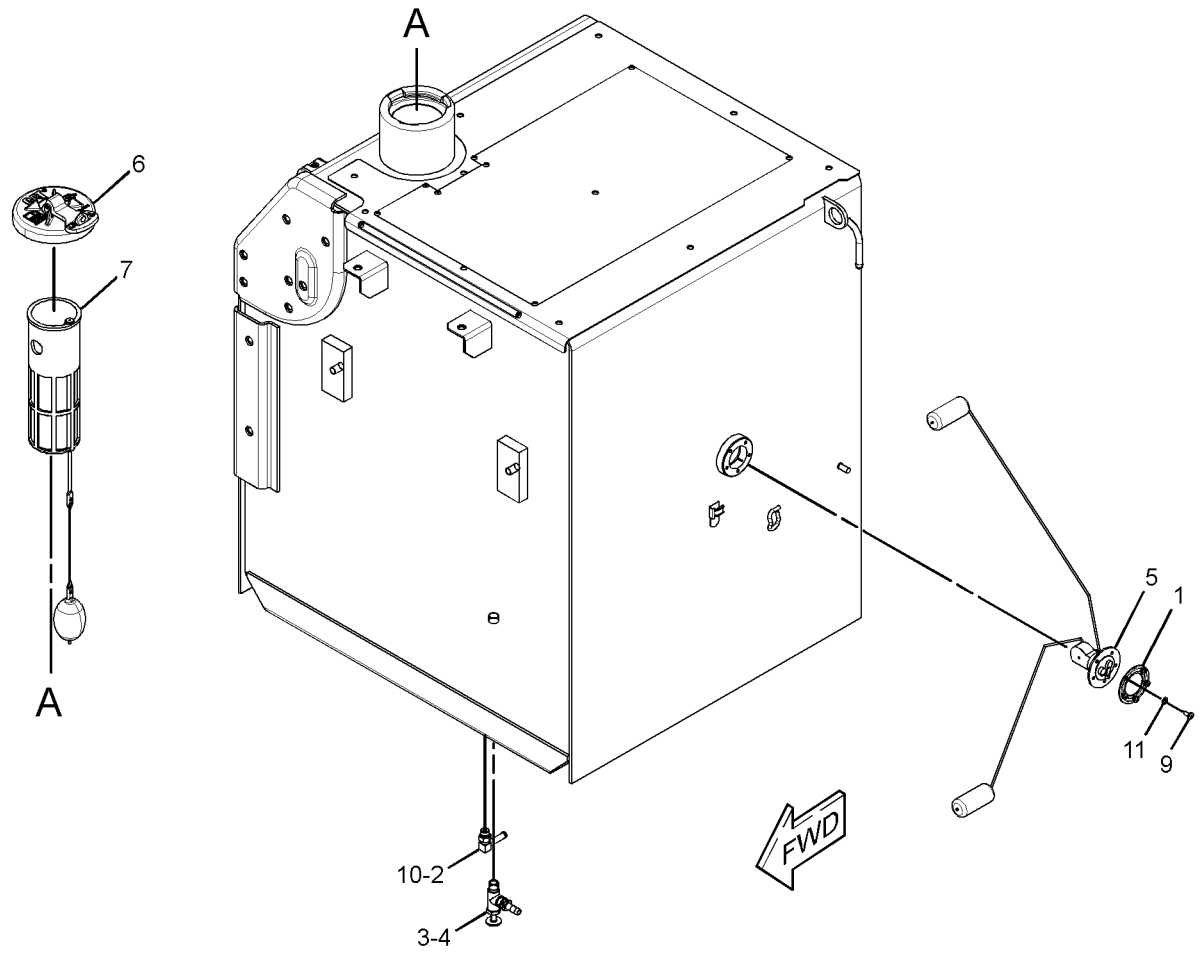

GRAPHIC #1 **<END>** g01393129

FUEL SYSTEM

278-3899 TANK GP-FUEL

S/N: KGF1-UP; FAL1-UP
410-L (108.3-US GAL)
PART OF 278-3897 TANK GP-FUEL
TYPE 2

SMCS-1273 **i02998188**

NOTE	REF NO	GRAPHIC REF	PART NUMBER	QTY	PART NAME 1 2 3 4 5 6 (PRODUCT LEVEL)	SEE PAGE
	1	1	**4I-0378**	1	GASKET-RUBBER	
	2	1	**5P-4924**	1	ELBOW	
	3	1	**003-7764**	1	END-HOSE	
	4	1	**128-4411**	1	VALVE AS (FUEL SHUTOFF)	
	5	1	**163-6700**	1	SENSOR GP-FUEL LEVEL	
		1	**186-3735**	2	PIN-CONNECTOR (16-GA TO 18-GA)	
		1	**102-8802**	1	KIT-RECEPTACLE (2-PIN)	
					(INCLUDES RECEPTACLE AS & WEDGE)	
Y	6	1	**164-4858**	1	CAP GP-FUEL FILLER (EXTREME SERVICE, LOCKABLE)	138
CJ	7	1	**303-9933**	1	STRAINER AS-FUEL (FLOAT GAUGE)	
M	9	1	**095-0736**	5	SCREW-MACHINE (M5X0.8X10-MM)	
	10	1	**3J-1907**	1	SEAL-O-RING	
	11	1	**8T-0328**	5	WASHER-HARD (5.5X10X1-MM THK)	
					AVAILABLE REPAIR KIT(S):	
J			**303-9937**	1	KIT-GAUGE (FLOAT)	
					(INCLUDES STOPPER & GAUGE FLOAT)	

C-CHANGE FROM PREVIOUS TYPE
J-KIT MARKED J SERVICES PART(S) MARKED J
M-METRIC PART
Y-SEPARATE ILLUSTRATION

278-3899 **TANK GP-FUEL** *(contd.)* **i02998188**

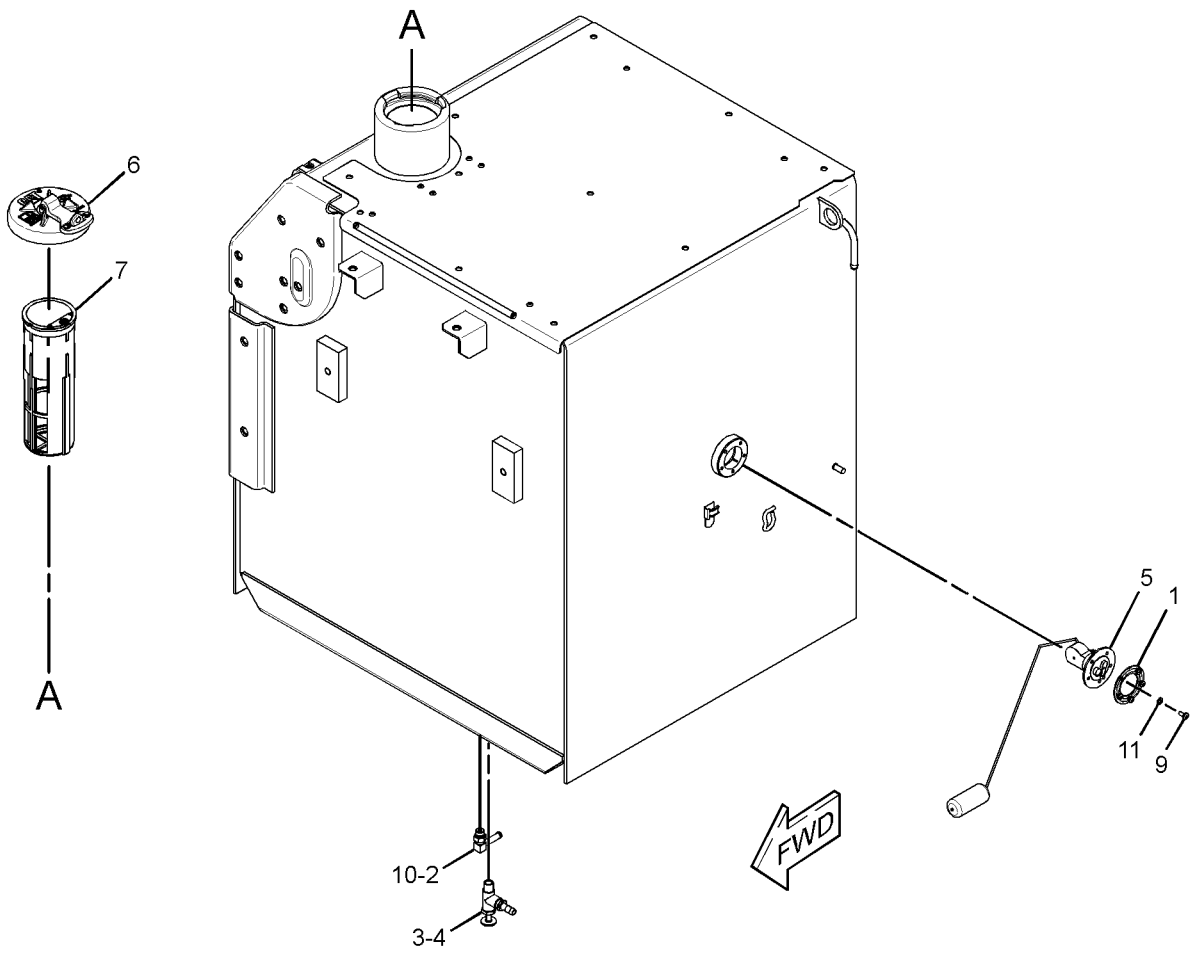

GRAPHIC #1 **<END>** g01528234

278-3901 TANK GP-FUEL

S/N: KGF1-UP; FAL1-UP
410-L (108.3-US GAL)
PART OF 278-3900 TANK & MTG GP-FUEL
AN ATTACHMENT

SMCS-1273 **i02563288**

NOTE	PART NUMBER	QTY	PART NAME 1 2 3 4 5 6 (PRODUCT LEVEL)	SEE PAGE
Y	*278-3902*	1	TANK GP-FUEL	175
			—OR—	
Y	*278-3903*	1	TANK GP-FUEL	179
Y-SEPARATE ILLUSTRATION				

<END>

FUEL SYSTEM

278-3902 TANK GP-FUEL

S/N: KGF1-UP; FAL1-UP
410-L (108.3-US GAL)
PART OF 278-3901 TANK GP-FUEL
AN ATTACHMENT
TYPE 1

SMCS-1273 **i02959232**

NOTE	REF NO	GRAPHIC REF	PART NUMBER	QTY	PART NAME 1 2 3 4 5 6 (PRODUCT LEVEL)	SEE PAGE
	1	1	**4I-0378**	1	GASKET-RUBBER	
	2	1	**5P-4924**	1	ELBOW	
	3	1	**003-7764**	1	END-HOSE	
	4	1	**128-4411**	1	VALVE AS (FUEL SHUTOFF)	
	5	1	**163-6700**	1	SENSOR GP-FUEL LEVEL	
		1	**186-3735**	2	PIN-CONNECTOR (16-GA TO 18-GA)	
		1	**102-8802**	1	KIT-RECEPTACLE (2-PIN)	
					(INCLUDES RECEPTACLE AS & WEDGE)	
Y	6	1	**164-4858**	1	CAP GP-FUEL FILLER (EXTREME SERVICE, LOCKABLE)	138
Y	8	1	**262-9372**	1	STRAINER GP-FUEL (FLOAT GAUGE)	161
M	9	1	**095-0736**	5	SCREW-MACHINE (M5X0.8X10-MM)	
	10	1	**2S-4078**	1	SEAL-O-RING	
	11	1	**3B-0551**	1	PLUG-PIPE	
	12	1	**3J-1907**	1	SEAL-O-RING	
	13	1	**8T-0328**	5	WASHER-HARD (5.5X10X1-MM THK)	
	14	1	**9S-6130**	1	PLUG	

M-METRIC PART
Y-SEPARATE ILLUSTRATION

278-3902 **TANK GP-FUEL** *(contd.)* **i02959232**

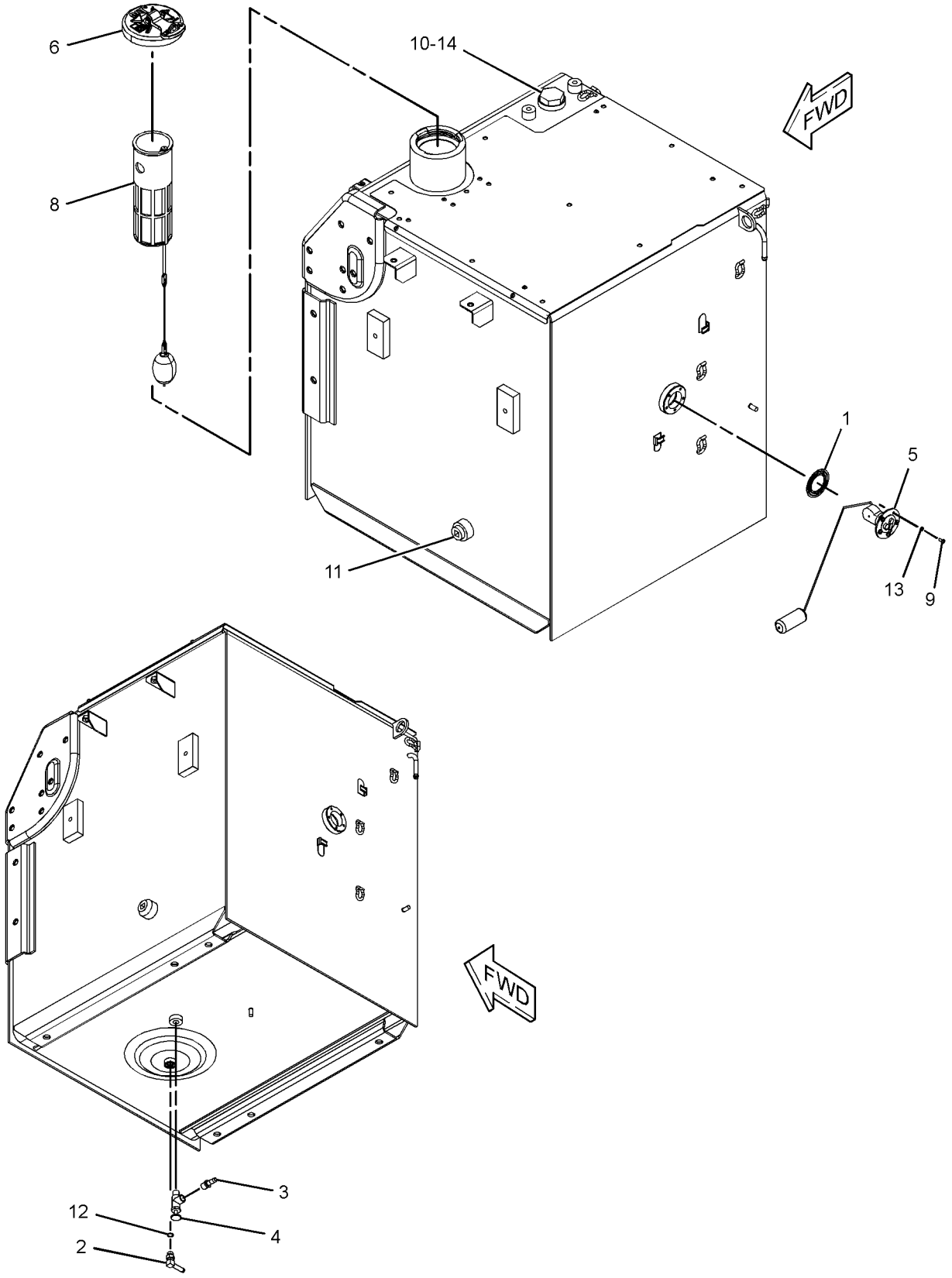

GRAPHIC #1 **<END>** g01396209

278-3902 TANK GP-FUEL

S/N: KGF1-UP; FAL1-UP
410-L (108.3-US GAL)
PART OF 278-3901 TANK GP-FUEL
AN ATTACHMENT
TYPE 2

SMCS-1273 **i03016247**

NOTE	REF NO	GRAPHIC REF	PART NUMBER	QTY	PART NAME 1 2 3 4 5 6 (PRODUCT LEVEL)	SEE PAGE
	1	1	**4I-0378**	1	GASKET-RUBBER	
	2	1	**5P-4924**	1	ELBOW	
	3	1	**003-7764**	1	END-HOSE	
	4	1	**128-4411**	1	VALVE AS (FUEL SHUTOFF)	
	5	1	**163-6700**	1	SENSOR GP-FUEL LEVEL	
		1	**186-3735**	2	PIN-CONNECTOR (16-GA TO 18-GA)	
		1	**102-8802**	1	KIT-RECEPTACLE (2-PIN)	
					(INCLUDES RECEPTACLE AS & WEDGE)	
Y	6	1	**164-4858**	1	CAP GP-FUEL FILLER (EXTREME SERVICE, LOCKABLE)	138
CJ	8	1	**303-9933**	1	STRAINER AS-FUEL (FLOAT GAUGE)	
M	9	1	**095-0736**	5	SCREW-MACHINE (M5X0.8X10-MM)	
	10	1	**2S-4078**	1	SEAL-O-RING	
	11	1	**3B-0551**	1	PLUG-PIPE	
	12	1	**3J-1907**	1	SEAL-O-RING	
	13	1	**8T-0328**	5	WASHER-HARD (5.5X10X1-MM THK)	
	14	1	**9S-6130**	1	PLUG	
					AVAILABLE REPAIR KIT(S):	
J			**303-9937**	1	KIT-GAUGE (FLOAT)	
					(INCLUDES STOPPER & GAUGE FLOAT)	

C-CHANGE FROM PREVIOUS TYPE
J-KIT MARKED J SERVICES PART(S) MARKED J
M-METRIC PART
Y-SEPARATE ILLUSTRATION

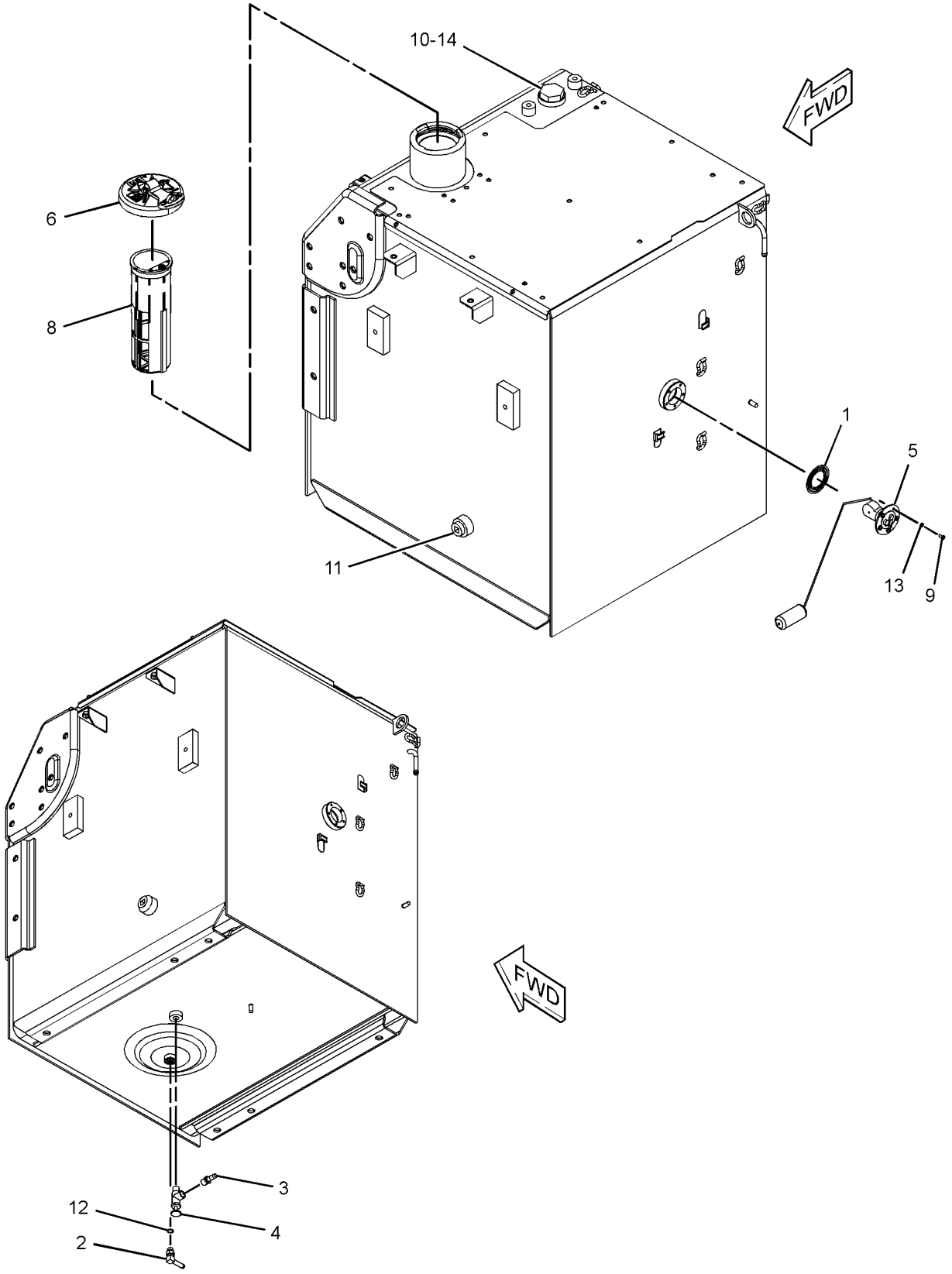

GRAPHIC #1 **<END>** g01529600

278-3903 TANK GP-FUEL

S/N: KGF1-UP; FAL1-UP
410-L (108.3-US GAL)
PART OF 278-3901 TANK GP-FUEL
AN ATTACHMENT
TYPE 1

SMCS-1273 **i02959320**

NOTE	REF NO	GRAPHIC REF	PART NUMBER	QTY	PART NAME 1 2 3 4 5 6 (PRODUCT LEVEL)	SEE PAGE
	1	1	**4I-0378**	1	GASKET-RUBBER	
	2	1	**5P-4924**	1	ELBOW	
Y	3	1	**164-4858**	1	CAP GP-FUEL FILLER (EXTREME SERVICE, LOCKABLE)	138
	4	1	**003-7764**	1	END-HOSE	
	5	1	**128-4411**	1	VALVE AS (FUEL SHUTOFF)	
	6	1	**163-6700**	1	SENSOR GP-FUEL LEVEL	
		1	**186-3735**	2	PIN-CONNECTOR (16-GA TO 18-GA)	
		1	**102-8802**	1	KIT-RECEPTACLE (2-PIN)	
					(INCLUDES RECEPTACLE AS & WEDGE)	
Y	7	1	**262-9372**	1	STRAINER GP-FUEL (FLOAT GAUGE)	161
	8	1	**9S-6130**	1	PLUG	
M	9	1	**095-0736**	5	SCREW-MACHINE (M5X0.8X10-MM)	
	10	1	**2S-4078**	1	SEAL-O-RING	
	11	1	**3B-0551**	1	PLUG-PIPE	
	12	1	**3J-1907**	1	SEAL-O-RING	
	13	1	**8T-0328**	5	WASHER-HARD (5.5X10X1-MM THK)	

M-METRIC PART
Y-SEPARATE ILLUSTRATION

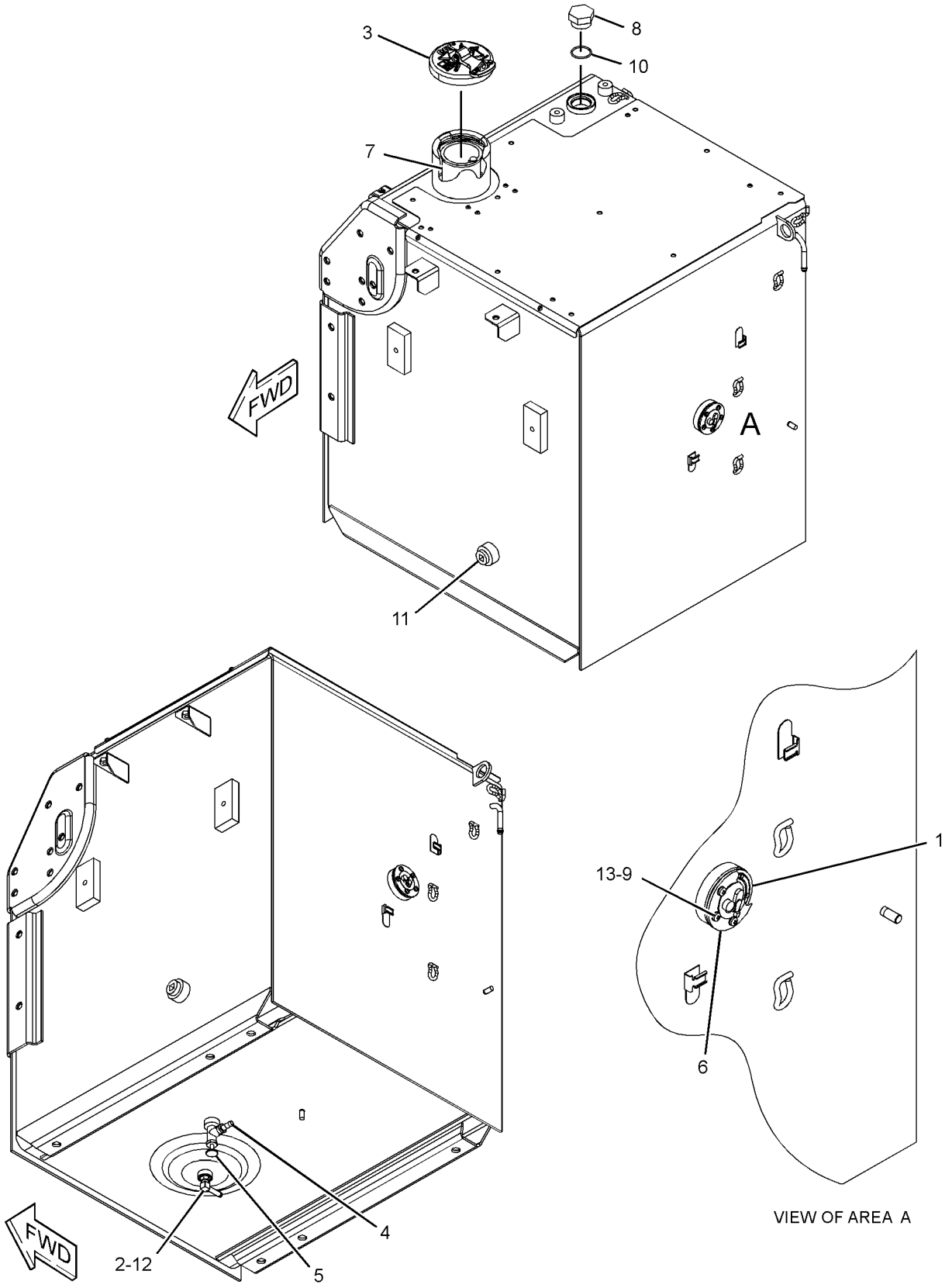

GRAPHIC #1 **<END>** g01389033

FUEL SYSTEM

278-3903 TANK GP-FUEL

S/N: KGF1-UP; FAL1-UP
410-L (108.3-US GAL)
PART OF 278-3901 TANK GP-FUEL
AN ATTACHMENT
TYPE 2

SMCS-1273 **i03016258**

NOTE	REF NO	GRAPHIC REF	PART NUMBER	QTY	PART NAME 1 2 3 4 5 6 (PRODUCT LEVEL)	SEE PAGE
	1	1	**4I-0378**	1	GASKET-RUBBER	
	2	1	**5P-4924**	1	ELBOW	
Y	3	1	**164-4858**	1	CAP GP-FUEL FILLER (EXTREME SERVICE, LOCKABLE)	138
	4	1	**003-7764**	1	END-HOSE	
	5	1	**128-4411**	1	VALVE AS (FUEL SHUTOFF)	
	6	1	**163-6700**	1	SENSOR GP-FUEL LEVEL	
		1	**186-3735**	2	PIN-CONNECTOR (16-GA TO 18-GA)	
		1	**102-8802**	1	KIT-RECEPTACLE (2-PIN)	
					(INCLUDES RECEPTACLE AS & WEDGE)	
CJ	7	1	**303-9933**	1	STRAINER AS-FUEL (FLOAT GAUGE)	
	8	1	**9S-6130**	1	PLUG	
M	9	1	**095-0736**	5	SCREW-MACHINE (M5X0.8X10-MM)	
	10	1	**2S-4078**	1	SEAL-O-RING	
	11	1	**3B-0551**	1	PLUG-PIPE	
	12	1	**3J-1907**	1	SEAL-O-RING	
	13	1	**8T-0328**	5	WASHER-HARD (5.5X10X1-MM THK)	
					AVAILABLE REPAIR KIT(S):	
J			**303-9937**	1	KIT-GAUGE (FLOAT)	
					(INCLUDES STOPPER & GAUGE FLOAT)	

C-CHANGE FROM PREVIOUS TYPE
J-KIT MARKED J SERVICES PART MARKED J
M-METRIC PART
Y-SEPARATE ILLUSTRATION

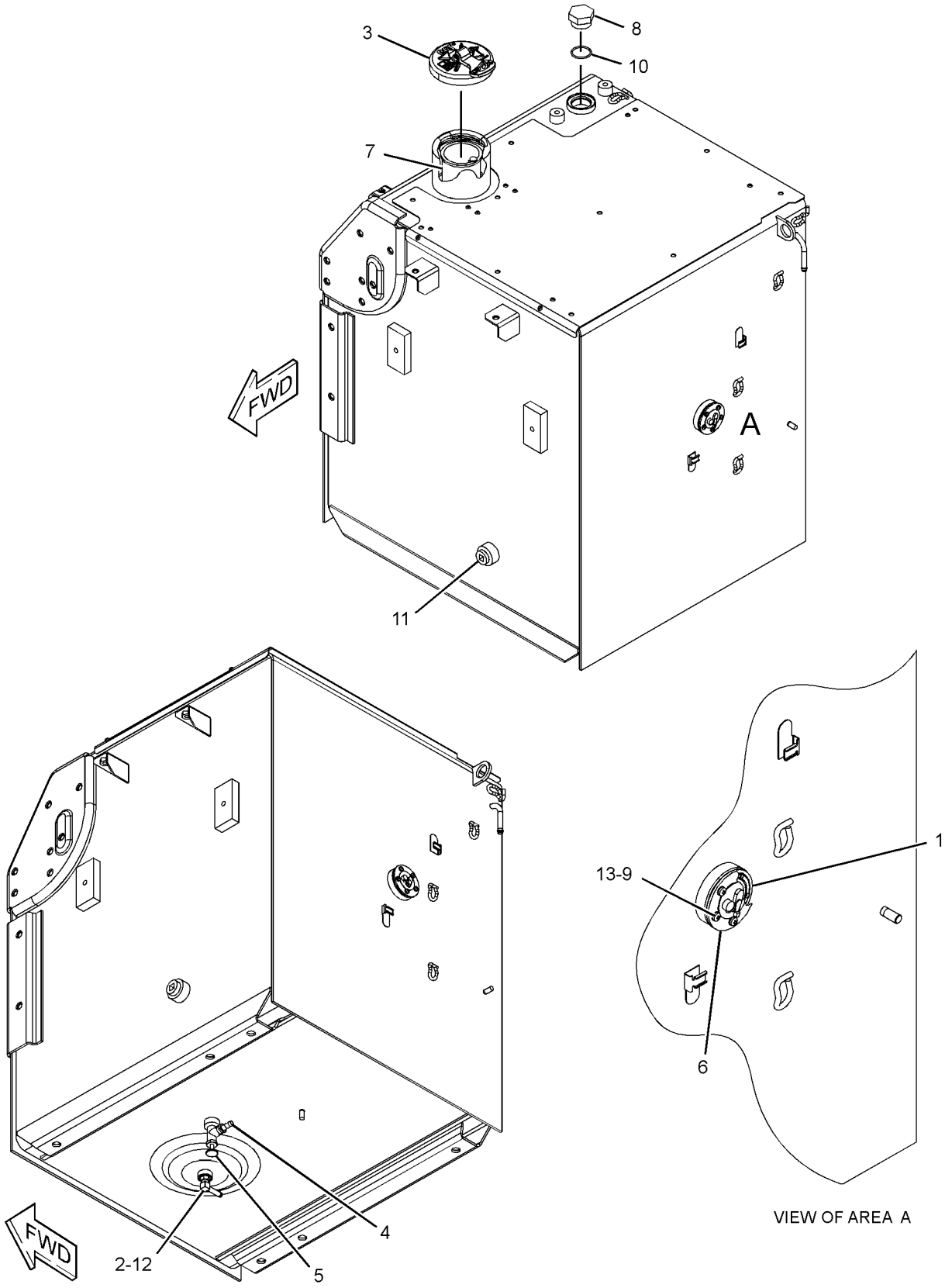

GRAPHIC #1 **<END>** g01389033

327-3192 TANK GP-FUEL

S/N: KGF1-UP; FAL1-UP
410-L (108.3-US GAL)
PART OF 327-3191 TANK & MTG GP-FUEL
AN ATTACHMENT

SMCS-1273 **i03142580**

NOTE	PART NUMBER	QTY	PART NAME 1 2 3 4 5 6 (PRODUCT LEVEL)	SEE PAGE
Y	*327-3193*	1	TANK & MTG GP-FUEL	165
			–OR–	
Y	*327-3196*	1	TANK & MTG GP-FUEL	166
Y-SEPARATE ILLUSTRATION				

<END>

327-3199 TANK GP-FUEL

S/N: KGF1-UP; FAL1-UP
410-L (108.3-US GAL)
PART OF 327-3198 TANK & MTG GP-FUEL
AN ATTACHMENT

SMCS-1273 **i03127847**

NOTE	PART NUMBER	QTY	PART NAME 1 2 3 4 5 6 (PRODUCT LEVEL)	SEE PAGE
Y	*327-3200*	1	TANK GP-FUEL	184
			–OR–	
Y	*327-3203*	1	TANK GP-FUEL	186
Y-SEPARATE ILLUSTRATION				

<END>

FUEL SYSTEM

327-3200 TANK GP-FUEL

S/N: KGF1-UP; FAL1-UP
410-L (108.3-US GAL)
PART OF 327-3199 TANK GP-FUEL
AN ATTACHMENT

SMCS-1273 **i03127850**

NOTE	REF NO	GRAPHIC REF	PART NUMBER	QTY	PART NAME 1 2 3 4 5 6 (PRODUCT LEVEL)	SEE PAGE
	1	1	**4I-0378**	1	GASKET-RUBBER	
	2	1	**5P-4924**	1	ELBOW	
	3	1	**003-7764**	1	END-HOSE	
	4	1	**128-4411**	1	VALVE AS (FUEL SHUTOFF)	
	5	1	**163-6700**	1	SENSOR GP-FUEL LEVEL	
		1	**186-3735**	2	PIN-CONNECTOR (16-GA TO 18-GA)	
		1	**102-8802**	1	KIT-RECEPTACLE (2-PIN)	
					(INCLUDES RECEPTACLE AS & WEDGE)	
Y	6	1	**164-4858**	1	CAP GP-FUEL FILLER (EXTREME SERVICE, LOCKABLE)	138
J	7	1	**303-9933**	1	STRAINER AS-FUEL (FLOAT GAUGE)	
	9	1	**9S-6130**	1	PLUG	
M	10	1	**095-0736**	5	SCREW-MACHINE (M5X0.8X10-MM)	
	11	1	**2S-4078**	1	SEAL-O-RING	
	12	1	**3B-0551**	1	PLUG-PIPE	
	13	1	**3J-1907**	1	SEAL-O-RING	
	14	1	**8T-0328**	5	WASHER-HARD (5.5X10X1-MM THK)	
					AVAILABLE REPAIR KIT(S):	
J			**303-9937**	1	KIT-GAUGE (FUEL STRAINER)	
					(INCLUDES STOPPER & GAUGE)	

J-KIT MARKED J SERVICES PART(S) MARKED J
M-METRIC PART
Y-SEPARATE ILLUSTRATION

327-3200 **TANK GP-FUEL** *(contd.)* **i03127850**

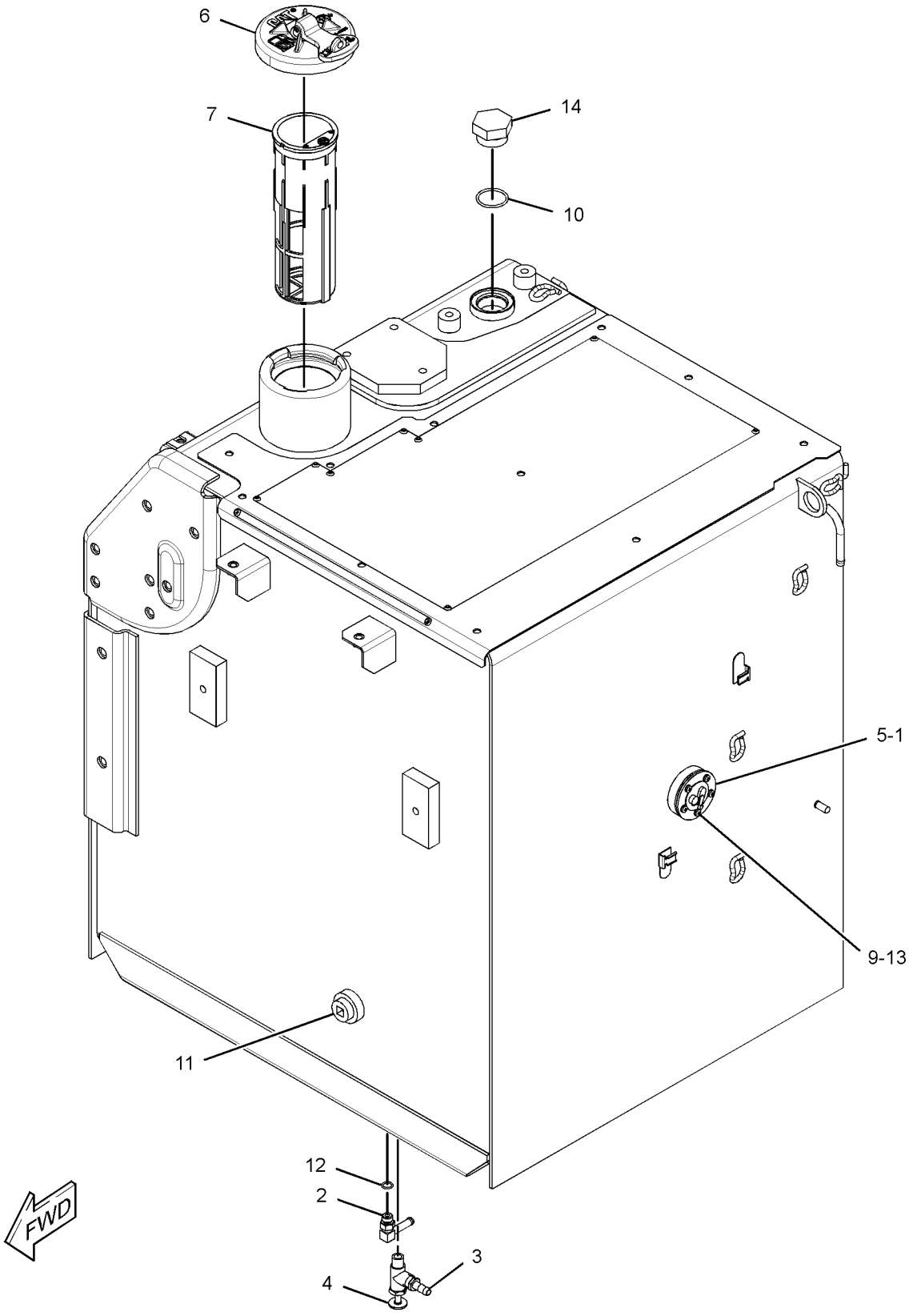

GRAPHIC #1 **<END>** g01623740

FUEL SYSTEM

327-3203 TANK GP-FUEL

S/N: KGF1-UP; FAL1-UP
410-L (108.3-US GAL)
PART OF 327-3199 TANK GP-FUEL
AN ATTACHMENT

SMCS-1273 **i03127852**

NOTE	REF NO	GRAPHIC REF	PART NUMBER	QTY	PART NAME 1 2 3 4 5 6 (PRODUCT LEVEL)	SEE PAGE
	1	1	**4I-0378**	1	GASKET-RUBBER	
	2	1	**5P-4924**	1	ELBOW	
	3	1	**003-7764**	1	END-HOSE	
	4	1	**128-4411**	1	VALVE AS (FUEL SHUTOFF)	
	5	1	**163-6700**	1	SENSOR GP-FUEL LEVEL	
		1	**186-3735**	2	PIN-CONNECTOR (16-GA TO 18-GA)	
		1	**102-8802**	1	KIT-RECEPTACLE (2-PIN)	
					(INCLUDES RECEPTACLE AS & WEDGE)	
Y	6	1	**164-4858**	1	CAP GP-FUEL FILLER (EXTREME SERVICE, LOCKABLE)	138
J	7	1	**303-9933**	1	STRAINER AS-FUEL (FLOAT GAUGE)	
M	9	1	**095-0736**	5	SCREW-MACHINE (M5X0.8X10-MM)	
	10	1	**2S-4078**	1	SEAL-O-RING	
	11	1	**3B-0551**	1	PLUG-PIPE	
	12	1	**3J-1907**	1	SEAL-O-RING	
	13	1	**8T-0328**	5	WASHER-HARD (5.5X10X1-MM THK)	
	14	1	**9S-6130**	1	PLUG	
					AVAILABLE REPAIR KIT(S):	
J			**303-9937**	1	KIT-GAUGE (FUEL)	
					(INCLUDES STOPPER & GAUGE)	

J-KIT MARKED J SERVICES PART(S) MARKED J
M-METRIC PART
Y-SEPARATE ILLUSTRATION

327-3203 **TANK GP-FUEL** *(contd.)* **i03127852**

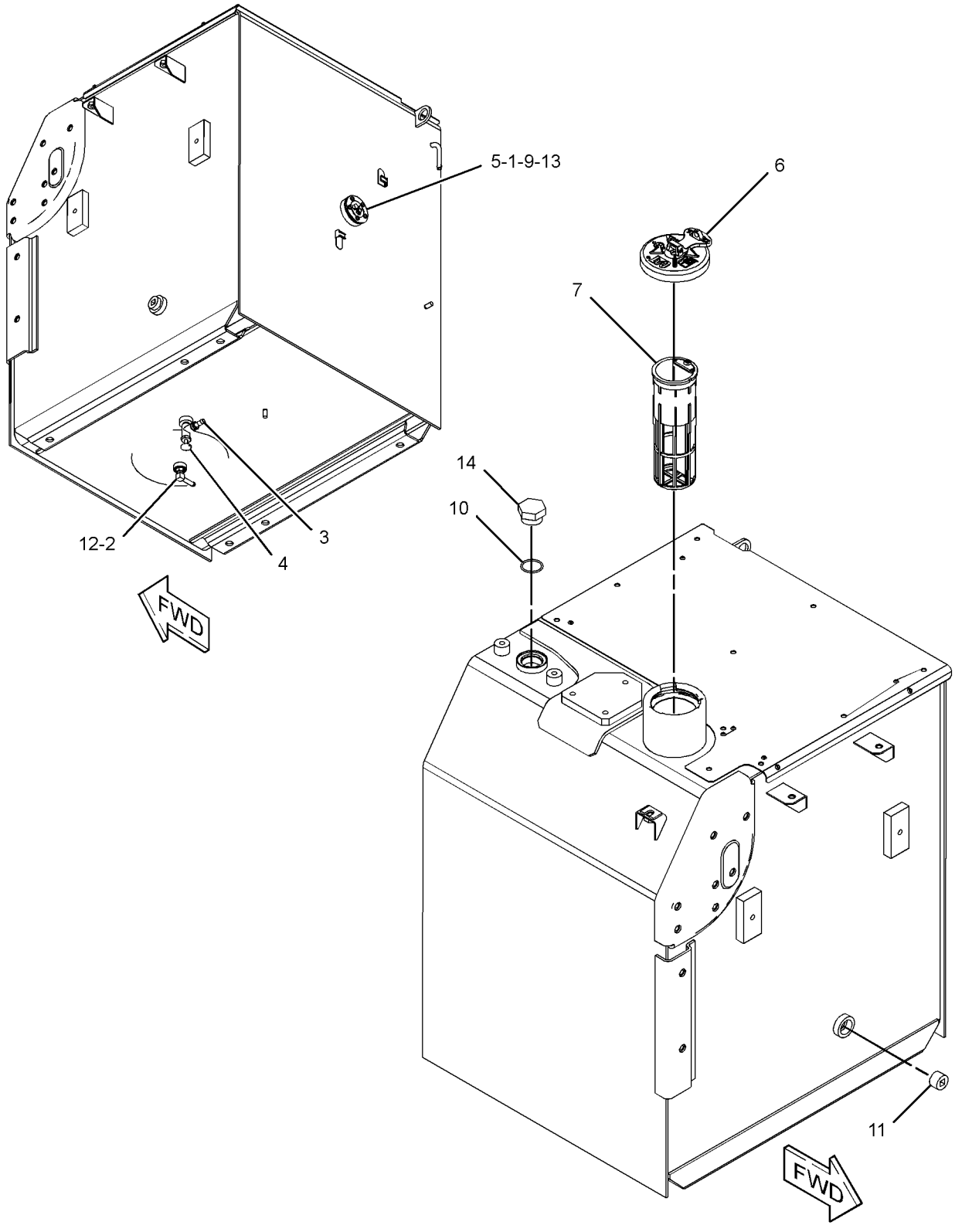

GRAPHIC #1 **<END>** g01623409

298-3147 VALVE GP-FUEL SHUTOFF

S/N: KGF1-UP; FAL1-UP

PART OF 273-7735 LINES GP-FUEL

SMCS-1273 **i02750485**

NOTE	REF NO	GRAPHIC REF	PART NUMBER	QTY	PART NAME 1 2 3 4 5 6 (PRODUCT LEVEL)	SEE PAGE
	1	1	**298-3257**	1	STOP	
	2	1	**298-3258**	1	LEVER	
M	3	1	**260-6692**	1	NUT (M5X0.8-THD)	
	4	1	**3J-1907**	1	SEAL-O-RING	
	5	1	**8T-0328**	1	WASHER-HARD (5.5X10X1-MM THK)	
					PARTS SHOWN IN GRAPHIC(S) WITHOUT A REFERENCE NUMBER ARE NOT SERVICED SEPARATELY	

M-METRIC PART

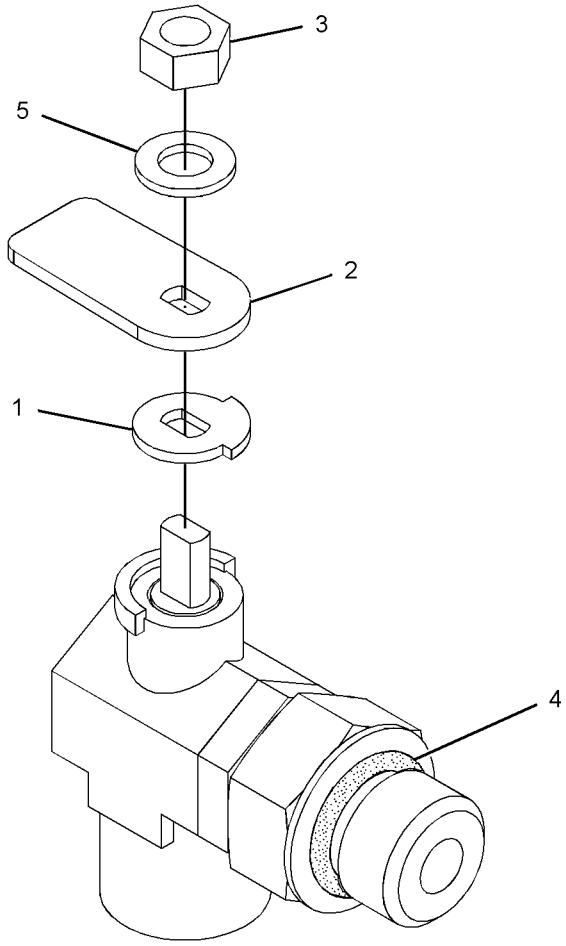

GRAPHIC #1 **<END>** g01377343

132-1829 ALARM GP

S/N: KGF1-UP; FAL1-UP
24-VOLT
PART OF 259-5161 WIRING GP-CAB

SMCS-7400, 7402, 7407 **i03254766**

NOTE	REF NO	GRAPHIC REF	PART NUMBER	QTY	PART NAME 1 2 3 4 5 6 (PRODUCT LEVEL)	SEE PAGE
	1	1	**102-8802**	1	KIT-RECEPTACLE (2-PIN)	
					(INCLUDES RECEPTACLE AS & WEDGE)	
	2	1	**186-3735**	2	PIN-CONNECTOR (16-GA TO 18-GA)	

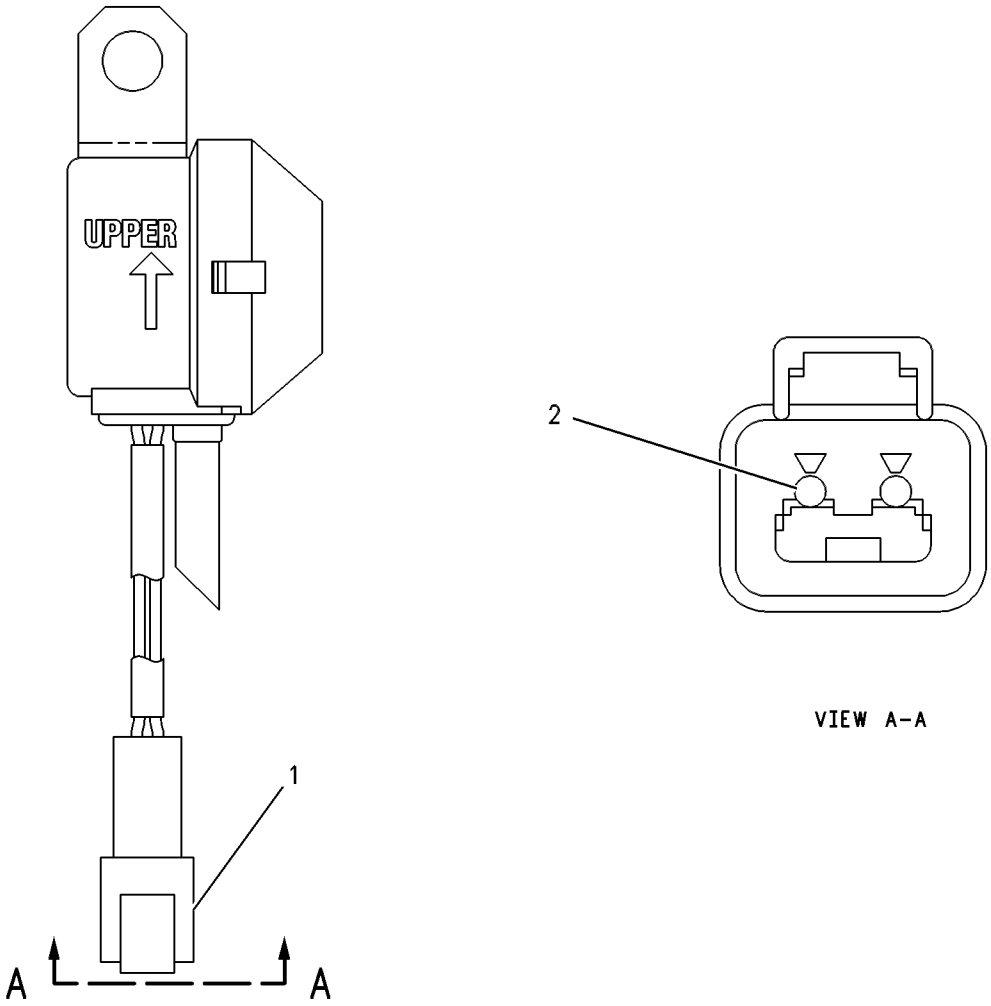

GRAPHIC #1 **<END>** g00272185

231-1771 ALARM GP-TRAVEL

S/N: KGF1-UP; FAL1-UP
AN ATTACHMENT

SMCS-7429 **i02693231**

NOTE	REF NO	GRAPHIC REF	PART NUMBER	QTY	PART NAME 1 2 3 4 5 6 (PRODUCT LEVEL)	SEE PAGE
	1	1	**213-9100**	1	ALARM GP	
BD		1	**5P-5623**		WIRE-ELECTRICAL (16-GA, BLACK)	
		1	**102-8802**	1	KIT-RECEPTACLE (2-PIN)	
					(INCLUDES RECEPTACLE AS & WEDGE)	
		1	**186-3735**	2	PIN-CONNECTOR (16-GA TO 18-GA)	
BE		1	**9X-1813**		SLEEVE	
M	2	1	**8T-4189**	2	BOLT (M8X1.25X20-MM)	
	3	1	**5P-4116**	2	WASHER-HARD (8.8X20.5X2-MM THK)	

B-USE AS REQUIRED
D-ORDER BY THE METER
E-ORDER BY THE CENTIMETER
M-METRIC PART

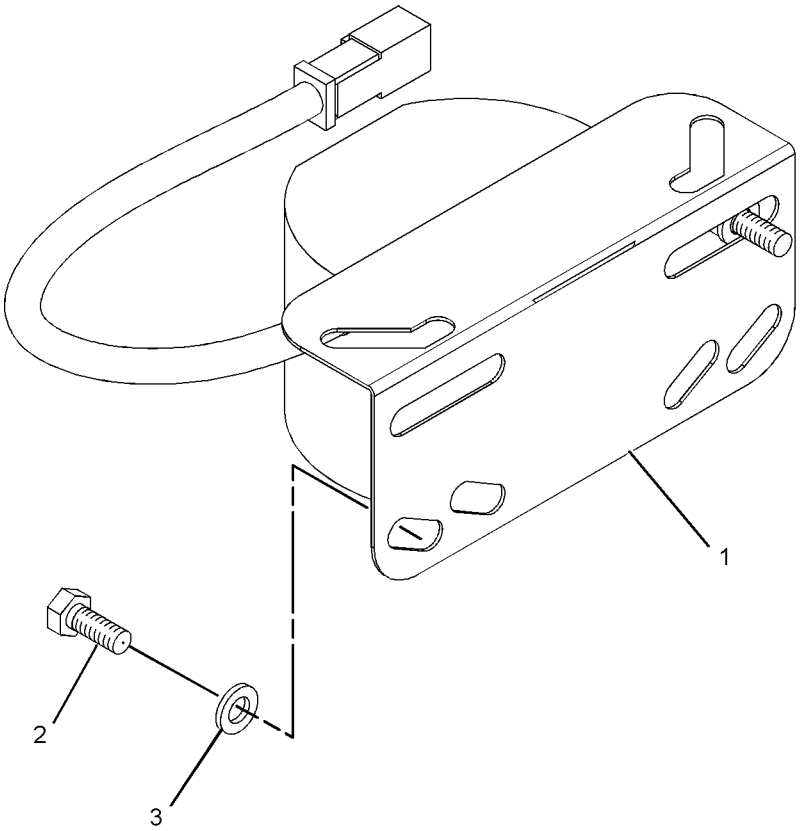

GRAPHIC #1 **<END>** g01071794

212-8561 ALTERNATOR GP-CHARGING

S/N: GDC1-UP; KGF1-UP
PART OF 272-4677, 272-4683, 296-4676, 305-4777 ENGINE AR, 296-4661 MOUNTING GP-ALTERNATOR
ALSO AN ATTACHMENT

SMCS-1405 **i02170840**

NOTE	REF NO	GRAPHIC REF	PART NUMBER	QTY	PART NAME 1 2 3 4 5 6 (PRODUCT LEVEL)	SEE PAGE
	1	1	**099-3913**	1	NUT SET	
	2	1	**212-8613**	1	PULLEY AS	
	3	1	**5I-7985**	1	SETSCREW	
	4	1	**5I-8086**	1	BRACKET AS	
	5	1	**5I-7987**	1	SETSCREW	
	6	1	**5I-8087**	1	BEARING	
	7	1	**5I-8088**	1	ROTOR AS	
	8	1	**5I-8089**	1	BEARING	
	9	1	**5I-8098**	1	COIL AS	
	10	1	**5I-8090**	1	STATOR	
	11	1	**5I-7997**	1	SETSCREW	
	12	1	**135-2381**	1	PLATE	
	13	1	**239-6681**	1	REGULATOR AS	
	14	1	**5I-8095**	1	RECTIFIER AS	
	15	1	**212-8521**	1	BRACKET	
	16	1	**085-9429**	1	NUT SET	
	17	1	**5I-8080**	1	CONNECTOR AS	
	18	1	**5I-8094**	1	BOLT	
	19	1	**5I-8097**	1	SETSCREW	

212-8561 ALTERNATOR GP-CHARGING *(contd.)* **i02170840**

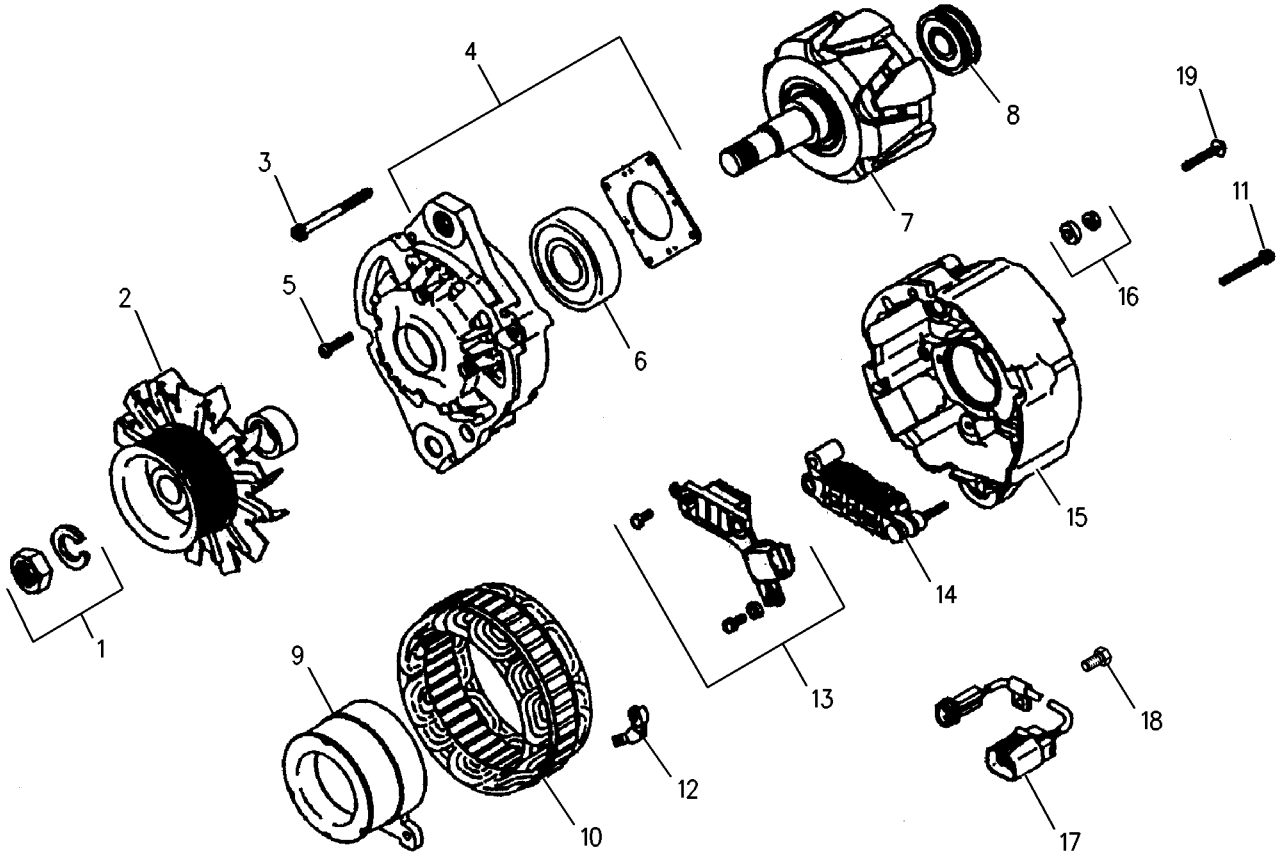

GRAPHIC #1 **<END>** g00923464

259-5049 BATTERY & WIRING GP–COLD WEATHER

S/N: KGF1-UP; FAL1-UP
AN ATTACHMENT

SMCS-1401, 1402, 1408 **i02989506**

NOTE	REF NO	GRAPHIC REF	PART NUMBER	QTY	PART NAME 1 2 3 4 5 6 (PRODUCT LEVEL)	SEE PAGE
	1	1	**3T-5760**	2	BATTERY (12-VOLT, MAINTENANCE FREE, WET)	
	2	1	**5I-8270**	1	COVER-BATTERY	
	3	1	**6W-6005**	1	HOLD-DOWN-BATTERY	
	4	1	**170-6929**	1	CABLE AS	
E		1	**5P-0761**		CABLE (00-GA, RED) (31-CM)	
		1	**9G-0002**	1	COVER-TERMINAL (RED)	
		1	**9G-0005**	1	COVER-TERMINAL (BLACK)	
		1	**8C-5918**	1	TERMINAL AS (NEGATIVE)	
		1	**8T-9756**	1	TERMINAL AS (POSITIVE)	
					(EACH TERMINAL AS INCLUDES)	
		1	**1M-6119**	1	BOLT (5/16-18X1.375-IN)	
		1	**1M-6120**	1	NUT (5/16-18-THD)	
	5	1	**238-2501**	1	KNOB	
	6	1	**238-2528**	1	ROD	
	7	1	**259-5225**	1	SUPPORT AS	
	8	1	**259-5229**	1	CABLE AS	
		1	**1S-7252**	1	TERMINAL-CABLE (00-GA, 3/8-IN BOLT)	
E		1	**5P-0747**		CABLE (00-GA, BLACK) (89-CM)	
		1	**9G-0003**	1	COVER-TERMINAL (BLACK)	
		1	**8T-9757**	1	TERMINAL AS-BATTERY (NEGATIVE)	
		1	**1M-6119**	1	BOLT (5/16-18X1.375-IN)	
		1	**1M-6120**	1	NUT (5/16-18-THD)	
Y	9	1	**289-6712**	1	SHEET AS-SOUND SUPPRESSION	481
	10	1	**291-7592**	1	CABLE AS	
		1	**1S-7252**	1	TERMINAL-CABLE (00-GA, 3/8-IN BOLT)	
E		1	**5P-0761**		CABLE (00-GA, RED) (281-CM)	
D		1	**6V-2722**		TUBE-HEAT SHRINK (25.4-MM DIA) (1-M)	
		1	**9G-0004**	1	COVER-TERMINAL (RED)	
		1	**8C-5917**	1	TERMINAL AS-BATTERY (POSITIVE)	
		1	**1M-6119**	1	BOLT (5/16-18X1.375-IN)	
		1	**1M-6120**	1	NUT (5/16-18-THD)	
	11	1	**4K-8864**	3	CLIP	
M	12	1	**5C-7261**	1	NUT (M8X1.25-THD)	
	13	1	**6K-8178**	2	CLIP	
	14	1	**8T-4121**	1	WASHER-HARD (11X21X2.5-MM THK)	
M	15	1	**8T-4133**	1	NUT (M10X1.5-THD)	
M	16	1	**8T-4191**	1	BOLT (M10X1.5X16-MM)	
M	17	1	**8T-4192**	4	BOLT (M12X1.75X25-MM)	
	18	1	**8T-4223**	4	WASHER-HARD (13.5X25.5X3-MM THK)	
	19	1	**8T-4226**	1	WASHER-PLATED (10.5X45X3-MM THK)	
	20	1	**204-1673**	1	STRAP-CABLE	

D-ORDER BY THE METER
E-ORDER BY THE CENTIMETER
M-METRIC PART
Y-SEPARATE ILLUSTRATION

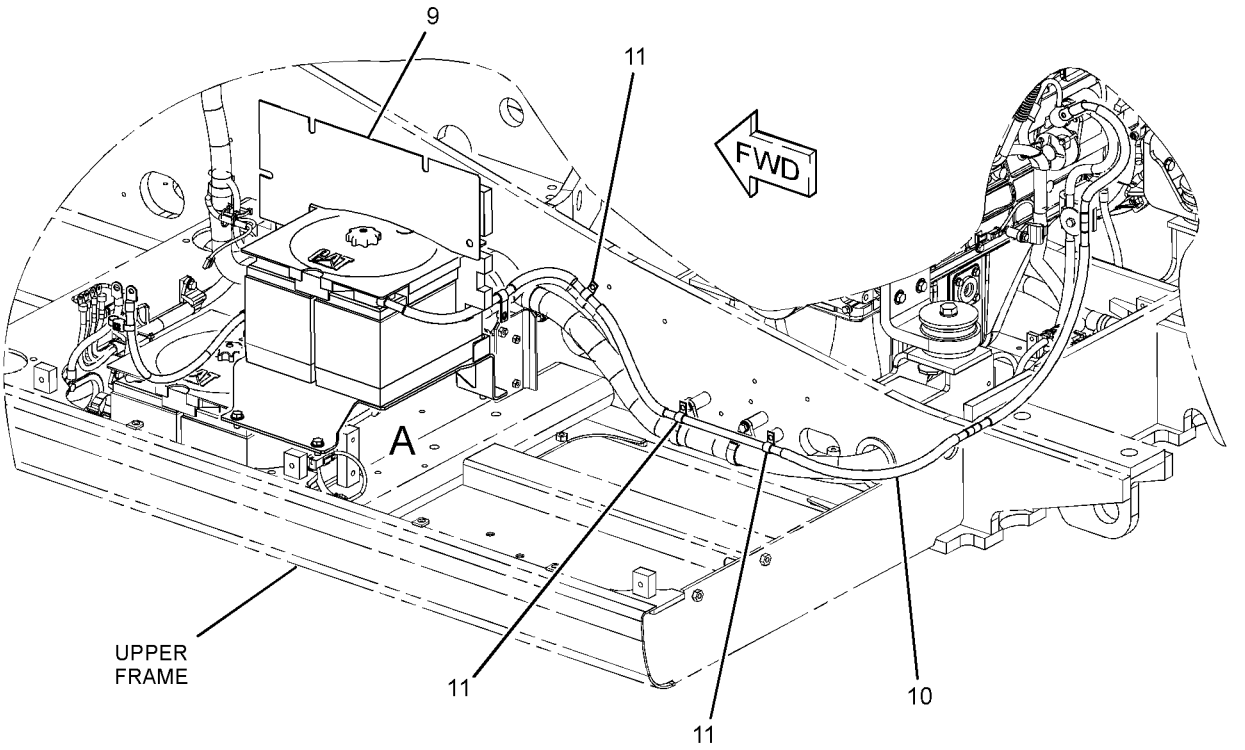

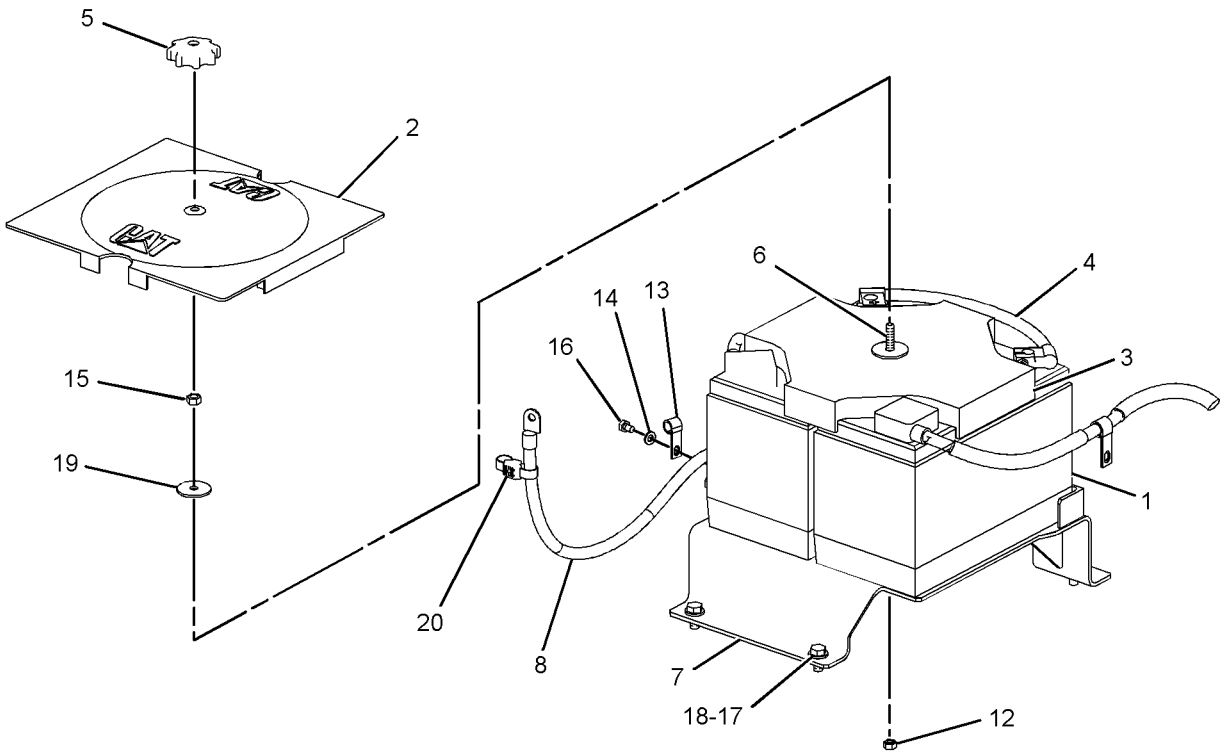

VIEW OF AREA A

GRAPHIC #1 **<END>** g01397361

ELECTRICAL AND STARTING SYSTEM

267-8000 BATTERY & WIRING GP

S/N: KGF1-1317; FAL1-879

PART OF 264-8638, 264-8639 CHASSIS AR

SMCS-1401, 1402, 1408 **i02867327**

NOTE	REF NO	GRAPHIC REF	PART NUMBER	QTY	PART NAME 1 2 3 4 5 6 (PRODUCT LEVEL)	SEE PAGE
	1	3,4	**2G-8767**	2	WASHER (10.5X60X3-MM THK)	
	2	1,2,3, 4,5	**3S-2093**	39	STRAP-CABLE	
	3	2	**3T-5760**	2	BATTERY (12-VOLT, MAINTENANCE FREE, WET)	
	4	2	**306-8401**	1	GROMMET	
	5	2	**5I-8270**	1	COVER-BATTERY	
	6	4	**5I-9368**	1	SPACER (9.24X13.72X20.5-MM THK)	
	7	2	**6W-6005**	1	HOLD-DOWN-BATTERY	
	8	3,4,5	**7I-2673**	4	STRAP-CABLE	
	9	2,3,5	**7K-1181**	15	STRAP-CABLE	
	10	1,2	**7Y-5456**	2	GROMMET	
	11	1,3,4,5	**111-4836**	11	CLIP	
	12	2,3,4,5	**111-4837**	12	CLIP	
	13	2,3,4	**111-4838**	13	CLIP	
	14	2,3,4	**111-4839**	13	STRAP	
	15	2,3,4,5	**116-0118**	10	CLIP	
	16	2	**132-1805**	1	STRAP AS-GROUND	
	17	4	**132-1806**	1	STRAP AS-GROUND	
	18	2	**170-6929**	1	CABLE AS	
E		2	**5P-0761**		CABLE (00-GA, RED) (31-CM)	
		2	**9G-0002**	1	COVER-TERMINAL (RED)	
		2	**9G-0005**	1	COVER-TERMINAL (BLACK)	
		2	**8T-9756**	1	TERMINAL AS (POSITIVE)	
		2	**8C-5918**	1	TERMINAL AS (NEGATIVE)	
					(EACH TERMINAL AS INCLUDES)	
		2	**1M-6119**	1	BOLT (5/16-18X1.375-IN)	
		2	**1M-6120**	1	NUT (5/16-18-THD)	
	19	4	**170-9336**	1	BRACKET AS	
	20	4	**183-1049**	1	BRACKET	
	21	2	**231-1827**	1	CABLE AS	
		2	**1S-7252**	1	TERMINAL-CABLE (00-GA, 3/8-IN BOLT)	
E		2	**5P-0747**		CABLE (00-GA, BLACK) (23-CM)	
		2	**9G-0003**	1	COVER-TERMINAL (BLACK)	
		2	**9G-8909**	1	COVER-TERMINAL (BLACK)	
		2	**8T-9757**	1	TERMINAL AS-BATTERY (NEGATIVE)	
		2	**1M-6119**	1	BOLT (5/16-18X1.375-IN)	
		2	**1M-6120**	1	NUT (5/16-18-THD)	
	22	2	**238-2501**	1	KNOB	
	23	2	**238-2528**	1	ROD	
	24	2	**251-0467**	1	BRACKET AS	
	25	3	**259-5267**	1	BRACKET AS	
	26	3	**259-5317**	1	BRACKET AS	
	27	2	**291-7590**	1	HARNESS AS-CHASSIS	
		2	**121-1038**	1	HOUSING-RECEPTACLE	
E		2	**103-2529**	1	HOSE (80-CM)	
		2	**102-8802**	4	KIT-RECEPTACLE (2-PIN)	
		2	**102-8803**	2	KIT-RECEPTACLE (3-PIN)	
		2	**102-8804**	1	KIT-RECEPTACLE (4-PIN)	
					(EACH RECPTACLE KIT INCLUDES RECEPTACLE AS & WEDGE)	
		2	**3S-2093**	17	STRAP-CABLE	
		2	**8T-8799**	2	BOOT	
E		2	**7Y-3820**	1	HOUSING-RECEPTACLE	
		2	**116-0128**	2	SEAL	
E		2	**119-3662**		TUBE-HEAT SHRINK (10.85-MM DIA) (26-CM)	
E		2	**125-7874**		TUBE-HEAT SHRINK (5.72-MM DIA) (95-CM)	

267-8000 **BATTERY & WIRING GP** *(contd.)* **i02867327**

NOTE	REF NO	GRAPHIC REF	PART NUMBER	QTY	PART NAME 1 2 3 4 5 6 (PRODUCT LEVEL)	SEE PAGE
E		2	**125-7875**		TUBE-HEAT SHRINK (7.44-MM DIA) (50-CM)	
		2	**134-3297**	1	SEAL	
		2	**153-2620**	1	PLUG AS-CONNECTOR (54-PIN, BLACK)	
		2	**163-6759**	1	SEAL	
		2	**153-2630**	1	PLUG AS-CONNECTOR (54-PIN, BROWN)	
		2	**163-6759**	1	SEAL	
		2	**155-2260**	2	KIT-CONNECTING PLUG (3-PIN)	
		2	**155-2270**	16	KIT-CONNECTING PLUG (2-PIN)	
		2	**155-2271**	1	KIT-CONNECTING PLUG (4-PIN)	
					(EACH PLUG KIT INCLUDES PLUG AS, WEDGE & INTERFACE SEAL)	
		2	**163-6637**	1	RECEPTACLE AS-CONNECTOR (54-PIN, BLACK)	
		2	**174-3016**	2	PLUG AS-CONNECTOR (3-PIN)	
		2	**230-4009**	3	PLUG AS-CONNECTOR (12-PIN)	
		2	**230-4011**	7	PLUG AS-CONNECTOR (2-PIN)	
		2	**230-4013**	1	PLUG AS-CONNECTOR (3-PIN)	
		2	**230-5010**	3	PLUG AS-CONNECTOR (6-PIN)	
		2	**231-2295**	2	PLUG AS-CONNECTOR (8-PIN)	
		2	**243-4505**	6	RECEPTACLE AS-CONNECTOR (2-PIN)	
		2	**243-4506**	1	RECEPTACLE AS-CONNECTOR (3-PIN)	
		2	**243-4508**	3	RECEPTACLE AS-CONNECTOR (6-PIN)	
		2	**243-4509**	2	RECEPTACLE AS-CONNECTOR (8-PIN)	
		2	**243-4510**	3	RECEPTACLE AS-CONNECTOR (12-PIN)	
		2	**245-1042**	1	PLUG AS-CONNECTOR (64-PIN)	
M		2	**267-7207**	1	BOLT-SPECIAL	
		2	**267-7208**	1	RING-RETAINING	
		2	**274-4990**	1	SEAL	
		2	**245-1045**	1	COVER	
	28	2	**291-7591**	1	CABLE AS	
		2	**1S-7252**	1	TERMINAL-CABLE (00-GA, 3/8-IN BOLT)	
E		2	**5P-0761**		CABLE (00-GA, RED) (327-CM)	
		2	**9G-0004**	1	COVER-TERMINAL (RED)	
		2	**8N-0869**	1	COVER-TERMINAL (RED)	
		2	**8C-5917**	1	TERMINAL AS-BATTERY (POSITIVE)	
		2	**1M-6119**	1	BOLT (5/16-18X1.375-IN)	
		2	**1M-6120**	1	NUT (5/16-18-THD)	
	29	2	**291-7593**	1	BRACKET AS	
	30	4	**085-7329**	2	SPACER (9X19X30-MM THK)	
	31	2	**091-9035**	1	SPACER (11X25X20-MM THK)	
	32	2,4	**9X-8256**	6	WASHER (6.6X12X2-MM THK)	
	33	2	**132-5789**	2	CLIP	
	34	2	**4K-8864**	1	CLIP	
	35	5	**4P-7428**	1	CLIP	
	36	2,3	**4P-7581**	4	CLIP	
M	37	2	**5C-7261**	1	NUT (M8X1.25-THD)	
M	38	2	**5C-7883**	4	BOLT-SOCKET HEAD (M6X1X16-MM)	
	39	5	**5I-3878**	1	GROMMET	
	40	4	**5P-4116**	5	WASHER-HARD (8.8X20.5X2-MM THK)	
	41	3,4	**6G-2256**	2	CLAMP	
	42	2,3,4	**6G-2263**	4	SPACER (10.5X19X28.5-MM THK)	
	43	2	**6K-8178**	4	CLIP	
M	44	4	**7X-0818**	2	BOLT (M8X1.25X45-MM)	
M	45	4	**7X-2533**	1	BOLT (M6X1X35-MM)	
M	46	4	**7X-2619**	1	BOLT (M6X1X10-MM)	
M	47	4	**7X-2621**	2	BOLT (M10X1.5X12-MM)	
	48	4	**7Y-1924**	2	SPACER (9X19X23-MM THK)	
M	49	4	**7Y-5226**	1	NUT (M5X0.8-THD)	
	50	4	**7Y-8165**	1	GROMMET	
	51	5	**7Y-8167**	1	GROMMET	
	52	4	**8J-1256**	1	CLIP	

267-8000 **BATTERY & WIRING GP** *(contd.)* **i02867327**

NOTE	REF NO	GRAPHIC REF	PART NUMBER	QTY	PART NAME 1 2 3 4 5 6 (PRODUCT LEVEL)	SEE PAGE
	53	2	**8M-2770**	1	CLIP	
M	54	4	**8T-0286**	1	BOLT (M5X0.8X8-MM)	
	55	4	**8T-0328**	2	WASHER-HARD (5.5X10X1-MM THK)	
	56	1,2,3, 4,5	**8T-4121**	60	WASHER-HARD (11X21X2.5-MM THK)	
M	57	2	**8T-4133**	1	NUT (M10X1.5-THD)	
M	58	2,3	**8T-4136**	10	BOLT (M10X1.5X25-MM)	
M	59	1,2,3, 4,5	**8T-4137**	36	BOLT (M10X1.5X20-MM)	
M	60	2,4	**8T-4182**	2	BOLT (M10X1.5X45-MM)	
M	61	2,3	**8T-4185**	2	BOLT (M10X1.5X50-MM)	
M	62	2,4	**8T-4191**	3	BOLT (M10X1.5X16-MM)	
M	63	2,3,4	**8T-4195**	5	BOLT (M10X1.5X30-MM)	
M	64	2	**8T-4196**	1	BOLT (M10X1.5X35-MM)	
M	65	4	**8T-4199**	1	BOLT (M8X1.25X12-MM)	
	66	2	**8T-4226**	1	WASHER-PLATED (10.5X45X3-MM THK)	
M	67	3	**8T-6466**	1	BOLT (M10X1.5X60-MM)	
M	68	4	**8T-6912**	2	BOLT (M8X1.25X50-MM)	

E-ORDER BY THE CENTIMETER
M-METRIC PART

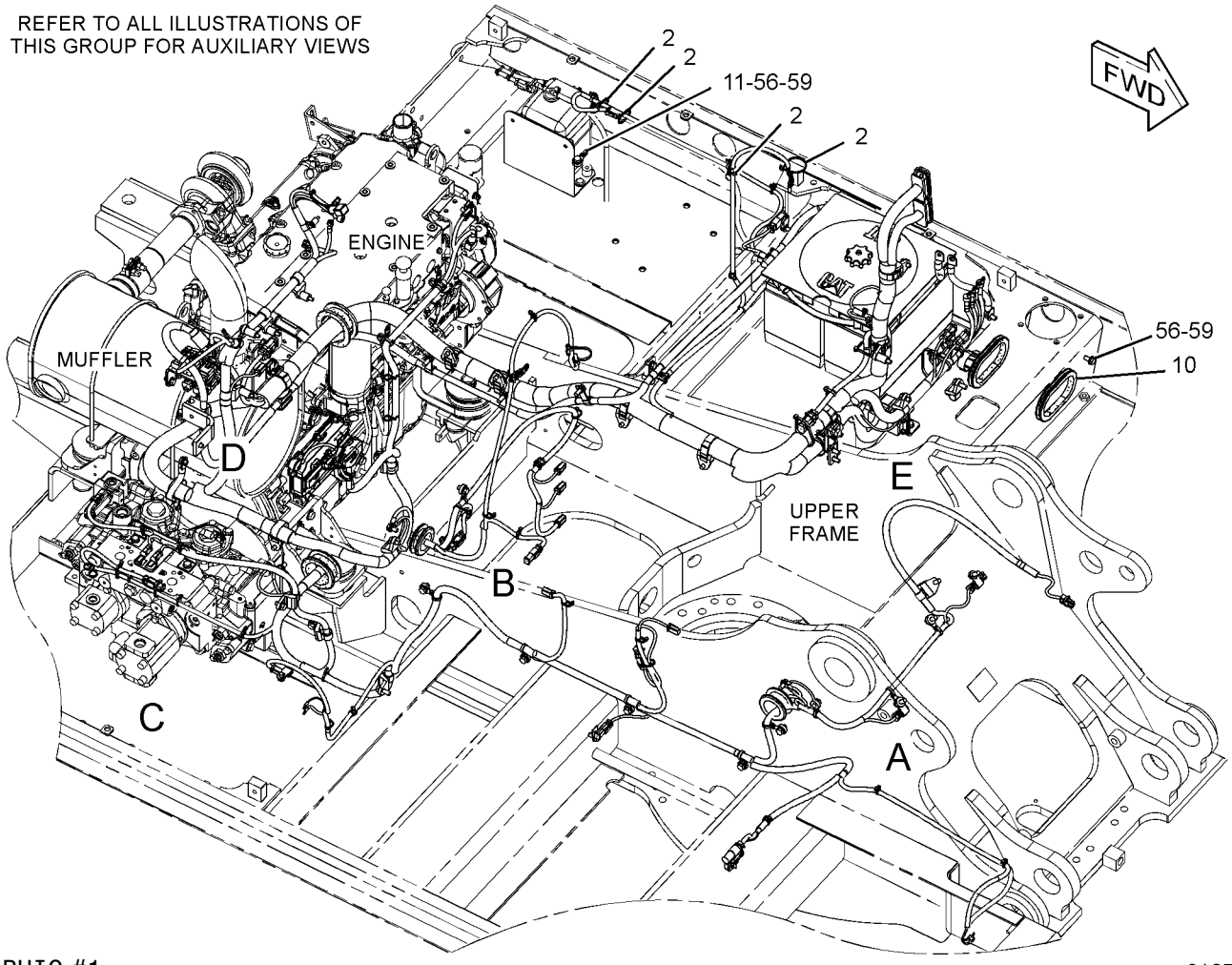

GRAPHIC #1 g01374697

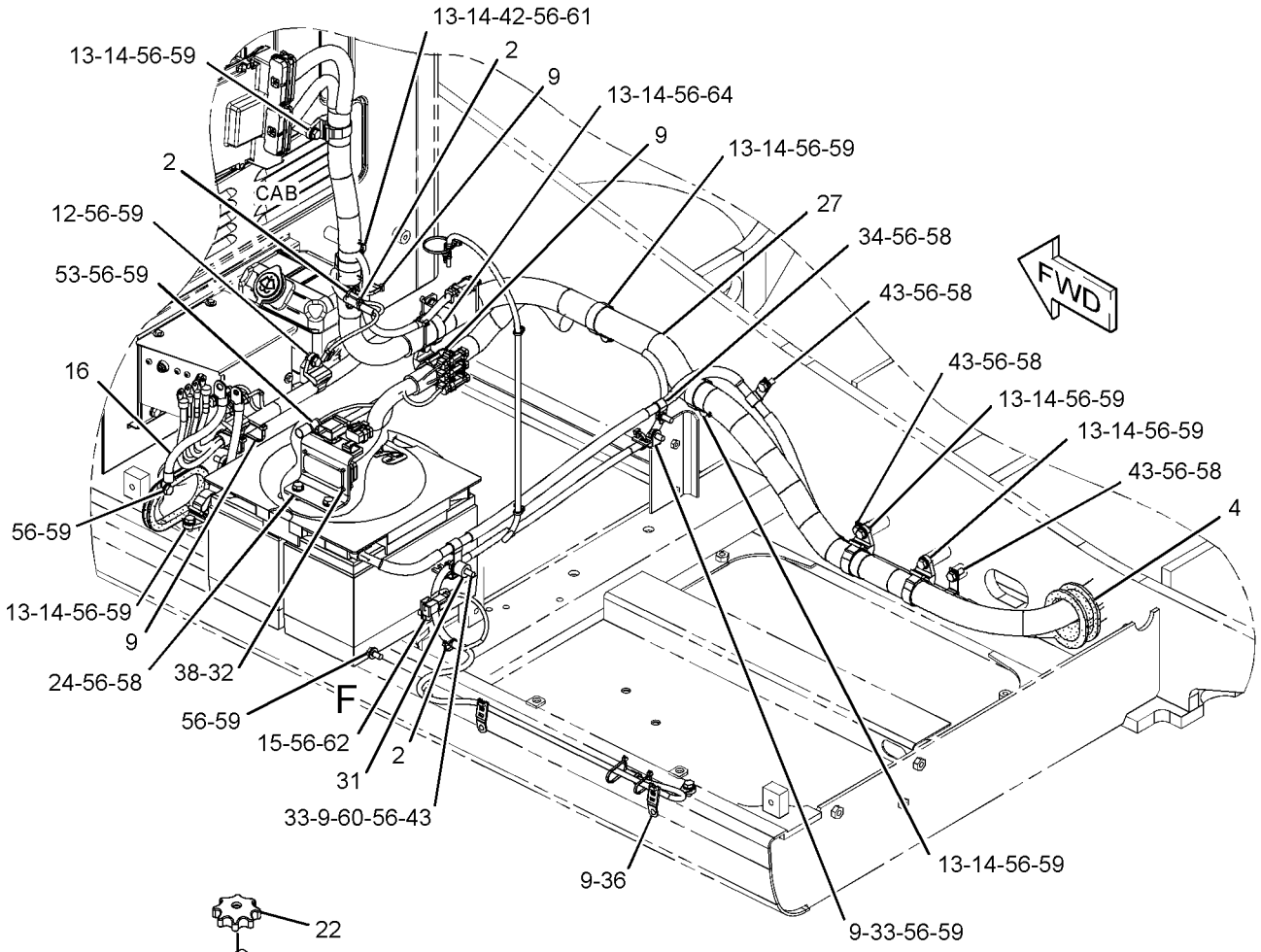

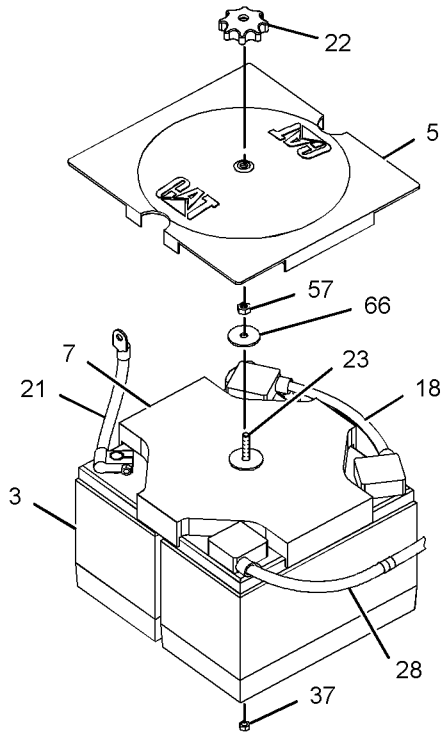

VIEW OF AREA F

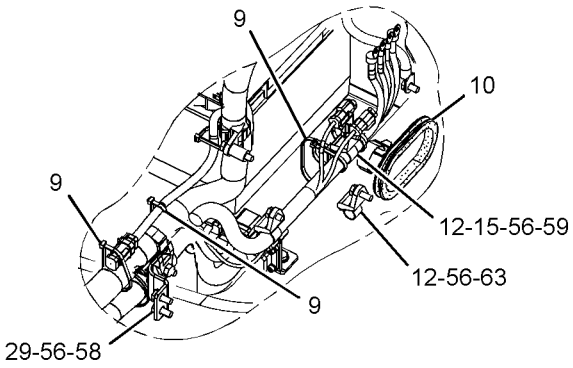

VIEW OF AREA E

GRAPHIC #2

g01374371

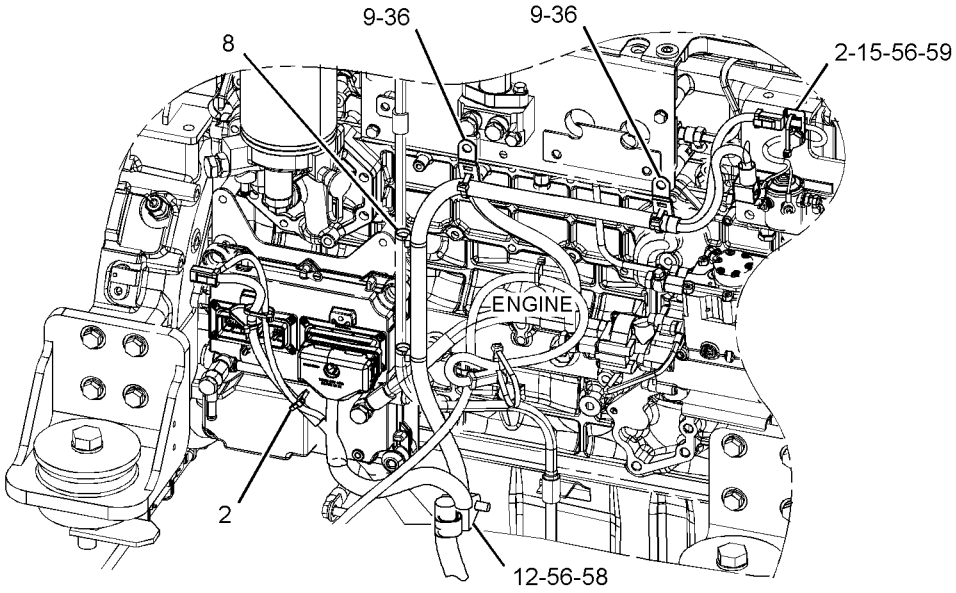

FRONT VIEW
(UPPER LEFT)

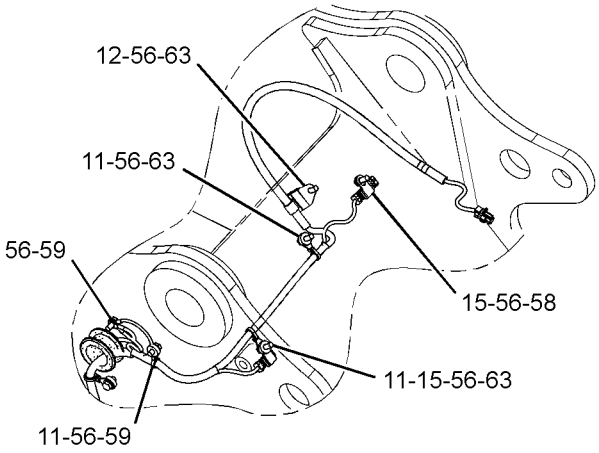

VIEW OF AREA A

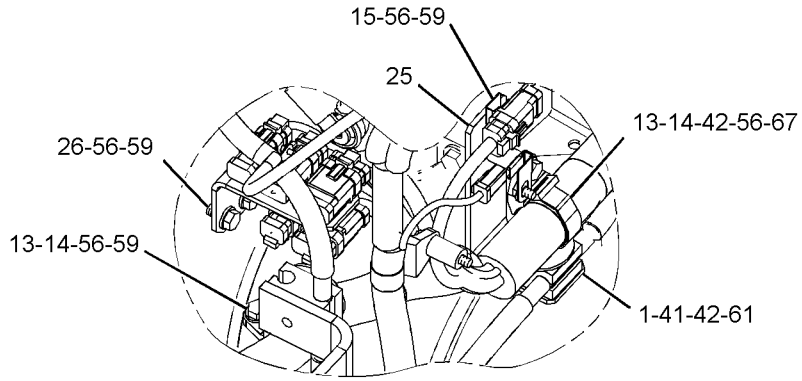

VIEW OF AREA D

GRAPHIC #3

g01310502

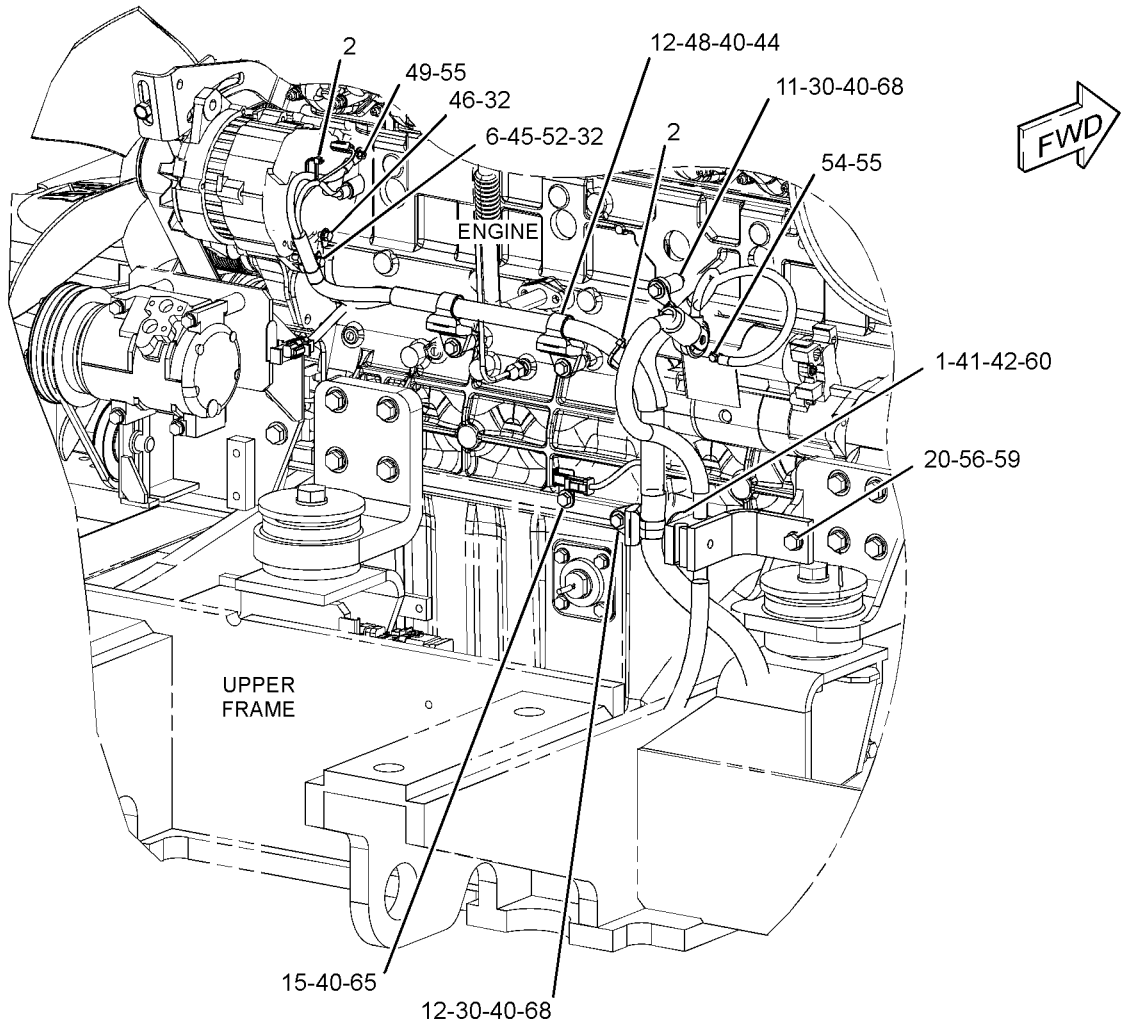

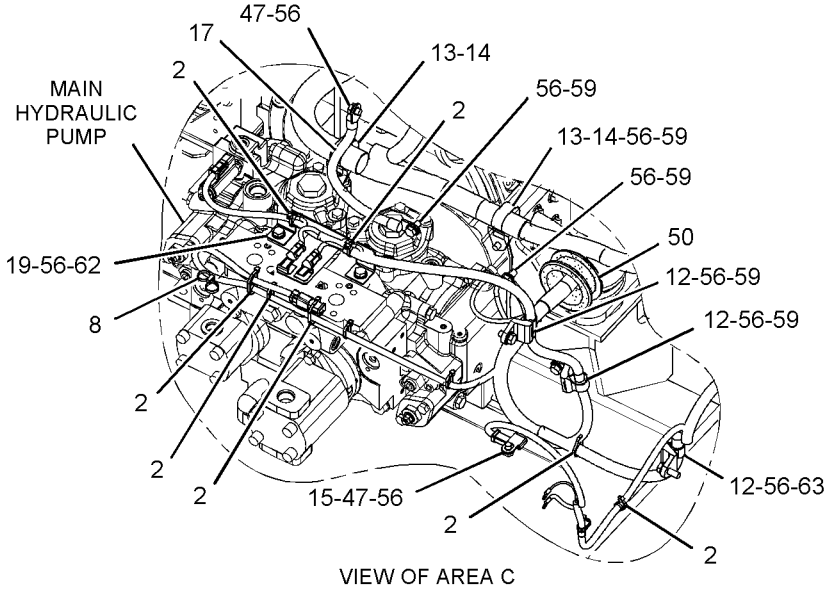

GRAPHIC #4

g01374768

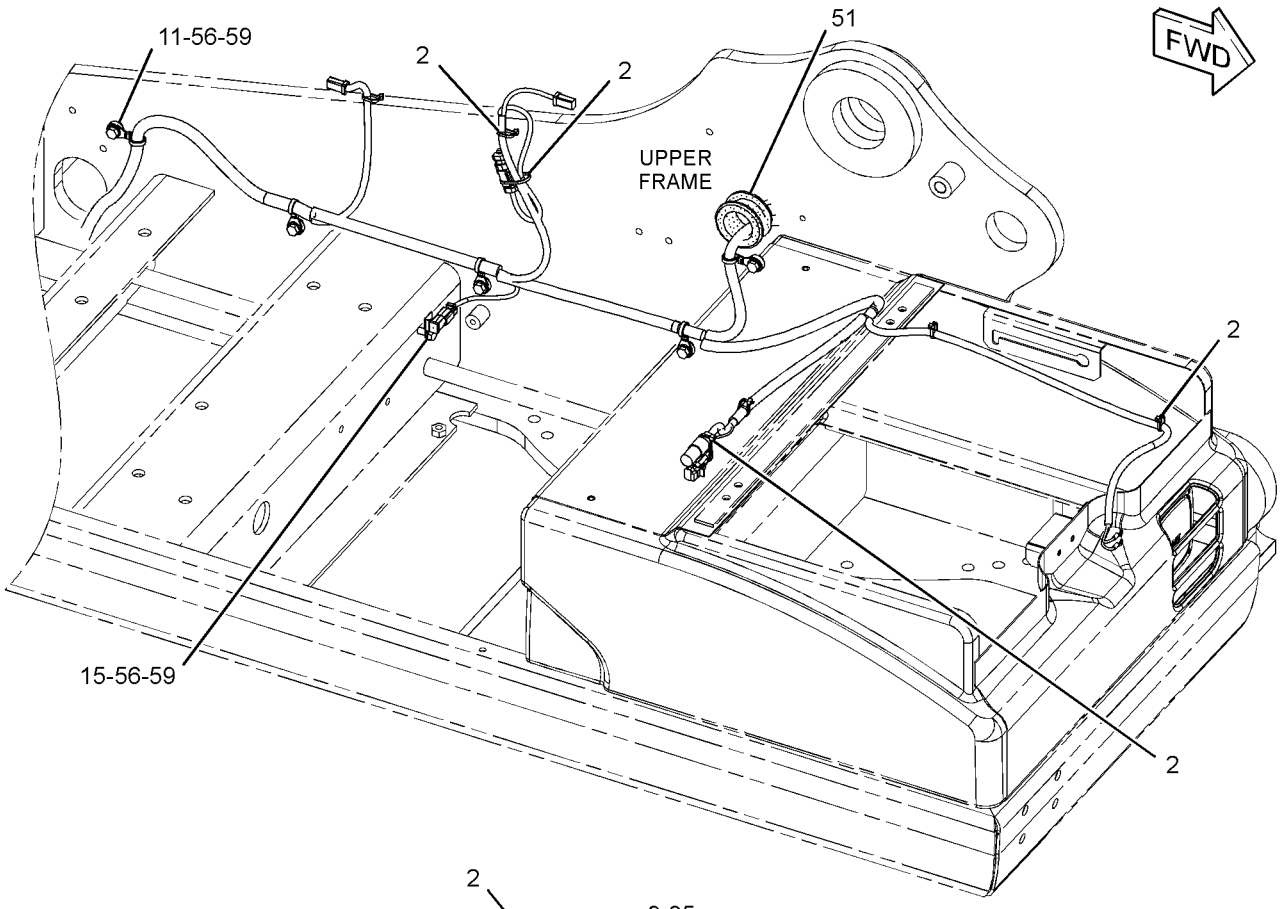

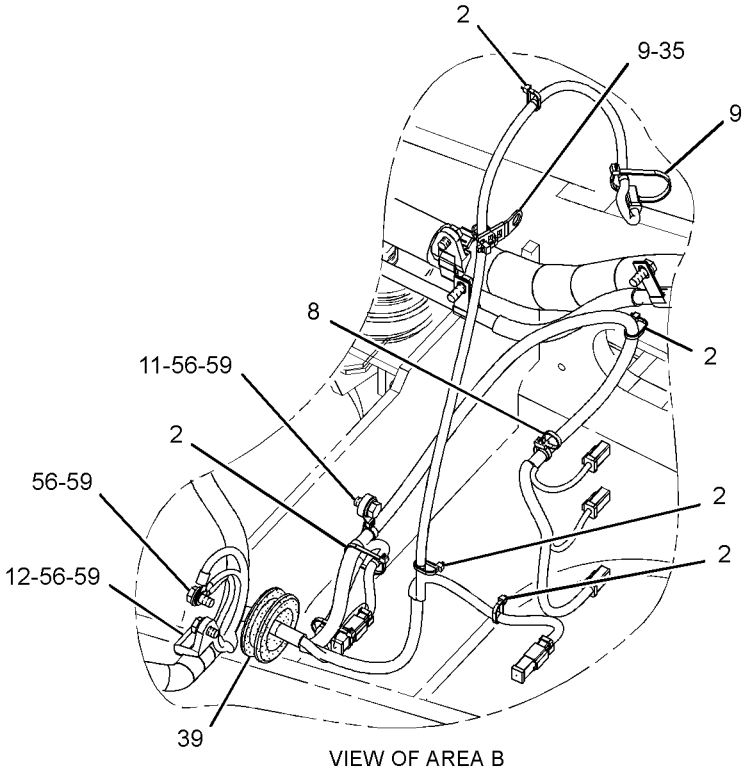

VIEW OF AREA B

GRAPHIC #5 **<END>** g01310504

ELECTRICAL AND STARTING SYSTEM

267-8000 BATTERY & WIRING GP

S/N: KGF1318-UP; FAL880-UP
PART OF 264-8638, 264-8639 CHASSIS AR
TYPE 1

SMCS-1401, 1402, 1408 **i02986680**

NOTE	REF NO	GRAPHIC REF	PART NUMBER	QTY	PART NAME 1 2 3 4 5 6 (PRODUCT LEVEL)	SEE PAGE
	1	3,4	**2G-8767**	2	WASHER (10.5X60X3-MM THK)	
C	2	1,2,3, 4,5	**3S-2093**	38	STRAP-CABLE	
	3	2	**3T-5760**	2	BATTERY (12-VOLT, MAINTENANCE FREE, WET)	
	4	2	**306-8401**	1	GROMMET	
	5	2	**5I-8270**	1	COVER-BATTERY	
	6	4	**5I-9368**	1	SPACER (9.24X13.72X20.5-MM THK)	
	7	2	**6W-6005**	1	HOLD-DOWN-BATTERY	
	8	3,4,5	**7I-2673**	4	STRAP-CABLE	
	9	2,3,5	**7K-1181**	15	STRAP-CABLE	
	10	1,2	**7Y-5456**	2	GROMMET	
	11	1,3,4,5	**111-4836**	11	CLIP	
	12	2,3,4,5	**111-4837**	12	CLIP	
	13	2,3,4	**111-4838**	13	CLIP	
	14	2,3,4	**111-4839**	13	STRAP	
C	15	2,3,4,5	**116-0118**	11	CLIP	
	16	2	**132-1805**	1	STRAP AS-GROUND	
	17	4	**132-1806**	1	STRAP AS-GROUND	
	18	2	**170-6929**	1	CABLE AS	
E		2	**5P-0761**		CABLE (00-GA, RED) (31-CM)	
		2	**9G-0002**	1	COVER-TERMINAL (RED)	
		2	**9G-0005**	1	COVER-TERMINAL (BLACK)	
		2	**8T-9756**	1	TERMINAL AS (POSITIVE)	
		2	**8C-5918**	1	TERMINAL AS (NEGATIVE)	
					(EACH TERMINAL AS INCLUDES)	
		2	**1M-6119**	1	BOLT (5/16-18X1.375-IN)	
		2	**1M-6120**	1	NUT (5/16-18-THD)	
	19	4	**170-9336**	1	BRACKET AS	
	20	4	**183-1049**	1	BRACKET	
	21	2	**231-1827**	1	CABLE AS	
		2	**1S-7252**	1	TERMINAL-CABLE (00-GA, 3/8-IN BOLT)	
E		2	**5P-0747**		CABLE (00-GA, BLACK) (23-CM)	
		2	**9G-0003**	1	COVER-TERMINAL (BLACK)	
		2	**9G-8909**	1	COVER-TERMINAL (BLACK)	
		2	**8T-9757**	1	TERMINAL AS-BATTERY (NEGATIVE)	
		2	**1M-6119**	1	BOLT (5/16-18X1.375-IN)	
		2	**1M-6120**	1	NUT (5/16-18-THD)	
	22	2	**238-2501**	1	KNOB	
	23	2	**238-2528**	1	ROD	
	24	2	**251-0467**	1	BRACKET AS	
	25	3	**259-5267**	1	BRACKET AS	
	26	3	**259-5317**	1	BRACKET AS	
C	27	2	**306-8610**	1	HARNESS AS-CHASSIS	
	28	2	**291-7591**	1	CABLE AS	
		2	**1S-7252**	1	TERMINAL-CABLE (00-GA, 3/8-IN BOLT)	
E		2	**5P-0761**		CABLE (00-GA, RED) (327-CM)	
		2	**9G-0004**	1	COVER-TERMINAL (RED)	
		2	**8N-0869**	1	COVER-TERMINAL (RED)	
		2	**8C-5917**	1	TERMINAL AS-BATTERY (POSITIVE)	
		2	**1M-6119**	1	BOLT (5/16-18X1.375-IN)	
		2	**1M-6120**	1	NUT (5/16-18-THD)	
	29	2	**291-7593**	1	BRACKET AS	
	30	4	**085-7329**	2	SPACER (9X19X30-MM THK)	
	31	2	**091-9035**	1	SPACER (11X25X20-MM THK)	
	32	2,4	**9X-8256**	6	WASHER (6.6X12X2-MM THK)	

267-8000 **BATTERY & WIRING GP** *(contd.)* **i02986680**

NOTE	REF NO	GRAPHIC REF	PART NUMBER	QTY	PART NAME 1 2 3 4 5 6 (PRODUCT LEVEL)	SEE PAGE
	33	2	**132-5789**	2	CLIP	
	34	2	**4K-8864**	1	CLIP	
	35	5	**4P-7428**	1	CLIP	
	36	2,3	**4P-7581**	4	CLIP	
M	37	2	**5C-7261**	1	NUT (M8X1.25-THD)	
M	38	2	**5C-7883**	4	BOLT-SOCKET HEAD (M6X1X16-MM)	
	39	5	**5I-3878**	1	GROMMET	
	40	4	**5P-4116**	5	WASHER-HARD (8.8X20.5X2-MM THK)	
	41	3,4	**6G-2256**	2	CLAMP	
	42	2,3,4	**6G-2263**	4	SPACER (10.5X19X28.5-MM THK)	
	43	2	**6K-8178**	4	CLIP	
M	44	4	**7X-0818**	2	BOLT (M8X1.25X45-MM)	
M	45	4	**7X-2533**	1	BOLT (M6X1X35-MM)	
M	46	4	**7X-2619**	1	BOLT (M6X1X10-MM)	
M	47	4	**7X-2621**	2	BOLT (M10X1.5X12-MM)	
	48	4	**7Y-1924**	2	SPACER (9X19X23-MM THK)	
M	49	4	**7Y-5226**	1	NUT (M5X0.8-THD)	
	50	4	**7Y-8165**	1	GROMMET	
	51	5	**7Y-8167**	1	GROMMET	
	52	4	**8J-1256**	1	CLIP	
	53	2	**8M-2770**	1	CLIP	
M	54	4	**8T-0286**	1	BOLT (M5X0.8X8-MM)	
	55	4	**8T-0328**	2	WASHER-HARD (5.5X10X1-MM THK)	
	56	1,2,3, 4,5	**8T-4121**	60	WASHER-HARD (11X21X2.5-MM THK)	
M	57	2	**8T-4133**	1	NUT (M10X1.5-THD)	
M	58	2,3	**8T-4136**	10	BOLT (M10X1.5X25-MM)	
M	59	1,2,3, 4,5	**8T-4137**	36	BOLT (M10X1.5X20-MM)	
M	60	2,4	**8T-4182**	2	BOLT (M10X1.5X45-MM)	
M	61	2,3	**8T-4185**	2	BOLT (M10X1.5X50-MM)	
M	62	2,4	**8T-4191**	3	BOLT (M10X1.5X16-MM)	
M	63	2,3,4	**8T-4195**	5	BOLT (M10X1.5X30-MM)	
M	64	2	**8T-4196**	1	BOLT (M10X1.5X35-MM)	
M	65	4	**8T-4199**	1	BOLT (M8X1.25X12-MM)	
	66	2	**8T-4226**	1	WASHER-PLATED (10.5X45X3-MM THK)	
M	67	3	**8T-6466**	1	BOLT (M10X1.5X60-MM)	
M	68	4	**8T-6912**	2	BOLT (M8X1.25X50-MM)	
C	69	3	**299-2767**	1	WIRE AS	

C-CHANGE FROM PREVIOUS TYPE
E-ORDER BY THE CENTIMETER
M-METRIC PART

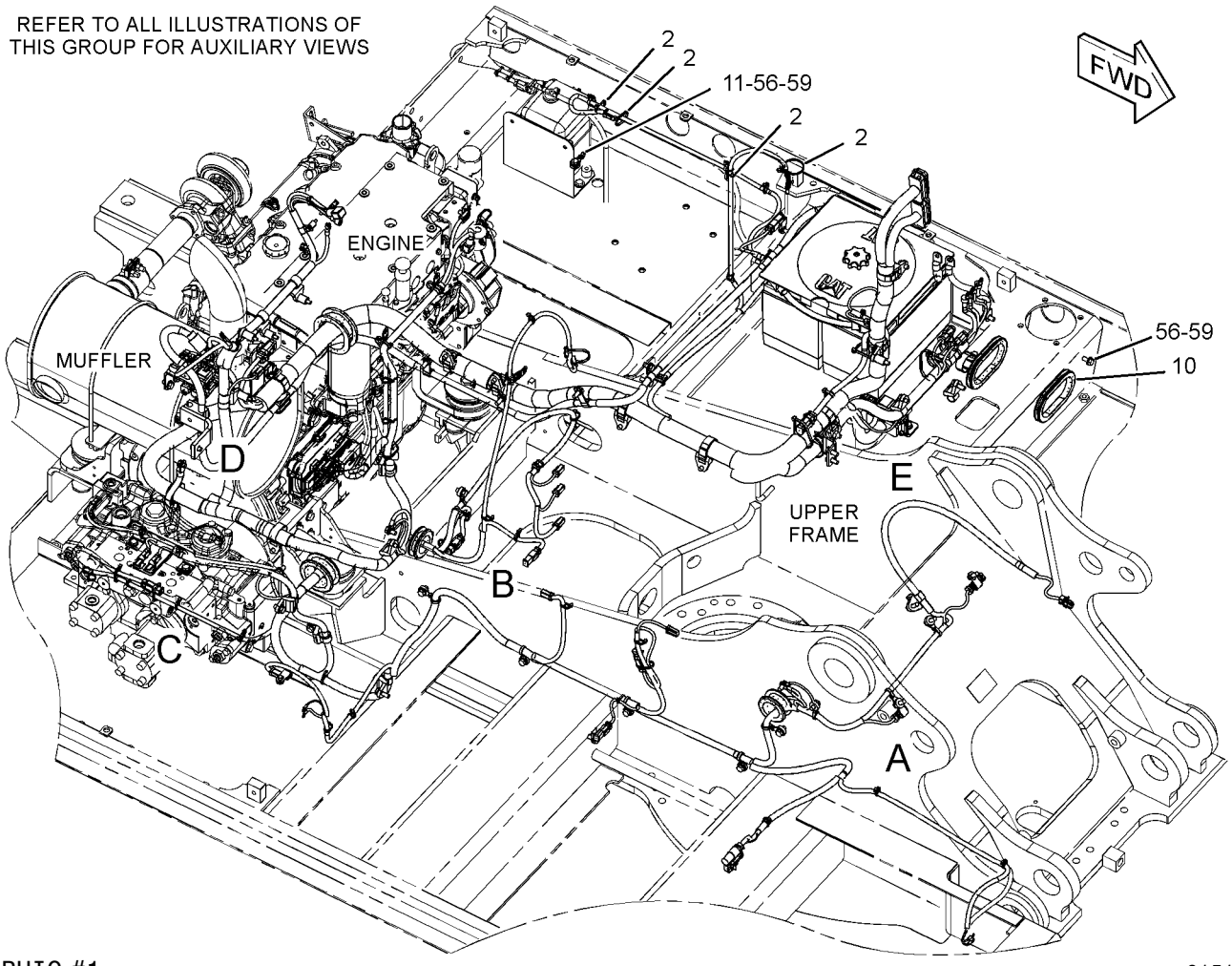

GRAPHIC #1 g01514570

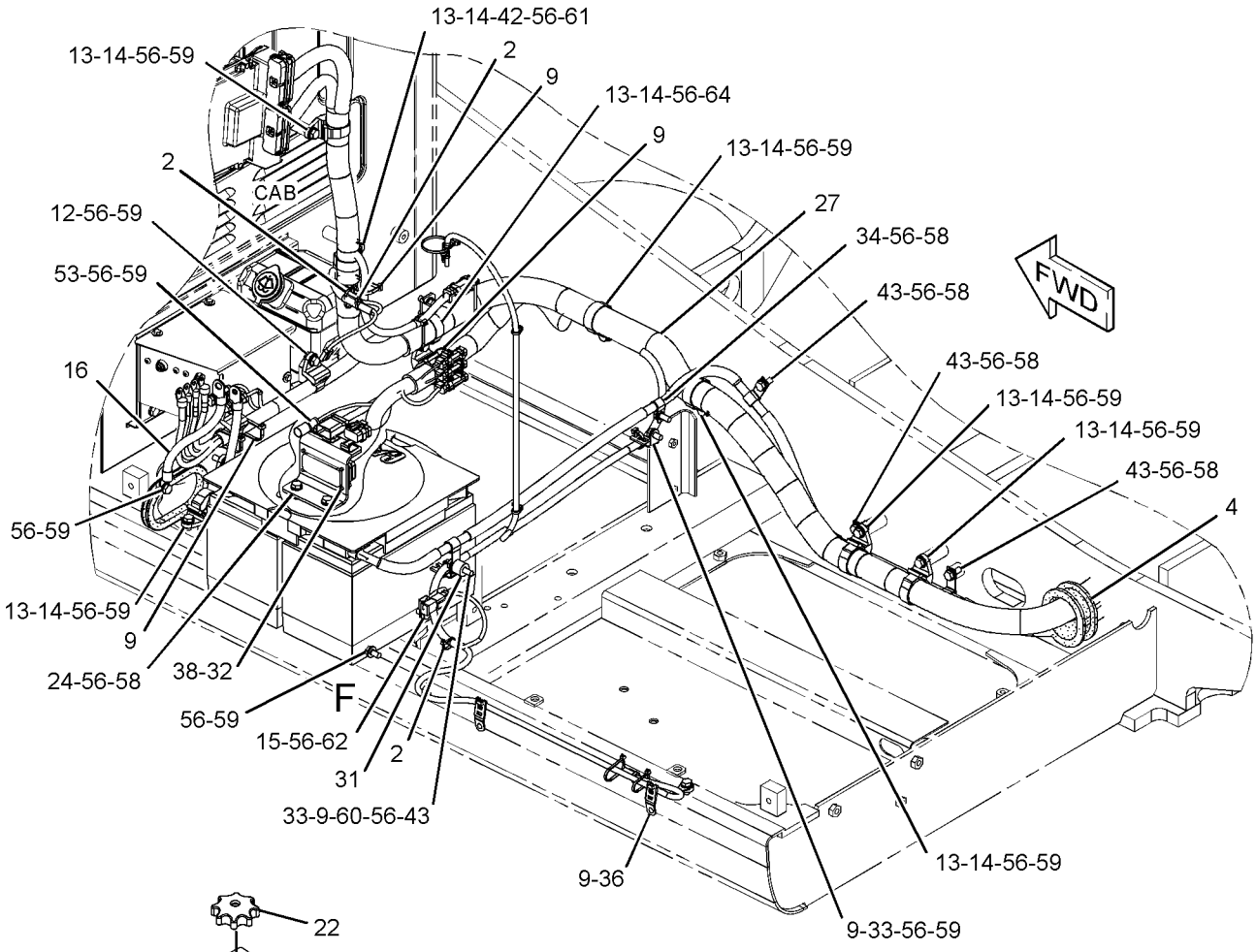

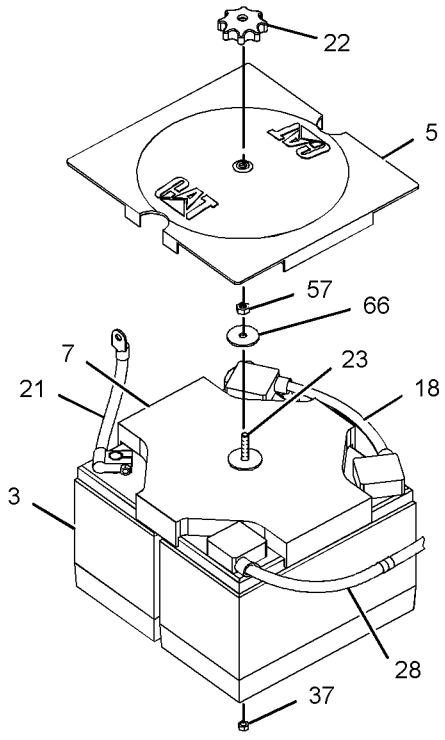

VIEW OF AREA F

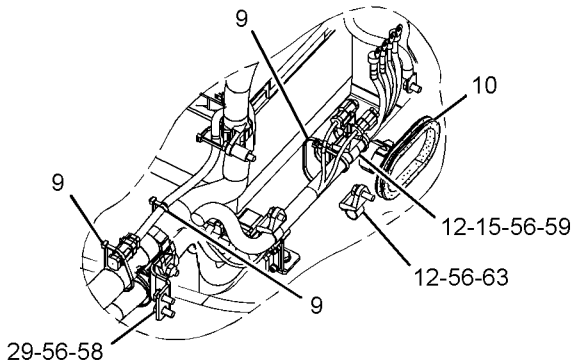

VIEW OF AREA E

GRAPHIC #2

g01374371

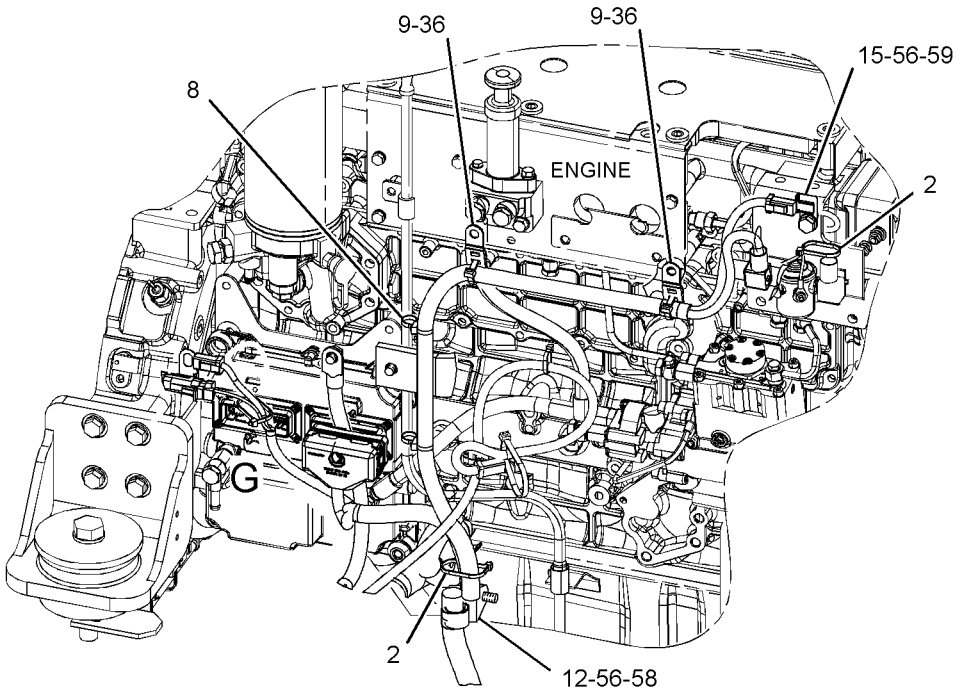

FRONT VIEW
(UPPER LEFT)

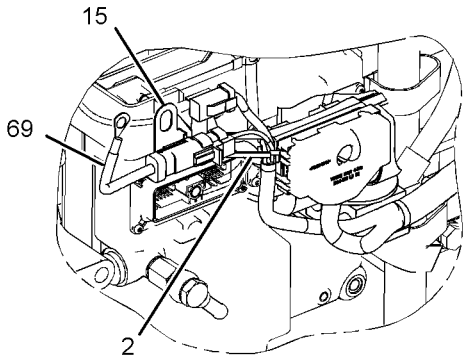

VIEW OF AREA G

90°

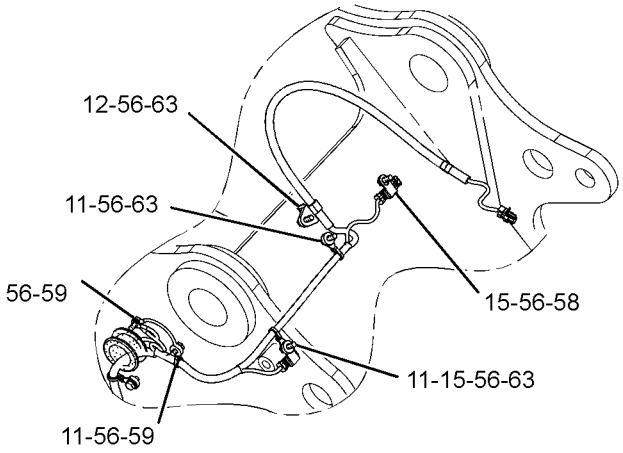

VIEW OF AREA A

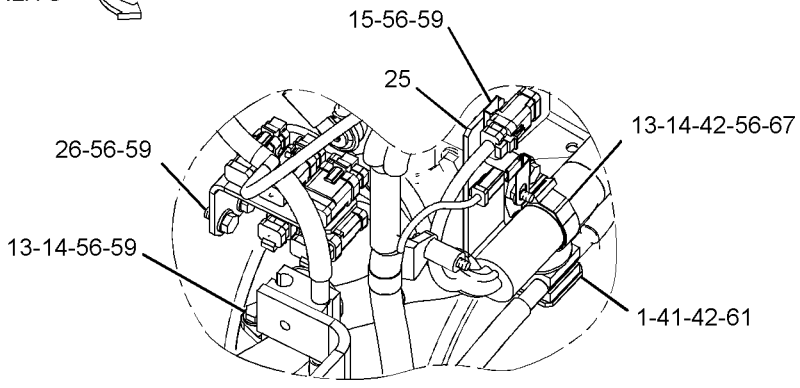

VIEW OF AREA D

GRAPHIC #3

g01514571

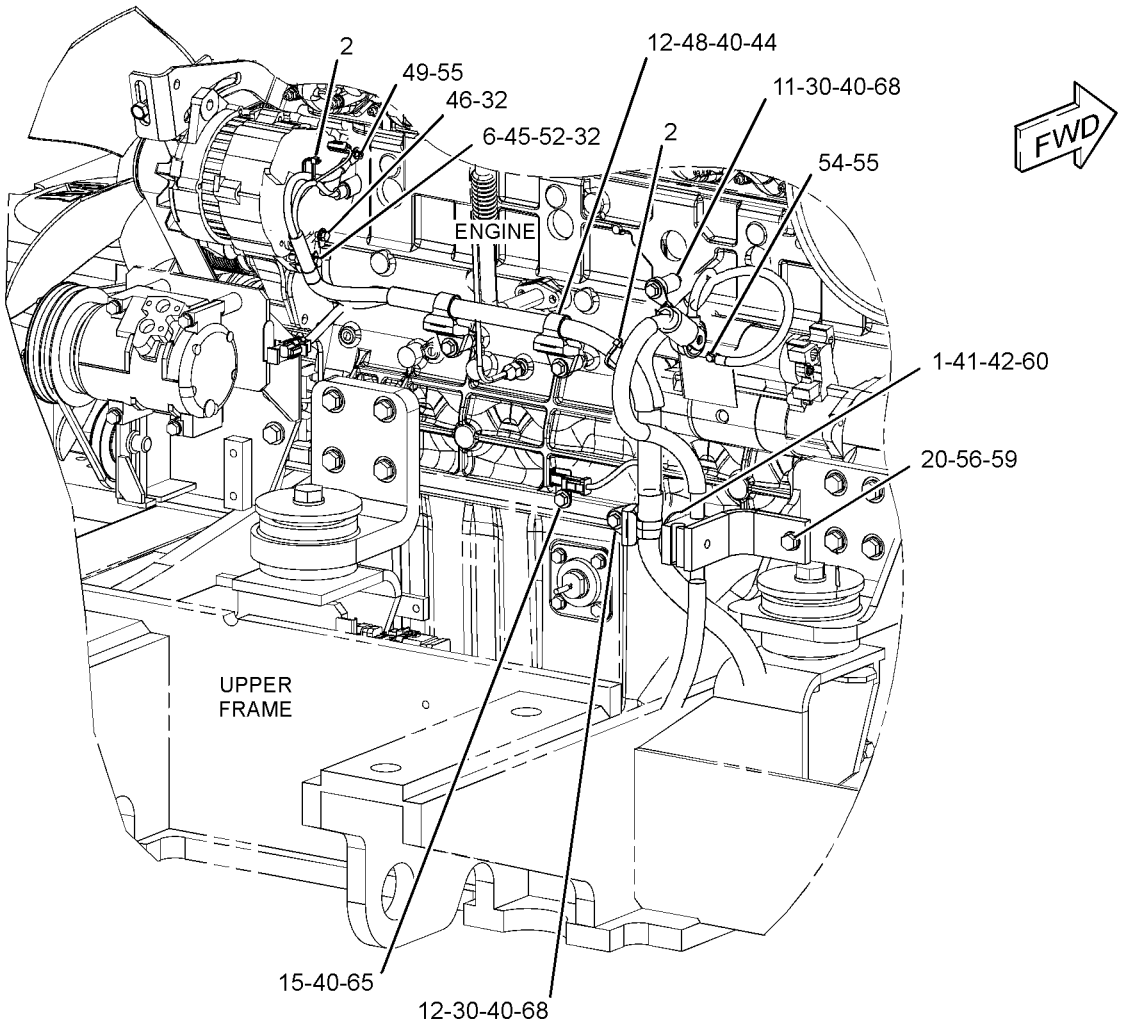

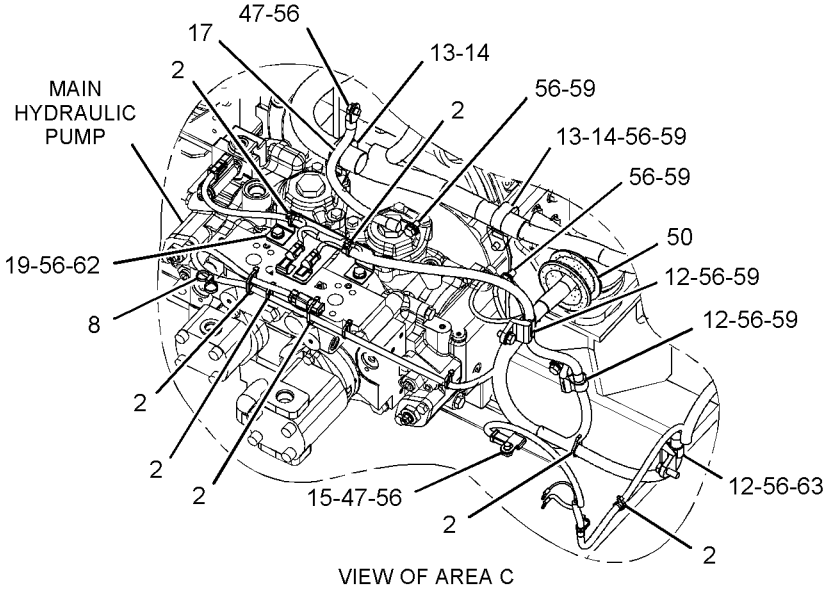

GRAPHIC #4

g01374768

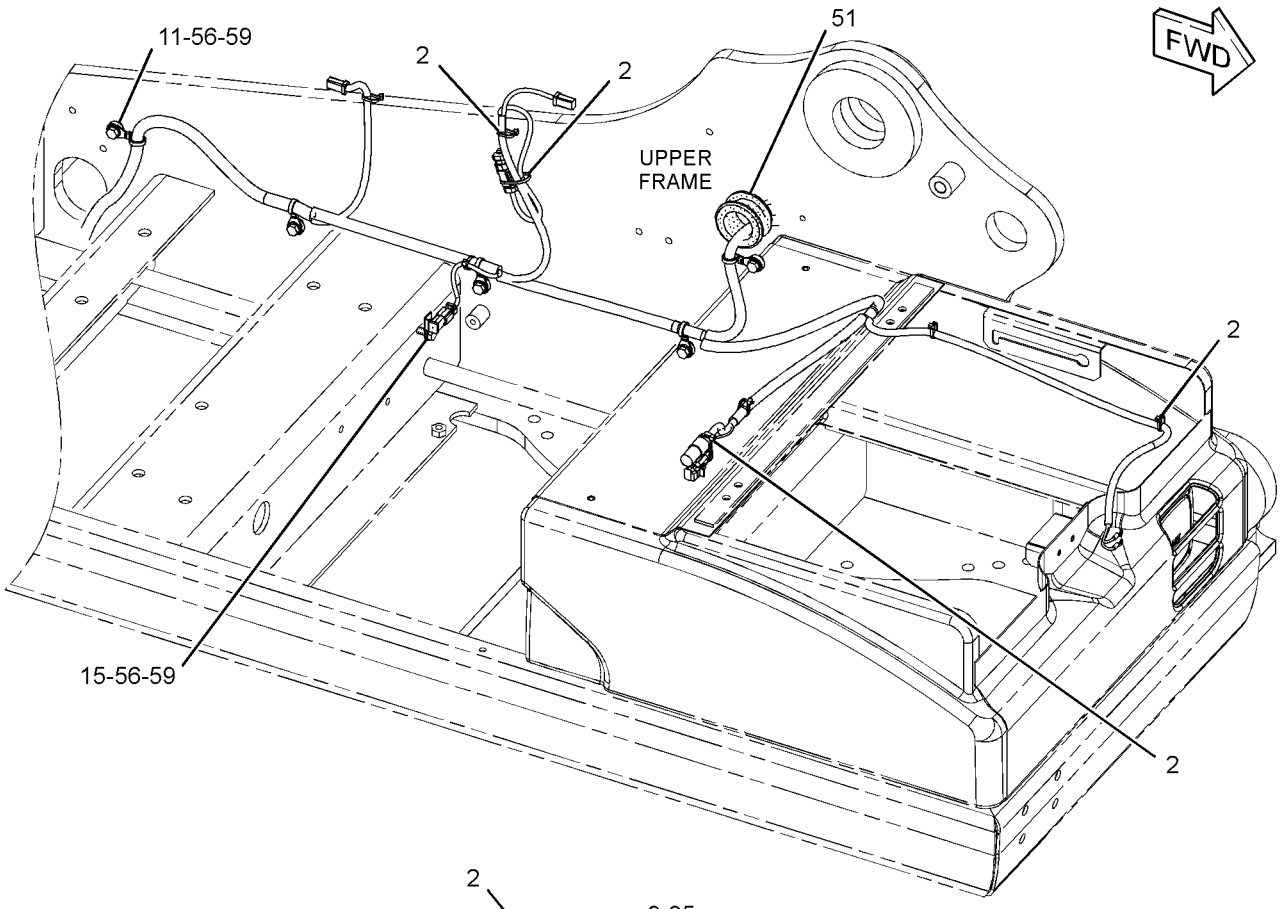

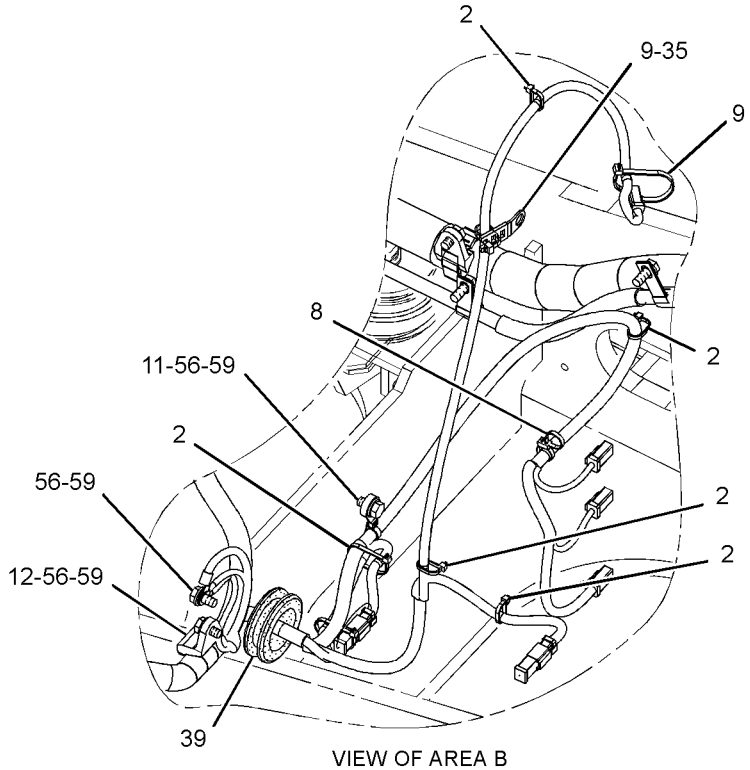

VIEW OF AREA B

GRAPHIC #5 **<END>** g01514573

267-8000 BATTERY & WIRING GP

S/N: KGF1318-UP; FAL880-UP
PART OF 264-8638, 264-8639 CHASSIS AR
TYPE 2

SMCS-1401, 1402, 1408 **i03186078**

NOTE	REF NO	GRAPHIC REF	PART NUMBER	QTY	PART NAME 1 2 3 4 5 6 (PRODUCT LEVEL)	SEE PAGE
	1	3,5	**2G-8767**	2	WASHER (10.5X60X3-MM THK)	
C	2	1,2,3, 4,5	**3S-2093**	37	STRAP-CABLE	
	3	2	**3T-5760**	2	BATTERY (12-VOLT, MAINTENANCE FREE, WET)	
	4	2	**306-8401**	1	GROMMET	
	5	2	**5I-8270**	1	COVER-BATTERY	
	6	3	**5I-9368**	1	SPACER (9.24X13.72X20.5-MM THK)	
	7	2	**6W-6005**	1	HOLD-DOWN-BATTERY	
	8	3,4,5	**7I-2673**	4	STRAP-CABLE	
C	9	2,4,5	**7K-1181**	16	STRAP-CABLE	
	10	1,2	**7Y-5456**	2	GROMMET	
	11	1,3,4,5	**111-4836**	11	CLIP	
	12	2,3,4,5	**111-4837**	12	CLIP	
	13	2,3,5	**111-4838**	13	CLIP	
	14	2,3,5	**111-4839**	13	STRAP	
C	15	2,3,4,5	**116-0118**	10	CLIP	
	16	2	**132-1805**	1	STRAP AS-GROUND	
	17	3	**132-1806**	1	STRAP AS-GROUND	
	18	2	**170-6929**	1	CABLE AS	
E		2	**5P-0761**		CABLE (00-GA, RED) (31-CM)	
		2	**9G-0002**	1	COVER-TERMINAL (RED)	
		2	**8L-8413**	1	STRAP-CABLE	
		2	**9G-0005**	1	COVER-TERMINAL (BLACK)	
		2	**8L-8413**	1	STRAP-CABLE	
		2	**8T-9756**	1	TERMINAL AS (POSITIVE)	
		2	**8C-5918**	1	TERMINAL AS (NEGATIVE)	
	19	3	**170-9336**	1	BRACKET AS	
	20	3	**183-1049**	1	BRACKET	
	21	2	**231-1827**	1	CABLE AS	
		2	**1S-7252**	1	TERMINAL-CABLE (00-GA, 3/8-IN BOLT)	
E		2	**5P-0747**		CABLE (00-GA, BLACK) (23-CM)	
		2	**9G-0003**	1	COVER-TERMINAL (BLACK)	
		2	**8L-8413**	1	STRAP-CABLE	
		2	**9G-8909**	1	COVER-TERMINAL (BLACK)	
		2	**8T-9757**	1	TERMINAL AS-BATTERY (NEGATIVE)	
	22	2	**238-2501**	1	KNOB	
	23	2	**238-2528**	1	ROD	
	24	2	**251-0467**	1	BRACKET AS	
	25	5	**259-5267**	1	BRACKET AS	
	26	5	**259-5317**	1	BRACKET AS	
C	27	2	**306-8777**	1	HARNESS AS-CHASSIS	
	28	2	**291-7591**	1	CABLE AS	
		2	**1S-7252**	1	TERMINAL-CABLE (00-GA, 3/8-IN BOLT)	
E		2	**5P-0761**		CABLE (00-GA, RED) (327-CM)	
		2	**9G-0004**	1	COVER-TERMINAL (RED)	
		2	**8L-8413**	1	STRAP-CABLE	
		2	**8N-0869**	1	COVER-TERMINAL (RED)	
		2	**8C-5917**	1	TERMINAL AS-BATTERY (POSITIVE)	
	29	2	**291-7593**	1	BRACKET AS	
	30	3	**085-7329**	2	SPACER (9X19X30-MM THK)	
	31	2	**091-9035**	1	SPACER (11X25X20-MM THK)	
	32	2,3	**9X-8256**	6	WASHER (6.6X12X2-MM THK)	
	33	2	**132-5789**	2	CLIP	
	34	2	**4K-8864**	1	CLIP	
	35	4	**4P-7428**	1	CLIP	

267-8000 **BATTERY & WIRING GP** *(contd.)* **i03186078**

NOTE	REF NO	GRAPHIC REF	PART NUMBER	QTY	PART NAME 1 2 3 4 5 6 (PRODUCT LEVEL)	SEE PAGE
C	36	2	**4P-7581**	2	CLIP	
M	37	2	**5C-7261**	1	NUT (M8X1.25-THD)	
M	38	2	**5C-7883**	4	BOLT-SOCKET HEAD (M6X1X16-MM)	
	39	4	**5I-3878**	1	GROMMET	
	40	3	**5P-4116**	5	WASHER-HARD (8.8X20.5X2-MM THK)	
	41	3,5	**6G-2256**	2	CLAMP	
	42	2,3,5	**6G-2263**	4	SPACER (10.5X19X28.5-MM THK)	
	43	2	**6K-8178**	4	CLIP	
M	44	3	**7X-0818**	2	BOLT (M8X1.25X45-MM)	
M	45	3	**7X-2533**	1	BOLT (M6X1X35-MM)	
M	46	3	**7X-2619**	1	BOLT (M6X1X10-MM)	
M	47	3	**7X-2621**	2	BOLT (M10X1.5X12-MM)	
	48	3	**7Y-1924**	2	SPACER (9X19X23-MM THK)	
M	49	3	**7Y-5226**	1	NUT (M5X0.8-THD)	
	50	3	**7Y-8165**	1	GROMMET	
	51	4	**7Y-8167**	1	GROMMET	
	52	3	**8J-1256**	1	CLIP	
	53	2	**8M-2770**	1	CLIP	
M	54	3	**8T-0286**	1	BOLT (M5X0.8X8-MM)	
	55	3	**8T-0328**	2	WASHER-HARD (5.5X10X1-MM THK)	
C	56	1,2,3, 4,5	**8T-4121**	59	WASHER-HARD (11X21X2.5-MM THK)	
M	57	2	**8T-4133**	1	NUT (M10X1.5-THD)	
M	58	2,5	**8T-4136**	10	BOLT (M10X1.5X25-MM)	
CM	59	1,2,3, 4,5	**8T-4137**	35	BOLT (M10X1.5X20-MM)	
M	60	2,3	**8T-4182**	2	BOLT (M10X1.5X45-MM)	
M	61	2,5	**8T-4185**	2	BOLT (M10X1.5X50-MM)	
M	62	2,3	**8T-4191**	3	BOLT (M10X1.5X16-MM)	
M	63	2,3,5	**8T-4195**	5	BOLT (M10X1.5X30-MM)	
M	64	2	**8T-4196**	1	BOLT (M10X1.5X35-MM)	
M	65	3	**8T-4199**	1	BOLT (M8X1.25X12-MM)	
	66	2	**8T-4226**	1	WASHER-PLATED (10.5X45X3-MM THK)	
M	67	5	**8T-6466**	1	BOLT (M10X1.5X60-MM)	
M	68	3	**8T-6912**	2	BOLT (M8X1.25X50-MM)	
	69	5	**299-2767**	1	WIRE AS	

C-CHANGE FROM PREVIOUS TYPE
E-ORDER BY THE CENTIMETER
M-METRIC PART

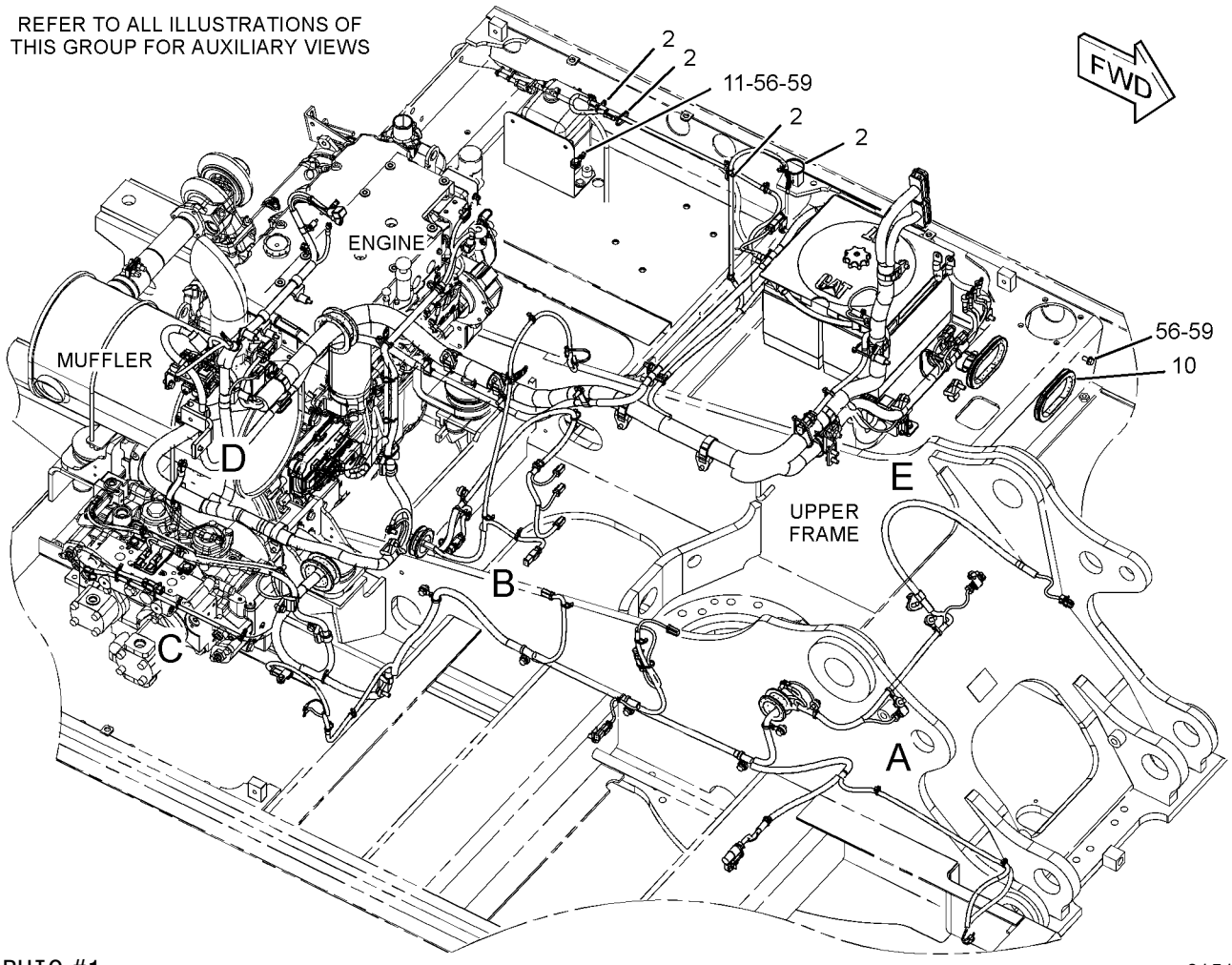

GRAPHIC #1 g01514570

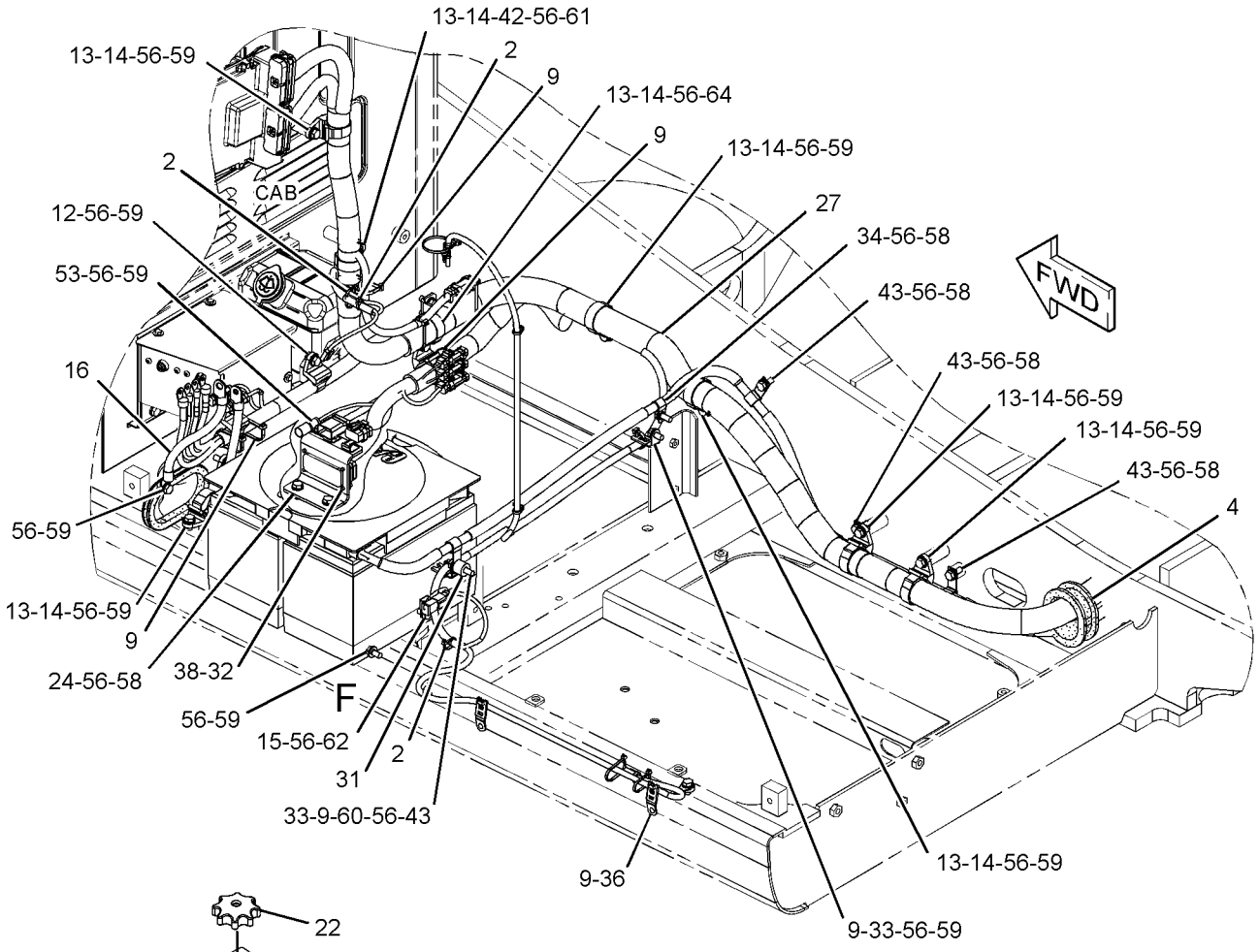

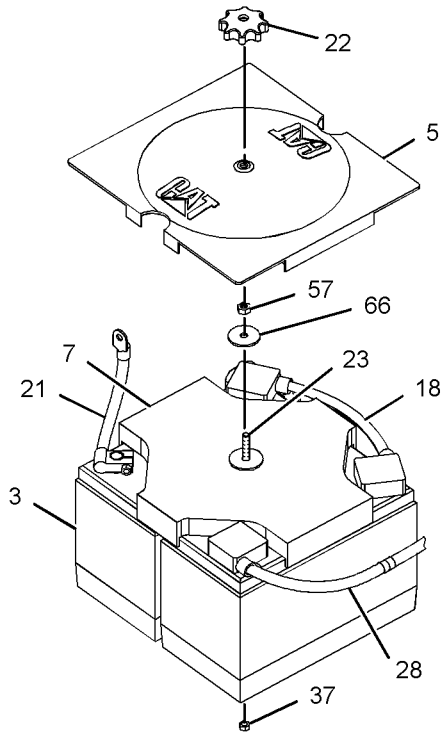

VIEW OF AREA F

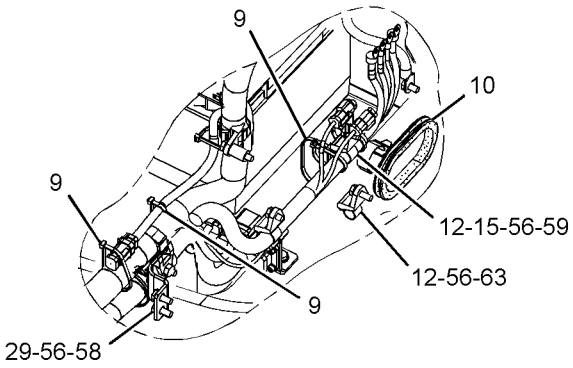

VIEW OF AREA E

GRAPHIC #2 g01374371

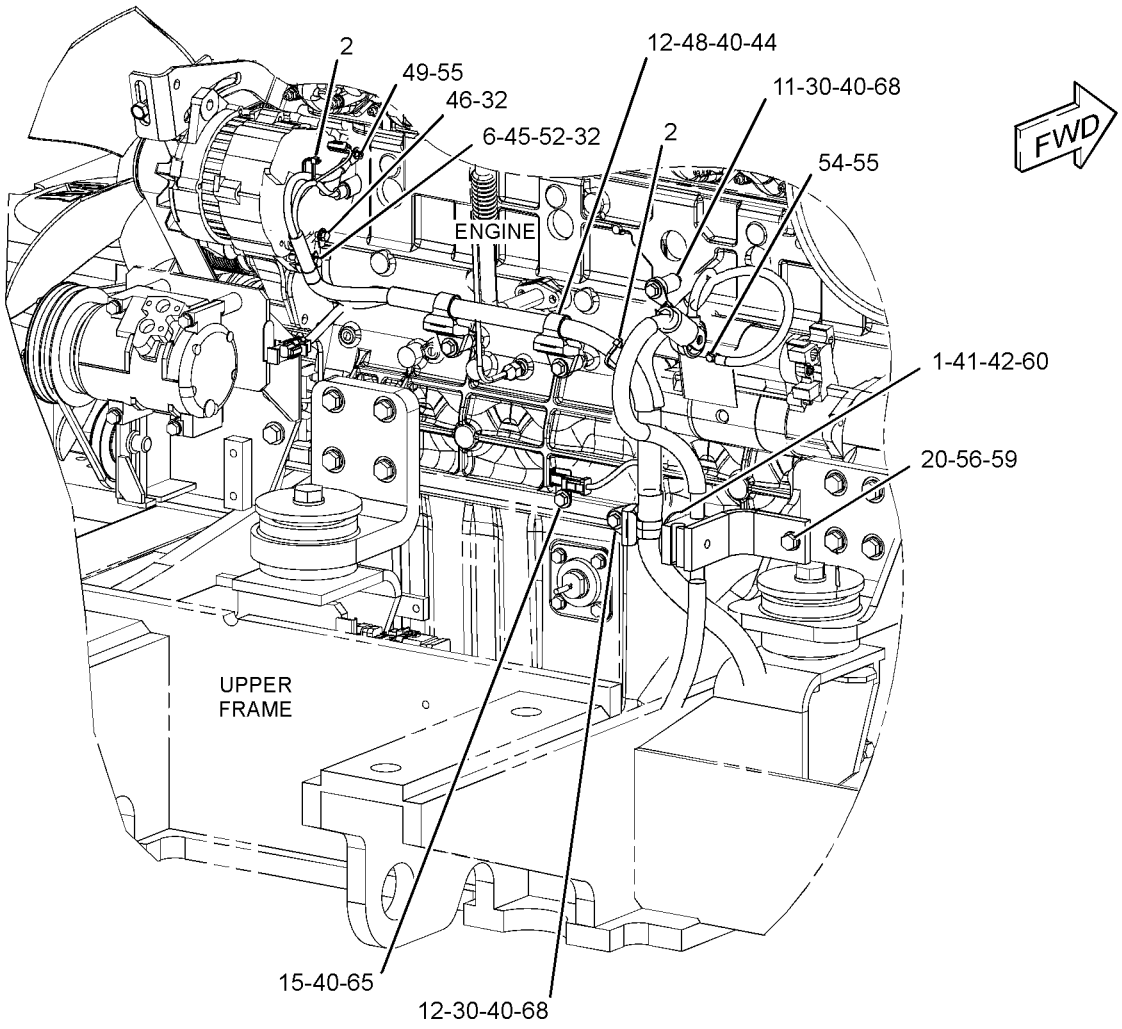

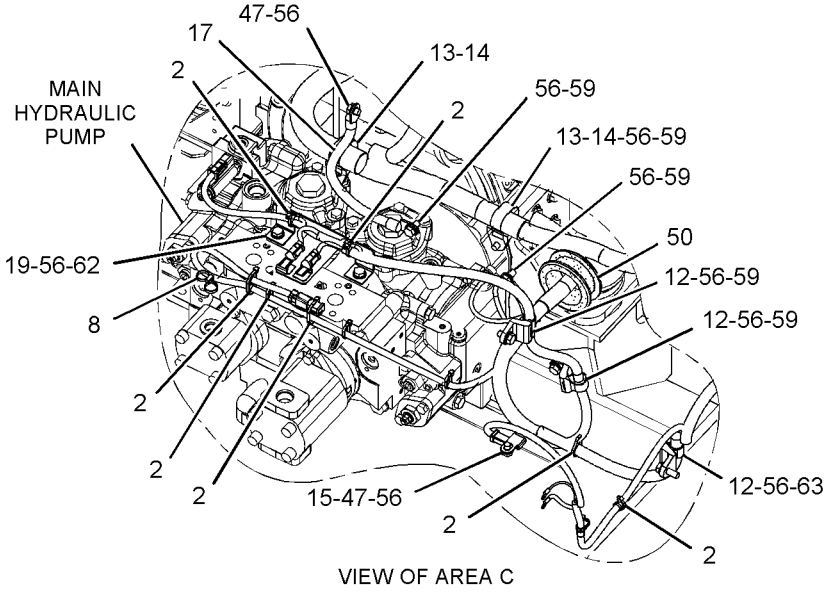

GRAPHIC #3

g01374768

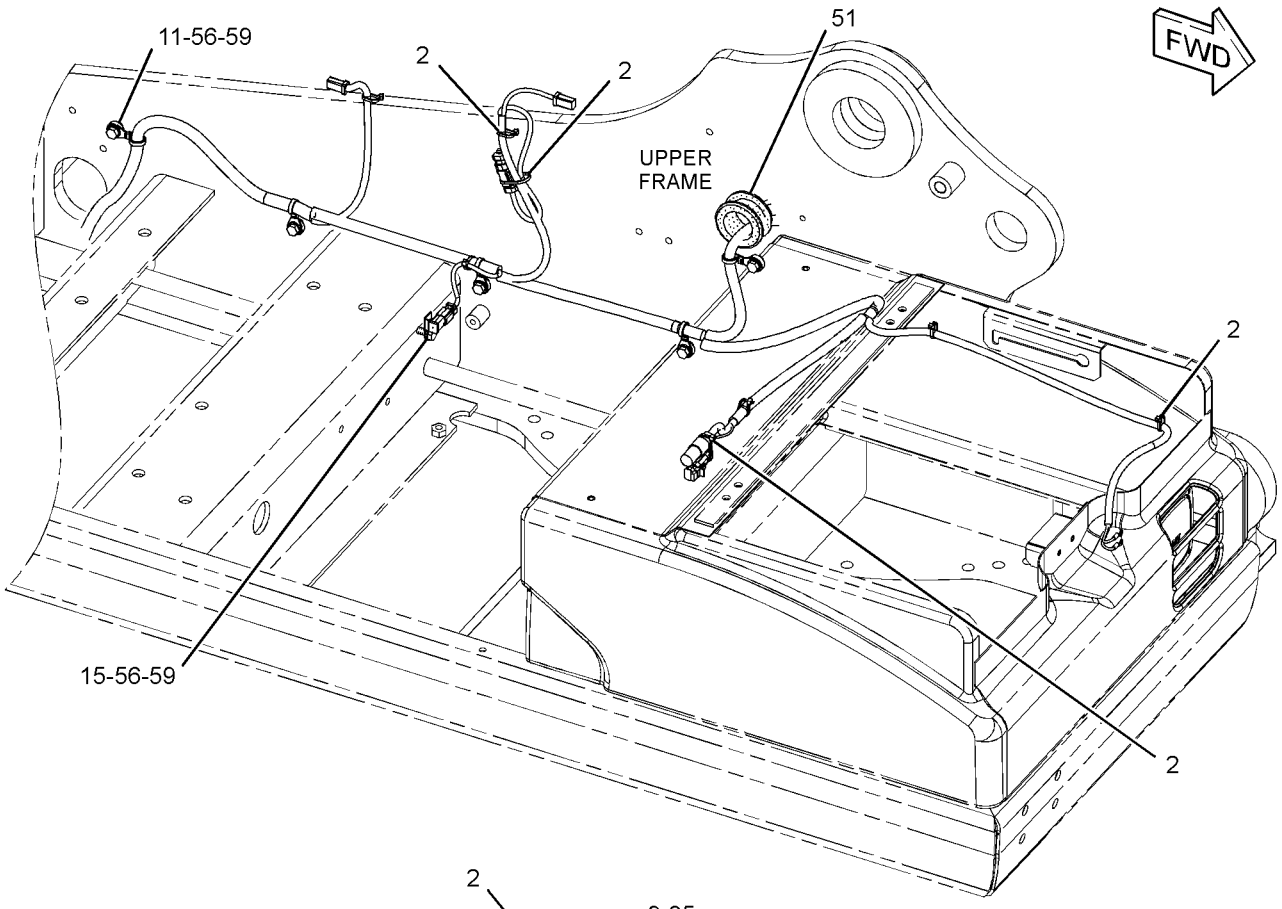

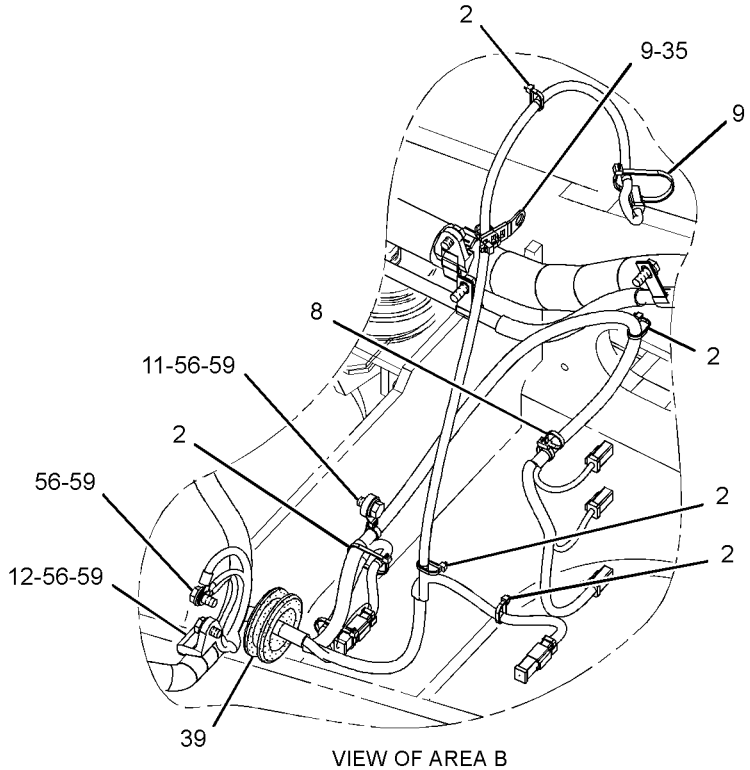

VIEW OF AREA B

GRAPHIC #4

g01514573

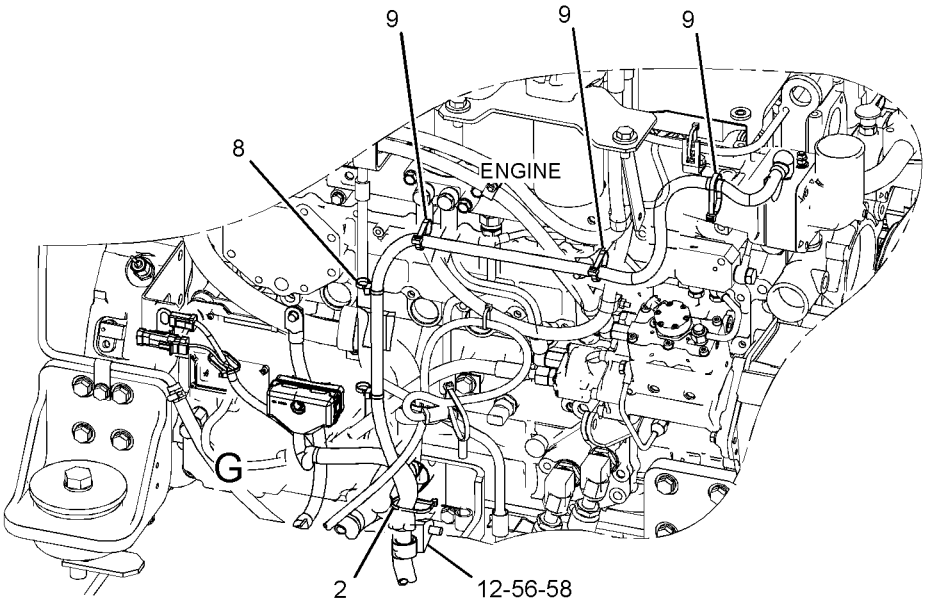

FRONT VIEW
(UPPER LEFT)

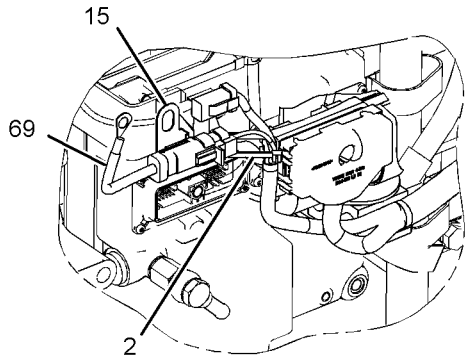

VIEW OF AREA G

90°

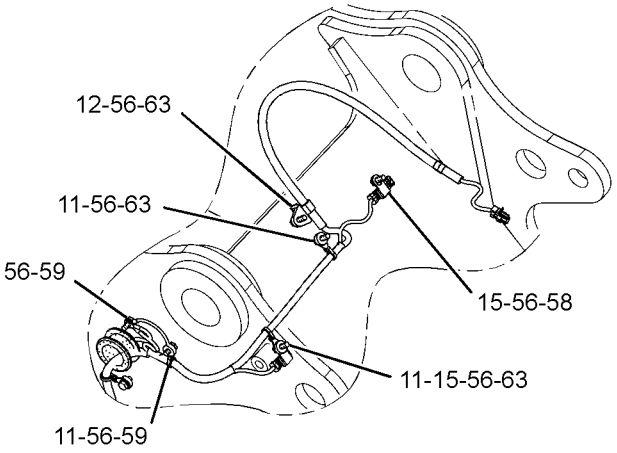

VIEW OF AREA A

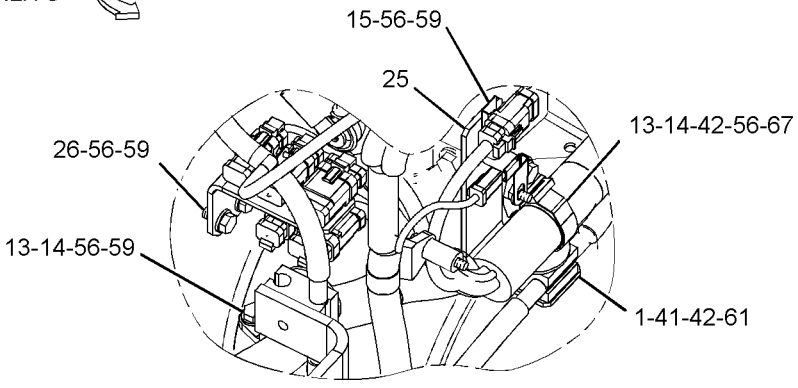

VIEW OF AREA D

GRAPHIC #5 **<END>** g01629956

ELECTRICAL AND STARTING SYSTEM

299-2783 BATTERY & WIRING GP—COLD WEATHER

S/N: KGF1-UP; FAL1-UP
AN ATTACHMENT

SMCS-1401, 1402, 1408 **i03002064**

NOTE	REF NO	GRAPHIC REF	PART NUMBER	QTY	PART NAME 1 2 3 4 5 6 (PRODUCT LEVEL)	SEE PAGE
	1	1	**5I-8270**	1	COVER-BATTERY	
	2	1	**6W-6005**	1	HOLD-DOWN-BATTERY	
	3	1	**263-9574**	4	BATTERY (12-VOLT, MAINTENANCE FREE)	
	4	1	**170-6929**	1	CABLE AS	
E		1	**5P-0761**		CABLE (00-GA, RED) (31-CM)	
		1	**9G-0002**	1	COVER-TERMINAL (RED)	
		1	**8L-8413**	1	STRAP-CABLE	
		1	**9G-0005**	1	COVER-TERMINAL (BLACK)	
		1	**8L-8413**	1	STRAP-CABLE	
		1	**8C-5918**	1	TERMINAL AS (NEGATIVE) (RH)	
		1	**1M-6119**	1	BOLT (5/16-18X1.375-IN)	
		1	**1M-6120**	1	NUT (5/16-18-THD)	
		1	**8T-9756**	1	TERMINAL AS (POSITIVE) (LH)	
		1	**1M-6119**	1	BOLT (5/16-18X1.375-IN)	
		1	**1M-6120**	1	NUT (5/16-18-THD)	
	5	1	**204-1673**	1	STRAP-CABLE	
	6	1	**238-2501**	1	KNOB	
	7	1	**238-2528**	1	ROD	
	8	1	**259-5225**	1	SUPPORT AS	
	9	1	**259-5229**	1	CABLE AS	
		1	**1S-7252**	1	TERMINAL-CABLE (00-GA, 3/8-IN BOLT)	
E		1	**5P-0747**		CABLE (00-GA, BLACK) (89-CM)	
		1	**9G-0003**	1	COVER-TERMINAL (BLACK)	
		1	**8L-8413**	1	STRAP-CABLE	
		1	**8T-9757**	1	TERMINAL AS-BATTERY (NEGATIVE) (LH)	
		1	**1M-6119**	1	BOLT (5/16-18X1.375-IN)	
		1	**1M-6120**	1	NUT (5/16-18-THD)	
Y	10	1	**289-6712**	1	SHEET AS-SOUND SUPPRESSION	481
	11	1	**291-7592**	1	CABLE AS	
		1	**1S-7252**	1	TERMINAL-CABLE (00-GA, 3/8-IN BOLT)	
E		1	**5P-0761**		CABLE (00-GA, RED) (281-CM)	
D		1	**6V-2722**		TUBE-HEAT SHRINK (25.4-MM DIA) (1-M)	
		1	**9G-0004**	1	COVER-TERMINAL (RED)	
		1	**8L-8413**	1	STRAP-CABLE	
		1	**8C-5917**	1	TERMINAL AS-BATTERY (POSITIVE) (RH)	
		1	**1M-6119**	1	BOLT (5/16-18X1.375-IN)	
		1	**1M-6120**	1	NUT (5/16-18-THD)	
	12	1	**4K-8864**	3	CLIP	
M	13	1	**5C-7261**	1	NUT (M8X1.25-THD)	
	14	1	**6K-8178**	2	CLIP	
	15	1	**8T-4121**	1	WASHER-HARD (11X21X2.5-MM THK)	
M	16	1	**8T-4133**	1	NUT (M10X1.5-THD)	
M	17	1	**8T-4191**	1	BOLT (M10X1.5X16-MM)	
M	18	1	**8T-4192**	4	BOLT (M12X1.75X25-MM)	
	19	1	**8T-4223**	4	WASHER-HARD (13.5X25.5X3-MM THK)	
	20	1	**8T-4226**	1	WASHER-PLATED (10.5X45X3-MM THK)	

D-ORDER BY THE METER
E-ORDER BY THE CENTIMETER
M-METRIC PART
Y-SEPARATE ILLUSTRATION

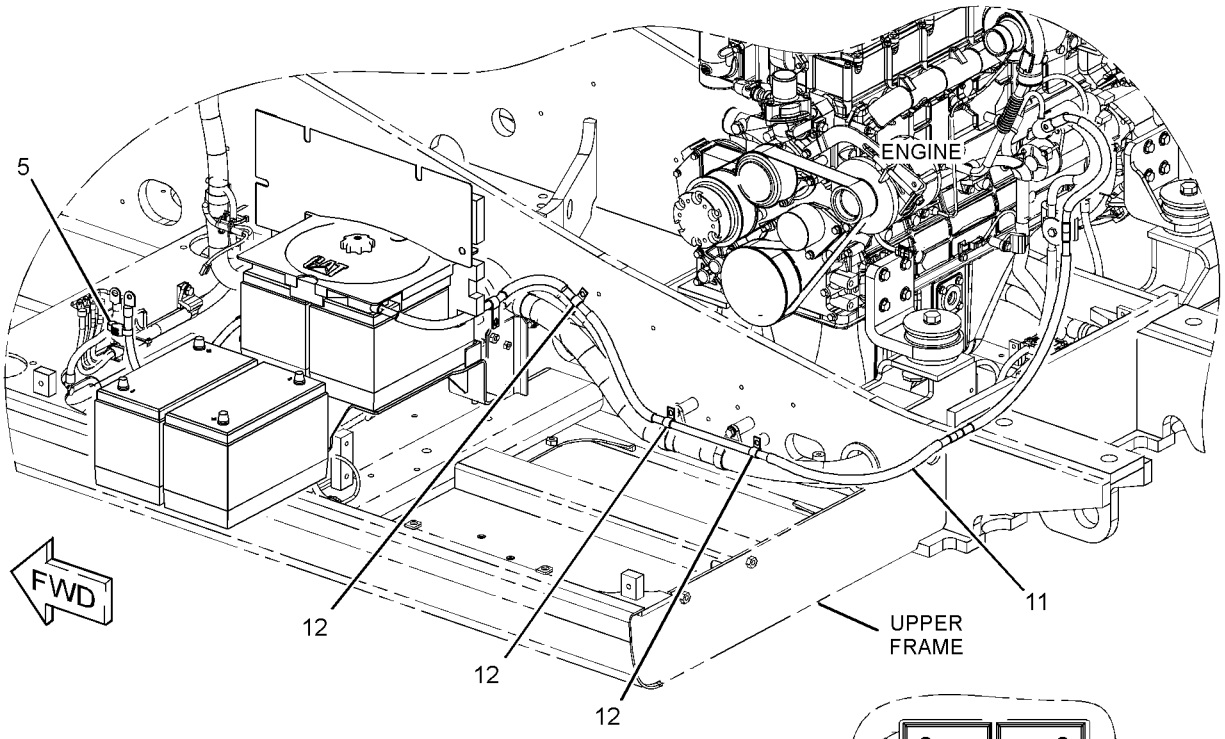

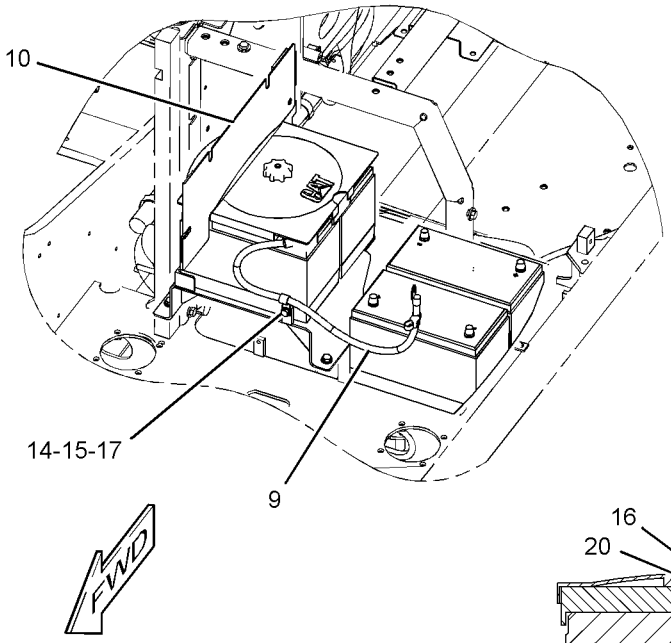

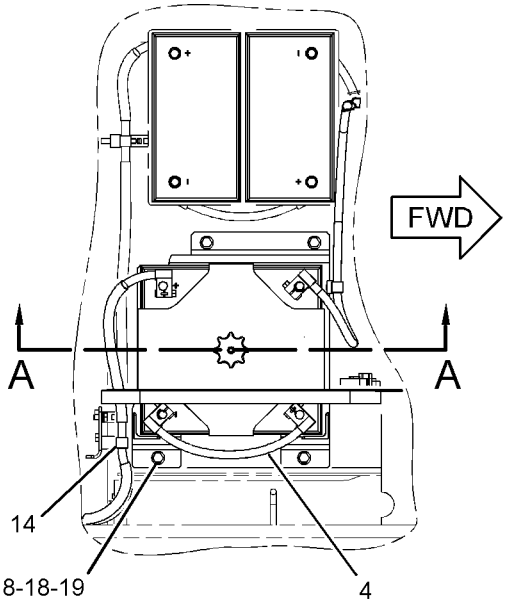

TOP VIEW

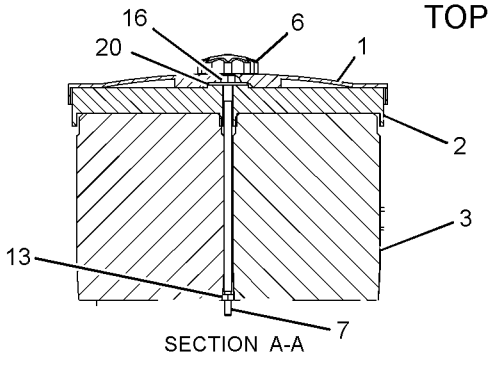

SECTION A-A

GRAPHIC #1 **<END>** g01506303

9W-0742 BLOCK GP-JUNCTION–BATTERY

S/N: KGF1-UP; FAL1-UP
PART OF 259-5051 WIRING GP-ENGINE
AN ATTACHMENT

SMCS-7426 **i02236462**

NOTE	REF NO	GRAPHIC REF	PART NUMBER	QTY	PART NAME 1 2 3 4 5 6 (PRODUCT LEVEL)	SEE PAGE
	1	1	**8C-6358**	1	BLOCK GP-JUNCTION (BATTERY)	
	1A	1	**8T-3519**	3	BOLT-BRONZE (1/2-13X2-IN)	
BD	2	1	**6V-2722**		TUBE-HEAT SHRINK (25.4-MM DIA)	
	3	1	**7F-0560**	6	WASHER (0.516X0.938X0.101-IN THK)	
	4	1	**8T-3518**	6	NUT-FULL (1/2-13-THD)	

B-USE AS REQUIRED
D-ORDER BY THE METER

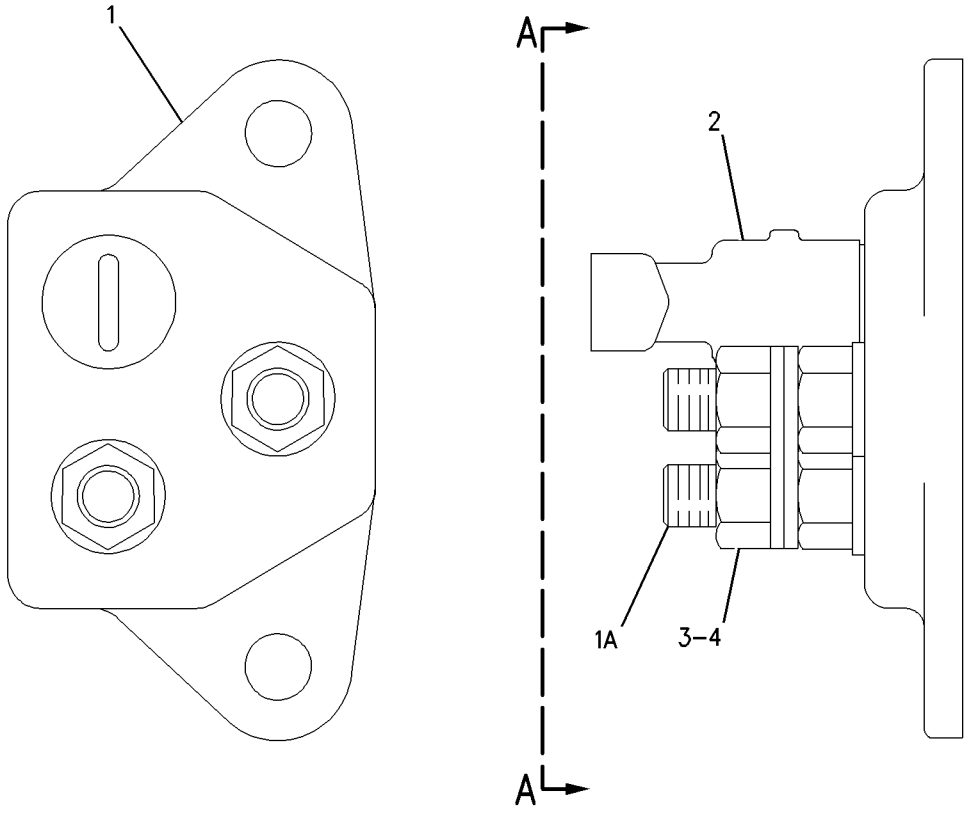

VIEW A-A

GRAPHIC #1 **<END>** g00650721

327-3329 CAMERA & MOUNTING GP

S/N: KGF1-UP; FAL1-UP
PART OF 314-3774 CAMERA AR
AN ATTACHMENT

SMCS-7348 **i03114041**

NOTE	REF NO	GRAPHIC REF	PART NUMBER	QTY	PART NAME 1 2 3 4 5 6 (PRODUCT LEVEL)	SEE PAGE
Y	1	1	*313-7833*	1	CAMERA GP (WITH MOUNTING)	222
	2	1	**320-5396**	1	COVER	
	3	1	**8T-4121**	4	WASHER-HARD (11X21X2.5-MM THK)	
M	4	1	**8T-4137**	4	BOLT (M10X1.5X20-MM)	

M-METRIC PART
Y-SEPARATE ILLUSTRATION

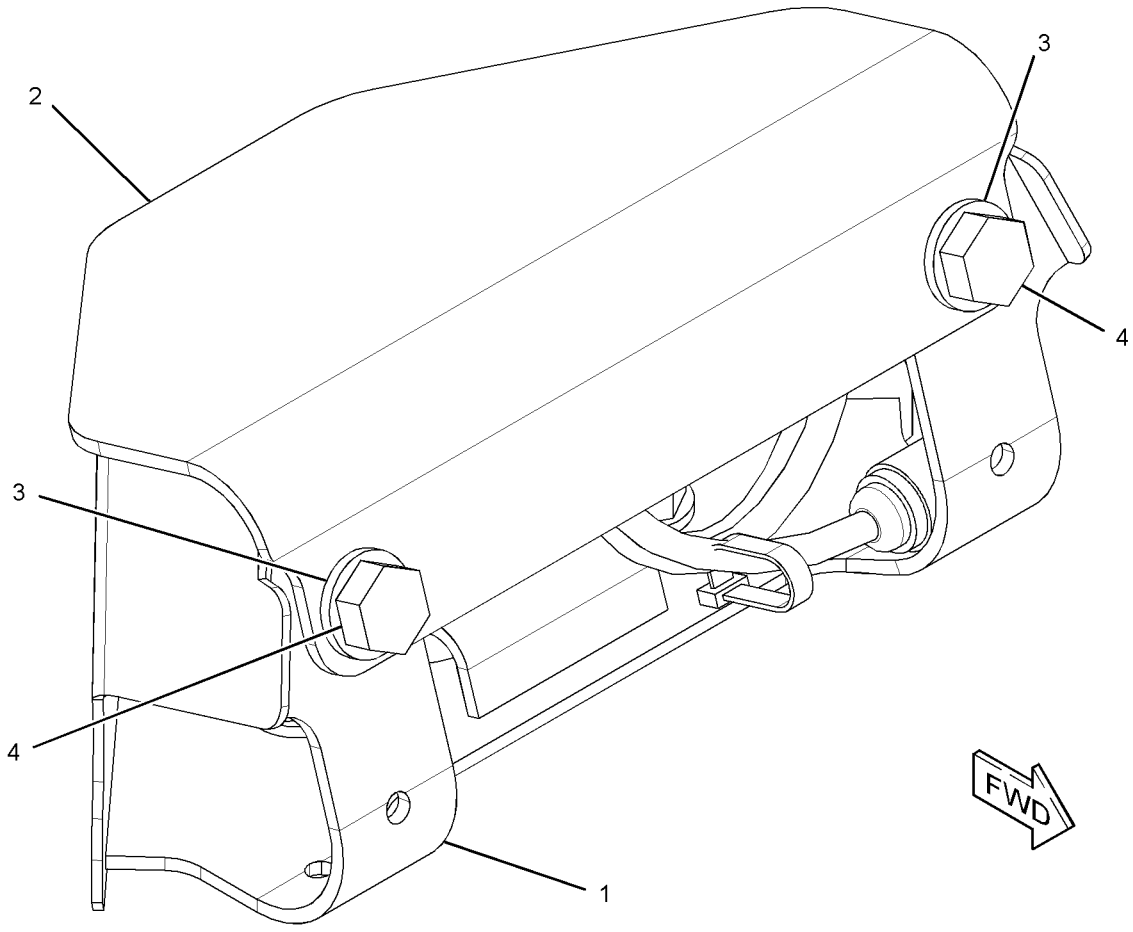

GRAPHIC #1 **<END>** g01609019

314-3735 CAMERA AR

S/N: KGF1-UP; FAL1-UP
FOR USE WITH 327-6552—PAGE 1343, 327-6553—PAGE 1344
AN ATTACHMENT

SMCS-7348 **i03162016**

NOTE	PART NUMBER	QTY	PART NAME 1 2 3 4 5 6 (PRODUCT LEVEL)	SEE PAGE
Y	*314-3774*	1	CAMERA AR	220
Y	*330-1194*	1	MIRROR AR	4

Y-SEPARATE ILLUSTRATION

<END>

314-3774 CAMERA AR

S/N: KGF1-UP; FAL1-UP
PART OF 314-3735 CAMERA AR
AN ATTACHMENT

SMCS-7348 **i03142740**

NOTE	PART NUMBER	QTY	PART NAME 1 2 3 4 5 6 (PRODUCT LEVEL)	SEE PAGE
Y	*327-3329*	1	CAMERA & MOUNTING GP	219
Y	*303-2787*	1	FILM GP	1438
Y	*328-0048*	1	WIRING GP-CAB	309
Y	*324-5774*	1	WIRING GP-CAMERA (REAR VISION CAMERA)	310

Y-SEPARATE ILLUSTRATION

<END>

286-4271 CAMERA GP

S/N: KGF1-UP; FAL1-UP
PART OF 313-7833 CAMERA GP
AN ATTACHMENT

SMCS-7348 **i02957535**

NOTE	REF NO	GRAPHIC REF	PART NUMBER	QTY	PART NAME 1 2 3 4 5 6 (PRODUCT LEVEL)	SEE PAGE
					AVAILABLE REPAIR KIT(S):	
			251-4162	1	KIT-BRACKET (CAMERA)	
					(KIT INCLUDES BRACKET, BOLTS, LOCKNUTS, SOCKET BOLTS, GASKET, & ALLEN KEY)	

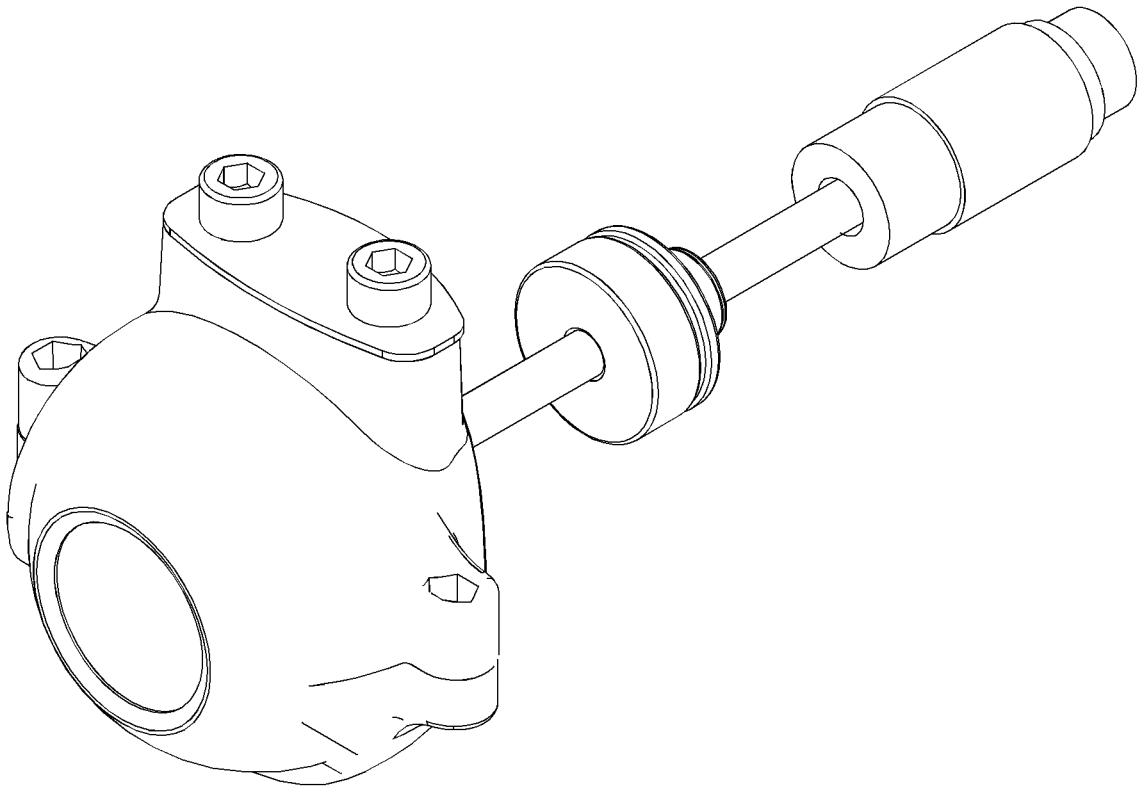

GRAPHIC #1 **<END>** g01356476

313-7833 CAMERA GP

S/N: KGF1-UP; FAL1-UP
PART OF 327-3329 CAMERA & MOUNTING GP
AN ATTACHMENT

SMCS-7348 **i03045209**

NOTE	REF NO	GRAPHIC REF	PART NUMBER	QTY	PART NAME 1 2 3 4 5 6 (PRODUCT LEVEL)	SEE PAGE
	1	1	**096-0061**	1	STRAP-CABLE	
Y	2	1	**286-4271**	1	CAMERA GP	221
	3	1	**320-5392**	1	BRACKET AS	
M	4	1	**8T-4970**	2	BOLT (M6X1X14-MM)	
	5	1	**9X-8256**	2	WASHER (6.6X12X2-MM THK)	

M-METRIC PART
Y-SEPARATE ILLUSTRATION

313-7833 **CAMERA GP** *(contd.)* **i03045209**

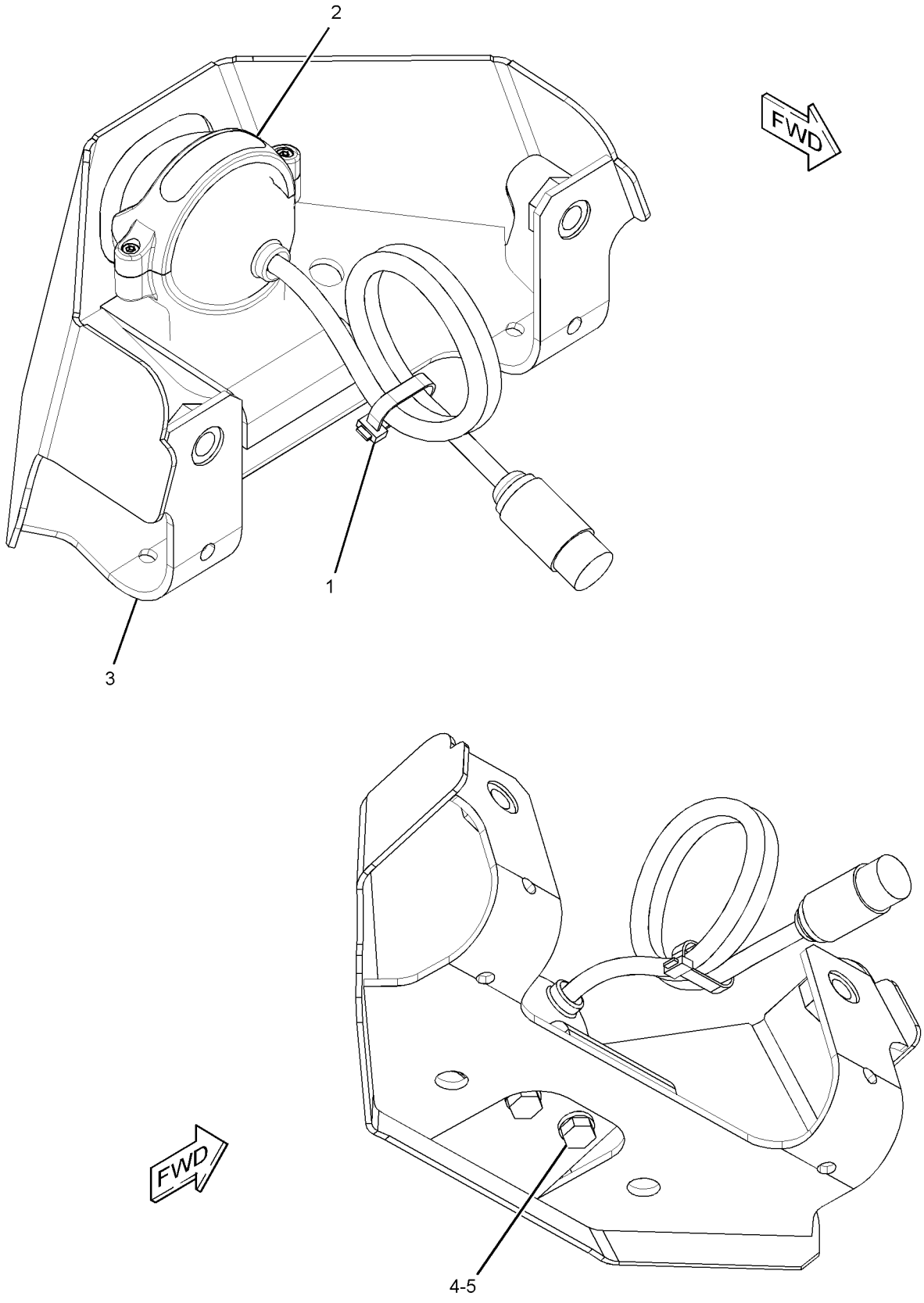

GRAPHIC #1 **<END>** g01515863

247-5284 CONTROL & MTG GP-COMMUNICATION—PRODUCT LINK

S/N: KGF1-UP; FAL1-UP
PART OF 264-8665 INSTALLATION AR-COMMUNICATION
AN ATTACHMENT

SMCS-7606 **i03278820**

NOTE	REF NO	GRAPHIC REF	PART NUMBER	QTY	PART NAME 1 2 3 4 5 6 (PRODUCT LEVEL)	SEE PAGE
	1	1	**8C-5608**	4	SPACER (6.5X9.5X25.4-MM THK)	
	2	1	**9X-9896**	8	MOUNT (ISOLATION)	
Y	3	1	**239-9954**	1	CONTROL GP-UNPROGRAMMED (PRODUCT LINK 300)	227
	4	1	**260-2042**	1	BRACKET AS	
M	5	1	**8C-8451**	4	BOLT (M6X1X40-MM)	
	6	1	**9X-6165**	4	WASHER (6.5X22X2.5-MM THK)	

M-METRIC PART
Y-SEPARATE ILLUSTRATION

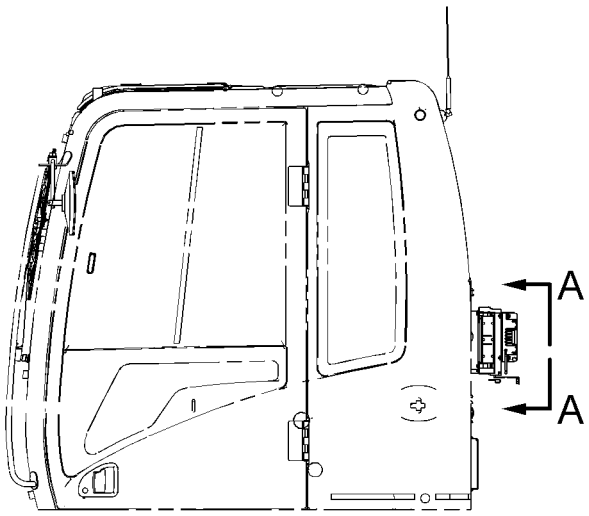

LEFT SIDE VIEW

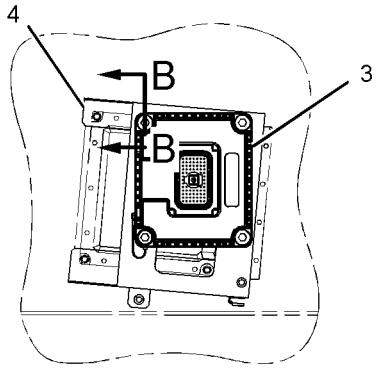

VIEW A-A

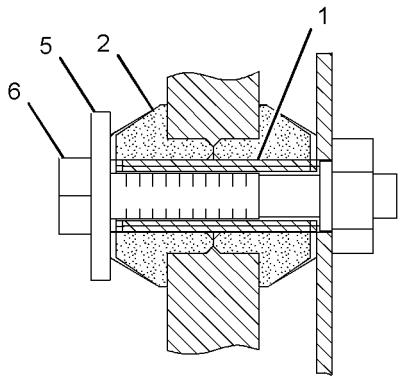

SECTION B-B

GRAPHIC #1 **<END>** g01126708

296-4664 CONTROL & MTG GP-ENGINE ELEK

S/N: GDC1-UP; KGF1-UP
PART OF 272-4677, 272-4683, 296-4676, 305-4777 ENGINE AR
ALSO AN ATTACHMENT

SMCS-1901 **i02706152**

NOTE	REF NO	GRAPHIC REF	PART NUMBER	QTY	PART NAME 1 2 3 4 5 6 (PRODUCT LEVEL)	SEE PAGE
	1	1	**274-6721**	1	SENSOR GP-PRESSURE (ENGINE OIL)	
	2	1	**296-4632**	1	BRACKET	
	3	1	**155-0576**	8	MOUNT-ISOLATION	
	4	1	**6I-1418**	4	SPACER (8.2X12.7X28.7-MM THK)	
	5	1	**294-1775**	2	BOLT (M10X1.5X23-MM)	
M	6	1	**178-6577**	2	BOLT (M8X1.25X100-MM)	
	7	1	**270-6259**	2	BOLT (M8X1.25X40-MM)	
	8	1	**8T-4224**	4	WASHER-HARD (8.8X16X2-MM THK)	
	9	1	**294-1804**	1	SEAL-O-RING	
M	10	1	**8T-4137**	1	BOLT (M10X1.5X20-MM)	
	11	1	**296-4635**	1	BRACKET	
	12	1	**286-3683**	1	CONTROL GP-UNPROGRAMMED	
	13	1	**3B-4505**	2	LOCKWASHER	

M-METRIC PART

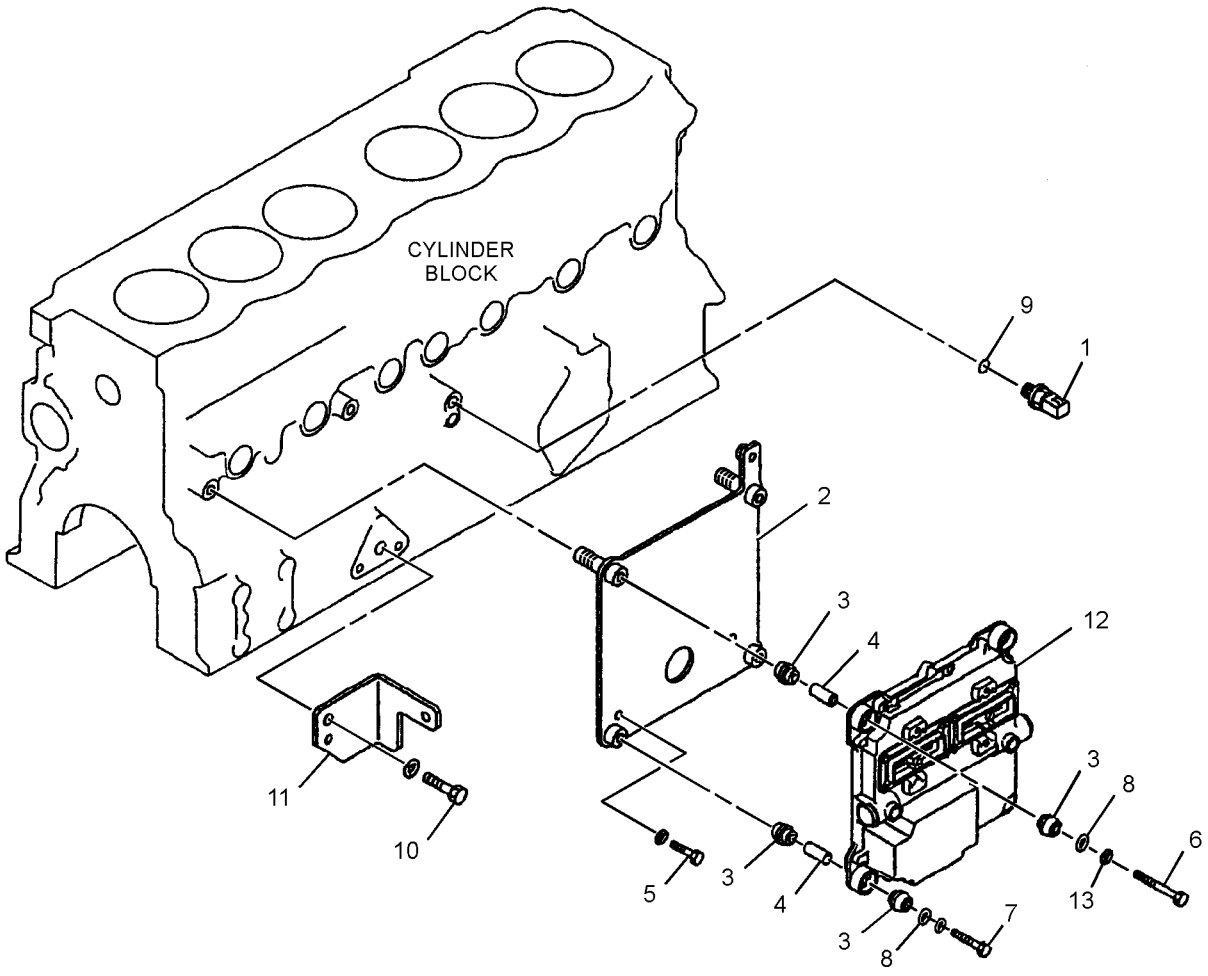

GRAPHIC #1 **<END>** g01356929

221-8872 CONTROL & MTG GP-MACHINE

S/N: KGF1-UP; FAL1-UP

PART OF 273-5387 OPERATOR AR

SMCS-1931, 7600 **i02348301**

NOTE	REF NO	GRAPHIC REF	PART NUMBER	QTY	PART NAME 1 2 3 4 5 6 (PRODUCT LEVEL)	SEE PAGE
	1	1	**221-8874**	1	CONTROL GP-UNPROGRAMMED	
M	2	1	**9X-2480**	4	BOLT (M6X1X45-MM)	
	3	1	**9X-8256**	4	WASHER (6.6X12X2-MM THK)	

M-METRIC PART

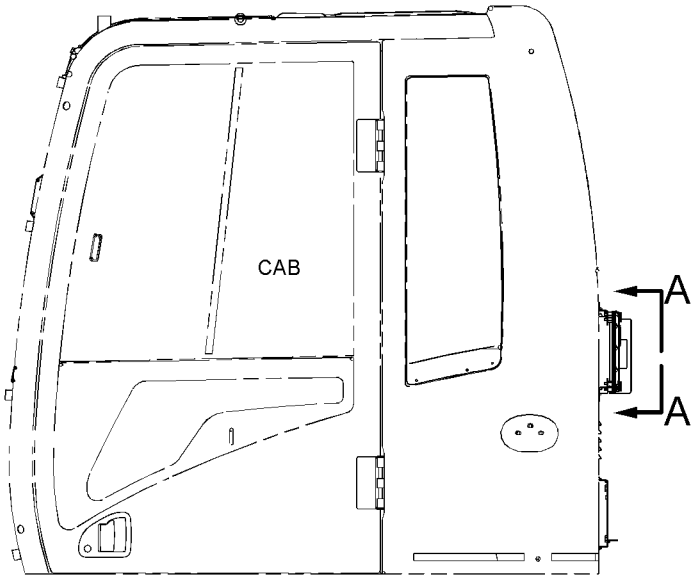

LEFT SIDE VIEW

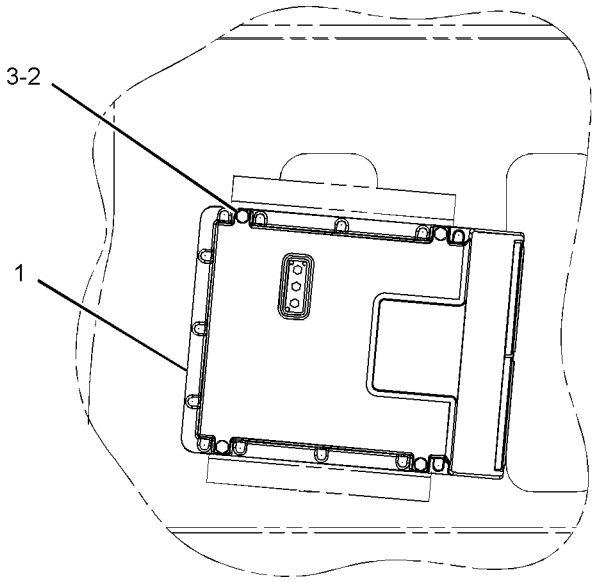

VIEW A-A

GRAPHIC #1 **<END>** g01150750

239-9954 CONTROL GP-UNPROGRAMMED

S/N: KGF1-UP; FAL1-UP
COMMUNICATION
PART OF 247-5284 CONTROL & MTG GP-COMMUNICATION
AN ATTACHMENT

SMCS-7610 **i02418848**

NOTE	REF NO	GRAPHIC REF	PART NUMBER	QTY	PART NAME 1 2 3 4 5 6 (PRODUCT LEVEL)	SEE PAGE
	1	1	**7X-6315**	1	STRAP AS-GROUND	
	2	1	**126-7574**	1	SCREW-PAN HEAD (8-32X9.52-MM)	
	3	1	**134-4126**	1	WASHER (4.52X8.28X0.76-MM THK)	

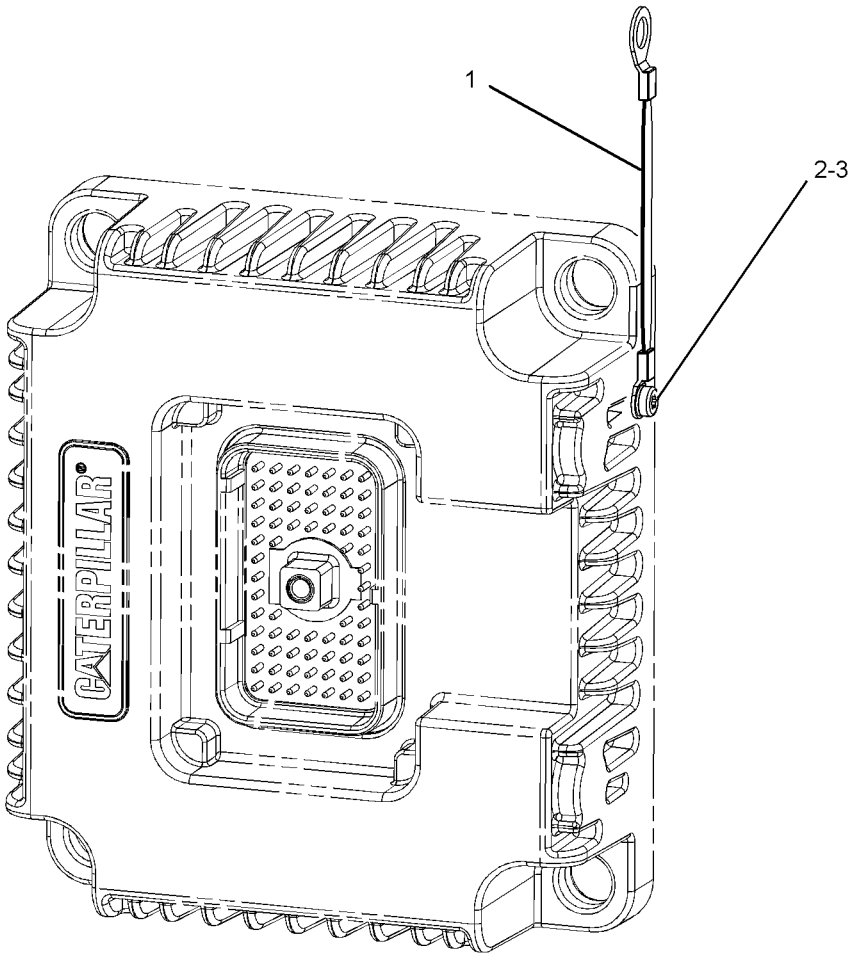

GRAPHIC #1 **<END>** g01213660

262-2043 ELECTRONICS GP-COMMUNICATION—PRODUCT LINK 300

S/N: KGF1-UP; FAL1-UP

PART OF 264-8665 INSTALLATION AR-COMMUNICATION

AN ATTACHMENT

SMCS-7606, 7610, 7620 **i02485254**

NOTE	PART NUMBER	QTY	PART NAME 1 2 3 4 5 6 (PRODUCT LEVEL)	SEE PAGE
	265-9642	1	SOFTWARE GP-COMMUNICATION (PRODUCT LINK 300)	
			(SOFTWARE ONLY)	
			—OR—	
	265-9643	1	SERVICE GP-COMMUNICATION (PRODUCT LINK 300)	
			(INCLUDES SOFTWARE)	
			(OPTIONAL SERVICE REPLACEMENT)	
	134-3379	1	FILM-IDENTIFICATION (ELECTRONIC CONTROL MODULE)	
			<END>	

270-5512 ELECTRONICS GP-MACHINE

S/N: KGF1-UP; FAL1-UP

PART OF 264-8626, 264-8627 GENERAL AR

SMCS-7610, 7620 **i02998168**

NOTE	PART NUMBER	QTY	PART NAME 1 2 3 4 5 6 (PRODUCT LEVEL)	SEE PAGE
	319-4261	1	SOFTWARE GP-MACHINE	
			—OR—	
	319-4262	1	SERVICE GP-MACHINE	
			(OPTIONAL SERVICE REPLACEMENT)(INCLUDES CONTROL GP & SOFTWARE)	
			<END>	

270-5514 ELECTRONICS GP-MACHINE—HIGH POWER

S/N: KGF1-UP; FAL1-UP

PART OF 290-1909 ENGINE AR-COMPLETE, 290-1910 MACHINE AR

AN ATTACHMENT

SMCS-7610, 7620 **i03093281**

NOTE	PART NUMBER	QTY	PART NAME 1 2 3 4 5 6 (PRODUCT LEVEL)	SEE PAGE
	319-4263	1	SOFTWARE GP-MACHINE	
			—OR—	
	319-4264	1	SERVICE GP-MACHINE	
			(OPTIONAL SERVICE REPLACEMENT) (INCLUDES CONTROL GP & SOFTWARE)	
			<END>	

221-8861 ELECTRONICS GP-MONITOR

S/N: KGF1-UP; FAL1-UP

PART OF 264-8626, 264-8627 GENERAL AR

SMCS-7490, 7601, 7610, 7620 **i03250673**

NOTE	PART NUMBER	QTY	PART NAME 1 2 3 4 5 6 (PRODUCT LEVEL)	SEE PAGE
	327-7486	1	SOFTWARE GP-MONITOR	
			—OR—	
	327-7483	1	MONITOR GP-OPERATOR	
			(OPTIONAL SERVICE REPLACEMENT)(PREPROGRAMMED CONTROL GP)	

<END>

251-0436 FASTENER GP-WIRING HARNESS

S/N: KGF1-UP; FAL1-UP
PART OF 259-7492, 259-7494 CONTROL AR-AUXILIARY
AN ATTACHMENT

SMCS-1408, 7553 **i02536437**

NOTE	REF NO	GRAPHIC REF	PART NUMBER	QTY	PART NAME 1 2 3 4 5 6 (PRODUCT LEVEL)	SEE PAGE
	1	1	**3S-2093**	1	STRAP-CABLE	
	2	1	**116-0118**	1	CLIP	
	3	1	**156-6175**	1	CLIP	
M	4	1	**7X-2621**	1	BOLT (M10X1.5X12-MM)	
	5	1	**8T-4121**	1	WASHER-HARD (11X21X2.5-MM THK)	
M	6	1	**8T-4171**	1	BOLT (M6X1X12-MM)	
	7	1	**9X-8256**	1	WASHER (6.6X12X2-MM THK)	
	8	1	**7K-1181**	1	STRAP-CABLE	

M-METRIC PART

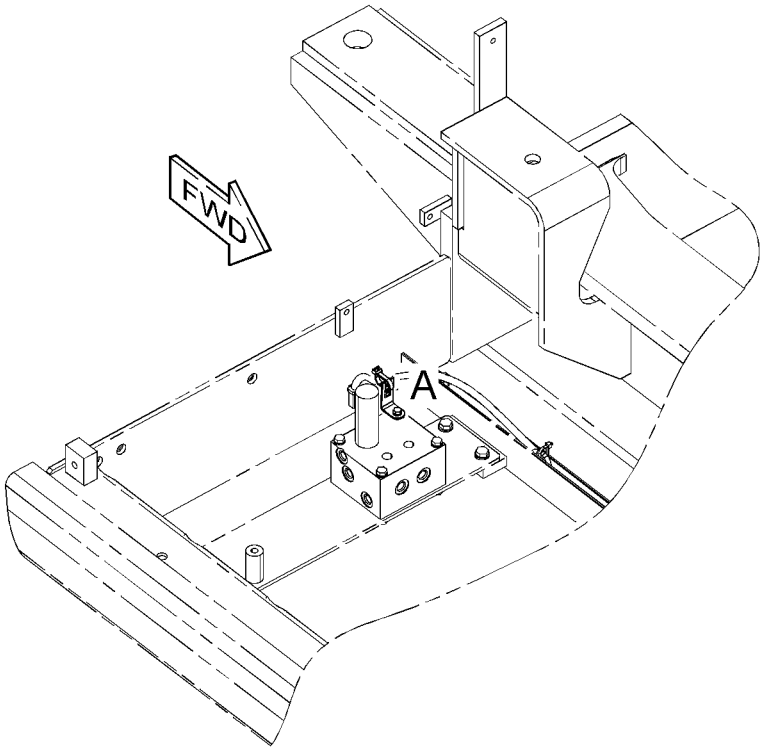

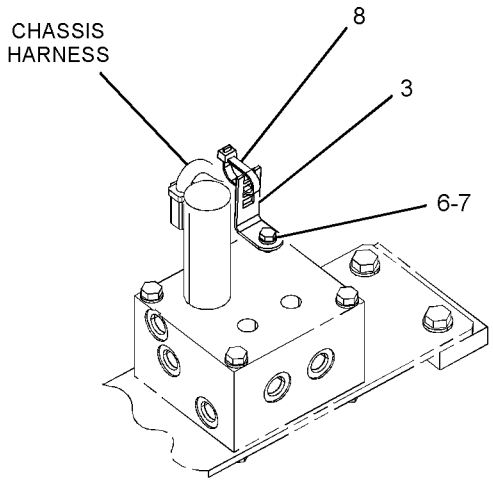

VIEW OF AREA A

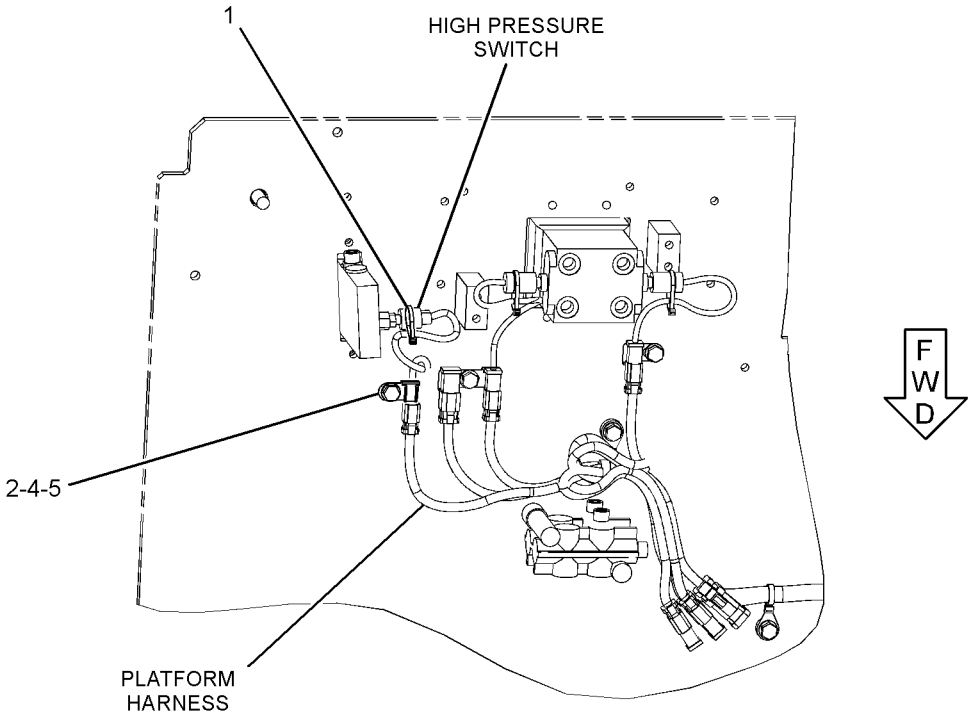

BOTTOM VIEW

GRAPHIC #1 **<END>** g01273033

251-0526 FASTENER GP-WIRING HARNESS–STRAIGHT TRAVEL

S/N: KGF1-UP; FAL1-UP
PART OF 259-7178 PEDAL AR-AUXILIARY
AN ATTACHMENT

SMCS-1408, 7553 **i02344768**

NOTE	REF NO	GRAPHIC REF	PART NUMBER	QTY	PART NAME 1 2 3 4 5 6 (PRODUCT LEVEL)	SEE PAGE
	1	1	**3S-2093**	1	STRAP-CABLE	
	2	1	**116-0118**	1	CLIP	
M	3	1	**7X-2621**	1	BOLT (M10X1.5X12-MM)	
	4	1	**8T-4121**	1	WASHER-HARD (11X21X2.5-MM THK)	

M-METRIC PART

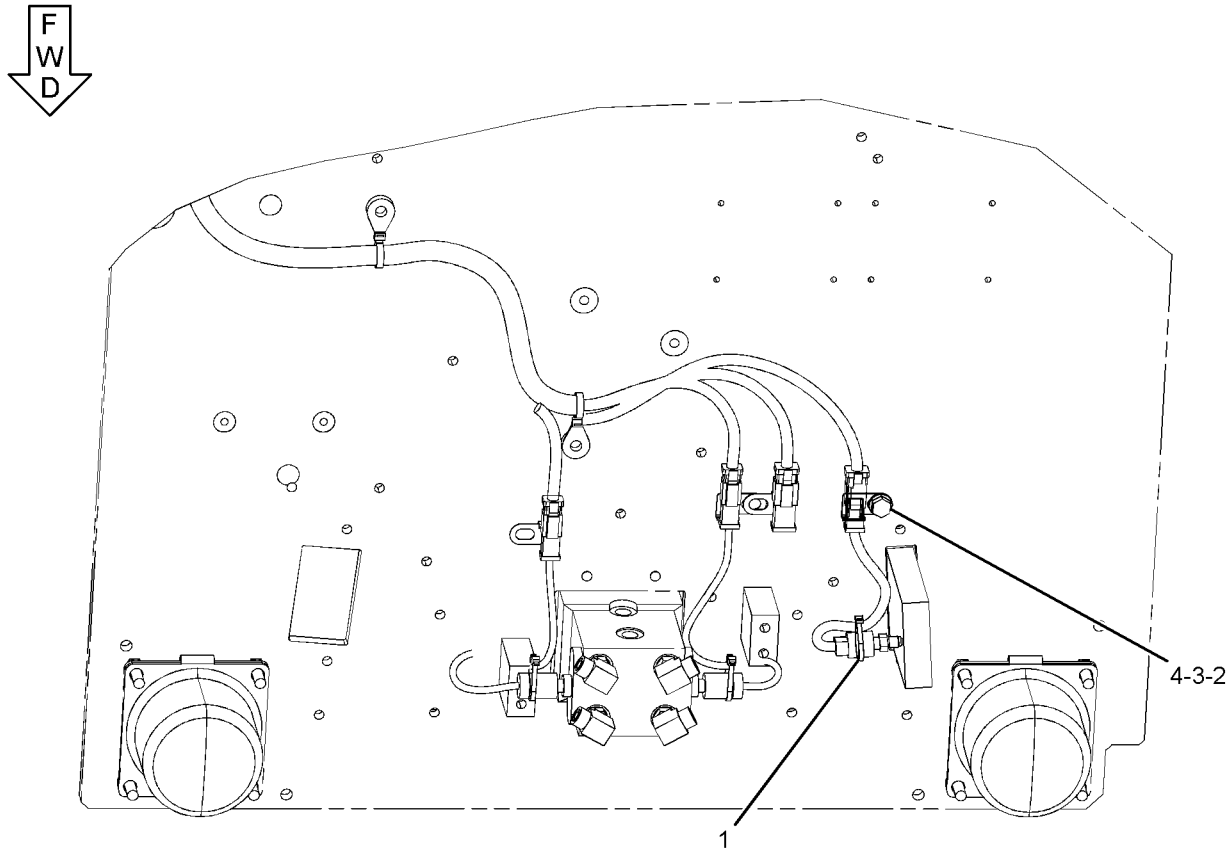

BOTTOM VIEW

GRAPHIC #1 **<END>** g01190326

259-5237 FASTENER GP-WIRING HARNESS–HEAVY LIFT

S/N: KGF1-UP; FAL1-UP
PART OF 240-3881 VALVE & LINES GP-HEAVY LIFT
AN ATTACHMENT

SMCS-1408, 7553 **i02408058**

NOTE	REF NO	GRAPHIC REF	PART NUMBER	QTY	PART NAME 1 2 3 4 5 6 (PRODUCT LEVEL)	SEE PAGE
	1	1	**7I-2673**	1	STRAP - CABLE	

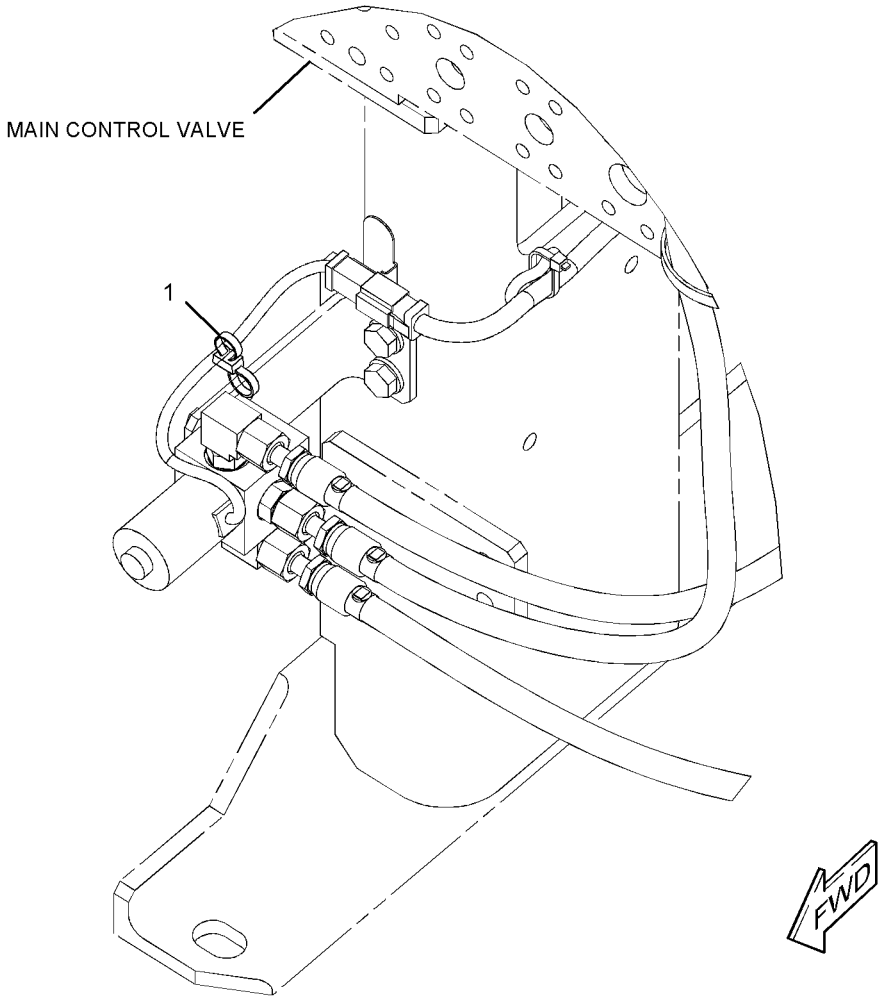

GRAPHIC #1 **<END>** g01200808

259-5293 FASTENER GP-WIRING HARNESS–PEDAL CONTROL

S/N: KGF1-UP; FAL1-UP
PART OF 255-5845 PEDAL AR-AUXILIARY
AN ATTACHMENT

SMCS-1408, 7553 **i02527277**

NOTE	REF NO	GRAPHIC REF	PART NUMBER	QTY	PART NAME 1 2 3 4 5 6 (PRODUCT LEVEL)	SEE PAGE
	1	1	**116-0118**	1	CLIP	
M	2	1	**7X-2621**	1	BOLT (M10X1.5X12-MM)	
	3	1	**8T-4121**	1	WASHER-HARD (11X21X2.5-MM THK)	

M-METRIC PART

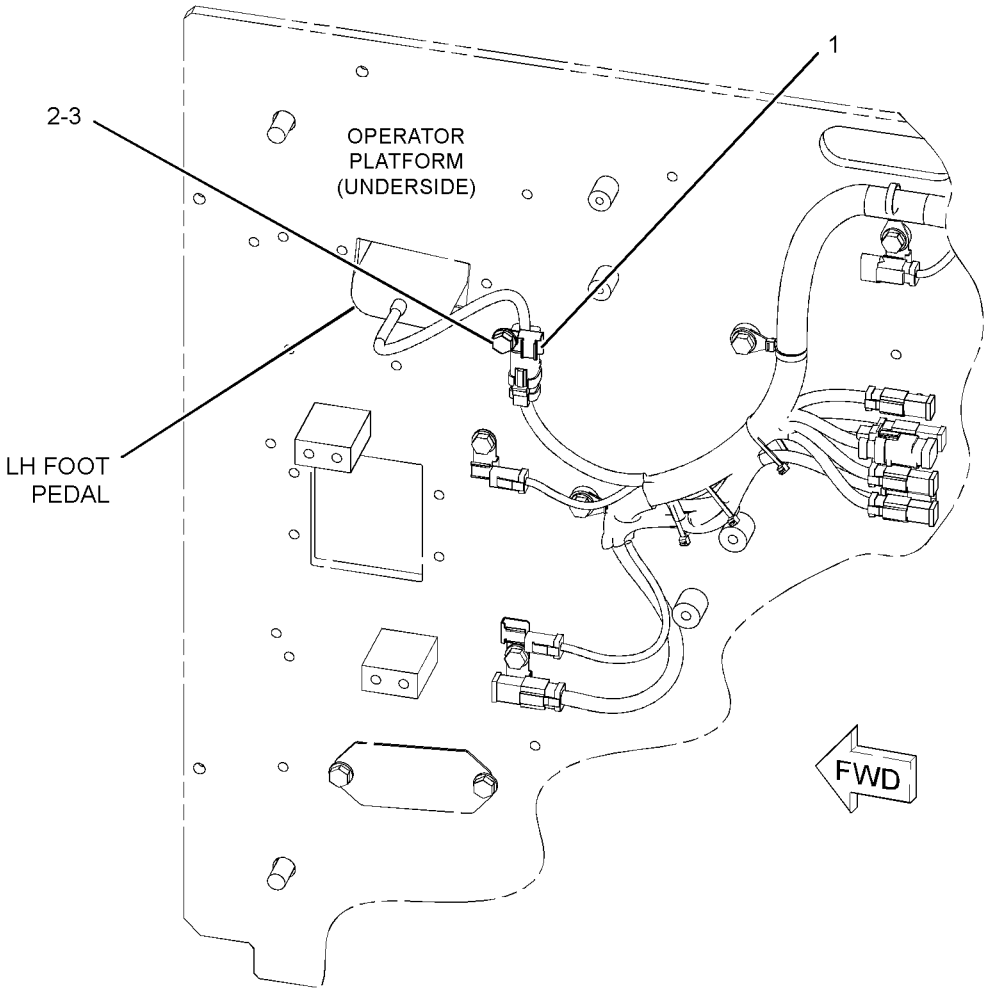

GRAPHIC #1 **<END>** g01264273

259-5294 FASTENER GP-WIRING HARNESS–FOOT SWITCH

S/N: KGF1-UP; FAL1-UP
PART OF 255-5846, 270-6106 CONTROL AR-AUXILIARY
AN ATTACHMENT

SMCS-1408, 7553 **i02430270**

NOTE	REF NO	GRAPHIC REF	PART NUMBER	QTY	PART NAME 1 2 3 4 5 6 (PRODUCT LEVEL)	SEE PAGE
	1	1	**116-0118**	1	CLIP	
M	2	1	**7X-2621**	1	BOLT (M10X1.5X12-MM)	
	3	1	**8T-4121**	1	WASHER-HARD (11X21X2.5-MM THK)	

M-METRIC PART

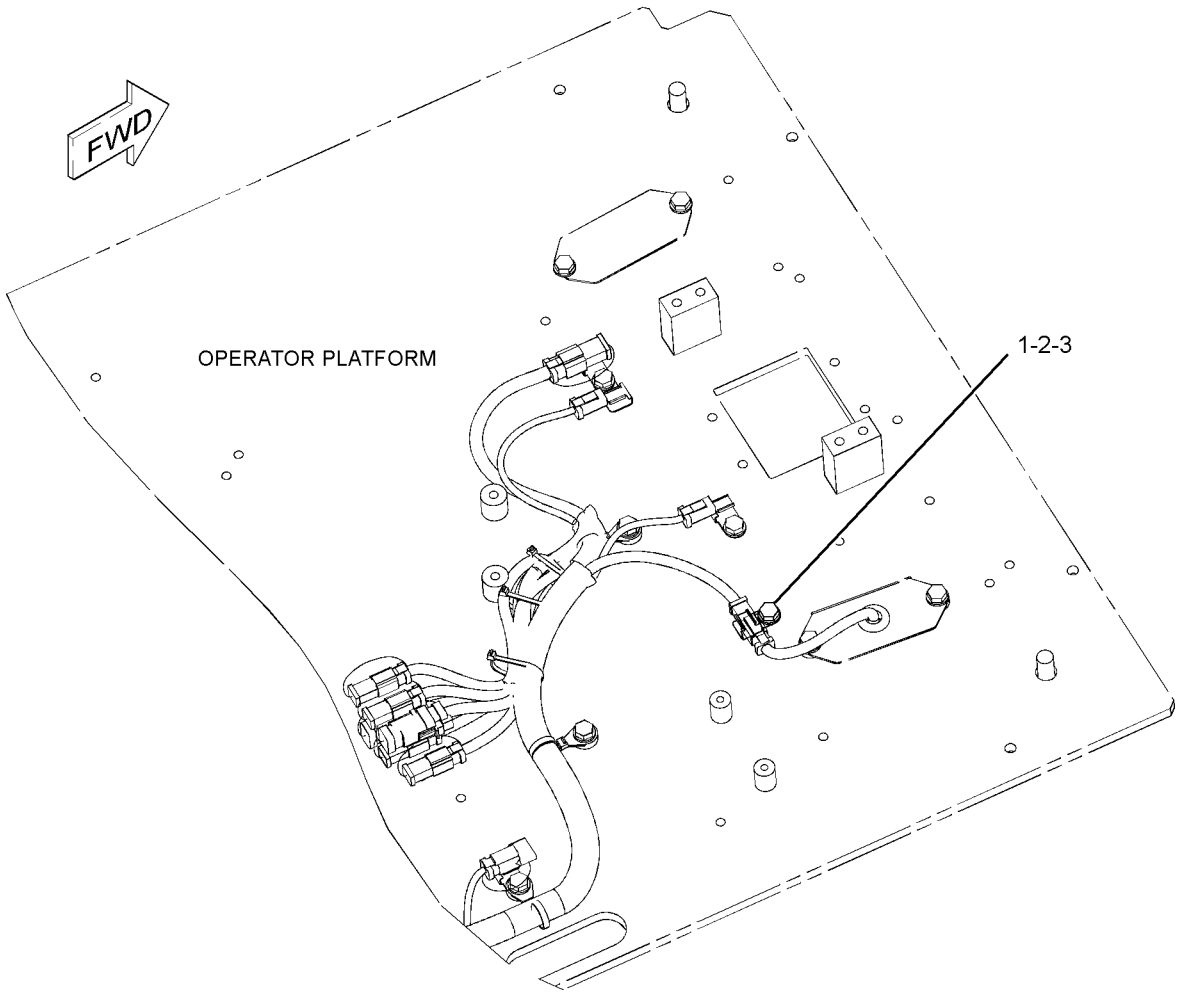

GRAPHIC #1 **<END>** g01156526

259-5295 FASTENER GP-WIRING HARNESS–JOYSTICK

S/N: KGF1-UP; FAL1-UP

PART OF 255-5843, 255-5844 CONTROL AR-AUXILIARY

AN ATTACHMENT

SMCS-1408, 7553 **i02425705**

NOTE	REF NO	GRAPHIC REF	PART NUMBER	QTY	PART NAME 1 2 3 4 5 6 (PRODUCT LEVEL)	SEE PAGE
	1	1	**3S-2093**	2	STRAP-CABLE	

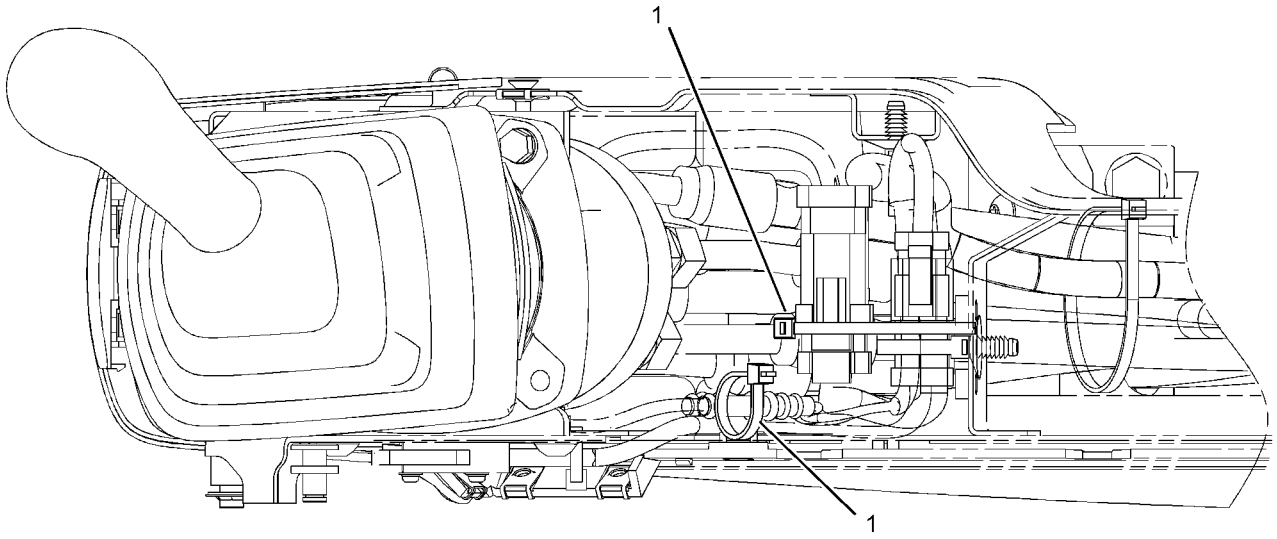

GRAPHIC #1 **<END>** g01160306

264-8665 INSTALLATION AR-COMMUNICATION–

PRODUCT LINK 321SR

S/N: KGF1-UP; FAL1-UP

AN ATTACHMENT

SMCS-7606 **i02797999**

NOTE	PART NUMBER	QTY	PART NAME 1 2 3 4 5 6 (PRODUCT LEVEL)	SEE PAGE
Y	*247-5284*	1	CONTROL & MTG GP-COMMUNICATION (PRODUCT LINK 300)	224
Y	*262-2043*	1	ELECTRONICS GP-COMMUNICATION (PRODUCT LINK 300)	228
Y	*270-5511*	1	INSTALLATION GP-COMMUNICATION (PRODUCT LINK 121SR)	238
Y	**290-9466**	1	MOUNTING GP-ANTENNA (PRODUCT LINK)	1349
Y	*267-8007*	1	WIRING GP-COMMUNICATION (PRODUCT LINK 321SR)	316
Y-SEPARATE ILLUSTRATION				

<END>

264-8666 INSTALLATION AR-COMMUNICATION–

PRODUCT LINK 121SR

S/N: KGF1-UP; FAL1-UP

AN ATTACHMENT

SMCS-7606 **i02797955**

NOTE	PART NUMBER	QTY	PART NAME 1 2 3 4 5 6 (PRODUCT LEVEL)	SEE PAGE
Y	*270-5511*	1	INSTALLATION GP-COMMUNICATION (PRODUCT LINK 121SR)	238
Y	*290-9466*	1	MOUNTING GP-ANTENNA (PRODUCT LINK)	1349
Y	*267-8008*	1	WIRING GP-COMMUNICATION (PRODUCT LINK 121SR)	320
Y-SEPARATE ILLUSTRATION				

<END>

270-5511 INSTALLATION GP-COMMUNICATION–

PRODUCT LINK 121SR

S/N: KGF1-UP; FAL1-UP

PART OF 264-8665, 264-8666 INSTALLATION AR-COMMUNICATION

AN ATTACHMENT

SMCS-7606 **i02684046**

NOTE	REF NO	GRAPHIC REF	PART NUMBER	QTY	PART NAME 1 2 3 4 5 6 (PRODUCT LEVEL)	SEE PAGE
	1	1	**3S-2093**	1	STRAP-CABLE	
	2	1	**7K-1181**	3	STRAP-CABLE	
Y	3	1	**263-9088**	1	RADIO GP-COMMUNICATION (PRODUCT LINK 121SR)	1355
M	4	1	**8T-4138**	4	BOLT (M6X1X20-MM)	
	5	1	**9X-8256**	4	WASHER (6.6X12X2-MM THK)	
	6	1	**230-1340**	1	FILM-WARNING (PRODUCT LINK RADIO, U.S.)	
	7	1	**230-1341**	1	FILM-WARNING (PRODUCT LINK RADIO, INTL)	

M-METRIC PART
Y-SEPARATE ILLUSTRATION

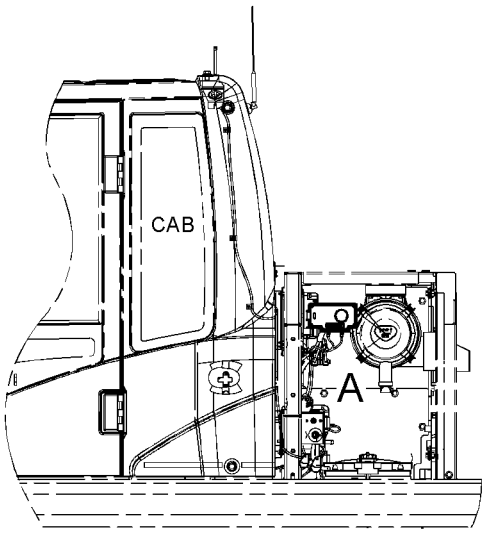

LEFT SIDE VIEW

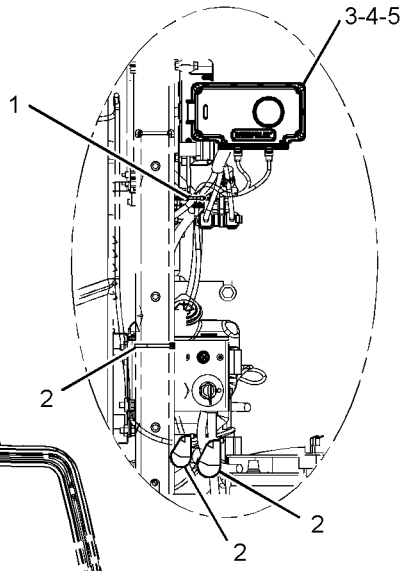

VIEW OF AREA A

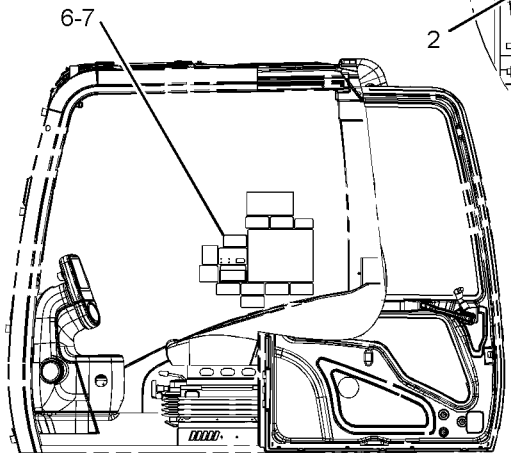

LEFT SIDE VIEW
(CAB)

GRAPHIC #1 **<END>** g01342214

227-7581 INSTALLATION GP-SECURITY

S/N: KGF1-UP; FAL1-UP
AN ATTACHMENT

SMCS-7631 **i02397785**

NOTE	REF NO	GRAPHIC REF	PART NUMBER	QTY	PART NAME 1 2 3 4 5 6 (PRODUCT LEVEL)	SEE PAGE
	1	1	**8C-5607**	4	MOUNT-ISOLATION	
	2	1	**8C-5608**	2	SPACER (6.5X9.5X25.4-MM THK)	
	3	1	**206-5162**	2	KEY AS-ELECTRONIC (SECURITY)	
	4	1	**218-0404**	1	MODULE GP-INTERFACE (KEY)	
	5	1	**219-6314**	2	KEY RING (IDENTIFICATION)	
Y	6	1	*251-0544*	1	PANEL GP-SWITCH (ENGINE SPEED, START)	267
M	7	1	**7X-2533**	2	BOLT (M6X1X35-MM)	
	8	1	**9X-6165**	2	WASHER (6.5X22X2.5-MM THK)	

M-METRIC PART
Y-SEPARATE ILLUSTRATION

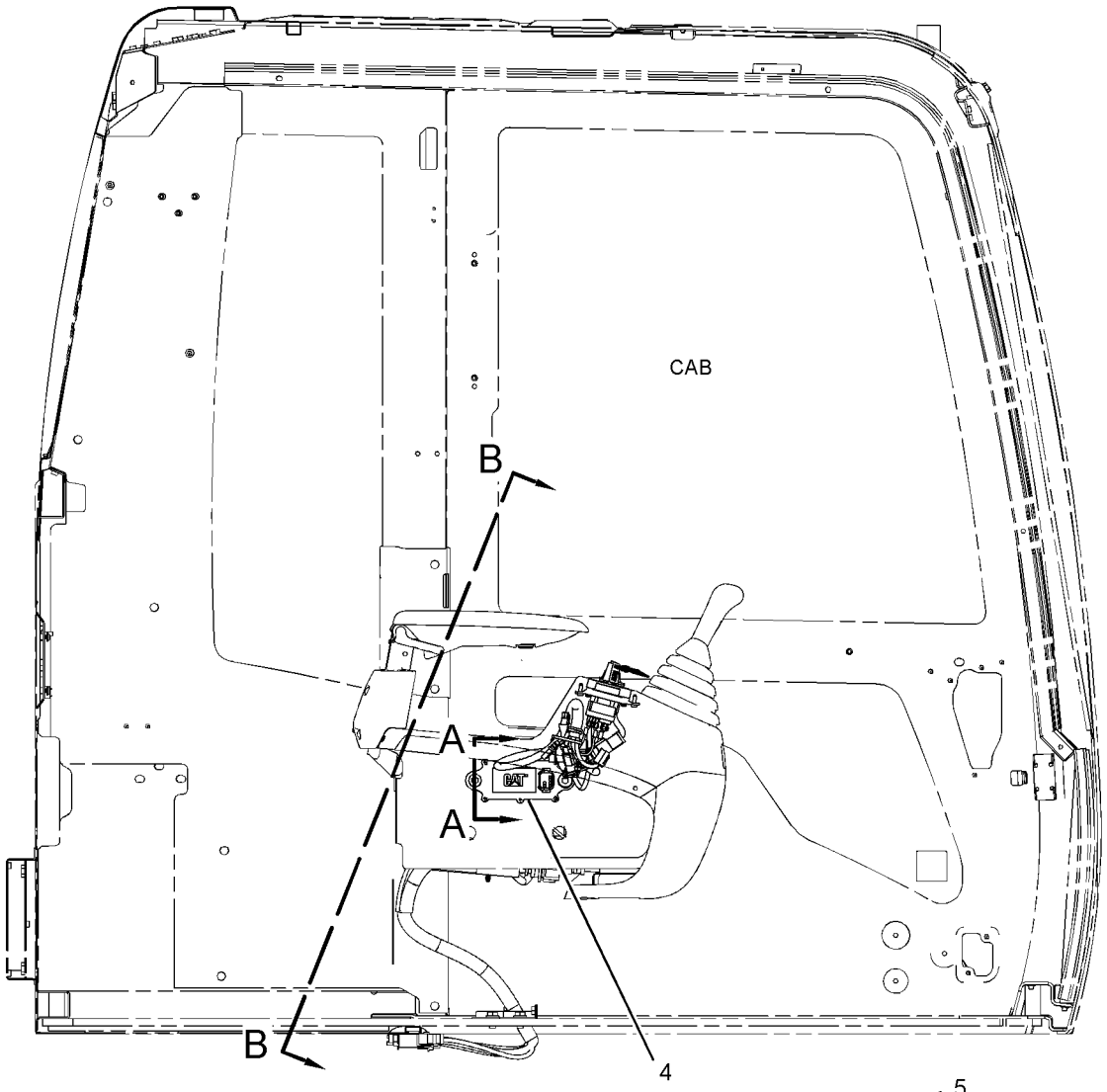

RIGHT SIDE VIEW

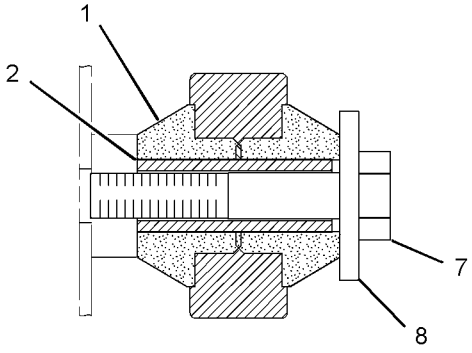

SECTION A-A

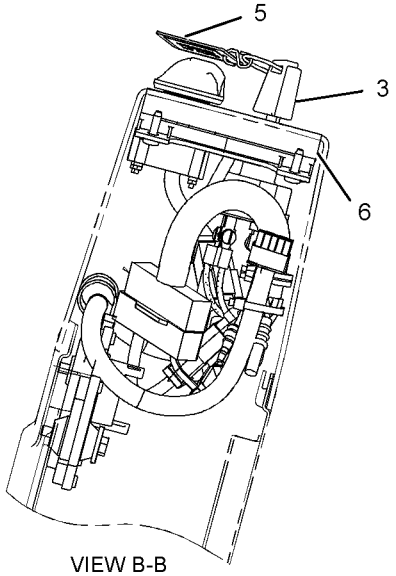

VIEW B-B

GRAPHIC #1 **<END>** g01196691

291-7701 KIT-BRACKET—PRODUCT LINK 121SR, 321SR

S/N: KGF1-UP; FAL1-UP

PROVIDES MOUNTING PARTS FOR PRODUCT LINK SYSTEM

FIELD INSTALLATION

SMCS-0635, 7606 **i02595811**

NOTE	PART NUMBER	QTY	PART NAME 1 2 3 4 5 6 (PRODUCT LEVEL)	SEE PAGE
M	**8T-4171**	1	BOLT (M6X1X12-MM)	
M	**8T-4190**	1	BOLT (M16X2X25-MM)	
	270-5433	1	BRACKET	
	260-2042	1	BRACKET AS	
	096-3872	1	GROMMET	
	291-7700	1	HARNESS AS-WIRING	
	155-2274	1	KIT-CONNECTING PLUG (6-PIN)	
			(INCLUDES PLUG AS, WEDGE & INTERFACE SEAL)	
	243-4508	1	RECEPTACLE AS-CONNECTOR (6-PIN)	
	9X-8256	1	WASHER (6.6X12X2-MM THK)	
	9X-8257	1	WASHER (17.5X30X3.5-MM THK)	

M-METRIC PART

<END>

153-2521 LAMP GP-FLOOD

S/N: KGF1-UP; FAL1-UP
24-VOLT
PART OF 259-5043, 259-5047, 259-5048, 267-7627 LIGHTING GP-FLOOD
AN ATTACHMENT

SMCS-1434 **i02743410**

NOTE	REF NO	GRAPHIC REF	PART NUMBER	QTY	PART NAME 1 2 3 4 5 6 (PRODUCT LEVEL)	SEE PAGE
M	1	1	**6V-5210**	2	SCREW-MACHINE (M4X0.7X10-MM)	
	2	1	**3B-4501**	2	LOCKWASHER	
	3	1	**9X-3463**	1	LAMP-HALOGEN (24-VOLT, 65-WATT)	
	4	1	**8T-4223**	1	WASHER-HARD (13.5X25.5X3-MM THK)	
M	5	1	**8T-4244**	1	NUT (M12X1.75-THD)	
M	6	1	**174-7791**	1	SCREW-TAPPING	
	7	1	**5C-2889**	1	LOCKWASHER	
	8	1	**170-6993**	1	COVER	
M	9	1	**180-3861**	4	SCREW-TAPPING	
	10	1	**170-9417**	1	LENS AS (FLOODLIGHT)	
	11	1	**170-9418**	1	BAND	

M-METRIC PART

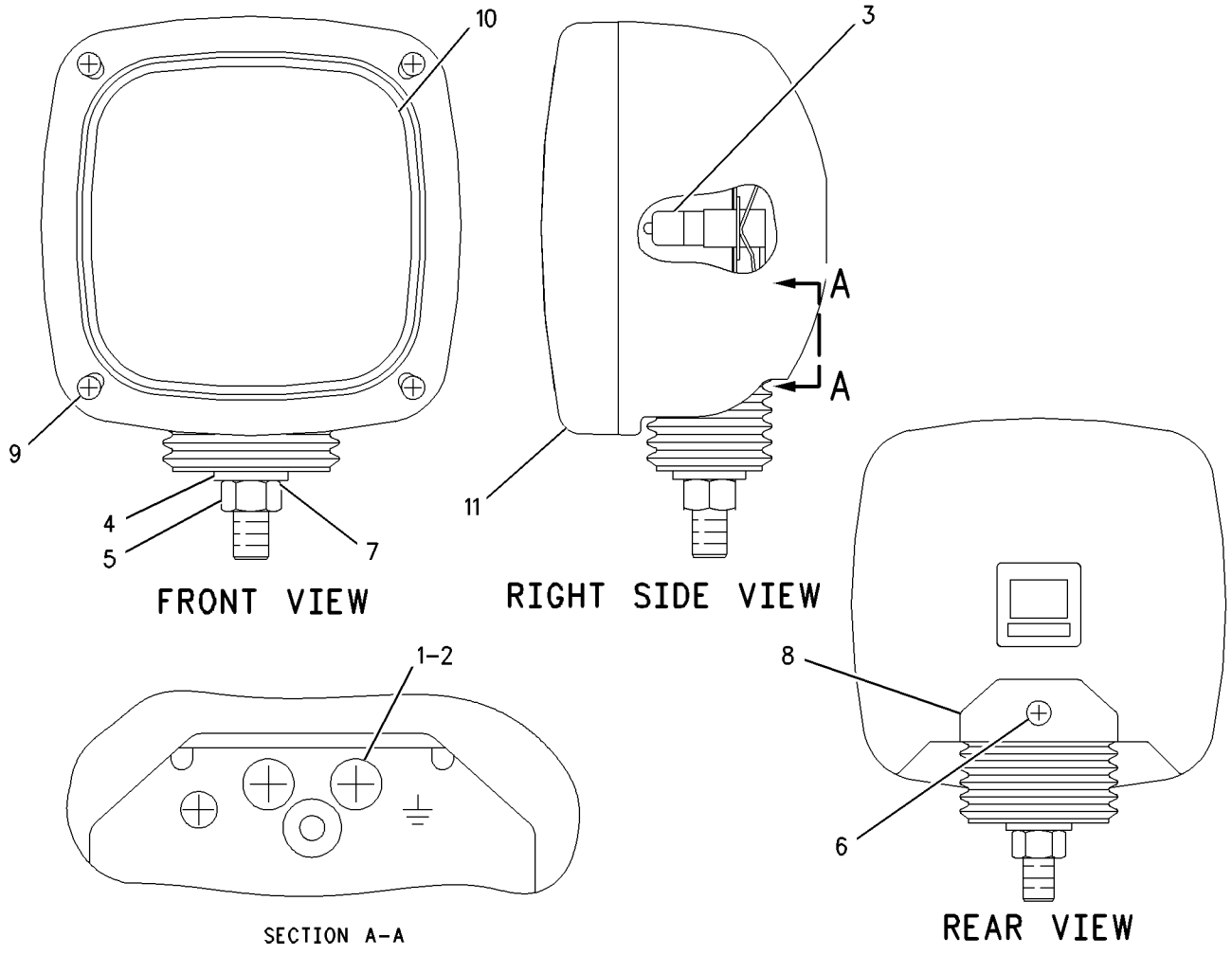

GRAPHIC #1 **<END>** g00645948

153-2523 LAMP GP-FLOOD

S/N: KGF1-UP; FAL1-UP
24-VOLT
PART OF 4I-5409 LIGHTING GP-CHASSIS

SMCS-1434 **i02724687**

NOTE	REF NO	GRAPHIC REF	PART NUMBER	QTY	PART NAME 1 2 3 4 5 6 (PRODUCT LEVEL)	SEE PAGE
M	1	1	**6V-5210**	2	SCREW-MACHINE (M4X0.7X10-MM)	
	2	1	**3B-4501**	2	LOCKWASHER	
	3	1	**9X-3463**	1	LAMP-HALOGEN (24-VOLT, 65-WATT)	
	4	1	**8T-4223**	1	WASHER-HARD (13.5X25.5X3-MM THK)	
M	5	1	**8T-4244**	1	NUT (M12X1.75-THD)	
M	6	1	**174-7791**	1	SCREW-TAPPING	
	7	1	**5C-2889**	1	LOCKWASHER	
	8	1	**170-6993**	1	COVER	
M	9	1	**180-3861**	4	SCREW-TAPPING	
	10	1	**170-9417**	1	LENS AS	
	11	1	**170-9418**	1	BAND	

M-METRIC PART

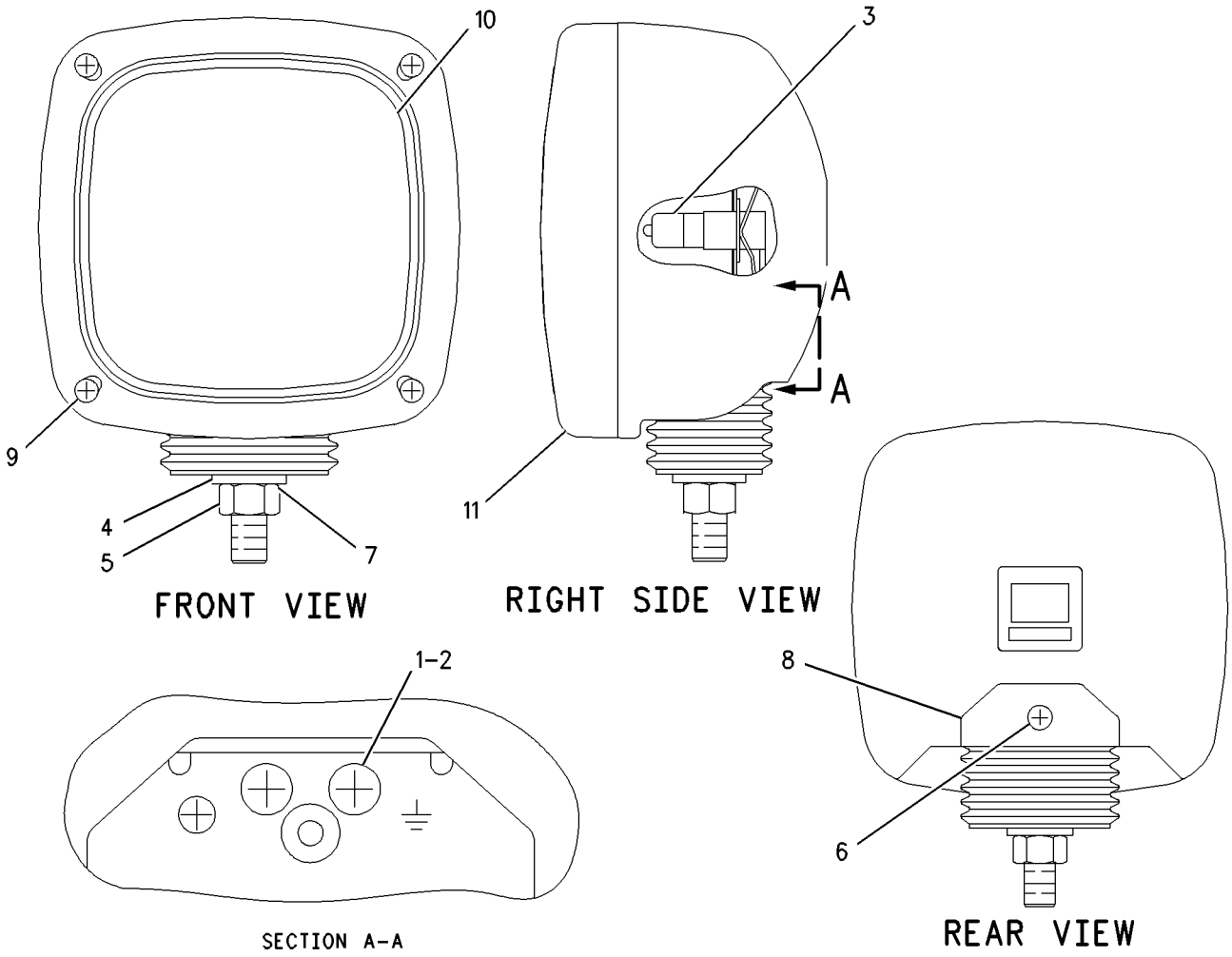

GRAPHIC #1 **<END>** g00645948

167-3441 LAMP GP-FLOOD

S/N: KGF1-UP; FAL1-UP
PART OF 163-6772 LIGHTING GP-FLOOD
AN ATTACHMENT

SMCS-1434 **i01823005**

NOTE	REF NO	GRAPHIC REF	PART NUMBER	QTY	PART NAME 1 2 3 4 5 6 (PRODUCT LEVEL)	SEE PAGE
	1	1	**9X-3463**	1	LAMP-HALOGEN (24-VOLT, 65-WATT)	

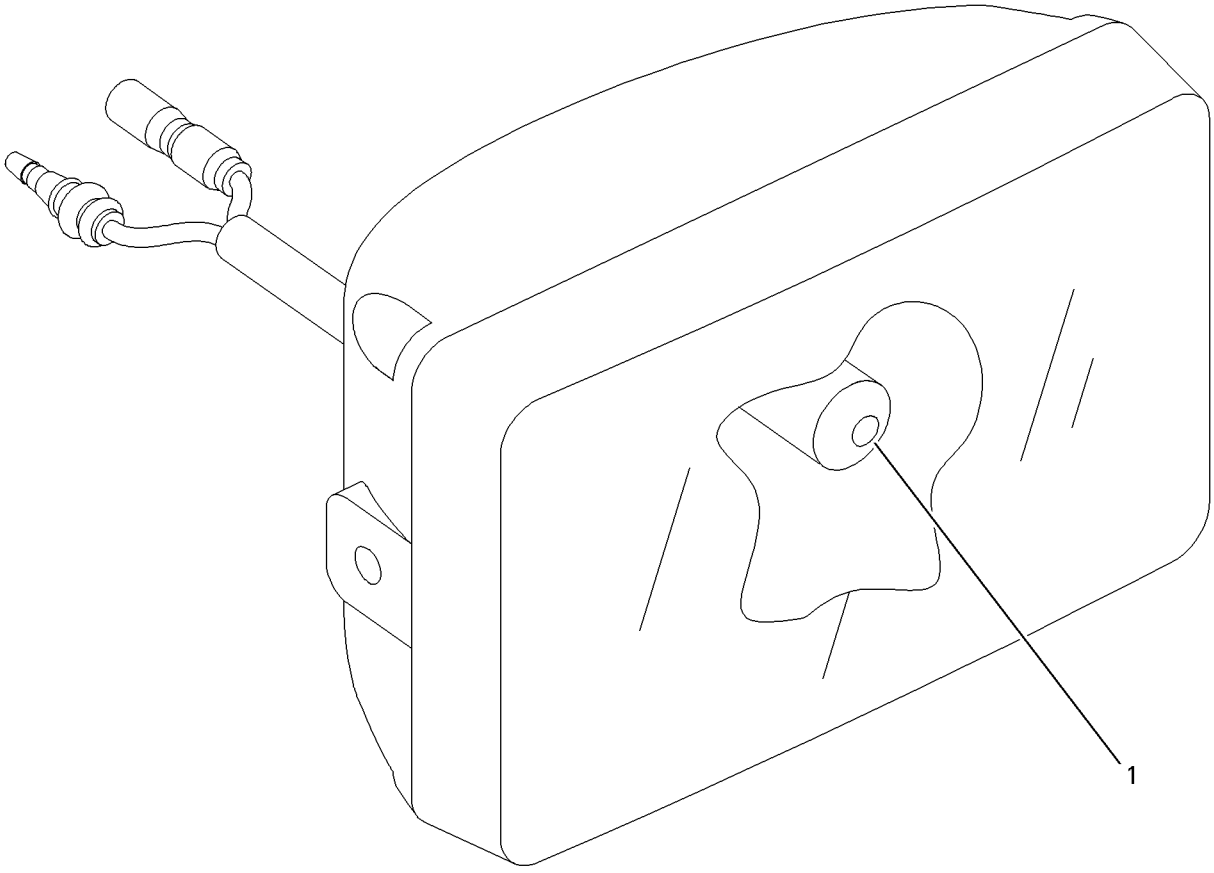

GRAPHIC #1 **<END>** g00692317

4I-5409 LIGHTING GP-CHASSIS–FRONT, RH

S/N: KGF1-UP; FAL1-UP

PART OF 264-8638, 264-8639 CHASSIS AR

SMCS-1429 **i01097714**

NOTE	REF NO	GRAPHIC REF	PART NUMBER	QTY	PART NAME 1 2 3 4 5 6 (PRODUCT LEVEL)	SEE PAGE
Y	1	1	**153-2523**	1	LAMP GP-FLOOD	243

Y-SEPARATE ILLUSTRATION

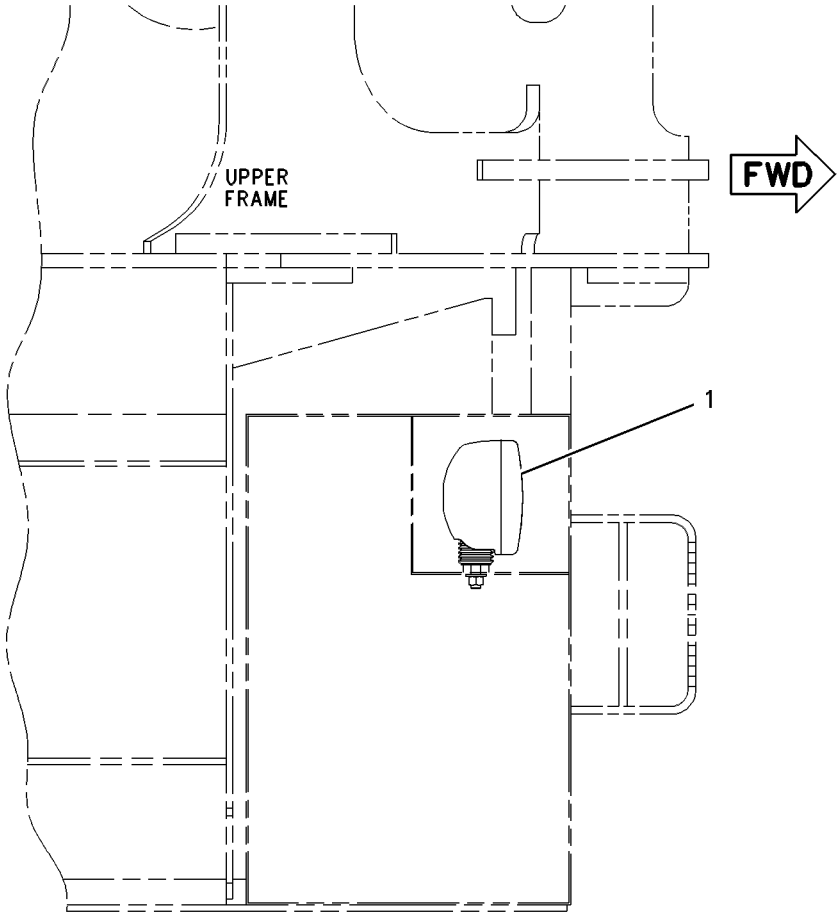

TOP VIEW

GRAPHIC #1 **<END>** g00588573

163-6772 LIGHTING GP-FLOOD—CAB

S/N: KGF1-UP; FAL1-UP

AN ATTACHMENT

SMCS-1434 **i03278406**

NOTE	REF NO	GRAPHIC REF	PART NUMBER	QTY	PART NAME 1 2 3 4 5 6 (PRODUCT LEVEL)	SEE PAGE
	1	1	**163-6814**	1	COVER (RH)	
	2	1	**163-6813**	1	COVER (LH)	
M	3	1	**8T-4970**	4	BOLT (M6X1X14-MM)	
	4	1	**9X-8256**	12	WASHER (6.6X12X2-MM THK)	
Y	5	1	**167-3441**	2	LAMP GP-FLOOD	244
	6	1	**163-6795**	2	STRAP-CABLE	
B	7	1	**9X-8256**	4	WASHER (6.6X12X2-MM THK)	
	8	1	**167-3437**	1	BRACKET AS (LH)	
M	9	1	**8T-6411**	6	SCREW-MACHINE (M6X1X12-MM)	
M	10	1	**8T-4200**	2	BOLT (M8X1.25X16-MM)	
	11	1	**8T-4224**	2	WASHER-HARD (8.8X16X2-MM THK)	
	12	1	**167-3456**	2	HARNESS AS-LIGHTING (CAB FLOODLIGHT)	
					(EACH INCLUDES)	
		1	**7Y-3962**	1	TERMINAL (CONNECTOR)	
		1	**7Y-3964**	1	TUBE (CONNECTOR TERMINAL)	
		1	**7Y-3963**	1	TERMINAL (RECEPTACLE)	
		1	**7Y-3965**	1	TUBE (RECEPTACLE TERMINAL)	
	13	1	**167-3438**	1	BRACKET AS (RH)	
M	14	1	**8T-6412**	2	SCREW-MACHINE (M6X1X20-MM)	

B-USE AS REQUIRED
M-METRIC PART
Y-SEPARATE ILLUSTRATION

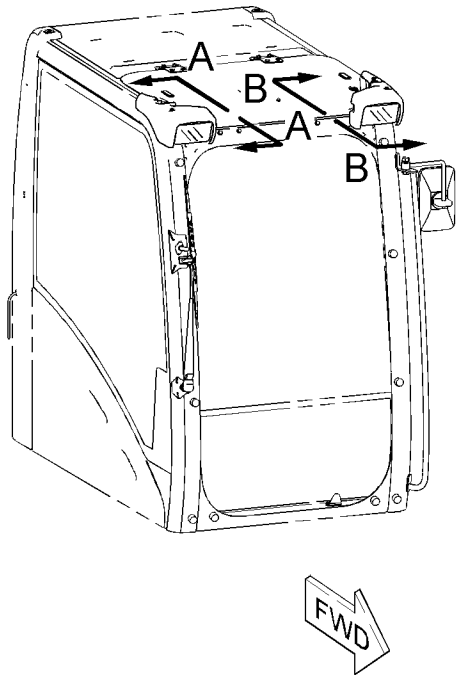

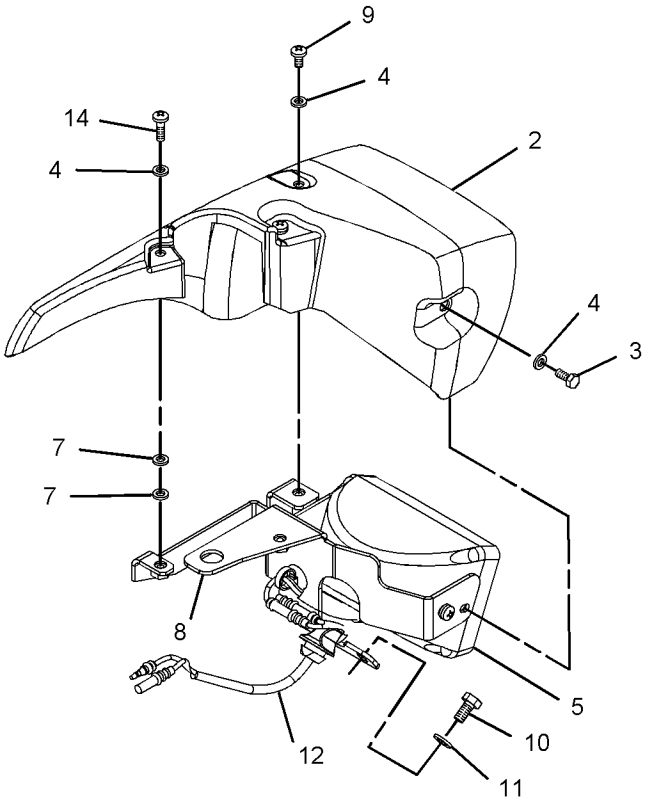

VIEW B-B
(EXPLODED)

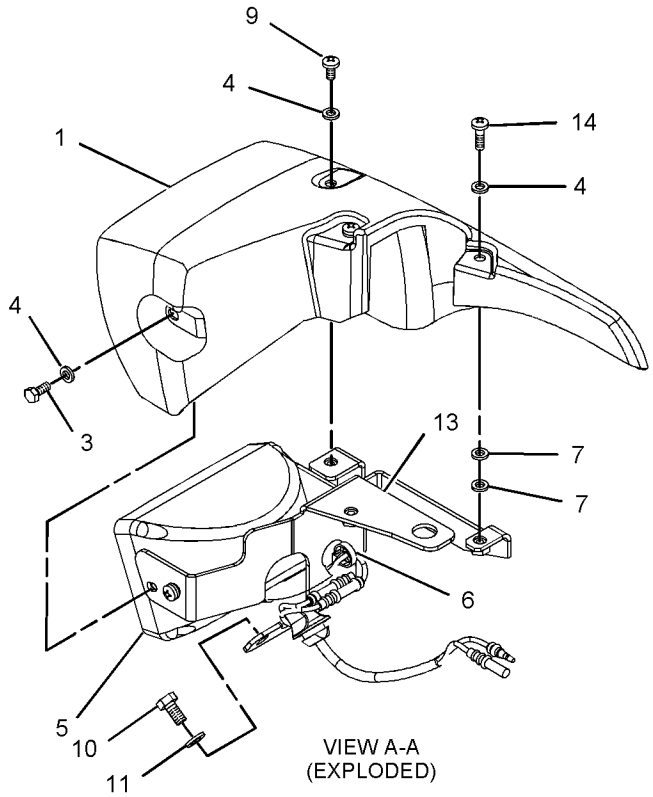

VIEW A-A
(EXPLODED)

GRAPHIC #1 **<END>** g01062205

170-9294 LIGHTING GP-FLOOD–CAB GUARD

S/N: KGF1-UP; FAL1-UP
AN ATTACHMENT

SMCS-1434 **i02259861**

NOTE	REF NO	GRAPHIC REF	PART NUMBER	QTY	PART NAME 1 2 3 4 5 6 (PRODUCT LEVEL)	SEE PAGE
	1	1	**183-1035**	2	LAMP GP-FLOOD	
					(EACH INCLUDES)	
		1	**9X-3463**	1	LAMP-HALOGEN (24-VOLT, 65-WATT)	
	2	1	**163-6795**	2	STRAP-CABLE	
M	3	1	**8T-4133**	2	NUT (M10X1.5-THD)	
	4	1	**8T-4121**	4	WASHER-HARD (11X21X2.5-MM THK)	
M	5	1	**8T-4137**	2	BOLT (M10X1.5X20-MM)	
	6	1	**170-9295**	2	HARNESS AS-LIGHTING (CAB FLOODLIGHTS, FRONT)	
					(EACH INCLUDES)	
		1	**7Y-3962**	2	TERMINAL (CONNECTOR)	
		1	**7Y-3964**	2	TUBE (CONNECTOR TERMINAL)	
		1	**7Y-3963**	2	TERMINAL (RECEPTACLE)	
		1	**7Y-3965**	2	TUBE (RECEPTACLE TERMINAL)	

M-METRIC PART

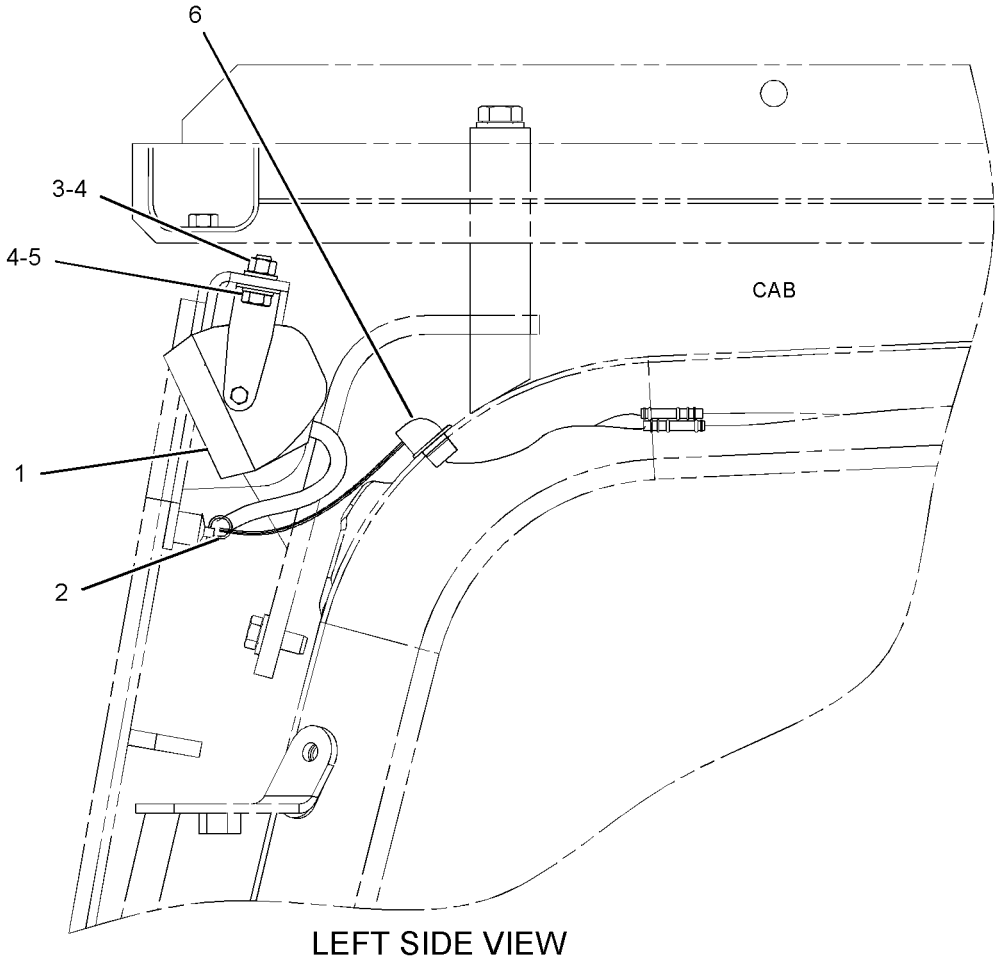

LEFT SIDE VIEW

GRAPHIC #1 **<END>** g01134805

259-5043 LIGHTING GP-FLOOD–BOOM, LH

S/N: KGF1-UP; FAL1-UP
PART OF 240-3828, 240-3830, 240-3832, 240-3836, 275-3695 BOOM AR-1 PIECE LONG,
302-9208 LINKAGE AR
AN ATTACHMENT

SMCS-1434 **i02423466**

NOTE	REF NO	GRAPHIC REF	PART NUMBER	QTY	PART NAME 1 2 3 4 5 6 (PRODUCT LEVEL)	SEE PAGE
	1	1	**7I-2673**	1	STRAP-CABLE	
	2	1	**111-4836**	4	CLIP	
	3	1	**116-0118**	1	CLIP	
Y	4	1	**153-2521**	1	LAMP GP-FLOOD (24-VOLT, VERTICAL MOUNT)	242
	5	1	**259-5326**	1	HARNESS AS-LIGHTING (BOOM, LH)	
		1	**243-4505**	1	RECEPTACLE AS-CONNECTOR (2-PIN)	
	6	1	**111-4837**	1	CLIP	
	7	1	**134-3284**	1	BRACKET	
	8	1	**5P-9297**	2	CLIP	
	9	1	**8T-4121**	5	WASHER-HARD (11X21X2.5-MM THK)	
M	10	1	**8T-4133**	5	NUT (M10X1.5-THD)	
M	11	1	**8T-4190**	1	BOLT (M16X2X25-MM)	
	12	1	**9X-8257**	1	WASHER (17.5X30X3.5-MM THK)	

M-METRIC PART
Y-SEPARATE ILLUSTRATION

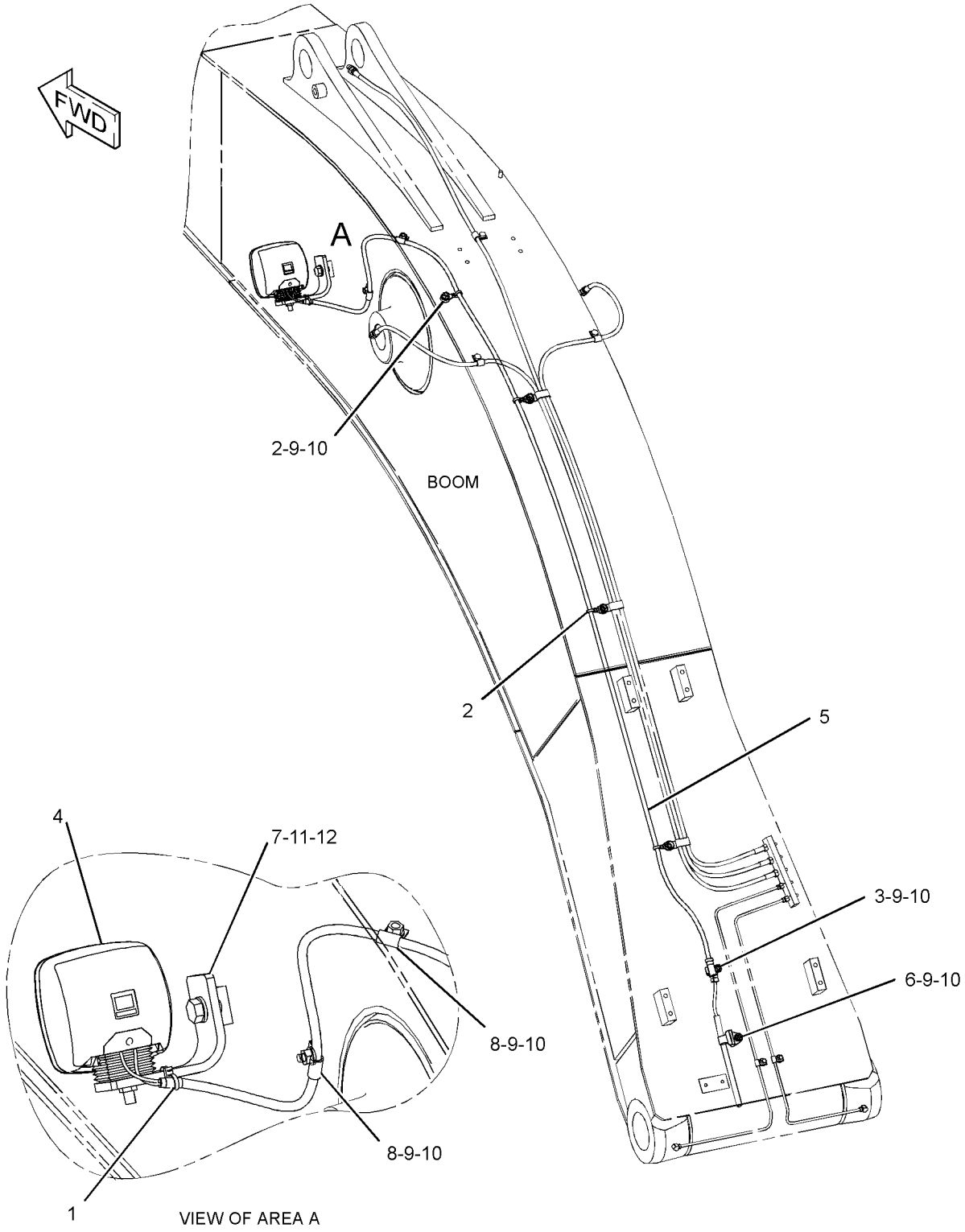

GRAPHIC #1 **<END>** g01226436

259-5047 LIGHTING GP-FLOOD—BOOM, RH

S/N: KGF1-UP; FAL1-UP
FOR USE WITH 259-5043—PAGE 249
AN ATTACHMENT

SMCS-1434 **i02423368**

NOTE	REF NO	GRAPHIC REF	PART NUMBER	QTY	PART NAME 1 2 3 4 5 6 (PRODUCT LEVEL)	SEE PAGE
	1	1	**7I-2673**	2	STRAP-CABLE	
	2	1	**111-4836**	2	CLIP	
Y	3	1	**153-2521**	1	LAMP GP-FLOOD (24-VOLT, VERTICAL MOUNT)	242
	4	1	**259-5327**	1	HARNESS AS-LIGHTING (BOOM)	
	5	1	**134-3284**	1	BRACKET	
	6	1	**7N-3718**	2	CLIP	
	7	1	**8T-4121**	2	WASHER-HARD (11X21X2.5-MM THK)	
M	8	1	**8T-4133**	2	NUT (M10X1.5-THD)	
M	9	1	**8T-4190**	1	BOLT (M16X2X25-MM)	
	10	1	**9X-8257**	1	WASHER (17.5X30X3.5-MM THK)	

M-METRIC PART
Y-SEPARATE ILLUSTRATION

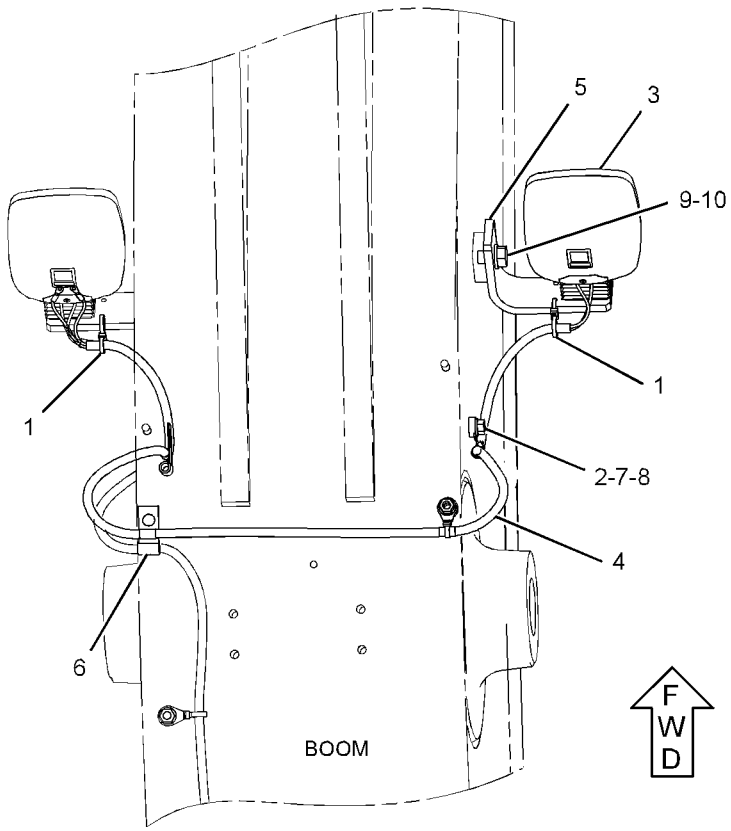

TOP VIEW

GRAPHIC #1 **<END>** g01223146

259-5048 LIGHTING GP-FLOOD—SHORT BOOM, RH

S/N: KGF1-UP; FAL1-UP

FOR USE WITH 267-7627—PAGE 254

AN ATTACHMENT

SMCS-1434 **i02706828**

NOTE	REF NO	GRAPHIC REF	PART NUMBER	QTY	PART NAME 1 2 3 4 5 6 (PRODUCT LEVEL)	SEE PAGE
	1	1	**3S-2093**	1	STRAP-CABLE	
	2	1	**7I-2673**	1	STRAP-CABLE	
Y	3	1	**153-2521**	1	LAMP GP-FLOOD (24-VOLT)	242
	4	1	**267-7626**	1	HARNESS AS-LIGHTING (SHORT BOOM, RH)	
	5	1	**111-4836**	1	CLIP	
	6	1	**134-3284**	1	BRACKET	
	7	1	**5P-9297**	1	CLIP	
	8	1	**7N-3718**	2	CLIP	
	9	1	**8T-4121**	4	WASHER-HARD (11X21X2.5-MM THK)	
M	10	1	**8T-4133**	4	NUT (M10X1.5-THD)	
M	11	1	**8T-4190**	1	BOLT (M16X2X25-MM)	
	12	1	**9X-8257**	1	WASHER (17.5X30X3.5-MM THK)	

M-METRIC PART
Y-SEPARATE ILLUSTRATION

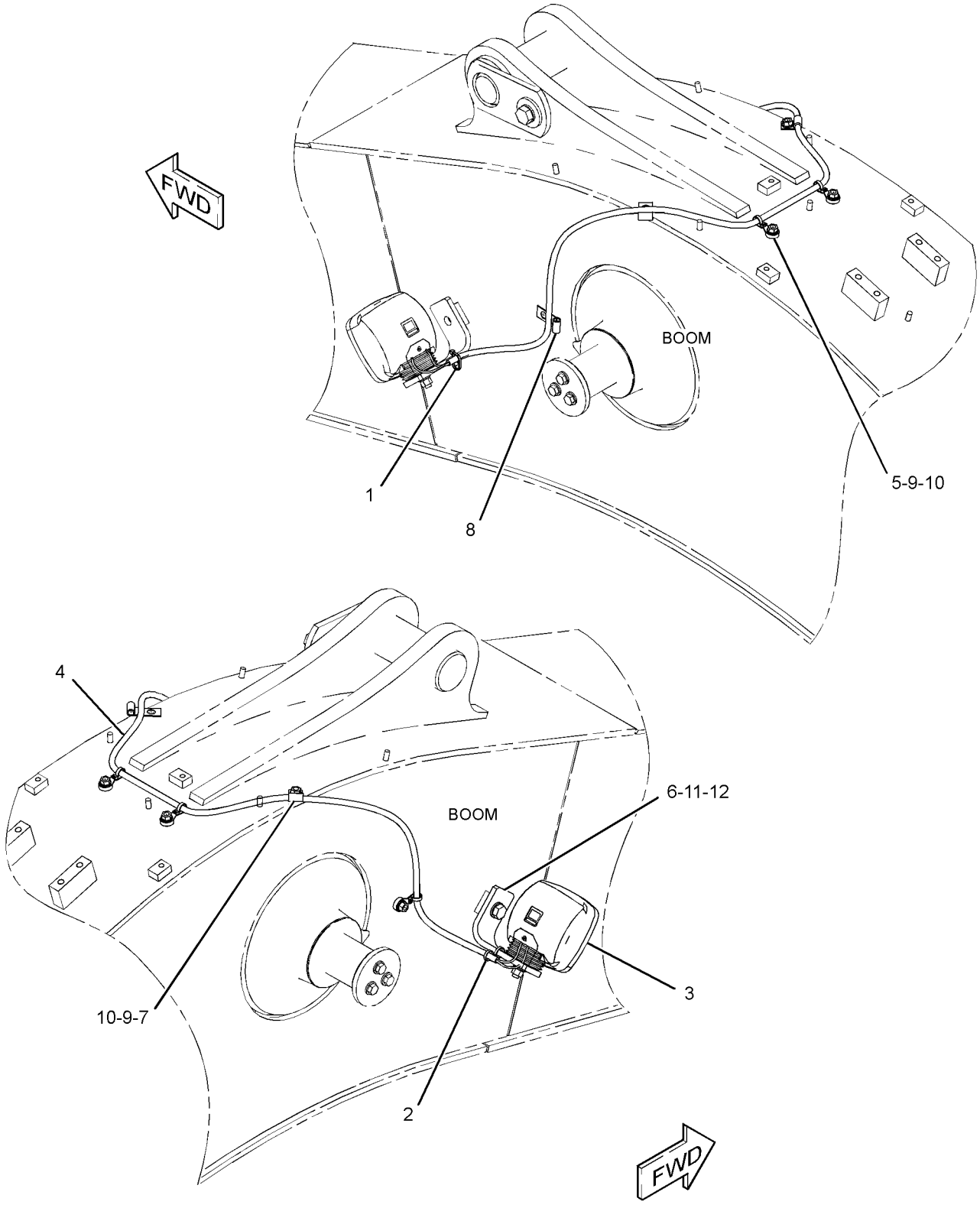

GRAPHIC #1 **<END>** g01230046

267-7627 LIGHTING GP-FLOOD—SHORT BOOM, LH

S/N: KGF1-UP; FAL1-UP
PART OF 240-3833 BOOM AR, 240-3835 BOOM AR-1 PIECE SHORT
AN ATTACHMENT

SMCS-1434 **i02706829**

NOTE	REF NO	GRAPHIC REF	PART NUMBER	QTY	PART NAME 1 2 3 4 5 6 (PRODUCT LEVEL)	SEE PAGE
	1	1	**7I-2673**	1	STRAP-CABLE	
	2	1	**111-4836**	4	CLIP	
	3	1	**116-0118**	1	CLIP	
Y	4	1	**153-2521**	1	LAMP GP-FLOOD (24-VOLT)	242
	5	1	**267-7628**	1	HARNESS AS-LIGHTING (SHORT BOOM, LH)	
		1	**9W-0852**	2	PIN-CONNECTOR (14-GA)	
		1	**243-4505**	1	RECEPTACLE AS-CONNECTOR (2-PIN)	
	6	1	**111-4837**	1	CLIP	
	7	1	**134-3284**	1	BRACKET	
	8	1	**5P-9297**	2	CLIP	
	9	1	**8T-4121**	5	WASHER-HARD (11X21X2.5-MM THK)	
M	10	1	**8T-4133**	5	NUT (M10X1.5-THD)	
M	11	1	**8T-4190**	1	BOLT (M16X2X25-MM)	
	12	1	**9X-8257**	1	WASHER (17.5X30X3.5-MM THK)	

M-METRIC PART
Y-SEPARATE ILLUSTRATION

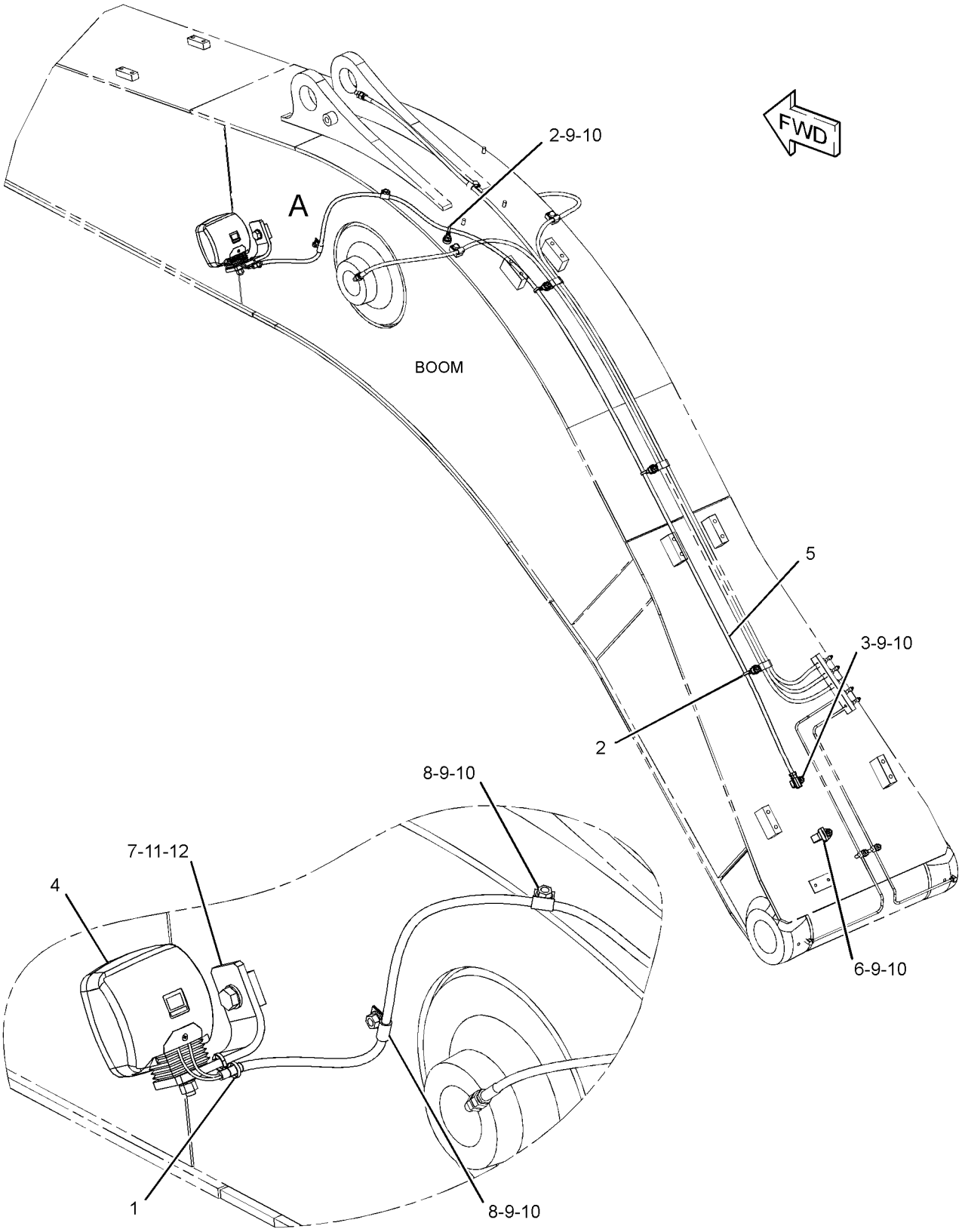

VIEW OF AREA A

GRAPHIC #1 **<END>** g01229074

259-5176 PANEL & MTG GP-CIRCUIT BREAKER

S/N: KGF1-1257; FAL1-841
PART OF 273-5387 OPERATOR AR

SMCS-1417, 1420 **i03093343**

NOTE	REF NO	GRAPHIC REF	PART NUMBER	QTY	PART NAME 1 2 3 4 5 6 (PRODUCT LEVEL)	SEE PAGE
Y	1	1	**259-5177**	1	PANEL GP-CIRCUIT BREAKER	258
	2	1	**8T-4121**	4	WASHER-HARD (11X21X2.5-MM THK)	
M	3	1	**8T-4137**	4	BOLT (M10X1.5X20-MM)	

M-METRIC PART
Y-SEPARATE ILLUSTRATION

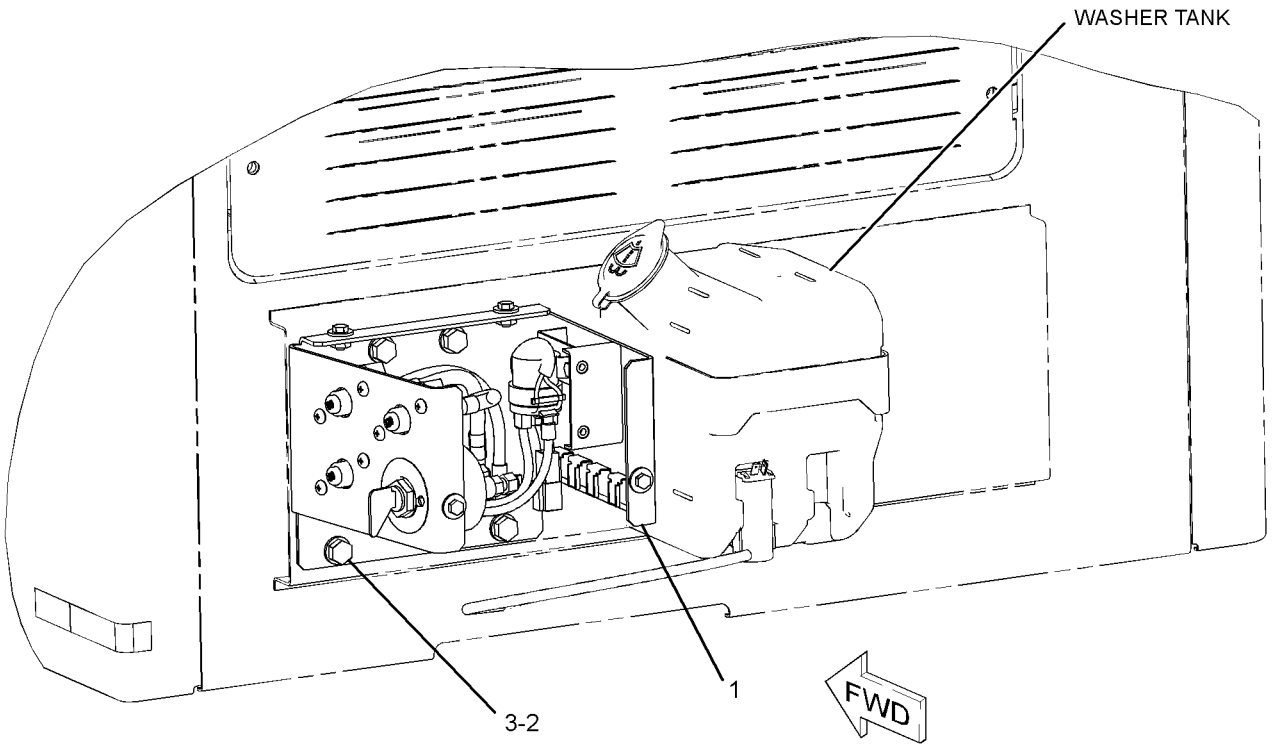

GRAPHIC #1 **<END>** g01193327

259-5176 PANEL & MTG GP-CIRCUIT BREAKER

S/N: KGF1258-UP; FAL842-UP
PART OF 273-5387 OPERATOR AR

SMCS-1417, 1420 **i03265580**

NOTE	REF NO	GRAPHIC REF	PART NUMBER	QTY	PART NAME 1 2 3 4 5 6 (PRODUCT LEVEL)	SEE PAGE
CY	1	1	**319-1386**	1	PANEL GP-CIRCUIT BREAKER	260
	2	1	**8T-4121**	4	WASHER-HARD (11X21X2.5-MM THK)	
M	3	1	**8T-4137**	4	BOLT (M10X1.5X20-MM)	

C-CHANGE FROM PREVIOUS TYPE
M-METRIC PART
Y-SEPARATE ILLUSTRATION

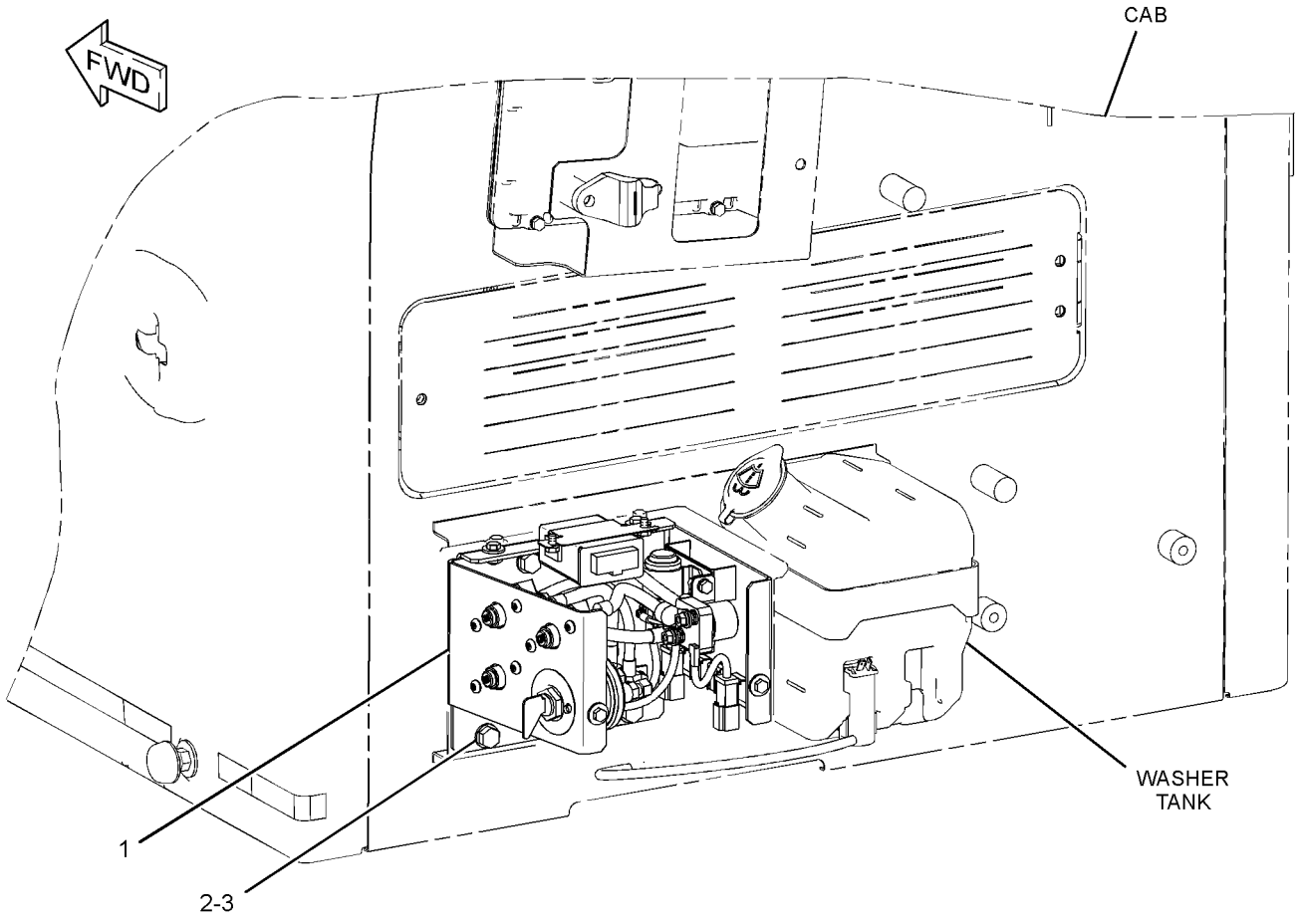

GRAPHIC #1 **<END>** g01515824

259-5177 PANEL GP-CIRCUIT BREAKER

S/N: KGF1-1257; FAL1-841

PART OF 259-5176 PANEL & MTG GP-CIRCUIT BREAKER

SMCS-1417 **i02851396**

NOTE	REF NO	GRAPHIC REF	PART NUMBER	QTY	PART NAME 1 2 3 4 5 6 (PRODUCT LEVEL)	SEE PAGE
	1	1	**3E-8320**	1	PLATE-INSTRUCTION (BATTERY)	
Y	2	1	**7N-0719**	1	SWITCH GP-DISCONNECT (BATTERY)	276
	3	1	**121-1023**	1	BLOCK-TERMINAL	
	4	1	**171-2208**	1	CIRCUIT BREAKER AS (60-AMPERE) (ALTERNATOR)	
		1	**6V-8187**	2	NUT (1/4-28-THD)	
		1	**8T-4205**	2	WASHER-HARD (7.2X14.5X2-MM THK)	
		1	**253-2111**	2	LOCKWASHER	
	5	1	**216-4970**	1	CIRCUIT BREAKER AS (120-AMPERE) (HEATER)	
		1	**6V-8187**	2	NUT (1/4-28-THD)	
		1	**8T-4205**	2	WASHER-HARD (7.2X14.5X2-MM THK)	
		1	**253-2111**	2	LOCKWASHER	
	6	1	**291-7547**	1	BRACKET AS	
	7	1	**234-1035**	1	CABLE AS	
D		1	**6V-2369**		WIRE (4-GA, BLACK) (0.3-M)	
		1	**9G-4343**	2	TERMINAL (4-GA)	
	8	1	**234-1037**	1	WIRE AS	
	9	1	**234-1038**	1	WIRE AS	
	10	1	**238-1506**	1	COVER	
	11	1	**238-2279**	1	BAR-BUS	
	12	1	**238-2280**	1	WIRE AS	
	13	1	**251-0303**	1	CABLE AS	
D		1	**6V-2369**		WIRE (4-GA, BLACK) (0.3-M)	
		1	**9G-4343**	2	TERMINAL (4-GA)	
	14	1	**251-0304**	1	CABLE AS	
D		1	**6V-2369**		WIRE (4-GA, BLACK) (0.2-M)	
		1	**9G-4343**	2	TERMINAL (4-GA)	
Y	15	1	**259-5274**	1	SWITCH GP-MAGNETIC (24-VOLT) (START RELAY)	278
	16	1	**171-2210**	1	CIRCUIT BREAKER AS (80-AMPERE) (MAIN)	
		1	**6V-8187**	2	NUT (1/4-28-THD)	
		1	**8T-4205**	2	WASHER-HARD (7.2X14.5X2-MM THK)	
		1	**253-2111**	2	LOCKWASHER	
M	17	1	**5C-9553**	5	BOLT (M6X1X16-MM)	
	18	1	**5P-4115**	4	WASHER-HARD (7.2X19X2-MM THK)	
	19	1	**6V-5645**	6	SCREW-MACHINE (10-32X0.87-IN)	
	20	1	**8T-0328**	6	WASHER-HARD (5.5X10X1-MM THK)	
M	21	1	**8T-4171**	4	BOLT (M6X1X12-MM)	
M	22	1	**8T-4970**	4	BOLT (M6X1X14-MM)	
	23	1	**9X-8256**	9	WASHER (6.6X12X2-MM THK)	

D-ORDER BY THE METER
M-METRIC PART
Y-SEPARATE ILLUSTRATION

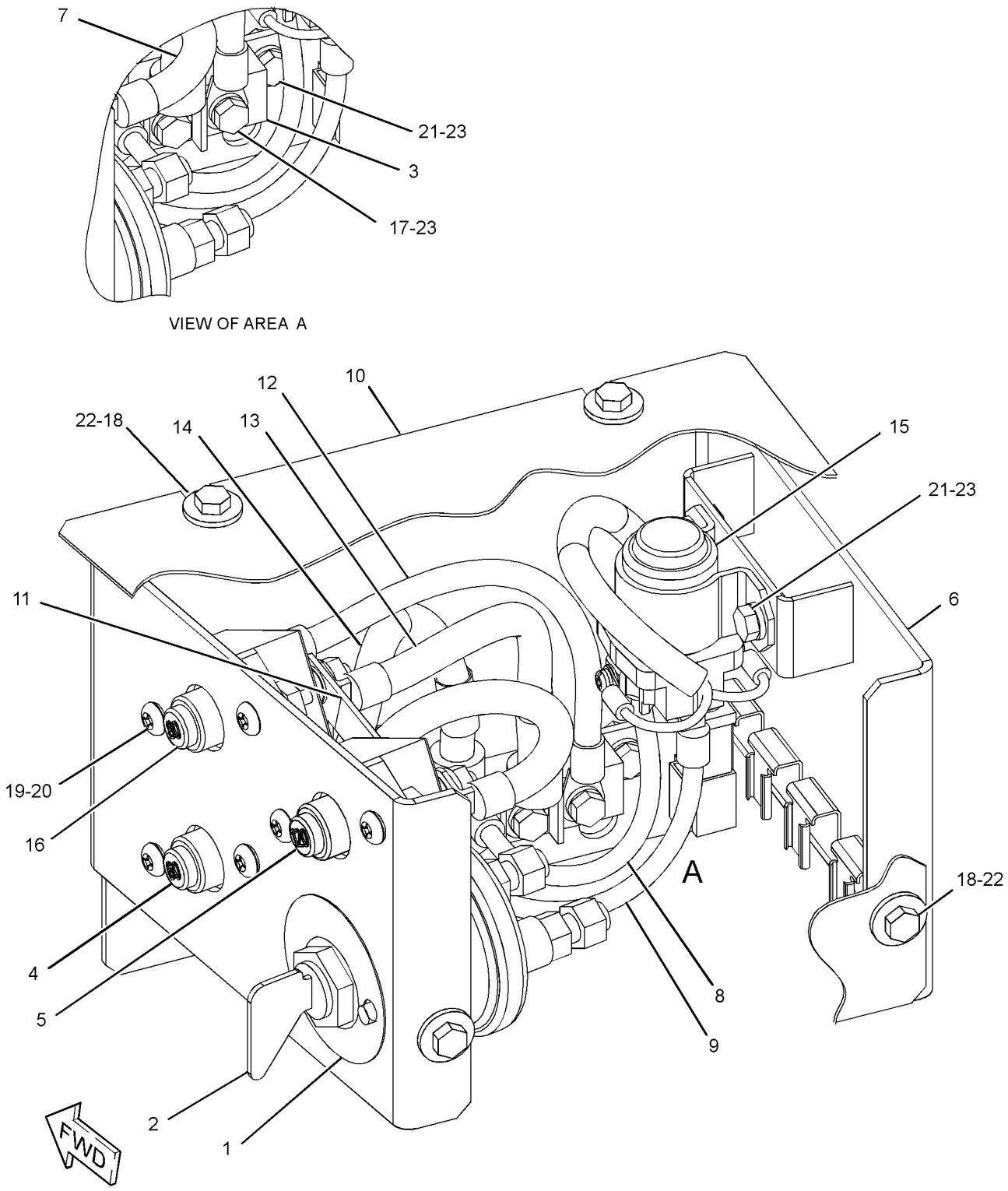

GRAPHIC #1 **<END>** g01362185

319-1386 PANEL GP-CIRCUIT BREAKER

S/N: KGF1258-UP; FAL842-UP

PART OF 259-5176 PANEL & MTG GP-CIRCUIT BREAKER

SMCS-1417 **i03016159**

NOTE	REF NO	GRAPHIC REF	PART NUMBER	QTY	PART NAME 1 2 3 4 5 6 (PRODUCT LEVEL)	SEE PAGE
	1	1	**3E-8320**	1	PLATE-INSTRUCTION (BATTERY)	
Y	2	1	**7N-0719**	1	SWITCH GP-DISCONNECT (BATTERY)	276
	3	1	**116-0114**	1	SWITCH AS-MAGNETIC (24-VOLT) (HEATER RELAY)	
		1	**186-3735**	2	PIN-CONNECTOR (16-GA TO 18-GA)	
		1	**102-8802**	1	KIT-RECEPTACLE (2-PIN)	
					(INCLUDES RECEPTACLE AS & WEDGE)	
	4	1	**121-1023**	1	BLOCK-TERMINAL	
	5	1	**171-2208**	1	CIRCUIT BREAKER AS (60-AMPERE) (ALTERNATOR)	
		1	**6V-8187**	2	NUT (1/4-28-THD)	
		1	**8T-4205**	2	WASHER-HARD (7.2X14.5X2-MM THK)	
		1	**253-2111**	2	LOCKWASHER	
	6	1	**197-4330**	1	CONTROLLER-AIR (HEATER)	
	7	1	**216-4970**	1	CIRCUIT BREAKER AS (120-AMPERE) (HEATER)	
		1	**6V-8187**	2	NUT (1/4-28-THD)	
		1	**8T-4205**	2	WASHER-HARD (7.2X14.5X2-MM THK)	
		1	**253-2111**	2	LOCKWASHER	
	8	1	**234-1037**	1	WIRE AS	
	9	1	**234-1038**	1	WIRE AS	
	10	1	**238-2279**	1	BAR-BUS	
	11	1	**238-2280**	1	WIRE AS	
	12	1	**238-2324**	1	CABLE AS	
		1	**9G-4343**	2	TERMINAL (4-GA)	
D		1	**6V-2369**		WIRE (4-GA, BLACK) (0.2-M)	
E		1	**125-7876**		TUBE-HEAT SHRINK (17.78-MM DIA) (4-CM)	
	13	1	**238-2325**	1	CABLE AS	
D		1	**6V-2369**		WIRE (4-GA, BLACK) (0.3-M)	
		1	**9G-4343**	2	TERMINAL (4-GA)	
E		1	**125-7876**		TUBE-HEAT SHRINK (17.78-MM DIA) (4-CM)	
	14	1	**251-0303**	1	CABLE AS	
D		1	**6V-2369**		WIRE (4-GA, BLACK) (0.2-M)	
		1	**9G-4343**	2	TERMINAL (4-GA)	
E		1	**125-7876**		TUBE-HEAT SHRINK (17.78-MM DIA) (4-CM)	
	15	1	**251-0304**	1	CABLE AS	
D		1	**6V-2369**		WIRE (4-GA, BLACK) (0.2-M)	
		1	**9G-4343**	2	TERMINAL (4-GA)	
E		1	**125-7876**		TUBE-HEAT SHRINK (17.78-MM DIA) (4-CM)	
Y	16	1	**259-5274**	1	SWITCH GP-MAGNETIC (24-VOLT) (START RELAY)	278
	17	1	**291-7547**	1	BRACKET AS	
	18	1	**319-1344**	1	BRACKET AS	
	19	1	**319-1346**	1	COVER AS	
	20	1	**171-2210**	1	CIRCUIT BREAKER AS (80-AMPERE) (MAIN)	
		1	**6V-8187**	2	NUT (1/4-28-THD)	
		1	**8T-4205**	2	WASHER-HARD (7.2X14.5X2-MM THK)	
		1	**253-2111**	2	LOCKWASHER	
M	21	1	**5C-2890**	2	NUT (M6X1-THD)	
M	22	1	**5C-9553**	5	BOLT (M6X1X16-MM)	
	23	1	**5P-4115**	4	WASHER-HARD (7.2X19X2-MM THK)	
	24	1	**6V-5645**	6	SCREW-MACHINE (10-32X0.87-IN)	
M	25	1	**7X-2619**	2	BOLT (M6X1X10-MM)	
	26	1	**8T-0328**	6	WASHER-HARD (5.5X10X1-MM THK)	
M	27	1	**8T-4171**	4	BOLT (M6X1X12-MM)	
M	28	1	**8T-4970**	6	BOLT (M6X1X14-MM)	
	29	1	**9X-8256**	15	WASHER (6.6X12X2-MM THK)	

319-1386 PANEL GP-CIRCUIT BREAKER *(contd.)* i03016159

D-ORDER BY THE METER
E-ORDER BY THE CENTIMETER
M-METRIC PART
Y-SEPARATE ILLUSTRATION

319-1386 PANEL GP-CIRCUIT BREAKER *(contd.)* **i03016159**

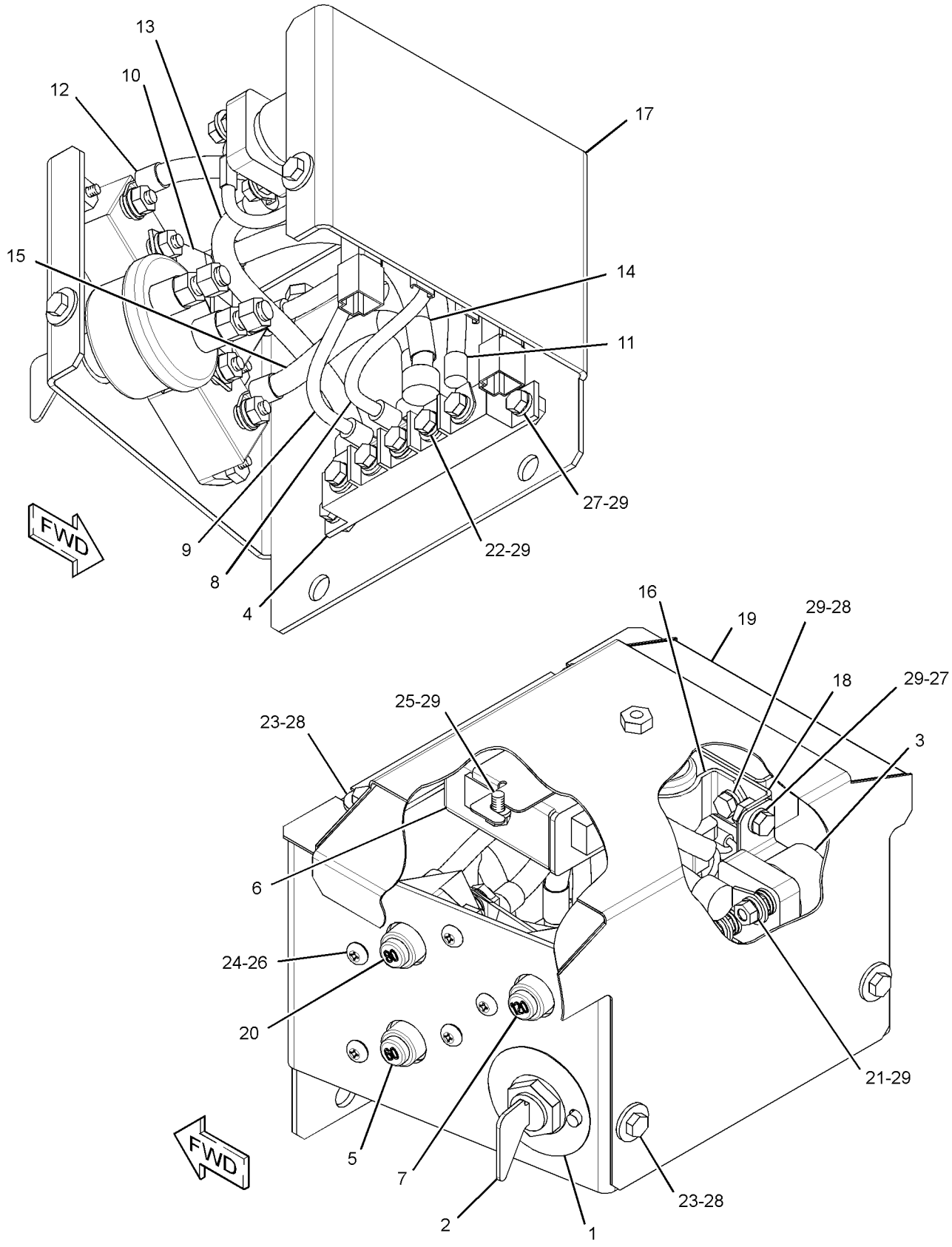

GRAPHIC #1 **<END>** g01515291

251-0542 PANEL GP-SWITCH–ENGINE SPEED, START

S/N: KGF1-UP; FAL1-UP
CONSOLE
CANNOT BE USED WITH 251-0544–PAGE 267
AN ATTACHMENT
TYPE 1

SMCS-1408, 1429, 7332, 7451 **i02742287**

NOTE	REF NO	GRAPHIC REF	PART NUMBER	QTY	PART NAME 1 2 3 4 5 6 (PRODUCT LEVEL)	SEE PAGE
	1	1	**3S-2093**	4	STRAP-CABLE	
Y	2	1	**9G-7641**	1	SWITCH GP-START (ENGINE, KEY)	285
Y	3	1	**106-0107**	1	SWITCH GP-ROTARY (THROTTLE POSITION)	283
	4	1	**170-9324**	1	LAMP AS (24-VOLT, 3-WATT)	
	5	1	**185-9208**	1	KNOB AS (THROTTLE POSITION)	
	6	1	**234-1156**	1	COVER	
	7	1	**234-1158**	1	COVER	
	8	1	**267-7976**	1	PANEL	
	9	1	**251-0543**	1	HARNESS AS-CONSOLE (RH)	
		1	**102-8802**	1	KIT-RECEPTACLE (2-PIN)	
					(INCLUDES RECEPTACLE AS & WEDGE)	
		1	**155-2270**	1	KIT-CONNECTING PLUG (2-PIN)	
		1	**155-2274**	1	KIT-CONNECTING PLUG (6-PIN)	
					(EACH CONNECTING PLUG KIT INCLUDES PLUG AS, WEDGE & INTERFACE SEAL)	
	10	1	**096-6166**	4	WASHER-HARD (4.5X9X1-MM THK)	
	11	1	**119-5026**	4	SCREW-PAN HEAD (10-16X0.63-IN)	
M	12	1	**6V-9491**	4	SCREW-MACHINE (M4X0.7X20-MM)	

M-METRIC PART
Y-SEPARATE ILLUSTRATION

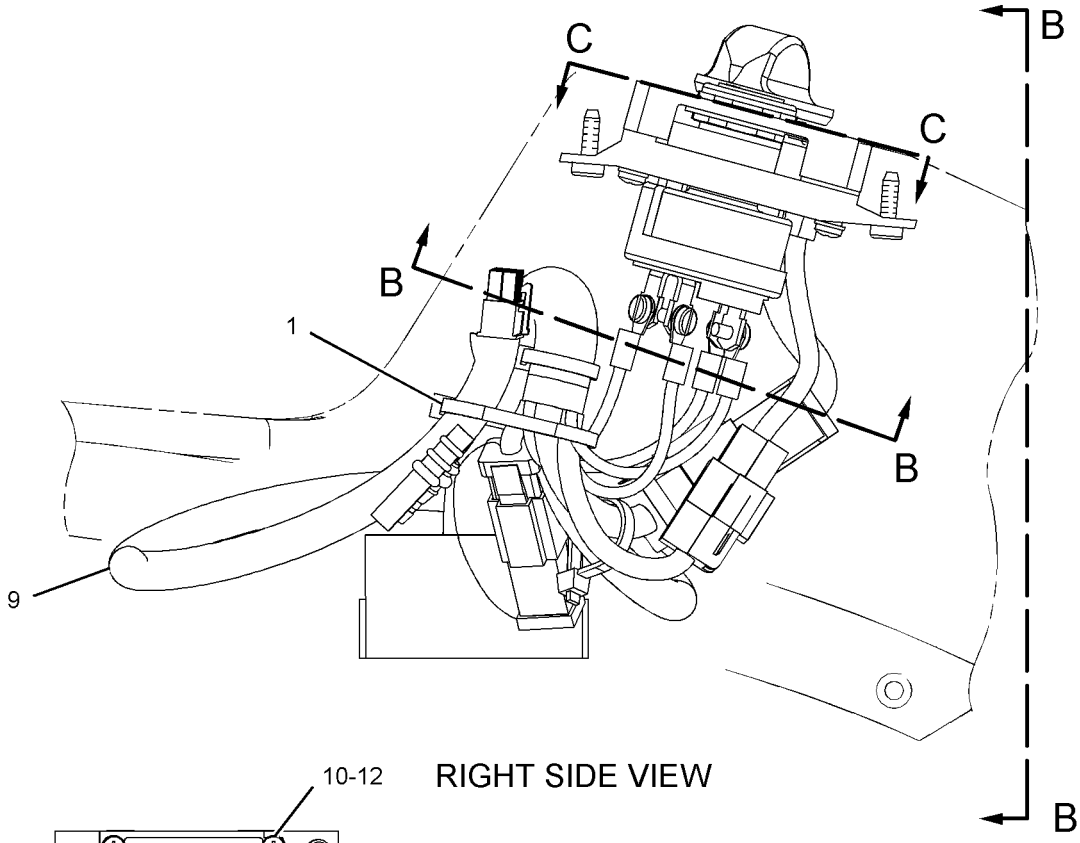

RIGHT SIDE VIEW

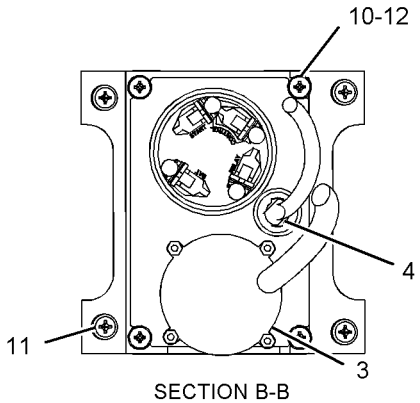

SECTION B-B

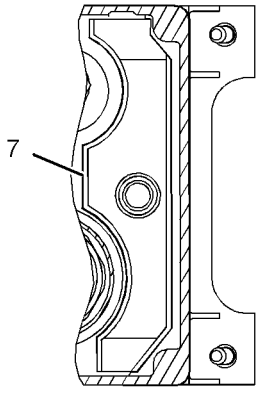

VIEW C-C

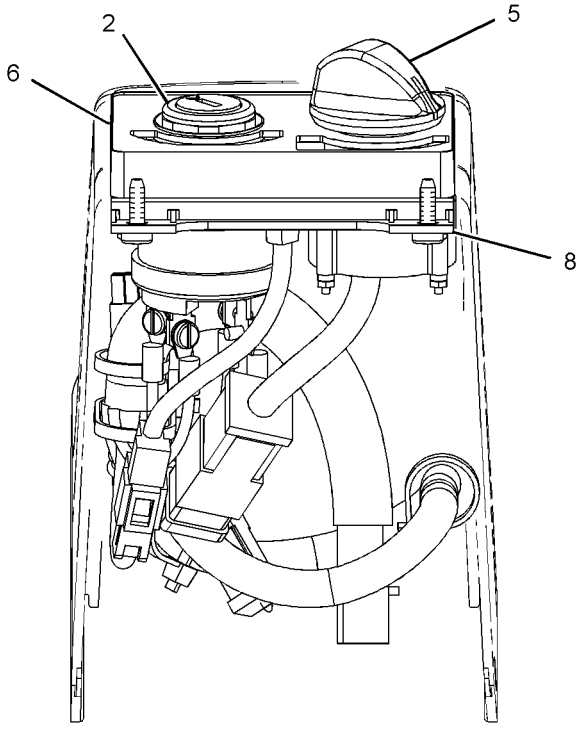

VIEW B-B

GRAPHIC #1 **<END>** g01112022

251-0542 PANEL GP-SWITCH–ENGINE SPEED, START

S/N: KGF1-UP; FAL1-UP
CONSOLE
CANNOT BE USED WITH 251-0544–PAGE 267
AN ATTACHMENT
TYPE 2

SMCS-1408, 1429, 7332, 7451 **i03098161**

NOTE	REF NO	GRAPHIC REF	PART NUMBER	QTY	PART NAME 1 2 3 4 5 6 (PRODUCT LEVEL)	SEE PAGE
	1	1	**3S-2093**	4	STRAP-CABLE	
Y	2	1	**9G-7641**	1	SWITCH GP-START (ENGINE, KEY)	285
CY	3	1	**319-4420**	1	SWITCH GP-ROTARY (THROTTLE POSITION)	284
	4	1	**170-9324**	1	LAMP AS (24-VOLT, 3-WATT)	
	5	1	**185-9208**	1	KNOB AS (THROTTLE POSITION)	
	6	1	**234-1156**	1	COVER	
	7	1	**234-1158**	1	COVER	
	8	1	**267-7976**	1	PANEL	
C	9	1	**328-0021**	1	HARNESS AS-CONSOLE (RH)	
	10	1	**096-6166**	4	WASHER-HARD (4.5X9X1-MM THK)	
	11	1	**119-5026**	4	SCREW-PAN HEAD (10-16X0.63-IN)	
M	12	1	**6V-9491**	4	SCREW-MACHINE (M4X0.7X20-MM)	

C-CHANGE FROM PREVIOUS TYPE
M-METRIC PART
Y-SEPARATE ILLUSTRATION

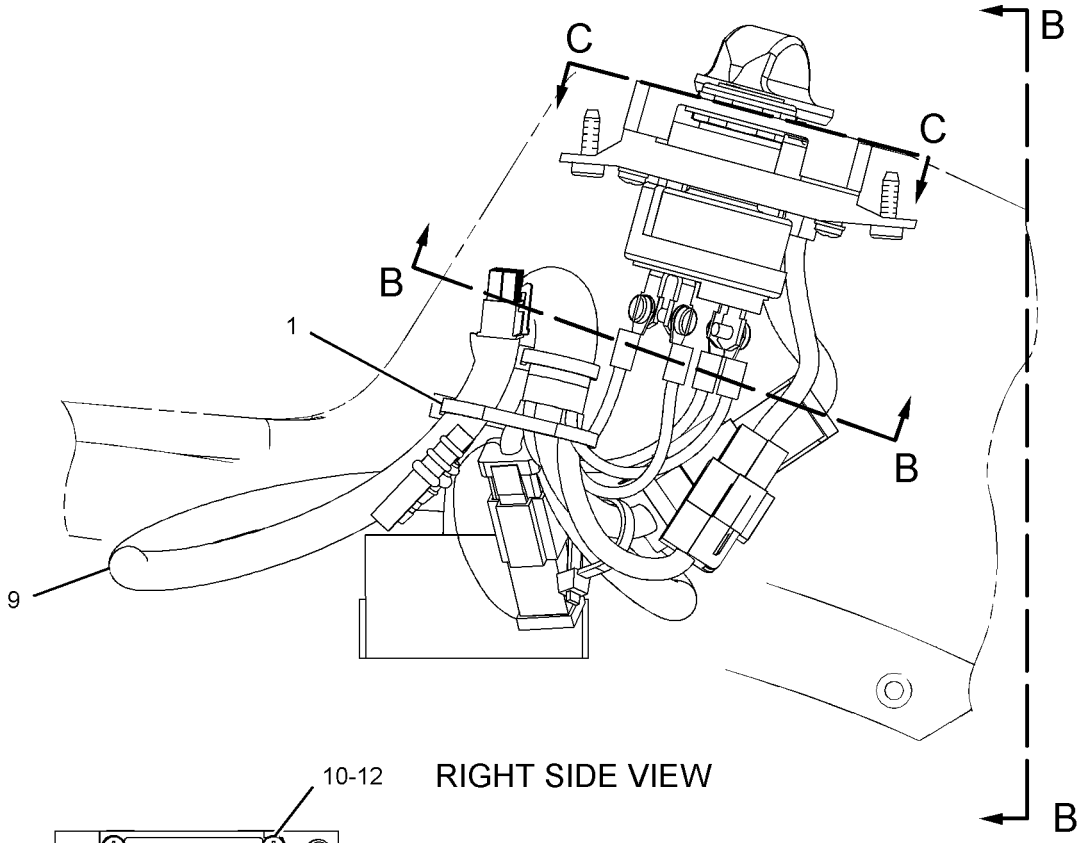

RIGHT SIDE VIEW

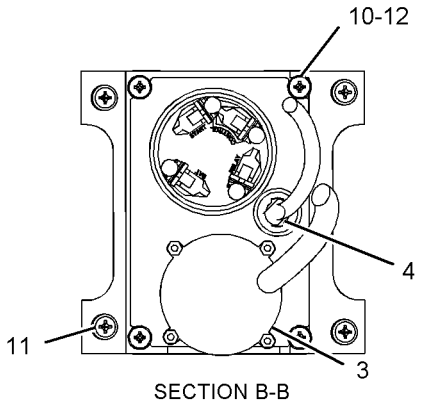

SECTION B-B

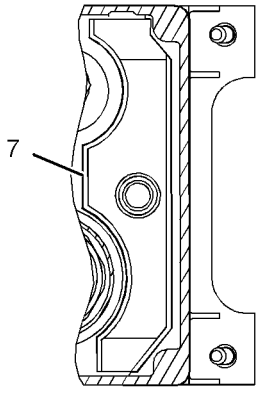

VIEW C-C

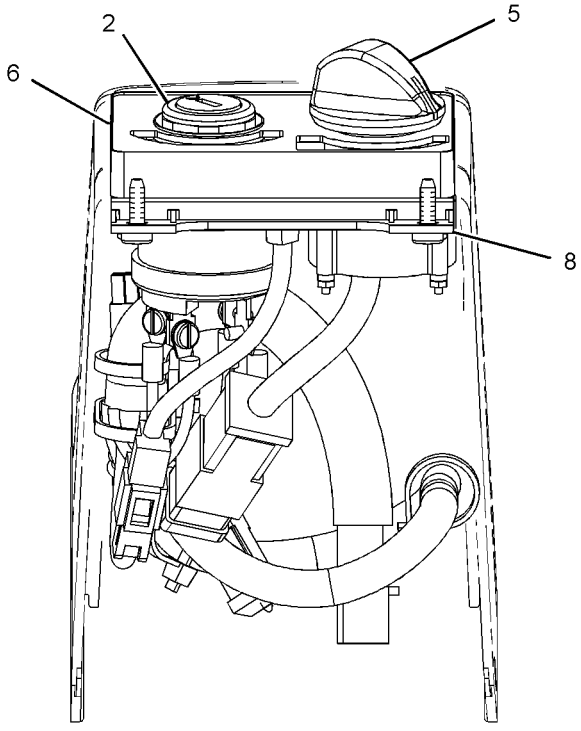

VIEW B-B

GRAPHIC #1 **<END>** g01112022

251-0544 PANEL GP-SWITCH–ENGINE SPEED, START

S/N: KGF1-UP; FAL1-UP
PART OF 227-7581 INSTALLATION GP-SECURITY
AN ATTACHMENT
TYPE 1

SMCS-1408, 1429, 7332, 7451 **i02742288**

NOTE	REF NO	GRAPHIC REF	PART NUMBER	QTY	PART NAME 1 2 3 4 5 6 (PRODUCT LEVEL)	SEE PAGE
	1	1	**3S-2093**	5	STRAP-CABLE	
Y	2	1	**9G-7641**	1	SWITCH GP-START (ENGINE, KEY)	285
Y	3	1	**106-0107**	1	SWITCH GP-ROTARY (THROTTLE POSITION)	283
	4	1	**185-9208**	1	KNOB AS	
	5	1	**205-0826**	1	FILM-INSTRUCTION (MACHINE SECURITY, CONSOLE)	
	6	1	**205-8257**	1	COIL AS (EXCITER)	
		1	**186-3735**	2	PIN-CONNECTOR (16-GA TO 18-GA)	
	7	1	**234-1156**	1	COVER	
	8	1	**267-7977**	1	PANEL	
	9	1	**251-0543**	1	HARNESS AS-CONSOLE (RH)	
		1	**102-8802**	1	KIT-RECEPTACLE (2-PIN)	
					(INCLUDES RECEPTACLE AS & WEDGE)	
		1	**155-2270**	1	KIT-CONNECTING PLUG (2-PIN)	
		1	**155-2274**	1	KIT-CONNECTING PLUG (6-PIN)	
					(EACH PLUG KIT INCLUDES PLUG AS, WEDGE & INTERFACE SEAL)	
	10	1	**096-6166**	4	WASHER-HARD (4.5X9X1-MM THK)	
	11	1	**119-5026**	4	SCREW-PAN HEAD (10-16X0.63-IN)	
M	12	1	**6V-9491**	4	SCREW-MACHINE (M4X0.7X20-MM)	

M-METRIC PART
Y-SEPARATE ILLUSTRATION

251-0544 **PANEL GP-SWITCH** *(contd.)* **i02742288**

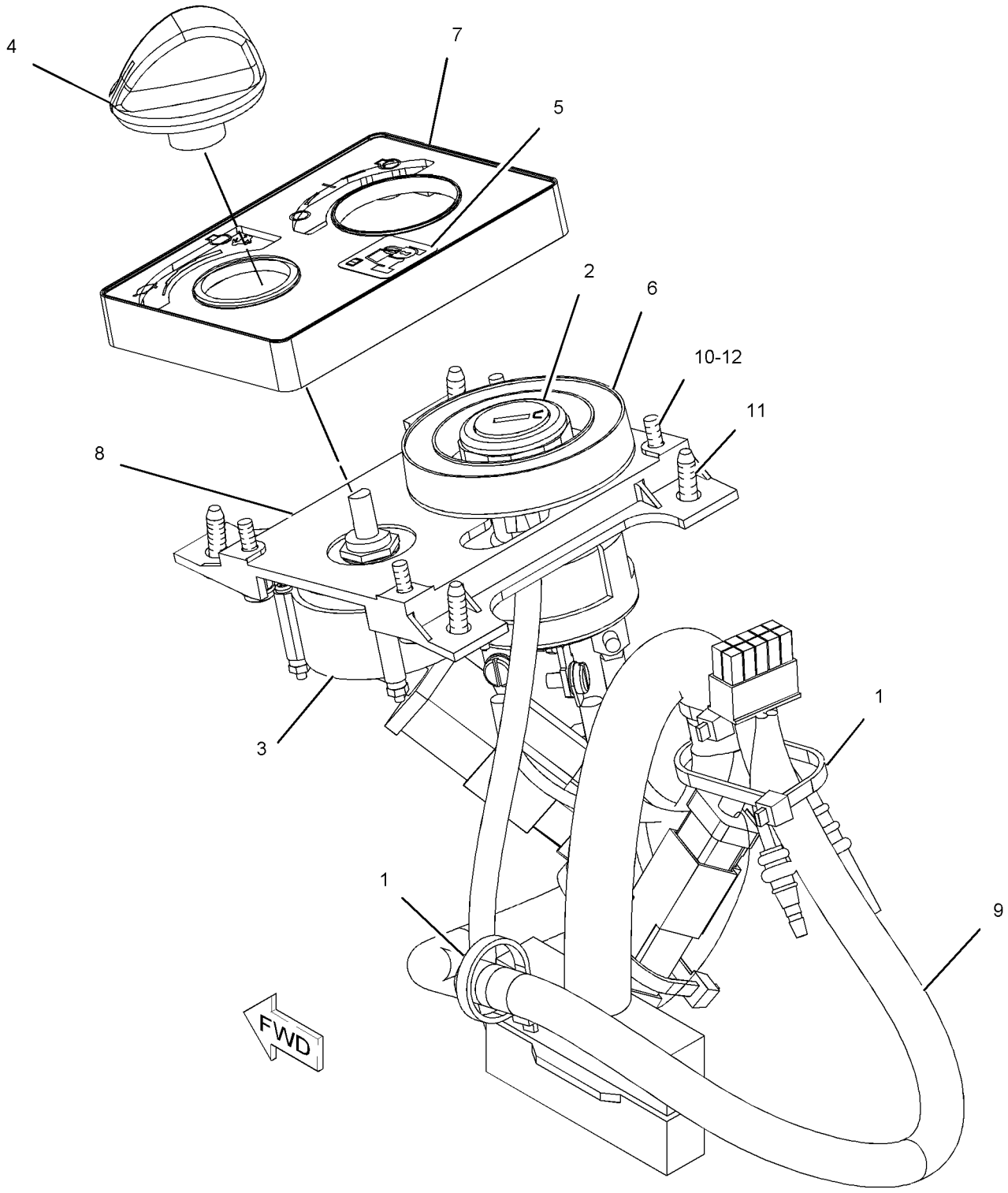

GRAPHIC #1 **<END>** g01123869

251-0544 PANEL GP-SWITCH–ENGINE SPEED, START

S/N: KGF1-UP; FAL1-UP
PART OF 227-7581 INSTALLATION GP-SECURITY
AN ATTACHMENT
TYPE 2

SMCS-1408, 1429, 7332, 7451 **i03265597**

NOTE	REF NO	GRAPHIC REF	PART NUMBER	QTY	PART NAME 1 2 3 4 5 6 (PRODUCT LEVEL)	SEE PAGE
	1	1	**3S-2093**	5	STRAP-CABLE	
Y	2	1	**9G-7641**	1	SWITCH GP-START (ENGINE, KEY)	285
CY	3	1	**319-4420**	1	SWITCH GP-ROTARY (THROTTLE POSITION)	284
	4	1	**185-9208**	1	KNOB AS	
	5	1	**205-0826**	1	FILM-INSTRUCTION (MACHINE SECURITY, CONSOLE)	
	6	1	**206-5208**	1	COIL AS (EXCITER)	
	7	1	**234-1156**	1	COVER	
	8	1	**267-7977**	1	PANEL	
C	9	1	**328-0021**	1	HARNESS AS-CONSOLE (RH)	
	10	1	**096-6166**	4	WASHER-HARD (4.5X9X1-MM THK)	
	11	1	**119-5026**	4	SCREW-PAN HEAD (10-16X0.63-IN)	
M	12	1	**6V-9491**	4	SCREW-MACHINE (M4X0.7X20-MM)	

C-CHANGE FROM PREVIOUS TYPE
M-METRIC PART
Y-SEPARATE ILLUSTRATION

251-0544 **PANEL GP-SWITCH** *(contd.)* **i03265597**

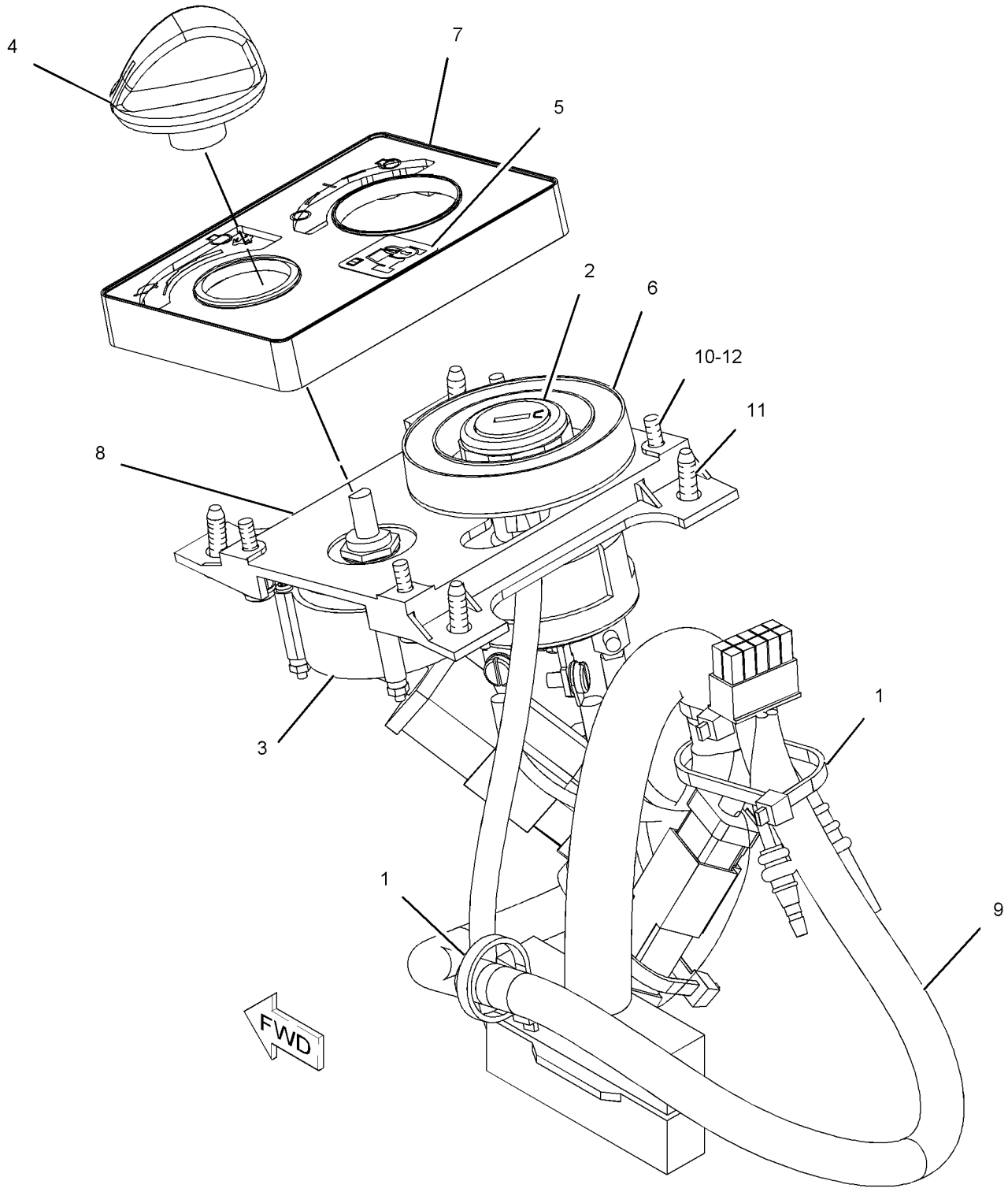

GRAPHIC #1 **<END>** g01123869

296-4666 SENSOR GP-ENGINE

S/N: GDC1-UP; KGF1-UP
PART OF 272-4677, 272-4683, 296-4676, 305-4777 ENGINE AR
ALSO AN ATTACHMENT

SMCS-1000, 1906, 1907, 1924, 7422 **i02618461**

NOTE	REF NO	GRAPHIC REF	PART NUMBER	QTY	PART NAME 1 2 3 4 5 6 (PRODUCT LEVEL)	SEE PAGE
	1	1	**238-0112**	1	SENSOR GP-TEMPERATURE (ENGINE OIL)	
	1A	1	**238-0112**	1	SENSOR GP-TEMPERATURE (AIR INLET MANIFOLD)	
	1B	1	**238-0112**	1	SENSOR GP-TEMPERATURE (FUEL)	
	2	1	**238-0118**	1	SENSOR GP-PRESSURE (FUEL MANIFOLD)	
	3	1	**296-4631**	1	WASHER	
	4	1	**274-6720**	1	SENSOR GP-PRESSURE (AIR INLET MANIFOLD)	
	5	1	**274-6721**	1	SENSOR GP-PRESSURE (FUEL)	
	6	1	**238-0120**	1	SENSOR GP-SPEED (ENGINE)	
	7	1	**294-1804**	4	SEAL-O-RING	
	8	1	**296-4633**	1	SEAL-O-RING	
	9	1	**266-0136**	1	SENSOR GP-PRESSURE (FUEL)	
E		1	**9X-1813**		SLEEVE (8-CM)	
		1	**9X-3401**	3	PIN-CONNECTOR (16-GA TO 18-GA)	
		1	**237-0228**	1	RECEPTACLE AS-CONNECTOR	
	10	1	**296-4621**	2	BOLT (M6X1.25X23.5-MM)	

E-ORDER BY THE CENTIMETER

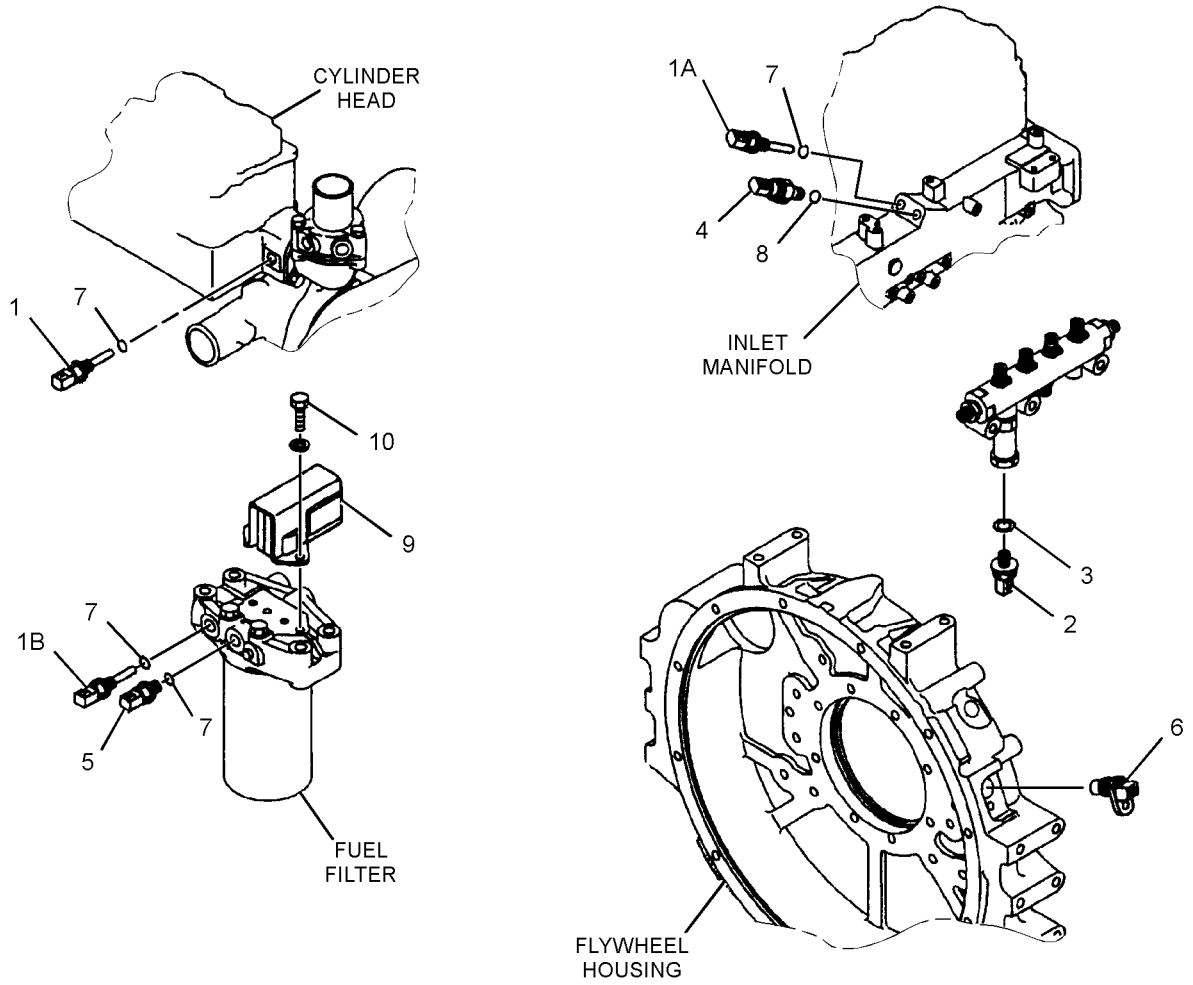

GRAPHIC #1 **<END>** g01317849

178-2345 SENSOR GP-LIQUID LEVEL–WATER IN FUEL

S/N: KGF1-UP; FAL1-UP
PART OF 272-4772 SENSOR GP-LIQUID LEVEL
AN ATTACHMENT

SMCS-7422 **i03195620**

NOTE	REF NO	GRAPHIC REF	PART NUMBER	QTY	PART NAME 1 2 3 4 5 6 (PRODUCT LEVEL)	SEE PAGE
	1	1	**178-2334**	1	PROBE AS-LIQUID LEVEL (WATER SEPARATOR)	
	2	1	**178-2335**	1	SENSOR AS-LIQUID LEVEL (WATER SEPARATOR)	
		1	**102-8804**	1	KIT-RECEPTACLE (4-PIN)	
					(INCLUDES RECEPTACLE AS & WEDGE)	
		1	**155-2270**	1	KIT-CONNECTING PLUG (2-PIN)	
					(INCLUDES PLUG AS,WEDGE & INTERFACE SEAL)	
		1	**186-3735**	4	PIN-CONNECTOR (16-GA TO 18-GA)	
		1	**186-3736**	2	SOCKET-CONNECTOR (16-GA TO 18-GA)	

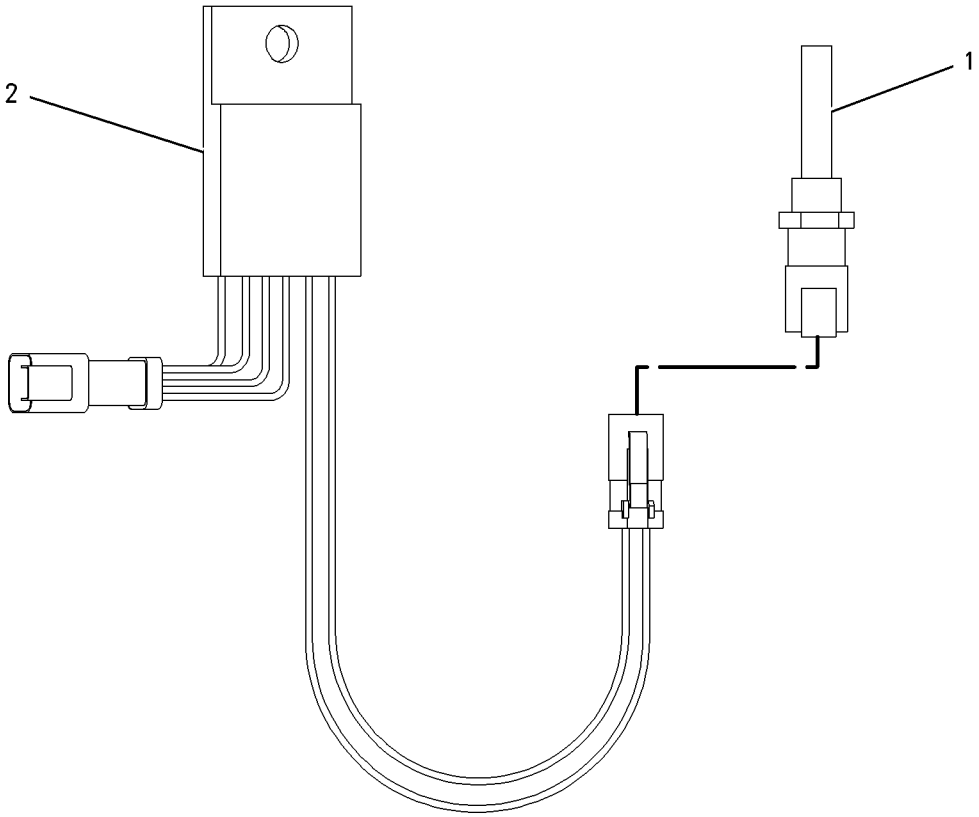

GRAPHIC #1 **<END>** g00816289

272-4772 SENSOR GP-LIQUID LEVEL–WATER SEPARATOR

S/N: KGF1-UP; FAL1-UP
AN ATTACHMENT

SMCS-7422 **i02852065**

NOTE	REF NO	GRAPHIC REF	PART NUMBER	QTY	PART NAME 1 2 3 4 5 6 (PRODUCT LEVEL)	SEE PAGE
	1	1	**3S-2093**	1	STRAP-CABLE	
Y	2	1	**178-2345**	1	SENSOR GP-LIQUID LEVEL (WATER SEPARATOR)	272
	3	1	**6V-5049**	1	SEAL-O-RING	
	4	1	**8T-4121**	1	WASHER-HARD (11X21X2.5-MM THK)	
M	5	1	**8T-4137**	1	BOLT (M10X1.5X20-MM)	

M-METRIC PART
Y-SEPARATE ILLUSTRATION

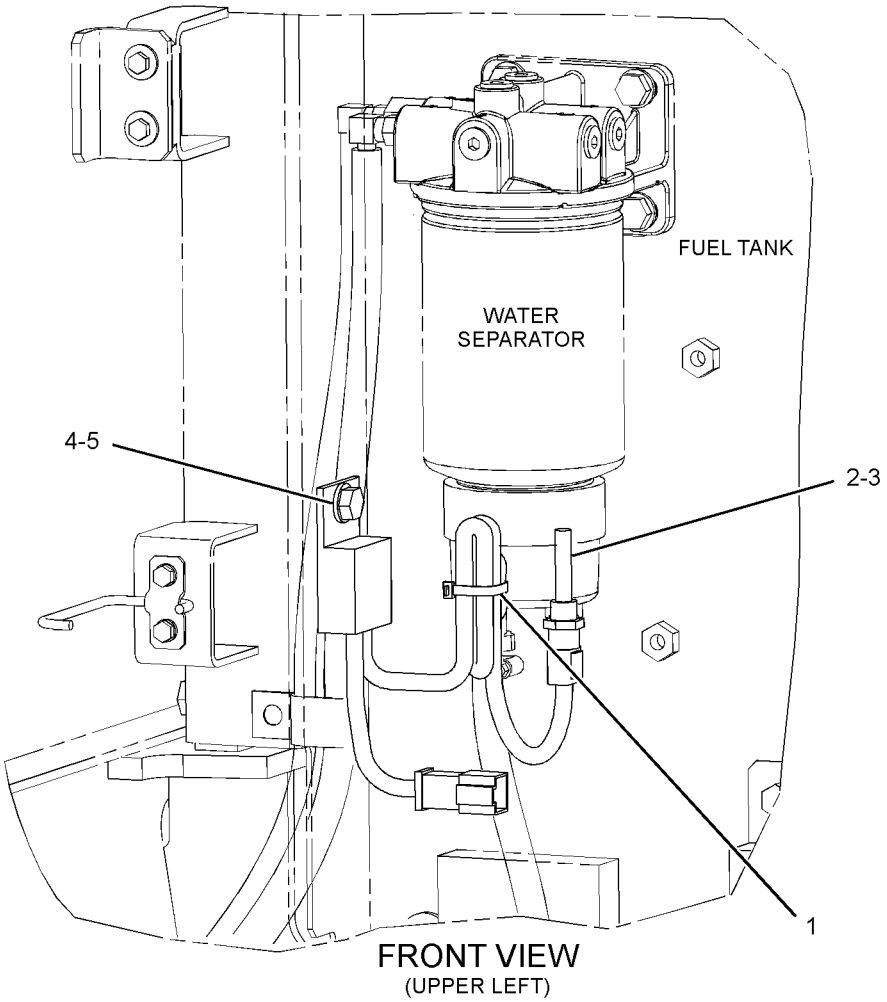

GRAPHIC #1

<END>

g01392538

272-4774 STARTING MOTOR GP-ELECTRIC*R

S/N: GDC1-UP; KGF1-UP

PART OF 272-4677, 272-4683, 296-4676, 305-4777 ENGINE AR, 296-4637 MOUNTING GP-STARTING MOTOR

ALSO AN ATTACHMENT

SMCS-1453 **i03279225**

NOTE	REF NO	GRAPHIC REF	PART NUMBER	QTY	PART NAME 1 2 3 4 5 6 (PRODUCT LEVEL)	SEE PAGE
	1	1	**127-5947**	1	SETSCREW	
C	2	1	**294-1855**	1	BRACKET AS	
		1	**127-5937**	1	BEARING AS	
	3	1	**127-5944**	1	LEVER AS	
C	4	1	**294-1857**	1	SOLENOID AS-STARTING MOTOR	
	5	1	**127-5948**	1	BALL	
	6	1	**127-5949**	1	PACKING AS	
	7	1	**127-5950**	1	ARMATURE AS	
		1	**095-0410**	1	BEARING	
	8	1	**095-0085**	1	BOLT SET	
	9	1	**279-7750**	1	PINION SET	
		1	**094-9950**	1	STOP SET	
	10	1	**233-1279**	1	SHAFT GP-MOTOR	
		1	**127-5939**	1	SHAFT AS-GEAR	
		1	**127-5940**	1	WASHER AS	
		1	**127-5941**	1	GEAR AS-INTERNAL	
		1	**127-5943**	4	GEAR AS (55/138-TEETH)	
		1	**233-1280**	1	CLUTCH	
	11	1	**094-9980**	2	GASKET	
	12	1	**127-5952**	1	YOKE AS	
		1	**127-5953**	2	BRUSH	
C	13	1	**294-1858**	1	HOLDER AS	
	14	1	**135-2366**	1	BRACKET	

C-CHANGE FROM PREVIOUS TYPE

272-4774 **STARTING MOTOR GP-ELECTRIC** *(contd.)* **i03279225**

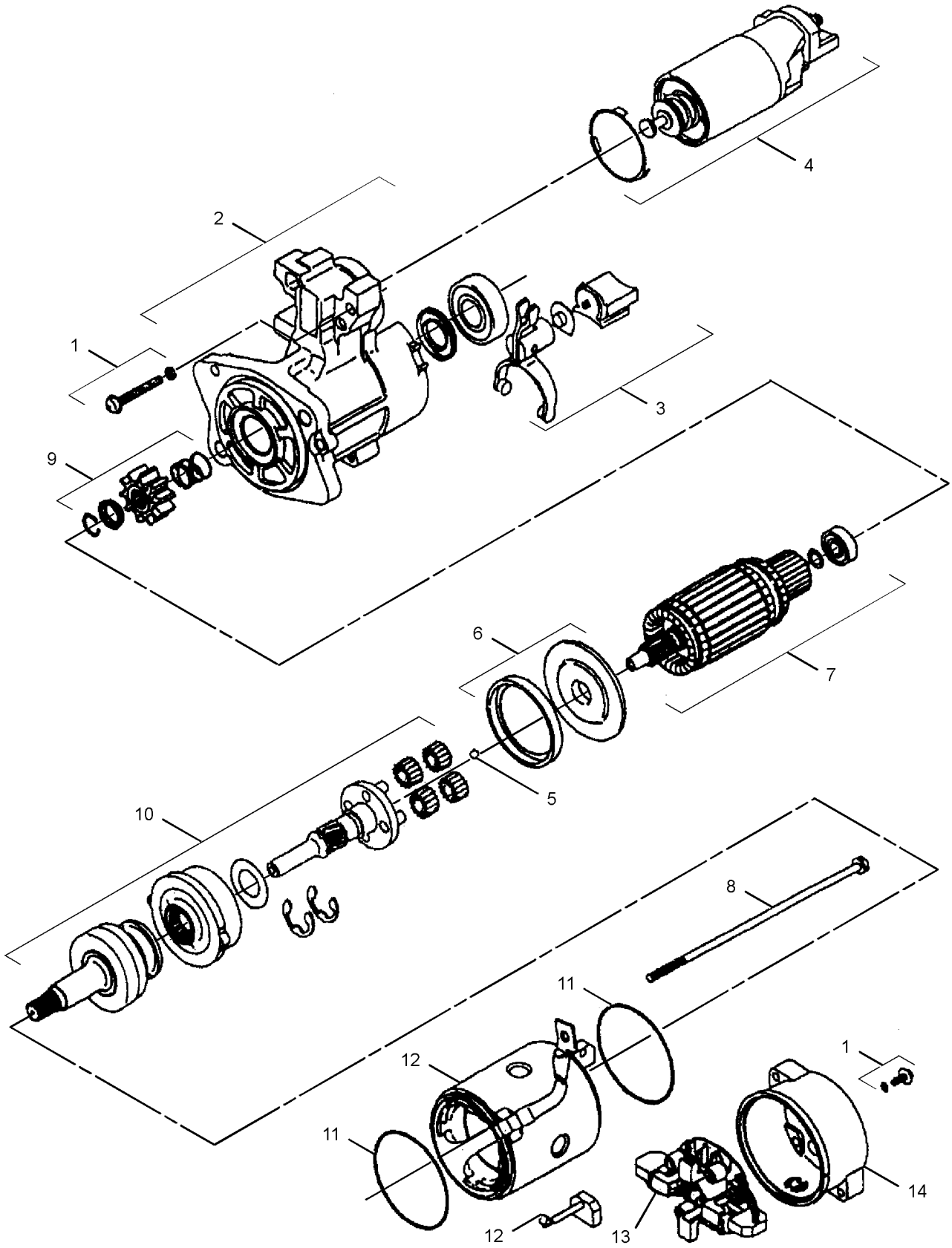

GRAPHIC #1 **<END>** g01219448

7N-0719 SWITCH GP-DISCONNECT–BATTERY

S/N: KGF1-UP; FAL1-UP

PART OF 259-5177, 319-1386 PANEL GP-CIRCUIT BREAKER

SMCS-1411 **i01102384**

NOTE	REF NO	GRAPHIC REF	PART NUMBER	QTY	PART NAME 1 2 3 4 5 6 (PRODUCT LEVEL)	SEE PAGE
	1	1	**2H-3922**	1	LOCKWASHER	
	2	1	**8H-5303**	1	NUT (3/4-16-THD)	
	3	1	**9F-5644**	2	LOCKWASHER	
	4	1	**6F-7045**	2	NUT-FULL (3/8-24-THD)	
	5	1	**8H-5306**	1	KEY (BATTERY DISCONNECT)	

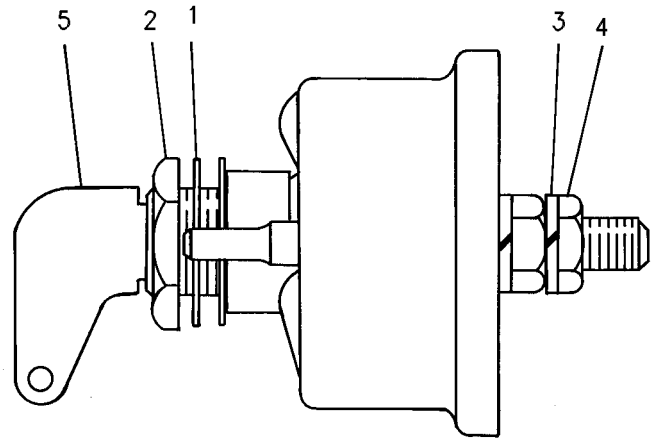

GRAPHIC #1 **<END>** g00580531

223-4453 SWITCH GP-MAGNETIC

S/N: GDC1-UP; KGF1-UP
24-VOLT
PART OF 296-4652 MANIFOLD GP-INLET
ALSO AN ATTACHMENT

SMCS-7499 **i02077586**

NOTE	REF NO	GRAPHIC REF	PART NUMBER	QTY	PART NAME 1 2 3 4 5 6 (PRODUCT LEVEL)	SEE PAGE
	1	1	**209-5582**	1	SWITCH GP-MAGNETIC (24-VOLT) (STARTING AID HEATER)	
	2	1	**102-8802**	1	KIT-RECEPTACLE (2-PIN)	
					(INCLUDES RECEPTACLE AS AND WEDGE)	
	3	1	**186-3735**	2	PIN-CONNECTOR (16-GA TO 18-GA)	
	4	1	**3F-9556**	2	LOCKWASHER	
	5	1	**6V-8186**	2	NUT-FULL (5/16-24-THD)	
	6	1	**6V-8378**	2	NUT (10-32-THD)	
	7	1	**8F-1434**	2	LOCKWASHER	

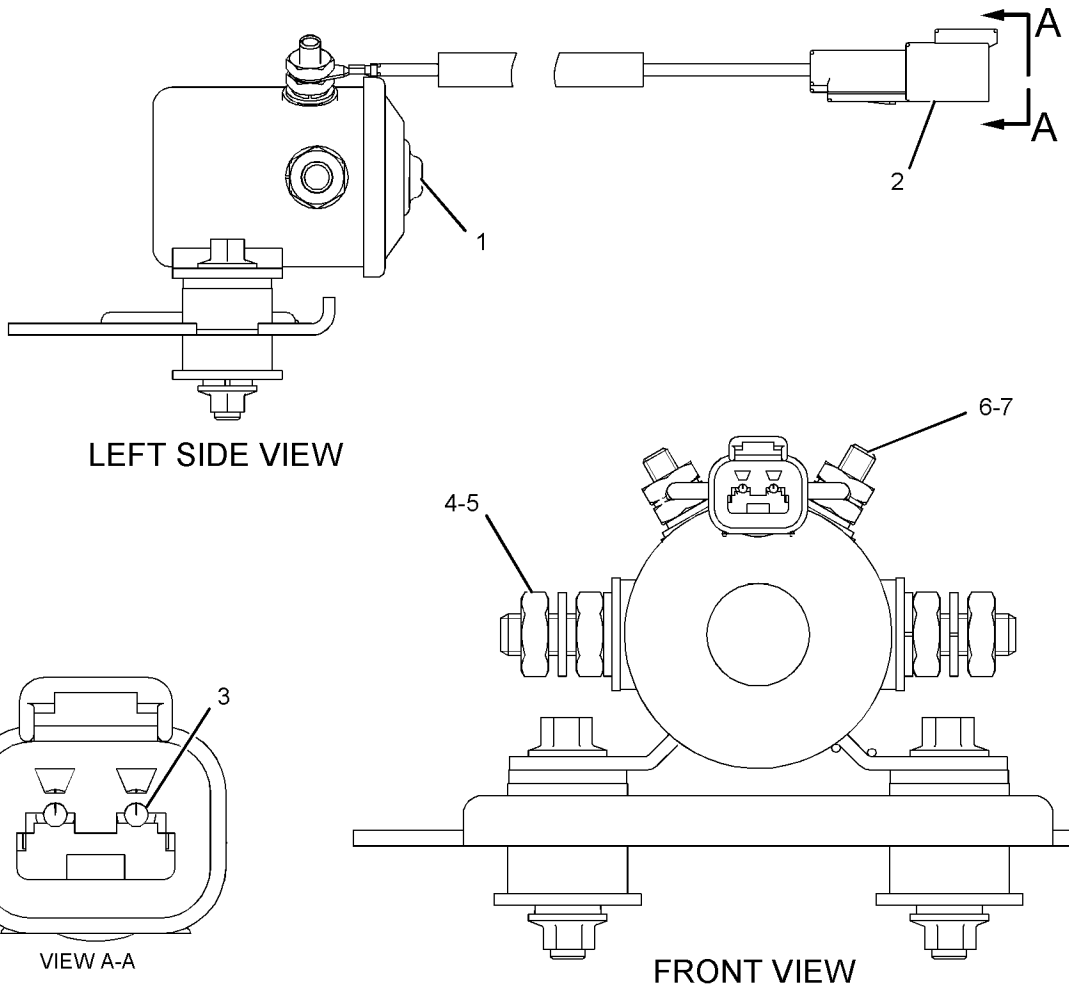

GRAPHIC #1 **<END>** g01065673

259-5274 SWITCH GP-MAGNETIC–START RELAY

S/N: KGF1-UP; FAL1-UP

PART OF 259-5177, 319-1386 PANEL GP-CIRCUIT BREAKER

SMCS-7499 **i02420131**

NOTE	REF NO	GRAPHIC REF	PART NUMBER	QTY	PART NAME 1 2 3 4 5 6 (PRODUCT LEVEL)	SEE PAGE
	1	1	**102-8802**	1	KIT-RECEPTACLE (2-PIN)	
					(INCLUDES RECEPTACLE AS & WEDGE)	
	2	1	**186-3735**	2	PIN-CONNECTOR (16-GA TO 18-GA)	
	3	1	**1H-3338**	2	LOCKWASHER (TOOTH)	
	4	1	**012-0380**	2	LOCKWASHER (SPLIT)	
M	5	1	**5C-2890**	2	NUT (M6X1-THD)	

M-METRIC PART

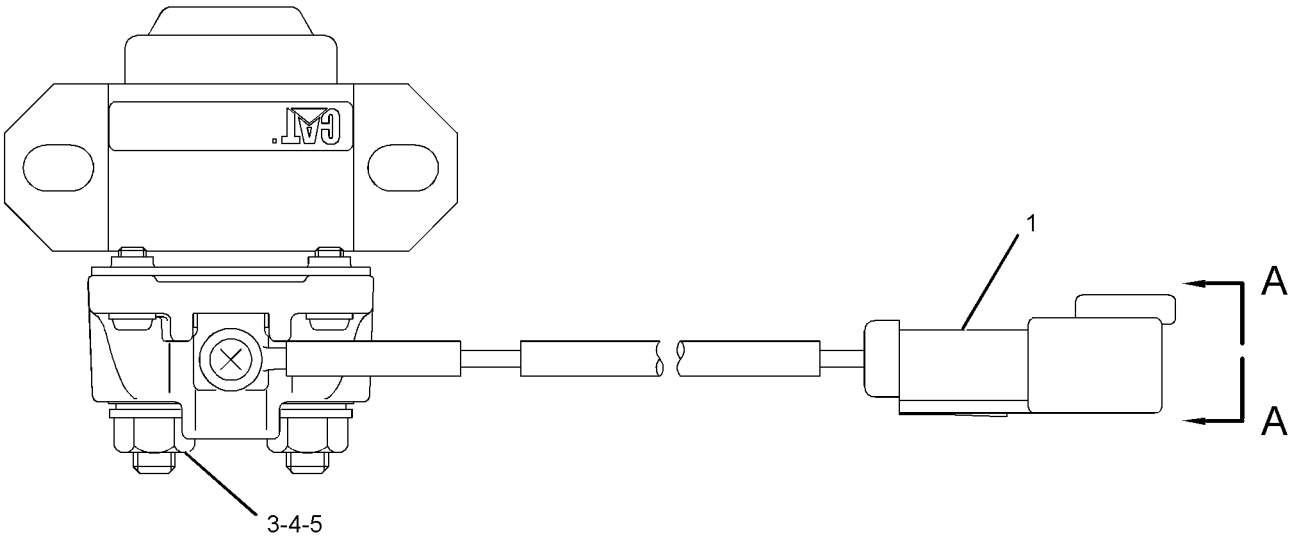

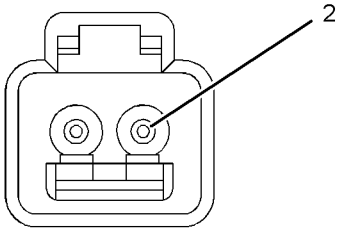

VIEW A-A

GRAPHIC #1 **<END>** g01196733

234-6613 SWITCH GP-POSITION–HYDRAULIC LOCKOUT

S/N: KGF1-UP; FAL1-UP

PART OF 259-7349 CONSOLE GP-OPERATOR

SMCS-1408, 1435 **i02175053**

NOTE	REF NO	GRAPHIC REF	PART NUMBER	QTY	PART NAME 1 2 3 4 5 6 (PRODUCT LEVEL)	SEE PAGE
	1	1	**3S-2093**	1	STRAP-CABLE	
	2	1	**4I-3038**	2	WASHER (3.3X8X0.5-MM THK)	
	3	1	**111-4799**	1	SWITCH AS-LIMIT (HYDRAULIC LOCKOUT)	
		1	**102-8803**	1	KIT-RECEPTACLE (3-PIN)	
					(INCLUDES RECEPTACLE AS & WEDGE)	
		1	**186-3735**		PIN-CONNECTOR (16-GA TO 18-GA)	
BD		1	**5P-5998**		TUBE	
M	4	1	**185-8286**	2	SCREW-MACHINE (M4X0.7X8-MM)	
	5	1	**234-6615**	1	KNOB	
	6	1	**087-4683**	2	LOCKWASHER	
M	7	1	**120-9027**	2	SCREW-PAN HEAD (M3X0.5X16-MM)	

B-USE AS REQUIRED
D-ORDER BY THE METER
M-METRIC PART

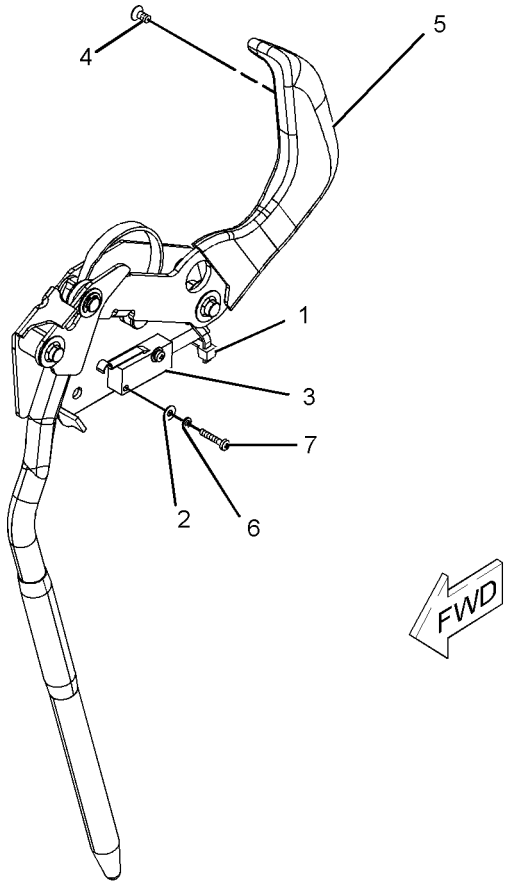

GRAPHIC #1 **<END>** g01096293

238-1594 SWITCH GP-PUSH BUTTON–REFUELING PUMP, START

S/N: KGF1-UP; FAL1-UP

PART OF 238-1570 WIRING GP-FUEL SYSTEM

AN ATTACHMENT

SMCS-1435, 7332 **i03156060**

NOTE	REF NO	GRAPHIC REF	PART NUMBER	QTY	PART NAME 1 2 3 4 5 6 (PRODUCT LEVEL)	SEE PAGE
	1	1	**6T-9442**	1	SWITCH GP-PUSHBUTTON (REFUELING PUMP, START)	
		1	**1S-0812**	2	SCREW-TAPPING	
		1	**3K-0835**	1	NUT (5/8-24-THD)	
		1	**6F-0253**	1	LOCKWASHER	
		1	**8T-8748**	1	ADAPTER-MOUNT	
		1	**9W-0625**	1	SWITCH AS (NORMALLY OPEN)	
	2	1	**238-1595**	1	HARNESS AS-SWITCH	
E	3	1	**125-7875**		TUBE-HEAT SHRINK (7.44-MM DIA) (6-CM)	

E-ORDER BY THE CENTIMETER

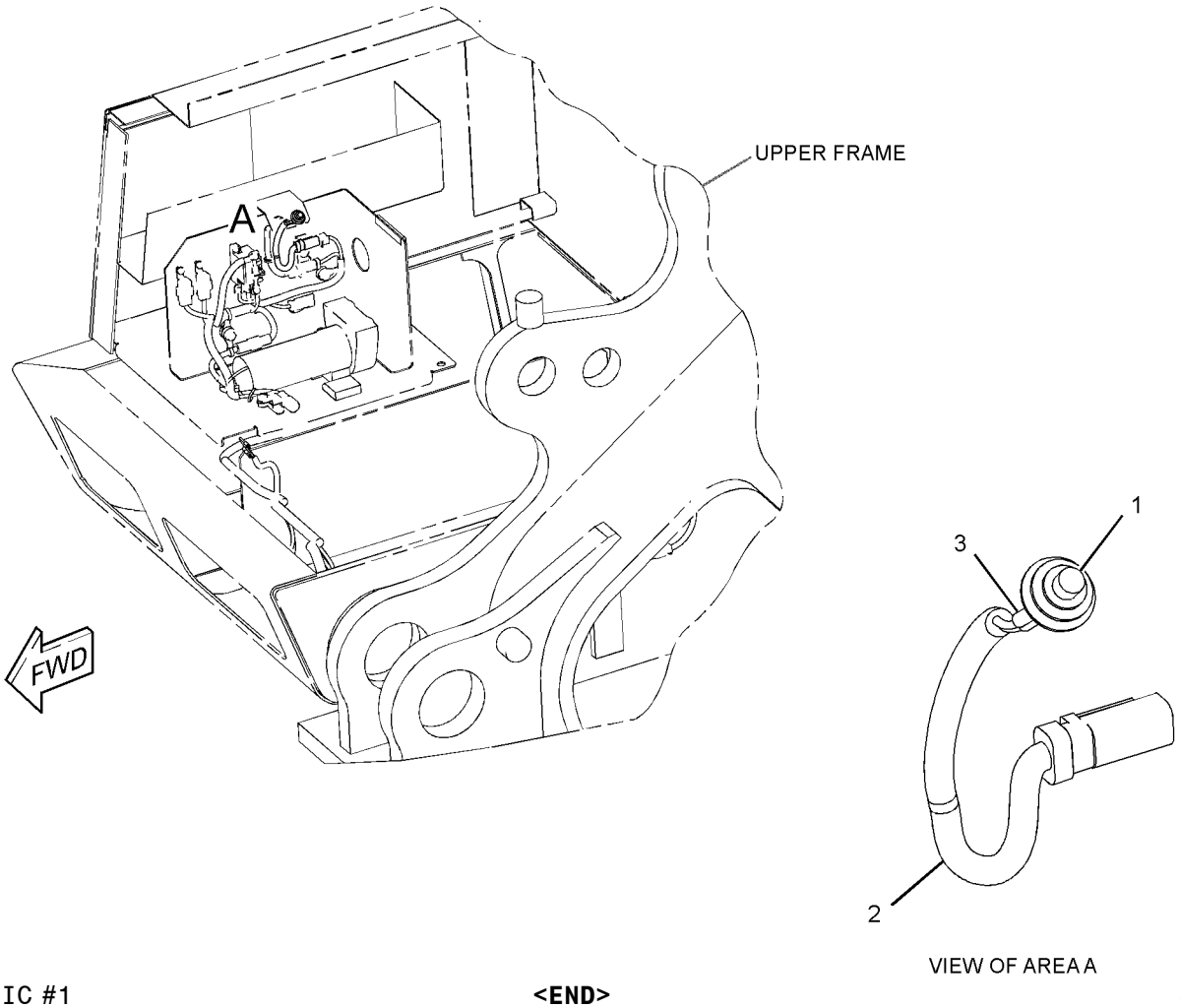

GRAPHIC #1 **<END>** g01560235

238-1596 SWITCH GP-PUSH BUTTON–REFUELING PUMP, STOP

S/N: KGF1-UP; FAL1-UP
PART OF 238-1570 WIRING GP-FUEL SYSTEM
AN ATTACHMENT

SMCS-1435, 7332 **i03156100**

NOTE	REF NO	GRAPHIC REF	PART NUMBER	QTY	PART NAME 1 2 3 4 5 6 (PRODUCT LEVEL)	SEE PAGE
	1	1	*9X-4184*	1	SWITCH AS (REFUELING PUMP, STOP)	
		1	**1S-0812**	2	SCREW-TAPPING	
		1	**3E-7389**	1	SWITCH AS (NORMALLY CLOSED)	
		1	**3K-0835**	1	NUT (5/8-24-THD)	
		1	**6F-0253**	1	LOCKWASHER	
		1	**8T-8748**	1	ADAPTER-MOUNT	
	2	1	**238-1597**	1	HARNESS AS-SWITCH	
E	3	1	**125-7875**		TUBE-HEAT SHRINK (7.44-MM DIA) (6-CM)	

E-ORDER BY THE CENTIMETER

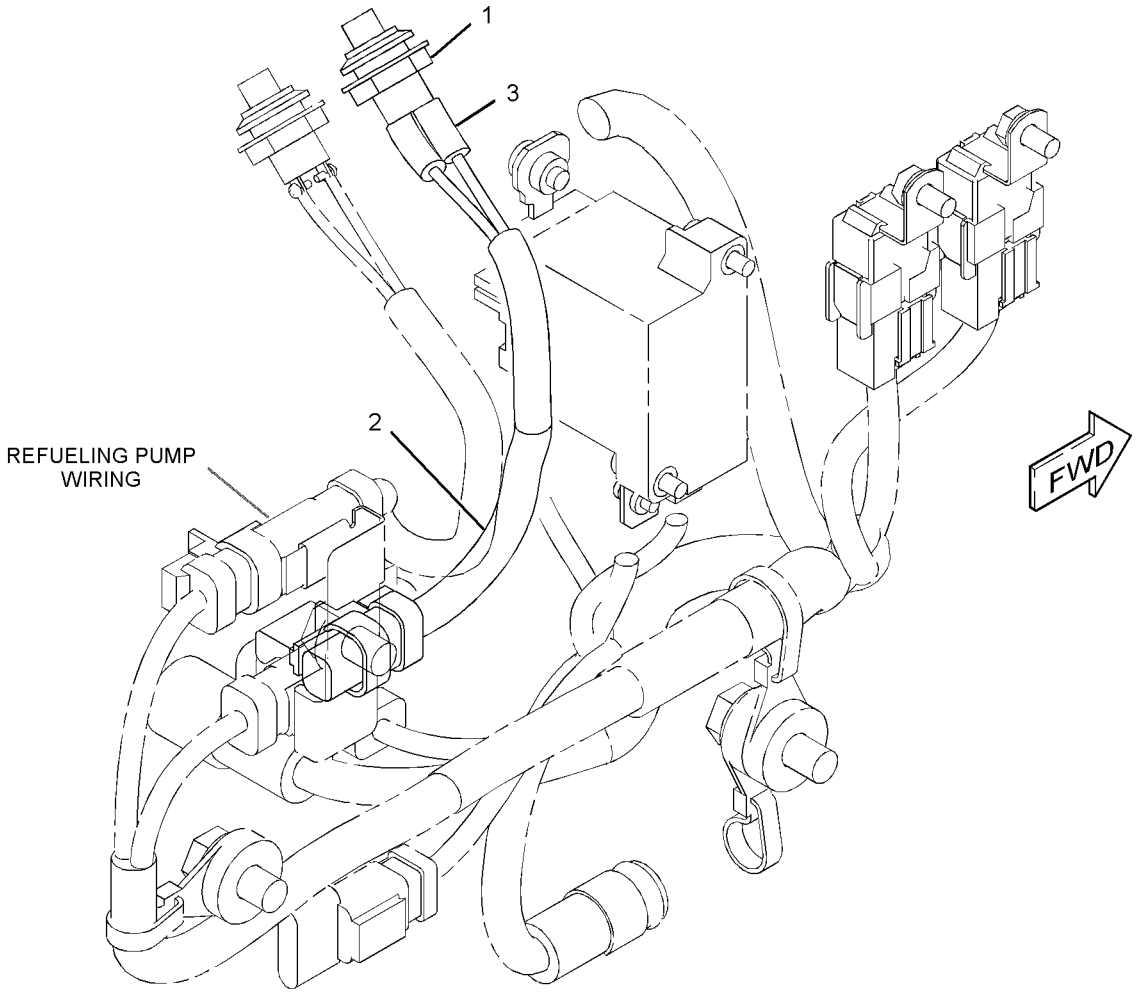

GRAPHIC #1 **<END>** g01560319

5C-6108 SWITCH GP-REFUELING–FUEL TANK SHUTOFF

S/N: KGF1-UP; FAL1-UP
PART OF 229-1785 PUMP GP-REFUELING
AN ATTACHMENT

SMCS-1295 **i02742303**

NOTE	REF NO	GRAPHIC REF	PART NUMBER	QTY	PART NAME 1 2 3 4 5 6 (PRODUCT LEVEL)	SEE PAGE
	1	1	**8J-9236**	1	SWITCH (LIQUID LEVEL) (FUEL)	
	2	1	**5C-6074**	1	FITTING	
	3	1	**2S-4078**	1	SEAL-O-RING	
	4	1	**3D-2824**	1	SEAL-O-RING	
	5	1	**8S-1815**	1	PLUG	
	6	1	**8S-1814**	2	INSULATOR	
	7	1	**4B-2049**	2	NUT (10-32-THD)	
	8	1	**8S-1812**	1	TERMINAL	
	9	1	**9B-4499**	1	SCREW-MACHINE (8-36X0.375-IN)	
	10	1	**2L-8076**	1	TERMINAL (14-GA TO 16-GA, NO. 10 SCREW)	

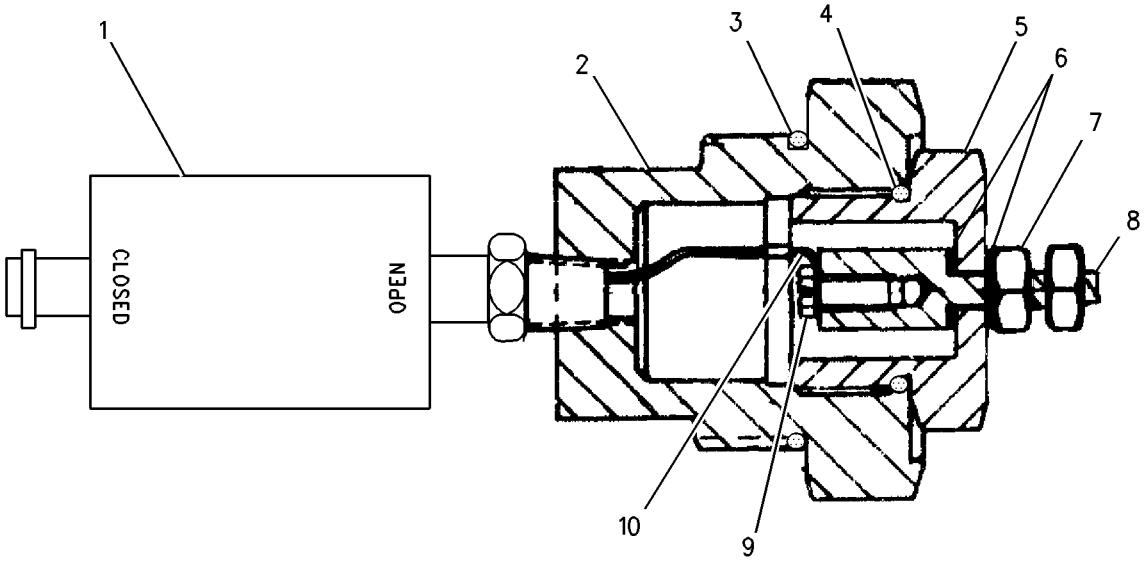

GRAPHIC #1 **<END>** g00687581

106-0107 SWITCH GP-ROTARY—THROTTLE POSITION

S/N: KGF1-UP; FAL1-UP
PART OF 251-0542, 251-0544 PANEL GP-SWITCH
AN ATTACHMENT

SMCS-7332 **i02164374**

NOTE	REF NO	GRAPHIC REF	PART NUMBER	QTY	PART NAME 1 2 3 4 5 6 (PRODUCT LEVEL)	SEE PAGE
	1	1	**102-8805**	1	KIT-RECEPTACLE (6-PIN)	
					(INCLUDES RECEPTACLE AS & WEDGE)	
	2	1	**3E-3383**	1	WEDGE-RECEPTACLE LOCK (6-PIN)	
	3	1	**8T-8737**	1	PLUG-SEAL	
	4	1	**144-1636**	5	PIN-CONNECTOR (14-GA TO 18-GA)	
M	5	1	**7Y-5458**	1	NUT (M12X1-THD)	
	6	1	**7Y-5464**	1	WASHER (M12.2X15.4X0.5-MM THK)	
	7	1	**106-0210**	1	SEAL	

M-METRIC PART

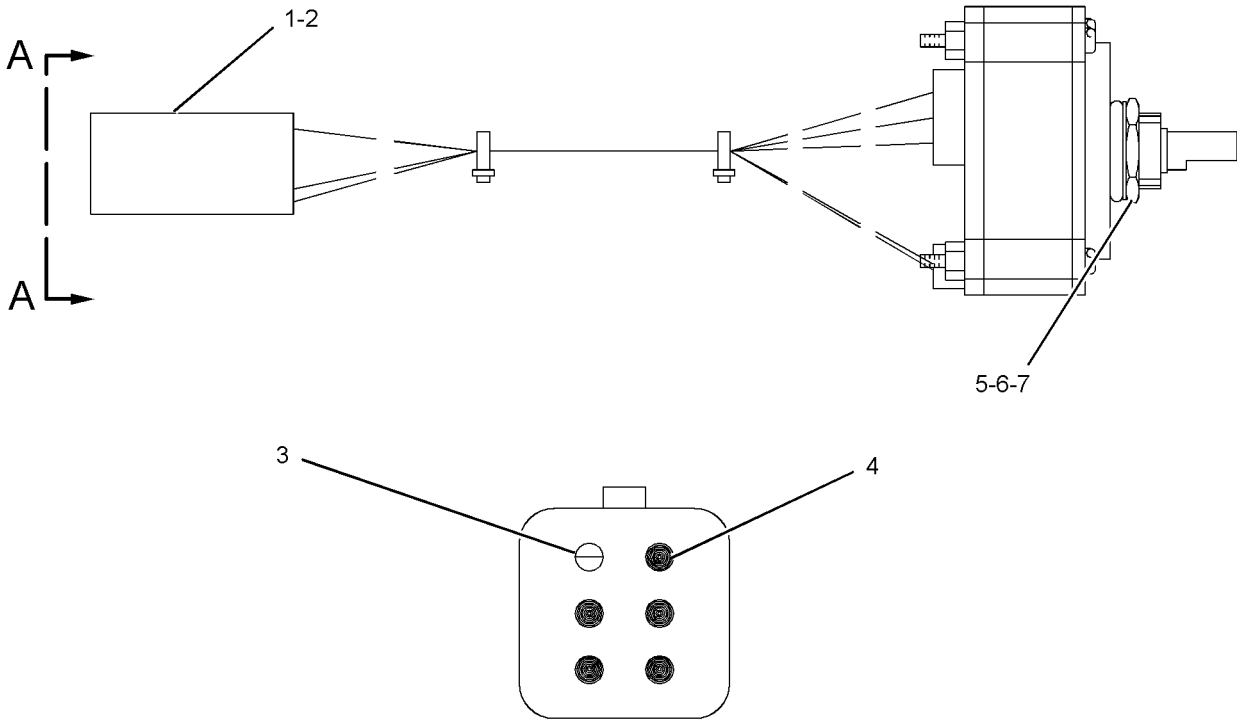

VIEW A-A

GRAPHIC #1 **<END>** g01098706

319-4420 SWITCH GP-ROTARY–THROTTLE POSITION

S/N: KGF1-UP; FAL1-UP

PART OF 251-0542, 251-0544 PANEL GP-SWITCH

AN ATTACHMENT

SMCS-7332 **i03105700**

NOTE	REF NO	GRAPHIC REF	PART NUMBER	QTY	PART NAME 1 2 3 4 5 6 (PRODUCT LEVEL)	SEE PAGE
	1	1	**243-4508**	1	RECEPTACLE AS-CONNECTOR (6-PIN)	
	2	1	**9X-3401**	5	PIN-CONNECTOR (16-GA TO 18-GA)	
					–OR–	
		1	**126-1767**	5	PIN-CONNECTOR (14-GA)	
	3	1	**8T-8737**	1	PLUG-SEAL	
M	4	1	**7Y-5458**	1	NUT (M12X1-THD)	
	5	1	**7Y-5464**	1	WASHER (M12.2X15.4X0.5-MM THK)	
	6	1	**106-0210**	1	SEAL	

M-METRIC PART

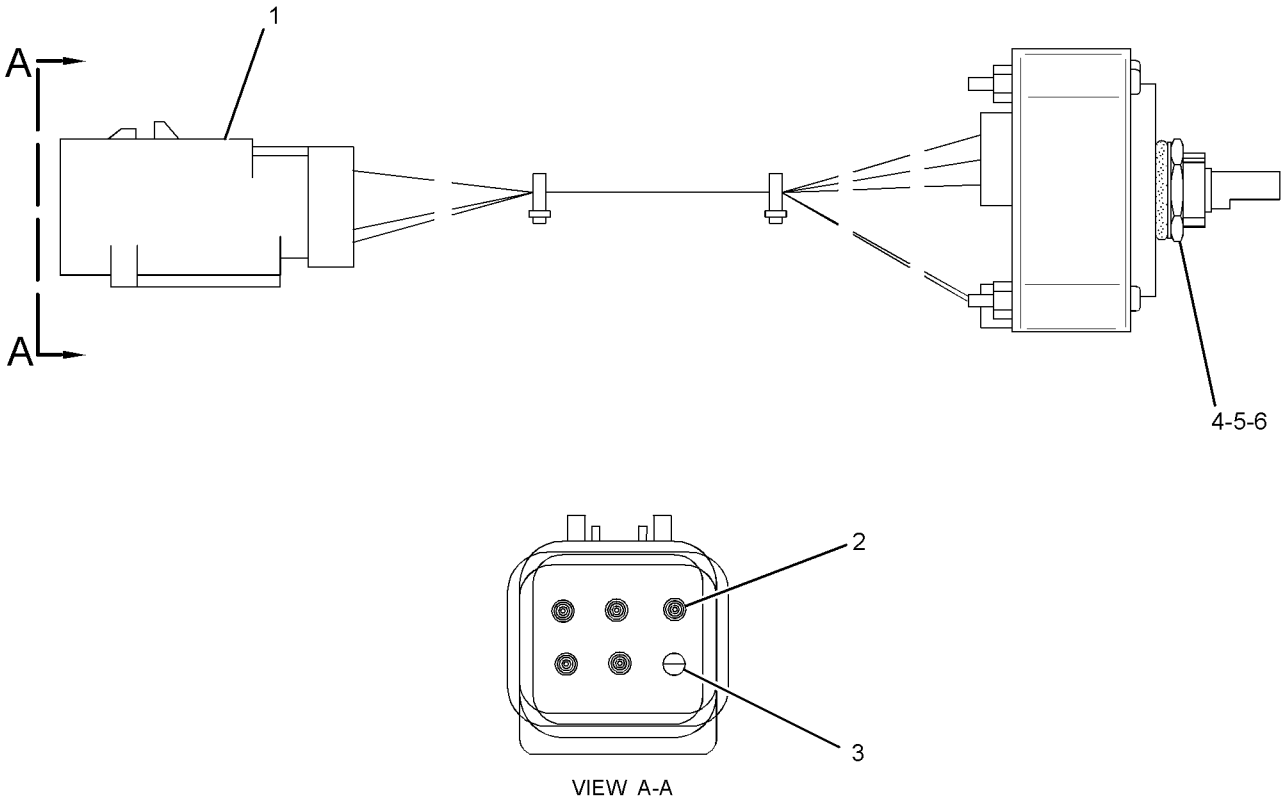

GRAPHIC #1 **<END>** g01588034

9G-7641 SWITCH GP-START–ENGINE, KEY

S/N: KGF1-UP; FAL1-UP
PART OF 251-0542, 251-0544 PANEL GP-SWITCH
AN ATTACHMENT

SMCS-1416 **i01101254**

NOTE	REF NO	GRAPHIC REF	PART NUMBER	QTY	PART NAME 1 2 3 4 5 6 (PRODUCT LEVEL)	SEE PAGE
	1	1	**6V-8362**	4	SCREW-MACHINE (8-32X0.31-IN)	
	2	1	**9B-7233**	4	LOCKWASHER	
	3	1	**7T-6799**	1	NUT-MOUNTING (1-32-THD)	

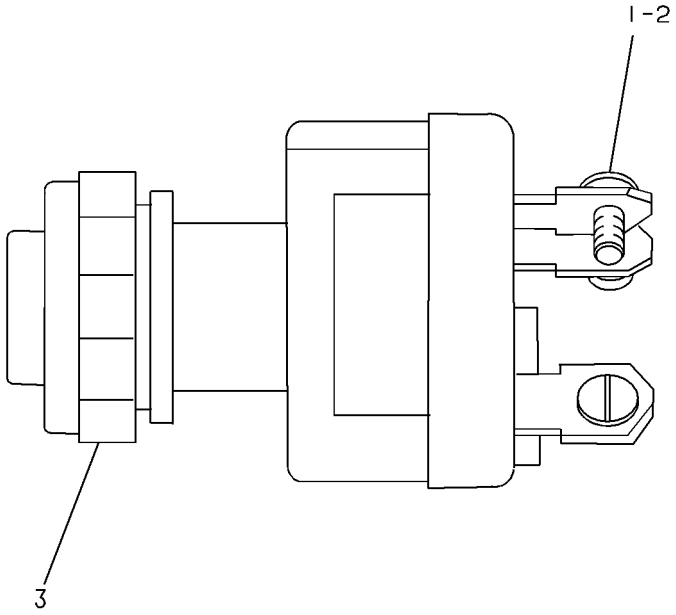

GRAPHIC #1 **<END>** g00081868

238-2478 SWITCH GP-TOGGLE–QUICK COUPLER

S/N: KGF1-UP; FAL1-UP
PART OF 238-2485 SWITCH GP-TOGGLE
AN ATTACHMENT

SMCS-7332 **i02518014**

NOTE	REF NO	GRAPHIC REF	PART NUMBER	QTY	PART NAME 1 2 3 4 5 6 (PRODUCT LEVEL)	SEE PAGE
	1	1	**7N-2353**	1	SWITCH AS-TOGGLE (QUICK COUPLER)	
	2	1	**238-2479**	1	HARNESS AS-WIRING (QUICK COUPLER SWITCH)	
		1	**7Y-3950**	2	TERMINAL (MALE)	
		1	**7Y-3953**	1	CONNECTOR-RECEPTACLE	
		1	**3S-2093**	1	STRAP-CABLE	

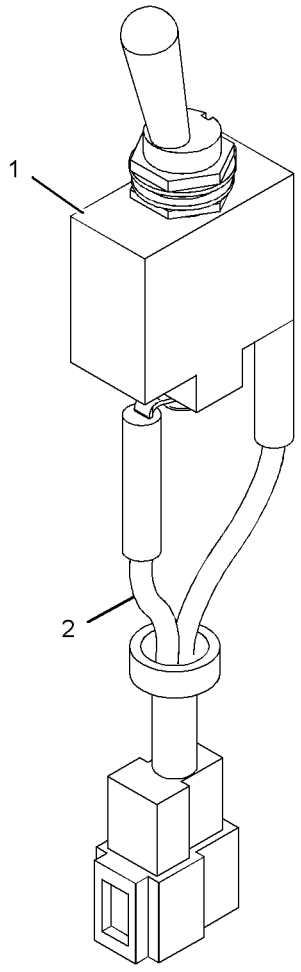

GRAPHIC #1 **<END>** g01125914

238-2485 SWITCH GP-TOGGLE

S/N: KGF1-UP; FAL1-UP
PART OF 288-7608 CONTROL AR-COUPLER
AN ATTACHMENT

SMCS-7332 **i02517794**

NOTE	REF NO	GRAPHIC REF	PART NUMBER	QTY	PART NAME 1 2 3 4 5 6 (PRODUCT LEVEL)	SEE PAGE
Y	1	1	*238-2478*	1	SWITCH GP-TOGGLE (QUICK COUPLER)	286
	2	1	**259-4884**	1	BRACKET AS	
	3	1	**259-7180**	1	COVER	
M	4	1	**9X-2042**	3	SCREW-TRUSS HEAD (M6X1X12-MM)	

M-METRIC PART
Y-SEPARATE ILLUSTRATION

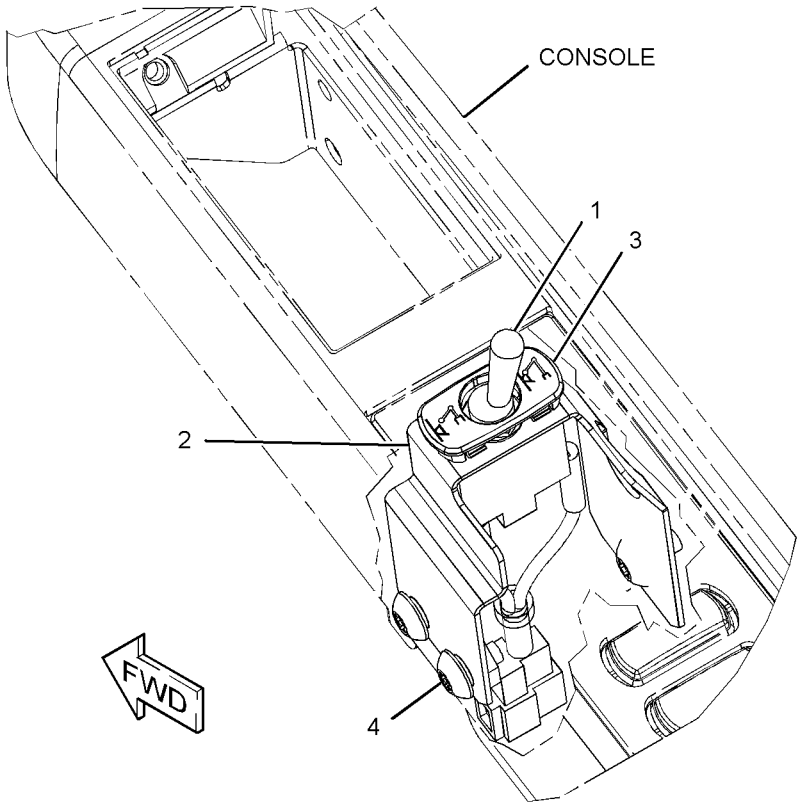

GRAPHIC #1 **<END>** g01259744

238-2208 SWITCH GP-WIPER–LOWER

S/N: KGF1-UP; FAL1-UP
PART OF 229-9086 WIPER AR-WINDOW
AN ATTACHMENT

SMCS-7305 **i02971621**

NOTE	REF NO	GRAPHIC REF	PART NUMBER	QTY	PART NAME 1 2 3 4 5 6 (PRODUCT LEVEL)	SEE PAGE
	1	1	**238-2209**	1	SWITCH AS-ROCKER (WIPER, LOWER)	
		1	**167-3542**	1	CONNECTOR-RECEPTACLE	
		1	**167-3543**	5	TERMINAL (MALE)	
	2	1	**238-2210**	1	SWITCH AS-ROCKER (LOWER WASHER)	
		1	**167-3542**	1	CONNECTOR-RECEPTACLE	
		1	**167-3543**	4	TERMINAL (MALE)	

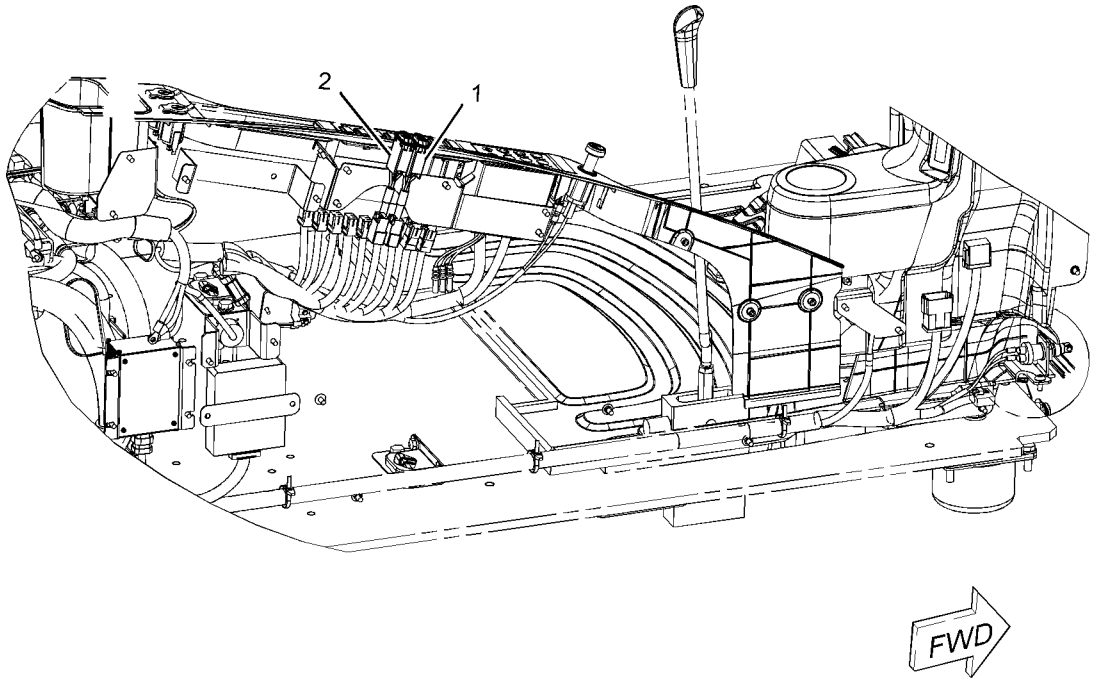

GRAPHIC #1 **<END>** g01098895

314-3765 WARNING AR-OVERLOAD—BOOM LOWERING CONTROL VALVE

S/N: KGF1-UP
FOR USE WITH 270-5974—PAGE 963
AN ATTACHMENT

SMCS-5472 **i03114082**

NOTE	PART NUMBER	QTY	PART NAME 1 2 3 4 5 6 (PRODUCT LEVEL)	SEE PAGE
Y	*314-3768*	1	FILM GP	1439
Y	*278-6894*	1	LINES GP-SENSOR (OVERLOAD WARNING DEVICE)	917
Y	*328-0094*	1	WIRING GP-OVERLOAD WARNING	353
Y-SEPARATE ILLUSTRATION				

<END>

298-4257 WARNING GP-OVERLOAD—OVERLOAD WARNING DEVICE

S/N: KGF1-UP
FOR USE WITH 270-5974—PAGE 963
AN ATTACHMENT

SMCS-5472 **i02787890**

NOTE	PART NUMBER	QTY	PART NAME 1 2 3 4 5 6 (PRODUCT LEVEL)	SEE PAGE
Y	*278-6894*	1	LINES GP-SENSOR (OVERLOAD WARNING DEVICE)	917
Y	*306-8452*	1	WIRING GP-OVERLOAD WARNING	352
Y-SEPARATE ILLUSTRATION				

<END>

267-8003 WIRING GP-AUXILIARY CONTROL

S/N: KGF1-UP; FAL1-UP
PART OF 259-7498 CONTROL AR-AUXILIARY
AN ATTACHMENT

SMCS-1408 **i02994165**

NOTE	REF NO	GRAPHIC REF	PART NUMBER	QTY	PART NAME 1 2 3 4 5 6 (PRODUCT LEVEL)	SEE PAGE
	1	1	**3S-2093**	19	STRAP-CABLE	
	2	1	**7K-1181**	8	STRAP-CABLE	
	3	1	**111-4836**	2	CLIP	
	4	1	**204-1611**	5	STRAP-CABLE	
	5	1	**275-7197**	1	HARNESS AS-AUXILIARY	
		1	**102-8802**	8	KIT-RECEPTACLE (2-PIN)	
		1	**102-8803**	1	KIT-RECEPTACLE (3-PIN)	
					(EACH RECEPTACLE KIT INCLUDES RECPTACLE AS & WEDGE)	
		1	**243-4509**	1	RECEPTACLE AS-CONNECTOR (8-PIN)	
		1	**243-4510**	1	RECEPTACLE AS-CONNECTOR (12-PIN)	
		1	**3S-2093**	1	STRAP-CABLE	
		1	**155-2260**	1	KIT-CONNECTING PLUG (3-PIN)	
		1	**155-2270**	9	KIT-CONNECTING PLUG (2-PIN)	
					(EACH PLUG KIT INCLUDES PLUG AS, WEDGE & INTERFACE SEAL)	
	6	1	**319-1248**	1	BRACKET AS	
	7	1	**283-2640**	1	BRACKET AS	
	8	1	**132-5789**	2	CLIP	
	9	1	**156-6175**	1	CLIP	
	10	1	**8T-4121**	3	WASHER-HARD (11X21X2.5-MM THK)	
M	11	1	**8T-4137**	1	BOLT (M10X1.5X20-MM)	
M	12	1	**8T-4171**	1	BOLT (M6X1X12-MM)	
M	13	1	**8T-4179**	3	BOLT (M12X1.75X20-MM)	
M	14	1	**8T-4191**	2	BOLT (M10X1.5X16-MM)	
	15	1	**8T-4223**	3	WASHER-HARD (13.5X25.5X3-MM THK)	
	16	1	**9X-8256**	1	WASHER (6.6X12X2-MM THK)	

M-METRIC PART

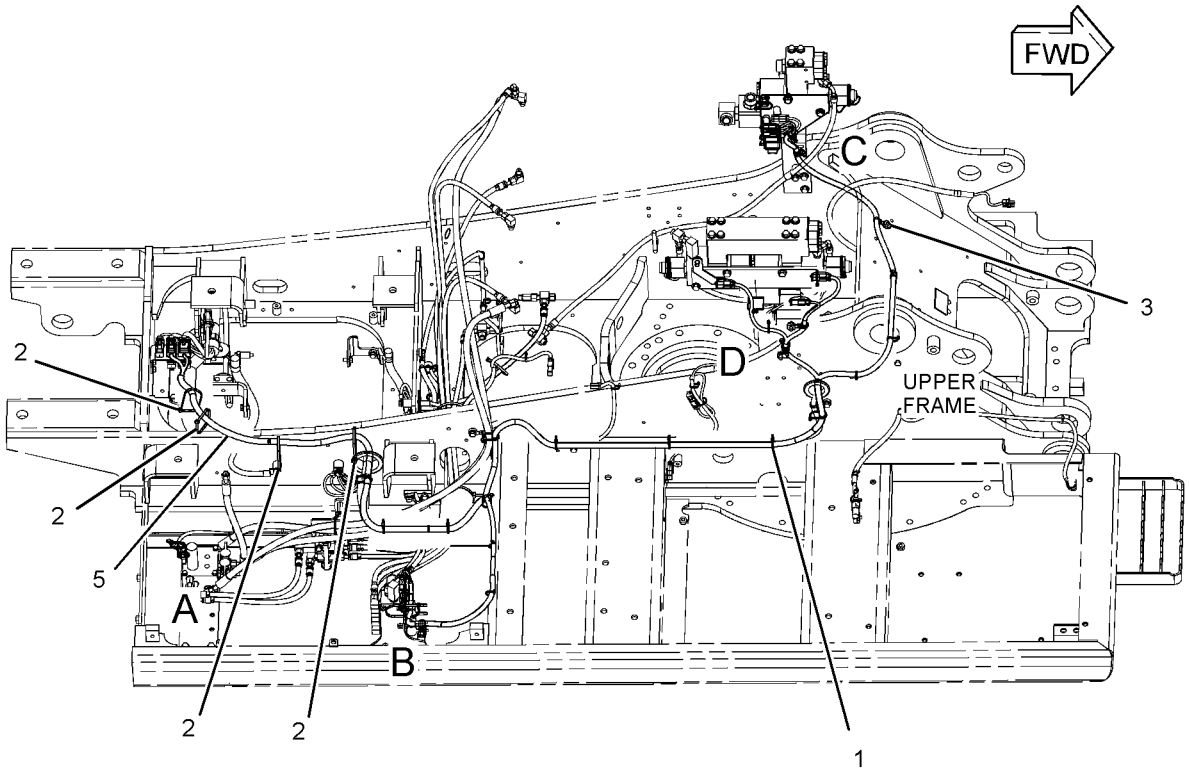

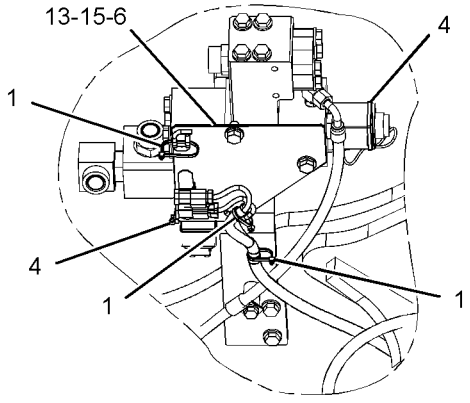

VIEW OF AREA C

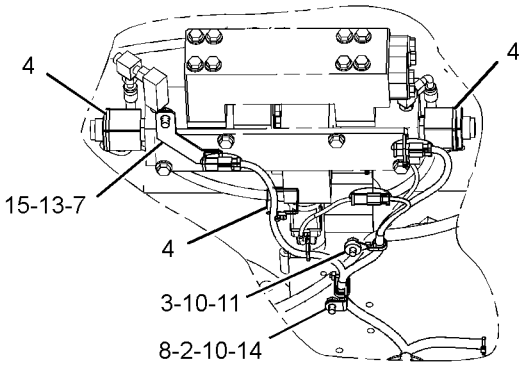

VIEW OF AREA D

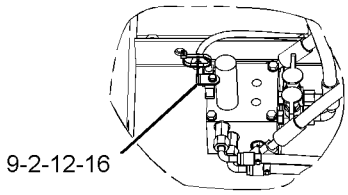

VIEW OF AREA A

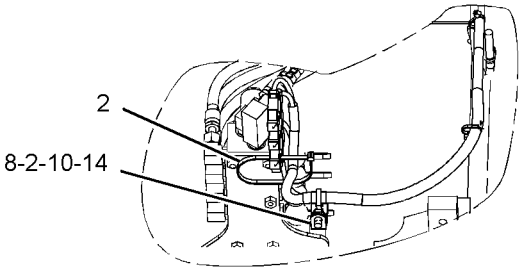

VIEW OF AREA B

GRAPHIC #1 **<END>** g01584795

275-7203 WIRING GP-AUXILIARY CONTROL–SYSTEMS 3, 5

S/N: KGF1-UP; FAL1-UP

PART OF 259-7496, 259-7497 CONTROL AR-AUXILIARY

AN ATTACHMENT

SMCS-1408 **i02559843**

NOTE	REF NO	GRAPHIC REF	PART NUMBER	QTY	PART NAME 1 2 3 4 5 6 (PRODUCT LEVEL)	SEE PAGE
	1	1	**3S-2093**	22	STRAP-CABLE	
	2	1	**7K-1181**	5	STRAP-CABLE	
	3	1	**275-7197**	1	HARNESS AS-AUXILIARY	
		1	**102-8802**	8	KIT-RECEPTACLE (2-PIN)	
		1	**102-8803**	1	KIT-RECEPTACLE (3-PIN)	
					(EACH RECEPTACLE KIT INCLUDES RECEPTACLE AS & WEDGE)	
		1	**3S-2093**	1	STRAP-CABLE	
		1	**155-2270**	9	KIT-CONNECTING PLUG (2-PIN)	
		1	**155-2260**	1	KIT-CONNECTING PLUG (3-PIN)	
					(EACH PLUG KIT INCLUDES PLUG AS, WEDGE, & INTERFACE SEAL)	
		1	**243-4509**	1	RECEPTACLE AS-CONNECTOR (8-PIN)	
		1	**243-4510**	1	RECEPTACLE AS-CONNECTOR (12-PIN)	
	4	1	**132-5789**	1	CLIP	
J	5	1	**156-6175**	1	CLIP	
	6	1	**8T-4121**	1	WASHER-HARD (11X21X2.5-MM THK)	
JM	7	1	**8T-4171**	1	BOLT (M6X1X12-MM)	
M	8	1	**8T-4191**	1	BOLT (M10X1.5X16-MM)	
J	9	1	**9X-8256**	1	WASHER (6.6X12X2-MM THK)	
J	10	1	**7K-1181**	1	STRAP-CABLE	

J-PART(S) MARKED J ARE FOR USE WITH SYSTEM 3 ONLY
M-METRIC PART

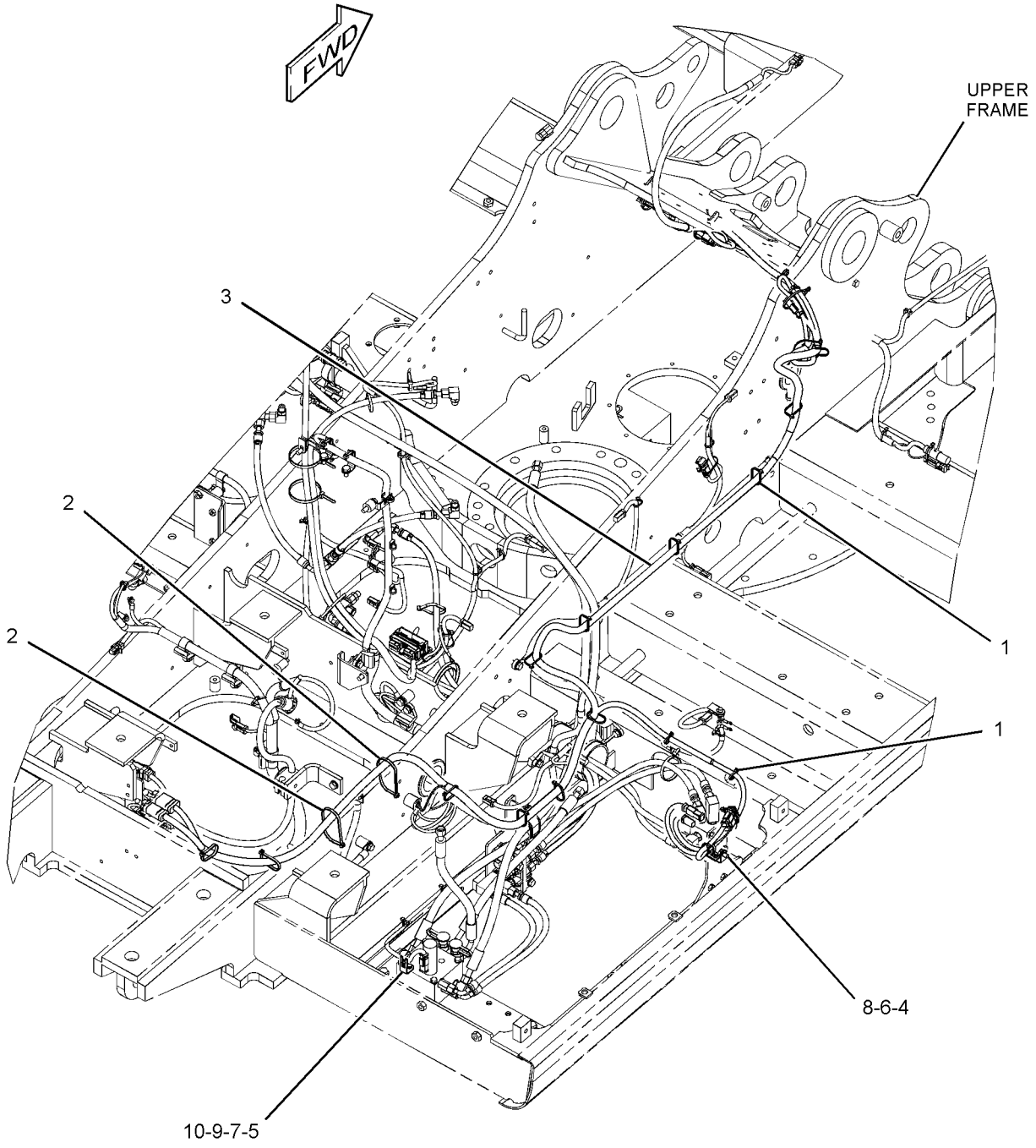

GRAPHIC #1 **<END>** g01310978

251-0529 WIRING GP-CAB–1-WAY/2-WAY FLOW

S/N: KGF1-UP; FAL1-UP

PART OF 259-7493, 259-7495 CONTROL AR-AUXILIARY

AN ATTACHMENT

SMCS-1408, 7301 **i02723812**

NOTE	REF NO	GRAPHIC REF	PART NUMBER	QTY	PART NAME 1 2 3 4 5 6 (PRODUCT LEVEL)	SEE PAGE
	1	1,3	**3S-2093**	4	STRAP-CABLE	
	2	1,2	**7K-1181**	8	STRAP-CABLE	
	3	3	**116-0118**	2	CLIP	
	4	1	**149-5050**	1	RELAY (24-VOLT) (1-WAY/2-WAY SOLENOID)	
	5	1	**251-0598**	1	HARNESS AS-SOLENOID (1-WAY/2-WAY FLOW)	
		1	**3S-2093**	6	STRAP-CABLE	
		1	**8T-8737**	1	PLUG-SEAL	
		1	**243-4508**	1	RECEPTACLE AS-CONNECTOR (6-PIN)	
M	6	1	**5C-2890**	1	NUT (M6X1-THD)	
M	7	3	**7X-2621**	2	BOLT (M10X1.5X12-MM)	
	8	3	**8T-4121**	2	WASHER-HARD (11X21X2.5-MM THK)	
	9	1	**9X-8256**	1	WASHER (6.6X12X2-MM THK)	

M-METRIC PART

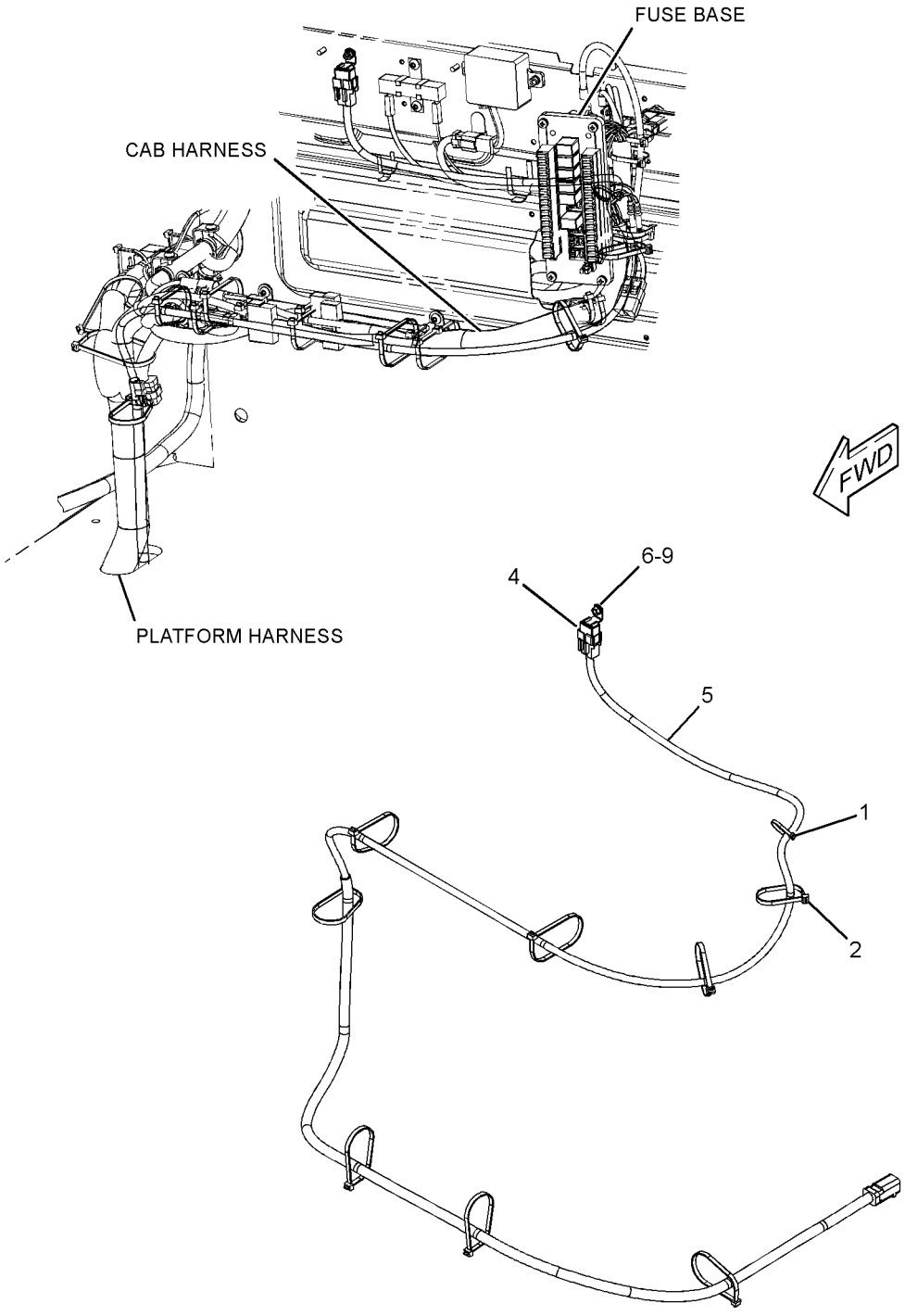

REFER TO ALL ILLUSTRATIONS OF
THIS GROUP FOR AUXILIARY VIEWS

GRAPHIC #1

g01233498

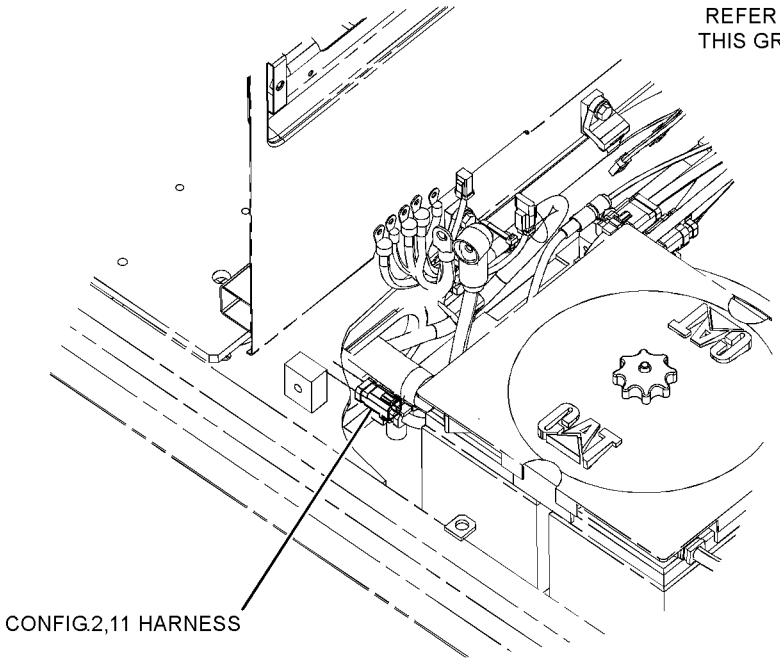

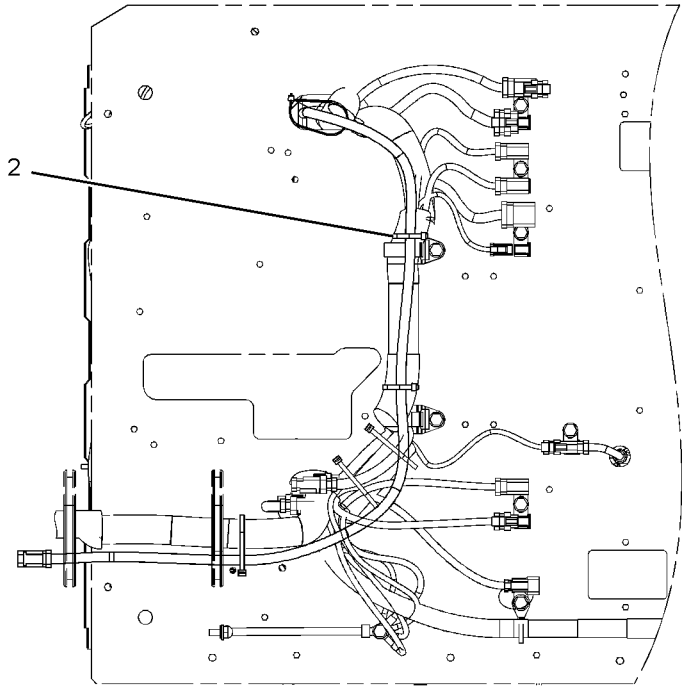

BOTTOM VIEW
(FOR CONFIG. 2,11)

GRAPHIC #2

g01233501

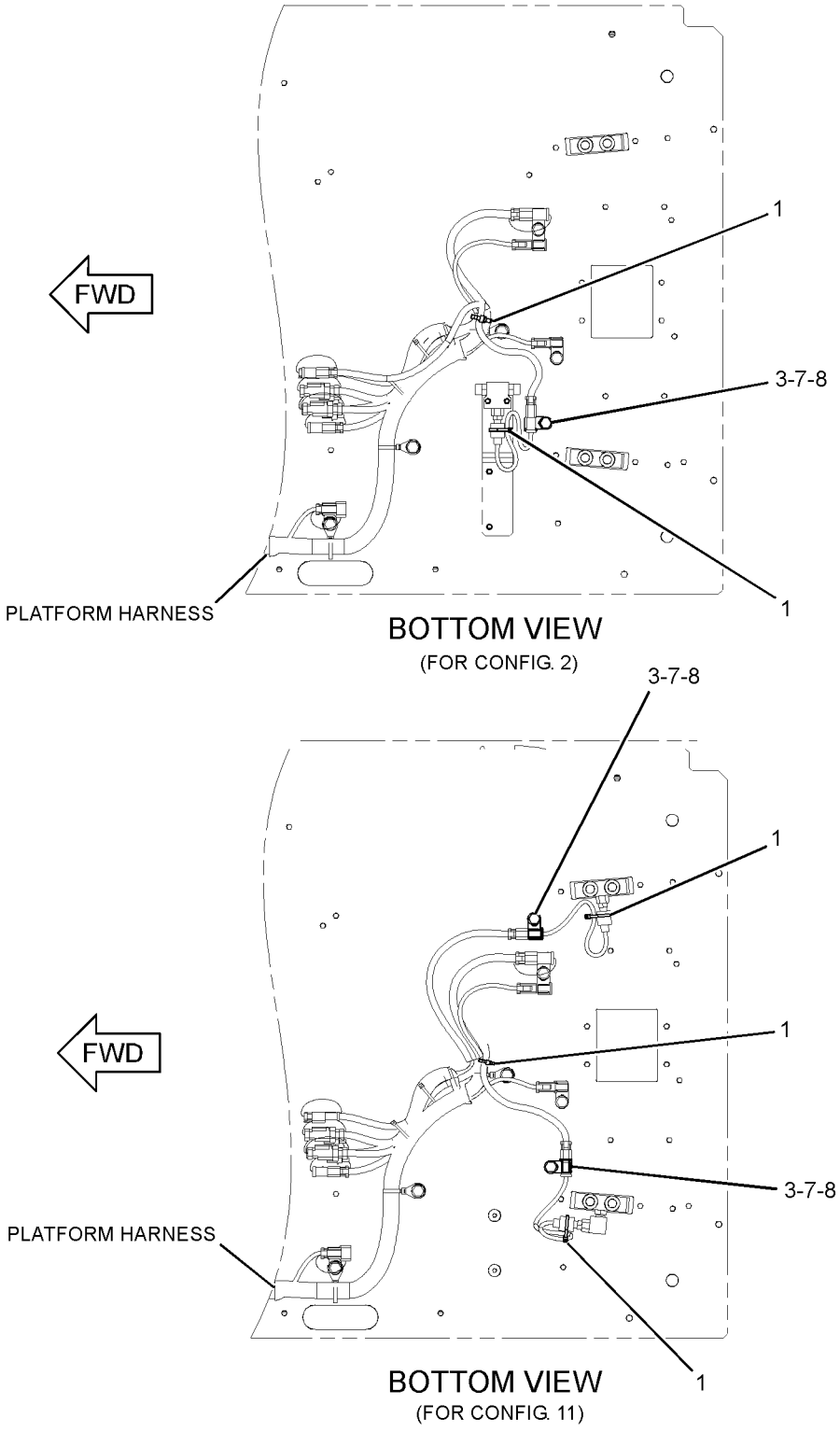

GRAPHIC #3 **<END>** g01233503

259-5161 WIRING GP-CAB

S/N: KGF1-UP; FAL1-UP

PART OF 273-5387 OPERATOR AR

SMCS-1408, 7301 **i02853579**

NOTE	REF NO	GRAPHIC REF	PART NUMBER	QTY	PART NAME 1 2 3 4 5 6 (PRODUCT LEVEL)	SEE PAGE
	1	3,4	**3S-2093**	10	STRAP-CABLE	
	2	4	**7Y-5505**	2	SPEAKER AS	
					(EACH INCLUDES)	
		4	**7Y-3951**	2	TERMINAL (FEMALE)	
		4	**7Y-3954**	1	CONNECTOR-PLUG	
	3	3	**9W-0335**	1	LIGHTER AS-CIGAR (24-VOLT)	
					—OR—	
F			**238-2318**	1	LIGHTER AS-CIGAR (24-VOLT)	
	4	3	**094-2080**	1	SWITCH-MAGNETIC (24-VOLT) (START RELAY)	
M	5	4	**099-7127**	8	SCREW-MACHINE (M4X0.7X12-MM)	
	6	1	**102-8016**	1	RESISTOR AS	
	7	3	**113-8490**	20	FUSE (10-AMPERE)	
	8	3	**113-8491**	5	FUSE (15-AMPERE)	
	9	3	**113-8492**	3	FUSE (20-AMPERE)	
	10	3	**113-8493**	3	FUSE (25-AMPERE)	
	11	4	**116-0210**	4	BRACKET AS	
	12	3	**124-3548**	2	FUSE (30-AMPERE)	
Y	13	4	**132-1829**	1	ALARM GP (24-VOLT)	189
	14	3	**141-2759**	7	FUSE (5-AMPERE)	
	15	3	**161-3128**	1	RELAY (24-VOLT) (BOOM FLOODLIGHT)	
	15A	3	**161-3128**	1	RELAY (24-VOLT) (CHASSIS LIGHT)	
	15B	3	**161-3128**	1	RELAY (24-VOLT) (CAB FLOODLIGHT)	
	15C	3	**161-3128**	1	RELAY (24-VOLT) (HORN)	
	15D	3	**161-3128**	1	RELAY (24-VOLT) (NEUTRAL START)	
	15E	3	**161-3128**	1	RELAY (24-VOLT) (TRAVEL ALARM)	
	16	4	**268-1964**	1	KIT-SERVICE METER	
					(INCLUDES FILM & METER)	
	17	4	**163-6758**	1	WIRE AS	
	18	2,3,4	**163-6795**	15	STRAP-CABLE	
	19	3	**167-3593**	1	STRAP	
	20	3	**170-6888**	1	PULLER-FUSE	
	21	4	**213-0772**	1	SWITCH AS-MAGNETIC (24-VOLT) (MAIN RELAY)	
	22	3	**227-7575**	1	PANEL-CONTROL (SWITCH)	
	23	3	**234-1097**	1	BRACKET	
	24	3	**238-2212**	1	SWITCH AS-ROCKER (FINE SWING)	
		3	**167-3542**	1	CONNECTOR-RECEPTACLE	
		3	**167-3543**	5	TERMINAL (MALE)	
	26	4	**238-2390**	1	CABLE AS	
		4	**3T-4004**	1	TERMINAL-SOLDER	
E		4	**125-7876**		TUBE-HEAT SHRINK (17.78-MM DIA) (4-CM)	
	27	4	**238-2391**	1	CABLE AS	
		4	**9G-4343**	1	TERMINAL (4-GA)	
E		4	**125-7876**		TUBE-HEAT SHRINK (17.78-MM DIA) (4-CM)	
	28	2	**245-7760**	8	INSULATION	
	29	2	**251-0637**	1	INSULATION	
	30	2	**259-4883**	1	ANTENNA AS	
	31	3	**259-5290**	1	BRACKET AS	
	32	1	**259-5296**	1	HARNESS AS-CAB	
		1	**7Y-3952**	4	CONNECTOR-PLUG	
		1	**7Y-3958**	2	CONNECTOR-PLUG	
		1	**102-7964**	2	CONNECTOR-PLUG	
		1	**111-4816**	1	CONNECTOR-PLUG	
		1	**163-6659**	1	CONNECTOR-PLUG	
		1	**163-6699**	1	CONNECTOR-PLUG	
		1	**163-6803**	9	CONNECTOR-PLUG	
		1	**7Y-3955**	2	CONNECTOR-RECEPTACLE	

259-5161 **WIRING GP-CAB** ***(contd.)*** **i02853579**

NOTE	REF NO	GRAPHIC REF	PART NUMBER	QTY	PART NAME 1 2 3 4 5 6 (PRODUCT LEVEL)	SEE PAGE
		1	**121-1168**	1	CONNECTOR-RECEPTACLE	
		1	**153-2602**	5	CONNECTOR-RECEPTACLE	
		1	**9W-1951**	1	RECEPTACLE-CONNECTOR (9-PIN)	
		1	**8C-6354**	1	CAP-RECEPTACLE	
		1	**5P-6271**	1	CONNECTOR AS	
		1	**134-3296**	1	HOUSING-PLUG	
		1	**134-3297**	1	SEAL	
		1	**3S-2093**	111	STRAP-CABLE	
		1	**121-1022**	3	DIODE	
		1	**238-2319**	1	BASE AS	
		1	**9X-8256**	2	WASHER (6.6X12X2-MM THK)	
M		1	**095-0742**	2	SCREW-MACHINE (M6X1X16-MM)	
		1	**170-9394**	40	TERMINAL	
		1	**102-8803**	3	KIT-RECEPTACLE (3-PIN)	
					(INCLUDES RECEPTACLE AS & WEDGE)	
		1	**155-2260**	1	KIT-CONNECTING PLUG (3-PIN)	
		1	**155-2270**	2	KIT-CONNECTING PLUG (2-PIN)	
					(EACH PLUG KIT INCLUDES PLUG AS, WEDGE & INTERFACE SEAL)	
		1	**230-4011**	1	PLUG AS-CONNECTOR (2-PIN)	
		1	**264-7029**	1	SEAL-CONNECTOR	
		1	**230-4013**	1	PLUG AS-CONNECTOR (3-PIN)	
		1	**264-7030**	1	SEAL-CONNECTOR	
		1	**239-7356**	1	PLUG AS-CONNECTOR (12-PIN)	
		1	**230-4009**	1	PLUG AS-CONNECTOR (12-PIN)	
					(EACH PLUG AS INCLUDES)	
		1	**264-7034**	1	SEAL-CONNECTOR	
		1	**174-3016**	2	PLUG AS-CONNECTOR (3-PIN)	
		1	**243-4505**	2	RECEPTACLE AS-CONNECTOR (2-PIN)	
		1	**243-4506**	1	RECEPTACLE AS-CONNECTOR (3-PIN)	
	33	3	**267-7639**	1	SWITCH AS-ROCKER (LEVELING)	
		3	**167-3542**	1	CONNECTOR-RECEPTACLE	
		3	**167-3543**	5	TERMINAL (MALE)	
M	34	3	**095-0723**	3	SCREW (M3X0.5X10-MM)	
	35	3	**096-5962**	3	WASHER-HARD (3.4X7X0.8-MM THK)	
	36	4	**096-6166**	2	WASHER-HARD (4.5X9X1-MM THK)	
	37	3,4	**132-5789**	7	CLIP	
	38	4	**4P-7581**	1	CLIP	
M	39	3	**5C-2890**	5	NUT (M6X1-THD)	
M	40	4	**6V-5210**	8	SCREW-MACHINE (M4X0.7X10-MM)	
M	41	4	**6V-9672**	2	SCREW-MACHINE (M4X0.7X16-MM)	
	42	4	**8T-0328**	3	WASHER-HARD (5.5X10X1-MM THK)	
M	43	4	**8T-4127**	2	SCREW-MACHINE (M5X0.8X20-MM)	
M	44	4	**8T-6693**	1	SCREW-MACHINE (M5X0.8X16-MM)	
M	45	1,3,4	**9X-2042**	13	SCREW-TRUSS HEAD (M6X1X12-MM)	
M	46	3	**9X-2044**	5	SCREW-TRUSS HEAD (M6X1X16-MM)	
	47	3	**9X-8256**	5	WASHER (6.6X12X2-MM THK)	
E	48	2	**101-2846**		GUARD (9.5-CM)	
E	48A	4	**101-2846**		GUARD (9-CM EACH)	

E-ORDER BY THE CENTIMETER
F-NOT SHOWN
M-METRIC PART
Y-SEPARATE ILLUSTRATION

REFER TO ALL ILLUSTRATIONS OF
THIS GROUP FOR AUXILIARY VIEWS

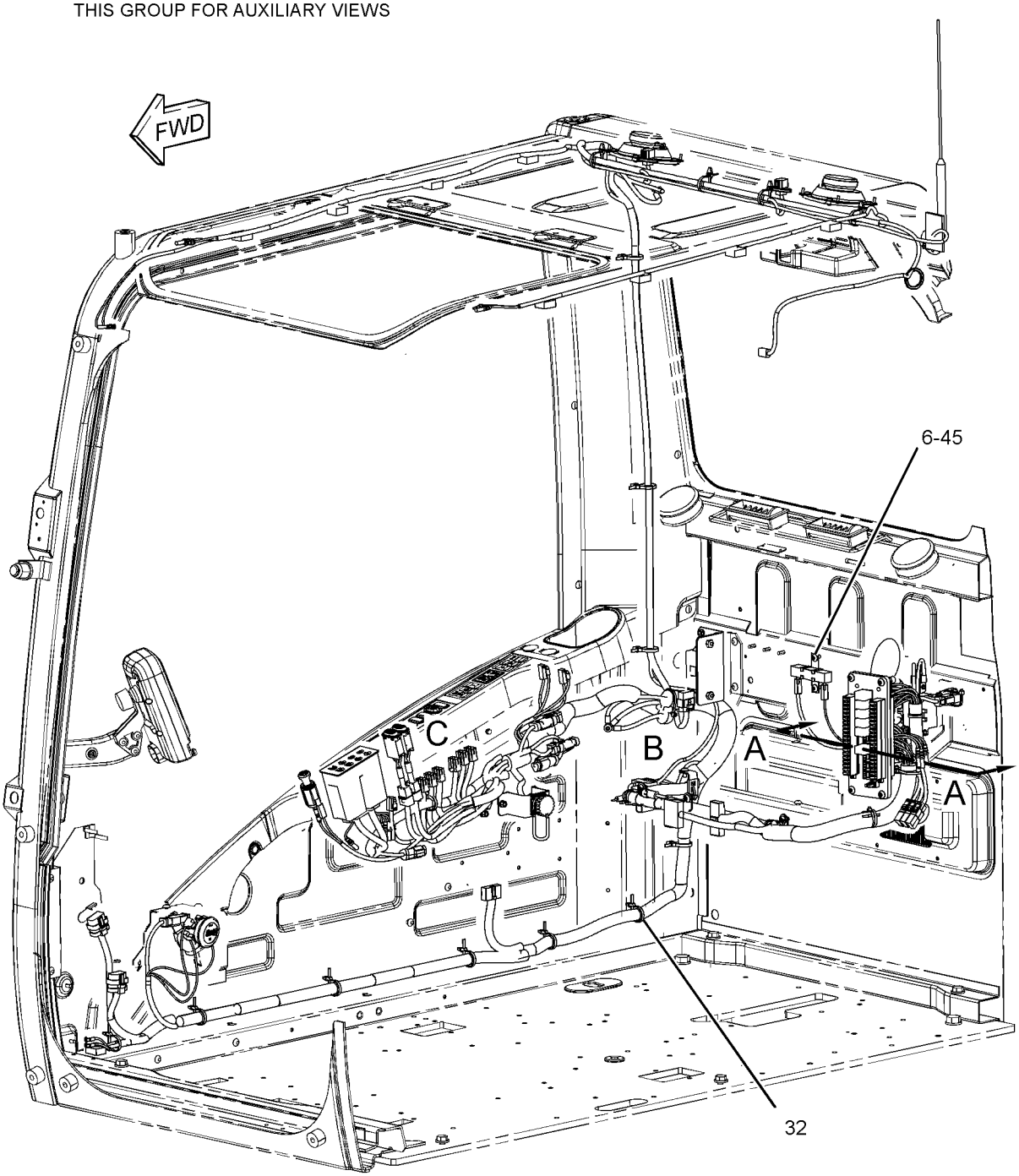

GRAPHIC #1 g01398279

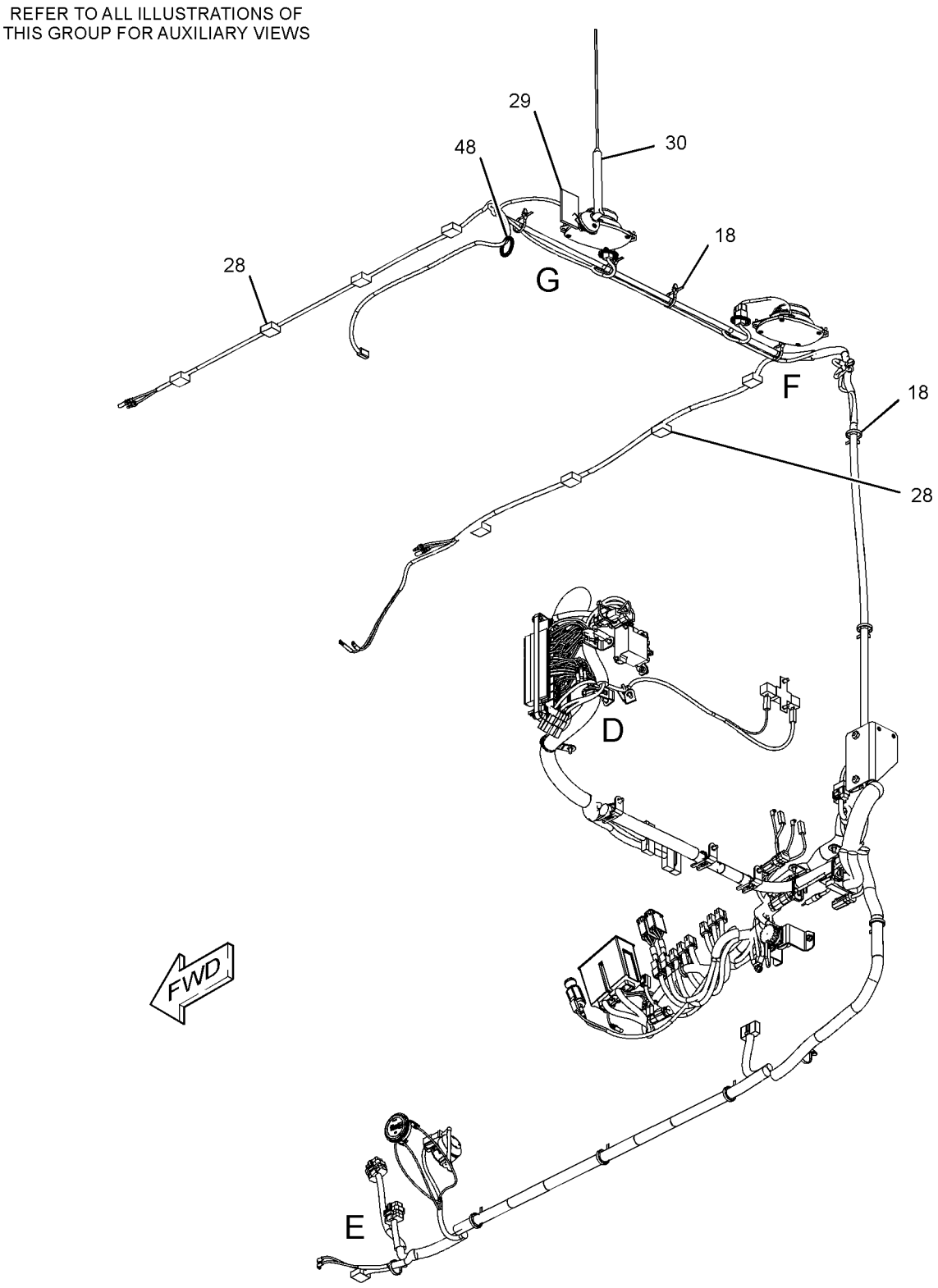

GRAPHIC #2 g01398365

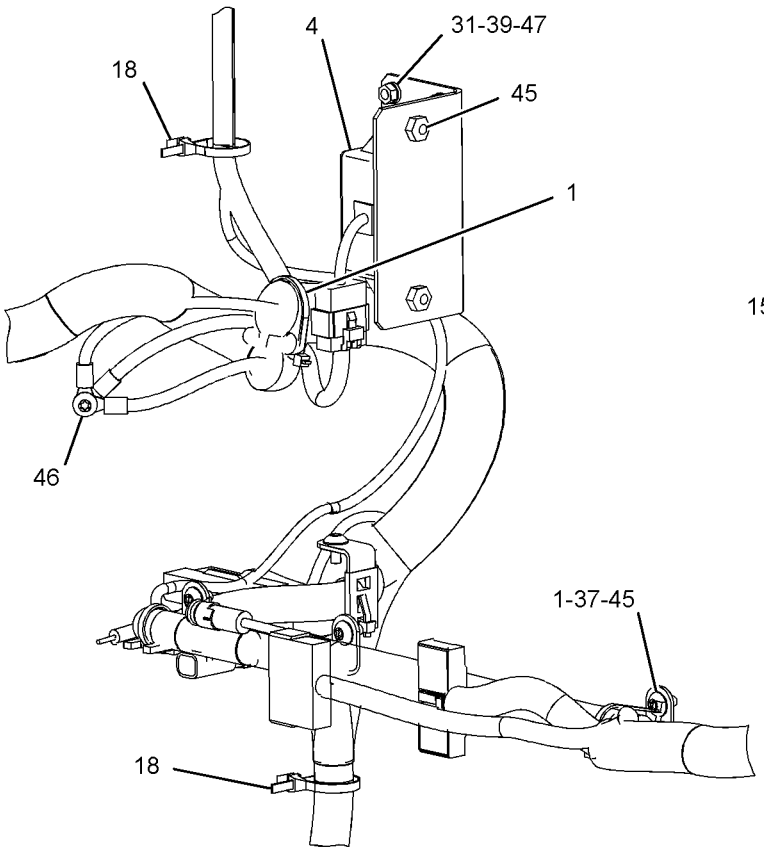

VIEW OF AREA B

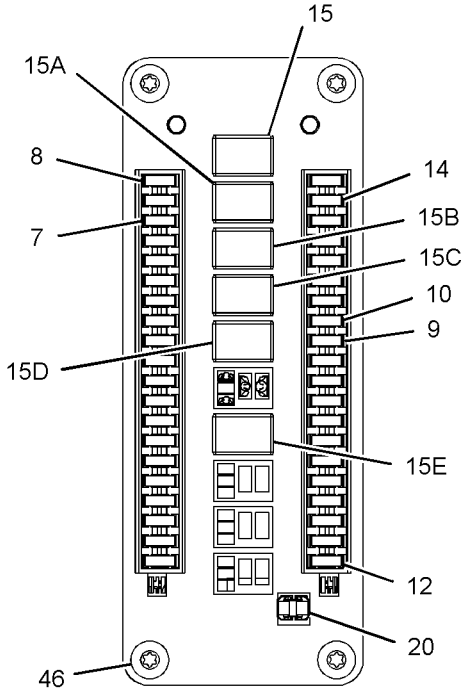

VIEW A-A

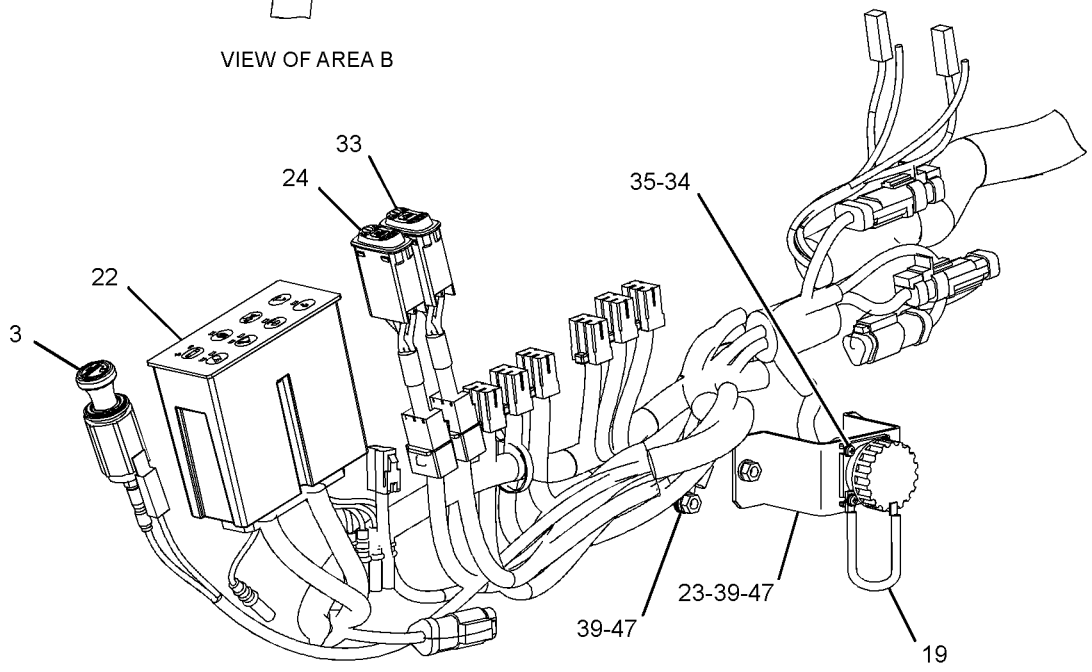

VIEW OF AREA C

GRAPHIC #3 g01398416

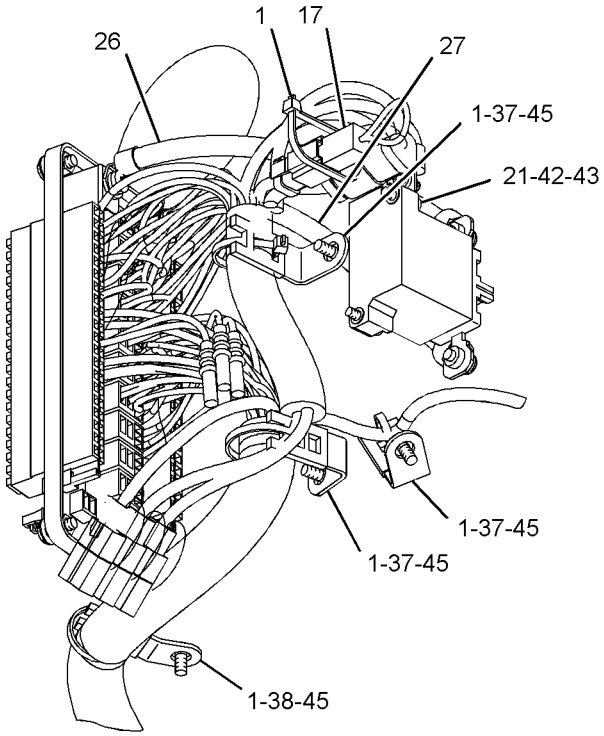

VIEW OF AREA D

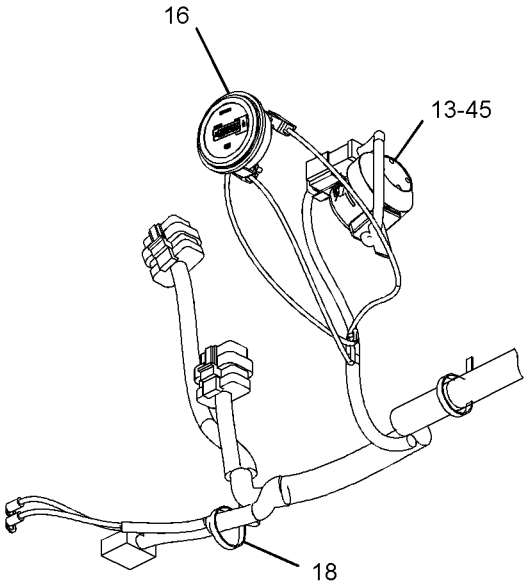

VIEW OF AREA E

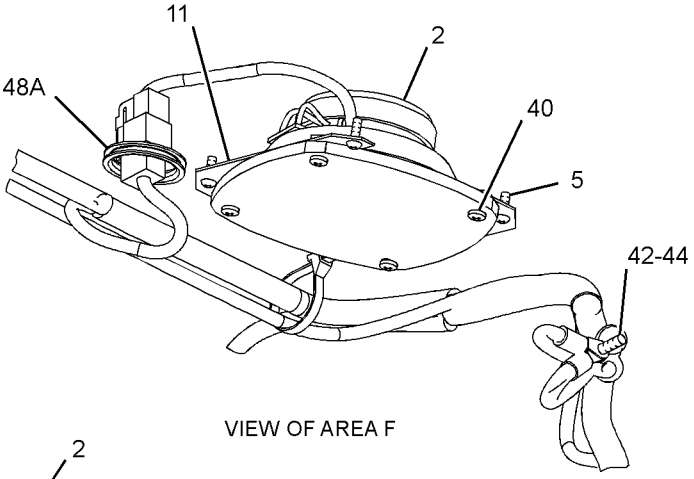

VIEW OF AREA F

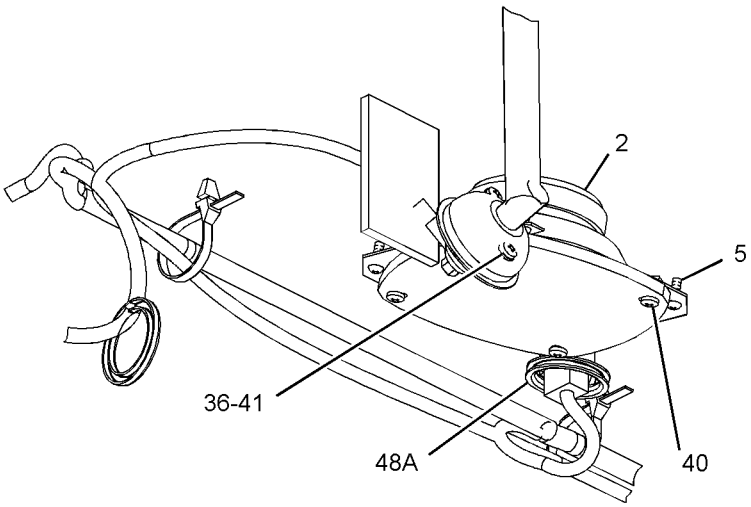

VIEW OF AREA G

GRAPHIC #4 **<END>** g01302137

267-7642 WIRING GP-CAB–COUPLER

S/N: KGF1-UP; FAL1-UP
PART OF 277-0863 CONTROL AR-COUPLER
AN ATTACHMENT

SMCS-1408, 7301 **i02706844**

NOTE	REF NO	GRAPHIC REF	PART NUMBER	QTY	PART NAME 1 2 3 4 5 6 (PRODUCT LEVEL)	SEE PAGE
	1	1	**7K-1181**	13	STRAP-CABLE	
	2	1	**149-5050**	1	RELAY (24-VOLT) (QUICK COUPLER LOCK PRIORITY)	
	2A	1	**149-5050**	1	RELAY (24-VOLT) (QUICK COUPLER LOCK ON)	
	2B	1	**149-5050**	1	RELAY (24-VOLT) (QUICK COUPLER LOCK)	
	2C	1	**149-5050**	1	RELAY (24-VOLT) (QUICK COUPLER LOCK)	
	3	1	**259-4884**	1	BRACKET AS	
	4	1	**259-7220**	1	COVER	
	5	1	**267-7644**	1	HARNESS AS-QUICK COUPLER	
		1	**102-7965**	3	TERMINAL (FEMALE)	
E		1	**125-7874**		TUBE-HEAT SHRINK (5.72-MM DIA) (10-CM)	
E		1	**125-7875**		TUBE-HEAT SHRINK (7.44-MM DIA) (15-CM)	
		1	**149-5070**	9	TERMINAL (FEMALE)	
		1	**163-6803**	1	CONNECTOR-PLUG	
		1	**230-5008**	1	PLUG AS-CONNECTOR (4-PIN)	
		1	**7Y-3950**	2	TERMINAL (MALE)	
		1	**7Y-3953**	1	CONNECTOR-RECEPTACLE	
		1	**149-5069**	7	TERMINAL (FEMALE)	
		1	**3S-2093**	15	STRAP-CABLE	
		1	**230-5008**	1	PLUG AS-CONNECTOR (4-PIN)	
	6	1	*267-7671*	1	SWITCH GP-TOGGLE (QUICK COUPLER)	
		1	**105-5175**	1	SWITCH AS-TOGGLE (QUICK COUPLER)	
		1	**3L-8187**	6	LOCKWASHER	
		1	**6T-3631**	2	NUT-HEX (15/32-32-THD)	
		1	**6T-3632**	1	LOCKWASHER	
		1	**6T-3633**	1	RING-LOCKING	
		1	**6V-8374**	6	SCREW-MACHINE (6-32X0.25-IN)	
		1	**267-7672**	1	HARNESS AS-WIRING (CAB)	
		1	**3S-2093**	1	STRAP-CABLE	
		1	**121-1173**	3	TERMINAL	
		1	**167-3542**	1	CONNECTOR-RECEPTACLE	
	7	1	**267-7676**	1	BRACKET AS	
M	8	1	**9X-2042**	7	SCREW-TRUSS HEAD (M6X1X12-MM)	

E-ORDER BY THE CENTIMETER
M-METRIC PART

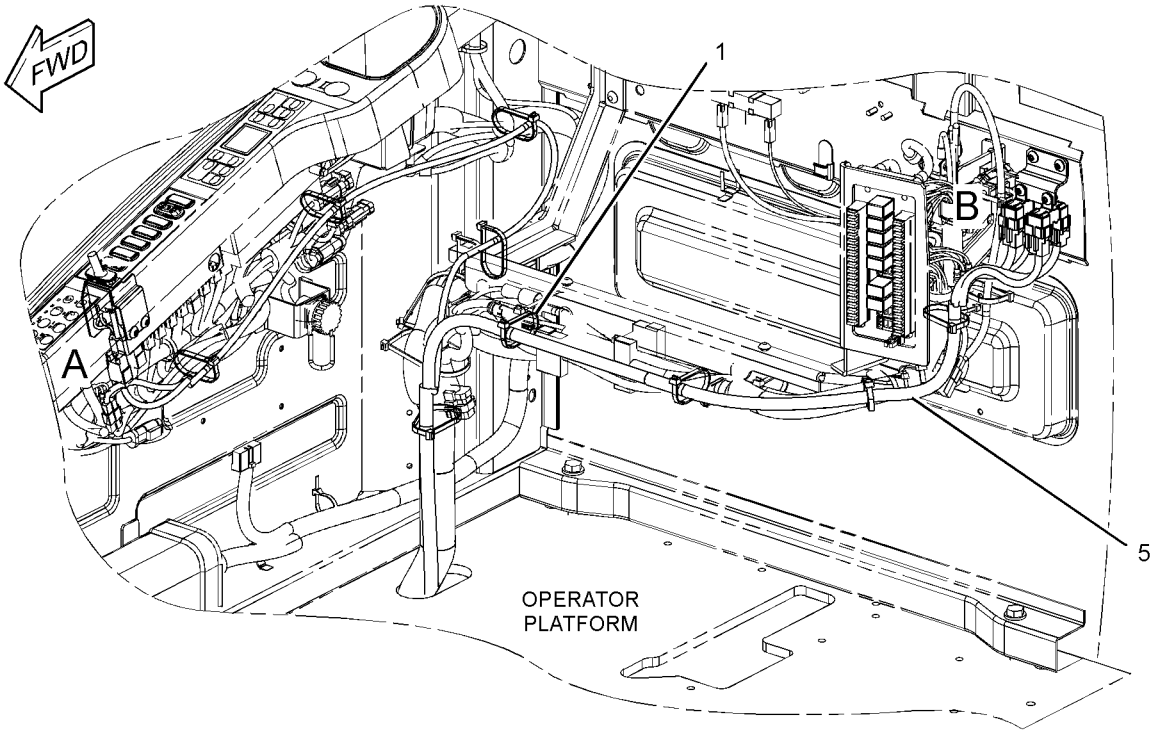

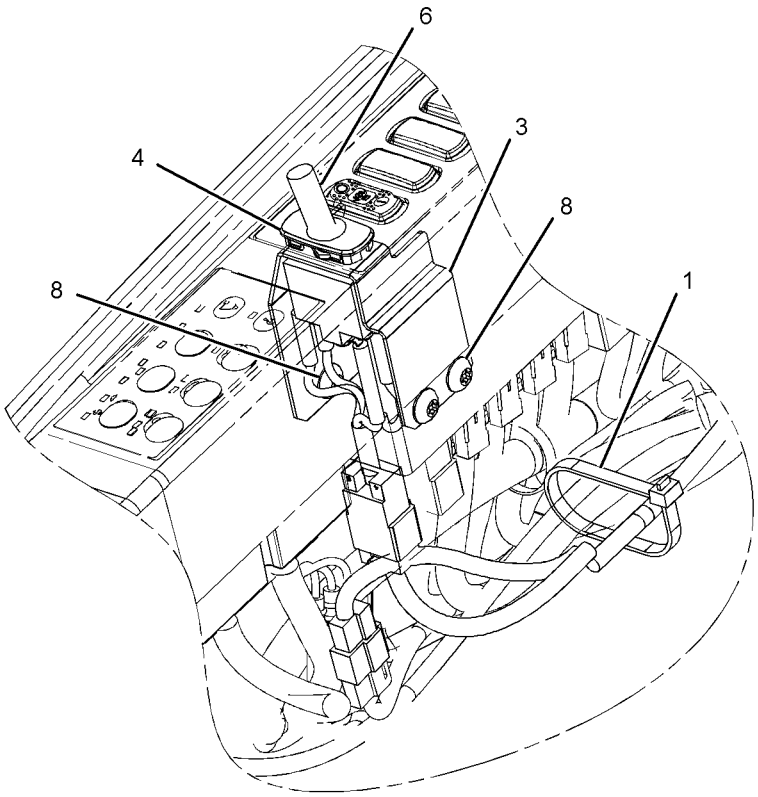

VIEW OF AREA A

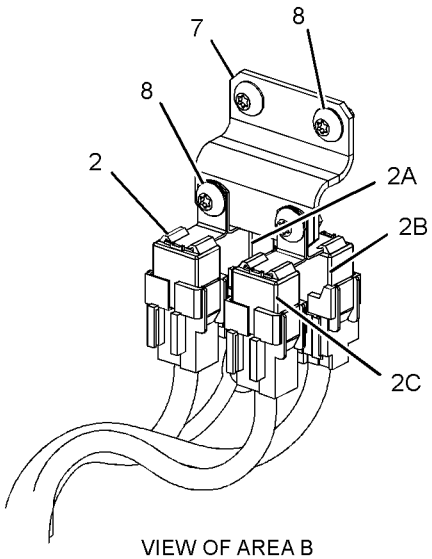

VIEW OF AREA B

GRAPHIC #1 **<END>** g01235651

299-2792 WIRING GP-CAB

S/N: KGF1-UP
PART OF 290-1775 CONVERSION AR-MACHINE
AN ATTACHMENT
TYPE 1

SMCS-1408, 7301 **i02845617**

NOTE	REF NO	GRAPHIC REF	PART NUMBER	QTY	PART NAME 1 2 3 4 5 6 (PRODUCT LEVEL)	SEE PAGE
	1	1	**7K-1181**	7	STRAP-CABLE	
	2	1	**113-8491**	1	FUSE (15-AMPERE)	
	3	1	**275-6840**	1	HARNESS AS-CONTROL (DISPLAY)	

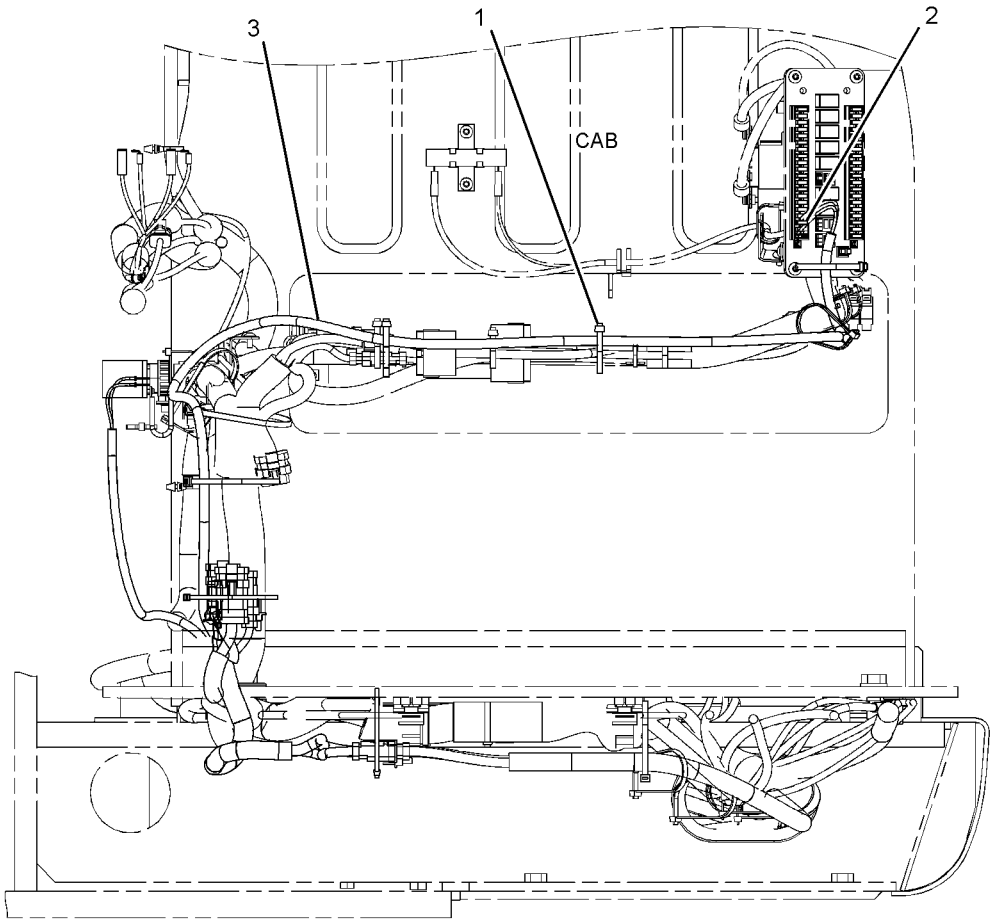

FRONT VIEW

GRAPHIC #1 **<END>** g01402306

299-2792 WIRING GP-CAB

S/N: KGF1-UP
PART OF 290-1775 CONVERSION AR-MACHINE
AN ATTACHMENT
TYPE 2

SMCS-1408, 7301 **i02981266**

NOTE	REF NO	GRAPHIC REF	PART NUMBER	QTY	PART NAME 1 2 3 4 5 6 (PRODUCT LEVEL)	SEE PAGE
	1	1	**7K-1181**	7	STRAP-CABLE	
	2	1	**113-8491**	1	FUSE (15-AMPERE)	
C	3	1	**306-8362**	1	HARNESS AS-CONTROL (DISPLAY)	

C-CHANGE FROM PREVIOUS TYPE

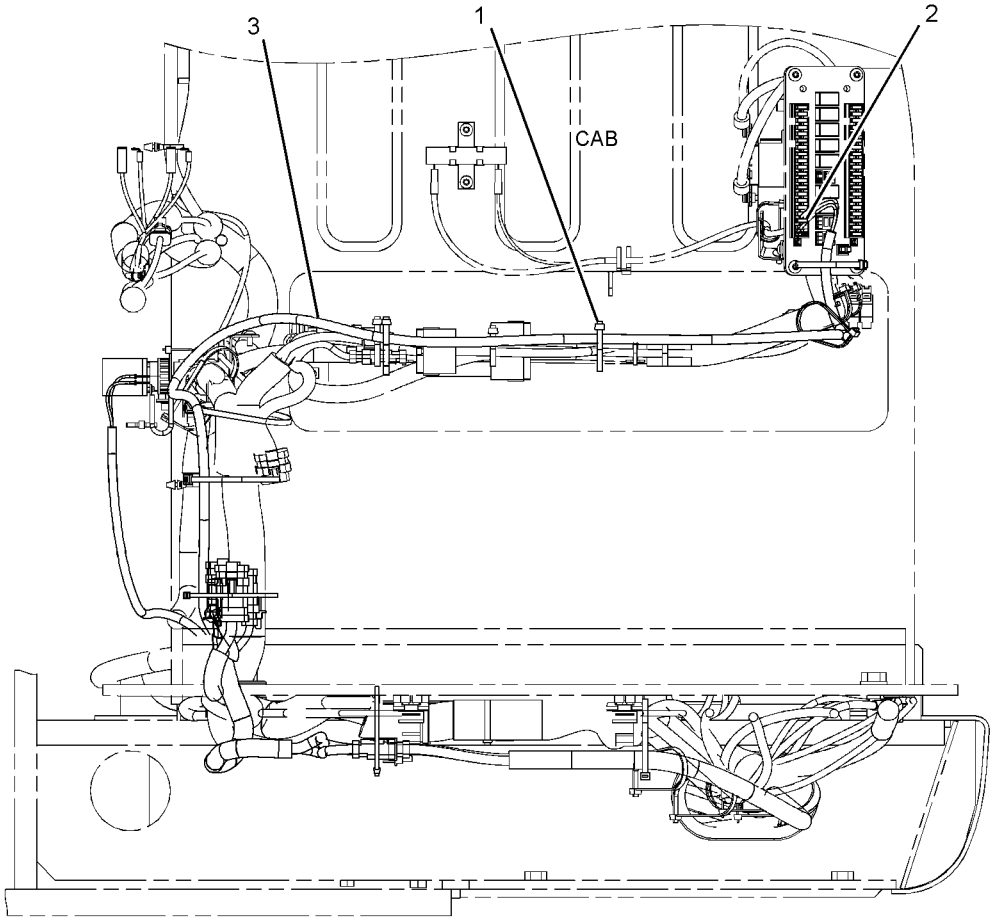

FRONT VIEW

GRAPHIC #1 **<END>** g01402306

306-8349 WIRING GP-CAB–ACCUGRADE READY

S/N: KGF1-UP; FAL1-UP
PART OF 290-1774, 290-1775 CONVERSION AR-MACHINE
AN ATTACHMENT

SMCS-1408, 7301 **i02825113**

NOTE	REF NO	GRAPHIC REF	PART NUMBER	QTY	PART NAME 1 2 3 4 5 6 (PRODUCT LEVEL)	SEE PAGE
	1	1	**7K-1181**	7	STRAP-CABLE	
	2	1	**113-8491**	1	FUSE (15-AMPERE)	
	3	1	**306-8350**	1	HARNESS AS-CONTROL	

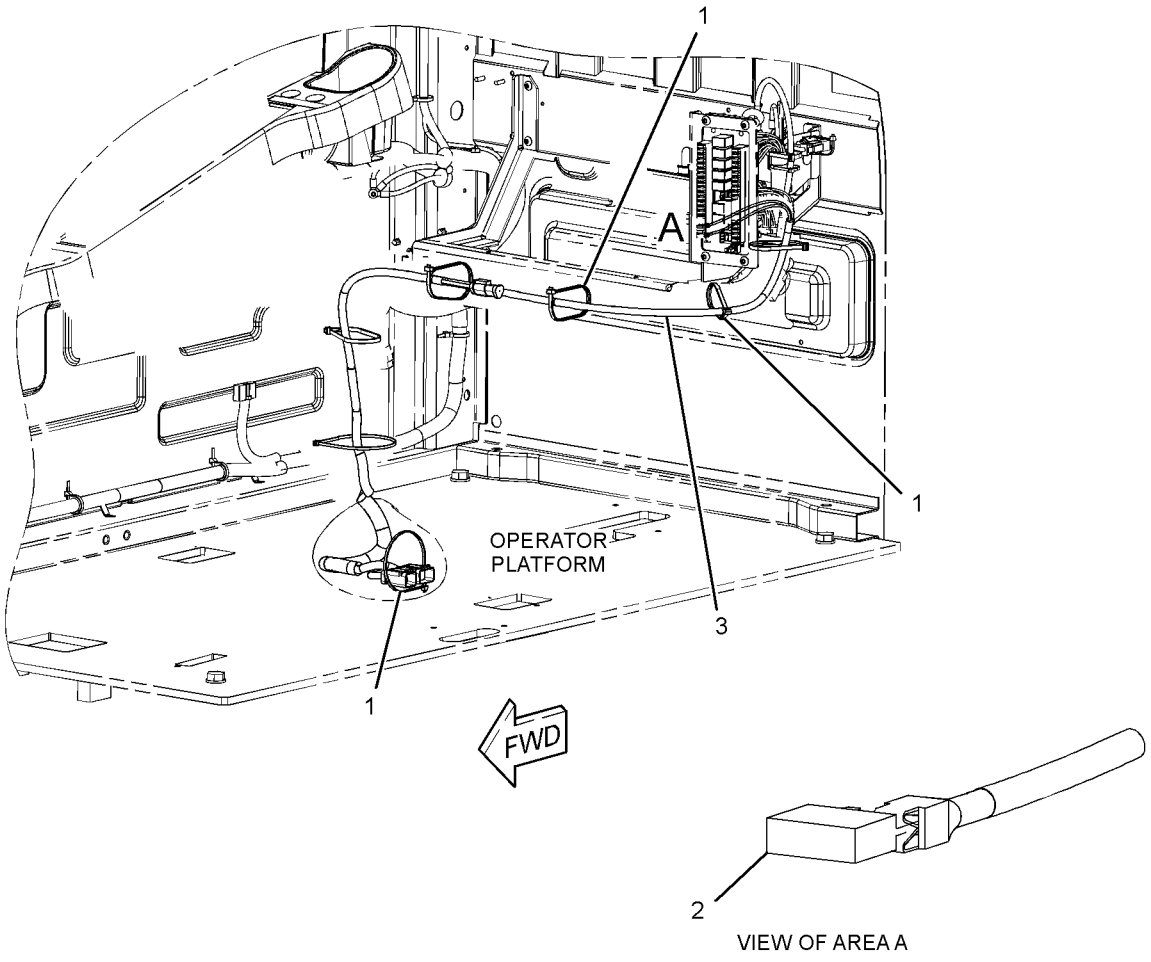

GRAPHIC #1 **<END>** g01398198

328-0048 WIRING GP-CAB–REAR VISION CAMERA

S/N: KGF1-UP; FAL1-UP
PART OF 314-3774 CAMERA AR
AN ATTACHMENT

SMCS-1408, 7301 **i03114038**

NOTE	REF NO	GRAPHIC REF	PART NUMBER	QTY	PART NAME 1 2 3 4 5 6 (PRODUCT LEVEL)	SEE PAGE
	1	1	**3S-2093**	13	STRAP-CABLE	
	2	1	**7K-1181**	16	STRAP-CABLE	
	3	1	**306-8590**	1	HARNESS AS-WIRING	
	4	1	**327-9998**	1	HARNESS AS-AUXILIARY	

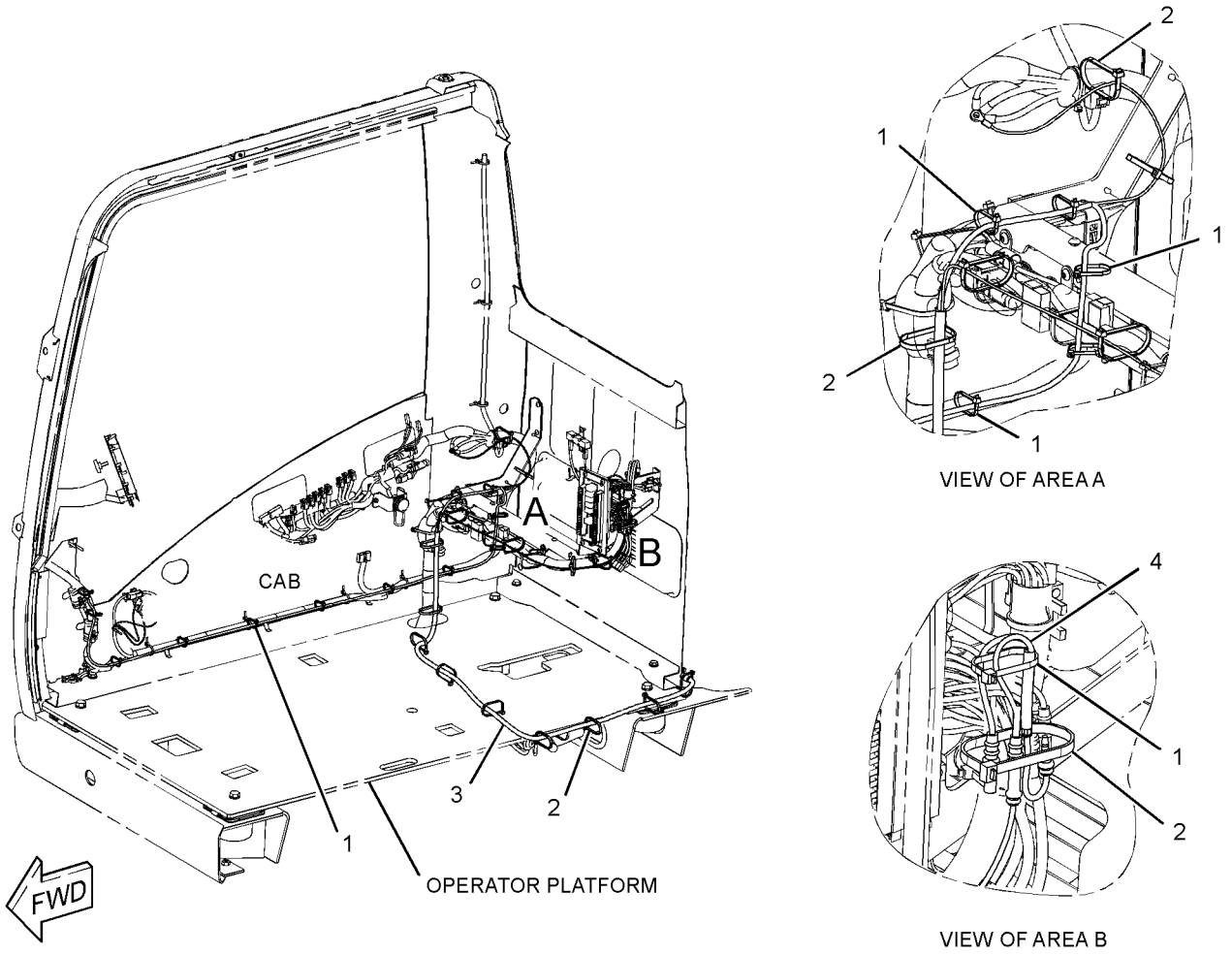

GRAPHIC #1 **<END>** g01609106

324-5774 WIRING GP-CAMERA–REAR VISION CAMERA

S/N: KGF1-UP; FAL1-UP
PART OF 314-3774 CAMERA AR
AN ATTACHMENT

SMCS-1408, 7348 **i03114065**

NOTE	REF NO	GRAPHIC REF	PART NUMBER	QTY	PART NAME 1 2 3 4 5 6 (PRODUCT LEVEL)	SEE PAGE
	1	1	**3S-2093**	20	STRAP-CABLE	
	2	1	**7K-1181**	5	STRAP-CABLE	
	3	1	**268-8643**	1	CABLE AS	

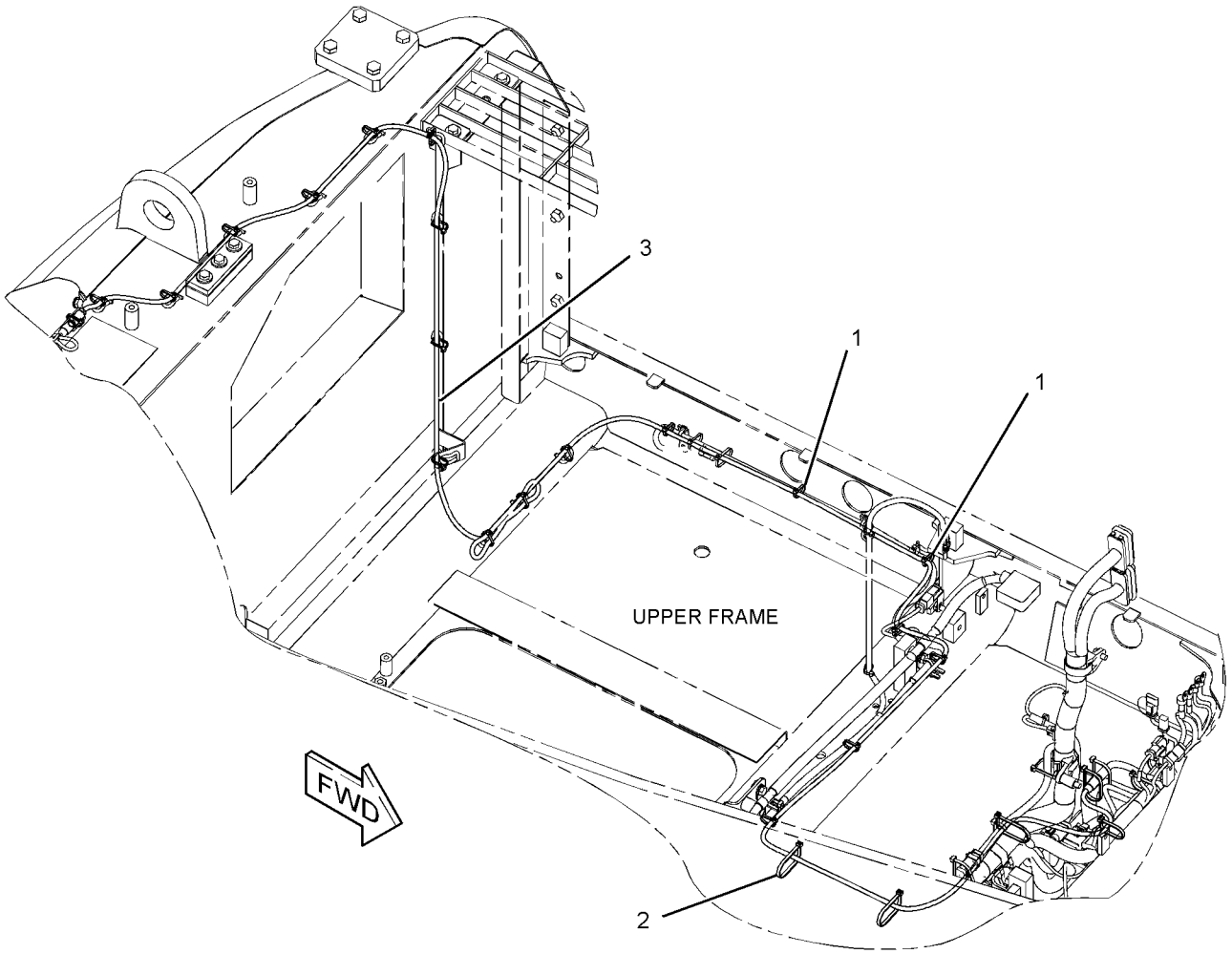

GRAPHIC #1 **<END>** g01600133

299-2954 WIRING GP-CHASSIS–ACCUGRADE READY

S/N: KGF1-UP; FAL1-UP

PART OF 290-1774, 290-1775 CONVERSION AR-MACHINE

AN ATTACHMENT

SMCS-1408 **i02984880**

NOTE	REF NO	GRAPHIC REF	PART NUMBER	QTY	PART NAME 1 2 3 4 5 6 (PRODUCT LEVEL)	SEE PAGE
	1	1	**7K-1181**	46	STRAP-CABLE	
	2	1	**111-4836**	1	CLIP	
	4	1	**275-6841**	1	HARNESS AS-CONTROL (BODY TILT SENSOR, GPS RECEIVER)	
	5	1	**275-6842**	1	HARNESS AS-CONTROL (DISPLAY, GPS RADIO)	
	6	1	**279-7609**	1	BRACKET AS	
		1	**7T-1099**	1	LINK	
	7	1	**299-2963**	1	HARNESS AS-CONTROL (BLADE)	
	8	1	**132-5789**	2	CLIP	
	9	1	**2S-1647**	1	GROMMET	
	10	1	**4P-7428**	1	CLIP	
	11	1	**8T-4121**	2	WASHER-HARD (11X21X2.5-MM THK)	
M	12	1	**8T-4191**	2	BOLT (M10X1.5X16-MM)	
	13	1	**8T-4223**	2	WASHER-HARD (13.5X25.5X3-MM THK)	
M	14	1	**8T-4648**	2	BOLT (M12X1.75X70-MM)	

M-METRIC PART

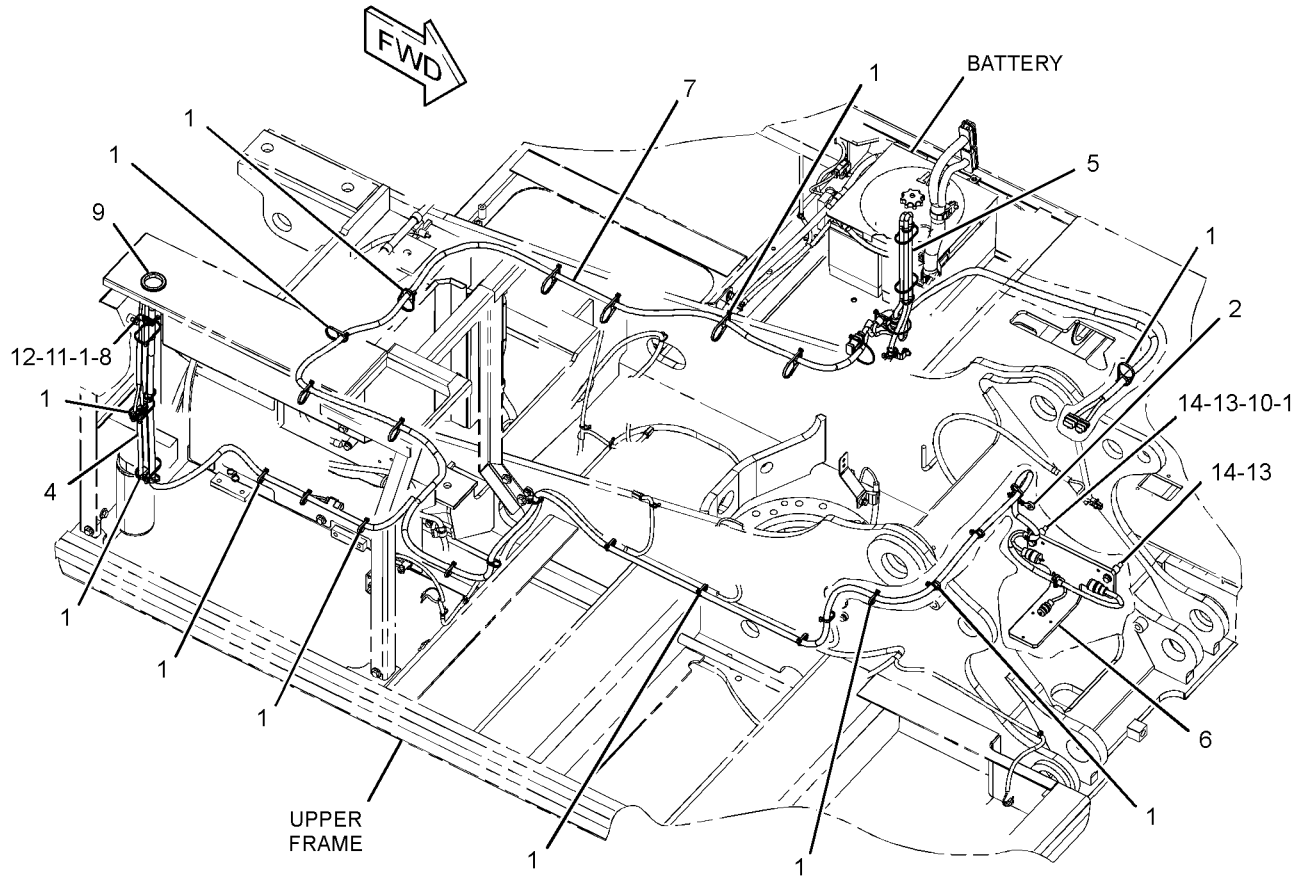

GRAPHIC #1 **<END>** g01419299

319-1387 WIRING GP-CHASSIS

S/N: KGF1258-UP; FAL842-UP

PART OF 264-8638, 264-8639 CHASSIS AR

SMCS-1408 **i02984882**

NOTE	REF NO	GRAPHIC REF	PART NUMBER	QTY	PART NAME 1 2 3 4 5 6 (PRODUCT LEVEL)	SEE PAGE
	1	1	**3S-2093**	2	STRAP-CABLE	
	2	1	**7K-1181**	5	STRAP-CABLE	
	3	1	**319-1348**	1	HARNESS AS-CONTROL (ENGINE START, PUMP CONTROL)	

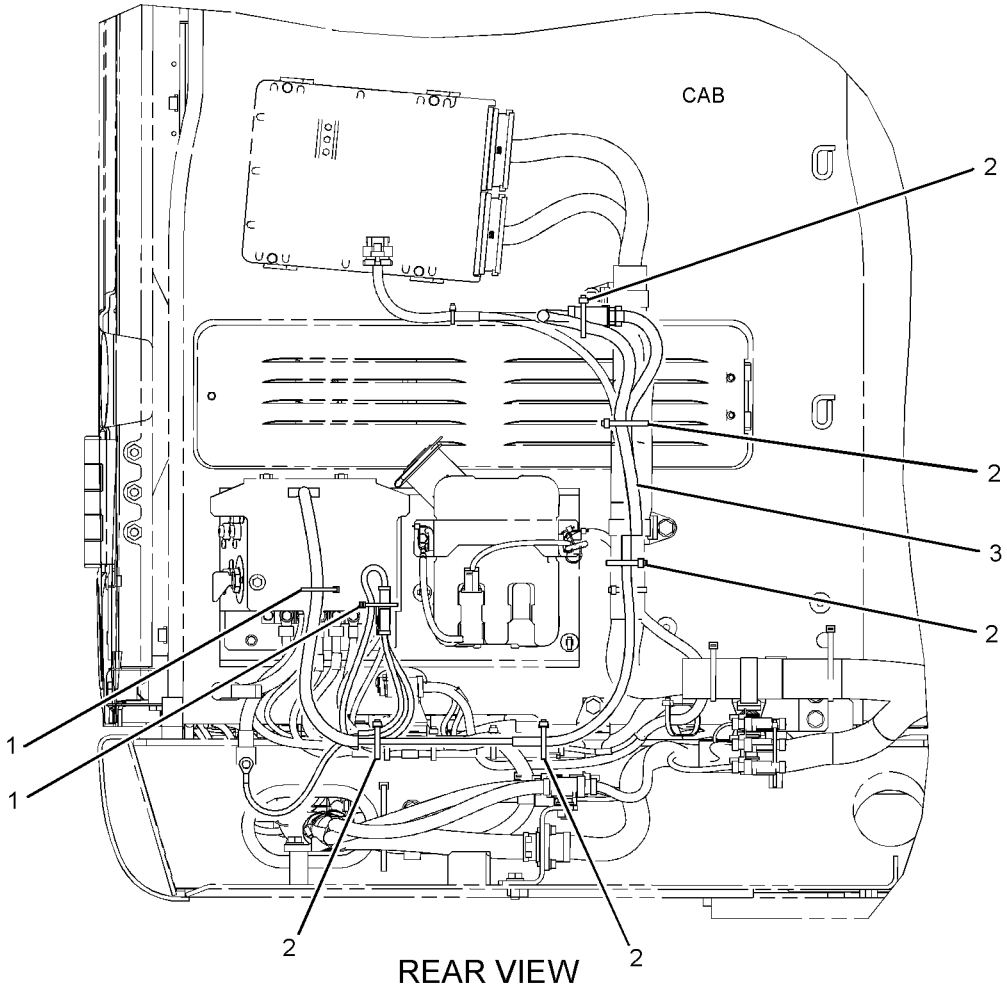

GRAPHIC #1

<END>

g01460607

259-5045 WIRING GP-COMBINED FLOW

S/N: KGF1-UP; FAL1-UP
PART OF 259-7493, 259-7495 CONTROL AR-AUXILIARY
AN ATTACHMENT

SMCS-1408 **i02423358**

NOTE	REF NO	GRAPHIC REF	PART NUMBER	QTY	PART NAME 1 2 3 4 5 6 (PRODUCT LEVEL)	SEE PAGE
	1	1,2	**3S-2093**	23	STRAP-CABLE	
	2	1	**7K-1181**	11	STRAP-CABLE	
	3	2	**111-4836**	2	CLIP	
	4	1	**116-0118**	1	CLIP	
	5	1	**204-1611**	4	STRAP-CABLE	
	6	1	**267-7636**	1	HARNESS AS-AUXILIARY	
		1	**3S-2093**	1	STRAP-CABLE	
E		1	**125-7874**		TUBE-HEAT SHRINK (5.72-MM DIA) (20-CM)	
		1	**155-2270**	6	KIT-CONNECTING PLUG (2-PIN)	
					(INCLUDES PLUG AS, WEDGE & INTERFACE SEAL)	
		1	**230-5010**	1	PLUG AS-CONNECTOR (6-PIN)	
		1	**243-4510**	1	RECEPTACLE AS-CONNECTOR (12-PIN)	
		1	**9W-0852**	1	PIN-CONNECTOR (14-GA)	
	7	1	**132-5789**	1	CLIP	
	8	2	**156-6175**	1	CLIP	
	9	2	**4P-7581**	1	CLIP	
	10	1,2	**8T-4121**	3	WASHER-HARD (11X21X2.5-MM THK)	
M	11	2	**8T-4137**	1	BOLT (M10X1.5X20-MM)	
M	12	2	**8T-4171**	1	BOLT (M6X1X12-MM)	
M	13	1,2	**8T-4191**	2	BOLT (M10X1.5X16-MM)	
M	14	2	**8T-4195**	1	BOLT (M10X1.5X30-MM)	
	15	2	**9X-8256**	1	WASHER (6.6X12X2-MM THK)	

E-ORDER BY THE CENTIMETER
M-METRIC PART

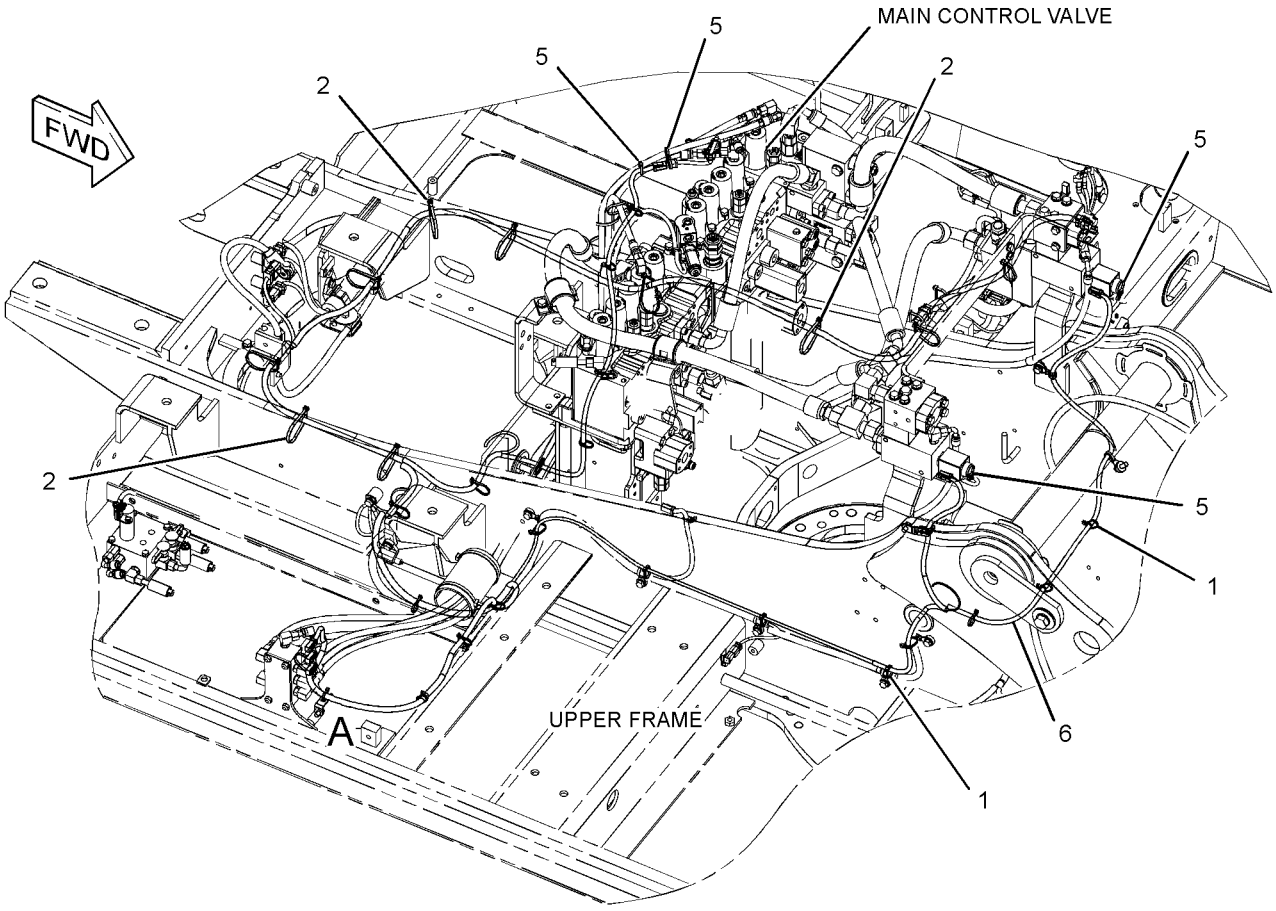

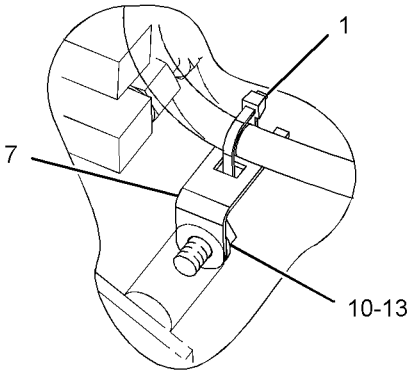

VIEW OF AREA A

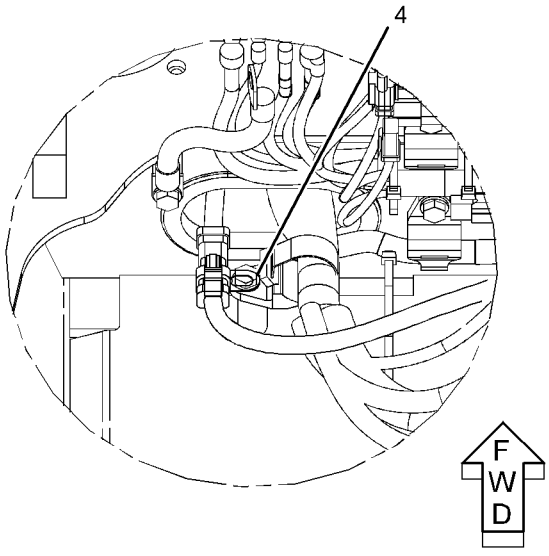

GRAPHIC #1 g01230607

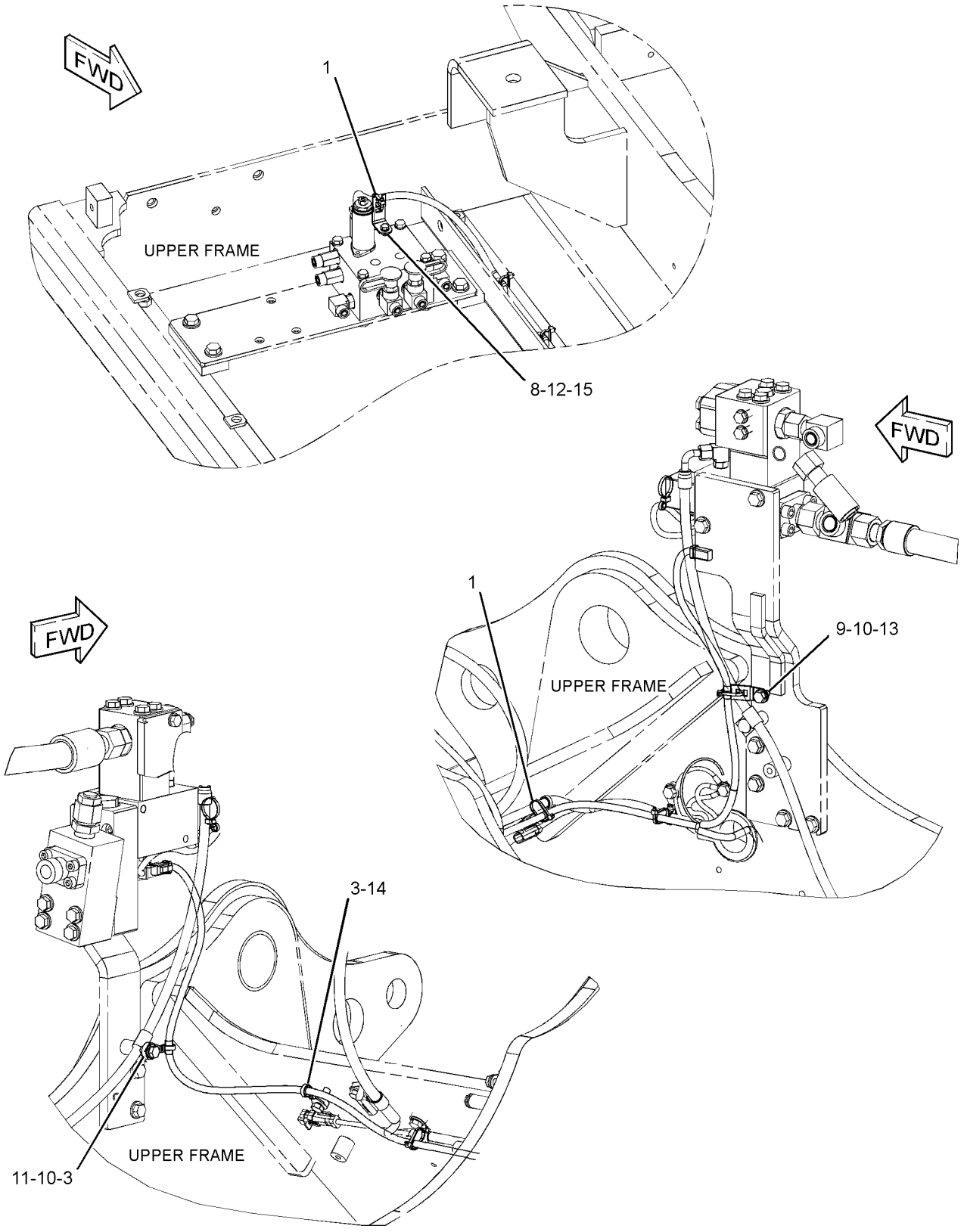

GRAPHIC #2 **<END>** g01230609

267-8007 WIRING GP-COMMUNICATION–PRODUCT LINK 321SR

S/N: KGF1-UP; FAL1-UP
PART OF 264-8665 INSTALLATION AR-COMMUNICATION
AN ATTACHMENT
TYPE 1

SMCS-1408 **i02555427**

NOTE	REF NO	GRAPHIC REF	PART NUMBER	QTY	PART NAME 1 2 3 4 5 6 (PRODUCT LEVEL)	SEE PAGE
	1	1	**3S-2093**	2	STRAP-CABLE	
	2	1	**4I-7889**	1	SPACER (11X25X45-MM THK)	
	3	1	**7K-1181**	3	STRAP-CABLE	
	4	1	**9X-3495**	1	CLIP AS	
	5	1	**091-9035**	1	SPACER (11X25X20-MM THK)	
	6	1	**116-0118**	3	CLIP	
	7	1	**259-4887**	1	HARNESS AS-CONTROL (PRODUCT LINK)	
		1	**3S-2093**	2	STRAP-CABLE	
E		1	**125-7874**		TUBE-HEAT SHRINK (5.72-MM DIA) (15-CM)	
E		1	**125-7875**		TUBE-HEAT SHRINK (7.44-MM DIA) (5-CM)	
		1	**126-1774**	1	COVER-CONNECTOR	
		1	**160-7690**	1	PLUG AS-CONNECTOR (70-PIN)	
		1	**230-5010**	2	PLUG AS-CONNECTOR (6-PIN)	
		1	**243-4508**	2	RECEPTACLE AS-CONNECTOR (6-PIN)	
	8	1	**259-4940**	1	HARNESS AS-WIRING (SERVICE CONNECTOR)	
		1	**243-4508**	1	RECEPTACLE AS-CONNECTOR (6-PIN)	
	9	1	**275-6979**	1	HARNESS AS-CONTROL (PRODUCT LINK 121SR)	
		1	**155-2255**	1	KIT-CONNECTING PLUG (12-PIN)	
					(INCLUDES PLUG AS, WEDGE & INTERFACE SEAL)	
		1	**230-5010**	1	PLUG AS-CONNECTOR (6-PIN)	
		1	**243-4508**	1	RECEPTACLE AS-CONNECTOR (6-PIN)	
	10	1	**111-4837**	1	CLIP	
	11	1	**132-5789**	2	CLIP	
	12	1	**8T-4121**	3	WASHER-HARD (11X21X2.5-MM THK)	
M	13	1	**8T-4136**	1	BOLT (M10X1.5X25-MM)	
M	14	1	**8T-4137**	1	BOLT (M10X1.5X20-MM)	
M	15	1	**8T-4185**	1	BOLT (M10X1.5X50-MM)	
M	16	1	**8T-4191**	1	BOLT (M10X1.5X16-MM)	
M	17	1	**8T-5005**	1	BOLT (M10X1.5X70-MM)	

E-ORDER BY THE CENTIMETER
M-METRIC PART

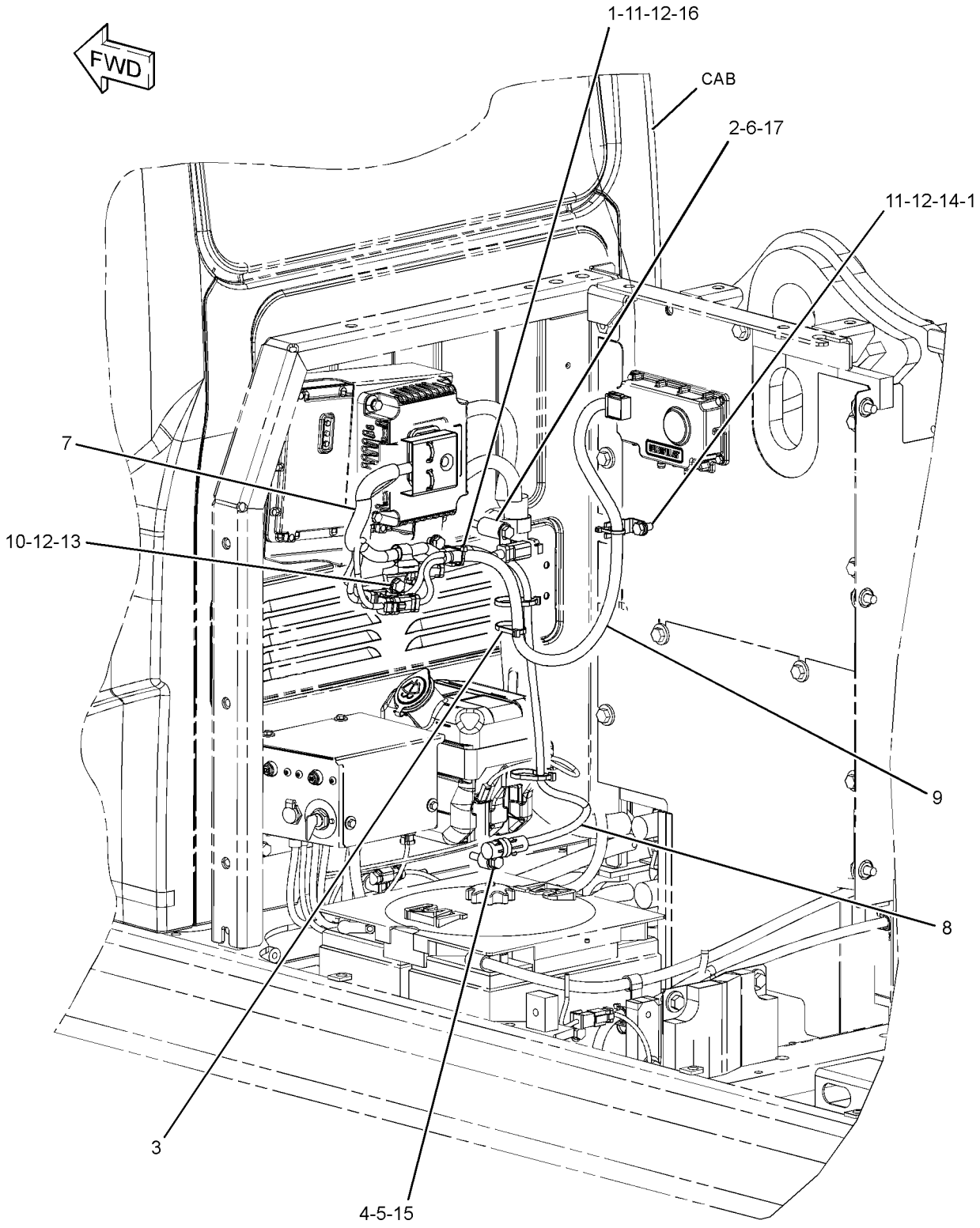

GRAPHIC #1 **<END>** g01297008

267-8007 WIRING GP-COMMUNICATION–PRODUCT LINK 321SR

S/N: KGF1-UP; FAL1-UP
PART OF 264-8665 INSTALLATION AR-COMMUNICATION
AN ATTACHMENT
TYPE 2

SMCS-1408 **i02858397**

NOTE	REF NO	GRAPHIC REF	PART NUMBER	QTY	PART NAME 1 2 3 4 5 6 (PRODUCT LEVEL)	SEE PAGE
	1	1	**3S-2093**	2	STRAP-CABLE	
	2	1	**4I-7889**	1	SPACER (11X25X45-MM THK)	
	3	1	**7K-1181**	3	STRAP-CABLE	
	4	1	**9X-3495**	1	CLIP AS	
	6	1	**116-0118**	3	CLIP	
	7	1	**259-4887**	1	HARNESS AS-CONTROL (PRODUCT LINK)	
		1	**3S-2093**	2	STRAP-CABLE	
E		1	**125-7874**		TUBE-HEAT SHRINK (5.72-MM DIA) (15-CM)	
E		1	**125-7875**		TUBE-HEAT SHRINK (7.44-MM DIA) (5-CM)	
		1	**126-1774**	1	COVER-CONNECTOR	
		1	**160-7690**	1	PLUG AS-CONNECTOR (70-PIN)	
		1	**230-5010**	2	PLUG AS-CONNECTOR (6-PIN)	
		1	**243-4508**	2	RECEPTACLE AS-CONNECTOR (6-PIN)	
	8	1	**259-4940**	1	HARNESS AS-WIRING (SERVICE CONNECTOR)	
		1	**243-4508**	1	RECEPTACLE AS-CONNECTOR (6-PIN)	
	9	1	**275-6979**	1	HARNESS AS-CONTROL (PRODUCT LINK 121SR)	
		1	**155-2255**	1	KIT-CONNECTING PLUG (12-PIN)	
					(INCLUDES PLUG AS, WEDGE & INTERFACE SEAL)	
		1	**230-5010**	1	PLUG AS-CONNECTOR (6-PIN)	
		1	**243-4508**	1	RECEPTACLE AS-CONNECTOR (6-PIN)	
	10	1	**111-4837**	1	CLIP	
	11	1	**132-5789**	2	CLIP	
	12	1	**8T-4121**	3	WASHER-HARD (11X21X2.5-MM THK)	
CM	13	1	**8T-4136**	2	BOLT (M10X1.5X25-MM)	
M	14	1	**8T-4137**	1	BOLT (M10X1.5X20-MM)	
M	16	1	**8T-4191**	1	BOLT (M10X1.5X16-MM)	
M	17	1	**8T-5005**	1	BOLT (M10X1.5X70-MM)	

C-CHANGE FROM PREVIOUS TYPE
E-ORDER BY THE CENTIMETER
M-METRIC PART

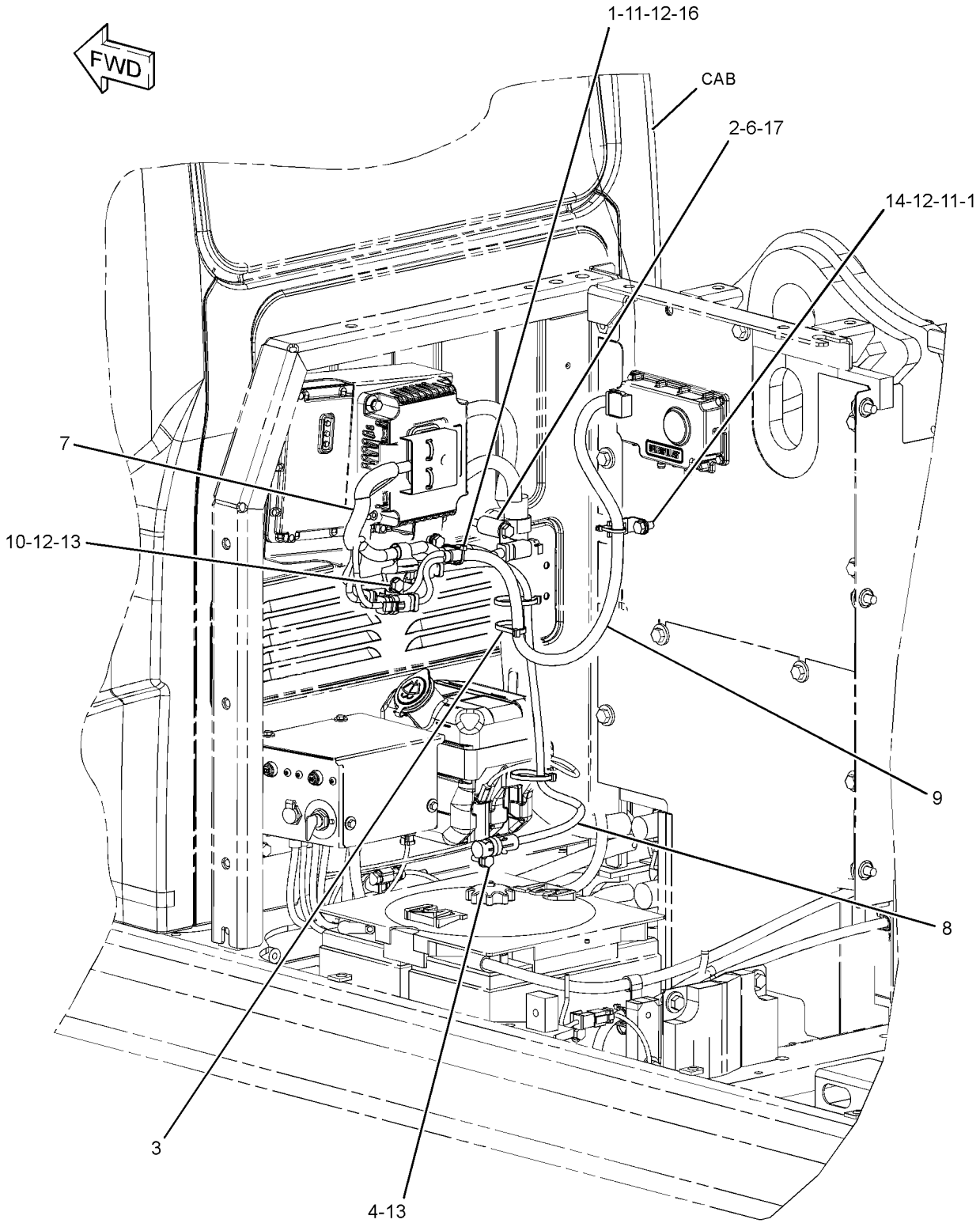

GRAPHIC #1 **<END>** g01431914

267-8008 WIRING GP-COMMUNICATION–PRODUCT LINK 121SR

S/N: KGF1-UP; FAL1-UP
PART OF 264-8666 INSTALLATION AR-COMMUNICATION
AN ATTACHMENT
TYPE 1

SMCS-1408 **i02426299**

NOTE	REF NO	GRAPHIC REF	PART NUMBER	QTY	PART NAME 1 2 3 4 5 6 (PRODUCT LEVEL)	SEE PAGE
	1	1	**3S-2093**	2	STRAP-CABLE	
	2	1	**4I-7889**	1	SPACER (11X25X45-MM THK)	
	3	1	**7K-1181**	3	STRAP-CABLE	
	4	1	**9X-3495**	1	CLIP AS	
		1	**8C-3334**	2	RIVET-TUBULAR	
	5	1	**091-9035**	1	SPACER (11X25X20-MM THK)	
	6	1	**116-0118**	2	CLIP	
	7	1	**259-4940**	1	HARNESS AS-WIRING (SERVICE CONNECTOR)	
		1	**102-8803**	1	KIT-RECEPTACLE (3-PIN)	
					(INCLUDES RECEPTACLE AS & WEDGE)	
		1	**155-2260**	6	KIT-CONNECTING PLUG (3-PIN)	
					(INCLUDES PLUG AS, WEDGE & INTERFACE SEAL)	
		1	**243-4508**		RECEPTACLE AS-CONNECTOR (6-PIN)	
	8	1	**275-6979**	1	HARNESS AS-CONTROL (PRODUCT LINK 121SR)	
		1	**155-2255**	1	KIT-CONNECTING PLUG (12-PIN)	
					(INCLUDES PLUG AS, WEDGE & INTERFACE SEAL)	
		1	**230-5010**	1	PLUG AS-CONNECTOR (6-PIN)	
		1	**243-4508**	1	RECEPTACLE AS-CONNECTOR (6-PIN)	
	9	1	**132-5789**	1	CLIP	
	10	1	**8T-4121**	1	WASHER-HARD (11X21X2.5-MM THK)	
M	11	1	**8T-4137**	1	BOLT (M10X1.5X20-MM)	
M	12	1	**8T-4185**	1	BOLT (M10X1.5X50-MM)	
M	13	1	**8T-5005**	1	BOLT (M10X1.5X70-MM)	

M-METRIC PART

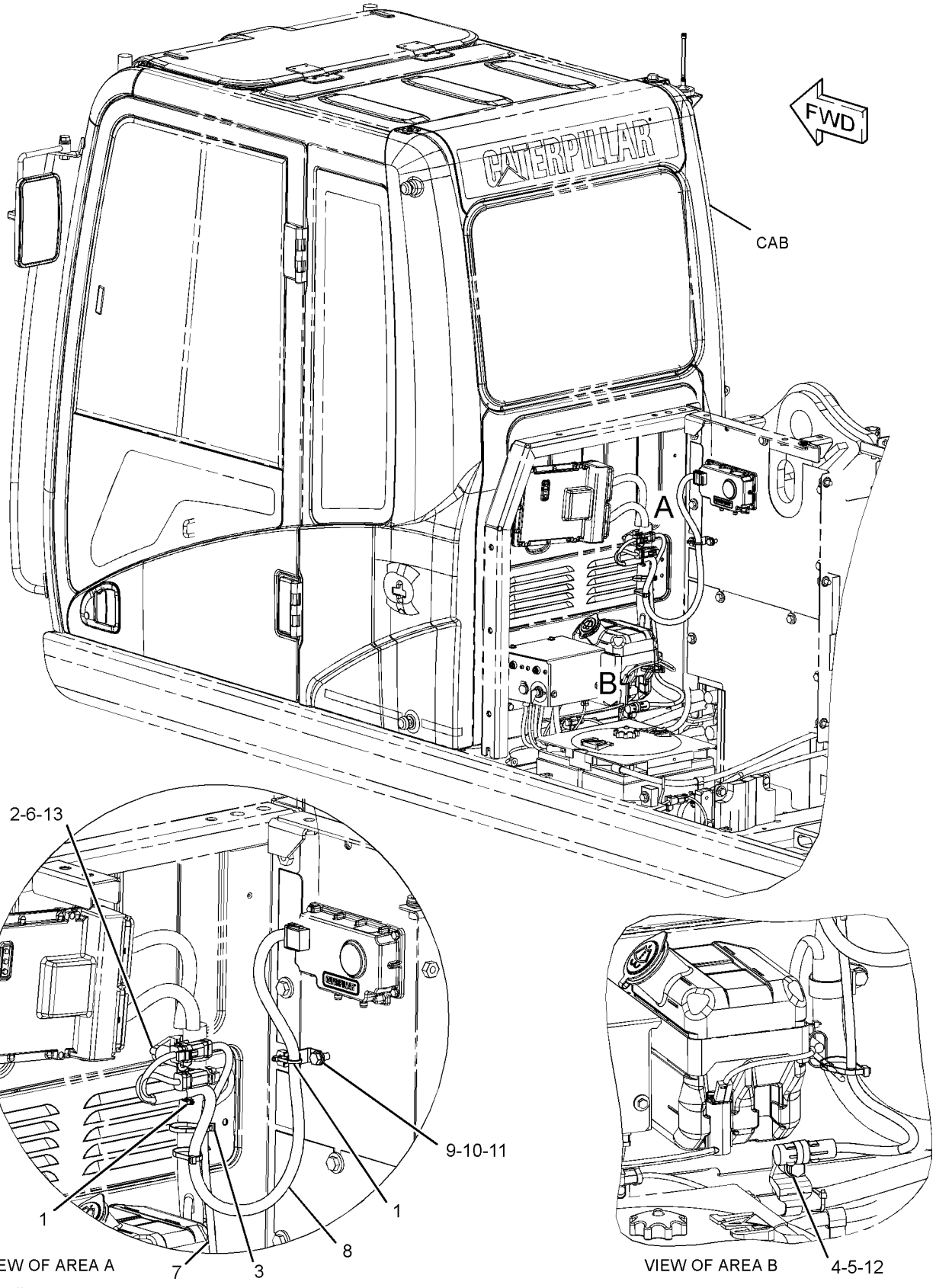

GRAPHIC #1 **<END>** g01229471

267-8008 WIRING GP-COMMUNICATION–PRODUCT LINK 121SR

S/N: KGF1-UP; FAL1-UP
PART OF 264-8666 INSTALLATION AR-COMMUNICATION
AN ATTACHMENT
TYPE 2

SMCS-1408 **i02858404**

NOTE	REF NO	GRAPHIC REF	PART NUMBER	QTY	PART NAME 1 2 3 4 5 6 (PRODUCT LEVEL)	SEE PAGE
	1	1	**3S-2093**	2	STRAP-CABLE	
	2	1	**4I-7889**	1	SPACER (11X25X45-MM THK)	
	3	1	**7K-1181**	3	STRAP-CABLE	
	4	1	**9X-3495**	1	CLIP AS	
	6	1	**116-0118**	2	CLIP	
	7	1	**259-4940**	1	HARNESS AS-WIRING (SERVICE CONNECTOR)	
	8	1	**275-6979**	1	HARNESS AS-CONTROL (PRODUCT LINK 121SR)	
	9	1	**132-5789**	1	CLIP	
	10	1	**8T-4121**	1	WASHER-HARD (11X21X2.5-MM THK)	
M	11	1	**8T-4137**	1	BOLT (M10X1.5X20-MM)	
CM	12	1	**8T-4136**	1	BOLT (M10X1.5X25-MM)	
M	13	1	**8T-5005**	1	BOLT (M10X1.5X70-MM)	

C-CHANGE FROM PREVIOUS TYPE
M-METRIC PART

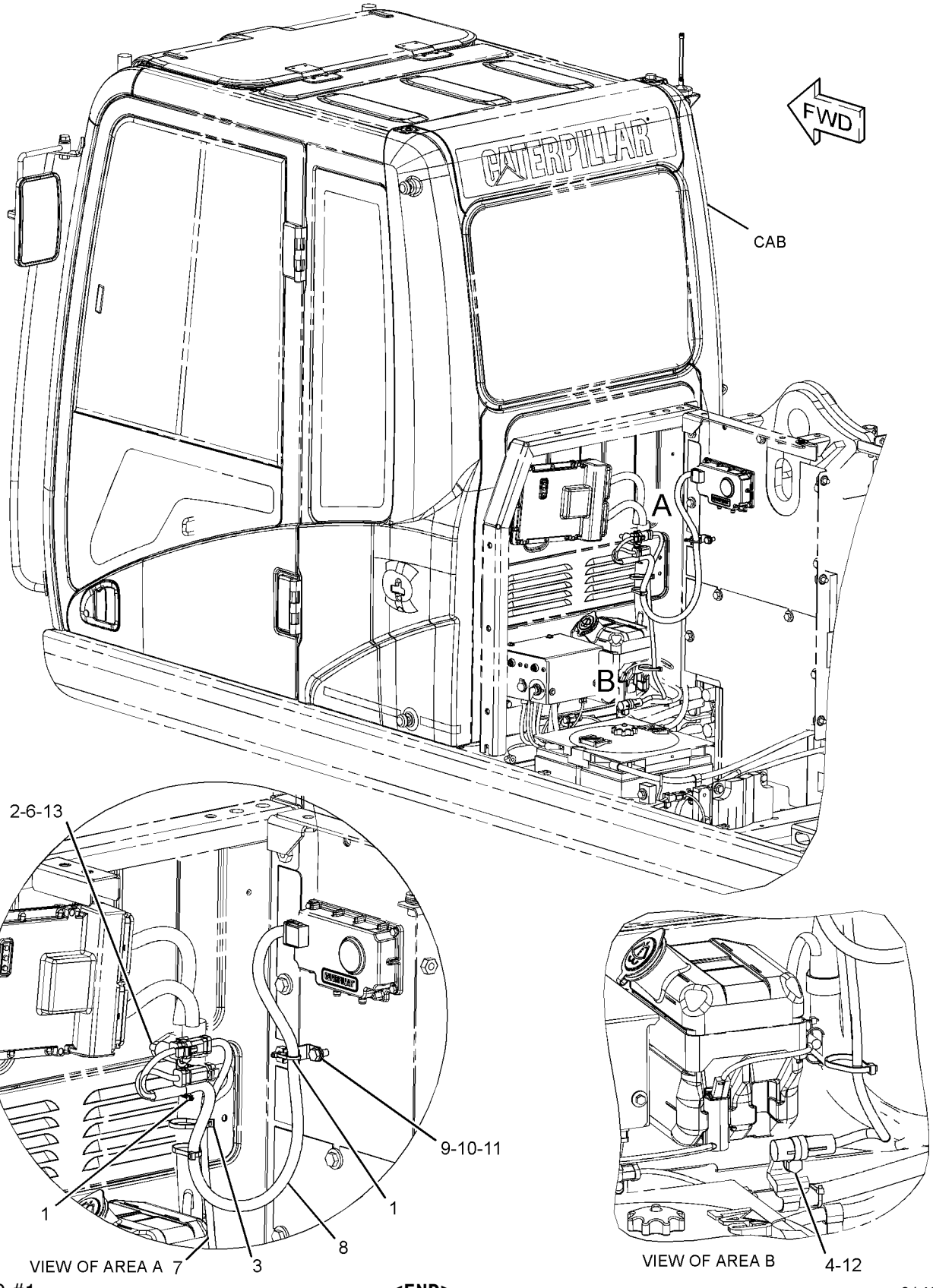

GRAPHIC #1 **<END>** g01431923

ELECTRICAL AND STARTING SYSTEM

283-2761 WIRING GP-COMMUNICATION

S/N: KGF1-UP; FAL1-UP

AN ATTACHMENT

SMCS-1408 **i03084913**

NOTE	REF NO	GRAPHIC REF	PART NUMBER	QTY	PART NAME 1 2 3 4 5 6 (PRODUCT LEVEL)	SEE PAGE
	1	1	**3S-2093**	3	STRAP-CABLE	
	2	1	**4I-7889**	1	SPACER (11X25X45-MM THK)	
	3	1	**7K-1181**	10	STRAP-CABLE	
	4	1	**116-0118**	1	CLIP	
	5	1	**149-5050**	1	RELAY (24-VOLT) (START CONTROL)	
	6	1	**283-2762**	1	HARNESS AS-CONTROL	
M	7	1	**5C-2890**	1	NUT (M6X1-THD)	
M	8	1	**8T-5005**	1	BOLT (M10X1.5X70-MM)	
	9	1	**9X-8256**	1	WASHER (6.6X12X2-MM THK)	

M-METRIC PART

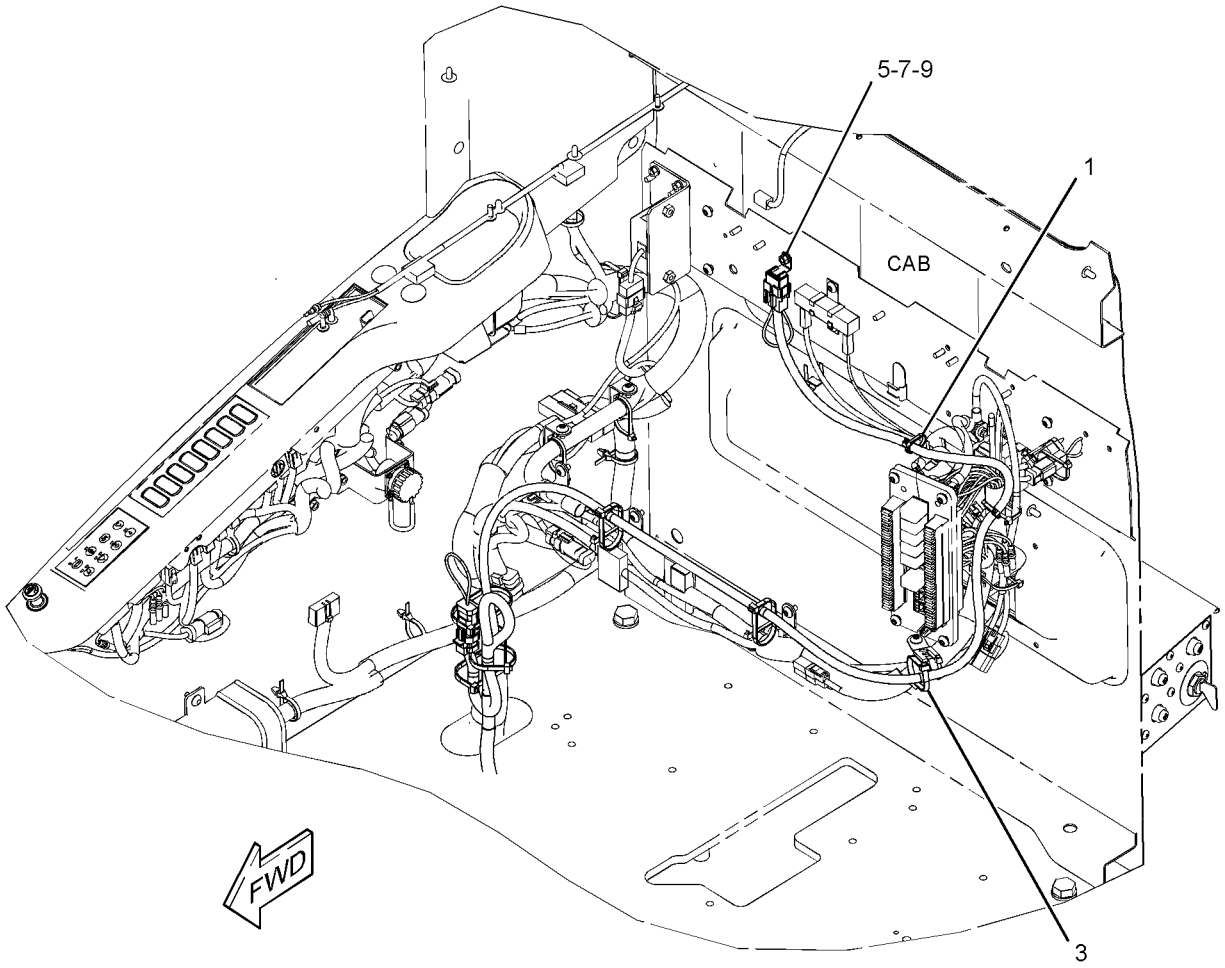

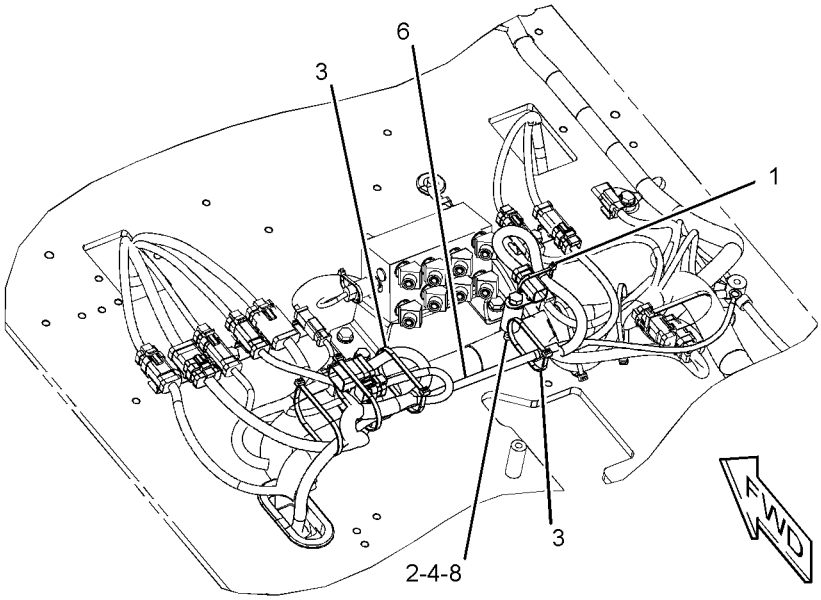

GRAPHIC #1 **<END>** g01571474

231-1836 WIRING GP-CONSOLE–LH

S/N: KGF1-UP; FAL1-UP

PART OF 251-0433 WIRING GP-CONSOLE

SMCS-1408 **i02348297**

NOTE	REF NO	GRAPHIC REF	PART NUMBER	QTY	PART NAME 1 2 3 4 5 6 (PRODUCT LEVEL)	SEE PAGE
	1	1	**3S-2093**	2	STRAP-CABLE	
	2	1	**7K-1181**	1	STRAP-CABLE	
	3	1	**163-6795**	2	STRAP-CABLE	
	4	1	**251-0580**	1	HARNESS AS-CONSOLE (LH)	
		1	**155-2260**	1	KIT-CONNECTING PLUG (3-PIN)	
					(INCLUDES PLUG AS, WEDGE & INTERFACE SEAL)	
		1	**230-4011**	1	PLUG AS-CONNECTOR (2-PIN)	
		1	**230-5010**	1	PLUG AS-CONNECTOR (6-PIN)	
		1	**239-7352**	1	PLUG AS-CONNECTOR (6-PIN)	
		1	**243-4505**	1	RECEPTACLE AS-CONNECTOR (2-PIN)	
		1	**243-4508**	1	RECEPTACLE AS-CONNECTOR (6-PIN)	
		1	**247-2693**	1	RECEPTACLE AS-CONNECTOR (6-PIN)	

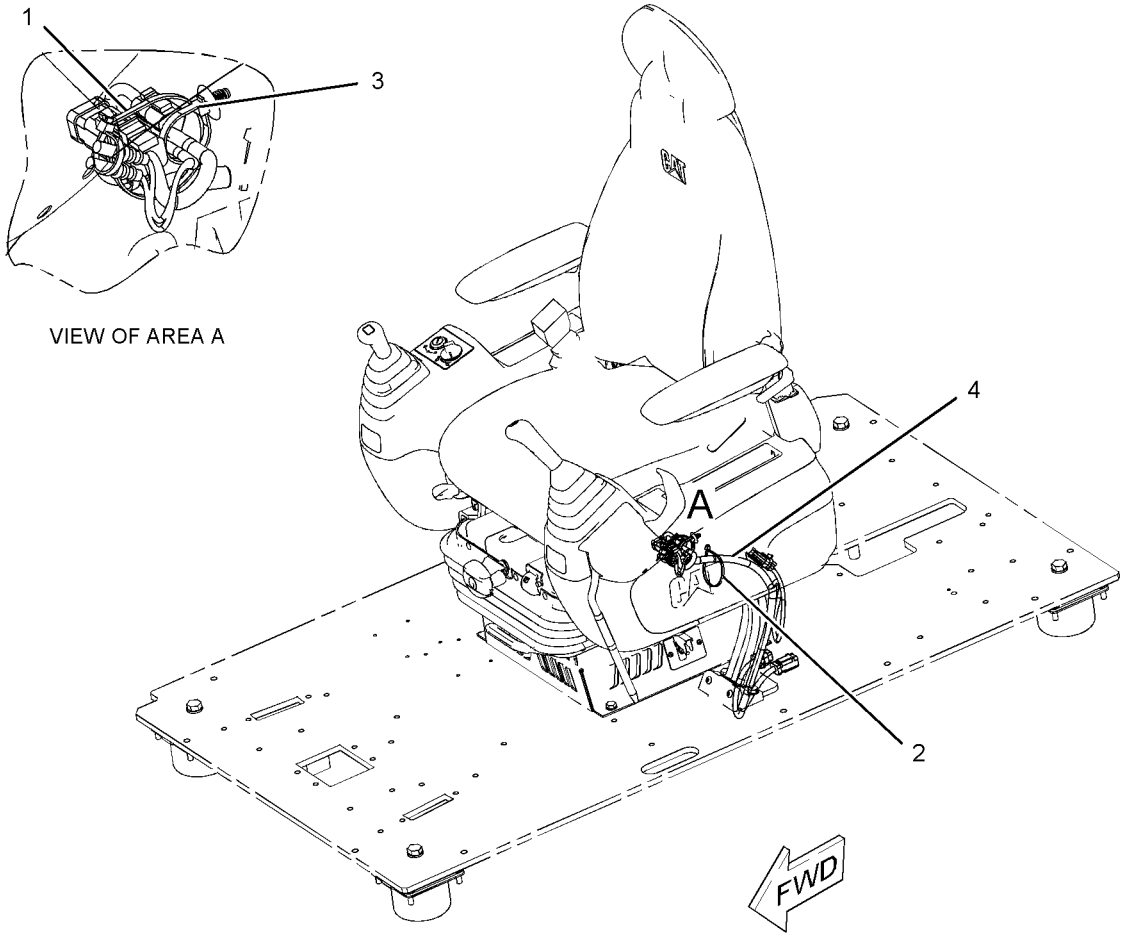

GRAPHIC #1 **<END>** g01150799

251-0433 WIRING GP-CONSOLE

S/N: KGF1-UP; FAL1-UP

PART OF 273-5387 OPERATOR AR

SMCS-1408 **i02706845**

NOTE	PART NUMBER	QTY	PART NAME 1 2 3 4 5 6 (PRODUCT LEVEL)	SEE PAGE
Y	*231-1836*	1	WIRING GP-CONSOLE (LH)	326
Y	*251-0435*	1	WIRING GP-CONSOLE (RH)	328

Y-SEPARATE ILLUSTRATION

<END>

251-0435 WIRING GP-CONSOLE—RH

S/N: KGF1-UP; FAL1-UP

PART OF 251-0433 WIRING GP-CONSOLE

SMCS-1408 **i02553916**

NOTE	REF NO	GRAPHIC REF	PART NUMBER	QTY	PART NAME 1 2 3 4 5 6 (PRODUCT LEVEL)	SEE PAGE
	1	1	**3S-2093**	3	STRAP-CABLE	
	2	1	**7K-1181**	1	STRAP-CABLE	
	3	1	**283-3074**	1	SWITCH AS-TOGGLE (AUTO/MANUAL ENG SPEED CONTROL)	
	4	1	**163-6711**	1	SWITCH AS-TOGGLE (MANUAL ENGINE SPEED CONTROL)	
	5	1	**163-6795**	3	STRAP-CABLE	
	6	1	**251-0602**	1	BRACKET	
	7	1	**259-4877**	1	HARNESS AS-CONSOLE (RH)	
		1	**102-8806**	1	KIT-RECEPTACLE (8-PIN)	
					(INCLUDES RECEPTACLE AS & WEDGE)	
		1	**3S-2093**	10	STRAP-CABLE	
		1	**7Y-3967**	2	TERMINAL AS	
		1	**7Y-3963**	1	TERMINAL (RECEPTACLE)	
		1	**7Y-3965**	1	TUBE (RECEPTACLE TERMINAL)	
		1	**102-7964**	1	CONNECTOR-PLUG	
		1	**102-7965**	14	TERMINAL (FEMALE)	
E		1	**125-7874**		TUBE-HEAT SHRINK (5.72-MM DIA) (10-CM)	
E		1	**125-7875**		TUBE-HEAT SHRINK (7.44-MM DIA) (10-CM)	
		1	**155-2265**	1	KIT-CONNECTING PLUG (8-PIN)	
					(INCLUDES PLUG AS, WEDGE & INTERFACE SEAL)	
		1	**9X-3401**	2	PIN-CONNECTOR (16-GA TO 18-GA)	
					—OR—	
		1	**126-1767**	2	PIN-CONNECTOR (14-GA)	
		1	**230-4009**	1	PLUG AS-CONNECTOR (12-PIN)	
		1	**230-4011**	1	PLUG AS-CONNECTOR (2-PIN)	
		1	**230-5008**	1	PLUG AS-CONNECTOR (4-PIN)	
		1	**230-5010**	1	PLUG AS-CONNECTOR (6-PIN)	
		1	**231-2295**	1	PLUG AS-CONNECTOR (8-PIN)	
		1	**239-7352**	1	PLUG AS-CONNECTOR (6-PIN)	
		1	**243-4505**	1	RECEPTACLE AS-CONNECTOR (2-PIN)	
		1	**243-4510**	1	RECEPTACLE AS-CONNECTOR (12-PIN)	
		1	**247-2693**	1	RECEPTACLE AS-CONNECTOR (6-PIN)	
M	8	1	**9X-2042**	3	SCREW-TRUSS HEAD (M6X1X12-MM)	

E-ORDER BY THE CENTIMETER
M-METRIC PART

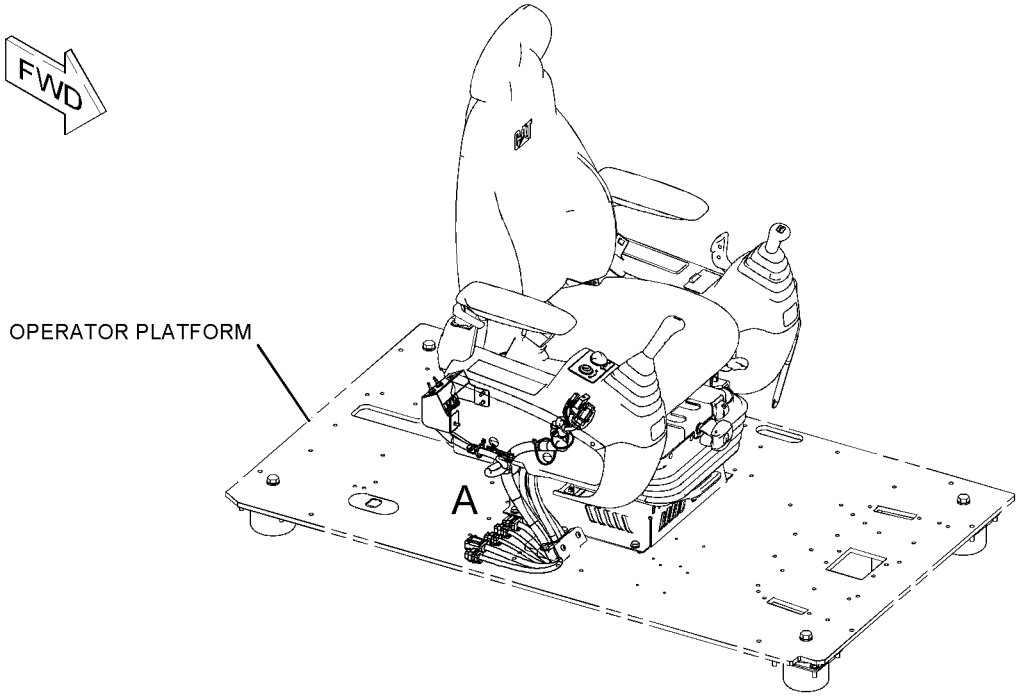

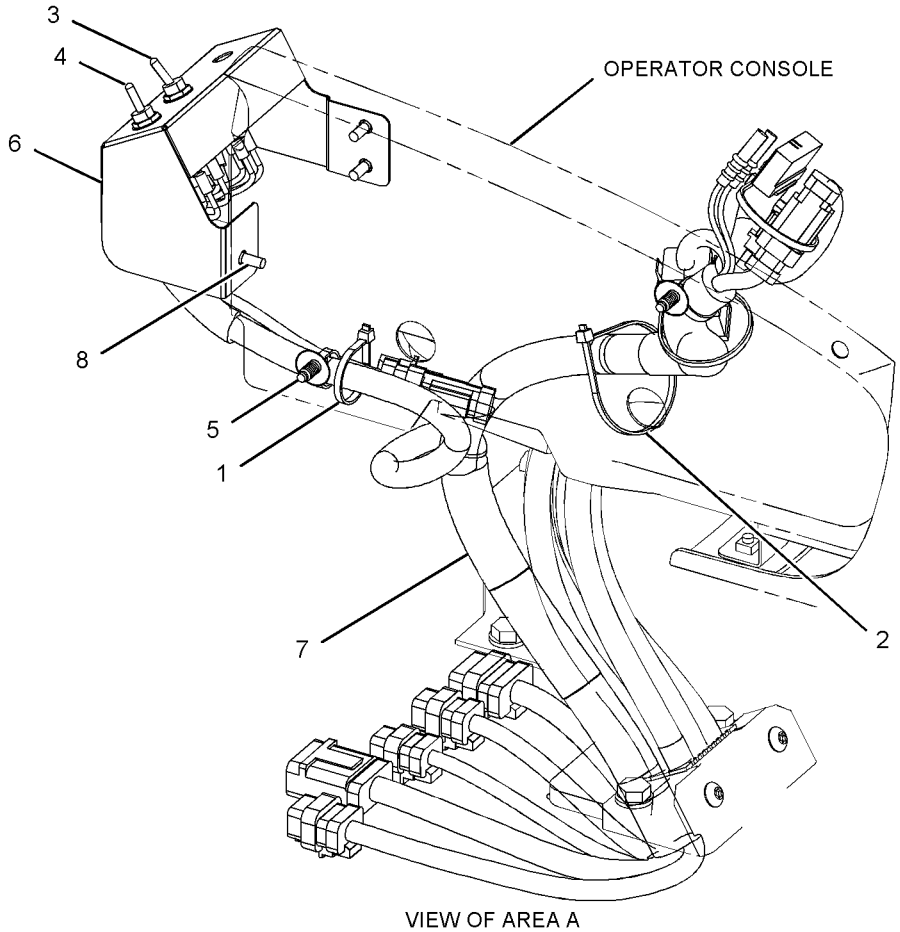

VIEW OF AREA A

GRAPHIC #1 **<END>** g01231684

251-0482 WIRING GP-CONVERTER

S/N: KGF1-UP; FAL1-UP
12-VOLT, 7-AMPERE POWER SUPPLY
CANNOT BE USED WITH 251-0485—PAGE 331
AN ATTACHMENT

SMCS-1421 **i02559417**

NOTE	REF NO	GRAPHIC REF	PART NUMBER	QTY	PART NAME 1 2 3 4 5 6 (PRODUCT LEVEL)	SEE PAGE
	1	1	**7K-1181**	2	STRAP-CABLE	
	2	1	**121-0987**	1	SOCKET (12-VOLT, 7-AMPERE)	
	3	1	**283-2783**	1	CONVERTER-POWER (24-VOLT TO 12-VOLT)	
	4	1	**251-0483**	1	BRACKET	
	5	1	**8T-4121**	2	WASHER-HARD (11X21X2.5-MM THK)	
M	6	1	**8T-4136**	2	BOLT (M10X1.5X25-MM)	
M	7	1	**8T-4171**	4	BOLT (M6X1X12-MM)	
	8	1	**9X-8256**	4	WASHER (6.6X12X2-MM THK)	

M-METRIC PART

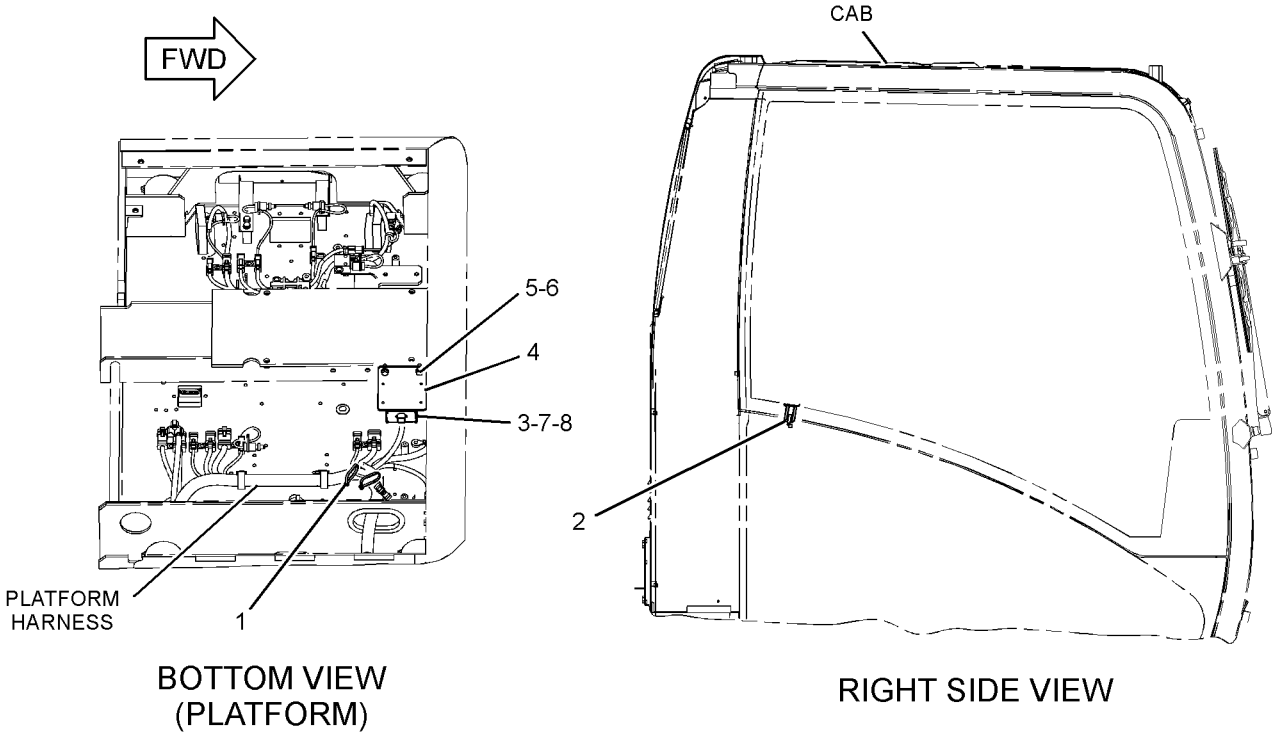

GRAPHIC #1 **<END>** g01155726

251-0485 WIRING GP-CONVERTER

S/N: KGF1-UP; FAL1-UP
12-VOLT, 7-AMPERE X2 POWER SUPPLY
CANNOT BE USED WITH 251-0482–PAGE 330
AN ATTACHMENT

SMCS-1421 **i02559437**

NOTE	REF NO	GRAPHIC REF	PART NUMBER	QTY	PART NAME 1 2 3 4 5 6 (PRODUCT LEVEL)	SEE PAGE
	1	1	**121-0987**	2	SOCKET (12-VOLT, 7-AMPERE)	
	2	1	**283-2783**	2	CONVERTER-POWER (24-VOLT TO 12-VOLT)	
	3	1	**251-0483**	2	BRACKET	
	4	1	**8T-4121**	4	WASHER-HARD (11X21X2.5-MM THK)	
M	5	1	**8T-4136**	4	BOLT (M10X1.5X25-MM)	
M	6	1	**8T-4171**	8	BOLT (M6X1X12-MM)	
	7	1	**9X-8256**	8	WASHER (6.6X12X2-MM THK)	

M-METRIC PART

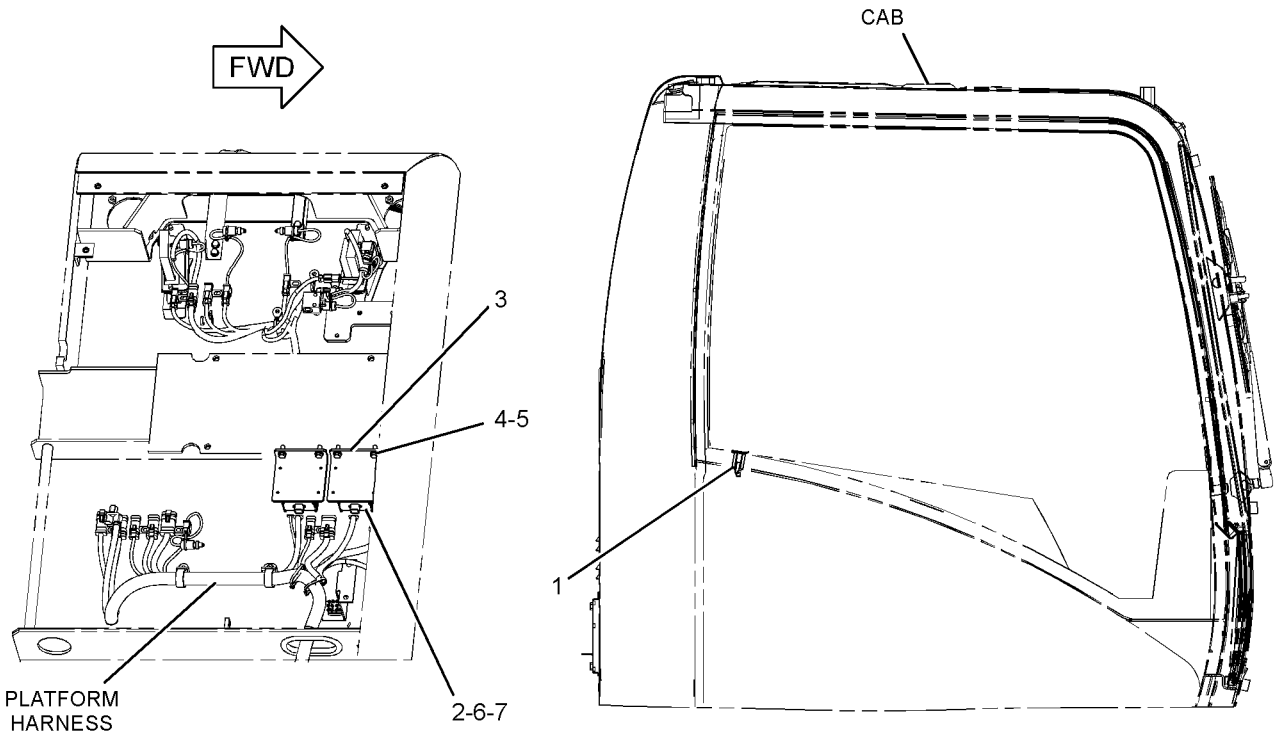

BOTTOM VIEW (PLATFORM)

RIGHT SIDE VIEW

GRAPHIC #1 **<END>** g01155779

296-4665 WIRING GP-ELECTRONIC CONTROL

S/N: GDC1-UP; KGF1-UP

PART OF 272-4677, 272-4683, 296-4676, 305-4777 ENGINE AR

ALSO AN ATTACHMENT

SMCS-1408 **i02725880**

NOTE	REF NO	GRAPHIC REF	PART NUMBER	QTY	PART NAME 1 2 3 4 5 6 (PRODUCT LEVEL)	SEE PAGE
	1	1	**296-4617**	1	HARNESS AS-ENGINE (ELECTRONIC CONTROL MODULE)	
	2	1	**296-4618**	1	SPACER	
	3	1	**296-4619**	1	CLIP	
	4	1	**099-4460**	1	BOLT	
	5	1	**096-2501**	1	LOCKWASHER	
	6	1	**8T-4223**	1	WASHER-HARD (13.5X25.5X3-MM THK)	
	7	1	**296-4621**	3	BOLT (M6X1.25X23.5-MM)	
	8	1	**305-4898**	2	CLIP	
	9	1	**305-4897**	1	CLIP	
	10	1	**305-4896**	5	CLIP	
	11	1	**282-8567**	3	BOLT	
	12	1	**305-4895**	8	STRAP-CABLE	
	13	1	**305-4893**	1	HARNESS AS-ENGINE (FUEL INJECTION)	

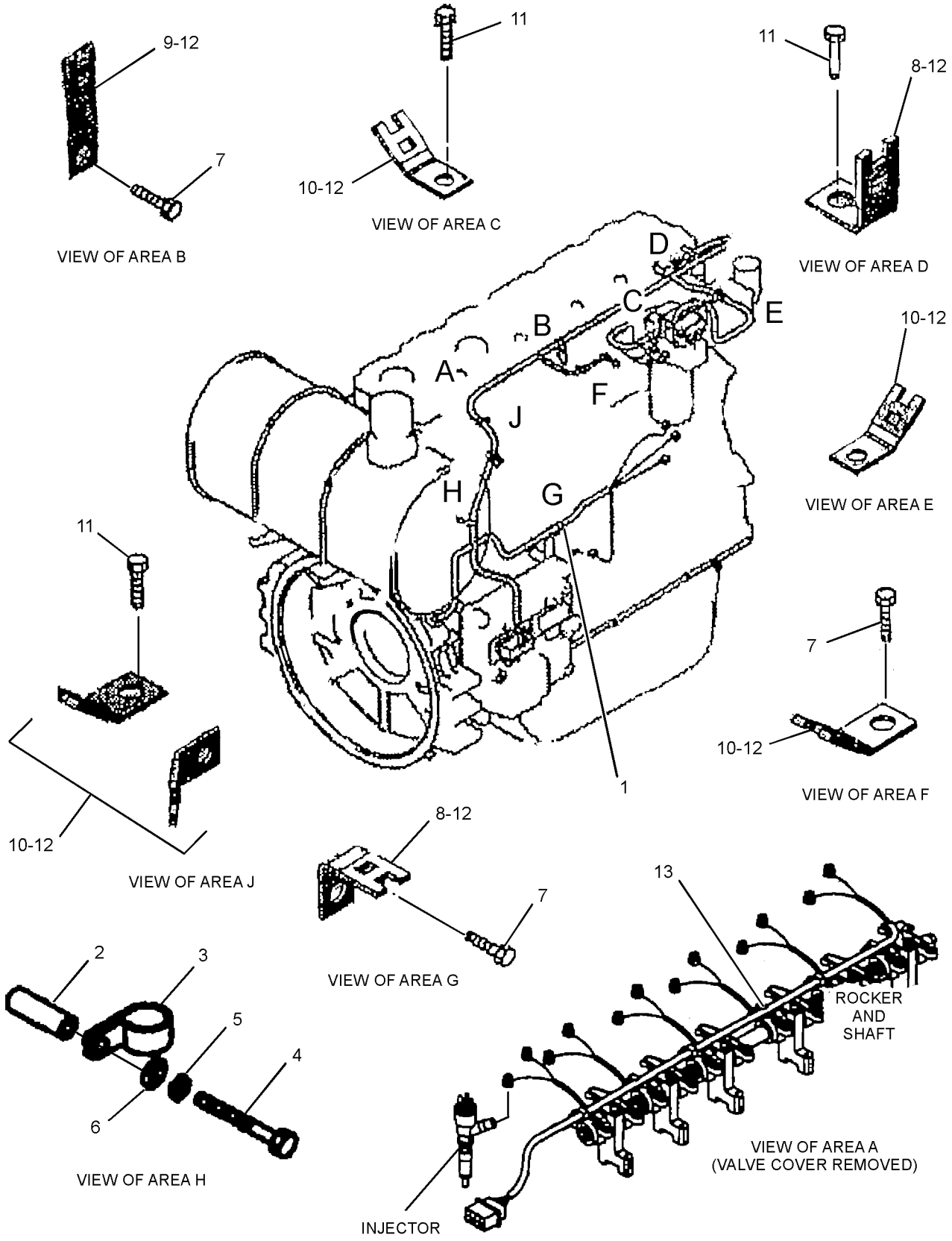

GRAPHIC #1 **<END>** g01368395

ELECTRICAL AND STARTING SYSTEM

259-5051 WIRING GP-ENGINE–JUMP START

S/N: KGF1-UP; FAL1-UP

AN ATTACHMENT

SMCS-1408 **i02708419**

NOTE	REF NO	GRAPHIC REF	PART NUMBER	QTY	PART NAME 1 2 3 4 5 6 (PRODUCT LEVEL)	SEE PAGE
	1	1	**2G-1830**	1	RECEPTACLE AS	
		1	**1S-7251**	2	TERMINAL-CABLE (00-GA, 1/2-IN BOLT)	
E		1	**5P-0747**		CABLE (00-GA, BLACK) (49-CM)	
E		1	**5P-0761**		CABLE (00-GA, RED) (56-CM)	
	2	1	**301-0091**	1	COVER-TERMINAL (RED)	
	3	1	**8S-2634**	1	COVER AS	
Y	4	1	**9W-0742**	1	BLOCK GP-JUNCTION (BATTERY)	218
	5	1	**251-0452**	1	BRACKET	
	6	1	**259-5097**	1	CABLE AS	
		1	**1S-7251**	1	TERMINAL-CABLE (00-GA, 1/2-IN BOLT)	
E		1	**5P-0761**		CABLE (00-GA, RED) (30-CM)	
		1	**301-0091**	1	COVER-TERMINAL (RED)	
		1	**9G-0004**	1	COVER-TERMINAL (RED)	
		1	**8C-5917**	1	TERMINAL AS-BATTERY (POSITIVE)	
		1	**1M-6119**	1	BOLT (5/16-18X1.375-IN)	
		1	**1M-6120**	1	NUT (5/16-18-THD)	
	7	1	**299-2798**	1	CABLE AS	
		1	**1S-7251**	1	TERMINAL-CABLE (00-GA, 1/2-IN BOLT)	
		1	**1S-7252**	1	TERMINAL-CABLE (00-GA, 3/8-IN BOLT)	
E		1	**5P-0761**		CABLE (00-GA, RED) (292-CM)	
		1	**8N-0869**	1	COVER-TERMINAL (RED)	
		1	**301-0091**	1	COVER-TERMINAL (RED)	
	8	1	**4I-7889**	1	SPACER (11X25X45-MM THK)	
	9	1	**4K-8864**	1	CLIP	
M	10	1	**5C-9553**	4	BOLT (M6X1X16-MM)	
	11	1	**5P-4115**	4	WASHER-HARD (7.2X19X2-MM THK)	
	12	1	**8T-4121**	5	WASHER-HARD (11X21X2.5-MM THK)	
M	13	1	**8T-4136**	2	BOLT (M10X1.5X25-MM)	
M	14	1	**8T-4137**	2	BOLT (M10X1.5X20-MM)	
M	15	1	**8T-5005**	1	BOLT (M10X1.5X70-MM)	

E-ORDER BY THE CENTIMETER
M-METRIC PART
Y-SEPARATE ILLUSTRATION

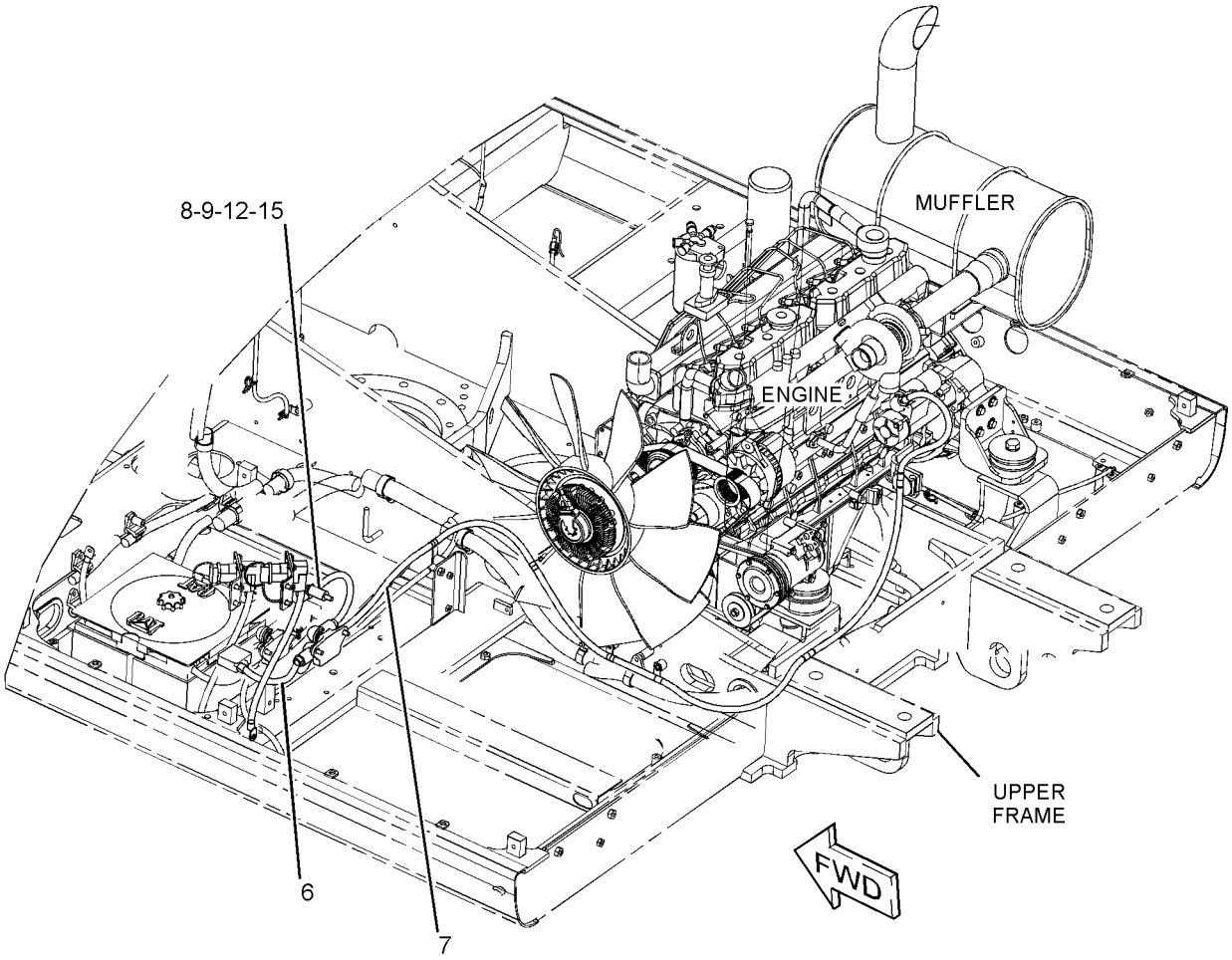

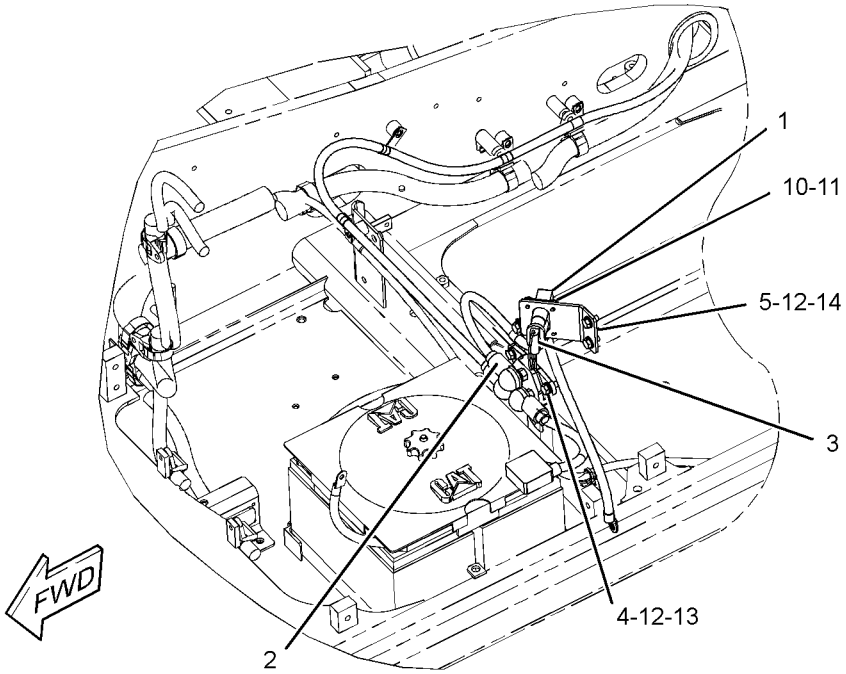

GRAPHIC #1 **<END>** g01230494

275-6798 WIRING GP-FAN—FLUID CLUTCH

S/N: KGF1-UP; FAL1-UP

PART OF 290-1911 COOLING AR-HIGH AMBIENT TEMP, 290-1892 SPECIAL AR AN ATTACHMENT

SMCS-1408 **i02615807**

NOTE	PART NUMBER	QTY	PART NAME 1 2 3 4 5 6 (PRODUCT LEVEL)	SEE PAGE
Y	*291-7462*	1	WIRING GP-FAN (HYD FAN CTL, AIR TEMP CTL)	337
Y	*291-7463*	1	WIRING GP-FAN (FAN CLUTCH)	338

Y-SEPARATE ILLUSTRATION

<END>

291-7462 WIRING GP-FAN–HYD FAN CTL, AIR TEMP CTL

S/N: KGF1-UP; FAL1-UP
PART OF 275-6798 WIRING GP-FAN
AN ATTACHMENT

SMCS-1408 **i02707637**

NOTE	REF NO	GRAPHIC REF	PART NUMBER	QTY	PART NAME 1 2 3 4 5 6 (PRODUCT LEVEL)	SEE PAGE
	1	1	**3S-2093**	7	STRAP-CABLE	
	2	1	**7K-1181**	4	STRAP-CABLE	
	3	1	**107-8618**	1	SENSOR GP-TEMPERATURE (INLET AIR)	
		1	**102-8803**	1	KIT-RECEPTACLE (3-PIN)	
					(INCLUDES RECEPTACLE AS & WEDGE)	
		1	**186-3735**	3	PIN-CONNECTOR (16-GA TO 18-GA)	
E		1	**112-4550**		SLEEVE (31-CM)	
	4	1	**116-0118**	1	CLIP	
	5	1	**275-6803**	1	HARNESS AS-PUMP (FAN CONTROL)	
		1	**3S-2093**	1	STRAP-CABLE	
		1	**125-7874**		TUBE-HEAT SHRINK (5.72-MM DIA) (5-CM)	
		1	**155-2260**	1	KIT-CONNECTING PLUG (3-PIN)	
					(INCLUDES PLUG AS, WEDGE & INTERFACE SEAL)	
		1	**230-5010**	1	PLUG AS-CONNECTOR (6-PIN)	
		1	**243-4509**	1	RECEPTACLE AS-CONNECTOR (8-PIN)	
	6	1	**8T-4121**	1	WASHER-HARD (11X21X2.5-MM THK)	
M	7	1	**8T-4137**	1	BOLT (M10X1.5X20-MM)	

E-ORDER BY THE CENTIMETER
M-METRIC PART

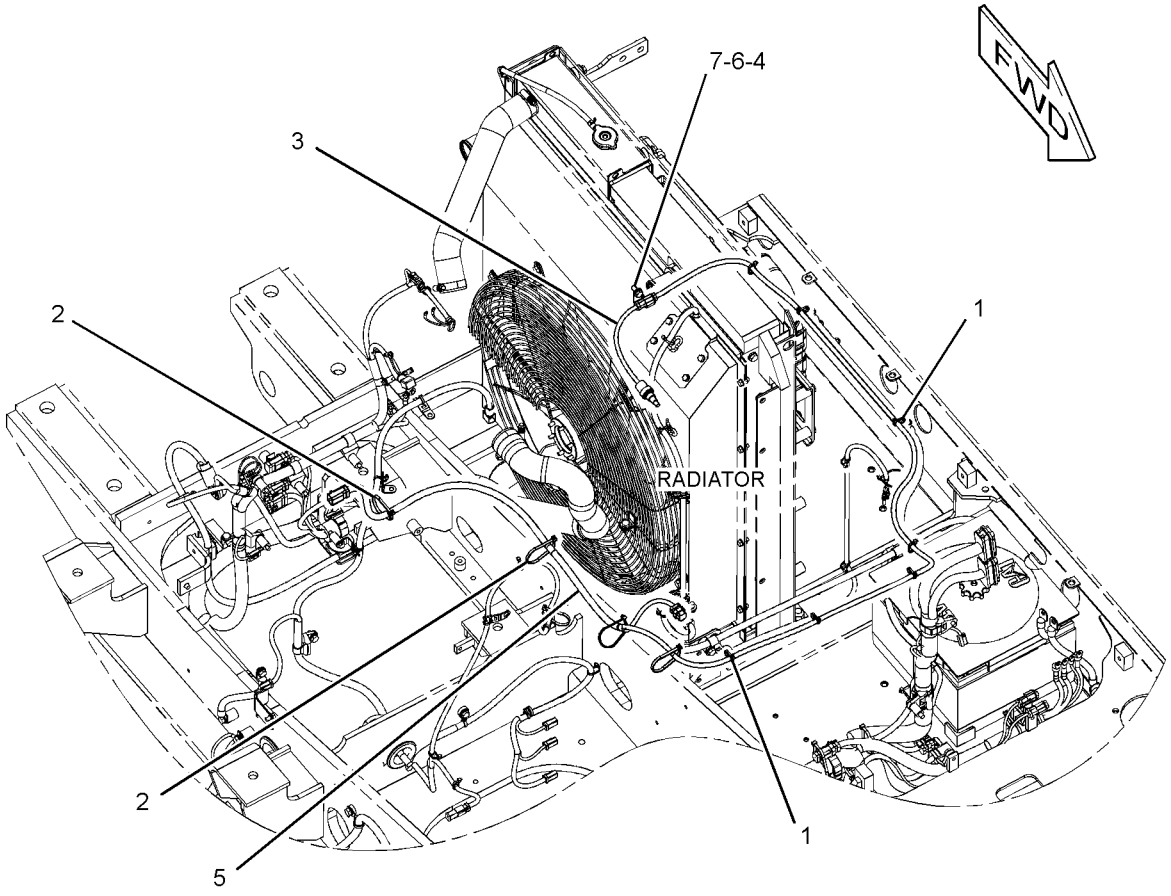

GRAPHIC #1 **<END>** g01310385

291-7463 WIRING GP-FAN–FAN CLUTCH

S/N: KGF1-UP; FAL1-UP
PART OF 275-6798, 306-8501 WIRING GP-FAN
AN ATTACHMENT

SMCS-1408 **i02615806**

NOTE	REF NO	GRAPHIC REF	PART NUMBER	QTY	PART NAME 1 2 3 4 5 6 (PRODUCT LEVEL)	SEE PAGE
	1	1	**3S-2093**	7	STRAP-CABLE	
	2	1	**7K-1181**	2	STRAP-CABLE	
	3	1	**116-0118**	1	CLIP	
	4	1	**275-6846**	1	HARNESS AS-SOLENOID (FAN)	
		1	**155-2274**	1	KIT-CONNECTING PLUG (6-PIN)	
					(INCLUDES PLUG AS , WEDGE & INTERFACE SEAL)	
		1	**243-4508**	1	RECEPTACLE AS-CONNECTOR (6-PIN)	
	5	1	**132-5789**	2	CLIP	
	6	1	**8T-4121**	3	WASHER-HARD (11X21X2.5-MM THK)	
M	7	1	**8T-4191**	3	BOLT (M10X1.5X16-MM)	

M-METRIC PART

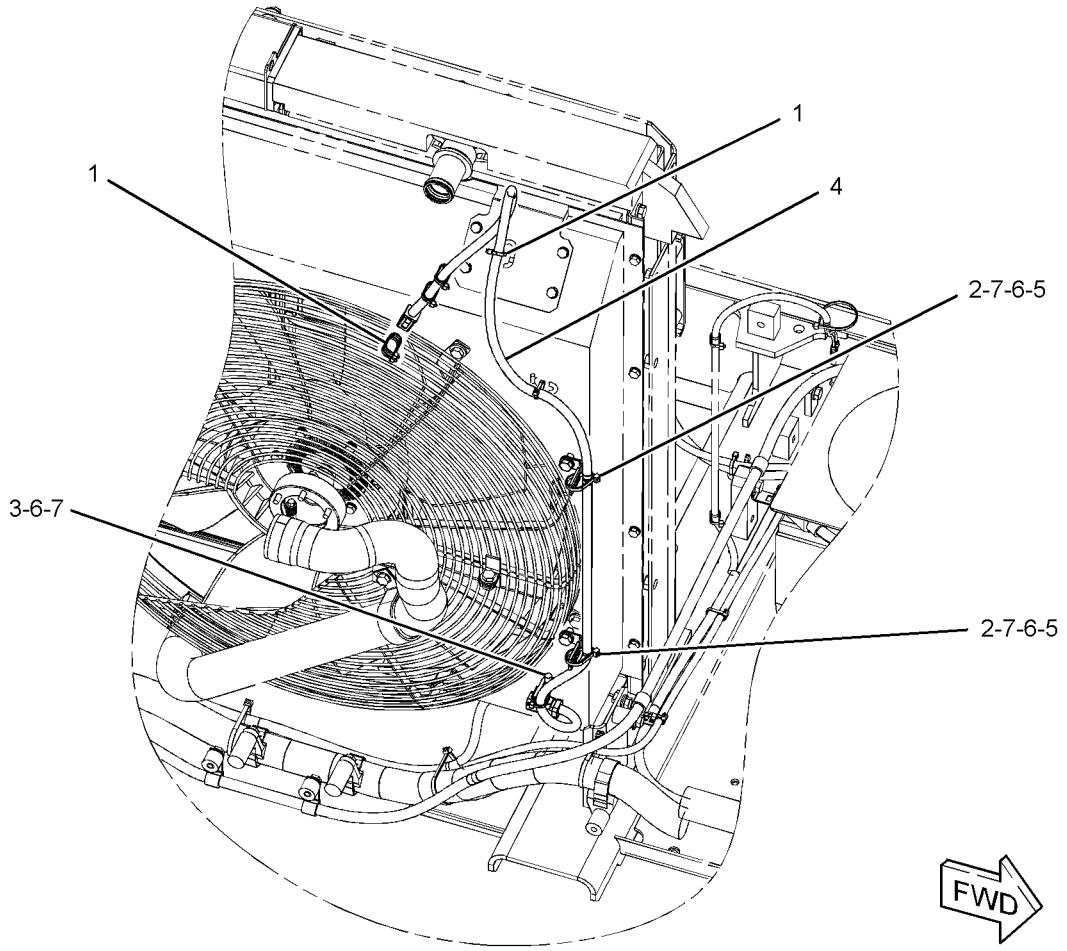

GRAPHIC #1 **<END>** g01315917

291-7716 WIRING GP-FAN–HYD FAN CTL, AIR TEMP CTL

S/N: KGF1-UP; FAL1-UP
PART OF 306-8501 WIRING GP-FAN
AN ATTACHMENT

SMCS-1408 **i02984883**

NOTE	REF NO	GRAPHIC REF	PART NUMBER	QTY	PART NAME 1 2 3 4 5 6 (PRODUCT LEVEL)	SEE PAGE
	1	1	**3S-2093**	9	STRAP-CABLE	
	2	1	**7K-1181**	4	STRAP-CABLE	
	3	1	**107-8618**	1	SENSOR GP-TEMPERATURE (AMBIENT AIR, RAD FAN CLUTCH)	
		1	**102-8803**	1	KIT-RECEPTACLE (3-PIN)	
					(INCLUDES RECEPTACLE AS & WEDGE)	
		1	**186-3735**	3	PIN-CONNECTOR (16-GA TO 18-GA)	
E		1	**112-4550**		SLEEVE (31-CM)	
	4	1	**275-6803**	1	HARNESS AS-PUMP (FAN CONTROL)	
		1	**3S-2093**	1	STRAP-CABLE	
		1	**155-2260**	1	KIT-CONNECTING PLUG (3-PIN)	
					(INCLUDES PLUG AS, WEDGE, & INTERFACE SEAL)	
		1	**230-5010**	1	PLUG AS-CONNECTOR (6-PIN)	
		1	**264-7032**	1	SEAL-CONNECTOR	
		1	**243-4509**	1	RECEPTACLE AS-CONNECTOR (8-PIN)	

E-ORDER BY THE CENTIMETER

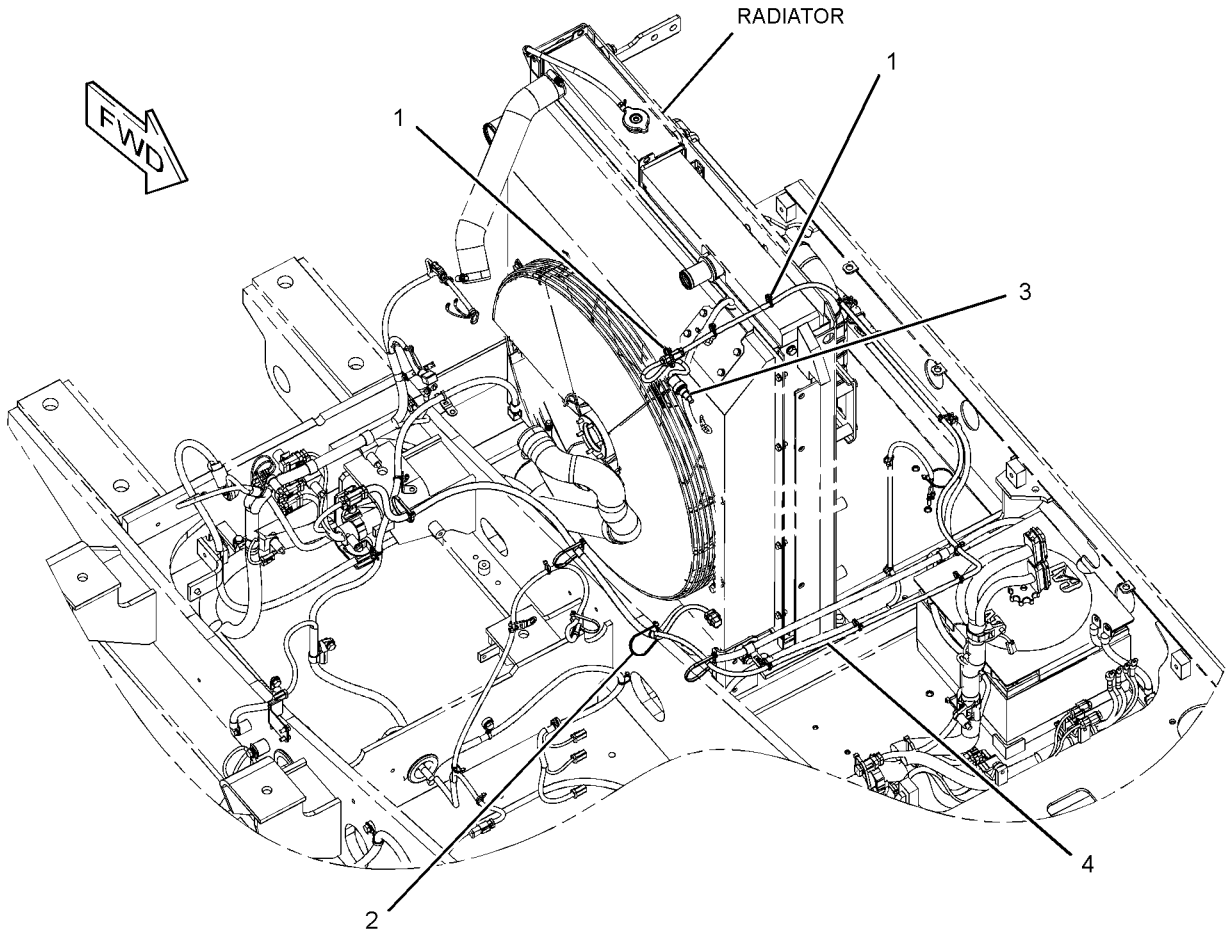

GRAPHIC #1 **<END>** g01383567

306-8501 WIRING GP-FAN—FLUID CLUTCH

S/N: KGF1-UP; FAL1-UP

PART OF 290-1911, 298-4271, 298-4272 COOLING AR-HIGH AMBIENT TEMP, 290-1892

SPECIAL AR

AN ATTACHMENT

SMCS-1408 **i02757974**

NOTE	PART NUMBER	QTY	PART NAME 1 2 3 4 5 6 (PRODUCT LEVEL)	SEE PAGE
Y	*291-7463*	1	WIRING GP-FAN (FAN CLUTCH)	338
Y	*291-7716*	1	WIRING GP-FAN (HYD FAN CTL, AIR TEMP CTL)	339

Y-SEPARATE ILLUSTRATION

<END>

259-5052 WIRING GP-FINE SWING

S/N: KGF1-UP; FAL1-UP

PART OF 264-8638, 264-8639 CHASSIS AR

SMCS-1408 **i02981303**

NOTE	REF NO	GRAPHIC REF	PART NUMBER	QTY	PART NAME 1 2 3 4 5 6 (PRODUCT LEVEL)	SEE PAGE
	1	1	**111-4836**	1	CLIP	
	2	1	**111-4837**	3	CLIP	
	3	1	**238-2171**	1	BRACKET AS	
	4	1	**259-5129**	1	HARNESS AS-SOLENOID (FINE SWING)	
		1	**3S-2093**	1	STRAP-CABLE	
		1	**155-2270**	1	KIT-CONNECTING PLUG (2-PIN)	
					(INCLUDES PLUG AS, WEDGE & INTERFACE SEAL)	
		1	**230-4011**	1	PLUG AS-CONNECTOR (2-PIN)	
	5	1	**8T-4121**	4	WASHER-HARD (11X21X2.5-MM THK)	
M	6	1	**8T-4136**	1	BOLT (M10X1.5X25-MM)	
M	7	1	**8T-4137**	3	BOLT (M10X1.5X20-MM)	

M-METRIC PART

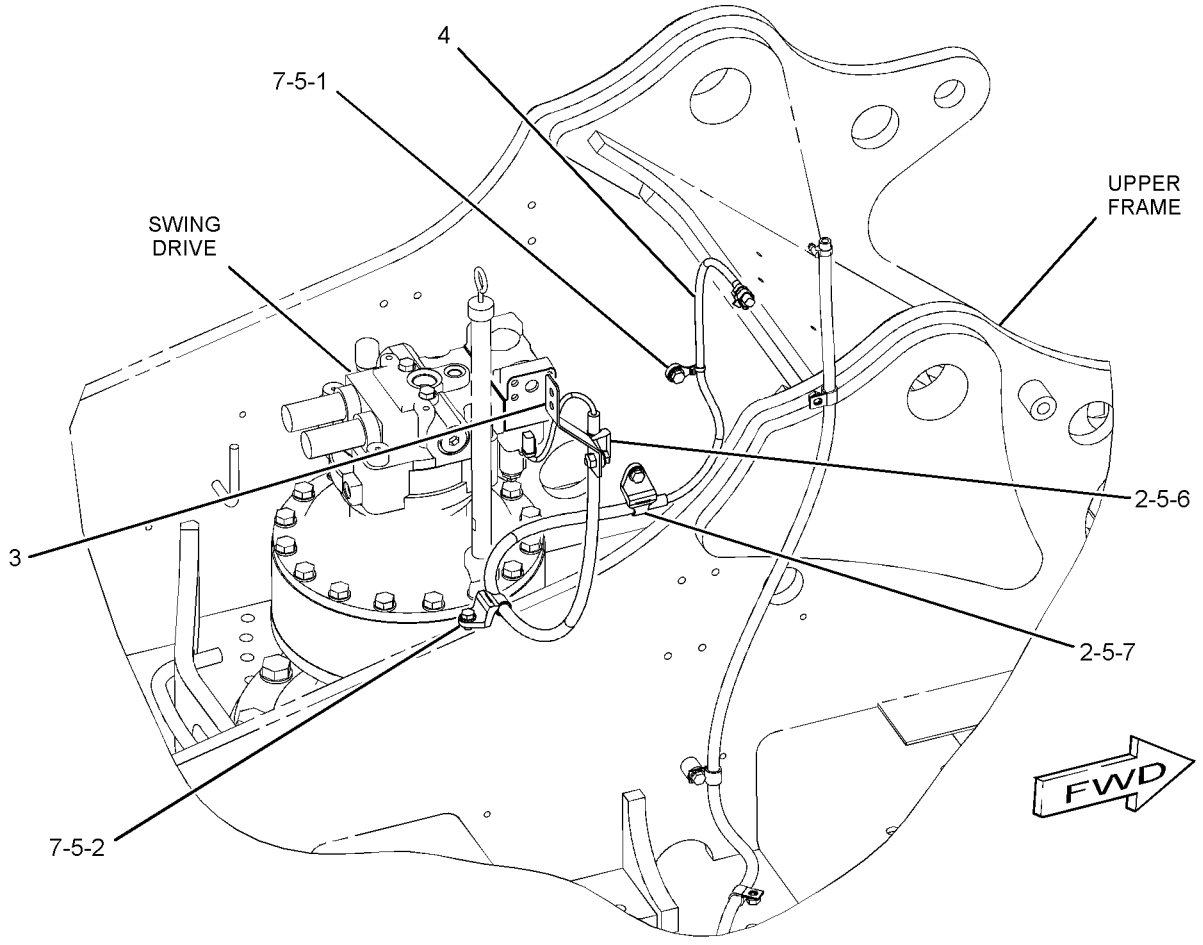

GRAPHIC #1 **<END>** g01228716

238-1570 WIRING GP-FUEL SYSTEM–REFUELING

S/N: KGF1-UP; FAL1-UP
PART OF 264-8770 PUMP AR-FUEL TRANSFER
AN ATTACHMENT
TYPE 1

SMCS-1408 **i03156140**

NOTE	REF NO	GRAPHIC REF	PART NUMBER	QTY	PART NAME 1 2 3 4 5 6 (PRODUCT LEVEL)	SEE PAGE
	1	1	**3S-2093**	16	STRAP-CABLE	
	2	1	**9X-3495**	1	CLIP AS	
	3	1	**149-5050**	1	RELAY (24-VOLT) (REFUELING PUMP, STOP)	
	3A	1	**149-5050**	1	RELAY (24-VOLT) (REFUELING PUMP, START)	
	4	1	**213-0772**	1	SWITCH AS-MAGNETIC (24-VOLT) (MAIN RELAY)	
	5	1	**238-1579**	1	HARNESS AS-PUMP (REFUELING)	
	6	1	**238-1593**	1	WIRE AS	
Y	7	1	**238-1594**	1	SWITCH GP-PUSH BUTTON (REFUELING PUMP, START)	280
Y	8	1	**238-1596**	1	SWITCH GP-PUSH BUTTON (REFUELING PUMP, STOP)	281
M	9	1	**096-2591**	2	SCREW-MACHINE (M5X0.8X35-MM)	
M	10	1	**7X-2619**	2	BOLT (M6X1X10-MM)	
	11	1	**8T-0328**	3	WASHER-HARD (5.5X10X1-MM THK)	
M	12	1	**8T-4199**	1	BOLT (M8X1.25X12-MM)	
	13	1	**8T-4224**	1	WASHER-HARD (8.8X16X2-MM THK)	
	14	1	**9X-8256**	2	WASHER (6.6X12X2-MM THK)	
	15	1	**275-6993**	1	COVER	

M-METRIC PART
Y-SEPARATE ILLUSTRATION

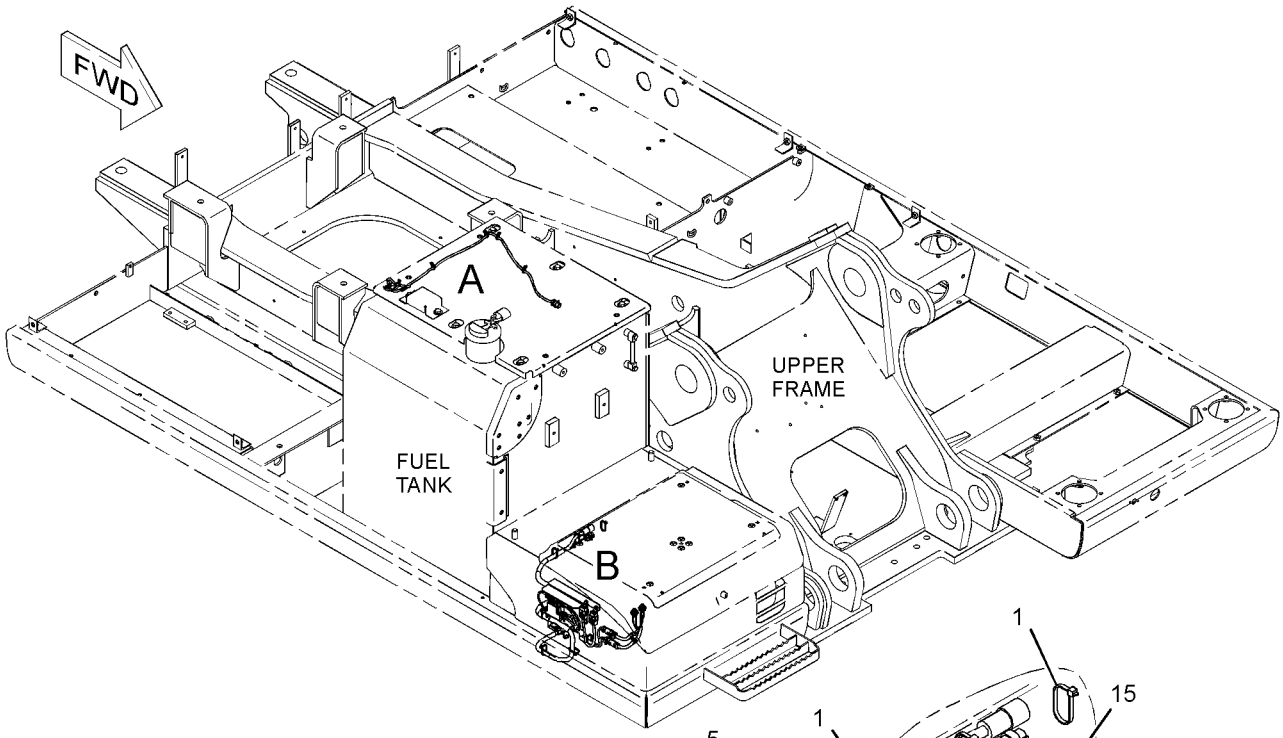

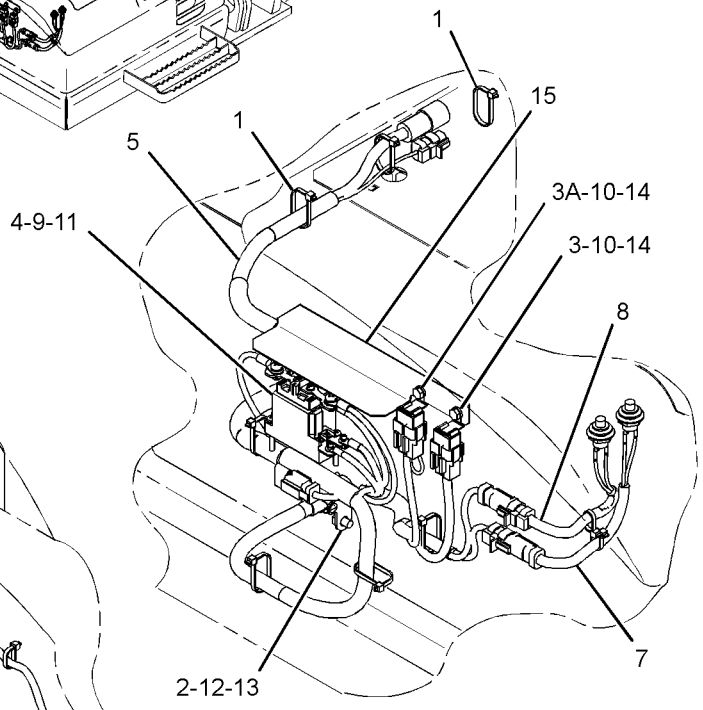

VIEW OF AREA B

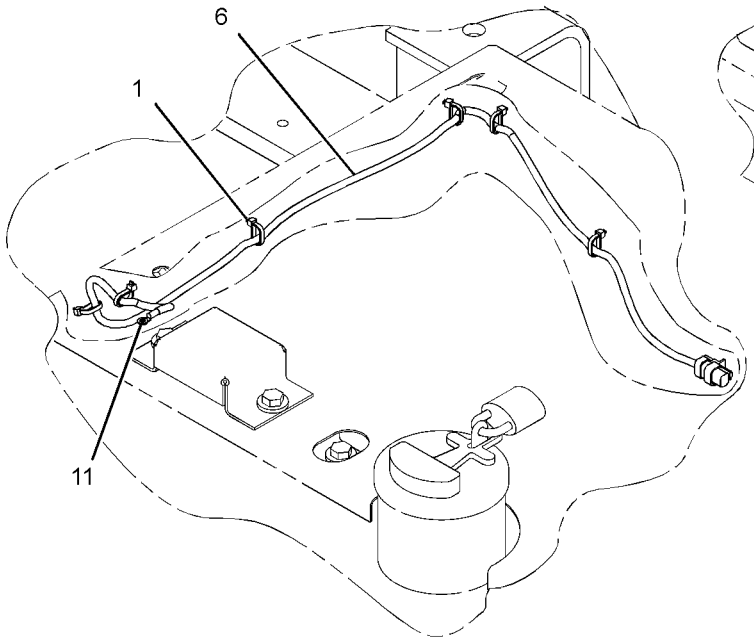

VIEW OF AREA A

GRAPHIC #1 **<END>** g01481290

238-1570 WIRING GP-FUEL SYSTEM–REFUELING

S/N: KGF1-UP; FAL1-UP
PART OF 264-8770, 314-3785 PUMP AR-FUEL TRANSFER
AN ATTACHMENT
TYPE 2

SMCS-1408 **i03087780**

NOTE	REF NO	GRAPHIC REF	PART NUMBER	QTY	PART NAME 1 2 3 4 5 6 (PRODUCT LEVEL)	SEE PAGE
	1	1	**3S-2093**	16	STRAP-CABLE	
	2	1	**9X-3495**	1	CLIP AS	
	3	1	**149-5050**	1	RELAY (24-VOLT) (REFUELING PUMP, STOP)	
	3A	1	**149-5050**	1	RELAY (24-VOLT) (REFUELING PUMP, START)	
	4	1	**213-0772**	1	SWITCH AS-MAGNETIC (24-VOLT) (MAIN RELAY)	
	5	1	**238-1579**	1	HARNESS AS-PUMP (REFUELING)	
C	6	1	**319-1335**	1	HARNESS AS-WIRING	
Y	7	1	**238-1594**	1	SWITCH GP-PUSH BUTTON (REFUELING PUMP, START)	280
Y	8	1	**238-1596**	1	SWITCH GP-PUSH BUTTON (REFUELING PUMP, STOP)	281
M	9	1	**096-2591**	2	SCREW-MACHINE (M5X0.8X35-MM)	
M	10	1	**7X-2619**	2	BOLT (M6X1X10-MM)	
C	11	1	**8T-0328**	2	WASHER-HARD (5.5X10X1-MM THK)	
M	12	1	**8T-4199**	1	BOLT (M8X1.25X12-MM)	
	13	1	**8T-4224**	1	WASHER-HARD (8.8X16X2-MM THK)	
	14	1	**9X-8256**	2	WASHER (6.6X12X2-MM THK)	
	15	1	**275-6993**	1	COVER	
C	16	1	**7K-1181**	11	STRAP-CABLE	

C-CHANGE FROM PREVIOUS TYPE
M-METRIC PART
Y-SEPARATE ILLUSTRATION

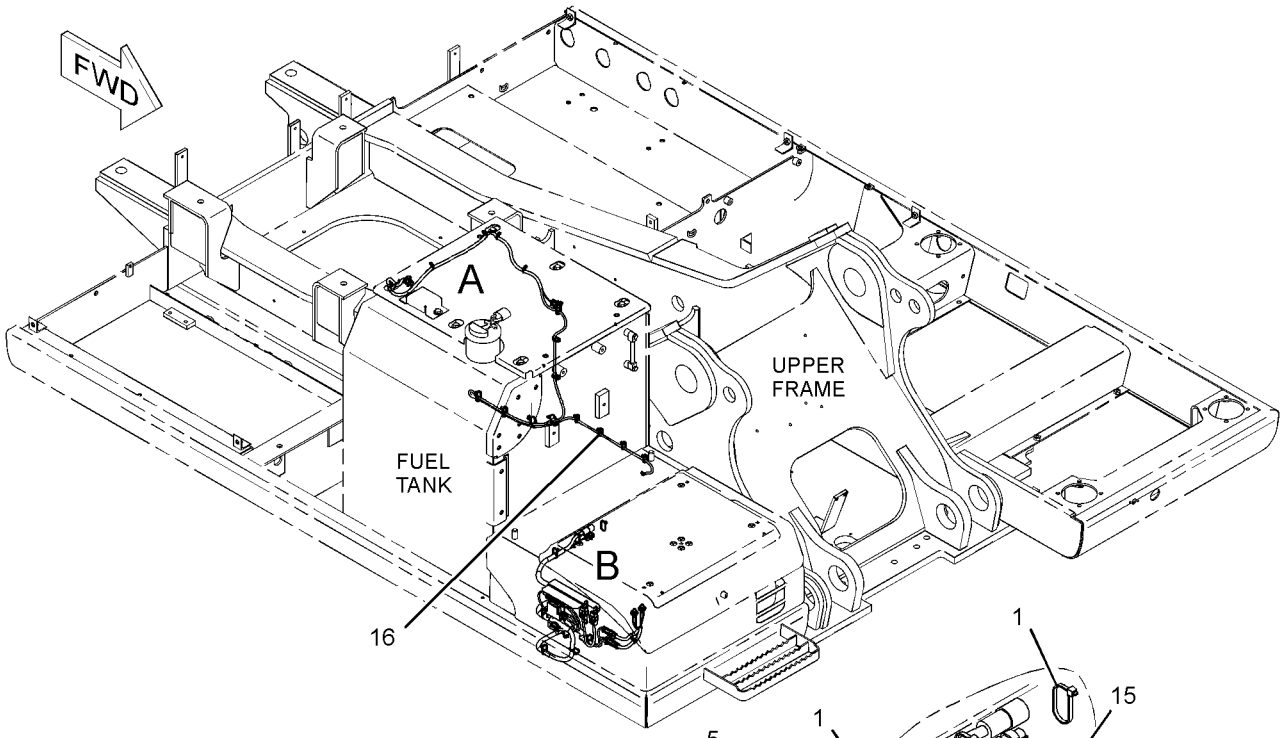

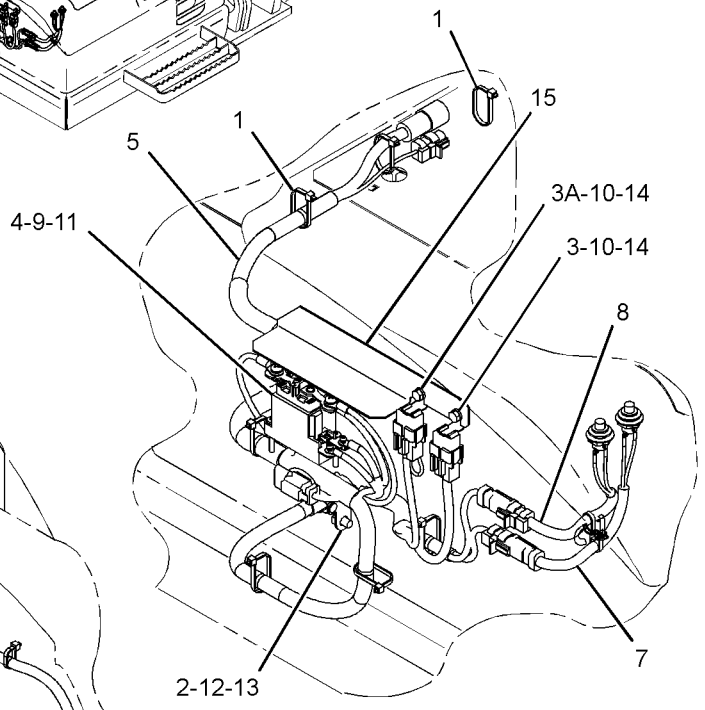

VIEW OF AREA B

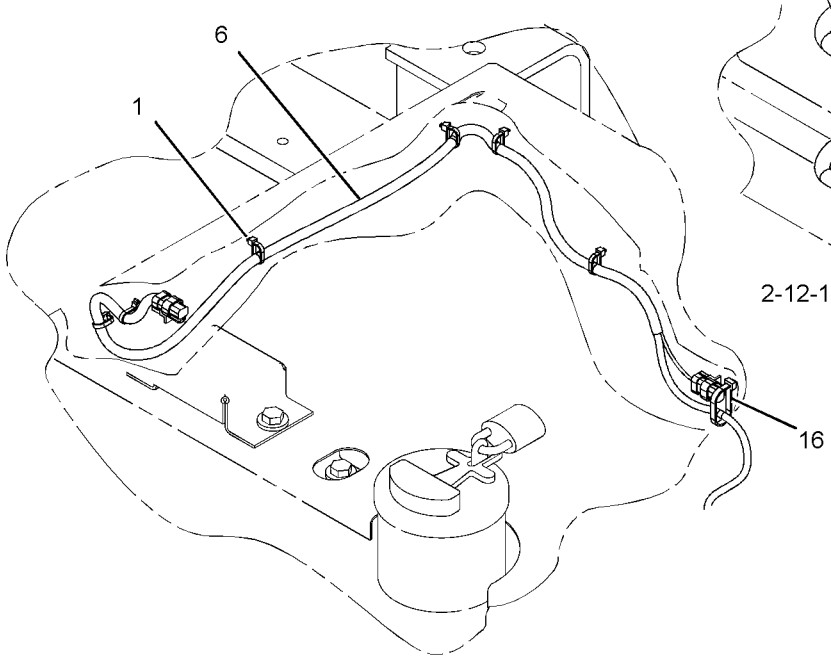

VIEW OF AREA A

GRAPHIC #1 **<END>** g01620056

306-8690 WIRING GP-HEATER

S/N: KGF1-UP; FAL1-UP

PART OF 264-8638, 264-8639 CHASSIS AR

SMCS-7304 **i02836330**

NOTE	REF NO	GRAPHIC REF	PART NUMBER	QTY	PART NAME 1 2 3 4 5 6 (PRODUCT LEVEL)	SEE PAGE
	1	1	**3S-2093**	2	STRAP-CABLE	
	2	1	**116-0118**	1	CLIP	
	3	1	**306-8691**	1	HARNESS AS-SOLENOID (HEATER)	

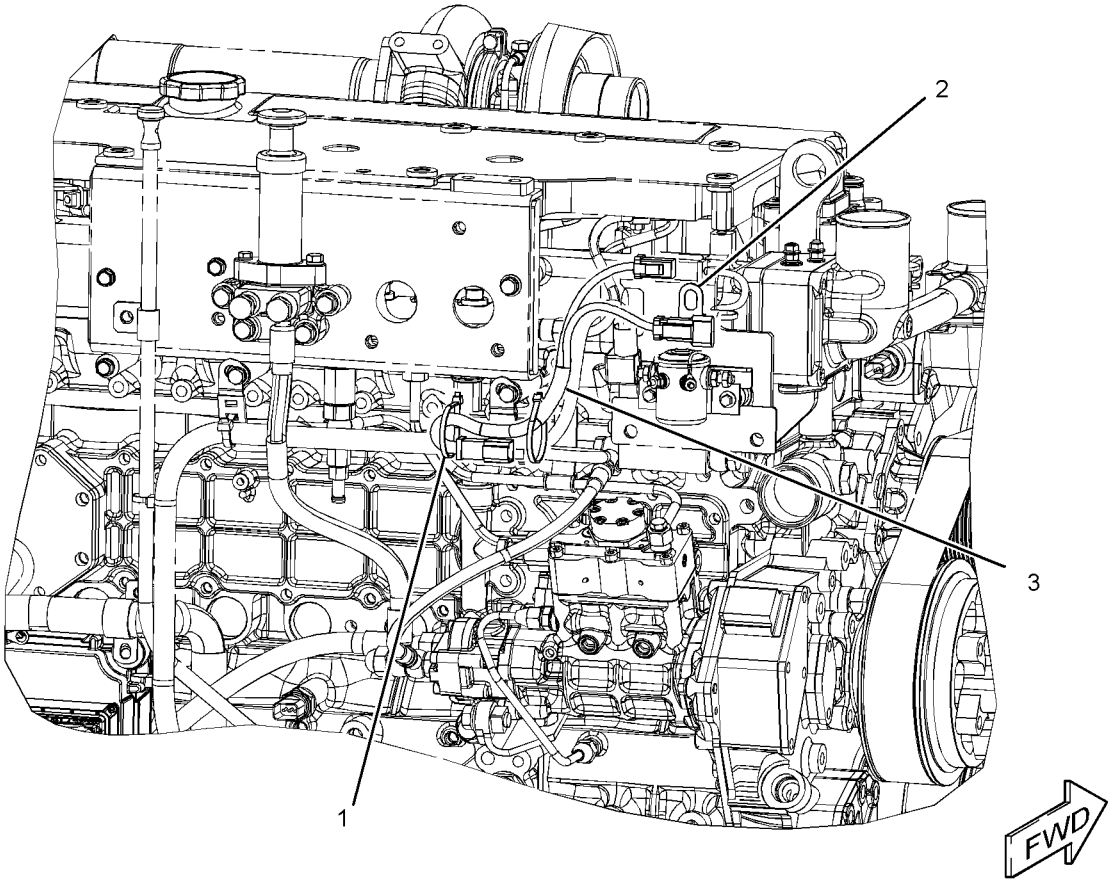

GRAPHIC #1 **<END>** g01406889

319-1358 WIRING GP-HEATER

S/N: KGF1-UP; FAL1-UP
FIELD INSTALLATION

SMCS-7304 **i02981304**

NOTE	REF NO	GRAPHIC REF	PART NUMBER	QTY	PART NAME 1 2 3 4 5 6 (PRODUCT LEVEL)	SEE PAGE
	1	1	**3S-2093**	2	STRAP-CABLE	
	2	1	**7K-1181**	5	STRAP-CABLE	
	3	1	**116-0114**	1	SWITCH AS-MAGNETIC (24-VOLT) (HEATER RELAY)	
		1	**186-3735**	2	PIN-CONNECTOR (16-GA TO 18-GA)	
		1	**102-8802**	1	KIT-RECEPTACLE (2-PIN)	
					(KIT INCLUDES RECEPTACLE AS & WEDGE)	
	4	1	**197-4330**	1	CONTROLLER-AIR (HEATER)	
	5	1	**238-2324**	1	CABLE AS	
		1	**6V-2369**	1	WIRE (4-GA, BLACK)	
		1	*131-1478*	2	TERMINAL AS	
					(EACH INCLUDES)	
		1	**9G-4343**	1	TERMINAL (4-GA)	
		1	**125-7876**		TUBE-HEAT SHRINK (17.78-MM DIA) (4-CM EACH)	
	6	1	**238-2325**	1	CABLE AS	
		1	**6V-2369**	1	WIRE (4-GA, BLACK)	
		1	*131-1478*	2	TERMINAL AS	
					(EACH INCLUDES)	
		1	**9G-4343**	1	TERMINAL (4-GA)	
		1	**125-7876**		TUBE-HEAT SHRINK (17.78-MM DIA) (4-CM EACH)	
	7	1	**319-1344**	1	BRACKET AS	
	8	1	**319-1346**	1	COVER AS	
	9	1	**319-1348**	1	HARNESS AS-CONTROL (ENGINE START, PUMP CONTROL) (HEATER)	
M	10	1	**5C-2890**	2	NUT (M6X1-THD)	
M	11	1	**7X-2619**	2	BOLT (M6X1X10-MM)	
M	12	1	**8T-4171**	2	BOLT (M6X1X12-MM)	
M	13	1	**8T-4970**	2	BOLT (M6X1X14-MM)	
	14	1	**9X-8256**	6	WASHER (6.6X12X2-MM THK)	

M-METRIC PART

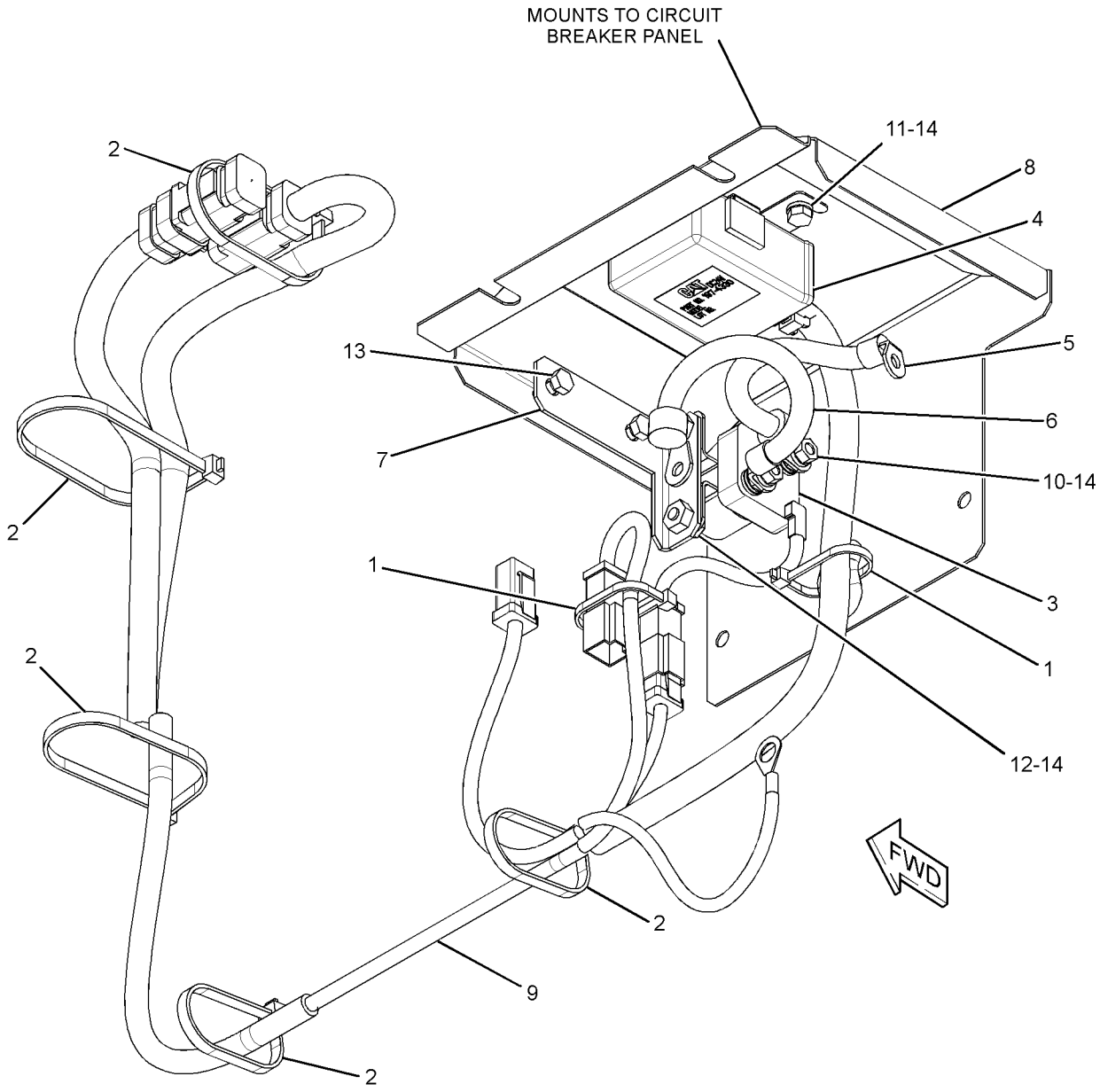

GRAPHIC #1 **<END>** g01473919

259-5046 WIRING GP-HYDRAULIC CONTROL–RETURN FILTER

S/N: KGF1-UP; FAL1-UP
PART OF 247-7459 FILTER AR-HYDRAULIC
AN ATTACHMENT

SMCS-1408 **i02423737**

NOTE	REF NO	GRAPHIC REF	PART NUMBER	QTY	PART NAME 1 2 3 4 5 6 (PRODUCT LEVEL)	SEE PAGE
	1	1	**3S-2093**	16	STRAP-CABLE	
	2	1	**4I-7889**	1	SPACER (11X25X45-MM THK)	
	3	1	**116-0118**	1	CLIP	
	4	1	**259-5344**	1	HARNESS AS-PUMP	
		1	**9X-3401**	1	PIN-CONNECTOR (16-GA TO 18-GA)	
		1	**155-2270**	1	KIT-CONNECTING PLUG (2-PIN)	
					(INCLUDES PLUG AS & WEDGE)	
	5	1	**132-5789**	2	CLIP	
	6	1	**8T-4121**	1	WASHER-HARD (11X21X2.5-MM THK)	
M	7	1	**8T-4191**	1	BOLT (M10X1.5X16-MM)	
M	8	1	**8T-5005**	1	BOLT (M10X1.5X70-MM)	

M-METRIC PART

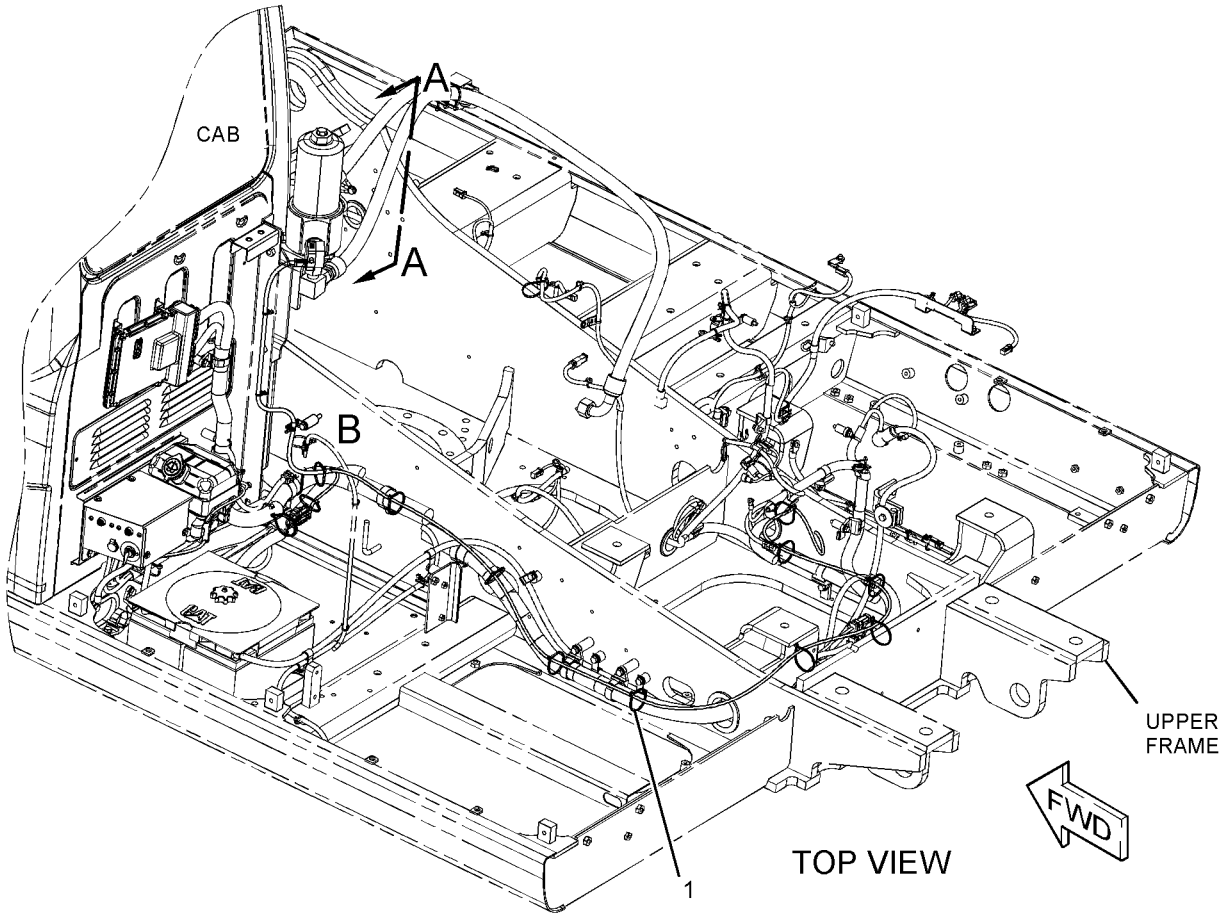

TOP VIEW

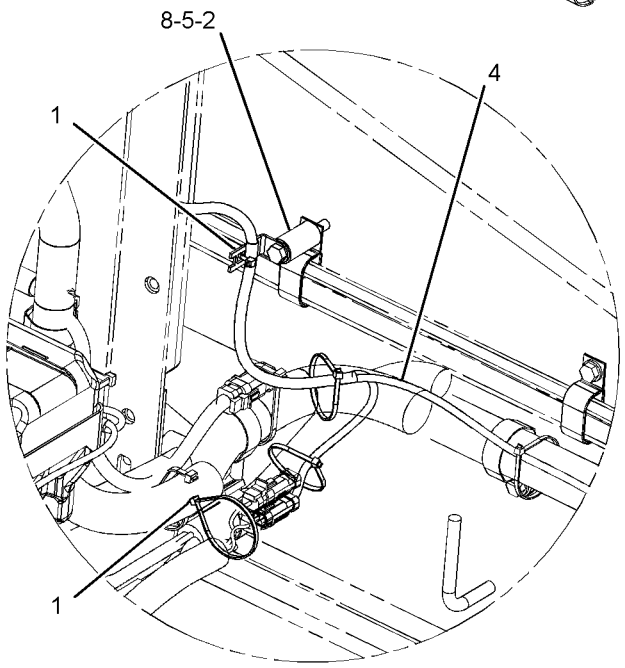

VIEW OF AREA B

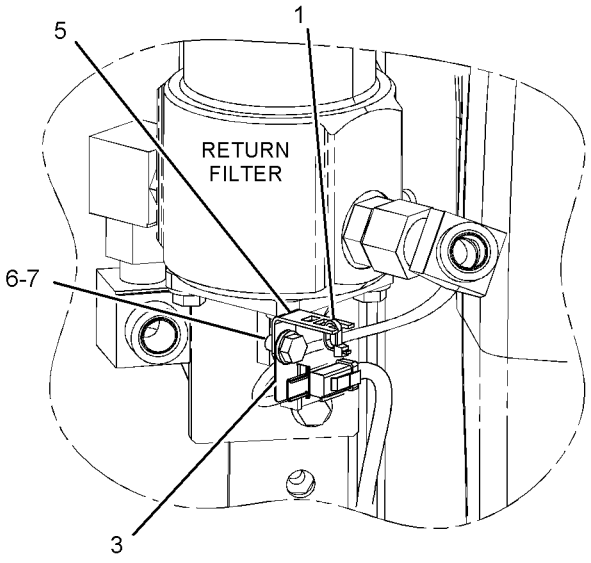

VIEW A-A

GRAPHIC #1 **<END>** g01228990

267-8005 WIRING GP-MEDIUM PRESSURE

S/N: KGF1-UP; FAL1-UP
PART OF 259-7501 CONTROL AR-AUXILIARY
AN ATTACHMENT

SMCS-1408 **i02998171**

NOTE	REF NO	GRAPHIC REF	PART NUMBER	QTY	PART NAME 1 2 3 4 5 6 (PRODUCT LEVEL)	SEE PAGE
	1	1	**3S-2093**	6	STRAP-CABLE	
	2	1	**7K-1181**	6	STRAP-CABLE	
	3	1	**275-7202**	1	HARNESS AS-SOLENOID	
	4	1	**132-5789**	1	CLIP	

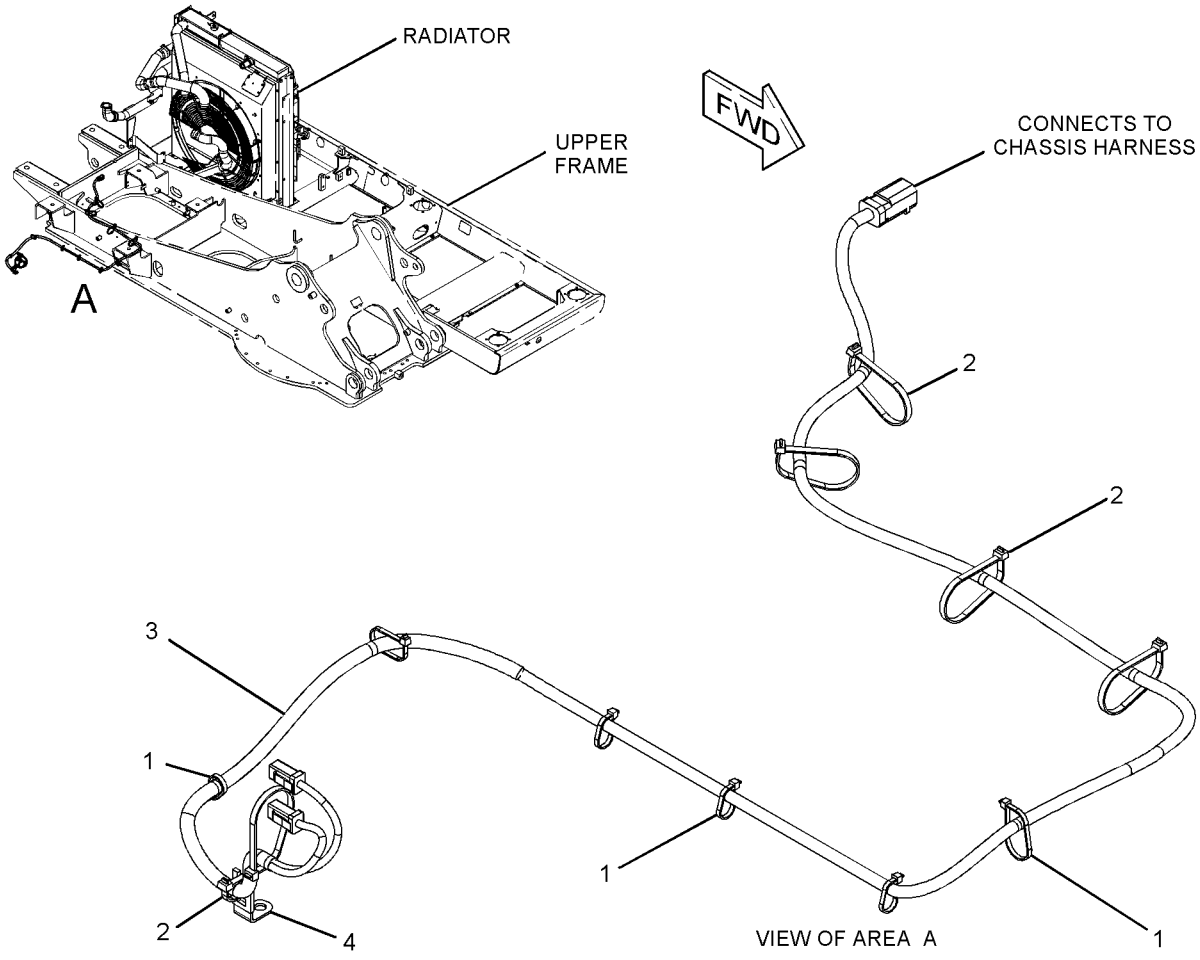

GRAPHIC #1 **<END>** g01522369

306-8452 WIRING GP-OVERLOAD WARNING–OVERLOAD WARNING

S/N: KGF1-UP

PART OF 298-4257 WARNING GP-OVERLOAD

AN ATTACHMENT

SMCS-1408 **i02787900**

NOTE	REF NO	GRAPHIC REF	PART NUMBER	QTY	PART NAME 1 2 3 4 5 6 (PRODUCT LEVEL)	SEE PAGE
	1	1	**3S-2093**	11	STRAP-CABLE	
	2	1	**7K-1181**	4	STRAP-CABLE	
	3	1	**116-0118**	1	CLIP	
	4	1	**238-2215**	1	SWITCH AS-ROCKER (OVERLOAD WARNING)	
		1	**167-3542**	1	CONNECTOR-RECEPTACLE	
		1	**167-3543**	4	TERMINAL (MALE)	
	5	1	**306-8502**	1	HARNESS AS-SENSOR	

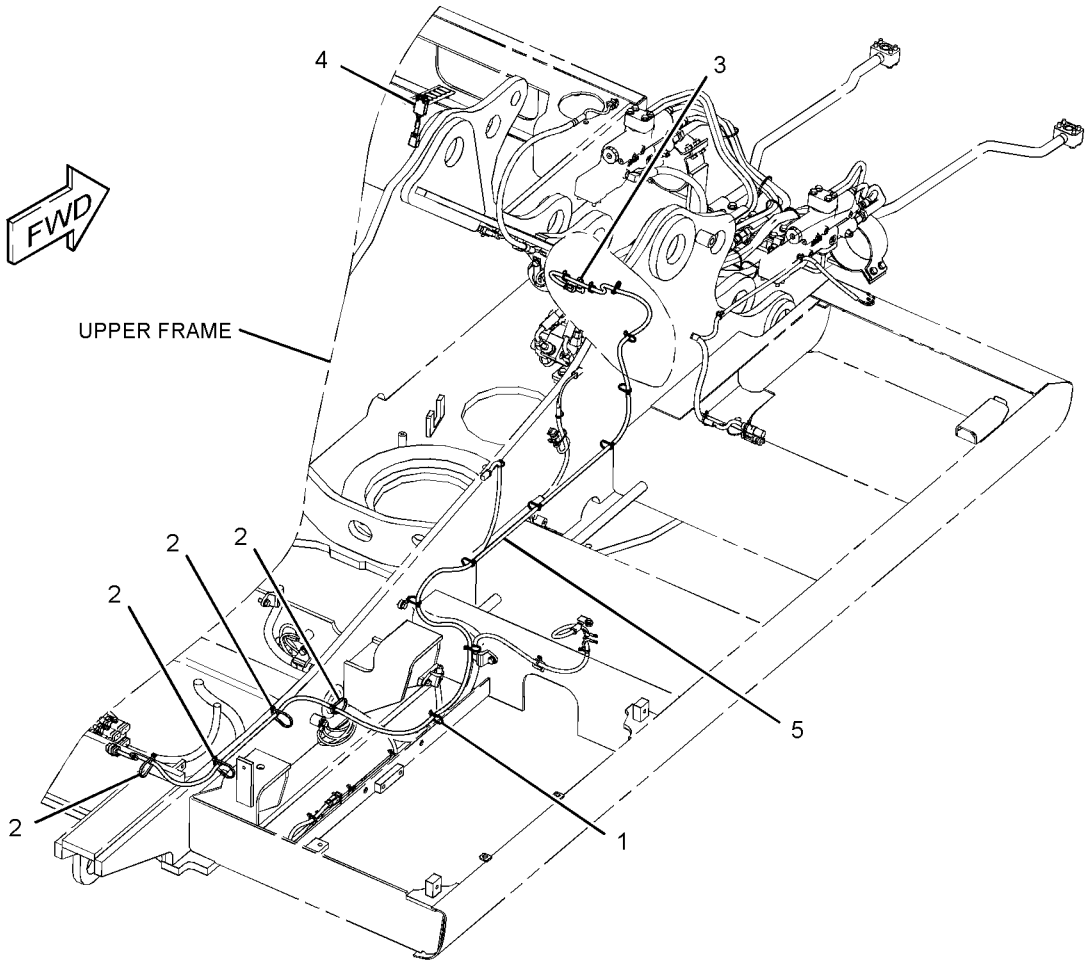

GRAPHIC #1 **<END>** g01431415

328-0094 WIRING GP-OVERLOAD WARNING

S/N: KGF1-UP
PART OF 314-3765 WARNING AR-OVERLOAD
AN ATTACHMENT

SMCS-1408 **i03114080**

NOTE	REF NO	GRAPHIC REF	PART NUMBER	QTY	PART NAME 1 2 3 4 5 6 (PRODUCT LEVEL)	SEE PAGE
	1	1	**3S-2093**	11	STRAP-CABLE	
	2	1	**7K-1181**	4	STRAP-CABLE	
	3	1	**116-0118**	1	CLIP	
	4	1	**306-8502**	1	HARNESS AS-SENSOR	
	5	1	**328-0028**	1	SWITCH AS-ROCKER (OVERLOAD WARNING)	
		1	**167-3542**	1	CONNECTOR-RECEPTACLE	
		1	**167-3543**	4	TERMINAL (MALE)	

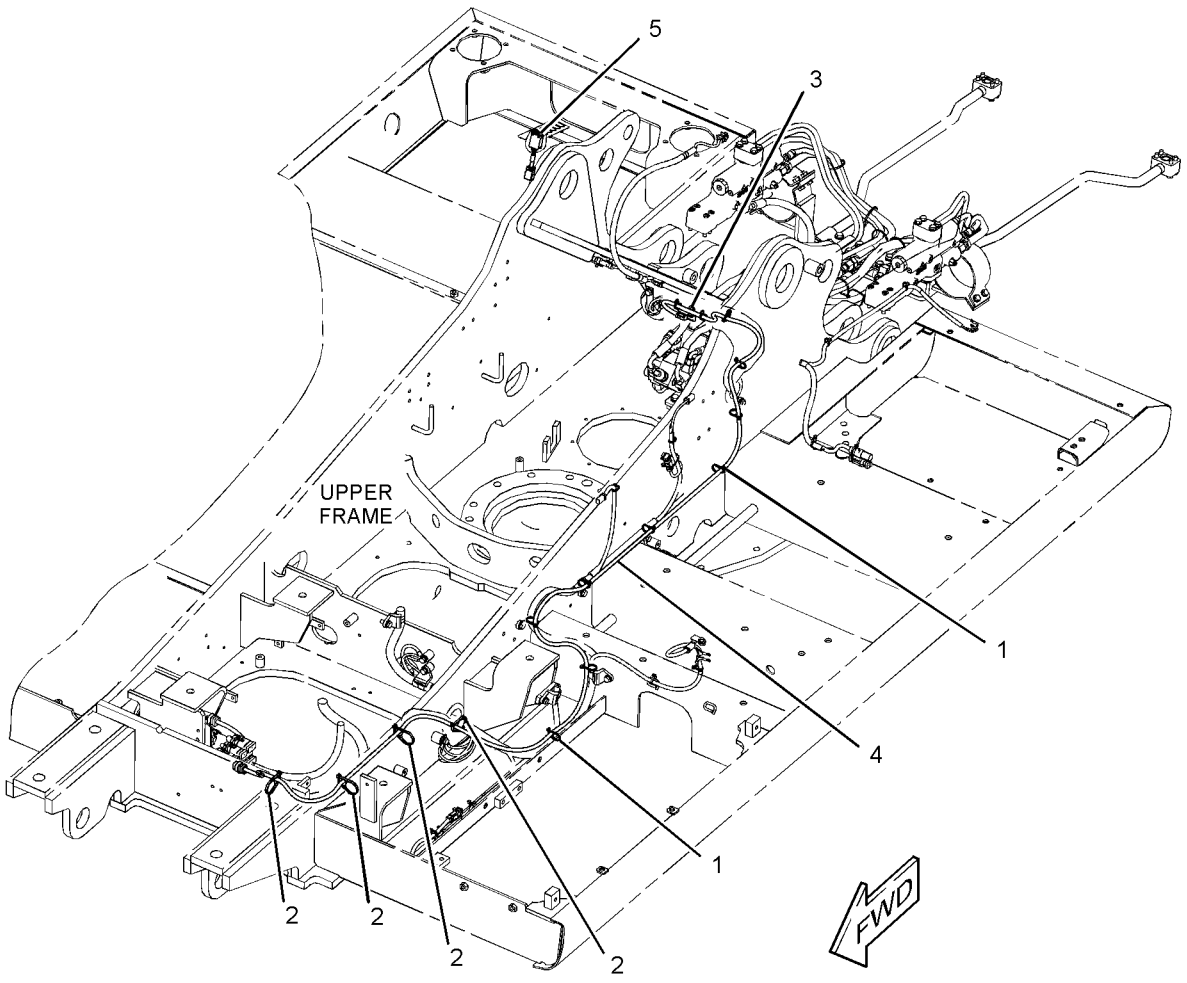

GRAPHIC #1 **<END>** g01620879

ELECTRICAL AND STARTING SYSTEM

275-7003 WIRING GP-PLATFORM

S/N: KGF1-UP; FAL1-UP

PART OF 273-5387 OPERATOR AR

SMCS-1408 **i02562765**

NOTE	REF NO	GRAPHIC REF	PART NUMBER	QTY	PART NAME 1 2 3 4 5 6 (PRODUCT LEVEL)	SEE PAGE
	1	1	**3S-2093**	6	STRAP-CABLE	
	2	1	**7G-1060**	1	STRAP AS-GROUND	
	3	1	**7K-1181**	16	STRAP-CABLE	
	4	1	**111-4836**	4	CLIP	
	5	1	**111-4838**	2	CLIP	
	6	1	**111-4839**	2	STRAP	
	7	1	**116-0118**	14	CLIP	
	8	1	**234-1122**	1	COVER	
	9	1	**251-0299**	1	HARNESS AS-SWITCH (SECONDARY SHUTDOWN)	
		1	**243-4505**	1	RECEPTACLE AS-CONNECTOR (2-PIN)	
	10	1	**275-7004**	1	HARNESS AS-PLATFORM	
		1	**102-8802**	5	KIT-RECEPTACLE (2-PIN)	
		1	**102-8804**	1	KIT-RECEPTACLE (4-PIN)	
					(EACH RECEPTACLE KIT INCLUDES RECEPTACLE AS & WEDGE)	
		1	**3S-2093**	22	STRAP-CABLE	
		1	**155-2270**	12	KIT-CONNECTING PLUG (2-PIN)	
		1	**155-2271**	1	KIT-CONNECTING PLUG (4-PIN)	
					(EACH CONNECTING PLUG KIT INCLUDES PLUG AS, WEDGE & INTERFACE SEAL)	
		1	**197-4385**	3	DIODE	
		1	**230-4009**	3	PLUG AS-CONNECTOR (12-PIN)	
		1	**230-4011**	3	PLUG AS-CONNECTOR (2-PIN)	
		1	**230-5010**	3	PLUG AS-CONNECTOR (6-PIN)	
		1	**239-7352**	1	PLUG AS-CONNECTOR (6-PIN)	
		1	**243-4505**	1	RECEPTACLE AS-CONNECTOR (2-PIN)	
		1	**243-4507**	1	RECEPTACLE AS-CONNECTOR (4-PIN)	
		1	**243-4508**	4	RECEPTACLE AS-CONNECTOR (6-PIN)	
		1	**243-4509**	1	RECEPTACLE AS-CONNECTOR (8-PIN)	
		1	**243-4510**	2	RECEPTACLE AS-CONNECTOR (12-PIN)	
		1	**247-2693**	1	RECEPTACLE AS-CONNECTOR (6-PIN)	
M	11	1	**095-0728**	2	SCREW-MACHINE (M4X0.7X12-MM)	
	12	1	**096-6166**	2	WASHER-HARD (4.5X9X1-MM THK)	
	13	1	**3E-5169**	1	GUARD-SWITCH	
	14	1	**4D-1836**	1	SWITCH AS-TOGGLE (SECONDARY SHUTDOWN)	
M	15	1	**7X-2621**	7	BOLT (M10X1.5X12-MM)	
	16	1	**8T-4121**	14	WASHER-HARD (11X21X2.5-MM THK)	
M	17	1	**8T-4137**	7	BOLT (M10X1.5X20-MM)	

M-METRIC PART

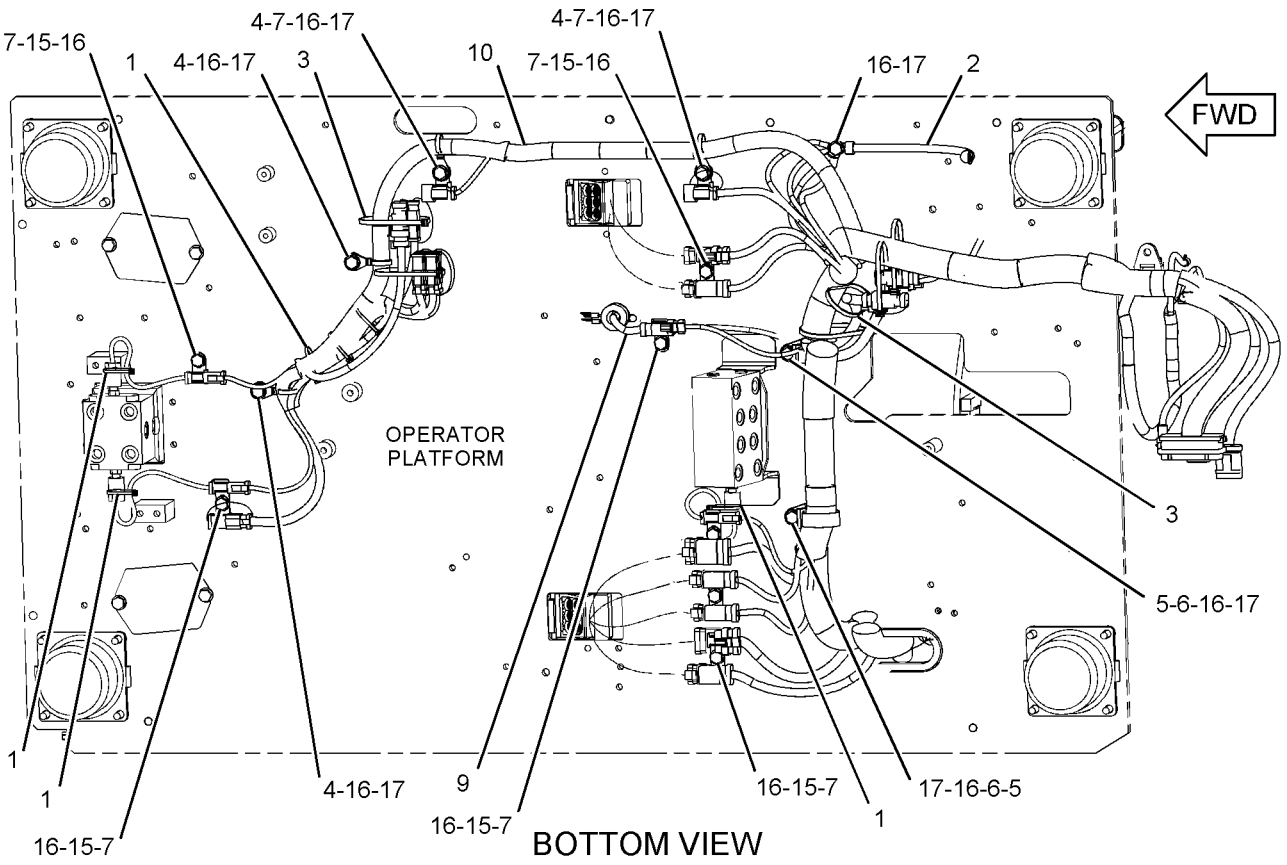

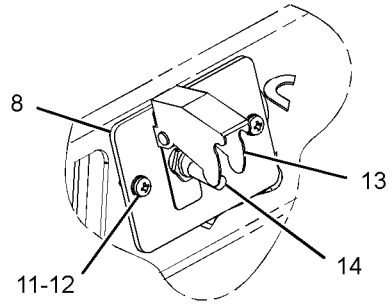

VIEW OF AREA A

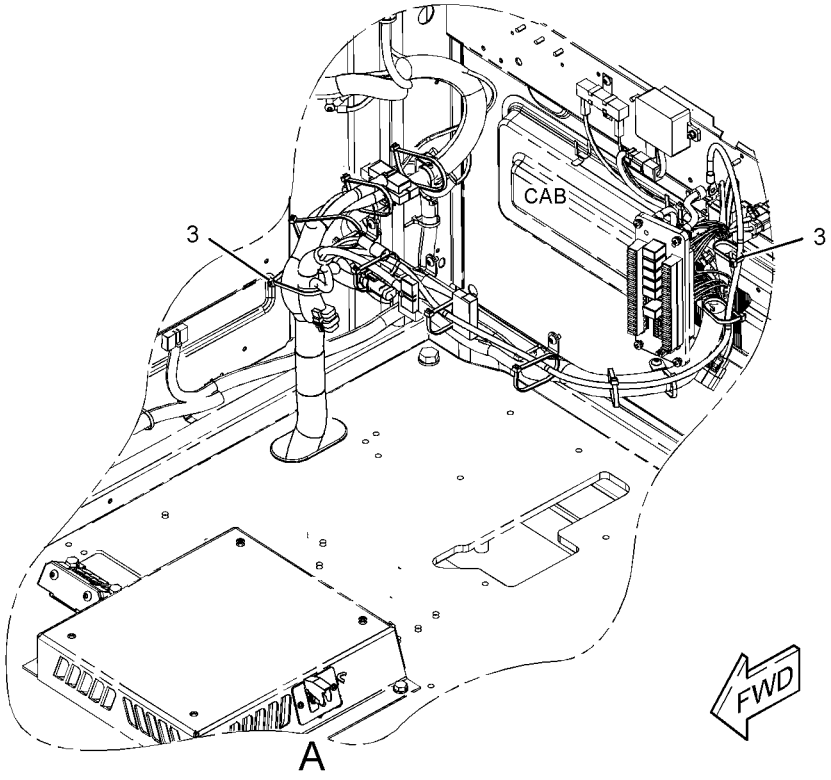

GRAPHIC #1 **<END>** g01297079

259-5044 WIRING GP-QUICK COUPLER

S/N: KGF1-UP; FAL1-UP
PART OF 288-7608 CONTROL AR-COUPLER
AN ATTACHMENT

SMCS-1408, 6129 **i02580840**

NOTE	REF NO	GRAPHIC REF	PART NUMBER	QTY	PART NAME 1 2 3 4 5 6 (PRODUCT LEVEL)	SEE PAGE
C	1	1	**3S-2093**	9	STRAP-CABLE	
C	2	1	**7K-1181**	9	STRAP-CABLE	
C	3	1	**283-3041**	1	HARNESS AS-SOLENOID (QUICK COUPLER)	
		1	**230-4011**	1	PLUG AS-CONNECTOR (2-PIN)	
		1	**243-4505**	1	RECEPTACLE AS-CONNECTOR (2-PIN)	

C-CHANGE FROM PREVIOUS TYPE

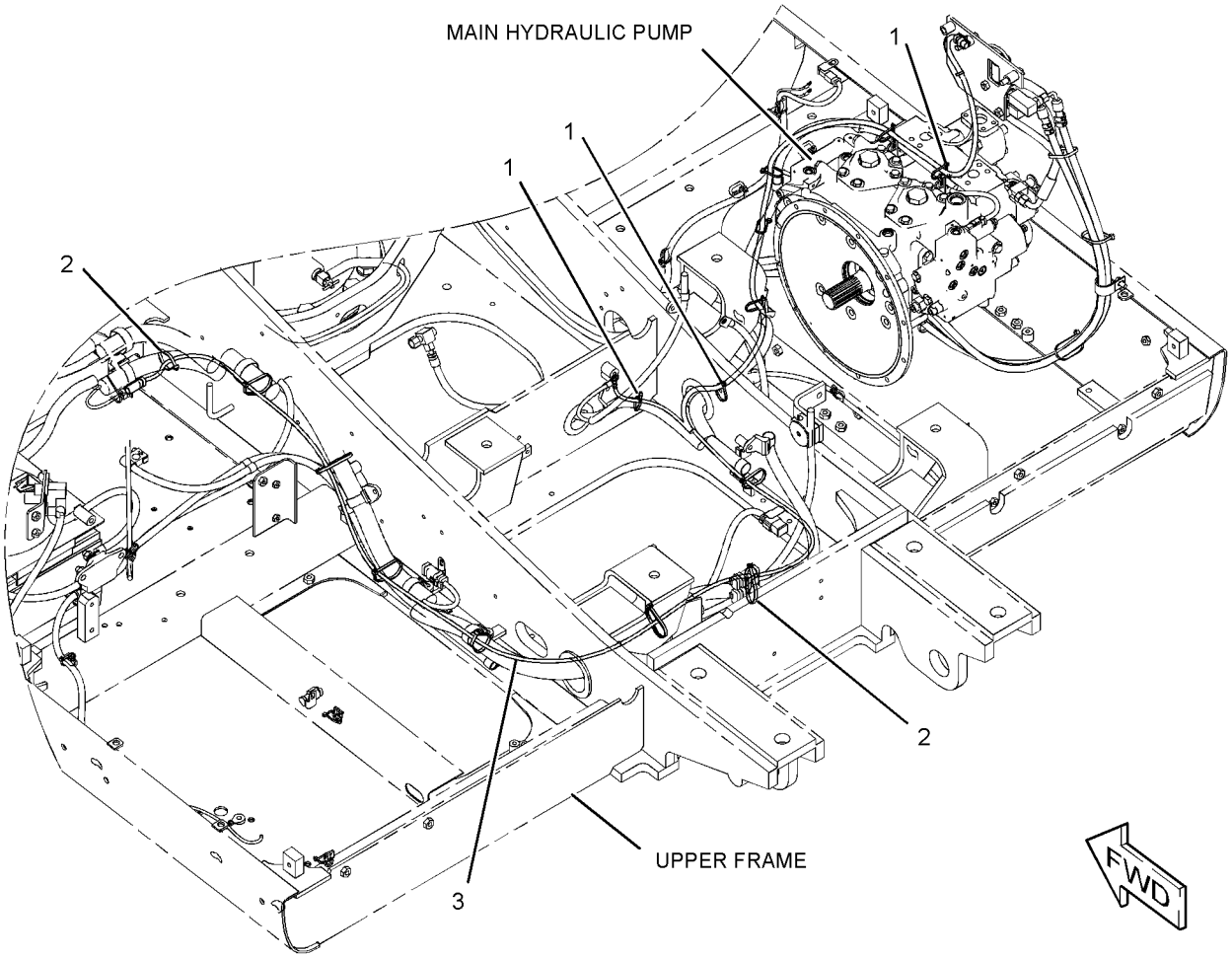

GRAPHIC #1 **<END>** g01230088

267-8002 WIRING GP-QUICK COUPLER

S/N: KGF1-UP; FAL1-UP
PART OF 277-0863 CONTROL AR-COUPLER
AN ATTACHMENT

SMCS-1408, 6129 **i02981300**

NOTE	REF NO	GRAPHIC REF	PART NUMBER	QTY	PART NAME 1 2 3 4 5 6 (PRODUCT LEVEL)	SEE PAGE
	1	1,2	**3S-2093**	13	STRAP-CABLE	
	2	2	**7I-2673**	2	STRAP-CABLE	
	3	1,2	**7K-1181**	15	STRAP-CABLE	
	4	2	**116-0118**	1	CLIP	
	5	2	**283-3015**	1	HARNESS AS-SOLENOID (COUPLER)	
	6	2	**132-5789**	2	CLIP	
	7	2	**4P-7581**	1	CLIP	
	8	2	**5P-4116**	3	WASHER-HARD (8.8X20.5X2-MM THK)	
M	9	2	**8T-4189**	3	BOLT (M8X1.25X20-MM)	

M-METRIC PART

REFER TO ALL ILLUSTRATIONS OF
THIS GROUP FOR AUXILIARY VIEWS

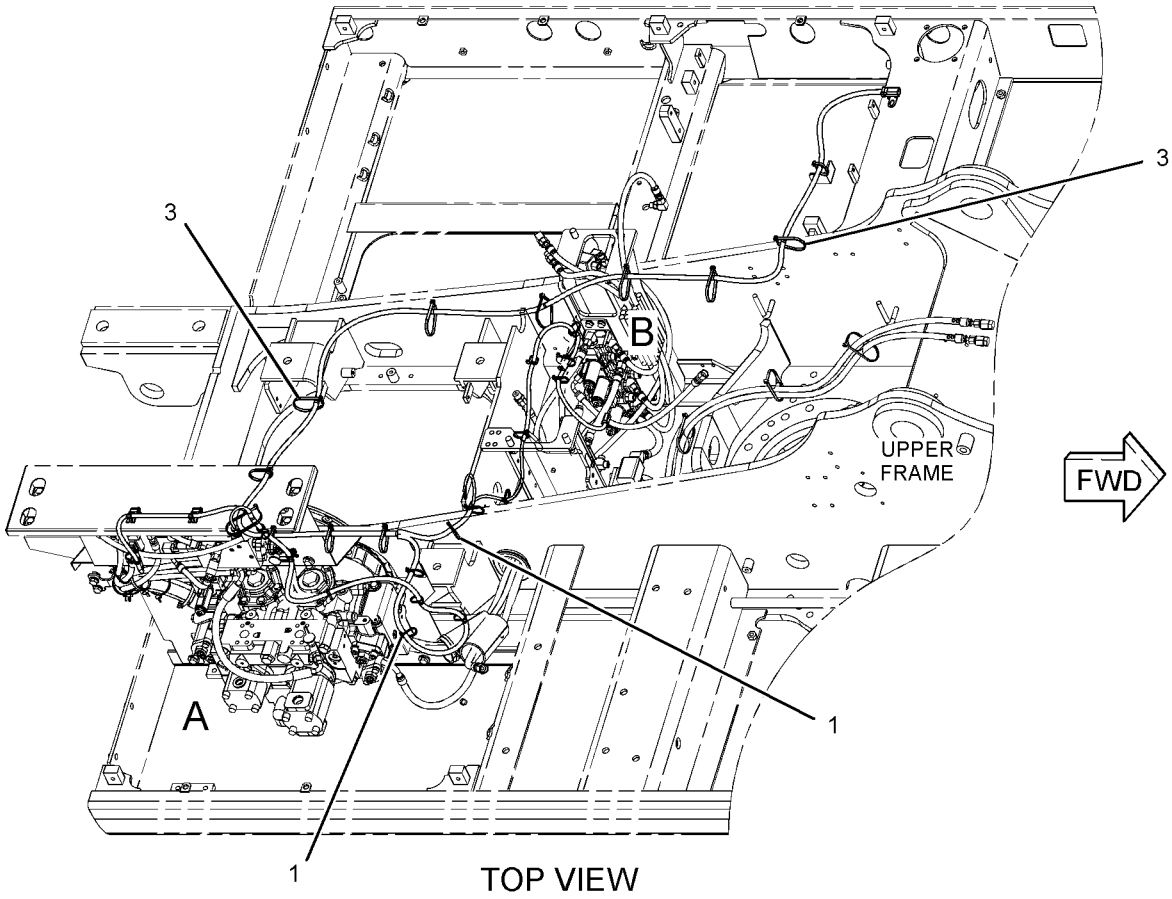

TOP VIEW

GRAPHIC #1 g01316032

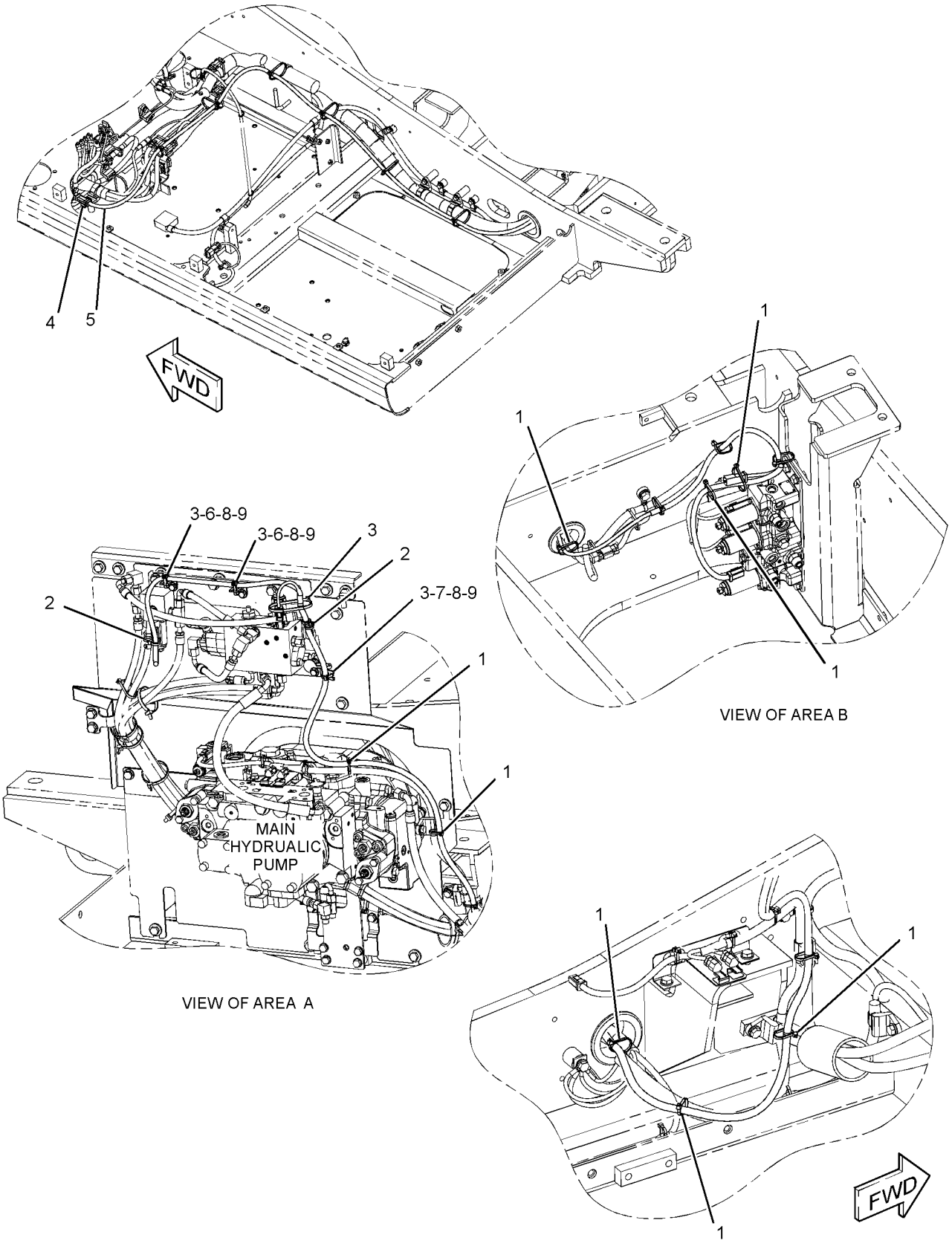

GRAPHIC #2 **<END>** g01316033

283-2913 WIRING GP-RADIO

S/N: KGF1-UP; FAL1-UP
AN ATTACHMENT

SMCS-1408, 7338 **i02984887**

NOTE	REF NO	GRAPHIC REF	PART NUMBER	QTY	PART NAME 1 2 3 4 5 6 (PRODUCT LEVEL)	SEE PAGE
	1	1	**3S-2093**	11	STRAP-CABLE	
	2	1	**4I-7889**	1	SPACER (11X25X45-MM THK)	
	3	1	**7K-1181**	10	STRAP-CABLE	
	4	1	**116-0118**	1	CLIP	
	5	1	**149-5050**	4	RELAY (24-VOLT) (SPEAKERS)	
	6	1	**170-2512**	1	SWITCH GP-TOGGLE (12-VOLT, 24-VOLT SPEAKER)	
		1	**6T-3631**	2	NUT-HEX (15/32-32-THD)	
		1	**6T-3632**	1	LOCKWASHER	
		1	**6T-3633**	1	RING-LOCKING	
		1	**186-3735**	1	PIN-CONNECTOR (16-GA TO 18-GA)	
		1	**102-8805**	1	KIT-RECEPTACLE (6-PIN)	
					(INCLUDES RECEPTACLE AS & WEDGE)	
	7	1	**267-7676**	1	BRACKET AS	
	8	1	**267-7695**	1	BRACKET AS	
	9	1	**283-2914**	1	HARNESS AS-RADIO	
		1	**3S-2093**	25	STRAP-CABLE	
		1	**149-5051**	4	CONNECTOR	
		1	**155-2274**	1	KIT-CONNECTING PLUG (6-PIN)	
					(KIT INCLUDES PLUG AS, WEDGE, & INTERFACE SEAL	
		1	**230-5010**	1	PLUG AS-CONNECTOR (6-PIN)	
		1	**231-2295**	2	PLUG AS-CONNECTOR (8-PIN)	
		1	**243-4509**	2	RECEPTACLE AS-CONNECTOR (8-PIN)	
	10	1	**283-2984**	1	COVER	
	11	1	**283-2783**	1	CONVERTER-POWER (24-VOLT TO 12-VOLT)	
M	12	1	**8T-4171**	4	BOLT (M6X1X12-MM)	
M	13	1	**8T-5005**	1	BOLT (M10X1.5X70-MM)	
M	14	1	**9X-2042**	7	SCREW-TRUSS HEAD (M6X1X12-MM)	
	15	1	**9X-8256**	4	WASHER (6.6X12X2-MM THK)	

M-METRIC PART

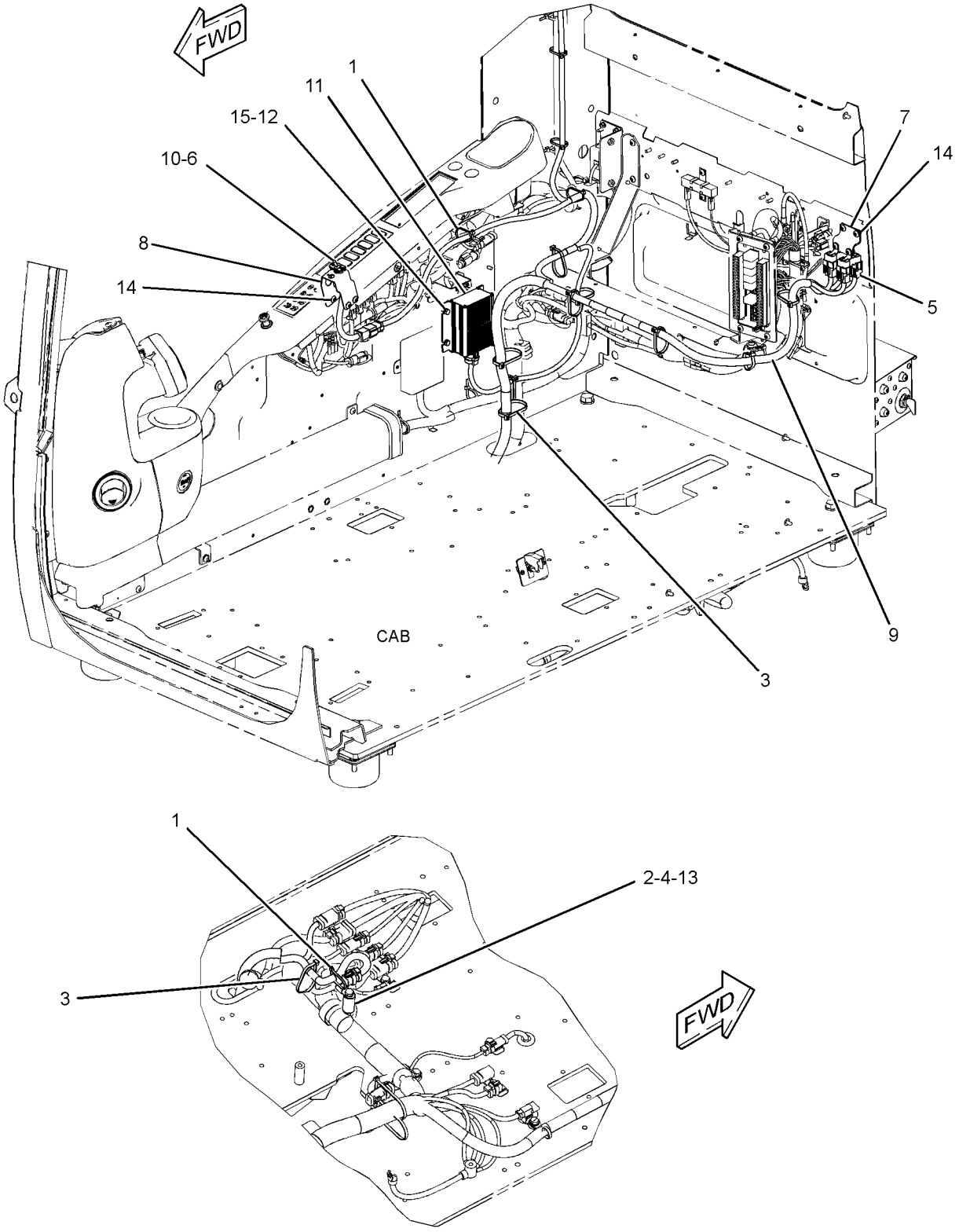

GRAPHIC #1 **<END>** g01290807

227-6035 DRIVE GP-FINAL—WITHOUT MOTOR

S/N: KGF1-UP; FAL1-UP

PART OF 227-6913 DRIVE GP-FINAL

SMCS-4050 **i01845871**

NOTE	REF NO	GRAPHIC REF	PART NUMBER	QTY	PART NAME 1 2 3 4 5 6 (PRODUCT LEVEL)	SEE PAGE
	1	1	**7Y-1434**	1	SPACER (40X69.5X6-MM THK)	
B	2	1	**096-1773**	1	SHIM (0.15-MM THK)	
B		1	**096-1774**	1	SHIM (0.3-MM THK)	
B		1	**096-1775**	1	SHIM (0.4-MM THK)	
B		1	**096-1776**	1	SHIM (0.5-MM THK)	
B		1	**096-1777**	1	SHIM (0.6-MM THK)	
B		1	**096-1778**	1	SHIM (0.7-MM THK)	
B		1	**096-1779**	1	SHIM (0.8-MM THK)	
B		1	**096-1780**	1	SHIM (1-MM THK)	
B		1	**096-1781**	1	SHIM (1.6-MM THK)	
	11	1	**227-6034**	14	BOLT-FLANGE HEAD (M16X2X60-MM)	
	12	1	**7Y-0223**	3	SHAFT-PLANETARY	
	13	1	**094-1542**	6	BEARING-ROLLER	
	14	1	**7Y-1431**	3	GEAR-PLANETARY (30-TEETH)	
M	15	1	**094-1528**	6	WASHER (53X84X1-MM THK)	
	16	1	**095-0891**	6	PIN-SPRING	
	17	1	**6I-6585**	3	GEAR-PLANETARY (44-TEETH)	
	18	1	**094-0616**	3	BEARING AS-ROLLER	
	19	1	**3E-2338**	2	PLUG-PIPE	
	20	1	**7M-8485**	2	SEAL-O-RING	
	21	1	**7Y-1426**	1	COVER	
	22	1	**7Y-0225**	3	SHAFT-PLANETARY	
	23	1	**094-0611**	6	WASHER (47.3X76X1-MM THK)	
	24	1	**094-0580**	1	PLATE (10-MM THK)	
	25	1	**6I-6583**	1	GEAR-SUN (14-TEETH)	
	26	1	**7Y-1430**	1	GEAR-SUN (17-TEETH)	
	27	1	**7Y-1558**	1	SPACER (90X119.6X7.5-MM THK)	
	28	1	**7Y-1432**	1	CARRIER	
M	29	1	**7X-2568**	16	BOLT (M20X2.5X180-MM)	
	30	1	**8T-4123**	16	WASHER (22X35X3.5-MM THK)	
B	31	1	**1U-8846**		SEALANT-GASKET	
	33	1	**148-4705**	1	GEAR-RING (104-TEETH)	
	34	1	**7Y-1433**	1	CARRIER	
	35	1	**6D-0692**	1	SEAL-O-RING	
	36	1	**148-4715**	1	GEAR-COUPLING (55-TEETH)	
	37	1	**114-1539**	6	PIN-DOWEL	
	38	1	**191-3235**	1	HOUSING	
	39	1	**168-8451**	2	BALL BEARING	
	40	1	**114-1497**	1	SEAL GP-DUO-CONE	
	41	1	**191-3236**	1	HOUSING	
M	42	1	**095-1270**	2	SETSCREW-SOCKET (M12X1.75X30-MM)	
B	43	1	**148-4708**	1	GEAR-RING (79-TEETH)	

B-USE AS REQUIRED
M-METRIC PART

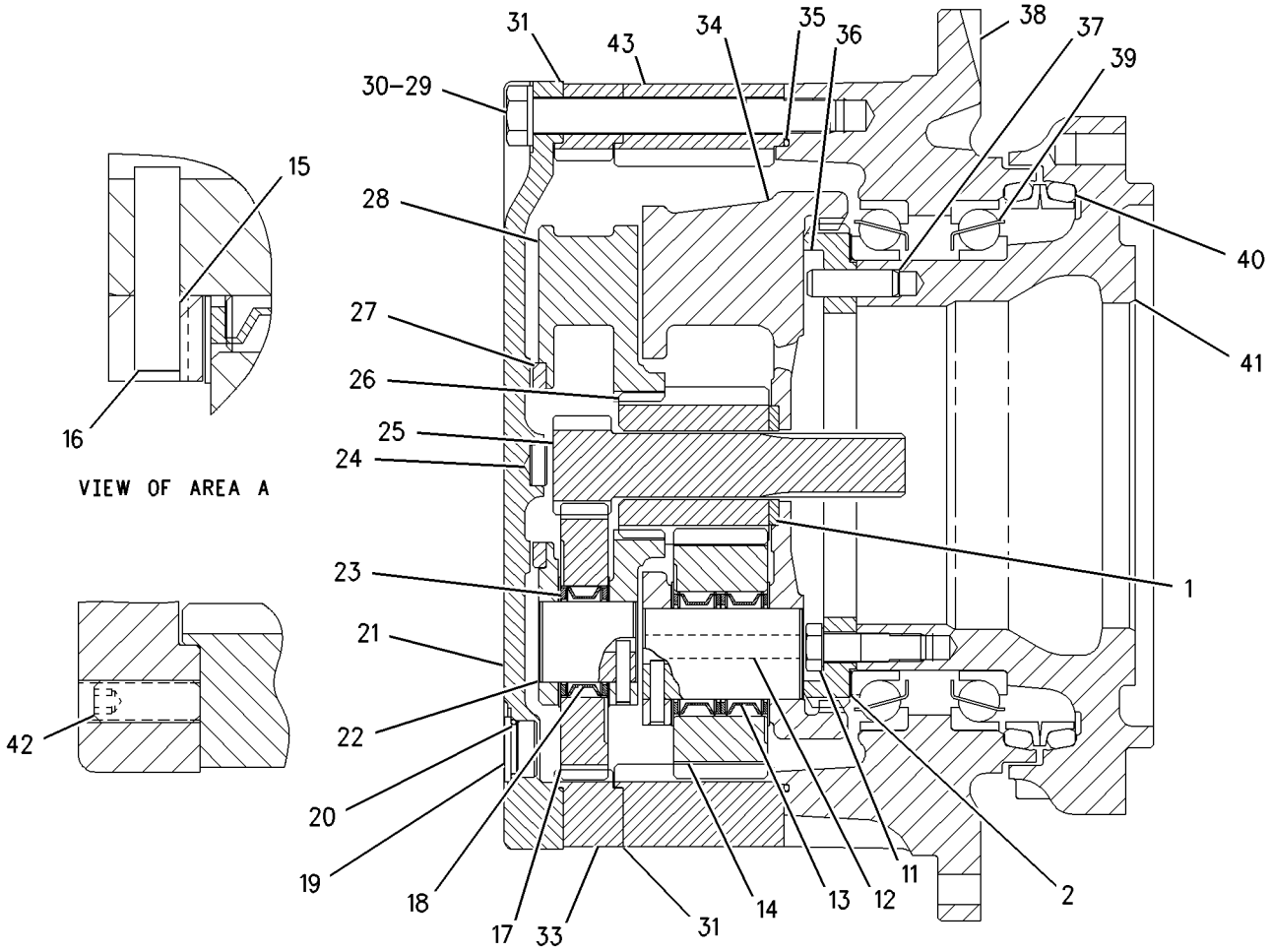

GRAPHIC #1 **<END>** g00880483

227-6913 FINAL DRIVE GP—WITHOUT MOTOR

S/N: KGF1-UP; FAL1-UP

PART OF 267-6767 POWER TRAIN AR

SMCS-4050 **i02562484**

NOTE	PART NUMBER	QTY	PART NAME 1 2 3 4 5 6 (PRODUCT LEVEL)	SEE PAGE
Y	**227-6035**	1	FINAL DRIVE GP (WITHOUT MOTOR)	361
Y	*215-9982*	1	MOTOR & MTG GP-TRAVEL	932

Y-SEPARATE ILLUSTRATION

<END>

296-6298 FINAL DRIVE GP—WITH MOTOR

S/N: KGF1-UP; FAL1-UP

PART OF 267-6767 POWER TRAIN AR

SMCS-4050 **i02998082**

NOTE	REF NO	GRAPHIC REF	PART NUMBER	QTY	PART NAME 1 2 3 4 5 6 (PRODUCT LEVEL)	SEE PAGE
Y	1	1	*215-9982*	1	MOTOR & MTG GP-TRAVEL	932
Y	2	1	**296-6299**	1	FINAL DRIVE GP	365

Y-SEPARATE ILLUSTRATION

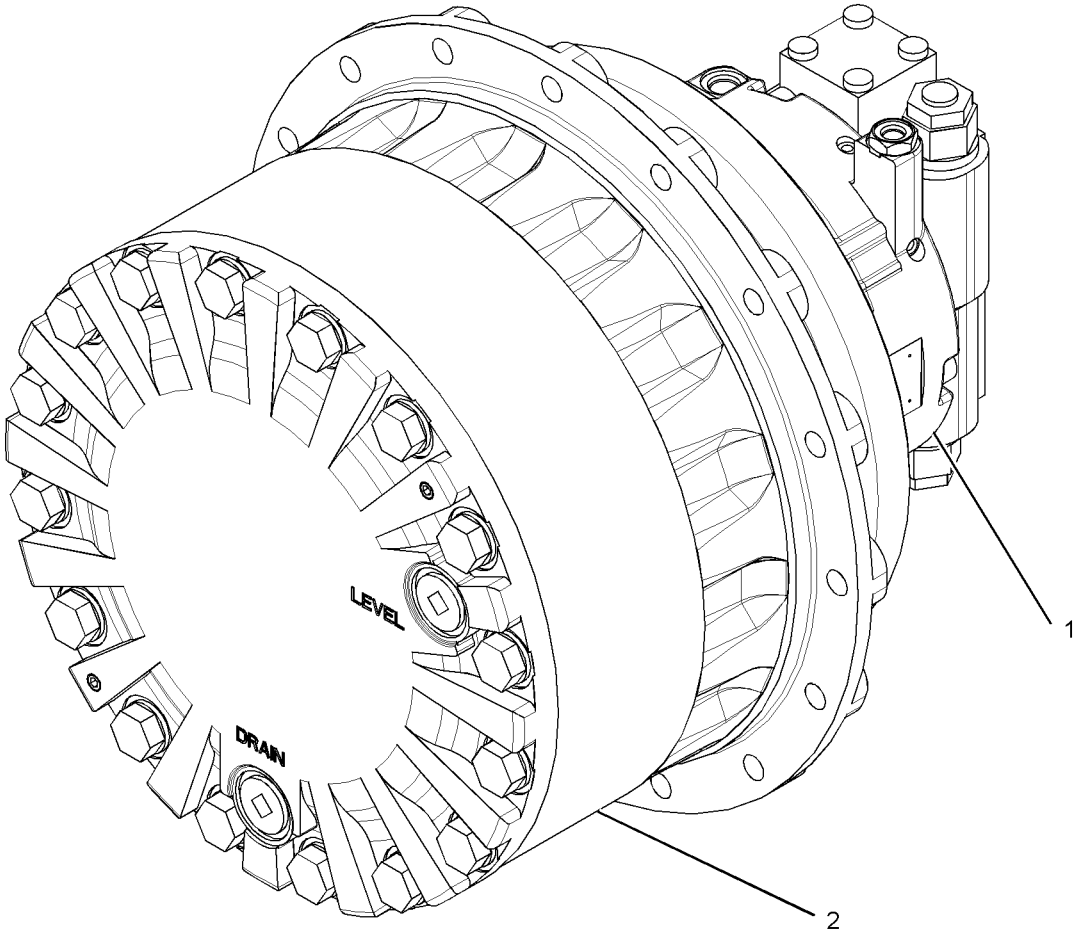

GRAPHIC #1 **<END>** g01522287

296-6299 DRIVE GP-FINAL—WITHOUT MOTOR

S/N: KGF1-UP; FAL1-UP

PART OF 296-6298 DRIVE GP-FINAL

SMCS-4050 **i02998085**

NOTE	REF NO	GRAPHIC REF	PART NUMBER	QTY	PART NAME 1 2 3 4 5 6 (PRODUCT LEVEL)	SEE PAGE
	1	1	**6I-6583**	1	GEAR-SUN (14-TEETH)	
	2	1	**6I-6585**	3	GEAR-PLANETARY (44-TEETH)	
	3	1	**7Y-0223**	3	SHAFT-PLANETARY	
	4	1	**7Y-0225**	3	SHAFT-PLANETARY	
	5	1	**7Y-1426**	1	COVER	
	6	1	**7Y-1430**	1	GEAR-SUN (17-TEETH)	
	7	1	**7Y-1431**	3	GEAR-PLANETARY (30-TEETH)	
	8	1	**7Y-1432**	1	CARRIER	
	9	1	**7Y-1433**	1	CARRIER	
	10	1	**7Y-1558**	1	SPACER (90X119.6X7.5-MM THK)	
	11	1	**094-0580**	1	PLATE (10-MM THK)	
	12	1	**094-0611**	6	WASHER (47.3X76X1-MM THK)	
M	13	1	**094-1528**	6	WASHER (53X84X1-MM THK)	
	14	1	**095-0891**	6	PIN-SPRING	
B	15	2	**096-1773**	1	SHIM (0.15-MM THK)	
B		2	**096-1774**	1	SHIM (0.3-MM THK)	
B		2	**096-1775**	1	SHIM (0.4-MM THK)	
B		2	**096-1776**	1	SHIM (0.5-MM THK)	
B		2	**096-1777**	1	SHIM (0.6-MM THK)	
B		2	**096-1778**	1	SHIM (0.7-MM THK)	
B		2	**096-1779**	1	SHIM (0.8-MM THK)	
B		2	**096-1780**	1	SHIM (1-MM THK)	
B		2	**096-1781**	1	SHIM (1.6-MM THK)	
	24	2	**114-1497**	1	SEAL GP-DUO-CONE	
	25	2	**114-1539**	6	PIN-DOWEL	
	26	2	**148-4715**	1	GEAR-COUPLING (55-TEETH)	
	27	2	**168-8451**	2	BALL BEARING	
	28	2	**191-3235**	1	HOUSING	
	29	2	**191-3236**	1	HOUSING	
	30	2	**227-6034**	14	BOLT-FLANGE HEAD (M16X2X60-MM)	
	31	2	**296-6300**	1	GEAR GP-RING	
	32	1	**094-0616**	3	BEARING AS-ROLLER	
	33	1	**094-1542**	6	BEARING-ROLLER	
M	34	1	**095-1270**	2	SETSCREW-SOCKET (M12X1.75X30-MM)	
	35	1	**3E-2338**	2	PLUG-PIPE	
	36	2	**6D-0692**	1	SEAL-O-RING	
	37	1	**7M-8485**	2	SEAL-O-RING	
M	38	1	**7X-2568**	16	BOLT (M20X2.5X180-MM)	
	39	1	**7Y-1434**	1	SPACER (40X69.5X6-MM THK)	
	40	1	**8T-4123**	16	WASHER (22X35X3.5-MM THK)	
B	41	1	**1U-8846**		SEALANT-GASKET	

B-USE AS REQUIRED
M-METRIC PART

REFER TO ALL ILLUSTRATIONS OF
THIS GROUP FOR AUXILIARY VIEWS

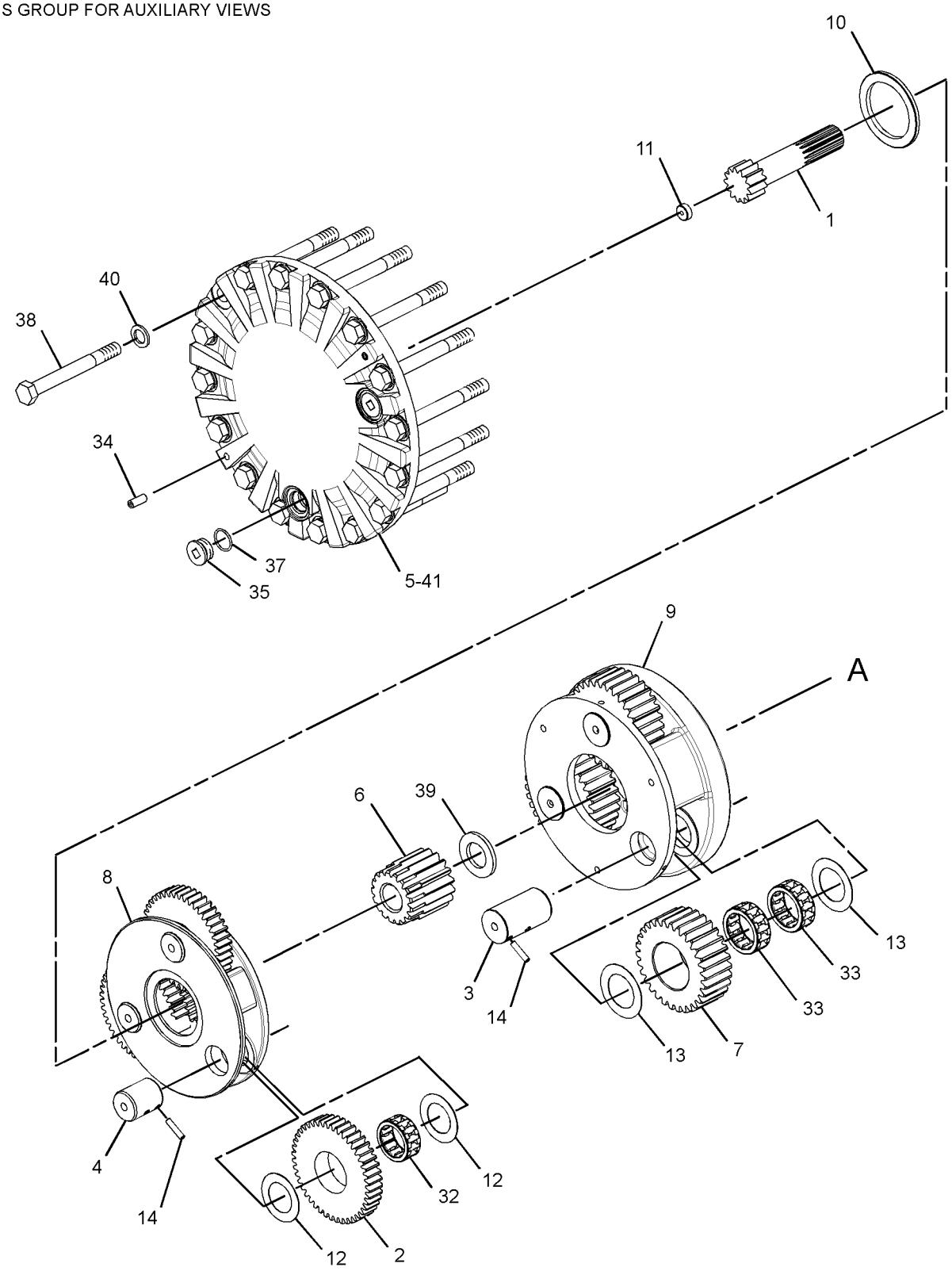

GRAPHIC #1

g01522723

296-6299 DRIVE GP-FINAL *(contd.)* **i02998085**

REFER TO ALL ILLUSTRATIONS OF
THIS GROUP FOR AUXILIARY VIEWS

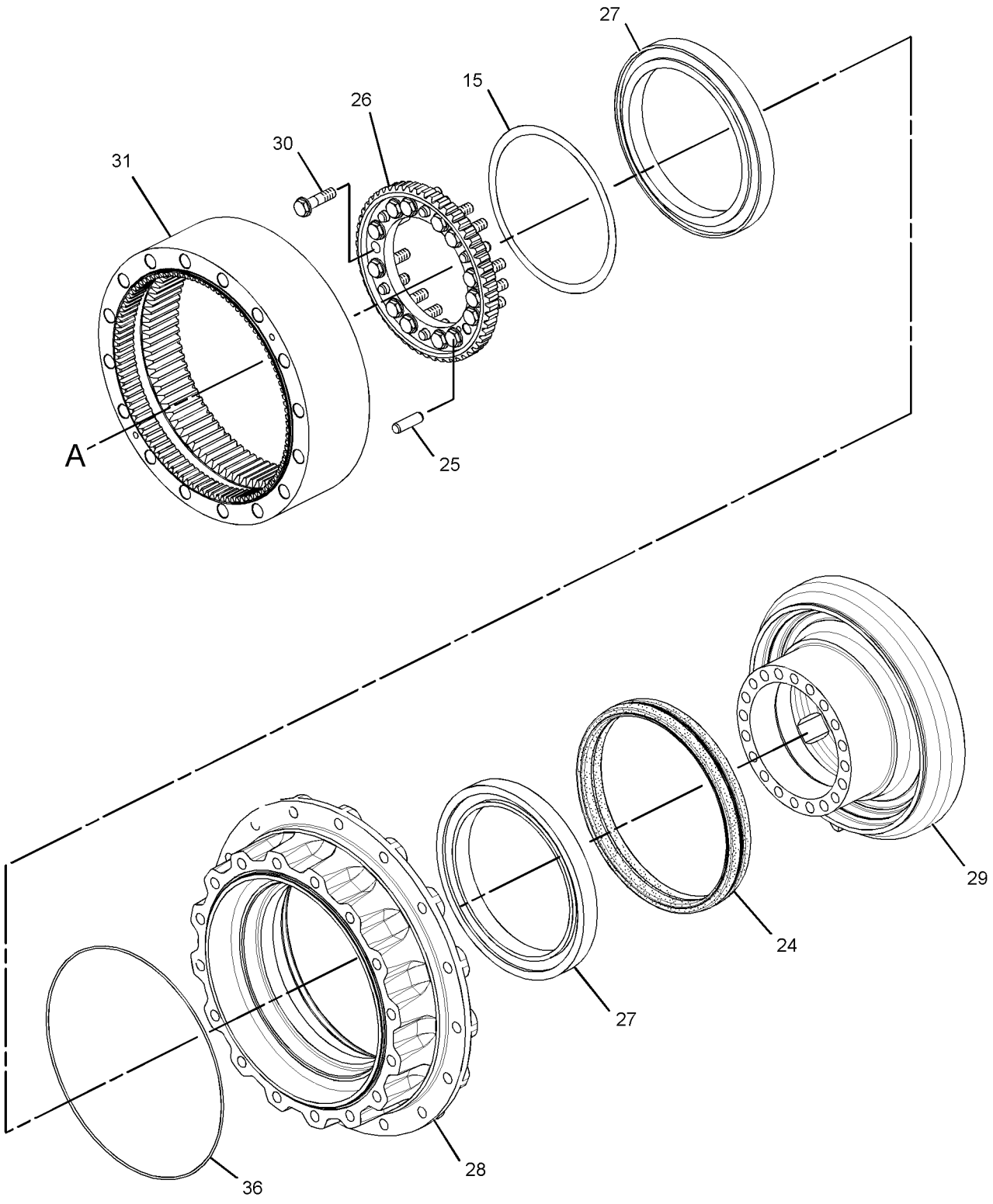

GRAPHIC #2 **<END>** g01522817

POWER TRAIN

267-6767 POWER TRAIN AR

S/N: KGF1-UP; FAL1-UP

PART OF 264-8626, 264-8627 GENERAL AR

SMCS-3000, 4000 **i03016367**

NOTE	PART NUMBER	QTY	PART NAME 1 2 3 4 5 6 (PRODUCT LEVEL)	SEE PAGE
Y	*148-4679*	1	DRIVE GP-SWING (WITH MOTOR)	599
Y	*227-6166*	1	FASTENER GP-SWING & FINAL DR	600
Y	*227-6913*	2	FINAL DRIVE GP	363
			—OR—	
Y	*296-6298*	1	FINAL DRIVE GP (WITH MOTOR)	364
Y	*145-3042*	2	SPROCKET GP	369

Y-SEPARATE ILLUSTRATION

<END>

145-3042 SPROCKET GP

S/N: KGF1-UP; FAL1-UP
NON-SEGMENTED
PART OF 267-6767 POWER TRAIN AR

SMCS-4164 **i01831999**

NOTE	REF NO	GRAPHIC REF	PART NUMBER	QTY	PART NAME 1 2 3 4 5 6 (PRODUCT LEVEL)	SEE PAGE
	1	1	**8E-9805**	1	SPROCKET-TRACK	
M	2	1	**7X-2562**	16	BOLT (M20X2.5X45MM)	

M-METRIC PART

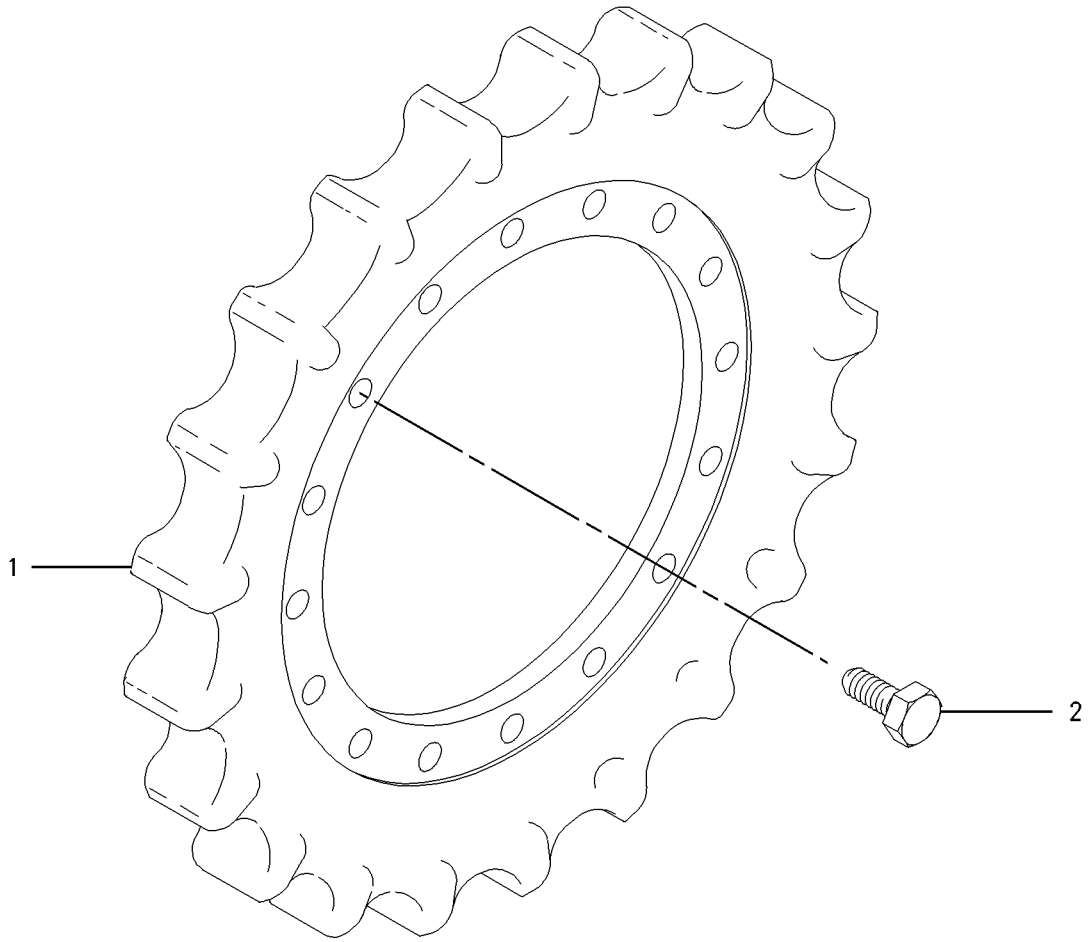

GRAPHIC #1 **<END>** g00935714

FRAME AND BODY

223-3040 BOX & MTG GP-STORAGE

S/N: KGF1-UP; FAL1-UP

PART OF 264-8638, 264-8639 CHASSIS AR

SMCS-7268 **i02347066**

NOTE	REF NO	GRAPHIC REF	PART NUMBER	QTY	PART NAME 1 2 3 4 5 6 (PRODUCT LEVEL)	SEE PAGE
Y	1	1	**223-3041**	1	BOX GP-STORAGE	371
M	2	1	**135-8577**	4	BOLT AS	

M-METRIC PART
Y-SEPARATE ILLUSTRATION

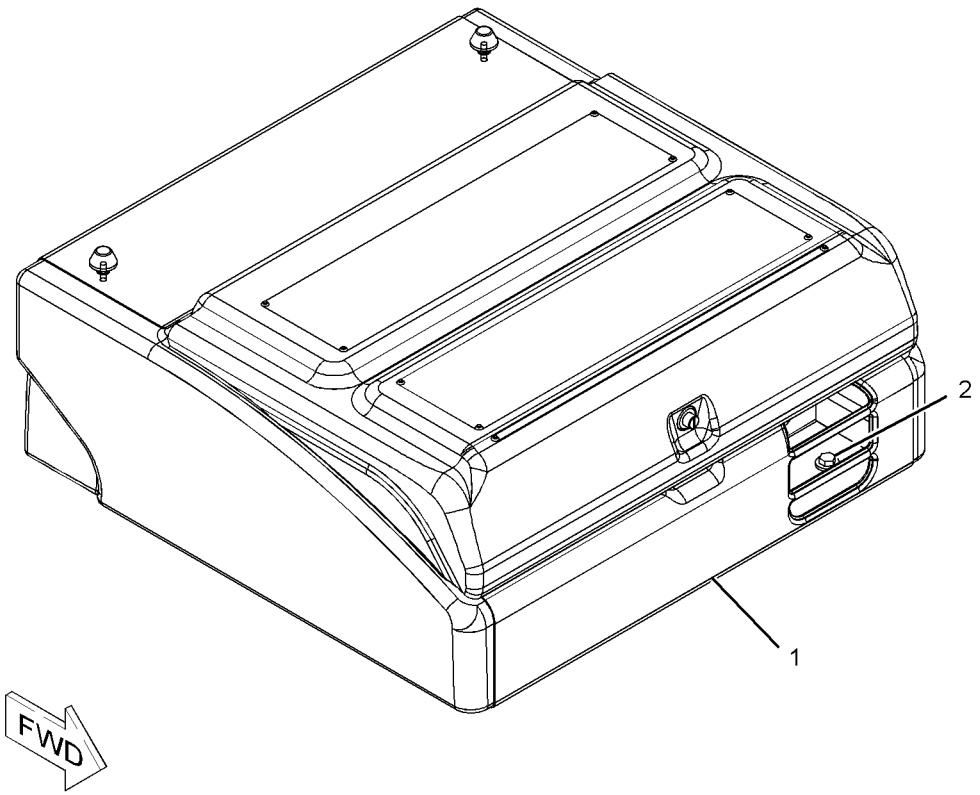

GRAPHIC #1 **<END>** g01150412

223-3041 BOX GP-STORAGE

S/N: KGF1-UP; FAL1-UP

PART OF 223-3040 BOX & MTG GP-STORAGE

SMCS-7268 **i02479480**

NOTE	REF NO	GRAPHIC REF	PART NUMBER	QTY	PART NAME 1 2 3 4 5 6 (PRODUCT LEVEL)	SEE PAGE
	1	1	**4I-2187**	1	SUPPORT AS	
	2	1	**236-3669**	1	LOCK AS	
	3	1	**236-3670**	1	STRIKER AS	
	4	1	**236-3671**	1	SEAL	
	5	1	**236-9435**	1	BOX AS	
	6	1	*236-9437*	1	COVER AS	
	6A	1	**3D-9143**	2	HINGE-BUTT	
	7	1	**236-9438**	1	PLUNGER AS	
	8	1	**236-9440**	1	SHEET	
	9	1	**273-7964**	2	MOUNT	
	10	1	**095-0843**	1	PIN-COTTER	
	11	1	**096-3780**	1	PIN-CLEVIS	
M	12	1	**105-3487**	4	BOLT-SOCKET HEAD (M6X1X20-MM)	
	13	1	**170-9360**	1	GROMMET	
M	15	1	**5C-9553**	3	BOLT (M6X1X16-MM)	
	16	1	**5P-1075**	4	WASHER-HARD (10.2X22.5X3-MM THK)	
	17	1	**5P-4116**	1	WASHER-HARD (8.8X20.5X2-MM THK)	
M	18	1	**8T-4133**	4	NUT (M10X1.5-THD)	
M	19	1	**8T-4200**	2	BOLT (M8X1.25X16-MM)	
	20	1	**8T-4224**	2	WASHER-HARD (8.8X16X2-MM THK)	
	21	1	**9X-8256**	7	WASHER (6.6X12X2-MM THK)	
	22	1	**278-3581**	4	CUSHION	
B	23	1	**8T-4223**	2	WASHER-HARD (13.5X25.5X3-MM THK)	

B-USE AS REQUIRED
M-METRIC PART

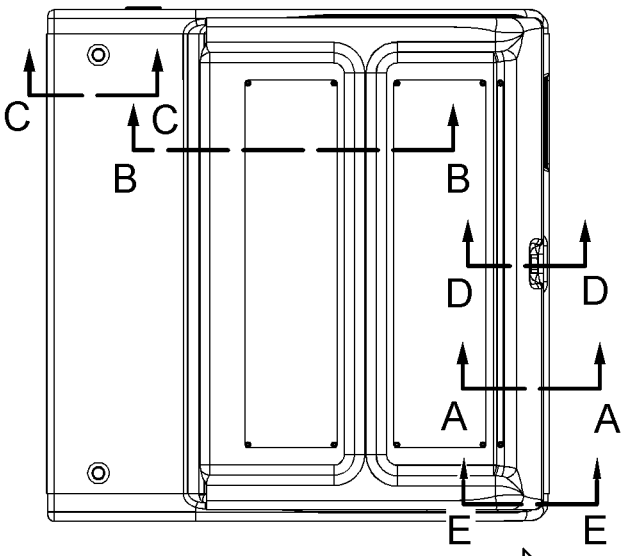

TOP VIEW

FWD

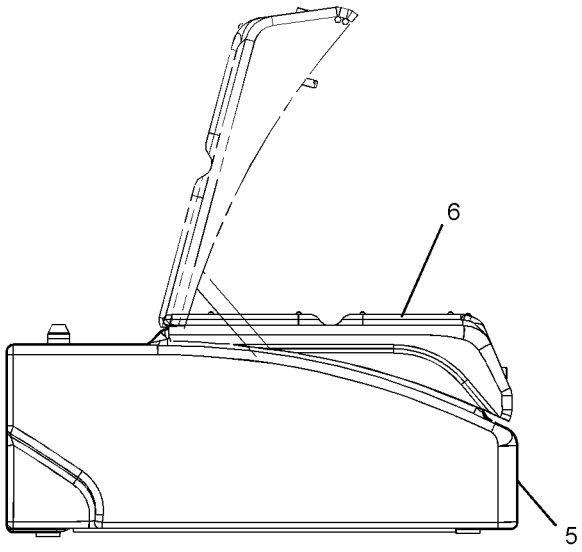

RIGHT SIDE VIEW

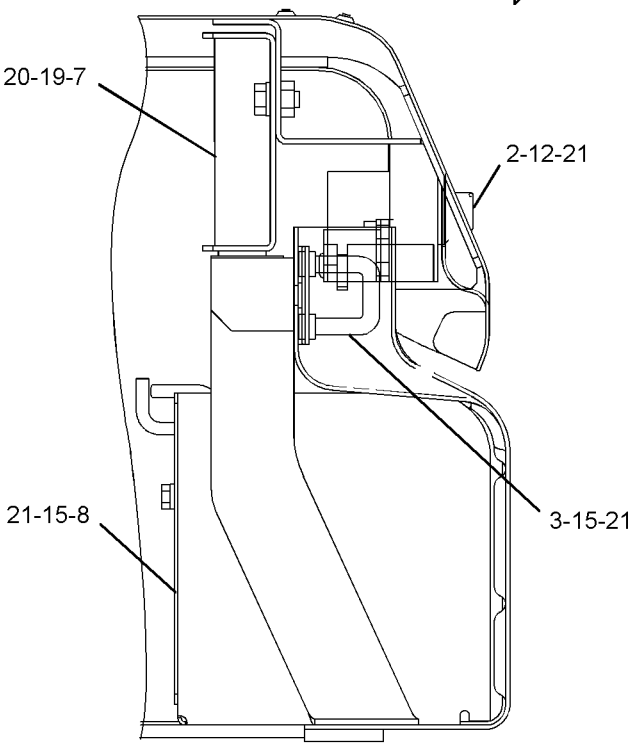

SECTION A-A

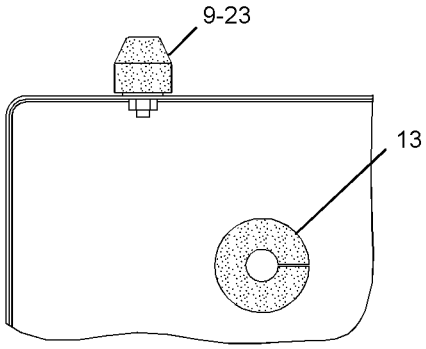

SECTION C-C

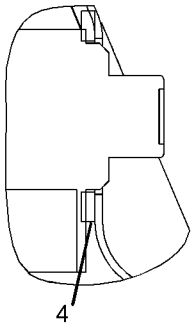

SECTION D-D

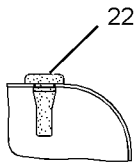

SECTION E-E

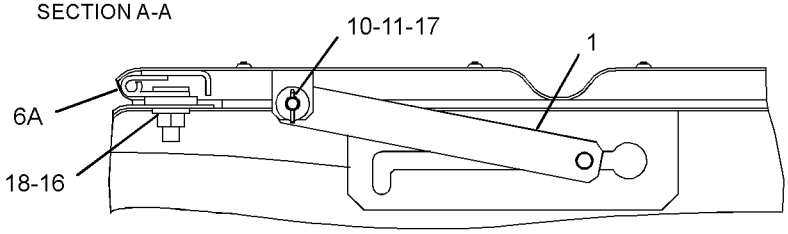

SECTION B-B

GRAPHIC #1

<END>

g01238343

278-9257 BUMPER GP

S/N: KGF1-UP; FAL1-UP
AN ATTACHMENT

SMCS-7156 **i03146204**

NOTE	REF NO	GRAPHIC REF	PART NUMBER	QTY	PART NAME 1 2 3 4 5 6 (PRODUCT LEVEL)	SEE PAGE
	1	1	**180-7521**	2	BUMPER AS	
					(EACH INCLUDES)	
M		1	**8T-4183**	2	BOLT (M12X1.75X40-MM)	
	2	1	**180-7525**	1	BUMPER AS	
M		1	**8T-4183**	3	BOLT (M12X1.75X40-MM)	
	3	1	**180-7529**	1	BUMPER AS	
M		1	**8T-4183**	2	BOLT (M12X1.75X40-MM)	
	4	1	**180-7533**	1	BUMPER AS	
M		1	**8T-4183**	2	BOLT (M12X1.75X40-MM)	
	5	1	**218-5199**	1	BUMPER AS	
M		1	**8T-4183**	2	BOLT (M12X1.75X40-MM)	
	6	1	**228-5463**	1	BUMPER AS	
M		1	**8T-4183**	2	BOLT (M12X1.75X40-MM)	
	7	1	**278-9258**	1	FRAME AS-UPPER	
	7A	1	**163-3729**	1	STEP AS	
	7B	1	**7Y-0633**	1	BOSS	
	8	1	**8T-4223**	14	WASHER-HARD (13.5X25.5X3-MM THK)	
M	9	1	**8T-4244**	14	NUT (M12X1.75-THD)	

M-METRIC PART

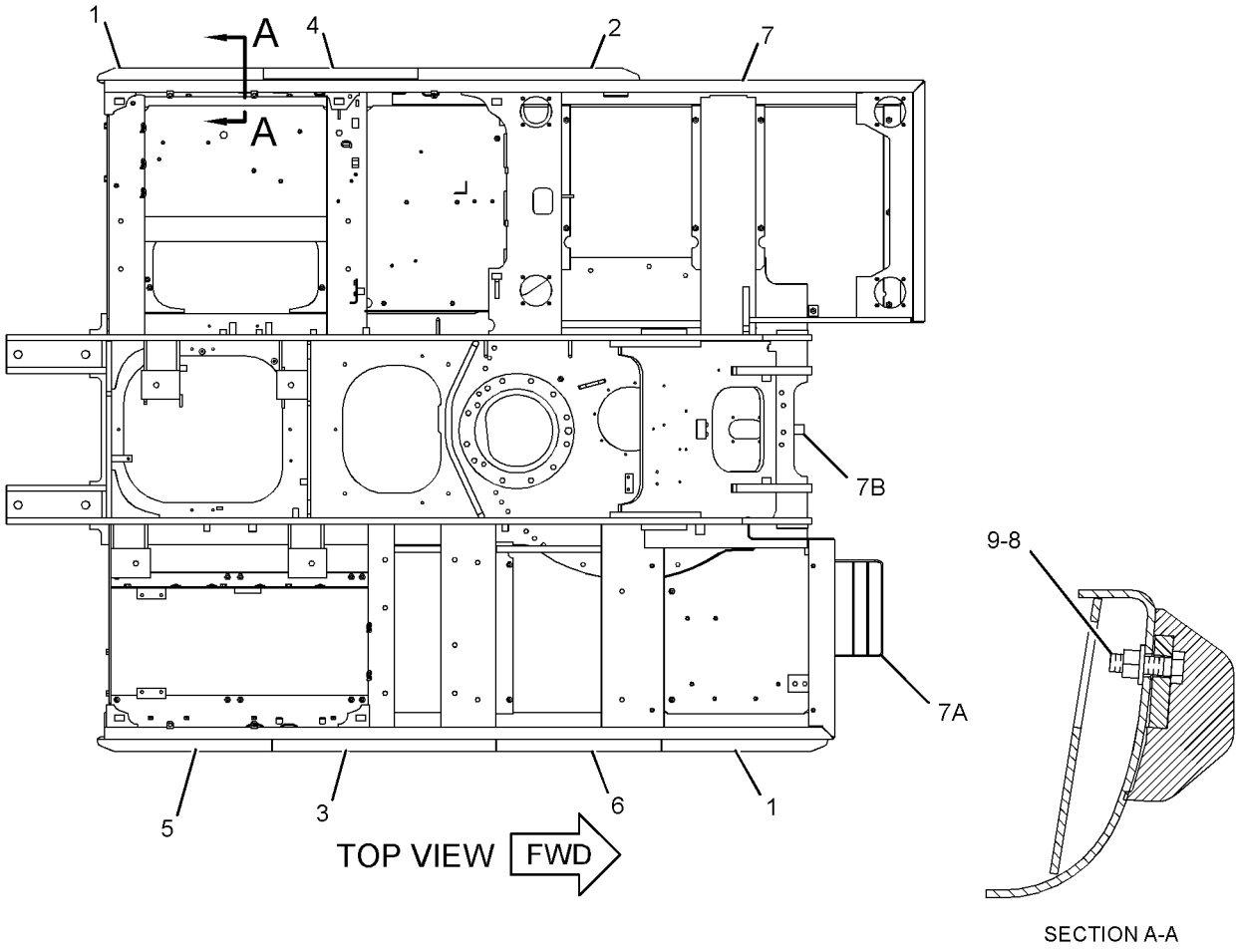

GRAPHIC #1 **<END>** g01620588

290-1902 COUNTERWEIGHT AR

S/N: KGF1-UP; FAL1-UP
AN ATTACHMENT

SMCS-7056 **i02595793**

NOTE	PART NUMBER	QTY	PART NAME 1 2 3 4 5 6 (PRODUCT LEVEL)	SEE PAGE
Y	*262-2608*	1	COUNTERWEIGHT GP	384

Y-SEPARATE ILLUSTRATION

<END>

241-1999 COUNTERWEIGHT GP

S/N: KGF1-UP
PART OF 290-1892 SPECIAL AR
AN ATTACHMENT
TYPE 1

SMCS-7056 **i02423523**

NOTE	REF NO	GRAPHIC REF	PART NUMBER	QTY	PART NAME 1 2 3 4 5 6 (PRODUCT LEVEL)	SEE PAGE
Y	1	1	**241-2000**	1	COUNTERWEIGHT GP	377
	2	1	**244-8194**	4	SPACER (32X65X30-MM THK)	
M	3	1	**7X-2583**	4	BOLT (M30X3.5X120-MM)	

M-METRIC PART
Y-SEPARATE ILLUSTRATION

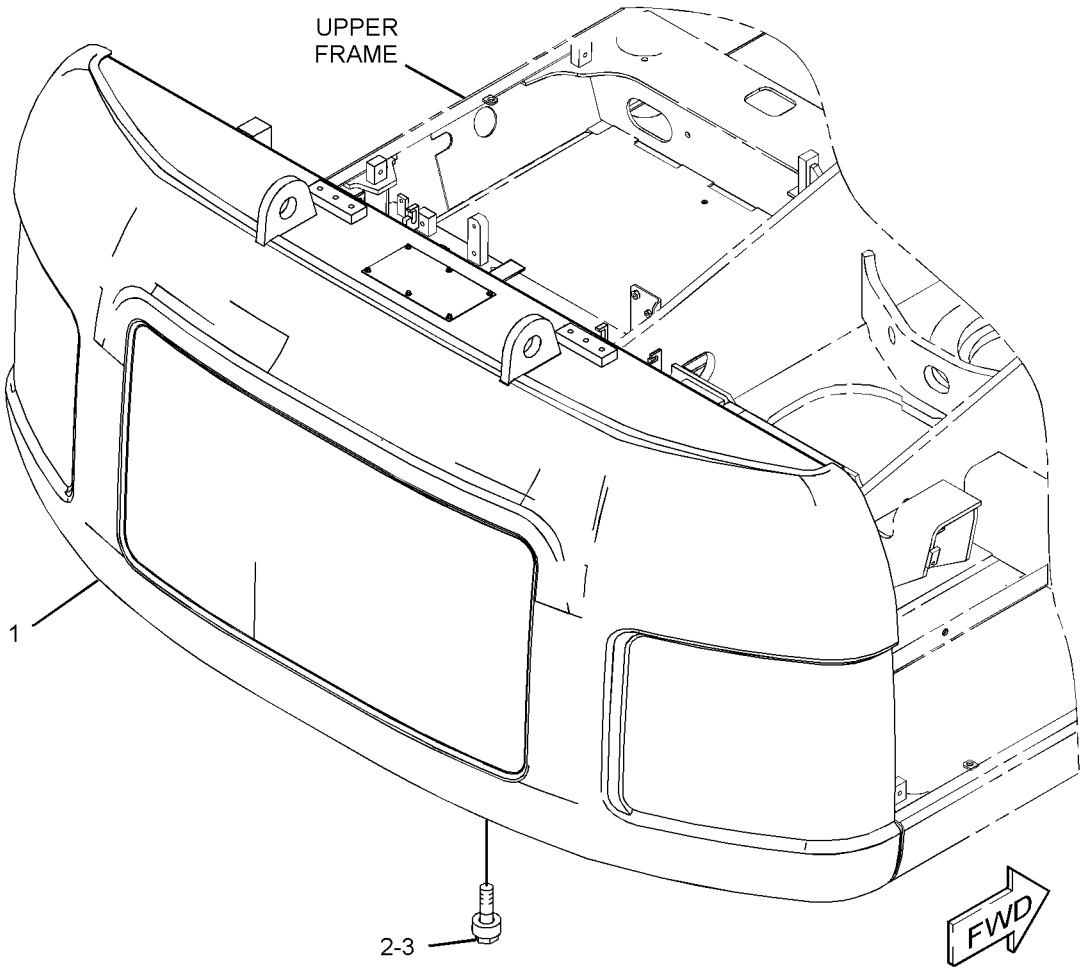

GRAPHIC #1 **<END>** g01228686

241-1999 COUNTERWEIGHT GP

S/N: KGF1-UP
PART OF 290-1892 SPECIAL AR
AN ATTACHMENT
TYPE 2

SMCS-7056 **i03133264**

NOTE	REF NO	GRAPHIC REF	PART NUMBER	QTY	PART NAME 1 2 3 4 5 6 (PRODUCT LEVEL)	SEE PAGE
CY	1	1	**327-3236**	1	COUNTERWEIGHT GP	394
	2	1	**244-8194**	4	SPACER (32X65X30-MM THK)	
M	3	1	**7X-2583**	4	BOLT (M30X3.5X120-MM)	

C-CHANGE FROM PREVIOUS TYPE
M-METRIC PART
Y-SEPARATE ILLUSTRATION

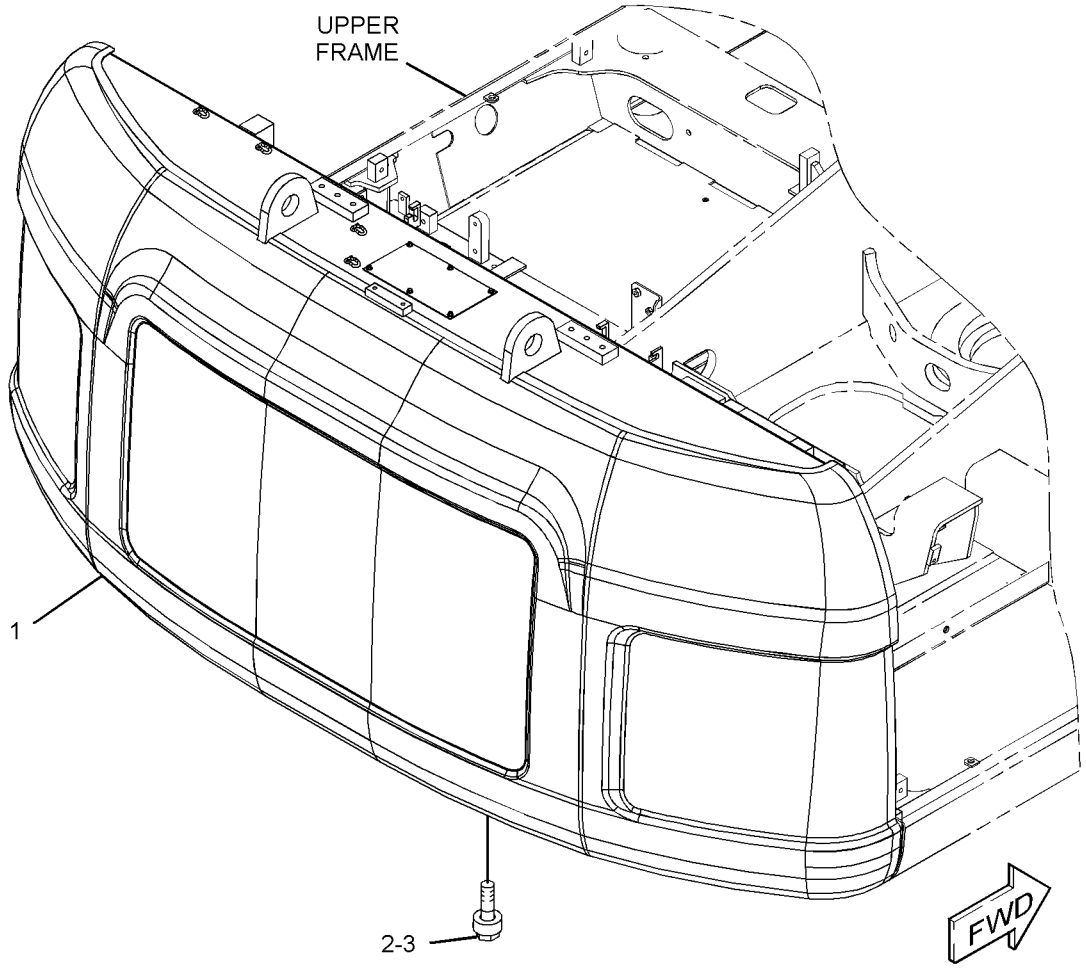

GRAPHIC #1 **<END>** g01628275

241-2000 COUNTERWEIGHT GP

S/N: KGF1-UP
5820-KG (12830.89-LB)
PART OF 241-1999 COUNTERWEIGHT GP
AN ATTACHMENT
TYPE 1

SMCS-7056 **i02423524**

NOTE	REF NO	GRAPHIC REF	PART NUMBER	QTY	PART NAME 1 2 3 4 5 6 (PRODUCT LEVEL)	SEE PAGE
	1	1	**7I-0717**	1	LINER	
	2	1	**116-1665**	1	LINER	
	3	1	**165-3102**	1	LINER	
	4	1	**165-3103**	1	LINER	
	5	1	**184-8722**	1	LINER	
	6	1	**241-2001**	1	COUNTERWEIGHT AS	
	7	1	**248-9061**	1	LINER	
	8	1	**262-2404**	1	INSULATION	
	9	1	**262-2405**	1	INSULATION	
	10	1	**262-2406**	1	LINER	
	11	1	**262-2417**	1	LINER	
	12	1	**273-7677**	1	LINER	
	13	1	**7Y-2292**	9	WASHER (13X50X2-MM THK)	
M	14	1	**8T-4179**	9	BOLT (M12X1.75X20-MM)	
	15	1	**8T-4223**	9	WASHER-HARD (13.5X25.5X3-MM THK)	

M-METRIC PART

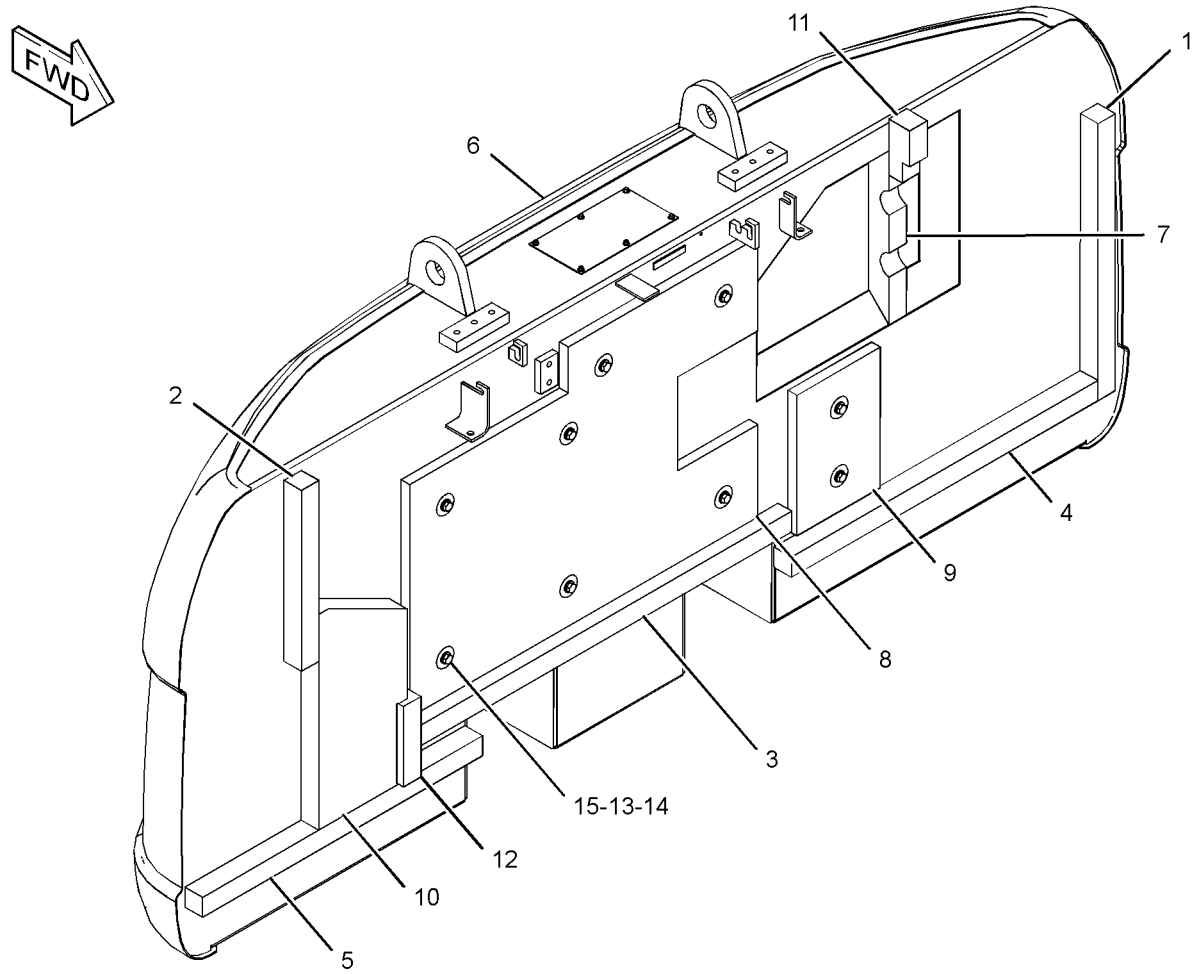

GRAPHIC #1 **<END>** g01228692

FRAME AND BODY

241-2000 COUNTERWEIGHT GP

S/N: KGF1-UP
5820-KG (12830.89-LB)
PART OF 241-1999 COUNTERWEIGHT GP
AN ATTACHMENT
TYPE 2

SMCS-7056 **i03010096**

NOTE	REF NO	GRAPHIC REF	PART NUMBER	QTY	PART NAME 1 2 3 4 5 6 (PRODUCT LEVEL)	SEE PAGE
	1	1	**7I-0717**	1	LINER	
	2	1	**116-1665**	1	LINER	
	3	1	**165-3102**	1	LINER	
	4	1	**165-3103**	1	LINER	
	5	1	**184-8722**	1	LINER	
	7	1	**248-9061**	1	LINER	
C	8	1	**286-6346**	1	INSULATION	
	9	1	**262-2405**	1	INSULATION	
	10	1	**262-2406**	1	LINER	
	11	1	**262-2417**	1	LINER	
	12	1	**273-7677**	1	LINER	
	13	1	**7Y-2292**	9	WASHER (13X50X2-MM THK)	
M	14	1	**8T-4179**	9	BOLT (M12X1.75X20-MM)	
	15	1	**8T-4223**	9	WASHER-HARD (13.5X25.5X3-MM THK)	

C-CHANGE FROM PREVIOUS TYPE
M-METRIC PART

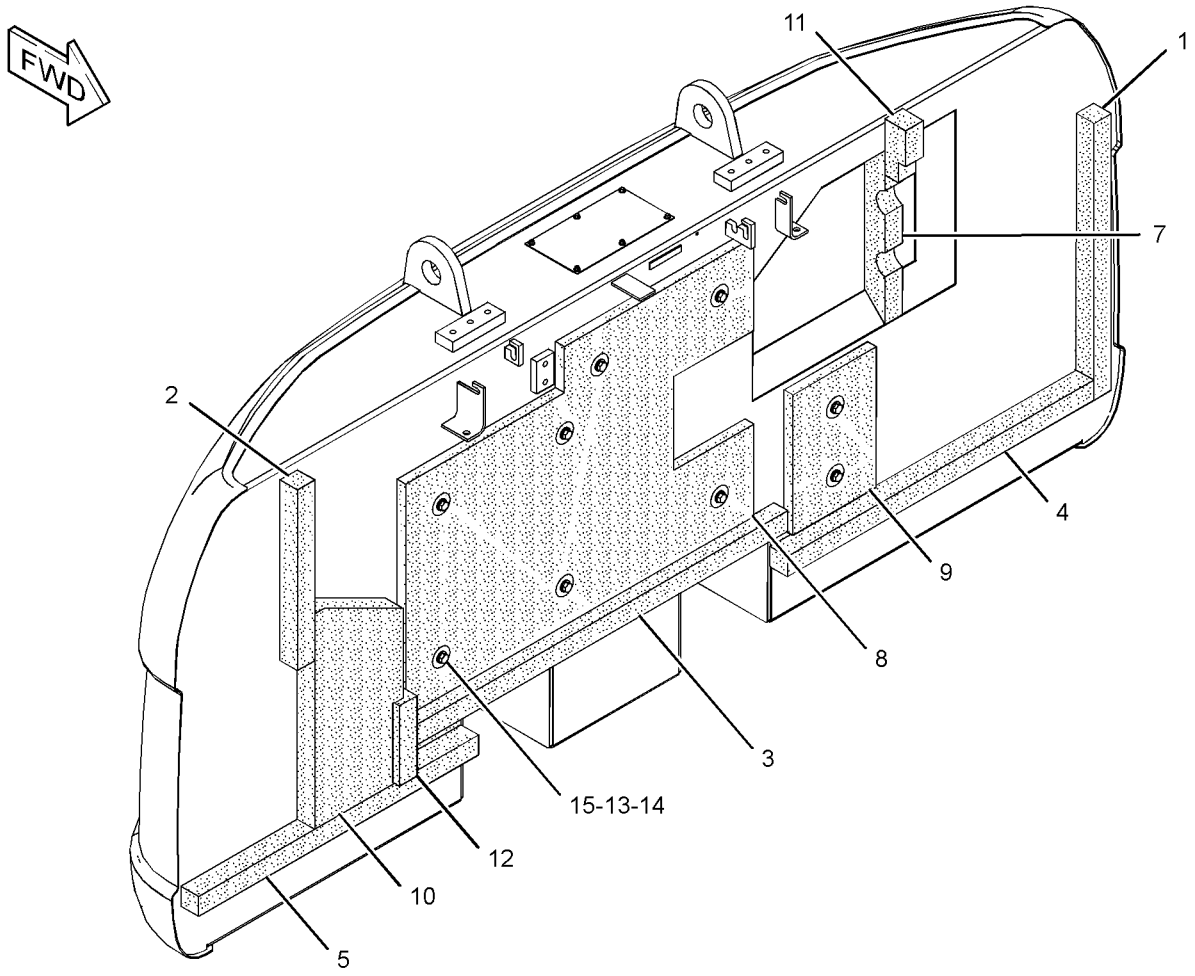

GRAPHIC #1 **<END>** g01619834

241-2002 COUNTERWEIGHT GP

S/N: KGF1-UP
PART OF 302-9208 LINKAGE AR
AN ATTACHMENT
TYPE 1

SMCS-7056 **i02423453**

NOTE	REF NO	GRAPHIC REF	PART NUMBER	QTY	PART NAME 1 2 3 4 5 6 (PRODUCT LEVEL)	SEE PAGE
Y	1	1	*241-2003*	1	COUNTERWEIGHT GP	381
	2	1	**244-8194**	4	SPACER (32X65X30-MM THK)	
M	3	1	**7X-2583**	4	BOLT (M30X3.5X120-MM)	

M-METRIC PART
Y-SEPARATE ILLUSTRATION

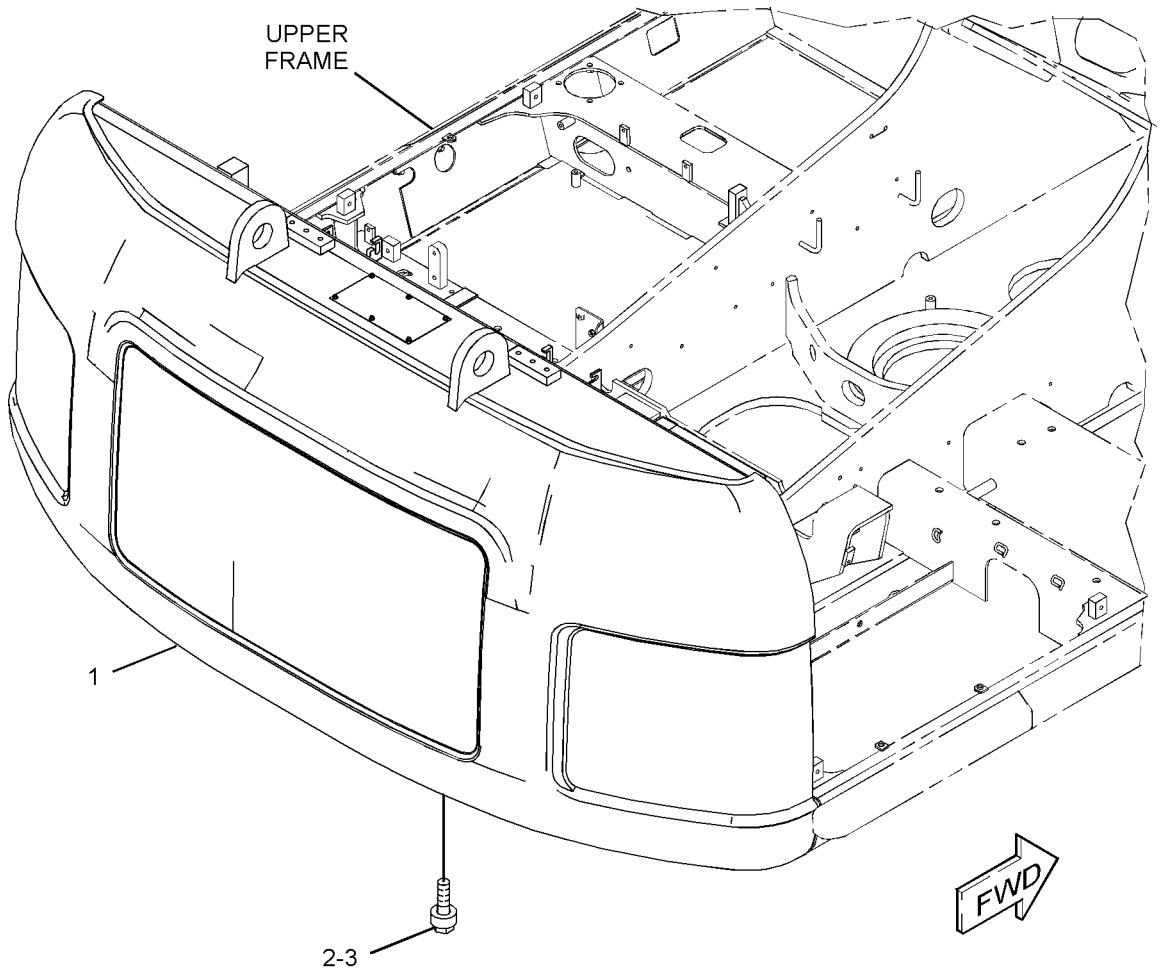

GRAPHIC #1 **<END>** g01229080

241-2002 COUNTERWEIGHT GP

S/N: KGF1-UP
PART OF 302-9208 LINKAGE AR
AN ATTACHMENT
TYPE 2

SMCS-7056 **i03137638**

NOTE	REF NO	GRAPHIC REF	PART NUMBER	QTY	PART NAME 1 2 3 4 5 6 (PRODUCT LEVEL)	SEE PAGE
CY	1	1	*327-3256*	1	COUNTERWEIGHT GP	397
	2	1	**244-8194**	4	SPACER (32X65X30-MM THK)	
M	3	1	**7X-2583**	4	BOLT (M30X3.5X120-MM)	

C-CHANGE FROM PREVIOUS TYPE
M-METRIC PART
Y-SEPARATE ILLUSTRATION

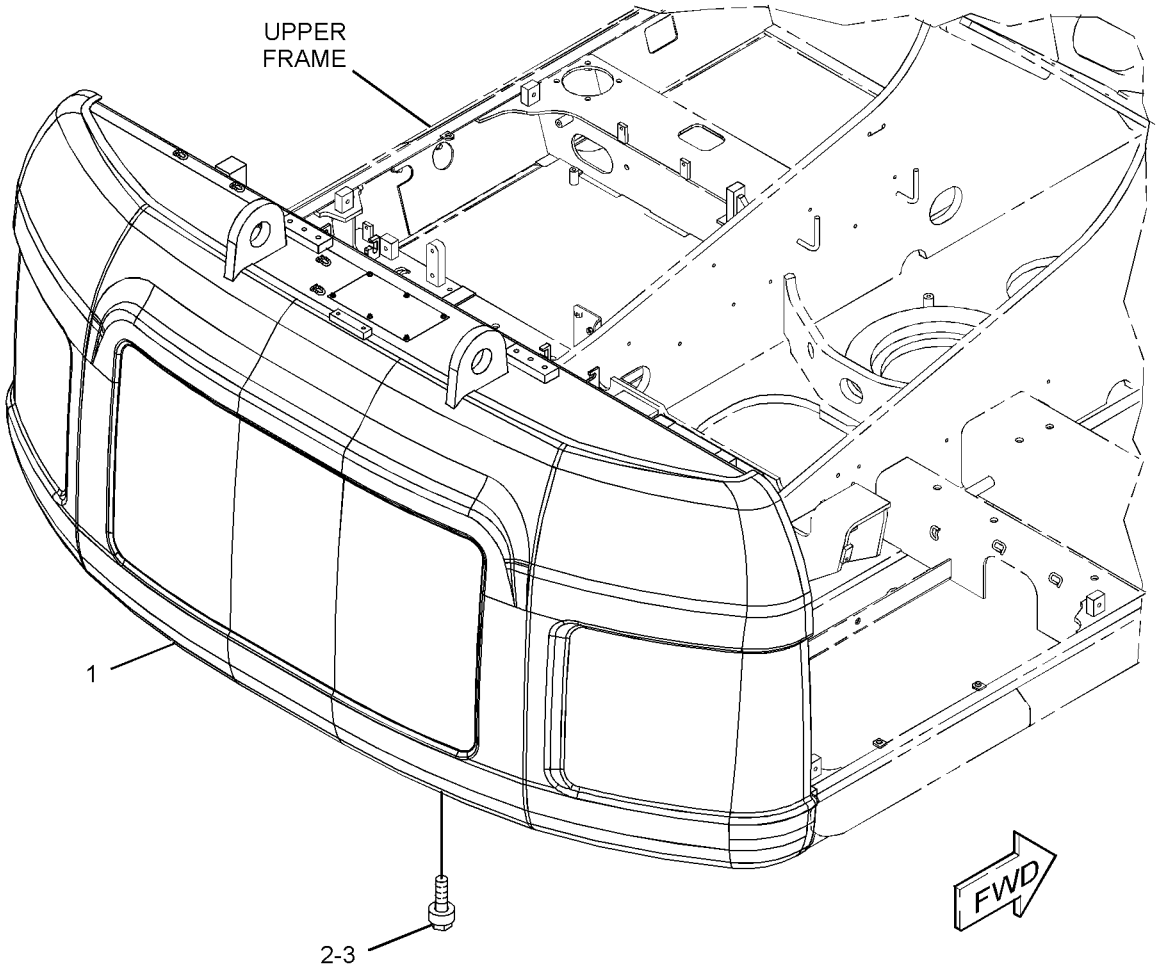

GRAPHIC #1 **<END>** g01628286

241-2003 COUNTERWEIGHT GP

S/N: KGF1-UP
4811-KG (10607-LB)
PART OF 241-2002 COUNTERWEIGHT GP
AN ATTACHMENT

SMCS-7056 **i02580825**

NOTE	REF NO	GRAPHIC REF	PART NUMBER	QTY	PART NAME 1 2 3 4 5 6 (PRODUCT LEVEL)	SEE PAGE
	1	1	**7I-0717**	1	LINER	
	2	1	**116-1665**	1	LINER	
	3	1	**165-3102**	1	LINER	
	4	1	**165-3103**	1	LINER	
	5	1	**184-8722**	1	LINER	
C	6	1	**286-6340**	1	COUNTERWEIGHT AS	
	7	1	**248-9061**	1	LINER	
C	8	1	**286-6346**	1	INSULATION	
	9	1	**262-2405**	1	INSULATION	
	10	1	**262-2406**	1	LINER	
	11	1	**262-2417**	1	LINER	
	12	1	**273-7677**	1	LINER	
	13	1	**7Y-2292**	9	WASHER (13X50X2-MM THK)	
M	14	1	**8T-4179**	9	BOLT (M12X1.75X20-MM)	
	15	1	**8T-4223**	9	WASHER-HARD (13.5X25.5X3-MM THK)	

C-CHANGE FROM PREVIOUS TYPE
M-METRIC PART

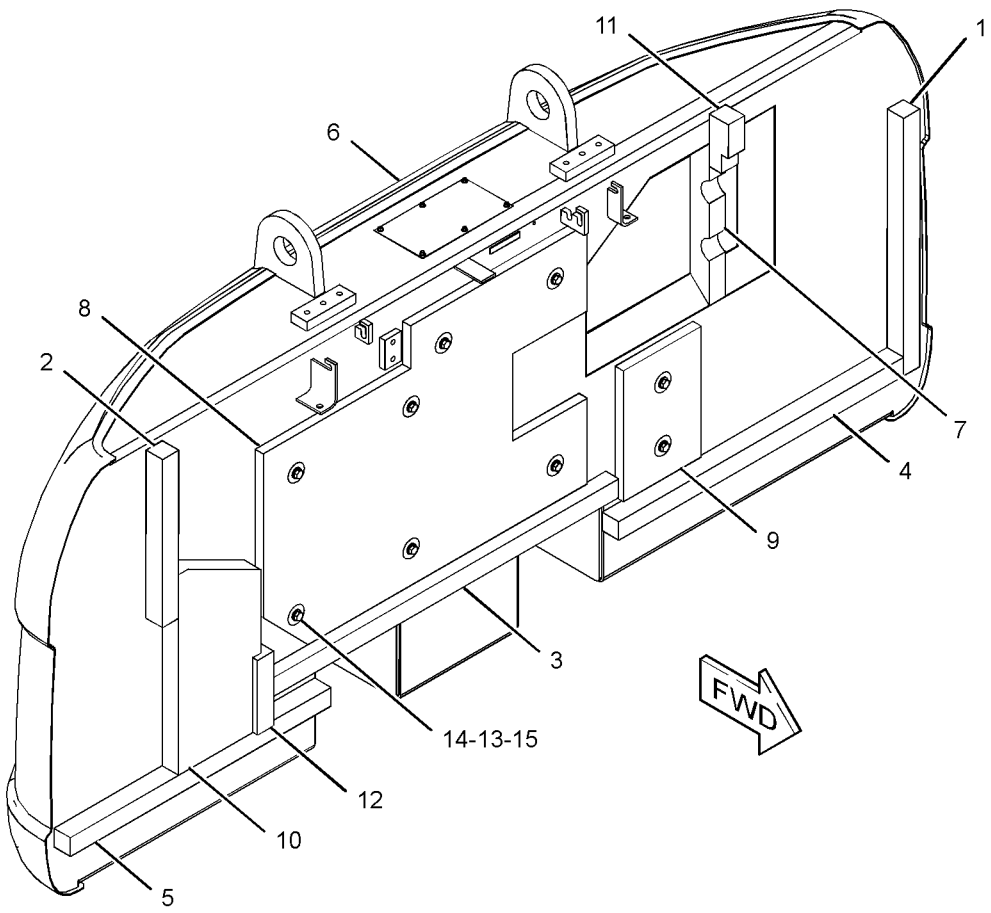

GRAPHIC #1 **<END>** g01296269

FRAME AND BODY

262-2607 COUNTERWEIGHT GP

S/N: KGF1-UP; FAL1-UP
PART OF 264-8638, 264-8639 CHASSIS AR
TYPE 1

SMCS-7056 **i02418737**

NOTE	REF NO	GRAPHIC REF	PART NUMBER	QTY	PART NAME 1 2 3 4 5 6 (PRODUCT LEVEL)	SEE PAGE
	1	1	**244-8194**	4	SPACER (32X65X30-MM THK)	
Y	2	1	*262-2623*	1	COUNTERWEIGHT GP	386
M	3	1	**7X-2583**	4	BOLT (M30X3.5X120-MM)	

M-METRIC PART
Y-SEPARATE ILLUSTRATION

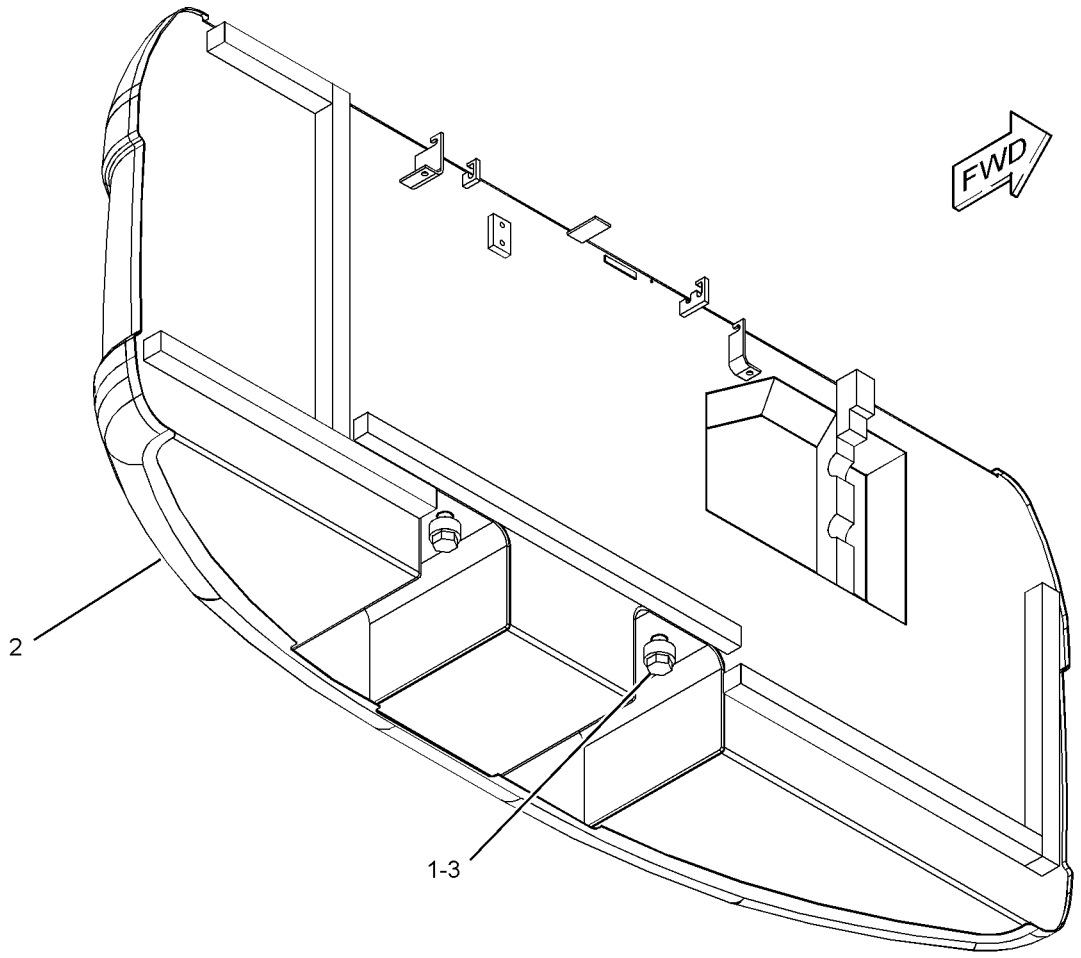

GRAPHIC #1 **<END>** g01229117

262-2607 COUNTERWEIGHT GP

S/N: KGF1-UP; FAL1-UP
PART OF 264-8638, 264-8639 CHASSIS AR
TYPE 2

SMCS-7056 **i03201482**

NOTE	REF NO	GRAPHIC REF	PART NUMBER	QTY	PART NAME 1 2 3 4 5 6 (PRODUCT LEVEL)	SEE PAGE
	1	1	**244-8194**	4	SPACER (32X65X30-MM THK)	
CY	2	1	*327-3252*	1	COUNTERWEIGHT GP	396
M	3	1	**7X-2583**	4	BOLT (M30X3.5X120-MM)	

C-CHANGE FROM PREVIOUS TYPE
M-METRIC PART
Y-SEPARATE ILLUSTRATION

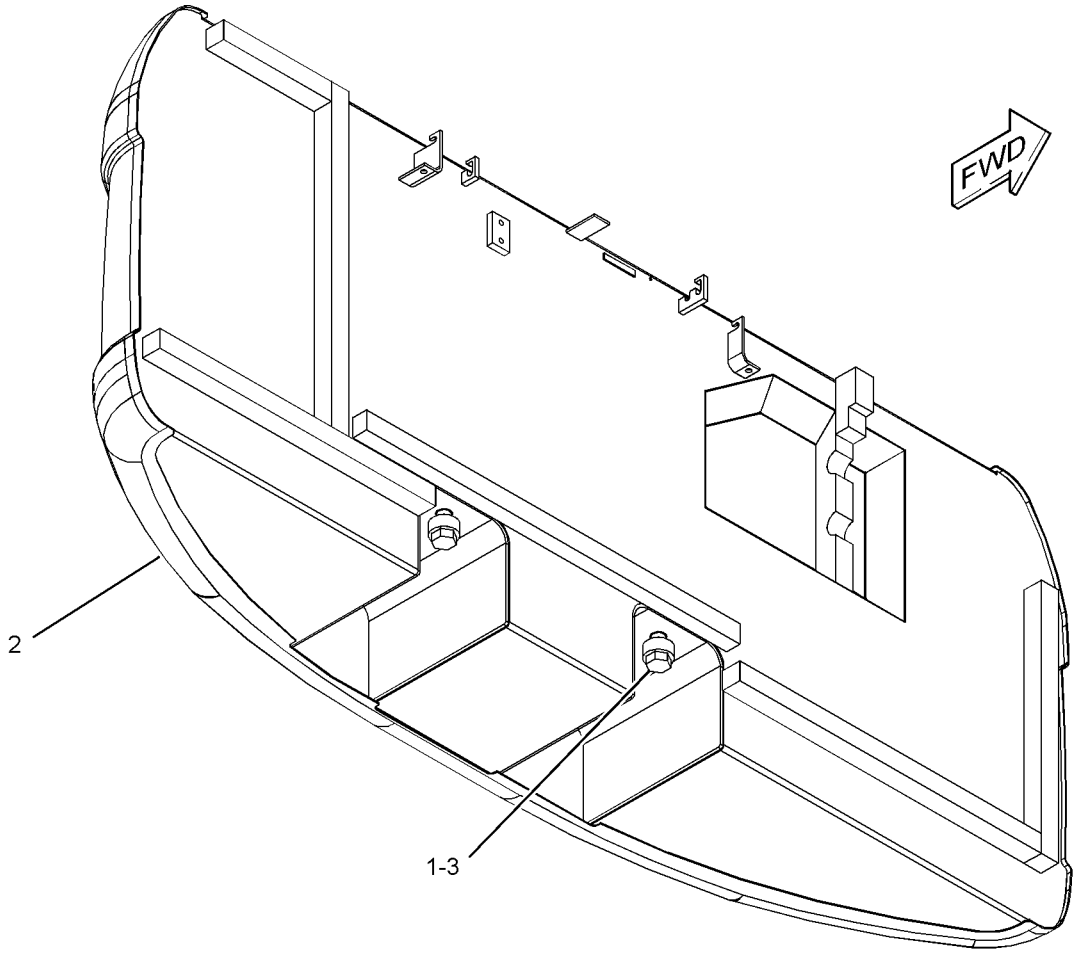

GRAPHIC #1 **<END>** g01229117

262-2608 COUNTERWEIGHT GP

S/N: KGF1-UP; FAL1-UP
PART OF 290-1902 COUNTERWEIGHT AR
AN ATTACHMENT
TYPE 1

SMCS-7056 **i02423410**

NOTE	REF NO	GRAPHIC REF	PART NUMBER	QTY	PART NAME 1 2 3 4 5 6 (PRODUCT LEVEL)	SEE PAGE
	1	1	**4I-0006**	2	CAP	
	2	1	**7Y-0063**	2	FILM-INFORMATION (DO NOT LIFT)	
	3	1	**244-8194**	4	SPACER (32X65X30-MM THK)	
Y	4	1	**262-2626**	1	COUNTERWEIGHT GP	387
M	5	1	**7X-2583**	4	BOLT (M30X3.5X120-MM)	

M-METRIC PART
Y-SEPARATE ILLUSTRATION

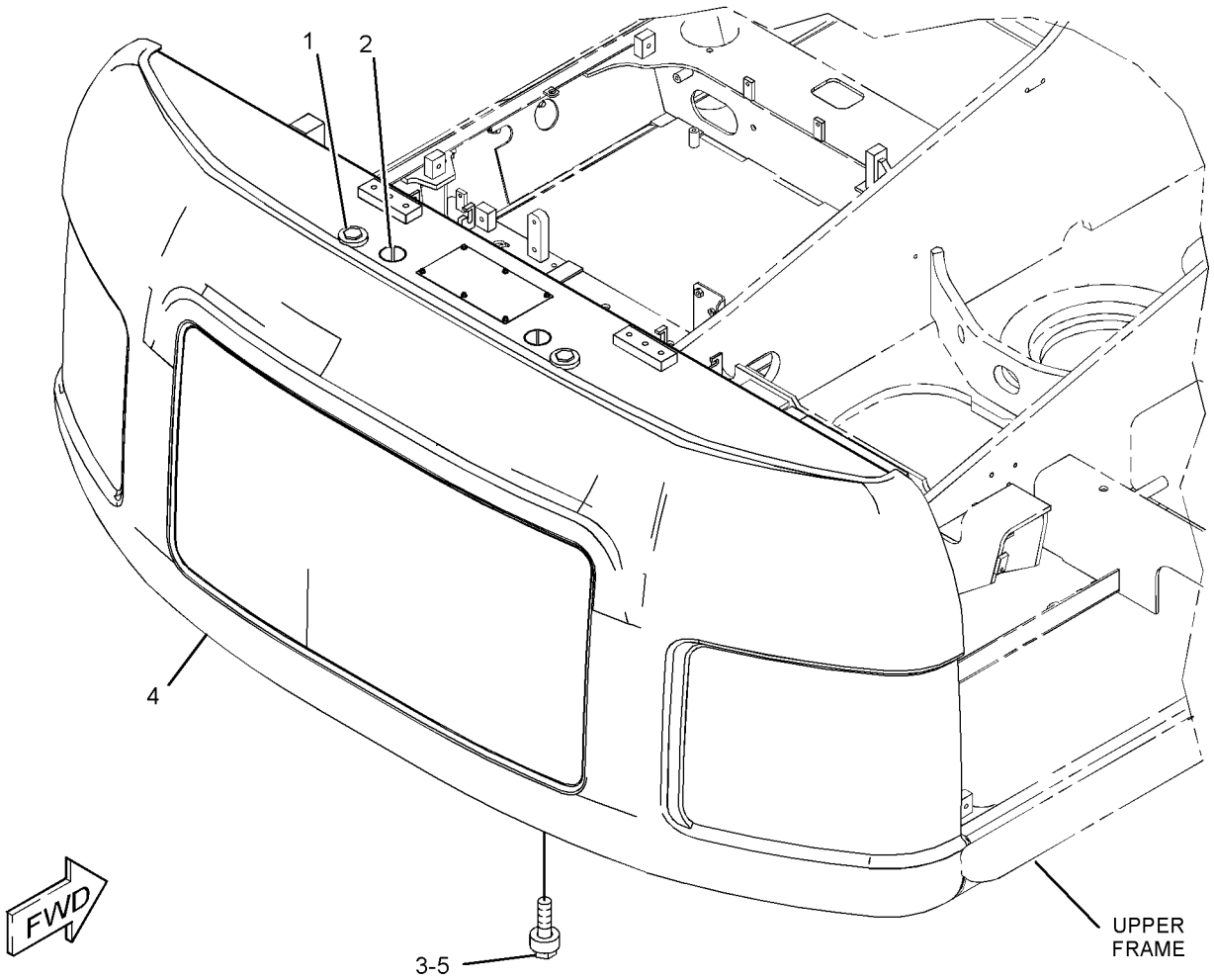

GRAPHIC #1 **<END>** g01229090

262-2608 COUNTERWEIGHT GP

S/N: KGF1-UP; FAL1-UP
PART OF 290-1902 COUNTERWEIGHT AR
AN ATTACHMENT
TYPE 2

SMCS-7056 **i03133301**

NOTE	REF NO	GRAPHIC REF	PART NUMBER	QTY	PART NAME 1 2 3 4 5 6 (PRODUCT LEVEL)	SEE PAGE
	1	1	**4I-0006**	2	CAP	
	2	1	**7Y-0063**	2	FILM-INFORMATION (DO NOT LIFT)	
	3	1	**244-8194**	4	SPACER (32X65X30-MM THK)	
CY	4	1	*327-3248*	1	COUNTERWEIGHT GP	395
M	5	1	**7X-2583**	4	BOLT (M30X3.5X120-MM)	

C-CHANGE FROM PREVIOUS TYPE
M-METRIC PART
Y-SEPARATE ILLUSTRATION

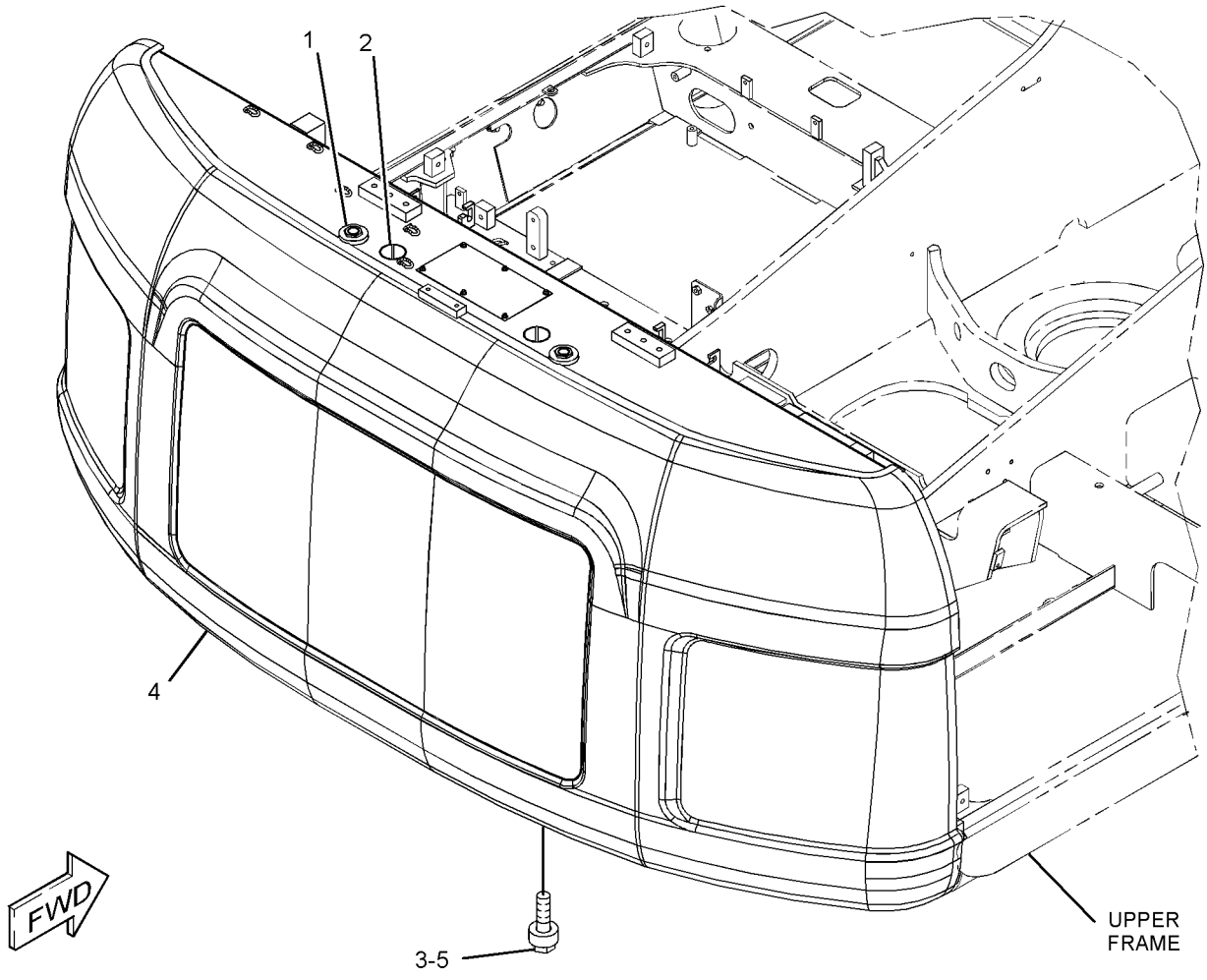

GRAPHIC #1 **<END>** g01628330

262-2623 COUNTERWEIGHT GP

S/N: KGF1-UP; FAL1-UP
3850-KG (8488-LB)
PART OF 262-2607 COUNTERWEIGHT GP

SMCS-7056 **i02418745**

NOTE	REF NO	GRAPHIC REF	PART NUMBER	QTY	PART NAME 1 2 3 4 5 6 (PRODUCT LEVEL)	SEE PAGE
	1	1	**7I-0717**	1	LINER	
	2	1	**116-1665**	1	LINER	
	3	1	**165-3102**	1	LINER	
	4	1	**165-3103**	1	LINER	
	5	1	**184-8722**	1	LINER	
	6	1	**248-9061**	1	LINER	
	7	1	**262-2406**	1	LINER	
	8	1	**262-2417**	1	LINER	
	9	1	**262-2624**	1	COUNTERWEIGHT AS	
	10	1	**273-7677**	1	LINER	

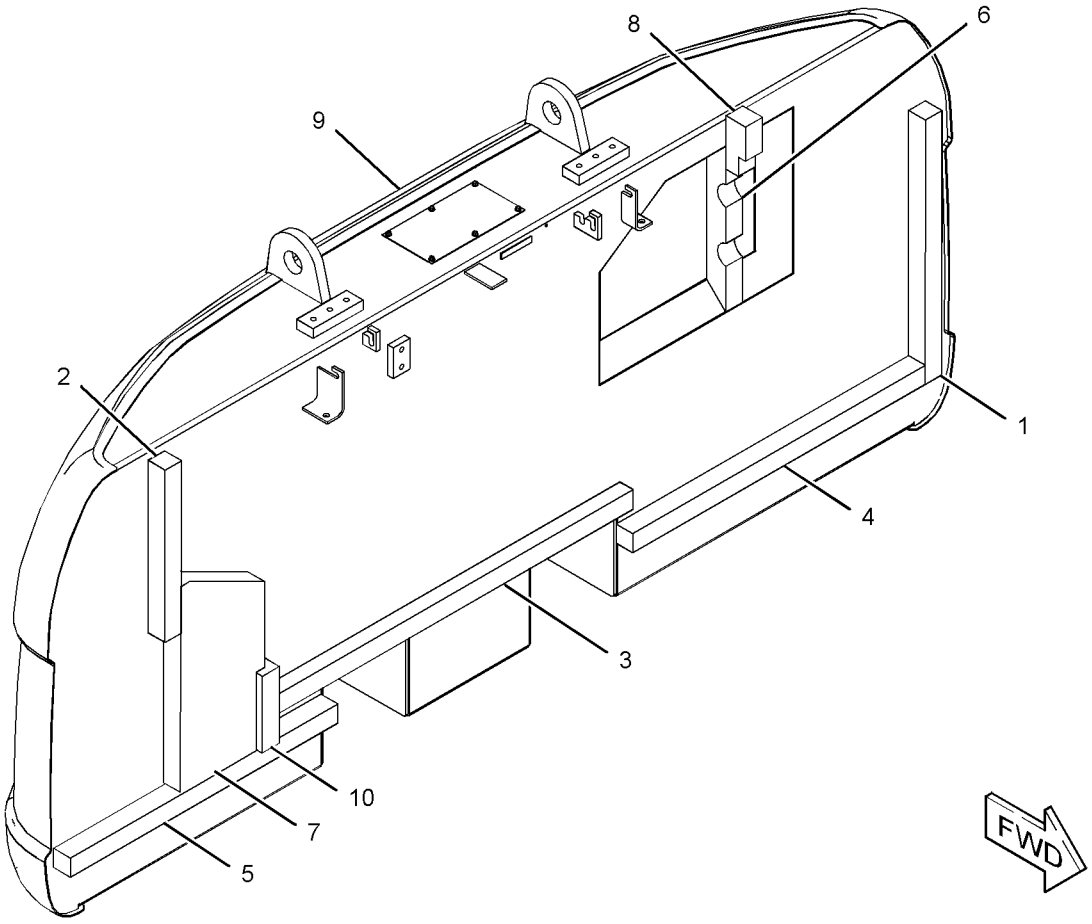

GRAPHIC #1 **<END>** g01230742

262-2626 COUNTERWEIGHT GP

S/N: KGF1-UP; FAL1-UP
PART OF 262-2608 COUNTERWEIGHT GP
AN ATTACHMENT

SMCS-7056 **i02423411**

NOTE	REF NO	GRAPHIC REF	PART NUMBER	QTY	PART NAME 1 2 3 4 5 6 (PRODUCT LEVEL)	SEE PAGE
	1	1	**7I-0717**	1	LINER	
	2	1	**116-1665**	1	LINER	
	3	1	**165-3102**	1	LINER	
	4	1	**165-3103**	1	LINER	
	5	1	**184-8722**	1	LINER	
	6	1	**248-9061**	1	LINER	
	7	1	**262-2406**	1	LINER	
	8	1	**262-2417**	1	LINER	
Z	9	1			COUNTERWEIGHT AS	
	10	1	**273-7677**	1	LINER	

Z-NOT SERVICED SEPARATELY

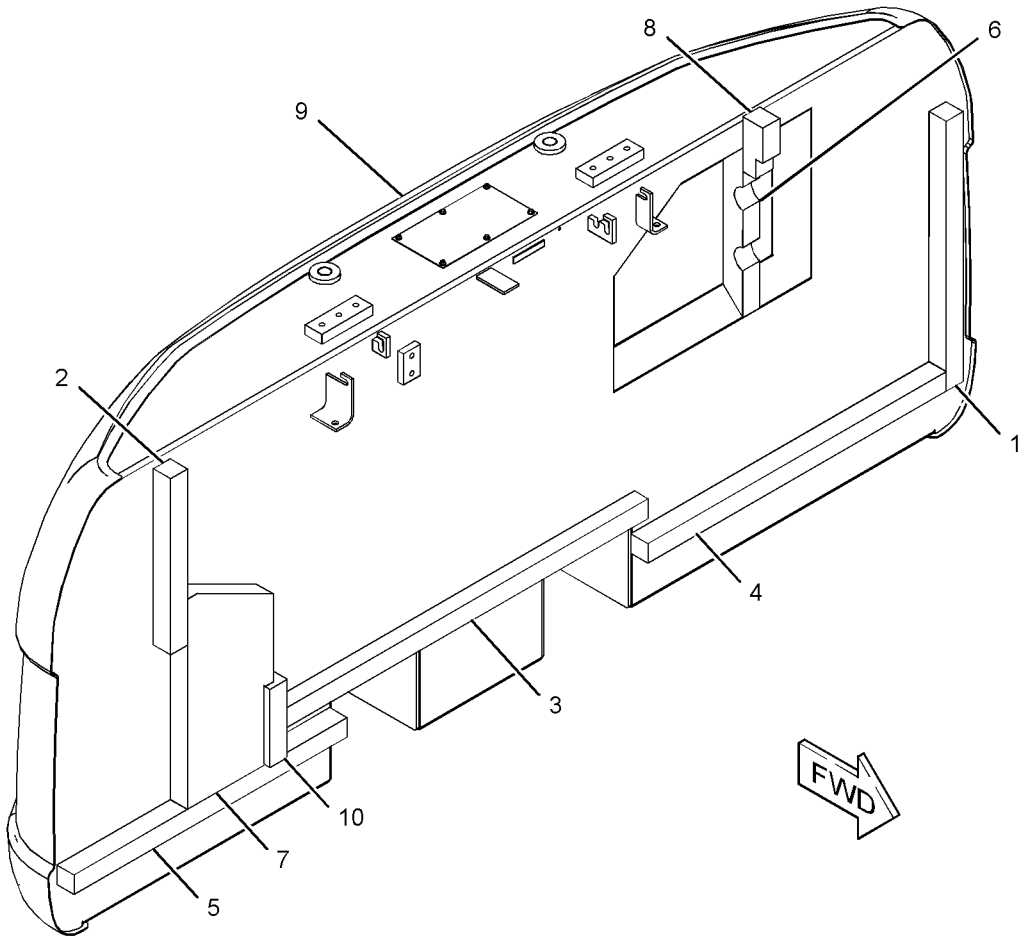

GRAPHIC #1 **<END>** g01230744

278-3908 COUNTERWEIGHT GP

S/N: KGF1-UP; FAL1-UP
AN ATTACHMENT
TYPE 1

SMCS-7056 **i02846384**

NOTE	REF NO	GRAPHIC REF	PART NUMBER	QTY	PART NAME 1 2 3 4 5 6 (PRODUCT LEVEL)	SEE PAGE
	1	1	**244-8194**	4	SPACER (32X65X30-MM THK)	
Y	2	1	*307-7694*	1	COUNTERWEIGHT GP	393
M	3	1	**7X-2583**	4	BOLT (M30X3.5X120-MM)	
M	4	1	**8T-4190**	8	BOLT (M16X2X25-MM)	

M-METRIC PART
Y-SEPARATE ILLUSTRATION

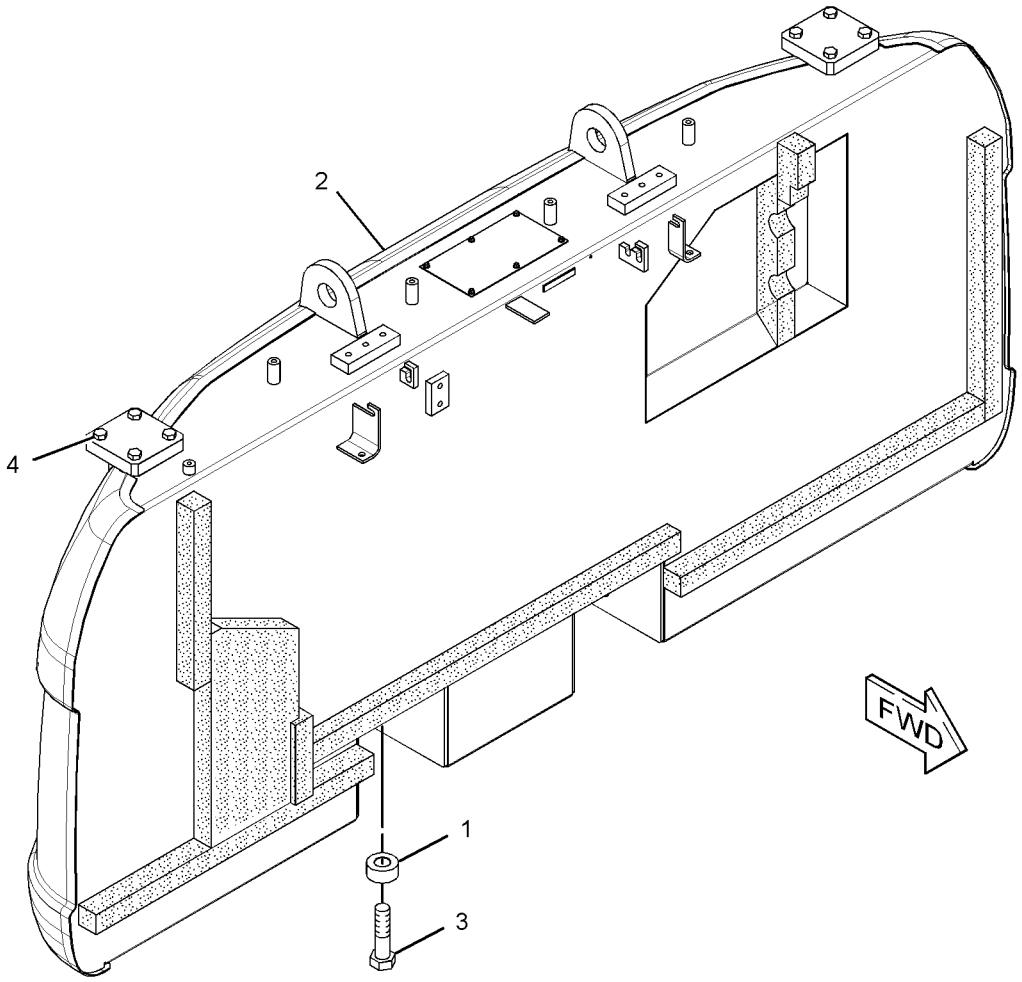

GRAPHIC #1 **<END>** g01431521

278-3908 COUNTERWEIGHT GP

S/N: KGF1-UP; FAL1-UP
AN ATTACHMENT
TYPE 2

SMCS-7056 **i03137662**

NOTE	REF NO	GRAPHIC REF	PART NUMBER	QTY	PART NAME 1 2 3 4 5 6 (PRODUCT LEVEL)	SEE PAGE
	1	1	**244-8194**	4	SPACER (32X65X30-MM THK)	
CY	2	1	*327-3268*	1	COUNTERWEIGHT GP	398
M	3	1	**7X-2583**	4	BOLT (M30X3.5X120-MM)	
M	4	1	**8T-4190**	8	BOLT (M16X2X25-MM)	

C-CHANGE FROM PREVIOUS TYPE
M-METRIC PART
Y-SEPARATE ILLUSTRATION

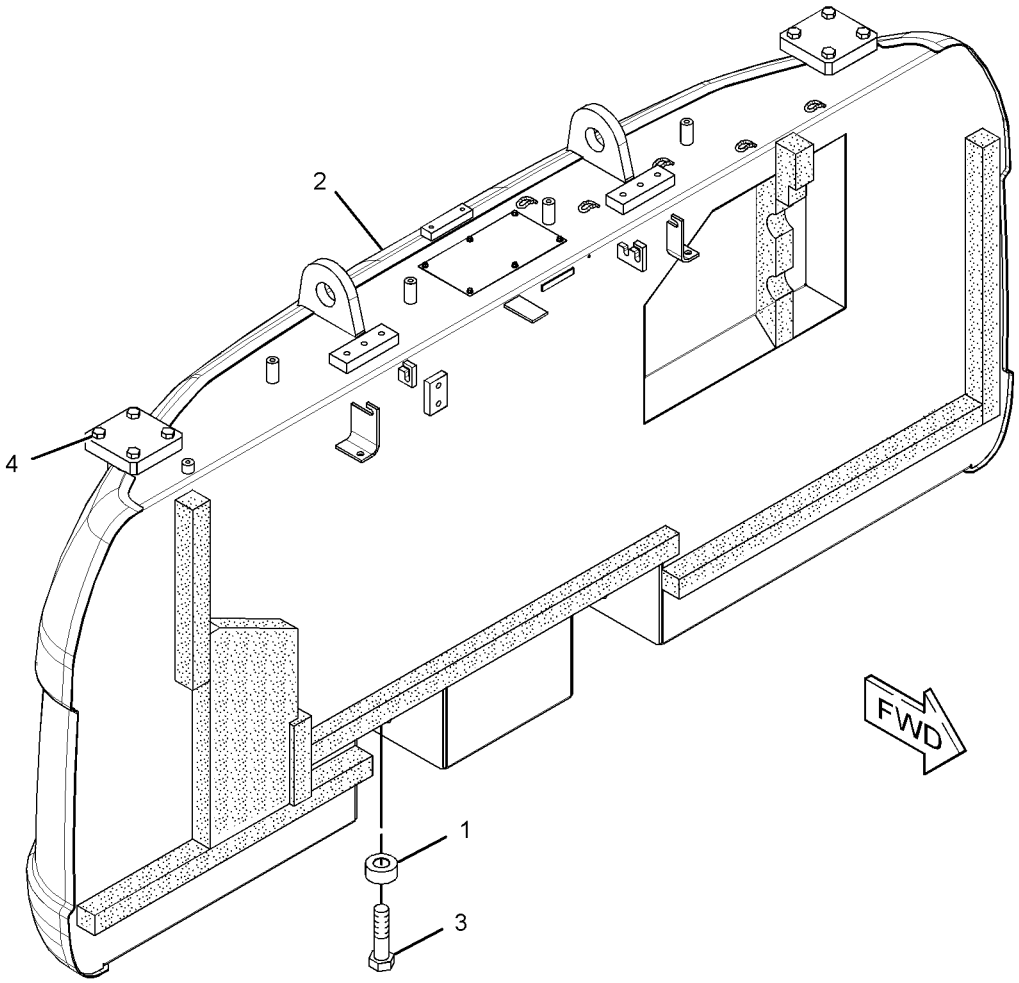

GRAPHIC #1 **<END>** g01628321

304-0096 COUNTERWEIGHT GP

S/N: KGF1-UP
PART OF 307-7674 COUNTERWEIGHT GP
AN ATTACHMENT

SMCS-7056 **i02715668**

NOTE	REF NO	GRAPHIC REF	PART NUMBER	QTY	PART NAME 1 2 3 4 5 6 (PRODUCT LEVEL)	SEE PAGE
	1	1	**7I-0717**	1	LINER	
	2	1	**116-1665**	1	LINER	
	3	1	**165-3102**	1	LINER	
	4	1	**165-3103**	1	LINER	
	5	1	**184-8722**	1	LINER	
	6	1	**248-9061**	1	LINER	
	7	1	**262-2405**	1	INSULATION	
	8	1	**262-2406**	1	LINER	
	9	1	**262-2417**	1	LINER	
	10	1	**273-7677**	1	LINER	
	11	1	**286-6346**	1	INSULATION	
	12	1	**304-0097**	1	COUNTERWEIGHT AS	
		1	**192-3039**	6	SCREW-HEX FLANGE (6.3X1.8X19-MM)	
	13	1	**7Y-2292**	9	WASHER (13X50X2-MM THK)	
M	14	1	**8T-4179**	9	BOLT (M12X1.75X20-MM)	
	15	1	**8T-4223**	9	WASHER-HARD (13.5X25.5X3-MM THK)	

M-METRIC PART

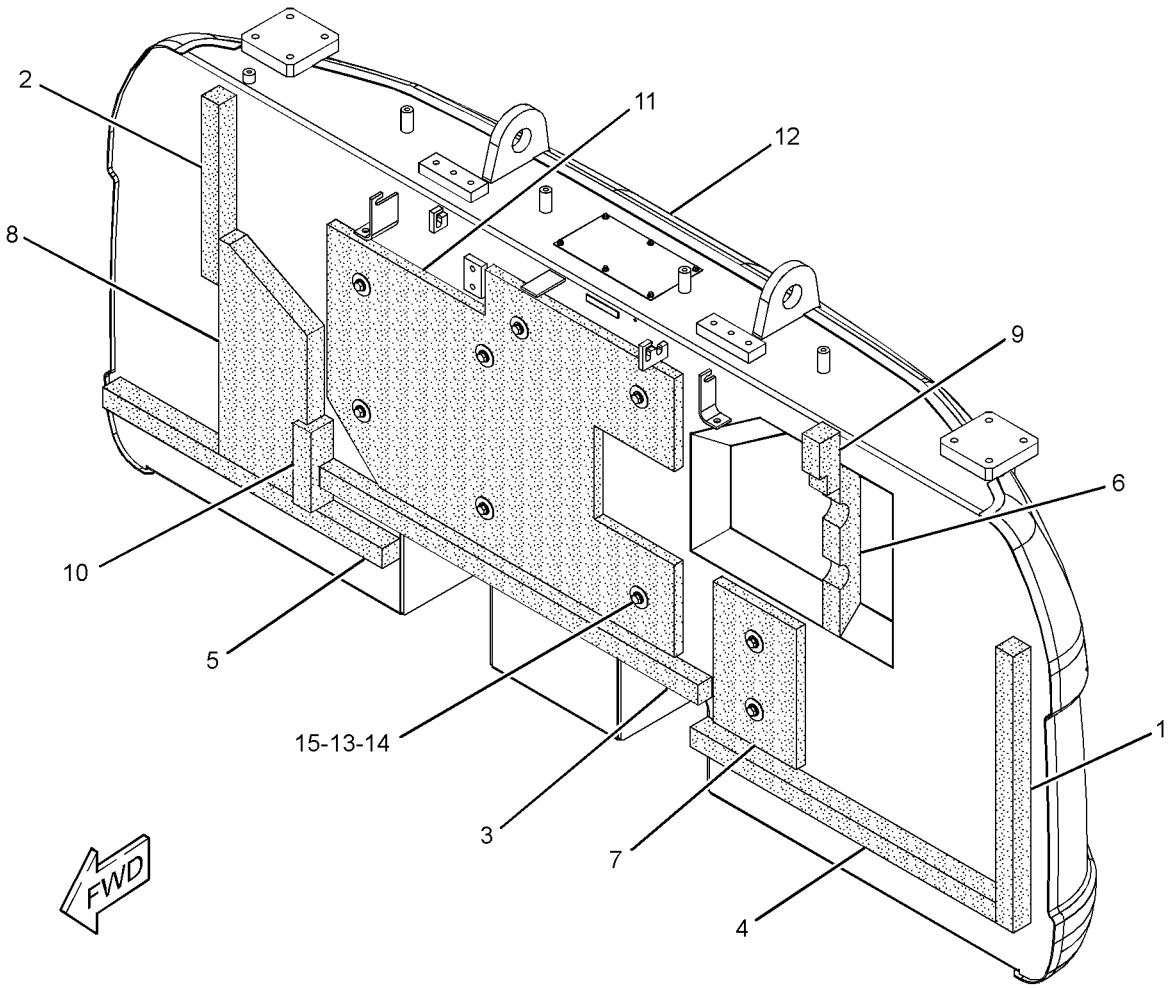

GRAPHIC #1 **<END>** g01363778

FRAME AND BODY

307-7674 COUNTERWEIGHT GP

S/N: KGF1-UP
AN ATTACHMENT
TYPE 1

SMCS-7056 **i02781245**

NOTE	REF NO	GRAPHIC REF	PART NUMBER	QTY	PART NAME 1 2 3 4 5 6 (PRODUCT LEVEL)	SEE PAGE
	1	1	**244-8194**	4	SPACER (32X65X30-MM THK)	
Y	2	1	*304-0096*	1	COUNTERWEIGHT GP	390
M	3	1	**7X-2583**	4	BOLT (M30X3.5X120-MM)	
M	4	1	**8T-4190**	8	BOLT (M16X2X25-MM)	

M-METRIC PART
Y-SEPARATE ILLUSTRATION

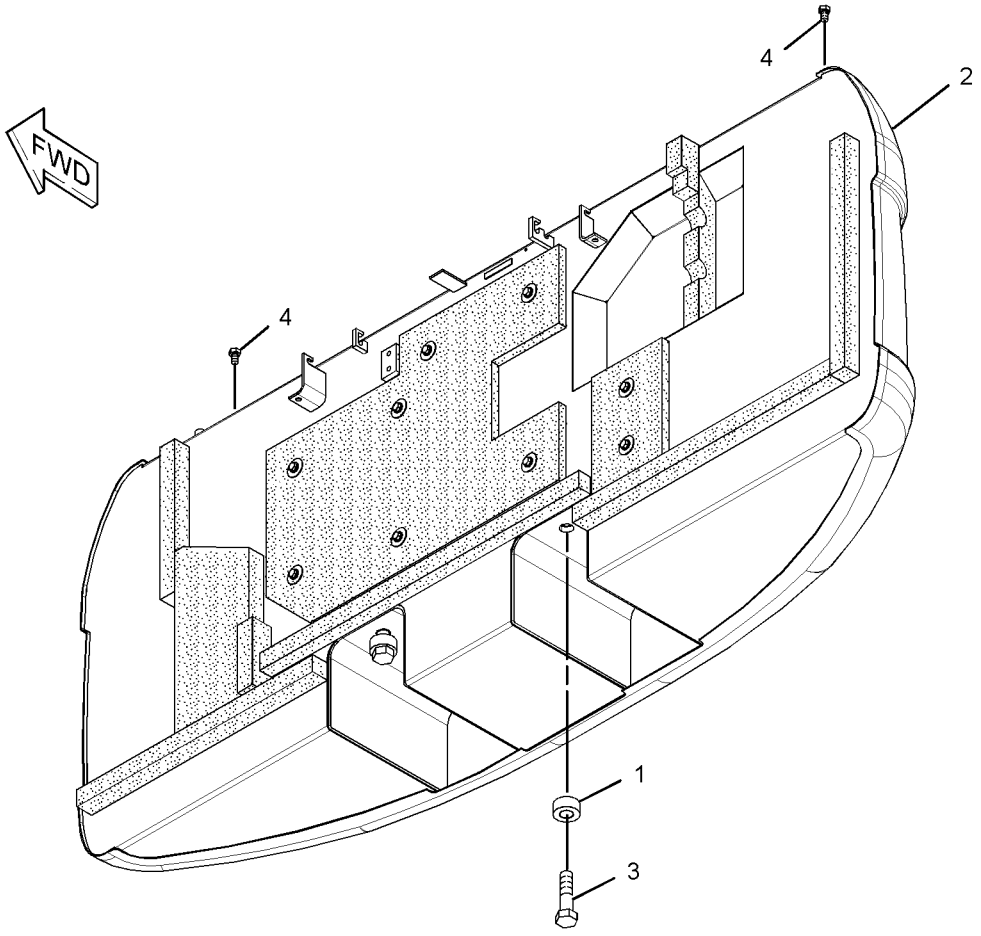

GRAPHIC #1 **<END>** g01404093

FRAME AND BODY

307-7674 COUNTERWEIGHT GP

S/N: KGF1-UP
AN ATTACHMENT
TYPE 2

SMCS-7056 **i03133344**

NOTE	REF NO	GRAPHIC REF	PART NUMBER	QTY	PART NAME 1 2 3 4 5 6 (PRODUCT LEVEL)	SEE PAGE
	1	1	**244-8194**	4	SPACER (32X65X30-MM THK)	
CY	2	1	*327-3272*	1	COUNTERWEIGHT GP	399
M	3	1	**7X-2583**	4	BOLT (M30X3.5X120-MM)	
M	4	1	**8T-4190**	8	BOLT (M16X2X25-MM)	

C-CHANGE FROM PREVIOUS TYPE
M-METRIC PART
Y-SEPARATE ILLUSTRATION

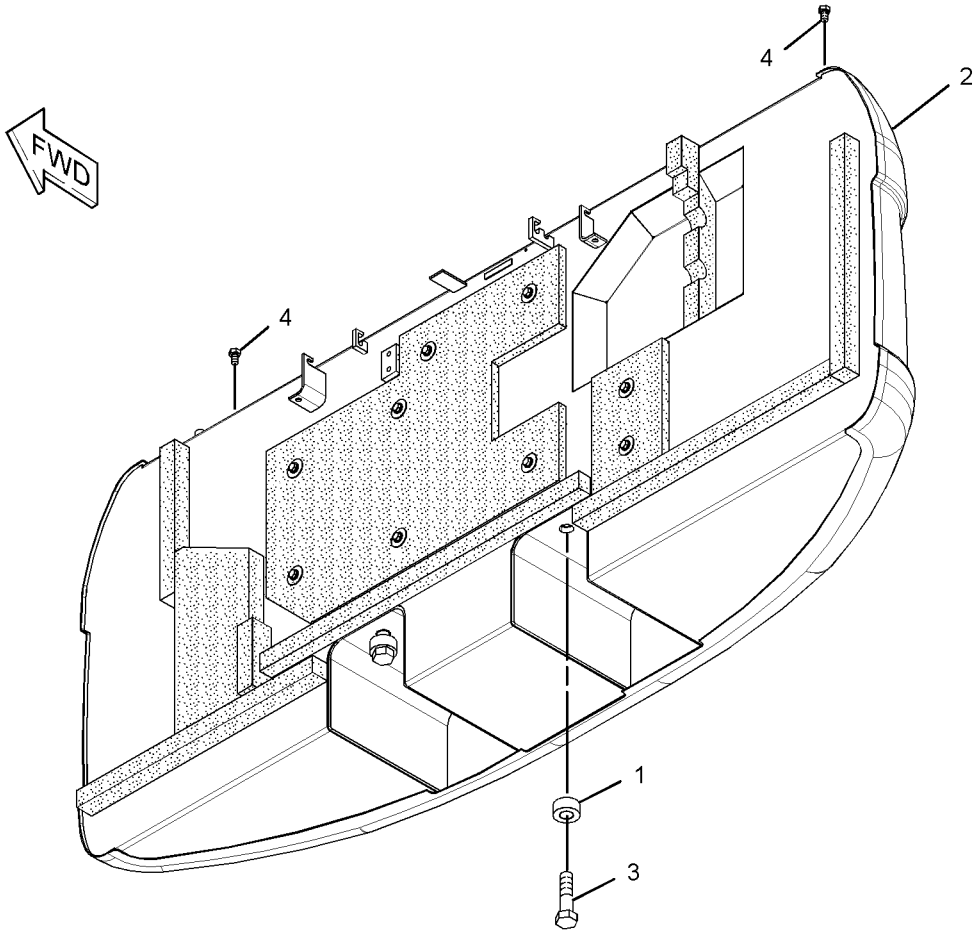

GRAPHIC #1 **<END>** g01404093

FRAME AND BODY

307-7694 COUNTERWEIGHT GP

S/N: KGF1-UP; FAL1-UP
3851-KG (8490-LB)
PART OF 278-3908 COUNTERWEIGHT GP
AN ATTACHMENT

SMCS-7056 **i02846385**

NOTE	REF NO	GRAPHIC REF	PART NUMBER	QTY	PART NAME 1 2 3 4 5 6 (PRODUCT LEVEL)	SEE PAGE
	1	1	**7I-0717**	1	LINER	
	2	1	**116-1665**	1	LINER	
	3	1	**165-3102**	1	LINER	
	4	1	**165-3103**	1	LINER	
	5	1	**184-8722**	1	LINER	
	6	1	**248-9061**	1	LINER	
	7	1	**262-2406**	1	LINER	
	8	1	**262-2417**	1	LINER	
	9	1	**273-7677**	1	LINER	
	10	1	**307-7695**	1	COUNTERWEIGHT AS	
		1	**192-3039**	6	SCREW-HEX FLANGE (6.3X1.8X19-MM)	

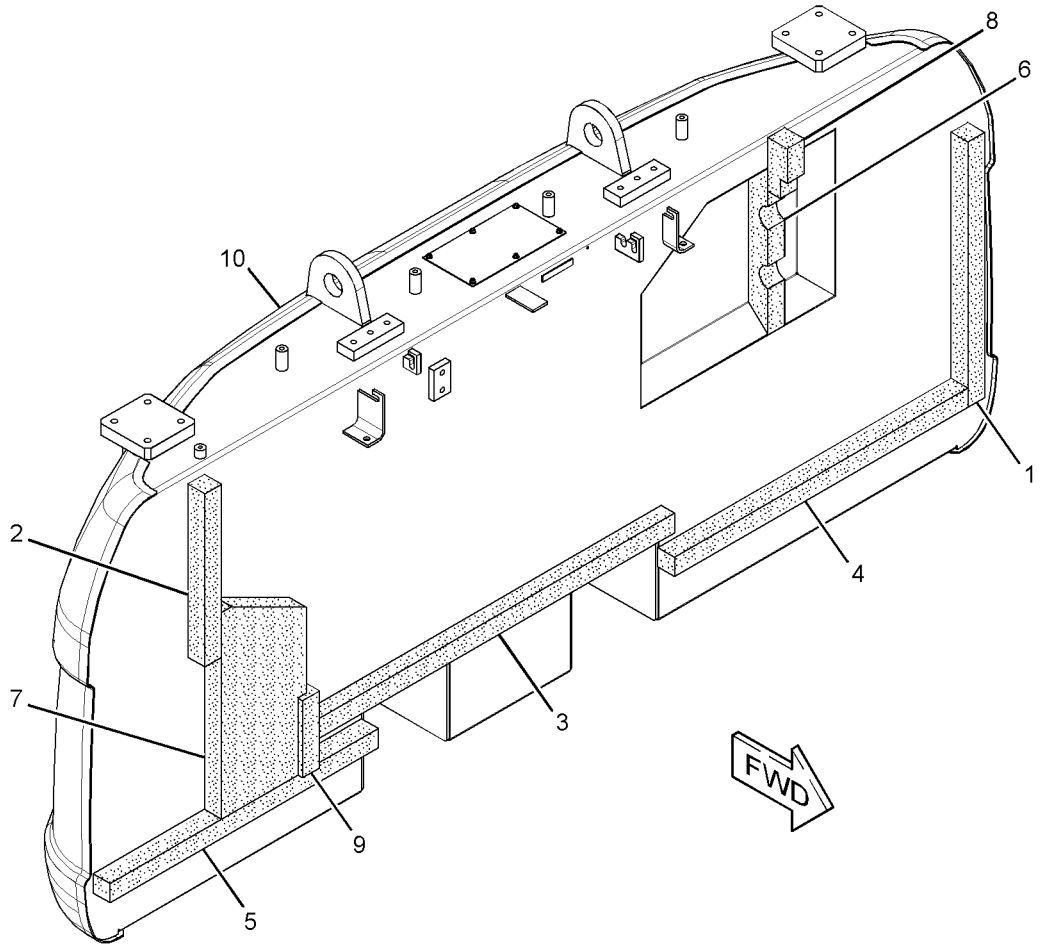

GRAPHIC #1 **<END>** g01431916

327-3236 COUNTERWEIGHT GP

S/N: KGF1-UP
3855-KG (8500-LB)
PART OF 241-1999 COUNTERWEIGHT GP
AN ATTACHMENT

SMCS-7056 **i03133263**

NOTE	REF NO	GRAPHIC REF	PART NUMBER	QTY	PART NAME 1 2 3 4 5 6 (PRODUCT LEVEL)	SEE PAGE
	1	1	**7I-0717**	1	LINER	
	2	1	**116-1665**	1	LINER	
	3	1	**165-3102**	1	LINER	
	4	1	**165-3103**	1	LINER	
	5	1	**184-8722**	1	LINER	
	6	1	**248-9061**	1	LINER	
	7	1	**262-2405**	1	INSULATION	
	8	1	**262-2406**	1	LINER	
	9	1	**262-2417**	1	LINER	
	10	1	**273-7677**	1	LINER	
	11	1	**286-6346**	1	INSULATION	
	12	1	**327-3237**	1	COUNTERWEIGHT AS	
		1	**165-3120**	1	SHEET	
M		1	**192-3039**	6	SCREW-HEX FLANGE (6.3X1.8X19-MM)	
	13	1	**7Y-2292**	9	WASHER (13X50X2-MM THK)	
M	14	1	**8T-4179**	9	BOLT (M12X1.75X20-MM)	
	15	1	**8T-4223**	9	WASHER-HARD (13.5X25.5X3-MM THK)	

M-METRIC PART

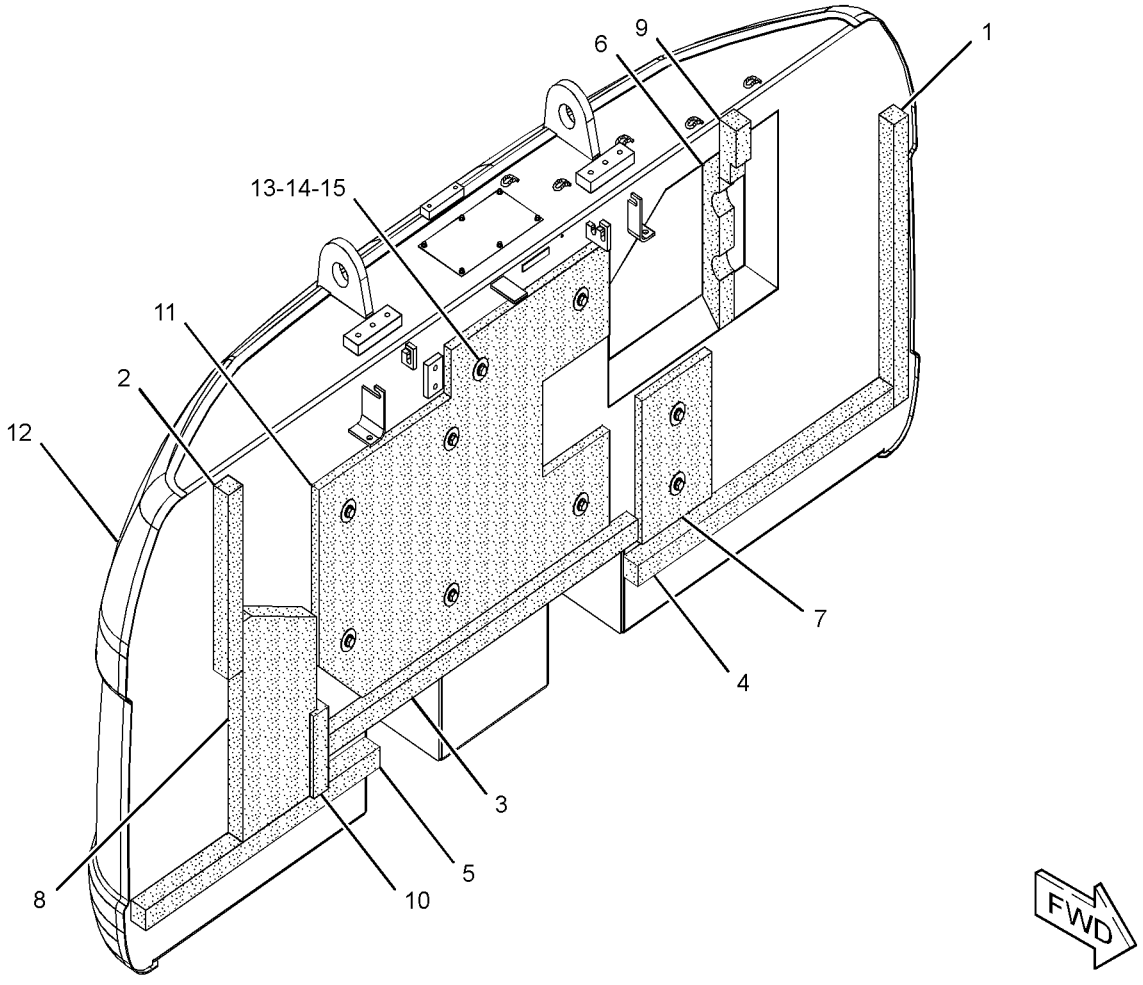

GRAPHIC #1 **<END>** g01628199

327-3248 COUNTERWEIGHT GP

S/N: KGF1-UP; FAL1-UP
3850-KG (8488-LB)
PART OF 262-2608 COUNTERWEIGHT GP
AN ATTACHMENT

SMCS-7056 **i03133300**

NOTE	REF NO	GRAPHIC REF	PART NUMBER	QTY	PART NAME 1 2 3 4 5 6 (PRODUCT LEVEL)	SEE PAGE
	1	1	**7I-0717**	1	LINER	
	2	1	**116-1665**	1	LINER	
	3	1	**165-3102**	1	LINER	
	4	1	**165-3103**	1	LINER	
	5	1	**184-8722**	1	LINER	
	6	1	**248-9061**	1	LINER	
	7	1	**262-2406**	1	LINER	
	8	1	**262-2417**	1	LINER	
	9	1	**273-7677**	1	LINER	
	10	1	**327-3249**	1	COUNTERWEIGHT AS	
		1	**165-3120**	1	SHEET	
M		1	**192-3039**	6	SCREW-HEX FLANGE (6.3X1.8X19-MM)	

M-METRIC PART

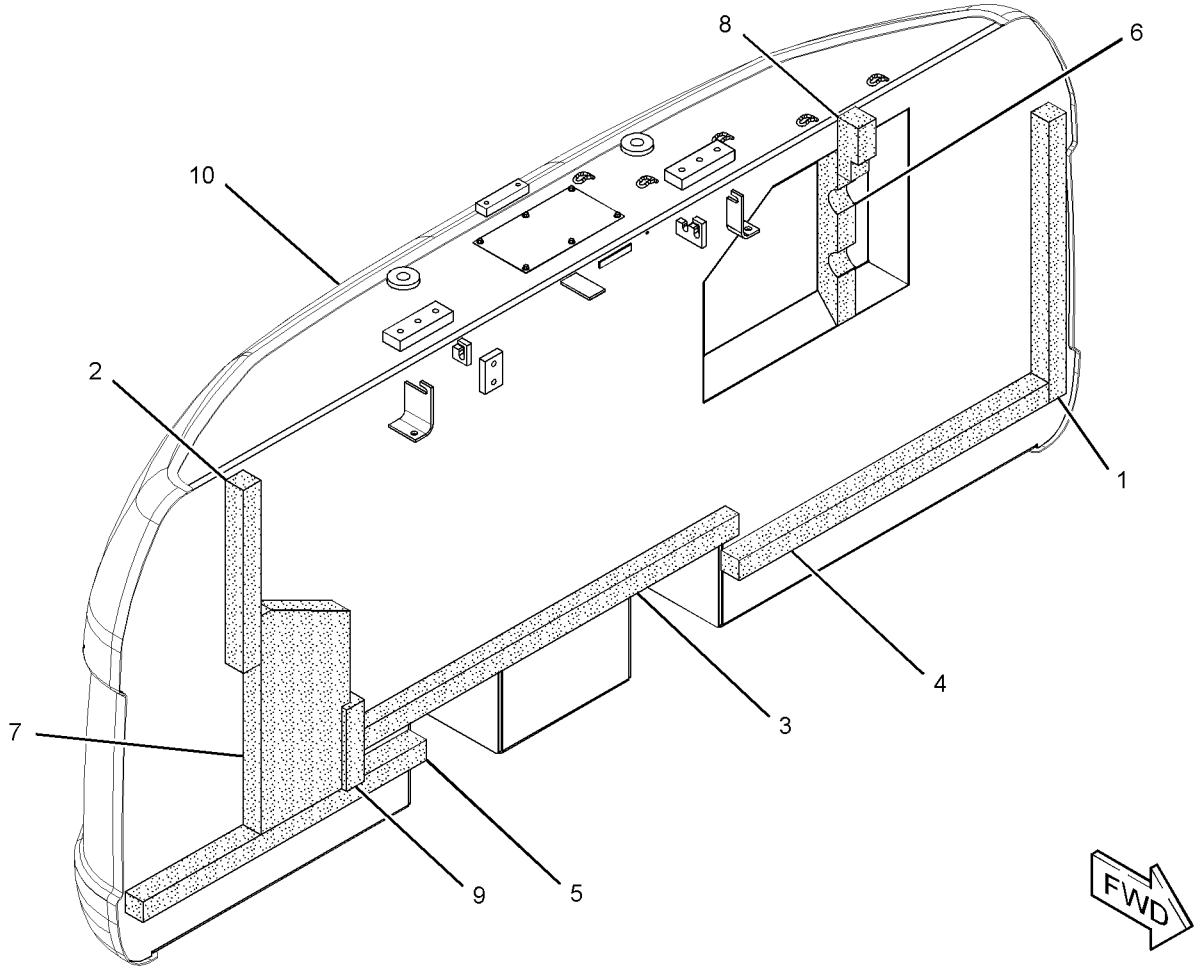

GRAPHIC #1 **<END>** g01629093

327-3252 COUNTERWEIGHT GP

S/N: KGF1-UP; FAL1-UP
3850-KG (8488-LB)
PART OF 262-2607 COUNTERWEIGHT GP

SMCS-7056 **i03185288**

NOTE	REF NO	GRAPHIC REF	PART NUMBER	QTY	PART NAME 1 2 3 4 5 6 (PRODUCT LEVEL)	SEE PAGE
	1	1	**7I-0717**	1	LINER	
	2	1	**116-1665**	1	LINER	
	3	1	**165-3102**	1	LINER	
	4	1	**165-3103**	1	LINER	
	5	1	**184-8722**	1	LINER	
	6	1	**248-9061**	1	LINER	
	7	1	**262-2406**	1	LINER	
	8	1	**262-2417**	1	LINER	
	9	1	**273-7677**	1	LINER	
	10	1	**327-3253**	1	COUNTERWEIGHT AS	
		1	**165-3120**	1	SHEET	
M		1	**192-3039**	6	SCREW-HEX FLANGE (6.3X1.8X19-MM)	

M-METRIC PART

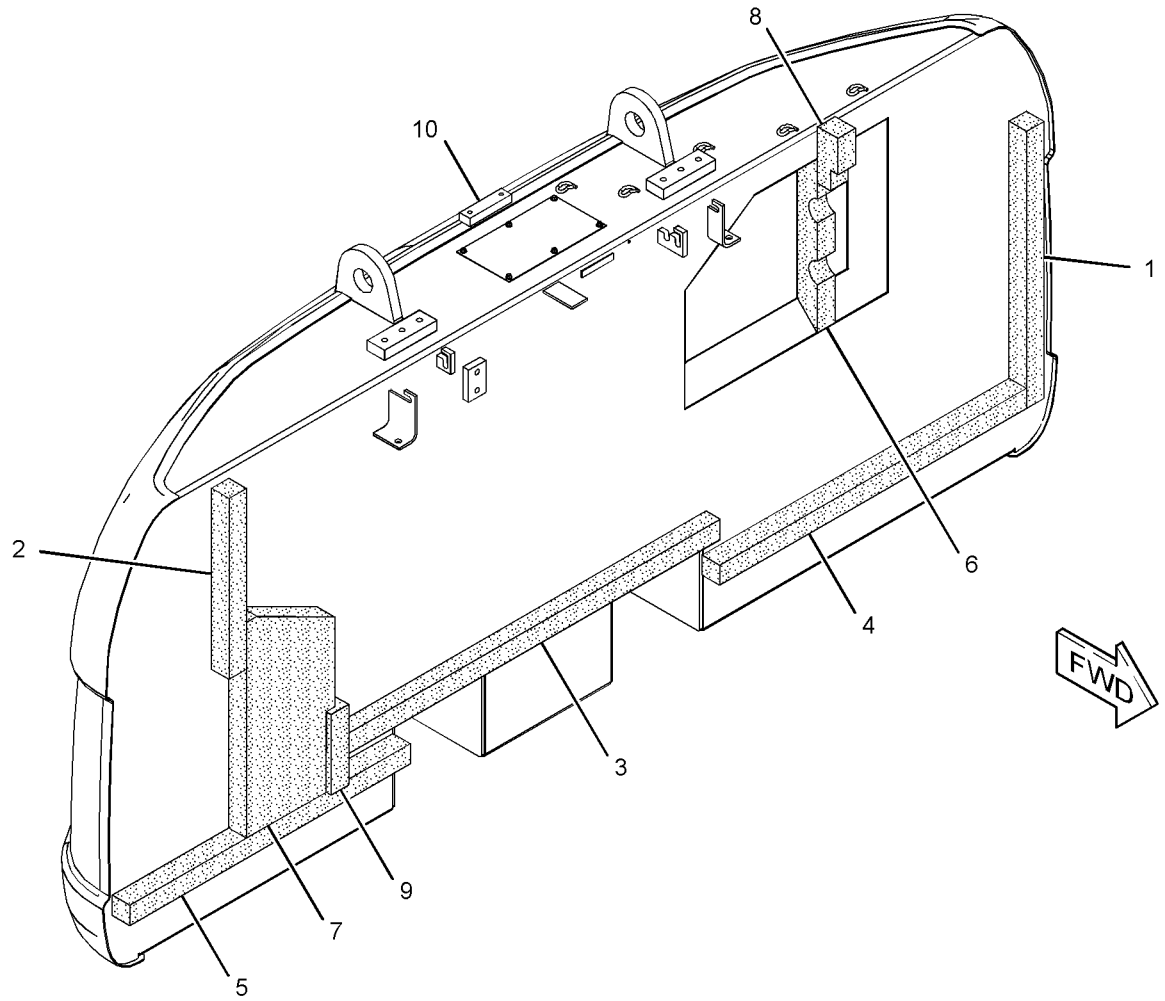

GRAPHIC #1 **<END>** g01638013

327-3256 COUNTERWEIGHT GP

S/N: KGF1-UP
4811-KG (10607-LB)
PART OF 241-2002 COUNTERWEIGHT GP
AN ATTACHMENT

SMCS-7056 **i03137641**

NOTE	REF NO	GRAPHIC REF	PART NUMBER	QTY	PART NAME 1 2 3 4 5 6 (PRODUCT LEVEL)	SEE PAGE
	1	1	**7I-0717**	1	LINER	
	2	1	**116-1665**	1	LINER	
	3	1	**165-3102**	1	LINER	
	4	1	**165-3103**	1	LINER	
	5	1	**184-8722**	1	LINER	
	6	1	**248-9061**	1	LINER	
	7	1	**262-2405**	1	INSULATION	
	8	1	**262-2406**	1	LINER	
	9	1	**262-2417**	1	LINER	
	10	1	**273-7677**	1	LINER	
	11	1	**286-6346**	1	INSULATION	
	12	1	**327-3257**	1	COUNTERWEIGHT AS	
		1	**165-3120**	1	SHEET	
M		1	**192-3039**	6	SCREW-HEX FLANGE (6.3X1.8X19-MM)	
	13	1	**7Y-2292**	9	WASHER (13X50X2-MM THK)	
M	14	1	**8T-4179**	9	BOLT (M12X1.75X20-MM)	
	15	1	**8T-4223**	9	WASHER-HARD (13.5X25.5X3-MM THK)	

M-METRIC PART

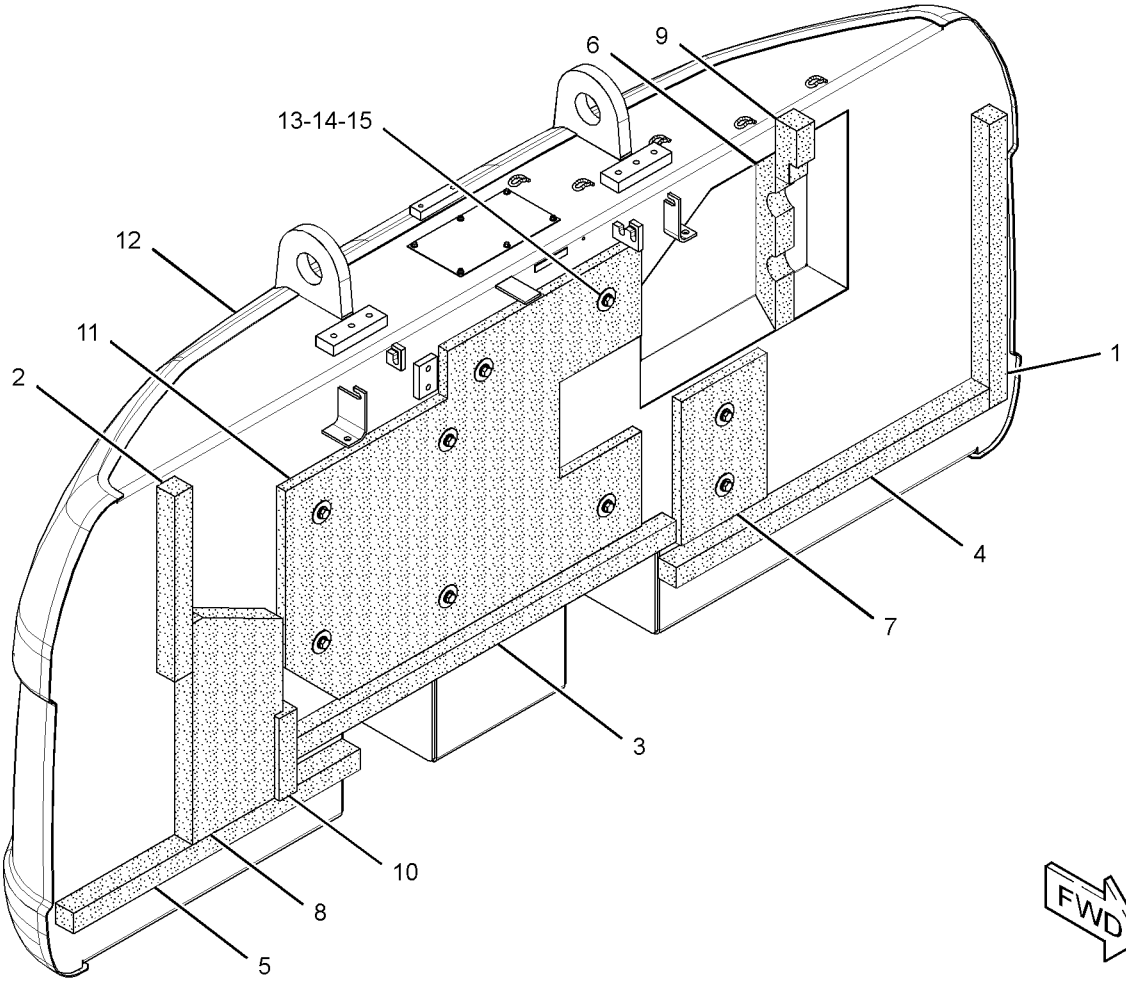

GRAPHIC #1 **<END>** g01628355

327-3268 COUNTERWEIGHT GP

S/N: KGF1-UP; FAL1-UP
3851-KG (8490-LB)
PART OF 278-3908 COUNTERWEIGHT GP
AN ATTACHMENT

SMCS-7056 **i03137661**

NOTE	REF NO	GRAPHIC REF	PART NUMBER	QTY	PART NAME 1 2 3 4 5 6 (PRODUCT LEVEL)	SEE PAGE
	1	1	**7I-0717**	1	LINER	
	2	1	**116-1665**	1	LINER	
	3	1	**165-3102**	1	LINER	
	4	1	**165-3103**	1	LINER	
	5	1	**184-8722**	1	LINER	
	6	1	**248-9061**	1	LINER	
	7	1	**262-2406**	1	LINER	
	8	1	**262-2417**	1	LINER	
	9	1	**273-7677**	1	LINER	
	10	1	**327-3269**	1	COUNTERWEIGHT AS	
		1	**165-3120**	1	SHEET	
M		1	**192-3039**	6	SCREW-HEX FLANGE (6.3X1.8X19-MM)	

M-METRIC PART

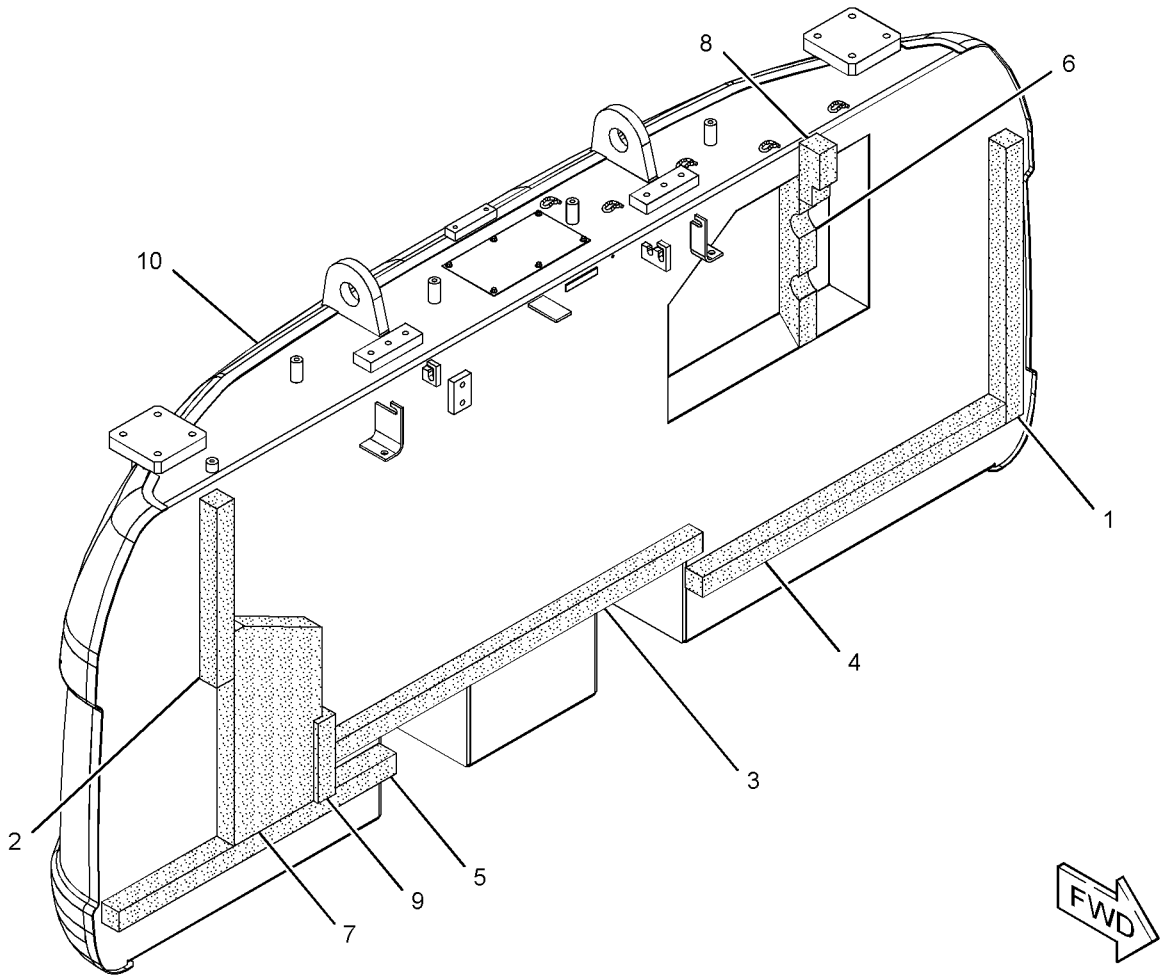

GRAPHIC #1 **<END>** g01628376

327-3272 COUNTERWEIGHT GP

S/N: KGF1-UP
PART OF 307-7674 COUNTERWEIGHT GP
AN ATTACHMENT

SMCS-7056 **i03133345**

NOTE	REF NO	GRAPHIC REF	PART NUMBER	QTY	PART NAME 1 2 3 4 5 6 (PRODUCT LEVEL)	SEE PAGE
	1	1	**7I-0717**	1	LINER	
	2	1	**116-1665**	1	LINER	
	3	1	**165-3102**	1	LINER	
	4	1	**165-3103**	1	LINER	
	5	1	**184-8722**	1	LINER	
	6	1	**248-9061**	1	LINER	
	7	1	**262-2405**	1	INSULATION	
	8	1	**262-2406**	1	LINER	
	9	1	**262-2417**	1	LINER	
	10	1	**273-7677**	1	LINER	
	11	1	**286-6346**	1	INSULATION	
	12	1	**327-3273**	1	COUNTERWEIGHT AS	
	13	1	**7Y-2292**	9	WASHER (13X50X2-MM THK)	
M	14	1	**8T-4179**	9	BOLT (M12X1.75X20-MM)	
	15	1	**8T-4223**	9	WASHER-HARD (13.5X25.5X3-MM THK)	

M-METRIC PART

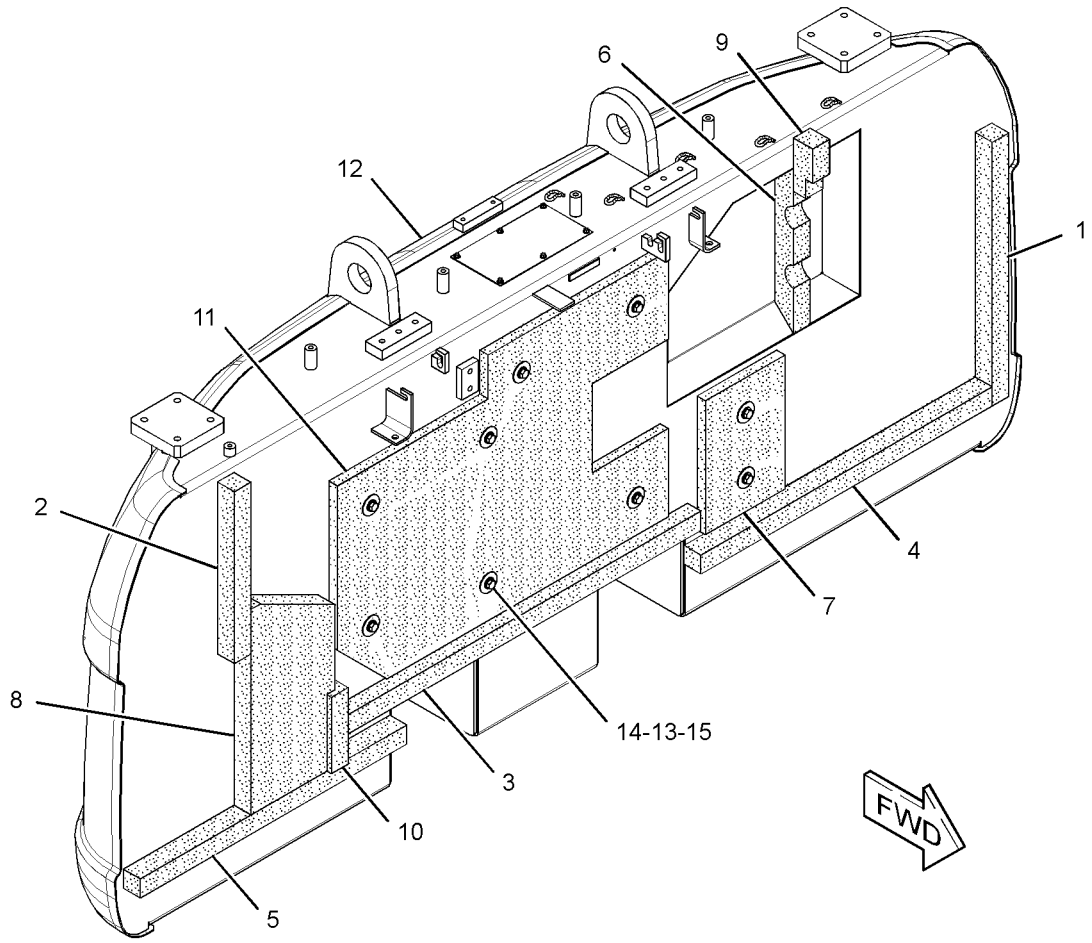

GRAPHIC #1 **<END>** g01627216

298-2979 COVER AS-ACCESS—HYDRAULIC TANK, SIDE

S/N: KGF106-UP; FAL183-UP
PART OF 273-7725, 273-7726, 320-5732 HOOD & GUARD GP
ALSO AN ATTACHMENT

SMCS-726A, 795C **i02668887**

NOTE	REF NO	GRAPHIC REF	PART NUMBER	QTY	PART NAME 1 2 3 4 5 6 (PRODUCT LEVEL)	SEE PAGE
	1	1	**170-3015**	1	BUMPER	
	2	1	**177-5739**	1	LINER	
	3	1	**240-2978**	2	LINER	
	4	1	**240-2979**	1	LINER	

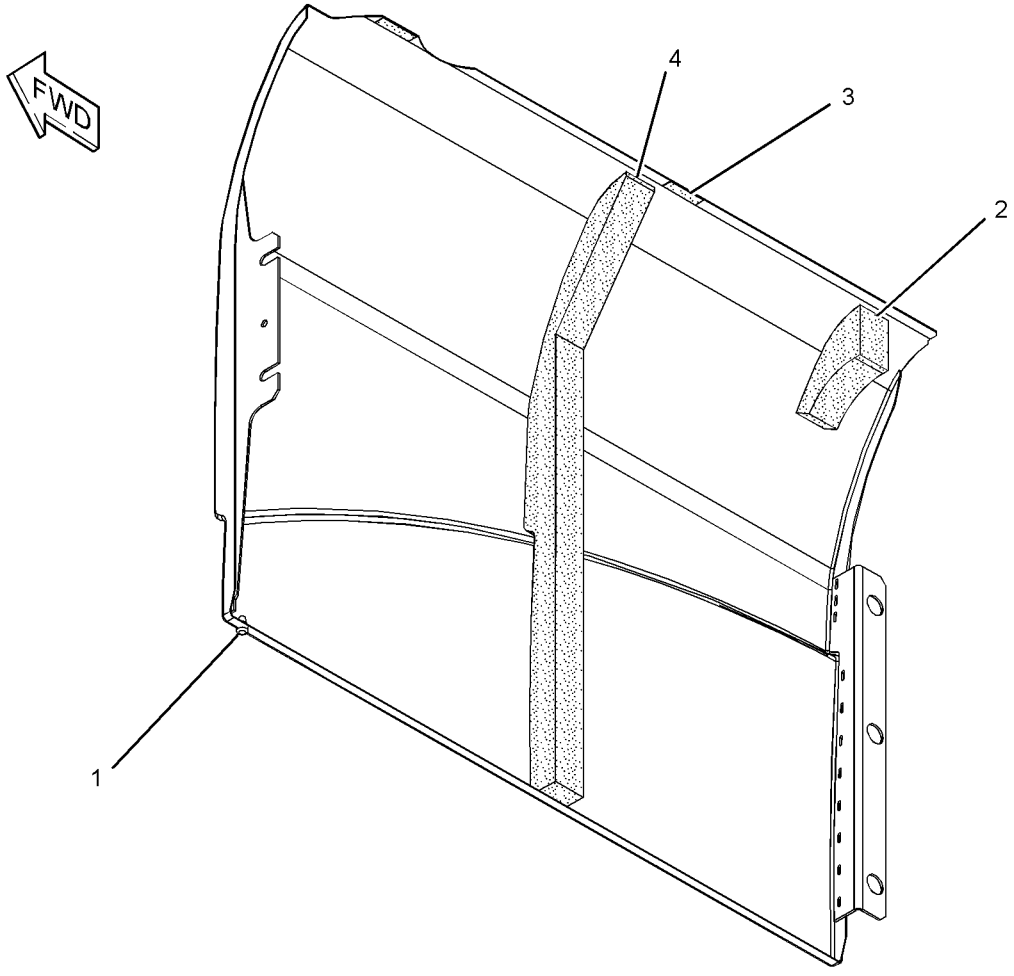

GRAPHIC #1 **<END>** g01342289

268-0749 COVER AS-SOUND SUPPRESSION

S/N: KGF1-UP; FAL1-UP
PART OF 278-3778 COVER GP-HOOD
AN ATTACHMENT

SMCS-7253, 7263, 7276, 795C **i02528926**

NOTE	REF NO	GRAPHIC REF	PART NUMBER	QTY	PART NAME 1 2 3 4 5 6 (PRODUCT LEVEL)	SEE PAGE
	1	1	**248-8930**	1	INSULATION	
Z	2	1		1	COVER AS	
	3	1	**273-7847**	1	INSULATION	
	4	1	**273-7848**	1	INSULATION	
	5	1	**273-7849**	2	INSULATION	

Z-NOT SERVICED SEPARATELY

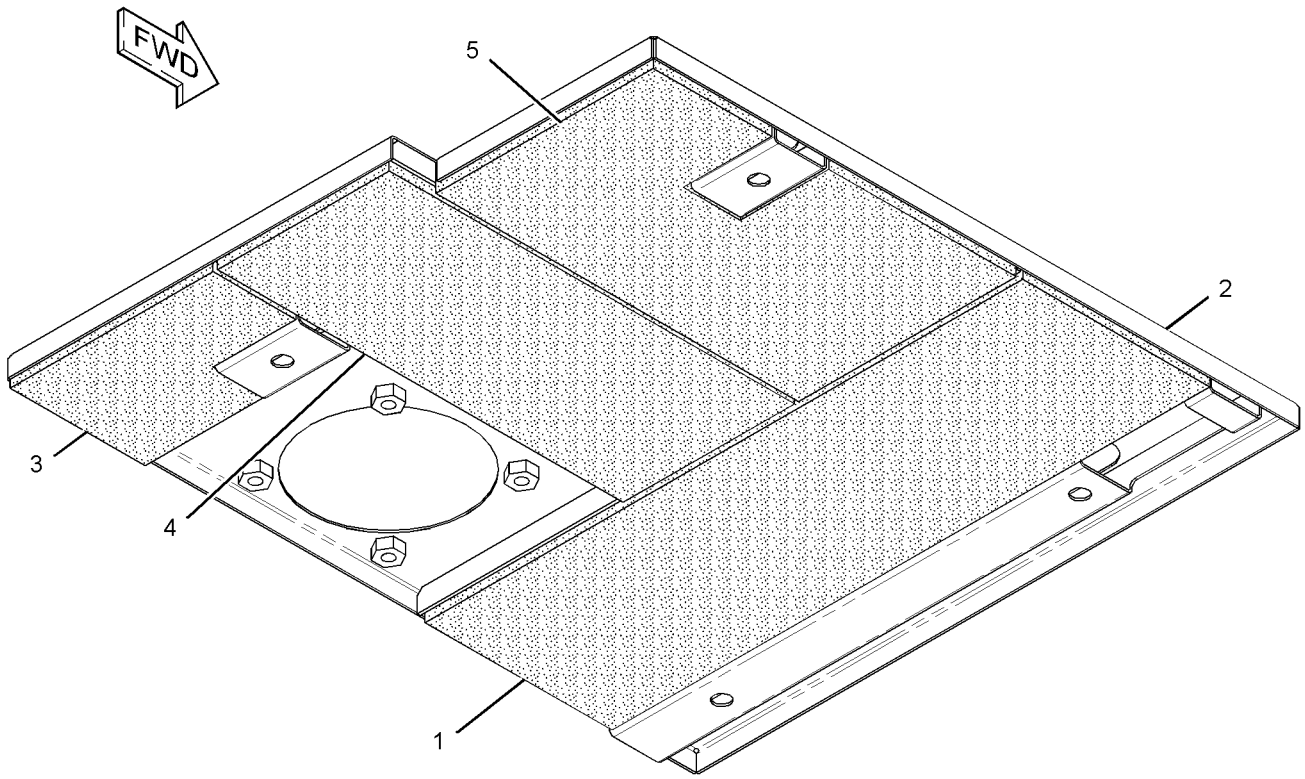

GRAPHIC #1 **<END>** g01299016

FRAME AND BODY

273-7893 COVER AS-SOUND SUPPRESSION

S/N: KGF1-UP; FAL1-UP

PART OF 273-7726 HOOD & GUARD GP

SMCS-7253, 7263, 7276, 795C **i02418895**

NOTE	REF NO	GRAPHIC REF	PART NUMBER	QTY	PART NAME 1 2 3 4 5 6 (PRODUCT LEVEL)	SEE PAGE
	1	1	**170-3015**	1	BUMPER	
	2	1	**177-5739**	1	LINER	
	3	1	**240-2978**	2	LINER	
	4	1	**240-2979**	1	LINER	
Z	5	1		1	DOOR AS-SIDE	

Z-NOT SERVICED SEPARATELY

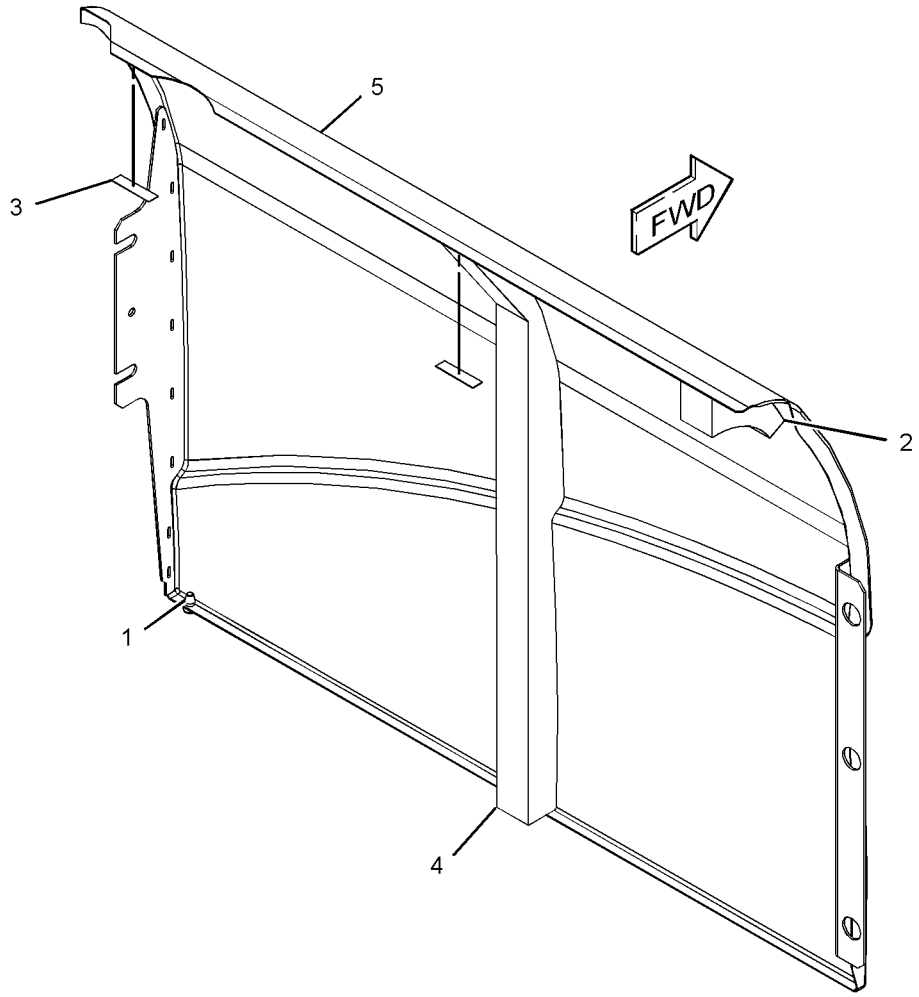

GRAPHIC #1 **<END>** g01231083

278-3778 COVER GP-HOOD–PRECLEANER

S/N: KGF1-UP; FAL1-UP
PART OF 264-8671 AIR CLEANER AR
AN ATTACHMENT

SMCS-7251 **i02896007**

NOTE	REF NO	GRAPHIC REF	PART NUMBER	QTY	PART NAME 1 2 3 4 5 6 (PRODUCT LEVEL)	SEE PAGE
Y	1	1	**268-0749**	1	COVER AS-SOUND SUPPRESSION	401
Y	2	1	**304-0093**	1	SUPPORT AS-ENCLOSURE	490
	3	1	**273-7774**	1	SUPPORT AS	

Y-SEPARATE ILLUSTRATION

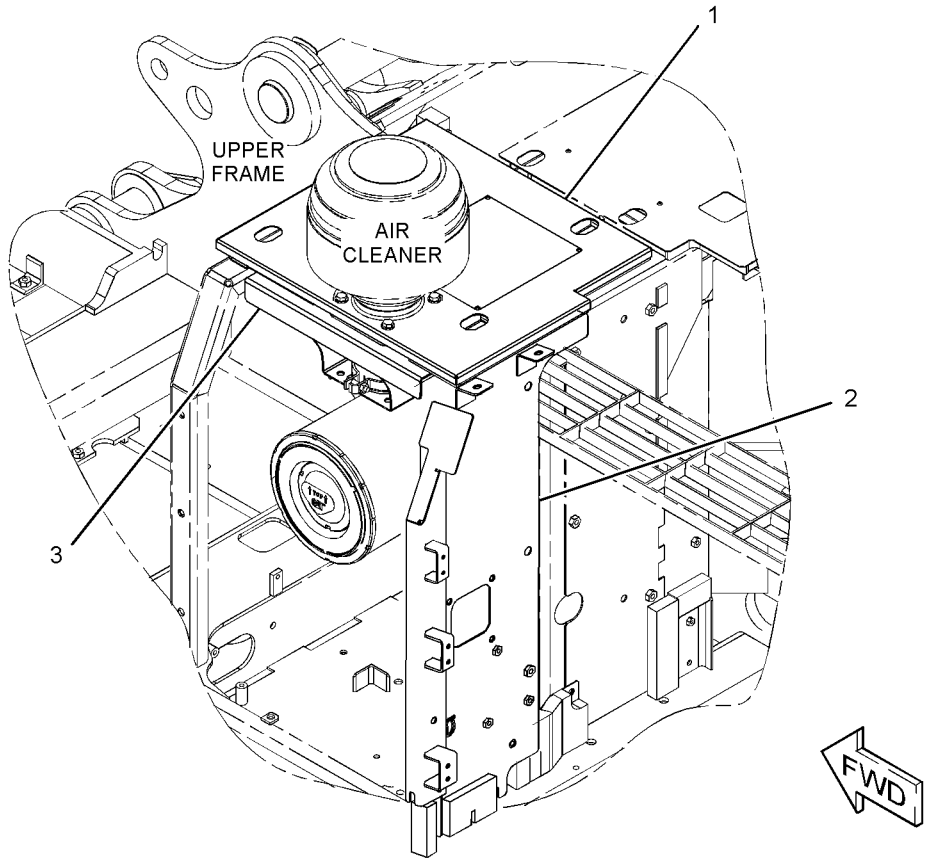

GRAPHIC #1 **<END>** g01388993

236-3746 DOOR AS-ACCESS—AIR CLEANER

S/N: KGF1-UP; FAL1-UP

PART OF 273-7726 HOOD & GUARD GP

SMCS-7273 **i02777721**

NOTE	REF NO	GRAPHIC REF	PART NUMBER	QTY	PART NAME 1 2 3 4 5 6 (PRODUCT LEVEL)	SEE PAGE
	1	1	**236-3747**	1	INSULATION	
	2	1	**236-3748**	1	INSULATION	
	3	1	*236-3749*	1	DOOR AS-ACCESS	
	3A	1	**165-2976**	2	HINGE	
	4	1	**250-5054**	1	LINER	
	5	1	**208-4289**	1	CUSHION	

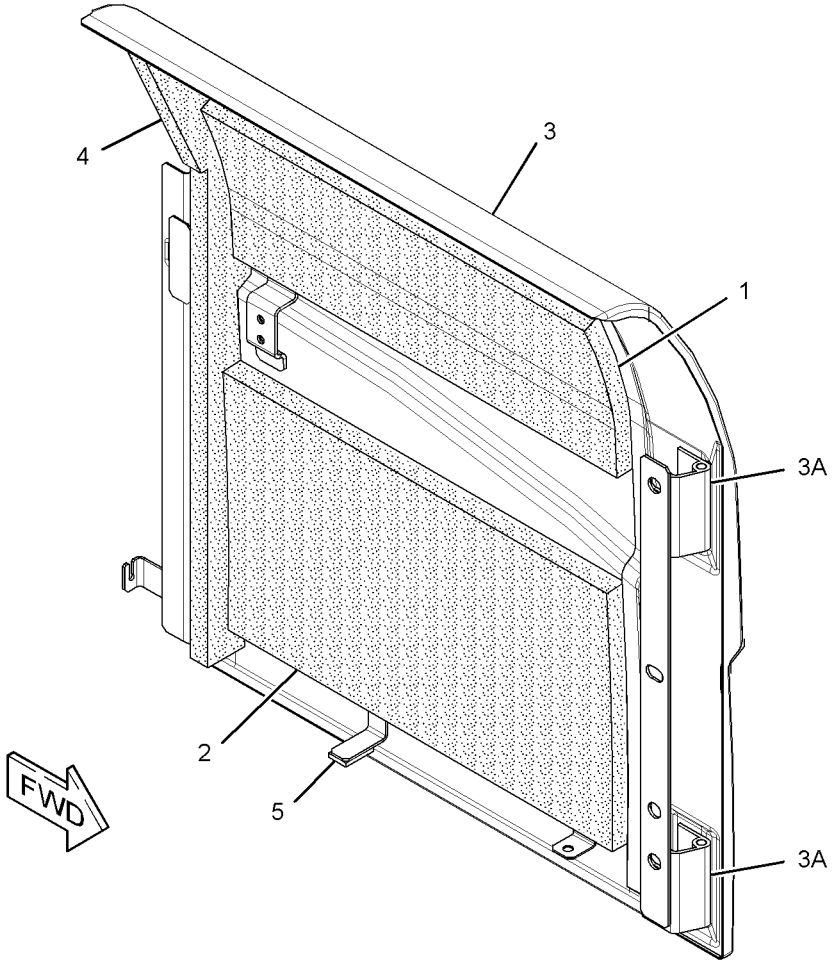

GRAPHIC #1 **<END>** g01392783

298-2977 DOOR AS-ACCESS—LEFT SIDE, FRONT

S/N: KGF106-UP; FAL183-UP
PART OF 273-7725, 273-7726, 320-5732 HOOD & GUARD GP
ALSO AN ATTACHMENT

SMCS-7273 **i02998204**

NOTE	REF NO	GRAPHIC REF	PART NUMBER	QTY	PART NAME 1 2 3 4 5 6 (PRODUCT LEVEL)	SEE PAGE
	1	1	**236-3747**	1	INSULATION	
	2	1	**236-3748**	1	INSULATION	
	3	1	**250-5054**	1	LINER	
	4	1	*298-2978*	1	DOOR AS-ACCESS	
	4A	1	**165-2976**	2	HINGE	
	5	1	**208-4289**	1	CUSHION	

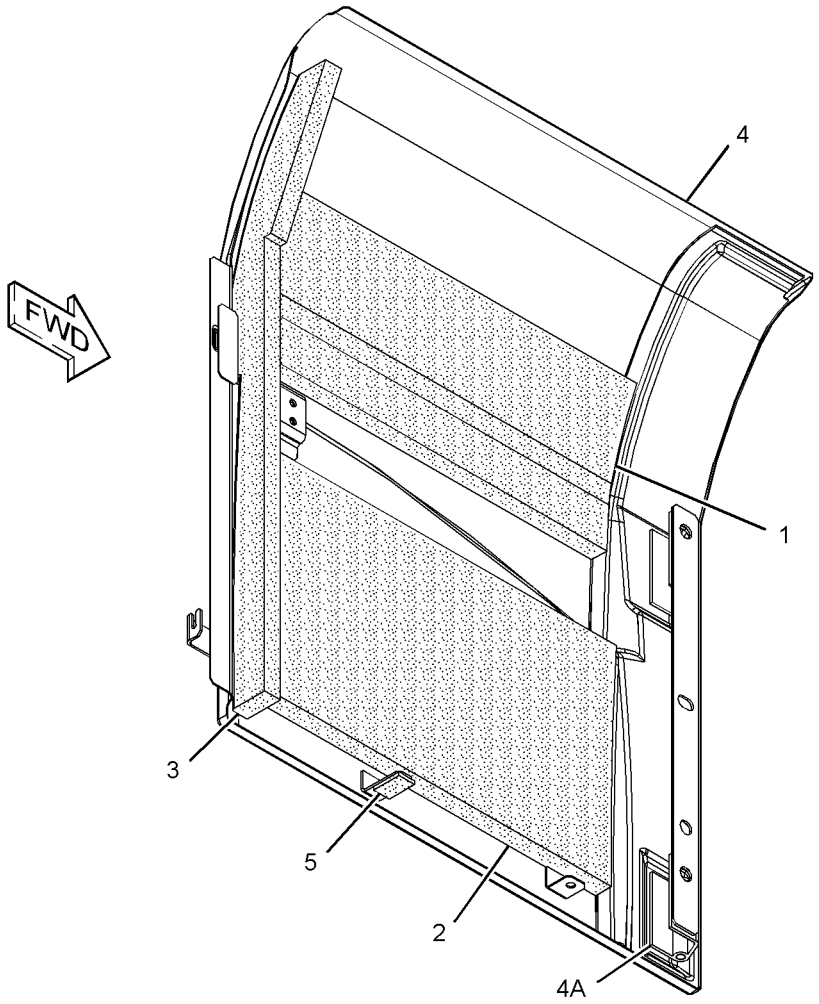

GRAPHIC #1 **<END>** g01390678

330-1426 DOOR AS-ACCESS

S/N: KGF1-UP; FAL1-UP
PART OF 330-1194 MACHINE AR, 314-3785 PUMP AR-FUEL TRANSFER
AN ATTACHMENT

SMCS-7273 **i03142602**

NOTE	REF NO	GRAPHIC REF	PART NUMBER	QTY	PART NAME 1 2 3 4 5 6 (PRODUCT LEVEL)	SEE PAGE
Y	1	1	**330-1427**	1	DOOR GP-ACCESS	412

Y-SEPARATE ILLUSTRATION

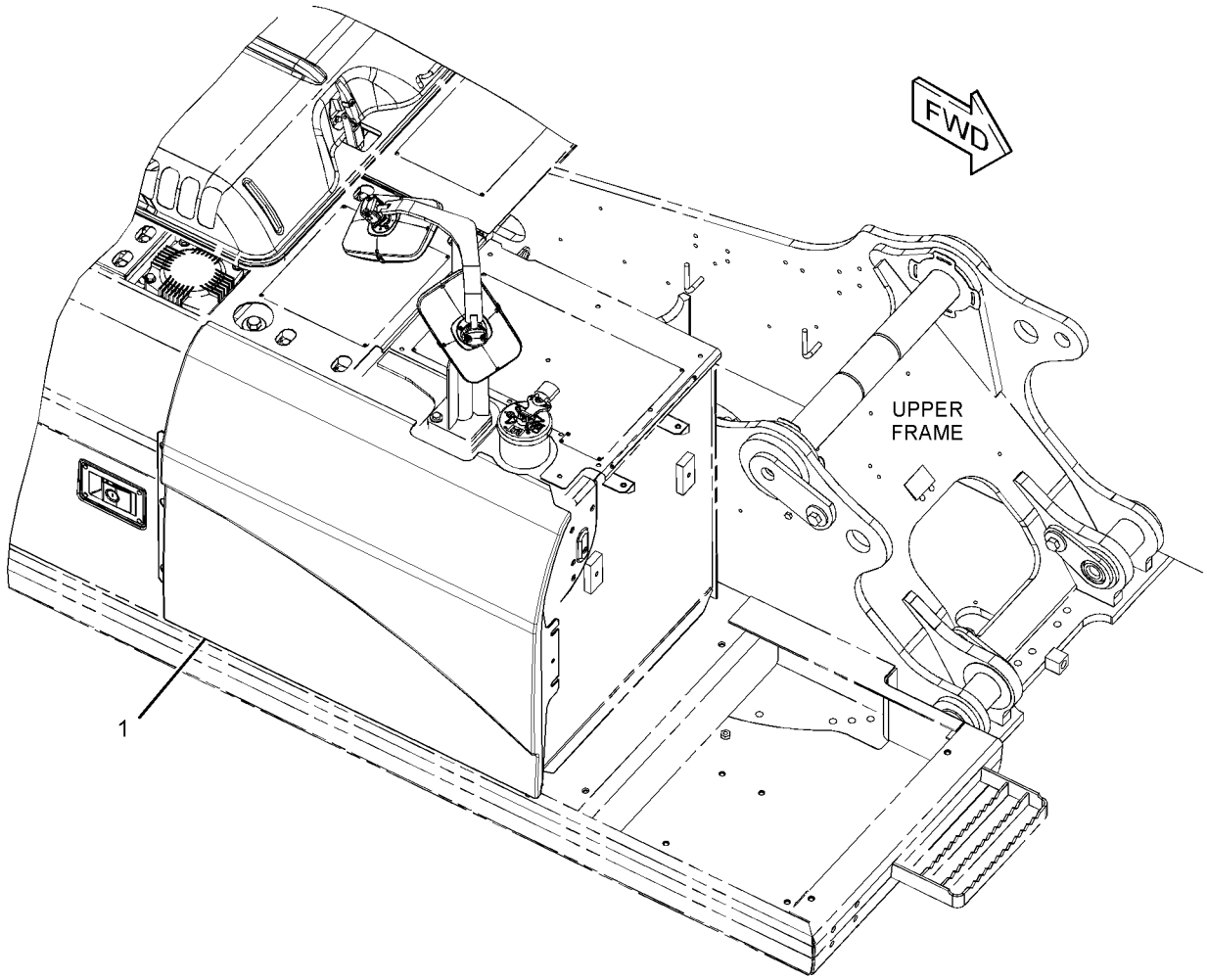

GRAPHIC #1 **<END>** g01627806

289-6910 DOOR GP-ACCESS–RADIATOR

S/N: KGF1-UP; FAL1-UP
PART OF 264-8651, 290-1911, 298-4256, 298-4271, 298-4272 COOLING AR-HIGH AMBIENT TEMP, 290-1910 MACHINE AR
AN ATTACHMENT

SMCS-7273 **i02763460**

NOTE	REF NO	GRAPHIC REF	PART NUMBER	QTY	PART NAME 1 2 3 4 5 6 (PRODUCT LEVEL)	SEE PAGE
Y	1	1	**289-6917**	1	DOOR GP-ACCESS (RADIATOR)	411

Y-SEPARATE ILLUSTRATION

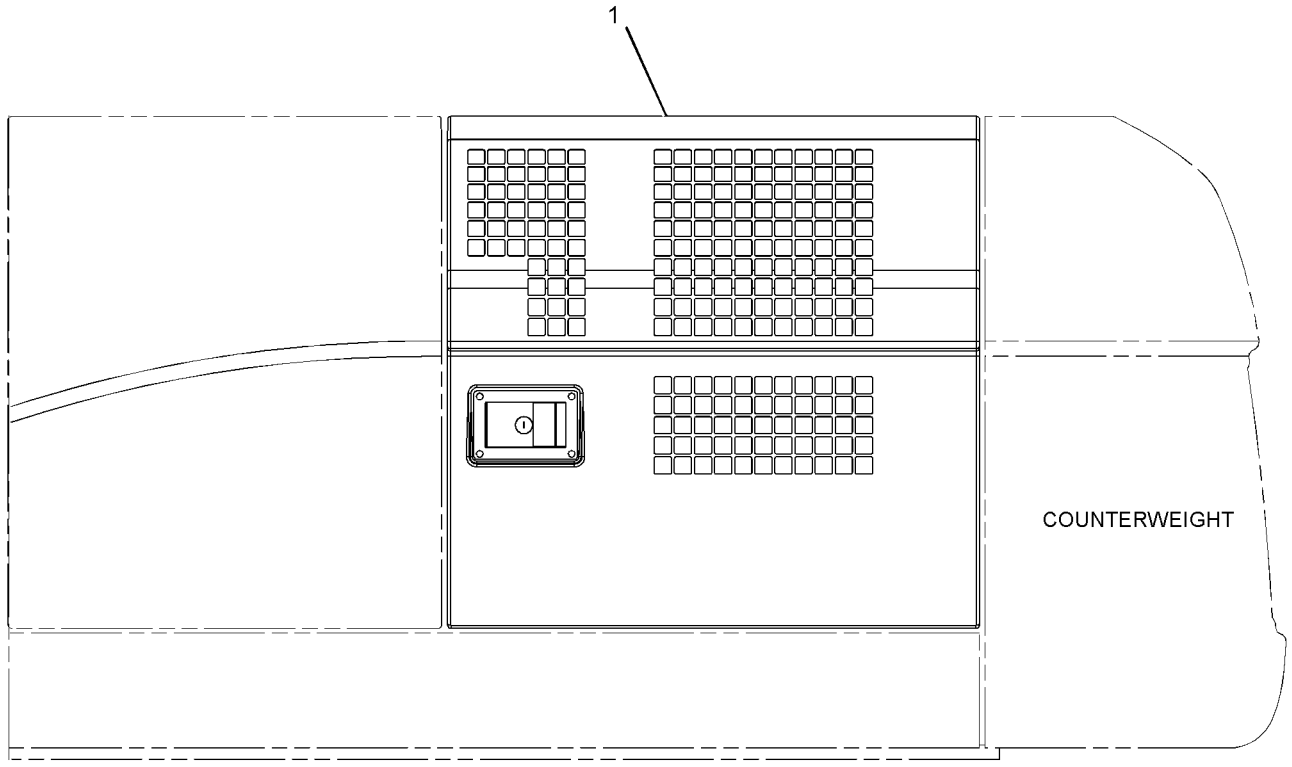

LEFT SIDE VIEW

GRAPHIC #1 **<END>** g01320462

289-6911 DOOR GP-ACCESS—RADIATOR, AFTCLR, HYD COOLER

S/N: KGF1-UP

PART OF 273-7725, 320-5732 HOOD & GUARD GP

AN ATTACHMENT

SMCS-7273 **i02765376**

NOTE	REF NO	GRAPHIC REF	PART NUMBER	QTY	PART NAME 1 2 3 4 5 6 (PRODUCT LEVEL)	SEE PAGE
	1	1	*289-6912*	1	DOOR AS-ACCESS	
		1	**165-2976**	2	HINGE	
J	2	1	**298-2942**	1	LOCK AS	
M	3	1	**099-6418**	4	NUT (M6X1-THD)	
	4	1	**244-7929**	1	INSULATION	
	5	1	**307-7656**	1	LINER	
	6	1	**122-4101**	1	RUBBER	
	7	1	**208-4289**	1	CUSHION	

J-REQUIRES CORPORATE KEY
M-METRIC PART

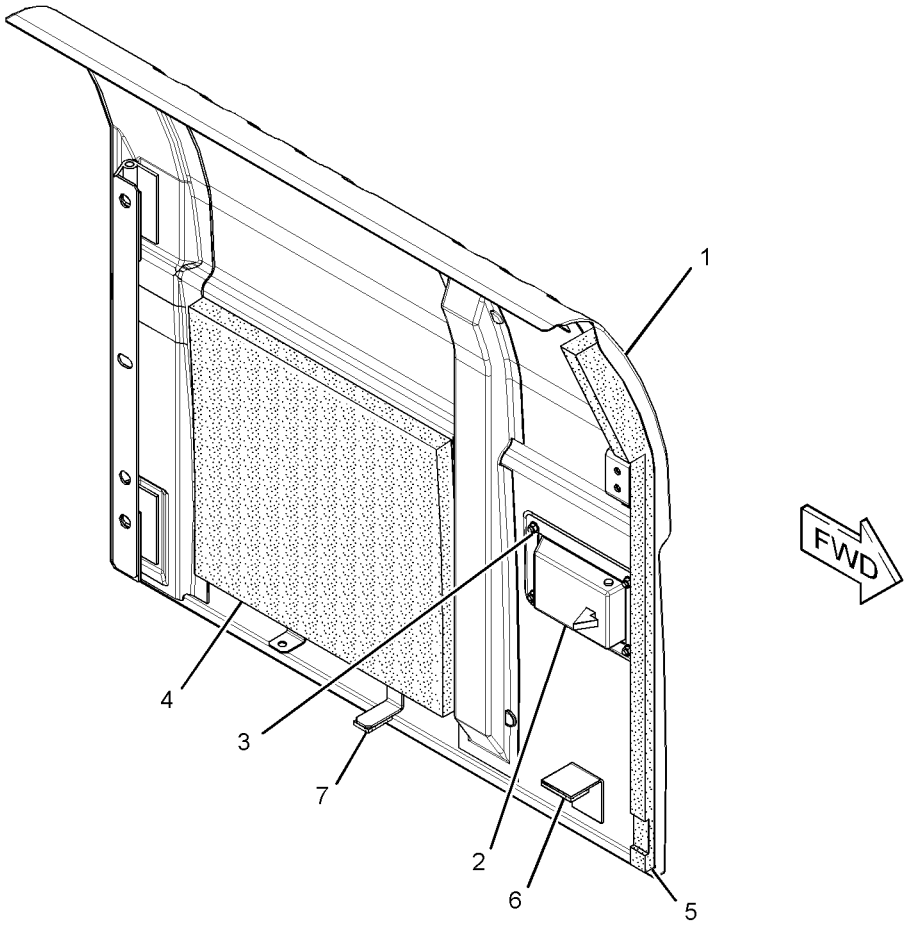

GRAPHIC #1 **<END>** g01388007

289-6913 DOOR GP-ACCESS–PUMP

S/N: KGF1-UP; FAL1-UP
PART OF 273-7725, 273-7726, 320-5732 HOOD & GUARD GP
ALSO AN ATTACHMENT

SMCS-7273 **i02785146**

NOTE	REF NO	GRAPHIC REF	PART NUMBER	QTY	PART NAME 1 2 3 4 5 6 (PRODUCT LEVEL)	SEE PAGE
	1	1	*289-6914*	1	DOOR AS-SIDE	
		1	**165-2976**	2	HINGE	
J	2	1	**298-2942**	1	LOCK AS	
M	3	1	**099-6418**	4	NUT (M6X1-THD)	
	4	1	**244-7928**	1	INSULATION	
	5	1	**244-7927**	1	INSULATION	
	6	1	**248-8961**	1	LINER	
	7	1	**184-8862**	1	COVER	

J-REQUIRES CORPORATE KEY
M-METRIC PART

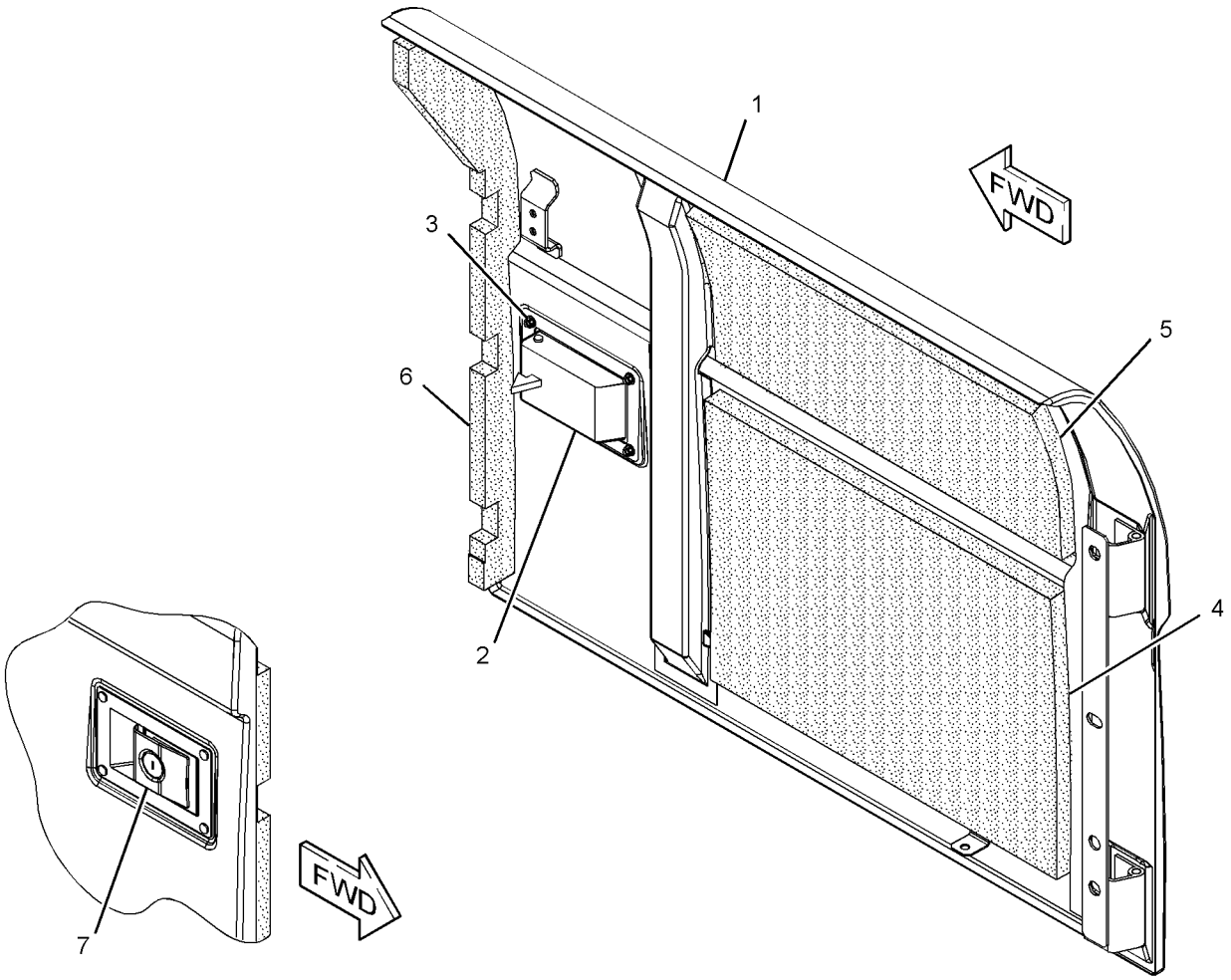

GRAPHIC #1 **<END>** g01370640

289-6915 DOOR GP-ACCESS–RADIATOR

S/N: KGF1-UP; FAL1-UP

PART OF 273-7726 HOOD & GUARD GP

SMCS-7273 **i02959247**

NOTE	REF NO	GRAPHIC REF	PART NUMBER	QTY	PART NAME 1 2 3 4 5 6 (PRODUCT LEVEL)	SEE PAGE
M	1	1	**099-6418**	4	NUT (M6X1-THD)	
	2	1	**122-4101**	1	RUBBER	
	3	1	**208-4289**	1	CUSHION	
	4	1	**244-7929**	1	INSULATION	
	5	1	*289-6916*	1	DOOR AS-ACCESS	
		1	**165-2976**	2	HINGE	
J	6	1	**298-2942**	1	LOCK AS	
	7	1	**307-7656**	1	LINER	

J-REQUIRES CORPORATE KEY
M-METRIC PART

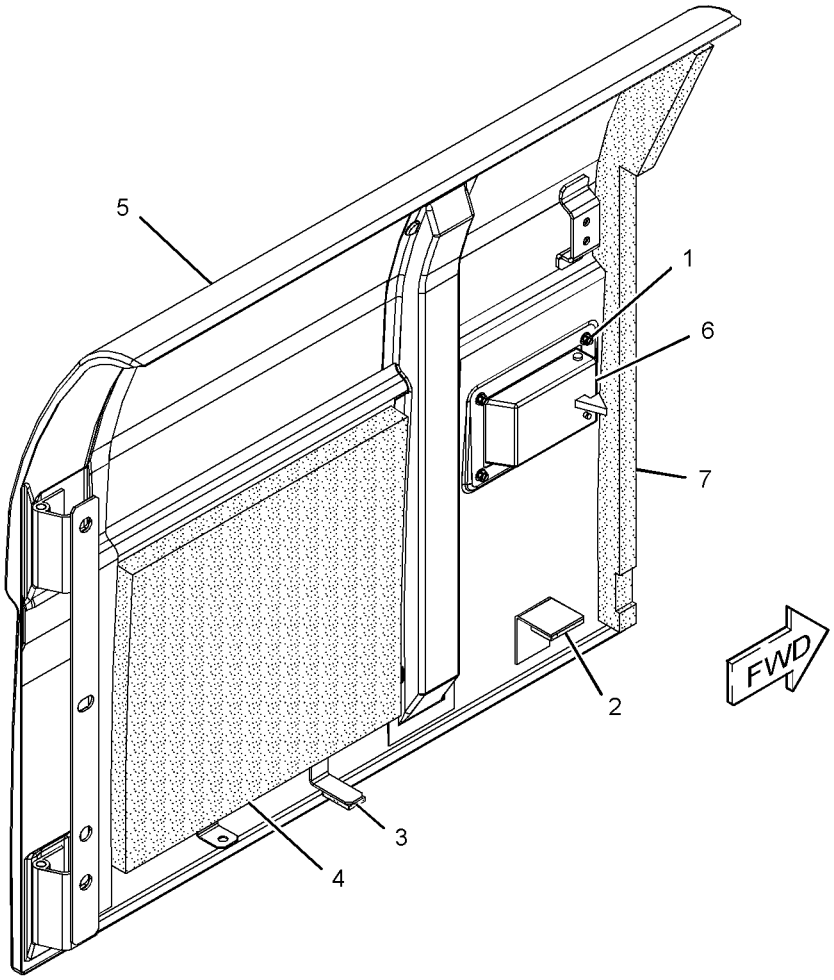

GRAPHIC #1 **<END>** g01371686

289-6917 DOOR GP-ACCESS–RADIATOR

S/N: KGF1-UP; FAL1-UP
PART OF 289-6910 DOOR GP-ACCESS
AN ATTACHMENT

SMCS-7273 **i03115741**

NOTE	REF NO	GRAPHIC REF	PART NUMBER	QTY	PART NAME 1 2 3 4 5 6 (PRODUCT LEVEL)	SEE PAGE
M	1	1	**099-6418**	4	NUT (M6X1-THD)	
	2	1	**122-4101**	1	RUBBER	
	3	1	**208-4289**	1	CUSHION	
	4	1	*293-6644*	1	DOOR AS-ACCESS	
	4A	1	**165-2976**	2	HINGE	
J	5	1	**298-2942**	1	LOCK AS	
	6	1	**307-7656**	1	LINER	

J-REQUIRES CORPORATE KEY
M-METRIC PART

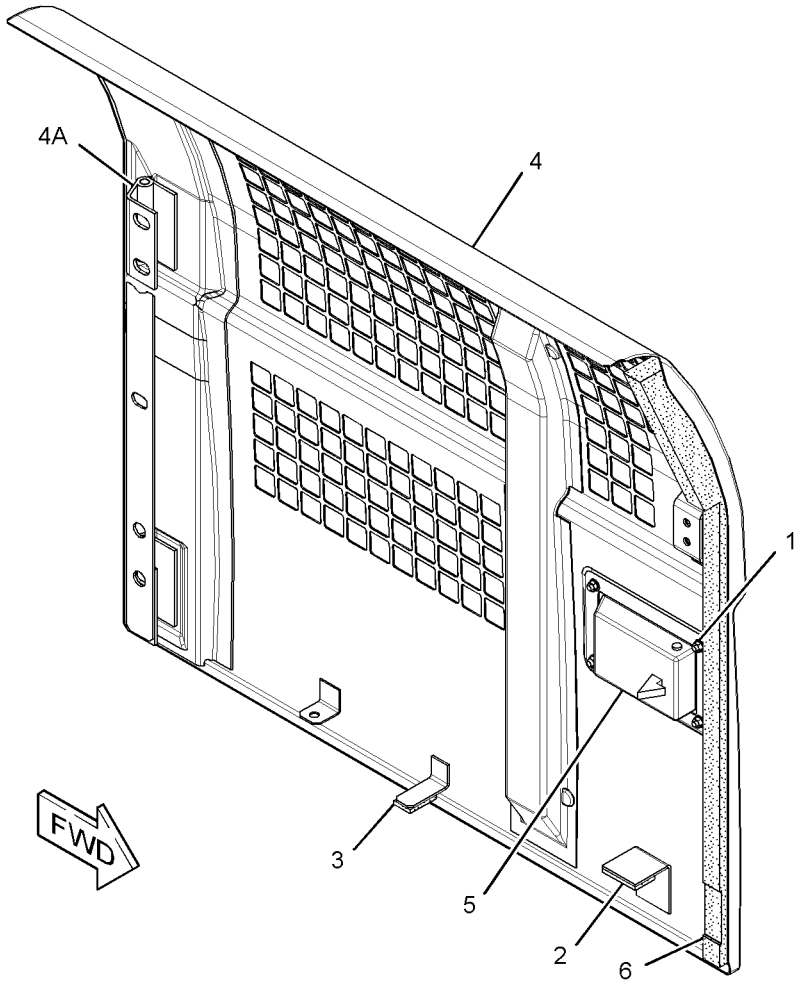

GRAPHIC #1 **<END>** g01481757

330-1427 DOOR GP-ACCESS—HYDRAULIC TANK, SIDE

S/N: KGF1-UP; FAL1-UP
PART OF 330-1426 DOOR AS-ACCESS
AN ATTACHMENT

SMCS-7273 **i03131758**

NOTE	REF NO	GRAPHIC REF	PART NUMBER	QTY	PART NAME 1 2 3 4 5 6 (PRODUCT LEVEL)	SEE PAGE
	1	1	**170-3015**	1	BUMPER	
	2	1	**177-5739**	1	LINER	
	3	1	**240-2978**	3	LINER	
	4	1	**240-2979**	1	LINER	

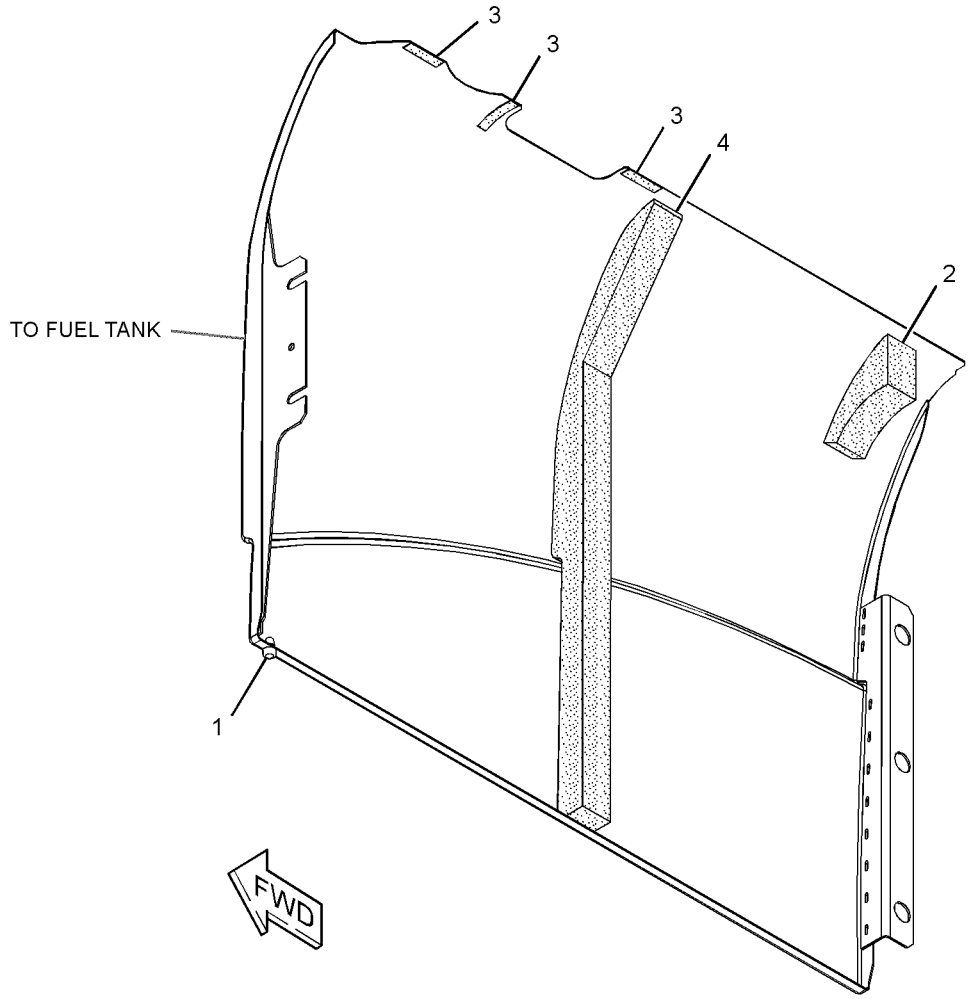

GRAPHIC #1 **<END>** g01627354

223-3042 FENDER & COVER GP

S/N: KGF1-UP; FAL1-UP

PART OF 264-8638, 264-8639 CHASSIS AR

SMCS-7252 **i02347079**

NOTE	REF NO	GRAPHIC REF	PART NUMBER	QTY	PART NAME 1 2 3 4 5 6 (PRODUCT LEVEL)	SEE PAGE
M	1	1	**135-8573**	2	BOLT AS (M12X1.75X25-MM)	
	2	1	**236-3702**	2	SPACER (15X35X11-MM THK)	
	3	1	**236-3703**	2	WASHER (25X35X4-MM THK)	
	4	1	**236-9570**	1	COVER AS	
	5	1	**259-3543**	1	STEP AS	
	6	1	**5P-1075**	2	WASHER-HARD (10.2X22.5X3-MM THK)	
M	7	1	**8T-4195**	2	BOLT (M10X1.5X30-MM)	

M-METRIC PART

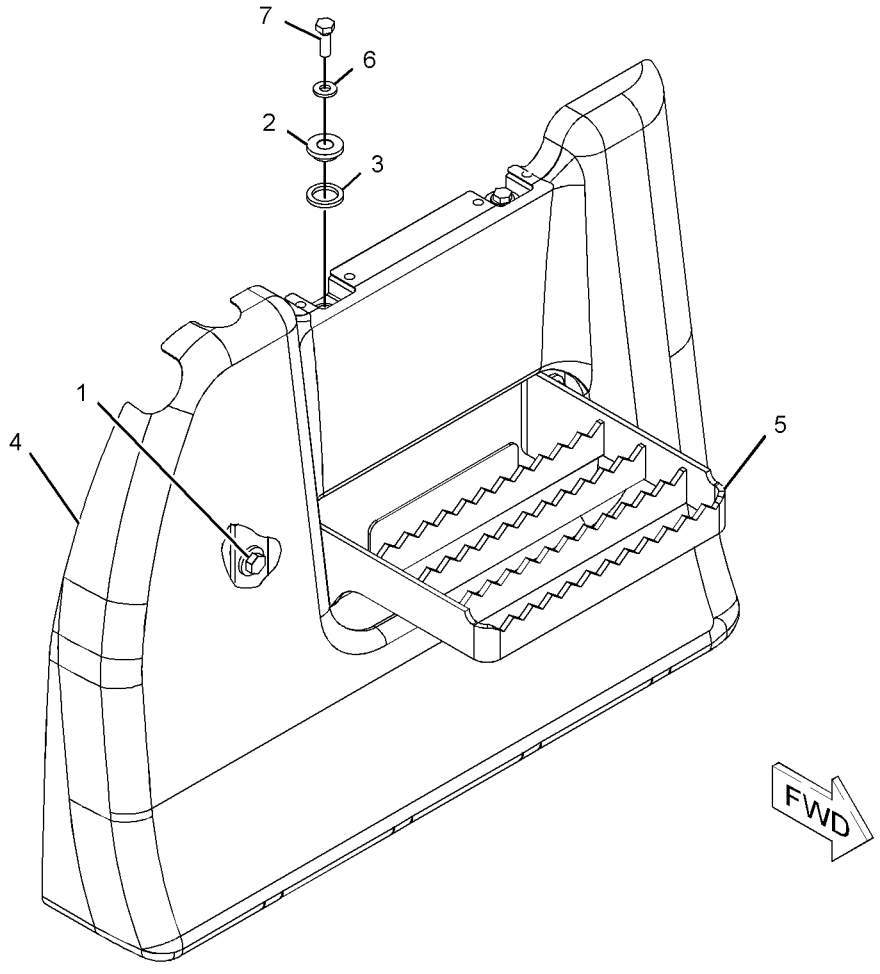

GRAPHIC #1 **<END>** g01150323

FRAME AND BODY

330-1166 FENDER & COVER GP

S/N: KGF1-UP; FAL1-UP
PART OF 330-1194 MACHINE AR
AN ATTACHMENT

SMCS-7252 **i03127885**

NOTE	REF NO	GRAPHIC REF	PART NUMBER	QTY	PART NAME 1 2 3 4 5 6 (PRODUCT LEVEL)	SEE PAGE
	1	1	**330-1167**	1	COVER AS	
		1	**278-3818**	1	LINER	

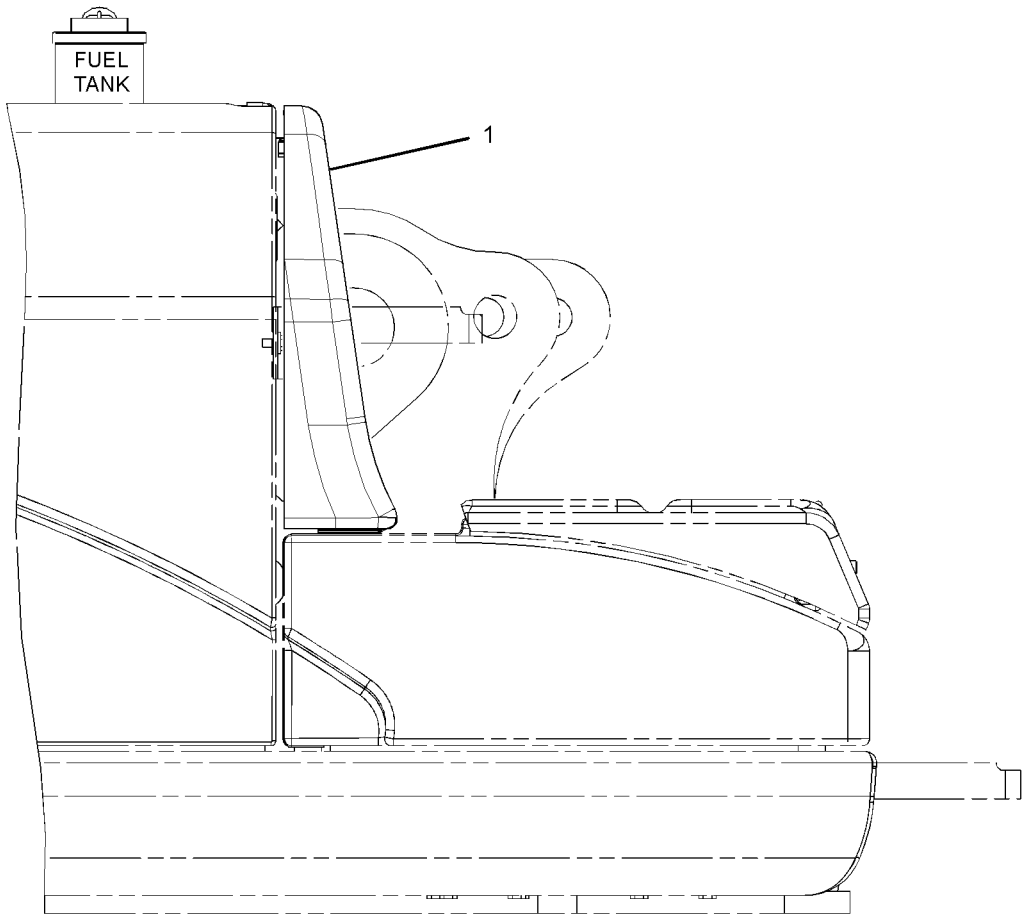

RIGHT SIDE VIEW

GRAPHIC #1

<END>

g01619313

FRAME AND BODY

273-6716 FRAME GP-UPPER

S/N: KGF1-UP; FAL1-UP

PART OF 264-8638, 264-8639 CHASSIS AR

SMCS-7051 **i03146203**

NOTE	REF NO	GRAPHIC REF	PART NUMBER	QTY	PART NAME 1 2 3 4 5 6 (PRODUCT LEVEL)	SEE PAGE
B	1	1	**093-0083**	4	SHIM (1-MM THK)	
B	2	1	**308-8776**	2	SHIM (1-MM THK)	
B	3	1	**093-0115**	2	SHIM (2-MM THK)	
B	4	1	**308-8777**	1	SHIM (2-MM THK)	
	5	1	**093-0349**	3	WASHER (22X60X6-MM THK)	
	6	1	**093-0363**	2	SPACER (83X120X12-MM THK)	
B	7	1	**308-8775**	1	SHIM (0.5-MM THK)	
B	8	1	**133-2425**	2	SHIM (0.5-MM THK)	
	9	1	**4I-4812**	2	PIN AS	
	10	1	**212-2838**	2	SHIM (2-MM THK)	
J	11	1	**245-7900**	1	CAP	
J	12	1	**245-7901**	1	CAP	
	13	1	**315-0800**	1	PIN AS	
	14	1	**273-6717**	1	FRAME AS-UPPER	
	14A	1	**163-3729**	1	STEP AS	
	14B	1	**7Y-0633**	1	BOSS	
	15	1	**8T-4123**	3	WASHER (22X35X3.5-MM THK)	
BM	16	1	**8T-4191**	1	BOLT (M10X1.5X16-MM)	
M	17	1	**8T-4780**	3	BOLT (M20X2.5X30-MM)	

B-USE AS REQUIRED
J-USE ON MACHINE WITHOUT LOWER WIPER
M-METRIC PART

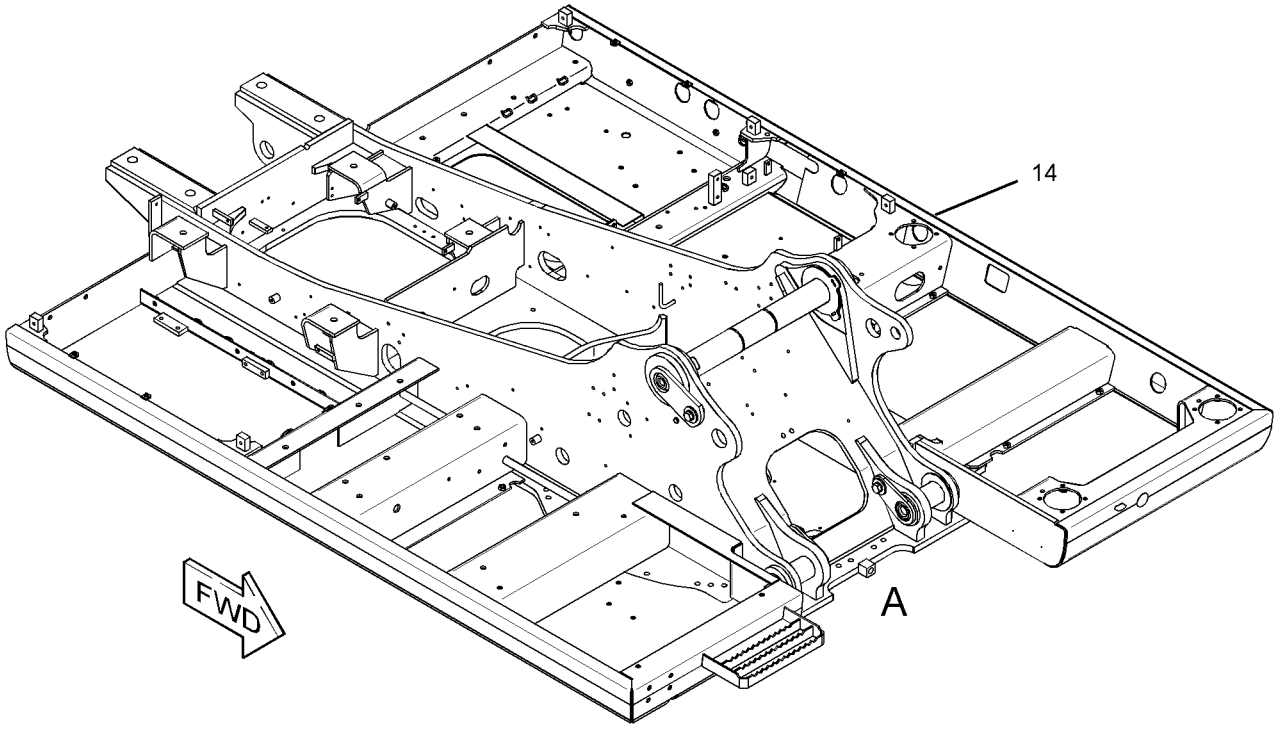

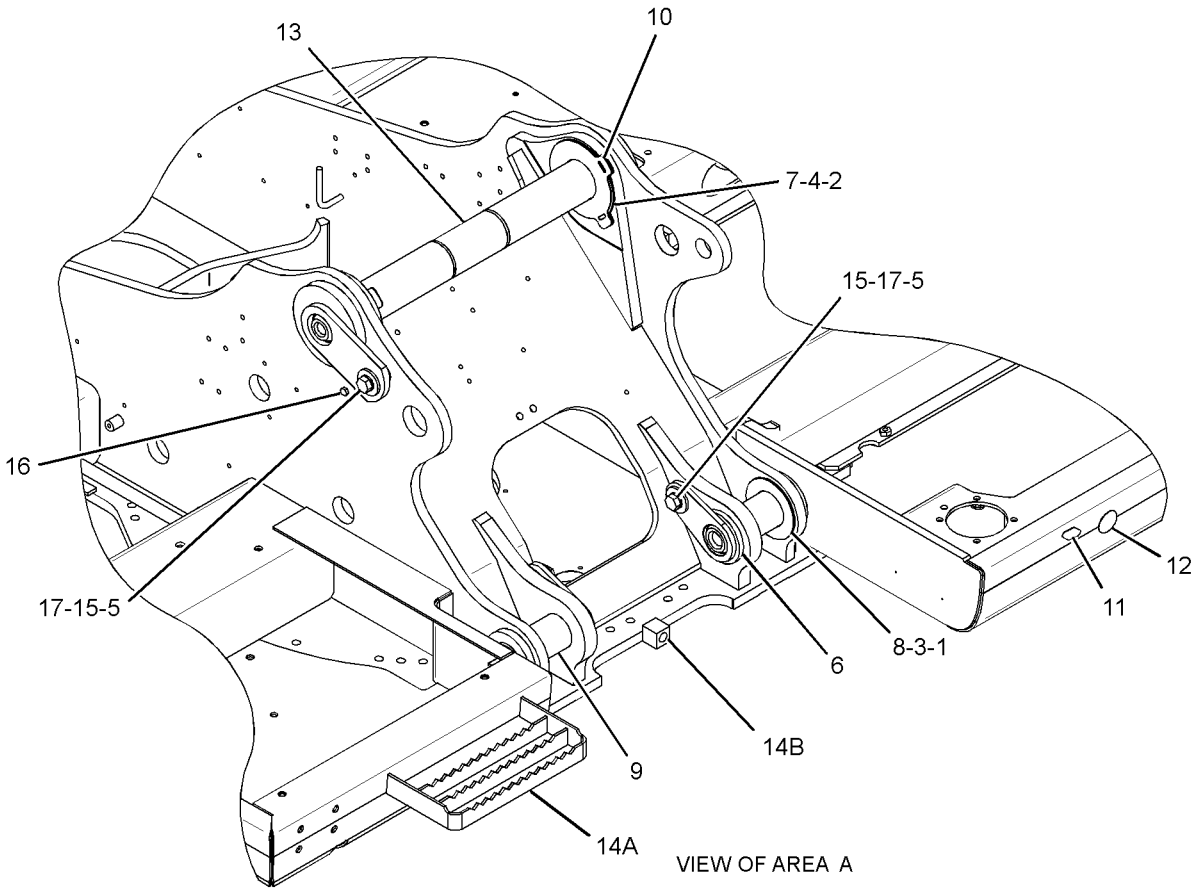

VIEW OF AREA A

GRAPHIC #1 **<END>** g01524900

227-6081 GEAR & BEARING GP-SWING

S/N: KGF1-UP; FAL1-UP

PART OF 227-6147 GEAR & BEARING GP-SWING

SMCS-7063 **i02169319**

NOTE	REF NO	GRAPHIC REF	PART NUMBER	QTY	PART NAME 1 2 3 4 5 6 (PRODUCT LEVEL)	SEE PAGE
Z	1	1		118	BALL	
Z	2	1		118	SEPARATOR	
Z	3	1		1	RACE AS-OUTER	
Z	4	1		1	RACE-BEARING	
	5	1	**3B-8489**	1	FITTING-GREASE	
	6	1	**227-6071**	1	SEAL-DUST	
BE	7	1	**148-4685**		SEAL	

B-USE AS REQUIRED
E-ORDER BY THE CENTIMETER
Z-NOT SERVICED SEPARATELY

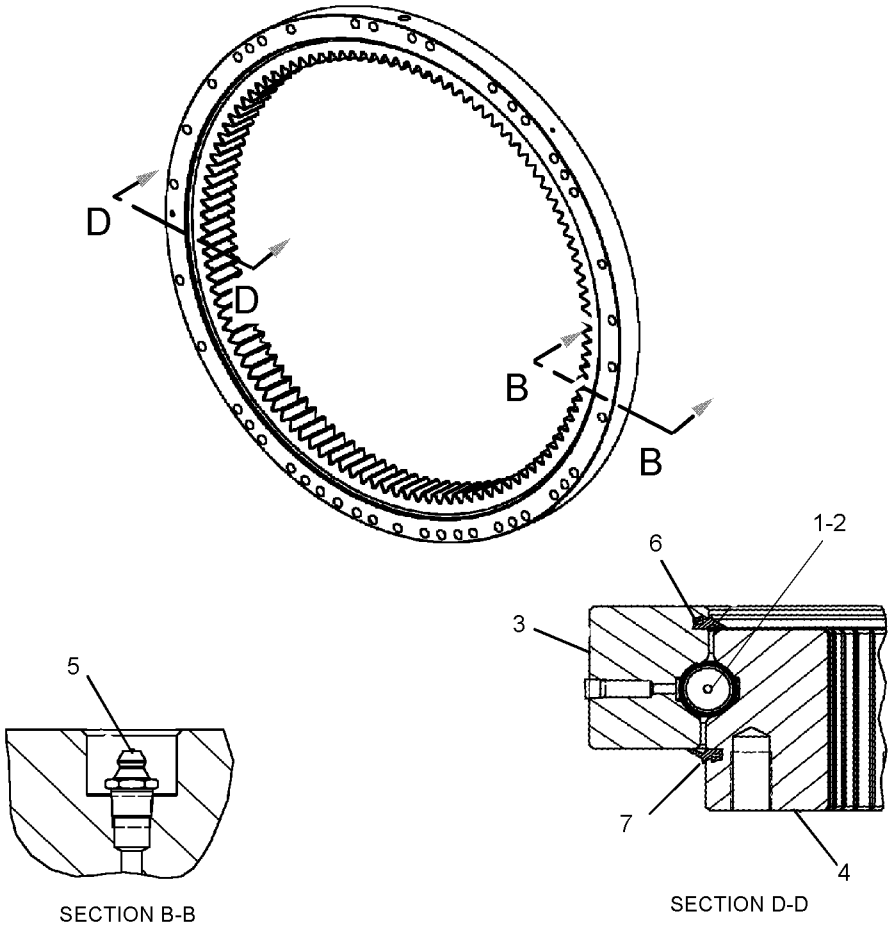

GRAPHIC #1 **<END>** g01099271

227-6147 GEAR & BEARING GP-SWING

S/N: KGF1-UP; FAL1-UP

PART OF 240-3822, 247-7454 FRAME AR-UNDERCARRIAGE

SMCS-7063 **i02507535**

NOTE	REF NO	GRAPHIC REF	PART NUMBER	QTY	PART NAME 1 2 3 4 5 6 (PRODUCT LEVEL)	SEE PAGE
	1	1	**5K-9243**	2	ELBOW-FLARED	
	2	1	**7Y-1647**	1	GASKET	
	3	1	**7Y-1650**	1	CLAMP-HOSE	
	4	1	**7Y-1863**	40	SPACER (20.5X38X34-MM THK)	
	5	1	**148-4689**	1	TUBE AS	
	6	1	**171-9464**	37	SPACER (20.6X38X6-MM THK)	
Y	7	1	**227-6081**	1	GEAR & BEARING GP-SWING	417
	8	1	**227-6105**	1	BOOT	
	9	1	**227-6106**	1	RETAINER	
	10	1	**096-4902**	1	DOWEL	
	11	1	**148-4703**	1	COVER	
	12	1	**148-4704**	1	GASKET	
	13	1	**3B-8489**	1	FITTING-GREASE	
	14	1	**4N-9170**	2	CLIP	
	15	1	**7Y-1648**	1	STRIP	
M	16	1	**8T-0360**	40	BOLT (M20X2.5X90-MM)	
M	17	1	**8T-0362**	37	BOLT (M20X2.5X110-MM)	
	18	1	**8T-4121**	14	WASHER-HARD (11X21X2.5-MM THK)	
M	19	1	**8T-4137**	2	BOLT (M10X1.5X20-MM)	
M	20	1	**8T-4136**	12	BOLT (M10X1.5X25-MM)	
M	21	1	**8T-4199**	2	BOLT (M8X1.25X12-MM)	
B	22	1	**1U-8846**		SEALANT-GASKET	

B-USE AS REQUIRED
M-METRIC PART
Y-SEPARATE ILLUSTRATION

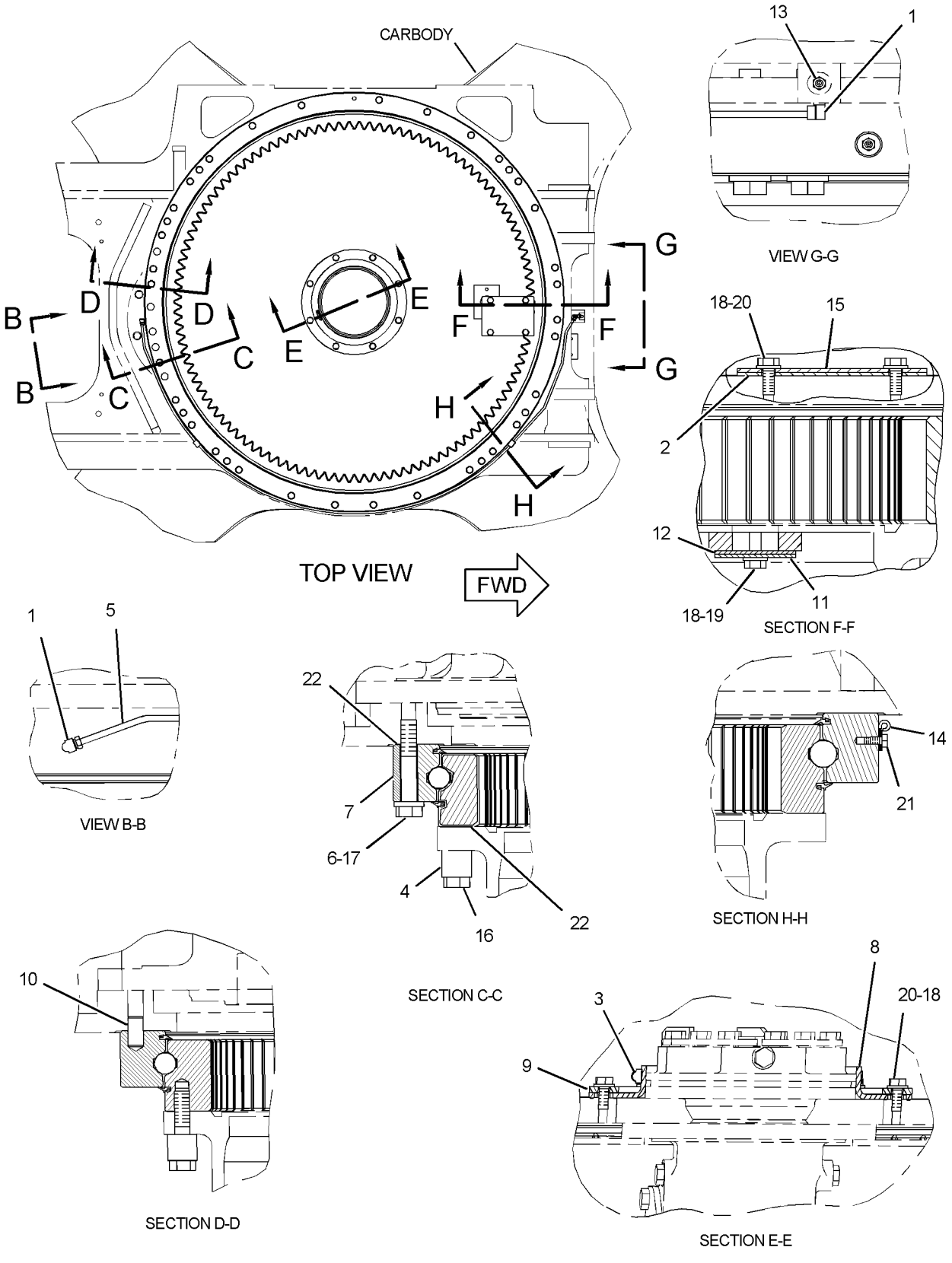

GRAPHIC #1 **<END>** g01276722

289-6424 GUARD GP-BOTTOM

S/N: KGF1-UP; FAL1-UP

PART OF 264-8638, 264-8639 CHASSIS AR

SMCS-7153 **i02562645**

NOTE	REF NO	GRAPHIC REF	PART NUMBER	QTY	PART NAME 1 2 3 4 5 6 (PRODUCT LEVEL)	SEE PAGE
M	1	1	**135-8576**	36	BOLT AS-LOCKING (M12X1.75X30-MM)	
	2	1	**165-2823**	1	SHEET	
	3	1	**248-8992**	1	SHEET	
	4	1	**248-8993**	1	SHEET	
	5	1	**248-8994**	1	SHEET	
	6	1	**248-8995**	1	SHEET	
	7	1	**273-7674**	2	SHEET	
	8	1	**286-6281**	1	SHEET AS	
	9	1	**289-6603**	1	SHEET	

M-METRIC PART

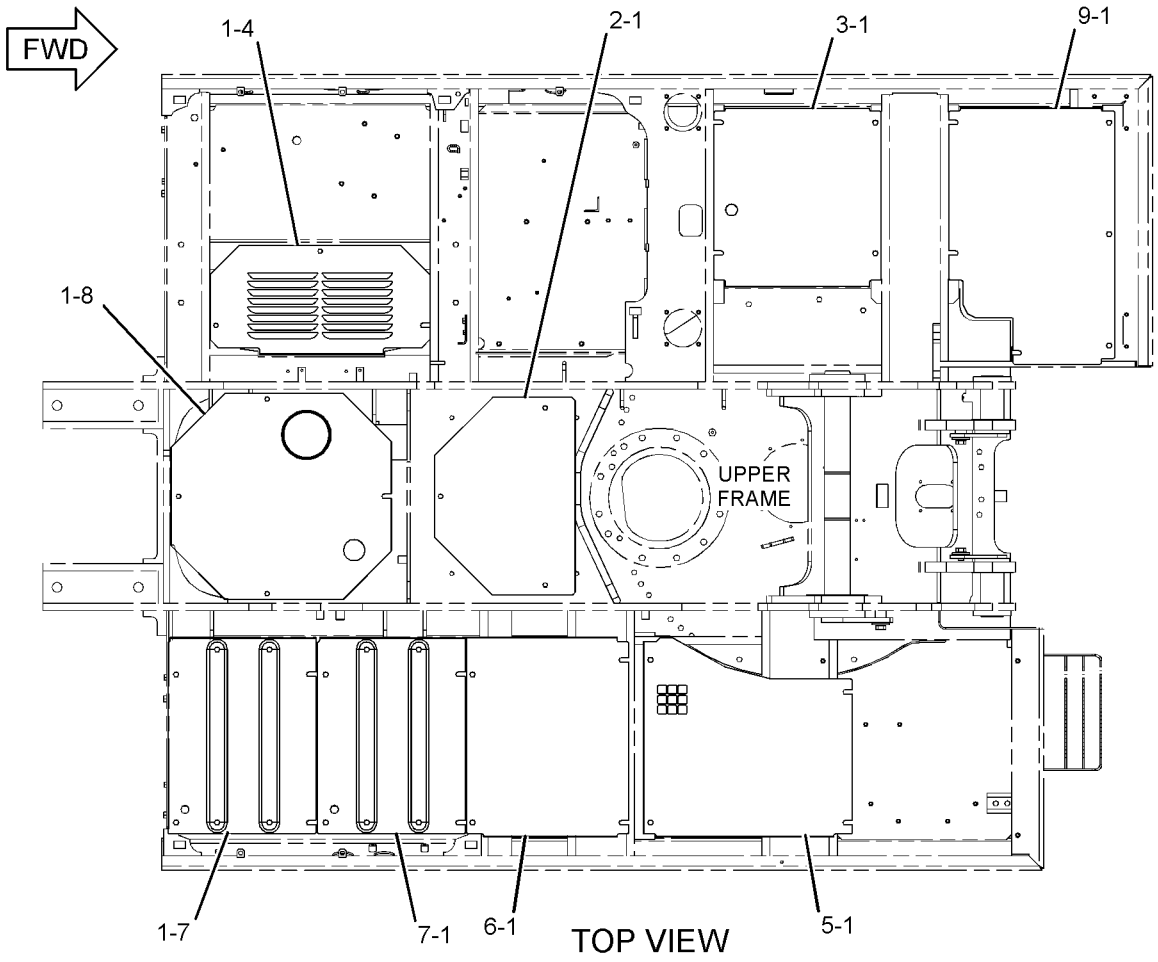

GRAPHIC #1

<END>

g01297179

289-6425 GUARD GP-BOTTOM–HEAVY-DUTY

S/N: KGF1-UP; FAL1-UP
AN ATTACHMENT

SMCS-7153 **i02558343**

NOTE	REF NO	GRAPHIC REF	PART NUMBER	QTY	PART NAME 1 2 3 4 5 6 (PRODUCT LEVEL)	SEE PAGE
M	1	1	**135-8576**	4	BOLT AS-LOCKING (M12X1.75X30-MM)	
	2	1	**165-2854**	1	PLATE AS	
	3	1	**248-9012**	1	SHEET AS	
	4	1	**248-9014**	1	SHEET AS	
	5	1	**248-9016**	1	SHEET AS	
	6	1	**248-9018**	1	SHEET AS	
	7	1	**248-9020**	1	SHEET AS	
	8	1	**262-2484**	1	PLATE AS	
		1	**099-7857**	1	HINGE	
	9	1	**273-7675**	2	SHEET AS	
	10	1	**286-6283**	1	SHEET AS	

M-METRIC PART

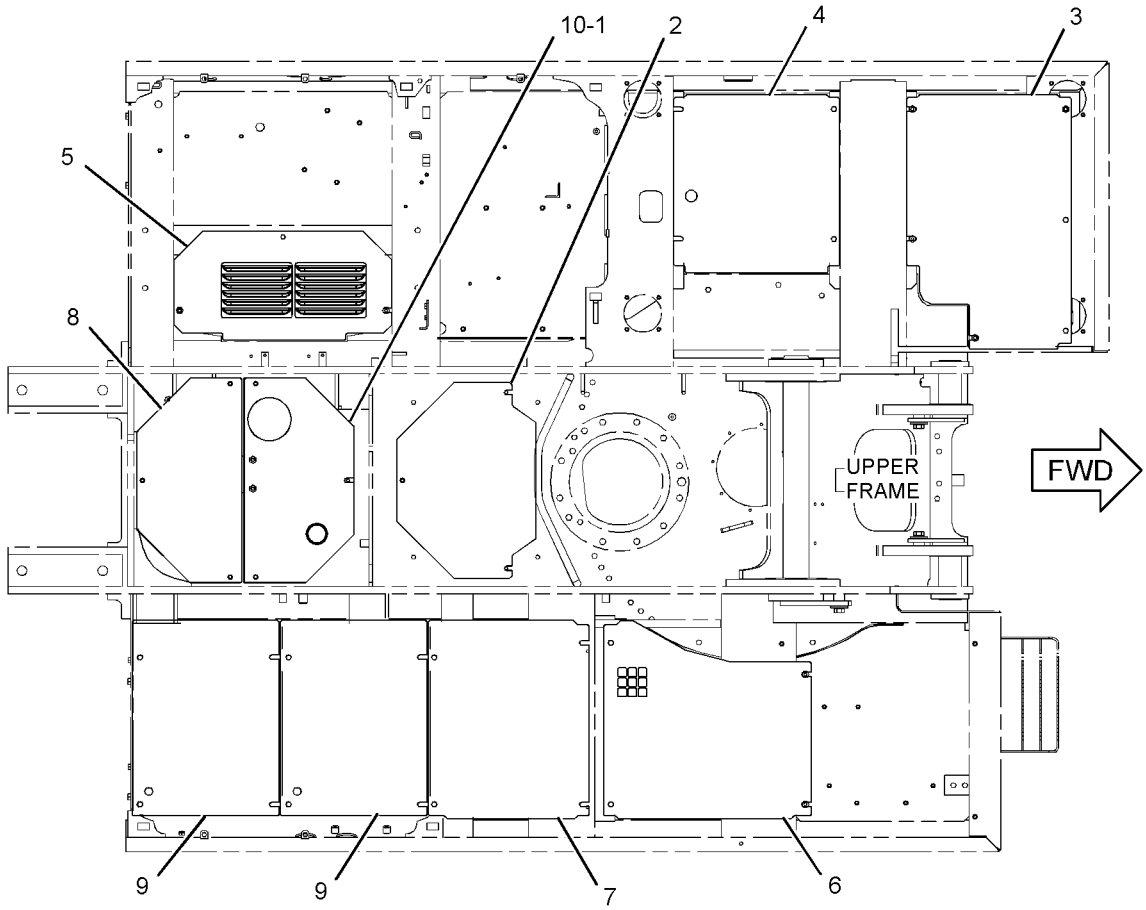

TOP VIEW

GRAPHIC #1 **<END>** g01285389

134-8850 GUARD GP-SWIVEL

S/N: KGF1-UP; FAL1-UP
AN ATTACHMENT

SMCS-7183 **i01287740**

NOTE	REF NO	GRAPHIC REF	PART NUMBER	QTY	PART NAME 1 2 3 4 5 6 (PRODUCT LEVEL)	SEE PAGE
	1	1	**134-8851**	1	PLATE AS	
	2	1	**130-4276**	4	PLATE	
M	3	1	**8T-4140**	8	BOLT (M16X2.0X60MM)	
	4	1	**3E-9411**	8	WASHER-HARD (6MM THK)	

M-METRIC PART

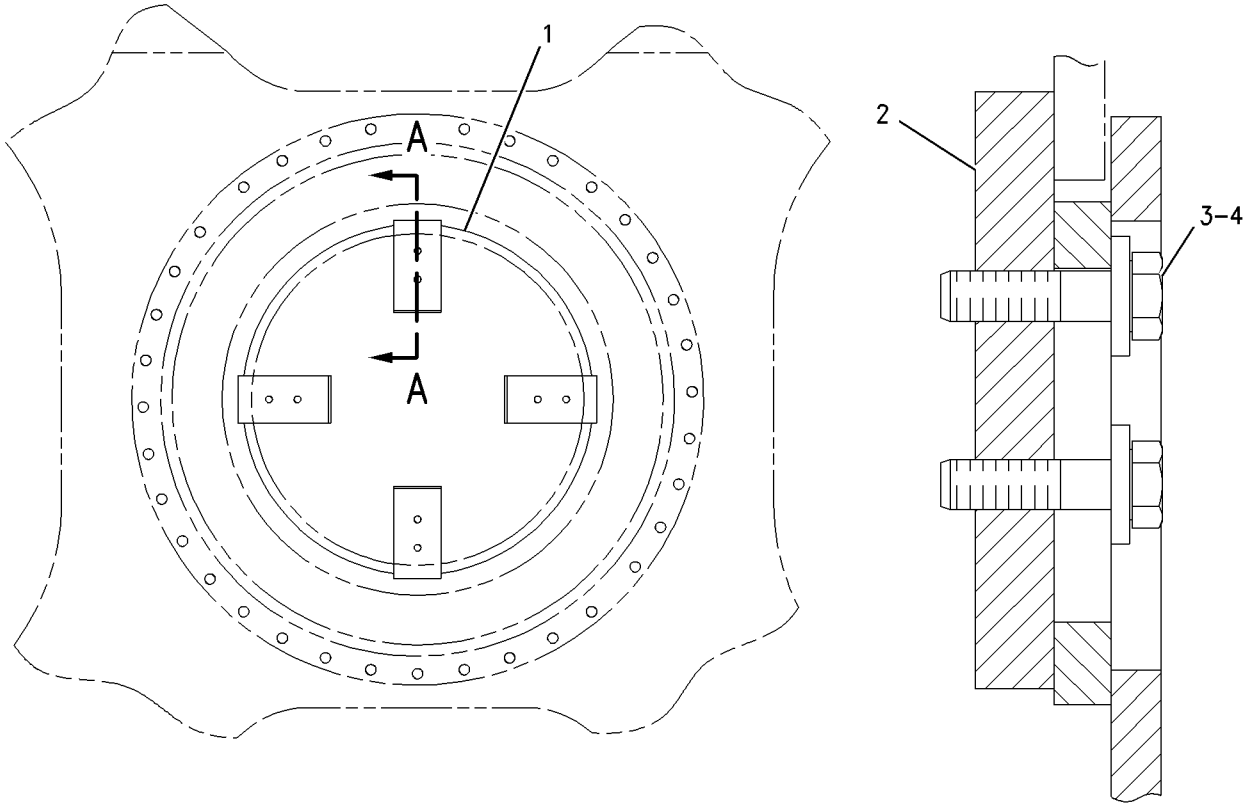

SECTION A-A

GRAPHIC #1 **<END>** g00690093

134-8875 GUARD GP-SWIVEL

S/N: KGF1-UP; FAL1-UP
AN ATTACHMENT

SMCS-7183 **i01721530**

NOTE	REF NO	GRAPHIC REF	PART NUMBER	QTY	PART NAME 1 2 3 4 5 6 (PRODUCT LEVEL)	SEE PAGE
	1	1	**134-8876**	1	PLATE AS	
	2	1	**134-8878**	1	PLATE AS	
M	3	1	**8C-8992**	5	BOLT-LOCKING (M12X1.75X30MM)	
	4	1	**5P-1076**	5	WASHER-HARD (13.5X30X4MM THK)	

M-METRIC PART

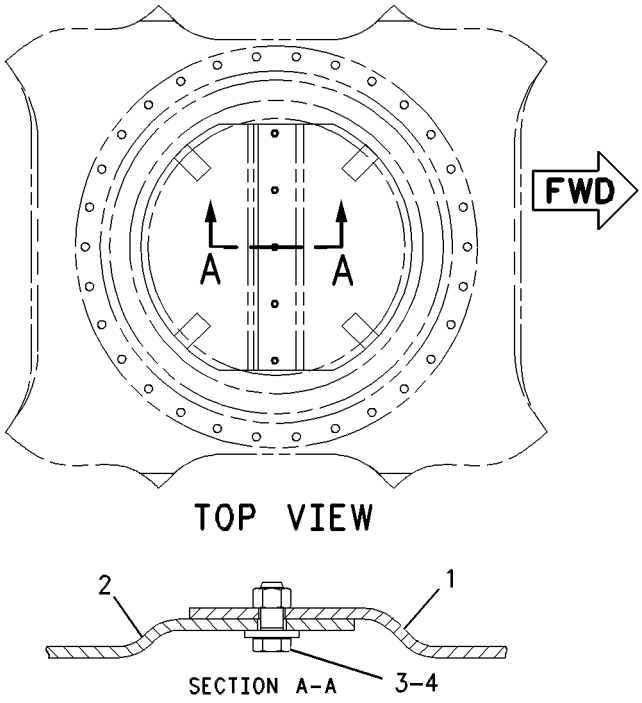

GRAPHIC #1 **<END>** g00390432

142-3835 HANDRAIL GP

S/N: KGF1-UP; FAL1-UP

PART OF 264-8638, 264-8639 CHASSIS AR

SMCS-7256 **i02781758**

NOTE	REF NO	GRAPHIC REF	PART NUMBER	QTY	PART NAME 1 2 3 4 5 6 (PRODUCT LEVEL)	SEE PAGE
	1	1	**8T-4223**	2	WASHER-HARD (13.5X25.5X3-MM THK)	
M	2	1	**8T-4192**	2	BOLT (M12X1.75X25-MM)	
	3	1	**177-5880**	2	SLEEVE	
	4	1	**177-5879**	1	CLAMP	
	5	1	**177-5877**	1	HANDHOLD AS	
M	6	1	**135-8578**	3	BOLT AS	

M-METRIC PART

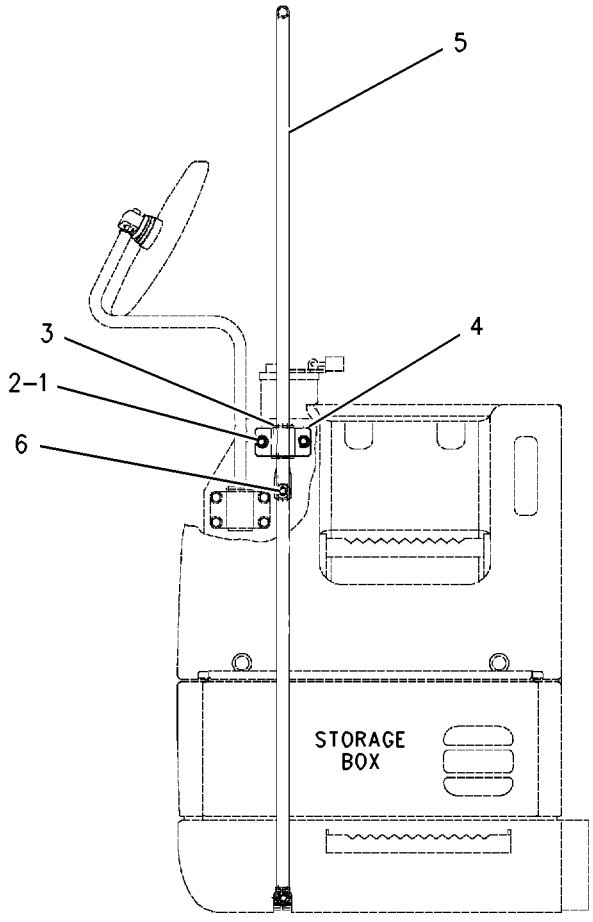

FRONT VIEW

GRAPHIC #1 **<END>** g00678707

FRAME AND BODY

273-7725 HOOD & GUARD GP

S/N: KGF1-UP
PART OF 290-1892 SPECIAL AR
AN ATTACHMENT
TYPE 1

SMCS-7251, 7276 **i02781580**

NOTE	REF NO	GRAPHIC REF	PART NUMBER	QTY	PART NAME 1 2 3 4 5 6 (PRODUCT LEVEL)	SEE PAGE
	1	1	**1R-9958**	1	FASTENER	
	2	1	**4I-0117**	1	FASTENER	
	3	3	**4I-0118**	2	HOOK AS	
	4	2	**4I-0232**	2	STRIKER	
	5	2	**4I-8019**	3	SUPPORT	
	6	2	**6I-6033**	3	STOP	
	7	2	**7Y-2853**	8	SPACER (13X38X5-MM THK)	
	8	2	**087-3908**	4	SHIM (1-MM THK)	
	9	2	**087-3909**	4	SHIM (2-MM THK)	
	10	2	**116-1628**	1	SUPPORT AS	
	11	2	**122-3979**	1	BAND	
	12	2	**122-3980**	1	ROD	
	13	1	**122-4120**	3	ROD	
M	14	1,2,3	**135-8573**	73	BOLT AS (M12X1.75X25-MM)	
M	15	1,2,3	**135-8575**	35	BOLT AS-LOCKING (M12X1.75X30-MM)	
M	16	2	**135-8577**	4	BOLT AS	
M	17	1	**135-8578**	6	BOLT AS	
	18	3	**170-3016**	15	SPACER (19X32X2-MM THK)	
	19	2	**184-8423**	1	SUPPORT AS	
	20	2	**190-6880**	3	SUPPORT AS	
					(EACH INCLUDES)	
M		2	**6V-9632**	2	NUT-WELD (M6X1-THD)	
	21	2	**203-4889**	1	SPRING	
	22	2	**203-4890**	1	SPRING	
	23	1	**244-8202**	1	COVER AS	
	24	1	**244-8207**	1	COVER AS	
	25	3	**244-8219**	1	SUPPORT AS	
	26	3	**244-8228**	1	SUPPORT AS	
	27	3	**244-8234**	1	SUPPORT AS	
	28	3	**244-8242**	1	SUPPORT AS	
	29	3	**244-8255**	1	SUPPORT AS	
Y	30	3	**248-8940**	1	SUPPORT AS-ENCLOSURE	488
Y	31	1	**259-3687**	1	HOOD GP-ENGINE	470
	32	3	**262-2324**	1	COVER AS	
	33	1	**262-2353**	1	COVER AS	
	34	3	**262-2363**	1	SHEET AS	
Y	35	3	**278-3842**	1	SHEET AS-SOUND SUPPRESSION	476
	36	3	**283-3911**	1	SHEET AS	
	37	3	**286-6220**	1	SHEET AS	
		3	**286-6276**	1	LINER	
	38	3	**286-6359**	1	SUPPORT AS	
Y	39	3	**289-6572**	1	SHEET AS-SOUND SUPPRESSION	477
	40	2	*289-6583*	1	SUPPORT AS	
M		2	**8T-3597**	8	NUT-WELD (M12X1.75-THD)	
Y	41	3	**307-7660**	1	SUPPORT AS-ENCLOSURE	491
Y	42	2	**289-6588**	1	SHEET AS-SOUND SUPPRESSION	478
Y	43	2	**289-6695**	1	SHEET AS-SOUND SUPPRESSION	479
	44	2	**289-6698**	1	SUPPORT AS	
		2	**129-3400**	1	GUARD	
		2	**244-8198**	1	LINER	
Y	45	3	**289-6699**	1	SHEET AS-SOUND SUPPRESSION	480
	46	2	**289-6805**	1	SUPPORT AS-ENCLOSURE	
Y	47	1	**289-6911**	1	DOOR GP-ACCESS (RADIATOR, AFTCLR, HYD COOLER)	408
Y	48	1	**289-6913**	1	DOOR GP-ACCESS (PUMP)	409

273-7725 **HOOD & GUARD GP** *(contd.)* **i02781580**

NOTE	REF NO	GRAPHIC REF	PART NUMBER	QTY	PART NAME 1 2 3 4 5 6 (PRODUCT LEVEL)	SEE PAGE
	49	3	**293-6982**	1	SHEET AS	
M		3	**8T-3597**	2	NUT-WELD (M12X1.75-THD)	
Y	50	1	**298-2977**	1	DOOR AS-ACCESS (LEFT SIDE, FRONT)	405
Y	51	1	**298-2979**	1	COVER AS-ACCESS (HYDRAULIC TANK, SIDE)	400
Y	52	3	**298-3033**	1	SHEET AS-SOUND SUPPRESSION	483
	53	3	**298-3038**	1	SUPPORT AS	
	54	3	**298-3041**	1	SUPPORT AS	
		3	**278-3832**	1	LINER	
	55	1	**298-3044**	1	COVER AS	
	56	1,2	**3B-4618**	1	PIN-COTTER	
M	57	2	**105-3487**	6	BOLT-SOCKET HEAD (M6X1X20-MM)	
	58	1	**114-6285**	2	BAR	
M	59	2	**5C-9553**	8	BOLT (M6X1X16-MM)	
	60	2	**5P-4115**	16	WASHER-HARD (7.2X19X2-MM THK)	
	61	2	**7Y-2854**	8	SPACER (24X38X3-MM THK)	
	62	1,3	**8T-4121**	5	WASHER-HARD (11X21X2.5-MM THK)	
M	63	3	**8T-4137**	2	BOLT (M10X1.5X20-MM)	
M	64	2	**8T-4138**	10	BOLT (M6X1X20-MM)	
M	65	3	**8T-4189**	4	BOLT (M8X1.25X20-MM)	
	66	2	**8T-4223**	2	WASHER-HARD (13.5X25.5X3-MM THK)	
	67	1,3	**8T-4224**	8	WASHER-HARD (8.8X16X2-MM THK)	
M	68	1	**8T-4908**	4	BOLT (M8X1.25X25-MM)	
	69	2	**9X-8256**	8	WASHER (6.6X12X2-MM THK)	
	70	3	**307-7700**	1	SHEET AS	
		3	**6P-2216**	3	CAP	
		3	**307-7702**	1	INSULATION	

M-METRIC PART
Y-SEPARATE ILLUSTRATION

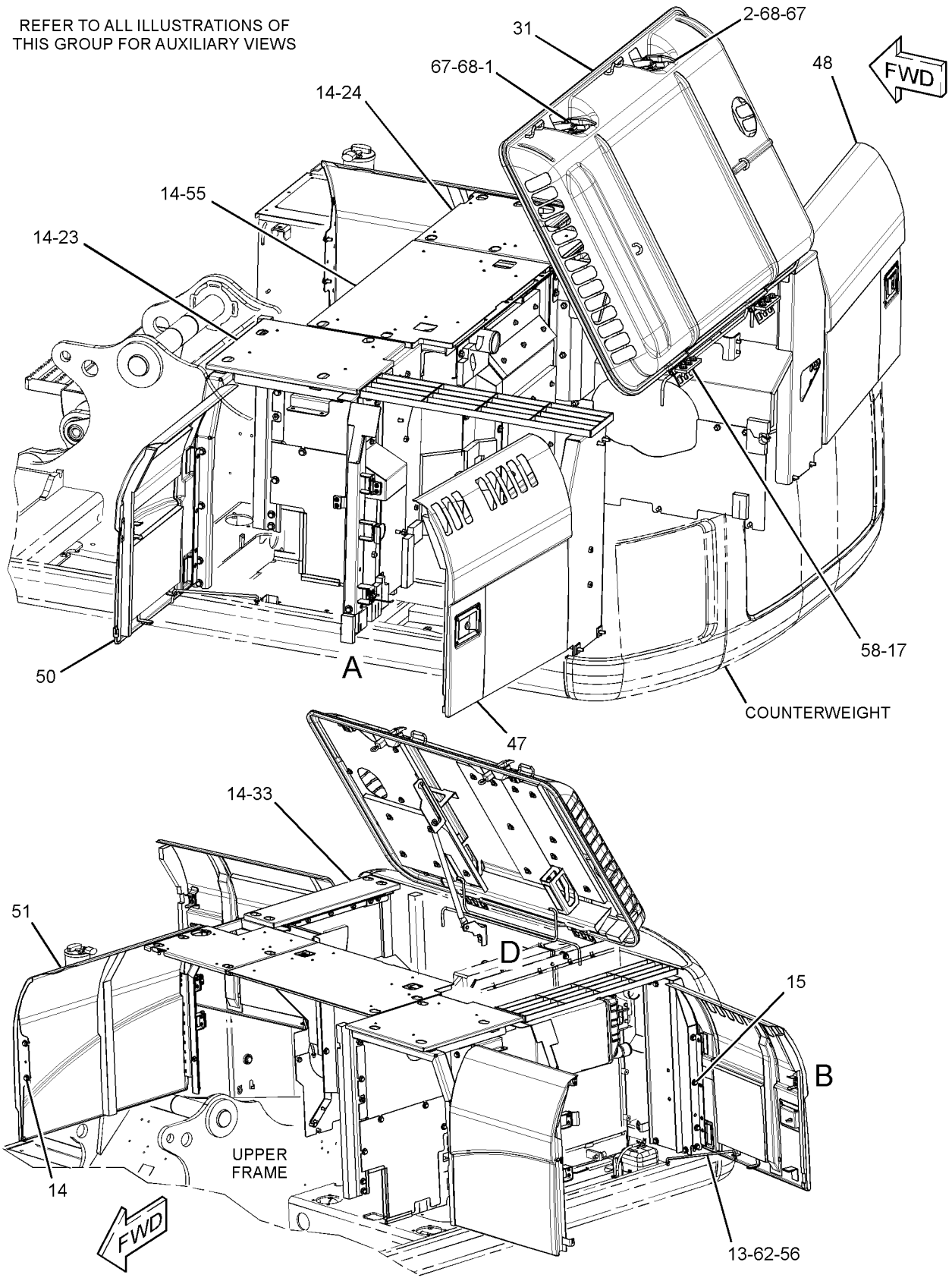

GRAPHIC #1

g01435693

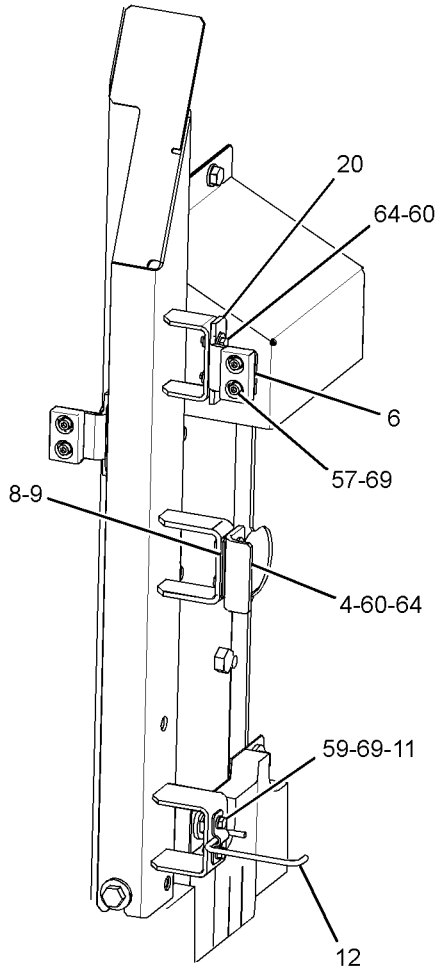

VIEW OF AREA A

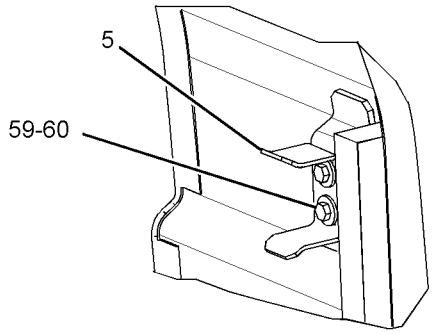

VIEW OF AREA B

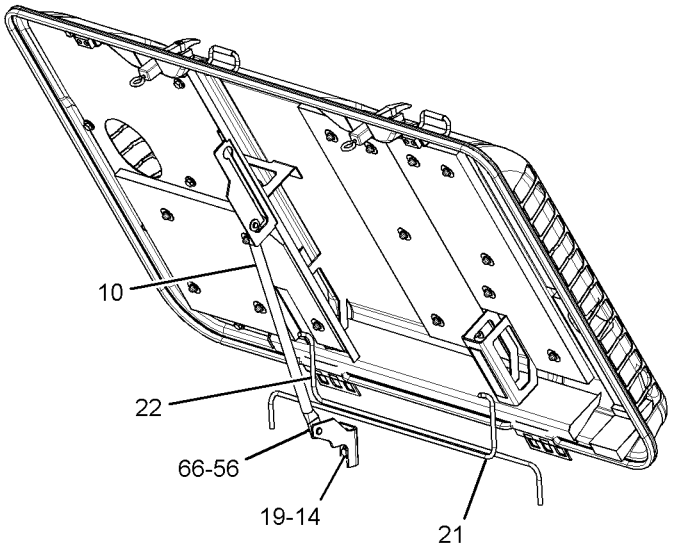

VIEW OF AREA D

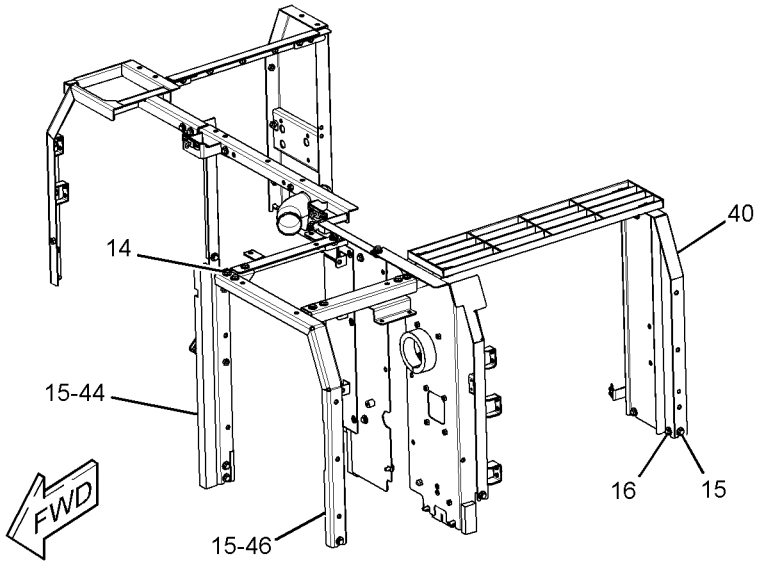

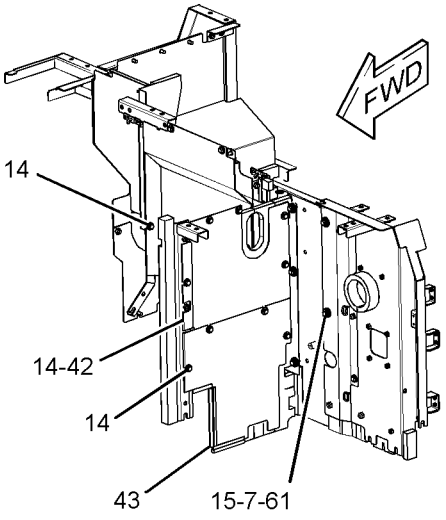

GRAPHIC #2

g01435694

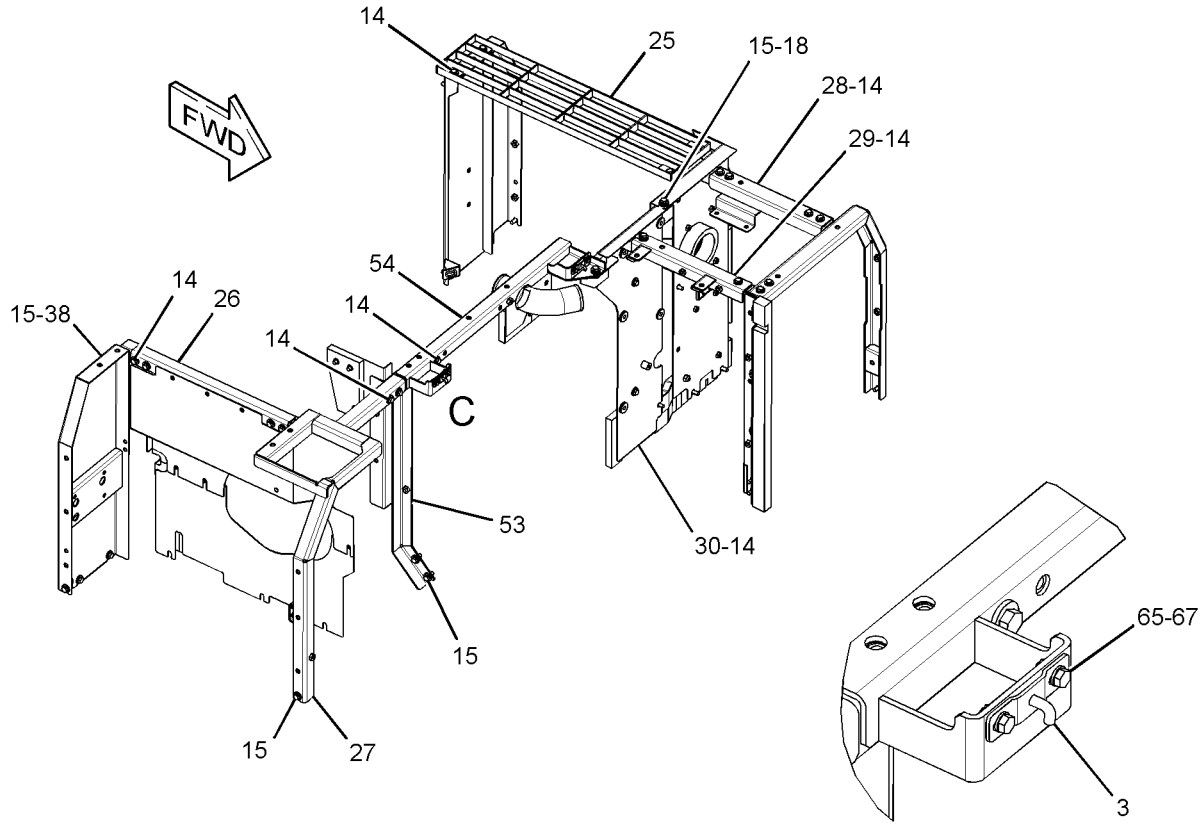

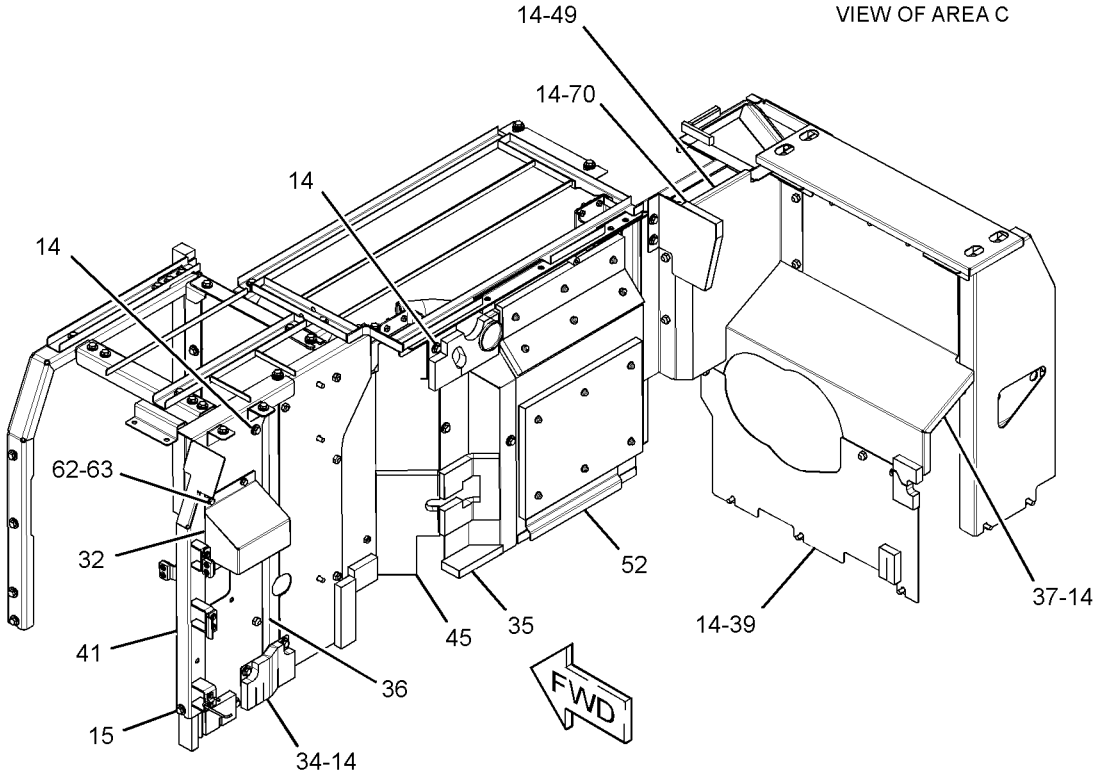

GRAPHIC #3 **<END>** g01435695

FRAME AND BODY

273-7725 HOOD & GUARD GP

S/N: KGF1-UP
PART OF 290-1892 SPECIAL AR
AN ATTACHMENT
TYPE 2

SMCS-7251, 7276 **i03180327**

NOTE	REF NO	GRAPHIC REF	PART NUMBER	QTY	PART NAME 1 2 3 4 5 6 (PRODUCT LEVEL)	SEE PAGE
	1	1	**1R-9958**	1	FASTENER	
	2	1	**4I-0117**	1	FASTENER	
	3	3	**4I-0118**	2	HOOK AS	
	4	2	**4I-0232**	2	STRIKER	
	5	2	**4I-8019**	3	SUPPORT	
	6	2	**6I-6033**	3	STOP	
	7	2	**7Y-2853**	8	SPACER (13X38X5-MM THK)	
	8	2	**087-3908**	4	SHIM (1-MM THK)	
	9	2	**087-3909**	4	SHIM (2-MM THK)	
	10	2	**116-1628**	1	SUPPORT AS	
	11	2	**122-3979**	1	BAND	
	12	2	**122-3980**	1	ROD	
	13	1	**122-4120**	3	ROD	
M	14	1,2,3	**135-8573**	73	BOLT AS (M12X1.75X25-MM)	
M	15	1,2,3	**135-8575**	35	BOLT AS-LOCKING (M12X1.75X30-MM)	
M	16	2	**135-8577**	4	BOLT AS	
M	17	1	**135-8578**	6	BOLT AS	
	18	3	**170-3016**	15	SPACER (19X32X2-MM THK)	
	19	2	**184-8423**	1	SUPPORT AS	
	20	2	**190-6880**	3	SUPPORT AS	
	21	2	**203-4889**	1	SPRING	
	22	2	**203-4890**	1	SPRING	
	23	1	**244-8202**	1	COVER AS	
	24	1	**330-1347**	1	COVER AS	
	25	3	**330-1182**	1	SUPPORT AS	
	26	3	**244-8228**	1	SUPPORT AS	
	27	3	**244-8234**	1	SUPPORT AS	
	28	3	**244-8242**	1	SUPPORT AS	
	29	3	**244-8255**	1	SUPPORT AS	
Y	30	3	**248-8940**	1	SUPPORT AS-ENCLOSURE	488
Y	31	1	**259-3687**	1	HOOD GP-ENGINE	470
	32	3	**262-2324**	1	COVER AS	
	33	1	**262-2353**	1	COVER AS	
	34	3	**262-2363**	1	SHEET AS	
Y	35	3	**278-3842**	1	SHEET AS-SOUND SUPPRESSION	476
	36	3	**283-3911**	1	SHEET AS	
	37	3	**286-6220**	1	SHEET AS	
		3	**286-6276**	1	LINER	
	38	3	**286-6359**	1	SUPPORT AS	
Y	39	3	**289-6572**	1	SHEET AS-SOUND SUPPRESSION	477
	40	2	**330-1183**	1	SUPPORT AS	
CY	41	3	**307-7662**	1	SUPPORT AS-ENCLOSURE	492
Y	42	2	**289-6588**	1	SHEET AS-SOUND SUPPRESSION	478
Y	43	2	**289-6695**	1	SHEET AS-SOUND SUPPRESSION	479
	44	2	**289-6698**	1	SUPPORT AS	
		2	**129-3400**	1	GUARD	
		2	**244-8198**	1	LINER	
Y	45	3	**289-6699**	1	SHEET AS-SOUND SUPPRESSION	480
	46	2	**289-6805**	1	SUPPORT AS-ENCLOSURE	
Y	47	1	**289-6911**	1	DOOR GP-ACCESS (RADIATOR, AFTCLR, HYD COOLER)	408
Y	48	1	**289-6913**	1	DOOR GP-ACCESS (PUMP)	409
	49	3	**293-6982**	1	SHEET AS	
Y	50	1	**298-2977**	1	DOOR AS-ACCESS (LEFT SIDE, FRONT)	405
Y	51	1	**298-2979**	1	COVER AS-ACCESS (HYDRAULIC TANK, SIDE)	400

273-7725 **HOOD & GUARD GP** *(contd.)* **i03180327**

NOTE	REF NO	GRAPHIC REF	PART NUMBER	QTY	PART NAME 1 2 3 4 5 6 (PRODUCT LEVEL)	SEE PAGE
Y	52	3	**298-3033**	1	SHEET AS-SOUND SUPPRESSION	483
	53	3	**298-3038**	1	SUPPORT AS	
	54	3	**298-3041**	1	SUPPORT AS	
		3	**278-3832**	1	LINER	
	55	1	**298-3044**	1	COVER AS	
	56	1,2	**3B-4618**	1	PIN-COTTER	
M	57	2	**105-3487**	6	BOLT-SOCKET HEAD (M6X1X20-MM)	
	58	1	**114-6285**	2	BAR	
M	59	2	**5C-9553**	8	BOLT (M6X1X16-MM)	
	60	2	**5P-4115**	16	WASHER-HARD (7.2X19X2-MM THK)	
	61	2	**7Y-2854**	8	SPACER (24X38X3-MM THK)	
	62	1,3	**8T-4121**	5	WASHER-HARD (11X21X2.5-MM THK)	
M	63	3	**8T-4137**	2	BOLT (M10X1.5X20-MM)	
M	64	2	**8T-4138**	10	BOLT (M6X1X20-MM)	
M	65	3	**8T-4189**	4	BOLT (M8X1.25X20-MM)	
	66	2	**8T-4223**	2	WASHER-HARD (13.5X25.5X3-MM THK)	
	67	1,3	**8T-4224**	8	WASHER-HARD (8.8X16X2-MM THK)	
M	68	1	**8T-4908**	4	BOLT (M8X1.25X25-MM)	
	69	2	**9X-8256**	8	WASHER (6.6X12X2-MM THK)	
	70	3	**307-7700**	1	SHEET AS	
		3	**6P-2216**	3	CAP	
		3	**307-7702**	1	INSULATION	

C-CHANGE FROM PREVIOUS TYPE
M-METRIC PART
Y-SEPARATE ILLUSTRATION

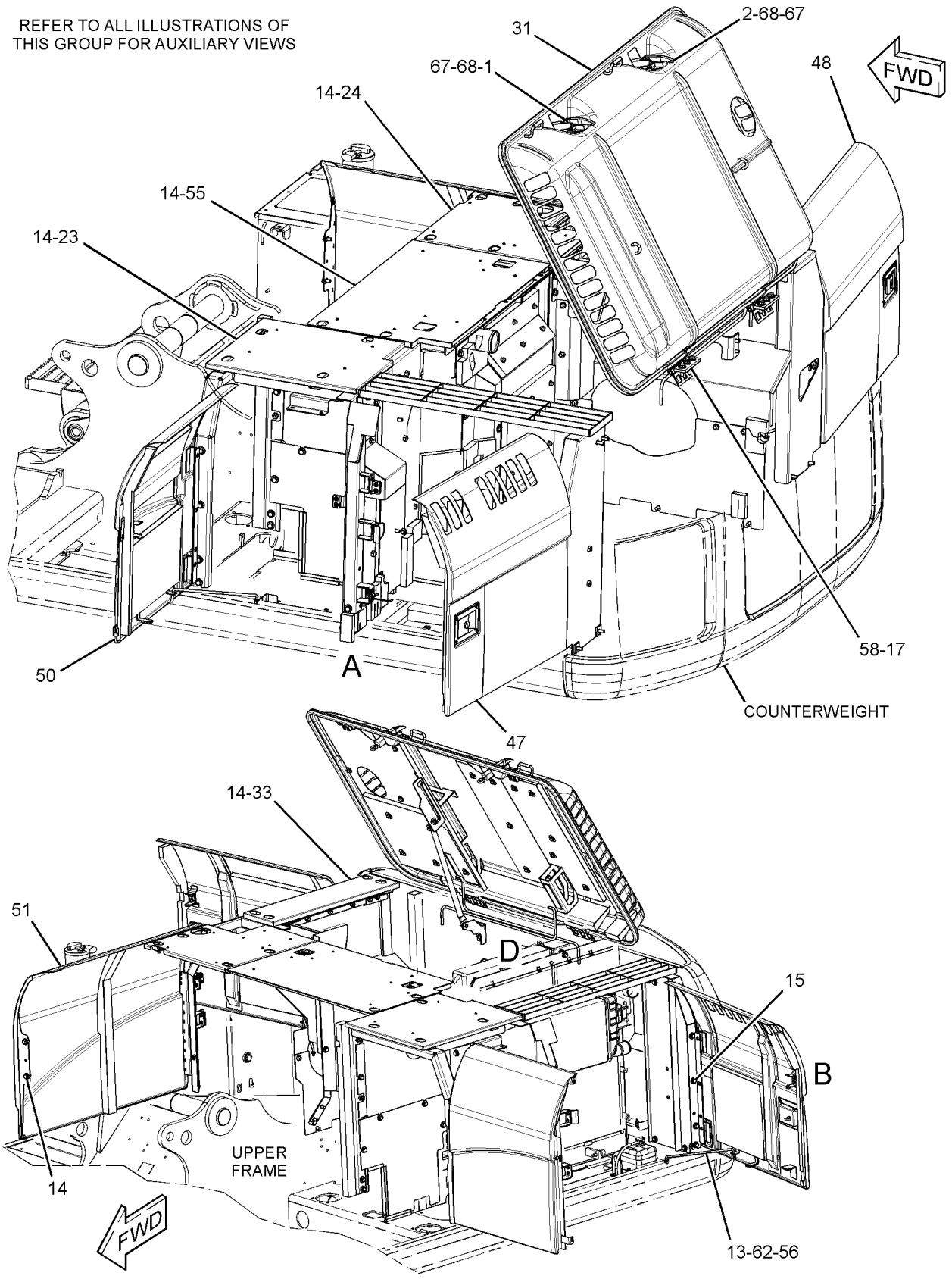

GRAPHIC #1

g01435693

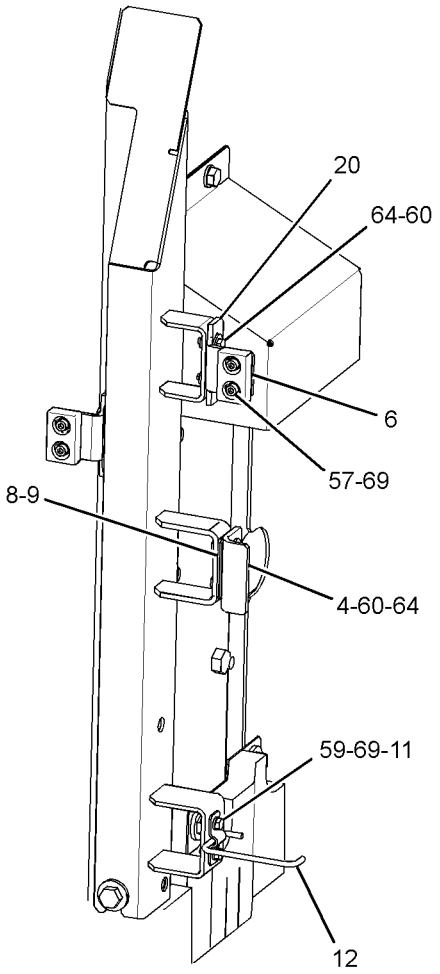

VIEW OF AREA A

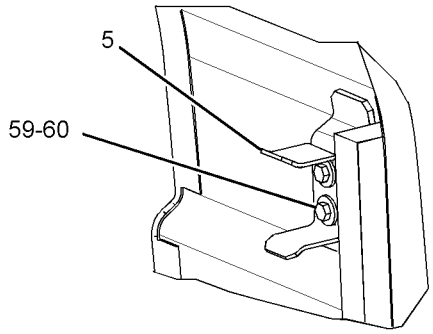

VIEW OF AREA B

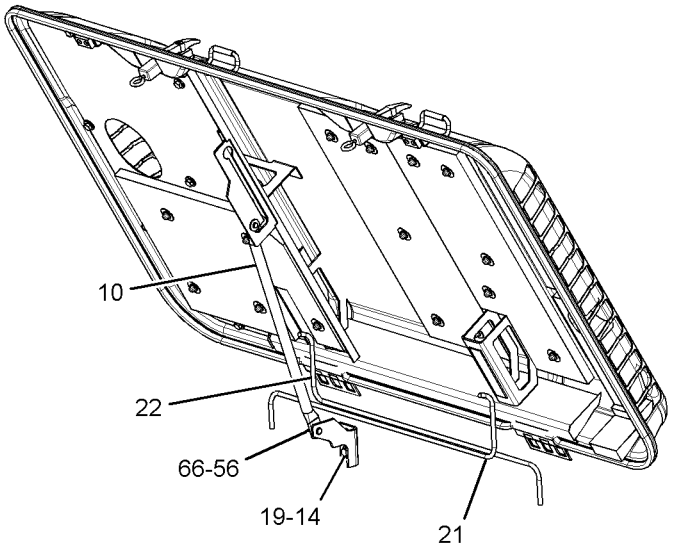

VIEW OF AREA D

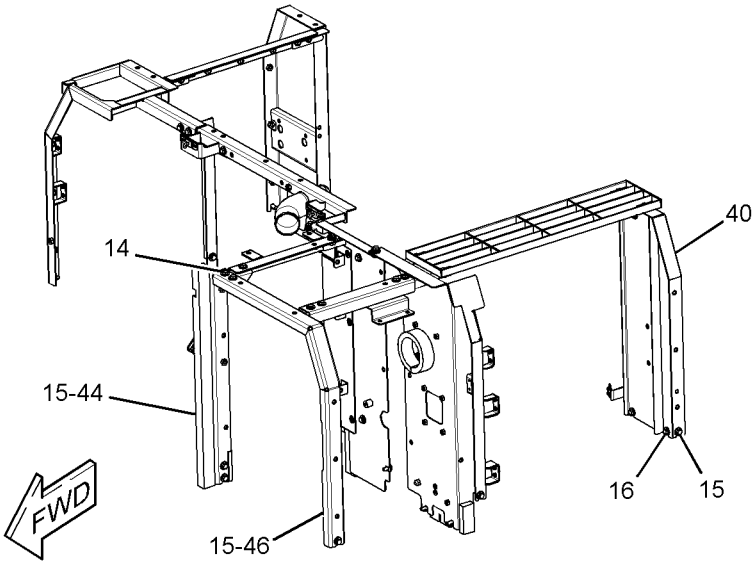

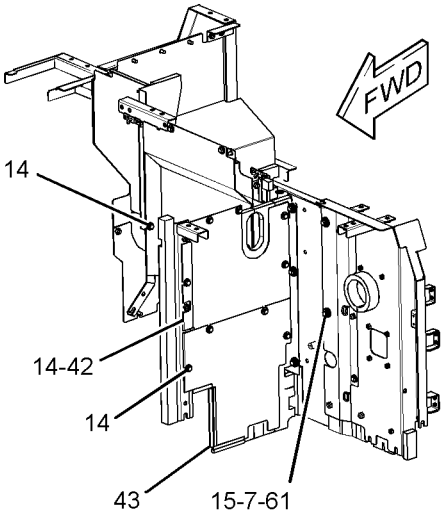

GRAPHIC #2

g01435694

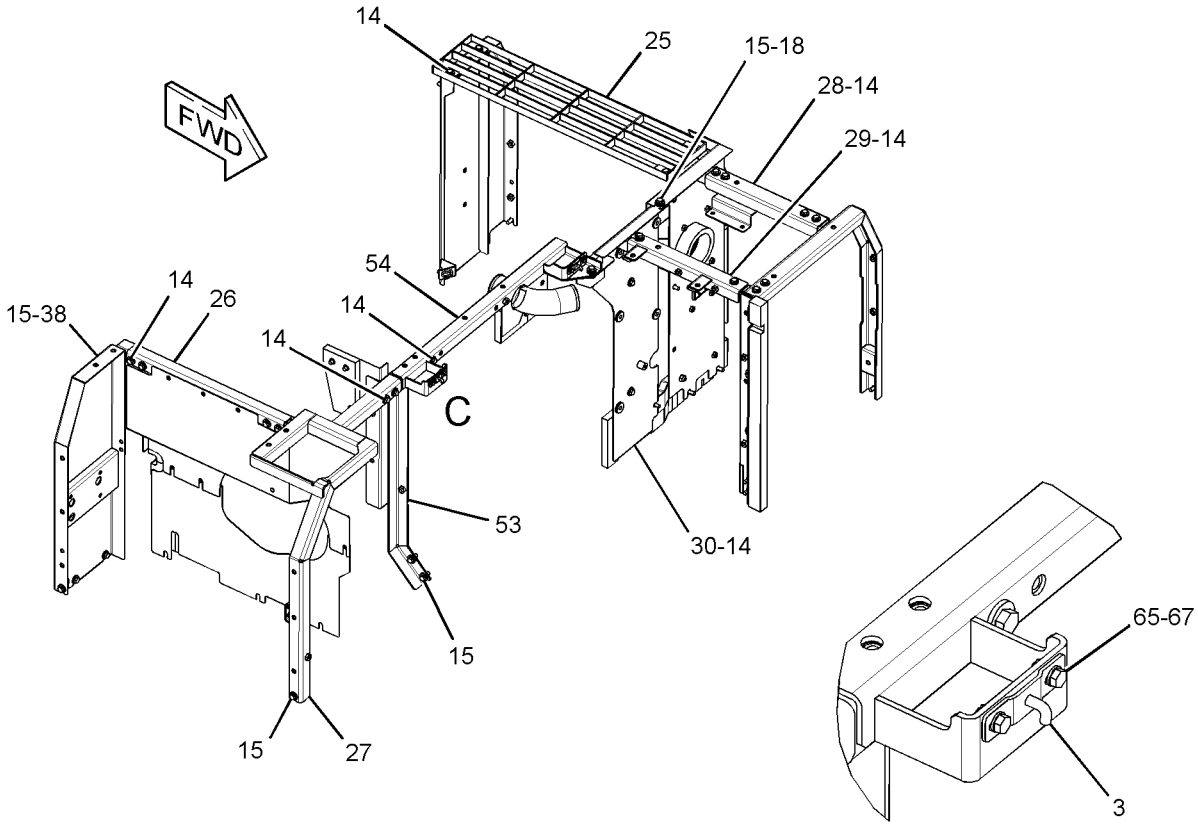

VIEW OF AREA C

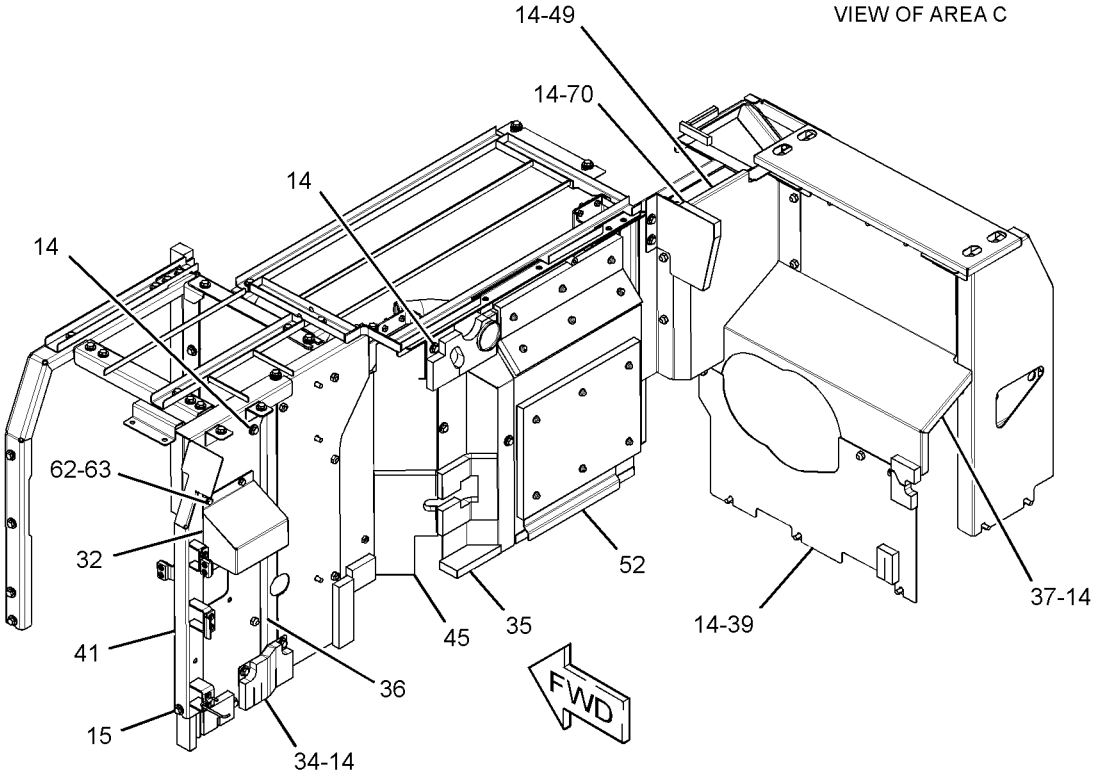

GRAPHIC #3 **<END>** g01435695

FRAME AND BODY

273-7726 HOOD & GUARD GP

S/N: KGF1-105; FAL1-182

PART OF 264-8638, 264-8639 CHASSIS AR

SMCS-7251, 7276 **i02610864**

NOTE	REF NO	GRAPHIC REF	PART NUMBER	QTY	PART NAME 1 2 3 4 5 6 (PRODUCT LEVEL)	SEE PAGE
	1	1	**1R-9958**	1	FASTENER	
	2	1	**4I-0117**	1	FASTENER	
	3	2	**4I-0118**	2	HOOK AS	
	4	3	**4I-0232**	2	STRIKER	
	5	2	**4I-8019**	3	SUPPORT	
	6	3	**6I-6033**	3	STOP	
	7	4	**7Y-2853**	8	SPACER (13X38X5-MM THK)	
	8	3	**087-3908**	4	SHIM (1-MM THK)	
	9	3	**087-3909**	4	SHIM (2-MM THK)	
	10	1	**116-1628**	1	SUPPORT AS	
	11	4	**122-3979**	1	BAND	
	12	4	**122-3980**	1	ROD	
	13	2	**122-4120**	3	ROD	
M	14	1,2,3,4	**135-8573**	71	BOLT AS (M12X1.75X25-MM)	
M	15	1,2,3,4	**135-8575**	35	BOLT AS-LOCKING (M12X1.75X30-MM)	
M	16	2,3	**135-8577**	4	BOLT AS	
M	17	1	**135-8578**	6	BOLT AS	
	18	1,2	**170-3016**	15	SPACER (19X32X2-MM THK)	
	19	1	**184-8423**	1	SUPPORT AS	
	20	3	**190-6880**	3	SUPPORT AS	
	21	1	**203-4889**	1	SPRING	
	22	1	**203-4890**	1	SPRING	
Y	23	1	**236-3746**	1	DOOR AS-ACCESS (AIR CLEANER)	404
	24	1	**244-8202**	1	COVER AS	
	25	1	**244-8207**	1	COVER AS	
	26	2	**244-8219**	1	SUPPORT AS	
	27	2	**244-8228**	1	SUPPORT AS	
	28	2	**244-8234**	1	SUPPORT AS	
	29	2	**244-8242**	1	SUPPORT AS	
	30	2	**244-8251**	1	SUPPORT AS	
	31	2	**244-8255**	1	SUPPORT AS	
Y	32	2	**248-8940**	1	SUPPORT AS-ENCLOSURE	488
	33	3	**248-8957**	1	SHEET AS	
Y	34	1	**262-2286**	1	HOOD GP-ENGINE	471
	35	3	**262-2324**	1	COVER AS	
	36	4	**293-7056**	1	SHEET AS	
	37	1	**262-2353**	1	COVER AS	
	38	4	**262-2363**	1	SHEET AS	
		4	**262-2365**	1	LINER	
Y	39	4	**273-7893**	1	COVER AS-SOUND SUPPRESSION	402
	40	2	**278-3831**	1	SUPPORT AS	
		2	**278-3832**	1	LINER	
Y	41	4	**278-3836**	1	SHEET AS-SOUND SUPPRESSION	475
Y	42	4	**278-3842**	1	SHEET AS-SOUND SUPPRESSION	476
	43	3	**278-3845**	1	SUPPORT AS	
	44	1	**278-3848**	1	COVER AS	
Y	45	3	**278-3852**	1	SUPPORT AS-ENCLOSURE	489
	46	4	**283-3911**	1	SHEET AS	
	47	3	**286-6220**	1	SHEET AS	
		3	**286-6276**	1	LINER	
	48	2	**286-6359**	1	SUPPORT AS	
Y	49	3	**289-6572**	1	SHEET AS-SOUND SUPPRESSION	477
Y	50	4	**289-6695**	1	SHEET AS-SOUND SUPPRESSION	479
	51	3	**289-6698**	1	SUPPORT AS	
		3	**129-3400**	1	GUARD	
		3	**244-8198**	1	LINER	

273-7726 **HOOD & GUARD GP** ***(contd.)*** **i02610864**

NOTE	REF NO	GRAPHIC REF	PART NUMBER	QTY	PART NAME 1 2 3 4 5 6 (PRODUCT LEVEL)	SEE PAGE
Y	52	4	**289-6699**	1	SHEET AS-SOUND SUPPRESSION	480
	53	3	**289-6805**	1	SUPPORT AS-ENCLOSURE	
Y	54	1	**289-6913**	1	DOOR GP-ACCESS (PUMP)	409
Y	55	1	**289-6915**	1	DOOR GP-ACCESS (RADIATOR)	410
	56	1,2	**3B-4618**	4	PIN-COTTER	
M	57	3	**105-3487**	6	BOLT-SOCKET HEAD (M6X1X20-MM)	
	58	1	**114-6285**	2	BAR	
M	59	2,4	**5C-9553**	8	BOLT (M6X1X16-MM)	
	60	2,3	**5P-4115**	16	WASHER-HARD (7.2X19X2-MM THK)	
	61	4	**7Y-2854**	8	SPACER (24X38X3-MM THK)	
	62	2,3	**8T-4121**	5	WASHER-HARD (11X21X2.5-MM THK)	
M	63	3	**8T-4137**	2	BOLT (M10X1.5X20-MM)	
M	64	3	**8T-4138**	10	BOLT (M6X1X20-MM)	
M	65	2	**8T-4189**	4	BOLT (M8X1.25X20-MM)	
	66	1	**8T-4223**	2	WASHER-HARD (13.5X25.5X3-MM THK)	
	67	1,2	**8T-4224**	8	WASHER-HARD (8.8X16X2-MM THK)	
M	68	1	**8T-4908**	4	BOLT (M8X1.25X25-MM)	
	69	3,4	**9X-8256**	8	WASHER (6.6X12X2-MM THK)	

M-METRIC PART
Y-SEPARATE ILLUSTRATION

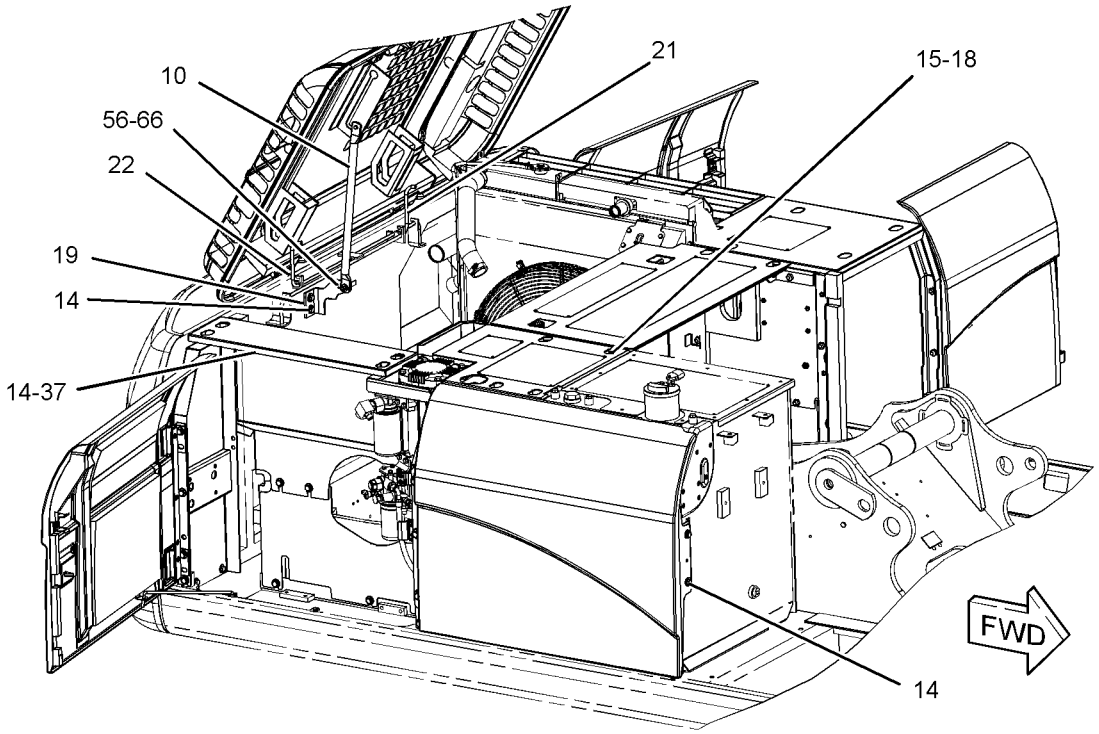

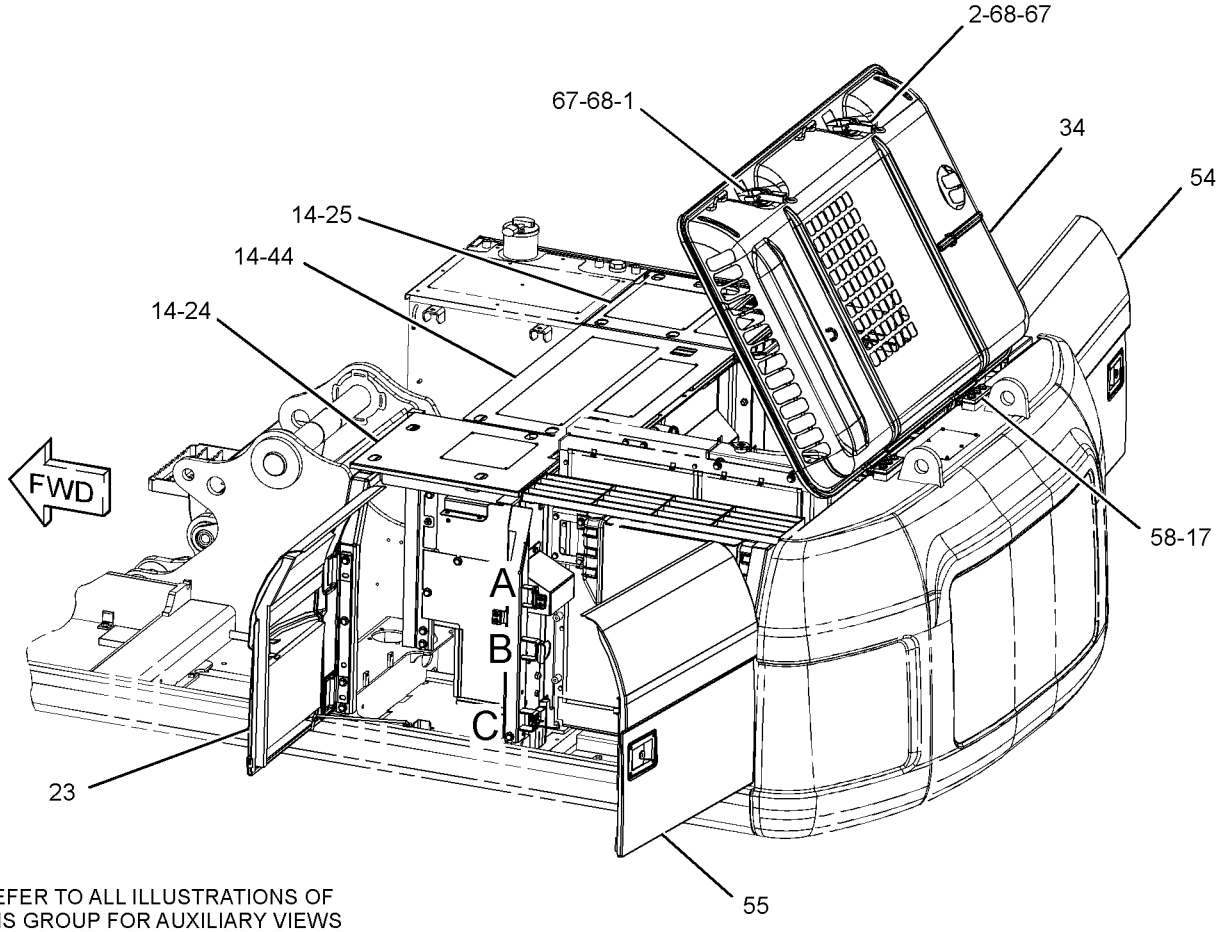

REFER TO ALL ILLUSTRATIONS OF
THIS GROUP FOR AUXILIARY VIEWS

GRAPHIC #1

g01303441

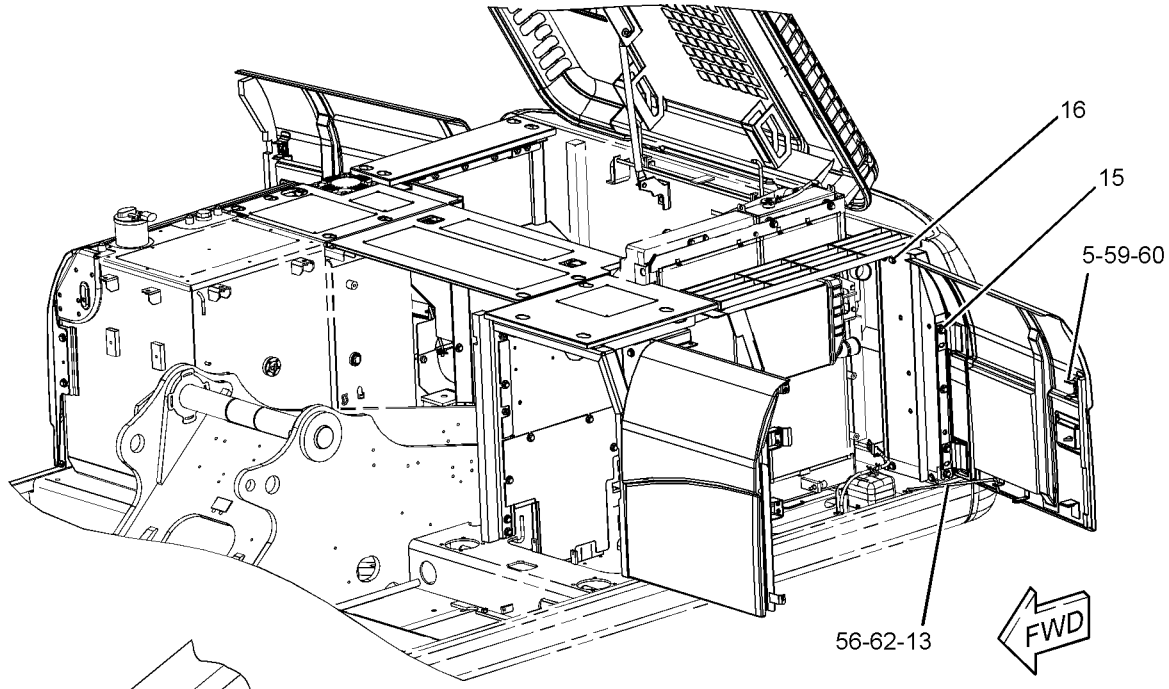

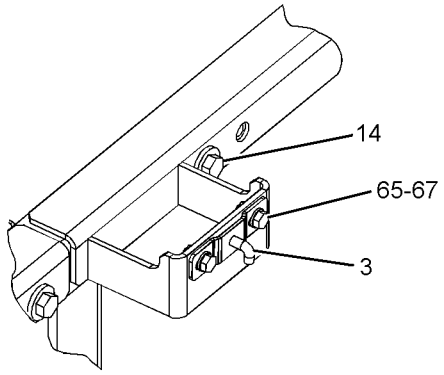

VIEW OF AREA D

GRAPHIC #2

g01303443

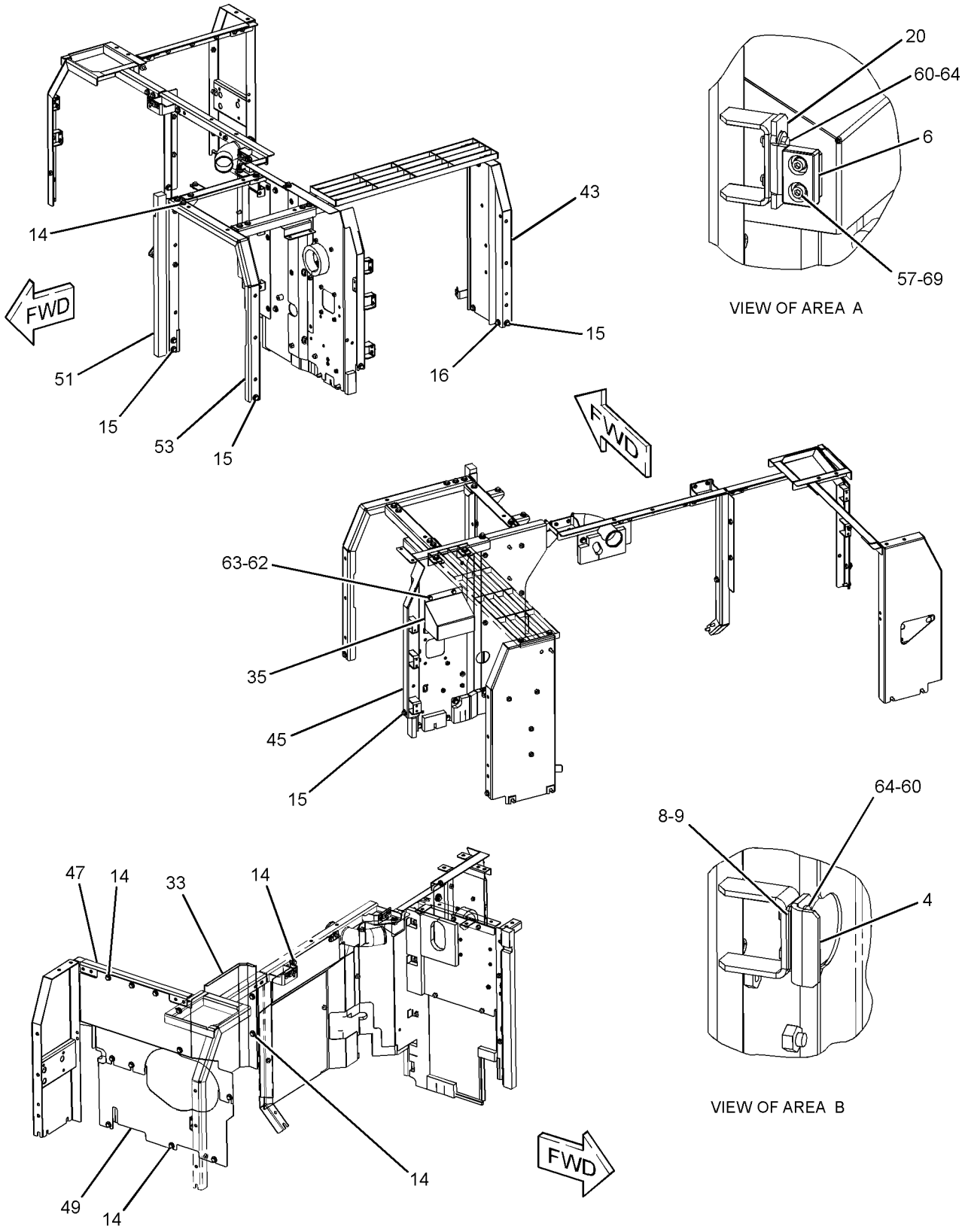

GRAPHIC #3

g01303444

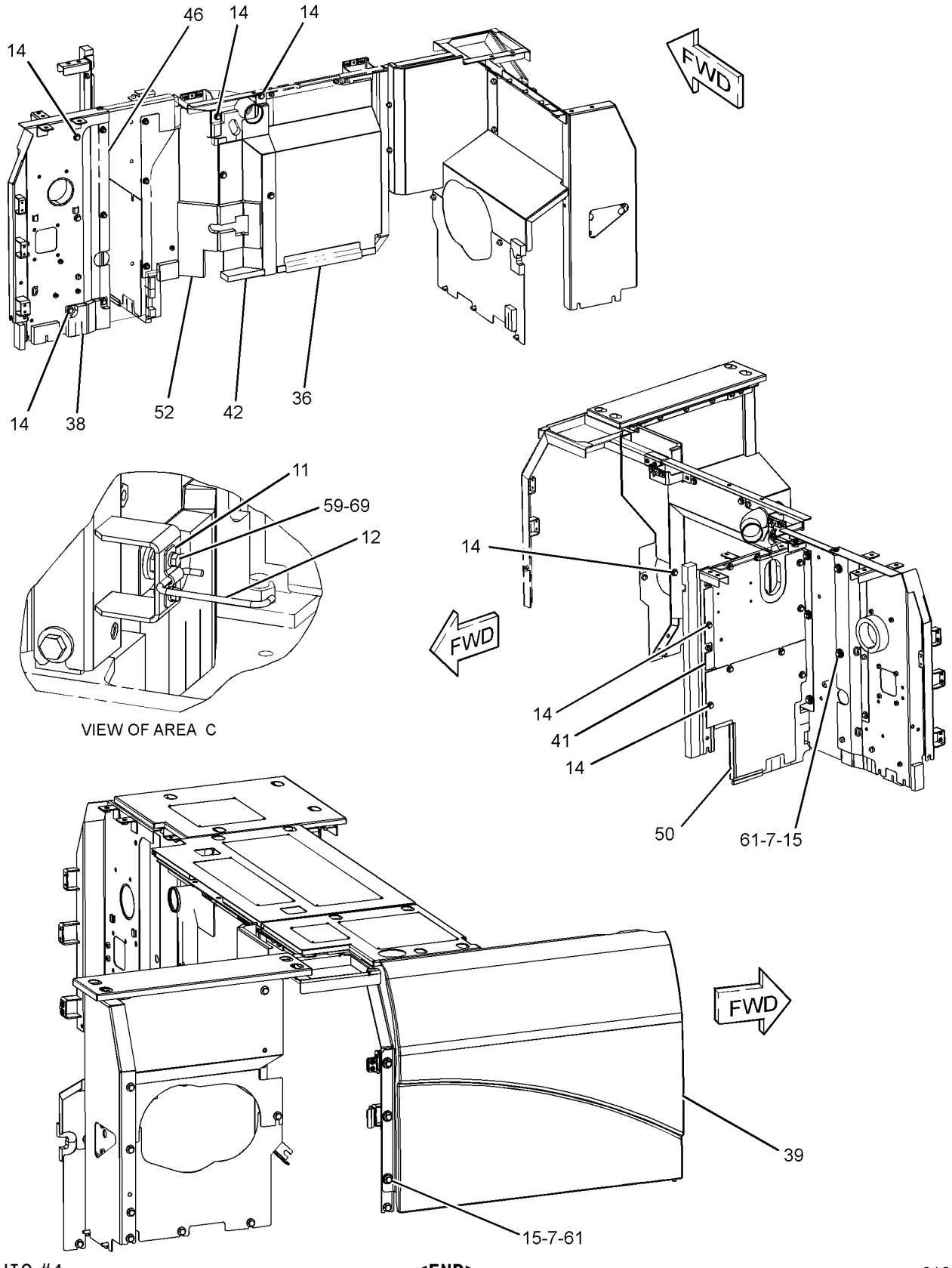

GRAPHIC #4 **<END>** g01310733

FRAME AND BODY

273-7726 HOOD & GUARD GP

S/N: KGF106-UP; FAL183-UP
PART OF 264-8638, 264-8639 CHASSIS AR
TYPE 1

SMCS-7251, 7276 **i03105742**

NOTE	REF NO	GRAPHIC REF	PART NUMBER	QTY	PART NAME 1 2 3 4 5 6 (PRODUCT LEVEL)	SEE PAGE
	1	1	**1R-9958**	1	FASTENER	
	2	1	**4I-0117**	1	FASTENER	
	3	2	**4I-0118**	2	HOOK AS	
	4	3	**4I-0232**	2	STRIKER	
	5	2	**4I-8019**	3	SUPPORT	
	6	3	**6I-6033**	3	STOP	
	7	4	**7Y-2853**	8	SPACER (13X38X5-MM THK)	
	8	3	**087-3908**	4	SHIM (1-MM THK)	
	9	3	**087-3909**	4	SHIM (2-MM THK)	
	10	1	**116-1628**	1	SUPPORT AS	
	11	4	**122-3979**	1	BAND	
	12	4	**122-3980**	1	ROD	
	13	2	**122-4120**	3	ROD	
CM	14	1,2,3,4	**135-8573**	73	BOLT AS (M12X1.75X25-MM)	
M	15	1,2,3,4	**135-8575**	35	BOLT AS-LOCKING (M12X1.75X30-MM)	
M	16	2,3	**135-8577**	4	BOLT AS	
M	17	1	**135-8578**	6	BOLT AS	
	18	1,2	**170-3016**	15	SPACER (19X32X2-MM THK)	
	19	1	**184-8423**	1	SUPPORT AS	
	20	3	**190-6880**	3	SUPPORT AS	
					(EACH INCLUDES)	
M		3	**6V-9632**	2	NUT-WELD (M6X1-THD)	
	21	1	**203-4889**	1	SPRING	
	22	1	**203-4890**	1	SPRING	
CY	23	1	**298-2977**	1	DOOR AS-ACCESS (LEFT SIDE, FRONT)	405
	24	1	**244-8202**	1	COVER AS	
	25	1	**244-8207**	1	COVER AS	
	26	2	**330-1182**	1	SUPPORT AS	
	27	2	**244-8228**	1	SUPPORT AS	
	28	2	**244-8234**	1	SUPPORT AS	
	29	2	**244-8242**	1	SUPPORT AS	
C	30	2	**298-3038**	1	SUPPORT AS	
	31	2	**244-8255**	1	SUPPORT AS	
Y	32	2	**248-8940**	1	SUPPORT AS-ENCLOSURE	488
C	33	3	**293-6982**	1	SHEET AS	
M		3	**8T-3597**	2	NUT-WELD (M12X1.75-THD)	
Y	34	1	**262-2286**	1	HOOD GP-ENGINE	471
	35	3	**262-2324**	1	COVER AS	
	36	4	**293-7056**	1	SHEET AS	
M		4	**8T-3597**	1	NUT-WELD (M12X1.75-THD)	
	37	1	**262-2353**	1	COVER AS	
	38	4	**262-2363**	1	SHEET AS	
CY	39	4	**298-2979**	1	COVER AS-ACCESS (HYDRAULIC TANK, SIDE)	400
C	40	2	**298-3041**	1	SUPPORT AS	
		2	**278-3832**	1	LINER	
Y	41	4	**278-3836**	1	SHEET AS-SOUND SUPPRESSION	475
Y	42	4	**278-3842**	1	SHEET AS-SOUND SUPPRESSION	476
	43	3	**330-1184**	1	SUPPORT AS	
C	44	1	**298-3044**	1	COVER AS	
CY	45	3	**307-7662**	1	SUPPORT AS-ENCLOSURE	492
	46	4	**283-3911**	1	SHEET AS	
	47	3	**286-6220**	1	SHEET AS	
		3	**286-6276**	1	LINER	
	48	2	**286-6359**	1	SUPPORT AS	
Y	49	3	**289-6572**	1	SHEET AS-SOUND SUPPRESSION	477

273-7726 **HOOD & GUARD GP** *(contd.)* **i03105742**

NOTE	REF NO	GRAPHIC REF	PART NUMBER	QTY	PART NAME 1 2 3 4 5 6 (PRODUCT LEVEL)	SEE PAGE
Y	50	4	**289-6695**	1	SHEET AS-SOUND SUPPRESSION	479
	51	3	**289-6698**	1	SUPPORT AS	
		3	**129-3400**	1	GUARD	
		3	**244-8198**	1	LINER	
Y	52	4	**289-6699**	1	SHEET AS-SOUND SUPPRESSION	480
	53	3	**289-6805**	1	SUPPORT AS-ENCLOSURE	
Y	54	1	**289-6913**	1	DOOR GP-ACCESS (PUMP)	409
Y	55	1	**289-6915**	1	DOOR GP-ACCESS (RADIATOR)	410
	56	1,2	**3B-4618**	4	PIN-COTTER	
M	57	3	**105-3487**	6	BOLT-SOCKET HEAD (M6X1X20-MM)	
	58	1	**114-6285**	2	BAR	
M	59	2,4	**5C-9553**	8	BOLT (M6X1X16-MM)	
	60	2,3	**5P-4115**	16	WASHER-HARD (7.2X19X2-MM THK)	
	61	4	**7Y-2854**	8	SPACER (24X38X3-MM THK)	
	62	2,3	**8T-4121**	5	WASHER-HARD (11X21X2.5-MM THK)	
M	63	3	**8T-4137**	2	BOLT (M10X1.5X20-MM)	
M	64	3	**8T-4138**	10	BOLT (M6X1X20-MM)	
M	65	2	**8T-4189**	4	BOLT (M8X1.25X20-MM)	
	66	1	**8T-4223**	2	WASHER-HARD (13.5X25.5X3-MM THK)	
	67	1,2	**8T-4224**	8	WASHER-HARD (8.8X16X2-MM THK)	
M	68	1	**8T-4908**	4	BOLT (M8X1.25X25-MM)	
	69	3,4	**9X-8256**	8	WASHER (6.6X12X2-MM THK)	
C	70	4	**307-7700**	1	SHEET AS	
		4	**6P-2216**	3	CAP	
		4	**307-7702**	1	INSULATION	

C-CHANGE FROM PREVIOUS TYPE
M-METRIC PART
Y-SEPARATE ILLUSTRATION

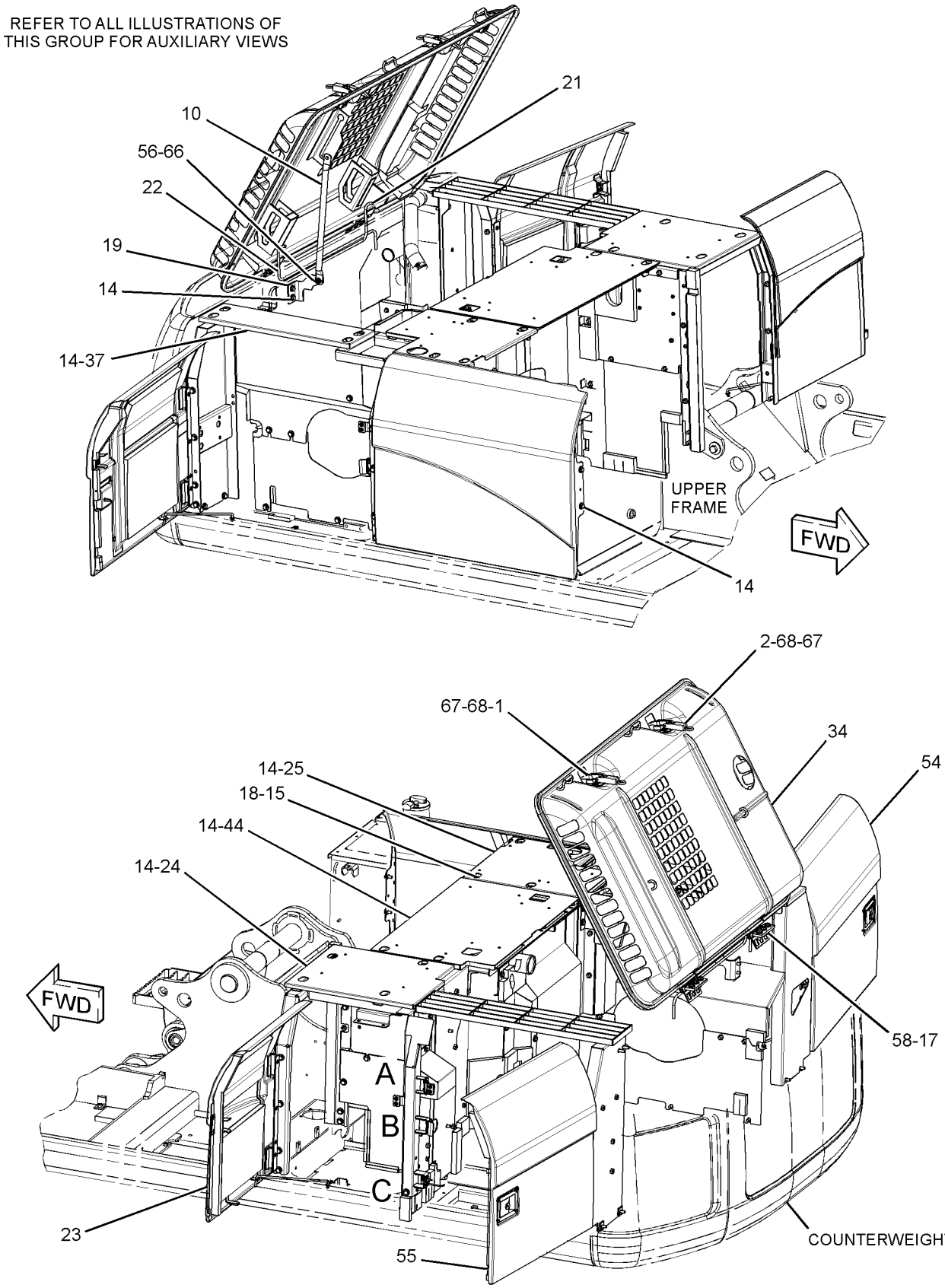

GRAPHIC #1

g01440901

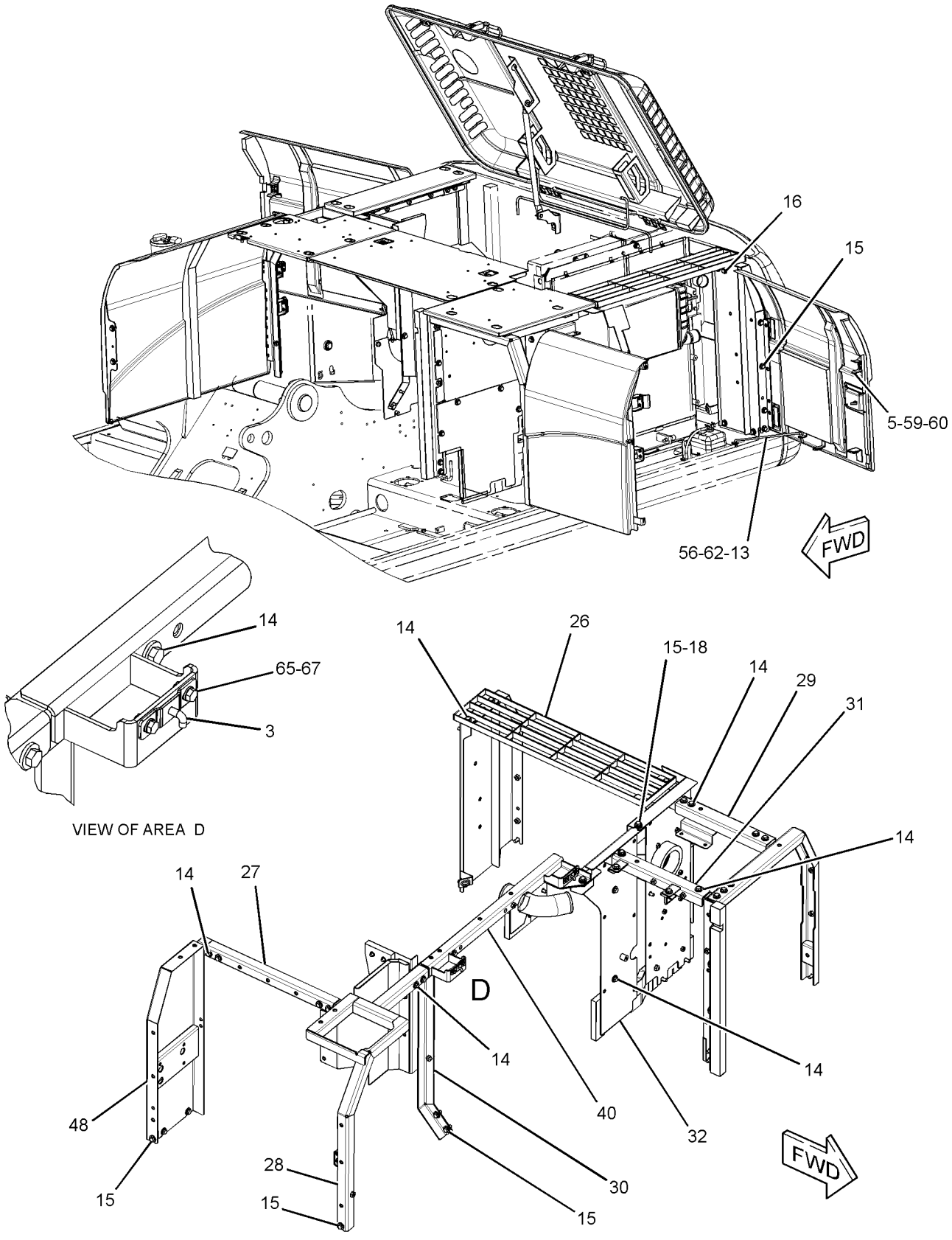

GRAPHIC #2

g01440902

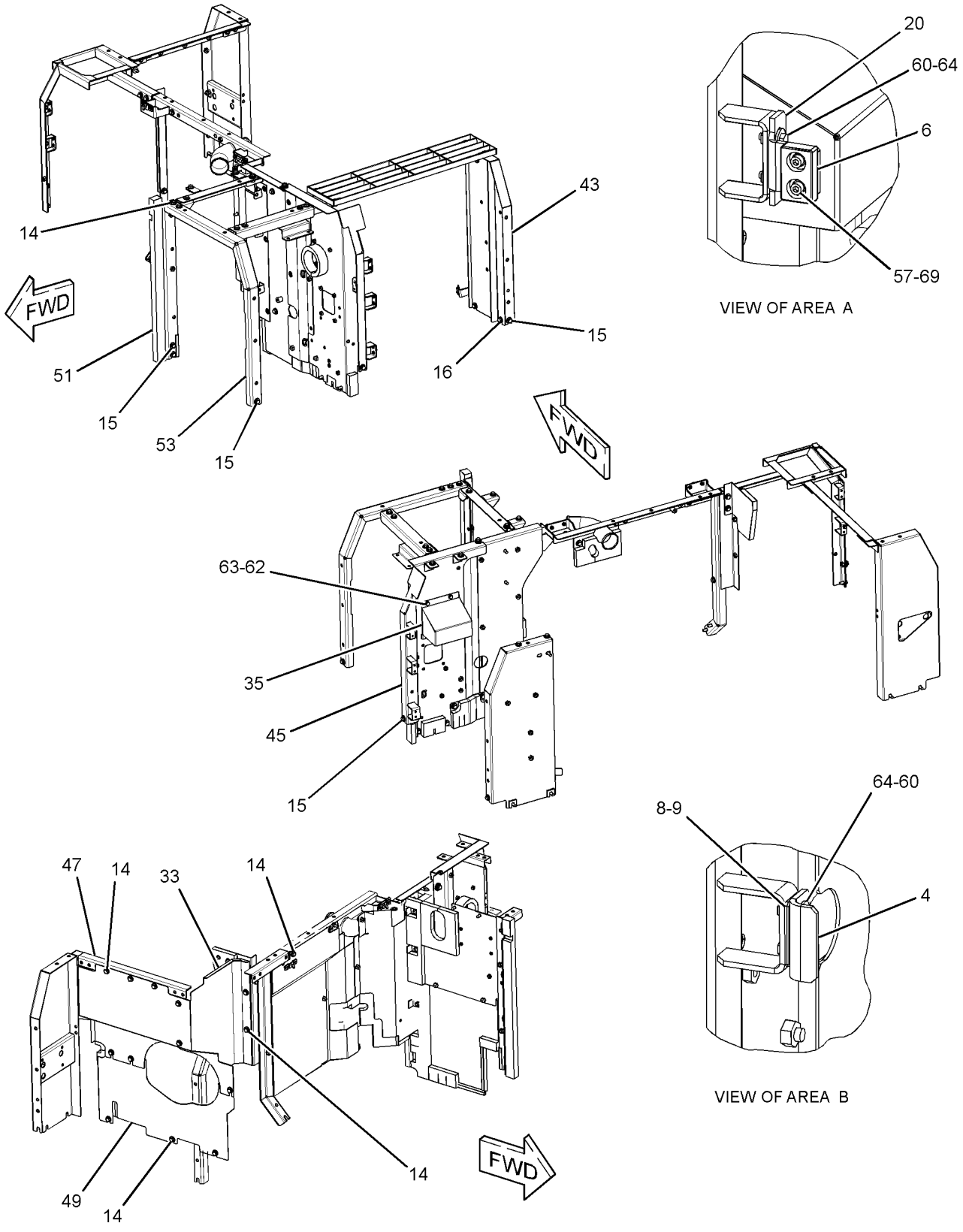

GRAPHIC #3

g01440903

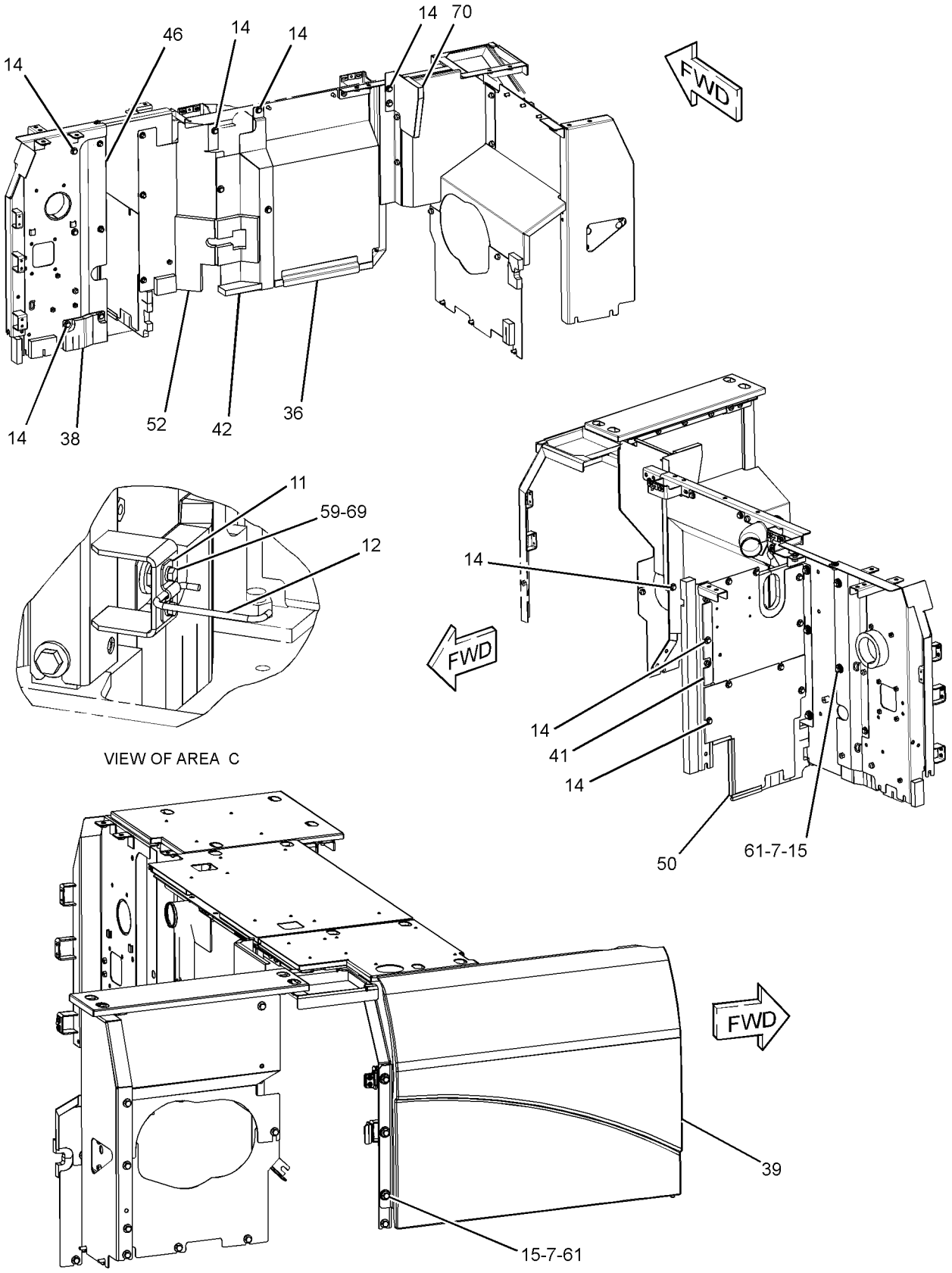

GRAPHIC #4 **<END>** g01440904

FRAME AND BODY

273-7726 HOOD & GUARD GP

S/N: KGF106-UP; FAL183-UP
PART OF 264-8638, 264-8639 CHASSIS AR
TYPE 2

SMCS-7251, 7276 **i03201487**

NOTE	REF NO	GRAPHIC REF	PART NUMBER	QTY	PART NAME 1 2 3 4 5 6 (PRODUCT LEVEL)	SEE PAGE
	1	1	**1R-9958**	1	FASTENER	
	2	1	**4I-0117**	1	FASTENER	
	3	2	**4I-0118**	2	HOOK AS	
	4	3	**4I-0232**	2	STRIKER	
	5	2	**4I-8019**	3	SUPPORT	
	6	3	**6I-6033**	3	STOP	
	7	4	**7Y-2853**	8	SPACER (13X38X5-MM THK)	
	8	3	**087-3908**	4	SHIM (1-MM THK)	
	9	3	**087-3909**	4	SHIM (2-MM THK)	
	10	1	**116-1628**	1	SUPPORT AS	
	11	4	**122-3979**	1	BAND	
	12	4	**122-3980**	1	ROD	
	13	2	**122-4120**	3	ROD	
M	14	1,2,3,4	**135-8573**	73	BOLT AS (M12X1.75X25-MM)	
M	15	1,2,3,4	**135-8575**	35	BOLT AS-LOCKING (M12X1.75X30-MM)	
M	16	2,3	**135-8577**	4	BOLT AS	
M	17	1	**135-8578**	6	BOLT AS	
	18	1,2	**170-3016**	15	SPACER (19X32X2-MM THK)	
	19	1	**184-8423**	1	SUPPORT AS	
	20	3	**190-6880**	3	SUPPORT AS	
	21	1	**203-4889**	1	SPRING	
	22	1	**203-4890**	1	SPRING	
Y	23	1	**298-2977**	1	DOOR AS-ACCESS (LEFT SIDE, FRONT)	405
	24	1	**244-8202**	1	COVER AS	
C	25	1	**330-1347**	1	COVER AS	
	26	2	**330-1182**	1	SUPPORT AS	
	27	2	**244-8228**	1	SUPPORT AS	
	28	2	**244-8234**	1	SUPPORT AS	
	29	2	**244-8242**	1	SUPPORT AS	
	30	2	**298-3038**	1	SUPPORT AS	
	31	2	**244-8255**	1	SUPPORT AS	
Y	32	2	**248-8940**	1	SUPPORT AS-ENCLOSURE	488
	33	3	**293-6982**	1	SHEET AS	
Y	34	1	**262-2286**	1	HOOD GP-ENGINE	471
	35	3	**262-2324**	1	COVER AS	
	36	4	**293-7056**	1	SHEET AS	
	37	1	**262-2353**	1	COVER AS	
	38	4	**262-2363**	1	SHEET AS	
Y	39	4	**298-2979**	1	COVER AS-ACCESS (HYDRAULIC TANK, SIDE)	400
	40	2	**298-3041**	1	SUPPORT AS	
		2	**278-3832**	1	LINER	
Y	41	4	**278-3836**	1	SHEET AS-SOUND SUPPRESSION	475
Y	42	4	**278-3842**	1	SHEET AS-SOUND SUPPRESSION	476
	43	3	**330-1184**	1	SUPPORT AS	
	44	1	**298-3044**	1	COVER AS	
Y	45	3	**307-7662**	1	SUPPORT AS-ENCLOSURE	492
	46	4	**283-3911**	1	SHEET AS	
	47	3	**286-6220**	1	SHEET AS	
		3	**286-6276**	1	LINER	
	48	2	**286-6359**	1	SUPPORT AS	
Y	49	3	**289-6572**	1	SHEET AS-SOUND SUPPRESSION	477
Y	50	4	**289-6695**	1	SHEET AS-SOUND SUPPRESSION	479
	51	3	**289-6698**	1	SUPPORT AS	
		3	**129-3400**	1	GUARD	
		3	**244-8198**	1	LINER	

273-7726 **HOOD & GUARD GP** ***(contd.)*** **i03201487**

NOTE	REF NO	GRAPHIC REF	PART NUMBER	QTY	PART NAME 1 2 3 4 5 6 (PRODUCT LEVEL)	SEE PAGE
Y	52	4	**289-6699**	1	SHEET AS-SOUND SUPPRESSION	480
	53	3	**289-6805**	1	SUPPORT AS-ENCLOSURE	
Y	54	1	**289-6913**	1	DOOR GP-ACCESS (PUMP)	409
Y	55	1	**289-6915**	1	DOOR GP-ACCESS (RADIATOR)	410
	56	1,2	**3B-4618**	4	PIN-COTTER	
M	57	3	**105-3487**	6	BOLT-SOCKET HEAD (M6X1X20-MM)	
	58	1	**114-6285**	2	BAR	
M	59	2,4	**5C-9553**	8	BOLT (M6X1X16-MM)	
	60	2,3	**5P-4115**	16	WASHER-HARD (7.2X19X2-MM THK)	
	61	4	**7Y-2854**	8	SPACER (24X38X3-MM THK)	
	62	2,3	**8T-4121**	5	WASHER-HARD (11X21X2.5-MM THK)	
M	63	3	**8T-4137**	2	BOLT (M10X1.5X20-MM)	
M	64	3	**8T-4138**	10	BOLT (M6X1X20-MM)	
M	65	2	**8T-4189**	4	BOLT (M8X1.25X20-MM)	
	66	1	**8T-4223**	2	WASHER-HARD (13.5X25.5X3-MM THK)	
	67	1,2	**8T-4224**	8	WASHER-HARD (8.8X16X2-MM THK)	
M	68	1	**8T-4908**	4	BOLT (M8X1.25X25-MM)	
	69	3,4	**9X-8256**	8	WASHER (6.6X12X2-MM THK)	
	70	4	**307-7700**	1	SHEET AS	
		4	**6P-2216**	3	CAP	
		4	**307-7702**	1	INSULATION	

C-CHANGE FROM PREVIOUS TYPE
M-METRIC PART
Y-SEPARATE ILLUSTRATION

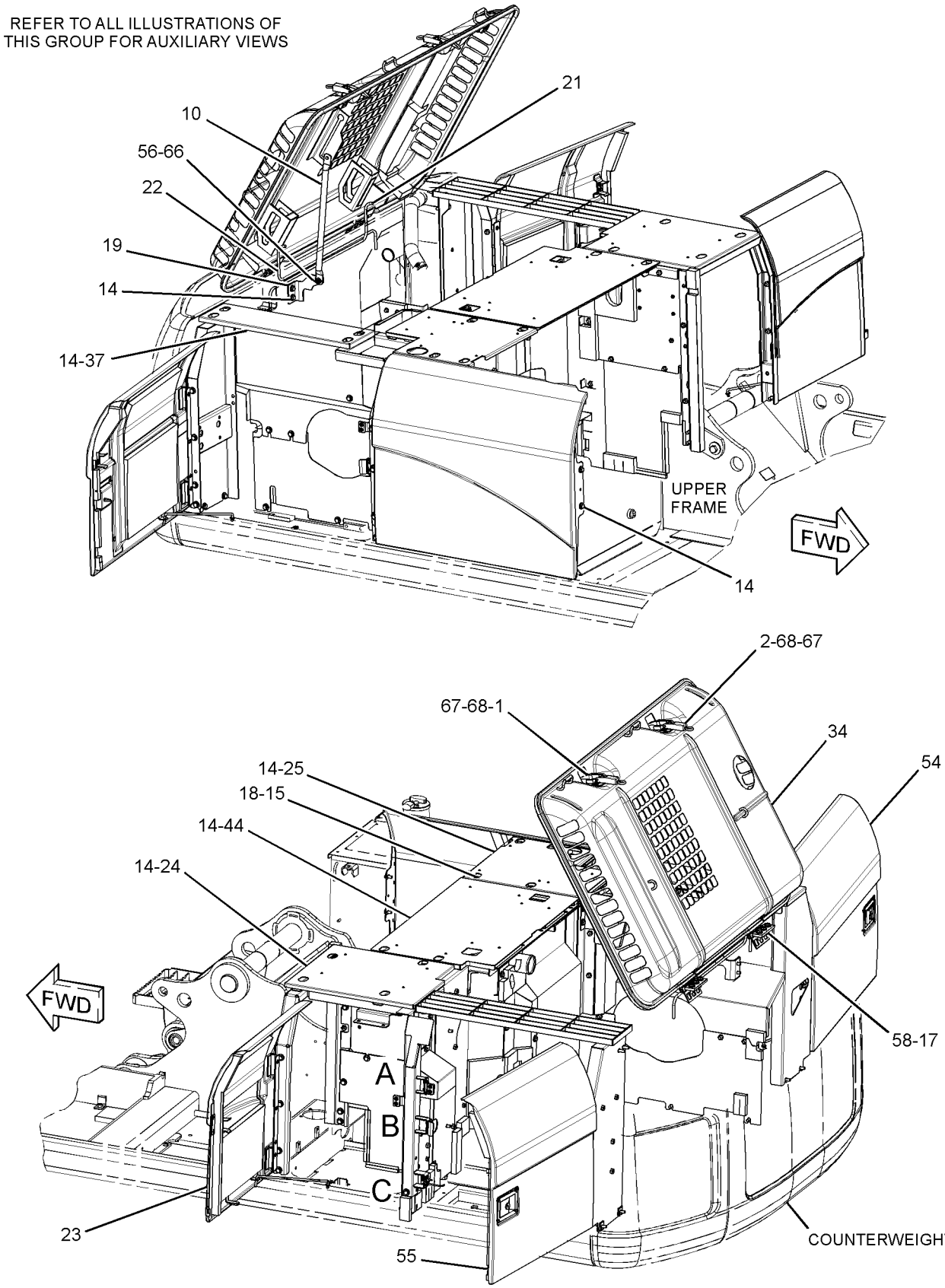

GRAPHIC #1

g01440901

273-7726 **HOOD & GUARD GP** *(contd.)* **i03201487**

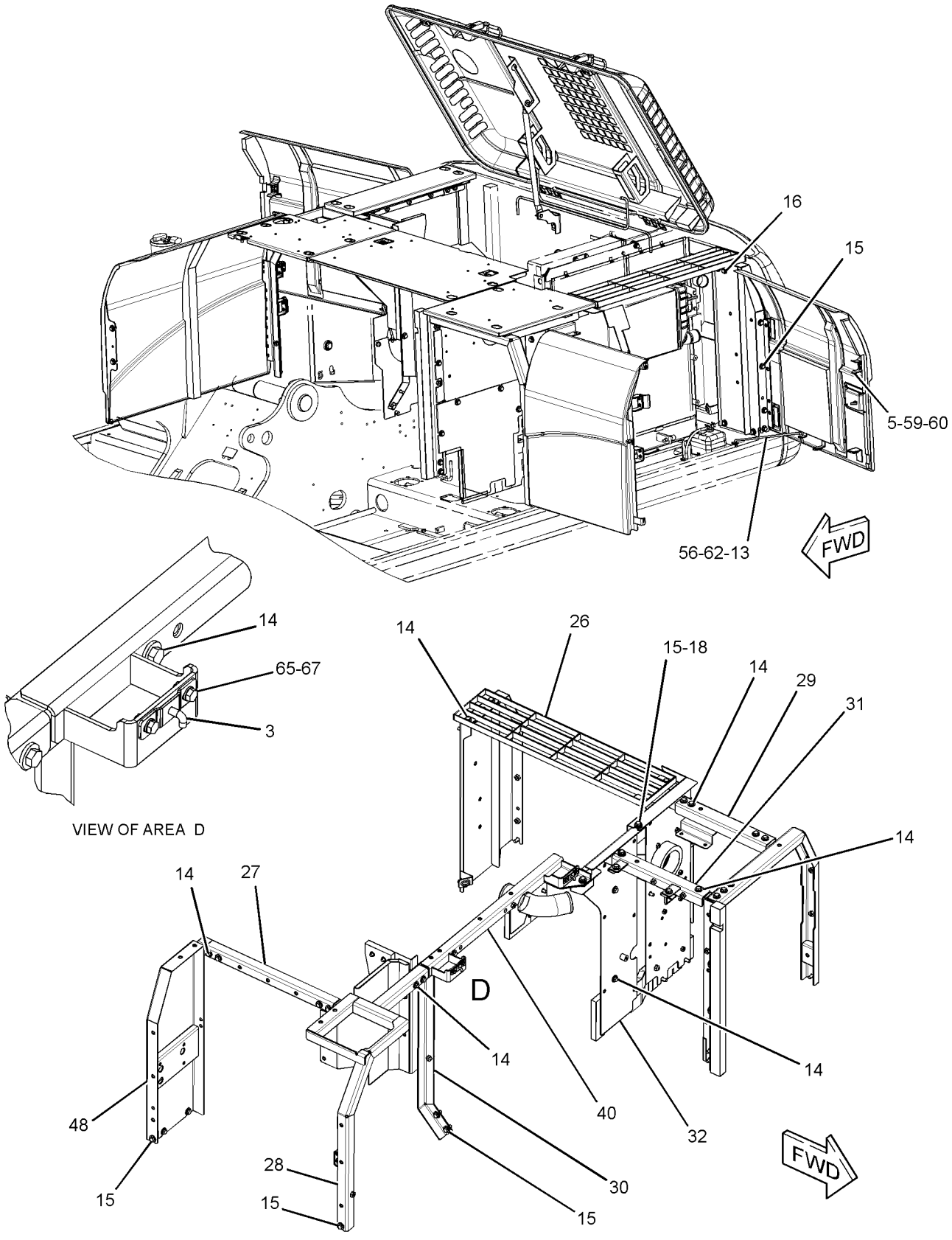

GRAPHIC #2

g01440902

273-7726 **HOOD & GUARD GP** *(contd.)* **i03201487**

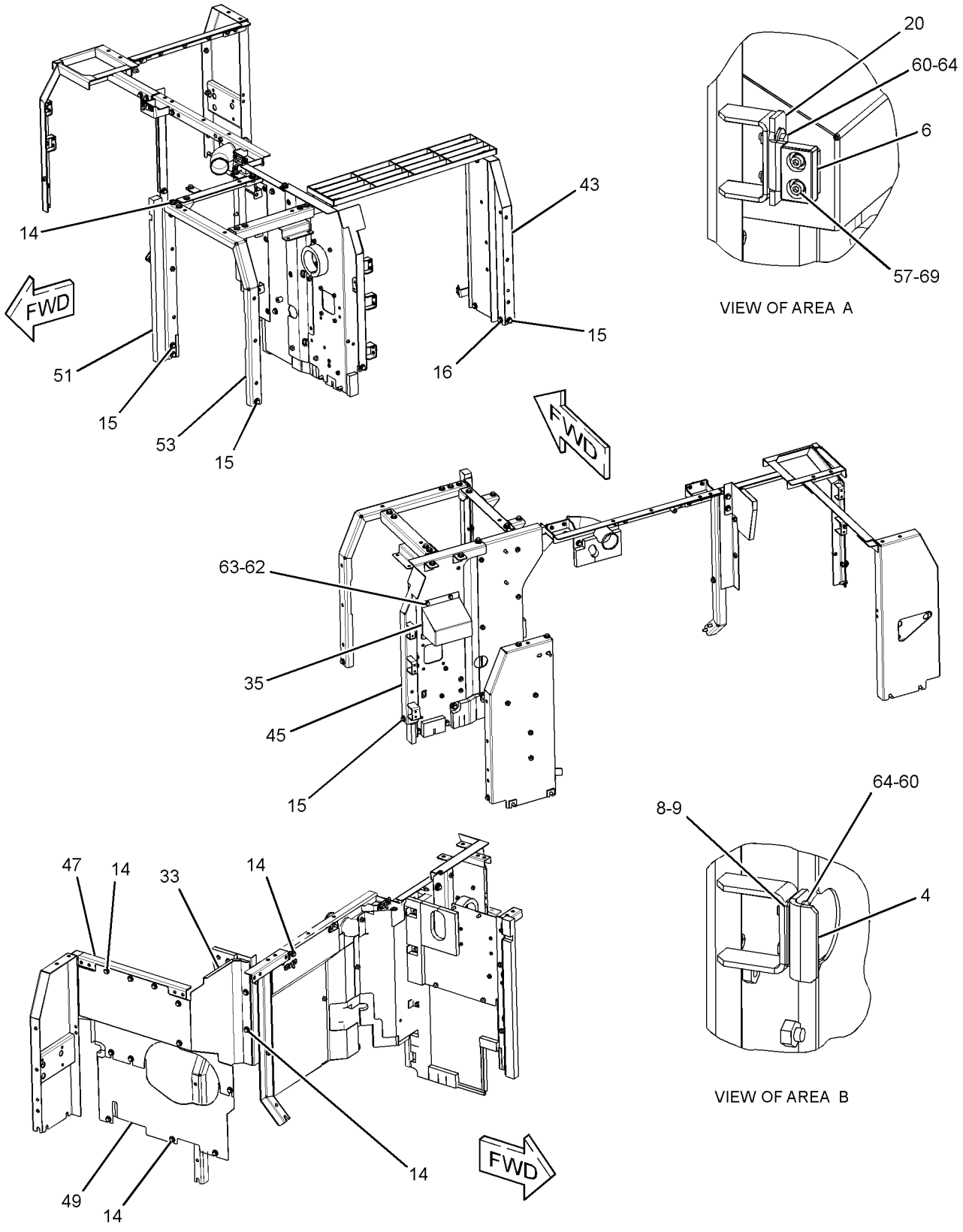

GRAPHIC #3 g01440903

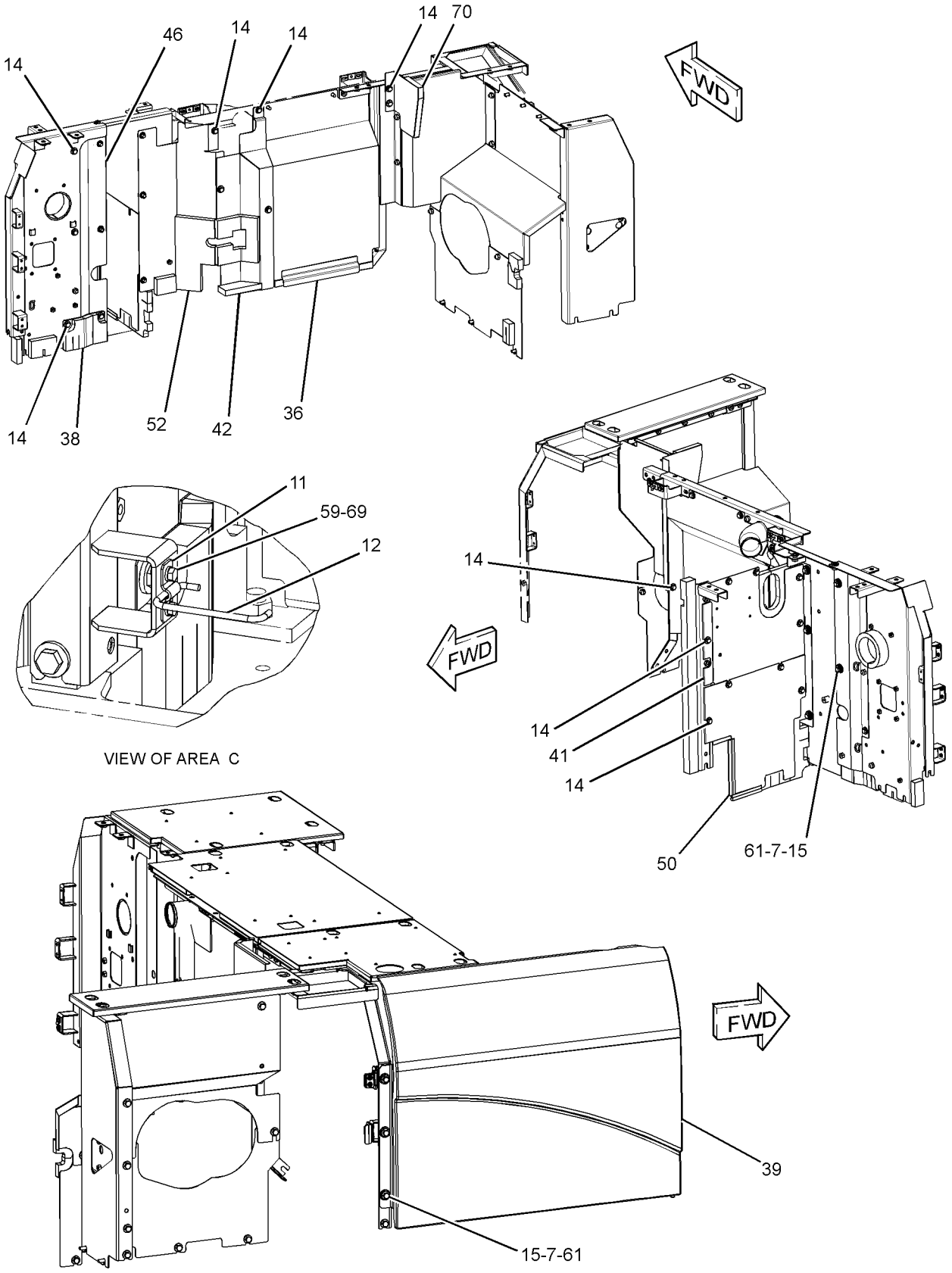

GRAPHIC #4 **<END>** g01440904

FRAME AND BODY

320-5732 HOOD & GUARD GP

S/N: KGF1-UP
PART OF 290-1892 SPECIAL AR
AN ATTACHMENT
TYPE 1

SMCS-7251, 7276 **i03078281**

NOTE	REF NO	GRAPHIC REF	PART NUMBER	QTY	PART NAME 1 2 3 4 5 6 (PRODUCT LEVEL)	SEE PAGE
	1	1	**1R-9958**	1	FASTENER	
	2	1	**4I-0117**	1	FASTENER	
	3	2	**4I-0118**	2	HOOK AS	
	4	3	**4I-0232**	2	STRIKER	
	5	1	**4I-8019**	3	SUPPORT	
	6	3	**6I-6033**	3	STOP	
	7	2	**7Y-2853**	8	SPACER (13X38X5-MM THK)	
	8	3	**087-3908**	4	SHIM (1-MM THK)	
	9	3	**087-3909**	4	SHIM (2-MM THK)	
	10	3	**116-1628**	1	SUPPORT AS	
	11	3	**122-3979**	1	BAND	
	12	3	**122-3980**	1	ROD	
	13	2	**122-4120**	3	ROD	
M	14	1,2,3	**135-8573**	73	BOLT AS (M12X1.75X25-MM)	
M	15	1,2,3	**135-8575**	35	BOLT AS-LOCKING (M12X1.75X30-MM)	
M	16	1	**135-8577**	4	BOLT AS	
M	17	2	**135-8578**	6	BOLT AS	
	18	1,2	**170-3016**	15	SPACER (19X32X2-MM THK)	
	19	3	**184-8423**	1	SUPPORT AS	
	20	3	**190-6880**	3	SUPPORT AS	
	21	3	**203-4889**	1	SPRING	
	22	3	**203-4890**	1	SPRING	
	23	1	**244-8202**	1	COVER AS	
	24	1	**244-8207**	1	COVER AS	
	25	1	**244-8219**	1	SUPPORT AS	
	26	2	**244-8228**	1	SUPPORT AS	
	27	2	**244-8234**	1	SUPPORT AS	
	28	2	**244-8242**	1	SUPPORT AS	
	29	2	**244-8255**	1	SUPPORT AS	
Y	30	2	**248-8940**	1	SUPPORT AS-ENCLOSURE	488
Y	31	1	**259-3687**	1	HOOD GP-ENGINE	470
	32	3	**262-2324**	1	COVER AS	
	33	1	**262-2353**	1	COVER AS	
	34	3	**262-2363**	1	SHEET AS	
		3	**262-2365**	1	LINER	
Y	35	2	**278-3836**	1	SHEET AS-SOUND SUPPRESSION	475
Y	36	3	**278-3842**	1	SHEET AS-SOUND SUPPRESSION	476
	37	3	**283-3911**	1	SHEET AS	
	38	2	**286-6220**	1	SHEET AS	
		2	**286-6276**	1	LINER	
	39	2	**286-6359**	1	SUPPORT AS	
Y	40	2	**289-6572**	1	SHEET AS-SOUND SUPPRESSION	477
	41	1	**289-6583**	1	SUPPORT AS	
Y	42	2	**289-6695**	1	SHEET AS-SOUND SUPPRESSION	479
	43	2	**289-6698**	1	SUPPORT AS	
		2	**129-3400**	1	GUARD	
		2	**244-8198**	1	LINER	
Y	44	3	**289-6699**	1	SHEET AS-SOUND SUPPRESSION	480
	45	2	**289-6805**	1	SUPPORT AS-ENCLOSURE	
Y	46	1	**289-6911**	1	DOOR GP-ACCESS (RADIATOR, AFTCLR, HYD COOLER)	408
Y	47	1	**289-6913**	1	DOOR GP-ACCESS (PUMP)	409
	48	2	**293-6982**	1	SHEET AS	
Y	49	1	**298-2977**	1	DOOR AS-ACCESS (LEFT SIDE, FRONT)	405
Y	50	1	**298-2979**	1	COVER AS-ACCESS (HYDRAULIC TANK, SIDE)	400

320-5732 **HOOD & GUARD GP** *(contd.)* **i03078281**

NOTE	REF NO	GRAPHIC REF	PART NUMBER	QTY	PART NAME 1 2 3 4 5 6 (PRODUCT LEVEL)	SEE PAGE
Y	51	3	**298-3033**	1	SHEET AS-SOUND SUPPRESSION	483
	52	2	**298-3038**	1	SUPPORT AS	
	53	3	**298-3041**	1	SUPPORT AS	
		3	**278-3832**	1	LINER	
	54	1	**298-3044**	1	COVER AS	
Y	55	3	**307-7662**	1	SUPPORT AS-ENCLOSURE	492
	56	2	**307-7700**	1	SHEET AS	
		2	**6P-2216**	3	CAP	
		2	**307-7702**	1	INSULATION	
	57	2,3	**3B-4618**	4	PIN-COTTER	
M	58	3	**105-3487**	6	BOLT-SOCKET HEAD (M6X1X20-MM)	
	59	2	**114-6285**	2	BAR	
M	60	1,3	**5C-9553**	8	BOLT (M6X1X16-MM)	
	61	1,3	**5P-4115**	16	WASHER-HARD (7.2X19X2-MM THK)	
	62	2	**7Y-2854**	8	SPACER (24X38X3-MM THK)	
	63	2,3	**8T-4121**	5	WASHER-HARD (11X21X2.5-MM THK)	
M	64	3	**8T-4137**	2	BOLT (M10X1.5X20-MM)	
M	65	3	**8T-4138**	10	BOLT (M6X1X20-MM)	
M	66	2	**8T-4189**	4	BOLT (M8X1.25X20-MM)	
	67	3	**8T-4223**	2	WASHER-HARD (13.5X25.5X3-MM THK)	
	68	1,2	**8T-4224**	8	WASHER-HARD (8.8X16X2-MM THK)	
M	69	1	**8T-4908**	4	BOLT (M8X1.25X25-MM)	
	70	3	**9X-8256**	8	WASHER (6.6X12X2-MM THK)	

M-METRIC PART
Y-SEPARATE ILLUSTRATION

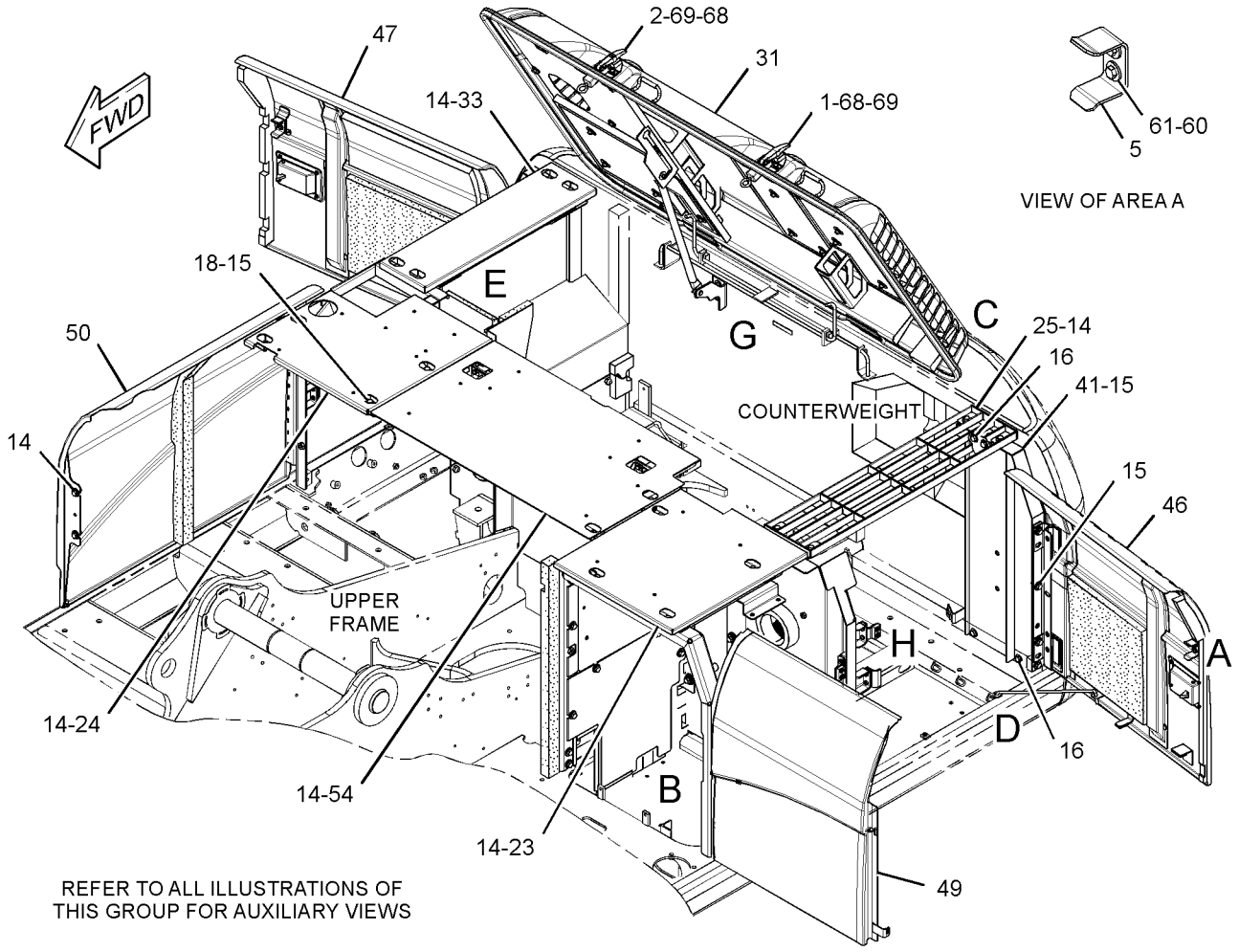

GRAPHIC #1 g01619947

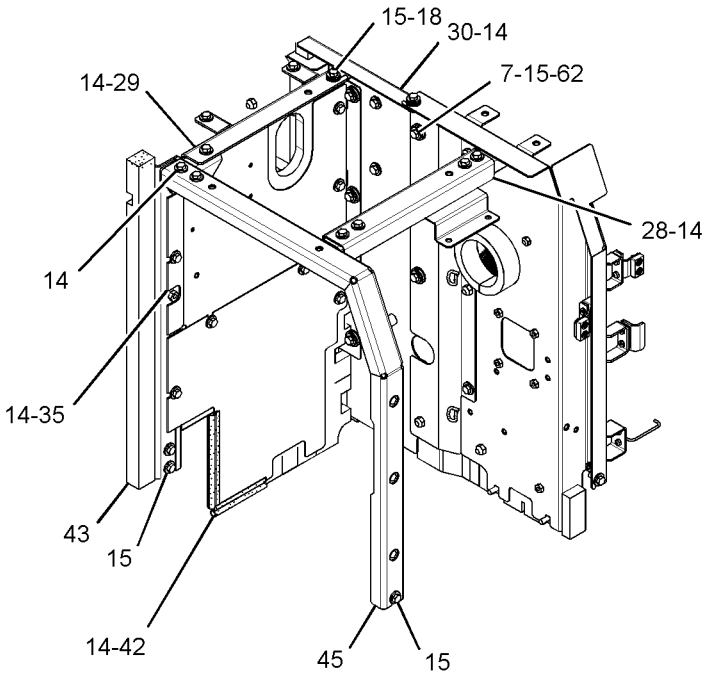

VIEW OF AREA B
(COVER REMOVED)

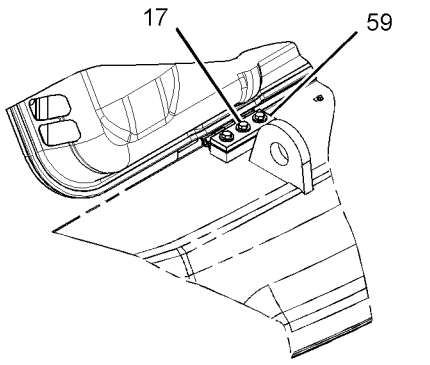

VIEW OF AREA C 90°

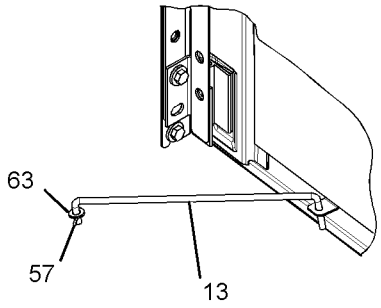

VIEW OF AREA D

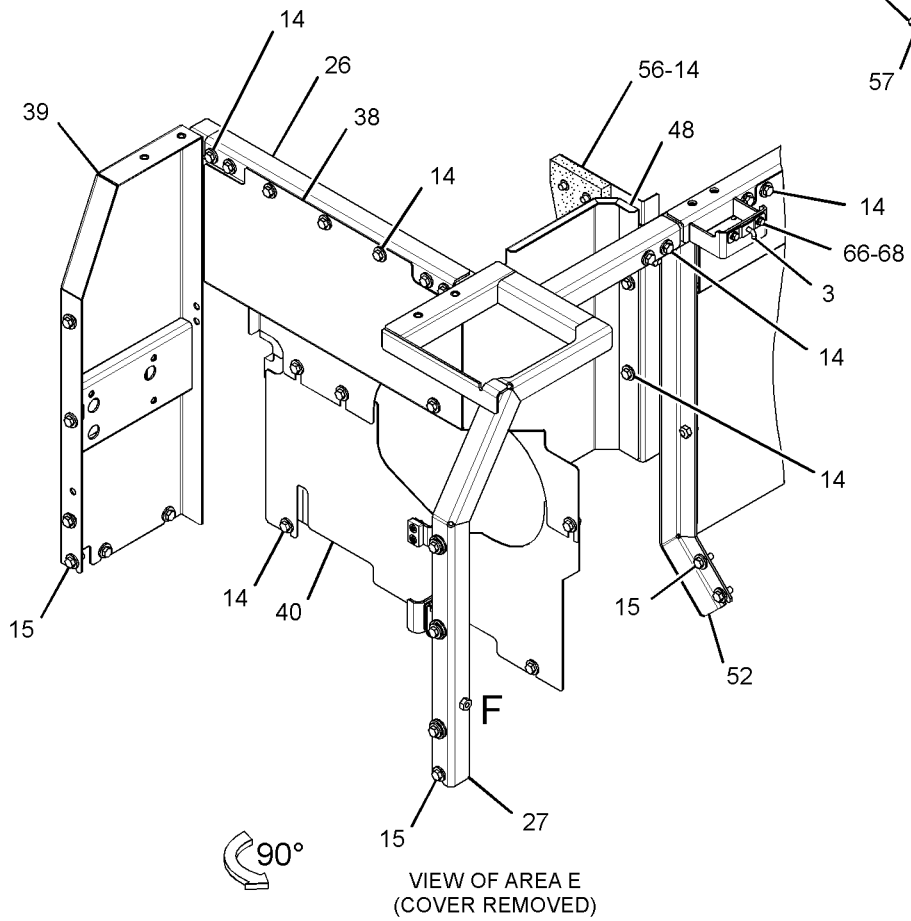

VIEW OF AREA E
(COVER REMOVED)

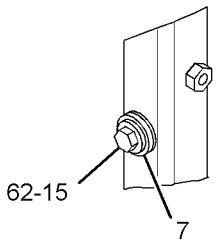

VIEW OF AREA F

GRAPHIC #2

g01619948

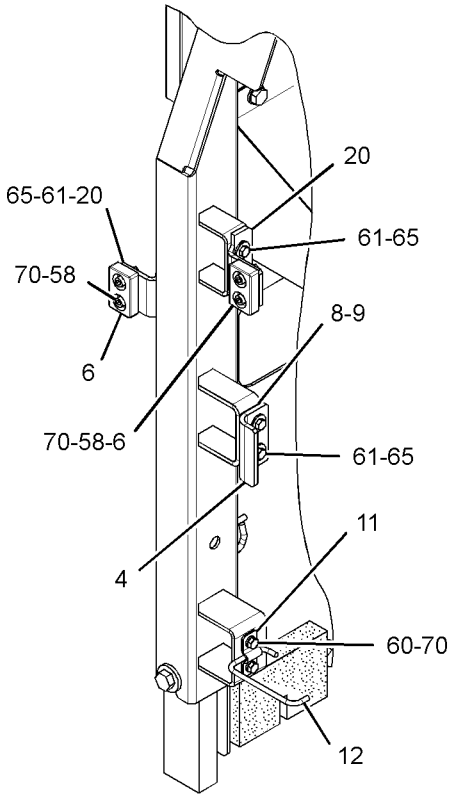

VIEW OF AREA J

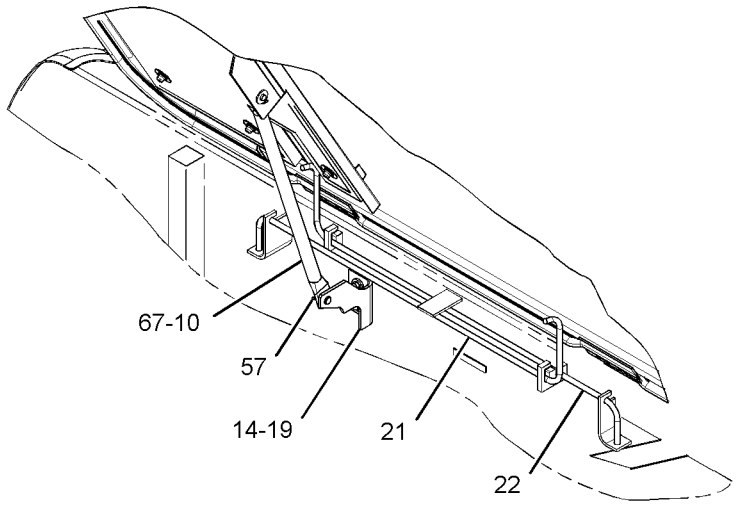

VIEW OF AREA G

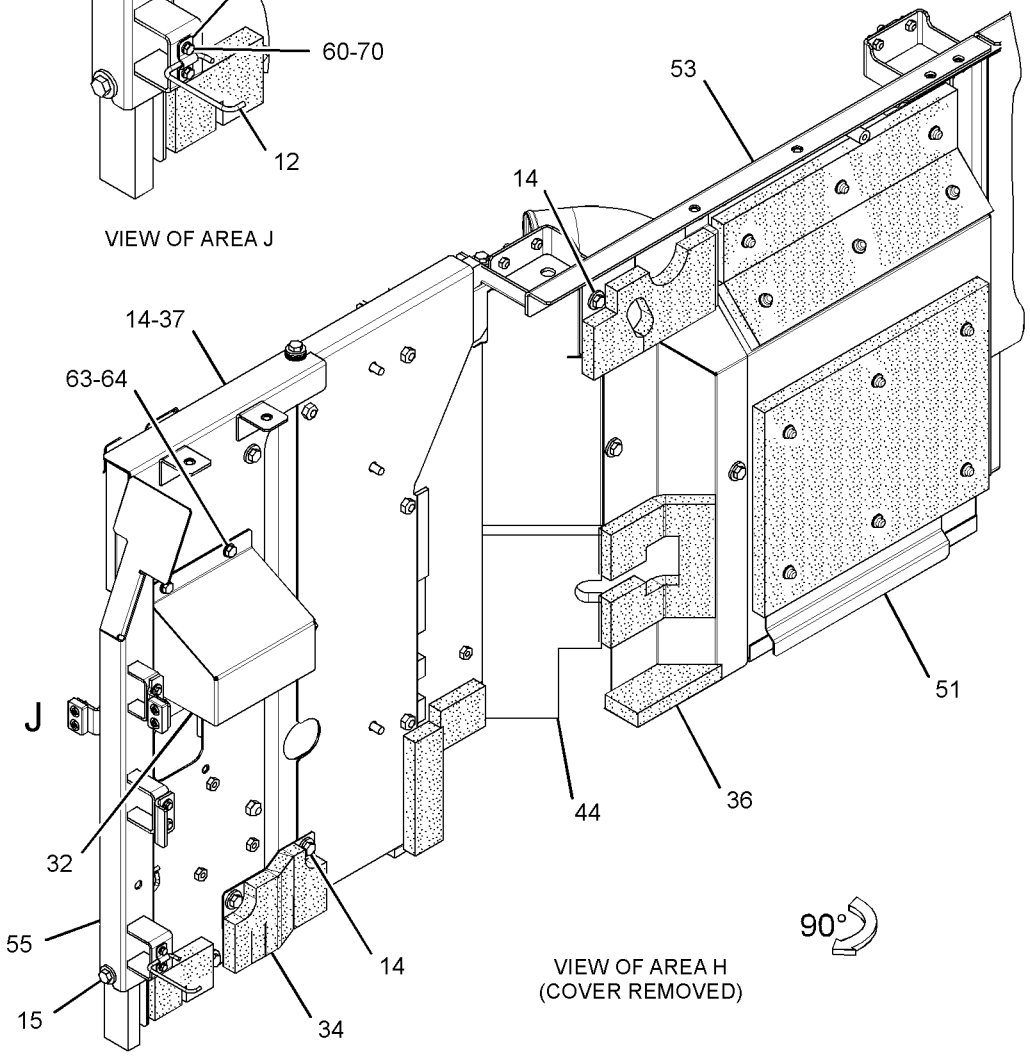

VIEW OF AREA H
(COVER REMOVED)

GRAPHIC #3 **<END>** g01619949

FRAME AND BODY

320-5732 HOOD & GUARD GP

S/N: KGF1-UP
PART OF 290-1892 SPECIAL AR
AN ATTACHMENT
TYPE 2

SMCS-7251, 7276 **i03087023**

NOTE	REF NO	GRAPHIC REF	PART NUMBER	QTY	PART NAME 1 2 3 4 5 6 (PRODUCT LEVEL)	SEE PAGE
	1	1	**1R-9958**	1	FASTENER	
	2	1	**4I-0117**	1	FASTENER	
	3	2	**4I-0118**	2	HOOK AS	
	4	3	**4I-0232**	2	STRIKER	
	5	1	**4I-8019**	3	SUPPORT	
	6	3	**6I-6033**	3	STOP	
	7	2	**7Y-2853**	8	SPACER (13X38X5-MM THK)	
	8	3	**087-3908**	4	SHIM (1-MM THK)	
	9	3	**087-3909**	4	SHIM (2-MM THK)	
	10	3	**116-1628**	1	SUPPORT AS	
	11	3	**122-3979**	1	BAND	
	12	3	**122-3980**	1	ROD	
	13	2	**122-4120**	3	ROD	
M	14	1,2,3	**135-8573**	73	BOLT AS (M12X1.75X25-MM)	
M	15	1,2,3	**135-8575**	35	BOLT AS-LOCKING (M12X1.75X30-MM)	
M	16	1	**135-8577**	4	BOLT AS	
M	17	2	**135-8578**	6	BOLT AS	
	18	1,2	**170-3016**	15	SPACER (19X32X2-MM THK)	
	19	3	**184-8423**	1	SUPPORT AS	
	20	3	**190-6880**	3	SUPPORT AS	
	21	3	**203-4889**	1	SPRING	
	22	3	**203-4890**	1	SPRING	
	23	1	**244-8202**	1	COVER AS	
	24	1	**244-8207**	1	COVER AS	
C	25	1	**330-1182**	1	SUPPORT AS	
	26	2	**244-8228**	1	SUPPORT AS	
	27	2	**244-8234**	1	SUPPORT AS	
	28	2	**244-8242**	1	SUPPORT AS	
	29	2	**244-8255**	1	SUPPORT AS	
Y	30	2	**248-8940**	1	SUPPORT AS-ENCLOSURE	488
Y	31	1	**259-3687**	1	HOOD GP-ENGINE	470
	32	3	**262-2324**	1	COVER AS	
	33	1	**262-2353**	1	COVER AS	
	34	3	**262-2363**	1	SHEET AS	
		3	**262-2365**	1	LINER	
Y	35	2	**278-3836**	1	SHEET AS-SOUND SUPPRESSION	475
Y	36	3	**278-3842**	1	SHEET AS-SOUND SUPPRESSION	476
	37	3	**283-3911**	1	SHEET AS	
	38	2	**286-6220**	1	SHEET AS	
		2	**286-6276**	1	LINER	
	39	2	**286-6359**	1	SUPPORT AS	
Y	40	2	**289-6572**	1	SHEET AS-SOUND SUPPRESSION	477
C	41	1	**330-1183**	1	SUPPORT AS	
Y	42	2	**289-6695**	1	SHEET AS-SOUND SUPPRESSION	479
	43	2	**289-6698**	1	SUPPORT AS	
		2	**129-3400**	1	GUARD	
		2	**244-8198**	1	LINER	
Y	44	3	**289-6699**	1	SHEET AS-SOUND SUPPRESSION	480
	45	2	**289-6805**	1	SUPPORT AS-ENCLOSURE	
Y	46	1	**289-6911**	1	DOOR GP-ACCESS (RADIATOR, AFTCLR, HYD COOLER)	408
Y	47	1	**289-6913**	1	DOOR GP-ACCESS (PUMP)	409
	48	2	**293-6982**	1	SHEET AS	
Y	49	1	**298-2977**	1	DOOR AS-ACCESS (LEFT SIDE, FRONT)	405
Y	50	1	**298-2979**	1	COVER AS-ACCESS (HYDRAULIC TANK, SIDE)	400

320-5732 **HOOD & GUARD GP** *(contd.)* **i03087023**

NOTE	REF NO	GRAPHIC REF	PART NUMBER	QTY	PART NAME 1 2 3 4 5 6 (PRODUCT LEVEL)	SEE PAGE
Y	51	3	**298-3033**	1	SHEET AS-SOUND SUPPRESSION	483
	52	2	**298-3038**	1	SUPPORT AS	
	53	3	**298-3041**	1	SUPPORT AS	
		3	**278-3832**	1	LINER	
	54	1	**298-3044**	1	COVER AS	
Y	55	3	**307-7662**	1	SUPPORT AS-ENCLOSURE	492
	56	2	**307-7700**	1	SHEET AS	
		2	**6P-2216**	3	CAP	
		2	**307-7702**	1	INSULATION	
	57	2,3	**3B-4618**	4	PIN-COTTER	
M	58	3	**105-3487**	6	BOLT-SOCKET HEAD (M6X1X20-MM)	
	59	2	**114-6285**	2	BAR	
M	60	1,3	**5C-9553**	8	BOLT (M6X1X16-MM)	
	61	1,3	**5P-4115**	16	WASHER-HARD (7.2X19X2-MM THK)	
	62	2	**7Y-2854**	8	SPACER (24X38X3-MM THK)	
	63	2,3	**8T-4121**	5	WASHER-HARD (11X21X2.5-MM THK)	
M	64	3	**8T-4137**	2	BOLT (M10X1.5X20-MM)	
M	65	3	**8T-4138**	10	BOLT (M6X1X20-MM)	
M	66	2	**8T-4189**	4	BOLT (M8X1.25X20-MM)	
	67	3	**8T-4223**	2	WASHER-HARD (13.5X25.5X3-MM THK)	
	68	1,2	**8T-4224**	8	WASHER-HARD (8.8X16X2-MM THK)	
M	69	1	**8T-4908**	4	BOLT (M8X1.25X25-MM)	
	70	3	**9X-8256**	8	WASHER (6.6X12X2-MM THK)	

C-CHANGE FROM PREVIOUS TYPE
M-METRIC PART
Y-SEPARATE ILLUSTRATION

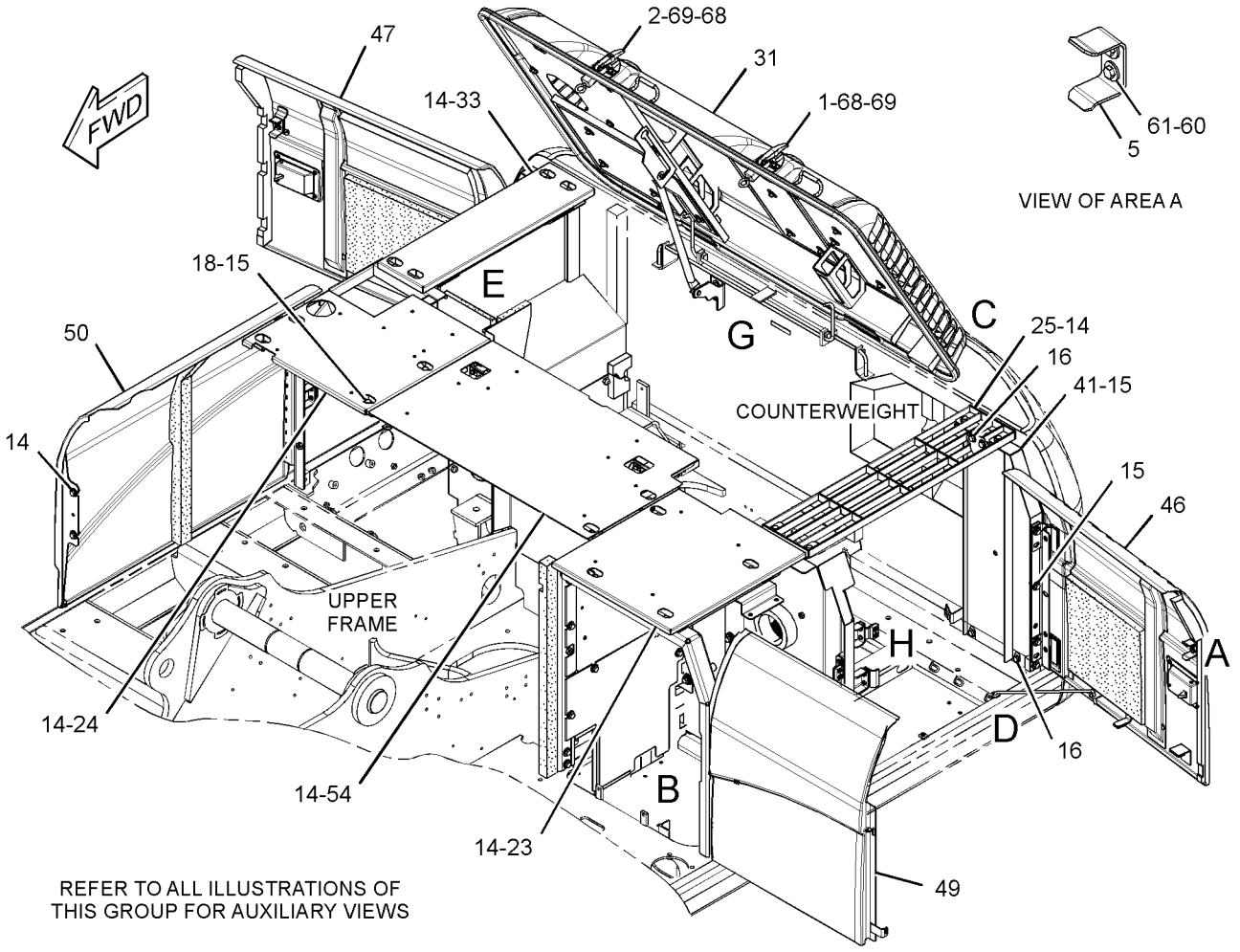

GRAPHIC #1 g01625602

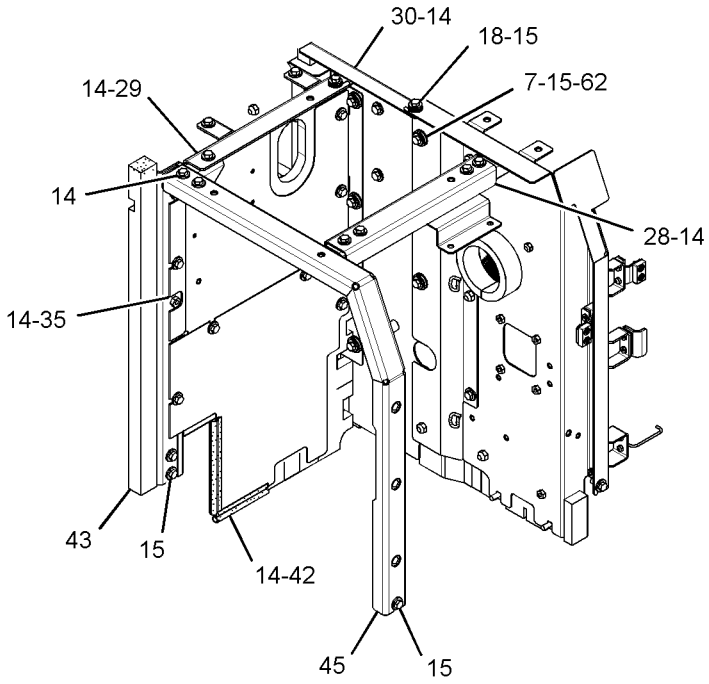

VIEW OF AREA B
(COVER REMOVED)

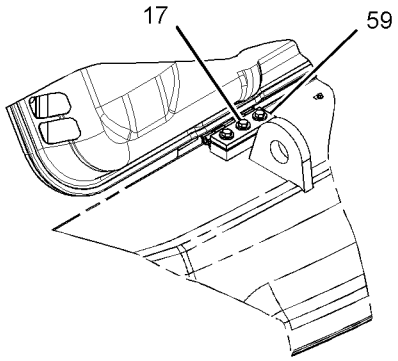

VIEW OF AREA C 90°

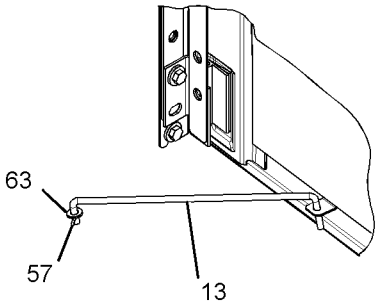

VIEW OF AREA D

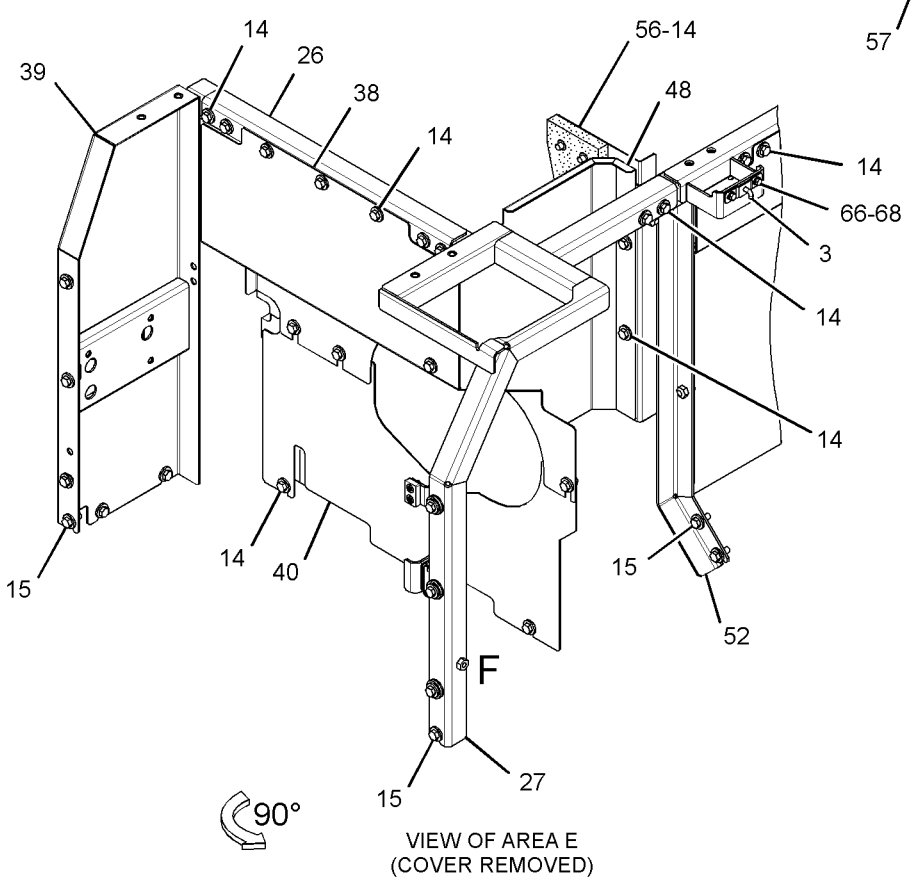

VIEW OF AREA E
(COVER REMOVED)

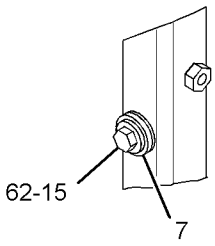

VIEW OF AREA F

GRAPHIC #2

g01625601

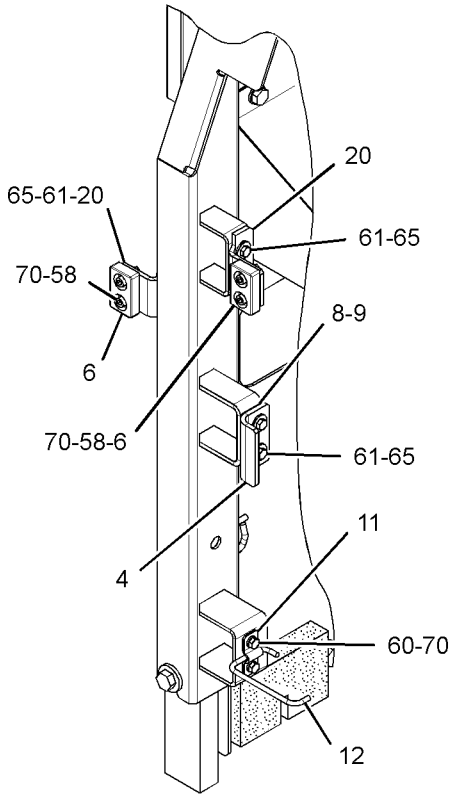

VIEW OF AREA J

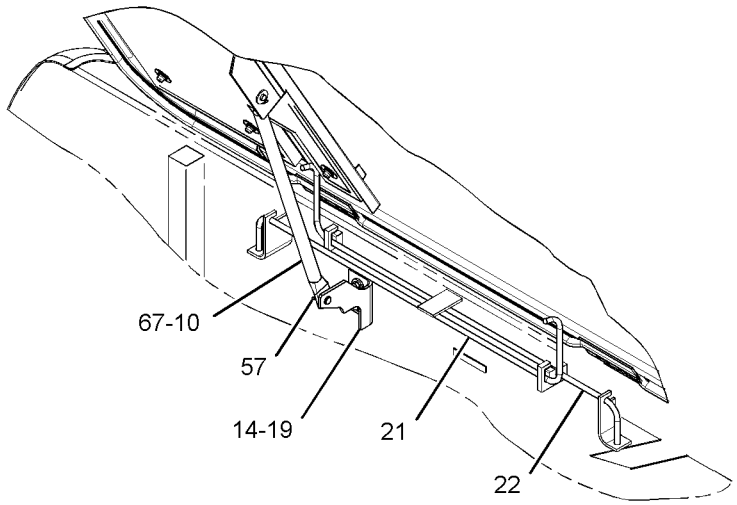

VIEW OF AREA G

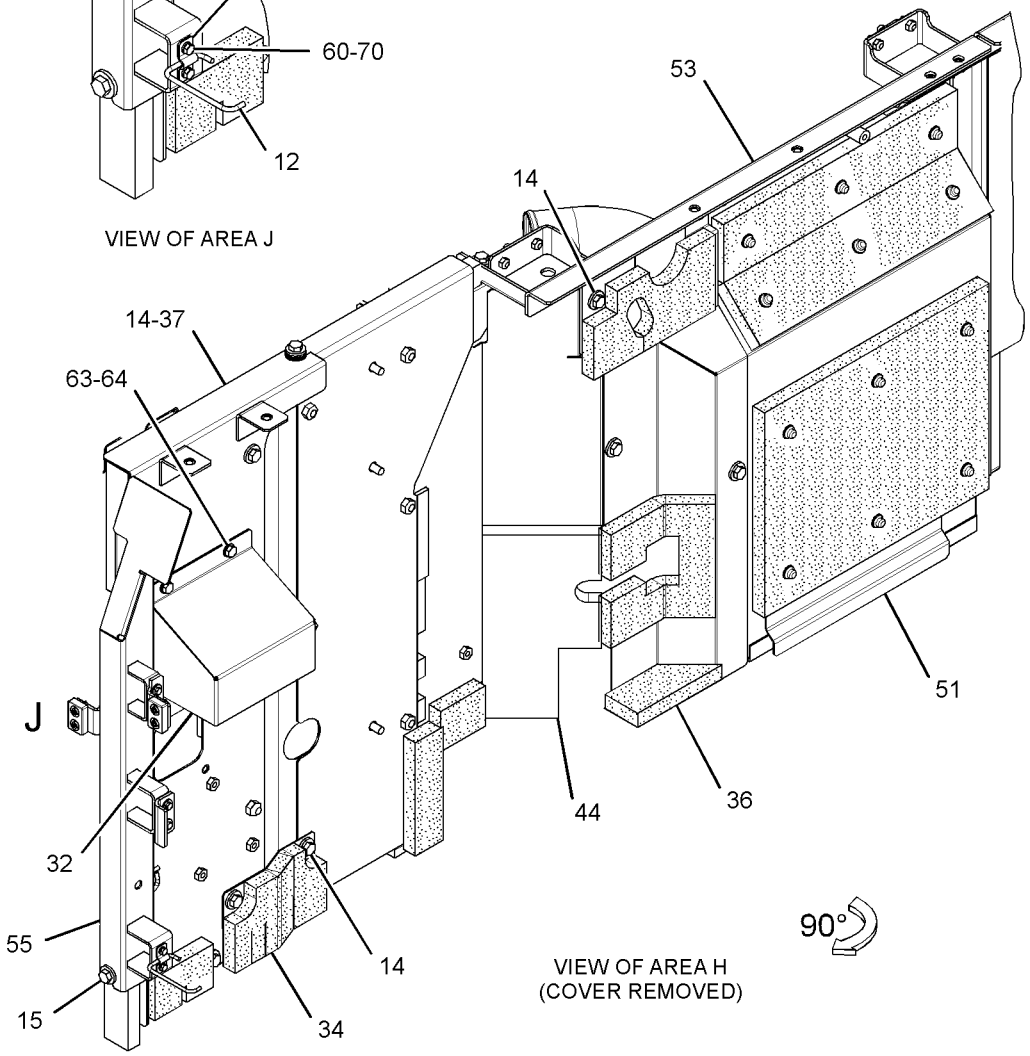

VIEW OF AREA H
(COVER REMOVED)

GRAPHIC #3 **<END>** g01625600

FRAME AND BODY

320-5732 HOOD & GUARD GP

S/N: KGF1-UP
PART OF 290-1892 SPECIAL AR
AN ATTACHMENT
TYPE 3

SMCS-7251, 7276 **i03192220**

NOTE	REF NO	GRAPHIC REF	PART NUMBER	QTY	PART NAME 1 2 3 4 5 6 (PRODUCT LEVEL)	SEE PAGE
	1	1	**1R-9958**	1	FASTENER	
	2	1	**4I-0117**	1	FASTENER	
	3	2	**4I-0118**	2	HOOK AS	
	4	3	**4I-0232**	2	STRIKER	
	5	1	**4I-8019**	3	SUPPORT	
	6	3	**6I-6033**	3	STOP	
	7	2	**7Y-2853**	8	SPACER (13X38X5-MM THK)	
	8	3	**087-3908**	4	SHIM (1-MM THK)	
	9	3	**087-3909**	4	SHIM (2-MM THK)	
	10	3	**116-1628**	1	SUPPORT AS	
	11	3	**122-3979**	1	BAND	
	12	3	**122-3980**	1	ROD	
	13	2	**122-4120**	3	ROD	
M	14	1,2,3	**135-8573**	73	BOLT AS (M12X1.75X25-MM)	
M	15	1,2,3	**135-8575**	35	BOLT AS-LOCKING (M12X1.75X30-MM)	
M	16	1	**135-8577**	4	BOLT AS	
M	17	2	**135-8578**	6	BOLT AS	
	18	1,2	**170-3016**	15	SPACER (19X32X2-MM THK)	
	19	3	**184-8423**	1	SUPPORT AS	
	20	3	**190-6880**	3	SUPPORT AS	
	21	3	**203-4889**	1	SPRING	
	22	3	**203-4890**	1	SPRING	
	23	1	**244-8202**	1	COVER AS	
C	24	1	**330-1347**	1	COVER AS	
	25	1	**330-1182**	1	SUPPORT AS	
	26	2	**244-8228**	1	SUPPORT AS	
	27	2	**244-8234**	1	SUPPORT AS	
	28	2	**244-8242**	1	SUPPORT AS	
	29	2	**244-8255**	1	SUPPORT AS	
Y	30	2	**248-8940**	1	SUPPORT AS-ENCLOSURE	488
Y	31	1	**259-3687**	1	HOOD GP-ENGINE	470
	32	3	**262-2324**	1	COVER AS	
	33	1	**262-2353**	1	COVER AS	
	34	3	**262-2363**	1	SHEET AS	
		3	**262-2365**	1	LINER	
Y	35	2	**278-3836**	1	SHEET AS-SOUND SUPPRESSION	475
Y	36	3	**278-3842**	1	SHEET AS-SOUND SUPPRESSION	476
	37	3	**283-3911**	1	SHEET AS	
	38	2	**286-6220**	1	SHEET AS	
		2	**286-6276**	1	LINER	
	39	2	**286-6359**	1	SUPPORT AS	
Y	40	2	**289-6572**	1	SHEET AS-SOUND SUPPRESSION	477
	41	1	**330-1183**	1	SUPPORT AS	
Y	42	2	**289-6695**	1	SHEET AS-SOUND SUPPRESSION	479
	43	2	**289-6698**	1	SUPPORT AS	
		2	**129-3400**	1	GUARD	
		2	**244-8198**	1	LINER	
Y	44	3	**289-6699**	1	SHEET AS-SOUND SUPPRESSION	480
	45	2	**289-6805**	1	SUPPORT AS-ENCLOSURE	
Y	46	1	**289-6911**	1	DOOR GP-ACCESS (RADIATOR, AFTCLR, HYD COOLER)	408
Y	47	1	**289-6913**	1	DOOR GP-ACCESS (PUMP)	409
	48	2	**293-6982**	1	SHEET AS	
Y	49	1	**298-2977**	1	DOOR AS-ACCESS (LEFT SIDE, FRONT)	405
Y	50	1	**298-2979**	1	COVER AS-ACCESS (HYDRAULIC TANK, SIDE)	400

320-5732 **HOOD & GUARD GP** *(contd.)* **i03192220**

NOTE	REF NO	GRAPHIC REF	PART NUMBER	QTY	PART NAME 1 2 3 4 5 6 (PRODUCT LEVEL)	SEE PAGE
Y	51	3	**298-3033**	1	SHEET AS-SOUND SUPPRESSION	483
	52	2	**298-3038**	1	SUPPORT AS	
	53	3	**298-3041**	1	SUPPORT AS	
		3	**278-3832**	1	LINER	
	54	1	**298-3044**	1	COVER AS	
Y	55	3	**307-7662**	1	SUPPORT AS-ENCLOSURE	492
	56	2	**307-7700**	1	SHEET AS	
		2	**6P-2216**	3	CAP	
		2	**307-7702**	1	INSULATION	
	57	2,3	**3B-4618**	4	PIN-COTTER	
M	58	3	**105-3487**	6	BOLT-SOCKET HEAD (M6X1X20-MM)	
	59	2	**114-6285**	2	BAR	
M	60	1,3	**5C-9553**	8	BOLT (M6X1X16-MM)	
	61	1,3	**5P-4115**	16	WASHER-HARD (7.2X19X2-MM THK)	
	62	2	**7Y-2854**	8	SPACER (24X38X3-MM THK)	
	63	2,3	**8T-4121**	5	WASHER-HARD (11X21X2.5-MM THK)	
M	64	3	**8T-4137**	2	BOLT (M10X1.5X20-MM)	
M	65	3	**8T-4138**	10	BOLT (M6X1X20-MM)	
M	66	2	**8T-4189**	4	BOLT (M8X1.25X20-MM)	
	67	3	**8T-4223**	2	WASHER-HARD (13.5X25.5X3-MM THK)	
	68	1,2	**8T-4224**	8	WASHER-HARD (8.8X16X2-MM THK)	
M	69	1	**8T-4908**	4	BOLT (M8X1.25X25-MM)	
	70	3	**9X-8256**	8	WASHER (6.6X12X2-MM THK)	

C-CHANGE FROM PREVIOUS TYPE
M-METRIC PART
Y-SEPARATE ILLUSTRATION

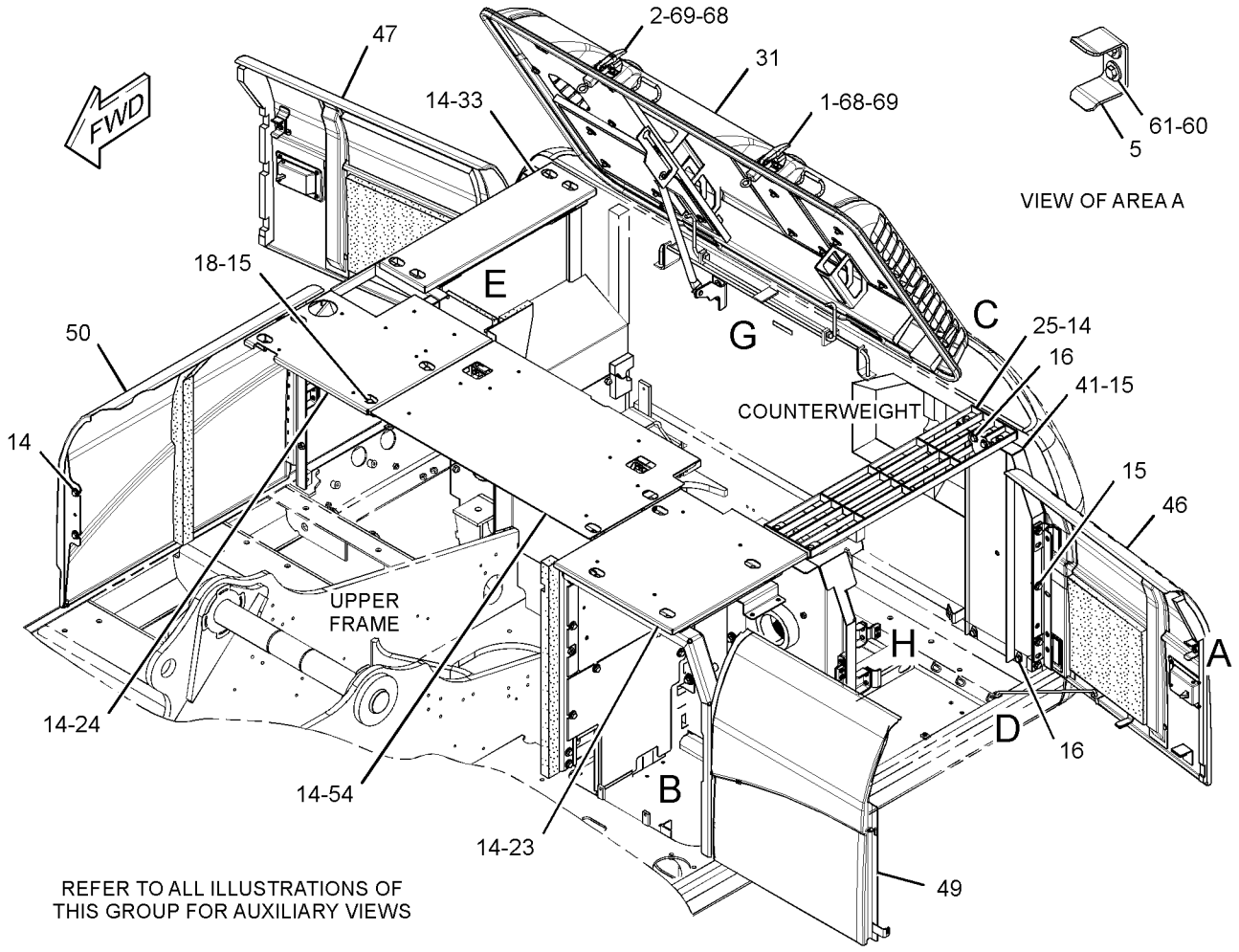

GRAPHIC #1 g01625602

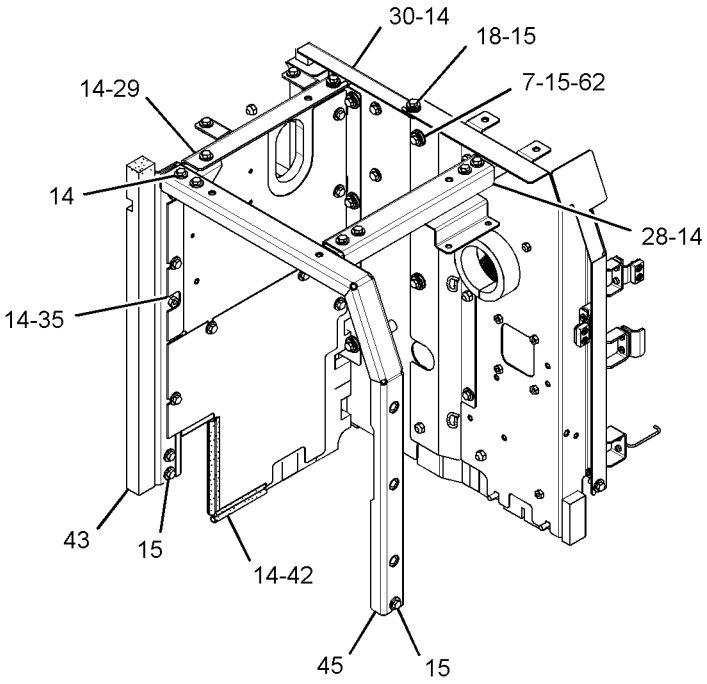

VIEW OF AREA B
(COVER REMOVED)

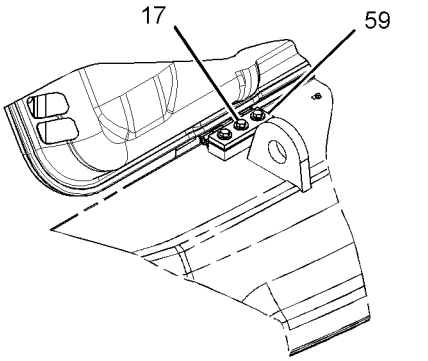

VIEW OF AREA C 90°

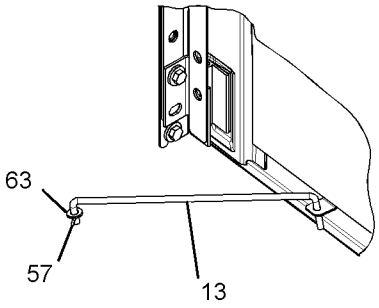

VIEW OF AREA D

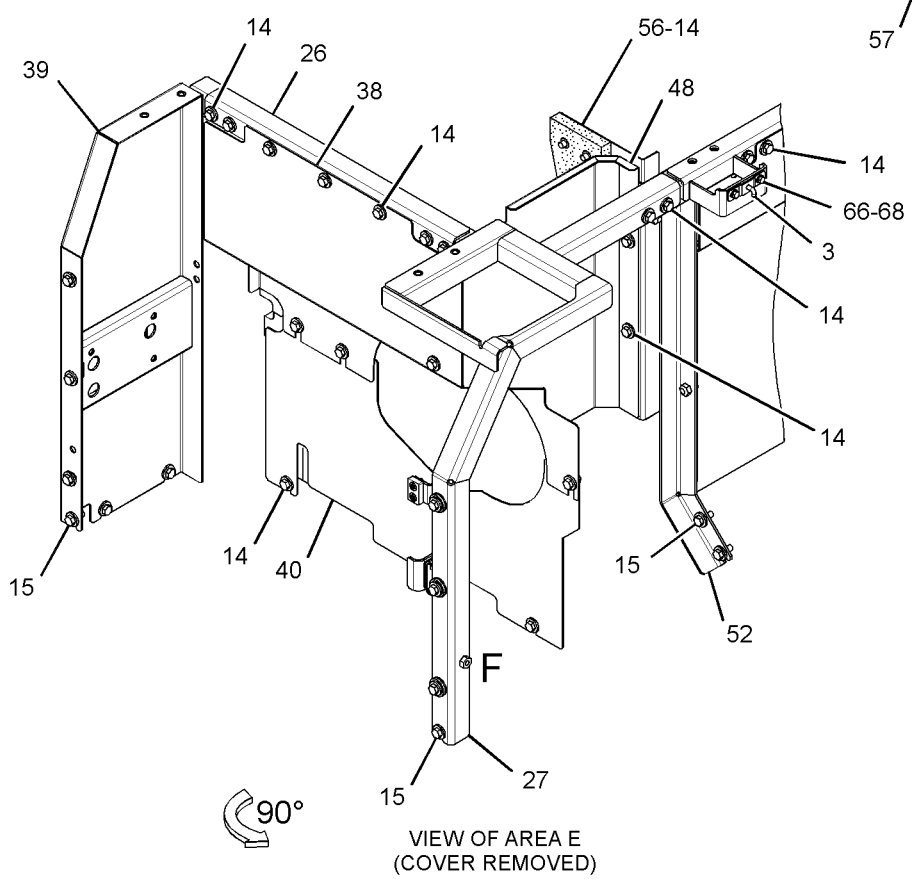

VIEW OF AREA E
(COVER REMOVED)

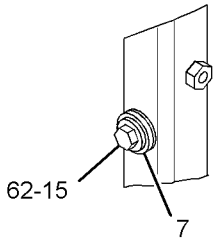

VIEW OF AREA F

GRAPHIC #2

g01625601

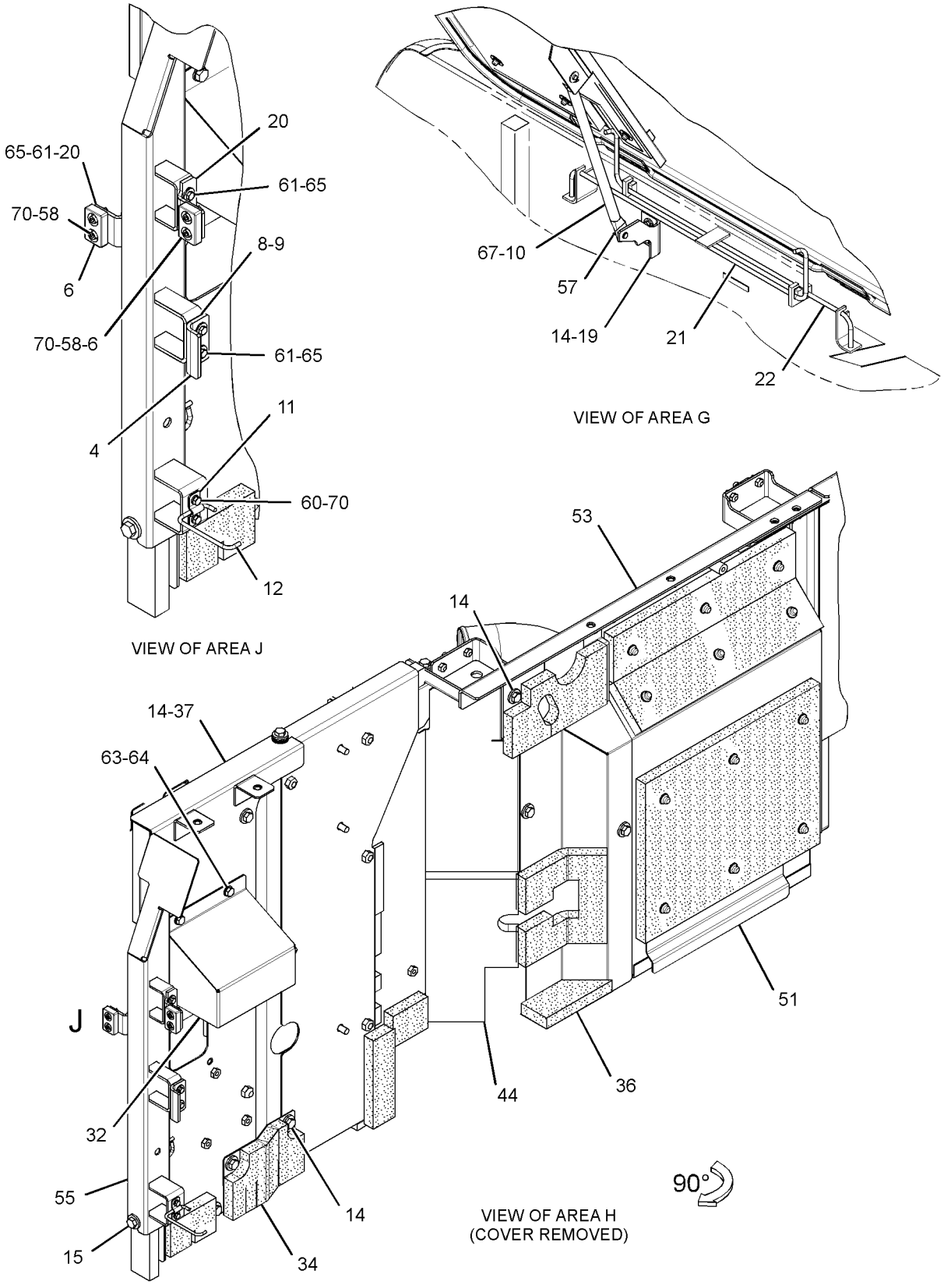

GRAPHIC #3 **<END>** g01625600

303-9859 HOOD GP–ACCUGRADE READY

S/N: KGF1-UP; FAL1-UP
PART OF 290-1774 CONVERSION AR-MACHINE
AN ATTACHMENT

SMCS-7251 **i02846379**

NOTE	REF NO	GRAPHIC REF	PART NUMBER	QTY	PART NAME 1 2 3 4 5 6 (PRODUCT LEVEL)	SEE PAGE
Y	1	1	**304-0014**	1	HOOD GP-ENGINE	472
	2	1	**304-0018**	1	SUPPORT AS	
	3	1	**304-0019**	1	COVER AS	

Y-SEPARATE ILLUSTRATION

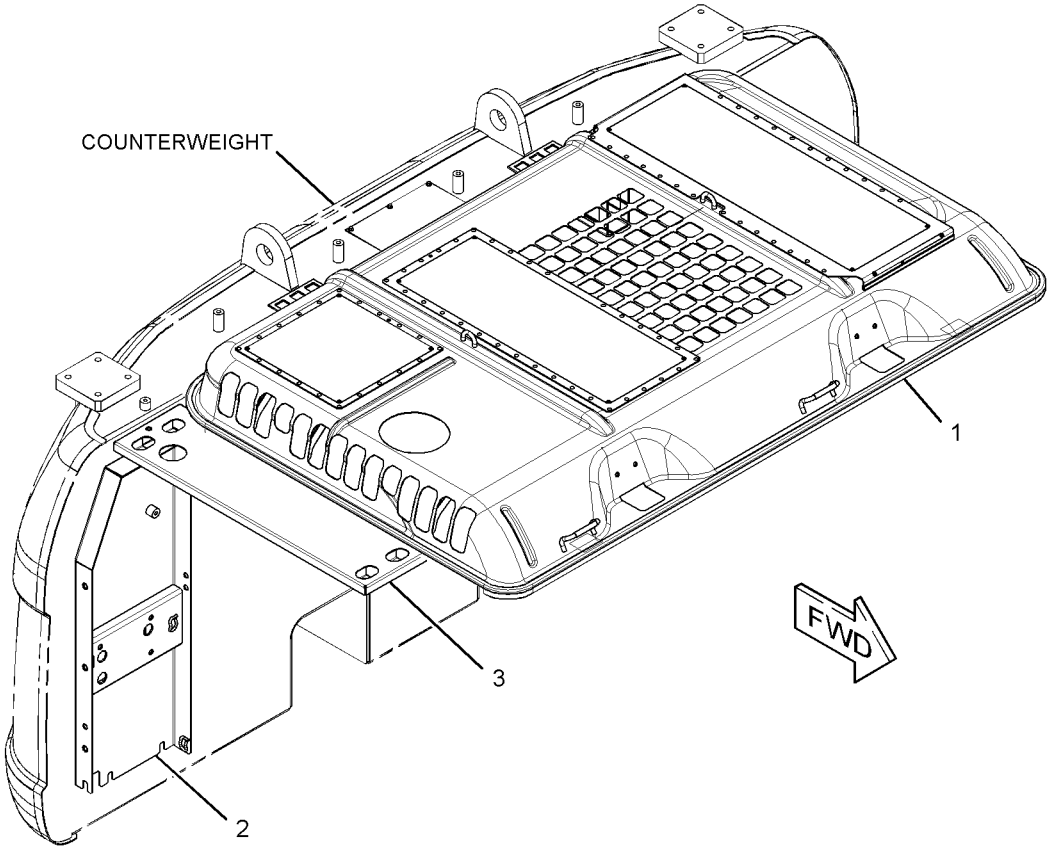

GRAPHIC #1 **<END>** g01422368

303-9860 HOOD GP

S/N: KGF1-UP
PART OF 290-1775 CONVERSION AR-MACHINE
AN ATTACHMENT

SMCS-7251 **i02845586**

NOTE	REF NO	GRAPHIC REF	PART NUMBER	QTY	PART NAME 1 2 3 4 5 6 (PRODUCT LEVEL)	SEE PAGE
Y	1	1	**304-0016**	1	HOOD GP-ENGINE	473
	2	1	**304-0018**	1	SUPPORT AS	
	3	1	**304-0019**	1	COVER AS	

Y-SEPARATE ILLUSTRATION

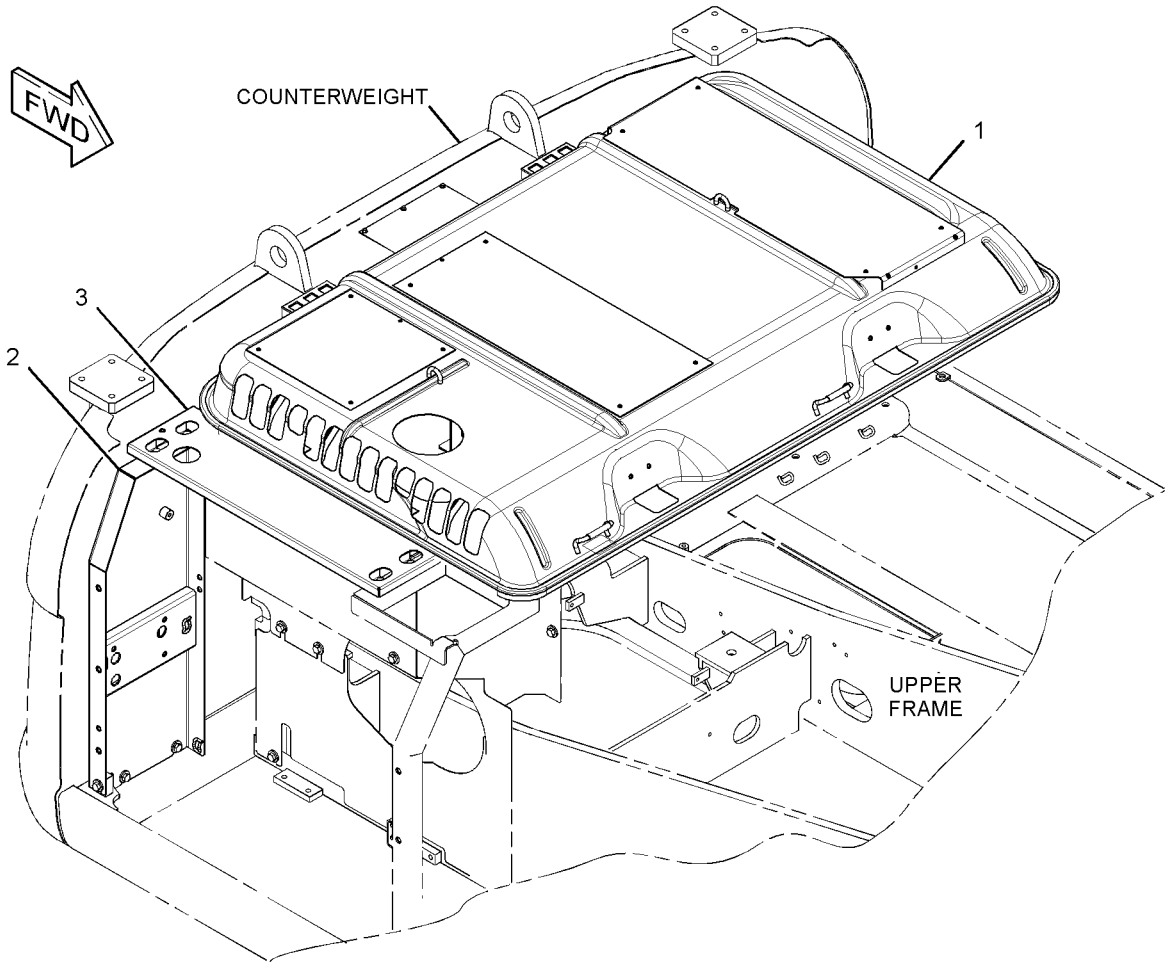

GRAPHIC #1 **<END>** g01409483

259-3687 HOOD GP-ENGINE

S/N: KGF1-UP
PART OF 273-7725, 320-5732 HOOD & GUARD GP
AN ATTACHMENT

SMCS-7251 **i03093621**

NOTE	REF NO	GRAPHIC REF	PART NUMBER	QTY	PART NAME 1 2 3 4 5 6 (PRODUCT LEVEL)	SEE PAGE
	1	1	**4I-7924**	15	WASHER (4.5X40X1.2-MM THK)	
	2	1	**6P-2216**	15	CAP	
	3	1	**096-4129**	2	CUSHION	
M	4	1	**135-8573**	8	BOLT AS (M12X1.75X25-MM)	
	5	1	*259-3688*	1	HOOD AS-ENGINE	
		1	**146-4936**	2	HANDLE AS	
	5A	1	**114-6289**	2	HINGE	
	6	1	**262-2420**	1	SHEET AS	
	7	1	**262-2427**	1	LINER	
	8	1	**262-2428**	1	LINER	
	9	1	**262-2429**	1	LINER	
	10	1	**262-2430**	1	LINER	
	11	1	**262-2432**	1	LINER	
	12	1	**8T-0328**	4	WASHER-HARD (5.5X10X1-MM THK)	
M	13	1	**8T-6693**	4	SCREW-MACHINE (M5X0.8X16-MM)	
D	14	1	**101-9848**		SEAL (6.14-M)	

D-ORDER BY THE METER
M-METRIC PART

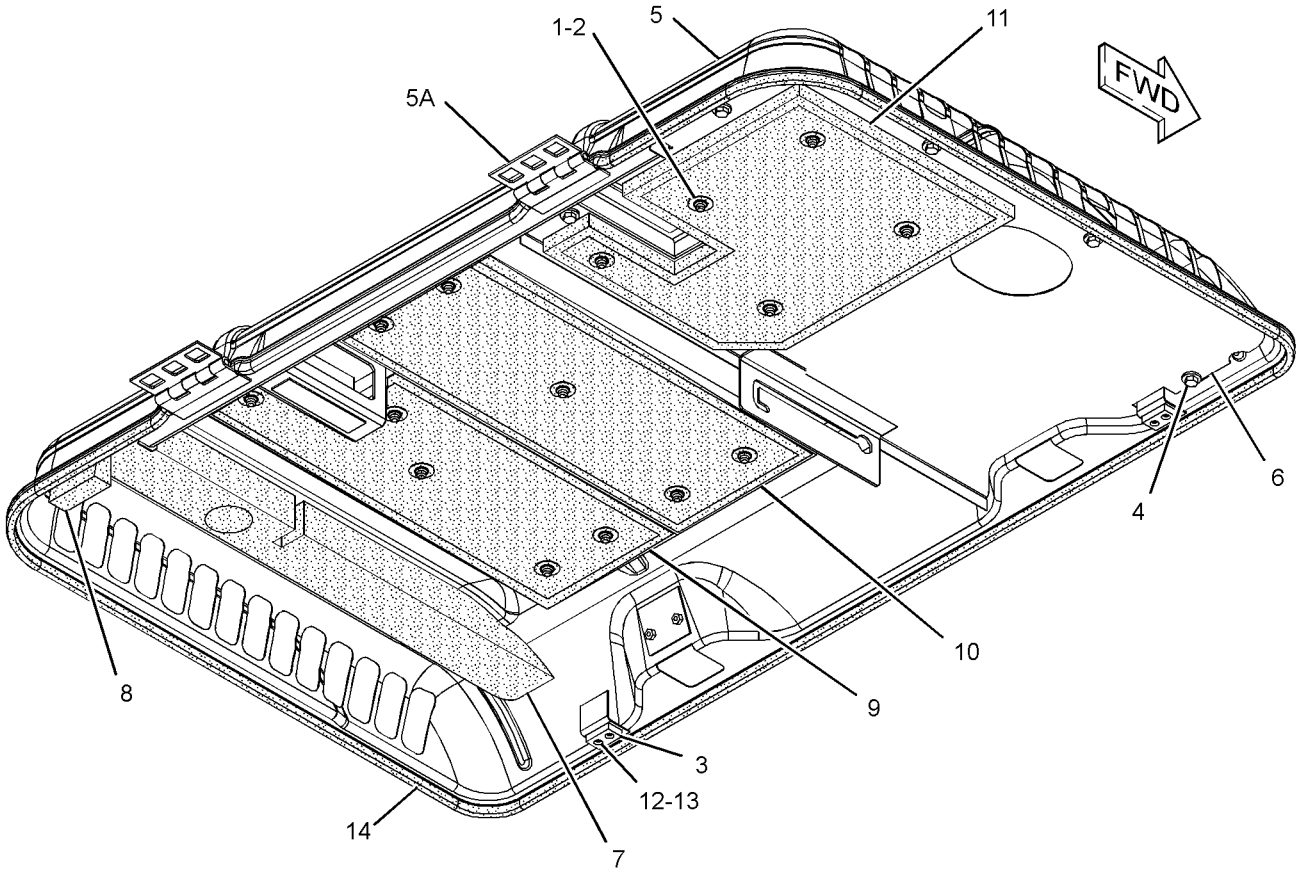

GRAPHIC #1 **<END>** g01293727

FRAME AND BODY

262-2286 HOOD GP-ENGINE

S/N: KGF1-UP; FAL1-UP

PART OF 273-7726 HOOD & GUARD GP

SMCS-7251 **i02826426**

NOTE	REF NO	GRAPHIC REF	PART NUMBER	QTY	PART NAME 1 2 3 4 5 6 (PRODUCT LEVEL)	SEE PAGE
	1	1	**096-4129**	2	CUSHION	
	2	1	*262-2287*	1	HOOD AS-ENGINE	
	2A	1	**114-6289**	2	HINGE	
	3	1	**262-2427**	1	LINER	
	4	1	**262-2428**	1	LINER	
	5	1	**8T-0328**	4	WASHER-HARD (5.5X10X1-MM THK)	
M	6	1	**8T-6693**	4	SCREW-MACHINE (M5X0.8X16-MM)	
D	7	1	**101-9848**		SEAL (0.62-M)	

D-ORDER BY THE METER
M-METRIC PART

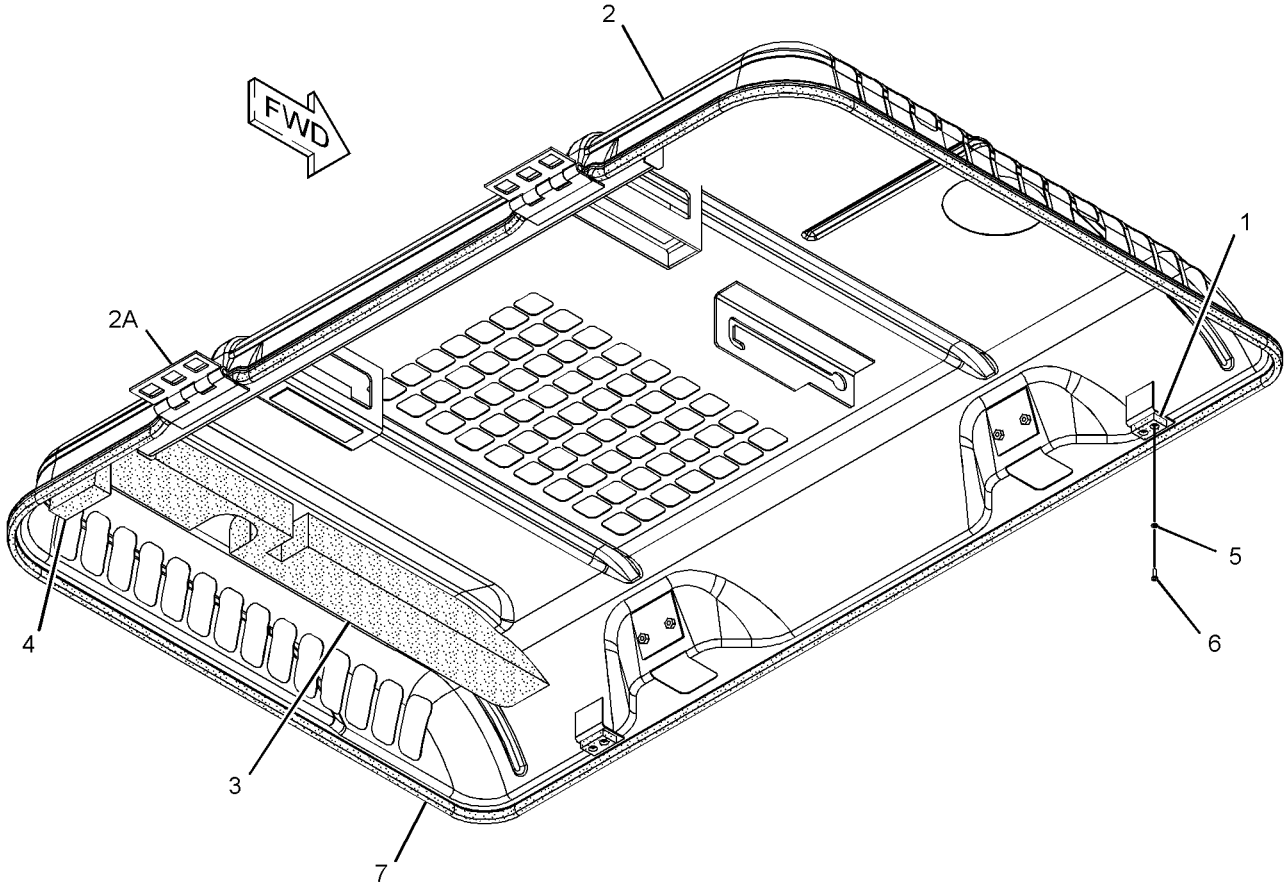

GRAPHIC #1 **<END>** g01392502

304-0014 HOOD GP-ENGINE

S/N: KGF1-UP; FAL1-UP
PART OF 303-9859 HOOD GP
AN ATTACHMENT

SMCS-7251 **i02846380**

NOTE	REF NO	GRAPHIC REF	PART NUMBER	QTY	PART NAME 1 2 3 4 5 6 (PRODUCT LEVEL)	SEE PAGE
	1	1	**096-4129**	2	CUSHION	
	2	1	**262-2427**	1	LINER	
	3	1	**262-2428**	1	LINER	
	5	1	**8T-0328**	4	WASHER-HARD (5.5X10X1-MM THK)	
M	6	1	**8T-6693**	4	SCREW-MACHINE (M5X0.8X16-MM)	
D	7	1	**101-9848**		SEAL (6.2-M)	
E	8	1	**184-8580**		SEAL (30-CM EACH)	

D-ORDER BY THE METER
E-ORDER BY THE CENTIMETER
M-METRIC PART

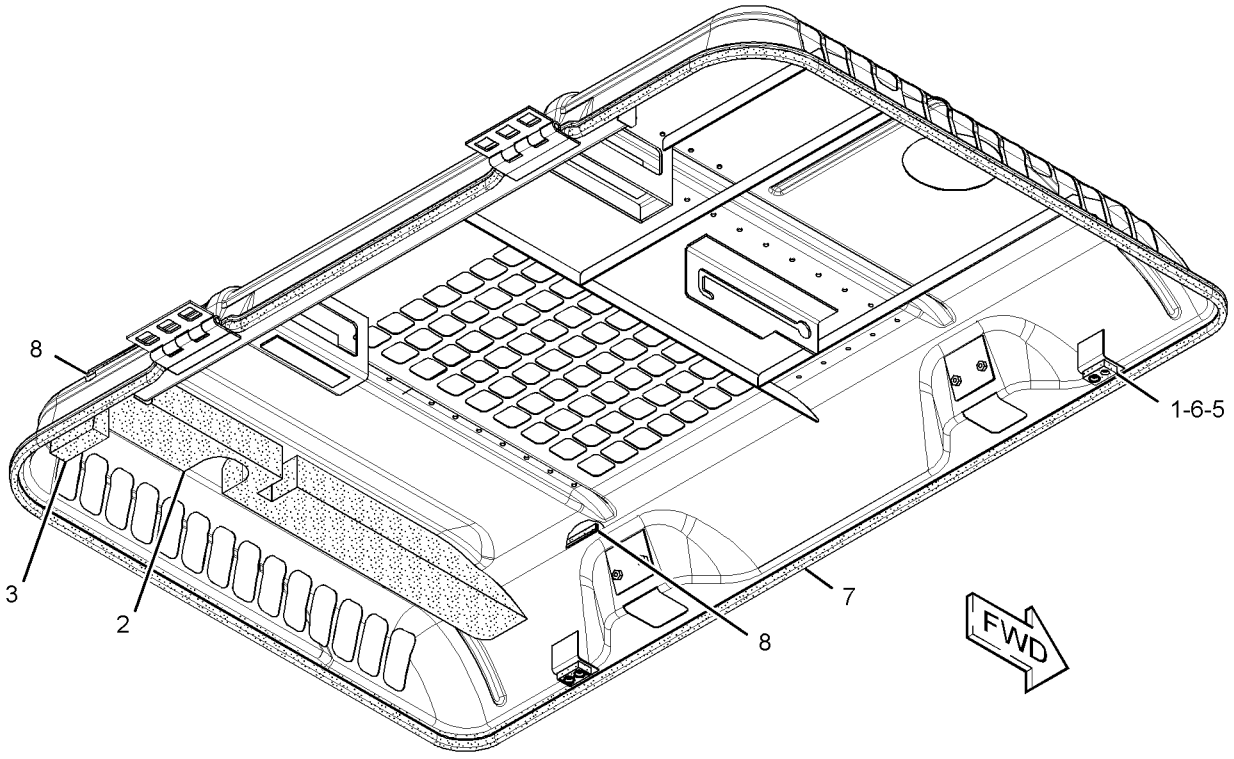

GRAPHIC #1 **<END>** g01427706

304-0016 HOOD GP-ENGINE

S/N: KGF1-UP
PART OF 303-9860 HOOD GP
AN ATTACHMENT

SMCS-7251 **i02845508**

NOTE	REF NO	GRAPHIC REF	PART NUMBER	QTY	PART NAME 1 2 3 4 5 6 (PRODUCT LEVEL)	SEE PAGE
	1	1	**4I-7924**	15	WASHER (4.5X40X1.2-MM THK)	
	2	1	**6P-2216**	15	CAP	
	3	1	**096-4129**	2	CUSHION	
M	4	1	**135-8573**	8	BOLT AS (M12X1.75X25-MM)	
	5	1	**262-2420**	1	SHEET AS	
	6	1	**262-2427**	1	LINER	
	7	1	**262-2428**	1	LINER	
	8	1	**262-2429**	1	LINER	
	9	1	**262-2430**	1	LINER	
	10	1	**262-2432**	1	LINER	
	11	1	*304-0017*	1	HOOD AS-ENGINE	
		1	**6P-2215**	10	PIN-WELD	
M		1	**8T-3597**	8	NUT-WELD (M12X1.75-THD)	
M		1	**8T-3612**	4	NUT-WELD (M8X1.25-THD)	
M		1	**8T-8874**	4	NUT-WELD (M5X0.8-THD)	
		1	**114-6289**	2	HINGE	
		1	**146-4936**	2	HANDLE AS	
	12	1	**8T-0328**	4	WASHER-HARD (5.5X10X1-MM THK)	
M	13	1	**8T-6693**	4	SCREW-MACHINE (M5X0.8X16-MM)	
D	14	1	**101-9848**		SEAL (6.2-M)	
	15	1	**184-8580**		SEAL (30-CM EACH)	

D-ORDER BY THE METER
M-METRIC PART

304-0016 HOOD GP-ENGINE *(contd.)* **i02845508**

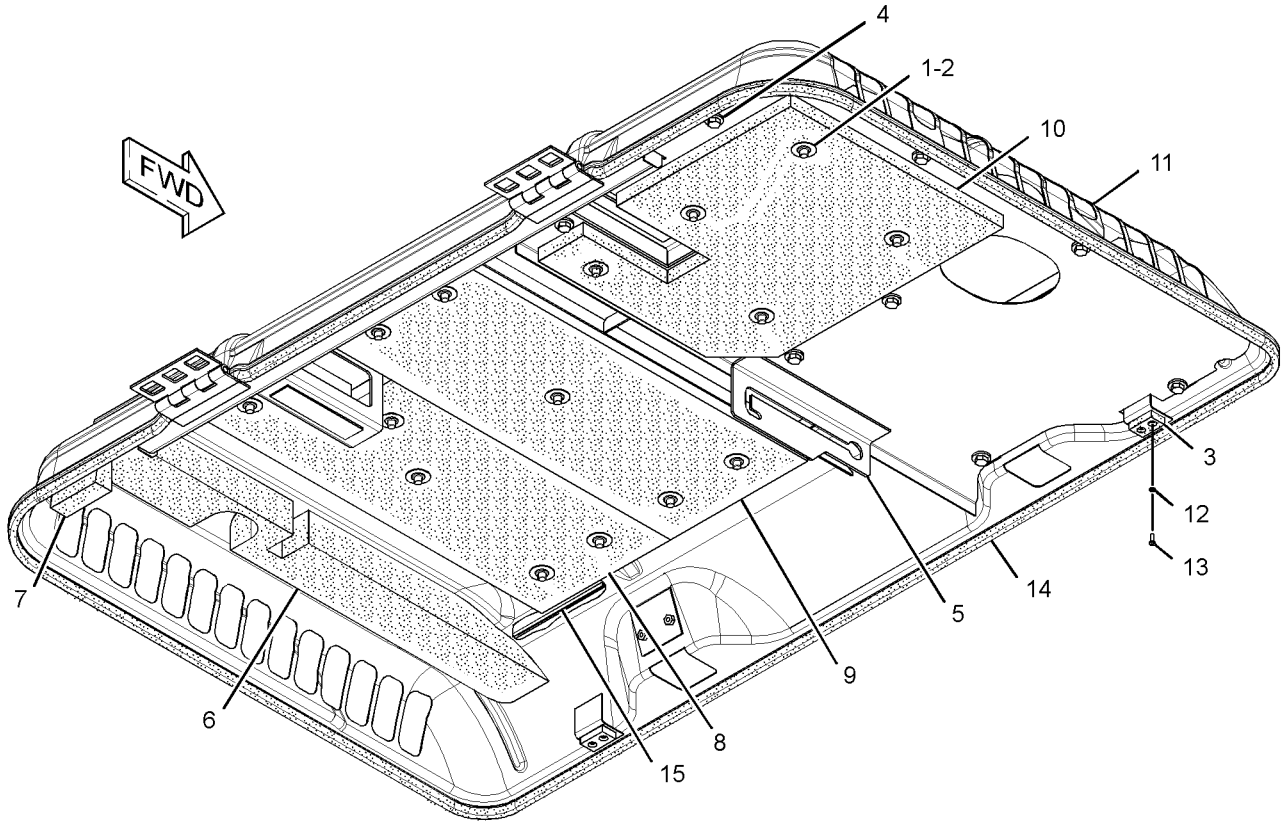

GRAPHIC #1 **<END>** g01418957

278-3836 SHEET AS-SOUND SUPPRESSION

S/N: KGF1-UP; FAL1-UP
PART OF 273-7726, 320-5732 HOOD & GUARD GP
ALSO AN ATTACHMENT

SMCS-1801, 7076, 7251, 7267 **i02562582**

NOTE	REF NO	GRAPHIC REF	PART NUMBER	QTY	PART NAME 1 2 3 4 5 6 (PRODUCT LEVEL)	SEE PAGE
	1	1	**262-2313**	1	LINER	
	2	1	**278-3837**	1	LINER	
Z	3	1		1	SHEET AS	

Z-NOT SERVICED SEPARATELY

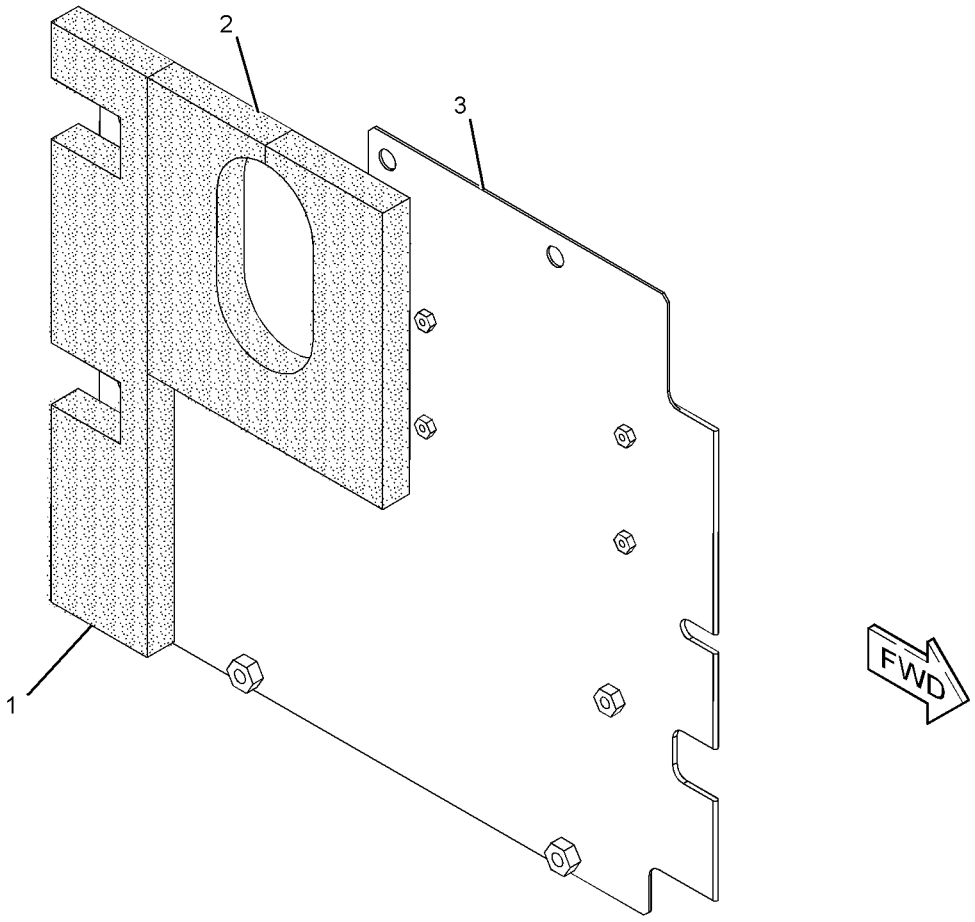

GRAPHIC #1 **<END>** g01290661

278-3842 SHEET AS-SOUND SUPPRESSION

S/N: KGF1-UP; FAL1-UP
PART OF 273-7725, 273-7726, 320-5732 HOOD & GUARD GP
ALSO AN ATTACHMENT

SMCS-1801, 7076, 7251, 7267 **i02562583**

NOTE	REF NO	GRAPHIC REF	PART NUMBER	QTY	PART NAME 1 2 3 4 5 6 (PRODUCT LEVEL)	SEE PAGE
Z	1	1		1	SHEET AS	
	2	1	**199-7398**	1	LINER	
	3	1	**204-3663**	1	LINER	

Z-NOT SERVICED SEPARATELY

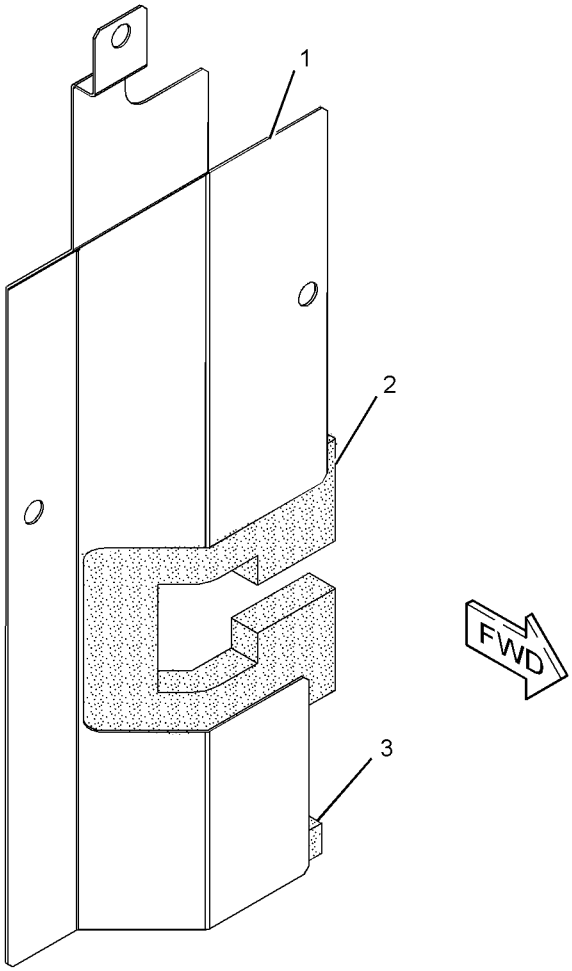

GRAPHIC #1

<END>

g01290665

289-6572 SHEET AS-SOUND SUPPRESSION

S/N: KGF1-UP; FAL1-UP
PART OF 273-7725, 273-7726, 320-5732 HOOD & GUARD GP
ALSO AN ATTACHMENT

SMCS-1801, 7076, 7251, 7267 **i02785154**

NOTE	REF NO	GRAPHIC REF	PART NUMBER	QTY	PART NAME 1 2 3 4 5 6 (PRODUCT LEVEL)	SEE PAGE
	1	1	**283-3905**	1	LINER	
	2	1	**286-6277**	1	LINER	

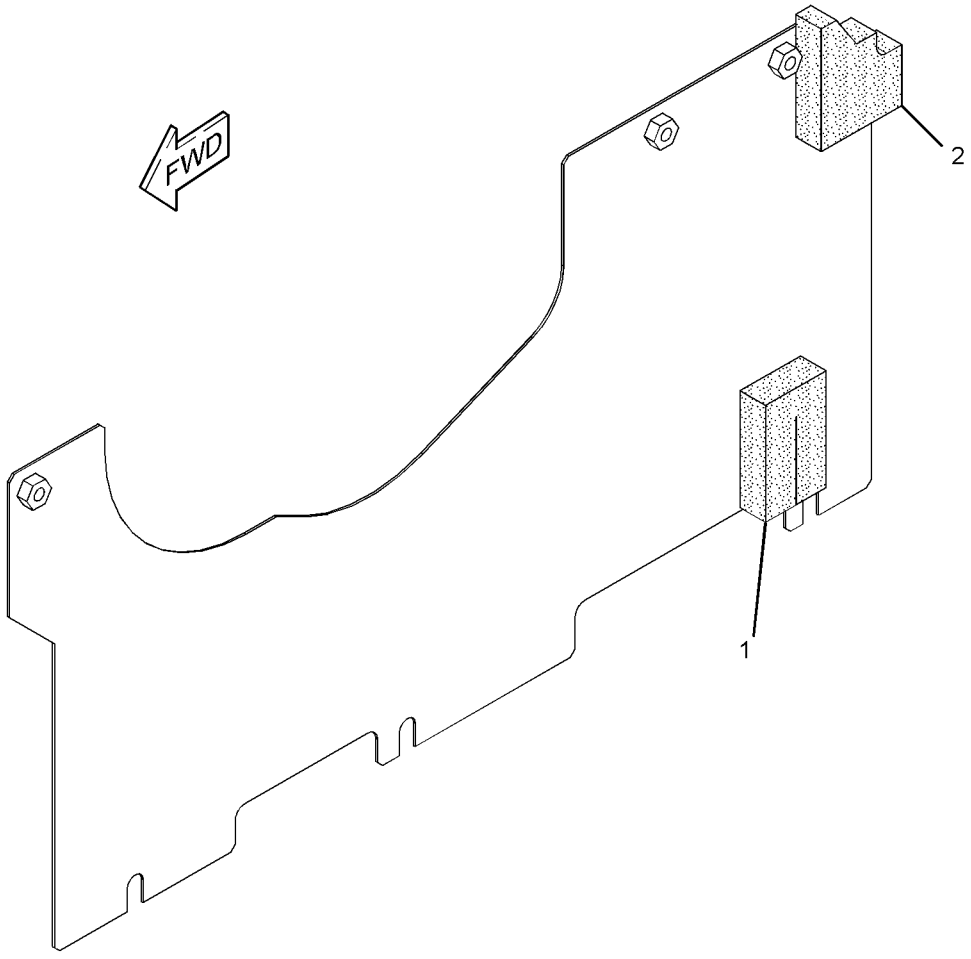

GRAPHIC #1 **<END>** g01393707

289-6588 SHEET AS-SOUND SUPPRESSION

S/N: KGF1-UP

PART OF 273-7725 HOOD & GUARD GP

AN ATTACHMENT

SMCS-1801, 7076, 7251, 7267 **i02668897**

NOTE	REF NO	GRAPHIC REF	PART NUMBER	QTY	PART NAME 1 2 3 4 5 6 (PRODUCT LEVEL)	SEE PAGE
	1	1	**262-2313**	1	LINER	
	2	1	**278-3837**	1	LINER	
Z	3	1		1	SHEET AS	

Z-NOT SERVICED SEPARATELY

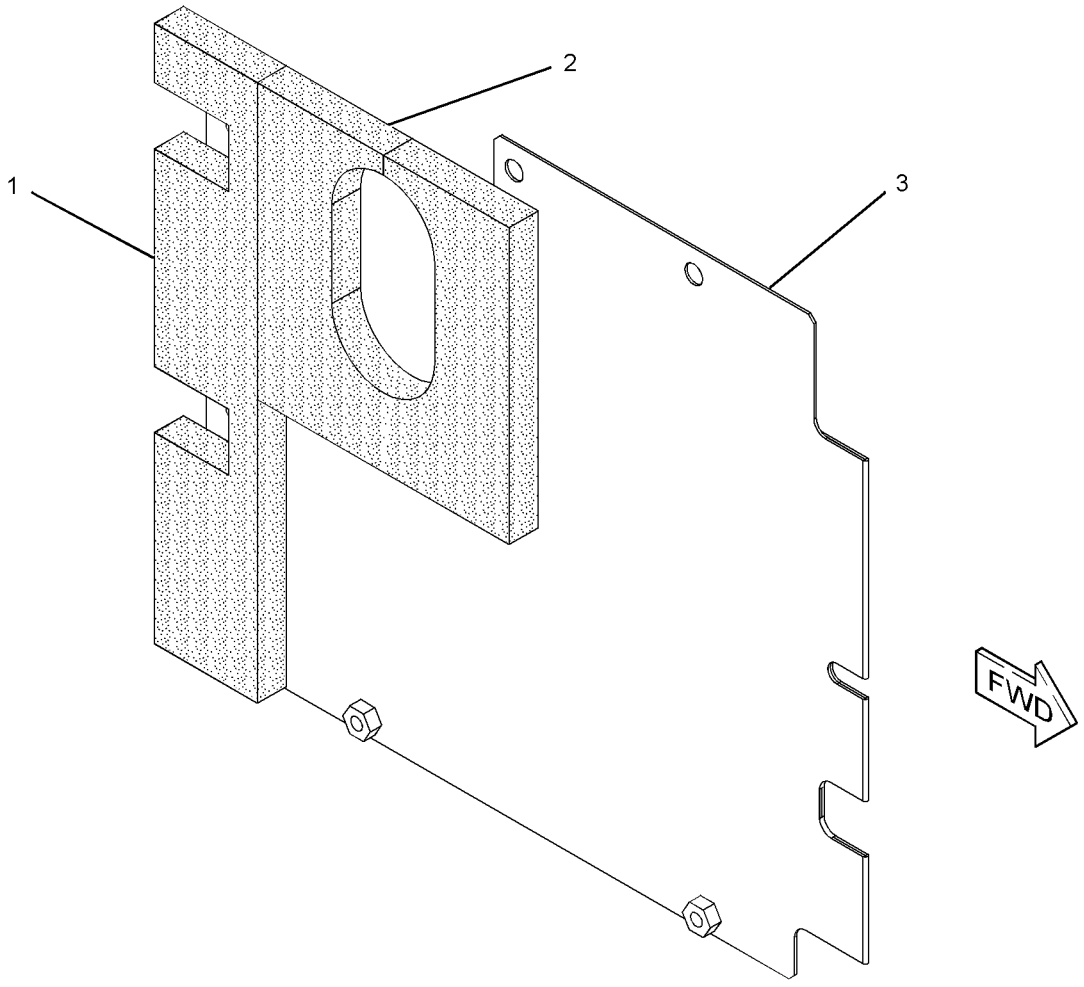

GRAPHIC #1 **<END>** g01342464

289-6695 SHEET AS-SOUND SUPPRESSION

S/N: KGF1-UP; FAL1-UP
PART OF 273-7725, 273-7726, 320-5732 HOOD & GUARD GP
ALSO AN ATTACHMENT

SMCS-1801, 7076, 7251, 7267 **i02562594**

NOTE	REF NO	GRAPHIC REF	PART NUMBER	QTY	PART NAME 1 2 3 4 5 6 (PRODUCT LEVEL)	SEE PAGE
Z	1	1		1	SHEET	
	2	1	**289-6697**	1	LINER	
	3	1	**244-8284**	1	LINER	
	4	1	**262-2347**	1	LINER	
D	5	1	**5P-8309**		SEAL (.5-M)	

D-ORDER BY THE METER
Z-NOT SERVICED SEPARATELY

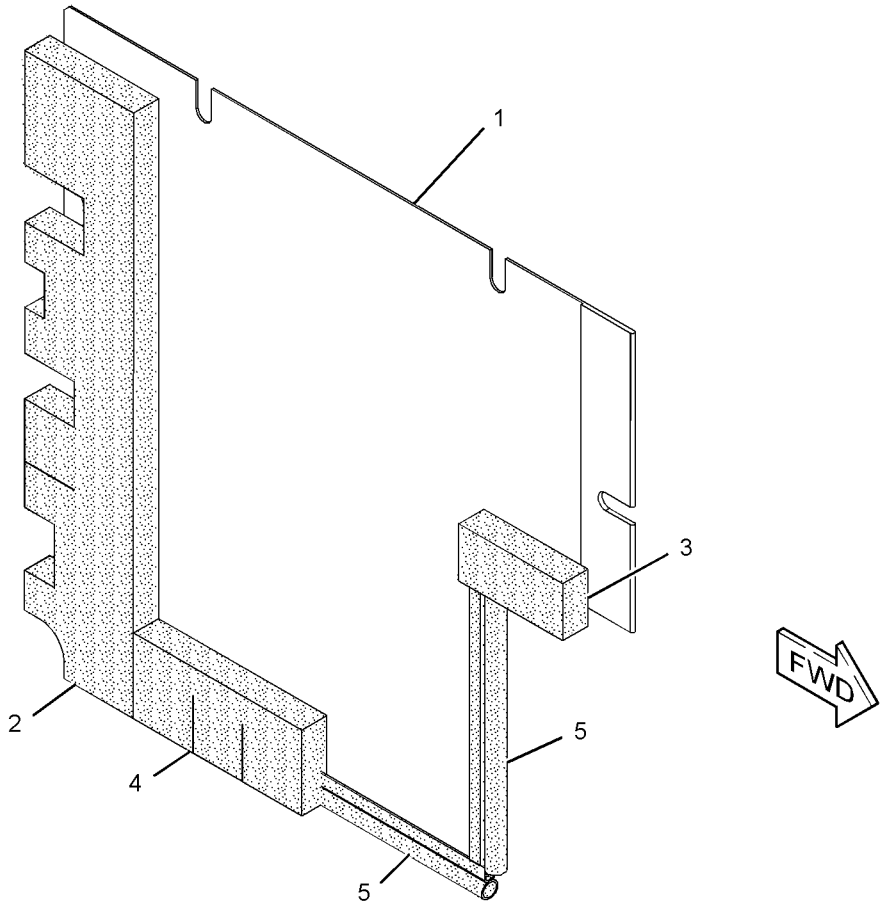

GRAPHIC #1 **<END>** g01290648

289-6699 SHEET AS-SOUND SUPPRESSION

S/N: KGF1-UP; FAL1-UP
PART OF 273-7725, 273-7726, 320-5732 HOOD & GUARD GP
ALSO AN ATTACHMENT

SMCS-1801, 7076, 7251, 7267 **i02562598**

NOTE	REF NO	GRAPHIC REF	PART NUMBER	QTY	PART NAME 1 2 3 4 5 6 (PRODUCT LEVEL)	SEE PAGE
	1	1	**262-2309**	1	LINER	
	2	1	**289-6700**	1	LINER	
Z	3	1		1	SHEET AS	

Z-NOT SERVICED SEPARATELY

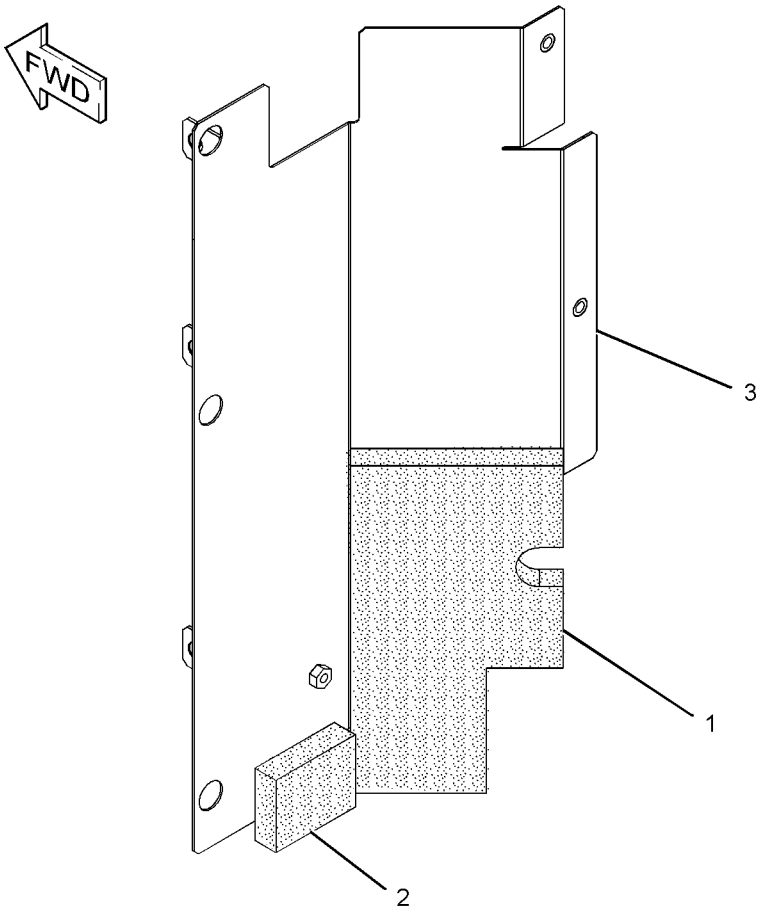

GRAPHIC #1 **<END>** g01290615

FRAME AND BODY

289-6712 SHEET AS-SOUND SUPPRESSION

S/N: KGF1-UP; FAL1-UP
PART OF 259-5049, 299-2783 BATTERY & WIRING GP
AN ATTACHMENT

SMCS-1801, 7076, 7251, 7267 **i02613437**

NOTE	REF NO	GRAPHIC REF	PART NUMBER	QTY	PART NAME 1 2 3 4 5 6 (PRODUCT LEVEL)	SEE PAGE
Z	1	1		1	SHEET	
	2	1	**262-2333**	1	LINER	
	3	1	**262-2335**	1	LINER	
	4	1	**289-6713**	1	LINER	

Z-NOT SERVICED SEPARATELY

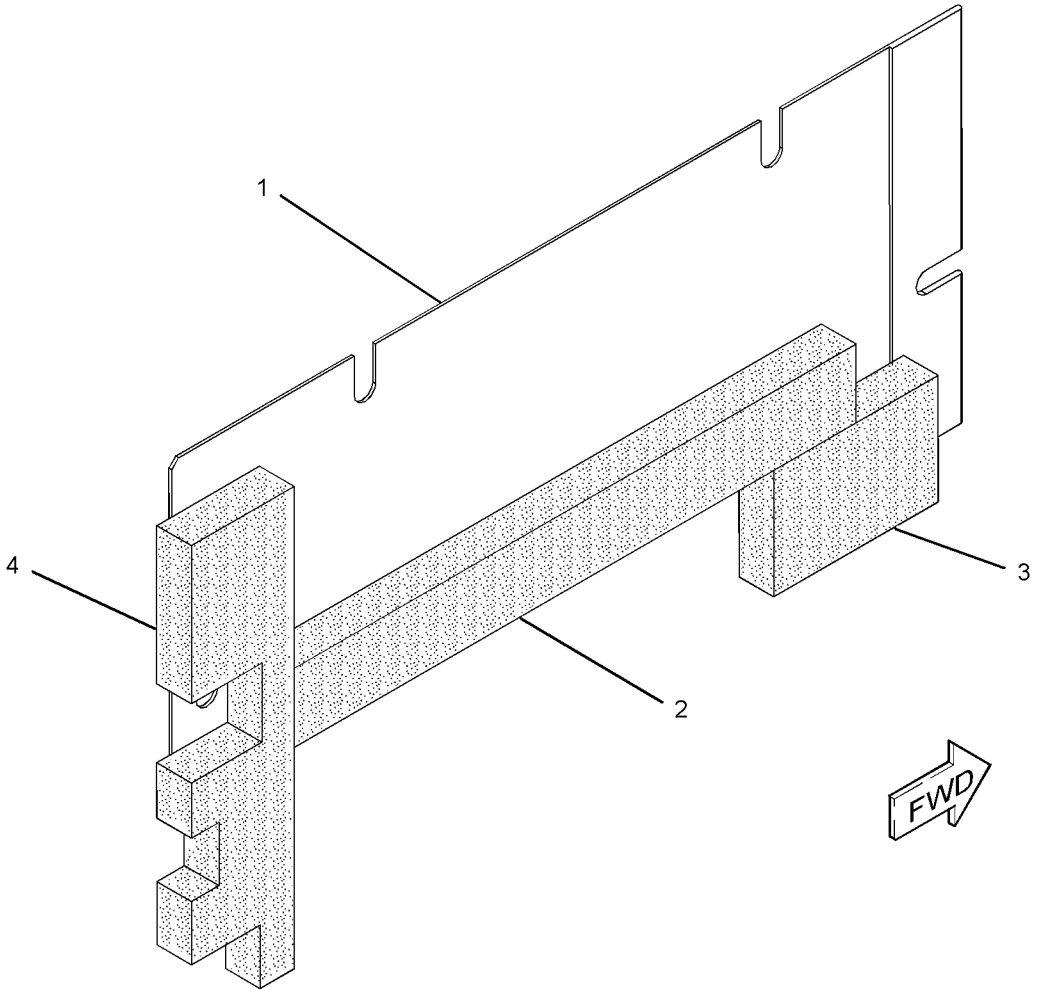

GRAPHIC #1 **<END>** g01309481

298-2995 SHEET AS-SOUND SUPPRESSION

S/N: KGF1-UP; FAL1-UP
PART OF 290-1912 DRIVE GP-PUMP
AN ATTACHMENT

SMCS-1801, 7076, 7251, 7267 **i02668505**

NOTE	REF NO	GRAPHIC REF	PART NUMBER	QTY	PART NAME 1 2 3 4 5 6 (PRODUCT LEVEL)	SEE PAGE
	1	1	**283-3905**	1	LINER	
	2	1	**286-6277**	1	LINER	

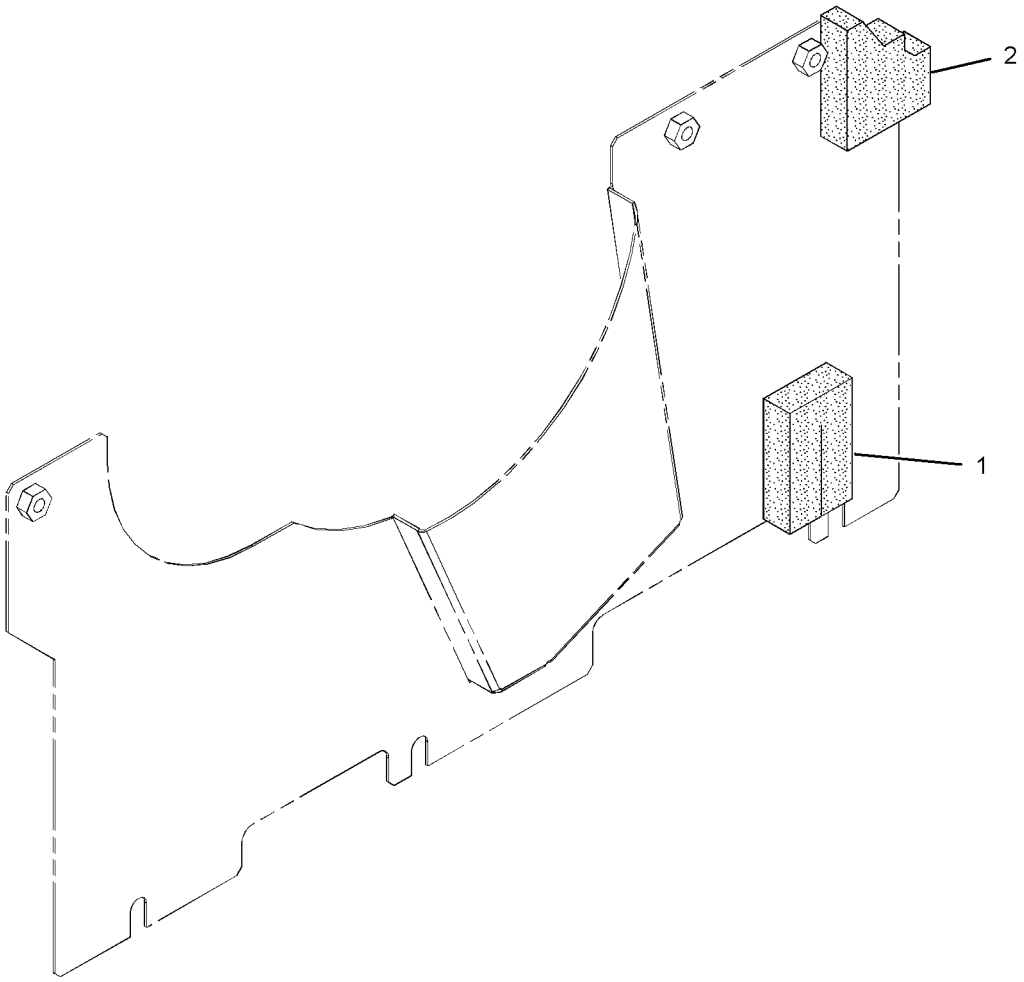

GRAPHIC #1 **<END>** g01345191

298-3033 SHEET AS-SOUND SUPPRESSION

S/N: KGF1-UP
PART OF 273-7725, 320-5732 HOOD & GUARD GP
AN ATTACHMENT

SMCS-1801, 7076, 7251, 7267 **i02668883**

NOTE	REF NO	GRAPHIC REF	PART NUMBER	QTY	PART NAME 1 2 3 4 5 6 (PRODUCT LEVEL)	SEE PAGE
	1	1	**6P-2216**	12	CAP	
	2	1	**262-2346**	2	INSULATION	
	3	1	**298-3037**	1	INSULATION	

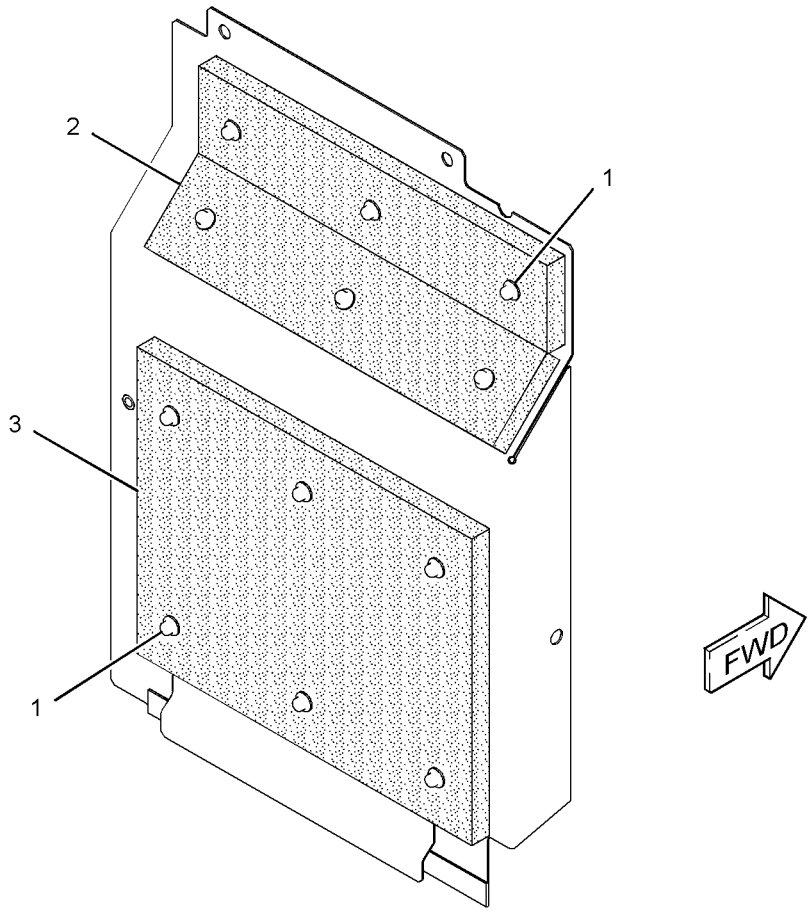

GRAPHIC #1 **<END>** g01342900

313-7881 SHEET AS-SOUND SUPPRESSION

S/N: KGF1-UP; FAL1-UP
PART OF 239-1726 LINES GP-RETURN & FILTER
AN ATTACHMENT

SMCS-1801, 7076, 7251, 7267 **i03016725**

NOTE	REF NO	GRAPHIC REF	PART NUMBER	QTY	PART NAME 1 2 3 4 5 6 (PRODUCT LEVEL)	SEE PAGE
	1	1	**262-2313**	1	LINER	
	2	1	**278-3837**	1	LINER	

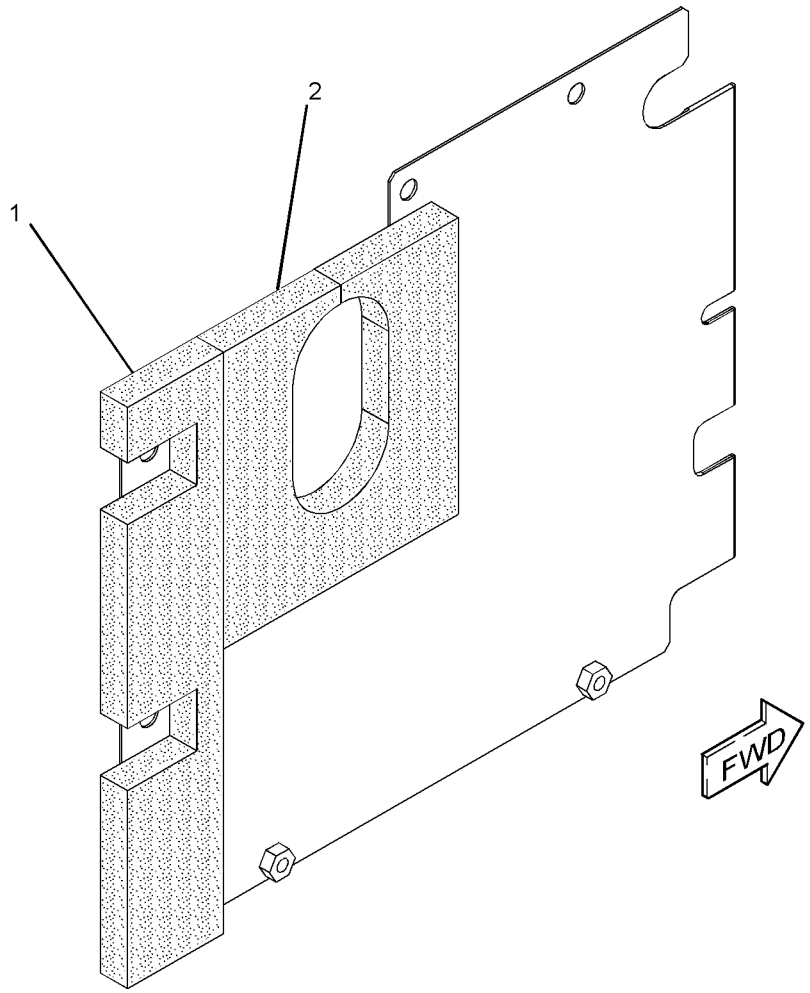

GRAPHIC #1 **<END>** g01498373

235-7764 STEP GP

S/N: KGF1-UP; FAL1-UP
PART OF 298-4287, 314-3575, 314-3846 SPECIAL AR, 247-7346, 247-7382, 314-3797 TRACK AR, 314-3798 TRACK GP
FOR USE WITH TRACK SHOES UP TO 800-MM (31.5-IN) WIDE AN ATTACHMENT

SMCS-7254 **i03255291**

NOTE	REF NO	GRAPHIC REF	PART NUMBER	QTY	PART NAME 1 2 3 4 5 6 (PRODUCT LEVEL)	SEE PAGE
	1	1	**235-7765**	2	STEP	
M	2	1	**8T-7338**	4	BOLT (M16X2X45-MM)	
	3	1	**9X-8257**	4	WASHER (17.5X30X3.5-MM THK)	

M-METRIC PART

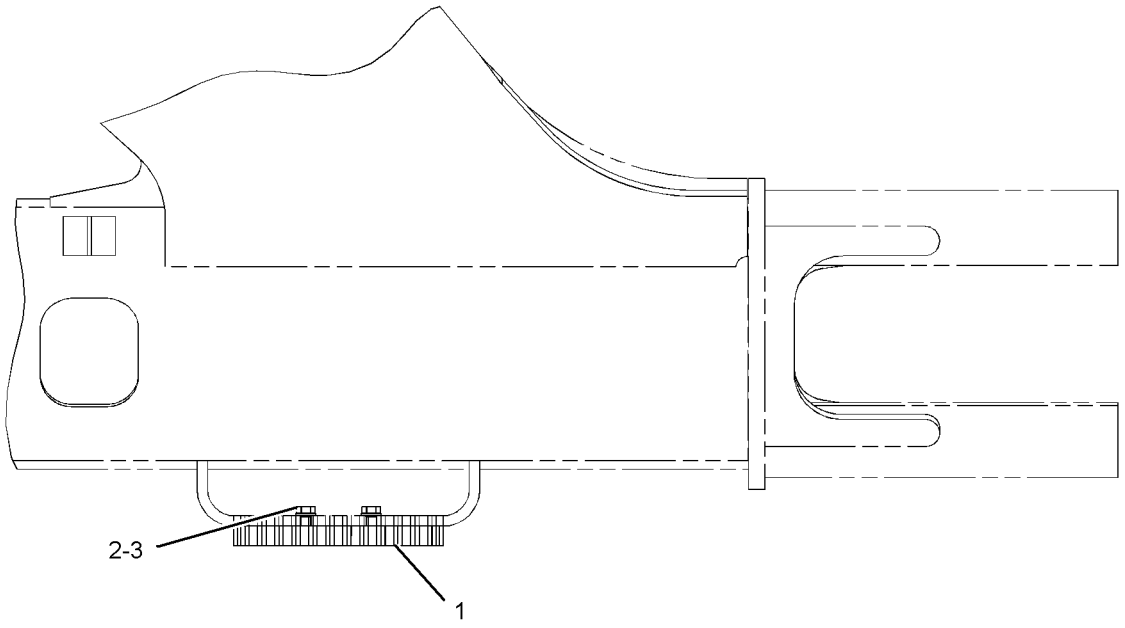

TOP VIEW

GRAPHIC #1 **<END>** g01150668

308-8881 STEP GP

S/N: KGF1-UP; FAL1-UP
PART OF 298-4288, 314-3576 SPECIAL AR
AN ATTACHMENT

SMCS-7254 **i02843488**

NOTE	REF NO	GRAPHIC REF	PART NUMBER	QTY	PART NAME 1 2 3 4 5 6 (PRODUCT LEVEL)	SEE PAGE
	1	1	**308-8882**	2	STEP AS	
M	2	1	**7X-2553**	4	BOLT (M16X2X40-MM)	
	3	1	**9X-8257**	4	WASHER (17.5X30X3.5-MM THK)	

M-METRIC PART

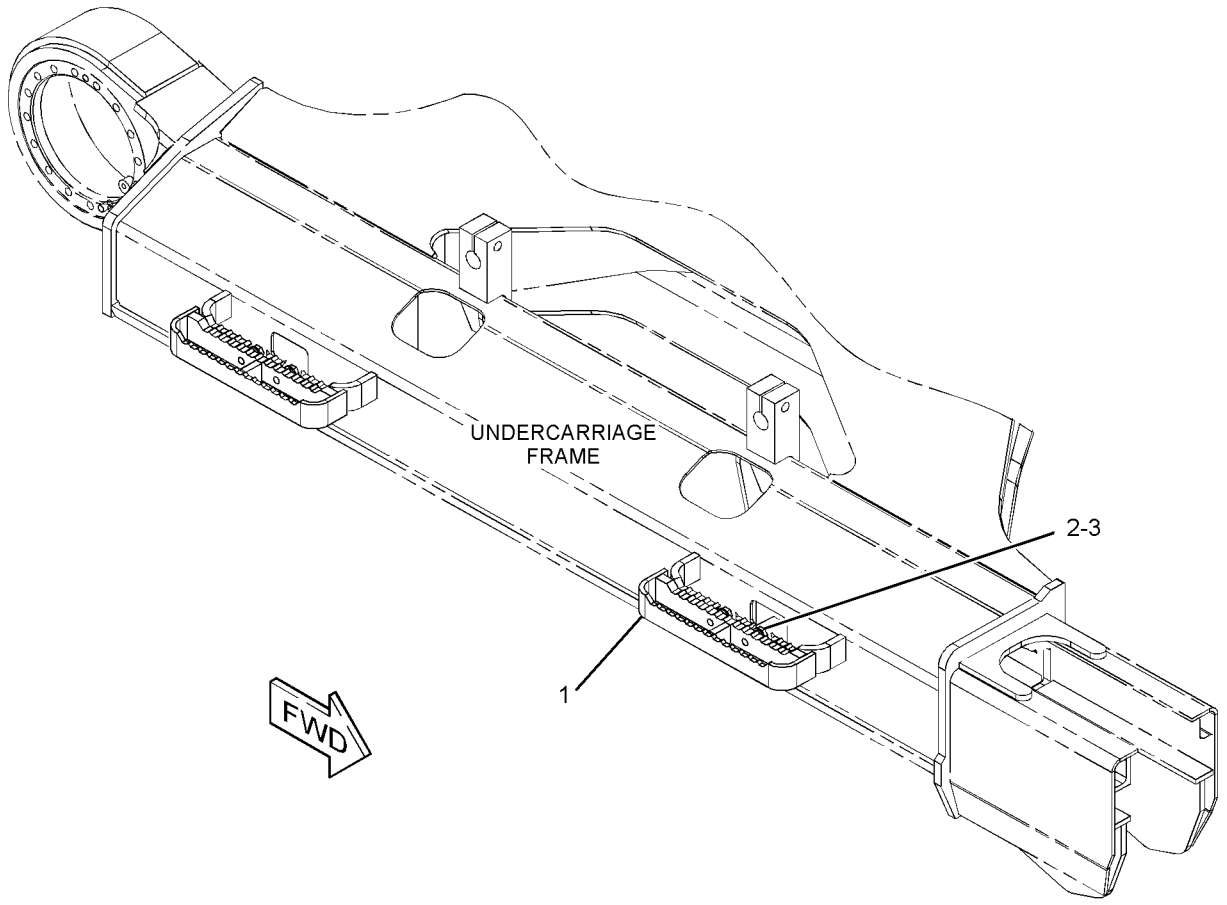

GRAPHIC #1 **<END>** g01421202

273-7727 STORAGE GP-VANDALISM GUARD

S/N: KGF1-UP; FAL1-UP
PART OF 264-8648, 264-8649 GUARD AR-VANDALISM
AN ATTACHMENT

SMCS-7315 **i02652033**

NOTE	REF NO	GRAPHIC REF	PART NUMBER	QTY	PART NAME 1 2 3 4 5 6 (PRODUCT LEVEL)	SEE PAGE
M	1	1	**135-8573**	4	BOLT AS (M12X1.75X25-MM)	
	2	1	**170-3015**	4	BUMPER	
	3	1	**241-1933**	1	BOLT AS-SPECIAL	
	4	1	**241-1938**	1	CABLE	
	5	1	**278-3729**	1	SHEET AS	
E	5A	1	**184-8580**		SEAL (15-CM)	
E	5B	1	**237-5586**		SEAL (95-CM)	
	6	1	**5P-7958**	2	SLEEVE-CABLE SPLICE	

E-ORDER BY THE CENTIMETER
M-METRIC PART

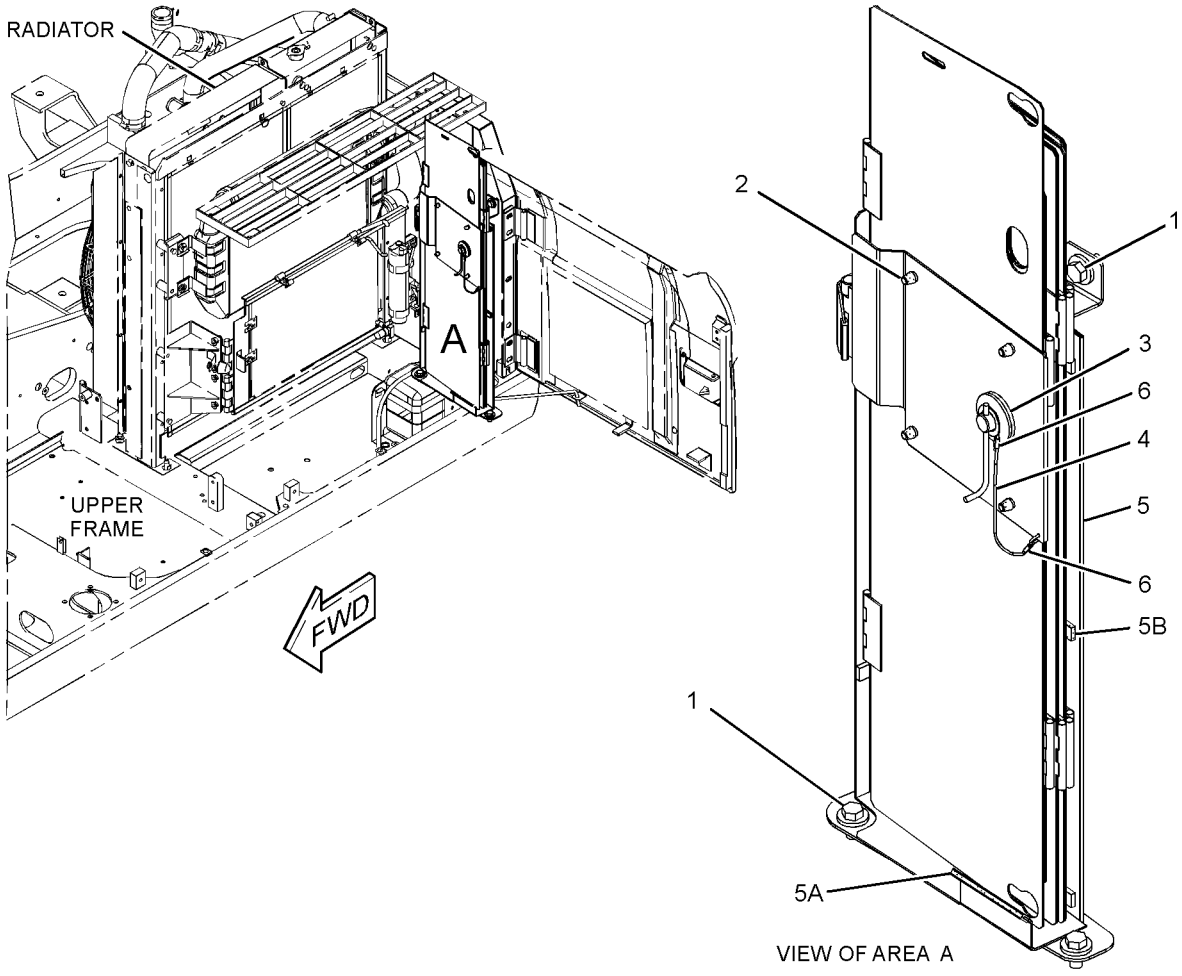

GRAPHIC #1 **<END>** g01339743

FRAME AND BODY

248-8940 SUPPORT AS-ENCLOSURE

S/N: KGF1-UP; FAL1-UP
PART OF 273-7725, 273-7726, 320-5732 HOOD & GUARD GP
ALSO AN ATTACHMENT

SMCS-0635, 1801, 7076, 7251, 7263, 7267, 7272, 7276 **i02418905**

NOTE	REF NO	GRAPHIC REF	PART NUMBER	QTY	PART NAME 1 2 3 4 5 6 (PRODUCT LEVEL)	SEE PAGE
Z	1	1		1	SUPPORT AS	
	2	1	**248-8943**	1	LINER	
	3	1	**248-8944**	1	LINER	

Z-NOT SERVICED SEPARATELY

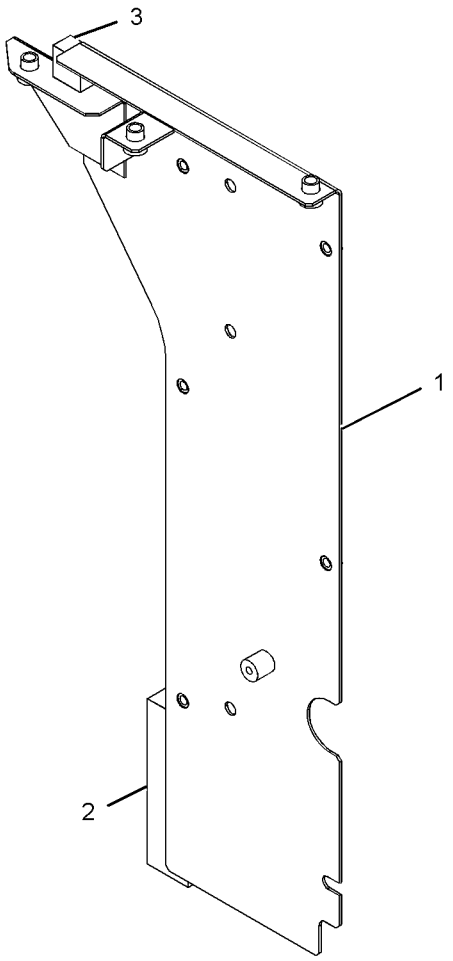

GRAPHIC #1 **<END>** g01229683

278-3852 SUPPORT AS-ENCLOSURE

S/N: KGF1-105; FAL1-182

PART OF 273-7726 HOOD & GUARD GP

SMCS-0635, 1801, 7076, 7251, 7263, 7267, 7272, 7276 **i02562587**

NOTE	REF NO	GRAPHIC REF	PART NUMBER	QTY	PART NAME 1 2 3 4 5 6 (PRODUCT LEVEL)	SEE PAGE
	1	1	**244-8277**	1	LINER	
	2	1	**244-8278**	1	LINER	
	3	1	**244-8288**	1	LINER	
Z	4	1		1	SUPPORT AS	

Z-NOT SERVICED SEPARATELY

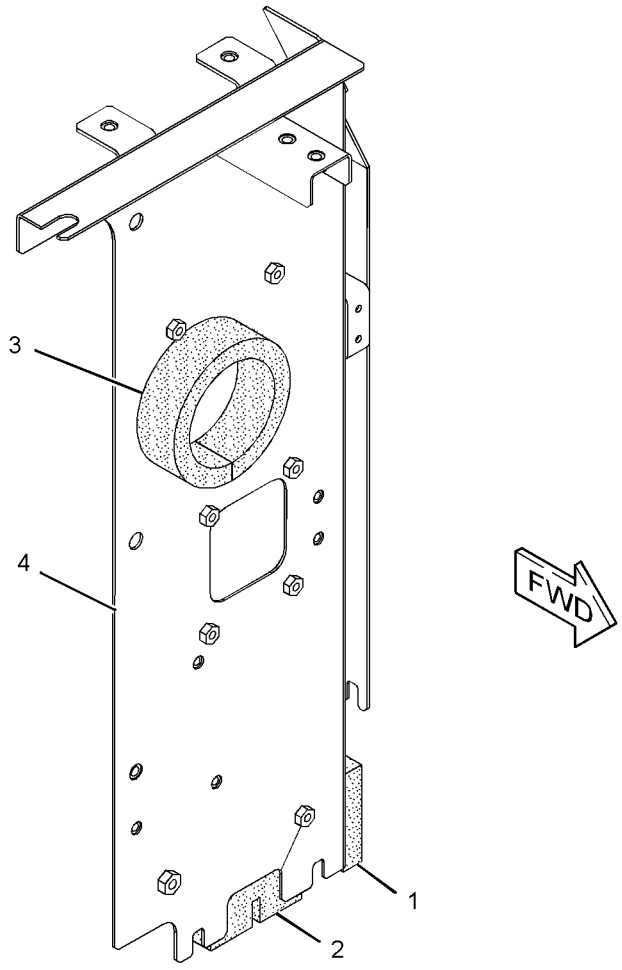

GRAPHIC #1 **<END>** g01290676

304-0093 SUPPORT AS-ENCLOSURE

S/N: KGF1-UP; FAL1-UP
PART OF 278-3778 COVER GP-HOOD
AN ATTACHMENT

SMCS-0635, 1801, 7076, 7251, 7263, 7267, 7272, 7276 **i02896005**

NOTE	REF NO	GRAPHIC REF	PART NUMBER	QTY	PART NAME 1 2 3 4 5 6 (PRODUCT LEVEL)	SEE PAGE
	1	1	**244-8277**	1	LINER	
	2	1	**244-8278**	1	LINER	

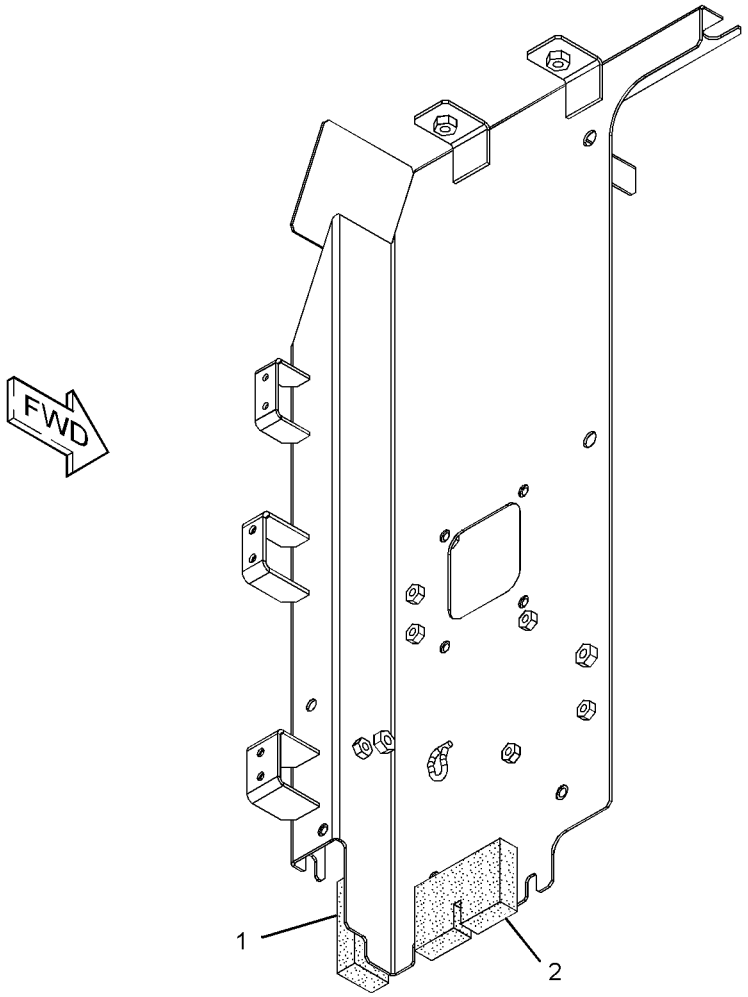

GRAPHIC #1

<END>

g01387729

307-7660 SUPPORT AS-ENCLOSURE

S/N: KGF1-UP
PART OF 273-7725 HOOD & GUARD GP
AN ATTACHMENT

SMCS-0635, 1801, 7076, 7251, 7263, 7267, 7272, 7276 **i02781304**

NOTE	REF NO	GRAPHIC REF	PART NUMBER	QTY	PART NAME 1 2 3 4 5 6 (PRODUCT LEVEL)	SEE PAGE
	1	1	**244-8277**	1	LINER	
	2	1	**244-8278**	1	LINER	
	3	1	**244-8288**	1	LINER	

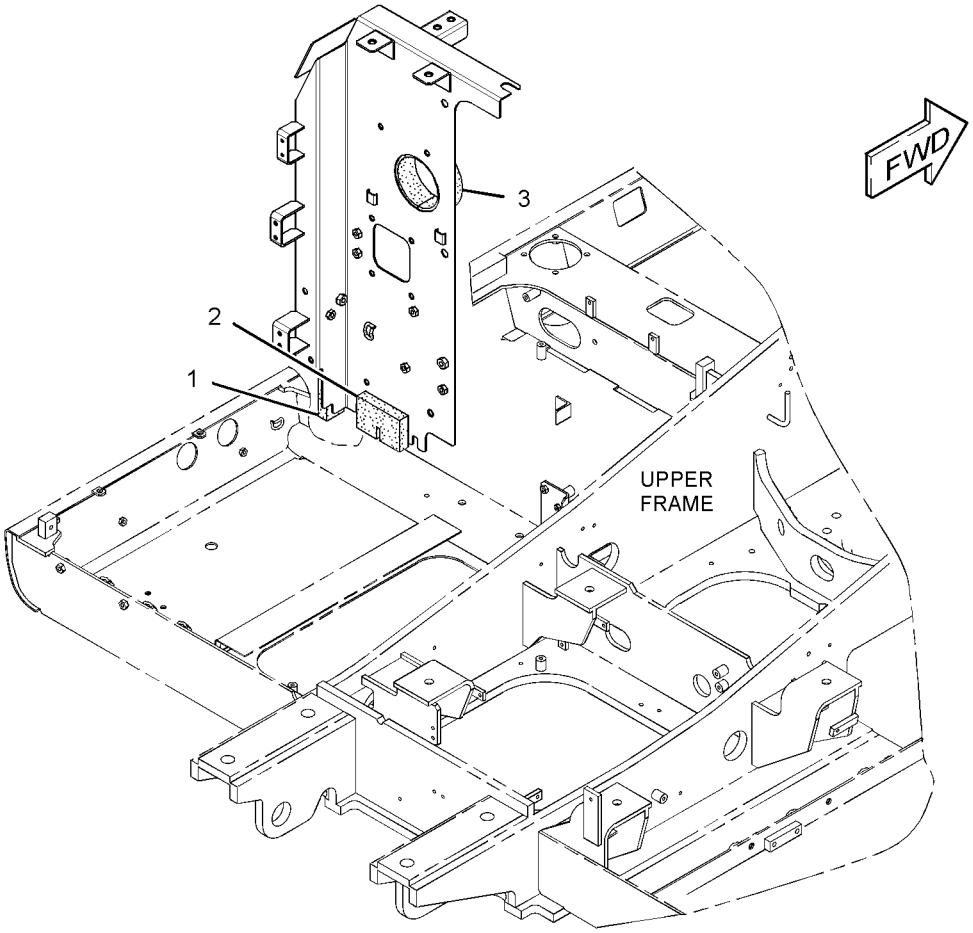

GRAPHIC #1 **<END>** g01416167

307-7662 SUPPORT AS-ENCLOSURE

S/N: KGF106-UP; FAL183-UP
PART OF 273-7725, 273-7726, 320-5732 HOOD & GUARD GP
ALSO AN ATTACHMENT

SMCS-0635, 1801, 7076, 7251, 7263, 7267, 7272, 7276 **i02900393**

NOTE	REF NO	GRAPHIC REF	PART NUMBER	QTY	PART NAME 1 2 3 4 5 6 (PRODUCT LEVEL)	SEE PAGE
	1	1	**244-8277**	1	LINER	
	2	1	**244-8278**	1	LINER	
	3	1	**244-8288**	1	LINER	

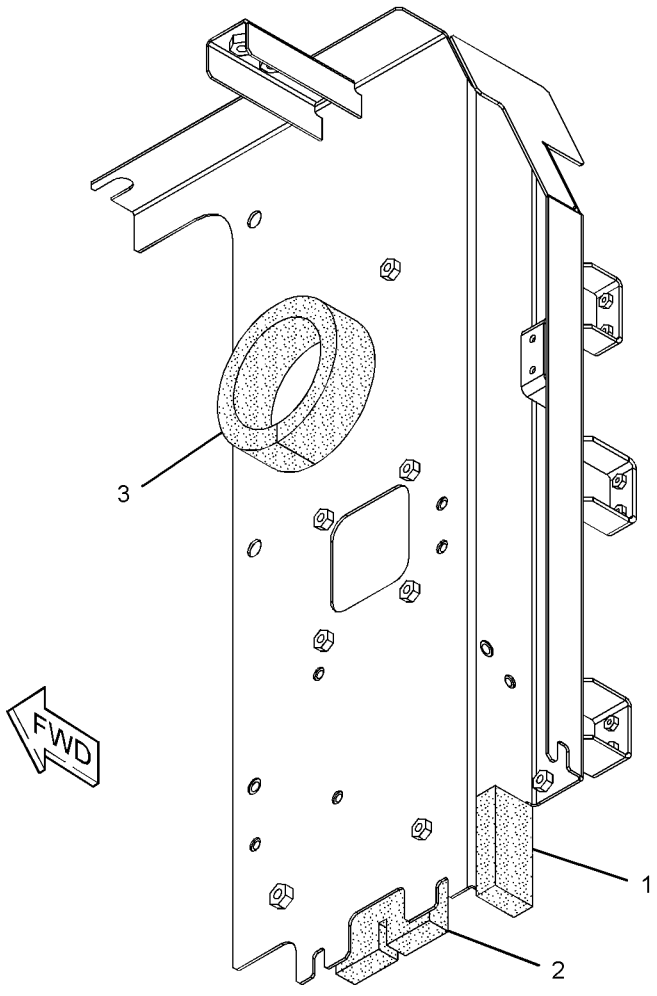

GRAPHIC #1 **<END>** g01377554

UNDERCARRIAGE

240-3822 FRAME AR-UNDERCARRIAGE—LONG

S/N: KGF1-UP

PART OF 264-8627 GENERAL AR

SMCS-4151 **i02578700**

NOTE	PART NUMBER	QTY	PART NAME 1 2 3 4 5 6 (PRODUCT LEVEL)	SEE PAGE
Y	*227-6147*	1	GEAR & BEARING GP-SWING	418
Y	*087-5908*	2	GUARD GP-TRACK GUIDE	495
Y	*163-3754*	1	GUARD GP-TRAVEL MOTOR	500
Y	*239-4341*	1	IDLER GP-FRONT	502
Y	*7Y-1608*	1	ROLLER AR-TRACK & CARRIER	511
	236-8341	1	FRAME AS-UNDERCARRIAGE	
	235-7520	4	STEP	

Y-SEPARATE ILLUSTRATION

<END>

247-7454 FRAME AR-UNDERCARRIAGE—STANDARD

S/N: FAL1-UP

PART OF 264-8626 GENERAL AR

SMCS-4151 **i02832467**

NOTE	PART NUMBER	QTY	PART NAME 1 2 3 4 5 6 (PRODUCT LEVEL)	SEE PAGE
Y	**254-3022**	1	FRAME AS-UNDERCARRIAGE	494
Y	*227-6147*	1	GEAR & BEARING GP-SWING	418
Y	*087-5908*	2	GUARD GP-TRACK GUIDE	495
Y	*163-3754*	1	GUARD GP-TRAVEL MOTOR	500
Y	*239-4341*	1	IDLER GP-FRONT	502
Y	*7Y-1607*	1	ROLLER AR-TRACK & CARRIER	510

Y-SEPARATE ILLUSTRATION

<END>

254-3022 FRAME AS-UNDERCARRIAGE

S/N: FAL1-UP

PART OF 247-7454 FRAME AR-UNDERCARRIAGE

SMCS-4150, 7062 **i02832458**

NOTE	REF NO	GRAPHIC REF	PART NUMBER	QTY	PART NAME 1 2 3 4 5 6 (PRODUCT LEVEL)	SEE PAGE
	1	1	*254-3023*	1	FRAME AS-TRACK ROLLER (RH)	
	1A	1	**117-5540**	2	BRACKET	
	1B	1	**235-7520**	2	STEP	
	2	1	*254-3024*	1	FRAME AS-TRACK ROLLER (LH)	
	2A	1	**117-5540**	2	BRACKET	
	2B	1	**235-7520**	2	STEP	

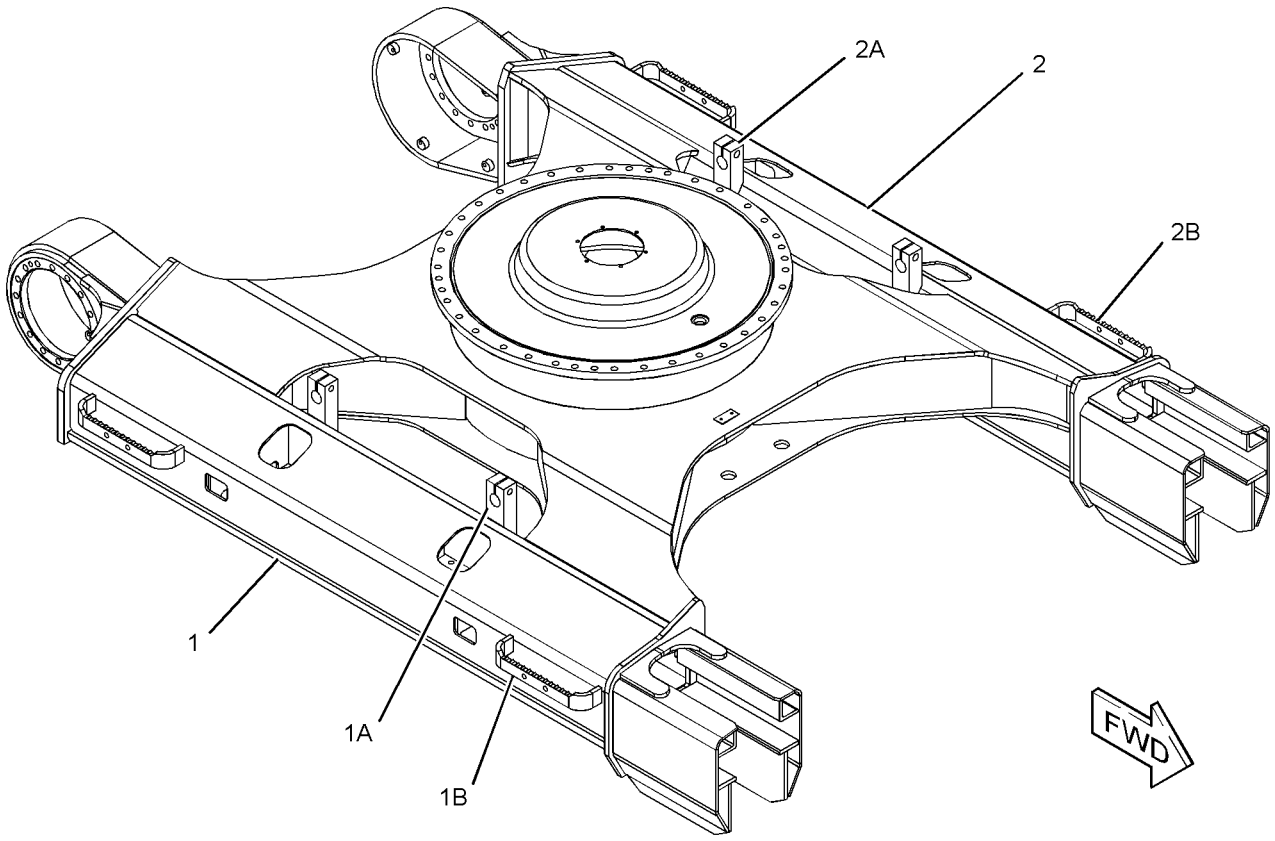

GRAPHIC #1 **<END>** g01416824

087-5908 GUARD GP-TRACK GUIDE

S/N: KGF1-UP; FAL1-UP

PART OF 240-3822, 247-7454 FRAME AR-UNDERCARRIAGE

SMCS-4177 **i02271129**

NOTE	REF NO	GRAPHIC REF	PART NUMBER	QTY	PART NAME 1 2 3 4 5 6 (PRODUCT LEVEL)	SEE PAGE
	1	1	**240-2988**	1	GUARD AS-TRACK GUIDE	
M	2	1	**8T-5460**	4	BOLT (M20X2.5X40-MM)	
	3	1	**8T-4123**	4	WASHER (22X35X3.5-MM THK)	

M-METRIC PART

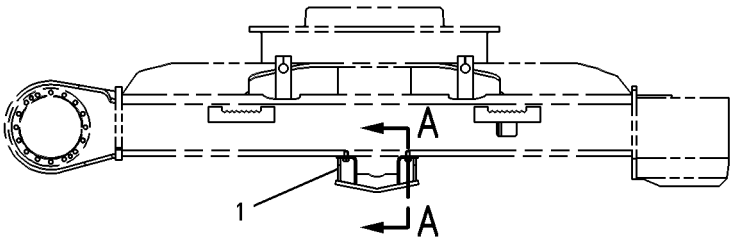

RIGHT SIDE VIEW

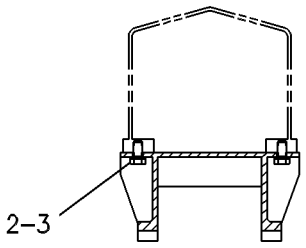

SECTION A–A

GRAPHIC #1 **<END>** g00257014

120-7164 GUARD GP-TRACK GUIDE

S/N: FAL1-UP
SPROCKET
AN ATTACHMENT

SMCS-4177 **i03096007**

NOTE	REF NO	GRAPHIC REF	PART NUMBER	QTY	PART NAME 1 2 3 4 5 6 (PRODUCT LEVEL)	SEE PAGE
	1	1	**219-8468**	2	GUARD AS-TRACK GUIDE	
M	2	1	**8T-5460**	12	BOLT (M20X2.5X40-MM)	
	3	1	**8T-4123**	12	WASHER (22X35X3.5-MM THK)	

QUANTITIES SHOWN ARE THOSE REQUIRED FOR BOTH LH AND RH SIDES
M-METRIC PART

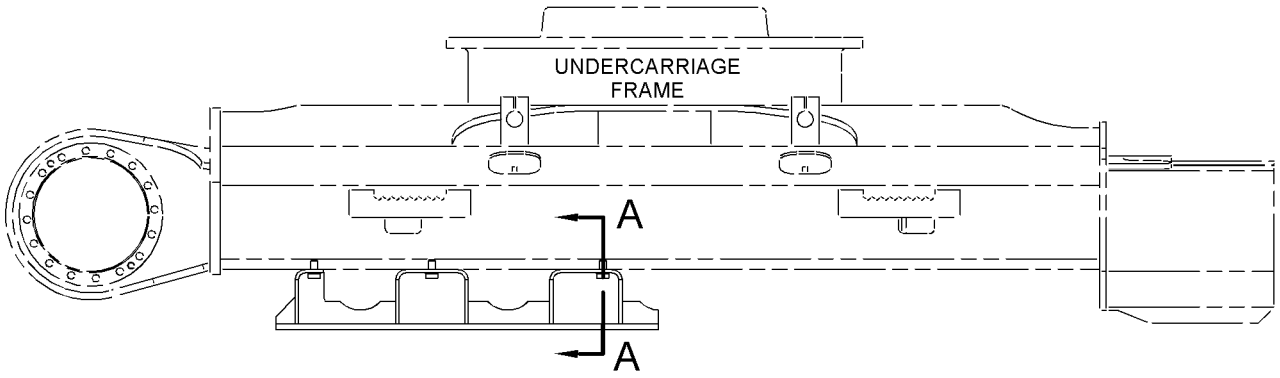

RIGHT SIDE VIEW

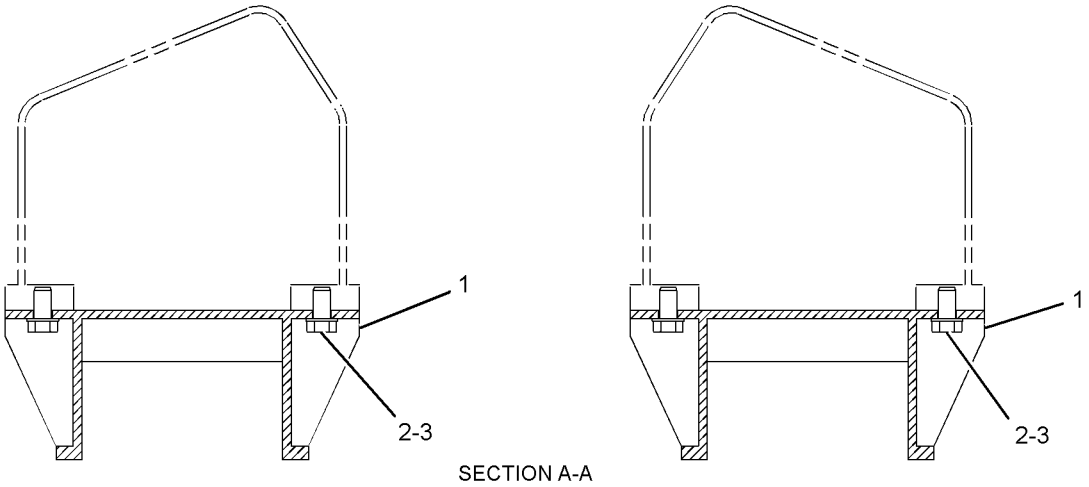

SECTION A-A

GRAPHIC #1 **<END>** g01577033

120-7165 GUARD GP-TRACK GUIDE

S/N: FAL1-UP
FULL LENGTH
AN ATTACHMENT

SMCS-4177 **i01863269**

NOTE	REF NO	GRAPHIC REF	PART NUMBER	QTY	PART NAME 1 2 3 4 5 6 (PRODUCT LEVEL)	SEE PAGE
	1	1	**219-8468**	4	GUARD AS-TRACK GUIDE	
M	2	1	**8T-5460**	24	BOLT (M20X2.5X40-MM)	
	3	1	**8T-4123**	24	WASHER (22X35X3.5-MM THK)	

QUANTITIES SHOWN ARE THOSE REQUIRED FOR BOTH LH AND RH SIDES
M-METRIC PART

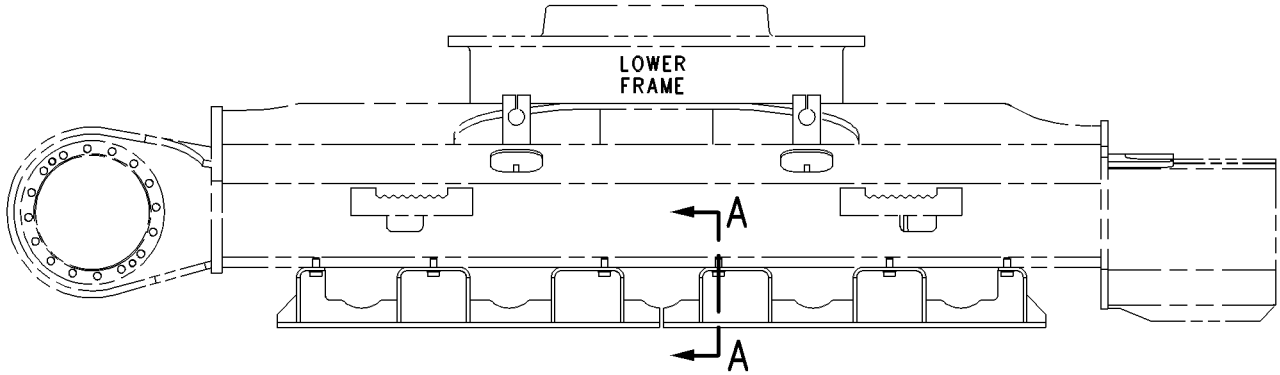

RIGHT SIDE VIEW

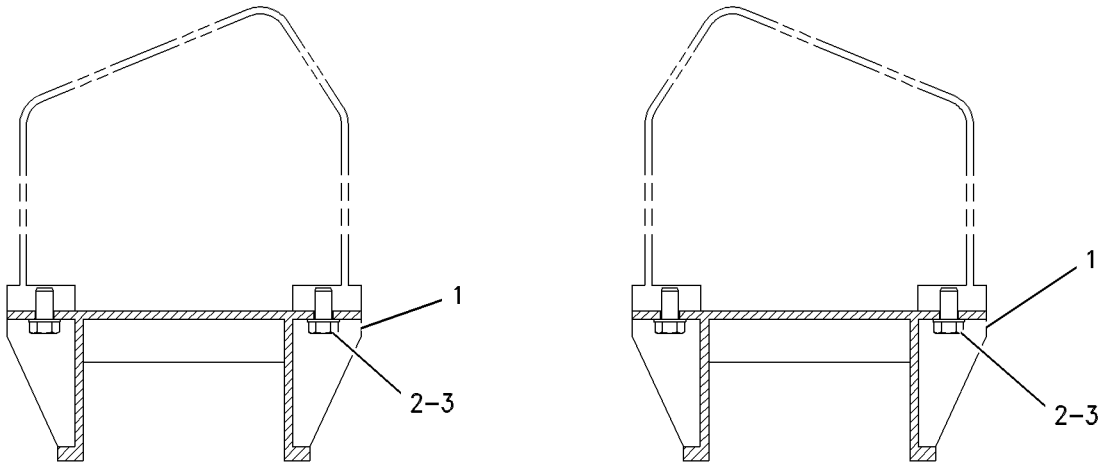

SECTION A-A

GRAPHIC #1 **<END>** g00470469

120-7167 GUARD GP-TRACK GUIDE

S/N: KGF1-UP
SPROCKET
AN ATTACHMENT

SMCS-4177 **i02752777**

NOTE	REF NO	GRAPHIC REF	PART NUMBER	QTY	PART NAME 1 2 3 4 5 6 (PRODUCT LEVEL)	SEE PAGE
	1	1	**219-8469**	2	GUARD AS-TRACK GUIDE	
M	2	1	**8T-5460**	16	BOLT (M20X2.5X40-MM)	
	3	1	**8T-4123**	16	WASHER (22X35X3.5-MM THK)	

QUANTITIES SHOWN ARE THOSE REQUIRED FOR BOTH LH AND RH SIDES
M-METRIC PART

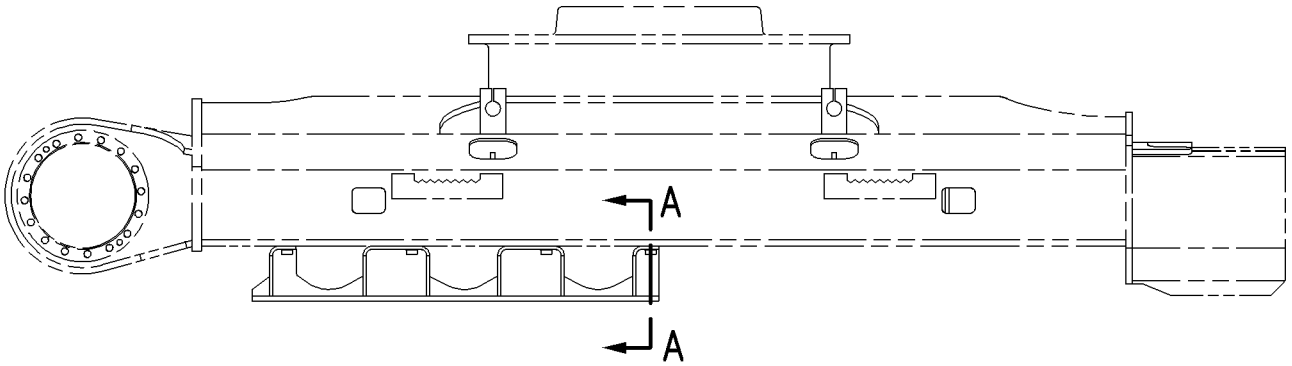

RIGHT SIDE VIEW

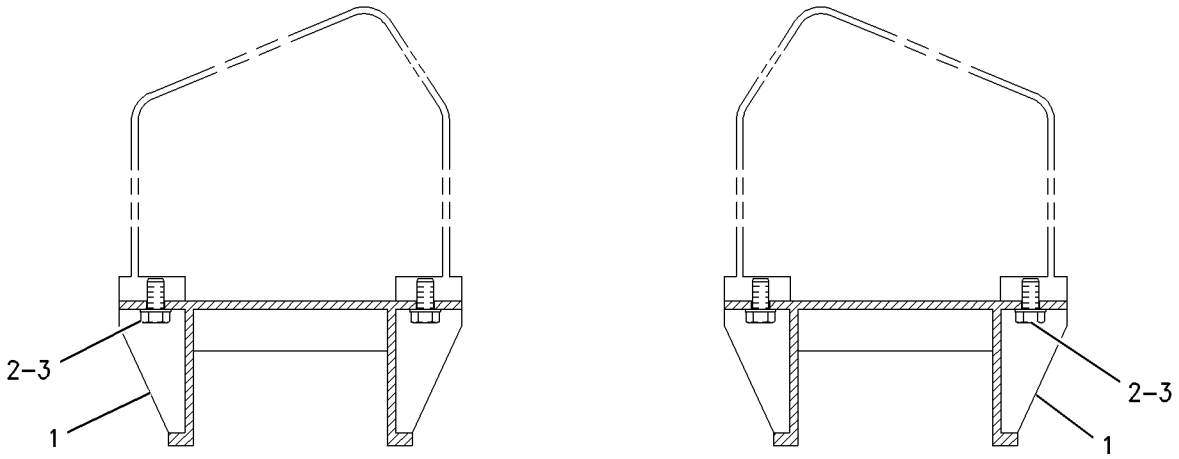

SECTION A-A

GRAPHIC #1 **<END>** g00761430

120-7168 GUARD GP-TRACK GUIDE

S/N: KGF1-UP
FULL LENGTH
AN ATTACHMENT

SMCS-4177 **i01891526**

NOTE	REF NO	GRAPHIC REF	PART NUMBER	QTY	PART NAME 1 2 3 4 5 6 (PRODUCT LEVEL)	SEE PAGE
	1	1	**219-8469**	4	GUARD AS-TRACK GUIDE	
M	2	1	**8T-5460**	32	BOLT (M20X2.5X40-MM)	
	3	1	**8T-4123**	32	WASHER (22X35X3.5-MM THK)	

QUANTITIES SHOWN ARE THOSE REQUIRED FOR BOTH LH AND RH SIDES
M-METRIC PART

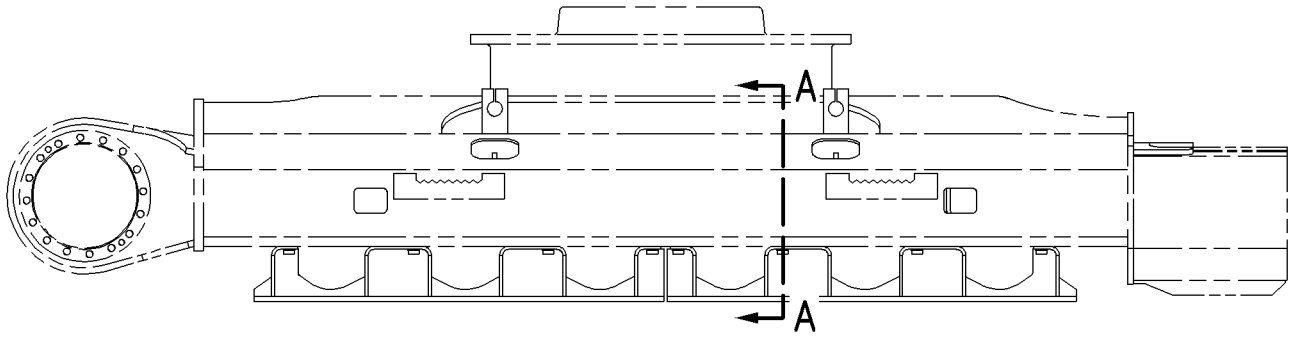

RIGHT SIDE VIEW

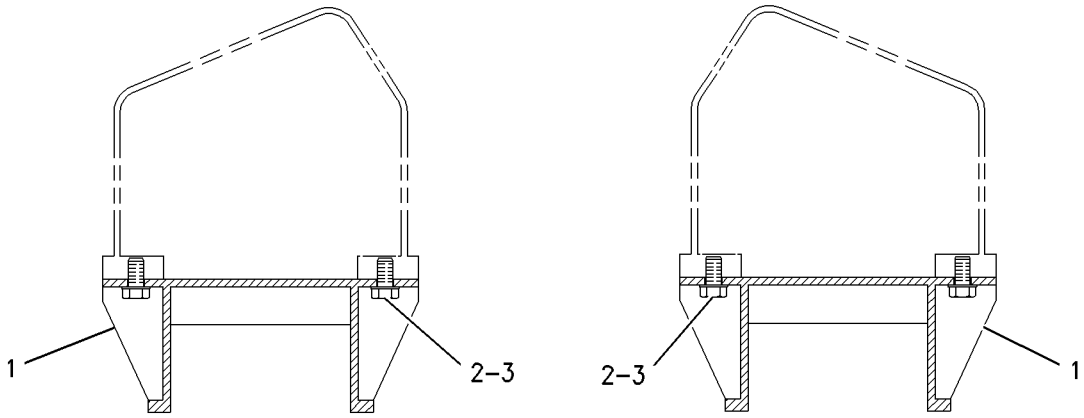

SECTION A-A

GRAPHIC #1 **<END>** g00736329

UNDERCARRIAGE

163-3754 GUARD GP-TRAVEL MOTOR

S/N: KGF1-UP; FAL1-UP

PART OF 240-3822, 247-7454 FRAME AR-UNDERCARRIAGE

SMCS-7163 **i03040366**

NOTE	REF NO	GRAPHIC REF	PART NUMBER	QTY	PART NAME 1 2 3 4 5 6 (PRODUCT LEVEL)	SEE PAGE
M	1	1	**135-8576**	8	BOLT AS-LOCKING (M12X1.75X30-MM)	
					(EACH INCLUDES)	
		1	**5P-1076**	1	WASHER-HARD (13.5X30X4-MM THK)	
M		1	**8C-8992**	1	BOLT-LOCKING (M12X1.75X30-MM)	
	2	1	**163-3755**	2	COVER	

QUANTITIES SHOWN ARE THOSE REQUIRED FOR BOTH LH AND RH SIDES
M-METRIC PART

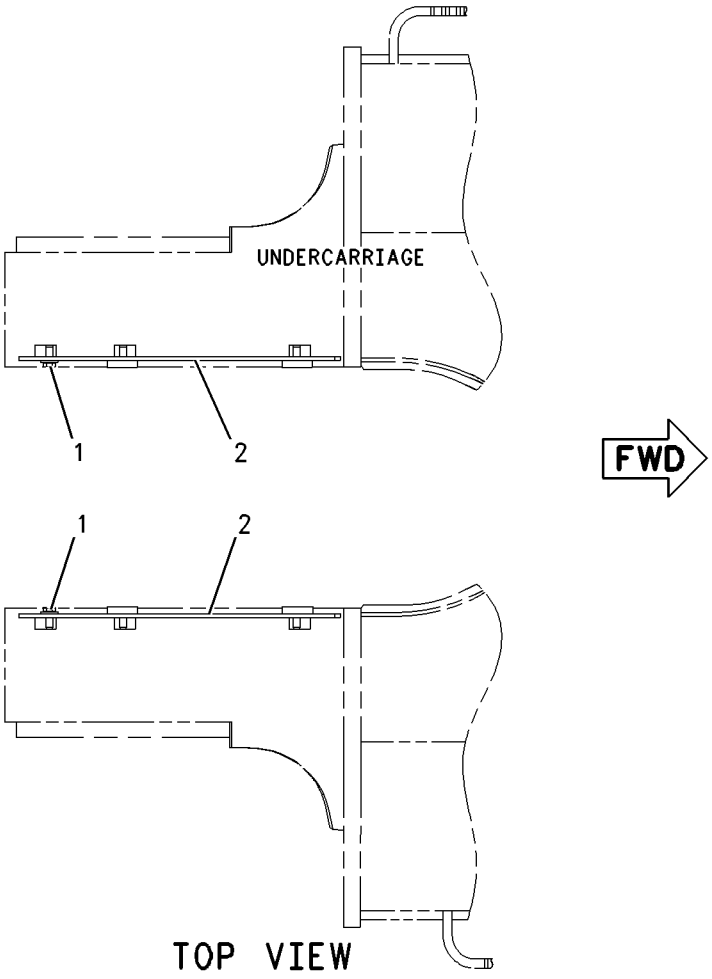

GRAPHIC #1

<END>

g00678898

166-1478 GUARD GP-TRAVEL MOTOR–HEAVY-DUTY

S/N: KGF1-UP; FAL1-UP
AN ATTACHMENT

SMCS-7163 **i01721606**

NOTE	REF NO	GRAPHIC REF	PART NUMBER	QTY	PART NAME 1 2 3 4 5 6 (PRODUCT LEVEL)	SEE PAGE
M	1	1	*135-8576*	8	BOLT AS-LOCKING (M12X1.75X30-MM)	
					(EACH INCLUDES)	
		1	**5P-1076**	1	WASHER-HARD (13.5X30X4-MM THK)	
M		1	**8C-8992**	1	BOLT-LOCKING (M12X1.75X30-MM)	
	2	1	**166-1479**	1	COVER AS	
	3	1	**166-1512**	1	COVER AS	

M-METRIC PART

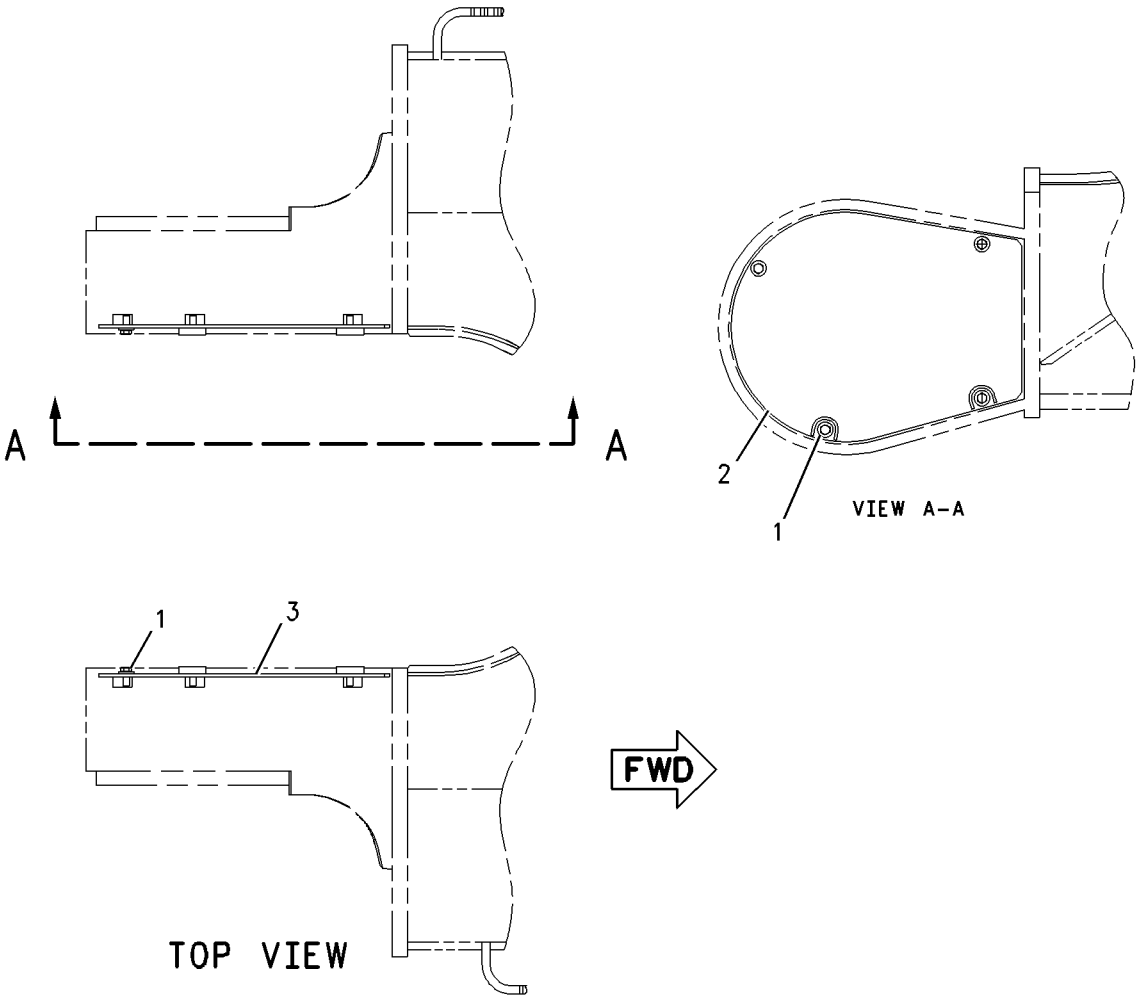

GRAPHIC #1 **<END>** g00885027

239-4341 IDLER GP-FRONT

S/N: KGF1-UP; FAL1-UP

PART OF 240-3822, 247-7454 FRAME AR-UNDERCARRIAGE

SMCS-4159 **i02417203**

NOTE	REF NO	GRAPHIC REF	PART NUMBER	QTY	PART NAME 1 2 3 4 5 6 (PRODUCT LEVEL)	SEE PAGE
Y	1	1	*239-4385*	1	IDLER GP-FRONT (RH)	503
Y	2	1	*239-4386*	1	IDLER GP-FRONT (LH)	504

Y-SEPARATE ILLUSTRATION

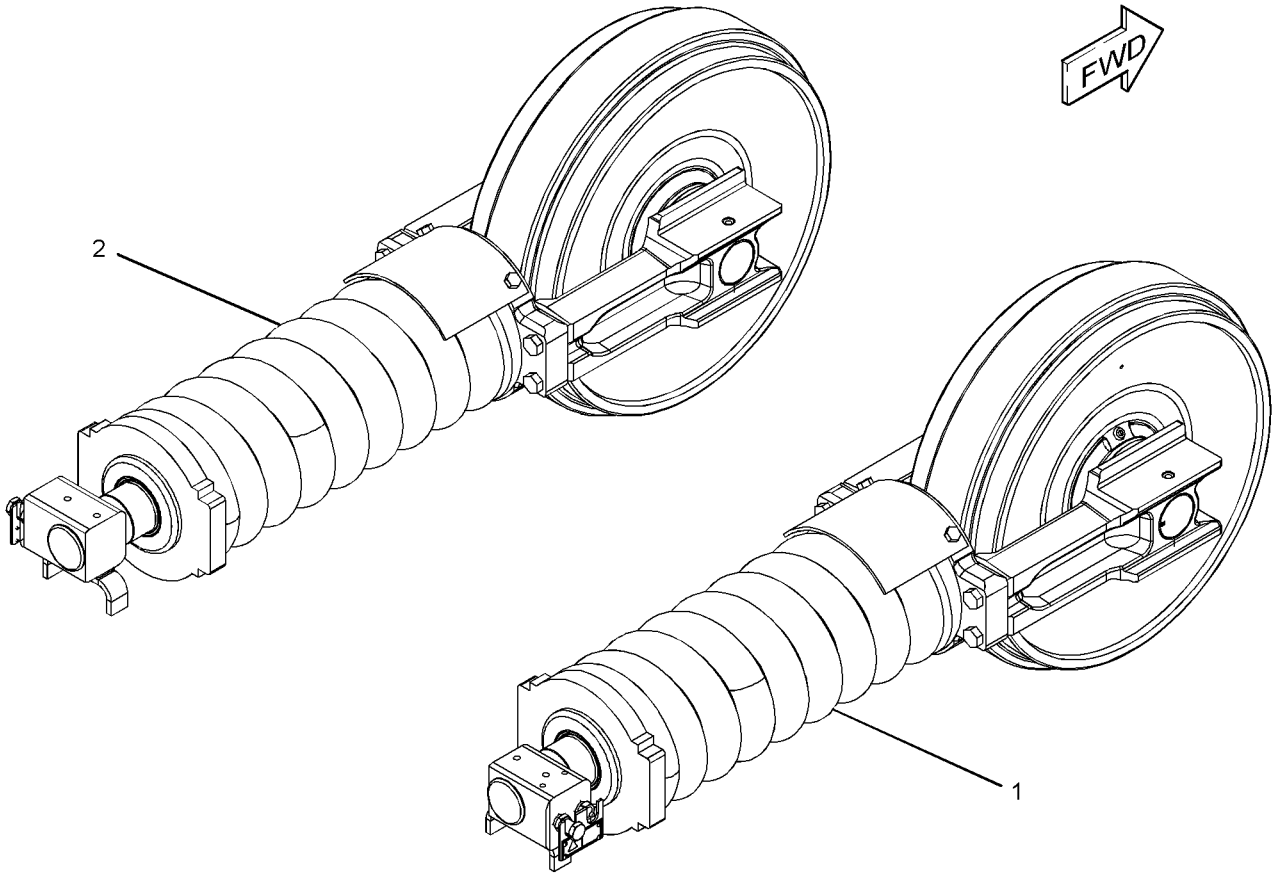

GRAPHIC #1 **<END>** g01217090

239-4385 IDLER GP-FRONT—RH

S/N: KGF1-UP; FAL1-UP

PART OF 239-4341 IDLER GP-FRONT

SMCS-4159 **i02417206**

NOTE	REF NO	GRAPHIC REF	PART NUMBER	QTY	PART NAME 1 2 3 4 5 6 (PRODUCT LEVEL)	SEE PAGE
Y	1	1	*239-4387*	1	TRACK ADJUSTER & RECOIL GP (RH)	515
Y	2	1	**248-7143**	1	IDLER GP-FRONT	505
M	3	1	**8T-4140**	4	BOLT (M16X2X60-MM)	

M-METRIC PART
Y-SEPARATE ILLUSTRATION

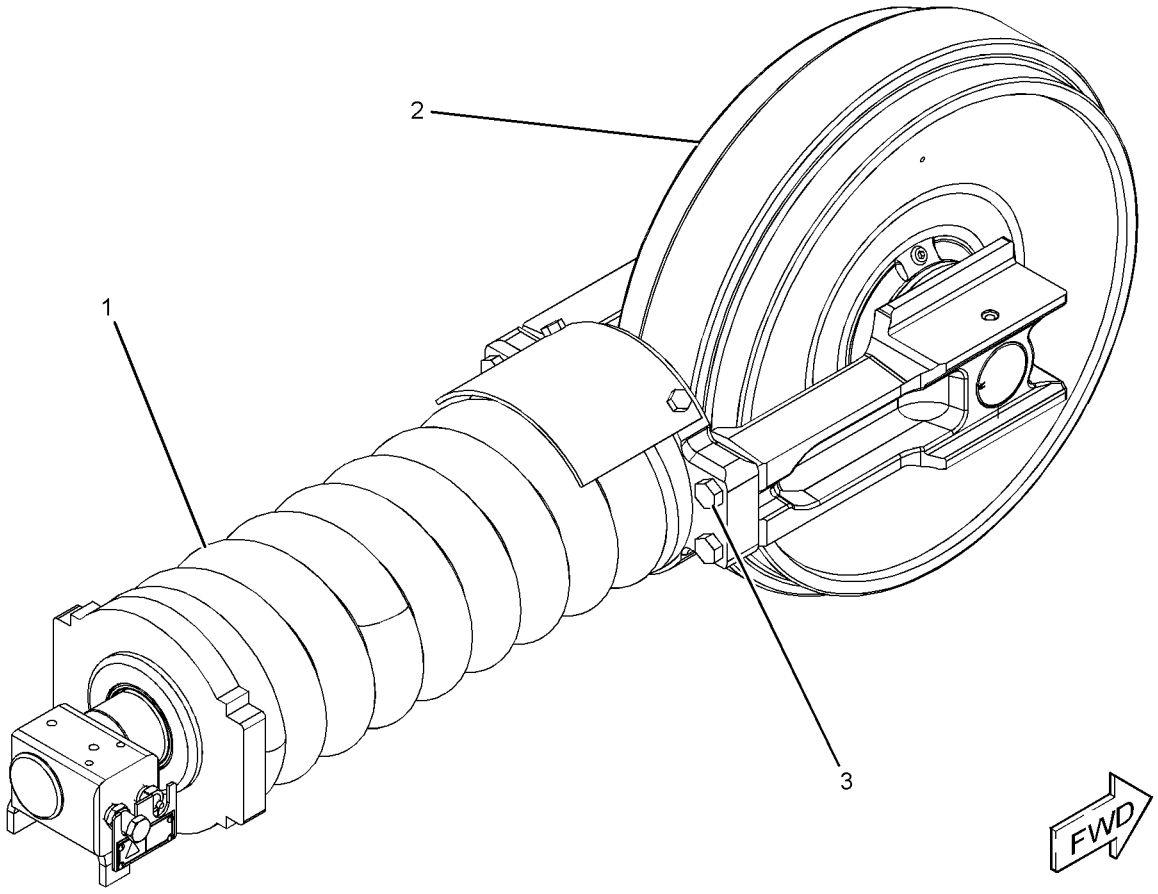

GRAPHIC #1 **<END>** g01217100

239-4386 IDLER GP-FRONT–LH

S/N: KGF1-UP; FAL1-UP

PART OF 239-4341 IDLER GP-FRONT

SMCS-4159 **i02417219**

NOTE	REF NO	GRAPHIC REF	PART NUMBER	QTY	PART NAME 1 2 3 4 5 6 (PRODUCT LEVEL)	SEE PAGE
Y	1	1	*239-4388*	1	TRACK ADJUSTER & RECOIL GP	516
Y	2	1	**248-7143**	1	IDLER GP-FRONT	505
M	3	1	**8T-4140**	4	BOLT (M16X2X60-MM)	

M-METRIC PART
Y-SEPARATE ILLUSTRATION

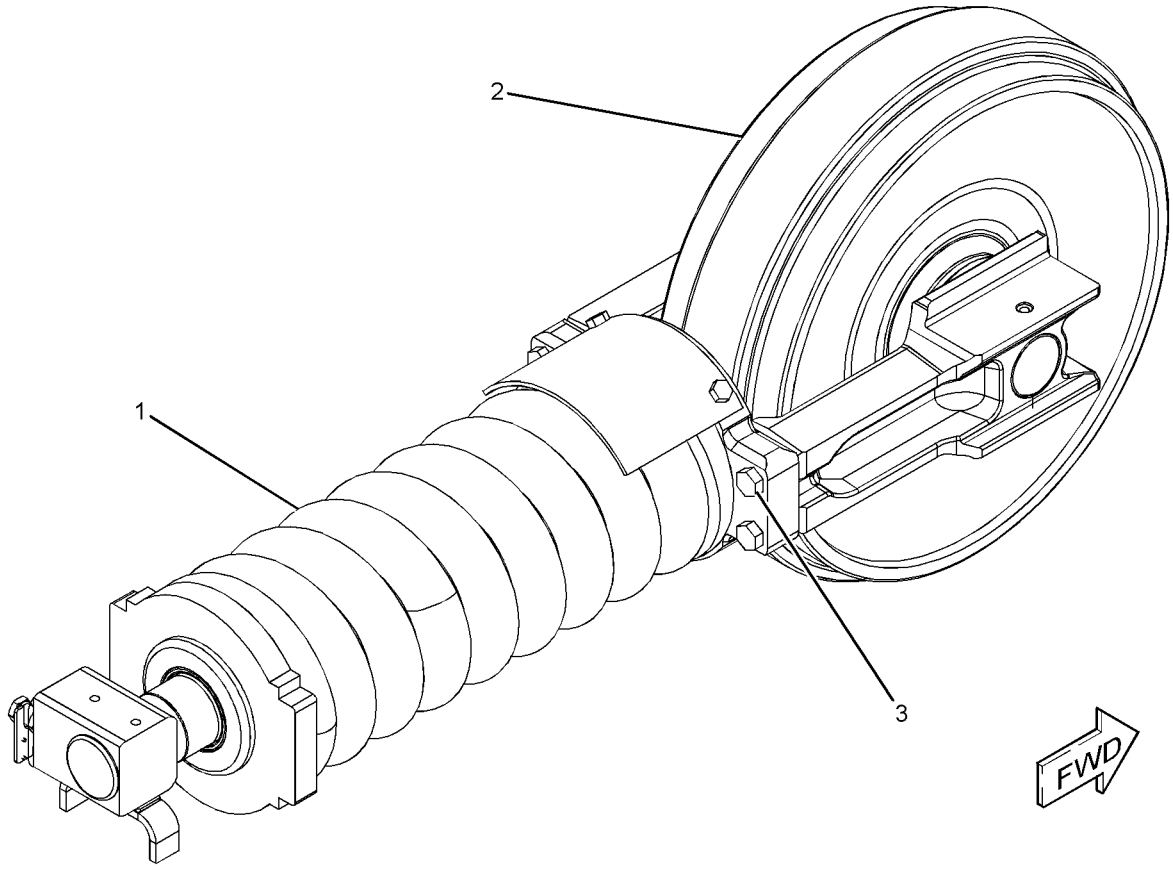

GRAPHIC #1 **<END>** g01217105

UNDERCARRIAGE

248-7143 IDLER GP-FRONT

S/N: KGF1-UP; FAL1-UP

PART OF 239-4385, 239-4386 IDLER GP-FRONT

SMCS-4159 **i02408880**

NOTE	REF NO	GRAPHIC REF	PART NUMBER	QTY	PART NAME 1 2 3 4 5 6 (PRODUCT LEVEL)	SEE PAGE
	1	1	**9W-2201**	2	SEAL GP-DUO-CONE	
					(EACH INCLUDES)	
		1	**096-4255**	2	RING	
	2	1	**239-4362**	2	BEARING (FRONT IDLER)	
	3	1	**246-5425**	1	SHAFT	
	4	1	**262-4781**	1	IDLER & BEARING AS	
		1	**8E-4359**	2	BEARING	
	5	1	**6V-7658**	2	SEAL-O-RING	
	6	1	**7H-3171**	1	PLUG-PIPE	
	7	1	**9W-9455**	2	PIN	

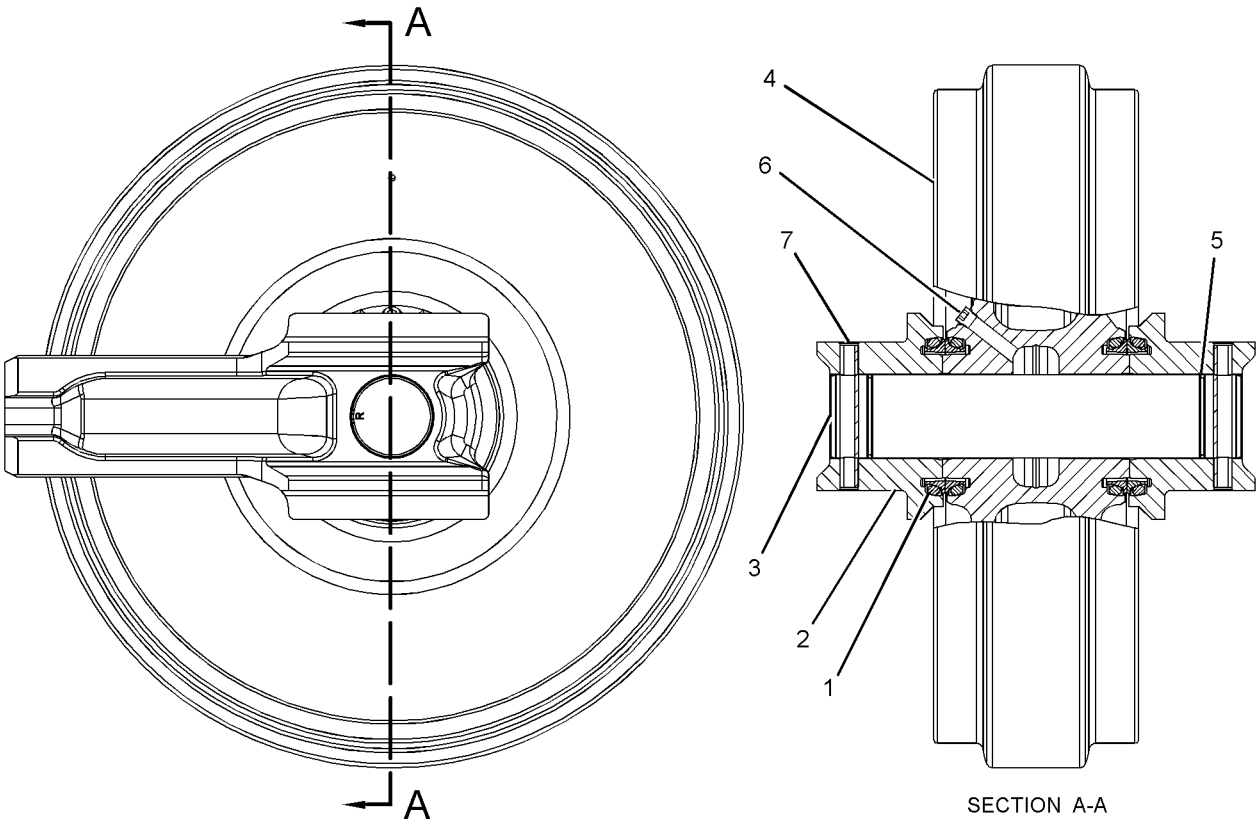

SECTION A-A

GRAPHIC #1 **<END>** g01206925

194-1608 LINK AS-TRACK

S/N: KGF1-UP
GREASE LUBRICATED TRACK
PART OF 194-1910, 194-1911, 194-1912, 194-1914, 194-1915, 332-8908 TRACK GP
AN ATTACHMENT

SMCS-4169, 4171 **i01450800**

NOTE	REF NO	GRAPHIC REF	PART NUMBER	QTY	PART NAME 1 2 3 4 5 6 (PRODUCT LEVEL)	SEE PAGE
	1	1	**9W-3138**	48	LINK-TRACK (LH)	
	2	1	**095-0863**	1	PIN-COTTER	
	3	1	**8E-8586**	1	LINK-MASTER (LH)	
	4	1	**190-3524**	1	BUSHING-MASTER	
	5	1	**8E-8585**	1	LINK-MASTER (RH)	
	6	1	**188-3064**	1	PIN-TRACK MASTER	
	7	1	**9W-3137**	48	LINK-TRACK (RH)	
	8	1	**6Y-8186**	48	PIN-TRACK	
	10	1	**158-4380**	96	SEAL-TRACK	
	11	1	**190-3523**	48	BUSHING-TRACK	
	12	1	**158-4381**	2	SEAL-TRACK MASTER	

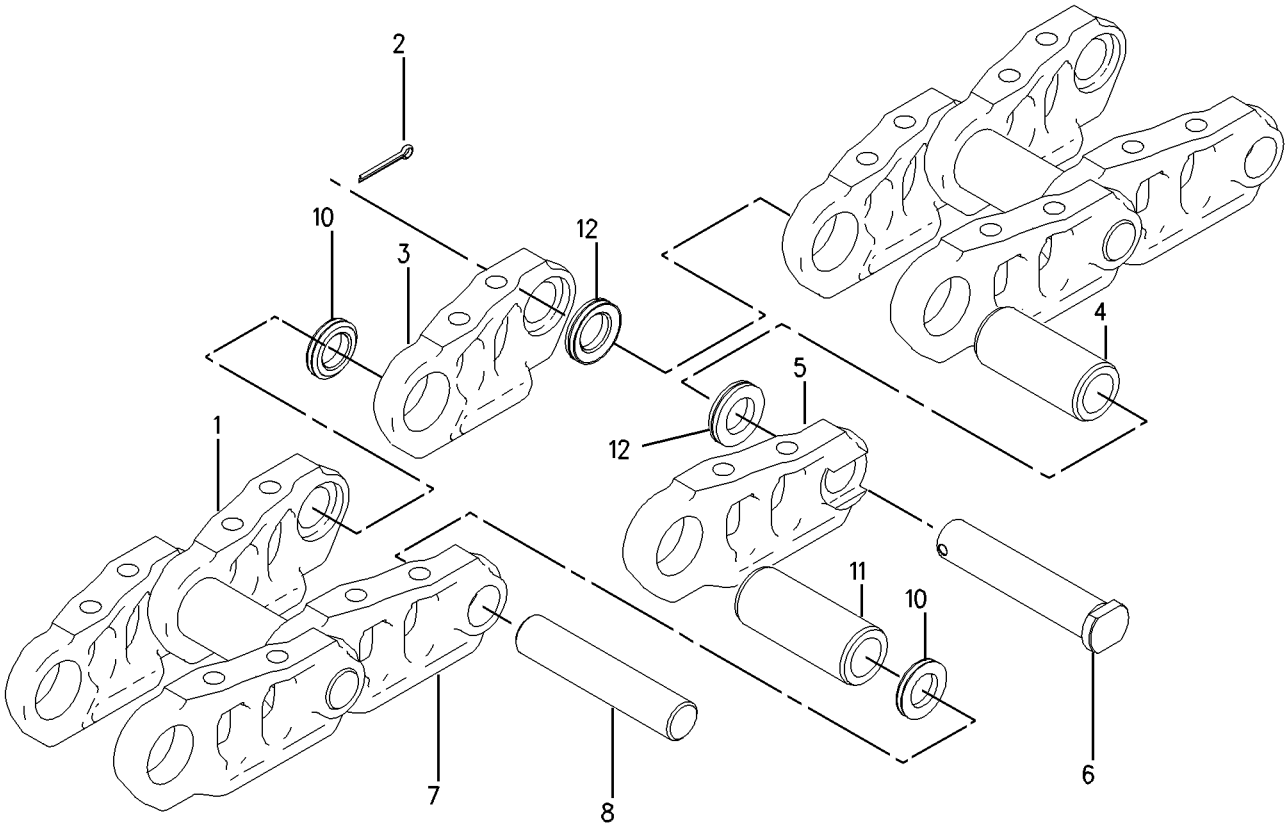

GRAPHIC #1 **<END>** g00668766

194-1609 LINK AS-TRACK

S/N: FAL1-UP
GREASE LUBRICATED TRACK
PART OF 194-1917, 194-1920, 194-1921, 332-8915 TRACK GP
AN ATTACHMENT

SMCS-4169, 4171 **i01471018**

NOTE	REF NO	GRAPHIC REF	PART NUMBER	QTY	PART NAME 1 2 3 4 5 6 (PRODUCT LEVEL)	SEE PAGE
	1	1	**9W-3138**	44	LINK-TRACK-LH	
	2	1	**095-0863**	1	COTTER	
	3	1	**8E-8586**	1	LINK-MASTER-LH	
	4	1	**190-3524**	1	BUSHING-MASTER	
	5	1	**8E-8585**	1	LINK-MASTER-RH	
	6	1	**188-3064**	1	PIN-TRACK MASTER	
	7	1	**9W-3137**	44	LINK-TRACK-RH	
	8	1	**6Y-8186**	44	PIN-TRACK	
	10	1	**158-4380**	88	SEAL-TRACK	
	11	1	**190-3523**	44	BUSHING-TRACK	
	12	1	**158-4381**	2	SEAL-TRACK MASTER	

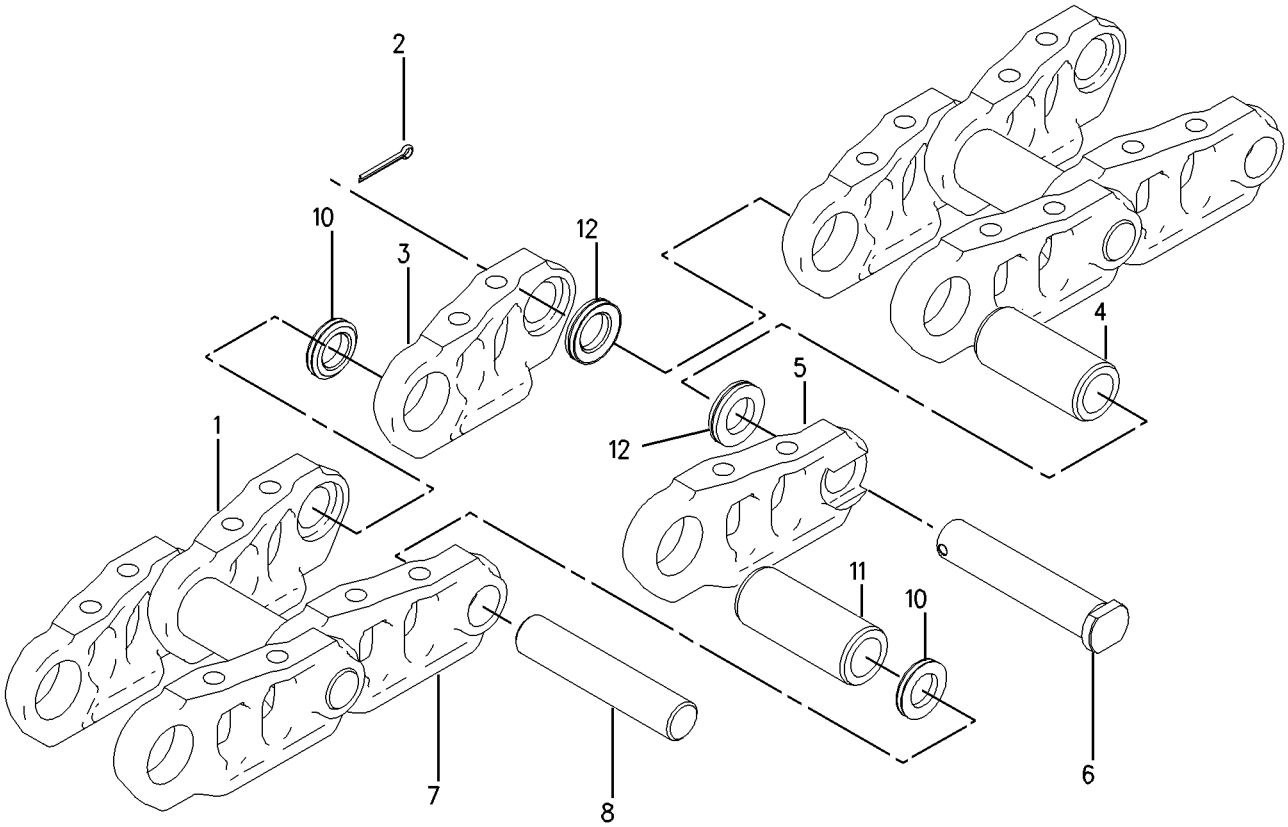

GRAPHIC #1 **<END>** g00668766

5Q-3226 ROLLER AR-TRACK & CARRIER

S/N: FAL1-UP
AN ATTACHMENT

SMCS-4154, 4180 **i01296904**

NOTE	REF NO	GRAPHIC REF	PART NUMBER	QTY	PART NAME 1 2 3 4 5 6 (PRODUCT LEVEL)	SEE PAGE
M	1	1	**8T-5878**	4	BOLT (M24X3X80-MM)	
Y	2	1	*8E-5600*	4	ROLLER GP-TRACK CARRIER	512
YR	3	1	*163-4143*	8	ROLLER GP-TRACK-SINGLE FLANGE	514
M	4	1	**7X-2565**	56	BOLT (M20X2.5X100-MM)	
	5	1	**8T-4123**	56	WASHER (22X35X3.5-MM THK)	
Y	6	1	*163-4144*	6	ROLLER GP-TRACK-DOUBLE FLANGE	513

QUANTITIES SHOWN ARE THOSE REQUIRED FOR BOTH LH AND RH SIDES
M-METRIC PART
R-REMFG PART MAY BE AVAILABLE
Y-SEPARATE ILLUSTRATION

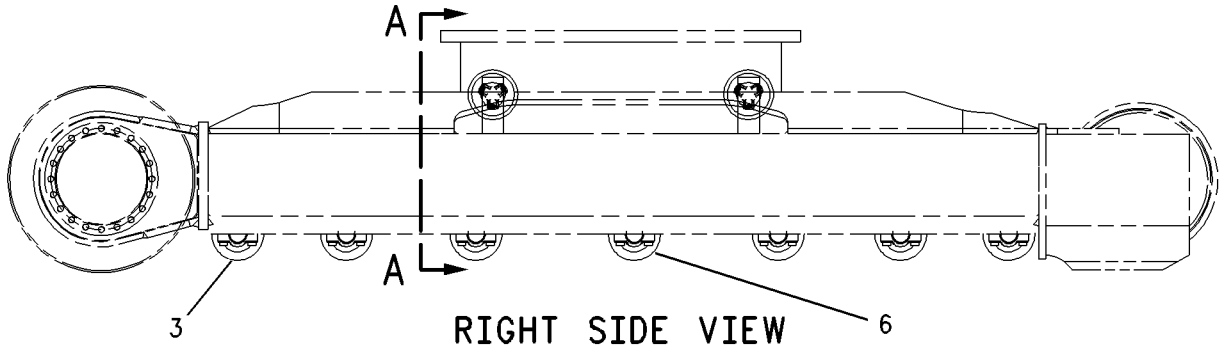

RIGHT SIDE VIEW

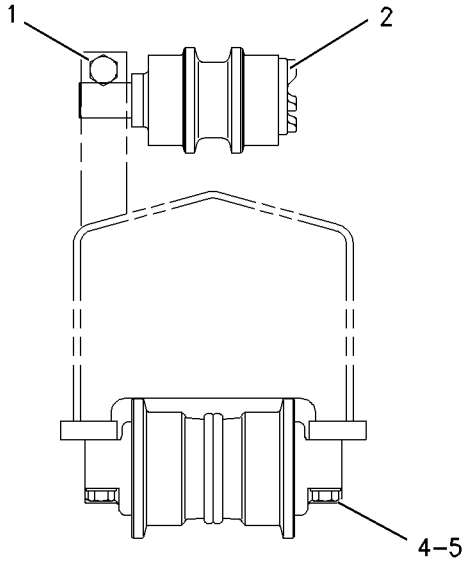

SECTION A-A

GRAPHIC #1 **<END>** g00691539

5Q-3227 ROLLER AR-TRACK & CARRIER

S/N: KGF1-UP
AN ATTACHMENT

SMCS-4154, 4180 **i01319076**

NOTE	REF NO	GRAPHIC REF	PART NUMBER	QTY	PART NAME 1 2 3 4 5 6 (PRODUCT LEVEL)	SEE PAGE
M	1	1	**8T-5878**	4	BOLT (M24X3X80-MM)	
Y	2	1	**8E-5600**	4	ROLLER GP-TRACK CARRIER	512
YR	3	1	**163-4143**	8	ROLLER GP-TRACK-SINGLE FLANGE	514
M	4	1	**7X-2565**	64	BOLT (M20X2.5X100-MM)	
	5	1	**8T-4123**	64	WASHER (22X35X3.5-MM THK)	
Y	6	1	**163-4144**	8	ROLLER GP-TRACK-DOUBLE FLANGE	513

M-METRIC PART
R-REMFG PART MAY BE AVAILABLE
Y-SEPARATE ILLUSTRATION

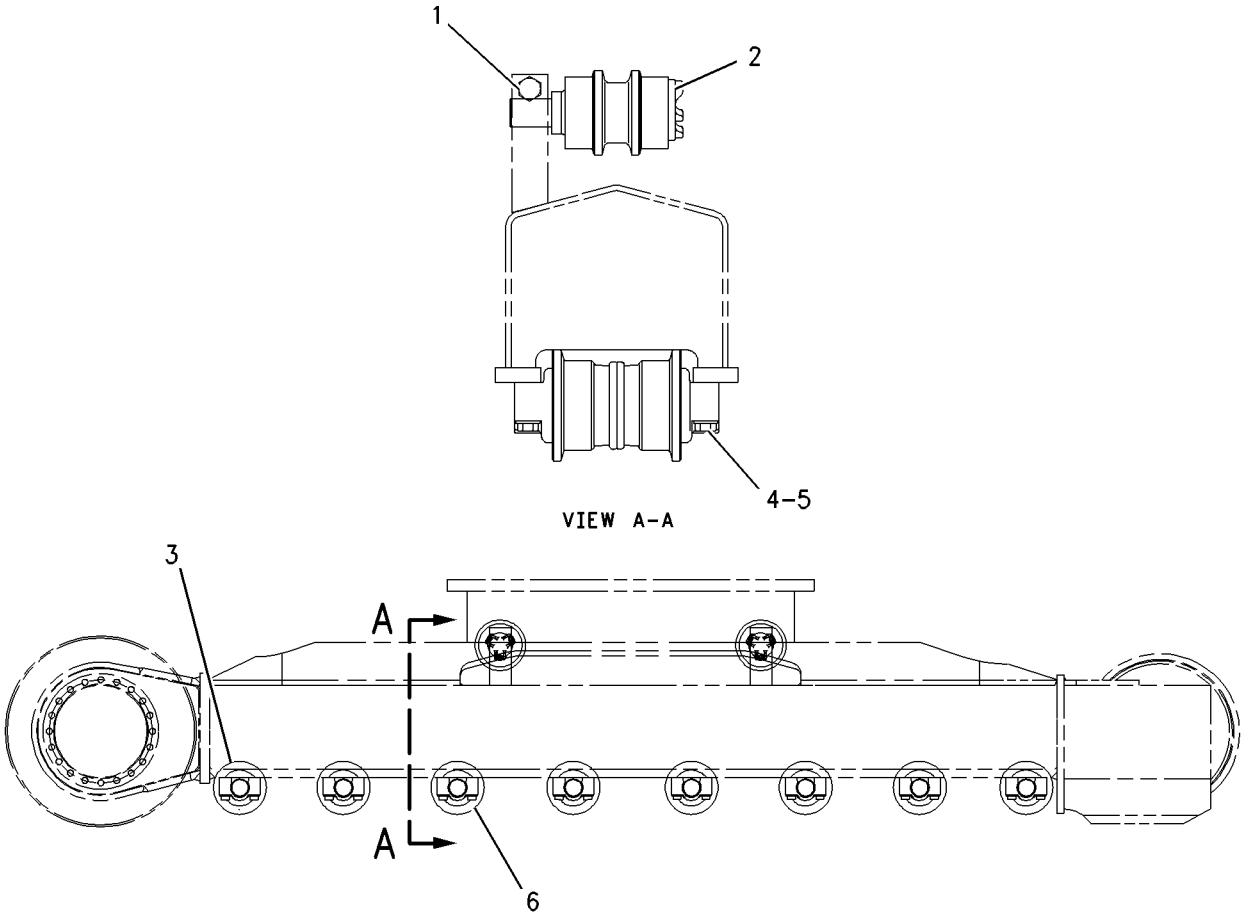

RIGHT SIDE VIEW

GRAPHIC #1 **<END>** g00690104

UNDERCARRIAGE

7Y-1607 ROLLER AR-TRACK & CARRIER

S/N: FAL1-UP

PART OF 247-7454 FRAME AR-UNDERCARRIAGE

SMCS-4154, 4180 **i01721628**

NOTE	REF NO	GRAPHIC REF	PART NUMBER	QTY	PART NAME 1 2 3 4 5 6 (PRODUCT LEVEL)	SEE PAGE
M	1	1	**8T-5878**	4	BOLT (M24X3X80-MM)	
Y	2	1	**8E-5600**	4	ROLLER GP-TRACK CARRIER	512
YR	3	1	**163-4143**	14	ROLLER GP-TRACK-SINGLE FLANGE	514
M	4	1	**7X-2565**	56	BOLT (M20X2.5X100-MM)	
	5	1	**8T-4123**	56	WASHER (22X35X3.5-MM THK)	

QUANTITIES SHOWN ARE THOSE REQUIRED FOR BOTH LH AND RH SIDES
M-METRIC PART
R-REMFG PART MAY BE AVAILABLE
Y-SEPARATE ILLUSTRATION

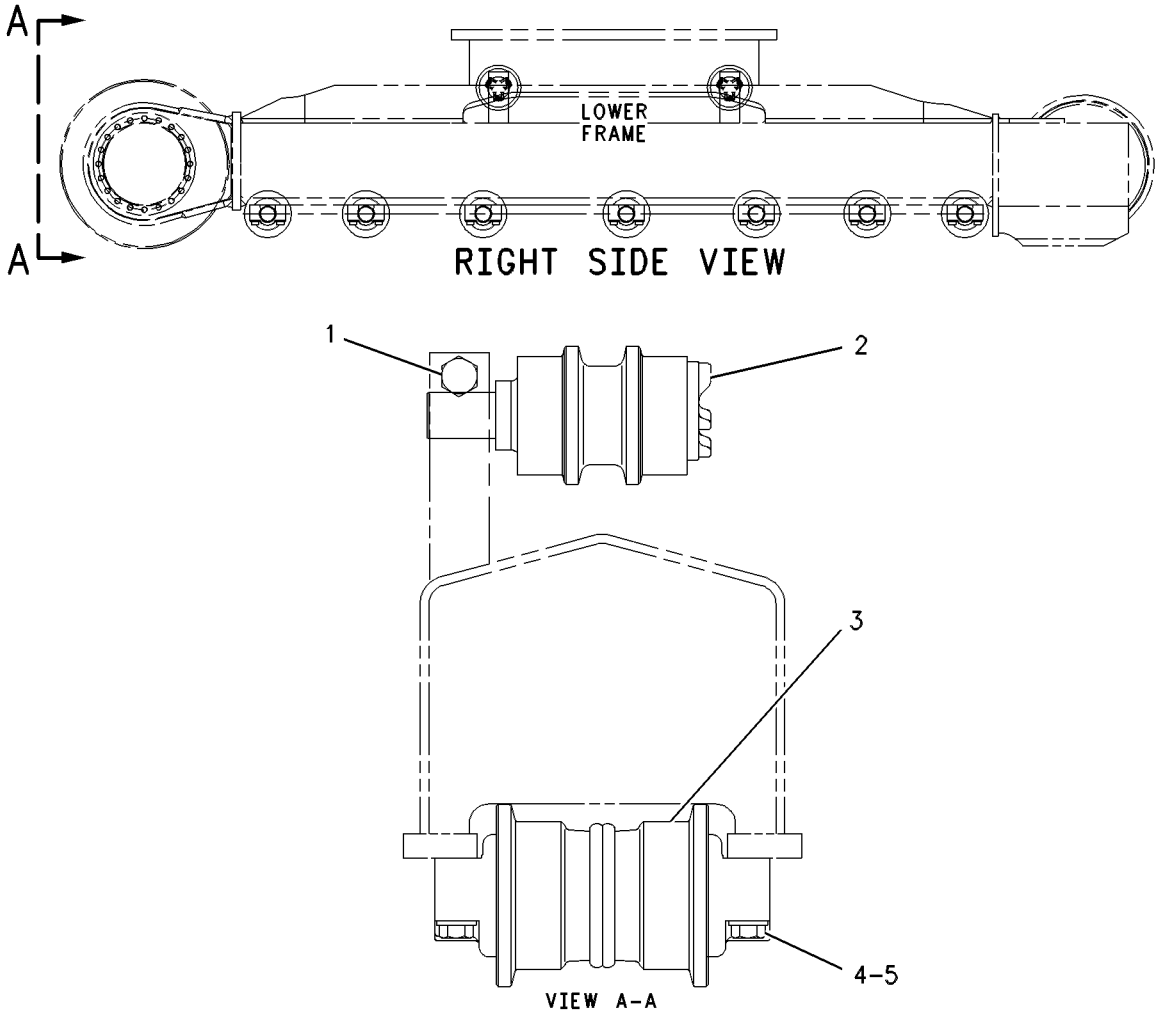

GRAPHIC #1 **<END>** g00387795

7Y-1608 ROLLER AR-TRACK & CARRIER

S/N: KGF1-UP

PART OF 240-3822 FRAME AR-UNDERCARRIAGE

SMCS-4154, 4180 **i02836335**

NOTE	REF NO	GRAPHIC REF	PART NUMBER	QTY	PART NAME 1 2 3 4 5 6 (PRODUCT LEVEL)	SEE PAGE
M	1	1	**8T-5878**	4	BOLT (M24X3X80-MM)	
Y	2	1	**8E-5600**	4	ROLLER GP-TRACK CARRIER	512
YR	3	1	**163-4143**	16	ROLLER GP-TRACK-SINGLE FLANGE	514
M	4	1	**7X-2565**	64	BOLT (M20X2.5X100-MM)	
	5	1	**8T-4123**	64	WASHER (22X35X3.5-MM THK)	

QUANTITIES SHOWN ARE THOSE REQUIRED FOR BOTH LH AND RH SIDES
M-METRIC PART
R-REMFG PART MAY BE AVAILABLE
Y-SEPARATE ILLUSTRATION

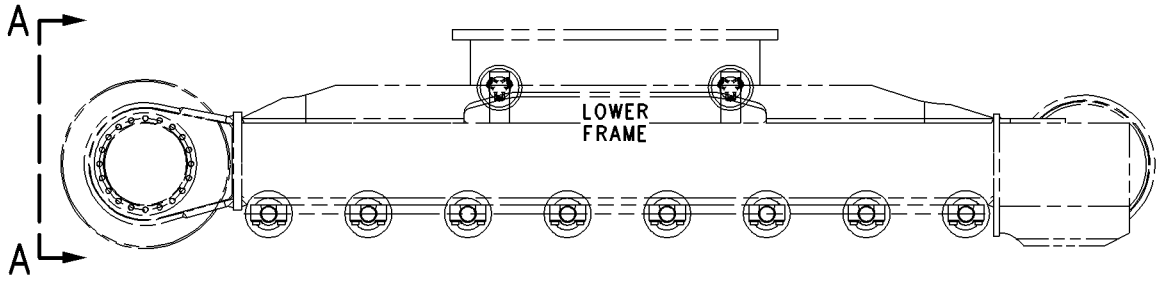

RIGHT SIDE VIEW

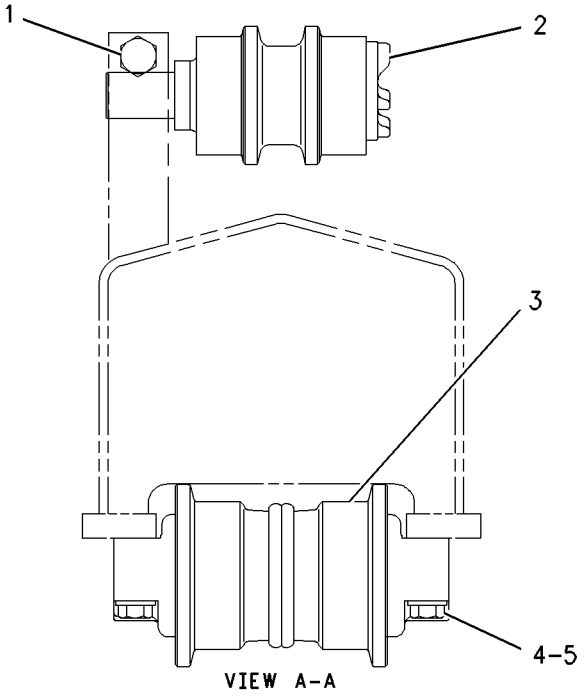

VIEW A-A

GRAPHIC #1 **<END>** g00680258

8E-5600 ROLLER GP-TRACK CARRIER

S/N: KGF1-UP; FAL1-UP

PART OF 5Q-3226, 5Q-3227, 7Y-1607, 7Y-1608 ROLLER AR-TRACK & CARRIER

ALSO AN ATTACHMENT

SMCS-4154 **i02752192**

NOTE	REF NO	GRAPHIC REF	PART NUMBER	QTY	PART NAME 1 2 3 4 5 6 (PRODUCT LEVEL)	SEE PAGE
	1	1	**8E-5601**	1	SHAFT AS-TRACK ROLLER	
		1	**8E-5604**	1	COLLAR-ROLLER END	
		1	**8E-5607**	1	SHAFT-TRACK ROLLER	
	2	1	**8E-5608**	1	SEAL GP-DUO-CONE	
	3	1	**8E-5602**	1	ROLLER & BEARING AS	
	3A	1	**8E-6792**	1	BEARING-TRACK ROLLER	
	3B	1	**8E-6793**	1	BEARING-TRACK ROLLER	
	4	1	**8E-5606**	1	RETAINER	
	5	1	**6V-7661**	1	SEAL-O-RING	
M	6	1	**8T-1159**	5	BOLT-SOCKET HEAD (M10X1.5X25-MM)	
	7	1	**8E-5605**	1	COVER-CARRIER ROLLER	
	8	1	**7H-3171**	1	PLUG-PIPE	

M-METRIC PART

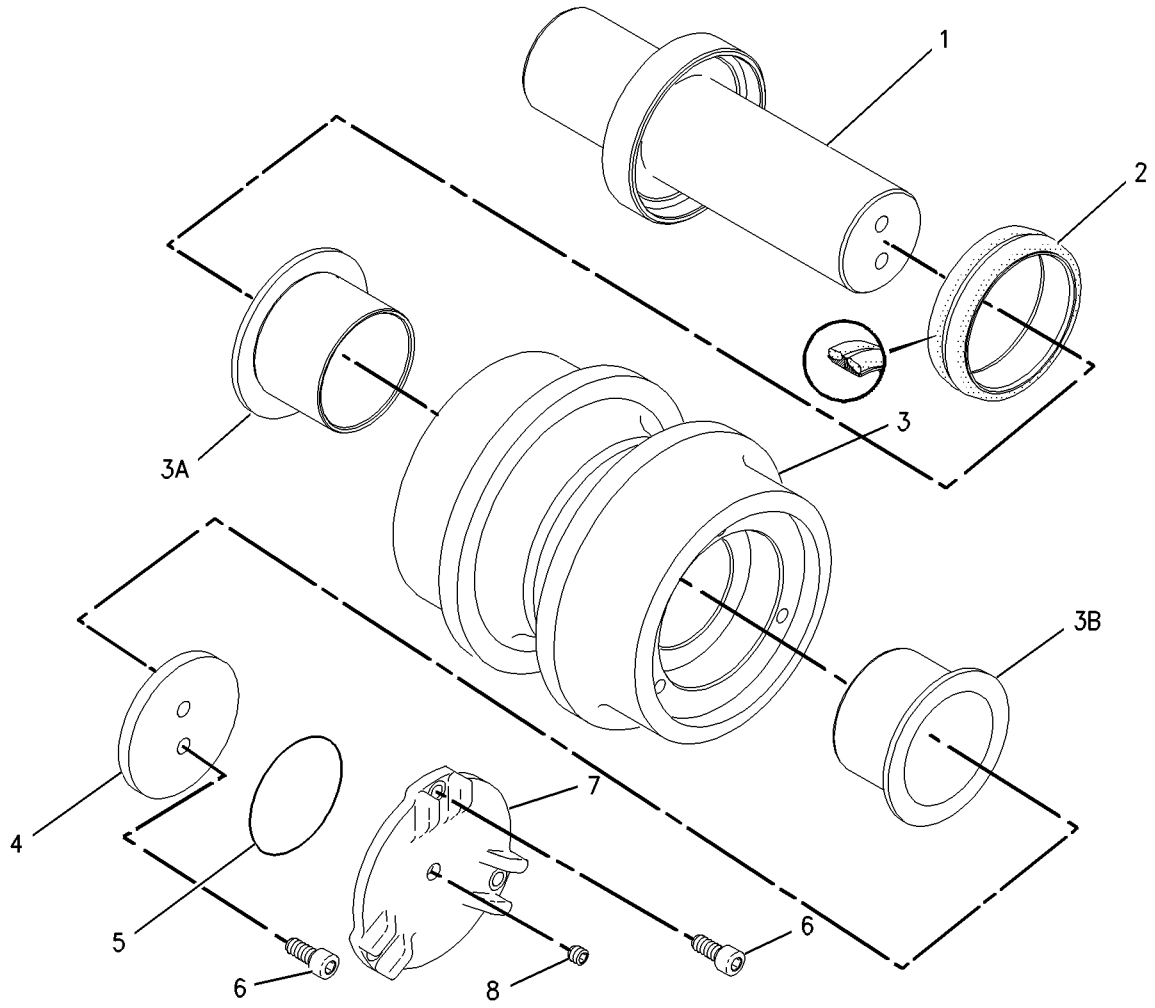

GRAPHIC #1 **<END>** g00715793

163-4144 ROLLER GP-TRACK-DOUBLE FLANGE

S/N: KGF1-UP; FAL1-UP
PART OF 5Q-3226, 5Q-3227 ROLLER AR-TRACK & CARRIER
AN ATTACHMENT

SMCS-4180 **i01287633**

NOTE	REF NO	GRAPHIC REF	PART NUMBER	QTY	PART NAME 1 2 3 4 5 6 (PRODUCT LEVEL)	SEE PAGE
	1	1	**8E-5031**	2	RING-RETAINING	
	2	1	**7F-8268**	2	SEAL-O-RING	
	3	1	**5G-2247**	1	STOPPER-RUBBER	
	4	1	**6Y-0473**	1	PLUG-CLEAR	
	5	1	**9W-2142**	2	SEAL GP-DUO-CONE	
	6	1	**8E-5037**	2	COLLAR-TRACK ROLLER	
	7	1	**8E-5035**	1	SHAFT-TRACK ROLLER	
	8	1	**3E-3217**	1	DOWEL	
	9	1	**5Q-3215**	1	ROLLER & BEARING AS	
		1	**8E-5599**	2	BEARING-TRACK ROLLER	

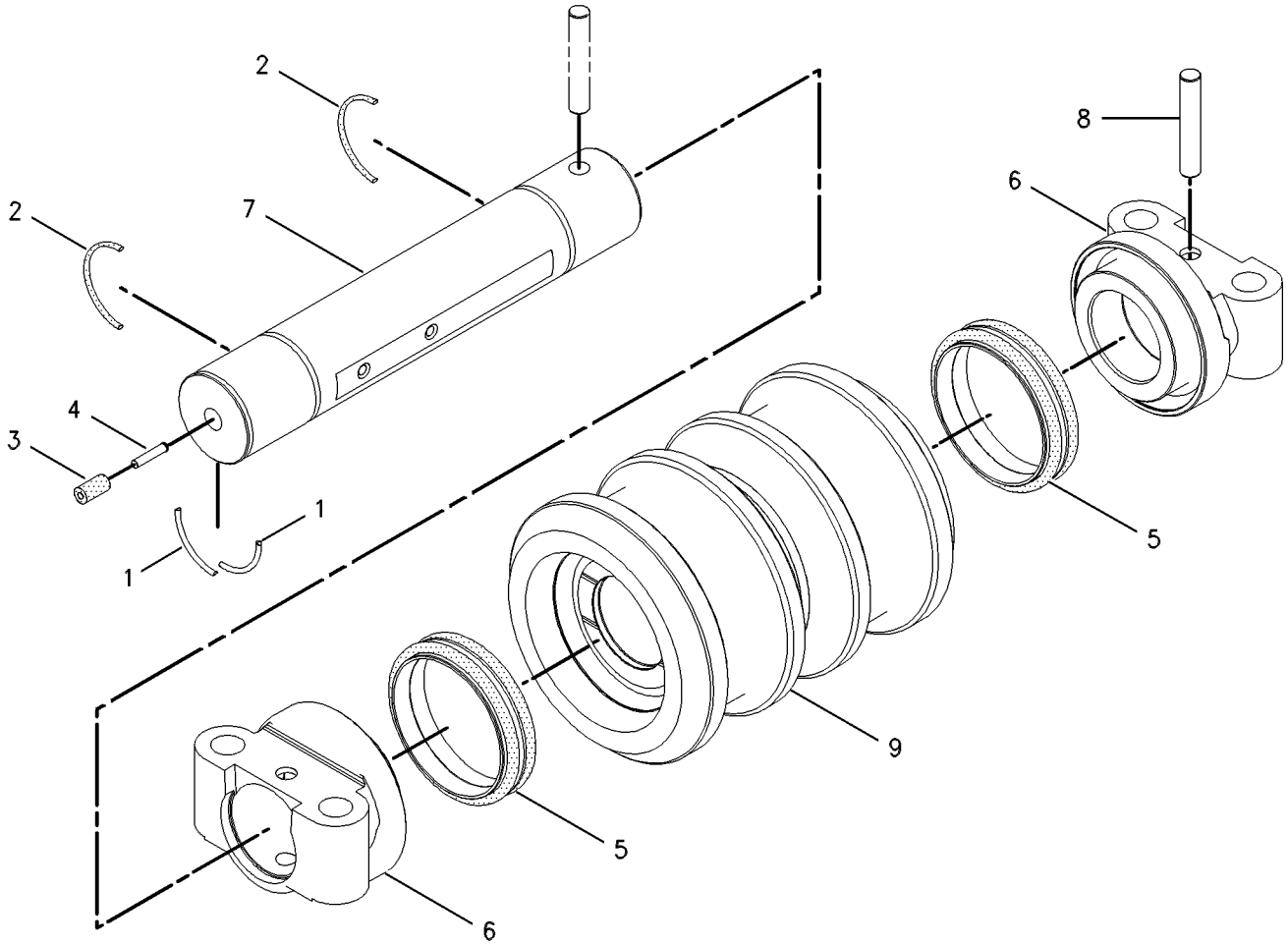

GRAPHIC #1 **<END>** g00626984

163-4143 ROLLER GP-TRACK-SINGLE FLANGE*R

S/N: KGF1-UP; FAL1-UP

PART OF 5Q-3226, 5Q-3227, 7Y-1607, 7Y-1608 ROLLER AR-TRACK & CARRIER

ALSO AN ATTACHMENT

SMCS-4180 **i01319077**

NOTE	REF NO	GRAPHIC REF	PART NUMBER	QTY	PART NAME 1 2 3 4 5 6 (PRODUCT LEVEL)	SEE PAGE
	1	1	**8E-5031**	2	RING-RETAINING	
	2	1	**7F-8268**	2	SEAL-O-RING	
	3	1	**5G-2247**	1	STOPPER-RUBBER	
	4	1	**6Y-0473**	1	PLUG-CLEAR	
	5	1	**8E-5032**	1	ROLLER & BEARING AS	
		1	**8E-5599**	2	BEARING-TRACK ROLLER	
	6	1	**8E-5035**	1	SHAFT-TRACK ROLLER	
	7	1	**8E-5037**	2	COLLAR-TRACK ROLLER	
	8	1	**9W-2142**	2	SEAL GP-DUO-CONE	
	9	1	**3E-3217**	1	DOWEL	

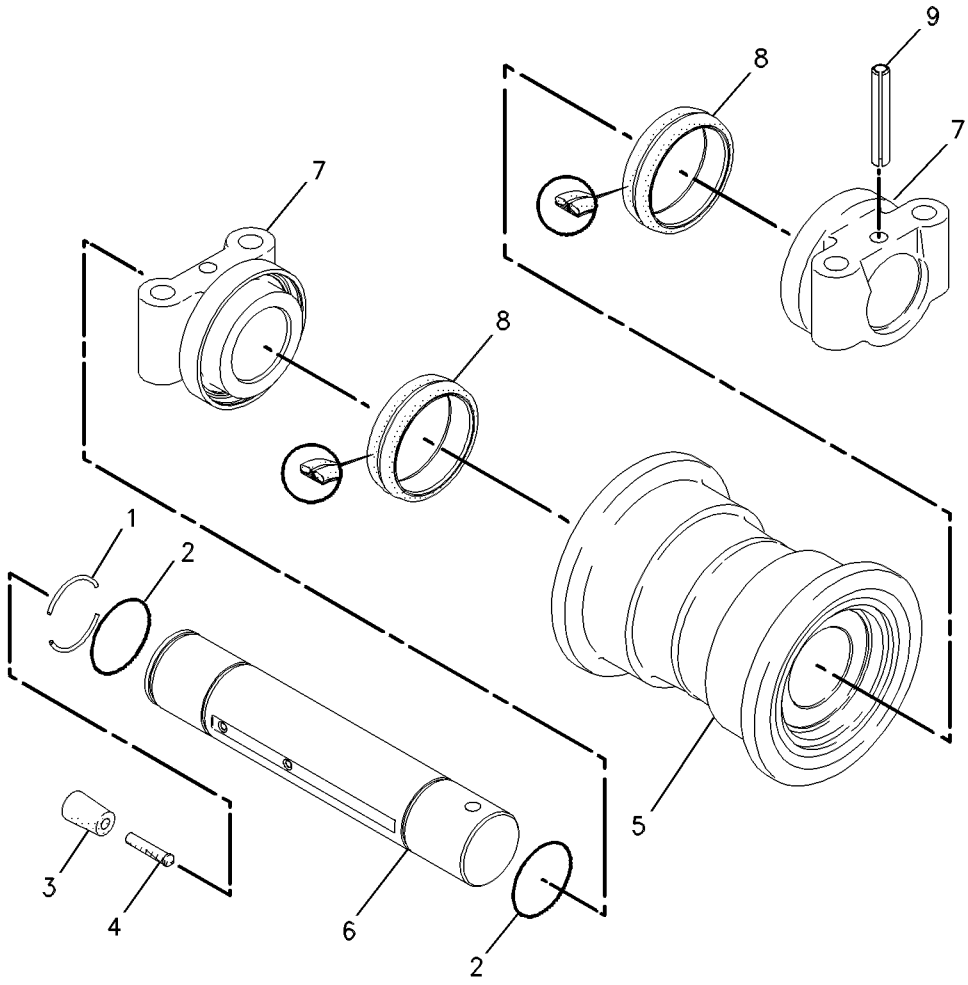

GRAPHIC #1 **<END>** g00593567

239-4387 TRACK ADJUSTER & RECOIL GP–RH

S/N: KGF1-UP; FAL1-UP

PART OF 239-4385 IDLER GP-FRONT

SMCS-4157, 4158 **i02417210**

NOTE	REF NO	GRAPHIC REF	PART NUMBER	QTY	PART NAME 1 2 3 4 5 6 (PRODUCT LEVEL)	SEE PAGE
	1	1	**7Y-1746**	1	PLATE	
	2	1	**168-6761**	1	PLATE AS	
		1	**4B-4158**	4	SCREW-DRIVE (3/16X0.25-IN)	
		1	**253-1346**	1	PLATE-WARNING (HIGH PRESSURE CYLINDER)	
Y	3	1	*239-4389*	1	TRACK ADJUSTER & RECOIL GP	517
M	4	1	**8T-4137**	2	BOLT (M10X1.5X20-MM)	

M-METRIC PART
Y-SEPARATE ILLUSTRATION

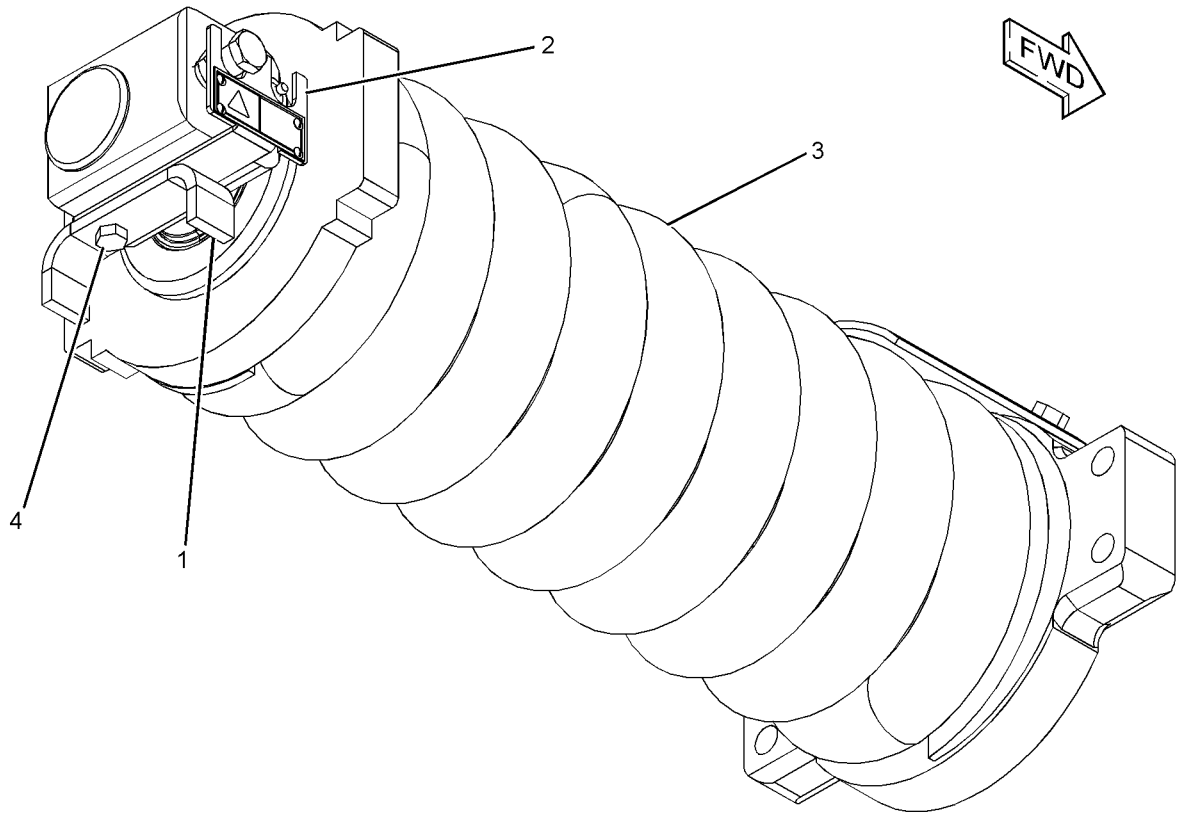

GRAPHIC #1 **<END>** g01217204

239-4388 TRACK ADJUSTER & RECOIL GP–LH

S/N: KGF1-UP; FAL1-UP

PART OF 239-4386 IDLER GP-FRONT

SMCS-4157, 4158 **i02417233**

NOTE	REF NO	GRAPHIC REF	PART NUMBER	QTY	PART NAME 1 2 3 4 5 6 (PRODUCT LEVEL)	SEE PAGE
	1	1	**7Y-1746**	1	PLATE	
	2	1	**168-6761**	1	PLATE AS	
		1	**4B-4158**	4	SCREW-DRIVE (3/16X0.25-IN)	
		1	**253-1346**	1	PLATE-WARNING (HIGH PRESSURE CYLINDER)	
Y	3	1	*239-4389*	1	TRACK ADJUSTER & RECOIL GP	517
M	4	1	**8T-4137**	2	BOLT (M10X1.5X20-MM)	

M-METRIC PART
Y-SEPARATE ILLUSTRATION

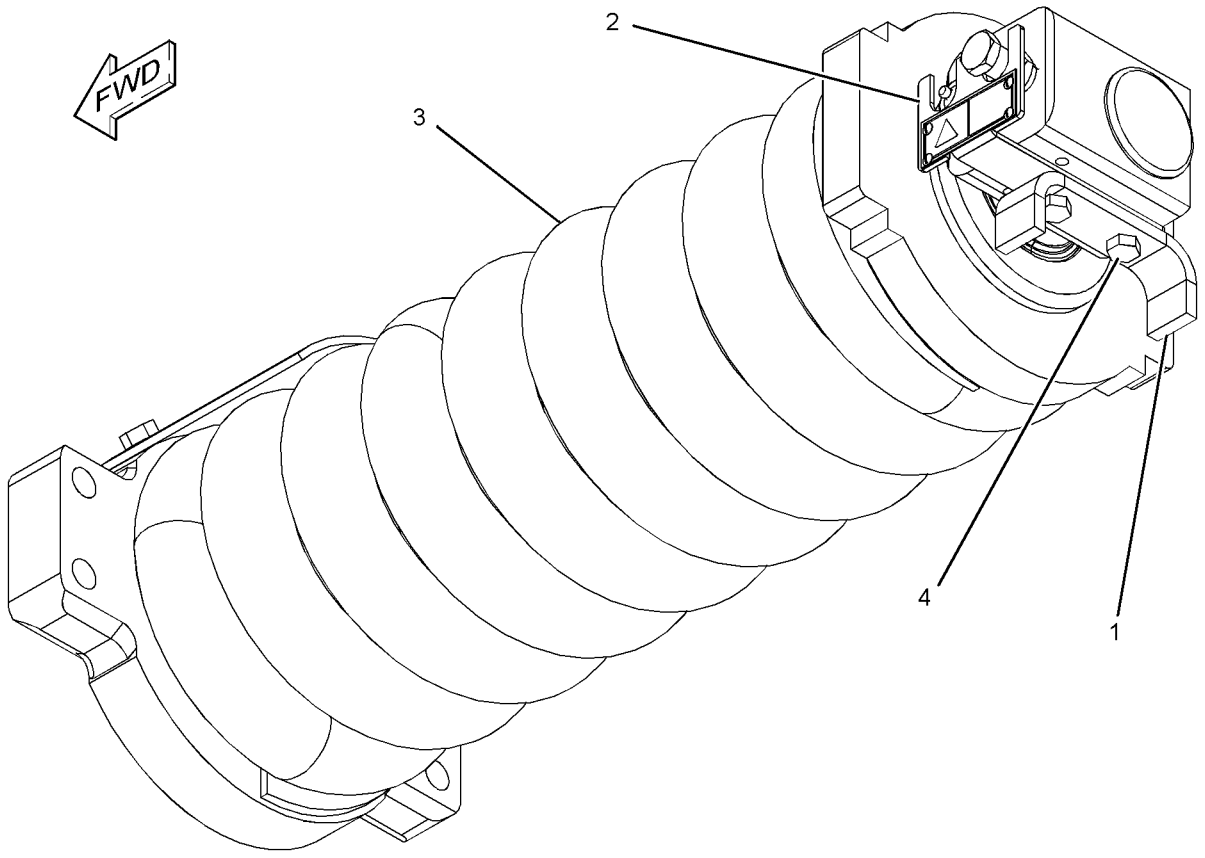

GRAPHIC #1 **<END>** g01217224

239-4389 TRACK ADJUSTER & RECOIL GP

S/N: KGF1-UP; FAL1-UP

PART OF 239-4387, 239-4388 TRACK ADJUSTER & RECOIL GP

SMCS-4157, 4158 **i02630754**

NOTE	REF NO	GRAPHIC REF	PART NUMBER	QTY	PART NAME 1 2 3 4 5 6 (PRODUCT LEVEL)	SEE PAGE
	1	1	**7Y-1781**	1	COVER	
	2	1	**145-3035**	1	PLATE	
	3	1	**239-4350**	1	SPRING	
	4	1	**239-4378**	1	SUPPORT	
	5	1	**239-4382**	1	NUT (M48X5-THD)	
	6	1	**239-4383**	1	STRIP	
	7	1	**239-4384**	1	SPACER (49X95X72-MM THK)	
Y	8	1	**239-4390**	1	TRACK ADJUSTER & RECOIL GP	518
	9	1	**239-4393**	1	WASHER (50X78X8-MM THK)	
M	10	1	**7X-2536**	2	BOLT (M8X1.25X14-MM)	
M	11	1	**8T-4179**	2	BOLT (M12X1.75X20-MM)	

M-METRIC PART
Y-SEPARATE ILLUSTRATION

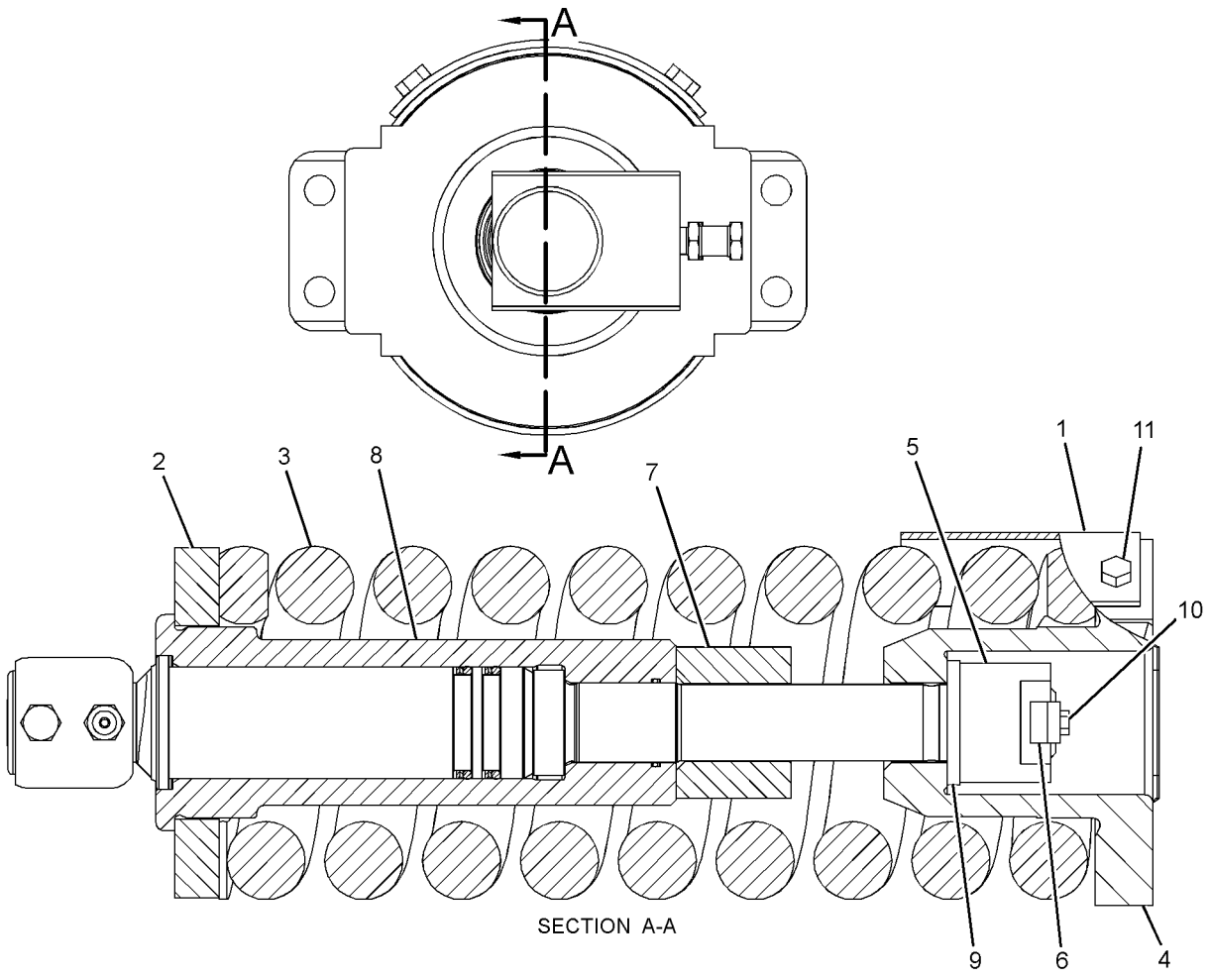

SECTION A-A

GRAPHIC #1 **<END>** g01217233

UNDERCARRIAGE

239-4390 TRACK ADJUSTER & RECOIL GP

S/N: KGF1-UP; FAL1-UP

PART OF 239-4389 TRACK ADJUSTER & RECOIL GP

SMCS-4157, 4158 **i02981384**

NOTE	REF NO	GRAPHIC REF	PART NUMBER	QTY	PART NAME 1 2 3 4 5 6 (PRODUCT LEVEL)	SEE PAGE
	1	1	**2S-5926**	1	VALVE-RELIEF	
	2 *	1	**7Y-0682**	2	RING de encosto 8-332 } iguais	
	3 *	1	**093-1436**	1	SEAL-LIP TYPE	
	4 *	1	**093-1512**	2	RING de encosto 8-332	
	5	1	**095-2927**	1	VALVE-FILL	
	6	1	**145-3031**	1	PISTON AS	
	7	1	**239-4391**	1	ROD	
	8	1	**239-4392**	1	CYLINDER	
	9 *	1	**239-4394**	1	RING-BACKUP	
	10 *	1	**248-7174**	2	SEAL-O-RING	
	11 *	1	**095-1704**	1	SEAL-O-RING	
	12	2	2394389/REP		REPARO DE ESTICADOR DE ESTEIRA (INCLUI	

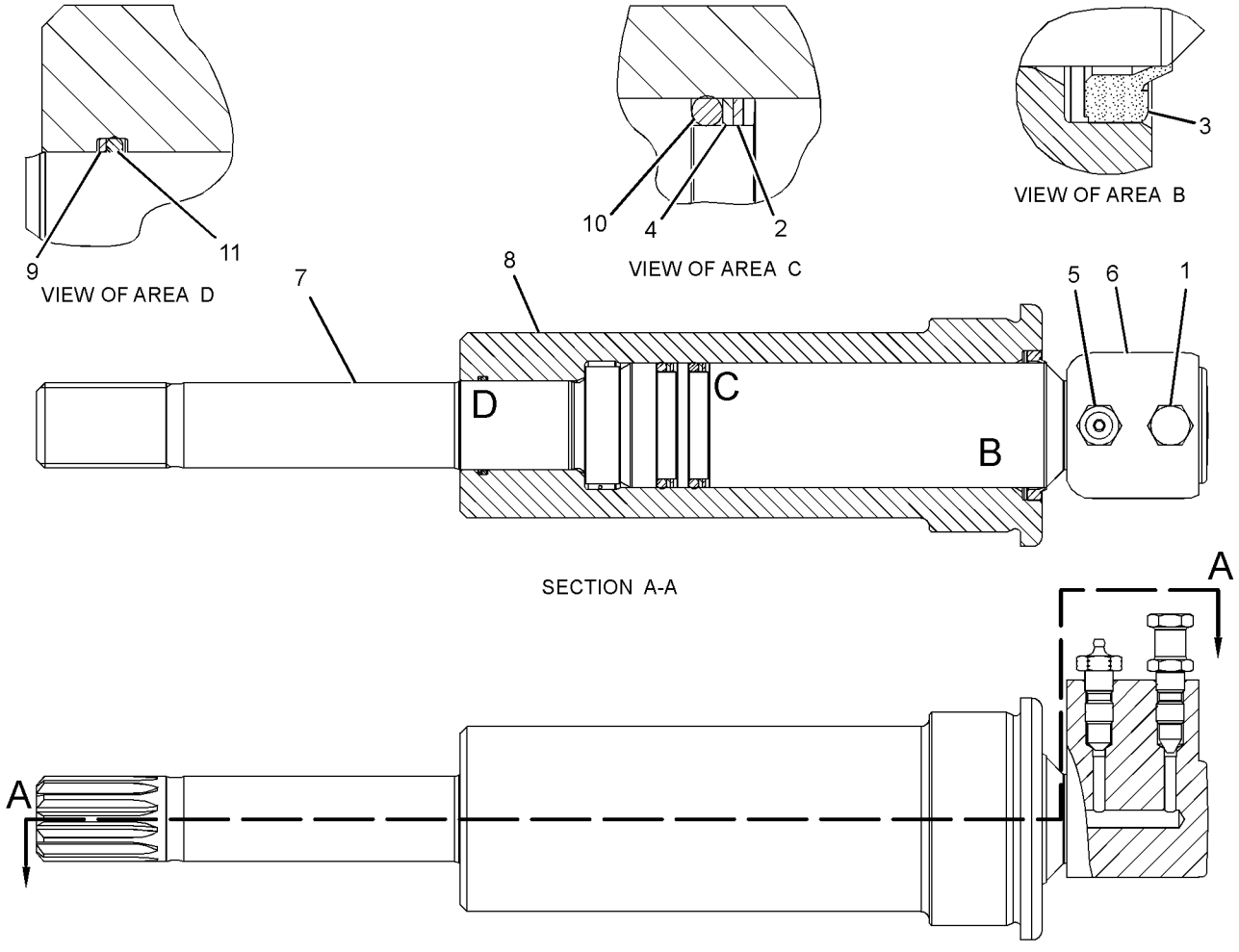

GRAPHIC #1 **<END>** g01217269

UNDERCARRIAGE

247-7346 TRACK AR–2-REQUIRED

S/N: KGF1-UP
800-MM (31.5-IN) TRIPLE GROUSER SHOE. WITH STEPS
AN ATTACHMENT

SMCS-4170 **i02797867**

NOTE	PART NUMBER	QTY	PART NAME 1 2 3 4 5 6 (PRODUCT LEVEL)	SEE PAGE
Y	*235-7764*	1	STEP GP	485
Y	*194-1912*	1	TRACK GP	522
Y-SEPARATE ILLUSTRATION				

<END>

247-7382 TRACK AR–2-REQUIRED

S/N: FAL1-UP
800-MM (31.5-IN) TRIPLE GROUSER SHOE. WITH STEPS
AN ATTACHMENT

SMCS-4170 **i02423752**

NOTE	PART NUMBER	QTY	PART NAME 1 2 3 4 5 6 (PRODUCT LEVEL)	SEE PAGE
Y	*235-7764*	1	STEP GP	485
Y	*194-1921*	1	TRACK GP	527
Y-SEPARATE ILLUSTRATION				

<END>

314-3797 TRACK AR–2-REQUIRED

S/N: FAL1-UP
790-MM (31.1-IN) TRIPLE GROUSER SHOE. WITH STEP
AN ATTACHMENT

SMCS-4170 **i03140152**

NOTE	PART NUMBER	QTY	PART NAME 1 2 3 4 5 6 (PRODUCT LEVEL)	SEE PAGE
Y	*235-7764*	1	STEP GP	485
Y	*332-8915*	1	TRACK GP	530
Y-SEPARATE ILLUSTRATION				

<END>

194-1910 TRACK GP–2-REQUIRED

S/N: KGF1-UP

600-MM (23.6-IN) TRIPLE GROUSER SHOE. GREASE LUBRICATED TRACK

AN ATTACHMENT

SMCS-4170 **i01469598**

NOTE	REF NO	GRAPHIC REF	PART NUMBER	QTY	PART NAME 1 2 3 4 5 6 (PRODUCT LEVEL)	SEE PAGE
Y	1	1	**194-1608**	1	LINK AS-TRACK	506
	2	1	**126-5062**	49	SHOE-TRACK	
M	3	1	**9W-3619**	196	BOLT-TRACK (M20X1.5X55-MM)	
M	4	1	**9W-3361**	196	NUT-TRACK (M20X1.5-THD)	

M-METRIC PART
Y-SEPARATE ILLUSTRATION

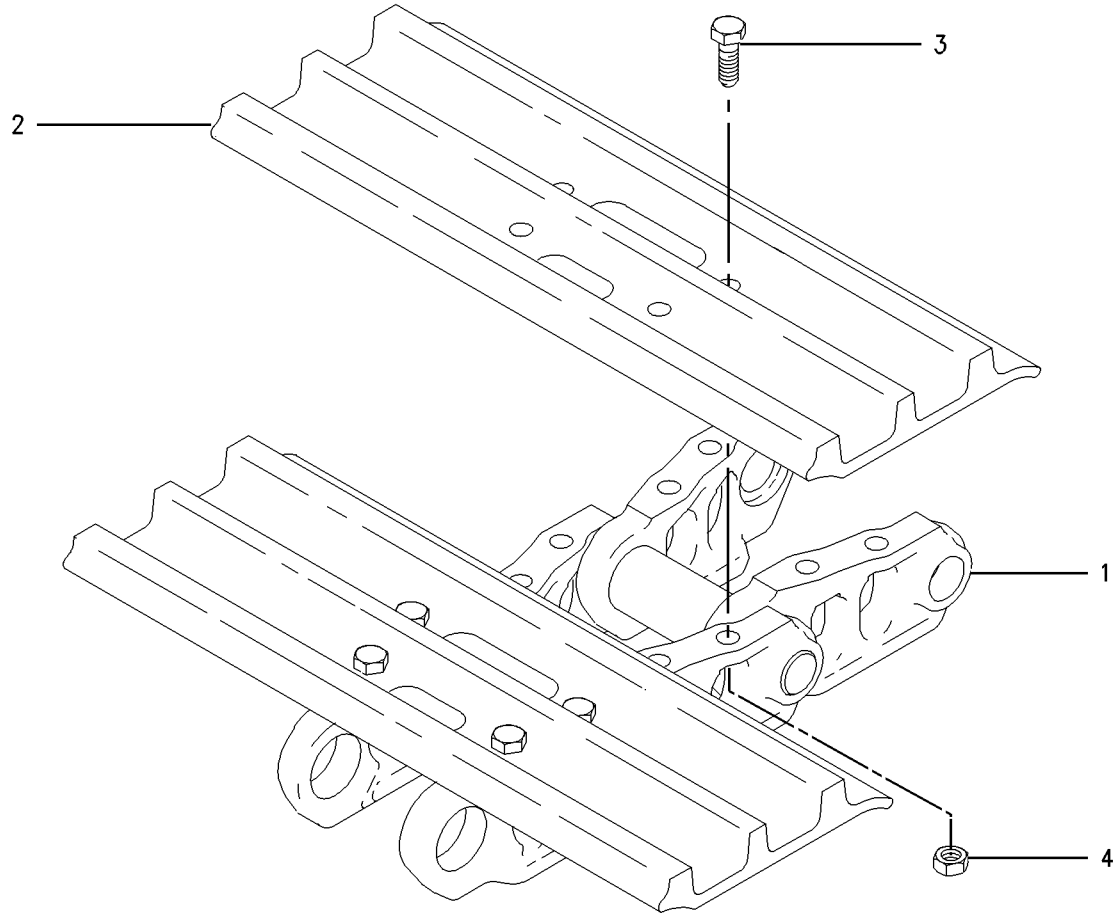

GRAPHIC #1 **<END>** g00705941

194-1911 TRACK GP–2-REQUIRED

S/N: KGF1-UP

700-MM (27.6-IN) TRIPLE GROUSER SHOE. GREASE LUBRICATED TRACK AN ATTACHMENT

SMCS-4170 **i01469596**

NOTE	REF NO	GRAPHIC REF	PART NUMBER	QTY	PART NAME 1 2 3 4 5 6 (PRODUCT LEVEL)	SEE PAGE
Y	1	1	**194-1608**	1	LINK AS-TRACK	506
	2	1	**6I-9454**	49	SHOE-TRACK	
M	3	1	**9W-3619**	196	BOLT-TRACK (M20X1.5X55-MM)	
M	4	1	**9W-3361**	196	NUT-TRACK (M20X1.5-THD)	

M-METRIC PART
Y-SEPARATE ILLUSTRATION

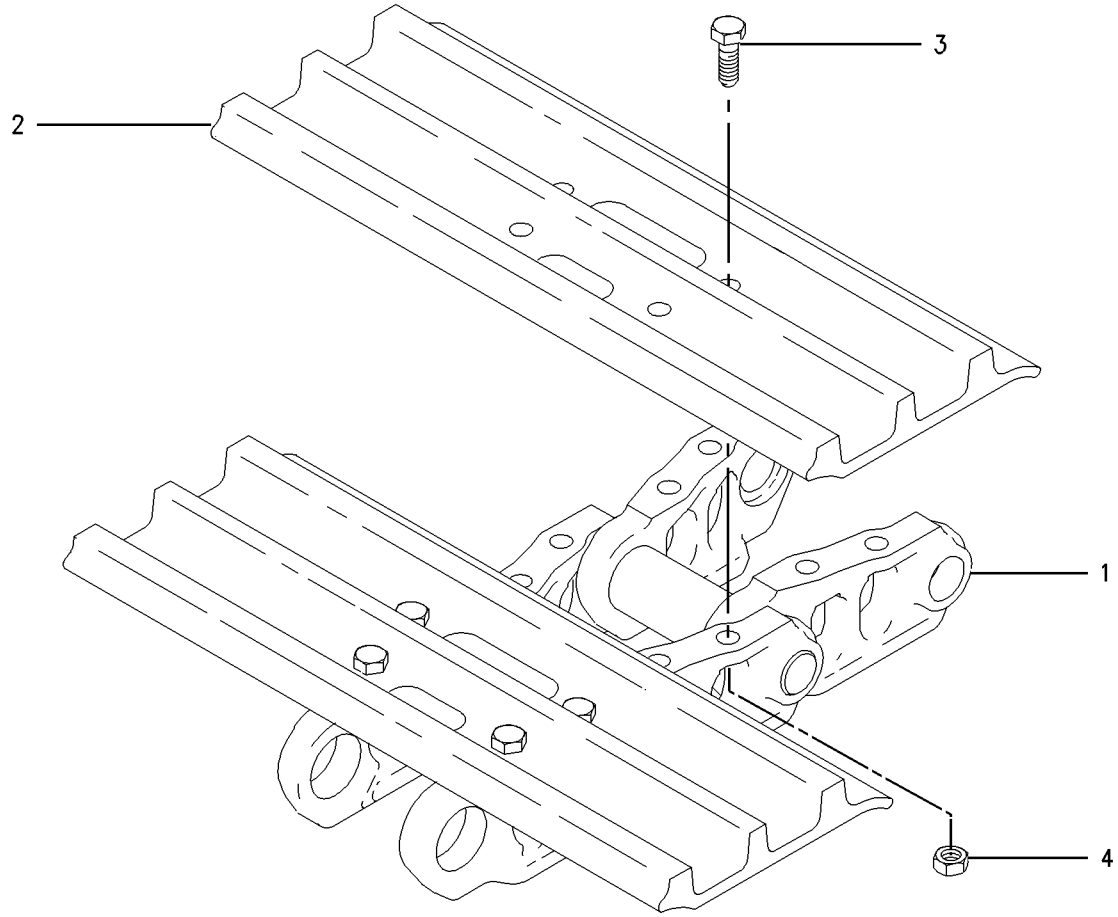

GRAPHIC #1 **<END>** g00705941

194-1912 TRACK GP–2-REQUIRED

S/N: KGF1-UP
800-MM (31.5-IN) TRIPLE GROUSER SHOE. GREASE LUBRICATED TRACK
PART OF 247-7346 TRACK AR
AN ATTACHMENT

SMCS-4170 **i01460381**

NOTE	REF NO	GRAPHIC REF	PART NUMBER	QTY	PART NAME 1 2 3 4 5 6 (PRODUCT LEVEL)	SEE PAGE
Y	1	1	**194-1608**	1	LINK AS-TRACK	506
	2	1	**9W-9351**	49	SHOE-TRACK	
M	3	1	**9W-3619**	196	BOLT-TRACK (M20X1.5X55-MM)	
M	4	1	**9W-3361**	196	NUT-TRACK (M20X1.5-THD)	

M-METRIC PART
Y-SEPARATE ILLUSTRATION

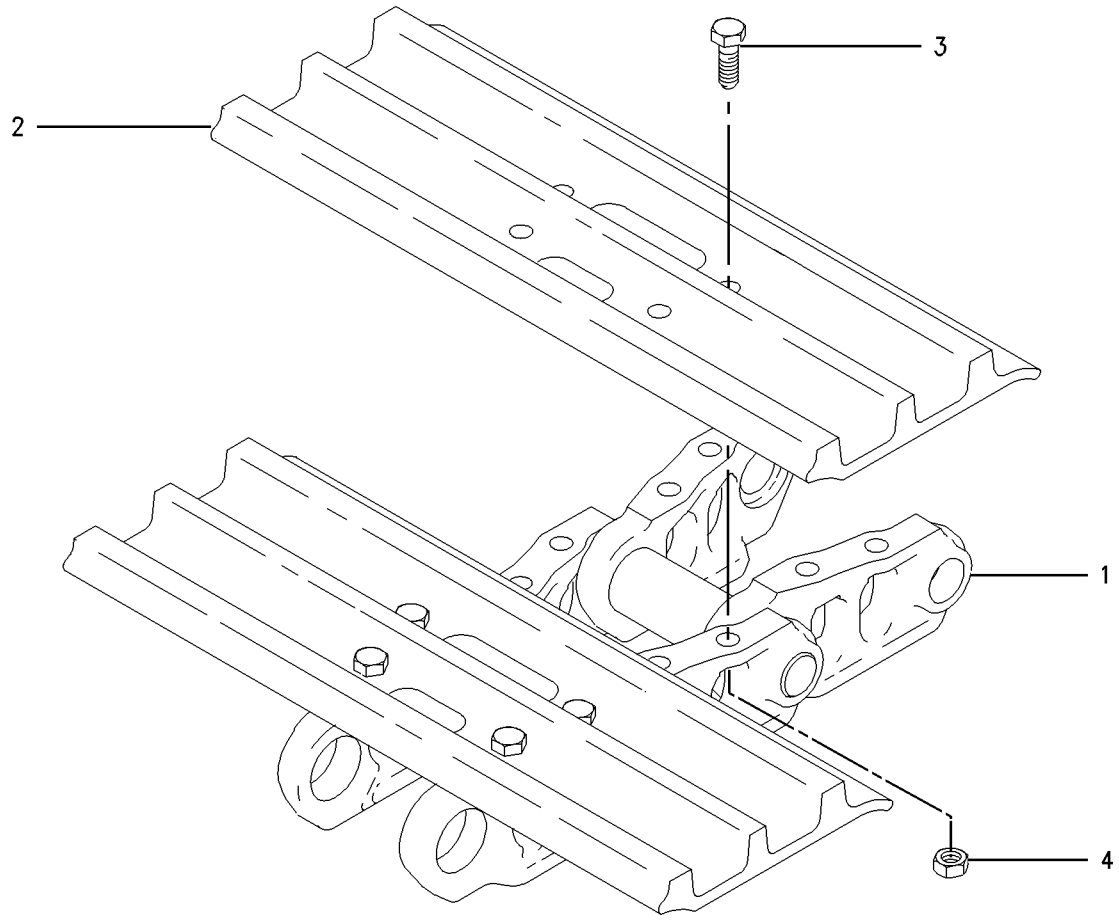

GRAPHIC #1 **<END>** g00705941

194-1914 TRACK GP–2-REQUIRED

S/N: KGF1-UP

600-MM (23.6-IN) DOUBLE GROUSER SHOE. GREASE LUBRICATED TRACK AN ATTACHMENT

SMCS-4170 **i01846102**

NOTE	REF NO	GRAPHIC REF	PART NUMBER	QTY	PART NAME 1 2 3 4 5 6 (PRODUCT LEVEL)	SEE PAGE
Y	1	1	**194-1608**	1	LINK AS-TRACK	506
	2	1	**106-0615**	49	SHOE-TRACK	
M	3	1	**6Y-0846**	196	BOLT-TRACK (M20X1.5X63-MM)	
M	4	1	**9W-3361**	196	NUT-TRACK (M20X1.5-THD)	

M-METRIC PART
Y-SEPARATE ILLUSTRATION

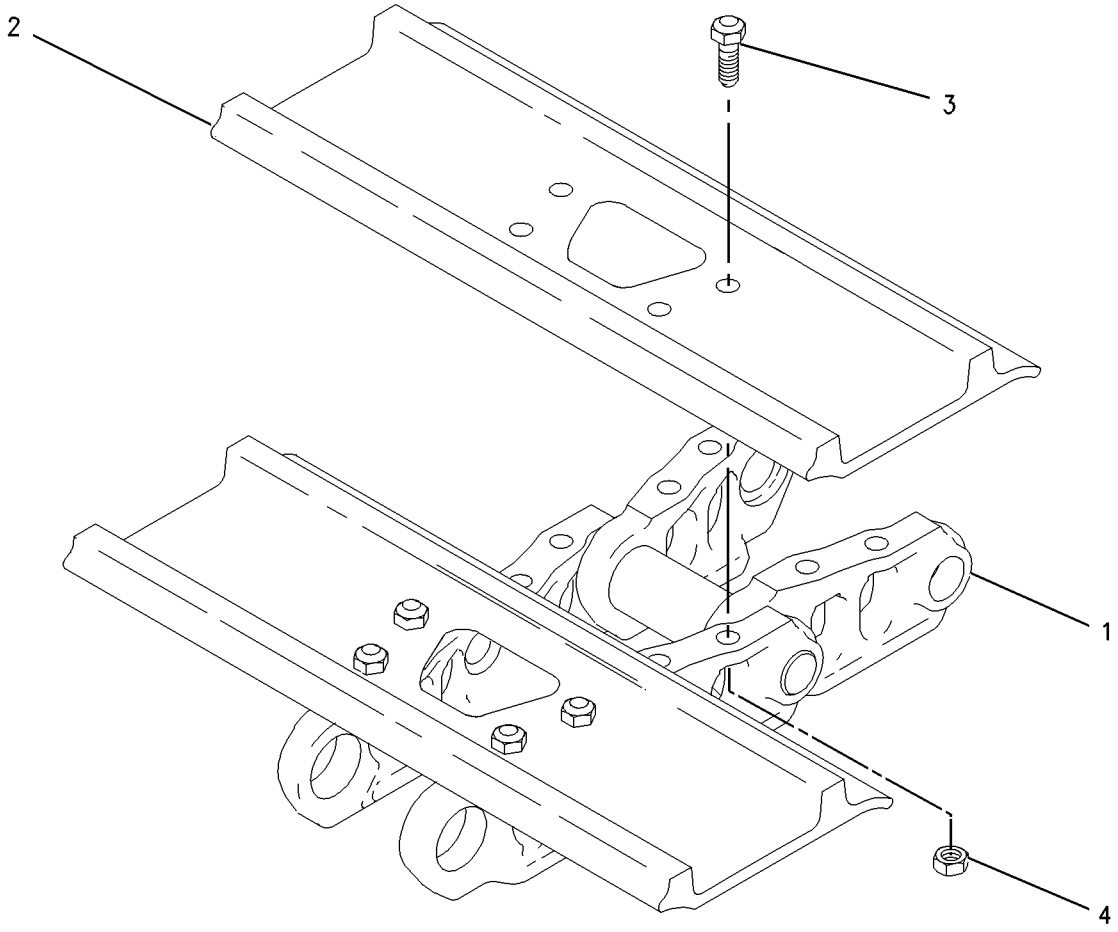

GRAPHIC #1 **<END>** g00941391

194-1915 TRACK GP–2-REQUIRED

S/N: KGF1-UP

700-MM (27.6-IN) DOUBLE GROUSER SHOE. GREASE LUBRICATED TRACK

AN ATTACHMENT

SMCS-4170 **i01855616**

NOTE	REF NO	GRAPHIC REF	PART NUMBER	QTY	PART NAME 1 2 3 4 5 6 (PRODUCT LEVEL)	SEE PAGE
Y	1	1	**194-1608**	1	LINK AS-TRACK	506
	2	1	**106-0616**	49	SHOE-TRACK	
M	3	1	**6Y-0846**	196	BOLT-TRACK (M20X1.5X63-MM)	
M	4	1	**9W-3361**	196	NUT-TRACK (M20X1.5-THD)	

M-METRIC PART
Y-SEPARATE ILLUSTRATION

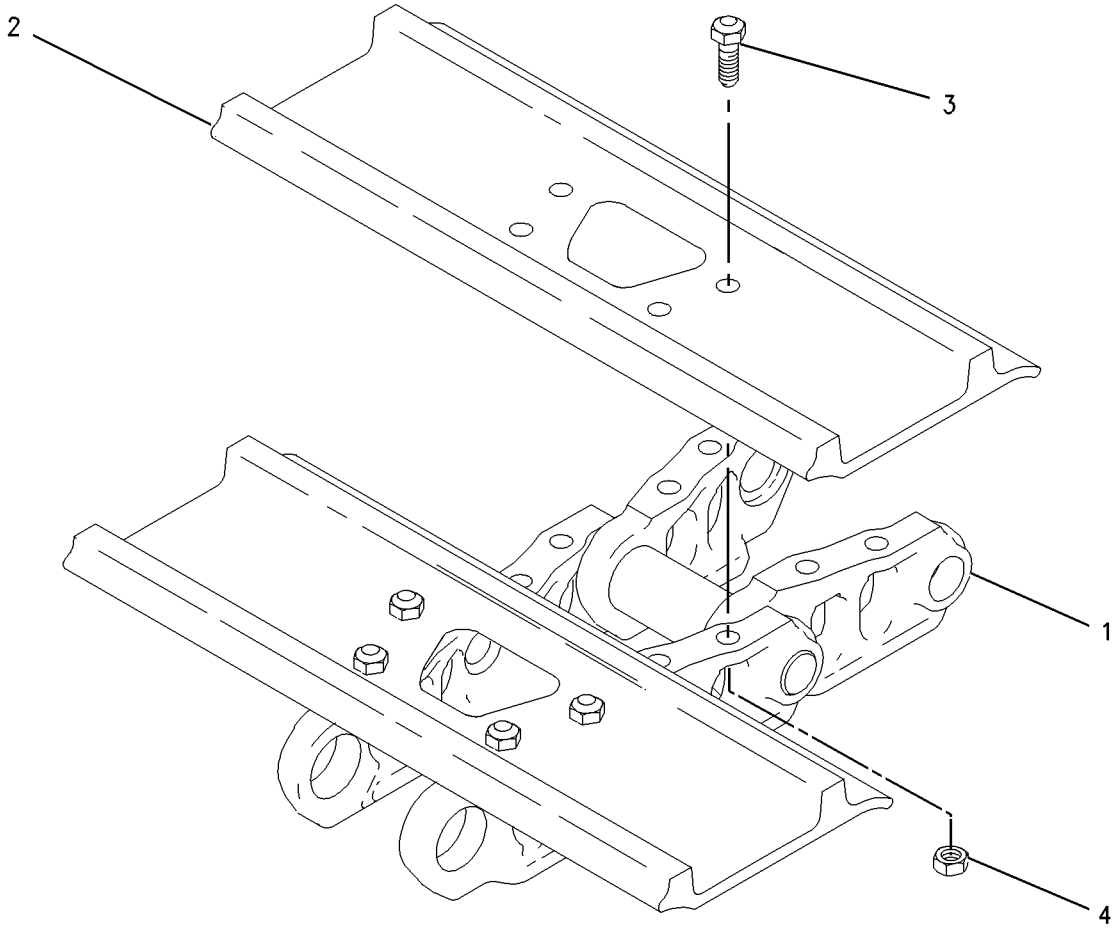

GRAPHIC #1 **<END>** g00946288

194-1917 TRACK GP–2-REQUIRED

S/N: FAL1-UP

700-MM (27.6-IN) TRIPLE GROUSER SHOE. GREASE LUBRICATED TRACK AN ATTACHMENT

SMCS-4170 **i01469602**

NOTE	REF NO	GRAPHIC REF	PART NUMBER	QTY	PART NAME 1 2 3 4 5 6 (PRODUCT LEVEL)	SEE PAGE
Y	1	1	**194-1609**	1	LINK AS-TRACK	507
	2	1	**6I-9454**	45	SHOE-TRACK	
M	3	1	**9W-3619**	180	BOLT-TRACK (M20X1.5X55MM)	
M	4	1	**9W-3361**	180	NUT-TRACK (M20X1.5 THD)	

M-METRIC PART
Y-SEPARATE ILLUSTRATION

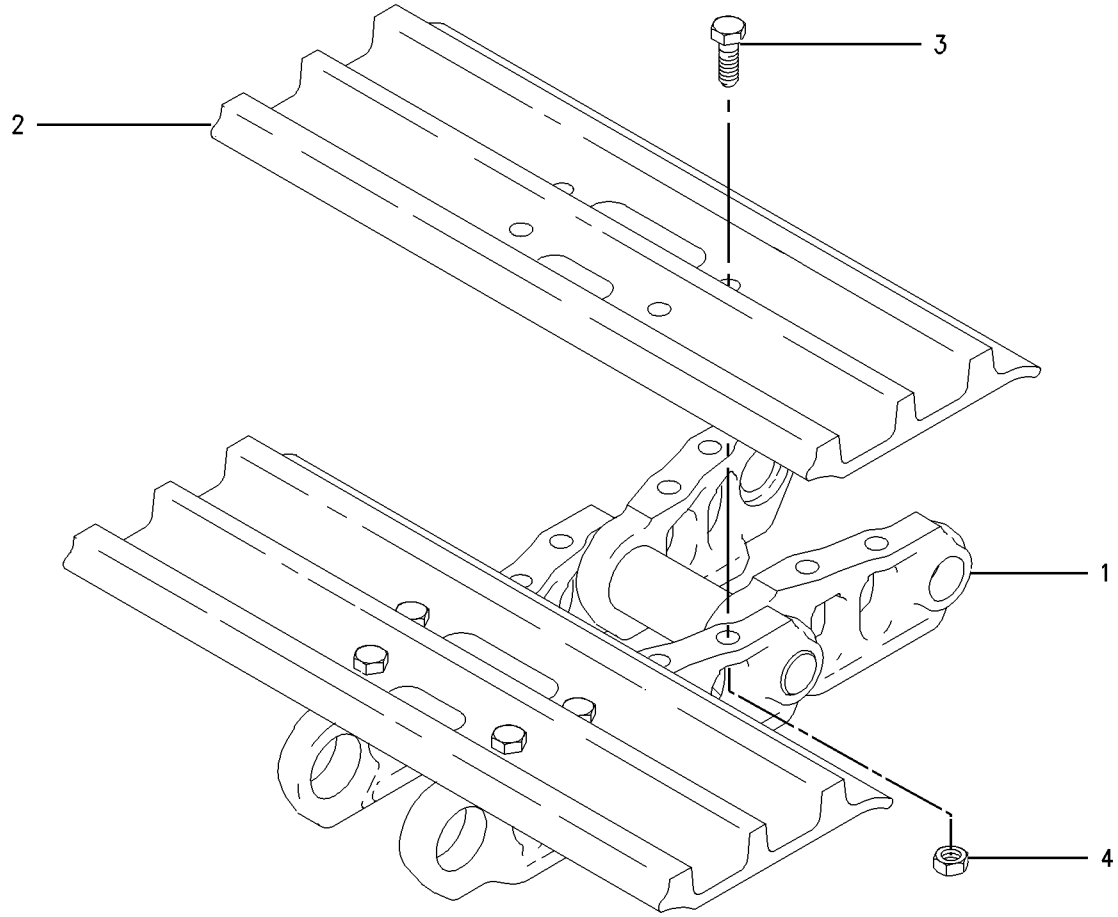

GRAPHIC #1 **<END>** g00705941

194-1920 TRACK GP–2-REQUIRED

S/N: FAL1-UP

600-MM (23.6-IN) TRIPLE GROUSER SHOE. GREASE LUBRICATED TRACK

AN ATTACHMENT

SMCS-4170 **i01474059**

NOTE	REF NO	GRAPHIC REF	PART NUMBER	QTY	PART NAME 1 2 3 4 5 6 (PRODUCT LEVEL)	SEE PAGE
Y	1	1	**194-1609**	1	LINK AS-TRACK	507
	2	1	**126-5062**	45	SHOE-TRACK	
M	3	1	**9W-3619**	180	BOLT-TRACK (M20X1.5X55MM)	
M	4	1	**9W-3361**	180	NUT-TRACK (M20X1.5 THD)	

M-METRIC PART
Y-SEPARATE ILLUSTRATION

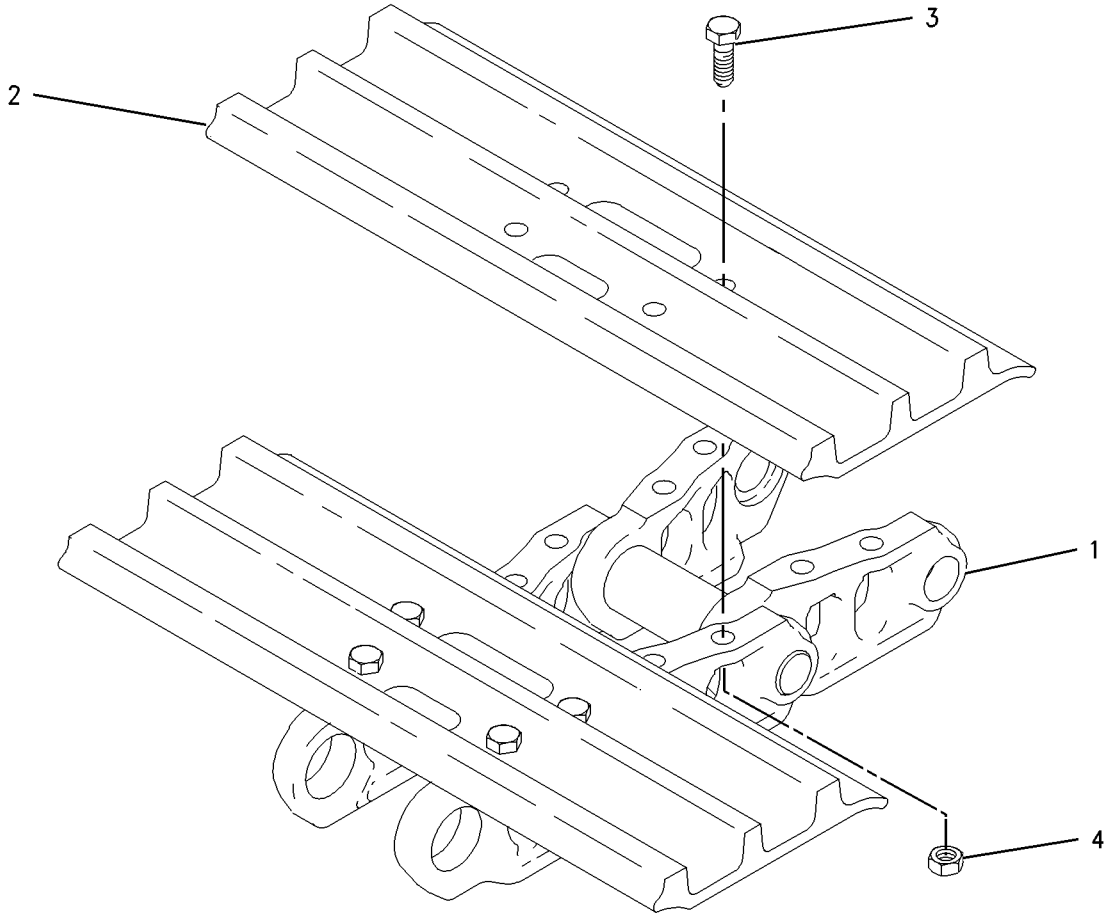

GRAPHIC #1 **<END>** g00731630

194-1921 TRACK GP–2-REQUIRED

S/N: FAL1-UP
800-MM (31.5-IN) TRIPLE GROUSER SHOE. GREASE LUBRICATED TRACK
PART OF 247-7382 TRACK AR
AN ATTACHMENT

SMCS-4170 **i01858813**

NOTE	REF NO	GRAPHIC REF	PART NUMBER	QTY	PART NAME 1 2 3 4 5 6 (PRODUCT LEVEL)	SEE PAGE
Y	1	1	**194-1609**	1	LINK AS-TRACK	507
	2	1	**9W-9351**	45	SHOE-TRACK	
M	3	1	**9W-3619**	180	BOLT-TRACK (M20X1.5X55MM)	
M	4	1	**9W-3361**	180	NUT-TRACK (M20X1.5 THD)	

M-METRIC PART
Y-SEPARATE ILLUSTRATION

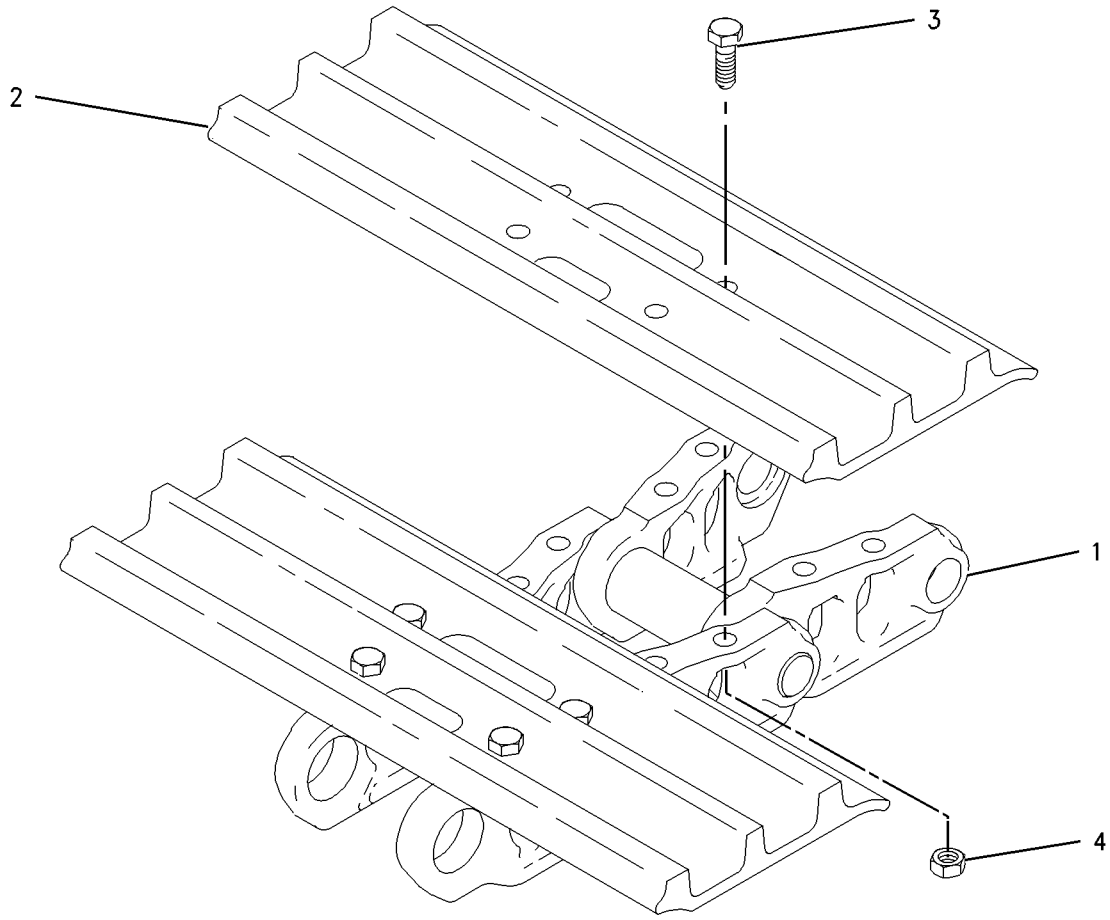

GRAPHIC #1 **<END>** g00731630

UNDERCARRIAGE

314-3798 TRACK GP—2-REQUIRED

S/N: KGF1-UP

790-MM (31.1-IN) TRIPLE GROUSER SHOE. WITH STEP

AN ATTACHMENT

SMCS-4170 **i03142164**

NOTE	PART NUMBER	QTY	PART NAME 1 2 3 4 5 6 (PRODUCT LEVEL)	SEE PAGE
Y	*235-7764*	1	STEP GP	485
Y	*332-8908*	1	TRACK GP	529

Y-SEPARATE ILLUSTRATION

<END>

332-8908 TRACK GP–2-REQUIRED

S/N: KGF1-UP
790-MM (31.1-IN) TRIPLE GROUSER SHOE. GREASE LUBRICATED TRACK
PART OF 314-3798 TRACK GP
AN ATTACHMENT

SMCS-4170 **i03159342**

NOTE	REF NO	GRAPHIC REF	PART NUMBER	QTY	PART NAME 1 2 3 4 5 6 (PRODUCT LEVEL)	SEE PAGE
Y	1	1	**194-1608**	1	LINK AS-TRACK	506
	2	1	**332-8903**	49	SHOE-TRACK	
M	3	1	**9W-3619**	196	BOLT-TRACK (M20X1.5X55-MM)	
M	4	1	**9W-3361**	196	NUT-TRACK (M20X1.5-THD)	

M-METRIC PART
Y-SEPARATE ILLUSTRATION

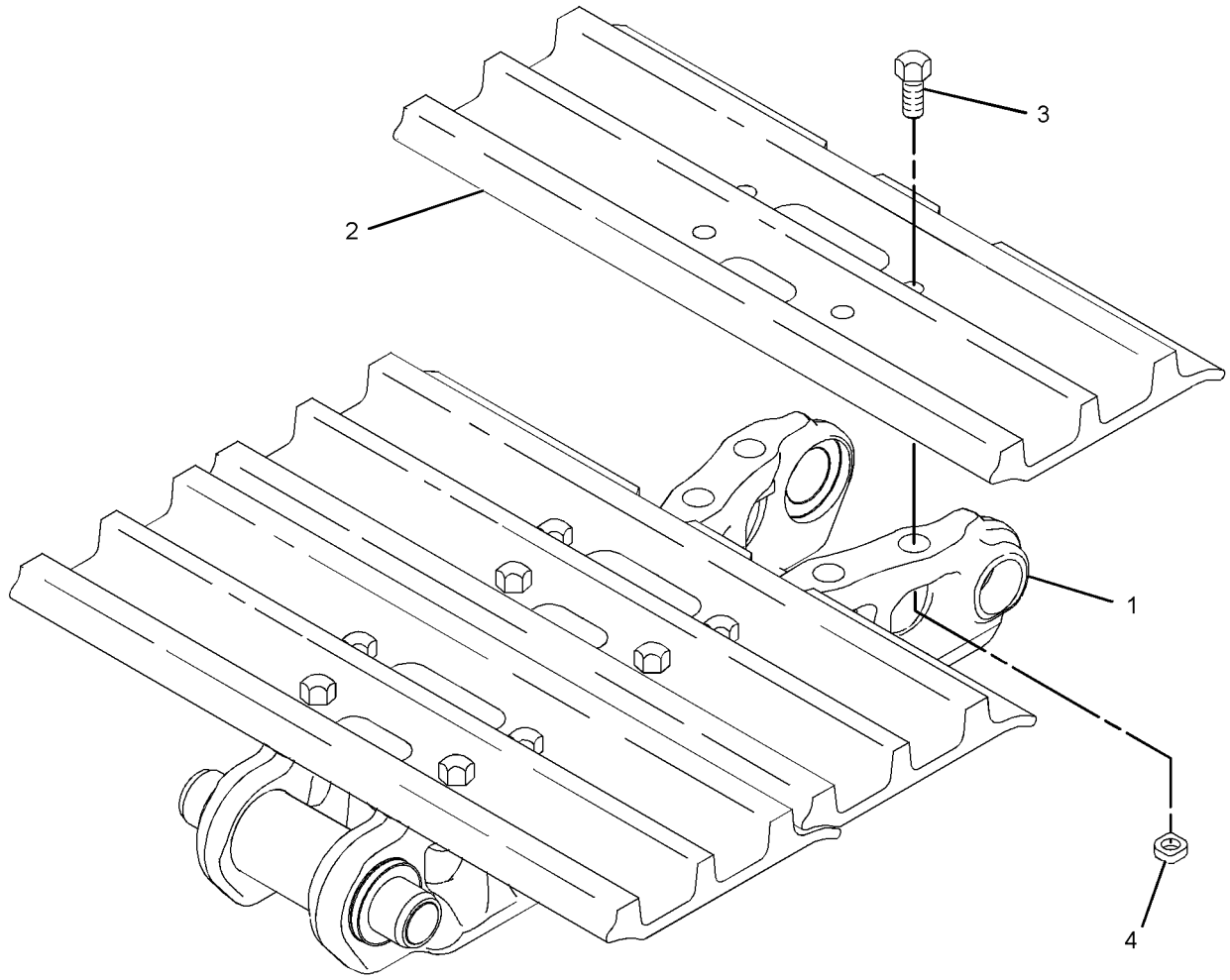

GRAPHIC #1 **<END>** g01201614

332-8915 TRACK GP–2-REQUIRED

S/N: FAL1-UP
790-MM (31.1-IN) TRIPLE GROUSER SHOE. GREASE LUBRICATED TRACK
PART OF 314-3797 TRACK AR
AN ATTACHMENT

SMCS-4170 **i03140155**

NOTE	REF NO	GRAPHIC REF	PART NUMBER	QTY	PART NAME 1 2 3 4 5 6 (PRODUCT LEVEL)	SEE PAGE
Y	1	1	**194-1609**	1	LINK AS-TRACK	507
	2	1	**332-8903**	45	SHOE-TRACK	
M	3	1	**9W-3619**	180	BOLT-TRACK (M20X1.5X55-MM)	
M	4	1	**9W-3361**	180	NUT-TRACK (M20X1.5-THD)	

M-METRIC PART
Y-SEPARATE ILLUSTRATION

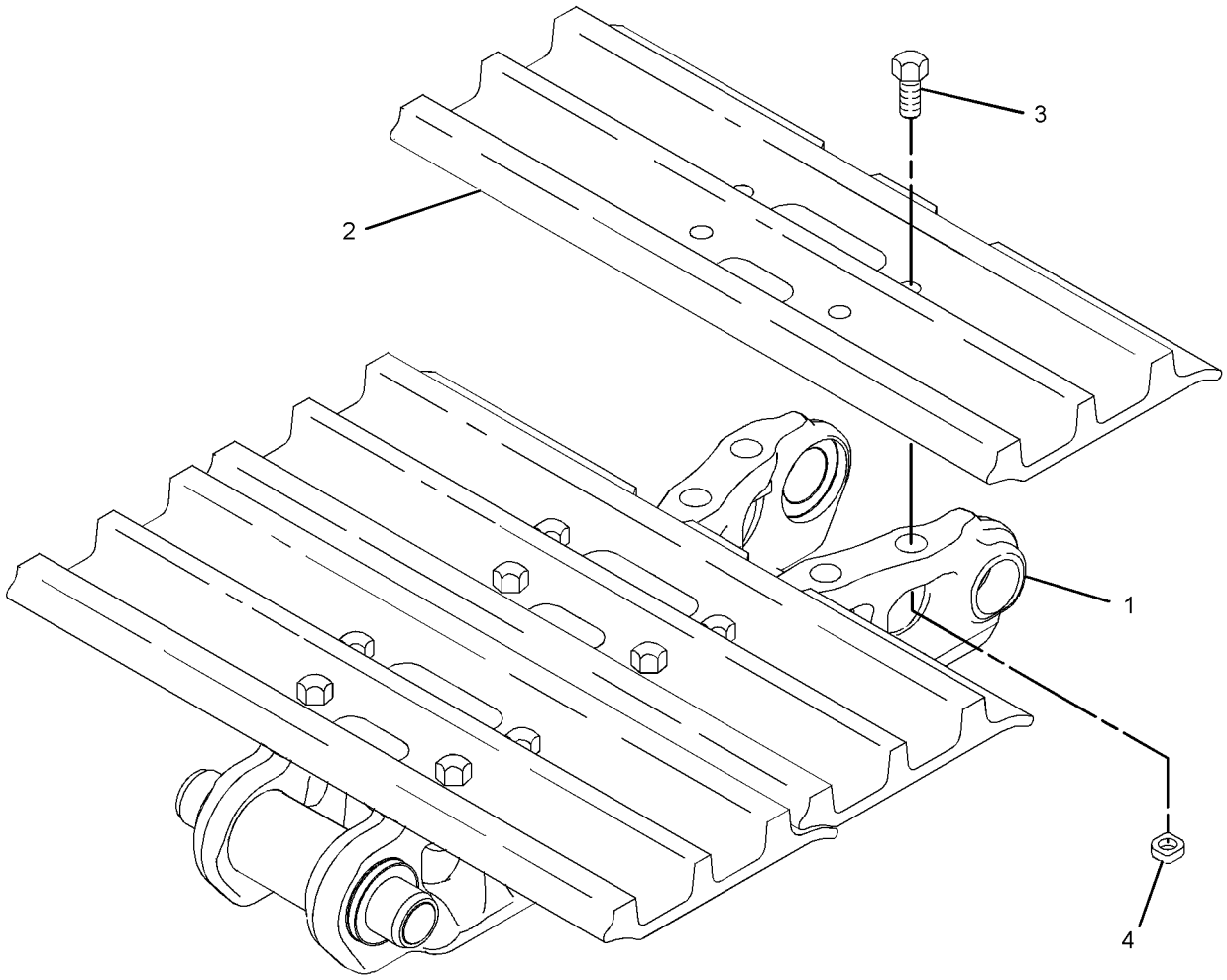

GRAPHIC #1 **<END>** g01201614

PART NUMBER INDEX

Part	Page
1	
1A-0621	1239
1F-0425	1064
1H-3338	278
1J-9671	746
	748
	1026
1M-6119	193
	195
	196
	202
	216
	334
1M-6120	193
	195
	196
	202
	216
	334
1P-2807	1441
	1446
	1451
	1456
1P-3702	695
	696
	697
	701
	702
	714
	727
	731
	735
	739
	751
	754
	758
	762
	961
	962
	974
	976
	1004
	1015
	1016
	1042
1P-3703	642
	646
	648
	650
	654
	659
	663
	669
	678
	682
	684
	691
	695
	696
	697
	701
	702
	714
	716
	720
	723
	727
	731
	735
	739
	750
	751
	754
	758
	762
	782
	785
	908
	909
	911
	919
	923
	925
1P-3704	648
	650
	654
	659
	663
	680
	758
	762
	919
1P-3705	650
	654
1P-4578	758
	762
	897
	900
1P-4579	897
	900
1P-5765	695
	696
	697
1P-5767	648
	650
	654
	659
	663
1R-0739	15
	73
1R-0751	139
1R-5998	1202
	1206
1R-6573	145
	146
1R-9958	425
	430
	435
	441
	447
	453
	458
	463
1S-0812	280
	281
1S-7251	334
1S-7252	193
	195
	196
1S-9593	779
	1081
	1082
1U-3351	1162
1U-3352	1158
1U-8846	361
	365
	418
	599
	600
	923
	925
2	
2A-5222	78
2B-0858	957
2C-9259	1143
	1144
	1145
	1146
2D-6642	937
	940
	1006
	1009
	1066
2G-1830	334
2G-8767	195
	202
	209
2H-3814	88
2H-3922	276
	1418
2L-8076	282
2M-0849	1341
2M-9780	613
	690
	746
	748
	904
	906
	923
	925
	937
	941
	978
	981
	986
	993
	997
	1004
2P-2537	73
2P-2975	1059
2Q-4703	1241
2R-1498	147
2S-1647	311
2S-2596	991
	1006
	1009
2S-3440	72
	87
2S-4078	159
	175
	177
	179
	181
	184
	186
	282
	716
	720
	723
	726
	730
	734
	738
	758
	762
	965
2S-5926	518
2T-2991	73
2U-2552	1182
2U-5338	593
2Y-5503	600
2Y-5685	1295
	1297
	1306
3	
3B-0551	175
	177
	179
	181
	184
	186
3B-4501	242
	243
3B-4505	66
	68
	79
	87
	127
	225
	1272
	1276
3B-4509	686
	687
	688
	689
3B-4618	426
	431
	436
	442
	448
	454
	459
	464
3B-8489	417
	418
	554
	556
	558
	560

► **PRIMARY REFERENCE**

PART NUMBER INDEX

Part	Page	Part	Page	Part	Page	Part	Page
	562		945	3F-9556	277		841
	564		957	3G-3236	▶1159		844
	566		1035	3G-5083	948		847
	568		1049	3H-0442	1006		850
	569		1050		1009		851
	571		1053	3J-1907	147		854
	573		1054		165		855
	576		1055		166		858
	578		1058		169		859
	580		1060		170		862
	582		1061		171		863
	584		1063		172		865
	586		1084		175		866
	588		1086		177		869
	1105	3D-2891	554		179		870
	1106		556		181		873
	1107		558		184		875
	1109		564		186		877
	1110		566		188		879
	1114		569		539		880
	1116		615		594		885
	1118		619		615		886
	1119		623		619		895
	1120		627		623		897
	1126		631		627		900
	1128		634		631		917
	1129	3D-9143	371		634		919
	1130	3E-2310	838		682		923
	1131		841		684		925
	1132		844		690		929
	1134		847		691		934
	1135		851		712		957
	1137		855		713		981
	1138		859		746		986
	1139		862		748		993
	1140		866		765		997
	1141		870		766		1002
	1149		880		769		1006
3D-2824	282		886		770		1009
	682	3E-2338	361		773		1011
	684		365		776		1013
	690	3E-2345	897		779		1017
	691		900		789		1066
	726	3E-3217	513		790		1067
	730		514		793		1068
	731	3E-3365	880		794		1071
	734	3E-3371	757		797		1091
	735		761		799	3J-7354	690
	738		807		800		712
	739		809		803		713
	751		917		804		896
	754	3E-3383	283		807		917
	757	3E-4297	609		809		957
	758	3E-5169	354		811		1006
	761	3E-6910	932		813		1009
	762	3E-7389	281		815		1032
	807	3E-8020	1202		817	3K-0360	536
	809		1206		819		597
	897	3E-8320	258		821		661
	900		260		823		665
	904	3E-9411	422		827		667
	906	3E-9872	1405		830		682
	909		1421		832		684
	911	3E-9874	1202		835		691
	919		1206		838		716

▶ PRIMARY REFERENCE

PART NUMBER INDEX

Part	Page	Part	Page	Part	Page	Part	Page
	720		230		209		177
	723		232	3T-7528	609		179
	726		236	3V-0046	712		181
	730		238		713		184
	735		252	3W-6399	1404		186
	739		263	3Y-9267	1032	4I-0379	147
	757		265			4I-0420	1407
	761		267				1408
	766		269	**4**		4I-0800	891
	770		273				893
	782		279	4B-2049	282	4I-0818	799
	785		286	4B-4158	515		803
	789		290		516	4I-0836	799
	793		292	4B-7739	957		803
	799		294	4B-9783	1067	4I-1022	949
	800		298		1068	4I-1025	815
	803		299		1071		817
	804		304	4B-9880	560		821
	807		309		562	4I-1031	875
	809		310		571	4I-1037	799
	832		312		573		803
	835		313		576	4I-1163	1418
	877		316		578	4I-1205	1202
	879		318		580		1206
	880		320		582	4I-1206	1202
	885		322		584		1206
	886		324		586	4I-1260	1307
	891		326		588	4I-1536	▶531
	893		328		1070		534
	904		337	4D-1836	354	4I-1539	531
	906		338	4H-1225	1239		537
	908		339	4H-6112	599	4I-1631	797
	909		341	4I-0006	384	4I-1671	847
	911		342		385		862
	917		344	4I-0117	425	4I-1674	669
	923		346		430		678
	925		347		435		680
	929		349		441		682
	930		351		447		684
	937		352		453		690
	940		353		458	4I-1676	669
	949		354		463		678
	957		356	4I-0118	425		680
	991		357		430	4I-1704	815
	1011		359		435		817
	1013		773		441		819
3K-0835	280		776		447		821
	281		779		453		823
3L-8187	304		1169		458	4I-1739	799
3P-0647	1034		1171		463		803
	1059		1312	4I-0232	425	4I-1780	799
3P-1896	33		1314		430		803
3P-9847	90		1318		435	4I-1878	850
	92		1319		441		854
	96		1321		447		879
	99		1334		453		885
3S-2093	90		1349		458	4I-2187	371
	92		1382		463	4I-2885	1430
	96		1404	4I-0378	165		1431
	99		1405		166	4I-3038	279
	126		1418		169	4I-3063	1202
	151	3T-4004	298		170		1206
	195	3T-5760	193		171	4I-3090	1203
	202		195		172		1207
	209		202		175		1421

▶ **PRIMARY REFERENCE**

PART NUMBER INDEX

Part	Page
4I-3123	1202
	1206
4I-3144	1202
	1206
4I-3266	1354
4I-3308	1095
	1097
	1099
	1101
	1103
4I-3309	1095
	1097
	1099
	1101
	1103
4I-3503	1327
	1331
4I-3510	1049
	1050
	1053
	1060
	1061
	1063
4I-3569	981
	986
	993
	997
4I-3615	554
	556
	558
	564
	566
	569
4I-3621	686
	687
	688
	689
4I-3627	576
	578
	580
	582
	584
	586
	588
4I-3628	560
	562
	571
	576
	578
	580
	582
	584
	586
	588
4I-3631	576
	578
	580
	582
	584
	586
	588
4I-3941	850
	854
	879
	885
4I-3953	797
4I-3981	797
	891
4I-3988	827
	830
	850
	854
	858
	862
	865
	869
	873
	879
	885
4I-3991	827
4I-3994	797
4I-4270	1202
	1206
4I-4286	1272
	1274
	1276
	1279
4I-4298	1416
4I-4300	1416
4I-4361	1307
4I-4392	1202
	1206
4I-4543	1105
	1107
	1109
4I-4544	1105
	1107
	1109
4I-4579	1334
4I-4580	1327
	1331
	1336
4I-4618	1101
	1126
4I-4809	1095
	1097
	1099
	1103
	1128
	1129
	1130
	1131
	1132
	1134
	1135
	1137
	1138
	1139
	1140
4I-4811	1128
	1129
	1130
	1131
	1132
	1135
	1137
	1138
	1139
	1140
	1141
4I-4812	415
4I-4814	1134
4I-5020	1418
4I-5021	1418
4I-5049	1403
4I-5394	957
4I-5409	1
	2
	▶245
4I-5490	957
4I-5556	693
4I-5795	807
	877
4I-5862	531
	537
4I-5906	799
	803
4I-5933	799
	803
4I-6054	797
	858
	862
	865
	869
4I-6248	811
4I-6365	1018
	1023
	1028
	1030
4I-6397	978
	981
	986
	993
	997
4I-6602	1295
	1297
	1299
	1300
4I-6608	1105
4I-6610	1105
4I-7554	121
4I-7714	1050
	1053
	1060
	1061
4I-7745	682
	684
4I-7889	316
	318
	320
	322
	324
	334
	349
	359
	823
4I-7924	470
	473
4I-8019	425
	430
	435
	441
	447
	453
	458
	463
4I-8267	532
	1451
4I-8472	1441
	1446
	1451
	1456
4I-8785	695
4I-8789	680
	750
4I-8864	554
	556
	558
4I-8869	576
	578
	580
	582
	584
	586
	588
4I-8965	1011
	1013
4I-9521	147
	691
	765
	769
	773
	776
	779
	789
	793
	797
	799
	803
	825
	827
	830
	850
	854
	858
	862
	865
	869
	873
	879
	885
4I-9522	691
	765
	769
	773
	776
	779
	789
	793
	797
	799
	803
	811
	813
	825
	827
	850
	854
	858

▶ PRIMARY REFERENCE

PART NUMBER INDEX

Part	Page
	862
	865
	869
	879
	885
4I-9523	789
	793
	797
	799
	803
	811
	813
	827
	830
	832
	835
	838
	841
	844
	847
	850
	854
	858
	862
	865
	869
	875
	879
	885
4I-9524	789
	793
	797
	799
	803
	811
	813
	827
	838
	841
	844
	847
	850
	854
	858
	862
	865
	869
	873
	879
	885
	895
4I-9525	691
	789
	793
	797
	799
	803
	825
	827
	830
	844
	847
	850
	854
	858
	862
4I-9526	691
	765
	769
	789
	793
	797
	825
	827
	859
	863
	865
	869
	873
	875
	877
4I-9527	765
	769
	789
	793
	797
	799
	803
	827
	830
	838
	841
	844
	847
	850
	854
	858
	862
	865
	869
	873
	877
	879
	885
	904
	906
4I-9528	789
	793
	797
	799
	803
	827
	879
	885
4I-9664	33
	38
	39
4J-0519	1015
	1016
4J-0520	641
	645
	978
4J-0522	758
	762
	897
	900
4J-0524	782
	785
	897
	900
	970
	971
4J-0527	766
	770
	782
	785
	957
4J-0528	1026
4J-5267	694
	714
	957
	974
	1002
4J-5268	714
	908
	909
	911
4J-5309	981
	986
	993
	997
4J-5477	709
	710
	711
	765
	766
	769
	770
	773
	776
	779
	919
4J-7385	1040
	1041
4J-7386	1040
	1041
4J-7533	609
	929
	967
	981
	986
	993
	997
	1006
	1009
	1011
	1013
4J-8998	961
	962
	974
	976
	1042
4K-1388	1040
	1041
4K-8864	193
	196
	203
	209
	216
	334
	800
	804
4N-9170	418
4P-7428	196
	203
	209
	311
4P-7581	196
	203
	210
	299
	313
	357
	790
	794
4S-1962	1327
	1331
	1336
4T-0987	1006
	1009
4T-3148	981
	986
	993
	997
4T-5074	981
	986
	993
	997
5	
5A-3604	154
	156
	1360
	1361
	1371
	1372
	1373
	1374
	1385
	1386
	1387
	1388
	1389
	1390
5B-5947	70
5B-9304	135
5C-2889	242
	243
5C-2890	139
	149
	260
	278
	294
	299
	324
	347
	1418
5C-6074	282
5C-6108	157
	▶282
5C-7261	79
	193
	196
	203

▶ **PRIMARY REFERENCE**

PART NUMBER INDEX

Part	Page	Part	Page	Part	Page	Part	Page
	210		877	5I-7601	127	5I-8095	191
	216	5I-4111	1040	5I-7602	135	5I-8097	191
	1036		1041	5I-7610	43	5I-8098	191
	1037	5I-4174	695	5I-7623	78	5I-8270	193
	1167		696	5I-7630	64		195
	1168		697		66		202
	1183		701		68		209
	1366		702	5I-7632	43		216
	1367	5I-4353	682	5I-7633	131	5I-8416	▶532
	1368	5I-4376	765		133		534
	1369		769		137	5I-8417	934
	1379		773	5I-7642	75	5I-8426	934
	1380		776	5I-7645	72	5I-8510	663
	1381		779	5I-7646	87	5I-8511	1011
	1384	5I-4393	670	5I-7650	27		1013
	1392		672		28	5I-8623	934
	1394		674		29	5I-8625	934
	1397	5I-4396	799	5I-7654	36	5I-8670	603
	1398		803	5I-7655	87		605
5C-7793	1202		821	5I-7656	43	5I-8708	799
	1206		838	5I-7660	42		803
5C-7883	196		841	5I-7666	49	5I-8715	696
	203		844	5I-7667	51	5I-8825	891
	210		847	5I-7677	129		893
5C-8138	1404		862	5I-7678	129	5I-8853	797
5C-8312	1408	5I-4915	38	5I-7679	131	5I-9368	195
5C-9553	258	5I-4940	72		133		202
	260	5I-4983	42	5I-7683	43		209
	334	5I-4993	49	5I-7690	79	5K-2298	1110
	371	5I-5005	40	5I-7691	79	5K-3294	1327
	426	5I-5038	75	5I-7696	88	5K-8451	147
	431	5I-5181	36	5I-7697	88		766
	436	5I-5597	46	5I-7724	33		770
	442		72	5I-7725	72		875
	448		129	5I-7735	87		891
	454	5I-7090	1237	5I-7742	137	5K-9090	613
	459		1238	5I-7750	46		639
	464		1251	5I-7784	36		642
	957		1252	5I-7785	36		646
	1169		1253	5I-7786	36		680
	1171	5I-7233	693	5I-7787	36		682
	1312	5I-7235	▶1105	5I-7788	36		684
	1314		1112	5I-7789	36		714
	1418	5I-7236	1105	5I-7867	87		716
5D-1026	600	5I-7238	1106	5I-7985	191		720
	1327	5I-7239	1106	5I-7987	191		723
5D-4822	1300	5I-7505	33	5I-7997	191		724
	1308		70	5I-8009	33		726
5D-8159	94	5I-7525	33	5I-8010	87		727
	101	5I-7528	33	5I-8021	129		730
	104	5I-7529	33	5I-8023	129		731
	106	5I-7540	54	5I-8040	131		734
5G-2247	513		55		133		735
	514		57	5I-8056	87		738
5H-5672	954		59	5I-8058	78		739
5H-8624	896	5I-7549	127		139		750
5H-8936	1106	5I-7550	127	5I-8066	70		751
5I-3523	1126	5I-7558	43	5I-8067	49		754
5I-3878	196	5I-7559	43	5I-8080	191		757
	203	5I-7561	78	5I-8086	191		758
	210	5I-7587	135	5I-8087	191		761
5I-4000	1026	5I-7588	36	5I-8088	191		762
5I-4002	1026	5I-7589	▶120	5I-8089	191		782
5I-4076	799		135	5I-8090	191		785
	803	5I-7599	48	5I-8094	191		908

▶ PRIMARY REFERENCE

PART NUMBER INDEX

Part	Page	Part	Page	Part	Page	Part	Page
	909	5P-4116	190	5P-8182	758		1327
	911		196		762		1331
	913		203	5P-8196	73	6D-4636	147
	915		210	5P-8292	1403	6D-7889	154
5K-9242	1106		357	5P-8309	479		156
	1110		371	5P-8444	782	6D-9157	896
5K-9243	418		1216		785		957
	1105		1220		913	6E-2163	991
	1106	5P-4924	147		915	6E-2271	973
	1107		165	5P-8500	162		978
	1109		166		163		991
5L-3233	111		169		164	6E-2274	974
	112		170		167		976
	118		171		1339		978
	119		172	5P-9085	1327		981
5L-4758	539		175	5P-9297	249		986
5L-6326	88		177		252		993
5P-0743	76		179		254		997
	77		181	5P-9617	73	6E-2313	1002
5P-0747	193		184	5P-9909	90	6E-2745	944
	195		186		92	6E-2746	944
	202	5P-4961	126		96	6E-3653	981
	209	5P-5623	190		99		986
	216	5P-5998	279	5Q-3215	513		993
	334	5P-6271	299	5Q-3226	▶508		997
5P-0761	193	5P-7175	147	5Q-3227	▶509	6E-4793	944
	195	5P-7462	800	5Q-4212	670	6E-4816	▶944
	196		804		672		978
	202	5P-7463	800		674	6E-5169	981
	209		804		676		986
	216	5P-7464	904		705		993
	334		906		707		997
5P-0767	600	5P-7465	904		709	6E-5431	1002
	1328		906		710	6E-5434	1002
	1331	5P-7468	716		711	6E-5438	1002
	1334		720	5Q-4213	670	6E-5439	1002
	1336		723		672	6E-5643	981
5P-1075	371		727		674		986
	413		731		676		993
5P-1076	423		735		705		997
	500		739		707	6E-5731	974
	501		782		919		976
	682		785				978
	684		897				981
5P-1296	896		900				986
5P-1318	746	5P-7469	716				993
	748		720	6C-6760	661		997
5P-1442	126		723		665	6F-0253	280
	147		727		667		281
5P-2568	1091		731	6C-8382	1295	6F-4855	614
5P-3108	1040		735		1297	6F-7045	276
	1041		739		1300	6F-7556	43
5P-3779	531		782	6D-0692	361	6F-7557	43
	533		785		365	6G-2256	196
5P-4115	258		897	6D-1641	73		203
	260		900		1327		210
	334	5P-7470	758		1331	6G-2263	196
	426		762		1334		203
	431	5P-7471	758		1336		210
	436		762	6D-3479	851	6I-1418	225
	442	5P-7854	773		855	6I-2501	112
	448		776		866		119
	454		779		870	6I-2502	112
	459	5P-7958	487		880		119
	464		1339		886	6I-5134	1110

6

▶ **PRIMARY REFERENCE**

PART NUMBER INDEX

Part	Page
6I-5135	1110
6I-5136	1110
6I-5298	1242
	1243
6I-5342	1307
6I-5470	1203
	1207
6I-6033	425
	430
	435
	441
	447
	453
	458
	463
6I-6354	1145
	1146
6I-6583	361
	365
6I-6585	361
	365
6I-6721	680
6I-6758	1026
6I-6795	1049
	1050
	1053
	1060
	1061
	1063
6I-6923	1064
6I-9454	521
	525
6J-2680	904
	906
	957
6K-0806	1255
	1256
	1257
	1258
	1259
	1260
	1261
	1262
	1263
	1264
	1265
	1266
6K-8178	193
	196
	203
	210
	216
6L-3616	1105
	1106
	1107
	1109
	1110
6M-5062	945
6P-2215	473
6P-2216	426
	431
	442
	448
	454
	459
	464
	470
	473
	483
6P-8855	1327
6T-3631	304
	359
6T-3632	304
	359
6T-3633	304
	359
6T-9442	280
6V-0400	648
	650
	654
	659
	663
	669
	678
	714
	782
	785
	896
	923
	925
6V-0683	800
	804
6V-0852	746
	748
	765
	769
	773
	776
	780
	807
	809
	838
	841
	844
	847
	851
	855
	859
	863
	866
	870
	873
	875
	880
	886
	897
	900
	957
6V-1874	716
	720
	723
	727
	731
	735
	739
	897
	900
6V-2369	258
	260
	347
6V-2722	193
	216
	218
6V-3265	1327
	1331
	1405
6V-3342	1106
	1110
6V-3922	978
	981
	986
	993
	997
6V-3938	1026
	1064
6V-3965	746
	748
	765
	769
	773
	776
	779
	807
	809
	838
	841
	844
	847
	851
	855
	859
	863
	866
	870
	873
	875
	880
	886
	897
	900
	957
6V-4298	607
6V-5049	273
6V-5200	931
6V-5210	242
	243
	299
6V-5215	27
	28
	29
	43
	139
6V-5266	73
6V-5326	1006
	1009
6V-5393	981
	986
	993
	997
6V-5556	981
	986
	994
	998
	1043
6V-5597	974
	976
	978
	981
	986
	994
	998
6V-5645	258
	260
6V-5683	1182
6V-5782	746
	748
6V-7238	597
6V-7357	1231
	1232
	1233
	1234
	1235
	1236
	1327
	1328
	1331
	1332
	1403
6V-7636	1202
	1206
6V-7646	1241
6V-7658	505
	609
6V-7661	512
6V-8186	277
6V-8187	258
	260
6V-8200	615
	619
	623
	627
	631
	634
	918
	921
	922
6V-8202	1064
	1357
	1358
	1359
	1360
	1361
	1370
	1371
	1372
	1382
	1385
	1386
6V-8218	1049
	1050
	1053
	1060
	1061
	1063
6V-8231	48
	131
	133
	1421
6V-8236	43
6V-8337	1018

► **PRIMARY REFERENCE**

PART NUMBER INDEX

Part	Page	Part	Page	Part	Page	Part	Page
	1023		875	6V-8625	682		761
6V-8362	285		877		684		904
6V-8363	1418		879		799		906
6V-8370	1418		880		803		909
6V-8374	304		885		832		911
6V-8378	277		886		835	6V-8639	782
6V-8397	613		891		923		800
	670		893		925		804
	672		895	6V-8626	690		807
	674		904	6V-8627	773		809
	676		906		776		904
	682		917		779	6V-8641	765
	684		919		919		769
	690		923	6V-8632	879	6V-8713	73
	691		925		885		690
	709		1013	6V-8633	919	6V-8714	751
	710		1069	6V-8635	613		754
	711		1071		680	6V-8716	734
	765	6V-8398	613		682		738
	766		652		720	6V-8721	923
	769		657		726		925
	770		661		734	6V-8722	880
	773		665		750		886
	776		667		751	6V-8724	690
	779		670		757		766
	780		672		762		770
	789		674		913		773
	790		676		915		776
	793		682	6V-8636	682		779
	794		684		684		789
	797		705		690		793
	799		707		766		797
	800		709		770		800
	803		710		773		804
	804		711		776		807
	807		742		779		809
	809		744		789		811
	811		746		793		813
	813		748		800		815
	815		782		804		817
	817		785		807		819
	819		789		809		821
	821		793		811		823
	823		799		813		827
	827		800		815		830
	830		803		817		832
	832		804		819		838
	835		807		821		841
	838		809		823		844
	841		832		827		847
	844		835		832		850
	847		904		835		854
	850		906		850		858
	851		919		854		862
	854		923		858		865
	855		925		862		869
	858		1072		865		873
	859		1074		869		875
	862	6V-8400	758		873		880
	863		762		875		886
	865		1021		877		917
	866		1032		879		923
	869	6V-8467	591		885		925
	870	6V-8624	904		895	6V-8774	766
	873		906	6V-8637	757		770

► **PRIMARY REFERENCE**

PART NUMBER INDEX

Part	Page
	800
	804
6V-8781	691
	766
	770
	797
	799
	803
	811
	813
	895
6V-8784	735
	739
	758
	762
6V-8934	773
	776
	779
6V-8935	709
	710
	711
	766
	770
	773
	776
	779
6V-8936	613
	709
	710
	711
6V-8978	1049
	1050
	1053
	1060
	1061
	1063
6V-8994	670
	672
	674
	676
6V-9001	682
	684
	789
	793
	800
	804
	815
	817
	819
	821
	823
	827
	850
	854
	880
	885
6V-9002	785
	789
	793
	800
	804
	904
	906
6V-9004	726
	731
	735
	739
	758
	762
6V-9005	726
	730
	735
	739
	751
	754
	758
	762
6V-9007	726
	730
	734
	738
	758
	762
	807
	809
	904
	906
6V-9008	716
	758
	762
	782
	785
	908
	909
	911
	913
	915
6V-9168	670
	672
	674
	676
6V-9175	691
6V-9200	917
6V-9491	263
	265
	267
	269
6V-9632	425
	441
6V-9672	299
6V-9746	643
	669
	678
	680
	682
	684
	691
	693
	697
	726
	730
	731
	734
	735
	738
	739
	742
	744
	750
	757
	758
	761
	762
	807
	809
	897
	900
	904
	906
	908
	909
	911
	919
	1084
	1086
6V-9829	835
	838
	841
	844
	847
	851
	855
	877
	880
	886
6V-9833	913
	915
6V-9836	773
	799
	803
	832
	835
	838
	841
	844
	847
	850
	854
	858
	862
	865
	869
	877
	880
	886
	891
6V-9837	682
	684
6V-9839	735
	739
6V-9840	716
	720
	723
	726
	730
	731
	734
	735
	739
	742
	744
6V-9843	832
	835
6V-9844	923
	925
6V-9850	682
	684
	766
	770
	776
	779
	800
	804
	811
	858
	895
6V-9852	880
	886
6V-9854	716
	720
	723
	726
	730
	734
	738
	913
	915
6V-9872	690
6V-9875	716
	720
	723
	726
	730
	734
	738
6V-9876	766
	770
	891
	893
	904
	906
6W-2464	712
	713
6W-6005	193
	195
	202
	209
	216
6W-7293	1327
	1331
6Y-0473	513
	514
6Y-0846	523
	524
6Y-8186	506
	507
	73
7C-1493	218
7F-0560	513
7F-8268	514
	354
7G-1060	782
7G-5984	785
	782
7G-5985	785

7

PART NUMBER INDEX

Part	Page
7G-5986	782
	785
7H-3171	505
	512
7I-0375	1327
	1331
	1334
	1336
7I-0717	377
	378
	381
	386
	387
	390
	393
	394
	395
	396
	397
	398
	399
7I-0966	1043
7I-0986	1075
7I-1026	961
7I-1105	885
7I-1248	974
	976
	978
	981
	986
	993
	997
7I-2272	615
	619
	623
	929
	930
	982
	987
	994
	998
	1002
7I-2673	90
	92
	96
	99
	118
	119
	195
	202
	209
	233
	249
	251
	252
	254
	357
	1382
	1390
	1396
	1401
7I-6843	1114
7I-7131	955
7I-7403	1075
7I-7439	690
7I-8084	1070
	1076
	1077
7I-8102	1075
7J-9108	652
	657
	690
	691
	879
	880
	885
	886
	945
7J-9933	1043
7K-1181	73
	157
	159
	195
	202
	209
	230
	238
	290
	292
	294
	304
	306
	307
	308
	309
	310
	311
	312
	313
	316
	318
	320
	322
	324
	326
	328
	330
	337
	338
	339
	344
	347
	351
	352
	353
	354
	356
	357
	359
	670
	672
	674
	676
	690
	713
	765
	769
	773
	776
	779
	789
	793
	797
	799
	803
	807
	809
	811
	813
	825
	827
	830
	832
	835
	838
	841
	844
	847
	850
	854
	858
	862
	865
	869
	873
	875
	877
	879
	885
	891
	893
	895
	904
	906
	908
	909
	911
	913
	915
	917
	923
	925
	1223
	1225
	1319
	1321
	1328
	1331
	1336
7M-7410	930
7M-8485	361
	365
	613
	680
	682
	684
	716
	720
	723
	724
	726
	727
	730
	731
	734
7N-0719	258
	260
	▶276
7N-2353	286
7N-3718	251
	252
7T-1099	311
	723
	751
	754
7T-6799	285
7T-8890	1404
7W-3556	49
7W-9028	73
7X-0578	1202
	1206
	1408
7X-0796	43
	48
	57
	59
	70
7X-0818	82
	196
	203
	210
	821
7X-0851	1150
7X-2459	844
	847
	850
	854
	879
	885
7X-2532	47
7X-2533	196
	203
	210
	239
	1219
7X-2535	151

▶ **PRIMARY REFERENCE**

PART NUMBER INDEX

Part	Page
7X-2536	517
	1237
	1238
	1251
	1252
	1253
7X-2543	661
	665
	667
7X-2544	782
	785
7X-2545	974
7X-2549	650
	652
	654
	657
	670
	672
	674
	676
7X-2550	897
	900
7X-2552	1347
7X-2553	486
	650
	654
	896
	1295
	1297
	1300
	1332
	1354
7X-2554	90
	92
	96
	99
7X-2557	949
7X-2558	931
7X-2559	1302
7X-2562	369
7X-2563	600
7X-2565	508
	509
	510
	511
7X-2568	361
	365
7X-2576	600
7X-2583	375
	376
	379
	380
	382
	383
	384
	385
	388
	389
	391
	392
7X-2619	196
	203
	210
	260
	342
	344
	347
7X-2621	196
	203
	210
	230
	232
	234
	235
	294
	354
	982
	987
	994
	998
7X-3164	661
	665
	667
7X-6315	227
7X-7644	1441
	1446
	1451
	1456
7X-7729	90
	92
	96
	99
	151
	782
	785
	1169
	1171
	1312
	1314
7Y-0059	1
	2
	▶1339
7Y-0063	384
	385
7Y-0223	361
	365
7Y-0225	361
	365
7Y-0252	597
7Y-0463	546
7Y-0466	546
7Y-0467	546
7Y-0468	546
	547
	1018
	1023
7Y-0623	1295
	1297
	1300
7Y-0633	373
	415
7Y-0682	518
7Y-0729	1147
	1148
	▶1150
7Y-1426	361
	365
7Y-1430	361
	365
7Y-1431	361
	365
7Y-1432	361
	365
7Y-1433	361
	365
7Y-1434	361
	365
	597
7Y-1558	361
	365
7Y-1607	493
	▶510
7Y-1608	493
	▶511
7Y-1647	418
7Y-1648	418
7Y-1650	418
7Y-1746	515
	516
7Y-1781	517
7Y-1863	418
7Y-1924	196
	203
	210
7Y-1976	90
	92
	94
	96
	99
	101
	104
	106
7Y-2219	▶1142
	1143
	1144
	1145
	1146
7Y-2292	377
	378
	381
	390
	394
	397
	399
7Y-2496	1134
7Y-2670	1110
7Y-2853	425
	430
	435
	441
	447
	453
	458
	463
7Y-2854	426
	431
	436
	442
	448
	454
	459
	464
7Y-3470	1421
7Y-3472	1421
7Y-3474	1404
7Y-3721	643
7Y-3729	735
	738
	757
	761
7Y-3730	714
7Y-3731	646
	716
	720
	723
	726
	730
	734
	738
	757
	761
7Y-3732	750
7Y-3820	195
7Y-3919	1318
7Y-3920	1318
7Y-3950	286
	304
7Y-3951	298
7Y-3952	298
7Y-3953	286
	304
7Y-3954	298
7Y-3955	298
7Y-3958	298
7Y-3962	246
	248
7Y-3963	246
	248
	328
7Y-3964	246
	248
7Y-3965	246
	248
	328
7Y-3967	328
7Y-4193	797
7Y-4199	850
	854
	865
	869
	873
	879
	885
7Y-4202	936
	940
7Y-4212	936
	940
7Y-4213	936
	940
7Y-4215	936
	940
	949
7Y-4216	936
	941
7Y-4217	937
	940
7Y-4222	937
	941
7Y-4224	936
	941

▶ PRIMARY REFERENCE

PART NUMBER INDEX

Part	Page
7Y-4234	936
	940
7Y-4267	934
7Y-4268	934
7Y-4366	858
	862
	865
	869
	873
7Y-4390	773
	776
	779
	797
	925
7Y-4399	838
	841
	844
	847
7Y-4538	648
	650
	654
	659
	663
7Y-4562	897
	900
7Y-4631	560
	562
	571
7Y-4817	955
7Y-4868	652
	657
	669
	678
	680
	693
	694
7Y-5074	643
7Y-5088	805
	895
7Y-5219	982
	987
	994
	998
	1026
7Y-5221	934
7Y-5226	196
	203
	210
	1006
	1009
7Y-5243	962
7Y-5247	782
	785
7Y-5272	539
	1026
7Y-5456	195
	202
	209
7Y-5458	283
	284
7Y-5464	283
	284
7Y-5505	298
7Y-6442	694
7Y-6510	694
7Y-6511	694
7Y-6627	1126
7Y-6641	1121
7Y-6649	1121
7Y-7364	1421
7Y-7394	1323
	1324
	1325
	1399
	1401
7Y-7904	693
7Y-7955	844
7Y-8036	680
7Y-8099	978
7Y-8165	196
	203
	210
7Y-8167	147
	196
	203
	210
7Y-8309	879
	885
7Y-8379	807
	809
7Y-8436	1048
7Y-8437	1048
7Y-8463	1244
	1245
	1246
	1247
	1248
	1259
	1260
	1261
	1262
7Y-8478	827
7Y-8484	765
	769
7Y-8487	799
	803
7Y-8561	1220
7Y-8621	1304
	1305
7Y-8622	1304
	1305
8C-0564	765
	769
8C-3206	641
	645
8C-3334	320
8C-3445	73
8C-3446	73
	957
8C-3451	957
8C-5607	239
8C-5608	224
	239
8C-5917	193
	196
	202
	209
	216
	334
8C-5918	193
	195
	202
	209
	216
8C-6354	299
8C-6358	218
8C-6364	1149
8C-6561	712
	713
8C-6965	1032
8C-7581	1349
8C-8400	897
	900
8C-8451	224
8C-8580	1241
8C-8988	690
8C-8992	423
	500
	501
8E-3752	▶1157
8E-3757	▶1153
8E-4359	505
8E-5031	513
	514
8E-5032	514
8E-5035	513
	514
8E-5037	513
	514
8E-5599	513
	514
8E-5600	508
	509
	510
	511
	▶512
8E-5601	512
8E-5602	512
8E-5604	512
8E-5605	512
8E-5606	512
8E-5607	512
8E-5608	512
8E-6792	512
8E-6793	512
8E-8585	506
	507
8E-8586	506
	507
8E-9805	369
8F-0212	1002
8F-1434	277
	1418
8H-2282	1304
	1305
8H-3481	1402
8H-5303	276
8H-5306	276
8H-9819	957
8J-1256	196
	203
	210
8J-4645	949
8J-4953	▶1164
8J-4954	▶1162
8J-4955	1147
	1148
	▶1158
8J-9236	282
8L-2779	156
	1034
	1059
8L-8413	209
	216
8M-2770	197
	203
	210
8M-2772	1105
	1106
	1107
	1109
	1110
8M-2773	1331
8N-0869	196
	202
	209
	334
8P-9770	1143
	1144
	1145
	1146
8S-0934	1362
	1365
8S-1812	282
8S-1814	282
8S-1815	282
8S-2634	334
8S-4723	1362
	1365
8S-4724	1362
	1365
8T-0075	811
	813
	838
	841
	844
	847
	850
	854
	858
	862
	865
	869
	875
	877
	879
	885
8T-0078	735
	739
	758
	762
	897
	900
8T-0114	1237
	1238
	1251

8

▶ **PRIMARY REFERENCE**

PART NUMBER INDEX

Part	Page	Part	Page	Part	Page	Part	Page
	1252		569		99		694
	1253	8T-1687	906		101		695
8T-0198	724	8T-1779	799		104		696
	730		803		106		697
	738		823		108		701
	754		923		109		702
	762		925		122		714
8T-0266	1214	8T-1905	773		126		716
8T-0267	957		776		147		720
8T-0269	1241		779		151		723
	1340		807		193		727
	1342		809		197		731
8T-0286	197		815		203		735
	203		817		210		739
	210		823		216		742
8T-0288	1076		830		219		744
	1077		838		230		751
	1078		841		232		754
	1079		844		234		758
	1080		847		235		762
	1089		851		248		766
8T-0328	165		855		249		770
	166		858		251		773
	169		862		252		776
	170		866		254		780
	171		870		256		782
	172		873		257		785
	175		875		273		790
	177		880		290		794
	179		886		292		801
	181	8T-2920	904		294		805
	184		906		311		811
	186	8T-3008	966		313		813
	188		967		316		827
	197	8T-3490	99		318		851
	203		723		320		855
	210		730		322		859
	258		751		330		863
	260		1327		331		866
	299	8T-3518	218		334		870
	342	8T-3519	218		337		873
	344	8T-3597	99		338		875
	470		425		341		877
	471		426		349		880
	472		441		354		886
	473		473		418		891
	607		723		426		897
	1169		730		431		900
	1171	8T-3612	473		436		919
	1312	8T-3647	1216		442		923
	1314		1327		448		925
8T-0341	691		1331		454		947
8T-0343	1021		1334		459		955
8T-0360	418		1336		464		957
8T-0362	418	8T-3653	686		648		974
8T-0380	1150		687		652		976
8T-1158	1021		688		657		978
	1032		689		659		982
8T-1159	512	8T-4121	72		661		987
	1026		73		663		994
8T-1447	554		88		665		998
	556		90		667		1026
	558		92		682		1105
	564		94		684		1106
	566		96		691		1107

PART NUMBER INDEX

Part	Page	Part	Page	Part	Page	Part	Page
	1109	8T-4127	299		631		99
	1110	8T-4131	615		634		101
	1169		619		661		104
	1171		623		665		106
	1216		626		667		108
	1219		630		691		109
	1220		634		716		122
	1223		1116		720		147
	1225	8T-4132	1114		723		151
	1237		1118		727		197
	1238		1119		731		203
	1239		1120		735		210
	1241		1122		739		219
	1250	8T-4133	147		751		225
	1251		151		754		248
	1252		193		758		256
	1253		197		762		257
	1312		203		766		273
	1314		210		770		290
	1317		216		773		313
	1318		248		776		316
	1327		249		780		318
	1331		251		782		320
	1334		252		785		322
	1336		254		790		334
	1349		371		794		337
	1351		615		801		341
	1354		619		805		354
	1391		623		851		418
	1393		626		855		426
	1405		630		859		431
	1418		634		863		436
8T-4123	47		694		866		442
	361		954		870		448
	365		1021		873		454
	415		1026		875		459
	495		1032		880		464
	496		1107		886		515
	497		1109		923		516
	498		1110		925		742
	499		1121		946		744
	508		1220		949		766
	509	8T-4134	1421		955		770
	510	8T-4136	73		957		773
	511		90		1011		790
	600		92		1013		794
	1095		96		1169		801
	1097		99		1171		805
	1099		122		1237		811
	1101		147		1238		813
	1103		197		1250		866
	1116		203		1251		870
	1126		210		1252		875
	1128		316		1253		949
	1129		318		1312		957
	1130		322		1314		1169
	1131		330		1327		1171
	1132		331		1331		1219
	1134		334	8T-4137	42		1220
	1135		341		43		1239
	1137		418		73		1241
	1138		615		90		1251
	1139		619		92		1252
	1140		623		94		1312
	1141		627		96		1314

► **PRIMARY REFERENCE**

PART NUMBER INDEX

Part	Page
	1327
	1331
	1334
	1336
	1349
8T-4138	238
	426
	431
	436
	442
	448
	454
	459
	464
	1305
	1327
	1331
8T-4139	47
	90
	92
	96
	99
	114
	116
	648
	650
	652
	654
	657
	659
	661
	663
	665
	667
	669
	670
	672
	674
	676
	678
	680
	682
	684
	693
	694
	705
	707
	751
	754
	758
	762
	766
	770
	773
	777
	780
	782
	785
	805
	904
	906
	913
	915
	919
	949
	1006
	1009
	1295
	1297
	1300
8T-4140	162
	163
	164
	167
	422
	503
	504
	949
	959
	1015
	1016
8T-4149	897
	900
8T-4167	600
8T-4171	230
	241
	258
	260
	290
	292
	313
	330
	331
	347
	359
	1222
	1319
	1349
8T-4172	43
	801
	805
	1216
	1334
	1336
8T-4174	1302
8T-4175	950
	1343
8T-4176	716
	720
	723
	727
	731
	735
	739
	758
	762
	950
8T-4177	838
	841
	845
	847
	851
	855
	859
	863
	866
	870
	880
	886
8T-4178	682
	684
	823
8T-4179	290
	377
	378
	381
	390
	394
	397
	399
	517
	697
	1126
	1184
	1188
	1192
	1196
	1220
8T-4182	151
	197
	203
	210
	682
	684
	695
	696
	697
	701
	702
8T-4183	47
	121
	373
	597
	648
	650
	654
	659
	661
	663
	665
	667
	721
	724
	731
	739
	751
	754
	762
	782
	785
	801
	897
	900
	957
8T-4184	648
	650
	652
	654
	657
	659
	663
	669
	678
	705
	707
	774
	777
	780
	877
	923
	925
	1216
	1334
	1336
8T-4185	70
	197
	203
	210
	316
	320
	652
	657
	661
	665
	667
	691
	694
	774
	777
	780
8T-4186	73
	782
	785
	866
	870
	919
8T-4189	82
	84
	94
	101
	104
	106
	190
	357
	426
	431
	436
	442
	448
	454
	459
	464
	594
	821
	1220
	1403
8T-4190	241
	249
	251
	252
	254
	388
	389
	391
	392
	1184
	1188
	1192
	1196
	1349

PART NUMBER INDEX

Part	Page
8T-4191	33
	126
	193
	197
	203
	210
	216
	290
	292
	311
	313
	316
	318
	338
	349
	415
	774
	827
	851
	855
	880
	886
	891
	1105
	1106
	1107
	1109
	1237
	1238
	1250
	1253
	1318
	1327
	1331
	1334
	1336
	1354
	1391
	1393
	1405
	1418
8T-4192	193
	216
	424
	594
	682
	684
	691
	766
	770
	774
	777
	780
	801
	805
	827
	830
	838
	841
	845
	848
	851
	855
	877
	880
	886
	897
	900
	913
	915
	950
	1295
	1297
	1299
	1300
	1341
8T-4193	1015
	1016
	1142
	1344
8T-4194	157
	159
	607
	648
	650
	652
	654
	657
	659
	663
	714
	774
	777
	780
	782
	785
	896
8T-4195	94
	101
	104
	106
	147
	197
	203
	210
	313
	413
	694
	947
	957
	974
	976
	978
	982
	987
	994
	998
	1002
	1223
	1225
	1317
	1351
8T-4196	94
	101
	104
	106
	197
	203
	210
	615
	619
	623
	627
	631
	634
	686
	687
	688
	689
	691
	699
	700
	703
	704
	716
	720
	723
	727
	731
	735
	739
	751
	754
	758
	762
	897
	900
	918
	919
	921
	922
	950
8T-4197	73
	1332
8T-4198	695
	696
	697
	701
	702
	790
	794
	877
8T-4199	197
	203
	210
	342
	344
	418
8T-4200	82
	90
	92
	96
	99
	154
	156
	246
	371
	1304
	1305
	1327
	1331
	1334
	1336
8T-4205	258
	260
8T-4223	46
	47
	90
	92
	96
	99
	114
	116
	121
	157
	159
	193
	216
	242
	243
	290
	311
	332
	371
	373
	377
	378
	381
	390
	394
	397
	399
	424
	426
	431
	436
	442
	448
	454
	459
	464
	597
	607
	615
	619
	623
	627
	631
	634
	648
	650
	652
	654
	657
	659
	661
	663
	665
	667
	669
	670
	672
	674
	676
	678
	680
	682
	684
	691
	693

► **PRIMARY REFERENCE**

PART NUMBER INDEX

Part	Page	Part	Page	Part	Page	Part	Page
	694		1097		1216		1103
	697		1099		1237		1126
	699		1101		1238		1128
	700		1103		1251		1129
	703		1126		1252		1130
	704		1184		1253		1131
	705		1188		1276		1132
	707		1192		1279		1134
	709		1196		1295		1135
	710		1216		1297		1137
	711		1220		1300		1138
	714		1295		1304		1139
	716		1297		1305		1140
	720		1299		1327		1141
	723		1300		1331	8T-4896	686
	727		1334		1334		687
	731		1336		1336		688
	735	8T-4224	30		1366		689
	739		73		1367		699
	742		82		1368		700
	744		84		1369		703
	746		90		1379		704
	748		92		1380		918
	750		94		1381		921
	751		96		1384		922
	754		99		1392	8T-4908	426
	758		101		1394		431
	762		104		1397		436
	766		106		1398		442
	770		151		1403		448
	774		225	8T-4226	193		454
	777		246		197		459
	780		342		203		464
	782		344		210		827
	785		371		216		830
	801		426	8T-4244	121		957
	805		431		157	8T-4910	682
	827		436		159		684
	830		442		242		699
	838		448		243		700
	841		454		373		703
	845		459		652		704
	848		464		657		750
	851		746		670		766
	855		748		672		770
	877		821		674		918
	880		827		676		921
	886		830		705		922
	896		838		707		1184
	897		841	8T-4648	311		1188
	900		845		650		1192
	904		848		654		1196
	906		851		680	8T-4944	937
	913		855		682		940
	915		859		684	8T-4956	648
	918		863		897		659
	919		866		900		663
	921		870		919		691
	922		880	8T-4779	1202		709
	923		886		1206		710
	925		957	8T-4780	415		711
	957		1002		1095		716
	970		1167		1097		720
	971		1168		1099		723
	1095		1183		1101		727

PART NUMBER INDEX

Part	Page
	731
	735
	739
	742
	744
	746
	748
	750
	751
	754
	758
	762
	782
	785
	897
	900
	904
	906
	957
	1095
	1097
	1099
	1101
	1103
8T-4970	222
	246
	258
	260
	347
	811
	813
	1404
	1405
8T-4971	1220
	1327
	1328
	1331
8T-4984	90
	92
	96
	99
	122
8T-4986	125
8T-4987	114
	116
8T-5005	316
	318
	320
	322
	324
	334
	349
	359
8T-5049	594
8T-5092	716
	720
	723
	727
	731
	735
	739
	751
	754
	758
	762
8T-5460	495
	496
	497
	498
	499
	1116
8T-5878	508
	509
	510
	511
8T-6411	246
8T-6412	246
8T-6466	151
	197
	203
	210
	691
	758
	762
	851
	855
	880
	886
	1121
	1216
8T-6684	751
	754
8T-6685	43
	648
	659
	663
	982
	987
	994
	998
8T-6693	299
	470
	471
	472
	473
	607
8T-6703	90
	92
	96
	99
	122
	788
8T-6759	930
	955
	982
	987
	994
	998
	1002
	1006
	1009
	1021
	1032
	1088
	1089
8T-6842	1441
	1446
	1451
	1456
8T-6868	705
	707
	970
	971
	1184
	1188
	1192
	1196
8T-6870	851
	855
	859
	863
	866
	870
	873
	875
	880
	886
	1002
8T-6912	197
	203
	210
8T-7087	782
	785
8T-7338	485
	897
	900
8T-7547	73
8T-7811	721
	1091
8T-7877	1034
8T-7930	670
	674
	676
8T-7964	64
	66
	68
8T-7971	897
	900
	957
8T-8729	1218
8T-8737	283
	284
	294
	1247
	1248
	1267
	1268
	1334
	1336
	1346
8T-8748	280
	281
8T-8799	195
8T-8874	473
8T-8887	776
	779
	859
8T-8899	897
	900
8T-9403	682
	684
	701
	702
	714
8T-9533	1064
8T-9598	53
	88
8T-9756	193
	195
	202
	209
	216
8T-9757	193
	195
	202
	209
	216
8V-1715	1302
8Y-6352	1200
	1210
	1212
8Y-6967	1184
	1188
	1192
	1196
9B-4499	282
9B-7233	285
9F-2167	682
	684
	750
9F-5644	276
9G-0002	193
	195
	202
9G-0003	193
	195
	202
	209
	216
9G-0004	193
	196
	202
	209
	216
	334
9G-0005	193
	195
	202
	209
	216
9G-4343	258
	260
	298
	347
9G-7641	263
	265
	267
	269
	▶285
9G-8909	195
	202
	209
9J-0705	944
	945

9

▶ **PRIMARY REFERENCE**

PART NUMBER INDEX

Part	Page
9J-0707	1034
	1059
9J-4359	1159
9L-9188	73
9M-3786	897
	900
9M-5590	1021
9M-7958	157
	159
9M-8406	147
9N-4352	1157
9N-4353	1153
9R-2640	723
	730
9S-4167	147
9S-4180	609
	981
	986
	993
	997
9S-4181	716
	720
	723
	727
	731
	735
	739
	758
	762
9S-4182	896
9S-4185	691
	716
	720
	723
	726
	730
	735
	739
	877
	880
	886
	904
	906
	908
	909
	911
	937
	941
	950
9S-4188	73
9S-4191	594
	615
	619
	623
	631
	690
	789
	793
	800
	804
	819
	821
	877
	1002
	1013
	1017
9S-6130	175
	177
	179
	181
	184
	186
	965
9S-8001	929
9S-8003	1026
9S-8004	147
	766
	770
	929
	1011
	1091
9S-8005	929
	930
	1011
	1013
9S-8006	1004
9T-0835	949
9T-0836	948
9T-1614	1006
	1009
9T-4506	944
9W-0335	298
9W-0625	280
9W-0742	▶218
	334
9W-0852	254
	313
9W-1951	299
9W-2142	513
	514
9W-2201	505
9W-2358	1152
9W-2359	1151
9W-3137	506
	507
9W-3138	506
	507
9W-3340	593
9W-3361	520
	521
	522
	523
	524
	525
	526
	527
	529
	530
9W-3619	520
	521
	522
	525
	526
	527
	529
	530
9W-6472	▶1151
9W-6473	▶1152
9W-9351	522
	527
9W-9455	505
9X-0199	1418
9X-1813	190
	271
9X-2041	1202
	1206
	1227
	1229
	1271
	1282
9X-2042	287
	299
	304
	328
	359
	1200
	1202
	1206
	1210
	1212
	1229
	1272
	1274
	1276
	1279
	1292
	1308
	1408
	1411
	1421
9X-2044	299
	1200
	1202
	1206
	1402
	1408
	1418
	1421
9X-2045	1202
	1206
	1223
	1225
	1307
	1408
9X-2046	1223
	1225
	1345
	1402
9X-2201	125
	896
	897
	900
9X-2297	766
	770
9X-2404	573
9X-2480	226
9X-2616	1375
	1376
	1377
	1378
9X-3401	49
	271
	284
	328
	349
	757
	761
	789
	793
	807
	809
	815
	817
	819
	821
	823
	851
	855
	880
	886
	957
	1244
	1245
	1246
	1247
	1248
	1267
	1268
	1346
9X-3463	242
	243
	244
	248
9X-3495	316
	318
	320
	322
	342
	344
9X-4184	281
9X-6032	686
	687
	688
	689
	699
	700
	703
	704
9X-6153	1182
9X-6165	224
	239
	1349
9X-6582	709
	710
	711
	765
	769
	773
	776
	779
9X-7298	591
9X-8256	139
	149
	151
	196
	202
	209
	222
	226
	230

▶ PRIMARY REFERENCE

PART NUMBER INDEX

Part	Page	Part	Page	Part	Page	Part	Page
	238		897	085-7083	1064		811
	241		900	085-7084	1064		813
	246		931	085-7329	196		815
	258		943		202		817
	260		1015		209		819
	290		1016	085-7356	815		821
	292		1142		817		823
	294		1184		858		858
	299		1188		862		862
	313		1192		865		865
	324		1196		869		869
	330		1203		873	087-4411	799
	331		1207		875		803
	342		1295	085-7538	1084	087-4454	532
	344		1297		1086		▶533
	347		1300	085-8037	1405	087-4456	▶534
	359		1302	085-8604	573		536
	371		1343		576	087-4531	799
	426		1344		578		803
	431		1347		580	087-4532	865
	436		1349		582		869
	442		1354		584	087-4534	799
	448	9X-8600	138		586		803
	454	9X-9896	224		588	087-4575	533
	459			085-8605	573	087-4576	533
	464				576	087-4577	533
	811	**0**			578	087-4683	279
	813				580	087-4710	1021
	957	003-7764	147		582		1032
	1169		165		584	087-4742	936
	1171		166		586		940
	1219		169	085-9310	162	087-4743	936
	1220		170		163		940
	1222		171		164	087-4757	936
	1231		172		167		940
	1232		175		959	087-4786	936
	1233		177	085-9429	191		940
	1234		179	085-9513	32	087-5166	1011
	1235		181	086-0255	554		1013
	1236		184		556	087-5303	797
	1241		186		558		830
	1312	006-6803	1064		564	087-5591	875
	1314	012-0380	278		566	087-5708	1021
	1319	030-0167	1034		569		1032
	1327		1059	086-0321	1142	087-5709	1021
	1328	033-5853	73	086-0322	1142	087-5760	799
	1331	033-5879	944	086-0523	1114		803
	1340	033-6036	944	087-3908	425	087-5762	799
	1342		1034		430		803
	1402		1059		435		823
	1403	033-6038	73		441		858
	1404	033-8248	1105		447	087-5764	850
	1405		1107		453		854
	1408		1109		458		865
	1418	061-7539	139		463		869
9X-8257	241	085-6444	1416	087-3909	425		879
	249	085-6447	1416		430		885
	251	085-6448	1416		435	087-5765	823
	252	085-6449	1307		441	087-5766	811
	254		1416		447		813
	485	085-6452	1203		453		823
	486		1207		458		844
	650	085-7079	1064		463		847
	654	085-7080	1064	087-4402	789	087-5772	799
	896	085-7081	1064		793		803

▶ **PRIMARY REFERENCE**

PART NUMBER INDEX

Part	Page
	813
	850
	854
	879
	885
087-5774	799
	803
087-5778	830
087-5780	827
087-5805	1118
	1119
	1120
	1122
087-5838	1110
087-5840	1105
087-5908	493
	▶495
087-5966	1106
087-6583	825
087-6585	821
090-8865	1302
091-3474	64
	66
	68
	127
091-5928	593
091-9035	196
	202
	209
	316
	320
	865
	869
093-0083	415
093-0084	1095
	1097
	1099
	1101
	1103
093-0115	415
093-0116	1095
	1097
	1099
	1103
093-0349	415
	1095
	1097
	1099
	1101
	1103
	1116
	1126
	1128
	1129
	1130
	1131
	1132
	1134
	1135
	1137
	1138
	1139
	1140
	1141
093-0357	1126
093-0363	415
	1095
	1097
	1099
	1101
	1103
	1126
	1128
	1129
	1130
	1131
	1132
	1134
	1135
	1137
	1138
	1139
	1140
	1141
093-1291	652
	657
093-1294	919
093-1342	1114
093-1344	1118
	1119
	1120
093-1345	1116
093-1433	568
	1126
093-1436	518
093-1512	518
093-1729	597
093-2069	1241
093-5432	94
	101
	104
	106
093-7521	612
094-0580	361
	365
094-0584	597
094-0611	361
	365
	597
094-0616	361
	365
094-0747	554
	556
	558
	564
	566
	569
094-0876	1018
	1023
	1028
	1030
094-1399	936
	940
094-1509	597
094-1516	597
094-1528	361
	365
094-1542	361
	365
094-1875	594
	615
	619
	623
	626
	630
	634
	936
	940
	949
094-1881	615
	619
	623
	626
	630
	634
094-1882	615
	619
	623
	626
	630
	634
	936
	940
	949
094-1900	934
094-1920	686
	687
	688
	689
094-1931	576
	578
	580
	582
	584
	586
	588
094-2080	298
094-4628	27
	28
	29
	32
094-7134	51
094-7154	51
094-7516	51
094-7583	131
	133
094-7741	33
094-9266	79
094-9267	79
094-9424	33
094-9525	64
	66
	68
094-9725	139
094-9950	274
094-9980	274
095-0085	274
095-0410	274
095-0673	1032
095-0707	932
095-0723	299
095-0728	354
	1250
095-0735	1237
	1238
	1251
	1252
	1253
095-0736	165
	166
	169
	170
	171
	172
	175
	177
	179
	181
	184
	186
	1321
095-0742	299
095-0772	1276
095-0826	957
	1318
095-0827	1222
095-0843	371
095-0863	506
	507
095-0882	934
095-0886	597
095-0891	361
	365
	597
095-0910	1349
095-0913	1327
	1331
	1334
	1336
095-0936	1021
095-0946	949
095-0965	1064
095-1022	597
095-1260	1021
	1032
095-1270	361
	365
095-1386	147
095-1388	76
	77
095-1519	614
	1075
095-1543	94
	101
	104
	106
095-1547	965
095-1572	936
	940
095-1575	936
	940
	981
	986
	993
	997
	1032
095-1576	1088
	1089
095-1578	1021
	1035

▶ PRIMARY REFERENCE

PART NUMBER INDEX

Part	Page	Part	Page	Part	Page	Part	Page
	1054	095-1595	934		1061	096-1570	576
	1055	095-1596	603		1063		578
	1058		604	095-1787	974		580
	1070		605		976		582
	1075	095-1597	686		978		584
095-1579	1049		687		981		586
	1050		699		986		588
	1053		700		993	096-1571	576
	1060	095-1600	918		997		578
	1061		922		1048		580
	1063	095-1601	966	095-1788	615		582
095-1580	1036		967		619		584
	1037		1048		623		586
095-1582	611	095-1602	966		626		588
	1036		967		630	096-1628	1018
	1037	095-1603	981		634		1023
095-1584	603		986	095-1789	1006		1028
	604		993		1009		1030
	605		997		1011	096-1773	361
	1050	095-1608	957		1013		365
	1061	095-1625	591	095-2005	33	096-1774	361
095-1585	936		955	095-2038	139		365
	940	095-1657	967	095-2039	33	096-1775	361
	967	095-1680	594		149		365
095-1586	936	095-1681	609	095-2927	518	096-1776	361
	940	095-1685	936	095-6639	954		365
	1019		940	095-7378	936	096-1777	361
	1024	095-1698	1043		940		365
	1028		1088	095-7380	936	096-1778	361
	1030		1089		940		365
	1044	095-1700	936	095-7382	936	096-1779	361
	1048		941		940		365
	1072		966	095-7383	936	096-1780	361
	1073		967		940		365
	1074	095-1704	518	095-7384	936	096-1781	361
095-1587	1049	095-1710	1064		940		365
	1050	095-1716	955	095-7386	936	096-2500	139
	1053	095-1717	554		940	096-2501	36
	1060		556	095-7387	936		40
	1061		564		940		332
	1063		566	095-7930	1318	096-2591	342
095-1590	603		611	095-8799	30		344
	604	095-1720	560		152	096-2617	1242
	605		562	096-0061	76		1243
	974	095-1721	576		222	096-2622	1272
	976		578	096-0121	594		1274
	978		580	096-0131	1126		1276
	981		582	096-1055	591		1279
	986		584	096-1519	936	096-3216	554
	993	095-1723	573		940		556
	997	095-1730	957	096-1521	936		558
	1036	095-1750	1072		940		564
	1037		1074	096-1522	936		566
	1048	095-1751	1072		940		569
	1049		1074	096-1523	936	096-3321	79
	1050	095-1778	981		940	096-3741	33
	1053		986	096-1545	1091		64
	1060		993	096-1567	554		66
	1061		997		558		68
	1063	095-1785	1044		564	096-3773	1004
	1064		1048		569	096-3780	371
095-1594	1006	095-1786	1049	096-1568	554	096-3785	936
	1009		1050		558		940
	1011		1053		564	096-3786	936
	1013		1060		569		940

► **PRIMARY REFERENCE**

PART NUMBER INDEX

Part	Page
096-3787	936
	940
096-3788	936
	940
096-3872	241
	1349
096-3884	1274
	1279
096-3944	949
096-3964	554
	556
	558
	564
	566
	569
096-3978	936
	941
096-3983	949
096-4003	936
	940
096-4035	90
	92
	94
	96
	99
	101
	104
	106
096-4129	470
	471
	472
	473
096-4255	505
096-4376	936
	940
096-4377	936
	940
096-4378	936
	940
096-4389	940
096-4402	554
	556
	558
	564
	566
	569
096-4412	700
	703
096-4430	560
	562
	571
096-4447	922
096-4480	699
	700
	703
	704
	918
	921
096-4498	1018
	1023
096-4747	1150
096-4748	1150
096-4755	600
096-4876	1114
096-4882	1295
	1297
	1300
096-4883	782
	785
096-4902	418
096-5625	576
	578
	580
	582
	584
	586
	588
096-5915	936
	940
096-5916	936
	940
096-5919	936
	940
096-5962	299
096-6073	611
096-6166	263
	265
	267
	269
	299
	354
	1250
096-6210	560
	562
	571
	573
	576
	578
	580
	582
	584
	586
	588
096-7803	554
	556
	558
	564
	566
	569
096-8490	129
096-8569	30
096-8619	87
096-9435	43
096-9528	43
096-9532	43
	87
099-0139	1416
099-0596	591
099-0600	591
099-0699	591
099-0700	591
099-0707	1114
099-0724	1114
099-0822	1075
	1356
099-0823	1202
	1206
	1408
099-2096	594
099-2374	1169
	1171
	1312
	1314
099-2503	149
099-3506	1306
	1308
099-3607	1202
	1206
099-3629	1414
	1415
099-3645	1339
099-3649	800
	804
099-3669	615
	619
	623
	626
	630
	634
099-3670	615
	619
	623
	626
	630
	634
099-3671	615
	619
	623
	626
	630
	634
099-3913	191
099-4420	33
099-4437	139
	149
099-4460	332
099-5041	139
	149
099-5572	573
099-5573	573
099-6109	615
	619
	623
	626
	630
	634
099-6110	615
	619
	623
	626
	630
	634
099-6111	615
	619
	623
	626
	630
	634
099-6112	615
	619
	623
	626
	630
	634
099-6113	615
	619
	623
	626
	630
	634
099-6115	615
	619
	623
	626
	630
	634
099-6117	615
	619
	623
	626
	630
	634
099-6118	615
	619
	623
	626
	630
	634
099-6119	615
	619
	623
	626
	630
	634
099-6120	615
	619
	623
	626
	630
	634
099-6121	615
	619
	623
	626
	630
	634
099-6122	615
	619
	623
	626
	630
	634
099-6123	615
	619
	623
	626
	630
	634
099-6124	615
	619
	623
	626
	630
	634
099-6125	615
	619
	623
	626
	630
	634

► **PRIMARY REFERENCE**

PART NUMBER INDEX

Part	Page
099-6126	615
	619
	623
	626
	630
	634
099-6127	615
	619
	623
	626
	630
	634
099-6128	615
	619
	623
	626
	630
	634
099-6136	1021
099-6137	1018
	1021
	1023
	1028
	1030
	1032
099-6141	1021
	1032
099-6144	1021
	1032
099-6145	1021
	1032
099-6418	408
	409
	410
	411
099-7127	298
099-7857	421
	1220
099-8232	716
	720
	723
	726
	730
	734
	738
	757
	761
1	
100-2881	1307
100-3866	943
100-4336	1327
	1331
101-2846	299
101-7397	714
	724
	726
	730
	734
	738
101-7398	682
	684
	750
101-7401	726
	730
	734
	738
	751
	754
	757
	761
101-7402	594
	716
	720
	723
	726
	730
	734
	738
	765
	769
	782
	785
101-7403	714
101-7404	682
	684
	714
	716
	720
	723
	726
	730
	734
	738
	757
	761
101-8899	1272
	1274
	1276
	1279
	1283
101-8900	1272
	1274
	1276
	1279
	1292
	1408
101-9848	470
	471
	472
	473
102-0889	1039
102-1120	697
102-1248	716
	720
	723
	726
	730
	734
	738
102-1279	697
102-1291	697
102-7964	298
	328
102-7965	304
	328
102-8016	298
102-8802	49
	165
	166
	169
	170
	171
	172
	175
	177
	179
	181
	184
	186
	189
	190
	195
	260
	263
	267
	277
	278
	290
	292
	347
	354
	789
	793
	815
	817
	819
	821
	823
	851
	855
	880
	886
	957
102-8803	195
	279
	290
	292
	299
	320
	337
	339
102-8804	195
	272
	354
102-8805	82
	283
	359
102-8806	328
103-2529	195
103-8173	981
	986
	993
	997
	1039
103-8177	981
	986
	993
	997
103-8236	604
103-8252	1035
	1054
	1055
	1058
103-8253	1035
	1054
	1055
	1058
103-8254	1035
	1054
	1055
	1058
103-8255	1035
	1054
	1055
	1058
103-9011	38
104-7293	973
	978
	991
104-7294	978
	991
104-7296	978
	991
104-8750	659
104-8774	827
	830
104-8783	827
	830
104-8838	799
	803
104-8903	827
104-8976	850
	879
105-1321	▶1034
	1047
105-1766	1223
	1225
105-2169	1203
	1207
	1306
	1308
105-3477	714
	726
	730
	734
	738
	751
	754
	757
	761
105-3478	946
105-3483	714
	757
	761
105-3484	800
	804
105-3485	757
	761
105-3487	371
	426
	431
	436
	442
	448
	454
	459
	464

▶ **PRIMARY REFERENCE**

PART NUMBER INDEX

Part	Page
105-5175	304
105-7781	897
	900
105-9526	1405
105-9527	1405
106-0107	263
	267
	▶283
106-0210	283
	284
106-0615	523
106-0616	524
106-6248	944
106-8715	897
	900
107-1567	908
	909
	911
107-3350	1164
107-6370	1040
	1041
107-6371	1040
	1041
107-6479	1021
	1070
107-6540	1050
	1053
	1060
	1061
107-6541	1050
	1053
	1060
	1061
	1086
107-6631	790
	794
	815
	817
	819
	821
	823
107-6954	936
	940
107-6955	936
	940
107-6969	936
	940
107-7017	1084
	1086
107-7018	1084
	1086
107-7640	593
107-8618	337
	339
108-1782	919
108-4282	734
	738
	751
	754
	757
	761
108-7118	923
	925
108-7313	854
	869
	879
	885
108-7354	682
	684
108-7357	865
108-7360	827
108-7373	850
108-7375	827
	838
	841
	844
	847
108-7516	815
	817
	819
	821
	823
108-7550	682
	684
109-2665	1040
109-2667	▶1040
	1042
109-5152	978
	▶1041
109-5153	1041
109-7556	875
109-9313	26
	▶108
	▶109
109-9329	47
110-5496	799
	803
110-5525	934
111-0988	830
	838
	841
	844
	847
	850
	854
	879
	885
111-4799	279
111-4816	298
111-4836	195
	202
	209
	249
	251
	252
	254
	290
	311
	313
	341
	354
	1169
	1171
	1312
	1314
	1349
111-4837	195
	202
	209
	249
	254
	316
	318
	341
111-4838	195
	202
	209
	354
111-4839	195
	202
	209
	354
111-6752	827
	923
111-9916	615
	619
	623
	▶1072
	1077
	1079
	1080
111-9959	978
111-9977	1084
	1086
111-9985	1084
	1086
111-9986	1084
	1086
111-9998	1036
	1037
112-0083	823
	▶1066
112-0085	1066
112-0090	1084
	1086
112-4550	337
	339
112-9717	111
	118
113-2127	1095
	1097
	1099
	1101
	1103
113-6479	642
	714
113-6738	676
113-8490	298
113-8491	298
	306
	307
	308
113-8492	298
113-8493	298
114-0358	1151
	1152
	1153
	1157
	1158
	1159
	1162
	1164
114-0359	1151
	1152
	1153
	1157
	1158
	1159
	1162
	1164
114-0489	1084
	1086
114-0623	1072
	1074
114-0706	573
114-0710	573
114-0711	573
114-0713	573
114-0754	591
114-1398	599
114-1399	599
114-1497	361
	365
114-1539	361
	365
114-1581	597
114-6285	426
	431
	436
	442
	448
	454
	459
	464
114-6289	470
	471
	473
114-8229	1006
	1009
115-2677	1107
115-2678	1107
115-8634	613
115-8645	765
	769
	797
	827
	830
116-0114	260
	347
116-0118	151
	195
	202
	209
	230
	232
	234
	235
	249
	254
	294
	313
	316
	318
	320
	322
	324
	337
	338
	346
	349

▶ PRIMARY REFERENCE

PART NUMBER INDEX

Part	Page	Part	Page	Part	Page	Part	Page
	352		1132		586		463
	353		1134		588	122-4021	157
	354		1135	121-1372	576	122-4101	408
	357		1137		578		410
	359		1138		582		411
116-0128	153		1139		586	122-4120	425
	195		1140		588		430
116-0210	298		1141	121-1459	1048		435
116-1628	425	118-5983	1026	121-1491	929		441
	430	118-9784	47		930		447
	435	118-9785	47		981		453
	441	118-9863	1216		986		458
	447	118-9902	850		993		463
	453		854		997	122-5114	936
	458		879		1002		940
	463		885		▶1074	122-5318	934
116-1665	377	118-9930	47		1076	122-7797	1006
	378	119-2325	919		1078		1009
	381	119-2804	690	121-1548	573	122-9605	1327
	386	119-3662	195	121-1549	573		1331
	387	119-5026	263		576		1334
	390		265		578		1336
	393		267		580	122-9608	1250
	394		269		582	122-9609	1250
	395		1321		584	122-9610	1250
	396	119-5259	1084		586	122-9611	1251
	397		1086		588		1252
	398	119-5260	1084	121-1558	936	122-9617	1223
	399		1086		940		1225
116-2659	114	119-5262	1084	121-1611	554	122-9657	1327
	116		1086		558		1331
116-3526	▶1073	119-5388	1021		564	123-2003	607
	1089		1032		569	123-2008	936
116-9115	1112	119-5389	1021	121-1865	1237		940
	▶1121		1032		1238	123-2423	1004
116-9129	694	119-5391	1021		1252	123-2430	804
116-9135	1437		1032	121-6303	811		821
117-1385	154	119-5392	1021		813		▶1067
	156	119-5398	1050		▶1075	123-2485	981
117-5540	494		1053	121-6304	1075		986
117-6306	1408		1060	121-7098	1327		993
117-6349	1250		1061		1331		997
117-6350	1250	120-5114	157	121-7136	1214	123-2511	1068
117-6356	1250		159		1327	123-2516	1084
117-8683	1244	120-7164	▶496		1331		1086
	1245	120-7165	▶497	121-7137	1327	123-2549	765
	1246	120-7167	▶498		1331		▶1068
	1247	120-7168	▶499	121-7138	1214		1069
	1248	120-7226	1109		1327	123-2552	1067
118-4044	1011	120-9027	279		1331		1068
	1013	121-0307	73	122-3979	425	123-4750	765
118-4057	936	121-0987	330		430		769
	949		331		435		773
118-4086	1019	121-1022	299		441	124-0914	922
	1024	121-1023	258		447	124-1008	838
	1028		260		453		841
	1030	121-1029	734		458		844
118-4087	1018	121-1038	153		463		847
	1023		195	122-3980	425		850
	1028	121-1039	153		430		854
	1030	121-1168	299		435		877
118-5982	1128	121-1173	304		441		879
	1129	121-1371	576		447		885
	1130		578		453	124-1019	918
	1131		582		458		921

▶ **PRIMARY REFERENCE**

PART NUMBER INDEX

Part	Page
124-1020	918
	921
124-1034	700
	703
124-1035	765
	769
124-1047	682
	684
124-1062	682
	684
124-1107	650
	654
124-1108	650
	654
124-1212	904
	906
124-1711	108
	▶111
124-3548	298
124-3953	1421
124-3966	1411
124-4009	1242
	1243
124-4010	1242
	1243
125-2947	88
125-2968	49
125-2970	79
125-2983	149
125-7874	195
	304
	313
	316
	318
	328
	337
125-7875	196
	280
	281
	304
	316
	318
	328
125-7876	260
	298
	347
126-1767	284
	328
	757
	761
	789
	793
	807
	809
	815
	817
	819
	821
	823
	855
	886
	1244
	1245
	1246
	1247
126-1774	316
	318
126-1813	604
126-1865	1021
	1032
126-1866	1021
	1032
126-1876	576
	580
	582
	584
	586
	588
126-1935	554
	556
	558
126-2016	949
126-2055	934
126-5062	520
	526
126-6514	1073
126-6515	1073
126-6516	1073
126-7574	227
126-9993	1064
127-0580	1202
	1206
127-5250	1353
127-5937	274
127-5939	274
127-5940	274
127-5941	274
127-5943	274
127-5944	274
127-5947	274
127-5948	274
127-5949	274
127-5950	274
127-5952	274
127-5953	274
127-6624	▶693
	1112
127-6625	▶1106
	1112
127-6780	648
127-6797	550
	▶694
128-2135	1184
	1188
	1192
	1196
	1200
	1210
	1212
	1227
	1229
128-2136	1200
	1210
	1212
128-2173	1237
	1238
	1248
	1267
	1268
	1346
128-2686	119
128-4411	165
	166
	169
	170
	171
	172
	175
	177
	179
	181
	184
	186
129-3400	425
	430
	435
	442
	447
	453
	458
	463
	915
129-5874	650
	654
129-6466	1418
129-7784	954
129-7854	949
129-7855	949
129-7857	594
	949
129-7859	949
129-7863	949
129-7921	949
129-7925	949
129-7927	949
129-7978	616
	620
	624
	626
	630
	635
129-7979	949
129-8034	607
130-0252	1327
	1331
130-0270	1327
	1331
130-3280	114
	116
130-4276	422
130-7596	32
131-1478	347
131-5818	1021
	1032
131-5915	1018
	1023
	1028
	1030
131-8821	111
	118
131-8822	111
	118
131-8824	111
131-8826	111
	112
	118
	119
131-8932	111
	118
131-9424	908
	909
132-1531	1106
132-1805	195
	202
	209
132-1806	195
	202
	209
132-1829	▶189
	298
132-5789	151
	196
	203
	209
	290
	292
	299
	311
	313
	316
	318
	320
	322
	338
	349
	351
	357
	1318
	1328
	1331
	1336
133-2425	415
133-5813	147
	789
	793
	832
	835
	891
	893
133-5828	682
	684
133-6777	936
133-6788	1089
133-6904	576
	578
	582
	586
	588
133-6909	573
133-8016	1202
	1206
134-0685	118
134-3284	249
	251
	252
	254
134-3296	299

▶ PRIMARY REFERENCE

PART NUMBER INDEX

Part	Page
134-3297	196
	299
134-3299	147
134-3379	228
134-4126	227
134-6921	879
	885
134-7089	114
	116
134-7258	1441
	1446
	1451
	1456
134-8850	▶422
134-8851	422
134-8875	▶423
134-8876	423
134-8878	423
134-8948	1142
135-2274	1253
135-2346	120
135-2347	120
135-2348	120
135-2349	120
135-2350	120
135-2351	120
135-2352	120
	135
135-2354	120
135-2355	120
135-2356	120
135-2358	120
135-2359	120
135-2360	120
135-2366	274
135-2369	48
135-2370	48
135-2381	191
135-3980	705
	707
	709
135-8572	147
	157
	159
135-8573	157
	159
	413
	425
	430
	435
	441
	447
	453
	458
	463
	470
	473
	487
135-8575	151
	425
	430
	435
	441
	447
	453
135-8576	420
	421
	500
	501
135-8577	370
	425
	430
	435
	441
	447
	453
	458
	463
135-8578	424
	425
	430
	435
	441
	447
	453
	458
	463
135-8965	1354
135-8966	1354
136-0207	827
	832
	835
	838
	841
	844
	847
	850
	854
	879
	885
137-0856	643
137-2270	1341
137-3623	609
137-3624	609
137-3625	609
137-3626	539
	609
137-3628	539
	609
137-3631	539
137-3709	686
	687
	688
	689
137-5541	139
138-5111	751
	754
138-5708	650
	654
139-7099	1186
	1190
	1194
	▶1306
139-7100	1271
	▶1272
	▶1274
139-7101	1186
	1190
	1194
	1198
	▶1408
139-7119	1412
139-7126	1202
	1206
139-7127	1202
	1206
139-7814	33
140-0674	1039
140-0677	1039
141-2759	298
142-0038	913
	915
142-3835	1
	2
	▶424
142-3836	1
	2
	▶1341
142-5515	940
142-5546	1250
142-5834	1239
142-6582	648
142-7764	646
142-7765	639
142-7768	682
	684
142-7769	682
	684
143-4254	799
	803
143-4308	765
	769
143-8023	591
143-8024	591
143-8025	591
143-8033	591
143-8149	591
144-0195	1404
	1405
144-0367	125
	782
	785
144-1636	283
	917
144-9126	1441
	1446
	1451
	1456
144-9691	1411
144-9692	1411
145-2237	765
	769
145-3031	518
145-3035	517
145-3042	368
	▶369
145-5106	534
	▶535
146-4936	470
	473
146-6747	1441
	1446
	1451
	1456
147-4131	1032
147-4184	1011
147-4921	1394
	1396
147-5860	936
	940
148-4632	597
148-4633	597
148-4634	597
148-4635	597
148-4636	597
148-4637	597
148-4638	597
148-4640	597
148-4642	597
148-4643	597
148-4644	▶597
	599
148-4679	368
	▶599
148-4685	417
148-4689	418
148-4703	418
148-4704	418
148-4705	361
148-4708	361
148-4715	361
	365
148-4732	597
148-4733	597
148-8317	751
	754
148-8321	765
	769
148-8323	716
	720
	723
	726
	730
	734
	738
148-8325	765
	769
148-8326	690
148-8327	757
	761
	904
	906
	909
	911
148-8328	919
148-8330	724
	730
	738
	754
	762
148-8335	613
	680
	682
	720
	726
	734
	750

▶ **PRIMARY REFERENCE**

PART NUMBER INDEX

Part	Page
	751
	757
	761
	913
	915
148-8336	682
	684
	690
	765
	769
	773
	776
	779
	789
	793
	800
	804
	807
	809
	811
	813
	815
	817
	819
	821
	823
	827
	832
	835
	850
	854
	858
	862
	865
	869
	873
	875
	877
	879
	885
	895
148-8338	811
	813
	838
	841
	844
	847
	850
	854
	858
	862
	865
	869
	875
	877
	879
	885
148-8339	734
	738
148-8340	782
	800
	804
	807
	809
	904
148-8341	690
148-8342	879
	885
148-8347	726
	730
	734
	738
	758
	762
	807
	809
	904
	906
148-8352	716
	720
	723
	726
	730
	734
	738
	913
	915
148-8353	682
	684
	789
	793
	800
	804
	815
	817
	819
	821
	823
	827
	850
	854
	879
	885
148-8354	785
	789
	793
	800
	804
	904
	906
148-8355	726
	730
	734
	738
	751
	754
	758
	762
148-8357	716
	758
	762
	782
	785
	908
	909
	911
	913
	915
148-8358	904
	906
148-8361	917
148-8362	751
	754
148-8363	766
	770
	891
	893
	904
	906
148-8364	682
	684
	799
	803
	832
	835
	923
	925
148-8367	682
	684
	766
	770
	776
	779
	800
	804
	811
	858
	895
148-8368	773
	776
	779
	919
148-8371	690
148-8372	923
	925
148-8378	690
	766
	770
	773
	776
	779
	789
	793
	797
	800
	804
	807
	809
	811
	813
	815
	817
	819
	821
	823
	827
	830
	832
	838
	841
	844
	847
	850
	854
	858
	862
	865
	869
	873
	875
	880
	886
	917
	923
	925
148-8390	690
148-8393	880
	886
148-8395	1011
	1013
148-8407	690
	789
	793
	800
	804
	819
	821
	877
	1002
	1013
148-8411	691
	716
	720
	723
	726
	730
	735
	739
	877
	880
	886
	904
	906
	908
	909
	911
148-8413	773
	776
	779
148-8415	709
	710
	711
148-8419	709
	710
	711
	766
	770
	773
	776
	779
148-8429	716
	720
	723
	726
	730
	735
	739
	913
	915
148-8433	773

▶ **PRIMARY REFERENCE**

PART NUMBER INDEX

Part	Page	Part	Page	Part	Page	Part	Page
	799		807	151-6705	1411	153-5290	978
	803		809	151-6767	1271		981
	832		815	151-6777	1271		986
	835		817		1282		993
	838		823	151-6778	1292		997
	841		830		1408	153-5291	978
	844		838	151-6785	1408		981
	847		841	151-6790	1414		986
	850		844	151-6792	1272		993
	854		847		1274		997
	858		851		1276	153-5292	978
	862		854		1279		981
	865		858		▶1416		986
	869		862	151-6793	1416		993
	877		865	151-6813	1292		997
	880		869		1408	153-5293	978
	886		873	151-6815	1292		981
	891		875		1408		986
	893		880	151-6831	1292		993
148-8434	832		886		1408		997
	835	150-4027	838	151-6832	1292	153-5295	981
148-8435	691		841		1408		986
	766		844	151-6841	1416		993
	770		847	151-6844	1408		997
	797		851	151-9461	1272		▶1039
	799		855		1274	153-5298	981
	803		859		1276		986
	811		862		1279		993
	813		866	151-9497	1272		997
	895		870		1274	153-5299	981
148-8439	766		880		1276		986
	770		886		1279		993
	800	150-4037	923	151-9557	1408		997
	804		925	151-9576	1292	153-5306	981
148-8443	844	150-4044	799		1408		986
	847		803	152-2938	73		993
	850		823	152-2939	73		997
	854		923	153-2521	▶242	153-5309	981
	879		925		249		986
	885	150-4048	880		251		993
148-8444	682		886		252		997
	684	150-4049	897		254	153-5311	981
148-8449	735		900	153-2523	▶243		986
	739	150-5782	949		245		993
149-1738	661	150-5797	616	153-2602	299		997
	665		620	153-2620	196	153-5313	1015
	667		624	153-2630	196		1016
	690		626	153-4906	73		▶1042
149-5050	294		630	153-5223	1021	153-6237	726
	304		635		1032		731
	324	150-5826	560	153-5239	1042		735
	342		571	153-5276	973		739
	344	150-5827	560		978		758
	359		571		991		762
149-5051	359	150-5828	560	153-5286	978		807
149-5069	304		571	153-5288	978		809
149-5070	304	151-1846	669		981	153-6249	776
149-5452	670	151-6703	1272		986		779
	672		1276		993		859
	674		1292		997	153-8623	616
	676		1408	153-5289	978		620
150-3024	147	151-6704	1272		981		624
150-3036	773		1276		986		626
	776		1292		993		630
	779		1408		997		635

▶ **PRIMARY REFERENCE**

PART NUMBER INDEX

Part	Page
153-8723	1237
	1238
153-8753	1252
153-8762	1251
	1252
153-8763	1251
	1252
153-8798	650
	654
153-8839	705
	707
153-8867	652
	657
	742
	744
154-0729	556
	566
154-0730	556
	566
154-0731	556
	566
154-0732	556
	566
154-0736	580
	584
154-0737	580
	584
154-0738	580
	584
154-0739	580
	584
154-9024	87
155-0576	225
155-2255	316
	318
	320
155-2260	196
	290
	292
	299
	320
	326
	337
	339
155-2265	328
155-2270	196
	263
	267
	272
	290
	292
	299
	313
	341
	349
	354
	1239
	1241
155-2271	196
	354
155-2274	241
	263
	267
	338
	359
155-3624	896
155-7024	1327
	1331
	1334
	1336
155-7042	1421
156-3103	120
156-5970	1081
	1082
156-6175	230
	290
	292
	313
156-6469	1414
156-6471	1272
	1274
156-6472	1292
	1407
	1408
156-6473	1412
156-6474	1416
156-6475	1416
156-6554	1408
156-6555	1408
156-6562	1408
156-6579	1408
156-6598	1272
	1274
	1276
	1279
156-6599	1202
	1206
156-6600	1272
	1274
	1276
	1279
156-6601	1408
156-6617	1202
156-6627	1408
156-6631	1412
156-6642	1326
156-6643	1272
	1274
	1276
	1279
156-6644	1272
	1274
	1276
	1279
156-6645	1272
	1274
	1276
	1279
156-6646	1418
156-6647	▶1411
	1418
156-6648	1411
156-6656	1200
156-6657	1200
156-8845	765
	769
157-0670	87
158-4380	506
	507
158-4381	506
	507
158-7864	1436
	1440
158-8150	981
	986
	993
	997
158-8159	974
	976
	978
	981
	986
	993
	997
158-8186	1039
158-8206	981
	986
	993
	997
158-8207	981
	986
	993
	997
158-8985	599
	▶931
158-8986	931
	▶933
158-8987	▶602
	▶603
	957
158-9085	▶1088
	1090
158-9090	682
	684
	▶1089
159-4700	535
159-7782	955
159-7784	607
160-7690	316
	318
161-3128	298
161-3639	1272
	1274
	1276
	1279
161-3650	1272
	1274
	1276
	1279
161-3663	1272
	1274
	1276
	1279
161-3665	1272
	1274
	1276
	1279
161-3668	1421
161-3669	1421
161-3670	1421
161-3677	1421
161-3684	1408
161-3685	1202
	1206
161-3694	1307
161-3695	1416
161-3697	1202
	1206
161-3698	1292
	1407
	1408
161-3705	1416
161-3717	1354
161-3750	▶1403
161-3751	▶1402
161-6987	1349
162-0177	766
	770
	1011
162-6185	26
	▶76
163-3729	373
	415
163-3754	493
	▶500
163-3755	500
163-4143	508
	509
	510
	511
	▶514
163-4144	508
	509
	▶513
163-6637	196
163-6659	298
163-6699	298
163-6700	165
	166
	169
	170
	171
	172
	175
	177
	179
	181
	184
	186
163-6711	328
163-6758	298
163-6759	196
163-6772	▶246
163-6795	246
	248
	298
	326
	328
	1404
	1405
	1421
163-6803	298
	304
163-6813	246
163-6814	246
164-0497	1294
	▶1302
164-0514	1274
	1276
	1279

▶ PRIMARY REFERENCE

PART NUMBER INDEX

Part	Page
164-0515	1272
	1274
	1276
	1279
164-0516	1416
164-0517	1416
164-0518	1416
164-0519	1274
	1276
	1279
164-0523	1202
	1206
164-0527	1202
	1206
164-0528	1202
	1206
	▶1326
164-0534	▶1295
	▶1297
164-0535	▶1299
164-0614	1253
164-0617	1253
164-0618	1403
164-0619	1403
164-0620	1403
164-0639	1402
164-0643	1305
164-0646	1200
	1210
	1212
164-0648	1408
164-0655	1200
	1210
	1212
164-0664	1326
164-0666	1414
	1415
164-4180	716
	720
	723
	727
	731
	735
	739
	758
	762
164-4858	▶138
	165
	166
	169
	170
	171
	172
	175
	177
	179
	181
	184
	186
164-5552	682
	684
164-5567	746
	748
	765
	769
	773
	776
	779
	807
	809
	838
	841
	844
	847
	851
	855
	859
	863
	866
	870
	873
	875
	880
	886
	897
	900
	957
164-5574	735
	739
	758
	762
164-5578	691
164-5590	957
164-5606	735
	739
	758
	762
	897
	900
164-5608	906
164-5628	790
	794
	815
	817
	819
	821
	823
164-5629	815
	817
	819
	821
	823
164-6874	815
	817
	858
	862
	865
	869
	873
	875
164-6980	769
	▶1069
164-6981	▶536
	799
	803
164-8474	1184
	1188
	1192
	1196
	1200
	1210
	1212
164-8977	799
	803
164-8983	799
	803
164-9640	765
	769
164-9869	766
	770
165-2823	420
165-2854	421
165-2976	404
	405
	408
	409
	410
	411
165-3065	1341
165-3102	377
	378
	381
	386
	387
	390
	393
	394
	395
	396
	397
	398
	399
165-3103	377
	378
	381
	386
	387
	390
	393
	394
	395
	396
	397
	398
165-3120	394
	395
	396
	397
	398
165-3165	639
165-3173	642
165-3185	714
165-3190	714
165-3194	714
165-3256	957
165-3260	904
	906
165-9282	591
165-9431	1018
	1023
	1028
	1030
165-9435	1019
	1024
	1028
	1030
165-9436	1018
	1023
	1028
	1030
165-9438	1019
	1024
	1028
	1030
165-9439	1018
	1023
165-9442	1018
	1023
	1028
	1030
165-9443	1019
	1024
	1028
	1030
165-9444	1018
	1023
	1028
	1030
165-9448	1018
	1023
165-9460	1018
	1023
	1028
	1030
165-9461	1018
	1030
165-9463	1021
	1032
165-9464	1021
	1070
165-9470	827
	▶1064
165-9473	▶945
	974
165-9474	945
165-9497	1004
165-9513	1006
	1009
165-9514	1006
	1009
165-9549	851
	855
	880
	886
	▶1076
165-9551	1021
165-9552	1021
	1032
165-9553	1021
	1032
165-9554	1021
	1032
165-9595	981
	986
	993
	997
165-9627	1083
166-1478	▶501
166-1479	501

▶ **PRIMARY REFERENCE**

PART NUMBER INDEX

Part	Page
166-1482	1114
166-1486	1095
	1097
	1099
	1101
	1103
	1118
	1119
	1120
	1126
	1128
	1129
	1130
	1131
	1132
	1134
	1135
	1137
	1138
	1139
	1140
	1141
166-1487	1095
	1097
	1099
	1101
	1103
	1116
166-1494	554
	556
	558
	564
	566
	569
	573
	576
	578
	580
	582
	584
	586
	588
	1118
	1119
	1120
	1128
	1129
	1130
	1131
	1132
	1137
	1138
	1139
	1140
	1141
166-1495	560
	562
	571
	1095
	1097
	1099
	1101
	1103
	1116
	1126
	1128
	1129
	1130
	1131
	1132
	1137
	1138
	1139
	1140
	1141
166-1512	501
166-1579	1107
	1109
166-3152	1107
	1109
167-3437	246
167-3438	246
167-3441	▶244
	246
167-3456	246
167-3466	815
	851
	880
167-3542	288
	298
	299
	304
	352
	353
	1319
	1382
	1386
167-3543	288
	298
	299
	352
	353
	1319
	1382
	1386
167-3593	298
167-7018	1202
	1206
167-7036	1415
167-7037	1415
167-7038	1276
	1279
167-7039	1272
	1274
	1276
	1279
167-7042	1202
	1206
167-7055	1299
167-7141	1302
167-7270	1441
	1446
	1451
	1456
168-0765	1043
168-0792	111
168-0794	1018
	1023
	1128
	1129
	1130
	1131
	1132
	1134
	1135
	1137
	1138
	1139
	1140
	1141
168-1969	746
	748
168-6761	515
	516
168-8451	361
	365
168-9523	642
168-9759	789
	793
	877
168-9760	638
168-9762	641
170-2512	359
170-2901	147
170-3015	400
	402
	412
	487
170-3016	425
	430
	435
	441
	447
	453
	458
	463
170-6888	298
170-6929	193
	195
	202
	209
	216
170-6993	242
	243
170-9294	▶248
170-9295	248
170-9324	263
	265
170-9336	195
	202
	209
170-9360	371
170-9394	299
170-9417	242
	243
170-9418	242
	243
170-9492	1405
170-9497	▶1250
	1353
170-9498	1250
170-9499	1250
170-9722	1292
	1407
	1408
170-9724	1200
	1210
	1212
170-9840	591
170-9856	591
170-9938	591
170-9941	591
171-0023	1084
	1086
171-0031	1053
171-0034	1049
	1050
	1053
	1060
	1061
	1063
171-0035	1049
	1053
	1060
	1063
171-0036	1049
	1053
	1060
	1063
171-0037	1049
	1050
	1053
	1060
	1061
	1063
171-0087	1018
	1023
	1028
	1030
171-0123	1036
	1037
171-0124	1036
	1037
171-0126	1036
	1037
171-0127	1036
	1037
171-0128	1036
	1037
171-0150	976
171-0183	1064
171-0184	1064
171-0185	1064
171-0188	838
	841
	844
	847
	851
	855
	859
	863
	866
	870
	880
	886
	▶1077
171-0198	▶1069
	1077
171-0596	757
	761
	807
	809
	917
171-2208	258
	260
171-2210	258
	260
171-3254	120
171-3369	90
	92

▶ PRIMARY REFERENCE

PART NUMBER INDEX

Part	Page
	96
	99
171-5956	1149
171-6723	897
	900
171-7325	1180
	1181
	1229
171-7413	1416
171-7414	1416
171-7420	1200
	1210
	1212
171-7426	1202
	1206
171-7477	1307
171-7485	1294
	▶1300
171-7503	1186
	1190
	1194
	1198
	▶1292
171-9073	126
171-9077	90
	92
	96
	99
171-9383	597
171-9464	418
171-9892	112
	119
172-2939	1092
	1094
	▶1107
172-4432	1002
172-8402	▶593
	1149
172-8406	593
172-8487	593
173-3384	616
	620
	624
	626
	630
	635
173-3397	616
	620
	624
	626
	630
	635
173-3398	615
	619
	623
	626
	630
	634
173-3406	594
173-3413	616
	620
	624
	626
	630
	635
173-3427	949
173-3428	949
173-3436	594
173-3439	934
173-3440	934
173-3441	934
173-3442	934
173-3443	934
173-3444	934
173-3445	934
173-3447	934
173-3450	934
173-3451	934
173-3452	933
	▶1043
173-3454	934
173-3473	949
173-3496	949
173-3498	949
173-3503	▶539
	607
173-3505	539
173-3506	539
173-3507	607
173-3510	607
173-3513	609
173-3515	609
173-3516	609
173-3517	609
173-3518	607
173-3529	609
173-3535	1088
173-3536	▶1044
	1088
	1089
173-4664	716
	720
	723
	727
	731
	735
	738
173-4816	782
	785
173-5089	925
173-7895	652
	657
173-7916	648
	650
	654
	659
	663
173-7995	650
	654
173-8073	73
174-3016	196
	299
174-5415	114
	116
174-7791	242
	243
174-9570	▶142
	147
176-1902	1327
	1331
176-1916	1223
	1225
176-1925	1300
176-1928	1295
	1297
	1300
176-1931	1404
176-1932	1405
176-1937	1202
	1206
176-1938	1202
	1206
176-1939	1202
	1206
176-1941	1326
176-1942	1202
	1206
176-1946	1200
176-1947	1200
176-1949	1308
176-1951	1416
176-1952	1416
176-1953	1416
176-1954	1416
176-1955	1416
176-1956	1416
176-1957	1416
176-1958	1186
	1190
	1194
	1198
	▶1412
176-1964	1194
	▶1276
	▶1279
	1282
176-1972	1200
	1210
	1212
176-1986	1202
	1206
176-1996	1283
176-2278	1095
	1097
	1099
	1101
	1103
176-2688	1431
176-2815	1429
176-4366	827
176-4463	799
	803
176-4469	799
	803
176-4472	799
	803
176-4684	827
176-4708	797
176-4743	807
	809
176-4768	799
	803
176-4770	904
	906
177-1061	913
	915
177-2470	949
177-2471	949
177-2553	609
177-2584	934
177-2585	594
177-2611	564
	566
	569
177-2619	539
177-2653	716
	720
	723
	726
	730
	734
	738
	▶1045
	▶1046
177-2713	965
177-5739	400
	402
	412
177-5877	424
177-5879	424
177-5880	424
177-6315	1341
177-8506	661
177-8572	665
	709
177-8628	▶1122
	1148
177-9778	147
178-2334	272
178-2335	272
178-2345	▶272
	273
178-5422	1223
	1225
178-5423	1223
	1225
178-5431	1404
178-5500	1405
178-5549	▶1294
178-5569	1412
178-5570	1202
	1206
178-5572	1414
	1415
178-5573	1272
	1274
	1276
	1279
	1414
	1415
178-5574	1272
	1274
	1276
	1279
	1414
	1415
178-5576	1408
178-5659	1367
	1368
	1377

▶ **PRIMARY REFERENCE**

PART NUMBER INDEX

Part	Page
	1378
178-6450	90
	92
	96
	99
178-6537	43
178-6538	43
178-6543	51
178-6544	51
178-6545	51
178-6552	127
178-6554	127
	131
	133
178-6563	75
178-6577	225
178-6598	46
178-6599	46
178-6600	46
178-6601	46
178-6633	88
178-6634	88
178-6635	88
178-6636	88
179-5005	654
179-5006	654
179-5030	670
	674
	676
179-5260	652
	657
179-7433	830
179-7456	823
179-7578	821
179-7616	850
	854
	879
	885
179-7662	751
	754
179-7863	782
	785
179-7867	782
	785
179-9681	619
179-9682	630
179-9763	949
179-9806	609
180-3861	242
	243
180-7521	373
180-7525	373
180-7529	373
180-7533	373
180-9286	897
	900
183-1035	248
183-1049	195
	202
	209
183-5916	33
183-8176	49
183-8177	49
183-8224	139
184-3833	965
184-3906	726
	734
184-3983	111
	118
184-8423	425
	430
	435
	441
	447
	453
	458
	463
184-8580	472
	473
	487
184-8722	377
	378
	381
	386
	387
	390
	393
	394
	395
	396
	397
	398
	399
184-8862	409
184-9156	827
184-9253	669
184-9254	669
184-9256	669
184-9257	669
184-9336	789
	793
184-9469	757
	761
185-0169	616
	620
	624
	626
	630
	635
185-0201	616
	620
	624
	626
	630
	634
185-0334	554
	556
	558
185-0383	789
	793
185-0400	1004
185-0407	1069
185-0423	1036
	1037
185-0462	789
	793
	▶1070
185-0463	1070
185-0490	974
	▶1004
185-2791	70
185-2793	70
185-8161	1223
	1225
185-8180	1272
	1274
	1276
	1279
185-8181	1408
185-8182	1408
185-8187	1408
185-8196	1202
	1206
185-8197	1408
185-8205	1200
	1210
	1212
185-8214	1200
	1210
	1212
185-8221	1408
185-8280	1326
185-8281	1326
185-8284	1227
185-8286	279
	1180
	1181
185-8290	1421
185-8293	1327
	1331
185-8300	1174
	1177
	1249
185-8302	1174
	1177
185-9208	263
	265
	267
	269
186-3735	159
	165
	166
	169
	170
	171
	172
	175
	177
	179
	181
	184
	186
	189
	190
	260
	267
	272
	277
	278
	279
	337
	339
	347
	359
	779
	1081
	1082
186-3736	272
186-5649	1116
186-5662	1116
187-0661	1441
	1446
	1451
	1456
187-5589	746
	748
187-5669	893
187-5693	▶695
	1123
	1124
	1125
187-5853	751
	754
187-5954	643
187-5975	▶696
	1124
187-5976	▶697
	1123
187-6058	701
	702
187-6696	697
187-6720	757
	761
187-6851	757
	761
187-6974	757
	761
187-7051	757
	761
187-7070	799
	803
187-7077	757
	761
187-9977	661
	665
	667
187-9978	661
	665
	667
187-9981	661
	665
	667
188-2084	602
	▶604
188-2315	1118
188-3064	506
	507
188-4140	▶607
	957
188-4142	607
	▶609
188-4143	609
188-4181	576
	578
	580
	582
	584
	586
	588
189-2678	1200

▶ PRIMARY REFERENCE

PART NUMBER INDEX

Part	Page
	1210
	1212
189-2690	1272
	1274
	1276
	1279
189-2693	1307
189-2694	1307
189-2702	1412
189-2704	1202
	1206
189-2711	1272
	1274
189-2716	1307
189-2717	1308
189-2768	1186
	1190
	1198
	▶1271
189-2793	1194
	▶1282
189-2796	1282
189-2847	1306
	1308
189-2849	1306
	▶1307
189-2853	1210
	1212
189-2854	1210
	1212
189-2855	1200
	1210
	1212
189-2864	1203
	1207
189-3396	1202
	1206
189-3409	1202
	1206
189-3925	1116
189-9377	73
189-9763	616
	620
	624
	626
	630
	634
	949
190-3523	506
	507
190-3524	506
	507
190-4896	619
	630
	949
190-5386	1441
	1446
	1451
	1456
190-5830	139
190-6880	425
	430
	435
	441
	447
	453
	458
	463
190-7673	616
	620
	624
	626
	630
	634
190-7674	615
	620
	623
	626
	630
	634
190-7750	1018
	1023
190-7751	1018
	1023
190-7819	1253
190-7826	965
190-7865	1013
190-9775	138
191-2578	597
191-3235	361
	365
191-3236	361
	365
191-5537	▶594
	596
191-5539	594
191-5540	594
191-5541	594
191-5542	933
	▶934
191-5543	934
191-5601	594
191-5707	615
	619
	623
	626
	630
	634
191-5709	949
192-0573	949
192-3039	390
	393
	394
	395
	396
	397
	398
193-1736	949
193-2764	1220
193-2765	1220
193-5014	1142
193-5015	1142
193-6606	650
	654
193-6788	1148
194-0027	765
	769
194-0174	▶638
	714
194-0176	638
	▶639
194-0180	▶640
	714
194-0181	640
	▶641
194-0182	640
	▶642
194-1608	▶506
	520
	521
	522
	523
	524
	529
194-1609	▶507
	525
	526
	527
	530
194-1910	▶520
194-1911	▶521
194-1912	519
	▶522
194-1914	▶523
194-1915	▶524
194-1917	▶525
194-1920	▶526
194-1921	519
	▶527
194-8353	573
194-8354	573
194-8355	573
194-8356	573
194-8359	573
	576
	578
	580
	582
	584
	586
	588
194-8380	922
194-9041	757
	761
195-8212	33
195-8322	78
195-8351	75
196-0711	943
196-0807	782
	785
196-0877	913
	915
196-1569	1295
	1297
	1300
196-1571	1295
	1297
	1300
196-1572	1295
	1297
	1300
196-1599	1295
196-1666	1249
196-3784	1032
196-7973	42
196-8217	139
196-8366	43
	49
	78
	79
197-0196	929
	930
197-0199	929
	930
197-0252	1084
	1086
197-0273	929
	930
197-2362	667
197-4330	260
	347
197-4385	354
198-3899	1168
	1392
	1397
	1398
199-1286	714
199-1609	879
	885
199-1773	757
	761
199-1863	891
199-1914	858
199-1965	800
	804
199-2045	897
	900
199-2178	49
199-2187	64
	66
	68
199-2188	64
	66
	68
199-2189	66
	68
199-2241	139
199-4561	597
199-7394	782
	785
199-7398	476
199-7403	782
	785
199-7447	▶537
200-3244	615
	619
	623
	626
	630
	634
200-3245	615
	619
	623
	626
	630
	634

2

▶ **PRIMARY REFERENCE**

PART NUMBER INDEX

Part	Page
200-3246	615
	619
	623
	626
	630
	634
200-3255	615
	619
	623
	626
	631
	634
200-3326	946
200-3327	946
200-3333	949
200-3334	949
200-3365	543
	▶946
201-3665	1149
201-3888	1216
201-4391	1274
	1276
	1279
201-4417	1202
	1206
201-4434	1334
201-4530	1202
	1206
201-4534	1295
	1297
	1300
201-4535	1295
	1297
	1300
201-9263	981
	986
	993
	997
201-9299	609
201-9329	▶965
	970
	971
201-9352	1004
	▶1047
201-9353	▶1035
	1047
201-9378	908
	909
	911
201-9379	832
	835
202-3855	678
202-3856	678
202-3857	678
202-3858	678
202-3915	652
	657
	670
	672
	674
	676
202-4004	797
	800
	804
202-6996	678
202-7127	650
	654
202-7128	650
	654
203-4889	425
	430
	435
	441
	447
	453
	458
	463
203-4890	425
	430
	435
	441
	447
	453
	458
	463
204-1611	290
	313
	1327
	1334
204-1673	193
	216
204-2755	▶1048
	1091
204-2756	1091
204-2762	609
204-2763	539
204-2800	948
204-2819	932
	▶1091
204-3622	554
	558
	564
	569
204-3623	576
	578
	582
	586
	588
204-3663	476
204-3737	716
	720
	723
204-3796	970
204-8137	716
	720
	723
205-0826	267
	269
205-1339	1239
205-1340	1239
	1241
205-6295	1202
	1206
205-6788	40
205-8257	267
206-3305	▶1018
	1255
	1256
	1257
	1258
206-3336	1251
	1252
	1253
206-5162	239
206-5208	269
207-0144	1186
	1190
	1194
	1198
	▶1407
207-0159	1294
	▶1304
207-0160	1294
	▶1305
207-0161	1304
207-0164	1304
	1305
207-0167	1304
	1305
207-0170	1304
	1305
207-0173	1304
	1305
207-0176	1305
207-0216	1295
	1297
207-6222	720
	724
	726
	730
	734
	738
207-6403	957
207-6404	957
207-6449	908
207-6666	643
207-6667	643
208-4289	404
	405
	408
	410
	411
209-0348	1398
209-4280	1397
209-5582	277
209-5894	936
	940
209-5909	936
	940
209-5917	1091
209-5920	1091
209-5957	560
	571
209-5992	932
	▶936
209-6000	954
209-6009	573
210-5808	1202
	1206
210-5827	1402
210-5828	1402
210-5829	1402
210-5834	1402
210-5836	1402
210-5837	1402
210-5838	1402
210-8012	122
210-8117	94
	101
	104
	106
210-8128	94
	101
	104
	106
210-9966	711
212-2838	415
212-5148	716
	720
	723
	726
	730
	751
	754
212-5419	850
	854
212-5423	850
	854
	879
	885
212-8489	127
212-8521	191
212-8561	8
	10
	14
	46
	▶191
212-8571	43
212-8572	43
212-8584	54
	55
	57
	59
212-8585	54
	59
212-8593	57
	59
212-8596	55
	61
	85
212-8613	191
213-0677	49
	957
213-0772	298
	342
	344
213-3745	765
	769
213-9100	190
213-9433	55
	139
214-4400	613
214-4401	613
214-4501	578
214-4511	▶613
	714
214-4512	▶613
	904
214-4518	613
214-4519	613

▶ PRIMARY REFERENCE

PART NUMBER INDEX

Part	Page
214-4531	1431
214-4532	1431
214-7915	1441
	1446
	1451
	1456
215-4890	757
	▶966
215-4909	603
	604
	605
215-5037	800
	804
	▶928
215-9952	▶940
215-9961	615
	619
	623
	626
	630
	634
215-9962	615
	619
	623
	626
	630
	634
215-9982	363
	364
	▶932
216-4970	258
	260
216-6485	667
216-6589	650
	654
216-6676	611
216-6677	611
216-6678	611
217-4890	▶1165
217-4891	▶1155
217-4892	▶1160
217-4893	▶1161
217-4894	▶1163
217-4895	▶1154
217-4896	1147
	▶1156
217-5469	76
	77
217-5589	79
218-0404	239
218-1139	716
	720
	723
	726
	730
	734
	738
218-5199	373
219-0305	1300
	1302
219-6314	239
219-8468	496
	497
219-8469	498
	499
220-8678	142
220-9090	1154
	1155
	1156
	1160
	1161
	1163
	1165
220-9091	1155
220-9092	1160
220-9093	1161
220-9094	1143
	1144
220-9097	1163
220-9099	1156
221-4807	865
	869
221-4883	797
	825
221-8045	1441
	1446
	1451
	1456
221-8813	▶1345
	1353
221-8859	757
	761
	807
	809
	917
221-8861	3
	▶229
221-8872	▶226
	1353
221-8874	226
221-8884	▶1237
	▶1238
	1353
222-0084	1045
	▶1049
222-0085	1049
	1063
222-0124	687
	689
222-0126	686
	688
222-0225	1242
	1243
222-1090	1165
222-4737	981
	986
	993
	997
222-8238	79
222-8292	43
222-8371	57
223-3040	1
	2
	▶370
223-3041	370
	▶371
223-3042	1
	2
	▶413
223-4296	1349
223-4453	129
	▶277
223-6768	879
223-9818	1441
	1446
	1451
	1456
224-0554	1441
	1446
	1451
	1456
224-1685	611
224-1687	▶611
	913
	915
224-8946	1441
	1446
	1451
	1456
225-0312	1441
	1446
	1451
	1456
225-4257	1441
	1446
	1451
	1456
225-4543	949
225-4544	949
225-4548	955
225-4549	955
225-4588	553
	▶573
225-4590	▶549
	1113
225-4591	549
	▶560
225-4592	549
	▶699
225-4598	▶549
	1113
225-4599	549
	▶562
225-4607	615
	619
	623
	626
	630
	634
225-4785	690
	▶1006
225-4787	1006
	1009
225-4789	1006
	1009
225-4790	1006
	1009
225-4791	1006
	1009
225-4792	1006
	1009
225-4793	1006
	1009
225-4796	1006
	1009
225-4797	1006
	1009
225-4803	1006
	1009
225-4804	967
	1006
	1009
	1011
	1013
225-4815	1018
	1023
225-4816	1018
	1023
225-4818	1006
	1009
	1011
	1013
225-4820	1006
	1009
225-4821	1006
	1009
225-4830	1006
	1009
225-4831	1006
	1009
225-4832	1006
	1009
225-4833	1006
	1009
225-4843	919
	▶1009
225-4844	1009
225-5707	1328
	1331
225-5714	1328
	1331
	1336
226-3065	654
227-0265	788
227-0581	782
	785
227-0590	957
227-0620	▶614
	957
227-6034	361
	365
227-6035	▶361
	363
227-6071	417
227-6081	▶417
	418
227-6105	418
227-6106	418
227-6147	▶418
	493
227-6166	368
	▶600
227-6215	599
227-6221	599
227-6228	597
227-6884	922
227-6913	▶363
	368
227-7575	298
227-7581	▶239

▶ **PRIMARY REFERENCE**

PART NUMBER INDEX

Part	Page
227-7617	1245
227-7625	1237
	1238
227-8807	▶538
228-2781	1441
	1446
	1451
	1456
228-5463	373
228-5614	1134
	1135
228-5615	560
	562
	571
	1116
	1134
	1135
	1140
228-7092	73
228-7316	1441
	1446
	1451
	1456
228-9254	1441
	1446
	1451
	1456
229-0887	1441
	1446
	1451
	1456
229-1009	591
229-1091	1126
229-1092	1114
229-1095	1126
229-1096	1128
	1129
	1130
	1131
	1132
	1137
	1138
	1139
	1140
	1141
229-1785	155
	▶157
	▶159
229-1857	157
	159
229-1859	▶153
	157
	159
229-1860	157
	159
229-1861	157
	159
229-3218	139
229-9070	▶1404
229-9075	1357
	▶1379
229-9076	▶1366
	1369
	1379
229-9077	1379
	1380
	▶1394
229-9078	1353
	▶1354
229-9082	1173
	▶1283
	1316
229-9084	▶1312
	▶1314
	1316
229-9086	▶1420
229-9087	▶1418
	1420
229-9088	▶1405
	1420
229-9089	1358
	▶1380
229-9090	▶1367
	1380
229-9093	▶1368
	1384
229-9094	▶1309
	1367
	1368
229-9095	1369
	▶1395
229-9096	▶1184
229-9097	1184
	▶1186
229-9098	▶1188
229-9099	1188
	▶1190
229-9100	▶1192
229-9101	1192
	▶1194
229-9108	▶1196
229-9109	1196
	▶1198
230-0185	716
230-0280	1112
	▶1126
230-1340	238
230-1341	238
230-2979	7
	13
	80
	81
	▶82
230-4009	196
	299
	328
	354
230-4011	196
	299
	326
	328
	341
	354
	356
	1318
230-4012	779
	1081
	1082
230-4013	196
	299
230-5008	304
	328
230-5010	196
	313
	316
	318
	320
	326
	328
	337
	339
	354
	359
	1319
231-1768	▶1319
231-1771	▶190
231-1827	195
	202
	209
231-1836	▶326
	327
231-2295	196
	328
	359
	1319
231-6969	599
232-0092	▶1166
232-4102	800
	▶1036
232-4103	746
	▶972
232-4113	966
	967
232-4114	967
233-1277	32
233-1279	274
233-1280	274
234-1035	258
234-1037	258
	260
234-1038	258
	260
234-1097	298
234-1122	354
234-1124	1319
234-1156	263
	265
	267
	269
234-1158	263
	265
234-3927	1116
234-3928	1116
234-3930	1116
234-3931	1116
234-4440	923
	925
	▶955
234-4452	615
	619
	623
	626
	630
	634
234-4453	615
	619
	623
	626
	630
	634
234-4492	682
	684
234-4573	573
234-4574	573
234-4576	573
234-4577	573
234-4578	573
234-4580	560
	562
	571
234-4581	560
	562
	571
234-4582	560
	562
	571
234-4583	560
	562
	571
234-4584	560
	562
234-4585	560
	562
	571
234-4586	560
	562
	571
234-4587	560
234-4588	560
	562
	571
234-4589	560
	562
	571
234-4591	699
	704
234-4592	699
	704
234-4629	940
234-4796	75
234-6467	1186
	1198
234-6468	1200
	1210
	1212
234-6469	1200
	1210
	1212
234-6470	1200
	1210
	1212
234-6471	1200
	1210
	1212
234-6472	1200
	1210
	1212
234-6473	1200

▶ PRIMARY REFERENCE

PART NUMBER INDEX

Part	Page
	1210
	1212
234-6474	1200
	1210
	1212
234-6475	1210
234-6476	1200
	1210
	1212
234-6477	1200
	1210
	1212
234-6478	1210
234-6480	1200
	1210
	1212
234-6483	1200
	1210
	1212
234-6485	1200
	1210
	1212
234-6489	1414
234-6490	1200
	1210
	1212
234-6491	1200
	1210
	1212
234-6493	1194
234-6497	1200
	1210
	1212
234-6498	1200
	1210
	1212
234-6499	1269
234-6500	▶1270
234-6501	1184
	1188
	1192
	1196
	▶1269
234-6502	1269
234-6521	1200
	1210
	1212
234-6547	1200
	1210
	1212
234-6548	1200
	1210
	1212
234-6549	1200
	1210
	1212
234-6550	1200
	1210
	1212
234-6579	1200
	1210
	1212
	1227
	1229
234-6580	1227
234-6593	1269
234-6594	1186
	1190
	1194
	1198
	▶1421
234-6602	1227
234-6603	1229
234-6604	1227
234-6605	1229
234-6608	1227
	1229
234-6609	1227
	1229
234-6610	1227
	1229
234-6611	1229
234-6612	1229
234-6613	▶279
	1229
234-6614	1229
234-6615	279
235-0723	712
	713
	▶1149
235-7520	493
	494
235-7679	560
	562
	564
	566
	568
	569
	571
	1114
	1128
	1129
	1130
	1131
	1132
	1134
	1135
	1137
	1138
	1139
	1140
	1141
235-7764	5
	6
	▶485
	519
	528
235-7765	485
235-7769	560
	562
	564
	566
	569
	571
235-7770	573
235-8856	1353
	▶1391
235-8857	1391
235-8862	1351
235-8873	1169
	1171
	1312
	1314
235-8874	1169
	1171
	1312
	1314
235-8875	1169
	1171
	1312
	1314
235-8876	1283
235-8877	1283
235-8878	1283
235-8879	1283
235-8880	1222
235-8891	1327
	1331
235-8893	1223
	1225
235-8894	1223
	1225
235-8908	1186
	1190
	1194
	▶1200
235-8909	1186
	1190
	1198
	▶1414
235-8910	1186
	1190
	1194
	1198
	▶1202
	▶1206
235-8911	1415
235-8912	1202
	1206
235-8914	1227
	1229
235-8915	1194
	▶1415
235-8916	1190
235-8917	1198
	▶1210
	▶1212
235-8922	1200
	1210
	1212
235-8923	1200
	1210
	1212
235-8926	1200
235-8928	1200
235-8929	1200
235-8930	1210
	1212
235-8932	1421
235-8933	1202
	1206
235-8950	1200
	1210
	1212
235-8951	1180
235-8952	1181
235-8965	1229
235-8966	1227
235-8969	▶1242
	1259
	1262
235-8970	▶1243
	1260
	1261
235-8971	1242
235-8972	1243
235-8974	1418
235-8996	1180
	1181
235-8997	1180
235-8998	1181
235-9001	1184
	1188
	1192
	1196
235-9003	▶1173
235-9004	▶1169
	▶1171
	1173
235-9005	1169
	1171
235-9012	1404
	1405
235-9014	1327
	1331
	1334
	1336
235-9015	1327
	1331
	1334
	1336
235-9020	▶1362
	1364
235-9028	▶1369
	1370
236-2843	789
	793
236-2844	789
	793
236-2848	789
	793
236-2970	676
236-3200	773
	776
	779
236-3212	▶643
	714
236-3213	▶643
	714
236-3214	▶643
236-3215	643
236-3257	614
236-3258	614
236-3259	614
236-3669	371
236-3670	371
236-3671	371
236-3702	413
236-3703	413

▶ **PRIMARY REFERENCE**

PART NUMBER INDEX

Part	Page	Part	Page	Part	Page	Part	Page
236-3746	▶404	238-2215	352	239-4350	517		1129
	435	238-2216	1319	239-4362	505		1130
236-3747	404	238-2260	1321	239-4378	517		1131
	405	238-2279	258	239-4382	517		1132
236-3748	404		260	239-4383	517		1137
	405	238-2280	258	239-4384	517		1138
236-3749	404		260	239-4385	502		1139
236-6365	1114	238-2318	298		▶503		1140
	1118	238-2319	299	239-4386	502		1141
	1119	238-2324	260		▶504	240-2978	400
	1120		347	239-4387	503		402
236-6366	1119	238-2325	260		▶515		412
	1120		347	239-4388	504	240-2979	400
	1122	238-2390	298		▶516		402
236-6419	974	238-2391	298	239-4389	515		412
	976	238-2478	▶286		516	240-2988	495
	978		287		▶517	240-2998	946
	981	238-2479	286	239-4390	517		▶948
	986	238-2485	▶287		▶518	240-3822	3
	993		545	239-4391	518		▶493
	997	238-2501	193	239-4392	518	240-3828	▶1092
236-6421	978		195	239-4393	517	240-3830	▶1092
	981		202	239-4394	518	240-3832	▶1093
	986		209	239-6395	114	240-3833	▶1092
	993		216		116	240-3835	▶1094
	997	238-2528	193	239-6507	26	240-3836	▶1093
236-8341	493		195		▶1216	240-3839	▶1123
236-9435	371		202	239-6604	127	240-3843	▶1124
236-9437	371		209	239-6612	▶112	240-3845	▶1123
236-9438	371		216		114	240-3846	▶1124
236-9440	371	239-1699	647	239-6626	63	240-3849	▶1124
236-9570	413		▶682	239-6627	63	240-3851	▶1124
237-0228	271		▶684	239-6630	63	240-3854	▶1125
237-3106	1126	239-1710	647	239-6631	63	240-3858	▶1112
237-3184	▶648		▶959	239-6632	63	240-3861	▶1112
237-5586	487	239-1711	▶957	239-6681	191	240-3881	▶960
238-0112	271		959	239-6986	1441	240-3882	▶1125
238-0118	271	239-1714	647		1446	240-3920	157
238-0120	154		▶714		1451		159
	156	239-1716	647		1456	240-4999	▶1357
	271		▶923	239-7352	326	240-5001	▶1370
238-1463	1319	239-1717	647		328	240-5003	▶1358
238-1506	258		▶925		354	240-5030	▶1316
238-1570	155	239-1726	606	239-7356	299	240-5033	1316
	▶342		▶913	239-8677	▶963		▶1334
	▶344		▶915	239-8679	▶964	240-5036	1169
238-1579	342	239-1732	▶669	239-8693	541		▶1174
	344		1092		▶1251		1312
238-1593	342		1094	239-8695	541	240-5037	▶1363
238-1594	▶280	239-2582	▶1147		542	240-5039	▶1364
	342	239-2583	▶1143		▶1252	240-5061	▶1359
	344		1147	239-8696	540	240-5062	1359
238-1595	280	239-2585	▶1147		▶1239		▶1381
238-1596	▶281	239-2586	▶1144	239-8697	928	240-5063	1381
	342		1147		▶929		1384
	344	239-2689	▶1147	239-8774	993		▶1396
238-1597	281	239-2690	▶1145		▶1050	240-5064	▶1382
238-2171	341		1147	239-8998	928	240-5065	1382
238-2208	▶288	239-2692	▶1148		▶930		▶1384
	1420	239-2693	▶1146	239-9954	224	240-5067	1245
238-2209	288		1148		▶227	240-5071	▶1286
238-2210	288	239-2876	1143	240-2912	1118	240-5073	▶1287
238-2211	1382		1145		1119	240-5074	1283
	1386	239-4341	493		1120	241-1933	487
238-2212	298		▶502	240-2913	1128	241-1938	487

▶ PRIMARY REFERENCE

PART NUMBER INDEX

Part	Page
241-1999	4
	▶375
	▶376
241-2000	375
	▶377
	▶378
241-2001	377
241-2002	▶379
	▶380
	1112
241-2003	379
	▶381
241-7282	1092
	1093
	▶1095
241-7283	1095
241-7286	1092
	1093
	▶1109
241-7287	1092
	1093
	▶1097
241-7288	1097
241-7291	1092
	1094
	▶1099
241-7292	1099
241-7296	1123
	▶1128
241-7300	1123
	▶1129
241-7301	1129
241-7303	1124
	▶1130
241-7304	1130
241-7306	1125
	▶1131
241-7309	1125
	▶1132
241-7312	1124
	▶1134
241-7313	1134
241-7315	1124
	▶1135
241-7316	1135
241-7379	554
	556
	558
241-7380	554
	556
	558
241-7381	576
	578
	580
	582
	584
	586
	588
241-7382	564
	566
	569
242-1510	1441
	1446
	1451
	1456
242-1588	1441
	1446
	1451
	1456
242-6092	1441
	1446
	1451
	1456
242-6463	1124
	▶1137
242-6464	1137
242-6475	▶650
242-6476	▶652
242-6478	▶705
242-6479	▶654
242-6480	▶657
242-6482	▶707
242-6483	▶659
242-6484	▶661
242-6486	▶709
242-6487	▶663
242-6488	▶665
242-6490	▶710
242-6492	▶667
242-6494	▶711
242-6505	▶670
	▶672
	▶674
	963
242-6506	▶676
	964
242-6730	▶548
	1092
	1093
	1112
242-6731	548
	▶554
242-6732	548
	▶686
242-6733	▶551
	1092
	1093
242-6734	551
	▶576
242-6735	551
	552
	▶918
242-6736	▶548
	1092
	1093
	1112
242-6737	548
	▶687
242-6743	▶551
	1092
242-6744	551
	▶578
242-6745	▶548
	1093
	1094
242-6746	548
	▶556
242-6747	▶551
	1093
242-6748	551
	▶580
242-6749	▶548
	1093
	1094
242-6750	▶552
	1092
242-6751	552
	▶582
242-6755	▶550
	1112
	1113
	1148
242-6756	550
	▶564
242-6757	550
	▶700
242-6758	▶550
	1112
242-6759	550
	▶566
242-6762	▶552
	1094
242-6763	552
	▶584
242-6801	949
242-6803	949
242-6804	949
242-8768	1394
	1395
	1396
243-4505	159
	196
	249
	254
	299
	326
	328
	354
	356
	1218
	1319
	1334
	1336
243-4506	196
	299
243-4507	354
243-4508	196
	241
	284
	294
	316
	318
	320
	326
	338
	354
243-4509	196
	290
	292
	313
	328
	354
244-4254	1092
	1119
244-4255	1118
	1119
	1120
244-4277	1113
	1095
	1097
	1099
	1101
	1103
	1126
	1128
	1129
	1130
	1131
	1132
	1134
	1135
	1137
	1138
	1139
	1141
244-4360	1118
	1119
	1120
244-7927	409
244-7928	409
244-7929	408
	410
244-8194	375
	376
	379
	380
	382
	383
	384
	385
	388
	389
	391
	392
244-8198	425
	430
	435
	442
	447
	453
	458
	463
	915
244-8202	425
	430
	435
	441
	447
	453
	458
	463
244-8207	425
	435

▶ **PRIMARY REFERENCE**

PART NUMBER INDEX

Part	Page
	441
	453
	458
244-8219	425
	435
	453
244-8228	425
	430
	435
	441
	447
	453
	458
	463
244-8234	425
	430
	435
	441
	447
	453
	458
	463
244-8242	425
	430
	435
	441
	447
	453
	458
	463
244-8251	435
244-8255	425
	430
	435
	441
	447
	453
	458
	463
244-8277	489
	490
	491
	492
244-8278	489
	490
	491
	492
244-8284	479
244-8288	489
	491
	492
244-8400	▶973
	974
	976
244-8419	962
	▶974
244-8494	1018
	1023
244-8495	1018
	1023
244-8496	1018
	1023
244-8497	1019
	1024
244-8498	1018
244-8499	1019
	1024
244-8500	1018
	1023
244-8501	1019
	1024
244-8506	757
	761
	▶1083
244-8507	1083
	▶1084
244-8522	720
245-1042	196
245-1045	196
245-5079	789
	793
245-5285	896
245-5287	896
245-5402	957
245-5416	925
245-5427	923
245-5457	1441
	1446
	1451
	1456
245-7749	1219
	1220
	▶1222
245-7750	1222
245-7751	1222
245-7756	1331
245-7757	1331
245-7758	1327
	1331
245-7760	298
245-7790	1200
	1210
	1212
	1227
	1229
245-7791	1283
245-7792	1283
245-7793	1283
245-7794	▶1288
245-7795	▶1289
245-7796	▶1290
245-7811	1
	2
	▶1351
245-7813	1249
245-7814	1249
245-7815	1249
245-7816	1249
245-7817	1174
	1177
245-7818	1174
	1177
245-7819	1174
	1177
245-7820	1174
	1177
245-7823	1174
	1177
245-7824	1174
245-7825	1174
	1177
245-7826	1174
	1177
245-7827	1174
	1177
245-7828	1174
	1177
245-7829	1174
	1177
245-7830	1174
	1177
245-7831	1174
	1177
245-7832	1174
	1177
245-7833	1174
	1177
245-7834	1174
	1177
245-7835	1174
	1177
245-7836	1174
	1177
	▶1214
245-7837	1214
245-7838	1174
	1177
245-7839	1174
	1177
245-7842	1242
245-7844	1243
245-7846	1174
	1177
	▶1249
245-7847	1174
	1177
245-7850	1327
	1331
245-7851	1327
	1331
245-7856	1174
	1177
245-7858	1312
	1314
245-7872	1283
245-7873	1283
245-7881	▶1356
245-7883	1366
245-7884	1367
245-7885	1368
245-7886	1168
245-7887	1366
	1367
	1368
245-7888	1366
	1367
	1368
245-7889	▶1167
	1394
	1395
	1396
245-7890	▶1183
	1394
	1395
	1396
245-7891	▶1392
245-7892	1394
	▶1397
245-7895	1323
	1324
	1325
	1394
	1395
	1396
245-7896	▶1168
	1394
	1395
	1396
245-7897	1167
	1168
	1183
	1392
	1394
	1397
	1398
245-7898	1168
	1366
	1367
	1368
	1392
	1397
	1398
245-7899	1167
	1183
	1392
	1394
	1397
	1398
245-7900	415
245-7901	415
245-7905	1214
245-7916	1354
245-7922	▶1223
	▶1225
	1353
245-7925	1229
245-7926	1227
245-7929	1269
245-7931	1421
245-7948	1227
	1229
245-9178	90
	92
	96
	99
245-9185	90
	92
	96
	99
245-9191	90
	92
	96
	99
245-9205	90
	92
	96
	99

▶ PRIMARY REFERENCE

PART NUMBER INDEX

Part	Page
245-9212	94
	101
	104
	106
245-9216	94
	101
	104
	106
245-9217	94
	101
	104
	106
245-9218	94
	101
	104
	106
245-9276	94
	106
245-9313	9
	▶84
245-9343	84
245-9344	82
245-9348	90
	92
	96
	99
245-9349	90
	92
	96
	99
245-9352	90
	92
	96
	99
246-2641	162
	163
	164
	167
246-5425	505
247-2693	326
	328
	354
	1244
	1245
	1246
	1247
	1248
	1267
	1268
247-2694	1346
247-2695	1346
247-5112	1267
	1268
247-5276	1237
	▶1267
247-5284	▶224
	237
247-6019	154
	156
247-7331	▶1113
247-7346	▶519
247-7382	▶519
247-7383	▶1113
247-7410	540
	▶1423
247-7411	540
	▶1425
247-7418	1353
	▶1426
247-7423	541
	542
	▶1427
247-7424	541
	▶1428
247-7436	1441
	1446
	1451
	1456
247-7437	1441
	1446
	1451
	1456
247-7438	1441
	1446
	1451
	1456
247-7454	3
	▶493
247-7457	▶964
247-7459	▶606
247-7465	540
	543
	▶1429
247-7490	963
	▶1430
247-7492	963
	▶1431
247-7587	1002
247-8782	949
247-8864	554
	556
	558
247-8865	554
	556
	558
	564
	566
	569
247-8866	554
	556
	558
247-8867	554
	556
	558
247-8868	554
247-8869	686
	688
247-8870	687
	689
247-8873	576
	578
	580
	582
	584
	586
	588
247-8874	576
	578
	580
	582
	584
	586
	588
247-8876	576
	578
	580
	586
247-8877	576
	578
	580
	586
247-8878	576
	582
247-8881	582
	584
	588
247-8882	582
	584
	588
247-8883	918
	921
247-8885	564
	566
	569
247-8886	564
	566
	569
247-8887	564
	566
	569
247-8888	564
247-8920	949
247-8974	578
247-9030	650
247-9033	650
247-9034	650
247-9073	919
247-9074	919
247-9076	919
247-9078	919
247-9129	652
247-9132	652
247-9135	652
247-9138	652
247-9141	652
247-9144	652
247-9147	652
247-9164	705
247-9169	705
247-9173	705
247-9177	705
247-9181	705
247-9294	705
	707
247-9298	652
	657
248-7143	503
	504
	▶505
248-7174	518
248-7820	1114
248-7822	1114
248-7823	1114
248-7831	1112
	▶1114
248-7832	1114
248-7835	1114
248-7836	1114
248-7854	550
	▶568
248-7857	591
248-8930	401
248-8940	425
	430
	435
	441
	447
	453
	458
	463
	▶488
248-8943	488
248-8944	488
248-8957	435
248-8961	409
248-8992	420
248-8993	420
248-8994	420
248-8995	420
248-9012	421
248-9014	421
248-9016	421
248-9018	421
248-9020	421
248-9061	377
	378
	381
	386
	387
	390
	393
	394
	395
	396
	397
	398
	399
248-9428	923
248-9633	▶701
	1124
248-9825	647
	▶789
	▶793
248-9846	647
	▶782
	▶785
248-9847	647
	▶896
248-9848	647
	▶788
248-9850	647
	▶797
248-9851	647
	▶799
	▶803
248-9852	647
	▶807
	▶809
248-9853	▶904
	▶906

▶ **PRIMARY REFERENCE**

PART NUMBER INDEX

Part	Page
	959
250-1440	661
	665
	667
250-2402	1101
250-2446	981
	986
	993
	997
250-2447	981
	986
	993
	997
250-2503	950
250-2508	751
	754
	▶1052
250-5054	404
	405
250-8054	1423
	1425
	1426
	1427
	1428
	1429
251-0299	354
251-0303	258
	260
251-0304	258
	260
251-0433	▶327
	1353
251-0435	327
	▶328
251-0436	▶230
	541
251-0452	334
251-0467	195
	202
	209
251-0482	▶330
251-0483	330
	331
251-0485	▶331
251-0526	▶232
	1353
251-0529	▶294
	541
	542
251-0538	▶1321
251-0542	▶263
	▶265
251-0543	263
	267
251-0544	239
	▶267
	▶269
251-0580	326
251-0598	294
251-0602	328
251-0637	298
251-2597	1113
	▶1116
251-4162	221
253-0861	1441
	1446
	1451
	1456
253-1346	515
	516
253-2111	258
	260
253-6445	663
253-6453	663
253-6454	663
253-6455	665
253-6548	710
253-6551	710
253-6621	659
253-6664	▶550
	1112
253-6685	667
253-6688	711
253-6691	711
253-6694	648
253-6697	648
254-2996	1116
254-3022	493
	▶494
254-3023	494
254-3024	494
254-3052	1118
	1119
	1120
254-3053	1118
	1119
	1120
254-3080	765
	769
	▶1002
255-0350	1143
	1144
	1145
	1146
255-0351	1145
255-0353	1143
	1145
255-0354	1143
	1145
255-0372	1143
255-0383	1146
255-0385	1144
255-0386	1144
	1146
255-0387	1144
	1146
255-0388	1144
	1146
255-1659	▶811
	▶813
	960
255-1663	542
	▶815
	▶817
255-1665	789
	793
255-1666	789
	793
255-1781	827
	830
255-1800	541
	▶819
255-1802	541
	▶821
255-1843	▶823
	1353
255-2068	875
255-2871	61
	85
255-2873	61
	85
255-2904	79
255-2926	61
	85
255-2927	1216
255-2966	111
	112
	118
	119
255-3018	▶63
	1216
255-3020	63
255-3021	63
255-3022	63
255-3044	26
	▶121
255-3160	147
255-3170	1430
255-3171	1430
255-3173	1430
255-4410	1356
255-5660	981
	▶1053
255-5661	976
	978
	981
	986
	993
	997
	▶1054
255-5662	1006
	1009
	1011
	1013
	▶1055
255-5680	714
	▶1011
255-5683	714
	▶1013
255-5713	541
	542
	543
	▶961
255-5716	542
	▶962
255-5843	▶540
	544
255-5844	▶540
255-5845	544
	▶1353
255-5846	▶540
256-0093	▶615
	▶619
	▶623
	949
256-0096	▶626
	▶630
	▶634
	949
256-9806	1149
256-9807	1149
256-9808	1149
257-4502	1441
	1446
257-4547	1431
257-5015	1430
258-0330	1295
	1297
	1300
258-6749	765
	769
	▶1078
259-0647	699
	704
259-0652	562
259-0653	562
259-0654	562
259-0655	562
259-0656	562
259-0680	964
	▶1090
259-0775	580
	584
259-0918	954
259-0922	▶954
	957
259-3543	413
259-3687	425
	430
	453
	458
	463
	▶470
259-3688	470
259-4877	328
259-4883	298
259-4884	287
	304
259-4887	316
	318
259-4914	1321
259-4940	316
	318
	320
	322
259-5043	▶249
	1092
	1093
	1112
259-5044	▶356
	545
259-5045	▶313
	541
	542
259-5046	▶349
	606
259-5047	▶251
259-5048	▶252

▶ **PRIMARY REFERENCE**

PART NUMBER INDEX

Part	Page
259-5049	▶193
259-5051	▶334
259-5052	1
	2
	▶341
259-5097	334
259-5129	341
259-5161	▶298
	1353
259-5176	▶256
	▶257
	1353
259-5177	256
	▶258
259-5225	193
	216
259-5229	193
	216
259-5237	▶233
	960
259-5267	195
	202
	209
259-5274	258
	260
	▶278
259-5290	298
259-5293	▶234
	1353
259-5294	▶235
	540
	543
259-5295	▶236
	540
259-5296	298
259-5317	195
	202
	209
259-5326	249
259-5327	251
259-5344	349
259-7178	▶1353
259-7179	▶1253
	1353
259-7180	287
259-7184	26
	▶1219
259-7202	1229
259-7207	1219
259-7214	1356
259-7215	1356
259-7220	304
259-7244	1216
	▶1218
259-7286	1218
259-7295	▶1182
	1202
	1206
259-7345	1181
259-7346	▶1180
	1227
259-7347	▶1181
	1229
259-7348	1223
	1225
	▶1227
259-7349	1223
	1225
	▶1229
259-7350	1198
	▶1308
259-7351	1308
259-7352	1308
259-7353	1210
	1212
259-7354	1272
	1274
	1276
	1279
259-7378	961
	962
	▶976
259-7429	865
	869
	▶1079
259-7430	858
	862
	873
	875
	▶1080
259-7464	647
	▶1015
259-7465	▶978
	1015
	1016
259-7466	▶981
	▶986
	1015
259-7484	▶963
259-7485	▶963
259-7492	▶541
259-7493	▶541
259-7494	▶541
259-7495	▶542
259-7496	▶542
	544
259-7497	▶542
	544
259-7498	▶543
259-7501	▶543
259-7598	540
	▶1231
	▶1232
259-7599	540
	▶1233
	▶1234
259-7600	972
	▶1056
259-7601	972
	▶1057
259-7602	960
	▶1016
259-7631	978
259-7632	981
	986
	▶991
	993
	997
259-7646	1052
	▶1058
259-7662	▶993
	▶997
	1016
259-7707	▶1235
259-7732	800
	▶1071
259-7733	1071
259-7762	1231
	▶1255
259-7763	1231
	▶1256
259-7764	1233
	▶1257
259-7765	1233
	▶1258
259-7788	1006
	1009
259-7848	1050
	1061
259-7849	1050
	1061
259-7850	1050
	1061
259-7851	1050
	1061
259-7852	1050
	1061
259-7877	1252
260-2042	224
	241
260-2109	▶1244
	1255
	1263
260-2110	▶1245
	▶1246
	1256
	1264
260-2111	1244
	1245
	1246
	1247
	1248
260-2127	▶1247
	1257
	1265
260-2128	▶1248
	1258
	1266
260-2288	1112
	▶1118
260-2289	1118
	1119
	1120
260-3003	1001
260-3877	773
	776
	▶1081
260-3883	779
	1081
	1082
260-5618	154
260-5619	154
260-5620	154
260-5656	8
	▶143
260-6692	188
260-6941	1423
260-6942	1425
260-6945	1427
260-6946	1428
260-6948	1426
260-7135	1441
	1446
	1451
	1456
260-7868	647
	▶943
260-7872	716
	720
	723
	726
	730
	734
	738
260-7900	776
	779
260-7904	943
260-7906	943
260-7910	▶644
	714
260-7911	644
	▶645
260-7912	645
260-7913	644
	▶646
260-7914	646
260-7965	▶825
	1353
260-7966	▶827
	963
260-7967	▶830
	963
260-7970	▶832
	▶835
	963
	964
260-7971	541
	▶838
	▶841
260-7972	541
	▶844
	▶847
260-7974	541
	▶850
	▶854
260-7976	542
	▶858
	▶862
260-7977	543
	▶865
	▶869
260-7978	542
	▶873
260-7982	543
	▶875
260-7983	543
	▶897
	▶900
260-7984	544
	▶877

▶ **PRIMARY REFERENCE**

PART NUMBER INDEX

Part	Page
260-7986	542
	▶879
	▶885
260-7988	714
	773
260-7992	714
260-7996	714
260-8000	714
260-8006	541
	▶716
	▶720
	▶723
260-8007	541
	542
	▶726
	▶730
260-8008	541
	542
	▶734
	▶738
260-8009	542
	▶742
	▶744
260-8010	▶678
	1092
	1093
260-8011	▶702
	1125
260-8015	543
	▶746
	▶748
260-8043	716
	720
	723
	726
	730
	734
	738
	751
	754
260-8315	678
260-8316	678
260-8320	669
260-8321	669
262-2043	▶228
	237
262-2286	435
	441
	447
	▶471
262-2287	471
262-2309	480
262-2313	475
	478
	484
262-2324	425
	430
	435
	441
	447
	453
	458
	463
262-2333	481
262-2335	481
262-2346	483
262-2347	479
262-2353	425
	430
	435
	441
	447
	453
	458
	463
262-2363	425
	430
	435
	441
	447
	453
	458
	463
262-2365	435
	453
	458
	463
262-2404	377
262-2405	377
	378
	381
	390
	394
	397
	399
262-2406	377
	378
	381
	386
	387
	390
	393
	394
	395
	396
	397
	398
	399
262-2417	377
	378
	381
	386
	387
	390
	393
	394
	395
	396
	397
	398
	399
262-2420	470
	473
262-2427	470
	471
	472
	473
262-2428	470
	471
	472
	473
262-2429	470
	473
262-2430	470
	473
262-2432	470
	473
262-2484	421
262-2607	1
	2
	▶382
	▶383
262-2608	374
	▶384
	▶385
262-2623	382
	▶386
262-2624	386
262-2626	384
	▶387
262-3390	710
262-3402	659
262-3403	659
262-3404	661
262-3407	709
262-3410	709
262-3471	▶919
	963
	964
262-3494	▶1148
262-3495	▶1148
262-3496	▶712
	▶713
	1148
262-3497	▶1119
	1148
262-3589	705
262-4781	505
262-9372	▶161
	169
	171
	175
	179
263-9088	238
	▶1355
263-9574	216
264-1702	1095
	1097
	1099
	1103
264-7029	299
264-7030	299
264-7032	339
264-7034	299
264-8507	1441
264-8508	1451
264-8626	▶3
264-8627	▶3
264-8638	▶1
	3
264-8639	▶2
	3
264-8648	▶1294
264-8649	▶1294
264-8651	▶80
264-8665	▶237
264-8666	▶237
264-8671	▶110
264-8770	▶155
264-9961	981
	986
	993
	997
264-9982	1218
264-9983	1218
264-9984	1218
265-3504	26
	▶122
265-3557	82
265-3581	122
265-3585	122
265-3586	122
265-3587	122
265-3590	122
265-3591	122
265-3599	122
265-3600	4
	80
	81
	▶90
	▶92
265-3601	90
	▶94
265-3602	90
	92
	96
	99
265-3616	26
	▶96
	▶99
265-3617	96
	▶101
265-3624	94
	101
	104
	106
265-3625	94
	101
	104
	106
265-3627	94
	101
265-3628	94
	106
265-3629	94
	101
	104
	106
265-3630	94
	101
	104
	106
265-3631	94
	101
	104
	106
265-3632	94
	101
	104
	106

▶ PRIMARY REFERENCE

PART NUMBER INDEX

Part	Page
265-3633	94
	101
	104
	106
265-3634	94
	101
	104
	106
265-3635	94
	101
	104
	106
265-3637	94
	101
	104
	106
265-3638	94
	101
	104
	106
265-3639	94
	106
265-3640	101
	104
265-3642	94
	106
265-3643	94
	106
265-9642	228
265-9643	228
266-0136	271
266-0898	726
266-0900	726
266-0908	746
	748
266-0912	716
	720
	723
	726
	730
	734
	738
	751
	754
	757
	761
266-0913	716
	720
	723
	726
	730
	734
	738
	751
	754
	757
	761
266-1028	807
	809
266-1037	782
	785
266-1045	782
	785
266-1055	782
266-1071	716
	720
	726
	734
	757
266-1098	800
	804
266-1108	838
	841
	844
	847
	850
	854
	877
	879
	885
266-1110	690
266-1111	690
266-1114	690
266-1115	690
266-1116	690
266-1133	838
	841
	844
	847
	850
	854
	858
	862
	865
	869
	879
	885
266-1136	838
	844
	850
	854
	858
	862
	865
	869
	879
	885
266-1139	838
	841
	844
	847
	850
	854
	858
	862
	865
	869
	879
	885
266-1142	844
	847
	850
	854
266-1147	690
266-1179	858
	862
	865
	869
	879
	885
266-1215	913
266-1217	716
	720
	723
	730
	738
	741
	744
	747
	750
	754
	757
	761
266-1258	913
	915
266-1266	734
	738
	757
	761
266-1271	873
266-1278	726
	730
	734
	738
	757
	761
266-1279	726
	730
	734
	738
	751
	754
	757
	761
266-1303	726
	730
	734
	738
	757
	761
266-1307	726
	734
	757
266-1311	734
266-1315	734
	738
	757
	761
266-2861	1349
266-5431	1441
	1446
	1451
	1456
266-6207	1216
	1334
	1336
266-6227	61
	85
266-6228	57
	59
266-6229	85
266-6230	57
	59
266-6231	57
	59
266-6232	61
	85
266-6297	26
	▶47
266-6298	47
266-6299	47
266-6300	47
266-6301	47
266-6317	18
	21
	▶54
266-6319	131
	133
266-6320	131
	133
266-6321	131
	133
266-6326	54
	55
	59
266-6327	54
	61
266-6332	55
266-6333	55
266-6334	55
266-6335	55
266-6336	55
266-6337	55
266-6338	55
266-6346	121
266-7891	556
266-7892	566
266-7964	688
	689
	703
	704
266-7965	921
266-7966	558
	569
266-7968	586
	588
266-7970	▶549
	590
266-7971	▶549
	590
266-7972	549
	▶558
266-7973	▶552
	590
266-7974	552
	▶586
266-7975	▶552
	590
266-7976	552
	▶588
266-7977	▶550
	590
266-7978	550
	▶569
266-7991	▶551
	590
266-7992	551
	▶571
266-8011	558
266-8012	586
	588
266-8022	549
	▶688
266-8023	549
	▶689
266-8024	552
	▶921
266-8025	550
	▶703
266-8026	571
266-8044	551
	▶704
266-8045	571

▶ **PRIMARY REFERENCE**

PART NUMBER INDEX

Part	Page
266-8057	569
267-0138	▶1110
	1123
267-0139	1110
267-0140	1110
267-0141	1110
267-3727	1052
	▶1059
267-4051	765
	769
267-6767	3
	▶368
267-7207	196
267-7208	196
267-7626	252
267-7627	▶254
	1092
	1094
267-7628	254
267-7636	313
267-7639	299
267-7642	▶304
	545
267-7644	304
267-7671	304
267-7672	304
267-7676	304
	359
267-7695	359
267-7976	263
	265
267-7977	267
	269
267-8000	1
	2
	▶195
	▶202
	▶209
267-8002	▶357
	545
267-8003	▶290
	543
267-8005	▶351
	543
267-8007	237
	▶316
	▶318
267-8008	237
	▶320
	▶322
267-8071	1
	2
	▶1317
268-0749	▶401
	403
268-1964	298
268-4530	1434
268-4531	1434
268-5145	757
	761
268-6787	652
268-6790	652
268-6816	545
	▶1433
268-6817	1433
268-6850	670
	672
	674
268-6966	654
268-6969	654
268-6970	654
268-6971	707
268-6974	707
268-6977	707
268-6980	707
268-6983	707
268-6986	707
268-6989	657
268-6992	657
268-6995	657
268-6998	657
268-7001	657
268-7004	657
268-7007	657
268-7010	657
268-7043	▶1101
	1112
268-7044	1101
268-7046	▶680
	1112
268-7047	680
268-7048	680
268-7049	680
268-7074	▶750
	1112
268-7183	750
268-7185	750
268-7186	750
268-7188	1437
268-7238	680
268-7239	680
268-7240	680
268-7241	919
268-7256	▶553
	1112
268-7257	553
	▶922
268-8643	310
268-8872	1434
269-0120	1434
269-0121	1434
269-9919	811
	813
270-0012	746
	748
270-0013	746
	748
270-0014	746
	748
270-0015	746
	748
270-5320	142
270-5433	241
	1349
270-5511	237
	▶238
270-5512	3
	▶228
270-5514	4
	19
	▶228
270-5603	2
	3
	▶1347
270-5947	789
	▶1021
270-5949	1021
	1032
270-5950	1021
	1032
270-5951	1235
	▶1259
270-5952	1235
	▶1260
270-5953	1023
	1028
270-5974	▶963
270-6106	▶543
	544
270-6107	543
	▶1241
270-6259	149
	225
270-6338	87
272-4675	4
	▶7
272-4676	7
	▶15
272-4677	▶8
	15
272-4681	3
	▶9
272-4682	9
	▶16
272-4683	▶10
	16
	17
	18
	22
	24
	25
272-4684	▶11
272-4685	11
	▶17
	80
272-4687	▶18
	80
272-4742	3
	▶26
272-4744	26
	▶125
272-4772	▶273
272-4773	110
	▶114
	▶116
272-4774	8
	10
	14
	48
	▶274
272-6955	947
	▶949
273-4159	1149
273-4160	1149
273-4161	1149
273-4162	1149
273-4163	1149
273-4165	1149
273-5166	1173
	▶1327
273-5167	1173
	▶1220
273-5168	▶1316
273-5169	1316
	▶1336
273-5274	1408
273-5333	1291
273-5345	1292
	1408
273-5346	1292
	1408
273-5358	2
	3
	▶1291
273-5359	1291
273-5360	1291
273-5384	1396
	▶1398
273-5386	1398
273-5387	1
	2
	▶1353
273-5399	1220
273-5400	1331
273-5446	1363
	▶1365
273-6716	1
	2
	▶415
273-6717	415
273-7674	420
273-7675	421
273-7677	377
	378
	381
	386
	387
	390
	393
	394
	395
	396
	397
	398
	399
273-7725	4
	▶425
	▶430
273-7726	1
	2
	▶435
	▶441
	▶447
273-7727	▶487
	1294
273-7735	1
	2
	▶147
273-7774	403
273-7847	401

▶ PRIMARY REFERENCE

PART NUMBER INDEX

Part	Page
273-7848	401
273-7849	401
273-7893	▶402
	435
273-7964	371
273-8314	949
273-8315	946
	949
273-8316	615
	619
	623
	626
	630
	634
273-8317	615
	619
	623
	626
	630
	634
273-8318	615
	619
	623
	626
	630
	634
273-8319	615
	619
	623
	626
	630
	634
274-2467	▶590
274-2488	▶590
274-2547	700
	703
274-4990	196
274-6720	271
274-6721	225
	271
275-1361	904
	906
275-1362	957
275-1398	542
	▶751
	▶754
275-1399	543
	▶757
	▶761
275-1409	545
	▶765
	▶769
275-1439	726
	730
	734
	738
	751
	754
	757
	761
275-1440	734
	738
	751
	754
	757
	761
275-1442	800
	804
	858
	862
	865
	869
275-1443	800
	804
	858
	862
	865
	869
275-1444	800
	804
	858
	862
	865
	869
275-1460	751
275-1468	765
	769
275-1538	765
	769
275-1712	832
	835
275-1713	832
	835
275-3683	1
	▶1441
	▶1446
275-3684	2
	▶1451
	▶1456
275-3695	▶1093
275-3702	▶1125
275-3707	▶1113
275-3835	▶1125
275-6798	4
	80
	▶336
275-6803	337
	339
275-6840	306
275-6841	311
275-6842	311
275-6846	338
275-6979	316
	318
	320
	322
275-6993	342
	344
275-7003	▶354
	1353
275-7004	354
275-7197	290
	292
275-7202	351
275-7203	▶292
	542
277-0786	650
	654
277-0863	▶545
277-0954	648
	659
	663
	▶1017
277-1045	712
277-1046	712
278-3581	371
278-3729	487
278-3778	110
	▶403
278-3818	414
278-3831	435
278-3832	426
	431
	435
	441
	447
	454
	459
	464
278-3836	435
	441
	447
	453
	458
	463
	▶475
278-3837	475
	478
	484
278-3842	425
	430
	435
	441
	447
	453
	458
	463
	▶476
278-3845	435
278-3848	435
278-3852	435
	▶489
278-3896	1
	2
	▶162
278-3897	162
	▶168
278-3898	168
	▶169
	▶170
278-3899	168
	▶171
	▶172
278-3900	155
	▶163
278-3901	163
	▶174
278-3902	174
	▶175
	▶177
278-3903	174
	▶179
	▶181
278-3908	▶388
	▶389
278-3970	161
278-6426	757
	761
278-6427	757
	761
278-6428	757
	761
278-6430	757
	761
278-6470	841
	847
	854
	858
	862
	865
	869
	885
278-6587	690
278-6593	690
278-6756	734
	738
278-6811	757
	761
278-6875	690
278-6877	690
278-6894	289
	▶917
278-6907	917
278-6912	897
	900
278-9257	▶373
278-9258	373
279-3161	1180
279-7609	311
279-7750	274
279-7859	27
	28
	29
279-7869	647
	▶947
279-7870	▶547
	947
279-7871	▶546
	547
279-7907	125
279-7909	114
	116
279-7911	26
	▶73
280-2747	727
	731
	735
	739
281-3488	94
	101
	104
	106
281-3534	94
	101
	104
	106
281-3535	94
	101
	104
	106

▶ **PRIMARY REFERENCE**

PART NUMBER INDEX

Part	Page
281-3568	94
	101
	104
	106
281-3588	82
281-3601	99
	▶104
281-3602	92
	▶106
281-3605	104
	106
282-4533	1093
	▶1103
282-4534	1103
282-4536	1125
	▶1138
282-4537	1138
282-4539	1113
	▶1120
282-4540	1120
282-5567	670
	674
	676
282-5681	676
282-5705	545
	▶1434
282-7055	897
	900
282-7061	897
282-7079	832
	835
282-7086	742
282-7088	742
	744
282-7096	742
282-7097	742
282-7135	913
	915
282-7161	▶908
	▶909
	▶911
	963
282-7162	▶891
	▶893
	963
282-7615	765
	769
282-8567	49
	332
283-2640	290
283-2761	▶324
283-2762	324
283-2783	330
	331
	359
	1319
283-2893	1334
	1336
283-2913	▶359
283-2914	359
283-2984	359
283-3015	357
283-3041	356
283-3074	328
283-3905	477
	482
283-3911	425
	430
	435
	441
	447
	453
	458
	463
283-6118	568
	▶591
283-6119	591
283-8982	1437
283-8983	1437
284-4386	1
	2
	▶1331
284-4426	1202
	1206
284-4442	▶1173
284-4552	1327
284-7161	1125
	▶1139
284-7162	1139
284-7317	1131
284-7325	1132
285-1327	▶1023
	1259
	1260
285-1332	1241
285-1333	1241
285-1337	1241
285-1354	3
	▶647
285-1355	3
	▶647
285-1399	800
	804
285-1465	800
	804
285-1531	748
	▶1001
285-1764	1026
285-1765	830
	▶1026
285-1766	1026
285-1767	1026
285-1777	1001
285-2415	765
	769
	773
	776
	779
285-2423	765
	769
285-2427	765
	769
285-2428	765
	769
285-2431	773
285-4470	615
	619
	623
	627
	631
	634
286-3683	225
286-4271	▶221
	222
286-6186	147
286-6220	425
	430
	435
	441
	447
	453
	458
	463
286-6276	425
	430
	435
	441
	447
	453
	458
	463
286-6277	477
	482
286-6281	420
286-6283	421
286-6340	381
286-6346	378
	381
	390
	394
	397
	399
286-6359	425
	430
	435
	441
	447
	453
	458
	463
286-6495	▶690
	963
286-6561	850
	854
	879
	885
286-6720	690
286-6721	690
286-6731	690
286-6760	800
	804
287-0047	547
287-0049	8
	10
	14
	▶135
	137
287-0118	126
287-0171	126
287-0183	26
	▶126
287-0187	49
287-0188	49
287-0189	49
287-0190	49
287-0211	125
287-2352	1002
288-7410	670
	672
	674
288-7502	650
	654
288-7608	▶545
288-9297	139
289-5400	773
289-5416	545
	▶773
	▶776
	▶779
289-5475	858
	862
	865
	869
289-5578	877
289-5607	773
	776
	779
289-5657	790
	794
289-5672	714
289-5681	897
	900
289-5731	897
	900
289-6424	1
	2
	▶420
289-6425	▶421
289-6572	425
	430
	435
	441
	453
	458
	463
	▶477
289-6583	425
	453
289-6588	425
	430
	▶478
289-6603	420
289-6695	425
	430
	435
	442
	447
	453
	458
	463
	▶479
289-6697	479
289-6698	425
	430
	435
	442
	447
	453
	458

▶ PRIMARY REFERENCE

PART NUMBER INDEX

Part	Page	Part	Page	Part	Page	Part	Page
	463		1446	293-1140	1418		64
289-6699	425		1451	293-1168	▶1284		129
	430		1456	293-1184	1283	294-1702	64
	436	290-1742	1441	293-1230	1327		66
	442		1446		1331		68
	448	290-1743	1451		1336	294-1703	30
	453		1456	293-1256	1405	294-1704	30
	458	290-1774	▶2	293-6644	411	294-1705	30
	463	290-1775	▶3	293-6789	147	294-1706	30
	▶480	290-1892	▶4	293-6982	426	294-1707	30
289-6700	480	290-1902	▶374		430	294-1708	30
289-6712	193	290-1906	1441		441	294-1709	30
	216		1446		447	294-1710	30
	▶481		1451		453	294-1711	30
289-6713	481		1456		458	294-1712	30
289-6805	425	290-1909	▶19		463	294-1713	30
	430	290-1910	▶4	293-7056	435	294-1714	30
	436	290-1911	▶80		441	294-1715	27
	442	290-1912	▶596		447	294-1716	27
	448	290-9101	1128	294-1678	38		28
	453	290-9466	237	294-1679	38		29
	458		▶1349	294-1680	38	294-1720	33
	463	291-7462	336	294-1682	39	294-1721	33
289-6910	4		▶337	294-1683	39	294-1722	33
	80	291-7463	336	294-1684	64	294-1723	36
	81		▶338		66	294-1724	36
	▶407		340		68	294-1725	▶33
289-6911	▶408	291-7547	258	294-1685	64		36
	425		260		66	294-1726	42
	430	291-7559	1317		68		43
	453		▶1318	294-1686	64		55
	458	291-7560	1318		66		70
	463	291-7561	1318		68	294-1727	43
289-6912	408	291-7590	195	294-1687	64	294-1729	43
289-6913	▶409	291-7591	196		66	294-1731	43
	425		202		68	294-1732	43
	430		209	294-1688	64	294-1733	43
	436	291-7592	193		66	294-1734	43
	442		216		68	294-1735	43
	448	291-7593	196	294-1689	64	294-1736	42
	453		202		66	294-1737	42
	458		209		68	294-1738	42
	463	291-7700	241	294-1690	64		79
289-6914	409	291-7701	▶241	294-1691	64		88
289-6915	▶410	291-7716	▶339		66		129
	436		340	294-1692	64		131
	442	292-3750	▶154		66		133
	448	292-3751	154	294-1693	64	294-1739	42
289-6916	410		156		66	294-1740	42
289-6917	407	292-7153	904		68	294-1741	49
	▶411		906	294-1694	64	294-1742	49
289-7836	602	292-7297	957		66	294-1743	49
	▶605	293-1117	1327	294-1695	64	294-1747	51
289-8194	▶612	293-1118	1327		66	294-1748	51
	957	293-1119	1327	294-1696	64	294-1749	32
289-8195	612	293-1120	1327		66	294-1751	32
290-1727	1441	293-1121	1220	294-1697	64	294-1752	40
	1446	293-1124	1220		66	294-1753	41
	1451	293-1127	1220	294-1698	64	294-1754	41
	1456	293-1136	1169		66	294-1755	41
290-1728	1441		1171		68	294-1756	41
	1446	293-1137	1174	294-1699	64	294-1757	41
	1451		1177		66	294-1758	129
	1456	293-1138	1312		68	294-1760	129
290-1729	1441		1314	294-1700	30	294-1761	127

▶ **PRIMARY REFERENCE**

PART NUMBER INDEX

Part	Page
294-1762	131
294-1763	135
294-1764	78
294-1765	78
294-1766	78
294-1767	75
294-1768	75
294-1769	70
294-1770	70
294-1771	70
294-1772	70
294-1773	72
294-1774	72
294-1775	72
	225
294-1776	72
294-1777	87
294-1778	87
294-1780	87
294-1781	55
294-1784	53
294-1785	53
294-1786	53
	64
	66
	68
294-1787	149
294-1788	149
294-1789	149
294-1790	149
294-1791	149
294-1792	149
294-1793	149
294-1794	149
294-1795	149
294-1796	145
	146
294-1800	145
	146
294-1801	149
294-1802	149
294-1803	145
	146
294-1804	139
	149
	225
	271
294-1805	145
	146
294-1806	149
294-1808	149
294-1809	149
294-1811	139
	149
294-1812	149
294-1814	149
294-1815	149
294-1819	139
294-1820	139
294-1821	30
	139
	152
294-1822	139
294-1825	139
294-1826	139
294-1827	139
294-1828	139
294-1830	139
294-1831	139
	151
294-1833	139
294-1834	152
294-1836	152
294-1837	139
294-1838	139
294-1839	152
294-1841	152
294-1842	152
294-1843	152
294-1844	139
294-1845	139
294-1846	152
294-1848	139
294-1849	139
294-1850	48
294-1851	48
294-1853	129
294-1854	129
294-1855	274
294-1857	274
294-1858	274
294-1859	46
294-1860	46
294-1861	46
294-3031	156
294-3032	156
294-3794	652
	657
294-3795	652
	657
294-3796	652
	657
294-3797	652
	657
294-7251	43
295-1257	615
	619
	626
	630
295-1258	615
	619
	626
	630
295-9126	152
	▶156
295-9130	10
	12
	14
	▶144
	146
295-9685	934
296-4617	332
296-4618	332
296-4619	332
296-4621	271
	332
296-4631	271
296-4632	225
296-4633	271
296-4635	225
296-4636	8
	10
	12
	14
	▶78
296-4637	8
	10
	12
	14
	▶48
296-4638	8
	10
	12
	14
	▶72
296-4639	10
	▶27
296-4640	8
	10
	12
	14
	▶49
296-4641	8
	10
	12
	14
	▶75
296-4642	8
	10
	12
	14
	▶79
296-4643	8
	10
	12
	14
	▶42
296-4644	8
	10
	12
	14
	▶40
296-4645	8
	10
	12
	14
	▶39
296-4646	10
	▶64
296-4647	8
	10
	12
	14
	▶30
296-4648	8
	10
	12
	14
	▶36
296-4649	8
	10
	12
	14
	▶43
296-4650	8
	10
	12
	14
	▶32
296-4651	8
	10
	12
	14
	▶41
296-4652	8
	10
	12
	14
	▶129
296-4653	8
	10
	12
	14
	▶127
296-4654	8
	10
	12
	14
	▶70
296-4655	8
	10
	12
	14
	▶88
296-4656	8
	10
	12
	14
	▶149
296-4658	8
	10
	12
	14
	▶87
296-4659	8
	10
	12
	14
	▶51
296-4661	8
	10
	12
	14
	▶131
296-4662	8
	10
	12
	14
	▶46
296-4663	51
296-4664	8
	10
	12
	14
	▶225
296-4665	8
	10
	12
	14
	▶332

▶ PRIMARY REFERENCE

PART NUMBER INDEX

Part	Page
296-4666	8
	10
	12
	14
	▶271
296-4667	15
	22
	23
	24
	25
	▶55
296-4673	41
296-4675	19
	▶20
296-4676	▶12
	20
	21
296-4678	4
	▶21
296-4680	▶22
	80
296-4733	87
296-4812	149
296-6298	▶364
	368
296-6299	364
	▶365
296-6300	365
296-6975	838
	841
296-7067	716
	720
	723
	730
	734
	738
	751
	754
	757
	761
296-7069	716
	720
	723
	730
	734
	738
	751
	754
296-7229	765
	769
297-0292	▶544
297-0293	▶544
297-0294	▶544
297-0370	734
	738
	761
	▶967
297-0462	782
	785
	▶969
297-0503	969
	▶970
297-0504	969
	▶971
297-0529	▶1028
	1261
	1262
297-0532	1236
	▶1261
297-0533	1236
	▶1262
297-0534	1232
	▶1263
297-0535	1232
	▶1264
297-0536	1234
	▶1265
297-0537	1234
	▶1266
297-0589	▶1030
	1263
	1264
	1265
	1266
297-4589	1244
297-4590	1246
297-4595	1247
	1248
297-7644	▶38
	39
297-7645	39
297-7646	43
297-7647	43
297-7648	51
297-7649	51
297-7650	51
297-7655	87
297-7656	149
297-7657	149
297-7658	149
297-7660	139
297-7671	26
	▶151
297-7672	151
297-7673	151
297-7674	151
297-7706	139
297-7736	10
297-7738	8
297-7745	12
	▶133
297-7747	16
	20
	▶57
297-7748	17
	▶59
297-7791	133
297-7822	139
297-7824	57
	59
297-7825	57
298-2942	408
	409
	410
	411
298-2977	▶405
	426
	430
	441
	447
	453
	458
	463
298-2978	405
298-2979	▶400
	426
	430
	441
	447
	453
	458
	463
298-2995	▶482
	596
298-3033	426
	431
	454
	459
	464
	▶483
298-3037	483
298-3038	426
	431
	441
	447
	454
	459
	464
298-3041	426
	431
	441
	447
	454
	459
	464
298-3044	426
	431
	441
	447
	454
	459
	464
298-3147	147
	▶188
298-3257	188
298-3258	188
298-4127	▶1123
298-4195	1300
298-4196	1302
298-4256	▶80
298-4257	▶289
298-4258	155
	▶1435
298-4271	▶80
298-4272	▶81
298-4281	5
	6
	▶1436
298-4282	1436
	1440
298-4286	▶5
298-4287	▶5
298-4288	▶5
299-1425	12
299-2767	203
	210
299-2783	▶216
299-2792	3
	▶306
	▶307
299-2798	334
299-2954	2
	3
	▶311
299-2963	311
	3
300-9715	615
	623
300-9716	626
	634
301-0091	334
301-6874	623
	634
301-7756	145
301-8294	623
	634
302-2852	765
	769
302-3168	800
302-3171	765
	769
302-3196	971
302-9208	▶1112
302-9210	1112
	▶1437
302-9466	1017
302-9635	893
303-2787	220
	▶1438
303-6261	129
303-9859	2
	▶468
303-9860	3
	▶469
303-9933	165
	166
	170
	172
	177
	181
	184
	186
303-9937	165
	166
	170
	172
	177
	181
	184
	186
304-0014	468
	▶472
304-0016	469
	▶473
304-0017	473
304-0018	468
	469

▶ **PRIMARY REFERENCE**

PART NUMBER INDEX

Part	Page
304-0019	468
	469
304-0093	403
	▶490
304-0096	▶390
	391
304-0097	390
305-0326	▶1285
305-0329	1283
305-0330	1200
	1212
305-0331	1246
	1248
305-0332	1244
	1247
305-0333	1200
	1212
305-0361	1412
305-0395	5
305-0441	1328
	1331
	1336
305-0442	1328
	1331
	1336
305-4678	8
	10
	12
	▶152
305-4691	129
305-4742	10
	14
	▶66
305-4743	10
	14
	▶28
305-4744	8
	10
	12
	▶29
305-4745	8
	10
	12
	14
	▶139
305-4746	66
	68
305-4747	66
	68
305-4748	28
305-4750	68
305-4751	68
305-4756	29
305-4763	4
	▶13
305-4774	59
	▶61
305-4775	57
	▶85
305-4776	13
	▶23
305-4777	▶14
	23
305-4781	73
305-4887	139
305-4889	139
305-4893	332
305-4895	332
305-4896	332
305-4897	332
305-4898	332
305-4900	139
305-4901	139
305-4902	139
305-4905	53
305-4906	53
305-4907	53
305-4908	▶53
	54
	55
	57
	59
305-4910	8
	10
	12
	▶68
305-4927	68
305-4928	68
305-4929	68
305-4930	68
305-4950	546
305-4951	546
305-4952	546
306-1294	672
306-1503	▶895
	1112
306-1611	650
306-1614	650
306-1615	650
306-8349	2
	3
	▶308
306-8350	308
306-8362	307
306-8401	195
	202
	209
306-8452	289
	▶352
306-8501	4
	80
	81
	▶340
306-8502	352
	353
306-8590	309
306-8610	202
306-8690	1
	2
	▶346
306-8691	346
306-8777	209
306-8802	1321
307-4918	684
307-4919	684
307-4920	909
	911
307-5034	678
307-5035	669
307-5097	906
307-5098	906
307-5120	809
307-5121	691
307-5161	765
	769
	776
	779
307-7656	408
	410
	411
307-7660	425
	▶491
307-7662	430
	441
	447
	454
	459
	464
	▶492
307-7674	▶391
	▶392
307-7694	388
	▶393
307-7695	393
307-7700	426
	431
	442
	448
	454
	459
	464
307-7702	426
	431
	442
	448
	454
	459
	464
307-7803	147
307-7804	147
308-8775	415
308-8776	415
308-8777	415
308-8881	5
	6
	▶486
308-8882	486
309-1098	1154
309-3872	1435
309-5769	789
	793
	817
	819
	821
	823
	855
	886
309-5808	1238
	▶1268
309-5849	1347
309-9941	1001
310-0078	▶1236
310-0210	804
	▶1037
310-0390	986
	▶1060
310-0393	997
	▶1061
310-0394	1046
	▶1063
310-0414	793
	▶1032
310-0419	1032
310-0420	1032
310-0421	1032
310-0422	1032
310-6252	1441
	1446
	1451
	1456
310-9484	▶24
	80
310-9485	▶25
	81
310-9498	73
310-9500	73
310-9509	51
310-9510	51
310-9511	51
310-9533	139
	149
310-9534	139
310-9536	139
310-9537	149
310-9582	26
	▶77
310-9606	8
	▶145
310-9607	10
	12
	▶146
310-9617	12
	▶137
310-9667	109
	▶118
310-9676	116
	▶119
311-6632	149
312-2645	159
312-5525	1436
	1440
313-7833	219
	▶222
313-7878	915
313-7881	▶484
	915
314-3574	▶6
314-3575	▶6
314-3576	▶6
314-3729	▶1123
314-3735	▶220
314-3765	▶289
314-3768	289
	▶1439
314-3774	▶220
314-3785	▶155
314-3797	▶519
314-3798	▶528
314-3846	▶6
314-3848	6

▶ **PRIMARY REFERENCE**

PART NUMBER INDEX

Part	Page
	▶1440
314-8124	915
314-8128	804
314-8205	738
314-8246	776
	779
314-8252	723
315-0800	415
315-1040	1123
	▶1140
315-1041	1140
316-4084	713
316-4085	713
316-8811	1171
	▶1177
	1314
316-8845	1174
	1177
316-8846	1174
	1177
316-8847	1174
	1177
316-8848	1174
	1177
316-8849	1174
	1177
316-8850	1174
	1177
316-8872	▶1322
316-8908	1300
316-8987	1360
	1361
	1371
	1372
	1373
	1374
	1375
	1376
	1377
	1378
	1385
	1386
	1387
	1388
	1389
	1390
	1399
	1400
	1401
316-8989	1344
317-4712	730
	738
	761
317-4798	754
319-1248	290
319-1335	344
319-1344	260
	347
319-1346	260
	347
319-1348	312
	347
319-1358	▶347
319-1386	257
	▶260
319-1387	1
	2
	▶312
319-4261	228
319-4262	228
319-4263	228
319-4264	228
319-4353	1345
	▶1346
319-4420	265
	269
	▶284
319-9152	1438
319-9845	911
319-9888	785
319-9996	900
320-0013	690
320-0198	669
320-5392	222
320-5396	219
320-5525	1340
320-5732	4
	▶453
	▶458
	▶463
322-4582	1439
323-7558	▶1085
323-7559	1085
	▶1086
323-7770	1032
323-7772	1086
323-7773	1086
324-0980	1123
	▶1141
324-0983	1141
324-5761	159
324-5774	220
	▶310
325-8865	723
	730
	738
	761
326-1644	142
327-3062	1340
327-3063	1340
327-3191	4
	▶164
327-3192	164
	▶183
327-3193	▶165
	183
327-3196	▶166
	183
327-3198	155
	▶167
327-3199	167
	▶183
327-3200	183
	▶184
327-3203	183
	▶186
327-3236	376
	▶394
327-3237	394
327-3248	385
	▶395
327-3249	395
327-3252	383
	▶396
327-3253	396
327-3256	380
	▶397
327-3257	397
327-3268	389
	▶398
327-3269	398
327-3272	392
	▶399
327-3273	399
327-3329	▶219
	220
327-6498	▶1371
327-6499	▶1372
327-6500	▶1385
327-6501	▶1360
327-6502	▶1361
327-6503	▶1386
327-6504	1371
	▶1373
327-6505	1372
	▶1374
327-6506	1385
	▶1387
327-6507	1360
	▶1388
327-6508	1361
	▶1389
327-6509	1386
	▶1390
327-6510	1373
	▶1375
327-6511	1374
	▶1376
	1387
327-6512	▶1377
	1388
	1389
327-6513	▶1378
	1390
327-6514	▶1310
327-6515	▶1311
	1377
	1378
327-6517	1373
	1374
	▶1399
327-6520	1387
	1388
	▶1400
327-6521	1389
	1390
	▶1401
327-6523	1353
	▶1393
327-6538	1393
327-6550	1206
	▶1342
	1343
	1344
327-6552	▶1343
327-6553	▶1344
327-6576	1343
327-6579	1274
	1279
327-6581	1403
327-6601	1297
327-6639	1376
327-6640	1375
	1376
	1377
	1378
327-6642	1375
	1376
	1377
	1378
327-6643	1375
	1376
	1377
	1378
327-6644	1400
	1401
327-6645	▶1323
	1400
327-6646	1323
	1324
327-6647	1323
327-6648	1399
	1400
	1401
327-6649	1378
327-7483	229
327-7486	229
327-9998	309
328-0021	265
	269
328-0028	353
328-0048	220
	▶309
328-0094	289
	▶353
328-2035	779
	▶1082
329-2817	744
329-2819	744
329-2820	744
330-1162	4
	▶1340
330-1166	4
	▶414
330-1167	414
330-1182	430
	441
	447
	458
	463
330-1183	430
	458
	463
330-1184	441
	447
330-1194	▶4
	220
330-1347	430
	447
	463

▶ **PRIMARY REFERENCE**

PART NUMBER INDEX

Part	Page	Part	Page	Part	Page	Part	Page
330-1426	4						
	155						
	▶406						
330-1427	406						
	▶412						
330-3408	1355						
332-8903	529						
	530						
332-8908	528						
	▶529						
332-8915	519						
	▶530						
333-4157	▶1324						
	1401						
333-4158	1324						
333-4159	1324						
333-4160	1377						
333-4172	1375						
333-4173	▶1325						
	1399						
333-4174	1325						
333-4175	1399						
333-4178	1324						
333-4179	1375						
	1376						
	1377						
	1378						
333-4180	1323						
	1324						
	1325						
	1399						
	1400						
	1401						
333-4181	1323						
	1325						

▶ PRIMARY REFERENCE



© 2008 CATERPILLAR
ALL RIGHTS RESERVED

CAT, CATERPILLAR, THEIR RESPECTIVE LOGOS, “CATERPILLAR YELLOW” AND THE POWER EDGE TRADE DRESS, AS WELL AS CORPORATE AND PRODUCT IDENTITY USED HEREIN, ARE TRADEMARKS OF CATERPILLAR AND MAY NOT BE USED WITHOUT PERMISSION.

PRINTED IN U.S.A.

SEBP4874-07
VOLUME I
Pages 1-530

320D & 320D L Excavators

FAL1-Up
KGF1-Up